CATERPILLAR®

SEBP3498-26
May 2005

VOLUME I
Pages 1-466

RUTHZIL TRATOR COMERCIAL DE PEÇAS LTDA 11 97083-6812 ROLANDO CITRANGULO

Parts Manual

SIS

See "General Information" for New Parts Manual Features.

938G II Wheel Loader

CRD1-Up (Machine)
5GG1-Up (Engine)
FWS1-Up (Transmission)
WNF1-Up (Transmission)
TCC1-Up (Torque Converter)
TCT1-Up (Torque Converter)

Powered By 3126B Engine
This Parts Manual is also available in .PDF Format on Compact Disc(CD-ROM)-Caterpillar Form SEBP3498

Product and Dealer Information

Note: For product identification plate locations, see the section "Product Identification Information" in the Operation and Maintenance Manual.

Delivery Date: _____

Product Information

Model: _____

Product Identification Number: _____

Engine Serial Number: _____

Transmission Serial Number: _____

Generator Serial Number: _____

Attachment Serial Numbers: _____

Attachment Information: _____

Customer Equipment Number: _____

Dealer Equipment Number: _____

Dealer Information

Name: _____ Branch: _____

Address: _____

_____

_____

	Dealer Contact	Phone Number	Hours
Sales:	_____	_____	_____
Parts:	_____	_____	_____
Service:	_____	_____	_____

Informations produit et concessionnaire

Nota: Voir l'emplacement de la plaque signalétique du produit au chapitre "Informations produit" du guide d'utilisation et d'entretien.

Date de livraison: _____

Informations produit

Modèle: _____

Numéro d'identification produit: _____

Numéro de série du moteur: _____

Numéro de série de la boîte de vitesses: _____

Numéro de série de l'alternateur: _____

Numéros de série d'équipement: _____

Informations sur l'équipement: _____

Numéro matériel client: _____

Numéro matériel concessionnaire: _____

Informations concessionnaire

Nom: _____ Agence: _____

Adresse: _____

_____

_____

	Contact concessionnaire	Numéro de téléphone	Heures
Ventes:	_____	_____	_____
Pièces:	_____	_____	_____
Service:	_____	_____	_____

Información del Producto/Distribuidor

Nota: Para saber la ubicación de las placas de identificación del producto, ver la sección "Información sobre identificación del producto" en el Manual de Operación y Mantenimiento.

Fecha de entrega: _____

Información del producto

Modelo: _____

Número de identificación del producto: _____

Número de serie del motor: _____

Número de serie de la transmisión: _____

Número de serie del generador: _____

Números de serie de los accesorios: _____

Información sobre los accesorios: _____

Número del equipo del cliente: _____

Número del equipo del distribuidor: _____

Información del distribuidor

Nombre: _____ Sucursal: _____

Dirección: _____

_____

_____

	Comunicación con el distribuidor	Número de teléfono	Horas
Ventas:	_____	_____	_____
Piezas:	_____	_____	_____
Servicio:	_____	_____	_____

Informações Sobre Produto e Revendedor

Nota: Para localizações da placa de identificação do produto, consulte a seção, "Informações Sobre Identificação do Produto" no Manual de Operação e Manutenção.

Data de Entrega: _____

Informações Sobre o Produto

Modelo: _____

Número de Identificação do Produto: _____

Número de Série do Motor: _____

Número de Série da Transmissão: _____

Número de Série do Gerador: _____

Números de Série de Acessórios: _____

Informações Sobre Acessórios: _____

Número do Equipamento do Cliente: _____

Número do Equipamento do Revendedor: _____

Informações Sobre o Revendedor

Nome: _____ Filial: _____

Endereço: _____

_____

_____

	Contato do Revendedor	Telefone	Horas
Vendas:	_____	_____	_____
Peças:	_____	_____	_____
Serviço:	_____	_____	_____

Produkt- und Händlerinformation

Anmerkung: Für die Lage der Produkt-Identnummer und Seriennummern siehe Abschnitt "Produkt-Identinformation" im Betriebs- und Wartungshandbuch.

Lieferdatum: _____

Produkt-Identinformation

Modell: _____

Produkt-Identnummer: _____

Seriennummer des Motors: _____

Seriennummer des Getriebes: _____

Seriennummer des Generators: _____

Seriennummern der Arbeitsgeräte: _____

Arbeitsgeräteinformation: _____

Kundennummer: _____

Händlernummer: _____

Händlerinformation

Name: _____ Niederlassung: _____

Adresse: _____

_____

_____

	Kontaktperson beim Händler	Telefon	Dienststunden
Verkauf:	_____	_____	_____
Ersatzteile:	_____	_____	_____
Service:	_____	_____	_____

MEMORANDA

TABLE OF CONTENTS

Name	Page
GENERAL INFORMATION	A27
REPAIR ALTERNATIVES	A46
SUPPLEMENTAL COOLANT ADDITIVES	A51
MAINTENANCE PARTS	A56
INDEX	A88
MACHINE ARRANGEMENT	1
CHASSIS AR	1
GENERAL AR	1
SCRAP HANDLING AR	2
WASTE HANDLING AR	2
ENGINE ARRANGEMENT	4
ENGINE AR-COMPLETE	4
ENGINE AR-CORE	5
INSTALLATION AR-ENGINE	6
BASIC ENGINE	7
CAMSHAFT GP	7
CARRIER GP-SEAL	8
COVER GP-CYLINDER BLOCK	9
COVER GP-FRONT HOUSING	11
COVER GP-VALVE MECHANISM	13
CRANKSHAFT GP	14
CYLINDER BLOCK GP	16
CYLINDER HEAD AS	20
CYLINDER HEAD GP	27
DAMPER & PULLEY GP	39
DRAIN GP-ENGINE OIL	40
FASTENER GP-DAMPER & PULLEY	41
FASTENER GP-FLYWHEEL	42
FASTENER GP-FRONT HOUSING	43
FLYWHEEL GP	44
GEAR GP-FRONT	45
HOUSING GP-FLYWHEEL	47
HOUSING GP-FRONT	48
IDLER GP-BELT	49
LIFTER GP-VALVE	50
LIFTING GP-ENGINE	51
MOUNTING GP-ALTERNATOR	52
MOUNTING GP-ENGINE & TMSN	54
PAN GP-OIL	56
PISTON & ROD GP	57
PLUG GP-CYLINDER BLOCK	60
PLUG GP-ENGINE	61
PULLEY GP-IDLER	62
SEAL GP-CRANKSHAFT	64
SEAL GP-FLYWHEEL HOUSING	65
VALVE MECHANISM GP	66
LUBRICATION SYSTEM	69
ADAPTER GP-OIL LINE	69
BREATHER GP	70
FILTER GP-ENGINE OIL	71
FUMES DISPOSAL GP	72
GAUGE GP-OIL LEVEL (DIPSTICK)	73
LINES GP-ENGINE OIL	75
LINES GP-TURBOCHARGER OIL	76
PUMP GP-ENGINE OIL	77
VALVE GP-FLUID SAMPLING	81
COOLING SYSTEM	82
COOLER GP-ENGINE OIL	82
GUARD GP-FAN	83
LINES GP-WATER	85
PUMP GP-WATER	94
RADIATOR & FAN GP	99
TANK GP-RADIATOR TOP	107
AIR INLET AND EXHAUST SYSTEM	109
AIR CLEANER GP	109
COVER GP-AIR INLET	112
ELBOW GP-AIR INLET	115
FILTER ELEMENT AS-AIR	116
LINES GP-AIR	117
MANIFOLD GP-EXHAUST	119
MUFFLER GP	120
PIPE AS-EXHAUST EXTENSION	121
PRECLEANER GP	122
TURBOCHARGER GP	125
FUEL SYSTEM	127
FILTER GP-WATER SEP & FUEL	127
LINES GP-FUEL	128
LINES GP-FUEL DRAIN	132
LINES GP-FUEL FILTER	133
LINES GP-INJECTOR HYD PUMP	145
PUMP GP-FUEL PRM & PRIM FILTER	147
PUMP GP-UNIT INJECTION	149
PUMP GP-UNIT INJECTOR HYD	151
REGULATOR GP-FUEL PRESSURE	154
TANK GP-FUEL	155
VALVE GP-SOLENOID	157
WATER SEP & FUEL PRM PUMP GP	158
ELECTRICAL AND STARTING SYSTEM	159
ALARM GP	159
ALTERNATOR AR-CHARGING	161
ALTERNATOR GP-CHARGING	162
BATTERY & WIRING GP	172
BLOCK GP-JUNCTION	175
CONTROL & MTG GP-COMMUNICATION	176
CONTROL & MTG GP-ENGINE ELEK	178
CONTROL GP-ENGINE ELECTRONIC	181

TABLE OF CONTENTS

Name	Page
CONTROL GP-LIFT KICKOUT	186
CONTROL GP-POSITION	188
CONTROL GP-UNPROGRAMMED	189
ELECTRICAL AR	192
ELECTRONICS GP-MACHINE	193
ELECTRONICS GP-POWER TRAIN	194
HEATER GP-JACKET WATER	195
INSTALLATION AR-COMMUNICATION	199
INSTALLATION AR-SECURITY	199
INSTALLATION GP-SECURITY	200
LAMP GP-FLOOD	201
LAMP GP-HEAD & SIGNAL	205
LAMP GP-SIGNAL	209
LAMP GP-WARNING BEACON	212
LIGHTING AR-AUXILIARY	213
LIGHTING AR-ROADING	213
LIGHTING AR-SIGNAL	214
LIGHTING GP-FLOOD	214
LIGHTING GP-FLOOD & SIGNAL	219
LIGHTING GP-ROADING	223
LIGHTING GP-SIGNAL	224
LIGHTING GP-WARNING BEACON	225
PANEL GP-CIRCUIT BREAKER	228
SENSOR GP-ENGINE	235
SENSOR GP-POSITION	237
SENSOR GP-PRESSURE	241
SENSOR GP-SPEED	250
SENSOR GP-TEMPERATURE	253
SERVICE GP-MACHINE	260
STARTING AID GP	261
STARTING AID GP-ETHER	263
STARTING MOTOR GP-ELECTRIC	264
SWITCH GP-DISCONNECT	267
SWITCH GP-MAGNETIC	268
SWITCH GP-QUICK COUPLER	276
SWITCH GP-SIGNAL	277
SWITCH GP-TOGGLE	278
SWITCH GP-WIPER	279
VALVE GP-ETHER STARTING	280
WARNING GP-BACKUP	281
WIRING AR-AXLE MONITORING	282
WIRING GP-AIR CONDITIONER	283
WIRING GP-AXLE MONITORING	284
WIRING GP-CAB	286
WIRING GP-COMMUNICATION	313
WIRING GP-COUPLER	315
WIRING GP-ELECTRIC CLUTCH	316
WIRING GP-ENGINE	317
WIRING GP-FRONT	335
WIRING GP-LIGHTING	344
WIRING GP-MACHINE	348
WIRING GP-POWER GUARD	356
WIRING GP-SECONDARY STEERING	358
WIRING GP-SENSOR	366
WIRING GP-STARTING AID	368
WIRING GP-TRACTION CONTROL	369
POWER TRAIN	374
AXLE AR-FIXED	374
AXLE AR-OSCILLATING	375
BRAKE & PLANETARY GP	377
CASE & PARTS GP-PLANETARY	379
CLUTCH GP	382
CONTROL GP-TRANSMISSION	388
COOLER & MTG GP-TRANSMISSION	390
COOLER AR-AXLE OIL	391
COVER GP-SHIPPING	392
COVER GP-TMSN OIL FILLER CAP	393
DIFFERENTIAL GP	394
DIFFERENTIAL GP-LIMITED SLIP	395
DIFFERENTIAL GP-NOSPIN	396
DRAIN GP-ECOLOGY	398
FILLER GP-POWER TRAIN OIL	399
FILTER GP-OIL	400
GEAR GP-BEVEL	402
GEAR GP-BEVEL & PINION	404
GEAR GP-OUTPUT TRANSFER	406
HOUSING GP-FIXED AXLE	408
HOUSING GP-OSCILLATING AXLE	412
INPUT GP-TRANSMISSION	416
LINES GP-AXLE OIL COOLER	417
LINES GP-POWER TRAIN FILTER	421
LINES GP-TORQUE CONV COOLER	425
MOUNTING GP-AXLE	427
MOUNTING GP-AXLE OIL COOLER	428
MOUNTING GP-RIM	430
POWER TRAIN AR	430
PUMP & MTG GP-AXLE OIL COOLER	431
PUMP GP-TRANSMISSION	432
RIM AR	434
RIM GP-DEMOUNTABLE	435
SHAFT GP-DRIVE	439
SLIP JOINT GP	441
TIRE & RIM AR	442
TORQUE CONVERTER GP	453
TRANSMISSION AR	455
UNIVERSAL JOINT GP	457
VALVE GP-BYPASS	459
VALVE GP-MODULATING	460
VALVE GP-RELIEF	461
VALVE GP-TRANSMISSION CONTROL	463
FRAME AND BODY	467
ACTUATOR AR-POWER GUARD	467
ACTUATOR GP-HOOD TILT	468
ACTUATOR GP-POWER	472
ACTUATOR GP-POWER GUARD	473
BAFFLE GP	475

TABLE OF CONTENTS

Name	Page
COUNTERWEIGHT GP	476
COUNTERWEIGHT GP-REAR	477
DOOR GP-BATTERY	478
EXTENSION GP-FENDER	480
FENDER GP	481
FENDER GP-ROADING	483
FRAME AS-FRONT	485
FRAME AS-LOADER	488
FRAME AS-REAR	490
GRILL GP-RADIATOR	497
GUARD GP-ARTICULATION	501
GUARD GP-AXLE OIL COOLER	503
GUARD GP-AXLE SEAL	504
GUARD GP-BOTTOM	505
GUARD GP-DRIVE SHAFT	513
GUARD GP-HITCH & STEERING	514
GUARD GP-LIGHTING	515
GUARD GP-POWER TRAIN	518
HINGE GP-ROADING FENDER	520
HITCH GP-ARTICULATING	522
HOOD & GUARD GP	524
LADDER GP	527
LINES GP-GREASE	528
LINK GP-STEERING FRAME LOCK	532
SHIELD GP-ENGINE COMPARTMENT	533
SUPPORT GP-AIR INLET	534
TILT GP-HOOD	535
BRAKING SYSTEM	539
ACCUMULATOR GP-BRAKE	539
BASE GP-FOOT BRAKE	542
BRAKE GP-PARKING	545
CONTROL AR-TRACTION	546
CONTROL GP-FOOT BRAKE	547
CONTROL GP-PARKING BRAKE	549
CONTROL GP-SERVICE BRAKE	555
CONVERSION AR-TRACTION CONTROL	564
MANIFOLD GP-BRAKE PROPORTIONAL	565
PUMP GP-VANE	566
VALVE GP-SOLENOID	567
STEERING SYSTEM	569
CONTROL GP-STEERING	569
CYLINDER & MTG GP-STEERING	573
CYLINDER & SEAL GP-STEERING	575
CYLINDER GP-STEERING	576
LINES GP-SECONDARY STEERING	578
LINES GP-STEERING	580
PUMP & MOTOR GP-SEC STEERING	584
PUMP & MTG GP-SECONDARY STEER	585
PUMP GP-METERING	586
PUMP GP-PISTON	588
ROTATING GP-PUMP	590
STEERING AR-SECONDARY	591
STEERING COLUMN GP	592
VALVE GP-PUMP CONTROL	593
VALVE GP-RELIEF	595
VALVE GP-SECONDARY STEERING	596
VALVE GP-STEERING	597
HYDRAULIC SYSTEM	600
ACCUMULATOR GP-RIDE CONTROL	600
BODY GP-PILOT VALVE	603
CARTRIDGE GP-VANE PUMP	606
CONTROL GP-HANDLE	607
CONTROL GP-PILOT OPERATED HYD	609
COVER GP-HYDRAULIC TANK CAP	621
CYLINDER & SEAL GP-LIFT	622
CYLINDER & SEAL GP-TILT	623
CYLINDER GP-COUPLER	624
CYLINDER GP-LIFT	626
CYLINDER GP-TILT	627
HANDLE GP-MODULAR	635
HYDRAULIC AR	636
HYDRAULIC AR-3 VALVE	636
HYDRAULIC AR-4 VALVE	637
KICKOUT & POSITIONER GP	641
LINES GP-COUPLER	645
LINES GP-FRONT	659
LINES GP-HYDRAULIC	667
LINES GP-HYDRAULIC OIL COOLER	669
LINES GP-LIFT CYLINDER	678
LINES GP-PILOT	682
LINES GP-RIDE CONTROL	687
LINES GP-TILT CYLINDER	702
MOTOR GP-GEAR	708
PIVOT GP-PILOT VALVE	709
PLATE GP-PILOT VALVE	712
PUMP & MTG GP-HYDRAULIC	720
PUMP & MTG GP-HYDRAULIC FAN	721
PUMP GP-PISTON	723
PUMP GP-PISTON & VANE	725
ROTATING GP-PUMP	726
TANK & FILTER GP-HYDRAULIC	727
TANK & MTG GP-HYDRAULIC	732
VALVE & MTG GP-MAIN CONTROL	734
VALVE GP-CHECK	736
VALVE GP-CONTROL	738
VALVE GP-DEMAND FAN	741
VALVE GP-DIVERTER	742
VALVE GP-MAIN CONTROL	745
VALVE GP-MANUAL	751
VALVE GP-PILOT	752
VALVE GP-PILOT CARTRIDGE	768
VALVE GP-PUMP CONTROL	774
VALVE GP-RELIEF	776

TABLE OF CONTENTS

Name	Page
VALVE GP-SELECTOR & PRESS CONT	780
VALVE GP-SHUTOFF	781
VALVE GP-SHUTTLE	783
VALVE GP-SOLENOID	785
VALVE GP-SOLENOID & MANIFOLD	790
IMPLEMENTS	791
ARM AS-LIFT	791
CONTROL GP-BUCKET	792
LIFT AR	799
WORK TOOLS	800
ADAPTER GP-TIP	800
ARM GP-MATERIAL HANDLING	801
BUCKET AS-GENERAL PURPOSE	802
BUCKET AS-MATERIAL HANDLING	805
BUCKET GP-GENERAL PURPOSE	810
BUCKET GP-MATERIAL HANDLING	814
CONTROL AR-QUICK COUPLER	814
COUPLER AR-QUICK	815
COUPLER GP-QUICK	818
EDGE GP-CUTTING	820
EDGE-CUTTING	822
EDGE-END	823
FORK GP-PALLET	824
FRAME GP-QUICK COUPLER	825
TIP GP	828
TIP GP-LONG	828
TIP GP-SHORT	829
OPERATOR STATION	831
ADJUSTER GP-SEAT	831
AIR COMPRESSOR GP-SEAT	832
AIR CONDITIONER & MOUNTING GP	833
AIR CONDITIONER AR	835
AIR CONDITIONER GP	836
ARMREST GP	839
CAB AR	844
CAB GP	845
CAB GP-ENCLOSED ROPS	847
CANOPY AR-OPEN ROPS	849
COMPRESSOR GP-REFRIGERANT	850
CONDENSER & MTG GP-REFRIGERANT	852
CONTROL GP-MONITOR	854
DASH GP	855
DOOR GP-CAB	856
DUCT GP-AIR	880
EXTENSION GP-BACKREST	882
FILTER GP-CAB AIR	883
GUARD GP-VANDALISM	885
GUARD GP-WINDOW	887
HEATER & MTG GP-CAB	890
HEATER GP-CAB	891
HORN GP-ELECTRIC	893
INSTALLATION GP-RADIO	895
LINER GP-CAB	896
LINER GP-OPEN ROPS	903
LINES GP-AIR CONDITIONER	904
LINES GP-CAB HEATER	912
LITERATURE GP	914
MIRROR GP-REAR VIEW	915
MONITOR AR-PAYLOAD	917
MONITOR GP-PAYLOAD	918
MOTOR GP-WINDOW WIPER	920
MOUNTING GP-CAB	922
OPERATOR AR	926
PAN GP-BACKREST	928
PAN GP-SEAT	931
PANEL GP-INSTRUMENT	933
PEDAL GP-GOVERNOR	939
RADIO GP	941
RECLINER GP-SEAT	943
ROPS GP-ENCLOSED	944
ROPS GP-OPEN	947
SCREEN GP-SUN	950
SEAT & MOUNTING GP	951
SEAT BELT GP	954
SEAT GP	958
SEAT GP-SUSPENSION	966
SUPPORT GP-SEAT	974
SUSPENSION GP-SEAT	975
VISOR GP-CAB	981
WASHER GP-WINDOW	982
WINDOW GP-DOOR	984
WIPER GP-WINDOW	986
SERVICE EQUIPMENT AND SUPPLIES	989
FILM GP	989
LINES GP-DIAGNOSTIC	991
LOCK GP-VANDALISM	998
MOUNTING GP-LUBRICATION CHART	999
PLATE & FILM GP	1000
PART NUMBER INDEX	B1

TABLE DES MATIÈRES

Désignation	Page
GÉNÉRALITÉS	A30
OPTIONS DE RÉPARATION	A47
ADDITIFS POUR LIQUIDE DE REFROIDISSEMENT	A52
PIÈCES DE RECHANGE	A61
INDEX	A101
VERSION DE MACHINE	1
VERSION DE CHASSIS	1
VUE DU MODÈLE	1
VERSION REBUT	2
ÉLIMINATION DES DÉCHETS (VERSION)	2
MOTEUR (VERSION)	4
VERSION DE MOTEUR COMPLET	4
MOTEUR - PARTIE CENTRALE (VERSION)	5
MONTAGE DE MOTEUR (VERSION)	6
MOTEUR STANDARD	7
ARBRE A CAMES (ASS)	7
CHÂSSIS-PORTEUR DE JOINT (ASS)	8
BLOC-CYLINDRES - COUVERCLE (ASS)	9
COUVERCLE DE CARTER AV (ASS)	11
CACHE-SOUPAPES (ASS)	13
VILEBREQUIN (ASS)	14
BLOC-CYLINDRES (ASS)	16
*CYLINDER BLOCK GP	17
BLOC-CYLINDRES (ASS)	18
CULASSE (ENS)	20
CULASSE (ASS)	27
AMORTISSEUR DE VIBRATIONS ET POULIE (ASS)	39
VIDANGE-HUILE DE MOTEUR (ASS)	40
*FASTENER GP-DAMPER & PULLEY	41
VOLANT - BOULONNERIE (ASS)	42
BOULONNERIE DE CARTER AV (ASS)	43
VOLANT MOTEUR (ASS)	44
PIGNONNERIE AV (ASS)	45
CARTER DE VOLANT (ASS)	47
CARTER AV (ASS)	48
COURROIE INTERMÉDIAIRE (ASS)	49
POUSSOIR DE SOUPAPE (ASS)	50
OEILLETONS DE LEVAGE MOTEUR (ASS)	51
MONTAGE D'ALTERNATEUR (ASS)	52
MONTAGE DE MOTEUR ET BOÎTE (ASS)	54
HUILE MOTEUR - CARTER (ASS)	56
PISTON ET BIELLE (ASS)	57
BOUCHON DE BLOC-CYLINDRES (ASS)	60
BOUCHON DE MOTEUR (ASS)	61
POULIE-ROUE AVANT (ASS)	62
JOINT DE VILEBREQUIN (ASS)	64
JOINT DE CARTER DE VOLANT (ASS)	65
CULBUTERIE (ASS)	66
CIRCUIT DE GRAISSAGE	69
RACCORD DE CANALISATION D'HUILE (ASS)	69
RENIFLARD (ASS)	70
FILTRE À HUILE MOTEUR (ASS)	71
DISPOSITIF D'EVACUATION DES VAPEURS DE CARTER	72
JAUGE D'HUILE MOTEUR (BAIONNETTE) (ASS)	73
CANALISATIONS D'HUILE MOTEUR (ASS)	75
CANALISATIONS D'HUILE DE TURBOCOMPRESSEUR (ASS)	76
POMPE A HUILE MOTEUR (ASS)	77
ROBINET-PRÉLÈVEMENT D'ÉCHANTILLON DE LIQUIDE (ASS)	81
CIRCUIT DE REFROIDISSEMENT	82
REFROIDISSEUR D'HUILE MOTEUR (ASS)	82
PROTECTION DE VENTILATEUR (ASS)	83
CANALISATIONS D'EAU (ASS)	85
POMPE A EAU (ASS)	94
RADIATEUR ET VENTILATEUR (ASS)	99
RÉSERVOIR DU COUVERCLE DE RADIATEUR (ASS)	107
CIRCUIT D'ADMISSION D'AIR ET D'ÉCHAPPEMENT	109
FILTRE A AIR (ASS)	109
COUVERCLE DE COLLECTEUR D'ADMISSION (ASS)	112
COUDE D'ADMISSION D'AIR (ASS)	115
ÉLÉMENT DE FILTRE À AIR (ENS)	116
CANALISATIONS D'AIR (ASS)	117
COLLECTEUR D'ÉCHAPPEMENT (ASS)	119
SILENCIEUX (ASS)	120
TUYAU DE RALLONGE D'ÉCHAPPEMENT (ENS)	121

* TRADUCTION NON DISPONIBLE AU MOMENT DE LA PUBLICATION

TABLE DES MATIÈRES

Désignation	Page
PREFILTRE (ASS)	122
TURBOCOMPRESSEUR (ASS)	125
CIRCUIT DE CARBURANT	127
FILTRE DE SÉPARATEUR D'EAU ET DE CARBURANT (ASS)	127
CANALISATIONS DE CARBURANT (ASS)	128
CARBURANT - CANALISATIONS DE VIDANGE (ASS)	132
CANALISATIONS DU FILTRE A CARBURANT (ASS)	133
CANALISATIONS - INJECTEURS-POMPES HYDRAULIQUES	145
POMPE D'AMORÇAGE DE CARBURANT ET FILTRE PRINCIPAL	147
POMPE D'INJECTION (ASS)	149
INJECTEURS-POMPES HYDRAULIQUES (ENS)	151
REGULATEUR DE PRESSION DE CARBURANT (ASS)	154
RÉSERVOIR DE CARBURANT (ASS)	155
SOUPAPE - SOLÉNOÏDE (ASS)	157
POMPE DE SÉPARATEUR D'EAU ET D'AMORÇAGE DE CARBURANT (ASS)	158
CIRCUIT ELECTRIQUE ET DE DEMARRAGE	159
AVERTISSEUR (ASS)	159
ALTERNATEUR DE CHARGE (VERSION)	161
ALTERNATEUR DE CHARGE (ASS)	162
BATTERIE ET CÂBLAGE	172
BLOC DE BRANCHEMENT (ASS)	175
COMMANDE ET MONTAGE-COMMUNICATION (ASS)	176
COMMANDE ET MONTAGE - MOTEUR	178
COMMANDE ELECTRONIQUE DE MOTEUR (ASS)	181
COMMANDE ELECTRONIQUE DE LIMITEUR DE LEVAGE (ASS)	186
COMMANDE DE POSITION (ASS)	188
COMMANDE NON PROGRAMMEE (ASS)	189
VERSION ÉLECTRIQUE	192
ÉLECTRONIQUE - MACHINE (ENS)	193
ÉLECTRONIQUE DE TRANSMISSION (ASS)	194
EAU DES CHEMISES - RECHAUFFEUR (ASS)	195
VERSION DE MONTAGE-COMMUNICATION	199
VERSION DE MONTAGE-SÉCURITÉ	199
MONTAGE-SÉCURITÉ (ASS)	200
LAMPE - PHARE (ASS)	201
LAMPE - PHARE ET CLIGNOTANT	205
LAMPE - CLIGNOTANT DE DIRECTION (ASS)	209
LAMPE - GYROPHARE (ASS)	212
ÉCLAIRAGE - AUXILIAIRE (VERSION)	213
ÉCLAIRAGE - FEUX DE ROUTE (VERSION)	213
ÉCLAIRAGE - CLIGNOTANT (VERSION)	214
ÉCLAIRAGE - PROJECTEURS (ASS)	214
ÉCLAIRAGE - PROJECTEURS ET CLIGNOTANTS (ASS)	219
ÉCLAIRAGE - FEUX DE ROUTE (ASS)	223
ÉCLAIRAGE CLIGNOTANT	224
ÉCLAIRAGE - GYROPHARE (ASS)	225
DISJONCTEUR DU PANNEAU DE COMMANDE (ASS)	228
CAPTEUR - MOTEUR (ASS)	235
SONDE - CIRCUIT DE CARBURANT	237
CAPTEUR DE PRESSION (ASS)	241
CAPTEUR DE VITESSE (ASS)	250
CAPTEUR DE TEMPERATURE (ASS)	253
ENTRETIEN DE LA MACHINE (ASS)	260
AUXILIAIRE DE DÉMARRAGE (ASS)	261
AUXILIAIRE DE DÉMARRAGE À L'ÉTHER	263
DÉMARREUR ÉLECTRIQUE (ASS)	264
ROBINET DE BATTERIE (ASS)	267
CONTACTEUR MAGNETIQUE (ASS)	268
CONTACTEUR DE COUPLEUR EXPRESS (ASS)	276
INTERRUPTEUR - SIGNAL (ASS)	277
INTERRUPTEUR À BASCULE (ASS)	278
INTERRUPTEUR D'ESSUIE-GLACE (ASS)	279
SOUPAPE DE DÉMARRAGE À L'ÉTHER (ASS)	280
AVERTISSEUR DE RECUL (ASS)	281
VERSION DE CÂBLAGE DE SURVEILLANCE D'ESSIEU	282
CABLAGE - CLIMATISEUR (ASS)	283
CÂBLE DE SURVEILLANCE D'ESSIEU (ASS)	284
CABLAGE DE CABINE (ASS)	286
CÂBLAGE DE COMMUNICATION (ASS)	313
CÂBLAGE-COUPLEUR (ASS)	315

* TRADUCTION NON DISPONIBLE AU MOMENT DE LA PUBLICATION

TABLE DES MATIÈRES

Désignation	Page
CABLAGE - EMBRAYAGE ÉLECTRIQUE (ASS)	316
CABLAGE DE MOTEUR (ASS)	317
CABLAGE AV (ASS)	335
CABLAGE D'ÉCLAIRAGE (ASS)	344
CABLAGE DE LA MACHINE (ASS)	348
CÂBLAGE DE BLINDAGE HYDRAULIQUE	356
CABLAGE DE DIRECTION AUXILIAIRE (ASS)	358
CABLAGE - CAPTEUR (ASS)	366
CÂBLAGE D'AIDE AU DÉMARRAGE (ASS)	368
CABLAGE DE COMMANDE ANTI-PATINAGE (TRACTION)	369
TRANSMISSION	374
ESSIEU FIXE (VERSION)	374
ESSIEU OSCILLANT (VERSION)	375
FREIN ET TRAINS PLANÉTAIRES (ASS)	377
TRAINS PLANÉTAIRES - CARTER ET PIÈCES	379
EMBRAYAGE (ASS)	382
COMMANDE DE BOITE DE VITESSES (ASS)	388
REFROIDISSEUR DE BOÎTE DE VITESSES ET MONTAGE (ASS)	390
REFROIDISSEUR D'HUILE D'ESSIEU (VERSION)	391
COUVERCLES D'EXPEDITION (ASS)	392
BOUCHON DE REMPLISSAGE D'HUILE DE BOÎTE (ASS)	393
DIFFERENTIEL (ASS)	394
DIFFÉRENTIEL - GLISSEMENT LIMITÉ (ASS)	395
DIFFÉRENTIEL NOSPIN (ASS)	396
VIDANGE-ÉCOLOGIE (ASS)	398
GOULOTTE DE REMPLISSAGE D'HUILE DE TRANSMISSION	399
FILTRE A HUILE (ASS)	400
COURONNE CONIQUE (ASS)	402
*GEAR GP-BEVEL & PINION	404
ENGRENAGE DE TRANSFERT DE RENDEMENT (ASS)	406
CARTER D'ESSIEU FIXE	408
CARTER D'ESSIEU OSCILLANT	412
ENTRÉE - BOÎTE POWERSHIFT (ASS)	416
CANALISATIONS DE REFROIDISSEUR D'HUILE D'ESSIEU (ASS)	417
CANALISATIONS DE FILTRE DE TRANSMISSION (ASS)	421
CANALIS. DE REFROIDISSEMENT DU CONV. DE COUPLE	425
MONTAGE D'ESSIEU (ASS)	427
MONTAGE DE REFROIDISSEUR D'HUILE D'ESSIEU (ASS)	428
MONTAGE DE JANTE (ASS)	430
TRANSMISSION (VERSION)	430
POMPE ET MONTAGE DE REFROIDISSEUR D'HUILE D'ESSIEU	431
POMPE DE BOÎTE DE VITESSES (ASS)	432
JANTE (VERSION)	434
JANTE DÉMONTABLE (ASS)	435
ARBRE D'ENTRAÎNEMENT (ASS)	439
CARDAN COULISSANT (ASS)	441
PNEU ET JANTE (VERSION)	442
CONVERTISSEUR DE COUPLE (ASS)	453
BOÎTE DE VITESSES (VERSION)	455
JOINT UNIVERSEL (ASS)	457
SOUPAPE DE DÉRIVATION (ASS)	459
SOUPAPE DE MODULATION (ASS)	460
CLAPET DE DECHARGE (ASS)	461
DISTRIBUTEUR DE BOITE (ASS)	463
CHÂSSIS ET BENNE	467
BLINDAGE HYDRAULIQUE DU MÉCANISME DE COMMANDE	467
MÉCANISME DE COMMANDE D'INCLINAISON (ASS)	468
MÉCANISME DE COMMANDE - PUISSANCE (ASS)	472
MÉCANISME DE COMMANDE DE GR. MOTO-PROPUL. (ASS)	473
DEFLECTEUR (ASS)	475
CONTREPOIDS (ASS)	476
CONTREPOIDS AR (ASS)	477
PORTE DE BATTERIE (ASS)	478
RALLONGE DE GARDE-BOUE	480
GARDE-BOUE (ASS)	481
BÂTI AV (ENS)	485
BÂTI - CHARGEUSE (ENS)	488
BÂTI AR (ENS)	490
GRILLE DE RADIATEUR (ASS)	497
PROTECTION-ARTICULATION (ASS)	501
PROTECTION DE REFROIDISSEUR D'HUILE D'ESSIEU	503
GROUPE DE PROTECTION (ASS)-JOINT D'ESSIEU	504
BLINDAGE INFÉRIEUR (ASS)	505
BLINDAGE D'ARBRE DE TRANSMISSION (ASS)	513
PROTECTION D'ATTELAGE ET DE DIRECTION (ASS)	514

* TRADUCTION NON DISPONIBLE AU MOMENT DE LA PUBLICATION

TABLE DES MATIÈRES

Désignation	Page
PROTECTION - ÉCLAIRAGE (ASS)	515
BLINDAGE DE TRANSMISSION (ASS)	518
CHARNIÈRE DE GARDE-BOUE (ASS)	520
ATTELAGE D'ARTICULATION (ASS)	522
CAPOT ET PROTECTION (ASS)	524
ECHELLE (ASS)	527
CANALISATIONS DE GRAISSAGE (ASS)	528
LIAISON - VERROUILLAGE DE CHÂSSIS DE DIRECTION (ASS)	532
ÉCRAN THERMIQUE DE COMPARTIMENT MOTEUR	533
SUPPORTS D'ADMISSION D'AIR (ASS)	534
INCLINAISON DU CAPOT (ASS)	535
CIRCUIT DE FREINS	539
ACCUMULATEUR - FREIN	539
SUPPORT - PÉDALE DE FREIN (ASS)	542
FREIN DE STATIONNEMENT (ASS)	545
COMMANDE ANTI-PATINAGE (TRACTION) (VERSION)	546
COMMANDE DE LA PÉDALE DE FREIN (ASS)	547
COMMANDE DE FREIN DE STATIONNEMENT (ASS)	549
FREIN DE MANOEUVRE - COMMANDE (ASS)	555
VERSION DE TRANSFORMATION DE COMMANDE DE TRACTION	564
COLLECTEUR PROPORTIONNEL DE FREIN (ASS)	565
POMPE À PALETTES (ASS)	566
SOUPAPE - SOLÉNOÏDE (ASS)	567
CIRCUIT DE DIRECTION	569
COMMANDE DE DIRECTION (ASS)	569
VERIN DE DIRECTION ET MONTAGE (ASS)	573
VÉRIN DE DIRECTION ET JOINT (ASS)	575
VERIN DE DIRECTION (ASS)	576
CANALISATION DE DIRECTION AUXILIAIRE	578
CANALISATIONS DE DIRECTION (ASS)	580
POMPE DE DIRECTION AUXILIAIRE ET MONTAGE (ASS)	584
POMPE DE REGULARISATION DE DEBIT (ASS)	586
POMPE A PISTONS (ASS)	588
GROUPE DE ROTATION DE POMPE	590
DIRECTION AUXILIAIRE (VERSION)	591
COLONNE DE DIRECTION (ASS)	592
DISTRIBUTEUR DE POMPE (ASS)	593
CLAPET DE DECHARGE (ASS)	595
SOUPAPE DE DIRECTION AUXILIAIRE (ASS)	596
SOUPAPE DE DIRECTION (ASS)	597
CIRCUIT HYDRAULIQUE	600
ACCUMULATEUR - COMMANDE DE TRANSLATION (ASS)	600
CORPS DE SOUPAPE PILOTE (ASS)	603
POMPE À AILETTES - CARTOUCHE	606
COMMANDE DE POIGNÉE (ASS)	607
COMMANDE HYDRAULIQUE PILOTE (ASS)	609
COUVERCLE DE RÉSERVOIR HYDRAULIQUE	621
VÉRIN DE LEVAGE ET JOINT (ASS)	622
VÉRIN D'INCLINAISON ET JOINT (ASS)	623
VÉRIN DE COUPLEUR (ASS)	624
VÉRIN DE LEVAGE (ASS)	626
VÉRIN D'INCLINAISON (ASS)	627
POIGNÉE MODULAIRE (ASS)	635
VERSION HYDRAULIQUE	636
DISTRIBUTEUR - 3 VOIES (VERSION)	636
DISTRIBUTEUR QUADRUPLE CORPS (VERSION)	637
LIMITEUR DE LEVAGE ET RETOUR À L'ANGLE DE CAVAGE	641
CANALISATIONS DE COUPLEUR (ASS)	645
CANALISATIONS AV	659
CANALISATIONS HYDRAULIQUES (ASS)	667
CANALISATIONS DE REFROIDISSEUR D'HUILE HYDR. (ASS)	669
CANALISATIONS DE VÉRIN DE LEVAGE (ASS)	678
CANALISATIONS A COMMANDE PILOTE (ASS)	682
CANALISATIONS DE COMMANDE DE MARCHE	687
CANALISATIONS DU VÉRIN D'INCLINAISON (ASS)	702
MOTEUR À ENGRENAGES (ASS)	708
ARTICULATION DE SOUPAPE PILOTE (ASS)	709
PLAQUE DE SOUPAPE PILOTE (ASS)	712
POMPE ET MONTAGE - HYDRAULIQUE (ASS)	720
POMPE ET MONTAGE-VENTILATEUR HYDRAULIQUE	721

* TRADUCTION NON DISPONIBLE AU MOMENT DE LA PUBLICATION

TABLE DES MATIÈRES

Désignation	Page
POMPE A PISTONS (ASS)	723
POMPE À PISTONS ET PALETTES (ASS)	725
GROUPE DE ROTATION DE POMPE	726
RÉSERVOIR HYDRAULIQUE ET FILTRE (ASS)	727
RÉSERVOIR HYDRAULIQUE ET MONTAGE (ASS)	732
COMMANDE PRINCIPALE DE SOUPAPE ET MONTAGE (ASS)	734
CLAPET DE RETENUE (ENS)	736
DISTRIBUTEUR (ASS)	738
SOUPAPE DE VENTILATEUR À VITESSE VARIABLE (ASS)	741
SOUPAPE DE DERIVATION (ASS)	742
SOUPAPE DE COMMANDE PRINCIPALE (ASS)	745
SOUPAPE A COMMANDE MANUELLE (ASS)	751
SOUPAPE PILOTE (ASS)	752
SOUPAPE - CARTOUCHE PILOTE (ASS)	768
DISTRIBUTEUR DE POMPE (ASS)	774
CLAPET DE DECHARGE (ASS)	776
SOUPAPE SELECTRICE ET REGULATRICE DE PRESSION	780
SOUPAPE D'ARRÊT (ASS)	781
VANNE PILOTE (ASS)	783
SOUPAPE - SOLÉNOÏDE (ASS)	785
SOUPAGE - SOLÉNOIDE ET COLLECTEUR	790
ÉQUIPEMENTS	791
BRAS DE LEVAGE (ENS)	791
COMMANDE DE GODET (ASS)	792
LEVAGE (VERSION)	799
*LIFT AR	799
OUTILS DE TRAVAIL	800
PORTE-POINTE (ASS)	800
BRAS DE MANUTENTION (ASS)	801
GODET NORMAL (ENS)	802
GODET DE MANUTENTION	805
GODET NORMAL (ASS)	810
GODET POUR MANUTENTION	814
COMMANDE - COUPLEUR EXPRESS (VERSION)	814
COUPLEUR EXPRESS (VERSION)	815
COUPLEUR EXPRESS (ASS)	818
LAME DE COUPE (ASS)	820
LAME DE COUPE	822
FOURCHE PALLETTE (ASS)	824
CHÂSSIS ARRIÈRE-COUPLEUR EXPRESS	825
POINTE (ASS)	828
POINTE LONGUE (ASS)	828
POINTE COURTE (ASS)	829
POSTE DE CONDUITE	831
REGLAGE DE SIEGE (ASS)	831
SIÈGE - COMPRESSEUR D'AIR (ASS)	832
CLIMATISEUR ET MONTAGE (ASS)	833
CLIMATISEUR (VERSION)	835
CLIMATISEUR (ASS)	836
ACCOUDOIR (ASS)	839
CABINE (VERSION)	844
CABINE (ASS)	845
FILTRE - ÉLECTRONIQUE (ASS)	847
VERSION DE TOIT - ROPS OUVERT	849
COMPRESSEUR DE REFRIGERANT (ASS)	850
CONDENSATEUR ET MONTAGE (RÉFRIGÉRANT)	852
GROUPE DE CONTROLE	854
TABLEAU DE BORD (ASS)	855
PORTIÈRE DE CABINE (ASS)	856
GAINE D'AIR (ASS)	880
RALLONGE DU DOSSIER DE SIEGE	882
FILTRE À AIR DE CABINE (ASS)	883
PROTECTION ANTIVANDALISME (ASS)	885
PROTECTION DE GLACE (ASS)	887
CHAUFFAGE ET MONTAGE - CABINE (ASS)	890
CHAUFFAGE DE CABINE (ASS)	891
KLAXON ÉLECTRIQUE (ASS)	893
MONTAGE DE RADIO (ASS)	895
CABINE - REVÊTEMENT (ASS)	896
REVETEMENT DE LA CABINE ROPS OUVERTE (ASS)	903
CANALISATIONS DE CLIMATISEUR (ASS)	904
CANALISATIONS DE CHAUFFAGE DE CABINE (ASS)	912
LITTÉRATURE (ASS)	914
RÉTROVISEUR (ASS)	915
ELECTROMODULE DE CHARGE UTILE DE BENNE	917
ÉLECTROMODULE DE CHARGE UTILE DE BENNE	918
MOTEUR D'ESSUIE-GLACE (ASS)	920
MONTAGE DE CABINE (ASS)	922
POSTE DE CONDUITE (VERSION)	926
COUVERCLE INFÉRIEUR-DOSSIER (ASS)	928

* TRADUCTION NON DISPONIBLE AU MOMENT DE LA PUBLICATION

TABLE DES MATIÈRES

Désignation	Page
SIEGE - COUVERCLE INFERIEUR (ASS)	931
TABLEAU DE BORD (ASS)	933
RÉGULATEUR - PÉDALE (ASS)	939
RADIO (ASS)	941
SIÈGE INCLINABLE (ASS)	943
CABINE ROPS FERMÉE (ASS)	944
TOIT ROPS - OUVERT (ASS)	947
PARE-SOLEIL (ASS)	950
SIÈGE ET MONTAGE (ASS)	951
CEINTURE DE SECURITE (ASS)	954
SIÈGE (ASS)	958
SIÈGE AVEC SUSPENSION (ASS)	966
SUPPORT DE SIÈGE (ASS)	974
SIÈGE AVEC SUSPENSION (ASS)	975
RETROVISEUR - CABINE (ASS)	981
LAVE-GLACE - VITRE (ASS)	982
GLACE DE PORTIÈRE (ASS)	984
ESSUIE-GLACE (ASS)	986
MATÉRIEL ET FOURNITURES D'ENTRETIEN	989
PLAQUE SIGNALÉTIQUE (ASS)	989
CANALISATIONS DE DIAGNOSTIC (ASS)	991
VERROUILLAGE ANTI-VANDALISME (ASS)	998
MONTAGE DU TABLEAU DE GRAISSAGE (ASS)	999
PLAQUES SIGNALETIQUES ET AUTOCOLLANTS (ASS)	1000
INDEX DE NUMÉROS DE PIÈCES	B1

* TRADUCTION NON DISPONIBLE AU MOMENT DE LA PUBLICATION

CONTENIDO

Nombre	Página
INFORMACIÓN GENERAL	A34
ALTERNATIVAS DE REPARACIÓN	A48
ADITIVOS DE REFRIGERANTE SUPLEMENTARIOS	A53
PIEZAS DE MANTENIMIENTO	A68
INDICE	A116
CONFIGURACIÓN DE MÁQUINAS	1
CHASIS (CONFIG)	1
CONFIGURACIÓN GENERAL	1
CONFIGURACIÓN DE TRAÍLLA	2
CONFIGURACIÓN DE ELIMINACIÓN DE BASURAS	2
CONFIGURACION DE MOTOR	4
MOTOR COMPLETO (CONFIG)	4
MOTOR - NÚCLEO (CONFIG)	5
CONFIGURACIÓN DE INSTALACIÓN DEL MOTOR	6
MOTOR BÁSICO	7
ÁRBOL DE LEVAS (GR)	7
SELLO DEL PORTADOR (GR)	8
TAPA DEL BLOQUE MOTOR (GR)	9
TAPA DE LA CAJA DELANTERA (GR)	11
TAPA DEL MECANISMO DE VÁLVULAS (GR)	13
CIGÜEÑAL (GR)	14
BLOQUE MOTOR (GR)	16
*CYLINDER BLOCK GP	17
BLOQUE MOTOR (GR)	18
CULATA DE CILINDROS (CONJ)	20
CULATA DE CILINDROS (GR)	27
AMORTIGUADOR Y POLEA (GR)	39
DRENAJE DEL ACEITE DE MOTOR	40
*FASTENER GP-DAMPER & PULLEY	41
SUJETADOR DE VOLANTE (GR)	42
CAJA DELANTERA - TORNILLERÍA DE LA (GR)	43
VOLANTE (GR)	44
ENGRANAJE DELANTERO (GR)	45
VOLANTE - CAJA DE (GR)	47
CAJA DELANTERA (GR)	48
GRUPO DE GUIA, CORREA	49
VÁLVULA DE LEVANTAMIENTO (GR)	50
CÁNCAMOS DE LEVANTAMIENTO DEL MOTOR (GR)	51
MONTAJE DEL ALTERNADOR (GR)	52
MONTAJE DEL MOTOR Y LA TRANSMISIÓN (GR)	54
CÁRTER - COLECTOR DEL (GR)	56
PISTÓN Y BIELA (GR)	57
TAPÓN DEL BLOQUE MOTOR (GR)	60
TAPÓN DEL MOTOR (GR)	61
POLEA DE RUEDA GUIA (GR)	62
SELLO DE CIGÜEÑAL (GR)	64
SELLO DE LA CAJA DE VOLANTE (GR)	65
MECANISMO DE VÁLVULAS (GR)	66
SISTEMA DE LUBRICACIÓN	69
GRUPO ADAPTADOR-TUBERIA DE ACEITE	69
RESPIRADERO (GR)	70
FILTRO DE ACEITE DEL MOTOR (GR)	71
ESCAPE DE GASES (GR)	72
INDICADOR DEL NIVEL DE ACEITE (VARILLA) (GR)	73
TUBERÍAS DE ACEITE DEL MOTOR (GR)	75
TURBOCOMPRESOR - TUBERÍAS DE ACEITE DEL (GR)	76
BOMBA DE ACEITE DEL MOTOR (GR)	77
VÁLVULA DE MUESTREO (GR)	81
SISTEMA DE ENFRIAMIENTO	82
ENFRIADOR DE ACEITE DEL MOTOR (GR)	82
PROTECTOR DEL VENTILADOR (GR)	83
TUBERÍAS DEL AGUA (GR)	85
BOMBA DE AGUA (GR)	94
RADIADOR Y VENTILADOR (GR)	99
TAPA DEL TANQUE DE RADIADOR (GR)	107
SISTEMA DE AIRE DE ADMISIÓN Y ESCAPE	109
FILTRO DE AIRE (GR)	109
TAPA DE ADMISIÓN DE AIRE (GR)	112
CODO DE ADMISIÓN DE AIRE (GR)	115
ELEMENTO DEL FILTRO DE AIRE (CONJ)	116
AIRE - TUBERÍAS DE (GR)	117
MÚLTIPLE DE ESCAPE (GR)	119
SILENCIADOR (GR)	120
TUBO DE EXTENSIÓN DEL ESCAPE (CONJ)	121
ANTEFILTRO (GR)	122
TURBOCOMPRESOR (GR)	125

* NO HAY TRADUCCION DISPONIBLE EN EL MOMENTO DE LA IMPRESION

CONTENIDO

Nombre	Página
SISTEMA DE COMBUSTIBLE	127
FILTRO DE COMBUSTIBLE Y SEPARADOR DE AGUA (GR)	127
TUBERÍAS DE COMBUSTIBLE (GR)	128
COMBUSTIBLE - TUBERÍAS DE DRENAJE DE (GR)	132
TUBERÍAS DEL FILTRO DE COMBUSTIBLE	133
TUBERÍAS DE BOMBA HIDRÁULICA DE INYECCIÓN (GR)	145
BOMBA DE CEBADO Y FILTRO PRIMARIO DE COMBUSTIBLE (GR)	147
BOMBA DE INYECCIÓN UNITARIA (GR)	149
BOMBA HIDRÁULICA DEL INYECTOR UNITARIO (GR)	151
REGULADOR DE LA PRESION DE COMBUSTIBLE (GR)	154
COMBUSTIBLE - TANQUE DE (GR)	155
VÁLVULA DE SOLENOIDE (GR)	157
SEPARADOR DE AGUA Y BOMBA DE CEBADO DE COMBUSTIBLE (GR)	158
SISTEMA ELECTRICO Y DE ARRANQUE	159
ALARMA (GR)	159
ALTERNADOR DE CARGA (CONFIG)	161
CARGA - ALTERNADOR DE (GR)	162
BATERÍA Y CABLES (GR)	172
BLOQUE DE EMPALME (GR)	175
CONTROL DE COMUNICACION Y MONTAJE (GR)	176
CONTROL ELECTRÓNICO DEL MOTOR Y MONTAJE	178
CONTROL ELECTRÓNICO DEL MOTOR (GR)	181
CONTROL DE DESCONEXIÓN DE LEVANTAMIENTO (GR)	186
CONTROL DE POSICION (GR)	188
CONTROL NO PROGRAMADO (GR)	189
CONFIGURACIÓN ELÉCTRICA	192
ELECTRONICA DE LA MAQUINA (GR)	193
TREN DE FUERZA-GRUPO ELECTRÓNICO	194
AGUA DE LAS CAMISAS - CALENTADOR DEL (GR)	195
INSTALACION DE COMUNICATION (CONFIG)	199
INSTALACION DE SEGURIDAD (CONFIG)	199
INSTALACION DE SEGURIDAD (GR)	200
REFLECTOR (GR)	201
LÁMPARA DE LUZ DELANTERA Y DE SEÑAL (GR)	205
LUZ DE SEÑAL DE GIRO (GR)	209
LÁMPARA DE BALIZA DE ADVERTENCIA (GR)	212
LUCES AUXILIARES (CONFIG)	213
LUCES DE DESPLAZAMIENTO (CONFIG)	213
SEÑAL DE LUCES (CONFIG)	214
LUCES DE REFLECTOR (GR)	214
LUCES DE REFLECTOR Y CAMBIO DE DIRECCION (GR)	219
LUCES DE DESPLAZAMIENTO (GR)	223
LUCES DE GIRO (GR)	224
LUZ DE BALIZA (GR)	225
PANEL DE DISYUNTORES (GR)	228
SENSOR DEL MOTOR (GR)	235
DETECTOR DE POSICIÓN (SISTEMA DE COMBUST.) (GR)	237
SENSOR DE PRESIÓN (GR)	241
SENSOR DE VELOCIDAD (GR)	250
SENSOR DE TEMPERATURA (GR)	253
SERVICIO DE MAQUINA (GR)	260
AUXILIAR DE ARRANQUE (GR)	261
AUXILIAR DE ARRANQUE CON ÉTER (GR)	263
MOTOR DE ARRANQUE ELÉCTRICO (GR)	264
DISYUNTOR (GR)	267
INTERRUPTOR MAGNÉTICO (GR)	268
GRUPO DE INTERRUPTOR, ACOPLAMIENTO RAPIDO	276
INTERRUPTOR DEL SEÑALERO (GR)	277
INTERRUPTOR DE VOLQUETE (GR)	278
INTERRUPTOR DEL LIMPIADOR (GR)	279
GRUPO DE VÁLVULA-ARRANQUE CON ÉTER	280
RETROCESO - ALARMA DE (GR)	281
CONJUNTO DE CABLES, MONITOREO DEL EJE	282
CABLES DEL ACONDICIONADOR DE AIRE (GR)	283
GRUPO DE CABLES, MONITOREO DEL EJE	284
CABLES DE LA CABINA (GR)	286
ALAMBRADO DE COMUNICACION (GR)	313
ALAMBRADO DE ACOPLADOR (GR)	315
CABLES DEL SISTEMA ELÉCTRICO DE EMBRAGUE	316
CABLES DEL MOTOR (GR)	317
CABLES DELANTEROS (GR)	335
CABLES DE LAS LUCES (GR)	344

* NO HAY TRADUCCION DISPONIBLE EN EL MOMENTO DE LA IMPRESION

CONTENIDO

Nombre	Página
CABLES DE LA MÁQUINA (GR)	348
GRUPO DE CABLES, PROTECTOR DE FUENTE	356
CABLES DE LA DIRECCIÓN SECUNDARIA	358
CABLES DE SENSOR (GR)	366
GRUPO DE CABLES, ARRANQUE ASISTIDO	368
CABLES DEL CONTROL DE TRACCIÓN (GR)	369
TREN DE FUERZA	374
EJE FIJO (CONFIG)	374
EJE OSCILANTE (CONFIG)	375
FRENO Y PLANETARIOS (GR)	377
CAJA Y PIEZAS DE LOS PLANETARIOS	379
EMBRAGUE (GR)	382
CONTROL DE LA TRANSMISIÓN (GR)	388
GRUPO DE MONTAJE Y ENFRIAMIENTO DE LA TRANSMISIÓN	390
ENFRIADOR DEL ACEITE DEL EJE (CONFIG)	391
TAPAS PROTECTORAS DE EMBARQUE (GR)	392
CUBIERTA (GR)-TAPA DE LLENADO DE ACEITE DE LA TRANSMISIÓN	393
DIFERENCIAL (GR)	394
DIFERENCIAL DE DESLIZAMIENTO LIMITADO (GR)	395
DIFERENCIAL NOSPIN (GR)	396
DRENAJE DE SEGURIDAD ECOLÓGICA (GR)	398
TUBO DE LLENADO DE ACEITE DE LA TRANSMISIÓN (GR)	399
FILTRO DE ACEITE (GR)	400
CORONA (GR)	402
*GEAR GP-BEVEL & PINION	404
ENGRANAJE DE TRANSFERENCIA DE SALIDA	406
CAJA DEL EJE OSCILANTE (GR)	408
CAJA DE EJE OSCILANTE (GR)	412
ENTRADA - SERVOTRANSMISIÓN (GR)	416
TUBERÍAS DEL ENFRIADOR DE ACEITE DEL EJE (GR)	417
TUBERÍAS DEL FILTRO DEL TREN DE FUERZA (GR)	421
TUBERIAS DEL ENFRIADOR DEL CONVERTIDOR DE PAR	425
EJE - GRUPO DE MONTAJE	427
MONTAJE DE ENFRIADOR DE ACEITE DE EJE (GR)	428
MONTAJE DE ARO	430
TREN DE FUERZA (CONFIG)	430
BOMBA DEL ENFRIADOR DE ACEITE DEL EJE Y MONTAJE (GR)	431
BOMBA DE LA TRANSMISIÓN (GR)	432
LLANTA (CONFIG)	434
ARO DESMONTABLE (GR)	435
EJE DE MANDO (GR)	439
JUNTA DESLIZANTE (GR)	441
ARO Y RUEDA	442
CONVERTIDOR DE PAR (GR)	453
TRANSMISION (CONFIG)	455
JUNTA UNIVERSAL (GR)	457
DERIVACIÓN - VÁLVULA DE (GR)	459
VÁLVULA DE MODULACIÓN (GR)	460
VÁLVULA DE ALIVIO (GR)	461
VÁLVULA DE CONTROL DE LA TRANSMISIÓN (GR)	463
BASTIDOR Y CAJA	467
ACCIONADOR DEL PROTECTOR DEL TREN DE FUERZA (CONFIG)	467
ACCIONADOR DE INCLINACIÓN DEL CAPO (GR)	468
ACCIONADOR DEL PROTECTOR (GR)	472
ACCIONADOR DEL PROTECTOR DEL TREN DE FUERZA (GR)	473
DEFLECTOR (GR)	475
CONTRAPESO (GR)	476
CONTRAPESO TRASERO (GR)	477
TAPA DE LA BATERÍA (GR)	478
EXTENSIÓN DEL GUARDABARROS (GR)	480
GUARDABARROS (GR)	481
GUARDABARROS PARA DESPLAZAMIENTO EN CARRETERA (GR)	483
BASTIDOR DELANTERO (CONJ)	485
BASTIDOR DEL CARGADOR (CONJ)	488
BASTIDOR TRASERO (CONJ)	490
REJILLA DEL RADIADOR (GR)	497
PROTECTOR DE ARTICULACION (GR)	501
PROTECTOR DEL ENFRIADOR DE ACEITE DEL EJE (GR)	503
PROTECTOR DE SELLO DEL EJE (GR)	504
PROTECTOR INFERIOR (GR)	505
PROTECTOR DEL EJE IMPULSOR (GR)	513
GRUPO DE PROTECTOR DE ENGANCHE Y DIRECCION	514
PROTECTOR DE LAS LUCES (GR)	515

* NO HAY TRADUCCION DISPONIBLE EN EL MOMENTO DE LA IMPRESION

CONTENIDO

Nombre	Página
PROTECTOR DEL TREN DE FUERZA (GR)	518
BISAGRA DEL GUARDABARROS PARA DESPLAZ. POR CARRETERA	520
ENGANCHE ARTICULADO (GR)	522
CAPO Y PROTECTOR (GR)	524
ESCALERILLA (GR)	527
TUBERÍAS DE ENGRASE (GR)	528
TIRANTE DE TRABA DEL BASTIDOR DE DIRECCIÓN (GR)	532
PROTECTOR TÉRMICO DEL COMPARTIMIENTO DEL MOTOR (GR)	533
SOPORTE DE LA ADMISIÓN DE AIRE (GR)	534
INCLINACIÓN DEL CAPÓ (GR)	535
SISTEMA DE FRENOS	539
ACUMULADOR DEL FRENO (GR)	539
BASE DEL FRENO DE PIE (GR)	542
FRENO DE ESTACIONAMIENTO (GR)	545
CONTROL DE TRACCIÓN (CONFIG)	546
CONTROL DEL PEDAL DE FRENO (GR)	547
CONTROL DEL FRENO DE ESTACIONAMIENTO	549
FRENO DE SERVICIO - CONTROL (GR)	555
CONFIGURACIÓN DE CONVERSIÓN, CONTROL DE TRACCIÓN	564
GRUPO DE MULTIPLE, PROPORCIONAL A FRENO	565
BOMBA DE PALETAS (GR)	566
VÁLVULA DE SOLENOIDE (GR)	567
SISTEMA DE DIRECCIÓN	569
CONTROL DE DIRECCIÓN (GR)	569
CILINDRO DE DIRECCIÓN Y MONTAJE (GR)	573
CILINDRO DE DIRECCIÓN Y SELLO (GR)	575
CILINDRO DE DIRECCIÓN (GR)	576
TUBERÍAS DE LA DIRECCIÓN SECUNDARIA (GR)	578
TUBERÍAS DE DIRECCIÓN (GR)	580
BOMBA Y MOTOR DE DIRECCION SECUNDARIA (GR)	584
BOMBA Y MONTAJE DE LA DIRECCIÓN SECUNDARIA (GR)	585
DOSIFICACIÓN - BOMBA DE (GR)	586
BOMBA DE PISTONES (GR)	588
GRUPO GIRATORIO DE BOMBA	590
DIRECCIÓN SECUNDARIA (CONFIG)	591
COLUMNA DE DIRECCIÓN (GR)	592
VALVULA DE CONTROL DE LA BOMBA (GR)	593
VÁLVULA DE ALIVIO (GR)	595
VALVULA DE DIRECCION SECUNDARIA (GR)	596
VÁLVULAS DE LA DIRECCIÓN (GR)	597
SISTEMA HIDRÁULICO	600
ACUMULADOR DE CONTROL DE AMORTIGUACION (GR)	600
GRUPO DE CAJA, VÁLVULA PILOTO	603
BOMBA DE PALETAS-CARTUCHO (GR)	606
CONTROL DE MANIJA (GR)	607
CONTROL HIDRÁULICO DE OPERACIÓN PILOTO (GR)	609
TAPA DEL TAPÓN DEL TANQUE HIDRÁULICO (GR)	621
CILINDRO DE LEVANTAMIENTO Y SELLO (GR)	622
CILINDRO DE INCLINACIÓN Y SELLO (GR)	623
CILINDRO DEL ACOPLADOR (GR)	624
CILINDRO DE LEVANTAMIENTO (GR)	626
INCLINACIÓN HORIZONTAL - CILINDRO DE (GR)	627
MANIJA MODULAR (GR)	635
HIDRÁULICA (CONFIG)	636
VÁLVULA HIDRÁULICA DE 3 VÍAS (CONFIG)	636
VÁLVULA HIDRÁULICA DE 4 VÍAS (CONFIG)	637
POSICIONADOR DEL CUCHARÓN Y DESCONEXIÓN (GR)	641
ACOPLADOR - TUBERÍAS DE (GR)	645
TUBERÍAS DELANTERAS (GR)	659
TUBERÍAS HIDRÁULICAS (GR)	667
TUBERÍAS DEL ENFRIADOR DE ACEITE HIDRÁULICO (GR)	669
CILINDRO DE LEVANTAMIENTO - TUBERÍAS DEL (GR)	678
TUBERÍAS CON SERVOMANDO (GR)	682
TUBERIAS DE CONTROL DE LA SUSPENSIÓN (GR)	687
TUBERÍAS DEL CILINDRO DE INCLINACIÓN (GR)	702
MOTOR DE ENGRANAJES (GR)	708
GRUPO DE PIVOTE, VÁLVULA PILOTO	709
GRUPO DE PLANCHA, VÁLVULA PILOTO	712

* NO HAY TRADUCCION DISPONIBLE EN EL MOMENTO DE LA IMPRESION

CONTENIDO

Nombre	Página
BOMBA HIDRÁULICA Y MONTAJE (GR)	720
BOMBA Y MONTAJE DE VENTILADOR HIDRAULICO (GR)	721
BOMBA DE PISTONES (GR)	723
BOMBA DE PISTONES Y PALETAS (GR)	725
GRUPO GIRATORIO DE BOMBA	726
TANQUE Y FILTRO HIDRÁULICOS (GR)	727
TANQUE HIDRÁULICO Y MONTAJE (GR)	732
MONTAJE Y VALVULA DEL CONTROL PRINCIPAL (GR)	734
VÁLVULA DE RETENCIÓN (GR)	736
VÁLVULA DE CONTROL (GR)	738
GRUPO DE VÁLVULA, VENTILADOR	741
VÁLVULA DE DERIVACIÓN (GR)	742
VÁLVULA DEL CONTROL PRINCIPAL (GR)	745
VÁLVULA DE CONTROL MANUAL (GR)	751
VÁLVULA PILOTO (GR)	752
VALVULA PILOTO DE CARTUCHO (GR)	768
VALVULA DE CONTROL DE LA BOMBA (GR)	774
VÁLVULA DE ALIVIO (GR)	776
VÁLVULA SELECTORA Y DE CONTROL DE PRESIÓN (GR)	780
VÁLVULA DE CORTE (GR)	781
VÁLVULA DE LANZADERA (GR)	783
VÁLVULA DE SOLENOIDE (GR)	785
VÁLVULA DE SOLENOIDE Y MÚLTIPLE (GR)	790
IMPLEMENTOS	791
BRAZO DE LEVANTAMIENTO (CONJ)	791
CONTROL DEL CUCHARÓN (GR)	792
LEVANTAMIENTO (CONFIG)	799
*LIFT AR	799
HERRAMIENTAS	800
GRUPO DE PUNTA Y ADAPTADOR	800
AGUILÓN TELESCÓPICO (GR)	801
CUCHARÓN DE USO GENERAL (CONJ)	802
CUCHARÓN DE MANEJO DE MATERIAL (CONJ)	805
CUCHARÓN DE USO GENERAL (GR)	810
CUCHARÓN DE MANEJO DE MATERIAL (GR)	814
CONTROL DE ACOPLADOR RÁPIDO (CONFIG)	814
ACOPLADOR RÁPIDO (CONFIG)	815
ACOPLADOR RÁPIDO (GR)	818
CUCHILLA (GR)	820
CUCHILLA	822
EXTREMO DE CUCHILLA	823
HORQUILLA PARA TARIMAS (GR)	824
BASTIDOR DEL ACOPLADOR RAPIDO (GR)	825
PUNTA (GR)	828
PUNTA LARGA (GR)	828
PUNTA CORTA (GR)	829
PUESTO DEL OPERADOR	831
AJUSTADOR DEL ASIENTO (GR)	831
COMPRESOR DE AIRE DEL ASIENTO (GR)	832
ACONDICIONADOR DE AIRE Y MONTAJE (GR)	833
ACONDICIONADOR DE AIRE (CONFIG)	835
ACONDICIONADOR DE AIRE (GR)	836
POSABRAZOS (GR)	839
CABINA (CONFIG)	844
CABINA (GR)	845
CABINA INCLUYE ROPS (GR)	847
TECHO ROPS ABIERTO (CONFIG)	849
COMPRESOR DE REFRIGERANTE (GR)	850
CONDENSADOR DEL REFRIGERANTE Y MONTAJE (GR)	852
CONTROL DE MONITOR (GR)	854
CONSOLA (GR)	855
PUERTA DE CABINA	856
CONDUCTO DE AIRE (GR)	880
EXTENSIÓN DEL RESPALDO (GR)	882
FILTRO DE AIRE DE LA CABINA (GR)	883
PROTECTOR CONTRA EL VANDALISMO (GR)	885
PROTECTOR DE LA VENTANA	887
CALEFACCIÓN Y MONTAJE DE LA CABINA (GR)	890
CALEFACCIÓN DE LA CABINA (GR)	891
BOCINA ELÉCTRICA (GR)	893
INSTALACIÓN DE RADIO (GR)	895
REVESTIMIENTO DE LA CABINA (GR)	896
REVESTIMIENTO DE LA CABINA ROPS ABIERTA	903
TUBERÍAS DE ACONDICIONADOR DE AIRE (GR)	904

* NO HAY TRADUCCION DISPONIBLE EN EL MOMENTO DE LA IMPRESION

CONTENIDO

Nombre	Página
TUBERÍAS DE CALEFACCIÓN DE LA CABINA	912
PUBLICACIONES (GR)	914
RETROVISOR (GR)	915
MONITOR DE CARGA ÚTIL (CONFIG)	917
MONITOR DE CARGA ÚTIL (GR)	918
MOTOR-LIMPIAPARABRISAS (GR)	920
GRUPO DE MONTAJE DE LA CABINA	922
COMPARTIMIENTO DEL OPERADOR (CONFIG)	926
SOPORTE DEL RESPALDO (GR)	928
CUBIERTA INFERIOR DEL ASIENTO DEL OPERADOR (GR)	931
TABLERO DE INSTRUMENTOS (GR)	933
REGULADOR - PEDAL DEL (GR)	939
RADIO (GR)	941
RECLINACION DE ASIENTO (GR)	943
CABINA ROPS CERRADA (GR)	944
ESTRUCTURA ROPS ABIERTA (GR)	947
PERSIANA PARA EL SOL (GR)	950
ASIENTO Y MONTAJE (GR)	951
CINTURÓN DE SEGURIDAD (GR)	954
ASIENTO (GR)	958
SUSPENSIÓN - ASIENTO CON (GR)	966
SOPORTE DEL ASIENTO (GR)	974
ASIENTO CON SUSPENSIÓN (GR)	975
VISERA (GR)	981
LAVAPARABRISAS DE LA VENTANA (GR)	982
VENTANA DE LA PUERTA (GR)	984
LIMPIAPARABRISAS DE LA VENTANA (GR)	986
EQUIPO DE SERVICIO Y SUMINISTROS	989
ETIQUETA DE ADVERTENCIA (GR)	989
GRUPO DE TUBERIAS DE DIAGNÓSTICO	991
TRABA CONTRA EL VANDALISMO (GR)	998
MONTAJE DE LA TABLA DE LUBRICACION (GR)	999
CALCOMANÍAS Y PLACAS DE IDENTIFICACIÓN (GR)	1000
INDICE DE NUMEROS DE PIEZA	B1

* NO HAY TRADUCCION DISPONIBLE EN EL MOMENTO DE LA IMPRESION

ÍNDICE

Designação	Página
INFORMAÇÃO GERAL	A38
ALTERNATIVAS DE REPARO	A49
ADITIVOS SUPLEMENTARES DO LÍQUIDO ARREFECEDOR	A54
PEÇAS DE MANUTENÇÃO	A75
ÍNDICE	A132
MÁQUINA - ARRANJO	1
CHASSI	1
ARRANJO GERAL	1
APARAS	2
ATERRO SANITÁRIO	2
MOTOR - ARRANJO	4
MOTOR COMPLETO	4
MOTOR - NÚCLEO	5
GRUPO DE INSTALAÇÃO - MOTOR	6
MOTOR BÁSICO	7
EIXO-COMANDO DE VÁLVULA	7
SUPORTE DO RETENTOR	8
TAMPA - BLOCO DO MOTOR	9
TAMPA - CAIXA DIANTEIRA	11
TAMPA - MECANISMO DAS VÁLVULAS	13
VIRABREQUIM	14
BLOCO DO MOTOR	16
*CYLINDER BLOCK GP	17
BLOCO DO MOTOR	18
CABEÇOTE DO MOTOR	20
AMORTECEDOR DE VIBRAÇÕES E POLIA	39
DRENO - ÓLEO DO MOTOR	40
*FASTENER GP-DAMPER & PULLEY	41
FIXADORES DO VOLANTE DO MOTOR	42
FIXADORES - CAIXA DIANTEIRA	43
VOLANTE DO MOTOR	44
ENGRENAGENS DE DISTRIBUIÇÃO	45
CAIXA DO VOLANTE DO MOTOR	47
CAIXA DIANTEIRA	48
RODA-GUIA - CORREIA	49
TUCHO DA VÁLVULA	50
LEVANTAMENTO DO MOTOR	51
MONTAGEM - ALTERNADOR	52
MONTAGEM - MOTOR E TRANSMISSÃO	54
CÁRTER DO ÓLEO DO MOTOR	56
PISTÃO E BIELA	57
BUJÃO DO BLOCO DO CILINDRO	60
BUJÃO DO MOTOR	61
POLIA DA RODA-GUIA	62
RETENTOR DO VIRABREQUIM	64
RETENTOR - CAIXA DO VOLANTE	65
MECANISMO DAS VÁLVULAS	66
SISTEMA DE LUBRIFICAÇÃO	69
ADAPTADOR-TUBULAÇÃO DE ÓLEO	69
RESPIRO	70
FILTRO - ÓLEO DO MOTOR	71
ELIMINAÇÃO DE VAPORES DO CÁRTER	72
INDICADOR - NÍVEL DO ÓLEO (VARETA)	73
TUBOS - ÓLEO DO MOTOR	75
TUBOS - ÓLEO DO TURBOALIMENTADOR	76
BOMBA DE ÓLEO - MOTOR	77
VÁLVULA PARA TIRAR AMOSTRAS DE FLUIDOS	81
SISTEMA DE ARREFECIMENTO	82
ARREFECEDOR - ÓLEO DO MOTOR	82
PROTETOR DO VENTILADOR	83
TUBOS - ÁGUA	85
BOMBA DE ÁGUA	94
RADIADOR E VENTILADOR	99
TANQUE SUPERIOR DO RADIADOR	107
SISTEMA DA ADMISSÃO DE AR E DE ESCAPE	109
PURIFICADOR DE AR	109
TAMPA - ADMISSÃO DE AR	112
COTOVELO DE ADMISSÃO DE AR	115
ELEMENTO DO FILTRO DE AR	116
TUBOS - AR	117
COLETOR DE ESCAPE	119
SILENCIADOR	120
TUBO DE ESCAPE - EXTENÇÃO	121
PRÉ-PURIFICADOR	122
TURBOALIMENTADOR	125
SISTEMA DE COMBUSTÍVEL	127
FILTRO DE COMBUSTÍVEL E SEPARADOR DE ÁGUA	127
TUBOS - COMBUSTÍVEL	128
TUBOS - DRENAGEM DO COMBUSTÍVEL	132
TUBOS - FILTRO DO COMBUSTÍVEL	133
TUBOS - INJETOR DA BOMBA HIDRÁULICA	145

* TRADUÇÃO NÃO DISPONÍVEL NO MOMENTO DA IMPRESSÃO

ÍNDICE

Designação	Página
BOMBA DE ESCORVA DO COMBUSTÍVEL E DO FILTRO PRIMÁRIO	147
BOMBA DA UNIDADE INJETORA	149
BOMBA HIDRÁULICA - UNIDADE INJETORA	151
REGULADOR DE PRESSÃO DO COMBUSTÍVEL	154
TANQUE DE COMBUSTÍVEL	155
VÁLVULA SOLENÓIDE	157
SEPARADOR DE ÁGUA E BOMBA DE ESCORVA DE COMBUSTÍVEL	158
SISTEMA ELÉTRICO E DE PARTIDA	159
ALARME	159
ALTERNADOR DE CORRENTE	161
BATERIA E CABOS / FIOS ELÉTRICOS	172
BLOCO DE JUNÇÃO	175
CONTROLE & MONTAGEM-COMUNICAÇÃO	176
CONTROLE ELETRÔNICO E MONTAGEM - MOTOR	178
CONTROLE ELETRÔNICO - MOTOR	181
CONTROLE - DESENGATE AUTOMÁTICO DE LEVANTAMENTO	186
CONTROLE - POSIÇÃO	188
CONTROLE - NÃO PROGRAMADO	189
SISTEMA ELÉTRICO	192
SISTEMA ELETRÔNICO - MÁQUINA	193
SISTEMA ELETRÔNICO - TREM DE FORÇA	194
AQUECEDOR DA ÁGUA DO MOTOR	195
INSTALAÇÃO-COMUNICAÇÃO	199
INSTALAÇÃO-SEGURANÇA	199
LÂMPADA - FAROL	201
LÂMPADA DIANTEIRA E DE SINAL	205
LÂMPADA - SINALIZAÇÃO	209
LUZ GIRATÓRIA DE ALARME	212
ILUMINAÇÃO AUXILIAR	213
ILUMINAÇÃO RODOVIÁRIA	213
ILUMINAÇÃO - SINALIZAÇÃO	214
SISTEMA DE ILUMINAÇÃO - FARÓIS	214
SISTEMA DE ILUMINAÇÃO - FARÓIS E SINAL	219
ILUMINAÇÃO - RODOVIÁRIA	223
ILUMINAÇÃO - SINALIZAÇÃO	224
SIST. DE ILUMINAÇÃO - PISCA-PISCA GIRATÓRIO DE ADVERTÊNCIA	225
PAINEL - DISJUNTOR ELÉTRICO AUTOMÁTICO	228
SENSOR DO MOTOR	235
EMISSOR - POSIÇÃO	237
SENSOR - PRESSÃO	241
SENSOR DE VELOCIDADE	250
SENSOR - TEMPERATURA	253
GR. DE SERVIÇO - MÁQUINA	260
AUXILIAR DE PARTIDA	261
AUXILIAR DE PARTIDA A ÉTER	263
MOTOR ELÉTRICO DE PARTIDA	264
CHAVE GERAL	267
INTERRUPTOR - MAGNÉTICO	268
INTERRUPTOR-ACOPLADOR RÁPIDO	276
INTERRUPTOR DE SINALIZAÇÃO	277
INTERRUPTOR - BALANCIM	278
INTERRUPTOR - LIMPADOR DO PÁRA-BRISA	279
VALVULA - PARTIDA A ETER	280
ALARME DE MARCHA À RÉ	281
FIAÇÃO - MONITORAÇÃO DO EIXO	282
CABOS/FIOS ELÉTRICOS - AR CONDICIONADO	283
FIAÇÃO - MONITORAÇÃO DO EIXO	284
CABOS/FIOS ELÉTRICOS - CABINE	286
CABO/FIOS ELÉTRICOS-COMUNICAÇÃO	313
CABOS/FIOS ELÉTRICOS - ACOPLADOR	315
CABOS/FIOS ELÉTRICOS - EMBREAGEM	316
CABOS/FIOS ELÉTRICOS - MOTOR	317
CABOS/FIOS ELÉTRICOS - DIANTEIROS	335
CABOS/FIOS ELÉTRICOS DE ILUMINAÇÃO	344
CABOS/FIOS ELÉTRICOS - MÁQUINA	348
FIAÇÃO - PROTETOR DE ENERGIA	356
CABOS/FIOS ELÉTRICOS - DIREÇÃO SECUNDÁRIA	358
CABOS/FIOS ELÉTRICOS - SENSOR	366
FIAÇÃO - AUXILIAR DE PARTIDA	368
CABOS/FIOS ELÉTRICOS - CONTROLE DE TRAÇÃO	369
TREM DE FORÇA	374
EIXO FIXO	374
EIXO OSCILANTE	375
FREIOS E ENGRENAGENS PLANETARIAS	377
CARCAÇA DAS ENGRENAGENS PLANETÁRIAS E COMPONENTES	379
EMBREAGEM	382
CONTROLE DA TRANSMISSÃO	388
ARREFECEDOR E MONTAGEM - TRANSMSSÃO	390
ARREFECEDOR DO ÓLEO DO EIXO	391

* TRADUÇÃO NÃO DISPONÍVEL NO MOMENTO DA IMPRESSÃO

ÍNDICE

Designação	Página
TAMPA - EMBARQUE	392
TAMPA - BOCAL DE ENCHIMENTO DE ÓLEO DA TRANSMISSÃO	393
DIFERENCIAL	394
DIFERENCIAL - DESLIZAMENTO LIMITADO	395
DIFERENCIAL - NOSPIN	396
DRENO - ECOLOGIA	398
BOCAL DE ENCHIMENTO DE ÓLEO DO TREM DE FORÇA	399
FILTRO - ÓLEO	400
ENGRENAGEM - COROA	402
*GEAR GP-BEVEL & PINION	404
ENGRENAGENS DE SAÍDA DE TRANSFERÊNCIA	406
CAIXA - EIXO FIXO	408
CAIXA - EIXO OSCILANTE	412
ENTRADA - TRANSMISSÃO	416
TUBOS - ARREFECEDOR DE ÓLEO DO EIXO	417
TUBOS - FILTRO DO TREM DE FORÇA	421
TUBOS - ARREFECEDOR DO CONVERSOR DE TORQUE	425
MONTAGEM DO EIXO	427
MONTAGEM - ARREFECEDOR DE ÓLEO DO EIXO	428
MONTAGEM - ARO	430
TREM DE FORÇA	430
BOMBA DO ARREFECEDOR DE ÓLEO DO EIXO E MONTAGEM	431
BOMBA DA TRANSMISSÃO	432
ARO	434
ARO DESMONTÁVEL	435
EIXO DE TRANSMISSÃO	439
JUNTA CORREDIÇA	441
PNEU E ARO	442
CONVERSOR DE TORQUE	453
TRANSMISSÃO	455
JUNTA UNIVERSAL	457
VÁLVULA DE DERIVAÇÃO	459
VÁLVULA DE MODULAÇÃO	460
VÁLVULA DE ALÍVIO	461
VÁLVULA DE CONTROLE - TRANSMISSÃO	463
CHASSI E CARROCERIA	467
ACIONADOR - PROTETOR DE POTÊNCIA	467
ACIONADOR - INCLINAÇÃO DO CAPÔ	468
ACIONADOR DE POTÊNCIA	472
ACIONADOR - PROTETOR DE POTÊNCIA	473
DEFLETOR	475
CONTRAPESO	476
CONTRAPESO TRASEIRO	477
TAMPA - ACESSO À BATERIA	478
PÁRA-LAMA-EXTENSÃO	480
PÁRA-LAMA	481
ARMAÇÃO DIANTEIRA	485
CHASSI DIANTEIRO	488
CHASSI TRASEIRO	490
GRADE DO RADIADOR	497
PROTETOR - ARTICULAÇÃO	501
PROTETOR - ARREFECEDOR DO ÓLEO DO EIXO	503
PROTETOR - VEDADOR DO EIXO	504
PROTETOR INFERIOR	505
PROTETOR - EIXO DE TRANSMISSÃO	513
PROTEÇÃO - ENGATE E DIREÇÃO	514
PROTETOR - ILUMINAÇÃO	515
PROTETOR - TREM DE FORÇA	518
DOBRADIÇA DO PÁRA-LAMA	520
ENGATE - ARTICULAÇÃO	522
CAPÔ E PROTETOR	524
ESCADA	527
TUBOS - GRAXA	528
ELO - TRAVA DA ARMAÇÃO DA DIREÇÃO	532
BLINDAGEM DO COMPARTIMENTO DO MOTOR	533
SUPORTE - ADMISSÃO DE AR	534
INCLINAÇÃO - CAPÔ	535
SISTEMA DE FREIO	539
ACUMULADOR - FREIO	539
BASE DO FREIO - PEDAL	542
FREIO DE ESTACIONAMENTO	545
CONTROLE DE TRAÇÃO	546
CONTROLE DO PEDAL DO FREIO	547
CONTROLE DO FREIO DE ESTACIONAMENTO	549
CONTROLE DO FREIO DE SERVIÇO	555
CONVERSÃO - CONTROLE DE TRAÇÃO	564
COLETOR-FREIO PROPORCIONAL	565
BOMBA DE PALHETAS	566
VÁLVULA SOLENÓIDE	567
SISTEMA DE DIREÇÃO	569
CONTROLE DE DIREÇÃO	569
CILINDRO DE DIREÇÃO E MONTAGEM	573

* TRADUÇÃO NÃO DISPONÍVEL NO MOMENTO DA IMPRESSÃO

ÍNDICE

Designação	Página
CILINDRO DE DIREÇÃO E RETENTOR	575
CILINDRO DA DIREÇÃO	576
TUBOS - DIREÇÃO SECUNDÁRIA	578
TUBOS - DIREÇÃO	580
BOMBA DE DIREÇÃO SECUNDÁRIA E MOTOR	584
BOMBA DA DIREÇÃO SECUNDÁRIA E MONTAGEM	585
BOMBA REGULADORA	586
BOMBA DE PISTÃO	588
GRUPO ROTATIVO DA BOMBA	590
DIREÇÃO SECUNDÁRIA	591
COLUNA DA DIREÇÃO	592
VÁLVULA DE CONTROLE DA BOMBA	593
VÁLVULA DE ALÍVIO	595
VÁLVULA DE DIREÇÃO SECUNDÁRIA	596
VÁLVULA DA DIREÇÃO	597
SISTEMA HIDRÁULICO	600
ACUMULADOR DO SISTEMA DE ABSORÇÃO DE IMPACTOS	600
CARROCERIA - VÁLVULA PILOTO	603
CARTUCHO - BOMBA DE PALHETAS	606
CONTROLE-CABO	607
CONTROLE HIDRÁULICO DE OPERAÇÃO PILOTO	609
TAMPA - TANQUE HIDRÁULICO	621
CILINDRO DE LEVANTAMENTO E RETENTOR	622
CILINDRO DE INCLINAÇÃO E RETENTOR	623
CILINDRO - ACOPLADOR	624
CILINDRO DE LEVANTAMENTO	626
CILINDRO DE INCLINAÇÃO	627
ALAVANCA DE CONTROLE - MODULAR	635
COMANDO HIDRÁULICO	636
ARRANJO HIDRÁULICO - 3 VÁLVULAS	636
ARRANJO HIDRÁULICO - 4 VÁLVULAS	637
DESENGATE E POSICIONADOR DA CAÇAMBA	641
TUBOS - ACOPLADOR	645
TUBOS - DIANTEIROS	659
TUBOS - ÓLEO HIDRÁULICO	667
TUBOS - ARREFECEDOR DE ÓLEO HIDRÁULICO	669
TUBOS - CILINDRO DE LEVANTAMENTO	678
TUBOS - CIRCUITO PILOTO	682
TUBOS - ABSORÇÃO DE IMPACTOS	687
TUBOS - CILINDRO DE INCLINAÇÃO	702
MOTOR - ENGRENAGENS	708
ARTICULAÇÃO DA VÁLVULA PILOTO	709
PLACA DA VÁLVULA PILOTO	712
BOMBA HIDRÁULICA E MONTAGEM	720
BOMBA DO VENTILADOR HIDRÁULICO E MONTAGEM	721
BOMBA DE PISTÃO	723
BOMBA DE PISTÃO E PALHETA	725
GRUPO ROTATIVO DA BOMBA	726
TANQUE HIDRÁULICO E FILTRO	727
TANQUE DE ÓLEO HIDRÁULICO E MONTAGEM	732
VÁLVULA DO CONTROLE PRINCIPAL E MONTAGEM	734
VÁLVULA DE RETENÇÃO	736
VÁLVULA DE CONTROLE	738
VÁLVULA - VENTILADOR POR DEMANDA	741
VÁLVULA DESVIADORA	742
VÁLVULA - CONTROLE PRINCIPAL	745
VÁLVULA MANUAL	751
VÁLVULA DE CONTROLE PILOTO	752
VÁLVULA DO CARTUCHO PILOTO	768
VÁLVULA DE CONTROLE DA BOMBA	774
VÁLVULA DE ALÍVIO	776
VÁLVULA SELETORA E CONTROLE DE PRESSÃO	780
VÁLVULA DE PARADA	781
VÁLVULA DE SEPARAÇÃO	783
VÁLVULA SOLENÓIDE	785
VÁLVULA - COLETOR E SOLENÓIDE	790
ACESSÓRIOS	791
BRAÇO DE LEVANTAMENTO	791
CONTROLE DA CAÇAMBA	792
LEVANTAMENTO - ARRANJO	799
*LIFT AR	799
FERRAMENTAS DE TRABALHO	800
ADAPTADOR DA PONTA	800
BRAÇO - MANIPULADOR DE MATERIAIS	801
CAÇAMBA PARA APLICAÇÃO GERAL	802
CAÇAMBA - MANUSEIO DE MATERIAL	805
CAÇAMBA PARA APLICAÇÃO GERAL	810
CAÇAMBA - MANUSEIO DE MATERIAL	814
CONTROLE - ACOPLADOR RÁPIDO	814
ACOPLADOR RÁPIDO	815
BORDA CORTANTE	820

* TRADUÇÃO NÃO DISPONÍVEL NO MOMENTO DA IMPRESSÃO

ÍNDICE

Designação	Página
BORDA CORTANTE - CANTO	823
GARFO DE PALETAS	824
CHASSI - ACOPLADOR RÁPIDO	825
PONTA	828
PONTA LONGA	828
PONTA CURTA	829
ESTAÇÃO DO OPERADOR	831
AJUSTADOR DO ASSENTO	831
COMPRESSOR DE AR - ASSENTO	832
CONDICIONADOR DE AR E MONTAGEM	833
CONDICIONADOR DE AR	835
BRAÇO DO ASSENTO	839
CABINE	844
CABINE - ESTRUTURA DE PROTEÇÃO CONTRA CAPOTAMENTO	847
TOLDO - ROPS ABERTA	849
COMPRESSOR DE REFRIGERANTE	850
CONDENSADOR DO REFRIGERANTE E MONTAGEM	852
CONTROLE DO PAINEL MONITOR	854
PAINEL DE INSTRUMENTOS	855
PORTA DA CABINE	856
DUCTO DE AR	880
EXTENSÃO - ENCOSTO	882
FILTRO - AR DA CABINE	883
PROTETOR CONTRA VANDALISMO	885
PROTETOR - JANELA	887
AQUECEDOR DA CABINE E MONTAGEM	890
AQUECEDOR DA CABINE	891
BUZINA ELÉTRICA	893
INSTALAÇÃO DO RÁDIO	895
REVESTIMENTO DA CABINE	896
PROTETOR SUPERIOR - ESTRUTURA ROPS ABERTA	903
TUBOS - AR CONDICIONADO	904
TUBOS - AQUECEDOR DA CABINE	912
PUBLICAÇÃO	914
ESPELHO RETROVISOR	915
PAINEL MONITOR DE CARGA ÚTIL	917
MOTOR - LIMPADOR DO VIDRO	920
MONTAGEM - CABINE	922
CABINE	926
FUNDO - ENCOSTO	928
ASSENTO - FUNDO	931
PAINEL DE INSTRUMENTOS	933
PEDAL DO GOVERNADOR	939
RÁDIO	941
RECLINAÇÃO - ASSENTO	943
ROPS FECHADA	944
ROPS ABERTA	947
TELA PÁRA-SOL	950
ASSENTO E MONTAGEM	951
CINTO DE SEGURANÇA	954
ASSENTO	958
ASSENTO COM SUSPENSÃO	966
SUPORTE - ASSENTO	974
SUSPENSÃO - ASSENTO	975
PÁRA-SOL DA CABINE	981
LAVADOR DO VIDRO	982
VIDRO DA PORTA	984
LIMPADOR DO VIDRO	986
EQUIPAMENTOS DE SERVIÇO E SUPRIMENTOS	989
DECALQUE	989
TUBULAÇÕES DE DIAGNÓSTICO	991
CADEADO CONTRA VANDALISMO	998
MONTAGEM - QUADRO DE LUBRIFICAÇÃO	999
PLACA E DECALQUE	1000
ÍNDICE DE NÚMERO DE PEÇA	B1

* TRADUÇÃO NÃO DISPONÍVEL NO MOMENTO DA IMPRESSÃO

INHALTSVERZEICHNIS

Bezeichnung	Seite
ALLGEMEINE HINWEISE	A42
REPARATURALTERNATIVEN	A50
KÜHLMITTELZUSATZ	A55
WARTUNGSTEILE	A81
STICHWORTVERZEICHNIS	A146
MASCHINE	1
FAHRWERK	1
GRUNDAUSFÜHRUNG	1
AUSFÜHRUNG FÜR SCHROTT	2
ABFALLBESEITIGUNGSMONTAGE	2
MOTOR	4
MOTOR, KOMPLETT	4
MOTORKÜHLERBLOCK	5
MOTOR-EINBAUSATZ	6
MOTOR (GRUNDAUSFÜHRUNG)	7
NOCKENWELLE	7
DICHTUNGSTRÄGER	8
MOTORBLOCKDECKEL	9
STIRNRADGEHÄUSEDECKEL	11
VENTILDECKEL	13
KURBELWELLE	14
MOTORBLOCK	16
*CYLINDER BLOCK GP	17
MOTORBLOCK	18
ZYLINDERKOPF	20
DÄMPFER UND RIEMENSCHEIBE	39
MOTORÖLABLASS	40
*FASTENER GP-DAMPER & PULLEY	41
SCHWUNGRAD-HALTETEILE	42
STIRNRADGEHÄUSE-HALTETEILE	43
SCHWUNGRAD	44
STIRNRAD	45
SCHWUNGRADGEHÄUSE	47
STIRNRADGEHÄUSE	48
LEITRAD - RIEMEN	49
HUBVENTIL	50
MOTORHUBÖSE	51
DREHSTROMGENERATOR - BEFESTIGUNG	52
MOTOR- UND GETRIEBEAUFLAGER	54
ÖLWANNE	56
PLEUELSTANGE UND KOLBEN	57
ZYLINDERBLOCKSCHRAUBE	60
MOTORSTOPFEN	61
RIEMENSPANNER	62
KURBELWELLENDICHTUNG	64
SCHWUNGRADGEHÄUSEDICHTUNG	65
VENTILSTEUERUNG	66
SCHMIERSYSTEM	69
ADAPTER - ÖLLEITUNG	69
ENTLÜFTER	70
ÖLFILTER	71
ENTDUNSTER	72
ÖLMESSSTAB	73
MOTORÖLLEITUNGEN	75
TURBOLADERÖLLEITUNGEN	76
SCHMIERPUMPE	77
PROBEENTNAHMEVENTIL	81
KÜHLSYSTEM	82
MOTORÖLKÜHLER	82
LÜFTERVERKLEIDUNG	83
KÜHLWASSERLEITUNGEN	85
KÜHLWASSERPUMPE	94
KÜHLER UND LÜFTER	99
KÜHLERWASSERKASTEN, OBEN	107
LUFTANSAUG- UND ABGASSYSTEM	109
LUFTREINIGER	109
LUFTEINLASSDECKEL	112
LUFTEINLASSBOGEN	115
LUFTFILTER	116
DRUCKLUFTLEITUNGEN	117
AUSPUFFKRÜMMER	119
SCHALLDÄMPFER	120
AUSPUFFROHRVERLÄNGERUNG	121
VORREINIGER	122
TURBOLADER	125
KRAFTSTOFFSYSTEM	127
WASSERABSCHEIDER- U. KRAFTSTOFFILTER	127
KRAFTSTOFFLEITUNGEN	128
KRAFTSTOFFABLASSLEITUNGEN	132
KRAFTSTOFFILTERLEITUNGEN	133
EINSPRITZLEITUNGEN - HYDRAULIKPUMPE	145
KRAFTSTOFFENTLÜFTUNGSPUMPE UND -HAUPTFILTER	147
EINSPRITZDÜSENPUMPE	149
PUMPENDÜSE, HYDRAULISCH	151
KRAFTSTOFFDRUCKREGLER	154
KRAFTSTOFFTANK	155
MAGNETVENTIL	157
WASSERABSCHEIDER U. KRAFTSTOFFENTLÜFTUNGSPUMPE	158

* ÜBERSETZUNG ZUM ZEITPUNKT DER DRUCKLEGUNG NICHT VORHANDEN

INHALTSVERZEICHNIS

Bezeichnung	Seite
ELEKTRISCHE ANLAGE U. STARTSYSTEM	159
WARNVORRICHTUNG	159
DREHSTROMGENERATOR	161
BATTERIE UND VERDRAHTUNG	172
KLEMMLEISTE	175
ÜBERTRAGUNGSSTEUERUNG U. BEFESTIGUNG	176
STEUERUNGSEINHEIT, ELEKTRON. FÜR MOTOR UND BEFEST.	178
MOTORSTEUERUNG, ELEKTRON.	181
HUBENDAUSSCHALTE-REGELUNG	186
STELLUNGSSTEUERUNG	188
STEUERUNG - NICHT PROGRAMMIERT	189
ELEKTR. ANLAGE	192
ELEKTRONIK - MASCHINE	193
KRAFTÜBERTRAGUNGSELEKTRONIK	194
UMLAUFKÜHLWASSERHEIZUNG	195
ÜBERTRAGUNGSEINBAUSATZ	199
SICHERHEITSEINBAUSATZ	199
ARBEITSLEUCHTEN	201
SCHEINWERFER U. RICHTUNGSLEUCHTE	205
BLINKLEUCHTE	209
RUNDUM-KENNLEUCHTE	212
ZUSATZBELEUCHTUNG	213
BELEUCHTUNGSANLAGE (STRASSENAUSRÜSTUNG)	213
BLINKERLEUCHTEN	214
ARBEITSLEUCHTEN	214
ARBEITS- U. SIGNALLEUCHTE	219
BELEUCHTUNGSANLAGE (STRASSENAUSRÜSTUNG)	223
BLINKERLEUCHTEN	224
RUNDUM-KENNLEUCHTE	225
UNTERBRECHER - INSTRUMENTENTAFEL	228
MOTORSENSOR	235
STELLUNGSSENSOR	237
DRUCKSENSOR	241
DREHZAHLSENSOR	250
TEMPERATURSENSOR	253
SERVICE MASCHINE	260
STARTHILFE	261
ÄTHERSTARTHILFE	263
STARTERMOTOR	264
TRENNSCHALTER	267
MAGNETSCHALTER	268
SCHNELLWECHSELEINRICHTUNG - SCHALTER	276
RICHTUNGSSIGNALSCHALTER	277
KIPPSCHALTER	278
SCHEIBENWISCHERSCHALTER	279
ÄTHERSTARTVENTIL	280
RÜCKFAHRWARNHORN	281
ACHSÜBERWACHUNGSSYSTEM - VERDRAHTUNG	282
KLIMAANLAGENVERDRAHTUNG	283
ACHSENÜBERWACHUNG - VERDRAHTUNG	284
FAHRERHAUSVERDRAHTUNG	286
ÜBERTRAGUNGSVERDRAHTUNG	313
SCHNELLWECHSELEINRICHTUNG - VERDRAHTUNG	315
VERDRAHTUNG - ELEKTR. KUPPLUNG	316
MOTORVERDRAHTUNG	317
VERDRAHTUNG, VORNE	335
BELEUCHTUNGSVERDRAHTUNG	344
MASCHINENVERDRAHTUNG	348
STROMSCHUTZVERDRAHTUNG	356
NOTLENKUNGSVERDRAHTUNG	358
SENSORVERDRAHTUNG	366
STARTHILFE - VERDRAHTUNG	368
VERDRAHTUNG - RADSCHLUPFBEGRENZUNG	369
KRAFTÜBERTRAGUNG	374
STARRACHSE	374
PENDELACHSE	375
BREMSE UND PLANETENGETRIEBE	377
PLANETENANTRIEBSGEHÄUSE U. TEILE	379
KUPPLUNG	382
GETRIEBESTEUERUNG	388
GETRIEBEKÜHLER U. BEFESTIGUNG	390
ACHSÖLKÜHLER	391
VERSANDDECKEL	392
GETRIEBEÖLEINFÜLLKAPPE	393
DIFFERENTIAL	394
DIFFERENTIAL (BEGRENZTER SCHLUPF)	395
NOSPIN-DIFFERENTIAL	396
ABLASS (UMWELTFREUNDLICH)	398
GETRIEBEÖLFÜLLSTUTZEN	399
ÖLFILTER	400
TELLERRAD	402
*GEAR GP-BEVEL & PINION	404
VERTEILERGETRIEBEANTRIEB	406
GEHÄUSE - STARRACHSE	408
GEHÄUSE - PENDELACHSE	412
GETRIEBEANTRIEBSWELLE	416
ACHSENÖLKÜHLERLEITUNGEN	417

* ÜBERSETZUNG ZUM ZEITPUNKT DER DRUCKLEGUNG NICHT VORHANDEN

INHALTSVERZEICHNIS

Bezeichnung	Seite
KRAFTÜBERTRAGUNGSFILTERLEITUNGEN	421
DREHMOMENTWANDLER-KÜHLERLEITUNGEN	425
ACHSENANBAUSATZ	427
BEFESTIGUNGSSATZ - ACHSÖLKÜHLER	428
FELGENAUFHÄNGUNG	430
KRAFTÜBERTRAGUNG	430
ACHSENÖLKÜHLERPUMPE U. BEFESTIGUNGSTEILE	431
GETRIEBEPUMPE	432
FELGE	434
FELGE (TEILBAR)	435
ANTRIEBSWELLE	439
ANTRIEBSWELLEN-KEILVERZAHNUNG	441
REIFEN UND FELGE	442
DREHMOMENTWANDLER	453
GETRIEBE	455
KREUZGELENK	457
NEBENSTROMVENTIL	459
MODULATORVENTIL	460
ÜBERDRUCKVENTIL	461
GETRIEBESTEUERVENTIL	463
RAHMEN UND FAHRGESTELL	467
STROMSCHUTZSCHALTER	467
MOTORHAUBENKIPPBETÄTIGUNG	468
STROMBETÄTIGUNG	472
STROMSCHUTZSCHALTER	473
LEITBLECH	475
GEGENGEWICHT	476
GEGENGEWICHT, HINTEN	477
BATTERIEDECKEL	478
SCHUTZBLECHVERLÄNGERUNG	480
SCHUTZBLECHE	481
SCHUTZBLECHE (STRASSENAUSRÜSTUNG)	483
VORDERRAHMEN	485
LADERRAHMEN	488
HINTERRAHMEN	490
KÜHLERGRILL	497
KNICKGELENKSCHUTZ	501
ACHSENÖLKÜHLERSCHUTZ	503
ACHSDICHTUNGSABDECKUNG	504
PANZERWANNE	505
ANTRIEBSWELLENVERKLEIDUNG	513
ANHÄNGUNGS- U. LENKUNGSSCHUTZABDECKUNG	514
BLITZSCHUTZ	515
ANTRIEBSSCHUTZ	518
GELENK FÜR SCHUTZBLECHE (STRASSENAUSRÜSTUNG)	520
KNICKGELENK-ANHÄNGUNG	522
MOTORHAUBE UND VERKLEIDUNG	524
STEIGLEITER	527
SCHMIERLEITUNGEN	528
KNICKGELENKSPERRE	532
MOTORRAUM-SCHUTZVERKLEIDUNG	533
LUFTEINLASS-TRÄGER	534
MOTORHAUBEN-KIPPSTELLUNG	535
BREMSSYSTEM	539
BREMSDRUCKSPEICHER	539
FUSSBREMSSOCKEL	542
FESTSTELLBREMSE	545
BODENSCHLUSSKONTROLLE	546
FUSSBREMSGESTÄNGE	547
FESTSTELLBREMSGESTÄNGE	549
BREMSGESTÄNGE	555
ANTRIEBSSCHLUPFREGELUNG	564
BREMSPROPOTIONALKRÜMMER	565
MESSERPUMPE	566
MAGNETVENTIL	567
LENKSYSTEM	569
LENKBETÄTIGUNG	569
LENKZYLINDER UND AUFHÄNGUNG	573
LENKZYLINDER UND DICHTUNG	575
LENKZYLINDER	576
NOTLENKUNGSLEITUNGEN	578
LENKÖLLEITUNGEN	580
NOTLENKUNGSPUMPE UND -MOTOR	584
NOTLENKUNGSPUMPE UND BEFESTIGUNGSTEILE	585
ZUMESSPUMPE	586
KOLBENPUMPE	588
KOLBENPUMPENUMLAUFSATZ	590
NOTLENKUNG	591
LENKSÄULE	592
PUMPENSTEUERVENTIL	593
ÜBERDRUCKVENTIL	595
NOTLENKUNGSVENTIL	596
LENKVENTIL	597
HYDRAULIKSYSTEM	600
DRUCKSPEICHER, HYDRAULISCHE SCHWINGUNGSDÄMPFUNG	600
VORSTEUERVENTILKÖRPER	603
FLÜGELZELLENPUMPENEINSATZ	606
STEUERHEBEL	607

* ÜBERSETZUNG ZUM ZEITPUNKT DER DRUCKLEGUNG NICHT VORHANDEN

INHALTSVERZEICHNIS

Bezeichnung	Seite
HYDRAULIKBEDIENUNG (MIT VORSTEUERUNG)	609
ZUGANGSKLAPPE - HYDRAULIKTANKKAPPE	621
HUBZYLINDER UND DICHTUNG	622
KIPPZYLINDER UND DICHTUNG	623
SCHNELLWECHSELANSCHLUSSZYLINDER	624
HUBZYLINDER	626
KIPPZYLINDER	627
MODULARHEBEL	635
HYDRAULIKSYSTEM	636
HYDRAULIKANORDNUNG (3-VENTIL-HYDRAULIK)	636
HYDRAULIKANORDNUNG (4-VENTIL-HYDRAULIK)	637
SCHAUFELAUSSCHALTER UND -EINSTELLER	641
ANSCHLUSSKUPPLUNGSLEITUNGEN	645
LEITUNGEN, VORNE	659
HYDRAULIKLEITUNGEN	667
HYDRAULIKÖLKÜHLERLEITUNGEN	669
HUBZYLINDERLEITUNGEN	678
VORSTEUERLEITUNGEN	682
SCHWINGUNGSDÄMPFUNGSLEITUNGEN	687
NEIGEZYLINDERLEITUNGEN	702
MOTORANTRIEB	708
VORSTEUERVENTIL	709
VORSTEUERVENTILPLATTE	712
HYDRAULIKPUMPE UND BEFESTIGUNGSTEILE	720
HYDRAULIKLÜFTERPUMPE U. BEFESTIGUNG	721
KOLBENPUMPE	723
KOLBEN- UND MESSERPUMPE	725
KOLBENPUMPENUMLAUFSATZ	726
HYDRAULIKTANK UND SCHMIERFILTER	727
HYDRAULIKTANK UND BEFESTIGUNGSTEILE	732
VENTIL UND BEFESTIGUNGSTEILE - HAUPTSTEUERUNG	734
SPERRVENTIL	736
STEUERVENTIL	738
VENTIL - TEMPERATURGESTEUERTER LÜFTER	741
UMLEITVENTIL	742
HAUPTSTEUERVENTIL	745
VENTIL, MECH.	751
VORSTEUERVENTIL	752
EINBAUVORSTEUERVENTIL	768
PUMPENSTEUERVENTIL	774
ÜBERDRUCKVENTIL	776
VENTIL - SCHALT- UND DRUCKSTEUERUNG	780
ABSPERRVENTIL	781
PENDELVENTIL	783
MAGNETVENTIL	785
VENTILSOLENOID U. -KRÜMMER	790
ARBEITSGERÄTE	791
HUBARM	791
SCHAUFELSTEUERUNG	792
HUBVORRICHTUNG	799
*LIFT AR	799
ARBEITSGERÄTE	800
ZAHNHALTER	800
TRAGARM	801
UNIVERSALSCHAUFEL	802
MATERIALUMSCHLAGSCHAUFEL	805
UNIVERSALSCHAUFEL	810
MATERIALUMSCHLAGSCHAUFEL	814
SCHNELLWECHSELANSCHLUSSSTEUERUNG	814
SCHNELLWECHSELVORRICHTUNG	815
SCHNELLWECHSELEINRICHTUNG	818
SCHNEIDMESSER	820
ENDMESSER	823
PALETTENGABEL	824
SCHNELLWECHSELEINRICHTUNGSRAHMEN	825
ZAHNSPITZE	828
ZAHNSPITZE, LANG	828
ZAHNSPITZE, KURZ	829
FAHRERHAUS	831
FAHRERSITZVERSTELLER	831
LUFTKOMPRESSORSITZ	832
KLIMAANLAGE UND AUFHÄNGUNG	833
KLIMAANLAGE	835
ARMLEHNE	839
FAHRERHAUS	844
FAHRERHAUS MIT ÜBERROLLSCHUTZ	847
OFFENES FAHRERHAUS MIT ÜBERROLLSCHUTZ	849
KÄLTEMITTELKOMPRESSOR	850
KÄLTEMITTELKONDENSATOR U. BEFESTIGUNGSTEILE	852
MONITORSTEUERUNG	854
ARMATURENBRETT	855
FAHRERHAUSTÜR	856
LUFTKANAL	880

* ÜBERSETZUNG ZUM ZEITPUNKT DER DRUCKLEGUNG NICHT VORHANDEN

INHALTSVERZEICHNIS

Bezeichnung	Seite
RÜCKLEHNENVERLÄNGERUNG	882
FAHRERHAUSLUFTFILTER	883
SCHUTZVERKLEIDUNG	885
SCHEIBENSCHUTZ	887
FAHRERHAUSHEIZUNG U. BEFESTIGUNGSTEILE	890
FAHRERHAUSHEIZUNG	891
WARNHORN, ELEKTR.	893
RADIOEINBAUSATZ	895
FAHRERHAUSAUSKLEIDUNG	896
FAHRERHAUSAUSKLEIDUNG (OFFENES FAHRERHAUS MIT ÜBERROLLSCHUTZ)	903
KLIMAANLAGENLEITUNGEN	904
FAHRERHAUSHEIZUNGSLEITUNGEN	912
DOKUMENTATION	914
RÜCKSPIEGEL	915
WÄGEEINRICHTUNG - MONITOR	917
WÄGEEINRICHTUNG	918
SCHEIBENWISCHERMOTOR	920
FAHRERHAUSANBAUSATZ	922
FAHRERHAUSAUSRÜSTUNG	926
SCHALE - RÜCKENLEHNE	928
FAHRERSITZVERKLEIDUNG	931
INSTRUMENTENTAFEL	933
GASPEDAL	939
RADIO	941
VERSTELLBARER SITZ	943
ÜBERROLL-SCHUTZKABINE	944
ÜBERROLL-SCHUTZDACH	947
SONNENBLENDE	950
FAHRERSITZ UND UNTERBAU	951
SICHERHEITSGURT	954
FAHRERSITZ	958
SCHWINGSITZ	966
SITZUNTERBAU	974
FAHRERSITZFEDERUNG	975
FAHRERHAUS, SONNENBLENDE	981
SCHEIBENWASCHANLAGE	982
TÜRFENSTER	984
SCHEIBENWISCHER	986
WARTUNGSAUSRÜSTUNG UND -ZUBEHÖR	989
AUFKLEBER	989
DIAGNOSELEITUNGEN	991
VORHÄNGESCHLOSS	998
BEFESTIGUNG - SCHMIERMITTELWARTUNGSTABELLE	999
SCHILD UND AUFKLEBER	1000
ERSATZTEILNUMMERNINDEX	B1

* ÜBERSETZUNG ZUM ZEITPUNKT DER DRUCKLEGUNG NICHT VORHANDEN

GENERAL INFORMATION

1. MACHINE IDENTIFICATION

Caterpillar machines are identified by Product Identification Numbers (PIN). Some components included in a machine may be identified by Serial Numbers (S/N). Typical components that will be serialized include engines, transmissions, bulldozers, and rippers. The machine and engine are further identified by arrangement numbers and in some cases modification numbers. These numbers are shown on the product identification plate(s) and on the master plate in the operator's compartment.

Caterpillar dealers need all of these numbers to determine accurate parts identification.

SIS *New Feature*

Effective First Quarter 2001 the Caterpillar Product Identification Number (PIN) changed from 8 to 17 characters. In an effort to provide uniform equipment identification, Caterpillar and other construction equipment manufacturers are moving to comply with the latest version of the product identification numbering standard. Non-road machine PINs are defined by ISO 10261. The new PIN format will apply to all Caterpillar machines and generator sets. The PIN plates and frame marking will display the 17 character PIN. The new format will look like the following:

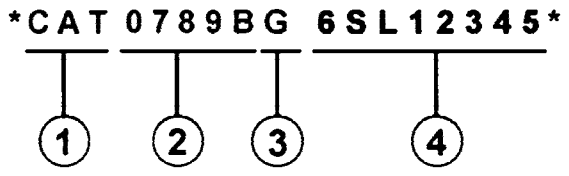

Where:

1. Caterpillar's World Manufacturing Code (characters 1-3)

2. Machine Descriptor (characters 4-8)

3. Check Character (character 9)

4. Machine Indicator Section (MIS) or Product Sequence Number (characters 10-17). These were previously referred to as the Serial Number.

Machines and generator sets produced before First Quarter 2001 will maintain their 8 character PIN format.

Components such as engines, transmissions, axles, etc. and work tools will continue to use an 8 character Serial Number (S/N).

2. ORDERING PARTS

⚠ WARNING

When replacement parts are required for this product Caterpillar recommends using Caterpillar replacement parts or parts with equivalent specifications including, but not limited to, physical dimensions, type, strength and material.

Failure to heed this warning can lead to premature failures, product damage, personal injury or death.

Quality Caterpillar replacement parts are available from Caterpillar dealers throughout the world. Their parts inventories are up to date and include all parts normally required to protect your investment in Caterpillar machines. Dealers may offer repair kits or remanufactured parts to allow selection of the most effective repair alternative for a particular situation. When ordering parts, your order should specify the quantity, part number, part name, and the serial number/product identification number of the machine for which the parts are needed.

3. PARTS MANUAL ORGANIZATION

Product information in this manual is presented as "information elements" that represent all of the components for the specific model. Engine Arrangement and Seat Group are examples of information elements. The information elements are organized alphabetically by part name and secondarily by part number within each major section of the manual.

4. TABLE OF CONTENTS

A table of contents (TOC) is found at the beginning of the manual. The TOC lists each section of the manual with a complete list of all information elements organized as they appear in the manual. Page numbers are provided for quick reference to detailed parts identification illustrations and serviceable consist lists.

5. MAINTENANCE PARTS INDEX

The Maintenance Parts Index, located near the beginning of the manual, references most frequently used maintenance part numbers, providing description, quantity, usage and page number. This information is organized alphabetically by part description.

6. INDEX

The index located near the front of the manual is an alphabetical listing of all information elements included in the manual. Page numbers are provided for quick reference to detailed parts identification illustrations and serviceable consist lists.

7. PART NUMBER INDEX

A numerical index listing all part numbers and the corresponding page number(s) appears at the back of the manual.

8. CAPTIONS

Captions located at the beginning of each information element identify the part number and part name along with additional descriptive information. PIN and S/N information found in each caption should be used to select correct information for a specific machine. Field replacement options, identification of optional attachment components, and where used ("part of") information is also provided.

The first line of a caption is shown in larger type font to indicate the beginning of an information element. Captions for additional pages that may be required to illustrate an information element will be shown in standard type font and will include the term *(contd.)* .

9. NON-SERVICED PARTS

In some instances it is necessary to display non-serviced parts that are a link to a lower level serviceable consist lists. These non-serviced part numbers are shown in *italic* type indicating that they are not available.

10. PARTS LIST REFERENCE NUMBERS

Numbers shown in the Ref No column correspond to numbers used in the associated graphic(s). An alphabetic suffix may be added to a reference number to identify lower level consist items. Numbers shown in the Graphic Ref column refer to the graphic number identifier displayed in the lower left corner of each illustration. The Graphic Ref number may be used in combination with the item Ref No to determine the correct part number. There may be intentional omission of a Ref No in a consist list as information is updated to reflect the latest serviceable part numbers.

11. INDENTED PART NAMES

When a part name is indented in a parts list, it is part of (included in) the group or assembly under which it is indented.

12. ILLUSTRATION REFERENCE LETTERS

When necessary, illustrations contain reference letters (A, B, C etc.) that are intended to track lines and harnesses from one point to another. They are also used to show where to reconnect illustrations that have been separated.

13. ABBREVIATIONS AND SYMBOLS

O.D. – Outside Diameter
I.D. – Inside Diameter
A – Not Part Of This Group
B – Use As Required
C – Change From Previous Type
D – Order By The Meter
E – Order By The Centimeter
F – Not Shown
G – Order By The Inch
I – Refer To Hydraulic Information System
M – Metric Part
R – Remfg Part May Be Available
Y – Separate Illustration
Z – Not Serviced Separately

SIS ***New Feature***

14.<END>

This symbol indicates the end of an information element.

NOTE:

Continuing improvement and advancement of product design may cause changes to your machine which may not be included in this publication. Whenever a question arises regarding your caterpillar product or this publication, please consult your caterpillar dealer for the latest available information.

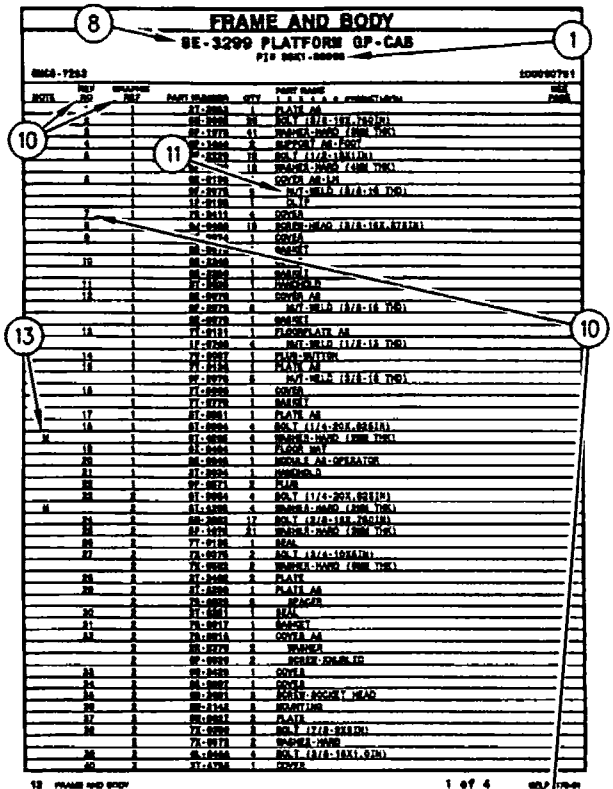
FRAME AND BODY
SE-3299 PLATFORM GP-CAB
1 of 4

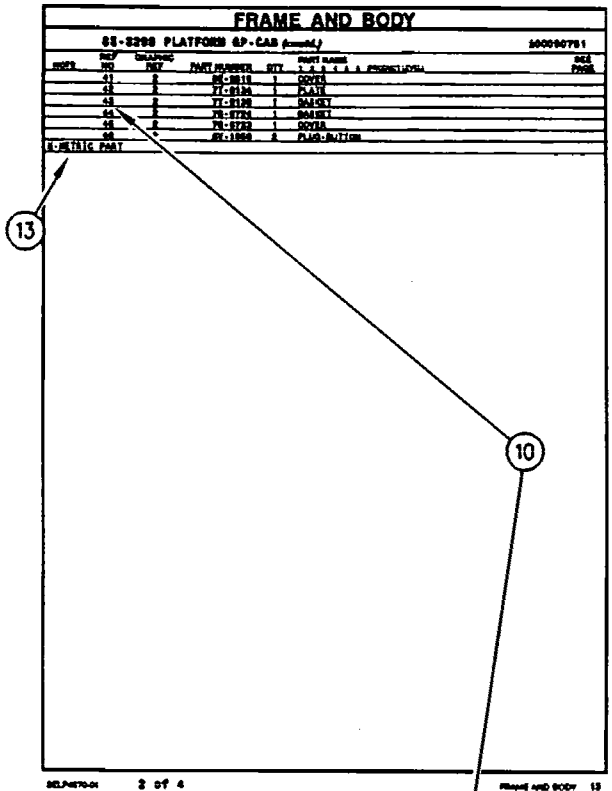
FRAME AND BODY
SE-3298 PLATFORM GP-CAB
2 of 4

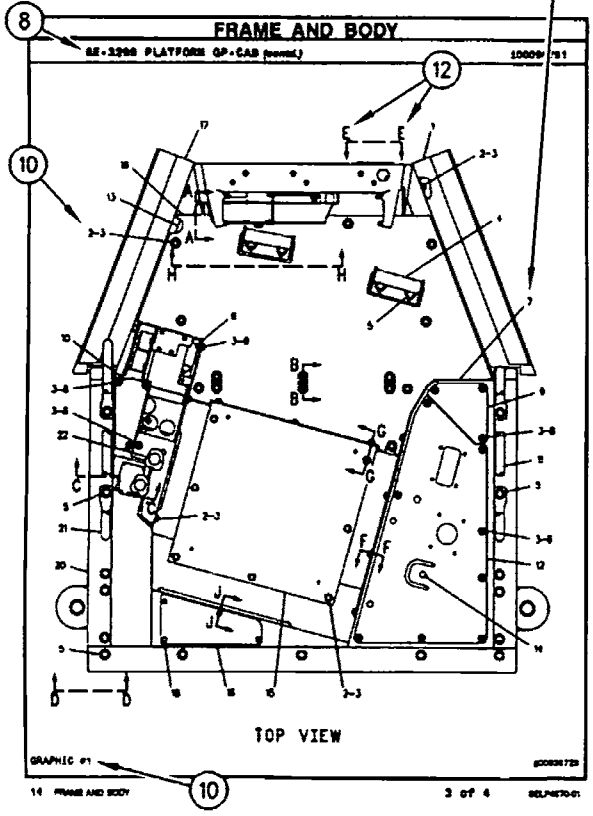
FRAME AND BODY
SE-3298 PLATFORM GP-CAB
TOP VIEW
3 of 4

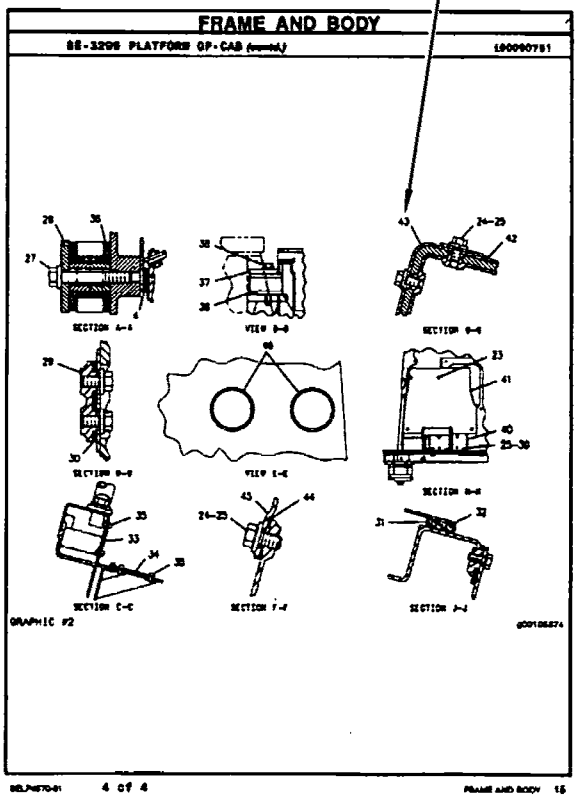
FRAME AND BODY
SE-3298 PLATFORM GP-CAB
GRAPHIC #2
4 of 4

1. IDENTIFICATION DE LA MACHINE

Toutes les machines Caterpillar portent un numéro d'identification (PIN). Certains composants des machines peuvent porter des numéros de série (S/N). En général, parmi les composants qui portent des numéros de série il y a les moteurs, les transmissions, les bulldozers et les rippers. En plus, la machine et le moteur peuvent recevoir des numéros de version, et dans certains cas, de modification. Ces numéros figurent sur les plaques de numéro de série et sur la plaque signalétique principale qui se trouve dans le poste de conduite.

Les concessionnaires Caterpillar doivent connaître tous ces numéros pour identifier correctement les pièces.

SIS *Nouvelle Caractéristique*

À partir du premier trimestre 2001, le numéro d'identification produit (PIN) Caterpillar passe de 8 à 17 caractères. Afin de permettre une identification uniforme des matériels, Caterpillar et d'autres constructeurs de machines de travaux publics s'efforcent de se conformer à la norme la plus récente portant sur les numéros d'identification des produits. Les numéros d'identification (PIN) de machines de chantier sont définis par la norme ISO 10261. Le nouveau format du numéro d'identification est valable pour toutes les machines et tous les groupes électrogènes Caterpillar. Le numéro d'identification produit (PIN) figurant sur la plaque et sur le châssis se composera de 17 caractères. Le nouveau format ressemblera à ceci:

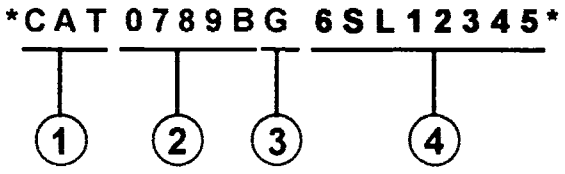

Il se décomposera de la façon suivante:

1. Code international de fabrication de Caterpillar (caractères 1 à 3)

2. Descriptif de la machine (caractères 4 à 8)

3. Contrôle (caractère 9)

4. Indicateur machine (MIS) ou numéro de séquence produit (caractères 10 à 17). Ceux-ci étaient auparavant désignés sous le terme de numéro de série.

Les machines et les groupes électrogènes construits avant le premier trimestre 2001 garderont le format à 8 caractères du numéro d'identification produit (PIN).

Les organes tels que les moteurs, les boîtes de vitesses, les essieux, etc., continueront d'être désignés par un numéro de série (S/N) à 8 caractères.

2. COMMANDE DE PIÈCES

⚠ DANGER

Lorsqu'il faut remplacer des pièces de rechange pour ce produit Caterpillar recommande d'utiliser les pièces de rechange Caterpillar ou les pièces qui ont des spécifications équivalentes dont les dimensions physiques, le type, la force et le matériau. Ces équivalences ne se limitent pas à l'énoncé précédent.

L'inobservation de cette mise en garde peut entraîner des défaillances prématurées, des dommages au produit, des blessures ou même la mort.

Les concessionnaires Caterpillar fournissent dans le monde entier des pièces de rechange de qualité Caterpillar. Leurs stocks de pièces sont constamment réapprovisionnés et comptent toutes les pièces nécessaires pour assurer la bonne marche de vos machines Caterpillar. Certains concessionnaires proposent également des kits de réparation ou des pièces rénovées, ce qui permet de choisir la solution la plus économique dans une situation donnée. Lors des commandes de pièces, mentionner la quantité, le numéro et la désignation des pièces ainsi que le numéro de série ou le numéro d'identification (PIN) de la machine pour laquelle ces pièces sont requises.

3. ORGANISATION DU CATALOGUE DE PIÈCES

Les renseignements sur les produits sont présentés sous forme de "Information element" (élément d'information) représentant tous les composants d'un modèle donné. "Engine Arrangement" (version de moteur) et "Seat Group" (assemblage de siège)" sont des exemples d'éléments d'information. Les éléments d'information sont classés par ordre alphabétique par la désignation standard des pièces et par numéros de pièces dans chaque partie importante du manuel.

4. TABLE DES MATIÈRES

SIS *Nouvelle Caractéristique*

La table des matières se trouve au début du manuel. La table des matières fournit la liste de tous les chapitres du manuel avec une liste complète de tous les éléments d'information classés par ordre d'apparition dans le manuel. Les numéros de page sont fournis afin que l'utilisateur puisse trouver rapidement les illustrations détaillées concernant l'identification des pièces et les listes des pièces d'entretien.

5. INDEX DES PIÈCES D'ENTRETIEN

La rubrique "Index des pièces d'entretien" qui se trouve au début du manuel renvoie aux pièces d'entretien les plus fréquemment utilisées en précisant la désignation, la quantité, là où la pièce est utilisée et le numéro de page. Ces pièces sont classés par ordre alphabétique.

6. INDEX

L'index qui se trouve vers le début du manuel est une liste alphabétique de tous les éléments d'information du manuel. Les numéros de page sont fournis afin que l'utilisateur puisse trouver rapidement les illustrations détaillées concernant l'identification des pièces et les listes des pièces d'entretien.

7. INDEX DES NUMÉROS DE PIÈCES

Une liste numérique de tous les numéros de pièces et des pages correspondantes se trouve à la fin du manuel.

8. LÉGENDES

Les légendes qui se trouvent en haut de chaque page de chaque élément d'information fournissent le numéro de pièce, la désignation ainsi que des renseignements supplémentaires sur les pièces. Les renseignements concernant les numéros de série (S/N) qui se trouvent dans chaque légende doivent être utilisés pour sélectionner les informations correctes pour un moteur donné. Les informations concernant les options de remplacement sur le chantier, l'identification des composants des équipements offerts en option et les lieux d'application sont aussi fournies.

SIS *Nouvelle Caractéristique*

Les lettres de la première ligne d'une légende sont présentées en police plus grande afin d'indiquer le début d'une unité d'information. Les légendes qui pourraient être requises pour des pages supplémentaires afin d'illustrer une unité d'information seront présentées en police standard et comprendront le terme (à suivre).

9. PIÈCES NON FOURNIES

SIS *Nouvelle Caractéristique*

Dans certains cas, il est nécessaire d'indiquer les pièces non fournies qui sont en aval de la liste des pièces d'entretien. Les numéros des pièces non fournies dans la liste des pièces et les légendes seront en italique pour signaler qu'ils ne sont pas disponibles.

10. NUMÉROS DE RÉFÉRENCE DE LA LISTE DES PIÈCES

SIS *Nouvelle Caractéristique*

Les numéros indiqués dans la colonne des numéros de références correspondent aux numéros utilisés dans les illustrations auxquelles ils sont associés. Un suffixe alphabétique peut être ajouté à un numéro de référence pour identifier la liste des articles en aval. Les numéros indiqués dans la colonne de référence de l'illustration renvoient à l'identification du numéro affiché dans le coin inférieur gauche de chaque illustration. Le numéro de référence de l'illustration pourrait être utilisé avec le numéro de référence de l'article pour déterminer le numéro de pièce correct. Il peut y avoir une omission intentionnelle d'un numéro de référence dans une liste de pièces suite à la mise à jour des informations en vue de refléter les numéros de pièces les plus récentes.

11. DÉSIGNATIONS DE PIÈCES EN RETRAIT

Lorsqu'une désignation de pièce est en retrait, cela veut dire que l'article en regard fait partie de l'ensemble sous lequel il figure.

12. LETTRES DE RÉFÉRENCE DES ILLUSTRATIONS

Quand cela est nécessaire, les illustrations comportent des lettres de référence (A, B, C, etc.) pour montrer le trajet des canalisations et faisceaux de câbles d'un point à l'autre. Elles sont utilisées également pour indiquer où relier les illustrations séparées auparavant.

13. ABRÉVIATIONS ET SYMBOLES

O.D. – Diamètre extérieur
I.D. – Diamètre intérieur
A – Ne fait pas partie de ce groupe
B – Utiliser selon besoin
C – Modification
D – Commander par mètre
E – Commander par centimètre
F – Non représenté
G – Commander par pouce
I – Voir "Hydraulic Information System"
M – Pièce métrique
R – Pièce rénovée éventuellement disponible
Y – Illustration séparée
Z – Non fourni séparément

NOTA:

En raison du progrès technique et des améliorations continuelles apportées au matériel, votre machine comporte peut-être des modifications qui n'apparaissent pas dans la présente publication. En cas de doute sur un détail de votre machine Caterpillar ou sur le texte de la présente publication, adressez-vous à votre concessionnaire Caterpillar.

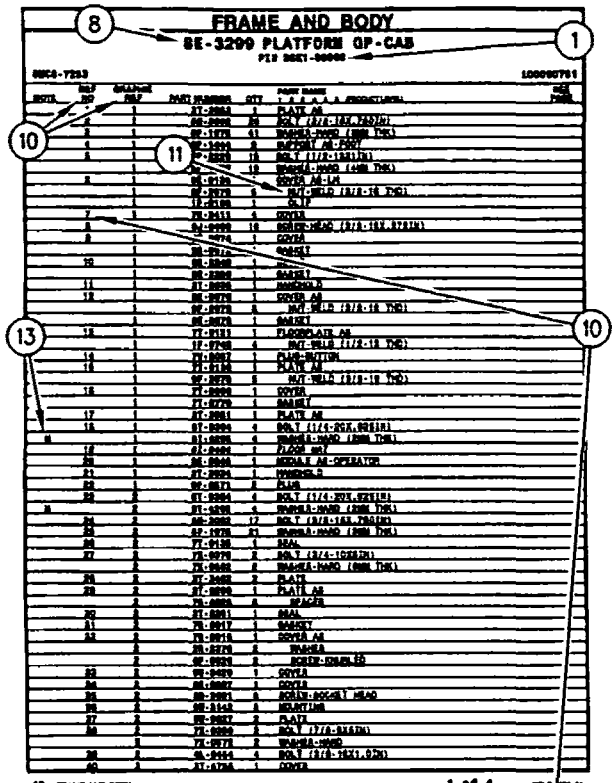
FRAME AND BODY
8E-3299 PLATFORM GP-CAB
1 of 4

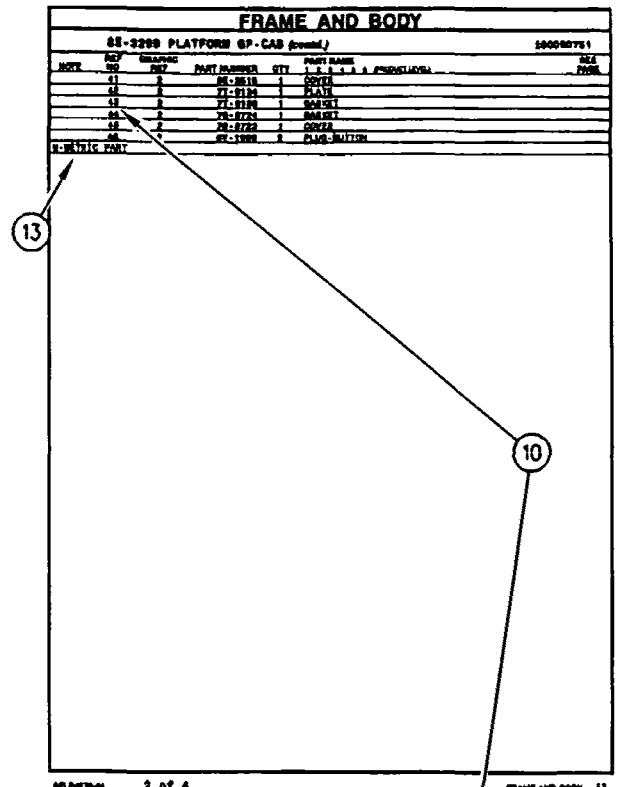
FRAME AND BODY
8E-3299 PLATFORM GP-CAB (contd.)
2 of 4

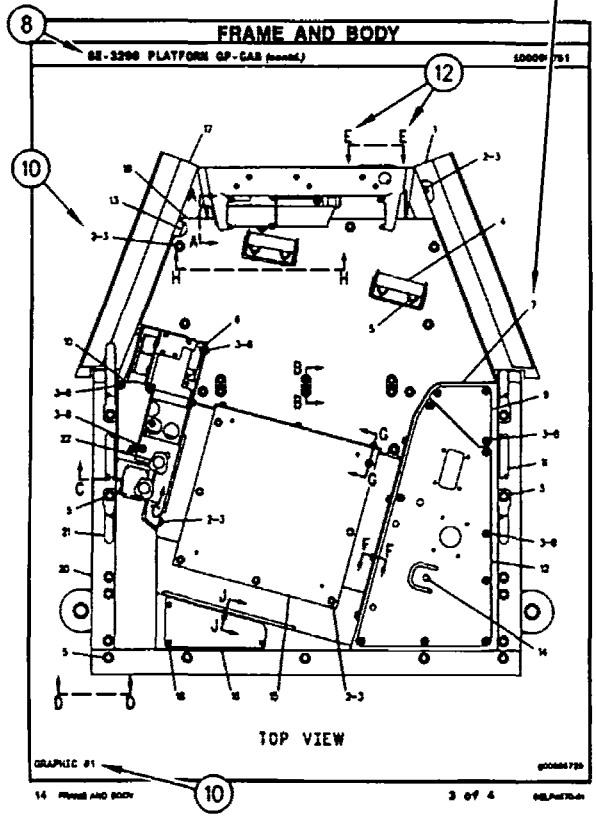
FRAME AND BODY
8E-3299 PLATFORM GP-CAB (contd.)
TOP VIEW
3 of 4

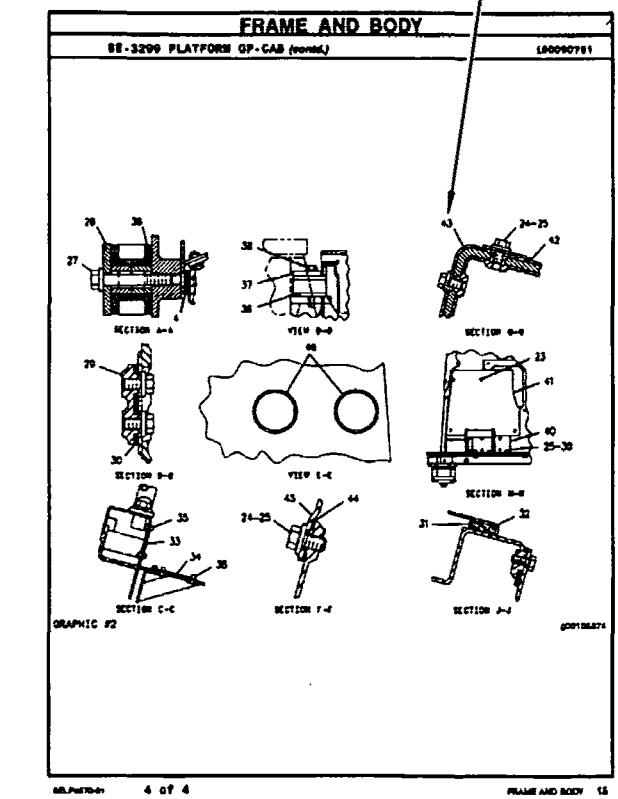
FRAME AND BODY
8E-3299 PLATFORM GP-CAB (contd.)
4 of 4

INFORMACIÓN GENERAL

1. MÁQUINAS

Las máquinas Caterpillar se identifican con Números de Identificación del Producto (PIN). Algunos componentes incluídos en la máquina pueden estar identificados con Números de Serie (N/S). Los componentes que tienen típicamente esta identificación incluyen motores, transmisiones, hojas topadoras y desgarradores. La máquina y el motor se identifican además con Números de Configuración y en algunos casos, Números de Modificación. Estos números están en las placas de identificación del producto o en la placa principal en la cabina del operador.

Los distribuidores Caterpillar necesitan estos números para identificar con exactitud los números de piezas de repuesto.

SIS *Nueva Característica*

A partir del primer trimestre del 2001, el Número de Identificación de Producto (PIN) de Caterpillar cambió de 8 a 17 caracteres. Para hacer más uniforme el método de identificación de equipos, Caterpillar y otros fabricantes de equipo de construcción han tomado medidas para cumplir con la versión más reciente de la norma de numeración de identificación de productos. Los Números de Identificación de Producto para máquinas que no se operan en carreteras son definidos por la norma ISO 10261. El nuevo formato PIN corresponderá a todas las máquinas y grupos electrógenos Caterpillar. Las placas y los caracteres PIN estampados en el bastidor mostrarán el PIN de 17 caracteres. El nuevo formato tendrá la apariencia siguiente:

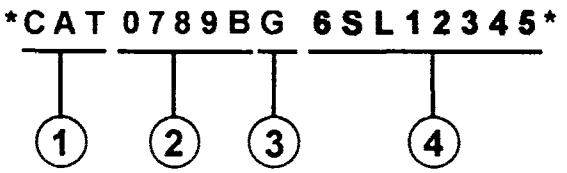

Significado de los caracteres:

1. Código de Fabricación Mundial de Caterpillar (caracteres 1-3)

2. Sección Descriptor de la Máquina (caracteres 4-8)

3. Carácter de Verificación (carácter 9)

4. Sección Indicador de la Máquina (MIS) o Número de Secuencia de Producto (caracteres 10-17). Anteriormente, estos caracteres constituían el Número de Serie.

Las máquinas y grupos electrógenos producidos antes del primer semestre del 2001 mantendrán su formato PIN de 8 caracteres.

Los componentes como motores, transmisiones, ejes, herramientas de trabajo, etc., continuarán usando un Número de Serie (S/N) de 8 caracteres.

2. COMO PEDIR REPUESTOS

⚠ ADVERTENCIA

Cuando se necesiten piezas de repuesto para este producto, Caterpillar recomienda usar piezas de repuesto Caterpillar o piezas que tengan especificaciones equivalentes incluyendo, pero sin estar limitadas a, dimensiones físicas, tipo, fortaleza y material.

El no hacer caso de esta advertencia puede llevar a fallas prematuras, daños al producto y lesiones graves o mortales.

Las piezas de repuesto Caterpillar de calidad están a la disposición de los distribuidores Caterpillar en todo el mundo. Sus existencias actualizadas incluyen todas las piezas normalmente requeridas para proteger su inversión en máquinas Caterpillar. Los distribuidores pueden tener juegos de reparación o piezas remanufacturadas para permitir la selección de la mejor alternativa de reparación en un caso en particular. Al pedir piezas de repuesto, especifique en su pedido la cantidad, el número de pieza, el nombre de la pieza y el número de serie/número de identificación del producto, de la máquina para la cual se necesitan estas piezas.

3. ORGANIZACION DEL MANUAL DE PIEZAS

La información sobre el producto, se presenta en este manual, como "elementos de información" que representan todos los componentes de un modelo específico. Las configuraciones de motores y los grupos de asientos son ejemplos de elementos de información. Los elementos de información están organizados primeramente por nombres de piezas en orden alfabético y en segundo lugar, por el número de pieza dentro de cada sección principal del manual.

4. CONTENIDO

La página de Contenido se encuentra al principio del manual. El Contenido indica cada sección del manual con una lista completa de todos los elementos de información organizados en el orden que aparecen en el manual. Los números de página proporcionan una referencia rápida a las ilustraciones detalladas de identificación de piezas y a las listas de componentes de repuesto de dichas piezas.

5. ÍNDICE DE PIEZAS DE MANTENIMIENTO

Al principio de este catálogo se encuentra un índice de los números de piezas utilizadas más frecuentemente para el mantenimiento, que incluye descripción, cantidad necesaria, lugar de utilización y número de página. Esta información está organizada alfabéticamente, por descripción de la pieza.

6. ÍNDICE

El Índice, ubicado cerca del principio del manual, es una lista en orden alfabético de todos los elementos de información incluídos en el manual. Los números de página proporcionan una referencia rápida a las ilustraciones detalladas de identificación de piezas y a las listas de componentes de repuesto de dichas piezas.

7. INDICE NUMÉRICO DE PIEZAS

Un índice numérico de piezas con el correspondiente número de página aparece al final de este catálogo.

8. TÍTULOS

Los títulos ubicados al principio de cada elemento de información identifican el número y el nombre de la pieza junto con información descriptiva. Se debe usar información sobre los Números de Identificación de Pieza (PIN) y los números de serie (S/N) para seleccionar la información que corresponda a una máquina en particular. También se suministra información sobre las opciones de reparación en el campo, la identificación de componentes de accesorios optativos y el lugar de ubicación de la pieza ("es parte de").

La primera línea del título se muestra con un tipo de letra más grande para indicar el comienzo de un elemento de información. Si se requieren páginas adicionales para ilustrar un elemento de información, los títulos se muestran con un tipo de letra normal y la continuación se indica entre paréntesis.

9. PIEZAS QUE NO SE SUMINISTRAN COMO REPUESTO

En algunos casos es necesario indicar piezas que no se suministran como repuesto pero que pueden estar conectadas a listas de componentes de otras piezas de repuesto. En tal caso, dichas piezas se muestran en cursiva para indicar que no son piezas disponibles.

10. NÚMEROS DE REFERENCIA

Los números en la columna de No. de Referencia corresponden a los números indicados en la ilustración que pertenece a ese número de pieza. Los números que tienen un sufijo alfabético identifican artículos de las listas de componentes de piezas. Los números en la columna de Referencia de la ilustración se identifican en la esquina inferior izquierda de cada ilustración. Para determinar el número de pieza correcto se puede utilizar tanto el No. de Referencia de la ilustración como el No. de Referencia del artículo. A medida que se actualiza la información para indicar los más recientes números de piezas de repuesto, puede omitirse intencionalmente un No. de Referencia en una lista de componentes de piezas.

11. NOMBRES DE PIEZA SANGRADOS

Cuando el nombre de una pieza está sangrado en una lista, significa que esta pieza forma parte del grupo o conjunto del renglón inmediatamente superior.

12. LETRAS DE REFERENCIA DE ILUSTRACIONES

Las ilustraciones contienen algunas veces letras de referencia (A, B, C etc.) cuyo propósito es seguir el trayecto de líneas y mazos de cables de un punto a otro. También se utilizan para mostrar dónde volver a unir ilustraciones que se habían separado.

13. ABREVIATURAS Y SIMBOLOS

O.D. – Diámetro exterior
I.D. – Diámetro interior
A – No es pieza de este grupo
B – Utilizado según la demanda
C – Indica cambio
D – Se pide por metro
E – Se pide por centímetro
F – No se muestra
G – Se pide por pulgada
I – Consulte el sistema de información hidráulica
M – Pieza métrica
R – Puede estar disponible como pieza remanufacturada
Y – Ilustración separada
Z – No se suministra por separado

SIS *Nueva Característica*

14.<END>

Este símbolo indica el final de un elemento de información.

NOTA:

Las contínuas mejoras y adelantos en diseño podrían originar cambios a su máquina que no se incluyen en esta publicación. Cuando tenga alguna pregunta acerca de su producto Caterpillar o de esta publicación, consulte al distribuidor Caterpillar para obtener la información más reciente.

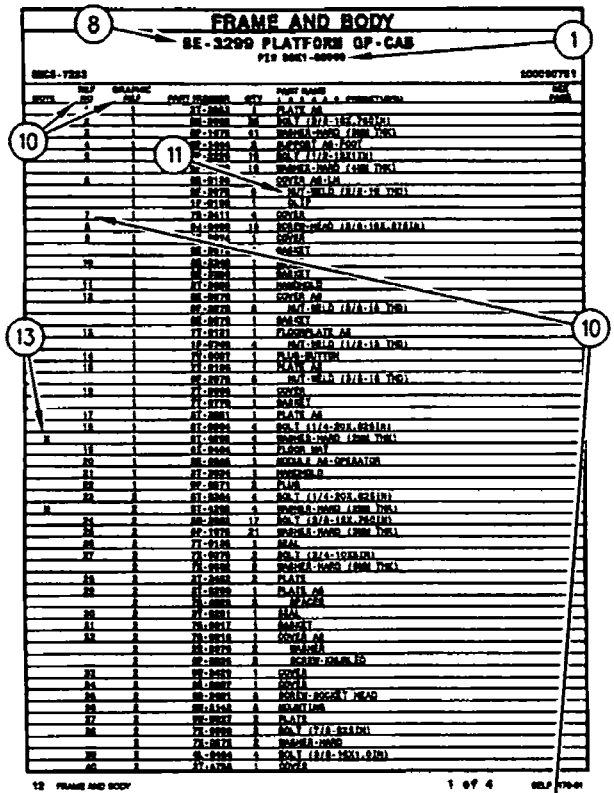
FRAME AND BODY
8E-3299 PLATFORM GP-CAB
8MC8-7253
1 of 4

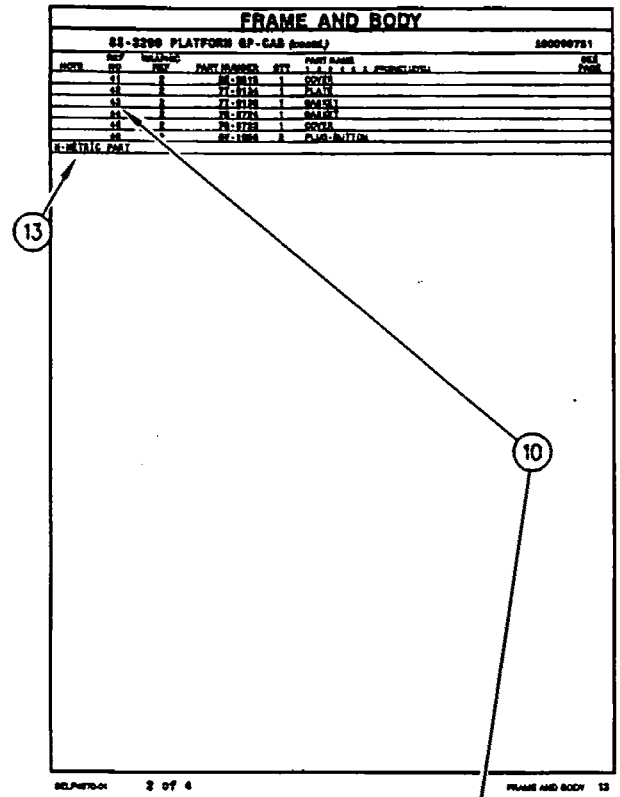
FRAME AND BODY
8E-3299 PLATFORM GP-CAB (cont'd.)
2 of 4

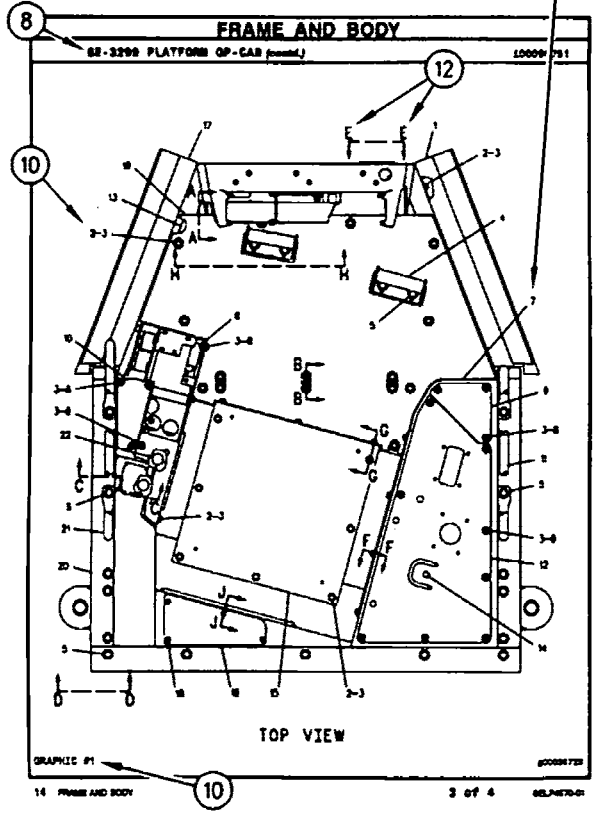
FRAME AND BODY
8E-3299 PLATFORM GP-CAB (cont'd.)
TOP VIEW
GRAPHIC #1
3 of 4

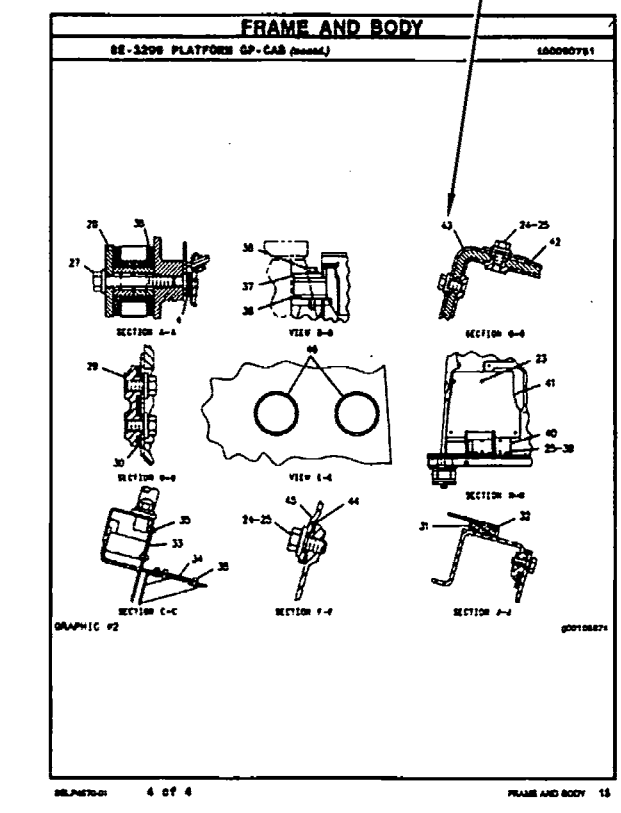
FRAME AND BODY
8E-3299 PLATFORM GP-CAB (cont'd.)
GRAPHIC #2
4 of 4

INFORMAÇÃO GERAL

1. IDENTIFICAÇÃO DA MÁQUINA

As máquinas Caterpillar são identificadas pelos Números de Informação do Produto (PIN). Alguns componentes incluídos numa máquina podem ser identificados por Números de Série (S/N). Componentes típicos que serão enumerados com números de série incluem motores, transmissões, lâminas e ríperes. Além do número de série, a máquina e o motor são ainda identificados por números de arranjo e, em alguns casos, números de modificações. Tais números encontram-se na(s) placa(s) de identificação do produto e na placa mestre no compartimento do operador.

SIS *Novidades*

A partir do primeiro trimestre de 2001 o Número de Identificação de Produto da Caterpillar (PIN) precisa ser mudado de 8 para 17 caracteres. Esforçando-se para fornecer uma identificação uniforme de equipamentos, a Caterpillar e outros fabricantes de equipamento de construção estão mudando para atender a versão mais atualizada do padrão de identificação de produtos. Os números de PIN para produtos de aplicações não rodoviárias são definidos pela ISO 10261. O novo formato de número PIN será adotado em todas as máquinas e grupos geradores Caterpillar. As placas e as marcações do chassi mostrarão os 17 dígitos de PIN. O novo formato terá a seguinte disposição:

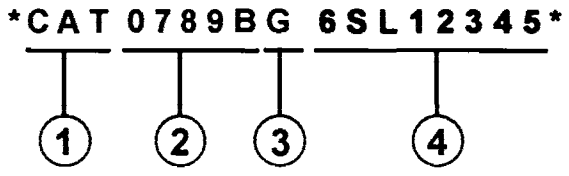

Onde:

1. Código de Fabricação Mundial da Caterpillar (dígitos 1-3)

2. Descrição da Máquina (dígitos 4-8)

3. Dígito de Verificação (dígito 9)

4. Seção de Indicador da Máquina (MIS) ou Número de Seqüência de Produto (dígitos 10-17). Estes eram anteriormente chamados de Número de Série.

Máquinas e grupos geradores produzidos antes do primeiro trimestre de 2001 manterão o formato de 8 caracteres de PIN.

Componentes como motores, transmissões, eixos, ferramentas de trabalho, etc. continuarão a usar Número de Série (S/N) com oito caracteres.

2. COMO OBTER PEÇAS

⚠ CUIDADO

Quando peças de substituição são exigidas para este produto, a Caterpillar recomenda a utilização de peças de substituição Caterpillar ou peças com as especificações equivalentes incluindo, mas não limitadas, à dimensões físicas, tipos, resistência e materiais.

A inobservância desta advertência poderá resultar em falhas prematuras, danos ao produto, ferimentos ou morte.

As Peças de Reposição de Qualidade Caterpillar encontram-se disponíveis nos revendedores Caterpillar no mundo inteiro. Seus estoques de peças são atualizados e incluem todas as peças normalmente necessárias para proteger seu investimento em máquinas Caterpillar. Alguns revendedores podem oferecer jogos de reparo ou peças de troca/remanufaturadas disponíveis como uma opção da alternativa de reparo mais eficaz para uma situação específica. Ao encomendar peças, seu pedido deve especificar a quantidade, o número e o nome da peça e o número de série/número de identificação do produto referentes à máquina para a qual as peças se destinam.

3. ORGANIZAÇÃO DO MANUAL DE PEÇAS

A informação do produto neste manual é apresentada em forma de "elementos de informação" que representam todos os componentes para o modelo específico. Arranjo de Motor e Grupo de Assento são exemplos de elementos de informação. Os elementos de informação são organizados em ordem alfabética por nome de peça ou secundariamente, por número de peça incluído em cada seção principal do manual.

4. LISTA DE CONTEÚDOS

A Lista de Conteúdos (TOC) se encontra no princípio do manual. A Lista de Conteúdos (TOC) relaciona em cada seção do manual uma lista completa com todos os elementos de informação organizados conforme aparecem no manual. Números de página são fornecidos para que se tenha referência rápida de ilustrações de peças detalhadas e listas de conteúdos que podem receber serviço de manutenção.

5. ÍNDICE DE PEÇAS DE MANUTENÇÃO

O Índice de Peças de Manutenção, localizado perto do princípio do manual, faz referência aos números de peça de manutenção usados com maior frequência, fornecendo uma descrição, a quantidade, o uso e o número de página. Esta informação é organizada com a descrição da peça em ordem alfabética.

6. ÍNDICE

O Índice localizado perto do princípio do manual, consiste de uma lista em ordem alfabética de todos os elementos de informação incluídos no manual. Números de página são fornecidos para que se tenha referência rápida de ilustrações de peças detalhadas e listas de conteúdos que podem receber serviço de manutenção.

7. ÍNDICE DE NÚMERO DE PEÇA

Um índice numérico relacionando todos os números de peça e a(s) página(s) correspondentes, aparece no final do manual.

8. LEGENDAS

As legendas localizadas no início de cada elemento de informação identificam o número e o nome de peça, juntamente com informação descritiva adicional. Informações sobre o Número de Informação do Produto (PIN) e o Número de Série (S/N) encontradas em cada legenda devem ser usadas para selecionar a informação correta sobre uma máquina específica. Opções de substituição no campo, identificação de componentes de acessórios opcionais e informações sobre onde são utilizados ("parte de") são também fornecidas.

A primeira linha de uma legenda é indicada em tipo maior para indicar o princípio de um elemento de informação. Legendas para páginas adicionais que podem ser necessárias para ilustrar um elemento de informação serão apresentadas em tipo padrão e incluirão o termo *(continua)* .

9. NÃO DISPONÍVEL SEPARADAMENTE

Em alguns casos, é necessário mostrar peças não disponíveis separadamente que têm uma ligação com listas de conteúdos de nível inferior que podem receber serviço de manutenção. Os números de peça destes componentes não disponíveis aparecerão em *itálico* , a fim de indicar que não estão disponíveis.

10. NÚMEROS DE REFERÊNCIA À LISTA DE PEÇAS

Os números indicados na coluna Ref No (No. de Referência) correspondem-se aos números usados no(s) gráfico(s) correspondente(s). Um sufixo com letras pode ser acrescentado a um número de referência para identificar itens de conteúdo de nível inferior. Os números indicados na coluna Graphic Ref (Referência de Gráfico) referem-se ao identificador de número de gráfico presente no canto esquerdo inferior de cada ilustração. O número de Referência de Gráfico pode ser usado em combinação com o item Ref No para determinar-se o número de peça correto. Poderá haver omissão intencional de um número de referência (Ref No) de uma lista de conteúdos uma vez que as informações são atualizadas para refletir os números de peça mais recentes que podem receber serviço de manutenção.

11. NOMES DE PEÇAS DESALINHADOS

Quando um nome de peça encontra-se desalinhado numa lista de peças, significa que tal item faz parte do (está incluído no) grupo ou conjunto sob o qual está relacionado.

12. LETRAS DE REFERÊNCIA NAS ILUSTRAÇÕES

Quando necessário, as ilustrações contêm letras de referência (A, B, C, etc.) que são utilizadas para seguir tubulações e cabos elétricos de um ponto a outro. Também foram utilizadas para indicar onde se pode reconectar as ilustrações que foram separadas.

13. ABREVIAÇÕES E SÍMBOLOS

O.D. – "Outside Diameter" (Diâmetro Externo)
I.D. – "Inside Diameter" (Diâmetro Interno)
A – Não faz parte deste grupo
B – Use conforme necessário
C – Indica modificação
D – Vendido por metro
E – Vendido por centímetro
F – Não ilustrado
G – Vendido por polegada
I – Consultar o Sistema de Informações Hidráulicas
M – Peça métrica
R – Peça remanufaturada pode estar disponível; consulte o seu revendedor Cat
Y – Ilustração separada
Z – Não disponível separadamente

SIS *Novidades*

14. <END>

Este símbolo indica o final de um elemento de informação.

INFORMAÇÃO GERAL

NOTA:

Os contínuos aperfeiçoamentos e avanços no projeto do produto podem ocasionar modificações em sua máquina que talvez ainda não estejam incluídas nesta publicação. Sempre que surgirem dúvidas quanto a um produto Caterpillar ou quanto à presente publicação, consulte o seu revendedor Caterpillar para obter as informações mais recentes disponíveis.

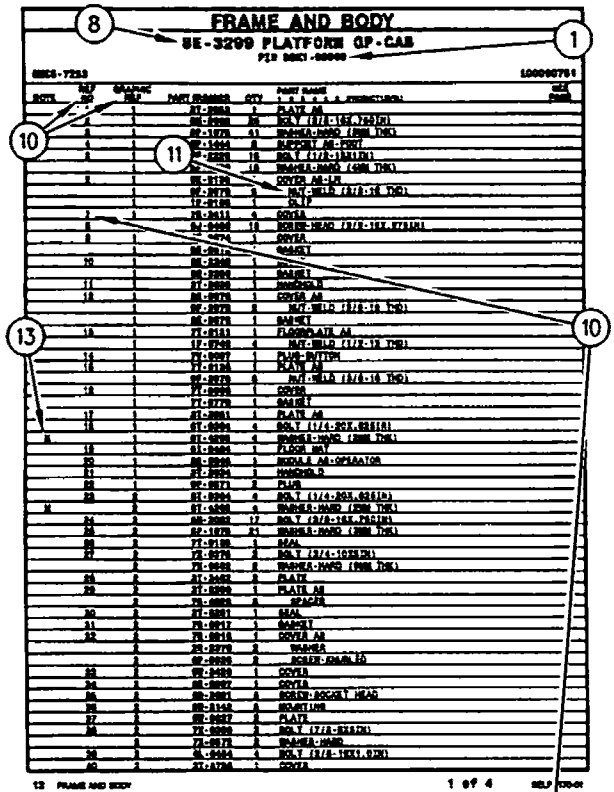
FRAME AND BODY
SE-3299 PLATFORM GP-CAB
1 of 4

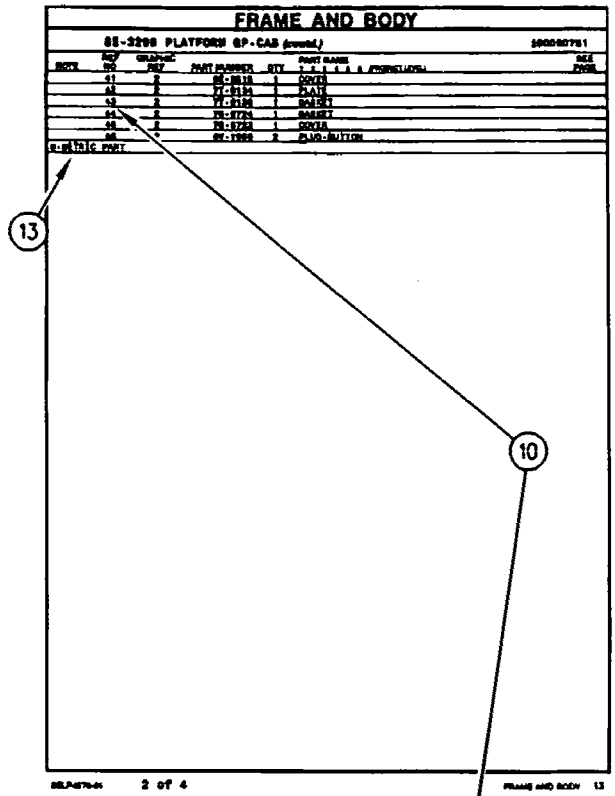
FRAME AND BODY
SE-3299 PLATFORM GP-CAB (contd.)
2 of 4

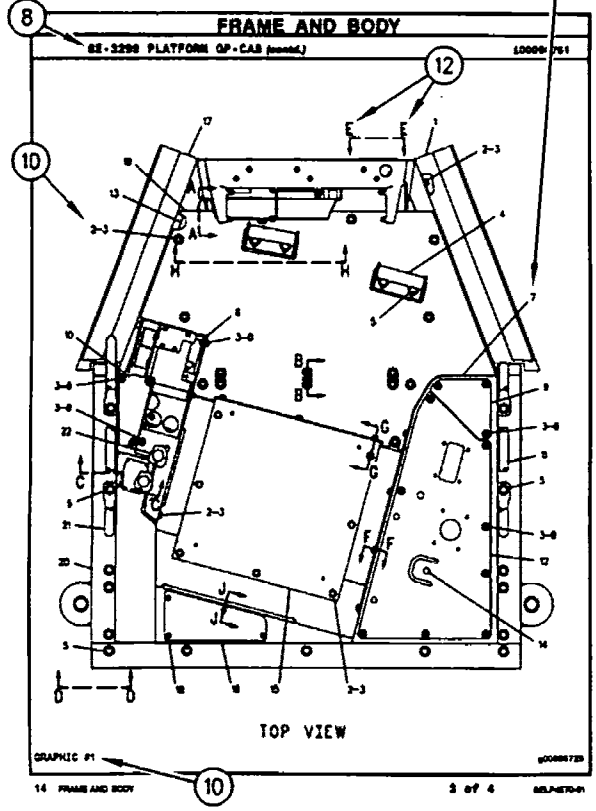
FRAME AND BODY
SE-3299 PLATFORM GP-CAB (contd.)
TOP VIEW
3 of 4

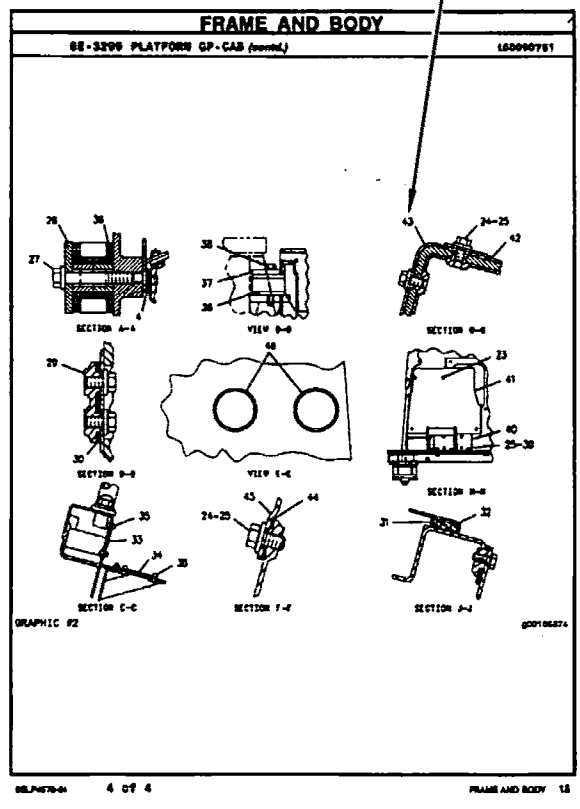
FRAME AND BODY
SE-3299 PLATFORM GP-CAB (contd.)
4 of 4

ALLGEMEINE HINWEISE

1. MASCHINENKENNZEICHNUNG

Caterpillar-Maschinen sind mit PRODUCT IDENTIFICATION NUMBERS (PIN) (Produkt-Identnummern) gekennzeichnet. Einige Baugruppen, z.B. Motoren, Getriebe, Planierschilde und Aufreißer, sind mit SERIAL NUMBERS (S/N) (Seriennummern) gekennzeichnet. An der Maschine und am Motor befinden sich außerdem ARRANGEMENT NUMBERS (Ausrüstungsnummern) sowie in einigen Fällen MODIFICATION NUMBERS (Änderungsnummern). Sie befinden sich auf den PIN-Schildern und auf dem Typenschild im Fahrerhaus.

Bei Ersatzteilbestellungen müssen dem Händler alle diese Nummern zur Verfügung gestellt werden.

SIS *Neu im Parts Manual*

Vom ersten Quartal 2001 ab wurde die Caterpillar Produkt-Identnummer (PIN) von 8 auf 17 Zeichen geändert. Um zur Standardisierung der Produkt-Identnummer beizutragen, sind Caterpillar und andere Baumaschinenhersteller bestrebt, die aktuellste Norm zur Produkt-Identnummerierung einzuführen. Produkt-Identnummern für Baumaschinen sind durch ISO 10261 definiert. Das neue Format der Produkt-Identnummern gilt für alle Caterpillar-Maschinen und -Stromaggregate. Die Produkt-Identschilder und -Identrahmenmarkierung enthalten die aus 17 Zeichen bestehende Identnummer. Das neue Format hat folgende Abschnitte:

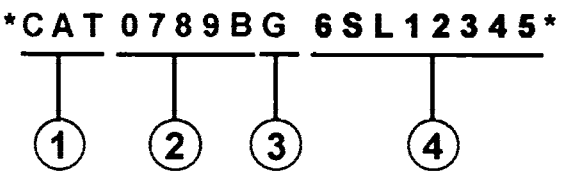

Abschnitte:

1. Caterpillars weltweiter Herstellungscode (Zeichen 1-3)

2. Modell (Zeichen 4-8)

3. Kontrollzeichen (Zeichen 9)

4. Maschinenspezifische Kennung (MIS) oder Produktsequenznummer (Zeichen 10-17). Diese wurde früher als Seriennummer bezeichnet.

Für vor dem ersten Quartal 2001 hergestellte Maschinen und Stromaggregate wird das aus 8 Zeichen bestehende PIN-Format beibehalten.

Bauteile wie z.B. Motoren, Getriebe, Achsen sowie Arbeitsgeräte werden weiterhin eine aus 8 Zeichen bestehende Seriennummer (S/N) aufweisen.

2. BESTELLEN VON ERSATZTEILEN

⚠ WARNUNG

Wenn für diese Maschine Ersatzteile benötigt werden, empfiehlt Caterpillar, ausschließlich Caterpillar-Ersatzteile oder solche zu verwenden, die die gleichen technischen Merkmale hinsichtlich Typ, Festigkeit, Werkzeugeigenschaften und die gleichen Maße aufweisen.

Bei Nichtbeachtung dieser Warnung besteht Verletzungs- oder sogar Lebensgefahr! Ferner kann Nichtbeachtung vorzeitige Ausfälle der Teile und Beschädigung der Maschine zur Folge haben.

Original Caterpillar-Ersatzteile können weltweit bei jedem Caterpillar-Händlern bestellt werden. Die umfangreichen Händlerlager enthalten normalerweise alle Teile, die Sie für Ihre Caterpillar-Maschine benötigen. Einige Händler bieten Reparatursätze, Austausch- oder werküberholte Teile an, so daß Sie eine Auswahl unter verschiedenen Reparaturmöglichkeiten treffen können. Ihre Bestellung muß folgende Angaben enthalten: Anzahl der benötigten Teile, Bestellnummer, Bezeichnung des Teils, Serien-Nr./Produkt-Ident-Nr., Ausrüstungs-Nr. und Änderungs-Nr. der Maschine, für die diese Teile benötigt werden.

3. AUFBAU DES PARTS MANUAL

Die Produktinformationen für alle Komponenten eines bestimmten Modells sind in INFORMATION ELEMENTS (Informationseinheiten) gegliedert. ENGINE ARRANGEMENT (Motorausführung) und SEAT GROUP (Fahrersitz) sind Beispiele für solche Informationseinheiten. Sie sind innerhalb jeder Gruppe alphabetisch, entsprechend der Ersatzteilbezeichnung, und zusätzlich numerisch, entsprechend der Ersatzteilnummer, geordnet.

4. INHALTSVERZEICHNIS

Das Inhaltsverzeichnis befindet sich am Anfang des Buches. Im Inhaltsverzeichnis werden die einzelnen Abschnitte des Buches aufgeführt. Die Abschnitte enthalten eine vollständige Aufstellung aller Informationseinheiten. Diese sind entsprechend ihrem Erscheinen im Buch geordnet. Das Inhaltsverzeichnis enthält Seitenangaben für Schnellverweise auf detaillierte Abbildungen und Teillisten.

5. INDEX FÜR WARTUNGSTEILE

Der Index für Wartungsteile vorn im Buch enthält die Bestellnummern, Seitenangaben, Mengenangaben und Informationen über den Einsatzbereich für die am häufigsten benötigten Ersatzteile. Die Angaben sind alphabetisch entsprechend der Teilebezeichnung geordnet.

6. INDEX

Der Index vorn im Buch enthält eine alphabetische Liste aller Informationseinheiten. Er enthält Seitenangaben für Schnellverweise auf detaillierte Abbildungen und Teillisten.

7. INDEX FÜR BESTELLNUMMERN

Hinten im Buch befindet sich ein numerischer Index, mit allen Bestellnummern und dem Hinweis auf die Seite, auf der sich die betreffende Abbildung befindet.

8. ÜBERSCHRIFTEN

Die Überschriften, die sich am Anfang jeder der Informationseinheiten befinden, enthalten Bestellnummern, Ersatzteilbezeichnungen und zusätzliche beschreibende Informationen. Produkt-Ident- und Seriennummern in den Überschriften sollten zur Auswahl der richtigen Informationen für die betreffende Maschine verwendet werden. Die Überschriften enthalten außerdem Informationen über möglichen Außendienstersatz, mögliche Baugerätekomponenten und die Baugruppe, zu der das Teil gehört.

Die erste Zeile einer Überschrift erscheint in einer größeren Schriftart, um den Anfang einer Informationseinheit zu kennzeichnen. Überschriften für zusätzliche Seiten, die zur Erläuterung einer Informationseinheit notwendig sind, erscheinen in normaler Schriftart und enthalten den Begriff "(contd.)".

9. NICHT EINZELN LIEFERBARE TEILE

In einigen Fällen ist es notwendig nicht lieferbare Teile, die selbst mit einer eigenen Teilliste im Buch vertreten sind, aufzuführen. Die Bestellnummern dieser nicht einzeln lieferbaren Teile erscheinen kursiv, wodurch angezeigt wird, daß sie nur in Verbindung mit anderen Teilen lieferbar sind.

10. REFERENZNUMMER FÜR ERSATZTEILE

Die Zahlen, die in der Spalte "Ref No" aufgeführt sind, stimmen mit den Zahlen in den beigefügten Abbildungen überein. Ein Buchstaben-Suffix kann zu einer Referenznummer hinzugefügt werden, um zu kennzeichnen, daß das Teil mit einer eigenen Teilliste im Buch aufgeführt ist. Die in der Spalte "Graphic Ref" angeführten Zahlen verweisen auf die Identifikationsnummer der Abbildung, die sich in der linken unteren Ecke der Abbildung befindet. Diese Nummer kann zusammen mit der Referenznummer des Teils angegeben werden, um die richtige Ersatzteilnummer zu ermitteln. Referenznummern können absichtlich weggelassen werden, da die Nummern der lieferbaren Ersatzteile ständig aktualisiert werden.

11. EINGERÜCKTE BEZEICHNUNGEN

Wenn eine Bezeichnung eingerückt ist, wird dadurch angezeigt, daß das Teil zu einer Baugruppe gehört, unter deren Bezeichnung es eingerückt ist.

12. REFERENZBUCHSTABEN

Falls erforderlich sind in den Abbildungen Referenzbuchstaben enthalten (z.B. A, B, C, usw.), die Leitungen und Kabelbäume von einem Punkt zum anderen verfolgen. Außerdem geben sie die Stelle an, an der getrennte Abbildungen fortgesetzt werden.

13. ABKÜRZUNGEN UND SYMBOLE

O.D. – Außendurchmesser
I.D. – Innendurchmesser
A – kein Teil dieser Gruppe
B – nach Bedarf verwenden
C – Hinweis auf eine Änderung
D – in Meter-Länge bestellen
E – in Zentimeter-Länge bestellen
F – nicht gezeigt
G – in Zoll-Länge bestellen
I – siehe Hydraulikinformationssystem
M – metrisches Teil
R – werküberholtes Teil unter Umständen lieferbar
Y – separate Abbildung
Z – nicht einzeln lieferbar

SIS ***Neu im Parts Manual***

14. <END>

Dieses Symbol zeigt das Ende eines Informationselements an.

ANMERKUNG:

Ständig vorgenommene Verbesserungen und Weiterentwicklungen an Ihrer Maschine können Änderungen verursachen, die in der vorliegenden Ausgabe noch nicht berücksichtigt sind. Fragen zu Ihrer Caterpillar-Maschine oder diesem Ersatzteilbuch beantwortet Ihr Caterpillar-Händler.

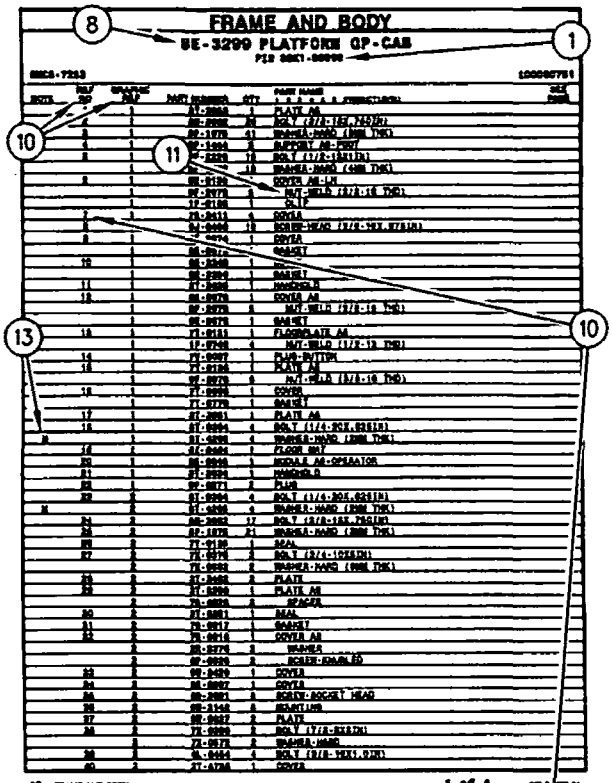
FRAME AND BODY
8E-3299 PLATFORM GP-CAB
1 of 4

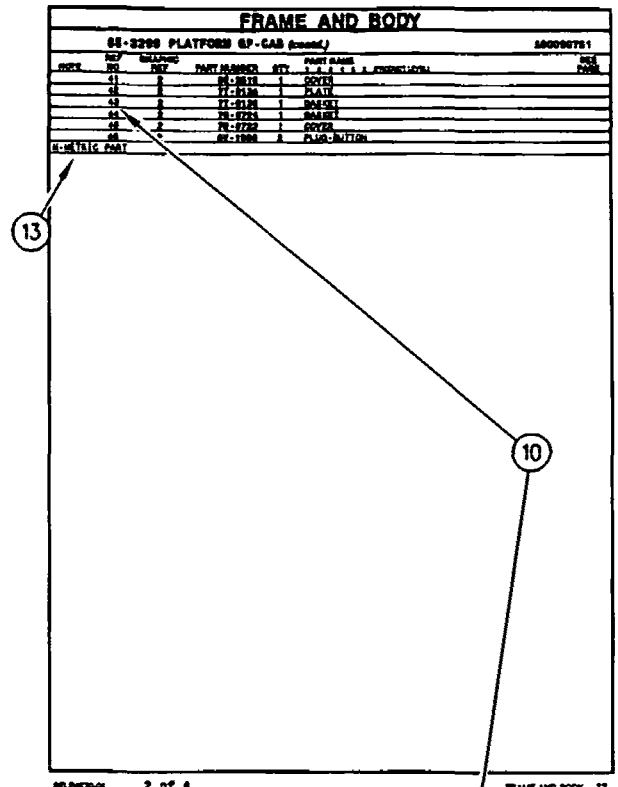
FRAME AND BODY
8E-3299 PLATFORM GP-CAB (cont.)
2 of 4

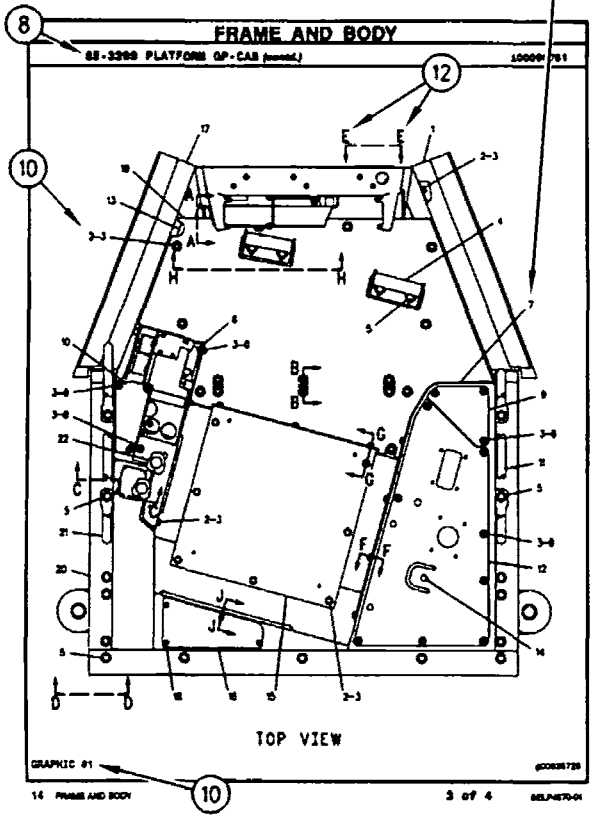
FRAME AND BODY
8E-3299 PLATFORM GP-CAB (cont.)
TOP VIEW
3 of 4

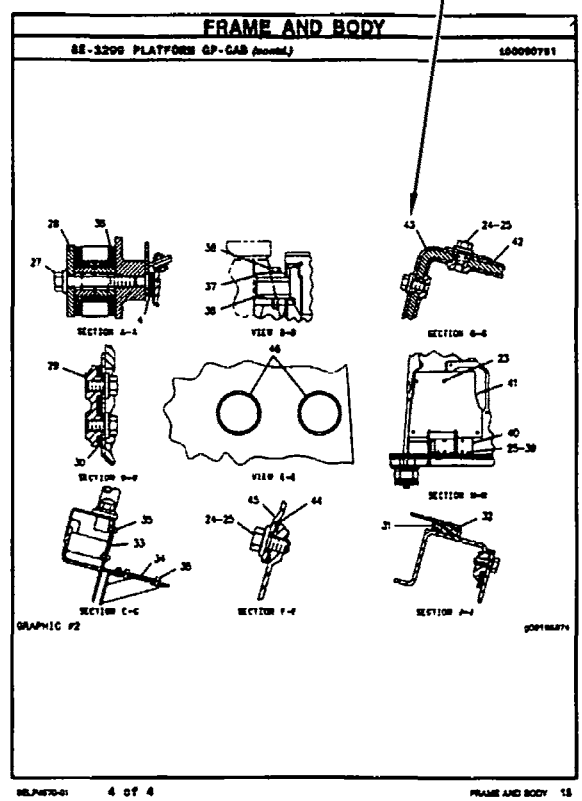
FRAME AND BODY
8E-3299 PLATFORM GP-CAB (cont.)
4 of 4

REMANUFACTURED COMPONENTS

As an option when making repairs consider Caterpillar Remanufactured Components. Components that are available through the Caterpillar Remanufactured Program are identified three ways in the parts book:

- with the letter R in the note field of the parts list
- with an R* at the beginning of the first line of the caption
- with an *R at the end of the first line of the caption

Typical components included in the Remanufacturing Program include:

ALTERNATORS
CONNECTING RODS
CRANKSHAFTS - UNDERSIZE
CRANKSHAFTS - UPGRADE TO NEW
CYLINDER HEADS
ELECTRONIC CONTROL MODULES (ECM)
ELECTRONIC SENSORS
FUEL INJECTORS
FUEL NOZZLES
FUEL PUMPS
GOVERNORS
OIL PUMPS
PISTONS
SHORT BLOCKS
STARTERS
TURBOCHARGERS - COMPLETE
TURBOCHARGER CARTRIDGES
WATER PUMPS

Caterpillar Remanufactured engines for many engine arrangements are also available.

COMPOSANTS RÉNOVÉS

Comme option de réparation, considérer les composants rénovés Caterpillar. Les composants disponibles dans le cadre du programme Caterpillar de composants rénovés sont identifiés de trois façons dans le catalogue de pièces:

- avec la lettre "R" dans l'espace note de la liste des pièces
- avec R* au début de la première ligne des légendes
- avec *R à la fin de la première ligne des légendes

Les composants suivants figurent parmi les composants typiques du programme de rénovation:

ALTERNATEURS
BIELLES
VILEBREQUINS - SOUS-DIMENSIONNÉS
VILEBREQUINS - REMIS À NEUF
CULASSES
MODULES DE COMMANDE ÉLECTRONIQUE (ECM)
CAPTEURS ÉLECTRONIQUES
INJECTEURS
TÊTES D'INJECTEURS
POMPES À CARBURANT
RÉGULATEURS
POMPES À HUILE
PISTONS
BLOCS EMBIELLÉS
DÉMARREURS
TURBOCOMPRESSEURS - COMPLETS
CARTOUCHES DE TURBOCOMPRESSEUR
POMPES À EAU

Des moteurs rénovés sont aussi disponibles pour plusieurs versions de moteur.

COMPONENTES REMANUFACTURADOS

Al hacer reparaciones, tenga en cuenta la opción de Componentes Remanufacturados Caterpillar. Los componentes que están disponibles por medio del programa de Productos Remanufacturados Caterpillar se identifican de tres maneras en el manual de piezas:

- con la letra R en el espacio de Nota de la lista de piezas
- con una R* al comienzo de la primera línea de la leyenda
- con una *R al final de la primera línea de la leyenda

Los componentes que se incluyen típicamente en el Programa de Productos Remanufacturados son:

ALTERNADORES
BIELAS
CIGÜEÑALES - BAJOMEDIDA
CIGÜEÑALES - REMANUFACTURADOS A NUEVO
CULATAS
MÓDULOS DE CONTROL ELECTRÓNICO (ECM)
SENSORES ELECTRONICOS
INYECTORES
BOQUILLAS
BOMBAS DE COMBUSTIBLE
REGULADORES
BOMBAS DE ACEITE
PISTONES
MONOBLOQUES
MOTORES DE ARRANQUE
TURBOCOMPRESORES - COMPLETOS
NÚCLEOS DE TURBOCOMPRESOR
BOMBAS DE AGUA

También hay disponibles motores Remanufacturados Caterpillar para muchas de las configuraciones de motores.

COMPONENTES REMANUFATURADOS

Considere o uso de Componentes Remanufaturados Caterpillar ao efetuar reparos. Os componentes disponíveis através do Programa de Remanufatura Caterpillar são identificados de três formas no manual de peças:

- com um R na área da nota da lista de peças
- com um R* no princípio da primeira linha da legenda
- com um *R no final da primeira linha da legenda

Os componentes típicos que constam no Programa de Remanufatura incluem:

ALTERNADORES
BIELAS
VIRABREQUINS - SUBMEDIDAS
VIRABREQUINS - ATUALIZAÇÃO
CABEÇOTES
MÓDULOS DE CONTROLE ELETRÔNICO (ECM)
SENSORES ELETRÔNICOS
INJETORES DE COMBUSTÍVEL
BICOS DE ABASTECIMENTO DE COMBUSTÍVEL
BOMBAS DE COMBUSTÍVEL
GOVERNADORES
BOMBAS DE ÓLEO
PISTÕES
BLOCOS BÁSICOS DO MOTOR
MOTORES DE PARTIDA
TURBOALIMENTADORES - COMPLETOS
CARTUCHOS DE TURBOALIMENTADORES
BOMBAS D'ÁGUA

Motores Remanufaturados Caterpillar também encontram-se disponíveis para diversos arranjos de motor.

WERKÜBERHOLTE AT-PRODUKTE

Bei Reparaturen sollten werküberholte AT-Produkte von Caterpillar in Betracht gezogen werden. Die durch das AT-Programm von Caterpillar erhältlichen Teile sind im Parts Book auf drei verschiedene Arten gekennzeichnet:

- mit dem Buchstaben R in der Spalte NOTE der Ersatzteilliste
- mit einem R* am Anfang der ersten Zeile der Überschrift
- mit einem *R am Ende der ersten Zeile der Überschrift

Das AT-Programm umfaßt u.a. folgende Produkte:

DREHSTROMGENERATOREN
PLEUELSTANGEN
KURBELWELLEN - MIT UNTERMASS
KURBELWELLEN - MIT ORIGINALMASS
ZYLINDERKÖPFE
ELEKTRONISCHE STEUEREINHEITEN (EMC)
ELEKTRONISCHE SENSOREN
PUMPENDÜSEN
EINSPRITZDÜSEN
KRAFTSTOFFPUMPEN
DREHZAHLREGLER
ÖLPUMPEN
KOLBEN
TEILMOTOREN
ANLASSER
TURBOLADER - KOMPLETT
TURBOLADERLAUFZEUGE
KÜHLWASSERPUMPEN

Viele Motoren können durch werküberholte AT-Motoren von Caterpillar ersetzt werden.

SUPPLEMENTAL COOLANT ADDITIVES

CUSTOMER BENEFITS:

Protects against cavitation, foam, erosion, corrosion, and scale buildup in cooling systems.

- Provides measured coolant conditioner.

DESCRIPTION:

Additives deplete from the coolant with normal operation. For this reason, Supplemental Coolant Additives (SCA) must be added to all heavy duty coolants at regular intervals. In addition, when not using a fully formulated, pre-charged antifreeze, like Caterpillar's DEAC, an initial charge of SCA must be added to the cooling system. The amount of SCA added to the system is dependent on the capacity of the system.

The SCA for initial fill is provided as a liquid. SCA's for maintenance intervals are available in liquid form and as a spin-on element. (No Spin-on available for 3600 Family of Engines)

NOTE:

The amount of SCA added at initial fill is not the same as the amount added at maintenance intervals.

The coolant additive elements can be used with any ethylene or propylene glycol type antifreeze which meets ASTM D4985 or ASTM D5345 Specifications.

NOTE:

For use with standard heavy duty coolant only, not for use with Extended Life Coolant.

PARTS NEEDED:

Cooling System Capacity		Liquid SCA at Initial Fill	Liquid SCA at Maintenance*	Spin-on SCA Maintenance Element*
Liters	Gallons			
22-30	(6-8)	3P-2044 (1)	6V-3542 (1)	111-2370 (1)
30-38	(8-10)	3P-2044 (1) 6V-3542 (1)	111-2372 (1)	111-2369 (1)
38-49	(10-13)	3P-2044 (1) 8T-1589 (1)	111-2372 (1)	111-2369 (1)
49-64	(13-17)	3P-2044 (2)	8T-1589 (1)	9N-3368 (1)
64-83	(17-22)	3P-2044 (2) 8T-1589 (1)	111-2372 (1) 6V-3542 (1)	111-2371 (1)
83-114	(22-30)	3P-2044 (3) 8T-1589 (1)	3P-2044 (1)	9N-3718 (1)
114-163	(30-43)	3P-2044 (5)	3P-2044 (1) 6V-3542 (1)	111-2371 (2)
163-242	(43-64)	3P-2044 (8)	3P-2044 (2)	9N-3718 (2)

** Normal maintenance period is 250 hrs. See your Operation and Maintenance Manual for complete coolant maintenance instructions.*

( ) Indicates quantity required.

ADDITIFS POUR LIQUIDE DE REFROIDISSEMENT

AVANTAGES POUR LE CLIENT

L'additif protège contre la cavitation, la mousse, l'érosion, la corrosion et l'accumulation de dépôts dans le circuit de refroidissement.

- L'additif complémentaire fournit une quantité mesurée d'additif.

DESCRIPTION:

Les additifs s'épuisent pendant l'utilisation du moteur. C'est pourquoi l'on doit ajouter de l'additif au liquide de refroidissement/antigel pour moteurs diesel à intervalles réguliers. En plus, si l'on n'utilise pas de l'antigel entièrement formulé et pré-chargé comme le liquide de refroidissement/antigel Caterpillar pour moteurs diesel, une quantité initiale d'additif doit être ajoutée au circuit de refroidissement. La quantité d'additif à ajouter au circuit dépend de la contenance du circuit.

L'additif pour le remplissage initial est fourni sous forme liquide. L'additif pour l'entretien ultérieur est disponible sous forme liquide et sous forme d'élément à visser. (Il n'y a pas d'élément à visser pour les moteurs de la famille 3600).

NOTA:

La quantité d'additif à ajouter au remplissage initial diffère de la quantité à ajouter aux intervalles d'entretien.

Les éléments d'additif peuvent être utilisés avec tout antigel de type éthylène ou propylène-glycol conforme à la norme ASTM D4985 ou ASTM D5345.

NOTA:

A utiliser uniquement avec du liquide de refroidissement pour moteurs diesel et non avec le liquide de refroidissement longue durée.

PIÈCES NÉCESSAIRES:

Contenance du circuit de refroidissement		Additif liquide au remplissage initial	Additif liquide aux intervalles d'entretien*	Elément d'additif à visser aux intervalles d'entretien*
Litres	Gallons U.S.			
22-30	(6-8)	3P-2044 (1)	6V-3542 (1)	111-2370 (1)
30-38	(8-10)	3P-2044 (1) 6V-3542 (1)	111-2372 (1)	111-2369 (1)
38-49	(10-13)	3P-2044 (1) 8T-1589 (1)	111-2372 (1)	111-2369 (1)
49-64	(13-17)	3P-2044 (2)	8T-1589 (1)	9N-3368 (1)
64-83	(17-22)	3P-2044 (2) 8T-1589 (1)	111-2372 (1) 6V-3542 (1)	111-2371 (1)
83-114	(22-30)	3P-2044 (3) 8T-1589 (1)	3P-2044 (1)	9N-3718 (1)
114-163	(30-43)	3P-2044 (5)	3P-2044 (1) 6V-3542 (1)	111-2371 (2)
163-242	(43-64)	3P-2044 (8)	3P-2044 (2)	9N-3718 (2)

** L'intervalle d'entretien normal est de 250 heures-service. Voir le Guide d'utilisation et d'entretien pour de plus amples renseignements concernant l'entretien du circuit de refroidissement.*

( ) Indique la quantité exigée.

ADITIVOS DE REFRIGERANTE SUPLEMENTARIOS

VENTAJAS PARA EL USUARIO:

Protegen contra la cavitación, la formación de espuma, la corrosión y la acumulación de escamas en los sistemas de enfriamiento.

- Suministra un acondicionador dosificado de refrigerante.

DESCRIPCIÓN:

Los aditivos en el refrigerante se agotan con la operación normal. Por esta razón, se debe agregar Aditivo de refrigerante suplementario (SCA) a todos los refrigerantes para servicio pesado, a intervalos regulares. Además, cuando no se usa un anticongelante de precarga completo, tal como el DEAC de Caterpillar, es necesario agregar una cantidad de aditivo de refrigerante suplementario inicial al sistema de enfriamiento. La cantidad de aditivo que se debe agregar depende de la capacidad del sistema.

El SCA de llenado inicial es líquido. El que se usa para el mantenimiento está disponible tanto en líquido como en un elemento enroscable. (No hay elemento enroscable disponible para la Familia de Motores 3600).

NOTA:

La cantidad de aditivo de llenado inicial no es la misma que se agrega en los intervalos de mantenimiento.

Los elementos de aditivo de refrigerante se pueden usar con cualquier anticongelante de tipo glicol etilénico o propílico que esté de acuerdo con las especificaciones de las normas ASTM D4985 o ASTM D5345.

NOTA:

Se debe utilizar únicamente con refrigerante estándar para servicio pesado; no se debe usar con Refrigerante de Larga Duración.

PIEZAS NECESARIAS:

Capacidad del Sistema de Enfriamiento		SCA líquido de llenado inicial	SCA líquido de mantenimiento*	Elemento de mantenimiento enroscable*
litros	gal EE.UU.			
22-30	6-8	3P-2044 (1)	6V-3542 (1)	111-2370 (1)
30-38	8-10	3P-2044 (1) 6V-3542 (1)	111-2372 (1)	111-2369 (1)
38-49	10-13	3P-2044 (1) 8T-1589 (1)	111-2372 (1)	111-2369 (1)
49-64	13-17	3P-2044 (2)	8T-1589 (1)	9N-3368 (1)
64-83	17-22	3P-2044 (2) 8T-1589 (1)	111-2372 (1) 6V-3542 (1)	111-2371 (1)
83-114	22-30	3P-2044 (3) 8T-1589 (1)	3P-2044 (1)	9N-3718 (1)
114-163	30-43	3P-2044 (5)	3P-2044 (1) 6V-3542 (1)	111-2371 (2)
163-242	43-64	3P-2044 (8)	3P-2044 (2)	9N-3718 (2)

** El período normal de mantenimiento es de 250 horas. Para ver las instrucciones completas sobre el mantenimiento del refrigerante, consulte el Manual de Operación y Mantenimiento.*

( ) Indica la cantidad necesaria.

ADITIVOS SUPLEMENTARES DO LÍQUIDO ARREFECEDOR

BENEFÍCIOS PARA O CLIENTE:

Protege contra cavitação, espuma, erosão, corrosão e acúmulo de crostas nos sistemas de arrefecimento.

- Fornece uma quantidade pré-determinada de condicionador de arrefecimento.

DESCRIÇÃO:

Com a operação normal, os aditivos se esgotam do líquido arrefecedor. Por isso, Aditivos Suplementares do Líquido Arrefecedor (SCA) devem ser acrescentados a todos os líquidos arrefecedores para serviço pesado em intervalos regulares. Além disso, quando um anticongelante pré-carregado, totalmente formulado não for usado, como o DEAC Caterpillar, uma carga inicial de SCA deve ser acrescentada ao sistema de arrefecimento. A quantidade de SCA acrescentada ao sistema depende da capacidade do sistema.

O SCA para abastecimento inicial é fornecido em forma de líquido. Os aditivos suplementares (SCA) para intervalos de manutenção estão à disposição em forma líquida e como um elemento com roscas. (Exceto os Motores da Família 3600)

NOTA:

A quantidade de SCA adicionada no abastecimento inicial não é a mesma que a acrescentada nos intervalos de manutenção.

Os elementos do aditivo do líquido arrefecedor podem ser usados com qualquer tipo de anticongelante etileno ou propileno que satisfaz as Especificações ASTM D4985 ou ASTM D5345.

NOTA:

Para uso apenas com líquido arrefecedor para serviço pesado padrão, não deve ser usado com Líquido Arrefecedor de Vida Longa.

PEÇAS NECESSÁRIAS:

Capacidade do Sistema de Arrefecimento		Líquido SCA Durante Abastecimento Inicial	Líquido SCA Durante Manutenção*	Elemento de Manutenção de SCA com Roscas*
Litros	Galões			
22-30	6-8	3P-2044 (1)	6V-3542 (1)	111-2370 (1)
30-38	8-10	3P-2044 (1) 6V-3542 (1)	111-2372 (1)	111-2369 (1)
38-49	10-13	3P-2044 (1) 8T-1589 (1)	111-2372 (1)	111-2369 (1)
49-64	13-17	3P-2044 (2)	8T-1589 (1)	9N-3368 (1)
64-83	17-22	3P-2044 (2) 8T-1589 (1)	111-2372 (1) 6V-3542 (1)	111-2371 (1)
83-114	22-30	3P-2044 (3) 8T-1589 (1)	3P-2044 (1)	9N-3718 (1)
114-163	30-43	3P-2044 (5)	3P-2044 (1) 6V-3542 (1)	111-2371 (2)
163-242	43-64	3P-2044 (8)	3P-2044 (2)	9N-3718 (2)

** O período normal de manutenção é de 250 horas. Consulte o Manual de Operação e Manutenção para obter instruções completas quanto à manutenção do líquido arrefecedor.*

( ) Indica a quantidade exigida.

KÜHLMITTELZUSATZ

VORTEILE FÜR DEN KUNDEN:

Schutz gegen Kavitation, Schaumbildung, Erosion, Korrosion und Kesselsteinbildung in Kühlsystemen.

- Richtig dosierter Kühlmittelzusatz

BESCHREIBUNG:

Additive erschöpfen sich während des Motorbetriebs. Deshalb muß allen HD-Kühlmitteln regelmäßig Kühlmittelzusatz beigefügt werden. Wenn bei Erstfüllung kein vollwertiges Fertigkühlmittel, wie das Frostschutz- und Kühlmittel für Dieselmotoren von Caterpiller (DEAC), verwendet wird, muß bei Erstfüllung Kühlmittelzusatz beigefügt werden. Wieviel Kühlmittelzusatz beigefügt werden muß, hängt vom Inhalt des Kühlsystems ab.

Für Erstfüllung ist Kühlmittelzusatz nur in flüssiger Form erhältlich. Für Wartungsintervalle ist Kühlmittelzusatz in flüssiger Form und als Zusatzelement erhältlich. (Für die Motorbaureihe 3600 sind keine Zusatzelemente erhältlich.)

ANMERKUNG:

Die Kühlmittelmenge bei Erstfüllung ist nicht die gleiche Menge, die bei Wartungsintervallen beigefügt werden muß.

Die Kühlmittelzusatzelemente können mit allen Frostschutzmitteln auf Ethylen- oder Propylenglykolbasis verwendet werden, die den Standards nach ASTM D4985 oder ASTM D5345 entsprechen.

ANMERKUNG:

Den Kühlmittelzusatz nicht mit Langzeitkühlmittel (ELC) von Caterpillar verwenden. Der Kühlmittelzusatz ist nur für HD-Kühlmittel bestimmt.

TEILEBEZEICHNUNG:

Kühlsysteminhalt		Kühlmittelzusatz bei Erstfüllung	Flüssiger Kühlmittelzusatz bei Wartung*	Kühlmittelzusatzelement bei Wartung*
Liter	US-Gall.			
22-30	(6-8)	3P-2044 (1)	6V-3542 (1)	111-2370 (1)
30-38	(8-10)	3P-2044 (1) 6V-3542 (1)	111-2372 (1)	111-2369 (1)
38-49	(10-13)	3P-2044 (1) 8T-1589 (1)	111-2372 (1)	111-2369 (1)
49-64	(13-17)	3P-2044 (2)	8T-1589 (1)	9N-3368 (1)
64-83	(17-22)	3P-2044 (2) 8T-1589 (1)	111-2372 (1) 6V-3542 (1)	111-2371 (1)
83-114	(22-30)	3P-2044 (3) 8T-1589 (1)	3P-2044 (1)	9N-3718 (1)
114-163	(30-43)	3P-2044 (5)	3P-2044 (1) 6V-3542 (1)	111-2371 (2)
163-242	(43-64)	3P-2044 (8)	3P-2044 (2)	9N-3718 (2)

** Der normale Wartungsintervall beträgt 250 Betriebsstunden. Für vollständige Anweisungen zur Wartung des Kühlsystems, siehe Betriebs- und Wartungshandbuch.*

( ) Erforderliche Anzahl

MAINTENANCE PARTS

DESCRIPTION	PART NUMBER	QTY	WHERE USED	PAGE
AIR INLET AND EXHAUST SYSTEM				
ELEMENT AS-PRIMARY	132-7165	1	AIR CLEANER GP	111
FILTER ELEMENT AS-AIR (SECONDARY)	6I-2504	1	AIR CLEANER GP	111
BASIC ENGINE				
CAP AS-FILLER	5L-2952	1	COVER GP-FRONT HOUSING	11
COOLING SYSTEM				
CAP-RADIATOR (7-PSI)	6L-8617	1	TANK GP-RADIATOR TOP	107
		1	TANK GP-RADIATOR TOP	108
FILTER (WATER) (PUMP)	119-3025	1	PUMP GP-WATER	96
		1	PUMP GP-WATER	98
GASKET	136-0812	1	LINES GP-WATER	86
GASKET (TEMPERATURE REGULATOR HOUSING)	136-0812	1	LINES GP-WATER	88
REGULATOR-WATER TEMPERATURE (94-DEG C)	126-5869	1	LINES GP-WATER	86
REGULATOR-WATER TEMPERATURE (94-DEG C) (COOLANT)	126-5869	1	LINES GP-WATER	88
ELECTRICAL AND STARTING SYSTEM				
BATTERY (12-VOLT, WET)	115-2422	2	BATTERY & WIRING GP	172
BELT-DRIVE (WARNING BEACON)	9X-8139	1	LAMP GP-WARNING BEACON	212
BELT-SERPENTINE	219-3303	1	ALTERNATOR GP-CHARGING	166
		1	ALTERNATOR GP-CHARGING	170
BELT-SERPENTINE (8 PK)	219-3303	1	ALTERNATOR GP-CHARGING	168
CAP AS-DUST	133-6517	1	HEATER GP-JACKET WATER	195
CIRCUIT BREAKER AS (15-AMPERE) (AIR CONDITIONER)	6T-3643	1	WIRING GP-CAB	288
CIRCUIT BREAKER AS (15-AMPERE) (ENGINE ECM)	6T-3643	1	PANEL GP-CIRCUIT BREAKER	228
		1	PANEL GP-CIRCUIT BREAKER	231
		1	PANEL GP-CIRCUIT BREAKER	233
CIRCUIT BREAKER AS (15-AMPERE) (RUNNING LIGHTS)	3T-2662	1	PANEL GP-CIRCUIT BREAKER	228
		1	PANEL GP-CIRCUIT BREAKER	231
		1	PANEL GP-CIRCUIT BREAKER	233
CIRCUIT BREAKER AS (20-AMPERE) (HOOD TILT ACTUATOR)	200-8577	1	PANEL GP-CIRCUIT BREAKER	231
		1	PANEL GP-CIRCUIT BREAKER	233
CIRCUIT BREAKER AS (80-AMPERE) (ALTERNATOR)	171-2210	1	PANEL GP-CIRCUIT BREAKER	233
CIRCUIT BREAKER AS (80-AMPERE) (MAIN)	171-2210	1	PANEL GP-CIRCUIT BREAKER	233
CIRCUIT BREAKER GP (20-AMPERE)	6T-3644	1	PANEL GP-CIRCUIT BREAKER	228
		1	PANEL GP-CIRCUIT BREAKER	231
		1	PANEL GP-CIRCUIT BREAKER	233
	9H-1958	1	WIRING GP-POWER GUARD	356
CIRCUIT BREAKER GP (20-AMPERE) (HOOD TILT ACTUATOR)	9H-1958	1	PANEL GP-CIRCUIT BREAKER	228
CIRCUIT BREAKER GP (80-AMPERE) (ALTERNATOR)	9S-4693	1	PANEL GP-CIRCUIT BREAKER	229
		1	PANEL GP-CIRCUIT BREAKER	231

MAINTENANCE PARTS

DESCRIPTION	PART NUMBER	QTY	WHERE USED	PAGE
CIRCUIT BREAKER GP (80-AMPERE) (MAIN)	9S-4693	1	PANEL GP-CIRCUIT BREAKER	228
		1	PANEL GP-CIRCUIT BREAKER	231
ELEMENT AS-JACKET WATER HEATER	124-0687	1	HEATER GP-JACKET WATER	195
ELEMENT AS-JACKET WATER HEATER (120-VOLT, 1000-WATT)	246-8628	1	HEATER GP-JACKET WATER	198
ELEMENT AS-JACKET WATER HEATER (240-VOLT, 1000-WATT)	246-8627	1	HEATER GP-JACKET WATER	196
FLASHER AS (24-VOLT)	108-0358	1	SWITCH GP-SIGNAL	277
FUSE (10-AMPERE)	9W-1442	28	WIRING GP-CAB	286
		28	WIRING GP-CAB	293
		28	WIRING GP-CAB	302
FUSE (15-AMPERE)	9W-1441	4	WIRING GP-CAB	286
		4	WIRING GP-CAB	293
		4	WIRING GP-CAB	302
KEY AS-ELECTRONIC (SECURITY)	206-5162	2	INSTALLATION GP-SECURITY	200
		2	WIRING GP-MACHINE	354
		2	SERVICE GP-MACHINE	260
	206-5165	2	SERVICE GP-MACHINE	260
KEY (BATTERY DISCONNECT)(STARTER)	8H-5306	1	SWITCH GP-DISCONNECT	267
KIT-RECEPTACLE (12-PIN)	190-7615	1	WIRING GP-FRONT	335
		1	WIRING GP-FRONT	341
LAMP	9X-3463	1	LAMP GP-FLOOD	201
LAMP AS (RED, GREEN, LED, 12-VOLT)	165-5655	1	INSTALLATION AR-SECURITY	199
		1	WIRING GP-MACHINE	354
		1	INSTALLATION GP-SECURITY	200
LAMP GP-SIGNAL (24-VOLT) (FRONT TURN)	3E-6466	2	LIGHTING GP-SIGNAL	224
LAMP-HALOGEN (24-VOLT, 65-WATT)	9X-3463	1	LAMP GP-FLOOD	203
		1	LAMP GP-FLOOD	204
		1	LIGHTING GP-FLOOD	214
		1	LIGHTING GP-FLOOD	215
		1	LIGHTING GP-FLOOD	216
LAMP-HALOGEN (24-VOLT, 65-WATT) (FLOODLIGHT)	9X-3463	1	LAMP GP-FLOOD	202
LAMP (24-VOLT) (RUNNING LAMP)	100-3245	1	LAMP GP-HEAD & SIGNAL	207
LAMP (24-VOLT) (RUNNING LIGHTS)	100-3245	1	LAMP GP-HEAD & SIGNAL	205
LAMP (24-VOLT) (TURN SIGNAL)	100-3245	1	LAMP GP-HEAD & SIGNAL	205
		1	LAMP GP-HEAD & SIGNAL	207
LAMP (24-VOLT, 21-WATT)	9X-4493	1	LAMP GP-SIGNAL	211
LAMP (24-VOLT, 21-WATT) (SIGNAL)	9X-4493	1	LAMP GP-SIGNAL	209
LAMP (24-VOLT, 21-WATT) (TURN SIGNAL)	9X-4493	1	LAMP GP-HEAD & SIGNAL	205
		1	LAMP GP-HEAD & SIGNAL	207
LAMP (24-VOLT, 3-WATT)	115-1748	4	WIRING GP-CAB	293
		4	WIRING GP-CAB	302
		8	WIRING GP-CAB	286
LAMP (24-VOLT, 70-WATT) (WARNING BEACON)	9X-7849	1	LAMP GP-WARNING BEACON	212
LAMP (24-VOLT, 75/70-WATT) (HIGH/LOW BEAM)	9X-3465	1	LAMP GP-HEAD & SIGNAL	205
LAMP (24-VOLT, 75/70-WATT) (HIGH/LOW BEAM)(RH)	9X-3465	1	LAMP GP-HEAD & SIGNAL	207

MAINTENANCE PARTS

DESCRIPTION	PART NUMBER	QTY	WHERE USED	PAGE
LENS-AMBER	162-2074	1	LAMP GP-SIGNAL	211
LENS-AMBER (SIGNAL)	9X-3066	1	LAMP GP-SIGNAL	209
LENS (AMBER) (TURN SIGNAL)	100-3250	1	LAMP GP-HEAD & SIGNAL	205
		1	LAMP GP-HEAD & SIGNAL	207
LENS AS	174-9558	1	LAMP GP-FLOOD	204
LENS AS (AMBER) (TURN SIGNAL)	136-3848	1	LAMP GP-HEAD & SIGNAL	205
		1	LAMP GP-HEAD & SIGNAL	207
LENS AS (FLOODLIGHT)	9X-4174	1	LAMP GP-FLOOD	202
LENS AS (HEADLIGHT) (HIGH/LOW BEAM)	100-3248	1	LAMP GP-HEAD & SIGNAL	205
		1	LAMP GP-HEAD & SIGNAL	207
FUEL SYSTEM				
CAP AS-FILLER (FUEL TANK)	7X-7700	1	TANK GP-FUEL	155
FILTER AS-FUEL	1R-0762	1	LINES GP-FUEL FILTER	139
		1	LINES GP-FUEL FILTER	142
FILTER AS-FUEL (SECONDARY)	1R-0762	1	LINES GP-FUEL FILTER	133
		1	LINES GP-FUEL FILTER	135
		1	LINES GP-FUEL FILTER	137
FILTER AS-WATER SEP & FUEL (PRIMARY)	1R-0770	1	FILTER GP-WATER SEP & FUEL	127
SEAL (WATER SEPARATOR, FUEL)	220-8678	1	FILTER GP-WATER SEP & FUEL	127
STRAINER-FUEL	9P-7121	1	TANK GP-FUEL	155

MAINTENANCE PARTS

DESCRIPTION	PART NUMBER	QTY	WHERE USED	PAGE
HYDRAULIC SYSTEM				
CAP-FILLER	7H-1447	1	TANK & FILTER GP-HYDRAULIC	727
		1	TANK & FILTER GP-HYDRAULIC	729
FILTER ELEMENT AS-OIL (STANDARD EFFICIENCY)	1R-0722	1	TANK & FILTER GP-HYDRAULIC	727
FILTER ELEMENT AS-OIL (STANDARD EFFICIENCY) (HYDRAULIC)	1R-0722	1	TANK & FILTER GP-HYDRAULIC	729
GASKET	9H-6454	1	TANK & FILTER GP-HYDRAULIC	727
		1	TANK & FILTER GP-HYDRAULIC	729
KIT-SEAL	107-7491	1	VALVE GP-CHECK	737
PADLOCK GP (HYDRAULIC TANK FILL)	246-2641	1	COVER GP-HYDRAULIC TANK CAP	621
SCREEN AS	141-9236	1	VALVE GP-PILOT	752
		1	VALVE GP-PILOT	754
		1	VALVE GP-PILOT	756
		1	VALVE GP-PILOT	758
		1	VALVE GP-PILOT	760
		1	VALVE GP-PILOT	762
		1	VALVE GP-PILOT	764
		1	VALVE GP-PILOT	766
STRAINER AS	5D-7927	1	TANK & FILTER GP-HYDRAULIC	727
		1	TANK & FILTER GP-HYDRAULIC	729
	6E-3877	2	TANK & FILTER GP-HYDRAULIC	727
		2	TANK & FILTER GP-HYDRAULIC	729
	9T-8270	1	TANK & FILTER GP-HYDRAULIC	727
		1	TANK & FILTER GP-HYDRAULIC	729
	160-3448	1	TANK & FILTER GP-HYDRAULIC	727
		1	TANK & FILTER GP-HYDRAULIC	730
	160-3451	1	TANK & FILTER GP-HYDRAULIC	727
		1	TANK & FILTER GP-HYDRAULIC	729
	160-3454	1	TANK & FILTER GP-HYDRAULIC	727
		1	TANK & FILTER GP-HYDRAULIC	729
IMPLEMENTS				
BEARING-SLEEVE	7P-3454	2	CONTROL GP-BUCKET	794
		2	CONTROL GP-BUCKET	797
LUBRICATION SYSTEM				
BREATHER AS (CRANKCASE)	164-0210	1	BREATHER GP	70
FILTER AS-ENGINE OIL	1R-1807	1	FILTER GP-ENGINE OIL	71
HOSE-DISPOSAL	202-6569	1	FUMES DISPOSAL GP	72

MAINTENANCE PARTS

DESCRIPTION	PART NUMBER	QTY	WHERE USED	PAGE
OPERATOR STATION				
ACCUMULATOR GP-REFRIGERANT (WITH DESICCANT)	176-3900	1	LINES GP-AIR CONDITIONER	904
		1	LINES GP-AIR CONDITIONER	908
BATTERY	101-1785	1	CONTROL GP-MONITOR	854
BELT-SERPENTINE	219-3304	1	COMPRESSOR GP-REFRIGERANT	851
BLADE AS-WIPER	5C-8811	1	WIPER GP-WINDOW	986
	6V-7419	1	WIPER GP-WINDOW	986
CAP-VENTED	8E-8292	1	WASHER GP-WINDOW	983
CIRCUIT BREAKER AS (15-AMPERE) (AIR SEAT)	3T-2662	1	SEAT & MOUNTING GP	951
CIRCUIT BREAKER AS (15-AMPERE) (AIR SUSPENSION SEAT)	3T-2662	1	SEAT & MOUNTING GP	952
		1	SEAT GP	965
		1	SEAT GP-SUSPENSION	972
FILTER	111-8738	1	FILTER GP-CAB AIR	884
FILTER (CAB AIR)	111-8738	1	FILTER GP-CAB AIR	883
	180-7487	1	FILTER GP-CAB AIR	883
		1	FILTER GP-CAB AIR	884
KEY	199-6309	1	GUARD GP-VANDALISM	885
LAMP GP-DOME (24-VOLT)	107-6032	1	LINER GP-CAB	896
		1	LINER GP-OPEN ROPS	903
LAMP (24-VOLT, 10-WATT)	112-5219	1	LINER GP-OPEN ROPS	903
LAMP (24-VOLT, 3-WATT)	115-1748	1	MONITOR GP-PAYLOAD	918
ORIFICE AS-AIR CONDITIONER	189-1707	1	AIR CONDITIONER GP	836
PADLOCK GP	246-2641	4	GUARD GP-VANDALISM	885
SCREEN-FILTER (WINDOW WASHER)	8T-5913	2	WASHER GP-WINDOW	983
SEAT BELT GP	222-0345	1	SEAT & MOUNTING GP	952
	236-7019	1	SEAT GP	965
		1	SEAT GP-SUSPENSION	972
	246-0667	1	SEAT & MOUNTING GP	953
POWER TRAIN				
BELT-SERPENTINE (WITH AIR CONDITIONING)	215-3015	1	PUMP & MTG GP-AXLE OIL COOLER	431
BREATHER AS	9G-5127	1	CASE & PARTS GP-PLANETARY	379
CAP-FILLER	5K-1568	1	FILLER GP-POWER TRAIN OIL	399
CAP-VALVE (STEM)	9K-7951	1	RIM GP-DEMOUNTABLE	435
FILTER ELEMENT-HYDRAULIC OIL	1G-8878	1	FILTER GP-OIL	400
FILTER ELEMENT-HYDRAULIC OIL (POWER TRAIN)	1G-8878	1	FILTER GP-OIL	401
FILTER-MAGNETIC (AXLE OIL COOLER)	130-9505	2	LINES GP-AXLE OIL COOLER	417
KEY	5P-8500	1	COVER GP-TMSN OIL FILLER CAP	393
PLUG	175-4966	1	DRAIN GP-ECOLOGY	398
PLUG-DRAIN	7T-2703	1	CASE & PARTS GP-PLANETARY	379
PLUG-MAGNETIC	5P-4484	1	HOUSING GP-FIXED AXLE	408
		1	HOUSING GP-FIXED AXLE	410
		1	HOUSING GP-OSCILLATING AXLE	412
		1	HOUSING GP-OSCILLATING AXLE	414
		2	LINES GP-AXLE OIL COOLER	417
SCREEN GP-MAGNETIC	4S-8603	1	CASE & PARTS GP-PLANETARY	379
SCREEN-SUCTION	4S-8598	1	CASE & PARTS GP-PLANETARY	379

PIÈCES DE RECHANGE

DESCRIPTION	NUMÉRO DE PIECÈS	QTÉ	DOMAINE D'APPLICATION	PAGE
CIRCUIT D'ADMISSION D'AIR ET D'ÉCHAPPEMENT				
ÉLÉMENT DE FILTRE À AIR (ENS) (SECONDAIRE)	6I-2504	1	FILTRE A AIR (ASS)	111
ÉLÉMENT PRINCIPAL (ENS)	132-7165	1	FILTRE A AIR (ASS)	111
CIRCUIT DE CARBURANT				
BOUCHON DE GOULOTTE DE REMPLISSAGE (ENS) (RÉSERVOIR DE CARBURANT)	7X-7700	1	RÉSERVOIR DE CARBURANT (ASS)	155
BOURRELET D'ÉTANCHÉITÉ (SÉPARATEUR D'EAU)	220-8678	1	FILTRE DE SÉPARATEUR D'EAU ET DE CARBURANT (ASS)	127
FILTRE - SÉPARATEUR D'EAU ET DE CARBURANT (ENS) (PRINCIPAL)	1R-0770	1	FILTRE DE SÉPARATEUR D'EAU ET DE CARBURANT (ASS)	127
FILTRE À CARBURANT	9P-7121	1	RÉSERVOIR DE CARBURANT (ASS)	155
FILTRE A CARBURANT (ENS)	1R-0762	1	CANALISATIONS DU FILTRE A CARBURANT (ASS)	139
		1	CANALISATIONS DU FILTRE A CARBURANT (ASS)	142
FILTRE A CARBURANT (ENS) (AUXILIAIRE)	1R-0762	1	CANALISATIONS DU FILTRE A CARBURANT (ASS)	133
		1	CANALISATIONS DU FILTRE A CARBURANT (ASS)	135
		1	CANALISATIONS DU FILTRE A CARBURANT (ASS)	137
CIRCUIT DE GRAISSAGE				
FILTRE A HUILE MOTEUR (ENS)	1R-1807	1	FILTRE À HUILE MOTEUR (ASS)	71
*HOSE-DISPOSAL	202-6569	1	DISPOSITIF D'EVACUATION DES VAPEURS DE CARTER	72
RENIFLARD (ENS) (CARTER)	164-0210	1	RENIFLARD (ASS)	70
CIRCUIT DE REFROIDISSEMENT				
CHAPEAU - RADIATEUR (7-PSI)	6L-8617	1	RÉSERVOIR DU COUVERCLE DE RADIATEUR (ASS)	107
		1	RÉSERVOIR DU COUVERCLE DE RADIATEUR (ASS)	108
FILTRE (EAU) (POMPE)	119-3025	1	POMPE A EAU (ASS)	96
		1	POMPE A EAU (ASS)	98
JOINT PLAT	136-0812	1	CANALISATIONS D'EAU (ASS)	86
JOINT PLAT (BOÎTIER DE RÉGULATEUR DE TEMPÉRATURE)	136-0812	1	CANALISATIONS D'EAU (ASS)	88
THERMOSTAT-TEMPÉRATURE D'EAU (94-DEG C)	126-5869	1	CANALISATIONS D'EAU (ASS)	86
THERMOSTAT-TEMPÉRATURE D'EAU (94-DEG C) (LIQUIDE DE REFROIDISSEMENT)	126-5869	1	CANALISATIONS D'EAU (ASS)	88
CIRCUIT ELECTRIQUE ET DE DEMARRAGE				
AMPOULE	9X-3463	1	LAMPE - PHARE (ASS)	201
AMPOULE (*24-VOLT, 21-WATT)	9X-4493	1	LAMPE - CLIGNOTANT DE DIRECTION (ASS)	211

* TRADUCTION NON DISPONIBLE AU MOMENT DE LA PUBLICATION

PIÈCES DE RECHANGE

DESCRIPTION	NUMÉRO DE PIECÈS	QTÉ	DOMAINE D'APPLICATION	PAGE
AMPOULE (24 VOLTS) (CLIGNOTANT DE DIRECTION)	100-3245	1	LAMPE - PHARE ET CLIGNOTANT	205
		1	LAMPE - PHARE ET CLIGNOTANT	207
AMPOULE (24 VOLTS) (FEU DE ROUTE)	100-3245	1	LAMPE - PHARE ET CLIGNOTANT	207
AMPOULE (24 VOLTS) (FEUX DE ROUTE)	100-3245	1	LAMPE - PHARE ET CLIGNOTANT	205
AMPOULE (24V, 21W) (CLIGNOTANT DE DIRECTION)	9X-4493	1	LAMPE - PHARE ET CLIGNOTANT	205
		1	LAMPE - PHARE ET CLIGNOTANT	207
AMPOULE (24V, 21W) (SIGNAL)	9X-4493	1	LAMPE - CLIGNOTANT DE DIRECTION (ASS)	209
AMPOULE (24V, 3W)	115-1748	4	CABLAGE DE CABINE (ASS)	293
		4	CABLAGE DE CABINE (ASS)	302
		8	CABLAGE DE CABINE (ASS)	286
AMPOULE (24V, 70W) (GYROPHARE)	9X-7849	1	LAMPE - GYROPHARE (ASS)	212
AMPOULE (24V, 75/70W) (FEUX DE ROUTE/DE CROISEMENT)(DROIT)	9X-3465	1	LAMPE - PHARE ET CLIGNOTANT	207
AMPOULE (24V, 75/70W) (FEUX DE ROUTE/FEUX DE CROISEMENT)	9X-3465	1	LAMPE - PHARE ET CLIGNOTANT	205
BATTERIE (*12-VOLT, WET)	115-2422	2	BATTERIE ET CÂBLAGE	172
CHAPEAU ANTI-POUSSIERE	133-6517	1	EAU DES CHEMISES - RECHAUFFEUR (ASS)	195
CLÉ (DÉBRANCHEMENT DE BATTERIE)(DÉMARREUR)	8H-5306	1	ROBINET DE BATTERIE (ASS)	267
CLÉ ÉLECTRONIQUE (ENS) (SÉCURITÉ)	206-5162	2	CABLAGE DE LA MACHINE (ASS)	354
		2	ENTRETIEN DE LA MACHINE (ASS)	260
		2	MONTAGE-SÉCURITÉ (ASS)	200
	206-5165	2	ENTRETIEN DE LA MACHINE (ASS)	260
CLIGNOTANT (ENS) (24 VOLTS)	108-0358	1	INTERRUPTEUR - SIGNAL (ASS)	277
COURROIE MULTIPLE	219-3303	1	ALTERNATEUR DE CHARGE (ASS)	166
		1	ALTERNATEUR DE CHARGE (ASS)	170
COURROIE MULTIPLE (8 PK)	219-3303	1	ALTERNATEUR DE CHARGE (ASS)	168
DISJONCTEUR (ASS) (*20-AMPERE)	6T-3644	1	DISJONCTEUR DU PANNEAU DE COMMANDE (ASS)	228
DISJONCTEUR (ASS) (*20-AMPERE) (COMMANDE VÉRIN DE CAPOT)	9H-1958	1	DISJONCTEUR DU PANNEAU DE COMMANDE (ASS)	228
DISJONCTEUR (ASS) (20A)	6T-3644	1	DISJONCTEUR DU PANNEAU DE COMMANDE (ASS)	231
		1	DISJONCTEUR DU PANNEAU DE COMMANDE (ASS)	233
	9H-1958	1	CÂBLAGE DE BLINDAGE HYDRAULIQUE	356
DISJONCTEUR (ASS) (*80-AMPERE) (ALTERNATEUR)	9S-4693	1	DISJONCTEUR DU PANNEAU DE COMMANDE (ASS)	229
DISJONCTEUR (ASS) (*80-AMPERE) (PRINCIPAL)	9S-4693	1	DISJONCTEUR DU PANNEAU DE COMMANDE (ASS)	228
DISJONCTEUR (ASS) (80A) (ALTERNATEUR)	9S-4693	1	DISJONCTEUR DU PANNEAU DE COMMANDE (ASS)	231
DISJONCTEUR (ASS) (80A) (PRINCIPAL)	9S-4693	1	DISJONCTEUR DU PANNEAU DE COMMANDE (ASS)	231

* TRADUCTION NON DISPONIBLE AU MOMENT DE LA PUBLICATION

PIÈCES DE RECHANGE

DESCRIPTION	NUMÉRO DE PIECÈS	QTÉ	DOMAINE D'APPLICATION	PAGE
DISJONCTEUR (ENS) (*15-AMPERE) (FEUX DE ROUTE)	3T-2662	1	DISJONCTEUR DU PANNEAU DE COMMANDE (ASS)	228
DISJONCTEUR (ENS) (*15-AMPERE) (MODULE DE COMMANDE MOTEUR)	6T-3643	1	DISJONCTEUR DU PANNEAU DE COMMANDE (ASS)	228
DISJONCTEUR (ENS) (15A) (CLIMATISEUR)	6T-3643	1	CABLAGE DE CABINE (ASS)	288
DISJONCTEUR (ENS) (15A) (FEUX DE ROUTE)	3T-2662	1	DISJONCTEUR DU PANNEAU DE COMMANDE (ASS)	231
		1	DISJONCTEUR DU PANNEAU DE COMMANDE (ASS)	233
DISJONCTEUR (ENS) (15A) (MODULE DE COMMANDE MOTEUR)	6T-3643	1	DISJONCTEUR DU PANNEAU DE COMMANDE (ASS)	231
		1	DISJONCTEUR DU PANNEAU DE COMMANDE (ASS)	233
DISJONCTEUR (ENS) (20A) (COMMANDE VÉRIN DE CAPOT)	200-8577	1	DISJONCTEUR DU PANNEAU DE COMMANDE (ASS)	231
		1	DISJONCTEUR DU PANNEAU DE COMMANDE (ASS)	233
DISJONCTEUR (ENS) (80A) (ALTERNATEUR)	171-2210	1	DISJONCTEUR DU PANNEAU DE COMMANDE (ASS)	233
DISJONCTEUR (ENS) (80A) (PRINCIPAL)	171-2210	1	DISJONCTEUR DU PANNEAU DE COMMANDE (ASS)	233
ÉLÉMENT DU RÉCHAUFFEUR D'EAU DES CHEMISES (ENS)	124-0687	1	EAU DES CHEMISES - RECHAUFFEUR (ASS)	195
ÉLÉMENT DU RÉCHAUFFEUR D'EAU DES CHEMISES (ENS) (120-VOLT, 1000-WATT)	246-8628	1	EAU DES CHEMISES - RECHAUFFEUR (ASS)	198
ÉLÉMENT DU RÉCHAUFFEUR D'EAU DES CHEMISES (ENS) (240V, 1000W)	246-8627	1	EAU DES CHEMISES - RECHAUFFEUR (ASS)	196
ENTRAÎNEMENT POUR COURROIE (GYROPHARE)	9X-8139	1	LAMPE - GYROPHARE (ASS)	212
FUSIBLE (10A)	9W-1442	28	CABLAGE DE CABINE (ASS)	286
		28	CABLAGE DE CABINE (ASS)	293
		28	CABLAGE DE CABINE (ASS)	302
FUSIBLE (15A)	9W-1441	4	CABLAGE DE CABINE (ASS)	286
		4	CABLAGE DE CABINE (ASS)	293
		4	CABLAGE DE CABINE (ASS)	302
KIT DE PRISE FEMELLE (12 BROCHES)	190-7615	1	CABLAGE AV (ASS)	335
		1	CABLAGE AV (ASS)	341
*LAMP-HALOGEN (*24-VOLT, 65-WATT)	9X-3463	1	ÉCLAIRAGE - PROJECTEURS (ASS)	214
LAMPE - CLIGNOTANT DE DIRECTION (ASS) (*24-VOLT) (CLIGNOTANT AVANT)	3E-6466	2	ÉCLAIRAGE CLIGNOTANT	224
LAMPE (ENS) (ROUGE, VERT, TÉMOIN LUMINEUX, 12V)	165-5655	1	CABLAGE DE LA MACHINE (ASS)	354
		1	VERSION DE MONTAGE-SÉCURITÉ	199
		1	MONTAGE-SÉCURITÉ (ASS)	200
LAMPE HALOGÈNE (24V, 65W)	9X-3463	1	ÉCLAIRAGE - PROJECTEURS (ASS)	215
		1	ÉCLAIRAGE - PROJECTEURS (ASS)	216
		1	LAMPE - PHARE (ASS)	203
		1	LAMPE - PHARE (ASS)	204

* TRADUCTION NON DISPONIBLE AU MOMENT DE LA PUBLICATION

PIÈCES DE RECHANGE

DESCRIPTION	NUMÉRO DE PIECÈS	QTÉ	DOMAINE D'APPLICATION	PAGE
LAMPE HALOGÈNE (24V, 65W) (PROJECTEUR)	9X-3463	1	LAMPE - PHARE (ASS)	202
*LENS-AMBER	162-2074	1	LAMPE - CLIGNOTANT DE DIRECTION (ASS)	211
LENTILLE (ENS)	174-9558	1	LAMPE - PHARE (ASS)	204
LENTILLE (ENS) (JAUNE) (CLIGNOTANT DE DIRECTION)	136-3848	1	LAMPE - PHARE ET CLIGNOTANT	205
		1	LAMPE - PHARE ET CLIGNOTANT	207
LENTILLE (ENS) (PHARE AVANT) (FEUX DE ROUTE/FEUX DE CROISEMENT)	100-3248	1	LAMPE - PHARE ET CLIGNOTANT	207
		1	LAMPE - PHARE ET CLIGNOTANT	205
LENTILLE (ENS) (PLAFONNIER)	9X-4174	1	LAMPE - PHARE (ASS)	202
LENTILLE (JAUNE) (CLIGNOTANT DE DIRECTION)	100-3250	1	LAMPE - PHARE ET CLIGNOTANT	205
		1	LAMPE - PHARE ET CLIGNOTANT	207
LENTILLE ORANGE (SIGNAL)	9X-3066	1	LAMPE - CLIGNOTANT DE DIRECTION (ASS)	209

* TRADUCTION NON DISPONIBLE AU MOMENT DE LA PUBLICATION

PIÈCES DE RECHANGE

DESCRIPTION	NUMÉRO DE PIECÈS	QTÉ	DOMAINE D'APPLICATION	PAGE
CIRCUIT HYDRAULIQUE				
BOUCHON DE GOULOTTE DE REMPLISSAGE	7H-1447	1	RÉSERVOIR HYDRAULIQUE ET FILTRE (ASS)	727
		1	RÉSERVOIR HYDRAULIQUE ET FILTRE (ASS)	729
CADENAS (ASS) (REMPLISSAGE DE RÉSERVOIR HYDRAULIQUE)	246-2641	1	COUVERCLE DE RÉSERVOIR HYDRAULIQUE	621
CREPINE (ENS)	5D-7927	1	RÉSERVOIR HYDRAULIQUE ET FILTRE (ASS)	727
		1	RÉSERVOIR HYDRAULIQUE ET FILTRE (ASS)	729
	6E-3877	2	RÉSERVOIR HYDRAULIQUE ET FILTRE (ASS)	727
		2	RÉSERVOIR HYDRAULIQUE ET FILTRE (ASS)	729
	9T-8270	1	RÉSERVOIR HYDRAULIQUE ET FILTRE (ASS)	727
		1	RÉSERVOIR HYDRAULIQUE ET FILTRE (ASS)	729
	160-3448	1	RÉSERVOIR HYDRAULIQUE ET FILTRE (ASS)	727
		1	RÉSERVOIR HYDRAULIQUE ET FILTRE (ASS)	730
	160-3451	1	RÉSERVOIR HYDRAULIQUE ET FILTRE (ASS)	727
		1	RÉSERVOIR HYDRAULIQUE ET FILTRE (ASS)	729
	160-3454	1	RÉSERVOIR HYDRAULIQUE ET FILTRE (ASS)	727
		1	RÉSERVOIR HYDRAULIQUE ET FILTRE (ASS)	729
ÉCRAN (ENS)	141-9236	1	SOUPAPE PILOTE (ASS)	752
		1	SOUPAPE PILOTE (ASS)	754
		1	SOUPAPE PILOTE (ASS)	756
		1	SOUPAPE PILOTE (ASS)	758
		1	SOUPAPE PILOTE (ASS)	760
		1	SOUPAPE PILOTE (ASS)	762
		1	SOUPAPE PILOTE (ASS)	764
		1	SOUPAPE PILOTE (ASS)	766
ÉLÉMENT DE FILTRE À HUILE (ENS) (EFFICACITÉ STANDARD)	1R-0722	1	RÉSERVOIR HYDRAULIQUE ET FILTRE (ASS)	727
ÉLÉMENT DE FILTRE À HUILE (ENS) (EFFICACITÉ STANDARD) (HYDRAULIQUE)	1R-0722	1	RÉSERVOIR HYDRAULIQUE ET FILTRE (ASS)	729
JOINT PLAT	9H-6454	1	RÉSERVOIR HYDRAULIQUE ET FILTRE (ASS)	727
		1	RÉSERVOIR HYDRAULIQUE ET FILTRE (ASS)	729
KIT DE JOINTS	107-7491	1	CLAPET DE RETENUE (ENS)	737

* TRADUCTION NON DISPONIBLE AU MOMENT DE LA PUBLICATION

PIÈCES DE RECHANGE

DESCRIPTION	NUMÉRO DE PIECÈS	QTÉ	DOMAINE D'APPLICATION	PAGE
ÉQUIPEMENTS				
BAGUE	7P-3454	2	COMMANDE DE GODET (ASS)	794
		2	COMMANDE DE GODET (ASS)	797
MOTEUR STANDARD				
BOUCHON DE GOULOTTE DE REMPLISSAGE (ENS)	5L-2952	1	COUVERCLE DE CARTER AV (ASS)	11
POSTE DE CONDUITE				
ACCUMULATEUR - CLIMATISEUR (ASS) (AVEC SICCATIF)	176-3900	1	CANALISATIONS DE CLIMATISEUR (ASS)	904
		1	CANALISATIONS DE CLIMATISEUR (ASS)	908
AMPOULE (24V, 10W)	112-5219	1	REVETEMENT DE LA CABINE ROPS OUVERTE (ASS)	903
AMPOULE (24V, 3W)	115-1748	1	ÉLECTROMODULE DE CHARGE UTILE DE BENNE	918
BALAI D'ESSUIE-GLACE (ENS)	5C-8811	1	ESSUIE-GLACE (ASS)	986
	6V-7419	1	ESSUIE-GLACE (ASS)	986
BATTERIE	101-1785	1	GROUPE DE CONTROLE	854
BOUCHON À ÉVENT	8E-8292	1	LAVE-GLACE - VITRE (ASS)	983
CADENAS (ASS)	246-2641	4	PROTECTION ANTIVANDALISME (ASS)	885
CEINTURE DE SECURITE (ASS)	222-0345	1	SIÈGE ET MONTAGE (ASS)	952
	236-7019	1	SIÈGE (ASS)	965
		1	SIÈGE AVEC SUSPENSION (ASS)	972
	246-0667	1	SIÈGE ET MONTAGE (ASS)	953
CLÉ	199-6309	1	PROTECTION ANTIVANDALISME (ASS)	885
COURROIE MULTIPLE	219-3304	1	COMPRESSEUR DE REFRIGERANT (ASS)	851
DISJONCTEUR (ENS) (15A) (SIÈGE À SUSPENSION PNEUMATIQUE)	3T-2662	1	SIÈGE (ASS)	965
		1	SIÈGE AVEC SUSPENSION (ASS)	972
		1	SIÈGE ET MONTAGE (ASS)	952
DISJONCTEUR (ENS) (15A) (SIÈGE PNEUMATIQUE)	3T-2662	1	SIÈGE ET MONTAGE (ASS)	951
FILTRE	111-8738	1	FILTRE À AIR DE CABINE (ASS)	884
FILTRE (AÉRATION DE LA CABINE)	111-8738	1	FILTRE À AIR DE CABINE (ASS)	883
FILTRE (AIR DE CABINE)	180-7487	1	FILTRE À AIR DE CABINE (ASS)	883
		1	FILTRE À AIR DE CABINE (ASS)	884
FILTRE (LAVE-GLACE)	8T-5913	2	LAVE-GLACE - VITRE (ASS)	983
*ORIFICE AS-AIR CONDITIONER	189-1707	1	CLIMATISEUR (ASS)	836
PLAFONNIER (ASS) (24 VOLTS)	107-6032	1	CABINE - REVÊTEMENT (ASS)	896
		1	REVETEMENT DE LA CABINE ROPS OUVERTE (ASS)	903

* TRADUCTION NON DISPONIBLE AU MOMENT DE LA PUBLICATION

PIÈCES DE RECHANGE

DESCRIPTION	NUMÉRO DE PIECÈS	QTÉ	DOMAINE D'APPLICATION	PAGE
TRANSMISSION				
BOUCHON AIMANTÉ	5P-4484	2	CANALISATIONS DE REFROIDISSEUR D'HUILE D'ESSIEU (ASS)	417
		1	CARTER D'ESSIEU FIXE	408
		1	CARTER D'ESSIEU FIXE	410
		1	CARTER D'ESSIEU OSCILLANT	412
		1	CARTER D'ESSIEU OSCILLANT	414
BOUCHON DE GOULOTTE DE REMPLISSAGE	5K-1568	1	GOULOTTE DE REMPLISSAGE D'HUILE DE TRANSMISSION	399
BOUCHON DE VIDANGE	7T-2703	1	TRAINS PLANÉTAIRES - CARTER ET PIÈCES	379
BOUCHON FILETÉ	175-4966	1	VIDANGE-ÉCOLOGIE (ASS)	398
CHAPEAU DE VALVE (TIGE)	9K-7951	1	JANTE DÉMONTABLE (ASS)	435
CLÉ	5P-8500	1	BOUCHON DE REMPLISSAGE D'HUILE DE BOÎTE (ASS)	393
COURROIE MULTIPLE (*WITH AIR CONDITIONING)	215-3015	1	POMPE ET MONTAGE DE REFROIDISSEUR D'HUILE D'ESSIEU	431
ÉCRAN MAGNÉTIQUE (ASS)	4S-8603	1	TRAINS PLANÉTAIRES - CARTER ET PIÈCES	379
ÉCRAN MAGNÉTIQUE (REFROIDISSEUR D'HUILE D'ESSIEU)	130-9505	2	CANALISATIONS DE REFROIDISSEUR D'HUILE D'ESSIEU (ASS)	417
ÉLÉMENT DE FILTRE À HUILE HYDRAULIQUE	1G-8878	1	FILTRE A HUILE (ASS)	400
ÉLÉMENT DE FILTRE À HUILE HYDRAULIQUE (TRANSMISSION)	1G-8878	1	FILTRE A HUILE (ASS)	401
RENIFLARD (ENS)	9G-5127	1	TRAINS PLANÉTAIRES - CARTER ET PIÈCES	379
TAMIS D'ASPIRATION	4S-8598	1	TRAINS PLANÉTAIRES - CARTER ET PIÈCES	379

* TRADUCTION NON DISPONIBLE AU MOMENT DE LA PUBLICATION

PIEZAS DE MANTENIMIENTO

DESCRIPCION	NUMERO DE PIEZA	CANT	SE UTILIZA EN	PAGINA
IMPLEMENTOS				
COJINETE	7P-3454	2	CONTROL DEL CUCHARÓN (GR)	794
		2	CONTROL DEL CUCHARÓN (GR)	797
MOTOR BÁSICO				
TAPA DE LLENADO (CONJ)	5L-2952	1	TAPA DE LA CAJA DELANTERA (GR)	11
PUESTO DEL OPERADOR				
ACUMULADOR DEL ACONDICIONADOR DE AIRE (GR) (CON DESECANTE)	176-3900	1	TUBERÍAS DE ACONDICIONADOR DE AIRE (GR)	904
		1	TUBERÍAS DE ACONDICIONADOR DE AIRE (GR)	908
BATERÍA	101-1785	1	CONTROL DE MONITOR (GR)	854
CANDADO (GR)	246-2641	4	PROTECTOR CONTRA EL VANDALISMO (GR)	885
CINTURÓN DE SEGURIDAD (GR)	222-0345	1	ASIENTO Y MONTAJE (GR)	952
	236-7019	1	ASIENTO (GR)	965
		1	SUSPENSIÓN - ASIENTO CON (GR)	972
	246-0667	1	ASIENTO Y MONTAJE (GR)	953
CONJ. ORIFICIO-AIRE ACONDICIONADO	189-1707	1	ACONDICIONADOR DE AIRE (GR)	836
CORREA-SERPENTIN	219-3304	1	COMPRESOR DE REFRIGERANTE (GR)	851
DISYUNTOR (CONJ) (15 AMPERIOS) (ASIENTO DE AIRE)	3T-2662	1	ASIENTO Y MONTAJE (GR)	951
DISYUNTOR (CONJ) (15 AMPERIOS) (ASIENTO DE SUSPENSIÓN DE AIRE)	3T-2662	1	ASIENTO (GR)	965
		1	SUSPENSIÓN - ASIENTO CON (GR)	972
		1	ASIENTO Y MONTAJE (GR)	952
FILTRO	111-8738	1	FILTRO DE AIRE DE LA CABINA (GR)	884
FILTRO (AIRE DE CABINA)	180-7487	1	FILTRO DE AIRE DE LA CABINA (GR)	883
		1	FILTRO DE AIRE DE LA CABINA (GR)	884
FILTRO (AIRE DE LA CABINA)	111-8738	1	FILTRO DE AIRE DE LA CABINA (GR)	883
HOJA DE LIMPIAPARABRISAS (CONJ)	5C-8811	1	LIMPIAPARABRISAS DE LA VENTANA (GR)	986
	6V-7419	1	LIMPIAPARABRISAS DE LA VENTANA (GR)	986
LÁMPARA DEL TECHO (GR) (24 VOLTIOS)	107-6032	1	REVESTIMIENTO DE LA CABINA (GR)	896
		1	REVESTIMIENTO DE LA CABINA ROPS ABIERTA	903
LÁMPARA (24 VOLTIOS, 10 VATIOS)	112-5219	1	REVESTIMIENTO DE LA CABINA ROPS ABIERTA	903
LÁMPARA (24-VOLTIOS, 3-VATIOS)	115-1748	1	MONITOR DE CARGA ÚTIL (GR)	918
LLAVE	199-6309	1	PROTECTOR CONTRA EL VANDALISMO (GR)	885
REJILLA DE FILTRO (LIMPIAPARABRISAS)	8T-5913	2	LAVAPARABRISAS DE LA VENTANA (GR)	983
TAPA CON RESPIRADERO	8E-8292	1	LAVAPARABRISAS DE LA VENTANA (GR)	983

* NO HAY TRADUCCION DISPONIBLE EN EL MOMENTO DE LA IMPRESION

PIEZAS DE MANTENIMIENTO

DESCRIPCION	NUMERO DE PIEZA	CANT	SE UTILIZA EN	PAGINA
SISTEMA DE AIRE DE ADMISIÓN Y ESCAPE				
ELEMENTO DEL FILTRO DE AIRE (CONJ) (SECUNDARIO)	6I-2504	1	FILTRO DE AIRE (GR)	111
ELEMENTO PRIMARIO (CONJ)	132-7165	1	FILTRO DE AIRE (GR)	111
SISTEMA DE COMBUSTIBLE				
COLADOR DE COMBUSTIBLE	9P-7121	1	COMBUSTIBLE - TANQUE DE (GR)	155
FILTRO DE COMBUSTIBLE (CONJ)	1R-0762	1	TUBERÍAS DEL FILTRO DE COMBUSTIBLE	139
		1	TUBERÍAS DEL FILTRO DE COMBUSTIBLE	142
FILTRO DE COMBUSTIBLE (CONJ) (SECUNDARIO(A))	1R-0762	1	TUBERÍAS DEL FILTRO DE COMBUSTIBLE	133
		1	TUBERÍAS DEL FILTRO DE COMBUSTIBLE	135
		1	TUBERÍAS DEL FILTRO DE COMBUSTIBLE	137
FILTRO DE COMBUSTIBLE Y SEPARADOR DE AGUA (CONJ) (PRIMARIO)	1R-0770	1	FILTRO DE COMBUSTIBLE Y SEPARADOR DE AGUA (GR)	127
SELLO (SEPARADOR DE AGUA, COMBUSTIBLE)	220-8678	1	FILTRO DE COMBUSTIBLE Y SEPARADOR DE AGUA (GR)	127
TAPA DE LLENADO (CONJ) (TANQUE DE COMBUSTIBLE)	7X-7700	1	COMBUSTIBLE - TANQUE DE (GR)	155
SISTEMA DE ENFRIAMIENTO				
EMPAQUETADURA	136-0812	1	TUBERÍAS DEL AGUA (GR)	86
EMPAQUETADURA (CAJA DEL REGULADOR DE TEMPERATURA)	136-0812	1	TUBERÍAS DEL AGUA (GR)	88
FILTRO (AGUA) (BOMBA)	119-3025	1	BOMBA DE AGUA (GR)	96
		1	BOMBA DE AGUA (GR)	98
REGULADOR DE TEMPERATURA DEL AGUA (94-GRADOS C)	126-5869	1	TUBERÍAS DEL AGUA (GR)	86
REGULADOR DE TEMPERATURA DEL AGUA (94-GRADOS C) (REFRIGERANTE)	126-5869	1	TUBERÍAS DEL AGUA (GR)	88
TAPA DEL RADIADOR (7 LB/PULG2)	6L-8617	1	TAPA DEL TANQUE DE RADIADOR (GR)	107
		1	TAPA DEL TANQUE DE RADIADOR (GR)	108
SISTEMA DE LUBRICACIÓN				
FILTRO DE ACEITE DEL MOTOR (CONJ)	1R-1807	1	FILTRO DE ACEITE DEL MOTOR (GR)	71
*HOSE-DISPOSAL	202-6569	1	ESCAPE DE GASES (GR)	72
RESPIRADERO (CONJ) (CÁRTER DEL MOTOR)	164-0210	1	RESPIRADERO (GR)	70
SISTEMA ELECTRICO Y DE ARRANQUE				
BATERÍA (*12-VOLT, WET)	115-2422	2	BATERÍA Y CABLES (GR)	172
CONJUNTO DE DESTELLADOR (24 VOLTIOS)	108-0358	1	INTERRUPTOR DEL SEÑALERO (GR)	277

* NO HAY TRADUCCION DISPONIBLE EN EL MOMENTO DE LA IMPRESION

PIEZAS DE MANTENIMIENTO

DESCRIPCION	NUMERO DE PIEZA	CANT	SE UTILIZA EN	PAGINA
CONJUNTO DE LLAVE, ELECTRONICA (SEGURIDAD)	206-5162	2	CABLES DE LA MÁQUINA (GR)	354
		2	INSTALACION DE SEGURIDAD (GR)	200
		2	SERVICIO DE MAQUINA (GR)	260
	206-5165	2	SERVICIO DE MAQUINA (GR)	260
CORREA-SERPENTIN	219-3303	1	CARGA - ALTERNADOR DE (GR)	166
		1	CARGA - ALTERNADOR DE (GR)	170
CORREA-SERPENTIN (8 PK)	219-3303	1	CARGA - ALTERNADOR DE (GR)	168
CRISTAL (AMBAR) (SEÑAL DE VIRAJE)	100-3250	1	LÁMPARA DE LUZ DELANTERA Y DE SEÑAL (GR)	205
		1	LÁMPARA DE LUZ DELANTERA Y DE SEÑAL (GR)	207
DISYUNTOR (CONJ) (*15-AMPERE) (ECM (MÓDULO DE CONTROL ELECTRÓNICO) DEL MOTOR)	6T-3643	1	PANEL DE DISYUNTORES (GR)	228
DISYUNTOR (CONJ) (*15-AMPERE) (LUCES DE TRABAJO)	3T-2662	1	PANEL DE DISYUNTORES (GR)	228
DISYUNTOR (CONJ) (15 AMPERIOS) (AIRE ACONDICIONADO)	6T-3643	1	CABLES DE LA CABINA (GR)	288
DISYUNTOR (CONJ) (15 AMPERIOS) (ECM (MÓDULO DE CONTROL ELECTRÓNICO) DEL MOTOR)	6T-3643	1	PANEL DE DISYUNTORES (GR)	231
		1	PANEL DE DISYUNTORES (GR)	233
DISYUNTOR (CONJ) (15 AMPERIOS) (LUCES DE TRABAJO)	3T-2662	1	PANEL DE DISYUNTORES (GR)	231
		1	PANEL DE DISYUNTORES (GR)	233
DISYUNTOR (CONJ) (20-AMPERIOS) (ACCIONADOR DE INCLINACION DE CAPO)	200-8577	1	PANEL DE DISYUNTORES (GR)	231
		1	PANEL DE DISYUNTORES (GR)	233
DISYUNTOR (CONJ) (80 AMPERIOS) (ALTERNADOR)	171-2210	1	PANEL DE DISYUNTORES (GR)	233
DISYUNTOR (CONJ) (80 AMPERIOS) (PRINCIPAL)	171-2210	1	PANEL DE DISYUNTORES (GR)	233
DISYUNTOR DE CIRCUITO (GR) (*20-AMPERE)	6T-3644	1	PANEL DE DISYUNTORES (GR)	228
DISYUNTOR DE CIRCUITO (GR) (*20-AMPERE) (ACCIONADOR DE INCLINACION DE CAPO)	9H-1958	1	PANEL DE DISYUNTORES (GR)	228
DISYUNTOR DE CIRCUITO (GR) (20-AMPERIOS)	6T-3644	1	PANEL DE DISYUNTORES (GR)	231
		1	PANEL DE DISYUNTORES (GR)	233
	9H-1958	1	GRUPO DE CABLES, PROTECTOR DE FUENTE	356
DISYUNTOR DE CIRCUITO (GR) (*80-AMPERE) (ALTERNADOR)	9S-4693	1	PANEL DE DISYUNTORES (GR)	229
DISYUNTOR DE CIRCUITO (GR) (*80-AMPERE) (PRINCIPAL)	9S-4693	1	PANEL DE DISYUNTORES (GR)	228
DISYUNTOR DE CIRCUITO (GR) (80 AMPERIOS) (ALTERNADOR)	9S-4693	1	PANEL DE DISYUNTORES (GR)	231
DISYUNTOR DE CIRCUITO (GR) (80 AMPERIOS) (PRINCIPAL)	9S-4693	1	PANEL DE DISYUNTORES (GR)	231

* NO HAY TRADUCCION DISPONIBLE EN EL MOMENTO DE LA IMPRESION

PIEZAS DE MANTENIMIENTO

DESCRIPCION	NUMERO DE PIEZA	CANT	SE UTILIZA EN	PAGINA
ELEMENTO DEL CALENTADOR DEL AGUA DE LAS CAMISAS	124-0687	1	AGUA DE LAS CAMISAS - CALENTADOR DEL (GR)	195
ELEMENTO DEL CALENTADOR DEL AGUA DE LAS CAMISAS (120 VOLTIOS, 1000 VATIOS)	246-8628	1	AGUA DE LAS CAMISAS - CALENTADOR DEL (GR)	198
ELEMENTO DEL CALENTADOR DEL AGUA DE LAS CAMISAS (240 VOLTIOS, 1000 VATIOS)	246-8627	1	AGUA DE LAS CAMISAS - CALENTADOR DEL (GR)	196
FUSIBLE (10-AMPERIOS)	9W-1442	28	CABLES DE LA CABINA (GR)	286
		28	CABLES DE LA CABINA (GR)	293
		28	CABLES DE LA CABINA (GR)	302
FUSIBLE (15 AMPERIOS)	9W-1441	4	CABLES DE LA CABINA (GR)	286
		4	CABLES DE LA CABINA (GR)	293
		4	CABLES DE LA CABINA (GR)	302
JUEGO DE RECEPTÁCULO (12-CLAVIJAS)	190-7615	1	CABLES DELANTEROS (GR)	335
		1	CABLES DELANTEROS (GR)	341
*LAMP-HALOGEN (*24-VOLT, 65-WATT)	9X-3463	1	LUCES DE REFLECTOR (GR)	214
LÁMPARA	9X-3463	1	REFLECTOR (GR)	201
LÁMPARA (CONJ) (ROJO, VERDE, DIODO, 12 VOLTIOS)	165-5655	1	CABLES DE LA MÁQUINA (GR)	354
		1	INSTALACION DE SEGURIDAD (CONFIG)	199
		1	INSTALACION DE SEGURIDAD (GR)	200
LÁMPARA (*24-VOLT, 21-WATT)	9X-4493	1	LUZ DE SEÑAL DE GIRO (GR)	211
LÁMPARA (24 VOLTIOS) (LÁMPARA DE FUNCIONAMIENTO)	100-3245	1	LÁMPARA DE LUZ DELANTERA Y DE SEÑAL (GR)	207
LÁMPARA (24 VOLTIOS) (LUCES DE TRABAJO)	100-3245	1	LÁMPARA DE LUZ DELANTERA Y DE SEÑAL (GR)	205
LÁMPARA (24 VOLTIOS) (SEÑAL DE VIRAJE)	100-3245	1	LÁMPARA DE LUZ DELANTERA Y DE SEÑAL (GR)	207
		1	LÁMPARA DE LUZ DELANTERA Y DE SEÑAL (GR)	205
LÁMPARA (24-VOLTIOS, 21 VATIOS) (SEÑAL)	9X-4493	1	LUZ DE SEÑAL DE GIRO (GR)	209
LÁMPARA (24-VOLTIOS, 21 VATIOS) (SEÑAL DE VIRAJE)	9X-4493	1	LÁMPARA DE LUZ DELANTERA Y DE SEÑAL (GR)	205
		1	LÁMPARA DE LUZ DELANTERA Y DE SEÑAL (GR)	207
LÁMPARA (24-VOLTIOS, 3-VATIOS)	115-1748	8	CABLES DE LA CABINA (GR)	286
		4	CABLES DE LA CABINA (GR)	293
		4	CABLES DE LA CABINA (GR)	302
LÁMPARA (24-VOLTIOS, 70-VATIOS) (BALIZA GIRATORIA DE ADVERTENCIA)	9X-7849	1	LÁMPARA DE BALIZA DE ADVERTENCIA (GR)	212
LÁMPARA (24 VOLTIOS, 75/70 VATIOS) (LUCES DE MANO DERECHA, ALTAS/BAJAS)	9X-3465	1	LÁMPARA DE LUZ DELANTERA Y DE SEÑAL (GR)	207
LÁMPARA (24 VOLTIOS, 75/70 VATIOS) (LUZ ALTA/BAJA)	9X-3465	1	LÁMPARA DE LUZ DELANTERA Y DE SEÑAL (GR)	205
*LENS-AMBER	162-2074	1	LUZ DE SEÑAL DE GIRO (GR)	211
LENTE AMBAR (SEÑAL)	9X-3066	1	LUZ DE SEÑAL DE GIRO (GR)	209

* NO HAY TRADUCCION DISPONIBLE EN EL MOMENTO DE LA IMPRESION

PIEZAS DE MANTENIMIENTO

DESCRIPCION	NUMERO DE PIEZA	CANT	SE UTILIZA EN	PAGINA
LLAVE (*BATTERY DISCONNECT)(STARTER)	8H-5306	1	DISYUNTOR (GR)	267
LUCES DE ALÓGENO (24 VOLTIOS, 65 VATIOS)	9X-3463	1	LUCES DE REFLECTOR (GR)	215
		1	LUCES DE REFLECTOR (GR)	216
		1	REFLECTOR (GR)	203
		1	REFLECTOR (GR)	204
LUCES DE ALÓGENO (24 VOLTIOS, 65 VATIOS) (REFLECTOR)	9X-3463	1	REFLECTOR (GR)	202
LUZ DE SEÑAL DE GIRO (GR) (*24-VOLT) (DELANTERA, DE GIRO)	3E-6466	2	LUCES DE GIRO (GR)	224
MANDO DE CORREA (BALIZA DE ADVERTENCIA)	9X-8139	1	LÁMPARA DE BALIZA DE ADVERTENCIA (GR)	212
TAPA CONTRA EL POLVO (CONJ)	133-6517	1	AGUA DE LAS CAMISAS - CALENTADOR DEL (GR)	195
VIDRIO (CONJ)	174-9558	1	REFLECTOR (GR)	204
VIDRIO (CONJ) (AMBAR) (SEÑAL DE VIRAJE)	136-3848	1	LÁMPARA DE LUZ DELANTERA Y DE SEÑAL (GR)	205
		1	LÁMPARA DE LUZ DELANTERA Y DE SEÑAL (GR)	207
VIDRIO (CONJ) (FARO DELANTERO) (LUZ ALTA/BAJA)	100-3248	1	LÁMPARA DE LUZ DELANTERA Y DE SEÑAL (GR)	205
		1	LÁMPARA DE LUZ DELANTERA Y DE SEÑAL (GR)	207
VIDRIO (CONJ) (REFLECTOR)	9X-4174	1	REFLECTOR (GR)	202

* NO HAY TRADUCCION DISPONIBLE EN EL MOMENTO DE LA IMPRESION

PIEZAS DE MANTENIMIENTO

DESCRIPCION	NUMERO DE PIEZA	CANT	SE UTILIZA EN	PAGINA
SISTEMA HIDRÁULICO				
CANDADO (GR) (LLENADO DEL TANQUE HIDRÁULICO)	246-2641	1	TAPA DEL TAPÓN DEL TANQUE HIDRÁULICO (GR)	621
COLADOR (CONJ)	5D-7927	1	TANQUE Y FILTRO HIDRÁULICOS (GR)	727
		1	TANQUE Y FILTRO HIDRÁULICOS (GR)	729
	6E-3877	2	TANQUE Y FILTRO HIDRÁULICOS (GR)	727
		2	TANQUE Y FILTRO HIDRÁULICOS (GR)	729
	9T-8270	1	TANQUE Y FILTRO HIDRÁULICOS (GR)	727
		1	TANQUE Y FILTRO HIDRÁULICOS (GR)	729
	160-3448	1	TANQUE Y FILTRO HIDRÁULICOS (GR)	727
		1	TANQUE Y FILTRO HIDRÁULICOS (GR)	730
	160-3451	1	TANQUE Y FILTRO HIDRÁULICOS (GR)	727
		1	TANQUE Y FILTRO HIDRÁULICOS (GR)	729
	160-3454	1	TANQUE Y FILTRO HIDRÁULICOS (GR)	727
		1	TANQUE Y FILTRO HIDRÁULICOS (GR)	729
ELEMENTO DE FILTRO DE ACEITE (CONJ) (GRUPO DE LAMPARA-TABLERO)	1R-0722	1	TANQUE Y FILTRO HIDRÁULICOS (GR)	727
ELEMENTO DE FILTRO DE ACEITE (CONJ) (GRUPO DE LAMPARA-TABLERO) (HIDRÁULICO)	1R-0722	1	TANQUE Y FILTRO HIDRÁULICOS (GR)	729
EMPAQUETADURA	9H-6454	1	TANQUE Y FILTRO HIDRÁULICOS (GR)	727
		1	TANQUE Y FILTRO HIDRÁULICOS (GR)	729
JUEGO DE SELLOS	107-7491	1	VÁLVULA DE RETENCIÓN (GR)	737
PANTALLA (CONJ)	141-9236	1	VÁLVULA PILOTO (GR)	752
		1	VÁLVULA PILOTO (GR)	754
		1	VÁLVULA PILOTO (GR)	756
		1	VÁLVULA PILOTO (GR)	758
		1	VÁLVULA PILOTO (GR)	760
		1	VÁLVULA PILOTO (GR)	762
		1	VÁLVULA PILOTO (GR)	764
		1	VÁLVULA PILOTO (GR)	766
TAPA DEL TUBO DE LLENADO	7H-1447	1	TANQUE Y FILTRO HIDRÁULICOS (GR)	727
		1	TANQUE Y FILTRO HIDRÁULICOS (GR)	729

* NO HAY TRADUCCION DISPONIBLE EN EL MOMENTO DE LA IMPRESION

PIEZAS DE MANTENIMIENTO

DESCRIPCION	NUMERO DE PIEZA	CANT	SE UTILIZA EN	PAGINA
TREN DE FUERZA				
CORREA-SERPENTIN (*WITH AIR CONDITIONING)	215-3015	1	BOMBA DEL ENFRIADOR DE ACEITE DEL EJE Y MONTAJE (GR)	431
ELEMENTO DE FILTRO DE ACEITE HIDRÁULICO	1G-8878	1	FILTRO DE ACEITE (GR)	400
ELEMENTO DE FILTRO DE ACEITE HIDRÁULICO (TREN DE FUERZA)	1G-8878	1	FILTRO DE ACEITE (GR)	401
FILTRO MAGNÉTICO (ENFRIADOR DE ACEITE DE EJE)	130-9505	2	TUBERÍAS DEL ENFRIADOR DE ACEITE DEL EJE (GR)	417
LLAVE	5P-8500	1	CUBIERTA (GR)-TAPA DE LLENADO DE ACEITE DE LA TRANSMISIÓN	393
REJILLA DE SUCCIÓN	4S-8598	1	CAJA Y PIEZAS DE LOS PLANETARIOS	379
REJILLA MAGNÉTICA (GR)	4S-8603	1	CAJA Y PIEZAS DE LOS PLANETARIOS	379
RESPIRADERO (CONJ)	9G-5127	1	CAJA Y PIEZAS DE LOS PLANETARIOS	379
TAPA DEL TUBO DE LLENADO	5K-1568	1	TUBO DE LLENADO DE ACEITE DE LA TRANSMISIÓN (GR)	399
TAPA (VASTAGO)	9K-7951	1	ARO DESMONTABLE (GR)	435
TAPÓN	175-4966	1	DRENAJE DE SEGURIDAD ECOLÓGICA (GR)	398
TAPÓN DE DRENAJE	7T-2703	1	CAJA Y PIEZAS DE LOS PLANETARIOS	379
TAPÓN MAGNÉTICO	5P-4484	1	CAJA DE EJE OSCILANTE (GR)	412
		1	CAJA DE EJE OSCILANTE (GR)	414
		1	CAJA DEL EJE OSCILANTE (GR)	408
		1	CAJA DEL EJE OSCILANTE (GR)	410
		2	TUBERÍAS DEL ENFRIADOR DE ACEITE DEL EJE (GR)	417

* NO HAY TRADUCCION DISPONIBLE EN EL MOMENTO DE LA IMPRESION

PEÇAS DE MANUTENÇÃO

DESCRIÇÃO	NÚMERO DE PEÇA	QUANT	UTILIZADA EM	PÁGINA
ACESSÓRIOS				
BRONZINA TIPO LUVA	7P-3454	2	CONTROLE DA CAÇAMBA	794
		2	CONTROLE DA CAÇAMBA	797
ESTAÇÃO DO OPERADOR				
ACUMULADOR - AR CONDICIONADO (COM DESSECANTE)	176-3900	1	TUBOS - AR CONDICIONADO	904
		1	TUBOS - AR CONDICIONADO	908
BATERIA	101-1785	1	CONTROLE DO PAINEL MONITOR	854
CADEADO	246-2641	4	PROTETOR CONTRA VANDALISMO	885
CHAVE	199-6309	1	PROTETOR CONTRA VANDALISMO	885
CINTO DE SEGURANÇA	222-0345	1	ASSENTO E MONTAGEM	952
	236-7019	1	ASSENTO	965
		1	ASSENTO COM SUSPENSÃO	972
	246-0667	1	ASSENTO E MONTAGEM	953
CORREIA- SERPENTINA	219-3304	1	COMPRESSOR DE REFRIGERANTE	851
DISJUNTOR AUTOMÁTICO DE CIRCUITO (15 AMPERES) (AR - ASSENTO)	3T-2662	1	ASSENTO E MONTAGEM	951
DISJUNTOR AUTOMÁTICO DE CIRCUITO (15 AMPERES) (ASSENTO DE SUSPENSÃO PNEUMÁTICA)	3T-2662	1	ASSENTO	965
		1	ASSENTO COM SUSPENSÃO	972
		1	ASSENTO E MONTAGEM	952
FILTRO	111-8738	1	FILTRO - AR DA CABINE	884
FILTRO (AR DA CABINE)	111-8738	1	FILTRO - AR DA CABINE	883
	180-7487	1	FILTRO - AR DA CABINE	883
		1	FILTRO - AR DA CABINE	884
LÂMINA DO LIMPADOR DE PÁRA-BRISA	5C-8811	1	LIMPADOR DO VIDRO	986
	6V-7419	1	LIMPADOR DO VIDRO	986
LÂMPADA - TETO (24 VOLTS)	107-6032	1	PROTETOR SUPERIOR - ESTRUTURA ROPS ABERTA	903
		1	REVESTIMENTO DA CABINE	896
LÂMPADA (24 VOLTS, 10 WATTS)	112-5219	1	PROTETOR SUPERIOR - ESTRUTURA ROPS ABERTA	903
LÂMPADA (24 VOLTS, 3 WATTS)	115-1748	1	PAINEL MONITOR DE CARGA ÚTIL	918
ORIFÍCIO-CONDICIONADOR DE AR	189-1707	1	CONDICIONADOR DE AR	836
TAMPA COM RESPIRO	8E-8292	1	LAVADOR DO VIDRO	983
TELA - FILTRO (LAVADOR DO VIDRO)	8T-5913	2	LAVADOR DO VIDRO	983
MOTOR BÁSICO				
TAMPA - BOCAL DE ENCHIMENTO	5L-2952	1	TAMPA - CAIXA DIANTEIRA	11
SISTEMA DA ADMISSÃO DE AR E DE ESCAPE				
ELEMENTO - PRIMÁRIO	132-7165	1	PURIFICADOR DE AR	111
ELEMENTO DO FILTRO DE AR (SECUNDÁRIO)	6I-2504	1	PURIFICADOR DE AR	111

* TRADUÇÃO NÃO DISPONÍVEL NO MOMENTO DA IMPRESSÃO

PEÇAS DE MANUTENÇÃO

DESCRIÇÃO	NÚMERO DE PEÇA	QUANT	UTILIZADA EM	PÁGINA
SISTEMA DE ARREFECIMENTO				
FILTRO (ÁGUA) (BOMBA)	119-3025	1	BOMBA DE ÁGUA	96
		1	BOMBA DE ÁGUA	98
JUNTA	136-0812	1	TUBOS - ÁGUA	86
JUNTA (ALOJAMENTO DO REGULADOR DE TEMPERATURA)	136-0812	1	TUBOS - ÁGUA	88
REGULADOR DE TEMPERATURA DA ÁGUA (94 GRAUS C)	126-5869	1	TUBOS - ÁGUA	86
REGULADOR DE TEMPERATURA DA ÁGUA (94 GRAUS C) (LÍQUIDO ARREFECEDOR)	126-5869	1	TUBOS - ÁGUA	88
TAMPA - RADIADOR (7 PSI)	6L-8617	1	TANQUE SUPERIOR DO RADIADOR	107
		1	TANQUE SUPERIOR DO RADIADOR	108
SISTEMA DE COMBUSTÍVEL				
FILTRO - COMBUSTÍVEL	1R-0762	1	TUBOS - FILTRO DO COMBUSTÍVEL	139
		1	TUBOS - FILTRO DO COMBUSTÍVEL	142
	9P-7121	1	TANQUE DE COMBUSTÍVEL	155
FILTRO - COMBUSTÍVEL (SECUNDÁRIO)	1R-0762	1	TUBOS - FILTRO DO COMBUSTÍVEL	133
		1	TUBOS - FILTRO DO COMBUSTÍVEL	135
		1	TUBOS - FILTRO DO COMBUSTÍVEL	137
FILTRO - SEPARADOR DE ÁGUA E COMBUSTÍVEL (PRIMÁRIO)	1R-0770	1	FILTRO DE COMBUSTÍVEL E SEPARADOR DE ÁGUA	127
RETENTOR (SEPARADOR DE ÁGUA, COMBUSTÍVEL)	220-8678	1	FILTRO DE COMBUSTÍVEL E SEPARADOR DE ÁGUA	127
TAMPA - BOCAL DE ENCHIMENTO (TANQUE DE COMBUSTÍVEL)	7X-7700	1	TANQUE DE COMBUSTÍVEL	155
SISTEMA DE LUBRIFICAÇÃO				
FILTRO - ÓLEO DO MOTOR	1R-1807	1	FILTRO - ÓLEO DO MOTOR	71
*HOSE-DISPOSAL	202-6569	1	ELIMINAÇÃO DE VAPORES DO CÁRTER	72
RESPIRO (CÁRTER DO MOTOR)	164-0210	1	RESPIRO	70
SISTEMA ELÉTRICO E DE PARTIDA				
BATERIA (*12-VOLT, WET)	115-2422	2	BATERIA E CABOS / FIOS ELÉTRICOS	172
CHAVE - ELETRÔNICO (SEGURANÇA)	206-5162	2	CABOS/FIOS ELÉTRICOS - MÁQUINA	354
		2	GR. DE SERVIÇO - MÁQUINA	260
		2	INSTALAÇÃO-SEGURANÇA	200
	206-5165	2	GR. DE SERVIÇO - MÁQUINA	260
CHAVE (CHAVE GERAL DA BATERIA)(MOTOR DE PARTIDA)	8H-5306	1	CHAVE GERAL	267
CORREIA- SERPENTINA	219-3303	1	ALTERNADOR DE CORRENTE	166
		1	ALTERNADOR DE CORRENTE	170
CORREIA- SERPENTINA (8 PK)	219-3303	1	ALTERNADOR DE CORRENTE	168
CORREIA DE COMANDO (PISCA-ALERTA)	9X-8139	1	LUZ GIRATÓRIA DE ALARME	212
DISJUNTOR AUTOMÁTICO DE CIRCUITO (*15-AMPERE) (ECM DO MOTOR)	6T-3643	1	PAINEL - DISJUNTOR ELÉTRICO AUTOMÁTICO	228

* TRADUÇÃO NÃO DISPONÍVEL NO MOMENTO DA IMPRESSÃO

PEÇAS DE MANUTENÇÃO

DESCRIÇÃO	NÚMERO DE PEÇA	QUANT	UTILIZADA EM	PÁGINA
DISJUNTOR AUTOMÁTICO DE CIRCUITO (*15-AMPERE) (ILUMINAÇÃO DE OPERAÇÃO)	3T-2662	1	PAINEL - DISJUNTOR ELÉTRICO AUTOMÁTICO	228
DISJUNTOR AUTOMÁTICO DE CIRCUITO (15 AMPERES) (AR CONDICIONADO)	6T-3643	1	CABOS/FIOS ELÉTRICOS - CABINE	288
DISJUNTOR AUTOMÁTICO DE CIRCUITO (15 AMPERES) (ECM DO MOTOR)	6T-3643	1	PAINEL - DISJUNTOR ELÉTRICO AUTOMÁTICO	233
		1	PAINEL - DISJUNTOR ELÉTRICO AUTOMÁTICO	231
DISJUNTOR AUTOMÁTICO DE CIRCUITO (15 AMPERES) (ILUMINAÇÃO DE OPERAÇÃO)	3T-2662	1	PAINEL - DISJUNTOR ELÉTRICO AUTOMÁTICO	233
		1	PAINEL - DISJUNTOR ELÉTRICO AUTOMÁTICO	231
DISJUNTOR AUTOMÁTICO DE CIRCUITO (20-AMPERES) (ACIONADOR DE INCLINAÇÃO DO CAPÔ)	200-8577	1	PAINEL - DISJUNTOR ELÉTRICO AUTOMÁTICO	233
		1	PAINEL - DISJUNTOR ELÉTRICO AUTOMÁTICO	231
DISJUNTOR AUTOMÁTICO DE CIRCUITO (80 AMPERES) (ALTERNADOR)	171-2210	1	PAINEL - DISJUNTOR ELÉTRICO AUTOMÁTICO	233
DISJUNTOR AUTOMÁTICO DE CIRCUITO (80 AMPERES) (PRINCIPAL)	171-2210	1	PAINEL - DISJUNTOR ELÉTRICO AUTOMÁTICO	233
ELEMENTO - AQUECEDOR DE ÁGUA DA CAMISA	124-0687	1	AQUECEDOR DA ÁGUA DO MOTOR	195
ELEMENTO - AQUECEDOR DE ÁGUA DA CAMISA (120 VOLTS, 1.000 WATTS)	246-8628	1	AQUECEDOR DA ÁGUA DO MOTOR	198
ELEMENTO - AQUECEDOR DE ÁGUA DA CAMISA (240 VOLTS, 1.000 WATTS)	246-8627	1	AQUECEDOR DA ÁGUA DO MOTOR	196
FUSÍVEL (10 AMPERES)	9W-1442	28	CABOS/FIOS ELÉTRICOS - CABINE	286
		28	CABOS/FIOS ELÉTRICOS - CABINE	293
		28	CABOS/FIOS ELÉTRICOS - CABINE	302
FUSÍVEL (15 AMPERES)	9W-1441	4	CABOS/FIOS ELÉTRICOS - CABINE	286
		4	CABOS/FIOS ELÉTRICOS - CABINE	293
		4	CABOS/FIOS ELÉTRICOS - CABINE	302
INTERRUPTOR - CIRCUITO (*20-AMPERE)	6T-3644	1	PAINEL - DISJUNTOR ELÉTRICO AUTOMÁTICO	228
INTERRUPTOR - CIRCUITO (*20-AMPERE) (ACIONADOR DE INCLINAÇÃO DO CAPÔ)	9H-1958	1	PAINEL - DISJUNTOR ELÉTRICO AUTOMÁTICO	228
INTERRUPTOR - CIRCUITO (20-AMPERES)	6T-3644	1	PAINEL - DISJUNTOR ELÉTRICO AUTOMÁTICO	231
		1	PAINEL - DISJUNTOR ELÉTRICO AUTOMÁTICO	233
	9H-1958	1	FIAÇÃO - PROTETOR DE ENERGIA	356
INTERRUPTOR - CIRCUITO (*80-AMPERE) (ALTERNADOR)	9S-4693	1	PAINEL - DISJUNTOR ELÉTRICO AUTOMÁTICO	229

* TRADUÇÃO NÃO DISPONÍVEL NO MOMENTO DA IMPRESSÃO

PEÇAS DE MANUTENÇÃO

DESCRIÇÃO	NÚMERO DE PEÇA	QUANT	UTILIZADA EM	PÁGINA
INTERRUPTOR - CIRCUITO (*80-AMPERE) (PRINCIPAL)	9S-4693	1	PAINEL - DISJUNTOR ELÉTRICO AUTOMÁTICO	228
INTERRUPTOR - CIRCUITO (80 AMPERES) (ALTERNADOR)	9S-4693	1	PAINEL - DISJUNTOR ELÉTRICO AUTOMÁTICO	231
INTERRUPTOR - CIRCUITO (80 AMPERES) (PRINCIPAL)	9S-4693	1	PAINEL - DISJUNTOR ELÉTRICO AUTOMÁTICO	231
JOGO DE RECEPTÁCULO (12 PINOS)	190-7615	1	CABOS/FIOS ELÉTRICOS - DIANTEIROS	335
		1	CABOS/FIOS ELÉTRICOS - DIANTEIROS	341
*LAMP-HALOGEN (*24-VOLT, 65-WATT)	9X-3463	1	SISTEMA DE ILUMINAÇÃO - FARÓIS	214
LÂMPADA	9X-3463	1	LÂMPADA - FAROL	201
LÂMPADA - HALOGÊNEO (24 VOLTS, 65 WATTS)	9X-3463	1	LÂMPADA - FAROL	203
		1	LÂMPADA - FAROL	204
		1	SISTEMA DE ILUMINAÇÃO - FARÓIS	215
		1	SISTEMA DE ILUMINAÇÃO - FARÓIS	216
LÂMPADA - HALOGÊNEO (24 VOLTS, 65 WATTS) (FAROL)	9X-3463	1	LÂMPADA - FAROL	202
LÂMPADA - SINALIZAÇÃO (*24-VOLT) (DIANTEIRA, DE CURVA)	3E-6466	2	ILUMINAÇÃO - SINALIZAÇÃO	224
LÂMPADA (VERMELHA, VERDE, LED, 12 VOLTS)	165-5655	1	INSTALAÇÃO-SEGURANÇA	199
		1	CABOS/FIOS ELÉTRICOS - MÁQUINA	354
		1	INSTALAÇÃO-SEGURANÇA	200
LÂMPADA (*24-VOLT, 21-WATT)	9X-4493	1	LÂMPADA - SINALIZAÇÃO	211
LÂMPADA (24 VOLTS) (ILUMINAÇÃO DE OPERAÇÃO)	100-3245	1	LÂMPADA DIANTEIRA E DE SINAL	205
LÂMPADA (24 VOLTS) (LUZ DE OPERAÇÃO)	100-3245	1	LÂMPADA DIANTEIRA E DE SINAL	207
LÂMPADA (24 VOLTS) (SETA DE DIREÇÃO)	100-3245	1	LÂMPADA DIANTEIRA E DE SINAL	205
		1	LÂMPADA DIANTEIRA E DE SINAL	207
LÂMPADA (24 VOLTS, 21 WATTS) (SETA DE DIREÇÃO)	9X-4493	1	LÂMPADA DIANTEIRA E DE SINAL	205
		1	LÂMPADA DIANTEIRA E DE SINAL	207
LÂMPADA (24 VOLTS, 21 WATTS) (SINAL)	9X-4493	1	LÂMPADA - SINALIZAÇÃO	209
LÂMPADA (24 VOLTS, 3 WATTS)	115-1748	8	CABOS/FIOS ELÉTRICOS - CABINE	286
		4	CABOS/FIOS ELÉTRICOS - CABINE	293
		4	CABOS/FIOS ELÉTRICOS - CABINE	302
LÂMPADA (24 VOLTS, 70 WATTS) (PISCA-PISCA DE ADVERTÊNCIA)	9X-7849	1	LUZ GIRATÓRIA DE ALARME	212
LÂMPADA (24 VOLTS, 75-70 WATTS) (FACHO ALTO - BAIXO)(LADO DIREITO)	9X-3465	1	LÂMPADA DIANTEIRA E DE SINAL	207
LÂMPADA (24 VOLTS, 75-70 WATTS) (LUZ ALTA/BAIXA)	9X-3465	1	LÂMPADA DIANTEIRA E DE SINAL	205
*LENS-AMBER	162-2074	1	LÂMPADA - SINALIZAÇÃO	211
LENTE	174-9558	1	LÂMPADA - FAROL	204
LENTE ÂMBAR (SINAL)	9X-3066	1	LÂMPADA - SINALIZAÇÃO	209
LENTE (ÂMBER) (SETA DE DIREÇÃO)	100-3250	1	LÂMPADA DIANTEIRA E DE SINAL	205

* TRADUÇÃO NÃO DISPONÍVEL NO MOMENTO DA IMPRESSÃO

PEÇAS DE MANUTENÇÃO

DESCRIÇÃO	NÚMERO DE PEÇA	QUANT	UTILIZADA EM	PÁGINA
		1	LÂMPADA DIANTEIRA E DE SINAL	207
	136-3848	1	LÂMPADA DIANTEIRA E DE SINAL	205
		1	LÂMPADA DIANTEIRA E DE SINAL	207
LENTE (HOLOFOTE)	9X-4174	1	LÂMPADA - FAROL	202
LENTE (LUZES DIANTEIRAS) (LUZ ALTA/BAIXA)	100-3248	1	LÂMPADA DIANTEIRA E DE SINAL	205
		1	LÂMPADA DIANTEIRA E DE SINAL	207
LUZ INTERMITENTE (24 VOLTS)	108-0358	1	INTERRUPTOR DE SINALIZAÇÃO	277
TAMPA CONTRA POEIRA	133-6517	1	AQUECEDOR DA ÁGUA DO MOTOR	195
SISTEMA HIDRÁULICO				
CADEADO (ENCHIMENTO DO TANUQE HIDRÁULICO)	246-2641	1	TAMPA - TANQUE HIDRÁULICO	621
ELEMENTO FILTRANTE - ÓLEO (EFICIÊNCIA PADRÃO)	1R-0722	1	TANQUE HIDRÁULICO E FILTRO	727
ELEMENTO FILTRANTE - ÓLEO (EFICIÊNCIA PADRÃO) (HIDRÁULICO)	1R-0722	1	TANQUE HIDRÁULICO E FILTRO	729
JOGO DE RETENTOR	107-7491	1	VÁLVULA DE RETENÇÃO	737
JUNTA	9H-6454	1	TANQUE HIDRÁULICO E FILTRO	727
		1	TANQUE HIDRÁULICO E FILTRO	729
TAMPA - BOCAL DE ENCHIMENTO	7H-1447	1	TANQUE HIDRÁULICO E FILTRO	727
		1	TANQUE HIDRÁULICO E FILTRO	729
TELA FILTRANTE	5D-7927	1	TANQUE HIDRÁULICO E FILTRO	727
		1	TANQUE HIDRÁULICO E FILTRO	729
	6E-3877	2	TANQUE HIDRÁULICO E FILTRO	727
		2	TANQUE HIDRÁULICO E FILTRO	729
	9T-8270	1	TANQUE HIDRÁULICO E FILTRO	727
		1	TANQUE HIDRÁULICO E FILTRO	729
	141-9236	1	VÁLVULA DE CONTROLE PILOTO	752
		1	VÁLVULA DE CONTROLE PILOTO	754
		1	VÁLVULA DE CONTROLE PILOTO	756
		1	VÁLVULA DE CONTROLE PILOTO	758
		1	VÁLVULA DE CONTROLE PILOTO	760
		1	VÁLVULA DE CONTROLE PILOTO	762
		1	VÁLVULA DE CONTROLE PILOTO	764
		1	VÁLVULA DE CONTROLE PILOTO	766
	160-3448	1	TANQUE HIDRÁULICO E FILTRO	727
		1	TANQUE HIDRÁULICO E FILTRO	730
	160-3451	1	TANQUE HIDRÁULICO E FILTRO	727
		1	TANQUE HIDRÁULICO E FILTRO	729
	160-3454	1	TANQUE HIDRÁULICO E FILTRO	727
		1	TANQUE HIDRÁULICO E FILTRO	729

* TRADUÇÃO NÃO DISPONÍVEL NO MOMENTO DA IMPRESSÃO

PEÇAS DE MANUTENÇÃO

DESCRIÇÃO	NÚMERO DE PEÇA	QUANT	UTILIZADA EM	PÁGINA
TREM DE FORÇA				
BUJÃO DO DRENO	7T-2703	1	CARCAÇA DAS ENGRENAGENS PLANETÁRIAS E COMPONENTES	379
BUJÃO MAGNÉTICO	5P-4484	1	CAIXA - EIXO FIXO	408
		1	CAIXA - EIXO FIXO	410
		1	CAIXA - EIXO OSCILANTE	412
		1	CAIXA - EIXO OSCILANTE	414
		2	TUBOS - ARREFECEDOR DE ÓLEO DO EIXO	417
CHAVE	5P-8500	1	TAMPA - BOCAL DE ENCHIMENTO DE ÓLEO DA TRANSMISSÃO	393
CORREIA- SERPENTINA (COM AR CONDICIONADO)	215-3015	1	BOMBA DO ARREFECEDOR DE ÓLEO DO EIXO E MONTAGEM	431
ELEMENTO FILTRANTE - ÓLEO HIDRÁULICO	1G-8878	1	FILTRO - ÓLEO	400
ELEMENTO FILTRANTE - ÓLEO HIDRÁULICO (TREM DE FORÇA)	1G-8878	1	FILTRO - ÓLEO	401
FILTRO - MAGNÉTICO	4S-8603	1	CARCAÇA DAS ENGRENAGENS PLANETÁRIAS E COMPONENTES	379
FILTRO - MAGNÉTICO (ARREFECEDOR DO ÓLEO DO EIXO)	130-9505	2	TUBOS - ARREFECEDOR DE ÓLEO DO EIXO	417
RESPIRO	9G-5127	1	CARCAÇA DAS ENGRENAGENS PLANETÁRIAS E COMPONENTES	379
TAMPA - BOCAL DE ENCHIMENTO	5K-1568	1	BOCAL DE ENCHIMENTO DE ÓLEO DO TREM DE FORÇA	399
TAMPA DA VÁLVULA (HASTE)	9K-7951	1	ARO DESMONTÁVEL	435
TAMPÃO	175-4966	1	DRENO - ECOLOGIA	398
TELA DE SUCÇÃO	4S-8598	1	CARCAÇA DAS ENGRENAGENS PLANETÁRIAS E COMPONENTES	379

* TRADUÇÃO NÃO DISPONÍVEL NO MOMENTO DA IMPRESSÃO

WARTUNGSTEILE

BESCHREIBUNG	ERSATZTEIL-NUMMER	MENGE	VERWENDET IN	SEITE
ARBEITSGERÄTE				
GLEITLAGER	7P-3454	2	SCHAUFELSTEUERUNG	794
		2	SCHAUFELSTEUERUNG	797
ELEKTRISCHE ANLAGE U. STARTSYSTEM				
ABDECKGLAS	174-9558	1	ARBEITSLEUCHTEN	204
ABDECKGLAS (ARBEITSSCHEIN-WERFER)	9X-4174	1	ARBEITSLEUCHTEN	202
ABDECKGLAS (FRONTSCHEINWER-FER) (FERNLICHT/ABBLENDLICHT)	100-3248	1	SCHEINWERFER U. RICHTUNGSLEUCHTE	207
		1	SCHEINWERFER U. RICHTUNGSLEUCHTE	205
ABDECKGLAS (GELB) (FAHRTRICHTUNGSANZEIGER)	100-3250	1	SCHEINWERFER U. RICHTUNGSLEUCHTE	205
		1	SCHEINWERFER U. RICHTUNGSLEUCHTE	207
	136-3848	1	SCHEINWERFER U. RICHTUNGSLEUCHTE	205
		1	SCHEINWERFER U. RICHTUNGSLEUCHTE	207
ABDECKGLAS (GELB) (SIGNAL)	9X-3066	1	BLINKLEUCHTE	209
BATTERIE (*12-VOLT, WET)	115-2422	2	BATTERIE UND VERDRAHTUNG	172
BELEUCHTUNGSANLAGE (ROT, GRÜN, LED, 12 V)	165-5655	1	MASCHINENVERDRAHTUNG	354
		1	SICHERHEITSEINBAUSATZ	199
		1	SICHERHEITSEINBAUSATZ	200
BLINKER (24 V)	108-0358	1	RICHTUNGSSIGNALSCHALTER	277
BLINKLEUCHTE (*24-VOLT) (WENDUNG, VORN)	3E-6466	2	BLINKERLEUCHTEN	224
ELEKTRONISCHER SCHLÜSSEL (SICHERHEIT)	206-5162	2	MASCHINENVERDRAHTUNG	354
		2	SERVICE MASCHINE	260
		2	SICHERHEITSEINBAUSATZ	200
	206-5165	2	SERVICE MASCHINE	260
HALOGENSCHINWERFER (24V)(65W)	9X-3463	1	ARBEITSLEUCHTEN	203
		1	ARBEITSLEUCHTEN	204
		1	ARBEITSLEUCHTEN	215
		1	ARBEITSLEUCHTEN	216
HALOGENSCHINWERFER (24V)(65W) (ARBEITSSCHEINWERFER)	9X-3463	1	ARBEITSLEUCHTEN	202
*LAMP-HALOGEN (*24-VOLT, 65-WATT)	9X-3463	1	ARBEITSLEUCHTEN	214
LAUFBAND UND ANTRIEB (RUNDUM-KENNLEUCHTE)	9X-8139	1	RUNDUM-KENNLEUCHTE	212
*LENS-AMBER	162-2074	1	BLINKLEUCHTE	211
LEUCHTE	9X-3463	1	ARBEITSLEUCHTEN	201
LEUCHTE (24 V) (FAHRLEUCHTE)	100-3245	1	SCHEINWERFER U. RICHTUNGSLEUCHTE	207
LEUCHTE (24 V) (FAHRSCHEINWERFER)	100-3245	1	SCHEINWERFER U. RICHTUNGSLEUCHTE	205
LEUCHTE (24 V) (FAHRTRICHTUNGSANZEIGER)	100-3245	1	SCHEINWERFER U. RICHTUNGSLEUCHTE	205

* ÜBERSETZUNG ZUM ZEITPUNKT DER DRUCKLEGUNG NICHT VORHANDEN

WARTUNGSTEILE

BESCHREIBUNG	ERSATZTEIL-NUMMER	MENGE	VERWENDET IN	SEITE
		1	SCHEINWERFER U. RICHTUNGSLEUCHTE	207
LEUCHTE (24 V, 3 W)	115-1748	8	FAHRERHAUSVERDRAHTUNG	286
		4	FAHRERHAUSVERDRAHTUNG	293
		4	FAHRERHAUSVERDRAHTUNG	302
LEUCHTE (24 V, 70 W) (RUNDUM-KENNLEUCHTE)	9X-7849	1	RUNDUM-KENNLEUCHTE	212
LEUCHTE (24 V, 75/70 W) (FERNLICHT/ABBLENDLICHT)	9X-3465	1	SCHEINWERFER U. RICHTUNGSLEUCHTE	205
LEUCHTE (24 V, 75/70 W) (FERNLICHT/ ABBLENDLICHT)(RECHTS)	9X-3465	1	SCHEINWERFER U. RICHTUNGSLEUCHTE	207
LEUCHTE (*24-VOLT, 21-WATT)	9X-4493	1	BLINKLEUCHTE	211
LEUCHTE (24V, 21W) (FAHRTRICHTUNGSANZEIGER)	9X-4493	1	SCHEINWERFER U. RICHTUNGSLEUCHTE	205
		1	SCHEINWERFER U. RICHTUNGSLEUCHTE	207
LEUCHTE (24V, 21W) (SIGNAL)	9X-4493	1	BLINKLEUCHTE	209
SCHLÜSSEL (*BATTERY DISCONNECT)(STARTER)	8H-5306	1	TRENNSCHALTER	267
SERPENTINENFÖRMIGER RIEMEN	219-3303	1	DREHSTROMGENERATOR	166
		1	DREHSTROMGENERATOR	170
SERPENTINENFÖRMIGER RIEMEN (8 PK)	219-3303	1	DREHSTROMGENERATOR	168
SICHERUNG (10 A)	9W-1442	28	FAHRERHAUSVERDRAHTUNG	286
		28	FAHRERHAUSVERDRAHTUNG	293
		28	FAHRERHAUSVERDRAHTUNG	302
SICHERUNG (15 A)	9W-1441	4	FAHRERHAUSVERDRAHTUNG	286
		4	FAHRERHAUSVERDRAHTUNG	293
		4	FAHRERHAUSVERDRAHTUNG	302
STAUBKAPPE	133-6517	1	UMLAUFKÜHLWASSERHEIZUNG	195
STECKDOSEN - EINBAUSATZ (12 STIFTE)	190-7615	1	VERDRAHTUNG, VORNE	335
		1	VERDRAHTUNG, VORNE	341
UMLAUFKÜHLWASSERHEIZUNGS-ELEMENT	124-0687	1	UMLAUFKÜHLWASSERHEIZUNG	195
UMLAUFKÜHLWASSERHEIZUNGS-ELEMENT (120 V, 1000 W)	246-8628	1	UMLAUFKÜHLWASSERHEIZUNG	198
UMLAUFKÜHLWASSERHEIZUNGS-ELEMENT (240 V, 1000 W)	246-8627	1	UMLAUFKÜHLWASSERHEIZUNG	196
UNTERBRECHER (15 A) (ELEKTRON. STEUERMODUL DES MOTORS)	6T-3643	1	UNTERBRECHER - INSTRUMENTENTAFEL	231
		1	UNTERBRECHER - INSTRUMENTENTAFEL	233
UNTERBRECHER (15 A) (FAHRSCHEINWERFER)	3T-2662	1	UNTERBRECHER - INSTRUMENTENTAFEL	231
		1	UNTERBRECHER - INSTRUMENTENTAFEL	233
UNTERBRECHER (15 A) (KLIMAANLAGE)	6T-3643	1	FAHRERHAUSVERDRAHTUNG	288
UNTERBRECHER (*15-AMPERE) (ELEKTRON. STEUERMODUL DES MOTORS)	6T-3643	1	UNTERBRECHER - INSTRUMENTENTAFEL	228

* ÜBERSETZUNG ZUM ZEITPUNKT DER DRUCKLEGUNG NICHT VORHANDEN

WARTUNGSTEILE

BESCHREIBUNG	ERSATZTEIL-NUMMER	MENGE	VERWENDET IN	SEITE
UNTERBRECHER (*15-AMPERE) (FAHRSCHEINWERFER)	3T-2662	1	UNTERBRECHER - INSTRUMENTENTAFEL	228
UNTERBRECHER (20 A)	6T-3644	1	UNTERBRECHER - INSTRUMENTENTAFEL	231
		1	UNTERBRECHER - INSTRUMENTENTAFEL	233
	9H-1958	1	STROMSCHUTZVERDRAHTUNG	356
UNTERBRECHER (20 A) (HAUBENNEIGESTELLGLIED)	200-8577	1	UNTERBRECHER - INSTRUMENTENTAFEL	231
		1	UNTERBRECHER - INSTRUMENTENTAFEL	233
UNTERBRECHER (*20-AMPERE)	6T-3644	1	UNTERBRECHER - INSTRUMENTENTAFEL	228
UNTERBRECHER (*20-AMPERE) (HAUBENNEIGESTELLGLIED)	9H-1958	1	UNTERBRECHER - INSTRUMENTENTAFEL	228
UNTERBRECHER (80 A) (DREHSTROMGENERATOR)	9S-4693	1	UNTERBRECHER - INSTRUMENTENTAFEL	231
	171-2210	1	UNTERBRECHER - INSTRUMENTENTAFEL	233
UNTERBRECHER (80 A) (HAUPTUNTERBRECHER)	9S-4693	1	UNTERBRECHER - INSTRUMENTENTAFEL	231
	171-2210	1	UNTERBRECHER - INSTRUMENTENTAFEL	233
UNTERBRECHER (*80-AMPERE) (DREHSTROMGENERATOR)	9S-4693	1	UNTERBRECHER - INSTRUMENTENTAFEL	229
UNTERBRECHER (*80-AMPERE) (HAUPTUNTERBRECHER)	9S-4693	1	UNTERBRECHER - INSTRUMENTENTAFEL	228

* ÜBERSETZUNG ZUM ZEITPUNKT DER DRUCKLEGUNG NICHT VORHANDEN

WARTUNGSTEILE

BESCHREIBUNG	ERSATZTEIL-NUMMER	MENGE	VERWENDET IN	SEITE
FAHRERHAUS				
BATTERIE	101-1785	1	MONITORSTEUERUNG	854
FAHRERHAUSBELEUCHTUNG (24 V)	107-6032	1	FAHRERHAUSAUSKLEIDUNG	896
		1	FAHRERHAUSAUSKLEIDUNG (OFFENES FAHRERHAUS MIT ÜBERROLLSCHUTZ)	903
FILTER	111-8738	1	FAHRERHAUSLUFTFILTER	884
FILTER (FAHRERHAUS LUFT)	180-7487	1	FAHRERHAUSLUFTFILTER	883
		1	FAHRERHAUSLUFTFILTER	884
FILTER (FAHRERHAUSLUFT)	111-8738	1	FAHRERHAUSLUFTFILTER	883
FILTERSIEB (SCHEIBENWASCHER)	8T-5913	2	SCHEIBENWASCHANLAGE	983
KAPPE MIT ENTLÜFTER	8E-8292	1	SCHEIBENWASCHANLAGE	983
KLIMAANLAGENDRUCKSPEICHER (MIT TROCKENMITTEL)	176-3900	1	KLIMAANLAGENLEITUNGEN	904
		1	KLIMAANLAGENLEITUNGEN	908
LEUCHTE (24 V, 3 W)	115-1748	1	WÄGEEINRICHTUNG	918
LEUCHTE (24V, 10W)	112-5219	1	FAHRERHAUSAUSKLEIDUNG (OFFENES FAHRERHAUS MIT ÜBERROLLSCHUTZ)	903
*ORIFICE AS-AIR CONDITIONER	189-1707	1	KLIMAANLAGE	836
SCHEIBENWISCHERBLATT	5C-8811	1	SCHEIBENWISCHER	986
	6V-7419	1	SCHEIBENWISCHER	986
SCHLÜSSEL	199-6309	1	SCHUTZVERKLEIDUNG	885
SERPENTINENFÖRMIGER RIEMEN	219-3304	1	KÄLTEMITTELKOMPRESSOR	851
SICHERHEITSGURT	222-0345	1	FAHRERSITZ UND UNTERBAU	952
	236-7019	1	FAHRERSITZ	965
		1	SCHWINGSITZ	972
	246-0667	1	FAHRERSITZ UND UNTERBAU	953
UNTERBRECHER (15 A) (LUFTGEFEDERTER SITZ)	3T-2662	1	FAHRERSITZ	965
		1	SCHWINGSITZ	972
		1	FAHRERSITZ UND UNTERBAU	952
UNTERBRECHER (15 A) (LUFTGEPOLTERTER SITZ)	3T-2662	1	FAHRERSITZ UND UNTERBAU	951
VORHÄNGESCHLOSS	246-2641	4	SCHUTZVERKLEIDUNG	885

* ÜBERSETZUNG ZUM ZEITPUNKT DER DRUCKLEGUNG NICHT VORHANDEN

WARTUNGSTEILE

BESCHREIBUNG	ERSATZTEIL-NUMMER	MENGE	VERWENDET IN	SEITE
HYDRAULIKSYSTEM				
DICHTUNG	9H-6454	1	HYDRAULIKTANK UND SCHMIERFILTER	727
		1	HYDRAULIKTANK UND SCHMIERFILTER	729
DICHTUNGSSATZ	107-7491	1	SPERRVENTIL	737
EINFÜLLSTUTZENKAPPE	7H-1447	1	HYDRAULIKTANK UND SCHMIERFILTER	727
		1	HYDRAULIKTANK UND SCHMIERFILTER	729
FILTERSIEB	5D-7927	1	HYDRAULIKTANK UND SCHMIERFILTER	727
		1	HYDRAULIKTANK UND SCHMIERFILTER	729
	6E-3877	2	HYDRAULIKTANK UND SCHMIERFILTER	727
		2	HYDRAULIKTANK UND SCHMIERFILTER	729
	9T-8270	1	HYDRAULIKTANK UND SCHMIERFILTER	727
		1	HYDRAULIKTANK UND SCHMIERFILTER	729
	160-3448	1	HYDRAULIKTANK UND SCHMIERFILTER	727
		1	HYDRAULIKTANK UND SCHMIERFILTER	730
	160-3451	1	HYDRAULIKTANK UND SCHMIERFILTER	727
		1	HYDRAULIKTANK UND SCHMIERFILTER	729
	160-3454	1	HYDRAULIKTANK UND SCHMIERFILTER	727
		1	HYDRAULIKTANK UND SCHMIERFILTER	729
ÖLFILTERELEMENT (STANDRAD EFFIZIENZ)	1R-0722	1	HYDRAULIKTANK UND SCHMIERFILTER	727
ÖLFILTERELEMENT (STANDRAD EFFIZIENZ) (HYDRAULIK)	1R-0722	1	HYDRAULIKTANK UND SCHMIERFILTER	729
SIEB	141-9236	1	VORSTEUERVENTIL	752
		1	VORSTEUERVENTIL	754
		1	VORSTEUERVENTIL	756
		1	VORSTEUERVENTIL	758
		1	VORSTEUERVENTIL	760
		1	VORSTEUERVENTIL	762
		1	VORSTEUERVENTIL	764
		1	VORSTEUERVENTIL	766
VORHÄNGESCHLOSS (HYDRAULIKTANKEINFÜLLSIEB)	246-2641	1	ZUGANGSKLAPPE - HYDRAULIKTANKKAPPE	621

* ÜBERSETZUNG ZUM ZEITPUNKT DER DRUCKLEGUNG NICHT VORHANDEN

WARTUNGSTEILE

BESCHREIBUNG	ERSATZTEIL-NUMMER	MENGE	VERWENDET IN	SEITE
KRAFTSTOFFSYSTEM				
DICHTUNG (WASSERABSCHEIDER, KRAFTSTOFF)	220-8678	1	WASSERABSCHEIDER- U. KRAFTSTOFFILTER	127
EINFÜLLKAPPE (KRAFTSTOFFTANK)	7X-7700	1	KRAFTSTOFFTANK	155
KRAFTSTOFFILTER	1R-0762	1	KRAFTSTOFFILTERLEITUNGEN	139
		1	KRAFTSTOFFILTERLEITUNGEN	142
KRAFTSTOFFILTER (AUSFALLSCHUTZ)	1R-0762	1	KRAFTSTOFFILTERLEITUNGEN	133
		1	KRAFTSTOFFILTERLEITUNGEN	135
		1	KRAFTSTOFFILTERLEITUNGEN	137
KRAFTSTOFFSIEB	9P-7121	1	KRAFTSTOFFTANK	155
WASSERABSCHEIDER UND KRAFTSTOFFILTER (HAUPTELEMENT)	1R-0770	1	WASSERABSCHEIDER- U. KRAFTSTOFFILTER	127
KRAFTÜBERTRAGUNG				
ABLASSSTOPFEN	7T-2703	1	PLANETENANTRIEBSGEHÄUSE U. TEILE	379
ANSAUGSIEB	4S-8598	1	PLANETENANTRIEBSGEHÄUSE U. TEILE	379
EINFÜLLSTUTZENKAPPE	5K-1568	1	GETRIEBEÖLFÜLLSTUTZEN	399
ENTLÜFTER	9G-5127	1	PLANETENANTRIEBSGEHÄUSE U. TEILE	379
HYDRAULIKÖLFILTER	1G-8878	1	ÖLFILTER	400
HYDRAULIKÖLFILTER (KRAFTÜBERTRAGUNG)	1G-8878	1	ÖLFILTER	401
MAGNETFILTER (ACHSÖLKÜHLER)	130-9505	2	ACHSENÖLKÜHLERLEITUNGEN	417
MAGNETSIEB	4S-8603	1	PLANETENANTRIEBSGEHÄUSE U. TEILE	379
MAGNETSTOPFEN	5P-4484	2	ACHSENÖLKÜHLERLEITUNGEN	417
		1	GEHÄUSE - PENDELACHSE	412
		1	GEHÄUSE - PENDELACHSE	414
		1	GEHÄUSE - STARRACHSE	408
		1	GEHÄUSE - STARRACHSE	410
SCHLÜSSEL	5P-8500	1	GETRIEBEÖLEINFÜLLKAPPE	393
SCHRAUBE	175-4966	1	ABLASS (UMWELTFREUNDLICH)	398
SERPENTINENFÖRMIGER RIEMEN (*WITH AIR CONDITIONING)	215-3015	1	ACHSENÖLKÜHLERPUMPE U. BEFESTIGUNGSTEILE	431
VENTILKAPPE (SCHAFT)	9K-7951	1	FELGE (TEILBAR)	435
KÜHLSYSTEM				
DICHTUNG	136-0812	1	KÜHLWASSERLEITUNGEN	86
DICHTUNG (TEMPERATURREGELGEHÄUSE)	136-0812	1	KÜHLWASSERLEITUNGEN	88
FILTER (WASSER) (PUMPE)	119-3025	1	KÜHLWASSERPUMPE	96
		1	KÜHLWASSERPUMPE	98
KÜHLERKAPPE (7 PSI)	6L-8617	1	KÜHLERWASSERKASTEN, OBEN	107
		1	KÜHLERWASSERKASTEN, OBEN	108
WASSERTEMPERATURREGLER (94 GRAD CELSIUS)	126-5869	1	KÜHLWASSERLEITUNGEN	86
WASSERTEMPERATURREGLER (94 GRAD CELSIUS) (KÜHLMITTEL)	126-5869	1	KÜHLWASSERLEITUNGEN	88

* ÜBERSETZUNG ZUM ZEITPUNKT DER DRUCKLEGUNG NICHT VORHANDEN

WARTUNGSTEILE

BESCHREIBUNG	ERSATZTEIL-NUMMER	MENGE	VERWENDET IN	SEITE
LUFTANSAUG- UND ABGASSYSTEM				
HAUPTFILTER	132-7165	1	LUFTREINIGER	111
LUFTFILTER (HILFSELEMENT)	6I-2504	1	LUFTREINIGER	111
MOTOR (GRUNDAUSFÜHRUNG)				
EINFÜLLKAPPE	5L-2952	1	STIRNRADGEHÄUSEDECKEL	11
SCHMIERSYSTEM				
ENTLÜFTER (KURBELGEHÄUSE)	164-0210	1	ENTLÜFTER	70
*HOSE-DISPOSAL	202-6569	1	ENTDUNSTER	72
ÖLFILTER	1R-1807	1	ÖLFILTER	71

* ÜBERSETZUNG ZUM ZEITPUNKT DER DRUCKLEGUNG NICHT VORHANDEN

INDEX

Name	Page
A	
ACCUMULATOR GP-BRAKE–CHARGED	539
ACCUMULATOR GP-BRAKE–UNCHARGED	540
ACCUMULATOR GP-BRAKE–UNCHARGED, COLD WEATHER	541
ACCUMULATOR GP-REFRIGERANT (WITH DESICCANT)	904
	908
ACCUMULATOR GP-RIDE CONTROL	600
	601
	602
ACTUATOR AR-POWER GUARD	467
ACTUATOR GP-HOOD TILT	468
	470
ACTUATOR GP-POWER	472
ACTUATOR GP-POWER GUARD	473
ADAPTER GP-OIL LINE–UNIT INJECTOR PUMP	69
ADAPTER GP-TIP	800
ADJUSTER GP-SEAT	831
AIR CLEANER GP	109
	111
AIR COMPRESSOR GP-SEAT	832
AIR CONDITIONER & MOUNTING GP–WITH CABLE CONTROL	833
	834
AIR CONDITIONER AR	835
AIR CONDITIONER GP	836
ALARM GP–ACTION	159
	160
ALTERNATOR AR-CHARGING	161
ALTERNATOR GP-CHARGING	162
	164
	166
	168
	170
ARM AS-LIFT	791
ARM GP-MATERIAL HANDLING	801
ARMREST GP	840
ARMREST GP–LH	841
	842
ARMREST GP–RH	839
	843
ASHTRAY AS	935
	936
	937
AXLE AR-FIXED	374
AXLE AR-OSCILLATING	375
	376
B	
BAFFLE GP	475
BASE GP-FOOT BRAKE–PEDAL, LH	542
BASE GP-FOOT BRAKE–RH PEDAL	544
BATTERY	854
BATTERY & WIRING GP	172
BATTERY (12-VOLT, WET)	172
BEARING GP-MAIN (CRANKSHAFT)	14
BEARING-SLEEVE	794
	797
BELT-DRIVE (WARNING BEACON)	212
BELT-SERPENTINE	166
	170
	851
BELT-SERPENTINE (WITH AIR CONDITIONING)	431
BELT-SERPENTINE (8 PK)	168
BLADE AS-WIPER	986
BLOCK AS-FUSE	303
BLOCK GP-JUNCTION	175
BLOCK GP-JUNCTION–BATTERY	175
BODY AS-GAUGE	90
	92
BODY GP-PILOT VALVE	603
	604
BRACKET AS-ADJUSTABLE SWITCH (STOP LIGHT LIMIT)	542
BRAKE & PLANETARY GP	377
BRAKE GP-PARKING	545
BREATHER AS	379
BREATHER AS (CRANKCASE)	70
BREATHER GP–CRANKCASE	70
BUCKET AS-GENERAL PURPOSE	802
	803
	804
BUCKET AS-MATERIAL HANDLING	805
	806
	807
	808
BUCKET GP-GENERAL PURPOSE	810
	811
	812
	813
BUCKET GP-MATERIAL HANDLING	814
C	
CAB AR	844
CAB GP	845
CAB GP-ENCLOSED ROPS	847
CAMSHAFT GP	7
CANOPY AR-OPEN ROPS	849
CAP AS-DUST	195
CAP AS-FILLER	11
CAP AS-FILLER (FUEL TANK)	155
CAP-FILLER	399
	727
	729

INDEX

Name	Page
CAP-RADIATOR (7-PSI)	107, 108
CAP-VALVE (STEM)	435
CAP-VENTED	983
CARRIER GP-SEAL	8
CARTRIDGE GP-TURBOCHARGER	126
CARTRIDGE GP-VANE PUMP	606
CASE & PARTS GP-PLANETARY	379
CHASSIS AR	1
CIRCUIT BREAKER AS (15-AMPERE) (AIR CONDITIONER)	288
CIRCUIT BREAKER AS (15-AMPERE) (AIR SEAT)	951
CIRCUIT BREAKER AS (15-AMPERE) (AIR SUSPENSION SEAT)	952, 965, 972
CIRCUIT BREAKER AS (15-AMPERE) (ENGINE ECM)	228, 231, 233
CIRCUIT BREAKER AS (15-AMPERE) (RUNNING LIGHTS)	228, 231, 233
CIRCUIT BREAKER AS (20-AMPERE) (HOOD TILT ACTUATOR)	231, 233
CIRCUIT BREAKER AS (80-AMPERE) (ALTERNATOR)	233
CIRCUIT BREAKER AS (80-AMPERE) (MAIN)	233
CIRCUIT BREAKER GP (20-AMPERE)	356
CIRCUIT BREAKER GP (20-AMPERE)	228, 231, 233
CIRCUIT BREAKER GP (20-AMPERE) (HOOD TILT ACTUATOR)	228
CIRCUIT BREAKER GP (80-AMPERE) (ALTERNATOR)	229, 231
CIRCUIT BREAKER GP (80-AMPERE) (MAIN)	228, 231
CLUTCH GP	382, 384, 386
COMPRESSOR GP-REFRIGERANT	850, 851
CONDENSER & MTG GP-REFRIGERANT	852, 853
CONTROL & MTG GP-COMMUNICATION–PRODUCT LINK	176
CONTROL & MTG GP-ENGINE ELEK	178, 179, 180
CONTROL AR-QUICK COUPLER	814, 815
CONTROL AR-TRACTION	546
CONTROL GP-BUCKET	794, 797
CONTROL GP-BUCKET–CUSTOM	792
CONTROL GP-COMMUNICATION (PRODUCT LINK)	176
CONTROL GP-ENGINE ELECTRONIC	178, 181, 182, 183, 184, 185
CONTROL GP-FOOT BRAKE	547, 548
CONTROL GP-HANDLE	608
CONTROL GP-HANDLE–TRANSMISSION DOWNSHIFT	607
CONTROL GP-LIFT KICKOUT	186, 187, 641
CONTROL GP-MONITOR–PAYLOAD	854
CONTROL GP-PARKING BRAKE	549, 552, 554
CONTROL GP-PARKING BRAKE–HANDLE	551
CONTROL GP-PILOT OPERATED HYD	609, 611, 613, 615, 617, 618, 619, 620
CONTROL GP-POSITION–WORK TOOL	188
CONTROL GP-POSITION (WORK TOOL)	641, 643
CONTROL GP-SERVICE BRAKE	555, 558, 562
CONTROL GP-STEERING	569, 571
CONTROL GP-TRANSMISSION	388, 389
CONTROL GP-UNPROGRAMMED	191, 200
CONTROL GP-UNPROGRAMMED–POWER TRAIN	189
CONTROL GP-UNPROGRAMMED–TRACTION CONTROL SYSTEM	190
CONTROL GP-UNPROGRAMMED (SECURITY)	260
CONTROL GP-UNPROGRAMMED (TRACTION CONTROL SYSTEM)	369

INDEX

Name	Page
CONVERSION AR-TRACTION CONTROL	564
COOLANT HEATER LINES	912
COOLER & MTG GP-TRANSMISSION	390
COOLER AR-AXLE OIL	391
COOLER GP-ENGINE OIL	82
CORE AS-AXLE OIL COOLER	428
CORE AS-ENGINE OIL COOLER	82
CORE AS-POWER TRAIN OIL COOLER	390
COUNTERWEIGHT GP	476
COUNTERWEIGHT GP-REAR	477
COUPLER AR-QUICK	815
COUPLER AR-QUICK–HIGH LIFT	816
	817
COUPLER AR-QUICK–STANDARD LIFT	816
COUPLER GP-QUICK	818
	819
COVER GP-AIR INLET–STARTING AID HEATER	112
	113
	114
COVER GP-CYLINDER BLOCK	9
COVER GP-FRONT HOUSING	11
COVER GP-HYDRAULIC TANK CAP	621
COVER GP-SHIPPING	392
COVER GP-TMSN OIL FILLER CAP	393
	998
COVER GP-VALVE MECHANISM	13
CRANKSHAFT GP	14
CYLINDER & MTG GP-STEERING	573
CYLINDER & SEAL GP-LIFT	622
CYLINDER & SEAL GP-STEERING	575
CYLINDER & SEAL GP-TILT	623
CYLINDER BLOCK GP	16
	17
	18
CYLINDER GP-COUPLER	624
	625
CYLINDER GP-LIFT	626
CYLINDER GP-STEERING	576
CYLINDER GP-TILT	631
	633
CYLINDER GP-TILT–CUSTOM–HIGH LIFT MACHINES	627
	629
CYLINDER HEAD AS	20
	22
	24
	25
CYLINDER HEAD GP	27
	28
	29
	30
	31
	33
	35
	37
	38

D

DAMPER & PULLEY GP	39
DASH GP	855
DIFFERENTIAL GP	394
DIFFERENTIAL GP-LIMITED SLIP	395
DIFFERENTIAL GP-NOSPIN	396
	397
DOOR GP-BATTERY	478
DOOR GP-CAB	861
DOOR GP-CAB–FIXED WINDOW, LH	878
DOOR GP-CAB–FIXED WINDOW, RH	875
DOOR GP-CAB–FIXED WINDOWS	856
DOOR GP-CAB–LH	857
	862
	864
DOOR GP-CAB–RH	859
	866
	869
	872
DRAIN GP-ECOLOGY–POWER TRAIN	398
DRAIN GP-ENGINE OIL	40
DUCT GP-AIR	880

E

EDGE-CUTTING	822
EDGE-END	823
EDGE GP-CUTTING	820
	821
ELBOW GP-AIR INLET	115
ELECTRICAL AR	192
ELECTRONICS GP-MACHINE	194
ELECTRONICS GP-MACHINE–SECURITY	193
ELECTRONICS GP-POWER TRAIN	194
ELEMENT AS-JACKET WATER HEATER	195
ELEMENT AS-JACKET WATER HEATER (120-VOLT, 1000-WATT)	197
	198
ELEMENT AS-JACKET WATER HEATER (240-VOLT, 1000-WATT)	196
ELEMENT AS-PRIMARY	111
ENGINE AR-COMPLETE	4
ENGINE AR-CORE	5
EXTENSION GP-BACKREST	882
EXTENSION GP-BACKREST (CLOTH)	964
EXTENSION GP-FENDER	480

F

FASTENER GP-DAMPER & PULLEY	41
FASTENER GP-FLYWHEEL	42

INDEX

Name	Page
FASTENER GP-FRONT HOUSING	43
FENDER GP	481
	482
FENDER GP-ROADING	483
FILLER GP-POWER TRAIN OIL	399
FILM	933
FILM-CIRCUIT BREAKER	228
	231
	233
FILM-CONTROLS (RH CONSOLE)	286
FILM-FUSE PANEL	935
	936
	937
FILM GP	989
FILM GP–PAYLOAD CONTROL	990
FILM-IDENTIFICATION (ELECTRONIC CONTROL MODULE)	194
FILM (IGNITION SWITCH)	199
	200
	354
FILM (IGNITION SWITCH) (IGNITION SWITCH)	354
FILM-INFORMATION (AIR CLEANER)	111
FILM-INFORMATION (12-VOLT)	286
	293
	302
FILM-INPUT/OUTPUT	935
	936
	937
FILM-INSTRUCTION	186
	187
	188
FILM-INSTRUCTION (ENGINE START)	933
FILM-INSTRUCTION (READ OWNERS MANUAL)	199
	200
	354
FILM-INSTRUCTION (SEAT ADJUSTMENT)	975
	977
	979
FILM-INSTRUMENT (HYDRAULIC LOCKOUT)	609
	611
	613
	615
FILM-PANEL (DUCT, LH)	288
	294
	303
FILM-PANEL (DUCT, RH)	288
FILM-REFLECTOR (YELLOW)	213
FILM (SECURITY)	199
	200
FILM-WARNING (HIGH PRESSURE CYLINDER)	687
	691
	694
	698
FILM-WARNING (MANUAL)	801
FILM-WARNING (PRODUCT LINK RADIO)	199
FILTER	884
FILTER AS-ENGINE OIL	71
FILTER AS-FUEL	139
	142
FILTER AS-FUEL (SECONDARY)	133
	135
	137
FILTER AS-WATER SEP & FUEL (PRIMARY)	127
FILTER (CAB AIR)	883
	884
FILTER ELEMENT AS-AIR	116
FILTER ELEMENT AS-AIR (SECONDARY)	111
FILTER ELEMENT AS-OIL (STANDARD EFFICIENCY)	727
FILTER ELEMENT AS-OIL (STANDARD EFFICIENCY) (HYDRAULIC)	729
FILTER ELEMENT-HYDRAULIC OIL	400
FILTER ELEMENT-HYDRAULIC OIL (POWER TRAIN)	401
FILTER GP-CAB AIR	883
	884
FILTER GP-ENGINE OIL	71
FILTER GP-OIL–POWER TRAIN	400
	401
FILTER GP-WATER SEP & FUEL–PRIMARY	127
FILTER-MAGNETIC (AXLE OIL COOLER)	417
FILTER (WATER) (PUMP)	96
	98
FLASHER AS (24-VOLT)	277
FLOOR MAT	897
	899
	901
FLYWHEEL GP	44
FORK GP-PALLET	824
FRAME AS-FRONT	485
FRAME AS-LOADER	488
FRAME AS-REAR	490
	493
	494
FRAME GP-QUICK COUPLER	825
	826
	827
FUMES DISPOSAL GP	72
FUSE (10-AMPERE)	286
	293
	302
FUSE (15-AMPERE)	286
	293
	302

INDEX

Name	Page
G	
GASKET	86, 727, 729
GASKET (TEMPERATURE REGULATOR HOUSING)	88
GAUGE AS-OIL LEVEL (DIPSTICK)	408, 410, 412, 414
GAUGE GP-OIL LEVEL (DIPSTICK)	73, 74
GAUGE-SIGHT	727, 729
GEAR GP-BEVEL	402
GEAR GP-BEVEL & PINION	404
GEAR GP-FRONT	45
GEAR GP-OUTPUT TRANSFER	406
GENERAL AR	1
GRILL GP-RADIATOR	497, 499
GUARD GP-ARTICULATION	501
GUARD GP-AXLE OIL COOLER	503
GUARD GP-AXLE SEAL	504
GUARD GP-BOTTOM	505, 507, 509, 511
GUARD GP-DRIVE SHAFT	513
GUARD GP-FAN	83, 84
GUARD GP-HITCH & STEERING	514
GUARD GP-LIGHTING	515, 517
GUARD GP-POWER TRAIN	518, 519
GUARD GP-VANDALISM	885
GUARD GP-WINDOW	887, 888
H	
HANDLE GP-MODULAR–DIRECTION, DOWNSHIFT	635
HARNESS AS-BRAKE (STOP LIGHT)	542
HARNESS AS-ENGINE (ELECTRONIC CONTROL)	317
HARNESS AS-ENGINE (ELECTRONIC CONTROL MODULE)	323
HARNESS AS-ENGINE (UNIT INJECTOR)	317
HARNESS AS-ENGINE (70A ALTERNATOR)	327
HARNESS AS-HEATER & AIR COND	836, 891
HARNESS AS-LIGHTING (FLOODLIGHT)	216
HARNESS AS-LIGHTING (RH ROADING)	344
HARNESS AS-LIGHTING (ROADING, LH)	344
HARNESS AS-PUMP (FUEL PRIMING)	147
HARNESS AS-RADIO (SPEAKER)	941
HARNESS AS-RIDE CONTROL	687, 691, 694, 698
HARNESS AS-STARTING AID (ETHER)	368
HARNESS AS-STEERING (SECONDARY)	358, 362
HARNESS AS-VALVE (SEAT AIR COMPRESSOR)	977, 979
HARNESS AS-WIRING (TEMPERATURE RESISTOR) (TEMPERATURE RESISTOR) (OIL)	319
HEATER & MTG GP-CAB	890
HEATER GP-CAB	891
HEATER GP-JACKET WATER–120 VOLT	197, 198
HEATER GP-JACKET WATER–240 VOLT	195, 196
HINGE GP-ROADING FENDER	520, 521
HITCH GP-ARTICULATING	522
HOOD & GUARD GP	524
HORN AS (24-VOLT, LOW TONE)	894
HORN GP-ELECTRIC	893, 894
HOSE-DISPOSAL	72
HOUSING GP-FIXED AXLE	408, 410
HOUSING GP-FLYWHEEL	47
HOUSING GP-FRONT	48
HOUSING GP-OSCILLATING AXLE	412, 414
HYDRAULIC AR	636
HYDRAULIC AR-3 VALVE	636
HYDRAULIC AR-4 VALVE–RIDE CONTROL	637
I	
IDLER GP-BELT–ALTERNATOR, REFRIGERANT COMPRESSOR	49
INDICATOR GP-AIR FILTER CHANGE	109
INJECTOR GP-FUEL	149
INPUT GP-TRANSMISSION	416
INSTALLATION AR-COMMUNICATION–PRODUCT LINK	199
INSTALLATION AR-ENGINE	6
INSTALLATION AR-SECURITY	199
INSTALLATION GP-RADIO	895
INSTALLATION GP-SECURITY	200

INDEX

Name	Page
K	
KEY	393
	885
KEY AS-ELECTRONIC (SECURITY)	200
	260
	354
KEY (BATTERY DISCONNECT)(STARTER)	267
KICKOUT & POSITIONER GP	641
	643
KIT-ADJUSTER (ARMREST)	840
KIT-ADJUSTER (SEAT PAN)	931
KIT-ADJUSTER (SUSPENSION)	966
	968
KIT-AIR CLEANER CLAMP	111
KIT-AIR COMPRESSOR	975
KIT-AIR VALVE	979
KIT-AIR VALVE (SUSPENSION SEAT)	977
KIT-ARMREST-LH	966
	968
KIT-ARMREST-RH	966
	968
KIT-BACK TILT (SEAT PAN)	931
KIT-BEARING (ALTERNATOR)	164
KIT-BRAKE CHARGE VALVE	562
KIT-BRAKE LINING	545
KIT-BRUSH SEAL	897
	899
	901
KIT-BRUSH (STARTING MOTOR)	265
KIT-BUSHING (STARTING MOTOR)	265
KIT-CABLE ADJUSTER	966
	968
KIT-CAP FILTER (FUEL TANK)	155
KIT-CARTRIDGE-REAR	566
KIT-COVER	966
KIT-COVER (BACK)	968
KIT-COVER (BOTTOM)	968
KIT-CUSHION (ARMREST)	840
KIT-CUSHION (CLOTH BACKREST)	882
KIT-DAMPER	966
	968
KIT-FASTENER	975
KIT-FRAME AS (SEAT)	966
	968
KIT-HANDLE	966
	968
KIT-HARDWARE (ALTERNATOR)	162
	164
KIT-HEIGHT RISER	966
	968
KIT-HORN	592
KIT-INSULATOR (STARTING MOTOR)	265
KIT-KNOB (RADIO)	941
KIT-LEVER AS (HEIGHT RISER)	966
	968
KIT-LEVER (STARTING MOTOR)	265
KIT-PISTON	590
KIT-PIVOT	592
KIT-REAR SEAL	566
KIT-RECEPTACLE (12-PIN)	335
	341
KIT-RELIEF VALVE (SECONDARY STEERING)	584
KIT-RETAINING BOLT (M5X0.8X53.24-MM) (UNPROGRAMMED CONTROL)	190
KIT-RETAINING BOLT (M5X0.8X53.24-MM) (UNPROGRAMMED CONTROL)	189
KIT-ROLLER	975
KIT-ROLLER (GOVERNOR PEDAL)	939
KIT-SCREEN (PRECLEANER)	124
KIT-SEAL	586
	600
	602
	625
	737
	781
KIT-SEAL (DEAD ENGINE LOWERING)	751
KIT-SEAL (JACKET WATER HEATER)	195
KIT-SEAL (JACKET WATER HEATER)	197
KIT-SEAL (SOLENOID VALVE)	157
	567
	568
	785
	786
	787
	788
KIT-SEAT (BACK)	966
KIT-SEAT (BACK)	968
KIT-SEAT (BOTTOM)	966
KIT-SEAT (BOTTOM)	968
KIT-SEAT CUSHION (CLOTH)	958
KIT-SEAT KNOB	958
KIT-SEAT TILT (SEAT PAN)	931
KIT-SHOCK ABSORBER (SUSPENSION SEAT)	977
KIT-SLIDE RAIL	966
	968
KIT-SLIDER BLOCK	958
	970
KIT-SOLENOID (STARTING MOTOR)	265
KIT-SPACER	588
KIT-SPIDER & BEARING	457
KIT-SPRING	586
KIT-SPRING (HEIGHT RISER)	966
	968
KIT-STOP	966
	968
KIT-SUPPORT	968
KIT-SUSPENSION BEARING	966

INDEX

Name	Page
	968
KIT-SUSPENSION COVER	966
	968
KIT-TERMINAL (ALTERNATOR)	162
	164
KIT-TETHER	966
	968
	975
	979
KIT-TETHER (SUSPENSION SEAT)	977
KIT-TILT LEVER	592
KIT-TILT PAN	958
KIT-TREADLE PIN (GOVERNOR PEDAL)	939
KIT-UPPER AS	966
KIT-VANE-REAR	566

L

LADDER GP	527
LAMP	201
LAMP AS (RED, GREEN, LED, 12-VOLT)	199
	354
LAMP AS (RED, GREEN, LED, 12-VOLT)	200
LAMP GP-DOME (24-VOLT)	896
	903
LAMP GP-FLOOD	201
	202
	204
LAMP GP-FLOOD–VERTICAL MOUNT	203
LAMP GP-HEAD & SIGNAL–LH	205
LAMP GP-HEAD & SIGNAL–RH	207
LAMP GP-SIGNAL	211
LAMP GP-SIGNAL–FRONT TURN	209
LAMP GP-SIGNAL–STOP, TAIL	210
LAMP GP-SIGNAL (24-VOLT) (FRONT TURN)	224
LAMP GP-WARNING BEACON	212
LAMP-HALOGEN (24-VOLT, 65-WATT)	203
	204
	216
LAMP-HALOGEN (24-VOLT, 65-WATT)	214
	215
LAMP-HALOGEN (24-VOLT, 65-WATT) (FLOODLIGHT)	202
LAMP (24-VOLT) (RUNNING LAMP)	207
LAMP (24-VOLT) (RUNNING LIGHTS)	205
LAMP (24-VOLT) (TURN SIGNAL)	205
LAMP (24-VOLT) (TURN SIGNAL)	207
LAMP (24-VOLT, 10-WATT)	903
LAMP (24-VOLT, 21-WATT)	211
LAMP (24-VOLT, 21-WATT) (SIGNAL)	209
LAMP (24-VOLT, 21-WATT) (TURN SIGNAL)	205
	207
LAMP (24-VOLT, 3-WATT)	286
	293
	302
	918
LAMP (24-VOLT, 70-WATT) (WARNING BEACON)	212
LAMP (24-VOLT, 75/70-WATT) (HIGH/LOW BEAM)	205
LAMP (24-VOLT, 75/70-WATT) (HIGH/LOW BEAM)(RH)	207
LENS-AMBER	211
LENS-AMBER (SIGNAL)	209
LENS (AMBER) (TURN SIGNAL)	205
	207
LENS AS	204
LENS AS (AMBER) (TURN SIGNAL)	205
	207
LENS AS (FLOODLIGHT)	202
LENS AS (HEADLIGHT) (HIGH/LOW BEAM)	205
	207
LIFT AR	799
LIFTER GP-VALVE–MECHANISM	50
LIFTING GP-ENGINE	51
LIGHTER GP-CIGAR (12-VOLT)	287
	293
	302
LIGHTING AR-AUXILIARY	213
LIGHTING AR-ROADING	213
LIGHTING AR-SIGNAL	214
LIGHTING GP-FLOOD	214
	215
	218
LIGHTING GP-FLOOD–INCLUDES RADIO ANTENNA	216
LIGHTING GP-FLOOD & SIGNAL	219
	221
LIGHTING GP-ROADING	223
LIGHTING GP-SIGNAL	224
LIGHTING GP-WARNING BEACON	225
	226
	227
LINER GP-CAB	901
LINER GP-CAB–LOWER	897
	899
LINER GP-CAB–UPPER	896
LINER GP-OPEN ROPS	903
LINES GP-AIR	117
	118
LINES GP-AIR CONDITIONER	904
	908
LINES GP-AXLE OIL COOLER	417
LINES GP-CAB HEATER	912
LINES GP-COUPLER	645
	648
	651
LINES GP-COUPLER–HIGH LIFT, FRONT	657
LINES GP-COUPLER–HIGH LIFT, REAR	654

INDEX

Name	Page
LINES GP-COUPLER–STANDARD LIFT, FRONT	652
LINES GP-DIAGNOSTIC	991
LINES GP-DIAGNOSTIC–REMOTE PRESSURE TAPS	994
LINES GP-ENGINE OIL	75
LINES GP-FRONT	661
	663
LINES GP-FRONT–CUSTOM	659
LINES GP-FRONT–HIGH LIFT MACHINES, 3-VALVE	665
LINES GP-FUEL	128
	130
LINES GP-FUEL DRAIN	132
LINES GP-FUEL FILTER	133
	135
	137
	139
	142
LINES GP-GREASE	528
	530
LINES GP-HYDRAULIC	667
LINES GP-HYDRAULIC OIL COOLER	669
	673
LINES GP-INJECTOR HYD PUMP	145
	146
LINES GP-LIFT CYLINDER	678
	680
LINES GP-PILOT	682
	684
	686
LINES GP-POWER TRAIN FILTER	421
	423
LINES GP-RIDE CONTROL	687
	691
	694
	698
LINES GP-SECONDARY STEERING	578
LINES GP-STEERING	580
LINES GP-TILT CYLINDER	702
	704
	706
LINES GP-TORQUE CONV COOLER	425
LINES GP-TURBOCHARGER OIL	76
LINES GP-WATER	85
	86
	88
	90
	92
LINK GP-STEERING FRAME LOCK	532
LITERATURE GP	914
LOCK GP-VANDALISM	998

M

Name	Page
MANIFOLD GP-BRAKE PROPORTIONAL	565
MANIFOLD GP-EXHAUST–DRY	119
MIRROR GP-REAR VIEW–CAB	915
	916
MODULE GP-PAYLOAD KEYPAD	918
MONITOR AR-PAYLOAD	917
MONITOR GP-PAYLOAD	918
MOTOR AS-BLOWER (24-VOLT, A/C, HEATER)	836
	891
MOTOR GP-GEAR–HYDRAULIC FAN	708
MOTOR GP-WINDOW WIPER–FRONT	920
MOTOR GP-WINDOW WIPER–REAR	921
MOUNTING GP-ALTERNATOR	52
	53
MOUNTING GP-AXLE	427
MOUNTING GP-AXLE OIL COOLER	428
MOUNTING GP-CAB	922
	924
MOUNTING GP-ENGINE & TMSN	54
MOUNTING GP-LUBRICATION CHART	999
MOUNTING GP-RIM	430
MUFFLER GP	120

O

Name	Page
OPERATOR AR	926
	927
OPERATOR AR–OPEN ROPS	926
ORIFICE AS-AIR CONDITIONER	836

P

Name	Page
PADLOCK GP	885
PADLOCK GP (HYDRAULIC TANK FILL)	621
PAN GP-BACKREST	930
PAN GP-BACKREST–CLOTH	929
PAN GP-BACKREST–LUMBAR	928
PAN GP-OIL	56
PAN GP-SEAT	931
PANEL GP-CIRCUIT BREAKER	228
	231
	233
PANEL GP-INSTRUMENT	935
	936
	937
PANEL GP-INSTRUMENT–HOUSING	933
PEDAL GP-GOVERNOR	939
	940
PIPE AS-EXHAUST EXTENSION	121
PISTON & ROD GP	57
	59
PIVOT GP-PILOT VALVE	709

INDEX

Name	Page
PIVOT GP-PILOT VALVE–TILT	710
PIVOT GP-PILOT VALVE–2, 3, 4-FUNCTION	711
PLATE	228
PLATE & FILM GP	1000
	1002
	1003
PLATE & FILM GP–DANISH	1001
PLATE & FILM GP–DUTCH	1001
PLATE & FILM GP–FINNISH	1002
PLATE & FILM GP–FRENCH	1001
PLATE & FILM GP–ICELANDIC	1003
PLATE & FILM GP–RUSSIAN	1004
PLATE & FILM GP–SWEDISH	1004
PLATE (BREAKER)	231
	233
PLATE GP-PILOT VALVE	715
	717
	718
PLATE GP-PILOT VALVE–JOYSTICK	712
	713
PLATE-INFORMATION (MANUAL FUEL)	417
PLATE-INFORMATION (MANUAL FUEL) (PRIMING)	147
PLATE-INSTRUCTION (AIR CONDITIONER)	835
PLATE-INSTRUCTION (BATTERY)	172
PLATE-WARNING (NO CLEARANCE, DANISH)	1001
PLUG	398
PLUG-DRAIN	379
PLUG GP-CYLINDER BLOCK	60
PLUG GP-ENGINE	61
PLUG-MAGNETIC	408
	410
	412
	414
	417
POWER TRAIN AR	430
PRECLEANER GP	122
	123
	124
PULLEY GP-IDLER	62
	63
PUMP & MOTOR GP-SEC STEERING	584
PUMP & MTG GP-AXLE OIL COOLER	431
PUMP & MTG GP-HYDRAULIC	720
PUMP & MTG GP-HYDRAULIC FAN	721
PUMP & MTG GP-SECONDARY STEER	585
PUMP GP-ENGINE OIL	77
	78
	79
	80
PUMP GP-FUEL INJECTION	152
PUMP GP-FUEL PRM & PRIM FILTER	147
PUMP GP-FUEL PRM & WATER SEP	158
PUMP GP-FUEL TRANSFER	151
	152
PUMP GP-METERING–HMU	586
PUMP GP-PISTON–HYDRAULIC FAN	723
PUMP GP-PISTON–STEERING	588
PUMP GP-PISTON & VANE–STEERING, IMPLEMENT, BRAKE	725
PUMP GP-TRANSMISSION	432
	433
PUMP GP-UNIT INJECTION	149
PUMP GP-UNIT INJECTOR HYD	151
	152
	153
PUMP GP-VANE–BRAKE	566
PUMP GP-WATER	94
	95
	96
PUMP GP-WATER–COOLANT	98

R

RADIATOR & FAN GP	99
	103
RADIO GP–AM/FM CASSETTE	941
	942
RECLINER GP-SEAT	943
REGULATOR AS	137
REGULATOR AS-ALTERNATOR (24-VOLT)	162
REGULATOR AS (FUEL)	133
	135
REGULATOR AS (FUEL PRESSURE)	154
REGULATOR AS-VOLTAGE (24-VOLT) (ALTERNATOR)	164
REGULATOR GP-FUEL PRESSURE	154
REGULATOR-WATER TEMPERATURE (94-DEG C)	86
REGULATOR-WATER TEMPERATURE (94-DEG C) (COOLANT)	88
RELAY AS (24-VOLT) (FLOOD LIGHT)	293
	302
RELAY AS (24-VOLT) (FLOODLIGHT)	286
RELAY AS (24-VOLT) (SECONDARY STEERING)	358
	362
RIM AR	434
RIM GP-DEMOUNTABLE	437
	438
RIM GP-DEMOUNTABLE–4 REQUIRED	435
RIM GP-DEMOUNTABLE–4-REQUIRED	436
ROCKER ARM GP (EXHAUST)	67
ROCKER ARM GP (INTAKE)	67
ROPS GP-ENCLOSED	944
	945
ROPS GP-OPEN	947
	948
ROTATING GP-PUMP–HYDRAULIC FAN	726

INDEX

Name	Page
ROTATING GP-PUMP–STEERING	590
S	
SCRAP HANDLING AR	2
SCREEN AS	752 754 756 758 760 762 764 766
SCREEN-FILTER (WINDOW WASHER)	983
SCREEN GP-MAGNETIC	379
SCREEN GP-SUN	950
SCREEN-SUCTION	379
SEAL GP-CRANKSHAFT	64
SEAL GP-CRANKSHAFT (FRONT)	64
SEAL GP-CRANKSHAFT (REAR)	64
SEAL GP-FLYWHEEL HOUSING	65
SEAL (WATER SEPARATOR, FUEL)	127
SEAT & MOUNTING GP	951 952 953
SEAT BELT GP	952 953 954 956 957 965 972
SEAT BELT GP–RETRACTABLE	955
SEAT GP	965
SEAT GP–CLOTH	958 961 962 964
SEAT GP–VINYL	960
SEAT GP-SUSPENSION	972
SEAT GP-SUSPENSION–CLOTH	968 970
SEAT GP-SUSPENSION–HEATED	971
SEAT GP-SUSPENSION–VINYL	966
SENDER AS-FUEL LEVEL	155
SENSOR GP-ENGINE	235
SENSOR GP-POSITION	239
SENSOR GP-POSITION–ARTICULATION ANGLE	240
SENSOR GP-POSITION–LEFT BRAKE PEDAL	238
SENSOR GP-POSITION–THROTTLE	237
SENSOR GP-POSITION (ARTICULATION ANGLE)	369
SENSOR GP-POSITION (ROTARY) (LIFT)	366
SENSOR GP-PRESSURE	244 246 248 249
SENSOR GP-PRESSURE–ATMOSPHERIC AIR	242 247
SENSOR GP-PRESSURE–INJECTION ACTUATION	245
SENSOR GP-PRESSURE–LIFT CYLINDER OIL	241
SENSOR GP-PRESSURE–TURBOCHARGER OUTLET	243
SENSOR GP-PRESSURE (FUEL)	248
SENSOR GP-SPEED	252
SENSOR GP-SPEED–TMSN INTERMEDIATE OUTPUT	251
SENSOR GP-SPEED–WHEEL	250
SENSOR GP-SPEED (WHEEL)	369
SENSOR GP-TEMPERATURE	253 257 258 259
SENSOR GP-TEMPERATURE–ENGINE OIL	256
SENSOR GP-TEMPERATURE–TORQUE CONVERTER OIL	255
SENSOR GP-TEMPERATURE–TRANSMISSION OIL	254
SENSOR GP-TEMPERATURE (HYDRAULIC OIL)	319 323 327 332
SENSOR GP-TEMPERATURE (TRANSMISSION OIL)	466
SERVICE GP-MACHINE–SECURITY	260
SHAFT GP-DRIVE	439 440
SHIELD GP-ENGINE COMPARTMENT	533
SLIP JOINT GP	441
SOFTWARE GP-MACHINE (SECURITY)	354
SPIDER & BEARING GP	441 458
STARTING AID GP	261 262
STARTING AID GP-ETHER	263
STARTING MOTOR GP-ELECTRIC	264 265
STEERING AR-SECONDARY	591
STEERING COLUMN GP–TILT	592
STRAINER AS	727 729 730
STRAINER-FUEL	155
SUN VISOR	981

INDEX

Name	Page
SUPPORT GP-AIR INLET	534
SUPPORT GP-SEAT	974
SUSPENSION GP-SEAT–AIR	975
	977
	979
SWITCH AS-BALL (HYD LOCKOUT DETENT OVERRIDE)	781
SWITCH AS-LIMIT (PARKING BRAKE)	551
	552
SWITCH AS-LIMIT (STOP LIGHT)	542
SWITCH AS-MAGNETIC (24 VDC)	272
SWITCH AS-MAGNETIC (24-VOLT) (AIR INLET HEATER)	273
SWITCH AS-PRESSURE (OIL FILTER BYPASS) (POWER TRAIN)	400
SWITCH AS-PRESSURE (PRIMARY STEERING OIL)	358
	362
SWITCH AS-PRESSURE (REFRIGERANT)	283
SWITCH AS-PRESSURE (SECONDARY STEERING OIL)	358
	362
SWITCH AS-PRESSURE (SERVICE BRAKE OIL)	555
	558
SWITCH AS-ROCKER	648
	698
SWITCH AS-ROCKER (AIR CONDITIONER)	833
SWITCH AS-ROCKER (MODE SELECT)	288
	294
	303
SWITCH AS-ROCKER (RIDE CONTROL)	687
	691
	694
SWITCH AS-ROCKER (TMSN NEUTRALIZER OVERRIDE CONT)	288
	294
	303
SWITCH AS-ROTARY (24-VOLT) (AUTOSHIFT CONTROL)	287
	302
SWITCH AS-ROTARY (24-VOLT) (AUTOSHIFT CONTROL)	295
SWITCH AS-ROTARY (24-VOLT) (HEATER/AC FAN CONTROL)	286
SWITCH AS-ROTARY (24-VOLT) (REAR WIPER)	286
SWITCH AS-ROTARY (24-VOLT) (RUNNING/FLOOD/PANEL/TAIL LIGHT)	286
SWITCH AS-ROTARY (24-VOLT) (RUNNING/FLOOD/PANEL/TAIL LIGHT)	293
	302
SWITCH AS-ROTARY (24-VOLT) (VARIABLE SHIFT CONTROL)	293
	302
SWITCH AS-ROTARY (24-VOLT) (VARIABLE SHIFT CONTROL)	288
SWITCH AS-TEMPERATURE (AXLE OIL MONITORING)	316
SWITCH AS-TEMPERATURE (FRONT AXLE OIL)	284
SWITCH AS-TEMPERATURE (REAR AXLE OIL)	284
SWITCH AS-TEMPERATURE (REFRIGERANT)	836
SWITCH AS-TOGGLE (MIDDLE BOTTOM GUARD ACTUATOR)	356
SWITCH AS-TOGGLE (REAR BOTTOM GUARD ACTUATOR)	356
SWITCH AS-TURN SIGNAL	277
SWITCH AS-WARNING BEACON	225
SWITCH AS-WIPER (24-VOLT) (FRONT INTERMITTENT)	286
SWITCH AS-WIPER (24-VOLT) (INTERMITTENT)	279
SWITCH GP-DISCONNECT–BATTERY	267
SWITCH GP-DISCONNECT (BATTERY)	172
SWITCH GP-MAGNETIC	268
	271
	272
	275
SWITCH GP-MAGNETIC–MAIN RELAY	270
	274
SWITCH GP-MAGNETIC–START RELAY	269
SWITCH GP-MAGNETIC– STARTING AID HEATER RELAY	273
SWITCH GP-MAGNETIC (24-VOLT) (MAIN RELAY)	228
	231
	233
SWITCH GP-MAGNETIC (24-VOLT) (START RELAY)	228
SWITCH GP-MAGNETIC (24-VOLT) (START RELAY)	231
	233
SWITCH GP-PRESSURE (OIL FILTER BYPASS)	401
SWITCH GP-QUICK COUPLER	276
SWITCH GP-ROTARY (TURN SIGNAL, HAZARD)	277
SWITCH GP-SIGNAL	277
SWITCH GP-START (KEY)	286
SWITCH GP-START (KEY)	293
	302
SWITCH GP-TOGGLE– FUEL PRIMING PUMP	278
SWITCH GP-TOGGLE (GROUND LEVEL SHUTDOWN)	348
	351

INDEX

Name	Page
SWITCH GP-TOGGLE (HOOD TILT ACTUATOR)	348, 351
SWITCH GP-WIPER–INTERMITTENT	279
T	
TANK & FILTER GP-HYDRAULIC	727, 729
TANK & MTG GP-HYDRAULIC	732, 733
TANK GP-FUEL	155
TANK GP-RADIATOR TOP	107, 108
TILT GP-HOOD	535, 537
TIP GP–LONG	828
TIP GP-LONG	828
TIP GP-SHORT	829, 830
TIRE & RIM AR	442, 443, 444, 445, 446, 447, 448, 449, 450, 451, 452
TORQUE CONVERTER GP	453
TRANSMISSION AR	455
TURBOCHARGER GP	125, 126
U	
UNIVERSAL JOINT GP	457, 458
V	
VALVE & MTG GP-MAIN CONTROL	734, 735
VALVE AS-BYPASS (ENGINE OIL FILTER)	71
VALVE AS-CONTROL	459
VALVE-BREAKER RELIEF	667
VALVE-DRAIN	133, 135, 137, 139
VALVE-DRAIN (FUEL FILTER)	142
VALVE-GAS	600
VALVE GP-ACCUMULATOR CHARGING (BRAKE)	562
VALVE GP-ACCUMULATOR CHARGING (BRAKE)	558
VALVE GP-ACCUMULATOR CHARGING (BRAKE)	555
VALVE GP-BRAKE CONTROL (SERVICE)	555, 558
VALVE GP-BYPASS–TORQUE CONVERTER COOLER	459
VALVE GP-CHECK	736
VALVE GP-CHECK–MAKEUP	737
VALVE GP-CHECK (AXLE OIL COOLER BYPASS)	428
VALVE GP-CHECK (DEAD ENGINE LOWER)	682, 684
VALVE GP-CHECK (PILOT)	682, 684
VALVE GP-CONTROL	740
VALVE GP-CONTROL–AUXILIARY	738
VALVE GP-DEMAND FAN	741
VALVE GP-DIVERTER–QUICK COUPLER	742, 743, 744
VALVE GP-ETHER STARTING	280
VALVE GP-FLUID SAMPLING	81
VALVE GP-MAIN CONTROL	745, 747, 749
VALVE GP-MANUAL–LOWERING CONTROL	751
VALVE GP-MODULATING–TRANSMISSION CLUTCH	460
VALVE GP-PILOT	752, 756, 758
VALVE GP-PILOT–JOYSTICK, 2-FUNCTION	754, 762
VALVE GP-PILOT–JOYSTICK, 3-FUNCTION	766
VALVE GP-PILOT–2-FUNCTION	760
VALVE GP-PILOT–3-FUNCTION	764
VALVE GP-PILOT CARTRIDGE	770, 772, 773
VALVE GP-PILOT CARTRIDGE–LIFT	768
VALVE GP-PILOT CARTRIDGE–TILT	771
VALVE GP-PRESSURE REDUCING (TRACTION CONTROL SYSTEM)	562
VALVE GP-PUMP CONTROL–PRESSURE, FLOW COMPENSATOR–HYDRAULIC FAN	774
VALVE GP-PUMP CONTROL–PRESSURE, FLOW COMPENSATOR–STEERING	593
VALVE GP-RELIEF–LINE	777, 778

INDEX

Name	Page
	779
VALVE GP-RELIEF–MAIN	776
VALVE GP-RELIEF–PUMP BACKUP	595
VALVE GP-RELIEF–TRANSMISSION, HYDRAULIC CONTROL	461
VALVE GP-RELIEF (REFRIGERANT COMPRESSOR)	850
VALVE GP-RELIEF (STEERING CYLINDER CROSSOVER)	597
VALVE GP-SECONDARY STEERING	596
VALVE GP-SELECTOR & PRESS CONT–PILOT	780
VALVE GP-SELECTOR (STEERING)	597
VALVE GP-SHUTOFF–HYDRAULIC LOCKOUT	781
VALVE GP-SHUTOFF (HYDRAULIC TANK)	673
VALVE GP-SHUTTLE	783
	784
VALVE GP-SOLENOID	788
VALVE GP-SOLENOID–BRAKE PROPORTIONING	568
VALVE GP-SOLENOID–DEMAND FAN	789
VALVE GP-SOLENOID–QUICK COUPLER	785
	786
VALVE GP-SOLENOID–RIDE CONTROL	787
VALVE GP-SOLENOID–TRACTION CONTROL ON, OFF	567
VALVE GP-SOLENOID–UNIT INJECTOR PUMP–INJECTION ACTUATION	157
VALVE GP-SOLENOID & MANIFOLD–RIDE CONTROL	790
VALVE GP-STEERING	597
	599
VALVE GP-TIRE	438
VALVE GP-TRANSMISSION CONTROL	463
	466
VALVE-MANUAL	673
VALVE MECHANISM GP	66
	67
VALVE-SAMPLING	90
	92
VISOR GP-CAB	981

W

Name	Page
WARNING GP-BACKUP	281
WASHER GP-WINDOW	982
	983
WASTE HANDLING AR	2
	3
WATER SEP & FUEL PRM PUMP GP	158
WINDOW GP-DOOR	984
WIPER GP-WINDOW	986
	988
WIRE AS-SENSOR (14-GA WIRE) (ENGINE OIL TEMPERATURE)	256
WIRING AR-AXLE MONITORING	282
WIRING GP-AIR CONDITIONER	283
WIRING GP-AXLE MONITORING	284
WIRING GP-CAB	293
	302
	311
WIRING GP-CAB–ENCLOSED	286
WIRING GP-COMMUNICATION–PRODUCT LINK	313
WIRING GP-COUPLER	315
WIRING GP-ELECTRIC CLUTCH–AXLE OIL COOLER PUMP	316
WIRING GP-ENGINE	317
	319
	323
	327
	332
WIRING GP-FRONT	335
	338
	341
WIRING GP-LIGHTING–ROADING	344
	345
WIRING GP-LIGHTING–WASTE HANDLER FLOOD	346
WIRING GP-MACHINE	348
	351
	354
WIRING GP-POWER GUARD	356
WIRING GP-SECONDARY STEERING	358
	362
WIRING GP-SENSOR	366
WIRING GP-STARTING AID–ETHER	368
WIRING GP-TRACTION CONTROL	369

INDEX

Désignation	Page
A	
ACCOUDOIR (ASS)	839 840 841 842 843
ACCUMULATEUR - CLIMATISEUR (ASS) (AVEC SICCATIF)	904 908
ACCUMULATEUR - COMMANDE DE TRANSLATION (ASS)	600 601 602
ACCUMULATEUR - FREIN	539 540 541
ACCUMULATEUR DE CHARGE - SOUPAPE (FREIN)	555 562
ACCUMULATEUR DE CHARGE - SOUPAPE (FREIN)	558
ALLUME-CIGARETTES (ASS) (12 VOLTS)	287 293 302
ALTERNATEUR DE CHARGE (ASS)	162 164 166 168 170
ALTERNATEUR DE CHARGE (VERSION)	161
ALTERNATEUR DE RÉGULATEUR (ENS) (24 VOLTS)	162
AMORTISSEUR DE VIBRATIONS ET POULIE (ASS)	39
AMPOULE	201
AMPOULE (*24-VOLT, 21-WATT)	211
AMPOULE (24 VOLTS) (CLIGNOTANT DE DIRECTION)	205 207
AMPOULE (24 VOLTS) (FEU DE ROUTE)	207
AMPOULE (24 VOLTS) (FEUX DE ROUTE)	205
AMPOULE (24V, 10W)	903
AMPOULE (24V, 21W) (CLIGNOTANT DE DIRECTION)	205 207
AMPOULE (24V, 21W) (SIGNAL)	209
AMPOULE (24V, 3W)	286 293 302 918
AMPOULE (24V, 70W) (GYROPHARE)	212
AMPOULE (24V, 75/70W) (FEUX DE ROUTE/DE CROISEMENT)(DROIT)	207
AMPOULE (24V, 75/70W) (FEUX DE ROUTE/FEUX DE CROISEMENT)	205
ARBRE A CAMES (ASS)	7
ARBRE D'ENTRAÎNEMENT (ASS)	439 440
ARTICULATION DE SOUPAPE PILOTE (ASS)	709 710 711
*ASHTRAY AS	935
ATTELAGE D'ARTICULATION (ASS)	522
AUTOCOLLANT	933
AUTOCOLLANT (CONTACTEUR D'ALLUMAGE)	199 200 354
AUTOCOLLANT (CONTACTEUR D'ALLUMAGE) (CONTACTEUR D'ALLUMAGE)	354
AUTOCOLLANT DE DISJONCTEUR	231 233
AUTOCOLLANT DE MISE EN GARDE (MANUEL)	801
AUTOCOLLANT DE MISE EN GARDE (RADIO PRODUCT LINK)	199
AUTOCOLLANT DE MISE EN GARDE (VÉRIN HAUTE PRESSION)	691 694 698
AUTOCOLLANT DE MISE EN GARDE (VÉRIN HAUTE PRESSION)	687
AUTOCOLLANT DE PANNEAU DE FUSIBLES	936 937
AUTOCOLLANT DES COMMANDES (CONSOLE DROITE)	286
AUTOCOLLANT D'IDENTIFICATION (MODULE DE COMMANDE ÉLECTRONIQUE)	194
AUTOCOLLANT DU PANNEAU (*DUCT, LH)	288 294 303
AUTOCOLLANT DU PANNEAU (*DUCT, RH)	288
AUTOCOLLANT-ENTRÉE/ SORTIE	935 936 937
AUTOCOLLANT-INFORMATION (FILTRE À AIR)	111
AUTOCOLLANT-INFORMATION (12 VOLTS)	286 293 302
AUTOCOLLANT INSTRUMENTS (VERROUILLAGE HYDRAULIQUE)	609 611 613 615
AUTOCOLLANT-RÉFLECTEUR (JAUNE)	213

* TRADUCTION NON DISPONIBLE AU MOMENT DE LA PUBLICATION

INDEX

Désignation	Page
AUTOCOLLANT (SÉCURITÉ)	199, 200
AUXILIAIRE DE DÉMARRAGE À L'ÉTHER	263
AUXILIAIRE DE DÉMARRAGE (ASS)	261, 262
AVERTISSEUR (ASS)	159, 160
AVERTISSEUR DE RECUL (ASS)	281
AXE DE CULBUTEUR (ASS) (ADMISSION)	67
AXE DE CULBUTEUR (ASS) (ÉCHAPPEMENT)	67

B

Désignation	Page
BAGUE	794, 797
BALAI D'ESSUIE-GLACE (ENS)	986
BÂTI - CHARGEUSE (ENS)	488
BÂTI AR (ENS)	490, 493, 494
BÂTI AV (ENS)	485
BATTERIE	854
BATTERIE ET CÂBLAGE	172
BATTERIE (*12-VOLT, WET)	172
BLINDAGE D'ARBRE DE TRANSMISSION (ASS)	513
BLINDAGE DE TRANSMISSION (ASS)	518, 519
BLINDAGE HYDRAULIQUE DU MÉCANISME DE COMMANDE	467
BLINDAGE INFÉRIEUR (ASS)	505, 507, 509, 511
BLOC-CYLINDRES - COUVERCLE (ASS)	9
BLOC-CYLINDRES (ASS)	16, 18
BLOC DE BRANCHEMENT (ASS)	175
BLOC-FUSIBLE (ENS)	303
BOÎTE DE VITESSES (VERSION)	455
BOUCHON À ÉVENT	983
BOUCHON AIMANTÉ	408, 410, 412, 414, 417
BOUCHON DE BLOC-CYLINDRES (ASS)	60
BOUCHON DE GOULOTTE DE REMPLISSAGE	399, 727, 729
BOUCHON DE GOULOTTE DE REMPLISSAGE (ENS)	11
BOUCHON DE GOULOTTE DE REMPLISSAGE (ENS) (RÉSERVOIR DE CARBURANT)	155
BOUCHON DE MOTEUR (ASS)	61
BOUCHON DE REMPLISSAGE D'HUILE DE BOÎTE (ASS)	998
BOUCHON DE REMPLISSAGE D'HUILE DE BOÎTE (ASS)	393
BOUCHON DE VIDANGE	379
BOUCHON FILETÉ	398
BOULONNERIE DE CARTER AV (ASS)	43
BOURRELET D'ÉTANCHÉITÉ (SÉPARATEUR D'EAU)	127
*BRACKET AS-ADJUSTABLE SWITCH (LIMITE DES FEUXD'ARRÊT)	542
BRAS DE LEVAGE (ENS)	791
BRAS DE MANUTENTION (ASS)	801

C

Désignation	Page
CABINE - REVÊTEMENT (ASS)	896, 897, 899, 901
CABINE (ASS)	845
CABINE ROPS FERMÉE (ASS)	944, 945
CABINE (VERSION)	844
CABLAGE - CAPTEUR (ASS)	366
CABLAGE - CLIMATISEUR (ASS)	283
CABLAGE - EMBRAYAGE ÉLECTRIQUE (ASS)	316
CABLAGE AV (ASS)	335, 338, 341
CÂBLAGE-COUPLEUR (ASS)	315
CÂBLAGE D'AIDE AU DÉMARRAGE (ASS)	368
CÂBLAGE DE BLINDAGE HYDRAULIQUE	356
CABLAGE DE CABINE (ASS)	293, 302, 311
CABLAGE DE CABINE (ASS)	286
CABLAGE DE COMMANDE ANTI-PATINAGE (TRACTION)	369
CÂBLAGE DE COMMUNICATION (ASS)	313
CABLAGE DE DIRECTION AUXILIAIRE (ASS)	358, 362
CABLAGE DE LA MACHINE (ASS)	348
CABLAGE DE LA MACHINE (ASS)	351, 354
CABLAGE DE MOTEUR (ASS)	317

* TRADUCTION NON DISPONIBLE AU MOMENT DE LA PUBLICATION

INDEX

Désignation	Page
	319
CABLAGE DE MOTEUR (ASS)	323
	327
	332
CABLAGE D'ÉCLAIRAGE (ASS)	344
CABLAGE D'ÉCLAIRAGE (ASS)	345
	346
CABLAGE MOTEUR (ENS) (COMMANDE ÉLECTRONIQUE)	317
CABLAGE MOTEUR (ENS) (INJECTEUR D'UNITÉ)	317
CABLAGE MOTEUR (ENS) (MODULE DE COMMANDE ÉLECTRONIQUE)	323
CABLAGE MOTEUR (ENS) (*70A ALTERNATOR)	327
CÂBLE DE SURVEILLANCE D'ESSIEU (ASS)	284
CACHE-SOUPAPES (ASS)	13
CADENAS (ASS)	885
CADENAS (ASS) (REMPLISSAGE DE RÉSERVOIR HYDRAULIQUE)	621
CANALIS. DE REFROIDISSEMENT DU CONV. DE COUPLE	425
CANALISATION DE DIRECTION AUXILIAIRE	578
CANALISATIONS - INJECTEURS-POMPES HYDRAULIQUES	145
	146
CANALISATIONS A COMMANDE PILOTE (ASS)	684
	686
CANALISATIONS A COMMANDE PILOTE (ASS)	682
CANALISATIONS AV	659
	661
	663
	665
CANALISATIONS D'AIR (ASS)	117
	118
CANALISATIONS DE CARBURANT (ASS)	128
	130
CANALISATIONS DE CHAUFFAGE DE CABINE (ASS)	912
CANALISATIONS DE CLIMATISEUR (ASS)	904
CANALISATIONS DE CLIMATISEUR (ASS)	908
CANALISATIONS DE COMMANDE DE MARCHE	687
	691
	694
	698
CANALISATIONS DE COUPLEUR (ASS)	645
	648
	651
	652
	654
	657
CANALISATIONS DE DIAGNOSTIC (ASS)	991
	994
CANALISATIONS DE DIRECTION (ASS)	580
CANALISATIONS DE FILTRE DE TRANSMISSION (ASS)	421
	423
CANALISATIONS DE GRAISSAGE (ASS)	528
	530
CANALISATIONS DE RÉCHAUFFEUR DE LIQUIDE DE REFROIDISSEMENT	912
CANALISATIONS DE REFROIDISSEUR D'HUILE D'ESSIEU (ASS)	417
CANALISATIONS DE REFROIDISSEUR D'HUILE HYDR. (ASS)	669
	673
CANALISATIONS DE VÉRIN DE LEVAGE (ASS)	678
	680
CANALISATIONS D'EAU (ASS)	88
	90
	92
CANALISATIONS D'EAU (ASS)	85
	86
CANALISATIONS D'HUILE DE TURBOCOMPRESSEUR (ASS)	76
CANALISATIONS D'HUILE MOTEUR (ASS)	75
CANALISATIONS DU FILTRE A CARBURANT (ASS)	135
	137
	139
	142
CANALISATIONS DU FILTRE A CARBURANT (ASS)	133
CANALISATIONS DU VÉRIN D'INCLINAISON (ASS)	702
	704
	706
CANALISATIONS HYDRAULIQUES (ASS)	667
CAPOT ET PROTECTION (ASS)	524
CAPTEUR - MOTEUR (ASS)	235
CAPTEUR DE PRESSION (ASS)	241
	242
	243
	244
	245
	246
	247
	248
	249
CAPTEUR DE PRESSION (ASS) (CARBURANT)	248
CAPTEUR DE TEMPERATURE (ASS)	253

* TRADUCTION NON DISPONIBLE AU MOMENT DE LA PUBLICATION

INDEX

Désignation	Page
	254
	255
	256
	257
	258
	259
CAPTEUR DE TEMPERATURE (ASS) (HUILE DE BOÎTE)	466
CAPTEUR DE TEMPERATURE (ASS) (HUILE HYDRAULIQUE)	319
	323
	327
	332
CAPTEUR DE VITESSE (ASS)	250
	251
	252
CAPTEUR DE VITESSE (ASS) (ROUE)	369
CARBURANT - CANALISATIONS DE VIDANGE (ASS)	132
CARDAN COULISSANT (ASS)	441
CARTER AV (ASS)	48
CARTER DE VOLANT (ASS)	47
CARTER D'ESSIEU FIXE	408
	410
CARTER D'ESSIEU OSCILLANT	412
	414
CEINTURE DE SECURITE (ASS)	952
	965
CEINTURE DE SECURITE (ASS)	972
CEINTURE DE SECURITE (ASS)	953
	954
	955
	956
	957
CENDRIER (ENS)	936
	937
CHAPEAU - RADIATEUR (7-PSI)	107
	108
CHAPEAU ANTI-POUSSIERE	195
CHAPEAU DE VALVE (TIGE)	435
CHARNIÈRE DE GARDE-BOUE (ASS)	520
	521
CHÂSSIS ARRIÈRE-COUPLEUR EXPRESS	825
	826
	827
CHÂSSIS-PORTEUR DE JOINT (ASS)	8
CHAUFFAGE DE CABINE (ASS)	891
CHAUFFAGE ET MONTAGE - CABINE (ASS)	890
CLAPET DE DECHARGE (ASS)	461
	595
	776
	777
	778
	779
CLAPET DE DECHARGE (ASS) (COMPRESSEUR DE RÉFRIGÉRANT)	850
CLAPET DE DECHARGE (ASS) (DOUBLE ALIMENTATION DE VÉRIN DE DIRECTION)	597
CLAPET DE DÉCHARGE HYDRAULIQUE	667
CLAPET DE RETENUE (ENS)	736
	737
CLAPET DE RETENUE (ENS) (ABAISSEMENT MOTEUR COUPÉ)	682
	684
CLAPET DE RETENUE (ENS) (DÉRIVATION DE REFROIDISSEUR D'HUILE D'ESSIEU)	428
CLAPET DE RETENUE (ENS) (PILOTE)	682
	684
CLÉ	393
	885
CLÉ (DÉBRANCHEMENT DE BATTERIE)(DÉMARREUR)	267
CLÉ ÉLECTRONIQUE (ENS) (SÉCURITÉ)	200
	260
	354
CLIGNOTANT (ENS) (24 VOLTS)	277
CLIMATISEUR (ASS)	836
CLIMATISEUR ET MONTAGE (ASS)	833
	834
CLIMATISEUR (VERSION)	835
COLLECTEUR D'ÉCHAPPEMENT (ASS)	119
COLLECTEUR PROPORTIONNEL DE FREIN (ASS)	565
COLONNE DE DIRECTION (ASS)	592
COMMANDE - COUPLEUR EXPRESS (VERSION)	814
	815
COMMANDE ANTI-PATINAGE (TRACTION) (VERSION)	546
COMMANDE DE BOITE DE VITESSES (ASS)	388
	389
COMMANDE DE COMMUNICATION (ASS) (LIAISON DE PRODUIT)	176
COMMANDE DE DIRECTION (ASS)	569
	571
COMMANDE DE FREIN DE STATIONNEMENT (ASS)	552
	554
COMMANDE DE FREIN DE STATIONNEMENT (ASS)	549
	551
COMMANDE DE GODET (ASS)	792
	794
	797

* TRADUCTION NON DISPONIBLE AU MOMENT DE LA PUBLICATION

INDEX

Désignation	Page
COMMANDE DE LA PÉDALE DE FREIN (ASS)	547
	548
COMMANDE DE POIGNÉE (ASS)	607
	608
COMMANDE DE POSITION (ASS)	188
COMMANDE DE POSITION (ASS) (OUTIL DE TRAVAIL)	641
	643
COMMANDE ELECTRONIQUE DE LIMITEUR DE LEVAGE (ASS)	186
	187
	641
COMMANDE ELECTRONIQUE DE MOTEUR (ASS)	178
	181
	182
	183
	184
	185
COMMANDE ET MONTAGE - MOTEUR	178
	179
	180
COMMANDE ET MONTAGE-COMMUNICATION (ASS)	176
COMMANDE HYDRAULIQUE PILOTE (ASS)	611
	613
	615
	617
	618
	619
	620
COMMANDE HYDRAULIQUE PILOTE (ASS)	609
COMMANDE NON PROGRAMMEE (ASS)	189
	190
	191
	200
COMMANDE NON PROGRAMMEE (ASS) (CIRCUIT DE COMMANDE DE TRACTION)	369
COMMANDE NON PROGRAMMEE (ASS) (SÉCURITÉ)	260
COMMANDE PRINCIPALE DE SOUPAPE ET MONTAGE (ASS)	734
	735
COMPRESSEUR DE REFRIGERANT (ASS)	850
	851
CONDENSATEUR ET MONTAGE (RÉFRIGÉRANT)	852
	853
CONTACTEUR DE CLIGNOTANT (ENS)	277
CONTACTEUR DE COUPLEUR EXPRESS (ASS)	276
CONTACTEUR MAGNETIQUE (ASS)	268
	269
	270
	271
	272
	273
	274
	275
CONTACTEUR MAGNETIQUE (ASS) (*24-VOLT) (RELAIS DE DÉMARRAGE)	228
CONTACTEUR MAGNETIQUE (ASS) (*24-VOLT) (RELAIS PRINCIPAL)	228
CONTACTEUR MAGNETIQUE (ASS) (24 VOLTS) (RELAIS DE DÉMARRAGE)	231
CONTACTEUR MAGNETIQUE (ASS) (24 VOLTS) (RELAIS DE DÉMARRAGE)	233
CONTACTEUR MAGNETIQUE (ASS) (24 VOLTS) (RELAIS PRINCIPAL)	231
CONTACTEUR MAGNETIQUE (ASS) (24 VOLTS) (RELAIS PRINCIPAL)	233
CONTACTEUR MAGNETIQUE (ENS) (24 V CC)	272
CONTACTEUR MAGNETIQUE (ENS) (24 VOLTS) (RÉCHAUFFEUR D'ADMISSION D'AIR)	273
CONTACTEUR ROTATIF (ASS) (CLIGNOTANTS, FEUX DE DÉTRESSE)	277
CONTREPOIDS AR (ASS)	477
CONTREPOIDS (ASS)	476
CONVERTISSEUR DE COUPLE (ASS)	453
CORPS DE SOUPAPE PILOTE (ASS)	603
	604
CORPS D'INDICATEUR	90
	92
COUDE D'ADMISSION D'AIR (ASS)	115
COUPLEUR EXPRESS (ASS)	818
	819
COUPLEUR EXPRESS (VERSION)	815
	816
	817
COURONNE CONIQUE (ASS)	402
COURROIE INTERMÉDIAIRE (ASS)	49
COURROIE MULTIPLE	166
	170
	851
COURROIE MULTIPLE (*WITH AIR CONDITIONING)	431
COURROIE MULTIPLE (8 PK)	168
COUVERCLE DE CARTER AV (ASS)	11
COUVERCLE DE COLLECTEUR D'ADMISSION (ASS)	112
	113
	114
COUVERCLE DE RÉSERVOIR HYDRAULIQUE	621

* TRADUCTION NON DISPONIBLE AU MOMENT DE LA PUBLICATION

INDEX

Désignation	Page
COUVERCLE INFÉRIEUR-DOSSIER (ASS)	928 929 930
COUVERCLES D'EXPEDITION (ASS)	392
CREPINE (ENS)	727 729 730
CROISILLON ET ROULEMENT	441 458
CULASSE (ASS)	27 28 29 30 31 33 35 37 38
CULASSE (ENS)	20 22 24 25
CULBUTERIE (ASS)	66 67
*CYLINDER BLOCK GP	17

D

Désignation	Page
DEFLECTEUR (ASS)	475
DÉMARREUR ÉLECTRIQUE (ASS)	264 265
DIFFÉRENTIEL - GLISSEMENT LIMITÉ (ASS)	395
DIFFERENTIEL (ASS)	394
DIFFÉRENTIEL NOSPIN (ASS)	396 397
DIRECTION AUXILIAIRE (VERSION)	591
DISJONCTEUR (ASS) (*20-AMPERE)	228
DISJONCTEUR (ASS) (*20-AMPERE) (COMMANDE VÉRIN DE CAPOT)	228
DISJONCTEUR (ASS) (20A)	231 233 356
DISJONCTEUR (ASS) (*80-AMPERE) (ALTERNATEUR)	229
DISJONCTEUR (ASS) (*80-AMPERE) (PRINCIPAL)	228
DISJONCTEUR (ASS) (80A) (ALTERNATEUR)	231
DISJONCTEUR (ASS) (80A) (PRINCIPAL)	231
DISJONCTEUR DE SECURITE (ENS) (FEUX D'ARRÊT)	542
DISJONCTEUR DE SECURITE (ENS) (FREIN DE STATIONNEMENT)	551 552
DISJONCTEUR DU PANNEAU DE COMMANDE (ASS)	228 231
DISJONCTEUR DU PANNEAU DE COMMANDE (ASS)	233
DISJONCTEUR (ENS) (*15-AMPERE) (FEUX DE ROUTE)	228
DISJONCTEUR (ENS) (*15-AMPERE) (MODULE DE COMMANDE MOTEUR)	228
DISJONCTEUR (ENS) (15A) (CLIMATISEUR)	288
DISJONCTEUR (ENS) (15A) (FEUX DE ROUTE)	231 233
DISJONCTEUR (ENS) (15A) (MODULE DE COMMANDE MOTEUR)	231 233
DISJONCTEUR (ENS) (15A) (SIÈGE À SUSPENSION PNEUMATIQUE)	952
DISJONCTEUR (ENS) (15A) (SIÈGE À SUSPENSION PNEUMATIQUE)	972
DISJONCTEUR (ENS) (15A) (SIÈGE À SUSPENSION PNEUMATIQUE)	965
DISJONCTEUR (ENS) (15A) (SIÈGE PNEUMATIQUE)	951
DISJONCTEUR (ENS) (20A) (COMMANDE VÉRIN DE CAPOT)	231 233
DISJONCTEUR (ENS) (80A) (ALTERNATEUR)	233
DISJONCTEUR (ENS) (80A) (PRINCIPAL)	233
DISPOSITIF D'EVACUATION DES VAPEURS DE CARTER	72
DISTRIBUTEUR - 3 VOIES (VERSION)	636
DISTRIBUTEUR (ASS)	738 740
DISTRIBUTEUR DE BOITE (ASS)	463 466
DISTRIBUTEUR DE FREIN (ASS) (ENTRETIEN)	555 558
DISTRIBUTEUR DE FREIN (ENS)	459
DISTRIBUTEUR DE POMPE (ASS)	593 774
DISTRIBUTEUR QUADRUPLE CORPS (VERSION)	637

E

Désignation	Page
EAU DES CHEMISES - RECHAUFFEUR (ASS)	195

* TRADUCTION NON DISPONIBLE AU MOMENT DE LA PUBLICATION

INDEX

Désignation	Page
	196
	197
	198
ECHELLE (ASS)	527
ÉCLAIRAGE - AUXILIAIRE (VERSION)	213
ÉCLAIRAGE - CLIGNOTANT (VERSION)	214
ÉCLAIRAGE - FEUX DE ROUTE (ASS)	223
ÉCLAIRAGE - FEUX DE ROUTE (VERSION)	213
ÉCLAIRAGE - GYROPHARE (ASS)	225
ÉCLAIRAGE - GYROPHARE (ASS)	226
	227
ÉCLAIRAGE - PROJECTEURS (ASS)	214
	215
	216
ÉCLAIRAGE - PROJECTEURS (ASS)	218
ÉCLAIRAGE - PROJECTEURS ET CLIGNOTANTS (ASS)	219
	221
ÉCLAIRAGE CLIGNOTANT	224
ÉCRAN (ENS)	752
	754
	756
	758
	760
	762
	764
	766
ÉCRAN MAGNÉTIQUE (ASS)	379
ÉCRAN MAGNÉTIQUE (REFROIDISSEUR D'HUILE D'ESSIEU)	417
ÉCRAN THERMIQUE DE COMPARTIMENT MOTEUR	533
ELECTROMODULE DE CHARGE UTILE DE BENNE	917
ÉLECTROMODULE DE CHARGE UTILE DE BENNE	918
ÉLECTRONIQUE - MACHINE (ENS)	193
	194
ÉLECTRONIQUE DE TRANSMISSION (ASS)	194
ÉLÉMENT DE FILTRE À AIR (ENS)	116
ÉLÉMENT DE FILTRE À AIR (ENS) (SECONDAIRE)	111
ÉLÉMENT DE FILTRE À HUILE (ENS) (EFFICACITÉ STANDARD)	727
ÉLÉMENT DE FILTRE À HUILE (ENS) (EFFICACITÉ STANDARD) (HYDRAULIQUE)	729
ÉLÉMENT DE FILTRE À HUILE HYDRAULIQUE	400
ÉLÉMENT DE FILTRE À HUILE HYDRAULIQUE (TRANSMISSION)	401
ÉLÉMENT DU RÉCHAUFFEUR D'EAU DES CHEMISES (ENS)	195
ÉLÉMENT DU RÉCHAUFFEUR D'EAU DES CHEMISES (ENS) (120-VOLT, 1000-WATT)	197
	198
ÉLÉMENT DU RÉCHAUFFEUR D'EAU DES CHEMISES (ENS) (240V, 1000W)	196
ÉLÉMENT PRINCIPAL (ENS)	111
ÉLIMINATION DES DÉCHETS (VERSION)	2
	3
EMBRAYAGE (ASS)	382
	384
	386
ENGRENAGE DE TRANSFERT DE RENDEMENT (ASS)	406
ENTRAÎNEMENT POUR COURROIE (GYROPHARE)	212
ENTRÉE - BOÎTE POWERSHIFT (ASS)	416
ENTRETIEN DE LA MACHINE (ASS)	260
ESSIEU FIXE (VERSION)	374
ESSIEU OSCILLANT (VERSION)	375
	376
ESSUIE-GLACE (ASS)	988
ESSUIE-GLACE (ASS)	986

F

Désignation	Page
FAISCEAU D'AIDE AU DÉMARRAGE (ENS) (ÉTHER)	368
FAISCEAU DE CÂBLES DE FREINS (ENS) (FEU DE STOP)	542
FAISCEAU DE CABLES (ENS) (*TEMPERATURE RESISTOR) (*TEMPERATURE RESISTOR) (OIL)	319
FAISCEAU DE CHAUFFAGE ET CLIMATISATION	836
	891
FAISCEAU DE COMMANDE ANTITANGAGE (ENS)	687
	691
	694
	698
FAISCEAU DE DIRECTION (ENS) (SECONDAIRE)	358
	362
FAISCEAU DE RADIO (ENS) (HAUT-PARLEUR)	941
FAISCEAU DE REFROIDISSEUR D'HUILE DE TRANSMISSION (ENS)	390
FAISCEAU DE REFROIDISSEUR D'HUILE D'ESSIEU	428
FAISCEAU DE REFROIDISSEUR D'HUILE MOTEUR (ENS)	82

* TRADUCTION NON DISPONIBLE AU MOMENT DE LA PUBLICATION

INDEX

Désignation	Page
FAISCEAU DE SOUPAPE (ENS) (COMPRESSEUR PNEUMATIQUE DE SIÈGE)	977, 979
FAISCEAU D'ÉCLAIRAGE (ENS) (DÉPLACEMENT ROUTIER, CÔTÉ GAUCHE)	344
FAISCEAU D'ÉCLAIRAGE (ENS) (DÉPLACEMENT SUR ROUTE, CÔTÉ DROIT)	344
FAISCEAU D'ÉCLAIRAGE (ENS) (PLAFONNIER)	216
*FASTENER GP-DAMPER & PULLEY	41
FIL DE CAPTEUR (ENS) (FIL DE CALIBRE 14) (TEMP. D'HUILE MOTEUR)	256
*FILM-CIRCUIT BREAKER	228
*FILM-FUSE PANEL	935
*FILM-INSTRUCTION	186, 187, 188
FILTRE	884
FILTRE - ELECTRONIQUE (ASS)	847
FILTRE - SÉPARATEUR D'EAU ET DE CARBURANT (ENS) (PRINCIPAL)	127
FILTRE A AIR (ASS)	109, 111
FILTRE À AIR DE CABINE (ASS)	883, 884
FILTRE À CARBURANT	155
FILTRE A CARBURANT (ENS)	139, 142
FILTRE A CARBURANT (ENS) (AUXILIAIRE)	133, 135, 137
FILTRE A HUILE (ASS)	400, 401
FILTRE À HUILE MOTEUR (ASS)	71
FILTRE A HUILE MOTEUR (ENS)	71
FILTRE (AÉRATION DE LA CABINE)	883
FILTRE (AIR DE CABINE)	883
FILTRE (AIR DE CABINE)	884
FILTRE DE SÉPARATEUR D'EAU ET DE CARBURANT (ASS)	127
FILTRE (EAU) (POMPE)	96, 98
FILTRE (LAVE-GLACE)	983
FOURCHE PALLETTE (ASS)	824
FREIN DE MANOEUVRE - COMMANDE (ASS)	555, 558, 562
FREIN DE STATIONNEMENT (ASS)	545
FREIN ET TRAINS PLANÉTAIRES (ASS)	377
FUSIBLE (10A)	286, 293, 302
FUSIBLE (15A)	286, 293, 302

G

Désignation	Page
GAINE D'AIR (ASS)	880
GARDE-BOUE (ASS)	481, 482, 483
*GEAR GP-BEVEL & PINION	404
GLACE DE PORTIÈRE (ASS)	984
GODET DE MANUTENTION	805, 806, 807, 808
GODET NORMAL (ASS)	810, 811, 812, 813
GODET NORMAL (ENS)	802, 803, 804
GODET POUR MANUTENTION	814
GOULOTTE DE REMPLISSAGE D'HUILE DE TRANSMISSION	399
GRILLE DE RADIATEUR (ASS)	497, 499
GROUPE DE CONTROLE	854
GROUPE DE PROTECTION (ASS)-JOINT D'ESSIEU	504
GROUPE DE ROTATION DE POMPE	590, 726

H

Désignation	Page
*HOSE-DISPOSAL	72
HUILE MOTEUR - CARTER (ASS)	56

I

Désignation	Page
INCLINAISON DU CAPOT (ASS)	535, 537
INDICATEUR DE COLMATAGE DE FILTRE À AIR (ASS)	109
INJECTEUR DE CARBURANT (ASS)	149
INJECTEURS-POMPES HYDRAULIQUES (ENS)	151, 152, 153

* TRADUCTION NON DISPONIBLE AU MOMENT DE LA PUBLICATION

INDEX

Désignation	Page
INTERRUPTEUR - SIGNAL (ASS)	277
INTERRUPTEUR À BASCULE (ASS)	278
INTERRUPTEUR À BASCULE (ASS) (ARRÊT DEPUIS LE SOL)	348, 351
INTERRUPTEUR À BASCULE (ASS) (COMMANDE VÉRIN DE CAPOT)	348, 351
INTERRUPTEUR À BASCULE (ENS) (*MIDDLE BOTTOM GUARD ACTUATOR)	356
INTERRUPTEUR À BASCULE (ENS) (*REAR BOTTOM GUARD ACTUATOR)	356
INTERRUPTEUR BALANCIER (ENS)	648, 698
INTERRUPTEUR BALANCIER (ENS) (CLIMATISEUR)	833
INTERRUPTEUR BALANCIER (ENS) (COMMANDE DE NEUTRALISATION DE BOÎTE DE VITESSES)	288, 294, 303
INTERRUPTEUR BALANCIER (ENS) (COMMANDE DE TRANSLATION)	687, 691, 694
INTERRUPTEUR BALANCIER (ENS) (SÉLECTION DE MODE)	288, 294, 303
INTERRUPTEUR DE DÉMARRAGE (ASS) (CLAVETTE)	286, 293, 302
INTERRUPTEUR D'ESSUIE-GLACE (ASS)	279
INTERRUPTEUR D'ESSUIE-GLACE (24 VOLTS) (AV, INTERMITTENT)	286
INTERRUPTEUR D'ESSUIE-GLACE (24 VOLTS) (INTERMITTENT)	279
INTERRUPTEUR-GYROPHARE (ENS)	225
INTERRUPTEUR ROTATIF (ENS) (24 VOLTS) (COMMANDE DE CHANGEMENT DE VITESSES VARIABLE)	288
INTERRUPTEUR ROTATIF (ENS) (24 VOLTS) (COMMANDE DE CHANGEMENT DE VITESSES VARIABLE)	293, 302
INTERRUPTEUR ROTATIF (ENS) (24 VOLTS) (COMMANDE DE PASSAGE AUTOMATIQUE DES VITESSES)	287, 295, 302
INTERRUPTEUR ROTATIF (ENS) (24 VOLTS) (COMMANDE DU VENTILATEUR CHAUFFAGE/CLIMATISEUR)	286
INTERRUPTEUR ROTATIF (ENS) (24 VOLTS) (ESSUIE-GLACE ARRIÈRE)	286
INTERRUPTEUR ROTATIF (ENS) (24 VOLTS) (FEU DE MARCHE/PROJECTEUR/TÉMOIN DU PANNEAU/FEU ARRIÈRE)	286
INTERRUPTEUR ROTATIF (ENS) (24 VOLTS) (FEU DE MARCHE/PROJECTEUR/TÉMOIN DU PANNEAU/FEU ARRIÈRE)	293, 302
INTERRUPTEUR SPHÉRIQUE (ENS) (NEUTRALISATION DU CRAN DE MISE HORS SERVICE DE L'HYDRAULIQUE)	781

J

Désignation	Page
JANTE DÉMONTABLE (ASS)	435
JANTE DÉMONTABLE (ASS)	436, 437, 438
JANTE (VERSION)	434
JAUGE D'HUILE MOTEUR (BAIONNETTE) (ASS)	73, 74
JAUGE D'HUILE MOTEUR (BAÏONNETTE) (ENS)	408, 412
JAUGE D'HUILE MOTEUR (BAÏONNETTE) (ENS)	410, 414
JOINT DE CARTER DE VOLANT (ASS)	65
JOINT DE VILEBREQUIN (ASS)	64
JOINT DE VILEBREQUIN (ASS) (ARRIÈRE)	64
JOINT DE VILEBREQUIN (ASS) (AVANT)	64
JOINT PLAT	86, 727, 729
JOINT PLAT (BOÎTIER DE RÉGULATEUR DE TEMPÉRATURE)	88
JOINT UNIVERSEL (ASS)	457, 458

K

Désignation	Page
KIT - COUSSIN (ACCOUDOIR)	840
KIT - COUSSIN (DOSSIER EN TOILE)	882
KIT - SUPÉRIEUR (ENS)	966
*KIT-BRUSH SEAL	897, 899, 901
KIT D'ACCOUDOIR - DROITE	966

* TRADUCTION NON DISPONIBLE AU MOMENT DE LA PUBLICATION

INDEX

Désignation	Page
	968
KIT D'ACCOUDOIR GAUCHE	966
	968
KIT D'AMORTISSEUR DE VIBRATIONS	966
	968
KIT D'AMORTISSEUR (SIEGE A SUSPENSION)	977
KIT D'ARTICULATION	592
KIT D'ATTACHE	966
	968
	975
	979
KIT D'ATTACHE (SIEGE A SUSPENSION)	977
KIT D'AXE À PÉDALE (PÉDALE DU RÉGULATEUR)	939
KIT DE BAGUE (DÉMARREUR)	265
KIT DE BALAIS (DÉMARREUR)	265
KIT DE BLOC COULISSANT	958
	970
KIT DE BORNE (ALTERNATEUR)	162
	164
KIT DE BOULONNERIE	975
KIT DE BOULONNERIE (ALTERNATEUR)	162
KIT DE BOULONNERIE (ALTERNATEUR)	164
KIT DE BOUTON DE SIEGE	958
KIT DE BOUTON (RADIO)	941
KIT DE BRIDE DE FIXATION DE FILTRE A AIR	111
KIT DE BUTÉE	966
	968
KIT DE CARTOUCHE - AR	566
KIT DE CHAPEAU DE FILTRE (RÉSERVOIR DE CARBURANT)	155
KIT DE CHÂSSIS (ENS) (SIÈGE)	966
	968
KIT DE CLAPET DE DECHARGE (DIRECTION AUXILIAIRE)	584
KIT DE COMPRESSEUR D'AIR	975
KIT DE COUSSIN DE SIEGE (TOILE)	958
KIT DE COUSSINET (ALTERNATEUR)	164
KIT DE COUSSINET DE SUSPENSION	966
	968
KIT DE COUVERCLE DE SUSPENSION	966
	968
KIT DE COUVERCLES	966
KIT DE COUVERCLES (ARRIÈRE)	968
KIT DE COUVERCLES (FOND)	968
KIT DE CROISILLON ET ROULEMENT	457
KIT DE GARNITURE DE FREIN	545
KIT DE HAUTEUR	966
	968
KIT DE JOINT AR	566
KIT DE JOINTS	586
	600
	602
	625
	737
	781
KIT DE JOINTS (ABAISSEMENT MOTEUR COUPÉ)	751
KIT DE JOINTS (ÉLECTROVANNE)	157
	567
	568
	785
	786
	787
	788
KIT DE JOINTS (RÉCHAUFFEUR D'EAU)	195
	197
KIT DE KLAXON	592
KIT DE LEVIER (DÉMARREUR)	265
KIT DE LEVIER D'INCLINAISON	592
KIT DE LEVIER (ENS) (LEVIER DE HAUTEUR)	966
	968
KIT DE PALETTE AR	566
KIT DE PANNEAU DU DOSSIER DU SIEGE	958
KIT DE PISTON	590
KIT DE POIGNÉE	966
	968
KIT DE PRISE FEMELLE (12 BROCHES)	335
	341
KIT DE RAIL DE SIEGE COULISSANT	966
	968
KIT DE REDRESSEMENT (CUVETTE DE SIÈGE)	931
KIT DE REGLAGE (ACCOUDOIR)	840
KIT DE REGLAGE (CUVETTE DE SIÈGE)	931
KIT DE RÉGLAGE DE CABLE	966
	968
KIT DE REGLAGE DE SIEGE - INCLINAISON (CUVETTE DE SIÈGE)	931
KIT DE REGLAGE (*SUSPENSION)	966
	968
KIT DE RESSORTS	586
KIT DE RESSORTS (LEVIER DE HAUTEUR)	966
	968
KIT DE RONDELLE D'ÉPAISSEUR	588
KIT DE ROULEAU	975
KIT DE ROULEAU (PÉDALE DU RÉGULATEUR)	939
KIT DE SIÈGE (ARRIÈRE)	966
	968
KIT DE SIÈGE (FOND)	966
	968
KIT DE SOLÉNOÏDE (DÉMARREUR)	265

* TRADUCTION NON DISPONIBLE AU MOMENT DE LA PUBLICATION

INDEX

Désignation	Page
KIT DE SOUPAPE DE CHARGE DE FREIN	562
KIT DE SOUPAPE PNEUMATIQUE	979
KIT DE SOUPAPE PNEUMATIQUE (SIEGE A SUSPENSION)	977
KIT DE SUPPORT	968
KIT DE TAMIS (PRÉFILTRE)	124
KIT DE VIS DE RETENUE (M5X0,8X53,24-MM) (COMMANDE NON PROGRAMMÉE)	190
KIT DE VIS DE RETENUE (*M5X0.8X53.24-MM) (COMMANDE NON PROGRAMMÉE)	189
KIT D'ISOLANT (DÉMARREUR)	265
KLAXON ÉLECTRIQUE (ASS)	893
	894
KLAXON (ENS) (*24-VOLT, LOW TONE)	894

L

LAME DE COUPE	822
	823
LAME DE COUPE (ASS)	820
	821
*LAMP-HALOGEN (*24-VOLT, 65-WATT)	214
LAMPE - CLIGNOTANT DE DIRECTION (ASS)	209
	210
	211
LAMPE - CLIGNOTANT DE DIRECTION (ASS) (*24-VOLT) (CLIGNOTANT AVANT)	224
LAMPE - GYROPHARE (ASS)	212
LAMPE - PHARE (ASS)	201
	202
LAMPE - PHARE (ASS)	203
	204
LAMPE - PHARE ET CLIGNOTANT	205
	207
LAMPE (ENS) (ROUGE, VERT, TÉMOIN LUMINEUX, 12V)	354
LAMPE (ENS) (ROUGE, VERT, TÉMOIN LUMINEUX, 12V)	200
LAMPE (ENS) (ROUGE, VERT, TÉMOIN LUMINEUX, 12V)	199
LAMPE HALOGÈNE (24V, 65W)	203
	204
	215
	216
LAMPE HALOGÈNE (24V, 65W) (PROJECTEUR)	202
LAVE-GLACE - VITRE (ASS)	982
	983
*LENS-AMBER	211
LENTILLE (ENS)	204
LENTILLE (ENS) (JAUNE) (CLIGNOTANT DE DIRECTION)	205
	207
LENTILLE (ENS) (PHARE AVANT) (FEUX DE ROUTE/FEUX DE CROISEMENT)	205
	207
LENTILLE (ENS) (PLAFONNIER)	202
LENTILLE (JAUNE) (CLIGNOTANT DE DIRECTION)	205
	207
LENTILLE ORANGE (SIGNAL)	209
LEVAGE (VERSION)	799
LIAISON - VERROUILLAGE DE CHÂSSIS DE DIRECTION (ASS)	532
*LIFT AR	799
LIMITEUR DE LEVAGE ET RETOUR À L'ANGLE DE CAVAGE	641
	643
LITTÉRATURE (ASS)	914
LOGICIEL - MACHINE (ENS) (SÉCURITÉ)	354

M

MANOCONTACT (ENS) (DÉRIVATION DU FILTRE À HUILE) (TRANSMISSION)	400
MANOCONTACT (ENS) (HUILE DE DIRECTION AUXILIAIRE)	358
	362
MANOCONTACT (ENS) (HUILE DE DIRECTION PRINCIPALE)	358
	362
MANOCONTACT (ENS) (HUILE DE FREIN DE MANOEUVRE)	555
	558
MANOCONTACT (ENS) (RÉFRIGÉRANT)	283
MANOCONTACT (*OIL FILTER BYPASS)	401
MÉCANISME DE COMMANDE - PUISSANCE (ASS)	472
MÉCANISME DE COMMANDE DE GR. MOTO-PROPUL. (ASS)	473
MÉCANISME DE COMMANDE D'INCLINAISON (ASS)	468
	470
MODULE (ASS)-TOUCHE DE CHARGE UTILE	918
MONTAGE D'ALTERNATEUR (ASS)	52
	53
MONTAGE DE CABINE (ASS)	922
	924
MONTAGE DE JANTE (ASS)	430
MONTAGE DE MOTEUR ET BOÎTE (ASS)	54
MONTAGE DE MOTEUR (VERSION)	6
MONTAGE DE RADIO (ASS)	895

* TRADUCTION NON DISPONIBLE AU MOMENT DE LA PUBLICATION

INDEX

Désignation	Page
MONTAGE DE REFROIDISSEUR D'HUILE D'ESSIEU (ASS)	428
MONTAGE D'ESSIEU (ASS)	427
MONTAGE DU TABLEAU DE GRAISSAGE (ASS)	999
MONTAGE-SÉCURITÉ (ASS)	200
MOTEUR - PARTIE CENTRALE (VERSION)	5
MOTEUR À ENGRENAGES (ASS)	708
MOTEUR DE VENTILATEUR (ENS) (CLIMATISATION, CHAUFFAGE, 24V)	836
	891
MOTEUR D'ESSUIE-GLACE (ASS)	920
	921

O

OEILLETONS DE LEVAGE MOTEUR (ASS)	51
*ORIFICE AS-AIR CONDITIONER	836

P

PALIER PRINCIPAL (ASS) (VILEBREQUIN)	14
PARE-SOLEIL	981
PARE-SOLEIL (ASS)	950
PIGNONNERIE AV (ASS)	45
PISTON ET BIELLE (ASS)	57
	59
PLAFONNIER (ASS) (24 VOLTS)	903
PLAFONNIER (ASS) (24 VOLTS)	896
PLAQUE - AVERTISSEMENT (PAS DE DÉGAGEMENT, DANOIS)	1001
PLAQUE DE SOUPAPE PILOTE (ASS)	712
	713
	715
	717
	718
PLAQUE D'INSTRUCTIONS (BATTERIE)	172
PLAQUE D'INSTRUCTIONS (CLIMATISEUR)	835
PLAQUE (DISJONCTEUR)	231
	233
PLAQUE SIGNALÉTIQUE (ASS)	989
	990
PLAQUE SIGNALÉTIQUE (CARBURANT MANUEL)	417
PLAQUE SIGNALÉTIQUE (CARBURANT MANUEL) (AMORÇAGE)	147
PLAQUES SIGNALETIQUES ET AUTOCOLLANTS (ASS)	1000
	1001
	1002
	1003
	1004
*PLATE	228
PNEU - GROUPE DE VALVE	438
PNEU ET JANTE (VERSION)	442
	443
	444
	445
	446
	447
	448
	449
	450
	451
	452
POIGNÉE MODULAIRE (ASS)	635
POINTE (ASS)	828
POINTE COURTE (ASS)	829
	830
POINTE LONGUE (ASS)	828
POMPE À AILETTES - CARTOUCHE	606
POMPE A EAU (ASS)	94
	95
	96
	98
POMPE A HUILE MOTEUR (ASS)	77
	78
	79
	80
POMPE À PALETTES (ASS)	566
POMPE A PISTONS (ASS)	588
	723
POMPE À PISTONS ET PALETTES (ASS)	725
POMPE D'ALIMENTATION EN CARBURANT (ASS)	152
POMPE D'ALIMENTATION EN CARBURANT (ASS)	151
POMPE D'AMORÇAGE DE CARBURANT ET FILTRE PRINCIPAL	147
POMPE D'AMORÇAGE DE CARBURANT ET SÉPARATEUR D'EAU (ASS)	158
POMPE DE BOÎTE DE VITESSES (ASS)	432
	433
POMPE DE DIRECTION AUXILIAIRE ET MONTAGE (ASS)	584
	585
POMPE DE FAISCEAU (ENS) (AMORÇAGE DE CARBURANT)	147
POMPE DE REGULARISATION DE DEBIT (ASS)	586
POMPE DE SÉPARATEUR D'EAU ET D'AMORÇAGE DE CARBURANT (ASS)	158
POMPE D'INJECTION (ASS)	149
POMPE D'INJECTION DE CARBURANT (ASS)	152

* TRADUCTION NON DISPONIBLE AU MOMENT DE LA PUBLICATION

INDEX

Désignation	Page
POMPE ET MONTAGE - HYDRAULIQUE (ASS)	720
POMPE ET MONTAGE DE REFROIDISSEUR D'HUILE D'ESSIEU	431
POMPE ET MONTAGE-VENTILATEUR HYDRAULIQUE	721
PORTE DE BATTERIE (ASS)	478
PORTE-POINTE (ASS)	800
PORTIÈRE DE CABINE (ASS)	856 857 859 861 862 864 866 869 872 875 878
POSTE DE CONDUITE (VERSION)	926 927
POULIE-ROUE AVANT (ASS)	62 63
POUSSOIR DE SOUPAPE (ASS)	50
PREFILTRE (ASS)	122 123 124
PROTECTION - ÉCLAIRAGE (ASS)	515 517
PROTECTION ANTIVANDALISME (ASS)	885
PROTECTION-ARTICULATION (ASS)	501
PROTECTION D'ATTELAGE ET DE DIRECTION (ASS)	514
PROTECTION DE GLACE (ASS)	887 888
PROTECTION DE REFROIDISSEUR D'HUILE D'ESSIEU	503
PROTECTION DE VENTILATEUR (ASS)	83 84

R

Désignation	Page
RACCORD DE CANALISATION D'HUILE (ASS)	69
RADIATEUR ET VENTILATEUR (ASS)	99 103
RADIO (ASS)	941 942
RALLONGE DE GARDE-BOUE	480
RALLONGE DU DOSSIER DE SIEGE	882
RALLONGE DU DOSSIER DE SIEGE (TOILE)	964
REFROIDISSEUR DE BOÎTE DE VITESSES ET MONTAGE (ASS)	390
REFROIDISSEUR D'HUILE D'ESSIEU (VERSION)	391
REFROIDISSEUR D'HUILE MOTEUR (ASS)	82
REGARD DE NIVEAU	727 729
REGLAGE DE SIEGE (ASS)	831
RÉGULATEUR - PÉDALE (ASS)	939 940
REGULATEUR DE LA TENSION (ENS) (24 VOLTS) (ALTERNATEUR)	164
REGULATEUR DE PRESSION DE CARBURANT (ASS)	154
RÉGULATEUR (ENS)	137
RÉGULATEUR (ENS) (CARBURANT)	133 135
RÉGULATEUR (ENS) (PRESSION DE CARBURANT)	154
RELAIS (ENS) (24 VOLTS) (DIRECTION AUXILIAIRE)	358
RELAIS (ENS) (24 VOLTS) (DIRECTION AUXILIAIRE)	362
RELAIS (ENS) (24 VOLTS) (PROJECTEUR)	286
RELAIS (ENS) (24 VOLTS) (PROJECTEUR)	293 302
RENIFLARD (ASS)	70
RENIFLARD (ENS)	379
RENIFLARD (ENS) (CARTER)	70
RÉSERVOIR DE CARBURANT (ASS)	155
RÉSERVOIR DU COUVERCLE DE RADIATEUR (ASS)	107 108
RÉSERVOIR HYDRAULIQUE ET FILTRE (ASS)	729
RÉSERVOIR HYDRAULIQUE ET FILTRE (ASS)	727
RÉSERVOIR HYDRAULIQUE ET MONTAGE (ASS)	732 733
RETROVISEUR - CABINE (ASS)	981
RÉTROVISEUR (ASS)	915 916
REVETEMENT DE LA CABINE ROPS OUVERTE (ASS)	903
ROBINET DE BATTERIE (ASS)	267
ROBINET DE BATTERIE (ASS) (BATTERIE)	172
ROBINET-PRÉLÈVEMENT D'ÉCHANTILLON DE LIQUIDE (ASS)	81
ROTATION DE LA ROUE DU VENTILATEUR SOUFFLANT (DÉMARRAGE DU MOTEUR)	933
ROTATION DE LA ROUE DU VENTILATEUR SOUFFLANT (LIRE LE MANUEL DU PROPRIÉTAIRE)	199

* TRADUCTION NON DISPONIBLE AU MOMENT DE LA PUBLICATION

INDEX

Désignation	Page
ROTATION DE LA ROUE DU VENTILATEUR SOUFFLANT (LIRE LE MANUEL DU PROPRIÉTAIRE)	200
ROTATION DE LA ROUE DU VENTILATEUR SOUFFLANT (LIRE LE MANUEL DU PROPRIÉTAIRE)	354
ROTATION DE LA ROUE DU VENTILATEUR SOUFFLANT (RÉGLAGE DU SIÈGE)	975 977 979

S

SIÈGE - COMPRESSEUR D'AIR (ASS)	832
SIEGE - COUVERCLE INFERIEUR (ASS)	931
SIÈGE (ASS)	958 960 961 962 964 965
SIÈGE AVEC SUSPENSION (ASS)	968 970 971 972 977 979
SIÈGE AVEC SUSPENSION (ASS)	966 975
SIÈGE ET MONTAGE (ASS)	951 952 953
SIÈGE INCLINABLE (ASS)	943
SILENCIEUX (ASS)	120
SONDE - CIRCUIT DE CARBURANT	237 238 239 240
SONDE - CIRCUIT DE CARBURANT (ANGLE D'ARTICULATION)	369
SONDE - CIRCUIT DE CARBURANT (ROTATIF) (LEVAGE)	366
SONDE - NIVEAU DE CARBURANT (ENS)	155
SOUPAGE - SOLÉNOIDE ET COLLECTEUR	790
SOUPAPE - CARTOUCHE PILOTE (ASS)	768 770 771 772 773
SOUPAPE - GAZ (CIRCUIT DE FREINAGE)	600
SOUPAPE - SOLÉNOÏDE (ASS)	157 567 568
	785 786 787 788 789
SOUPAPE A COMMANDE MANUELLE (ASS)	751
SOUPAPE D'ARRÊT (ASS)	781
SOUPAPE D'ARRÊT (ASS) (RÉSERVOIR HYDRAULIQUE)	673
SOUPAPE DE COMMANDE PRINCIPALE (ASS)	745 747 749
SOUPAPE DE DÉMARRAGE À L'ÉTHER (ASS)	280
SOUPAPE DE DERIVATION (ASS)	742 743 744
SOUPAPE DE DÉRIVATION (ASS)	459
SOUPAPE DE DIRECTION (ASS)	597
SOUPAPE DE DIRECTION (ASS)	599
SOUPAPE DE DIRECTION AUXILIAIRE (ASS)	596
SOUPAPE DE MODULATION (ASS)	460
SOUPAPE DE VENTILATEUR À VITESSE VARIABLE (ASS)	741
SOUPAPE DE VIDANGE	133 135 137 139
SOUPAPE DE VIDANGE (FILTRE À CARBURANT)	142
SOUPAPE-ÉCHANTILLON	90 92
SOUPAPE (ENS)-DÉRIVATION (FILTRE A HUILE MOTEUR)	71
SOUPAPE-MANUEL	673
SOUPAPE PILOTE (ASS)	752 754 756 758 760 762 764 766
SOUPAPE RÉDUCTRICE DE PRESSION (ASS) (CIRCUIT DE COMMANDE DE TRACTION)	562
SOUPAPE SÉLECTRICE (ASS) (DIRECTION)	597
SOUPAPE SELECTRICE ET REGULATRICE DE PRESSION	780
SUPPORT - PÉDALE DE FREIN (ASS)	542 544
SUPPORT DE SIÈGE (ASS)	974

* TRADUCTION NON DISPONIBLE AU MOMENT DE LA PUBLICATION

INDEX

Désignation	Page
SUPPORTS D'ADMISSION D'AIR (ASS)	534
*SWITCH AS-TEMPERATURE (*AXLE OIL MONITORING)	316

T

TABLEAU DE BORD (ASS)	855
	933
	935
	936
	937
TAMIS D'ASPIRATION	379
TAPIS DE PLANCHER	897
	899
	901
THERMOCONTACT (ENS) (HUILE D'ESSIEU ARRIÈRE)	284
THERMOCONTACT (ENS) (HUILE D'ESSIEU AVANT)	284
THERMOCONTACT (ENS) (RÉFRIGÉRANT)	836
THERMOSTAT-TEMPÉRATURE D'EAU (94-DEG C)	86
THERMOSTAT-TEMPÉRATURE D'EAU (94-DEG C) (LIQUIDE DE REFROIDISSEMENT)	88
TOIT ROPS - OUVERT (ASS)	947
	948
TRAINS PLANÉTAIRES - CARTER ET PIÈCES	379
TRANSMISSION (VERSION)	430
TURBOCOMPRESSEUR - CARTOUCHE (ASS)	126
TURBOCOMPRESSEUR (ASS)	125
	126
TUYAU DE RALLONGE D'ÉCHAPPEMENT (ENS)	121

V

VANNE PILOTE (ASS)	783
	784
VÉRIN DE COUPLEUR (ASS)	624
	625
VERIN DE DIRECTION (ASS)	576
VÉRIN DE DIRECTION ET JOINT (ASS)	575
VERIN DE DIRECTION ET MONTAGE (ASS)	573
VÉRIN DE LEVAGE (ASS)	626
VÉRIN DE LEVAGE ET JOINT (ASS)	622
VÉRIN D'INCLINAISON (ASS)	627
	629
	631
	633
VÉRIN D'INCLINAISON ET JOINT (ASS)	623
VERROUILLAGE ANTI-VANDALISME (ASS)	998
VERSION DE CÂBLAGE DE SURVEILLANCE D'ESSIEU	282
VERSION DE CHASSIS	1
VERSION DE MONTAGE-COMMUNICATION	199
VERSION DE MONTAGE-SÉCURITÉ	199
VERSION DE MOTEUR COMPLET	4
VERSION DE TOIT - ROPS OUVERT	849
VERSION DE TRANSFORMATION DE COMMANDE DE TRACTION	564
VERSION ÉLECTRIQUE	192
VERSION HYDRAULIQUE	636
VERSION REBUT	2
VIDANGE-ÉCOLOGIE (ASS)	398
VIDANGE-HUILE DE MOTEUR (ASS)	40
VILEBREQUIN (ASS)	14
VOLANT - BOULONNERIE (ASS)	42
VOLANT MOTEUR (ASS)	44
VUE DU MODÈLE	1

* TRADUCTION NON DISPONIBLE AU MOMENT DE LA PUBLICATION

INDICE

Nombre	Página
A	
ACCIONADOR DE INCLINACIÓN DEL CAPO (GR)	468
	470
ACCIONADOR DEL PROTECTOR DEL TREN DE FUERZA (CONFIG)	467
ACCIONADOR DEL PROTECTOR DEL TREN DE FUERZA (GR)	473
ACCIONADOR DEL PROTECTOR (GR)	472
ACONDICIONADOR DE AIRE (CONFIG)	835
ACONDICIONADOR DE AIRE (GR)	836
ACONDICIONADOR DE AIRE Y MONTAJE (GR)	834
ACONDICIONADOR DE AIRE Y MONTAJE (GR)	833
ACOPLADOR - TUBERÍAS DE (GR)	645
	648
	651
	652
	654
	657
ACOPLADOR RÁPIDO (CONFIG)	815
	816
	817
ACOPLADOR RÁPIDO (GR)	818
	819
ACUMULADOR DE CONTROL DE AMORTIGUACION (GR)	600
	601
	602
ACUMULADOR DEL ACONDICIONADOR DE AIRE (GR) (CON DESECANTE)	904
	908
ACUMULADOR DEL FRENO (GR)	539
	540
	541
AGUA DE LAS CAMISAS - CALENTADOR DEL (GR)	195
	196
	197
	198
AGUILÓN TELESCÓPICO (GR)	801
AIRE - TUBERÍAS DE (GR)	117
	118
AJUSTADOR DEL ASIENTO (GR)	831
ALAMBRADO DE ACOPLADOR (GR)	315
ALAMBRADO DE COMUNICACION (GR)	313
ALARMA (GR)	159
	160
ALFOMBRILLA DEL PISO	897
	899
	901
ALTERNADOR DE CARGA (CONFIG)	161
AMORTIGUADOR Y POLEA (GR)	39
ANTEFILTRO (GR)	122
	123
	124
ÁRBOL DE LEVAS (GR)	7
ARO DESMONTABLE (GR)	435
	436
	437
	438
ARO Y RUEDA	442
	443
	444
	445
	446
	447
	448
	449
	450
	451
	452
ARRANQUE - INTERRUPTOR DE (GR) (LLAVE)	286
	293
ARRANQUE - INTERRUPTOR DE (GR) (LLAVE)	302
*ASHTRAY AS	935
ASIENTO CON SUSPENSIÓN (GR)	977
	979
ASIENTO CON SUSPENSIÓN (GR)	975
ASIENTO (GR)	958
	960
	961
	962
	964
	965
ASIENTO Y MONTAJE (GR)	951
	953
ASIENTO Y MONTAJE (GR)	952
AUXILIAR DE ARRANQUE CON ÉTER (GR)	263
AUXILIAR DE ARRANQUE (GR)	261
	262
B	
BALANCÍN (GR) (ADMISION)	67
BALANCÍN (GR) (ESCAPE)	67
BASE DEL FRENO DE PIE (GR)	542
	544
BASTIDOR DEL ACOPLADOR RAPIDO (GR)	825
	826
	827
BASTIDOR DEL CARGADOR (CONJ)	488
BASTIDOR DELANTERO (CONJ)	485

* NO HAY TRADUCCION DISPONIBLE EN EL MOMENTO DE LA IMPRESION

INDICE

Nombre	Página
BASTIDOR TRASERO (CONJ)	490
	493
	494
BATERÍA	854
BATERÍA Y CABLES (GR)	172
BATERÍA (*12-VOLT, WET)	172
BISAGRA DEL GUARDABARROS PARA DESPLAZ. POR CARRETERA	520
	521
BLOQUE DE EMPALME (GR)	175
BLOQUE DE FUSIBLES (CONJ)	303
BLOQUE DESLIZANTE-JUEGO	958
	970
BLOQUE MOTOR (GR)	16
	18
BOCINA (CONJ) (*24-VOLT, LOW TONE)	894
BOCINA ELÉCTRICA (GR)	893
	894
BOMBA DE ACEITE DEL MOTOR (GR)	77
	78
	79
	80
BOMBA DE AGUA (GR)	94
	95
	96
	98
BOMBA DE CEBADO Y FILTRO PRIMARIO DE COMBUSTIBLE (GR)	147
BOMBA DE INYECCIÓN DE COMBUSTIBLE (GR)	152
BOMBA DE INYECCIÓN UNITARIA (GR)	149
BOMBA DE LA TRANSMISIÓN (GR)	432
	433
BOMBA DE PALETAS-CARTUCHO (GR)	606
BOMBA DE PALETAS (GR)	566
BOMBA DE PISTONES (GR)	588
	723
BOMBA DE PISTONES Y PALETAS (GR)	725
BOMBA DE SEPARADOR DE AGUA Y CEBADO DE COMBUSTIBLE (GR)	158
BOMBA DE TRANSFERENCIA DE COMBUSTIBLE (GR)	151
	152
BOMBA DEL ENFRIADOR DE ACEITE DEL EJE Y MONTAJE (GR)	431
BOMBA HIDRÁULICA DEL INYECTOR UNITARIO (GR)	151
	152
	153
BOMBA HIDRÁULICA Y MONTAJE (GR)	720
BOMBA Y MONTAJE DE LA DIRECCIÓN SECUNDARIA (GR)	585
BOMBA Y MONTAJE DE VENTILADOR HIDRAULICO (GR)	721
BOMBA Y MOTOR DE DIRECCION SECUNDARIA (GR)	584
*BRACKET AS-ADJUSTABLE SWITCH (LIMITE DE LUZ DE PARADA)	542
BRAZO DE LEVANTAMIENTO (CONJ)	791

C

CABINA (CONFIG)	844
CABINA (GR)	845
CABINA INCLUYE ROPS (GR)	847
CABINA ROPS CERRADA (GR)	944
	945
CABLE CONJ.-SENSOR (CABLE DE 14 GA) (TEMPERATURA DEL ACEITE DEL MOTOR)	256
CABLES DE LA CABINA (GR)	286
CABLES DE LA CABINA (GR)	311
CABLES DE LA CABINA (GR)	293
	302
CABLES DE LA DIRECCIÓN SECUNDARIA	358
	362
CABLES DE LA MÁQUINA (GR)	348
	351
	354
CABLES DE LAS LUCES (GR)	345
	346
CABLES DE LAS LUCES (GR)	344
CABLES DE SENSOR (GR)	366
CABLES DEL ACONDICIONADOR DE AIRE (GR)	283
CABLES DEL CONTROL DE TRACCIÓN (GR)	369
CABLES DEL MOTOR (GR)	319
CABLES DEL MOTOR (GR)	317
	323
	327
	332
CABLES DEL SISTEMA ELÉCTRICO DE EMBRAGUE	316
CABLES DELANTEROS (GR)	335
	338
	341
CAJA DE EJE OSCILANTE (GR)	412
	414
CAJA DEL EJE OSCILANTE (GR)	408
	410
CAJA DELANTERA - TORNILLERÍA DE LA (GR)	43
CAJA DELANTERA (GR)	48
CAJA Y PIEZAS DE LOS PLANETARIOS	379

* NO HAY TRADUCCION DISPONIBLE EN EL MOMENTO DE LA IMPRESION

INDICE

Nombre	Página
CALCOMANÍA	933
CALCOMANÍA DE ADVERTENCIA (ARRANQUE DEL MOTOR)	933
CALCOMANÍA DE ADVERTENCIA (ASIENTO AJUSTABLE)	975
	977
	979
CALCOMANÍA DE ADVERTENCIA (CILINDRO PARA ALTA PRESION)	687
	691
	694
	698
CALCOMANÍA DE ADVERTENCIA (LEER EL MANUAL)	199
	200
	354
CALCOMANÍA DE ADVERTENCIA (MANUAL)	801
CALCOMANÍA DE ADVERTENCIA (RADIO PRODUCT LINK)	199
CALCOMANÍA DE IDENTIFICACIÓN (MÓDULO DE CONTROL ELECTRONICO)	194
CALCOMANÍA DE IDENTIFICACIÓN (MÓDULO DE CONTROL ELECTRONICO)	194
CALCOMANIA, DISYUNTOR	231
	233
CALCOMANIA, ENTRADA/SALIDA	935
	936
	937
CALCOMANÍA-INSTRUMENTO (TRABA HIDRÁULICA)	609
	611
	613
	615
CALCOMANÍA (INTERRUPTOR DE ENCENDIDO)	199
	200
	354
CALCOMANÍA (INTERRUPTOR DE ENCENDIDO) (INTERUPTOR DE IGNICION)	354
CALCOMANÍA (SEGURIDAD)	199
	200
CALCOMANIA, TABLERO DE FUSIBLE	936
	937
CALCOMANÍAS Y PLACAS DE IDENTIFICACIÓN (GR)	1000
	1001
CALCOMANÍAS Y PLACAS DE IDENTIFICACIÓN (GR)	1001
	1002
	1003
	1004
CALEFACCIÓN DE LA CABINA (GR)	891
CALEFACCIÓN Y MONTAJE DE LA CABINA (GR)	890
CÁNCAMOS DE LEVANTAMIENTO DEL MOTOR (GR)	51
CANDADO (GR)	885
CANDADO (GR) (LLENADO DEL TANQUE HIDRÁULICO)	621
CAPO Y PROTECTOR (GR)	524
CARGA - ALTERNADOR DE (GR)	162
	164
	166
	168
CARGA - ALTERNADOR DE (GR)	170
CÁRTER - COLECTOR DEL (GR)	56
CENICERO (CONJ)	936
	937
CHASIS (CONFIG)	1
CIGÜEÑAL (GR)	14
CILINDRO DE DIRECCIÓN (GR)	576
CILINDRO DE DIRECCIÓN Y MONTAJE (GR)	573
CILINDRO DE DIRECCIÓN Y SELLO (GR)	575
CILINDRO DE INCLINACIÓN Y SELLO (GR)	623
CILINDRO DE LEVANTAMIENTO - TUBERÍAS DEL (GR)	678
	680
CILINDRO DE LEVANTAMIENTO (GR)	626
CILINDRO DE LEVANTAMIENTO Y SELLO (GR)	622
CILINDRO DEL ACOPLADOR (GR)	624
	625
CINTURÓN DE SEGURIDAD (GR)	952
	953
	954
	955
	956
	957
	972
CINTURÓN DE SEGURIDAD (GR)	965
CODO DE ADMISIÓN DE AIRE (GR)	115
COJINETE	794
	797
COLADOR (CONJ)	727
	729
	730
COLADOR DE COMBUSTIBLE	155
COLUMNA DE DIRECCIÓN (GR)	592
COMBUSTIBLE - TANQUE DE (GR)	155
COMBUSTIBLE - TUBERÍAS DE DRENAJE DE (GR)	132
COMPARTIMIENTO DEL OPERADOR (CONFIG)	926
	927
COMPRESOR DE AIRE DEL ASIENTO (GR)	832

* NO HAY TRADUCCION DISPONIBLE EN EL MOMENTO DE LA IMPRESION

INDICE

Nombre	Página
COMPRESOR DE REFRIGERANTE (GR)	851
COMPRESOR DE REFRIGERANTE (GR)	850
CONDENSADOR DEL REFRIGERANTE Y MONTAJE (GR)	852
	853
CONDUCTO DE AIRE (GR)	880
CONFIGURACIÓN DE CABLERIA, CALENTADOR Y ACONDICIONADOR DE AIRE	836
	891
CONFIGURACIÓN DE CONVERSIÓN, CONTROL DE TRACCIÓN	564
CONFIGURACIÓN DE ELIMINACIÓN DE BASURAS	2
	3
CONFIGURACIÓN DE INSTALACIÓN DEL MOTOR	6
CONFIGURACIÓN DE TRAÍLLA	2
CONFIGURACIÓN ELÉCTRICA	192
CONFIGURACIÓN GENERAL	1
CONJ. ORIFICIO-AIRE ACONDICIONADO	836
CONJUNTO DE CABLERIA, ARRANQUE ASISTIDO (ETER)	368
CONJUNTO DE CABLERIA, RADIO (ALTAVOZ)	941
CONJUNTO DE CABLES-BOMBA (*FUEL PRIMING)	147
CONJUNTO DE CABLES, MONITOREO DEL EJE	282
CONJUNTO DE CABLES, VÁLVULA (COMPRESOR DE AIRE DEL ASIENTO)	977
	979
CONJUNTO DE DESTELLADOR (24 VOLTIOS)	277
CONJUNTO DE INTERRUPTOR DE SEÑAL DE GIRO	277
CONJUNTO DE JUEGO SUPERIOR	966
CONJUNTO DE LLAVE, ELECTRONICA (SEGURIDAD)	200
	260
	354
CONJUNTO DE MAZO DE CABLES DEL CONTROL DE AMORTIGUACIÓN	687
	691
	694
	698
CONJUNTO DE REGULADOR-ALTERNADOR (24 VOLTIOS)	162
CONSOLA (GR)	855
CONTRAPESO (GR)	476
CONTRAPESO TRASERO (GR)	477
CONTROL DE ACOPLADOR RÁPIDO (CONFIG)	814
	815
CONTROL DE COMUNICACION (GR) (ESLABON DE PRODUCTO)	176
CONTROL DE COMUNICACION Y MONTAJE (GR)	176
CONTROL DE DESCONEXIÓN DE LEVANTAMIENTO (GR)	186
	187
CONTROL DE DESCONEXIÓN DE LEVANTAMIENTO (GR)	641
CONTROL DE DIRECCIÓN (GR)	569
	571
CONTROL DE LA TRANSMISIÓN (GR)	388
	389
CONTROL DE MANIJA (GR)	607
	608
CONTROL DE MONITOR (GR)	854
CONTROL DE POSICION (GR)	188
CONTROL DE POSICION (GR) (HERRAMIENTA)	641
	643
CONTROL DE TRACCIÓN (CONFIG)	546
CONTROL DEL CUCHARÓN (GR)	792
	794
	797
CONTROL DEL FRENO DE ESTACIONAMIENTO	549
	551
	552
	554
CONTROL DEL PEDAL DE FRENO (GR)	547
	548
CONTROL ELECTRÓNICO DEL MOTOR (GR)	178
	181
	182
	183
	184
	185
CONTROL ELECTRÓNICO DEL MOTOR Y MONTAJE	178
	179
	180
CONTROL HIDRÁULICO DE OPERACIÓN PILOTO (GR)	609
	611
	613
	615
	617
	618
	619
	620
CONTROL NO PROGRAMADO (GR)	189

* NO HAY TRADUCCION DISPONIBLE EN EL MOMENTO DE LA IMPRESION

INDICE

Nombre	Página
	190
	191
	200
CONTROL NO PROGRAMADO (GR) (SEGURIDAD)	260
CONTROL NO PROGRAMADO (GR) (SISTEMA DE CONTROL DE TRACCION)	369
CONVERTIDOR DE PAR (GR)	453
*CORE AS-AXLE OIL COOLER	428
CORONA (GR)	402
CORREA-SERPENTIN	166
	170
	851
CORREA-SERPENTIN (*WITH AIR CONDITIONING)	431
CORREA-SERPENTIN (8 PK)	168
CRISTAL (AMBAR) (SEÑAL DE VIRAJE)	205
	207
CRUCETA Y COJINETE (GR)	441
CRUCETA Y COJINETE (GR)	458
CUBIERTA (GR)-TAPA DE LLENADO DE ACEITE DE LA TRANSMISIÓN	393
	998
CUBIERTA INFERIOR DEL ASIENTO DEL OPERADOR (GR)	931
CUCHARÓN DE MANEJO DE MATERIAL (CONJ)	805
	806
	807
	808
CUCHARÓN DE MANEJO DE MATERIAL (GR)	814
CUCHARÓN DE USO GENERAL (CONJ)	802
	803
	804
CUCHARÓN DE USO GENERAL (GR)	810
	811
	812
	813
CUCHILLA	822
CUCHILLA (GR)	820
	821
CUERPO DEL MEDIDOR (CONJ)	90
	92
CULATA DE CILINDROS (CONJ)	20
	22
	24
	25
CULATA DE CILINDROS (GR)	27
	28
	29
	30
	31
	33
	35
	37
	38
*CYLINDER BLOCK GP	17

D

Nombre	Página
DEFLECTOR (GR)	475
DERIVACIÓN - VÁLVULA DE (GR)	459
DETECTOR DE NIVEL DEL COMBUSTIBLE	155
DETECTOR DE POSICIÓN (SISTEMA DE COMBUST.) (GR)	237
	238
	239
	240
DETECTOR DE POSICIÓN (SISTEMA DE COMBUST.) (GR) (ANGULO DE ARTICULACION)	369
DETECTOR DE POSICIÓN (SISTEMA DE COMBUST.) (GR) (ROTATORIO) (LEVANTAMIENTO)	366
DIFERENCIAL DE DESLIZAMIENTO LIMITADO (GR)	395
DIFERENCIAL (GR)	394
DIFERENCIAL NOSPIN (GR)	396
	397
DIRECCIÓN SECUNDARIA (CONFIG)	591
DISYUNTOR (CONJ) (*15-AMPERE) (ECM (MÓDULO DE CONTROL ELECTRÓNICO) DEL MOTOR)	228
DISYUNTOR (CONJ) (*15-AMPERE) (LUCES DE TRABAJO)	228
DISYUNTOR (CONJ) (15 AMPERIOS) (AIRE ACONDICIONADO)	288
DISYUNTOR (CONJ) (15 AMPERIOS) (ASIENTO DE AIRE)	951
DISYUNTOR (CONJ) (15 AMPERIOS) (ASIENTO DE SUSPENSIÓN DE AIRE)	952
	965
	972
DISYUNTOR (CONJ) (15 AMPERIOS) (ECM (MÓDULO DE CONTROL ELECTRÓNICO) DEL MOTOR)	231
	233
DISYUNTOR (CONJ) (15 AMPERIOS) (LUCES DE TRABAJO)	231
	233
DISYUNTOR (CONJ) (20-AMPERIOS) (ACCIONADOR DE INCLINACION DE CAPO)	231
	233

* NO HAY TRADUCCION DISPONIBLE EN EL MOMENTO DE LA IMPRESION

INDICE

Nombre	Página
DISYUNTOR (CONJ) (80 AMPERIOS) (ALTERNADOR)	233
DISYUNTOR (CONJ) (80 AMPERIOS) (PRINCIPAL)	233
DISYUNTOR DE CIRCUITO (GR) (*20-AMPERE)	228
DISYUNTOR DE CIRCUITO (GR) (*20-AMPERE) (ACCIONADOR DE INCLINACION DE CAPO)	228
DISYUNTOR DE CIRCUITO (GR) (20-AMPERIOS)	231
	233
DISYUNTOR DE CIRCUITO (GR) (20-AMPERIOS)	356
DISYUNTOR DE CIRCUITO (GR) (*80-AMPERE) (ALTERNADOR)	229
DISYUNTOR DE CIRCUITO (GR) (*80-AMPERE) (PRINCIPAL)	228
DISYUNTOR DE CIRCUITO (GR) (80 AMPERIOS) (ALTERNADOR)	231
DISYUNTOR DE CIRCUITO (GR) (80 AMPERIOS) (PRINCIPAL)	231
DISYUNTOR (GR)	267
DISYUNTOR (GR) (BATERÍA)	172
DOSIFICACIÓN - BOMBA DE (GR)	586
DRENAJE DE SEGURIDAD ECOLÓGICA (GR)	398
DRENAJE DEL ACEITE DE MOTOR	40

E

Nombre	Página
EJE - GRUPO DE MONTAJE	427
EJE DE MANDO (GR)	439
	440
EJE FIJO (CONFIG)	374
EJE OSCILANTE (CONFIG)	375
	376
ELECTRONICA DE LA MAQUINA (GR)	193
	194
ELEMENTO DE FILTRO DE ACEITE (CONJ) (GRUPO DE LAMPARA-TABLERO)	727
ELEMENTO DE FILTRO DE ACEITE (CONJ) (GRUPO DE LAMPARA-TABLERO) (HIDRÁULICO)	729
ELEMENTO DE FILTRO DE ACEITE HIDRÁULICO	400
ELEMENTO DE FILTRO DE ACEITE HIDRÁULICO (TREN DE FUERZA)	401
ELEMENTO DEL CALENTADOR DEL AGUA DE LAS CAMISAS	195
ELEMENTO DEL CALENTADOR DEL AGUA DE LAS CAMISAS (120 VOLTIOS, 1000 VATIOS)	197
	198
ELEMENTO DEL CALENTADOR DEL AGUA DE LAS CAMISAS (240 VOLTIOS, 1000 VATIOS)	196
ELEMENTO DEL FILTRO DE AIRE (CONJ)	116
ELEMENTO DEL FILTRO DE AIRE (CONJ) (SECUNDARIO)	111
ELEMENTO PRIMARIO (CONJ)	111
EMBRAGUE (GR)	382
	384
	386
EMPAQUETADURA	86
	727
	729
EMPAQUETADURA (CAJA DEL REGULADOR DE TEMPERATURA)	88
ENCENDEDOR DE CIGARRILLOS (GR) (12 VOLTIOS)	287
	293
	302
ENFRIADOR DE ACEITE DEL MOTOR (GR)	82
ENFRIADOR DEL ACEITE DEL EJE (CONFIG)	391
ENGANCHE ARTICULADO (GR)	522
ENGRANAJE DE TRANSFERENCIA DE SALIDA	406
ENGRANAJE DELANTERO (GR)	45
ENTRADA - SERVOTRANSMISIÓN (GR)	416
ESCALERILLA (GR)	527
ESCAPE DE GASES (GR)	72
ESTRUCTURA ROPS ABIERTA (GR)	947
	948
ETIQUETA DE ADVERTENCIA (GR)	989
	990
ETIQUETA REFLECTORA (AMARILLO)	213
EXTENSIÓN DEL GUARDABARROS (GR)	480
EXTENSIÓN DEL RESPALDO (GR)	882
EXTENSIÓN DEL RESPALDO (GR) (DE TELA)	964
EXTREMO DE CUCHILLA	823

F

Nombre	Página
*FASTENER GP-DAMPER & PULLEY	41
*FILM-CIRCUIT BREAKER	228
*FILM-FUSE PANEL	935
*FILM-INSTRUCTION	186
	187
	188
FILTRO	884
FILTRO (AGUA) (BOMBA)	96
	98
FILTRO (AIRE DE CABINA)	883

* NO HAY TRADUCCION DISPONIBLE EN EL MOMENTO DE LA IMPRESION

INDICE

Nombre	Página
	884
FILTRO (AIRE DE LA CABINA)	883
FILTRO DE ACEITE DEL MOTOR (CONJ)	71
FILTRO DE ACEITE DEL MOTOR (GR)	71
FILTRO DE ACEITE (GR)	400
	401
FILTRO DE AIRE DE LA CABINA (GR)	883
	884
FILTRO DE AIRE (GR)	109
	111
FILTRO DE COMBUSTIBLE (CONJ)	139
	142
FILTRO DE COMBUSTIBLE (CONJ) (SECUNDARIO(A))	133
	135
	137
FILTRO DE COMBUSTIBLE Y SEPARADOR DE AGUA (CONJ) (PRIMARIO)	127
FILTRO DE COMBUSTIBLE Y SEPARADOR DE AGUA (GR)	127
FILTRO MAGNÉTICO (ENFRIADOR DE ACEITE DE EJE)	417
FRENO DE ESTACIONAMIENTO (GR)	545
FRENO DE SERVICIO - CONTROL (GR)	555
FRENO DE SERVICIO - CONTROL (GR)	558
	562
FRENO Y PLANETARIOS (GR)	377
FUSIBLE (10-AMPERIOS)	286
	293
	302
FUSIBLE (15 AMPERIOS)	286
	293
	302

G

*GEAR GP-BEVEL & PINION	404
GRUPO ADAPTADOR-TUBERIA DE ACEITE	69
GRUPO DE CABLES, ARRANQUE ASISTIDO	368
GRUPO DE CABLES, MONITOREO DEL EJE	284
GRUPO DE CABLES, PROTECTOR DE FUENTE	356
GRUPO DE CAJA, VÁLVULA PILOTO	603
	604
GRUPO DE COJINETES DE BANCADA (CIGÜEÑAL)	14
GRUPO DE GUIA, CORREA	49
GRUPO DE INTERRUPTOR, ACOPLAMIENTO RAPIDO	276
GRUPO DE INTERRUPTOR ROTATORIO (LUZ DE GIRO, PELIGRO)	277
GRUPO DE MONTAJE DE LA CABINA	922
	924
GRUPO DE MONTAJE Y ENFRIAMIENTO DE LA TRANSMISIÓN	390
GRUPO DE MULTIPLE, PROPORCIONAL A FRENO	565
GRUPO DE PIVOTE, VÁLVULA PILOTO	709
	710
	711
GRUPO DE PLANCHA, VÁLVULA PILOTO	712
	713
	715
	717
	718
GRUPO DE PROTECTOR DE ENGANCHE Y DIRECCION	514
GRUPO DE PUNTA Y ADAPTADOR	800
GRUPO DE TUBERIAS DE DIAGNÓSTICO	991
	994
GRUPO DE VÁLVULA-ARRANQUE CON ÉTER	280
GRUPO DE VÁLVULA, VENTILADOR	741
GRUPO GIRATORIO DE BOMBA	590
	726
GUARDABARROS (GR)	481
	482
GUARDABARROS PARA DESPLAZAMIENTO EN CARRETERA (GR)	483

H

HIDRÁULICA (CONFIG)	636
HOJA DE LIMPIAPARABRISAS (CONJ)	986
HORQUILLA PARA TARIMAS (GR)	824
*HOSE-DISPOSAL	72

I

INCLINACIÓN DEL CAPÓ (GR)	535
	537
INCLINACIÓN HORIZONTAL - CILINDRO DE (GR)	627
	629
	631
	633
INDICADOR DE CAMBIO DE FILTRO DE ACEITE (GR)	109
INDICADOR DEL NIVEL DE ACEITE (VARILLA) (GR)	73
	74
INDICADOR DEL NIVEL DEL ACEITE (VARILLA) (CONJ)	408
	410
	412
	414

* NO HAY TRADUCCION DISPONIBLE EN EL MOMENTO DE LA IMPRESION

INDICE

Nombre	Página
INSTALACION DE COMUNICATION (CONFIG)	199
INSTALACIÓN DE RADIO (GR)	895
INSTALACION DE SEGURIDAD (CONFIG)	199
INSTALACION DE SEGURIDAD (GR)	200
INTERRUPTOR DE BALIZA DE ADVERTENCIA (CONJ)	225
INTERRUPTOR DE BOLA (CONJ) (TRABA HIDRÁULICA, ANULACIÓN)	781
INTERRUPTOR DE LÍMITE (CONJ) (FRENO DE ESTACIONAMIENTO)	551 552
INTERRUPTOR DE LÍMITE (CONJ) (LUZ DE PARADA)	542
INTERRUPTOR DE PRESIÓN (CONJ) (ACEITE DE LA DIRECCION PRIMARIA)	358 362
INTERRUPTOR DE PRESIÓN (CONJ) (ACEITE DE LA DIRECCION SECUNDARIA)	358 362
INTERRUPTOR DE PRESIÓN (CONJ) (ACEITE DEL FRENO DE SERVICIO)	555
INTERRUPTOR DE PRESIÓN (CONJ) (ACEITE DEL FRENO DE SERVICIO)	558
INTERRUPTOR DE PRESIÓN (CONJ) (DERIVADOR DE FILTRO DE ACEITE) (TREN DE FUERZA)	400
INTERRUPTOR DE PRESIÓN (CONJ) (REFRIGERANTE)	283
INTERRUPTOR DE PRESIÓN (GR) (*OIL FILTER BYPASS)	401
INTERRUPTOR DE TEMPERATURA (CONJ) (ACEITE DEL EJE DELANTERO)	284
INTERRUPTOR DE TEMPERATURA (CONJ) (ACEITE DEL EJE POSTERIOR)	284
INTERRUPTOR DE TEMPERATURA (CONJ) (REFRIGERANTE)	836
INTERRUPTOR DE VOLQUETE (CONJ)	648 698
INTERRUPTOR DE VOLQUETE (CONJ) (AIRE ACONDICIONADO)	833
INTERRUPTOR DE VOLQUETE (CONJ) (CONTROL DE AMORT.)	687 691 694
INTERRUPTOR DE VOLQUETE (CONJ) (CONTROL DE MEUTRALIZADOR DE ANULACION DE TRANSM.)	288 294 303
INTERRUPTOR DE VOLQUETE (CONJ) (*MIDDLE BOTTOM GUARD ACTUATOR)	356
INTERRUPTOR DE VOLQUETE (CONJ) (*REAR BOTTOM GUARD ACTUATOR)	356
INTERRUPTOR DE VOLQUETE (CONJ) (SELECCIÓN DE MODALIDAD)	288 294 303
INTERRUPTOR DE VOLQUETE (GR)	278
INTERRUPTOR DE VOLQUETE (GR) (ACCIONADOR DE INCLINACION DE CAPO)	348 351
INTERRUPTOR DE VOLQUETE (GR) (APAGADO A NIVEL DEL SUELO)	348 351
INTERRUPTOR DEL LIMPIADOR (GR)	279
INTERRUPTOR DEL LIMPIAPARABRISAS (CONJ) (24 VOLTIOS) (INTERMITENTE)	279
INTERRUPTOR DEL LIMPIAPARABRISAS (CONJ) (24 VOLTIOS) (INTERMITENTE DELANTERO)	286
INTERRUPTOR DEL SEÑALERO (GR)	277
INTERRUPTOR MAGNÉTICO (CONJ) (24 VOLTIOS) (AIRE DE ADMISIÓN DE LA CALEFACCIÓN)	273
INTERRUPTOR MAGNÉTICO (CONJ) (24 VOLTIOS CORRIENTE CONTINUA)	272
INTERRUPTOR MAGNÉTICO (GR)	268 269 270 271 272 273 274 275
INTERRUPTOR MAGNÉTICO (GR) (*24-VOLT) (RELÉ DE ARRANQUE)	228
INTERRUPTOR MAGNÉTICO (GR) (*24-VOLT) (RELE PRINCIPAL)	228
INTERRUPTOR MAGNÉTICO (GR) (24 VOLTIOS) (RELÉ DE ARRANQUE)	233
INTERRUPTOR MAGNÉTICO (GR) (24 VOLTIOS) (RELÉ DE ARRANQUE)	231
INTERRUPTOR MAGNÉTICO (GR) (24 VOLTIOS) (RELE PRINCIPAL)	233
INTERRUPTOR MAGNÉTICO (GR) (24 VOLTIOS) (RELE PRINCIPAL)	231
INTERRUPTOR ROTATIVO (CONJ) (24 VOLTIOS) (CONTROL DE CAMBIO AUTOMATICO)	287 295 302

* NO HAY TRADUCCION DISPONIBLE EN EL MOMENTO DE LA IMPRESION

INDICE

Nombre	Página
INTERRUPTOR ROTATIVO (CONJ) (24 VOLTIOS) (CONTROL DEL VENTILADOR DEL CALENTADOR/ACONDICIONADOR DE AIRE)	286
INTERRUPTOR ROTATIVO (CONJ) (24 VOLTIOS) (CONTROL VARIABLE DE PALANCA)	288
INTERRUPTOR ROTATIVO (CONJ) (24 VOLTIOS) (CONTROL VARIABLE DE PALANCA)	293 302
INTERRUPTOR ROTATIVO (CONJ) (24 VOLTIOS) (DE DESPLAZAMIENTO/REFLECTOR/DE TABLERO/LUZ DE COLA)	293 302
INTERRUPTOR ROTATIVO (CONJ) (24 VOLTIOS) (DE DESPLAZAMIENTO/REFLECTOR/DE TABLERO/LUZ DE COLA)	286
INTERRUPTOR ROTATIVO (CONJ) (24 VOLTIOS) (LIMPIAPARABRISAS TRASERO)	286
INYECTOR DE COMBUSTIBLE (GR)	149

J

Nombre	Página
JUEGO (AISLADOR) (MOTOR DE ARRANQUE)	265
JUEGO AJUSTADOR DE CABLE	966 968
JUEGO DE ABRAZADERA DEL FILTRO DE AIRE	111
JUEGO DE AJUSTE DEL ASIENTO (POSABRAZO)	840
JUEGO DE AJUSTE DEL ASIENTO (SOPORTE INFERIOR DEL ASIENTO)	931
JUEGO DE AJUSTE DEL ASIENTO (*SUSPENSION)	966 968
JUEGO DE AMORTIGUADOR	966 968
JUEGO DE AMORTIGUADOR (ASIENTO DE SUSPENSION)	977
JUEGO DE AMORTIGUADOR (POSABRAZO)	840
JUEGO DE AMORTIGUADOR (RESPALDO DE TELA)	882
JUEGO DE ASIENTO (PARTE INFERIOR)	966 968
JUEGO DE ASIENTO (PARTE TRASERA)	966 968
JUEGO DE ATADURA	966 968
	975 979
JUEGO DE ATADURA (ASIENTO DE SUSPENSION)	977
JUEGO DE BASTIDOR (CONJ) (ASIENTO)	966 968
JUEGO DE BOCINA	592
JUEGO DE BOTÓN DEL ASIENTO	958
JUEGO DE BOTÓN (RADIO)	941
JUEGO DE BUJES (MOTOR DE ARRANQUE)	265
JUEGO DE COJÍN DEL ASIENTO (DE TELA)	958
JUEGO DE COJINETE DE SUSPENSIÓN	966 968
JUEGO DE COJINETES (ALTERNADOR)	164
JUEGO DE CRUCETA Y COJINETE	457
JUEGO DE ELEVADOR DE ALTURA	966 968
JUEGO DE ESCOBILLAS (MOTOR DE ARRANQUE)	265
JUEGO DE ESPACIADOR	588
JUEGO DE FILTRO DE TAPA (TANQUE DE COMBUSTIBLE)	155
JUEGO DE INCLINACIÓN DE ASIENTO (SOPORTE INFERIOR DEL ASIENTO)	931
JUEGO DE INCLINACIÓN TRASERA (SOPORTE INFERIOR DEL ASIENTO)	931
JUEGO DE MANIJA	966 968
JUEGO DE NÚCLEO POSTERIOR	566
JUEGO DE PALANCA (CONJ) (ELEVADOR DE ASIENTO)	966 968
JUEGO DE PALANCA DE INCLINACIÓN	592
JUEGO DE PALANCA (MOTOR DE ARRANQUE)	265
JUEGO DE PALETA POSTERIOR	566
JUEGO DE PANEL DEL RESPALDO DEL ASIENTO	958
JUEGO DE PANTALLA (ANTEFILTRO)	124
JUEGO DE PASADOR DE PEDAL (PEDAL DEL REGULADOR)	939
JUEGO DE PERNO RETENEDOR (M5X0.8X53.24 MM) (CONTROL NO PROGRAMADO)	190
JUEGO DE PERNO RETENEDOR (*M5X0.8X53.24-MM) (CONTROL NO PROGRAMADO)	189
JUEGO DE PISTÓN	590
JUEGO DE POSABRAZOS DERECHO	966 968
JUEGO DE RECEPTÁCULO (12-CLAVIJAS)	335 341
JUEGO DE RESORTES	586

* NO HAY TRADUCCION DISPONIBLE EN EL MOMENTO DE LA IMPRESION

INDICE

Nombre	Página
JUEGO DE RESORTES (ELEVADOR DE ASIENTO)	966
JUEGO DE RESORTES (ELEVADOR DE ASIENTO)	968
JUEGO DE RETÉN	966
	968
JUEGO DE REVESTIMIENTO DE FRENO	545
JUEGO DE RIEL DE DESLIZAMIENTO DEL ASIENTO	966
	968
JUEGO DE RODILLO	975
JUEGO DE RODILLO (PEDAL DEL REGULADOR)	939
JUEGO DE SELLO POSTERIOR	566
JUEGO DE SELLOS	586
	600
	602
	625
	737
	781
JUEGO DE SELLOS (BAJADA DE MOTOR INOPERANTE)	751
JUEGO DE SELLOS (CALENTADOR DE AGUA DE LAS CAMISAS)	195
	197
JUEGO DE SELLOS (VALVULA DE SOLENOIDE)	157
	567
	568
	785
	786
	787
	788
JUEGO DE SOLENOIDE (MOTOR DE ARRANQUE)	265
JUEGO DE SOPORTE	968
JUEGO DE TAPA	966
JUEGO DE TAPA DE SUSPENSIÓN	966
	968
JUEGO DE TAPA (PARTE INFERIOR)	968
JUEGO DE TAPA (PARTE TRASERA)	968
JUEGO DE TERMINAL (ALTERNADOR)	162
JUEGO DE TERMINAL (ALTERNADOR)	164
JUEGO DE TORNILLERÍA	975
JUEGO DE TORNILLERÍA (ALTERNADOR)	162
	164
JUEGO DE VALVULA DE AIRE	979
JUEGO DE VALVULA DE AIRE (ASIENTO DE SUSPENSION)	977
JUEGO DE VÁLVULA DE ALIVIO (DIRECCIÓN SECUNDARIA)	584
JUEGO DE VÁLVULA DE CARGA DEL FRENO	562
JUEGO DEL COMPRESOR DE AIRE	975
JUEGO-PIVOTE	592
JUEGO-POSABRAZOS-LADO IZQUIERDO	966
	968
JUNTA DESLIZANTE (GR)	441
JUNTA UNIVERSAL (GR)	457
	458

K

*KIT-BRUSH SEAL	897
	899
	901

L

*LAMP-HALOGEN (*24-VOLT, 65-WATT)	214
LÁMPARA	201
LÁMPARA (CONJ) (ROJO, VERDE, DIODO, 12 VOLTIOS)	199
	354
LÁMPARA (CONJ) (ROJO, VERDE, DIODO, 12 VOLTIOS)	200
LÁMPARA DE BALIZA DE ADVERTENCIA (GR)	212
LÁMPARA DE LUZ DELANTERA Y DE SEÑAL (GR)	207
LÁMPARA DE LUZ DELANTERA Y DE SEÑAL (GR)	205
LÁMPARA DEL TECHO (GR) (24 VOLTIOS)	896
	903
LÁMPARA (*24-VOLT, 21-WATT)	211
LÁMPARA (24 VOLTIOS) (LÁMPARA DE FUNCIONAMIENTO)	207
LÁMPARA (24 VOLTIOS) (LUCES DE TRABAJO)	205
LÁMPARA (24 VOLTIOS) (SEÑAL DE VIRAJE)	207
LÁMPARA (24 VOLTIOS) (SEÑAL DE VIRAJE)	205
LÁMPARA (24 VOLTIOS, 10 VATIOS)	903
LÁMPARA (24-VOLTIOS, 21 VATIOS) (SEÑAL)	209
LÁMPARA (24-VOLTIOS, 21 VATIOS) (SEÑAL DE VIRAJE)	205
	207
LÁMPARA (24-VOLTIOS, 3-VATIOS)	302
	918
LÁMPARA (24-VOLTIOS, 3-VATIOS)	286
	293
LÁMPARA (24-VOLTIOS, 70-VATIOS) (BALIZA GIRATORIA DE ADVERTENCIA)	212
LÁMPARA (24 VOLTIOS, 75/70 VATIOS) (LUCES DE MANO DERECHA, ALTAS/BAJAS)	207

* NO HAY TRADUCCION DISPONIBLE EN EL MOMENTO DE LA IMPRESION

INDICE

Nombre	Página
LÁMPARA (24 VOLTIOS, 75/70 VATIOS) (LUZ ALTA/BAJA)	205
LAVAPARABRISAS DE LA VENTANA (GR)	982 983
*LENS-AMBER	211
LENTE AMBAR (SEÑAL)	209
LEVANTAMIENTO (CONFIG)	799
*LIFT AR	799
LIMPIAPARABRISAS DE LA VENTANA (GR)	986 988
LLANTA (CONFIG)	434
LLAVE	393 885
LLAVE (*BATTERY DISCONNECT)(STARTER)	267
LUCES AUXILIARES (CONFIG)	213
LUCES DE ALÓGENO (24 VOLTIOS, 65 VATIOS)	203 204 215 216
LUCES DE ALÓGENO (24 VOLTIOS, 65 VATIOS) (REFLECTOR)	202
LUCES DE DESPLAZAMIENTO (CONFIG)	213
LUCES DE DESPLAZAMIENTO (GR)	223
LUCES DE GIRO (GR)	224
LUCES DE REFLECTOR (GR)	214 215 216 218
LUCES DE REFLECTOR Y CAMBIO DE DIRECCION (GR)	219 221
LUZ DE BALIZA (GR)	225 226 227
LUZ DE SEÑAL DE GIRO (GR)	209 210 211
LUZ DE SEÑAL DE GIRO (GR) (*24-VOLT) (DELANTERA, DE GIRO)	224

M

Nombre	Página
MANDO DE CORREA (BALIZA DE ADVERTENCIA)	212
MANIJA MODULAR (GR)	635
MAZO DE CABLES (CONJ) (*TEMPERATURE RESISTOR) (*TEMPERATURE RESISTOR) (OIL)	319
MAZO DE CABLES DE DIRECCION (CONJ) (SECUNDARIO)	358 362
MAZO DE CABLES DE LOS FRENOS (CONJ) (LUZ DE PARADA)	542
MAZO DE CABLES DEL MOTOR (CONJ) (BOMBA INYECTORA INDIVIDUAL)	317
MAZO DE CABLES DEL MOTOR (CONJ) (CONTROL ELECTRONICO)	317
MAZO DE CABLES DEL MOTOR (CONJ) (MODULO DE CONTROL ELECTRONICO)	323
MAZO DE CABLES DEL MOTOR (CONJ) (*70A ALTERNATOR)	327
MAZO DE CABLES, LUCES (LADO DERECHO, DESPLAZAMIENTO)	344
MAZO DE CABLES, LUCES (LADO IZQUIERDO, DESPLAZAMIENTO)	344
MAZO DE CABLES, LUCES (REFLECTOR)	216
MECANISMO DE VÁLVULAS (GR)	66 67
MIRILLA	727 729
MODULO DEL TECLADO DE CARGA UTIL (GR)	918
MONITOR DE CARGA ÜTIL (CONFIG)	917
MONITOR DE CARGA ÜTIL (GR)	918
MONTAJE DE ARO	430
MONTAJE DE ENFRIADOR DE ACEITE DE EJE (GR)	428
MONTAJE DE LA TABLA DE LUBRICACION (GR)	999
MONTAJE DEL ALTERNADOR (GR)	52 53
MONTAJE DEL MOTOR Y LA TRANSMISIÓN (GR)	54
MONTAJE Y VALVULA DEL CONTROL PRINCIPAL (GR)	734 735
MOTOR - NÚCLEO (CONFIG)	5
MOTOR COMPLETO (CONFIG)	4
MOTOR CONJ-SOPLADOR (CALENTADOR, AIRE ACONDICIONADO, 24 VOLTIOS)	836 891
MOTOR DE ARRANQUE ELÉCTRICO (GR)	264 265
MOTOR DE ENGRANAJES (GR)	708
MOTOR-LIMPIAPARABRISAS (GR)	920 921
MÚLTIPLE DE ESCAPE (GR)	119

N

Nombre	Página
NÚCLEO CONJ.-ENFRIADOR DE ACEITE DE TREN DE FUERZA	390
NUCLEO DE ENFRIADOR DE ACEITE DE MOTOR (CONJ)	82

* NO HAY TRADUCCION DISPONIBLE EN EL MOMENTO DE LA IMPRESION

INDICE

Nombre	Página
NÚCLEO DE TURBOCOMPRESOR (GR)	126
P	
PANEL DE DISYUNTORES (GR)	228
PANEL DE DISYUNTORES (GR)	231
	233
PANTALLA (CONJ)	752
	754
	756
	758
	760
	762
	764
	766
PERSIANA PARA EL SOL (GR)	950
PISTÓN Y BIELA (GR)	57
	59
PLACA DE ADVERTENCIA (*NO CLEARANCE, DANISH)	1001
PLACA DE INFORMACION (COMBUSTIBLE MANUAL)	417
PLACA DE INFORMACION (COMBUSTIBLE MANUAL) (DE CEBADO)	147
PLACA DE INFORMACION (FILTRO DE AIRE)	111
PLACA DE INFORMACION (12 VOLTIOS)	286
	293
	302
PLACA DE INSTRUCCIONES (ACONDICIONADOR DE AIRE)	835
PLACA DE INSTRUCCIONES (BATERÍA)	172
PLACA DE PATRÓN DE LOS CONTROLES (CONSOLA DERECHA)	286
PLACA DEL TABLERO (*DUCT, LH)	288
	294
	303
PLACA DEL TABLERO (*DUCT, RH)	288
PLACA (DISYUNTOR)	231
	233
*PLATE	228
POLEA DE RUEDA GUIA (GR)	62
	63
POSABRAZOS (GR)	839
	840
	841
	842
	843
POSICIONADOR DEL CUCHARÓN Y DESCONEXIÓN (GR)	641
	643
PROTECTOR CONTRA EL VANDALISMO (GR)	885
PROTECTOR DE ARTICULACION (GR)	501
PROTECTOR DE LA VENTANA	887
	888
PROTECTOR DE LAS LUCES (GR)	515
	517
PROTECTOR DE SELLO DEL EJE (GR)	504
PROTECTOR DEL EJE IMPULSOR (GR)	513
PROTECTOR DEL ENFRIADOR DE ACEITE DEL EJE (GR)	503
PROTECTOR DEL TREN DE FUERZA (GR)	518
	519
PROTECTOR DEL VENTILADOR (GR)	83
	84
PROTECTOR INFERIOR (GR)	505
	507
	509
	511
PROTECTOR TÉRMICO DEL COMPARTIMIENTO DEL MOTOR (GR)	533
PUBLICACIONES (GR)	914
PUERTA DE CABINA	856
	857
	859
	861
	862
	864
	866
	869
	872
	875
	878
PUNTA CORTA (GR)	829
	830
PUNTA (GR)	828
PUNTA LARGA (GR)	828
R	
RADIADOR Y VENTILADOR (GR)	99
	103
RADIO (GR)	941
	942
RECLINACION DE ASIENTO (GR)	943
REFLECTOR (GR)	201
	202
	203
	204
REGULADOR - PEDAL DEL (GR)	939
	940
REGULADOR (CONJ)	137
REGULADOR (CONJ) (COMBUSTIBLE)	133
	135

* NO HAY TRADUCCION DISPONIBLE EN EL MOMENTO DE LA IMPRESION

INDICE

Nombre	Página
REGULADOR (CONJ) (PRESIÓN DE COMBUSTIBLE)	154
REGULADOR DE LA PRESION DE COMBUSTIBLE (GR)	154
REGULADOR DE TEMPERATURA DEL AGUA (94-GRADOS C)	86
REGULADOR DE TEMPERATURA DEL AGUA (94-GRADOS C) (REFRIGERANTE)	88
REGULADOR DE VOLTAJE (24 VOLTIOS) (ALTERNADOR)	164
REJILLA DE FILTRO (LIMPIAPARABRISAS)	983
REJILLA DE SUCCIÓN	379
REJILLA DEL RADIADOR (GR)	497
	499
REJILLA MAGNÉTICA (GR)	379
RELÉ (CONJ) (24 VOLTIOS) (DIRECCIÓN SECUNDARIA)	358
	362
RELÉ (CONJ) (24 VOLTIOS) (REFLECTOR)	286
RELÉ (CONJ) (24 VOLTIOS) (REFLECTOR)	293
	302
RESPIRADERO (CONJ)	379
RESPIRADERO (CONJ) (CÁRTER DEL MOTOR)	70
RESPIRADERO (GR)	70
RETROCESO - ALARMA DE (GR)	281
RETROVISOR (GR)	915
	916
REVESTIMIENTO DE LA CABINA (GR)	896
	897
	899
	901
REVESTIMIENTO DE LA CABINA ROPS ABIERTA	903

S

SELLO DE CIGÜEÑAL (GR)	64
SELLO DE CIGÜEÑAL (GR) (*FRONT)	64
SELLO DE CIGÜEÑAL (GR) (PARTE TRASERA)	64
SELLO DE LA CAJA DE VOLANTE (GR)	65
SELLO DEL PORTADOR (GR)	8
SELLO (SEPARADOR DE AGUA, COMBUSTIBLE)	127
SEÑAL DE LUCES (CONFIG)	214
SENSOR DE PRESIÓN (GR)	241
	242
	243
	244
	245
	246
	247
	248
	249
SENSOR DE PRESIÓN (GR) (COMBUSTIBLE)	248
SENSOR DE TEMPERATURA (GR)	253
	254
	255
	256
	257
	258
	259
SENSOR DE TEMPERATURA (GR) (ACEITE DE LA TRANSMISIÓN)	466
SENSOR DE TEMPERATURA (GR) (ACEITE HIDRÁULICO)	323
	327
	332
SENSOR DE TEMPERATURA (GR) (ACEITE HIDRÁULICO)	319
SENSOR DE VELOCIDAD (GR)	250
	251
	252
SENSOR DE VELOCIDAD (GR) (RUEDA)	369
SENSOR DEL MOTOR (GR)	235
SEPARADOR DE AGUA Y BOMBA DE CEBADO DE COMBUSTIBLE (GR)	158
SERVICIO DE MAQUINA (GR)	260
SILENCIADOR (GR)	120
SOFTWARE PARA LA MAQUINA (GR) (SEGURIDAD)	354
SOPORTE DE LA ADMISIÓN DE AIRE (GR)	534
SOPORTE DEL ASIENTO (GR)	974
SOPORTE DEL RESPALDO (GR)	928
	929
	930
SUJETADOR DE VOLANTE (GR)	42
SUSPENSIÓN - ASIENTO CON (GR)	966
	968
	970
	971
	972
*SWITCH AS-TEMPERATURE (*AXLE OIL MONITORING)	316

T

TABLERO DE INSTRUMENTOS (GR)	935
	936
	937
TABLERO DE INSTRUMENTOS (GR)	933
TANQUE HIDRÁULICO Y MONTAJE (GR)	732
	733
TANQUE Y FILTRO HIDRÁULICOS (GR)	727

* NO HAY TRADUCCION DISPONIBLE EN EL MOMENTO DE LA IMPRESION

INDICE

Nombre	Página
TANQUE Y FILTRO HIDRÁULICOS (GR)	729
TAPA CON RESPIRADERO	983
TAPA CONTRA EL POLVO (CONJ)	195
TAPA DE ADMISIÓN DE AIRE (GR)	112
	113
	114
TAPA DE LA BATERÍA (GR)	478
TAPA DE LA CAJA DELANTERA (GR)	11
TAPA DE LLENADO (CONJ)	11
TAPA DE LLENADO (CONJ) (TANQUE DE COMBUSTIBLE)	155
TAPA DEL BLOQUE MOTOR (GR)	9
TAPA DEL MECANISMO DE VÁLVULAS (GR)	13
TAPA DEL RADIADOR (7 LB/PULG2)	107
	108
TAPA DEL TANQUE DE RADIADOR (GR)	107
	108
TAPA DEL TAPÓN DEL TANQUE HIDRÁULICO (GR)	621
TAPA DEL TUBO DE LLENADO	399
	727
	729
TAPA (VASTAGO)	435
TAPAS PROTECTORAS DE EMBARQUE (GR)	392
TAPÓN	398
TAPÓN DE DRENAJE	379
TAPÓN DEL BLOQUE MOTOR (GR)	60
TAPÓN DEL MOTOR (GR)	61
TAPÓN MAGNÉTICO	408
	410
	412
	414
	417
TECHO ROPS ABIERTO (CONFIG)	849
TIRANTE DE TRABA DEL BASTIDOR DE DIRECCIÓN (GR)	532
TRABA CONTRA EL VANDALISMO (GR)	998
TRANSMISION (CONFIG)	455
TREN DE FUERZA (CONFIG)	430
TREN DE FUERZA-GRUPO ELECTRÓNICO	194
TUBERÍAS CON SERVOMANDO (GR)	682
TUBERÍAS CON SERVOMANDO (GR)	684
	686
TUBERÍAS DE ACEITE DEL MOTOR (GR)	75
TUBERÍAS DE ACONDICIONADOR DE AIRE (GR)	904
	908
TUBERÍAS DE BOMBA HIDRÁULICA DE INYECCIÓN (GR)	145
	146
TUBERIAS DE CALEFACCION	912
TUBERÍAS DE CALEFACCIÓN DE LA CABINA	912
TUBERÍAS DE COMBUSTIBLE (GR)	128
	130
TUBERIAS DE CONTROL DE LA SUSPENSIÓN (GR)	687
	691
	694
	698
TUBERÍAS DE DIRECCIÓN (GR)	580
TUBERÍAS DE ENGRASE (GR)	528
	530
TUBERÍAS DE LA DIRECCIÓN SECUNDARIA (GR)	578
TUBERÍAS DEL AGUA (GR)	85
	86
	88
	90
	92
TUBERÍAS DEL CILINDRO DE INCLINACIÓN (GR)	702
	704
	706
TUBERÍAS DEL ENFRIADOR DE ACEITE DEL EJE (GR)	417
TUBERÍAS DEL ENFRIADOR DE ACEITE HIDRÁULICO (GR)	669
	673
TUBERIAS DEL ENFRIADOR DEL CONVERTIDOR DE PAR	425
TUBERÍAS DEL FILTRO DE COMBUSTIBLE	133
	135
	137
	139
	142
TUBERÍAS DEL FILTRO DEL TREN DE FUERZA (GR)	421
	423
TUBERÍAS DELANTERAS (GR)	659
	661
	663
	665
TUBERÍAS HIDRÁULICAS (GR)	667
TUBO DE EXTENSIÓN DEL ESCAPE (CONJ)	121
TUBO DE LLENADO DE ACEITE DE LA TRANSMISIÓN (GR)	399
TURBOCOMPRESOR - TUBERÍAS DE ACEITE DEL (GR)	76
TURBOCOMPRESOR (GR)	125
	126

* NO HAY TRADUCCION DISPONIBLE EN EL MOMENTO DE LA IMPRESION

INDICE

Nombre	Página
V	
VÁLVULA DE ALIVIO DEL FRENO	667
VÁLVULA DE ALIVIO (GR)	461
	595
	776
	777
	778
	779
VÁLVULA DE ALIVIO (GR) (COMPRESOR DEL REFRIGERANTE)	850
VÁLVULA DE ALIVIO (GR) (CRUCE DEL CILINDRO DE DIRECCION)	597
VÁLVULA DE CARGA DEL ACUMULADOR (GR) (FRENO)	555
VÁLVULA DE CARGA DEL ACUMULADOR (GR) (FRENO)	558
	562
VÁLVULA DE CONTROL (CONJ)	459
VALVULA DE CONTROL DE LA BOMBA (GR)	593
	774
VÁLVULA DE CONTROL DE LA TRANSMISIÓN (GR)	463
	466
VÁLVULA DE CONTROL DEL FRENO (GR) (SERVICIO)	555
	558
VÁLVULA DE CONTROL (GR)	738
	740
VÁLVULA DE CONTROL MANUAL (GR)	751
VÁLVULA DE CORTE (GR)	781
VÁLVULA DE CORTE (GR) (TANQUE HIDRÁULICO)	673
VALVULA DE DERIVACION (CONJ) (FILTRO DE ACEITE DEL MOTOR)	71
VÁLVULA DE DERIVACIÓN (GR)	742
	743
	744
VALVULA DE DIRECCION SECUNDARIA (GR)	596
VÁLVULA DE DRENAJE	133
	135
	137
	139
VÁLVULA DE DRENAJE (FILTRO DE COMBUSTIBLE)	142
VÁLVULA DE GAS	600
VÁLVULA DE LANZADERA (GR)	783
	784
VÁLVULA DE LEVANTAMIENTO (GR)	50
VÁLVULA DE MODULACIÓN (GR)	460
VALVULA DE MUESTREAR	90
	92
VÁLVULA DE MUESTREO (GR)	81
VÁLVULA DE RETENCIÓN (GR)	736
	737
VÁLVULA DE RETENCIÓN (GR) (BAJADA DE MOTOR INOPERANTE)	682
	684
VÁLVULA DE RETENCIÓN (GR) (DERIVACION DE ENFRIADOR DE ACEITE DEL EJE)	428
VÁLVULA DE RETENCIÓN (GR) (PILOTO)	682
	684
VÁLVULA DE SOLENOIDE (GR)	157
	567
	568
	786
	787
	788
	789
VÁLVULA DE SOLENOIDE (GR)	785
VÁLVULA DE SOLENOIDE Y MÚLTIPLE (GR)	790
VÁLVULA DEL CONTROL PRINCIPAL (GR)	745
	747
	749
VÁLVULA DEL NEUMÁTICO (GR)	438
VÁLVULA HIDRÁULICA DE 3 VÍAS (CONFIG)	636
VÁLVULA HIDRÁULICA DE 4 VÍAS (CONFIG)	637
VALVULA MANUAL	673
VALVULA PILOTO DE CARTUCHO (GR)	768
	770
	771
	772
	773
VÁLVULA PILOTO (GR)	752
	754
	756
	758
	760
	762
	764
	766
VÁLVULA REDUCTORA DE PRESIÓN (GR) (SISTEMA DE CONTROL DE TRACCION)	562
VÁLVULA SELECTORA (GR) (DIRECCIÓN)	597
VÁLVULA SELECTORA Y DE CONTROL DE PRESIÓN (GR)	780
VÁLVULAS DE LA DIRECCIÓN (GR)	597
	599
VENTANA DE LA PUERTA (GR)	984
VIDRIO (CONJ)	204
VIDRIO (CONJ) (AMBAR) (SEÑAL DE VIRAJE)	205
	207
VIDRIO (CONJ) (FARO DELANTERO) (LUZ ALTA/BAJA)	205

* NO HAY TRADUCCION DISPONIBLE EN EL MOMENTO DE LA IMPRESION

INDICE

Nombre	Página	Nombre	Página
VIDRIO (CONJ) (FARO DELANTERO) (LUZ ALTA/BAJA)	207		
VIDRIO (CONJ) (REFLECTOR)	202		
VISERA	981		
VISERA (GR)	981		
VOLANTE - CAJA DE (GR)	47		
VOLANTE (GR)	44		

* NO HAY TRADUCCION DISPONIBLE EN EL MOMENTO DE LA IMPRESION

ÍNDICE

Designação	Página
A	
ACENDEDOR DE CIGARROS (12-VOLTS)	287, 293, 302
ACIONADOR - INCLINAÇÃO DO CAPÔ	468, 470
ACIONADOR - PROTETOR DE POTÊNCIA	467, 473
ACIONADOR DE POTÊNCIA	472
ACOPLADOR RÁPIDO	815, 816, 817, 818, 819
ACUMULADOR - AR CONDICIONADO (COM DESSECANTE)	904, 908
ACUMULADOR - FREIO	539, 540, 541
ACUMULADOR DO SISTEMA DE ABSORÇÃO DE IMPACTOS	600, 601, 602
ADAPTADOR DA PONTA	800
ADAPTADOR-TUBULAÇÃO DE ÓLEO	69
ADESIVO - PAINEL DE FUSÍVEIS	936, 937
AJUSTADOR DO ASSENTO	831
ALARME	159, 160
ALARME DE MARCHA À RÉ	281
ALAVANCA DE CONTROLE - MODULAR	635
ALTERNADOR DE CORRENTE	161, 162, 164, 166, 168, 170
AMORTECEDOR DE VIBRAÇÕES E POLIA	39
APARAS	2
AQUECEDOR DA ÁGUA DO MOTOR	195, 196, 197, 198
AQUECEDOR DA CABINE	891
AQUECEDOR DA CABINE E MONTAGEM	890
ARMAÇÃO DIANTEIRA	485
ARO	434
ARO DESMONTÁVEL	435, 436, 437, 438
ARRANJO GERAL	1
ARRANJO HIDRÁULICO - 3 VÁLVULAS	636
ARRANJO HIDRÁULICO - 4 VÁLVULAS	637
ARREFECEDOR - ÓLEO DO MOTOR	82
ARREFECEDOR DO ÓLEO DO EIXO	391
ARREFECEDOR E MONTAGEM - TRANSMSSÃO	390
ARTICULAÇÃO DA VÁLVULA PILOTO	709, 710, 711
*ASHTRAY AS	935
ASSENTO	958, 960, 961, 962, 964, 965
ASSENTO - FUNDO	931
ASSENTO COM SUSPENSÃO	966, 968, 970, 971, 972
ASSENTO E MONTAGEM	951, 952, 953
ATERRO SANITÁRIO	2, 3
AUXILIAR DE PARTIDA	261, 262
AUXILIAR DE PARTIDA A ÉTER	263
B	
BALANCIM (ADMISSÃO)	67
BALANCIM (ESCAPE)	67
BASE DO FREIO - PEDAL	542, 544
BATERIA	854
BATERIA E CABOS / FIOS ELÉTRICOS	172
BATERIA (*12-VOLT, WET)	172
BLINDAGEM DO COMPARTIMENTO DO MOTOR	533
BLOCO DE FUSÍVEIS	303
BLOCO DE JUNÇÃO	175
BLOCO DO MOTOR	16, 18
BOCAL DE ENCHIMENTO DE ÓLEO DO TREM DE FORÇA	399
BOMBA - ESCORVA DE COMBUSTÍVEL E SEPARADOR DE ÁGUA	158
BOMBA DA DIREÇÃO SECUNDÁRIA E MONTAGEM	585

* TRADUÇÃO NÃO DISPONÍVEL NO MOMENTO DA IMPRESSÃO

ÍNDICE

Designação	Página
BOMBA DA TRANSMISSÃO	432 433
BOMBA DA UNIDADE INJETORA	149
BOMBA DE ÁGUA	94 95 96 98
BOMBA DE DIREÇÃO SECUNDÁRIA E MOTOR	584
BOMBA DE ESCORVA DO COMBUSTÍVEL E DO FILTRO PRIMÁRIO	147
BOMBA DE INJEÇÃO DO COMBUSTÍVEL	152
BOMBA DE ÓLEO - MOTOR	77 78 79 80
BOMBA DE PALHETAS	566
BOMBA DE PISTÃO	588 723
BOMBA DE PISTÃO E PALHETA	725
BOMBA DE TRANSFERÊNCIA DO COMBUSTÍVEL	151 152
BOMBA DO ARREFECEDOR DE ÓLEO DO EIXO E MONTAGEM	431
BOMBA DO VENTILADOR HIDRÁULICO E MONTAGEM	721
BOMBA HIDRÁULICA - UNIDADE INJETORA	151 152 153
BOMBA HIDRÁULICA E MONTAGEM	720
BOMBA REGULADORA	586
BORDA CORTANTE	820 821 822
BORDA CORTANTE - CANTO	823
BRAÇO - MANIPULADOR DE MATERIAIS	801
BRAÇO DE LEVANTAMENTO	791
BRAÇO DO ASSENTO	839 840 841 842 843
BRONZINA TIPO LUVA	794 797
BUJÃO DO BLOCO DO CILINDRO	60
BUJÃO DO DRENO	379
BUJÃO DO MOTOR	61
BUJÃO MAGNÉTICO	408 410 412 414 417
BUZINA ELÉTRICA	893 894
BUZINA (*24-VOLT, LOW TONE)	894

C

Designação	Página
CABEÇOTE DO MOTOR	20 22 24 25 27 28 29 30 31 33 35 37 38
CABINE	844 845 926 927
CABINE - ESTRUTURA DE PROTEÇÃO CONTRA CAPOTAMENTO	847
CABO/FIOS ELÉTRICOS-COMUNICAÇÃO	313
CABOS/FIOS ELÉTRICOS - ACOPLADOR	315
CABOS/FIOS ELÉTRICOS - AR CONDICIONADO	283
CABOS/FIOS ELÉTRICOS - CABINE	286 293 302 311
CABOS/FIOS ELÉTRICOS - CONTROLE DE TRAÇÃO	369
CABOS/FIOS ELÉTRICOS - DIANTEIROS	335 338 341
CABOS/FIOS ELÉTRICOS - DIREÇÃO SECUNDÁRIA	358 362
CABOS/FIOS ELÉTRICOS - EMBREAGEM	316
CABOS/FIOS ELÉTRICOS - MÁQUINA	348 351 354
CABOS/FIOS ELÉTRICOS - MOTOR	317 319 323 327 332
CABOS/FIOS ELÉTRICOS - SENSOR	366
CABOS/FIOS ELÉTRICOS DE ILUMINAÇÃO	344 345

* TRADUÇÃO NÃO DISPONÍVEL NO MOMENTO DA IMPRESSÃO

ÍNDICE

Designação	Página
	346
CAÇAMBA - MANUSEIO DE MATERIAL	805
	806
	807
	808
	814
CAÇAMBA PARA APLICAÇÃO GERAL	802
	803
	804
	810
	811
	812
	813
CADEADO	885
CADEADO CONTRA VANDALISMO	998
CADEADO (ENCHIMENTO DO TANUQE HIDRÁULICO)	621
CAIXA - EIXO FIXO	408
	410
CAIXA - EIXO OSCILANTE	412
	414
CAIXA DIANTEIRA	48
CAIXA DO VOLANTE DO MOTOR	47
CAPÔ E PROTETOR	524
CARCAÇA - INDICADOR	90
	92
CARCAÇA DAS ENGRENAGENS PLANETÁRIAS E COMPONENTES	379
CARROCERIA - VÁLVULA PILOTO	603
	604
CÁRTER DO ÓLEO DO MOTOR	56
CARTUCHO - BOMBA DE PALHETAS	606
CARTUCHO DO TURBOALIMENTADOR	126
CHASSI	1
CHASSI - ACOPLADOR RÁPIDO	825
	826
	827
CHASSI DIANTEIRO	488
CHASSI TRASEIRO	490
	493
	494
CHAVE	393
	885
CHAVE - ELETRÔNICO (SEGURANÇA)	260
	354
CHAVE - ELETRÔNICO (SEGURANÇA)	200
CHAVE (CHAVE GERAL DA BATERIA)(MOTOR DE PARTIDA)	267
CHAVE GERAL	267
CHAVE GERAL (BATERIA)	172
CHICOTE - CABOS ELÉTRICOS (RESISTOR DE TEMPERATURA) (RESISTOR DE TEMPERATURA) (ÓLEO)	319
CHICOTE - FREIOS (LUZ DO FREIO)	542
CHICOTE - ILUMINAÇÃO (HOLOFOTE)	216
CHICOTE - ILUMINAÇÃO (RODAGEM LADO DIREITO)	344
CHICOTE - ILUMINAÇÃO (RODAGEM, LADO ESQUERDO)	344
CHICOTE - MOTOR (ALTERNADOR 70A)	327
CHICOTE - MOTOR (CONTROLE ELETRÔNICO)	317
CHICOTE - MOTOR (MÓDULO DE CONTROLE ELETRÔNICO)	323
CHICOTE - MOTOR (UNIDADE INJETORA)	317
CHICOTE - VÁLVULA (COMPRESSOR DE AR DO ASSENTO)	979
CHICOTE - VÁLVULA (COMPRESSOR DE AR DO ASSENTO)	977
CHICOTE-DIREÇÃO (SECUNDÁRIO)	358
	362
CILINDRO - ACOPLADOR	624
	625
CILINDRO DA DIREÇÃO	576
CILINDRO DE DIREÇÃO E MONTAGEM	573
CILINDRO DE DIREÇÃO E RETENTOR	575
CILINDRO DE INCLINAÇÃO	627
	629
	631
	633
CILINDRO DE INCLINAÇÃO E RETENTOR	623
CILINDRO DE LEVANTAMENTO	626
CILINDRO DE LEVANTAMENTO E RETENTOR	622
CINTO DE SEGURANÇA	952
	953
	954
	955
	956
	957
	965
	972
CINZEIRO	936
	937
COLETOR DE ESCAPE	119
COLETOR-FREIO PROPORCIONAL	565
COLMÉIA-ARREFECEDOR DE ÓLEO DO MOTOR	82
COLMÉIA-ARREFECEDOR DO ÓLEO DO EIXO	428
COLMÉIA-ARREFECEDOR DO ÓLEO DO TREM DE FORÇA	390
COLUNA DA DIREÇÃO	592
COMANDO HIDRÁULICO	636
COMPRESSOR DE AR - ASSENTO	832
COMPRESSOR DE REFRIGERANTE	850

* TRADUÇÃO NÃO DISPONÍVEL NO MOMENTO DA IMPRESSÃO

ÍNDICE

Designação	Página
	851
CONDENSADOR DO REFRIGERANTE E MONTAGEM	852
	853
CONDICIONADOR DE AR	835
	836
CONDICIONADOR DE AR E MONTAGEM	833
	834
CONTRAPESO	476
CONTRAPESO TRASEIRO	477
CONTROLE - ACOPLADOR RÁPIDO	814
	815
CONTROLE - DESENGATE AUTOMÁTICO DE LEVANTAMENTO	186
	187
	641
CONTROLE - NÃO PROGRAMADO	189
	190
	191
	200
CONTROLE - NÃO PROGRAMADO (SEGURANÇA)	260
CONTROLE - NÃO PROGRAMADO (SISTEMA DE CONTROLE DE TRAÇÃO)	369
CONTROLE - POSIÇÃO	188
CONTROLE - POSIÇÃO (FERRAMENTA DE TRABALHO)	641
	643
CONTROLE & MONTAGEM-COMUNICAÇÃO	176
CONTROLE-CABO	607
	608
CONTROLE-COMUNICAÇÃO (PRODUCT LINK)	176
CONTROLE DA CAÇAMBA	792
	794
	797
CONTROLE DA TRANSMISSÃO	388
	389
CONTROLE DE DIREÇÃO	569
	571
CONTROLE DE TRAÇÃO	546
CONTROLE DO FREIO DE ESTACIONAMENTO	549
	551
	552
	554
CONTROLE DO FREIO DE SERVIÇO	555
	558
	562
CONTROLE DO PAINEL MONITOR	854
CONTROLE DO PEDAL DO FREIO	547
	548
CONTROLE ELETRÔNICO - MOTOR	178

Designação	Página
	181
	182
	183
	184
	185
CONTROLE ELETRÔNICO E MONTAGEM - MOTOR	178
	179
	180
CONTROLE HIDRÁULICO DE OPERAÇÃO PILOTO	609
	611
	613
	615
	617
	618
	619
	620
CONVERSÃO - CONTROLE DE TRAÇÃO	564
CONVERSOR DE TORQUE	453
CORREIA- SERPENTINA	166
	170
	851
CORREIA- SERPENTINA (COM AR CONDICIONADO)	431
CORREIA- SERPENTINA (8 PK)	168
CORREIA DE COMANDO (PISCA-ALERTA)	212
COTOVELO DE ADMISSÃO DE AR	115
CRUZETA E MANCAL	441
	458
*CYLINDER BLOCK GP	17

D

DECALQUE	933
	989
	990
DECALQUE - ADVERTÊNCIA (CILINDRO DE ALTA PRESSÃO)	687
	691
	694
	698
DECALQUE - ADVERTÊNCIA (MANUAL)	801
DECALQUE - ADVERTÊNCIA (RAIO DE ARTICULAÇÃO DO PRODUTO)	199
DECALQUE - CONTROLES (CONSOLE DIREITO)	286
DECALQUE - IDENTIFICAÇÃO (MÓDULO DE CONTROLE ELETRÔNICO)	194
DECALQUE - INFORMAÇÕES (PURIFICADOR DE AR)	111
DECALQUE - INFORMAÇÕES (12-VOLTS)	286
	293

* TRADUÇÃO NÃO DISPONÍVEL NO MOMENTO DA IMPRESSÃO

ÍNDICE

Designação	Página
	302
DECALQUE - INSTRUÇÃO (AJUSTE DO ASSENTO)	975
	977
	979
DECALQUE - INSTRUÇÃO (LER MANUAL DO PROPRIETÁRIO)	199
	200
	354
DECALQUE - INSTRUÇÃO (PARTIDA DO MOTOR)	933
DECALQUE - INSTRUMENTO (TRAVA HIDRÁULICA)	609
	611
	613
	615
DECALQUE - PAINEL (DUTO, DIREITO)	288
DECALQUE - PAINEL (DUTO, ESQUERDO)	288
	294
	303
DECALQUE (IGNIÇÃO)	199
	200
DECALQUE (IGNIÇÃO)	354
DECALQUE (IGNIÇÃO) (INTERRUTPOR DE IGNIÇAO)	354
DECALQUE-REFLETOR (AMARELO)	213
DECALQUE (SEGURANÇA)	199
	200
DEFLETOR	475
DESENGATE E POSICIONADOR DA CAÇAMBA	641
	643
DIFERENCIAL	394
DIFERENCIAL - DESLIZAMENTO LIMITADO	395
DIFERENCIAL - NOSPIN	396
	397
DIREÇÃO SECUNDÁRIA	591
DISJUNTOR AUTOMÁTICO DE CIRCUITO (*15-AMPERE) (ECM DO MOTOR)	228
DISJUNTOR AUTOMÁTICO DE CIRCUITO (*15-AMPERE) (ILUMINAÇÃO DE OPERAÇÃO)	228
DISJUNTOR AUTOMÁTICO DE CIRCUITO (15 AMPERES) (AR - ASSENTO)	951
DISJUNTOR AUTOMÁTICO DE CIRCUITO (15 AMPERES) (AR CONDICIONADO)	288
DISJUNTOR AUTOMÁTICO DE CIRCUITO (15 AMPERES) (ASSENTO DE SUSPENSÃO PNEUMÁTICA)	972
DISJUNTOR AUTOMÁTICO DE CIRCUITO (15 AMPERES) (ASSENTO DE SUSPENSÃO PNEUMÁTICA)	952
	965
DISJUNTOR AUTOMÁTICO DE CIRCUITO (15 AMPERES) (ECM DO MOTOR)	231
	233
DISJUNTOR AUTOMÁTICO DE CIRCUITO (15 AMPERES) (ILUMINAÇÃO DE OPERAÇÃO)	231
	233
DISJUNTOR AUTOMÁTICO DE CIRCUITO (20-AMPERES) (ACIONADOR DE INCLINAÇÃO DO CAPÔ)	231
	233
DISJUNTOR AUTOMÁTICO DE CIRCUITO (80 AMPERES) (ALTERNADOR)	233
DISJUNTOR AUTOMÁTICO DE CIRCUITO (80 AMPERES) (PRINCIPAL)	233
DOBRADIÇA DO PÁRA-LAMA	520
	521
DRENO - ECOLOGIA	398
DRENO - ÓLEO DO MOTOR	40
DUCTO DE AR	880

E

EIXO-COMANDO DE VÁLVULA	7
EIXO DE TRANSMISSÃO	439
	440
EIXO FIXO	374
EIXO OSCILANTE	375
	376
ELEMENTO - AQUECEDOR DE ÁGUA DA CAMISA	195
ELEMENTO - AQUECEDOR DE ÁGUA DA CAMISA (120 VOLTS, 1.000 WATTS)	197
	198
ELEMENTO - AQUECEDOR DE ÁGUA DA CAMISA (240 VOLTS, 1.000 WATTS)	196
ELEMENTO - PRIMÁRIO	111
ELEMENTO DO FILTRO DE AR	116
ELEMENTO DO FILTRO DE AR (SECUNDÁRIO)	111
ELEMENTO FILTRANTE - ÓLEO (EFICIÊNCIA PADRÃO)	727
ELEMENTO FILTRANTE - ÓLEO (EFICIÊNCIA PADRÃO) (HIDRÁULICO)	729
ELEMENTO FILTRANTE - ÓLEO HIDRÁULICO	400
ELEMENTO FILTRANTE - ÓLEO HIDRÁULICO (TREM DE FORÇA)	401
ELIMINAÇÃO DE VAPORES DO CÁRTER	72
ELO - TRAVA DA ARMAÇÃO DA DIREÇÃO	532
EMBREAGEM	382
	384
	386

* TRADUÇÃO NÃO DISPONÍVEL NO MOMENTO DA IMPRESSÃO

ÍNDICE

Designação	Página
EMISSOR - NÍVEL DO COMBUSTÍVEL	155
EMISSOR - POSIÇÃO	237
	238
	239
	240
EMISSOR - POSIÇÃO (ÂNGULO DE ARTICULAÇÃO)	369
EMISSOR - POSIÇÃO (GIRATÓRIO) (LEVANTAMENTO)	366
ENGATE - ARTICULAÇÃO	522
ENGRENAGEM - COROA	402
ENGRENAGENS DE DISTRIBUIÇÃO	45
ENGRENAGENS DE SAÍDA DE TRANSFERÊNCIA	406
ENTRADA - TRANSMISSÃO	416
ESCADA	527
ESPELHO RETROVISOR	915
	916
EXTENSÃO - ENCOSTO	882
EXTENSÃO - ENCOSTO (TECIDO)	964

F

*FASTENER GP-DAMPER & PULLEY	41
FIAÇÃO - AQUECEDOR E AR CONDICIONADO	836
	891
FIAÇÃO - AUXILIAR DE PARTIDA	368
FIAÇÃO - AUXILIAR DE PARTIDA (ÉTER)	368
FIACAO - BOMBA (ESCORVA DO COMBUSTIVEL)	147
FIAÇÃO - CONTROLE DE PERCURSO	687
	691
	694
	698
FIAÇÃO - MONITORAÇÃO DO EIXO	282
	284
FIAÇÃO - PROTETOR DE ENERGIA	356
FIAÇÃO-RÁDIO (ALTO-FALANTE)	941
FIAÇÃO-SENSOR (FIAÇÃO 14-GA) (TEMPERATURA DO ÓLEO DO MOTOR)	256
*FILM-CIRCUIT BREAKER	228
*FILM-FUSE PANEL	935
*FILM-INSTRUCTION	186
	187
	188
FILTRO	884
FILTRO - AR DA CABINE	883
	884
FILTRO - COMBUSTÍVEL	139
	142
	155
FILTRO - COMBUSTÍVEL (SECUNDÁRIO)	133
	135
	137
FILTRO - MAGNÉTICO	379
FILTRO - MAGNÉTICO (ARREFECEDOR DO ÓLEO DO EIXO)	417
FILTRO - ÓLEO	400
	401
FILTRO - ÓLEO DO MOTOR	71
FILTRO - SEPARADOR DE ÁGUA E COMBUSTÍVEL (PRIMÁRIO)	127
FILTRO (ÁGUA) (BOMBA)	96
	98
FILTRO (AR DA CABINE)	883
	884
FILTRO DE COMBUSTÍVEL E SEPARADOR DE ÁGUA	127
FIXADORES - CAIXA DIANTEIRA	43
FIXADORES DO VOLANTE DO MOTOR	42
FREIO DE ESTACIONAMENTO	545
FREIOS E ENGRENAGENS PLANETARIAS	377
FUNDO - ENCOSTO	928
	929
	930
FUSÍVEL (10 AMPERES)	286
	293
	302
FUSÍVEL (15 AMPERES)	286
	293
	302

G

GARFO DE PALETAS	824
*GEAR GP-BEVEL & PINION	404
GR. DE SERVIÇO - MÁQUINA	260
GRADE DO RADIADOR	497
	499
GRUPO DE INSTALAÇÃO - MOTOR	6
GRUPO ROTATIVO DA BOMBA	590
	726

H

*HOSE-DISPOSAL	72

I

ILUMINAÇÃO - RODOVIÁRIA	223
ILUMINAÇÃO - SINALIZAÇÃO	214
	224
ILUMINAÇÃO AUXILIAR	213
ILUMINAÇÃO RODOVIÁRIA	213
INCLINAÇÃO - CAPÔ	535

* TRADUÇÃO NÃO DISPONÍVEL NO MOMENTO DA IMPRESSÃO

ÍNDICE

Designação	Página
	537
INDICADOR - NÍVEL DO ÓLEO (VARETA)	73
	74
INDICADOR - TROCA DO FILTRO DE AR	109
INDICADOR - VARETA DO NÍVEL DE ÓLEO	408
	410
	412
	414
INJETOR DE COMBUSTÍVEL	149
INSTALAÇÃO-COMUNICAÇÃO	199
INSTALAÇÃO DO RÁDIO	895
INSTALAÇÃO-SEGURANÇA	199
	200
INTERRUPTOR - BALANCIM	278
	648
	698
INTERRUPTOR - BALANCIM (ACIONADOR DE INCLINAÇÃO DO CAPÔ)	348
	351
INTERRUPTOR - BALANCIM (ACIONADOR DO PROTETOR INFERIOR INTERMEDIÁRIO)	356
INTERRUPTOR - BALANCIM (ACIONADOR DO PROTETOR INFERIOR TRASEIRO)	356
INTERRUPTOR - BALANCIM (AR CONDICIONADO)	833
INTERRUPTOR - BALANCIM (CONTROLE DO NEUTRALIZADOR DA TRANSMISSÃO)	288
	294
	303
INTERRUPTOR - BALANCIM (PARADA A NÍVEL DO SOLO)	348
	351
INTERRUPTOR - BALANCIM (SELEÇÃO DE MODO)	288
	294
	303
INTERRUPTOR - BALANCIM (SISTEMA DE ABSORÇÃO DE IMPACTOS)	687
	691
	694
INTERRUPTOR - CIRCUITO (*20-AMPERE)	228
INTERRUPTOR - CIRCUITO (*20-AMPERE) (ACIONADOR DE INCLINAÇÃO DO CAPÔ)	228
INTERRUPTOR - CIRCUITO (20-AMPERES)	231
	233
	356
INTERRUPTOR - CIRCUITO (*80-AMPERE) (ALTERNADOR)	229
INTERRUPTOR - CIRCUITO (*80-AMPERE) (PRINCIPAL)	228
INTERRUPTOR - CIRCUITO (80 AMPERES) (ALTERNADOR)	231
INTERRUPTOR - CIRCUITO (80 AMPERES) (PRINCIPAL)	231
INTERRUPTOR - ESFERA (NEUTRALIZADOR DO RETÉM DE TRAVA HIDRÁULICA)	781
INTERRUPTOR - LIMITADOR (FREIO DE ESTACIONAMENTO)	551
	552
INTERRUPTOR - LIMITADOR (LUZ DE FREIO)	542
INTERRUPTOR - LIMPADOR DO PÁRA-BRISA	279
INTERRUPTOR - LIMPADOR (24 VOLTS) (INTERMITENTE)	279
INTERRUPTOR - LIMPADOR (24 VOLTS) (PISCA-PISCA DIANTEIRA)	286
INTERRUPTOR - MAGNÉTICO	268
	269
	270
	271
	272
	273
	274
	275
INTERRUPTOR - MAGNÉTICO (24 VDC)	272
INTERRUPTOR - MAGNÉTICO (*24-VOLT) (RELÉ DE PARTIDA)	228
INTERRUPTOR - MAGNÉTICO (*24-VOLT) (RELÉ PRINCIPAL)	228
INTERRUPTOR - MAGNÉTICO (24 VOLTS) (AQUECEDOR DE ADMISSÃO DE AR)	273
INTERRUPTOR - MAGNÉTICO (24 VOLTS) (RELÉ DE PARTIDA)	231
INTERRUPTOR - MAGNÉTICO (24 VOLTS) (RELÉ DE PARTIDA)	233
INTERRUPTOR - MAGNÉTICO (24 VOLTS) (RELÉ PRINCIPAL)	231
INTERRUPTOR - MAGNÉTICO (24 VOLTS) (RELÉ PRINCIPAL)	233
INTERRUPTOR - PARTIDA (CHAVE)	286
INTERRUPTOR - PARTIDA (CHAVE)	293
	302
INTERRUPTOR - PISCA-PISCA	277
INTERRUPTOR - PRESSÃO (DERIVAÇÃO DO FILTRO DE ÓLEO)	401
INTERRUPTOR - PRESSÃO (DERIVAÇÃO DO FILTRO DO ÓLEO) (TREM DE FORÇA)	400
INTERRUPTOR - PRESSÃO (ÓLEO DA DIREÇÃO PRIMÁRIA)	358
	362
INTERRUPTOR - PRESSÃO (ÓLEO DA DIREÇÃO SECUNDÁRIA)	358
	362

* TRADUÇÃO NÃO DISPONÍVEL NO MOMENTO DA IMPRESSÃO

ÍNDICE

Designação	Página
INTERRUPTOR - PRESSÃO (ÓLEO DO FREIO DE SERVIÇO)	555, 558
INTERRUPTOR - PRESSÃO (REFRIGERANTE)	283
INTERRUPTOR - ROTATIVO (24 VOLTS) (CONTROLE DE MUDANÇA AUTOMÁTICA)	287
INTERRUPTOR - ROTATIVO (24 VOLTS) (CONTROLE DE MUDANÇA AUTOMÁTICA)	302
INTERRUPTOR - ROTATIVO (24 VOLTS) (CONTROLE DE MUDANÇA AUTOMÁTICA)	295
INTERRUPTOR - ROTATIVO (24 VOLTS) (CONTROLE DO VENTILADOR DO AR CONDICIONADO/AQUECEDOR)	286
INTERRUPTOR - ROTATIVO (24 VOLTS) (CONTROLE VARÍAVEL DE MUDANÇA DAS MARCHAS)	288
INTERRUPTOR - ROTATIVO (24 VOLTS) (CONTROLE VARÍAVEL DE MUDANÇA DAS MARCHAS)	293, 302
INTERRUPTOR - ROTATIVO (24 VOLTS) (FAROL E LUZES - TRASEIRA, DO PAINEL, DE OPERAÇÃO)	286, 293, 302
INTERRUPTOR - ROTATIVO (24 VOLTS) (LIMPADOR TRASEIRO)	286
INTERRUPTOR - TEMPERATURA (ÓLEO DO EIXO DIANTEIRO)	284
INTERRUPTOR - TEMPERATURA (ÓLEO DO EIXO TRASEIRO)	284
INTERRUPTOR - TEMPERATURA (REFRIGERANTE)	836
INTERRUPTOR-ACOPLADOR RÁPIDO	276
INTERRUPTOR DE SINALIZAÇÃO	277
INTERRUPTOR DO PISCA-PISCA DE ADVERTÊNCIA	225
INTERRUPTOR GIRATÓRIO (PISCA-PISCA, PISCA-ALERTA)	277

J

JOGO - ASSENTO (INFERIOR)	966, 968
JOGO - ASSENTO (PARTE TRASEIRA)	966, 968
JOGO - BUZINA	592
JOGO - LIMITADOR	966, 968
JOGO - SUPERIOR	966
JOGO-ARTICULAÇÃO	592
JOGO DE ABRAÇADEIRA DO PURIFICADOR DE AR	111
JOGO DE AJUSTADOR DE CABO	966, 968
JOGO DE AJUSTADOR (ENCOSTO DO BRAÇO)	840
JOGO DE AJUSTADOR (FUNDO DO ASSENTO)	931
JOGO DE AJUSTADOR (*SUSPENSION)	966, 968
JOGO DE AJUSTE DA ALTURA	966, 968
JOGO DE ALAVANCA	966, 968
JOGO DE ALAVANCA (AJUSTE DE ALTURA)	966, 968
JOGO DE ALAVANCA DE INCLINAÇÃO	592
JOGO DE ALAVANCA (MOTOR DE PARTIDA)	265
JOGO DE ALMOFADA DO ASSENTO (TECIDO)	958
JOGO DE ALMOFADA (ENCOSTO DE TECIDO)	882
JOGO DE ALMOFADA (ENCOSTO DO BRAÇO)	840
JOGO DE AMORTECEDOR	966, 968
JOGO DE AMORTECEDOR DE CHOQUES (ASSENTO DA SUSPENSÃO)	977
JOGO DE ARMAÇÃO (ASSENTO)	966, 968
JOGO DE BLOCO DESLIZADOR	958, 970
JOGO DE BRAÇO DO ASSENTO - LADO ESQUERDO	966, 968
JOGO DE BRAÇO DO ASSENTO DO OPERADOR - LADO DIREITO	966, 968
JOGO DE BUCHA (MOTOR DE PARTIDA)	265
JOGO DE CÁRTER DE INCLINAÇÃO	958
JOGO DE CARTUCHO TRASEIRO	566
JOGO DE COMPRESSOR DE AR	975
JOGO DE CORDÃO	966, 968, 975, 979
JOGO DE CORDÃO (ASSENTO DA SUSPENSÃO)	977
JOGO DE CRUZETA E MANCAL	457
JOGO DE ESCOVA (MOTOR DE PARTIDA)	265
JOGO DE ESPAÇADORES	588

* TRADUÇÃO NÃO DISPONÍVEL NO MOMENTO DA IMPRESSÃO

ÍNDICE

Designação	Página
JOGO DE FILTRO DA TAMPA (TANQUE DE COMBUSTÍVEL)	155
JOGO DE FIXADORES	975
JOGO DE FIXADORES (ALTERNADOR)	162
	164
JOGO DE INCLINAÇÃO DO ASSENTO (FUNDO DO ASSENTO)	931
JOGO DE INCLINAÇÃO TRASEIRA (FUNDO DO ASSENTO)	931
JOGO DE ISOLADOR (MOTOR DE PARTIDA)	265
JOGO DE LONA DO FREIO	545
JOGO DE MAÇANETA DO ASSENTO	958
JOGO DE MAÇANETA (RADIO)	941
JOGO DE MANCAL (ALTERNADOR)	164
JOGO DE MANCAL DA SUSPENSÃO	966
	968
JOGO DE MOLA	586
JOGO DE MOLA (AJUSTE DE ALTURA)	966
	968
JOGO DE PALHETA TRASEIRA	566
JOGO DE PARAFUSO DE RETENÇÃO (*M5X0.8X53.24-MM) (CONTROLE NÃO PROGRAMADO)	189
JOGO DE PARAFUSO DE RETENÇÃO (M5X0,8X53,24MM) (CONTROLE NÃO PROGRAMADO)	190
JOGO DE PINO DO PEDAL (PEDAL DO GOVERNADOR)	939
JOGO DE PISTÃO	590
JOGO DE RECEPTÁCULO (12 PINOS)	335
	341
JOGO DE RETENTOR	586
	600
	602
	625
	737
	781
JOGO DE RETENTOR (ABAIXAMENTO DO MOTOR DESLIGADO)	751
JOGO DE RETENTOR (AQUECEDOR DE ÁGUA DA CAMISA)	195
	197
JOGO DE RETENTOR TRASEIRO	566
JOGO DE RETENTOR (VÁLVULA SOLENÓIDE)	157
	567
	568
	785
	786
	787
	788
JOGO DE ROLO	975
JOGO DE ROLO (PEDAL DO GOVERNADOR)	939
JOGO DE SOLENÓIDE (MOTOR DE PARTIDA)	265
JOGO DE SUPORTE	968
JOGO DE TAMPA	966
JOGO DE TAMPA DA SUSPENSÃO	966
	968
JOGO DE TAMPA (INFERIOR)	968
JOGO DE TAMPA (PARTE TRASEIRA)	968
JOGO DE TELA (PRÉ-PURIFICADOR)	124
JOGO DE TERMINAL (ALTERNADOR)	164
JOGO DE TERMINAL (ALTERNADOR)	162
JOGO DE TRILHO DESLIZANTE	966
	968
JOGO DE VÁLVULA DE ALÍVIO (DIREÇÃO SECUNDÁRIA)	584
JOGO DE VÁLVULA DE AR	979
JOGO DE VÁLVULA DE AR (ASSENTO DA SUSPENSÃO)	977
JOGO DE VÁLVULA DE CARREGAMENTO DO FREIO	562
JOGO-RETENTOR DA ESCOVA	897
	899
	901
JUNTA	86
	727
	729
JUNTA (ALOJAMENTO DO REGULADOR DE TEMPERATURA)	88
JUNTA CORREDIÇA	441
JUNTA UNIVERSAL	457
	458

L

LÂMINA DO LIMPADOR DE PÁRA-BRISA	986
*LAMP-HALOGEN (*24-VOLT, 65-WATT)	214
LÂMPADA	201
LÂMPADA - FAROL	201
	202
	203
	204
LÂMPADA - HALOGÊNEO (24 VOLTS, 65 WATTS)	203
	204
	215
	216
LÂMPADA - HALOGÊNEO (24 VOLTS, 65 WATTS) (FAROL)	202
LÂMPADA - SINALIZAÇÃO	209
	210
	211

* TRADUÇÃO NÃO DISPONÍVEL NO MOMENTO DA IMPRESSÃO

ÍNDICE

Designação	Página
LÂMPADA - SINALIZAÇÃO (*24-VOLT) (DIANTEIRA, DE CURVA)	224
LÂMPADA - TETO (24 VOLTS)	896 903
LÂMPADA DIANTEIRA E DE SINAL	205 207
LÂMPADA (VERMELHA, VERDE, LED, 12 VOLTS)	354
LÂMPADA (VERMELHA, VERDE, LED, 12 VOLTS)	200
LÂMPADA (VERMELHA, VERDE, LED, 12 VOLTS)	199
LÂMPADA (*24-VOLT, 21-WATT)	211
LÂMPADA (24 VOLTS) (ILUMINAÇÃO DE OPERAÇÃO)	205
LÂMPADA (24 VOLTS) (LUZ DE OPERAÇÃO)	207
LÂMPADA (24 VOLTS) (SETA DE DIREÇÃO)	205 207
LÂMPADA (24 VOLTS, 10 WATTS)	903
LÂMPADA (24 VOLTS, 21 WATTS) (SETA DE DIREÇÃO)	205 207
LÂMPADA (24 VOLTS, 21 WATTS) (SINAL)	209
LÂMPADA (24 VOLTS, 3 WATTS)	286 293
LÂMPADA (24 VOLTS, 3 WATTS)	918
LÂMPADA (24 VOLTS, 3 WATTS)	302
LÂMPADA (24 VOLTS, 70 WATTS) (PISCA-PISCA DE ADVERTÊNCIA)	212
LÂMPADA (24 VOLTS, 75-70 WATTS) (FACHO ALTO - BAIXO)(LADO DIREITO)	207
LÂMPADA (24 VOLTS, 75-70 WATTS) (LUZ ALTA/BAIXA)	205
LAVADOR DO VIDRO	982 983
*LENS-AMBER	211
LENTE	204
LENTE ÂMBAR (SINAL)	209
LENTE (ÂMBER) (SETA DE DIREÇÃO)	205 207
LENTE (HOLOFOTE)	202
LENTE (LUZES DIANTEIRAS) (LUZ ALTA/BAIXA)	205 207
LEVANTAMENTO - ARRANJO	799
LEVANTAMENTO DO MOTOR	51
*LIFT AR	799
LIMPADOR DO VIDRO	986 988
LUZ GIRATÓRIA DE ALARME	212
LUZ INTERMITENTE (24 VOLTS)	277

M

Designação	Página
MANCAL - PRINCIPAL (VIRABREQUIM)	14
MECANISMO DAS VÁLVULAS	66 67
MÓDULO - TECLADO DA CARGA ÚTIL	918
MONTAGEM - ALTERNADOR	52 53
MONTAGEM - ARO	430
MONTAGEM - ARREFECEDOR DE ÓLEO DO EIXO	428
MONTAGEM - CABINE	922 924
MONTAGEM - MOTOR E TRANSMISSÃO	54
MONTAGEM - QUADRO DE LUBRIFICAÇÃO	999
MONTAGEM DO EIXO	427
MOTOR - ENGRENAGENS	708
MOTOR - LIMPADOR DO VIDRO	920 921
MOTOR - NÚCLEO	5
MOTOR COMPLETO	4
MOTOR ELÉTRICO DE PARTIDA	264 265
MOTOR-SOPRADOR (24 VOLTS, A/C, AQUECEDOR)	836 891

O

Designação	Página
ORIFÍCIO-CONDICIONADOR DE AR	836

P

Designação	Página
PAINEL - DISJUNTOR ELÉTRICO AUTOMÁTICO	228 231 233
PAINEL DE INSTRUMENTOS	855 933 935 936 937
PAINEL MONITOR DE CARGA ÚTIL	917 918
PÁRA-LAMA	481 482 483
PÁRA-LAMA-EXTENSÃO	480
PÁRA-SOL	981
PÁRA-SOL DA CABINE	981
PEDAL DO GOVERNADOR	939 940
PELÍCULA - DISJUNTOR	231 233

* TRADUÇÃO NÃO DISPONÍVEL NO MOMENTO DA IMPRESSÃO

ÍNDICE

Designação	Página
PELÍCULA - ENTRADA - SAÍDA	935
	936
	937
PISTÃO E BIELA	57
	59
PLACA DA VÁLVULA PILOTO	712
	713
	715
	717
	718
PLACA DE ADVERTÊNCIA (SEM FOLGA, DINAMARQUÊS)	1001
PLACA DE INFORMAÇÃO (COMBUSTIVEL MANUAL)	417
PLACA DE INFORMAÇÃO (COMBUSTIVEL MANUAL) (ESCORVA)	147
PLACA DE INSTRUÇÃO (BATERIA)	172
PLACA DE INSTRUÇÃO (CONDICIONADOR DE AR)	835
PLACA E DECALQUE	1000
	1001
	1002
	1003
	1004
PLACA/CHAPA (DISJUNTOR)	231
	233
*PLATE	228
PNEU E ARO	442
	443
	444
	445
	446
	447
	448
	449
	450
	451
	452
POLIA DA RODA-GUIA	62
	63
PONTA	828
PONTA CURTA	829
	830
PONTA LONGA	828
PORTA DA CABINE	856
	857
	859
	861
	862
	864
	866
	869
	872
	875
	878
PRÉ-PURIFICADOR	122
	123
	124
PROTEÇÃO - ENGATE E DIREÇÃO	514
PROTETOR - ARREFECEDOR DO ÓLEO DO EIXO	503
PROTETOR - ARTICULAÇÃO	501
PROTETOR - EIXO DE TRANSMISSÃO	513
PROTETOR - ILUMINAÇÃO	515
	517
PROTETOR - JANELA	887
	888
PROTETOR - TREM DE FORÇA	518
	519
PROTETOR - VEDADOR DO EIXO	504
PROTETOR CONTRA VANDALISMO	885
PROTETOR DO VENTILADOR	83
	84
PROTETOR INFERIOR	505
	507
	509
	511
PROTETOR SUPERIOR - ESTRUTURA ROPS ABERTA	903
PUBLICAÇÃO	914
PURIFICADOR DE AR	109
	111

R

Designação	Página
RADIADOR E VENTILADOR	99
	103
RÁDIO	941
	942
RECLINAÇÃO - ASSENTO	943
REGULADOR	137
REGULADOR - ALTERNADOR (24 VOLTS)	162
REGULADOR (COMBUSTÍVEL)	133
	135
REGULADOR DE PRESSÃO DO COMBUSTÍVEL	154
REGULADOR DE TEMPERATURA DA ÁGUA (94 GRAUS C)	86
REGULADOR DE TEMPERATURA DA ÁGUA (94 GRAUS C) (LÍQUIDO ARREFECEDOR)	88
REGULADOR DE VOLTAGEM (24 VOLTS) (ALTERNADOR)	164
REGULADOR (PRESSÃO DO COMBUSTÍVEL)	154
RELÉ (CONJ) (24 VOLTS) (DIREÇÃO SECUNDÁRIA)	358

* TRADUÇÃO NÃO DISPONÍVEL NO MOMENTO DA IMPRESSÃO

ÍNDICE

Designação	Página
RELÉ (CONJ) (24 VOLTS) (DIREÇÃO SECUNDÁRIA)	362
RELÉ (CONJ) (24 VOLTS) (FAROL)	286
	293
	302
RESPIRO	70
	379
RESPIRO (CÁRTER DO MOTOR)	70
RETENTOR - CAIXA DO VOLANTE	65
RETENTOR DO VIRABREQUIM	64
RETENTOR DO VIRABREQUIM (DIANTEIRO)	64
RETENTOR DO VIRABREQUIM (TRASEIRO)	64
RETENTOR (SEPARADOR DE ÁGUA, COMBUSTÍVEL)	127
REVESTIMENTO DA CABINE	896
	897
	899
	901
RODA-GUIA - CORREIA	49
ROPS ABERTA	947
	948
ROPS FECHADA	944
	945

S

SENSOR - PRESSÃO	241
	242
	243
	244
	245
	246
	247
	248
	249
SENSOR - PRESSÃO (COMBUSTÍVEL)	248
SENSOR - TEMPERATURA	253
	254
	255
	256
	257
	258
	259
SENSOR - TEMPERATURA (ÓLEO DA TRANSMISSÃO)	466
SENSOR - TEMPERATURA (ÓLEO HIDRÁULICO)	319
	323
	327
	332
SENSOR DE VELOCIDADE	250
	251
	252
SENSOR DE VELOCIDADE (RODA)	369
SENSOR DO MOTOR	235
SEPARADOR DE ÁGUA E BOMBA DE ESCORVA DE COMBUSTÍVEL	158
SILENCIADOR	120
SIST. DE ILUMINAÇÃO - PISCA-PISCA GIRATÓRIO DE ADVERTÊNCIA	225
	226
	227
SISTEMA DE ILUMINAÇÃO - FARÓIS	214
	215
	216
	218
SISTEMA DE ILUMINAÇÃO - FARÓIS E SINAL	219
	221
SISTEMA ELÉTRICO	192
SISTEMA ELETRÔNICO - MÁQUINA	193
	194
SISTEMA ELETRÔNICO - TREM DE FORÇA	194
SOFTWARE - MÁQUINA (SEGURANÇA)	354
SUPORTE - ADMISSÃO DE AR	534
SUPORTE - ASSENTO	974
SUPORTE DO RETENTOR	8
SUPORTE-INTERRUPTOR AJUSTÁVEL (LIMITE DA LUZ DO FREIO)	542
SUSPENSÃO - ASSENTO	975
	977
	979
*SWITCH AS-TEMPERATURE (*AXLE OIL MONITORING)	316

T

TAMPA - ACESSO À BATERIA	478
TAMPA - ADMISSÃO DE AR	112
	113
	114
TAMPA - BLOCO DO MOTOR	9
TAMPA - BOCAL DE ENCHIMENTO	11
	399
	727
	729
TAMPA - BOCAL DE ENCHIMENTO DE ÓLEO DA TRANSMISSÃO	393
	998
TAMPA - BOCAL DE ENCHIMENTO (TANQUE DE COMBUSTÍVEL)	155
TAMPA - CAIXA DIANTEIRA	11
TAMPA - EMBARQUE	392
TAMPA - MECANISMO DAS VÁLVULAS	13
TAMPA - RADIADOR (7 PSI)	107

* TRADUÇÃO NÃO DISPONÍVEL NO MOMENTO DA IMPRESSÃO

ÍNDICE

Designação	Página
	108
TAMPA - TANQUE HIDRÁULICO	621
TAMPA COM RESPIRO	983
TAMPA CONTRA POEIRA	195
TAMPA DA VÁLVULA (HASTE)	435
TAMPÃO	398
TANQUE DE COMBUSTÍVEL	155
TANQUE DE ÓLEO HIDRÁULICO E MONTAGEM	732
	733
TANQUE HIDRÁULICO E FILTRO	727
	729
TANQUE SUPERIOR DO RADIADOR	107
	108
TAPETE	897
	899
	901
TELA - FILTRO (LAVADOR DO VIDRO)	983
TELA DE SUCÇÃO	379
TELA FILTRANTE	727
	729
	730
	752
	754
	756
	758
	760
	762
	764
	766
TELA PÁRA-SOL	950
TOLDO - ROPS ABERTA	849
TRANSMISSÃO	455
TREM DE FORÇA	430
TUBO DE ESCAPE - EXTENÇÃO	121
TUBOS - ABSORÇÃO DE IMPACTOS	687
	691
	694
	698
TUBOS - ACOPLADOR	645
	648
	651
	652
	654
	657
TUBOS - ÁGUA	85
	86
	88
	90
	92
TUBOS - AQUECEDOR DA CABINE	912
TUBOS - AR	117
	118
TUBOS - AR CONDICIONADO	904
	908
TUBOS - ARREFECEDOR DE ÓLEO DO EIXO	417
TUBOS - ARREFECEDOR DE ÓLEO HIDRÁULICO	669
	673
TUBOS - ARREFECEDOR DO CONVERSOR DE TORQUE	425
TUBOS - CILINDRO DE INCLINAÇÃO	702
	704
	706
TUBOS - CILINDRO DE LEVANTAMENTO	678
	680
TUBOS - CIRCUITO PILOTO	682
	684
	686
TUBOS - COMBUSTÍVEL	128
	130
TUBOS - DIANTEIROS	659
	661
	663
	665
TUBOS - DIREÇÃO	580
TUBOS - DIREÇÃO SECUNDÁRIA	578
TUBOS - DRENAGEM DO COMBUSTÍVEL	132
TUBOS - FILTRO DO COMBUSTÍVEL	133
	135
	137
	139
	142
TUBOS - FILTRO DO TREM DE FORÇA	421
	423
TUBOS - GRAXA	528
	530
TUBOS - INJETOR DA BOMBA HIDRÁULICA	145
	146
TUBOS - ÓLEO DO MOTOR	75
TUBOS - ÓLEO DO TURBOALIMENTADOR	76
TUBOS - ÓLEO HIDRÁULICO	667
TUBOS DO AQUECEDOR	912
TUBULAÇÕES DE DIAGNÓSTICO	991
	994
TUCHO DA VÁLVULA	50
TURBOALIMENTADOR	125
	126
V	
VÁLVULA - COLETOR E SOLENÓIDE	790
VÁLVULA - CONTROLE PRINCIPAL	745
	747
	749

* TRADUÇÃO NÃO DISPONÍVEL NO MOMENTO DA IMPRESSÃO

ÍNDICE

Designação	Página
VALVULA - PARTIDA A ETER	280
VÁLVULA - VENTILADOR POR DEMANDA	741
VÁLVULA DA DIREÇÃO	597
	599
VÁLVULA DE ALÍVIO	461
	595
	776
	777
	778
	779
VÁLVULA DE ALÍVIO (CILINDRO DE DIREÇÃO - DUAS DIREÇÕES)	597
VÁLVULA DE ALÍVIO (COMPRESSOR DO REFRIGERANTE)	850
VÁLVULA DE AMOSTRAGEM	90
	92
VÁLVULA DE CARGA DO ACUMULADOR (FREIO)	555
	558
	562
VÁLVULA DE CONTROLE	459
	738
	740
VÁLVULA DE CONTROLE - TRANSMISSÃO	463
	466
VÁLVULA DE CONTROLE DA BOMBA	593
	774
VÁLVULA DE CONTROLE DOS FREIOS (SERVIÇO)	555
	558
VÁLVULA DE CONTROLE PILOTO	752
	754
	756
	758
	760
	762
	764
	766
VÁLVULA DE DERIVAÇÃO	459
VÁLVULA DE DERIVAÇÃO (FILTRO DE ÓLEO DO MOTOR)	71
VÁLVULA DE DIREÇÃO SECUNDÁRIA	596
VÁLVULA DE DRENAGEM	133
	135
	137
	139
VÁLVULA DE DRENAGEM (FILTRO DE COMBUSTÍVEL)	142
VÁLVULA DE GÁS	600
VÁLVULA DE MODULAÇÃO	460
VÁLVULA DE PARADA	781
VÁLVULA DE PARADA (TANQUE HIDRÁULICO)	673
VÁLVULA DE PNEU	438
VÁLVULA DE REDUÇÃO DE PRESSÃO (SISTEMA DE CONTROLE DE TRAÇÃO)	562
VÁLVULA DE RETENÇÃO	736
	737
VÁLVULA DE RETENÇÃO (DERIVAÇÃO DO ARREFECEDOR DE ÓLEO DO EIXO)	428
VÁLVULA DE RETENÇÃO (MOTOR INATIVO INFERIOR)	682
	684
VÁLVULA DE RETENÇÃO (PILOTO)	682
	684
VÁLVULA DE SEPARAÇÃO	783
	784
VÁLVULA DESVIADORA	742
	743
	744
VÁLVULA DISJUNTORA	667
VÁLVULA DO CARTUCHO PILOTO	768
	770
	771
	772
	773
VÁLVULA DO CONTROLE PRINCIPAL E MONTAGEM	734
	735
VÁLVULA MANUAL	751
VÁLVULA-MANUAL	673
VÁLVULA PARA TIRAR AMOSTRAS DE FLUIDOS	81
VÁLVULA SELETORA (DIREÇÃO)	597
VÁLVULA SELETORA E CONTROLE DE PRESSÃO	780
VÁLVULA SOLENÓIDE	157
	567
	568
	785
	786
	787
	788
	789
VIDRO DA PORTA	984
VIGIA	727
	729
VIRABREQUIM	14
VOLANTE DO MOTOR	44

* TRADUÇÃO NÃO DISPONÍVEL NO MOMENTO DA IMPRESSÃO

STICHWORTVERZEICHNIS

Bezeichnung	Seite
A	
ABDECKGLAS	204
ABDECKGLAS (ARBEITSSCHEINWERFER)	202
ABDECKGLAS (FRONTSCHEINWERFER) (FERNLICHT/ABBLENDLICHT)	207
ABDECKGLAS (FRONTSCHEINWERFER) (FERNLICHT/ABBLENDLICHT)	205
ABDECKGLAS (GELB) (FAHRTRICHTUNGSANZEIGER)	205 207
ABDECKGLAS (GELB) (SIGNAL)	209
ABFALLBESEITIGUNGSMONTAGE	2 3
ABLASS (UMWELTFREUNDLICH)	398
ABLASSSTOPFEN	379
ABLASSVENTIL	133 135 137 139
ABLASSVENTIL (KRAFTSTOFFILTER)	142
ABSPERRVENTIL	781
ABSPERRVENTIL (HYDRAULIKTANK)	673
ACHSDICHTUNGSABDECKUNG	504
ACHSENANBAUSATZ	427
ACHSENÖLKÜHLERLEITUNGEN	417
ACHSENÖLKÜHLERPUMPE U. BEFESTIGUNGSTEILE	431
ACHSENÖLKÜHLERSCHUTZ	503
ACHSENÜBERWACHUNG - VERDRAHTUNG	284
ACHSÖLKÜHLER	391
ACHSÜBERWACHUNGSSYSTEM - VERDRAHTUNG	282
ADAPTER - ÖLLEITUNG	69
ANHÄNGUNGS- U. LENKUNGSSCHUTZABDECKUNG	514
ANSAUGSIEB	379
ANSCHLAG-EINBAUSATZ	966 968
ANSCHLUSSKLEMMENSATZ (DREHSTROMGENERATOR)	162 164
ANSCHLUSSKUPPLUNGSLEITUNGEN	645 648 651 652 654 657
ANTRIEBSSCHLUPFREGELUNG	564
ANTRIEBSSCHUTZ	518 519
ANTRIEBSWELLE	439 440
ANTRIEBSWELLEN-KEILVERZAHNUNG	441
ANTRIEBSWELLENVERKLEIDUNG	513
ANZEIGENKÖRPER	90 92
ANZUGSLEINE	966 968 975 979
ANZUGSLEINE (SCHWINGSITZ)	977
ARBEITS- U. SIGNALLEUCHTE	219 221
ARBEITSLEUCHTEN	201 202 203 204 214 215 216 218
ARMATURENBRETT	855
ARMLEHNE	839 840 841 842 843
ARMLEHNENEINBAUSATZ	966 968
ARMLEHNENEINBAUSATZ, RECHTS	966 968
ASCHENBECHER	936 937
*ASHTRAY AS	935
ÄTHERSTARTHILFE	263
ÄTHERSTARTVENTIL	280
AUFHÄNGUNGSVERKLEIDUNGS-EINBAUSATZ	966 968
AUFKLEBER	933 989 990
AUFKLEBER - INFORMATION (LUFTREINIGER)	111
AUFKLEBER - INFORMATION (12 V)	286 293 302
AUFKLEBER - SICHERUNGSTAFEL	936 937
AUFKLEBER-EINGANG/AUSGANG	935 936 937
AUFKLEBER (SICHERHEIT)	199 200

* ÜBERSETZUNG ZUM ZEITPUNKT DER DRUCKLEGUNG NICHT VORHANDEN

STICHWORTVERZEICHNIS

Bezeichnung	Seite
AUFKLEBER (STARTSCHLÜSSELSCHALTER)	199, 200, 354
AUFKLEBER (STARTSCHLÜSSELSCHALTER) (ZÜNDSCHALTER)	354
AUSFÜHRUNG FÜR SCHROTT	2
AUSPUFFKRÜMMER	119
AUSPUFFROHRVERLÄNGERUNG	121

B

Bezeichnung	Seite
BATTERIE	854
BATTERIE UND VERDRAHTUNG	172
BATTERIE (*12-VOLT, WET)	172
BATTERIEDECKEL	478
BEDIENUNGSHEBEL-AUFKLEBER (KONSOLE, RECHTS)	286
BEFESTIGUNG - SCHMIERMITTELWARTUNGSTABELLE	999
BEFESTIGUNGSSATZ	968
BEFESTIGUNGSSATZ - ACHSÖLKÜHLER	428
BEFESTIGUNGSSCHRAUBENSATZ (M5X0,8X3,24 MM) (NICHT PROGRAMMIERTE STEUERUNG)	190
BEFESTIGUNGSSCHRAUBENSATZ (*M5X0.8X53.24-MM) (NICHT PROGRAMMIERTE STEUERUNG)	189
BEFESTIGUNGSTEILE (DREHSTROMGENERATOR)	162, 164
BELEUCHTUNGSANLAGE (ROT, GRÜN, LED, 12 V)	199, 354
BELEUCHTUNGSANLAGE (ROT, GRÜN, LED, 12 V)	200
BELEUCHTUNGSANLAGE (STRASSENAUSRÜSTUNG)	213, 223
BELEUCHTUNGSKABELSTRANG (ARBEITSSCHEINWERFER)	216
BELEUCHTUNGSKABELSTRANG (RECHTS, STRASSENFAHRT)	344
BELEUCHTUNGSKABELSTRANG (STRASSENFAHRT, LINKS)	344
BELEUCHTUNGSVERDRAHTUNG	344, 345, 346
BLINKER (24 V)	277
BLINKERLEUCHTEN	214, 224
BLINKLEUCHTE	209, 210, 211
BLINKLEUCHTE (*24-VOLT) (WENDUNG, VORN)	224
BLITZSCHUTZ	515, 517
BODENSCHLUSSKONTROLLE	546
*BRACKET AS-ADJUSTABLE SWITCH (BREMSLEUCHTENBEGRENZUNG)	542
BREMS-KABELBAUM (BREMSLEUCHTE)	542
BREMSBELAG-EINBAUSATZ	545
BREMSDRUCKSPEICHER	539, 540, 541
BREMSE UND PLANETENGETRIEBE	377
BREMSGESTÄNGE	555, 558, 562
BREMSPROPOTIONALKRÜMMER	565
BREMSSTEUERVENTIL (SERVICE)	555, 558
BUCHSEN-EINBAUSATZ (STARTERMOTOR)	265
BÜRSTEN-EINBAUSATZ (STARTERMOTOR)	265

C

Bezeichnung	Seite
*CORE AS-AXLE OIL COOLER	428
*CYLINDER BLOCK GP	17

D

Bezeichnung	Seite
DÄMPFER-EINBAUSATZ	966, 968
DÄMPFER UND RIEMENSCHEIBE	39
DECKELSATZ	966
DECKELSATZ (SITZFLÄCHE)	968
DECKELSATZ (SITZLEHNE)	968
DIAGNOSELEITUNGEN	991, 994
DICHTUNG	86, 727, 729
DICHTUNG (TEMPERATURREGELGEHÄUSE)	88
DICHTUNG (WASSERABSCHEIDER, KRAFTSTOFF)	127
DICHTUNGSSATZ	586, 600, 602, 625, 737, 781
DICHTUNGSSATZ (ABSENKEN BEI DEFEKTEM MOTOR)	751

* ÜBERSETZUNG ZUM ZEITPUNKT DER DRUCKLEGUNG NICHT VORHANDEN

STICHWORTVERZEICHNIS

Bezeichnung	Seite
DICHTUNGSSATZ (SOLENOIDVENTIL)	157, 567, 568, 785, 786, 787, 788
DICHTUNGSSATZ (UMLAUFKÜHLWASSERHEIZUNG)	195
DICHTUNGSSATZ (UMLAUFKÜHLWASSERHEIZUNG)	197
DICHTUNGSTRÄGER	8
DIFFERENTIAL	394
DIFFERENTIAL (BEGRENZTER SCHLUPF)	395
DISTANZSCHEIBE	588
DOKUMENTATION	914
DREHKNOPFSCHALTER (24 V) (AUTOSHIFT STEUERUNG)	287, 295, 302
DREHKNOPFSCHALTER (24 V) (FAHR-/ARBEITS-/INSTRUMENTENTAFEL-/HECKLEUCHTE)	286, 293, 302
DREHKNOPFSCHALTER (24 V) (HEIZUNG/KLIMAANLAGE - VENTILATORSTEUERUNG)	286
DREHKNOPFSCHALTER (24 V) (HINTERER SCHEIBENWISCHER)	286
DREHKNOPFSCHALTER (24 V) (VARIABLE SCHALTSTEUERUNG)	293, 302
DREHKNOPFSCHALTER (24 V) (VARIABLE SCHALTSTEUERUNG)	288
DREHMOMENTWANDLER	453
DREHMOMENTWANDLER-KÜHLERLEITUNGEN	425
DREHSCHALTER (HYDRAULIKSPERRRASTENÜBERSTEUERUNG)	781
DREHSCHALTER (RICHTUNGSBLINKER, WARNLEUCHTE)	277
DREHSTROMGENERATOR	161, 162, 164, 166, 168, 170
DREHSTROMGENERATOR - BEFESTIGUNG	52, 53
DREHZAHLSENSOR	250, 251, 252
DREHZAHLSENSOR (RAD)	369
DRUCKLUFTLEITUNGEN	117, 118
DRUCKLUFTVENTILSATZ	979
DRUCKLUFTVENTILSATZ (SCHWINGSITZ)	977
DRUCKREDUZIERVENTIL (RADSCHLUPFBEGRENZUNG)	562
DRUCKSCHALTER (BETRIEBSBREMSENÖL)	555, 558
DRUCKSCHALTER (HAUPTLENKUNGSÖL)	358, 362
DRUCKSCHALTER (KÜHLMITTEL)	283
DRUCKSCHALTER (NOTLENKUNGSÖL)	358, 362
DRUCKSCHALTER (*OIL FILTER BYPASS)	401
DRUCKSCHALTER (ÖLFILTERUMGEHUNG) (KRAFTÜBERTRAGUNG)	400
DRUCKSENSOR	241, 242, 243, 244, 245, 246, 247, 248, 249
DRUCKSENSOR (KRAFTSTOFF)	248
DRUCKSPEICHER, HYDRAULISCHE SCHWINGUNGSDÄMPFUNG	600, 601, 602
DRUCKSPEICHERLADEVENTIL (BREMSE)	555, 562
DRUCKSPEICHERLADEVENTIL (BREMSE)	558

E

Bezeichnung	Seite
EINBAUSATZ - BREMSLADEVENTIL	562
EINBAUSATZ - DICHTUNG, HINTEN	566
EINBAUVORSTEUERVENTIL	768, 770, 771, 772, 773
EINFÜLLKAPPE	11
EINFÜLLKAPPE (KRAFTSTOFFTANK)	155
EINFÜLLSTUTZENKAPPE	399, 727, 729
EINSPRITZDÜSENPUMPE	149
EINSPRITZLEITUNGEN - HYDRAULIKPUMPE	145, 146

* ÜBERSETZUNG ZUM ZEITPUNKT DER DRUCKLEGUNG NICHT VORHANDEN

STICHWORTVERZEICHNIS

Bezeichnung	Seite
EINSTELLER-EINBAUSATZ (ARMLEHNE)	840
EINSTELLER-EINBAUSATZ (SITZWANNE)	931
EINSTELLER-EINBAUSATZ (*SUSPENSION)	966
	968
ELEKTR. ANLAGE	192
ELEKTRONIK - MASCHINE	193
	194
ELEKTRONISCHER SCHLÜSSEL (SICHERHEIT)	200
	260
	354
ENDMESSER	823
ENDSCHALTER (BREMSLEUCHTE)	542
ENDSCHALTER (FESTSTELLBREMSE)	551
	552
ENTDUNSTER	72
ENTLÜFTER	70
	379
ENTLÜFTER (KURBELGEHÄUSE)	70

F

FAHRERHAUS	844
	845
FAHRERHAUS MIT ÜBERROLLSCHUTZ	847
FAHRERHAUS, SONNENBLENDE	981
FAHRERHAUSANBAUSATZ	922
	924
FAHRERHAUSAUSKLEIDUNG	896
	897
	899
	901
FAHRERHAUSAUSKLEIDUNG (OFFENES FAHRERHAUS MIT ÜBERROLLSCHUTZ)	903
FAHRERHAUSAUSRÜSTUNG	926
	927
FAHRERHAUSBELEUCHTUNG (24 V)	903
FAHRERHAUSBELEUCHTUNG (24 V)	896
FAHRERHAUSHEIZUNG	891
FAHRERHAUSHEIZUNG U. BEFESTIGUNGS-TEILE	890
FAHRERHAUSHEIZUNGSLEITUNGEN	912
FAHRERHAUSLUFTFILTER	883
	884
FAHRERHAUSTÜR	856
	857
	859
	861
	862
	864
	866
	869
	872
	875
	878
FAHRERHAUSVERDRAHTUNG	286
	293
	302
	311
FAHRERSITZ	958
	960
	961
	962
	964
	965
FAHRERSITZ-EINBAUSATZ (SITZFLÄCHE)	966
FAHRERSITZ-EINBAUSATZ (SITZFLÄCHE)	968
FAHRERSITZ-EINBAUSATZ (SITZLEHNE)	966
FAHRERSITZ-EINBAUSATZ (SITZLEHNE)	968
FAHRERSITZ, KIPPVORRICHTUNG (SITZWANNE)	931
FAHRERSITZ UND UNTERBAU	951
	952
	953
FAHRERSITZFEDERUNG	975
	977
	979
FAHRERSITZVERKLEIDUNG	931
FAHRERSITZVERSTELLER	831
FAHRWERK	1
*FASTENER GP-DAMPER & PULLEY	41
FEDER-EINBAUSATZ	586
FEDER-EINBAUSATZ (HÖHENVERSTEL-LUNG)	966
	968
FEDERUNGSLAGER-EINBAUSATZ	966
	968
FELGE	434
FELGE (TEILBAR)	435
	436
	437
	438
FELGENAUFHÄNGUNG	430
FESTSTELLBREMSE	545
FESTSTELLBREMSGESTÄNGE	549
	551
	552
	554
*FILM-CIRCUIT BREAKER	228
*FILM-FUSE PANEL	935
*FILM-INSTRUCTION	186
	187
	188
FILTER	884
FILTER (FAHRERHAUS LUFT)	883
	884

* ÜBERSETZUNG ZUM ZEITPUNKT DER DRUCKLEGUNG NICHT VORHANDEN

STICHWORTVERZEICHNIS

Bezeichnung	Seite
FILTER (FAHRERHAUSLUFT)	883
FILTER (WASSER) (PUMPE)	96
	98
FILTERSIEB	727
	729
	730
FILTERSIEB (SCHEIBENWASCHER)	983
FLÜGELZELLENPUMPENEINSATZ	606
FUSSBREMSGESTÄNGE	547
	548
FUSSBREMSSOCKEL	542
	544
FUSSMATTE	897
	899
	901

G

GASPEDAL	939
	940
GASVENTIL	600
*GEAR GP-BEVEL & PINION	404
GEBLÄSEMOTOR (*24-VOLT, A/C, HEATER)	836
	891
GEGENGEWICHT	476
GEGENGEWICHT, HINTEN	477
GEHÄUSE - PENDELACHSE	412
	414
GEHÄUSE - STARRACHSE	408
	410
GELENK FÜR SCHUTZBLECHE (STRASSENAUSRÜSTUNG)	520
	521
GETRIEBE	455
GETRIEBEANTRIEBSWELLE	416
GETRIEBEKÜHLER U. BEFESTIGUNG	390
GETRIEBEÖLEINFÜLLKAPPE	393
	998
GETRIEBEÖLFÜLLSTUTZEN	399
GETRIEBEPUMPE	432
	433
GETRIEBESTEUERUNG	388
	389
GETRIEBESTEUERVENTIL	463
	466
GLEITLAGER	794
	797
GLEITSCHIENENBLOCK-EINBAUSATZ	958
	970
GRUNDAUSFÜHRUNG	1

H

HALOGENSCHINWERFER (24V)(65W)	203
	204
	215
	216
HALOGENSCHINWERFER (24V)(65W) (ARBEITSSCHEINWERFER)	202
HALTETEILESATZ	975
HANDGRIFF-EINBAUSATZ	966
	968
HAUPTFILTER	111
HAUPTLAGER (KURBELWELLE)	14
HAUPTSTEUERVENTIL	745
	747
	749
HEBEL-EINBAUSATZ (HÖHENVERSTELLUNG)	966
	968
HEBEL-EINBAUSATZ (STARTERMOTOR)	265
HEIZUNGSLEITUNGEN	912
HINTERRAHMEN	490
	493
	494
HÖHENEINSTELLUNGSSATZ (FAHRERSITZ)	966
	968
*HOSE-DISPOSAL	72
HUBARM	791
HUBENDAUSSCHALTE-REGELUNG	186
	187
	641
HUBVENTIL	50
HUBVORRICHTUNG	799
HUBZYLINDER	626
HUBZYLINDER UND DICHTUNG	622
HUBZYLINDERLEITUNGEN	678
	680
HYDRAULIKANORDNUNG (3-VENTIL-HYDRAULIK)	636
HYDRAULIKANORDNUNG (4-VENTIL-HYDRAULIK)	637
HYDRAULIKBEDIENUNG (MIT VORSTEUERUNG)	609
	611
	613
	615
	617
	618
	619
	620
HYDRAULIKLEITUNGEN	667
HYDRAULIKLÜFTERPUMPE U. BEFESTIGUNG	721

* ÜBERSETZUNG ZUM ZEITPUNKT DER DRUCKLEGUNG NICHT VORHANDEN

STICHWORTVERZEICHNIS

Bezeichnung	Seite
HYDRAULIKÖLFILTER	400
HYDRAULIKÖLFILTER (KRAFTÜBERTRAGUNG)	401
HYDRAULIKÖLKÜHLERLEITUNGEN	669 673
HYDRAULIKPUMPE UND BEFESTIGUNGSTEILE	720
HYDRAULIKSYSTEM	636
HYDRAULIKTANK UND BEFESTIGUNGSTEILE	732 733
HYDRAULIKTANK UND SCHMIERFILTER	727 729

I

Bezeichnung	Seite
IDENTIFIZIERUNGS-AUFKLEBER (ELEKTRN. STEUERMODUL)	194
INFORMATIONSSCHILD (MANUELL KRAFTSTOFF)	417
INFORMATIONSSCHILD (MANUELL KRAFTSTOFF) (ENTLÜFTEN)	147
INSTRUKTIONS-AUFKLEBER (BETRIEBSHANDBUCH LESEN)	199 200
INSTRUKTIONS-AUFKLEBER (BETRIEBSHANDBUCH LESEN)	354
INSTRUKTIONS-AUFKLEBER (FÜR SITZVERSTELLUNG)	975 977 979
INSTRUKTIONS-AUFKLEBER (MOTORSTART)	933
INSTRUKTONSSCHILD (BATTERIE)	172
INSTRUKTONSSCHILD (KLIMAANLAGE)	835
INSTRUMENTEN-AUFKLEBER (HYDRAULIKSPERRE)	609 611 613 615
INSTRUMENTENBRETT-AUFKLEBER (*DUCT, LH)	288 294 303
INSTRUMENTENBRETT-AUFKLEBER (*DUCT, RH)	288
INSTRUMENTENTAFEL	933 935 936 937
ISOLATOR-EINBAUSATZ (STARTERMOTOR)	265

K

Bezeichnung	Seite
KABELSTRANG - HEIZUNG U. KLIMAANLAGE	836 891
KABELSTRANG - LENKUNG (HILFSELEMENT)	358 362
KABELSTRANG U. STARTHILFE (ÄTHER)	368
KÄLTEMITTELKOMPRESSOR	850 851
KÄLTEMITTELKONDENSATOR U. BEFESTIGUNGSTEILE	852 853
KAPPE MIT ENTLÜFTER	983
KAPPENFILTERSATZ (KRAFTSTOFFTANK)	155
KIPPHEBELSATZ	592
KIPPSCHALTER	278 648 698
KIPPSCHALTER (ABSTELLUNG AUF STANDEBENE)	348 351
KIPPSCHALTER (BETRIEBSART WÄHLEN)	288 294 303
KIPPSCHALTER (GETRIEBENEUTRALISIER-ÜBERSTEUERUNG)	288 294 303
KIPPSCHALTER (HAUBENNEIGESTELLGLIED)	348 351
KIPPSCHALTER (KLIMAANLAGE)	833
KIPPSCHALTER (*MIDDLE BOTTOM GUARD ACTUATOR)	356
KIPPSCHALTER (*REAR BOTTOM GUARD ACTUATOR)	356
KIPPSCHALTER (SCHWINGUNGSDÄMPFUNG)	687 691 694
KIPPVORRICHTUNG NACH HINTEN, REPARATURSATZ (SITZWANNE)	931
KIPPWANNENSATZ	958
KIPPZYLINDER	627 629 631 633
KIPPZYLINDER UND DICHTUNG	623
*KIT-BRUSH SEAL	897 899 901
KLEMMLEISTE	175

* ÜBERSETZUNG ZUM ZEITPUNKT DER DRUCKLEGUNG NICHT VORHANDEN

STICHWORTVERZEICHNIS

Bezeichnung	Seite
KLIMAANLAGE	835, 836
KLIMAANLAGE UND AUFHÄNGUNG	833, 834
KLIMAANLAGENDRUCKSPEICHER (MIT TROCKENMITTEL)	904, 908
KLIMAANLAGENLEITUNGEN	904, 908
KLIMAANLAGENVERDRAHTUNG	283
KNICKGELENK-ANHÄNGUNG	522
KNICKGELENKSCHUTZ	501
KNICKGELENKSPERRE	532
KOLBEN- UND MESSERPUMPE	725
KOLBENPUMPE	588, 723
KOLBENPUMPENUMLAUFSATZ	590, 726
KOLBENSATZ	590
KRAFTSTOFFABLASSLEITUNGEN	132
KRAFTSTOFFDRUCKREGLER	154
KRAFTSTOFFEINSPRITZDÜSE	149
KRAFTSTOFFEINSPRITZPUMPE	152
KRAFTSTOFFENTLÜFTUNGSPUMPE UND -HAUPTFILTER	147
KRAFTSTOFFILTER	139, 142
KRAFTSTOFFILTER (AUSFALLSCHUTZ)	133, 135, 137
KRAFTSTOFFILTERLEITUNGEN	133, 135, 137, 139, 142
KRAFTSTOFFLEITUNGEN	128, 130
KRAFTSTOFFÖRDERPUMPE	151, 152
KRAFTSTOFFSIEB	155
KRAFTSTOFFSTANDGEBER	155
KRAFTSTOFFTANK	155
KRAFTÜBERTRAGUNG	430
KRAFTÜBERTRAGUNGSELEKTRONIK	194
KRAFTÜBERTRAGUNGSFILTERLEITUNGEN	421, 423
KRAFTÜBERTRAGUNGSÖLKÜHLERBLOCK	390
KREUZGELENK	457, 458
KREUZGELENK UND LAGER	441, 458
KREUZGELENKLAGER-EINBAUSATZ	457
KÜHLER UND LÜFTER	99, 103
KÜHLERGRILL	497, 499
KÜHLERKAPPE (7 PSI)	107, 108
KÜHLERWASSERKASTEN, OBEN	107
KÜHLERWASSERKASTEN, OBEN	108
KÜHLWASSERLEITUNGEN	85, 86, 88, 90, 92
KÜHLWASSERPUMPE	94, 95, 96, 98
KUPPLUNG	382, 384, 386
KURBELWELLE	14
KURBELWELLENDICHTUNG	64
KURBELWELLENDICHTUNG (HINTEN)	64
KURBELWELLENDICHTUNG (VORN)	64

L

Bezeichnung	Seite
LADERRAHMEN	488
LAGERSATZ (DREHSTROMGENERATOR)	164
*LAMP-HALOGEN (*24-VOLT, 65-WATT)	214
LAUFBAND UND ANTRIEB (RUNDUM-KENNLEUCHTE)	212
LEITBLECH	475
LEITRAD - RIEMEN	49
LEITUNGEN, VORNE	659, 661, 663, 665
LENKBETÄTIGUNG	569, 571
LENKÖLLEITUNGEN	580
LENKSÄULE	592
LENKVENTIL	597, 599
LENKZYLINDER	576
LENKZYLINDER UND AUFHÄNGUNG	573
LENKZYLINDER UND DICHTUNG	575
*LENS-AMBER	211
LEUCHTE	201
LEUCHTE (24 V) (FAHRLEUCHTE)	207
LEUCHTE (24 V) (FAHRSCHEINWERFER)	205
LEUCHTE (24 V) (FAHRTRICHTUNGSANZEIGER)	205

* ÜBERSETZUNG ZUM ZEITPUNKT DER DRUCKLEGUNG NICHT VORHANDEN

STICHWORTVERZEICHNIS

Bezeichnung	Seite
	207
LEUCHTE (24 V, 3 W)	286
	293
	918
LEUCHTE (24 V, 3 W)	302
LEUCHTE (24 V, 70 W) (RUNDUM-KENNLEUCHTE)	212
LEUCHTE (24 V, 75/70 W) (FERNLICHT/ ABBLENDLICHT)	205
LEUCHTE (24 V, 75/70 W) (FERNLICHT/ ABBLENDLICHT)(RECHTS)	207
LEUCHTE (*24-VOLT, 21-WATT)	211
LEUCHTE (24V, 10W)	903
LEUCHTE (24V, 21W) (FAHRTRICHTUNGSAN-ZEIGER)	205
	207
LEUCHTE (24V, 21W) (SIGNAL)	209
*LIFT AR	799
LUFTEINLASS-TRÄGER	534
LUFTEINLASSBOGEN	115
LUFTEINLASSDECKEL	112
	113
	114
LÜFTERVERKLEIDUNG	83
	84
LUFTFILTER	116
LUFTFILTER (HILFSELEMENT)	111
LUFTFILTERWARTUNGSANZEIGE	109
LUFTKANAL	880
LUFTKOMPRESSOR-EINBAUSATZ	975
LUFTKOMPRESSORSITZ	832
LUFTREINIGER	109
	111
LUFTREINIGERKLEMMEN-EINBAUSATZ	111

M

MAGNETFILTER (ACHSÖLKÜHLER)	417
MAGNETSCHALTER	268
	269
	270
	271
	272
	273
	274
	275
MAGNETSCHALTER (24 V) (ANSAUGLUFT-VORWÄRMANLAGE)	273
MAGNETSCHALTER (24 V) (HAUPTRELAIS)	231
	233
MAGNETSCHALTER (24 V) (STARTRELAIS)	231
	233
MAGNETSCHALTER (24 VOLT DC (GLEICHSPANNUNG))	272
MAGNETSCHALTER (*24-VOLT) (HAUPTRELAIS)	228
MAGNETSCHALTER (*24-VOLT) (STARTRELAIS)	228
MAGNETSIEB	379
MAGNETSTOPFEN	408
	410
	412
	414
	417
MAGNETVENTIL	157
	567
	568
	785
	786
	787
	788
	789
MASCHINENVERDRAHTUNG	348
	351
	354
MATERIALUMSCHLAGSCHAUFEL	805
	806
	807
	808
	814
MESSEREINBAUSATZ, HINTEN	566
MESSERPUMPE	566
MODULARHEBEL	635
MODULATORVENTIL	460
MONITORSTEUERUNG	854
MOTOR- UND GETRIEBEAUFLAGER	54
MOTOR-EINBAUSATZ	6
MOTOR, KOMPLETT	4
MOTORANTRIEB	708
MOTORBLOCK	16
	18
MOTORBLOCKDECKEL	9
MOTORHAUBE UND VERKLEIDUNG	524
MOTORHAUBEN-KIPPSTELLUNG	535
	537
MOTORHAUBENKIPPBETÄTIGUNG	468
	470
MOTORHUBÖSE	51
MOTORKABELSTRANG (ELEKTRON. STEUERMODUL)	323
MOTORKABELSTRANG (ELEKTRONISCHE STEUERUNG)	317
MOTORKABELSTRANG (PUMPENDÜSE)	317
MOTORKABELSTRANG (*70A ALTERNA-TOR)	327

* ÜBERSETZUNG ZUM ZEITPUNKT DER DRUCKLEGUNG NICHT VORHANDEN

STICHWORTVERZEICHNIS

Bezeichnung	Seite
MOTORKÜHLERBLOCK	5
MOTORÖLABLASS	40
MOTORÖLKÜHLER	82
MOTORÖLKÜHLERBLOCK	82
MOTORÖLLEITUNGEN	75
MOTORRAUM-SCHUTZVERKLEIDUNG	533
MOTORSENSOR	235
MOTORSTEUERUNG, ELEKTRON.	178
	181
	182
	183
	184
	185
MOTORSTOPFEN	61
MOTORVERDRAHTUNG	317
	319
	323
	327
	332

N

NEBENSTROMVENTIL	459
NEIGEZYLINDERLEITUNGEN	702
	704
	706
NOCKENWELLE	7
NOSPIN-DIFFERENTIAL	396
	397
NOTLENKUNG	591
NOTLENKUNGSLEITUNGEN	578
NOTLENKUNGSPUMPE UND -MOTOR	584
NOTLENKUNGSPUMPE UND BEFESTIGUNGS-TEILE	585
NOTLENKUNGSVENTIL	596
NOTLENKUNGSVERDRAHTUNG	358
	362

O

OBERER EINBAUSATZ	966
OFFENES FAHRERHAUS MIT ÜBERROLL-SCHUTZ	849
ÖLFILTER	71
	400
	401
ÖLFILTERELEMENT (STANDRAD EFFIZIENZ)	727
ÖLFILTERELEMENT (STANDRAD EFFIZIENZ) (HYDRAULIK)	729
ÖLMESSSTAB	73
	74
	408
	410
	412
	414
ÖLWANNE	56
*ORIFICE AS-AIR CONDITIONER	836

P

PALETTENGABEL	824
PANZERWANNE	505
	507
	509
	511
PEDALBOLZEN (DREHZAHLREGLERPE-DAL)	939
PENDELACHSE	375
	376
PENDELVENTIL	783
	784
PLANETENANTRIEBSGEHÄUSE U. TEILE	379
*PLATE	228
PLATTE (SCHUTZSCHALTER)	231
	233
PLEUELSTANGE UND KOLBEN	57
	59
POLSTEREINBAUSATZ (ARMLEHNE)	840
POLSTEREINBAUSATZ (TEXTILRÜCKENLEH-NE)	882
PROBEENTNAHMEVENTIL	81
	90
	92
PUMPE FÜR KRAFTSTOFFENTLÜFTUNG U. WASSERABSCHEIDER	158
PUMPENDÜSE, HYDRAULISCH	151
	152
	153
PUMPENEINSATZ, HINTEN	566
PUMPENKABELSTRANG (KRAFTSTOFF-ENTLÜFTUNG)	147
PUMPENSTEUERVENTIL	593
	774

R

RADIO	941
	942
RADIO - KABELSTRANG (LAUTSPRECHER)	941
RADIOEINBAUSATZ	895
RAHMEN-EINBAUSATZ (SITZ)	966
	968
REFLEKTORAUFKLEBER (GELB)	213
REGLER	137
REGLER (KRAFTSTOFF)	133

* ÜBERSETZUNG ZUM ZEITPUNKT DER DRUCKLEGUNG NICHT VORHANDEN

STICHWORTVERZEICHNIS

Bezeichnung	Seite
	135
REGLER (KRAFTSTOFFDRUCK)	154
REGULATOR - DREHSTROMGENERATOR (24 V)	162
REIFEN UND FELGE	442
	443
	444
	445
	446
	447
	448
	449
	450
	451
	452
REIFENVENTIL	438
RELAIS (24 V) (ARBEITSLEUCHTE)	293
	302
RELAIS (24 V) (ARBEITSSCHEINWERFER)	286
RELAIS (24 V) (NOTLENKUNG)	358
	362
RICHTUNGSBLINKERSCHALTER	277
RICHTUNGSSIGNALSCHALTER	277
RIEMENSPANNER	62
	63
ROLLENSATZ	975
ROLLENSATZ (DREHZAHLREGLERPEDAL)	939
RÜCKFAHRWARNHORN	281
RÜCKLEHNENVERLÄNGERUNG	882
RÜCKLEHNENVERLÄNGERUNG (STOFF)	964
RÜCKSCHLAGVENTIL (GEGEN VAKUUM)	667
RÜCKSPIEGEL	915
	916
RUNDUM-KENNLEUCHTE	212
	225
	226
	227

S

Bezeichnung	Seite
SCHALE - RÜCKENLEHNE	928
	929
	930
SCHALLDÄMPFER	120
SCHALTKNOPFEINBAUSATZ (RADIO)	941
SCHALTVENTIL (LENKUNG)	597
SCHAUFELAUSSCHALTER UND -EINSTELLER	641
	643
SCHAUFELSTEUERUNG	792
	794
	797
SCHAUGLAS	727
	729
SCHEIBENSCHUTZ	887
	888
SCHEIBENWASCHANLAGE	982
	983
SCHEIBENWISCHER	986
	988
SCHEIBENWISCHERBLATT	986
SCHEIBENWISCHERMOTOR	920
	921
SCHEIBENWISCHERSCHALTER	279
SCHEIBENWISCHERSCHALTER (24 V) (INTERVALLSCHALTUNG)	279
SCHEIBENWISCHERSCHALTER (24 V) (VORN, INTERVALLSCHALTUNG)	286
SCHEINWERFER U. RICHTUNGSLEUCHTE	205
	207
SCHIEBESCHIENE-EINBAUSATZ	966
	968
SCHILD UND AUFKLEBER	1000
	1001
	1002
	1003
	1004
SCHLÜSSEL	393
	885
SCHLÜSSEL (*BATTERY DISCONNECT) (STARTER)	267
SCHMIERLEITUNGEN	528
	530
SCHMIERPUMPE	77
	78
	79
	80
SCHNEIDMESSER	820
	821
	822
SCHNELLWECHSELANSCHLUSSSTEUERUNG	814
	815
SCHNELLWECHSELANSCHLUSSZYLINDER	624
	625
SCHNELLWECHSELEINRICHTUNG	818
	819
SCHNELLWECHSELEINRICHTUNG - SCHALTER	276
SCHNELLWECHSELEINRICHTUNG - VERDRAHTUNG	315
SCHNELLWECHSELEINRICHTUNGSRAHMEN	825
	826
	827
SCHNELLWECHSELVORRICHTUNG	815

* ÜBERSETZUNG ZUM ZEITPUNKT DER DRUCKLEGUNG NICHT VORHANDEN

STICHWORTVERZEICHNIS

Bezeichnung	Seite
	816
	817
SCHRAUBE	398
SCHUTZBLECHE	481
	482
SCHUTZBLECHE (STRASSENAUSRÜSTUNG)	483
SCHUTZBLECHVERLÄNGERUNG	480
SCHUTZSCHLATERAUFKLEBER	231
	233
SCHUTZVERKLEIDUNG	885
SCHWINGSITZ	966
	968
	970
	971
	972
SCHWINGUNGSDÄMPFUNG - KABELSTRANG	687
	691
	694
	698
SCHWINGUNGSDÄMPFUNGSLEITUNGEN	687
	691
	694
	698
SCHWUNGRAD	44
SCHWUNGRAD-HALTETEILE	42
SCHWUNGRADGEHÄUSE	47
SCHWUNGRADGEHÄUSEDICHTUNG	65
SEILEINSTELLVORRICHTUNGS-EINBAUSATZ	966
	968
SENSORVERDRAHTUNG	366
SENSORVERDRAHTUNG (STÄRKE 14) (MOTORÖLTEMPERATUR)	256
SERPENTINENFÖRMIGER RIEMEN	166
	170
	851
SERPENTINENFÖRMIGER RIEMEN (*WITH AIR CONDITIONING)	431
SERPENTINENFÖRMIGER RIEMEN (8 PK)	168
SERVICE MASCHINE	260
SICHERHEITSEINBAUSATZ	199
	200
SICHERHEITSGURT	952
	953
	954
	955
	956
	957
	965
	972
SICHERUNG (10 A)	286
	293
	302
SICHERUNG (15 A)	286
	293
	302
SICHERUNGSBLOCK	303
SIEB	752
	754
	756
	758
	760
	762
	764
	766
SIEB-EINBAUSATZ (VORREINIGER)	124
SITZHEBEL-EINBAUSATZ	958
SITZKISSENEINBAUSATZ (STOFF)	958
SITZUNTERBAU	974
SOFTWARE - MASCHINE (SICHERHEIT)	354
SOLENOID-EINBAUSATZ (STARTERMOTOR)	265
SONNENBLENDE	950
	981
SPANNUNGSREGLER (24 V) (DREHSTROMGENERATOR)	164
SPERRVENTIL	736
	737
SPERRVENTIL (ABSENKEN BEI AUSGEFALLENEM MOTOR)	682
	684
SPERRVENTIL (ACHSÖLKÜHLERNEBENSTROM-VENTIL)	428
SPERRVENTIL (VORSTEUERUNG)	682
	684
STARRACHSE	374
STARTERMOTOR	264
	265
STARTHILFE	261
	262
STARTHILFE - VERDRAHTUNG	368
STARTSCHALTER (TASTE)	286
	293
	302
STAUBKAPPE	195
STECKDOSEN - EINBAUSATZ (12 STIFTE)	335
	341
STEIGLEITER	527
STELLUNGSSENSOR	237
	238
	239
	240
STELLUNGSSENSOR (KNICKWINKEL)	369
STELLUNGSSENSOR (ROTIEREND) (HUB)	366

* ÜBERSETZUNG ZUM ZEITPUNKT DER DRUCKLEGUNG NICHT VORHANDEN

STICHWORTVERZEICHNIS

Bezeichnung	Seite
STELLUNGSSTEUERUNG	188
STELLUNGSSTEUERUNG (ARBEITSGERÄT)	641
	643
STEUERHEBEL	607
	608
STEUERUNG - NICHT PROGRAMMIERT	189
	190
	191
	200
STEUERUNG - NICHT PROGRAMMIERT (RADSCHLUPFBEGRENZUNG)	369
STEUERUNG - NICHT PROGRAMMIERT (SICHERHEIT)	260
STEUERUNGSEINHEIT, ELEKTRON. FÜR MOTOR UND BEFEST.	178
	179
	180
STEUERVENTIL	459
	738
	740
STIRNRAD	45
STIRNRADGEHÄUSE	48
STIRNRADGEHÄUSE-HALTETEILE	43
STIRNRADGEHÄUSEDECKEL	11
STOSSDÄMPFER-REPARATURSATZ (SCHWINGSITZ)	977
STROMBETÄTIGUNG	472
STROMSCHUTZSCHALTER	467
	473
STROMSCHUTZVERDRAHTUNG	356
*SWITCH AS-TEMPERATURE (*AXLE OIL MONITORING)	316

T

TASTENFELDMODUL FÜR WÄGEEINRICHTUNG	918
TELLERRAD	402
TEMPERATURSCHALTER (HINTERACHSÖL)	284
TEMPERATURSCHALTER (KÜHLMITTEL)	836
TEMPERATURSCHALTER (VORDERACHSÖL)	284
TEMPERATURSENSOR	253
	254
	255
	256
	257
	258
	259
TEMPERATURSENSOR (GETRIEBEÖL)	466
TEMPERATURSENSOR (HYDRAULIKÖL)	319
	323
	327
	332
TRAGARM	801
TRENNSCHALTER	267
TRENNSCHALTER (BATTERIE)	172
TURBOLADER	125
	126
TURBOLADEREINSATZ	126
TURBOLADERÖLLEITUNGEN	76
TÜRFENSTER	984

U

ÜBERDRUCKVENTIL	461
	595
	776
	777
	778
	779
ÜBERDRUCKVENTIL-EINBAUSATZ (NOTLENKUNG)	584
ÜBERDRUCKVENTIL (KÄLTEMITTELKOMPRESSOR)	850
ÜBERDRUCKVENTIL (UMSCHALTVENTIL - LENKZYLINDER)	597
ÜBERROLL-SCHUTZDACH	947
	948
ÜBERROLL-SCHUTZKABINE	944
	945
ÜBERTRAGUNGSEINBAUSATZ	199
ÜBERTRAGUNGSSTEUERUNG U. BEFESTIGUNG	176
ÜBERTRAGUNGSSTEURUNG (PRODUCT LINK RADIO)	176
ÜBERTRAGUNGSVERDRAHTUNG	313
UMGEHUNGSVENTIL (MOTORLUFTFILTER)	71
UMLAUFKÜHLWASSERHEIZUNG	195
	196
	197
	198
UMLAUFKÜHLWASSERHEIZUNGS-ELEMENT	195
UMLAUFKÜHLWASSERHEIZUNGS-ELEMENT (120 V, 1000 W)	197
	198
UMLAUFKÜHLWASSERHEIZUNGS-ELEMENT (240 V, 1000 W)	196
UMLEITVENTIL	742
	743
	744
UNIVERSALSCHAUFEL	802
	803

* ÜBERSETZUNG ZUM ZEITPUNKT DER DRUCKLEGUNG NICHT VORHANDEN

STICHWORTVERZEICHNIS

Bezeichnung	Seite
	804
	810
	811
	812
	813
UNTERBRECHER - INSTRUMENTENTAFEL	228
	231
	233
UNTERBRECHER (15 A) (ELEKTRON. STEUERMODUL DES MOTORS)	231
	233
UNTERBRECHER (15 A) (FAHRSCHEINWERFER)	231
	233
UNTERBRECHER (15 A) (KLIMAANLAGE)	288
UNTERBRECHER (15 A) (LUFTGEFEDERTER SITZ)	952
	972
UNTERBRECHER (15 A) (LUFTGEFEDERTER SITZ)	965
UNTERBRECHER (15 A) (LUFTGEPOLTERTER SITZ)	951
UNTERBRECHER (*15-AMPERE) (ELEKTRON. STEUERMODUL DES MOTORS)	228
UNTERBRECHER (*15-AMPERE) (FAHRSCHEINWERFER)	228
UNTERBRECHER (20 A)	231
	233
	356
UNTERBRECHER (20 A) (HAUBENNEIGESTELLGLIED)	231
	233
UNTERBRECHER (*20-AMPERE)	228
UNTERBRECHER (*20-AMPERE) (HAUBENNEIGESTELLGLIED)	228
UNTERBRECHER (80 A) (DREHSTROMGENERATOR)	231
	233
UNTERBRECHER (80 A) (HAUPTUNTERBRECHER)	231
	233
UNTERBRECHER (*80-AMPERE) (DREHSTROMGENERATOR)	229
UNTERBRECHER (*80-AMPERE) (HAUPTUNTERBRECHER)	228

V

Bezeichnung	Seite
VENTIL - MANUELL	673
VENTIL - SCHALT- UND DRUCKSTEUERUNG	780
VENTIL - TEMPERATURGESTEUERTER LÜFTER	741
VENTIL, MECH.	751
VENTIL UND BEFESTIGUNGSTEILE - HAUPTSTEUERUNG	734
	735
VENTILDECKEL	13
VENTILKABELSTRANG (SITZ LUFTKOMPRESSOR)	977
	979
VENTILKAPPE (SCHAFT)	435
VENTILKIPPHEBEL (AUSLASS)	67
VENTILKIPPHEBEL (EINLASS)	67
VENTILSOLENOID U. -KRÜMMER	790
VENTILSTEUERUNG	66
	67
VERDRAHTUNG - ELEKTR. KUPPLUNG	316
VERDRAHTUNG - RADSCHLUPFBEGRENZUNG	369
VERDRAHTUNG, VORNE	335
	338
	341
VERDRAHTUNGSKABELBAUM (*TEMPERATURE RESISTOR) (*TEMPERATURE RESISTOR) (OIL)	319
VERSANDDECKEL	392
VERSTELLBARER SITZ	943
VERTEILERGETRIEBEANTRIEB	406
VORDERRAHMEN	485
VORHÄNGESCHLOSS	885
	998
VORHÄNGESCHLOSS (HYDRAULIKTANKEINFÜLLSIEB)	621
VORREINIGER	122
	123
	124
VORSTEUERLEITUNGEN	682
	684
	686
VORSTEUERUNGSSATZ	592
VORSTEUERVENTIL	709
	710
	711
	752
	754
	756
	758
	760
	762
	764
	766
VORSTEUERVENTILKÖRPER	603
	604
VORSTEUERVENTILPLATTE	712
	713

* ÜBERSETZUNG ZUM ZEITPUNKT DER DRUCKLEGUNG NICHT VORHANDEN

STICHWORTVERZEICHNIS

Bezeichnung	Seite
	715
	717
	718
W	
WÄGEEINRICHTUNG	918
WÄGEEINRICHTUNG - MONITOR	917
WARNAUFKLEBER (HANDBUCH)	801
WARNAUFKLEBER (HOCHDRUCKZYLINDER)	687
WARNAUFKLEBER (HOCHDRUCKZYLINDER)	691
	694
	698
WARNAUFKLEBER (PRODUCT LINK RADIO)	199
WARNHORN	592
WARNHORN, ELEKTR.	893
	894
WARNHORN (*24-VOLT, LOW TONE)	894
WARNLEUCHTENSCHALTER	225
WARNSCHILD (*NO CLEARANCE, DANISH)	1001
WARNVORRICHTUNG	159
	160
WASSERABSCHEIDER- U. KRAFTSTOFFILTER	127
WASSERABSCHEIDER U. KRAFTSTOFFENTLÜFTUNGSPUMPE	158
WASSERABSCHEIDER UND KRAFTSTOFFILTER (HAUPTELEMENT)	127
WASSERTEMPERATURREGLER (94 GRAD CELSIUS)	86
WASSERTEMPERATURREGLER (94 GRAD CELSIUS) (KÜHLMITTEL)	88
Z	
ZAHNHALTER	800
ZAHNSPITZE	828
ZAHNSPITZE, KURZ	829
	830
ZAHNSPITZE, LANG	828
ZIGARETTENANZÜNDER (12 V)	287
	293
	302
ZUGANGSKLAPPE - HYDRAULIKTANKKAPPE	621
ZUMESSPUMPE	586
ZUSATZBELEUCHTUNG	213
ZYLINDERBLOCKSCHRAUBE	60
ZYLINDERKOPF	20
	22
	24
	25
	27
	28
	29
	30
	31
	33
	35
	37
	38

* ÜBERSETZUNG ZUM ZEITPUNKT DER DRUCKLEGUNG NICHT VORHANDEN

MEMORANDA

MACHINE ARRANGEMENT

199-2816 CHASSIS AR

S/N: CRD1-UP

PART OF 199-2812 GENERAL AR

SMCS-7000 **i01673182**

NOTE	PART NUMBER	QTY	PART NAME 1 2 3 4 5 6 (PRODUCT LEVEL)	SEE PAGE
Y	199-2830	1	CONTROL GP-SERVICE BRAKE	555
Y	153-9772	1	CONTROL GP-BUCKET	794
Y	126-9531	1	CONTROL GP-PARKING BRAKE	549
Y	198-9340	1	COOLER & MTG GP-TRANSMISSION	390
Y	134-9637	1	COUNTERWEIGHT GP-REAR	477
Y	149-7393	1	CYLINDER & MTG GP-STEERING	573
Y	165-4586	1	DOOR GP-BATTERY	478
Y	126-9535	1	FENDER GP	481
Y	199-3810	1	FRAME AS-LOADER	488
Y	199-3809	1	FRAME AS-REAR	490
Y	100-3854	1	HITCH GP-ARTICULATING	522
Y	199-3853	1	HOOD & GUARD GP	524
Y	126-9579	1	LADDER GP	527
Y	198-9333	1	LINES GP-AIR (AIR-TO-AIR AFTERCOOLER)	117
Y	198-2751	1	LINES GP-FUEL	128
Y	103-5780	1	LINES GP-GREASE	528
Y	198-2752	1	LINES GP-CAB HEATER	912
Y	198-2750	1	LINES GP-HYDRAULIC OIL COOLER	669
Y	139-5953	1	LINES GP-STEERING	580
Y	198-2756	1	LINES GP-TORQUE CONV COOLER	425
Y	198-2761	1	LINES GP-WATER	90
Y	7V-2885	1	LINK GP-STEERING FRAME LOCK	532
Y	6V-1970	1	LITERATURE GP	914
Y	165-4104	1	MOUNTING GP-LUBRICATION CHART	999
Y	202-2629	1	PLATE & FILM GP	1000
Y	199-3144	1	RADIATOR & FAN GP	99
Y	199-3854	1	SHIELD GP-ENGINE COMPARTMENT	533
Y	199-3855	1	SUPPORT GP-AIR INLET	534
Y	199-3856	1	TANK GP-FUEL	155

Y-SEPARATE ILLUSTRATION

<END>

199-2812 GENERAL AR

S/N: CRD1-UP

SMCS-7000 **i01673176**

NOTE	PART NUMBER	QTY	PART NAME 1 2 3 4 5 6 (PRODUCT LEVEL)	SEE PAGE
Y	199-2816	1	CHASSIS AR	1
Y	199-2817	1	ELECTRICAL AR	192
Y	198-5914	1	ENGINE AR-COMPLETE	4
Y	199-2818	1	HYDRAULIC AR	636
Y	199-2857	1	INSTALLATION AR-ENGINE	6
Y	199-3441	1	OPERATOR AR	926
Y	199-2820	1	POWER TRAIN AR	430

Y-SEPARATE ILLUSTRATION

<END>

MACHINE ARRANGEMENT

224-5588 SCRAP HANDLING AR

S/N: CRD1-UP
AN ATTACHMENT

SMCS-7000 **i01986104**

NOTE	PART NUMBER	QTY	PART NAME 1 2 3 4 5 6 (PRODUCT LEVEL)	SEE PAGE
Y	*183-4182*	1	BAFFLE GP	475
Y	**221-7054**	1	FRAME AS-FRONT	485
Y	**221-7051**	1	FRAME AS-REAR	494
Y	*221-6998*	1	GRILL GP-RADIATOR	499
Y	*158-6314*	1	GUARD GP-ARTICULATION	501
Y	**2Z-9155**	1	GUARD GP-AXLE SEAL	504
Y	*226-1117*	1	GUARD GP-BOTTOM	509
Y	*189-7309*	1	GUARD GP-DRIVE SHAFT	513
Y	*224-8633*	1	GUARD GP-HITCH & STEERING	514
Y	*220-7100*	1	GUARD GP-LIGHTING	517
			S/N: CRD1-597	
Y	*202-0318*	1	GUARD GP-LIGHTING	515
			S/N: CRD598-UP	
	198-8532	2	FILM-STRIPE (SCRAP HANDLER)	

Y-SEPARATE ILLUSTRATION

<END>

221-8128 WASTE HANDLING AR

S/N: CRD1-UP
AN ATTACHMENT

SMCS-7000 **i01955403**

NOTE	PART NUMBER	QTY	PART NAME 1 2 3 4 5 6 (PRODUCT LEVEL)	SEE PAGE
Y	*183-4182*	1	BAFFLE GP	475
	198-8533	2	FILM-STRIPE (WASTE HANDLER)	
Y	**221-7054**	1	FRAME AS-FRONT	485
Y	**221-7051**	1	FRAME AS-REAR	494
Y	*221-6998*	1	GRILL GP-RADIATOR	499
Y	*158-6314*	1	GUARD GP-ARTICULATION	501
Y	*2Z-9155*	1	GUARD GP-AXLE SEAL	504
Y	*226-1117*	1	GUARD GP-BOTTOM	509
Y	*189-7309*	1	GUARD GP-DRIVE SHAFT	513
Y	*224-8633*	1	GUARD GP-HITCH & STEERING	514
Y	*220-7100*	1	GUARD GP-LIGHTING	517
			–OR–	
Y	*202-0318*	1	GUARD GP-LIGHTING	515
Y	*233-9477*	1	OPERATOR AR	927

Y-SEPARATE ILLUSTRATION

<END>

MACHINE ARRANGEMENT

240-2031 WASTE HANDLING AR

S/N: CRD1-UP

CANNOT BE USED WITH 240-2032 WASTE HANDLING AR, 233-9477 OPERATOR AR, 205-7387 ROPS GP-OPEN

AN ATTACHMENT

SMCS-7000 **i02016823**

NOTE	PART NUMBER	QTY	PART NAME 1 2 3 4 5 6 (PRODUCT LEVEL)	SEE PAGE
Y	*183-4182*	1	BAFFLE GP	475
Y	**221-7054**	1	FRAME AS-FRONT	485
Y	**221-7051**	1	FRAME AS-REAR	494
Y	*221-6998*	1	GRILL GP-RADIATOR	499
Y	*158-6314*	1	GUARD GP-ARTICULATION	501
Y	*2Z-9155*	1	GUARD GP-AXLE SEAL	504
Y	*226-1117*	1	GUARD GP-BOTTOM	509
Y	*189-7309*	1	GUARD GP-DRIVE SHAFT	513
Y	*224-8633*	1	GUARD GP-HITCH & STEERING	514
Y	*202-0318*	1	GUARD GP-LIGHTING	515
Y	*233-9477*	1	OPERATOR AR	927
Y	*240-5961*	1	WIRING GP-LIGHTING (WASTE HANDLER FLOOD)	346
	211-9290	2	FILM (SCRAP HANDLER)	

Y-SEPARATE ILLUSTRATION

<END>

240-2032 WASTE HANDLING AR

S/N: CRD1-UP

AN ATTACHMENT

SMCS-7000 **i02156762**

NOTE	PART NUMBER	QTY	PART NAME 1 2 3 4 5 6 (PRODUCT LEVEL)	SEE PAGE
Y	*183-4182*	1	BAFFLE GP	475
Y	**221-7054**	1	FRAME AS-FRONT	485
Y	**221-7051**	1	FRAME AS-REAR	494
Y	*221-6998*	1	GRILL GP-RADIATOR	499
Y	*158-6314*	1	GUARD GP-ARTICULATION	501
Y	*2Z-9155*	1	GUARD GP-AXLE SEAL	504
Y	*226-1117*	1	GUARD GP-BOTTOM	509
Y	*189-7309*	1	GUARD GP-DRIVE SHAFT	513
Y	*224-8633*	1	GUARD GP-HITCH & STEERING	514
Y	*202-0318*	1	GUARD GP-LIGHTING	515
Y	*233-9477*	1	OPERATOR AR	927
Y	*240-5961*	1	WIRING GP-LIGHTING (WASTE HANDLER FLOOD)	346
			S/N: CRD802-UP	
	211-9291	2	FILM (WASTE HANDLER)	

Y-SEPARATE ILLUSTRATION

<END>

ENGINE ARRANGEMENT

198-5914 ENGINE AR-COMPLETE

S/N: 5GG1-UP
174 BRAKE HP (130 BKW) AT 2200 RPM
PART OF 199-2812 GENERAL AR

SMCS-1000 **i01952086**

NOTE	PART NUMBER	QTY	PART NAME 1 2 3 4 5 6 (PRODUCT LEVEL)	SEE PAGE
Y	*4W-3462*	1	CARRIER GP-SEAL	8
Y	*183-1195*	1	CONTROL & MTG GP-ENGINE ELEK	178
			S/N: 5GG1-2636	
Y	*188-7726*	1	CONTROL & MTG GP-ENGINE ELEK	180
			S/N: 5GG2637-UP	
Y	*189-8780*	1	COVER GP-AIR INLET (STARTING AID HEATER)	113
Y	*193-4620*	1	COVER GP-CYLINDER BLOCK	9
Y	*189-5470*	1	COVER GP-FRONT HOUSING	11
Y	*211-4770*	1	COVER GP-VALVE MECHANISM	13
Y	*118-2073*	1	DRAIN GP-ENGINE OIL	40
Y	*191-7733*	1	ELBOW GP-AIR INLET	115
Y	*198-5915*	1	ENGINE AR-CORE	5
Y	*121-8786*	1	FASTENER GP-FLYWHEEL	42
Y	*116-4556*	1	FASTENER GP-FRONT HOUSING	43
Y	*189-5433*	1	FILTER GP-ENGINE OIL	71
Y	*7E-0519*	1	FLYWHEEL GP	44
Y	*192-0108*	1	GAUGE GP-OIL LEVEL (DIPSTICK)	73
Y	*197-5210*	1	HOUSING GP-FLYWHEEL	47
Y	*201-4053*	1	LIFTING GP-ENGINE	51
Y	*7C-2475*	1	LINES GP-ENGINE OIL	75
Y	*217-5149*	1	LINES GP-FUEL FILTER	137
			S/N: 5GG1-1092	
Y	*187-6277*	1	LINES GP-FUEL FILTER	133
			S/N: 5GG1093-2932	
Y	*237-2263*	1	LINES GP-FUEL FILTER	139
			S/N: 5GG2933-UP	
Y	*187-6279*	1	LINES GP-TURBOCHARGER OIL	76
Y	*192-2201*	1	LINES GP-WATER	86
Y	*183-6845*	1	MANIFOLD GP-EXHAUST (DRY)	119
Y	*202-7385*	1	MOUNTING GP-ALTERNATOR	52
Y	*201-6850*	1	PAN GP-OIL	56
Y	*159-0303*	1	PLUG GP-CYLINDER BLOCK (COOLANT CONDITIONER)	60
Y	*162-8068*	1	PLUG GP-ENGINE	61
Y	*216-5181*	1	PULLEY GP-IDLER (BELT TENSIONER)	63
			S/N: 5GG1-1092	
Y	*172-5754*	1	PULLEY GP-IDLER (BELT TENSIONER)	62
			S/N: 5GG1093-UP	
Y	*185-2069*	1	PUMP GP-FUEL PRM & PRIM FILTER	147
Y	*193-9237*	1	PUMP GP-WATER	94
Y	*115-4210*	1	SEAL GP-CRANKSHAFT	64
Y	*7C-1770*	1	SEAL GP-FLYWHEEL HOUSING	65
Y	*201-6851*	1	SENSOR GP-ENGINE	235
Y	*2T-2951*	1	VALVE GP-FLUID SAMPLING	81
			S/N: 5GG1-1092	
Y	*190-5038*	1	WIRING GP-ENGINE	317
Y	*191-6113*	1	STARTING AID GP (SWITCH, WIRING)	261
			S/N: 5GG1-2636	
Y	*235-9679*	1	STARTING AID GP (SWITCH, WIRING)	262
			S/N: 5GG2637-UP	
			GASKET KITS WILL BE PROVIDED WHEN AVAILABLE	

Y-SEPARATE ILLUSTRATION

ENGINE ARRANGEMENT

198-5915 ENGINE AR-CORE

S/N: 5GG1-UP

PART OF 198-5914 ENGINE AR-COMPLETE

SMCS-1000 i02087691

NOTE	PART NUMBER	QTY	PART NAME 1 2 3 4 5 6 (PRODUCT LEVEL)	SEE PAGE
Y	*128-2682*	1	BREATHER GP	70
Y	*216-7922*	1	CAMSHAFT GP	7
Y	*117-3643*	1	COOLER GP-ENGINE OIL	82
Y	*113-6087*	1	CRANKSHAFT GP	14
YR	*129-1165*	1	CYLINDER BLOCK GP	16
Y	*133-3742*	1	CYLINDER HEAD GP	27
Y	*165-4557*	1	DAMPER & PULLEY GP	39
	204-8068	1	ELECTRONICS GP-ENGINE RATINGS	
Y	*117-6487*	1	FASTENER GP-DAMPER & PULLEY	41
Y	*205-1321*	1	GEAR GP-FRONT	45
Y	*133-5055*	1	HOUSING GP-FRONT	48
Y	*210-5574*	1	LINES GP-INJECTOR HYD PUMP	145
YR	*161-8420*	6	PISTON & ROD GP	57
			S/N: 5GG1-4449	
Y	*177-7500*	6	PISTON & ROD GP	59
			S/N: 5GG4450-UP	
Y	*210-5575*	1	PUMP GP-UNIT INJECTOR HYD	153
Y	*212-2270*	1	PUMP GP-ENGINE OIL	79
Y	*178-6343*	6	PUMP GP-UNIT INJECTION	149
Y	*185-1145*	1	TURBOCHARGER GP	125
Y	*135-2969*	1	VALVE MECHANISM GP	66

R-REMFG PART MAY BE AVAILABLE
Y-SEPARATE ILLUSTRATION

ENGINE ARRANGEMENT

199-2857 INSTALLATION AR-ENGINE

S/N: CRD1-UP

PART OF 199-2812 GENERAL AR

SMCS-1000 101896647

NOTE	PART NUMBER	QTY	PART NAME 1 2 3 4 5 6 (PRODUCT LEVEL)	SEE PAGE
Y	199-2860	1	AIR CLEANER GP	109
Y	217-5154	1	ALTERNATOR GP-CHARGING	168
Y	208-0038	1	FUMES DISPOSAL GP	72
Y	199-2864	1	LINES GP-AIR	118
Y	218-0706	1	LINES GP-FUEL DRAIN	132
Y	138-1965	1	MOUNTING GP-ENGINE & TMSN	54
Y	199-2865	1	MUFFLER GP	120
Y	7E-3509	1	PIPE AS-EXHAUST EXTENSION	121
Y	111-4275	1	STARTING MOTOR GP-ELECTRIC	264

Y-SEPARATE ILLUSTRATION

BASIC ENGINE

216-7922 CAMSHAFT GP

S/N: 5GG1-UP

PART OF 198-5915 ENGINE AR-CORE

SMCS-1210, 1211, 1212 i01743398

NOTE	REF NO	GRAPHIC REF	PART NUMBER	QTY	PART NAME 1 2 3 4 5 6 (PRODUCT LEVEL)	SEE PAGE
	1	1	107-7694	1	PLATE-THRUST	
	2	1	216-7921	1	CAMSHAFT AS	
	2A	1	1B-8705	1	KEY-WOODRUFF	
	2B	1	205-1322	1	GEAR (100 TEETH)	
M	3	1	6V-3940	2	BOLT (M8X1.25X25MM)	

M-METRIC PART

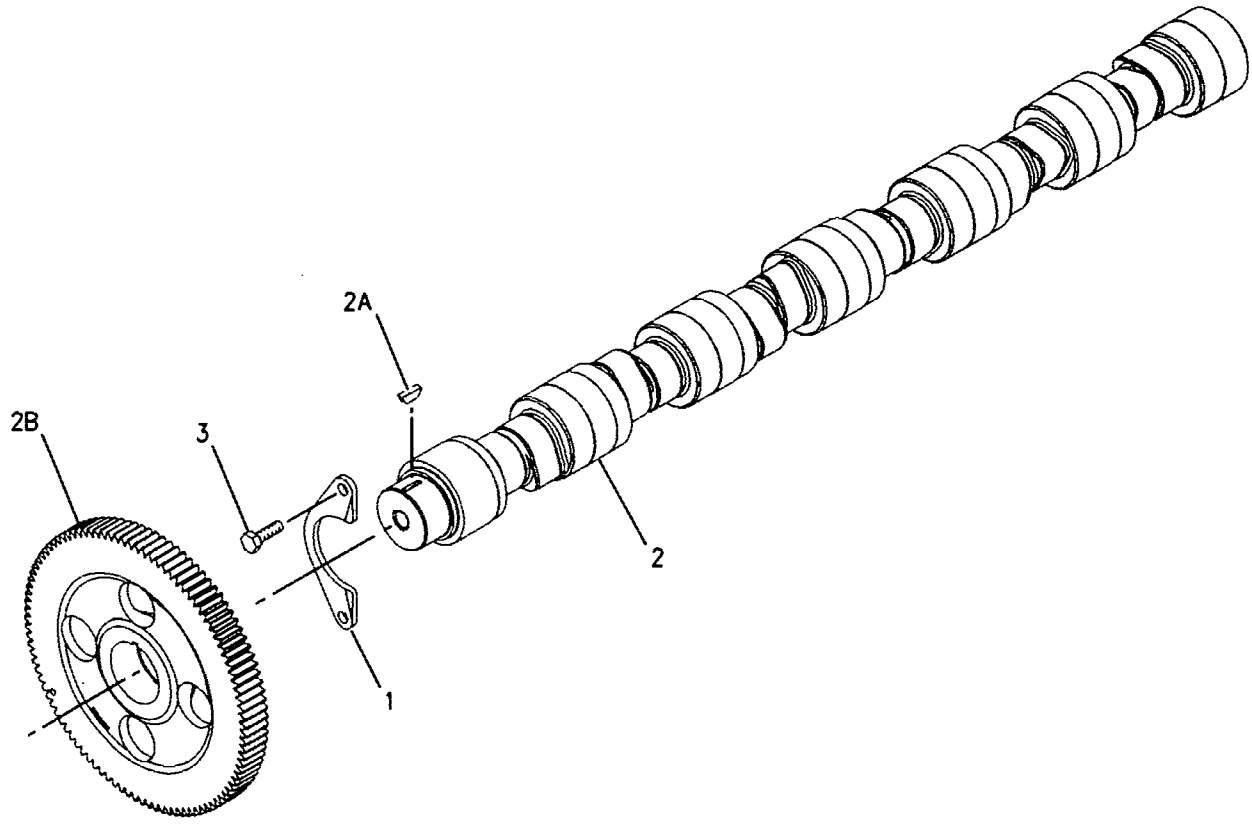

GRAPHIC #1 <END> g00869530

BASIC ENGINE

4W-3462 CARRIER GP-SEAL

S/N: 5GG1-UP

PART OF 198-5914 ENGINE AR-COMPLETE

SMCS-1160, 1161 — 102041151

NOTE	REF NO	GRAPHIC REF	PART NUMBER	QTY	PART NAME 1 2 3 4 5 6 (PRODUCT LEVEL)	SEE PAGE
	1	1	2W-6546	1	COVER	
	2	1	8C-3091	1	SEAL-O-RING	
	3	1	239-0583	1	GASKET	
	4	1	6V-3538	2	DOWEL	
M	5	1	6V-3940	8	BOLT (M8X1.25X25-MM)	
	6	1	9M-1974	8	WASHER-HARD (8.8X16X2-MM THK)	
B	7	1	4C-9612		SEALANT-SILICONE	

B-USE AS REQUIRED
M-METRIC PART

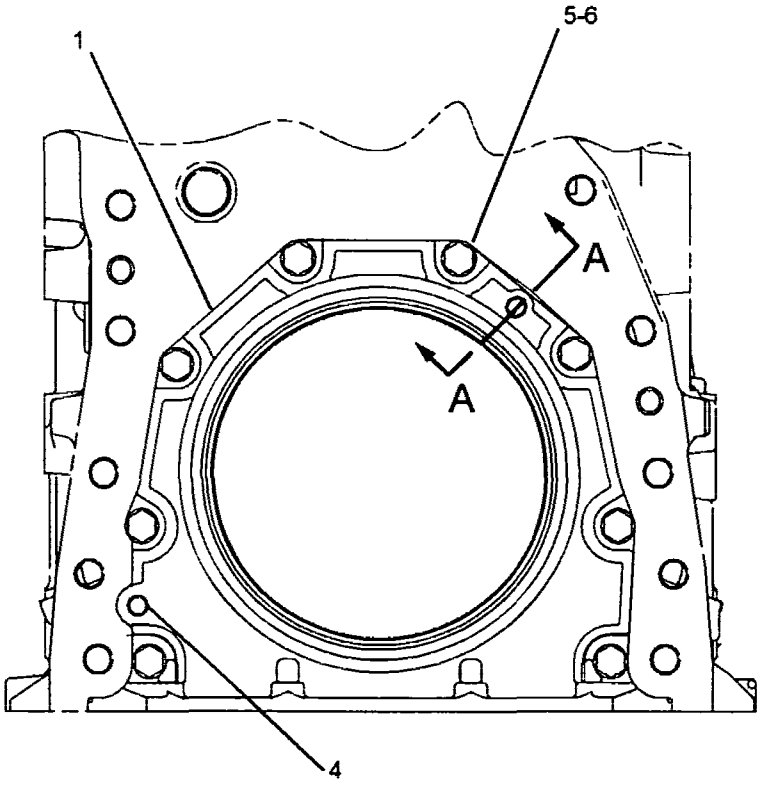

FRONT VIEW

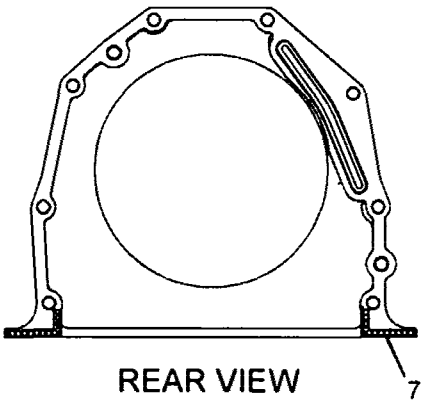

REAR VIEW

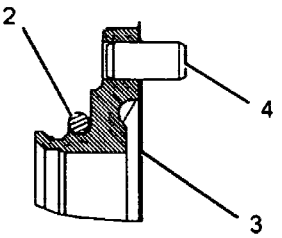

SECTION A-A

GRAPHIC #1 **<END>** g01051044

BASIC ENGINE

193-4620 COVER GP-CYLINDER BLOCK

S/N: 5GG1-UP

PART OF 198-5914 ENGINE AR-COMPLETE

SMCS-1201 i02049495

NOTE	REF NO	GRAPHIC REF	PART NUMBER	QTY	PART NAME 1 2 3 4 5 6 (PRODUCT LEVEL)	SEE PAGE
M	1	1	9X-2099	2	STUD (M8X1.25-THD)	
	2	1	2W-6544	1	COVER	
	3	1	4P-5918	2	CLIP	
	4	1	4Y-9652	3	GASKET	
	5	1	7W-3871	3	COVER-SIDE	
	6	1	7W-3872	6	SLEEVE	
	7	1	8E-9571	12	WASHER-HARD (8.8X16X7-MM THK)	
M	8	1	9X-2097	1	STUD (M8X1.25-THD)	
	9	1	110-7618	3	BOLT AS	
					(EACH INCLUDES)	
M		1	6V-5215	1	BOLT (M8X1.25X16-MM)	
		1	9M-1974	1	WASHER-HARD (8.8X16X2-MM THK)	
	10	1	130-5301	1	CLIP	
	11	1	3K-0360	1	SEAL-O-RING	
	12	1	4P-7581	2	CLIP	
	13	1	5P-4116	1	WASHER-HARD (8.8X20.5X2-MM THK)	
M	14	1	5P-7970	2	NUT (M8X1.25-THD)	
M	15	1	6V-2317	22	BOLT (M8X1.25X30-MM)	
	16	1	9M-1974	14	WASHER-HARD (8.8X16X2-MM THK)	
	17	1	9S-4185	1	PLUG	
B	18	1	1U-8846		SEALANT-GASKET	

B-USE AS REQUIRED
M-METRIC PART

193-4620 COVER GP-CYLINDER BLOCK (contd.) i02049495

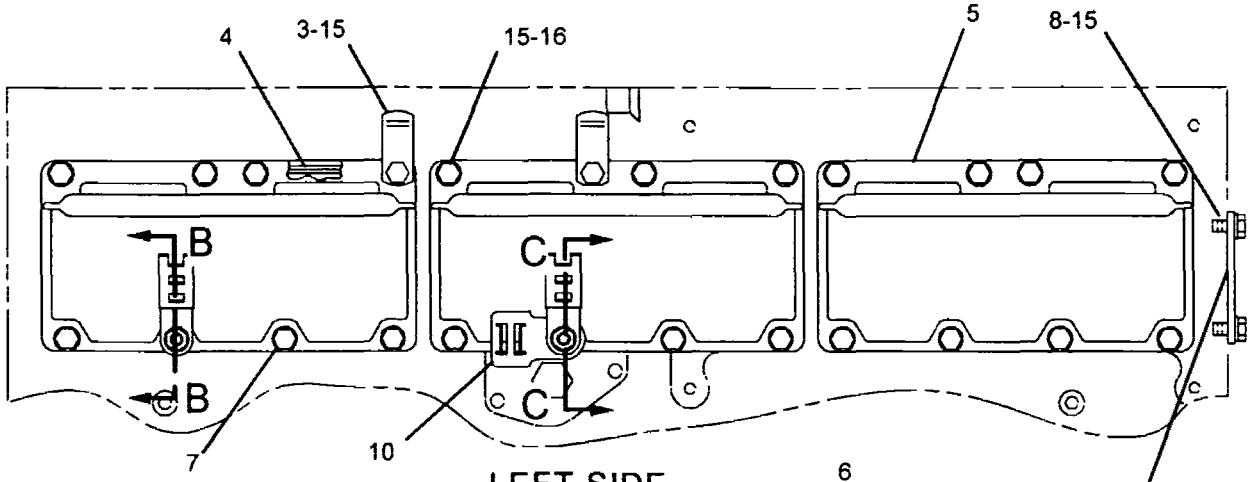

LEFT SIDE VIEW

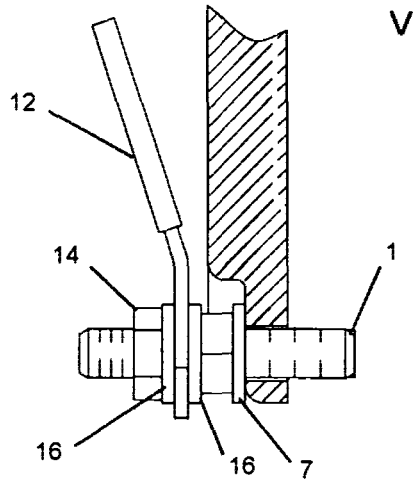

SECTION B-B

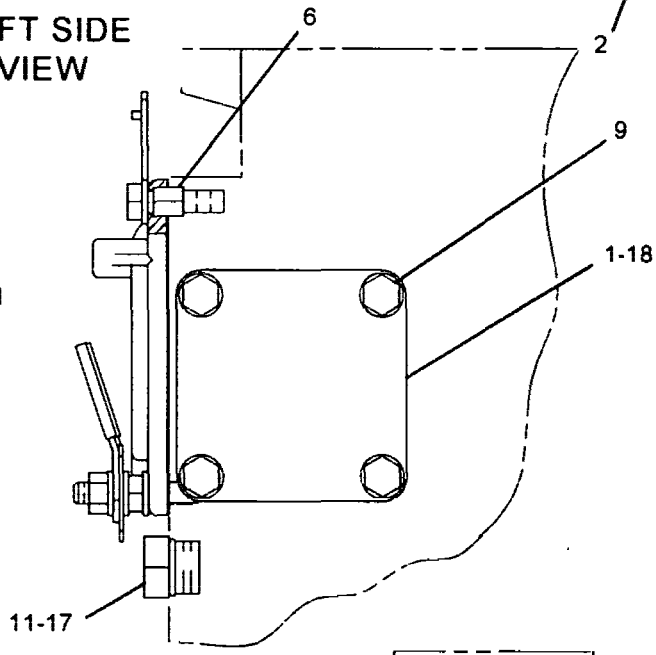

REAR VIEW

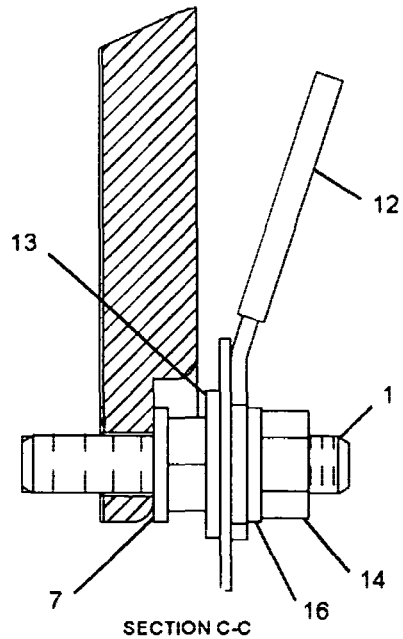

SECTION C-C

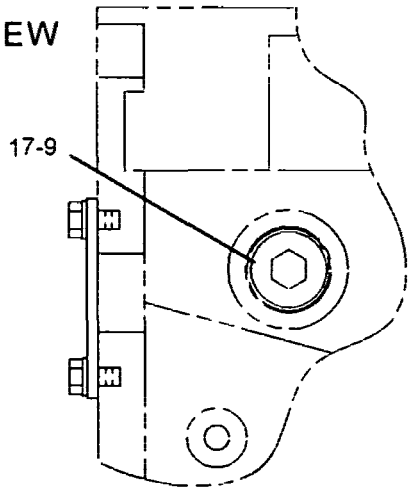

RIGHT SIDE VIEW

GRAPHIC #1 <END> g01058342

BASIC ENGINE

189-5470 COVER GP-FRONT HOUSING

S/N: 5GG1-UP

PART OF 198-5914 ENGINE AR-COMPLETE

SMCS-1151, 1166 i01787532

NOTE	REF NO	GRAPHIC REF	PART NUMBER	QTY	PART NAME 1 2 3 4 5 6 (PRODUCT LEVEL)	SEE PAGE
M	1	1	9X-2099	3	STUD (M8X1.25-THD)	
	2	1	4W-2026	1	COVER	
	3	1	5L-2952	1	CAP AS-FILLER	
		1	6L-2609	1	SEAL-RUBBER	
	4	1	135-9819	1	SEAL	
	5	1	136-0823	1	COVER AS-FRONT	
	5A	1	136-0822	2	STUD	
	5B	1	126-1757	2	WASHER (10.85X19.3X1.27-MM THK)	
	6	1	139-3526	1	GASKET	
	7	1	191-5213	1	TUBE AS	
	8	1	191-7699	1	BRACKET AS	
M		1	8T-3490	1	NUT-WELD (M10X1.5-THD)	
	9	1	061-9455	1	SEAL-O-RING	
M	10	1	5P-7970	3	NUT (M8X1.25-THD)	
	11	1	5P-8245	4	WASHER-HARD (13.5X25.5X3-MM THK)	
M	12	1	6V-2317	6	BOLT (M8X1.25X30-MM)	
M	13	1	6V-5696	2	BOLT (M12X1.75X80-MM)	
	14	1	6V-5839	1	WASHER (11X21X2.5-MM THK)	
M	15	1	6V-6317	1	BOLT (M10X1.5X20-MM)	
M	16	1	6V-8149	2	NUT (M12X1.75-THD)	
	17	1	7D-7233	1	CLIP	
M	18	1	8T-0100	1	BOLT (M8X1.25X60-MM)	
	19	1	9M-1974	4	WASHER-HARD (8.8X16X2-MM THK)	
M	20	1	185-9356	1	STUD (M8X1.25-THD)	
	21	1	210-3321	3	STUD (M8X1.25-THD)	

M-METRIC PART

189-5470 COVER GP-FRONT HOUSING *(contd.)* i01787532

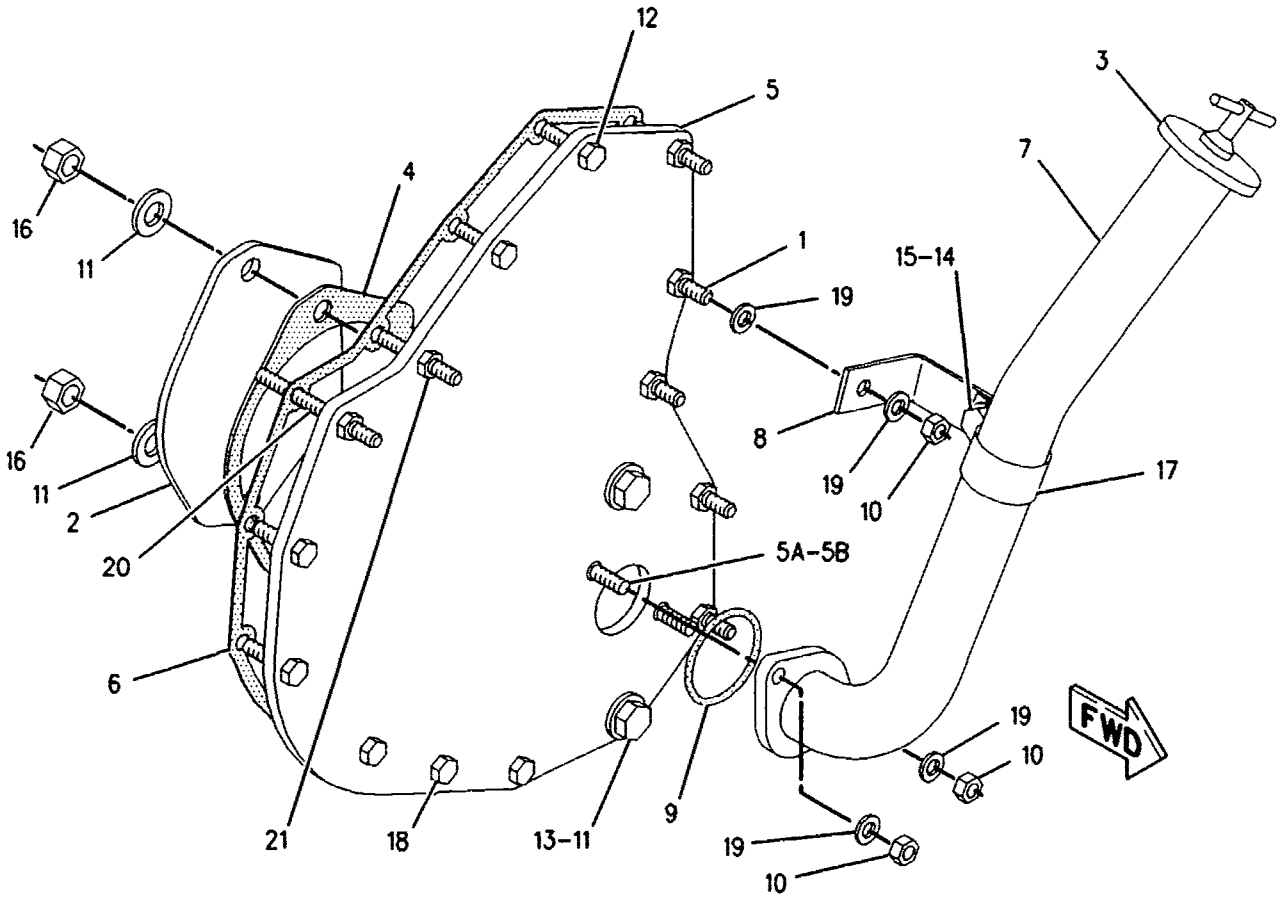

GRAPHIC #1 **<END>** g00883330

211-4770 COVER GP-VALVE MECHANISM

S/N: 5GG1-UP

PART OF 198-5914 ENGINE AR-COMPLETE

SMCS-1107 i02042722

NOTE	REF NO	GRAPHIC REF	PART NUMBER	QTY	PART NAME 1 2 3 4 5 6 (PRODUCT LEVEL)	SEE PAGE
	1	1	167-8361	1	COVER AS-BASE	
D	1A	1	5P-5678		SEAL (2M)	
M	2	1	2W-9499	10	BOLT (M6X1X40-MM)	
	3	1	236-2101	1	COVER AS (TOP)	
D	3A	1	5P-5678		SEAL (2M)	
	4	1	5P-0537	28	WASHER-HARD (7.2X14.5X2-MM THK)	
M	5	1	6V-7728	11	BOLT (M6X1X45-MM)	
	6	1	232-3646	4	STUD	
	7	1	210-3323	3	STUD	

D-ORDER BY THE METER
M-METRIC PART

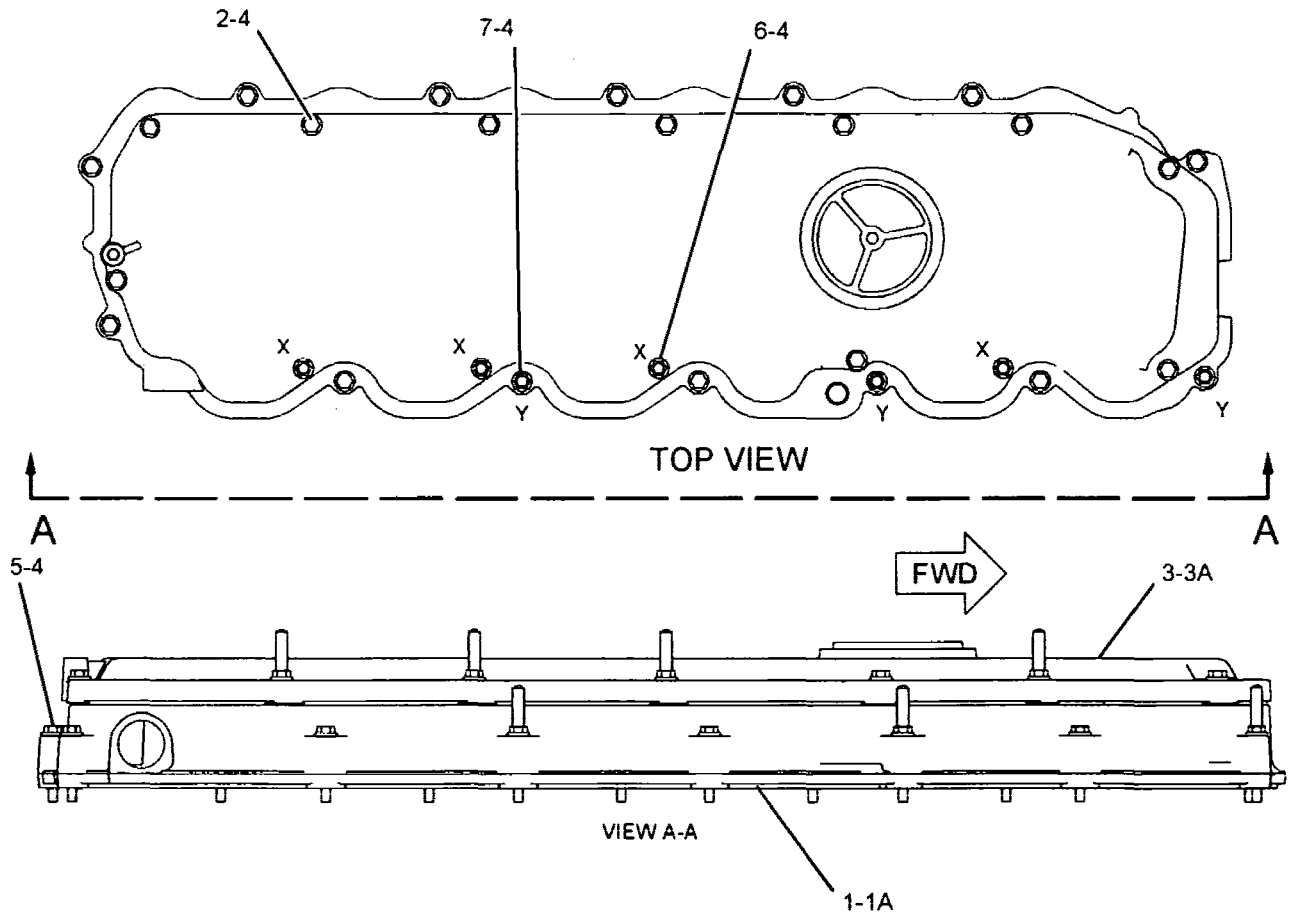

GRAPHIC #1 <END> g01058923

BASIC ENGINE

113-6087 CRANKSHAFT GP

S/N: 5GG1-UP

PART OF 198-5915 ENGINE AR-CORE

SMCS-1202 **i02162788**

NOTE	REF NO	GRAPHIC REF	PART NUMBER	QTY	PART NAME 1 2 3 4 5 6 (PRODUCT LEVEL)	SEE PAGE
	1	1	**227-5480**	1	CRANKSHAFT AS	
	1A	1	**1B-8705**	1	KEY-WOODRUFF	
	1B	1	**2W-8147**	1	GEAR (50-TEETH)	
	2	1	**212-4893**	1	BEARING-THRUST	
AB		1	**229-5153**		BEARING-THRUST (0.25-MM US)	
AB		1	**229-5154**		BEARING-THRUST (0.5-MM US)	
AB		1	**229-5155**		BEARING-THRUST (0.5-MM OS)	
AB		1	**229-5156**		BEARING-THRUST (0.5-MM US - 0.5-MM OS)	
	3	1	**107-7708**	6	BEARING-MAIN	
AB		1	**145-0168**		BEARING-MAIN (0.5-MM OS)	
AB		1	**145-0170**		BEARING-MAIN (0.5-MM US - 0.5-MM OS)	
AB		1	**145-0162**		BEARING-MAIN (0.25-MM US)	
AB		1	**145-0164**		BEARING-MAIN (0.5-MM US)	
					AVAILABLE REPAIR KIT(S):	
AB			**7C-7980**		SLEEVE-OIL SEAL (CRANKSHAFT)	
					(THIS WEAR SLEEVE IS USED ONLY TO SALVAGE (REPAIR) THE REAR SEAL SURFACE OF THE CRANKSHAFT)	
AB			**196-9519**		BEARING GP-MAIN (CRANKSHAFT)	
					(INCLUDES STANDARD MAIN AND THRUST BEARINGS)	

A-NOT PART OF THIS GROUP
B-USE AS REQUIRED

113-6087 **CRANKSHAFT GP** *(contd.)* **i02162788**

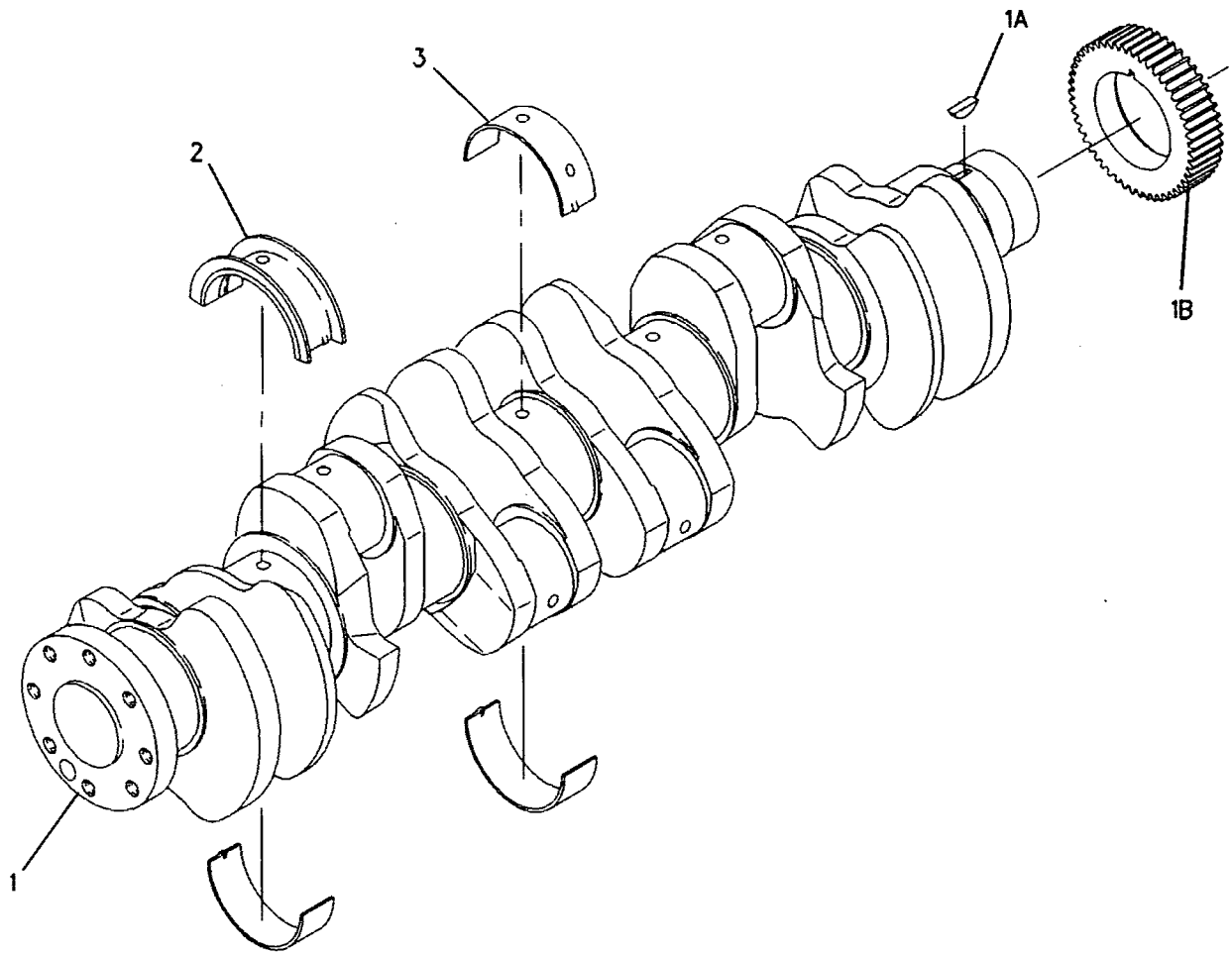

GRAPHIC #1 **<END>** g00810614

BASIC ENGINE

129-1165 CYLINDER BLOCK GP*R

S/N: 5GG1-UP

PART OF 198-5915 ENGINE AR-CORE

SMCS-1201 i02319061

NOTE	REF NO	GRAPHIC REF	PART NUMBER	QTY	PART NAME 1 2 3 4 5 6 (PRODUCT LEVEL)	SEE PAGE
Y	1	1	**221-4481**	1	CYLINDER BLOCK GP	18
	2	1	**1W-8407**	2	SLEEVE	
	3	1	**6V-3538**	2	DOWEL	
	4	1	**7N-5683**	2	DOWEL	
	5	1	*183-3409*	1	PLUG AS	
		1	**9S-8002**	1	PLUG	
		1	**033-5853**	1	SEAL-O-RING	

Y-SEPARATE ILLUSTRATION

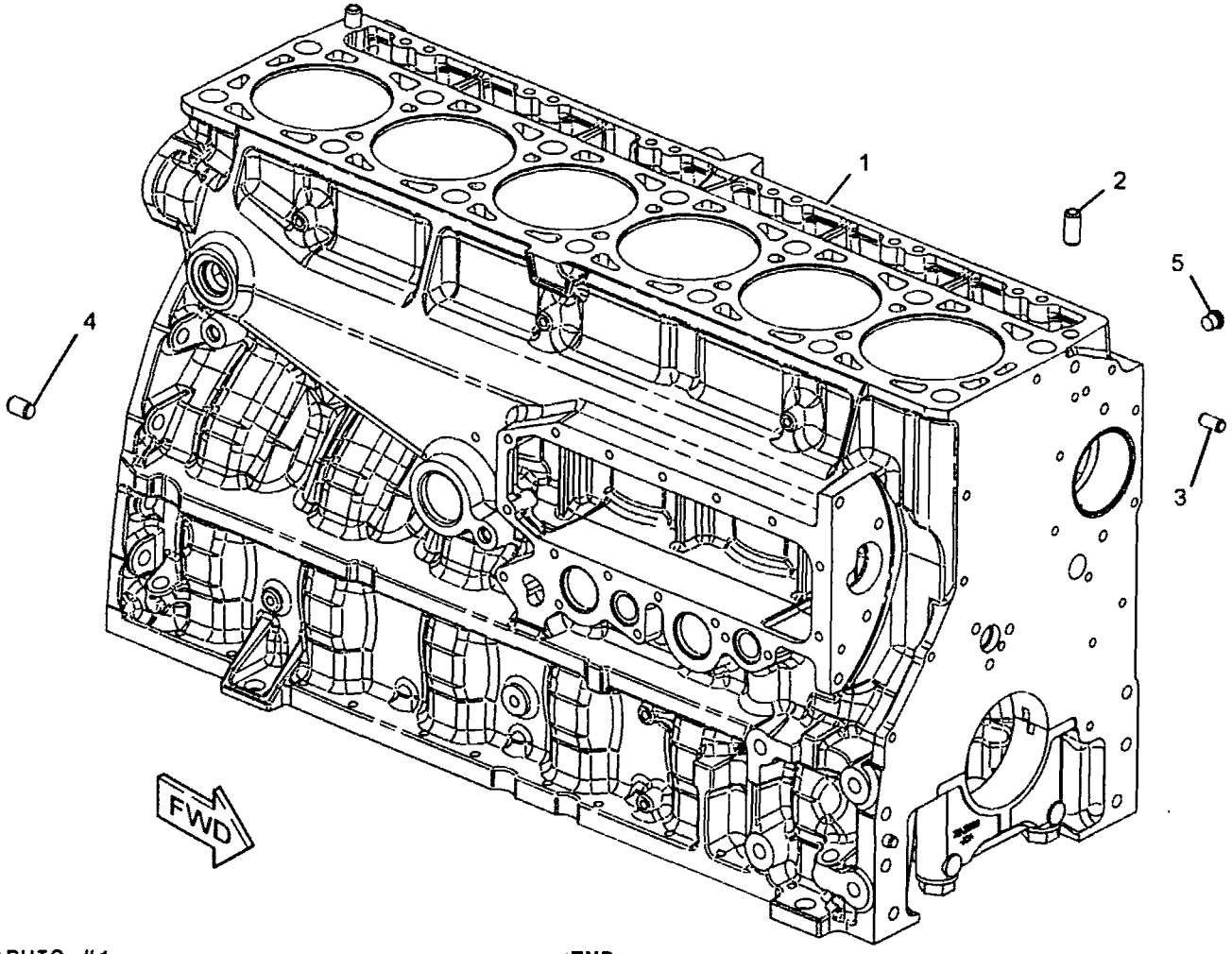

GRAPHIC #1 **<END>** g01159558

221-4480 CYLINDER BLOCK GP

S/N: 5GG1-UP

PART OF 221-4481 CYLINDER BLOCK GP

SMCS-1201 i01858493

NOTE	REF NO	GRAPHIC REF	PART NUMBER	QTY	PART NAME 1 2 3 4 5 6 (PRODUCT LEVEL)	SEE PAGE
	2	1	7E-2968	7	CAP-CRANKSHAFT BEARING	
M	3	1	9X-8916	14	BOLT (M16X2.0X140MM)	
	4	1	5P-8247	14	WASHER-HARD (17X32X3.5MM THK)	

M-METRIC PART

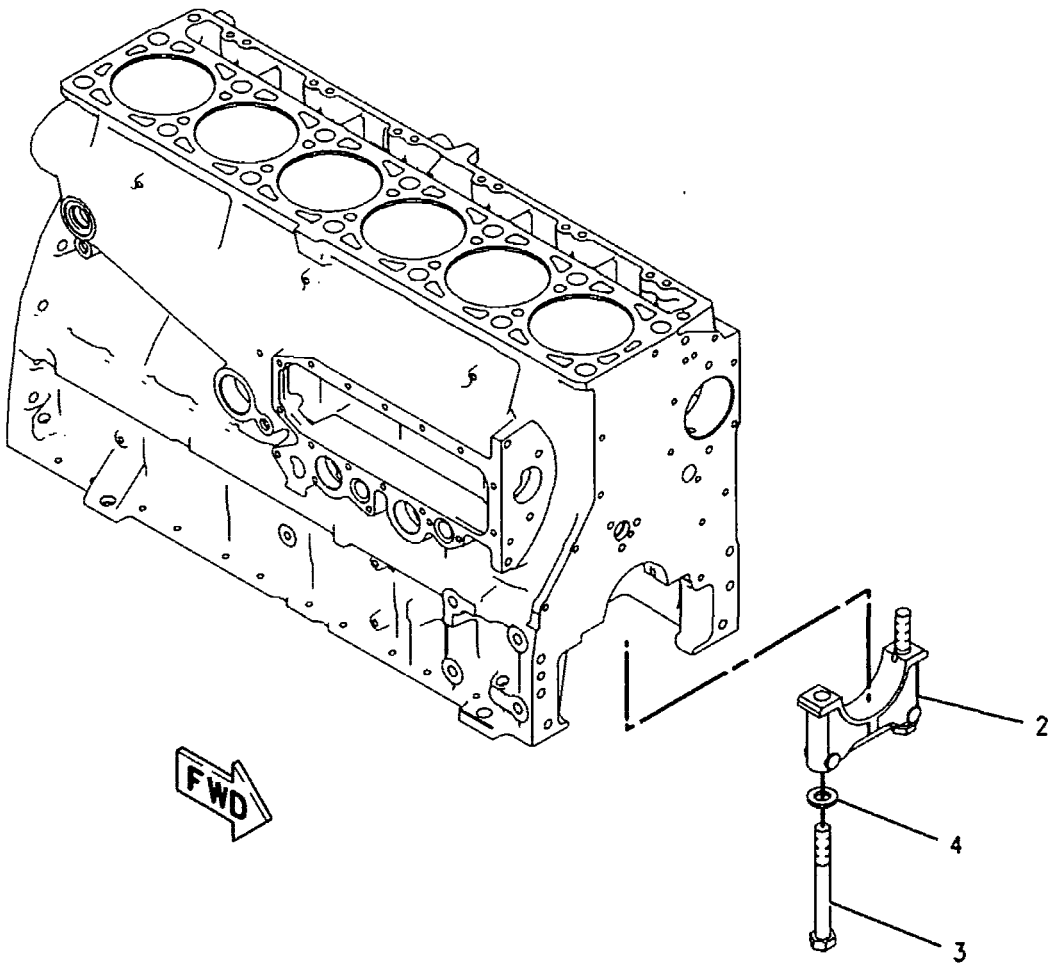

GRAPHIC #1 <END> g00948902

BASIC ENGINE

221-4481 CYLINDER BLOCK GP

S/N: 5GG1-UP

PART OF 129-1165 CYLINDER BLOCK GP

SMCS-1201 **i01972302**

NOTE	REF NO	GRAPHIC REF	PART NUMBER	QTY	PART NAME 1 2 3 4 5 6 (PRODUCT LEVEL)	SEE PAGE
Y	1	1	*221-4480*	1	CYLINDER BLOCK GP	17
	2	1	**2M-6471**	2	PLUG-CUP	
	3	1	**3H-5552**	1	PLUG-CUP	
	4	1	**9S-8006**	1	PLUG	
	5	1	**2M-9780**	1	SEAL-O-RING	
	6	1	**216-5586**	1	BEARING-SLEEVE (CAMSHAFT)	
	7	1	**2W-7213**	6	BEARING-SLEEVE (CAMSHAFT)	

Y-SEPARATE ILLUSTRATION

221-4481 CYLINDER BLOCK GP (contd.) i01972302

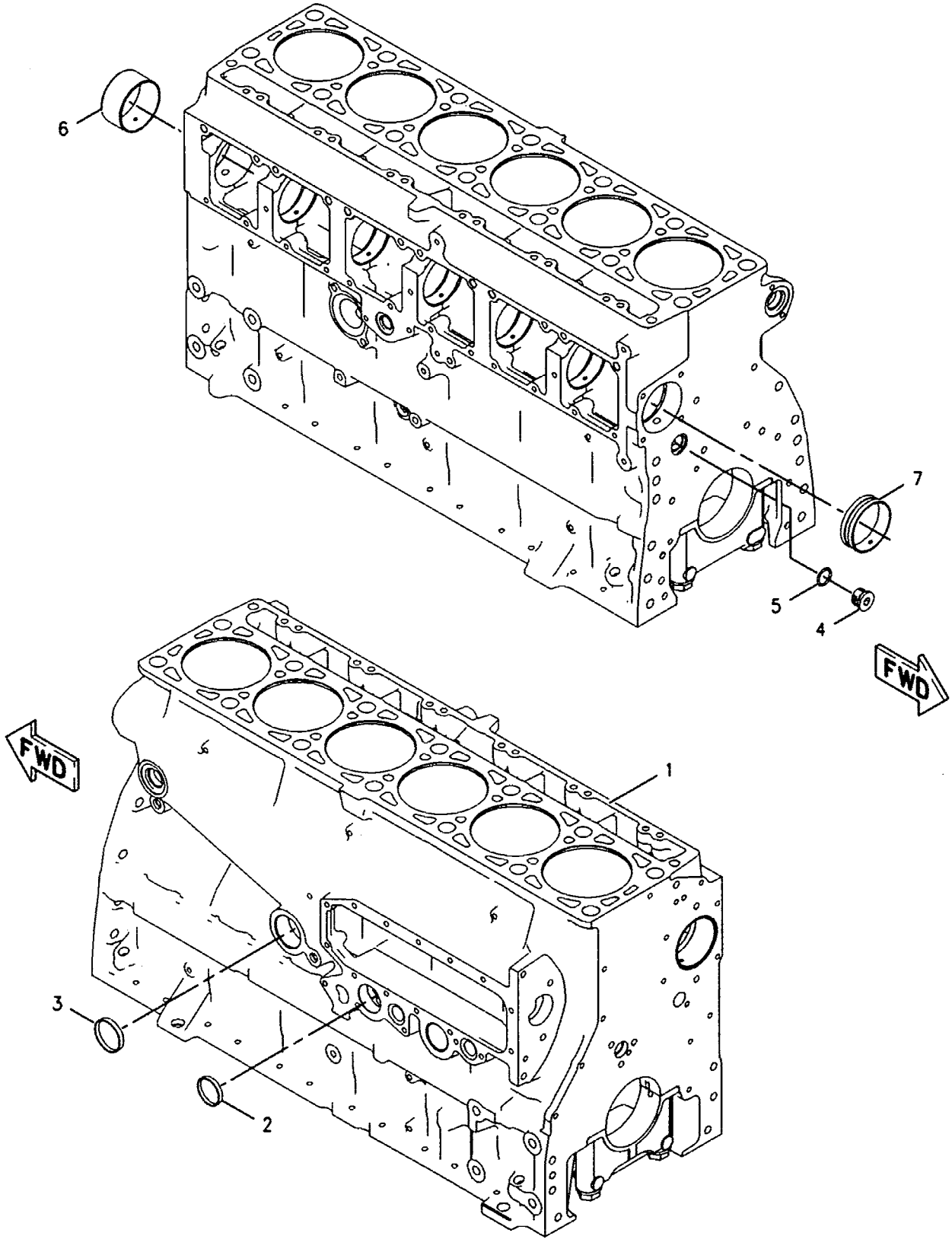

GRAPHIC #1 <END> g00947530

BASIC ENGINE

205-1271 CYLINDER HEAD AS

S/N: 5GG1-2634, 2662-2896

PART OF 205-1272 CYLINDER HEAD AS, 205-1273 CYLINDER HEAD GP

FIELD REPLACEMENT ORDER 205-1272–PAGE 22

SMCS-1100, 1101 i01943628

NOTE	REF NO	GRAPHIC REF	PART NUMBER	QTY	PART NAME 1 2 3 4 5 6 (PRODUCT LEVEL)	SEE PAGE
	2	1	8M-5860	12	PLUG-CUP	
	3	1	4F-5695	2	PLUG-CUP	
	4	1	227-2911	6	SLEEVE-INJECTOR	
	5	1	155-9504	12	INSERT-VALVE SEAT (INLET)	
	6	1	147-8218	6	INSERT-VALVE SEAT (EXHAUST)	
	7	1	8C-0563	12	SEAL-O-RING	
	8	1	154-8025	6	SETSCREW-SOCKET	
	9	1	9S-9334	1	PLUG	
	10	1	9X-7712	1	SEAL-O-RING	

205-1271 CYLINDER HEAD AS *(contd.)* i01943628

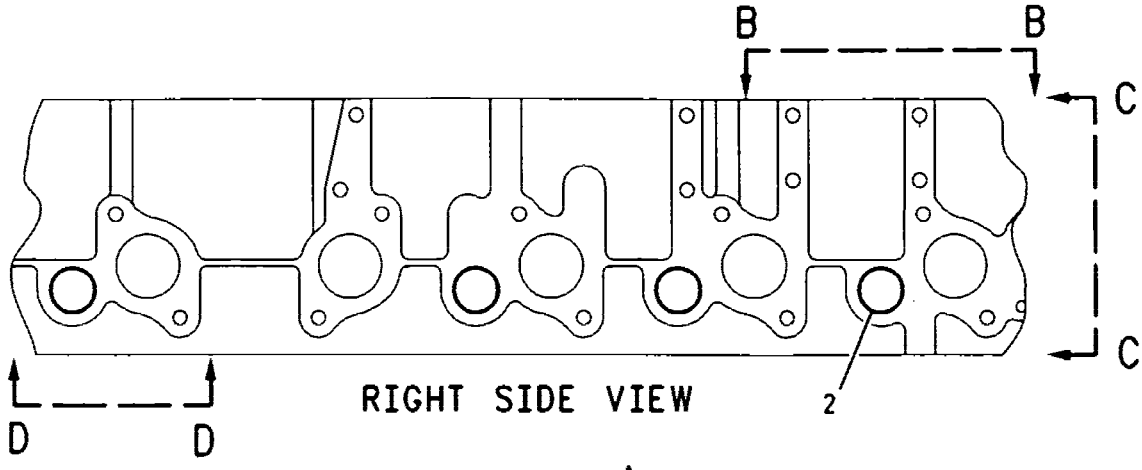

RIGHT SIDE VIEW

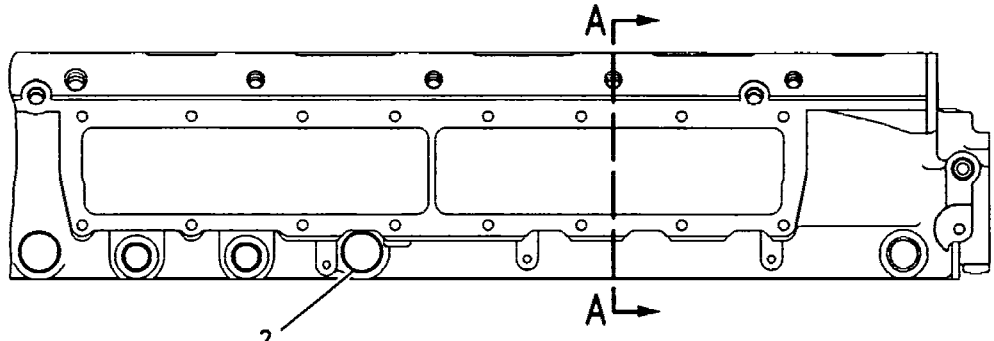

LEFT SIDE VIEW

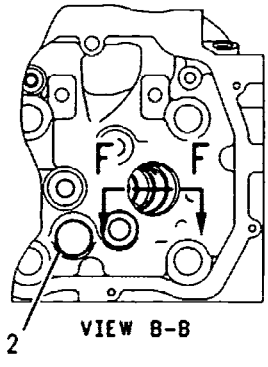

VIEW B-B

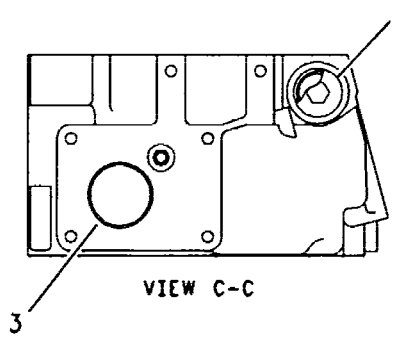

VIEW C-C

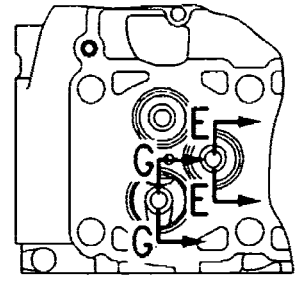

VIEW D-D

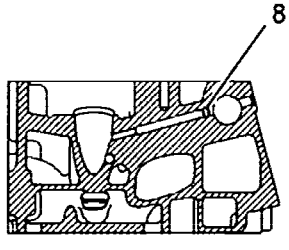

SECTION A-A

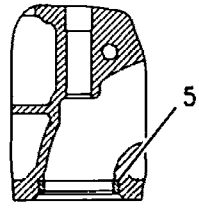

SECTION E-E

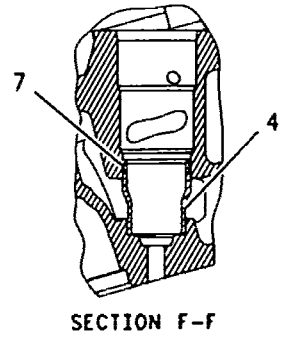

SECTION F-F

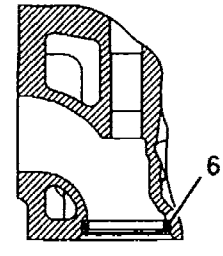

SECTION G-G

GRAPHIC #1 <END> g00826091

BASIC ENGINE

205-1272 CYLINDER HEAD AS

S/N: 5GG1-UP

FIELD REPLACEMENT FOR 205-1271–PAGE 20

SMCS-1100, 1101 i01636378

NOTE	REF NO	GRAPHIC REF	PART NUMBER	QTY	PART NAME 1 2 3 4 5 6 (PRODUCT LEVEL)	SEE PAGE
Y	1	1	*205-1271*	1	CYLINDER HEAD AS	20
	2	1	**9S-8002**	6	PLUG	
	3	1	**6V-5048**	6	SEAL-O-RING	
	4	1	**9S-8004**	4	PLUG	
	5	1	**3J-1907**	4	SEAL-O-RING	
	6	1	**147-8214**	12	SEAL-VALVE STEM	
	7	1	**140-9670**	12	GUIDE-VALVE	
	8	1	**9S-8006**	1	PLUG	
	9	1	**2M-9780**	1	SEAL-O-RING	
	10	1	**9S-9334**	1	PLUG	
	11	1	**9X-7712**	1	SEAL-O-RING	
	12	1	**147-8220**	6	GUIDE-VALVE	
	13	1	**102-6229**	6	SEAL-VALVE STEM	
	14	1	**137-6715**	6	SEAT-VALVE SPRING	
	15	1	**9S-8005**	1	PLUG	
	16	1	**3K-0360**	1	SEAL-O-RING	
	17	1	**1N-5999**	2	PLUG	
	18	1	**7J-0204**	2	SEAL-O-RING	
	19	1	**9S-8003**	1	PLUG	
	20	1	**1J-9671**	1	SEAL-O-RING	

Y-SEPARATE ILLUSTRATION

205-1272 CYLINDER HEAD AS *(contd.)* i01636378

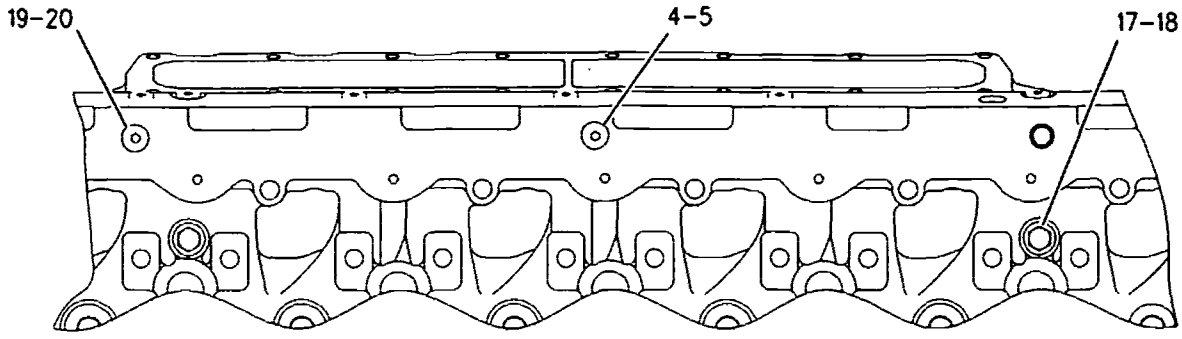

TOP VIEW

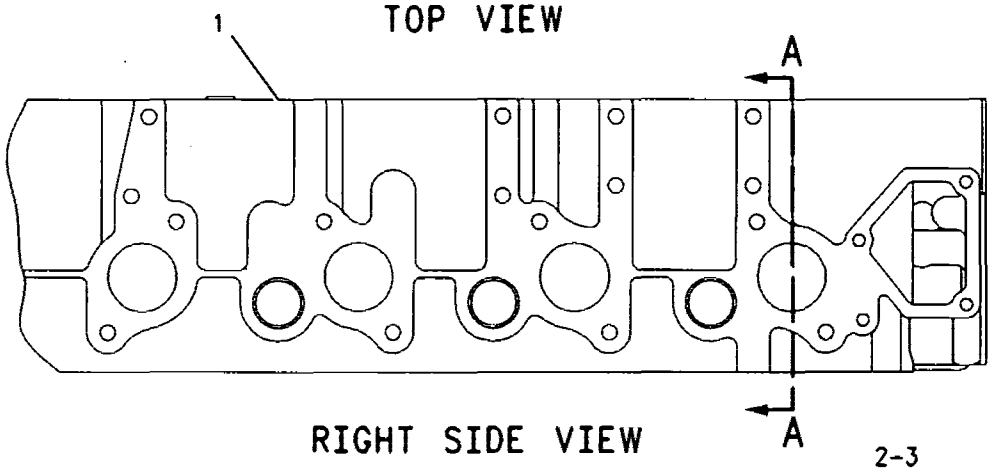

RIGHT SIDE VIEW

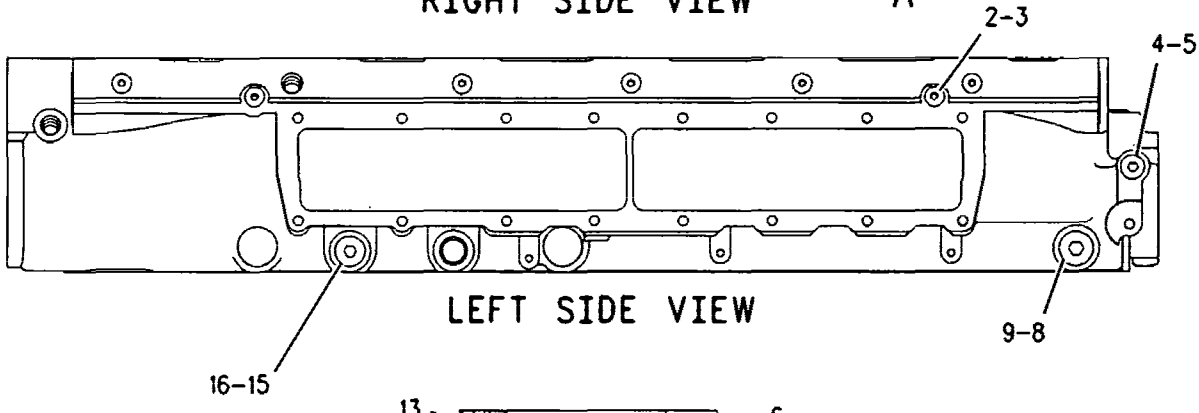

LEFT SIDE VIEW

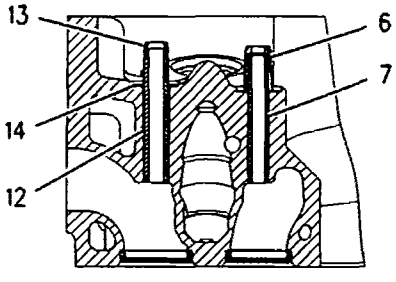

SECTION A-A

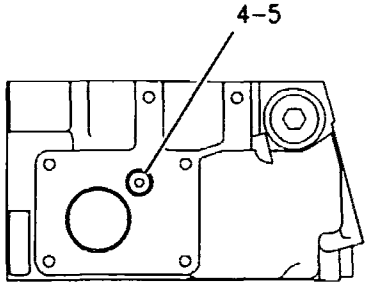

FRONT VIEW

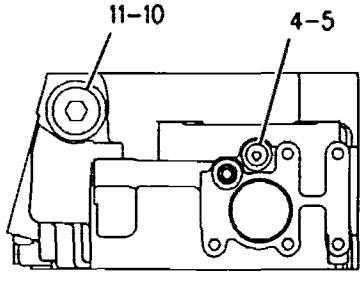

REAR VIEW

GRAPHIC #1 **<END>** g00847258

BASIC ENGINE

227-5951 CYLINDER HEAD AS

S/N: 5GG2635-2661, 2897-UP

PART OF 227-5952 CYLINDER HEAD AS, 227-5953 CYLINDER HEAD GP

FIELD REPLACEMENT ORDER 227-5952–PAGE 25

SMCS-1100, 1101 i01935334

NOTE	REF NO	GRAPHIC REF	PART NUMBER	QTY	PART NAME 1 2 3 4 5 6 (PRODUCT LEVEL)	SEE PAGE
	2	1	8M-5860	12	PLUG-CUP	
	3	1	4F-5695	2	PLUG-CUP	
	4	1	227-2911	6	SLEEVE-INJECTOR	
	5	1	217-5213	12	INSERT-VALVE SEAT (INTAKE)	
	6	1	147-8218	6	INSERT-VALVE SEAT (EXHAUST)	
	7	1	8C-0563	12	SEAL-O-RING	
	8	1	154-8025	6	SETSCREW-SOCKET	
	9	1	9S-9334	1	PLUG	
	10	1	9X-7712	1	SEAL-O-RING	

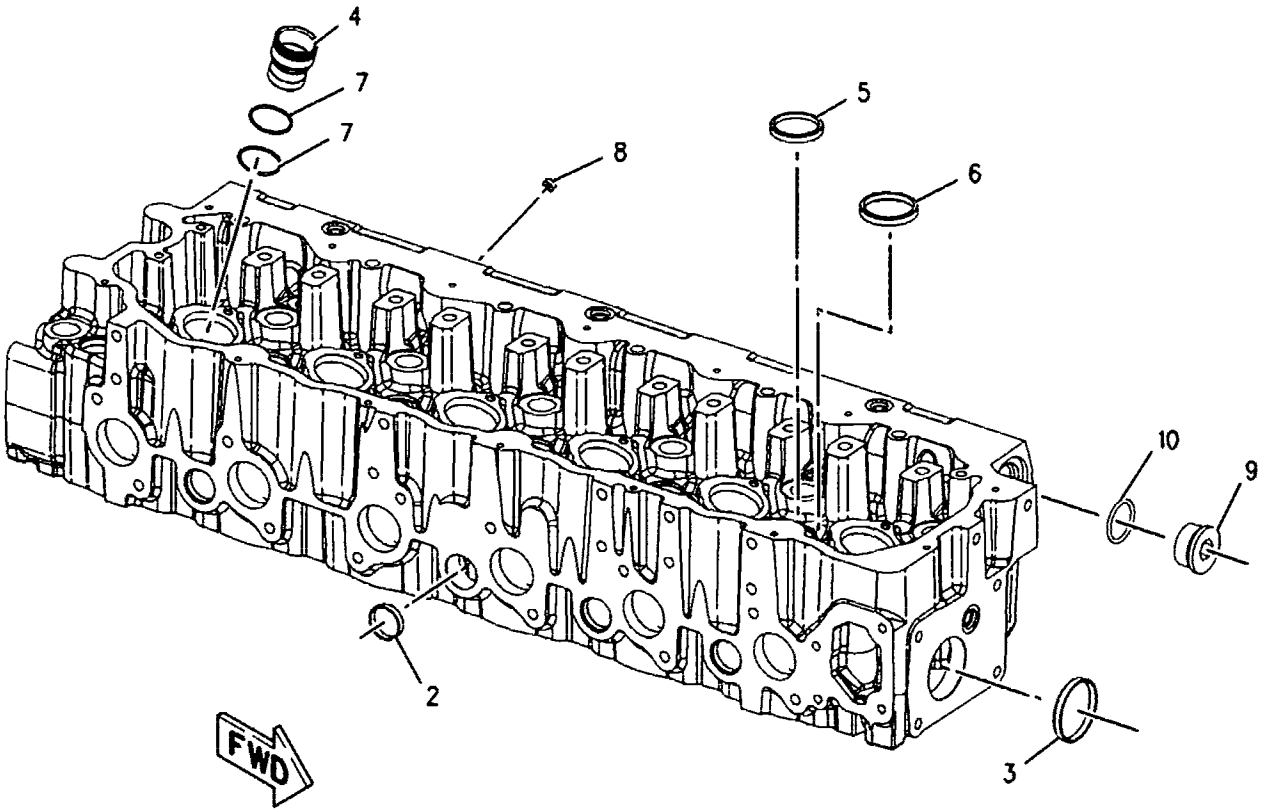

GRAPHIC #1 <END> g01007729

BASIC ENGINE

227-5952 CYLINDER HEAD AS

S/N: 5GG2635-UP

FIELD REPLACEMENT FOR 227-5951–PAGE 24

SMCS-1100, 1101 i01935360

NOTE	REF NO	GRAPHIC REF	PART NUMBER	QTY	PART NAME 1 2 3 4 5 6 (PRODUCT LEVEL)	SEE PAGE
	1	1	**163-2478**	6	SEAL-VALVE STEM	
	2	1	**9S-8002**	6	PLUG	
	3	1	**6V-5048**	6	SEAL-O-RING	
	4	1	**9S-8004**	4	PLUG	
	5	1	**3J-1907**	4	SEAL-O-RING	
	6	1	**147-8214**	12	SEAL-VALVE STEM	
	7	1	**140-9670**	12	GUIDE-VALVE	
	8	1	**9S-8006**	1	PLUG	
	9	1	**2M-9780**	1	SEAL-O-RING	
Y	10	1	*227-5951*	1	CYLINDER HEAD AS	24
	11	1	**9X-7712**	1	SEAL-O-RING	
	12	1	**147-8220**	6	GUIDE-VALVE	
	13	1	**9S-9334**	1	PLUG	
	14	1	**137-6715**	6	SEAT-VALVE SPRING	
	15	1	**9S-8005**	1	PLUG	
	16	1	**3K-0360**	1	SEAL-O-RING	
	17	1	**1N-5999**	2	PLUG	
	18	1	**7J-0204**	2	SEAL-O-RING	
	19	1	**9S-8003**	1	PLUG	
	20	1	**1J-9671**	1	SEAL-O-RING	

Y-SEPARATE ILLUSTRATION

227-5952 CYLINDER HEAD AS *(contd.)* i01935360

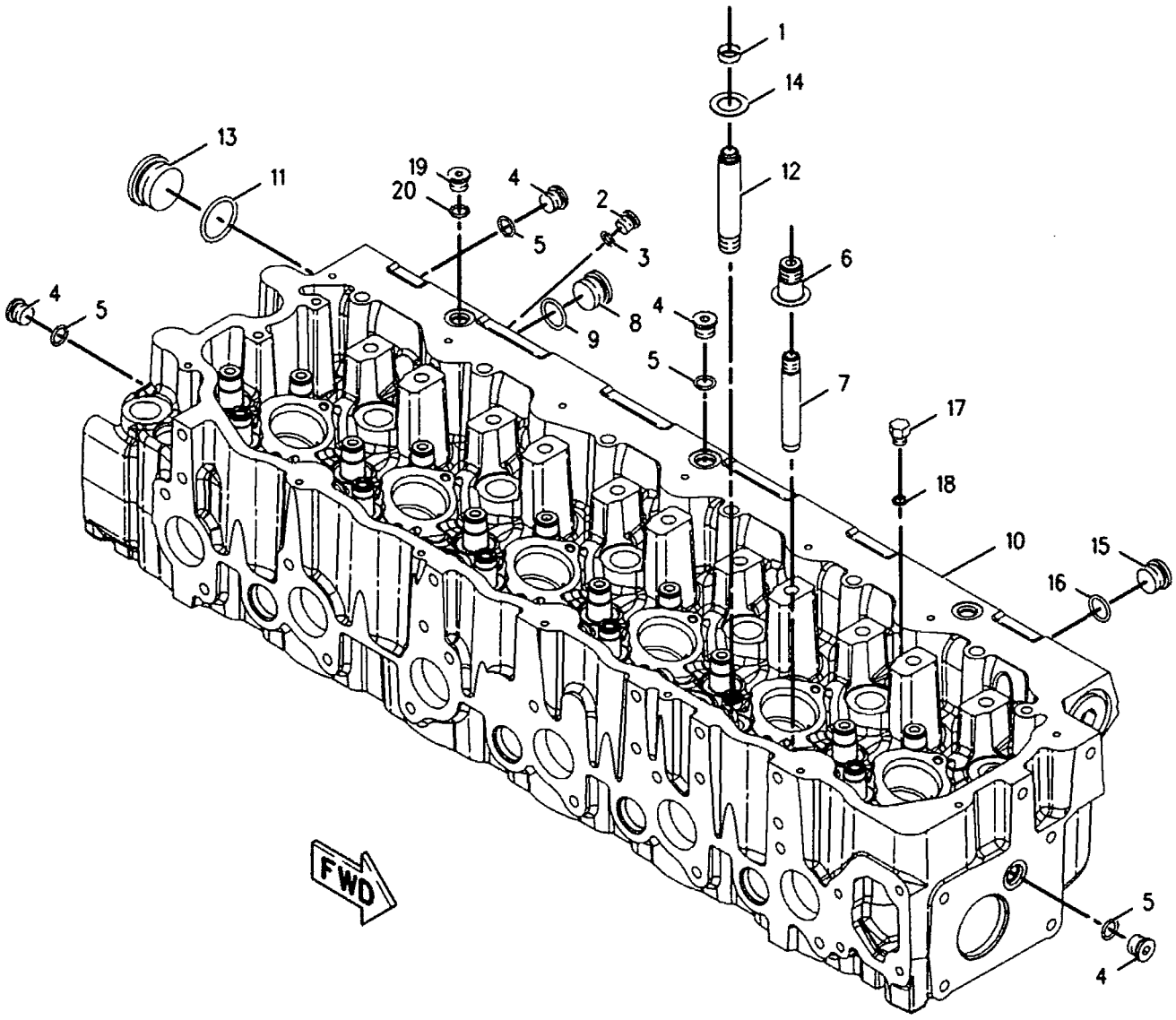

GRAPHIC #1 **<END>** g01007686

133-3742 CYLINDER HEAD GP

S/N: 5GG1-2634

PART OF 198-5915 ENGINE AR-CORE

FIELD REPLACEMENT ORDER 205-1274–PAGE 33, 227-5954–PAGE 38

SMCS-1100 i01984075

NOTE	REF NO	GRAPHIC REF	PART NUMBER	QTY	PART NAME 1 2 3 4 5 6 (PRODUCT LEVEL)	SEE PAGE
CY	1	1	*205-1274*	1	CYLINDER HEAD GP	33
	2	1	**133-4995**	1	GASKET-CYLINDER HEAD	
	3	1	**138-3252**	14	BOLT-12 POINT HEAD (M20X2.5X170MM)	
		1	**8T-3282**	14	WASHER-HARD (22X35X3.5MM THK)	
M	4	1	**8T-7950**	6	BOLT (M10X1.5X180MM)	
	5	1	**6V-5839**	6	WASHER (11X21X2.5MM THK)	

C-CHANGE FROM PREVIOUS TYPE
M-METRIC PART
Y-SEPARATE ILLUSTRATION

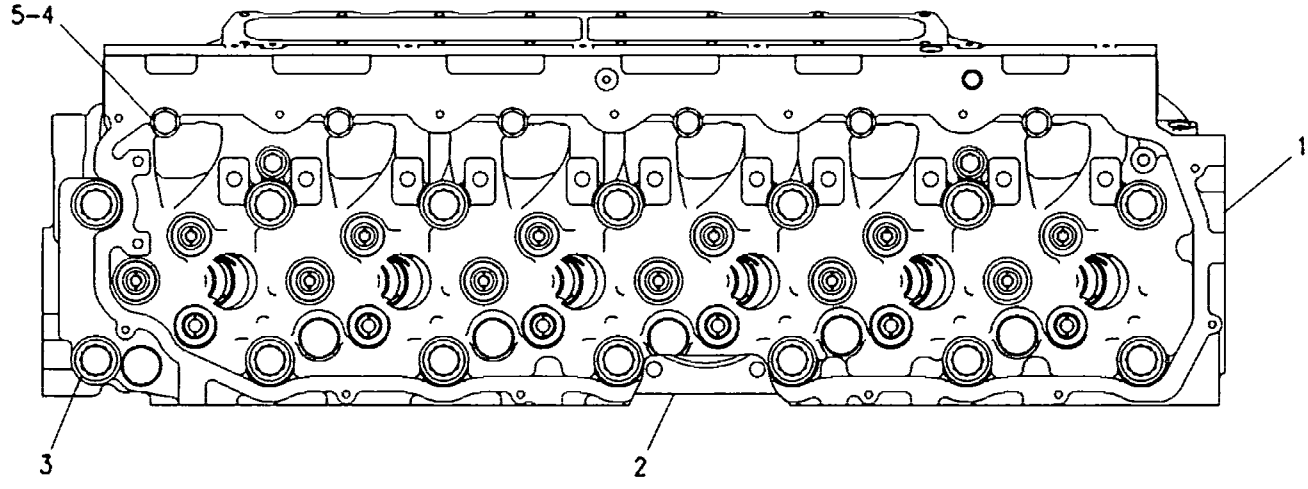

TOP VIEW

GRAPHIC #1 <END> g00760746

133-3742 CYLINDER HEAD GP

S/N: 5GG2635-2661

PART OF 198-5915 ENGINE AR-CORE

FIELD REPLACEMENT ORDER 205-1274–PAGE 33, 227-5954–PAGE 38

SMCS-1100 i01984078

NOTE	REF NO	GRAPHIC REF	PART NUMBER	QTY	PART NAME 1 2 3 4 5 6 (PRODUCT LEVEL)	SEE PAGE
CY	1	1	227-5954	1	CYLINDER HEAD GP	38
	2	1	133-4995	1	GASKET-CYLINDER HEAD	
	3	1	138-3252	14	BOLT-12 POINT HEAD (M20X2.5X170MM)	
		1	8T-3282	14	WASHER-HARD (22X35X3.5MM THK)	
M	4	1	8T-7950	6	BOLT (M10X1.5X180MM)	
	5	1	6V-5839	6	WASHER (11X21X2.5MM THK)	

C-CHANGE FROM PREVIOUS TYPE
M-METRIC PART
Y-SEPARATE ILLUSTRATION

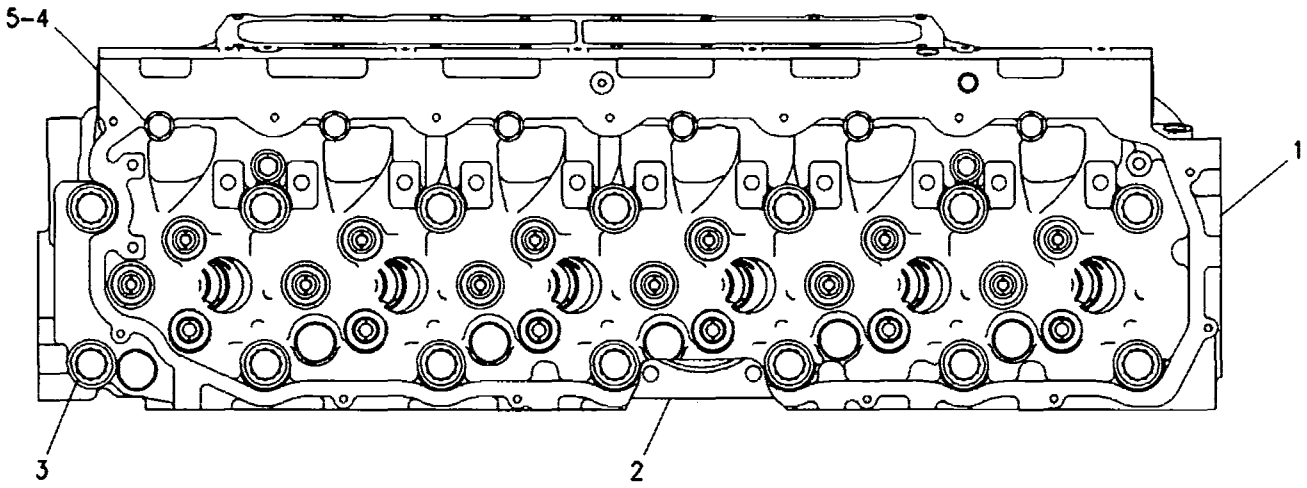

TOP VIEW

GRAPHIC #1 <END> g00760746

133-3742 CYLINDER HEAD GP

S/N: 5GG2662-2896

PART OF 198-5915 ENGINE AR-CORE

FIELD REPLACEMENT ORDER 205-1274–PAGE 33, 227-5954–PAGE 38

SMCS-1100 i01984080

NOTE	REF NO	GRAPHIC REF	PART NUMBER	QTY	PART NAME 1 2 3 4 5 6 (PRODUCT LEVEL)	SEE PAGE
CY	1	1	*205-1274*	1	CYLINDER HEAD GP	33
	2	1	**133-4995**	1	GASKET-CYLINDER HEAD	
	3	1	**138-3252**	14	BOLT-12 POINT HEAD (M20X2.5X170MM)	
		1	**8T-3282**	14	WASHER-HARD (22X35X3.5MM THK)	
M	4	1	**8T-7950**	6	BOLT (M10X1.5X180MM)	
	5	1	**6V-5839**	6	WASHER (11X21X2.5MM THK)	

C-CHANGE FROM PREVIOUS TYPE
M-METRIC PART
Y-SEPARATE ILLUSTRATION

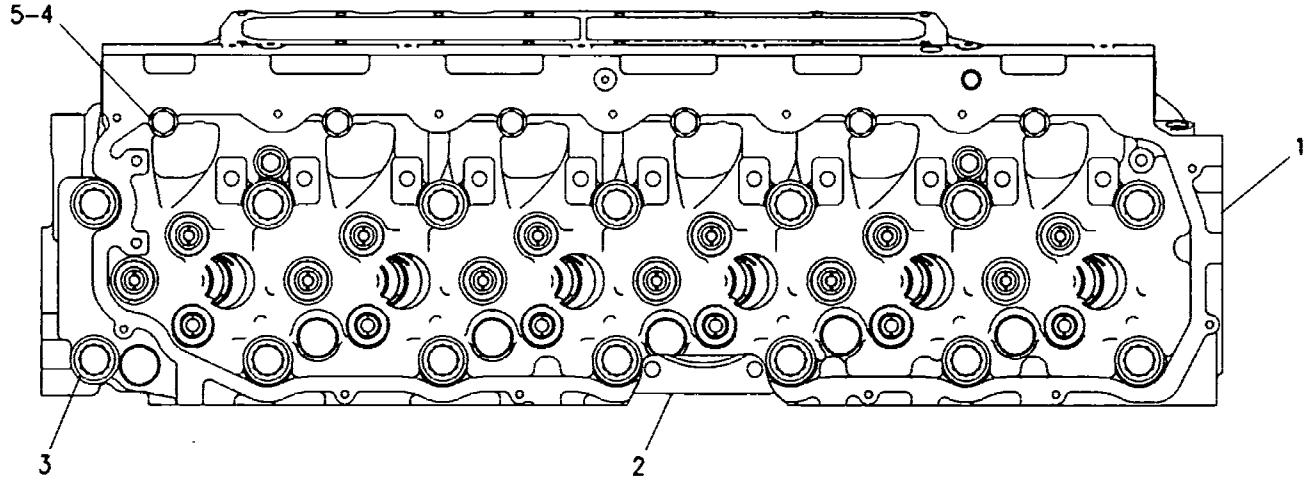

TOP VIEW

GRAPHIC #1 <END> g00760746

BASIC ENGINE

133-3742 CYLINDER HEAD GP

S/N: 5GG2897-UP

PART OF 198-5915 ENGINE AR-CORE

FIELD REPLACEMENT ORDER 205-1274–PAGE 33, 227-5954–PAGE 38

SMCS-1100 **i01984083**

NOTE	REF NO	GRAPHIC REF	PART NUMBER	QTY	PART NAME 1 2 3 4 5 6 (PRODUCT LEVEL)	SEE PAGE
CY	1	1	*227-5954*	1	CYLINDER HEAD GP	38
	2	1	**133-4995**	1	GASKET-CYLINDER HEAD	
	3	1	**138-3252**	14	BOLT-12 POINT HEAD (M20X2.5X170MM)	
		1	**8T-3282**	14	WASHER-HARD (22X35X3.5MM THK)	
M	4	1	**8T-7950**	6	BOLT (M10X1.5X180MM)	
	5	1	**6V-5839**	6	WASHER (11X21X2.5MM THK)	

C-CHANGE FROM PREVIOUS TYPE
M-METRIC PART
Y-SEPARATE ILLUSTRATION

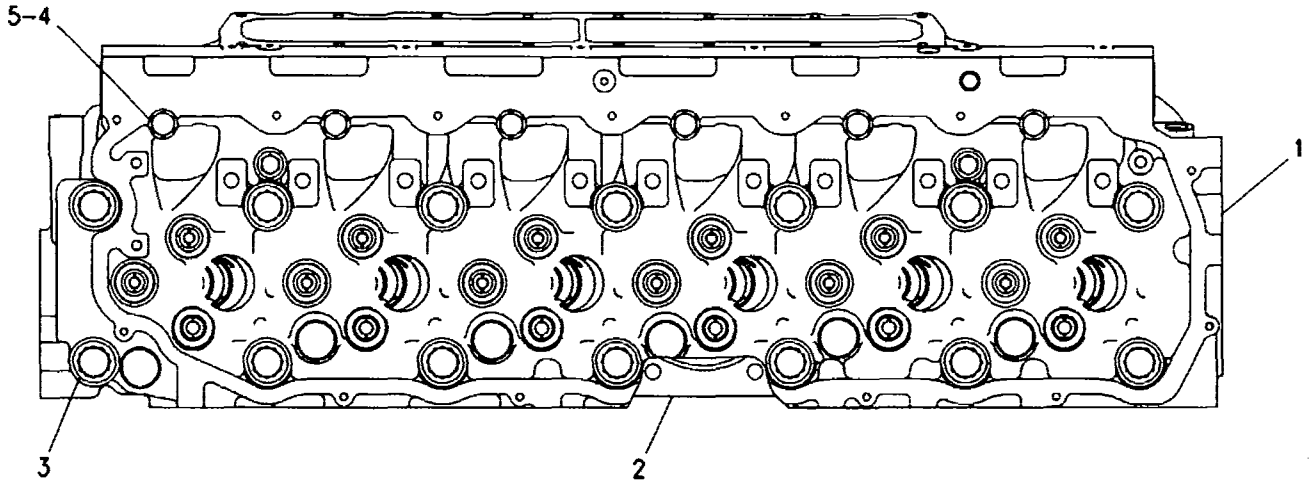

TOP VIEW

GRAPHIC #1 **<END>** g00760746

BASIC ENGINE

205-1273 CYLINDER HEAD GP

S/N: 5GG1-2634, 2662-2896

PART OF 205-1274, 205-1275 CYLINDER HEAD GP

SMCS-1100 i01636082

NOTE	REF NO	GRAPHIC REF	PART NUMBER	QTY	PART NAME 1 2 3 4 5 6 (PRODUCT LEVEL)	SEE PAGE
Y	1	1	*205-1271*	1	CYLINDER HEAD AS	20
	2	1	**145-7390**	12	VALVE-INLET	
	3	1	**147-8211**	6	VALVE-EXHAUST	
	4	1	**1W-2715**	24	LOCK-RETAINER	
	5	1	**7E-7779**	12	RETAINER-SPRING	
	6	1	**147-8214**	12	SEAL-VALVE STEM	
	7	1	**140-9670**	12	GUIDE-VALVE	
	8	1	**137-6718**	6	SPRING-VALVE	
	9	1	**140-6188**	12	SPRING-VALVE	
	10	1	**2A-4429**	12	LOCK-RETAINER	
	11	1	**134-4483**	6	RETAINER-SPRING	
	12	1	**147-8220**	6	GUIDE-VALVE	
	13	1	**102-6229**	6	SEAL-VALVE STEM	
	14	1	**137-6715**	6	SEAT-VALVE SPRING	

Y-SEPARATE ILLUSTRATION

205-1273 CYLINDER HEAD GP *(contd.)* i01636082

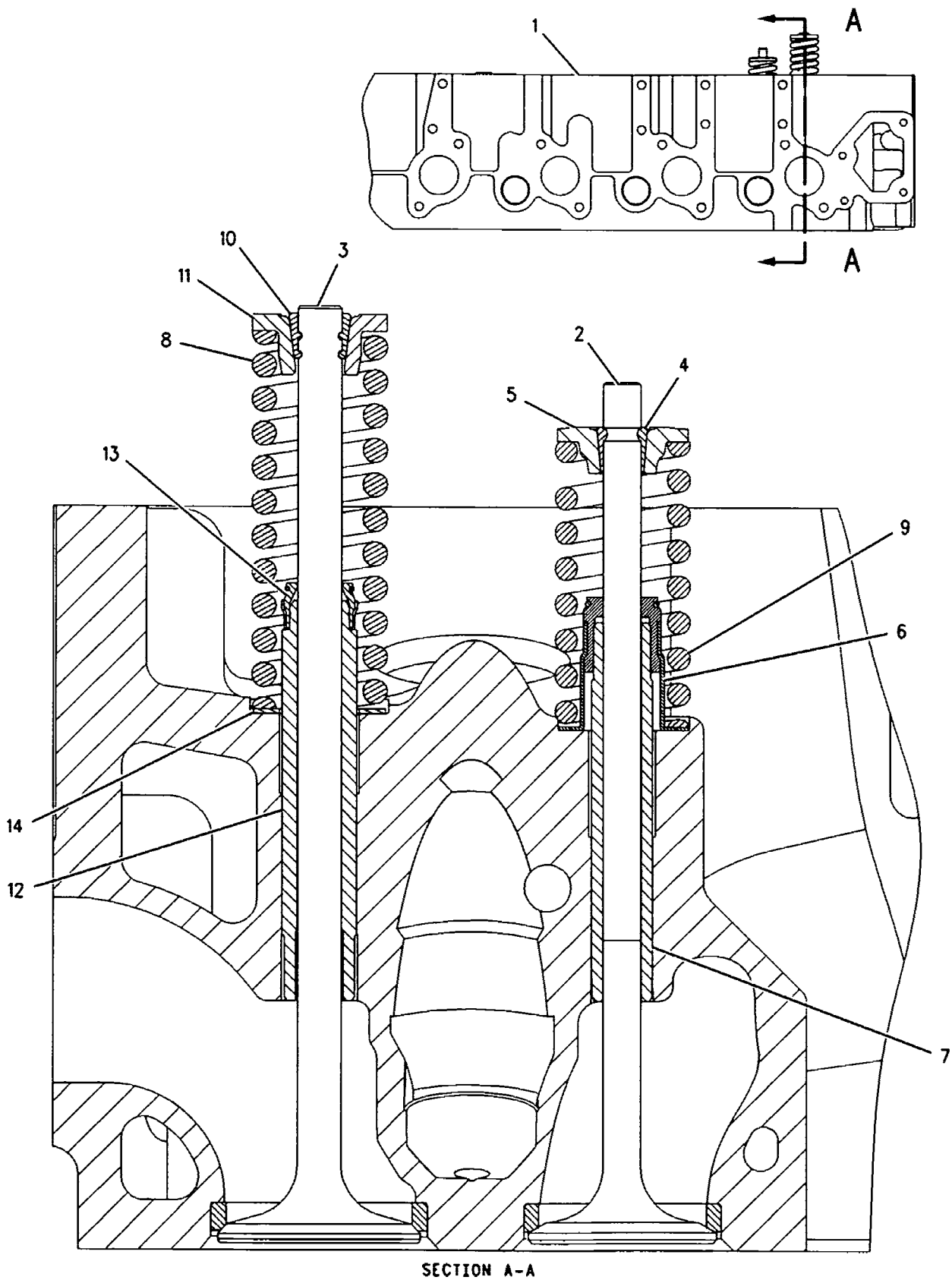

SECTION A-A

GRAPHIC #1 **<END>** g00808330

205-1274 CYLINDER HEAD GP

S/N: 5GG1-2634, 2662-2896
PART OF 133-3742 CYLINDER HEAD GP
FIELD REPLACEMENT ORDER 205-1275–PAGE 35

SMCS-1100 i01713156

NOTE	REF NO	GRAPHIC REF	PART NUMBER	QTY	PART NAME 1 2 3 4 5 6 (PRODUCT LEVEL)	SEE PAGE
Y	1	1	*205-1273*	1	CYLINDER HEAD GP	31
	2	1	**1N-5999**	2	PLUG	
	3	1	**7J-0204**	2	SEAL-O-RING	
	4	1	**9S-8002**	6	PLUG	
	5	1	**6V-5048**	6	SEAL-O-RING	
	6	1	**9S-8004**	3	PLUG	
	7	1	**3J-1907**	3	SEAL-O-RING	
	8	1	**9S-8006**	1	PLUG	
	9	1	**2M-9780**	1	SEAL-O-RING	
	10	1	**9S-9334**	1	PLUG	
	11	1	**9X-7712**	1	SEAL-O-RING	

Y-SEPARATE ILLUSTRATION

205-1274 CYLINDER HEAD GP (contd.) i01713156

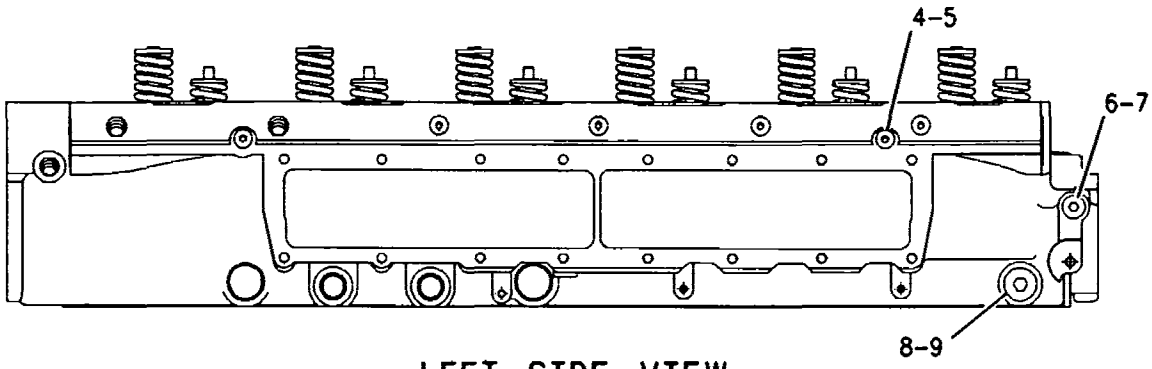

LEFT SIDE VIEW

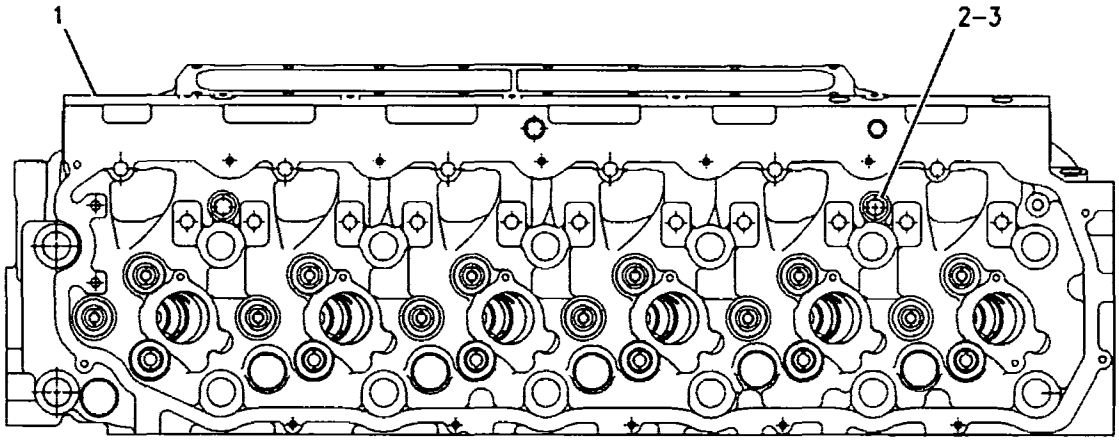

TOP VIEW

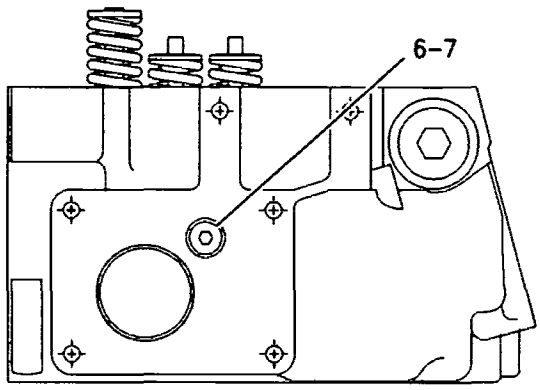

FRONT VIEW

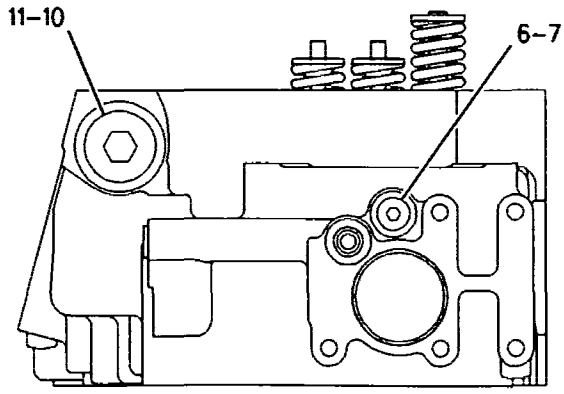

REAR VIEW

GRAPHIC #1 <END> g00808348

BASIC ENGINE

205-1275 CYLINDER HEAD GP*R

S/N: 5GG1-UP

FIELD REPLACEMENT FOR 205-1274–PAGE 33

SMCS-1100 i01682114

NOTE	REF NO	GRAPHIC REF	PART NUMBER	QTY	PART NAME 1 2 3 4 5 6 (PRODUCT LEVEL)	SEE PAGE
Y	1	1	*205-1273*	1	CYLINDER HEAD GP	31
	2	1	**1N-5999**	2	PLUG	
	3	1	**7J-0204**	2	SEAL-O-RING	
	4	1	**9S-8002**	6	PLUG	
	5	1	**6V-5048**	6	SEAL-O-RING	
	6	1	**9S-8004**	4	PLUG	
	7	1	**3J-1907**	4	SEAL-O-RING	
	8	1	**9S-8006**	1	PLUG	
	9	1	**2M-9780**	1	SEAL-O-RING	
	10	1	**9S-9334**	1	PLUG	
	11	1	**9X-7712**	1	SEAL-O-RING	
	12	1	**9S-8005**	1	PLUG	
	13	1	**3K-0360**	1	SEAL-O-RING	
	14	1	**9S-8003**	1	PLUG	
	15	1	**1J-9671**	1	SEAL-O-RING	
	16	1	**9S-4191**	1	PLUG	
		1	**3J-1907**	1	SEAL-O-RING	

Y-SEPARATE ILLUSTRATION

205-1275 CYLINDER HEAD GP *(contd.)* i01682114

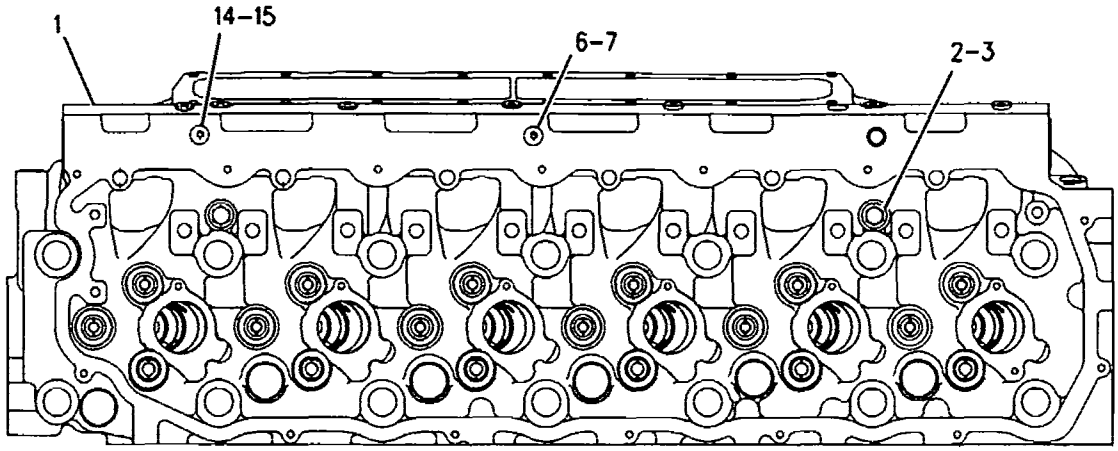

TOP VIEW

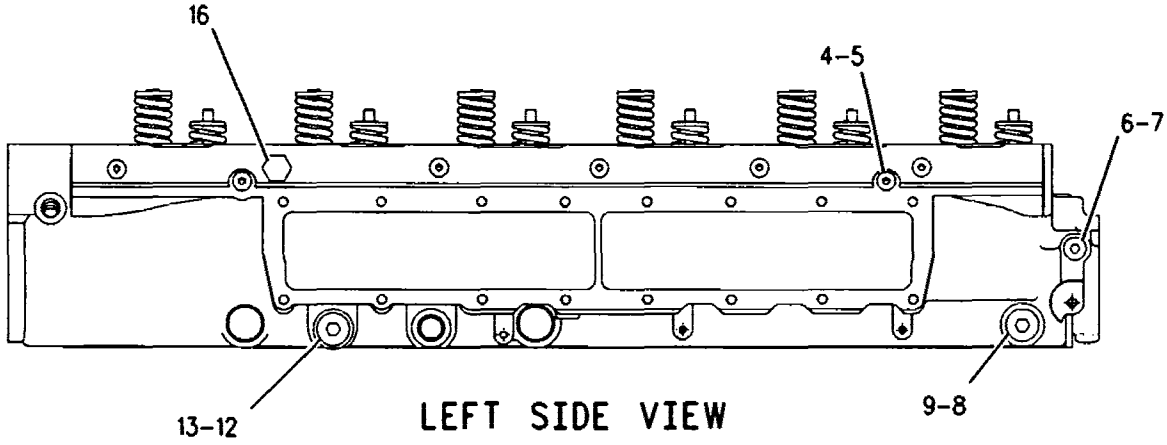

LEFT SIDE VIEW

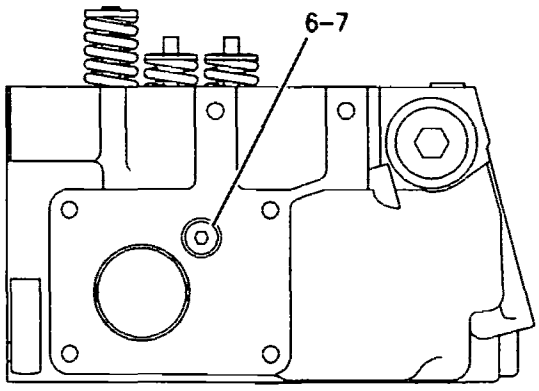

FRONT VIEW

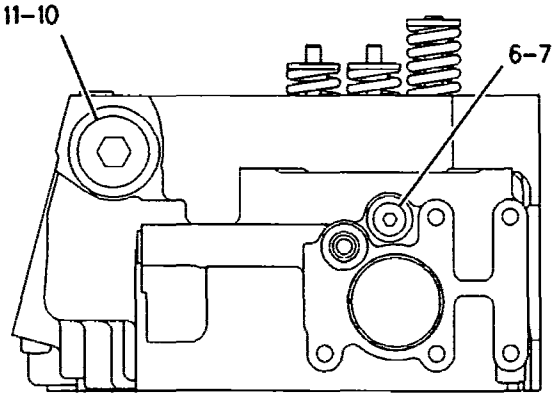

REAR VIEW

GRAPHIC #1 **<END>** g00867459

227-5953 CYLINDER HEAD GP

S/N: 5GG2635-2661, 2897-UP

PART OF 227-5954 CYLINDER HEAD GP

SMCS-1100 i01936236

NOTE	REF NO	GRAPHIC REF	PART NUMBER	QTY	PART NAME 1 2 3 4 5 6 (PRODUCT LEVEL)	SEE PAGE
	1	1	163-2478	6	SEAL-VALVE STEM	
	2	1	145-7390	12	VALVE-INLET	
	3	1	147-8211	6	VALVE-EXHAUST	
	4	1	1W-2715	24	LOCK-RETAINER	
	5	1	7E-7779	12	RETAINER-SPRING	
	6	1	147-8214	12	SEAL-VALVE STEM	
	7	1	140-9670	12	GUIDE-VALVE	
	8	1	137-6718	6	SPRING-VALVE	
	9	1	140-6188	12	SPRING-VALVE	
	10	1	2A-4429	12	LOCK-RETAINER	
	11	1	134-4483	6	RETAINER-SPRING	
	12	1	147-8220	6	GUIDE-VALVE	
Y	13	1	227-5951	1	CYLINDER HEAD AS	24
	14	1	137-6715	6	SEAT-VALVE SPRING	

Y-SEPARATE ILLUSTRATION

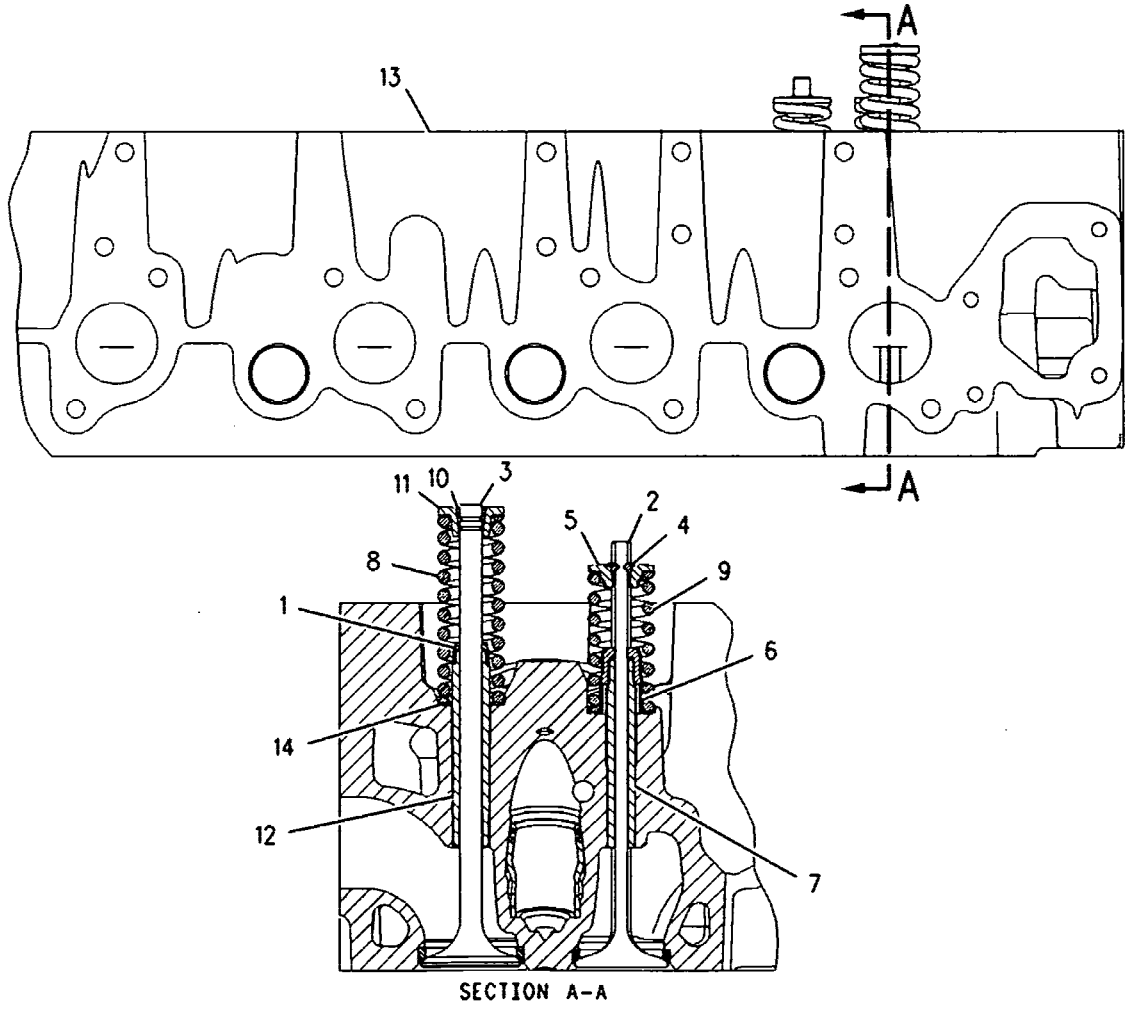

SECTION A-A

GRAPHIC #1 <END> g01000145

BASIC ENGINE

227-5954 CYLINDER HEAD GP

S/N: 5GG2635-2661, 2897-UP

PART OF 133-3742 CYLINDER HEAD GP

SMCS-1100 i01935975

NOTE	REF NO	GRAPHIC REF	PART NUMBER	QTY	PART NAME 1 2 3 4 5 6 (PRODUCT LEVEL)	SEE PAGE
Y	1	1	227-5953	1	CYLINDER HEAD GP	37
	2	1	1N-5999	2	PLUG	
	3	1	2M-9780	1	SEAL-O-RING	
	4	1	3J-1907	2	SEAL-O-RING	
	5	1	6V-5048	6	SEAL-O-RING	
	6	1	7J-0204	2	SEAL-O-RING	
	7	1	9S-8002	6	PLUG	
	8	1	9S-8004	2	PLUG	
	9	1	9S-8006	1	PLUG	
	10	1	9S-9334	1	PLUG	
	11	1	9X-7712	1	SEAL-O-RING	

Y-SEPARATE ILLUSTRATION

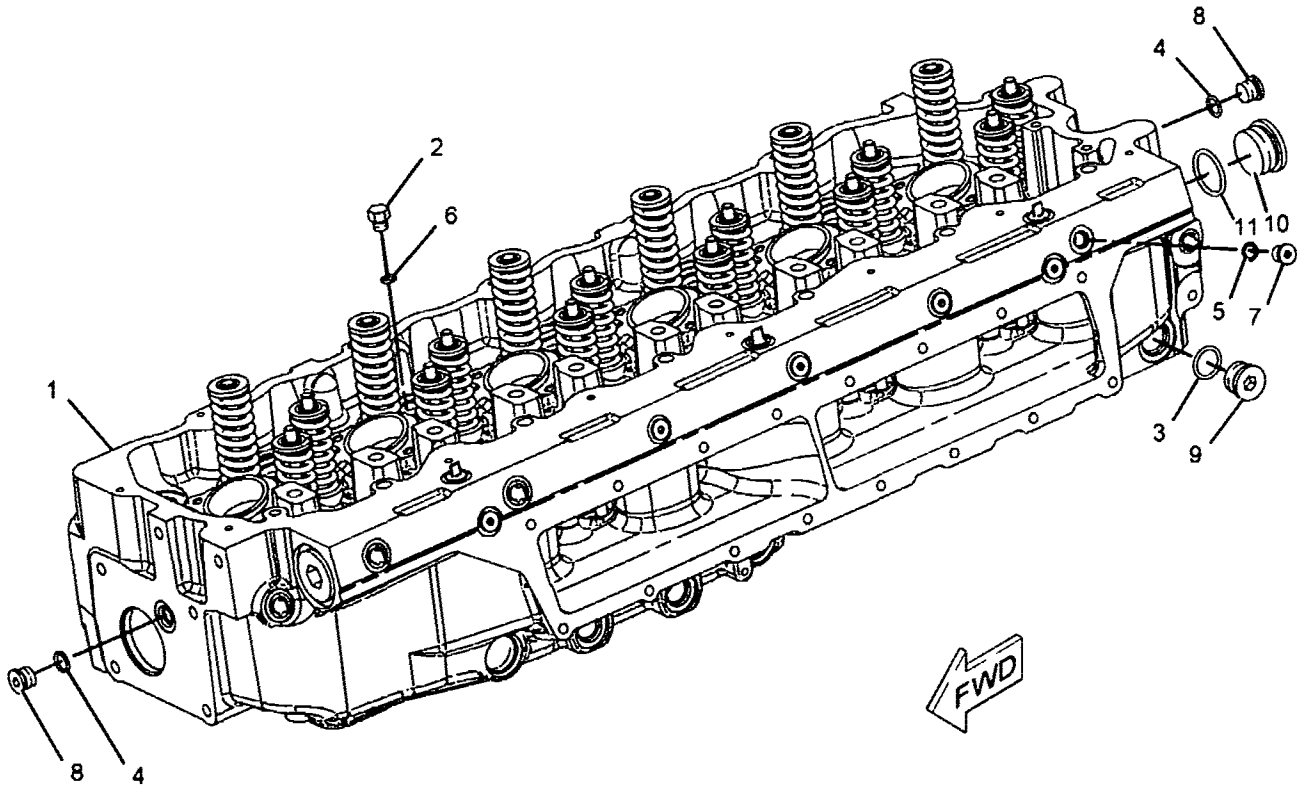

GRAPHIC #1 <END> g01009124

165-4557 DAMPER & PULLEY GP

S/N: 5GG1-UP

PROVIDES VISCOUS DAMPER WITH 8-GROOVE POLY-RIB PULLEY

PART OF 198-5915 ENGINE AR-CORE

SMCS-1205 i01457178

NOTE	REF NO	GRAPHIC REF	PART NUMBER	QTY	PART NAME 1 2 3 4 5 6 (PRODUCT LEVEL)	SEE PAGE
	1	1	2W-7381	1	WASHER	
	2	1	167-8121	1	DAMPER AS	
	3	1	153-1036	1	PULLEY-CRANKSHAFT	
M	4	1	8T-3666	4	BOLT (M14X60-MM)	

M-METRIC PART

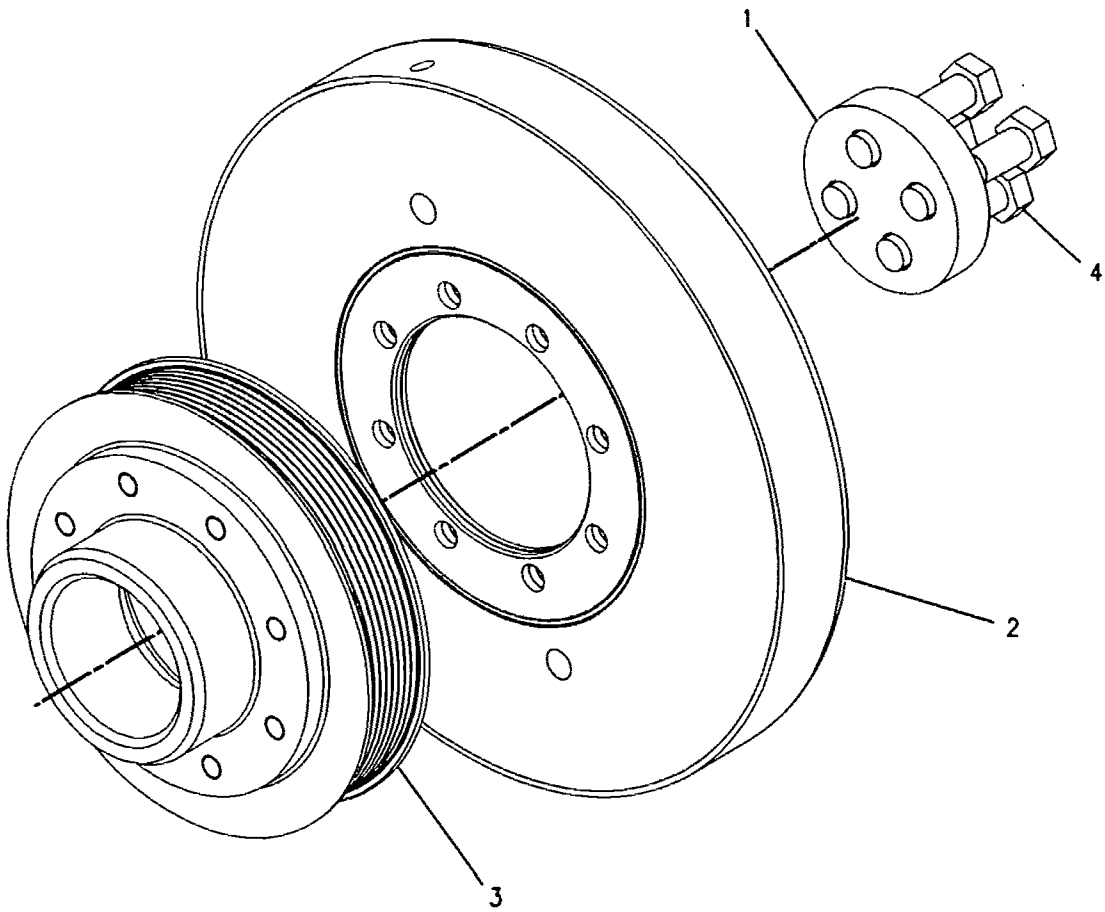

GRAPHIC #1 <END> g00585853

118-2073 DRAIN GP-ENGINE OIL

S/N: 5GG1-UP

PART OF 198-5914 ENGINE AR-COMPLETE

SMCS-1302 i01994508

NOTE	REF NO	GRAPHIC REF	PART NUMBER	QTY	PART NAME 1 2 3 4 5 6 (PRODUCT LEVEL)	SEE PAGE
	1	1	**3K-0360**	1	SEAL-O-RING	
	2	1	**6V-7238**	1	VALVE-SHUTOFF (ENGINE OIL DRAIN)	

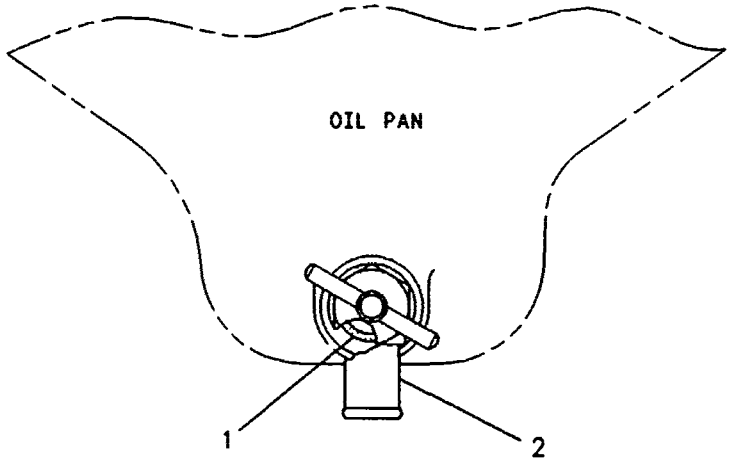

GRAPHIC #1 **<END>** g00117513

117-6487 FASTENER GP-DAMPER & PULLEY

S/N: 5GG1-UP

PART OF 198-5915 ENGINE AR-CORE

SMCS-1205, 7553 i01622067

NOTE	REF NO	GRAPHIC REF	PART NUMBER	QTY	PART NAME 1 2 3 4 5 6 (PRODUCT LEVEL)	SEE PAGE
	1	1	8T-2561	8	WASHER-HARD (10.5X28.5X5MM THK)	
M		1	6V-5843	8	BOLT (M10X1.50X45MM)	

M-METRIC PART

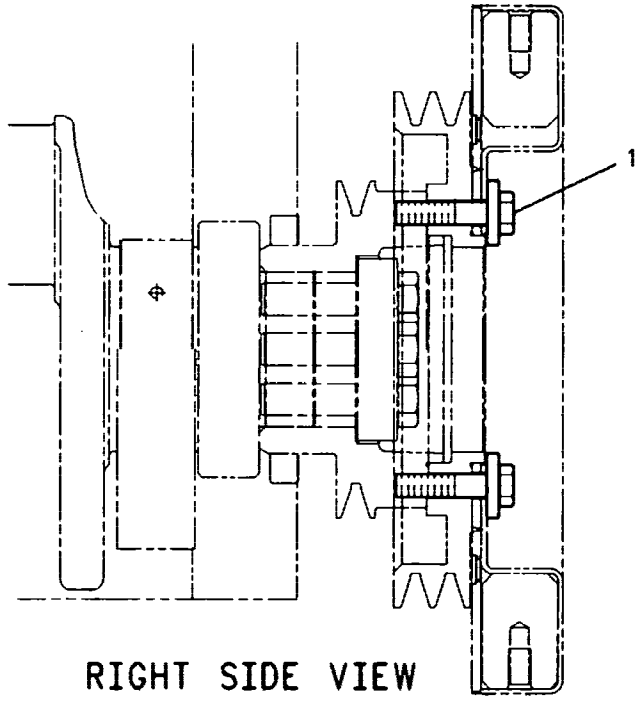

RIGHT SIDE VIEW

GRAPHIC #1 <END> g00839336

BASIC ENGINE

121-8786 FASTENER GP-FLYWHEEL

S/N: 5GG1-UP

PART OF 198-5914 ENGINE AR-COMPLETE

FOR USE WITH AUTOMATIC TRANSMISSION

SMCS-1156, 7553 i01438462

NOTE	REF NO	GRAPHIC REF	PART NUMBER	QTY	PART NAME 1 2 3 4 5 6 (PRODUCT LEVEL)	SEE PAGE
	1	1	3E-3213	1	PIN-SPRING	

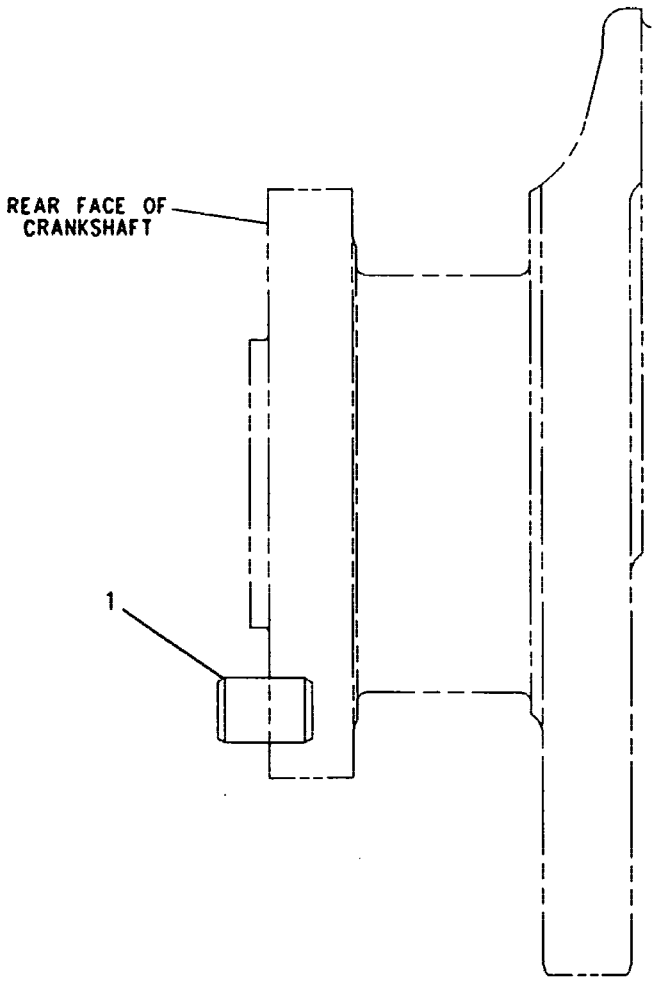

GRAPHIC #1 <END> g00753603

116-4556 FASTENER GP-FRONT HOUSING

S/N: 5GG1-UP

PART OF 198-5914 ENGINE AR-COMPLETE

CANNOT BE USED WITH FRONT ENGINE SUPPORT

SMCS-1151, 1162 i01427276

NOTE	REF NO	GRAPHIC REF	PART NUMBER	QTY	PART NAME 1 2 3 4 5 6 (PRODUCT LEVEL)	SEE PAGE
M	1	1	6V-8336	6	BOLT (M12X1.75X70-MM)	
		1	5P-8245	6	WASHER-HARD (13.5X25.5X3-MM THK)	

M-METRIC PART

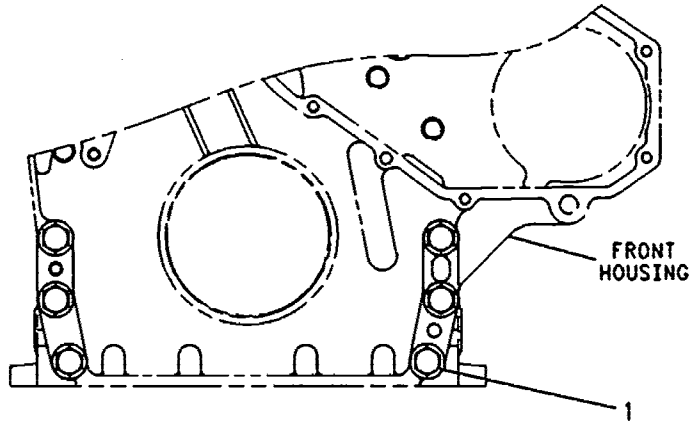

FRONT VIEW

GRAPHIC #1 <END> g00244671

BASIC ENGINE

7E-0519 FLYWHEEL GP

S/N: 5GG1-UP

PART OF 198-5914 ENGINE AR-COMPLETE

SMCS-1156 **i01451626**

NOTE	REF NO	GRAPHIC REF	PART NUMBER	QTY	PART NAME 1 2 3 4 5 6 (PRODUCT LEVEL)	SEE PAGE
	1	1	**160-8230**	1	FLYWHEEL AS	
		1	**7W-5095**	1	GEAR-FLYWHEEL (134-TEETH)	
	2	1	**5P-8245**	8	WASHER-HARD (13.5X25.5X3-MM THK)	
M	3	1	**7X-3344**	8	BOLT (M12X1.75X40-MM)	

M-METRIC PART

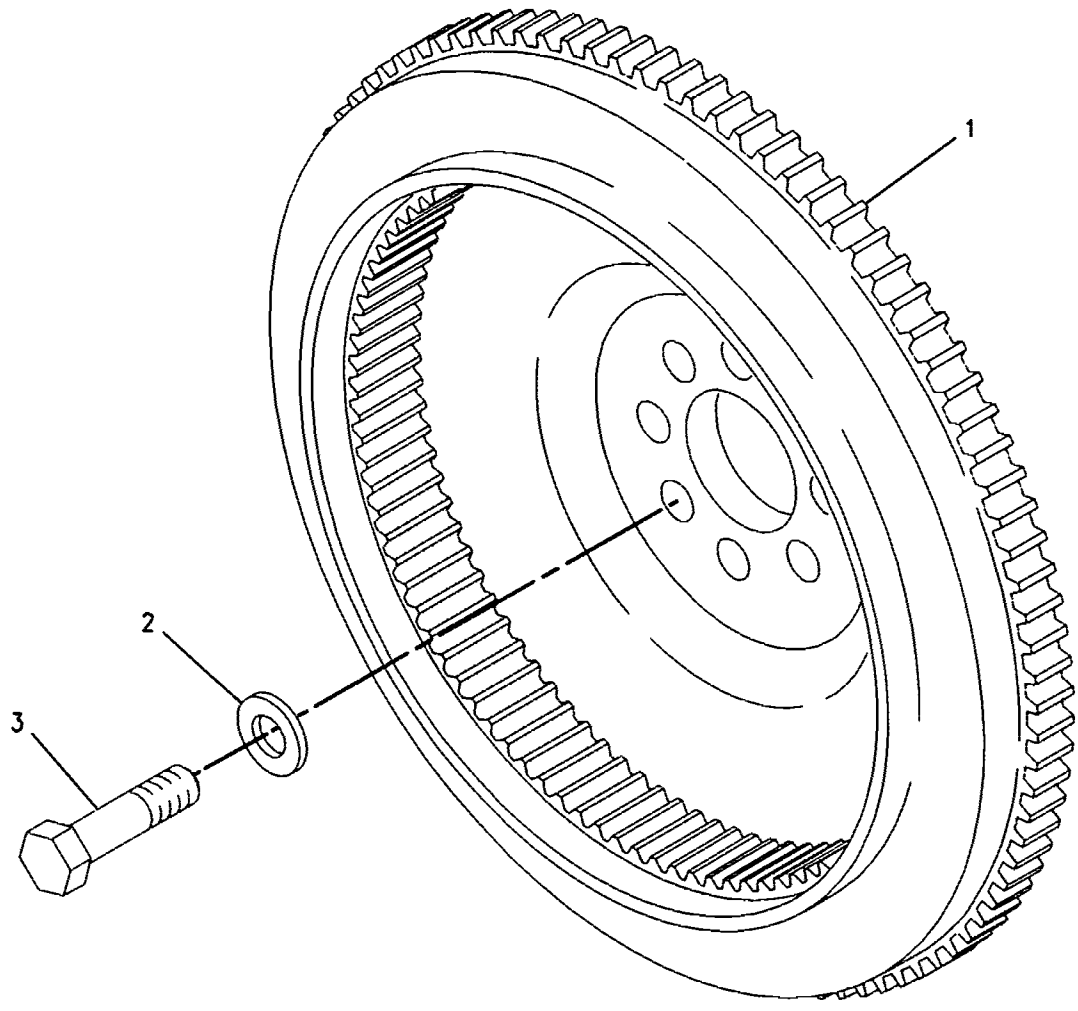

GRAPHIC #1 **<END>** g00759559

205-1321 GEAR GP-FRONT

S/N: 5GG1-UP

PART OF 198-5915 ENGINE AR-CORE

SMCS-1206 101689285

NOTE	REF NO	GRAPHIC REF	PART NUMBER	QTY	PART NAME 1 2 3 4 5 6 (PRODUCT LEVEL)	SEE PAGE
	1	1	113-6069	1	PLATE-THRUST	
	2	1	115-4219	1	PLATE-RETAINING	
	3	1	200-4495	1	SHAFT-IDLER	
	4	1	205-1320	1	GEAR AS-IDLER (50 TEETH)	
	4A	1	115-4072	1	BEARING	
M	5	1	136-4183	1	BOLT-12 POINT HEAD (M10X1.5X30MM)	
M	6	1	6V-5843	2	BOLT (M10X1.50X45MM)	

M-METRIC PART

205-1321 GEAR GP-FRONT *(contd.)* i01689285

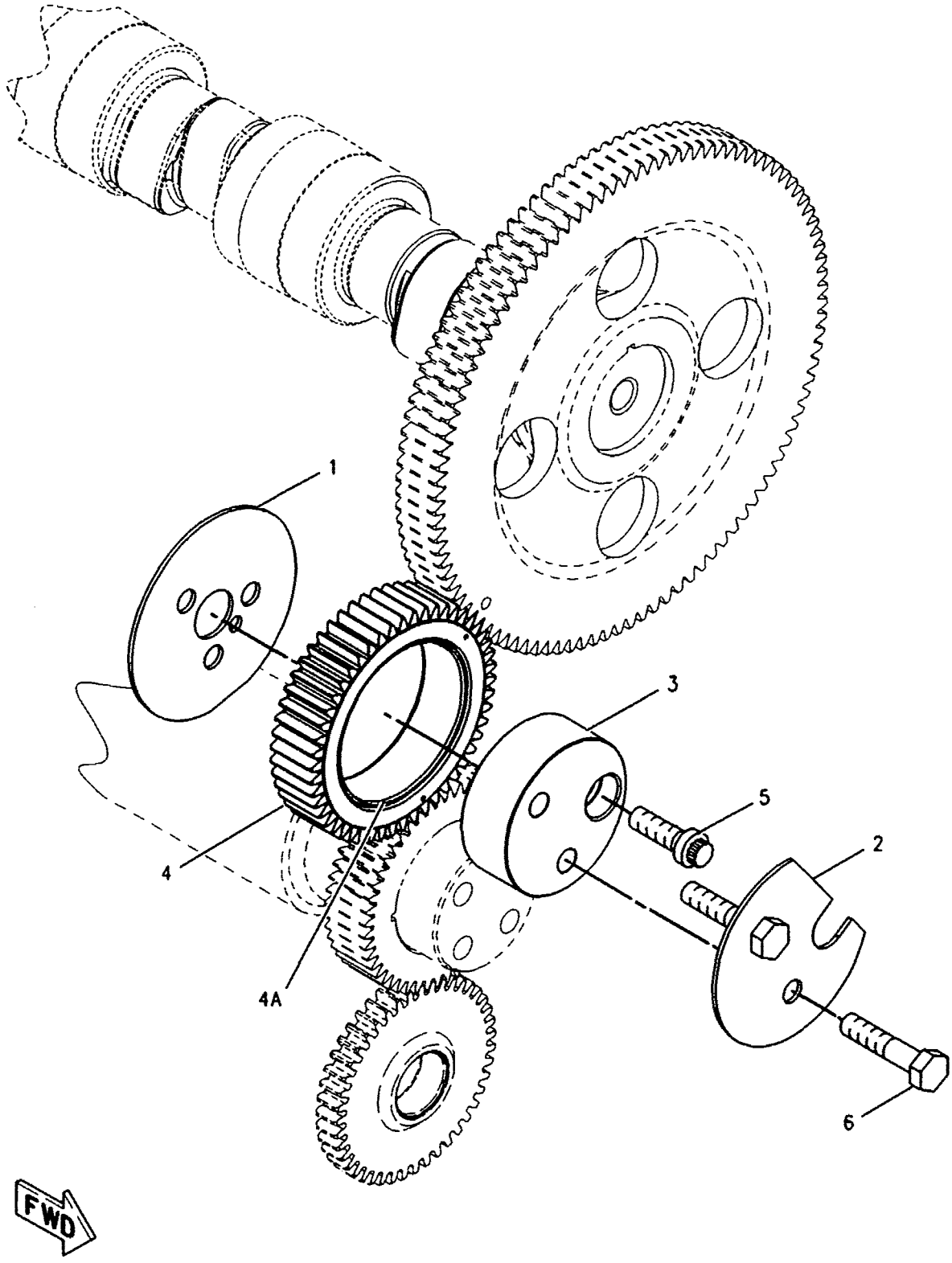

GRAPHIC #1 <END> g00870175

197-5210 HOUSING GP-FLYWHEEL

S/N: 5GG1-UP

PART OF 198-5914 ENGINE AR-COMPLETE

SMCS-1157 i02302429

NOTE	REF NO	GRAPHIC REF	PART NUMBER	QTY	PART NAME 1 2 3 4 5 6 (PRODUCT LEVEL)	SEE PAGE
	1	1	5F-0304	1	PLUG	
	2	1	100-6551	1	HOUSING-FLYWHEEL	
	4	1	2A-1162	1	GASKET	
M	5	1	6V-5842	2	BOLT (M10X1.5X40-MM)	
M	6	1	8T-0226	10	BOLT (M14X2X45-MM)	
	7	1	9S-4182	1	PLUG	
	8	1	9S-4183	1	PLUG	
BF		1	1U-8846		SEALANT-GASKET	

B-USE AS REQUIRED
F-NOT SHOWN
M-METRIC PART

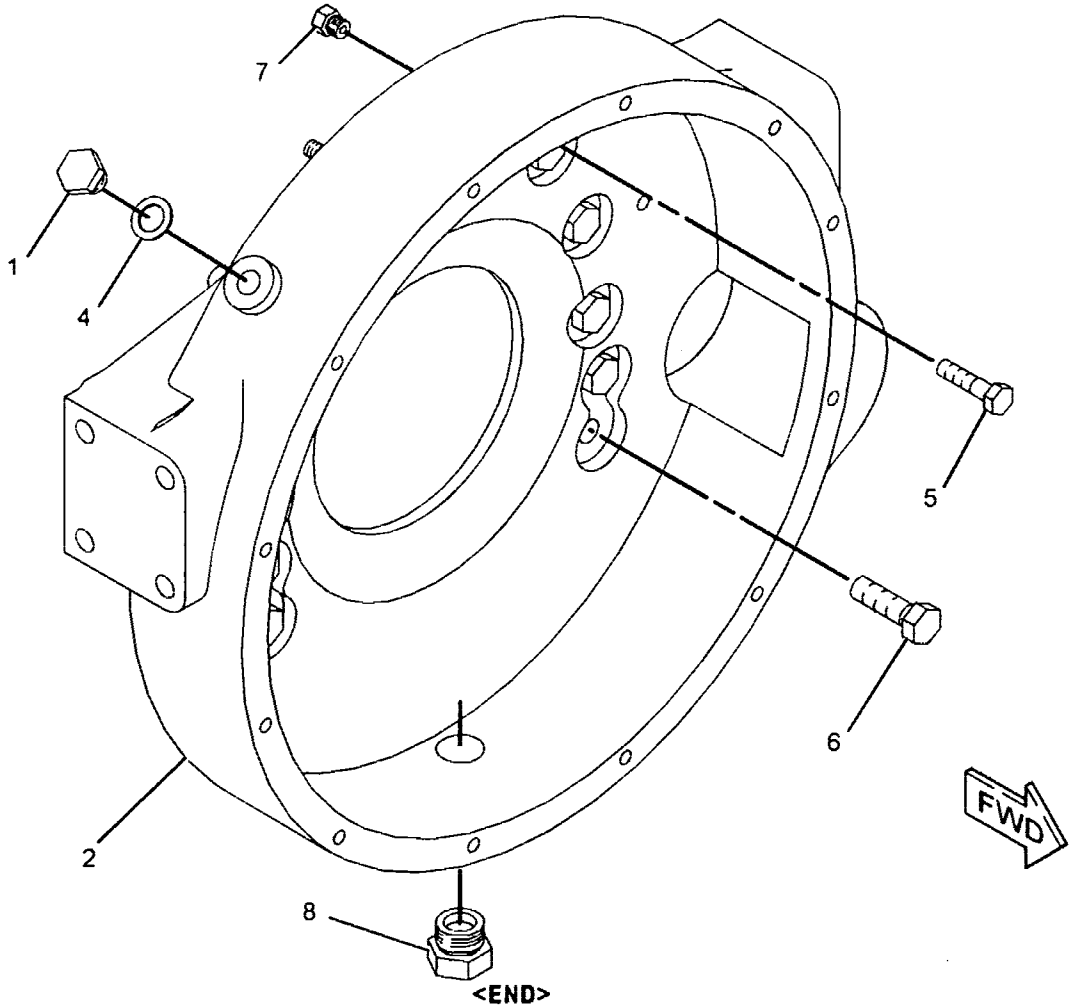

GRAPHIC #1

<END>

g01153041

BASIC ENGINE

133-5055 HOUSING GP-FRONT

S/N: 5GG1-UP

PART OF 198-5915 ENGINE AR-CORE

SMCS-1151, 1162 — 101972313

NOTE	REF NO	GRAPHIC REF	PART NUMBER	QTY	PART NAME 1 2 3 4 5 6 (PRODUCT LEVEL)	SEE PAGE
	1	1	128-3883	1	HOUSING-FRONT	
M	2	1	6V-5217	8	BOLT (M8X1.25X20-MM)	
	3	1	9M-1974	12	WASHER-HARD (8.8X16X2-MM THK)	
M	4	1	6V-3918	4	BOLT (M8X1.25X50-MM)	
B	5	1	1U-8846		SEALANT-GASKET	

B-USE AS REQUIRED
M-METRIC PART

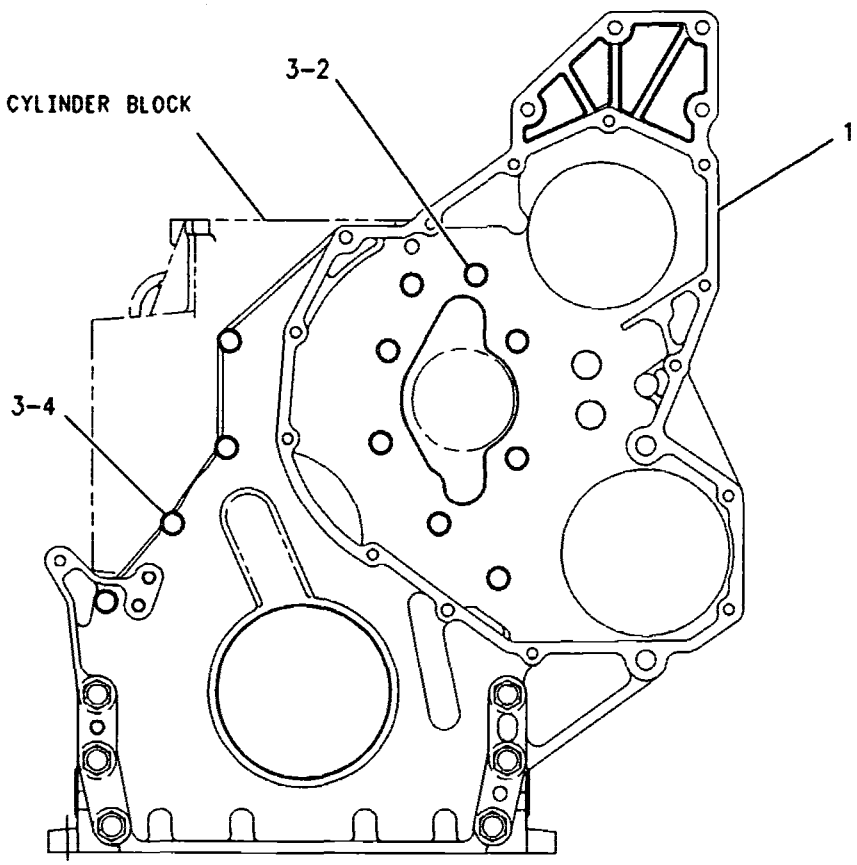

FRONT VIEW

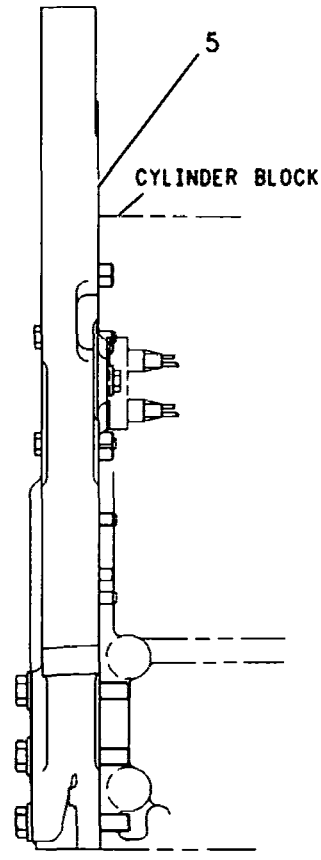

LEFT SIDE VIEW

GRAPHIC #1

<END>

g00285827

192-1563 IDLER GP-BELT-
ALTERNATOR, REFRIGERANT COMPRESSOR
S/N: CRD1-UP
PART OF 216-9818 COMPRESSOR GP-REFRIGERANT, 215-3022 PUMP & MTG GP-AXLE
OIL COOLER
AN ATTACHMENT

SMCS-1358, 1365, 1397, 1802 i02045201

NOTE	REF NO	GRAPHIC REF	PART NUMBER	QTY	PART NAME 1 2 3 4 5 6 (PRODUCT LEVEL)	SEE PAGE
	1	1	151-2898	1	SPACER (10.4X38.1X20-MM THK)	
	2	1	144-5611	1	PULLEY AS-IDLER	
	3	1	145-2901	1	COVER-DUST	
	4	1	151-2900	1	BOLT (M10X1.5X54.25-MM)	
	5	1	6V-9027	1	SEAL-O-RING	

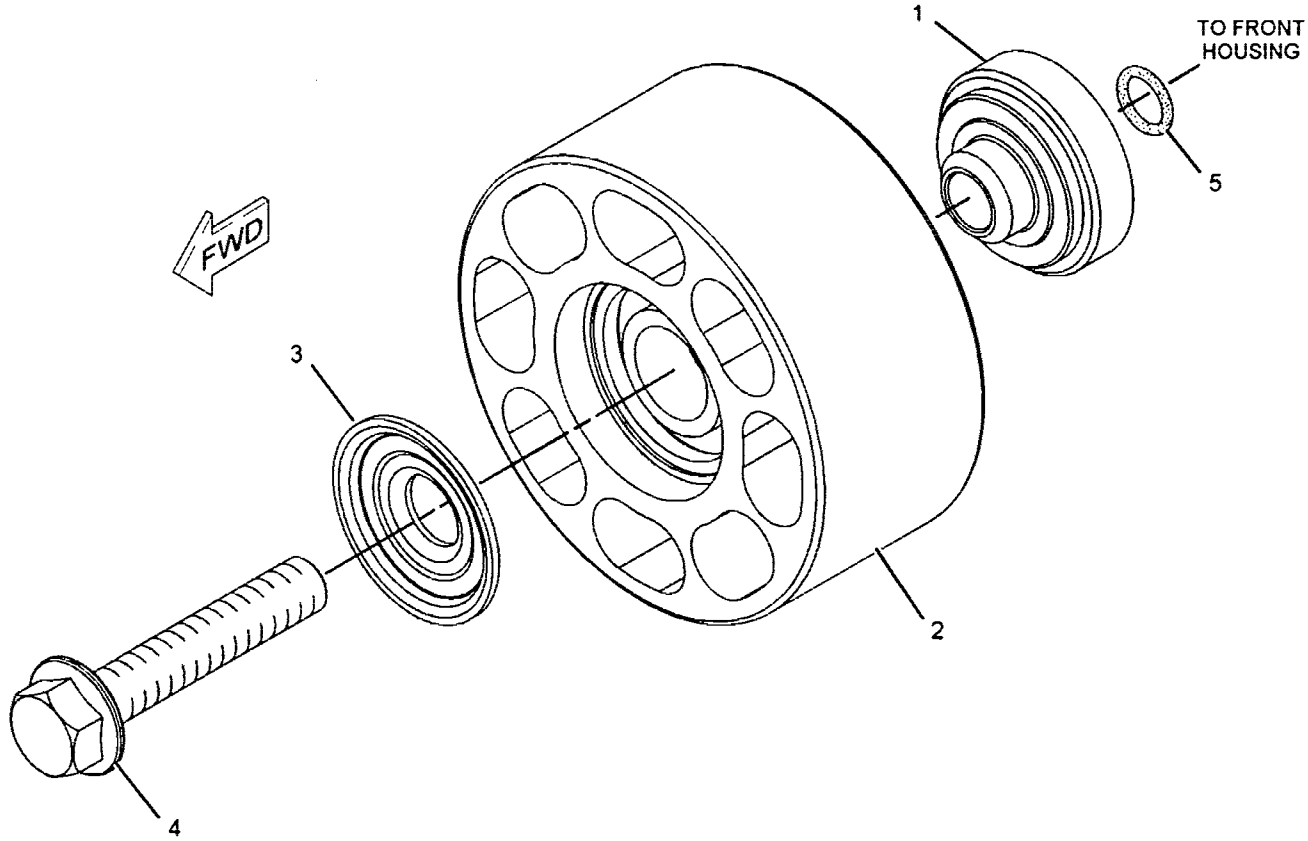

GRAPHIC #1 <END> g01051933

139-4081 LIFTER GP-VALVE-MECHANISM

S/N: 5GG1-UP

PART OF 135-2969 VALVE MECHANISM GP

SMCS-1209 i00827973

NOTE	REF NO	GRAPHIC REF	PART NUMBER	QTY	PART NAME 1 2 3 4 5 6 (PRODUCT LEVEL)	SEE PAGE
	1	1	139-9476	1	SHAFT AS-LIFTER	
		1	2D-6642	2	BALL	
	2	1	7E-6794	4	ARM AS-INJECTOR	
	3	1	139-4084	2	SPACER-FOLLOWER	

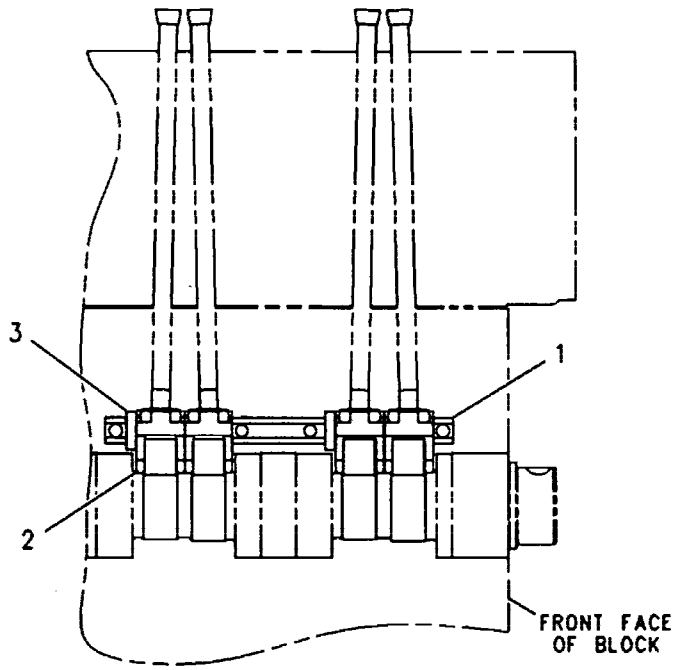

RIGHT SIDE VIEW

GRAPHIC #1 <END> g00288708

201-4053 LIFTING GP-ENGINE

S/N: 5GG1-UP

PART OF 198-5914 ENGINE AR-COMPLETE

SMCS-1122 i01691042

NOTE	REF NO	GRAPHIC REF	PART NUMBER	QTY	PART NAME 1 2 3 4 5 6 (PRODUCT LEVEL)	SEE PAGE
	1	1	201-4054	1	PLATE-LIFTING	
	2	1	8T-4121	4	WASHER-HARD (11X21X2.5-MM THK)	
M	3	1	8T-4136	4	BOLT (M10X1.5X25-MM)	

M-METRIC PART

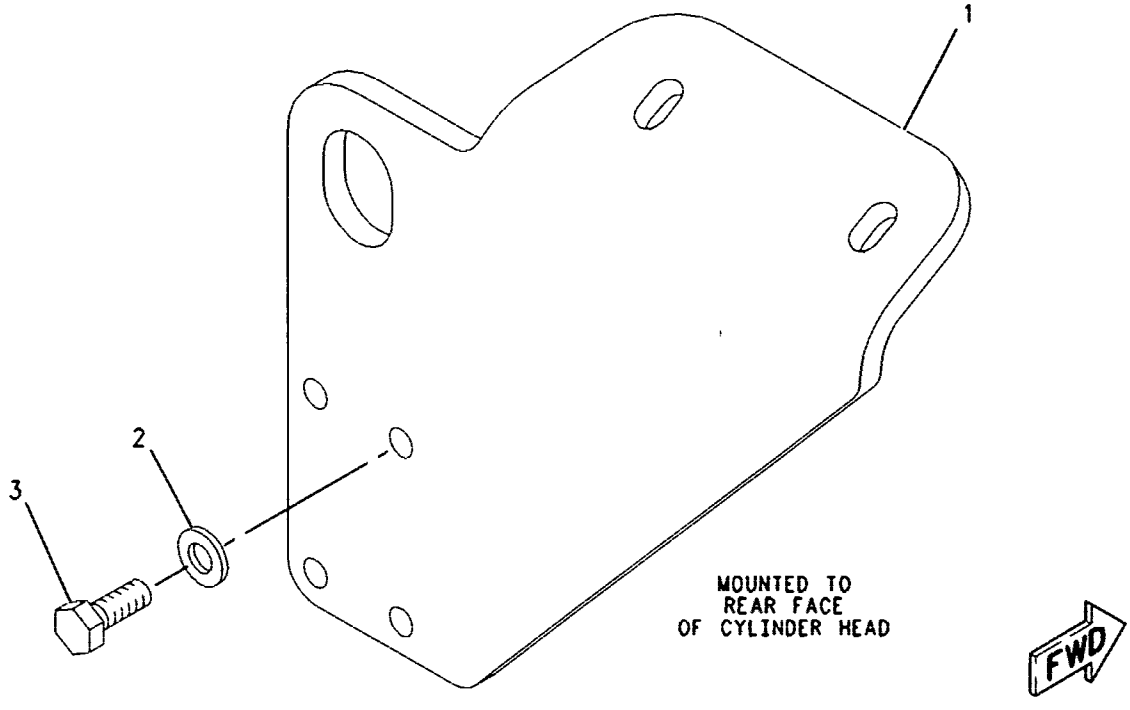

GRAPHIC #1 <END> g00871163

202-7385 MOUNTING GP-ALTERNATOR

S/N: 5GG1-UP

PART OF 198-5914 ENGINE AR-COMPLETE

SMCS-1405 i01691052

NOTE	REF NO	GRAPHIC REF	PART NUMBER	QTY	PART NAME 1 2 3 4 5 6 (PRODUCT LEVEL)	SEE PAGE
	1	1	7W-3872	2	SLEEVE	
	2	1	201-0160	1	BRACKET	
M	3	1	7X-2537	2	BOLT (M8X1.25X35MM)	
M	4	1	8T-7547	2	BOLT (M8X1.25X30MM)	

M-METRIC PART

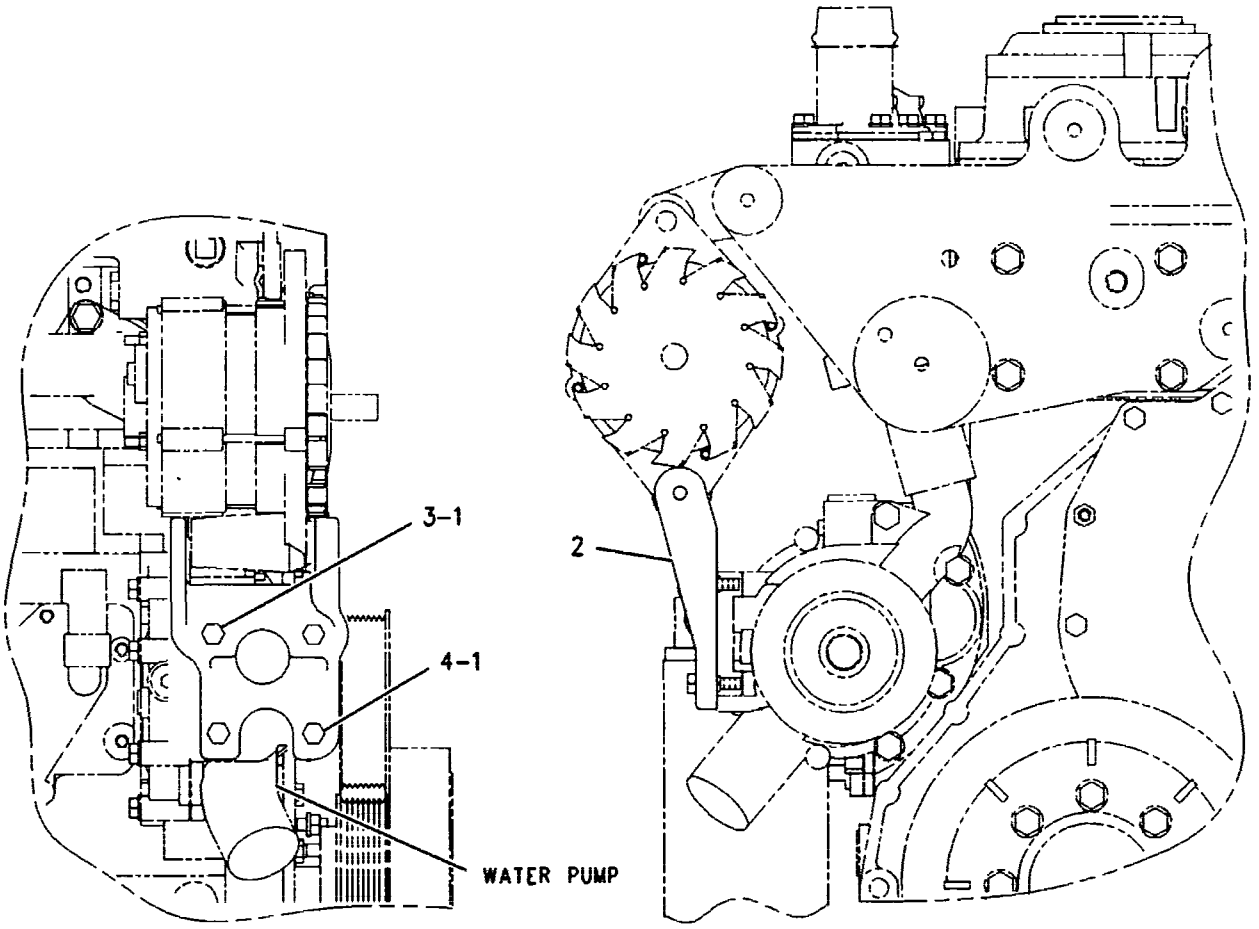

RIGHT SIDE VIEW FRONT VIEW

GRAPHIC #1 <END> g00871190

213-8569 MOUNTING GP-ALTERNATOR

S/N: CRD1-UP

PART OF 206-7345 ALTERNATOR AR-CHARGING

AN ATTACHMENT

SMCS-1405 i01680019

NOTE	REF NO	GRAPHIC REF	PART NUMBER	QTY	PART NAME 1 2 3 4 5 6 (PRODUCT LEVEL)	SEE PAGE
	1	1	3L-7334	1	SPACER	
	2	1	7W-3872	2	SLEEVE	
	3	1	185-1914	1	BRACKET	
	4	1	216-6919	1	BRACKET AS	
M		1	8T-3490	1	NUT-WELD (M10X1.5-THD)	
M	5	1	6V-5220	1	BOLT (M8X1.25X65-MM)	
M	6	1	7X-2537	1	BOLT (M8X1.25X35-MM)	
	7	1	8T-4224	1	WASHER-HARD (8.8X16X2-MM THK)	
M	8	1	8T-7547	2	BOLT (M8X1.25X30-MM)	

M-METRIC PART

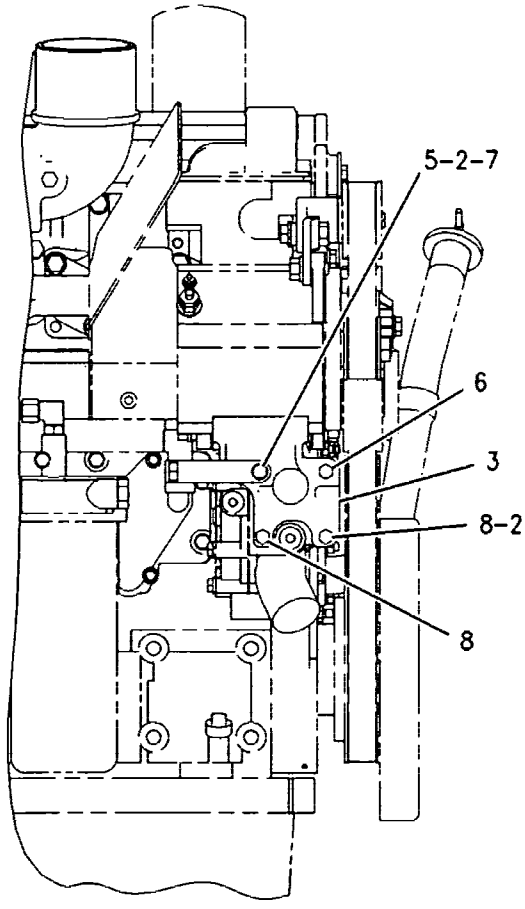

RIGHT SIDE VIEW

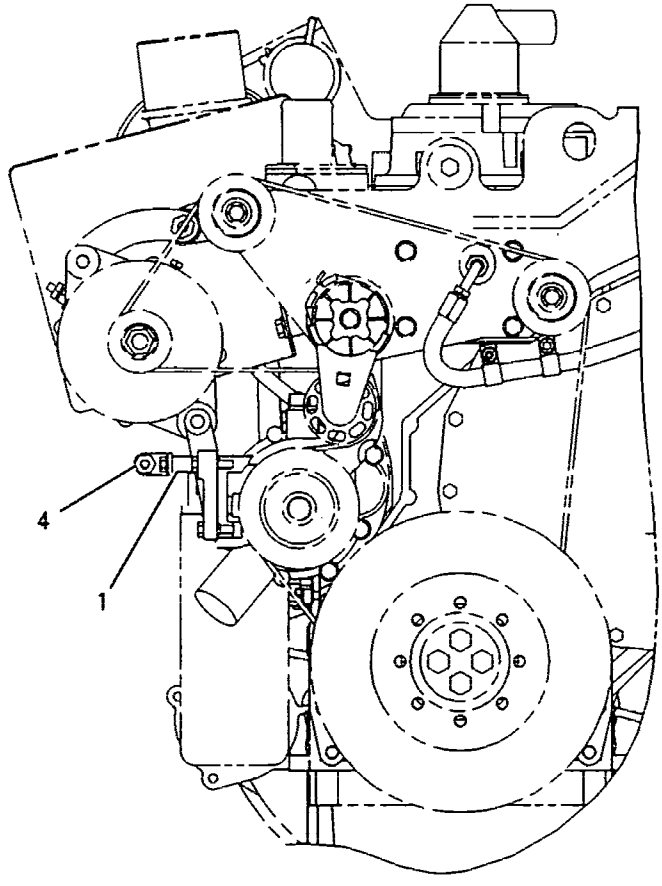

FRONT VIEW

GRAPHIC #1 <END> g00875296

BASIC ENGINE

138-1965 MOUNTING GP-ENGINE & TMSN

S/N: CRD1-UP

PART OF 199-2857 INSTALLATION AR-ENGINE

SMCS-1152, 1154, 3082 i01072094

NOTE	REF NO	GRAPHIC REF	PART NUMBER	QTY	PART NAME 1 2 3 4 5 6 (PRODUCT LEVEL)	SEE PAGE
	1	1	**3E-4883**	4	SLEEVE	
	2	1	**4E-1373**	2	BRACKET AS	
	3	1	**7X-2622**	4	WASHER (22X115X10-MM THK)	
M	4	1	**8C-6855**	4	BOLT (M14X2-THD)	
M	5	1	**8T-3653**	4	BOLT (M14X2X80-MM)	
	6	1	**9W-9920**	4	MOUNT AS	
	7	1	**128-1008**	2	SUPPORT	
	8	1	**7X-0510**	8	WASHER-HARD (15.5X29X3-MM THK)	
	9	1	**8T-4121**	12	WASHER-HARD (11X21X2.5-MM THK)	
	10	1	**8T-4123**	4	WASHER-PLATED (22X35X3.5-MM THK)	
M	11	1	**8T-4195**	12	BOLT (M10X1.5X30-MM)	
M	12	1	**8T-4779**	8	BOLT (M16X2X35-MM)	
M	13	1	**8T-6381**	4	BOLT (M20X2.5X120-MM)	
	14	1	**9X-8257**	8	WASHER (17.5X30X3.5-MM THK)	

M-METRIC PART

138-1965 MOUNTING GP-ENGINE & TMSN *(contd.)* i01072094

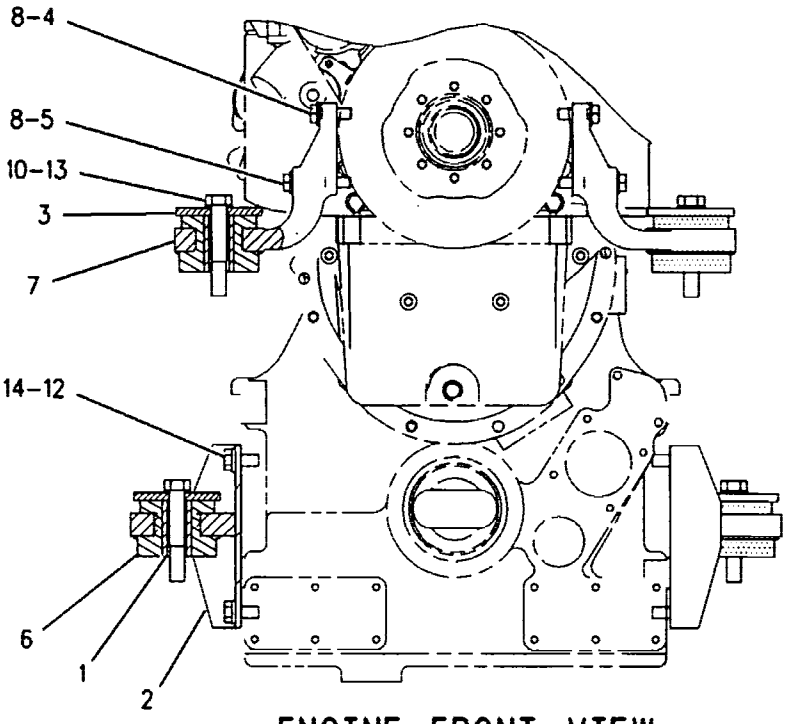

ENGINE FRONT VIEW

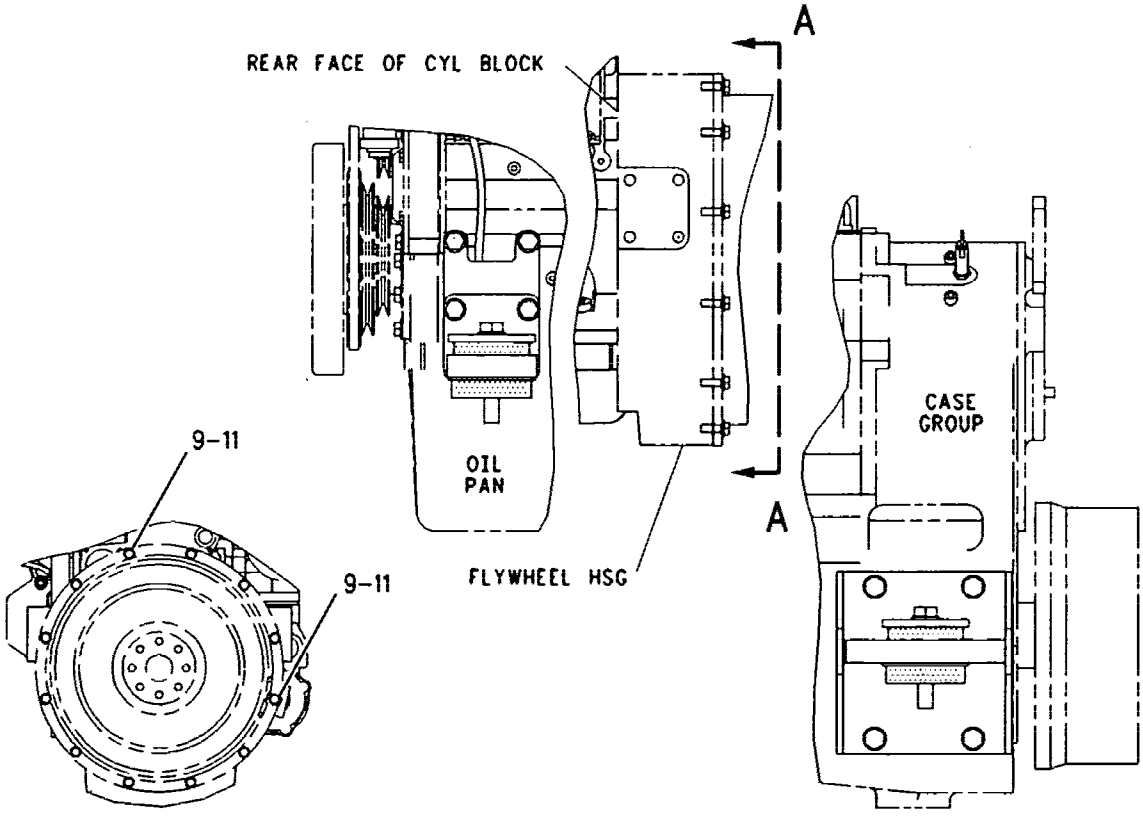

VIEW A-A

ENGINE LEFT SIDE VIEW

GRAPHIC #1 <END> g00560460

201-6850 PAN GP-OIL

S/N: 5GG1-UP

PART OF 198-5914 ENGINE AR-COMPLETE

SMCS-1302 i02048997

NOTE	REF NO	GRAPHIC REF	PART NUMBER	QTY	PART NAME 1 2 3 4 5 6 (PRODUCT LEVEL)	SEE PAGE
	1	1	166-2905	1	SEAL-INTEGRAL	
	2	1	200-4516	1	PAN-OIL	
M	3	1	6V-3918	36	BOLT (M8X1.25X50-MM)	
	4	1	9M-1974	36	WASHER-HARD (8.8X16X2-MM THK)	
B	5	1	4C-9612		SEALANT-SILICONE	

B-USE AS REQUIRED
M-METRIC PART

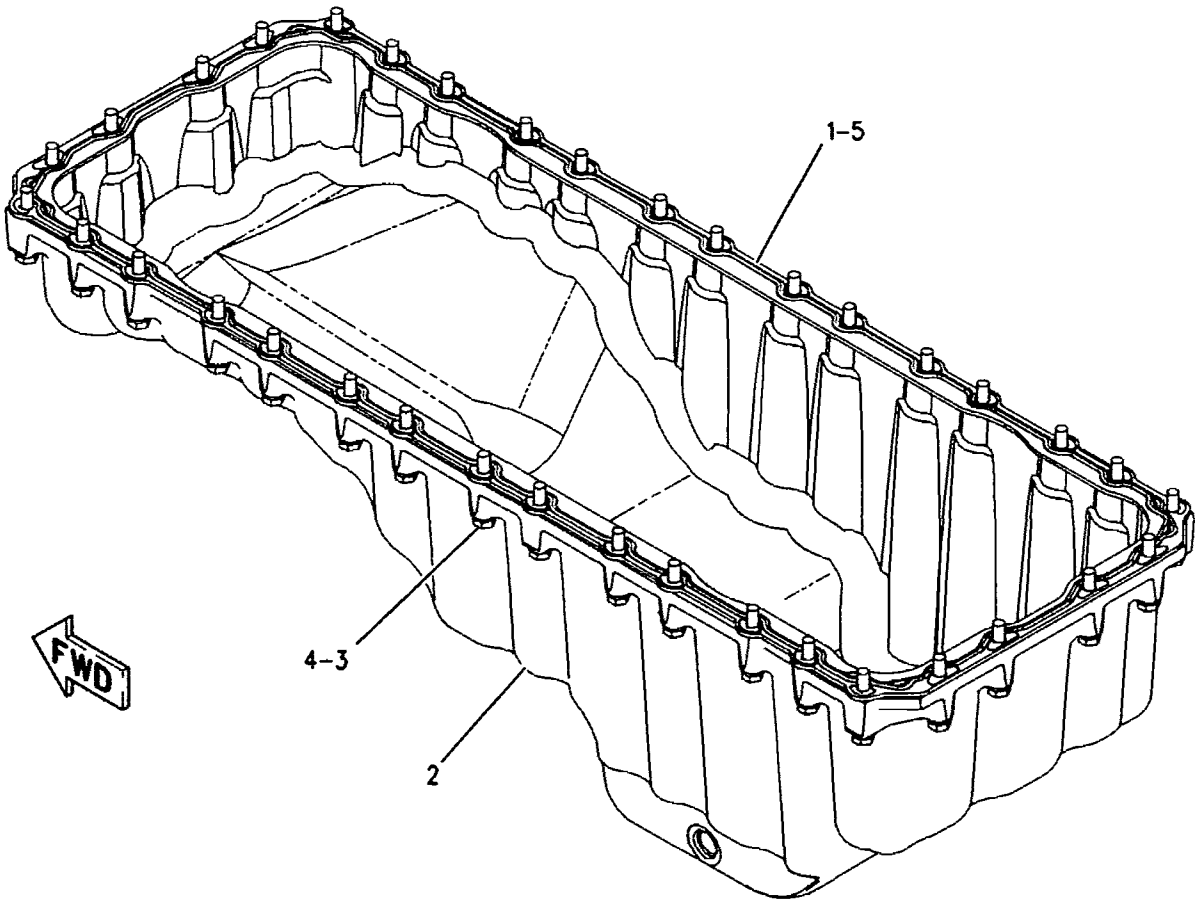

GRAPHIC #1 <END> g01001517

161-8420 PISTON & ROD GP*R

S/N: 5GG1-4449
16:1 COMPRESSION RATIO
PART OF 198-5915 ENGINE AR-CORE

SMCS-1225 i02210430

NOTE	REF NO	GRAPHIC REF	PART NUMBER	QTY	PART NAME 1 2 3 4 5 6 (PRODUCT LEVEL)	SEE PAGE
	1	1	150-4621	1	CROWN AS-PISTON	
	2	1	197-9386	1	RING-PISTON-TOP	
	3	1	197-9277	1	RING-PISTON (INTERMEDIATE)	
	4	1	197-9354	1	RING-PISTON (OIL CONTROL)	
	5	1	7C-0111	2	RETAINER-PIN	
	6	1	168-7226	1	PIN-PISTON	
R	7	1	213-3193	1	ROD AS-CONNECTING (NON-DRILLED)	
	7A	1	2W-0027	1	BEARING (EYE END)	
	7B	1	195-0321	2	BOLT (CONNECTING ROD)	
	8	1	224-6638	1	BEARING-CONNECTING ROD (STANDARD)	
AB		1	7C-6976	1	BEARING-CONNECTING ROD (0.25-MM US)	
AB		1	7C-6977	1	BEARING-CONNECTING ROD (0.5-MM US)	
	9	1	238-2726	1	SKIRT-PISTON	
	10	1	135-5970	1	TUBE AS (OIL JET)	
M	11	1	6V-3940	1	BOLT (M8X1.25X25-MM)	

A-NOT PART OF THIS GROUP
B-USE AS REQUIRED
M-METRIC PART
R-REMFG PART MAY BE AVAILABLE

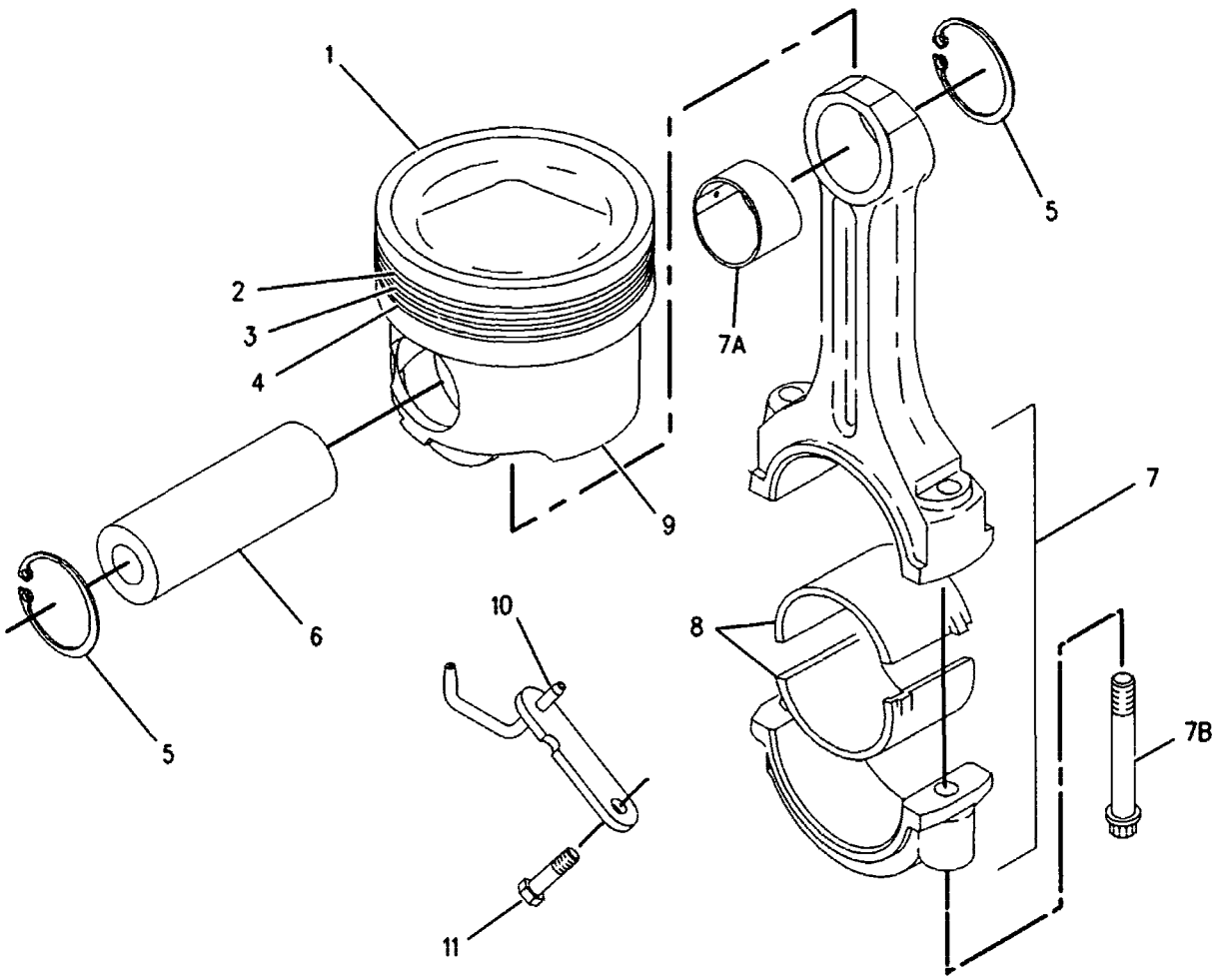

GRAPHIC #1 **<END>** g00878306

177-7500 PISTON & ROD GP

S/N: 5GG4450-UP
16:1 COMPRESSION RATIO
PART OF 198-5915 ENGINE AR-CORE

SMCS-1225 i02107371

NOTE	REF NO	GRAPHIC REF	PART NUMBER	QTY	PART NAME 1 2 3 4 5 6 (PRODUCT LEVEL)	SEE PAGE
R	1	1	213-3193	1	ROD AS-CONNECTING (NON-DRILLED)	
	1A	1	2W-0027	2	BEARING (EYE END)	
	1B	1	195-0321	2	BOLT	
	2	1	224-6638	1	BEARING-CONNECTING ROD (STANDARD)	
A		1	7C-6976	1	BEARING-CONNECTING ROD (0.25-MM US)	
A		1	7C-6977	1	BEARING-CONNECTING ROD (0.5-MM US)	
	3	1	197-9354	1	RING-PISTON (OIL CONTROL)	
	4	1	197-9277	1	RING-PISTON (INTERMEDIATE)	
	5	1	197-9386	1	RING-PISTON-TOP	
	6	1	168-7224	1	PIN-PISTON	
	7	1	173-0143	1	JET AS-PISTON COOLING	
	8	1	238-2729	1	BODY AS-PISTON	
M	9	1	6V-3940	1	BOLT (M8X1.25X25-MM)	
	10	1	7C-0111	2	RETAINER-PIN	

A-NOT PART OF THIS GROUP
M-METRIC PART
R-REMFG PART MAY BE AVAILABLE

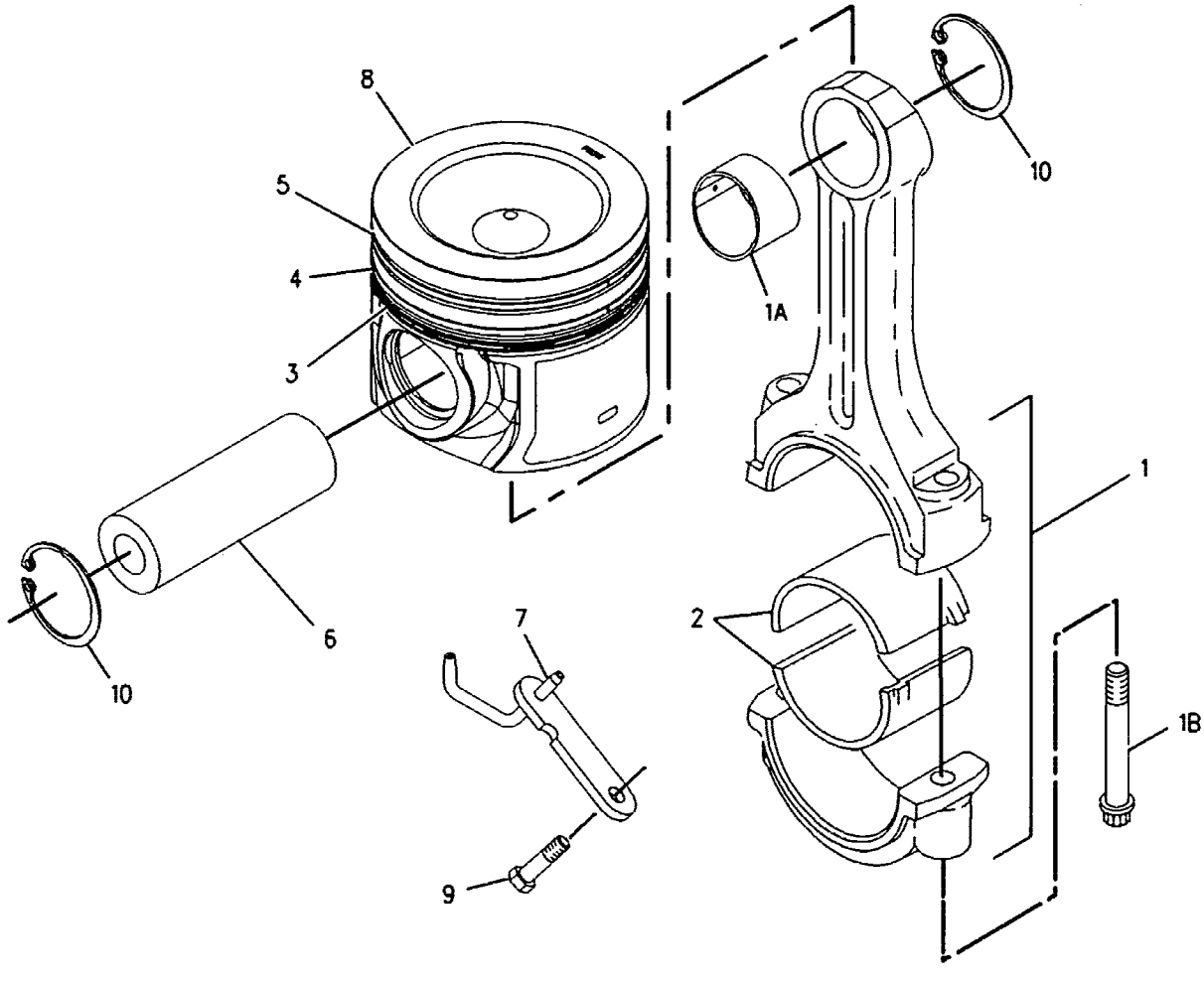

GRAPHIC #1 <END> g00903037

159-0303 PLUG GP-CYLINDER BLOCK

S/N: 5GG1-UP

REQUIRED WHEN REMOTE MOUNT COOLANT CONDITIONER IS NOT USED

PART OF 198-5914 ENGINE AR-COMPLETE

SMCS-1201 i01972327

NOTE	REF NO	GRAPHIC REF	PART NUMBER	QTY	PART NAME 1 2 3 4 5 6 (PRODUCT LEVEL)	SEE PAGE
M	1	1	8T-0293	1	BOLT (M12X1.75X20-MM)	
	2	1	6F-7062	1	WASHER (12.7X19.05X1.83-MM THK)	
	3	1	9S-8008	2	PLUG	
	4	1	3D-2824	2	SEAL-O-RING	

M-METRIC PART

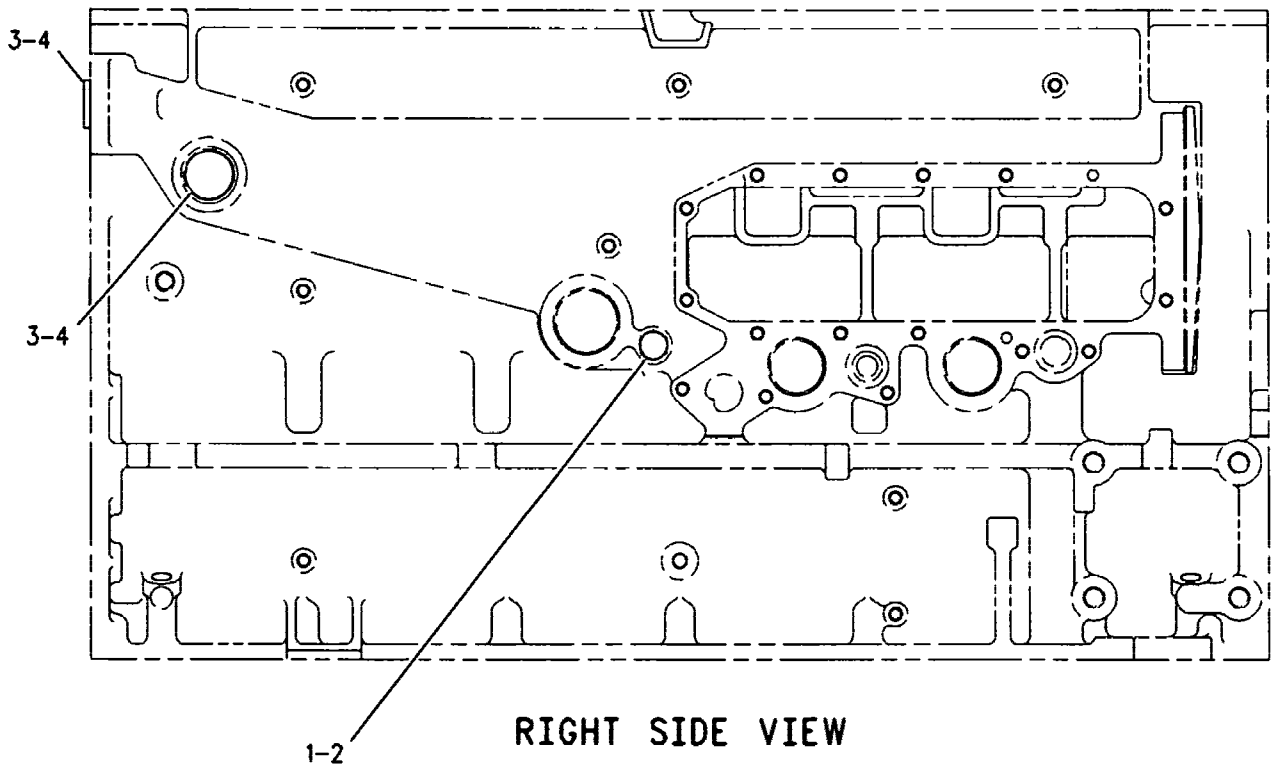

RIGHT SIDE VIEW

GRAPHIC #1 <END> g00677138

162-8068 PLUG GP-ENGINE

S/N: 5GG1-UP
PART OF 198-5914 ENGINE AR-COMPLETE
FOR USE WITH GM ENGINES ONLY

SMCS-1000 i01828029

NOTE	REF NO	GRAPHIC REF	PART NUMBER	QTY	PART NAME 1 2 3 4 5 6 (PRODUCT LEVEL)	SEE PAGE
	1	1	9S-8005	1	PLUG	
	2	1	3K-0360	1	SEAL-O-RING	

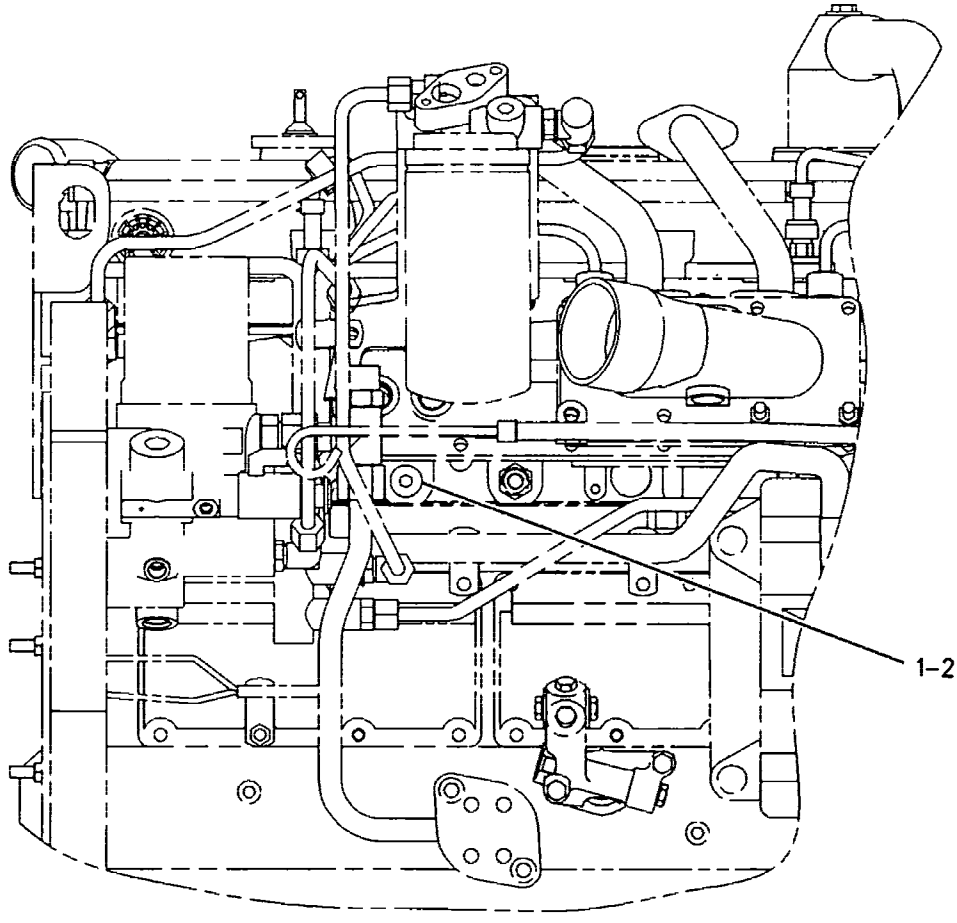

LEFT SIDE VIEW

GRAPHIC #1 <END> g00932414

172-5754 PULLEY GP-IDLER

S/N: 5GG1093-UP

PART OF 198-5914 ENGINE AR-COMPLETE

SMCS-1358 **i02056003**

NOTE	REF NO	GRAPHIC REF	PART NUMBER	QTY	PART NAME 1 2 3 4 5 6 (PRODUCT LEVEL)	SEE PAGE
	1	1	**173-1498**	1	PULLEY AS-IDLER (8-GROOVE)	
	1A	1	**166-6358**	1	COVER-DUST	
	1B	1	**151-2900**	1	BOLT (M10X1.5X54.25-MM)	
	2	1	**190-0643**	1	BELT TIGHTENER (IDLER PULLEY)	
	3	1	**8T-4121**	1	WASHER-HARD (11X21X2.5-MM THK)	
M	4	1	**8T-4172**	1	BOLT (M10X1.5X80-MM)	

M-METRIC PART

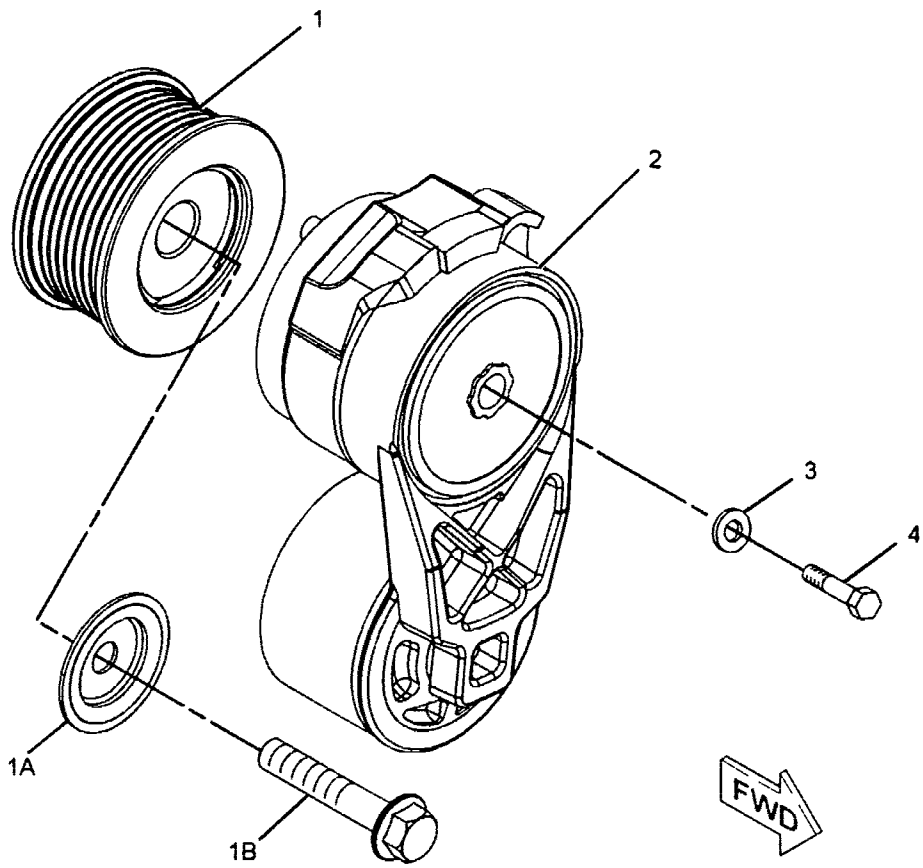

GRAPHIC #1 **<END>** g01060759

216-5181 PULLEY GP-IDLER

S/N: 5GG1-1092

PART OF 198-5914 ENGINE AR-COMPLETE

SMCS-1358 i02087787

NOTE	REF NO	GRAPHIC REF	PART NUMBER	QTY	PART NAME 1 2 3 4 5 6 (PRODUCT LEVEL)	SEE PAGE
	1	1	190-0643	1	BELT TIGHTENER	
	2	1	173-1498	1	PULLEY AS-IDLER (8-GROOVE)	
		1	151-2900	1	BOLT (M10X1.5X54.25-MM)	
		1	166-6358	1	COVER-DUST	
		1	173-1500	1	SPACER (10.4X45.1X1.8-MM THK)	
	3	1	216-4575	1	BRACKET	
	4	1	8T-4121	5	WASHER-HARD (11X21X2.5-MM THK)	
M	5	1	8T-4137	1	BOLT (M10X1.5X20-MM)	
M	6	1	8T-4172	1	BOLT (M10X1.5X80-MM)	
M	7	1	8T-4196	4	BOLT (M10X1.5X35-MM)	
	8	1	8T-4226	1	WASHER-PLATED (10.5X45X3-MM THK)	

M-METRIC PART

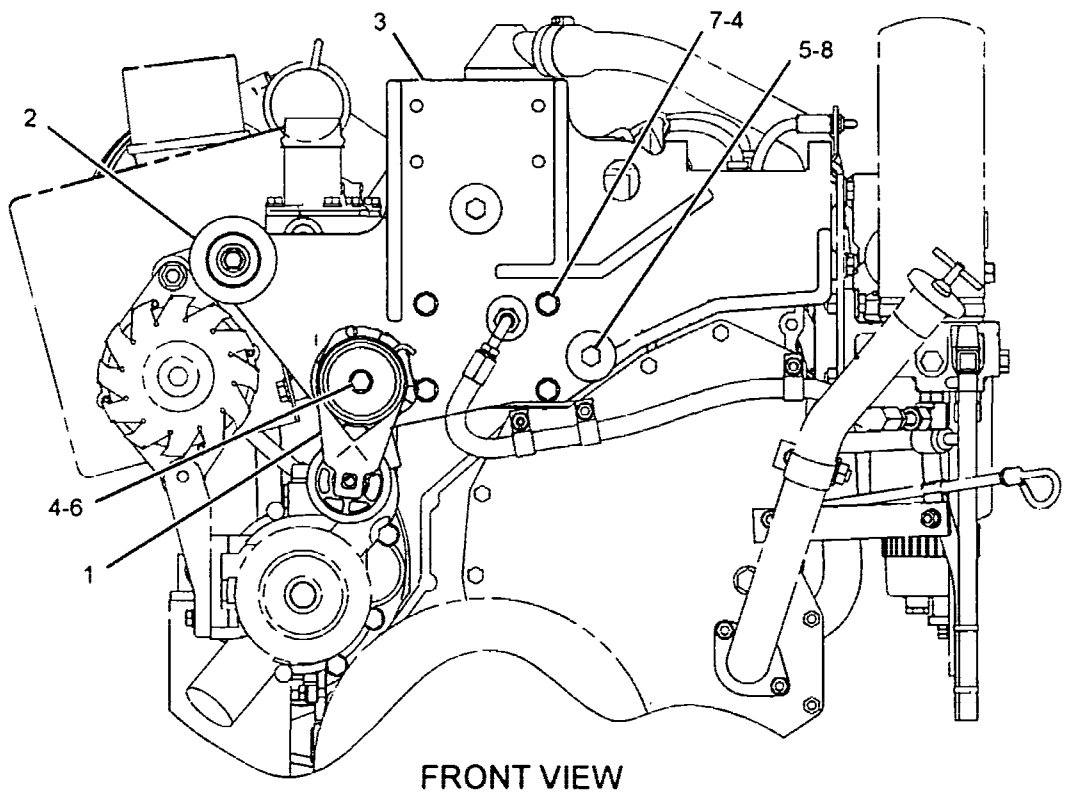

FRONT VIEW

GRAPHIC #1

<END>

g01067937

BASIC ENGINE

115-4210 SEAL GP-CRANKSHAFT

S/N: 5GG1-UP

PART OF 198-5914 ENGINE AR-COMPLETE

SMCS-1160, 1161 i02162860

NOTE	REF NO	GRAPHIC REF	PART NUMBER	QTY	PART NAME 1 2 3 4 5 6 (PRODUCT LEVEL)	SEE PAGE
	1	1	115-4120	1	SEAL GP-CRANKSHAFT (REAR)	
	2	1	119-2921	1	SEAL GP-CRANKSHAFT (FRONT)	
	3	1	4R-9999	1	EXCLUDER-CRANKSHAFT SEAL	

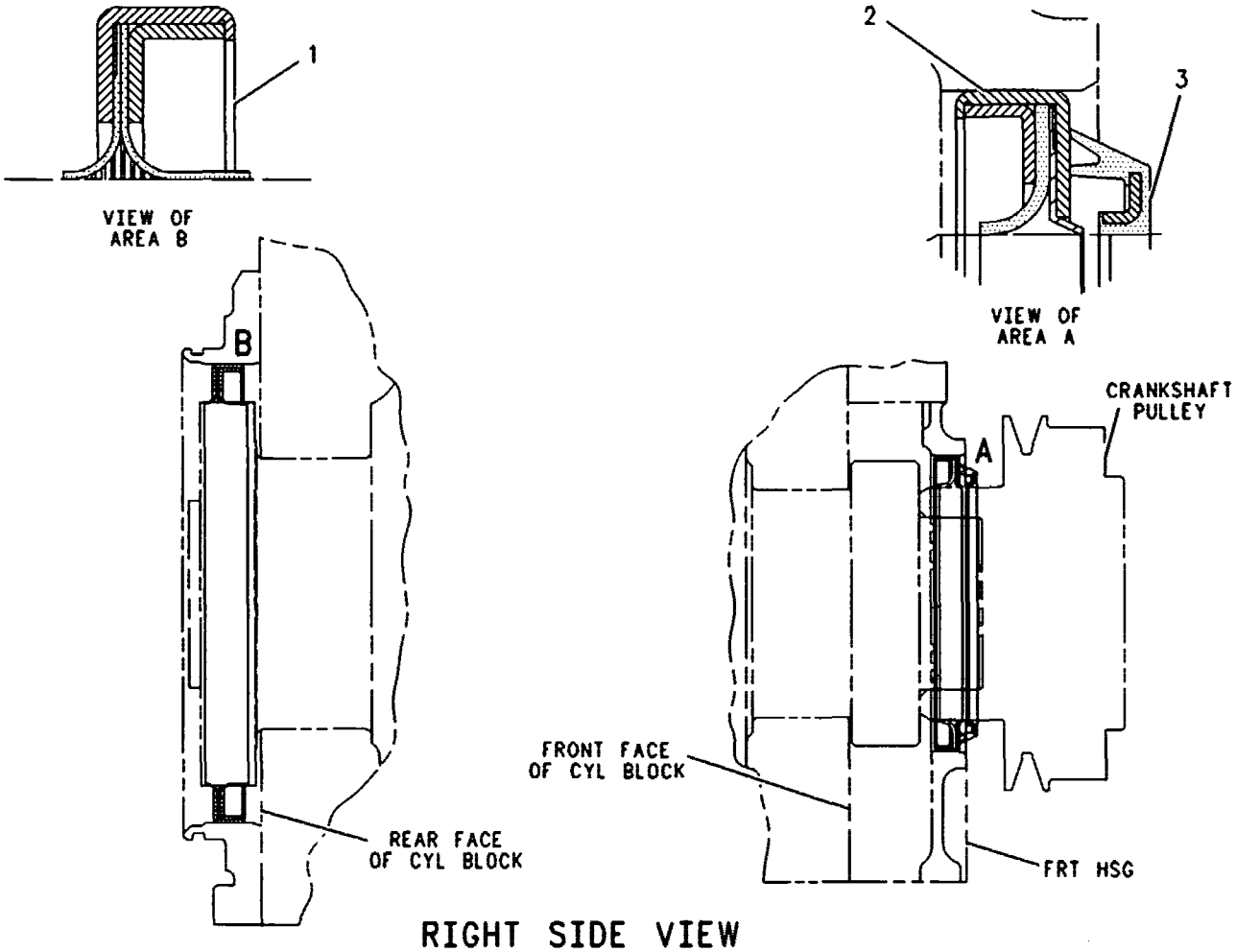

RIGHT SIDE VIEW

GRAPHIC #1

<END>

g00109240

7C-1770 SEAL GP-FLYWHEEL HOUSING

S/N: 5GG1-UP

PART OF 198-5914 ENGINE AR-COMPLETE

SMCS-1157 i01099524

NOTE	REF NO	GRAPHIC REF	PART NUMBER	QTY	PART NAME 1 2 3 4 5 6 (PRODUCT LEVEL)	SEE PAGE
B	1	1	1U-8846		SEALANT-GASKET	
	2	1	3J-7354	1	SEAL-O-RING	
B	3	1	3D-2824	1	SEAL-O-RING	

B-USE AS REQUIRED

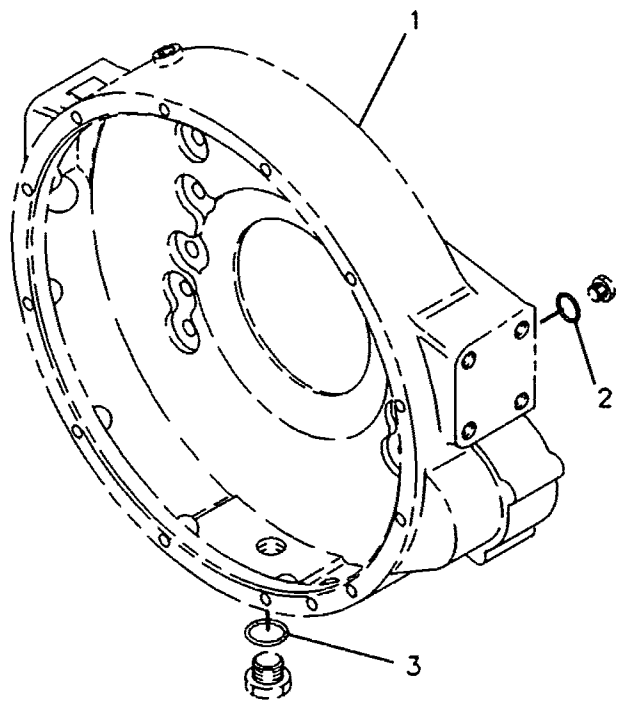

GRAPHIC #1 <END> g00108872

135-2969 VALVE MECHANISM GP

S/N: 5GG1-UP

PART OF 198-5915 ENGINE AR-CORE

SMCS-1102, 1121, 1123 i02213730

NOTE	REF NO	GRAPHIC REF	PART NUMBER	QTY	PART NAME 1 2 3 4 5 6 (PRODUCT LEVEL)	SEE PAGE
	1	1	133-6379	12	ROD	
	2	1	219-3309	6	BRIDGE-VALVE	
Y	3	1	139-4081	3	LIFTER GP-VALVE	50
M	4	1	8T-8442	12	BOLT-SOCKET HEAD (M6X1X30-MM)	
	5	1	3E-9412	6	DOWEL	
Y	6	1	235-5528	1	VALVE MECHANISM GP	67
M	7	1	6V-5696	11	BOLT (M12X1.75X80-MM)	
	8	1	9M-1974	2	WASHER-HARD (8.8X16X2-MM THK)	
	9	1	3H-7654	11	WASHER-HARD (13.5X22.5X3-MM THK)	
M	10	1	8T-0100	2	BOLT (M8X1.25X60-MM)	

M-METRIC PART
Y-SEPARATE ILLUSTRATION

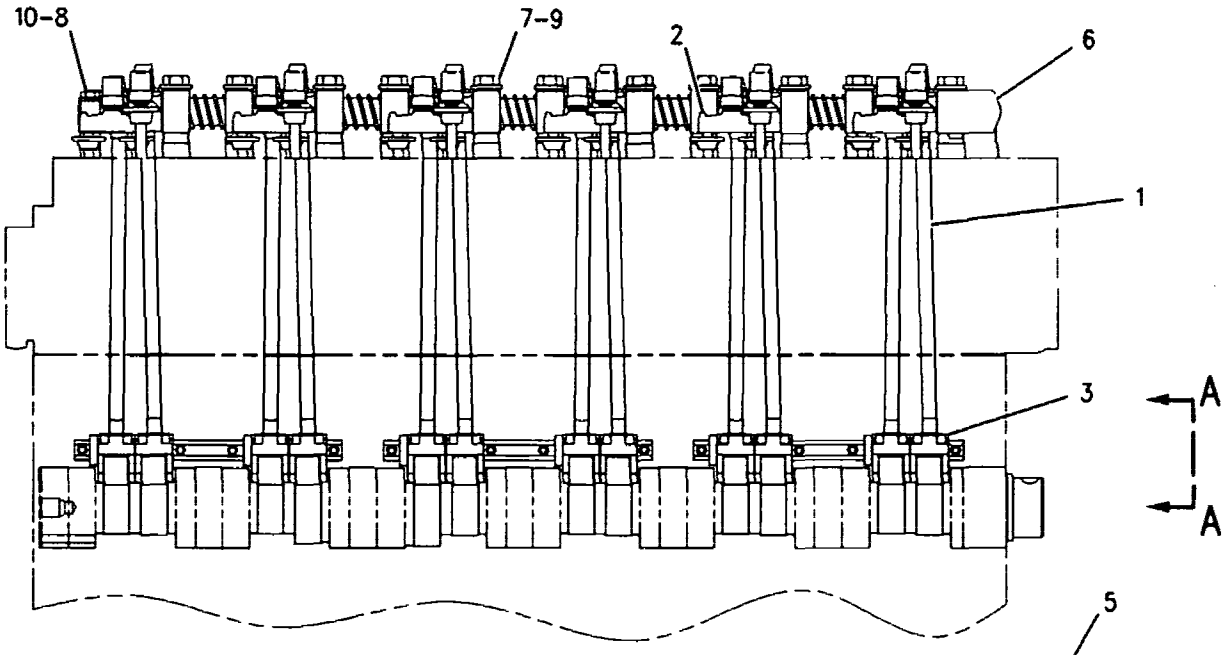

RIGHT SIDE VIEW

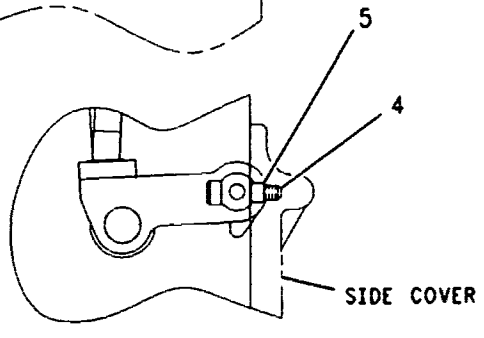

VIEW A-A

GRAPHIC #1 <END> g00286874

235-5528 VALVE MECHANISM GP

S/N: 5GG1-UP

PART OF 135-2969 VALVE MECHANISM GP

SMCS-1102, 1121, 1123 i01939721

NOTE	REF NO	GRAPHIC REF	PART NUMBER	QTY	PART NAME 1 2 3 4 5 6 (PRODUCT LEVEL)	SEE PAGE
	1	1	137-6717	5	SPRING	
	2	1	*222-1185*	6	ROCKER ARM GP (INTAKE)	
					(EACH INCLUDES)	
M	2A	1	2Y-5829	1	NUT (M10X1.5 THD)	
M		1	183-4365	1	SCREW-ADJUSTING (M10X1.5 THD)	
	2B	1	153-8467	1	ROCKER ARM AS	
	2C	1	173-5549	1	SEAL-O-RING	
	2D	1	145-7376	1	BUTTON-ROCKER ARM	
	2E	1	145-7385	1	SOCKET-ROCKER ARM	
	3	1	138-8403	1	STAND	
	4	1	*222-1186*	6	ROCKER ARM GP (EXHAUST)	
					(EACH INCLUDES)	
M	4A	1	2Y-5829	1	NUT (M10X1.5 THD)	
M		1	183-4365	1	SCREW-ADJUSTING (M10X1.5 THD)	
	4B	1	153-8470	1	ROCKER ARM AS	
	4C	1	173-5549	1	SEAL-O-RING	
	4D	1	145-7376	1	BUTTON-ROCKER ARM	
	4E	1	145-7385	1	SOCKET-ROCKER ARM	
	5	1	235-5527	10	STAND	
	6	1	138-8402	1	STAND (END)	
	7	1	138-9868	1	RING-RETAINING	
	8	1	8H-5244	1	DOWEL	
	9	1	138-7198	1	SHAFT AS	
		1	5B-1866	1	PLUG-CUP	

M-METRIC PART

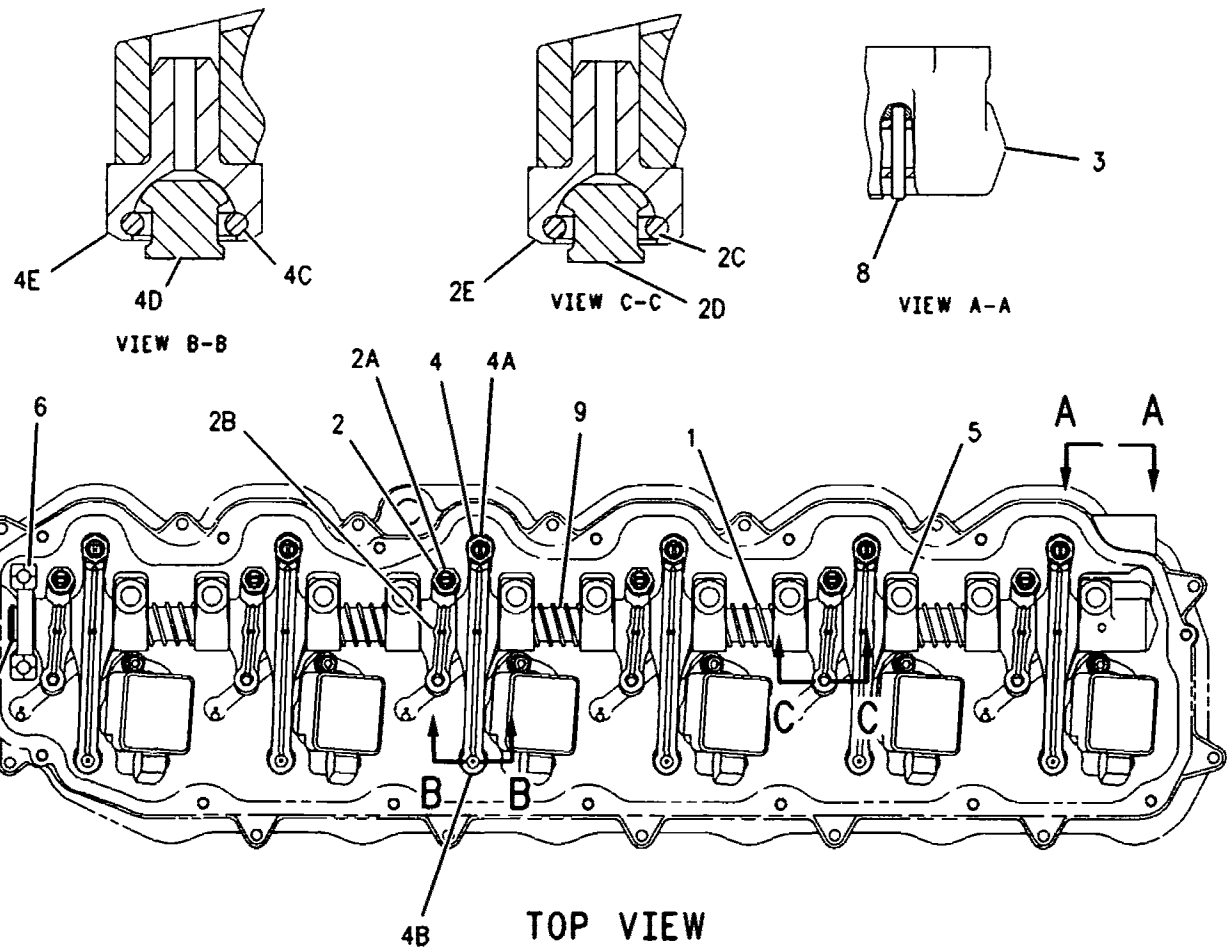

GRAPHIC #1 <END> g00901133

179-7001 ADAPTER GP-OIL LINE–UNIT INJECTOR PUMP

S/N: 5GG1-UP

PART OF 210-5574 LINES GP-INJECTOR HYD PUMP

SMCS-1307 i01836385

NOTE	REF NO	GRAPHIC REF	PART NUMBER	QTY	PART NAME 1 2 3 4 5 6 (PRODUCT LEVEL)	SEE PAGE
	1	1	179-7002	1	ADAPTER AS	
	2	1	214-7568	1	SEAL-O-RING	

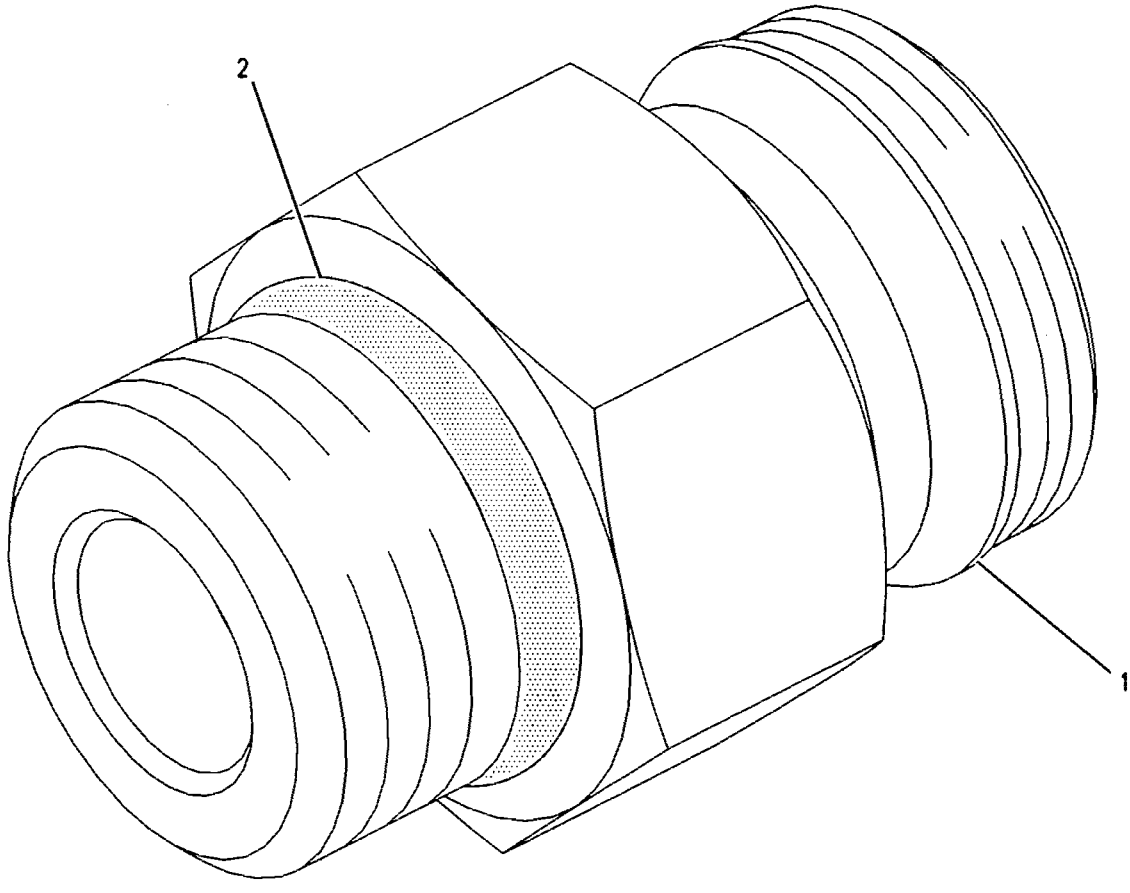

GRAPHIC #1 <END> g00938522

LUBRICATION SYSTEM

128-2682 BREATHER GP–CRANKCASE

S/N: 5GG1-UP
PART OF 198-5915 ENGINE AR-CORE
FOR USE WITH FUMES DISPOSAL

SMCS-1317 i01982515

NOTE	REF NO	GRAPHIC REF	PART NUMBER	QTY	PART NAME 1 2 3 4 5 6 (PRODUCT LEVEL)	SEE PAGE
	1	1	164-0210	1	BREATHER AS (CRANKCASE)	
	2	1	8H-2046	1	SEAL-O-RING	
M	3	1	6V-3821	1	BOLT (M8X1.25X110-MM)	
	4	1	9N-0869	1	WASHER-HARD (8.8X25.5X2-MM THK)	

M-METRIC PART

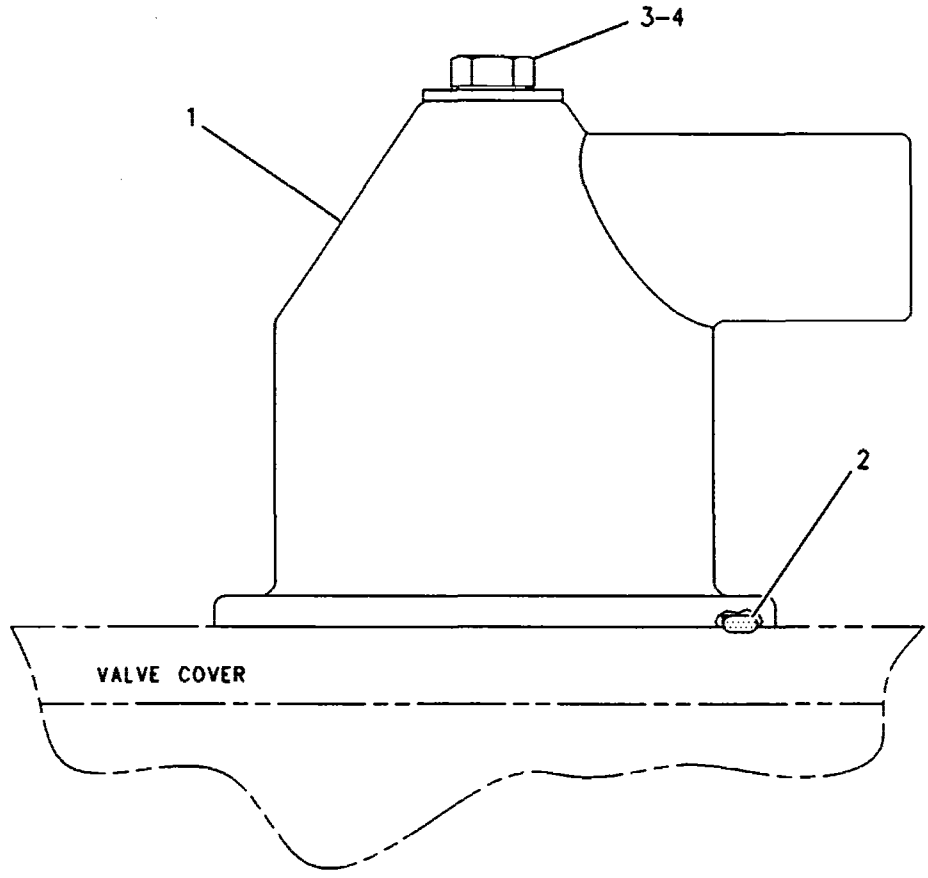

LEFT SIDE VIEW

GRAPHIC #1 <END> g00288715

189-5433 FILTER GP-ENGINE OIL

S/N: 5GG1-UP

PART OF 198-5914 ENGINE AR-COMPLETE

SMCS-1306, 1308 i02195486

NOTE	REF NO	GRAPHIC REF	PART NUMBER	QTY	PART NAME 1 2 3 4 5 6 (PRODUCT LEVEL)	SEE PAGE
	1	1	7C-1493	2	VALVE AS-BYPASS (ENGINE OIL FILTER)	
	2	1	8C-3445	1	CAP-DUST	
	3	1	068-9526	2	CAP-TUBE	
	4	1	201-9774	1	BASE AS-OIL FILTER	
	4A	1	2P-2537	1	STUD-HOLLOW	
	5	1	1R-1807	1	FILTER AS-ENGINE OIL	
	6	1	2M-9780	2	SEAL-O-RING	
	7	1	3J-7354	1	SEAL-O-RING	
	8	1	3P-1932	1	ADAPTER	
M	9	1	5P-8196	2	PLUG	
M	10	1	6V-2317	10	BOLT (M8X1.25X30-MM)	
	11	1	233-7654	1	GASKET	
	12	1	8C-3446	1	VALVE AS-FLUID SAMPLING (ENGINE OIL)	
	13	1	8L-2786	1	SEAL-O-RING	
M	14	1	8T-0276	3	BOLT (M8X1.25X45-MM)	
	15	1	242-3864	2	SPRING	
	16	1	9M-1974	15	WASHER-HARD (8.8X16X2-MM THK)	
M	17	1	9X-2098	2	STUD (M8X1.25X67.75-MM OAL)	

M-METRIC PART

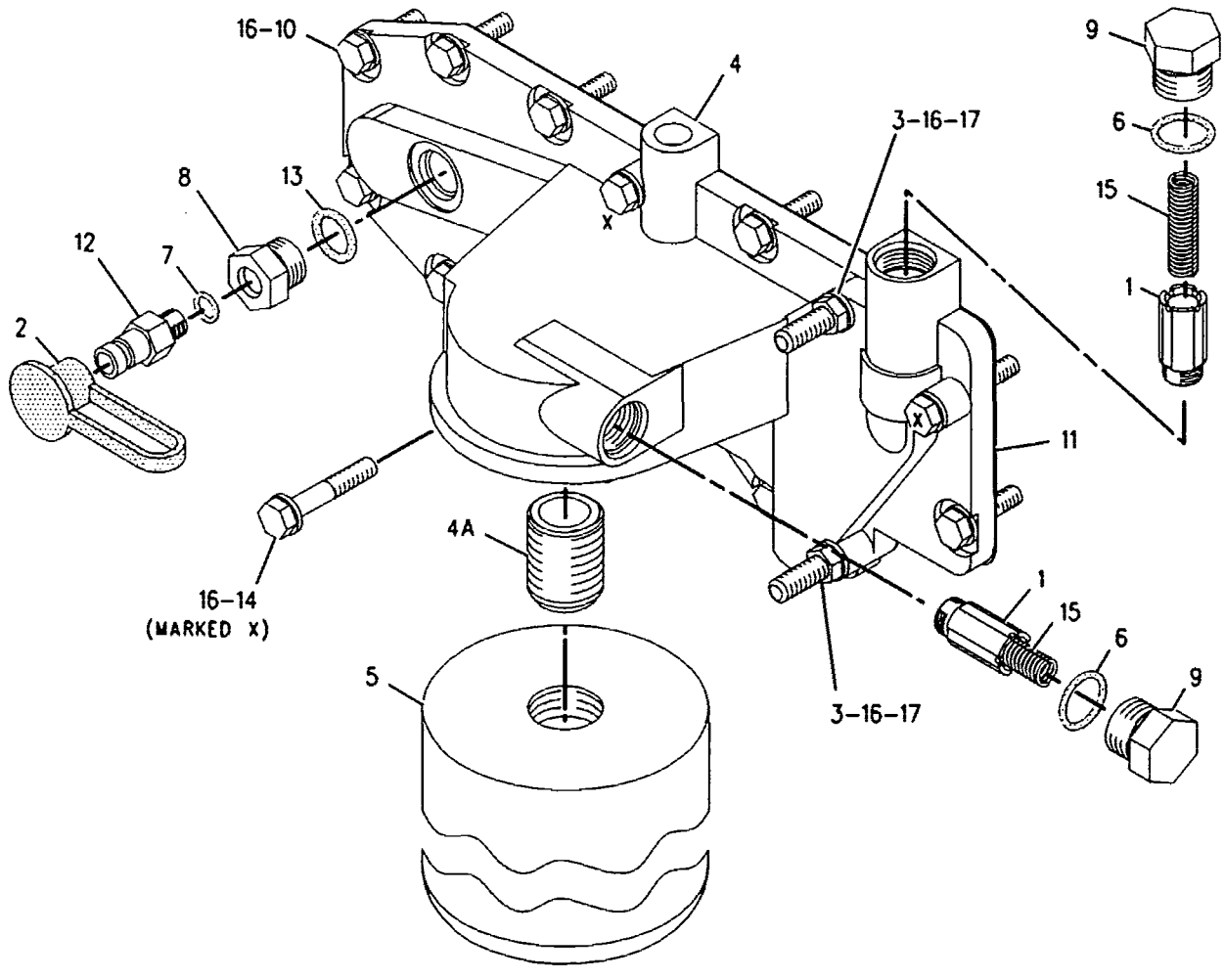

GRAPHIC #1 <END> g00943879

LUBRICATION SYSTEM

208-0038 FUMES DISPOSAL GP

S/N: CRD1-UP

PART OF 199-2857 INSTALLATION AR-ENGINE

SMCS-1317 i01793721

NOTE	REF NO	GRAPHIC REF	PART NUMBER	QTY	PART NAME 1 2 3 4 5 6 (PRODUCT LEVEL)	SEE PAGE
	1	1	3V-0778	1	BRACKET	
	2	1	9M-2904	1	CLAMP-HOSE	
	3	1	202-6569	1	HOSE-DISPOSAL	
	4	1	2A-2677	1	SPACER (0.75-IN THK)	
	5	1	2S-2053	2	CLIP	
	6	1	8T-4121	2	WASHER-HARD (11X21X2.5-MM THK)	
M	7	1	8T-4133	1	NUT (M10X1.5-THD)	
M	8	1	8T-4137	1	BOLT (M10X1.5X20-MM)	
M	9	1	8T-5005	1	BOLT (M10X1.50X70-MM)	
	10	1	8T-4224	1	WASHER-HARD (8.8X16X2-MM THK)	
M	11	1	5C-7261	1	NUT (M8X1.25-THD)	

M-METRIC PART

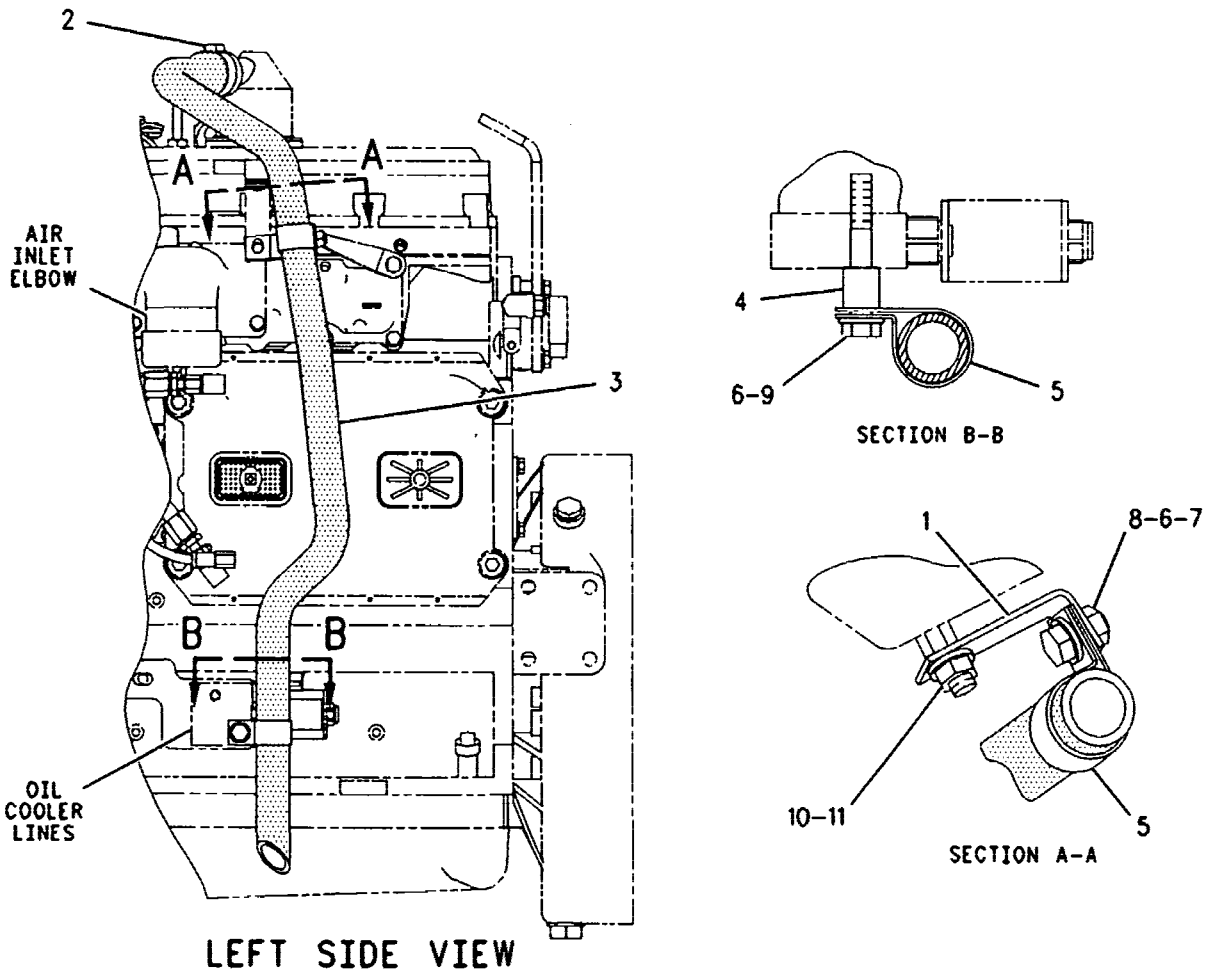

LEFT SIDE VIEW

GRAPHIC #1 <END> g00917781

192-0108 GAUGE GP-OIL LEVEL (DIPSTICK)

S/N: 5GG1-2173

PART OF 198-5914 ENGINE AR-COMPLETE

SMCS-1326 i01759778

NOTE	REF NO	GRAPHIC REF	PART NUMBER	QTY	PART NAME 1 2 3 4 5 6 (PRODUCT LEVEL)	SEE PAGE
	1	1	1S-2563	3	PLUG	
	2	1	215-4683	1	GAUGE-OIL LEVEL	
	3	1	192-0111	1	TUBE AS	
	4	1	192-1285	1	BRACKET	
M	5	1	5C-7261	2	NUT (M8X1.25 THD)	
	6	1	6V-3265	1	CLIP	
M	7	1	8T-4200	1	BOLT (M8X1.25X16MM)	
	8	1	8T-4224	2	WASHER-HARD (8.8X16X2MM THK)	
	9	1	9M-1974	2	WASHER-HARD (8.8X16X2MM THK)	

M-METRIC PART

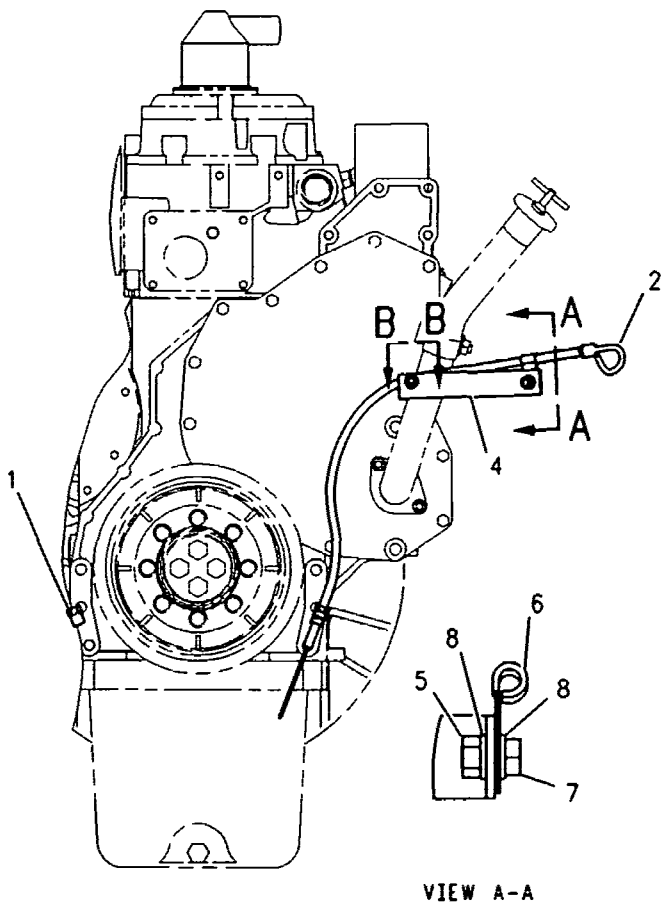

FRONT VIEW

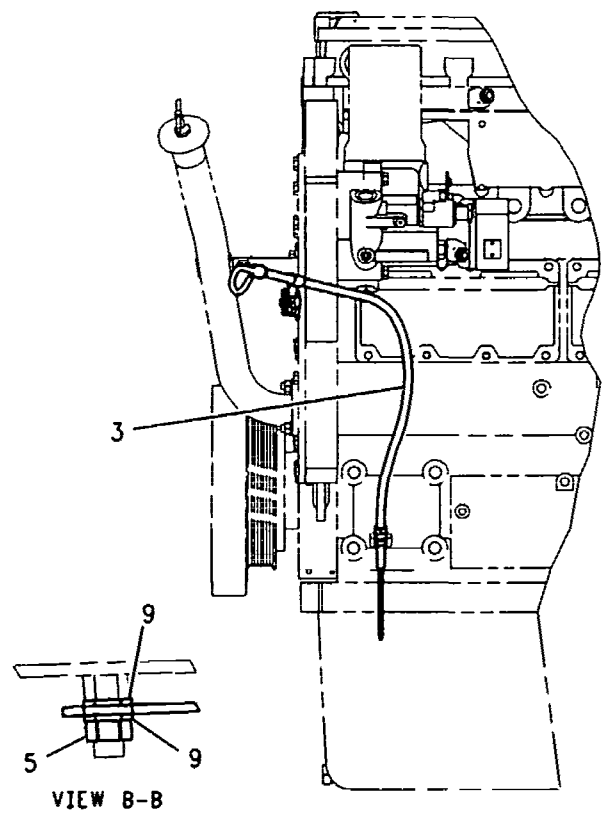

LEFT SIDE VIEW

GRAPHIC #1 <END> g00826946

192-0108 GAUGE GP-OIL LEVEL (DIPSTICK)

S/N: 5GG2174-UP

PART OF 198-5914 ENGINE AR-COMPLETE

SMCS-1326 i02044275

NOTE	REF NO	GRAPHIC REF	PART NUMBER	QTY	PART NAME 1 2 3 4 5 6 (PRODUCT LEVEL)	SEE PAGE
J	1	1	1S-2563	3	PLUG	
C	2	1	246-5717	1	GAUGE GP-OIL LEVEL (DIPSTICK) (ENGINE)	
C	3	1	225-1460	1	TUBE AS	
C	4	1	225-1461	1	BRACKET	
M	5	1	5C-7261	2	NUT (M8X1.25-THD)	
	6	1	6V-3265	1	CLIP	
M	7	1	8T-4200	1	BOLT (M8X1.25X16-MM)	
	8	1	8T-4224	2	WASHER-HARD (8.8X16X2-MM THK)	
	9	1	9M-1974	2	WASHER-HARD (8.8X16X2-MM THK)	
C	10	1	4D-7794	1	CLIP	

C-CHANGE FROM PREVIOUS TYPE
J-USE TO PLUG OPTIONAL DIPSTICK LOCATIONS IN CYLINDER BLOCK
M-METRIC PART

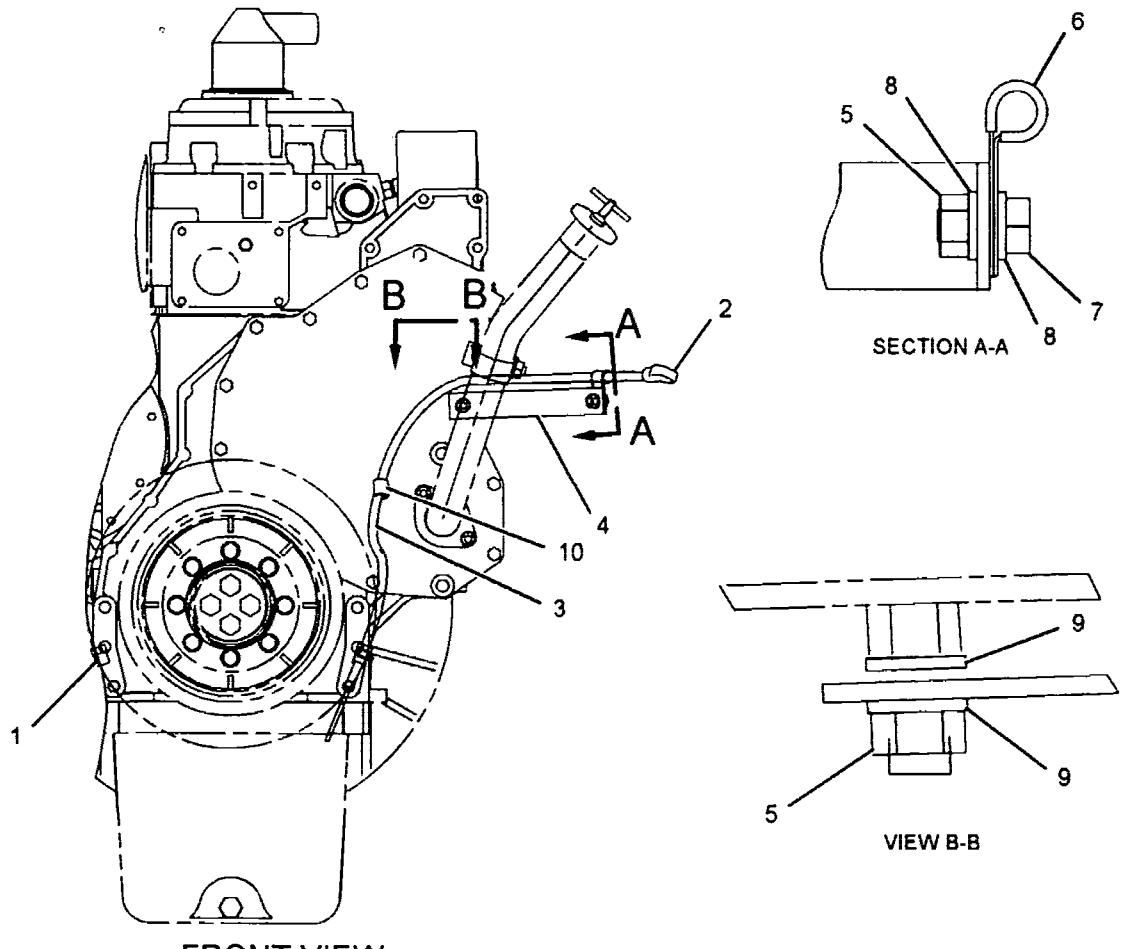

GRAPHIC #1 <END> g01023767

7C-2475 LINES GP-ENGINE OIL

S/N: 5GG1-UP

PART OF 198-5914 ENGINE AR-COMPLETE

FOR USE WITH 32 LITER FRONT SUMP OIL PAN

SMCS-1307 i01744292

NOTE	REF NO	GRAPHIC REF	PART NUMBER	QTY	PART NAME 1 2 3 4 5 6 (PRODUCT LEVEL)	SEE PAGE
	1	1	7C-5403	1	TUBE AS	
	2	1	7W-5340	1	GASKET	
	3	1	9M-1974	2	WASHER-HARD (8.8X16X2MM THK)	
M	4	1	6V-3940	4	BOLT (M8X1.25X25MM)	
	5	1	4W-2232	1	ELBOW-OUTLET	
	6	1	3P-1156	2	SEAL-O-RING	

M-METRIC PART

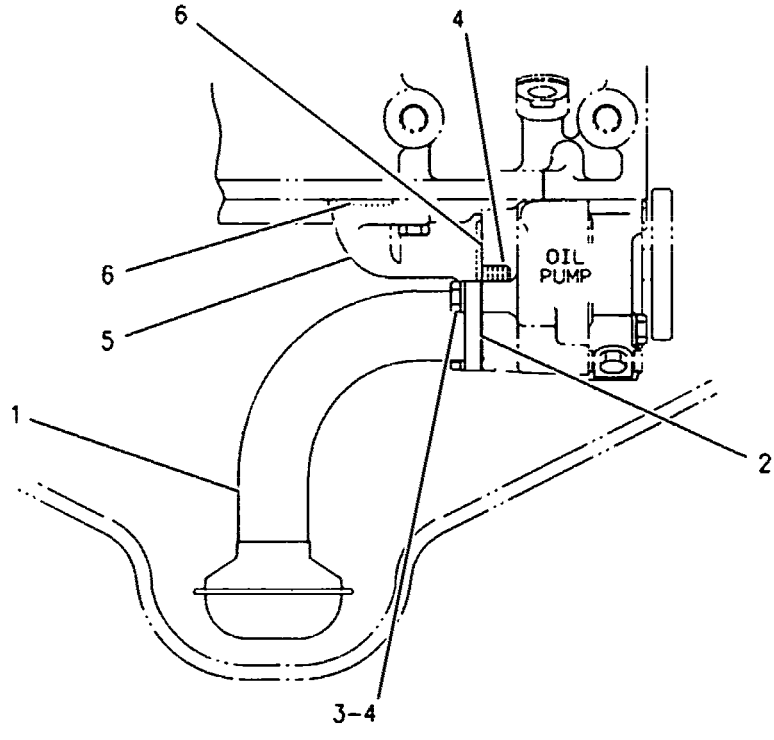

RIGHT SIDE VIEW

GRAPHIC #1 <END> g00892941

LUBRICATION SYSTEM

187-6279 LINES GP-TURBOCHARGER OIL

S/N: 5GG1-UP

PART OF 198-5914 ENGINE AR-COMPLETE

SMCS-1052, 1307 i01884840

NOTE	REF NO	GRAPHIC REF	PART NUMBER	QTY	PART NAME 1 2 3 4 5 6 (PRODUCT LEVEL)	SEE PAGE
	1	1	183-3399	1	CONNECTOR AS	
	1A	1	214-7568	1	SEAL-O-RING (11.89MM ID)	
	1B	1	221-3494	1	SEAL-O-RING (12.83-MM OD) (12.83MM OD)	
	2	1	228-4709	1	HOSE AS	
	3	1	187-6294	1	HOSE AS-OIL SUPPLY	
	4	1	6V-8724	1	ELBOW	
	4A	1	3J-1907	1	SEAL-O-RING (11.89MM ID)	
	4B	1	6V-8397	1	SEAL-O-RING (12.83MM OD)	
	5	1	3P-1156	1	SEAL-O-RING (21.82MM ID)	
	6	1	5P-8066	1	SEAL-O-RING (32.92MM ID)	
M	7	1	9X-2099	2	STUD (M8X1.25-THD)	
	8	1	8T-4224	4	WASHER-HARD (8.8X16X2-MM THK)	
M	9	1	8T-7547	2	BOLT (M8X1.25X30-MM)	

M-METRIC PART

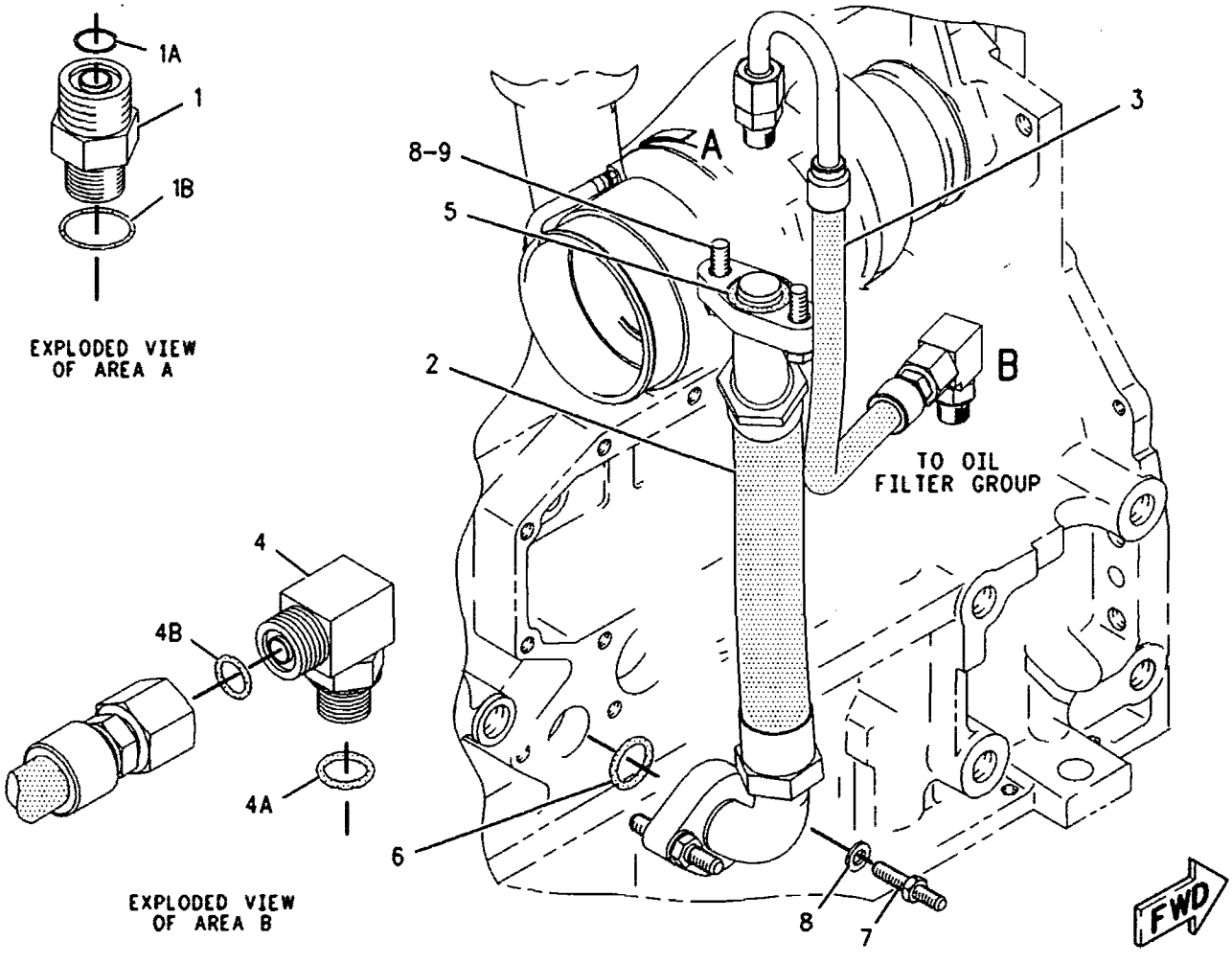

GRAPHIC #1 <END> g00993616

LUBRICATION SYSTEM

200-4497 PUMP GP-ENGINE OIL

S/N: 5GG1597-UP

PART OF 212-2270 PUMP GP-ENGINE OIL

SMCS-1304, 1315 i02162882

NOTE	REF NO	GRAPHIC REF	PART NUMBER	QTY	PART NAME 1 2 3 4 5 6 (PRODUCT LEVEL)	SEE PAGE
	1	1	7W-9737	1	SHAFT	
	2	1	7W-9738	1	WASHER (10.5X38X1.6-MM THK)	
	3	1	7W-9740	1	GEAR AS-IDLER (43-TEETH)	
	3A	1	7W-9930	1	BEARING-SLEEVE	
M	4	1	9X-2305	1	BOLT-LOCKING (M10X1.5X50-MM)	
	5	1	189-8777	1	PUMP GP-ENGINE OIL	

M-METRIC PART

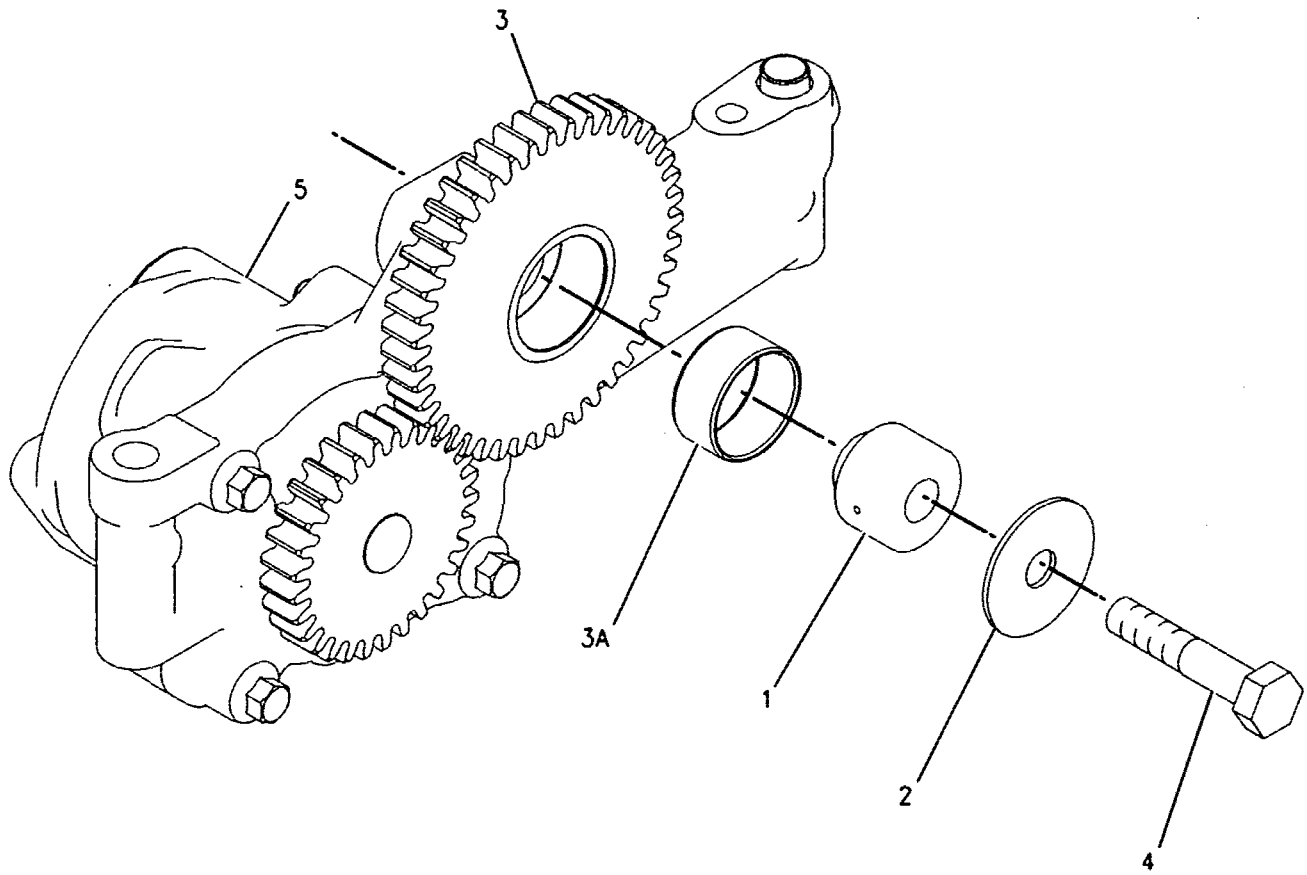

GRAPHIC #1 <END> g00775788

LUBRICATION SYSTEM

212-2269 PUMP GP-ENGINE OIL

S/N: 5GG1-1596

PART OF 212-2270 PUMP GP-ENGINE OIL

SMCS-1304, 1315 i01642781

NOTE	REF NO	GRAPHIC REF	PART NUMBER	QTY	PART NAME 1 2 3 4 5 6 (PRODUCT LEVEL)	SEE PAGE
	1	1	7W-9737	1	SHAFT-OIL PUMP	
	2	1	7W-9738	1	WASHER (10.5X38X1.6MM THK)	
	3	1	7W-9740	1	GEAR AS-IDLER (43 TEETH)	
		1	7W-9930	1	BEARING-SLEEVE	
M	4	1	9X-2305	1	BOLT-LOCKING (M10X1.5 THD)	
	5	1	210-5559	1	PUMP AS-GEROTOR	

M-METRIC PART

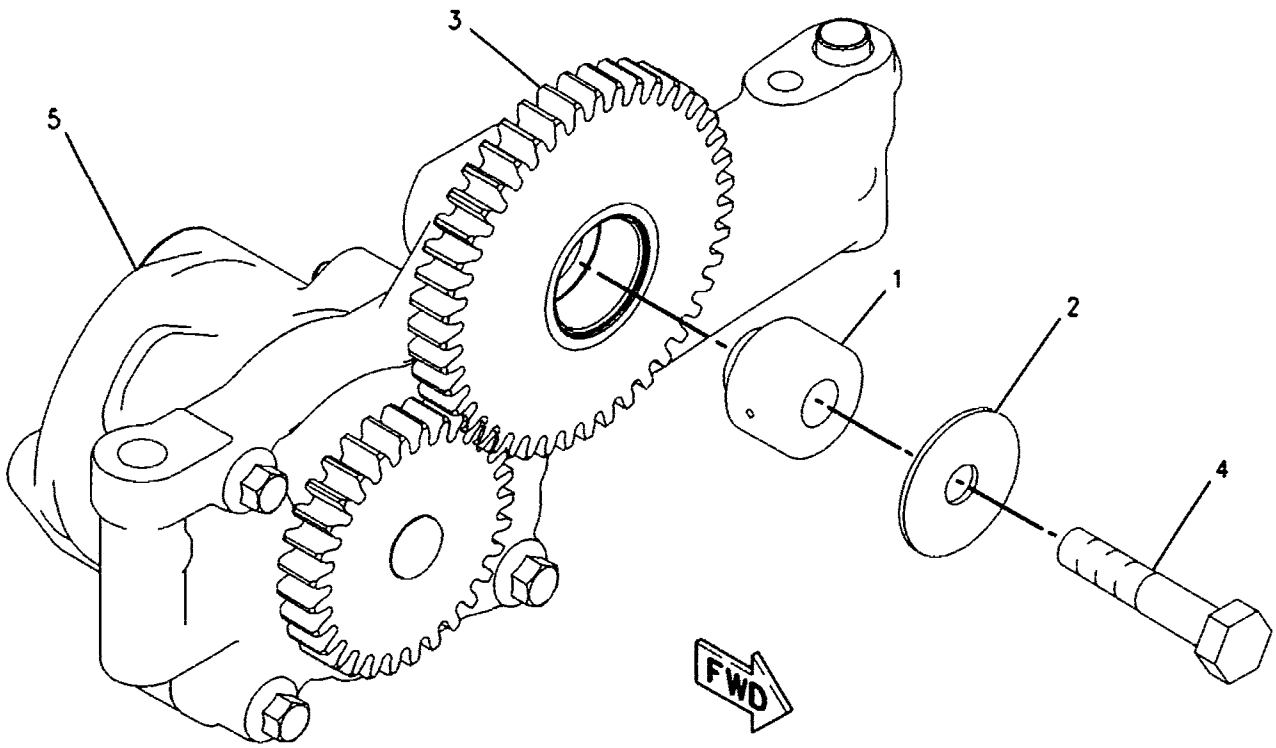

GRAPHIC #1 <END> g00849418

LUBRICATION SYSTEM

212-2270 PUMP GP-ENGINE OIL

S/N: 5GG1-1596

PART OF 198-5915 ENGINE AR-CORE

SMCS-1304, 1315 i01642750

NOTE	REF NO	GRAPHIC REF	PART NUMBER	QTY	PART NAME 1 2 3 4 5 6 (PRODUCT LEVEL)	SEE PAGE
Y	1	1	212-2269	1	PUMP GP-ENGINE OIL	78
M	2	1	6V-5815	2	BOLT (M10X1.5X75MM)	
	3	1	6V-5839	2	WASHER (11X21X2.5MM THK)	

M-METRIC PART
Y-SEPARATE ILLUSTRATION

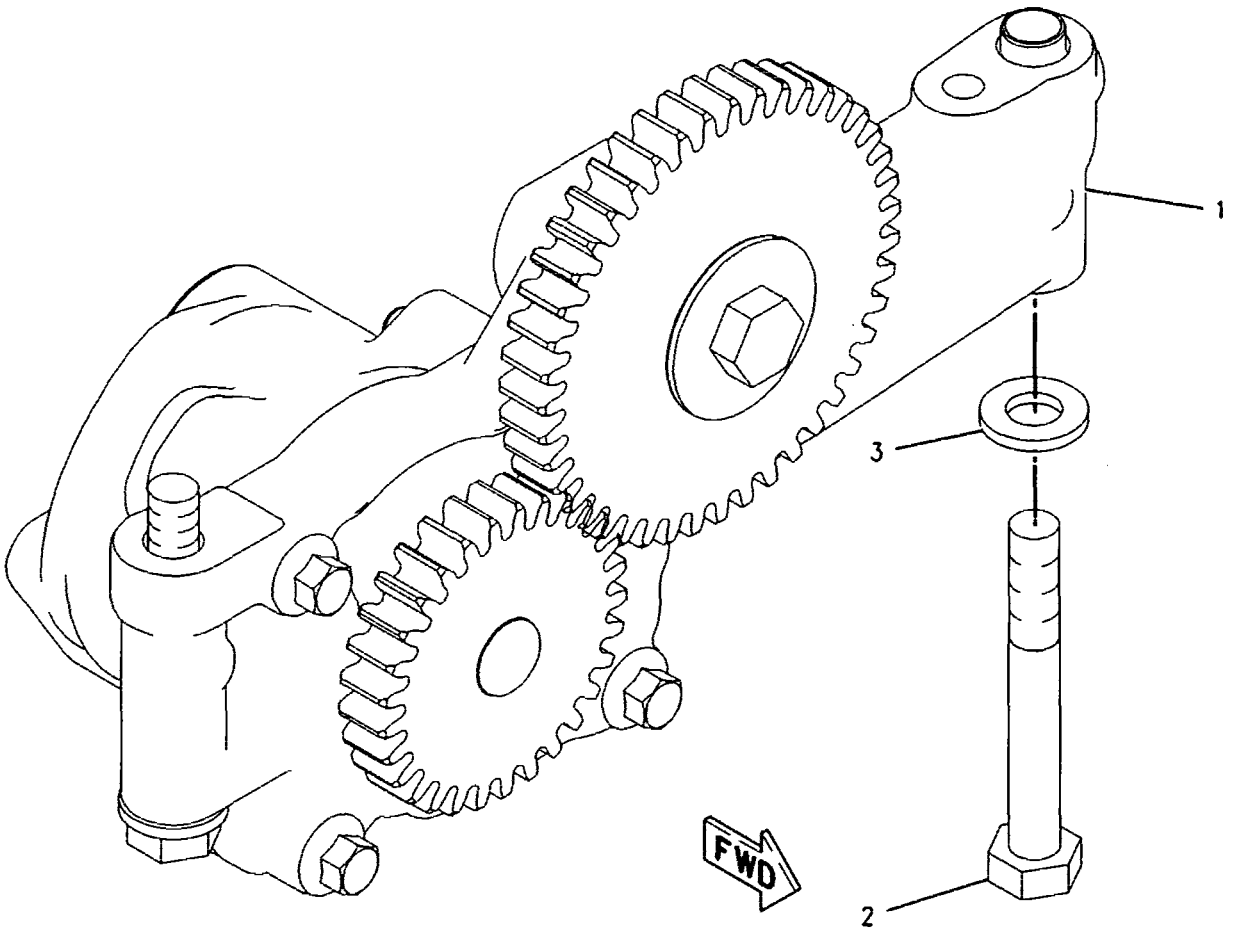

GRAPHIC #1 <END> g00849437

LUBRICATION SYSTEM

212-2270 PUMP GP-ENGINE OIL

S/N: 5GG1597-UP

PART OF 198-5915 ENGINE AR-CORE

SMCS-1304, 1315 i02162884

NOTE	REF NO	GRAPHIC REF	PART NUMBER	QTY	PART NAME 1 2 3 4 5 6 (PRODUCT LEVEL)	SEE PAGE
CY	1	1	**200-4497**	1	PUMP GP-ENGINE OIL	77
M	2	1	**6V-5815**	2	BOLT (M10X1.5X75-MM)	
	3	1	**6V-5839**	2	WASHER (11X21X2.5-MM THK)	

C-CHANGE FROM PREVIOUS TYPE
M-METRIC PART
Y-SEPARATE ILLUSTRATION

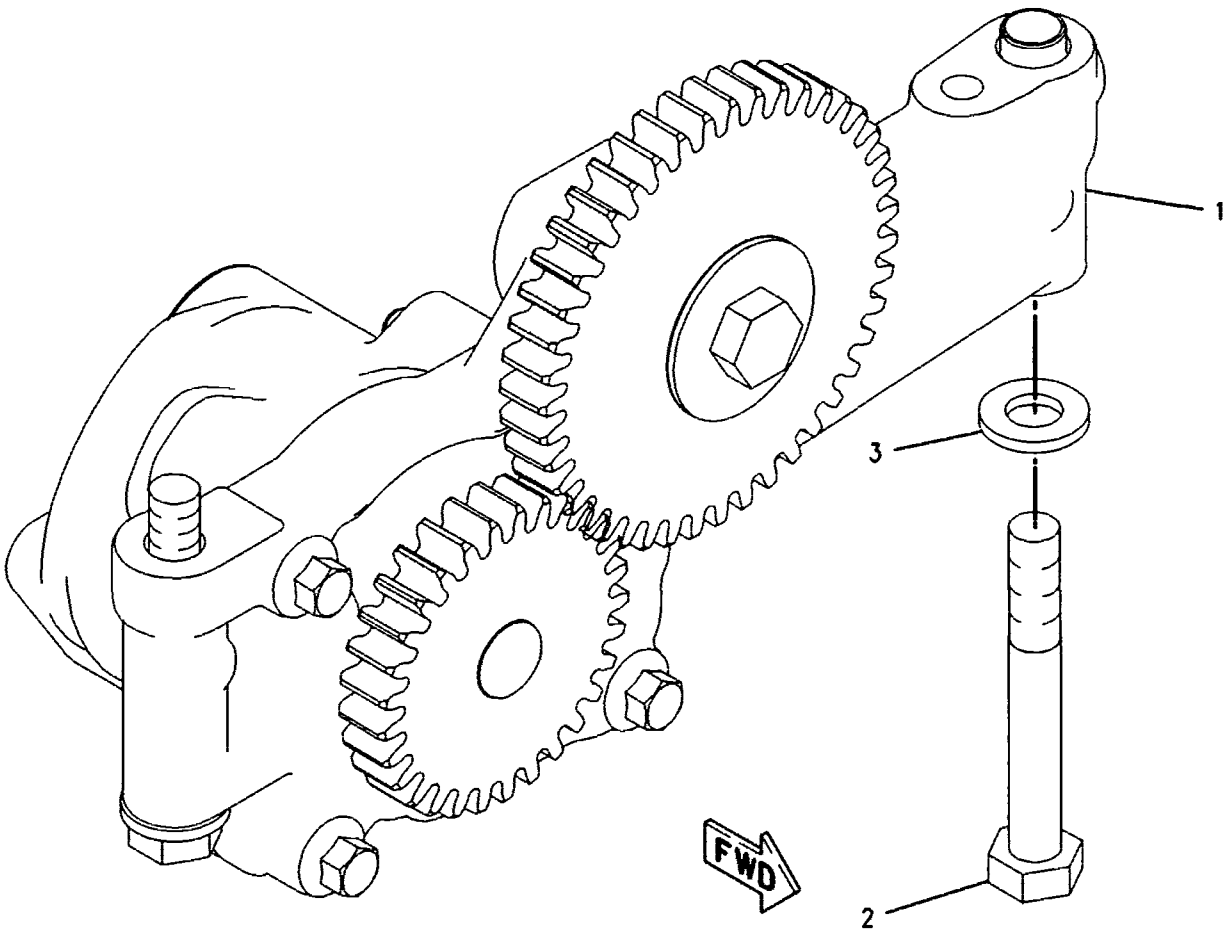

GRAPHIC #1 **<END>** g00849437

2T-2951 VALVE GP-FLUID SAMPLING

S/N: 5GG1-1092

PART OF 198-5914 ENGINE AR-COMPLETE

SMCS-7542 101266079

NOTE	REF NO	GRAPHIC REF	PART NUMBER	QTY	PART NAME 1 2 3 4 5 6 (PRODUCT LEVEL)	SEE PAGE
	1	1	3J-7354	1	SEAL-O-RING	
	2	1	3J-1907	1	SEAL-O-RING	
	3	1	5P-9617	1	ADAPTER	
	4	1	8C-3445	1	CAP-DUST	
	5	1	8C-3446	1	VALVE AS-FLUID SAMPLING	

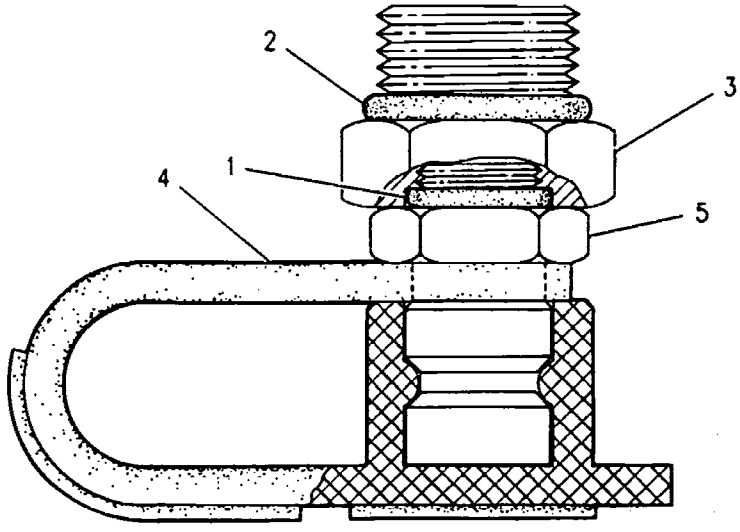

GRAPHIC #1 <END> g00484896

COOLING SYSTEM

117-3643 COOLER GP-ENGINE OIL

S/N: 5GG1-UP
RH MOUNTED
PART OF 198-5915 ENGINE AR-CORE

SMCS-1378 i02103486

NOTE	REF NO	GRAPHIC REF	PART NUMBER	QTY	PART NAME 1 2 3 4 5 6 (PRODUCT LEVEL)	SEE PAGE
R	1	1	**187-8595**	1	CORE AS-ENGINE OIL COOLER	
	2	1	**233-7655**	1	GASKET	
	3	1	**3P-1156**	2	SEAL-O-RING	

R-REMFG PART MAY BE AVAILABLE

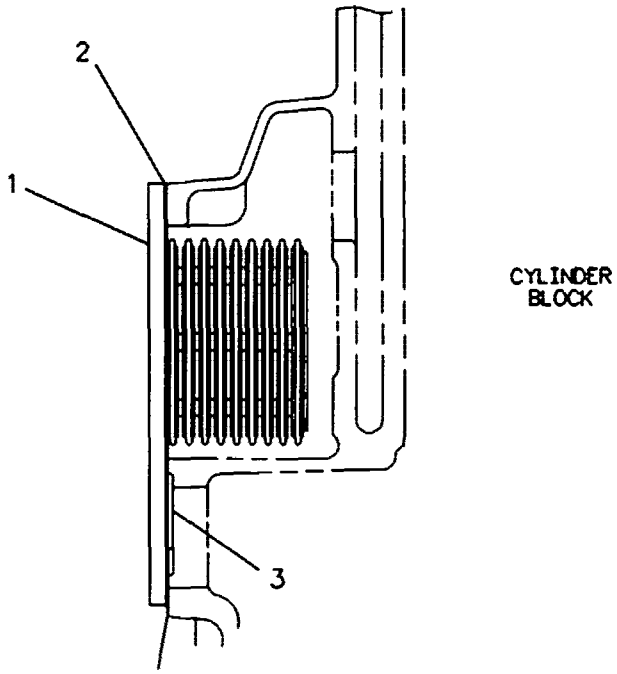

GRAPHIC #1 **<END>** g00117316

191-1932 GUARD GP-FAN

S/N: CRD1-597

PART OF 199-3144 RADIATOR & FAN GP

SMCS-1360 i01866070

NOTE	REF NO	GRAPHIC REF	PART NUMBER	QTY	PART NAME 1 2 3 4 5 6 (PRODUCT LEVEL)	SEE PAGE
	1	1	186-0125	1	GUARD AS	
M		1	8T-3597	10	NUT-WELD (M12X1.75 THD)	
M		1	8T-4219	2	STUD-WELD (M10X1.5X17.5MM)	
	2	1	188-3091	6	BRACKET AS	
	3	1	188-3092	6	PLATE	
M	4	1	8T-4195	12	BOLT (M10X1.5X30MM)	
	5	1	7X-7729	12	WASHER (11X25X3MM THK)	

M-METRIC PART

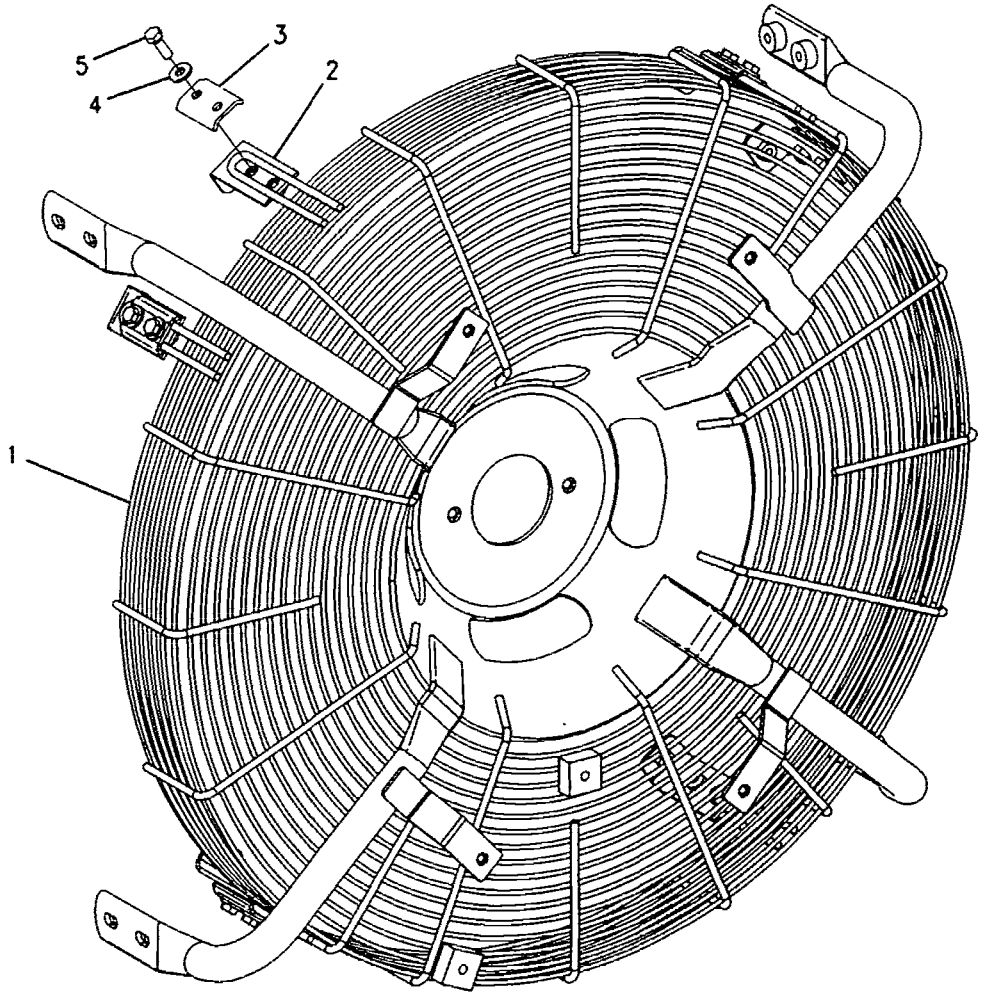

GRAPHIC #1 <END> g00813846

COOLING SYSTEM

236-2508 GUARD GP-FAN

S/N: CRD598-UP

PART OF 199-3144 RADIATOR & FAN GP

SMCS-1360 i02046960

NOTE	REF NO	GRAPHIC REF	PART NUMBER	QTY	PART NAME 1 2 3 4 5 6 (PRODUCT LEVEL)	SEE PAGE
	1	1	188-3091	6	BRACKET AS	
					(EACH INCLUDES)	
M		1	8T-3490	3	NUT-WELD (M10X1.5-THD)	
	2	1	188-3092	6	PLATE	
	3	1	236-2509	1	GUARD AS	
M		1	8T-3597	10	NUT-WELD (M12X1.75-THD)	
	4	1	7X-7729	12	WASHER (11X25X3-MM THK)	
M	5	1	8T-4195	12	BOLT (M10X1.5X30-MM)	

M-METRIC PART

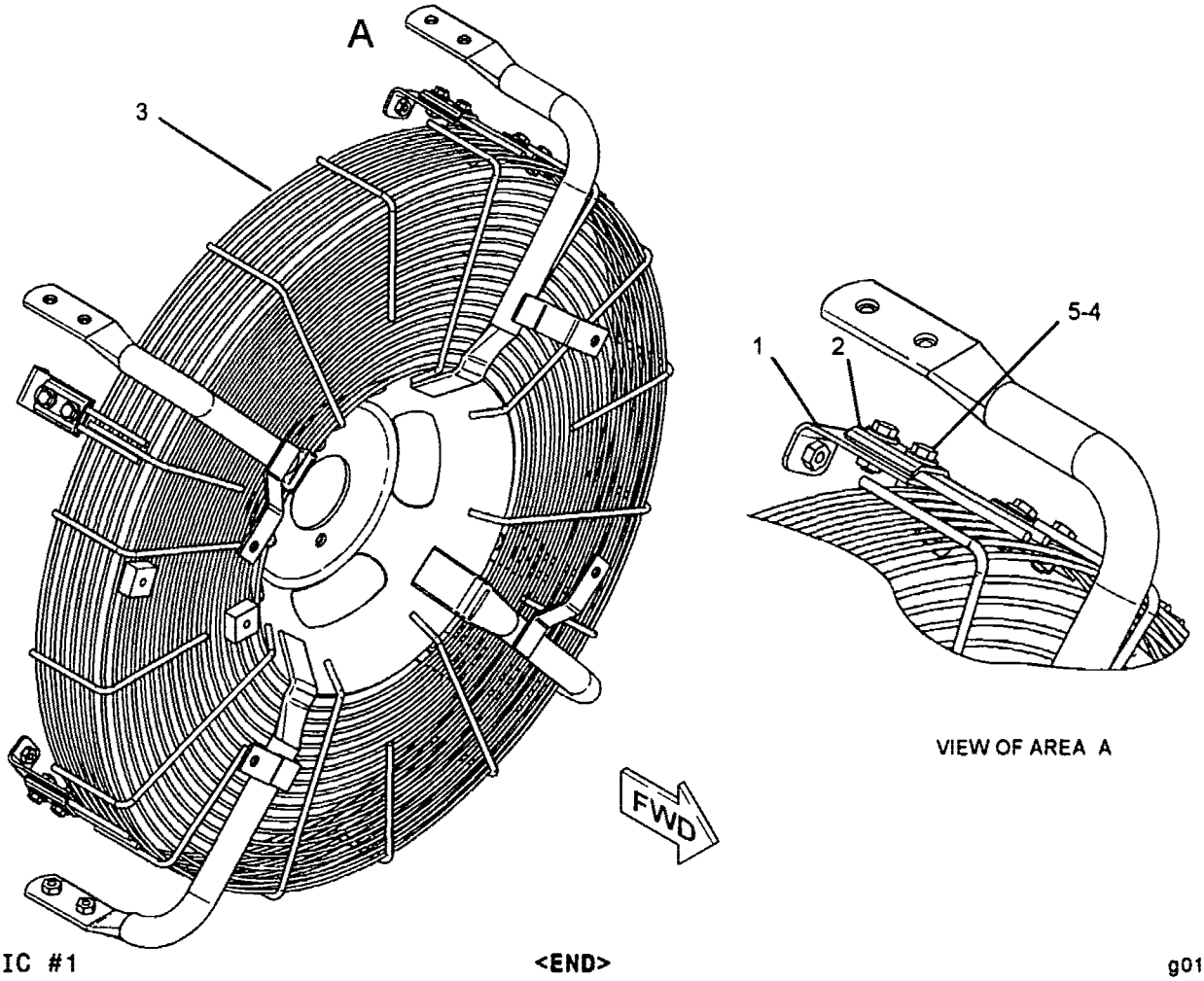

VIEW OF AREA A

GRAPHIC #1 <END> g01048717

168-2037 LINES GP-WATER

S/N: CRD1-UP
PART OF 201-8906 COOLER AR-AXLE OIL
AN ATTACHMENT

SMCS-1380 i01117948

NOTE	REF NO	GRAPHIC REF	PART NUMBER	QTY	PART NAME 1 2 3 4 5 6 (PRODUCT LEVEL)	SEE PAGE
	1	1	5D-1026	4	CLAMP-HOSE	
	2	1	6V-1438	2	CONNECTOR	
	3	1	8T-0119	1	ELBOW	
	4	1	3D-2824	1	SEAL-O-RING	
	5	1	3K-0360	3	SEAL-O-RING	
	6	1	6V-1722	1	ADAPTER-O-RING	
BE	7	1	5P-0767		HOSE	

B-USE AS REQUIRED
E-ORDER BY THE CENTIMETER

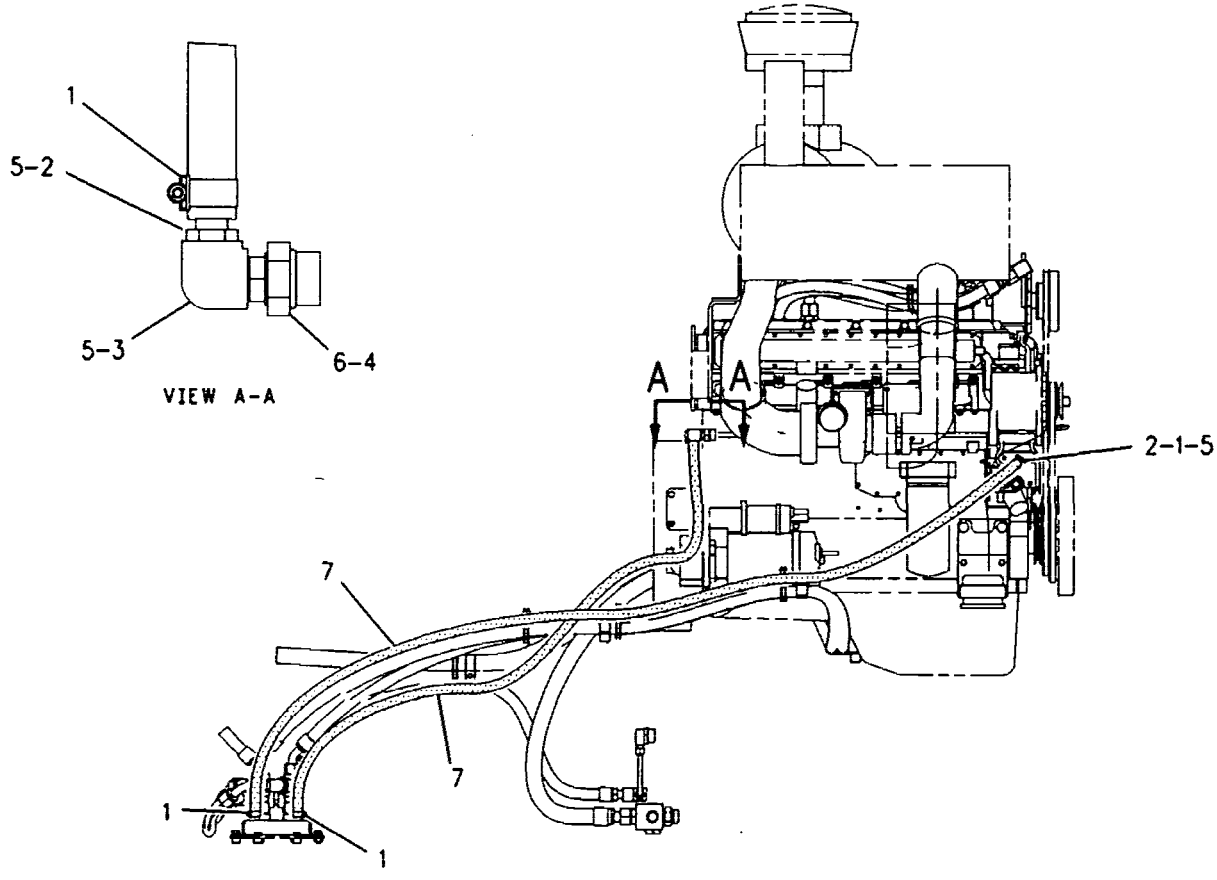

LEFT SIDE VIEW

GRAPHIC #1 <END> g00603732

COOLING SYSTEM

192-2201 LINES GP-WATER

S/N: 5GG1-1636

PART OF 198-5914 ENGINE AR-COMPLETE

SMCS-1380 **i01788670**

NOTE	REF NO	GRAPHIC REF	PART NUMBER	QTY	PART NAME 1 2 3 4 5 6 (PRODUCT LEVEL)	SEE PAGE
	1	1	**133-3730**	1	HOUSING-WATER REGULATOR	
	2	1	**136-0607**	1	PIPE	
	3	1	**136-0812**	1	GASKET	
	4	1	**126-5466**	1	GASKET	
M	5	1	**5P-8347**	2	BOLT (M8X1.25X70-MM)	
M	6	1	**6V-5223**	1	BOLT (M8X1.25X100-MM)	
E	7	1	**5P-0763**		HOSE (76CM)	
	8	1	**8T-4983**	2	CLAMP-HOSE	
M	9	1	**6V-3940**	5	BOLT (M8X1.25X25-MM)	
	10	1	**7X-7731**	1	PLUG-PIPE	
	12	1	**126-5869**	1	REGULATOR-WATER TEMPERATURE (94-DEG C)	
	13	1	**7W-6492**	4	PLUG-PIPE	
	14	1	**9M-1974**	6	WASHER-HARD (8.8X16X2-MM THK)	
	15	1	**8T-6767**	1	PLUG-PIPE	
	16	1	**9S-8005**	1	PLUG	
	17	1	**3K-0360**	1	SEAL-O-RING	
M	18	1	**8T-0100**	1	BOLT (M8X1.25X60-MM)	
	19	1	**157-0670**	1	CAP-DUST	
	20	1	**154-9025**	1	VALVE-FLUID SAMPLING	
	21	1	**3B-7722**	1	BUSHING-PIPE	

E-ORDER BY THE CENTIMETER
M-METRIC PART

192-2201 LINES GP-WATER *(contd.)* i01788670

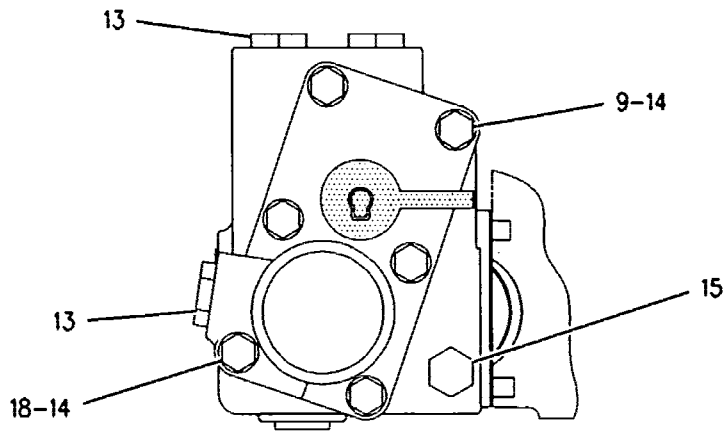

VIEW A-A

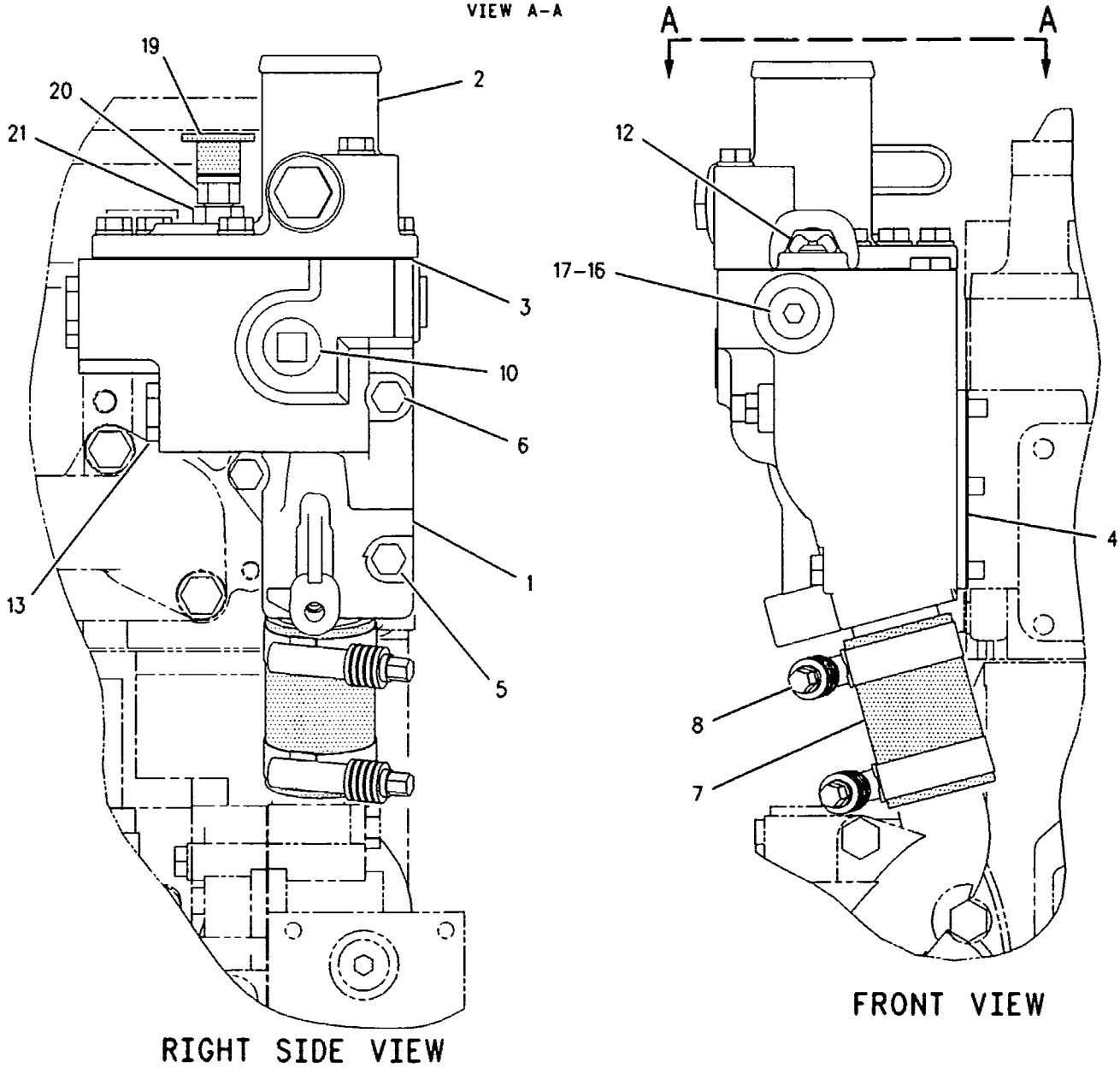

RIGHT SIDE VIEW

FRONT VIEW

GRAPHIC #1 <END> g00871011

COOLING SYSTEM

192-2201 LINES GP-WATER

S/N: 5GG1637-UP

PART OF 198-5914 ENGINE AR-COMPLETE

SMCS-1380 **i02218640**

NOTE	REF NO	GRAPHIC REF	PART NUMBER	QTY	PART NAME 1 2 3 4 5 6 (PRODUCT LEVEL)	SEE PAGE
	1	1	**133-3730**	1	HOUSING-WATER REGULATOR	
	2	1	**136-0607**	1	PIPE	
	3	1	**136-0812**	1	GASKET (TEMPERATURE REGULATOR HOUSING)	
	4	1	**126-5466**	1	GASKET	
M	5	1	**5P-8347**	2	BOLT (M8X1.25X70-MM)	
M	6	1	**6V-5223**	1	BOLT (M8X1.25X100-MM)	
E	7	1	**5P-0763**		HOSE (76-CM)	
	8	1	**237-5176**	2	CLAMP-BAND	
M	9	1	**6V-3940**	5	BOLT (M8X1.25X25-MM)	
	10	1	**7X-7731**	1	PLUG-PIPE	
	12	1	**126-5869**	1	REGULATOR-WATER TEMPERATURE (94-DEG C) (COOLANT)	
	13	1	**7W-6492**	4	PLUG-PIPE	
	14	1	**9M-1974**	6	WASHER-HARD (8.8X16X2-MM THK)	
C	15	1	**8T-6767**	2	PLUG-PIPE	
	16	1	**9S-8005**	1	PLUG	
	17	1	**3K-0360**	1	SEAL-O-RING	
M	18	1	**8T-0100**	1	BOLT (M8X1.25X60-MM)	

C-CHANGE FROM PREVIOUS TYPE
E-ORDER BY THE CENTIMETER
M-METRIC PART

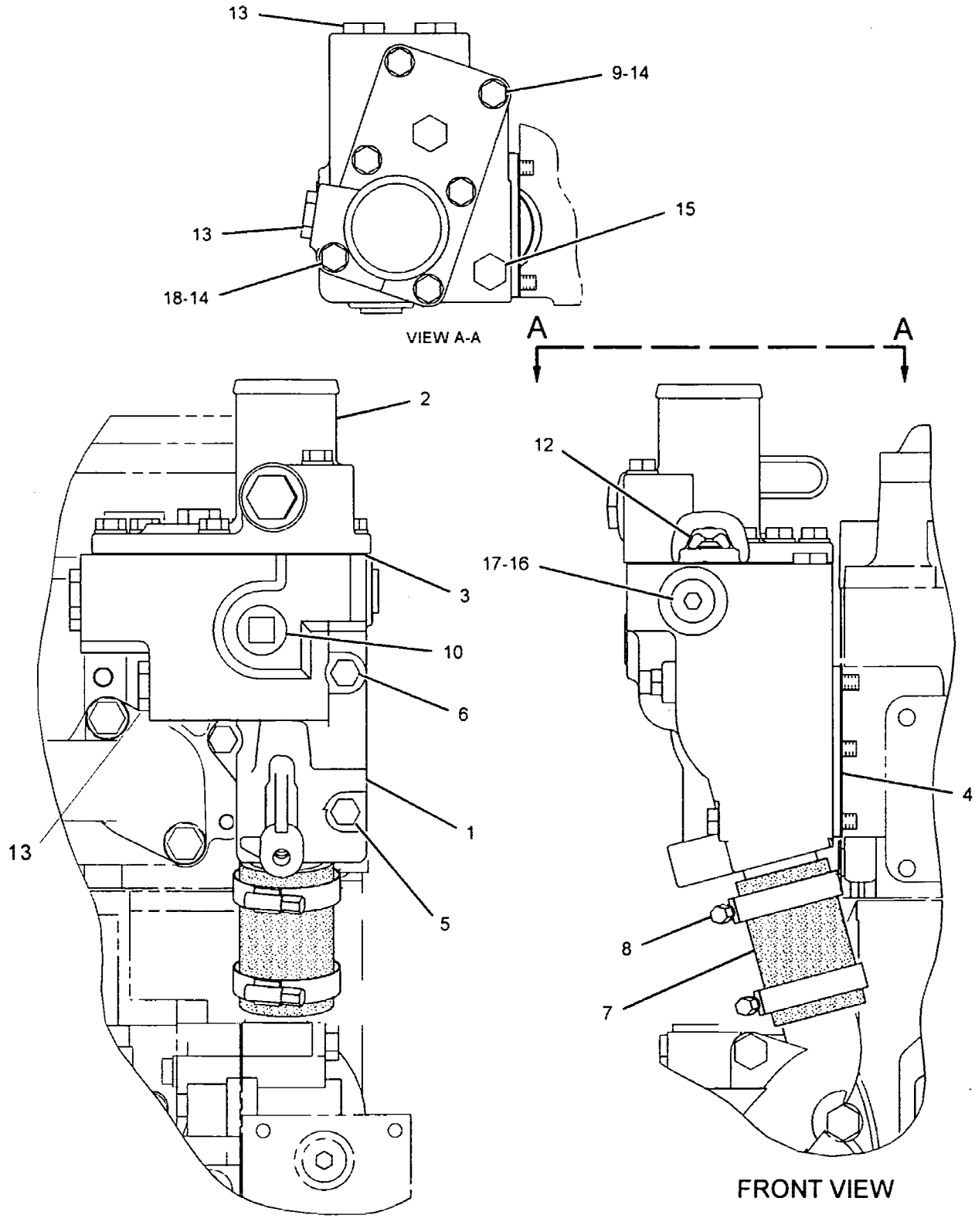

GRAPHIC #1 **<END>** g01120306

COOLING SYSTEM

198-2761 LINES GP-WATER

S/N: CRD1-597

PART OF 199-2816 CHASSIS AR

SMCS-1380 **i01866108**

NOTE	REF NO	GRAPHIC REF	PART NUMBER	QTY	PART NAME 1 2 3 4 5 6 (PRODUCT LEVEL)	SEE PAGE
	1	1	**1P-4278**	4	CLAMP-HOSE	
	2	1	**6V-1355**	4	ELBOW	
	3	1	**7K-1181**	2	STRAP-CABLE	
	4	1	**8T-4983**	4	CLAMP-HOSE	
	5	1	**9Y-9236**	1	BODY AS-GAUGE	
	6	1	**132-7370**	2	HOSE	
	7	1	**158-0851**	1	CLIP	
	8	1	**173-0064**	1	ELBOW	
	9	1	**198-9331**	1	HOSE	
Y	10	1	*204-7968*	1	TANK GP-RADIATOR TOP	107
	11	1	**224-5882**	1	TUBE AS	
	12	1	**205-7087**	1	HOSE	
	13	1	**214-9457**	1	TUBE	
	14	1	**124-0174**	1	CLIP	
	15	1	**3J-7354**	5	SEAL-O-RING	
	16	1	**4D-9517**	2	CLIP	
	17	1	**4S-1962**	1	CLIP	
M	18	1	**5C-7261**	1	NUT (M8X1.25-THD)	
	19	1	**5P-4116**	1	WASHER-HARD (8.8X20.5X2-MM THK)	
	20	1	**7M-8485**	2	SEAL-O-RING	
	21	1	**7X-7729**	7	WASHER (11X25X3-MM THK)	
	22	1	**8T-4121**	1	WASHER-HARD (11X21X2.5-MM THK)	
M	23	1	**8T-4133**	3	NUT (M10X1.5-THD)	
M	24	1	**8T-4136**	4	BOLT (M10X1.5X25-MM)	
M	25	1	**8T-4137**	1	BOLT (M10X1.5X20-MM)	
	26	1	**157-0670**	2	CAP-DUST	
	27	1	**8T-4984**	8	CLAMP-HOSE	
E	28	1	**5P-6442**		HOSE (89CM)	
E	29	1	**5P-1251**		HOSE (128CM)	
E	30	1	**7Y-1976**		HOSE (179CM)	
	31	1	**154-9023**	1	VALVE-SAMPLING	

E-ORDER BY THE CENTIMETER
M-METRIC PART
Y-SEPARATE ILLUSTRATION

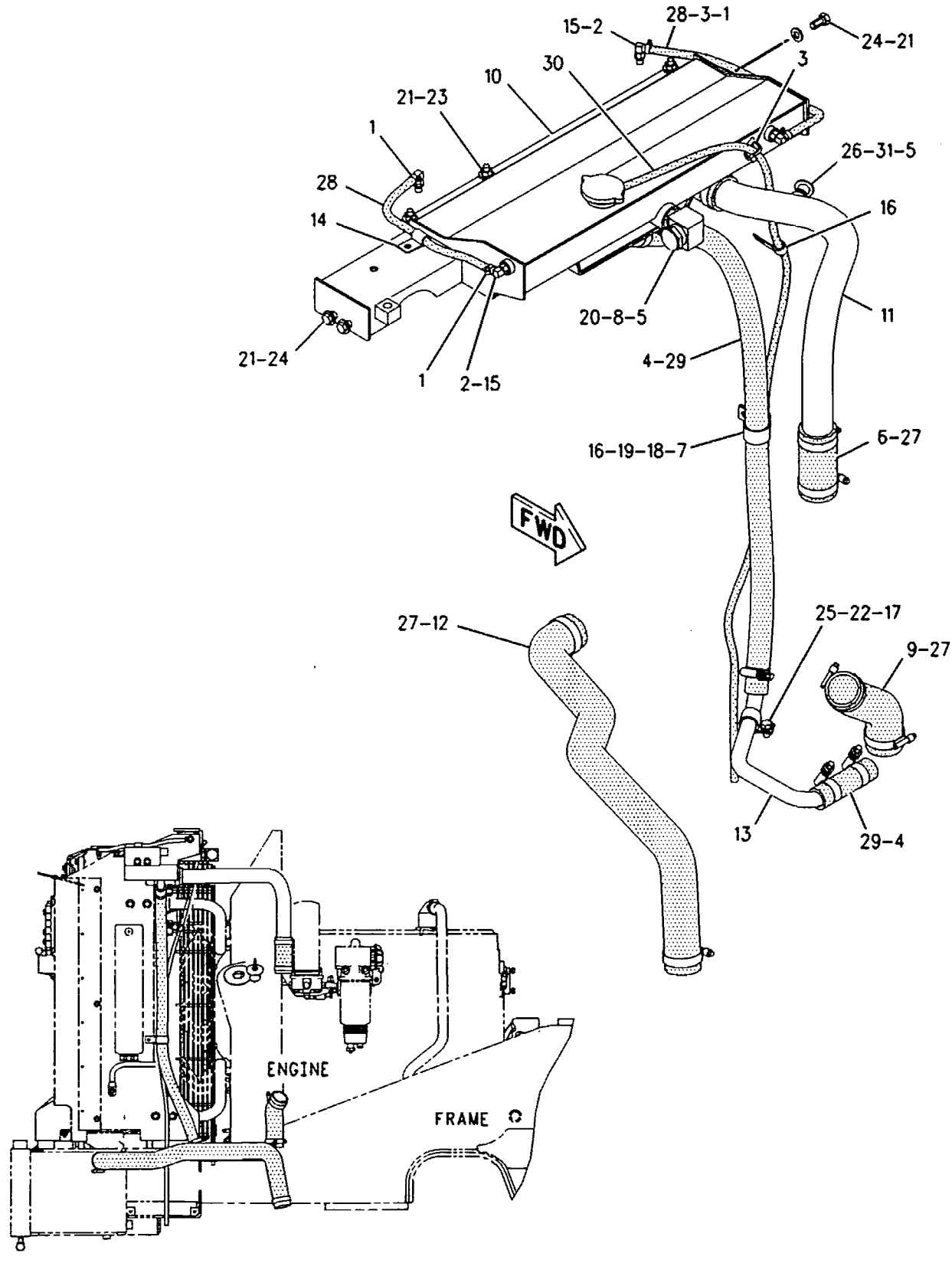

RIGHT SIDE VIEW

GRAPHIC #1 **<END>** g00951406

COOLING SYSTEM

198-2761 LINES GP-WATER

S/N: CRD598-UP

PART OF 199-2816 CHASSIS AR

SMCS-1380 102009702

NOTE	REF NO	GRAPHIC REF	PART NUMBER	QTY	PART NAME 1 2 3 4 5 6 (PRODUCT LEVEL)	SEE PAGE
	1	1	1P-4278	4	CLAMP-HOSE	
	2	1	6V-1355	4	ELBOW	
	3	1	7K-1181	2	STRAP-CABLE	
	4	1	8T-4983	4	CLAMP-HOSE	
	5	1	9Y-9236	1	BODY AS-GAUGE	
	6	1	132-7370	2	HOSE	
	7	1	158-0851	1	CLIP	
	8	1	173-0064	1	ELBOW	
	9	1	198-9331	1	HOSE	
CY	10	1	*236-2325*	1	TANK GP-RADIATOR TOP	108
	11	1	224-5882	1	TUBE AS	
	12	1	205-7087	1	HOSE	
	13	1	214-9457	1	TUBE	
	14	1	124-0174	1	CLIP	
	15	1	3J-7354	5	SEAL-O-RING	
	16	1	4D-9517	2	CLIP	
	17	1	4S-1962	1	CLIP	
M	18	1	5C-7261	1	NUT (M8X1.25-THD)	
	19	1	5P-4116	1	WASHER-HARD (8.8X20.5X2-MM THK)	
	20	1	7M-8485	2	SEAL-O-RING	
	21	1	7X-7729	7	WASHER (11X25X3-MM THK)	
	22	1	8T-4121	1	WASHER-HARD (11X21X2.5-MM THK)	
M	23	1	8T-4133	3	NUT (M10X1.5-THD)	
M	24	1	8T-4136	4	BOLT (M10X1.5X25-MM)	
M	25	1	8T-4137	1	BOLT (M10X1.5X20-MM)	
	26	1	157-0670	2	CAP-DUST	
	27	1	8T-4984	8	CLAMP-HOSE	
E	28	1	5P-6442		HOSE (89CM)	
E	29	1	5P-1251		HOSE (128CM)	
E	30	1	7Y-1976		HOSE (179CM)	
	31	1	154-9023	1	VALVE-SAMPLING	

C-CHANGE FROM PREVIOUS TYPE
E-ORDER BY THE CENTIMETER
M-METRIC PART
Y-SEPARATE ILLUSTRATION

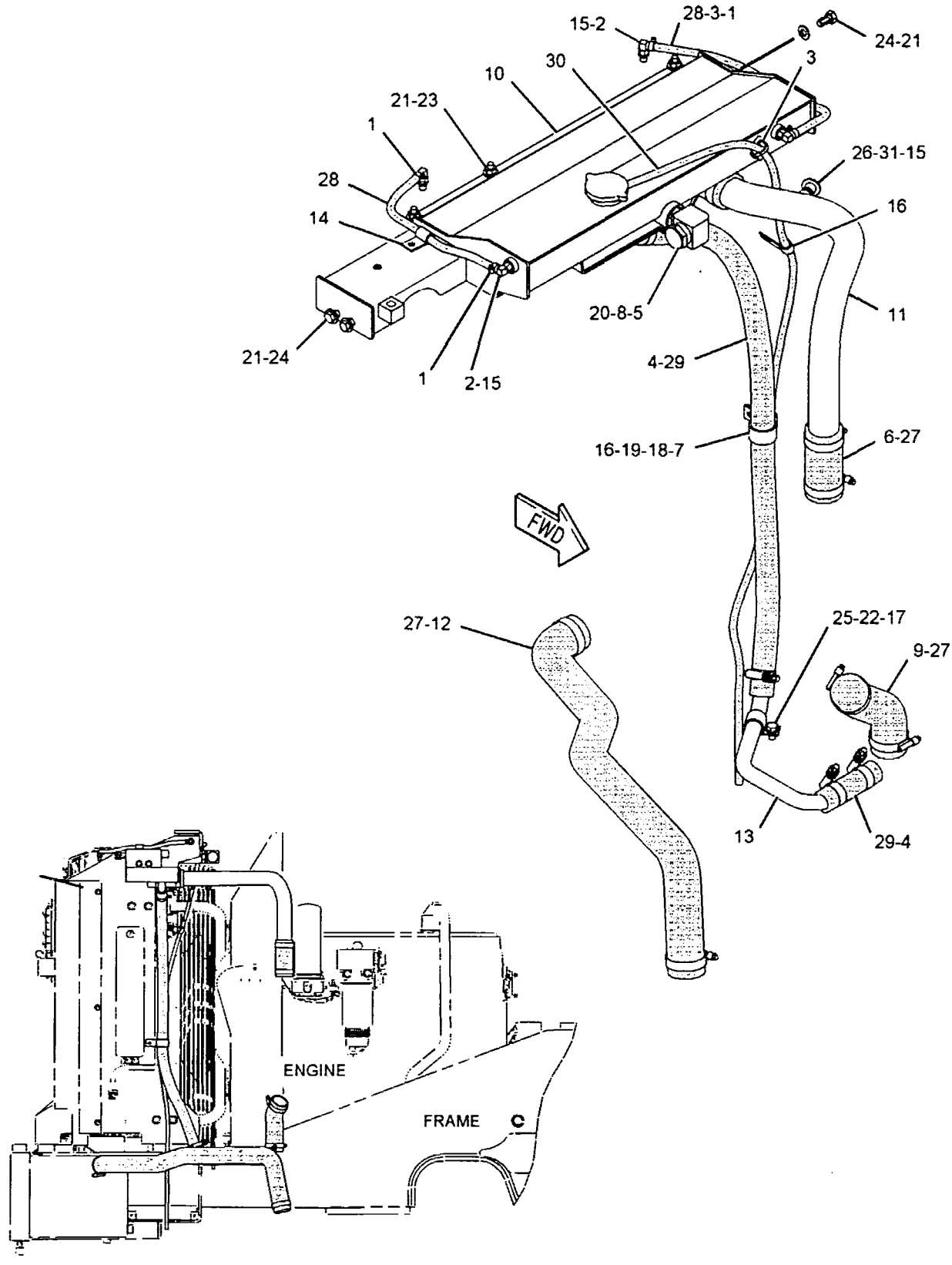

RIGHT SIDE VIEW

GRAPHIC #1 **<END>** g01040710

COOLING SYSTEM

193-9237 PUMP GP-WATER

S/N: 5GG1-5810

PART OF 198-5914 ENGINE AR-COMPLETE

SMCS-1361 **i01972352**

NOTE	REF NO	GRAPHIC REF	PART NUMBER	QTY	PART NAME 1 2 3 4 5 6 (PRODUCT LEVEL)	SEE PAGE
Y	1	1	**193-9238**	1	PUMP GP-WATER	96
M	2	1	**8T-0644**	4	BOLT (M10X1.50X90MM)	
	3	1	**2M-4453**	1	SEAL-O-RING	
	4	1	**4J-0524**	1	SEAL-O-RING	

M-METRIC PART
Y-SEPARATE ILLUSTRATION

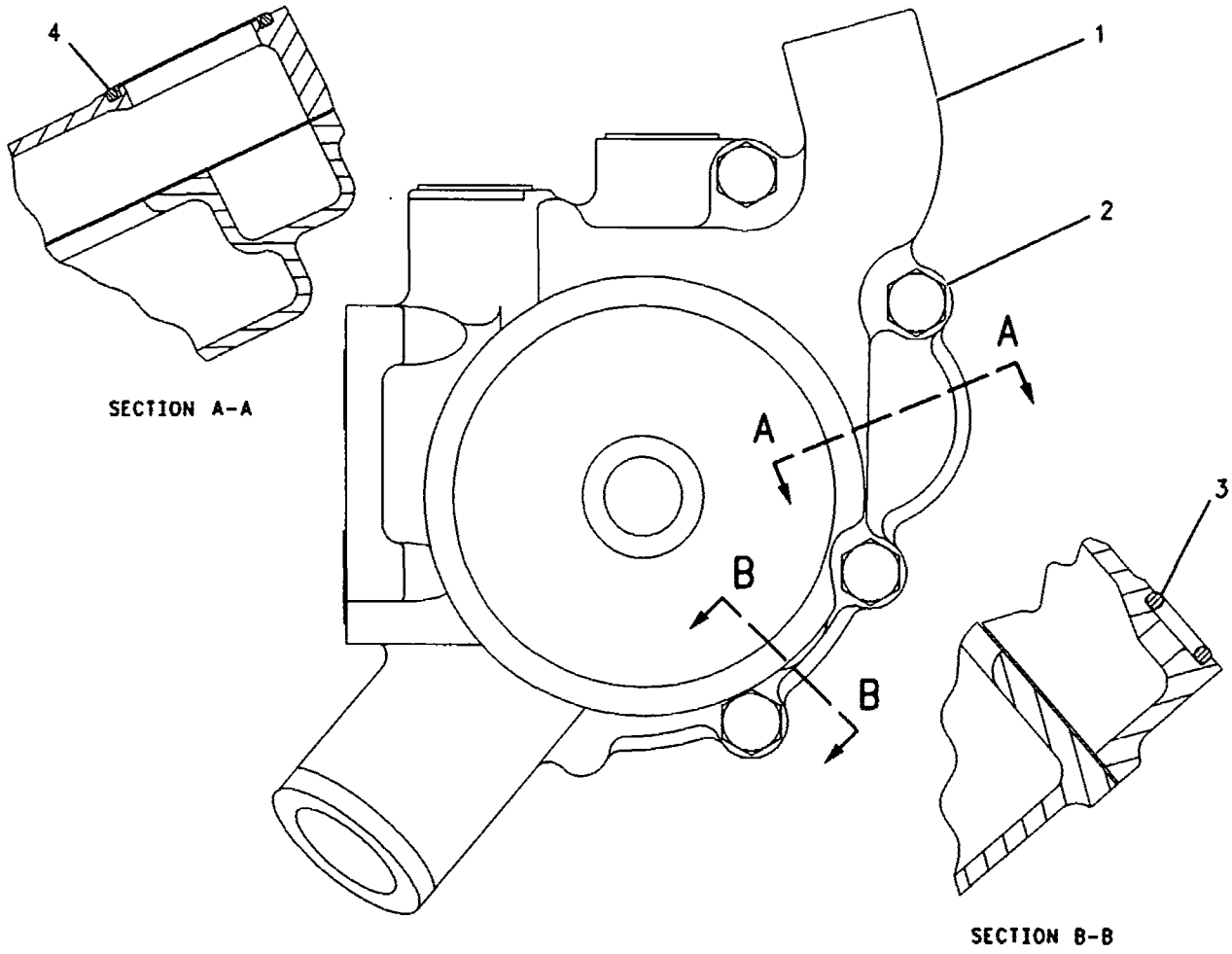

GRAPHIC #1 **<END>** g00772077

COOLING SYSTEM

193-9237 PUMP GP-WATER

S/N: 5GG5811-UP

PART OF 198-5914 ENGINE AR-COMPLETE

SMCS-1361 i02129608

NOTE	REF NO	GRAPHIC REF	PART NUMBER	QTY	PART NAME 1 2 3 4 5 6 (PRODUCT LEVEL)	SEE PAGE
CY	2	1	236-4413	1	PUMP GP-WATER	98
C	3	1	148-8395	2	PLUG AS	
					(EACH INCLUDES)	
		1	3K-0360	1	SEAL-O-RING	
		1	9S-8005	1	PLUG	
C	4	1	148-8409	2	PLUG AS	
					(EACH INCLUDES)	
		1	3D-2824	1	SEAL-O-RING	
		1	9S-8008	1	PLUG	
C	5	1	164-5619	1	PLUG AS	
		1	2M-9780	1	SEAL-O-RING	
		1	9S-8006	1	PLUG	
	6	1	2M-4453	1	SEAL-O-RING	
C	7	1	3J-3679	1	PLUG AS	
		1	1J-9671	1	SEAL-O-RING	
		1	9S-8003	1	PLUG	
	8	1	4J-0524	1	SEAL-O-RING	
M	9	1	8T-0644	4	BOLT (M10X1.5X90-MM)	

C-CHANGE FROM PREVIOUS TYPE
M-METRIC PART
Y-SEPARATE ILLUSTRATION

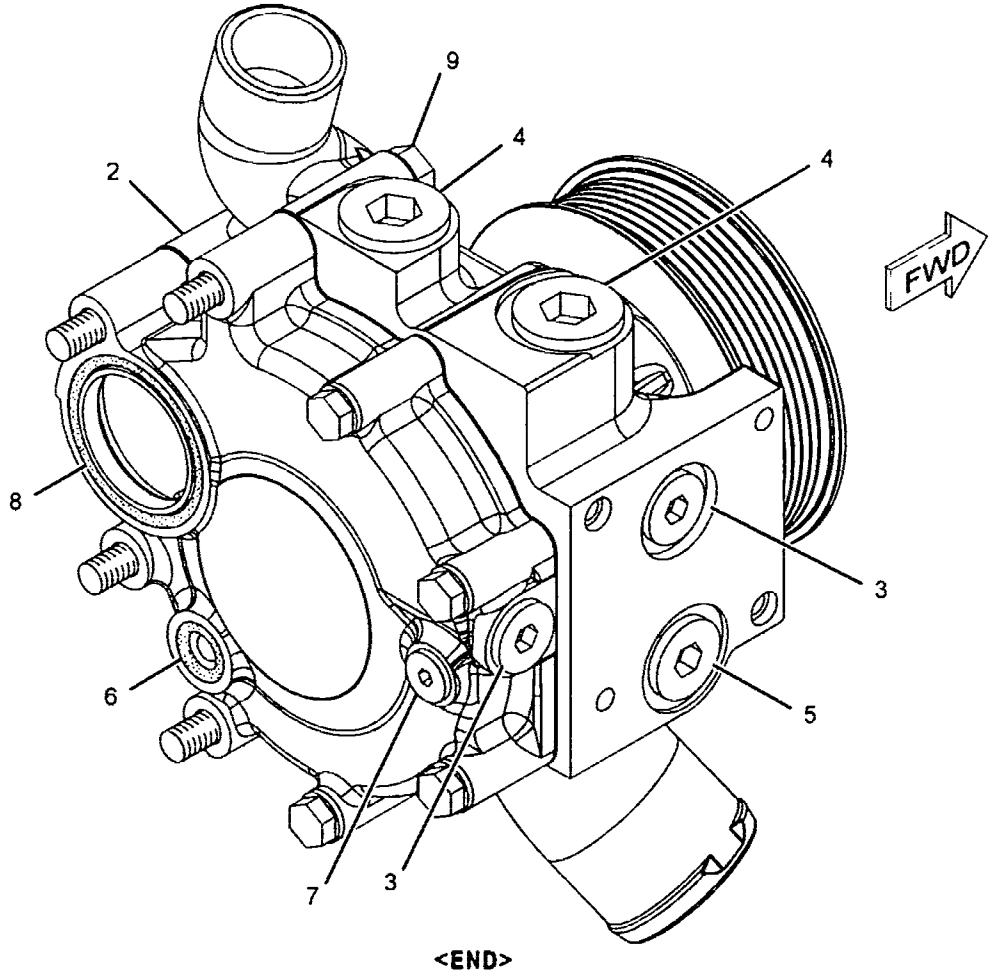

GRAPHIC #1 <END> g01086088

COOLING SYSTEM

193-9238 PUMP GP-WATER

S/N: 5GG1-5810

PART OF 193-9237 PUMP GP-WATER

SMCS-1361 i01991825

NOTE	REF NO	GRAPHIC REF	PART NUMBER	QTY	PART NAME 1 2 3 4 5 6 (PRODUCT LEVEL)	SEE PAGE
R	1	1	193-9239	1	PUMP AS-WATER	
	1A	1	117-3437	1	PULLEY	
	1B	1	119-3025	1	FILTER (WATER) (PUMP)	
	1C	1	129-1170	1	SHAFT AS	
	1D	1	147-5088	1	SEAL AS-WATER PUMP	
	1E	1	152-3952	1	IMPELLER-PUMP	
	1F	1	193-9240	1	HOUSING-PUMP	
	2	1	4W-7592	1	GASKET	
	3	1	4W-0253	1	COVER	
M	4	1	6V-3918	4	BOLT (M8X1.25X50-MM)	
	5	1	9M-1974	4	WASHER-HARD (8.8X16X2-MM THK)	
	6	1	9S-8003	1	PLUG	
	7	1	1J-9671	1	SEAL-O-RING	
	8	1	9S-8005	2	PLUG	
	9	1	3K-0360	2	SEAL-O-RING	
	10	1	9S-8008	2	PLUG	
	11	1	3D-2824	2	SEAL-O-RING	
	12	1	9S-8006	1	PLUG	
	13	1	2M-9780	1	SEAL-O-RING	

M-METRIC PART
R-REMFG PART MAY BE AVAILABLE

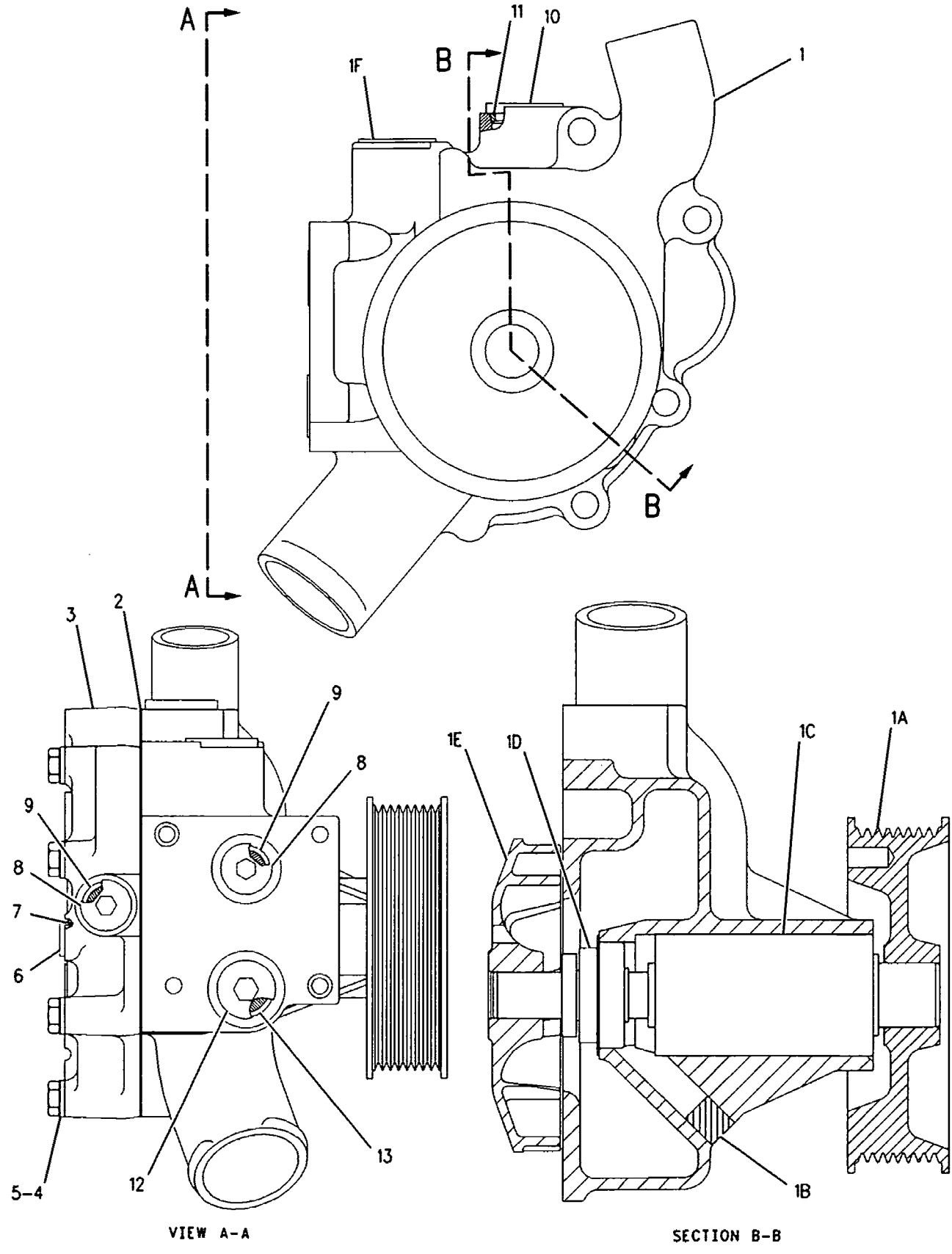

GRAPHIC #1 **<END>** g00772119

236-4413 PUMP GP-WATER–COOLANT

S/N: 5GG5811-UP

PART OF 193-9237 PUMP GP-WATER

SMCS-1361 i02116273

NOTE	REF NO	GRAPHIC REF	PART NUMBER	QTY	PART NAME 1 2 3 4 5 6 (PRODUCT LEVEL)	SEE PAGE
	1	1	4W-0253	1	COVER	
	2	1	4W-7592	1	GASKET	
R	3	1	236-4420	1	PUMP AS-WATER	
		1	117-3437	1	PULLEY	
		1	119-3025	1	FILTER (WATER) (PUMP)	
		1	129-1170	1	SHAFT AS	
		1	147-5088	1	SEAL AS-WATER PUMP	
		1	152-3952	1	IMPELLER-PUMP	
		1	236-4421	1	HOUSING-PUMP	
M	4	1	6V-3918	4	BOLT (M8X1.25X50-MM)	
	5	1	9M-1974	4	WASHER-HARD (8.8X16X2-MM THK)	

M-METRIC PART
R-REMFG PART MAY BE AVAILABLE

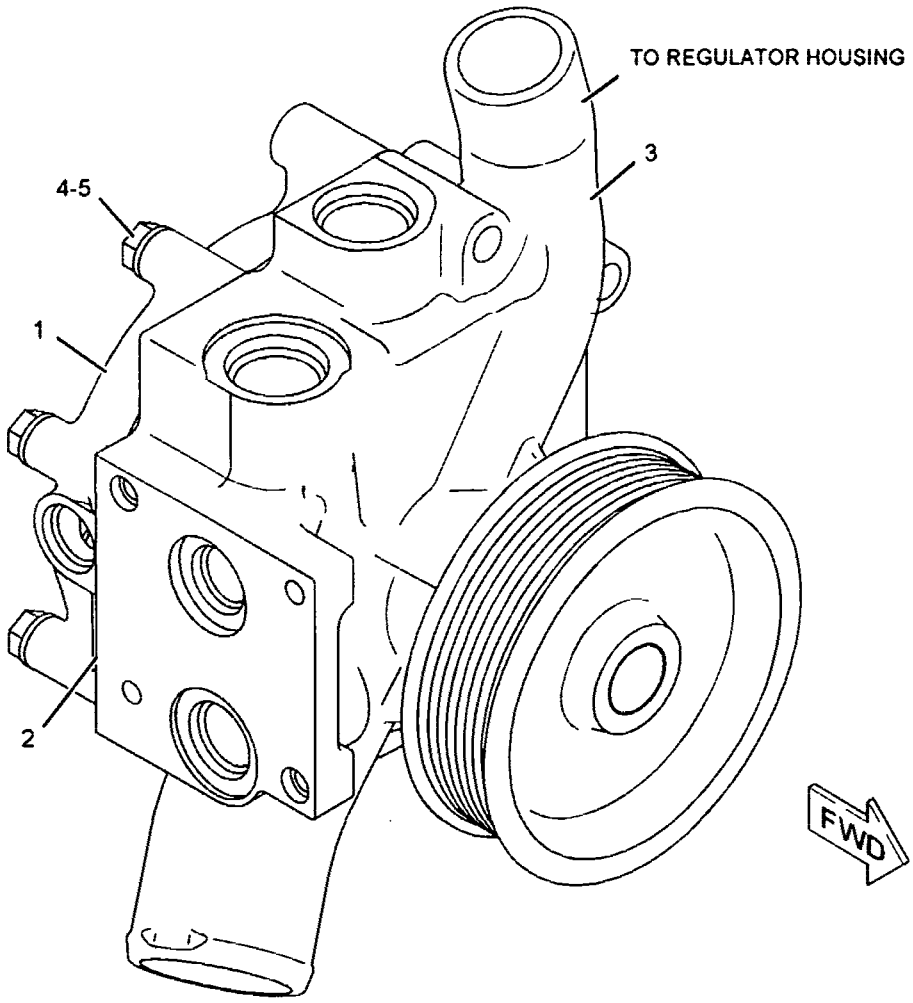

GRAPHIC #1 <END> g01040531

COOLING SYSTEM

199-3144 RADIATOR & FAN GP

S/N: CRD1-597

PART OF 199-2816 CHASSIS AR

SMCS-1353, 1356 i01866434

NOTE	REF NO	GRAPHIC REF	PART NUMBER	QTY	PART NAME 1 2 3 4 5 6 (PRODUCT LEVEL)	SEE PAGE
	1	1	3R-8530	4	BOSS (31.75-MM THK)	
	2	1	4E-1384	1	BUMPER-CONICAL	
	3	1	5V-8780	1	KNOB	
	4	1	8T-2893	2	LOCK AS-CYLINDER	
					(EACH INCLUDES)	
		1	7F-9223	1	LOCKWASHER	
		1	8T-5004	1	SCREW-MACHINE (1/4-28X0.375-IN)	
	5	1	9L-8781	3	WASHER (0.406X1.5X0.188-IN THK)	
	6	1	112-5345	1	LATCH AS-DOOR	
	7	1	121-3307	2	MOUNT AS-RESILIENT	
					(EACH INCLUDES)	
		1	8T-4226	1	WASHER-PLATED (10.5X45X3-MM THK)	
	8	2	137-4238	1	ADAPTER	
	9	1	164-4413	3	MOUNT	
	10	1	176-0326	1	HINGE AS	
	11	2	184-0846	1	DEFLECTOR	
	12	2	186-0116	1	SPIDER AS-FAN	
	13	1	219-0306	1	AFTERCOOLER AS	
	14	1	187-4007	1	BRACKET AS	
	15	1	188-5039	1	BAFFLE AS	
		1	174-5807	7	RIVET-POP	
	16	1	188-8950	1	BRACKET AS	
M		1	6V-9632	4	NUT-WELD (M6X1 THD)	
M		1	8T-3490	1	NUT-WELD (M10X1.5-THD)	
	17	1	189-0224	1	CORE AS-HYDRAULIC OIL COOLER	
	18	1	189-5594	2	COVER AS	
					(EACH INCLUDES)	
		1	194-5278	1	HINGE	
	19	1	189-6654	1	ANGLE AS	
M		1	8T-3490	6	NUT-WELD (M10X1.5-THD)	
	20	1	189-6656	1	SUPPORT AS	
M		1	8T-3490	2	NUT-WELD (M10X1.5-THD)	
	21	2	189-6657	1	ANGLE AS	
M		2	8T-3490	4	NUT-WELD (M10X1.5-THD)	
	22	1	189-6658	1	SUPPORT AS (LH)	
M		1	6V-9632	2	NUT-WELD (M6X1 THD)	
M		1	8T-3490	11	NUT-WELD (M10X1.5-THD)	
M		1	8T-3612	2	NUT-WELD (M8X1.25-THD)	
M		1	192-7979	1	STUD-WELD	
	23	1	189-6659	1	SUPPORT AS (RH)	
M		1	6V-9632	2	NUT-WELD (M6X1 THD)	
M		1	8T-3490	13	NUT-WELD (M10X1.5-THD)	
	24	1	190-1125	1	GROMMET	
Y	25	1	191-1932	1	GUARD GP-FAN	83
Y	26	1	191-2943	1	MOTOR GP-GEAR (HYDRAULIC FAN)	708
	27	1	195-0349	1	SHROUD AS	
	28	1	199-3755	1	HANDLE	
	29	2	201-7947	1	BAFFLE	
	30	1	204-0826	1	BAFFLE AS	
		1	174-5807	6	RIVET-POP	
	31	1	204-0827	1	BAFFLE AS	
		1	174-5807	6	RIVET-POP	
	32	1	204-7961	1	PLATE	
	33	1	204-9877	2	BAFFLE	
	34	1	205-5465	1	PLATE AS	
M		1	8T-3490	4	NUT-WELD (M10X1.5-THD)	

199-3144 RADIATOR & FAN GP *(contd.)* i01866434

NOTE	REF NO	GRAPHIC REF	PART NUMBER	QTY	PART NAME 1 2 3 4 5 6 (PRODUCT LEVEL)	SEE PAGE
	35	1	**224-5895**	1	CORE AS-RADIATOR	
	36	1	**215-5612**	1	BAFFLE AS	
		1	**174-5807**	5	RIVET-POP	
M	37	1	**5C-7261**	1	NUT (M8X1.25-THD)	
M	38	1	**5C-9553**	4	BOLT (M6X1X16-MM)	
	39	2	**5I-3878**	1	GROMMET	
	40	1	**5P-1076**	10	WASHER-HARD (13.5X30X4-MM THK)	
	41	2	**7X-0515**	1	WASHER-HARD (17X35X5-MM THK)	
M	42	1	**7X-2553**	2	BOLT (M16X2X40-MM)	
M	43	1	**7X-2554**	4	BOLT (M16X2X70-MM)	
	44	1,2	**7X-7729**	68	WASHER (11X25X3-MM THK)	
M	45	2	**8T-4132**	1	NUT (M16X2-THD)	
M	46	1	**8T-4133**	8	NUT (M10X1.5-THD)	
M	47	1	**8T-4137**	4	BOLT (M10X1.5X20-MM)	
M	48	1,2	**8T-4195**	43	BOLT (M10X1.5X30-MM)	
M	49	1,2	**8T-4196**	11	BOLT (M10X1.5X35-MM)	
	50	1	**8T-4226**	2	WASHER-PLATED (10.5X45X3-MM THK)	
M	51	1	**8T-4956**	2	BOLT (M12X1.75X35-MM)	
M	52	1	**8T-4971**	8	BOLT (M6X1X30-MM)	
M	53	1	**8T-6466**	2	BOLT (M10X1.5X60-MM)	
	54	1	**9X-8256**	12	WASHER (6.6X12X2-MM THK)	
	55	1	**9X-8257**	6	WASHER (17.5X30X3.5-MM THK)	
E	57	1,2	**3E-8349**		SEAL (90CM)	
M	58	1	**8T-4139**	8	BOLT (M12X1.75X30-MM)	

E-ORDER BY THE CENTIMETER
M-METRIC PART
Y-SEPARATE ILLUSTRATION

199-3144 RADIATOR & FAN GP *(contd.)* i01866434

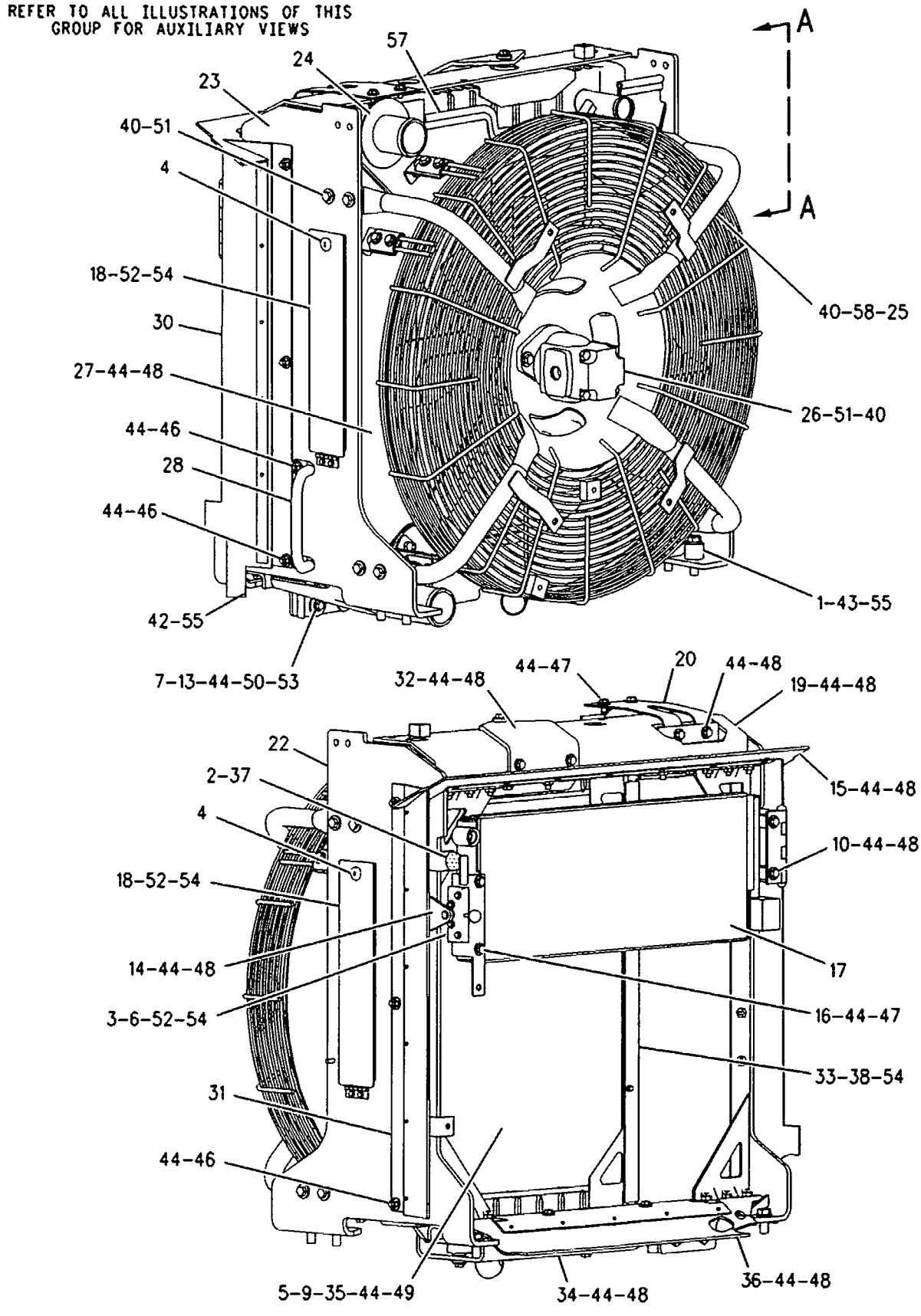

GRAPHIC #1 g00874026

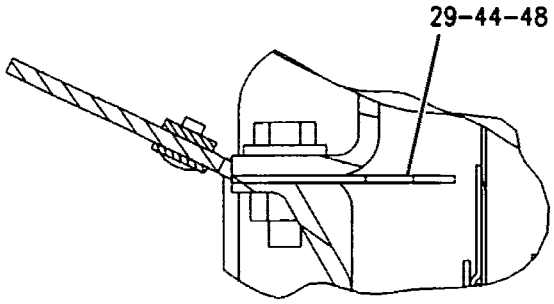

VIEW OF AREA C

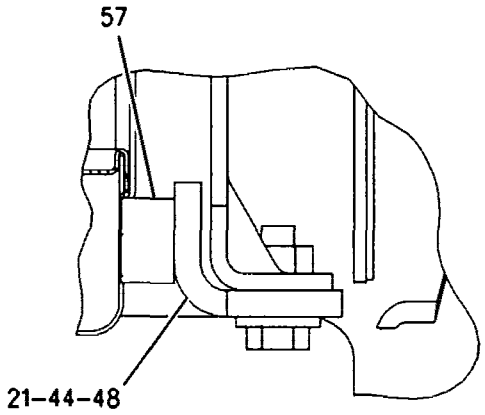

VIEW OF AREA B

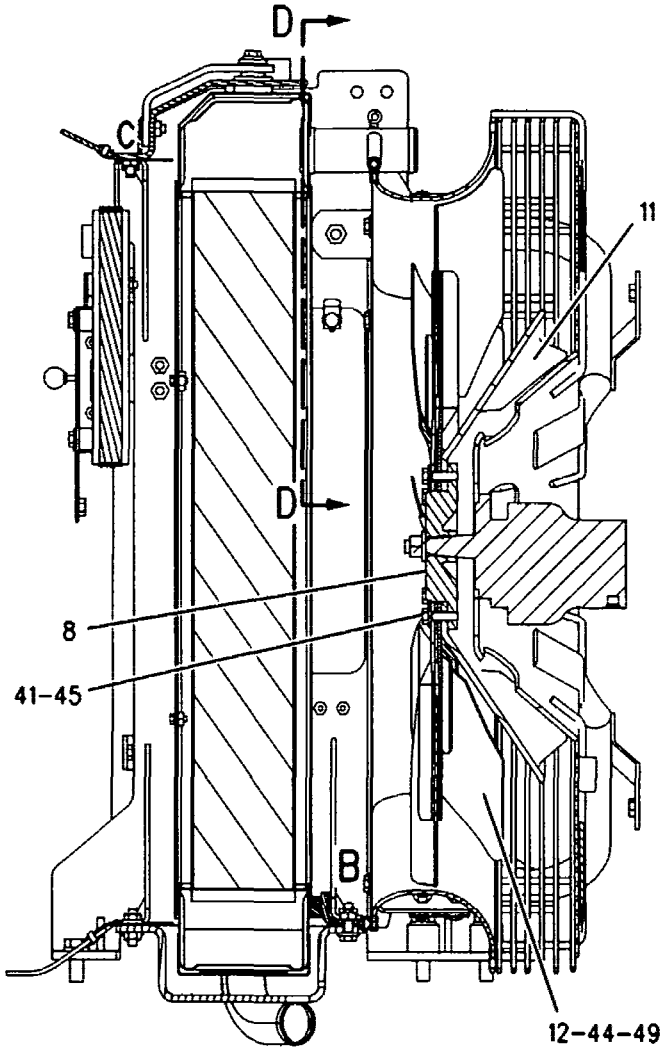

CROSS SECTION OF RADIATOR

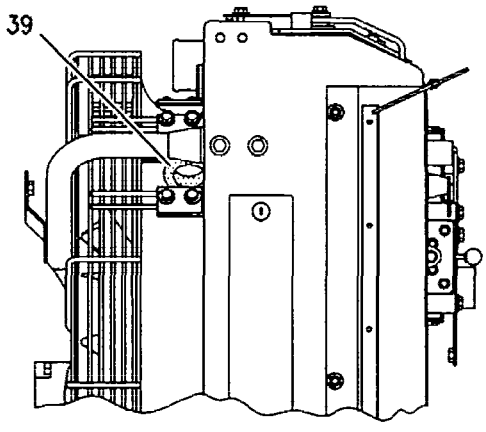

VIEW A-A

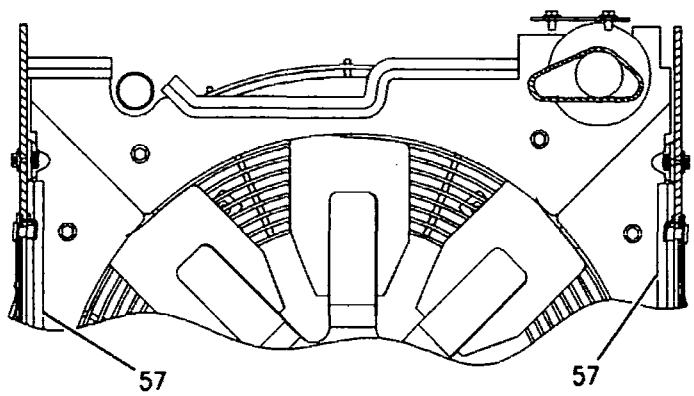

SECTION D-D

GRAPHIC #2 **<END>** g00951390

COOLING SYSTEM

199-3144 RADIATOR & FAN GP

S/N: CRD598-UP

PART OF 199-2816 CHASSIS AR

SMCS-1353, 1356 i02300247

NOTE	REF NO	GRAPHIC REF	PART NUMBER	QTY	PART NAME 1 2 3 4 5 6 (PRODUCT LEVEL)	SEE PAGE
	1	1	3R-8530	4	BOSS (31.75-MM THK)	
	2	1	4E-1384	1	BUMPER-CONICAL	
	3	1	5V-8780	1	KNOB	
	4	1	8T-2893	2	LOCK AS-CYLINDER	
					(EACH INCLUDES)	
		1	7F-9223	1	LOCKWASHER	
		1	8T-5004	1	SCREW-MACHINE (1/4-28X0.375-IN)	
	5	1	9L-8781	3	WASHER (0.406X1.5X0.188-IN THK)	
	6	1	112-5345	1	LATCH AS-DOOR	
	7	1	121-3307	2	MOUNT AS-RESILIENT	
					(EACH INCLUDES)	
		1	8T-4226	1	WASHER-PLATED (10.5X45X3-MM THK)	
	8	2	137-4238	1	ADAPTER	
	9	1	164-4413	3	MOUNT	
	10	1	176-0326	1	HINGE AS	
	11	2	184-0846	1	DEFLECTOR	
	12	2	186-0116	1	SPIDER AS-FAN	
	13	1	219-0306	1	AFTERCOOLER AS	
	14	1	187-4007	1	BRACKET AS	
	15	1	188-5039	1	BAFFLE AS	
		1	174-5807	7	RIVET-POP	
	16	1	188-8950	1	BRACKET AS	
M		1	6V-9632	4	NUT-WELD (M6X1-THD)	
M		1	8T-3490	1	NUT-WELD (M10X1.5-THD)	
	17	1	189-0224	1	CORE AS-HYDRAULIC OIL COOLER	
	18	1	189-5594	2	COVER AS	
					(EACH INCLUDES)	
		1	194-5278	1	HINGE	
	19	1	189-6654	1	ANGLE AS	
M		1	8T-3490	6	NUT-WELD (M10X1.5-THD)	
	20	1	189-6656	1	SUPPORT AS	
M		1	8T-3490	2	NUT-WELD (M10X1.5-THD)	
	21	2	189-6657	1	ANGLE AS	
M		2	8T-3490	4	NUT-WELD (M10X1.5-THD)	
	22	1	189-6658	1	SUPPORT AS (LH)	
M		1	6V-9632	2	NUT-WELD (M6X1-THD)	
M		1	8T-3490	11	NUT-WELD (M10X1.5-THD)	
M		1	8T-3612	2	NUT-WELD (M8X1.25-THD)	
M		1	192-7979	1	STUD-WELD	
	23	1	189-6659	1	SUPPORT AS (RH)	
M		1	6V-9632	2	NUT-WELD (M6X1-THD)	
M		1	8T-3490	13	NUT-WELD (M10X1.5-THD)	
	24	1	190-1125	1	GROMMET	
CY	25	1	236-2508	1	GUARD GP-FAN	84
Y	26	1	191-2943	1	MOTOR GP-GEAR (HYDRAULIC FAN)	708
C	27	1	236-1861	1	SHROUD AS	
	28	1	199-3755	1	HANDLE	
	29	2	201-7947	1	BAFFLE	
	30	1	204-0826	1	BAFFLE AS	
		1	174-5807	6	RIVET-POP	
	31	1	204-0827	1	BAFFLE AS	
		1	174-5807	6	RIVET-POP	
	32	1	204-7961	1	PLATE	
	33	1	204-9877	2	BAFFLE	
	34	1	205-5465	1	PLATE AS	
M		1	8T-3490	4	NUT-WELD (M10X1.5-THD)	

199-3144 RADIATOR & FAN GP *(contd.)* i02300247

NOTE	REF NO	GRAPHIC REF	PART NUMBER	QTY	PART NAME 1 2 3 4 5 6 (PRODUCT LEVEL)	SEE PAGE
	35	1	**225-3317**	1	CORE AS-RADIATOR	
	36	1	**215-5612**	1	BAFFLE AS	
		1	**174-5807**	5	RIVET-POP	
M	37	1	**5C-7261**	1	NUT (M8X1.25-THD)	
M	38	1	**5C-9553**	4	BOLT (M6X1X16-MM)	
	39	2	**5I-3878**	1	GROMMET	
	40	1	**5P-1076**	10	WASHER-HARD (13.5X30X4-MM THK)	
	41	2	**7X-0515**	1	WASHER-HARD (17X35X5-MM THK)	
M	42	1	**7X-2553**	2	BOLT (M16X2X40-MM)	
M	43	1	**7X-2554**	4	BOLT (M16X2X70-MM)	
	44	1,2	**7X-7729**	68	WASHER (11X25X3-MM THK)	
M	45	2	**8T-4132**	1	NUT (M16X2-THD)	
M	46	1	**8T-4133**	8	NUT (M10X1.5-THD)	
M	47	1	**8T-4137**	4	BOLT (M10X1.5X20-MM)	
M	48	1,2	**8T-4195**	43	BOLT (M10X1.5X30-MM)	
M	49	1,2	**8T-4196**	11	BOLT (M10X1.5X35-MM)	
	50	1	**8T-4226**	2	WASHER-PLATED (10.5X45X3-MM THK)	
M	51	1	**8T-4956**	2	BOLT (M12X1.75X35-MM)	
M	52	1	**8T-4971**	8	BOLT (M6X1X30-MM)	
M	53	1	**8T-6466**	2	BOLT (M10X1.5X60-MM)	
	54	1	**9X-8256**	12	WASHER (6.6X12X2-MM THK)	
	55	1	**9X-8257**	6	WASHER (17.5X30X3.5-MM THK)	
D	57	1,2	**5P-5649**		SEAL (0.9-M)	
M	58	1	**8T-4139**	8	BOLT (M12X1.75X30-MM)	

C-CHANGE FROM PREVIOUS TYPE
D-ORDER BY THE METER
M-METRIC PART
Y-SEPARATE ILLUSTRATION

199-3144 RADIATOR & FAN GP *(contd.)* i02300247

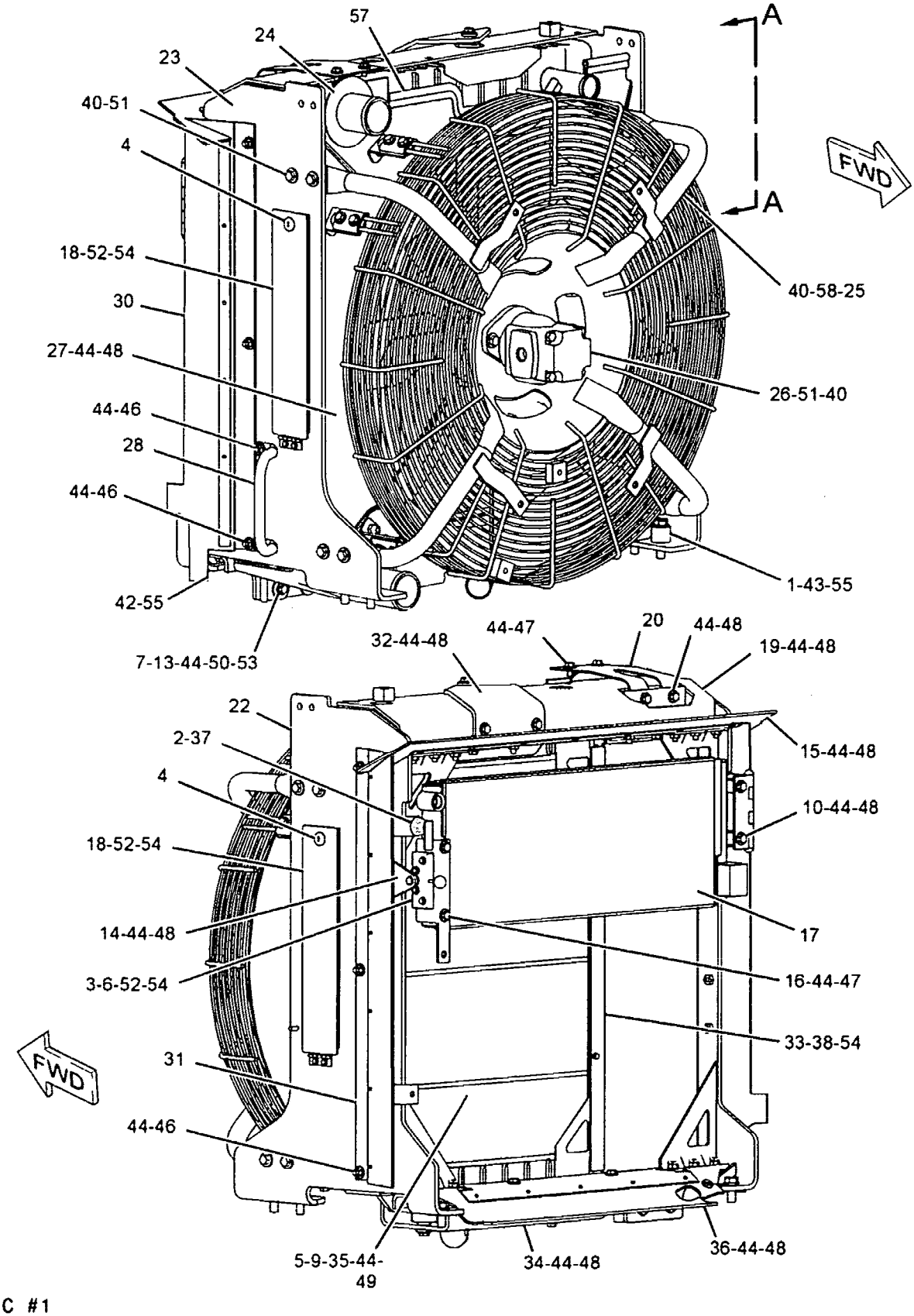

GRAPHIC #1 g01097570

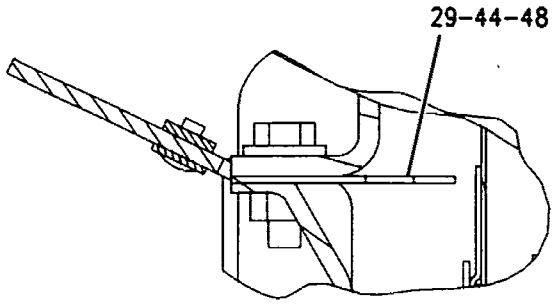

VIEW OF AREA C

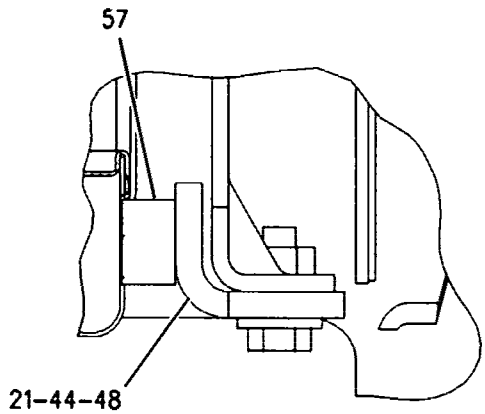

VIEW OF AREA B

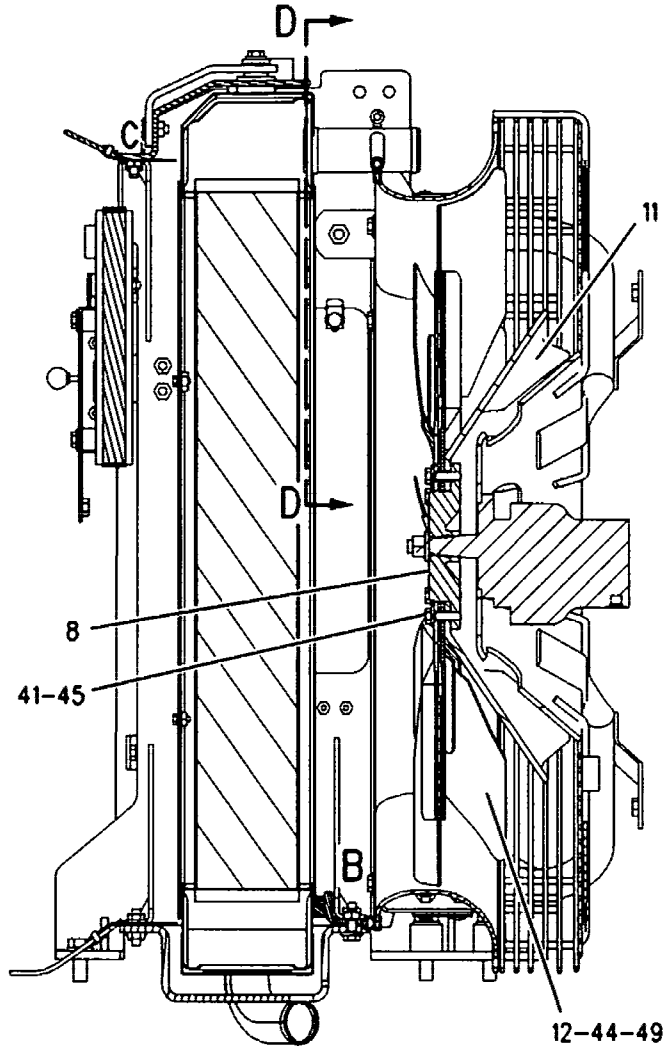

CROSS SECTION OF RADIATOR

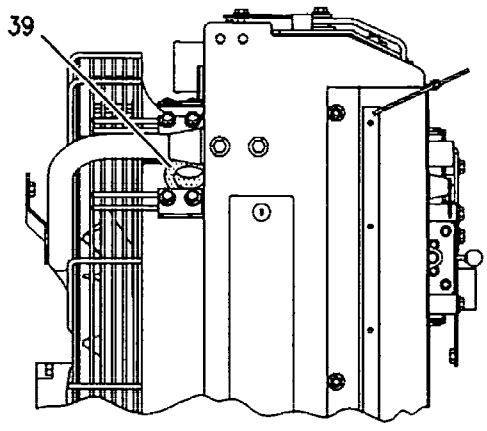

VIEW A-A

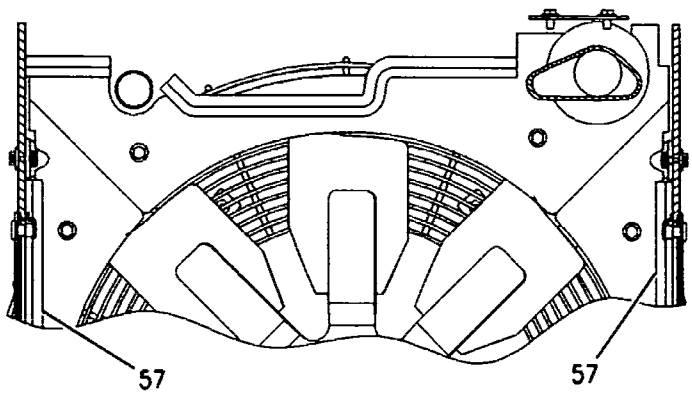

SECTION D-D

GRAPHIC #2 **<END>** g00951390

COOLING SYSTEM

204-7968 TANK GP-RADIATOR TOP

S/N: CRD1-UP

PART OF 198-2761 LINES GP-WATER

FIELD REPLACEMENT ORDER 236-2325—PAGE 108

SMCS-1377 i01876955

NOTE	REF NO	GRAPHIC REF	PART NUMBER	QTY	PART NAME 1 2 3 4 5 6 (PRODUCT LEVEL)	SEE PAGE
	1	1	6L-8617	1	CAP-RADIATOR (7-PSI)	
	2	1	204-7967	1	TANK AS-WATER	
	2A	1	3L-5893	1	TUBE-OVERFLOW	
	2B	1	8N-8846	1	NECK-FILLER	
	2C	1	7T-1099	2	LINK	
	2D	1	9R-8151	1	BLOCK	
M	2E	1	8T-3490	4	NUT-WELD (M10X1.5-THD)	

M-METRIC PART

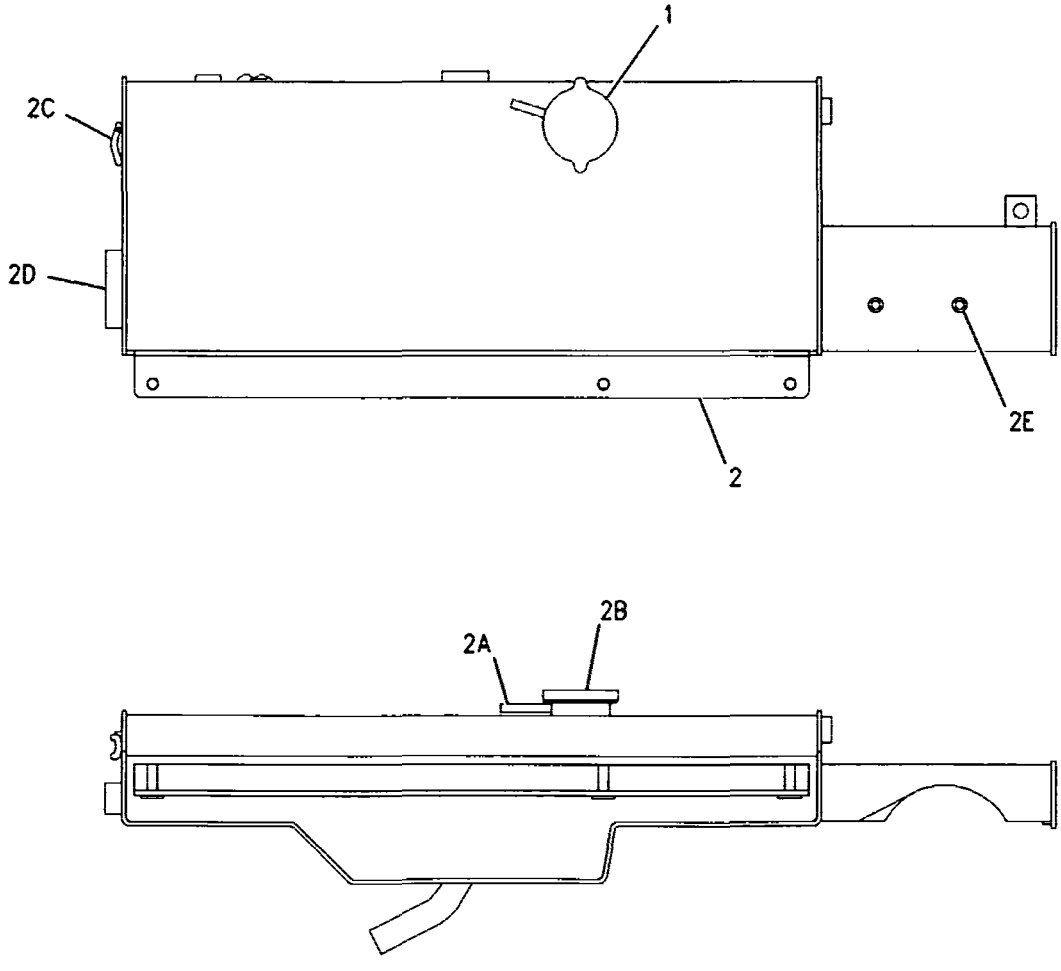

GRAPHIC #1 <END> g00955014

236-2325 TANK GP-RADIATOR TOP

S/N: CRD598-UP

PART OF 198-2761 LINES GP-WATER

FIELD REPLACEMENT FOR 204-7968–PAGE 107

SMCS-1377 i02009771

NOTE	REF NO	GRAPHIC REF	PART NUMBER	QTY	PART NAME 1 2 3 4 5 6 (PRODUCT LEVEL)	SEE PAGE
	1	1	6L-8617	1	CAP-RADIATOR (7-PSI)	
	2	1	236-2324	1	TANK AS-WATER	
	2A	1	3L-5893	1	TUBE-OVERFLOW	
	2B	1	8N-8846	1	NECK-FILLER	
	2C	1	7T-1099	2	LINK	
	2D	1	9R-8151	1	BLOCK	
M	2E	1	8T-3490	4	NUT-WELD (M10X1.5-THD)	

M-METRIC PART

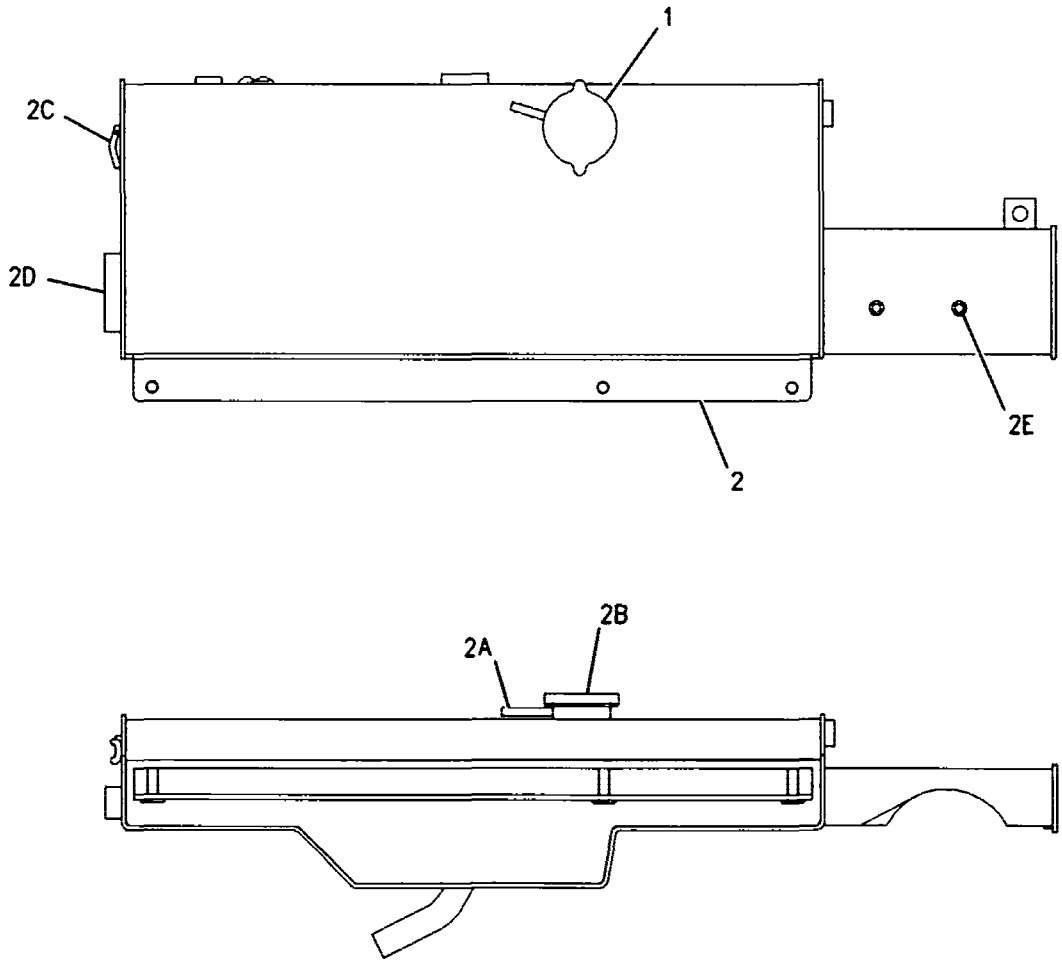

GRAPHIC #1 <END> g00955014

AIR INLET AND EXHAUST SYSTEM

199-2860 AIR CLEANER GP

S/N: CRD1-UP

PART OF 199-2857 INSTALLATION AR-ENGINE

SMCS-1051, 1054 **i01938446**

NOTE	REF NO	GRAPHIC REF	PART NUMBER	QTY	PART NAME 1 2 3 4 5 6 (PRODUCT LEVEL)	SEE PAGE
	1	1	**3G-6660**	1	HOSE AS	
	2	1	**8N-2694**	1	INDICATOR GP-AIR FILTER CHANGE	
Y	3	1	**124-3237**	1	PRECLEANER GP	122
Y	4	1	**199-2862**	1	AIR CLEANER GP	111
	5	1	**0A-2926**	1	FITTING	
	6	1	**2V-3216**	2	CLIP	
	7	1	**3B-6487**	2	COUPLING	
	8	1	**3B-6552**	1	ELBOW	
M	9	1	**5C-2890**	4	NUT (M6X1-THD)	
	10	1	**5P-0537**	4	WASHER-HARD (7.2X14.5X2-MM THK)	
	11	1	**8T-4121**	4	WASHER-HARD (11X21X2.5-MM THK)	
M	12	1	**8T-4137**	4	BOLT (M10X1.5X20-MM)	
M	13	1	**8T-4138**	2	BOLT (M6X1X20-MM)	
	14	1	**9X-8256**	4	WASHER (6.6X12X2-MM THK)	
	15	1	**7K-1181**	1	STRAP-CABLE	
	16	1	**119-6723**	1	FITTING	

M-METRIC PART
Y-SEPARATE ILLUSTRATION

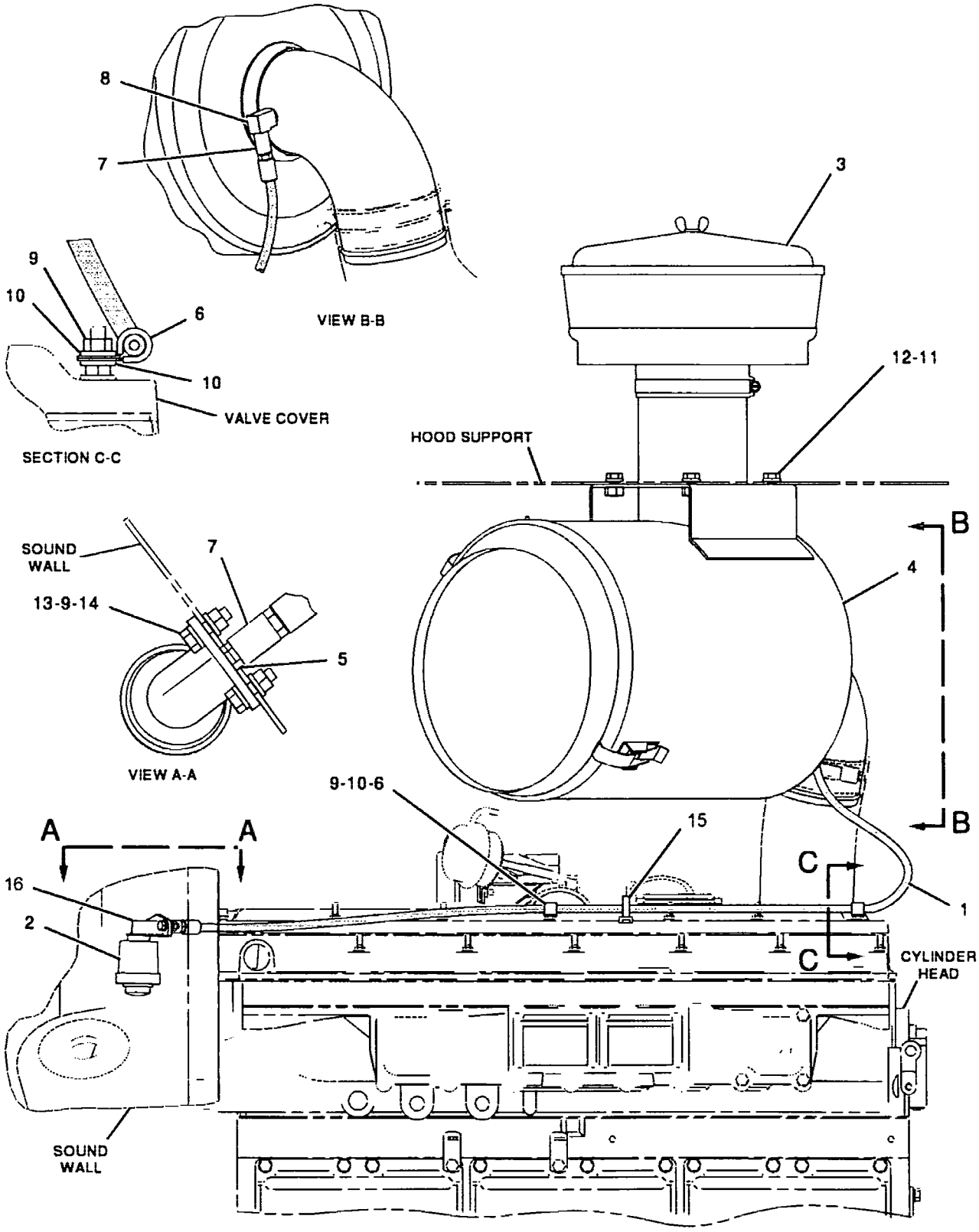

LEFT SIDE VIEW

GRAPHIC #1 **<END>** g01010368

AIR INLET AND EXHAUST SYSTEM

199-2862 AIR CLEANER GP

S/N: CRD1-UP

PART OF 199-2860 AIR CLEANER GP

SMCS-1051, 1054 i01690321

NOTE	REF NO	GRAPHIC REF	PART NUMBER	QTY	PART NAME 1 2 3 4 5 6 (PRODUCT LEVEL)	SEE PAGE
	1	1	6I-4464	1	COVER AS-AIR CLEANER	
	1A	1	4P-5524	1	SEAL-O-RING	
		1	101-2850	1	FILM-INFORMATION (AIR CLEANER)	
	2	1	8N-4617	2	KIT-AIR CLEANER CLAMP	
					(EACH INCLUDES)	
		1	1N-4403	1	CLIP AS	
		1	9B-2596	1	RIVET	
	3	1	132-7165	1	ELEMENT AS-PRIMARY	
Y	4	1	6I-2504	1	FILTER ELEMENT AS-AIR (SECONDARY)	116

Y-SEPARATE ILLUSTRATION

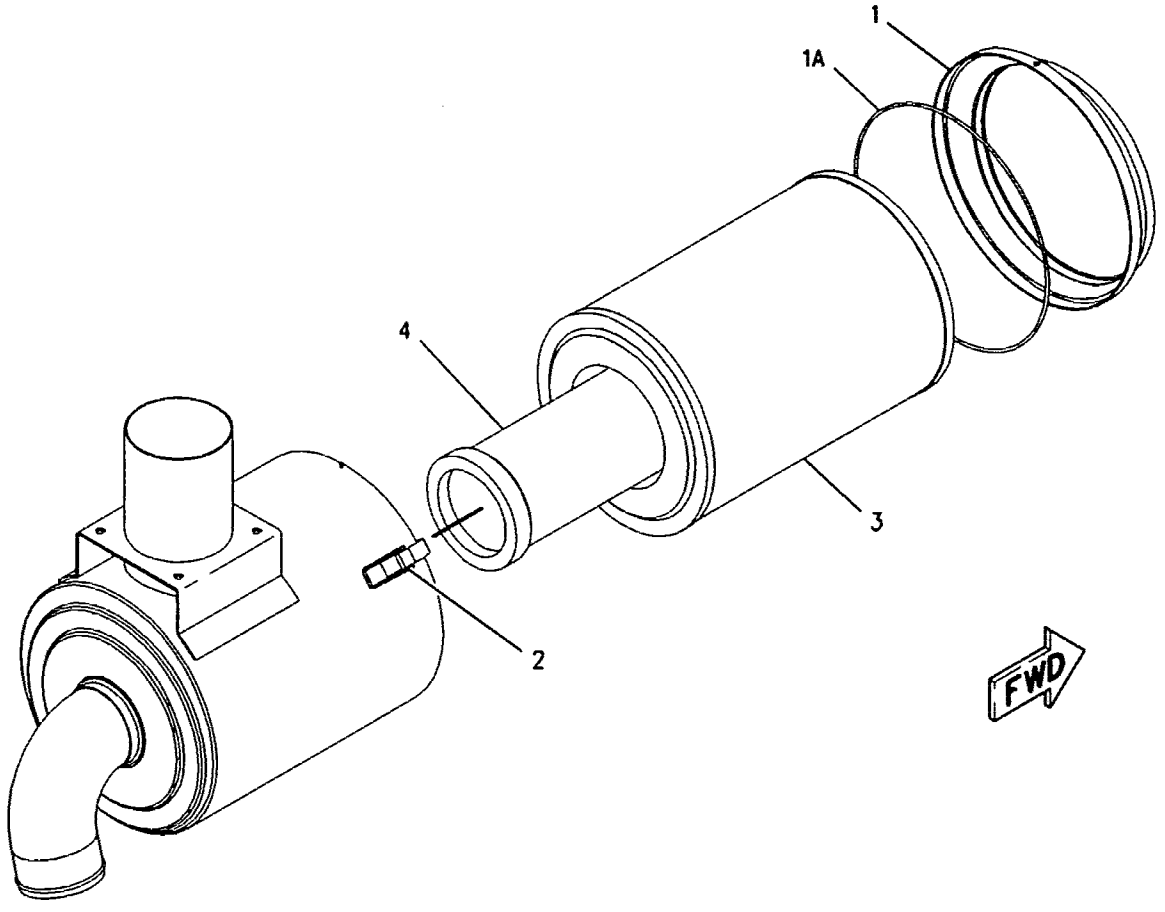

GRAPHIC #1 <END> g00871050

AIR INLET AND EXHAUST SYSTEM

189-8779 COVER GP-AIR INLET–STARTING AID HEATER

S/N: 5GG1-UP
24 VOLT, NARROW INSTALLATION
PART OF 189-8780 COVER GP-AIR INLET

SMCS-1087 i02092262

NOTE	REF NO	GRAPHIC REF	PART NUMBER	QTY	PART NAME 1 2 3 4 5 6 (PRODUCT LEVEL)	SEE PAGE
	1	1	9S-4191	2	PLUG	
	2	1	3J-1907	2	SEAL-O-RING	
	3	1	245-6795	1	INSULATOR	

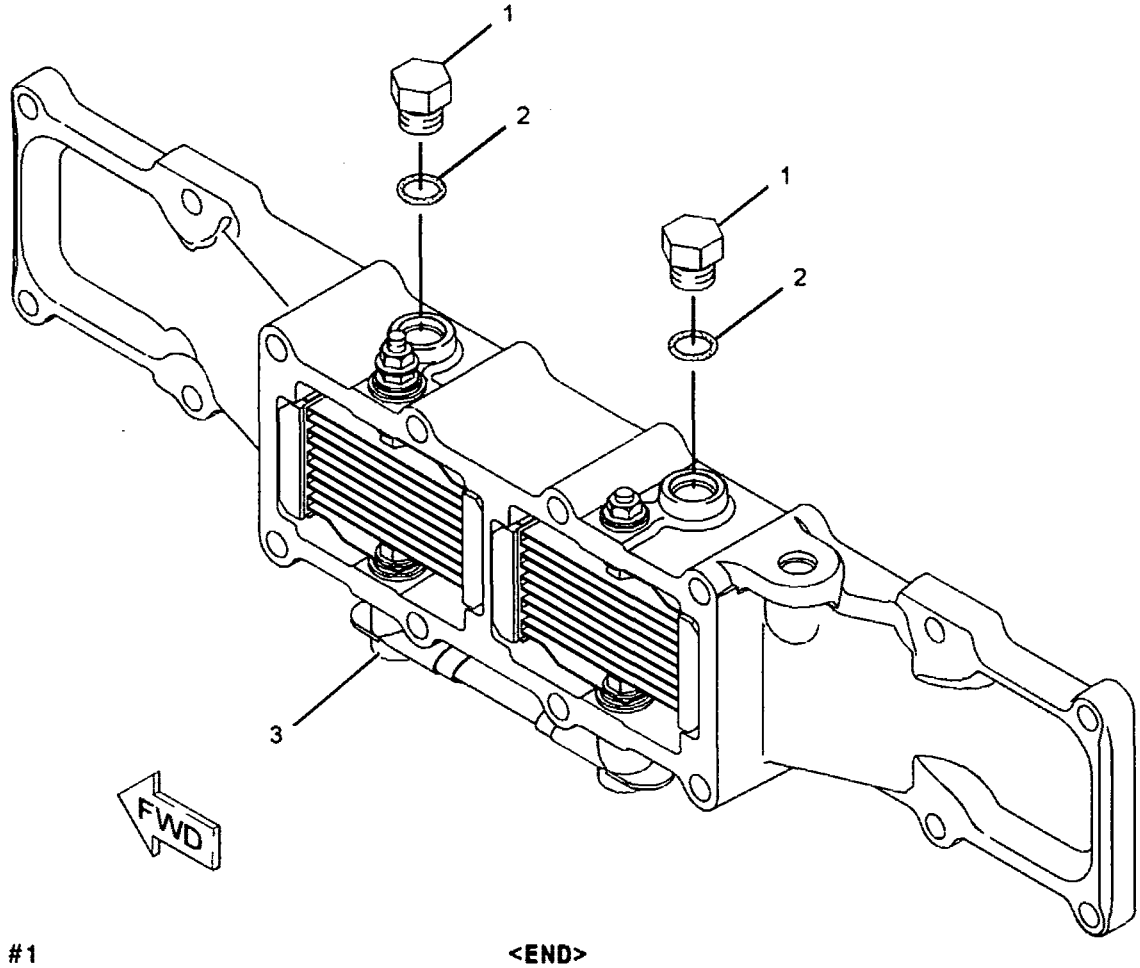

GRAPHIC #1 <END> g01071181

AIR INLET AND EXHAUST SYSTEM

189-8780 COVER GP-AIR INLET–STARTING AID HEATER

S/N: 5GG1-UP
24 VOLT
PART OF 198-5914 ENGINE AR-COMPLETE
TYPE 1

SMCS-1087 i01644371

NOTE	REF NO	GRAPHIC REF	PART NUMBER	QTY	PART NAME 1 2 3 4 5 6 (PRODUCT LEVEL)	SEE PAGE
	1	1	**144-3472**	1	GASKET	
Y	2	1	**189-8779**	1	COVER GP-AIR INLET (STARTING AID HEATER)	112

Y-SEPARATE ILLUSTRATION

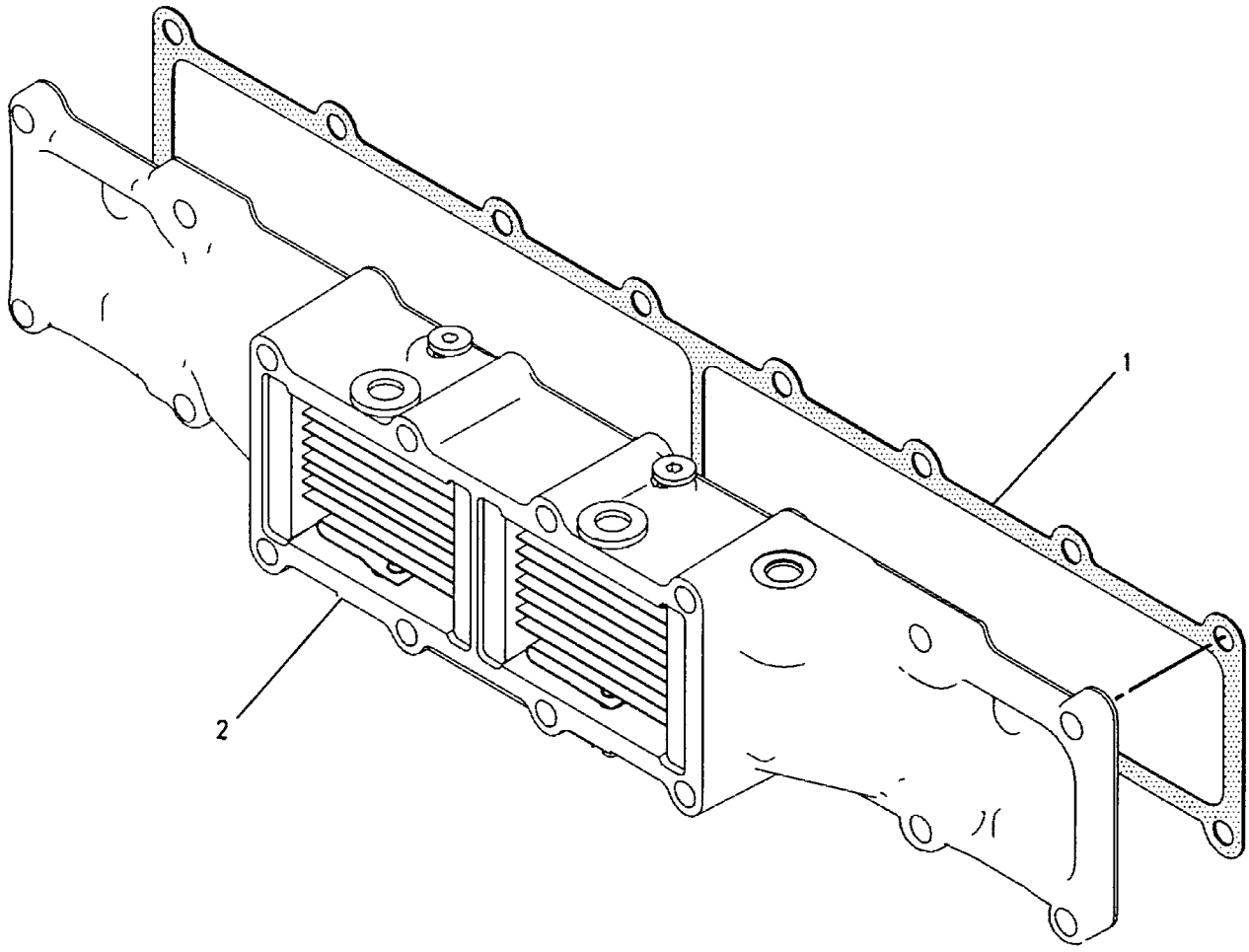

GRAPHIC #1 **<END>** g00850842

189-8780 COVER GP-AIR INLET–STARTING AID HEATER

S/N: 5GG1-UP
24 VOLT
PART OF 198-5914 ENGINE AR-COMPLETE
TYPE 2

SMCS-1087 i02228170

NOTE	REF NO	GRAPHIC REF	PART NUMBER	QTY	PART NAME 1 2 3 4 5 6 (PRODUCT LEVEL)	SEE PAGE
BC	1	1	1U-8846		SEALANT-GASKET	
Y	2	1	189-8779	1	COVER GP-AIR INLET (STARTING AID HEATER)	112

B-USE AS REQUIRED
C-CHANGE FROM PREVIOUS TYPE
Y-SEPARATE ILLUSTRATION

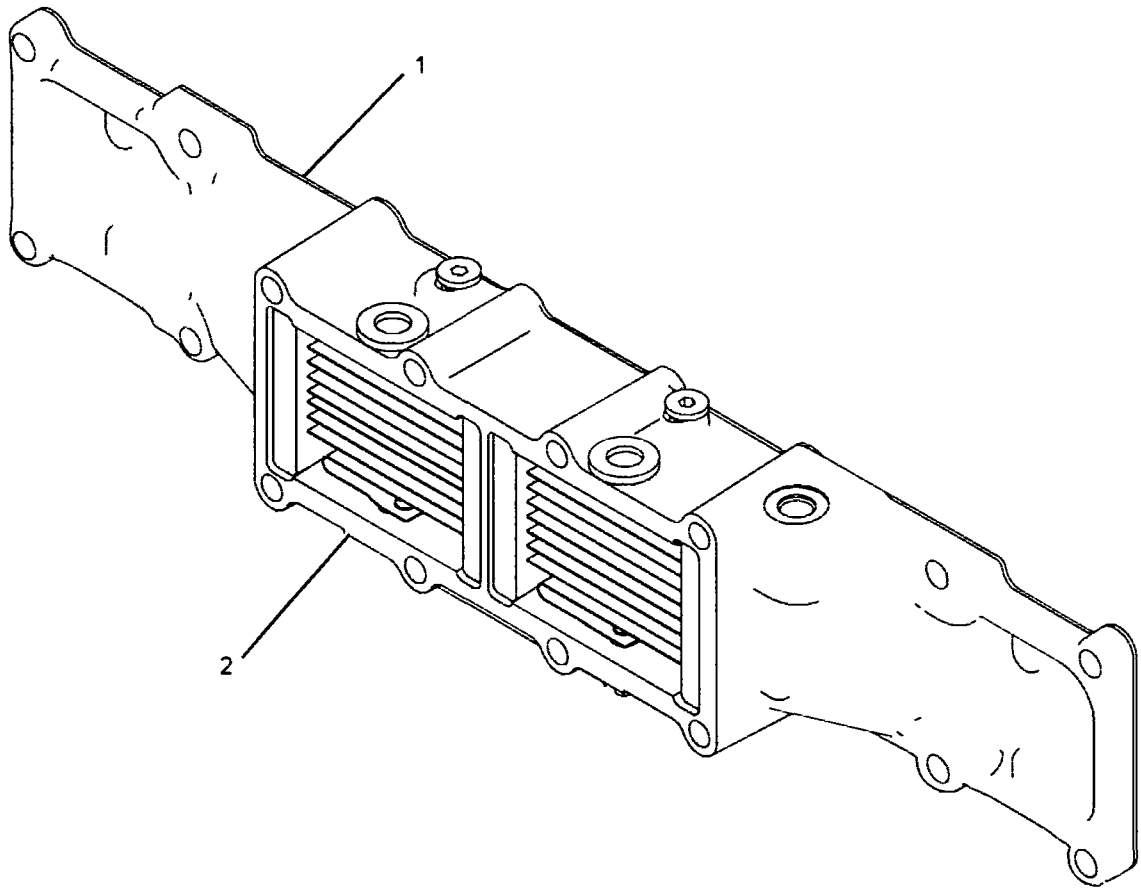

GRAPHIC #1 <END> g01125094

191-7733 ELBOW GP-AIR INLET

S/N: 5GG1-UP

PART OF 198-5914 ENGINE AR-COMPLETE

SMCS-1087 i01690604

NOTE	REF NO	GRAPHIC REF	PART NUMBER	QTY	PART NAME 1 2 3 4 5 6 (PRODUCT LEVEL)	SEE PAGE
	2	1	7S-6369	1	WASHER (0.344X0.75X0.188-IN THK)	
M	4	1	123-4511	3	STUD (M8X1.25-THD)	
	5	1	197-0416	1	ELBOW	
	6	1	3J-1907	1	SEAL-O-RING	
M	7	1	8T-4177	5	BOLT (M8X1.25X90-MM)	
	8	1	9M-1974	7	WASHER-HARD (8.8X16X2-MM THK)	
	9	1	9S-8004	1	PLUG	
B	10	1	1U-8846		SEALANT-GASKET	

B-USE AS REQUIRED
M-METRIC PART

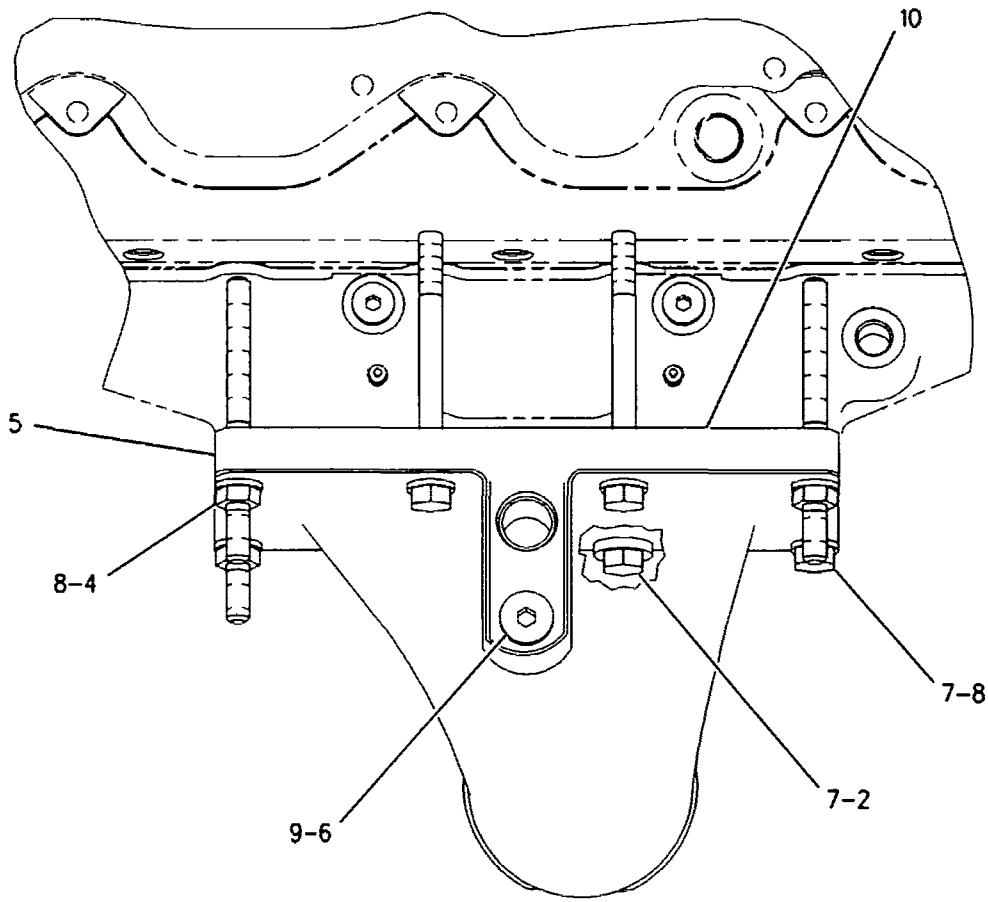

TOP VIEW

GRAPHIC #1 <END> g00772990

AIR INLET AND EXHAUST SYSTEM

6I-2504 FILTER ELEMENT AS-AIR

S/N: CRD1-UP

147.4 MM (5.8 IN) OUTLET TUBE. SECONDARY

PART OF 199-2862 AIR CLEANER GP

SMCS-1054 i00709517

NOTE	PART NUMBER	QTY	PART NAME 1 2 3 4 5 6 (PRODUCT LEVEL)	SEE PAGE
			(INDIVIDUAL PARTS ARE NOT SERVICED SEPARATELY)	

<END>

AIR INLET AND EXHAUST SYSTEM

198-9333 LINES GP-AIR

S/N: CRD1-UP
AIR TO AIR AFTERCOOLER
PART OF 199-2816 CHASSIS AR

SMCS-1071 **i02304941**

NOTE	REF NO	GRAPHIC REF	PART NUMBER	QTY	PART NAME 1 2 3 4 5 6 (PRODUCT LEVEL)	SEE PAGE
	1	1	209-4579	4	CLAMP	
	2	1	208-6055	4	CLAMP	
	3	1	177-0581	1	HOSE	
	4	1	198-9334	1	TUBE	
	5	1	198-9335	1	TUBE	
	6	1	202-7935	1	HOSE	
	7	1	209-6477	2	HOSE	

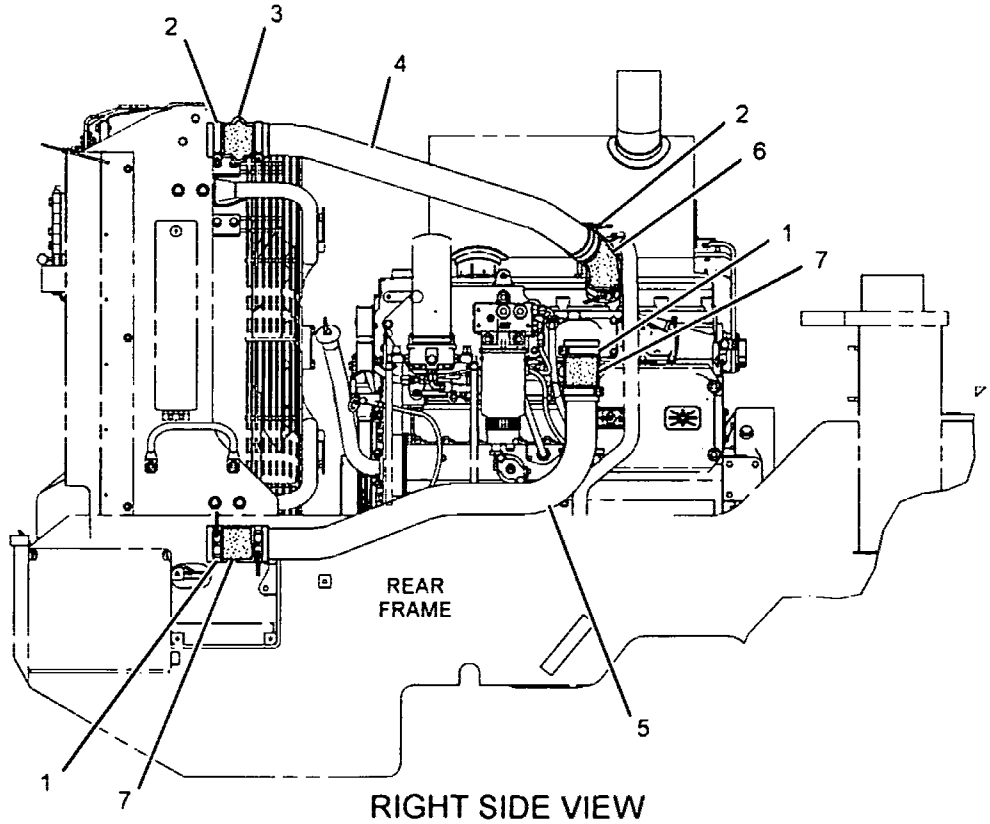

RIGHT SIDE VIEW

GRAPHIC #1 **<END>** g01154360

AIR INLET AND EXHAUST SYSTEM

199-2864 LINES GP-AIR

S/N: CRD1-UP

PART OF 199-2857 INSTALLATION AR-ENGINE

SMCS-1071 i01788089

NOTE	REF NO	GRAPHIC REF	PART NUMBER	QTY	PART NAME 1 2 3 4 5 6 (PRODUCT LEVEL)	SEE PAGE
	1	1	6N-0009	2	RING-METAL SEAL	
	2	1	218-3745	1	COUPLING	
	3	1	185-2068	1	ELBOW-EXHAUST	
	4	1	201-4055	1	HOSE	
	5	1	5B-7890	1	PLUG-PIPE	
M	6	1	8T-4195	3	BOLT (M10X1.5X30MM)	
	7	1	9X-2201	4	CLAMP-HOSE	

M-METRIC PART

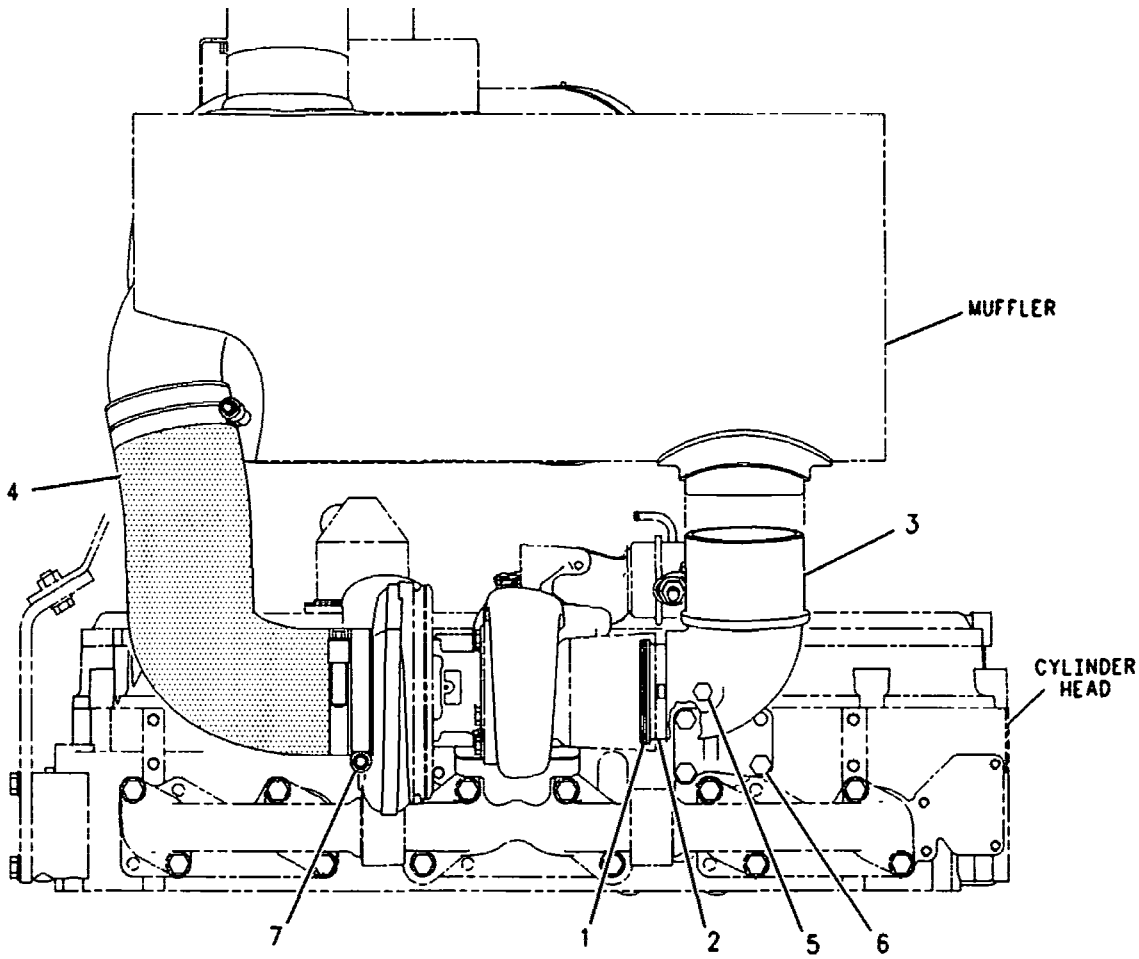

RIGHT SIDE VIEW

GRAPHIC #1 <END> g00870913

AIR INLET AND EXHAUST SYSTEM

183-6845 MANIFOLD GP-EXHAUST–DRY

S/N: 5GG1-UP

FOR USE WITH FRONT TURBO EXHAUST OR REAR EXHAUST, HIGH MOUNT

PART OF 198-5914 ENGINE AR-COMPLETE

SMCS-1059 **i01600086**

NOTE	REF NO	GRAPHIC REF	PART NUMBER	QTY	PART NAME 1 2 3 4 5 6 (PRODUCT LEVEL)	SEE PAGE
M	1	1	8T-7044	4	STUD-TAPERLOCK (M10X1.5X40-MM)	
	2	1	172-6284	3	GASKET	
M	3	1	172-6298	10	BOLT-FLANGE HEAD (M10)	
	4	1	183-6854	1	MANIFOLD-EXHAUST	
	5	1	183-6856	2	MANIFOLD-EXHAUST	
	6	1	189-8772	10	SPACER (11X16X35-MM THK)	
	7	1	203-3768	2	SPACER (11X16X60-MM THK)	
	8	1	210-7722	2	BOLT-FLANGE HEAD (M10)	

M-METRIC PART

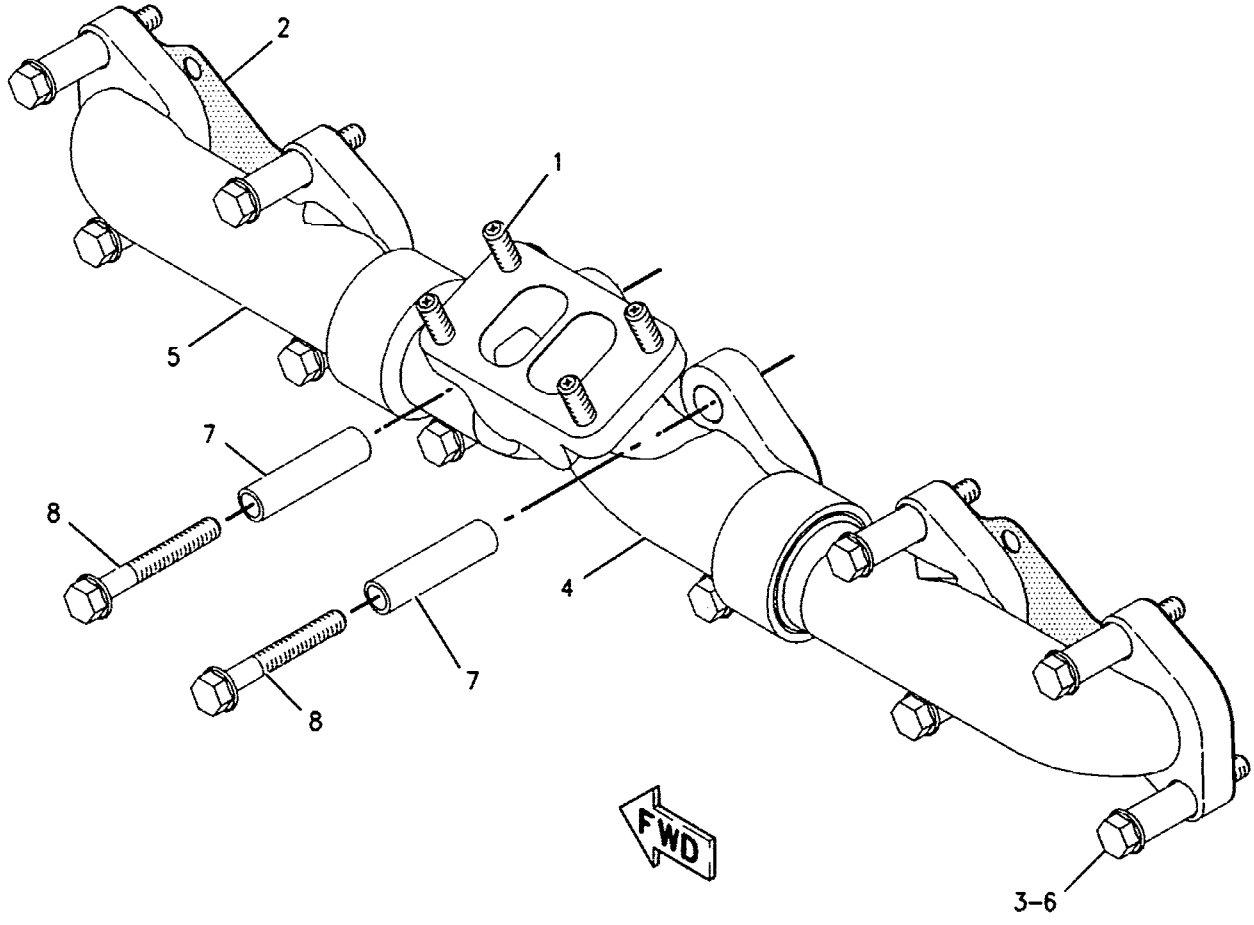

GRAPHIC #1 **<END>** g00829483

AIR INLET AND EXHAUST SYSTEM

199-2865 MUFFLER GP

S/N: CRD1-UP

PART OF 199-2857 INSTALLATION AR-ENGINE

SMCS-1062 **i01690311**

NOTE	REF NO	GRAPHIC REF	PART NUMBER	QTY	PART NAME 1 2 3 4 5 6 (PRODUCT LEVEL)	SEE PAGE
	1	1	**200-5024**	1	MUFFLER AS	
	1A	1	**7E-3870**	1	CLAMP	
	2	1	**8T-4121**	2	WASHER-HARD (11X21X2.5-MM THK)	
M	3	1	**8T-4195**	2	BOLT (M10X1.5X30-MM)	

M-METRIC PART

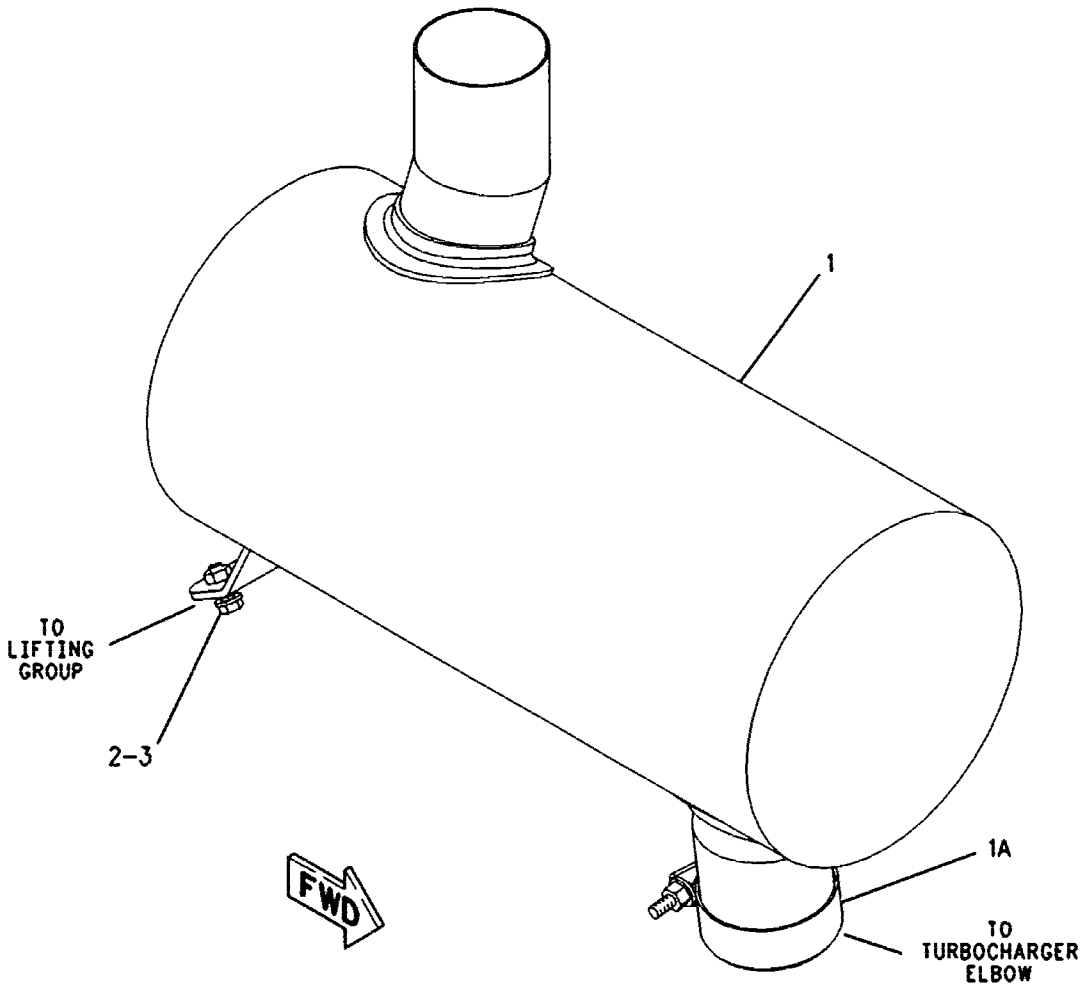

GRAPHIC #1 **<END>** g00870740

AIR INLET AND EXHAUST SYSTEM

7E-3509 PIPE AS-EXHAUST EXTENSION

S/N: CRD1-UP

PART OF 199-2857 INSTALLATION AR-ENGINE

SMCS-1061 i01122517

NOTE	REF NO	GRAPHIC REF	PART NUMBER	QTY	PART NAME 1 2 3 4 5 6 (PRODUCT LEVEL)	SEE PAGE
	1	1	7E-1397	1	CLAMP-BENT BOLT	

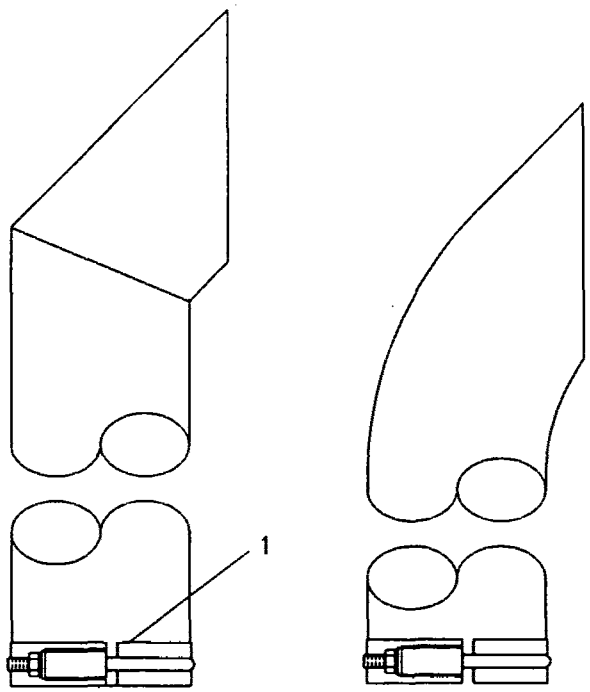

ALTERNATE DESIGN

GRAPHIC #1 <END> g00593320

AIR INLET AND EXHAUST SYSTEM

124-3237 PRECLEANER GP

S/N: CRD1-UP

PART OF 199-2860 AIR CLEANER GP

SMCS-1055 **i01124722**

NOTE	REF NO	GRAPHIC REF	PART NUMBER	QTY	PART NAME 1 2 3 4 5 6 (PRODUCT LEVEL)	SEE PAGE
	1	1	**9M-5201**	1	COVER AS	
	2	1	**6H-8021**	1	BODY-PRECLEANER	
	3	1	**5P-0599**	1	CLAMP (HOSE)	

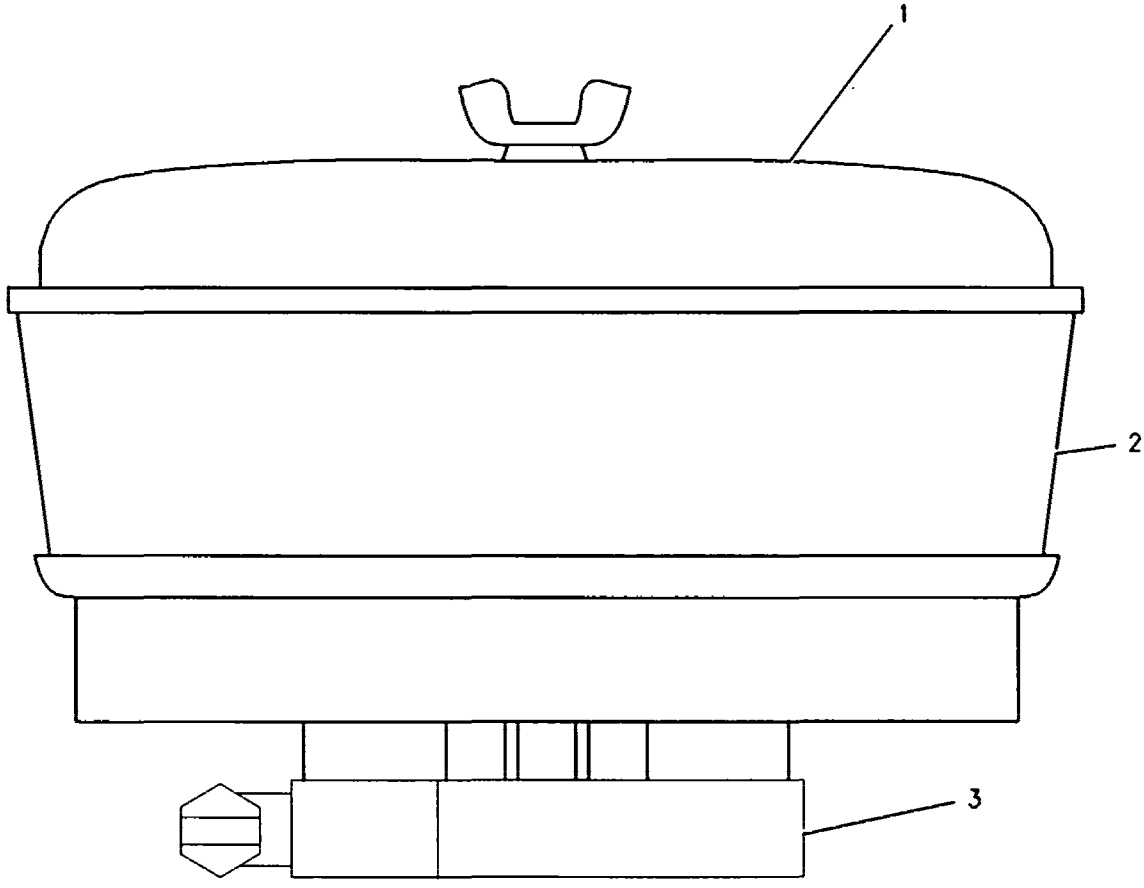

GRAPHIC #1 **<END>** g00595692

AIR INLET AND EXHAUST SYSTEM

200-7137 PRECLEANER GP

S/N: CRD1-UP

AN ATTACHMENT

SMCS-1055 i01485912

NOTE	PART NUMBER	QTY	PART NAME 1 2 3 4 5 6 (PRODUCT LEVEL)	SEE PAGE
	200-7138	1	PRECLEANER AS	

<END>

AIR INLET AND EXHAUST SYSTEM

217-5289 PRECLEANER GP

S/N: CRD1-UP
AN ATTACHMENT

SMCS-1055 **102193478**

NOTE	REF NO	GRAPHIC REF	PART NUMBER	QTY	PART NAME 1 2 3 4 5 6 (PRODUCT LEVEL)	SEE PAGE
	1	1	**4P-0659**	1	CLAMP	
	2	1	*217-5288*	1	PRECLEANER AS	
		1	**153-1277**	1	KIT-SCREEN (PRECLEANER)	
					(INCLUDES DAMPER)	
		1	**7X-7732**	6	PLUG-PIPE	
		1	**116-2659**	2	DAMPER	
		1	**130-3280**	1	PRECLEANER AS	
		1	**217-5287**	1	PIPE	
	3	1	**8T-4121**	2	WASHER-HARD (11X21X2.5-MM THK)	
M	4	1	**8T-4133**	1	NUT (M10X1.5-THD)	
M	5	1	**8T-4172**	1	BOLT (M10X1.5X80-MM)	

M-METRIC PART

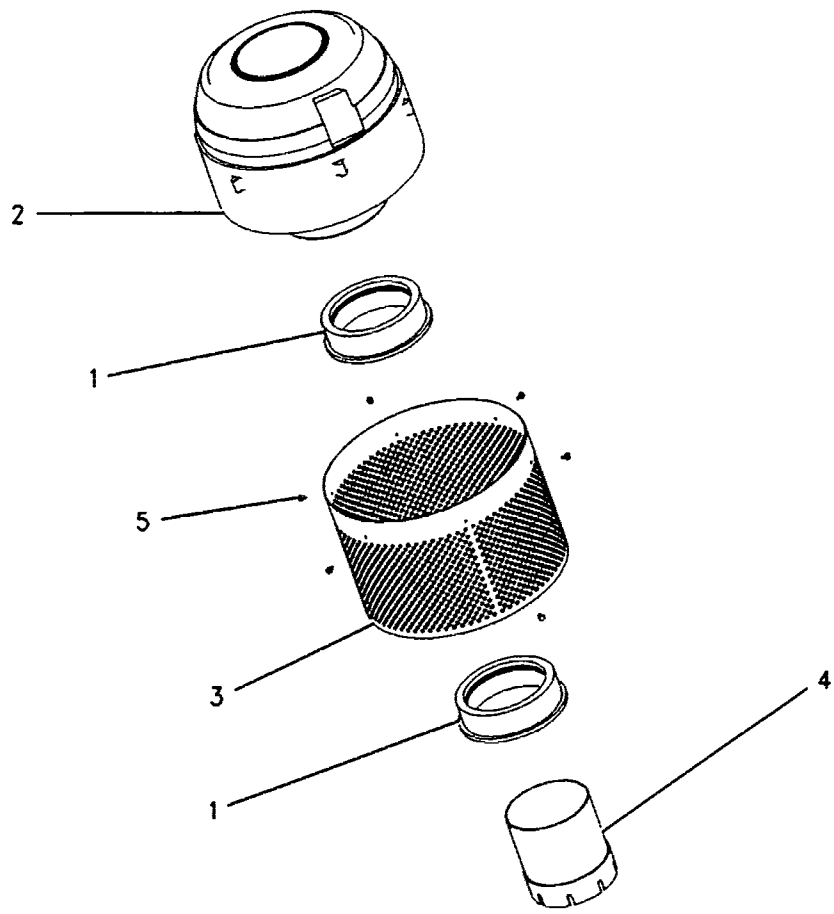

GRAPHIC #1 **<END>** g00873820

AIR INLET AND EXHAUST SYSTEM

185-1145 TURBOCHARGER GP

S/N: 5GG1-UP

PART OF 198-5915 ENGINE AR-CORE

SMCS-1052, 1053 **i01691439**

NOTE	REF NO	GRAPHIC REF	PART NUMBER	QTY	PART NAME 1 2 3 4 5 6 (PRODUCT LEVEL)	SEE PAGE
YR	1	1	**185-8016**	1	TURBOCHARGER GP	126
M	2	1	**3E-8017**	4	LOCKNUT (M10X1.5)	
	3	1	**7C-7431**	1	GASKET-TURBOCHARGER	

M-METRIC PART
R-REMFG PART MAY BE AVAILABLE
Y-SEPARATE ILLUSTRATION

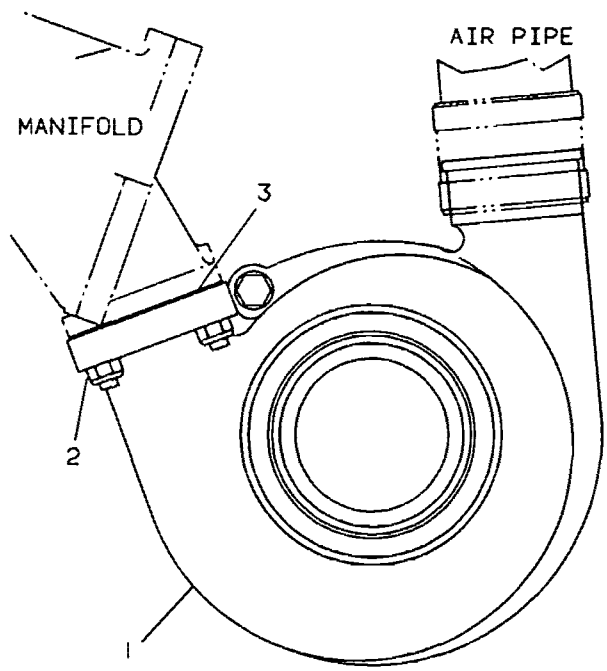

GRAPHIC #1 **<END>** g00108333

AIR INLET AND EXHAUST SYSTEM

185-8016 TURBOCHARGER GP*R

S/N: 5GG1-UP

PART OF 185-1145 TURBOCHARGER GP

SMCS-1052, 1053 i02196616

NOTE	REF NO	GRAPHIC REF	PART NUMBER	QTY	PART NAME 1 2 3 4 5 6 (PRODUCT LEVEL)	SEE PAGE
	1	1	161-6963	2	CLAMP	
	2	1	5P-4536	1	ELBOW	
	3	1	179-0091	1	HOSE	
M	4	1	7C-6670	4	BOLT (M8X12.5-MM)	
	5	1	206-6465	1	HOUSING AS-TURBINE	
	6	1	7C-6672	2	PLATE-CLAMP (TURBINE)	
	7	1	7M-9918	1	LOCKNUT (1/4-28-THD)	
	8	1	158-6072	1	CLAMP AS (COMPRESSOR)	
	9	1	196-0351	1	COVER-COMPRESSOR	
	10	1	196-0268	1	CARTRIDGE GP-TURBOCHARGER	

M-METRIC PART

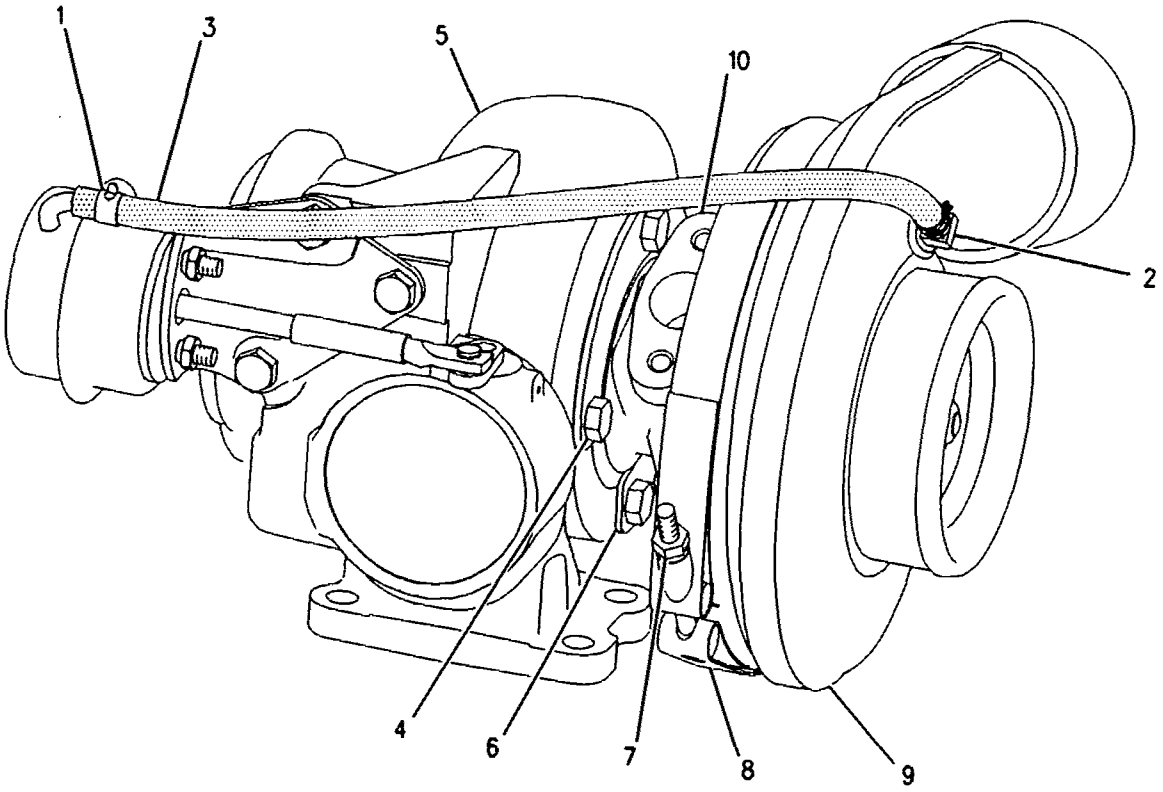

GRAPHIC #1 <END> g00606204

174-9570 FILTER GP-WATER SEP & FUEL–PRIMARY

S/N: 5GG1-UP

PART OF 212-3657 WATER SEP & FUEL PRM PUMP GP

SMCS-1261, 1263 i02311859

NOTE	REF NO	GRAPHIC REF	PART NUMBER	QTY	PART NAME 1 2 3 4 5 6 (PRODUCT LEVEL)	SEE PAGE
	1	1	173-7126	1	BOWL AS (WATER, FUEL SEPARATOR)	
	2	1	1R-0770	1	FILTER AS-WATER SEP & FUEL (PRIMARY)	
		1	220-8678	1	SEAL (WATER SEPARATOR, FUEL)	

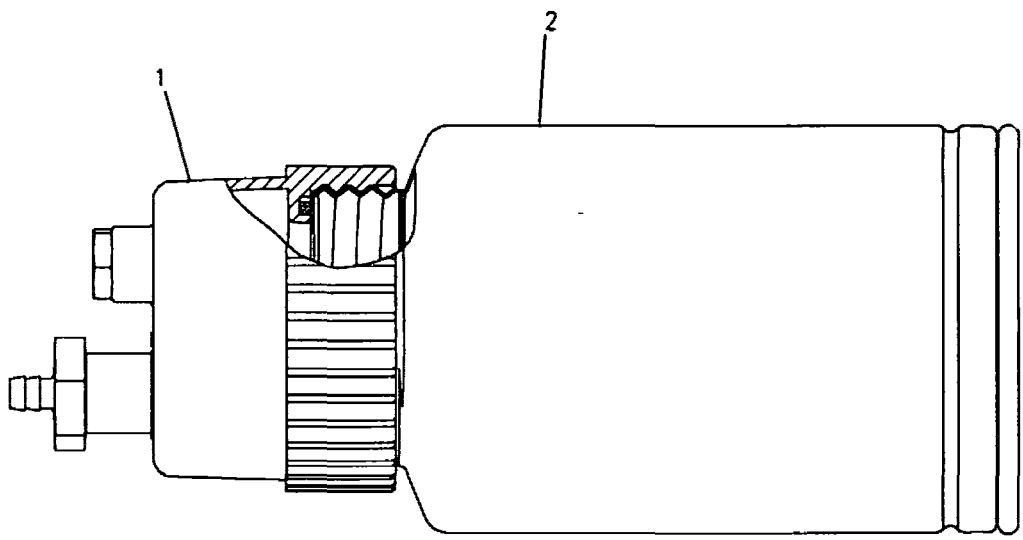

GRAPHIC #1 <END> g00787237

FUEL SYSTEM

198-2751 LINES GP-FUEL

S/N: CRD1-511

PART OF 199-2816 CHASSIS AR

SMCS-1274 i02144103

NOTE	REF NO	GRAPHIC REF	PART NUMBER	QTY	PART NAME 1 2 3 4 5 6 (PRODUCT LEVEL)	SEE PAGE
	1	1	124-3019	2	BRACKET AS	
					(EACH INCLUDES)	
M		1	8T-3490	1	NUT-WELD (M10X1.5-THD)	
	2	1	130-9927	1	STRIP AS	
M		1	8T-3490	1	NUT-WELD (M10X1.5-THD)	
I	3	1	148-6988	1	HOSE AS	
I	4	1	216-2534	1	HOSE AS	
	5	1	3E-6753	1	GROMMET	
	6	1	3J-1907	1	SEAL-O-RING	
	7	1	3J-7354	1	SEAL-O-RING	
	8	1	4J-5477	1	SEAL-O-RING	
M	9	1	5C-7261	1	NUT (M8X1.25-THD)	
	11	1	6K-8178	1	CLIP	
	12	1	6V-8397	3	SEAL-O-RING	
	13	1	6V-8628	1	ELBOW	
	14	1	6V-8724	1	ELBOW	
	15	1	8M-2770	3	CLIP	
	16	1	8T-4121	3	WASHER-HARD (11X21X2.5-MM THK)	
M	17	1	8T-4136	1	BOLT (M10X1.5X25-MM)	
M	18	1	8T-4137	2	BOLT (M10X1.5X20-MM)	
	19	1	8T-4224	1	WASHER-HARD (8.8X16X2-MM THK)	

I-REFER TO HYDRAULIC INFORMATION SYSTEM
M-METRIC PART

198-2751 **LINES GP-FUEL** *(contd.)* **i02144103**

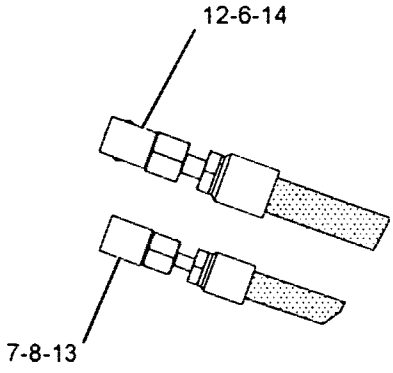

SECTION A-A

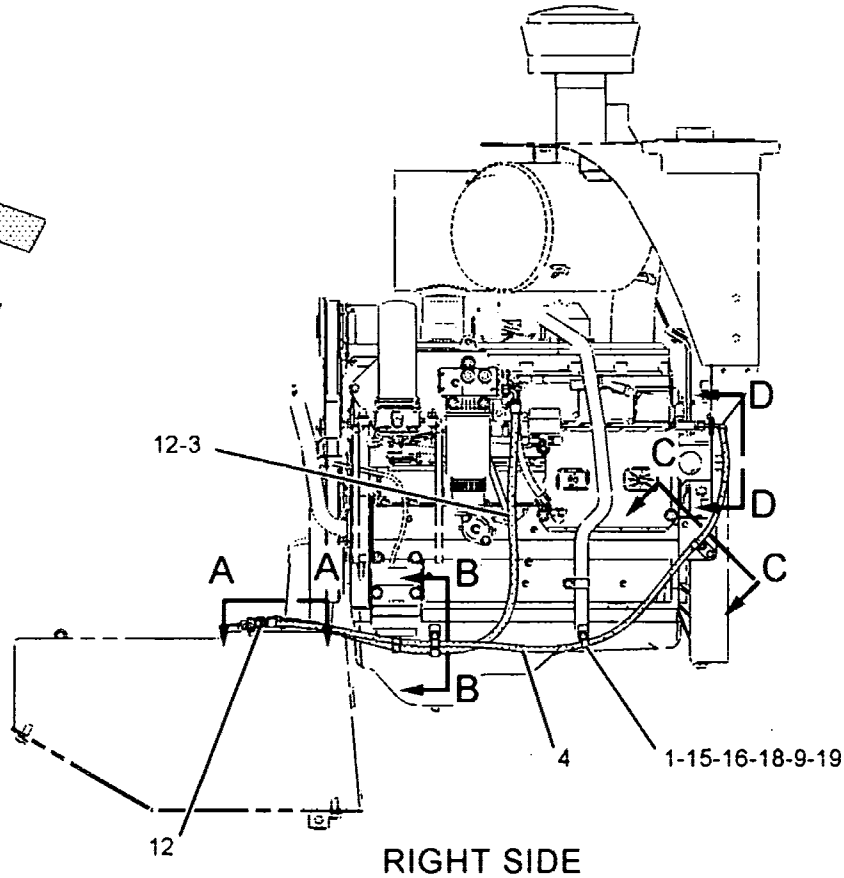

RIGHT SIDE VIEW

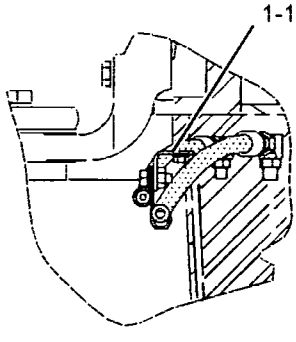

SECTION B-B

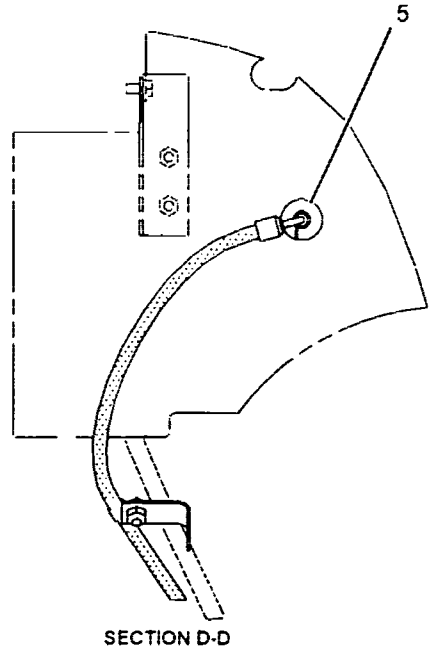

SECTION D-D

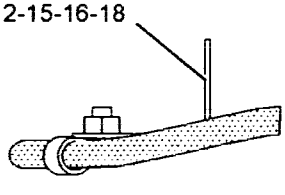

SECTION C-C

GRAPHIC #1 **<END>** g01088309

FUEL SYSTEM

198-2751 LINES GP-FUEL

S/N: CRD512-UP

PART OF 199-2816 CHASSIS AR

SMCS-1274 **i01987853**

NOTE	REF NO	GRAPHIC REF	PART NUMBER	QTY	PART NAME 1 2 3 4 5 6 (PRODUCT LEVEL)	SEE PAGE
C	1	1	**7K-1181**	2	STRAP-CABLE	
C	2	1	**124-3019**	1	BRACKET AS	
M		1	**8T-3490**	1	NUT-WELD (M10X1.5-THD)	
I	3	1	**148-6988**	1	HOSE AS	
CI	4	1	**236-7737**	1	HOSE AS	
C	5	1	**3J-1907**	2	SEAL-O-RING	
	6	1	**3J-7354**	1	SEAL-O-RING	
C	7	1	**4D-9517**	1	CLIP	
	8	1	**4J-5477**	1	SEAL-O-RING	
	10	1	**6K-8178**	1	CLIP	
	11	1	**6V-8397**	3	SEAL-O-RING	
	12	1	**6V-8628**	1	ELBOW	
C	13	1	**6V-8636**	1	CONNECTOR	
	14	1	**6V-8724**	1	ELBOW	
C	15	1	**8M-2770**	1	CLIP	
C	16	1	**8T-4121**	1	WASHER-HARD (11X21X2.5-MM THK)	
M	17	1	**8T-4136**	1	BOLT (M10X1.5X25-MM)	

C-CHANGE FROM PREVIOUS TYPE
I-REFER TO HYDRAULIC INFORMATION SYSTEM
M-METRIC PART

198-2751 LINES GP-FUEL (contd.) i01987853

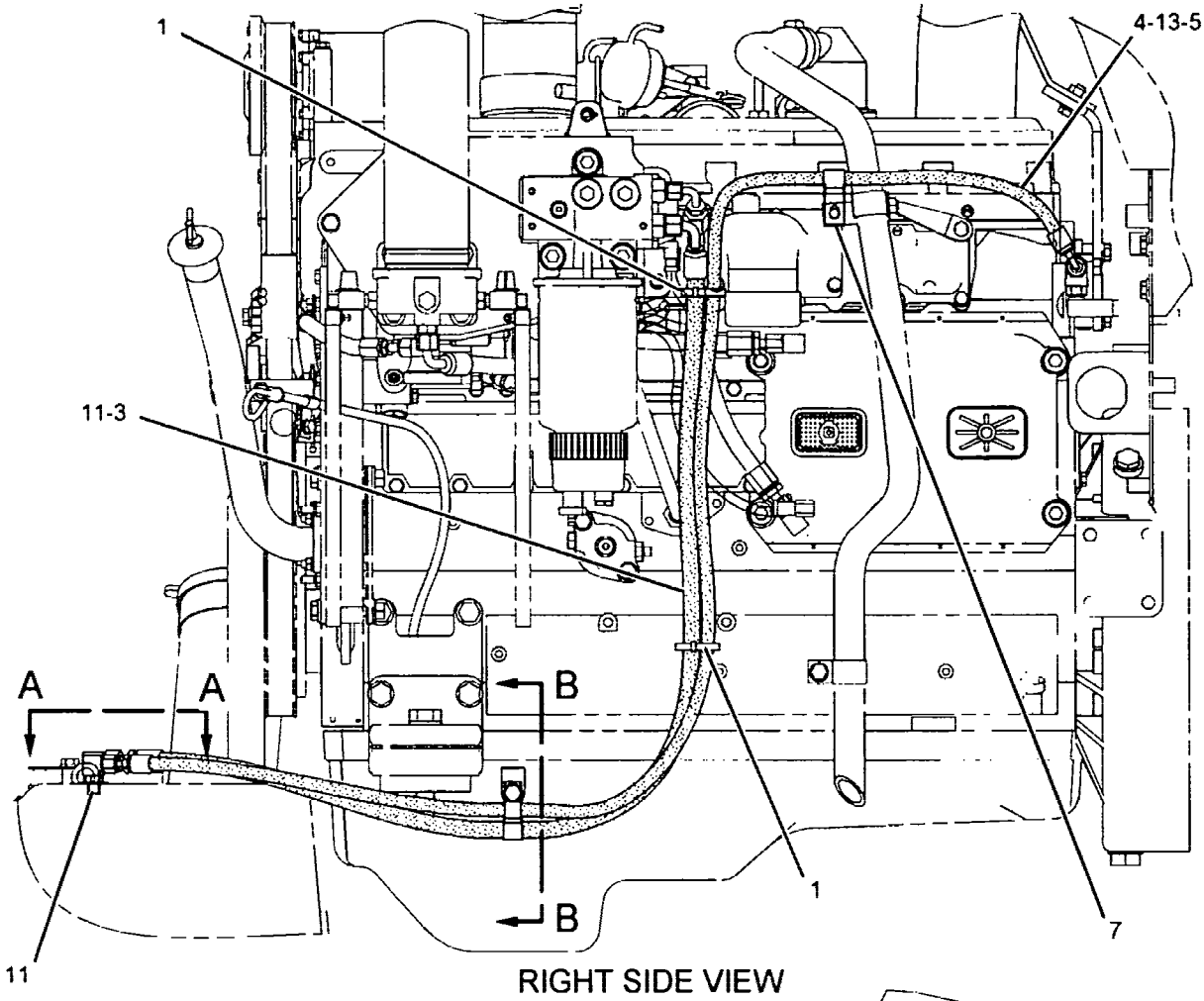

RIGHT SIDE VIEW

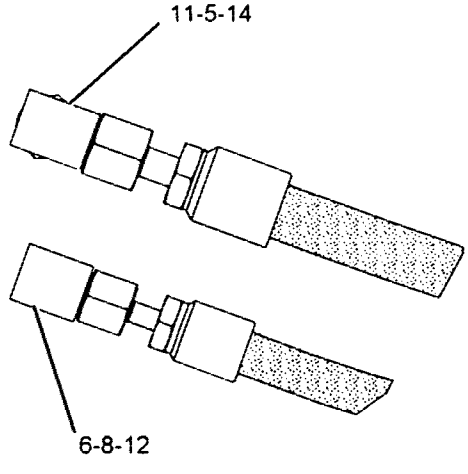

SECTION A-A

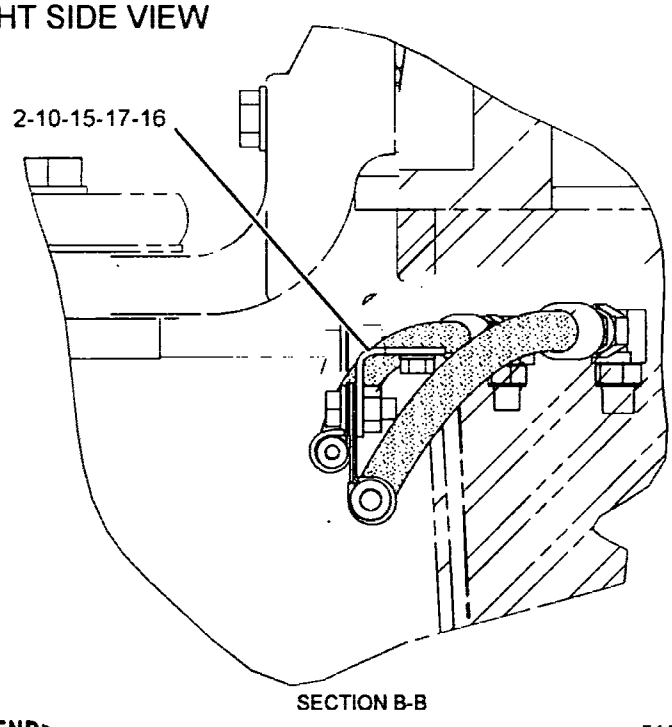

SECTION B-B

GRAPHIC #1 <END> g01087629

218-0706 LINES GP-FUEL DRAIN

S/N: CRD1-UP

PART OF 199-2857 INSTALLATION AR-ENGINE

SMCS-1274 i02238864

NOTE	REF NO	GRAPHIC REF	PART NUMBER	QTY	PART NAME 1 2 3 4 5 6 (PRODUCT LEVEL)	SEE PAGE
	1	1	3S-2093	2	STRAP-CABLE	
	2	1	5P-4961	2	CLAMP-HOSE	
	3	1	103-2529		HOSE (73-CM)	
	3A	1	103-2529		HOSE (70-CM)	

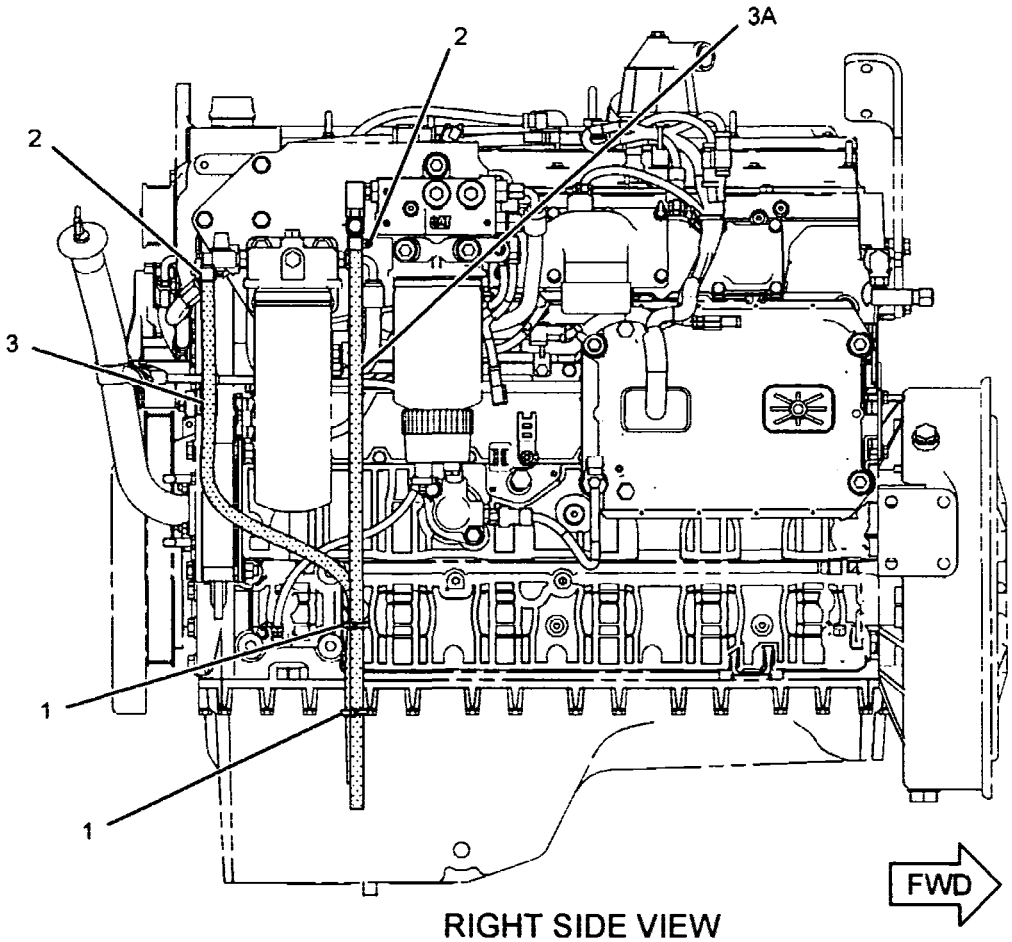

RIGHT SIDE VIEW

GRAPHIC #1 <END> g01157221

FUEL SYSTEM

187-6277 LINES GP-FUEL FILTER

S/N: 5GG1093-2633

PART OF 198-5914 ENGINE AR-COMPLETE

SMCS-1261, 1274 i01833717

NOTE	REF NO	GRAPHIC REF	PART NUMBER	QTY	PART NAME 1 2 3 4 5 6 (PRODUCT LEVEL)	SEE PAGE
	1	1	1R-0762	1	FILTER AS-FUEL (SECONDARY)	
	2	1	6V-0484	1	ADAPTER-O-RING	
	3	1	174-7599	1	BASE AS-FUEL FILTER	
		1	9S-4167	1	STUD-HOLLOW	
	4	1	176-1252	1	REGULATOR AS (FUEL)	
	5	1	*183-3406*	4	PLUG AS	
					(EACH INCLUDES)	
		1	9S-4191	1	PLUG	
		1	6V-5049	1	SEAL-O-RING (11.89MM ID)	
I	6	1	187-6290	1	HOSE AS	
	7	1	206-6876	2	CAP-TUBE	
I	8	1	209-5526	1	HOSE AS	
I	9	1	211-6007	1	HOSE AS	
	10	1	216-4575	1	BRACKET	
	11	1	217-5152	1	BRACKET AS	
	12	1	030-8188	1	CONNECTOR	
	13	1	134-3988	1	CLIP	
	14	1	141-8275	2	VALVE-DRAIN	
	15	1	3E-4353	4	WASHER-HARD (11X25X3-MM THK)	
	16	1	3E-7410	1	TEE-O-RING	
	17	1	3E-9412	2	DOWEL	
	18	1	3J-1907	1	SEAL-O-RING (11.89MM ID)	
M	19	1	5C-7261	5	NUT (M8X1.25-THD)	
M	20	1	6V-1820	4	BOLT (M10X1.5X30-MM)	
	21	1	6V-5049	10	SEAL-O-RING (11.89MM ID)	
	22	1	6V-8397	4	SEAL-O-RING (12.83MM OD)	
	23	1	6V-8636	2	CONNECTOR	
	24	1	6V-8724	1	ELBOW	
	25	1	6V-9001	1	ELBOW	
	26	1	8L-2786	1	SEAL-O-RING (16.36MM ID)	
	27	1	8T-4121	7	WASHER-HARD (11X21X2.5-MM THK)	
M	28	1	8T-4136	3	BOLT (M10X1.5X25-MM)	
M	29	1	8T-4137	1	BOLT (M10X1.5X20-MM)	
M	30	1	8T-4196	4	BOLT (M10X1.5X35-MM)	
	31	1	8T-4226	1	WASHER-PLATED (10.5X45X3-MM THK)	
	32	1	9S-8004	1	PLUG	
	33	1	9X-0261	1	ADAPTER	
	34	1	8T-4224	6	WASHER-HARD (8.8X16X2-MM THK)	

I-REFER TO HYDRAULIC INFORMATION SYSTEM
M-METRIC PART

187-6277 LINES GP-FUEL FILTER *(contd.)* i01833717

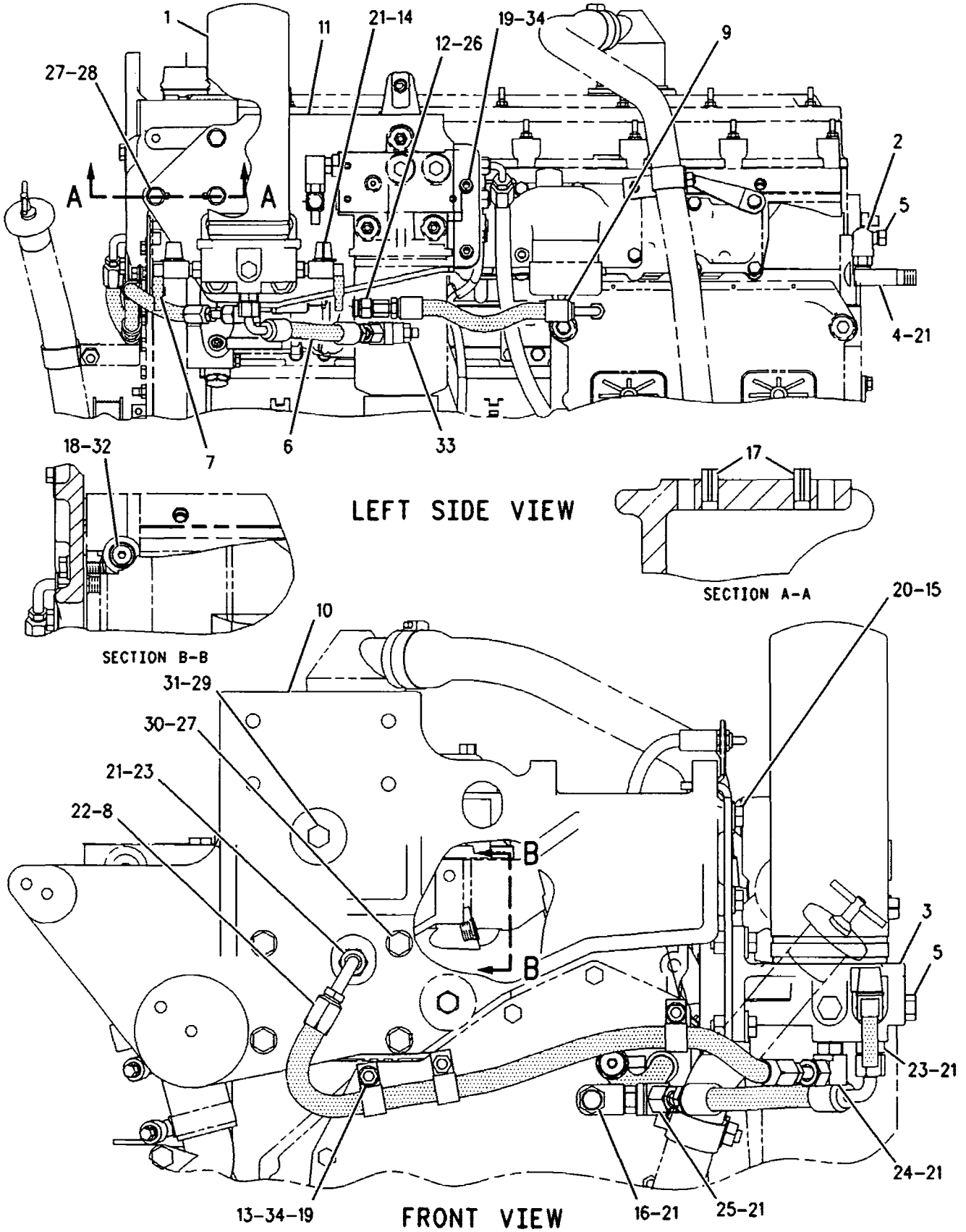

GRAPHIC #1

<END>

g00907161

FUEL SYSTEM

187-6277 LINES GP-FUEL FILTER

S/N: 5GG2634-2932

PART OF 198-5914 ENGINE AR-COMPLETE

SMCS-1261, 1274 i01961593

NOTE	REF NO	GRAPHIC REF	PART NUMBER	QTY	PART NAME 1 2 3 4 5 6 (PRODUCT LEVEL)	SEE PAGE
	1	1	1R-0762	1	FILTER AS-FUEL (SECONDARY)	
	2	1	6V-0484	1	ADAPTER-O-RING	
	3	1	174-7599	1	BASE AS-FUEL FILTER	
		1	9S-4167	1	STUD-HOLLOW	
	4	1	176-1252	1	REGULATOR AS (FUEL)	
	5	1	*183-3406*	4	PLUG AS	
					(EACH INCLUDES)	
		1	9S-4191	1	PLUG	
		1	6V-5049	1	SEAL-O-RING (11.89MM ID)	
I	6	1	187-6290	1	HOSE AS	
	7	1	206-6876	2	CAP-TUBE	
I	8	1	209-5526	1	HOSE AS	
	10	1	216-4575	1	BRACKET	
	11	1	217-5152	1	BRACKET AS	
	13	1	134-3988	1	CLIP	
	14	1	141-8275	2	VALVE-DRAIN	
	15	1	3E-4353	4	WASHER-HARD (11X25X3-MM THK)	
	16	1	3E-7410	1	TEE-O-RING	
	17	1	3E-9412	2	DOWEL	
	18	1	3J-1907	1	SEAL-O-RING (11.89MM ID)	
M	19	1	5C-7261	5	NUT (M8X1.25-THD)	
M	20	1	6V-1820	4	BOLT (M10X1.5X30-MM)	
	21	1	6V-5049	10	SEAL-O-RING (11.89MM ID)	
	22	1	6V-8397	4	SEAL-O-RING (12.83MM OD)	
	23	1	6V-8636	2	CONNECTOR	
	24	1	6V-8724	1	ELBOW	
	25	1	6V-9001	1	ELBOW	
	27	1	8T-4121	7	WASHER-HARD (11X21X2.5-MM THK)	
M	28	1	8T-4136	3	BOLT (M10X1.5X25-MM)	
M	29	1	8T-4137	1	BOLT (M10X1.5X20-MM)	
M	30	1	8T-4196	4	BOLT (M10X1.5X35-MM)	
	31	1	8T-4226	1	WASHER-PLATED (10.5X45X3-MM THK)	
	32	1	9S-8004	1	PLUG	
	33	1	9X-0261	1	ADAPTER	
	34	1	8T-4224	6	WASHER-HARD (8.8X16X2-MM THK)	

I-REFER TO HYDRAULIC INFORMATION SYSTEM
M-METRIC PART

187-6277 LINES GP-FUEL FILTER (contd.) 101961593

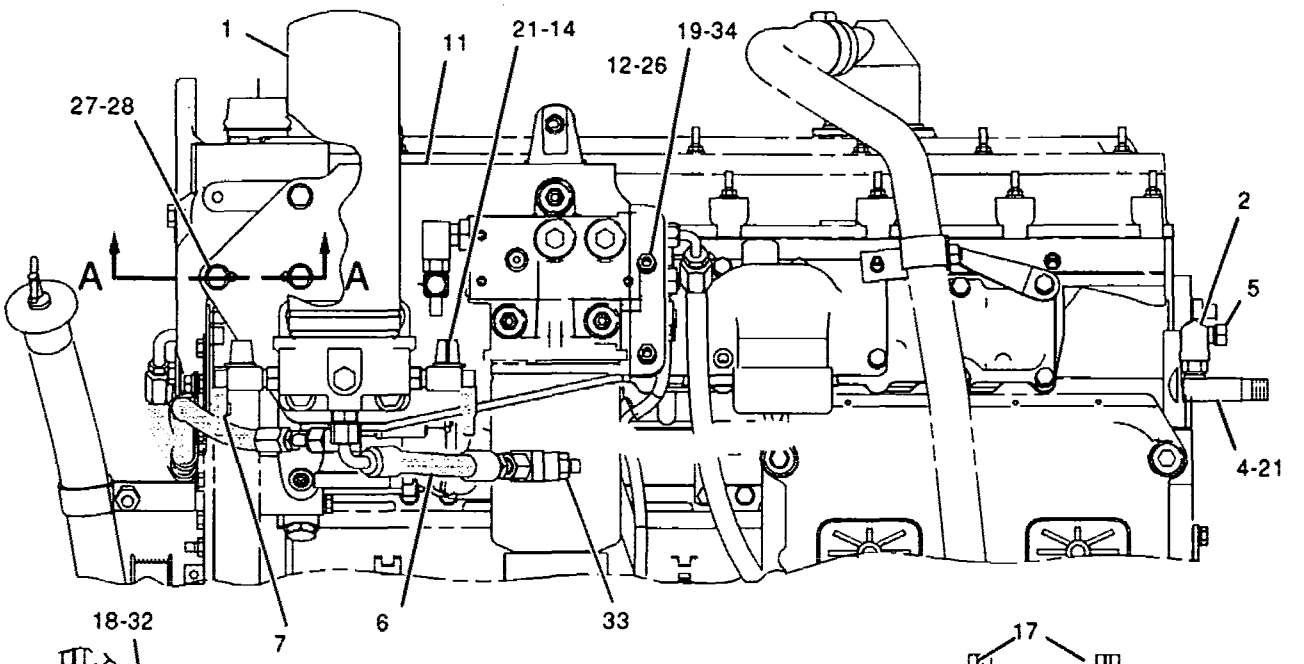

LEFT SIDE VIEW

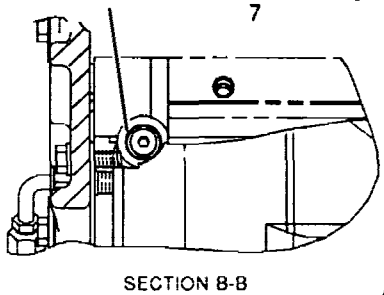

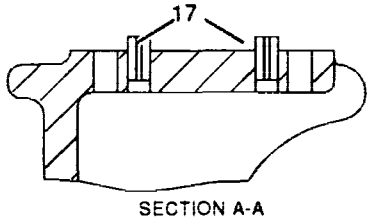

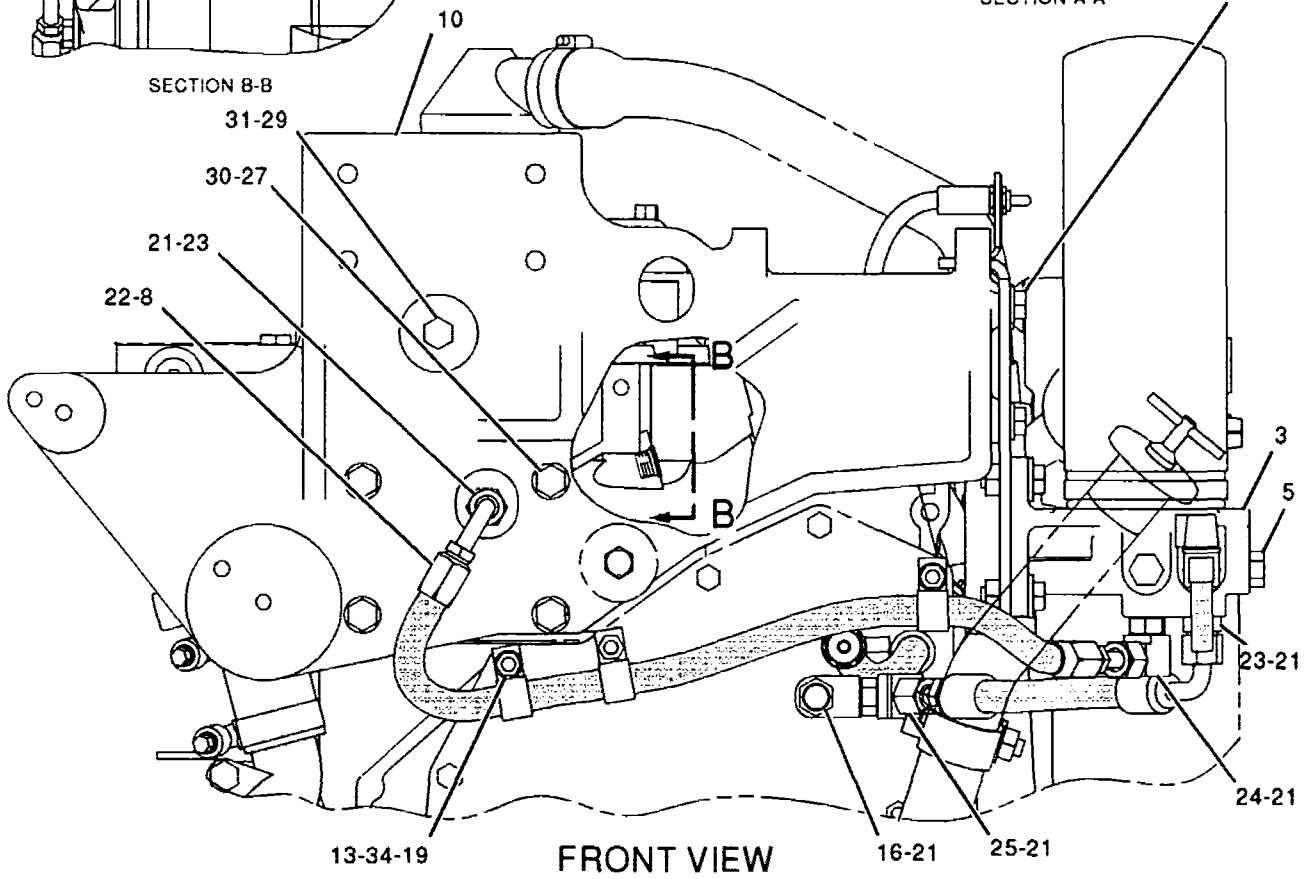

FRONT VIEW

GRAPHIC #1

<END>

g01028951

217-5149 LINES GP-FUEL FILTER

S/N: 5GG1-1092

PART OF 198-5914 ENGINE AR-COMPLETE

SMCS-1261, 1274 i01707654

NOTE	REF NO	GRAPHIC REF	PART NUMBER	QTY	PART NAME 1 2 3 4 5 6 (PRODUCT LEVEL)	SEE PAGE
	1	1	1R-0762	1	FILTER AS-FUEL (SECONDARY)	
	2	1	6V-0484	1	ADAPTER-O-RING	
	3	1	174-7599	1	BASE AS-FUEL FILTER	
		1	9S-4167	1	STUD-HOLLOW	
	4	1	176-1252	1	REGULATOR AS	
	5	1	9S-4191	4	PLUG	
		1	6V-5049	4	SEAL-O-RING	
I	6	1	187-6290	1	HOSE AS	
I	7	1	209-5526	1	HOSE AS	
I	8	1	211-6007	1	HOSE AS	
	9	1	217-5152	1	BRACKET AS	
M		1	8T-3490	6	NUT-WELD (M10X1.5-THD)	
M		1	8T-3612	6	NUT-WELD (M8X1.25-THD)	
M		1	9R-2672	1	BOSS-THREADED	
	10	1	030-8188	1	CONNECTOR	
	11	1	134-3988	3	CLIP	
	12	1	141-8275	2	VALVE-DRAIN	
	13	1	3E-4353	4	WASHER-HARD (11X25X3-MM THK)	
	14	1	3E-7410	1	TEE-O-RING	
	15	1	3J-1907	1	SEAL-O-RING	
M	16	1	5C-7261	5	NUT (M8X1.25-THD)	
M	17	1	6V-1820	4	BOLT (M10X1.5X30-MM)	
	18	1	6V-5049	10	SEAL-O-RING	
	19	1	6V-8397	4	SEAL-O-RING	
	20	1	6V-8636	2	CONNECTOR	
	21	1	6V-8724	1	ELBOW	
	22	1	6V-9001	1	ELBOW	
	23	1	8L-2786	1	SEAL-O-RING	
	24	1	8T-4121	3	WASHER-HARD (11X21X2.5-MM THK)	
M	25	1	8T-4136	3	BOLT (M10X1.5X25-MM)	
	26	1	8T-4224	6	WASHER-HARD (8.8X16X2-MM THK)	
	27	1	9S-8004	1	PLUG	
	28	1	9X-0261	1	ADAPTER	

I-REFER TO HYDRAULIC INFORMATION SYSTEM
M-METRIC PART

217-5149 LINES GP-FUEL FILTER (contd.) i01707654

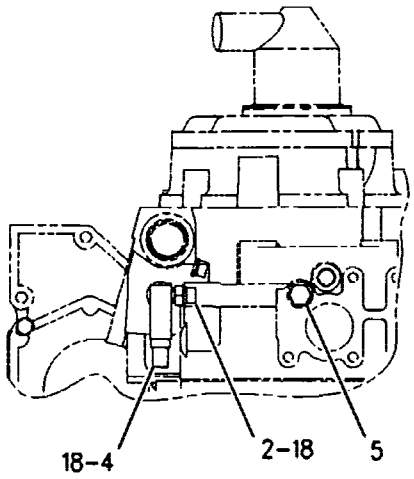

VIEW A-A

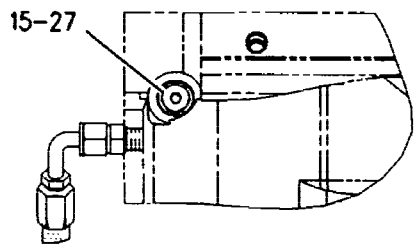

VIEW B-B

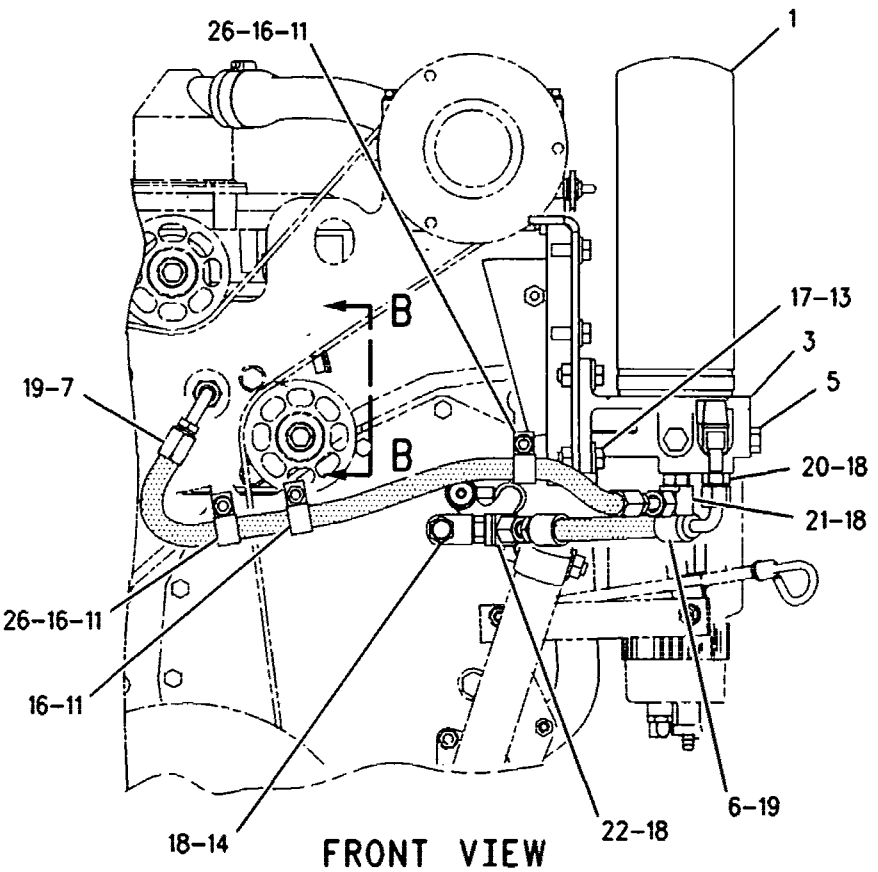

FRONT VIEW

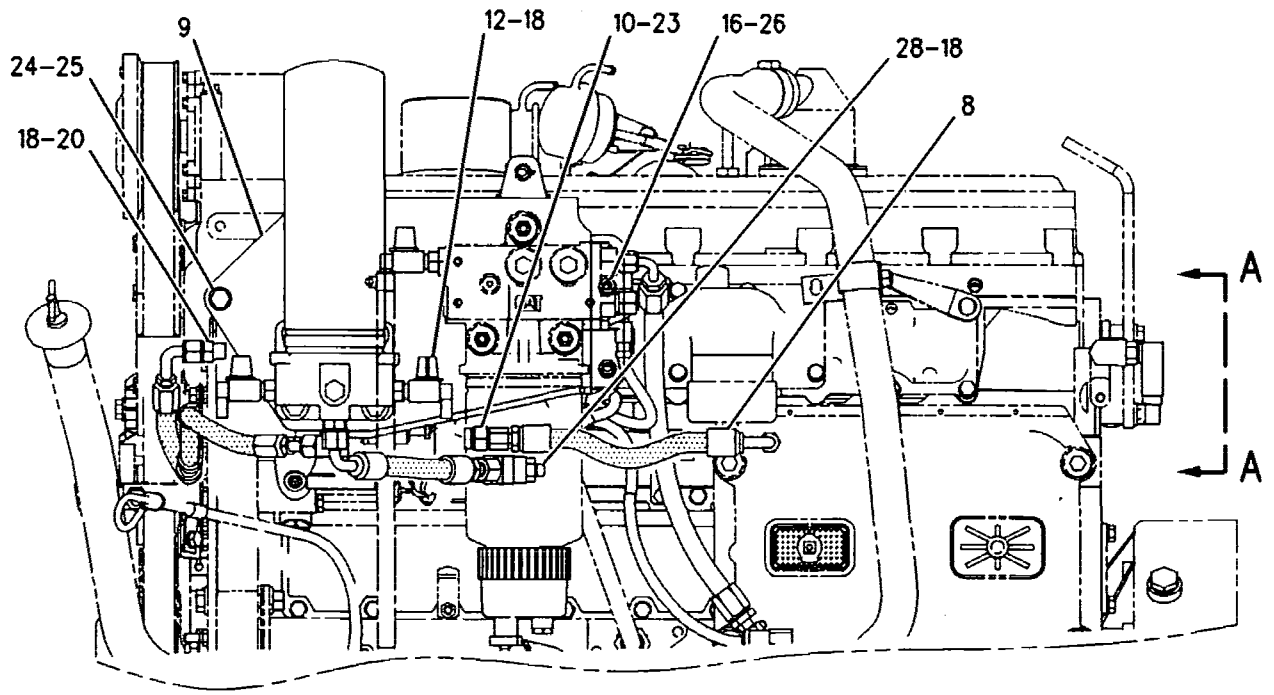

LEFT SIDE VIEW

GRAPHIC #1 <END> g00872871

237-2263 LINES GP-FUEL FILTER

S/N: 5GG2933-5953

PART OF 198-5914 ENGINE AR-COMPLETE

SMCS-1261, 1274 i01944972

NOTE	REF NO	GRAPHIC REF	PART NUMBER	QTY	PART NAME 1 2 3 4 5 6 (PRODUCT LEVEL)	SEE PAGE
	1	1	1R-0762	1	FILTER AS-FUEL	
	2	1	174-7599	1	BASE AS-FUEL FILTER	
		1	9S-4167	1	STUD-HOLLOW	
	3	1	183-3406	4	PLUG AS	
					(EACH INCLUDES)	
		1	9S-4191	1	PLUG	
		1	6V-5049	1	SEAL-O-RING	
I	4	1	187-6290	1	HOSE AS	
	5	1	206-6876	2	CAP-TUBE	
I	6	1	209-5526	1	HOSE AS	
	7	1	216-4575	1	BRACKET	
	8	1	217-5152	1	BRACKET AS	
M		1	8T-3490	6	NUT-WELD (M10X1.5-THD)	
M		1	8T-3612	6	NUT-WELD (M8X1.25-THD)	
M		1	9R-2672	1	BOSS-THREADED	
Y	9	1	232-0343	1	REGULATOR GP-FUEL PRESSURE	154
	10	1	134-3988	3	CLIP	
	11	1	141-8275	2	VALVE-DRAIN	
	12	1	3E-4353	4	WASHER-HARD (11X25X3-MM THK)	
	13	1	3E-7410	1	TEE-O-RING	
	14	1	3J-1907	1	SEAL-O-RING	
M	15	1	5C-7261	5	NUT (M8X1.25-THD)	
M	16	1	6V-1820	4	BOLT (M10X1.5X30-MM)	
	17	1	6V-5049	8	SEAL-O-RING	
	18	1	6V-8397	4	SEAL-O-RING	
	19	1	6V-8636	2	CONNECTOR	
	20	1	6V-8724	1	ELBOW	
	21	1	6V-9001	1	ELBOW	
	22	1	8T-4121	7	WASHER-HARD (11X21X2.5-MM THK)	
M	23	1	8T-4136	3	BOLT (M10X1.5X25-MM)	
M	24	1	8T-4137	1	BOLT (M10X1.5X20-MM)	
M	25	1	8T-4196	4	BOLT (M10X1.5X35-MM)	
	26	1	8T-4226	1	WASHER-PLATED (10.5X45X3-MM THK)	
	27	1	9S-8004	1	PLUG	
	28	1	9X-0261	1	ADAPTER	
	29	1	8T-4224	6	WASHER-HARD (8.8X16X2-MM THK)	

I-REFER TO HYDRAULIC INFORMATION SYSTEM
M-METRIC PART
Y-SEPARATE ILLUSTRATION

237-2263 LINES GP-FUEL FILTER (contd.) i01944972

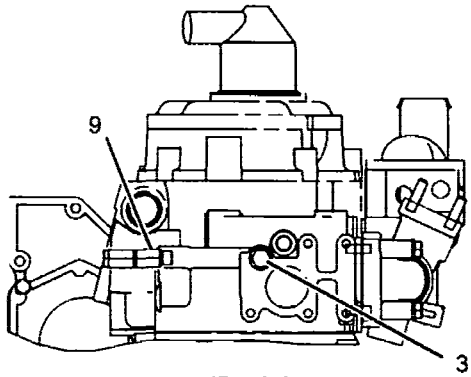

VIEW A-A

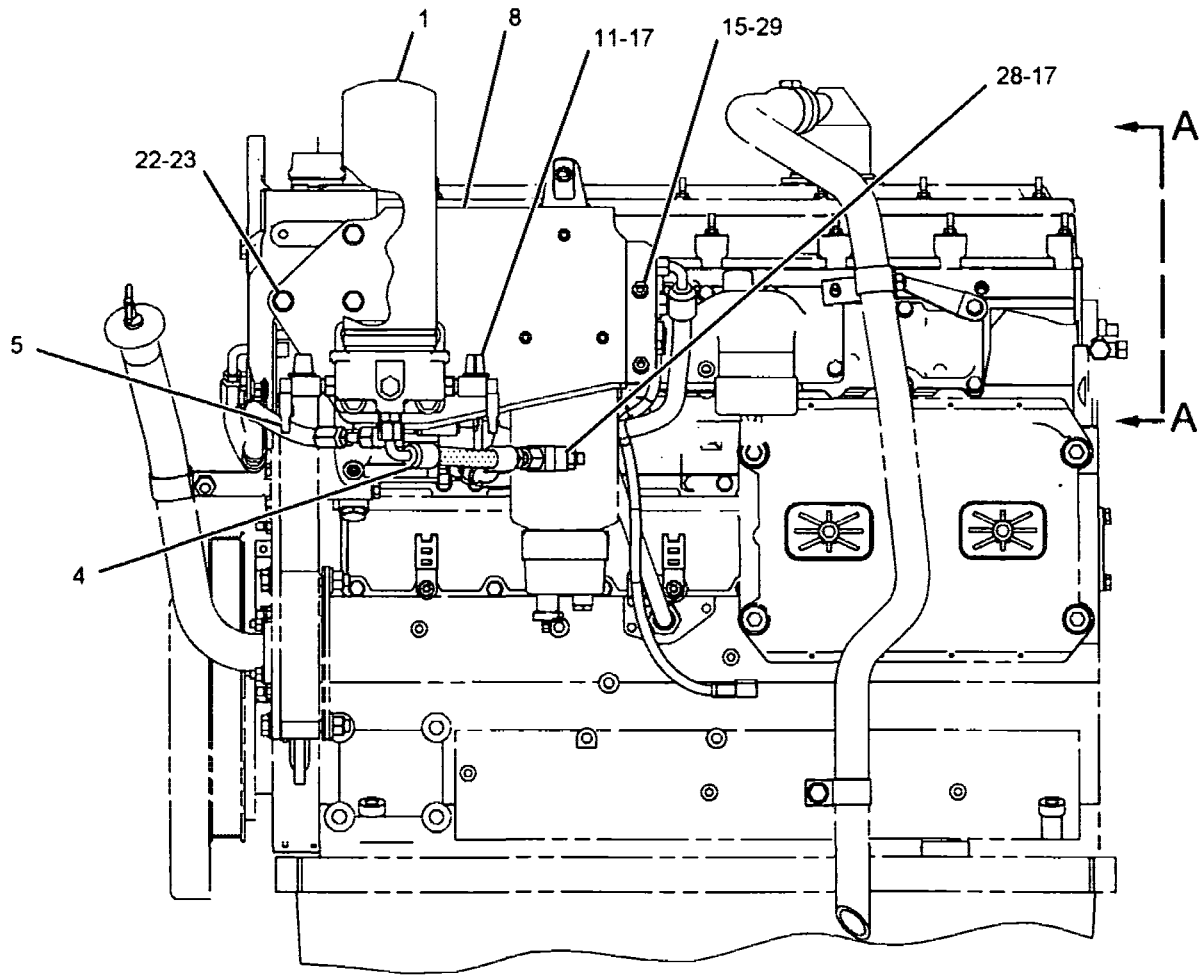

RIGHT SIDE VIEW

GRAPHIC #1 g01020243

237-2263 LINES GP-FUEL FILTER (contd.) i01944972

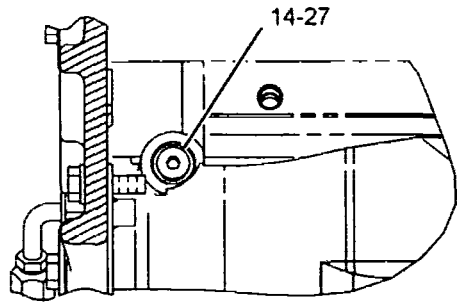

SECTION B-B

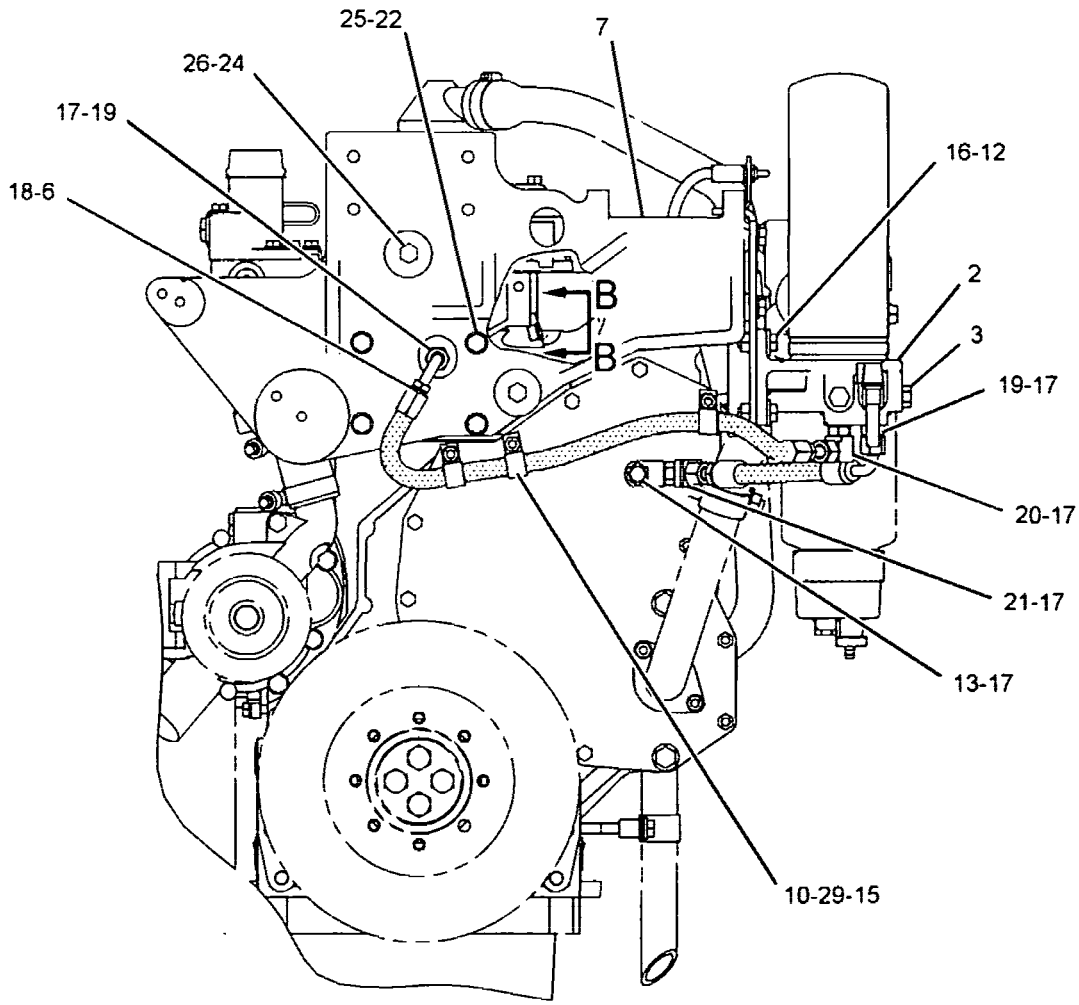

FRONT VIEW

GRAPHIC #2

<END>

g01020274

FUEL SYSTEM

237-2263 LINES GP-FUEL FILTER

S/N: 5GG5954-UP

PART OF 198-5914 ENGINE AR-COMPLETE

SMCS-1261, 1274 i02193408

NOTE	REF NO	GRAPHIC REF	PART NUMBER	QTY	PART NAME 1 2 3 4 5 6 (PRODUCT LEVEL)	SEE PAGE
	1	1	**1R-0762**	1	FILTER AS-FUEL	
	2	1	**174-7599**	1	BASE AS-FUEL FILTER	
		1	**9S-4167**	1	STUD-HOLLOW	
C	3	1,2	*183-3406*	5	PLUG AS	
					(EACH INCLUDES)	
		1,2	**9S-4191**	1	PLUG	
		1,2	**6V-5049**	1	SEAL-O-RING	
CI	4	2	**148-7027**	1	HOSE AS	
C	5	1	**206-6876**	1	CAP-TUBE	
I	6	1	**209-5526**	1	HOSE AS	
	7	1	**216-4575**	1	BRACKET	
	8	2	**217-5152**	1	BRACKET AS	
M		2	**8T-3490**	6	NUT-WELD (M10X1.5-THD)	
M		2	**8T-3612**	6	NUT-WELD (M8X1.25-THD)	
M		2	**9R-2672**	1	BOSS-THREADED	
Y	9	2	*232-0343*	1	REGULATOR GP-FUEL PRESSURE	154
	10	1	**134-3988**	3	CLIP	
C	11	2	**141-8275**	1	VALVE-DRAIN (FUEL FILTER)	
	12	1	**3E-4353**	4	WASHER-HARD (11X25X3-MM THK)	
	13	1	**3E-7410**	1	TEE-O-RING	
	14	2	**3J-1907**	1	SEAL-O-RING	
M	15	1,2	**5C-7261**	5	NUT (M8X1.25-THD)	
CM	16	1	**6V-4249**	4	BOLT (M10X1.5X50-MM)	
C	17	1,2	**6V-5049**	5	SEAL-O-RING	
C	18	1	**6V-8397**	2	SEAL-O-RING	
C	19	1	**6V-8636**	1	CONNECTOR	
C	20	1	**148-8353**	1	ELBOW AS	
	21	1	**6V-9001**	1	ELBOW	
	22	1,2	**8T-4121**	7	WASHER-HARD (11X21X2.5-MM THK)	
M	23	2	**8T-4136**	3	BOLT (M10X1.5X25-MM)	
M	24	1	**8T-4137**	1	BOLT (M10X1.5X20-MM)	
M	25	1	**8T-4196**	4	BOLT (M10X1.5X35-MM)	
	26	1	**8T-4226**	1	WASHER-PLATED (10.5X45X3-MM THK)	
	27	2	**9S-8004**	1	PLUG	
	28	2	**9X-0261**	1	ADAPTER	
	29	1,2	**8T-4224**	6	WASHER-HARD (8.8X16X2-MM THK)	
C	30	2	**148-8336**	1	CONNECTOR AS	
C	31	1	**9R-5383**	4	BOSS	

C-CHANGE FROM PREVIOUS TYPE
I-REFER TO HYDRAULIC INFORMATION SYSTEM
M-METRIC PART
Y-SEPARATE ILLUSTRATION

237-2263 LINES GP-FUEL FILTER (contd.) i02193408

REFER TO ALL ILLUSTRATIONS OF THIS GROUP FOR AUXILIARY VIEWS

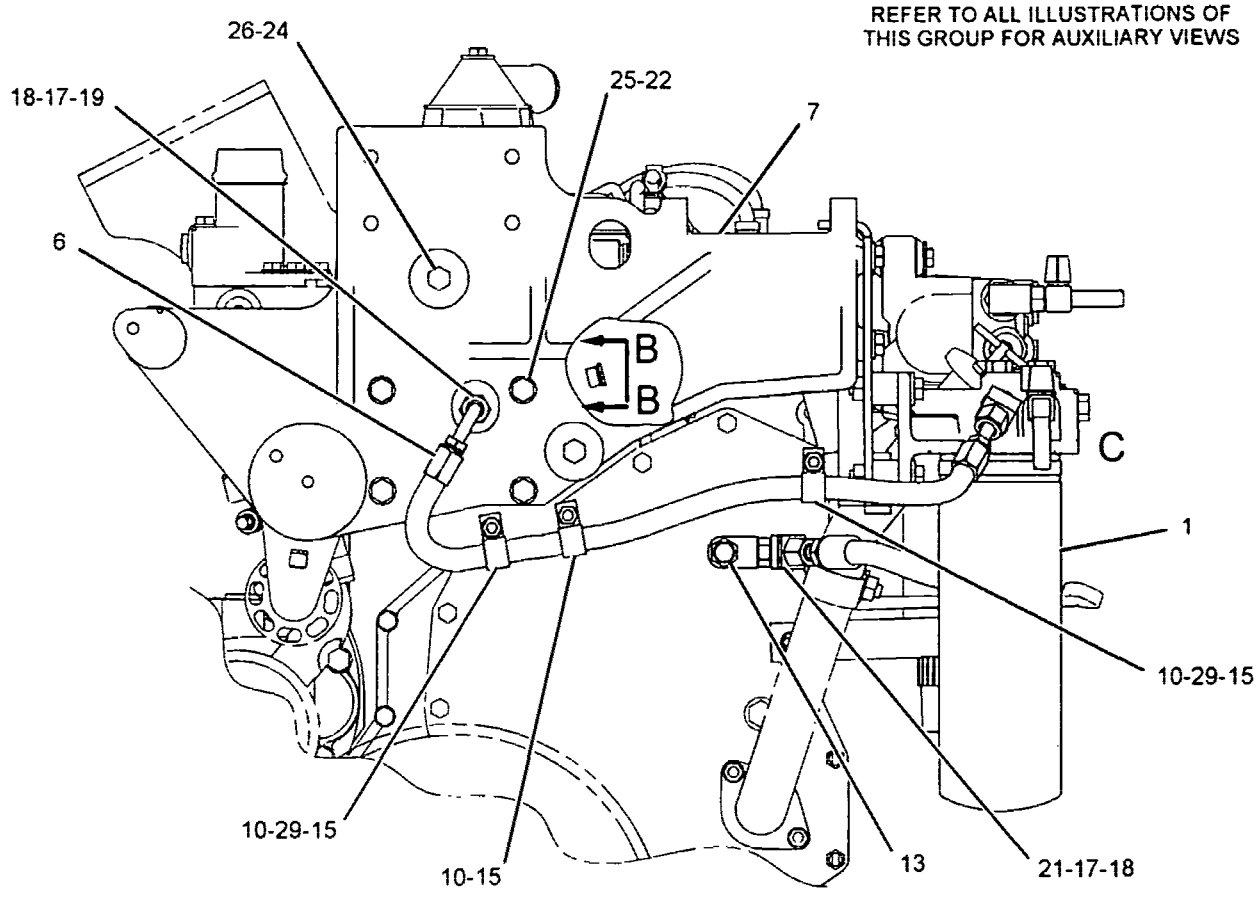

FRONT VIEW

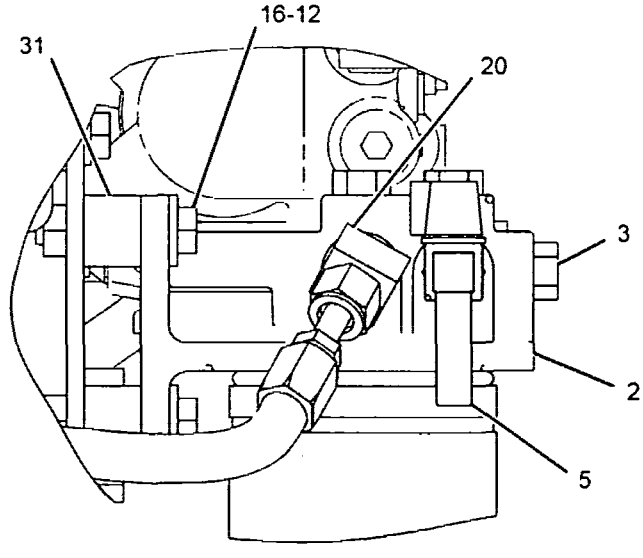

VIEW OF AREA C

GRAPHIC #1 g01108295

237-2263 LINES GP-FUEL FILTER *(contd.)* i02193408

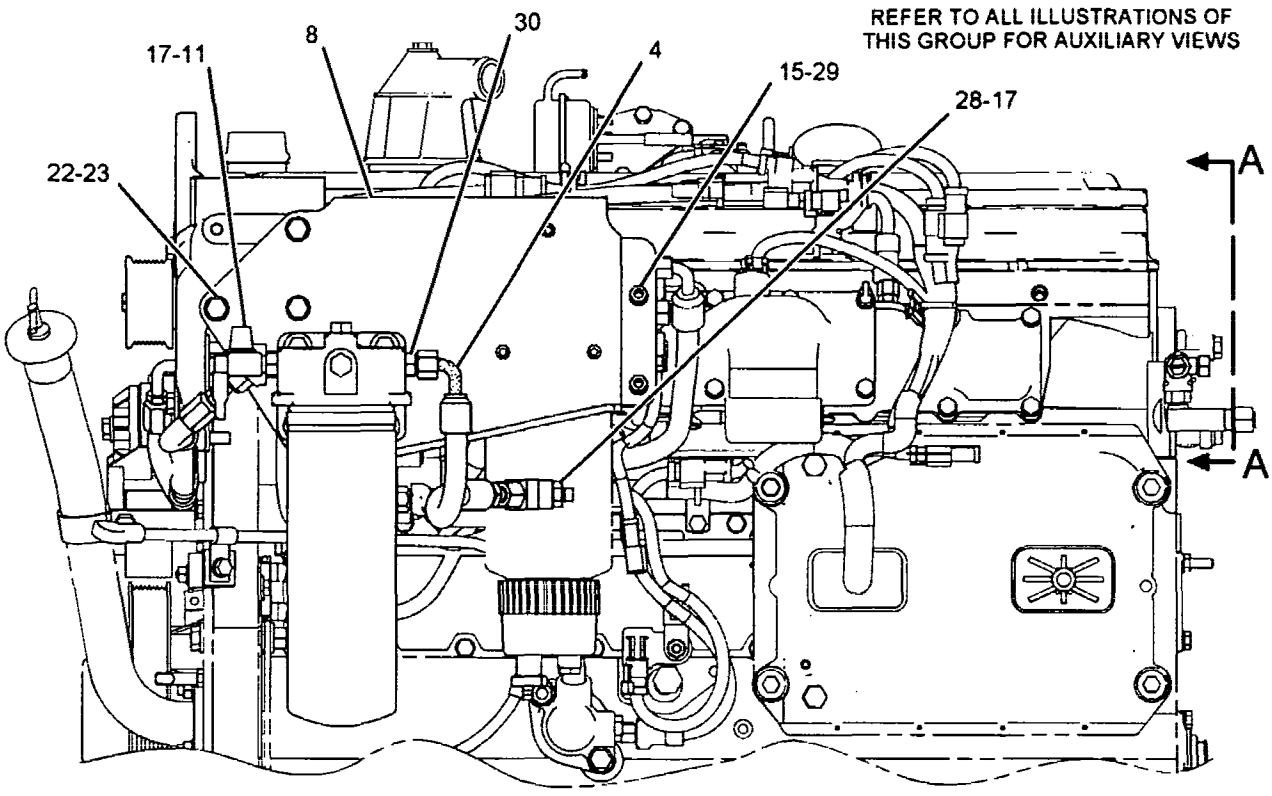

LEFT SIDE VIEW

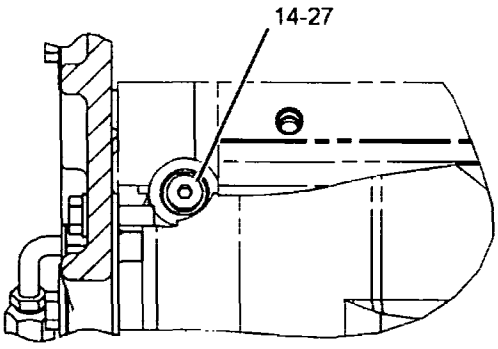

SECTION B-B

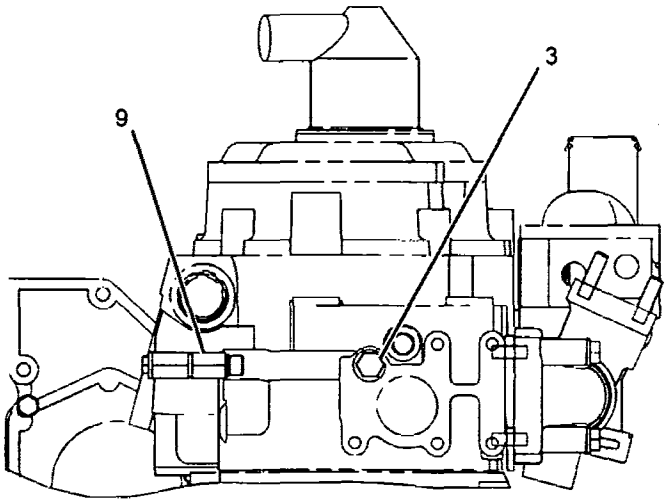

VIEW OF AREA A

GRAPHIC #2 **<END>** g01108294

210-5574 LINES GP-INJECTOR HYD PUMP

S/N: 5GG1-UP

PART OF 198-5915 ENGINE AR-CORE

TYPE 1

SMCS-1714 i01837577

NOTE	REF NO	GRAPHIC REF	PART NUMBER	QTY	PART NAME 1 2 3 4 5 6 (PRODUCT LEVEL)	SEE PAGE
Y	1	1	*179-7001*	1	ADAPTER GP-OIL LINE	69
	2	1	**200-4528**	1	HOSE AS	
	3	1	**227-5928**	1	TUBE AS	
	4	1	**030-8196**	1	CONNECTOR	
	5	1	**2M-9780**	1	SEAL-O-RING	
	6	1	**3J-1907**	1	SEAL-O-RING	
	7	1	**4F-9653**	1	SEAL-O-RING	
	8	1	**6V-5839**	2	WASHER (11X21X2.5-MM THK)	
M	9	1	**6V-5842**	2	BOLT (M10X1.5X40-MM)	
	10	1	**9X-0261**	1	ADAPTER	

M-METRIC PART
Y-SEPARATE ILLUSTRATION

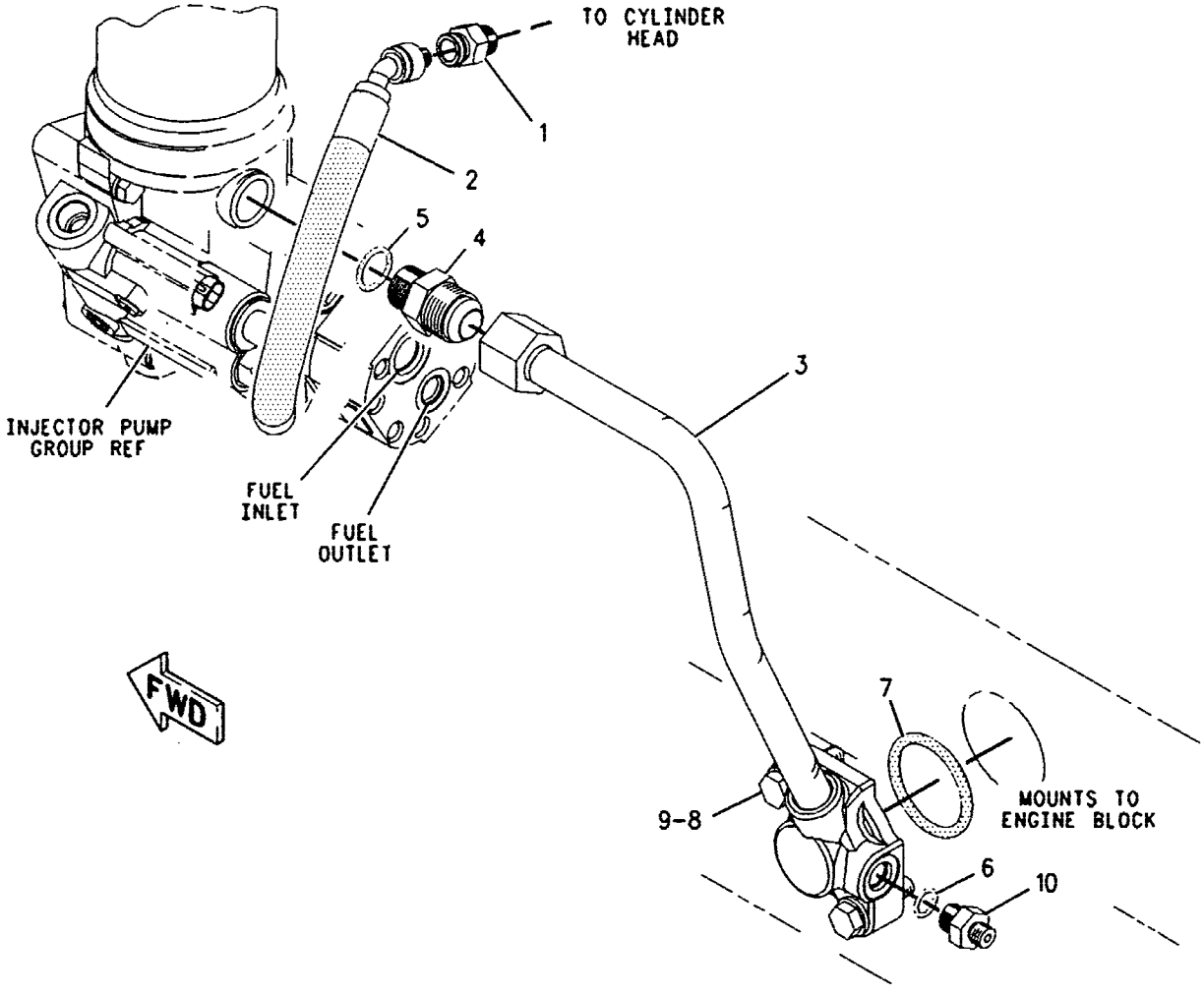

GRAPHIC #1 <END> g00938119

210-5574 LINES GP-INJECTOR HYD PUMP

S/N: 5GG1-UP

PART OF 198-5915 ENGINE AR-CORE

TYPE 2

SMCS-1714 i02104063

NOTE	REF NO	GRAPHIC REF	PART NUMBER	QTY	PART NAME 1 2 3 4 5 6 (PRODUCT LEVEL)	SEE PAGE
	1	1	*183-3399*	1	CONNECTOR AS	
		1	**6V-8636**	1	CONNECTOR	
		1	**214-7568**	1	SEAL-O-RING	
		1	**221-3494**	1	SEAL-O-RING (12.83-MM OD)	
	2	1	**247-3755**	1	TUBE AS	
	3	1	**227-5928**	1	TUBE AS	
	4	1	**030-8196**	1	CONNECTOR	
	5	1	**2M-9780**	1	SEAL-O-RING	
	6	1	**3J-1907**	1	SEAL-O-RING	
	7	1	**4F-9653**	1	SEAL-O-RING	
	8	1	**6V-5839**	2	WASHER (11X21X2.5-MM THK)	
M	9	1	**6V-5842**	2	BOLT (M10X1.5X40-MM)	
	10	1	**9X-0261**	1	ADAPTER	

M-METRIC PART

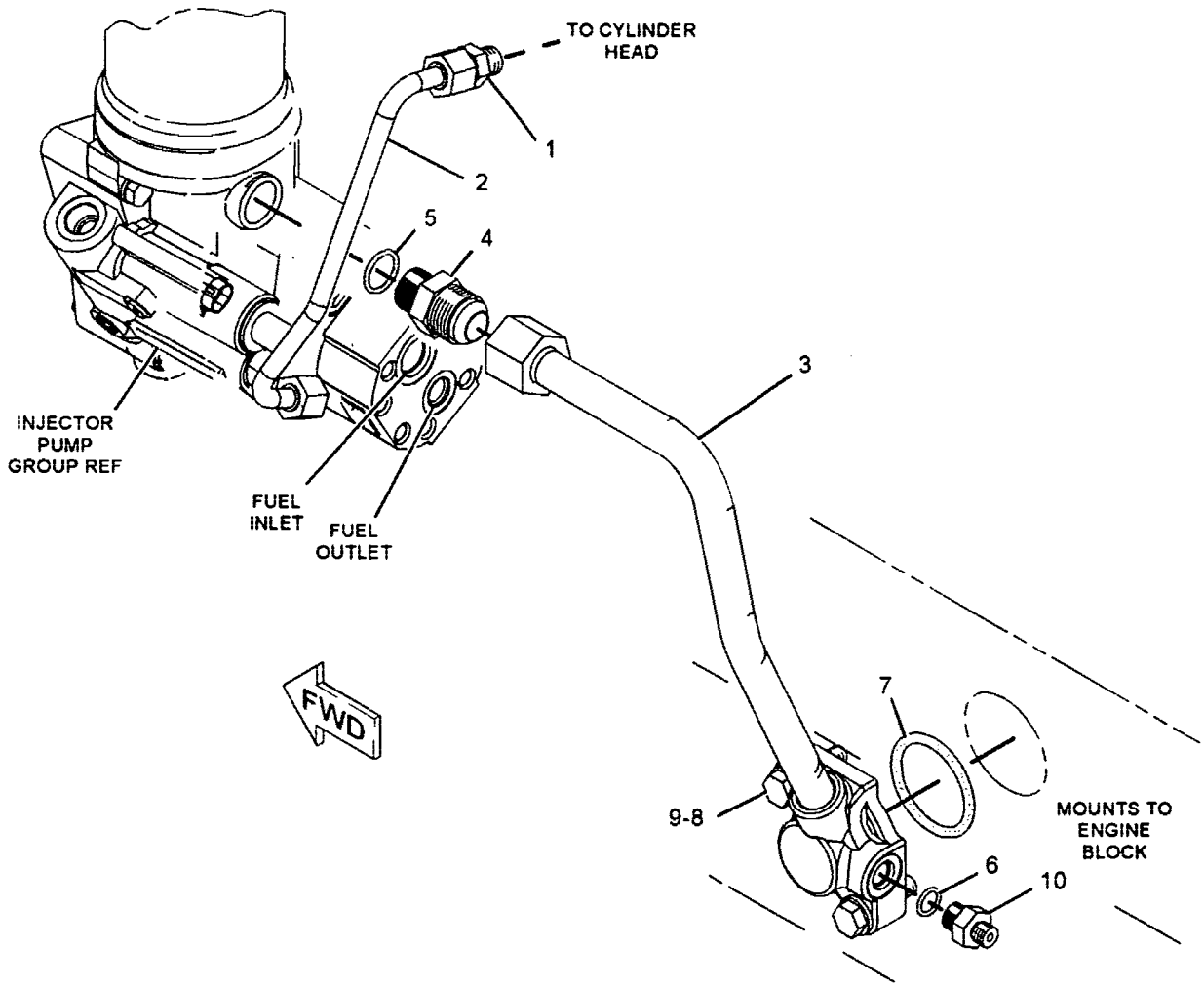

GRAPHIC #1 <END> g01072709

185-2069 PUMP GP-FUEL PRM & PRIM FILTER

S/N: 5GG1-UP

PART OF 198-5914 ENGINE AR-COMPLETE

SMCS-1258, 1260 i02204395

NOTE	REF NO	GRAPHIC REF	PART NUMBER	QTY	PART NAME 1 2 3 4 5 6 (PRODUCT LEVEL)	SEE PAGE
	1	1	3S-2093	1	STRAP-CABLE	
I	2	1	9V-9295	1	HOSE AS	
Y	3	1	165-5970	1	SWITCH GP-TOGGLE (FUEL PRIMING PUMP)	278
	4	1	179-9348	1	VALVE-DRAIN (FUEL FILTER)	
	5	1	191-1782	1	SPACER (8.5X12.7X38.2-MM THK)	
	6	1	206-6876	1	CAP-TUBE	
	7	1	209-8441	1	HARNESS AS-PUMP (FUEL PRIMING)	
		1	102-8802	1	KIT-RECEPTACLE (2-PIN)	
					(INCLUDES RECEPTACLE AS AND WEDGE)	
		1	155-2260	1	KIT-CONNECTING PLUG (3-PIN)	
		1	155-2270	1	KIT-CONNECTING PLUG (2-PIN)	
					(EACH KIT INCLUDES PLUG AS AND WEDGE)	
Y	8	1	212-3657	1	WATER SEP & FUEL PRM PUMP GP	158
	9	1	232-1374	1	BRACKET	
	10	1	232-1376	2	SPACER (8.5X12.7X139.1-MM THK)	
	11	1	030-8188	1	CONNECTOR	
	12	1	030-8194	1	CONNECTOR	
	13	1	*150-3065*	1	ADAPTER AS	
		1	3J-1907	1	SEAL-O-RING	
		1	6V-0484	1	ADAPTER-O-RING	
	14	1	4P-7581	1	CLIP	
	15	1	5P-1404	1	ADAPTER-O-RING	
	16	1	6V-4589	4	SEAL-O-RING	
	17	1	6V-5049	1	SEAL-O-RING	
	18	1	6V-8715	1	CONNECTOR	
	19	1	8L-2786	1	SEAL-O-RING	
	20	1	8T-4121	1	WASHER-HARD (11X21X2.5-MM THK)	
M	21	1	8T-4137	1	BOLT (M10X1.5X20-MM)	
M	22	1	8T-6869	1	BOLT (M8X1.25X60-MM)	
M	23	1	8T-7352	2	BOLT (M8X160-MM)	
	24	1	8T-9655	8	MOUNT-ISOLATION	
	25	1	9N-0869	6	WASHER-HARD (8.8X25.5X2-MM THK)	
	26	1	9S-8006	1	PLUG	
	27	1	209-7659	1	PLATE-INFORMATION (MANUAL FUEL) (PRIMING)	

I-REFER TO HYDRAULIC INFORMATION SYSTEM
M-METRIC PART
Y-SEPARATE ILLUSTRATION

185-2069 PUMP GP-FUEL PRM & PRIM FILTER *(contd.)* i02204395

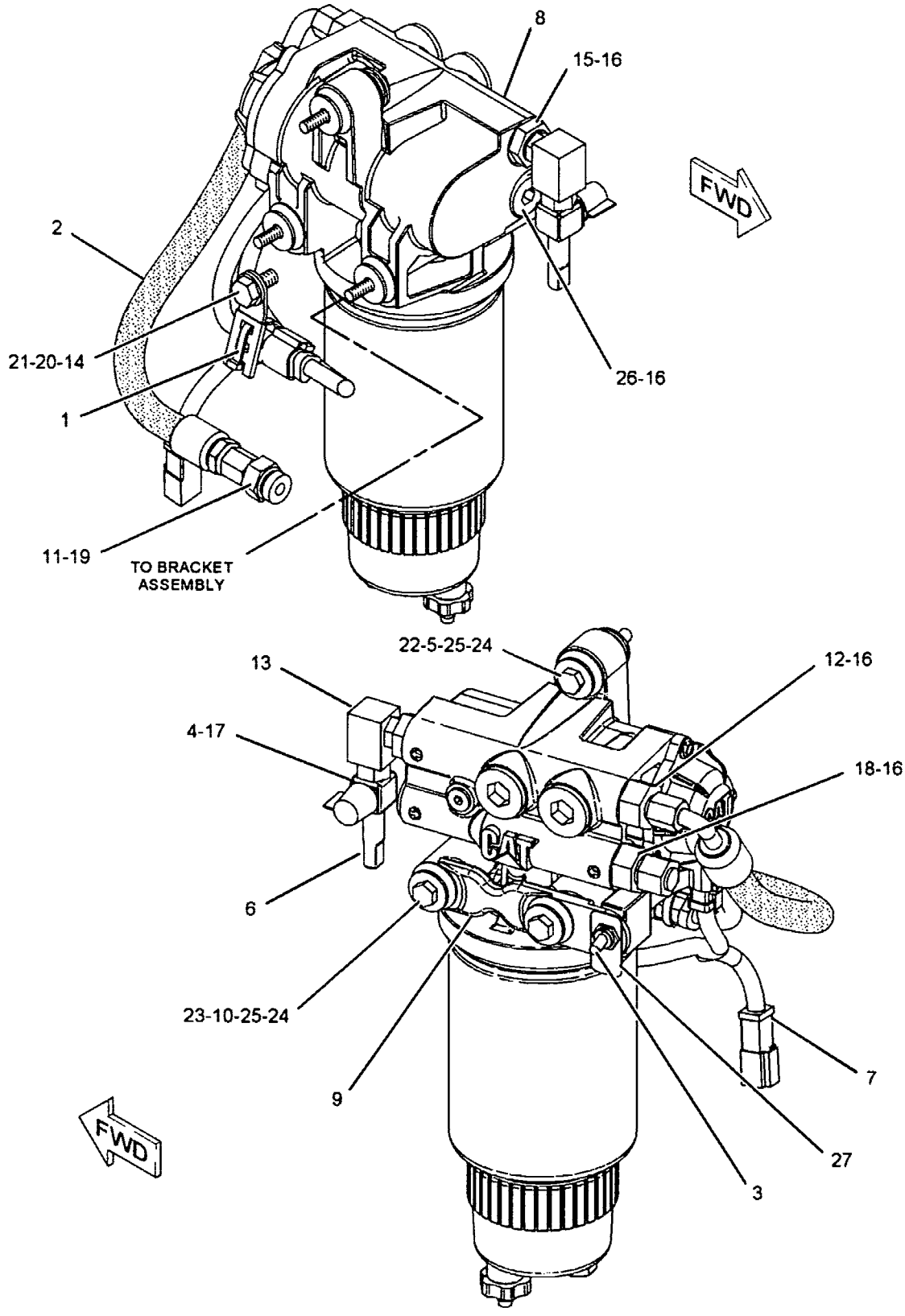

GRAPHIC #1 <END> g01114681

178-6343 PUMP GP-UNIT INJECTION

S/N: 5GG1-UP

PART OF 198-5915 ENGINE AR-CORE

SMCS-1290 i01878468

NOTE	REF NO	GRAPHIC REF	PART NUMBER	QTY	PART NAME 1 2 3 4 5 6 (PRODUCT LEVEL)	SEE PAGE
	1	1	177-4752	1	INJECTOR GP-FUEL	
	2	1	150-4105	1	RING-BACKUP	
	3	1	9X-7557	1	SEAL-O-RING	
	4	1	148-2903	1	SEAL-O-RING	
	5	1	149-5240	1	RING-BACKUP	
	6	1	109-3207	1	SEAL-O-RING	
	7	1	133-3715	1	RING-BACKUP	
	8	1	199-6103	1	BOLT-SHOULDER	
	9	1	159-0288	1	DEFLECTOR	
M	10	1	8T-2396	1	BOLT (M6X1X60MM)	

M-METRIC PART

178-6343 **PUMP GP-UNIT INJECTION** *(contd.)* **i01878468**

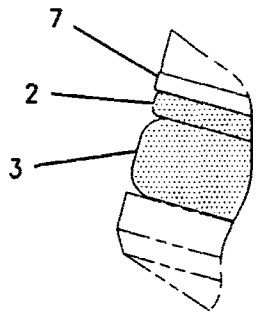

VIEW OF AREA B

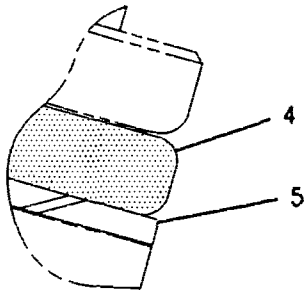

VIEW OF AREA C

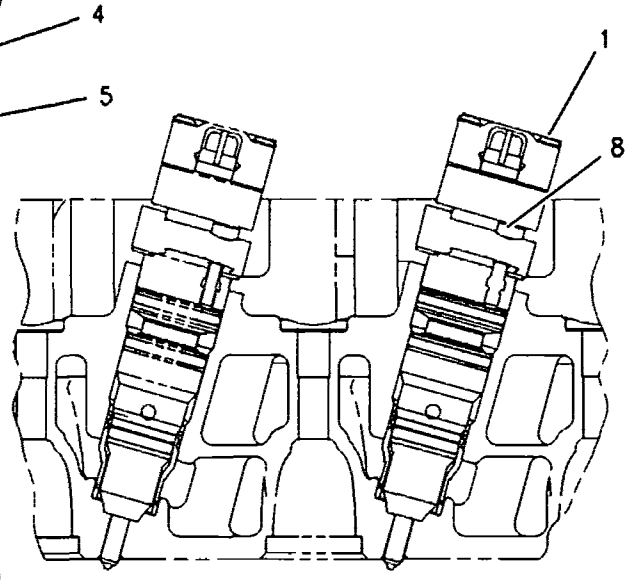

VIEW A-A

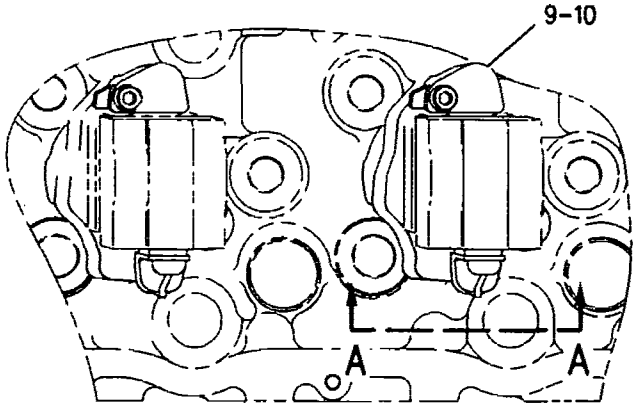

TOP VIEW

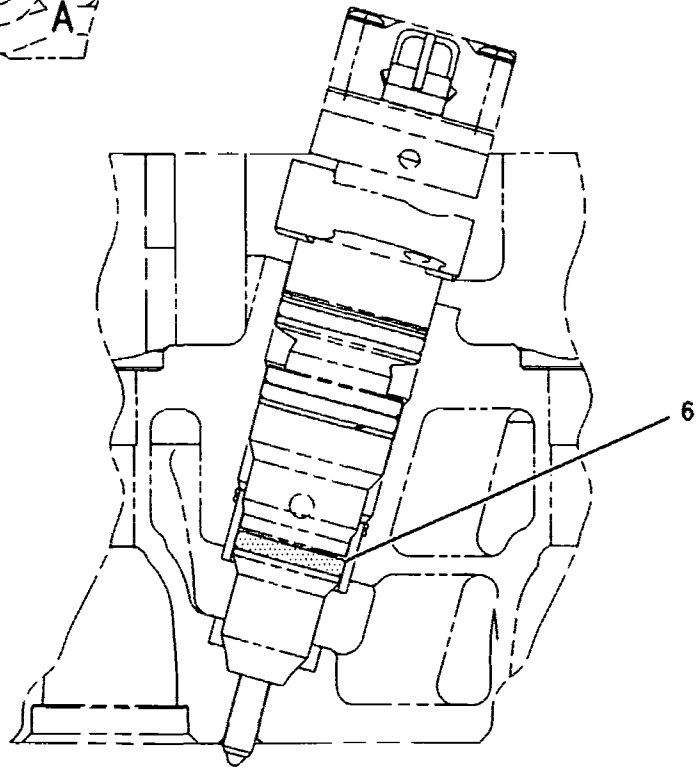

RIGHT SIDE VIEW

GRAPHIC #1 **<END>** g00660627

180-7341 PUMP GP-UNIT INJECTOR HYD

S/N: 5GG1-6099

PART OF 210-5575 PUMP GP-UNIT INJECTOR HYD

SMCS-1714 i02139395

NOTE	REF NO	GRAPHIC REF	PART NUMBER	QTY	PART NAME 1 2 3 4 5 6 (PRODUCT LEVEL)	SEE PAGE
Y	1	1	122-5053	1	VALVE GP-SOLENOID (INJECTION ACTUATION)	157
	2	1	128-3473	1	GEAR-PUMP DRIVE (36-TEETH)	
	4	1	162-9612	1	PUMP GP-FUEL TRANSFER	
F		1	144-7339	1	SEAL-O-RING (FUEL TRANSFER PUMP)	
	5	1	179-7004	1	ADAPTER AS	
		1	153-4906	1	SEAL-O-RING	
	6	1	4P-5918	1	CLIP	
	7	1	8T-4224	1	WASHER-HARD (8.8X16X2-MM THK)	
M	8	1	8T-7547	2	BOLT (M8X1.25X30-MM)	
	9	1	118-0275	1	WASHER (13.5X32X8-MM THK)	
	10	1	131-1845	1	PLUG-HEX SOCKET	
M	12	1	8T-4139	1	BOLT (M12X1.75X30-MM)	

F-NOT SHOWN
M-METRIC PART
Y-SEPARATE ILLUSTRATION

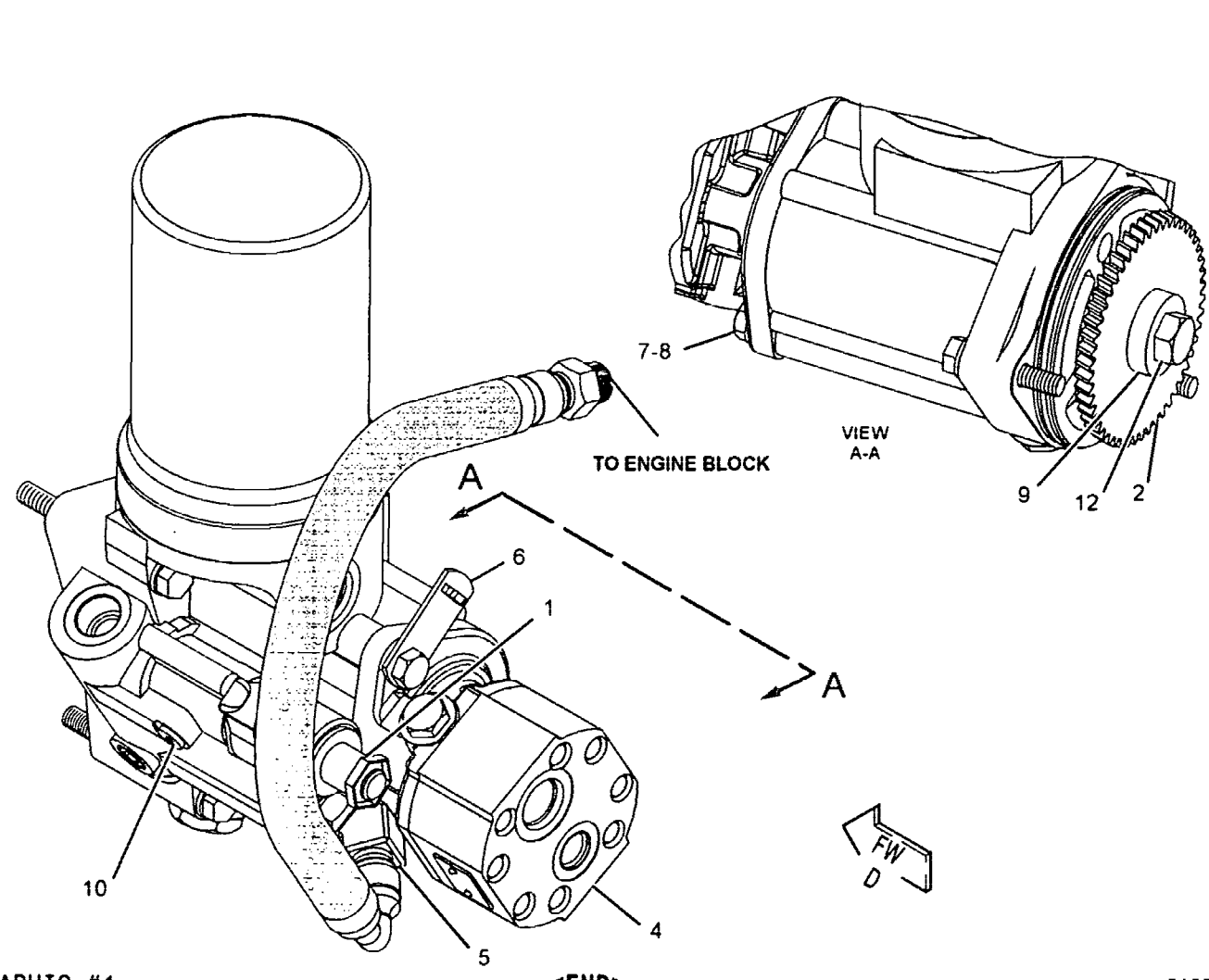

GRAPHIC #1 <END> g01086492

180-7341 PUMP GP-UNIT INJECTOR HYD

S/N: 5GG6100-UP

PART OF 210-5575 PUMP GP-UNIT INJECTOR HYD

SMCS-1714 102141138

NOTE	REF NO	GRAPHIC REF	PART NUMBER	QTY	PART NAME 1 2 3 4 5 6 (PRODUCT LEVEL)	SEE PAGE
Y	1	1	122-5053	1	VALVE GP-SOLENOID (INJECTION ACTUATION)	157
	2	1	128-3473	1	GEAR-PUMP DRIVE (36-TEETH)	
	3	1	162-9610	1	PUMP GP-FUEL INJECTION	
	4	1	162-9612	1	PUMP GP-FUEL TRANSFER	
C	5	1	*250-1424*	1	ELBOW AS	
		1	6V-8724	1	ELBOW	
			214-7568	1	SEAL-O-RING	
			221-3494	1	SEAL-O-RING (12.83-MM OD)	
	6	1	4P-5918	1	CLIP	
	7	1	8T-4224	1	WASHER-HARD (8.8X16X2-MM THK)	
M	8	1	8T-7547	2	BOLT (M8X1.25X30-MM)	
	9	1	118-0275	1	WASHER (13.5X32X8-MM THK)	
	10	1	131-1845	1	PLUG-HEX SOCKET	
M	12	1	8T-4139	1	BOLT (M12X1.75X30-MM)	
F			144-7339	1	SEAL-O-RING (FUEL TRANSFER PUMP)	

C-CHANGE FROM PREVIOUS TYPE
F-NOT SHOWN
M-METRIC PART
Y-SEPARATE ILLUSTRATION

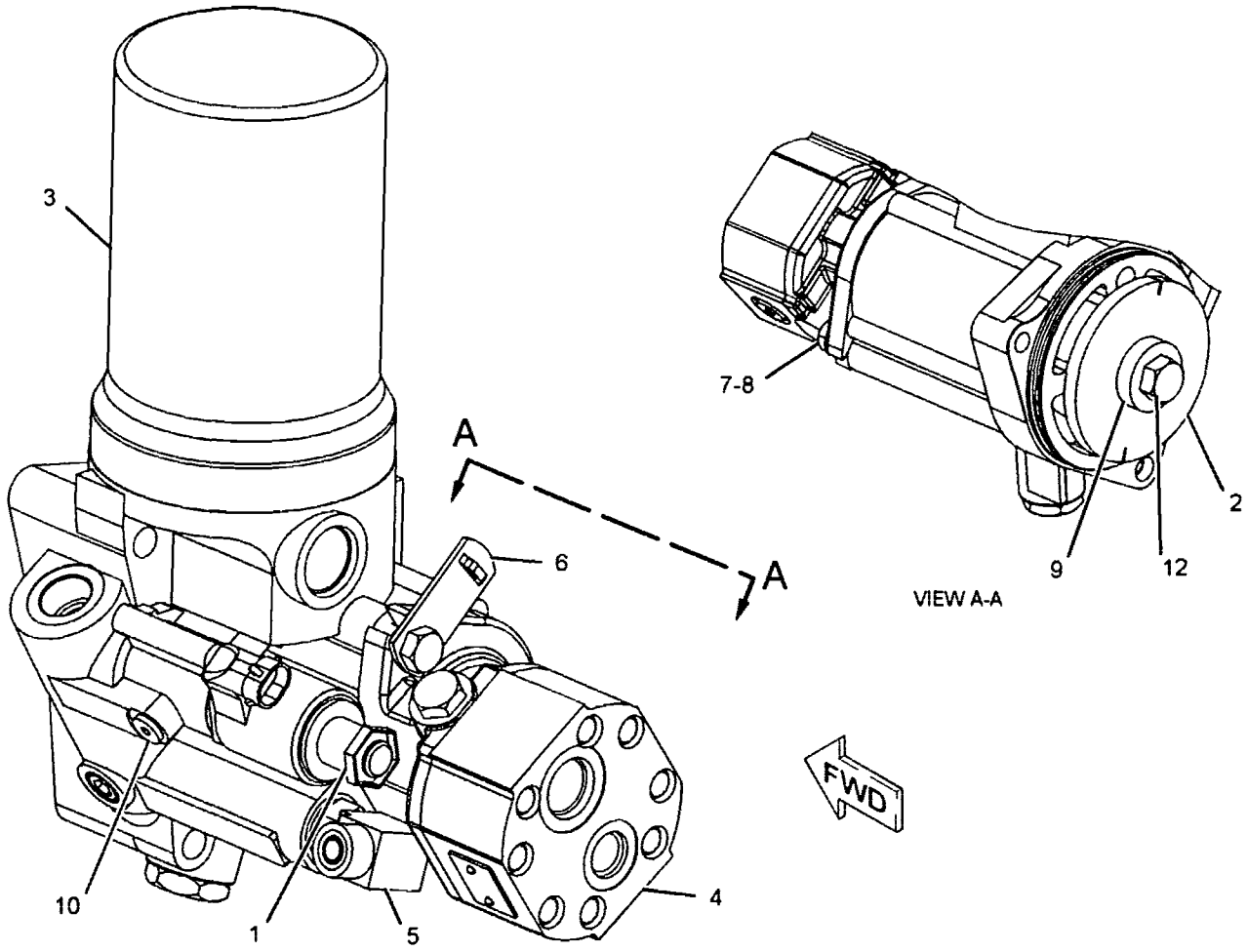

GRAPHIC #1 <END> g01088277

210-5575 PUMP GP-UNIT INJECTOR HYD

S/N: 5GG1-UP

PART OF 198-5915 ENGINE AR-CORE

SMCS-1714 i01698847

NOTE	REF NO	GRAPHIC REF	PART NUMBER	QTY	PART NAME 1 2 3 4 5 6 (PRODUCT LEVEL)	SEE PAGE
Y	1	1	180-7341	1	PUMP GP-UNIT INJECTOR HYD	151
	2	1	185-3241	1	SEAL-O-RING	
	3	1	3J-1907	1	SEAL-O-RING	
M	4	1	6V-5219	1	BOLT (M8X1.25X40-MM)	
M	5	1	6V-9804	2	BOLT (M8X75-MM)	
	6	1	9M-1974	3	WASHER-HARD (8.8X16X2-MM THK)	
	7	1	9S-4191	1	PLUG	

M-METRIC PART
Y-SEPARATE ILLUSTRATION

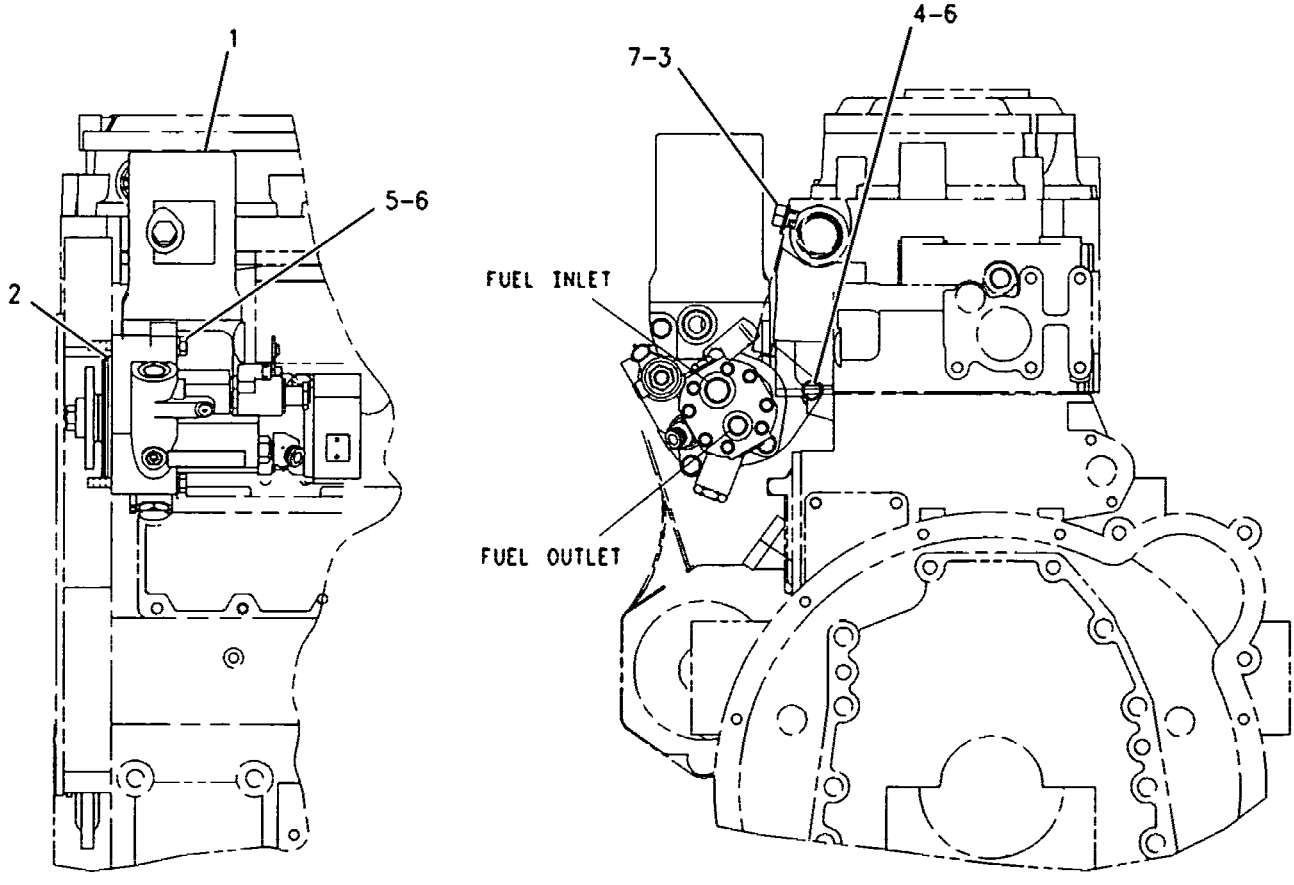

LEFT SIDE VIEW

REAR VIEW

GRAPHIC #1

<END>

g00834014

FUEL SYSTEM

232-0343 REGULATOR GP-FUEL PRESSURE

S/N: 5GG2933-UP

PART OF 237-2263 LINES GP-FUEL FILTER

SMCS-1715 i02288771

NOTE	REF NO	GRAPHIC REF	PART NUMBER	QTY	PART NAME 1 2 3 4 5 6 (PRODUCT LEVEL)	SEE PAGE
	1	1	6V-5049	1	SEAL-O-RING	
	2	1	229-8870	1	REGULATOR AS (FUEL PRESSURE)	

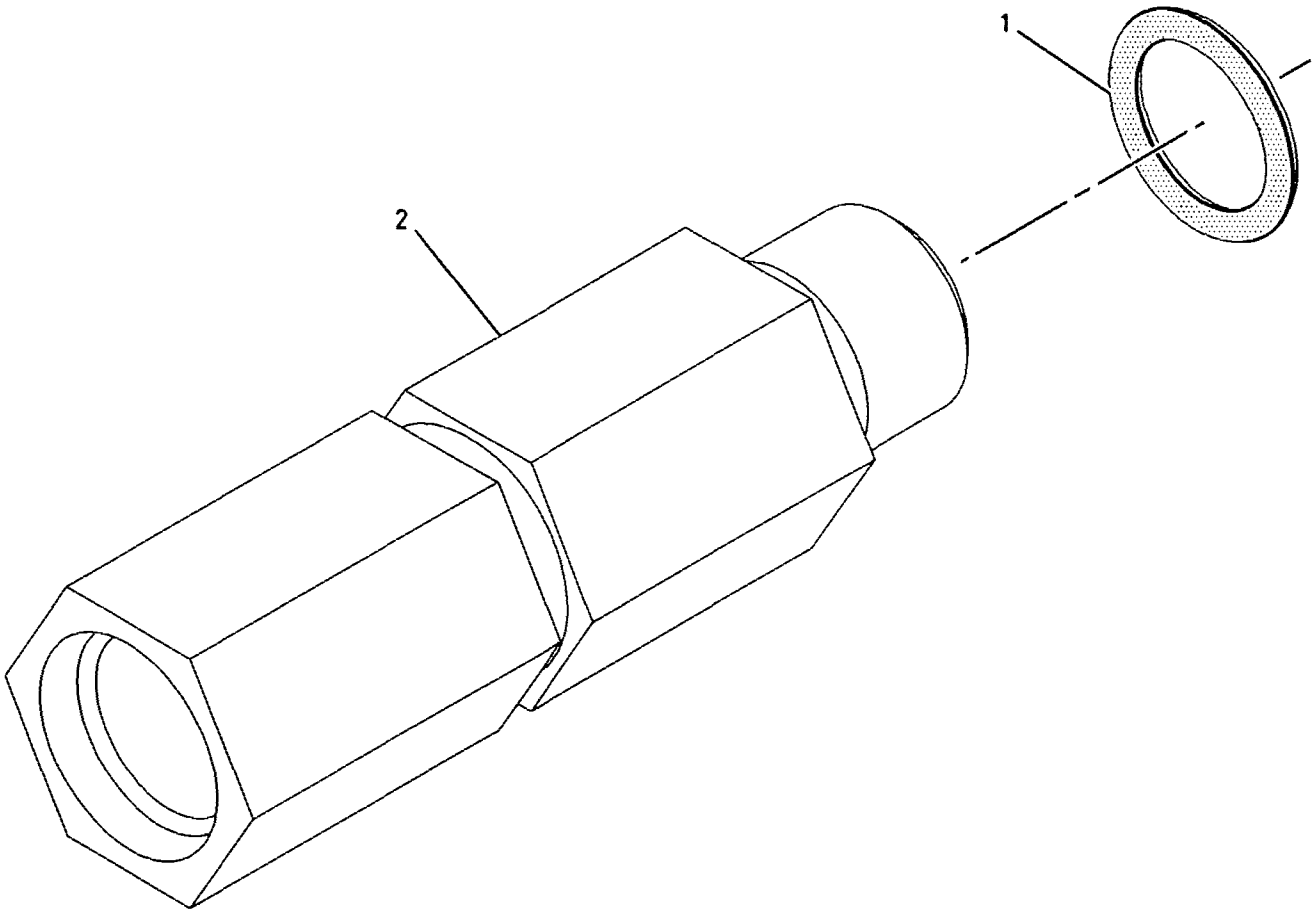

GRAPHIC #1 <END> g01004480

199-3856 TANK GP-FUEL

S/N: CRD1-UP

PART OF 199-2816 CHASSIS AR

SMCS-1273 i01764867

NOTE	REF NO	GRAPHIC REF	PART NUMBER	QTY	PART NAME 1 2 3 4 5 6 (PRODUCT LEVEL)	SEE PAGE
	2	1	204-3403	1	SENDER AS-FUEL LEVEL	
		1	3E-3365	1	WEDGE-RECEPTACLE LOCK (2-PIN)	
		1	102-8802	1	KIT-RECEPTACLE (2-PIN)	
		1	186-3735	2	PIN-CONNECTOR (16-GA TO 18-GA)	
	3	1	1H-8306	1	SCREW-PURGE (1/2-20X1.625-IN)	
	4	1	7K-1181	1	STRAP-CABLE	
	5	1	7M-8485	1	SEAL-O-RING	
	6	1	7X-7700	1	CAP AS-FILLER (FUEL TANK)	
		1	9X-2205	1	KIT-CAP FILTER (FUEL TANK)	
		1	9X-8600	1	SEAL-O-RING	
	7	1	9P-7121	1	STRAINER-FUEL	
	8	1	9S-9334	1	PLUG	
	9	1	202-3522	1	TANK AS-FUEL	
	10	1	130-5300	1	CLIP	
	11	1	7X-0515	4	WASHER-HARD (17X35X5-MM THK)	
M	12	1	7X-2553	4	BOLT (M16X2X40-MM)	
M	13	1	8C-3210	5	BOLT (M6X1X16-MM)	
	14	1	8T-4121	1	WASHER-HARD (11X21X2.5-MM THK)	
M	15	1	8T-4137	1	BOLT (M10X1.5X20-MM)	
	16	1	9X-8256	5	WASHER (6.6X12X2-MM THK)	

M-METRIC PART

199-3856 **TANK GP-FUEL** *(contd.)* **i01764867**

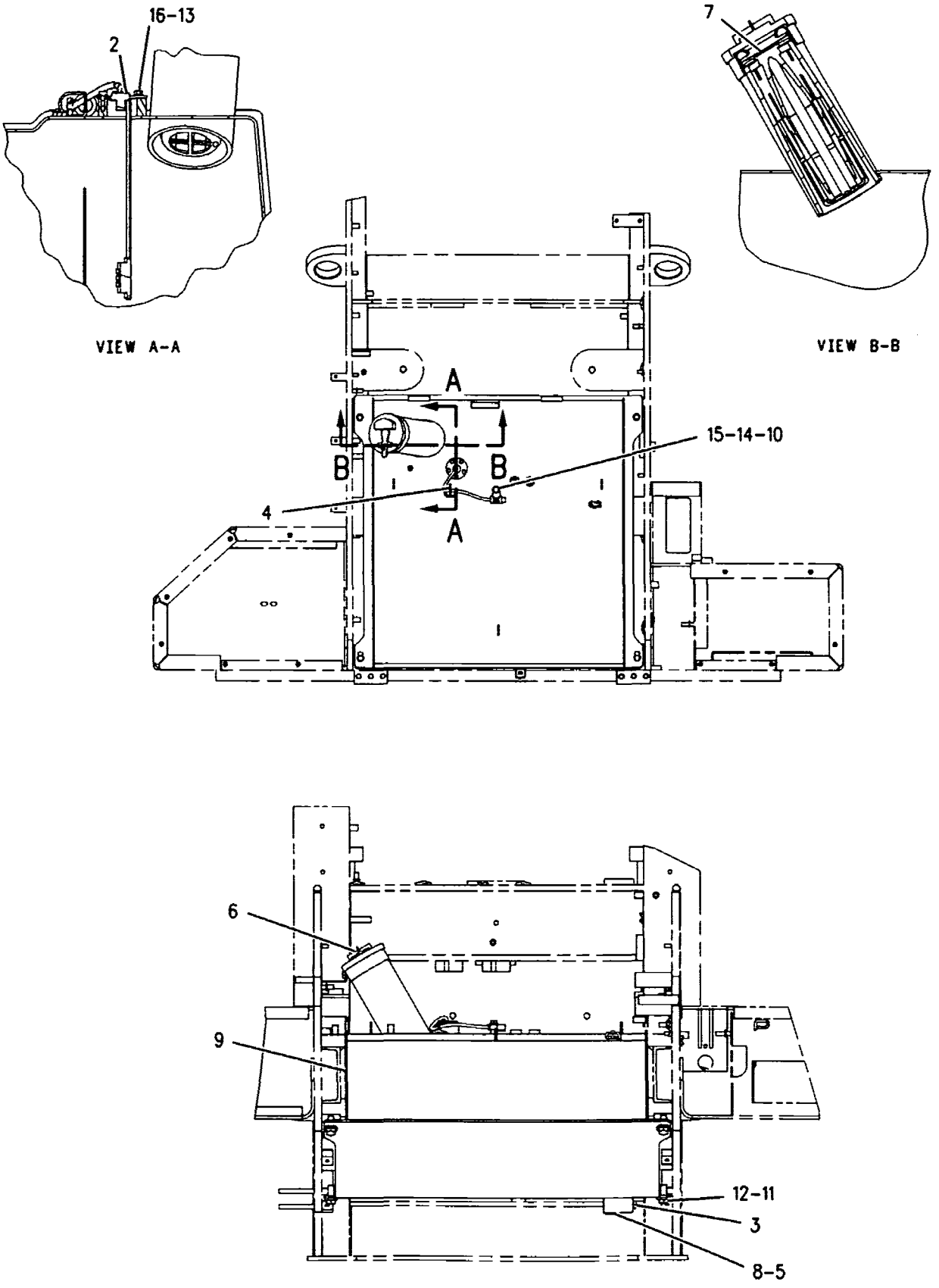

GRAPHIC #1 **<END>** g00869278

122-5053 VALVE GP-SOLENOID–UNIT INJECTOR PUMP–INJECTION ACTUATION

S/N: 5GG1-UP

PART OF 180-7341 PUMP GP-UNIT INJECTOR HYD

SMCS-1259 i01941331

NOTE	REF NO	GRAPHIC REF	PART NUMBER	QTY	PART NAME 1 2 3 4 5 6 (PRODUCT LEVEL)	SEE PAGE
JZ	1	1		1	SEAL-O-RING	
JZ	2	1		1	RING-BACKUP	
JZ	3	1		1	SPACER	
JZ	4	1		1	NUT-RETAINER (1/2-20 THD)	
JZ	5	1		1	SEAL-O-RING	
					AVAILABLE REPAIR KIT(S):	
J			9X-1484	1	KIT-SEAL (SOLENOID VALVE)	

J-KIT MARKED J SERVICES PARTS MARKED J
Z-NOT SERVICED SEPARATELY

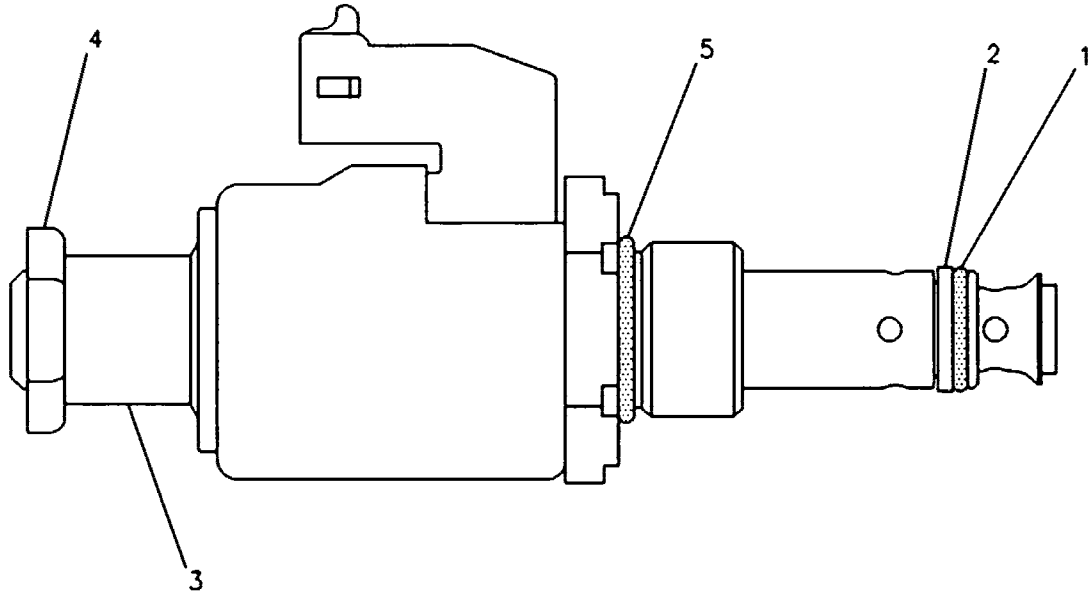

GRAPHIC #1 <END> g00085024

212-3657 WATER SEP & FUEL PRM PUMP GP

S/N: 5GG1-UP

PART OF 185-2069 PUMP GP-FUEL PRM & PRIM FILTER

SMCS-1258, 1263 i02286021

NOTE	REF NO	GRAPHIC REF	PART NUMBER	QTY	PART NAME 1 2 3 4 5 6 (PRODUCT LEVEL)	SEE PAGE
Y	1	1	*174-9570*	1	FILTER GP-WATER SEP & FUEL (PRIMARY)	127
	2	1	**217-8339**	1	BASE AS-FUEL FILTER	

Y-SEPARATE ILLUSTRATION

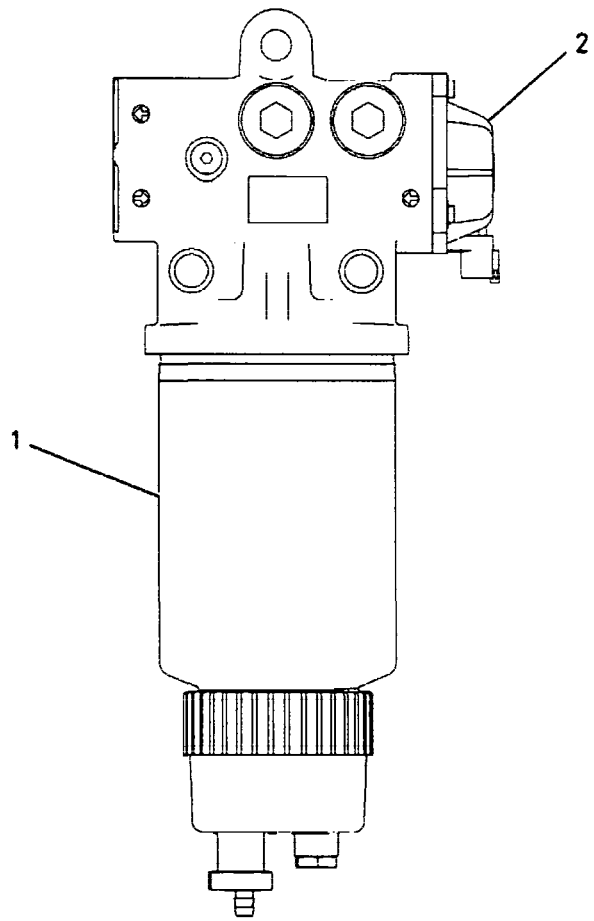

GRAPHIC #1 **<END>** g00875466

3E-6328 ALARM GP–ACTION

S/N: CRD1-UP
24-VOLT
PART OF 201-8409, 201-8410 WIRING GP-CAB
ALSO AN ATTACHMENT

SMCS-7400, 7402, 7407 i02160203

NOTE	REF NO	GRAPHIC REF	PART NUMBER	QTY	PART NAME 1 2 3 4 5 6 (PRODUCT LEVEL)	SEE PAGE
	1	1	102-8802	1	KIT-RECEPTACLE (2-PIN)	
					(INCLUDES RECEPTACLE AS & WEDGE)	
	2	1	186-3735	2	PIN-CONNECTOR	
	3	1	3E-3365	1	WEDGE-RECEPTACLE LOCK (2-PIN)	

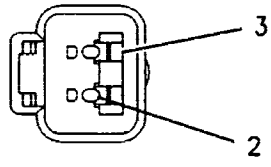

VIEW A–A

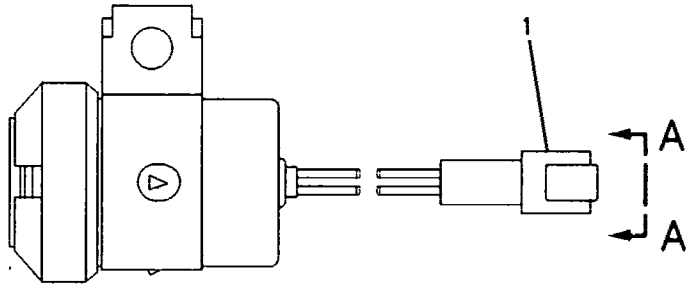

GRAPHIC #1 <END> g00826023

132-1829 ALARM GP-ACTION

S/N: CRD1006-UP
24-VOLT
PART OF 250-9215 SWITCH GP-QUICK COUPLER
AN ATTACHMENT

SMCS-7400, 7402, 7407 i01884986

NOTE	REF NO	GRAPHIC REF	PART NUMBER	QTY	PART NAME 1 2 3 4 5 6 (PRODUCT LEVEL)	SEE PAGE
	1	1	102-8802	2	KIT-RECEPTACLE (2-PIN)	
					(INCLUDES RECEPTACLE AS & WEDGE)	
	2	1	186-3735	2	PIN-CONNECTOR (16-GA TO 18-GA)	

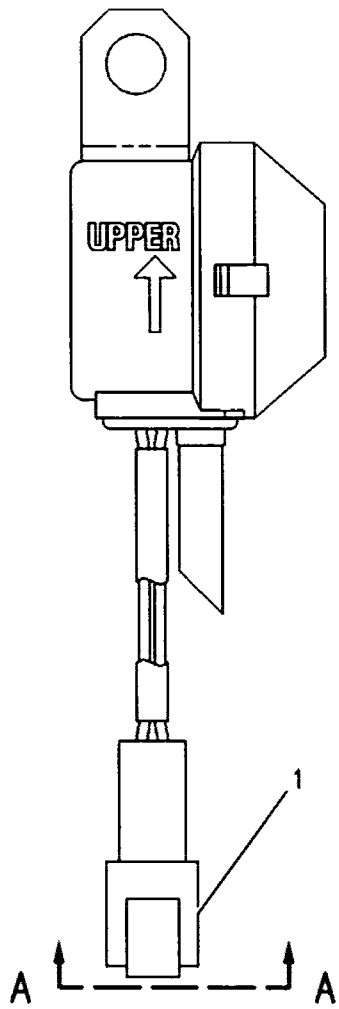

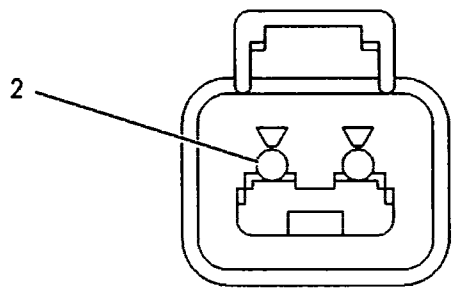

VIEW A-A

GRAPHIC #1 <END> g00272185

206-7345 ALTERNATOR AR-CHARGING

S/N: CRD1-UP

PART OF 205-5678 LIGHTING AR-AUXILIARY

AN ATTACHMENT

SMCS-1405, 1410, 1425 i01679822

NOTE	PART NUMBER	QTY	PART NAME 1 2 3 4 5 6 (PRODUCT LEVEL)	SEE PAGE
Y	*213-8542*	1	ALTERNATOR GP-CHARGING	166
Y	*213-8569*	1	MOUNTING GP-ALTERNATOR	53
Y	*217-3062*	1	WIRING GP-ENGINE (70A ALTERNATOR)	327

Y-SEPARATE ILLUSTRATION

<END>

ELECTRICAL AND STARTING SYSTEM

9W-3043 ALTERNATOR GP-CHARGING*R

S/N: CRD1-UP
24 VOLT, 52 AMPERE
PART OF 217-5154 ALTERNATOR GP-CHARGING

SMCS-1405 **i02226167**

NOTE	REF NO	GRAPHIC REF	PART NUMBER	QTY	PART NAME 1 2 3 4 5 6 (PRODUCT LEVEL)	SEE PAGE
	1	1	**8F-1434**	2	LOCKWASHER	
	2	1	**8C-6141**	1	PLATE-SUPPORT	
	3	1	**9W-1904**	1	FAN	
M	4	1	**9W-1901**	4	SCREW (M5X0.8X96MM)	
	5	1	**8C-6149**	1	FRAME AS	
	6	1	**2P-8099**	1	BALL BEARING	
	7	1	**9W-1794**	1	COVER	
	8	1	**8C-6146**	1	ROTOR	
	9	1	**1H-3244**	1	LOCKWASHER	
	10	1	**9W-1793**	1	BEARING	
	11	1	**8C-6147**	1	STATOR	
M	12	1	**6V-9492**	2	SCREW-MACHINE (M4X0.7X25-MM)	
	13	1	**8C-6144**	1	RECTIFIER	
	14	1	**8C-6148**	1	FRAME AS	
M	15	1	**6V-5210**	2	SCREW-MACHINE (M4X0.7X10-MM)	
	16	1	**096-6166**	5	WASHER-HARD (4.5X9X1-MM THK)	
	17	1	**105-2063**	1	REGULATOR AS-ALTERNATOR (24-VOLT)	
	18	1	**9B-7233**	1	LOCKWASHER	
	19	1	**8T-4205**	2	WASHER-HARD (7.2X14.5X2-MM THK)	
M	20	1	**5C-2890**	2	NUT (M6X1-THD)	
M	21	1	**5C-2874**	1	NUT (M5X0.8-THD)	
	22	1	**8T-0328**	1	WASHER-HARD (5.5X10X1-MM THK)	
M	23	1	**5C-7261**	1	NUT (M8X1.25-THD)	
	24	1	**8T-4224**	1	WASHER-HARD (8.8X16X2-MM THK)	
M	25	1	**5C-8312**	1	NUT (M4X0.7-THD)	
M	26	1	**6V-9673**	1	SCREW-MACHINE (M5X0.8X12-MM)	
	27	1	**9W-1900**	1	CAPACITOR	
	28	1	**8C-6143**	1	GASKET	
	29	1	**8C-6142**	1	RING-FITTING	
					AVAILABLE REPAIR KIT(S):	
			9W-1912	1	KIT-HARDWARE (ALTERNATOR)	
					(INCLUDES SPACERS, LOCKWASHERS, NUTS, SCREWS, AND KEY)	
			8C-6150	1	KIT-TERMINAL (ALTERNATOR)	
					(INCLUDES NUTS, WASHERS, INSULATORS, BUSHING, STUD AND CAP)	

M-METRIC PART

9W-3043 ALTERNATOR GP-CHARGING *(contd.)* i02226167

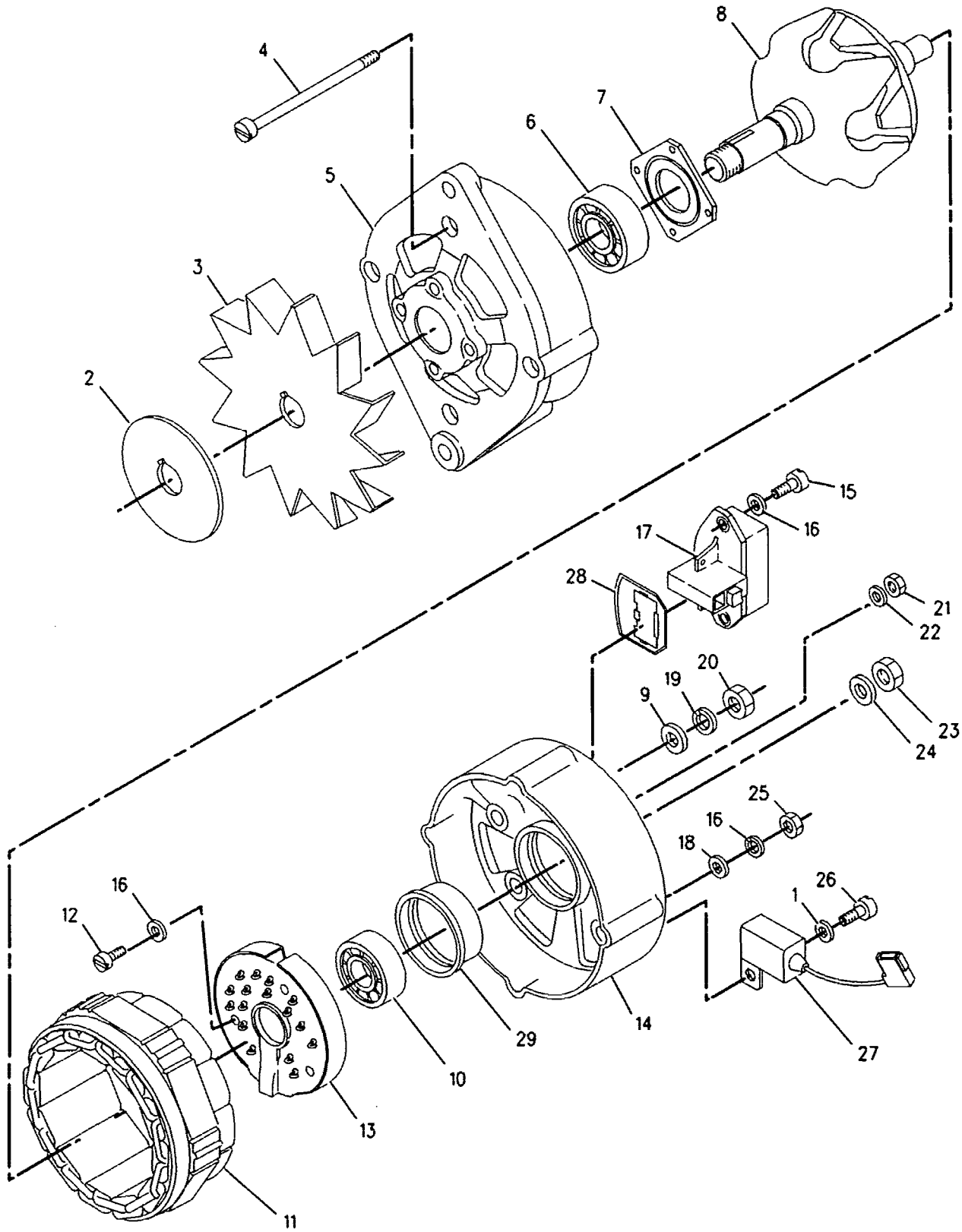

GRAPHIC #1 <END> g00709519

185-5294 ALTERNATOR GP-CHARGING*R

S/N: CRD1-UP
24 VOLT, 65 AMPERE
PART OF 213-8542 ALTERNATOR GP-CHARGING
AN ATTACHMENT

SMCS-1405 i02147128

NOTE	REF NO	GRAPHIC REF	PART NUMBER	QTY	PART NAME 1 2 3 4 5 6 (PRODUCT LEVEL)	SEE PAGE
	1	1	185-2653	1	FRAME	
	2	1	5S-7349	1	BOLT (1/4-20X0.5-IN)	
	3	1	185-2639	1	FAN AS	
	4	1	1H-3244	1	LOCKWASHER	
	5	1	185-2645	1	FRAME	
	6	1	2K-4821	1	LOCKNUT (5/8-18-THD)	
	7	1	5P-8247	1	WASHER-HARD (17X32X3.5-MM THK)	
	8	1	185-2651	1	COVER	
	9	1	8T-4205	1	WASHER-HARD (7.2X14.5X2-MM THK)	
	10	1	185-2647	1	GROMMET	
	11	1	9L-6770	1	CAP (ALTERNATOR RELAY TERMINAL)	
	12	1	185-2642	1	STATOR AS	
	13	1	185-2638	2	COLLAR	
	14	1	185-2654	1	PLATE	
	15	1	185-2650	1	ROTOR AS	
	16	1	185-2644	1	COIL AS	
	17	1	185-2648	1	REGULATOR AS-VOLTAGE (24-VOLT) (ALTERNATOR)	
	18	1	6V-8189	1	NUT (5/16-18-THD)	
	19	1	8T-4224	1	WASHER-HARD (8.8X16X2-MM THK)	
	20	1	3F-9556	1	LOCKWASHER	
					AVAILABLE REPAIR KIT(S):	
			185-2655	1	KIT-BEARING (ALTERNATOR)	
					(INCLUDES 2 BEARINGS)	
			199-8436	1	KIT-TERMINAL (ALTERNATOR)	
					(INCLUDES HOLDER AS, PLATE, INSULATOR, PIN, BOLT, GROMMET, AND NUT)	
			199-7891	1	KIT-TERMINAL (ALTERNATOR)	
					(INCLUDES INSULATORS, WASHERS AND NUT)	
			185-2658	1	KIT-HARDWARE (ALTERNATOR)	
					(INCLUDES BOLTS)	

185-5294 ALTERNATOR GP-CHARGING *(contd.)* i02147128

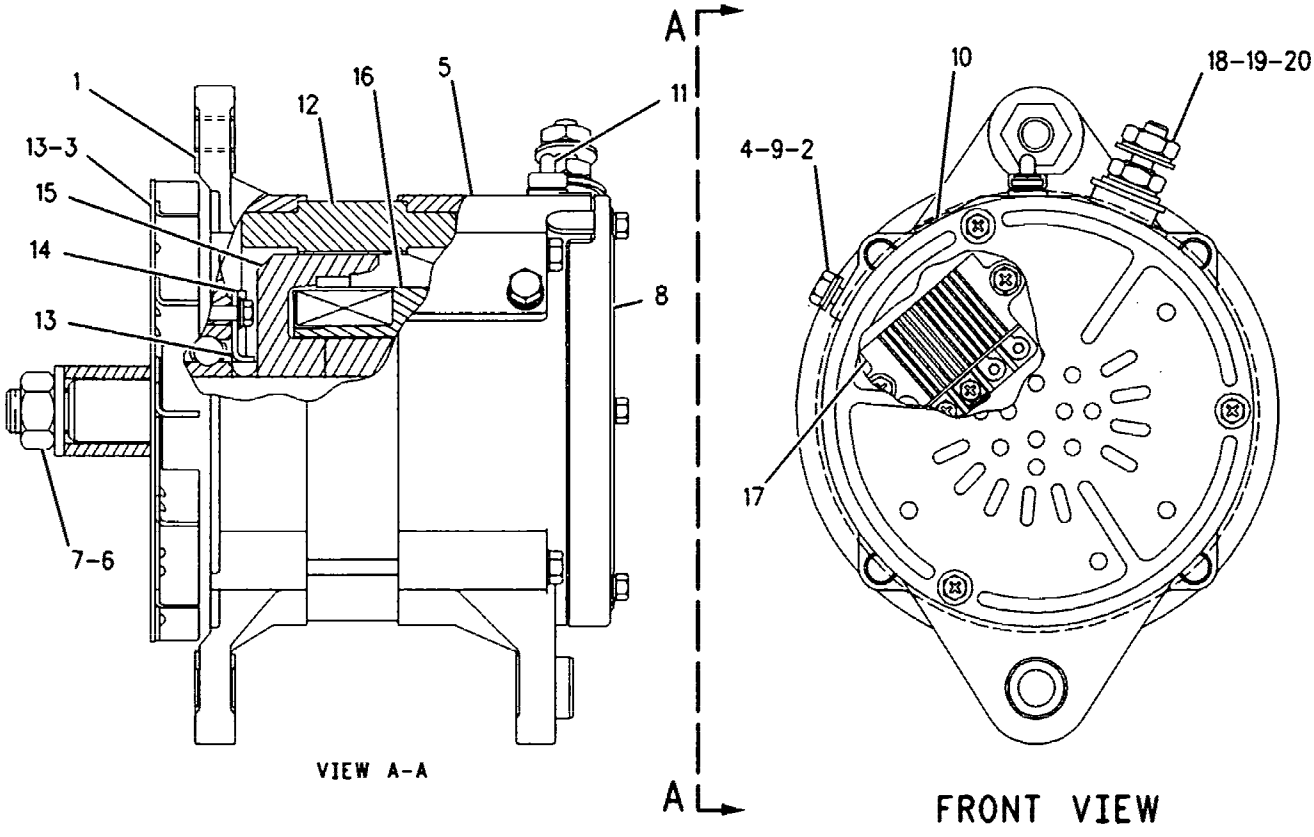

GRAPHIC #1 <END> g00806894

ELECTRICAL AND STARTING SYSTEM

213-8542 ALTERNATOR GP-CHARGING

S/N: CRD1-UP

PART OF 206-7345 ALTERNATOR AR-CHARGING

AN ATTACHMENT

SMCS-1405 i02342092

NOTE	REF NO	GRAPHIC REF	PART NUMBER	QTY	PART NAME 1 2 3 4 5 6 (PRODUCT LEVEL)	SEE PAGE
	1	1	**129-5096**	1	PULLEY-ALTERNATOR	
	2	1	**173-1498**	1	PULLEY AS-IDLER (8-GROOVE)	
		1	**151-2900**	1	BOLT (M10X1.5X54.25-MM)	
		1	**166-6358**	1	COVER-DUST	
		1	**173-1500**	1	SPACER (10.4X45.1X1.8-MM THK)	
YR	3	1	**185-5294**	1	ALTERNATOR GP-CHARGING (24-VOLT) (24V - 65A)	164
	4	1	**216-9825**	1	SHIELD AS	
	5	1	**219-3303**	1	BELT-SERPENTINE	
	6	1	**222-4866**	1	BRACKET	
	7	1	**5P-1076**	1	WASHER-HARD (13.5X30X4-MM THK)	
	8	1	**5P-2566**	1	BOLT (1/2-13X1.5-IN)	
	9	1	**6V-8188**	1	NUT (1/2-13-THD)	
	10	1	**7X-0338**	1	BOLT (1/2-13X6-IN)	
	11	1	**8T-4121**	3	WASHER-HARD (11X21X2.5-MM THK)	
M	12	1	**8T-4137**	1	BOLT (M10X1.5X20-MM)	
M	13	1	**8T-4196**	2	BOLT (M10X1.5X35-MM)	
	14	1	**8T-4223**	3	WASHER-HARD (13.5X25.5X3-MM THK)	
	15	1	**8T-7934**	1	WASHER-HARD (11X21X5-MM THK)	
	16	1	**9S-2396**	1	BUSHING-TERMINAL	

M-METRIC PART
R-REMFG PART MAY BE AVAILABLE
Y-SEPARATE ILLUSTRATION

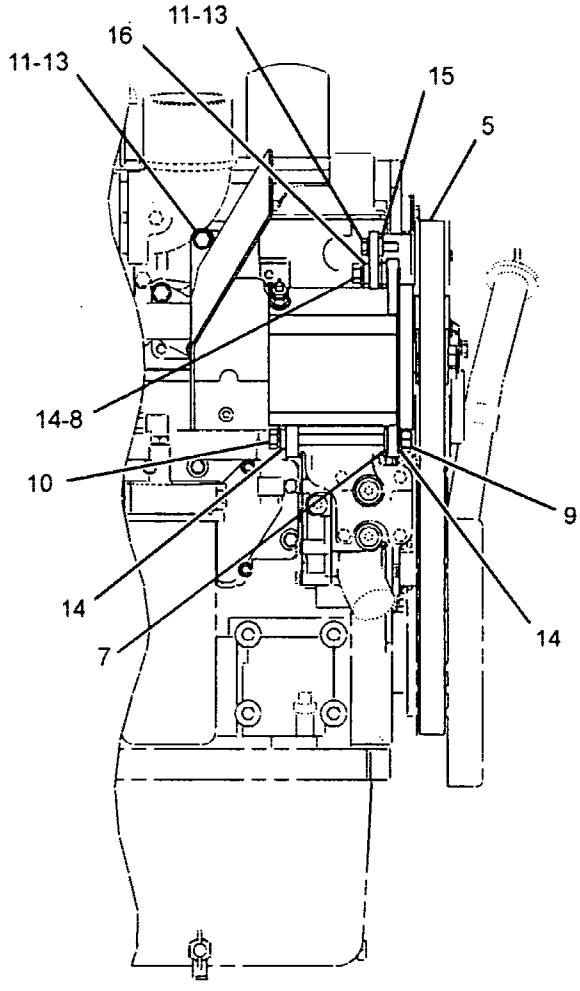

RIGHT SIDE VIEW

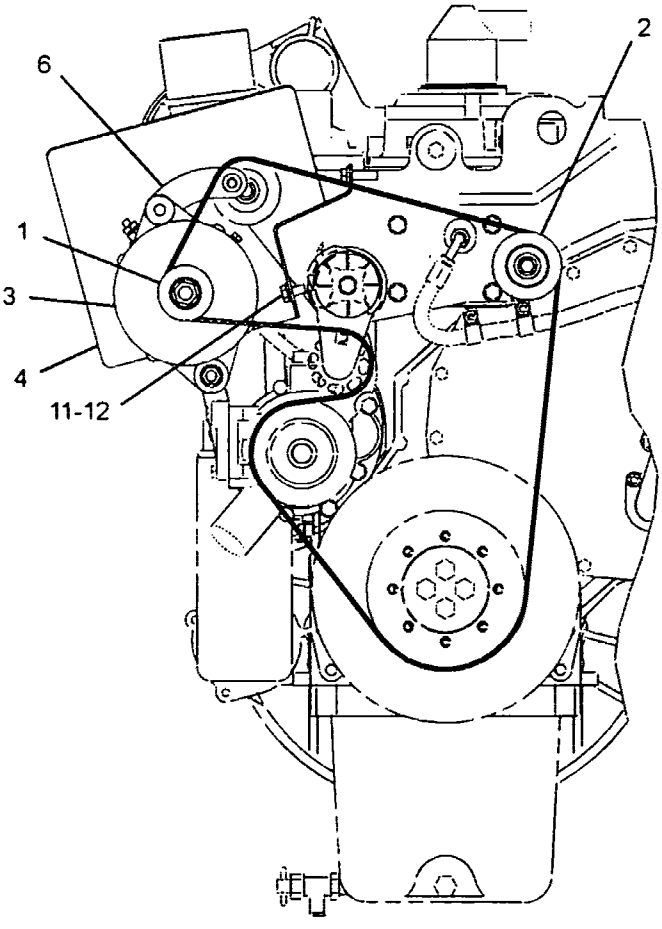

FRONT VIEW

GRAPHIC #1 **<END>** g01167717

ELECTRICAL AND STARTING SYSTEM

217-5154 ALTERNATOR GP-CHARGING

S/N: CRD1-UP
24 VOLT-52 AMP
PART OF 199-2857 INSTALLATION AR-ENGINE
TYPE 1

SMCS-1405 **i01805907**

NOTE	REF NO	GRAPHIC REF	PART NUMBER	QTY	PART NAME 1 2 3 4 5 6 (PRODUCT LEVEL)	SEE PAGE
YR	1	1	**9W-3043**	1	ALTERNATOR GP-CHARGING (24-VOLT, 52-AMPERE)	162
	2	1	**123-9814**	1	SPACER	
	3	1	**173-1498**	1	PULLEY AS-IDLER (8-GROOVE)	
		1	**151-2900**	1	BOLT (M10X1.5X54.25-MM)	
		1	**166-6358**	1	COVER-DUST	
		1	**173-1500**	1	SPACER (10.4X45.1X1.8-MM THK)	
	4	1	**200-6200**	1	PULLEY-ALTERNATOR	
	5	1	**216-9825**	1	SHIELD AS	
	6	1	**217-5283**	1	BRACKET AS	
M		1	**8T-3597**	2	NUT-WELD (M12X1.75-THD)	
	7	1	**219-3303**	1	BELT-SERPENTINE (8 PK)	
M	8	1	**134-8221**	1	BOLT (M10X1.5X120-MM)	
	9	1	**5P-1075**	2	WASHER-HARD (10.2X22.5X3-MM THK)	
	10	1	**8T-4121**	2	WASHER-HARD (11X21X2.5-MM THK)	
M	11	1	**8T-4137**	1	BOLT (M10X1.5X20-MM)	
M	12	1	**8T-4184**	1	BOLT (M12X1.75X45-MM)	
M	13	1	**8T-4196**	1	BOLT (M10X1.5X35-MM)	
	14	1	**8T-4223**	1	WASHER-HARD (13.5X25.5X3-MM THK)	
M	15	1	**8T-6466**	1	BOLT (M10X1.5X60-MM)	
	16	1	**9S-2396**	1	BUSHING-TERMINAL	

M-METRIC PART
R-REMFG PART MAY BE AVAILABLE
Y-SEPARATE ILLUSTRATION

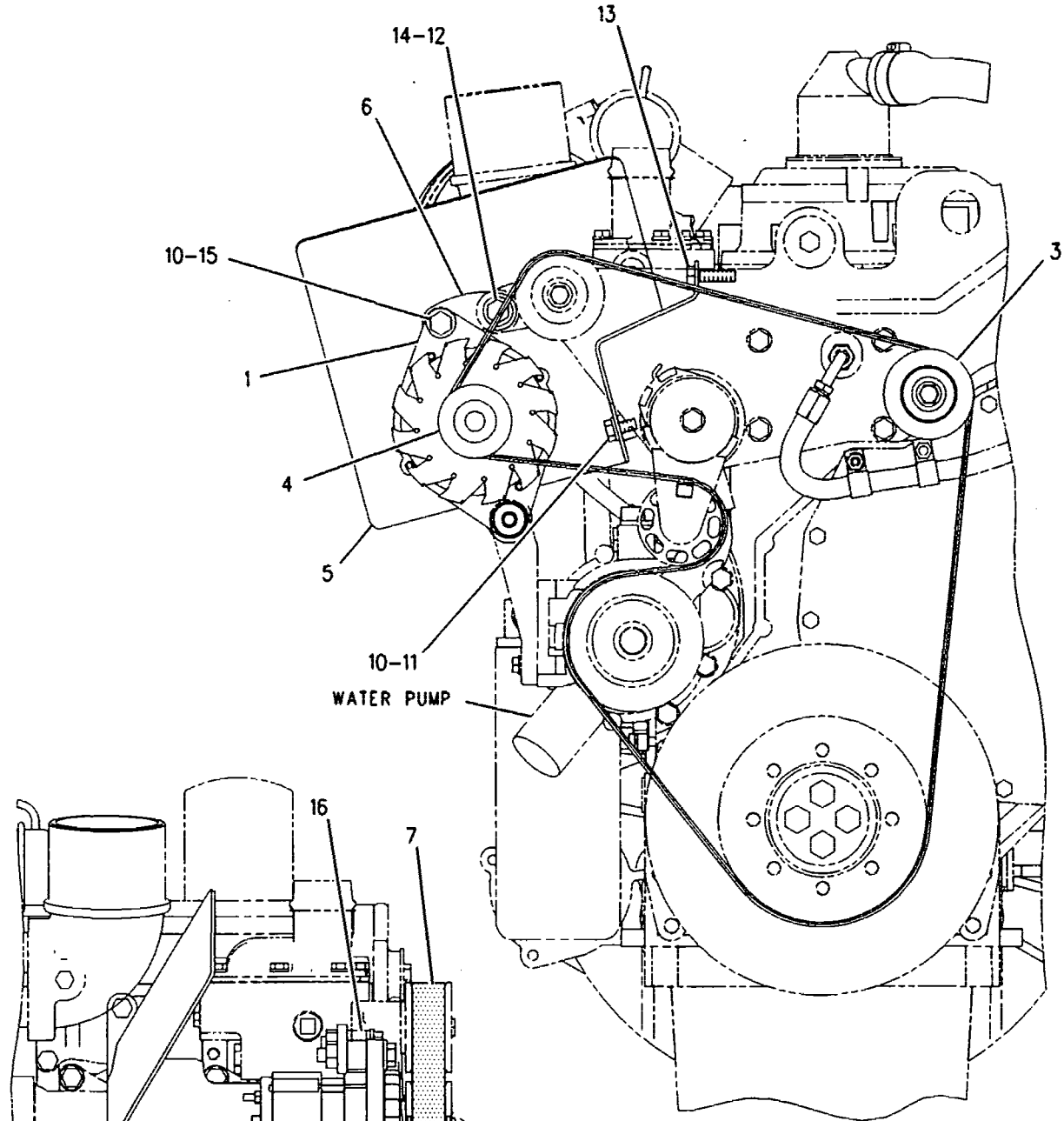

FRONT VIEW

RIGHT SIDE VIEW

GRAPHIC #1 **<END>** g00923818

217-5154 ALTERNATOR GP-CHARGING

S/N: CRD1-UP
24 VOLT-52 AMP
PART OF 199-2857 INSTALLATION AR-ENGINE
TYPE 2

SMCS-1405 i02064111

NOTE	REF NO	GRAPHIC REF	PART NUMBER	QTY	PART NAME 1 2 3 4 5 6 (PRODUCT LEVEL)	SEE PAGE
YR	1	1	**9W-3043**	1	ALTERNATOR GP-CHARGING (24-VOLT, 52-AMPERE)	162
	2	1	**123-9814**	2	SPACER	
	3	1	**173-1498**	1	PULLEY AS-IDLER (8-GROOVE)	
		1	**151-2900**	1	BOLT (M10X1.5X54.25-MM)	
		1	**166-6358**	1	COVER-DUST	
		1	**173-1500**	1	SPACER (10.4X45.1X1.8-MM THK)	
	4	1	**200-6200**	1	PULLEY-ALTERNATOR	
	5	1	**216-9825**	1	SHIELD AS	
	6	1	**219-3303**	1	BELT-SERPENTINE	
C	7	1	**228-7463**	1	BRACKET	
M	8	1	**134-8221**	1	BOLT (M10X1.5X120-MM)	
	9	1	**5P-1075**	2	WASHER-HARD (10.2X22.5X3-MM THK)	
	10	1	**8T-4121**	5	WASHER-HARD (11X21X2.5-MM THK)	
M	11	1	**8T-4133**	1	NUT (M10X1.5-THD)	
M	12	1	**8T-4137**	1	BOLT (M10X1.5X20-MM)	
M	13	1	**8T-4185**	1	BOLT (M10X1.5X50-MM)	
M	14	1	**8T-4196**	2	BOLT (M10X1.5X35-MM)	
	15	1	**8T-7934**	1	WASHER-HARD (11X21X5-MM THK)	

C-CHANGE FROM PREVIOUS TYPE
M-METRIC PART
R-REMFG PART MAY BE AVAILABLE
Y-SEPARATE ILLUSTRATION

217-5154 **ALTERNATOR GP-CHARGING** *(contd.)* **i02064111**

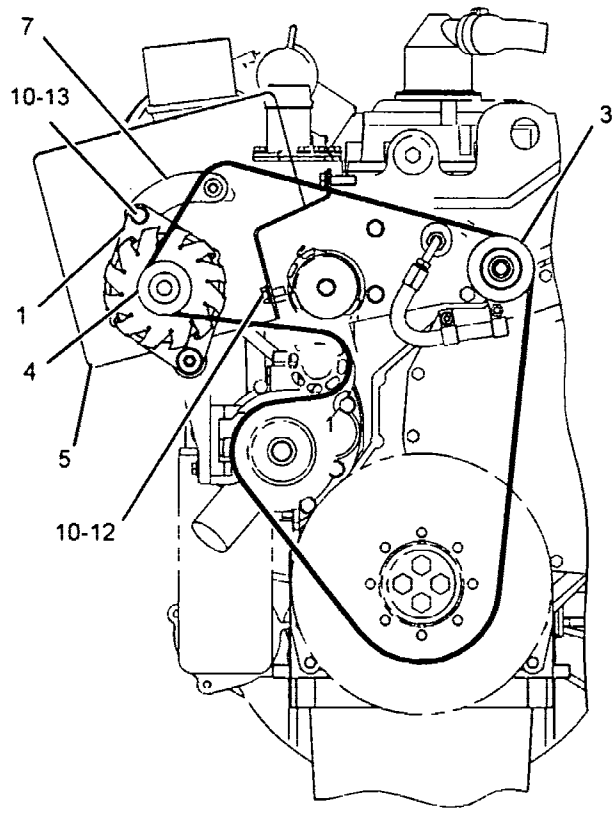

RIGHT SIDE VIEW

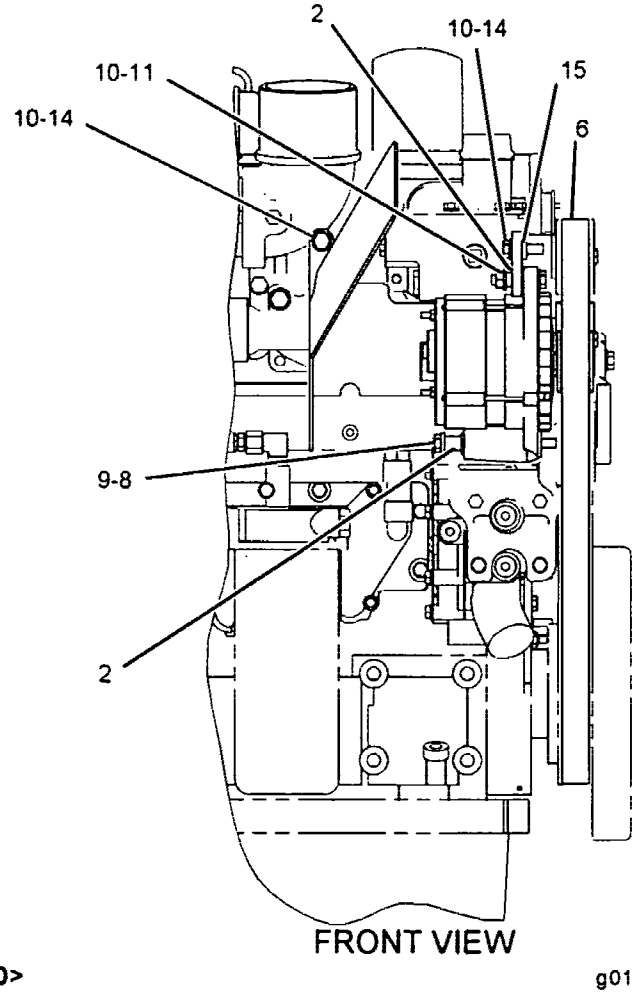

FRONT VIEW

GRAPHIC #1 **<END>** g01060765

201-8414 BATTERY & WIRING GP

S/N: CRD1-UP

PART OF 199-2817 ELECTRICAL AR

SMCS-1401, 1402, 1408 i01691012

NOTE	REF NO	GRAPHIC REF	PART NUMBER	QTY	PART NAME 1 2 3 4 5 6 (PRODUCT LEVEL)	SEE PAGE
	1	1	1P-1010	1	CABLE AS	
		1	1S-7251	2	TERMINAL-RING (FOR 1/2-IN BOLT)	
	2	1	3E-8320	1	PLATE-INSTRUCTION (BATTERY)	
	3	1,2	3S-2093	6	STRAP-CABLE	
	4	1	6W-6005	1	HOLD-DOWN-BATTERY	
Y	5	1	7N-0718	1	SWITCH GP-DISCONNECT (BATTERY)	267
	6	1	111-7758	1	ROD	
	7	1	116-0080	1	CABLE AS	
		1	5P-0761	31	CABLE (00-GA, RED)	
		1	7N-5274	1	COVER-TERMINAL (BLACK)	
		1	8N-1725	1	COVER-TERMINAL (RED)	
	8	1	205-0353	2	GROMMET	
	9	2	215-3357	1	CABLE AS	
		2	1S-7251	1	TERMINAL-RING (FOR 1/2-IN BOLT)	
		2	1S-7252	1	TERMINAL-RING (FOR 3/8-IN BOLT)	
E		2	5P-0747		CABLE (00-GA, BLACK) (44CM)	
	10	2	215-3611	1	BRACKET AS	
M		2	8T-3490	2	NUT-WELD (M10X1.5-THD)	
	11	1	216-6938	1	CABLE AS	
		1	1S-7251	1	TERMINAL-RING (FOR 1/2-IN BOLT)	
E		1	5P-0761		CABLE (00-GA, RED) (173CM)	
		1	8N-0869	1	COVER-TERMINAL (RED)	
		1	8N-1725	1	COVER-TERMINAL (RED)	
	12	2	216-6939	1	CABLE AS	
		2	1S-7252	1	TERMINAL-RING (FOR 3/8-IN BOLT)	
E		2	5P-0747		CABLE (00-GA, BLACK) (143CM)	
		2	7N-5274	1	COVER-TERMINAL (BLACK)	
		2	9G-8909	1	COVER-TERMINAL (BLACK)	
	13	1	115-2422	2	BATTERY (12-VOLT, WET)	
	14	1,2	205-7299	11	CLIP	
M	15	1	6V-7744	1	LOCKNUT (M10X1.5-THD)	
	16	1,2	8T-4121	8	WASHER-HARD (11X21X2.5-MM THK)	
M	17	2	8T-4136	3	BOLT (M10X1.5X25-MM)	
M	18	1,2	8T-4137	5	BOLT (M10X1.5X20-MM)	
	19	2	8T-4223	1	WASHER-HARD (13.5X25.5X3-MM THK)	
	20	2	8T-4224	2	WASHER-HARD (8.8X16X2-MM THK)	
	21	1	8T-4226	1	WASHER-PLATED (10.5X45X3-MM THK)	
M	22	2	8T-4244	1	NUT (M12X1.75-THD)	
M	23	2	8T-6912	2	BOLT (M8X1.25X50-MM)	

E-ORDER BY THE CENTIMETER
M-METRIC PART
Y-SEPARATE ILLUSTRATION

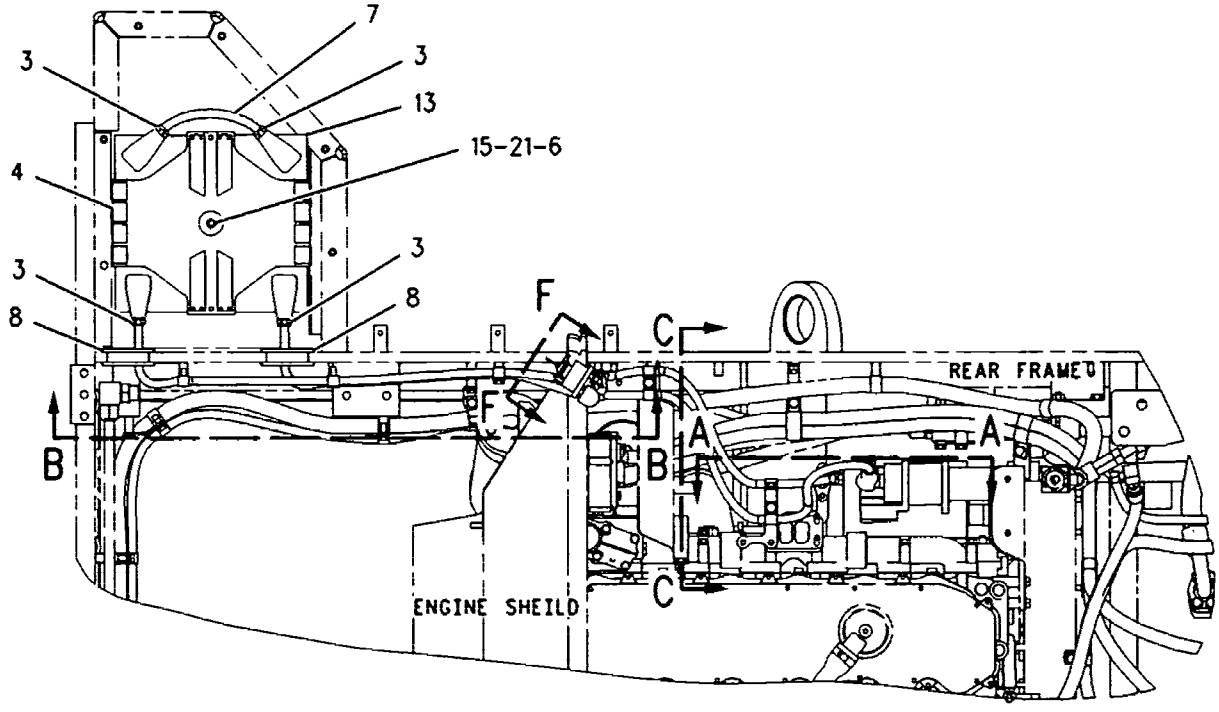

TOP VIEW

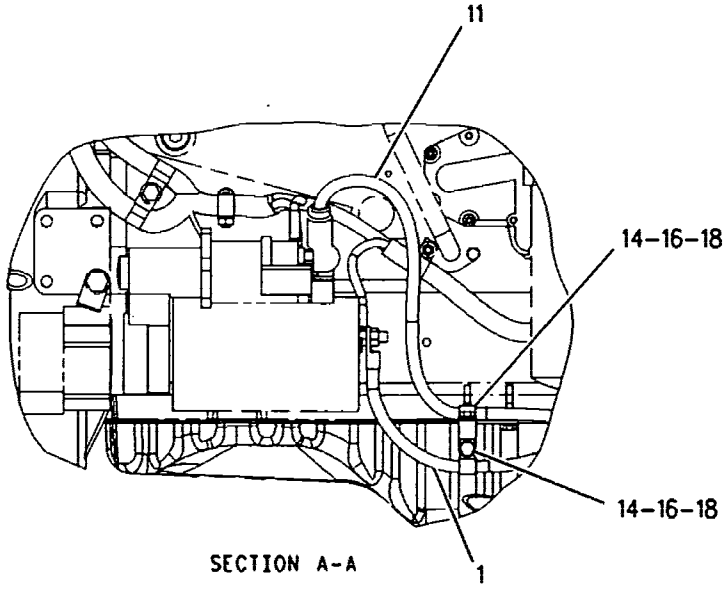

SECTION A-A

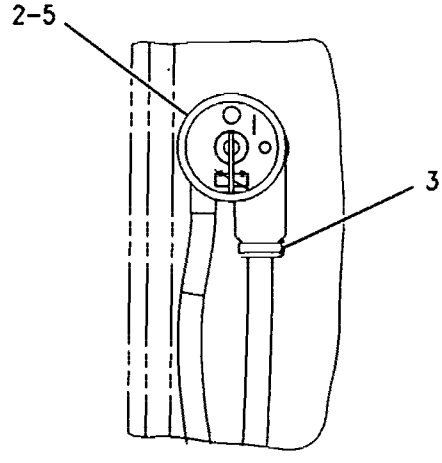

SECTION F-F

REFER TO ALL ILLUSTRATIONS OF THIS GROUP FOR AUXILIARY VIEWS

GRAPHIC #1 g00866185

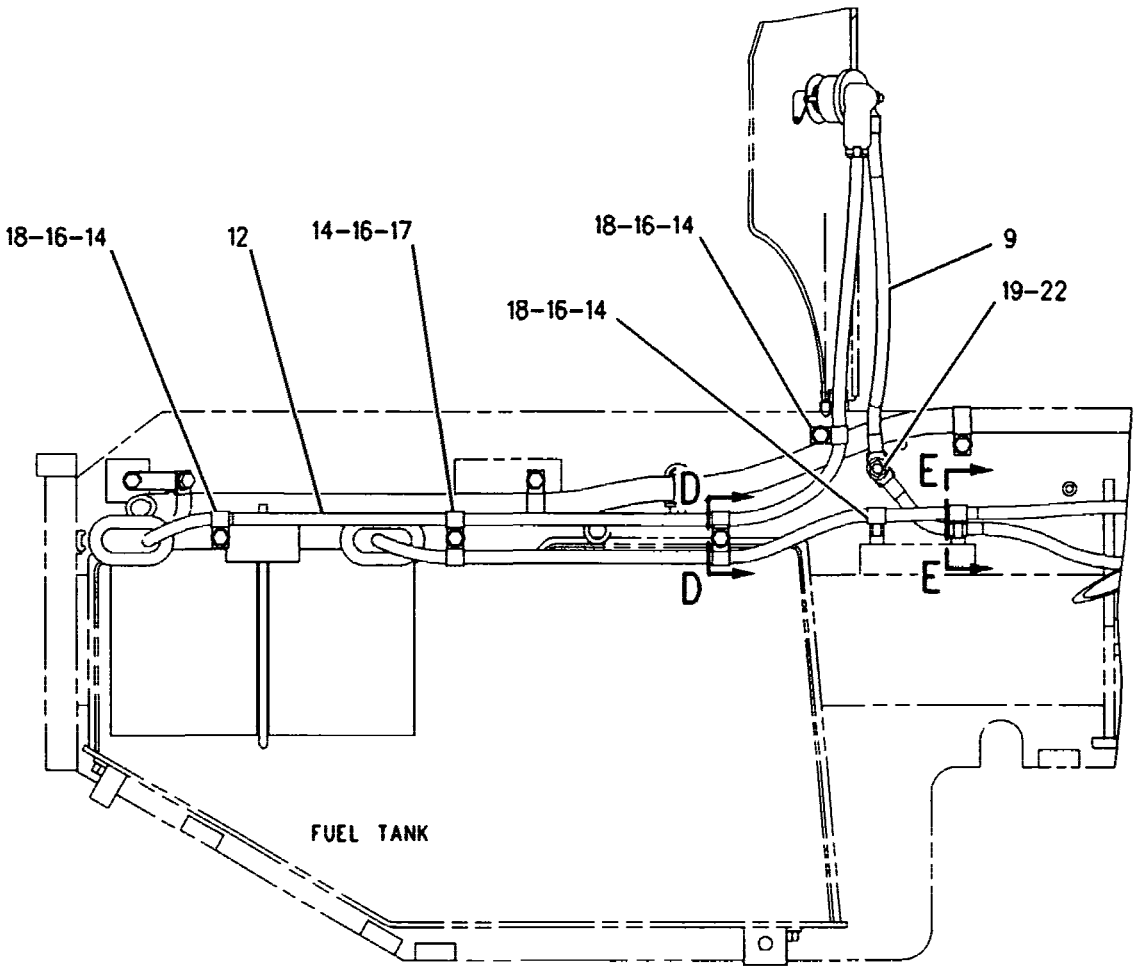

SECTION B-B

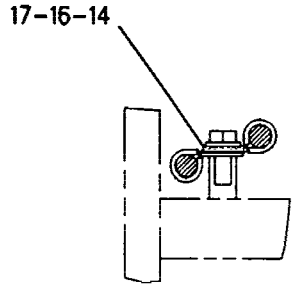

SECTION E-E

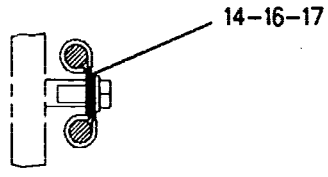

SECTION D-D

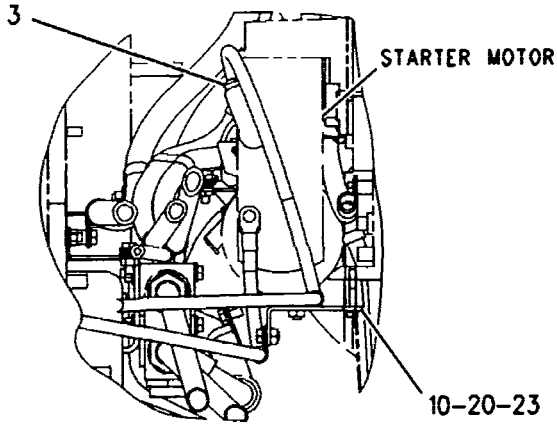

SECTION C-C

GRAPHIC #2 **<END>** g00866187

9W-0742 BLOCK GP-JUNCTION-BATTERY

S/N: CRD1-UP

PART OF 201-8416 WIRING GP-SECONDARY STEERING

AN ATTACHMENT

SMCS-1408, 7426 i02162969

NOTE	REF NO	GRAPHIC REF	PART NUMBER	QTY	PART NAME 1 2 3 4 5 6 (PRODUCT LEVEL)	SEE PAGE
	1	1	8C-6358	1	BLOCK GP-JUNCTION	
	1A	1	8T-3519	3	BOLT-BRONZE (1/2-13X2-IN)	
BD	2	1	6V-2722		TUBE-HEAT SHRINK	
	3	1	7F-0560	6	WASHER (0.516X0.938X0.101-IN THK)	
	4	1	8T-3518	6	NUT-FULL (1/2-13-THD)	

B-USE AS REQUIRED
D-ORDER BY THE METER

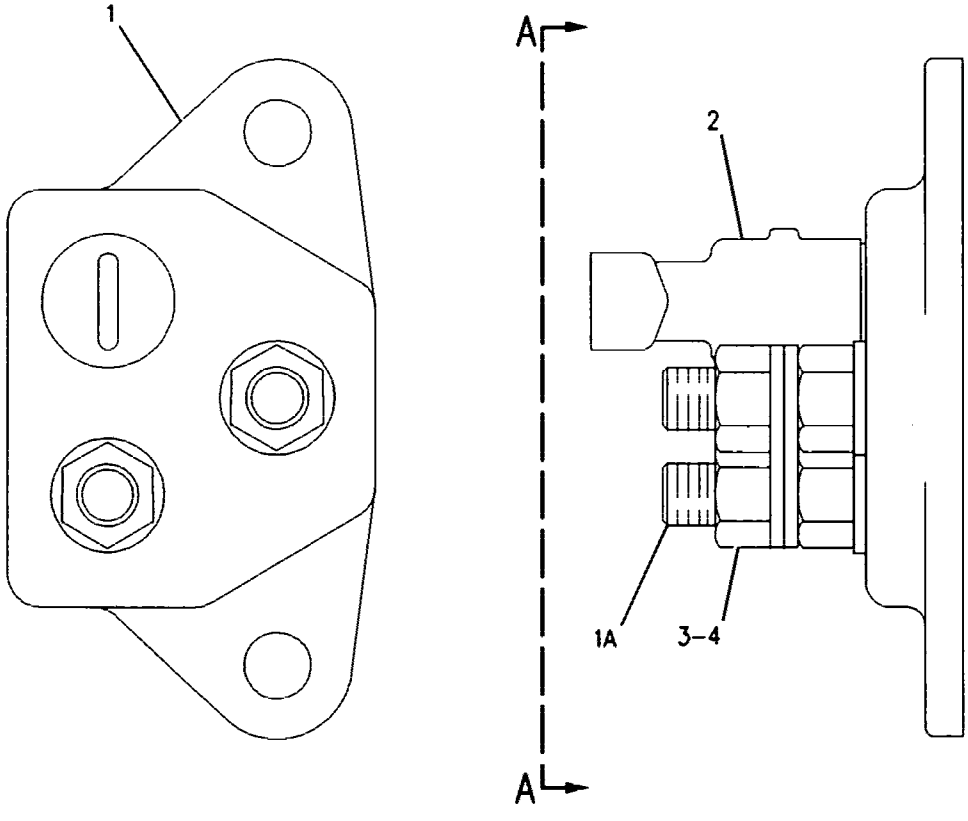

VIEW A-A

GRAPHIC #1 <END> g00650721

206-2828 CONTROL & MTG GP-COMMUNICATION-PRODUCT LINK

S/N: CRD1-UP

PART OF 206-2817 INSTALLATION AR-COMMUNICATION

AN ATTACHMENT

SMCS-7606 i01868100

NOTE	REF NO	GRAPHIC REF	PART NUMBER	QTY	PART NAME 1 2 3 4 5 6 (PRODUCT LEVEL)	SEE PAGE
	1	1	8C-5607	8	MOUNT-ISOLATION	
	2	1	8C-5608	4	SPACER (6.5X9.5X25.4-MM THK)	
	3	1	9X-6165	4	WASHER (6.5X22X2.5-MM THK)	
	4	1	170-9198	2	PLATE	
	5	1	206-2831	1	BRACKET AS	
M		1	8T-3490	4	NUT-WELD (M10X1.5-THD)	
		1	206-2834	1	PLATE	
	6	1	207-6797	1	ANTENNA AS (WHIP)	
	7	1	209-6417	1	CONTROL GP-COMMUNICATION (PRODUCT LINK)	
M	8	1	5C-9553	4	BOLT (M6X1X16-MM)	
	9	1	2T-3019	1	CLIP	
M	10	1	8C-8451	4	BOLT (M6X1X40-MM)	
M	11	1	8T-4139	1	BOLT (M12X1.75X30-MM)	
M	12	1	9X-2041	4	SCREW-TRUSS HEAD (M10X1.5X20-MM)	
	13	1	8T-4223	1	WASHER-HARD (13.5X25.5X3-MM THK)	

M-METRIC PART

206-2828 CONTROL & MTG GP-COMMUNICATION (contd.) i01868100

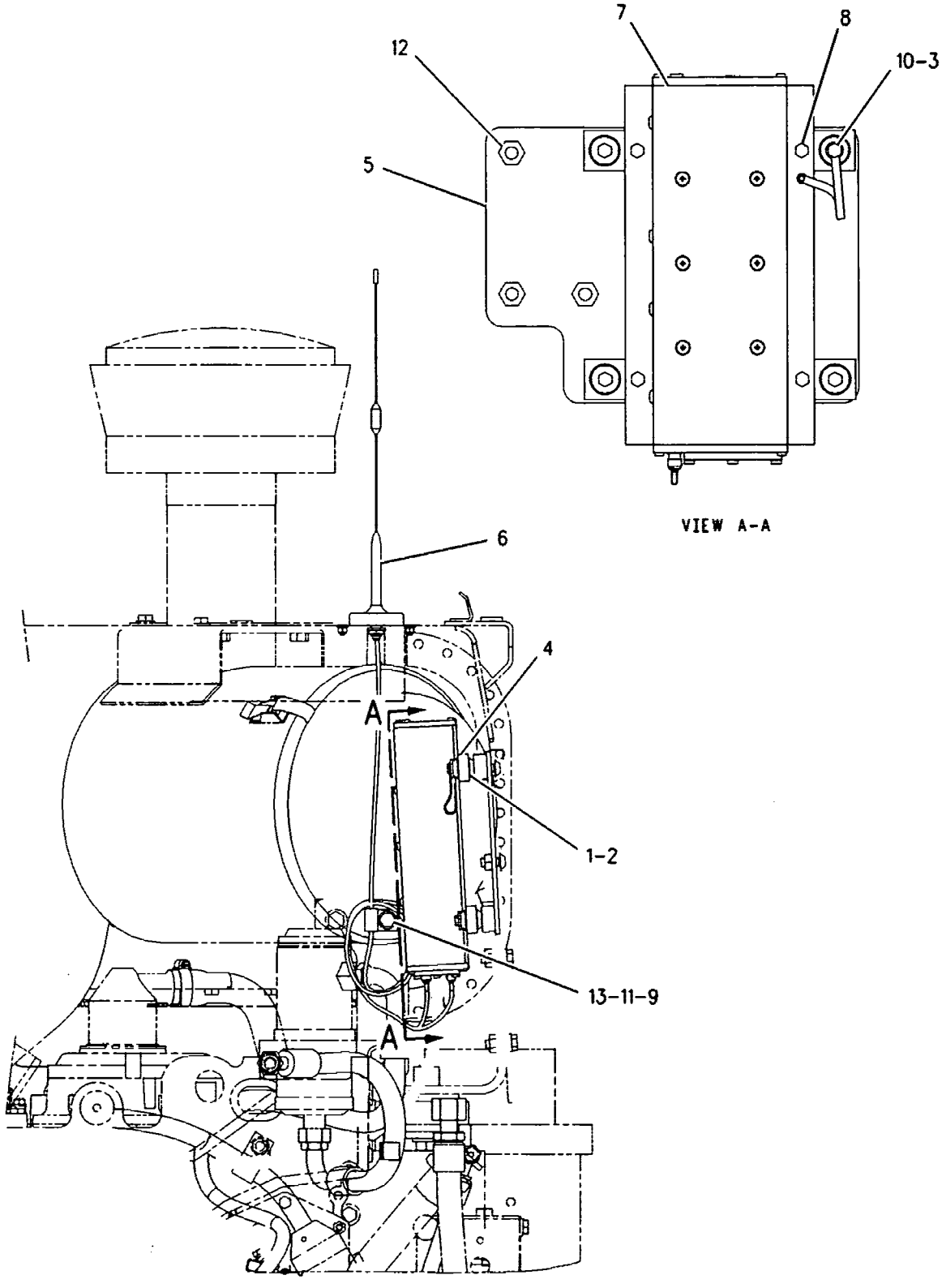

RIGHT SIDE VIEW

GRAPHIC #1 <END> g00951813

ELECTRICAL AND STARTING SYSTEM

183-1195 CONTROL & MTG GP-ENGINE ELEK

S/N: 5GG1-761
FUEL COOLED
PART OF 198-5914 ENGINE AR-COMPLETE

SMCS-1901, 7620 **i01787122**

NOTE	REF NO	GRAPHIC REF	PART NUMBER	QTY	PART NAME 1 2 3 4 5 6 (PRODUCT LEVEL)	SEE PAGE
	1	1	**8S-4950**	1	CAP (37 DEGREE FLARED)	
	2	1	**8T-9655**	8	MOUNT-ISOLATION	
	3	1	**101-3128**	2	SPACER	
	4	1	**169-3111**	2	SPACER	
	5	1	**179-9850**	1	CONTROL GP-ENGINE ELECTRONIC	
	5A	1	**7X-6315**	1	STRAP AS-GROUND	
	5B	1	**184-2472**	1	SCREW-PAN HEAD (NO 8-32X9.52-MM)	
	5C	1	**134-4126**	1	WASHER (4.52X8.28X0.76-MM THK)	
M	6	1	**5P-8347**	2	BOLT (M8X1.25X70-MM)	
M	7	1	**6V-5223**	2	BOLT (M8X1.25X100-MM)	
	8	1	**9M-1974**	1	WASHER-HARD (8.8X16X2-MM THK)	
	9	1	**9N-0869**	4	WASHER-HARD (8.8X25.5X2-MM THK)	

M-METRIC PART

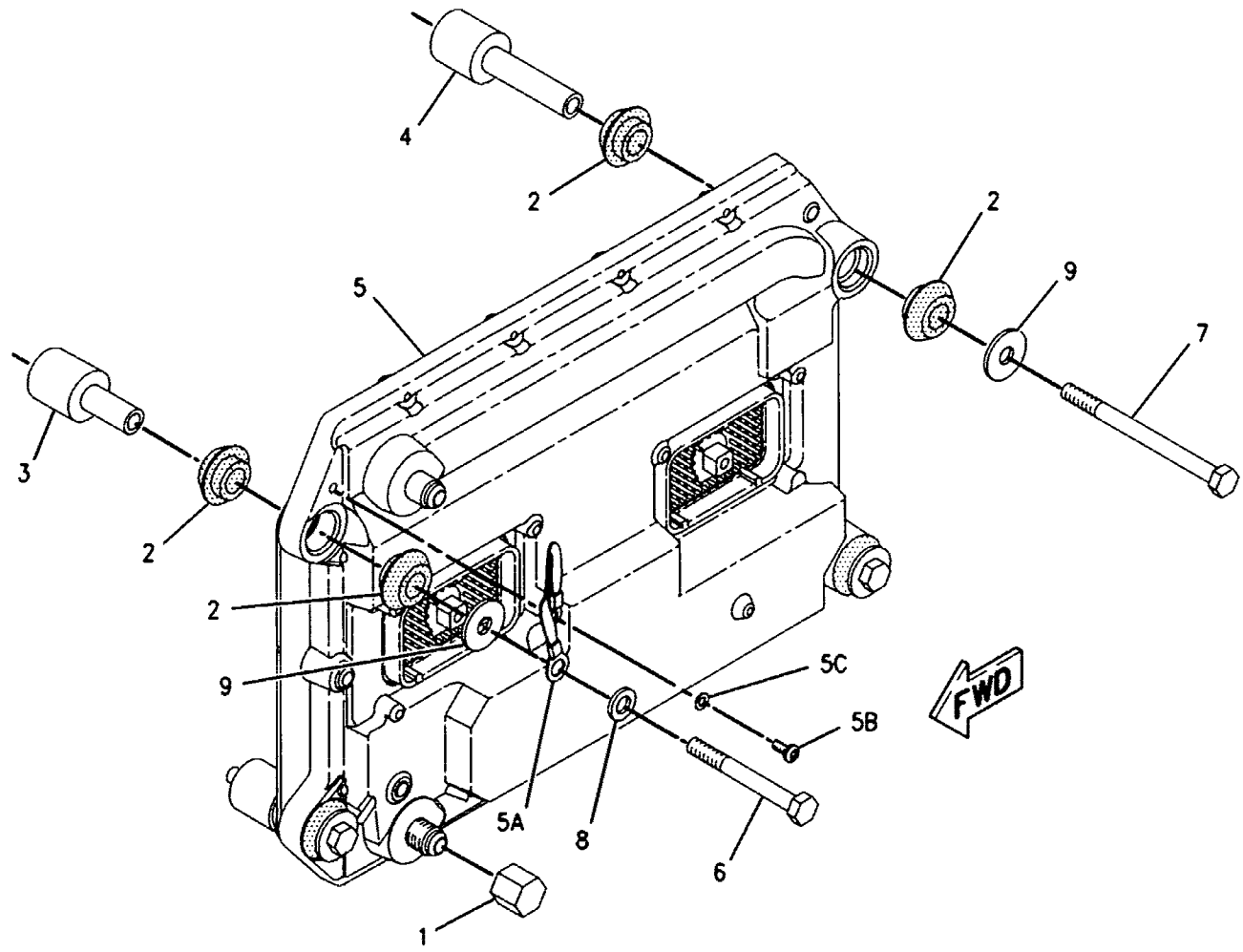

GRAPHIC #1 **<END>** g00723153

183-1195 CONTROL & MTG GP-ENGINE ELEK

S/N: 5GG762-UP
FUEL COOLED
PART OF 198-5914 ENGINE AR-COMPLETE

SMCS-1901, 7620 i01787124

NOTE	REF NO	GRAPHIC REF	PART NUMBER	QTY	PART NAME 1 2 3 4 5 6 (PRODUCT LEVEL)	SEE PAGE
	1	1	8S-4950	1	CAP (37 DEGREE FLARED)	
	2	1	8T-9655	8	MOUNT-ISOLATION	
	3	1	101-3128	2	SPACER	
	4	1	169-3111	2	SPACER	
CY	5	1	*210-0849*	1	CONTROL GP-ENGINE ELECTRONIC	184
M	6	1	5P-8347	2	BOLT (M8X1.25X70-MM)	
M	7	1	6V-5223	2	BOLT (M8X1.25X100-MM)	
	8	1	9M-1974	1	WASHER-HARD (8.8X16X2-MM THK)	
	9	1	9N-0869	4	WASHER-HARD (8.8X25.5X2-MM THK)	

C-CHANGE FROM PREVIOUS TYPE
M-METRIC PART
Y-SEPARATE ILLUSTRATION

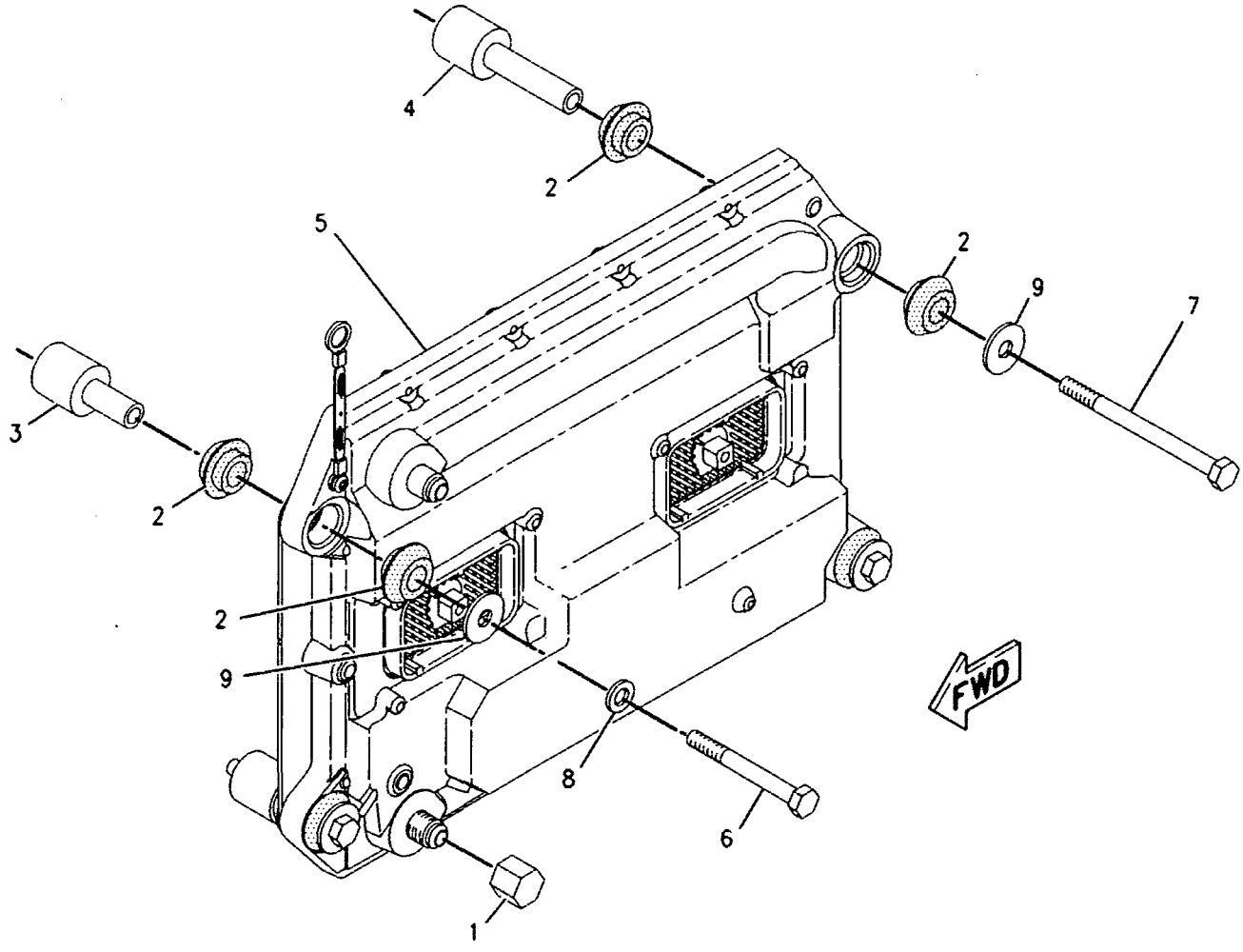

GRAPHIC #1 <END> g00907225

188-7726 CONTROL & MTG GP-ENGINE ELEK

S/N: 5GG2637-UP

PART OF 198-5914 ENGINE AR-COMPLETE

SMCS-1901, 7620 i01944952

NOTE	REF NO	GRAPHIC REF	PART NUMBER	QTY	PART NAME 1 2 3 4 5 6 (PRODUCT LEVEL)	SEE PAGE
	2	1	8T-9655	8	MOUNT-ISOLATION	
	3	1	101-3128	4	SPACER	
M	4	1	6V-9804	1	BOLT (M8X75-MM)	
Y	6	1	209-9588	1	CONTROL GP-ENGINE ELECTRONIC	182
M	7	1	5P-8347	3	BOLT (M8X1.25X70-MM)	
	8	1	9M-1974	1	WASHER-HARD (8.8X16X2-MM THK)	
	9	1	9N-0869	4	WASHER-HARD (8.8X25.5X2-MM THK)	

M-METRIC PART
Y-SEPARATE ILLUSTRATION

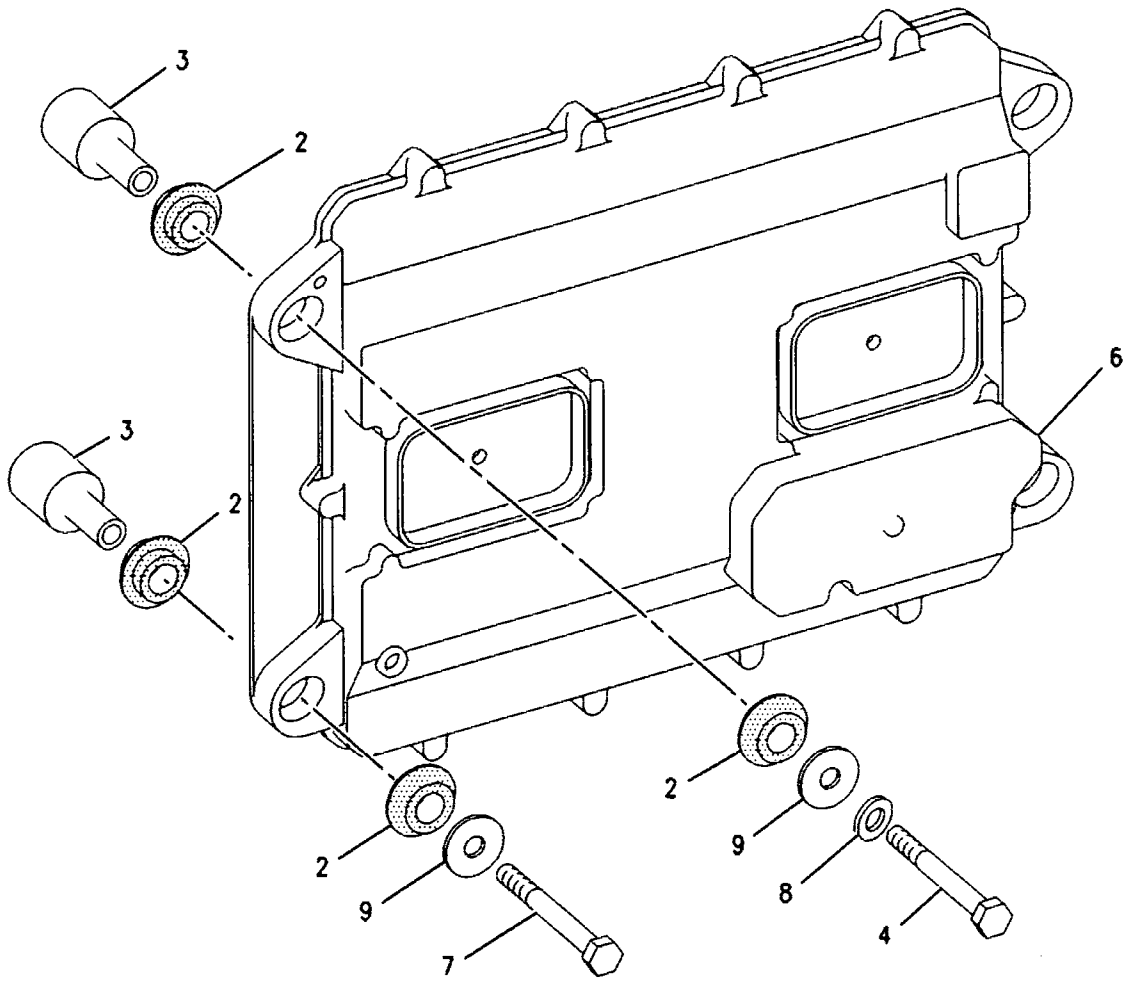

GRAPHIC #1 <END> g00922695

209-9587 CONTROL GP-ENGINE ELECTRONIC

S/N: 5GG2637-2638
FULL FEATURE PROGRAM
PART OF 209-9588 CONTROL GP-ENGINE ELECTRONIC
FIELD REPLACEMENT FOR 209-9588–PAGE 182

SMCS-1901 i01780194

NOTE	REF NO	GRAPHIC REF	PART NUMBER	QTY	PART NAME 1 2 3 4 5 6 (PRODUCT LEVEL)	SEE PAGE
	1	1	184-2472	1	SCREW-PAN HEAD (NO 8-32X9.52-MM)	
	2	1	7X-6315	1	STRAP AS-GROUND	

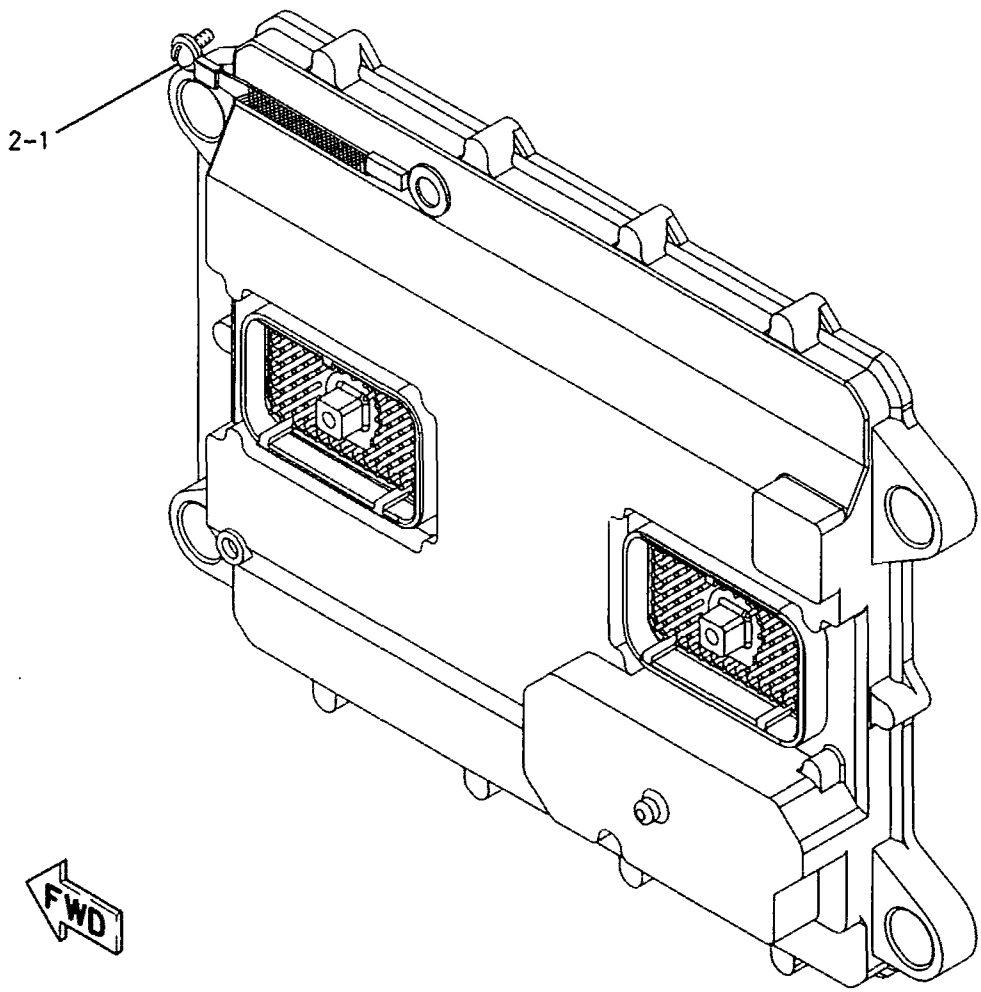

GRAPHIC #1 <END> g00916697

ELECTRICAL AND STARTING SYSTEM

209-9588 CONTROL GP-ENGINE ELECTRONIC

S/N: 5GG2637-2638

PART OF 188-7726 CONTROL & MTG GP-ENGINE ELEK

FIELD REPLACEMENT ORDER 209-9587–PAGE 181, 240-5307–PAGE 191

SMCS-1901 i01780189

NOTE	REF NO	GRAPHIC REF	PART NUMBER	QTY	PART NAME 1 2 3 4 5 6 (PRODUCT LEVEL)	SEE PAGE
Y	1	1	**209-9587**	1	CONTROL GP-ENGINE ELECTRONIC	181

Y-SEPARATE ILLUSTRATION

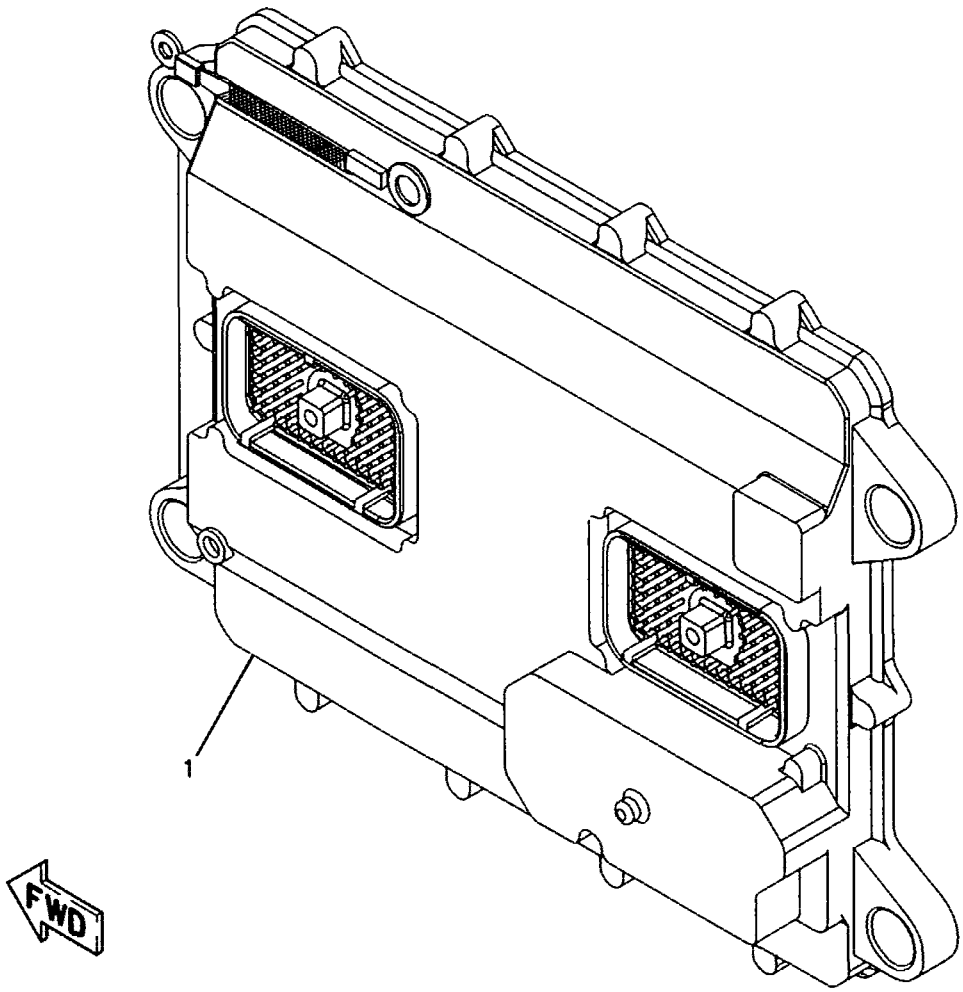

GRAPHIC #1 **<END>** g00913420

209-9588 CONTROL GP-ENGINE ELECTRONIC

S/N: 5GG2637-2932

PART OF 188-7726 CONTROL & MTG GP-ENGINE ELEK

FIELD REPLACEMENT ORDER 209-9587–PAGE 181, 240-5307–PAGE 191

SMCS-1901 i02221753

NOTE	REF NO	GRAPHIC REF	PART NUMBER	QTY	PART NAME 1 2 3 4 5 6 (PRODUCT LEVEL)	SEE PAGE
Y	1	1	209-9587	1	CONTROL GP-ENGINE ELECTRONIC	181
					(FOR 12 VOLT APPLICATION ONLY)	
					–OR–	
CY		1	240-5307	1	CONTROL GP-UNPROGRAMMED	191
					(FOR 12 AND 24 VOLT APPLICATION ONLY)	

C-CHANGE FROM PREVIOUS TYPE
Y-SEPARATE ILLUSTRATION

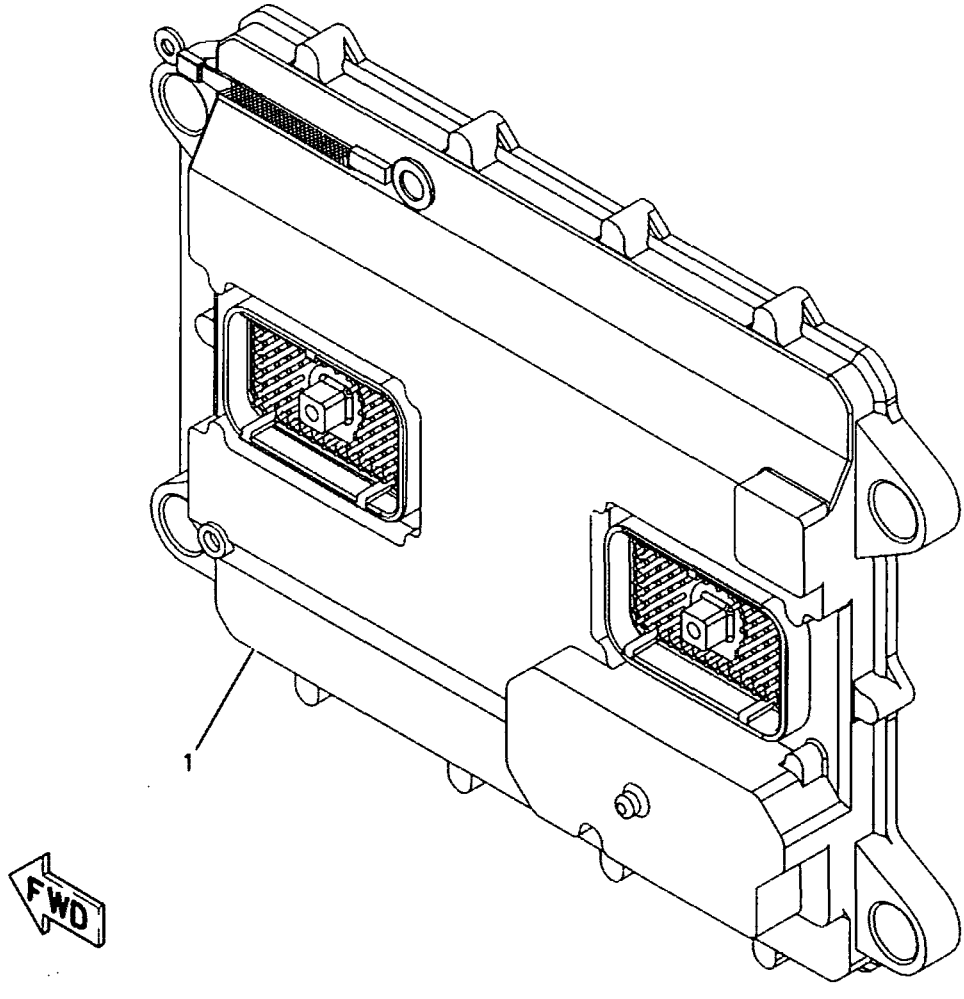

GRAPHIC #1 <END> g00913420

ELECTRICAL AND STARTING SYSTEM

210-0849 CONTROL GP-ENGINE ELECTRONIC

S/N: 5GG762-UP

PART OF 183-1195 CONTROL & MTG GP-ENGINE ELEK

SMCS-1901 i02054605

NOTE	REF NO	GRAPHIC REF	PART NUMBER	QTY	PART NAME 1 2 3 4 5 6 (PRODUCT LEVEL)	SEE PAGE
Y	1	1	240-5304	1	CONTROL GP-ENGINE ELECTRONIC	185

Y-SEPARATE ILLUSTRATION

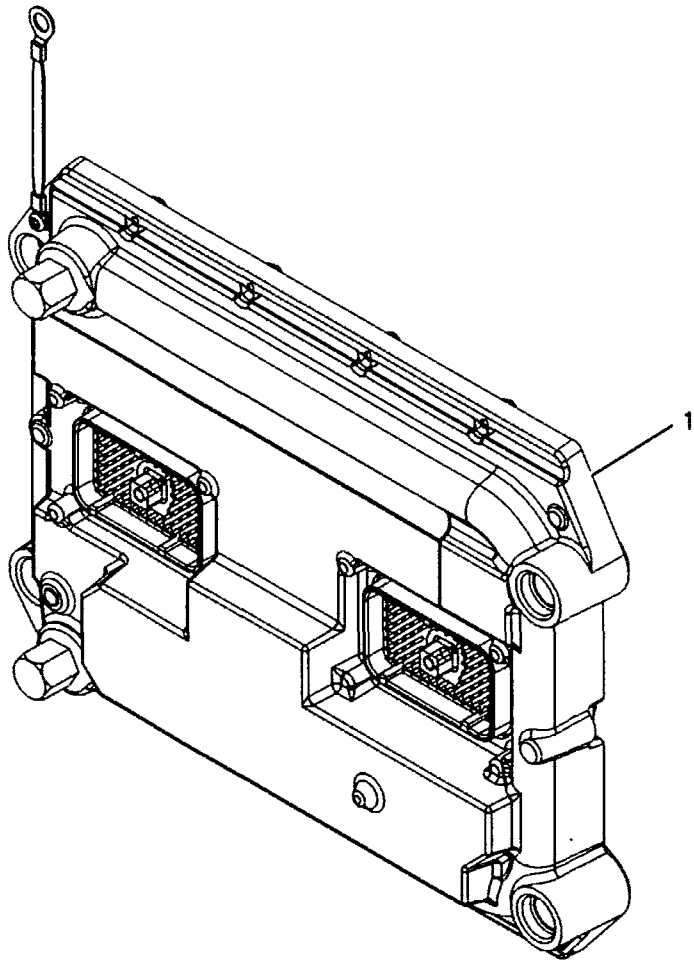

GRAPHIC #1 <END> g01007040

240-5304 CONTROL GP-ENGINE ELECTRONIC

S/N: 5GG762-UP

PART OF 210-0849 CONTROL GP-ENGINE ELECTRONIC

SMCS-1901 i02051599

NOTE	REF NO	GRAPHIC REF	PART NUMBER	QTY	PART NAME 1 2 3 4 5 6 (PRODUCT LEVEL)	SEE PAGE
	1	1	7X-6315	1	STRAP AS-GROUND	
	2	1	184-2472	1	SCREW-PAN HEAD (NO 8-32X9.52-MM)	

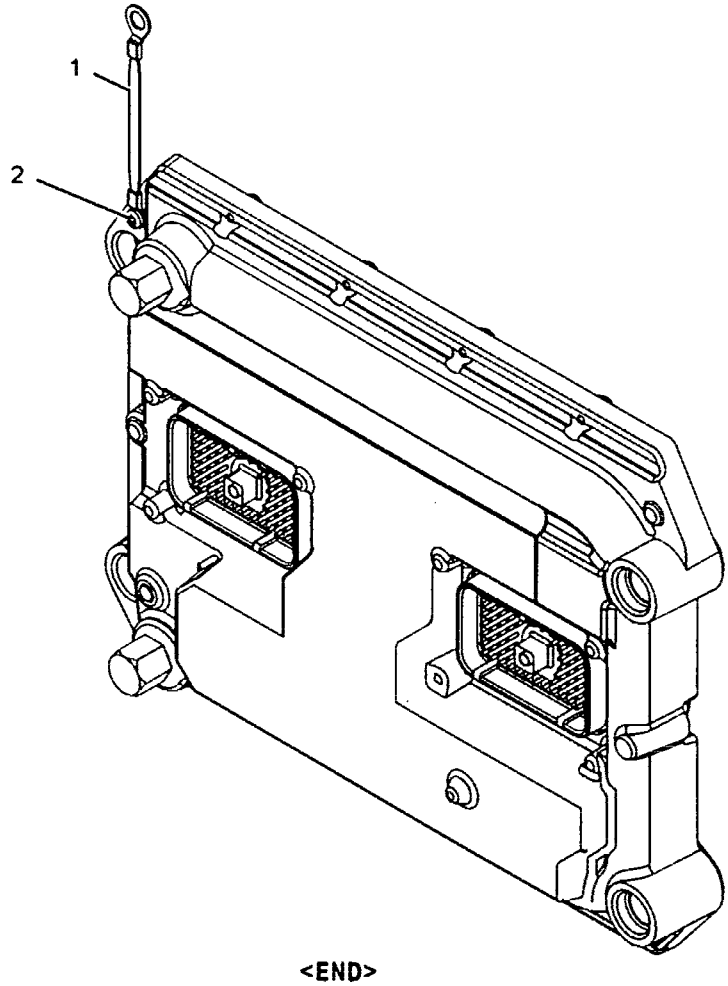

GRAPHIC #1 <END> g01055257

ELECTRICAL AND STARTING SYSTEM

3E-7844 CONTROL GP-LIFT KICKOUT

S/N: CRD1-UP

PART OF 219-0310 KICKOUT & POSITIONER GP

SMCS-5109 i01303520

NOTE	REF NO	GRAPHIC REF	PART NUMBER	QTY	PART NAME 1 2 3 4 5 6 (PRODUCT LEVEL)	SEE PAGE
	1	1	9X-5617	1	FILM-INSTRUCTION	
	2	1	102-8803	1	KIT-RECEPTACLE (3-PIN)	
					(INCLUDES RECEPTACLE AS AND WEDGE)	
	3	1	8T-8729	3	PIN-CONNECTOR	
	4	1	3E-3371	1	WEDGE-RECEPTACLE LOCK (3-PIN)	

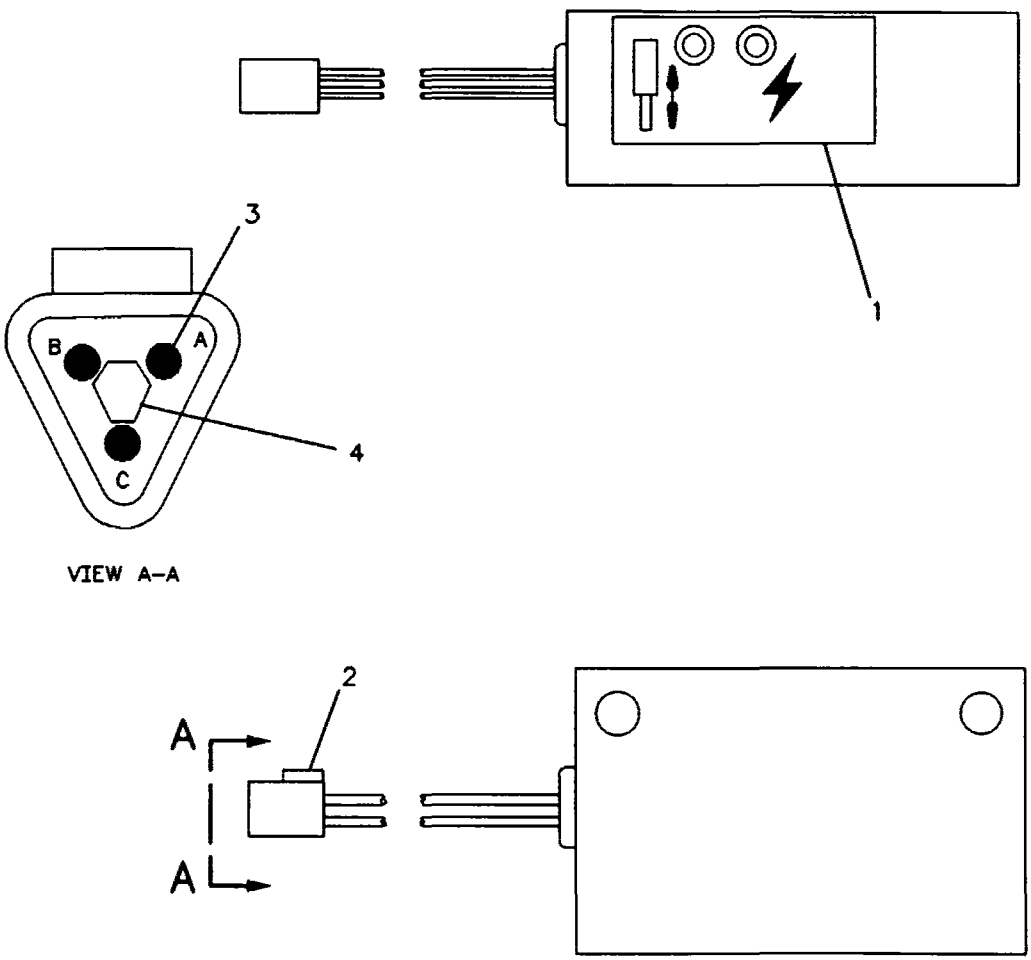

GRAPHIC #1 <END> g00119271

145-8670 CONTROL GP-LIFT KICKOUT

S/N: CRD1-UP

PART OF 220-4105 KICKOUT & POSITIONER GP

AN ATTACHMENT

SMCS-5109 i01303526

NOTE	REF NO	GRAPHIC REF	PART NUMBER	QTY	PART NAME 1 2 3 4 5 6 (PRODUCT LEVEL)	SEE PAGE
	1	1	9X-5617	1	FILM-INSTRUCTION	
	2	1	102-8803	1	KIT-RECEPTACLE (3-PIN)	
					(INCLUDES RECEPTACLE AS AND WEDGE)	
	3	1	8T-8729	3	PIN-CONNECTOR	
	4	1	3E-3371	1	WEDGE-RECEPTACLE LOCK (3-PIN)	

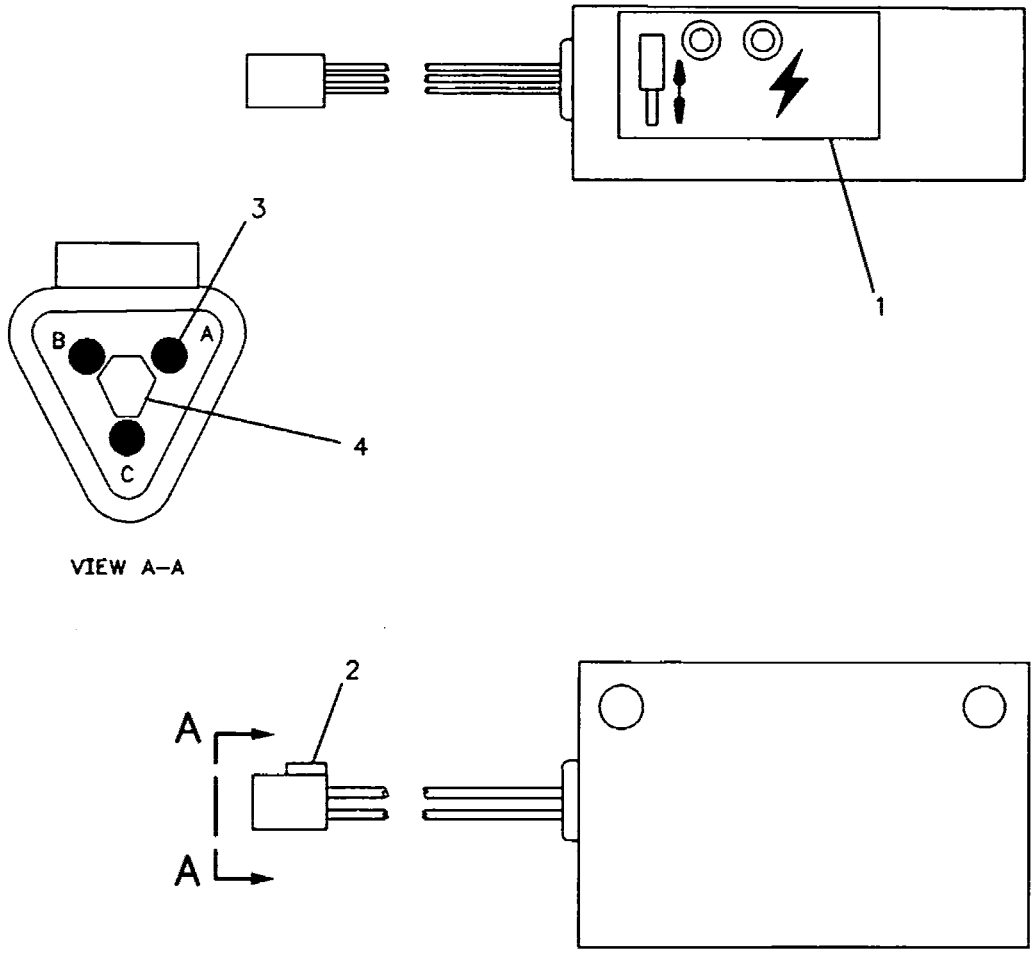

GRAPHIC #1 <END> g00119271

ELECTRICAL AND STARTING SYSTEM

176-5459 CONTROL GP-POSITION-WORK TOOL

S/N: CRD1-UP

PART OF 219-0310, 220-4105 KICKOUT & POSITIONER GP

ALSO AN ATTACHMENT

SMCS-5112 i01294037

NOTE	REF NO	GRAPHIC REF	PART NUMBER	QTY	PART NAME 1 2 3 4 5 6 (PRODUCT LEVEL)	SEE PAGE
	1	1	9X-5617	1	FILM-INSTRUCTION	
	2	1	8T-8730	3	SOCKET-CONNECTOR	
	3	1	155-2276	1	WEDGE-PLUG LOCK (3-PIN)	
	4	1	155-2267	1	PLUG AS-CONNECTOR (3-PIN)	

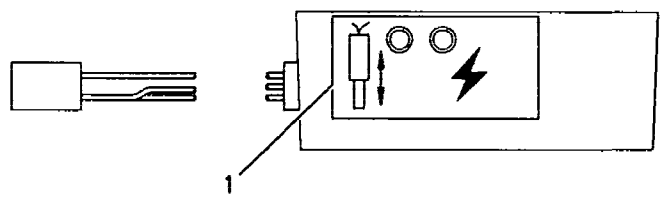

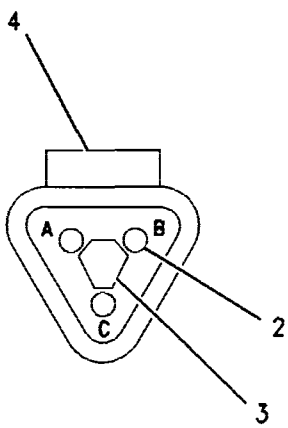

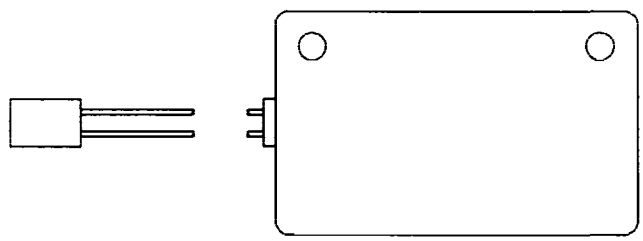

GRAPHIC #1 <END> g00685725

172-9389 CONTROL GP-UNPROGRAMMED–POWER TRAIN

S/N: CRD1-UP

PART OF 201-8409, 201-8410 WIRING GP-CAB

ALSO AN ATTACHMENT

SMCS-7610 i02127652

NOTE	REF NO	GRAPHIC REF	PART NUMBER	QTY	PART NAME 1 2 3 4 5 6 (PRODUCT LEVEL)	SEE PAGE
	1	1	7X-6315	1	STRAP AS-GROUND	
	2	1	101-0852	1	SCREW-PAN HEAD (NO 8X3/8-IN)	
M	3	1	6V-6703	2	KIT-RETAINING BOLT (M5X0.8X53.24-MM) (UNPROGRAMMED CONTROL)	
					(EACH INCLUDES BOLT, RING, AND SEALS)	
	4	1	134-4126	1	WASHER (4.52X8.28X0.76-MM THK)	

M-METRIC PART

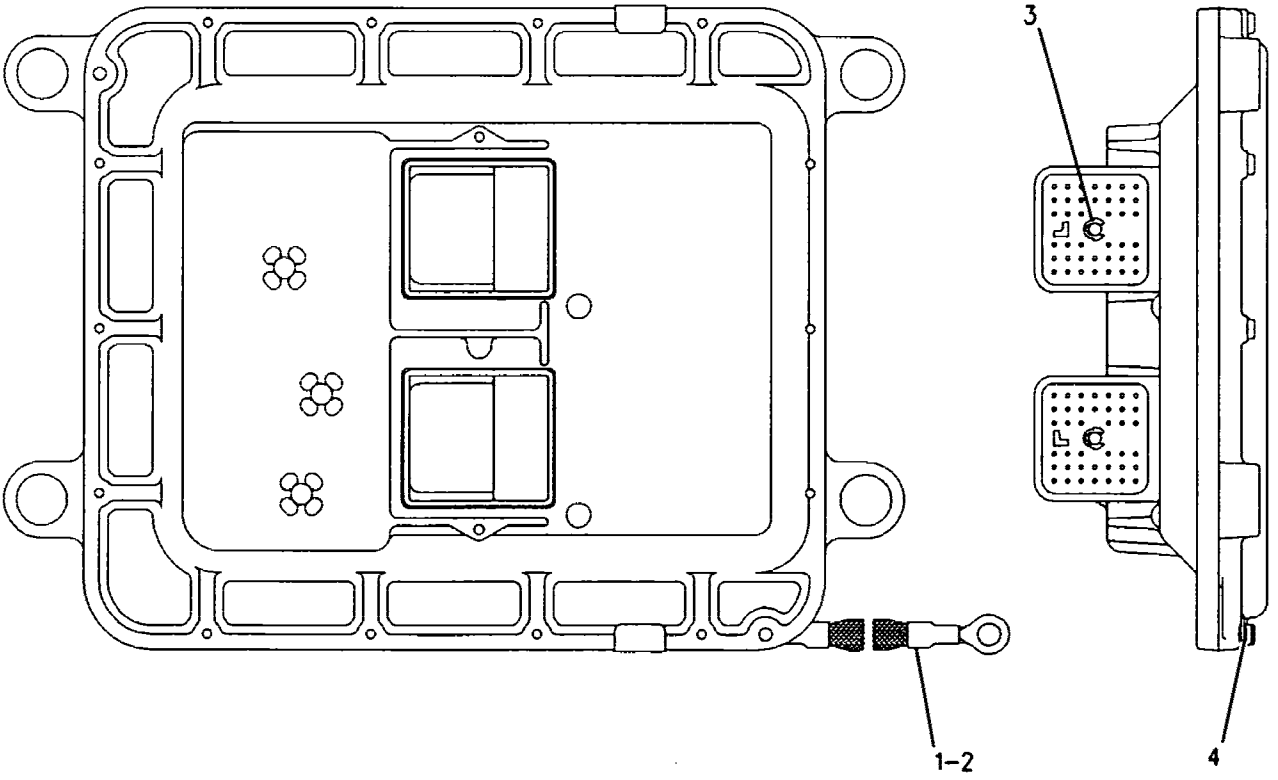

GRAPHIC #1 <END> g00951290

172-9391 CONTROL GP-UNPROGRAMMED-
TRACTION CONTROL SYSTEM
S/N: CRD1-UP
PART OF 201-8422 WIRING GP-TRACTION CONTROL
AN ATTACHMENT

SMCS-7610 i02279220

NOTE	REF NO	GRAPHIC REF	PART NUMBER	QTY	PART NAME 1 2 3 4 5 6 (PRODUCT LEVEL)	SEE PAGE
	1	1	7X-6315	1	STRAP AS-GROUND	
	2	1	101-0852	1	SCREW-PAN HEAD (NO 8X3/8-IN)	
M	3	1	6V-6703	2	KIT-RETAINING BOLT (M5X0.8X53.24-MM) (UNPROGRAMMED CONTROL) (INCLUDES BOLT, RING, AND SEALS)	
	4	1	134-4126	1	WASHER (4.52X8.28X0.76-MM THK)	

M-METRIC PART

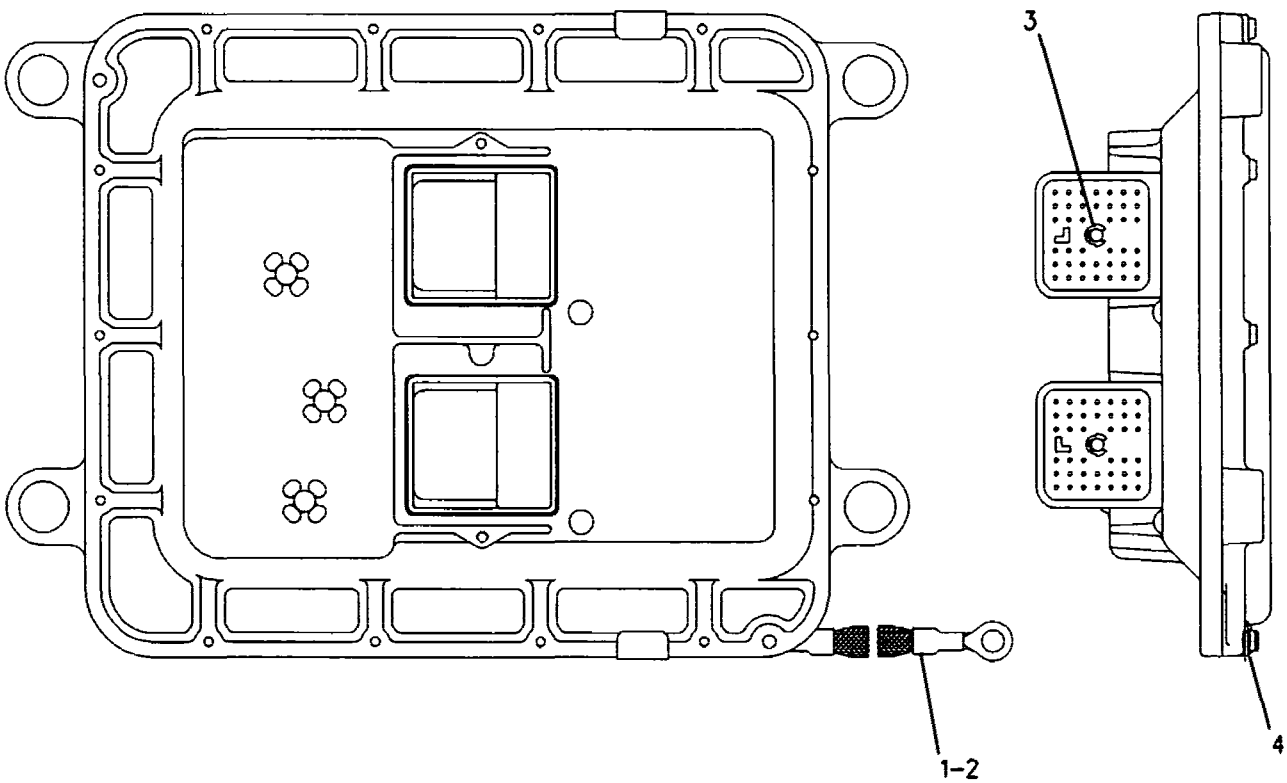

GRAPHIC #1 <END> g00951283

240-5307 CONTROL GP-UNPROGRAMMED

S/N: 5GG2637-2932

PART OF 209-9588 CONTROL GP-ENGINE ELECTRONIC

FIELD REPLACEMENT FOR 209-9588—PAGE 182

SMCS-7610 i02217626

NOTE	REF NO	GRAPHIC REF	PART NUMBER	QTY	PART NAME 1 2 3 4 5 6 (PRODUCT LEVEL)	SEE PAGE
	1	1	7X-6315	1	STRAP AS-GROUND	
	2	1	184-2472	1	SCREW-PAN HEAD (NO 8-32X9.52-MM)	

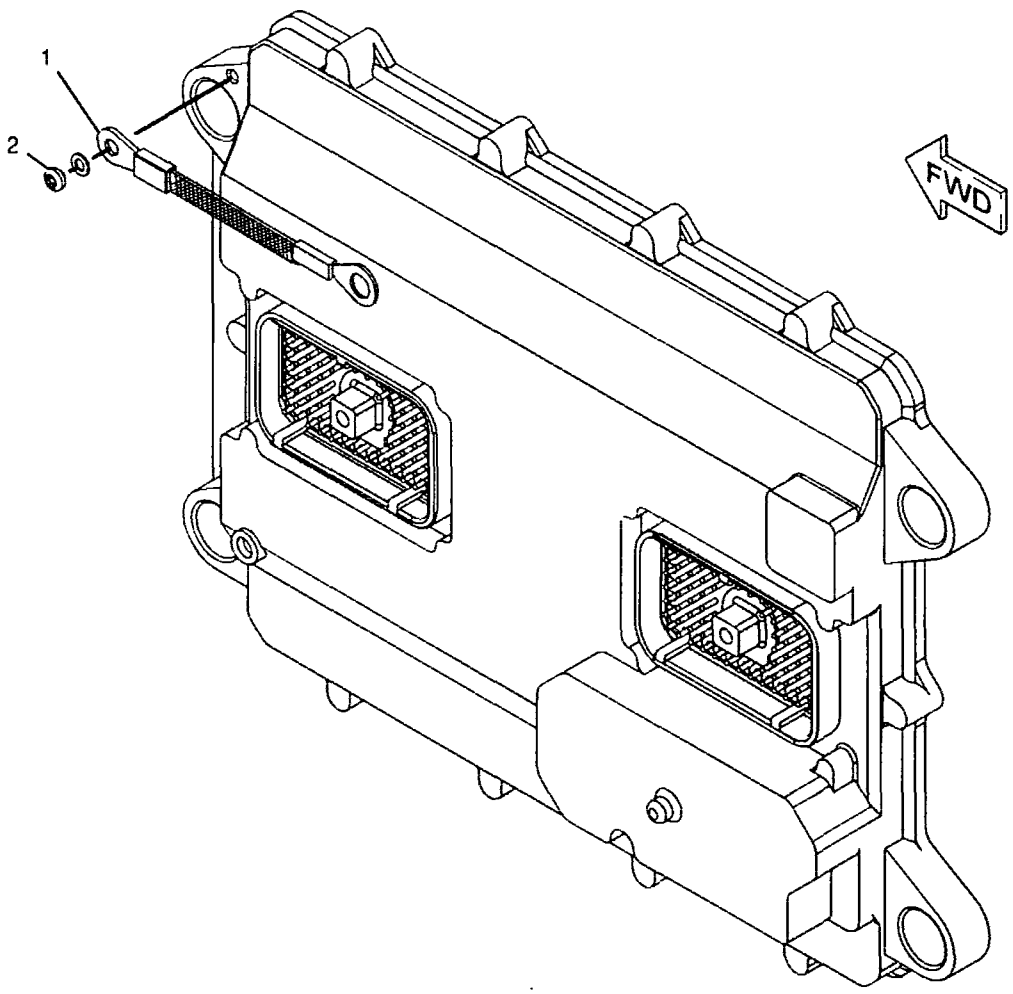

GRAPHIC #1

<END>

g01027711

ELECTRICAL AND STARTING SYSTEM

199-2817 ELECTRICAL AR

S/N: CRD1-UP

PART OF 199-2812 GENERAL AR

SMCS-1408, 1429, 7402, 7406 **i02044444**

NOTE	PART NUMBER	QTY	PART NAME 1 2 3 4 5 6 (PRODUCT LEVEL)	SEE PAGE
Y	*201-8414*	1	BATTERY & WIRING GP	172
Y	*211-6611*	1	ELECTRONICS GP-POWER TRAIN	194
Y	**206-9177**	1	HORN GP-ELECTRIC	894
			S/N: CRD1-597	
Y	*200-4152*	1	HORN GP-ELECTRIC	893
			S/N: CRD598-UP	
Y	*219-0310*	1	KICKOUT & POSITIONER GP	641
Y	**206-7958**	1	LIGHTING GP-FLOOD & SIGNAL	219
			S/N: CRD1-597	
Y	*232-3325*	1	LIGHTING GP-FLOOD & SIGNAL	221
			S/N: CRD598-UP	
Y	*215-2467*	1	TILT GP-HOOD	535
Y	*201-8413*	1	WIRING GP-ENGINE	319
Y	*201-8412*	1	WIRING GP-FRONT	335
Y	*201-8415*	1	WIRING GP-MACHINE	348

Y-SEPARATE ILLUSTRATION

<END>

213-1198 ELECTRONICS GP-MACHINE–SECURITY

S/N: CRD1-UP

PART OF 215-5558 INSTALLATION GP-SECURITY

AN ATTACHMENT

SMCS-7610, 7620 i02282448

NOTE	REF NO	GRAPHIC REF	PART NUMBER	QTY	PART NAME 1 2 3 4 5 6 (PRODUCT LEVEL)	SEE PAGE
	1	1	243-6464	1	SOFTWARE GP-MACHINE	
					-OR-	
					(OPTIONAL SERVICE REPLACEMENT)	
Y	2	1	207-5262	1	SERVICE GP-MACHINE (SECURITY)	260

Y-SEPARATE ILLUSTRATION

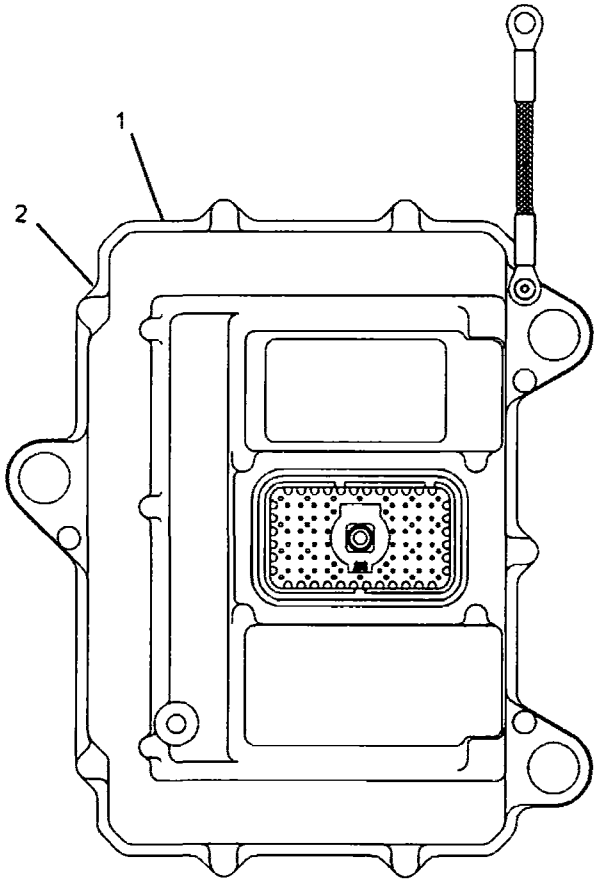

GRAPHIC #1 <END> g01140031

217-8250 ELECTRONICS GP-MACHINE

S/N: CRD1-UP
TRACTION CONTROL SYSTEM
PART OF 201-8909 CONTROL AR-TRACTION, 221-8179 CONVERSION AR-TRACTION CONTROL
AN ATTACHMENT

SMCS-7610, 7620 i01684100

NOTE	PART NUMBER	QTY	PART NAME 1 2 3 4 5 6 (PRODUCT LEVEL)	SEE PAGE
	134-3379	1	FILM-IDENTIFICATION (ELECTRONIC CONTROL MODULE)	
			(NOT SERVICED SEPARATELY-FACTORY INSTALLED)	
	170-4871	1	SOFTWARE GP-MONITOR (TRACTION CONTROL SYSTEM)	
			NOTE: 187-5032 SERVICE GP-MONITOR (TRACTION CONTROL SYSTEM) IS AVAILABLE	
			NOTE: THIS ELECTRONICS GP CONTAINS SOFTWARE FOR CONTROL GP-UNPROGRAMMED (TRACTION CONTROL SYSTEM)	
			<END>	

211-6611 ELECTRONICS GP-POWER TRAIN

S/N: CRD1-UP
PART OF 199-2817 ELECTRICAL AR

SMCS-4800, 4808, 7610, 7620 i01971385

NOTE	PART NUMBER	QTY	PART NAME 1 2 3 4 5 6 (PRODUCT LEVEL)	SEE PAGE
	134-3379	1	FILM-IDENTIFICATION (ELECTRONIC CONTROL MODULE)	
			(NOT SERVICED SEPARATELY-FACTORY INSTALLED)	
	238-9015	1	SOFTWARE GP-POWER TRAIN	
			NOTE: 238-9016 SERVICE GP-POWER TRAIN IS AVAILABLE	
			NOTE: THIS ELECTRONICS GP CONTAINS SOFTWARE FOR CONTROL GP-UNPROGRAMMED (POWER TRAIN)	
			<END>	

3T-8724 HEATER GP-JACKET WATER–240 VOLT

S/N: CRD1-UP
1000 WATT
AN ATTACHMENT
TYPE 1

SMCS-1383 i01621288

NOTE	REF NO	GRAPHIC REF	PART NUMBER	QTY	PART NAME 1 2 3 4 5 6 (PRODUCT LEVEL)	SEE PAGE
	1	1	4N-8227	1	CORD AS-HEATER	
C	2	1	124-0687	1	ELEMENT AS-JACKET WATER HEATER	
		1	133-6517	1	CAP AS-DUST	
		1	132-1448	1	KIT-SEAL (JACKET WATER HEATER)	
					(INCLUDES SEALS, SPACER, AND RINGS)	

C-CHANGE FROM PREVIOUS TYPE

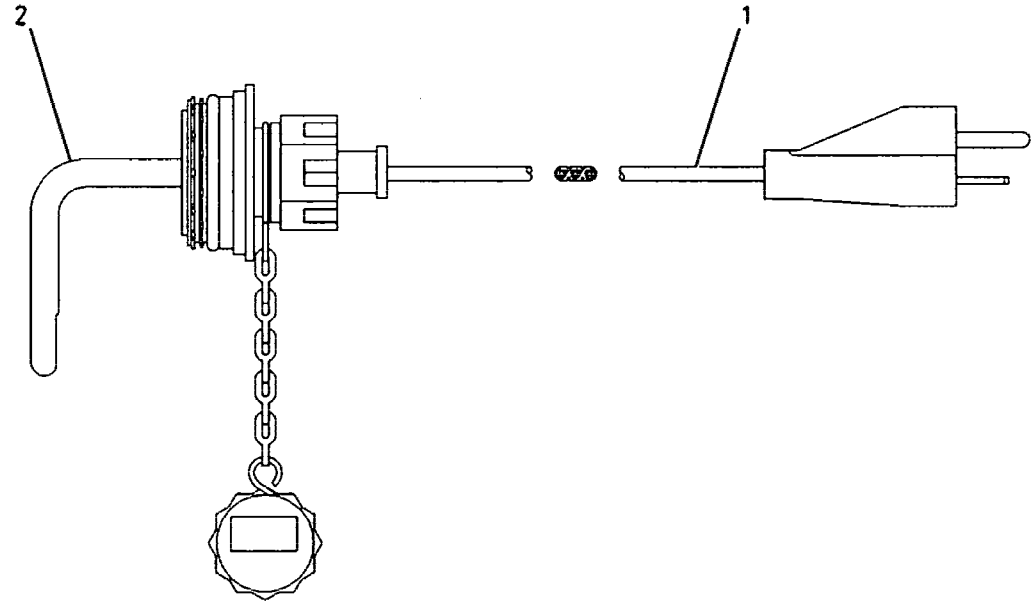

GRAPHIC #1 <END> g00839018

3T-8724 HEATER GP-JACKET WATER–240 VOLT

S/N: CRD1-UP
1000 WATT
AN ATTACHMENT
TYPE 2

SMCS-1383 102238645

NOTE	REF NO	GRAPHIC REF	PART NUMBER	QTY	PART NAME 1 2 3 4 5 6 (PRODUCT LEVEL)	SEE PAGE
C	1	1	**246-8630**	1	CORD AS-HEATER	
C	2	1	**246-8627**	1	ELEMENT AS-JACKET WATER HEATER (240-VOLT, 1000-WATT)	
	2A	1	**5F-9657**	1	SEAL-O-RING	

C-CHANGE FROM PREVIOUS TYPE

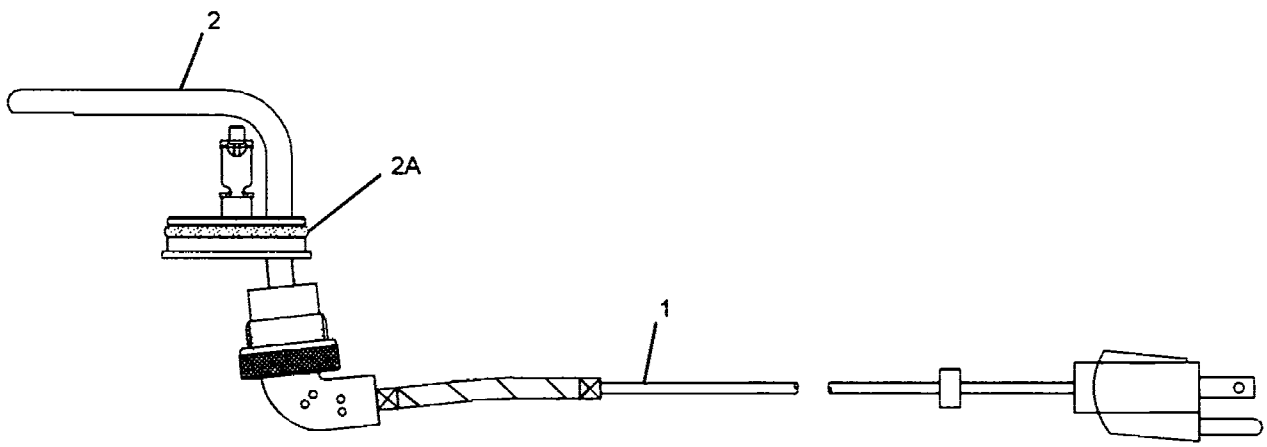

GRAPHIC #1 **<END>** g01135257

ELECTRICAL AND STARTING SYSTEM

9X-3294 HEATER GP-JACKET WATER–120 VOLT

S/N: CRD1-UP
1000 WATT
AN ATTACHMENT
TYPE 1

SMCS-1383 i02252577

NOTE	REF NO	GRAPHIC REF	PART NUMBER	QTY	PART NAME 1 2 3 4 5 6 (PRODUCT LEVEL)	SEE PAGE
	1	1	9N-5253	1	CORD AS-JACKET WATER HEATER	
C	2	1	124-0686	1	ELEMENT AS-JACKET WATER HEATER (120-VOLT, 1000-WATT)	
		1	132-1448	1	KIT-SEAL (JACKET WATER HEATER)	
					(INCLUDES SEAL, SPACER, & RINGS)	
	2A	1	6N-1604	1	CAP AS-DUST (JACKET WATER HEATER ELEMENT)	

C-CHANGE FROM PREVIOUS TYPE

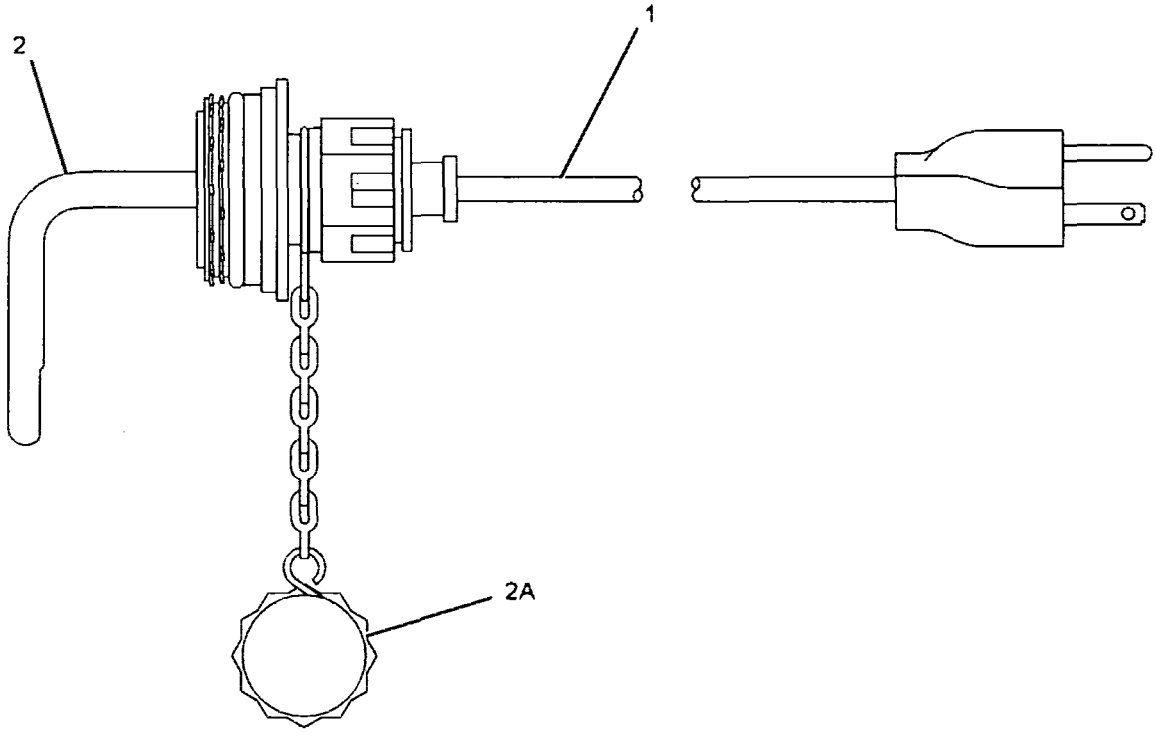

GRAPHIC #1 <END> g01134257

ELECTRICAL AND STARTING SYSTEM

9X-3294 HEATER GP-JACKET WATER–120 VOLT

S/N: CRD1-UP
1000 WATT
AN ATTACHMENT
TYPE 2

SMCS-1383 i02252596

NOTE	REF NO	GRAPHIC REF	PART NUMBER	QTY	PART NAME 1 2 3 4 5 6 (PRODUCT LEVEL)	SEE PAGE
	1	1	**246-8631**	1	CORD AS-HEATER	
	2	1	**246-8628**	1	ELEMENT AS-JACKET WATER HEATER (120-VOLT, 1000-WATT)	
	2A	1	**5F-9657**	1	SEAL-O-RING	

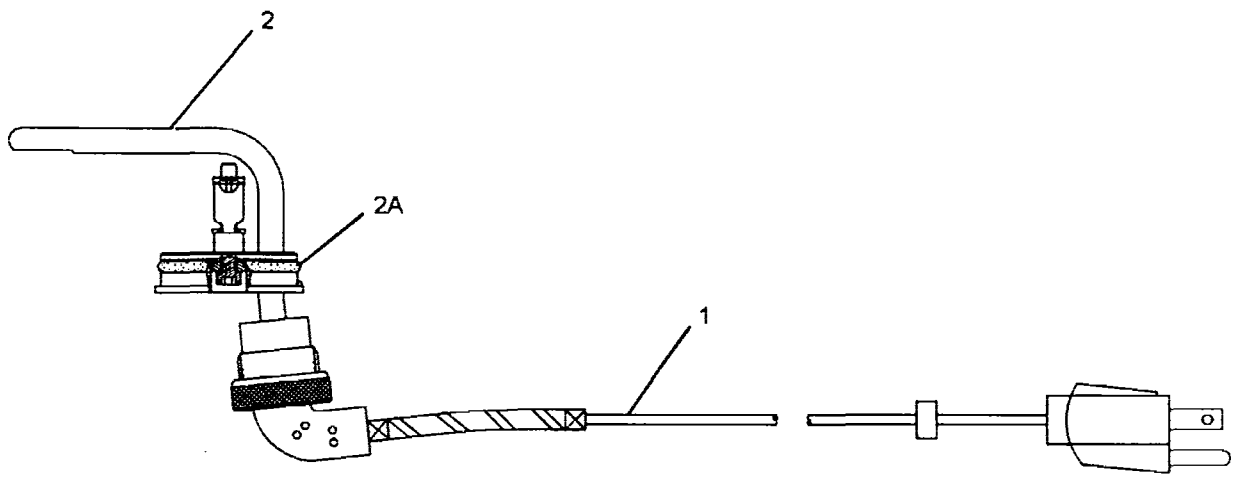

GRAPHIC #1 **<END>** g01135286

206-2817 INSTALLATION AR-COMMUNICATION–PRODUCT LINK

S/N: CRD1-UP
AN ATTACHMENT

SMCS-7606 i01895583

NOTE	PART NUMBER	QTY	PART NAME 1 2 3 4 5 6 (PRODUCT LEVEL)	SEE PAGE
Y	206-2828	1	CONTROL & MTG GP-COMMUNICATION (PRODUCT LINK)	176
	209-9794	1	FILM-WARNING (PRODUCT LINK RADIO)	
Y	206-2830	1	WIRING GP-COMMUNICATION (PRODUCT LINK)	313

Y-SEPARATE ILLUSTRATION

<END>

228-1845 INSTALLATION AR-SECURITY

S/N: CRD1-UP
FIELD INSTALLATION

SMCS-7631 i01878111

NOTE	PART NUMBER	QTY	PART NAME 1 2 3 4 5 6 (PRODUCT LEVEL)	SEE PAGE
M	099-3649	3	BOLT (M8X1.25X40-MM)	
	205-8257	1	COIL AS (EXCITER)	
Y	207-5262	1	SERVICE GP-MACHINE (SECURITY)	260
	198-5389	1	FILM (IGNITION SWITCH)	
	205-0826	1	FILM-INSTRUCTION (READ OWNERS MANUAL)	
	225-5927	1	FILM (SECURITY)	
	223-3381	1	HARNESS AS-CONTROL	
	150-6766	1	PLUG AS-CONNECTOR (26-PIN)	
	155-2255	1	KIT-CONNECTING PLUG (12-PIN)	
	155-2270	2	KIT-CONNECTING PLUG (2-PIN)	
			(EACH KIT PLUG INCLUDES PLUG AS & WEDGE)	
	102-8802	1	KIT-RECEPTACLE (2-PIN)	
	102-8803	1	KIT-RECEPTACLE (3-PIN)	
			(EACH KIT INCLUDES RECEPTACLE AS & WEDGE)	
	165-5655	1	LAMP AS (RED, GREEN, LED, 12-VOLT)	
	186-3735	3	PIN-CONNECTOR (16-GA TO 18-GA)	
	8T-9655	6	MOUNT-ISOLATION	
	6I-1418	3	SPACER (8.2X12.7X28.7-MM THK)	
	7K-1181	23	STRAP-CABLE	
	151-6320	1	TOOL-WIRE REMOVAL	
	9N-0869	3	WASHER-HARD (8.8X25.5X2-MM THK)	

M-METRIC PART
Y-SEPARATE ILLUSTRATION

<END>

ELECTRICAL AND STARTING SYSTEM

215-5558 INSTALLATION GP-SECURITY

S/N: CRD1-UP
AN ATTACHMENT

SMCS-7631 **i01867499**

NOTE	PART NUMBER	QTY	PART NAME 1 2 3 4 5 6 (PRODUCT LEVEL)	SEE PAGE
Y	*213-1198*	1	ELECTRONICS GP-MACHINE (SECURITY)	193
M	**099-3649**	3	BOLT (M8X1.25X40-MM)	
	206-5208	1	COIL AS (EXCITER)	
	102-8802	1	KIT-RECEPTACLE (2-PIN)	
	3E-3365	1	WEDGE-RECEPTACLE LOCK (2-PIN)	
	198-5389	1	FILM (IGNITION SWITCH)	
	5P-5677	1	WIRE (18-GA, BLACK)	
	186-3735	1	PIN-CONNECTOR (16-GA TO 18-GA)	
	156-6155	1	CONTROL GP-UNPROGRAMMED	
	198-5389	1	FILM (IGNITION SWITCH)	
	205-0826	1	FILM-INSTRUCTION (READ OWNERS MANUAL)	
	225-5927	1	FILM (SECURITY)	
	223-3381	1	HARNESS AS-CONTROL	
	8T-8737	60	PLUG-SEAL	
	206-5162	2	KEY AS-ELECTRONIC (SECURITY)	
	102-8803	1	KIT-RECEPTACLE (3-PIN)	
	165-5655	1	LAMP AS (RED, GREEN, LED, 12-VOLT)	
	186-3735	3	PIN-CONNECTOR (16-GA TO 18-GA)	
	8T-9655	1	MOUNT-ISOLATION	
	155-0576	6	MOUNT-ISOLATION	
	6I-1418	3	SPACER (8.2X12.7X28.7-MM THK)	
	7K-1181	23	STRAP-CABLE	
	9N-0869	3	WASHER-HARD (8.8X25.5X2-MM THK)	
	3E-3371	1	WEDGE-RECEPTACLE LOCK (3-PIN)	

M-METRIC PART
Y-SEPARATE ILLUSTRATION

<END>

117-3468 LAMP GP-FLOOD

S/N: CRD1-UP
24 VOLT, SUSPENDED
PART OF 207-1320 LIGHTING GP-FLOOD
AN ATTACHMENT

SMCS-1434 i01017730

NOTE	REF NO	GRAPHIC REF	PART NUMBER	QTY	PART NAME 1 2 3 4 5 6 (PRODUCT LEVEL)	SEE PAGE
	1	1	9X-3463	1	LAMP	
	2	1	144-5282	2	SCREW	
	3	1	144-5283	1	SEAL	
	4	1	144-5284	1	LENS AS	
	5	1	164-7556	1	CLIP	

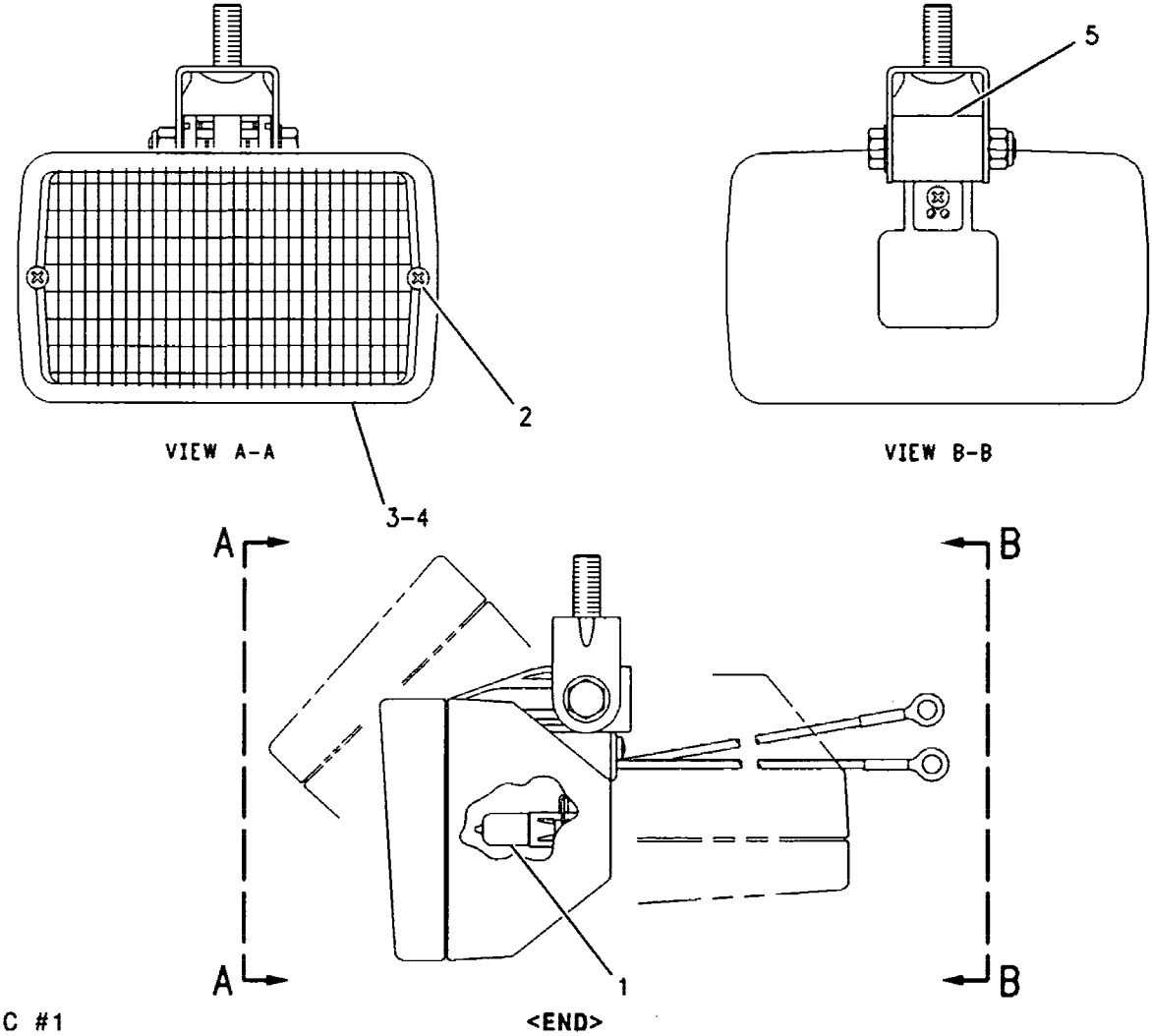

GRAPHIC #1 <END> g00523187

172-9973 LAMP GP-FLOOD

S/N: CRD1-597
24 VOLT, VERTICAL
PART OF 206-7958 LIGHTING GP-FLOOD & SIGNAL

SMCS-1434 i02314608

NOTE	REF NO	GRAPHIC REF	PART NUMBER	QTY	PART NAME 1 2 3 4 5 6 (PRODUCT LEVEL)	SEE PAGE
	1	1	9X-4244	4	SCREW	
	2	1	9X-4174	1	LENS AS (FLOODLIGHT)	
	3	1	9X-4243	1	SEAL	
	4	1	176-7261	1	BODY AS	
	5	1	9X-3463	1	LAMP-HALOGEN (24-VOLT, 65-WATT) (FLOODLIGHT)	
	6	1	102-8802	1	KIT-RECEPTACLE (2-PIN)	
					(INCLUDES RECEPTACLE AS AND WEDGE)	
	7	1	3E-3365	1	WEDGE-RECEPTACLE LOCK (2-PIN)	
	8	1	8T-8729	2	PIN-CONNECTOR	

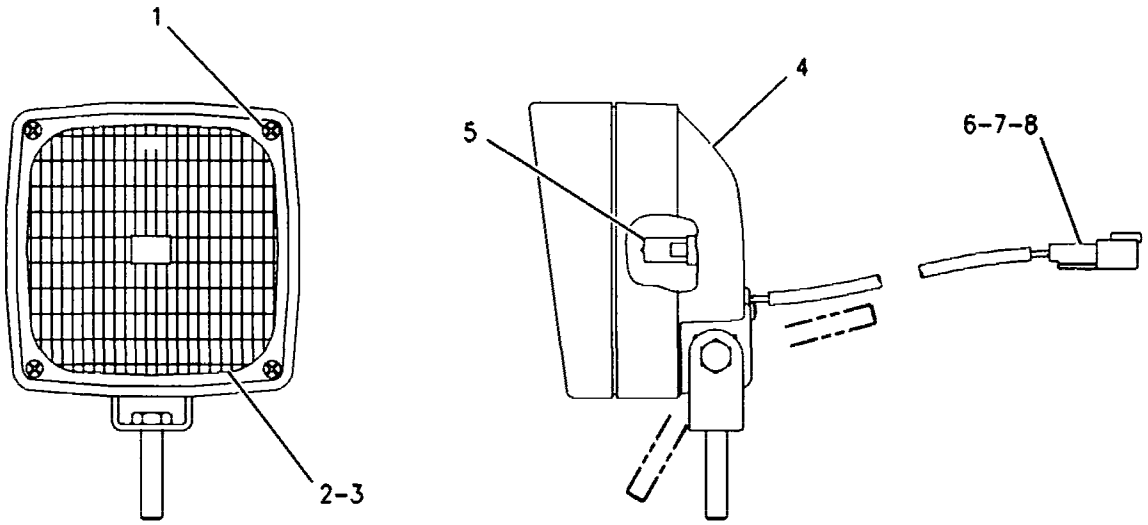

GRAPHIC #1 <END> g00673521

234-4323 LAMP GP-FLOOD–VERTICAL MOUNT

S/N: CRD598-UP

24-VOLT

PART OF 232-3325 LIGHTING GP-FLOOD & SIGNAL

SMCS-1434 i02247190

NOTE	REF NO	GRAPHIC REF	PART NUMBER	QTY	PART NAME 1 2 3 4 5 6 (PRODUCT LEVEL)	SEE PAGE
	1	1	9X-3463	1	LAMP-HALOGEN (24-VOLT, 65-WATT)	
	2	1	9X-4244	2	SCREW	
	3	1	202-6614	1	LENS AS	
	4	1	234-7730	1	BODY AS	
	5	1	164-7556	1	CLIP	
M	6	1	8T-4133	1	NUT (M10X1.5-THD)	
	7	1	234-7731	1	BRACKET AS	

M-METRIC PART

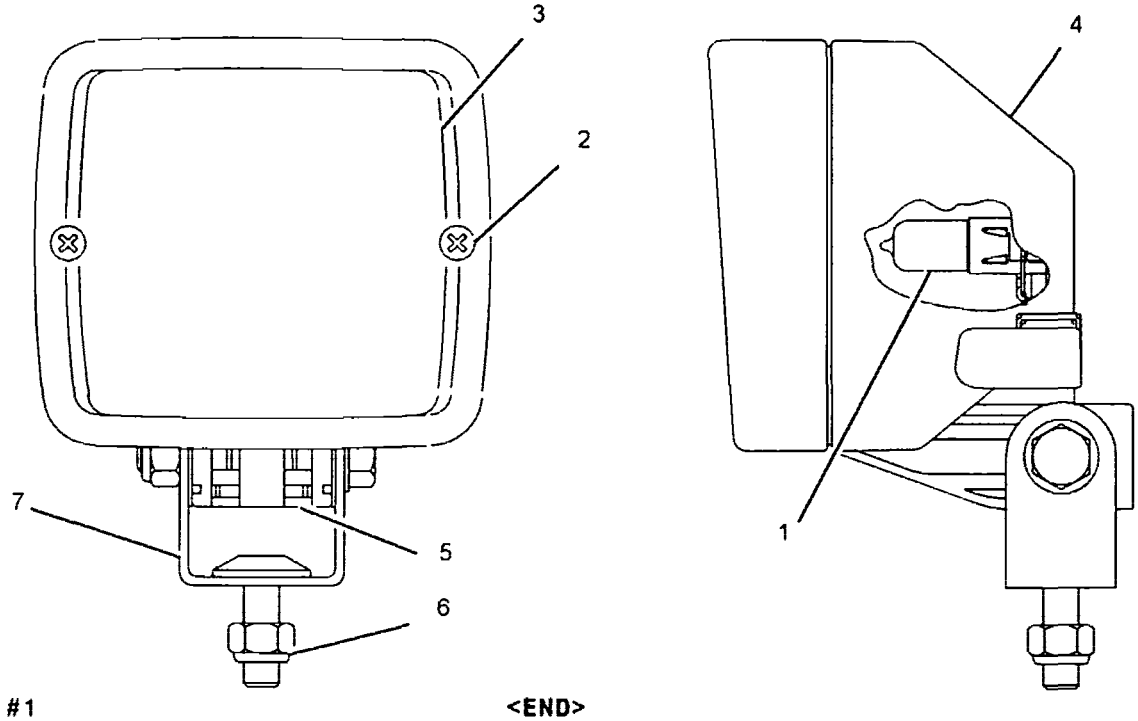

GRAPHIC #1 <END> g01088195

242-3519 LAMP GP-FLOOD

S/N: CRD1-UP
PART OF 207-1320 LIGHTING GP-FLOOD
AN ATTACHMENT

SMCS-1434 i02093754

NOTE	REF NO	GRAPHIC REF	PART NUMBER	QTY	PART NAME 1 2 3 4 5 6 (PRODUCT LEVEL)	SEE PAGE
	1	1	9X-3463	1	LAMP-HALOGEN (24-VOLT, 65-WATT)	
	2	1	144-5282	2	SCREW (7.4X20-MM)	
	3	1	174-9558	1	LENS AS	
	4	1	174-9560	1	SEAL	
	5	1	164-7556	1	CLIP	
	6	1	242-3523	1	BODY AS	

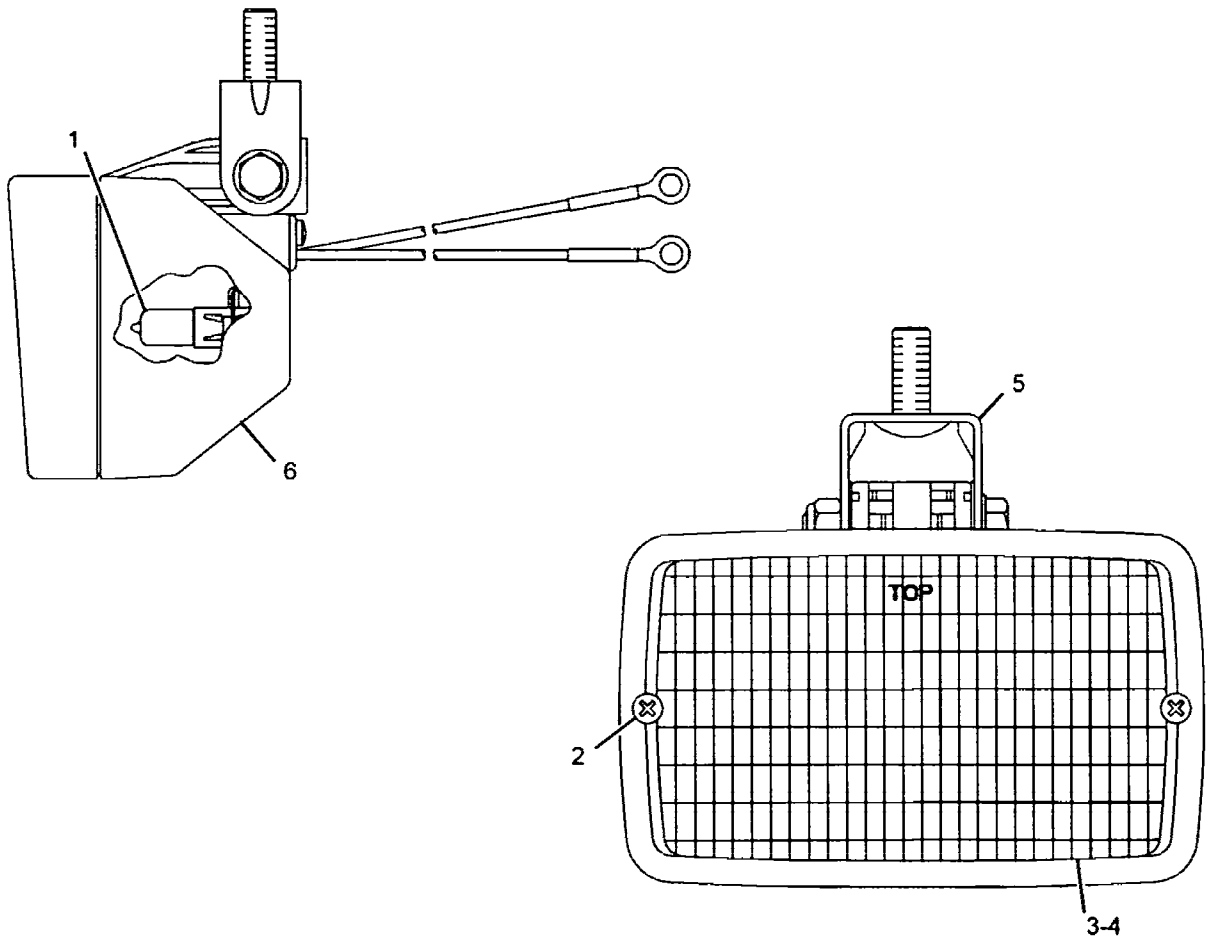

GRAPHIC #1 <END> g01072894

ELECTRICAL AND STARTING SYSTEM

105-4849 LAMP GP-HEAD & SIGNAL-LH

S/N: CRD1-UP
PART OF 215-1888 LIGHTING GP-ROADING
AN ATTACHMENT

SMCS-1429, 1430 i02162971

NOTE	REF NO	GRAPHIC REF	PART NUMBER	QTY	PART NAME 1 2 3 4 5 6 (PRODUCT LEVEL)	SEE PAGE
	1	1	9X-4244	4	SCREW	
	2	1	100-3251	2	SCREW-LENS	
	3	1	9X-9865	1	SEAL	
	4	1	100-3248	1	LENS AS (HEADLIGHT) (HIGH/LOW BEAM)	
	5	1	9X-3465	1	LAMP (24-VOLT, 75/70-WATT) (HIGH/LOW BEAM)	
	6	1	136-3848	1	LENS AS (AMBER) (TURN SIGNAL)	
M	7	1	8T-5005	1	BOLT (M10X1.5X70-MM)	
M	8	1	8T-0389	1	LOCKNUT (M10X1.5-THD)	
	9	1	100-3253	1	SPACER	
	10	1	100-3254	1	SPACER	
	11	1	100-3255	1	WASHER	
	12	1	102-8805	1	KIT-RECEPTACLE (6-PIN) (HEADLAMP) (INCLUDES RECEPTACLE AS AND WEDGE)	
	13	1	186-3735	5	PIN-CONNECTOR (16-GA TO 18-GA)	
	14	1	3E-3383	1	WEDGE-RECEPTACLE LOCK (6-PIN)	
	15	1	8T-8737	1	PLUG-SEAL	
	16	1	100-3245	1	LAMP (24-VOLT) (RUNNING LIGHTS)	
	16A	1	100-3245	1	LAMP (24-VOLT) (TURN SIGNAL)	
	17	1	9X-4493	1	LAMP (24-VOLT, 21-WATT) (TURN SIGNAL)	
	18	1	100-3250	1	LENS (AMBER) (TURN SIGNAL)	
	19	1	136-3845	1	BODY AS-LAMP	

M-METRIC PART

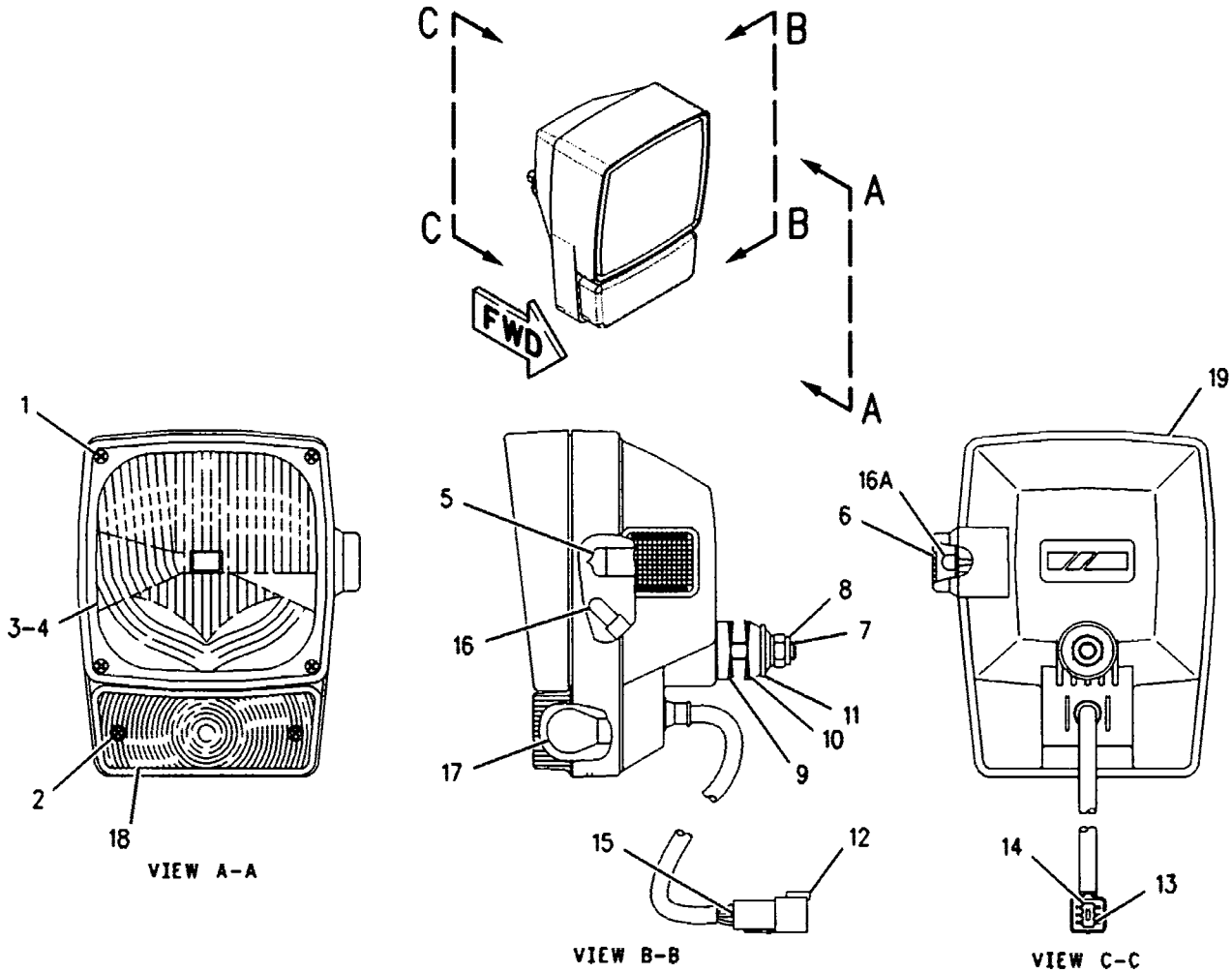

GRAPHIC #1

<END>

g00853119

105-4850 LAMP GP-HEAD & SIGNAL-RH

S/N: CRD1-UP

PART OF 215-1888 LIGHTING GP-ROADING

AN ATTACHMENT

SMCS-1429, 1430 i02293337

NOTE	REF NO	GRAPHIC REF	PART NUMBER	QTY	PART NAME 1 2 3 4 5 6 (PRODUCT LEVEL)	SEE PAGE
	1	1	9X-4244	4	SCREW	
	2	1	100-3251	2	SCREW-LENS	
	3	1	9X-9865	1	SEAL	
	4	1	100-3248	1	LENS AS (HEADLIGHT) (HIGH/LOW BEAM)	
	5	1	9X-3465	1	LAMP (24-VOLT, 75/70-WATT) (HIGH/LOW BEAM)(RH)	
	6	1	136-3848	1	LENS AS (AMBER) (TURN SIGNAL)	
M	7	1	8T-5005	1	BOLT (M10X1.5X70-MM)	
M	8	1	8T-0389	1	LOCKNUT (M10X1.5-THD)	
	9	1	100-3253	1	SPACER	
	10	1	100-3254	1	SPACER	
	11	1	100-3255	1	WASHER	
	12	1	102-8805	1	KIT-RECEPTACLE (6-PIN) (HEADLAMP) (INCUDES RECEPTALCE AS & WEDGE)	
	13	1	186-3735	5	PIN-CONNECTOR (16-GA TO 18-GA)	
	14	1	3E-3383	1	WEDGE-RECEPTACLE LOCK (6-PIN)	
	15	1	8T-8737	1	PLUG-SEAL	
	16	1	100-3245	1	LAMP (24-VOLT) (RUNNING LAMP)	
	16A	1	100-3245	1	LAMP (24-VOLT) (TURN SIGNAL)	
	17	1	9X-4493	1	LAMP (24-VOLT, 21-WATT) (TURN SIGNAL)	
	18	1	100-3250	1	LENS (AMBER) (TURN SIGNAL)	
	19	1	136-3846	1	BODY AS-LAMP	

M-METRIC PART

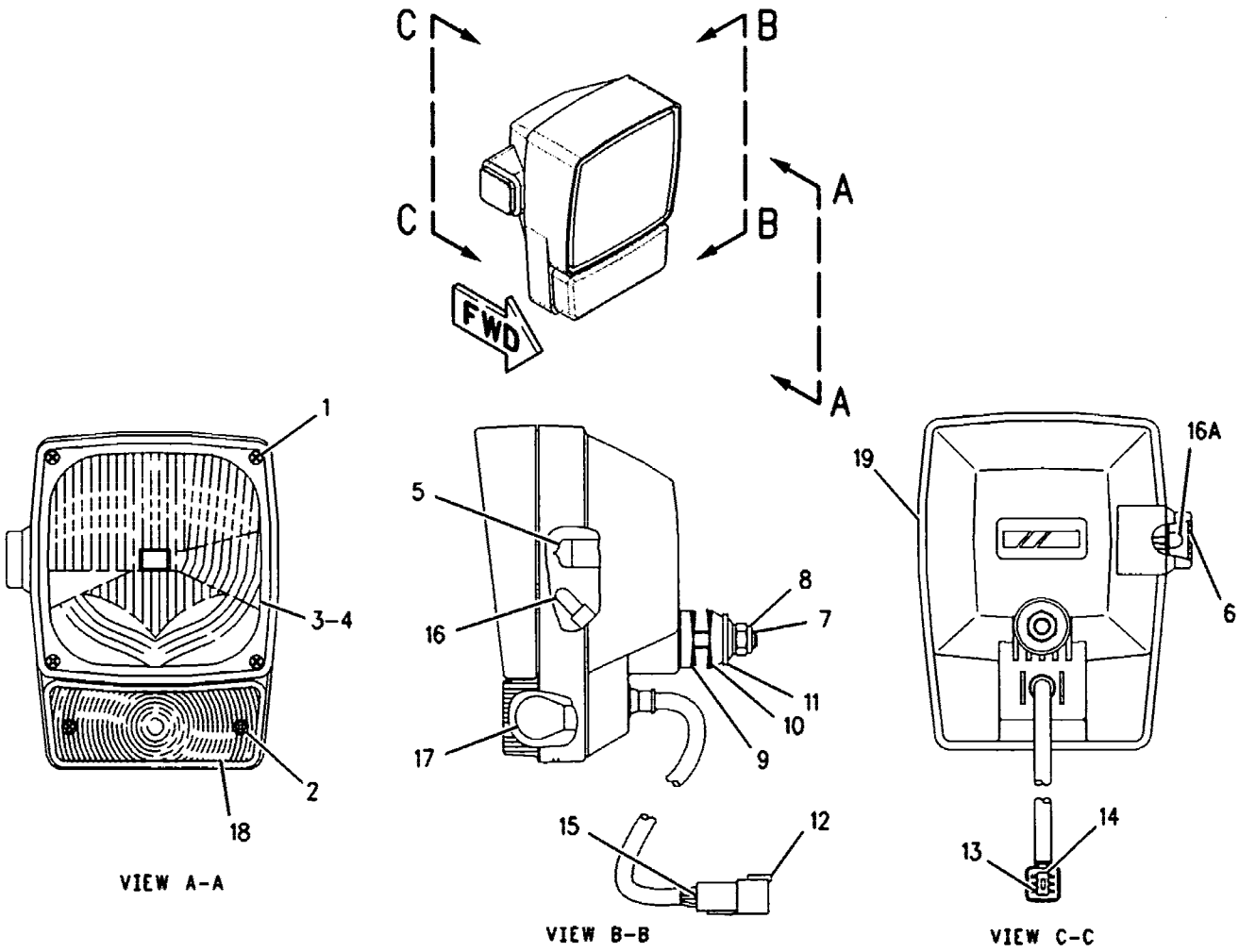

GRAPHIC #1

<END>

g00853116

3E-6466 LAMP GP-SIGNAL–FRONT TURN

S/N: CRD1-UP
24 VOLT
PART OF 204-0724 LIGHTING GP-SIGNAL
AN ATTACHMENT

SMCS-1430 102314630

NOTE	REF NO	GRAPHIC REF	PART NUMBER	QTY	PART NAME 1 2 3 4 5 6 (PRODUCT LEVEL)	SEE PAGE
	1	1	9X-3066	1	LENS-AMBER (SIGNAL)	
	2	1	9X-4493	1	LAMP (24-VOLT, 21-WATT) (SIGNAL)	
	3	1	102-8802	1	KIT-RECEPTACLE (2-PIN)	
					(INCLUDES RECEPTACLE AS & WEDGE)	
	4	1	8T-8729	2	PIN-CONNECTOR	

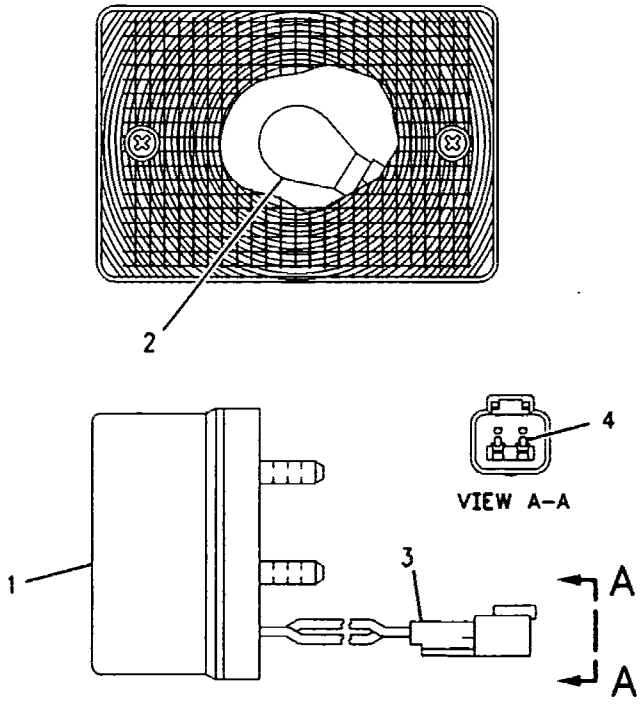

GRAPHIC #1 <END> g00728141

135-0426 LAMP GP-SIGNAL–STOP, TAIL

S/N: CRD1-UP

24-VOLT

PART OF 206-7958, 232-3325 LIGHTING GP-FLOOD & SIGNAL

SMCS-1430 i02266998

NOTE	REF NO	GRAPHIC REF	PART NUMBER	QTY	PART NAME 1 2 3 4 5 6 (PRODUCT LEVEL)	SEE PAGE
	1	1	102-8803	1	KIT-RECEPTACLE (3-PIN)	
					(INCLUDES RECEPTACLE AS & WEDGE)	
	2	1	3E-3371	1	WEDGE-RECEPTACLE LOCK (3-PIN)	
	3	1	186-3735	3	PIN-CONNECTOR (16-GA TO 18-GA)	

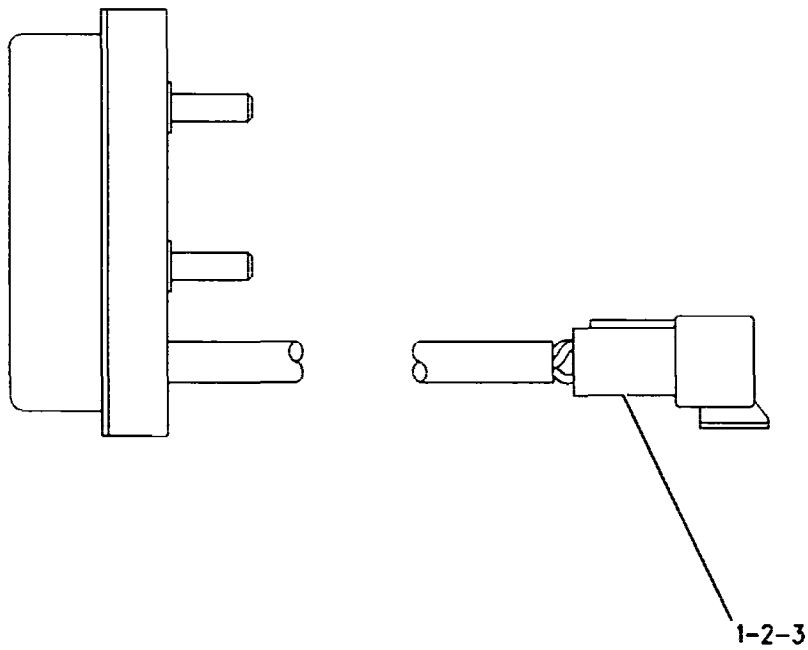

GRAPHIC #1 <END> g00305543

162-2073 LAMP GP-SIGNAL

S/N: CRD1-UP
24V
PART OF 215-1888 LIGHTING GP-ROADING, 204-0724 LIGHTING GP-SIGNAL
AN ATTACHMENT

SMCS-1430 i01318688

NOTE	REF NO	GRAPHIC REF	PART NUMBER	QTY	PART NAME 1 2 3 4 5 6 (PRODUCT LEVEL)	SEE PAGE
	1	1	3E-3365	1	WEDGE-RECEPTACLE LOCK (2-PIN)	
	2	1	8T-8729	2	PIN-CONNECTOR	
	3	1	162-2074	1	LENS-AMBER	
	4	1	9X-4493	1	LAMP (24-VOLT, 21-WATT)	
	5	1	102-8802	1	KIT-RECEPTACLE (2-PIN)	
					(INCLUDES RECEPTACLE AS AND WEDGE)	

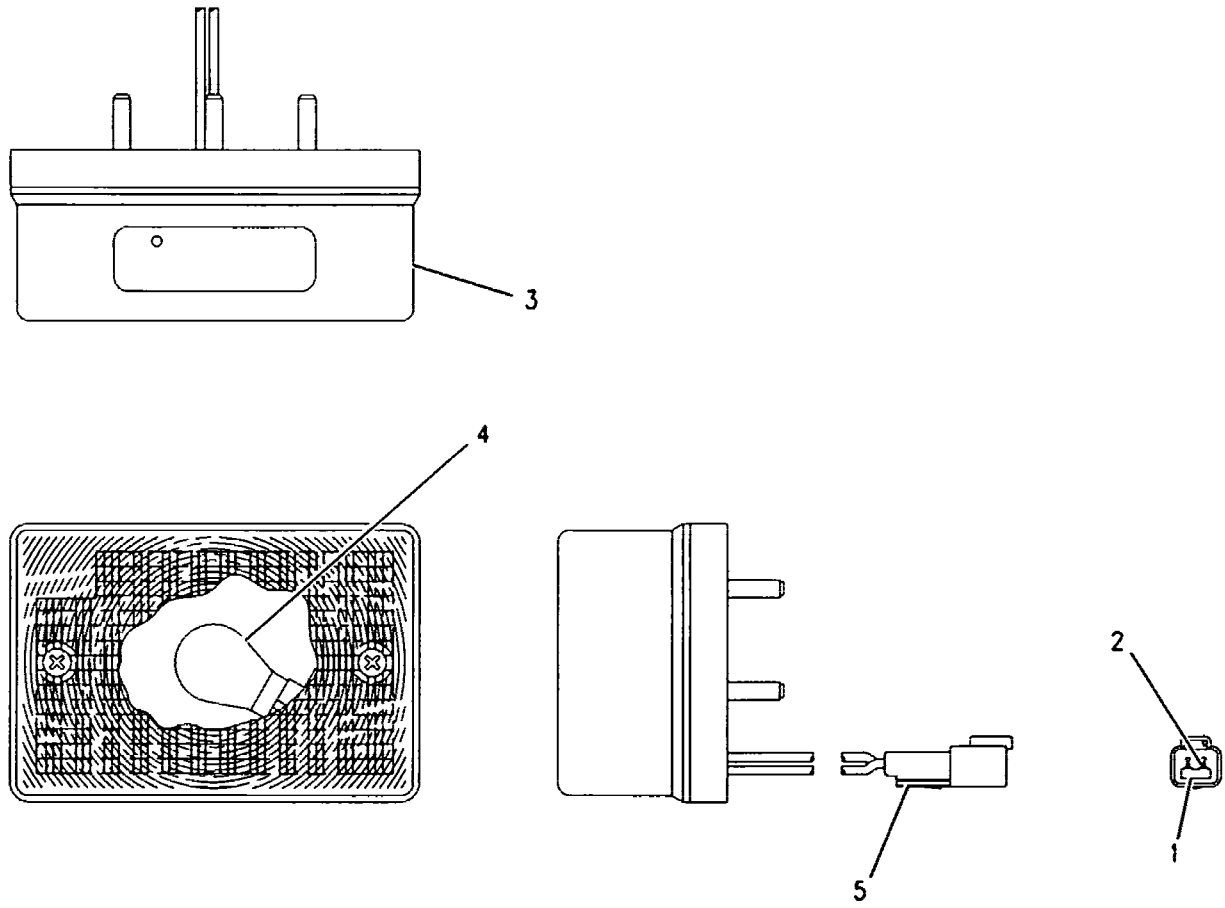

GRAPHIC #1 <END> g00517617

108-1029 LAMP GP-WARNING BEACON

S/N: CRD1-UP
24 VOLT. AMBER
PART OF 107-6142, 218-8836, 218-8837 LIGHTING GP-WARNING BEACON
AN ATTACHMENT

SMCS-1431 i02331273

NOTE	REF NO	GRAPHIC REF	PART NUMBER	QTY	PART NAME 1 2 3 4 5 6 (PRODUCT LEVEL)	SEE PAGE
	1	1	9X-8121	1	LENS (AMBER, WARNING BEACON)	
	2	1	9X-7849	1	LAMP (24-VOLT, 70-WATT) (WARNING BEACON)	
	3	1	9X-8139	1	BELT-DRIVE (WARNING BEACON)	
	4	1	9R-7958	1	CORD AS	
	5	1	9R-7942	1	PLUG AS	

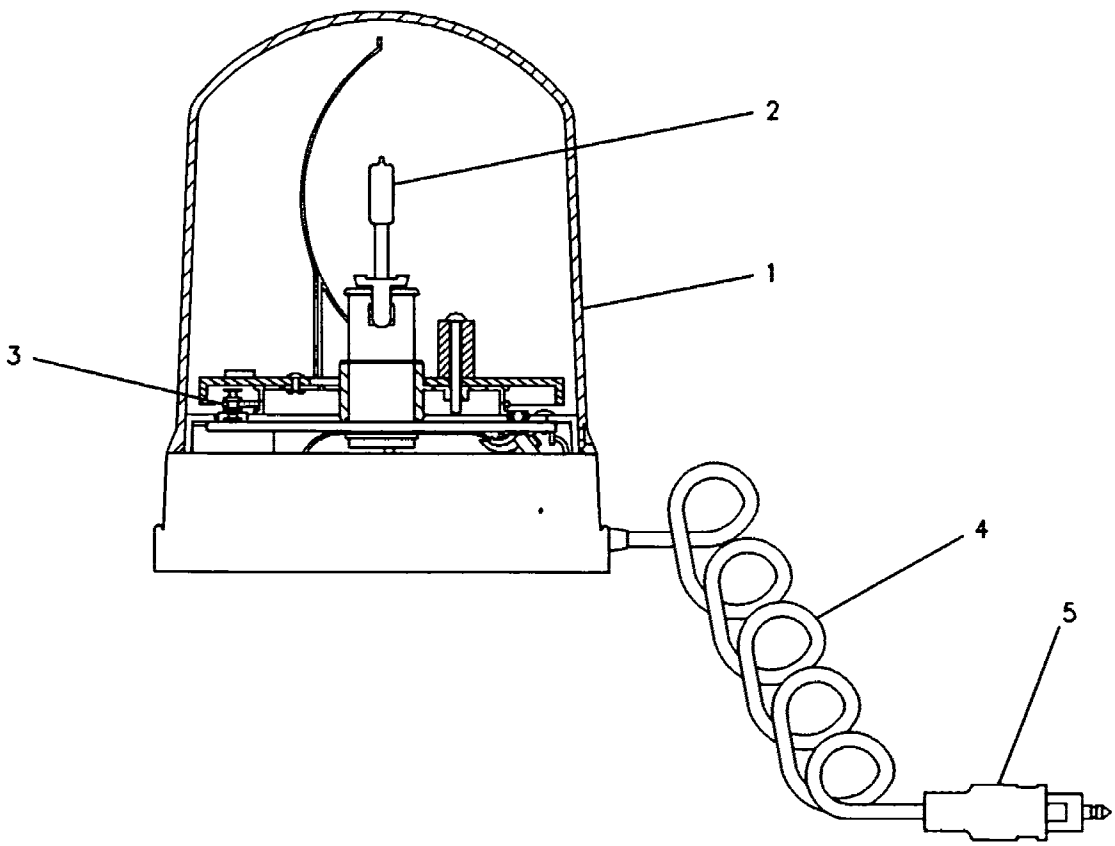

GRAPHIC #1 <END> g00131297

205-5678 LIGHTING AR-AUXILIARY

S/N: CRD1-UP
AN ATTACHMENT

SMCS-1429 i01679852

NOTE	PART NUMBER	QTY	PART NAME 1 2 3 4 5 6 (PRODUCT LEVEL)	SEE PAGE
Y	206-7345	1	ALTERNATOR AR-CHARGING	161
Y	207-1320	1	LIGHTING GP-FLOOD	214

Y-SEPARATE ILLUSTRATION

<END>

212-1529 LIGHTING AR-ROADING

S/N: CRD1-UP
CANNOT BE USED WITH 205-5682 LIGHTING AR-SIGNAL, 212-1531 LIGHTING AR-ROADING, VEHICLES EQUIPPED WITH WASTE AR, VEHICLES EQUIPPED WITH SCRAP AR
AN ATTACHMENT

SMCS-1429 i01674222

NOTE	PART NUMBER	QTY	PART NAME 1 2 3 4 5 6 (PRODUCT LEVEL)	SEE PAGE
Y	215-1888	1	LIGHTING GP-ROADING	223
	212-1547	1	REFLECTOR GP	
	195-2274	6	FILM	
	216-3903	1	SWITCH GP-DIMMER	
Y	207-1321	1	SWITCH GP-SIGNAL	277
Y	215-1889	1	WIRING GP-LIGHTING (ROADING)	344

Y-SEPARATE ILLUSTRATION

<END>

212-1531 LIGHTING AR-ROADING

S/N: CRD1-UP
CANNOT BE USED WITH 205-5682 LIGHTING AR-SIGNAL, 212-1529 LIGHTING AR-ROADING, VEHICLES EQUIPPED WITH WASTE AR, VEHICLES EQUIPPED WITH SCRAP AR
AN ATTACHMENT

SMCS-1429 i01683522

NOTE	PART NUMBER	QTY	PART NAME 1 2 3 4 5 6 (PRODUCT LEVEL)	SEE PAGE
Y	215-1888	1	LIGHTING GP-ROADING	223
	212-1547	1	REFLECTOR GP	
	195-2274	6	FILM-REFLECTOR (YELLOW)	
	216-3903	1	SWITCH GP-DIMMER	
	111-7899	1	GASKET	
Y	216-3902	1	SWITCH GP-SIGNAL (EU)	277
Y	215-1889	1	WIRING GP-LIGHTING (ROADING)	344

Y-SEPARATE ILLUSTRATION

<END>

205-5682 LIGHTING AR-SIGNAL

S/N: CRD1-UP
AN ATTACHMENT

SMCS-1430 i01674197

NOTE	PART NUMBER	QTY	PART NAME 1 2 3 4 5 6 (PRODUCT LEVEL)	SEE PAGE
Y	*204-0724*	1	LIGHTING GP-SIGNAL	224
Y	*207-1321*	1	SWITCH GP-SIGNAL	277

Y-SEPARATE ILLUSTRATION

<END>

207-1320 LIGHTING GP-FLOOD

S/N: CRD1-UP
PART OF 205-5678 LIGHTING AR-AUXILIARY
AN ATTACHMENT
TYPE 1

SMCS-1434 i01866067

NOTE	PART NUMBER	QTY	PART NAME 1 2 3 4 5 6 (PRODUCT LEVEL)	SEE PAGE
M	**8T-4189**	4	BOLT (M8X1.25X20-MM)	
Y	**117-3468**	2	LAMP GP-FLOOD (24-VOLT, SUSPENDED MOUNT)	201
	109-7041	2	LAMP GP-FLOOD (24-VOLT)	
			(EACH INCLUDES)	
	9X-3463	1	LAMP-HALOGEN (24-VOLT, 65-WATT)	
	142-5789	4	SCREW	
M	**5C-2890**	4	NUT (M6X1-THD)	
M	**8T-4133**	2	NUT (M10X1.5-THD)	
	115-1559	2	PLATE	
	8T-4121	2	WASHER-HARD (11X21X2.5-MM THK)	
	8T-4224	4	WASHER-HARD (8.8X16X2-MM THK)	
	5P-6039	5	WRAP-SPIRAL	

M-METRIC PART
Y-SEPARATE ILLUSTRATION

<END>

ELECTRICAL AND STARTING SYSTEM

207-1320 LIGHTING GP-FLOOD

S/N: CRD1-UP
PART OF 205-5678 LIGHTING AR-AUXILIARY
AN ATTACHMENT
TYPE 2

SMCS-1434 i02093794

NOTE	REF NO	GRAPHIC REF	PART NUMBER	QTY	PART NAME 1 2 3 4 5 6 (PRODUCT LEVEL)	SEE PAGE
	1	1	109-7041	2	LAMP GP-FLOOD (24-VOLT)	
					(EACH INCLUDES)	
		1	9X-3463	1	LAMP-HALOGEN (24-VOLT, 65-WATT)	
		1	142-5789	4	SCREW	
	2	1	115-1559	2	PLATE	
CY	3	1	242-3519	2	LAMP GP-FLOOD (24-VOLT, SUSPENDED MOUNT) (24-VOLT)	204
M	4	1	5C-2890	4	NUT (M6X1-THD)	
	5	1	8T-4121	2	WASHER-HARD (11X21X2.5-MM THK)	
M	6	1	8T-4133	2	NUT (M10X1.5-THD)	
M	7	1	8T-4189	4	BOLT (M8X1.25X20-MM)	
	8	1	8T-4224	4	WASHER-HARD (8.8X16X2-MM THK)	
D	9	1	5P-6039		WRAP-SPIRAL (.5-M)	

C-CHANGE FROM PREVIOUS TYPE
D-ORDER BY THE METER
M-METRIC PART
Y-SEPARATE ILLUSTRATION

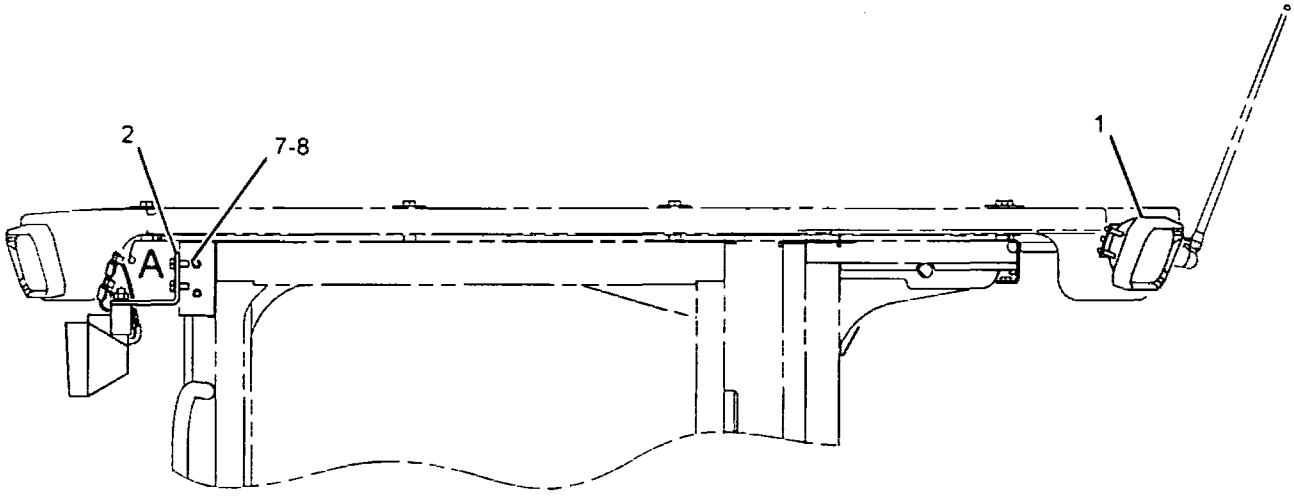

LEFT SIDE VIEW

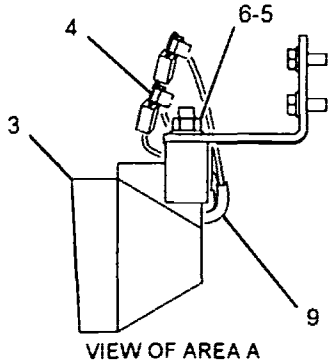

VIEW OF AREA A

GRAPHIC #1 **<END>** g01075630

207-7937 LIGHTING GP-FLOOD–INCLUDES RADIO ANTENNA

S/N: CRD1-UP

PART OF 204-0176, 230-1257 ROPS GP-ENCLOSED, 205-7387 ROPS GP-OPEN
ALSO AN ATTACHMENT

SMCS-1434 i02125804

NOTE	REF NO	GRAPHIC REF	PART NUMBER	QTY	PART NAME 1 2 3 4 5 6 (PRODUCT LEVEL)	SEE PAGE
	1	1	8E-1118	1	ANTENNA AS	
	2	1	9R-7941	1	SOCKET AS	
		1	9R-7980	1	COVER	
	3	1	109-7041	2	LAMP GP-FLOOD (24-VOLT)	
					(EACH INCLUDES)	
		1	9X-3463	1	LAMP-HALOGEN (24-VOLT, 65-WATT)	
		1	142-5789	4	SCREW	
	4	1	109-8981	1	CABLE AS-COAXIAL	
	5	1	111-0157	1	HARNESS AS-LIGHTING (FLOODLIGHT)	
		1	102-8804	1	KIT-RECEPTACLE (4-PIN)	
					(KIT INCLUDES RECEPTACLE AS & WEDGE)	
	6	1	114-6604	16	NUT-SPEED	
	7	1	119-0781	1	ADHESIVE	
	8	1	9K-5635	8	SCREW-TAPPING (8-18X1-IN)	
	9	1	164-5509	1	BLOCK	
	10	1	180-5100	1	ROOF	
	11	1	208-2429	2	PLATE	
M	12	1	5C-2890	4	NUT (M6X1-THD)	
M	13	1	6V-7357	4	BOLT (M6X1X25-MM)	
M	14	1	8T-4137	12	BOLT (M10X1.5X20-MM)	
	15	1	8T-4205	8	WASHER-HARD (7.2X14.5X2-MM THK)	
	16	1	8T-4226	12	WASHER-PLATED (10.5X45X3-MM THK)	
BD	17	1	5P-5927		SEAL	
BD	18	1	5P-5639		SEAL	

B-USE AS REQUIRED
D-ORDER BY THE METER
M-METRIC PART

207-7937 LIGHTING GP-FLOOD *(contd.)* i02125804

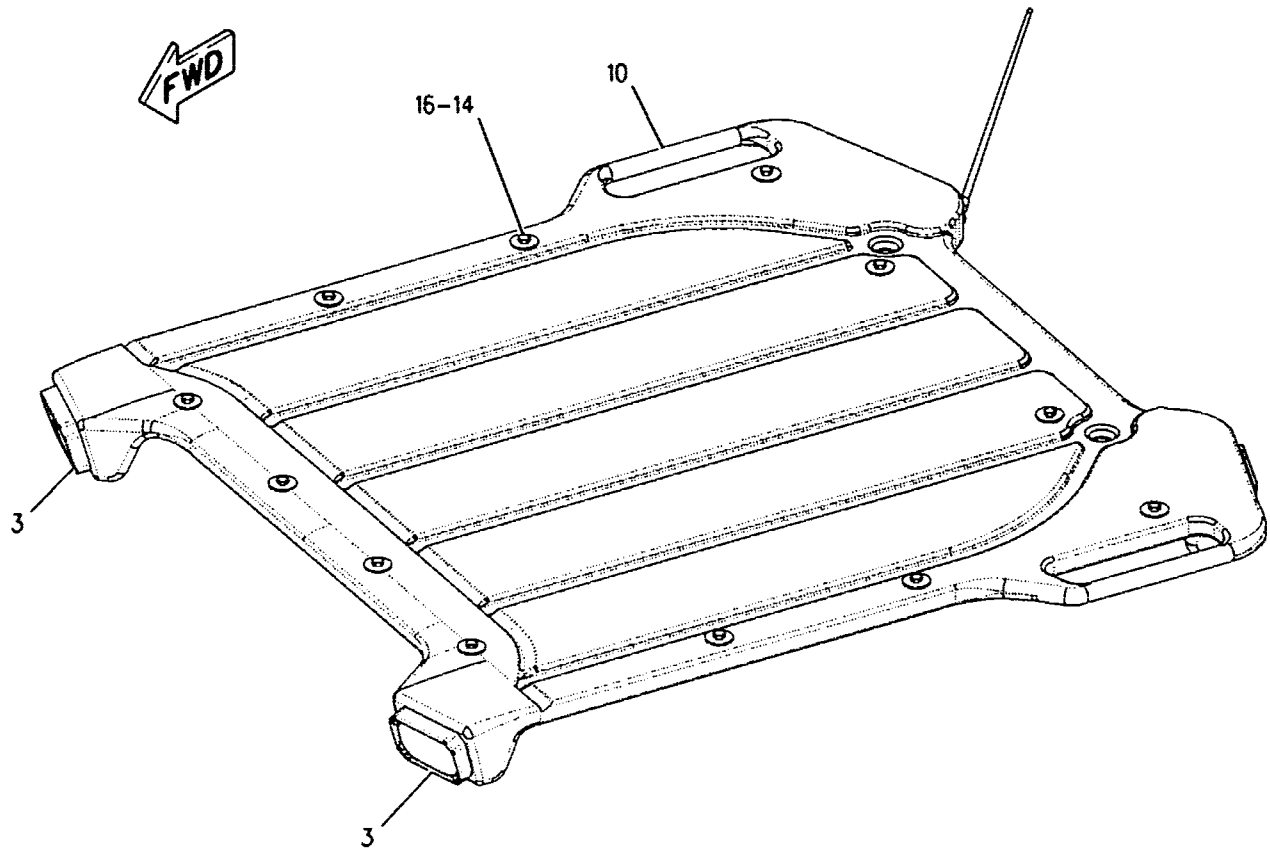

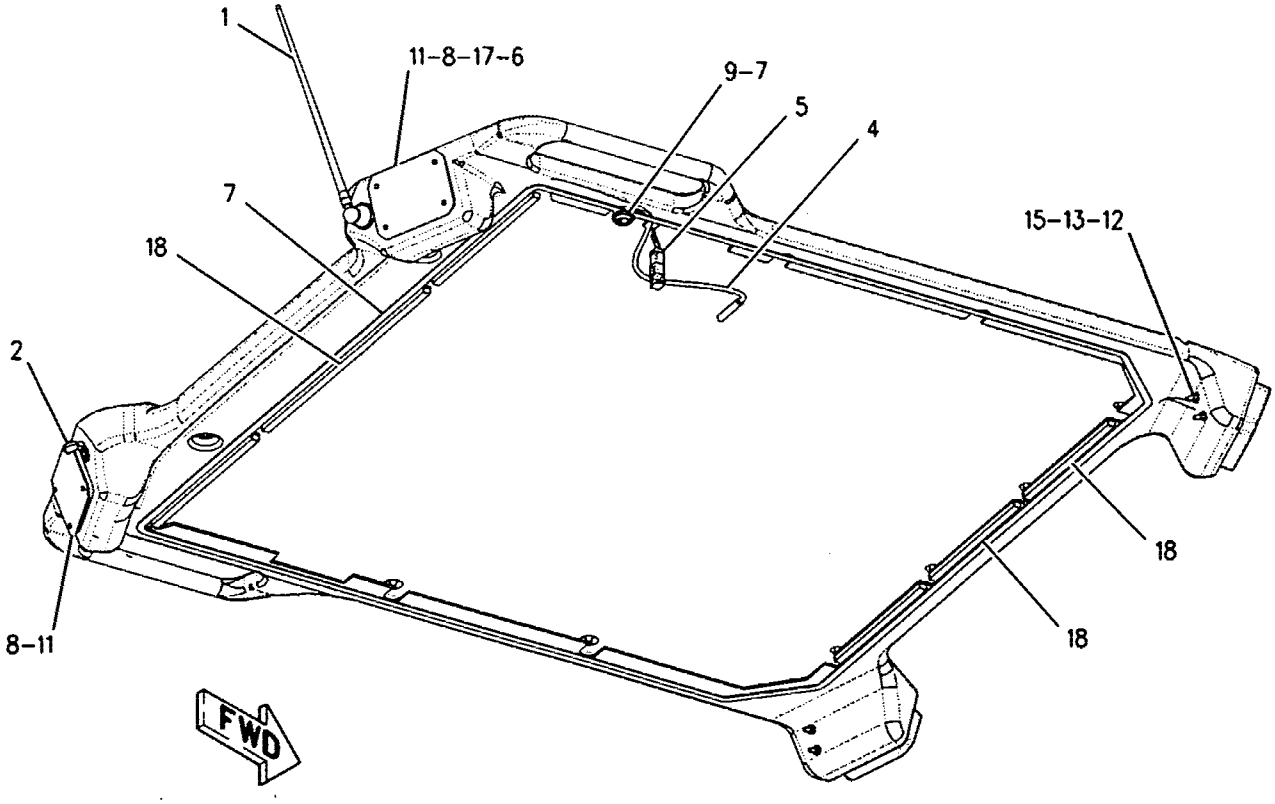

GRAPHIC #1 <END> g00951338

ELECTRICAL AND STARTING SYSTEM

219-0057 LIGHTING GP-FLOOD

S/N: CRD1-UP
PART OF 206-9249 ROPS GP-OPEN
AN ATTACHMENT

SMCS-1434 i01860558

NOTE	REF NO	GRAPHIC REF	PART NUMBER	QTY	PART NAME 1 2 3 4 5 6 (PRODUCT LEVEL)	SEE PAGE
	1	1	9R-7941	1	SOCKET AS	
	2	1	109-7041	2	LAMP GP-FLOOD (24-VOLT)	
	3	1	111-0157	1	HARNESS AS-LIGHTING (FLOODLIGHT)	
		1	102-8804	1	KIT-RECEPTACLE (4-PIN)	
	4	1	114-6604	16	NUT-SPEED	
	5	1	142-5789	8	SCREW	
	6	1	180-5100	1	ROOF	
	7	1	208-2429	2	PLATE	
M	8	1	5C-2890	4	NUT (M6X1-THD)	
	9	1	5P-5774	1	PLUG	
M	10	1	6V-7357	4	BOLT (M6X1X25-MM)	
M	11	1	8T-4137	12	BOLT (M10X1.5X20-MM)	
	12	1	8T-4205	8	WASHER-HARD (7.2X14.5X2-MM THK)	
	13	1	8T-4226	12	WASHER-PLATED (10.5X45X3-MM THK)	
D	14	1	5P-5927		SEAL (.1M)	
D	15	1	5P-5639		SEAL (2M)	

D-ORDER BY THE METER
M-METRIC PART

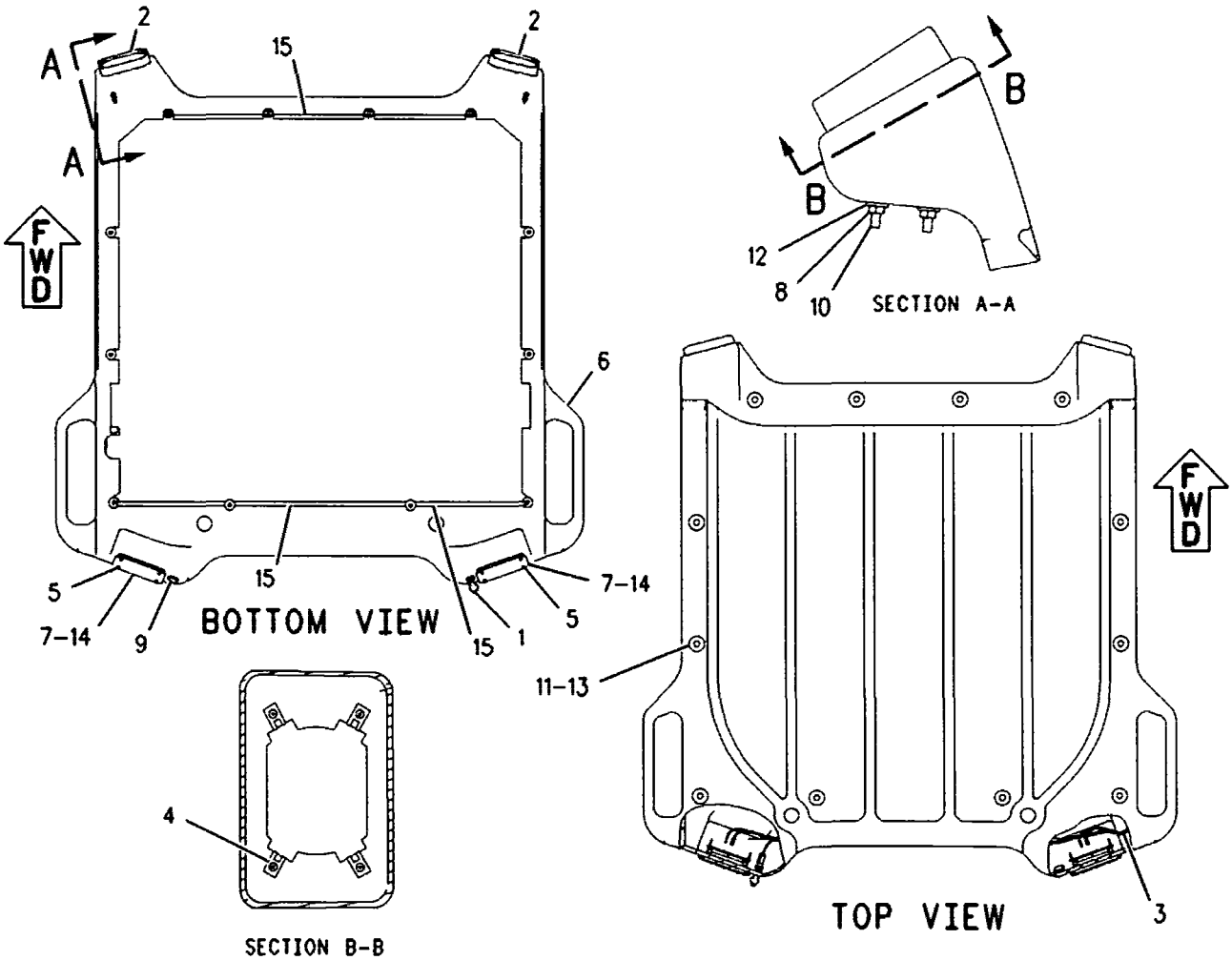

GRAPHIC #1 <END> g00949242

206-7958 LIGHTING GP-FLOOD & SIGNAL

S/N: CRD1-597

PART OF 199-2817 ELECTRICAL AR

SMCS-1430, 1434 i02229756

NOTE	REF NO	GRAPHIC REF	PART NUMBER	QTY	PART NAME 1 2 3 4 5 6 (PRODUCT LEVEL)	SEE PAGE
	1	1	213-1787	2	SHEET	
Y	2	1	135-0426	2	LAMP GP-SIGNAL (24-VOLT, STOP, TAIL)	210
Y	3	1	172-9973	4	LAMP GP-FLOOD (24-VOLT, VERTICAL MOUNT)	202
	4	1	184-3650	1	BRACKET AS (RH)	
	5	1	184-3651	1	BRACKET AS (LH)	
	6	1	202-0436	1	HOUSING AS-REAR (RH)	
	7	1	202-0437	1	HOUSING AS-REAR (LH)	
	8	1	202-0440	2	SHEET	
	9	1	130-5300	11	CLIP	
	10	1	3P-9554	2	GROMMET	
M	11	1	5C-2890	6	NUT (M6X1-THD)	
M	12	1	5C-9553	8	BOLT (M6X1X16-MM)	
	13	1	8T-4121	14	WASHER-HARD (11X21X2.5-MM THK)	
M	14	1	8T-4133	4	NUT (M10X1.5-THD)	
M	15	1	8T-4136	4	BOLT (M10X1.5X25-MM)	
M	16	1	8T-4137	6	BOLT (M10X1.5X20-MM)	
M	17	1	8T-4179	4	BOLT (M12X1.75X20-MM)	
	18	1	8T-4223	4	WASHER-HARD (13.5X25.5X3-MM THK)	
	19	1	9X-8256	14	WASHER (6.6X12X2-MM THK)	

M-METRIC PART
Y-SEPARATE ILLUSTRATION

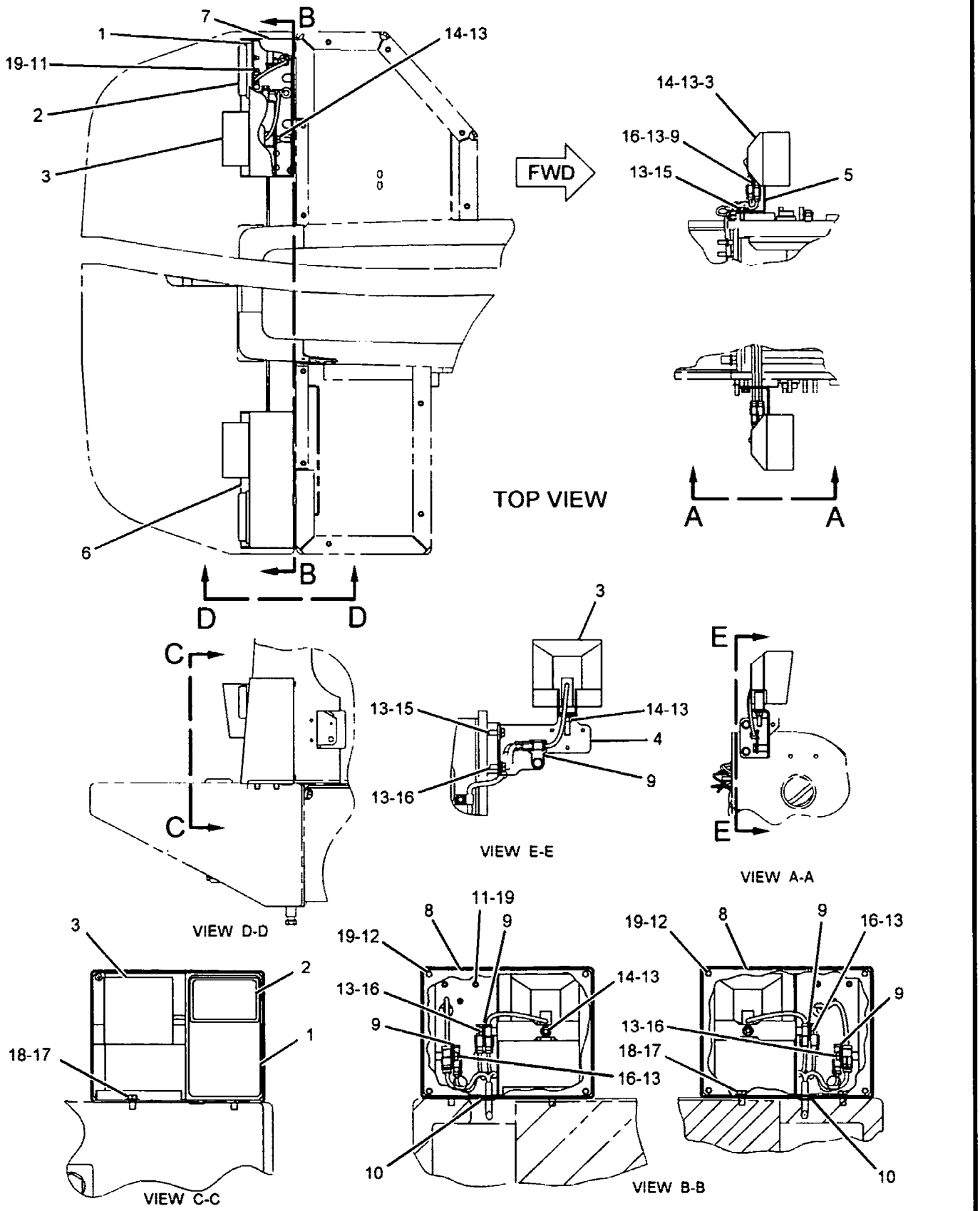

GRAPHIC #1 **<END>** g01124828

232-3325 LIGHTING GP-FLOOD & SIGNAL

S/N: CRD598-UP

PART OF 199-2817 ELECTRICAL AR

SMCS-1430, 1434 i01979387

NOTE	REF NO	GRAPHIC REF	PART NUMBER	QTY	PART NAME 1 2 3 4 5 6 (PRODUCT LEVEL)	SEE PAGE
Y	1	1	135-0426	2	LAMP GP-SIGNAL (24-VOLT, STOP, TAIL)	210
	2	1	184-3650	1	BRACKET AS	
M		1	8T-3851	1	BOSS-WELD (M10X1.5X17.5-MM)	
	3	1	184-3651	1	BRACKET AS	
M		1	8T-3851	1	BOSS-WELD (M10X1.5X17.5-MM)	
	4	1	202-0440	2	SHEET	
	5	1	213-1787	2	SHEET	
	6	1	232-3363	1	HOUSING AS (RH)	
M		1	6V-9632	4	NUT-WELD (M6X1-THD)	
M		1	7X-0752	1	BOSS-WELD (M10X1.5X65-MM OAL)	
M		1	8T-3490	3	NUT-WELD (M10X1.5-THD)	
M		1	8T-3851	1	BOSS-WELD (M10X1.5X17.5-MM)	
	7	1	232-3364	1	HOUSING AS (LH)	
M		1	6V-9632	4	NUT-WELD (M6X1-THD)	
M		1	7X-0752	1	BOSS-WELD (M10X1.5X65-MM OAL)	
M		1	8T-3851	1	BOSS-WELD (M10X1.5X17.5-MM)	
Y	8	1	234-4323	4	LAMP GP-FLOOD (24-VOLT)	203
	9	1	130-5300	7	CLIP	
	10	1	3P-9554	2	GROMMET	
M	11	1	5C-2890	6	NUT (M6X1-THD)	
M	12	1	5C-9553	8	BOLT (M6X1X16-MM)	
	13	1	8T-4121	13	WASHER-HARD (11X21X2.5-MM THK)	
M	14	1	8T-4133	4	NUT (M10X1.5-THD)	
M	15	1	8T-4136	4	BOLT (M10X1.5X25-MM)	
M	16	1	8T-4137	5	BOLT (M10X1.5X20-MM)	
M	17	1	8T-4179	4	BOLT (M12X1.75X20-MM)	
	18	1	8T-4223	4	WASHER-HARD (13.5X25.5X3-MM THK)	
	19	1	9X-8256	14	WASHER (6.6X12X2-MM THK)	

M-METRIC PART
Y-SEPARATE ILLUSTRATION

232-3325 LIGHTING GP-FLOOD & SIGNAL *(contd.)* i01979387

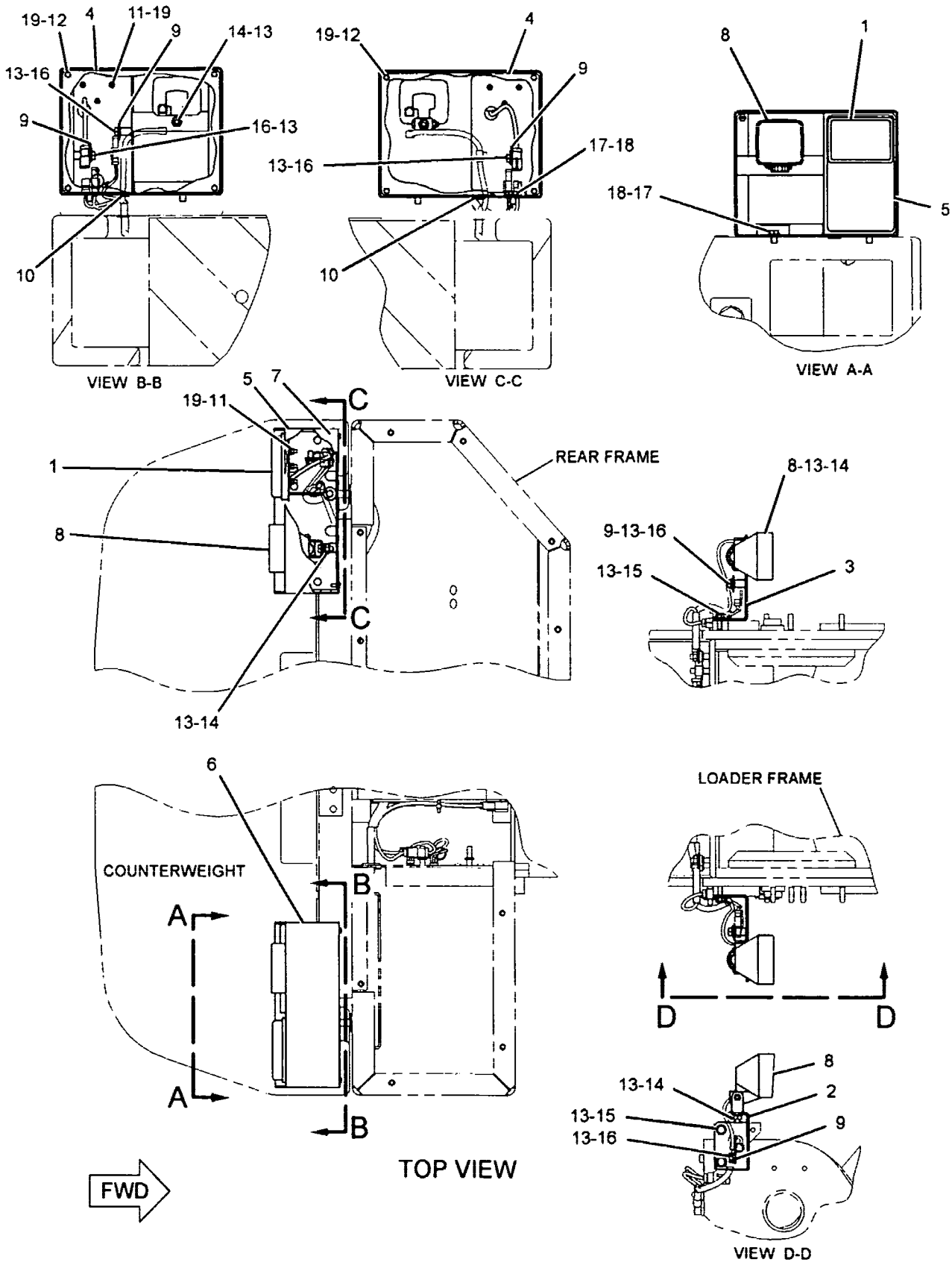

GRAPHIC #1 **<END>** g01058642

215-1888 LIGHTING GP-ROADING

S/N: CRD1-UP

PART OF 212-1529, 212-1531 LIGHTING AR-ROADING

AN ATTACHMENT

SMCS-1429 i01876968

NOTE	REF NO	GRAPHIC REF	PART NUMBER	QTY	PART NAME 1 2 3 4 5 6 (PRODUCT LEVEL)	SEE PAGE
	1	1	8C-0538	2	GROMMET	
Y	2	1	105-4849	1	LAMP GP-HEAD & SIGNAL (LH)	205
Y	3	1	105-4850	1	LAMP GP-HEAD & SIGNAL (RH)	207
	4	1	111-4013	2	GROMMET	
Y	5	1	162-2073	2	LAMP GP-SIGNAL (24-VOLT)	211
	6	1	215-1879	1	BRACKET AS	
	7	1	217-7331	1	BRACKET AS	
M	8	1	5C-2890	6	NUT (M6X1-THD)	
	9	1	8T-4121	2	WASHER-HARD (11X21X2.5-MM THK)	
M	10	1	8T-4136	2	BOLT (M10X1.5X25-MM)	
	11	1	9X-8256	6	WASHER (6.6X12X2-MM THK)	

M-METRIC PART
Y-SEPARATE ILLUSTRATION

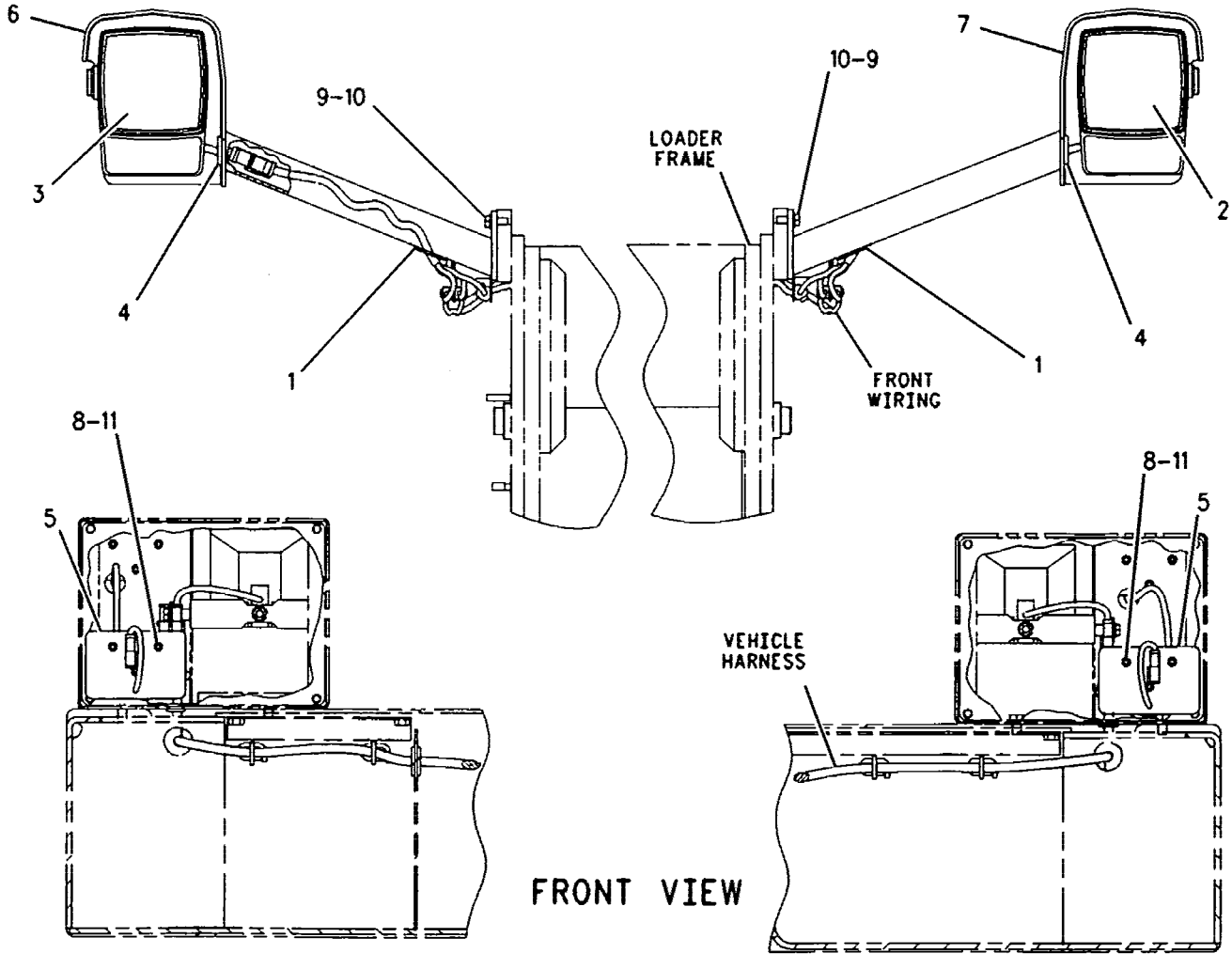

GRAPHIC #1 <END> g00918272

204-0724 LIGHTING GP-SIGNAL

S/N: CRD1-UP

PART OF 205-5682 LIGHTING AR-SIGNAL

AN ATTACHMENT

SMCS-1430 101676367

NOTE	REF NO	GRAPHIC REF	PART NUMBER	QTY	PART NAME 1 2 3 4 5 6 (PRODUCT LEVEL)	SEE PAGE
Y	1	1	3E-6466	2	LAMP GP-SIGNAL (24-VOLT) (FRONT TURN)	209
Y	2	1	162-2073	2	LAMP GP-SIGNAL (24-VOLT) (REAR TURN)	211
M	3	1	5C-2890	12	NUT (M6X1-THD)	
	4	1	9X-8256	12	WASHER (6.6X12X2-MM THK)	

M-METRIC PART
Y-SEPARATE ILLUSTRATION

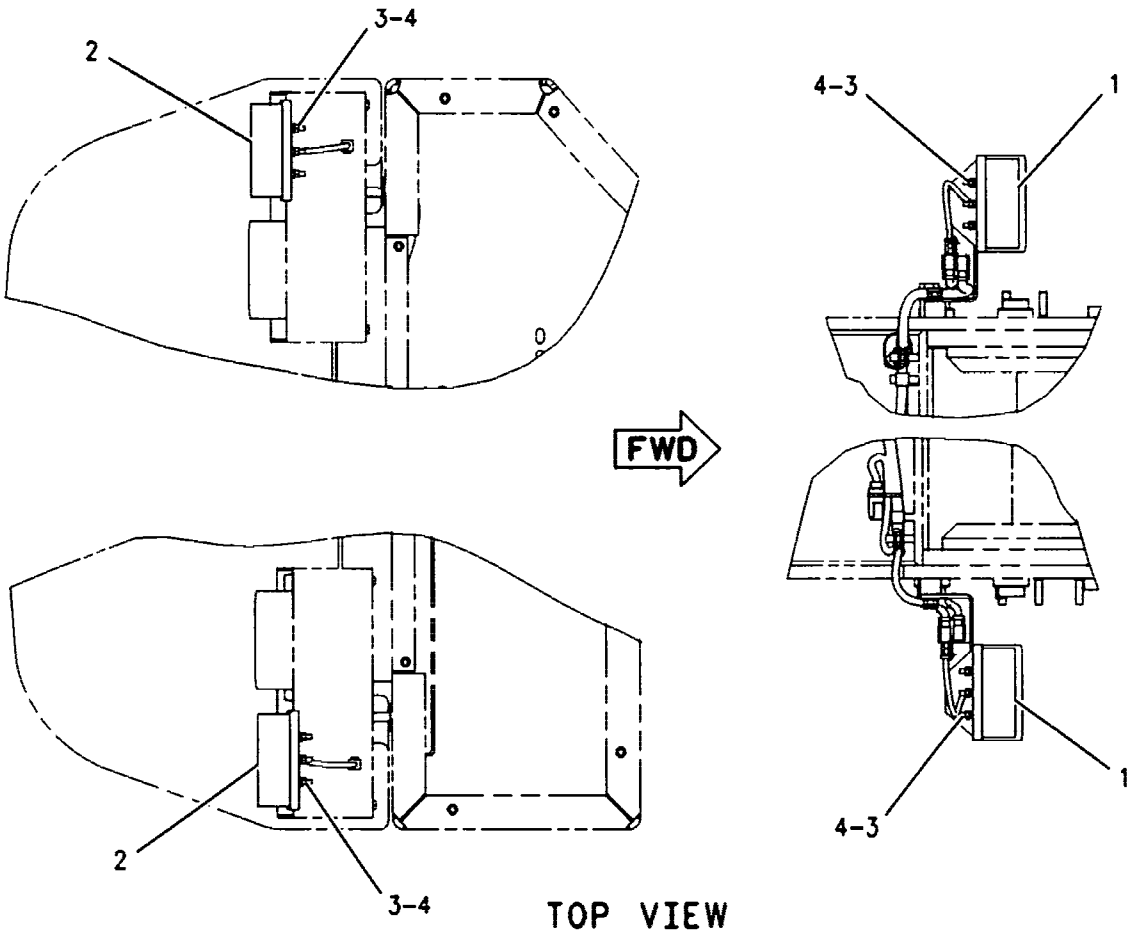

GRAPHIC #1 <END> g00813833

107-6142 LIGHTING GP-WARNING BEACON

S/N: CRD1-UP
AN ATTACHMENT

SMCS-1431 i01288207

NOTE	REF NO	GRAPHIC REF	PART NUMBER	QTY	PART NAME 1 2 3 4 5 6 (PRODUCT LEVEL)	SEE PAGE
	1	1	6V-6635	4	SCREW-PAN HEAD	
Y	2	1	108-1029	1	LAMP GP-WARNING BEACON (24-VOLT, AMBER)	212
	3	1	129-0336	1	PLATE	
	4	1	107-6033	1	SWITCH AS-WARNING BEACON	
		1	111-7899	1	GASKET	

Y-SEPARATE ILLUSTRATION

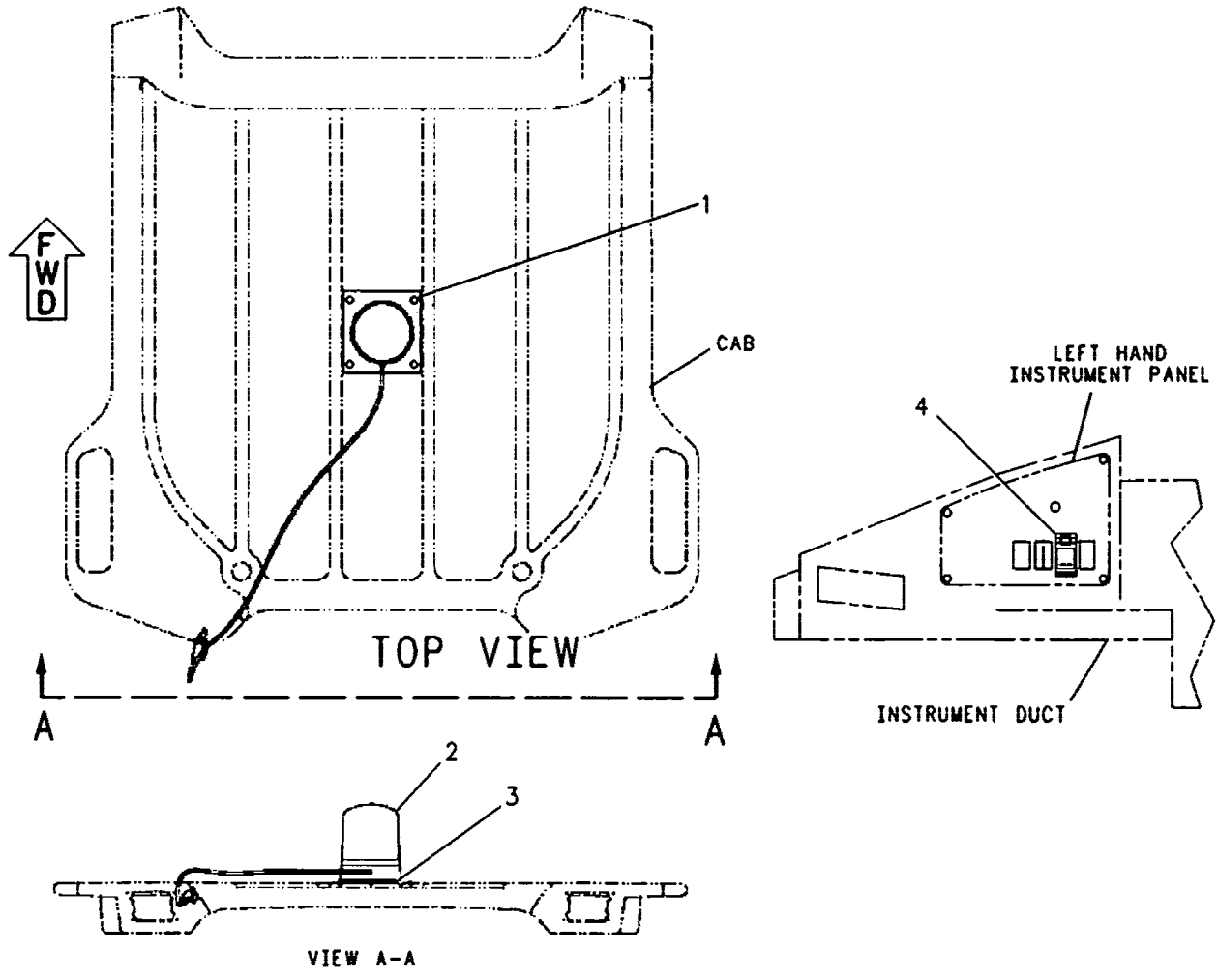

GRAPHIC #1 <END> g00132033

218-8836 LIGHTING GP-WARNING BEACON

S/N: CRD1-UP
AN ATTACHMENT

SMCS-1431 i02230412

NOTE	REF NO	GRAPHIC REF	PART NUMBER	QTY	PART NAME 1 2 3 4 5 6 (PRODUCT LEVEL)	SEE PAGE
Y	1	1	108-1029	1	LAMP GP-WARNING BEACON (24-VOLT, AMBER)	212
	2	1	129-0336	1	PLATE	
	3	1	195-0925	1	SWITCH AS-ROCKER (WARNING BEACON)	
		1	111-7899	1	GASKET	
	4	1	6V-6635	4	SCREW-PAN HEAD	

Y-SEPARATE ILLUSTRATION

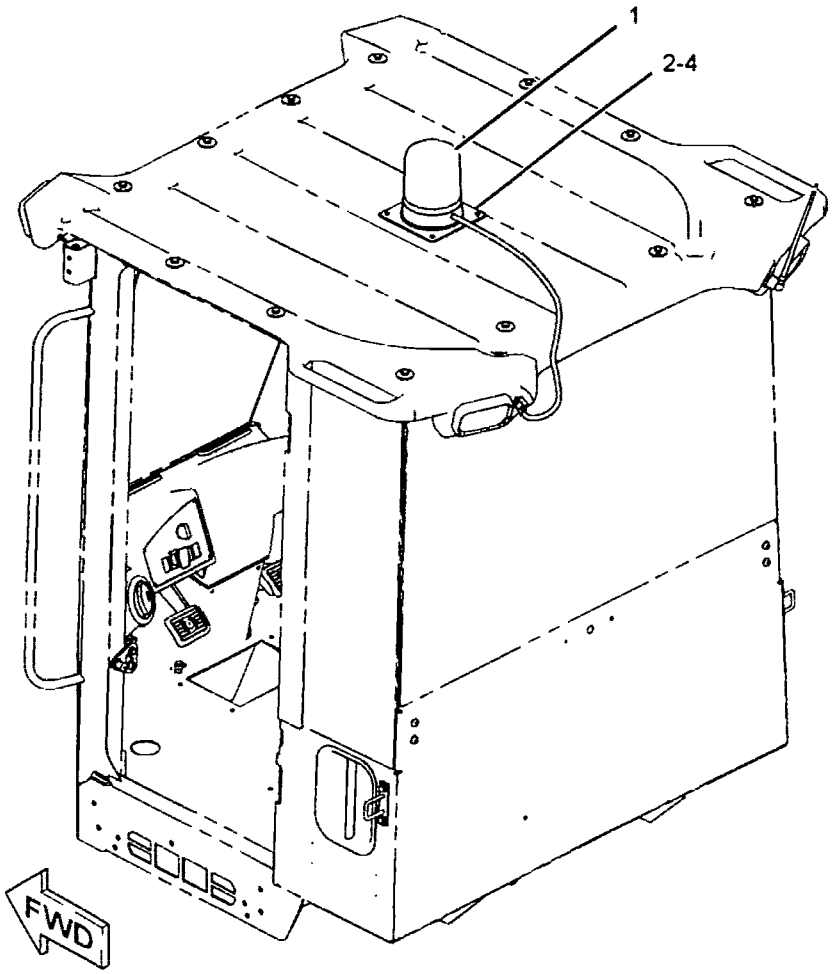

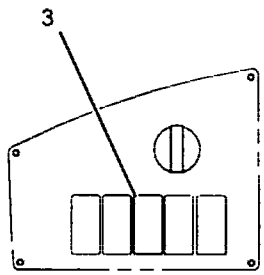

LH SWITCH PANEL
(924, 928, IT28G, 930G)

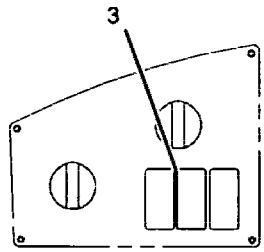

LH SWITCH PANEL
(938, IT38G11

GRAPHIC #1 <END> g01125022

218-8837 LIGHTING GP-WARNING BEACON

S/N: CRD1-UP
AN ATTACHMENT

SMCS-1431 i02230413

NOTE	REF NO	GRAPHIC REF	PART NUMBER	QTY	PART NAME 1 2 3 4 5 6 (PRODUCT LEVEL)	SEE PAGE
Y	1	1	108-1029	1	LAMP GP-WARNING BEACON (24-VOLT, AMBER)	212
	2	1	129-0337	1	PLATE AS	
	3	1	195-0925	1	SWITCH AS-ROCKER (WARNING BEACON)	
		1	111-7899	1	GASKET	
	4	1	6V-6635	4	SCREW-PAN HEAD	

Y-SEPARATE ILLUSTRATION

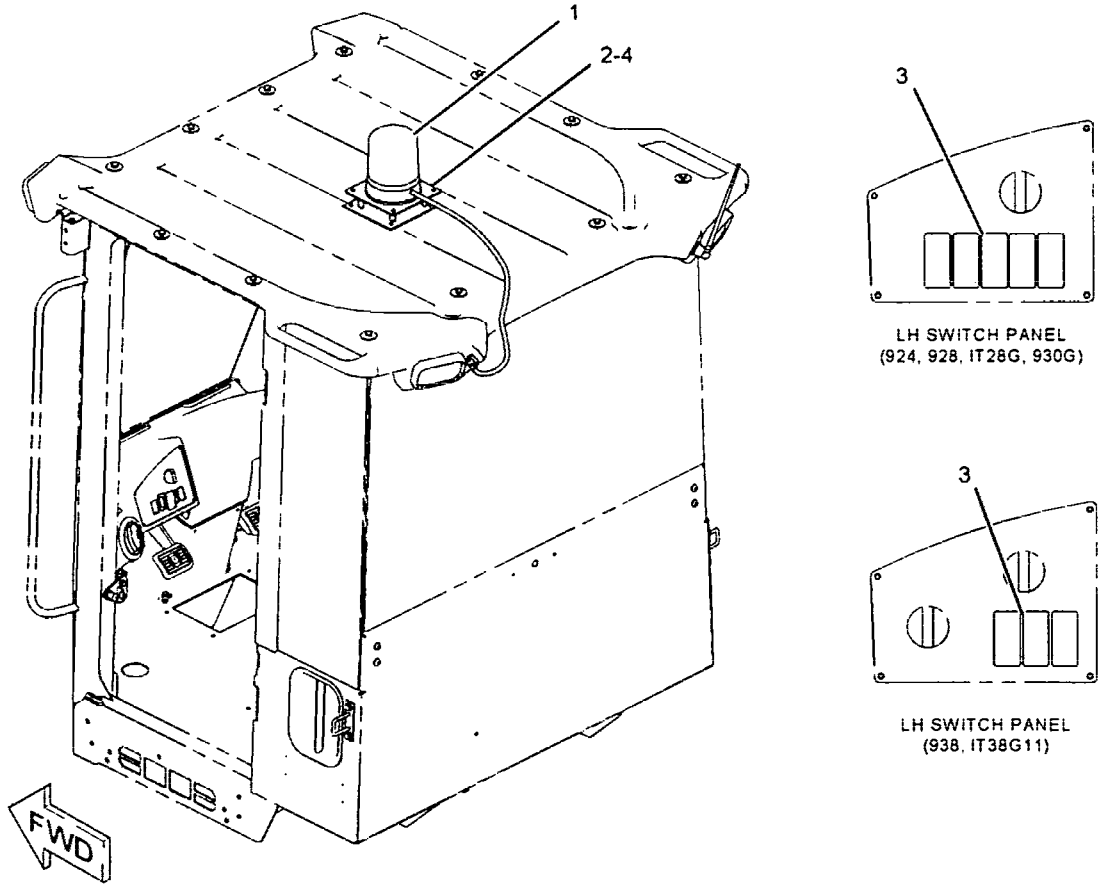

GRAPHIC #1 <END> g01125026

ELECTRICAL AND STARTING SYSTEM

202-3245 PANEL GP-CIRCUIT BREAKER

S/N: CRD1-284

PART OF 201-8415 WIRING GP-MACHINE

SMCS-1417, 1420 **i01877847**

NOTE	REF NO	GRAPHIC REF	PART NUMBER	QTY	PART NAME 1 2 3 4 5 6 (PRODUCT LEVEL)	SEE PAGE
	1	1	7V-9275	1	STRAP	
	2	1	125-1302	1	SWITCH GP-MAGNETIC (24-VOLT) (START RELAY)	
		1	102-8802	1	KIT-RECEPTACLE (2-PIN)	
		1	3E-3365	1	WEDGE-RECEPTACLE LOCK (2-PIN)	
M		1	5C-2890	2	NUT (M6X1-THD)	
		1	8T-8729	2	PIN-CONNECTOR	
		1	9X-1813	16	SLEEVE	
	3	1	149-2612	1	RELAY AS (24-VOLT) (HOOD TILT MOTOR)	
		1	8T-8729	2	PIN-CONNECTOR	
		1	102-8805	1	KIT-RECEPTACLE (6-PIN)	
Y	4	1	167-0138	1	SWITCH GP-MAGNETIC (24-VOLT) (MAIN RELAY)	270
		1	4F-2294	2	NUT-JAM (5/16-24-THD)	
		1	6V-8186	2	NUT-FULL (5/16-24-THD)	
		1	155-2261	1	WEDGE-PLUG LOCK (2-PIN)	
		1	155-2270	1	KIT-CONNECTING PLUG (2-PIN)	
	5	1	193-8552	1	FILM-CIRCUIT BREAKER	
	6	1	193-8557	1	FILM-CIRCUIT BREAKER	
	7	1	193-8571	1	PLATE	
	8	1	201-3399	1	WIRE AS	
	9	1	204-7450	1	WIRE AS	
	10	1	204-7451	1	WIRE AS	
	11	1	204-7552	1	BOX AS	
M		1	8T-3490	3	NUT-WELD (M10X1.5-THD)	
		1	7T-1099	2	LINK	
M		1	8T-4935	1	BOSS-WELD (M10X1.5X45-MM OAL)	
		1	9R-2821	4	BOSS (M10X15-MM)	
	12	1	130-5300	3	CLIP	
	13	1	144-2257	1	PLATE	
	14	1	180-7451	2	WASHER-HARD (5.3X8.8X2-MM THK)	
	15	1	3T-2662	1	CIRCUIT BREAKER AS (15-AMPERE) (RUNNING LIGHTS)	
		1	6V-8376	2	SCREW-MACHINE (8-32X0.25-IN)	
		1	9B-7233	2	LOCKWASHER	
	16	1	4B-2049	2	NUT (10-32-THD)	
	17	1	4B-4274	12	WASHER (5.5X13X1.2-MM THK)	
	18	1	5L-4507	6	SCREW-MACHINE (10-32X0.875-IN)	
	19	1	5M-6668	6	SCREW-MACHINE (8-32X0.75-IN)	
	20	1	6T-3643	1	CIRCUIT BREAKER AS (15-AMPERE) (ENGINE ECM)	
		1	6V-8376	2	SCREW-MACHINE (8-32X0.25-IN)	
		1	9B-7233	2	LOCKWASHER	
	21	1	6T-3644	1	CIRCUIT BREAKER GP (20-AMPERE) (UNSWITCHED BATTERY POWER TO CAB)	
		1	6V-8376	2	SCREW-MACHINE (8-32X0.25-IN)	
		1	9B-7233	2	LOCKWASHER	
M	22	1	6V-8225	8	NUT (M6X1-THD)	
	23	1	8T-4121	3	WASHER-HARD (11X21X2.5-MM THK)	
M	24	1	8T-4137	3	BOLT (M10X1.5X20-MM)	
	25	1	8T-4205	8	WASHER-HARD (7.2X14.5X2-MM THK)	
	26	1	9H-1958	1	CIRCUIT BREAKER GP (20-AMPERE) (HOOD TILT ACTUATOR)	
		1	6V-8376	2	SCREW-MACHINE (8-32X0.25-IN)	
		1	9B-7233	2	LOCKWASHER	
	27	1	9S-4693	1	CIRCUIT BREAKER GP (80-AMPERE) (MAIN)	
		1	0S-1570	2	BOLT (1/4-28X0.625-IN)	
		1	1H-3244	2	LOCKWASHER	
		1	7X-3182	2	BOLT (1/4-28X0.5-IN)	

202-3245 PANEL GP-CIRCUIT BREAKER *(contd.)* i01877847

NOTE	REF NO	GRAPHIC REF	PART NUMBER	QTY	PART NAME 1 2 3 4 5 6 (PRODUCT LEVEL)	SEE PAGE
		1	8T-4205	2	WASHER-HARD (7.2X14.5X2-MM THK)	
	28	1	9S-4693	1	CIRCUIT BREAKER GP (80-AMPERE) (ALTERNATOR)	
		1	0S-1570	2	BOLT (1/4-28X0.625-IN)	
		1	1H-3244	2	LOCKWASHER	
		1	7X-3182	2	BOLT (1/4-28X0.5-IN)	
		1	8T-4205	2	WASHER-HARD (7.2X14.5X2-MM THK)	
M	29	1	9X-2041	4	SCREW-TRUSS HEAD	

M-METRIC PART
Y-SEPARATE ILLUSTRATION

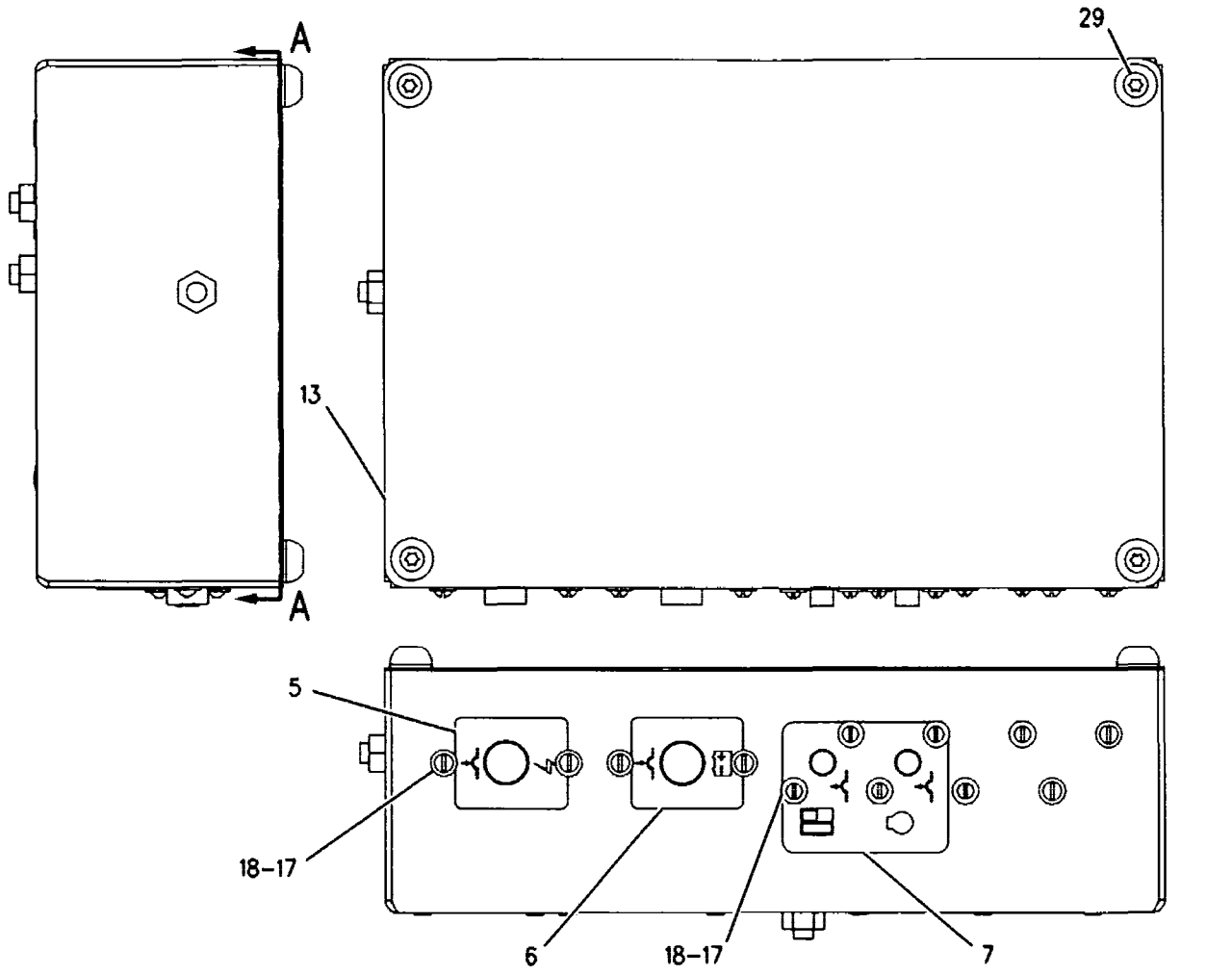

GRAPHIC #1 **<END>** g00951215

202-3245 PANEL GP-CIRCUIT BREAKER

S/N: CRD285-1005

PART OF 201-8415 WIRING GP-MACHINE

SMCS-1417, 1420 i01986574

NOTE	REF NO	GRAPHIC REF	PART NUMBER	QTY	PART NAME 1 2 3 4 5 6 (PRODUCT LEVEL)	SEE PAGE
	1	1	7V-9275	1	STRAP	
Y	2	1	125-1302	1	SWITCH GP-MAGNETIC (24-VOLT) (START RELAY)	269
	3	1	149-2612	1	RELAY AS (24-VOLT) (HOOD TILT MOTOR)	
		1	8T-8729	2	PIN-CONNECTOR	
		1	102-8805	1	KIT-RECEPTACLE (6-PIN)	
Y	4	1	167-0138	1	SWITCH GP-MAGNETIC (24-VOLT) (MAIN RELAY)	270
	5	1	193-8552	1	FILM-CIRCUIT BREAKER	
	6	1	193-8557	1	FILM-CIRCUIT BREAKER	
	7	1	193-8571	1	PLATE (BREAKER)	
	8	1	201-3399	1	WIRE AS	
	9	1	204-7450	1	WIRE AS	
	10	1	204-7451	1	WIRE AS	
	11	1	204-7552	1	BOX AS	
M		1	8T-3490	3	NUT-WELD (M10X1.5-THD)	
		1	7T-1099	2	LINK	
M		1	8T-4935	1	BOSS-WELD (M10X1.5X45-MM OAL)	
		1	9R-2821	4	BOSS (M10X15-MM)	
	12	1	130-5300	3	CLIP	
	13	1	144-2257	1	PLATE	
C	14	1	200-8577	1	CIRCUIT BREAKER AS (20-AMPERE) (HOOD TILT ACTUATOR)	
		1	6V-8376	2	SCREW-MACHINE (8-32X0.25-IN)	
		1	9B-7233	2	LOCKWASHER	
	15	1	3T-2662	1	CIRCUIT BREAKER AS (15-AMPERE) (RUNNING LIGHTS)	
		1	6V-8376	2	SCREW-MACHINE (8-32X0.25-IN)	
		1	9B-7233	2	LOCKWASHER	
	16	1	4B-4274	12	WASHER (5.5X13X1.2-MM THK)	
C	17	1	5L-4507	4	SCREW-MACHINE (10-32X0.875-IN)	
C	18	1	5M-6668	8	SCREW-MACHINE (8-32X0.75-IN)	
	19	1	6T-3643	1	CIRCUIT BREAKER AS (15-AMPERE) (ENGINE ECM)	
		1	6V-8376	2	SCREW-MACHINE (8-32X0.25-IN)	
		1	9B-7233	2	LOCKWASHER	
	20	1	6T-3644	1	CIRCUIT BREAKER GP (20-AMPERE) (UNSWITCHED BATTERY POWER TO CAB)	
		1	6V-8376	2	SCREW-MACHINE (8-32X0.25-IN)	
		1	9B-7233	2	LOCKWASHER	
M	21	1	6V-8225	8	NUT (M6X1-THD)	
	22	1	8T-4121	3	WASHER-HARD (11X21X2.5-MM THK)	
M	23	1	8T-4137	3	BOLT (M10X1.5X20-MM)	
	24	1	8T-4205	8	WASHER-HARD (7.2X14.5X2-MM THK)	
	25	1	9S-4693	1	CIRCUIT BREAKER GP (80-AMPERE) (MAIN)	
		1	0S-1570	2	BOLT (1/4-28X0.625-IN)	
		1	1H-3244	2	LOCKWASHER	
		1	7X-3182	2	BOLT (1/4-28X0.5-IN)	
		1	8T-4205	2	WASHER-HARD (7.2X14.5X2-MM THK)	
M	26	1	9X-2041	4	SCREW-TRUSS HEAD	
	27	1	9S-4693	1	CIRCUIT BREAKER GP (80-AMPERE) (ALTERNATOR)	
		1	0S-1570	2	BOLT (1/4-28X0.625-IN)	
		1	1H-3244	2	LOCKWASHER	
		1	7X-3182	2	BOLT (1/4-28X0.5-IN)	
		1	8T-4205	2	WASHER-HARD (7.2X14.5X2-MM THK)	
	28	1	7L-6479	2	PLUG-BUTTON	

C-CHANGE FROM PREVIOUS TYPE
M-METRIC PART
Y-SEPARATE ILLUSTRATION

202-3245 PANEL GP-CIRCUIT BREAKER (contd.) i01986574

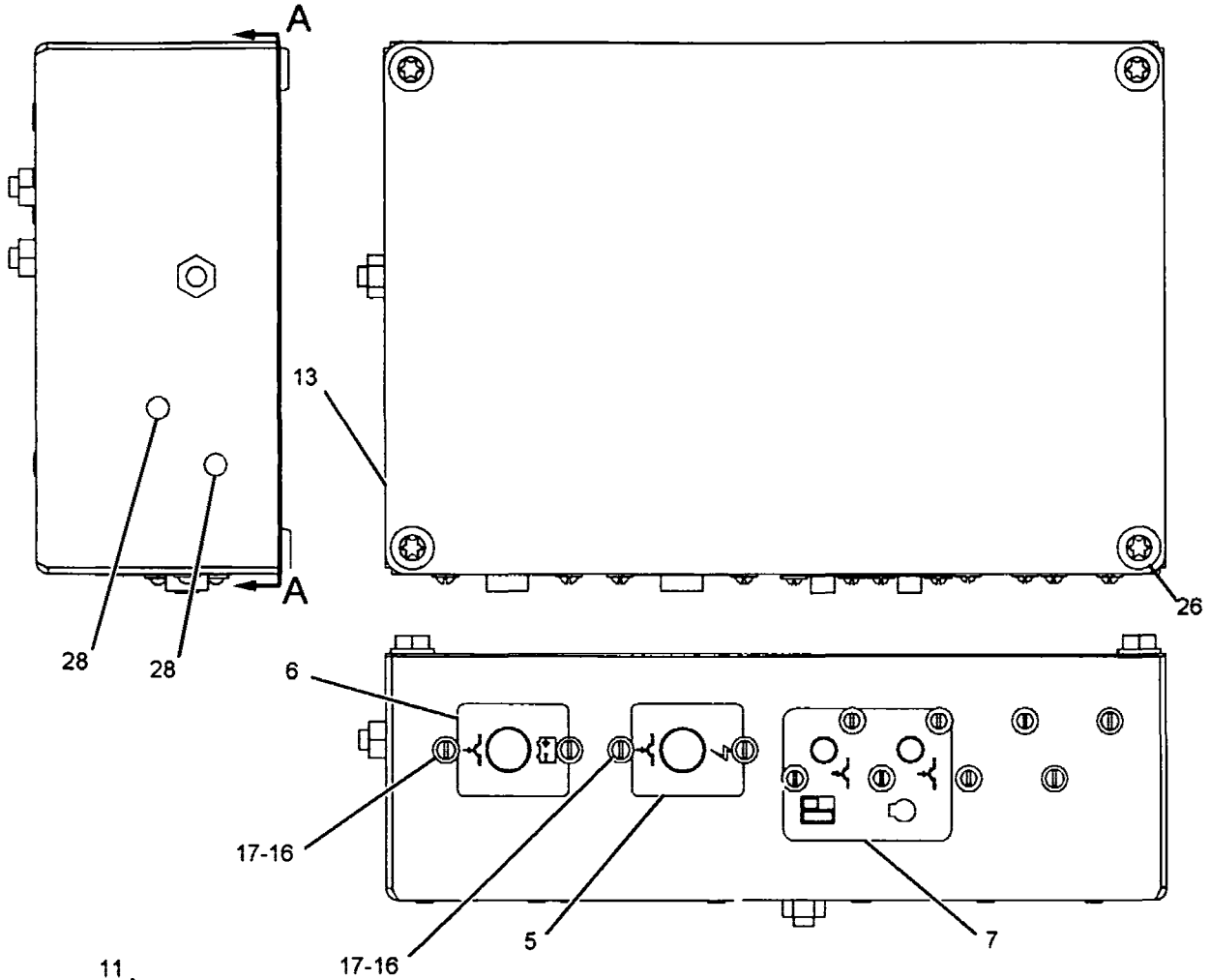

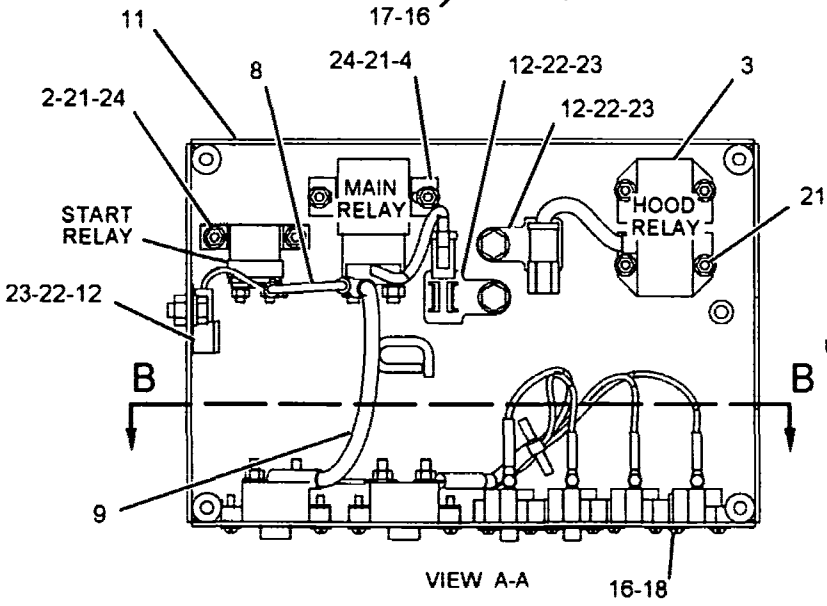

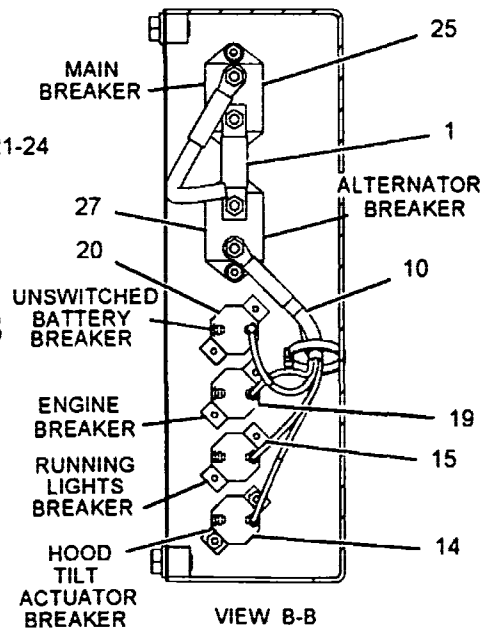

GRAPHIC #1 <END> g01080017

198-7248 DRAIN GP-ECOLOGY–POWER TRAIN

S/N: CRD1-UP
AN ATTACHMENT

SMCS-3260 i01771356

NOTE	REF NO	GRAPHIC REF	PART NUMBER	QTY	PART NAME 1 2 3 4 5 6 (PRODUCT LEVEL)	SEE PAGE
	1	1	173-0566	2	DRAIN GP-ECOLOGY	
					(EACH INCLUDES)	
	1A	1	2K-8199	1	SEAL-O-RING	
	1B	1	077-3241	1	SEAL-O-RING	
	1C	1	175-4966	1	PLUG	
	2	1	7M-8485	2	SEAL-O-RING	

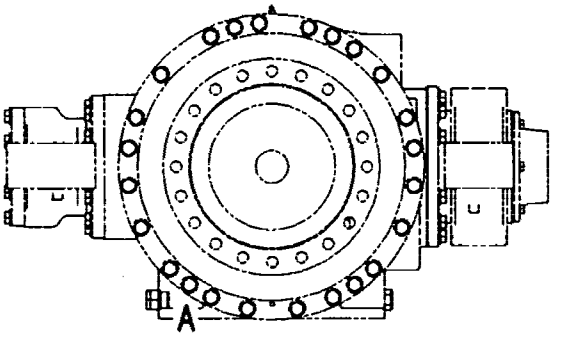

REAR AXLE

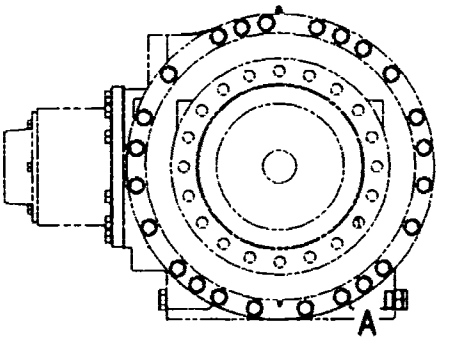

FRONT AXLE

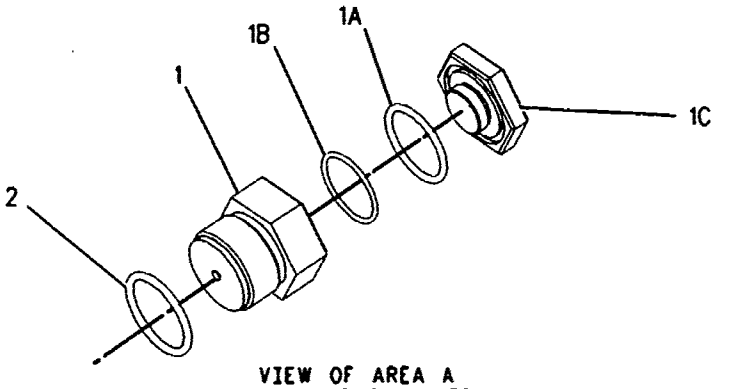

VIEW OF AREA A
COMMON BOTH AXLES

GRAPHIC #1 <END> g00886906

8R-9833 DIFFERENTIAL GP-NOSPIN

S/N: CRD1-UP

PART OF 4E-3488 DIFFERENTIAL GP-NOSPIN

AN ATTACHMENT

SMCS-3265 i01127608

NOTE	REF NO	GRAPHIC REF	PART NUMBER	QTY	PART NAME 1 2 3 4 5 6 (PRODUCT LEVEL)	SEE PAGE
	1	1	8R-9831	1	CAM AS-SPIDER	
	2	1	3V-0908	2	CLUTCH & RING AS	
	3	1	3V-0905	2	SPRING-CONICAL	
	4	1	3V-0906	2	RETAINER	
	5	1	8R-9830	2	GEAR-SIDE (35 TEETH)	
	6	1	8R-9832	1	BLOCK-SPACER	

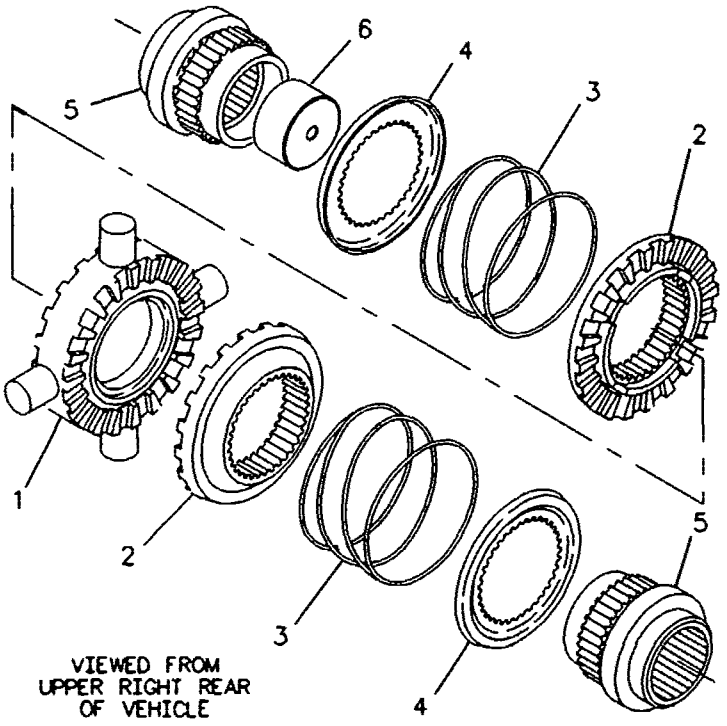

GRAPHIC #1 <END> g00118822

4E-3488 DIFFERENTIAL GP-NOSPIN

S/N: CRD1-UP
PART OF 207-3690 AXLE AR-OSCILLATING
AN ATTACHMENT

SMCS-3265 i01662648

NOTE	REF NO	GRAPHIC REF	PART NUMBER	QTY	PART NAME 1 2 3 4 5 6 (PRODUCT LEVEL)	SEE PAGE
	1	1	4E-3191	1	CASE AS-DIFFERENTIAL	
J	1A	1	5P-8245	4	WASHER-HARD (13.5X25.5X3-MM THK)	
JM	1B	1	8T-0646	4	BOLT (M12X1.75X110-MM)	
Y	2	1	8R-9833	1	DIFFERENTIAL GP-NOSPIN	397

J-PARTS MARKED J ARE FOR SHIPPING & STORAGE ONLY, REMOVE BEFORE INSTALLATION INTO AXLE
M-METRIC PART
Y-SEPARATE ILLUSTRATION

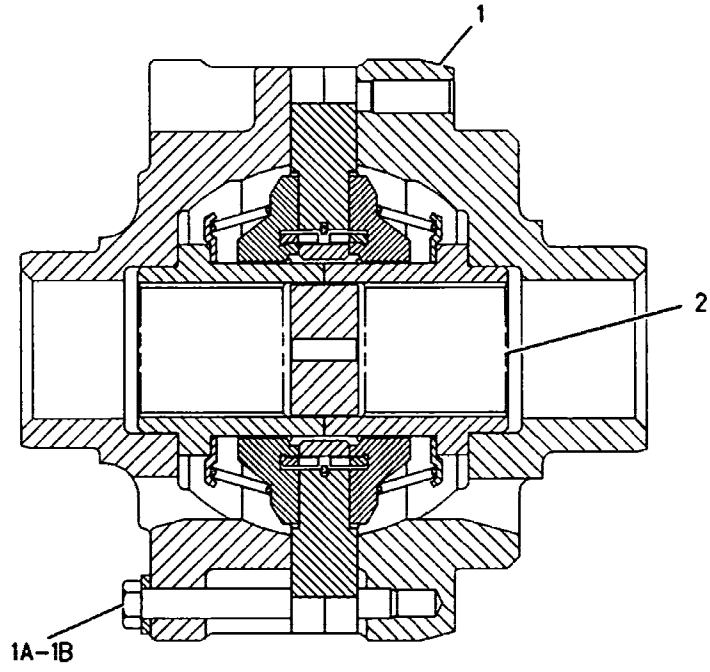

GRAPHIC #1 <END> g00858160

144-4464 DIFFERENTIAL GP-LIMITED SLIP

S/N: CRD1-UP

PART OF 207-3688 AXLE AR-FIXED, 207-3689 AXLE AR-OSCILLATING

AN ATTACHMENT

SMCS-3263 i01691005

NOTE	REF NO	GRAPHIC REF	PART NUMBER	QTY	PART NAME 1 2 3 4 5 6 (PRODUCT LEVEL)	SEE PAGE
	1	1	104-6737	2	WASHER-THRUST	
	2	1	104-6734	2	HOUSING-ACTUATOR	
	3	1	104-6732	4	PINION-DIFFERENTIAL BEVEL (9 TEETH)	
	4	1	104-6733	2	SHAFT-PINION	
	5	1	104-6731	2	GEAR-DIFFERENTIAL BEVEL (16 TEETH)	
	6	1	104-6738	1	CASE AS	
JM	6A	1	8T-9515	2	BOLT-SOCKET HEAD (M10X1.5X40MM)	
	7	1	144-4466	2	KIT-DISC (THIN)	
	8	1	144-4467	2	KIT-DISC (THICK)	

J-PARTS MARKED J ARE FOR SHIPPING & STORAGE ONLY, REMOVE BEFORE INSTALLATION INTO AXLE
M-METRIC PART

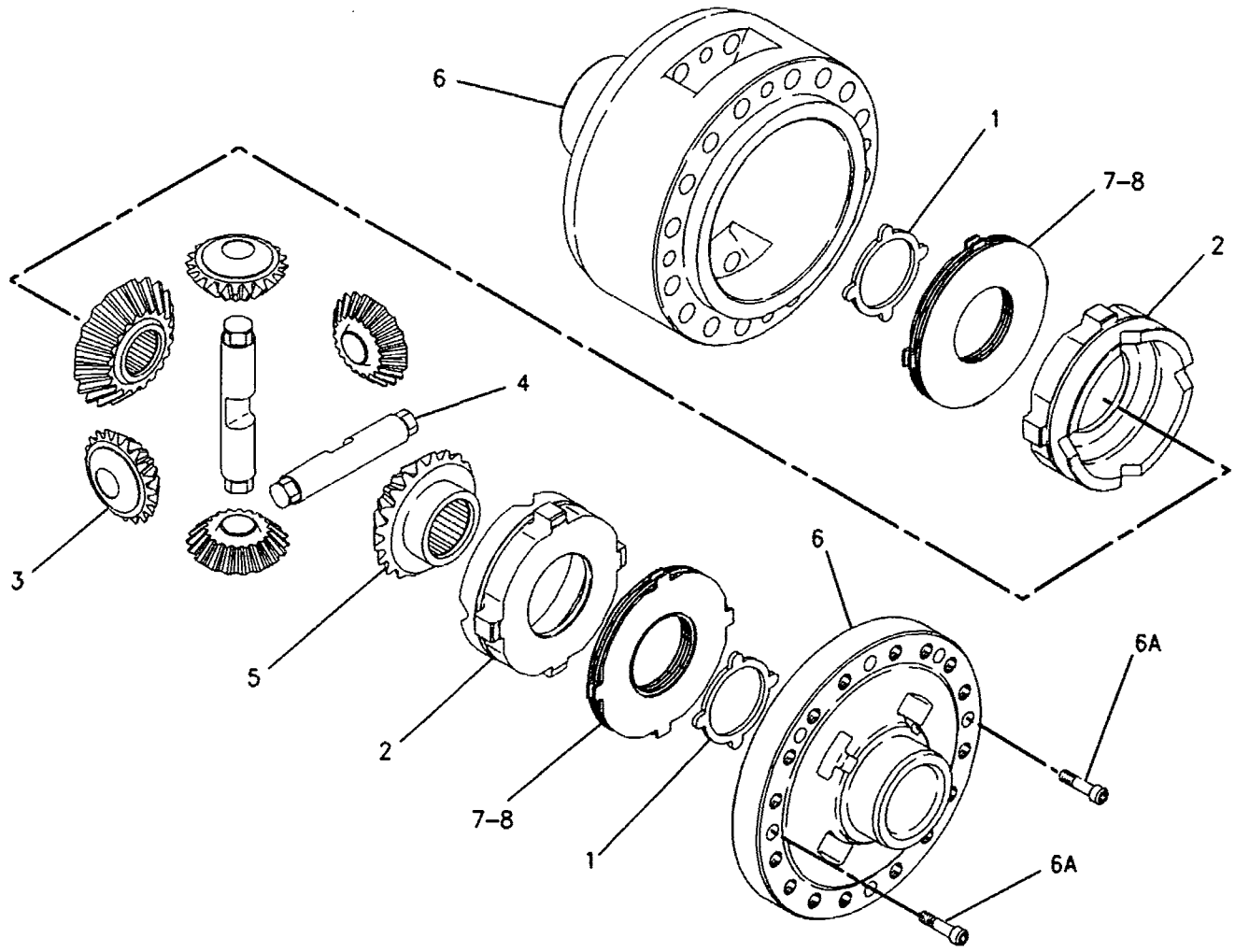

GRAPHIC #1 <END> g00826206

144-5417 DIFFERENTIAL GP

S/N: CRD1-UP

PART OF 206-4539, 207-3691 AXLE AR-FIXED, 206-4540, 207-3692 AXLE AR-OSCILLATING

ALSO AN ATTACHMENT

SMCS-3258 i01662486

NOTE	REF NO	GRAPHIC REF	PART NUMBER	QTY	PART NAME 1 2 3 4 5 6 (PRODUCT LEVEL)	SEE PAGE
	1	1	4E-3191	1	CASE AS-DIFFERENTIAL	
J	1A	1	5P-8245	4	WASHER-HARD (13.5X25.5X3-MM THK)	
JM	1B	1	8T-0646	4	BOLT (M12X1.75X110-MM)	
	2	1	8R-1704	2	GEAR-DIFFERENTIAL BEVEL (16-TEETH)	
	3	1	8R-1703	4	PINION-DIFFERENTIAL BEVEL (10-TEETH)	
	4	1	5V-1274	1	SPIDER	
	5	1	8R-2211	4	BEARING-SLEEVE	
	6	1	133-8305	4	WASHER-THRUST	
	7	1	162-8772	2	WASHER-THRUST	

J-PARTS MARKED J ARE FOR SHIPPING & STORAGE ONLY, REMOVE BEFORE INSTALLATION INTO AXLE
M-METRIC PART

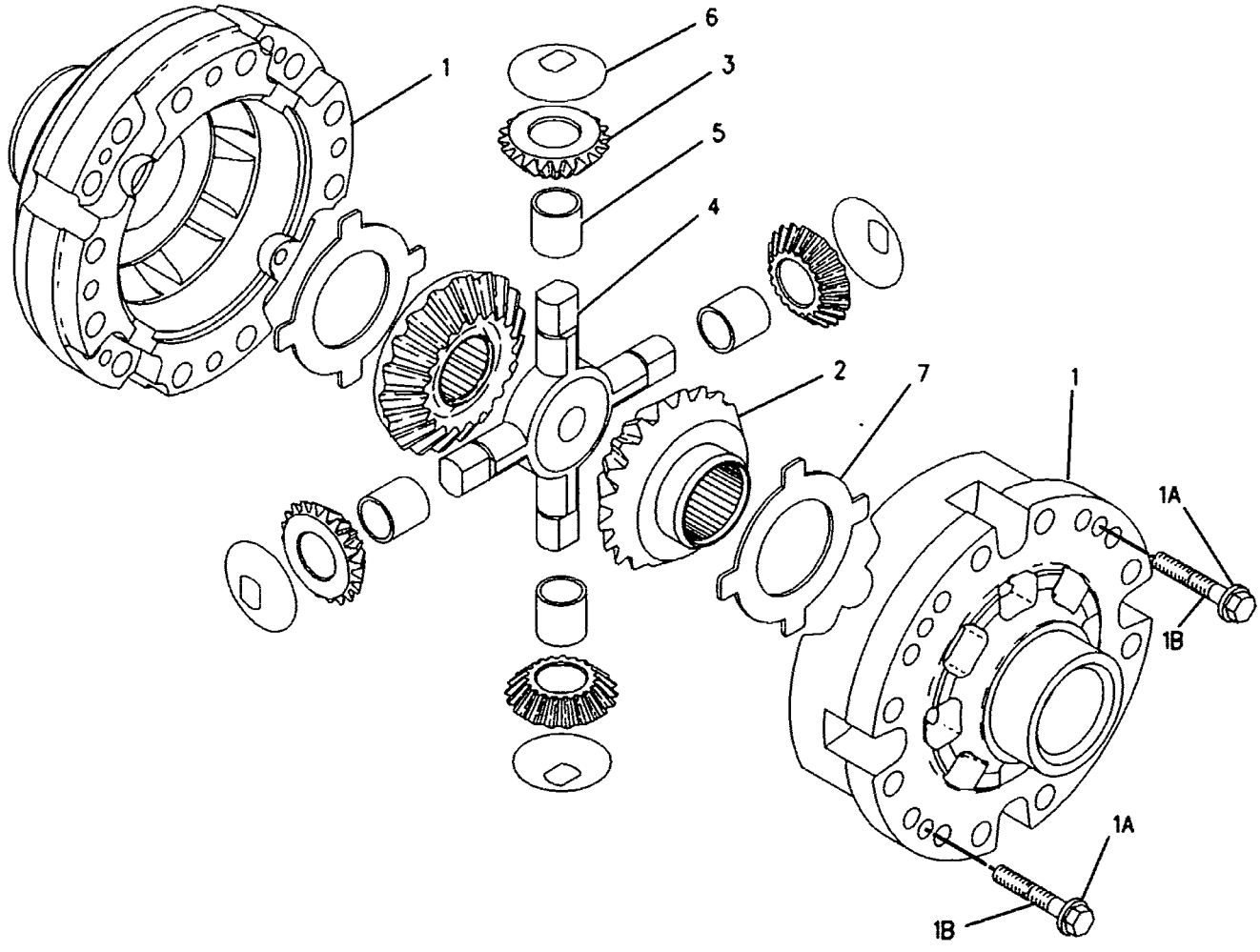

GRAPHIC #1 <END> g00827635

7K-5636 COVER GP-TMSN OIL FILLER CAP

S/N: CRD1-UP

PART OF 126-9524 LOCK GP-VANDALISM

AN ATTACHMENT

SMCS-3005, 3030, 7315 i02282461

NOTE	REF NO	GRAPHIC REF	PART NUMBER	QTY	PART NAME 1 2 3 4 5 6 (PRODUCT LEVEL)	SEE PAGE
	1	1	1L-5072	1	DOWEL	
	2	1	9M-7394	1	LEVER (COVER)	
	3	1	7K-5634	1	COVER	
	4	1	2J-7761	1	RING-RETAINING	
	5	1	5P-8502	1	PADLOCK GP	
		1	5P-8500	1	KEY	
		1	8Y-6364	1	SLEEVE	

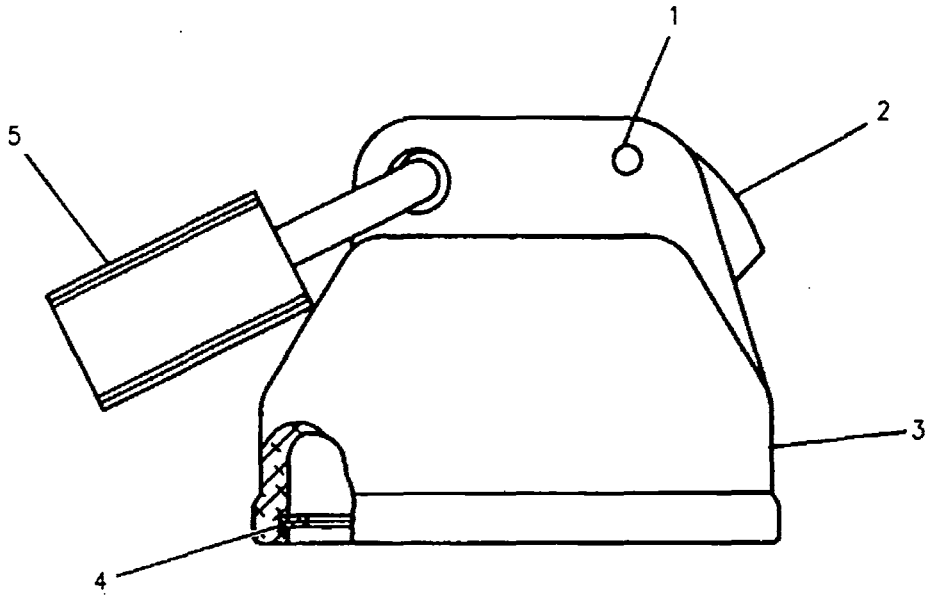

GRAPHIC #1 <END> g00523924

6I-8598 COVER GP-SHIPPING

S/N: WNF1-UP

PART OF 201-3265 TRANSMISSION AR

SMCS-3064 i01294279

NOTE	REF NO	GRAPHIC REF	PART NUMBER	QTY	PART NAME 1 2 3 4 5 6 (PRODUCT LEVEL)	SEE PAGE
	1	1	7G-2132	1	COVER	
M	2	1	8T-6466	6	BOLT (M10X1.50X60-MM)	
	3	1	8T-4121	6	WASHER-HARD (11X21X2.5-MM THK)	
M	4	1	8T-4133	6	NUT (M10X1.5-THD)	
	5	1	7J-3554	4	COVER	
	6	1	2D-0094	4	GASKET	
CM	7	1	6V-8212	6	BOLT (M10X1.50X16-MM)	
M	8	1	6V-6317	4	BOLT (M10X1.5X20-MM)	
	9	1	8P-1438	1	COVER	
	10	1	4M-0189	1	SEAL-O-RING	
M	11	1	6V-8675	2	BOLT (M12X1.75X35-MM)	
	12	1	155-2270	7	KIT-CONNECTING PLUG (2-PIN)	
	13	1	8T-8737	14	PLUG-SEAL	
	14	1	4S-5971	1	COVER	
	15	1	7F-8268	1	SEAL-O-RING	

C-CHANGE FROM PREVIOUS TYPE
M-METRIC PART

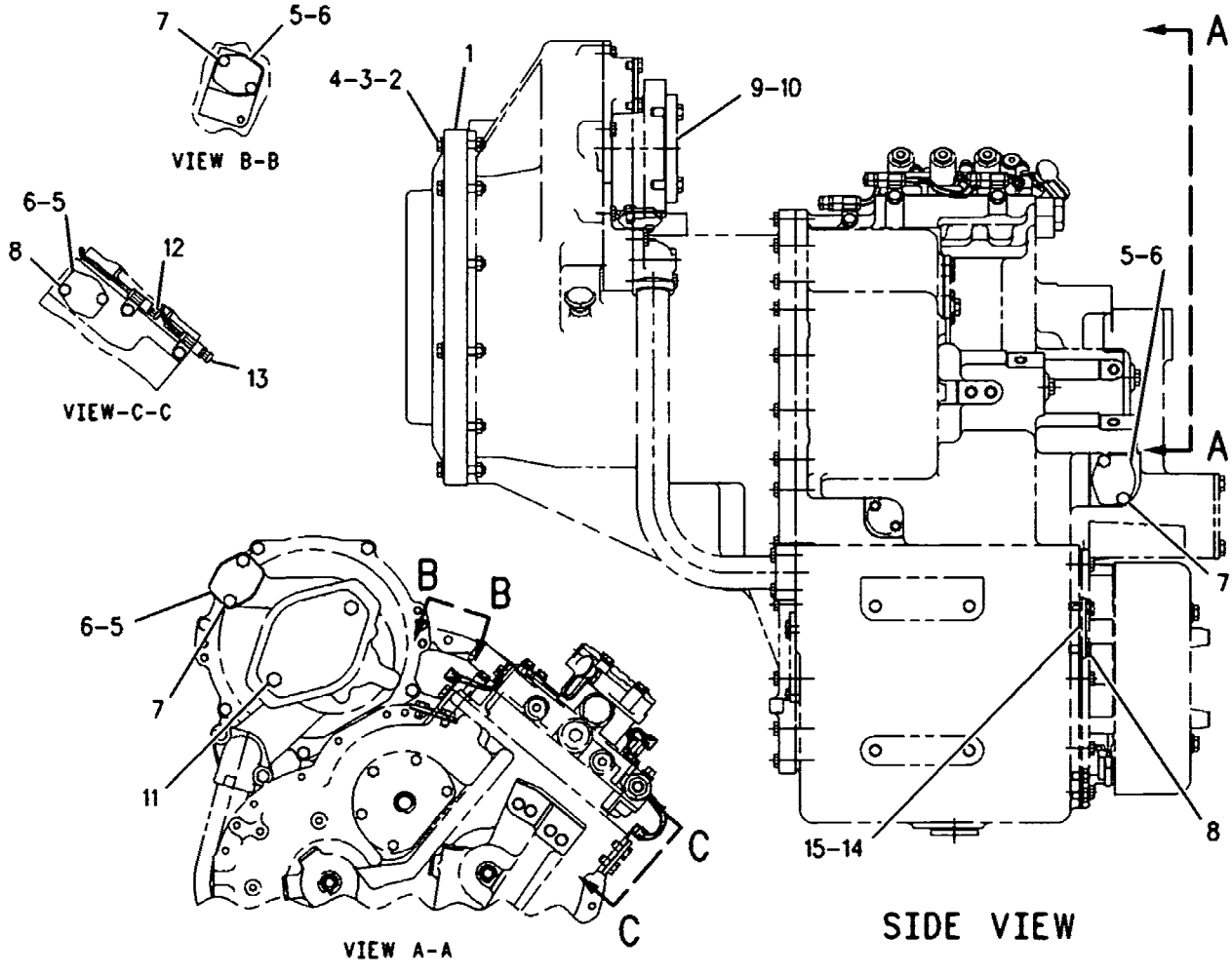

GRAPHIC #1 <END> g00294038

201-8906 COOLER AR-AXLE OIL

S/N: CRD1-UP

AN ATTACHMENT

SMCS-1365 i01981265

NOTE	PART NUMBER	QTY	PART NAME 1 2 3 4 5 6 (PRODUCT LEVEL)	SEE PAGE
Y	*203-8464*	1	FRAME AS-REAR	493
Y	*168-2040*	1	GUARD GP-AXLE OIL COOLER	503
Y	*168-2039*	1	GUARD GP-POWER TRAIN	519
Y	*215-3021*	1	LINES GP-AXLE OIL COOLER	417
Y	*168-2037*	1	LINES GP-WATER	85
Y	*168-2035*	1	MOUNTING GP-AXLE OIL COOLER	428
Y	*215-3022*	1	PUMP & MTG GP-AXLE OIL COOLER	431
	143-2471	1	SHEET AS	
	143-2472	1	SHEET AS	
Y	*205-5747*	1	WIRING AR-AXLE MONITORING	282
Y	*201-8418*	1	WIRING GP-ELECTRIC CLUTCH (AXLE OIL COOLER PUMP)	316

Y-SEPARATE ILLUSTRATION

<END>

198-9340 COOLER & MTG GP-TRANSMISSION

S/N: CRD1-UP

PART OF 199-2816 CHASSIS AR

SMCS-1375 i01866425

NOTE	REF NO	GRAPHIC REF	PART NUMBER	QTY	PART NAME 1 2 3 4 5 6 (PRODUCT LEVEL)	SEE PAGE
	1	1	**5D-1026**	1	CLAMP-HOSE	
	2	1	*165-2273*	1	VALVE GP-SHUTOFF (RADIATOR DRAIN)	
		1	**3K-0360**	1	SEAL-O-RING	
		1	**6V-7238**	1	VALVE-SHUTOFF	
	3	1	**198-9336**	1	COOLER AS-TRANSMISSION OIL	
		1	**7J-5544**	1	FITTING (3/4X16-THD)	
		1	**125-2871**	1	CORE AS-POWER TRAIN OIL COOLER	
	4	1	**8T-4121**	6	WASHER-HARD (11X21X2.5-MM THK)	
M	5	1	**8T-4137**	6	BOLT (M10X1.5X20-MM)	
E	6	1	**5P-0767**		HOSE (18CM)	

E-ORDER BY THE CENTIMETER
M-METRIC PART

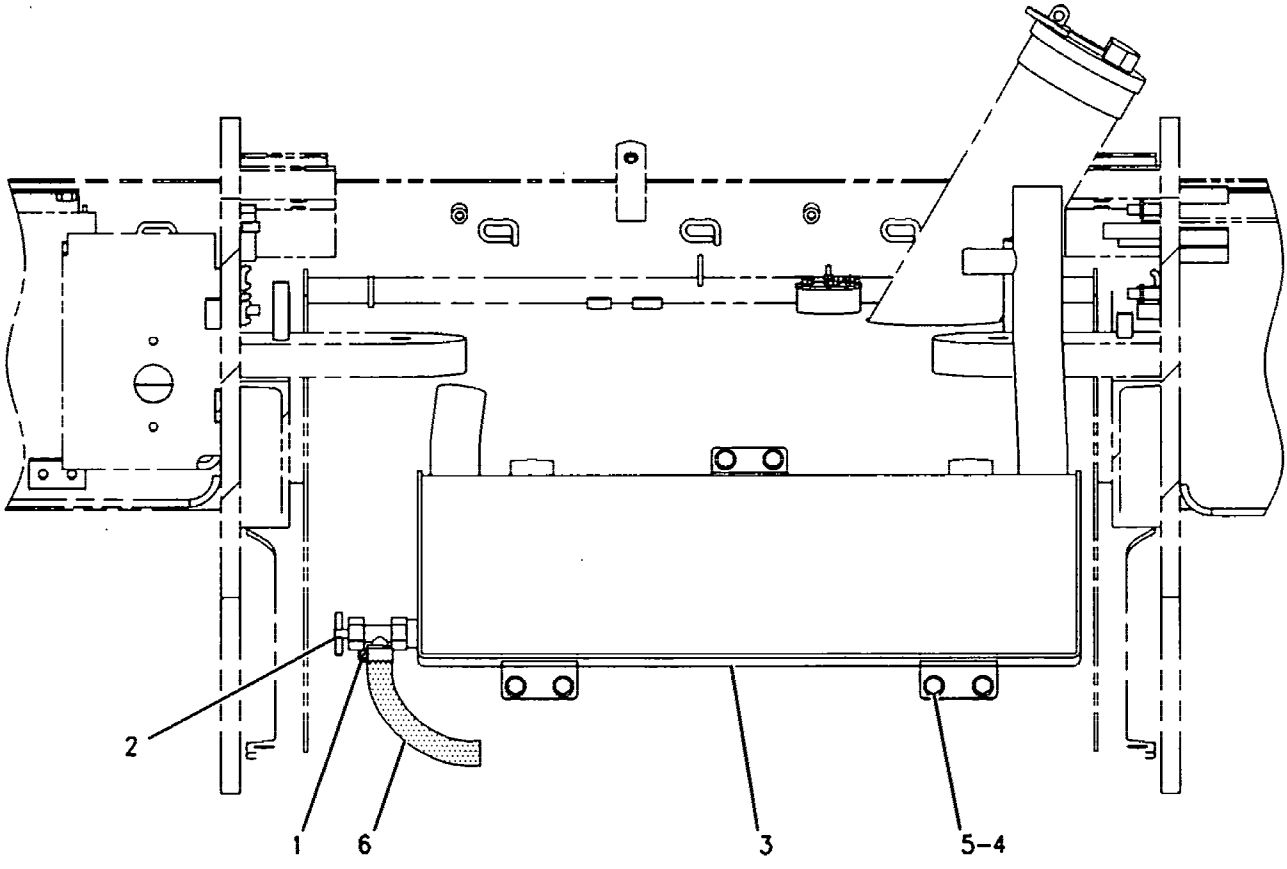

FRONT VIEW

GRAPHIC #1 <END> g00951594

201-0211 CONTROL GP-TRANSMISSION

S/N: CRD1-UP

PART OF 199-3460 CONTROL GP-TRANSMISSION

ALSO AN ATTACHMENT

SMCS-3065 i01480277

NOTE	REF NO	GRAPHIC REF	PART NUMBER	QTY	PART NAME 1 2 3 4 5 6 (PRODUCT LEVEL)	SEE PAGE
	1	1	102-8805	1	KIT-RECEPTACLE (6-PIN)	
					(INCLUDES RECEPTACLE AS AND WEDGE)	
	2	1	155-2265	1	KIT-CONNECTING PLUG (8-PIN)	
					(INLUDES PLUG AS AND WEDGE)	
	3	1	155-2259	1	WEDGE-PLUG LOCK (8-PIN)	
	4	1	3E-3383	1	WEDGE-RECEPTACLE LOCK (6-PIN)	
	5	1	186-3736	12	SOCKET-CONNECTOR (16-AWG TO 18-AWG)	
	6	1	186-3735	4	PIN-CONNECTOR (16-GA TO 18-GA)	
	7	1	101-9161	1	WIRE AS	
	8	1	155-2271	1	KIT-CONNECTING PLUG (4-PIN)	
					(INCLUDES PLUG AS AND WEDGE)	
	9	1	155-2262	1	WEDGE-PLUG LOCK (4-PIN)	
	10	1	9G-3695	2	PLUG (GROMMET SEALING)	

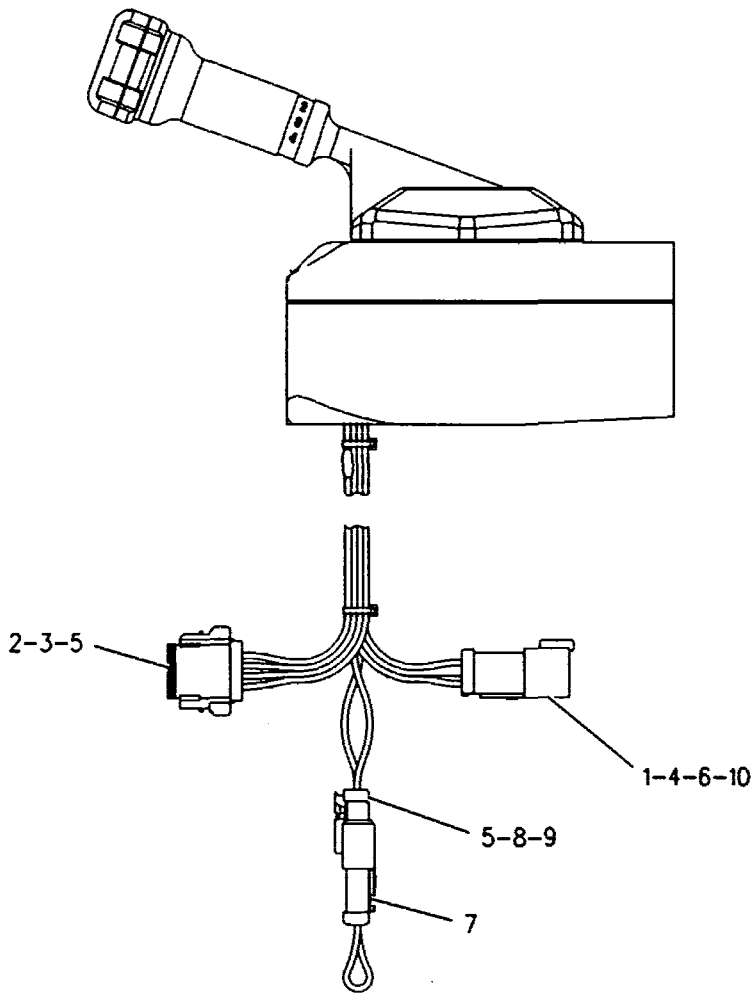

GRAPHIC #1

<END>

g00438763

199-3460 CONTROL GP-TRANSMISSION

S/N: CRD1-UP

PART OF 199-3459, 230-1258 CAB AR, 200-2150 CANOPY AR-OPEN ROPS

ALSO AN ATTACHMENT

SMCS-3065 i01674793

NOTE	REF NO	GRAPHIC REF	PART NUMBER	QTY	PART NAME 1 2 3 4 5 6 (PRODUCT LEVEL)	SEE PAGE
Y	1	1	201-0211	1	CONTROL GP-TRANSMISSION	389
M	2	1	134-1374	4	BOLT-SOCKET HEAD (M5X.8X20MM)	

M-METRIC PART
Y-SEPARATE ILLUSTRATION

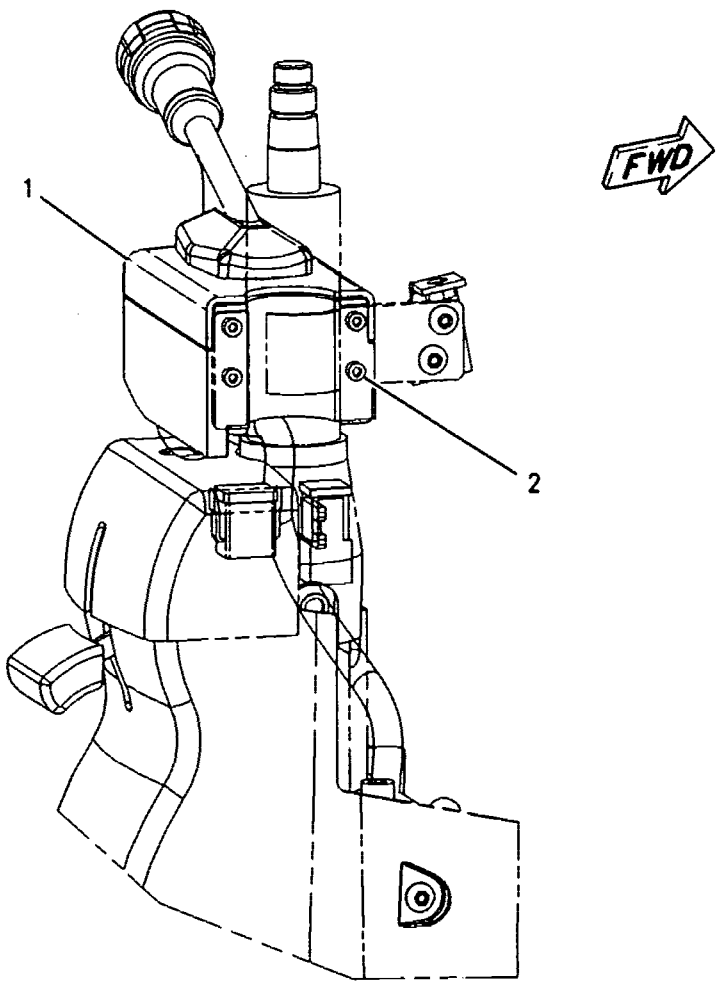

GRAPHIC #1 <END> g00868149

230-3665 **CLUTCH GP** *(contd.)* **i01987717**

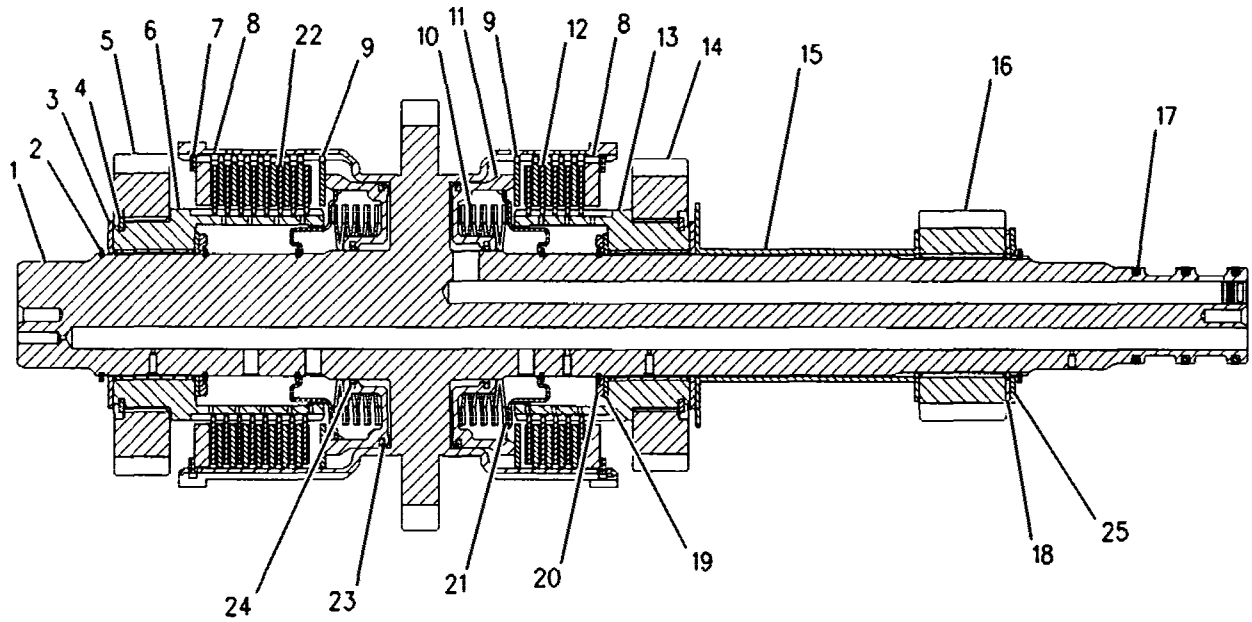

GRAPHIC #1 **<END>** g00951892

POWER TRAIN

230-3665 CLUTCH GP

S/N: WNF1-15

REVERSE & 2ND

PART OF 201-3265 TRANSMISSION AR

SMCS-3155 **i01987717**

NOTE	REF NO	GRAPHIC REF	PART NUMBER	QTY	PART NAME 1 2 3 4 5 6 (PRODUCT LEVEL)	SEE PAGE
	1	1	230-3661	1	SHAFT AS	
		1	9W-0719	2	PLUG	
	2	1	8T-0251	6	RING-RETAINING	
	3	1	8E-8654	2	DISC-THRUST	
	4	1	6V-2394	2	RING-RETAINING	
	5	1	230-3663	1	GEAR (51-TEETH)	
	6	1	6Y-8266	1	HUB AS	
		1	8E-3416	1	BEARING-SLEEVE	
	7	1	236-2541	2	RING-RETAINING	
	8	1	6Y-8514	2	PLATE-END	
	9	1	6Y-8512	13	PLATE-CLUTCH	
	10	1	8E-1278	2	SPRING-WAVE	
	11	1	114-1071	2	PISTON	
	12	1	6Y-7922	5	DISC-FRICTION	
	13	1	6Y-8275	1	HUB AS	
		1	8E-3416	1	BEARING-SLEEVE	
	14	1	7T-8682	1	GEAR (49-TEETH)	
	15	1	6Y-8278	1	SPACER AS	
	16	1	3T-3008	1	GEAR (32-TEETH)	
	17	1	6Y-8285	3	RING-SEAL	
	18	1	9W-9271	1	WASHER	
	19	1	8E-8317	2	DISC-THRUST	
	20	1	9W-9278	2	RETAINER	
	21	1	6Y-8265	2	SEAL AS-BALANCE	
	22	1	231-2236	8	DISC AS-FRICTION	
	23	1	9W-9436	2	RING-SEAL	
	24	1	9W-9399	2	RING-SEAL	
	25	1	8E-8653	1	DISC-THRUST	

230-3664 **CLUTCH GP** *(contd.)* **i01987643**

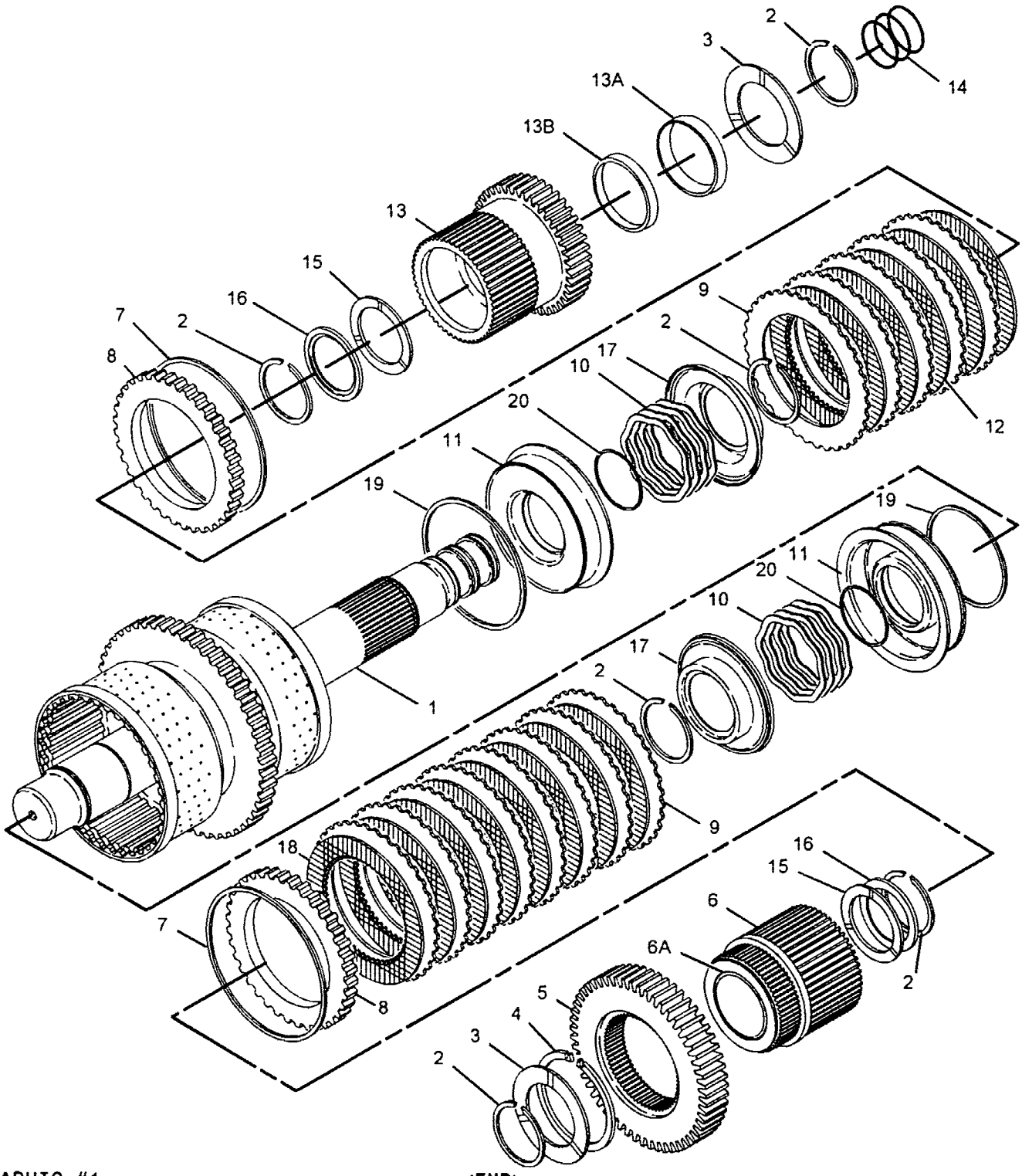

GRAPHIC #1

<END>

g01043224

POWER TRAIN

230-3664 CLUTCH GP

S/N: WNF1-UP
FORWARD LOW & FORWAD HIGH
PART OF 201-3265 TRANSMISSION AR

SMCS-3155 i01987643

NOTE	REF NO	GRAPHIC REF	PART NUMBER	QTY	PART NAME 1 2 3 4 5 6 (PRODUCT LEVEL)	SEE PAGE
	1	1	230-3660	1	SHAFT AS	
		1	9W-0719	2	PLUG	
	2	1	8T-0251	6	RING-RETAINING	
	3	1	8E-8654	2	DISC-THRUST	
	4	1	6V-2394	1	RING-RETAINING	
	5	1	230-3663	1	GEAR (51-TEETH)	
	6	1	6Y-8266	1	HUB AS	
	6A	1	8E-3416	1	BEARING-SLEEVE	
	7	1	236-2541	2	RING-RETAINING	
	8	1	6Y-8514	2	PLATE-END	
	9	1	6Y-8512	13	PLATE-CLUTCH	
	10	1	8E-1278	2	SPRING-WAVE	
	11	1	114-1071	2	PISTON	
	12	1	6Y-7922	5	DISC-FRICTION	
	13	1	204-9605	1	GEAR AS (38 TEETH)	
	13A	1	8E-3416	1	BEARING-SLEEVE	
	13B	1	8E-3435	1	BEARING-SLEEVE	
	14	1	6Y-8285	3	RING-SEAL	
	15	1	8E-8317	2	DISC-THRUST	
	16	1	9W-9278	2	RETAINER	
	17	1	6Y-8265	2	SEAL AS-BALANCE	
	18	1	231-2236	8	DISC AS-FRICTION	
	19	1	9W-9436	2	RING-SEAL	
	20	1	9W-9399	2	RING-SEAL	

197-3260 **CLUTCH GP** *(contd.)* **i01974681**

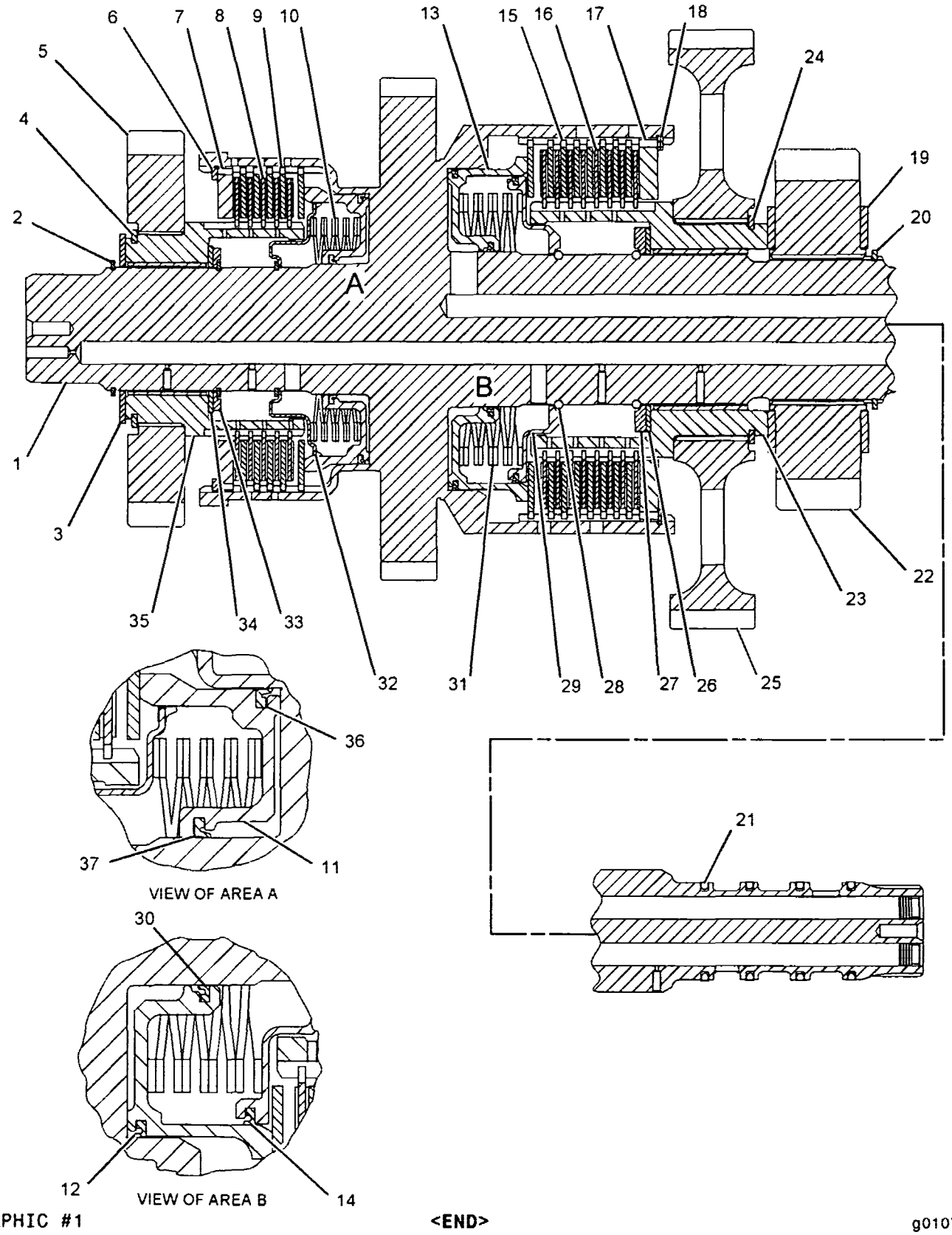

GRAPHIC #1 **<END>** g01075996

POWER TRAIN

197-3260 CLUTCH GP

S/N: WNF1-UP

1ST & 3RD

PART OF 201-3265 TRANSMISSION AR

SMCS-3155 i01974681

NOTE	REF NO	GRAPHIC REF	PART NUMBER	QTY	PART NAME 1 2 3 4 5 6 (PRODUCT LEVEL)	SEE PAGE
	1	1	173-7439	1	SHAFT AS	
		1	9W-0719	3	PLUG	
	2	1	8T-0251	3	RING-RETAINING	
	3	1	8E-8654	1	DISC-THRUST	
	4	1	6V-2394	1	RING-RETAINING	
	5	1	6Y-1758	1	GEAR (46-TEETH)	
	6	1	236-2541	1	RING-RETAINING	
	7	1	6Y-8514	1	PLATE-END	
	8	1	6Y-7922	5	DISC-FRICTION	
	9	1	6Y-8512	5	PLATE-CLUTCH	
	10	1	8E-1278	1	SPRING-WAVE	
	11	1	114-1071	1	PISTON	
	12	1	8E-5737	1	RING-SEAL	
	13	1	6Y-8286	1	PISTON	
	14	1	8E-5735	1	RING-SEAL	
	15	1	6Y-5632	8	PLATE-CLUTCH	
	16	1	6Y-7932	8	DISC-FRICTION	
	17	1	9W-9272	1	PLATE-END	
	18	1	9U-9322	1	RING-RETAINING	
	19	1	8E-8321	2	DISC-THRUST	
	20	1	8C-3979	1	RING-RETAINING	
	21	1	6Y-8285	4	RING-SEAL	
	22	1	3T-6580	1	GEAR (36-TEETH)	
	23	1	6Y-8289	1	HUB AS	
		1	8E-3433	1	BEARING-SLEEVE	
	24	1	8C-8550	1	RING-RETAINING	
	25	1	7T-8698	1	GEAR (97-TEETH)	
	26	1	8E-8652	1	DISC-THRUST	
	27	1	6Y-0373	1	RETAINER-RING	
	28	1	104-7336	2	RING-RETAINING	
	29	1	6Y-8288	1	PISTON-BALANCE	
	30	1	8E-5742	1	RING-SEAL	
	31	1	8E-1279	1	SPRING-WAVE	
	32	1	6Y-8265	1	SEAL AS-BALANCE	
	33	1	9W-9278	1	RETAINER	
	34	1	8E-8317	1	DISC-THRUST	
	35	1	6Y-8275	1	HUB AS	
		1	8E-3416	1	BEARING-SLEEVE	
	36	1	9W-9436	1	RING-SEAL	
	37	1	9W-9399	1	RING-SEAL	

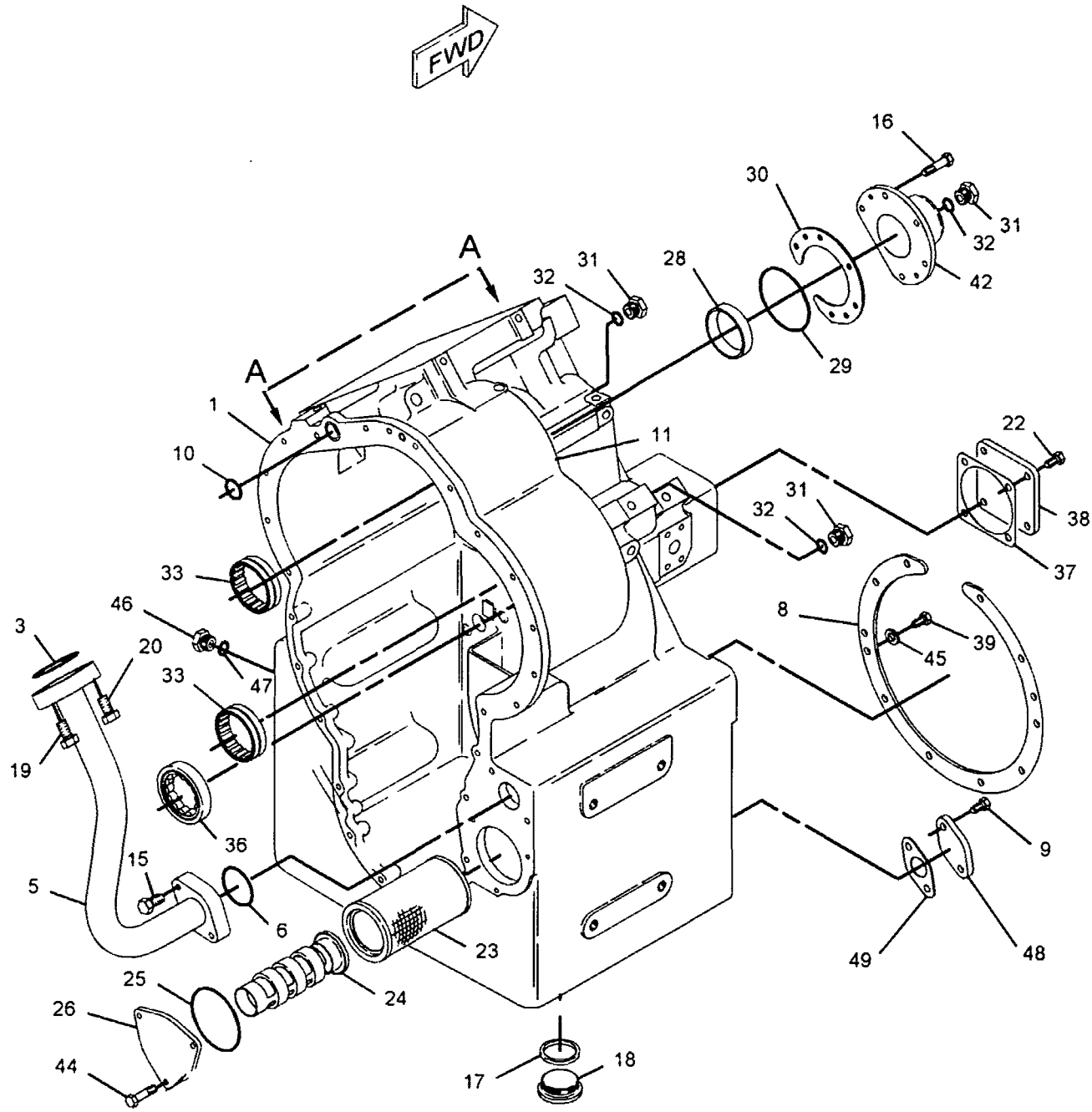

REFER TO ALL ILLUSTRATIONS OF THIS GROUP FOR AUXILIARY VIEWS

GRAPHIC #2 **<END>** g01095800

190-2899 CASE & PARTS GP-PLANETARY *(contd.)* i02156571

B-USE AS REQUIRED
M-METRIC PART

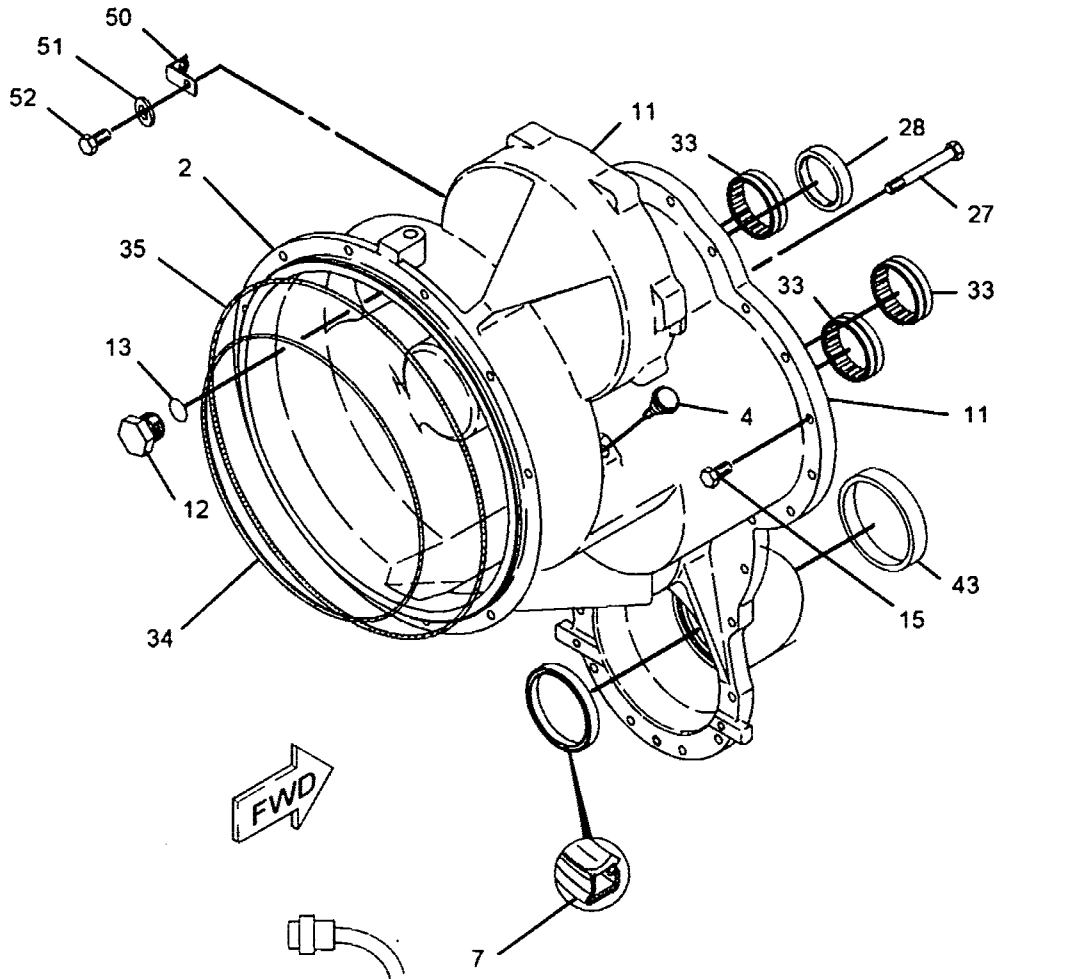

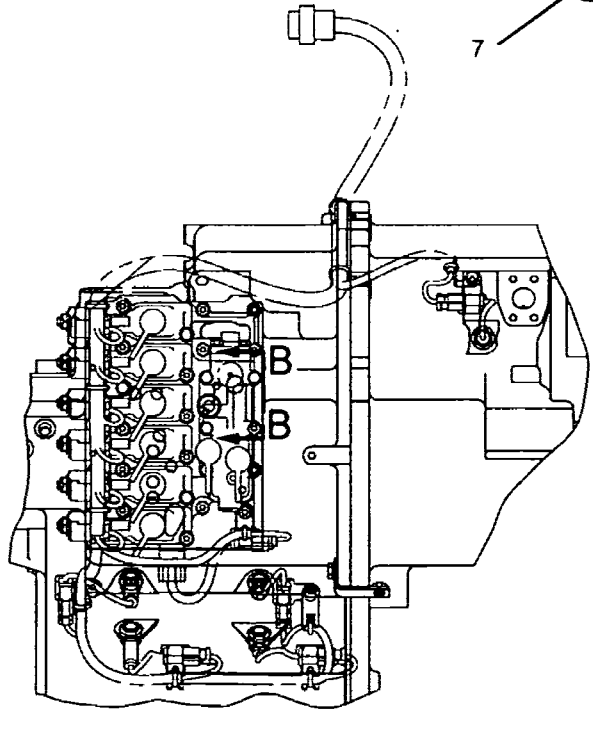

VIEW A-A

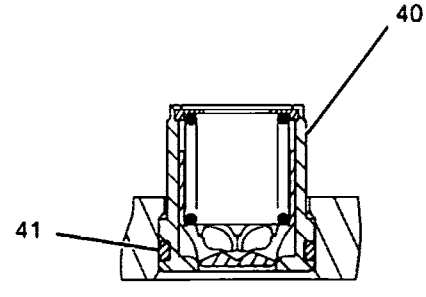

SECTION B-B

GRAPHIC #1 g01095791

POWER TRAIN

190-2899 CASE & PARTS GP-PLANETARY

S/N: WNF1-UP

PART OF 201-3265 TRANSMISSION AR

SMCS-3064 i02156571

NOTE	REF NO	GRAPHIC REF	PART NUMBER	QTY	PART NAME 1 2 3 4 5 6 (PRODUCT LEVEL)	SEE PAGE
	1	2	200-2046	1	CASE AS	
		2	6Y-0869	2	PLUG	
		2	8T-5353	2	DOWEL	
		2	9W-7226	13	PLUG	
	2	1	201-3315	1	COVER	
	3	2	5F-8000	1	SEAL-O-RING	
	4	1	9G-5127	1	BREATHER AS	
	5	2	6Y-8508	1	TUBE AS	
	6	2	1P-3707	1	SEAL-RECTANGULAR	
	7	1	193-2200	1	SEAL-LIP TYPE	
B	8	2	142-4431	1	SHIM PACK (INCLUDES 19-SHIMS)	
M	9	2	6V-8212	2	BOLT (M10X1.5X16-MM)	
	10	2	4D-9986	1	SEAL-O-RING	
B	11	1,2	1U-8846		SEALANT-GASKET	
	12	1	9S-6130	1	PLUG	
	13	1	2S-4078	1	SEAL-O-RING	
M	15	1,2	6V-5842	26	BOLT (M10X1.5X40-MM)	
M	16	2	6V-3940	5	BOLT (M8X1.25X25-MM)	
	17	2	7F-8268	1	SEAL-O-RING	
	18	2	7T-2703	1	PLUG-DRAIN	
M	19	2	6V-1820	1	BOLT (M10X1.5X30-MM)	
M	20	2	6V-7981	1	BOLT (M10X1.5X70-MM)	
M	22	2	6A-5591	4	BOLT (M12X1.75X25-MM)	
	23	2	4S-8598	1	SCREEN-SUCTION	
	24	2	4S-8603	1	SCREEN GP-MAGNETIC	
		2	8M-7160	3	MAGNET	
	25	2	8H-7521	1	SEAL-O-RING	
	26	2	6Y-0809	1	COVER	
M	27	1	8T-0643	6	BOLT (M10X1.5X80-MM)	
	28	1,2	7J-8209	2	CUP-BEARING	
	29	2	2H-6184	1	SEAL-O-RING	
B	30	2	8E-5261	1	SHIM PACK (INCLUDES 24-SHIMS)	
	31	2	9S-4191	3	PLUG	
	32	2	3J-1907	3	SEAL-O-RING	
	33	1,2	8E-5380	5	BEARING-ROLLER	
	34	1	1T-1639	1	RING	
	35	1	5P-9806	1	SEAL-O-RING	
	36	2	170-1807	1	BEARING-SPECIAL RACE	
	37	2	2N-7007	1	GASKET	
	38	2	2N-7006	1	COVER	
M	39	2	6V-3668	10	BOLT (M12X1.75X30-MM)	
	40	1	148-1928	1	VALVE-RELIEF	
	41	1	9X-4609	1	SEAL-O-RING	
	42	2	6Y-8506	1	CAGE-BEARING	
	43	1	2P-8986	1	CUP-BEARING	
M	44	2	6V-5217	3	BOLT (M8X1.25X20-MM)	
	45	2	5P-8245	10	WASHER-HARD (13.5X25.5X3-MM THK)	
	46	2	3K-8460	2	PLUG	
	47	2	1J-9671	2	SEAL-O-RING	
	48	2	5M-3154	1	COVER	
	49	2	1S-6595	1	GASKET-OIL SUPPLY	
	50	1	127-9323	1	BRACKET AS	
M		1	8T-3490	1	NUT-WELD (M10X1.5-THD)	
	51	1	6V-5839	1	WASHER (11X21X2.5-MM THK)	
M	52	1	6V-5843	1	BOLT (M10X1.5X45-MM)	

206-4542 **BRAKE & PLANETARY GP** *(contd.)* i02176730

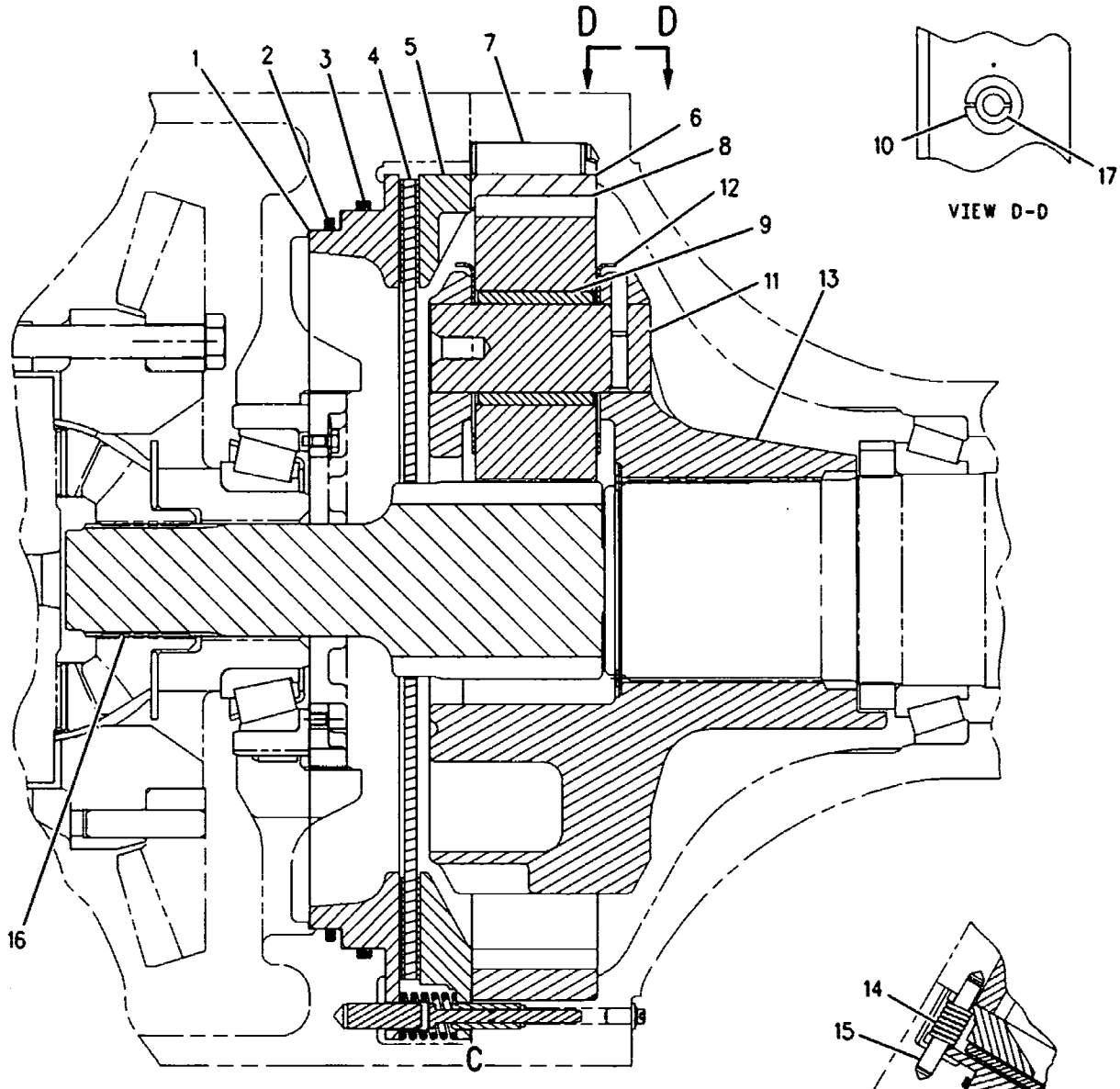

SECTION A-A

VIEW D-D

SECTION B-B

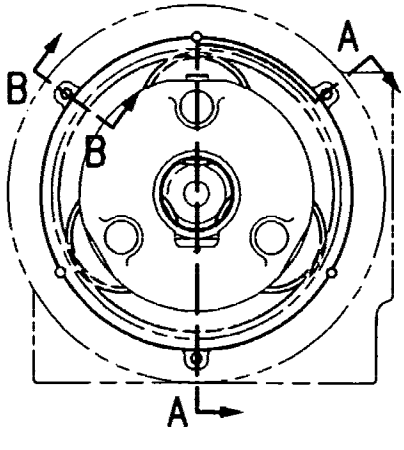

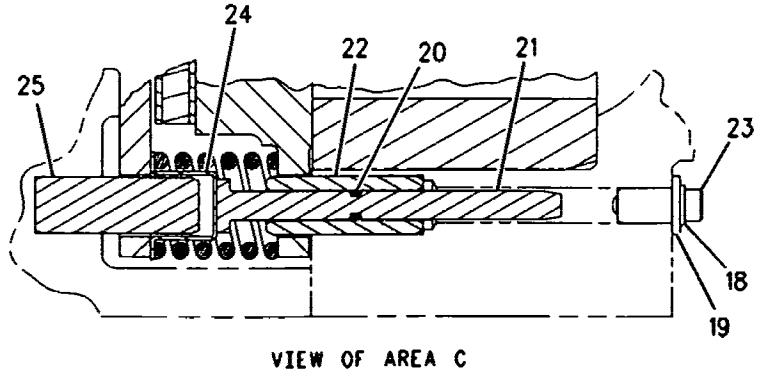

VIEW OF AREA C

GRAPHIC #1 <END> g00874614

206-4542 BRAKE & PLANETARY GP

S/N: CRD1-UP

PART OF 206-4539, 207-3688, 207-3691 AXLE AR-FIXED, 206-4540, 207-3689, 207-3690, 207-3692 AXLE AR-OSCILLATING

ALSO AN ATTACHMENT

SMCS-4011, 4255 i02176730

NOTE	REF NO	GRAPHIC REF	PART NUMBER	QTY	PART NAME 1 2 3 4 5 6 (PRODUCT LEVEL)	SEE PAGE
	1	1	4E-2168	1	PISTON	
	2	1	4E-0211	1	SEAL	
	3	1	228-0417	1	SEAL AS	
	4	1	6Y-2082	1	DISC-FRICTION	
	5	1	9C-6329	1	PLATE-REACTION	
	6	1	8R-1891	1	GEAR-RING (78-TEETH)	
	7	1	115-5327	3	DOWEL	
	8	1	9C-6335	3	GEAR-PLANETARY (29-TEETH)	
	9	1	9C-6318	3	BEARING-SLEEVE	
	10	1	8T-2925	3	PIN-SPRING	
	11	1	9C-6317	3	SHAFT-PLANETARY	
	12	1	9C-6342	6	WASHER-THRUST	
	13	1	4E-2166	1	CARRIER-PLANETARY	
	14	1	4E-2167	3	SPRING	
	15	1	9M-4335	2	DOWEL-REACTION	
	16	1	4E-2165	1	GEAR-SUN (18-TEETH)	
	17	1	138-1645	3	PIN-SPRING	
	18	1	096-6166	1	WASHER-HARD (4.5X9X1-MM THK)	
	19	1	112-0759	1	PLUG	
	20	1	150-4651	1	SEAL-O-RING	
	21	1	149-9114	1	PIN (BRAKE DISC WEAR INDICATOR)	
	22	1	149-9112	1	DOWEL-HOLLOW	
	23	1	2N-2658	1	BOLT-SOCKET HEAD (8-32X15.88-MM)	
	24	1	205-3197	1	CUP	
	25	1	117-1801	1	DOWEL	

207-3692 AXLE AR-OSCILLATING

S/N: CRD1-UP
REAR, TRACTION CONTROL SYSTEM
PART OF 201-8909 CONTROL AR-TRACTION
AN ATTACHMENT

SMCS-3013, 3278 i01681126

NOTE	PART NUMBER	QTY	PART NAME 1 2 3 4 5 6 (PRODUCT LEVEL)	SEE PAGE
Y	206-4542	2	BRAKE & PLANETARY GP	377
Y	144-5417	1	DIFFERENTIAL GP	394
Y	167-0980	1	GEAR GP-BEVEL & PINION	404
Y	207-3694	1	HOUSING GP-OSCILLATING AXLE	414

Y-SEPARATE ILLUSTRATION

<END>

206-4540 AXLE AR-OSCILLATING

S/N: CRD1-UP
REAR
PART OF 199-2820 POWER TRAIN AR

SMCS-3013, 3278 i01673500

NOTE	PART NUMBER	QTY	PART NAME 1 2 3 4 5 6 (PRODUCT LEVEL)	SEE PAGE
Y	206-4542	2	BRAKE & PLANETARY GP	377
Y	144-5417	1	DIFFERENTIAL GP	394
Y	167-0980	1	GEAR GP-BEVEL & PINION	404
Y	206-4547	1	HOUSING GP-OSCILLATING AXLE	412

Y-SEPARATE ILLUSTRATION

<END>

207-3689 AXLE AR-OSCILLATING

S/N: CRD1-UP
REAR, LIMITED SLIP DIFFERENTIAL
AN ATTACHMENT

SMCS-3013, 3278 i01674215

NOTE	PART NUMBER	QTY	PART NAME 1 2 3 4 5 6 (PRODUCT LEVEL)	SEE PAGE
Y	206-4542	2	BRAKE & PLANETARY GP	377
Y	144-4464	1	DIFFERENTIAL GP-LIMITED SLIP	395
Y	167-0980	1	GEAR GP-BEVEL & PINION	404
Y	206-4547	1	HOUSING GP-OSCILLATING AXLE	412

Y-SEPARATE ILLUSTRATION

<END>

207-3690 AXLE AR-OSCILLATING

S/N: CRD1-UP
REAR, NOSPIN DIFFERENTIAL
AN ATTACHMENT

SMCS-3013, 3278 i01822384

NOTE	PART NUMBER	QTY	PART NAME 1 2 3 4 5 6 (PRODUCT LEVEL)	SEE PAGE
Y	206-4542	2	BRAKE & PLANETARY GP	377
Y	4E-3488	1	DIFFERENTIAL GP-NOSPIN	396
Y	167-0980	1	GEAR GP-BEVEL & PINION	404
Y	206-4547	1	HOUSING GP-OSCILLATING AXLE	412

Y-SEPARATE ILLUSTRATION

<END>

POWER TRAIN

206-4539 AXLE AR-FIXED

S/N: CRD1-UP
FRONT
PART OF 199-2820 POWER TRAIN AR

SMCS-3013, 3278 **i01673499**

NOTE	PART NUMBER	QTY	PART NAME 1 2 3 4 5 6 (PRODUCT LEVEL)	SEE PAGE
Y	206-4542	2	BRAKE & PLANETARY GP	377
Y	144-5417	1	DIFFERENTIAL GP	394
Y	167-0979	1	GEAR GP-BEVEL	402
Y	206-4544	1	HOUSING GP-FIXED AXLE	408

Y-SEPARATE ILLUSTRATION

<END>

207-3688 AXLE AR-FIXED

S/N: CRD1-UP
FRONT, LIMITED SLIP DIFFERENTIAL
AN ATTACHMENT

SMCS-3013, 3278 **i01683521**

NOTE	PART NUMBER	QTY	PART NAME 1 2 3 4 5 6 (PRODUCT LEVEL)	SEE PAGE
Y	206-4542	2	BRAKE & PLANETARY GP	377
Y	144-4464	1	DIFFERENTIAL GP-LIMITED SLIP	395
Y	167-0979	1	GEAR GP-BEVEL	402
Y	206-4544	1	HOUSING GP-FIXED AXLE	408

Y-SEPARATE ILLUSTRATION

<END>

207-3691 AXLE AR-FIXED

S/N: CRD1-UP
FRONT, TRACTION CONTROL SYSTEM
PART OF 201-8909 CONTROL AR-TRACTION
AN ATTACHMENT

SMCS-3013, 3278 **i01681127**

NOTE	PART NUMBER	QTY	PART NAME 1 2 3 4 5 6 (PRODUCT LEVEL)	SEE PAGE
Y	206-4542	2	BRAKE & PLANETARY GP	377
Y	144-5417	1	DIFFERENTIAL GP	394
Y	167-0979	1	GEAR GP-BEVEL	402
Y	207-3693	1	HOUSING GP-FIXED AXLE	410

Y-SEPARATE ILLUSTRATION

<END>

201-8422 WIRING GP-TRACTION CONTROL (contd.) i01866528

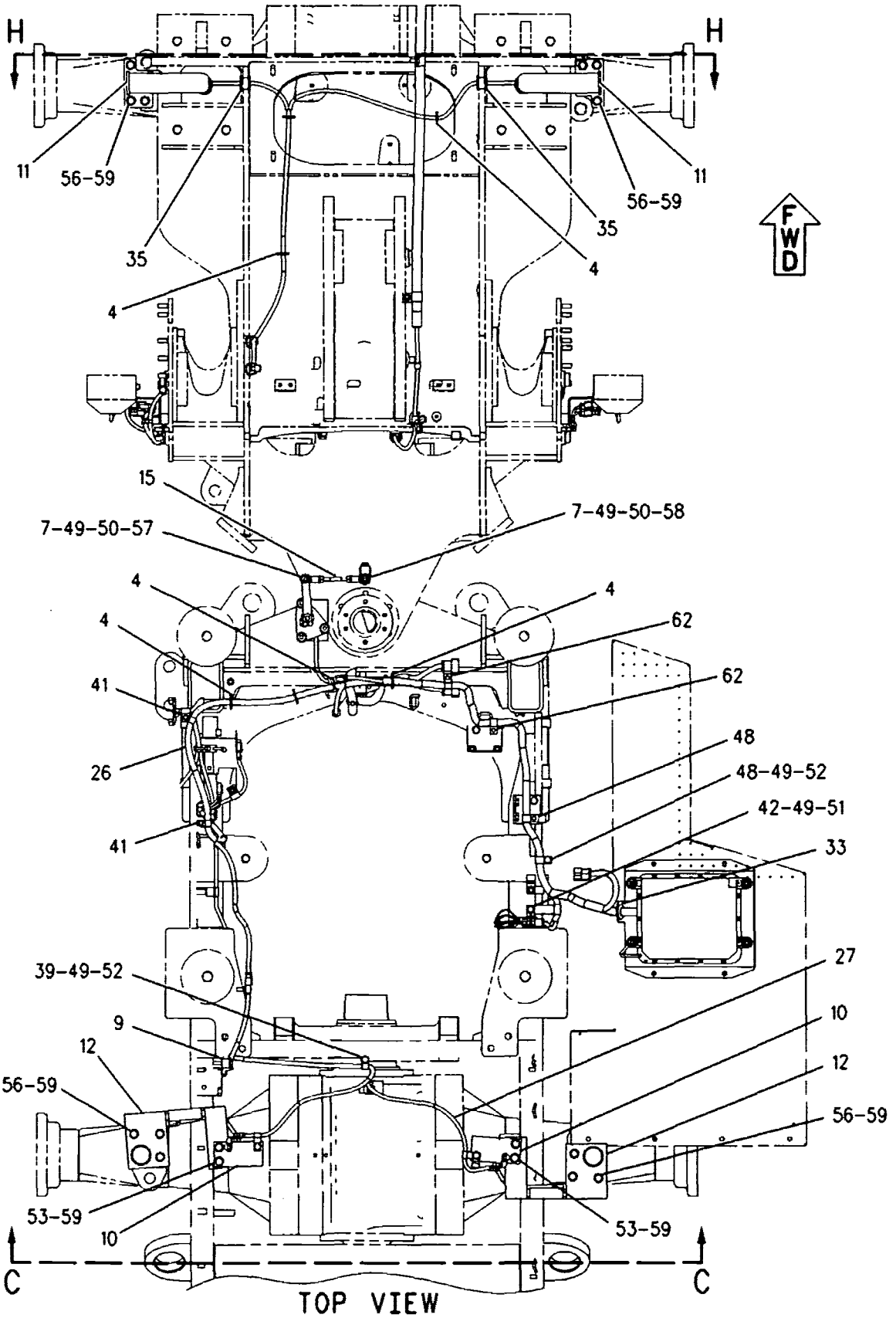

GRAPHIC #3

<END>

g00952294

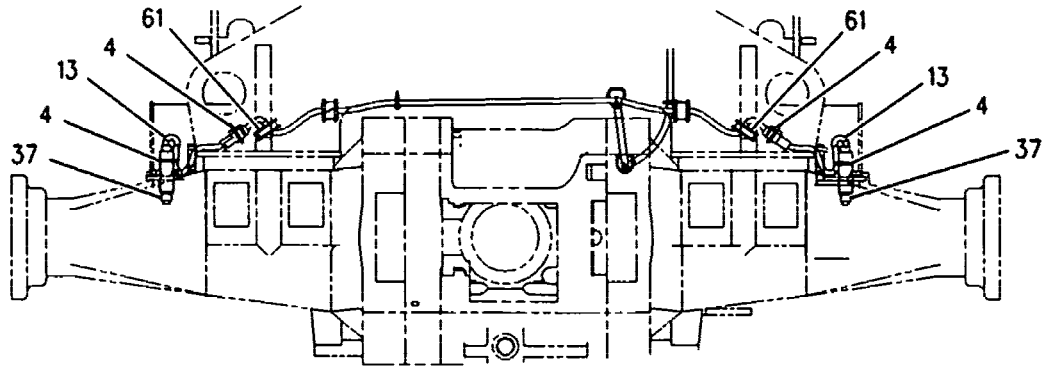

SECTION H-H

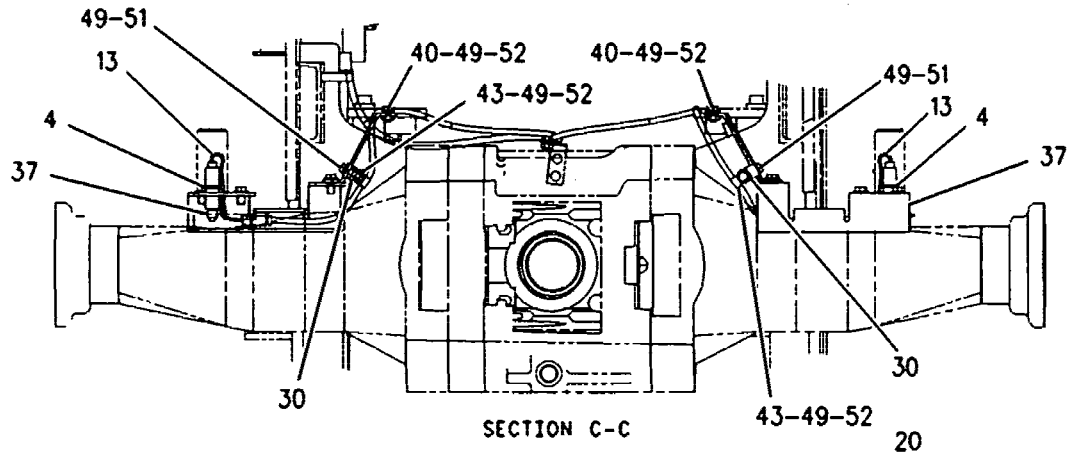

SECTION C-C

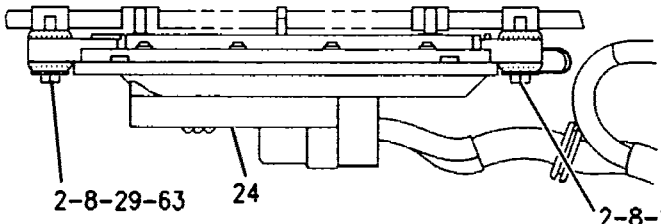

SECTION F-F

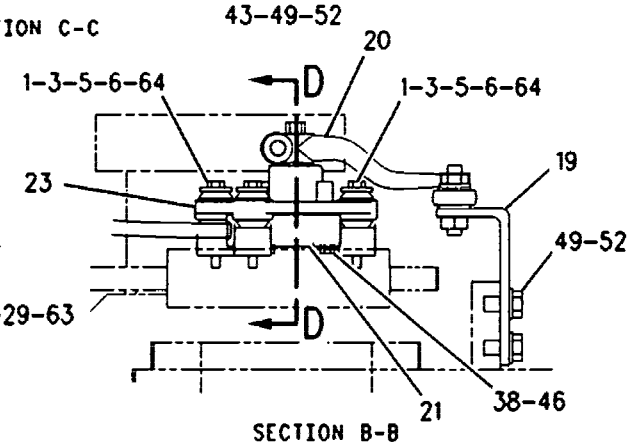

SECTION B-B

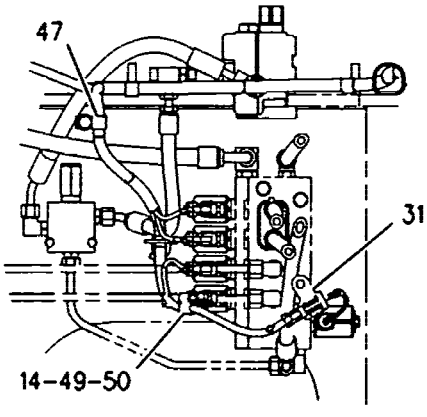

SECTION A-A

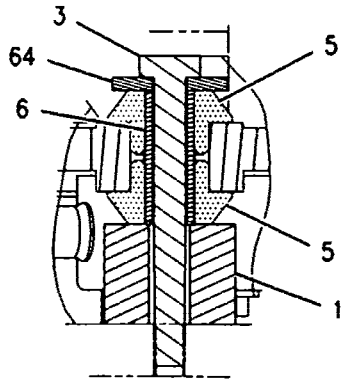

SECTION E-E

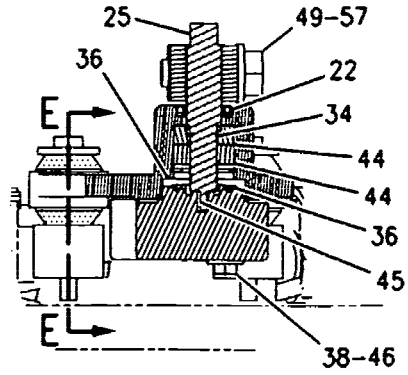

SECTION D-D

GRAPHIC #2 g00952293

REFER TO ALL ILLUSTRATIONS OF THIS GROUP FOR AUXILIARY VIEWS

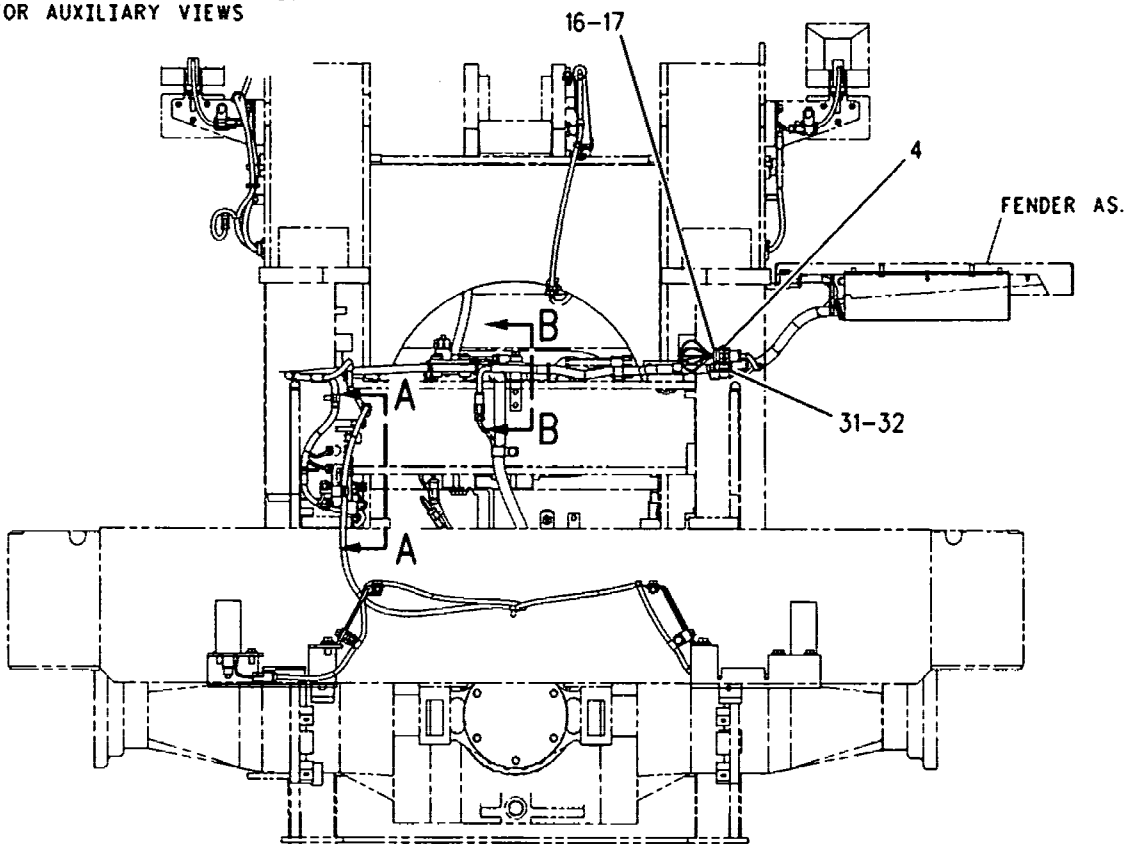

REAR VIEW

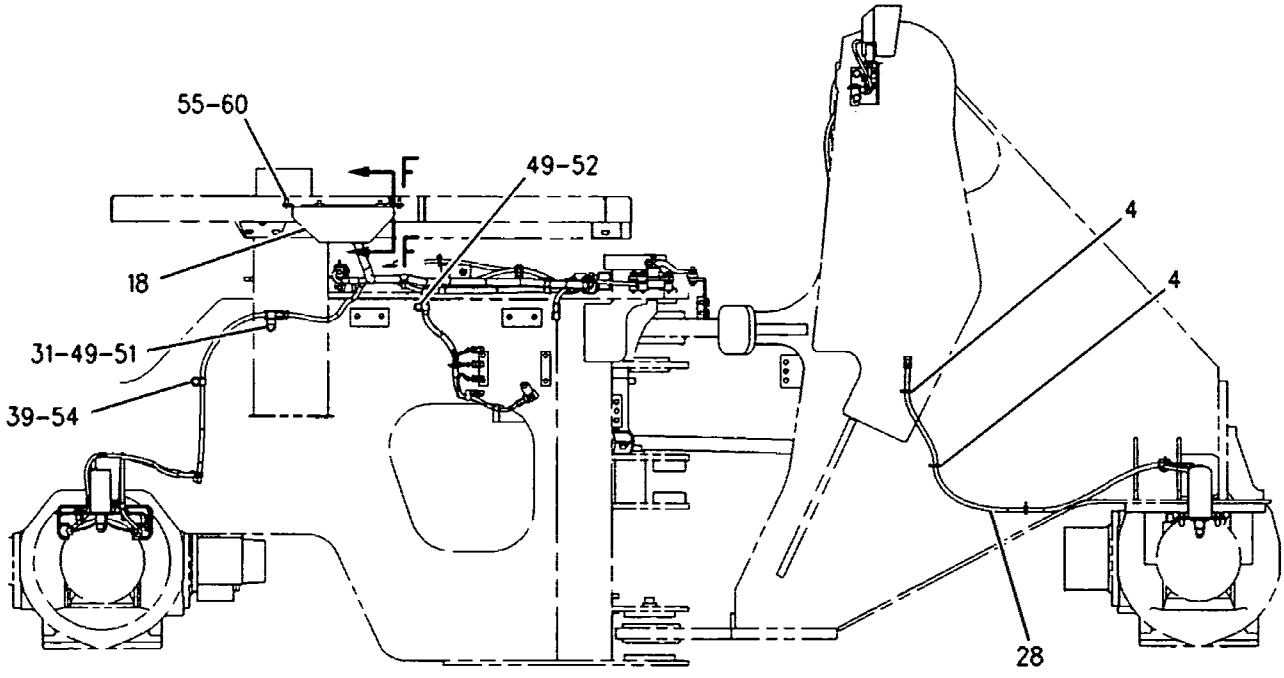

RIGHT SIDE VIEW

GRAPHIC #1

g00952292

201-8422 WIRING GP-TRACTION CONTROL (contd.) i01866528

NOTE	REF NO	GRAPHIC REF	PART NUMBER	QTY	PART NAME 1 2 3 4 5 6 (PRODUCT LEVEL)	SEE PAGE
	35	3	2H-9524	2	GROMMET	
	36	2	2L-6726	2	RING-RETAINING	
	37	2	3K-0360	4	SEAL-O-RING	
	38	2	4B-4274	2	WASHER (5.5X13X1.2-MM THK)	
	39	1,3	4D-7794	2	CLIP	
	40	2	4D-8123	2	CLIP	
	41	3	4K-8864	2	CLIP	
	42	3	5K-4778	1	CLIP	
	43	2	5P-9085	2	CLIP	
	44	2	6D-3025	2	BALL BEARING	
	45	2	6V-0894	1	SEAL-O-RING	
M	46	2	6V-2313	2	BOLT (M5X0.8X30-MM)	
	47	2	8M-2770	1	CLIP	
	48	3	8M-2773	2	CLIP	
	49	1,2,3	8T-4121	18	WASHER-HARD (11X21X2.5-MM THK)	
M	50	2,3	8T-4133	3	NUT (M10X1.5-THD)	
M	51	1,2,3	8T-4136	3	BOLT (M10X1.5X25-MM)	
M	52	1,2,3	8T-4137	10	BOLT (M10X1.5X20-MM)	
M	53	3	8T-4139	4	BOLT (M12X1.75X30-MM)	
M	54	1	8T-4185	1	BOLT (M10X1.5X50-MM)	
M	55	1	8T-4189	4	BOLT (M8X1.25X20-MM)	
M	56	3	8T-4192	12	BOLT (M12X1.75X25-MM)	
M	57	2,3	8T-4195	2	BOLT (M10X1.5X30-MM)	
M	58	3	8T-4196	1	BOLT (M10X1.5X35-MM)	
	59	3	8T-4223	16	WASHER-HARD (13.5X25.5X3-MM THK)	
	60	1	8T-4224	4	WASHER-HARD (8.8X16X2-MM THK)	
	61	2	8T-5387	2	GROMMET	
	62	3	9M-8406	2	CLIP	
	63	2	9N-0869	4	WASHER-HARD (8.8X25.5X2-MM THK)	
	64	2	9X-6165	3	WASHER (6.5X22X2.5-MM THK)	

J-FOR IT38G MODEL ONLY
M-METRIC PART
Y-SEPARATE ILLUSTRATION

201-8422 WIRING GP-TRACTION CONTROL

S/N: CRD1-UP

PART OF 201-8909 CONTROL AR-TRACTION, 221-8179 CONVERSION AR-TRACTION CONTROL
AN ATTACHMENT

SMCS-1634, 4801, 4802 i01866528

NOTE	REF NO	GRAPHIC REF	PART NUMBER	QTY	PART NAME 1 2 3 4 5 6 (PRODUCT LEVEL)	SEE PAGE
	1	2	4J-9448	3	LUG	
	2	2	6I-1418	4	SPACER (8.2X12.7X28.7-MM THK)	
M	3	2	6V-8211	3	BOLT (M6X1X55-MM)	
	4	1,2,3	7K-1181	17	STRAP-CABLE	
	5	2	8C-5607	6	MOUNT-ISOLATION	
	6	2	8C-5608	3	SPACER (6.5X9.5X25.4-MM THK)	
	7	3	8T-6431	2	ROD END	
	8	2	8T-9655	8	MOUNT-ISOLATION	
	9	3	9R-5383	1	BOSS	
	10	3	109-7078	2	BRACKET AS	
					(EACH INCLUDES)	
M		3	8T-3490	2	NUT-WELD (M10X1.5-THD)	
	11	3	109-7079	2	GUARD AS	
	12	3	109-7080	2	GUARD AS	
Y	13	2	109-7330	4	SENSOR GP-SPEED (WHEEL)	250
	14	2	5P-9297	2	CLIP	
	15	3	119-4167	1	ROD	
J	16	1	141-7552	1	PLUG AS	
		1	155-2265	1	KIT-CONNECTING PLUG (8-PIN)	
	17	1	141-7553	1	PLUG AS	
		1	155-2265	1	KIT-CONNECTING PLUG (8-PIN)	
	18	1	141-9817	1	GUARD AS	
	19	2	152-3764	1	BRACKET AS	
M		2	8T-3490	1	NUT-WELD (M10X1.5-THD)	
	20	2	152-7356	1	LEVER	
Y	21	2	219-2386	1	SENSOR GP-POSITION (ARTICULATION ANGLE)	240
	22	2	166-2232	1	SEAL-LIP TYPE	
	23	2	168-0402	1	HOUSING	
Y	24	2	172-9391	1	CONTROL GP-UNPROGRAMMED (TRACTION CONTROL SYSTEM)	190
	25	2	193-8532	1	SHAFT	
	26	3	202-3250	1	HARNESS AS-CONTROL (TRACTION-MAIN)	
		3	102-8804	1	KIT-RECEPTACLE (4-PIN)	
		3	102-8806	1	KIT-RECEPTACLE (8-PIN)	
		3	102-8801	1	KIT-RECEPTACLE (12-PIN)	
		3	155-2260	1	KIT-CONNECTING PLUG (3-PIN)	
		3	155-2270	1	KIT-CONNECTING PLUG (2-PIN)	
		3	155-2271	1	KIT-CONNECTING PLUG (4-PIN)	
		3	8T-8737	53	PLUG-SEAL	
		3	110-6848	1	PLUG AS-CONNECTOR (40-PIN)	
		3	110-6846	1	PLUG AS-CONNECTOR (40-PIN)	
	27	3	202-3251	1	HARNESS AS-CONTROL (TRACTION-REAR AXLE)	
		3	102-8804	1	KIT-RECEPTACLE (4-PIN)	
		3	155-2260	1	KIT-CONNECTING PLUG (3-PIN)	
	28	1	202-3252	1	HARNESS AS-CONTROL (TRACTION-FRONT AXLE)	
		1	155-2260	1	KIT-CONNECTING PLUG (3-PIN)	
		1	155-2271	1	KIT-CONNECTING PLUG (4-PIN)	
M	29	2	099-3649	4	BOLT (M8X1.25X40-MM)	
	30	2	124-3019	2	BRACKET AS	
M		2	8T-3490	1	NUT-WELD (M10X1.5-THD)	
	31	1,2	130-5300	3	CLIP	
	32	1	132-5789	1	CLIP	
	33	3	2D-0388	1	GROMMET	
	34	2	2H-3429	1	RING-RETAINING	

259-7165 WIRING GP-STARTING AID-ETHER

S/N: CRD1-UP

PART OF 253-7358 STARTING AID GP-ETHER

AN ATTACHMENT

SMCS-1090, 1408 i02194584

NOTE	REF NO	GRAPHIC REF	PART NUMBER	QTY	PART NAME 1 2 3 4 5 6 (PRODUCT LEVEL)	SEE PAGE
	1	1	7K-1181	9	STRAP-CABLE	
	2	1	259-7164	1	HARNESS AS-STARTING AID (ETHER)	
		1	155-2270	1	KIT-CONNECTING PLUG (2-PIN)	
					(INCLUDES PLUG AS AND WEDGE)	

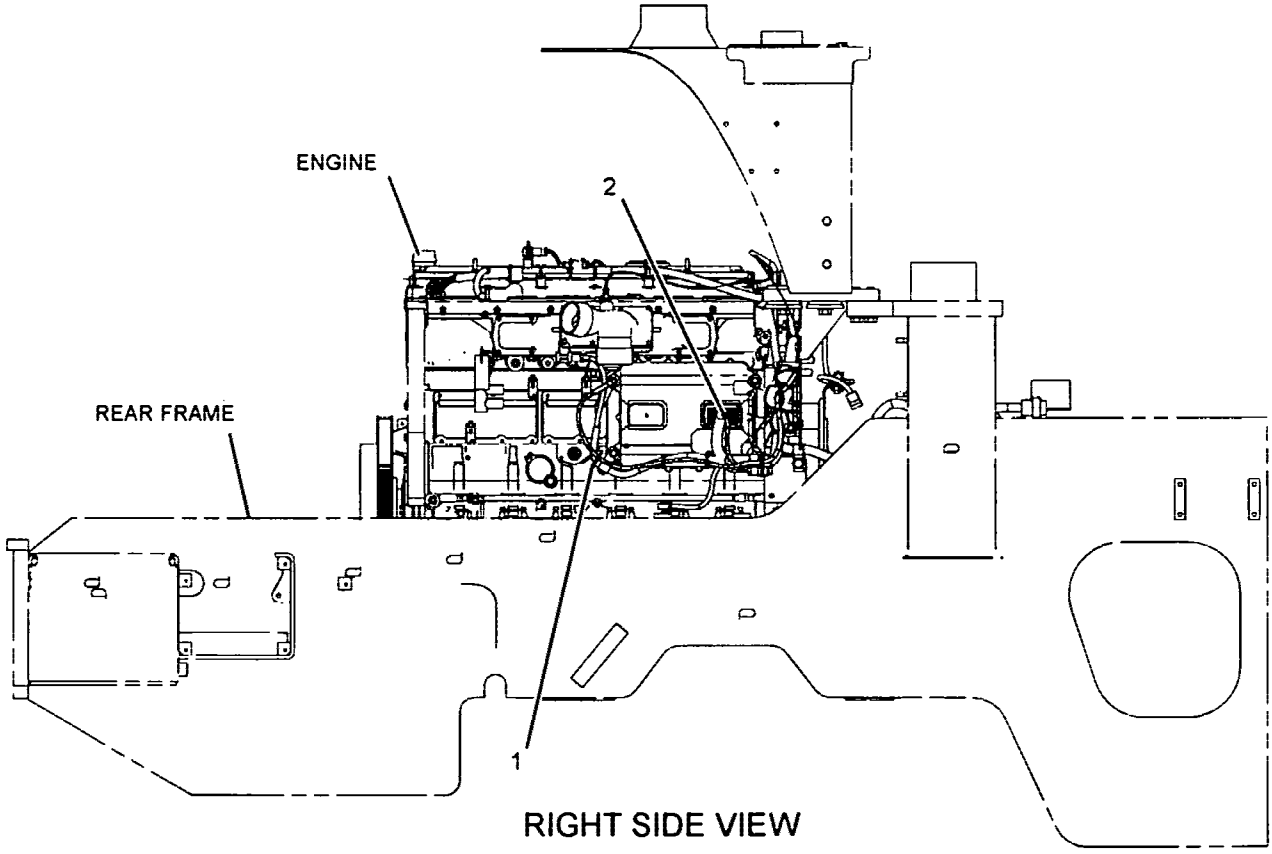

RIGHT SIDE VIEW

GRAPHIC #1 <END> g01168346

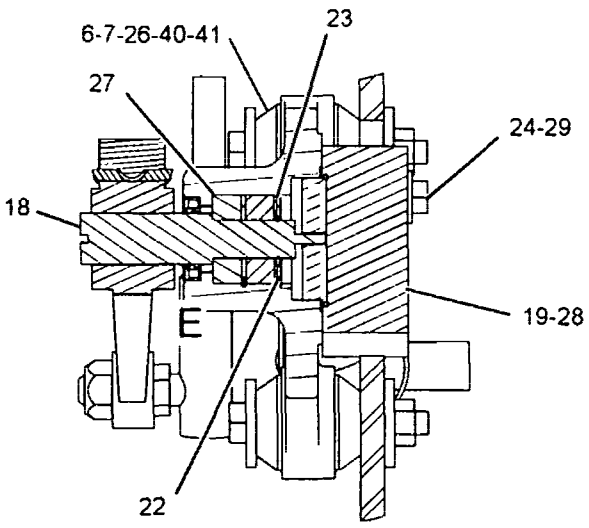

SECTION A-A

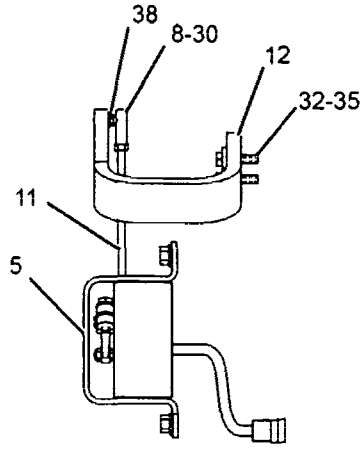

VIEW B-B

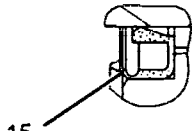

VIEW OF AREA E

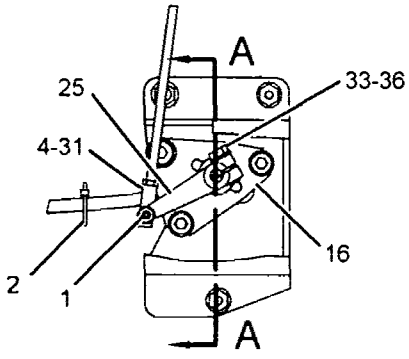

VIEW OF AREA C

RIGHT SIDE VIEW

GRAPHIC #1 **<END>** g01159419

ELECTRICAL AND STARTING SYSTEM

130-4730 WIRING GP-SENSOR

S/N: CRD1-UP
PART OF 134-8593 MONITOR AR-PAYLOAD
AN ATTACHMENT

SMCS-1408 **i02299820**

NOTE	REF NO	GRAPHIC REF	PART NUMBER	QTY	PART NAME 1 2 3 4 5 6 (PRODUCT LEVEL)	SEE PAGE
	1	1	**3D-8752**	1	LOCKNUT (5/16-24-THD)	
	2	1	**3S-2093**	6	STRAP-CABLE	
	3	1	**4E-2448**	1	BRACKET	
	4	1	**5P-9683**	1	ROD END	
	5	1	**7I-3236**	1	SUPPORT AS	
	6	1	**8C-5607**	6	MOUNT-ISOLATION	
	7	1	**8C-5608**	3	SPACER (6.5X9.5X25.4-MM THK)	
	8	1	**8K-1253**	1	ROD END	
I	9	1	**102-5912**	1	HOSE AS	
Y	10	1	**124-4672**	1	SENSOR GP-PRESSURE (LIFT CYL HEAD END OIL)	241
	11	1	**129-6791**	1	ROD	
	12	1	**129-6792**	1	ARM-BAIL	
	13	1	**129-8111**	1	HARNESS AS-MONITOR (PAYLOAD)	
	14	1	**164-6871**	1	ADAPTER AS	
C	15	1	**166-2232**	1	SEAL-LIP TYPE	
C	16	1	**168-0402**	1	HOUSING	
	17	1	**168-1968**	1	TEE AS	
C	18	1	**168-8774**	1	SHAFT	
CY	19	1	**219-2384**	1	SENSOR GP-POSITION (ROTARY) (LIFT)	239
	20	1	**148-8367**	1	ELBOW AS	
	21	1	**155-7327**	1	CONNECTOR AS	
	22	1	**2H-3429**	1	RING-RETAINING	
	23	1	**2L-6726**	2	RING-RETAINING	
	24	1	**4B-4274**	2	WASHER (5.5X13X1.2-MM THK)	
	25	1	**4E-7088**	1	LEVER	
M	26	1	**5C-2890**	3	NUT (M6X1-THD)	
	27	1	**6D-3025**	2	BALL BEARING	
C	28	1	**6V-0894**	1	SEAL-O-RING	
M	29	1	**6V-2313**	2	BOLT (M5X0.8X30-MM)	
	30	1	**6V-8186**	1	NUT-FULL (5/16-24-THD)	
	31	1	**8L-4496**	1	NUT-JAM (5/16-24 LH THD)	
	32	1	**8T-2561**	2	WASHER-HARD (10.5X28.5X5-MM THK)	
	33	1	**8T-4121**	1	WASHER-HARD (11X21X2.5-MM THK)	
M	34	1	**8T-4139**	2	BOLT (M12X1.75X30-MM)	
M	35	1	**8T-4186**	2	BOLT (M10X1.5X40-MM)	
M	36	1	**8T-4195**	1	BOLT (M10X1.5X30-MM)	
	37	1	**8T-4223**	5	WASHER-HARD (13.5X25.5X3-MM THK)	
	38	1	**8T-4224**	3	WASHER-HARD (8.8X16X2-MM THK)	
M	39	1	**8T-4244**	1	NUT (M12X1.75-THD)	
M	40	1	**9X-2480**	3	BOLT (M6X1X45-MM)	
	41	1	**9X-6165**	6	WASHER (6.5X22X2.5-MM THK)	

C-CHANGE FROM PREVIOUS TYPE
I-REFER TO HYDRAULIC INFORMATION SYSTEM
M-METRIC PART
Y-SEPARATE ILLUSTRATION

201-8416 WIRING GP-SECONDARY STEERING (contd.) i02155713

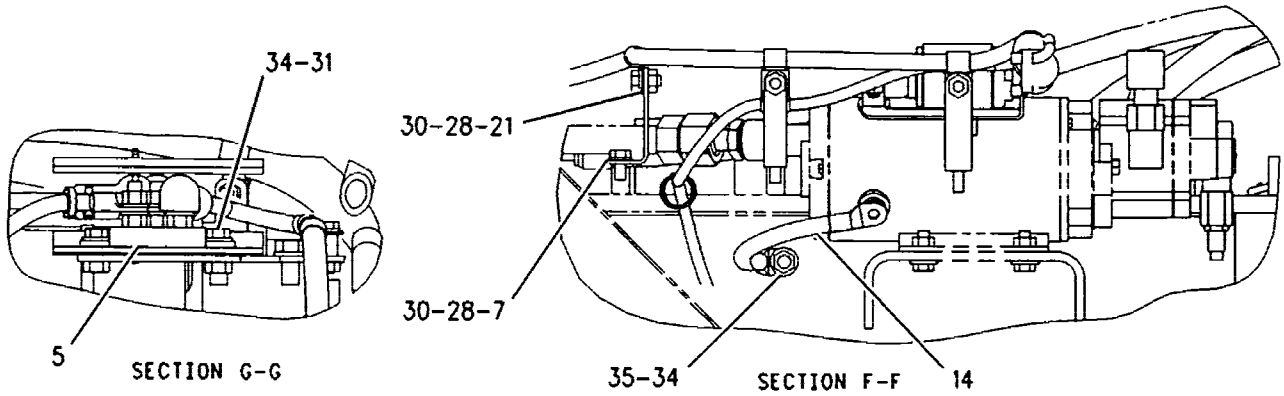

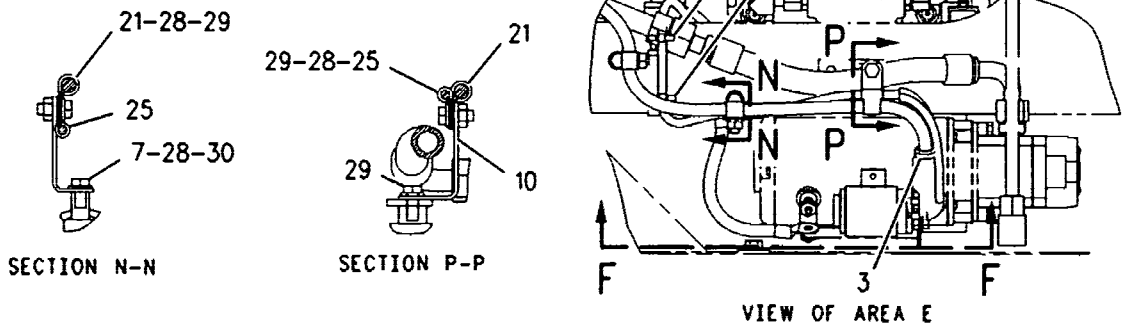

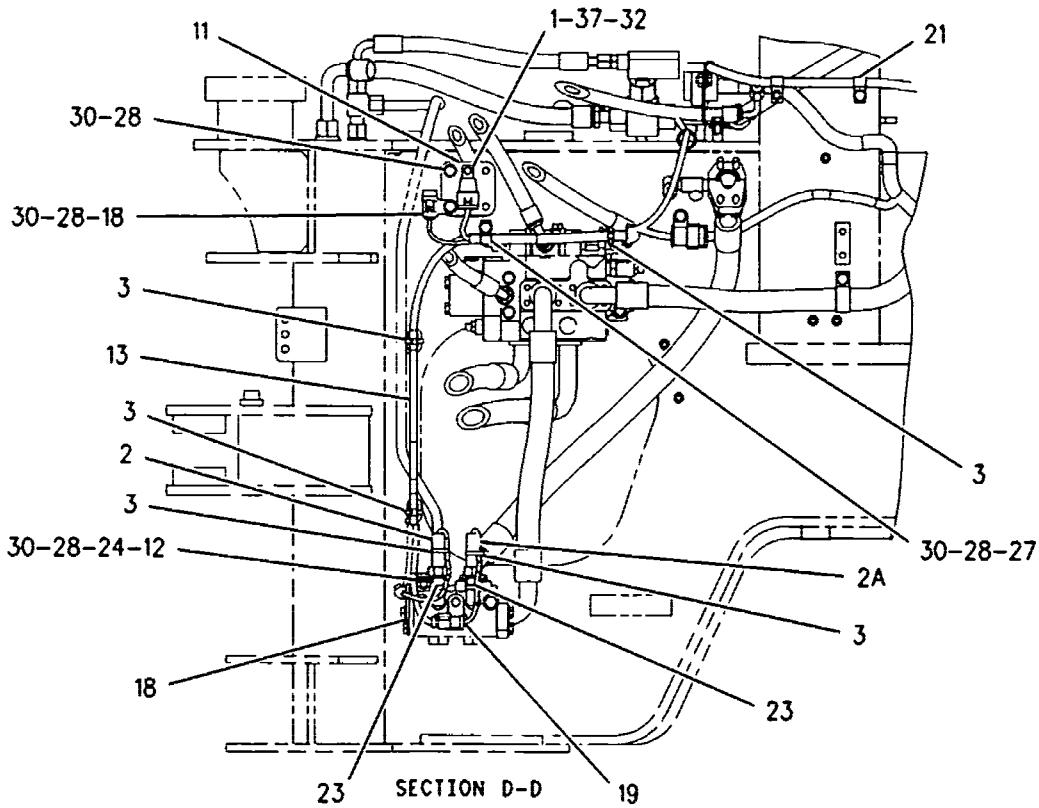

GRAPHIC #2 <END> g00869869

201-8416 WIRING GP-SECONDARY STEERING *(contd.)* i02155713

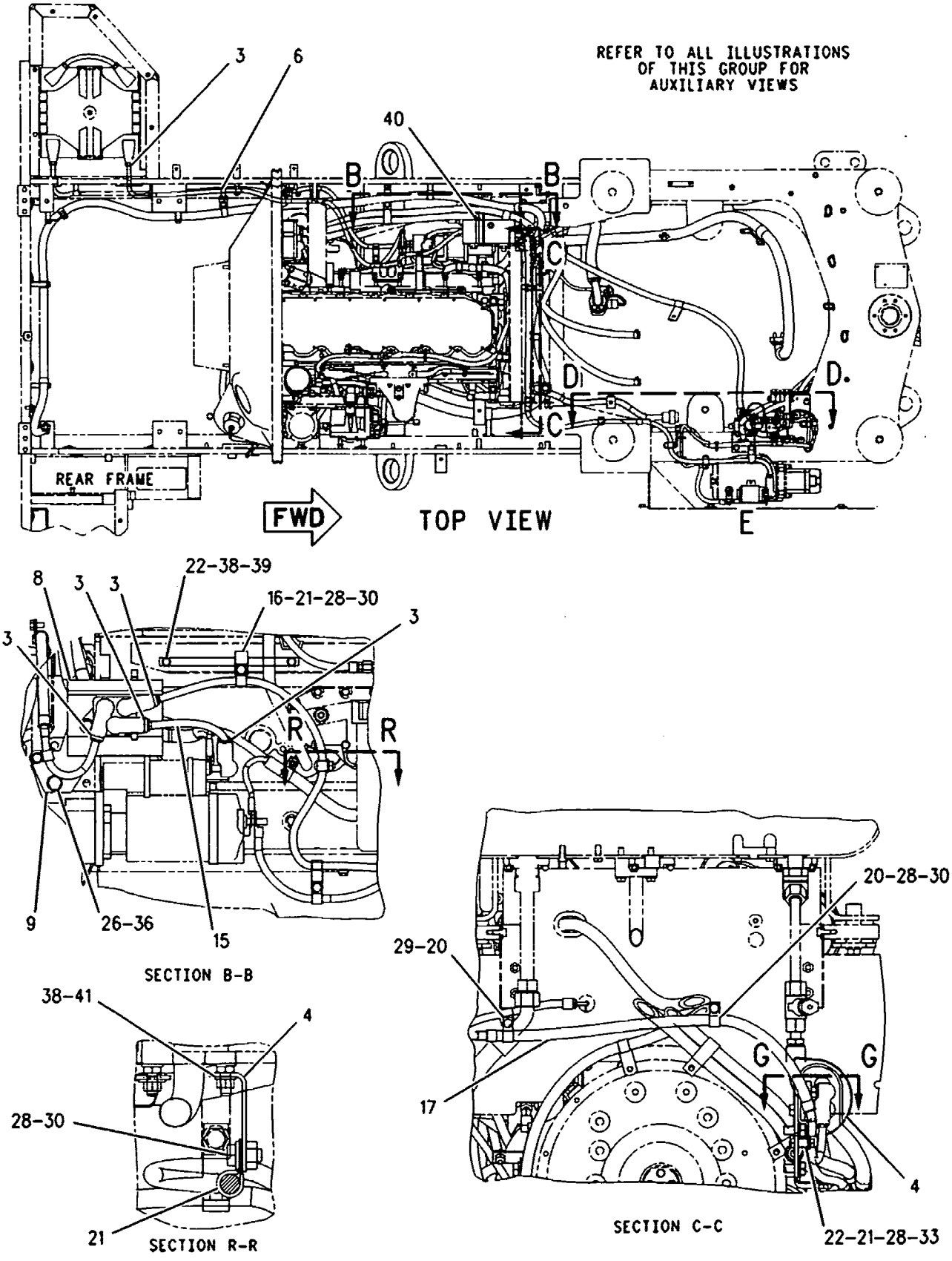

GRAPHIC #1 g00949579

201-8416 WIRING GP-SECONDARY STEERING (contd.)

i02155713

NOTE	REF NO	GRAPHIC REF	PART NUMBER	QTY	PART NAME 1 2 3 4 5 6 (PRODUCT LEVEL)	SEE PAGE
	19	2	130-5301	1	CLIP	
	20	1	1S-0994	2	CLIP	
	21	1,2	205-7299	8	CLIP	
	22	1	2A-2677	3	SPACER (0.75-IN THK)	
	23	2	3K-0360	2	SEAL-O-RING	
	24	2	5P-9085	1	CLIP	
	25	2	5P-9297	2	CLIP	
M	26	1	7X-2552	2	BOLT (M16X2X30-MM)	
	27	2	8M-2770	1	CLIP	
	28	1,2	8T-4121	14	WASHER-HARD (11X21X2.5-MM THK)	
M	29	1,2	8T-4136	4	BOLT (M10X1.5X25-MM)	
M	30	1,2	8T-4137	11	BOLT (M10X1.5X20-MM)	
M	31	2	8T-4139	2	BOLT (M12X1.75X30-MM)	
M	32	2	8T-4171	1	BOLT (M6X1X12-MM)	
M	33	1	8T-4186	1	BOLT (M10X1.5X40-MM)	
	34	2	8T-4223	3	WASHER-HARD (13.5X25.5X3-MM THK)	
M	35	2	8T-4244	1	NUT (M12X1.75-THD)	
	36	1	9X-8257	2	WASHER (17.5X30X3.5-MM THK)	
	37	2	9X-8267	1	WASHER (6.6X12X2-MM THK)	
	38	1	8T-4224	3	WASHER-HARD (8.8X16X2-MM THK)	
M	39	1	7X-2537	2	BOLT (M8X1.25X35-MM)	
	40	1	5P-5148	1	STRAP-TIE	
M	41	1	5C-7261	1	NUT (M8X1.25-THD)	

C-CHANGE FROM PREVIOUS TYPE
E-ORDER BY THE CENTIMETER
M-METRIC PART
Y-SEPARATE ILLUSTRATION

ELECTRICAL AND STARTING SYSTEM

201-8416 WIRING GP-SECONDARY STEERING

S/N: CRD515-UP
PART OF 204-0835 STEERING AR-SECONDARY
AN ATTACHMENT

SMCS-1408, 4334 — i02155713

NOTE	REF NO	GRAPHIC REF	PART NUMBER	QTY	PART NAME 1 2 3 4 5 6 (PRODUCT LEVEL)	SEE PAGE
	1	2	3E-5239	1	RELAY AS (24-VOLT) (SECONDARY STEERING)	
C	2	2	230-5771	1	SWITCH AS-PRESSURE (SECONDARY STEERING OIL)	
C	2A	2	230-5771	1	SWITCH AS-PRESSURE (PRIMARY STEERING OIL)	
					(EACH SWITCH INCLUDES)	
		2	102-8803	1	KIT-RECEPTACLE (3-PIN)	
					(INCLUDES RECEPTACLE AS & WEDGE)	
		2	3E-3371	1	WEDGE-RECEPTACLE LOCK (3-PIN)	
		2	186-3735	3	PIN-CONNECTOR (16-GA TO 18-GA)	
E		2	9X-1813		SLEEVE (30-CM)	
	3	1,2	3S-2093	13	STRAP-CABLE	
	4	1	212-3413	1	BRACKET AS	
M		1	8T-3490	1	NUT-WELD (M10X1.5-THD)	
Y	5	2	*9W-0742*	1	BLOCK GP-JUNCTION	175
	6	1	113-8449	1	CABLE AS	
		1	1S-7251	1	TERMINAL-RING (FOR 1/2-IN BOLT)	
E		1	5P-0761		CABLE (00-GA, RED) (193-CM)	
		1	8N-0869	1	COVER-TERMINAL (RED)	
		1	8N-1725	1	COVER-TERMINAL (RED)	
	7	2	116-4491	2	BRACKET AS	
					(EACH INCLUDES)	
M		2	8T-3490	1	NUT-WELD (M10X1.5-THD)	
	8	1	122-0493	1	COVER	
	9	1	145-1015	1	PLATE AS	
M		1	8T-3490	1	NUT-WELD (M10X1.5-THD)	
M		1	8T-3597	2	NUT-WELD (M12X1.75-THD)	
	10	2	162-9728	1	BRACKET AS	
M		2	8T-3490	1	NUT-WELD (M10X1.5-THD)	
	11	2	189-5604	1	PLATE AS	
M		2	6V-9632	1	NUT-WELD (M6X1-THD)	
	12	2	192-5017	1	BRACKET AS	
M		2	8T-3490	1	NUT-WELD (M10X1.5-THD)	
	13	2	202-3247	1	HARNESS AS-STEERING (SECONDARY)	
		2	102-8801	1	KIT-RECEPTACLE (12-PIN)	
		2	155-2260	1	KIT-CONNECTING PLUG (3-PIN)	
		2	155-2270	1	KIT-CONNECTING PLUG (2-PIN)	
					(INCLUDES PLUG AS & WEDGE)	
		2	8T-8737	2	PLUG-SEAL	
		2	9X-1054	1	PLUG AS-CONNECTOR (4-PIN)	
	14	2	203-3694	1	CABLE AS	
		2	1S-7252	1	TERMINAL-RING (FOR 3/8-IN BOLT)	
E		2	5P-0747		CABLE (00-GA, BLACK) (26-CM)	
		2	9X-9825	1	TERMINAL-CABLE (FOR 1/2-IN BOLT)	
	15	1	203-3697	1	CABLE AS	
		1	1S-7251	2	TERMINAL-RING (FOR 1/2-IN BOLT)	
E		1	5P-0761		CABLE (00-GA, RED) (30-CM)	
		1	8N-0869	2	COVER-TERMINAL (RED)	
	16	1	212-3415	1	BRACKET AS	
M		1	8T-3490	1	NUT-WELD (M10X1.5-THD)	
	17	1	216-6940	1	CABLE AS	
		1	1S-7251	1	TERMINAL-RING (FOR 1/2-IN BOLT)	
		1	1S-7252	1	TERMINAL-RING (FOR 3/8-IN BOLT)	
E		1	5P-0695		CONDUIT (73-CM)	
E		1	5P-0761		CABLE (00-GA, RED) (211-CM)	
		1	8N-0869	2	COVER-TERMINAL (RED)	
	18	2	130-5300	2	CLIP	

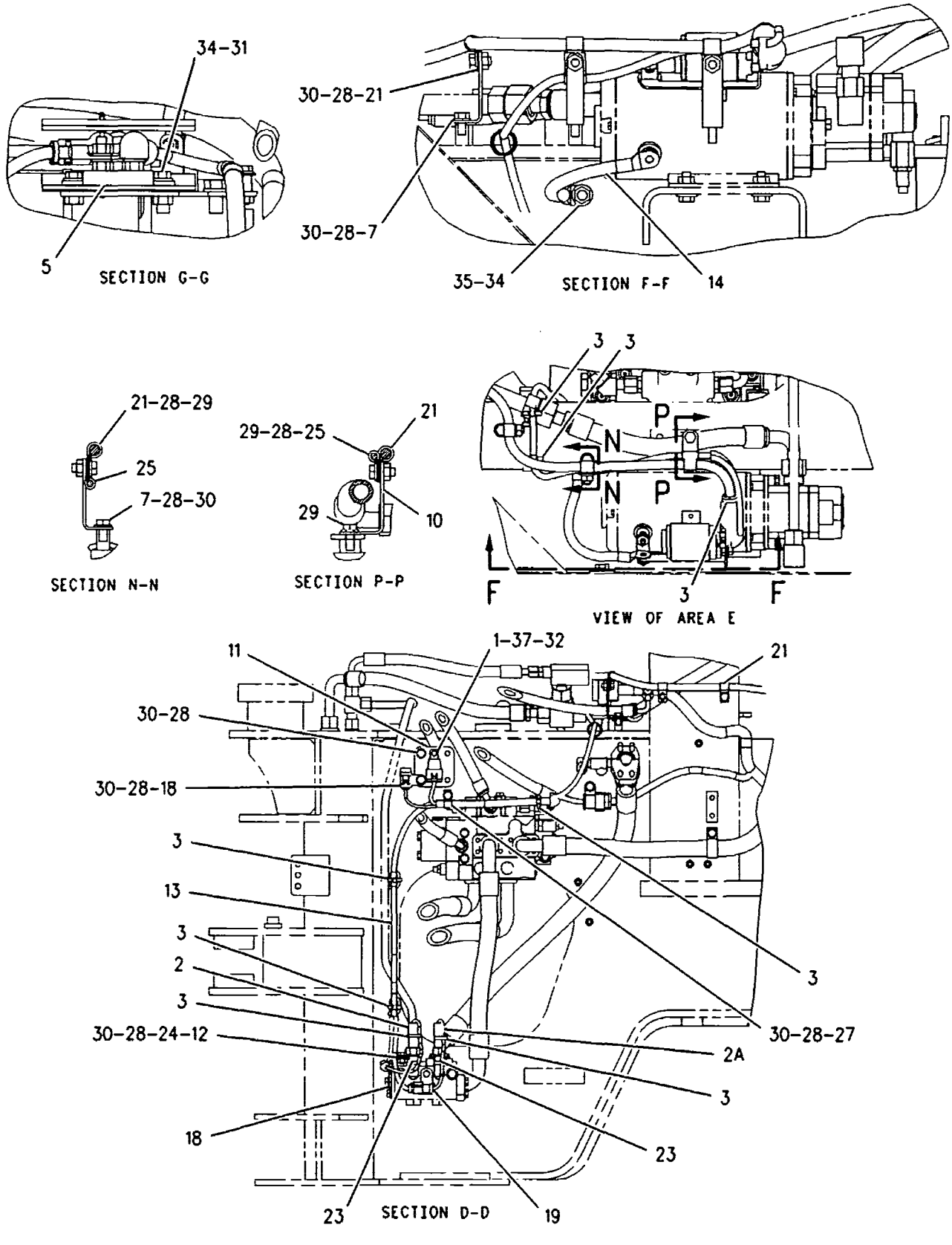

GRAPHIC #2 **<END>** g00869869

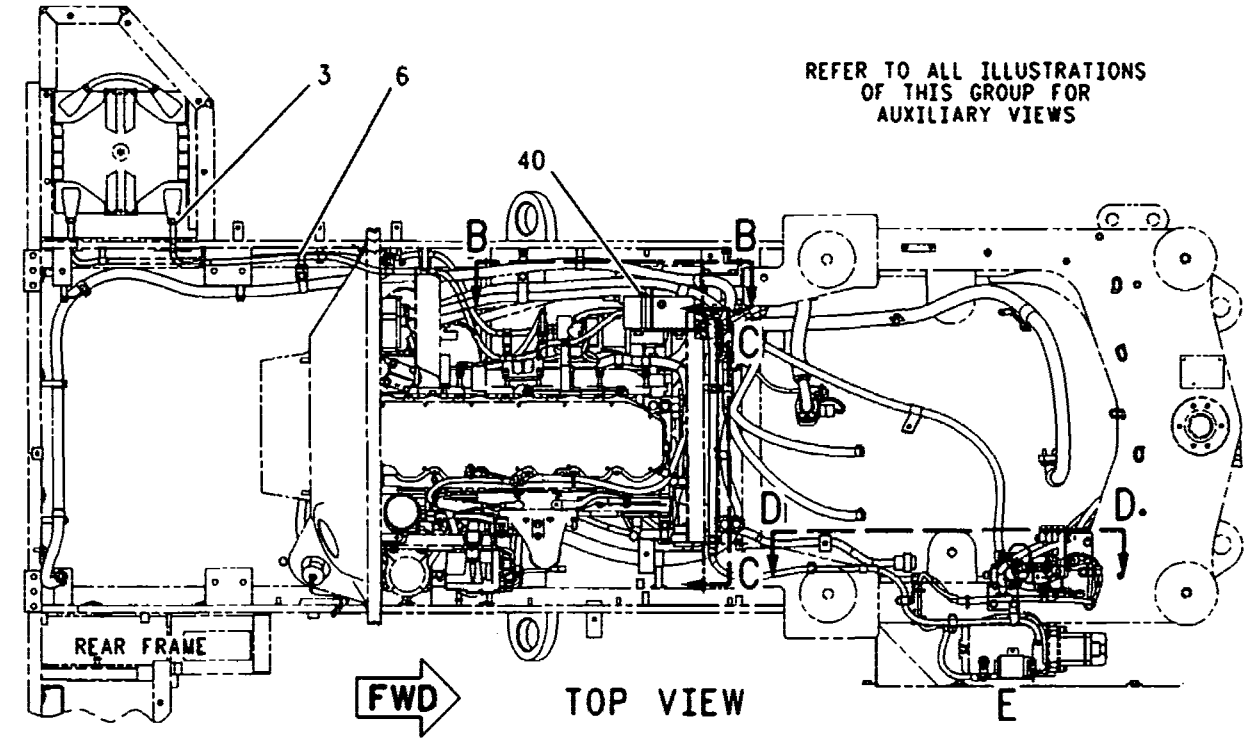

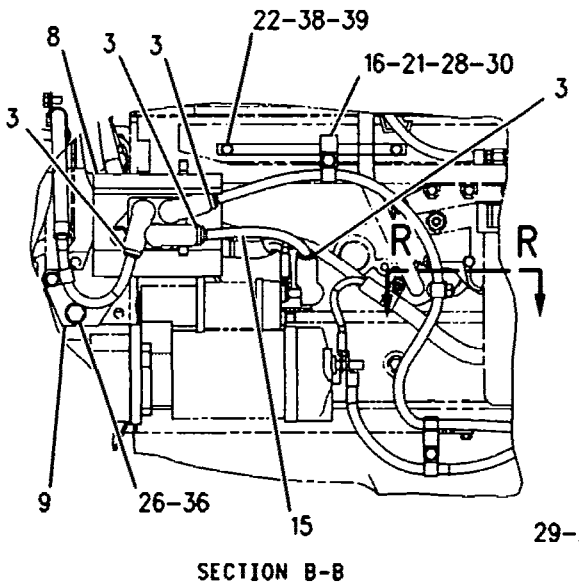

SECTION B-B

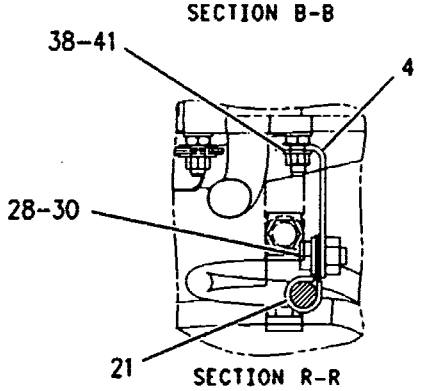

SECTION R-R

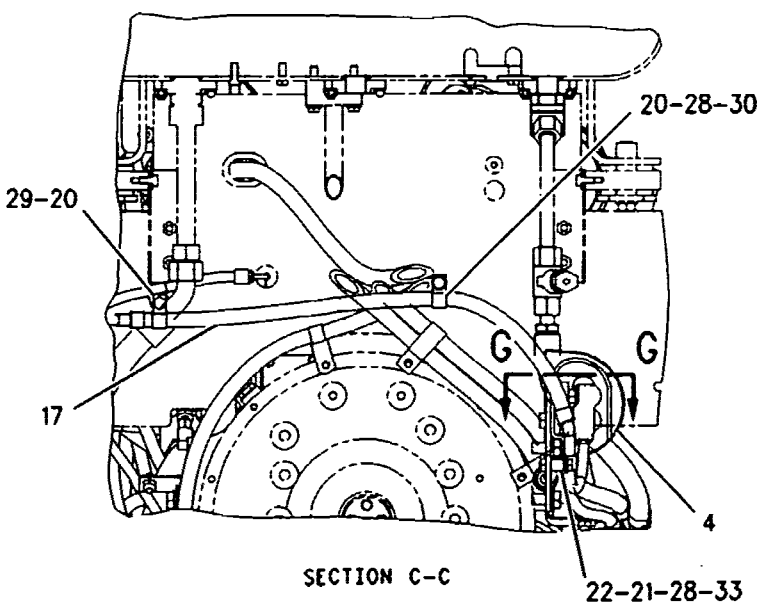

SECTION C-C

GRAPHIC #1 g00949579

201-8416 WIRING GP-SECONDARY STEERING (contd.) i01861205

NOTE	REF NO	GRAPHIC REF	PART NUMBER	QTY	PART NAME 1 2 3 4 5 6 (PRODUCT LEVEL)	SEE PAGE
	22	1	2A-2677	3	SPACER (0.75-IN THK)	
	23	2	3K-0360	2	SEAL-O-RING	
	24	2	5P-9085	1	CLIP	
	25	2	5P-9297	2	CLIP	
M	26	1	7X-2552	2	BOLT (M16X2X30-MM)	
	27	2	8M-2770	1	CLIP	
	28	1,2	8T-4121	14	WASHER-HARD (11X21X2.5-MM THK)	
M	29	1,2	8T-4136	4	BOLT (M10X1.5X25-MM)	
M	30	1,2	8T-4137	11	BOLT (M10X1.5X20-MM)	
M	31	2	8T-4139	2	BOLT (M12X1.75X30-MM)	
M	32	2	8T-4171	1	BOLT (M6X1X12-MM)	
M	33	1	8T-4186	1	BOLT (M10X1.5X40-MM)	
	34	2	8T-4223	3	WASHER-HARD (13.5X25.5X3-MM THK)	
M	35	2	8T-4244	1	NUT (M12X1.75-THD)	
	36	1	9X-8257	2	WASHER (17.5X30X3.5-MM THK)	
	37	2	9X-8267	1	WASHER (6.6X12X2-MM THK)	
	38	1	8T-4224	3	WASHER-HARD (8.8X16X2-MM THK)	
M	39	1	7X-2537	2	BOLT (M8X1.25X35-MM)	
	40	1	5P-5148	1	STRAP-TIE	
M	41	1	5C-7261	1	NUT (M8X1.25-THD)	

E-ORDER BY THE CENTIMETER
M-METRIC PART
Y-SEPARATE ILLUSTRATION

201-8416 WIRING GP-SECONDARY STEERING

S/N: CRD1-514
PART OF 204-0835 STEERING AR-SECONDARY
AN ATTACHMENT

SMCS-1408, 4334 i01861205

NOTE	REF NO	GRAPHIC REF	PART NUMBER	QTY	PART NAME 1 2 3 4 5 6 (PRODUCT LEVEL)	SEE PAGE
	1	2	3E-5239	1	RELAY AS (24-VOLT) (SECONDARY STEERING)	
	2	2	3E-6450	1	SWITCH AS-PRESSURE (SECONDARY STEERING OIL)	
	2A	2	3E-6450	1	SWITCH AS-PRESSURE (PRIMARY STEERING OIL)	
					(EACH SWITCH INCLUDES)	
		2	102-8803	1	KIT-RECEPTACLE (3-PIN)	
		2	3E-3371	1	WEDGE-RECEPTACLE LOCK (3-PIN)	
		2	8T-8729	3	PIN-CONNECTOR	
	3	1,2	3S-2093	13	STRAP-CABLE	
	4	1	212-3413	1	BRACKET AS	
M		1	8T-3490	1	NUT-WELD (M10X1.5-THD)	
Y	5	2	9W-0742	1	BLOCK GP-JUNCTION	175
	6	1	113-8449	1	CABLE AS	
		1	1S-7251	1	TERMINAL-RING (FOR 1/2-IN BOLT)	
E		1	5P-0761		CABLE (00-GA, RED) (193CM)	
		1	8N-0869	1	COVER-TERMINAL (RED)	
		1	8N-1725	1	COVER-TERMINAL (RED)	
	7	2	116-4491	2	BRACKET AS	
					(EACH INCLUDES)	
M		2	8T-3490	1	NUT-WELD (M10X1.5-THD)	
	8	1	122-0493	1	COVER	
	9	1	145-1015	1	PLATE AS	
M		1	8T-3490	1	NUT-WELD (M10X1.5-THD)	
M		1	8T-3597	2	NUT-WELD (M12X1.75-THD)	
	10	2	162-9728	1	BRACKET AS	
M		2	8T-3490	1	NUT-WELD (M10X1.5-THD)	
	11	2	189-5604	1	PLATE AS	
M		2	6V-9632	1	NUT-WELD (M6X1-THD)	
	12	2	192-5017	1	BRACKET AS	
M		2	8T-3490	1	NUT-WELD (M10X1.5-THD)	
	13	2	202-3247	1	HARNESS AS-STEERING (SECONDARY)	
		2	102-8801	1	KIT-RECEPTACLE (12-PIN)	
		2	155-2260	1	KIT-CONNECTING PLUG (3-PIN)	
		2	155-2270	1	KIT-CONNECTING PLUG (2-PIN)	
		2	8T-8737	2	PLUG-SEAL	
		2	9X-1054	1	PLUG AS-CONNECTOR (4-PIN)	
	14	2	203-3694	1	CABLE AS	
		2	1S-7252	1	TERMINAL-RING (FOR 3/8-IN BOLT)	
E		2	5P-0747		CABLE (00-GA, BLACK) (26CM)	
		2	9X-9825	1	TERMINAL-CABLE	
	15	1	203-3697	1	CABLE AS	
		1	1S-7251	2	TERMINAL-RING (FOR 1/2-IN BOLT)	
E		1	5P-0761		CABLE (00-GA, RED) (30CM)	
		1	8N-0869	2	COVER-TERMINAL (RED)	
	16	1	212-3415	1	BRACKET AS	
M		1	8T-3490	1	NUT-WELD (M10X1.5-THD)	
	17	1	216-6940	1	CABLE AS	
		1	1S-7251	1	TERMINAL-RING (FOR 1/2-IN BOLT)	
		1	1S-7252	1	TERMINAL-RING (FOR 3/8-IN BOLT)	
E		1	5P-0695		CONDUIT (73CM)	
E		1	5P-0761		CABLE (00-GA, RED) (211CM)	
		1	8N-0869	2	COVER-TERMINAL (RED)	
	18	2	130-5300	2	CLIP	
	19	2	130-5301	1	CLIP	
	20	1	1S-0994	2	CLIP	
	21	1,2	205-7299	8	CLIP	

229-2273 WIRING GP-POWER GUARD *(contd.)* i02172134

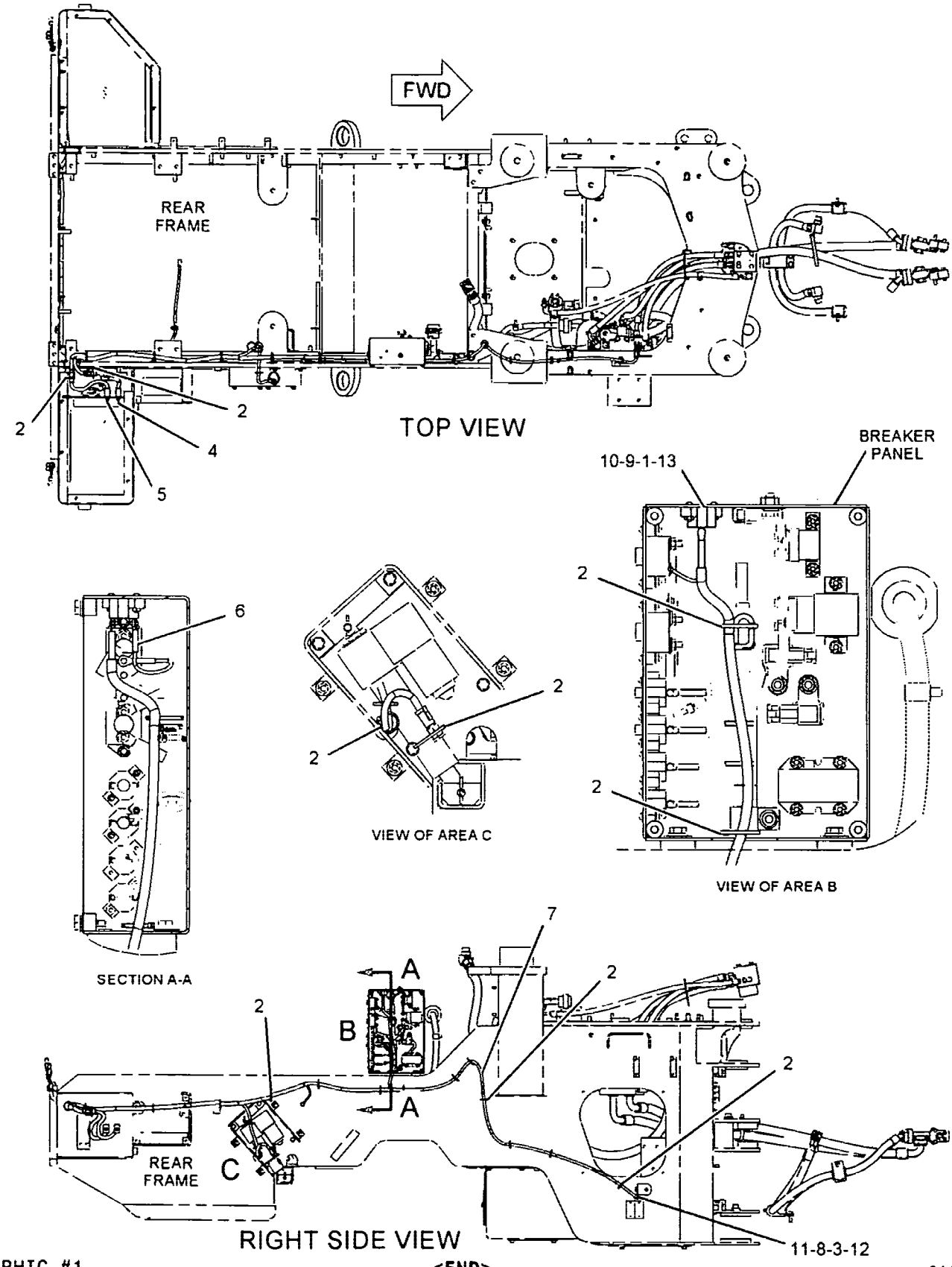

GRAPHIC #1

<END>

g01101462

ELECTRICAL AND STARTING SYSTEM

229-2273 WIRING GP-POWER GUARD

S/N: CRD1-UP

PART OF 227-4777 ACTUATOR AR-POWER GUARD

AN ATTACHMENT

SMCS-1408 i02172134

NOTE	REF NO	GRAPHIC REF	PART NUMBER	QTY	PART NAME 1 2 3 4 5 6 (PRODUCT LEVEL)	SEE PAGE
	1	1	5M-6668	2	SCREW-MACHINE (8-32X0.75-IN)	
	2	1	7K-1181	21	STRAP-CABLE	
	3	1	155-4791	1	BRACKET AS	
M		1	8T-3490	1	NUT-WELD (M10X1.5-THD)	
	4	1	157-1356	1	SWITCH AS-TOGGLE (MIDDLE BOTTOM GUARD ACTUATOR)	
		1	3E-3389	1	WEDGE-RECEPTACLE LOCK	
		1	6T-3631	2	NUT-HEX (15/32-32-THD)	
		1	6T-3632	1	LOCKWASHER	
		1	6T-3633	1	RING-LOCKING	
		1	9G-3695	2	PLUG (GROMMET SEALING)	
		1	102-8806	1	KIT-RECEPTACLE (8-PIN)	
					(INCLUDES RECEPTACLE AS AND WEDGE)	
	5	1	157-1364	1	SWITCH AS-TOGGLE (REAR BOTTOM GUARD ACTUATOR)	
		1	3E-3383	1	WEDGE-RECEPTACLE LOCK (6-PIN)	
		1	6T-3631	2	NUT-HEX (15/32-32-THD)	
		1	6T-3632	1	LOCKWASHER	
		1	6T-3633	1	RING-LOCKING	
		1	102-8805	1	KIT-RECEPTACLE (6-PIN)	
					(INCLUDES RECEPTACLE AS AND WEDGE)	
	6	1	229-2274	1	WIRE AS	
	7	1	229-2276	1	HARNESS AS-CHASSIS (POWER GUARD)	
		1	8T-8737	2	PLUG-SEAL	
		1	155-2269	2	PLUG AS-CONNECTOR (2-PIN)	
					(INCLUDES RECEPTACLE AS AND WEDGE)	
		1	155-2274	1	KIT-CONNECTING PLUG (6-PIN)	
					(INCLUDES PLUG AS AND WEDGE)	
	8	1	130-5300	1	CLIP	
	9	1	4B-4274	2	WASHER (5.5X13X1.2-MM THK)	
	10	1	4B-2043	2	NUT (8-32X3.18-MM)	
	11	1	8T-4121	1	WASHER-HARD (11X21X2.5-MM THK)	
M	12	1	8T-4137	1	BOLT (M10X1.5X20-MM)	
	13	1	9H-1958	1	CIRCUIT BREAKER GP (20-AMPERE)	
		1	6V-8376	2	SCREW-MACHINE (8-32X0.25-IN)	
		1	9B-7233	2	LOCKWASHER	

M-METRIC PART

235-8632 **WIRING GP-MACHINE** *(contd.)* **i02148732**

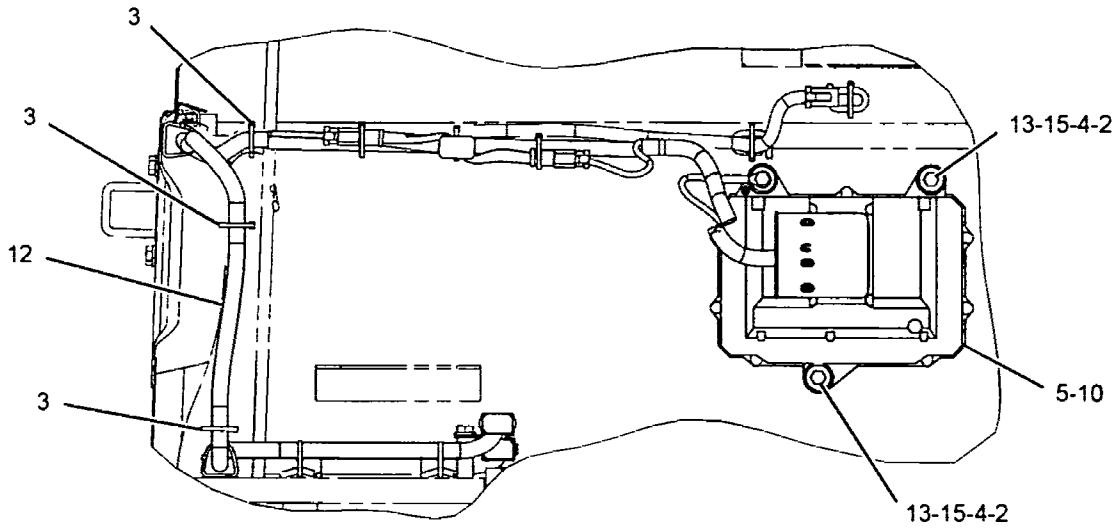

VIEW A-A

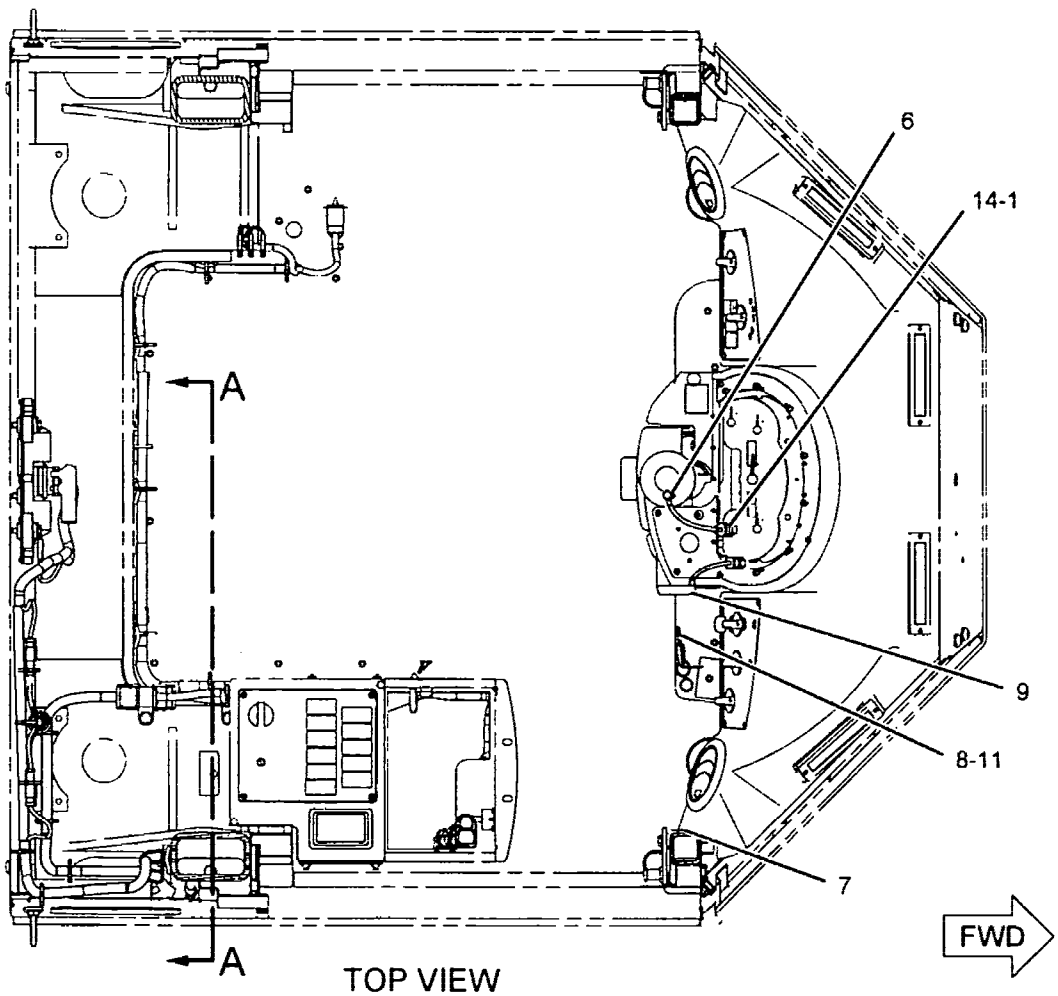

TOP VIEW

GRAPHIC #1

<END>

g01096720

ELECTRICAL AND STARTING SYSTEM

235-8632 WIRING GP-MACHINE

S/N: CRD1-UP
AN ATTACHMENT

SMCS-1408 i02148732

NOTE	REF NO	GRAPHIC REF	PART NUMBER	QTY	PART NAME 1 2 3 4 5 6 (PRODUCT LEVEL)	SEE PAGE
	1	1	3E-3371	1	WEDGE-RECEPTACLE LOCK (3-PIN)	
	2	1	6I-1418	3	SPACER (8.2X12.7X28.7-MM THK)	
	3	1	7K-1181	7	STRAP-CABLE	
	4	1	8T-9655	6	MOUNT-ISOLATION	
Y	5	1	207-5262	1	SERVICE GP-MACHINE (SECURITY)	260
	6	1	165-5655	1	LAMP AS (RED, GREEN, LED, 12-VOLT)	
		1	186-3735	3	PIN-CONNECTOR (16-GA TO 18-GA)	
	7	1	205-0826	1	FILM-INSTRUCTION (READ OWNERS MANUAL)	
	8	1	206-5162	2	KEY AS-ELECTRONIC (SECURITY)	
	9	1	*206-5208*	1	COIL AS (EXCITER)	
		1	102-8802	1	KIT-RECEPTACLE (2-PIN)	
					(INCLUDES RECEPTACLE AS AND WEDGE)	
		1	3E-3365	1	WEDGE-RECEPTACLE LOCK (2-PIN)	
		1	198-5389	1	FILM (IGNITION SWITCH)	
		1	200-5125	1	FILM (IGNITION SWITCH) (IGNITION SWITCH)	
BD		1	5P-5677		WIRE (18-GA, BLACK)	
		1	186-3735	2	PIN-CONNECTOR (16-GA TO 18-GA)	
	10	1	232-9737	1	SOFTWARE GP-MACHINE (SECURITY)	
	11	1	219-6314	2	KEY RING (IDENTIFICATION)	
	12	1	235-0369	1	HARNESS AS-CONTROL (SECURITY)	
		1	3S-2093	2	STRAP-CABLE	
		1	7K-1181	3	STRAP-CABLE	
		1	8T-8737	16	PLUG-SEAL	
		1	150-6766	1	PLUG AS-CONNECTOR (26-PIN)	
		1	159-9322	1	SEAL-O-RING	
		1	155-2255	1	KIT-CONNECTING PLUG (12-PIN)	
		1	155-2270	2	KIT-CONNECTING PLUG (2-PIN)	
					(EACH INCLUDES PLUG AS AND WEDGE)	
		1	222-3870	1	COIL AS (FERRITE)	
		1	102-8802	2	KIT-RECEPTACLE (2-PIN)	
					(INCLUDES RECEPTACLE AS AND WEDGE)	
		1	3E-3365	2	WEDGE-RECEPTACLE LOCK (2-PIN)	
M	13	1	099-3649	3	BOLT (M8X1.25X40-MM)	
	14	1	102-8803	1	KIT-RECEPTACLE (3-PIN)	
					(INCLUDES RECEPTACLE AS AND WEDGE)	
	15	1	9N-0869	3	WASHER-HARD (8.8X25.5X2-MM THK)	

B-USE AS REQUIRED
D-ORDER BY THE METER
M-METRIC PART
Y-SEPARATE ILLUSTRATION

201-8415 WIRING GP-MACHINE (contd.) i02161916

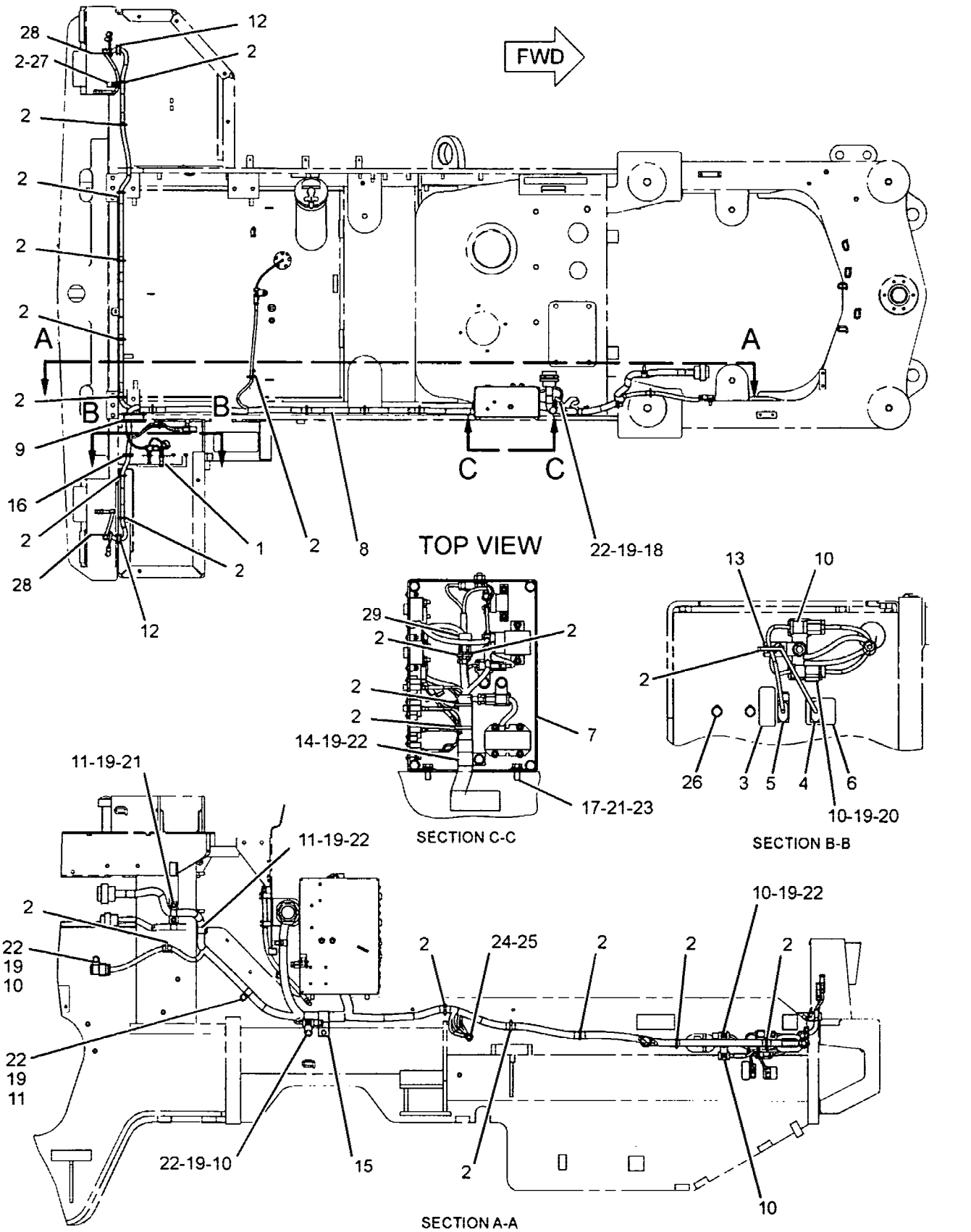

GRAPHIC #1

<END>

g01099526

201-8415 WIRING GP-MACHINE (contd.)

i02161916

NOTE	REF NO	GRAPHIC REF	PART NUMBER	QTY	PART NAME 1 2 3 4 5 6 (PRODUCT LEVEL)	SEE PAGE
	23	1	8T-4222	3	WASHER-PLATED (11X32X2.5-MM THK)	
	24	1	8T-4223	1	WASHER-HARD (13.5X25.5X3-MM THK)	
M	25	1	8T-4244	1	NUT (M12X1.75-THD)	
	26	1	3D-9872	2	PLUG-BUTTON	
C	27	1	132-5789	1	CLIP	
C	28	1	7N-3718	2	CLIP	
	29	1	218-4935	1	SUPPRESSOR-ARC	

C-CHANGE FROM PREVIOUS TYPE
M-METRIC PART
Y-SEPARATE ILLUSTRATION

201-8415 WIRING GP-MACHINE

S/N: CRD598-UP

PART OF 199-2817 ELECTRICAL AR

SMCS-1408 i02161916

NOTE	REF NO	GRAPHIC REF	PART NUMBER	QTY	PART NAME 1 2 3 4 5 6 (PRODUCT LEVEL)	SEE PAGE
	1	1	3E-5169	1	GUARD-SWITCH	
C	2	1	7K-1181	22	STRAP-CABLE	
	3	1	131-0359	1	PLATE-CONTROL (ENGINE START)	
	4	1	146-0240	1	SWITCH GP-TOGGLE (HOOD TILT ACTUATOR)	
		1	3E-3371	1	WEDGE-RECEPTACLE LOCK (3-PIN)	
		1	6T-3631	2	NUT-HEX (15/32-32-THD)	
		1	6T-3632	1	LOCKWASHER	
		1	6T-3633	1	RING-LOCKING	
		1	8T-8729	3	PIN-CONNECTOR	
		1	102-8803	1	KIT-RECEPTACLE (3-PIN)	
	5	1	158-6634	1	SWITCH GP-TOGGLE (GROUND LEVEL SHUTDOWN)	
		1	3E-3377	1	WEDGE-RECEPTACLE LOCK (4-PIN)	
		1	6T-3631	2	NUT-HEX (15/32-32-THD)	
		1	6T-3632	1	LOCKWASHER	
		1	6T-3633	1	RING-LOCKING	
		1	8T-8729	3	PIN-CONNECTOR	
		1	9G-3695	1	PLUG (GROMMET SEALING)	
		1	102-8804	1	KIT-RECEPTACLE (4-PIN)	
	6	1	188-6252	1	PLATE-HOOD	
Y	7	1	*202-3245*	1	PANEL GP-CIRCUIT BREAKER	228
C	8	1	234-0621	1	HARNESS AS	
		1	102-8801	1	KIT-RECEPTACLE (12-PIN)	
		1	102-8802	1	KIT-RECEPTACLE (2-PIN)	
		1	102-8804	1	KIT-RECEPTACLE (4-PIN)	
		1	155-2255	11	KIT-CONNECTING PLUG (12-PIN)	
		1	155-2260	1	KIT-CONNECTING PLUG (3-PIN)	
		1	155-2270	1	KIT-CONNECTING PLUG (2-PIN)	
		1	155-2271	1	KIT-CONNECTING PLUG (4-PIN)	
		1	155-2274	11	KIT-CONNECTING PLUG (6-PIN)	
		1	7G-7920	1	PLUG-SEAL	
		1	7K-1181	1	STRAP-CABLE	
		1	8N-1517	1	RECEPTACLE AS (25-PIN)	
		1	8N-1518	1	PLUG AS-CONNECTOR (25-PIN)	
		1	8N-1521	2	BELL AS-END	
		1	8N-1522	1	NUT (2-1/4-16-THD)	
		1	8T-8737	27	PLUG-SEAL	
		1	7G-7917	5	PLUG-SEAL	
		1	7G-7918	5	PLUG-SEAL	
		1	7G-7919	2	PLUG-SEAL	
		1	7G-7920	1	PLUG-SEAL	
		1	129-7163	1	PLUG AS-CONNECTOR (1-PIN)	
		1	129-7164	1	RECEPTACLE AS (1-PIN)	
	9	1	205-0353	2	GROMMET	
	10	1	130-5300	6	CLIP	
	11	1	1S-0994	3	CLIP	
	12	1	2M-3433	2	GROMMET	
	13	1	4P-7581	1	CLIP	
	14	1	4S-1962	1	CLIP	
	15	1	4D-7388	1	CLIP	
	16	1	5F-9757	1	GROMMET	
	17	1	5P-1075	3	WASHER-HARD (10.2X22.5X3-MM THK)	
	18	1	6D-4244	1	CLIP	
	19	1	8T-4121	9	WASHER-HARD (11X21X2.5-MM THK)	
M	20	1	8T-4133	1	NUT (M10X1.5-THD)	
M	21	1	8T-4136	4	BOLT (M10X1.5X25-MM)	
M	22	1	8T-4137	7	BOLT (M10X1.5X20-MM)	

201-8415 WIRING GP-MACHINE (contd.) i01865550

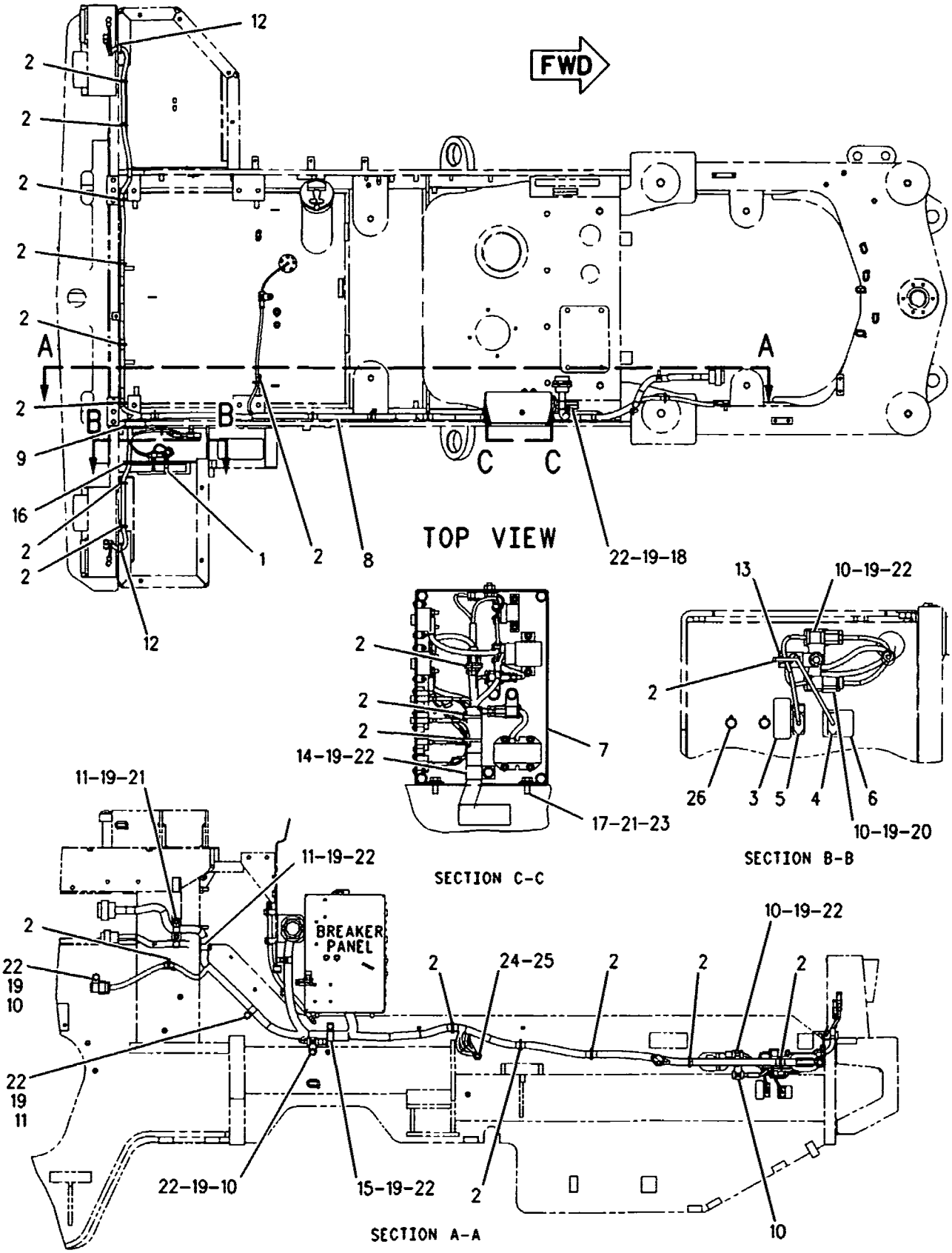

GRAPHIC #1 <END> g00951506

201-8415 WIRING GP-MACHINE (contd.)

i01865550

NOTE	REF NO	GRAPHIC REF	PART NUMBER	QTY	PART NAME 1 2 3 4 5 6 (PRODUCT LEVEL)	SEE PAGE
	24	1	8T-4223	1	WASHER-HARD (13.5X25.5X3-MM THK)	
M	25	1	8T-4244	1	NUT (M12X1.75-THD)	
	26	1	3D-9872	2	PLUG-BUTTON	

M-METRIC PART
Y-SEPARATE ILLUSTRATION

ELECTRICAL AND STARTING SYSTEM

201-8415 WIRING GP-MACHINE

S/N: CRD1-597

PART OF 199-2817 ELECTRICAL AR

SMCS-1408 **101865550**

NOTE	REF NO	GRAPHIC REF	PART NUMBER	QTY	PART NAME 1 2 3 4 5 6 (PRODUCT LEVEL)	SEE PAGE
	1	1	3E-5169	1	GUARD-SWITCH	
	2	1	7K-1181	20	STRAP-CABLE	
	3	1	131-0359	1	PLATE-CONTROL (ENGINE START)	
	4	1	146-0240	1	SWITCH GP-TOGGLE (HOOD TILT ACTUATOR)	
		1	3E-3371	1	WEDGE-RECEPTACLE LOCK (3-PIN)	
		1	6T-3631	2	NUT-HEX (15/32-32-THD)	
		1	6T-3632	1	LOCKWASHER	
		1	6T-3633	1	RING-LOCKING	
		1	8T-8729	3	PIN-CONNECTOR	
		1	102-8803	1	KIT-RECEPTACLE (3-PIN)	
	5	1	158-6634	1	SWITCH GP-TOGGLE (GROUND LEVEL SHUTDOWN)	
		1	3E-3377	1	WEDGE-RECEPTACLE LOCK (4-PIN)	
		1	6T-3631	2	NUT-HEX (15/32-32-THD)	
		1	6T-3632	1	LOCKWASHER	
		1	6T-3633	1	RING-LOCKING	
		1	8T-8729	3	PIN-CONNECTOR	
		1	9G-3695	1	PLUG (GROMMET SEALING)	
		1	102-8804	1	KIT-RECEPTACLE (4-PIN)	
	6	1	188-6252	1	PLATE-HOOD	
Y	7	1	*202-3245*	1	PANEL GP-CIRCUIT BREAKER	228
	8	1	202-3246	1	HARNESS AS-CHASSIS	
		1	102-8802	1	KIT-RECEPTACLE (2-PIN)	
		1	102-8804	1	KIT-RECEPTACLE (4-PIN)	
		1	102-8801	1	KIT-RECEPTACLE (12-PIN)	
		1	155-2255	1	KIT-CONNECTING PLUG (12-PIN)	
		1	155-2260	1	KIT-CONNECTING PLUG (3-PIN)	
		1	155-2270	1	KIT-CONNECTING PLUG (2-PIN)	
		1	155-2271	1	KIT-CONNECTING PLUG (4-PIN)	
		1	155-2274	1	KIT-CONNECTING PLUG (6-PIN)	
		1	7K-1181	1	STRAP-CABLE	
		1	8N-1517	1	RECEPTACLE AS (25-PIN)	
		1	8N-1522	1	NUT (2-1/4-16-THD)	
		1	8N-1518	1	PLUG AS-CONNECTOR (25-PIN)	
		1	8N-1521	2	BELL AS-END	
		1	8T-8737	27	PLUG-SEAL	
		1	7G-7917	5	PLUG-SEAL	
		1	7G-7918	5	PLUG-SEAL	
		1	7G-7919	2	PLUG-SEAL	
		1	7G-7920	1	PLUG-SEAL	
		1	129-7163	1	PLUG AS-CONNECTOR (1-PIN)	
		1	129-7164	1	RECEPTACLE AS (1-PIN)	
	9	1	205-0353	2	GROMMET	
	10	1	130-5300	6	CLIP	
	11	1	1S-0994	3	CLIP	
	12	1	2M-3433	2	GROMMET	
	13	1	4P-7581	1	CLIP	
	14	1	4S-1962	1	CLIP	
	15	1	4D-7388	1	CLIP	
	16	1	5F-9757	1	GROMMET	
	17	1	5P-1075	3	WASHER-HARD (10.2X22.5X3-MM THK)	
	18	1	6D-4244	1	CLIP	
	19	1	8T-4121	10	WASHER-HARD (11X21X2.5-MM THK)	
M	20	1	8T-4133	1	NUT (M10X1.5-THD)	
M	21	1	8T-4136	4	BOLT (M10X1.5X25-MM)	
M	22	1	8T-4137	8	BOLT (M10X1.5X20-MM)	
	23	1	8T-4222	3	WASHER-PLATED (11X32X2.5-MM THK)	

240-5961 WIRING GP-LIGHTING (contd.) i02089611

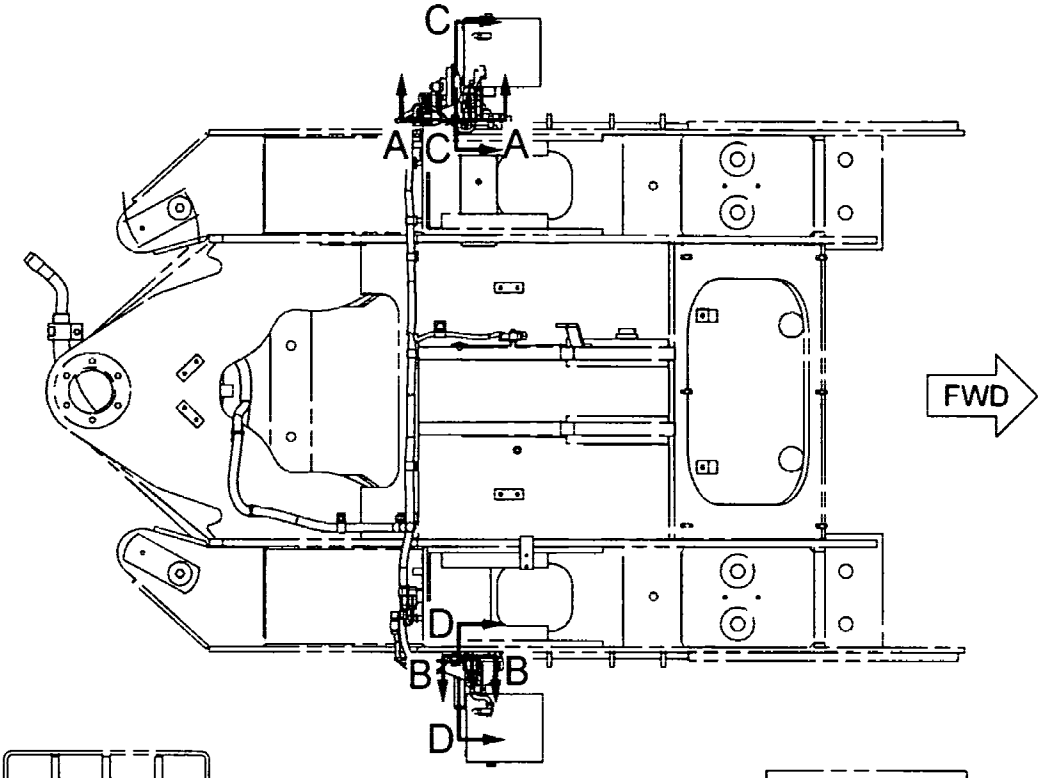

TOP VIEW

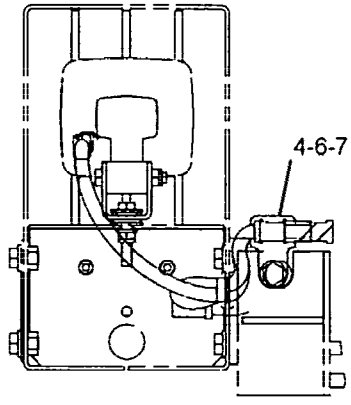

SECTION C-C

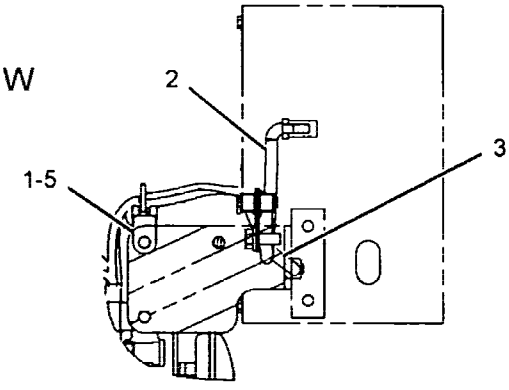

SECTION A-A

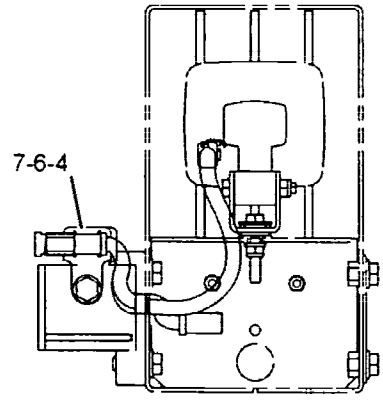

SECTION D-D

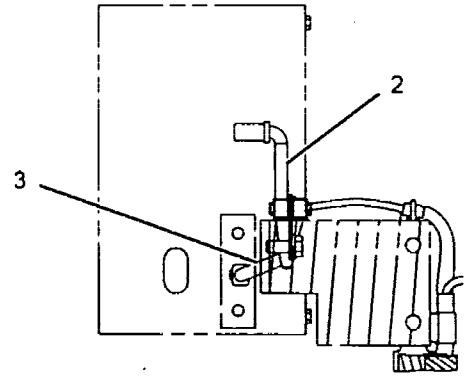

SECTION B-B

GRAPHIC #1 <END> g01066703

240-5961 WIRING GP-LIGHTING–WASTE HANDLER FLOOD

S/N: CRD1-UP

PART OF 240-2031, 240-2032 WASTE HANDLING AR

AN ATTACHMENT

SMCS-1408, 1429 i02089611

NOTE	REF NO	GRAPHIC REF	PART NUMBER	QTY	PART NAME 1 2 3 4 5 6 (PRODUCT LEVEL)	SEE PAGE
	1	1	7K-1181	1	STRAP-CABLE	
	2	1	240-5962	2	HARNESS AS-LIGHTING (FRONT FLOOD, RH, LH)	
					(EACH INCLUDES)	
		1	102-8802	1	KIT-RECEPTACLE (2-PIN)	
		1	155-2270	1	KIT-CONNECTING PLUG (2-PIN)	
	3	1	241-8461	2	HARNESS AS-LIGHTING (FRONT FLOOD, RH, LH)	
					(EACH INCLUDES)	
		1	102-8802	1	KIT-RECEPTACLE (2-PIN)	
		1	155-2270	1	KIT-CONNECTING PLUG (2-PIN)	
	4	1	130-5300	4	CLIP	
	5	1	4P-8134	1	CLIP	
	6	1	8T-4121	2	WASHER-HARD (11X21X2.5-MM THK)	
M	7	1	8T-4136	2	BOLT (M10X1.5X25-MM)	

M-METRIC PART

215-1889 WIRING GP-LIGHTING-ROADING

S/N: CRD1-UP
PART OF 212-1529, 212-1531 LIGHTING AR-ROADING
AN ATTACHMENT
TYPE 2

SMCS-1408, 1429 i01974666

NOTE	REF NO	GRAPHIC REF	PART NUMBER	QTY	PART NAME 1 2 3 4 5 6 (PRODUCT LEVEL)	SEE PAGE
C	1	1	7K-1181	1	STRAP-CABLE	
	2	1	138-7500	2	SPACER (11X25X50-MM THK)	
C	3	1	228-2516	1	HARNESS AS-LIGHTING (ROADING, RH)	
		1	102-8802	3	KIT-RECEPTACLE (2-PIN)	
		1	102-8803	1	KIT-RECEPTACLE (3-PIN)	
		1	8T-8737	2	PLUG-SEAL	
		1	155-2274	1	KIT-CONNECTING PLUG (6-PIN)	
C	4	1	228-2517	1	HARNESS AS-LIGHTING (ROADING, LH)	
		1	102-8802	2	KIT-RECEPTACLE (2-PIN)	
		1	102-8803	1	KIT-RECEPTACLE (3-PIN)	
		1	8T-8737	2	PLUG-SEAL	
		1	155-2274	1	KIT-CONNECTING PLUG (6-PIN)	
C	5	1	130-5300	4	CLIP	
	6	1	8T-4121	2	WASHER-HARD (11X21X2.5-MM THK)	
M	7	1	8T-4172	2	BOLT (M10X1.5X80-MM)	

C-CHANGE FROM PREVIOUS TYPE
M-METRIC PART

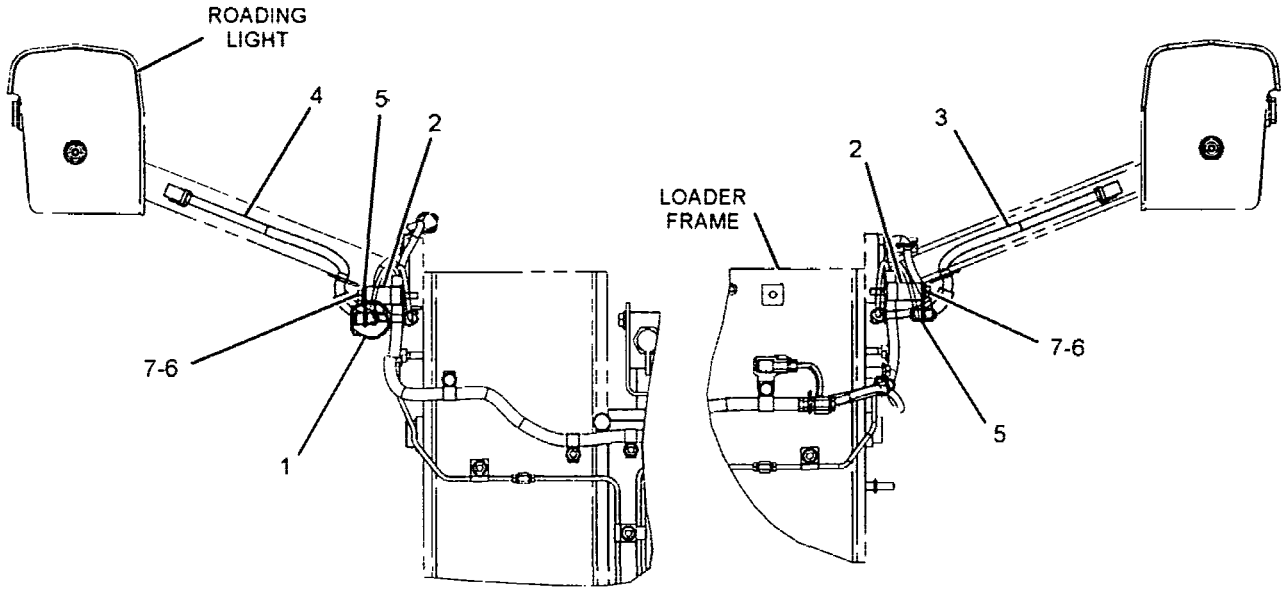

REAR VIEW

GRAPHIC #1 <END> g01100848

215-1889 WIRING GP-LIGHTING–ROADING

S/N: CRD1-UP

PART OF 212-1529, 212-1531 LIGHTING AR-ROADING

AN ATTACHMENT

TYPE 1

SMCS-1408, 1429 i02127285

NOTE	REF NO	GRAPHIC REF	PART NUMBER	QTY	PART NAME 1 2 3 4 5 6 (PRODUCT LEVEL)	SEE PAGE
	1	1	138-7500	2	SPACER (11X25X50-MM THK)	
	2	1	215-1882	1	HARNESS AS-LIGHTING (RH ROADING)	
		1	102-8802	1	KIT-RECEPTACLE (2-PIN)	
		1	102-8803	1	KIT-RECEPTACLE (3-PIN)	
					(EACH RECEPTACLE KIT INCLUDES RECEPTACLE AS AND WEDGE)	
		1	155-2274	1	KIT-CONNECTING PLUG (6-PIN)	
					(INCLUDES PLUG AS AND WEDGE)	
	3	1	215-1883	1	HARNESS AS-LIGHTING (ROADING, LH)	
		1	102-8802	1	KIT-RECEPTACLE (2-PIN)	
		1	102-8803	1	KIT-RECEPTACLE (3-PIN)	
					(EACH RECEPTACLE KIT INCLUDES RECEPTACLE AS AND WEDGE)	
		1	155-2274	1	KIT-CONNECTING PLUG (6-PIN)	
					(INCLUDES PLUG AS AND WEDGE)	
	4	1	130-5300	6	CLIP	
	5	1	8T-4121	2	WASHER-HARD (11X21X2.5-MM THK)	
M	6	1	8T-4172	2	BOLT (M10X1.5X80-MM)	

M-METRIC PART

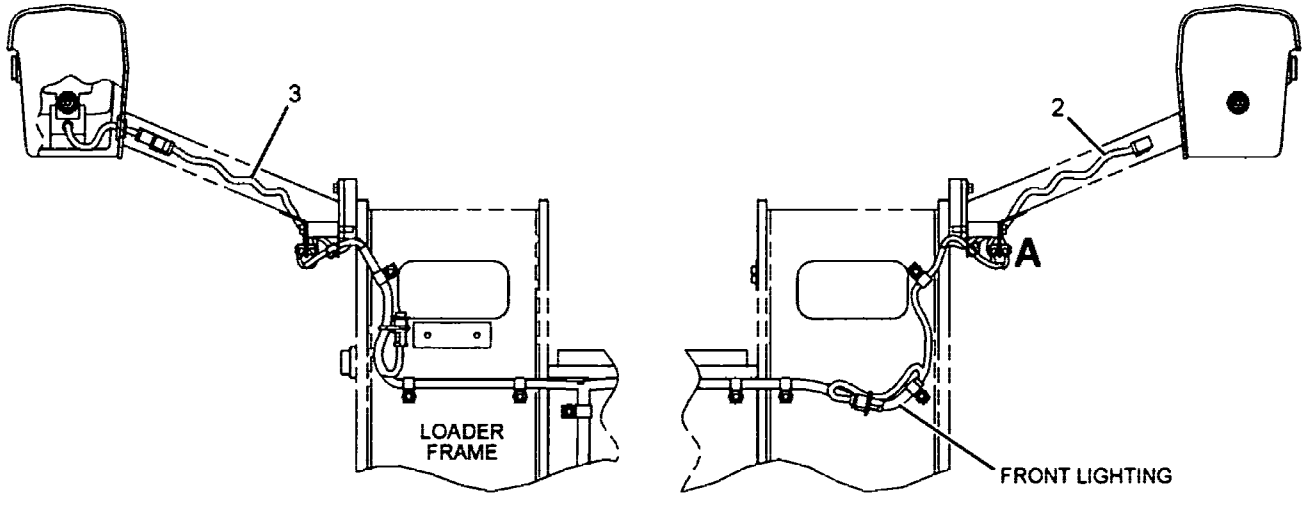

REAR VIEW

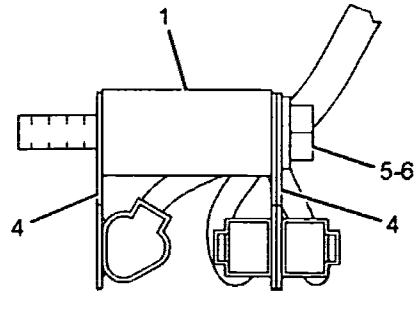

VIEW OF AREA A

GRAPHIC #1 <END> g01082967

201-8412 WIRING GP-FRONT *(contd.)* i01979228

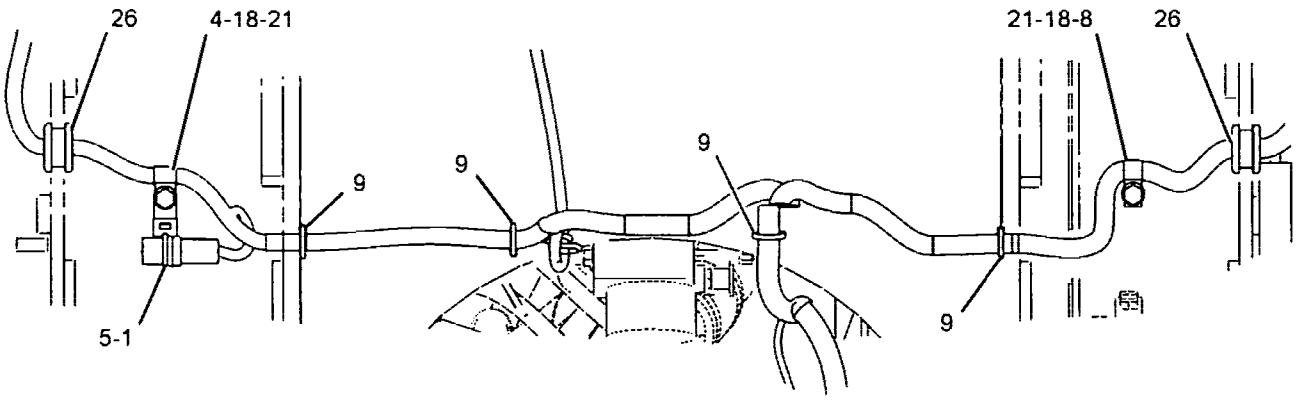

VIEW C-C

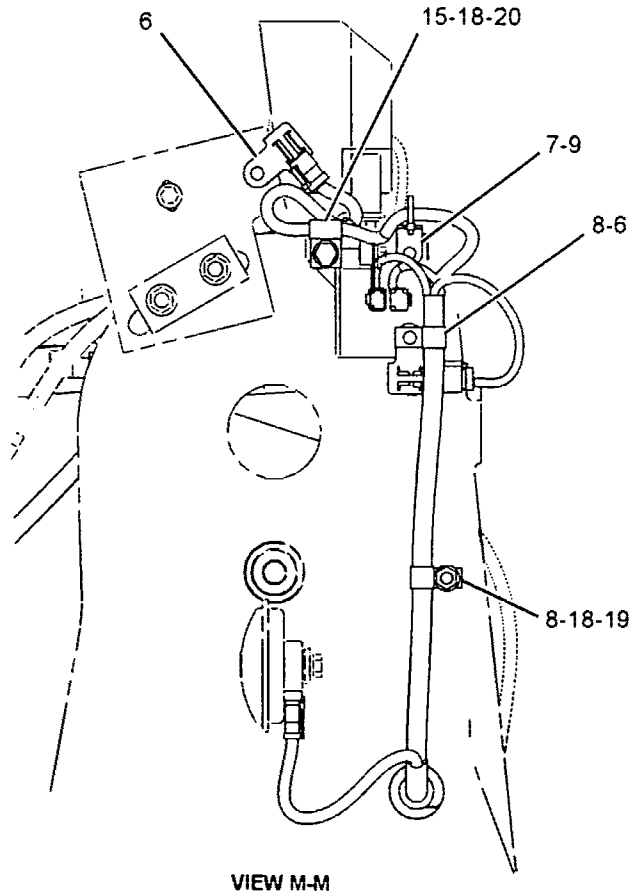

VIEW M-M

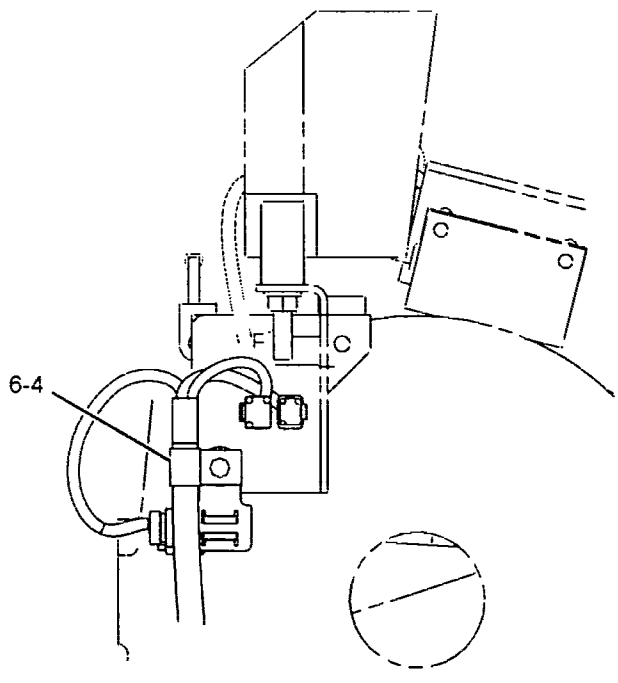

VIEW G-G

GRAPHIC #2

<END>

g01080898

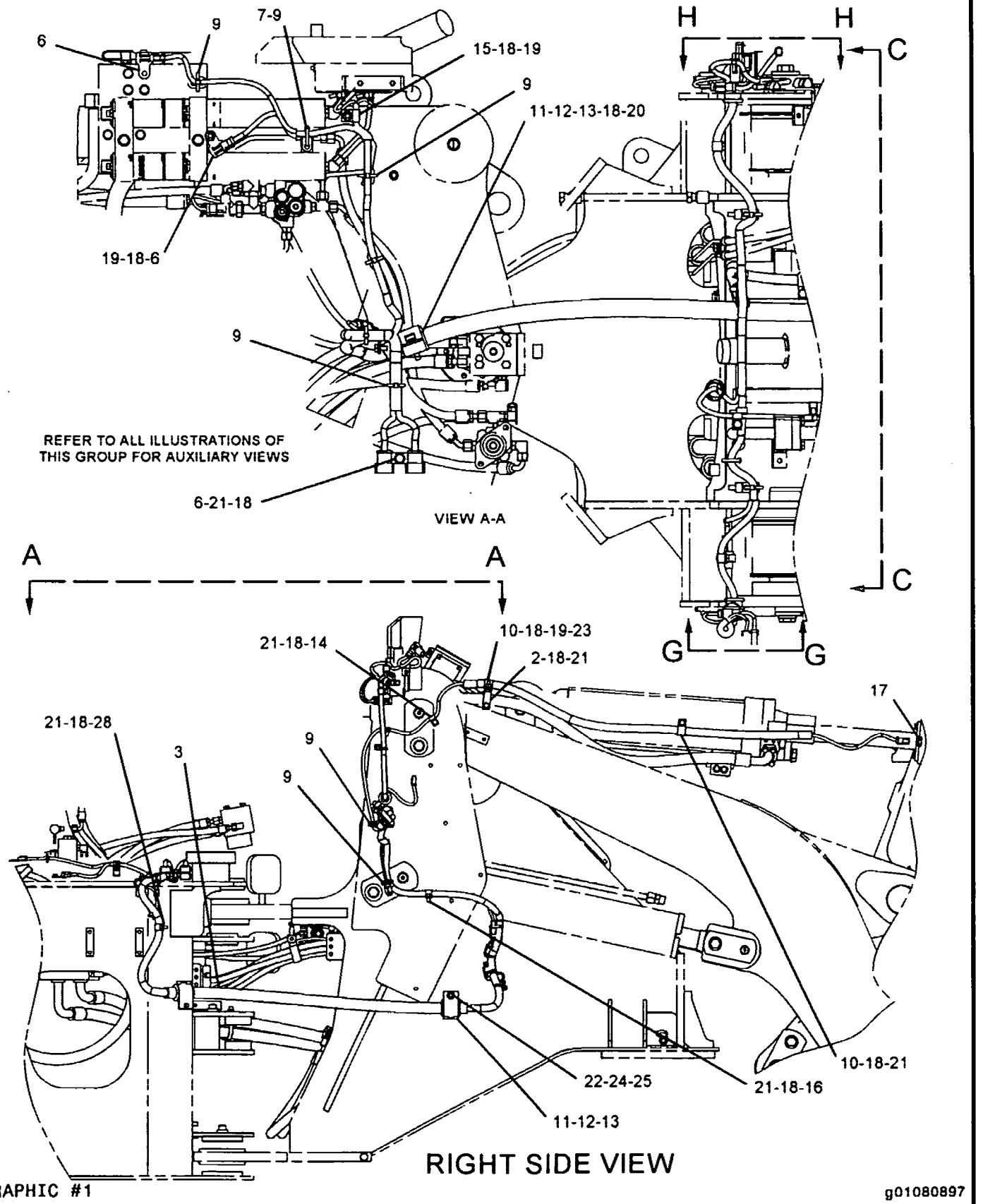

GRAPHIC #1

g01080897

201-8412 WIRING GP-FRONT

S/N: CRD598-UP
PART OF 199-2817 ELECTRICAL AR
TYPE 2

SMCS-5734 i01979228

NOTE	REF NO	GRAPHIC REF	PART NUMBER	QTY	PART NAME 1 2 3 4 5 6 (PRODUCT LEVEL)	SEE PAGE
	2	1	3V-0778	1	BRACKET	
	3	1	202-3243	1	HARNESS AS-FRONT CHASSIS	
		1	102-8802	1	KIT-RECEPTACLE (2-PIN)	
		1	102-8803	1	KIT-RECEPTACLE (3-PIN)	
		1	102-8804	1	KIT-RECEPTACLE (4-PIN)	
		1	102-8805	1	KIT-RECEPTACLE (6-PIN)	
		1	102-8801	1	KIT-RECEPTACLE (12-PIN)	
		1	190-7614	1	KIT-RECEPTACLE (12-PIN)	
		1	190-7615	1	KIT-RECEPTACLE (12-PIN)	
		1	155-2260	1	KIT-CONNECTING PLUG (3-PIN)	
		1	155-2270	1	KIT-CONNECTING PLUG (2-PIN)	
		1	155-2271	1	KIT-CONNECTING PLUG (4-PIN)	
		1	155-2274	1	KIT-CONNECTING PLUG (6-PIN)	
		1	3S-2093	5	STRAP-CABLE	
		1	8N-1521	1	BELL AS-END	
		1	8T-8737	42	PLUG-SEAL	
C	4	2	033-8248	2	CLIP	
	5	2	4P-7581	1	CLIP	
	6	1,2	130-5300	8	CLIP	
	7	1,2	132-5789	2	CLIP	
C	8	2	4K-8864	3	CLIP	
C	9	2	7K-1181	15	STRAP-CABLE	
	10	1	4S-1962	2	CLIP	
	11	1	5P-7468	2	CLIP (SLOT)	
	12	1	5P-7469	2	CLIP (TAB)	
	13	1	5P-8444	2	GROMMET	
	14	1	5P-9085	2	CLIP	
C	15	1,2	5P-9297	2	CLIP	
C	16	1,2	6D-4244	1	CLIP	
	17	1	7G-7053	1	GROMMET	
C	18	1,2	8T-4121	16	WASHER-HARD (11X21X2.5-MM THK)	
M	19	1,2	8T-4133	4	NUT (M10X1.5-THD)	
M	20	1,2	8T-4136	2	BOLT (M10X1.5X25-MM)	
CM	21	1,2	8T-4137	9	BOLT (M10X1.5X20-MM)	
M	22	1	8T-4183	1	BOLT (M12X1.75X40-MM)	
M	23	1	8T-4195	1	BOLT (M10X1.5X30-MM)	
	24	1	8T-4223	2	WASHER-HARD (13.5X25.5X3-MM THK)	
M	25	1	8T-4244	1	NUT (M12X1.75-THD)	
	26	2	9K-0700	2	GROMMET	
	28	1	9X-8250	1	CLIP	

C-CHANGE FROM PREVIOUS TYPE
M-METRIC PART

201-8412 **WIRING GP-FRONT** *(contd.)* **i02112582**

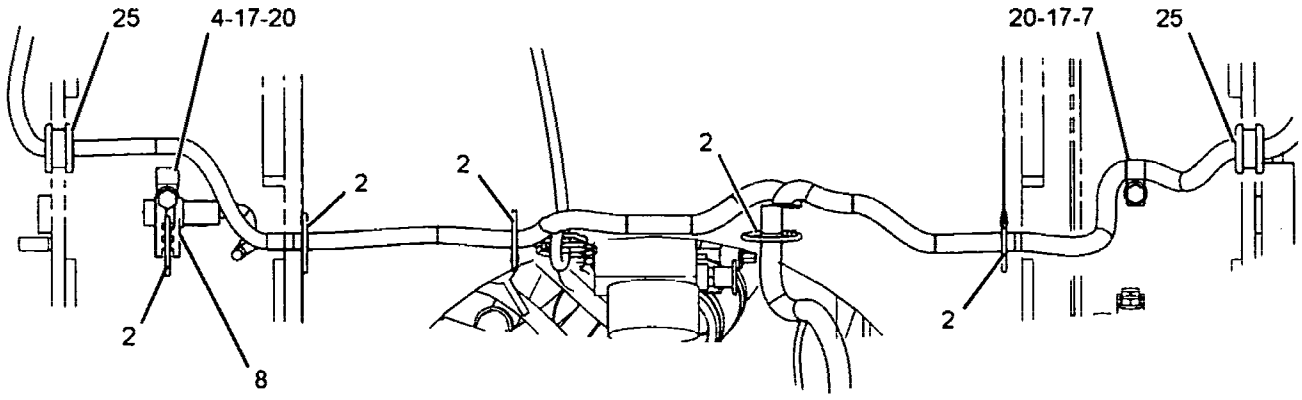

VIEW C-C

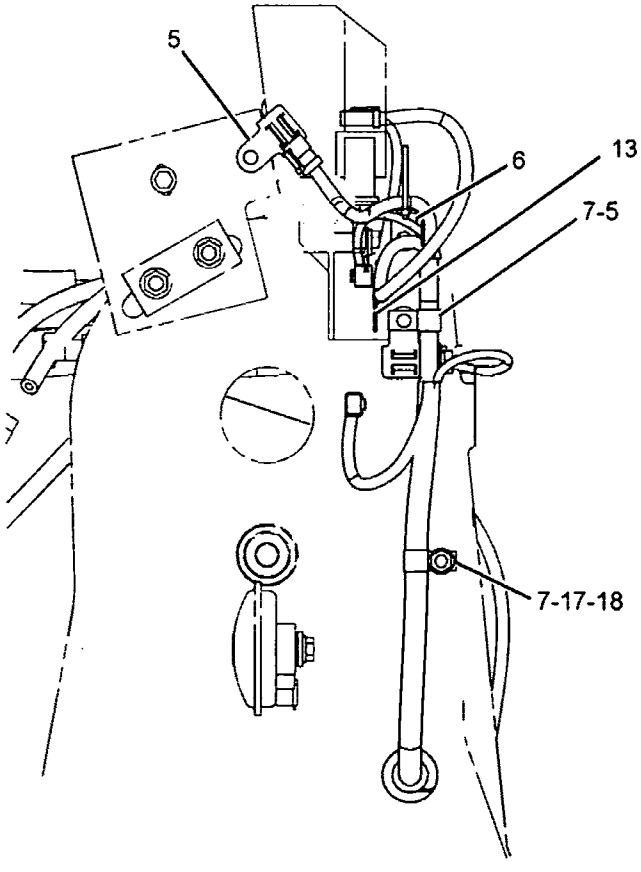

VIEW M-M

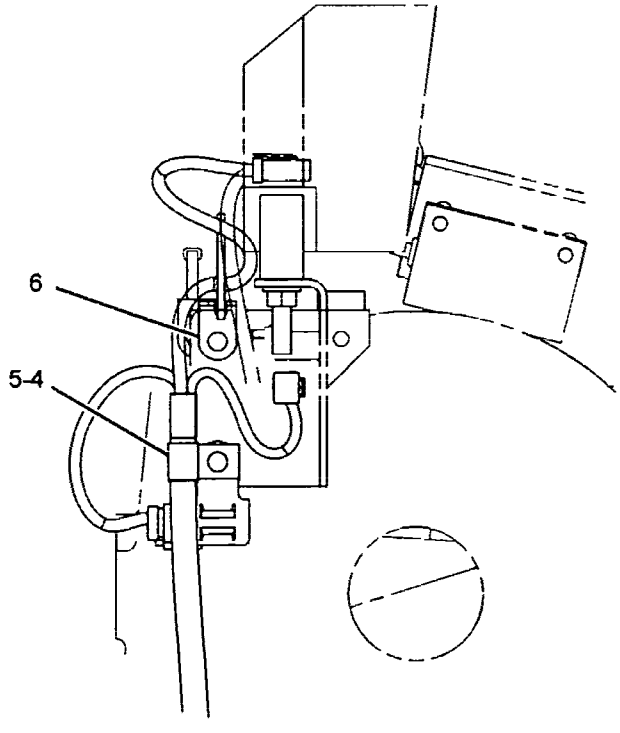

VIEW G-G

GRAPHIC #2 **<END>** g01137796

201-8412 **WIRING GP-FRONT** *(contd.)* i02112582

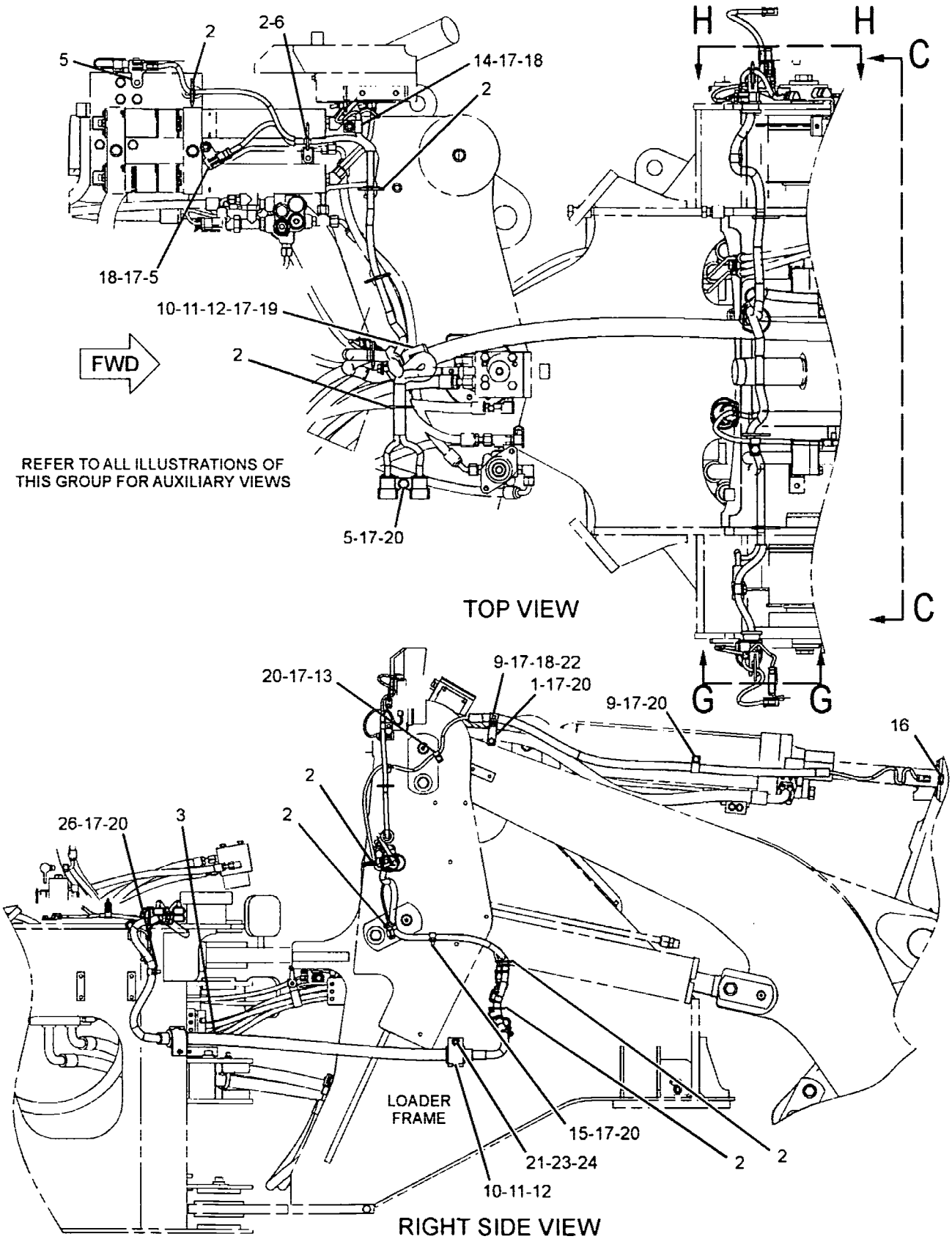

GRAPHIC #1 g01137794

ELECTRICAL AND STARTING SYSTEM

201-8412 WIRING GP-FRONT

S/N: CRD598-UP
PART OF 199-2817 ELECTRICAL AR
TYPE 1

SMCS-5734 i02112582

NOTE	REF NO	GRAPHIC REF	PART NUMBER	QTY	PART NAME 1 2 3 4 5 6 (PRODUCT LEVEL)	SEE PAGE
	1	2	3V-0778	1	BRACKET	
C	2	1	7K-1181	18	STRAP-CABLE	
C	3	1	234-0622	1	HARNESS AS-FRONT CHASSIS	
		1	155-2271	2	KIT-CONNECTING PLUG (4-PIN)	
		1	155-2270	7	KIT-CONNECTING PLUG (2-PIN)	
		1	155-2260	7	KIT-CONNECTING PLUG (3-PIN)	
					(EACH KIT INCLUDES PLUG AS AND WEDGE)	
		1	8T-8737	40	PLUG-SEAL	
		1	190-7615	1	KIT-RECEPTACLE (12-PIN)	
		1	190-7614	1	KIT-RECEPTACLE (12-PIN)	
		1	102-8801	1	KIT-RECEPTACLE (12-PIN)	
		1	102-8804	2	KIT-RECEPTACLE (4-PIN)	
		1	102-8803	6	KIT-RECEPTACLE (3-PIN)	
		1	102-8802	3	KIT-RECEPTACLE (2-PIN)	
					(EACH KIT INCLUDES RECEPTACLE AS AND WEDGE)	
		1	3S-2093	6	STRAP-CABLE	
		1	171-5349	2	MARKER	
	4	2	033-8248	2	CLIP	
	5	2	130-5300	8	CLIP	
C	6	1,2	132-5789	3	CLIP	
	7	1,2	4K-8864	3	CLIP	
	8	2	4P-7581	1	CLIP	
	9	1,2	4S-1962	2	CLIP	
	10	1	5P-7468	2	CLIP (SLOT)	
	11	1	5P-7469	2	CLIP (TAB)	
	12	1	5P-8444	2	GROMMET	
C	13	1	5P-9085	3	CLIP	
C	14	1	5P-9297	1	CLIP	
	15	1	6D-4244	1	CLIP	
	16	1	7G-7053	1	GROMMET	
C	17	1	8T-4121	15	WASHER-HARD (11X21X2.5-MM THK)	
M	18	1,2	8T-4133	4	NUT (M10X1.5-THD)	
CM	19	1,2	8T-4136	1	BOLT (M10X1.5X25-MM)	
M	20	1	8T-4137	9	BOLT (M10X1.5X20-MM)	
M	21	1,2	8T-4183	1	BOLT (M12X1.75X40-MM)	
M	22	1	8T-4195	1	BOLT (M10X1.5X30-MM)	
	23	1	8T-4223	2	WASHER-HARD (13.5X25.5X3-MM THK)	
M	24	1	8T-4244	1	NUT (M12X1.75-THD)	
	25	1	9K-0700	2	GROMMET	
	26	2	9X-8250	1	CLIP	

C-CHANGE FROM PREVIOUS TYPE
M-METRIC PART

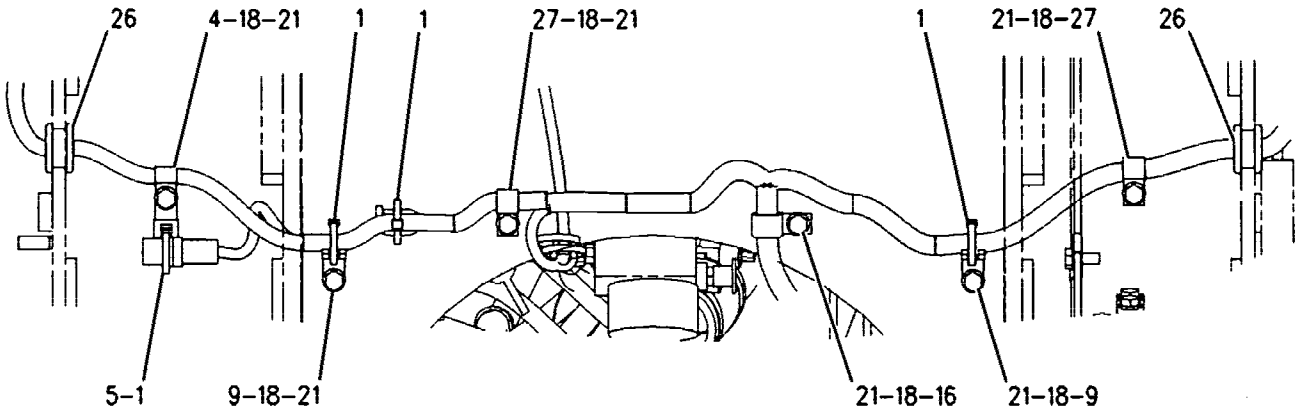

VIEW C-C

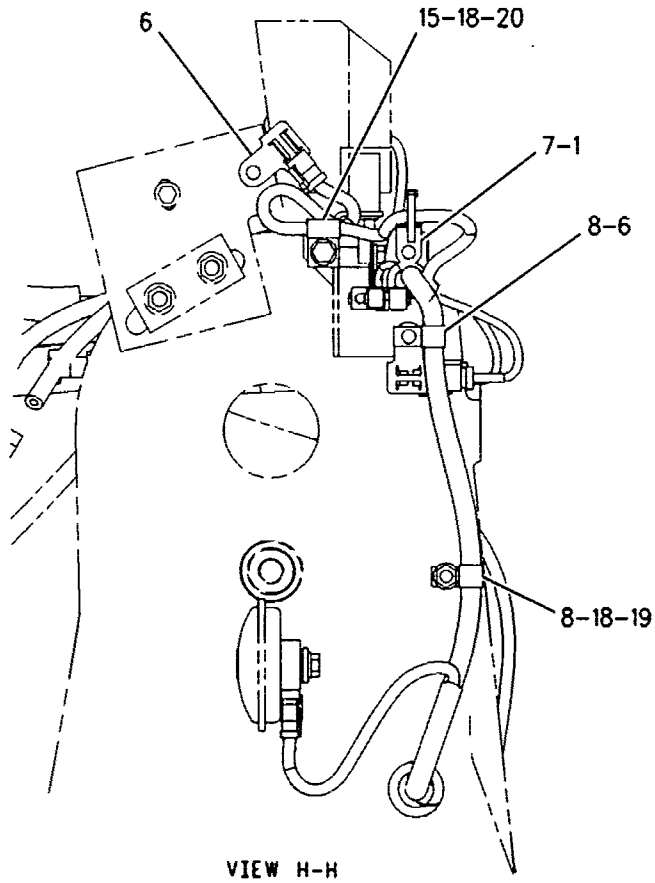

VIEW H-H

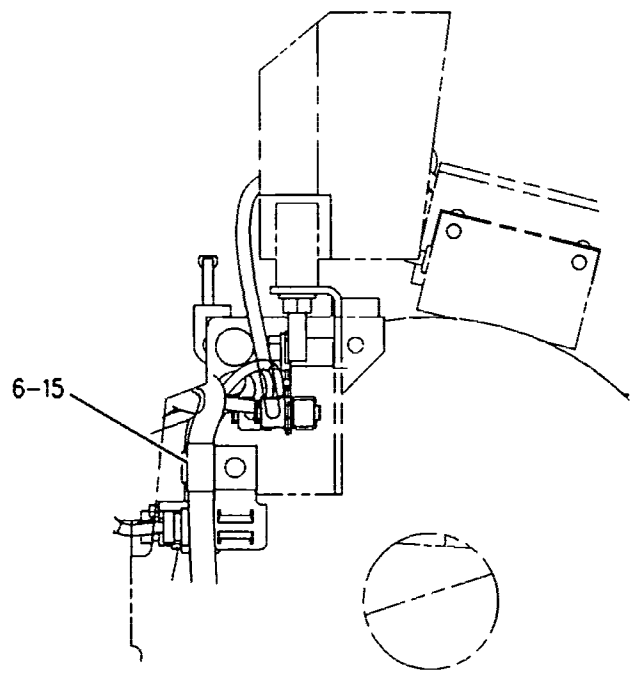

VIEW G-G

GRAPHIC #2 **<END>** g00957472

201-8412 **WIRING GP-FRONT** *(contd.)* i01939081

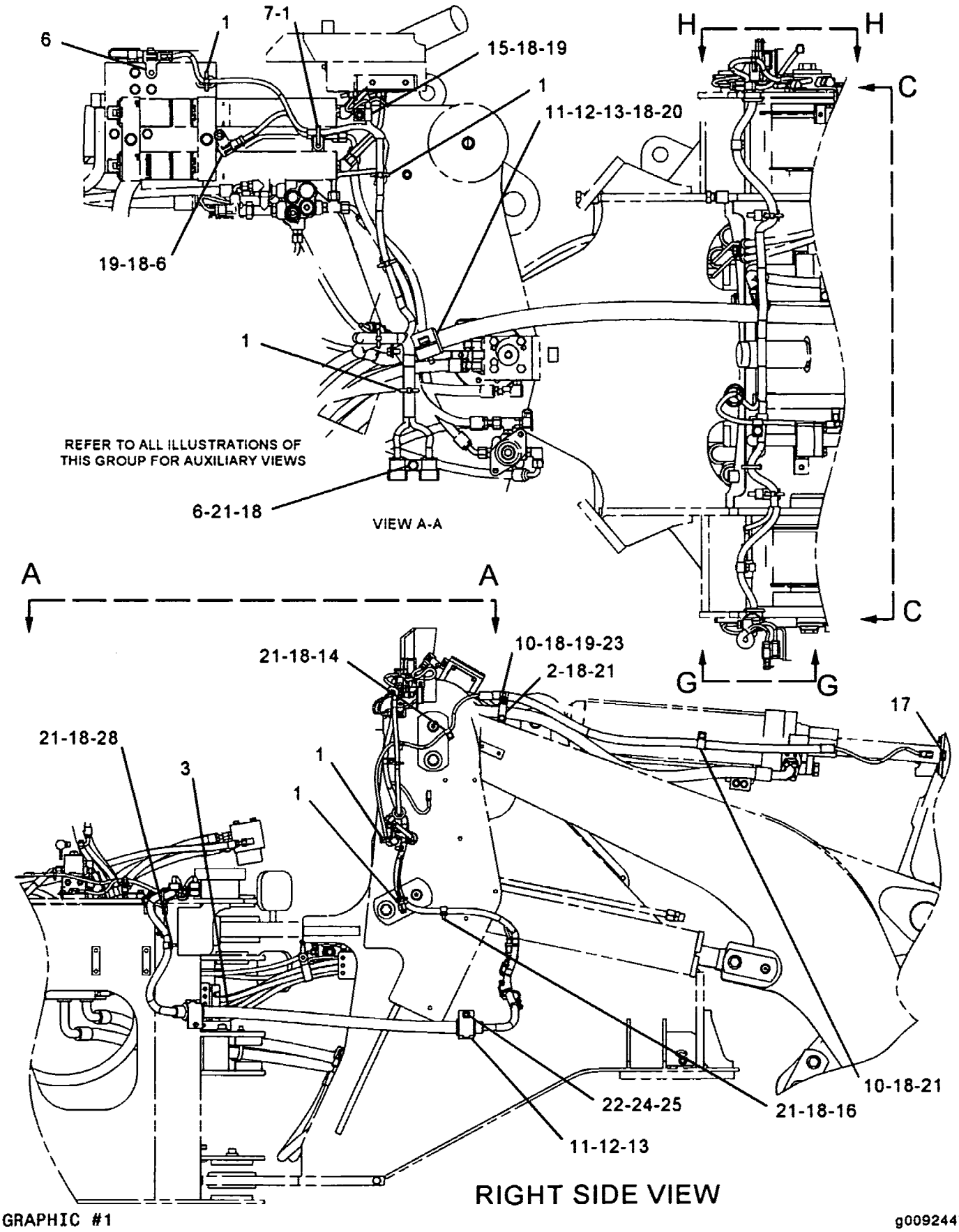

GRAPHIC #1 g00924479

201-8412 WIRING GP-FRONT

S/N: CRD1-597

PART OF 199-2817 ELECTRICAL AR

SMCS-5734 i01939081

NOTE	REF NO	GRAPHIC REF	PART NUMBER	QTY	PART NAME 1 2 3 4 5 6 (PRODUCT LEVEL)	SEE PAGE
	1	1,2	3S-2093	14	STRAP-CABLE	
	2	1	3V-0778	1	BRACKET	
	3	1	202-3243	1	HARNESS AS-FRONT CHASSIS	
		1	102-8802	1	KIT-RECEPTACLE (2-PIN)	
		1	102-8803	1	KIT-RECEPTACLE (3-PIN)	
		1	102-8804	1	KIT-RECEPTACLE (4-PIN)	
		1	102-8805	1	KIT-RECEPTACLE (6-PIN)	
		1	102-8801	1	KIT-RECEPTACLE (12-PIN)	
		1	190-7614	1	KIT-RECEPTACLE (12-PIN)	
		1	190-7615	1	KIT-RECEPTACLE (12-PIN)	
		1	155-2260	1	KIT-CONNECTING PLUG (3-PIN)	
		1	155-2270	1	KIT-CONNECTING PLUG (2-PIN)	
		1	155-2271	1	KIT-CONNECTING PLUG (4-PIN)	
		1	155-2274	1	KIT-CONNECTING PLUG (6-PIN)	
		1	3S-2093	5	STRAP-CABLE	
		1	8N-1521	1	BELL AS-END	
		1	8T-8737	42	PLUG-SEAL	
	4	2	033-8248	1	CLIP	
	5	2	4P-7581	1	CLIP	
	6	1,2	130-5300	8	CLIP	
	7	1,2	132-5789	2	CLIP	
	8	2	4K-8864	2	CLIP	
	9	2	4P-8134	2	CLIP	
	10	1	4S-1962	2	CLIP	
	11	1	5P-7468	2	CLIP (SLOT)	
	12	1	5P-7469	2	CLIP (TAB)	
	13	1	5P-8444	2	GROMMET	
	14	1	5P-9085	2	CLIP	
	15	1,2	5P-9297	3	CLIP	
	16	1,2	6D-4244	2	CLIP	
	17	1	7G-7053	1	GROMMET	
	18	1,2	8T-4121	20	WASHER-HARD (11X21X2.5-MM THK)	
M	19	1,2	8T-4133	4	NUT (M10X1.5-THD)	
M	20	1,2	8T-4136	2	BOLT (M10X1.5X25-MM)	
M	21	1,2	8T-4137	13	BOLT (M10X1.5X20-MM)	
M	22	1	8T-4183	1	BOLT (M12X1.75X40-MM)	
M	23	1	8T-4195	1	BOLT (M10X1.5X30-MM)	
	24	1	8T-4223	2	WASHER-HARD (13.5X25.5X3-MM THK)	
M	25	1	8T-4244	1	NUT (M12X1.75-THD)	
	26	2	9K-0700	2	GROMMET	
	27	2	9M-8406	2	CLIP	
	28	1	9X-8250	1	CLIP	

M-METRIC PART

217-3062 WIRING GP-ENGINE *(contd.)* i01986103

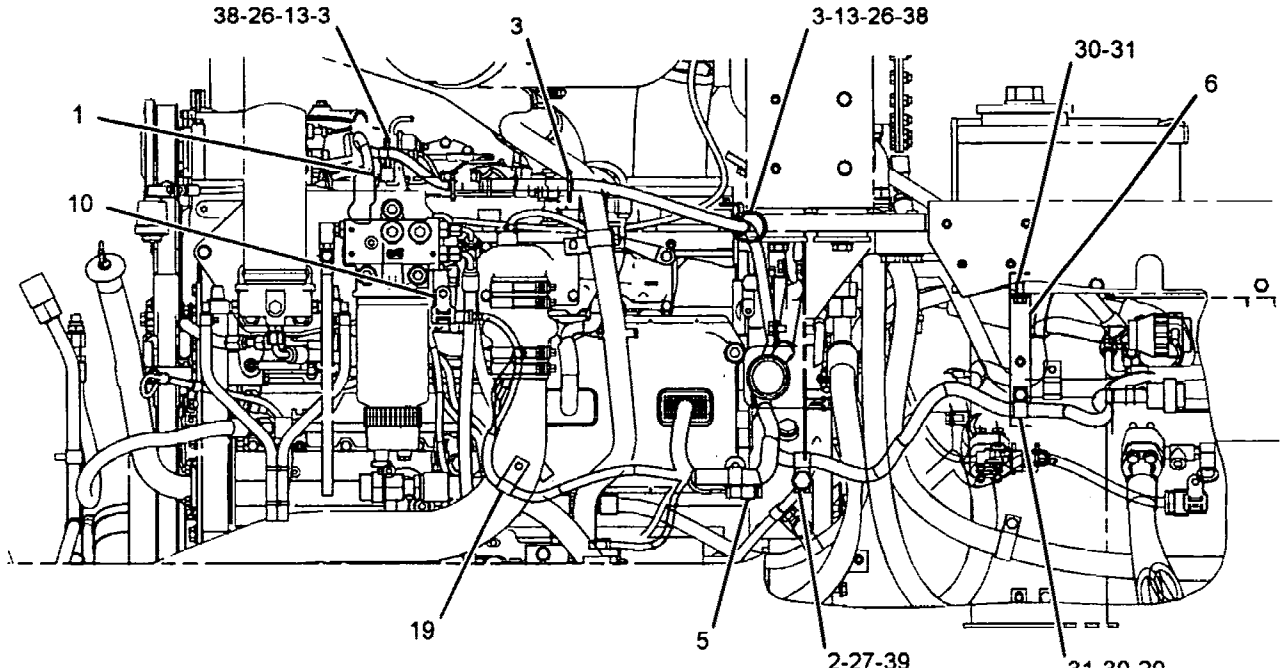

RIGHT SIDE VIEW

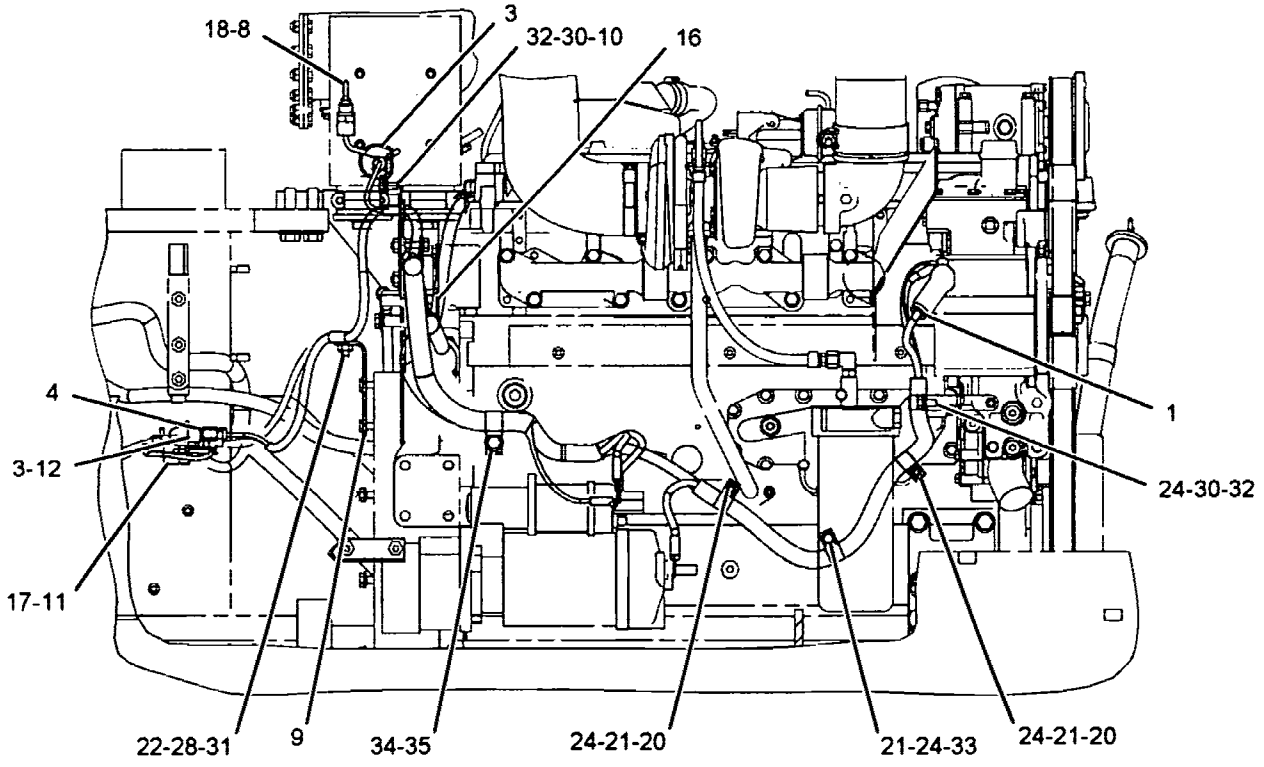

LEFT SIDE VIEW

GRAPHIC #2

<END>

g01071236

217-3062 WIRING GP-ENGINE (contd.) i01986103

NOTE	REF NO	GRAPHIC REF	PART NUMBER	QTY	PART NAME 1 2 3 4 5 6 (PRODUCT LEVEL)	SEE PAGE
	34	1,2	8T-4223	1	WASHER-HARD (13.5X25.5X3-MM THK)	
M	35	2	8T-5041	1	BOLT (M12X1.75X120-MM)	
	36	2	9X-7345	1	GROMMET	
	37	2	9X-8250	2	CLIP	
	38	1	9X-8256	2	WASHER (6.6X12X2-MM THK)	
	39	1	9X-8257	1	WASHER (17.5X30X3.5-MM THK)	

M-METRIC PART
Y-SEPARATE ILLUSTRATION

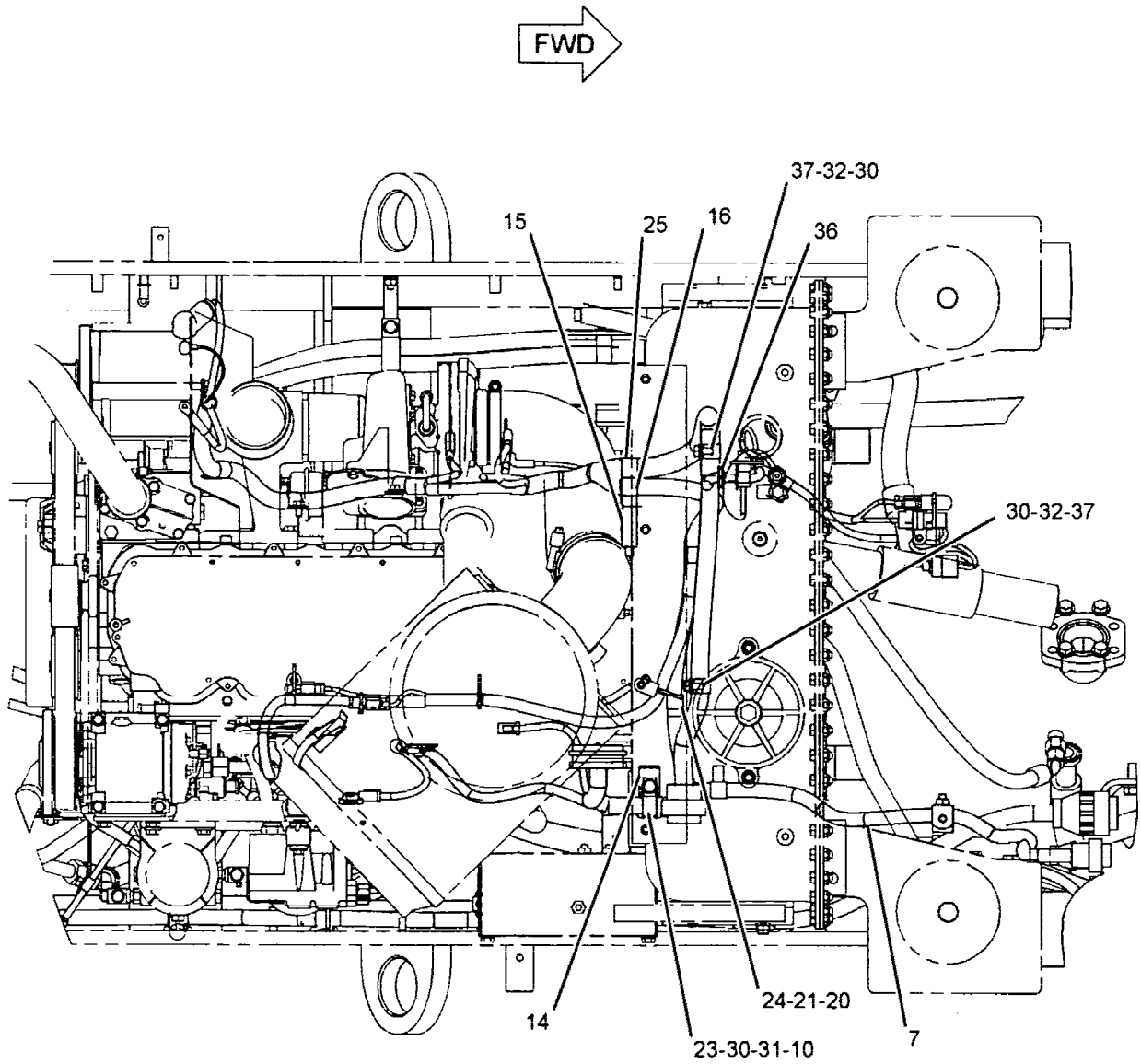

TOP VIEW

GRAPHIC #1 g01071235

ELECTRICAL AND STARTING SYSTEM

217-3062 WIRING GP-ENGINE

S/N: CRD512-UP

PART OF 206-7345 ALTERNATOR AR-CHARGING AN ATTACHMENT

SMCS-1403, 1408 — i01986103

NOTE	REF NO	GRAPHIC REF	PART NUMBER	QTY	PART NAME 1 2 3 4 5 6 (PRODUCT LEVEL)	SEE PAGE
	1	2	3S-2093	2	STRAP-CABLE	
	2	1	5D-2651	1	CLIP	
	3	2	7K-1181	5	STRAP-CABLE	
	4	2	9X-3495	1	CLIP AS	
	5	2	174-3016	1	PLUG AS (3-PIN)	
	6	2	215-3860	1	BRACKET AS	
M		2	8T-3490	2	NUT-WELD (M10X1.5-THD)	
	7	2	235-3502	1	HARNESS AS (ENGINE)(65-AMP ALTERNATOR)	
		2	102-8802	1	KIT-RECEPTACLE (2-PIN)	
					(INCLUDES RECPTACLE AS AND WEDGE)	
		2	102-8803	1	KIT-RECEPTACLE (3-PIN)	
					(INCLUDES RECEPTACLE AS AND WEDGE)	
		2	3S-2093	2	STRAP-CABLE	
		2	3T-0203	1	PLUG AS-CONNECTOR (20-PIN)	
		2	7G-7917	5	PLUG-SEAL	
		2	7G-7918	4	PLUG-SEAL	
		2	7K-1181	1	STRAP-CABLE	
		2	8N-1518	1	PLUG AS-CONNECTOR (25-PIN)	
		2	8T-8731	1	PLUG-CONNECTOR	
		2	8T-8737	45	PLUG-SEAL	
		2	9X-6772	4	STRAP-CABLE	
		2	155-2260	1	KIT-CONNECTING PLUG (3-PIN)	
					(INCLUDES PLUG AS AND WEDGE)	
		2	155-2270	1	KIT-CONNECTING PLUG (2-PIN)	
					(INCLUDES PLUG AS AND WEDGE)	
		2	160-7689	1	PLUG AS-CONNECTOR (70-PIN)	
		2	159-9322	1	SEAL-O-RING	
Y	8	1	102-2240	1	SENSOR GP-TEMPERATURE (HYDRAULIC OIL)	253
	9	2	118-6878	1	BRACKET AS	
M		2	8T-3490	1	NUT-WELD (M10X1.5-THD)	
	10	2	130-5300	3	CLIP	
Y	11	1,2	131-0427	1	SENSOR GP-TEMPERATURE (TORQUE CONVERTER OIL)	255
	12	1	147-0856	1	RESISTOR AS	
	13	2	156-6175	2	CLIP	
	14	2	195-0882	1	BRACKET AS	
M		2	8T-3490	1	NUT-WELD (M10X1.5-THD)	
	15	2	1K-3113	1	PIPE	
	16	1	1S-1015	2	CLIP	
	17	2	3J-1907	1	SEAL-O-RING	
	18	2	3K-0360	1	SEAL-O-RING	
	19	2	4D-9517	1	CLIP	
M	20	1,2	5C-7261	3	NUT (M8X1.25-THD)	
	21	1,2	5P-4116	6	WASHER-HARD (8.8X20.5X2-MM THK)	
	22	2	5P-9297	1	CLIP	
	23	1	6D-4244	1	CLIP	
	24	1,2	6D-4246	5	CLIP	
	25	1,2	6D-4636	1	CLIP	
M	26	1	6V-8225	2	NUT (M6X1-THD)	
M	27	2	7X-2552	1	BOLT (M16X2X30-MM)	
	28	2	7X-7729	1	WASHER (11X25X3-MM THK)	
	29	2	8M-2773	1	CLIP	
	30	2	8T-4121	7	WASHER-HARD (11X21X2.5-MM THK)	
M	31	2	8T-4136	4	BOLT (M10X1.5X25-MM)	
M	32	1,2	8T-4137	4	BOLT (M10X1.5X20-MM)	
M	33	1,2	8T-4200	1	BOLT (M8X1.25X16-MM)	

217-3062 **WIRING GP-ENGINE** *(contd.)* **i01909978**

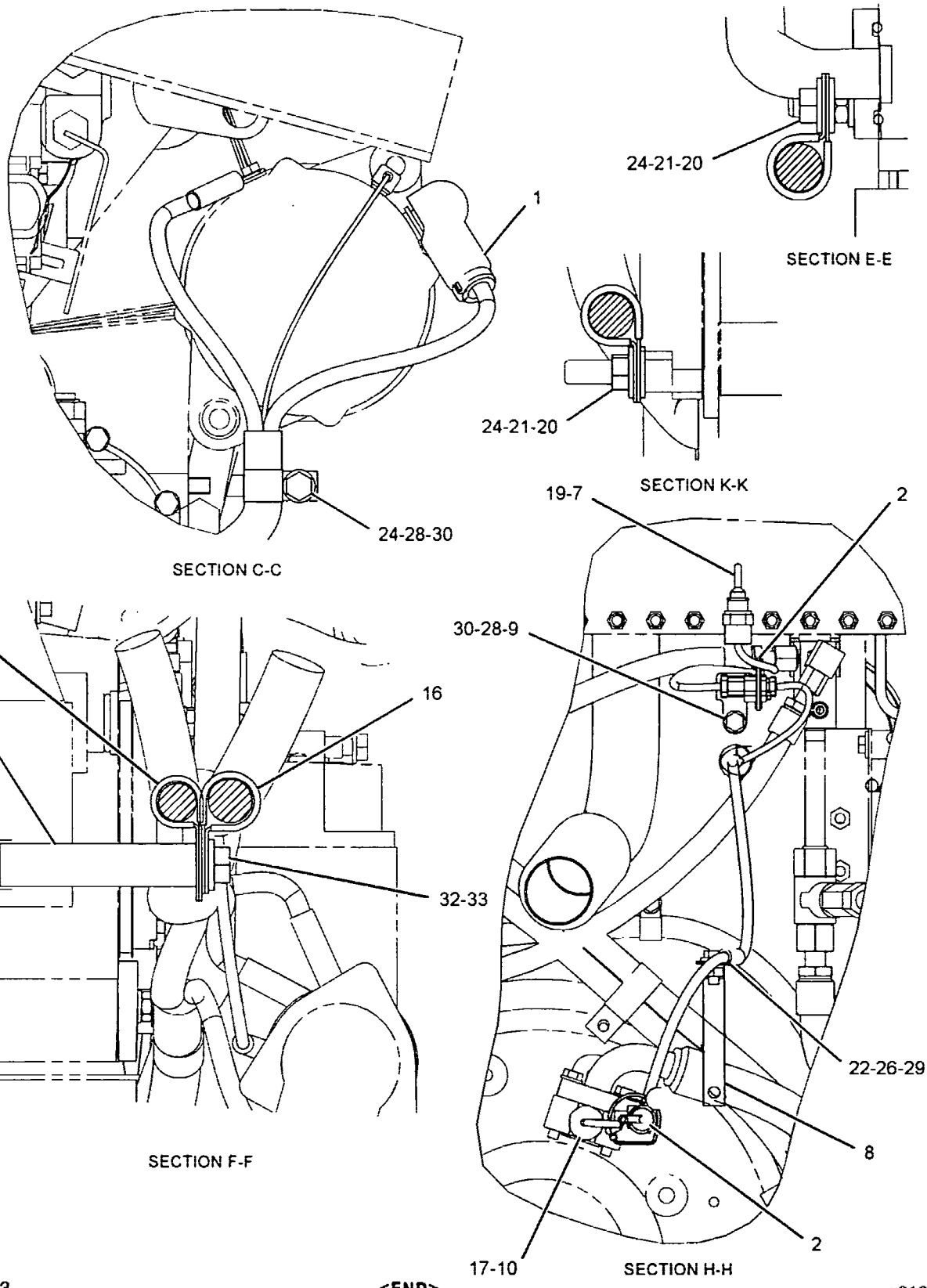

GRAPHIC #3 **<END>** g01089562

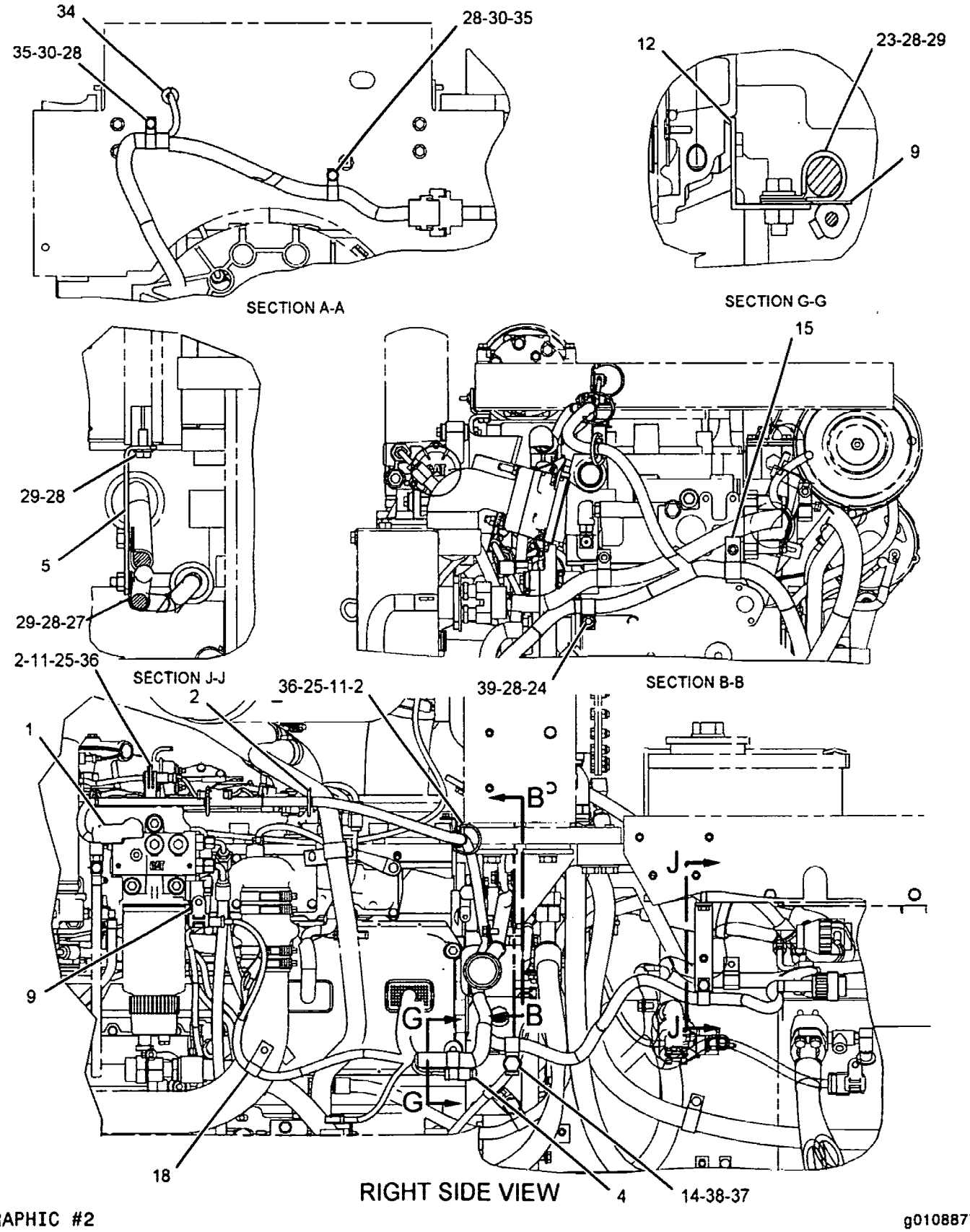

GRAPHIC #2

g01088774

217-3062 **WIRING GP-ENGINE** *(contd.)* **i01909978**

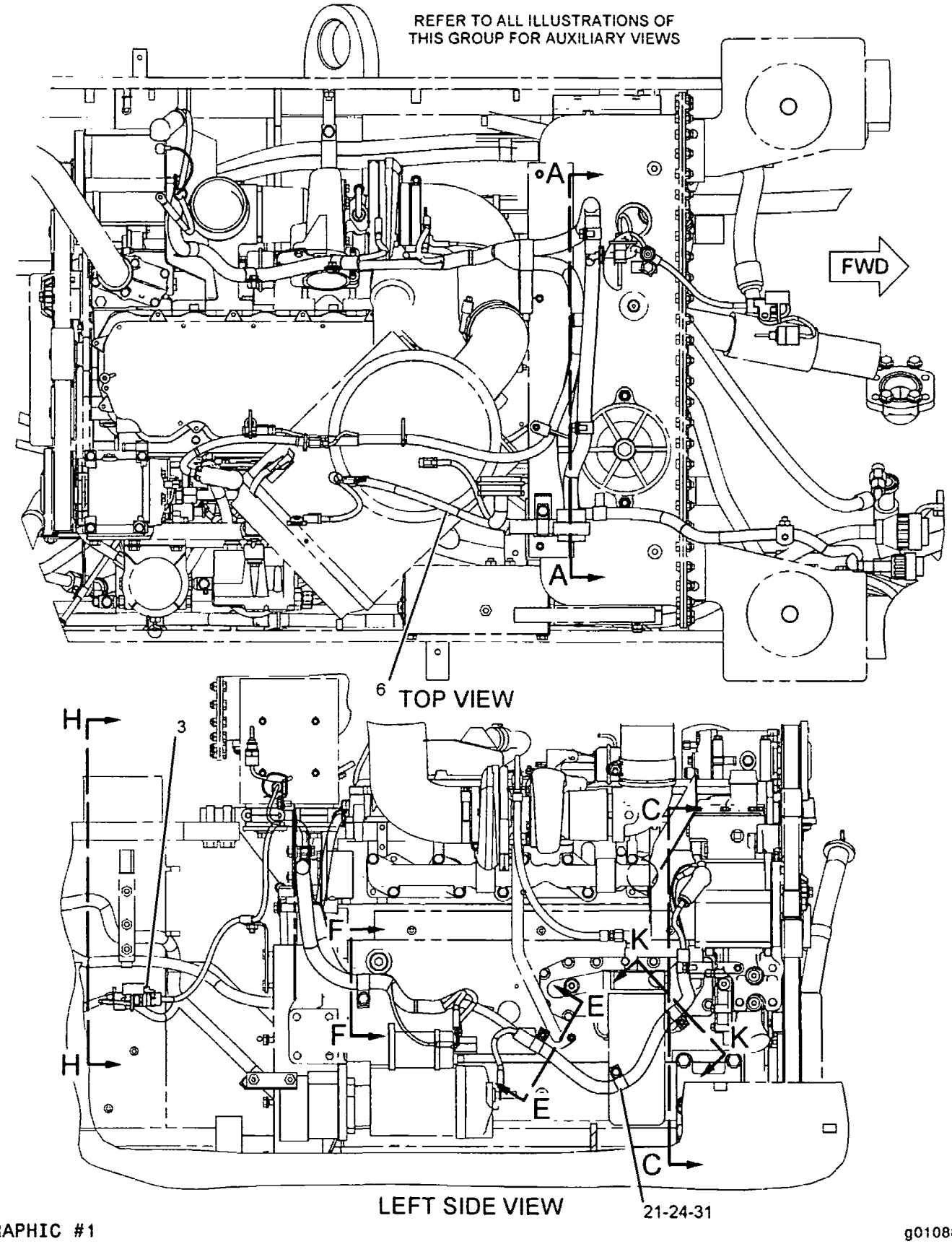

GRAPHIC #1

g01088773

217-3062 WIRING GP-ENGINE *(contd.)* 101909978

NOTE	REF NO	GRAPHIC REF	PART NUMBER	QTY	PART NAME 1 2 3 4 5 6 (PRODUCT LEVEL)	SEE PAGE
	35	2	**9X-8250**	2	CLIP	
	36	2	**9X-8256**	2	WASHER (6.6X12X2-MM THK)	
	37	2	**9X-8257**	1	WASHER (17.5X30X3.5-MM THK)	
M	38	2	**7X-2552**	1	BOLT (M16X2X30-MM)	
M	39	2	**8T-4133**	1	NUT (M10X1.5-THD)	

E-ORDER BY THE CENTIMETER
M-METRIC PART
Y-SEPARATE ILLUSTRATION

217-3062 WIRING GP-ENGINE

S/N: CRD1-511
PART OF 206-7345 ALTERNATOR AR-CHARGING
AN ATTACHMENT

SMCS-1403, 1408 i01909978

NOTE	REF NO	GRAPHIC REF	PART NUMBER	QTY	PART NAME 1 2 3 4 5 6 (PRODUCT LEVEL)	SEE PAGE
	1	2,3	3S-2093	2	STRAP-CABLE	
	2	2,3	7K-1181	5	STRAP-CABLE	
	3	1	9X-3495	1	CLIP AS	
	4	2	174-3016	1	PLUG AS (3-PIN)	
	5	2	215-3860	1	BRACKET AS	
M		2	8T-3490	2	NUT-WELD (M10X1.5-THD)	
	6	1	217-3064	1	HARNESS AS-ENGINE (70A ALTERNATOR)	
		1	102-8802	1	KIT-RECEPTACLE (2-PIN)	
		1	102-8803	1	KIT-RECEPTACLE (3-PIN)	
		1	155-2260	1	KIT-CONNECTING PLUG (3-PIN)	
		1	155-2270	1	KIT-CONNECTING PLUG (2-PIN)	
		1	3T-0203	1	PLUG AS-CONNECTOR (20-PIN)	
		1	8N-1518	1	PLUG AS-CONNECTOR (25-PIN)	
		1	160-7689	1	PLUG AS-CONNECTOR (70-PIN)	
		1	8N-1521	1	BELL AS-END	
		1	8N-1535	1	BELL AS-END	
		1	8T-8737	45	PLUG-SEAL	
		1	7G-7917	5	PLUG-SEAL	
		1	7G-7918	4	PLUG-SEAL	
		1	9X-6772	4	STRAP-CABLE	
		1	3S-2093	1	STRAP-CABLE	
	7	3	102-2240	1	SENSOR GP-TEMPERATURE (HYDRAULIC OIL)	
		3	102-8803	1	KIT-RECEPTACLE (3-PIN)	
		3	3E-3371	1	WEDGE-RECEPTACLE LOCK (3-PIN)	
		3	8T-8729	3	PIN-CONNECTOR	
E		3	9X-1813		SLEEVE (31CM)	
	8	3	118-6878	1	BRACKET AS	
M		3	8T-3490	1	NUT-WELD (M10X1.5-THD)	
	9	2,3	130-5300	3	CLIP	
Y	10	3	131-0427	1	SENSOR GP-TEMPERATURE (TORQUE CONVERTER OIL)	255
	11	2	156-6175	2	CLIP	
	12	2	195-0882	1	BRACKET AS	
M		2	8T-3490	1	NUT-WELD (M10X1.5-THD)	
	13	3	1K-3113	1	PIPE	
	14	2	5D-2651	1	CLIP	
	15	2,3	1S-1015	2	CLIP	
	16	3	6D-4636	1	CLIP	
	17	3	3J-1907	1	SEAL-O-RING	
	18	2	3K-0360	1	SEAL-O-RING	
	19	3	4D-9517	1	CLIP	
M	20	3	5C-7261	2	NUT (M8X1.25-THD)	
	21	1,3	5P-4116	5	WASHER-HARD (8.8X20.5X2-MM THK)	
	22	3	5P-9297	1	CLIP	
	23	2	6D-4244	1	CLIP	
	24	1,2,3	6D-4246	5	CLIP	
M	25	2	6V-8225	2	NUT (M6X1-THD)	
	26	3	7X-7729	1	WASHER (11X25X3-MM THK)	
	27	2	8M-2773	1	CLIP	
	28	2,3	8T-4121	8	WASHER-HARD (11X21X2.5-MM THK)	
M	29	2,3	8T-4136	4	BOLT (M10X1.5X25-MM)	
M	30	2,3	8T-4137	4	BOLT (M10X1.5X20-MM)	
M	31	1	8T-4200	1	BOLT (M8X1.25X16-MM)	
	32	3	8T-4223	1	WASHER-HARD (13.5X25.5X3-MM THK)	
M	33	3	8T-5041	1	BOLT (M12X1.75X120-MM)	
	34	2	9X-7345	1	GROMMET	

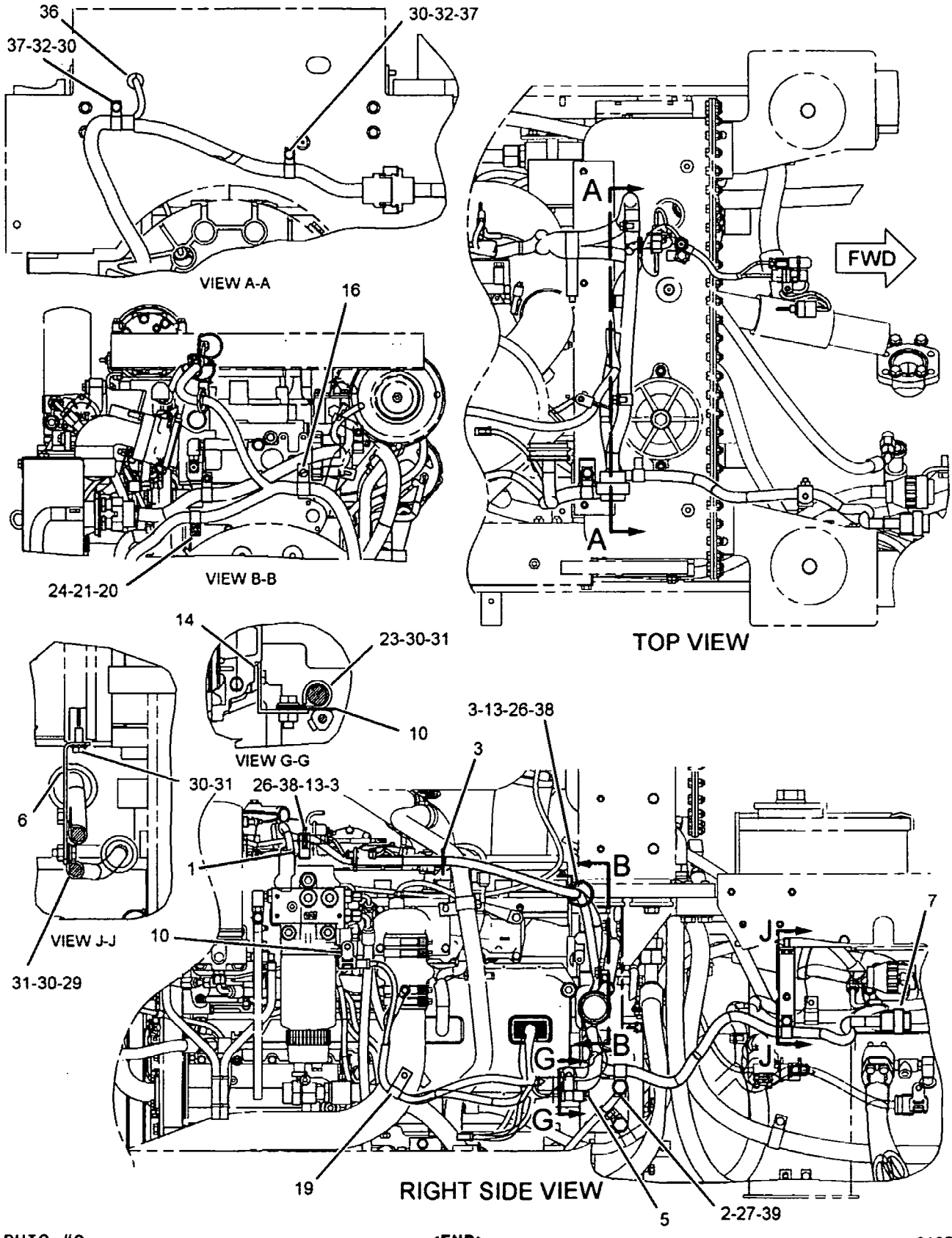

GRAPHIC #2 **<END>** g01077092

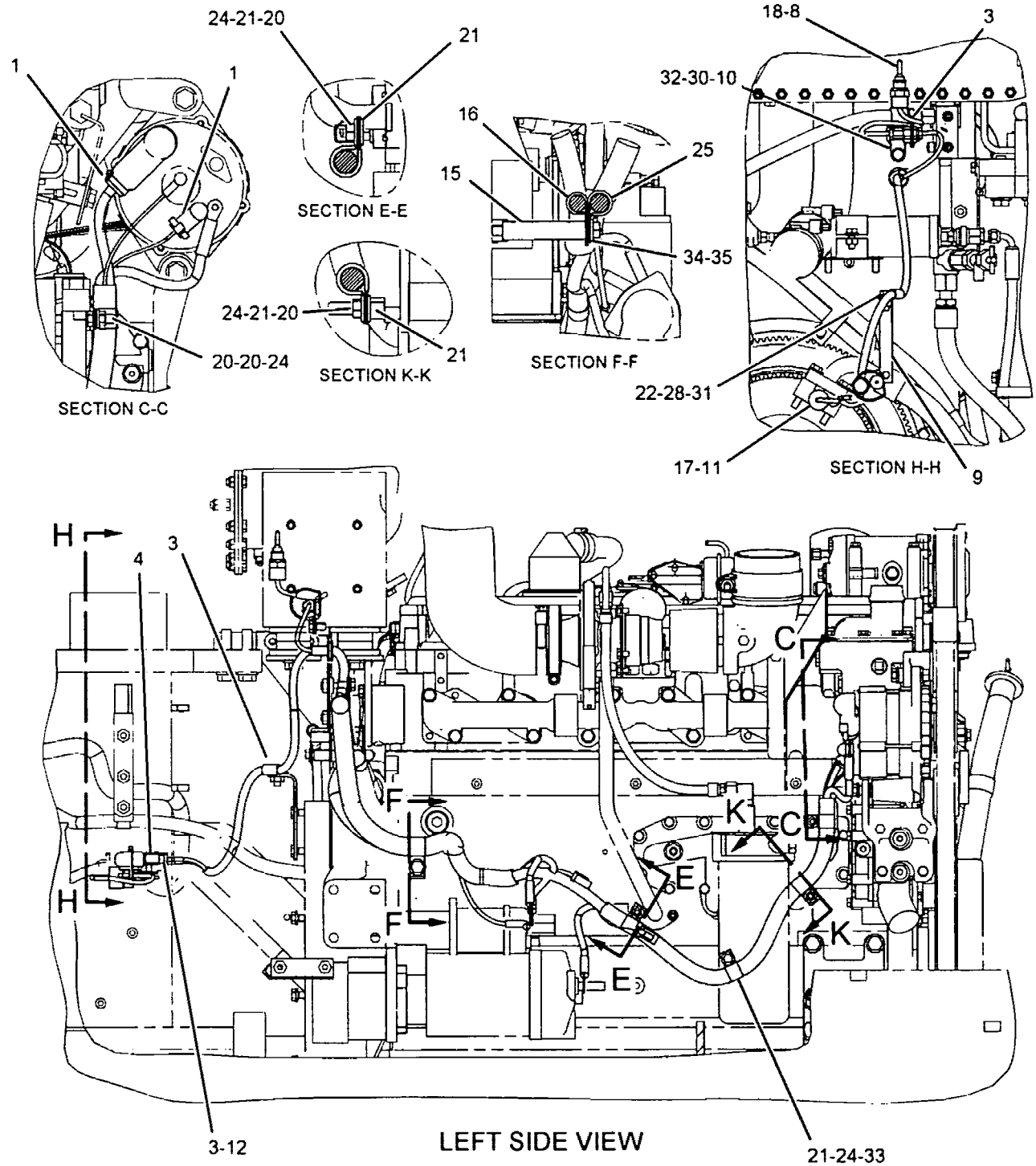

GRAPHIC #1 g01077093

201-8413 WIRING GP-ENGINE *(contd.)* i01985999

NOTE	REF NO	GRAPHIC REF	PART NUMBER	QTY	PART NAME 1 2 3 4 5 6 (PRODUCT LEVEL)	SEE PAGE
M	32	1,2	8T-4137	3	BOLT (M10X1.5X20-MM)	
M	33	1	8T-4200	1	BOLT (M8X1.25X16-MM)	
	34	1	8T-4223	1	WASHER-HARD (13.5X25.5X3-MM THK)	
M	35	1	8T-5041	1	BOLT (M12X1.75X120-MM)	
	36	2	9X-7345	1	GROMMET	
	37	2	9X-8250	2	CLIP	
	38	2	9X-8256	2	WASHER (6.6X12X2-MM THK)	
	39	2	9X-8257	1	WASHER (17.5X30X3.5-MM THK)	

B-USE AS REQUIRED
E-ORDER BY THE CENTIMETER
M-METRIC PART
Y-SEPARATE ILLUSTRATION

ELECTRICAL AND STARTING SYSTEM

201-8413 WIRING GP-ENGINE

S/N: CRD512-UP

PART OF 199-2817 ELECTRICAL AR

SMCS-1403, 1408 **i01985999**

NOTE	REF NO	GRAPHIC REF	PART NUMBER	QTY	PART NAME 1 2 3 4 5 6 (PRODUCT LEVEL)	SEE PAGE
	1	1,2	3S-2093	3	STRAP-CABLE	
	2	2	5D-2651	1	CLIP	
	3	1,2	7K-1181	5	STRAP-CABLE	
	4	1	9X-3495	1	CLIP AS	
	5	2	174-3016	1	PLUG AS (3-PIN)	
	6	2	215-3860	1	BRACKET AS	
	7	2	235-3501	1	HARNESS AS-ENGINE (ELECTRONIC CONTROL MODULE)	
		2	102-8802	1	KIT-RECEPTACLE (2-PIN)	
					(INCLUDES RECEPTACLE AS AND WEDGE)	
		2	102-8803	1	KIT-RECEPTACLE (3-PIN)	
					(INCLUDES RECEPTACLE AS AND WEDGE)	
		2	3S-2093	2	STRAP-CABLE	
		2	3T-0203	1	PLUG AS-CONNECTOR (20-PIN)	
		2	7G-7917	5	PLUG-SEAL	
		2	7G-7918	4	PLUG-SEAL	
		2	7K-1181	1	STRAP-CABLE	
		2	8N-1518	1	PLUG AS-CONNECTOR (25-PIN)	
		2	8T-8731	1	PLUG-CONNECTOR	
		2	8T-8737	45	PLUG-SEAL	
		2	9X-6772	4	STRAP-CABLE	
		2	155-2260	1	KIT-CONNECTING PLUG (3-PIN)	
					(INCLUDES PLUG AS AND WEDGE)	
		2	155-2270	1	KIT-CONNECTING PLUG (2-PIN)	
					(INCLUDES PLUG AS AND WEDGE)	
		2	160-7689	1	PLUG AS-CONNECTOR (70-PIN)	
		2	159-9322	1	SEAL-O-RING	
Y	8	1	102-2240	1	SENSOR GP-TEMPERATURE (HYDRAULIC OIL)	253
	9	1	118-6878	1	BRACKET AS	
M		1	8T-3490	1	NUT-WELD (M10X1.5-THD)	
	10	1,2	130-5300	3	CLIP	
Y	11	1	131-0427	1	SENSOR GP-TEMPERATURE (TORQUE CONVERTER OIL)	255
	12	1	147-0856	1	RESISTOR AS	
		1	3E-3365	1	WEDGE-RECEPTACLE LOCK (2-PIN)	
		1	102-8802	1	KIT-RECEPTACLE (2-PIN)	
					(INCLUDES RECEPTACLE AS AND WEDGE)	
BE		1	8T-6885		TUBE-HEAT SHRINK	
		1	186-3735	2	PIN-CONNECTOR (16-GA TO 18-GA)	
	13	2	156-6175	2	CLIP	
	14	2	195-0882	1	BRACKET AS	
	15	1	1K-3113	1	PIPE	
	16	1,2	1S-1015	2	CLIP	
	17	1	3J-1907	1	SEAL-O-RING	
	18	1	3K-0360	1	SEAL-O-RING	
	19	2	4D-9517	1	CLIP	
M	20	1,2	5C-7261	4	NUT (M8X1.25-THD)	
	21	1,2	5P-4116	7	WASHER-HARD (8.8X20.5X2-MM THK)	
	22	1	5P-9297	1	CLIP	
	23	2	6D-4244	1	CLIP	
	24	1,2	6D-4246	5	CLIP	
	25	1	6D-4636	1	CLIP	
M	26	2	6V-8225	2	NUT (M6X1-THD)	
M	27	2	7X-2552	1	BOLT (M16X2X30-MM)	
	28	1	7X-7729	1	WASHER (11X25X3-MM THK)	
	29	2	8M-2773	1	CLIP	
	30	1,2	8T-4121	6	WASHER-HARD (11X21X2.5-MM THK)	
M	31	1,2	8T-4136	4	BOLT (M10X1.5X25-MM)	

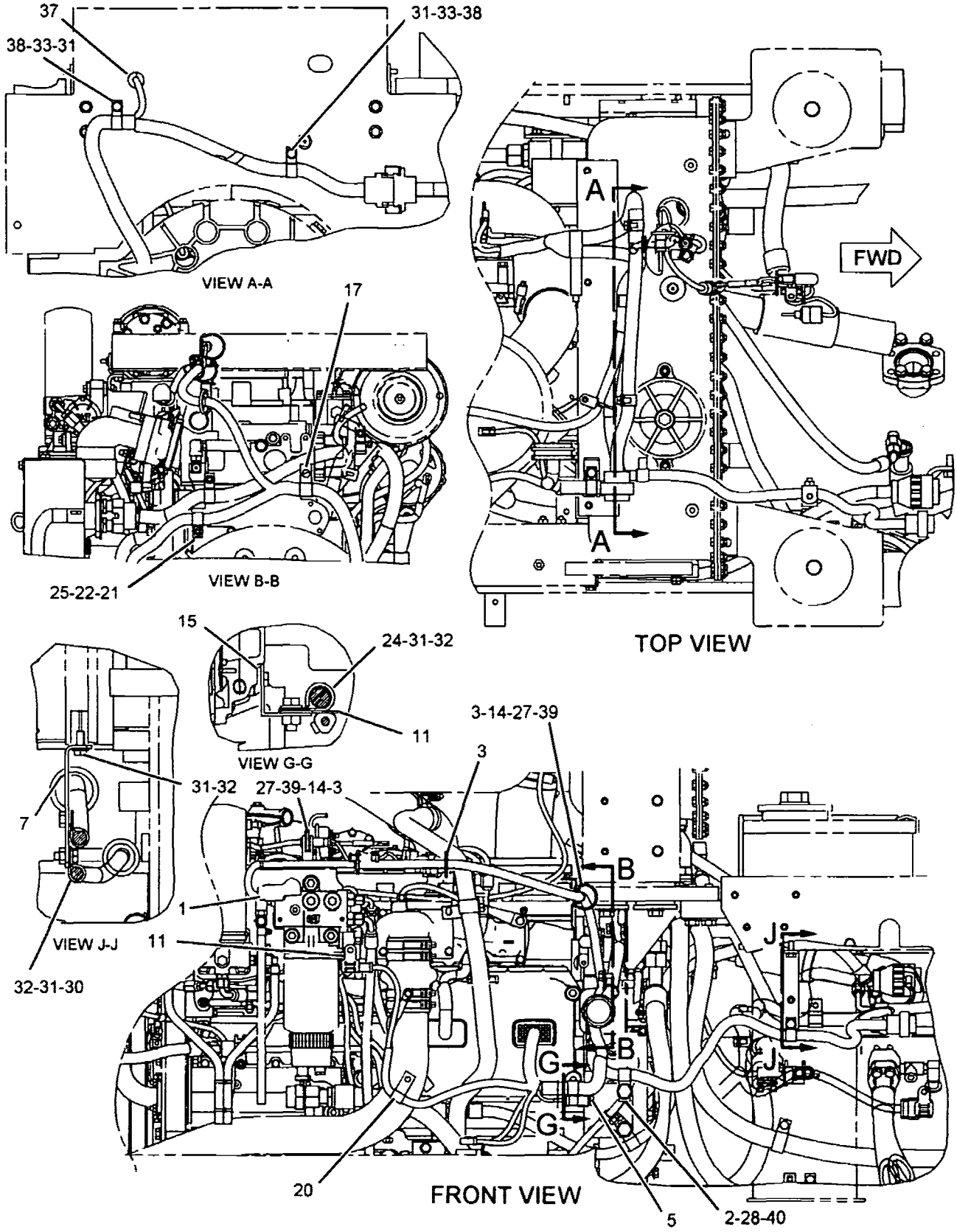

GRAPHIC #2 **<END>** g01045690

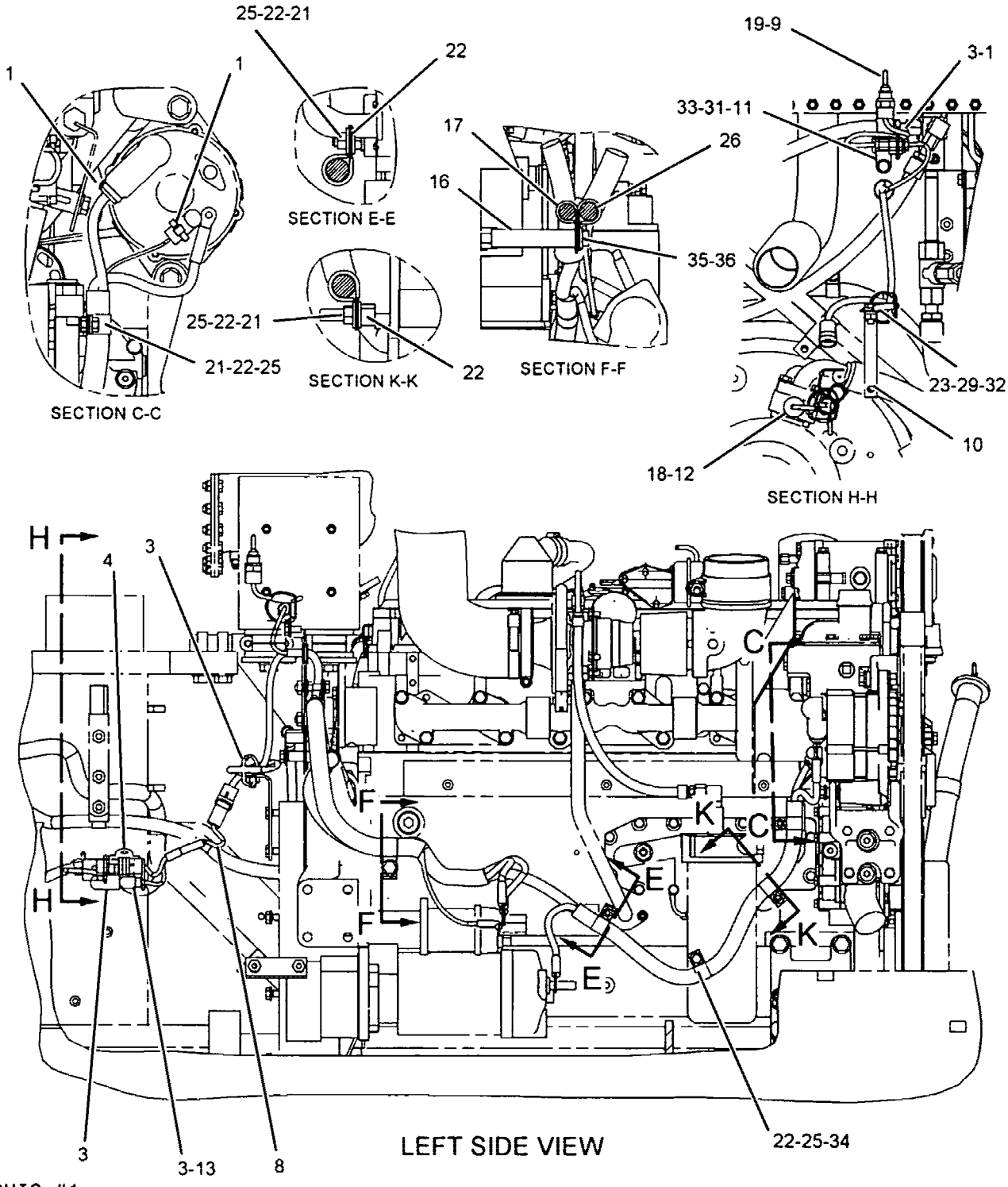

GRAPHIC #1

g01045964

201-8413 WIRING GP-ENGINE *(contd.)* 102110756

NOTE	REF NO	GRAPHIC REF	PART NUMBER	QTY	PART NAME 1 2 3 4 5 6 (PRODUCT LEVEL)	SEE PAGE
	31	1,2	8T-4121	6	WASHER-HARD (11X21X2.5-MM THK)	
M	32	1,2	8T-4136	4	BOLT (M10X1.5X25-MM)	
M	33	1,2	8T-4137	3	BOLT (M10X1.5X20-MM)	
M	34	1	8T-4200	1	BOLT (M8X1.25X16-MM)	
	35	2	8T-4223	1	WASHER-HARD (13.5X25.5X3-MM THK)	
M	36	2	8T-5041	1	BOLT (M12X1.75X120-MM)	
	37	2	9X-7345	1	GROMMET	
	38	2	9X-8250	2	CLIP	
	39	1	9X-8256	2	WASHER (6.6X12X2-MM THK)	
	40	2	9X-8257	1	WASHER (17.5X30X3.5-MM THK)	

B-USE AS REQUIRED
E-ORDER BY THE CENTIMETER
M-METRIC PART
Y-SEPARATE ILLUSTRATION

201-8413 WIRING GP-ENGINE

S/N: CRD1-511

PART OF 199-2817 ELECTRICAL AR

SMCS-1403, 1408 i02110756

NOTE	REF NO	GRAPHIC REF	PART NUMBER	QTY	PART NAME 1 2 3 4 5 6 (PRODUCT LEVEL)	SEE PAGE
	1	1,2	3S-2093	3	STRAP-CABLE	
	2	2	5D-2651	1	CLIP	
	3	1,2	7K-1181	7	STRAP-CABLE	
	4	2	9X-3495	1	CLIP AS	
	5	2	174-3016	1	PLUG AS (3-PIN)	
	6	1	202-3244	1	HARNESS AS-ENGINE	
		1	8N-1521	1	BELL AS-END	
		1	8N-1535	1	BELL AS-END	
		1	8T-8737	45	PLUG-SEAL	
		1	7G-7917	5	PLUG-SEAL	
		1	7G-7918	4	PLUG-SEAL	
		1	3S-2093	2	STRAP-CABLE	
		1	7K-1181	1	STRAP-CABLE	
		1	9X-6772	2	STRAP-CABLE	
		1	102-8802	2	KIT-RECEPTACLE (2-PIN)	
		1	102-8803	1	KIT-RECEPTACLE (3-PIN)	
					(EACH KIT INCLUDES RECEPTACLE AS AND WEDGE)	
		1	3T-0203	1	PLUG AS-CONNECTOR (20-PIN)	
		1	8N-1518	1	PLUG AS-CONNECTOR (25-PIN)	
		1	155-2260	1	KIT-CONNECTING PLUG (3-PIN)	
		1	155-2270	4	KIT-CONNECTING PLUG (2-PIN)	
					(EACH KIT INCLUDES PLUG AS AND WEDGE)	
		1	160-7689	1	PLUG AS-CONNECTOR (70-PIN)	
	7	2	215-3860	1	BRACKET AS	
	8	1	235-2426	1	HARNESS AS-WIRING (TEMPERATURE RESISTOR) (TEMPERATURE RESISTOR) (OIL)	
		1	155-2270	1	KIT-CONNECTING PLUG (2-PIN)	
					(INCLUDES PLUG AS AND WEDGE)	
Y	9	2	102-2240	1	SENSOR GP-TEMPERATURE (HYDRAULIC OIL)	253
	10	2	118-6878	1	BRACKET AS	
M		2	8T-3490	1	NUT-WELD (M10X1.5-THD)	
	11	1,2	130-5300	3	CLIP	
Y	12	2	131-0427	1	SENSOR GP-TEMPERATURE (TORQUE CONVERTER OIL)	255
	13	1	147-0856	1	RESISTOR AS	
		1	3E-3365	1	WEDGE-RECEPTACLE LOCK (2-PIN)	
		1	102-8802	1	KIT-RECEPTACLE (2-PIN)	
					(INCLUDES RECEPTACLE AS AND WEDGE)	
BE		1	8T-6885		TUBE-HEAT SHRINK	
		1	186-3735	2	PIN-CONNECTOR (16-GA TO 18-GA)	
	14	1	156-6175	2	CLIP	
	15	2	195-0882	1	BRACKET AS	
	16	2	1K-3113	1	PIPE	
	17	2	1S-1015	2	CLIP	
	18	2	3J-1907	1	SEAL-O-RING	
	19	2	3K-0360	1	SEAL-O-RING	
	20	1	4D-9517	1	CLIP	
M	21	1,2	5C-7261	4	NUT (M8X1.25-THD)	
	22	1,2	5P-4116	7	WASHER-HARD (8.8X20.5X2-MM THK)	
	23	2	5P-9297	1	CLIP	
	24	2	6D-4244	1	CLIP	
	25	2	6D-4246	5	CLIP	
	26	1	6D-4636	1	CLIP	
M	27	1	6V-8225	2	NUT (M6X1-THD)	
M	28	2	7X-2552	1	BOLT (M16X2X30-MM)	
	29	2	7X-7729	1	WASHER (11X25X3-MM THK)	
	30	2	8M-2773	1	CLIP	

190-5038 WIRING GP-ENGINE *(contd.)* i01943376

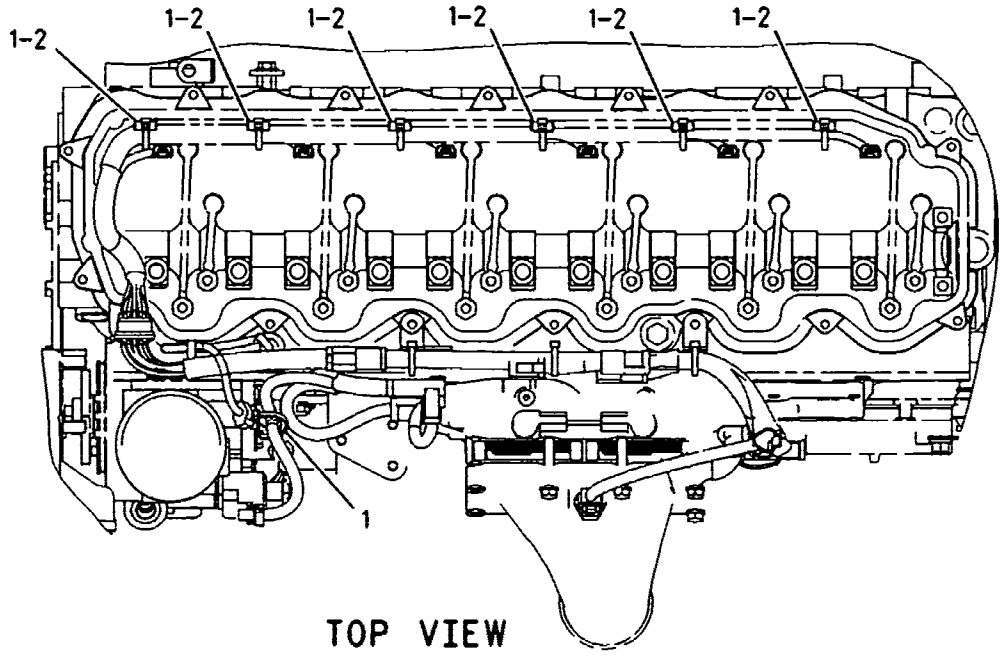

TOP VIEW

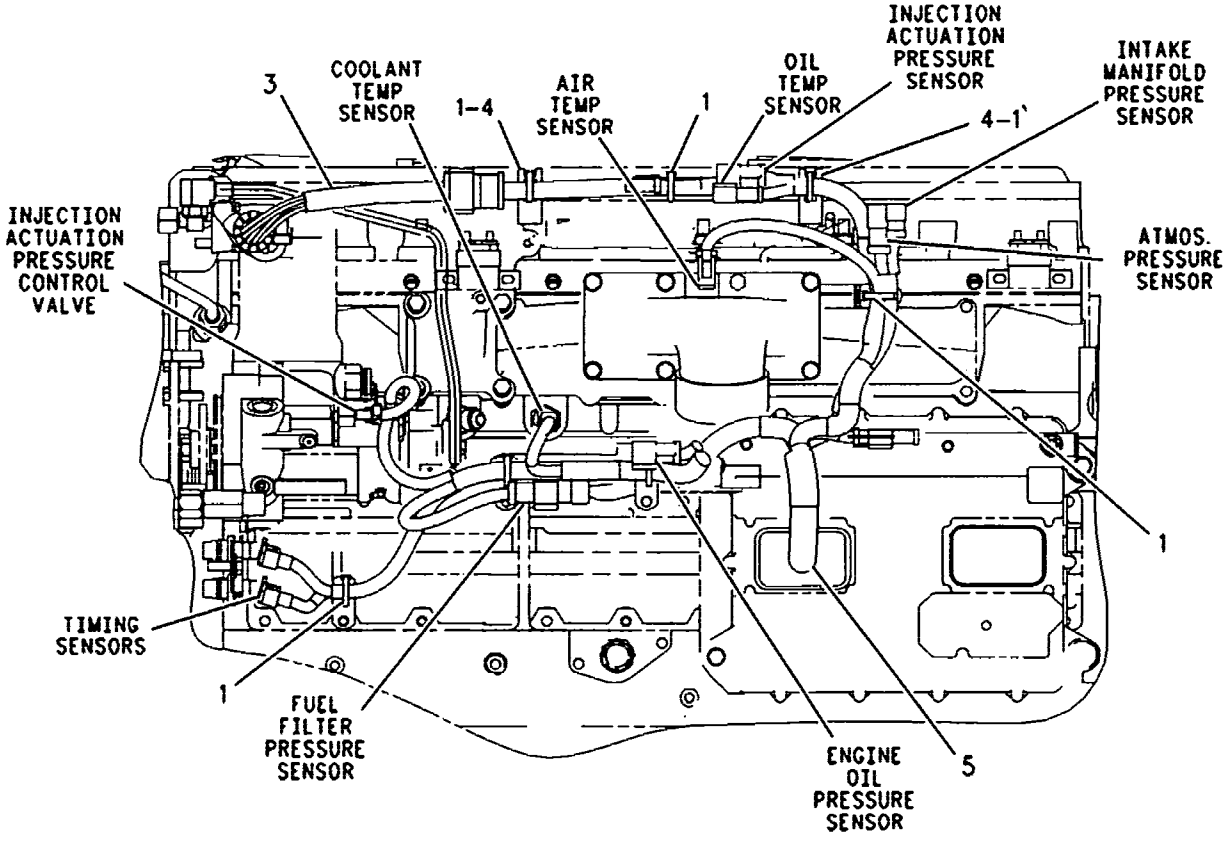

LEFT SIDE VIEW

GRAPHIC #1 <END> g00777749

190-5038 WIRING GP-ENGINE

S/N: 5GG1-UP

HIGH SIDE ACTIVATION OF STARTING AID HEATER RELAY

PART OF 198-5914 ENGINE AR-COMPLETE

SMCS-1403, 1408 i01943376

NOTE	REF NO	GRAPHIC REF	PART NUMBER	QTY	PART NAME 1 2 3 4 5 6 (PRODUCT LEVEL)	SEE PAGE
	1	1	3S-2093	14	STRAP-CABLE	
	2	1	105-1797	6	MOUNT	
	3	1	153-8920	1	HARNESS AS-ENGINE (UNIT INJECTOR)	
		1	155-2255	1	KIT-CONNECTING PLUG (12-PIN) (ENGINE UNIT INJECTOR HARNESS)	
					(INCLUDES PLUG AS, INTERFACE SEAL & WEDGE)	
	4	1	156-6175	2	CLIP	
	5	1	195-7336	1	HARNESS AS-ENGINE (ELECTRONIC CONTROL)	
		1	102-8802	2	KIT-RECEPTACLE (2-PIN) (ENG ELECTRONIC CONTROL HARNESS)	
		1	102-8803	4	KIT-RECEPTACLE (3-PIN) (ENG ELECTRONIC CONTROL HARNESS)	
		1	102-8801	1	KIT-RECEPTACLE (12-PIN) (ENG ELECTRONIC CONTROL HARNESS)	
					(EACH RECEPTACLE KIT INCLUDES RECEPTACLE AS AND WEDGE)	
		1	100-3320	1	PLUG AS-CONNECTOR (2-PIN)	
		1	126-5011	1	SEAL-CONNECTOR	
		1	111-2416	1	PLUG AS-CONNECTOR (2-PIN)	
		1	126-5011	1	SEAL-CONNECTOR	
		1	155-2260	1	KIT-CONNECTING PLUG (3-PIN) (ENG ELECTRONIC CONTROL HARNESS)	
		1	155-2270	4	KIT-CONNECTING PLUG (2-PIN) (ENG ELECTRONIC CONTROL HARNESS)	
					(EACH CONNECTING PLUG KIT INCLUDES PLUG AS, INTERFACE SEAL & WEDGE)	
		1	160-7690	1	PLUG AS-CONNECTOR (70-PIN)	
		1	159-9322	1	SEAL-O-RING	

201-8418 WIRING GP-ELECTRIC CLUTCH-

AXLE OIL COOLER PUMP

S/N: CRD1-UP

PART OF 201-8906 COOLER AR-AXLE OIL

AN ATTACHMENT

SMCS-1634 101694580

NOTE	REF NO	GRAPHIC REF	PART NUMBER	QTY	PART NAME 1 2 3 4 5 6 (PRODUCT LEVEL)	SEE PAGE
	1	1	3S-2093	3	STRAP-CABLE	
	2	1	155-8998	1	SWITCH AS-TEMPERATURE (AXLE OIL MONITORING)	
		1	102-8802	1	KIT-RECEPTACLE (2-PIN)	
		1	3E-3365	1	WEDGE-RECEPTACLE LOCK (2-PIN)	
		1	8T-8729	2	PIN-CONNECTOR	
	3	1	130-5301	1	CLIP	
	4	1	202-3249	1	HARNESS AS-PUMP (AXLE OIL COOLER PUMP CLUTCH)	
		1	102-8802	1	KIT-RECEPTACLE (2-PIN)	
		1	155-2270	1	KIT-CONNECTING PLUG (2-PIN)	
	5	1	156-6175	1	CLIP	
	6	1	5P-9085	1	CLIP	

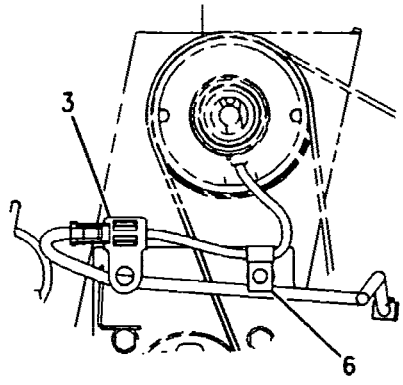

VIEW A-A

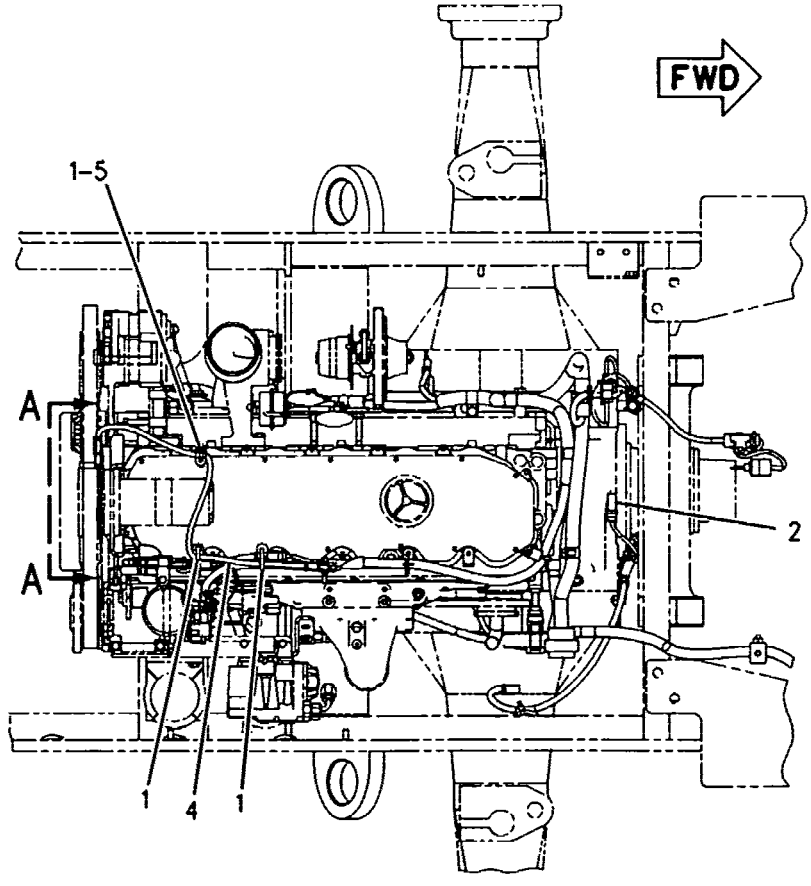

TOP VIEW

GRAPHIC #1 <END> g00868096

ELECTRICAL AND STARTING SYSTEM

251-0025 WIRING GP-COUPLER

S/N: CRD1006-UP
PART OF 245-7355, 246-1049 COUPLER AR-QUICK
AN ATTACHMENT

SMCS-5734 **i02154597**

NOTE	REF NO	GRAPHIC REF	PART NUMBER	QTY	PART NAME 1 2 3 4 5 6 (PRODUCT LEVEL)	SEE PAGE
	1	1	**7K-1181**	2	STRAP-CABLE	
	2	1	**252-0040**	1	HARNESS AS-WORK TOOL (QUICK COUPLER)	
		1	**155-2260**	1	KIT-CONNECTING PLUG (3-PIN)	
					(INCLUDES PLUG AS AND WEDGE)	
		1	**155-2270**	2	KIT-CONNECTING PLUG (2-PIN)	
					(EACH INCLUDES PLUG AS AND WEDGE)	
	3	1	**130-5300**	1	CLIP	

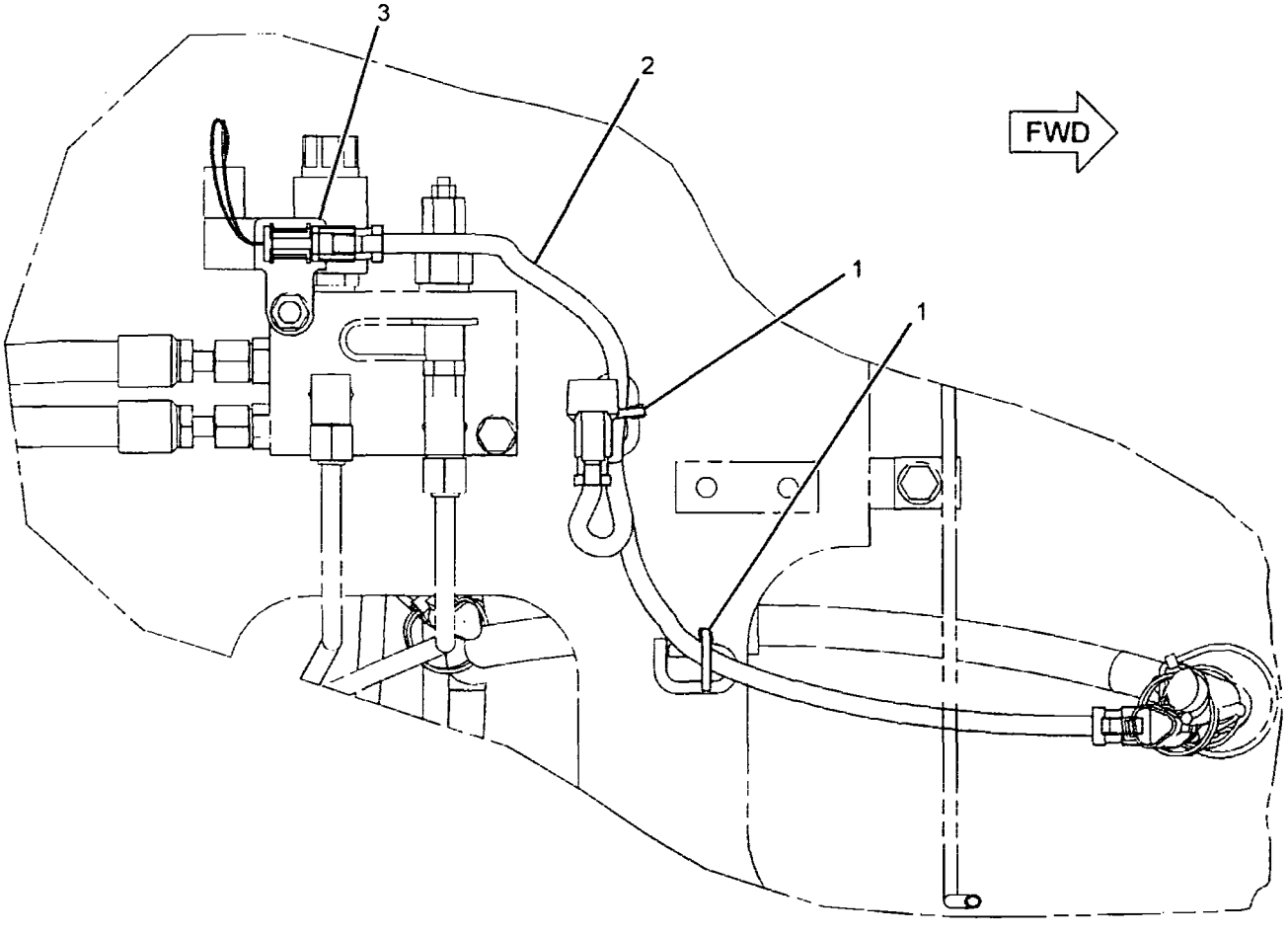

BOTTOM VIEW

GRAPHIC #1

<END>

g01098943

206-2830 WIRING GP-COMMUNICATION *(contd.)* i01868515

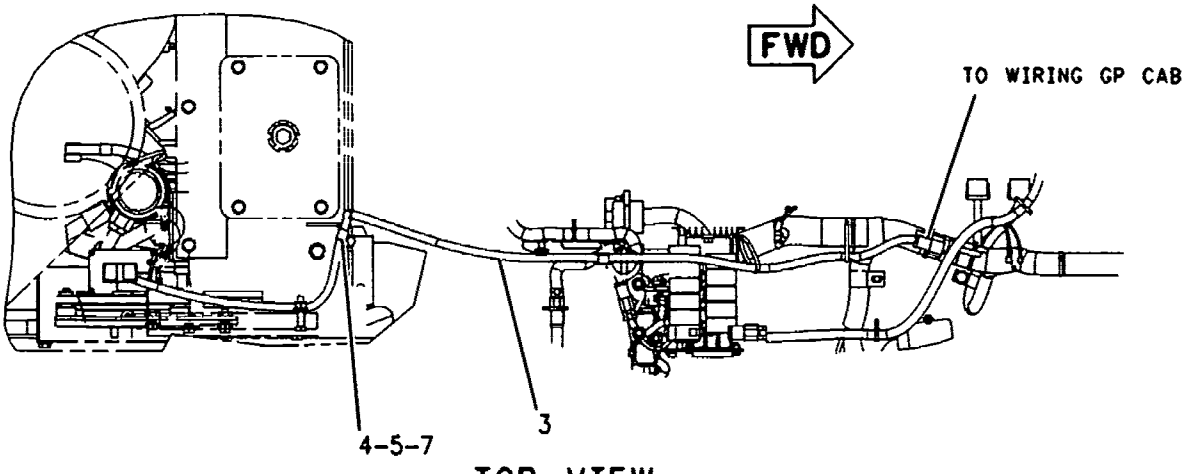

TOP VIEW

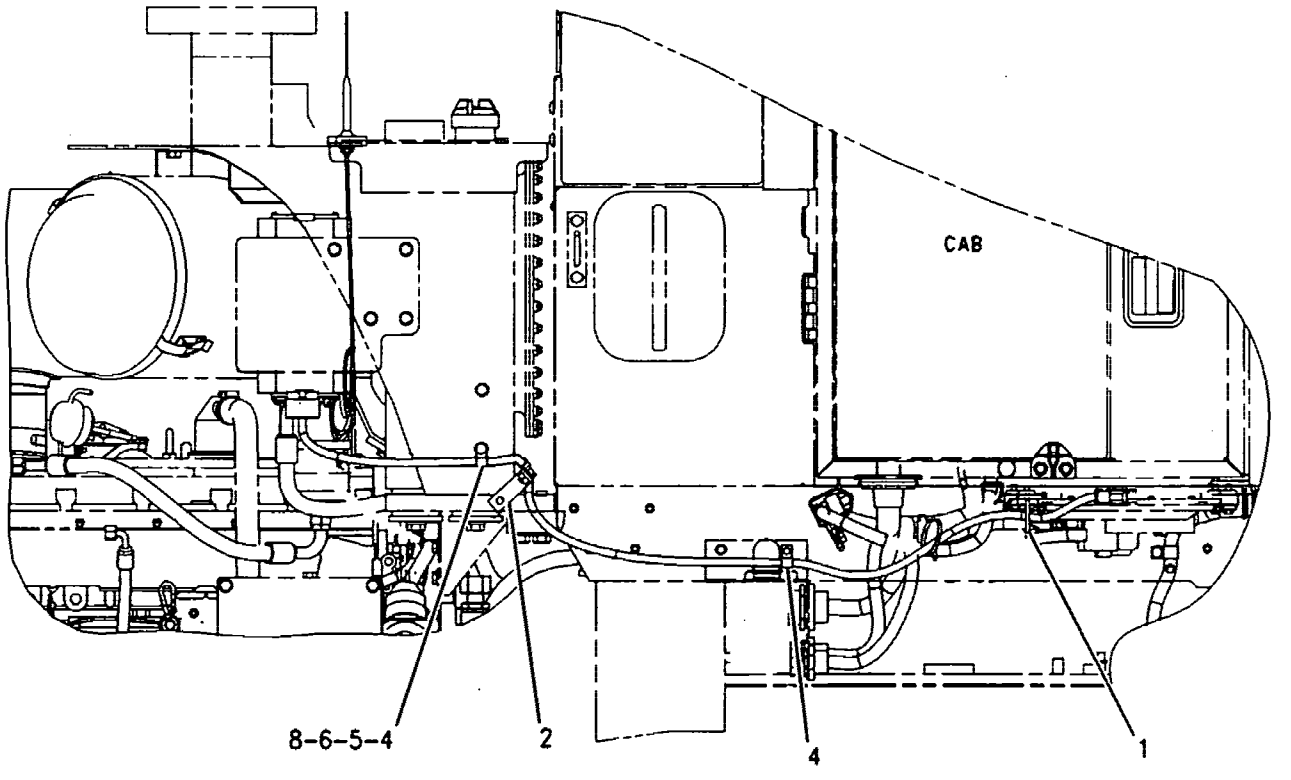

RIGHT SIDE VIEW

GRAPHIC #1 <END> g00951846

206-2830 WIRING GP-COMMUNICATION-PRODUCT LINK

S/N: CRD1-UP

PART OF 206-2817 INSTALLATION AR-COMMUNICATION

AN ATTACHMENT

SMCS-1408, 7606 i01868515

NOTE	REF NO	GRAPHIC REF	PART NUMBER	QTY	PART NAME 1 2 3 4 5 6 (PRODUCT LEVEL)	SEE PAGE
	1	1	7K-1181	2	STRAP-CABLE	
	2	1	144-4613	1	ANGLE AS	
M		1	8T-3490	1	NUT-WELD (M10X1.5-THD)	
	3	1	215-9550	1	HARNESS AS-CONTROL (PRODUCT LINK)	
		1	102-8805	1	KIT-RECEPTACLE (6-PIN)	
		1	7X-6222	1	PLUG AS-CONNECTOR (24-PIN)	
		1	3E-4367	1	RING-RETAINING	
M		1	3E-8558	1	BOLT (M5X.8X39.37-MM)	
		1	9X-3265	2	SEAL-CONNECTOR	
	4	1	4D-7794	3	CLIP	
	5	1	8T-4121	2	WASHER-HARD (11X21X2.5-MM THK)	
M	6	1	8T-4133	1	NUT (M10X1.5-THD)	
M	7	1	8T-4137	1	BOLT (M10X1.5X20-MM)	
M	8	1	8T-4185	1	BOLT (M10X1.5X50-MM)	

M-METRIC PART

212-7449 **WIRING GP-CAB** *(contd.)* **i01866329**

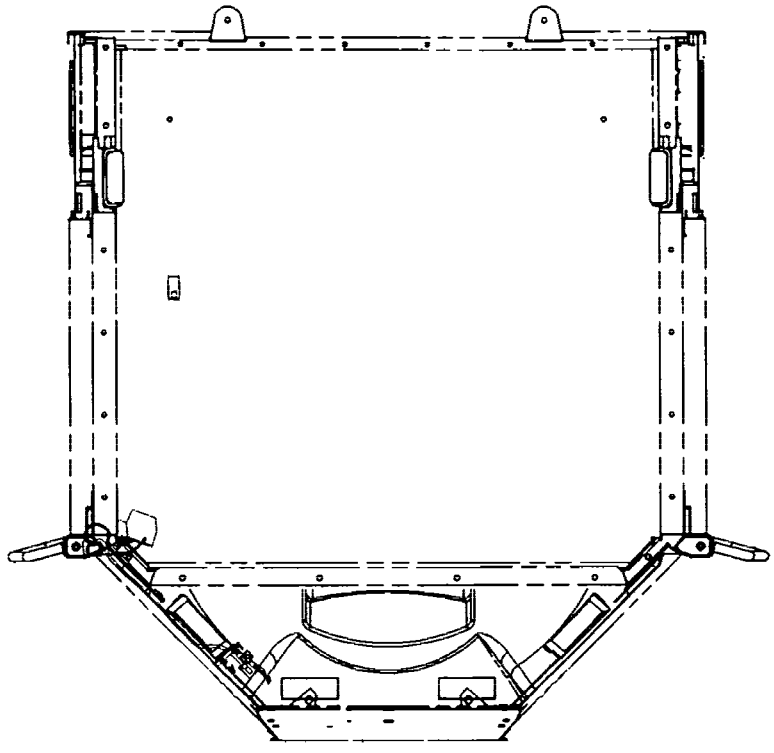

TOP VIEW

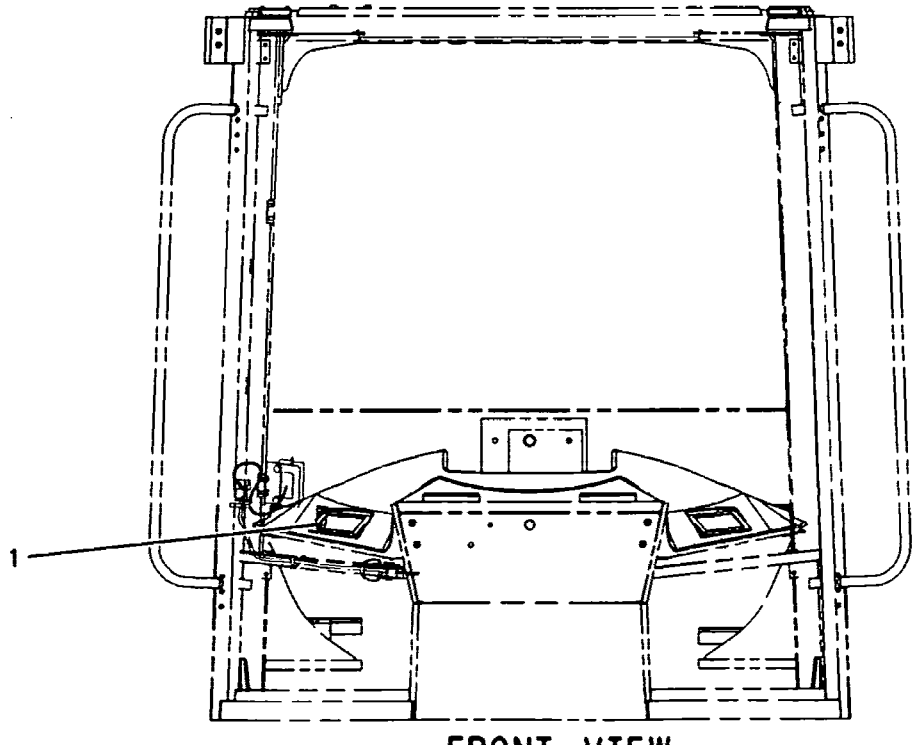

FRONT VIEW

GRAPHIC #1 **<END>** g00951316

212-7449 WIRING GP-CAB

S/N: CRD1-UP
TRACTION CONTROL SYSTEM
PART OF 201-8909 CONTROL AR-TRACTION, 221-8179 CONVERSION AR-TRACTION CONTROL
AN ATTACHMENT

SMCS-1408, 7301 i01866329

NOTE	REF NO	GRAPHIC REF	PART NUMBER	QTY	PART NAME 1 2 3 4 5 6 (PRODUCT LEVEL)	SEE PAGE
	1	1	206-5685	1	SWITCH AS-TRACTION CONTROL (TEST, ENABLE)	
		1	111-7899	1	GASKET	

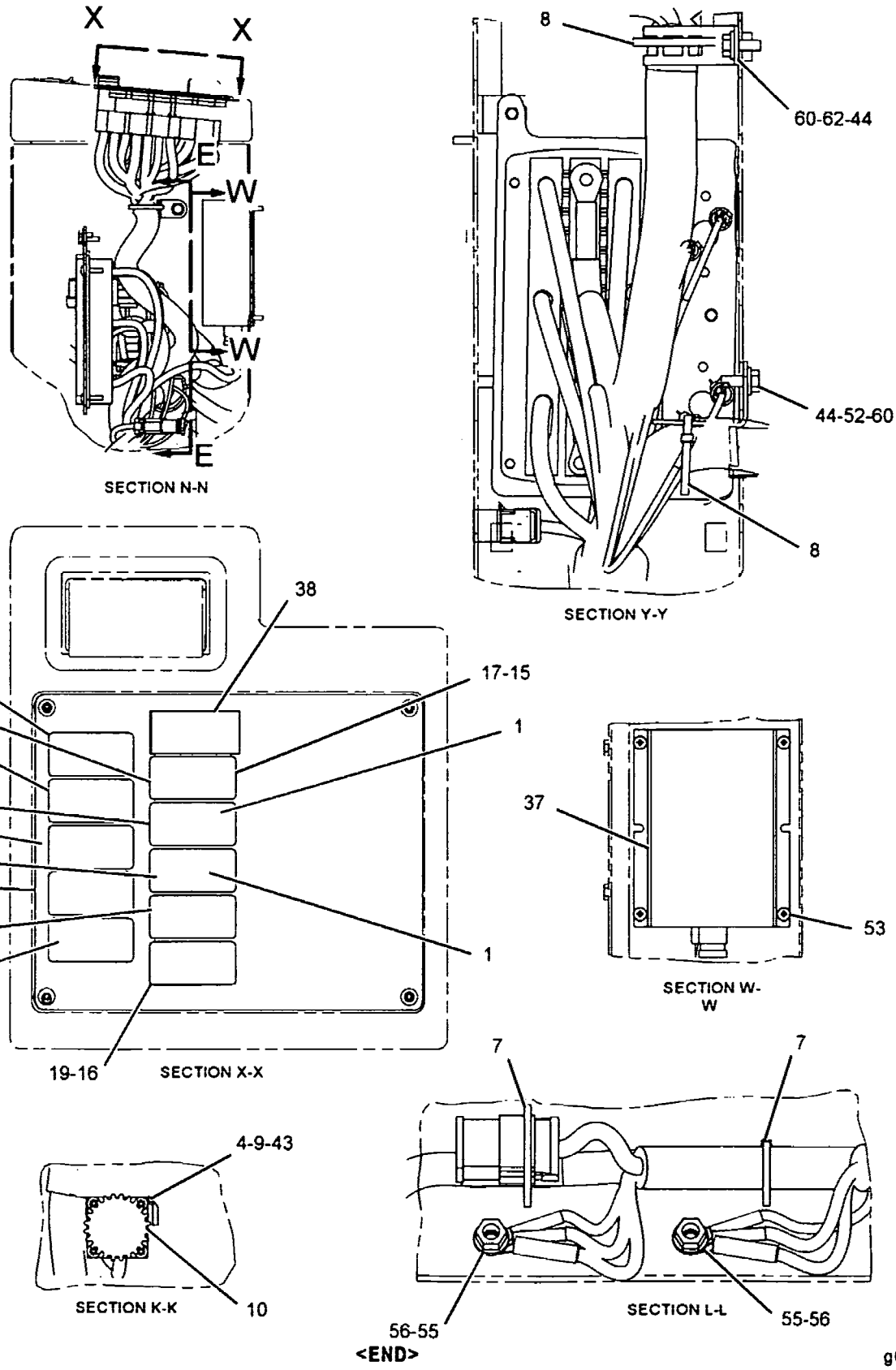

GRAPHIC #6

<END>

g01101747

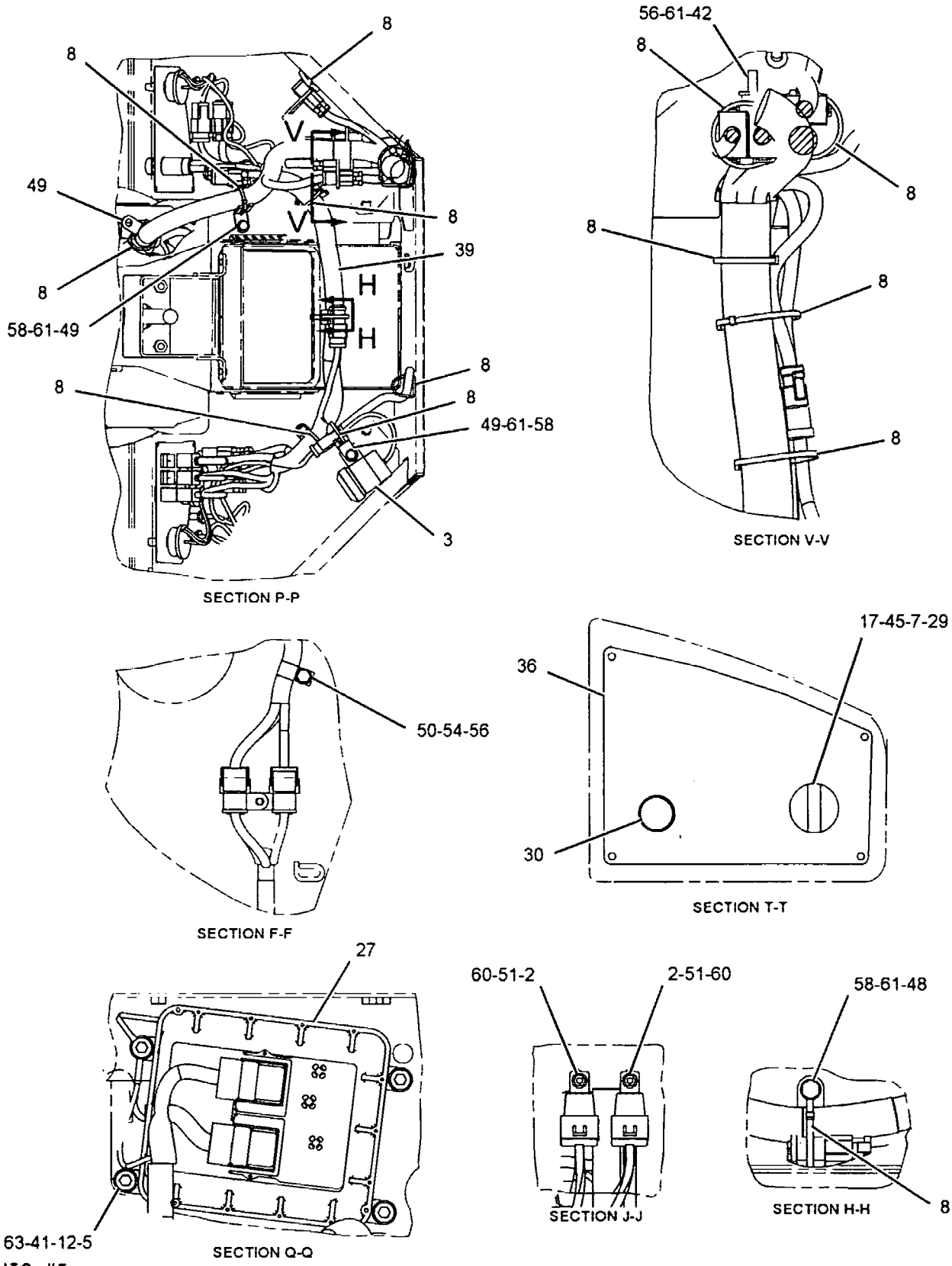

GRAPHIC #5

g01101746

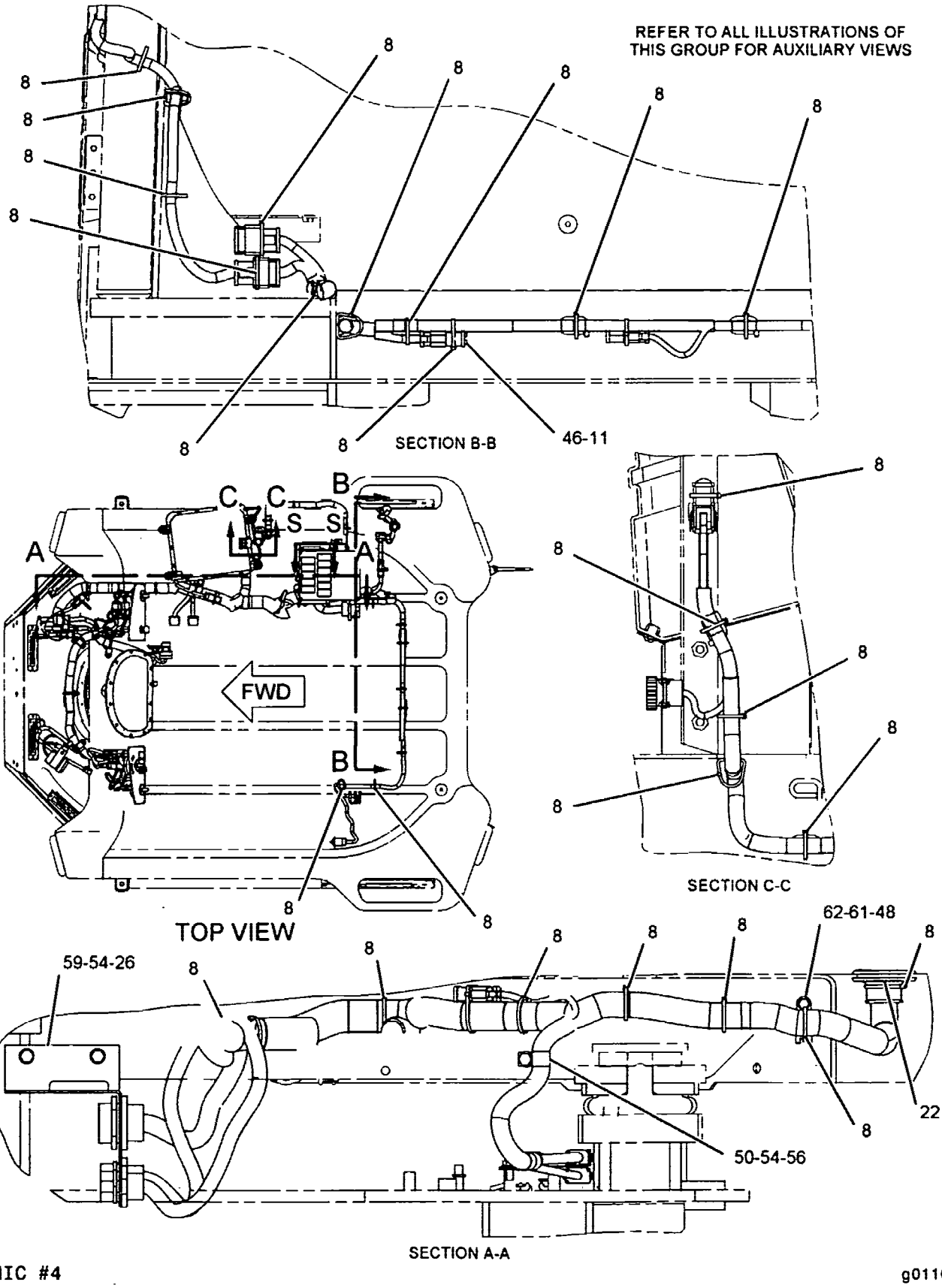

GRAPHIC #4 g01101745

REFER TO ALL ILLUSTRATIONS OF
THIS GROUP FOR AUXILIARY VIEWS

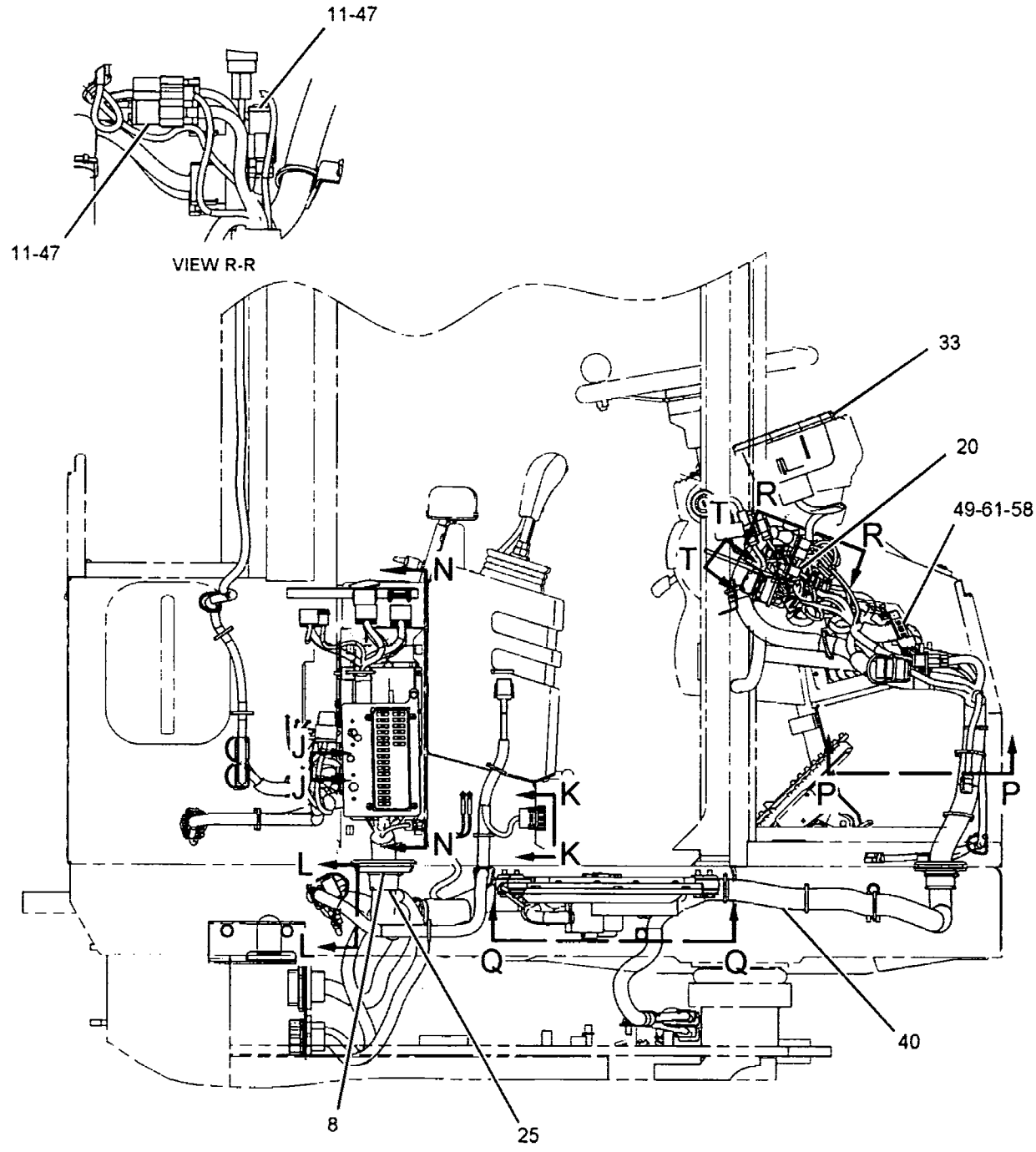

RIGHT SIDE VIEW

GRAPHIC #3

g01101744

REFER TO ALL ILLUSTRATIONS OF
THIS GROUP FOR AUXILIARY VIEWS

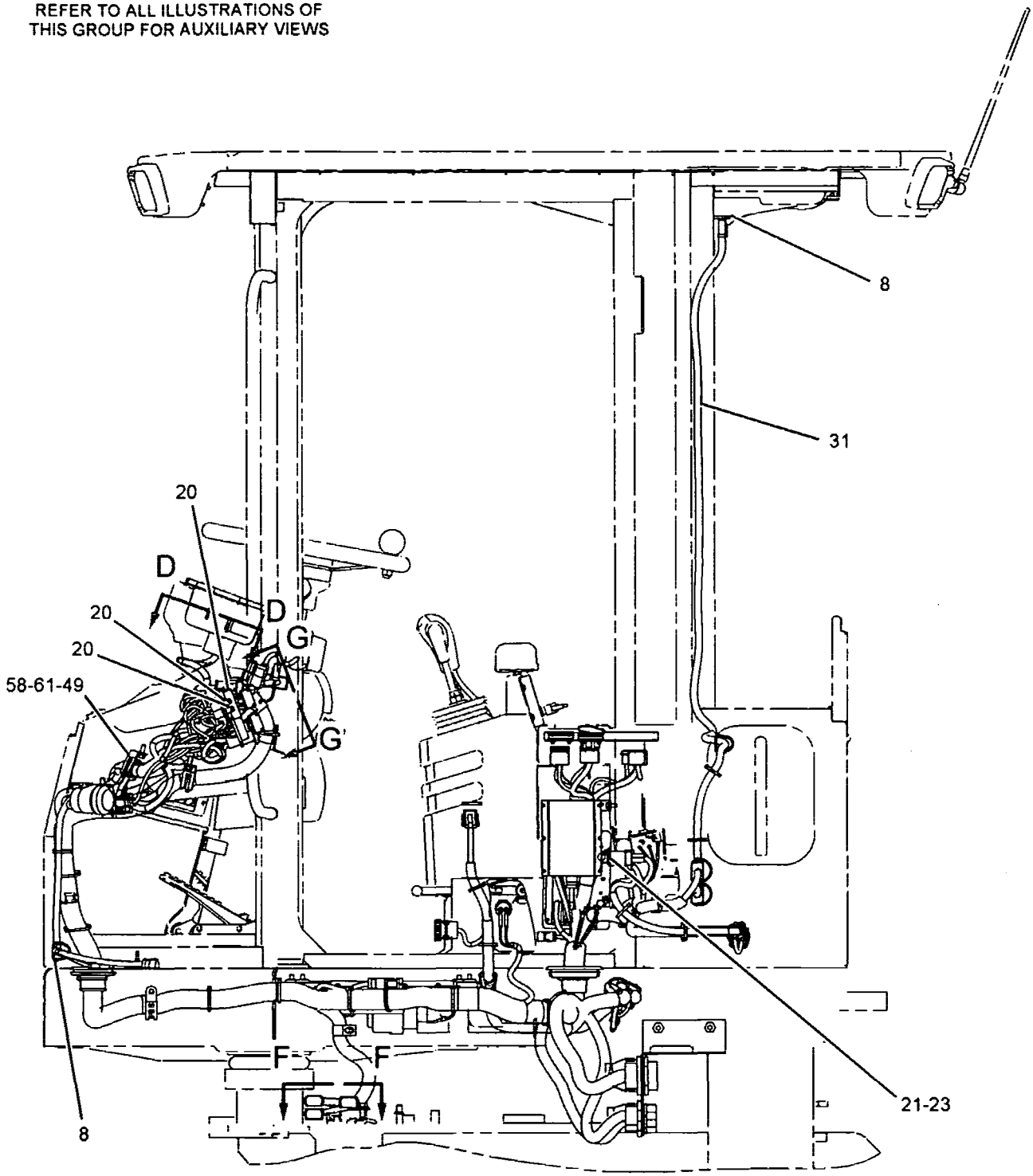

LEFT SIDE VIEW

GRAPHIC #2 g01101749

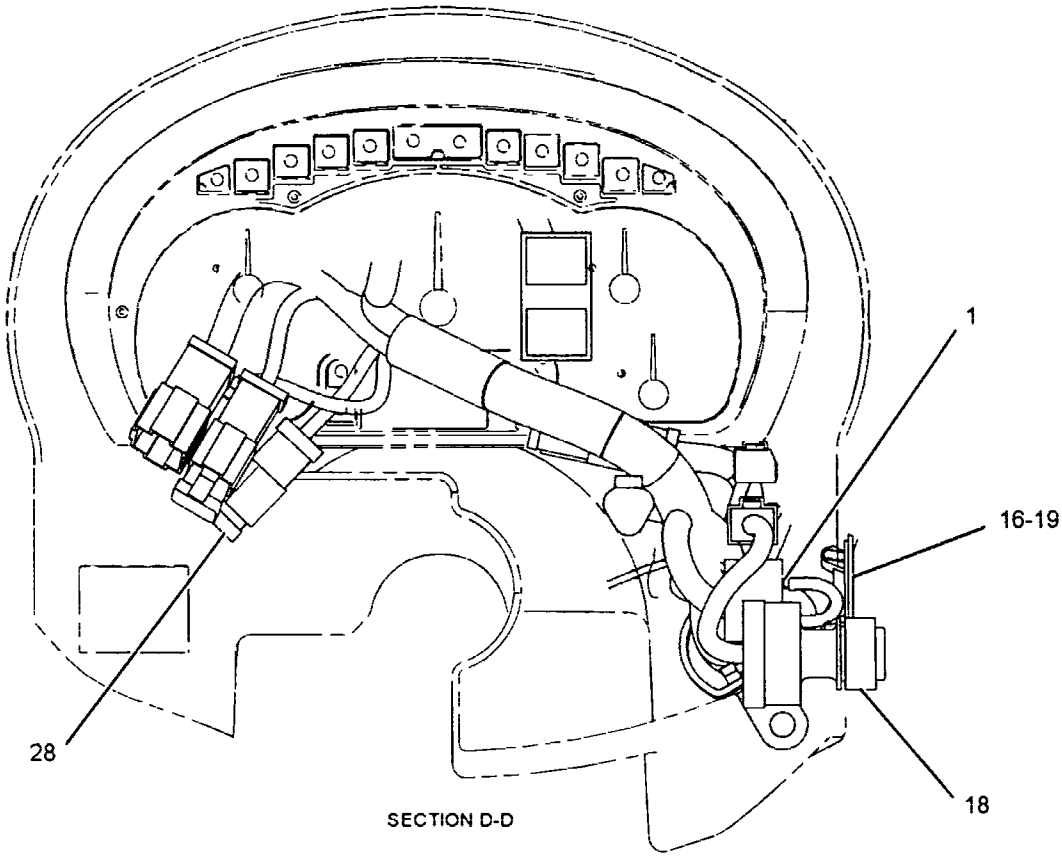

SECTION D-D

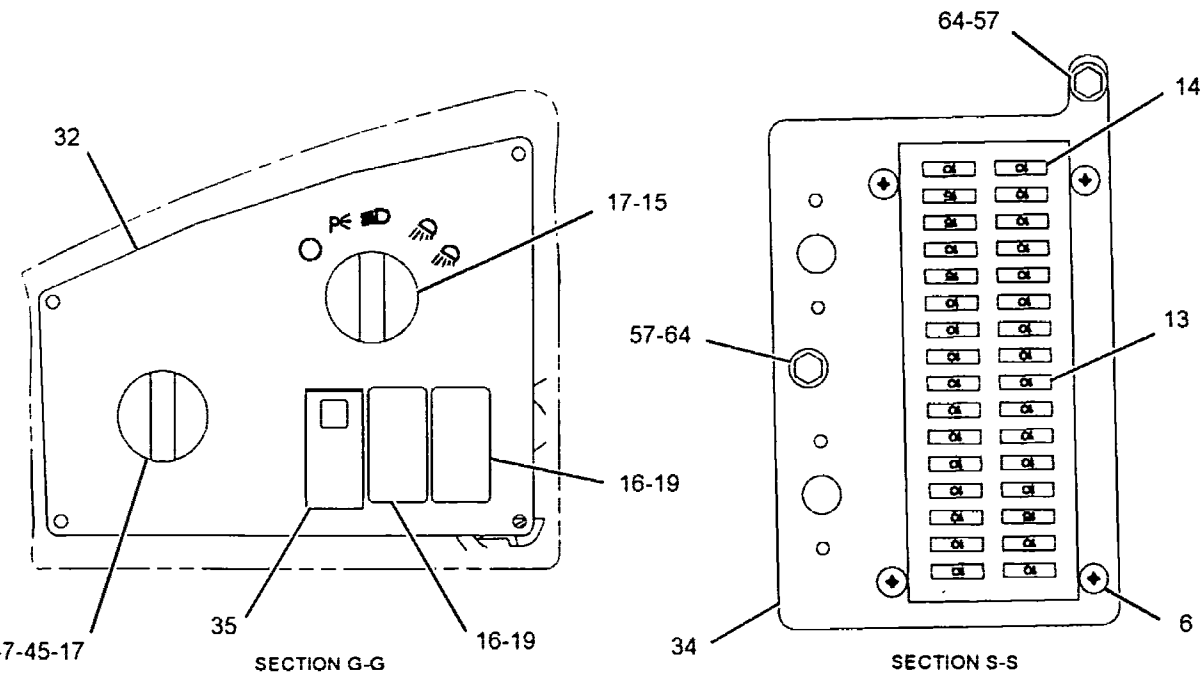

SECTION G-G

SECTION S-S

GRAPHIC #1

g01101748

201-8410 WIRING GP-CAB *(contd.)* 102162696

NOTE	REF NO	GRAPHIC REF	PART NUMBER	QTY	PART NAME 1 2 3 4 5 6 (PRODUCT LEVEL)	SEE PAGE
	43	6	**142-2928**	4	LOCKNUT (4-40-THD)	
	44	6	**156-6175**	2	CLIP	
	45	1,5	**2H-3920**	2	LOCKWASHER	
	46	4	**102-8805**	2	KIT-RECEPTACLE (6-PIN)	
					(INCLUDES RECEPTACLE AS AND WEDGE)	
C	47	3	**102-8806**	2	KIT-RECEPTACLE (8-PIN)	
					(INCLUDES RECEPTACLE AS AND WEDGE)	
	48	4,5	**4P-7581**	2	CLIP	
	49	2,3,5	**4P-8134**	5	CLIP	
	50	4,5	**6D-4246**	2	CLIP	
M	51	5	**6V-8225**	2	NUT (M6X1-THD)	
M	52	6	**6V-8837**	2	BOLT (M6X1X16-MM)	
M	53	6	**6V-9673**	4	SCREW-MACHINE (M5X0.8X12-MM)	
	54	4,5	**8T-4121**	6	WASHER-HARD (11X21X2.5-MM THK)	
M	55	6	**8T-4133**	2	NUT (M10X1.5-THD)	
M	56	4,5,6	**8T-4137**	2	BOLT (M10X1.5X20-MM)	
M	57	1	**8T-4138**	2	BOLT (M6X1X20-MM)	
M	58	2,3,5	**8T-4189**	6	BOLT (M8X1.25X20-MM)	
M	59	4	**8T-4195**	2	BOLT (M10X1.5X30-MM)	
	60	5,6	**8T-4205**	4	WASHER-HARD (7.2X14.5X2-MM THK)	
	61	2,3,4,5	**8T-4224**	7	WASHER-HARD (8.8X16X2-MM THK)	
M	62	4,6	**8T-4908**	1	BOLT (M8X1.25X25-MM)	
	63	5	**9N-0869**	4	WASHER-HARD (8.8X25.5X2-MM THK)	
	64	1	**9X-8256**	2	WASHER (6.6X12X2-MM THK)	

C-CHANGE FROM PREVIOUS TYPE
M-METRIC PART
Y-SEPARATE ILLUSTRATION

201-8410 WIRING GP-CAB (contd.)

i02162696

NOTE	REF NO	GRAPHIC REF	PART NUMBER	QTY	PART NAME 1 2 3 4 5 6 (PRODUCT LEVEL)	SEE PAGE
		2	155-2271	1	KIT-CONNECTING PLUG (4-PIN)	
					(INCLUDES PLUG AS AND WEDGE)	
	32	1	205-1703	1	FILM-PANEL (DUCT, LH)	
	33	3	205-1784	1	MODULE GP-DISPLAY (GAUGE CLUSTER)	
	34	1	205-9113	1	PLATE	
	35	1	206-5688	1	SWITCH AS-ROCKER (MODE SELECT)	
		1	111-7899	1	GASKET	
	36	5	207-2530	1	FILM-PANEL	
	37	6	209-0381	1	CONVERTER-POWER (24-VOLT TO 12-VOLT)	
	38	6	212-3501	1	SWITCH AS-ROCKER (TMSN NEUTRALIZER OVERRIDE CONT)	
		6	111-7899	1	GASKET	
C	39	5	226-2902	1	HARNESS AS-INSTRUMENT PANEL (DUCT)	
		5	155-2274	3	KIT-CONNECTING PLUG (6-PIN)	
		5	155-2270	1	KIT-CONNECTING PLUG (2-PIN)	
		5	155-2260	1	KIT-CONNECTING PLUG (3-PIN)	
		5	155-2265	3	KIT-CONNECTING PLUG (8-PIN)	
		5	155-2255	1	KIT-CONNECTING PLUG (12-PIN)	
					(EACH KIT INCLUDES PLUG AS AND WEDGE)	
		5	8T-8737	8	PLUG-SEAL	
		5	190-7614	1	KIT-RECEPTACLE (12-PIN)	
		5	102-8801	1	KIT-RECEPTACLE (12-PIN)	
		5	102-8802	1	KIT-RECEPTACLE (2-PIN)	
					(EACH KIT INCLUDES RECEPTACLE AS AND WEDGE)	
		5	9X-0196	1	TERMINAL AS	
C	40	3	261-5545	1	HARNESS AS-CAB (MAIN)	
		3	188-6253	1	BLOCK AS-FUSE	
		3	8N-1521	1	BELL AS-END	
		3	8N-1535	2	BELL AS-END	
		3	110-6846	1	PLUG AS-CONNECTOR (40-PIN)	
		3	7X-6222	1	PLUG AS-CONNECTOR (24-PIN)	
		3	9X-1054	2	PLUG AS-CONNECTOR (4-PIN)	
		3	110-6848	1	PLUG AS-CONNECTOR (40-PIN)	
		3	155-2255	7	KIT-CONNECTING PLUG (12-PIN)	
		3	155-2256	2	KIT-CONNECTING PLUG (12-PIN)	
		3	155-2257	1	KIT-CONNECTING PLUG (12-PIN)	
		3	155-2265	1	KIT-CONNECTING PLUG (8-PIN)	
		3	155-2260	2	KIT-CONNECTING PLUG (3-PIN)	
		3	155-2270	4	KIT-CONNECTING PLUG (2-PIN)	
		3	155-2271	2	KIT-CONNECTING PLUG (4-PIN)	
		3	155-2274	5	KIT-CONNECTING PLUG (6-PIN)	
					(EACH KIT INCLUDES PLUG AS AND WEDGE)	
		3	8T-8737	129	PLUG-SEAL	
		3	7G-7919	2	PLUG-SEAL	
		3	7G-7920	1	PLUG-SEAL	
		3	102-8802	3	KIT-RECEPTACLE (2-PIN)	
		3	102-8803	2	KIT-RECEPTACLE (3-PIN)	
		3	102-8804	1	KIT-RECEPTACLE (4-PIN)	
		3	102-8805	1	KIT-RECEPTACLE (6-PIN)	
		3	102-8806	1	KIT-RECEPTACLE (8-PIN)	
		3	102-8801	5	KIT-RECEPTACLE (12-PIN)	
					(EACH KIT INCLUDES RECEPTACLE AS AND WEDGE)	
		3	3T-0204	1	RECEPTACLE AS (20-PIN)	
		3	8N-1517	1	RECEPTACLE AS (25-PIN)	
		3	8N-1534	1	RECEPTACLE AS (20-PIN)	
		3	7K-1181	2	STRAP-CABLE	
		3	171-5349	4	MARKER	
		3	9X-6772	31	STRAP-CABLE	
M	41	5	099-3649	4	BOLT (M8X1.25X40-MM)	
	42	5	132-5789	1	CLIP	

201-8410 WIRING GP-CAB

S/N: CRD1-UP
PART OF 200-2150 CANOPY AR-OPEN ROPS
AN ATTACHMENT
TYPE 2

SMCS-1408, 7301 — 102162696

NOTE	REF NO	GRAPHIC REF	PART NUMBER	QTY	PART NAME 1 2 3 4 5 6 (PRODUCT LEVEL)	SEE PAGE
	1	1,6	2G-5298	3	WIRE AS	
	2	5	3E-5239	2	RELAY AS (24-VOLT) (FLOOD LIGHT)	
Y	3	5	3E-6328	1	ALARM GP (24-VOLT) (ACTION)	159
	4	6	4I-3038	4	WASHER (3.3X8X0.5-MM THK)	
	5	5	6I-1418	4	SPACER (8.2X12.7X28.7-MM THK)	
	6	1	6V-5645	4	SCREW-MACHINE (10-32X0.87-IN)	
	7	1,5,6	6V-8369	2	NUT (7/16-28-THD)	
	8	2,3,4, 5,6	7K-1181	45	STRAP-CABLE	
	9	6	7X-3308	4	BOLT-SOCKET HEAD (3/32-4X0.375-IN)	
	10	6	8C-6354	1	CAP-RECEPTACLE (DUST)	
C	11	3,4	8T-8737	28	PLUG-SEAL	
	12	5	8T-9655	8	MOUNT-ISOLATION	
	13	1	9W-1441	4	FUSE (15-AMPERE)	
	14	1	9W-1442	28	FUSE (10-AMPERE)	
	15	1,6	108-3320	1	SWITCH AS-ROTARY (24-VOLT) (RUNNING/FLOOD/PANEL/TAIL LIGHT)	
		1,6	3E-3389	1	WEDGE-RECEPTACLE LOCK	
		1,6	9W-0852	8	PIN-CONNECTOR (14-GA)	
		1,6	102-8806	1	KIT-RECEPTACLE (8-PIN)	
					(INCLUDES RECEPTACLE AS AND WEDGE)	
	16	1,6	109-2356	13	PLUG	
	17	1,5,6	110-6109	3	KNOB-CONTROL	
	18	1	110-7887	1	SWITCH GP-START (KEY)	
		1	3E-3377	1	WEDGE-RECEPTACLE LOCK (4-PIN)	
		1	7T-6799	1	NUT-MOUNTING (1-32-THD)	
		1	8T-8729	4	PIN-CONNECTOR	
		1	102-8804	1	KIT-RECEPTACLE (4-PIN)	
					(INCLUDES RECEPTACLE AS AND WEDGE)	
	19	1,6	111-7899	13	GASKET	
	20	2,3	115-1748	4	LAMP (24-VOLT, 3-WATT)	
	21	2	117-2311	1	RECEPTACLE AS-POWER (12-VOLT) (AUXILIARY)	
	22	4	118-7362	1	GROMMET-SPLIT	
	23	2	124-5638	1	FILM-INFORMATION (12-VOLT)	
	25	3	148-5689	1	GROMMET-SPLIT	
	26	4	148-6471	1	PLATE AS	
M		4	8T-3490	2	NUT-WELD (M10X1.5-THD)	
Y	27	5	172-9389	1	CONTROL GP-UNPROGRAMMED (POWER TRAIN)	189
	28	1	174-3016	1	PLUG AS (3-PIN)	
	29	5	185-6335	1	SWITCH AS-ROTARY (24-VOLT) (VARIABLE SHIFT CONTROL)	
	29A	1	185-6335	1	SWITCH AS-ROTARY (24-VOLT) (AUTOSHIFT CONTROL)	
					(EACH SWITCH AS INCLUDES)	
		1	3E-3383	1	WEDGE-RECEPTACLE LOCK (6-PIN)	
		1	8T-8737	2	PLUG-SEAL	
		1	9W-0852	4	PIN-CONNECTOR (14-GA)	
		1	102-8805	1	KIT-RECEPTACLE (6-PIN)	
					(INCLUDES RECEPTACLE AS AND WEDGE)	
	30	5	198-6570	1	LIGHTER GP-CIGAR (12-VOLT)	
	31	2	202-3240	1	HARNESS AS-CAB (OPEN ROPS, REAR)	
		2	102-8801	1	KIT-RECEPTACLE (12-PIN)	
					(INCLUDES RECEPTACLE AS AND WEDGE)	
		2	8T-8737	8	PLUG-SEAL	

201-8410 **WIRING GP-CAB** *(contd.)* i01946509

REFER TO ALL ILLUSTRATIONS OF
THIS GROUP FOR AUXILIARY VIEWS

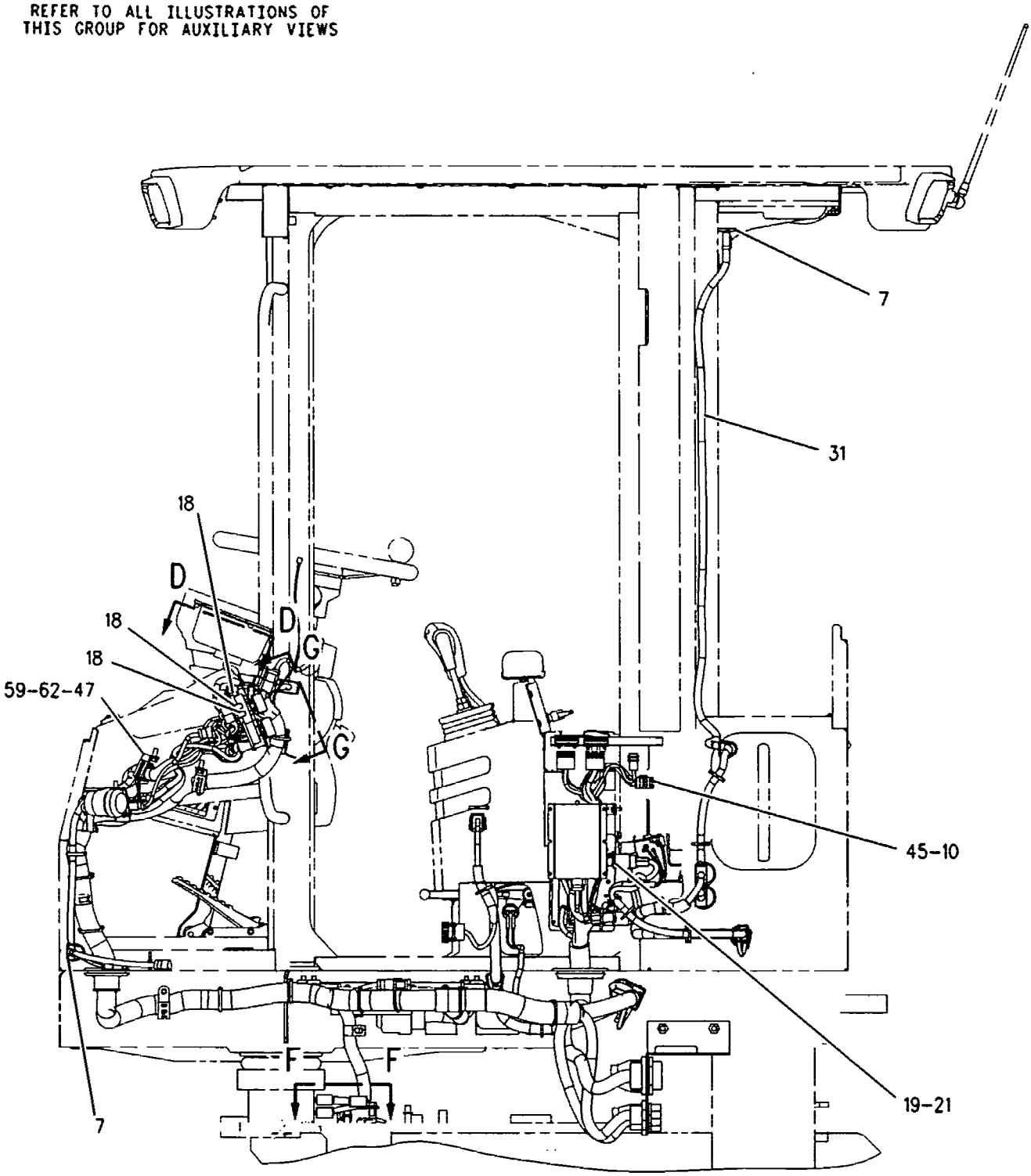

LEFT SIDE VIEW

GRAPHIC #6 <END> g00868380

REFER TO ALL ILLUSTRATIONS OF
THIS GROUP FOR AUXILIARY VIEWS

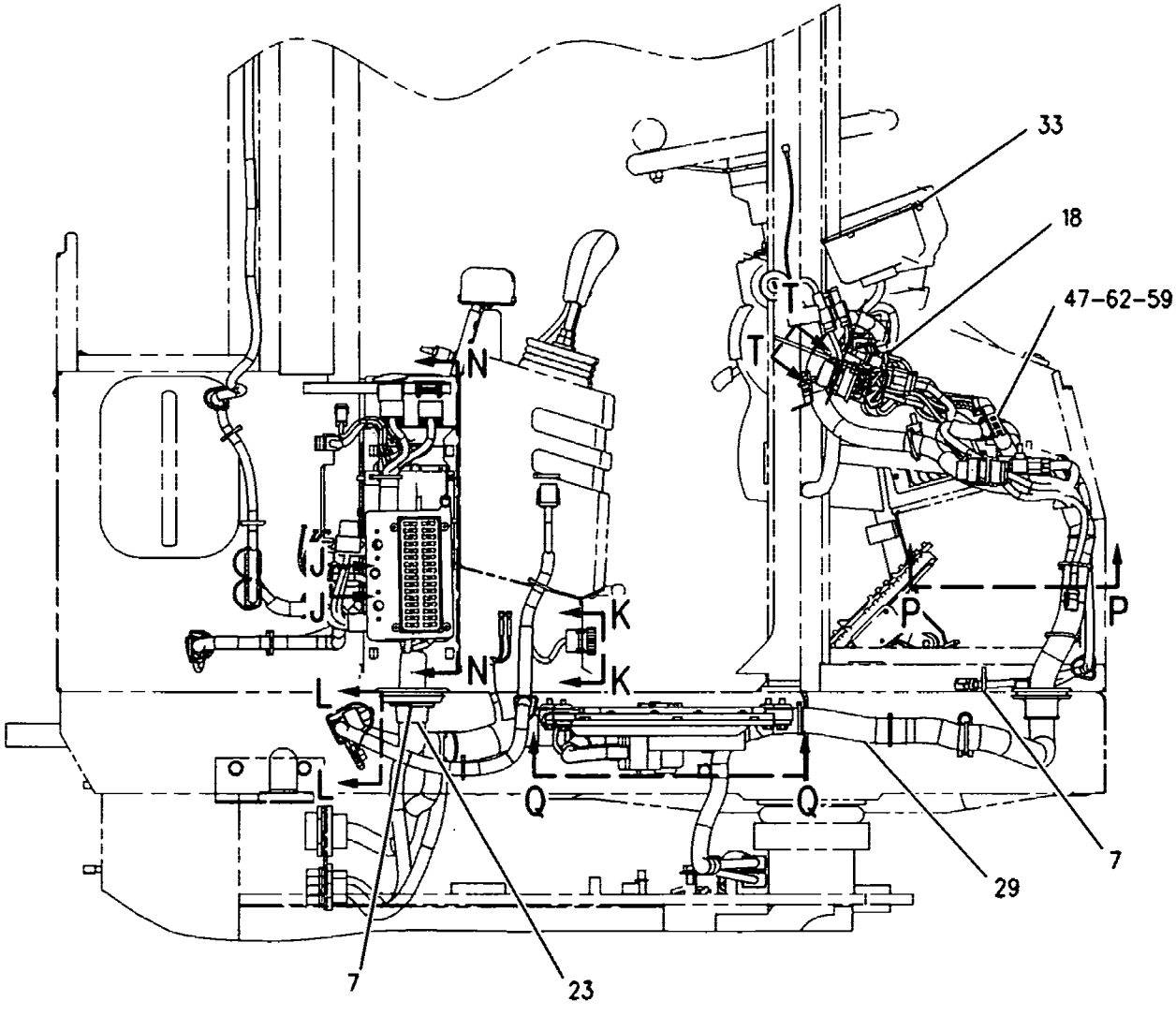

RIGHT SIDE VIEW

GRAPHIC #5 g00948997

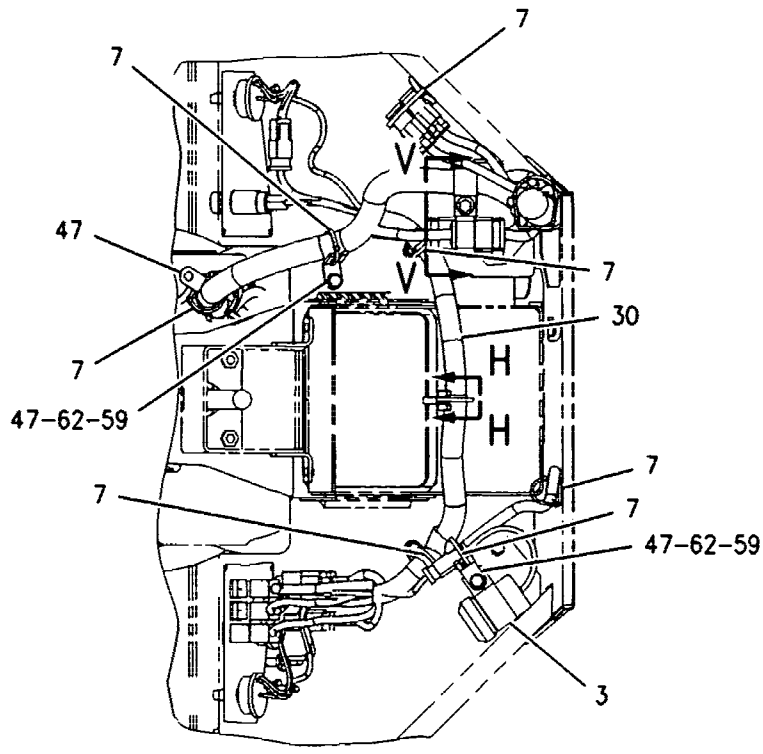

SECTION P-P

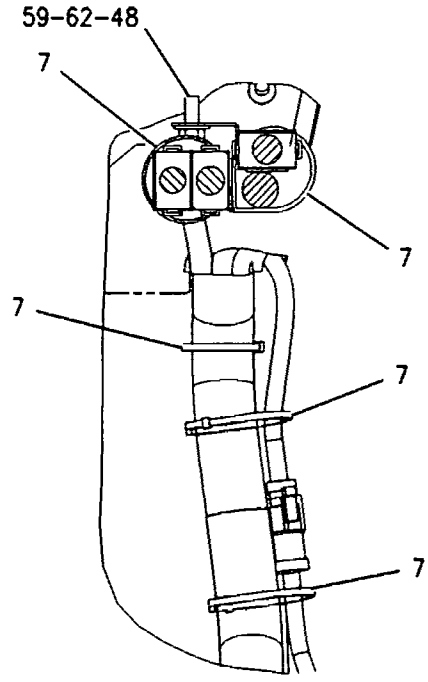

SECTION V-V

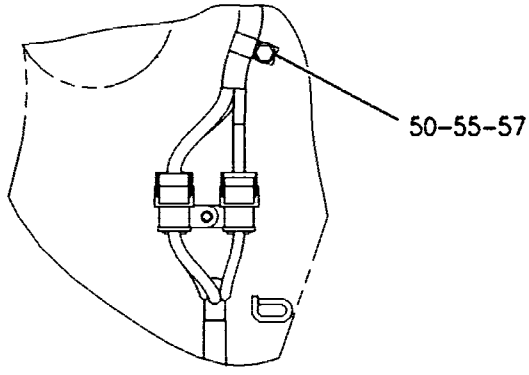

SECTION F-F

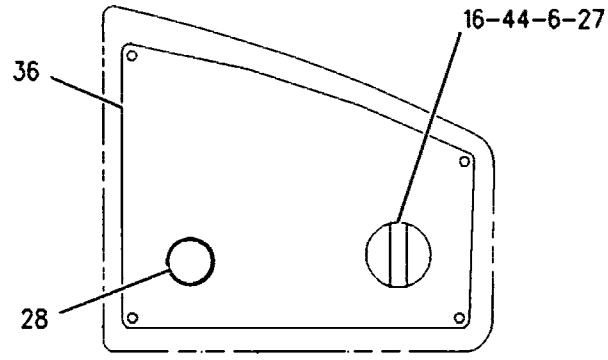

SECTION T-T

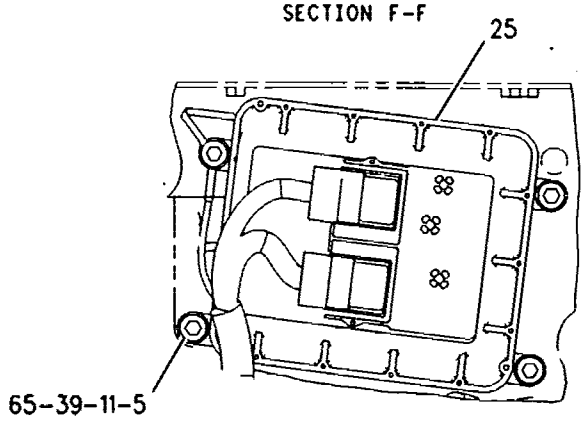

SECTION Q-Q

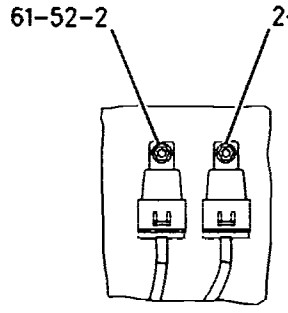

SECTION J-J

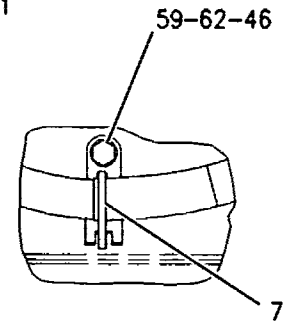

SECTION H-H

GRAPHIC #4 g00948983

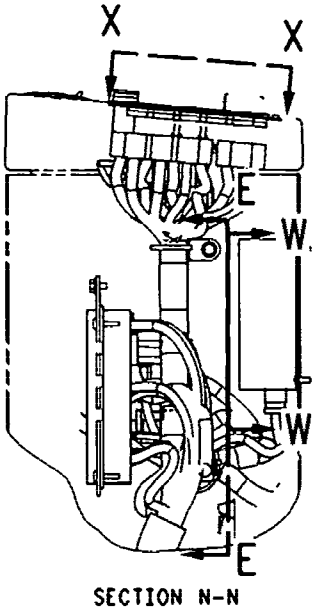

SECTION N-N

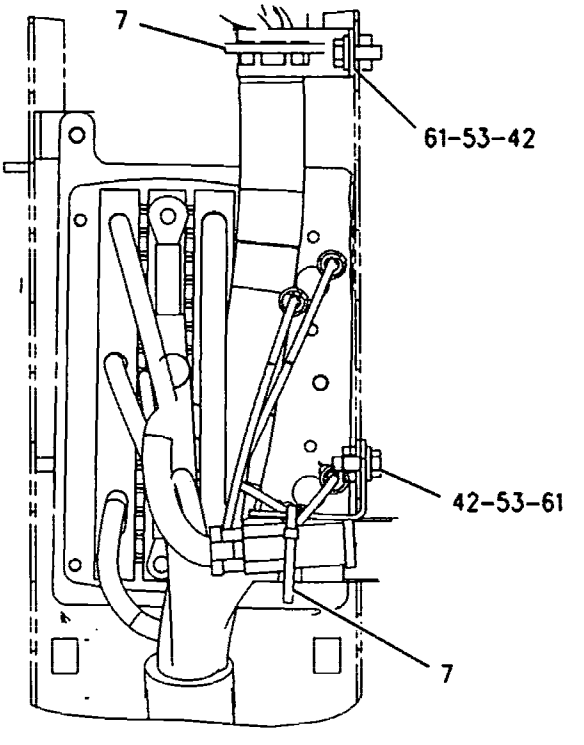

SECTION E-E

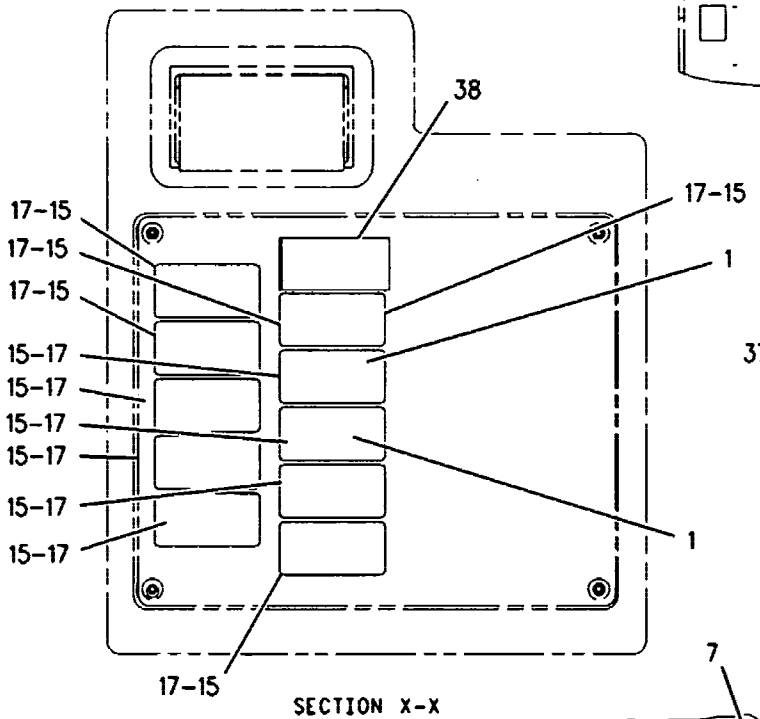

SECTION X-X

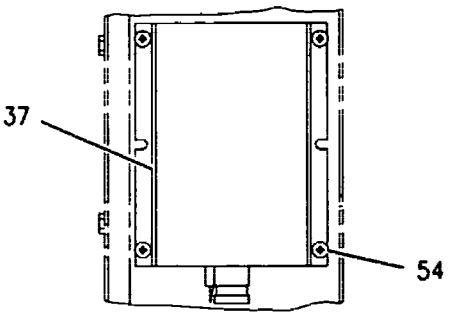

SECTION W-W

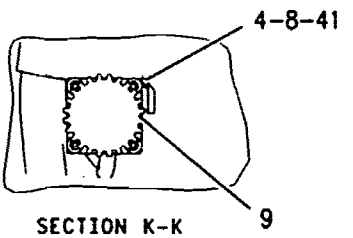

SECTION K-K

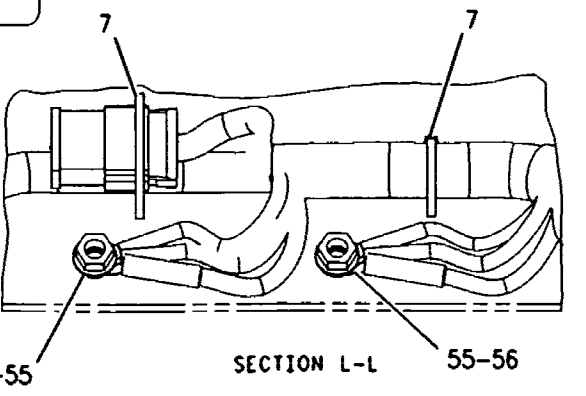

SECTION L-L

GRAPHIC #3 g00868376

201-8410 WIRING GP-CAB (contd.) i01946509

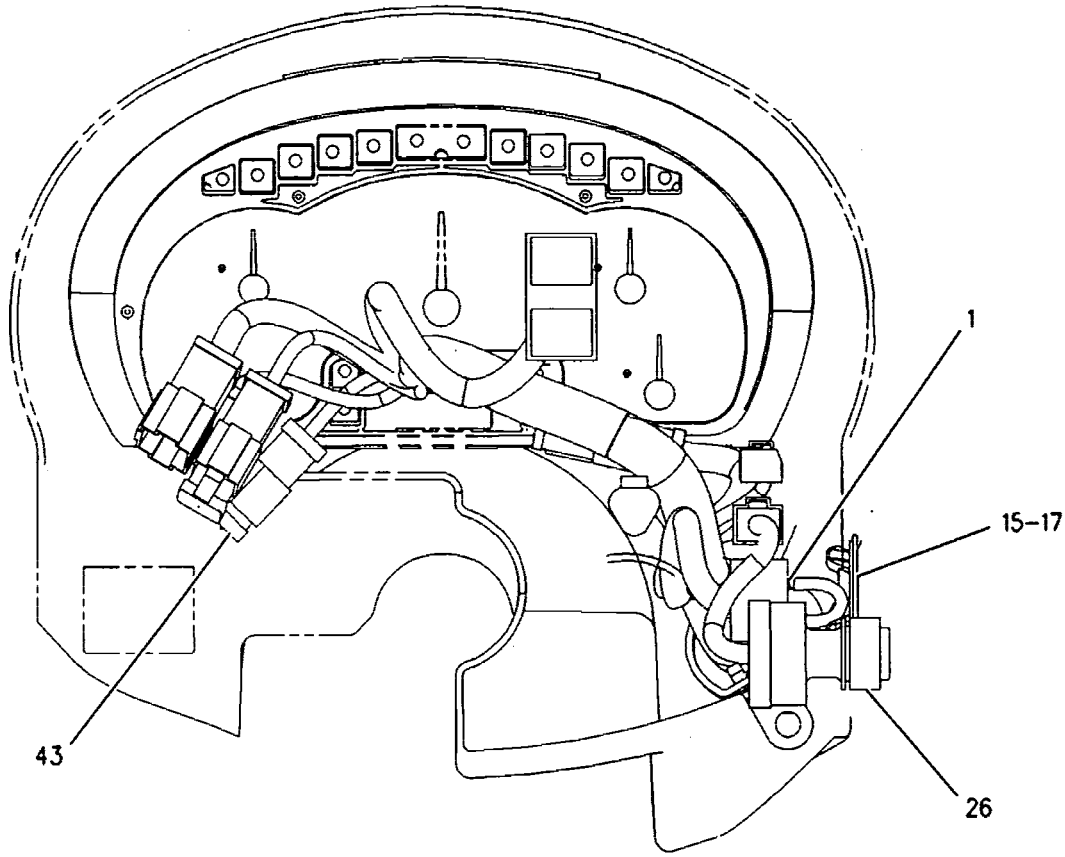

SECTION D-D

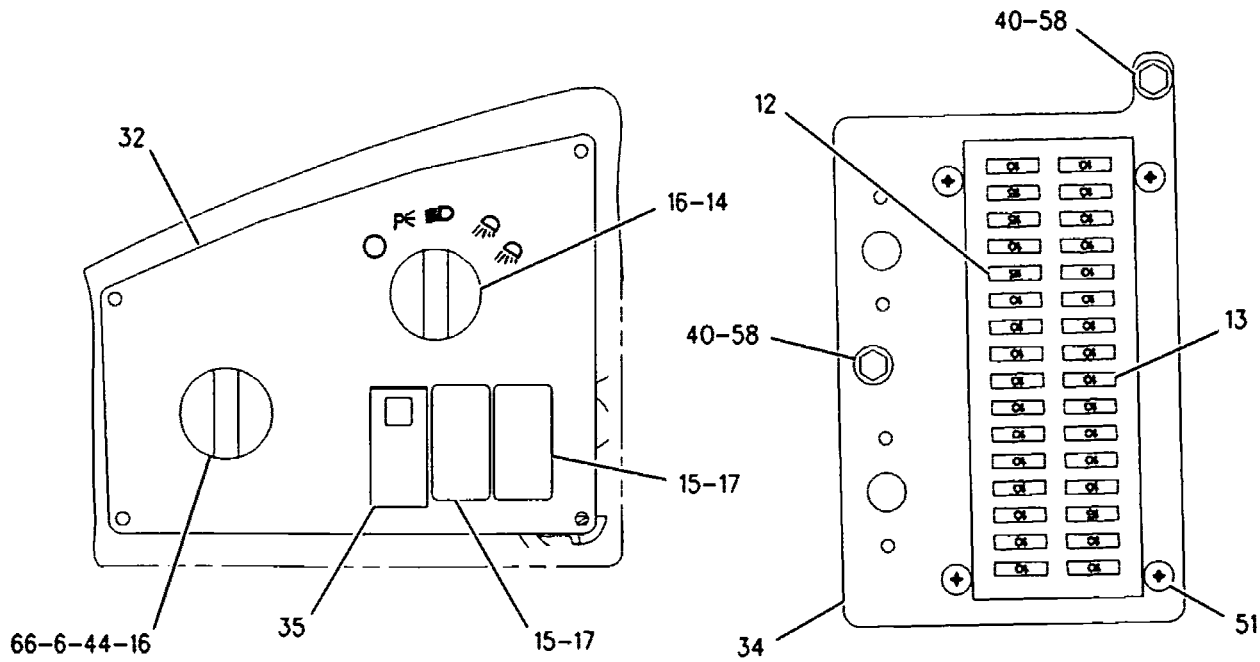

SECTION G-G

SECTION S-S

GRAPHIC #2 g00948976

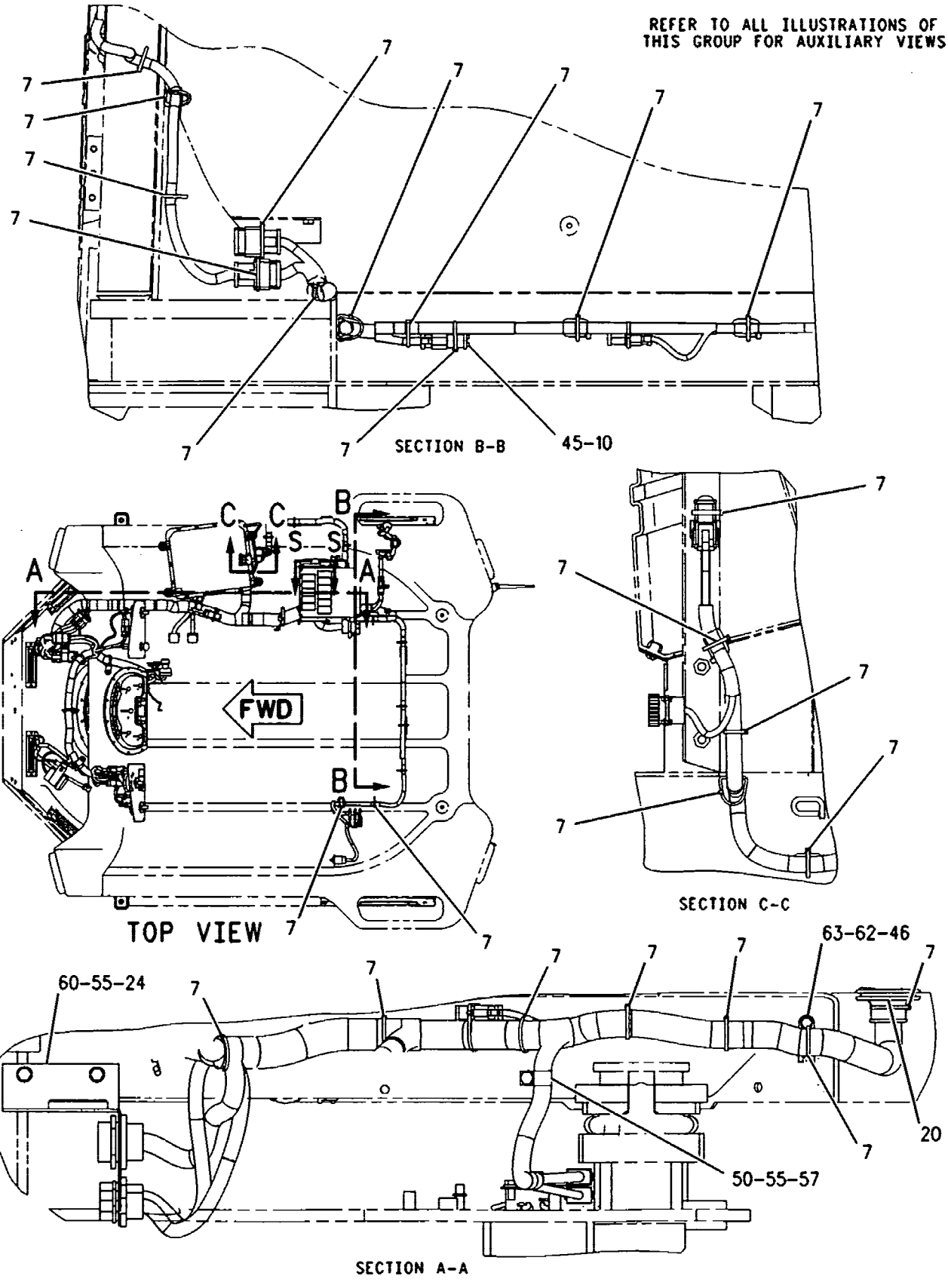

GRAPHIC #1 g00948937

201-8410 WIRING GP-CAB *(contd.)*

i01946509

NOTE	REF NO	GRAPHIC REF	PART NUMBER	QTY	PART NAME 1 2 3 4 5 6 (PRODUCT LEVEL)	SEE PAGE
M	53	3	**6V-8837**	2	BOLT (M6X1X16-MM)	
M	54	3	**6V-9673**	4	SCREW-MACHINE (M5X0.8X12-MM)	
	55	1,3,4	**8T-4121**	6	WASHER-HARD (11X21X2.5-MM THK)	
M	56	3	**8T-4133**	2	NUT (M10X1.5-THD)	
M	57	1,4	**8T-4137**	2	BOLT (M10X1.5X20-MM)	
M	58	2	**8T-4138**	2	BOLT (M6X1X20-MM)	
M	59	4,5,6	**8T-4189**	6	BOLT (M8X1.25X20-MM)	
M	60	1	**8T-4195**	2	BOLT (M10X1.5X30-MM)	
	61	3,4	**8T-4205**	4	WASHER-HARD (7.2X14.5X2-MM THK)	
	62	1,4,5,6	**8T-4224**	7	WASHER-HARD (8.8X16X2-MM THK)	
M	63	1	**8T-4908**	1	BOLT (M8X1.25X25-MM)	
	65	4	**9N-0869**	4	WASHER-HARD (8.8X25.5X2-MM THK)	
	66	2	**185-6335**	1	SWITCH AS-ROTARY (24-VOLT) (AUTOSHIFT CONTROL)	
		2	**3E-3383**	1	WEDGE-RECEPTACLE LOCK (6-PIN)	
		2	**8T-8737**	2	PLUG-SEAL	
		2	**9W-0852**	4	PIN-CONNECTOR (14-GA)	
		2	**102-8805**	1	KIT-RECEPTACLE (6-PIN)	

M-METRIC PART
Y-SEPARATE ILLUSTRATION

201-8410 WIRING GP-CAB *(contd.)* i01946509

NOTE	REF NO	GRAPHIC REF	PART NUMBER	QTY	PART NAME 1 2 3 4 5 6 (PRODUCT LEVEL)	SEE PAGE
		5	155-2270	1	KIT-CONNECTING PLUG (2-PIN)	
		5	155-2271	1	KIT-CONNECTING PLUG (4-PIN)	
		5	155-2274	1	KIT-CONNECTING PLUG (6-PIN)	
		5	3T-0204	1	RECEPTACLE AS (20-PIN)	
		5	8N-1536	1	NUT (1-5/8-18-THD)	
		5	8N-1517	1	RECEPTACLE AS (25-PIN)	
		5	8N-1522	1	NUT (2-1/4-16-THD)	
		5	8N-1534	1	RECEPTACLE AS (20-PIN)	
		5	8N-1536	1	NUT (1-5/8-18-THD)	
		5	7G-7919	2	PLUG-SEAL	
		5	7G-7920	1	PLUG-SEAL	
		5	8T-8737	149	PLUG-SEAL	
		5	7K-1181	2	STRAP-CABLE	
		5	110-6846	1	PLUG AS-CONNECTOR (40-PIN)	
		5	9X-1054	2	PLUG AS-CONNECTOR (4-PIN)	
		5	110-6848	1	PLUG AS-CONNECTOR (40-PIN)	
		5	7X-6222	1	PLUG AS-CONNECTOR (24-PIN)	
		5	3E-4367	1	RING-RETAINING	
M		5	3E-8558	1	BOLT (M5X0.8X39.37-MM)	
		5	9X-3265	2	SEAL-CONNECTOR (24-PIN)	
		5	8N-1521	1	BELL AS-END	
		5	8N-1535	2	BELL AS-END	
		5	171-5349	4	MARKER	
	30	4	226-2903	1	HARNESS AS (UPPER, DUCT)	
		4	102-8802	1	KIT-RECEPTACLE (2-PIN)	
		4	102-8801	1	KIT-RECEPTACLE (12-PIN)	
		4	8T-8737	11	PLUG-SEAL	
		4	155-2255	1	KIT-CONNECTING PLUG (12-PIN)	
		4	155-2265	1	KIT-CONNECTING PLUG (8-PIN)	
		4	155-2260	1	KIT-CONNECTING PLUG (3-PIN)	
		4	155-2270	1	KIT-CONNECTING PLUG (2-PIN)	
		4	155-2274	1	KIT-CONNECTING PLUG (6-PIN)	
		4	190-7614	1	KIT-RECEPTACLE (12-PIN)	
	31	6	202-3240	1	HARNESS AS-CAB (OPEN ROPS, REAR)	
		6	102-8801	1	KIT-RECEPTACLE (12-PIN)	
		6	8T-8737	8	PLUG-SEAL	
		6	155-2271	1	KIT-CONNECTING PLUG (4-PIN)	
	32	2	205-1703	1	FILM-PANEL (DUCT, LH)	
	33	5	205-1784	1	MODULE GP-DISPLAY (GAUGE CLUSTER)	
	34	2	205-9113	1	PLATE	
	35	2	206-5688	1	SWITCH AS-ROCKER (MODE SELECT)	
		2	111-7899	1	GASKET	
	36	4	207-2530	1	FILM-PANEL	
	37	3	209-0381	1	CONVERTER-POWER (24-VOLT TO 12-VOLT)	
	38	3	212-3501	1	SWITCH AS-ROCKER (TMSN NEUTRALIZER OVERRIDE CONT)	
		3	111-7899	1	GASKET	
M	39	4	099-3649	4	BOLT (M8X1.25X40-MM)	
	40	2	9X-8256	2	WASHER (6.6X12X2-MM THK)	
	41	3	142-2928	4	LOCKNUT (4-40-THD)	
	42	3	156-6175	2	CLIP	
	43	2	174-3016	1	PLUG AS (3-PIN)	
	44	2,4	2H-3920	2	LOCKWASHER	
	45	1,6	102-8805		KIT-RECEPTACLE (6-PIN)	
	46	1,4	4P-7581	2	CLIP	
	47	4,5,6	4P-8134	5	CLIP	
	48	4	132-5789	1	CLIP	
	50	1,4	6D-4246	2	CLIP	
	51	2	6V-5645	4	SCREW-MACHINE (10-32X0.87-IN)	
M	52	4	6V-8225	2	NUT (M6X1-THD)	

201-8410 WIRING GP-CAB

S/N: CRD1-UP
PART OF 200-2150 CANOPY AR-OPEN ROPS
AN ATTACHMENT
TYPE 1

SMCS-1408, 7301 i01946509

NOTE	REF NO	GRAPHIC REF	PART NUMBER	QTY	PART NAME 1 2 3 4 5 6 (PRODUCT LEVEL)	SEE PAGE
	1	2,3	2G-5298	3	WIRE AS	
	2	4	3E-5239	2	RELAY AS (24-VOLT) (FLOOD LIGHT)	
Y	3	4	3E-6328	1	ALARM GP (24-VOLT) (ACTION)	159
	4	3	4I-3038	4	WASHER (3.3X8X0.5-MM THK)	
	5	4	6I-1418	4	SPACER (8.2X12.7X28.7-MM THK)	
	6	2,4	6V-8369	2	NUT (7/16-28-THD)	
	7	1,3,4, 5,6	7K-1181	46	STRAP-CABLE	
	8	3	7X-3308	4	BOLT-SOCKET HEAD (3/32-4X0.375-IN)	
	9	3	8C-6354	1	CAP-RECEPTACLE (DUST)	
	10	1,6	8T-8737	12	PLUG-SEAL	
	11	4	8T-9655	8	MOUNT-ISOLATION	
	12	2	9W-1441	4	FUSE (15-AMPERE)	
	13	2	9W-1442	28	FUSE (10-AMPERE)	
	14	2	108-3320	1	SWITCH AS-ROTARY (24-VOLT) (RUNNING/FLOOD/PANEL/TAIL LIGHT)	
		2	3E-3389	1	WEDGE-RECEPTACLE LOCK	
		2	9W-0852	8	PIN-CONNECTOR (14-GA)	
		2	102-8806	1	KIT-RECEPTACLE (8-PIN)	
	15	2,3	109-2356	13	PLUG	
	16	2,4	110-6109	3	KNOB-CONTROL	
	17	2,3	111-7899	13	GASKET	
	18	5,6	115-1748	4	LAMP (24-VOLT, 3-WATT)	
	19	6	117-2311	1	RECEPTACLE AS-POWER (12-VOLT)	
	20	1	118-7362	1	GROMMET-SPLIT	
	21	6	124-5638	1	FILM-INFORMATION (12-VOLT)	
	23	5	148-5689	1	GROMMET-SPLIT	
	24	1	148-6471	1	PLATE AS	
M		1	8T-3490	2	NUT-WELD (M10X1.5-THD)	
Y	25	4	172-9389	1	CONTROL GP-UNPROGRAMMED (POWER TRAIN)	189
	26	2	110-7887	1	SWITCH GP-START (KEY)	
		2	3E-3377	1	WEDGE-RECEPTACLE LOCK (4-PIN)	
		2	7T-6799	1	NUT-MOUNTING (1-32-THD)	
		2	8T-8729	4	PIN-CONNECTOR	
		2	102-8804	1	KIT-RECEPTACLE (4-PIN)	
	27	4	185-6335	1	SWITCH AS-ROTARY (24-VOLT) (VARIABLE SHIFT CONTROL)	
		4	3E-3383	1	WEDGE-RECEPTACLE LOCK (6-PIN)	
		4	8T-8737	2	PLUG-SEAL	
		4	9W-0852	4	PIN-CONNECTOR (14-GA)	
		4	102-8805	1	KIT-RECEPTACLE (6-PIN)	
	28	4	198-6570	1	LIGHTER GP-CIGAR (12-VOLT)	
	29	5	226-2898	1	HARNESS AS-CAB (MAIN)	
		5	102-8802	1	KIT-RECEPTACLE (2-PIN)	
		5	102-8803	1	KIT-RECEPTACLE (3-PIN)	
		5	102-8804	1	KIT-RECEPTACLE (4-PIN)	
		5	102-8805	1	KIT-RECEPTACLE (6-PIN)	
		5	102-8806	1	KIT-RECEPTACLE (8-PIN)	
		5	102-8801	1	KIT-RECEPTACLE (12-PIN)	
		5	155-2255	1	KIT-CONNECTING PLUG (12-PIN)	
		5	155-2256	1	KIT-CONNECTING PLUG (12-PIN)	
		5	155-2257	1	KIT-CONNECTING PLUG (12-PIN)	
		5	155-2265	1	KIT-CONNECTING PLUG (8-PIN)	
		5	155-2260	1	KIT-CONNECTING PLUG (3-PIN)	

201-8409 WIRING GP-CAB *(contd.)* i01946505

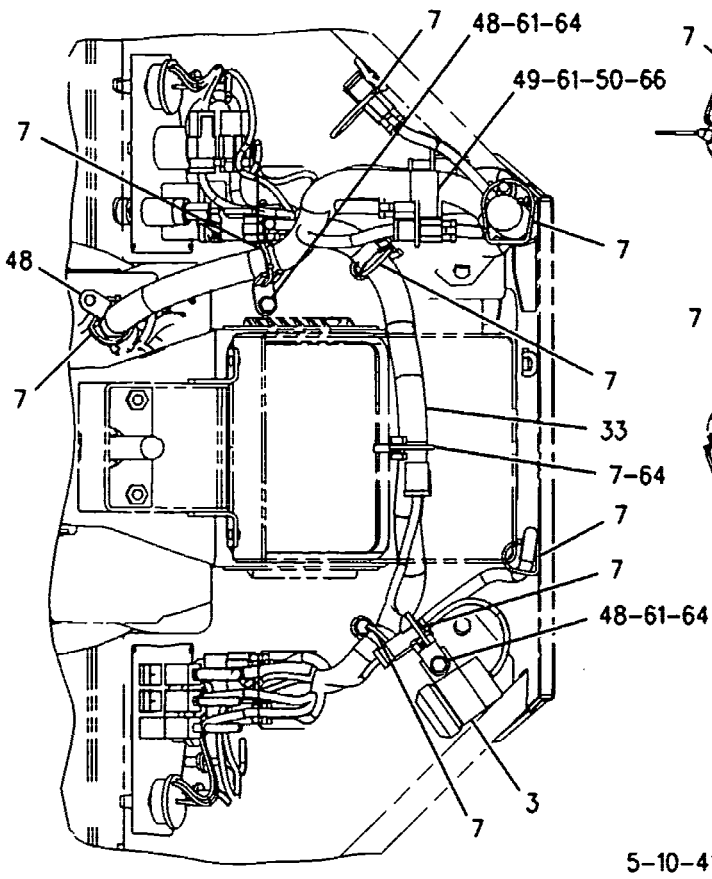

SECTION P-P

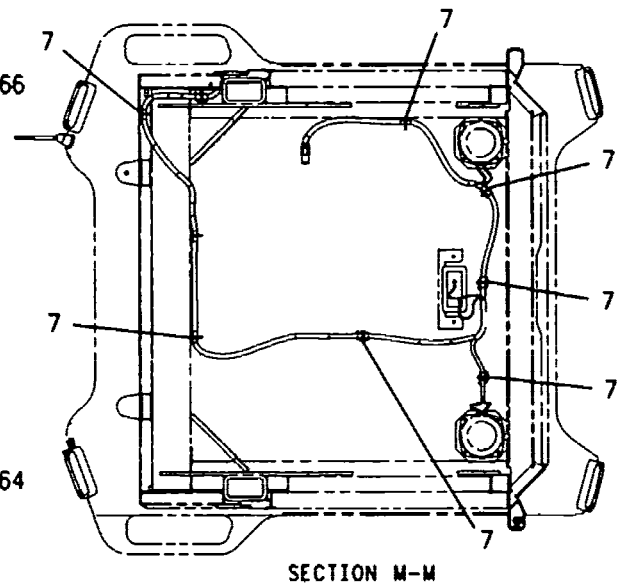

SECTION M-M

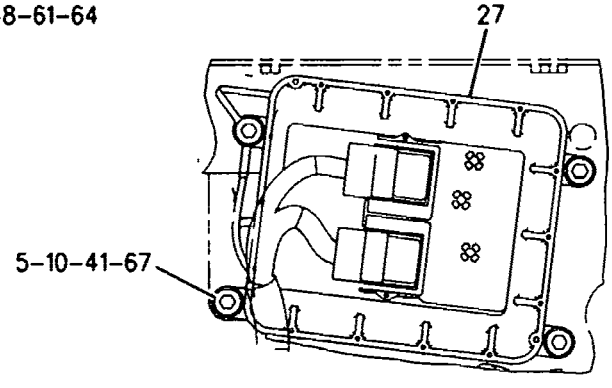

SECTION Q-Q

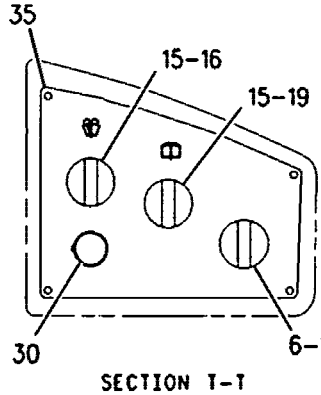

SECTION T-T

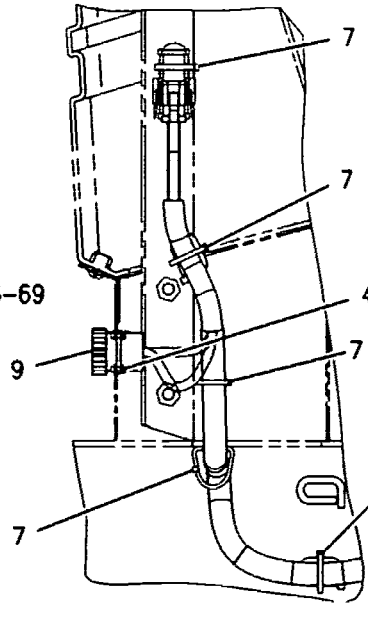

SECTION E-E

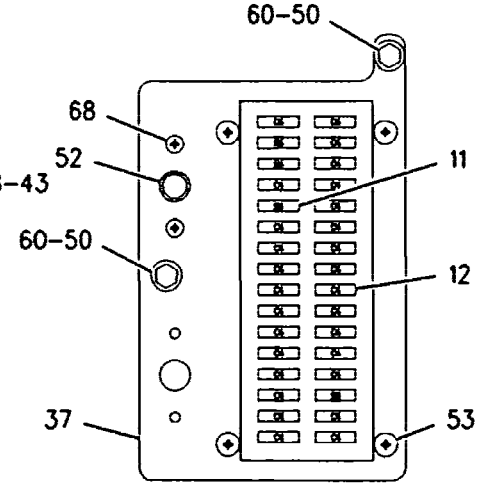

SECTION S-S

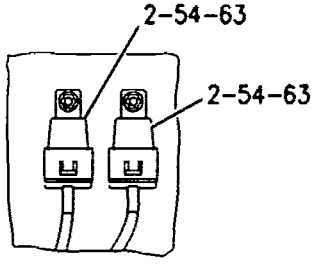

SECTION U-U

GRAPHIC #4 <END> g00925951

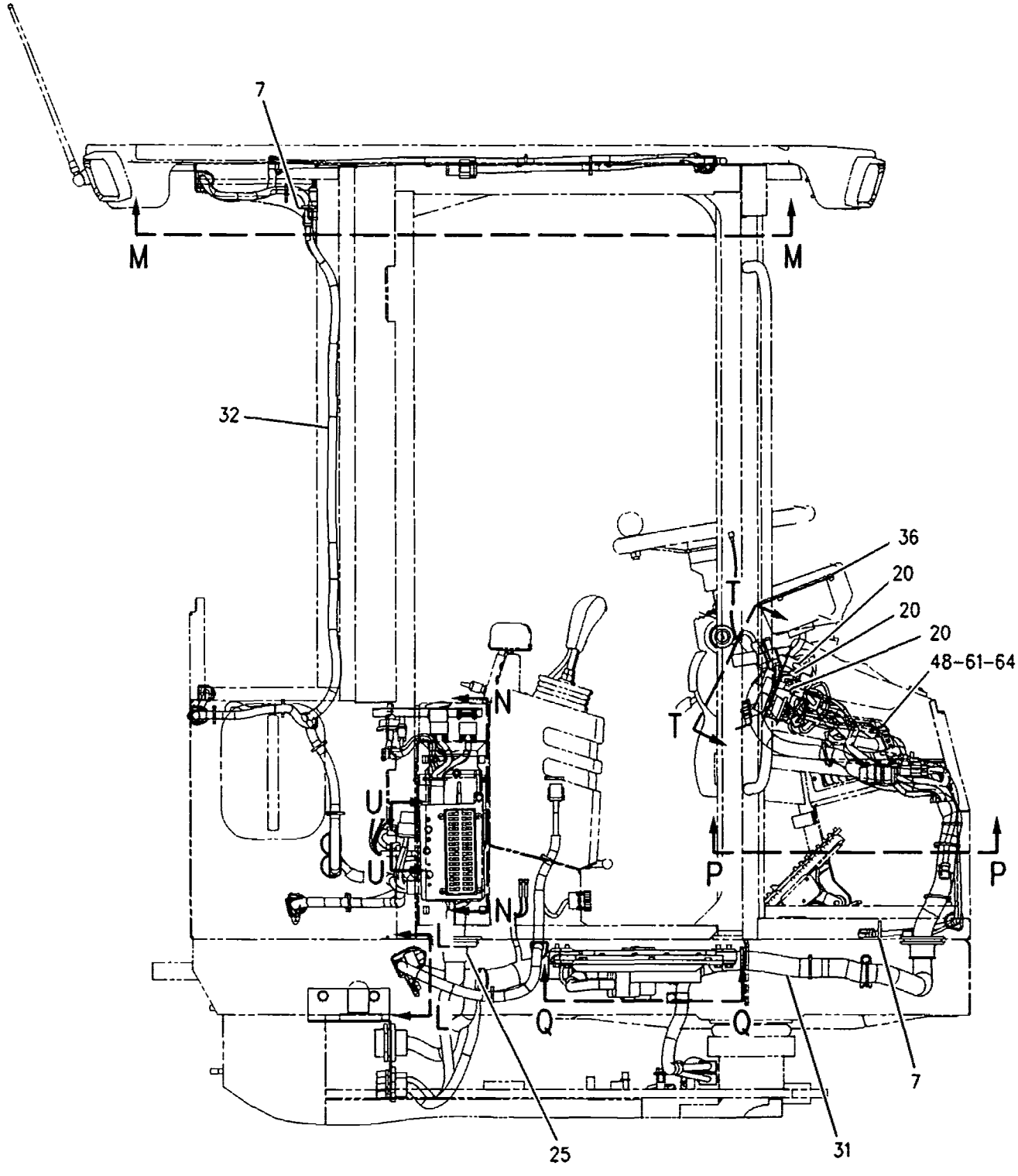

RIGHT SIDE VIEW

GRAPHIC #3 g00875355

201-8409 **WIRING GP-CAB** *(contd.)* i01946505

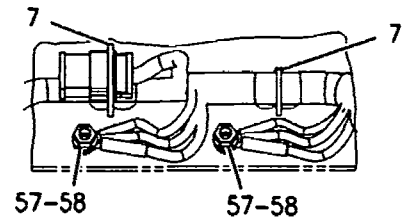

SECTION L-L

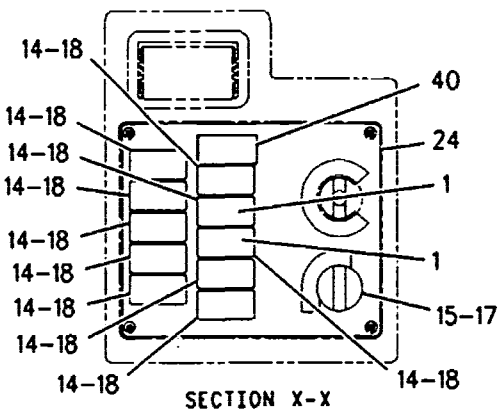

SECTION X-X

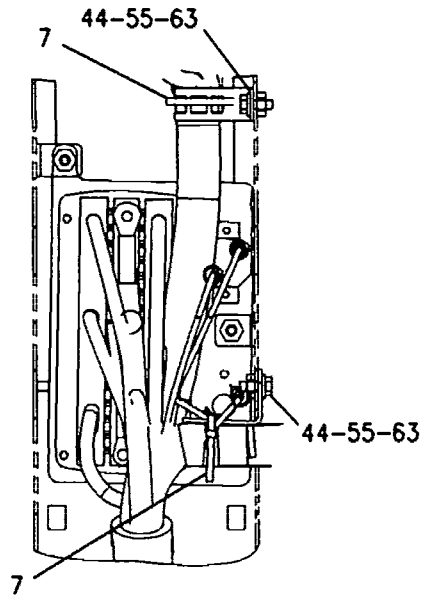

SECTION Y-Y

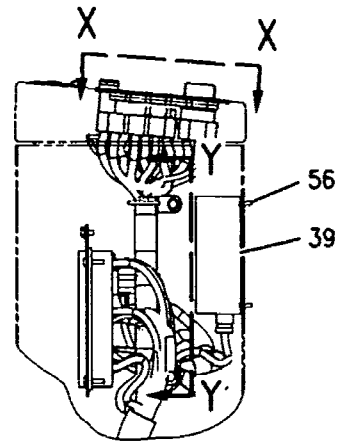

SECTION N-N

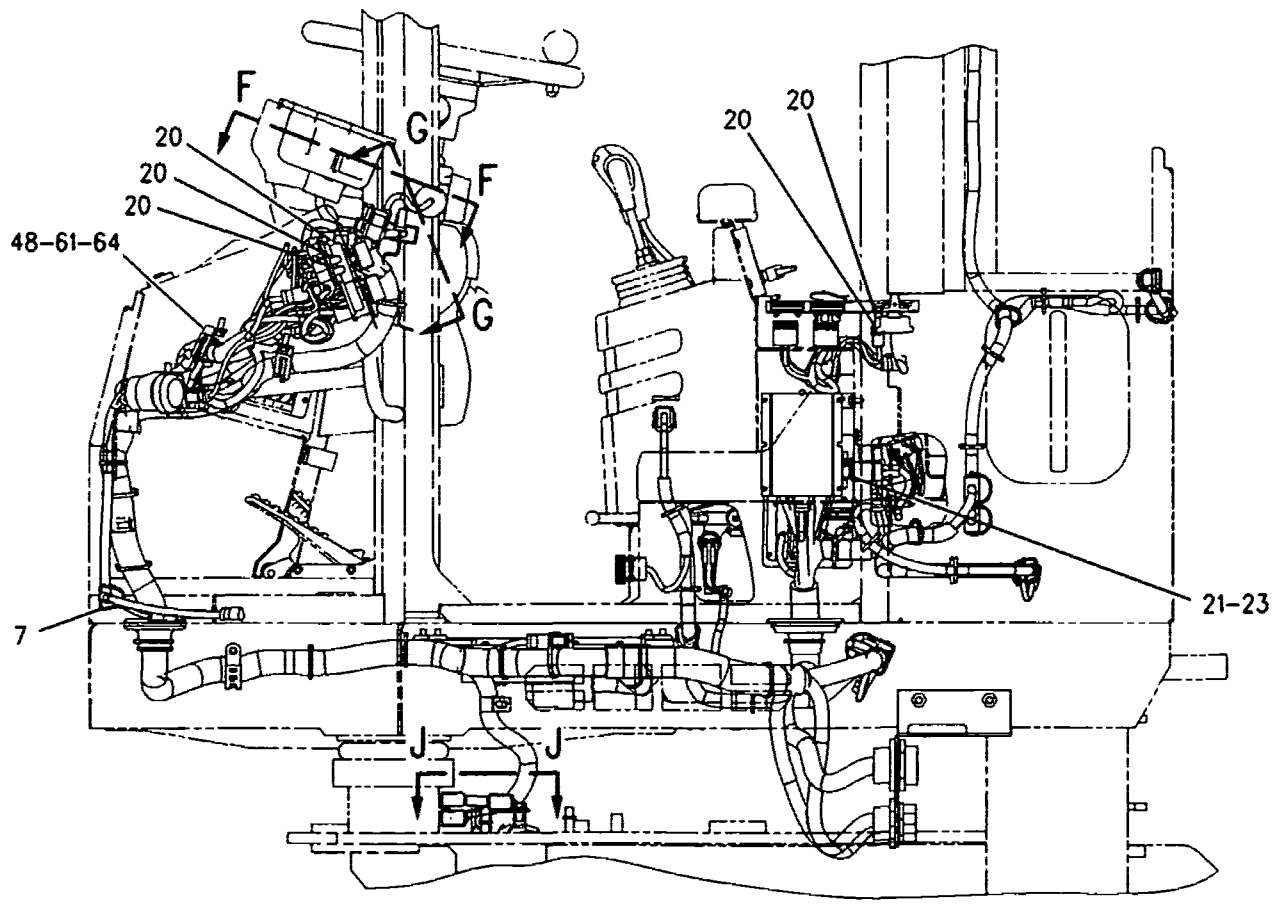

LEFT SIDE VIEW

GRAPHIC #2 g00925932

REFER TO ALL ILLUSTRATIONS OF THIS GRAPHIC FOR AUXILIARY VIEWS

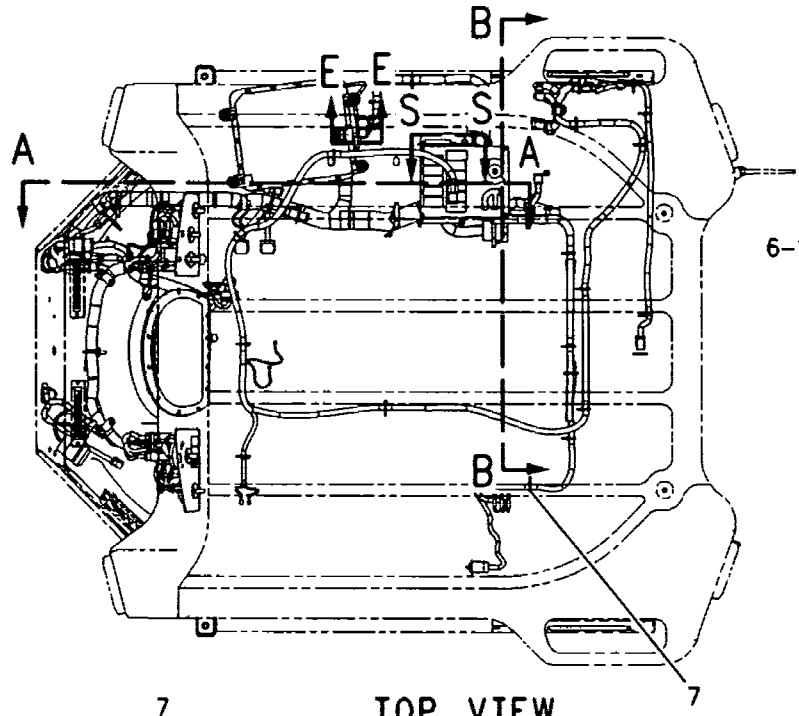

TOP VIEW

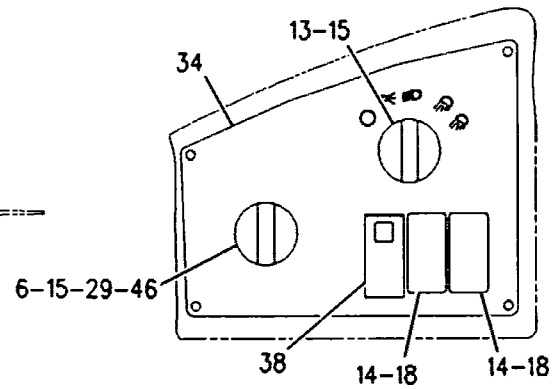

SECTION G-G

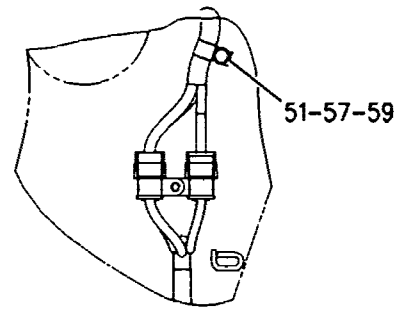

SECTION J-J

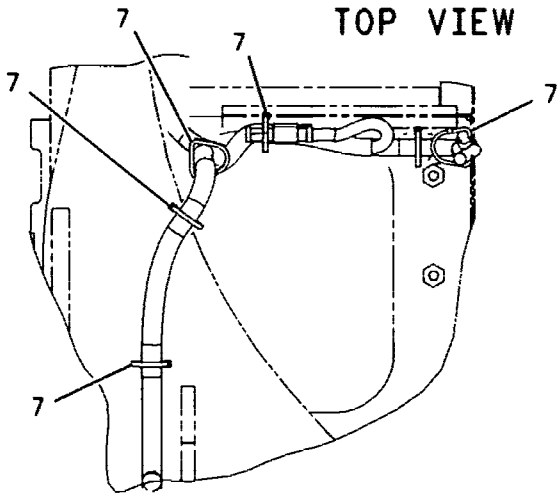

SECTION D-D

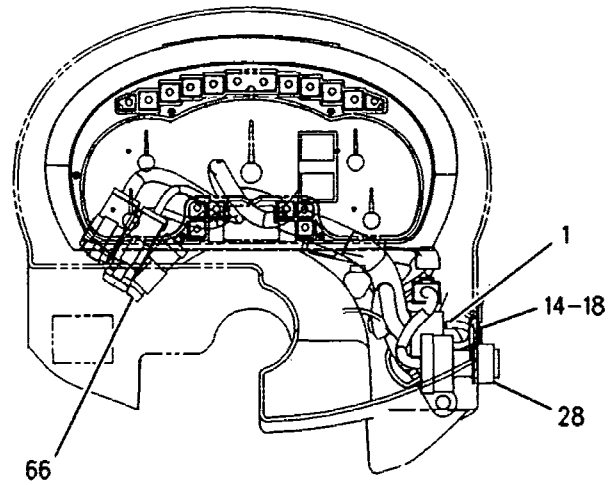

SECTION F-F

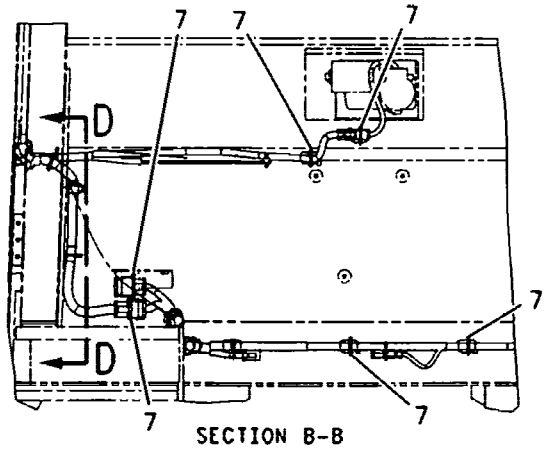

SECTION B-B

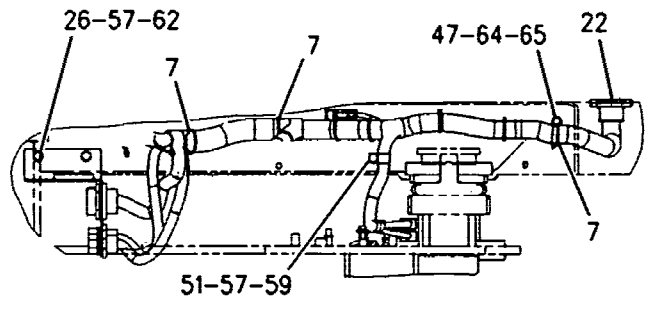

SECTION A-A

GRAPHIC #1 g00925930

201-8409 WIRING GP-CAB (contd.)

i01946505

NOTE	REF NO	GRAPHIC REF	PART NUMBER	QTY	PART NAME 1 2 3 4 5 6 (PRODUCT LEVEL)	SEE PAGE
		4	155-2270	1	KIT-CONNECTING PLUG (2-PIN)	
		4	155-2274	1	KIT-CONNECTING PLUG (6-PIN)	
		4	102-8802	1	KIT-RECEPTACLE (2-PIN)	
		4	102-8801	1	KIT-RECEPTACLE (12-PIN)	
		4	190-7614	1	KIT-RECEPTACLE (12-PIN)	
		4	8T-8737	8	PLUG-SEAL	
	34	1	205-1703	1	FILM-PANEL (DUCT, LH)	
	35	4	205-1704	1	FILM-PANEL (DUCT, RH)	
	36	3	205-1784	1	MODULE GP-DISPLAY (GAUGE CLUSTER)	
	37	4	205-9113	1	PLATE	
	38	1	206-5688	1	SWITCH AS-ROCKER (MODE SELECT)	
		1	111-7899	1	GASKET	
	39	2	209-0381	1	CONVERTER-POWER (24-VOLT TO 12-VOLT)	
	40	2	212-3501	1	SWITCH AS-ROCKER (TMSN NEUTRALIZER OVERRIDE CONT)	
		2	111-7899	1	GASKET	
M	41	4	099-3649	4	BOLT (M8X1.25X40-MM)	
	43	4	142-2928	4	LOCKNUT (4-40-THD)	
	44	2	156-6175	2	CLIP	
	46	1,4	2H-3920	2	LOCKWASHER	
	47	1	4P-7581	2	CLIP	
	48	2,3,4	4P-8134	5	CLIP	
	49	4	132-5789	1	CLIP	
	50	4	9X-8256	2	WASHER (6.6X12X2-MM THK)	
	51	1	6D-4246	2	CLIP	
	52	4	6T-3643	1	CIRCUIT BREAKER AS (15-AMPERE) (AIR CONDITIONER)	
		4	6V-8376	2	SCREW-MACHINE (8-32X0.25-IN)	
		4	9B-7233	2	LOCKWASHER	
	53	4	6V-5645	4	SCREW-MACHINE (10-32X0.87-IN)	
M	54	4	6V-8225	2	NUT (M6X1-THD)	
M	55	2	6V-8837	2	BOLT (M6X1X16-MM)	
M	56	2	6V-9673	4	SCREW-MACHINE (M5X0.8X12-MM)	
	57	1,2	8T-4121	6	WASHER-HARD (11X21X2.5-MM THK)	
M	58	2	8T-4133	2	NUT (M10X1.5-THD)	
M	59	1	8T-4137	2	BOLT (M10X1.5X20-MM)	
M	60	4	8T-4138	2	BOLT (M6X1X20-MM)	
M	61	2,3,4	8T-4189	6	BOLT (M8X1.25X20-MM)	
M	62	1	8T-4195	2	BOLT (M10X1.5X30-MM)	
	63	2,4	8T-4205	4	WASHER-HARD (7.2X14.5X2-MM THK)	
	64	1,2,3,4	8T-4224	7	WASHER-HARD (8.8X16X2-MM THK)	
M	65	1	8T-4908	1	BOLT (M8X1.25X25-MM)	
	66	1,4	174-3016	1	PLUG AS (3-PIN)	
	67	4	9N-0869	4	WASHER-HARD (8.8X25.5X2-MM THK)	
	68	4	9X-8486	2	SCREW-MACHINE (8-32X0.75-IN)	
	69	4	185-6335	1	SWITCH AS-ROTARY (24-VOLT) (VARIABLE SHIFT CONTROL)	
		4	3E-3383	1	WEDGE-RECEPTACLE LOCK (6-PIN)	
		4	8T-8737	2	PLUG-SEAL	
		4	9W-0852	4	PIN-CONNECTOR (14-GA)	
		4	102-8805	1	KIT-RECEPTACLE (6-PIN)	

M-METRIC PART
Y-SEPARATE ILLUSTRATION

201-8409 WIRING GP-CAB (contd.)

i01946505

NOTE	REF NO	GRAPHIC REF	PART NUMBER	QTY	PART NAME 1 2 3 4 5 6 (PRODUCT LEVEL)	SEE PAGE
	29	1	185-6335	1	SWITCH AS-ROTARY (24-VOLT) (AUTOSHIFT CONTROL)	
		1	3E-3383	1	WEDGE-RECEPTACLE LOCK (6-PIN)	
		1	8T-8737	2	PLUG-SEAL	
		1	9W-0852	4	PIN-CONNECTOR (14-GA)	
		1	102-8805	1	KIT-RECEPTACLE (6-PIN)	
	30	4	198-6570	1	LIGHTER GP-CIGAR (12-VOLT)	
	31	3	226-2898	1	HARNESS AS-CAB (MAIN)	
		3	102-8802	1	KIT-RECEPTACLE (2-PIN)	
		3	102-8803	1	KIT-RECEPTACLE (3-PIN)	
		3	102-8804	1	KIT-RECEPTACLE (4-PIN)	
		3	102-8805	1	KIT-RECEPTACLE (6-PIN)	
		3	102-8806	1	KIT-RECEPTACLE (8-PIN)	
		3	102-8801	1	KIT-RECEPTACLE (12-PIN)	
		3	155-2255	1	KIT-CONNECTING PLUG (12-PIN)	
		3	155-2256	1	KIT-CONNECTING PLUG (12-PIN)	
		3	155-2257	1	KIT-CONNECTING PLUG (12-PIN)	
		3	155-2265	1	KIT-CONNECTING PLUG (8-PIN)	
		3	155-2260	1	KIT-CONNECTING PLUG (3-PIN)	
		3	155-2270	1	KIT-CONNECTING PLUG (2-PIN)	
		3	155-2271	1	KIT-CONNECTING PLUG (4-PIN)	
		3	155-2274	1	KIT-CONNECTING PLUG (6-PIN)	
		3	3T-0204	1	RECEPTACLE AS (20-PIN)	
		3	8N-1536	1	NUT (1-5/8-18-THD)	
		3	7G-7919	2	PLUG-SEAL	
		3	7G-7920	1	PLUG-SEAL	
		3	7K-1181	2	STRAP-CABLE	
		3	9X-1054	2	PLUG AS-CONNECTOR (4-PIN)	
		3	110-6848	1	PLUG AS-CONNECTOR (40-PIN)	
		3	1U-9053	1	CAPSULE-LUBRICANT	
		3	110-6844	1	SEAL	
		3	110-6846	1	PLUG AS-CONNECTOR (40-PIN)	
		3	1U-9053	1	CAPSULE-LUBRICANT	
		3	110-6844	1	SEAL	
		3	7X-6222	1	PLUG AS-CONNECTOR (24-PIN)	
		3	3E-4367	1	RING-RETAINING	
M		3	3E-8558	1	BOLT (M5X0.8X39.37-MM)	
		3	9X-3265	2	SEAL-CONNECTOR (24-PIN)	
		3	8N-1517	1	RECEPTACLE AS (25-PIN)	
		3	8N-1522	1	NUT (2-1/4-16-THD)	
		3	8N-1534	1	RECEPTACLE AS (20-PIN)	
		3	8N-1536	1	NUT (1-5/8-18-THD)	
		3	8N-1521	1	BELL AS-END	
		3	8N-1535	2	BELL AS-END	
		3	8T-8737	149	PLUG-SEAL	
	32	3	226-2901	1	HARNESS AS-CAB (REAR)	
		3	102-8802	1	KIT-RECEPTACLE (2-PIN)	
		3	102-8806	1	KIT-RECEPTACLE (8-PIN)	
		3	102-8801	1	KIT-RECEPTACLE (12-PIN)	
		3	155-2265	1	KIT-CONNECTING PLUG (8-PIN)	
		3	155-2270	1	KIT-CONNECTING PLUG (2-PIN)	
		3	155-2271	1	KIT-CONNECTING PLUG (4-PIN)	
		3	155-2274	1	KIT-CONNECTING PLUG (6-PIN)	
		3	3S-2093	1	STRAP-CABLE	
		3	7K-1181	1	STRAP-CABLE	
		3	8T-8737	12	PLUG-SEAL	
	33	4	226-2902	1	HARNESS AS-INSTRUMENT PANEL (DUCT)	
		4	155-2255	1	KIT-CONNECTING PLUG (12-PIN)	
		4	155-2265	1	KIT-CONNECTING PLUG (8-PIN)	
		4	155-2260	1	KIT-CONNECTING PLUG (3-PIN)	

ELECTRICAL AND STARTING SYSTEM

201-8409 WIRING GP-CAB–ENCLOSED

S/N: CRD1-1175

PART OF 199-3459 CAB AR

SMCS-1408, 7301 i01946505

NOTE	REF NO	GRAPHIC REF	PART NUMBER	QTY	PART NAME 1 2 3 4 5 6 (PRODUCT LEVEL)	SEE PAGE
	1	1,2	2G-5298	3	WIRE AS	
	2	4	3E-5239	2	RELAY AS (24-VOLT) (FLOODLIGHT)	
Y	3	4	3E-6328	1	ALARM GP (24-VOLT) (ACTION)	159
	4	4	4I-3038	4	WASHER (3.3X8X0.5-MM THK)	
	5	4	6I-1418	4	SPACER (8.2X12.7X28.7-MM THK)	
	6	1,4	6V-8369	2	NUT (7/16-28-THD)	
	7	1,2,3,4	7K-1181	53	STRAP-CABLE	
	8	4	7X-3308	4	BOLT-SOCKET HEAD (3/32-4X0.375-IN)	
	9	4	8C-6354	1	CAP-RECEPTACLE (DUST)	
	10	4	8T-9655	8	MOUNT-ISOLATION	
	11	4	9W-1441	4	FUSE (15-AMPERE)	
	12	4	9W-1442	28	FUSE (10-AMPERE)	
	13	1	108-3320	1	SWITCH AS-ROTARY (24-VOLT) (RUNNING/FLOOD/PANEL/TAIL LIGHT)	
		1	3E-3389	1	WEDGE-RECEPTACLE LOCK	
		1	9W-0852	8	PIN-CONNECTOR (14-GA)	
		1	102-8806	1	KIT-RECEPTACLE (8-PIN)	
	14	1,2	109-2356	13	PLUG	
	15	1,2,4	110-6109	6	KNOB-CONTROL	
	16	4	110-7886	1	SWITCH AS-WIPER (24-VOLT) (FRONT INTERMITTENT)	
		4	2H-3920	1	LOCKWASHER	
		4	3E-3389	1	WEDGE-RECEPTACLE LOCK	
		4	6V-8369	1	NUT (7/16-28-THD)	
		4	8T-8729	3	PIN-CONNECTOR	
		4	8T-8737	1	PLUG-SEAL	
		4	9W-0852	4	PIN-CONNECTOR (14-GA)	
		4	102-8806	1	KIT-RECEPTACLE (8-PIN)	
	17	2	110-7890	1	SWITCH AS-ROTARY (24-VOLT) (HEATER/AC FAN CONTROL)	
		2	3E-3383	1	WEDGE-RECEPTACLE LOCK (6-PIN)	
		2	8T-8737	1	PLUG-SEAL	
		2	9W-0852	5	PIN-CONNECTOR (14-GA)	
		2	102-8805	1	KIT-RECEPTACLE (6-PIN)	
	18	1,2	111-7899	13	GASKET	
	19	4	112-6174	1	SWITCH AS-ROTARY (24-VOLT) (REAR WIPER)	
		4	2H-3920	1	LOCKWASHER	
		4	3E-3389	1	WEDGE-RECEPTACLE LOCK	
		4	6V-8369	1	NUT (7/16-28-THD)	
		4	8T-8729	6	PIN-CONNECTOR	
		4	8T-8737	2	PLUG-SEAL	
		4	102-8806	1	KIT-RECEPTACLE (8-PIN)	
	20	2,3	115-1748	8	LAMP (24-VOLT, 3-WATT)	
	21	2	117-2311	1	RECEPTACLE AS-POWER (12-VOLT)	
	22	1	118-7362	1	GROMMET-SPLIT	
	23	2	124-5638	1	FILM-INFORMATION (12-VOLT)	
	24	2	135-2601	1	FILM-CONTROLS (RH CONSOLE)	
	25	3	148-5689	1	GROMMET-SPLIT	
	26	1	148-6471	1	PLATE AS	
M		1	8T-3490	2	NUT-WELD (M10X1.5-THD)	
Y	27	4	172-9389	1	CONTROL GP-UNPROGRAMMED (POWER TRAIN)	189
	28	1	110-7887	1	SWITCH GP-START (KEY)	
		1	3E-3377	1	WEDGE-RECEPTACLE LOCK (4-PIN)	
		1	7T-6799	1	NUT-MOUNTING (1-32-THD)	
		1	8T-8729	4	PIN-CONNECTOR	
		1	102-8804	1	KIT-RECEPTACLE (4-PIN)	

201-8411 WIRING GP-AXLE MONITORING (contd.) i01866332

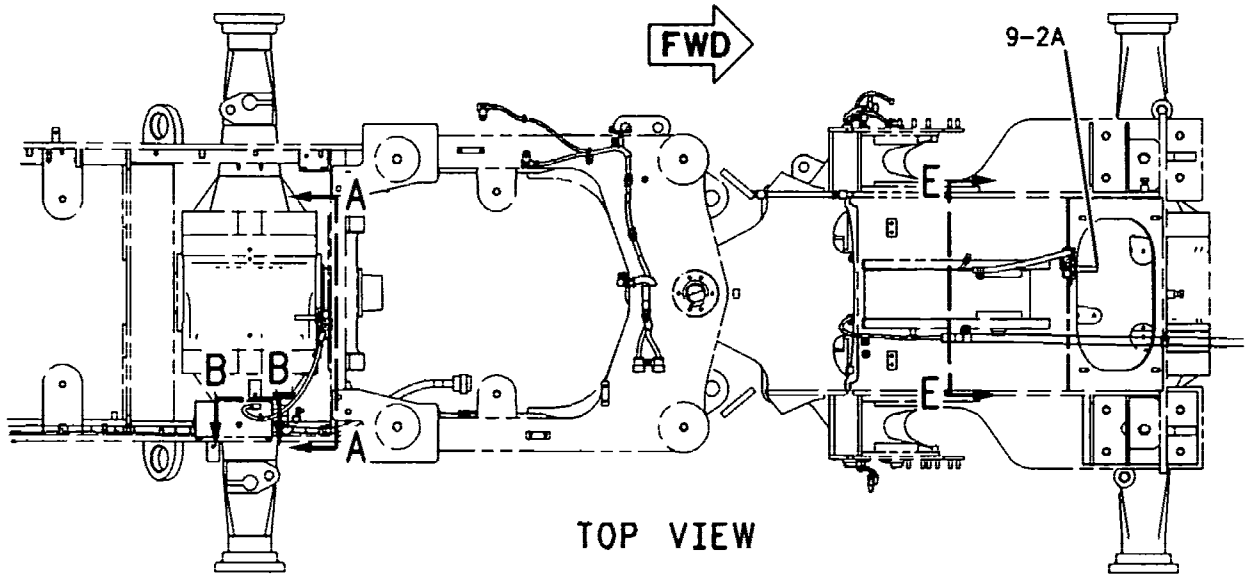

TOP VIEW

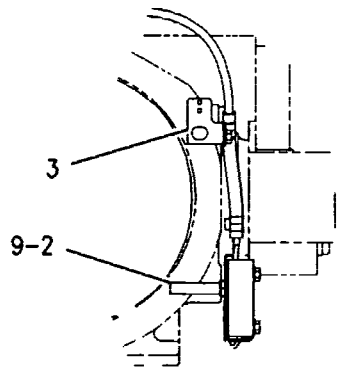

SECTION C-C

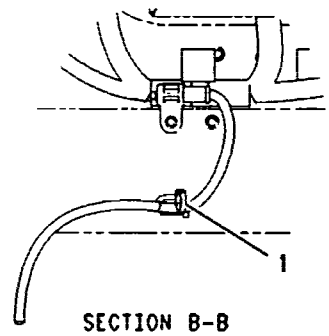

SECTION B-B

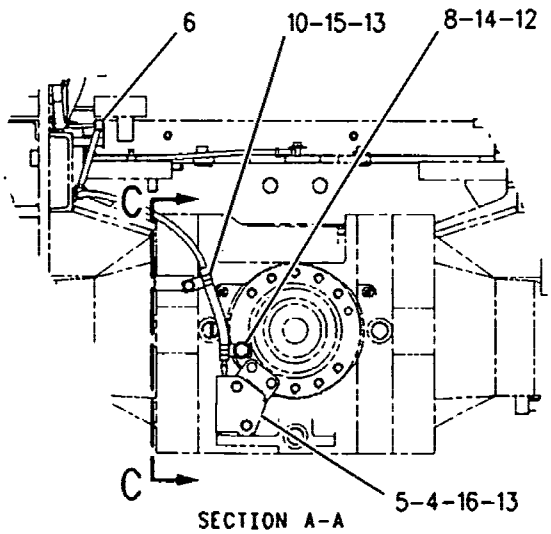

SECTION A-A

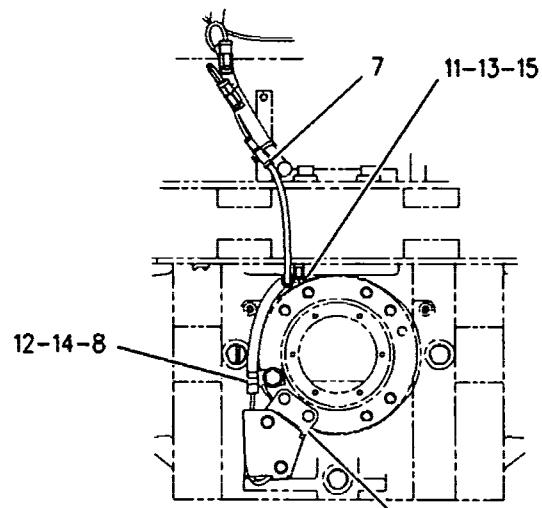

SECTION E-E

GRAPHIC #1 <END> g00951619

201-8411 WIRING GP-AXLE MONITORING

S/N: CRD1-UP

PART OF 205-5747 WIRING AR-AXLE MONITORING

AN ATTACHMENT

SMCS-1408, 7490 i01866332

NOTE	REF NO	GRAPHIC REF	PART NUMBER	QTY	PART NAME 1 2 3 4 5 6 (PRODUCT LEVEL)	SEE PAGE
	1	1	7K-1181	1	STRAP-CABLE	
	2	1	155-8999	1	SWITCH AS-TEMPERATURE (REAR AXLE OIL)	
		1	102-8802	1	KIT-RECEPTACLE (2-PIN)	
		1	3E-3365	1	WEDGE-RECEPTACLE LOCK (2-PIN)	
		1	8T-8729	2	PIN-CONNECTOR	
	2A	1	155-8999	1	SWITCH AS-TEMPERATURE (FRONT AXLE OIL)	
		1	102-8802	1	KIT-RECEPTACLE (2-PIN)	
		1	3E-3365	1	WEDGE-RECEPTACLE LOCK (2-PIN)	
		1	8T-8729	2	PIN-CONNECTOR	
	3	1	172-8713	1	BRACKET AS	
M		1	8T-3490	1	NUT-WELD (M10X1.5-THD)	
	4	1	173-7471	2	PLATE AS	
					(EACH INCLUDES)	
		1	8C-3334	2	RIVET-TUBULAR	
		1	8Y-4489	2	BOSS-THREADED	
	5	1	173-7472	2	COVER	
	6	1	202-3241	1	HARNESS AS-AXLE (REAR AXLE OIL TEMPERATURE)	
		1	102-8802	1	KIT-RECEPTACLE (2-PIN)	
		1	8T-8737	2	PLUG-SEAL	
		1	155-2270	1	KIT-CONNECTING PLUG (2-PIN)	
		1	155-2271	1	KIT-CONNECTING PLUG (4-PIN)	
	7	1	202-3242	1	HARNESS AS-AXLE (FRONT AXLE OIL TEMPERATURE)	
		1	155-2270	1	KIT-CONNECTING PLUG (2-PIN)	
	8	1	172-6833	2	CLIP	
	9	1	3K-0360	2	SEAL-O-RING	
	10	1	4D-7735	1	CLIP	
	11	1	8M-2773	1	CLIP	
M	12	1	8T-2926	2	BOLT	
	13	1	8T-4121	6	WASHER-HARD (11X21X2.5-MM THK)	
	14	1	8T-4122	2	WASHER-HARD (17X32X3.5-MM THK)	
M	15	1	8T-4137	2	BOLT (M10X1.5X20-MM)	
M	16	1	8T-4195	4	BOLT (M10X1.5X30-MM)	

M-METRIC PART

ELECTRICAL AND STARTING SYSTEM

200-2725 WIRING GP-AIR CONDITIONER

S/N: CRD1-UP

PART OF 199-2842 AIR CONDITIONER AR

AN ATTACHMENT

SMCS-1408, 7320 **i02286205**

NOTE	REF NO	GRAPHIC REF	PART NUMBER	QTY	PART NAME 1 2 3 4 5 6 (PRODUCT LEVEL)	SEE PAGE
	1	1	7K-1181	3	STRAP-CABLE	
	2	1	114-5333	1	SWITCH AS-PRESSURE (REFRIGERANT)	
		1	102-8802	1	KIT-RECEPTACLE (2-PIN)	
					(INCLUDES RECEPTACLE AS AND WEDGE)	
		1	3E-3365	1	WEDGE-RECEPTACLE LOCK (2-PIN)	
		1	186-3735	2	PIN-CONNECTOR (16-GA TO 18-GA)	
	3	1	211-0255	1	HARNESS AS-HEATER & AIR COND	
		1	102-8802	1	KIT-RECEPTACLE (2-PIN)	
					(INCLUDES RECEPTACLE AS AND WEDGE)	
		1	155-2270	1	KIT-CONNECTING PLUG (2-PIN)	
					(INCLUDES PLUG AS AND WEDGE)	
	4	1	130-5300	2	CLIP	
	5	1	132-5789	1	CLIP	
	6	1	156-6175	1	CLIP	
M	7	1	5C-2890	1	NUT (M6X1-THD)	
	8	1	9X-7378	1	SEAL-O-RING	
	9	1	9X-8256	1	WASHER (6.6X12X2-MM THK)	
	10	1	4P-7581	1	CLIP	
	11	1	218-4935	1	SUPPRESSOR-ARC	

M-METRIC PART

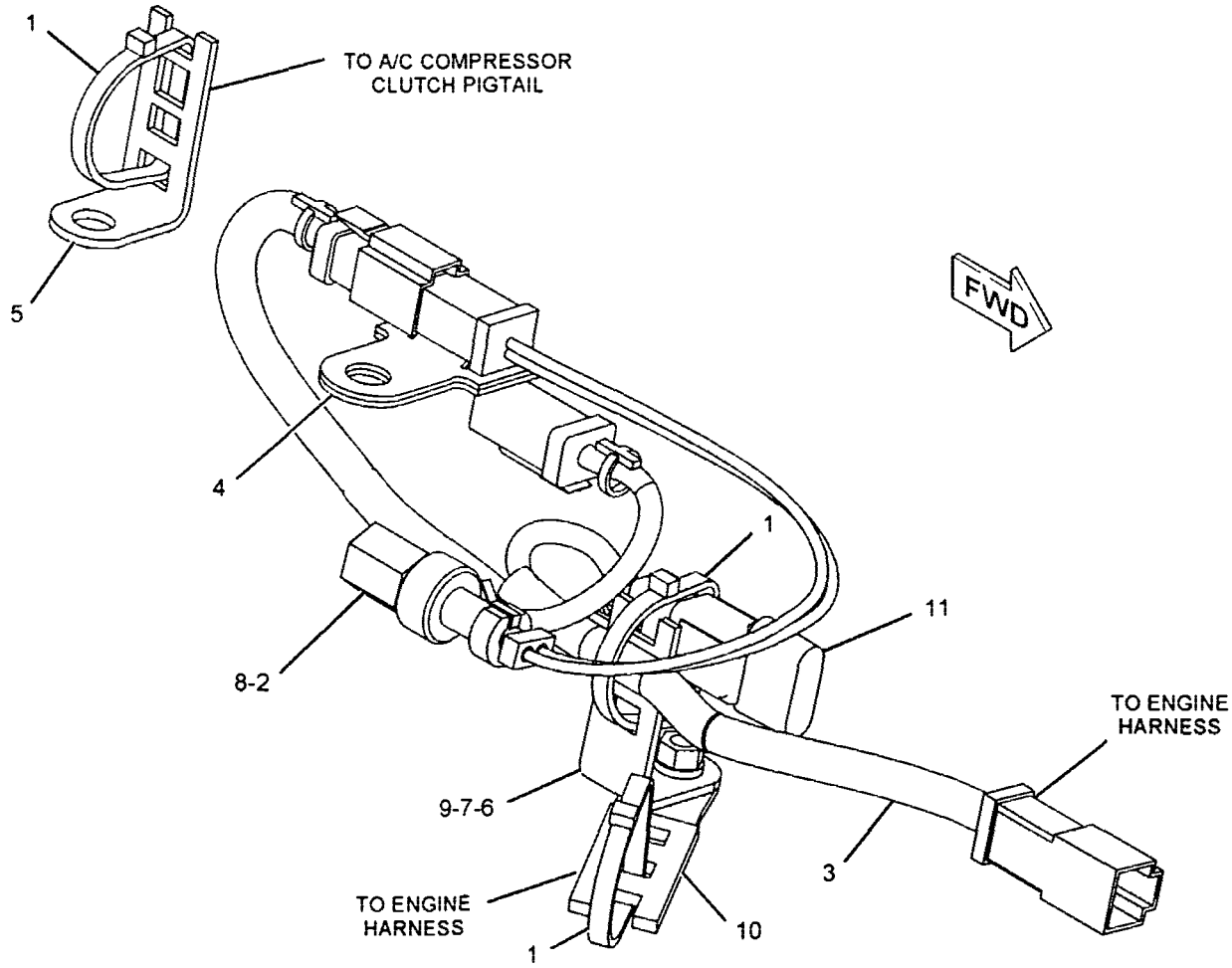

GRAPHIC #1

<END>

g01098207

205-5747 WIRING AR-AXLE MONITORING

S/N: CRD1-UP
PART OF 201-8906 COOLER AR-AXLE OIL
AN ATTACHMENT

SMCS-1408, 7490 i01674199

NOTE	PART NUMBER	QTY	PART NAME 1 2 3 4 5 6 (PRODUCT LEVEL)	SEE PAGE
Y	201-8411	1	WIRING GP-AXLE MONITORING	284

Y-SEPARATE ILLUSTRATION

<END>

204-2516 WARNING GP-BACKUP

S/N: CRD1-UP
AN ATTACHMENT

SMCS-7406 i01556092

NOTE	REF NO	GRAPHIC REF	PART NUMBER	QTY	PART NAME 1 2 3 4 5 6 (PRODUCT LEVEL)	SEE PAGE
	1	1	3S-2093	1	STRAP-CABLE	
	2	1	123-6449	1	ALARM GP	
		1	102-8802	1	KIT-RECEPTACLE (2-PIN)	
		1	3E-3365	1	WEDGE-RECEPTACLE LOCK (2-PIN)	
		1	8T-8729	2	PIN-CONNECTOR	
		1	9X-1813		SLEEVE (28CM)	
		1	5P-5677		WIRE (18-GA, BLACK) (1M)	
	3	1	4P-7581	1	CLIP	
M	4	1	7X-2538	2	BOLT (M8X1.25X100-MM)	
	5	1	8T-4224	2	WASHER-HARD (8.8X16X2-MM THK)	

M-METRIC PART

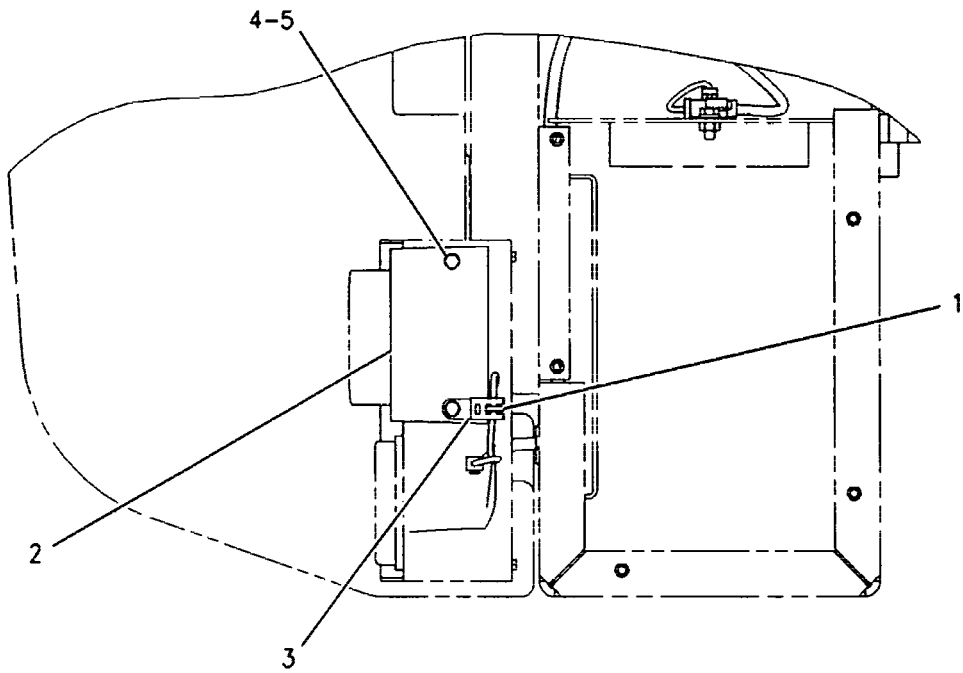

TOP VIEW

GRAPHIC #1 <END> g00814525

239-1134 VALVE GP-ETHER STARTING

S/N: CRD1-UP
24-VOLT
PART OF 253-7358 STARTING AID GP-ETHER
AN ATTACHMENT

SMCS-1456 i02145416

NOTE	REF NO	GRAPHIC REF	PART NUMBER	QTY	PART NAME 1 2 3 4 5 6 (PRODUCT LEVEL)	SEE PAGE
	1	1	3E-3365	1	WEDGE-RECEPTACLE LOCK (2-PIN)	
	2	1	7N-9801	1	GASKET	
	3	1	102-8802	1	KIT-RECEPTACLE (2-PIN)	
					(KIT INCLUDES RECEPTACLE AS & WEDGE)	
	4	1	186-3735	2	PIN-CONNECTOR (16-GA TO 18-GA)	

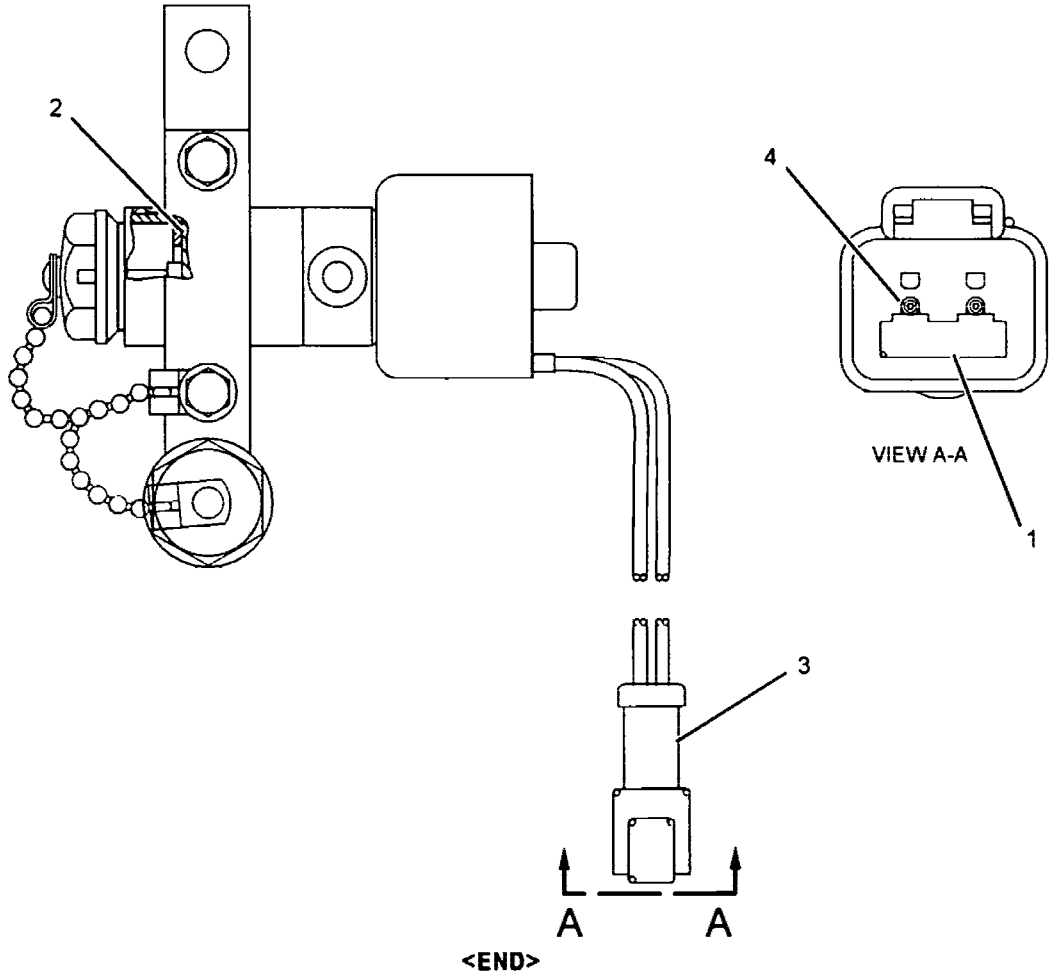

GRAPHIC #1 <END> g01053000

180-3732 SWITCH GP-WIPER-INTERMITTENT

S/N: CRD1-UP
AN ATTACHMENT

SMCS-7332 i02279279

NOTE	REF NO	GRAPHIC REF	PART NUMBER	QTY	PART NAME 1 2 3 4 5 6 (PRODUCT LEVEL)	SEE PAGE
	1	1	110-7886	1	SWITCH AS-WIPER (24-VOLT) (INTERMITTENT)	
	1A	1	2H-3920	1	LOCKWASHER	
	1B	1	3E-3389	1	WEDGE-RECEPTACLE LOCK	
	1C	1	6V-8369	1	NUT (7/16-28-THD)	
	1D	1	8T-8729	3	PIN-CONNECTOR	
	1E	1	8T-8737	1	PLUG-SEAL	
	1F	1	9W-0852	4	PIN-CONNECTOR (14-GA)	
	1G	1	102-8806	1	KIT-RECEPTACLE (8-PIN)	
					(INCLUDES RECEPTACLE AS AND WEDGE)	

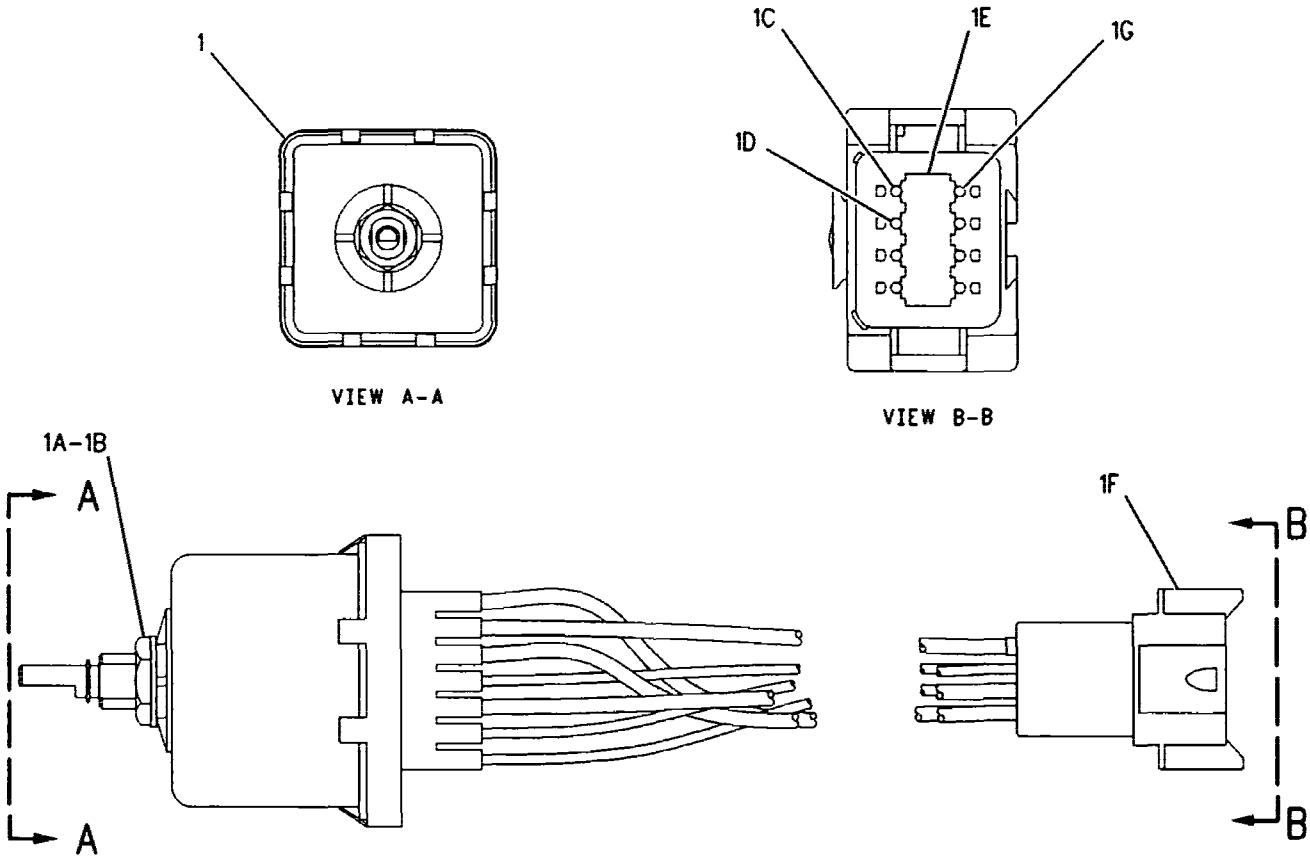

GRAPHIC #1 <END> g00656684

165-5970 SWITCH GP-TOGGLE–FUEL PRIMING PUMP

S/N: 5GG1-UP

PART OF 185-2069 PUMP GP-FUEL PRM & PRIM FILTER

SMCS-7332 i02262653

NOTE	REF NO	GRAPHIC REF	PART NUMBER	QTY	PART NAME 1 2 3 4 5 6 (PRODUCT LEVEL)	SEE PAGE
	1	1	6T-3631	2	NUT-HEX (15/32-32-THD)	
	2	1	6T-3632	1	LOCKWASHER	
	3	1	6T-3633	1	RING-LOCKING	
	4	1	102-8803	1	KIT-RECEPTACLE (3-PIN)	
					(INCLUDES RECEPTACLE AS & WEDGE)	
	5	1	3E-3371	1	WEDGE-RECEPTACLE LOCK (3-PIN)	
	6	1	186-3735	3	PIN-CONNECTOR (16-GA TO 18-GA)	

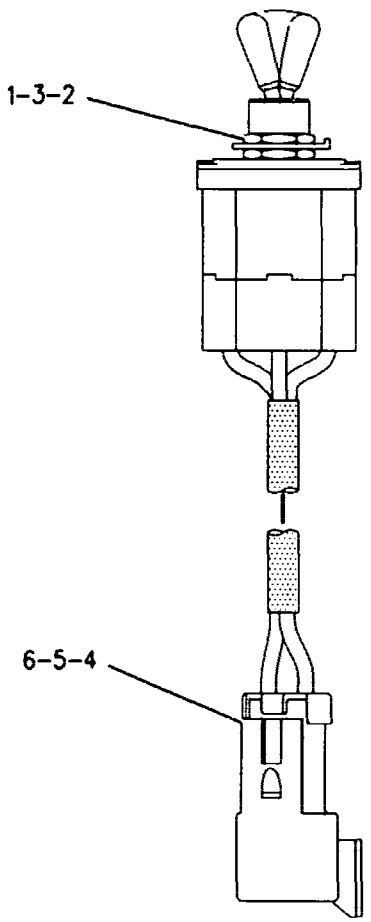

GRAPHIC #1 <END> g00749466

207-1321 SWITCH GP-SIGNAL

S/N: CRD1-UP

PART OF 212-1529 LIGHTING AR-ROADING, 205-5682 LIGHTING AR-SIGNAL AN ATTACHMENT

SMCS-7332 i01691011

NOTE	PART NUMBER	QTY	PART NAME 1 2 3 4 5 6 (PRODUCT LEVEL)	SEE PAGE
	108-0358	1	FLASHER AS (24-VOLT)	
	202-7479	1	HARNESS AS-LIGHTING (TURN SIGNAL)	
	102-8801	1	KIT-RECEPTACLE (12-PIN)	
	8T-8737	6	PLUG-SEAL	
	8N-2622	1	LEVER	
	1H-4393	3	LOCKWASHER	
M	5C-8312	3	NUT (M4X0.7-THD)	
	5V-2998	1	PLATE	
	119-5026	2	SCREW-PAN HEAD (10-16X0.63-IN)	
	173-3064	1	SWITCH GP-ROTARY (TURN SIGNAL, HAZARD)	
	5L-7200	1	SCREW (8-32X0.375-IN)	
	9B-7233	1	LOCKWASHER	

M-METRIC PART

<END>

216-3902 SWITCH GP-SIGNAL

S/N: CRD1-UP

PART OF 212-1531 LIGHTING AR-ROADING AN ATTACHMENT

SMCS-7332 i01869852

NOTE	PART NUMBER	QTY	PART NAME 1 2 3 4 5 6 (PRODUCT LEVEL)	SEE PAGE
	217-8166	1	FLASHER AS	
	214-5372	1	HARNESS AS-LIGHTING (TURN SIGNAL, HAZARD)	
	102-8801	1	KIT-RECEPTACLE (12-PIN)	
	8T-8737	3	PLUG-SEAL	
	155-2270	1	KIT-CONNECTING PLUG (2-PIN)	
	155-2271	1	KIT-CONNECTING PLUG (4-PIN)	
	155-2274	1	KIT-CONNECTING PLUG (6-PIN)	
	8N-2622	1	LEVER	
	1H-4393	3	LOCKWASHER	
M	5C-8312	3	NUT (M4X0.7-THD)	
	185-5634	1	PLATE AS	
	155-2105	1	PLATE-INSTRUCTION (TURN SIGNAL)	
M	6V-5210	2	SCREW-MACHINE (M4X0.7X10-MM)	
M	9X-2042	2	SCREW-TRUSS HEAD (M6X1X12-MM)	
	195-0924	1	SWITCH AS-ROCKER (HAZARD WARNING LIGHTS)	
	111-7899	1	GASKET	
	134-9569	1	SWITCH AS-TURN SIGNAL	
	5L-7200	1	SCREW (8-32X0.375-IN)	
	9B-7233	1	LOCKWASHER	

M-METRIC PART

<END>

250-9215 SWITCH GP-QUICK COUPLER

S/N: CRD1006-UP

PART OF 245-7355, 246-1049 COUPLER AR-QUICK

AN ATTACHMENT

SMCS-6129, 7332 i02154681

NOTE	REF NO	GRAPHIC REF	PART NUMBER	QTY	PART NAME 1 2 3 4 5 6 (PRODUCT LEVEL)	SEE PAGE
Y	1	1	132-1829	1	ALARM GP (24-VOLT) (ACTION)	160
	2	1	225-6303	1	SWITCH AS (QUICK COUPLER)	
		1	111-7899	1	GASKET	
	3	1	8T-4121	1	WASHER-HARD (11X21X2.5-MM THK)	
M	4	1	8T-4133	1	NUT (M10X1.5-THD)	

M-METRIC PART
Y-SEPARATE ILLUSTRATION

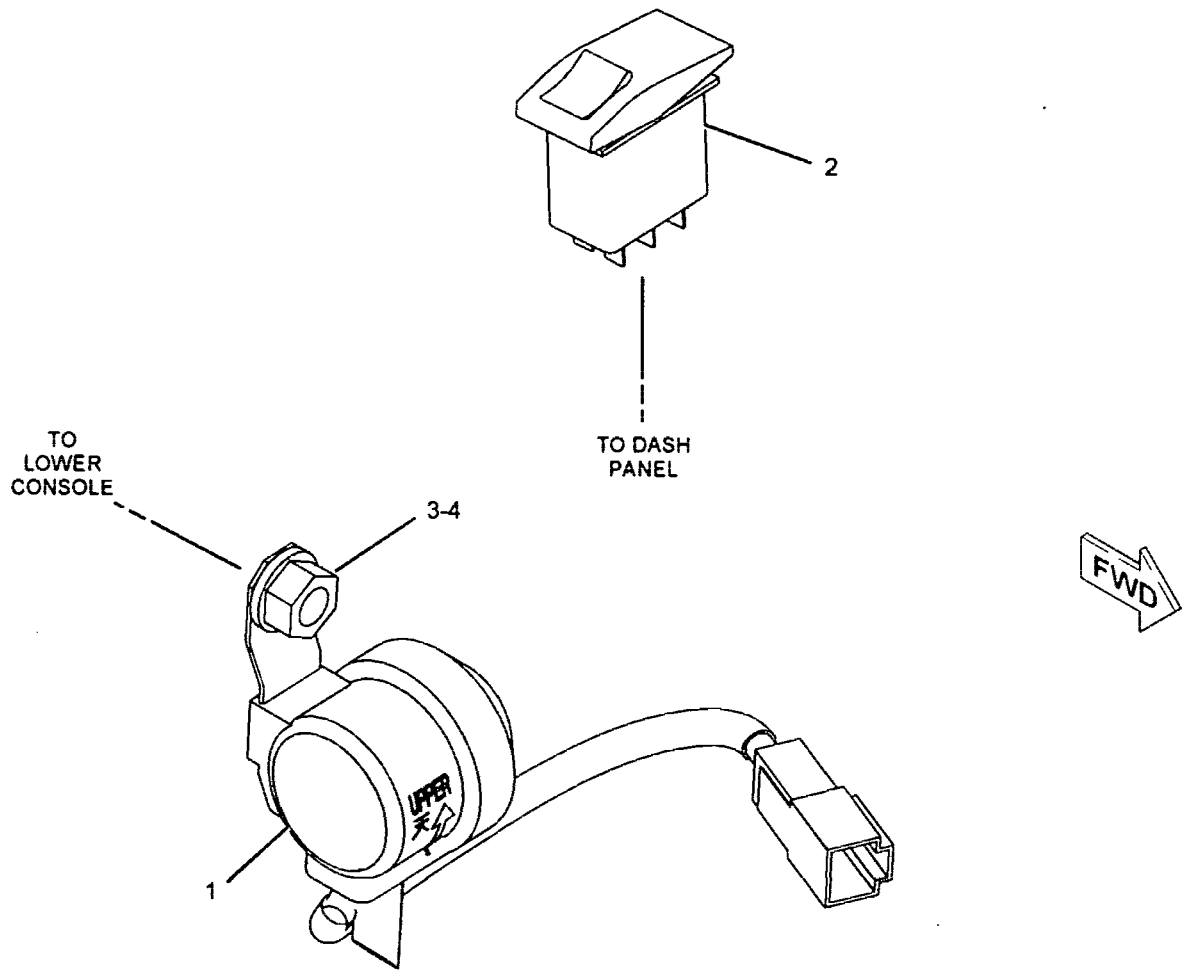

GRAPHIC #1 <END> g01097113

254-3783 SWITCH GP-MAGNETIC

S/N: CRD1-UP
24 VOLTS
FIELD REPLACEMENT FOR 167-0138–PAGE 270

SMCS-7499 i02280323

NOTE	REF NO	GRAPHIC REF	PART NUMBER	QTY	PART NAME 1 2 3 4 5 6 (PRODUCT LEVEL)	SEE PAGE
	1	1	4F-2294	2	NUT-JAM (5/16-24-THD)	
	2	1	6V-8186	2	NUT-FULL (5/16-24-THD)	
	3	1	155-2270	1	KIT-CONNECTING PLUG (2-PIN)	
					(INCLUDES PLUG AS & WEDGE)	
	4	1	186-3736	2	SOCKET-CONNECTOR (16-AWG TO 18-AWG)	

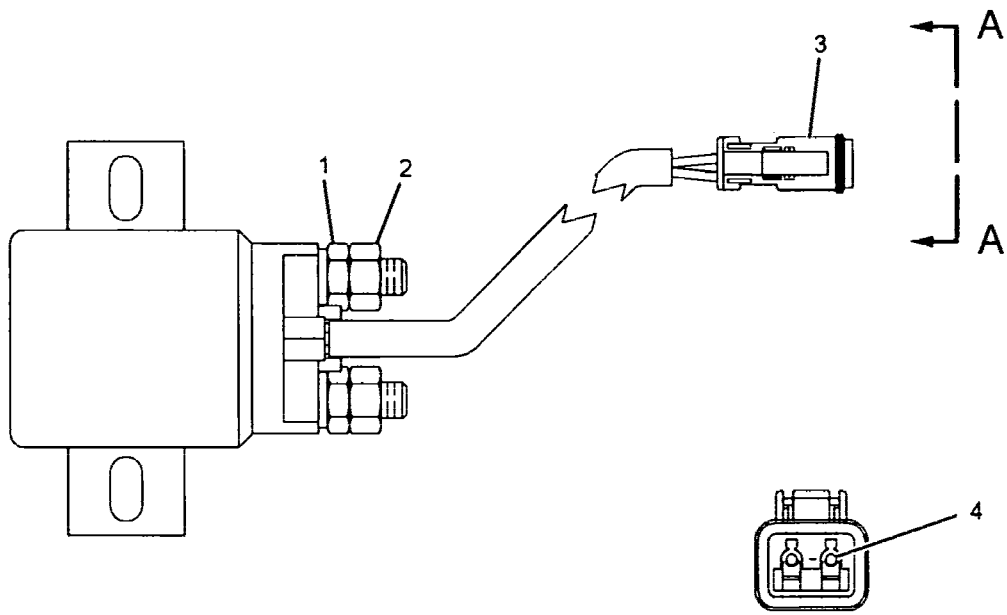

VIEW A-A

GRAPHIC #1 <END> g01141735

ELECTRICAL AND STARTING SYSTEM

241-8368 SWITCH GP-MAGNETIC–MAIN RELAY

S/N: CRD1-UP

24-VOLTS

FIELD REPLACEMENT FOR 167-0138–PAGE 270

SMCS-7499 102325242

NOTE	REF NO	GRAPHIC REF	PART NUMBER	QTY	PART NAME 1 2 3 4 5 6 (PRODUCT LEVEL)	SEE PAGE
	1	1	155-2270	1	KIT-CONNECTING PLUG (2-PIN)	
					(INCLUDES PLUG AS, WEDGE & INTERFACE SEAL)	
	2	1	4F-2294	2	NUT-JAM (5/16-24-THD)	
	3	1	186-3736	2	SOCKET-CONNECTOR (16-GA TO 18-GA)	

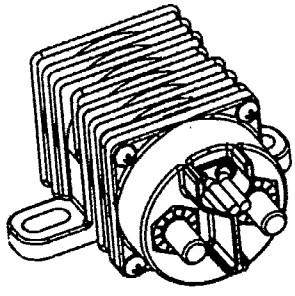

ISOMETRIC VIEW

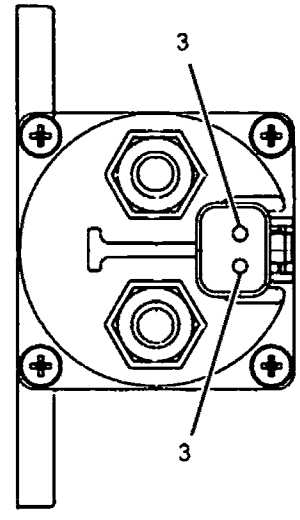

VIEW A-A

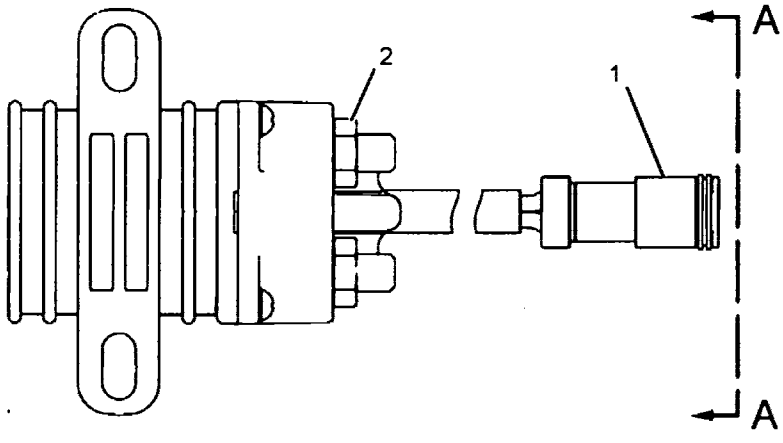

GRAPHIC #1 <END> g01077362

223-7577 SWITCH GP-MAGNETIC–STARTING AID HEATER RELAY

S/N: 5GG2637-UP

24-VOLT

PART OF 235-9679 STARTING AID GP

SMCS-7499 i02174621

NOTE	REF NO	GRAPHIC REF	PART NUMBER	QTY	PART NAME 1 2 3 4 5 6 (PRODUCT LEVEL)	SEE PAGE
	1	1	209-5582	1	SWITCH AS-MAGNETIC (24-VOLT) (AIR INLET HEATER)	
	1A	1	102-8802	1	KIT-RECEPTACLE (2-PIN) (INCLUDES RECEPTACLE AS AND WEDGE)	
	1B	1	186-3735	2	PIN-CONNECTOR (16-GA TO 18-GA)	
	1C	1	3F-9556	2	LOCKWASHER	
	1D	1	6V-8186	2	NUT-FULL (5/16-24-THD)	
	1E	1	6V-8378	2	NUT (10-32-THD)	
	1F	1	8F-1434	2	LOCKWASHER	

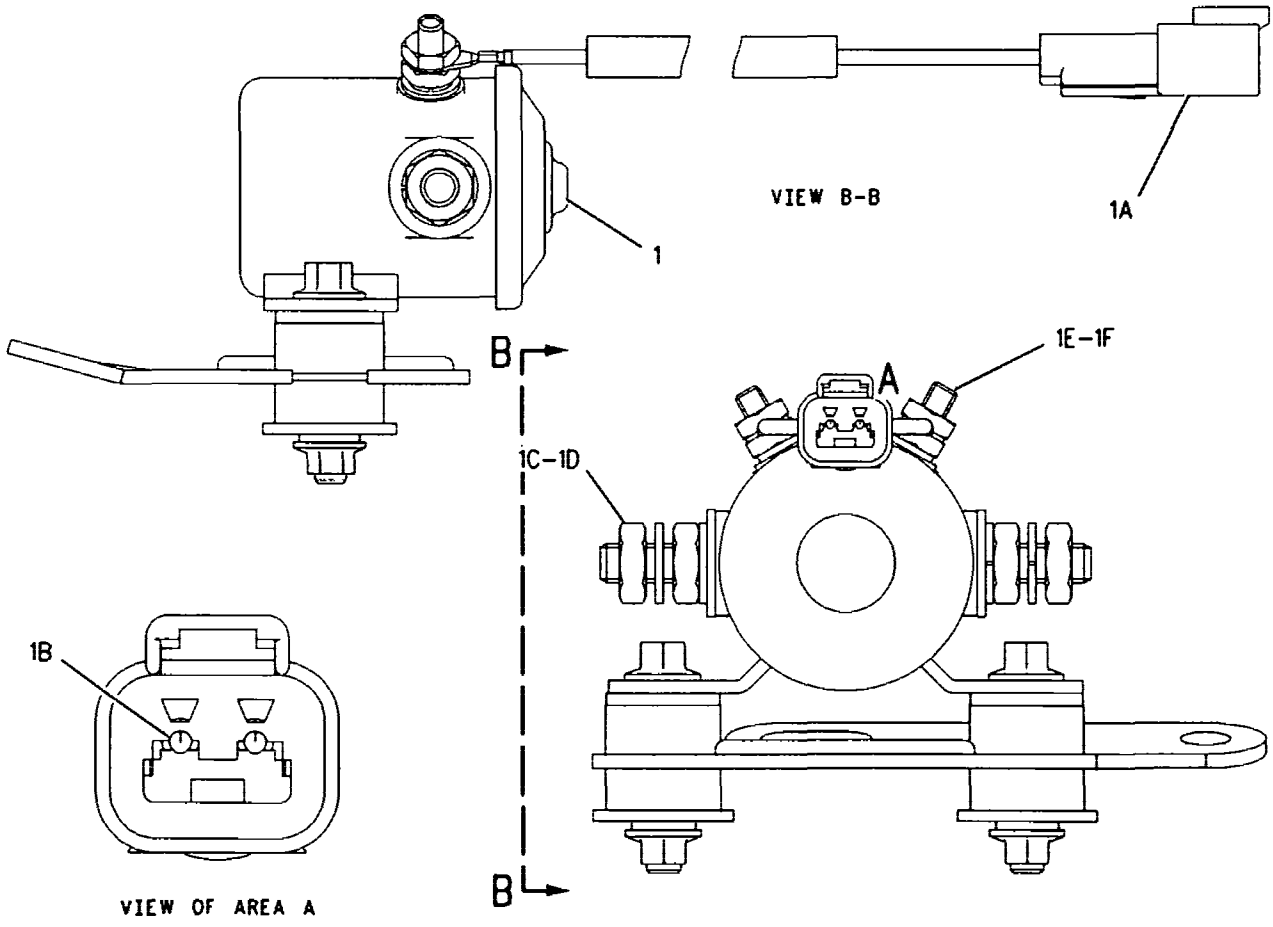

GRAPHIC #1

<END>

g00976450

175-2324 SWITCH GP-MAGNETIC

S/N: 5GG1-2636
24-VOLT
PART OF 3E-0075 SWITCH GP-MAGNETIC
FIELD REPLACEMENT ORDER 3E-0075–PAGE 268

SMCS-7499 i02310130

NOTE	REF NO	GRAPHIC REF	PART NUMBER	QTY	PART NAME 1 2 3 4 5 6 (PRODUCT LEVEL)	SEE PAGE
	1	1	3E-7277	1	SWITCH AS-MAGNETIC (24 VDC)	
	2	1	102-8802	1	KIT-RECEPTACLE (2-PIN)	
					(INCLUDES RECEPTACLE AS AND WEDGE)	
	3	1	186-3735	2	PIN-CONNECTOR (16-GA TO 18-GA)	
	4	1	1H-3338	2	LOCKWASHER	
	5	1	012-0380	2	LOCKWASHER	
M	6	1	5C-2890	2	NUT (M6X1-THD)	
E	7	1	9X-1813		SLEEVE (16-CM)	

E-ORDER BY THE CENTIMETER
M-METRIC PART

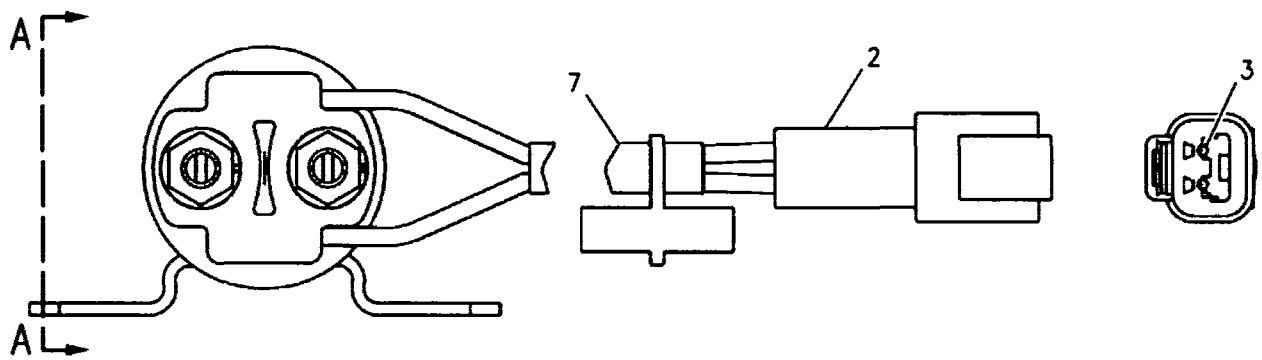

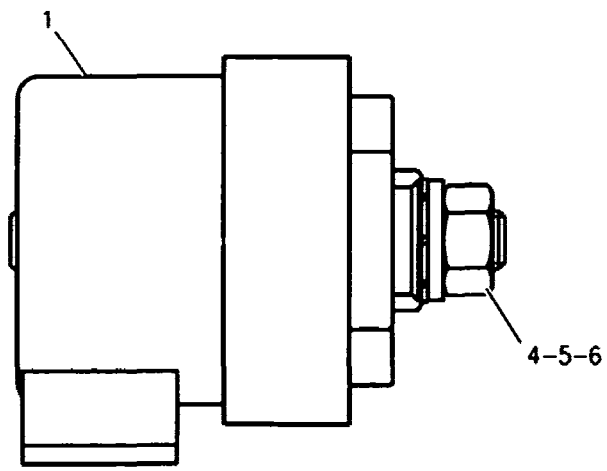

VIEW A–A

GRAPHIC #1 <END> g00985960

175-2322 SWITCH GP-MAGNETIC

S/N: 5GG1-2636
24-VOLT
PART OF 3E-0075 SWITCH GP-MAGNETIC
FIELD REPLACEMENT ORDER 3E-0075–PAGE 268

SMCS-7499 i02233187

NOTE	REF NO	GRAPHIC REF	PART NUMBER	QTY	PART NAME 1 2 3 4 5 6 (PRODUCT LEVEL)	SEE PAGE
	1	1	102-8802	1	KIT-RECEPTACLE (2-PIN)	
					(INCLUDES RECEPTACLE AS AND WEDGE)	
	2	1	186-3735	2	PIN-CONNECTOR (16-GA TO 18-GA)	
	3	1	1H-3338	2	LOCKWASHER	
	4	1	012-0380	2	LOCKWASHER	
M	5	1	5C-2890	2	NUT (M6X1-THD)	
E	6	1	9X-1813		SLEEVE (16-CM)	

E-ORDER BY THE CENTIMETER
M-METRIC PART

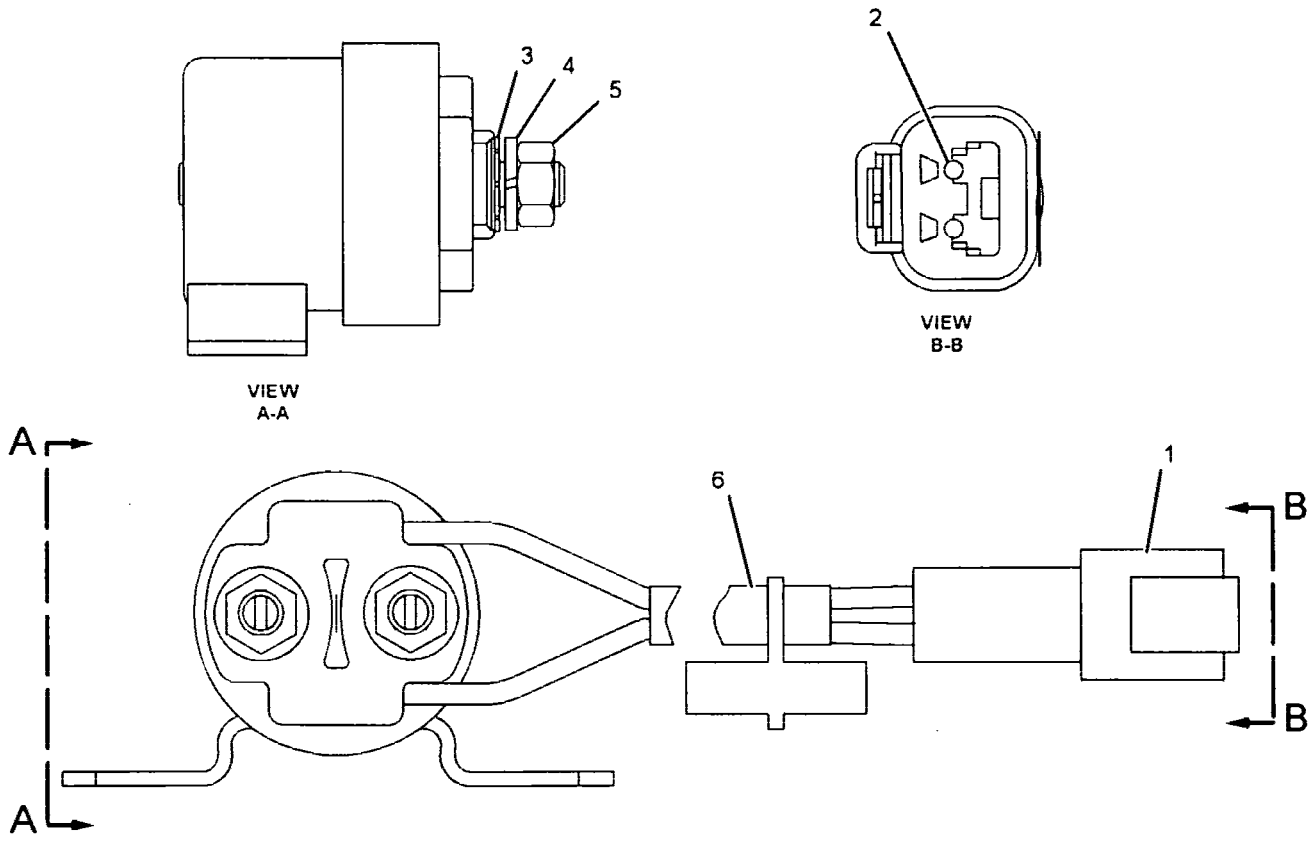

GRAPHIC #1 <END> g01126375

167-0138 SWITCH GP-MAGNETIC–MAIN RELAY

S/N: CRD1-UP
24 VOLT
PART OF 202-3245 PANEL GP-CIRCUIT BREAKER
FIELD REPLACEMENT ORDER 241-8368–PAGE 274, 254-3783–PAGE 275

SMCS-7499 i02280944

NOTE	REF NO	GRAPHIC REF	PART NUMBER	QTY	PART NAME 1 2 3 4 5 6 (PRODUCT LEVEL)	SEE PAGE
	1	1	155-2270	1	KIT-CONNECTING PLUG (2-PIN)	
					(INCLUDES PLUG AS, WEDGE, & INTERFACE SEAL)	
	2	1	4F-2294	2	NUT-JAM (5/16-24-THD)	
	3	1	186-3736	2	SOCKET-CONNECTOR (16-AWG TO 18-AWG)	

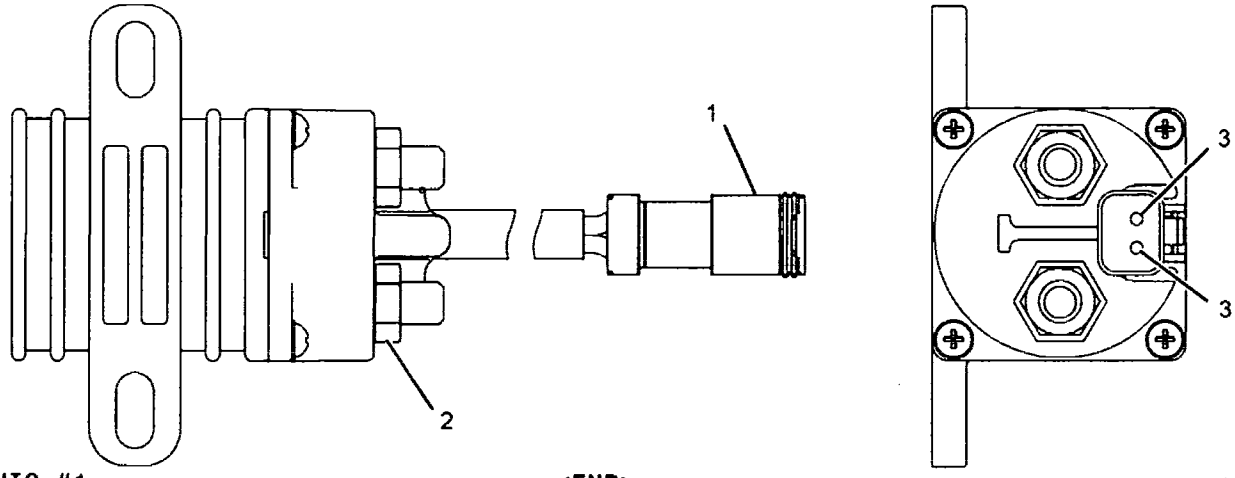

GRAPHIC #1 <END> g01079731

125-1302 SWITCH GP-MAGNETIC–START RELAY

S/N: CRD245-UP
24-VOLT
PART OF 202-3245 PANEL GP-CIRCUIT BREAKER

SMCS-7499 i02331231

NOTE	REF NO	GRAPHIC REF	PART NUMBER	QTY	PART NAME 1 2 3 4 5 6 (PRODUCT LEVEL)	SEE PAGE
	1	1	102-8802	1	KIT-RECEPTACLE (2-PIN)	
					(INCLUDES RECEPTACLE AS & WEDGE)	
	2	1	186-3735	2	PIN-CONNECTOR (16-GA TO 18-GA)	
	3	1	1H-3338	2	LOCKWASHER	
	4	1	012-0380	2	LOCKWASHER	
M	5	1	5C-2890	2	NUT (M6X1-THD)	
BE	6	1	9X-1813		SLEEVE	

B-USE AS REQUIRED
E-ORDER BY THE CENTIMETER
M-METRIC PART

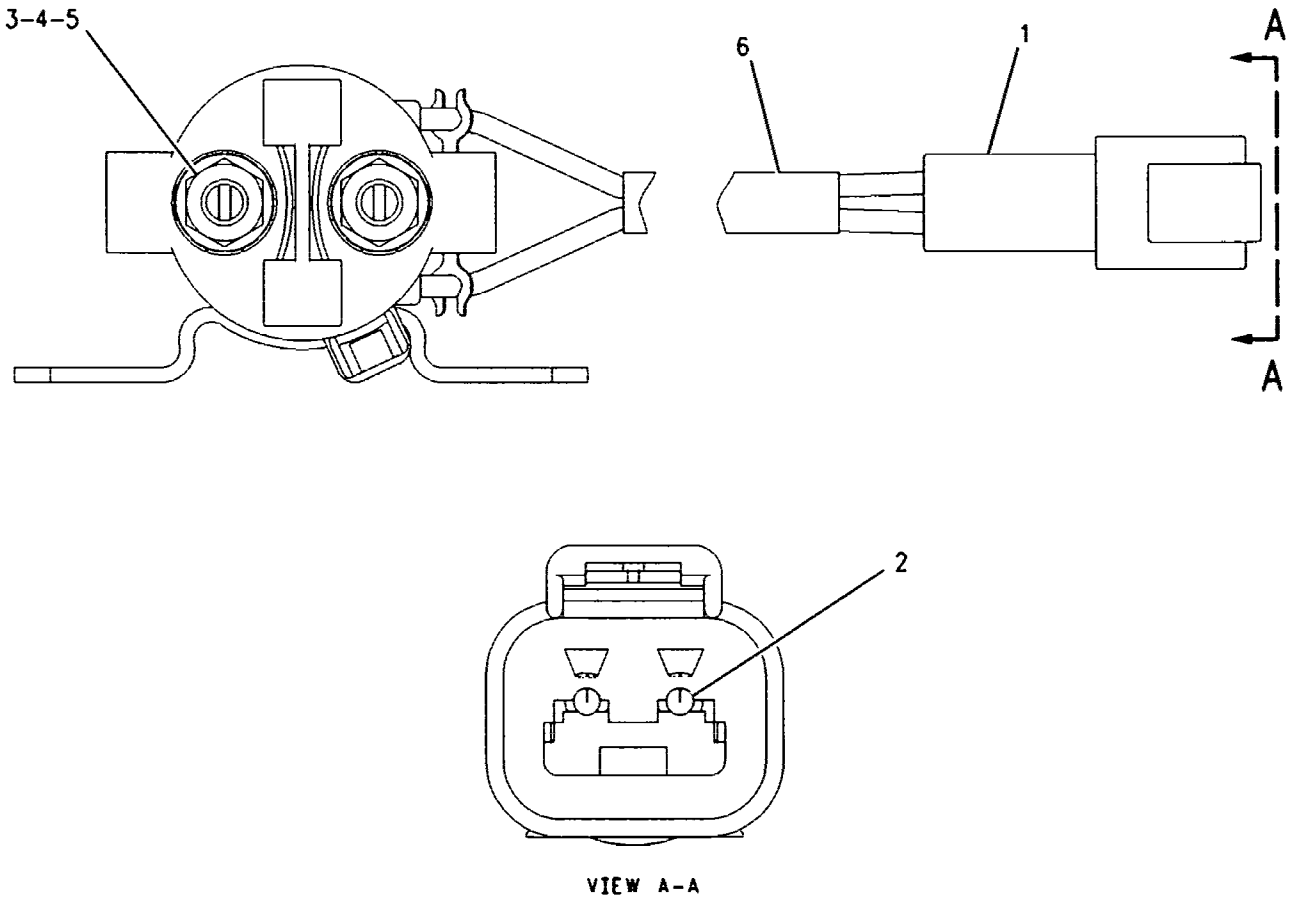

VIEW A-A

GRAPHIC #1 <END> g00988001

3E-0075 SWITCH GP-MAGNETIC

S/N: 5GG1-2636
24-VOLT
PART OF 191-6113 STARTING AID GP
FIELD REPLACEMENT FOR 175-2324–PAGE 272, 175-2322–PAGE 271

SMCS-7499 i02327083

NOTE	PART NUMBER	QTY	PART NAME 1 2 3 4 5 6 (PRODUCT LEVEL)	SEE PAGE
Y	*175-2322*	1	SWITCH GP-MAGNETIC	271
			–OR–	
Y	*175-2324*	1	SWITCH GP-MAGNETIC	272

Y-SEPARATE ILLUSTRATION

<END>

7N-0718 SWITCH GP-DISCONNECT-BATTERY

S/N: CRD1-UP

PART OF 201-8414 BATTERY & WIRING GP

SMCS-1411 i02338397

NOTE	REF NO	GRAPHIC REF	PART NUMBER	QTY	PART NAME 1 2 3 4 5 6 (PRODUCT LEVEL)	SEE PAGE
	1	1	8H-5306	1	KEY (BATTERY DISCONNECT) (STARTER)	
	2	1	8H-5303	1	NUT (3/4-16-THD)	
	3	1	2H-3922	2	LOCKWASHER	
	4	1	9F-5644	2	LOCKWASHER	
	5	1	6F-7045	2	NUT-FULL (3/8X24-THD)	

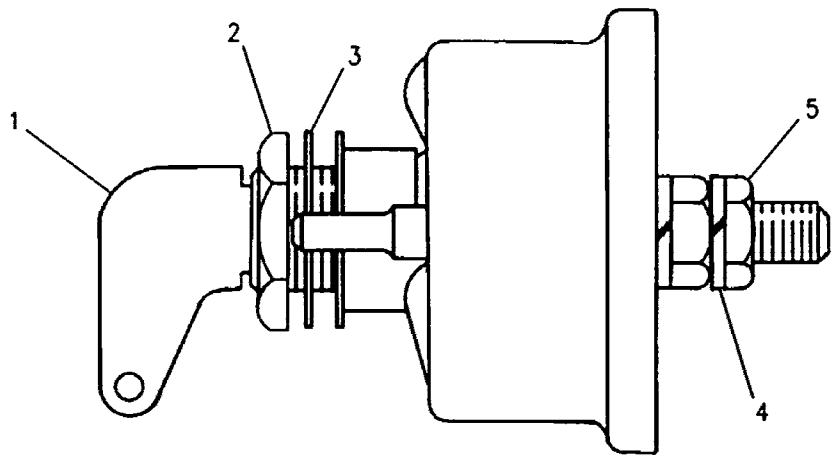

GRAPHIC #1 <END> g00715584

207-1517 STARTING MOTOR GP-ELECTRIC (contd.) i02169871

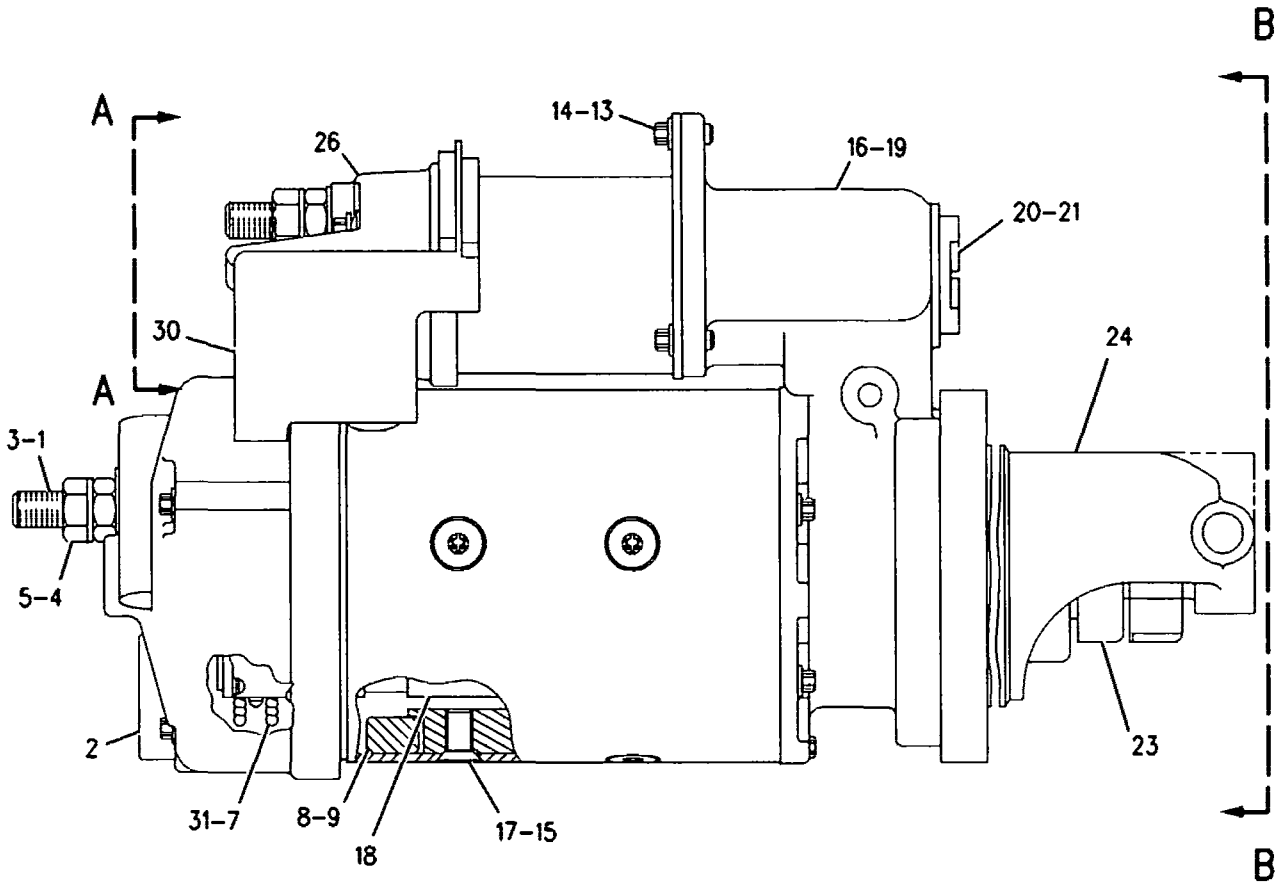

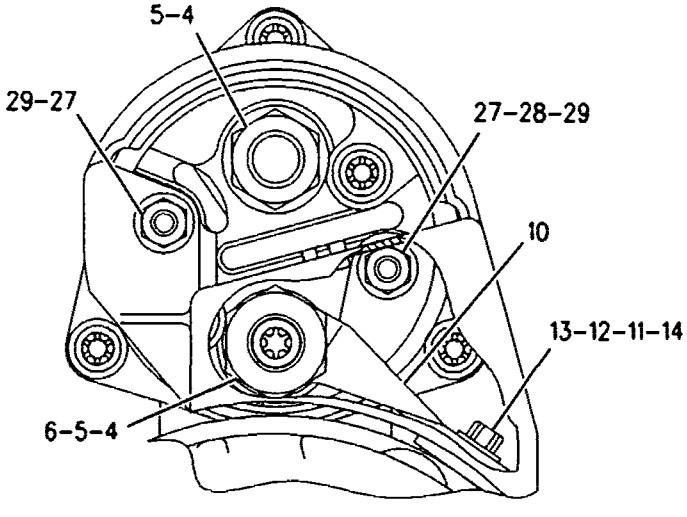

VIEW A-A

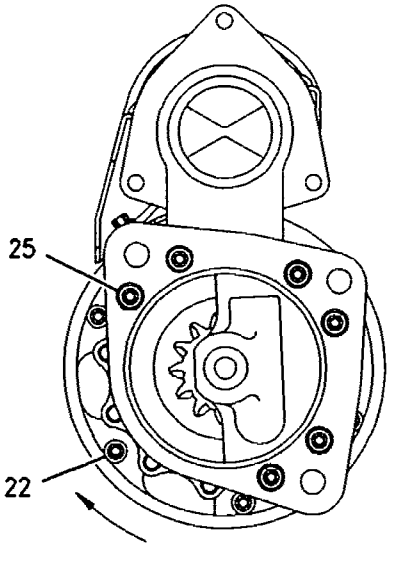

VIEW B-B

GRAPHIC #1 <END> g00839695

207-1517 STARTING MOTOR GP-ELECTRIC*R

S/N: CRD1-UP
24 VOLT
PART OF 111-4275 STARTING MOTOR GP-ELECTRIC

SMCS-1453 i02169871

NOTE	REF NO	GRAPHIC REF	PART NUMBER	QTY	PART NAME 1 2 3 4 5 6 (PRODUCT LEVEL)	SEE PAGE
	1	1	8T-9884	1	KIT-INSULATOR (STARTING MOTOR)	
					(INCLUDES INSULATORS AND BUSHING)	
	2	1	106-7149	1	HOUSING AS	
	3	1	102-9863	1	TERMINAL AS	
	4	1	6V-8188	4	NUT (1/2-13-THD)	
	5	1	7X-0562	4	WASHER-HARD (13.5X19X0.8-MM THK)	
	6	1	3E-7853	1	TERMINAL	
	7	1	9X-4821	1	PLATE AS	
	8	1	3E-7852	1	COIL-STARTING MOTOR	
	9	1	7T-3454	1	INSULATOR	
	10	1	9X-4271	1	CONNECTOR	
	11	1	7T-3451	1	INSULATOR-TERMINAL	
	12	1	8T-8569	1	INSULATOR-TERMINAL	
	13	1	5S-7349	4	BOLT (1/4-20X0.5-IN)	
	14	1	8T-4205	4	WASHER-HARD (7.2X14.5X2-MM THK)	
	15	1	7X-1950	4	SHOE-POLE	
	16	1	3E-7861	1	KIT-LEVER (STARTING MOTOR)	
					(INCLUDES LEVER AS, SHAFT AS, GASKET, O-RINGS, RING, AND NUT)	
	17	1	3F-0379	8	SCREW-POLE SHOE (3/8-24-THD)	
	18	1	3E-7855	1	ARMATURE AS-STARTER (24-VOLT)	
	19	1	7X-1952	1	HOUSING AS-LEVER	
	20	1	4M-1831	1	PLUG-LEVER HOUSING	
	21	1	7L-2894	1	GASKET	
	22	1	036-9823	5	BOLT (1/4-28X1-IN)	
	23	1	3E-7857	1	DRIVE AS-STARTING MOTOR	
	24	1	3E-7858	1	HOUSING AS	
	25	1	7X-3373	6	BOLT (5/16-18X0.88-IN)	
	26	1	206-8784	1	KIT-SOLENOID (STARTING MOTOR)	
					(INCLUDES SOLENOID AS, BOLT, AND NUTS)	
	27	1	6V-8378	2	NUT (10-32-THD)	
	28	1	8F-1434	1	LOCKWASHER	
	29	1	8T-0328	2	WASHER-HARD (5.5X10X1-MM THK)	
	30	1	9X-4824	1	COVER-STARTING MOTOR	
	31	1	9X-4825	1	KIT-BRUSH (STARTING MOTOR)	
					(INCLUDES O-RING, SCREWS, BRUSH, AND SPRING)	
					AVAILABLE REPAIR KIT(S):	
			3E-7860	1	KIT-BUSHING (STARTING MOTOR)	
					(INCLUDES BUSHINGS, PLUG, CUP, SEALS, NUT, O-RINGS, GASKET, SPACERS, WASHERS, AND SCREWS)	

111-4275 STARTING MOTOR GP-ELECTRIC

S/N: CRD1-UP
24 VOLT
PART OF 199-2857 INSTALLATION AR-ENGINE

SMCS-1453 102163007

NOTE	REF NO	GRAPHIC REF	PART NUMBER	QTY	PART NAME 1 2 3 4 5 6 (PRODUCT LEVEL)	SEE PAGE
	1	1	118-9573	3	BOLT-12 POINT HEAD (M10X1.5-THD)	
CYR	2	1	207-1517	1	STARTING MOTOR GP-ELECTRIC	265
	3	1	3K-3257	1	GASKET	
M	4	1	8T-4191	1	BOLT (M10X1.5X16-MM)	
	5	1	8Y-9603	1	CABLE AS-STARTING MOTOR	
		1	1S-7251	1	TERMINAL-RING	
		1	1S-7252	1	TERMINAL-RING	
E		1	5P-0747		CABLE (00-GA, BLACK) (28-CM)	
	6	1	8T-4121	4	WASHER-HARD (11X21X2.5-MM THK)	

C-CHANGE FROM PREVIOUS TYPE
E-ORDER BY THE CENTIMETER
M-METRIC PART
R-REMFG PART MAY BE AVAILABLE
Y-SEPARATE ILLUSTRATION

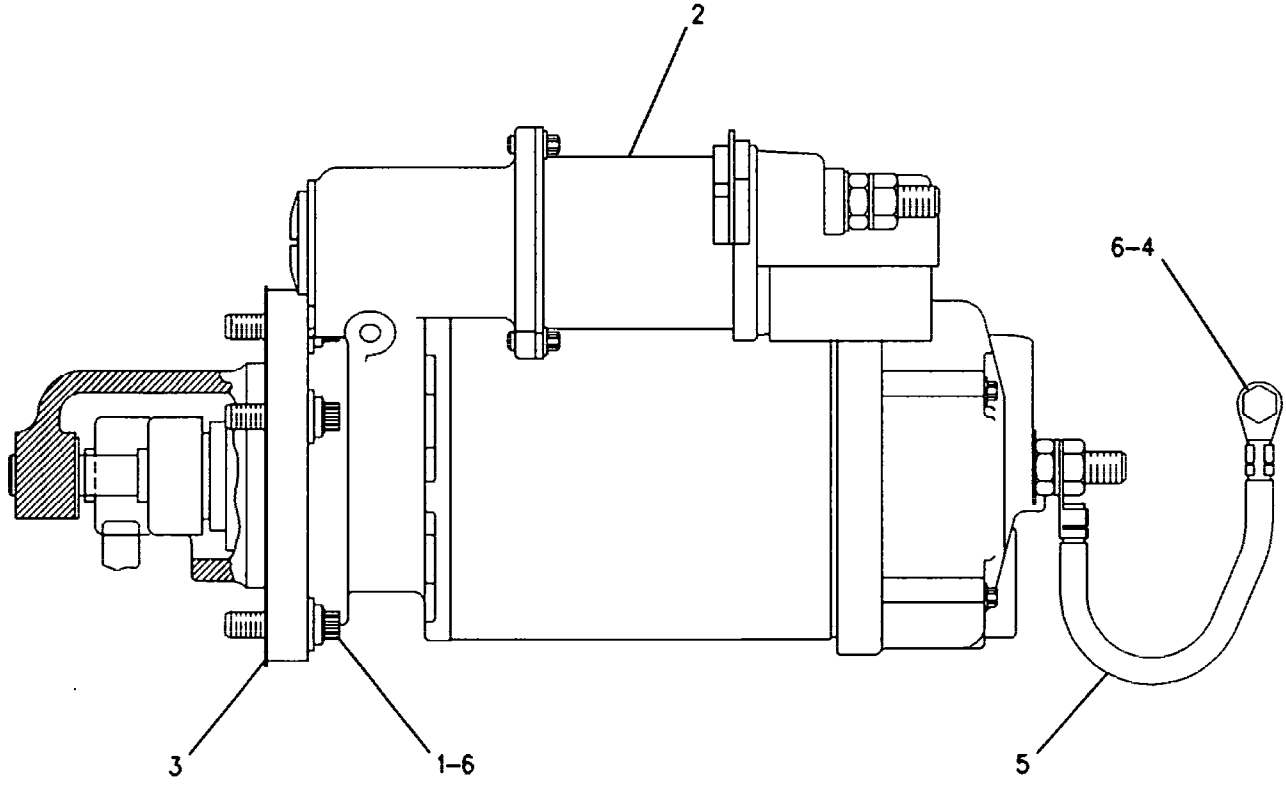

GRAPHIC #1 <END> g00613782

253-7358 STARTING AID GP-ETHER

S/N: CRD1-UP
AN ATTACHMENT

SMCS-1456 i02272755

NOTE	REF NO	GRAPHIC REF	PART NUMBER	QTY	PART NAME 1 2 3 4 5 6 (PRODUCT LEVEL)	SEE PAGE
	1	1	3Y-2888	1	CONNECTOR	
	2	1	5P-6313	1	NUT-FLARELESS (5/16-24-THD)	
	3	1	5P-6314	1	SLEEVE	
	4	1	7N-2059	1	CLAMP AS	
Y	5	1	239-1134	1	VALVE GP-ETHER STARTING (24-VOLT)	280
	6	1	241-4194	1	FITTING	
	7	1	258-0733	1	ATOMIZER AS	
Y	8	1	*259-7165*	1	WIRING GP-STARTING AID (ETHER)	368
	9	1	130-5300	1	CLIP	
	10	1	1V-3113	1	CLIP	
	11	1	3J-1907	1	SEAL-O-RING	
	12	1	6V-2686	3	CLIP	
	13	1	8T-4121	1	WASHER-HARD (11X21X2.5-MM THK)	
M	14	1	8T-4137	1	BOLT (M10X1.5X20-MM)	
M	15	1	8T-4189	4	BOLT (M8X1.25X20-MM)	
	16	1	8T-4224	4	WASHER-HARD (8.8X16X2-MM THK)	
E	17	1	174-9169	1	TUBE (150-CM)	

E-ORDER BY THE CENTIMETER
M-METRIC PART
Y-SEPARATE ILLUSTRATION

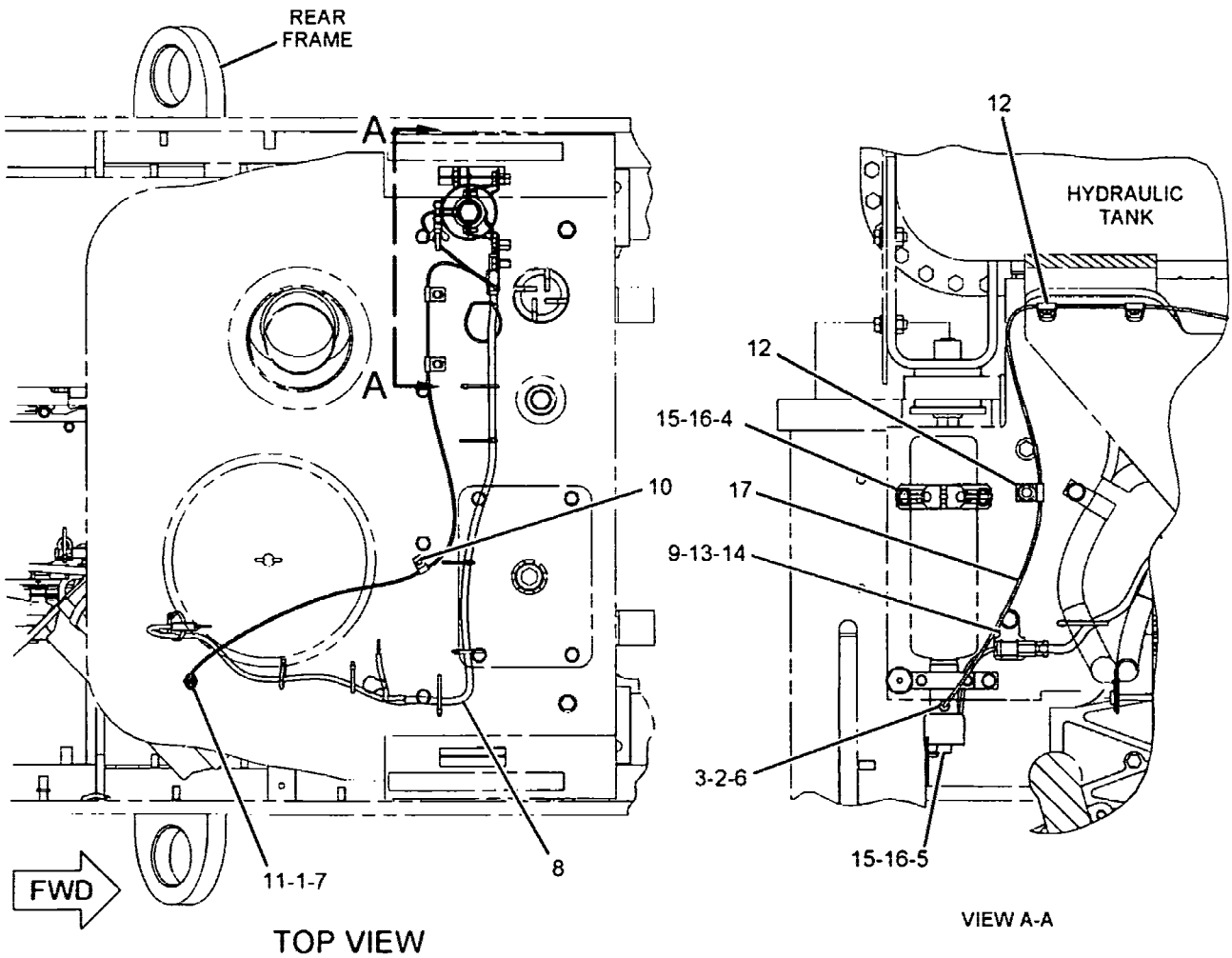

GRAPHIC #1 <END> g01138573

235-9679 STARTING AID GP

S/N: 5GG2637-UP
24-VOLT. FRONT
PART OF 198-5914 ENGINE AR-COMPLETE

SMCS-1090 i01944894

NOTE	REF NO	GRAPHIC REF	PART NUMBER	QTY	PART NAME 1 2 3 4 5 6 (PRODUCT LEVEL)	SEE PAGE
	1	1	3S-2093	2	STRAP-CABLE	
	2	1	7S-6369	1	WASHER (0.344X0.75X0.188-IN THK)	
	3	1	229-8851	1	CABLE AS	
	3A	1	030-1712	1	TERMINAL-RING (2-AWG, 6.35-MM)	
	3B	1	135-2543	1	BOOT	
Y	5	1	223-7577	1	SWITCH GP-MAGNETIC (INLET AIR HEATER)	273
	6	1	4P-8134	1	CLIP	
M	7	1	6V-2317	5	BOLT (M8X1.25X30-MM)	
M	8	1	6V-5218	3	BOLT (M8X1.25X35-MM)	
	9	1	9M-1974	8	WASHER-HARD (8.8X16X2-MM THK)	

M-METRIC PART
Y-SEPARATE ILLUSTRATION

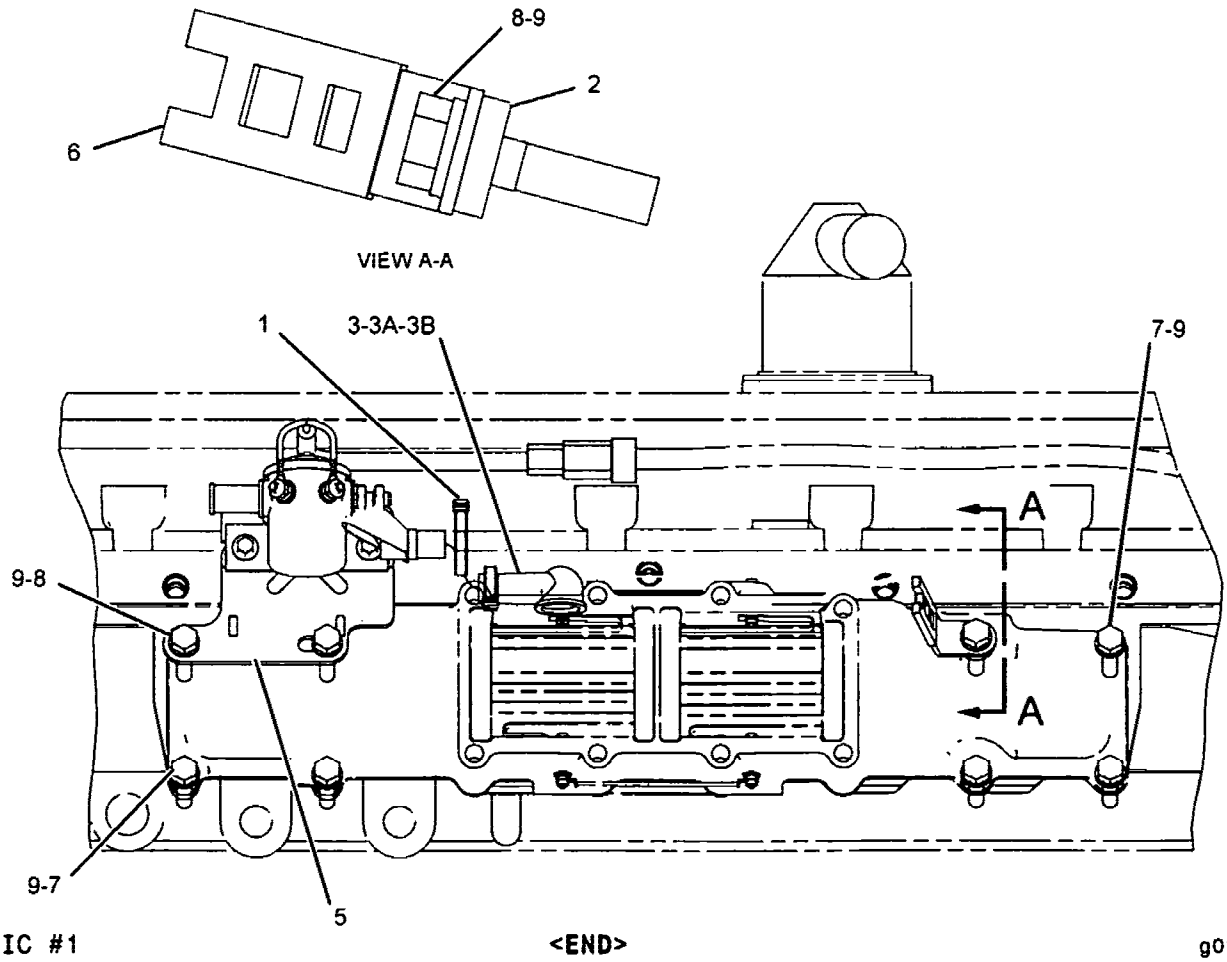

GRAPHIC #1 <END> g01028998

191-6113 STARTING AID GP

S/N: 5GG1-2636
24 VOLT FRONT
PART OF 198-5914 ENGINE AR-COMPLETE

SMCS-1090 i01961815

NOTE	REF NO	GRAPHIC REF	PART NUMBER	QTY	PART NAME 1 2 3 4 5 6 (PRODUCT LEVEL)	SEE PAGE
	1	1	3S-2093	2	STRAP-CABLE	
	2	1	7S-6369	1	WASHER (0.344X0.75X0.188-IN THK)	
	3	1	135-2543	2	BOOT	
	4	1	145-4926	1	BRACKET AS	
M		1	6V-9632	2	NUT-WELD (M6X1 THD)	
	5	1	179-9355	1	WIRE AS	
Y	6	1	3E-0075	1	SWITCH GP-MAGNETIC (STARTING HEATER RELAY)	268
	7	1	4P-8134	1	CLIP	
M	8	1	6V-2317	5	BOLT (M8X1.25X30-MM)	
M	9	1	6V-5218	3	BOLT (M8X1.25X35-MM)	
M	10	1	8T-4970	2	BOLT (M6X1X14-MM)	
	11	1	9M-1974	8	WASHER-HARD (8.8X16X2-MM THK)	
	12	1	9X-8256	2	WASHER (6.6X12X2-MM THK)	

M-METRIC PART
Y-SEPARATE ILLUSTRATION

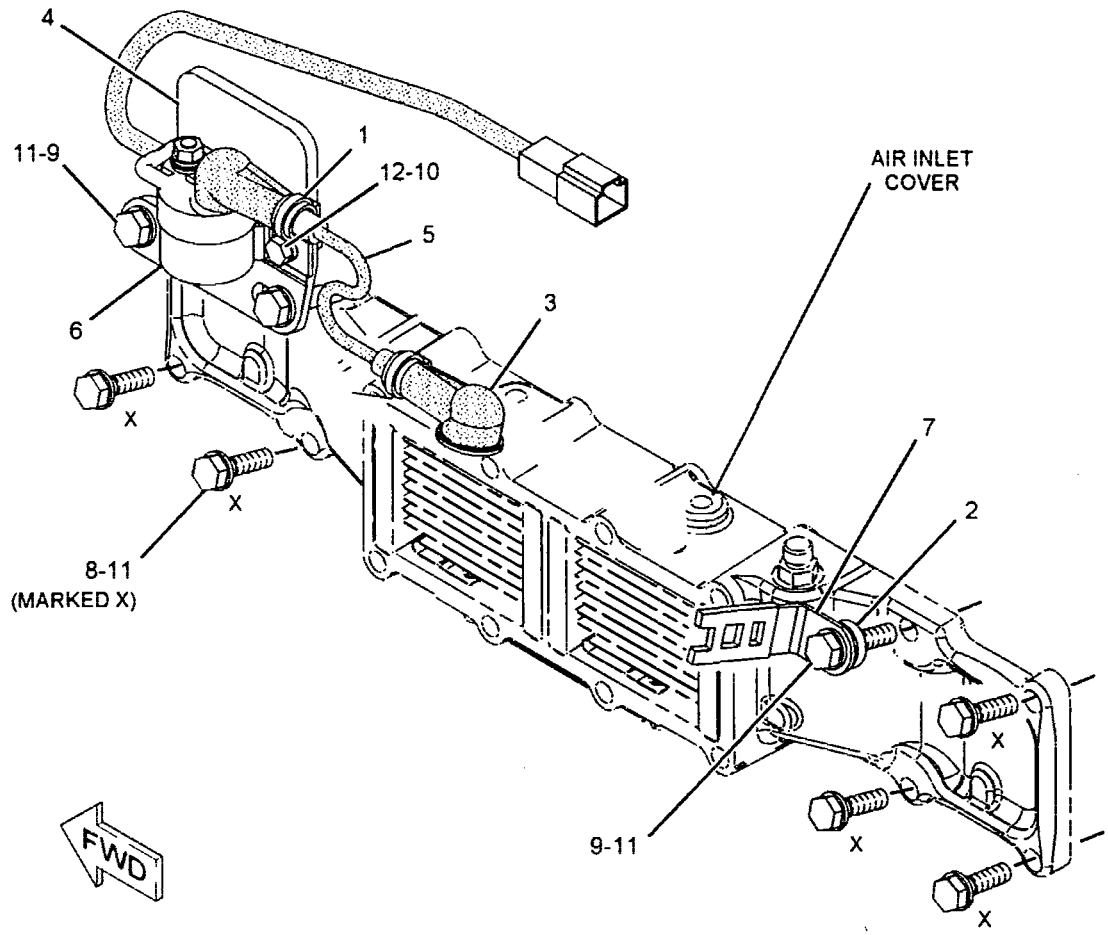

GRAPHIC #1 <END> g01020227

207-5262 SERVICE GP-MACHINE-SECURITY

S/N: CRD1-UP

PART OF 213-1198 ELECTRONICS GP-MACHINE, 228-1845 INSTALLATION AR-SECURITY, 235-8632 WIRING GP-MACHINE

AN ATTACHMENT

SMCS-7610, 7631 i02331279

NOTE	REF NO	GRAPHIC REF	PART NUMBER	QTY	PART NAME 1 2 3 4 5 6 (PRODUCT LEVEL)	SEE PAGE
	1	1	*156-6155*	1	CONTROL GP-UNPROGRAMMED (SECURITY)	
	1A	1	**7X-6315**	1	STRAP AS-GROUND	
	1B	1	**184-2472**	1	SCREW-PAN HEAD (NO 8-32X9.52-MM)	
	1C	1	**134-4126**	1	WASHER (4.52X8.28X0.76-MM THK)	
	2	1	**243-6464**	1	SOFTWARE GP-MACHINE	
	3	1	**206-5162**	2	KEY AS-ELECTRONIC (SECURITY)	
					-OR-	
		1	**206-5165**	2	KEY AS-ELECTRONIC (SECURITY)	
	4	1	**219-6314**	2	KEY RING (IDENTIFICATION)	

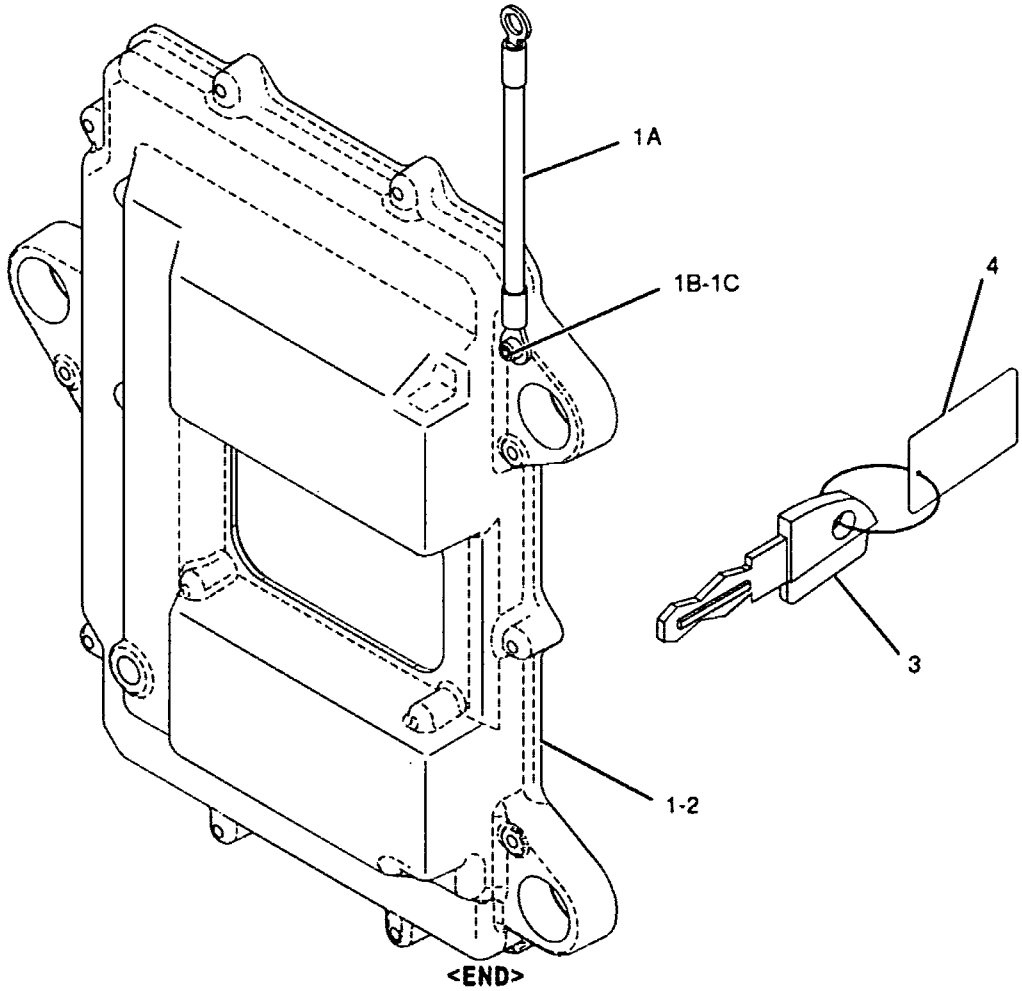

GRAPHIC #1

<END>

g01026135

204-0320 SENSOR GP-TEMPERATURE

S/N: 5GG1-UP

PART OF 201-6851 SENSOR GP-ENGINE

SMCS-1408, 1906, 1921, 1922, 301T, 429T, 509T i02226555

NOTE	REF NO	GRAPHIC REF	PART NUMBER	QTY	PART NAME 1 2 3 4 5 6 (PRODUCT LEVEL)	SEE PAGE
Y	1	1	191-6587	1	SENSOR GP-TEMPERATURE (ENGINE OIL)	256
	2	1	214-7568	1	SEAL-O-RING	

Y-SEPARATE ILLUSTRATION

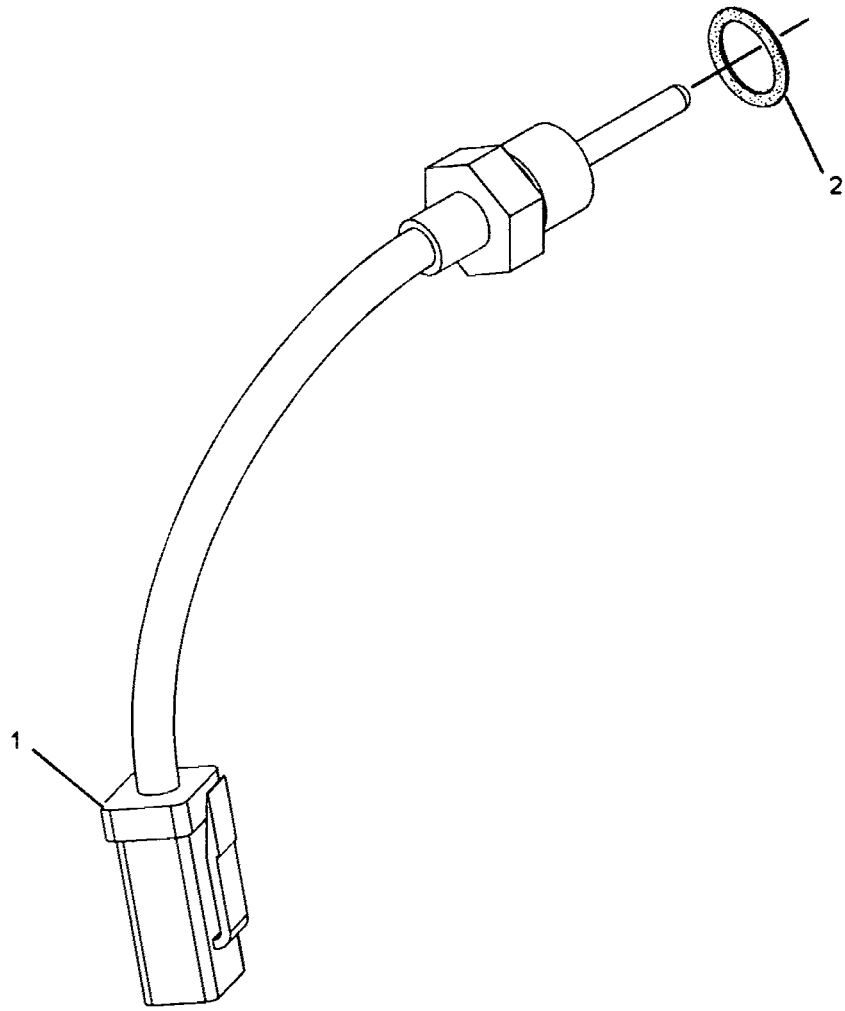

GRAPHIC #1 <END> g01057529

ELECTRICAL AND STARTING SYSTEM

197-8392 SENSOR GP-TEMPERATURE

S/N: 5GG1-UP

PART OF 201-6851 SENSOR GP-ENGINE

SMCS-1408, 1906, 1921, 1922, 301T, 429T, 509T **i02330227**

NOTE	REF NO	GRAPHIC REF	PART NUMBER	QTY	PART NAME 1 2 3 4 5 6 (PRODUCT LEVEL)	SEE PAGE
	1	1	**130-9811**	1	SENSOR GP-TEMPERATURE (WATER, COOLANT)	
	2	1	**6V-6609**	1	SEAL-O-RING	

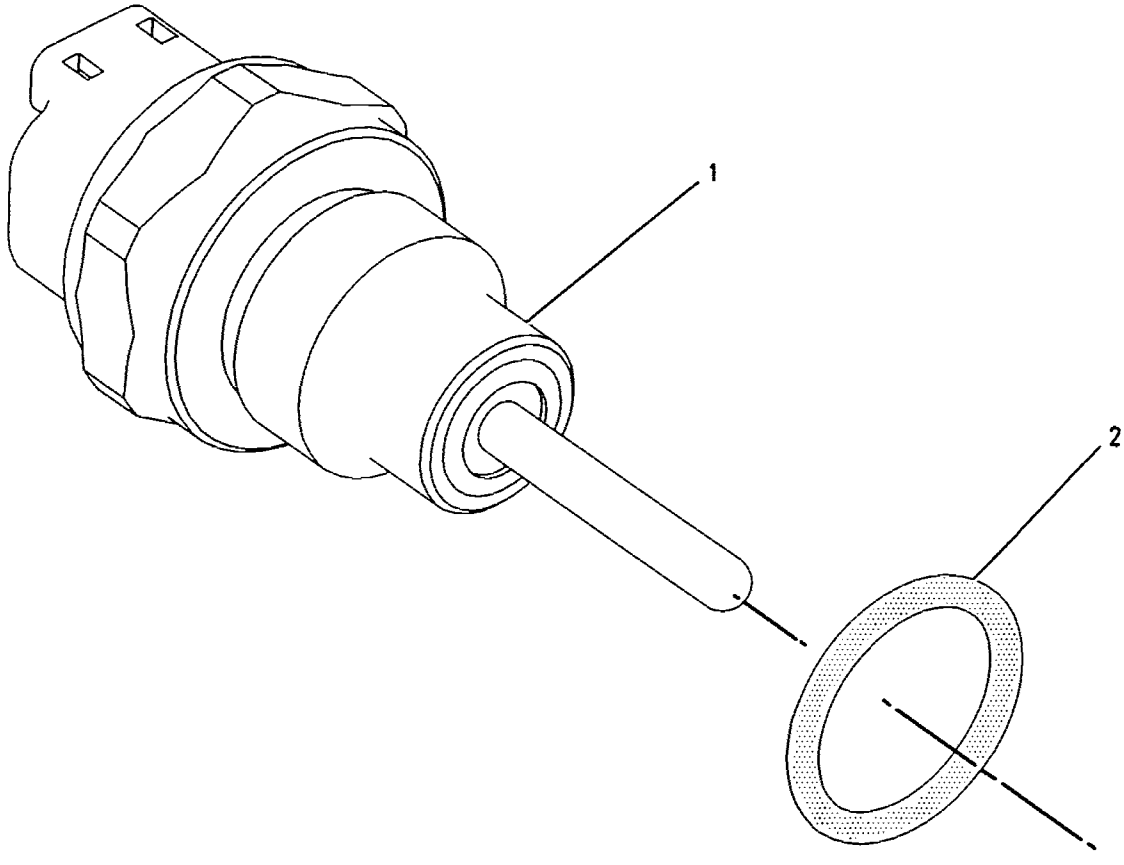

GRAPHIC #1 **<END>** g00856005

197-8391 SENSOR GP-TEMPERATURE

S/N: 5GG1-UP

PART OF 201-6851 SENSOR GP-ENGINE

SMCS-1408, 1906, 1921, 1922, 301T, 429T, 509T i02330228

NOTE	REF NO	GRAPHIC REF	PART NUMBER	QTY	PART NAME 1 2 3 4 5 6 (PRODUCT LEVEL)	SEE PAGE
	1	1	130-9811	1	SENSOR GP-TEMPERATURE (AIR INLET MANIFOLD)	
	2	1	8L-2786	1	SEAL-O-RING	

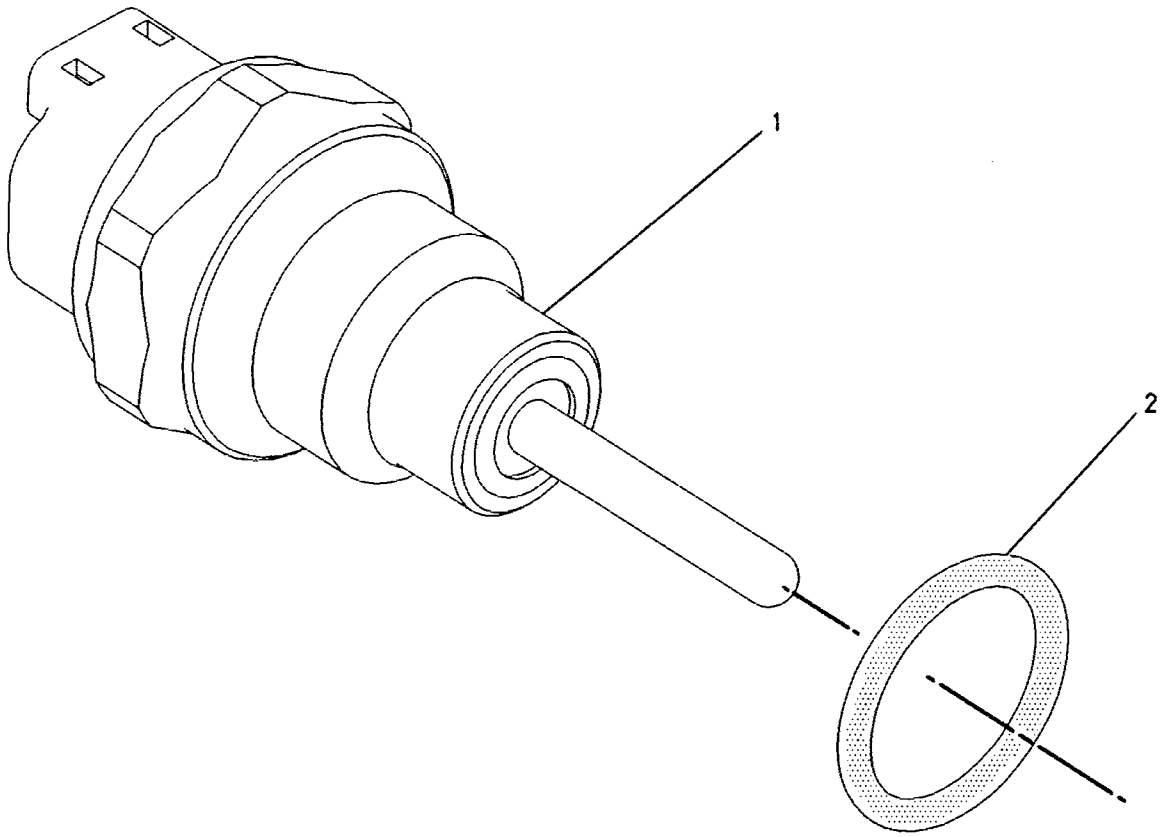

GRAPHIC #1 <END> g00856011

191-6587 SENSOR GP-TEMPERATURE–ENGINE OIL

S/N: 5GG1-UP

PART OF 204-0320 SENSOR GP-TEMPERATURE

SMCS-1408, 1906, 1921, 1922, 301T, 429T, 509T i02243713

NOTE	REF NO	GRAPHIC REF	PART NUMBER	QTY	PART NAME 1 2 3 4 5 6 (PRODUCT LEVEL)	SEE PAGE
D	1	1	153-5043		SLEEVE (0.13-M)	
	2	1	155-2270	1	KIT-CONNECTING PLUG (2-PIN)	
					(INCLUDES PLUG AS AND WEDGE)	
	3	1	194-5226	2	WIRE AS-HARNESS (16-GA TO 18-GA)	
					–OR–	
		1	194-5227	2	WIRE AS-SENSOR (14-GA WIRE) (ENGINE OIL TEMPERATURE)	
	4	1	155-2261	1	WEDGE-PLUG LOCK (2-PIN)	

D-ORDER BY THE METER

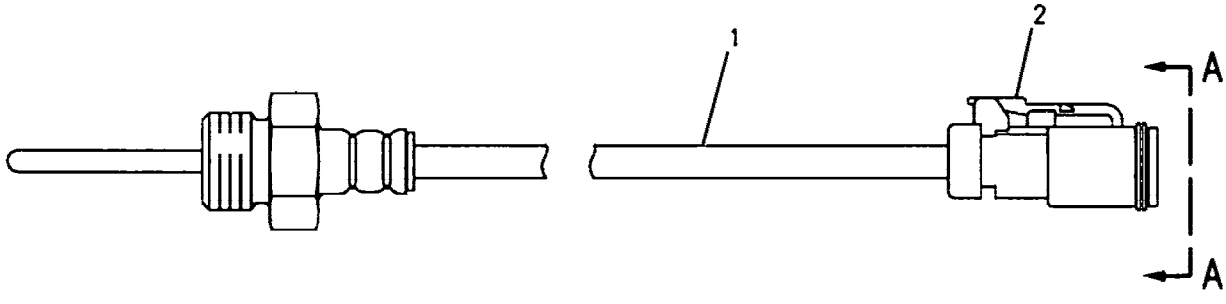

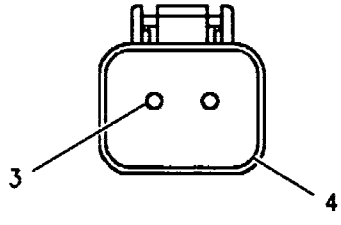

VIEW A-A

GRAPHIC #1 <END> g00865978

131-0427 SENSOR GP-TEMPERATURE–TORQUE CONVERTER OIL

S/N: CRD1-UP
8-VOLT. PULSE WIDTH MODULATION
PART OF 201-8413, 217-3062 WIRING GP-ENGINE
ALSO AN ATTACHMENT

SMCS-1408, 1906, 1921, 1922, 301T, 429T, 509T i02279273

NOTE	REF NO	GRAPHIC REF	PART NUMBER	QTY	PART NAME 1 2 3 4 5 6 (PRODUCT LEVEL)	SEE PAGE
E	1	1	112-4550		SLEEVE (33-CM)	
	2	1	186-3735	3	PIN-CONNECTOR (16-GA TO 18-GA)	
	3	1	8T-8732	1	RECEPTACLE (3-PIN)	

E-ORDER BY THE CENTIMETER

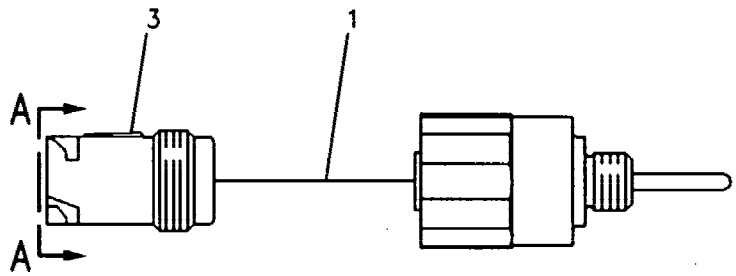

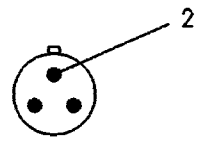

VIEW A-A

GRAPHIC #1 <END> g00084552

118-7226 SENSOR GP-TEMPERATURE–TRANSMISSION OIL

S/N: WNF1-UP

8-VOLT. PULSE WIDTH MODULATION

PART OF 200-2049 VALVE GP-TRANSMISSION CONTROL

SMCS-1408, 1906, 1921, 1922, 301T, 429T, 509T i02128103

NOTE	REF NO	GRAPHIC REF	PART NUMBER	QTY	PART NAME 1 2 3 4 5 6 (PRODUCT LEVEL)	SEE PAGE
E	1	1	9X-1813		SLEEVE (33-CM)	
	2	1	102-8803	1	KIT-RECEPTACLE (3-PIN)	
					(INCLUDES RECEPTACLE AS & WEDGE)	
	3	1	186-3735	3	PIN-CONNECTOR (16-GA TO 18-GA)	
	4	1	3E-3371	1	WEDGE-RECEPTACLE LOCK (3-PIN)	

E-ORDER BY THE CENTIMETER

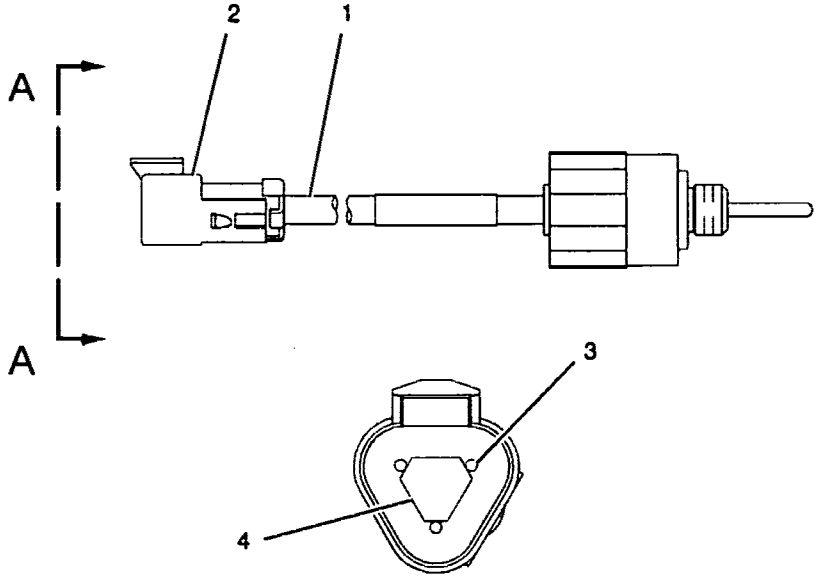

VIEW A-A

GRAPHIC #1 <END> g01023677

102-2240 SENSOR GP-TEMPERATURE

S/N: CRD1-UP

PART OF 201-8413, 217-3062 WIRING GP-ENGINE

ALSO AN ATTACHMENT

SMCS-1408, 1906, 1921, 1922, 301T, 429T, 509T i01966291

NOTE	REF NO	GRAPHIC REF	PART NUMBER	QTY	PART NAME 1 2 3 4 5 6 (PRODUCT LEVEL)	SEE PAGE
BE	2	1	9X-1813		SLEEVE	
	3	1	102-8803	1	KIT-RECEPTACLE (3-PIN)	
					(KIT INCLUDES RECEPTACLE AS AND WEDGE)	
	4	1	186-3735	3	PIN-CONNECTOR (16-GA TO 18-GA)	
	5	1	3E-3371	1	WEDGE-RECEPTACLE LOCK (3-PIN)	

B-USE AS REQUIRED
E-ORDER BY THE CENTIMETER

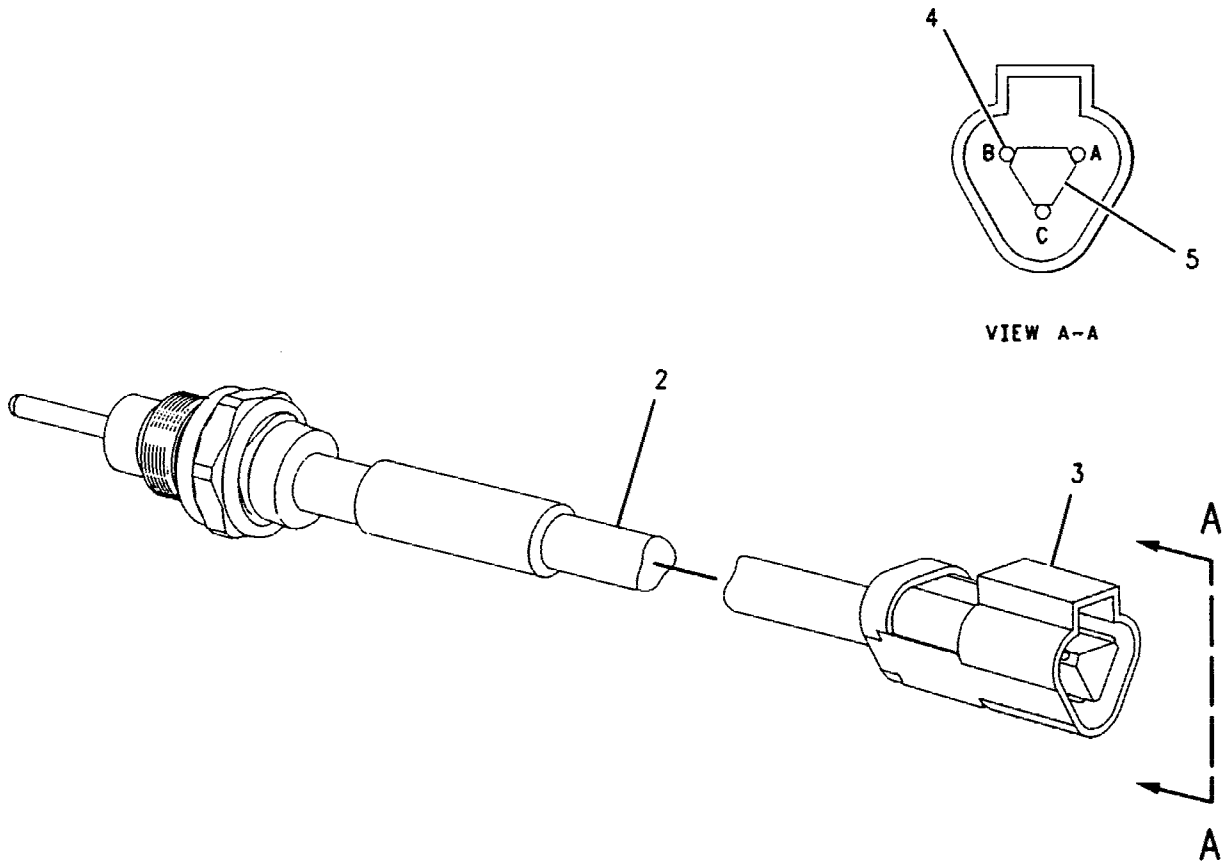

GRAPHIC #1 <END> g00790343

ELECTRICAL AND STARTING SYSTEM

236-6221 SENSOR GP-SPEED

S/N: 5GG1-UP

PART OF 201-6851 SENSOR GP-ENGINE

SMCS-1907, 1912, 3175, 4803, 7493 **102240026**

NOTE	REF NO	GRAPHIC REF	PART NUMBER	QTY	PART NAME 1 2 3 4 5 6 (PRODUCT LEVEL)	SEE PAGE
	1	1	**203-3940**	2	SEAL-O-RING	
	2	1	**245-4630**	1	SENSOR GP-SPEED (ENGINE TIMING)	

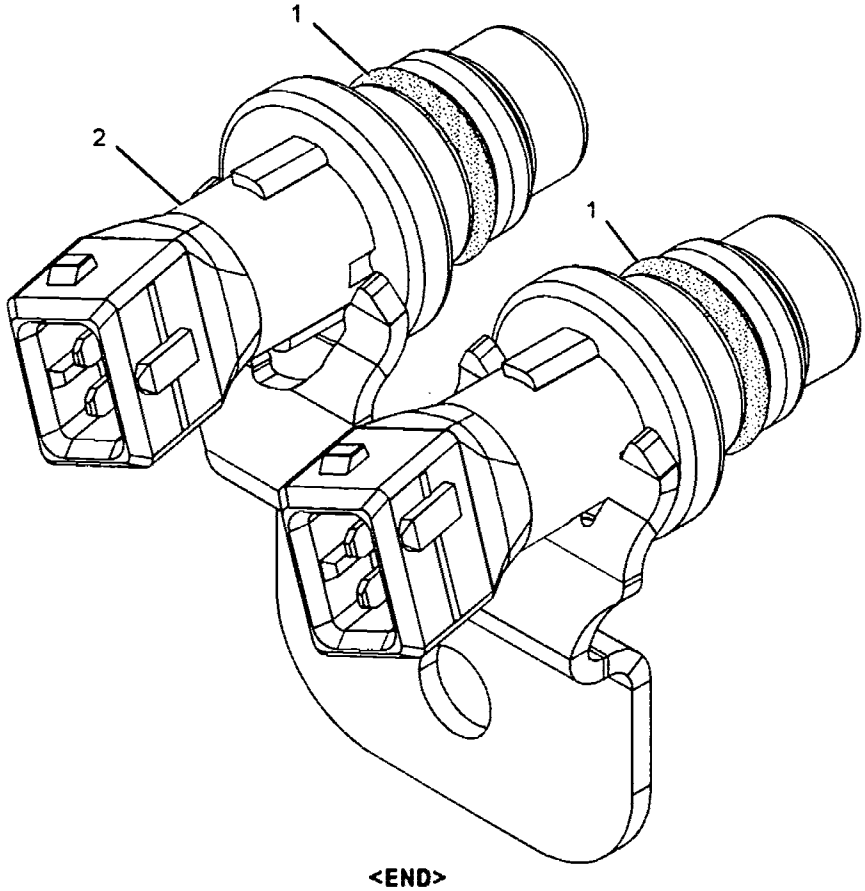

GRAPHIC #1 **<END>** g01013894

183-8597 SENSOR GP-SPEED–TMSN INTERMEDIATE OUTPUT

S/N: WNF1-UP

PART OF 200-2048 VALVE GP-TRANSMISSION CONTROL

SMCS-1907, 1912, 3175, 4803, 7493 i02119253

NOTE	REF NO	GRAPHIC REF	PART NUMBER	QTY	PART NAME 1 2 3 4 5 6 (PRODUCT LEVEL)	SEE PAGE
	1	1	171-5349	1	MARKER	
	2	1	102-8802	1	KIT-RECEPTACLE (2-PIN)	
					(INCLUDES RECEPTACLE AS & WEDGE)	
	3	1	186-3735	2	PIN-CONNECTOR (16-GA TO 18-GA)	
	4	1	3E-3365	1	WEDGE-RECEPTACLE LOCK (2-PIN)	
BE	5	1	9X-1813		SLEEVE	

B-USE AS REQUIRED
E-ORDER BY THE CENTIMETER

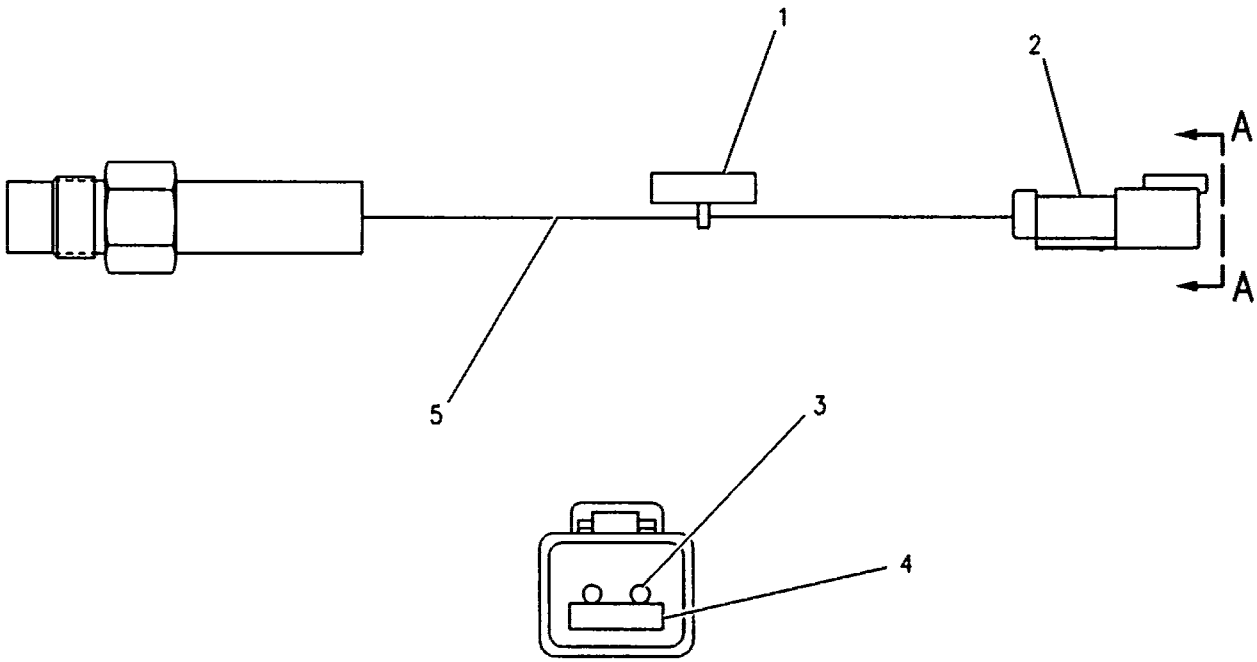

VIEW A-A

GRAPHIC #1 <END> g00680294

109-7330 SENSOR GP-SPEED-WHEEL

S/N: CRD1-UP

PART OF 201-8422 WIRING GP-TRACTION CONTROL

AN ATTACHMENT

SMCS-1907, 1912, 3175, 4803, 7493 i01793011

NOTE	REF NO	GRAPHIC REF	PART NUMBER	QTY	PART NAME 1 2 3 4 5 6 (PRODUCT LEVEL)	SEE PAGE
Z	1	1		1	SENSOR AS-SPEED	
E	2	1	9X-1813		SLEEVE (26CM)	
	3	1	102-8803	1	KIT-RECEPTACLE (3-PIN)	
	4	1	186-3735	3	PIN-CONNECTOR (16-GA TO 18-GA)	
	5	1	3E-3371	1	WEDGE-RECEPTACLE LOCK (3-PIN)	

E-ORDER BY THE CENTIMETER
Z-NOT SERVICED SEPARATELY

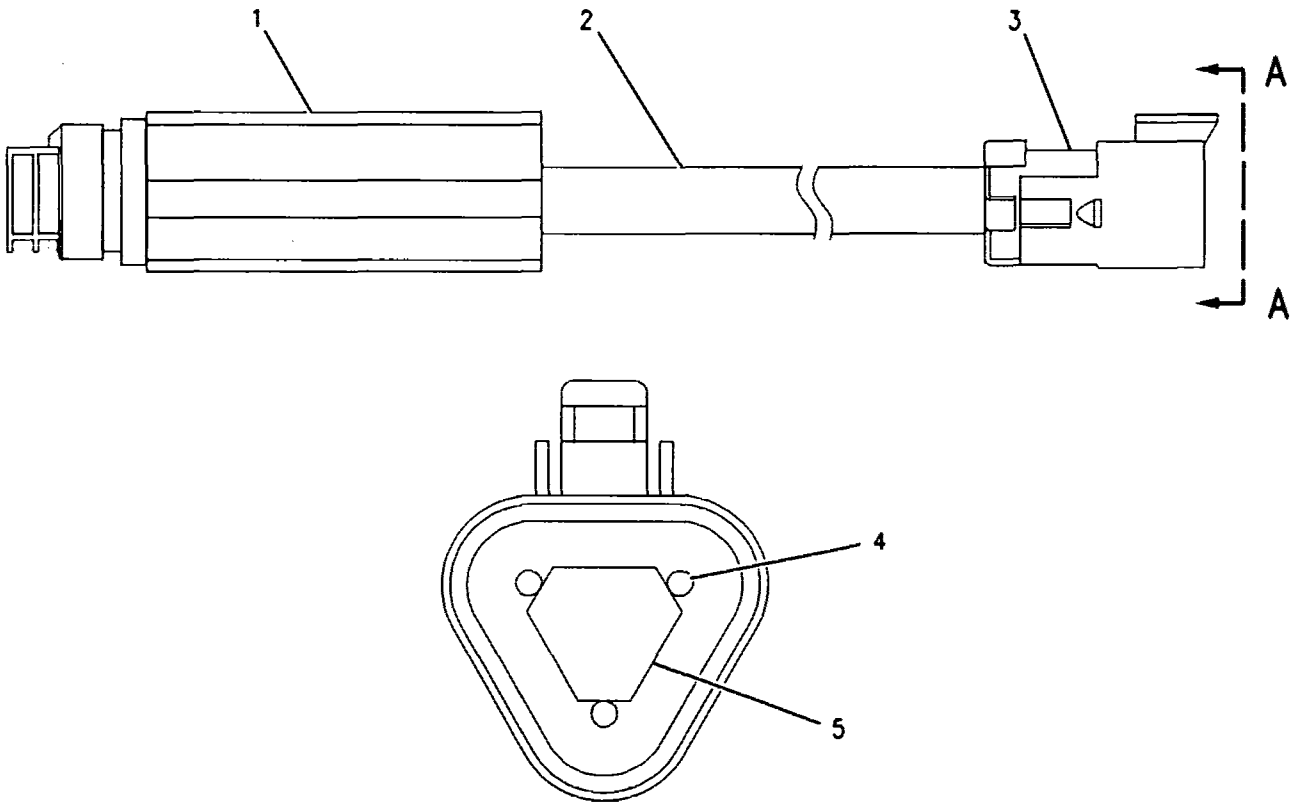

VIEW A-A

GRAPHIC #1 <END> g00917078

247-0302 SENSOR GP-PRESSURE

S/N: 5GG1-UP

PART OF 201-6851 SENSOR GP-ENGINE

SMCS-1408, 1925, 7494 i02174581

NOTE	REF NO	GRAPHIC REF	PART NUMBER	QTY	PART NAME 1 2 3 4 5 6 (PRODUCT LEVEL)	SEE PAGE
Y	1	1	194-6723	1	SENSOR GP-PRESSURE	243
	2	1	6V-5048	1	SEAL-O-RING	

Y-SEPARATE ILLUSTRATION

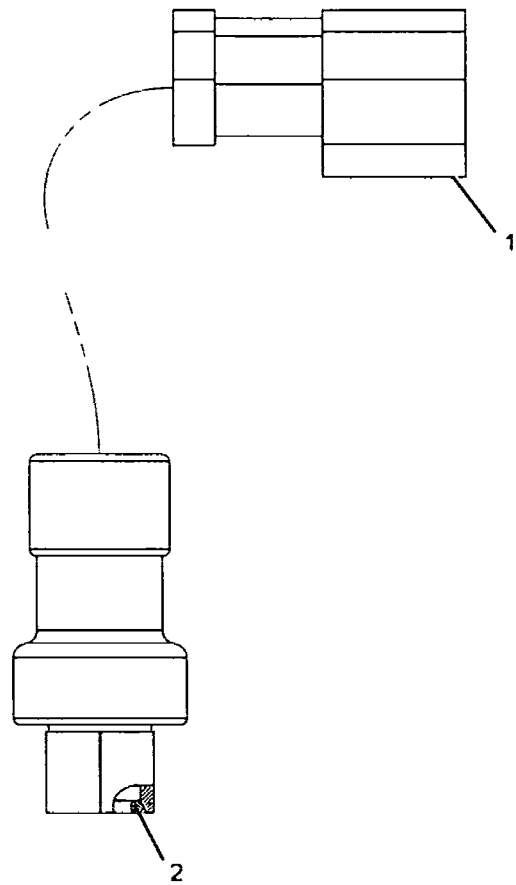

GRAPHIC #1 <END> g01065845

239-2396 SENSOR GP-PRESSURE

S/N: 5GG1-UP

PART OF 201-6851 SENSOR GP-ENGINE

SMCS-1408, 1925, 7494 i02334719

NOTE	REF NO	GRAPHIC REF	PART NUMBER	QTY	PART NAME 1 2 3 4 5 6 (PRODUCT LEVEL)	SEE PAGE
Y	1	1	194-6725	1	SENSOR GP-PRESSURE (FUEL)	244
	2	1	6V-5048	1	SEAL-O-RING	

Y-SEPARATE ILLUSTRATION

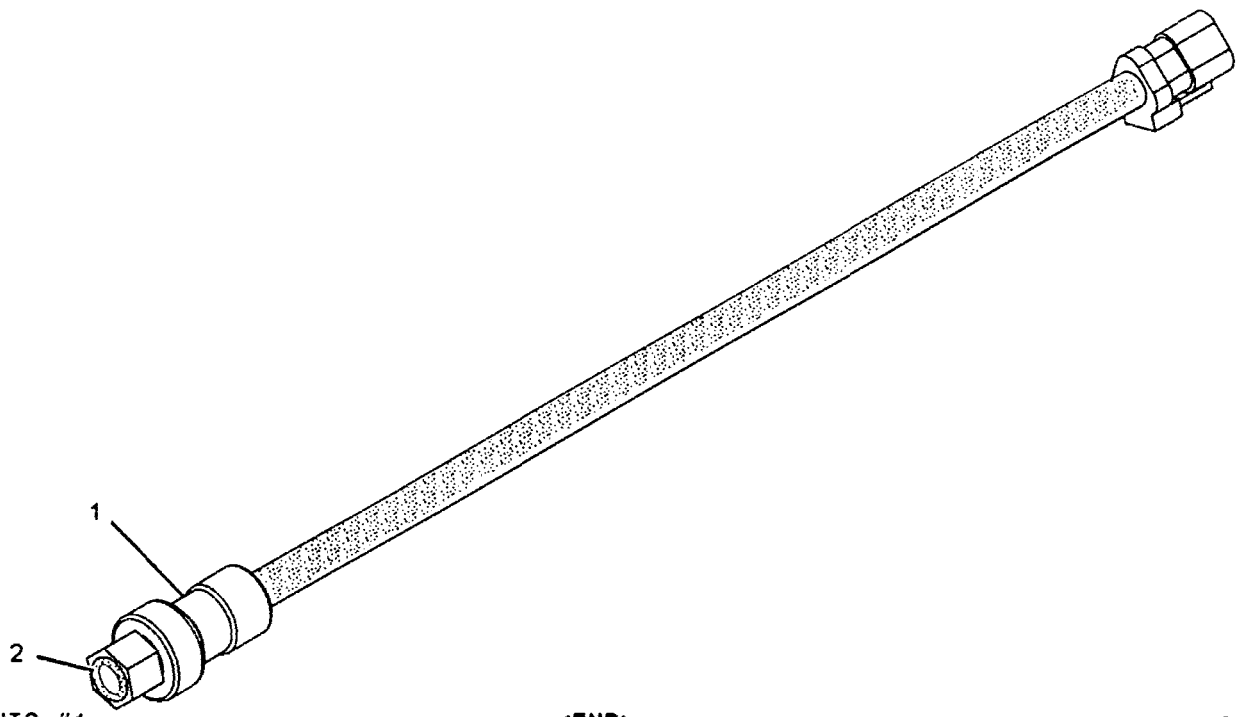

GRAPHIC #1

<END>

g01019323

239-2395 SENSOR GP-PRESSURE–ATMOSPHERIC AIR

S/N: 5GG1-UP

PART OF 201-6851 SENSOR GP-ENGINE

SMCS-1408, 1925, 7494 i02320275

NOTE	REF NO	GRAPHIC REF	PART NUMBER	QTY	PART NAME 1 2 3 4 5 6 (PRODUCT LEVEL)	SEE PAGE
Y	1	1	194-6722	1	SENSOR GP-PRESSURE (ATMOSPHERIC)	242
	2	1	6V-5049	1	SEAL-O-RING	

Y-SEPARATE ILLUSTRATION

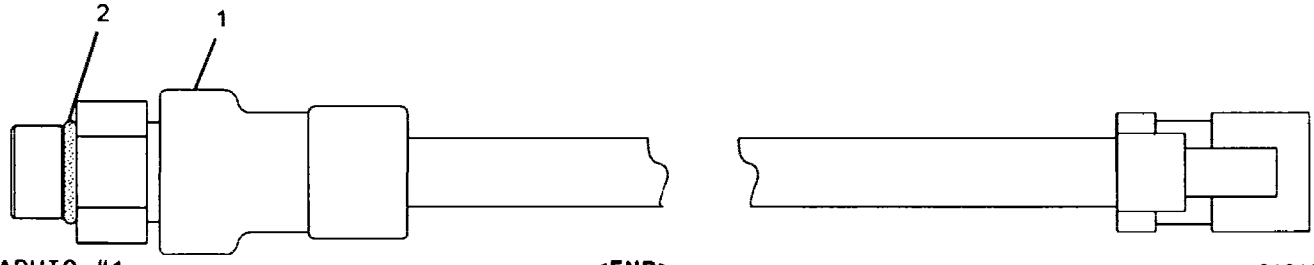

GRAPHIC #1 <END> g01019702

236-6220 SENSOR GP-PRESSURE

S/N: 5GG1-UP

PART OF 201-6851 SENSOR GP-ENGINE

SMCS-1408, 1925, 7494 i02330215

NOTE	REF NO	GRAPHIC REF	PART NUMBER	QTY	PART NAME 1 2 3 4 5 6 (PRODUCT LEVEL)	SEE PAGE
	1	1	**214-7567**	1	SEAL-O-RING	
Y	2	1	**224-4536**	1	SENSOR GP-PRESSURE (INJECTION ACTUATION)	245

Y-SEPARATE ILLUSTRATION

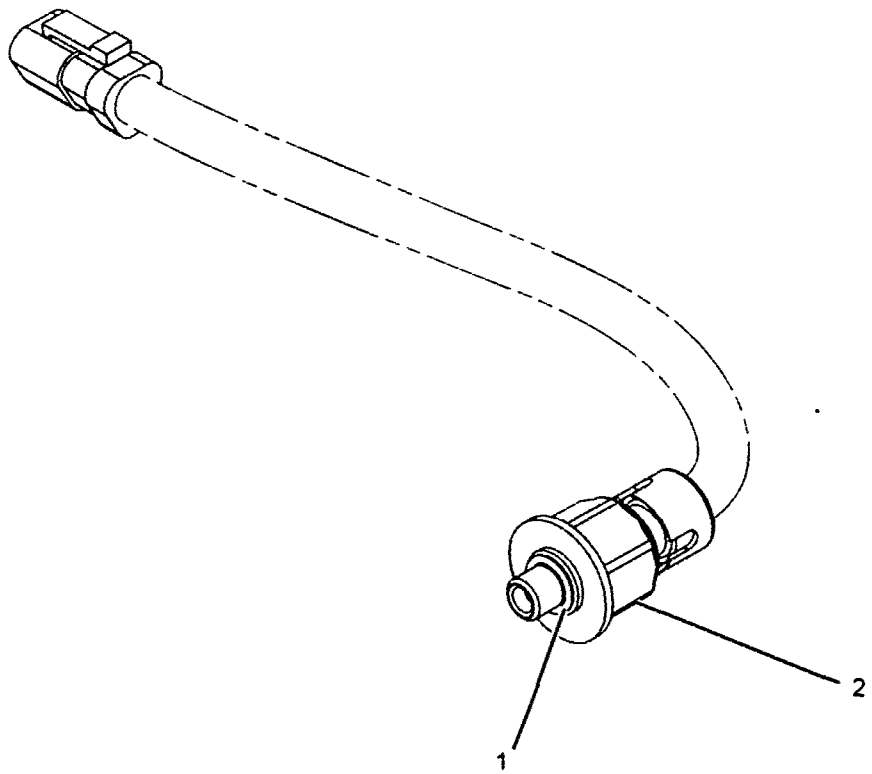

GRAPHIC #1 **<END>** g01054528

224-4536 SENSOR GP-PRESSURE–INJECTION ACTUATION

S/N: 5GG1-UP

PART OF 236-6220 SENSOR GP-PRESSURE

SMCS-1408, 1925, 7494 i02294161

NOTE	REF NO	GRAPHIC REF	PART NUMBER	QTY	PART NAME 1 2 3 4 5 6 (PRODUCT LEVEL)	SEE PAGE
E	1	1	9X-1813		SLEEVE (35-CM)	
	2	1	155-2260	1	KIT-CONNECTING PLUG (3-PIN)	
					(INCLUDES PLUG AS, WEDGES & INTERFACE SEAL)	
	3	1	194-5226	3	WIRE AS-HARNESS (16-GA TO 18-GA)	
					–OR–	
		1	194-5227	3	WIRE AS-SENSOR (14-GA WIRE)	
	4	1	155-2276	1	WEDGE-PLUG LOCK (3-PIN)	

E-ORDER BY THE CENTIMETER

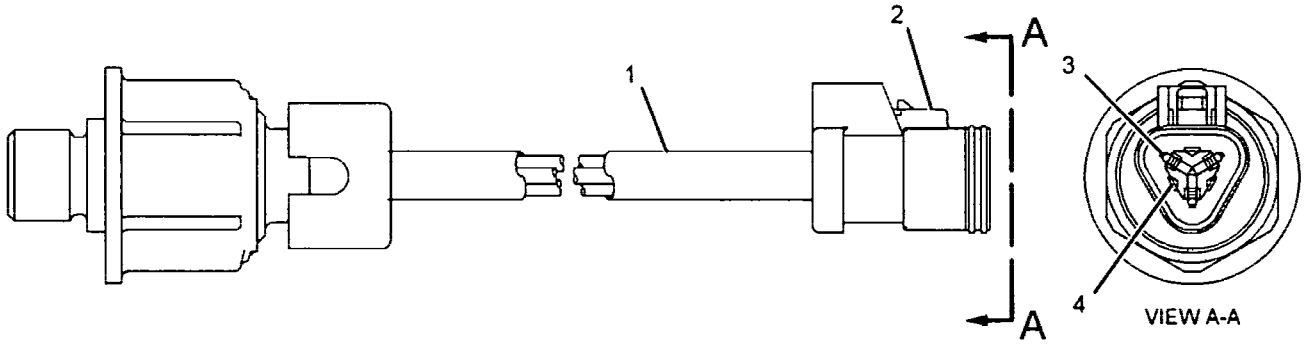

GRAPHIC #1 <END> g01040301

194-6725 SENSOR GP-PRESSURE

S/N: 5GG1-UP

PART OF 239-2396 SENSOR GP-PRESSURE

SMCS-1408, 1925, 7494 i02276739

NOTE	REF NO	GRAPHIC REF	PART NUMBER	QTY	PART NAME 1 2 3 4 5 6 (PRODUCT LEVEL)	SEE PAGE
E	1	1	9X-1813		SLEEVE (34-CM)	
	2	1	155-2260	1	KIT-CONNECTING PLUG (3-PIN)	
					(INCLUDES PLUG AS AND WEDGE)	
	3	1	194-5226	3	WIRE AS-HARNESS (16-GA TO 18-GA)	
	4	1	3E-3368	1	WEDGE-PLUG LOCK (3-PIN)	

E-ORDER BY THE CENTIMETER

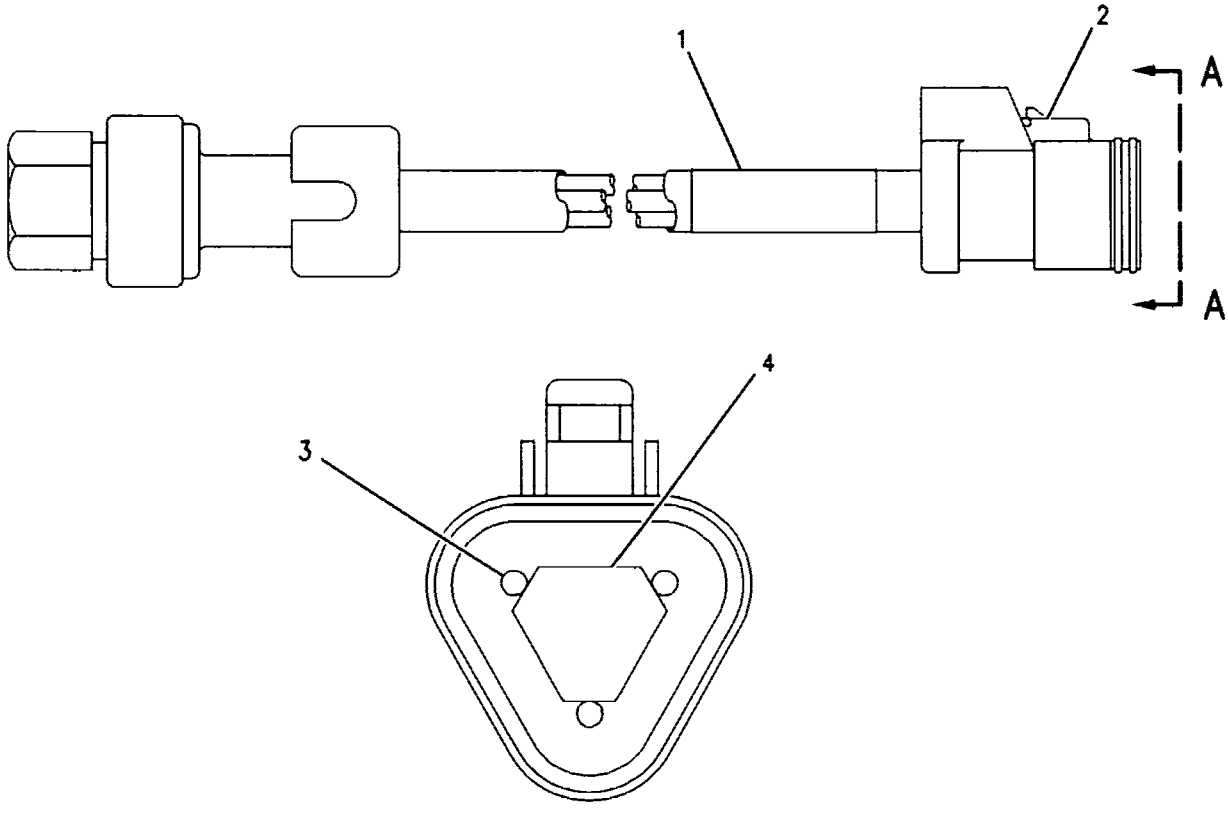

VIEW A-A

GRAPHIC #1 <END> g00851220

194-6723 SENSOR GP-PRESSURE–TURBOCHARGER OUTLET

S/N: 5GG1-UP

PART OF 247-0302 SENSOR GP-PRESSURE

SMCS-1408, 1925, 7494 i02173555

NOTE	REF NO	GRAPHIC REF	PART NUMBER	QTY	PART NAME 1 2 3 4 5 6 (PRODUCT LEVEL)	SEE PAGE
E	1	1	9X-1813		SLEEVE (34-CM)	
	2	1	102-8803	1	KIT-RECEPTACLE (3-PIN)	
					(INCLUDES RECEPTACLE AS AND WEDGE)	
	3	1	180-9339	3	PIN-CONNECTOR (FOR 14 GAUGE WIRE)	
	4	1	3E-3371	1	WEDGE-RECEPTACLE LOCK (3-PIN)	

E-ORDER BY THE CENTIMETER

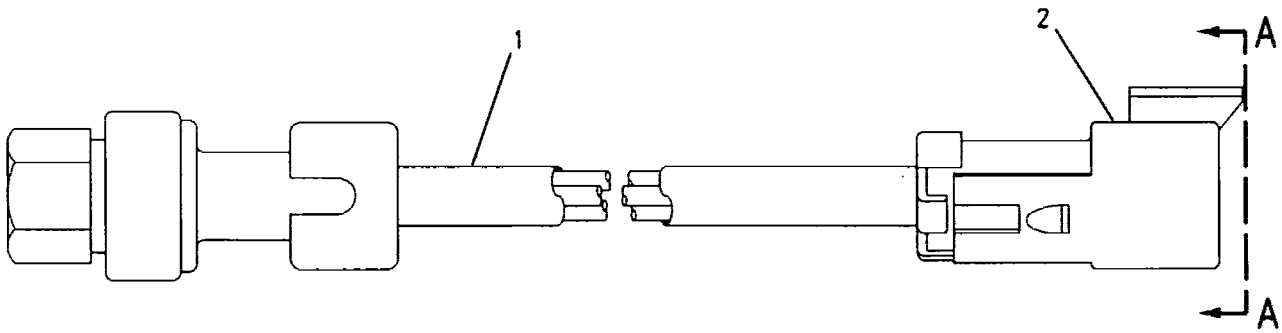

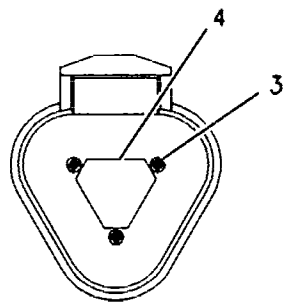

VIEW A-A

GRAPHIC #1 <END> g00865974

194-6722 SENSOR GP-PRESSURE–ATMOSPHERIC AIR

S/N: 5GG1-UP

PART OF 239-2395 SENSOR GP-PRESSURE

SMCS-1408, 1925, 7494 102230727

NOTE	REF NO	GRAPHIC REF	PART NUMBER	QTY	PART NAME 1 2 3 4 5 6 (PRODUCT LEVEL)	SEE PAGE
BE	1	1	9X-1813		SLEEVE	
	2	1	155-2260	1	KIT-CONNECTING PLUG (3-PIN)	
					(INCLUDES PLUG AS & WEDGE)	
	3	1	180-9340	3	SOCKET-CONNECTOR	
	4	1	3E-3368	1	WEDGE-PLUG LOCK (3-PIN)	

B-USE AS REQUIRED
E-ORDER BY THE CENTIMETER

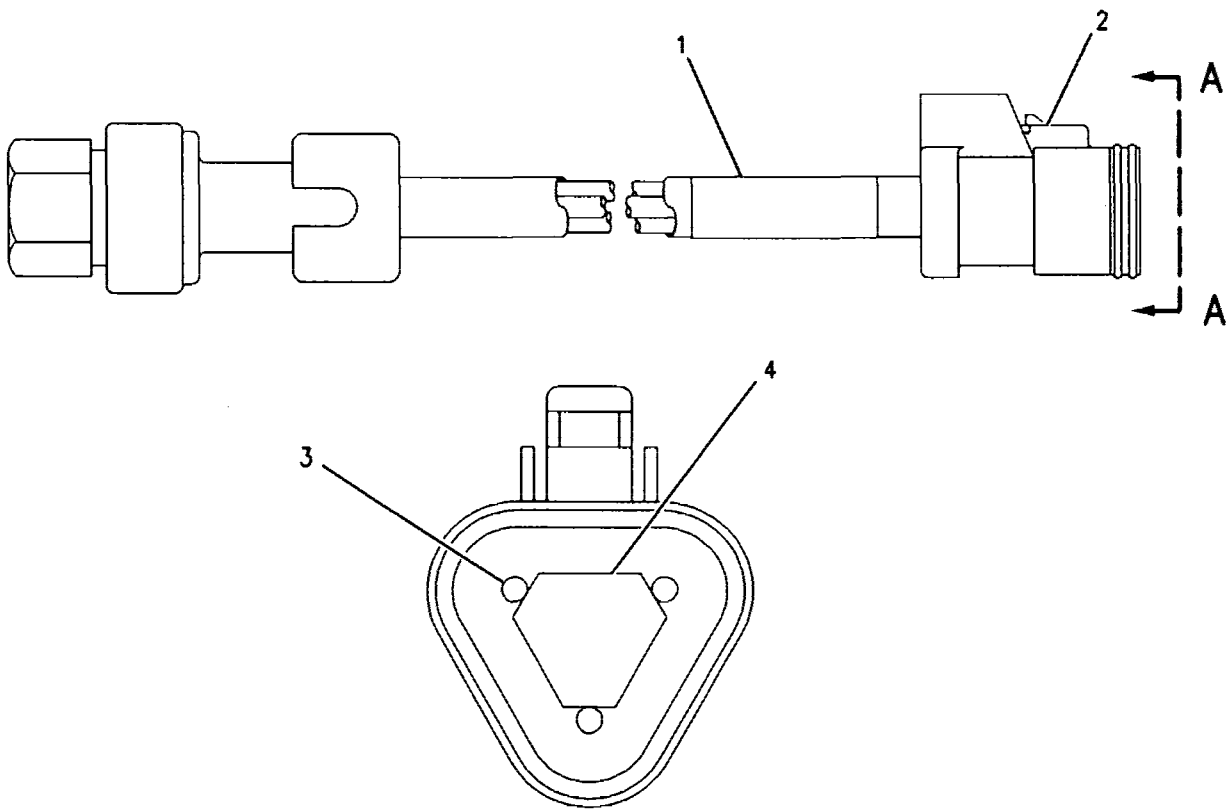

VIEW A-A

GRAPHIC #1 <END> g00934579

124-4672 SENSOR GP-PRESSURE-LIFT CYLINDER OIL

S/N: CRD1-UP
PART OF 130-4730 WIRING GP-SENSOR
AN ATTACHMENT

SMCS-1408, 1925, 7494 i02267085

NOTE	REF NO	GRAPHIC REF	PART NUMBER	QTY	PART NAME 1 2 3 4 5 6 (PRODUCT LEVEL)	SEE PAGE
	1	1	7T-7370	1	SEAL-SECURITY	
E	2	1	9X-1813		SLEEVE (16-CM)	
	3	1	102-8803	1	KIT-RECEPTACLE (3-PIN)	
					(INCLUDES RECEPTACLE AS AND WEDGE)	
	4	1	186-3735	3	PIN-CONNECTOR (16-GA TO 18-GA)	
	5	1	3E-3371	1	WEDGE-RECEPTACLE LOCK (3-PIN)	

E-ORDER BY THE CENTIMETER

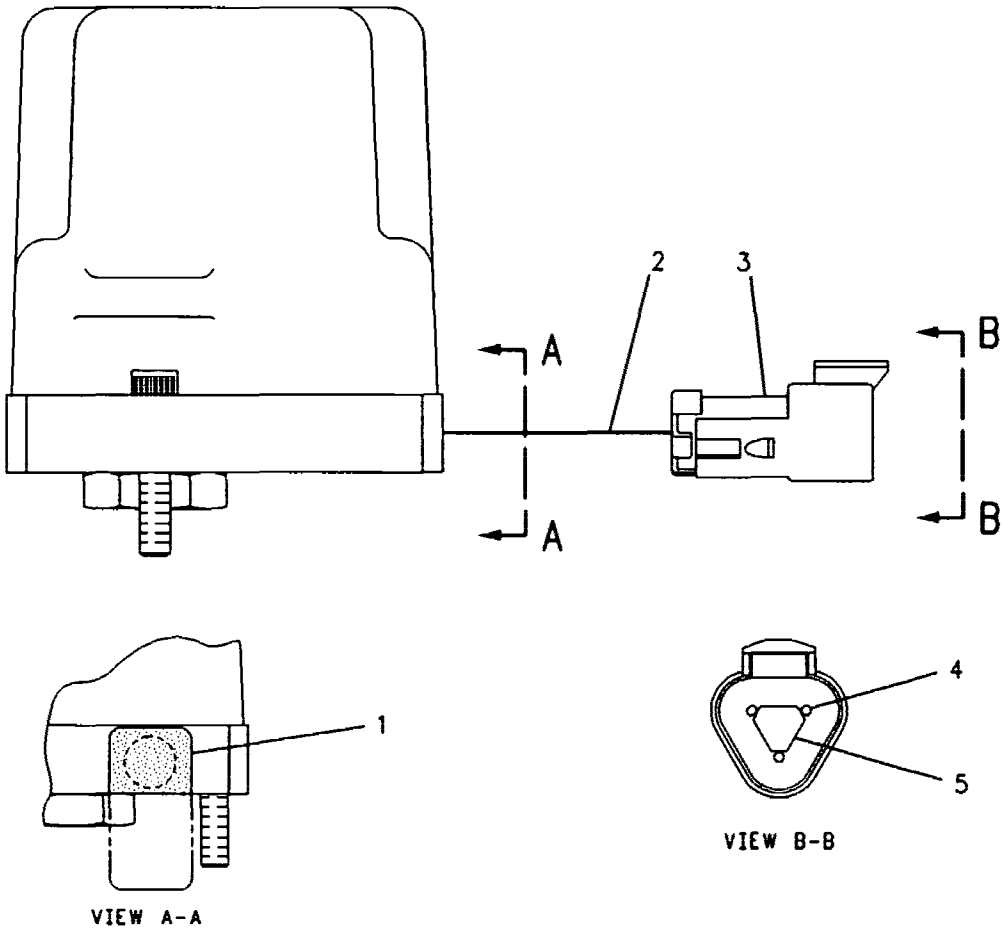

GRAPHIC #1 <END> g00109035

219-2386 SENSOR GP-POSITION–ARTICULATION ANGLE

S/N: CRD1-UP

PART OF 201-8422 WIRING GP-TRACTION CONTROL

AN ATTACHMENT

SMCS-4269, 5702, 5736, 5737, 7494 i02059353

NOTE	REF NO	GRAPHIC REF	PART NUMBER	QTY	PART NAME 1 2 3 4 5 6 (PRODUCT LEVEL)	SEE PAGE
	1	1	*161-8932*	1	SENSOR AS-POSITION (ARTICULATION ANGLE)	
		1	**8T-8886**		SEAL-LIP TYPE	
	2	1	**102-8803**	1	KIT-RECEPTACLE (3-PIN)	
					(INCLUDES RECEPTACLE AS AND WEDGE)	
	3	1	**186-3735**	3	PIN-CONNECTOR (16-GA TO 18-GA)	
	4	1	**3E-3371**	1	WEDGE-RECEPTACLE LOCK (3-PIN)	
E	5	1	*3E-9375*		CONDUIT (13CM)	

E-ORDER BY THE CENTIMETER

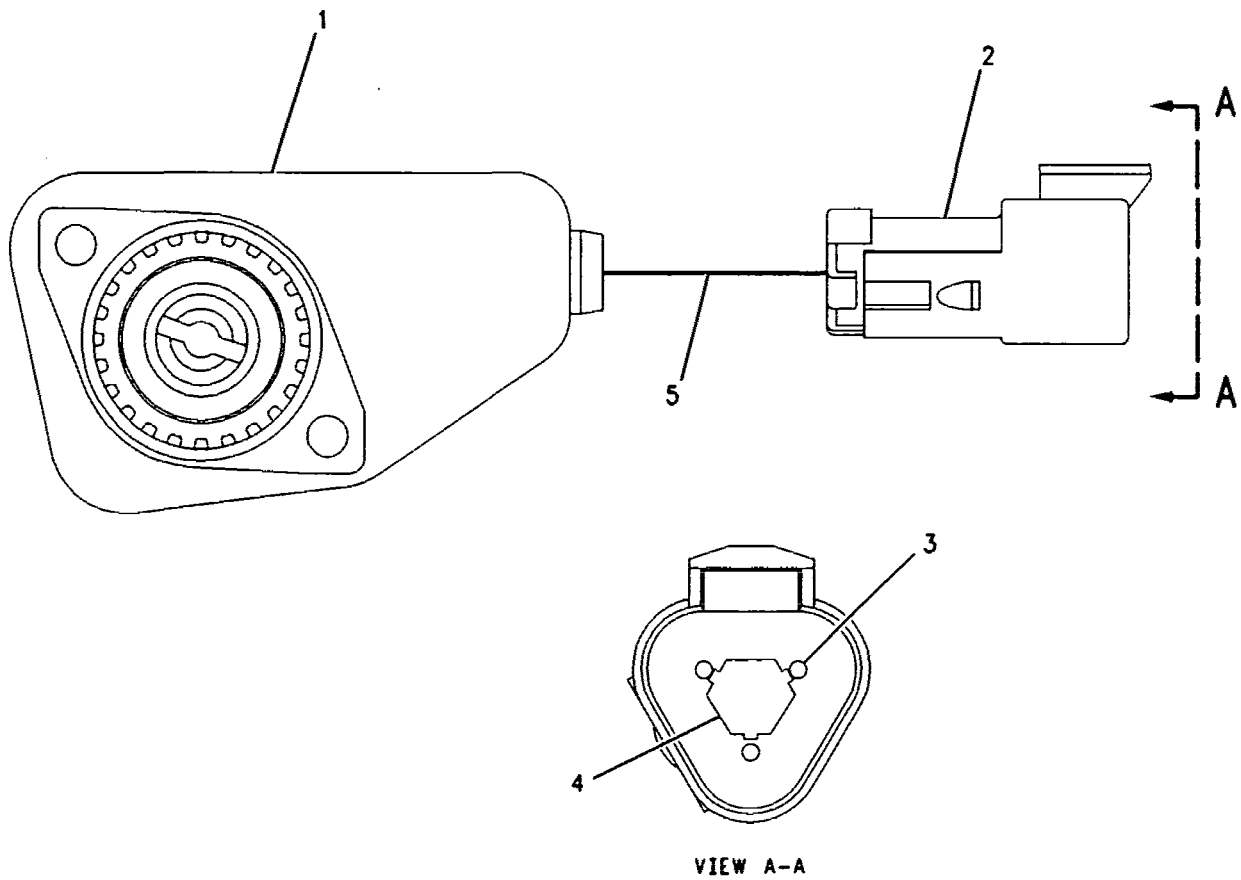

VIEW A-A

GRAPHIC #1 <END> g00875236

219-2384 SENSOR GP-POSITION

S/N: CRD1-UP
LEVER OPERATED
PART OF 130-4730 WIRING GP-SENSOR
AN ATTACHMENT

SMCS-4269, 5702, 5736, 5737, 7494 i01761274

NOTE	REF NO	GRAPHIC REF	PART NUMBER	QTY	PART NAME 1 2 3 4 5 6 (PRODUCT LEVEL)	SEE PAGE
	1	1	8T-8731	1	PLUG-CONNECTOR	
	2	1	8T-8730	3	SOCKET-CONNECTOR	

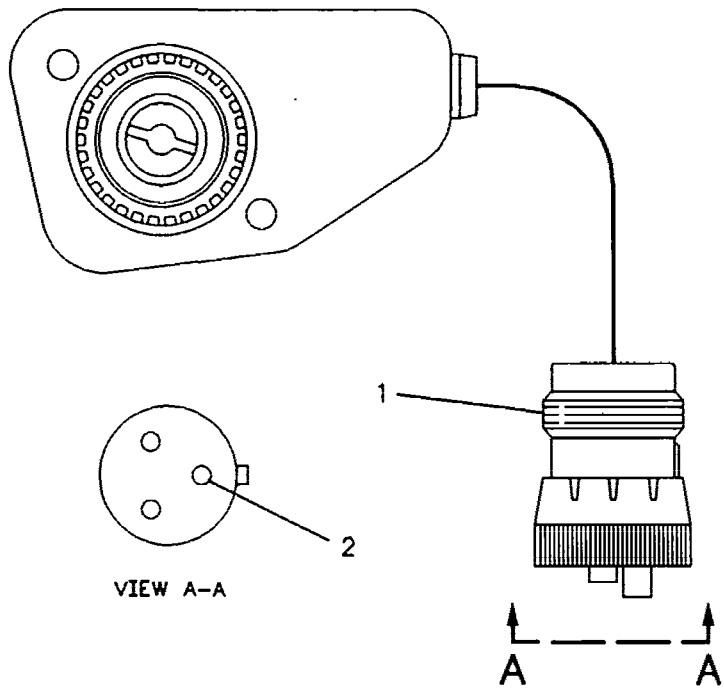

GRAPHIC #1 <END> g00083170

214-4863 SENSOR GP-POSITION–LEFT BRAKE PEDAL

S/N: CRD1-UP

PART OF 205-9236 BASE GP-FOOT BRAKE

ALSO AN ATTACHMENT

SMCS-4269, 5702, 5736, 5737, 7494 i02267084

NOTE	REF NO	GRAPHIC REF	PART NUMBER	QTY	PART NAME 1 2 3 4 5 6 (PRODUCT LEVEL)	SEE PAGE
	1	1	102-8803	1	KIT-RECEPTACLE (3-PIN)	
					(INCLUDES RECEPTACLE AS & WEDGE)	
	2	1	186-3735	1	PIN-CONNECTOR (16-GA TO 18-GA)	
	3	1	3E-3371	1	WEDGE-RECEPTACLE LOCK (3-PIN)	

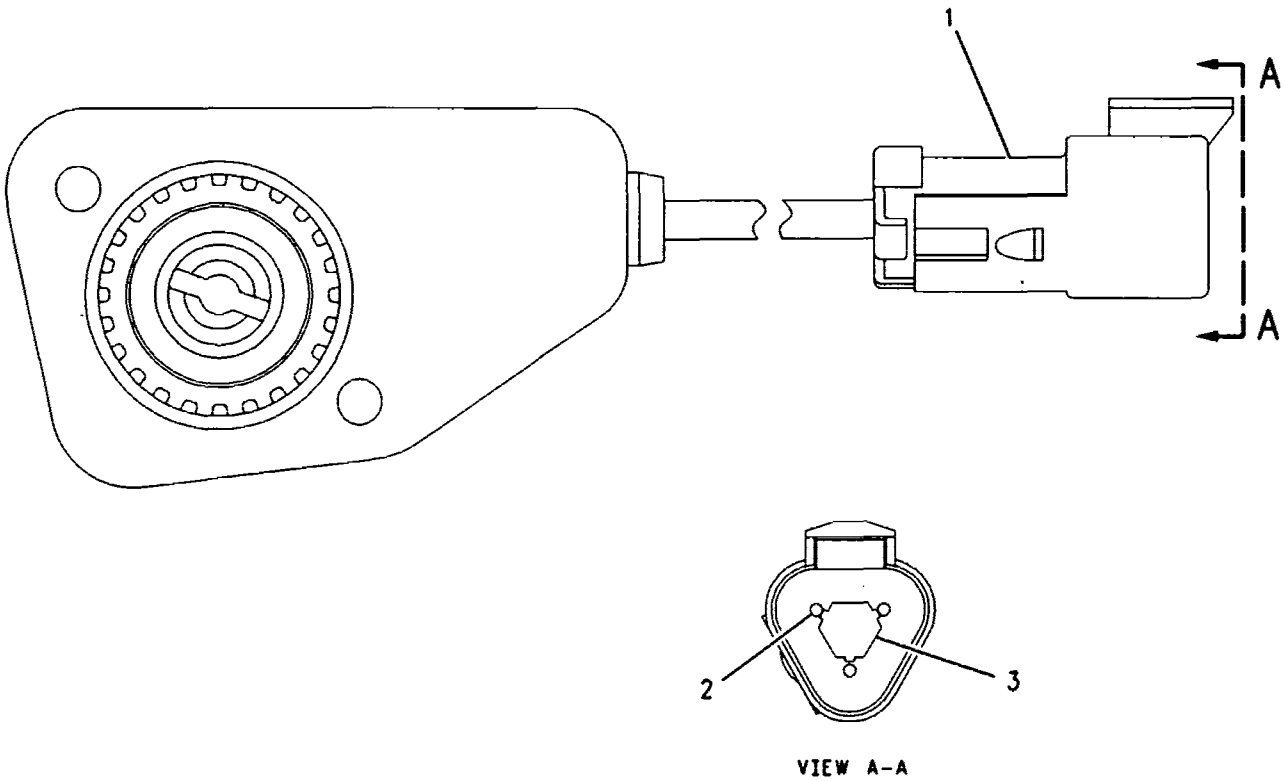

VIEW A-A

GRAPHIC #1 <END> g00925281

204-7949 SENSOR GP-POSITION-THROTTLE

S/N: CRD1-UP
500 HZ, 72 DEGREE
PART OF 113-4799 PEDAL GP-GOVERNOR
ALSO AN ATTACHMENT

SMCS-4269, 5702, 5736, 5737, 7494 i02277576

NOTE	REF NO	GRAPHIC REF	PART NUMBER	QTY	PART NAME 1 2 3 4 5 6 (PRODUCT LEVEL)	SEE PAGE
	1	1	102-8803	1	KIT-RECEPTACLE (3-PIN)	
					(INCLUDES RECEPTACLE AS AND WEDGE)	
	2	1	3E-3371	1	WEDGE-RECEPTACLE LOCK (3-PIN)	
	3	1	186-3735	3	PIN-CONNECTOR (16-GA TO 18-GA)	

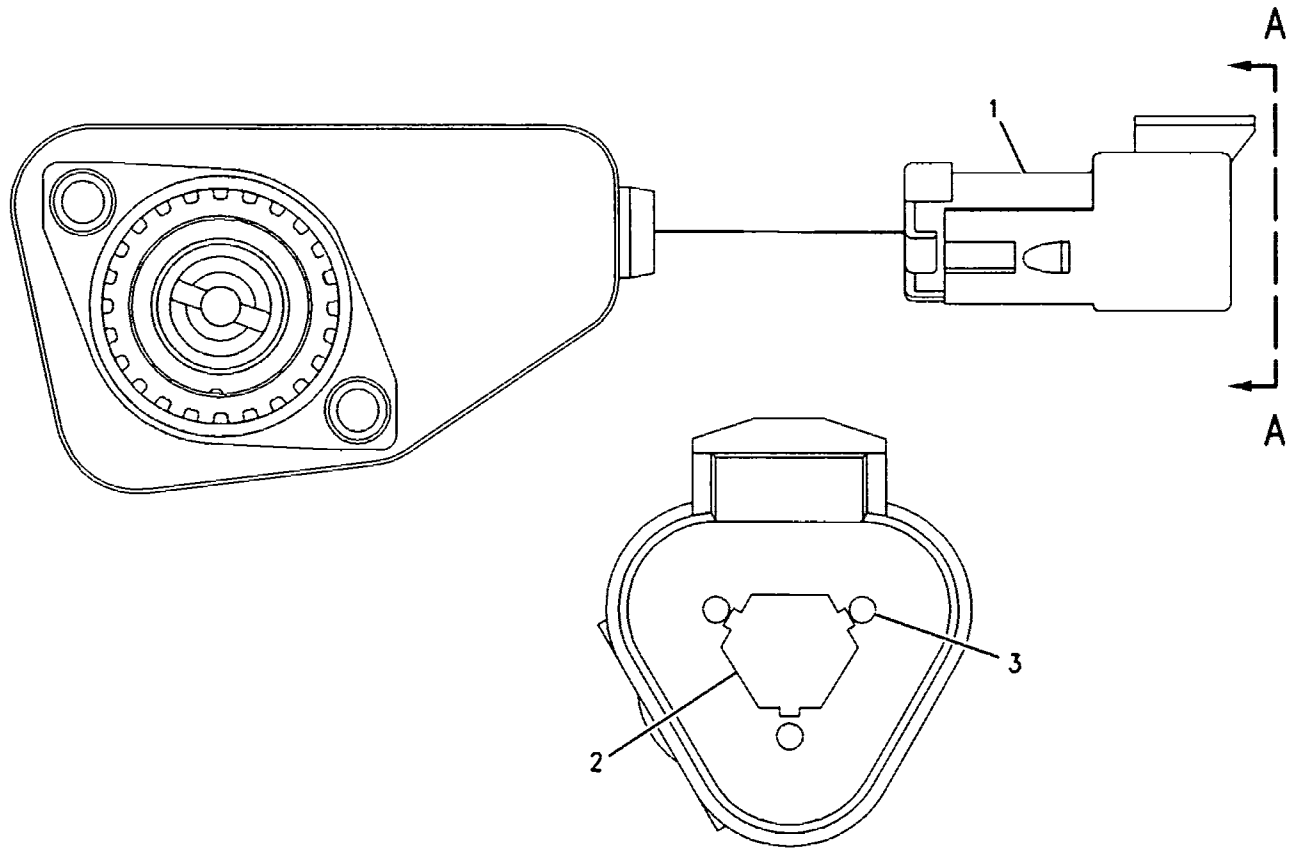

VIEW A-A

GRAPHIC #1 <END> g00925280

201-6851 SENSOR GP-ENGINE *(contd.)* i02169583

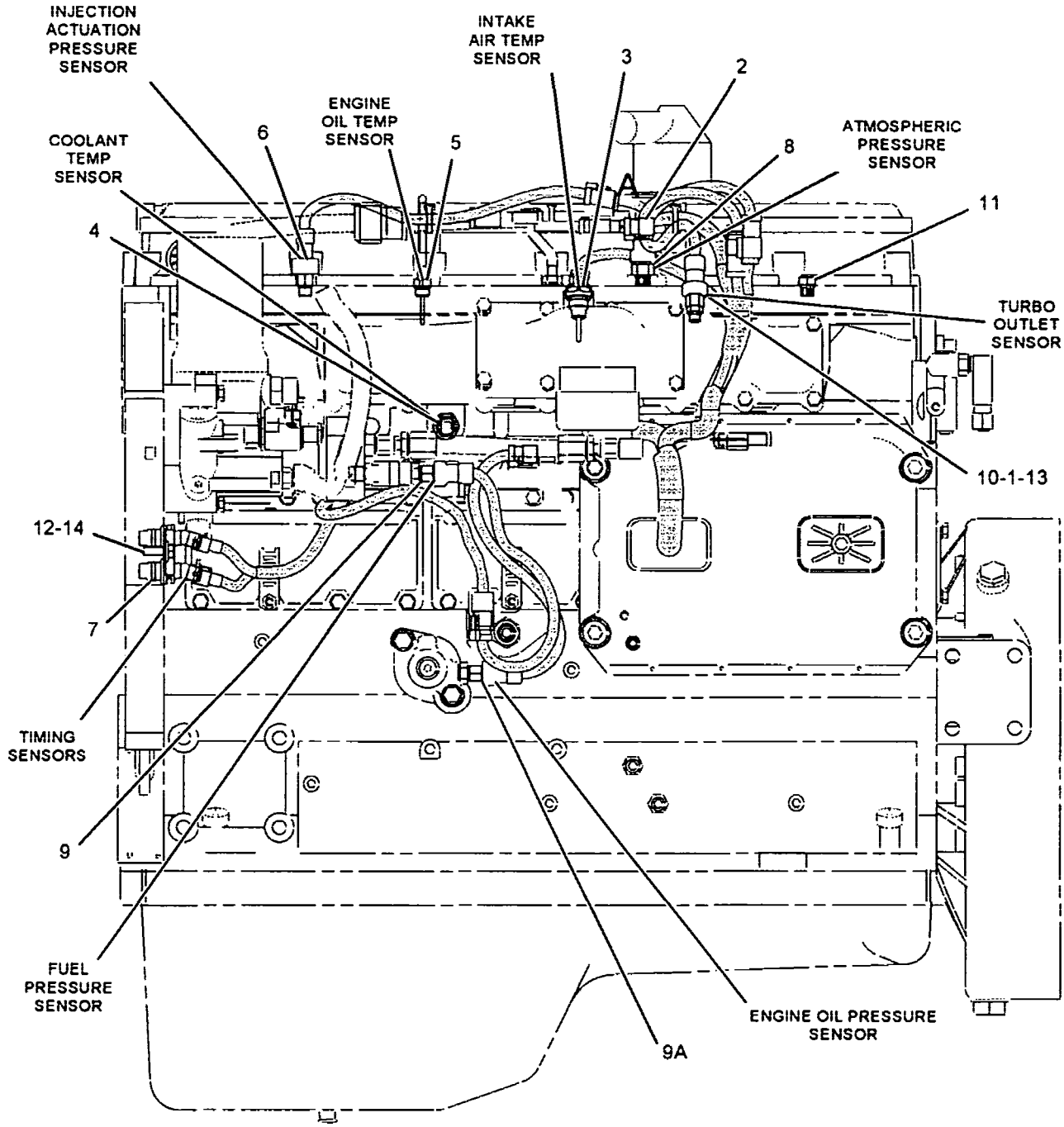

LEFT SIDE VIEW

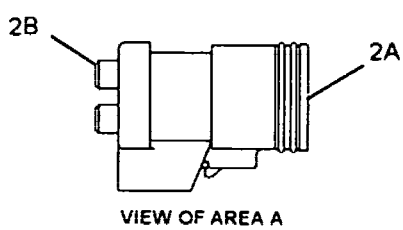

VIEW OF AREA A

GRAPHIC #1 <END> g01099646

201-6851 SENSOR GP-ENGINE

S/N: 5GG1-UP

PART OF 198-5914 ENGINE AR-COMPLETE

SMCS-1718, 1906, 1907, 1912, 1917, 1923, 1924, 1928, 1929, 7400

i02169583

NOTE	REF NO	GRAPHIC REF	PART NUMBER	QTY	PART NAME 1 2 3 4 5 6 (PRODUCT LEVEL)	SEE PAGE
	1	1	**9X-0262**	1	ADAPTER	
	2	1	**160-8123**	1	PLUG AS	
	2A	1	**3E-3368**	1	WEDGE-PLUG LOCK (3-PIN)	
	2B	1	**8T-8737**	3	PLUG-SEAL	
Y	3	1	*197-8391*	1	SENSOR GP-TEMPERATURE (INLET AIR)	257
Y	4	1	*197-8392*	1	SENSOR GP-TEMPERATURE (WATER, COOLANT)	258
Y	5	1	*204-0320*	1	SENSOR GP-TEMPERATURE (ENGINE OIL)	259
Y	6	1	*236-6220*	1	SENSOR GP-PRESSURE (INJECTION ACTUATION)	246
Y	7	1	*236-6221*	1	SENSOR GP-SPEED	252
Y	8	1	*239-2395*	1	SENSOR GP-PRESSURE (ATMOSPHERIC)	247
Y	9	1	*239-2396*	1	SENSOR GP-PRESSURE (FUEL)	248
Y	9A	1	*239-2396*	1	SENSOR GP-PRESSURE (ENGINE OIL)	248
Y	10	1	*247-0302*	1	SENSOR GP-PRESSURE (TURBO OUTLET)	249
	11	1	**169-5861**	1	PLUG AS	
		1	**3K-8460**	1	PLUG	
		1	**5P-7814**	1	SEAL-O-RING	
	12	1	**3E-4352**	1	WASHER-HARD (8.8X20.5X2.5-MM THK)	
	13	1	**3J-7354**	1	SEAL-O-RING	
M	14	1	**6V-3940**	1	BOLT (M8X1.25X25-MM)	

M-METRIC PART
Y-SEPARATE ILLUSTRATION

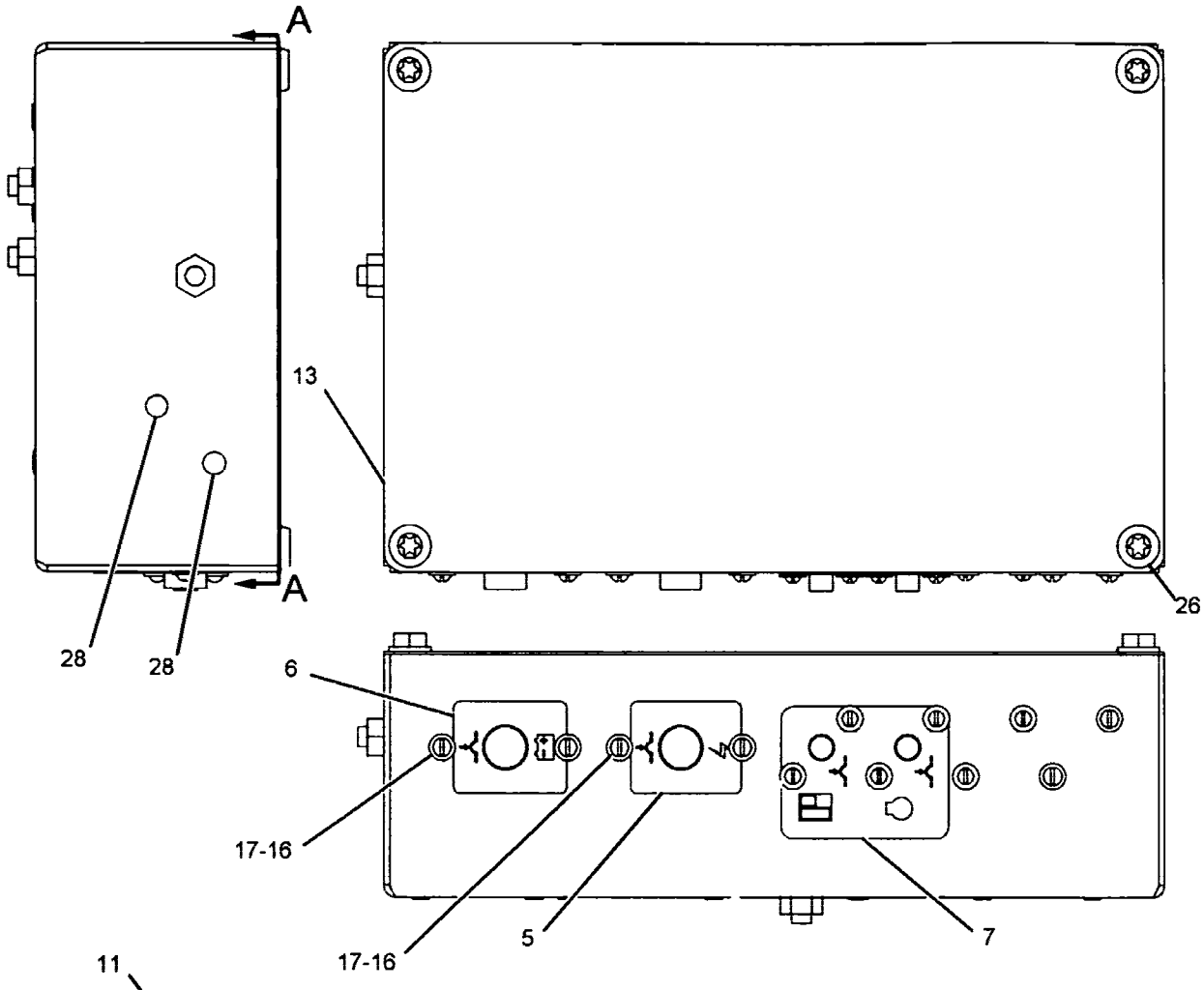

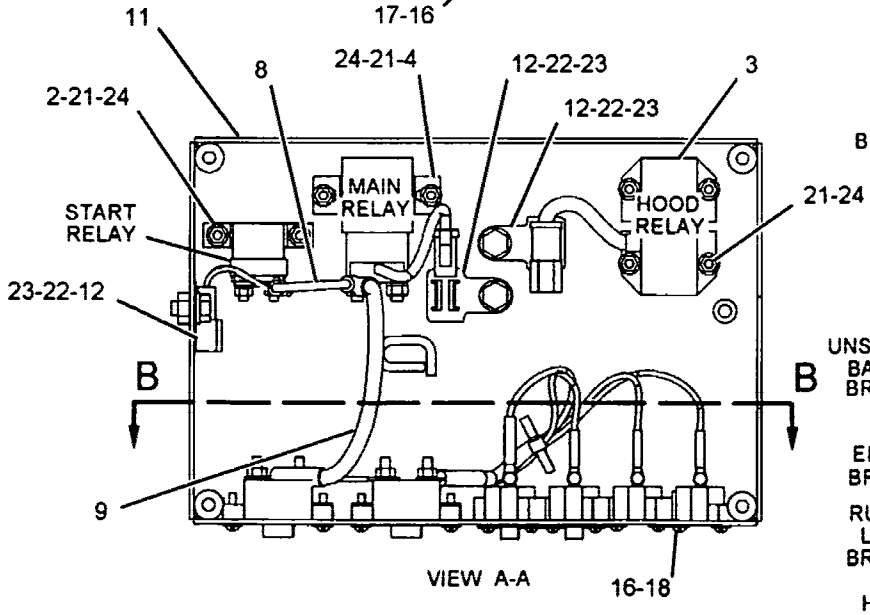

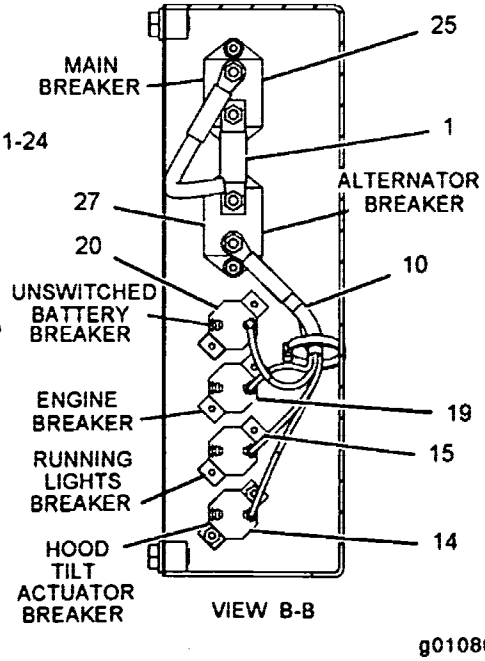

GRAPHIC #1 **<END>** g01080017

202-3245 PANEL GP-CIRCUIT BREAKER

S/N: CRD1006-UP

PART OF 201-8415 WIRING GP-MACHINE

SMCS-1417, 1420 i02138299

NOTE	REF NO	GRAPHIC REF	PART NUMBER	QTY	PART NAME 1 2 3 4 5 6 (PRODUCT LEVEL)	SEE PAGE
C	1	1	7V-9275	1	STRAP	
Y	2	1	125-1302	1	SWITCH GP-MAGNETIC (24-VOLT) (START RELAY)	269
	3	1	149-2612	1	RELAY AS (24-VOLT) (HOOD TILT MOTOR)	
		1	8T-8729	2	PIN-CONNECTOR	
		1	102-8805	1	KIT-RECEPTACLE (6-PIN)	
					(INCLUDES RECEPTACLE AS AND WEDGE)	
Y	4	1	167-0138	1	SWITCH GP-MAGNETIC (24-VOLT) (MAIN RELAY)	270
	5	1	193-8552	1	FILM-CIRCUIT BREAKER	
	6	1	193-8557	1	FILM-CIRCUIT BREAKER	
	7	1	193-8571	1	PLATE (BREAKER)	
	8	1	201-3399	1	WIRE AS	
	9	1	204-7450	1	WIRE AS	
	10	1	204-7451	1	WIRE AS	
	11	1	204-7552	1	BOX AS	
M		1	8T-3490	3	NUT-WELD (M10X1.5-THD)	
		1	7T-1099	2	LINK	
M		1	8T-4935	1	BOSS-WELD (M10X1.5X45-MM OAL)	
		1	9R-2821	4	BOSS (M10X15-MM)	
	12	1	130-5300	3	CLIP	
	13	1	144-2257	1	PLATE	
	14	1	200-8577	1	CIRCUIT BREAKER AS (20-AMPERE) (HOOD TILT ACTUATOR)	
		1	6V-8376	2	SCREW-MACHINE (8-32X0.25-IN)	
		1	9B-7233	2	LOCKWASHER	
	15	1	3T-2662	1	CIRCUIT BREAKER AS (15-AMPERE) (RUNNING LIGHTS)	
		1	6V-8376	2	SCREW-MACHINE (8-32X0.25-IN)	
		1	9B-7233	2	LOCKWASHER	
	16	1	4B-4274	12	WASHER (5.5X13X1.2-MM THK)	
	17	1	5L-4507	4	SCREW-MACHINE (10-32X0.875-IN)	
	18	1	5M-6668	8	SCREW-MACHINE (8-32X0.75-IN)	
	19	1	6T-3643	1	CIRCUIT BREAKER AS (15-AMPERE) (ENGINE ECM)	
		1	6V-8376	2	SCREW-MACHINE (8-32X0.25-IN)	
		1	9B-7233	2	LOCKWASHER	
	20	1	6T-3644	1	CIRCUIT BREAKER GP (20-AMPERE)	
					(UNSWITCHED BATTERY POWER TO CAB)	
		1	6V-8376	2	SCREW-MACHINE (8-32X0.25-IN)	
		1	9B-7233	2	LOCKWASHER	
M	21	1	6V-8225	8	NUT (M6X1-THD)	
	22	1	8T-4121	3	WASHER-HARD (11X21X2.5-MM THK)	
M	23	1	8T-4137	3	BOLT (M10X1.5X20-MM)	
	24	1	8T-4205	8	WASHER-HARD (7.2X14.5X2-MM THK)	
C	25	1	171-2210	1	CIRCUIT BREAKER AS (80-AMPERE) (MAIN)	
		1	6V-8187	2	NUT (1/4-28-THD)	
		1	8T-4205	2	WASHER-HARD (7.2X14.5X2-MM THK)	
		1	253-2111	2	LOCKWASHER	
M	26	1	9X-2041	4	SCREW-TRUSS HEAD	
C	27	1	171-2210	1	CIRCUIT BREAKER AS (80-AMPERE) (ALTERNATOR)	
		1	6V-8187	2	NUT (1/4-28-THD)	
		1	8T-4205	2	WASHER-HARD (7.2X14.5X2-MM THK)	
		1	253-2111	2	LOCKWASHER	
C	28	1	5P-7803	2	PLUG-BUTTON	

C-CHANGE FROM PREVIOUS TYPE
M-METRIC PART
Y-SEPARATE ILLUSTRATION

149-2958 FILLER GP-POWER TRAIN OIL

S/N: CRD1-UP

PART OF 199-2820 POWER TRAIN AR

SMCS-3005, 3081 i00695725

NOTE	REF NO	GRAPHIC REF	PART NUMBER	QTY	PART NAME 1 2 3 4 5 6 (PRODUCT LEVEL)	SEE PAGE
	1	1	4B-9782	1	BALL	
	2	1	5K-1568	1	CAP-FILLER	
	3	1	6F-5188	1	SEAL-RING	
	4	1	6H-5139	1	PLATE-PRESSURE	
	5	1	149-2957	1	TUBE AS	
	6	1	149-4456	1	GAUGE AS	
		1	114-4231	2	BOLT-MOUNTING	
		1	122-8352	1	SEAL-O-RING	
	7	1	1P-3707	1	SEAL-RECTANGULAR	
	8	1	8T-4121	2	WASHER-HARD (11X21X2.5-MM THK)	
M	9	1	8T-4185	2	BOLT (M10X1.5X50-MM)	

M-METRIC PART

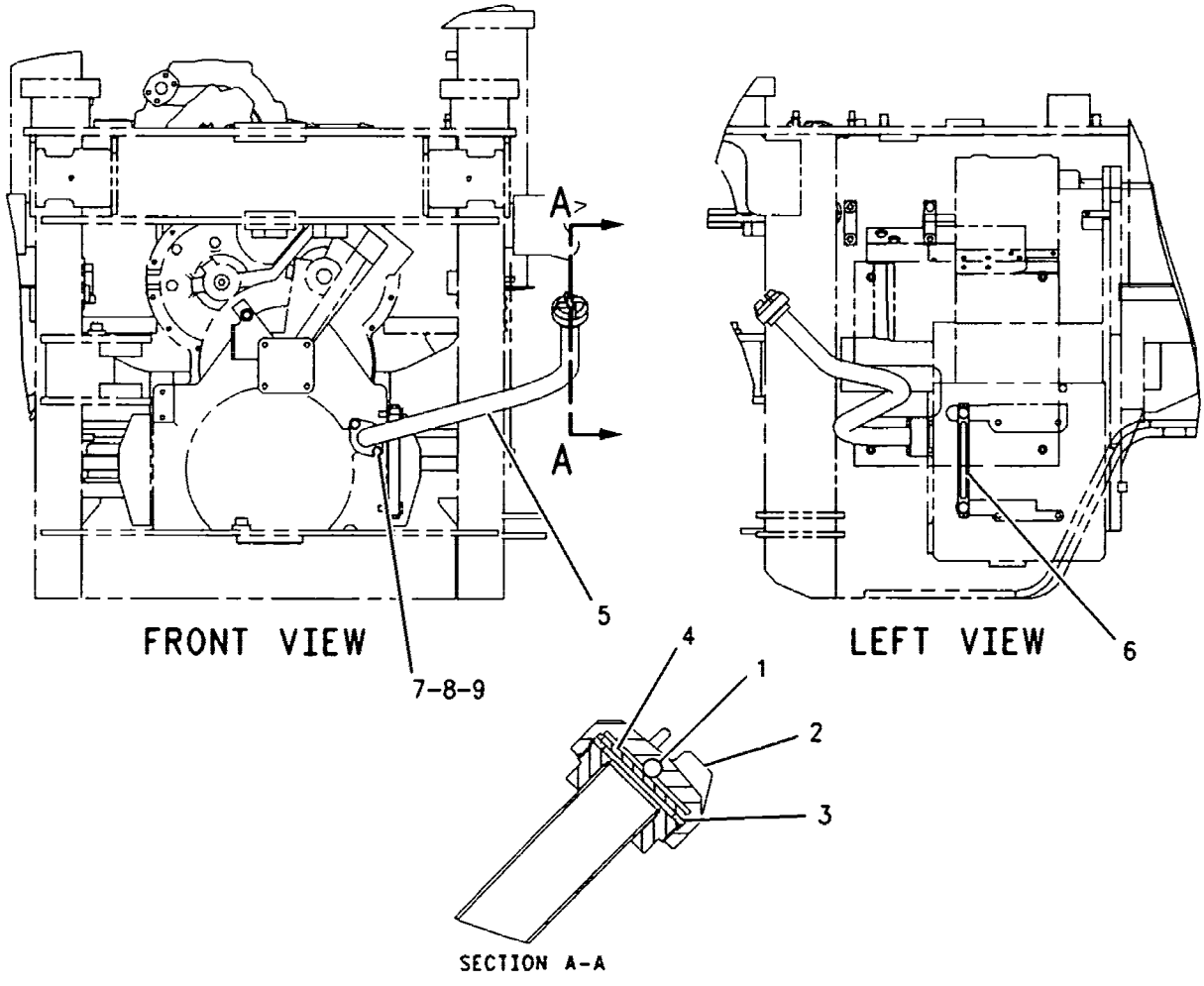

GRAPHIC #1 <END> g00293837

POWER TRAIN

197-1993 FILTER GP-OIL–POWER TRAIN

S/N: CRD1-946

PART OF 204-9262 LINES GP-POWER TRAIN FILTER

SMCS-3004, 3067 — 102198411

NOTE	REF NO	GRAPHIC REF	PART NUMBER	QTY	PART NAME 1 2 3 4 5 6 (PRODUCT LEVEL)	SEE PAGE
	1	1	1G-8878	1	FILTER ELEMENT-HYDRAULIC OIL	
	2	1	3J-7354	1	SEAL-O-RING	
	3	1	6V-0852	1	CAP-DUST	
	4	1	6V-3965	1	FITTING AS (QUICK DISCONNECT)	
	5	1	8C-3446	1	VALVE AS-FLUID SAMPLING	
	6	1	8C-3447	1	CAP-DUST	
	7	1	117-7773	1	SWITCH AS-PRESSURE (OIL FILTER BYPASS) (POWER TRAIN)	
		1	102-8802	1	KIT-RECEPTACLE (2-PIN)	
		1	3E-3365	1	WEDGE-RECEPTACLE LOCK (2-PIN)	
		1	8T-8729	2	PIN-CONNECTOR	
		1	9X-1813	14	SLEEVE	
	8	1	3J-1907	1	SEAL-O-RING	

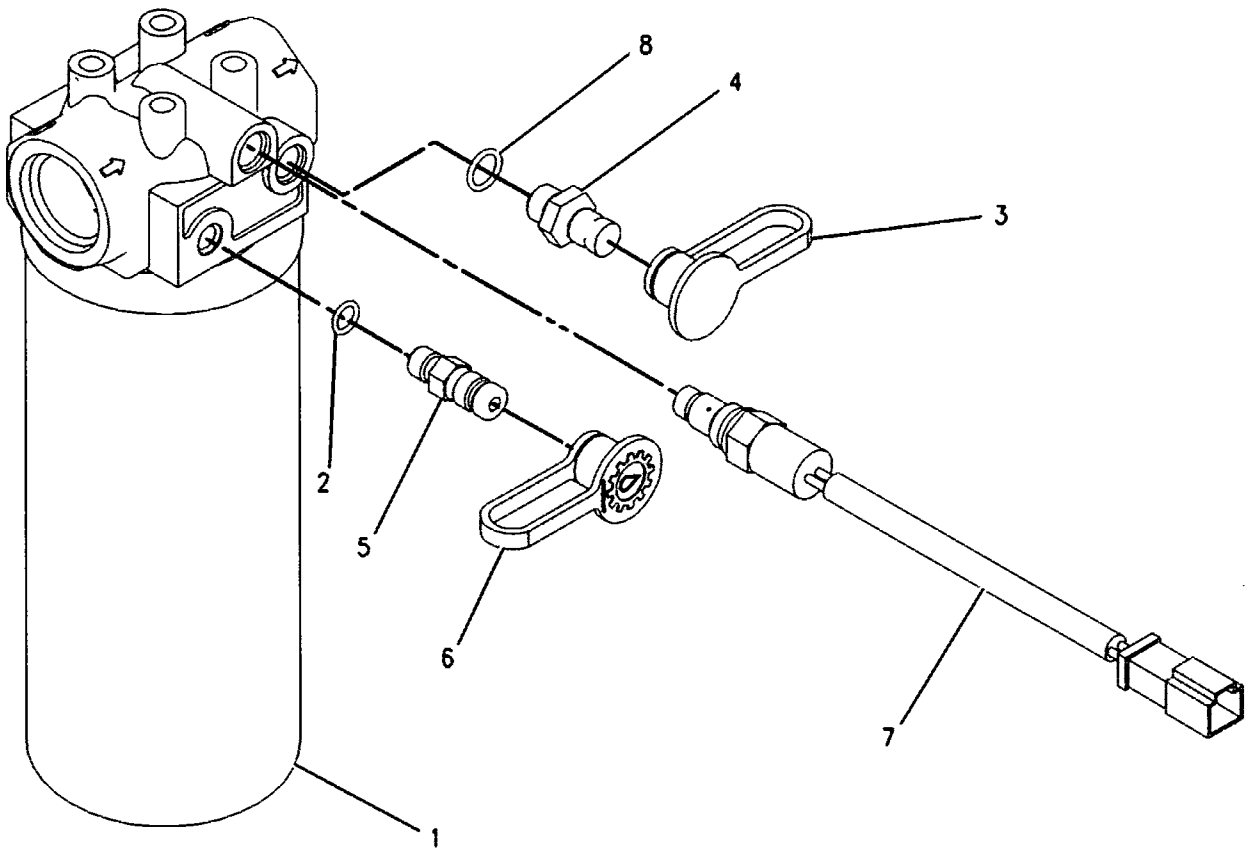

GRAPHIC #1 <END> g00869808

249-1750 FILTER GP-OIL–POWER TRAIN

S/N: CRD947-UP

PART OF 204-9262 LINES GP-POWER TRAIN FILTER

SMCS-3004, 3067 i02155488

NOTE	REF NO	GRAPHIC REF	PART NUMBER	QTY	PART NAME 1 2 3 4 5 6 (PRODUCT LEVEL)	SEE PAGE
	1	1	6V-0852	1	CAP-DUST	
	2	1	8C-3447	1	CAP-DUST	
	3	1	227-6744	1	SWITCH GP-PRESSURE (OIL FILTER BYPASS)	
		1	102-8802	1	KIT-RECEPTACLE (2-PIN)	
					(KIT INCLUDES RECEPTACLE AS & WEDGE)	
		1	3E-3365	1	WEDGE-RECEPTACLE LOCK (2-PIN)	
		1	186-3735	2	PIN-CONNECTOR (16-GA TO 18-GA)	
BE		1	9X-1813		SLEEVE	
	4	1	1G-8878	1	FILTER ELEMENT-HYDRAULIC OIL (POWER TRAIN)	
	5	1	3J-1907	2	SEAL-O-RING	
	6	1	3J-7354	1	SEAL-O-RING	
	7	1	6V-3965	1	FITTING AS (QUICK DISCONNECT)	
	8	1	8C-3446	1	VALVE AS-FLUID SAMPLING (POWER TRAIN OIL)	
	9	1	8T-6850	1	SEAL-O-RING	

B-USE AS REQUIRED
E-ORDER BY THE CENTIMETER

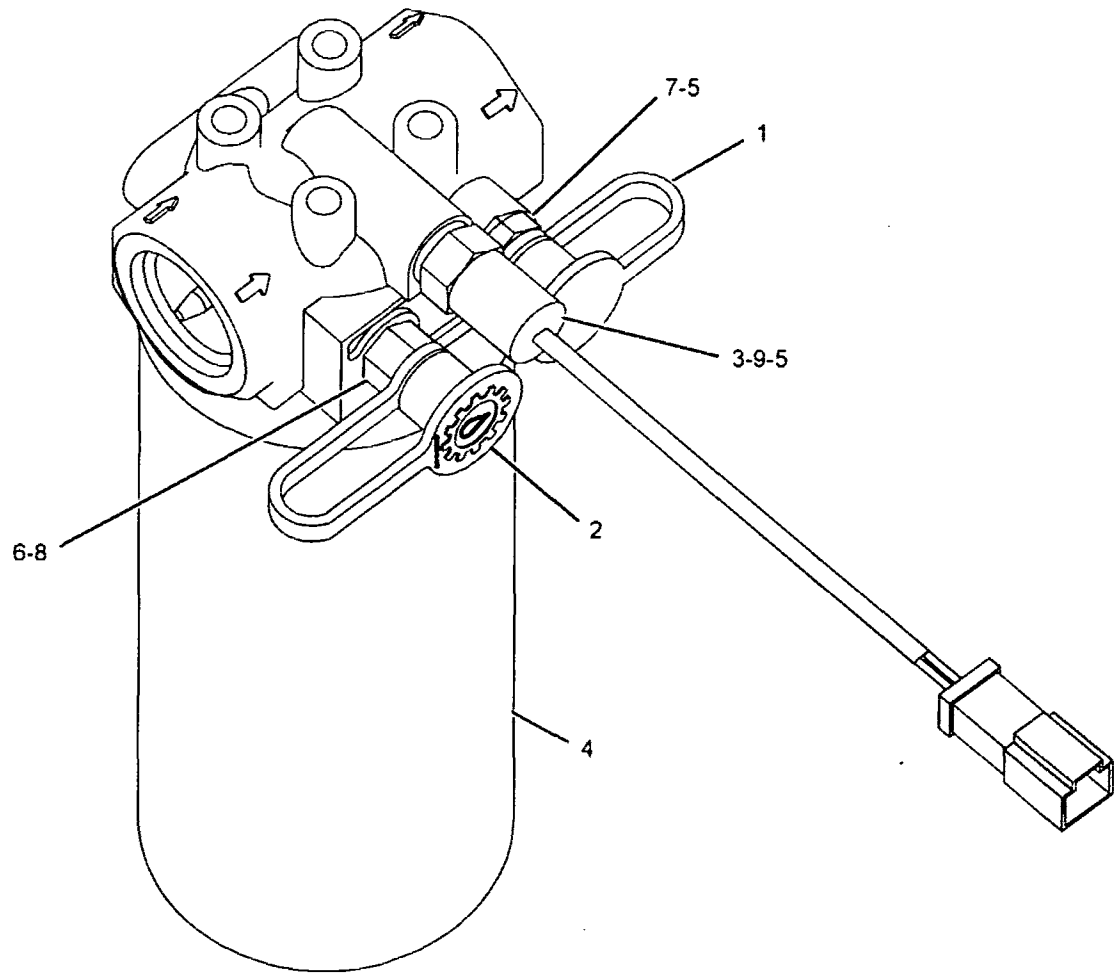

GRAPHIC #1 <END> g01088035

167-0979 GEAR GP-BEVEL

S/N: CRD1-UP

PART OF 206-4539, 207-3688, 207-3691 AXLE AR-FIXED

ALSO AN ATTACHMENT

SMCS-3256 101599490

NOTE	REF NO	GRAPHIC REF	PART NUMBER	QTY	PART NAME 1 2 3 4 5 6 (PRODUCT LEVEL)	SEE PAGE
	1	1	1P-2694	1	CONE-BEARING	
	2	1	1P-2695	1	CUP-BEARING	
	3	1	5L-2031	1	CUP-BEARING	
	4	1	5L-2030	1	CONE-BEARING	
	5	1	6W-1638	1	WASHER (5.0MM THK)	
M	6	1	9C-8287	1	LOCKNUT-STAKE (M70X1.5 THD)	
	7	1	9U-1913	1	SLEEVE AS	
		1	030-0060	1	CUP-BEARING	
	8	1	9U-1912	1	SLEEVE AS	
		1	6Y-2540	1	CUP-BEARING	
	9	1	4E-4031	2	PIN	
M	10	1	4E-3896	2	BOLT (M6X1X14MM)	
	11	1	4E-3897	2	LOCK	
	12	1	6Y-2539	1	CONE-BEARING	
	13	1	030-0061	1	CONE-BEARING	
	14	1	4E-4029	1	NUT-ADJUSTMENT (M190X2 SPL THD)	
	15	1	4E-4030	1	NUT-ADJUSTMENT (M160X2 SPL THD)	
	16	1	158-6479	1	GEAR SET-BEVEL	
M	17	1	9X-6492	16	BOLT (M16X2X160 MM)	
	18	1	9X-2619	4	PIN-SPRING	
	19	1	9X-2620	4	PIN-SPRING	
M	21	1	8T-0372	1	BOLT (M12X1.75X90MM)	
	22	1	9V-2429	1	RETAINER	
	23	1	2H-3088	1	SEAL-O-RING	
	24	1	166-6757	1	YOKE	

M-METRIC PART

167-0979 **GEAR GP-BEVEL** *(contd.)* **i01599490**

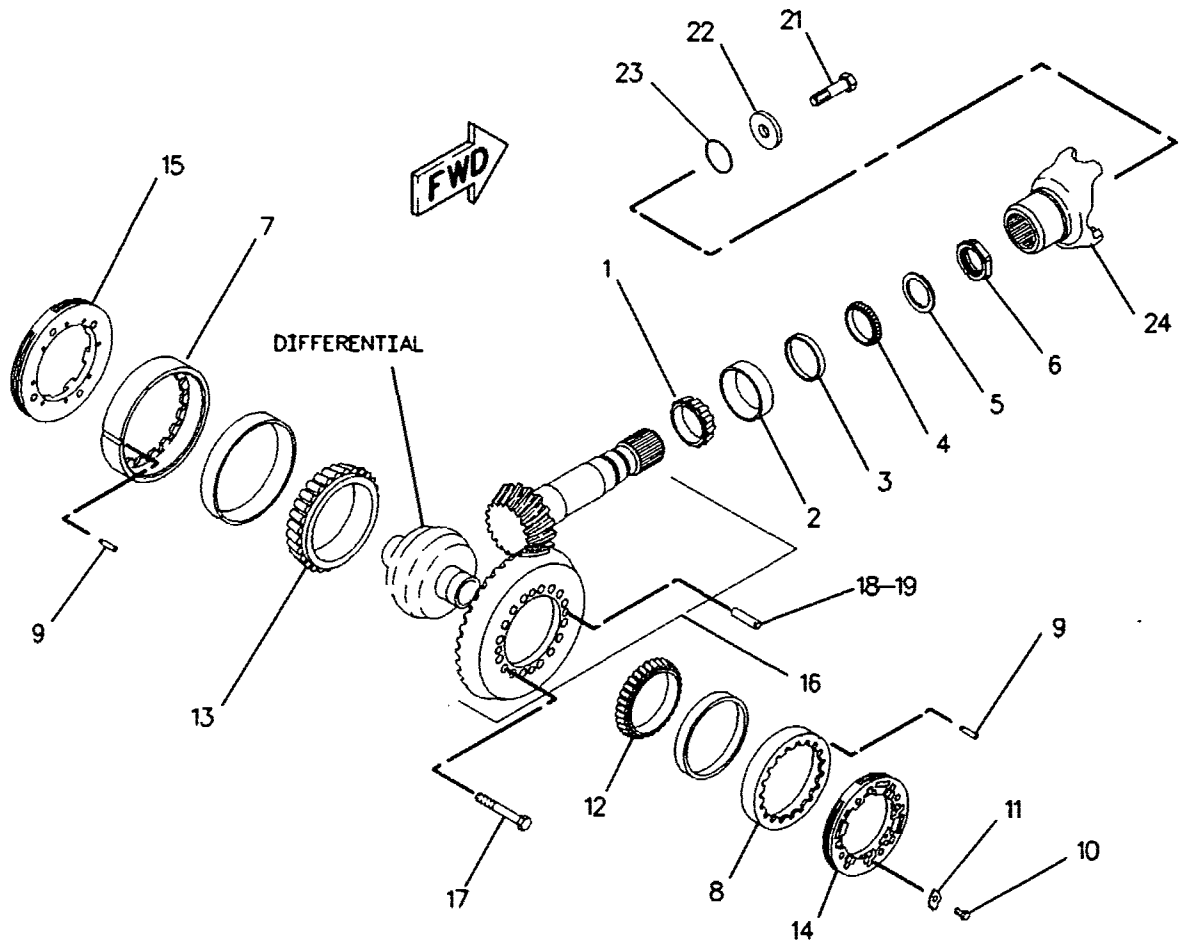

GRAPHIC #1 **<END>** g00828913

167-0980 GEAR GP-BEVEL & PINION

S/N: CRD1-UP

PART OF 206-4540, 207-3689, 207-3690, 207-3692 AXLE AR-OSCILLATING

ALSO AN ATTACHMENT

SMCS-3254, 3256 i01599538

NOTE	REF NO	GRAPHIC REF	PART NUMBER	QTY	PART NAME 1 2 3 4 5 6 (PRODUCT LEVEL)	SEE PAGE
	1	1	9U-1913	1	SLEEVE AS	
	2	1	030-0060	1	CUP-BEARING	
	3	1	030-0061	1	CONE-BEARING	
	4	1	4E-4030	1	NUT-ADJUSTMENT (M160X2 SPL THD)	
	5	1	4E-3897	2	LOCK	
M	6	1	4E-3896	2	BOLT (M6X1X14MM)	
	7	1	4E-4031	2	PIN	
	8	1	1P-2694	1	CONE-BEARING	
	9	1	1P-2695	1	CUP-BEARING	
	10	1	5L-2030	1	CONE-BEARING	
	11	1	5L-2031	1	CUP-BEARING	
	12	1	6W-1638	1	WASHER (5.0MM THK)	
M	13	1	9C-8287	1	LOCKNUT-STAKE (M70X1.5 THD)	
	14	1	*158-6482*	1	GEAR SET-BEVEL	
	16	1	9X-2619	4	PIN-SPRING	
	17	1	9X-2620	4	PIN-SPRING	
	18	1	6Y-2539	1	CONE-BEARING	
M	19	1	9X-6492	16	BOLT (M16X2X160 MM)	
	20	1	4E-4029	1	NUT-ADJUSTMENT (M190X2 SPL THD)	
	21	1	9U-1912	1	SLEEVE AS	
	22	1	6Y-2540	1	CUP-BEARING	
	23	1	159-1846	1	YOKE AS	
	24	1	4E-9413	1	GUARD	
	25	1	160-4816	1	KIT-SERVICE (INCLUDES DUST CUP, SEAL & SNAP RING)	

M-METRIC PART

167-0980 GEAR GP-BEVEL & PINION *(contd.)* i01599538

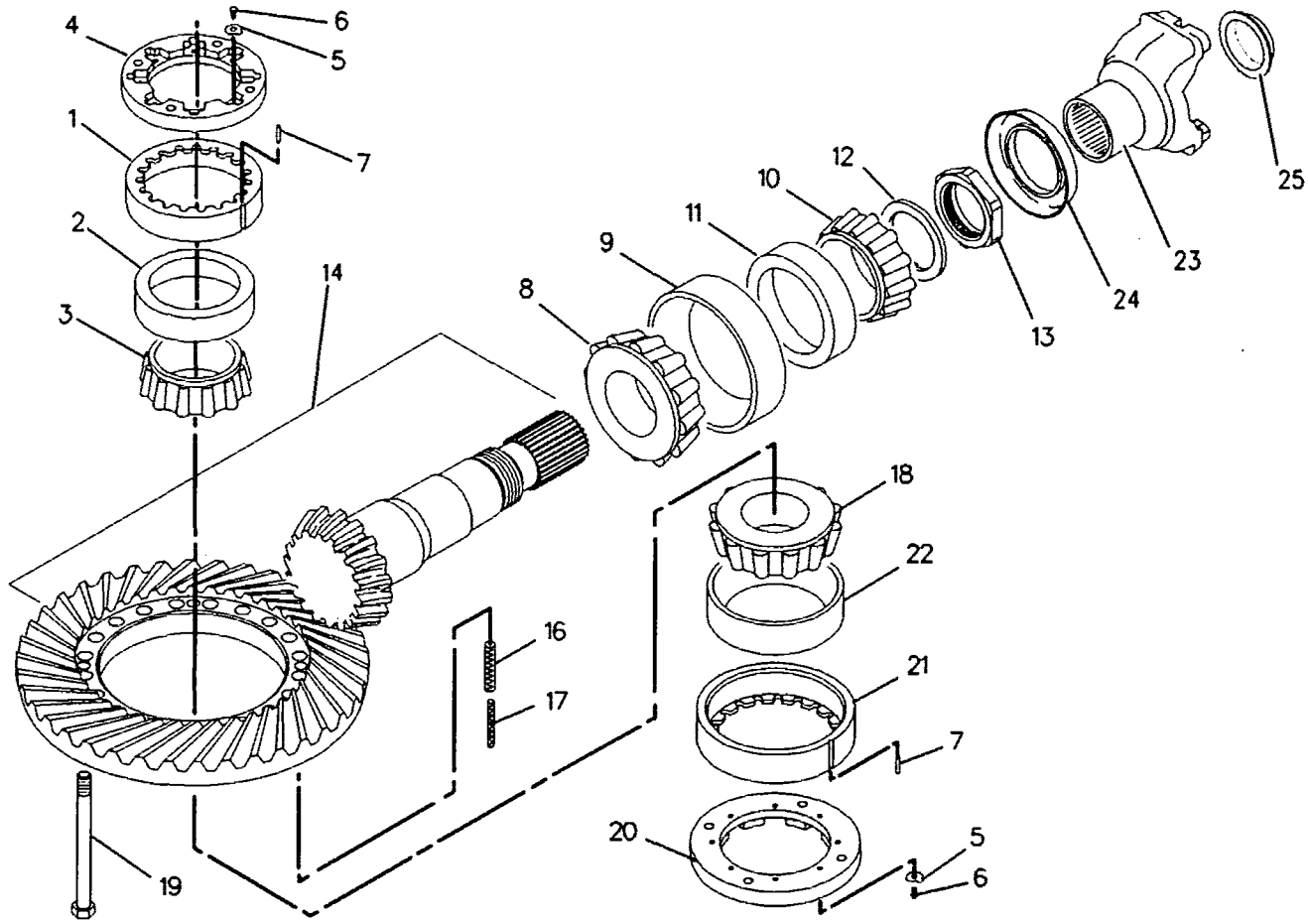

GRAPHIC #1 **<END>** g00828957

170-1857 GEAR GP-OUTPUT TRANSFER

S/N: WNF1-UP

PART OF 201-3265 TRANSMISSION AR

SMCS-3075, 3159 102301522

NOTE	REF NO	GRAPHIC REF	PART NUMBER	QTY	PART NAME 1 2 3 4 5 6 (PRODUCT LEVEL)	SEE PAGE
	1	1	2H-3088	2	SEAL-O-RING	
M	2	1	6V-5696	2	BOLT (M12X1.75X80-MM)	
	3	1	4S-5824	2	RETAINER	
	4	1	2P-8987	2	CONE-BEARING	
	5	1	6Y-8293	1	SHAFT-OUTPUT	
	6	1	3T-6581	1	GEAR (49-TEETH)	
	7	1	2P-8986	1	CUP-BEARING	
	8	1	6V-7991	1	SEAL-O-RING	
	9	1	193-2200	1	SEAL-LIP TYPE	
	10	1	103-1712	1	DRUM	
CY	11	1	200-1315	1	BRAKE GP-PARKING	545
M	12	1	6V-8201	4	BOLT-SOCKET HEAD (M16X2X45-MM)	
	13	1	5P-8245	8	WASHER-HARD (13.5X25.5X3-MM THK)	
M	14	1	6V-3668	8	BOLT (M12X1.75X30-MM)	
	15	1	142-4247	1	CAGE-BEARING	
	16	1	8E-9550	1	SPACER (61X75X9.85-MM THK)	
	17	1	6Y-4873	1	LEVER	
	18	1	166-6762	1	YOKE-BRAKE	
	19	1	8E-4950	1	YOKE	
M	20	1	6V-5843	1	BOLT (M10X1.5X45-MM)	
M	21	1	2Y-5829	1	NUT (M10X1.5-THD)	
	22	1	6V-5839	1	WASHER (11X21X2.5-MM THK)	
	23	1	9X-8268	4	WASHER (17.5X30X3.5-MM THK)	

C-CHANGE FROM PREVIOUS TYPE
M-METRIC PART
Y-SEPARATE ILLUSTRATION

170-1857 GEAR GP-OUTPUT TRANSFER (contd.) i02301522

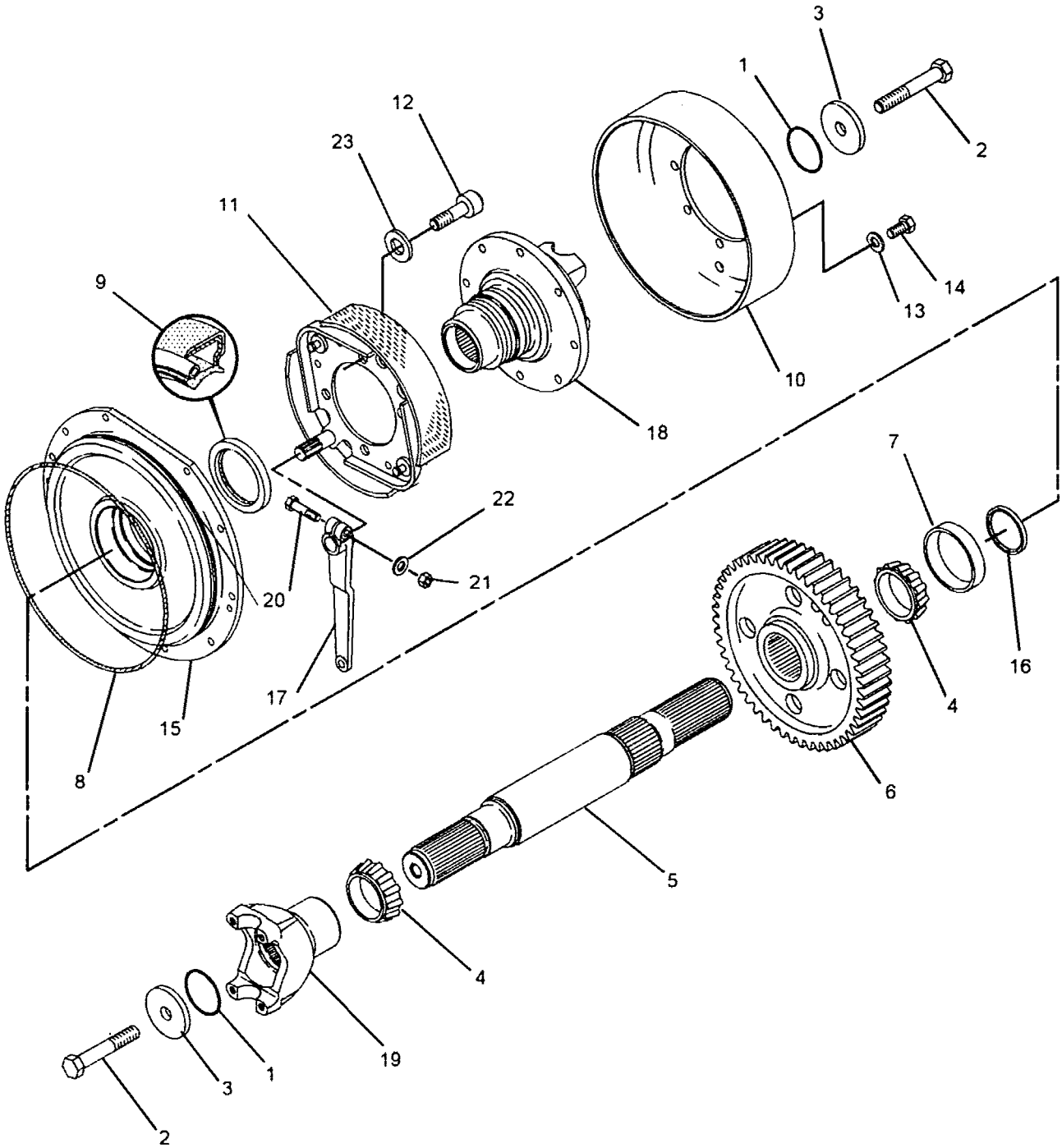

GRAPHIC #1 <END> g01072823

206-4544 HOUSING GP-FIXED AXLE

S/N: CRD1-UP

PART OF 206-4539, 207-3688 AXLE AR-FIXED

ALSO AN ATTACHMENT

SMCS-3260 i01850203

NOTE	REF NO	GRAPHIC REF	PART NUMBER	QTY	PART NAME 1 2 3 4 5 6 (PRODUCT LEVEL)	SEE PAGE
	1	1	9G-5315	2	SEAL GP-DUO-CONE	
	2	1	5P-8247	52	WASHER-HARD (17X32X3.5-MM THK)	
M	3	1	8T-0649	22	BOLT (M16X2X110-MM)	
B	4	1	1U-8846		SEALANT-GASKET	
	5	1	5H-3701	2	SCREW-PURGE	
	6	1	8T-0336	1	FITTING-PRESSURE RELIEF	
M	7	1	8T-5002	22	BOLT (M16X180-MM)	
	8	1	6Y-1032	2	CUP-BEARING	
	9	1	6Y-1031	2	CONE-BEARING	
	10	1	9C-6312	2	SHAFT-AXLE	
	11	1	8T-4224	6	WASHER-HARD (8.8X16X2-MM THK)	
M	12	1	8T-5093	6	BOLT-LOCKING (M8X1.25X25-MM)	
M	13	1	8T-0375	8	BOLT (M16X2X45-MM)	
	14	1	6F-4718	1	SEAL-O-RING	
B	15	1	4E-3999	1	SHIM PACK (INCLUDES 10-SHIMS)	
	16	1	4E-3997	1	HOUSING-PINION	
	17	1	138-1840	1	RETAINER-SEAL	
	18	1	206-4545	1	HOUSING AS	
M		1	095-0673	4	BOLT-SOCKET HEAD (M12X1.75X60-MM)	
	19	1	5P-4484	1	PLUG-MAGNETIC	
	20	1	7M-8485	4	SEAL-O-RING	
	21	1	9S-4181	2	PLUG	
	22	1	2K-9295	2	BEARING AS-TAPERED ROLLER	
	23	1	3B-4124	2	CUP-BEARING (TAPERED ROLLER)	
	24	1	9C-6313	2	NUT-BEARING	
	25	1	8T-3727	2	RING-RETAINING	
	26	1	9C-6041	3	DOWEL	
	27	1	123-4003	1	SEAL-LIP TYPE	
	28	1	3B-0551	1	PLUG-PIPE	
	29	1	8R-0512	1	GAUGE AS-OIL LEVEL (DIPSTICK)	
	30	1	206-4546	2	HOUSING-AXLE	
	31	1	9S-9334	1	PLUG	
	32	1	9S-8005	1	PLUG	
	33	1	3K-0360	1	SEAL-O-RING	

B-USE AS REQUIRED
M-METRIC PART

206-4544 HOUSING GP-FIXED AXLE (contd.) i01850203

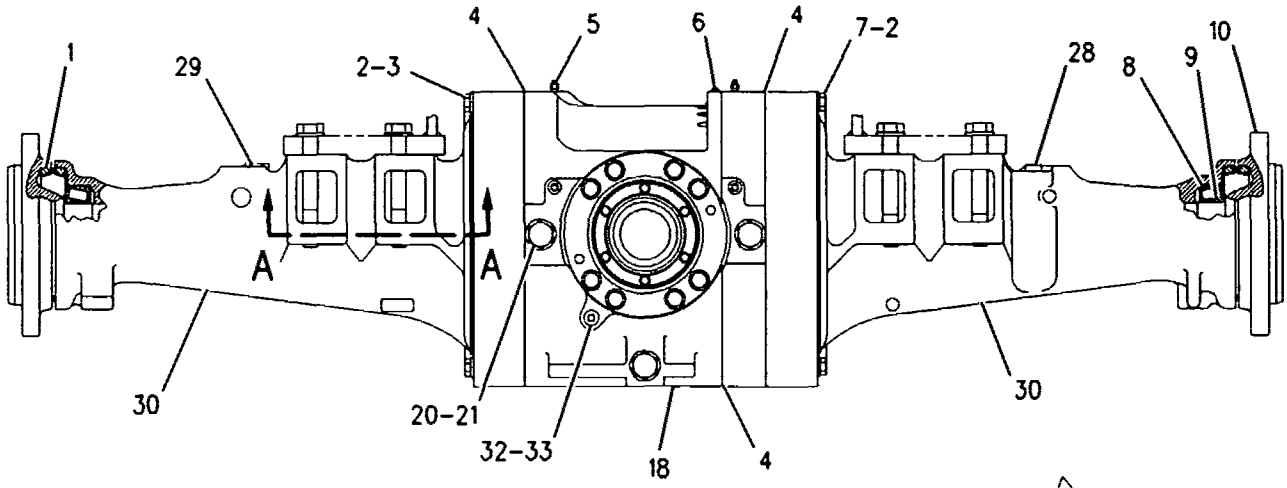

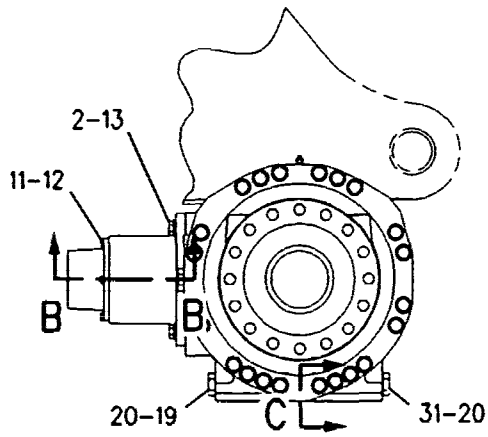

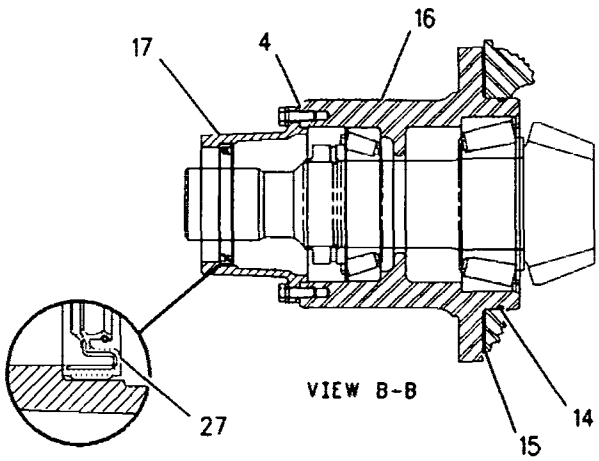

VIEW B-B

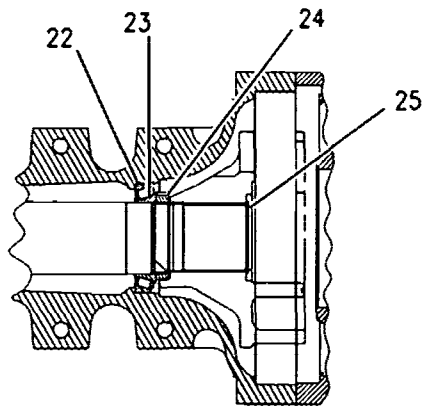

VIEW A-A

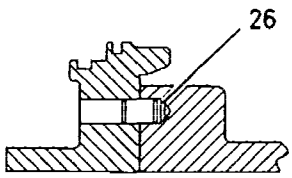

VIEW C

GRAPHIC #1 <END> g00942508

POWER TRAIN

207-3693 HOUSING GP-FIXED AXLE

S/N: CRD1-UP
PART OF 207-3691 AXLE AR-FIXED
AN ATTACHMENT

SMCS-3260 101682362

NOTE	REF NO	GRAPHIC REF	PART NUMBER	QTY	PART NAME 1 2 3 4 5 6 (PRODUCT LEVEL)	SEE PAGE
	1	1	9G-5315	2	SEAL GP-DUO-CONE	
	2	1	8R-0512	1	GAUGE AS-OIL LEVEL (DIPSTICK)	
	3	1	5P-8247	52	WASHER-HARD (17X32X3.5-MM THK)	
M	4	1	8T-0649	22	BOLT (M16X2X110-MM)	
B	5	1	1U-8846		SEALANT-GASKET	
	6	1	5H-3701	2	SCREW-PURGE	
	7	1	8T-0336	1	FITTING-PRESSURE RELIEF	
M	8	1	8T-5002	22	BOLT (M16X180-MM)	
	11	1	6Y-1032	2	CUP-BEARING	
	12	1	6Y-1031	2	CONE-BEARING	
	13	1	112-1255	2	SHAFT-AXLE	
	14	1	8T-4224	6	WASHER-HARD (8.8X16X2-MM THK)	
M	15	1	8T-5093	6	BOLT-LOCKING (M8X1.25X25-MM)	
M	16	1	8T-0375	8	BOLT (M16X2X45-MM)	
	17	1	6F-4718	1	SEAL-O-RING	
B	18	1	4E-3999	1	SHIM PACK (INCLUDES 10-SHIMS)	
	19	1	4E-3997	1	HOUSING-PINION	
	20	1	138-1840	1	RETAINER-SEAL	
	21	1	206-4545	1	HOUSING AS	
M		1	095-0673	4	BOLT-SOCKET HEAD (M12X1.75X60-MM)	
	22	1	5P-4484	1	PLUG-MAGNETIC	
	23	1	7M-8485	4	SEAL-O-RING	
	24	1	9S-4181	2	PLUG	
	25	1	207-3695	2	HOUSING	
	26	1	2K-9295	2	BEARING AS-TAPERED ROLLER	
	27	1	3B-4124	2	CUP-BEARING (TAPERED ROLLER)	
	28	1	9C-6313	2	NUT-BEARING	
	29	1	8T-3727	2	RING-RETAINING	
	30	1	9C-6041	3	DOWEL	
	31	1	123-4003	1	SEAL-LIP TYPE	
	32	1	3B-0551	1	PLUG-PIPE	
	33	1	9S-8005	3	PLUG	
	34	1	3K-0360	3	SEAL-O-RING	
	35	1	9S-9334	1	PLUG	

B-USE AS REQUIRED
M-METRIC PART

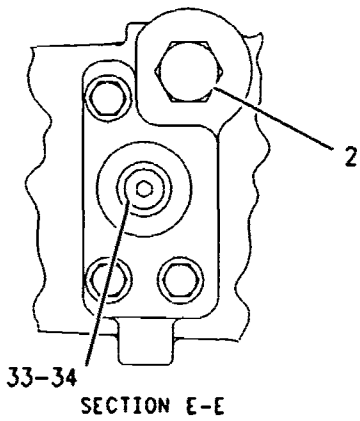

SECTION E-E

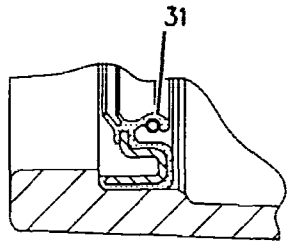

VIEW OF AREA D

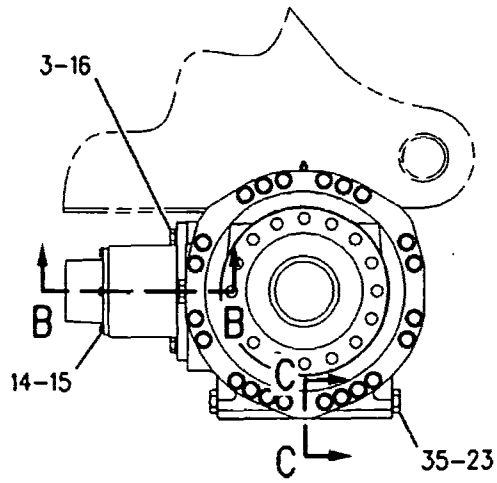

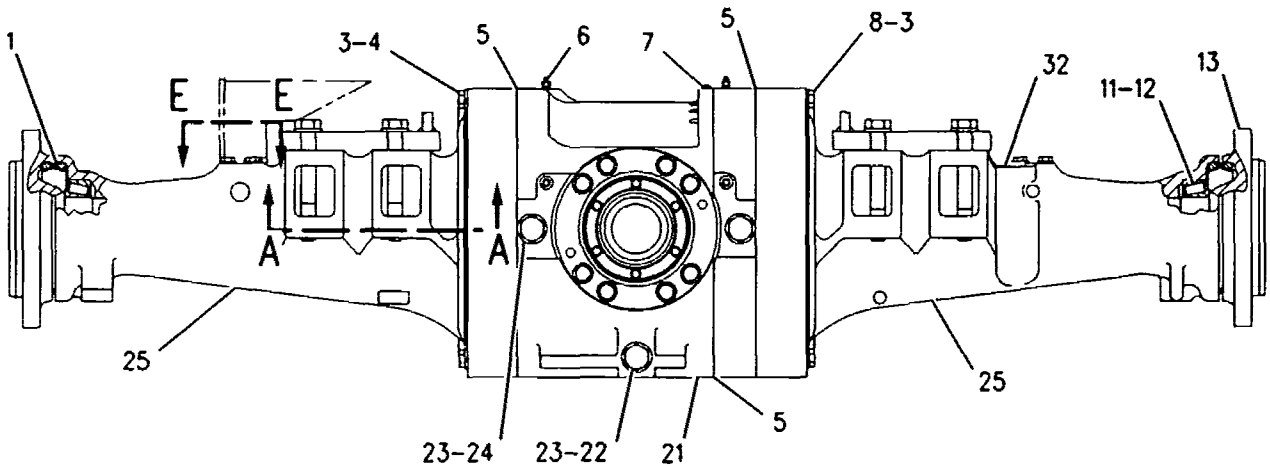

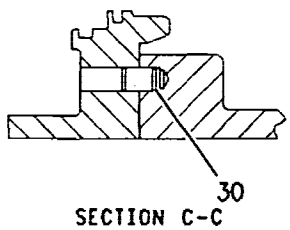

SECTION C-C

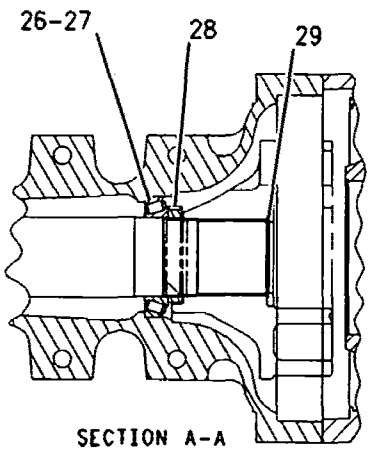

SECTION A-A

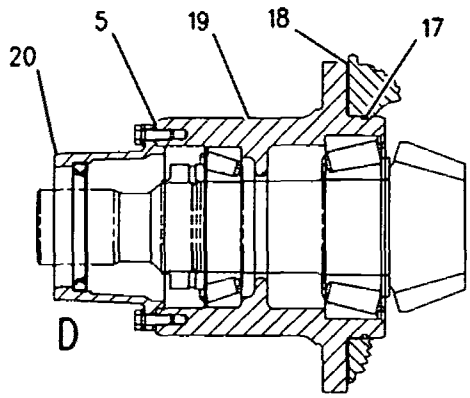

SECTION B-B

GRAPHIC #1 **<END>** g00857176

206-4547 HOUSING GP-OSCILLATING AXLE

S/N: CRD1-UP

PART OF 206-4540, 207-3689, 207-3690 AXLE AR-OSCILLATING

ALSO AN ATTACHMENT

SMCS-3260, 3268 101674207

NOTE	REF NO	GRAPHIC REF	PART NUMBER	QTY	PART NAME 1 2 3 4 5 6 (PRODUCT LEVEL)	SEE PAGE
	1	1	9C-6041	3	DOWEL	
	2	1	5H-3701	2	SCREW-PURGE	
	3	1	8T-0336	1	FITTING-PRESSURE RELIEF	
	4	1	9S-4181	2	PLUG	
	5	1	7M-8485	4	SEAL-O-RING	
	6	1	5P-4484	1	PLUG-MAGNETIC	
	9	1	100-3650	1	SUPPORT-TRUNNION	
	10	1	100-3651	1	SUPPORT-TRUNNION	
M	11	1	8T-0375	22	BOLT (M16X2X45-MM)	
	12	1	5P-8247	72	WASHER-HARD (17X32X3.5-MM THK)	
	13	1	4V-5099	1	COVER	
M	14	1	6V-5686	6	BOLT (M16X2X50-MM)	
	15	1	6K-2430	1	SEAL-LIP TYPE	
	16	1	9C-6312	2	SHAFT-AXLE	
	17	1	3B-0551	1	PLUG-PIPE	
	18	1	2K-9295	2	BEARING AS-TAPERED ROLLER	
	19	1	3B-4124	2	CUP-BEARING (TAPERED ROLLER)	
B	20	1	1U-8846		SEALANT-GASKET (70ML)	
M	21	1	8T-5093	6	BOLT-LOCKING (M8X1.25X25-MM)	
	22	1	8T-4224	6	WASHER-HARD (8.8X16X2-MM THK)	
	23	1	6F-4718	1	SEAL-O-RING	
	24	1	138-1840	1	RETAINER-SEAL	
	25	1	4E-3997	1	HOUSING-PINION	
B	26	1	4E-3999	1	SHIM PACK (INCLUDES 10-SHIMS)	
	27	1	8T-3727	2	RING-RETAINING	
	28	1	9C-6313	2	NUT-BEARING	
	29	1	6Y-1031	2	CONE-BEARING	
	30	1	6Y-1032	2	CUP-BEARING	
	31	1	9G-5315	2	SEAL GP-DUO-CONE	
	32	1	206-4549	2	HOUSING-AXLE	
M	33	1	8T-0649	22	BOLT (M16X2X110-MM)	
	34	1	206-4548	1	HOUSING AS	
M		1	095-0673	4	BOLT-SOCKET HEAD (M12X1.75X60-MM)	
	35	1	109-4731	1	PLATE	
M	36	1	6V-3531	4	BOLT (M20X2.5X50-MM)	
	37	1	8T-3282	4	WASHER-HARD (22X35X3.5-MM THK)	
	38	1	4E-4007	1	TRUNNION	
M	39	1	8T-5002	22	BOLT (M16X180-MM)	
	40	1	8R-0512	1	GAUGE AS-OIL LEVEL (DIPSTICK)	
	41	1	123-4003	1	SEAL-LIP TYPE	
	42	1	3K-5093	2	SEAL-LIP TYPE	
	43	1	5V-7574	1	RING-RETAINING	
	44	1	213-1364	1	BEARING-SLEEVE	
	45	1	2K-0715	2	WASHER-THRUST (6.35-MM THK)	
	46	1	213-1369	1	BEARING-SLEEVE	
	47	1	9S-9334	1	PLUG	
F		1	9S-8005	1	PLUG	
F		1	3K-0360	1	SEAL-O-RING	

B-USE AS REQUIRED
F-NOT SHOWN
M-METRIC PART

206-4547 HOUSING GP-OSCILLATING AXLE (contd.) i01674207

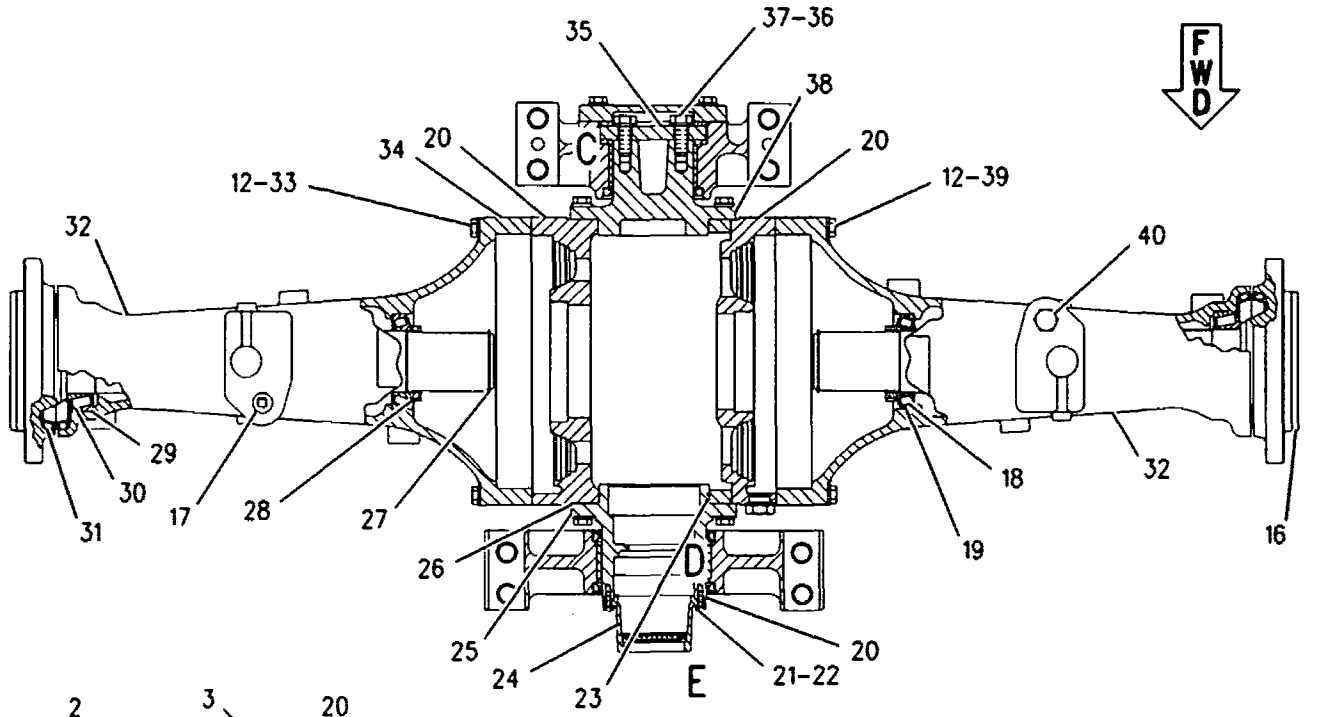

TOP VIEW

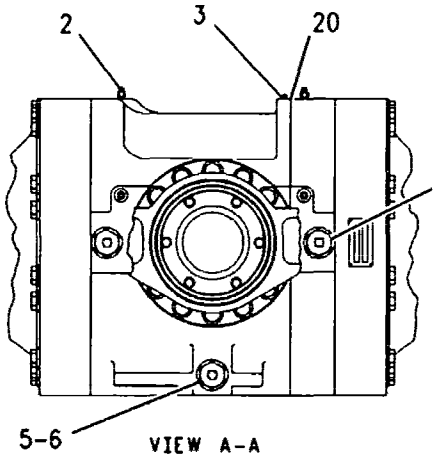

VIEW A-A

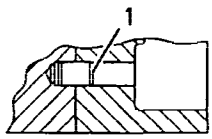

VIEW B-B

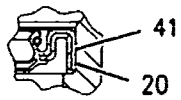

VIEW OF AREA E

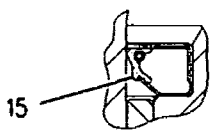

VIEW OF AREA F

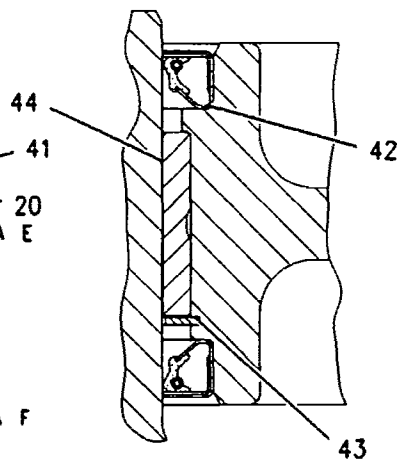

VIEW OF AREA D

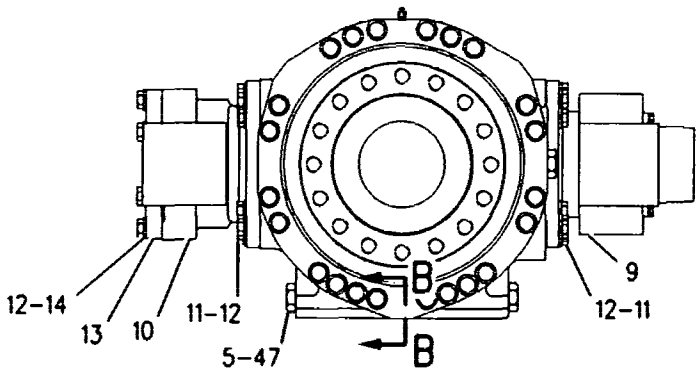



RIGHT SIDE VIEW

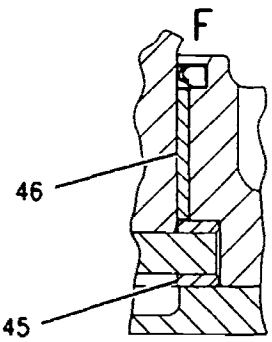

VIEW OF AREA C

GRAPHIC #1 <END> g00877076

POWER TRAIN

207-3694 HOUSING GP-OSCILLATING AXLE

S/N: CRD1-UP
PART OF 207-3692 AXLE AR-OSCILLATING
AN ATTACHMENT

SMCS-3260, 3268 i01682363

NOTE	REF NO	GRAPHIC REF	PART NUMBER	QTY	PART NAME 1 2 3 4 5 6 (PRODUCT LEVEL)	SEE PAGE
	1	1	9C-6041	3	DOWEL	
	2	1	8R-0512	1	GAUGE AS-OIL LEVEL (DIPSTICK)	
	3	1	9S-8005	3	PLUG	
	4	1	9S-4181	2	PLUG	
	5	1	7M-8485	4	SEAL-O-RING	
	6	1	5P-4484	1	PLUG-MAGNETIC	
	8	1	100-3650	1	SUPPORT-TRUNNION	
	9	1	100-3651	1	SUPPORT-TRUNNION	
M	10	1	8T-0375	22	BOLT (M16X2X45-MM)	
	11	1	5P-8247	72	WASHER-HARD (17X32X3.5-MM THK)	
	12	1	4V-5099	1	COVER	
M	13	1	6V-5686	6	BOLT (M16X2X50-MM)	
	14	1	112-1255	2	SHAFT-AXLE	
	15	1	3B-0551	1	PLUG-PIPE	
	16	1	2K-9295	2	BEARING AS-TAPERED ROLLER	
	17	1	3B-4124	2	CUP-BEARING (TAPERED ROLLER)	
B	18	1	1U-8846		SEALANT-GASKET	
M	19	1	8T-5093	6	BOLT-LOCKING (M8X1.25X25-MM)	
	20	1	8T-4224	6	WASHER-HARD (8.8X16X2-MM THK)	
	21	1	6F-4718	1	SEAL-O-RING	
	22	1	138-1840	1	RETAINER-SEAL	
	23	1	4E-3997	1	HOUSING-PINION	
B	24	1	4E-3999	1	SHIM PACK (INCLUDES 10-SHIMS)	
	25	1	8T-3727	2	RING-RETAINING	
	26	1	9C-6313	2	NUT-BEARING	
	27	1	6Y-1031	2	CONE-BEARING	
	28	1	6Y-1032	2	CUP-BEARING	
	29	1	9G-5315	2	SEAL GP-DUO-CONE	
	30	1	207-3696	2	HOUSING	
M	31	1	8T-0649	22	BOLT (M16X2X110-MM)	
	32	1	206-4548	1	HOUSING AS	
M		1	095-0673	4	BOLT-SOCKET HEAD (M12X1.75X60-MM)	
	33	1	109-4731	1	PLATE	
M	34	1	6V-3531	4	BOLT (M20X2.5X50-MM)	
	35	1	8T-3282	4	WASHER-HARD (22X35X3.5-MM THK)	
	36	1	4E-4007	1	TRUNNION	
M	37	1	8T-5002	22	BOLT (M16X180-MM)	
	38	1	5H-3701	2	SCREW-PURGE	
	39	1	123-4003	1	SEAL-LIP TYPE	
	40	1	3K-5093	2	SEAL-LIP TYPE	
	41	1	5V-7574	1	RING-RETAINING	
	42	1	213-1364	1	BEARING-SLEEVE	
	43	1	2K-0715	2	WASHER-THRUST (6.35-MM THK)	
	44	1	213-1369	1	BEARING-SLEEVE	
	45	1	6K-2430	1	SEAL-LIP TYPE	
	46	1	8T-0336	1	FITTING-PRESSURE RELIEF	
	47	1	3K-0360	3	SEAL-O-RING	
	49	1	9S-9334	1	PLUG	

B-USE AS REQUIRED
M-METRIC PART

207-3694 HOUSING GP-OSCILLATING AXLE (contd.) i01682363

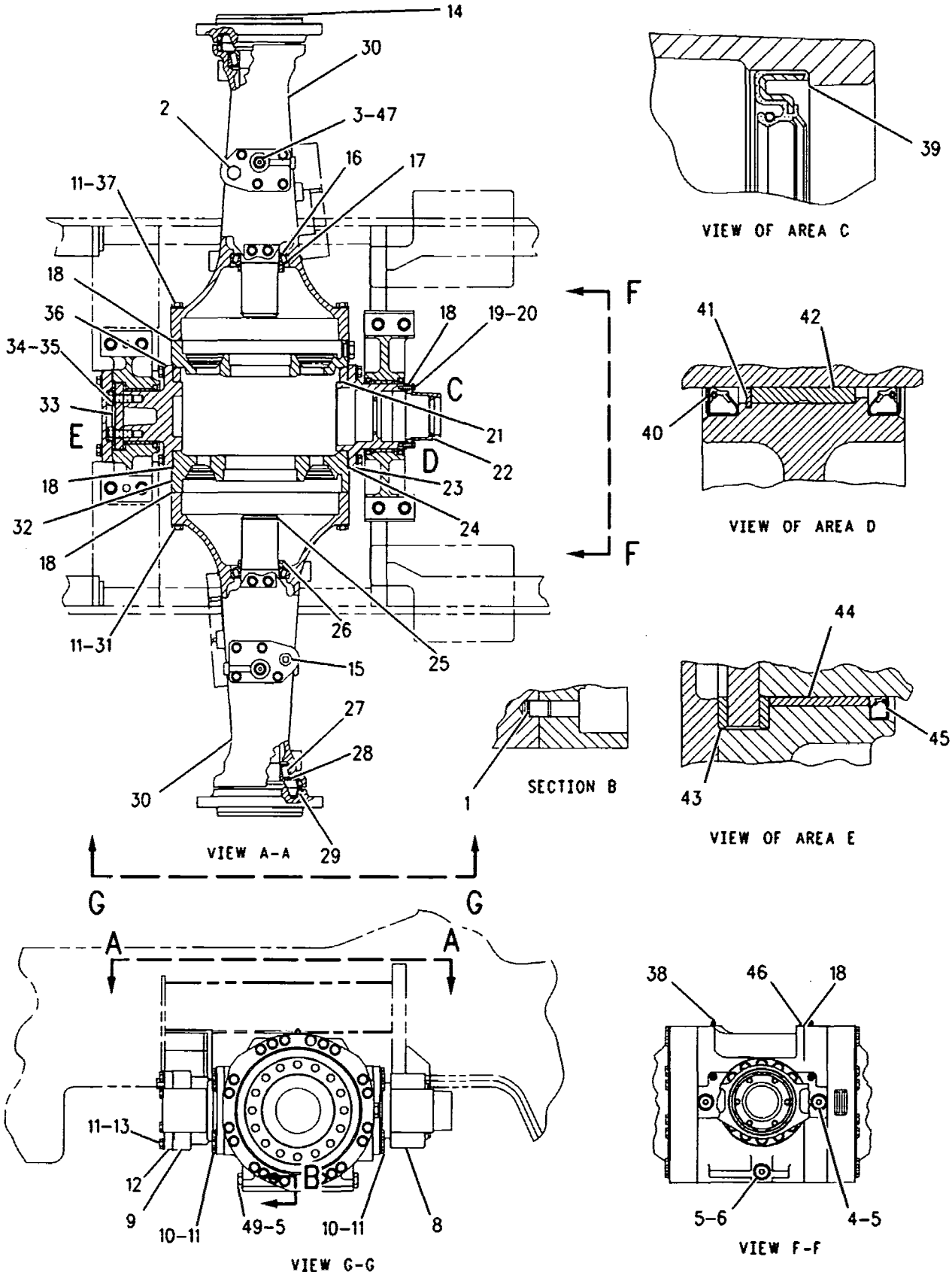

GRAPHIC #1 <END> g00857312

204-9602 INPUT GP-TRANSMISSION

S/N: WNF1-UP

PART OF 201-3265 TRANSMISSION AR

SMCS-3002, 3063, 3159 i01877237

NOTE	REF NO	GRAPHIC REF	PART NUMBER	QTY	PART NAME 1 2 3 4 5 6 (PRODUCT LEVEL)	SEE PAGE
	1	1	204-9603	1	SHAFT	
	2	1	6Y-8262	1	CARRIER-RING	
	3	1	9M-2008	1	RING-METAL SEAL	
	4	1	230-3662	1	GEAR (43 TEETH)	
	5	1	203-7613	1	GEAR (56 TEETH)	
	6	1	7J-8210	2	CONE-BEARING	

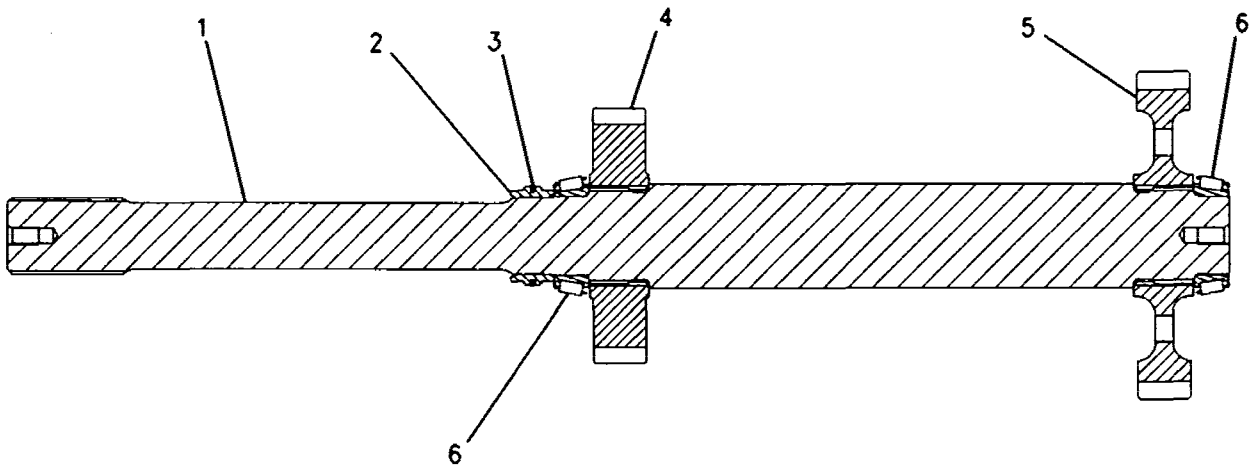

GRAPHIC #1 <END> g00951568

215-3021 LINES GP-AXLE OIL COOLER

S/N: CRD1-UP

PART OF 201-8906 COOLER AR-AXLE OIL

AN ATTACHMENT

SMCS-1365, 3016 i01877826

NOTE	REF NO	GRAPHIC REF	PART NUMBER	QTY	PART NAME 1 2 3 4 5 6 (PRODUCT LEVEL)	SEE PAGE
	1	1,2	5P-4484	2	PLUG-MAGNETIC	
	2	2	5P-5148	1	STRAP-TIE	
	3	1,2	7K-1181	12	STRAP-CABLE	
M	4	1,2	7Y-5238	2	U-BOLT	
	5	1,2	8C-6875	4	CONNECTOR	
	6	1,2	130-9505	2	FILTER-MAGNETIC (AXLE OIL COOLER)	
I	7	1	146-3197	2	HOSE AS	
	8	1,2	153-5100	2	MANIFOLD AS	
I	9	2	167-7773	1	HOSE AS	
I	10	2	167-7774	1	HOSE AS	
	11	1,2	167-7777	2	TUBE AS	
	12	1,2	167-7778	2	TUBE AS	
	13	1	168-6453	2	ELBOW	
	14	2	228-3626	1	TUBE AS	
	15	2	228-3627	1	TUBE AS	
	16	2	215-3008	1	TUBE AS	
	17	2	215-3009	1	TUBE AS	
I	18	1	215-3010	1	HOSE AS	
I	19	1	215-3011	1	HOSE AS	
I	20	2	215-3012	2	HOSE AS	
	21	1	215-3017	1	BRACKET AS	
M		1	8T-3490	2	NUT-WELD (M10X1.5-THD)	
		1	209-7659	1	PLATE-INFORMATION (MANUAL FUEL)	
	22	1,2	215-3018	2	BRACKET AS	
	23	1	215-3019	1	BRACKET	
	24	2	154-0273	1	CLIP	
	25	2	2M-9780	2	SEAL-O-RING	
	26	2	3D-2824	2	SEAL-O-RING	
	27	1	3J-1907	2	SEAL-O-RING	
	28	1,2	3K-0360	6	SEAL-O-RING	
	29	1	4S-1962	2	CLIP	
	30	1	5D-0718	2	CLIP	
	31	1,2	5K-9090	10	SEAL-O-RING	
	32	2	5P-5777	2	ADAPTER-O-RING	
	33	1	5P-7468	1	CLIP (SLOT)	
	34	1	5P-7469	1	CLIP (TAB)	
	35	1	5P-8444	1	GROMMET	
	36	1	8T-1887	2	CLIP (SLOT)	
	37	1	6V-1889	1	CLIP	
	38	1,2	6V-8397	4	SEAL-O-RING	
	39	1,2	6V-8398	4	SEAL-O-RING	
	40	2	8T-5389	2	ELBOW	
	41	1,2	6V-8635	2	CONNECTOR	
	42	1	6V-8636	2	CONNECTOR	
	43	1,2	6V-9158	2	TEE-UNION	
	44	2	6V-9746	9	SEAL-O-RING	
	45	2	6V-9853	1	ELBOW	
	46	1,2	7D-7233	3	CLIP	
	47	2	7J-9108	2	SEAL-O-RING	
	48	1,2	7M-8485	10	SEAL-O-RING	
	49	2	8T-1683	2	ELBOW	
	50	1,2	8T-4121	19	WASHER-HARD (11X21X2.5-MM THK)	
M	51	1,2	8T-4133	5	NUT (M10X1.5-THD)	
M	52	1,2	8T-4136	6	BOLT (M10X1.5X25-MM)	
M	53	1	8T-4137	4	BOLT (M10X1.5X20-MM)	

215-3021 LINES GP-AXLE OIL COOLER (contd.)

i01877826

NOTE	REF NO	GRAPHIC REF	PART NUMBER	QTY	PART NAME 1 2 3 4 5 6 (PRODUCT LEVEL)	SEE PAGE
M	54	1	8T-4186	1	BOLT (M10X1.5X40-MM)	
M	55	1	8T-4195	3	BOLT (M10X1.5X30-MM)	
M	56	2	8T-4196	1	BOLT (M10X1.5X35-MM)	
	57	2	8T-6684	2	ELBOW (90-DEG)	
	58	1,2	9S-4185	3	PLUG	
M	59	1	8T-4194	1	BOLT (M12X1.75X50-MM)	
	60	1	3P-2404	1	CLIP	
	61	1	8T-1888	2	CLIP (TAB)	

I-REFER TO HYDRAULIC INFORMATION SYSTEM
M-METRIC PART

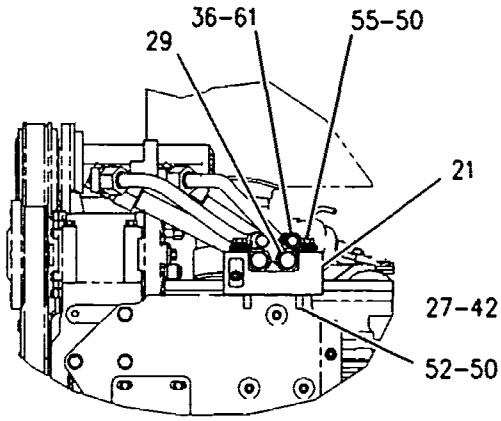

SECTION F-F

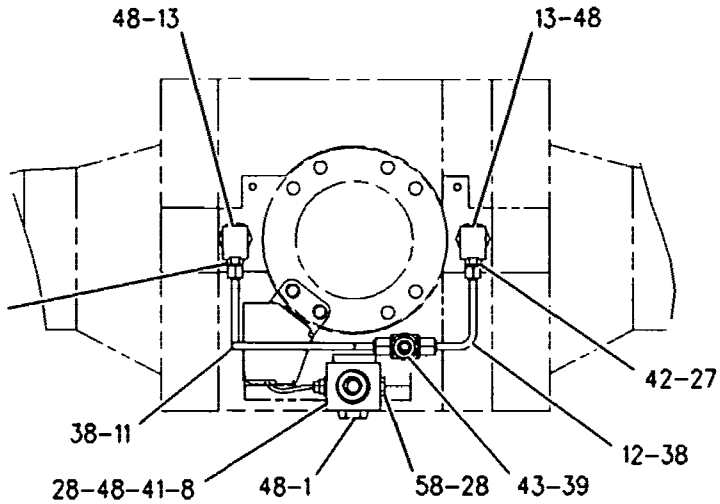

SECTION A-A

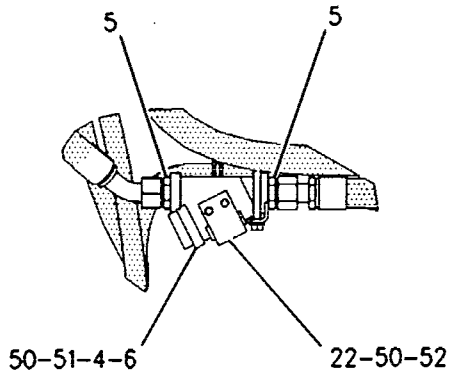

VIEW OF AREA D

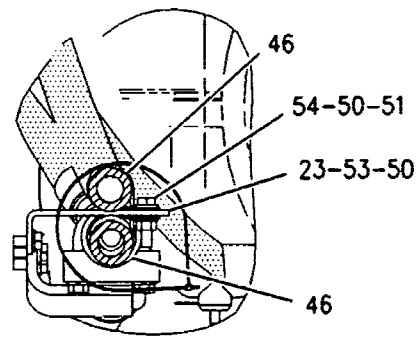

SECTION G-G

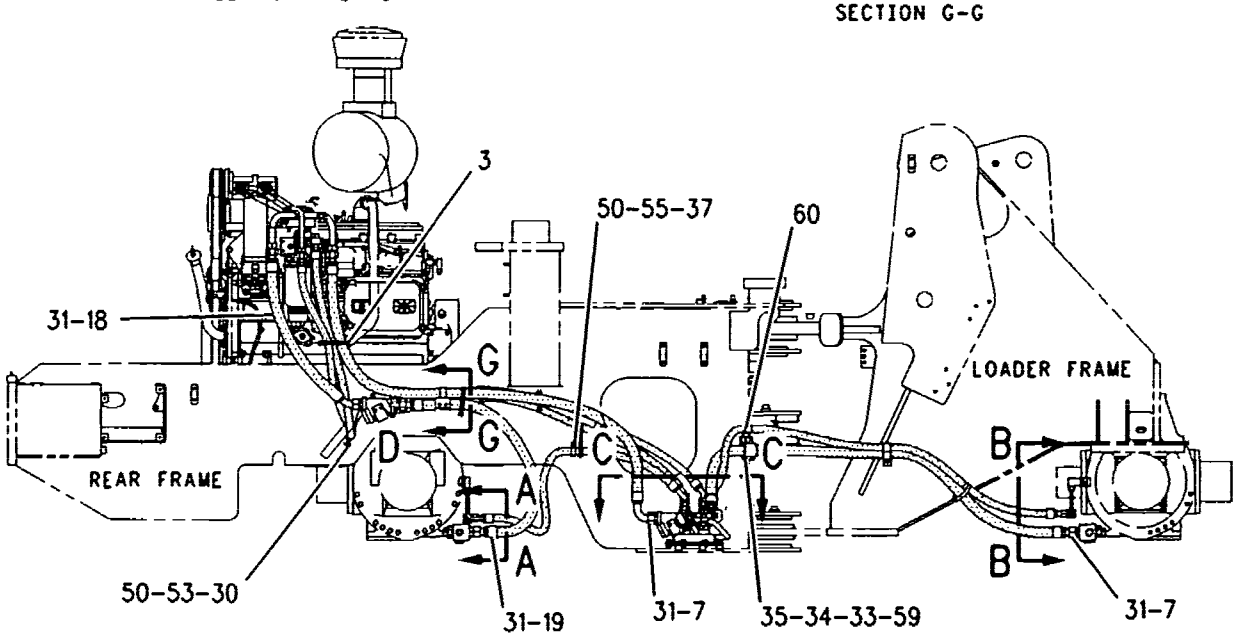

REFER TO ALL ILLUSTRATIONS OF THIS GROUP FOR AUXILIARY VIEWS

GRAPHIC #1 g00953089

215-3021 LINES GP-AXLE OIL COOLER (contd.) 101877826

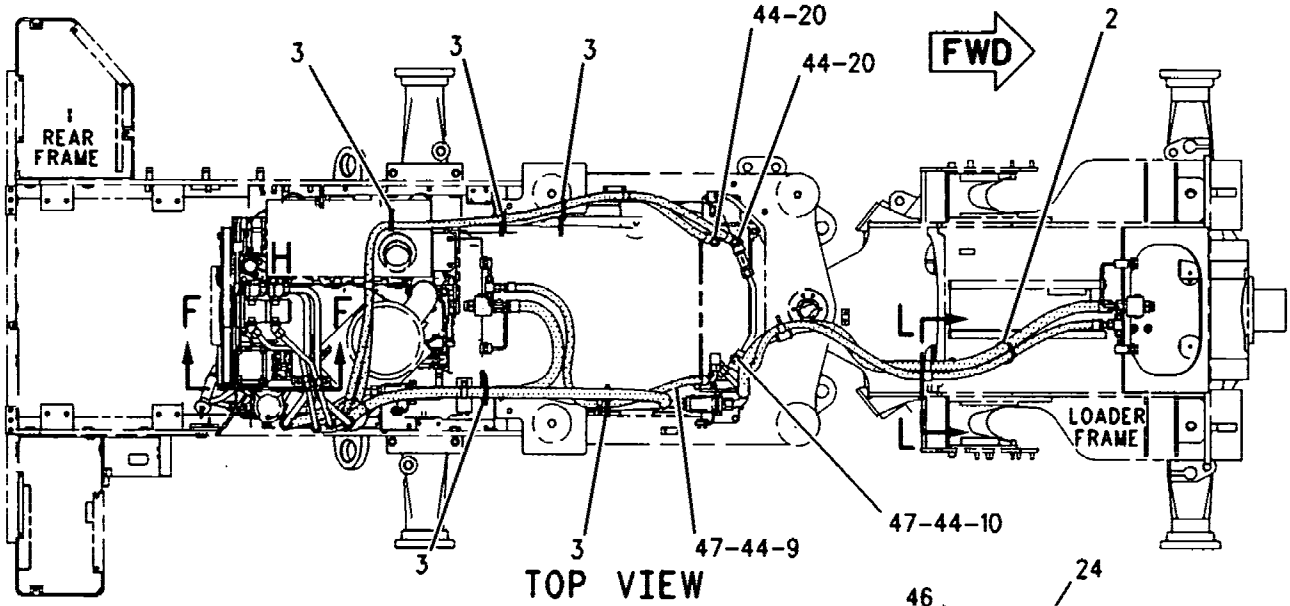

TOP VIEW

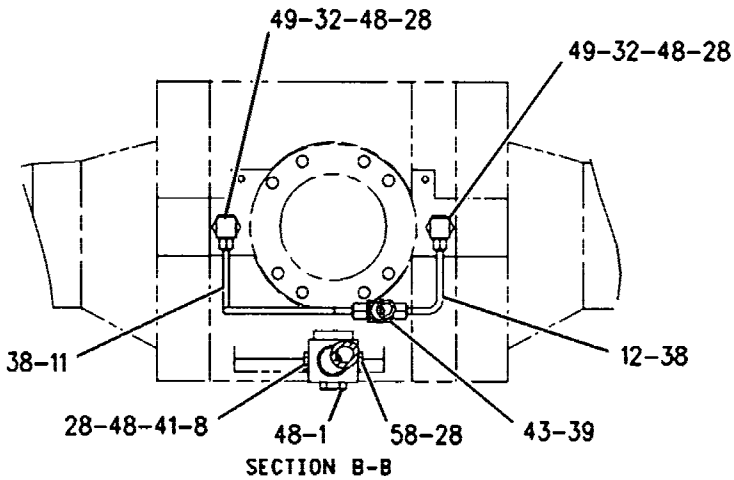

SECTION B-B

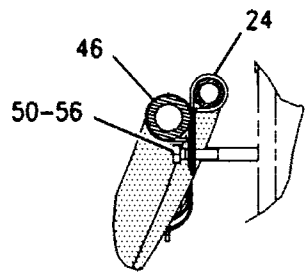

SECTION L-L

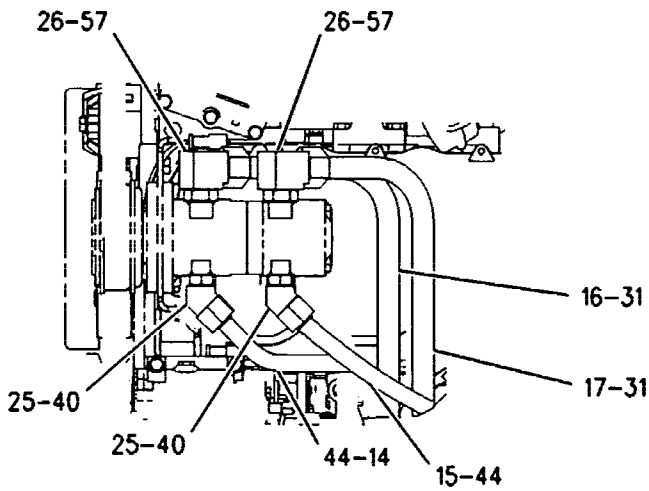

VIEW OF AREA H

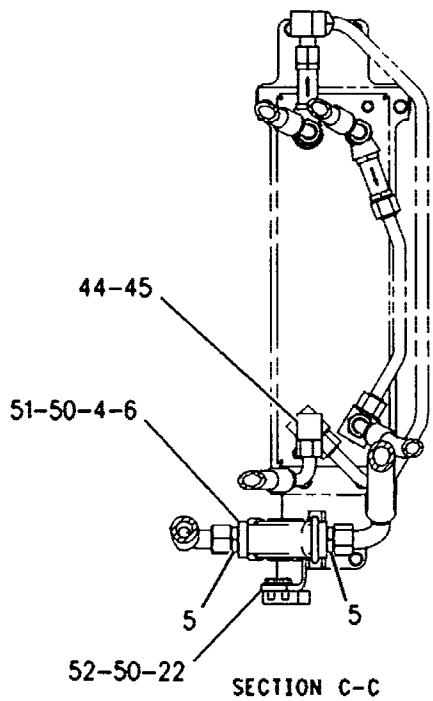

SECTION C-C

REFER TO ALL ILLUSTRATIONS OF THIS GROUP FOR AUXILIARY VIEWS

GRAPHIC #2 <END> g00953093

204-9262 LINES GP-POWER TRAIN FILTER

S/N: CRD1-946

PART OF 199-2820 POWER TRAIN AR

SMCS-3016, 3067 i01673497

NOTE	REF NO	GRAPHIC REF	PART NUMBER	QTY	PART NAME 1 2 3 4 5 6 (PRODUCT LEVEL)	SEE PAGE
	1	1	8T-6684	1	ELBOW (90-DEG)	
	2	1	8T-7970	1	ELBOW	
	3	1	139-1451	1	TUBE AS	
I	4	1	149-7544	1	HOSE AS	
	5	1	205-7133	1	TUBE AS	
I	6	1	216-3372	1	HOSE AS	
Y	7	1	197-1993	1	FILTER GP-OIL (POWER TRAIN)	400
	8	1	3D-2824	2	SEAL-O-RING	
	9	1	4J-0520	2	SEAL-O-RING	
	10	1	5K-9090	4	SEAL-O-RING	
	11	1	8C-3206	4	FLANGE-HALF	
	12	1	8T-1889	1	CLIP (SLOT)	
	13	1	8T-1890	1	CLIP (TAB)	
	14	1	8T-4121	13	WASHER-HARD (11X21X2.5-MM THK)	
M	15	1	8T-4137	5	BOLT (M10X1.5X20-MM)	
M	16	1	8T-4186	4	BOLT (M10X1.5X40-MM)	
M	17	1	8T-4196	4	BOLT (M10X1.5X35-MM)	

I-REFER TO HYDRAULIC INFORMATION SYSTEM
M-METRIC PART
Y-SEPARATE ILLUSTRATION

204-9262 LINES GP-POWER TRAIN FILTER (contd.) 101673497

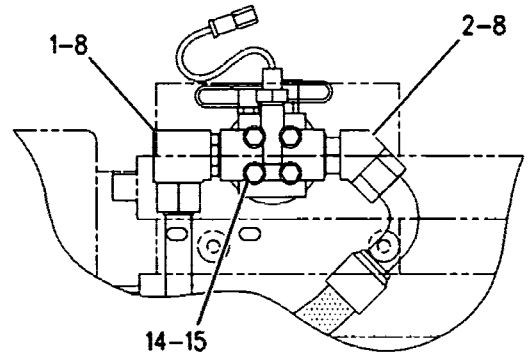

VIEW A-A

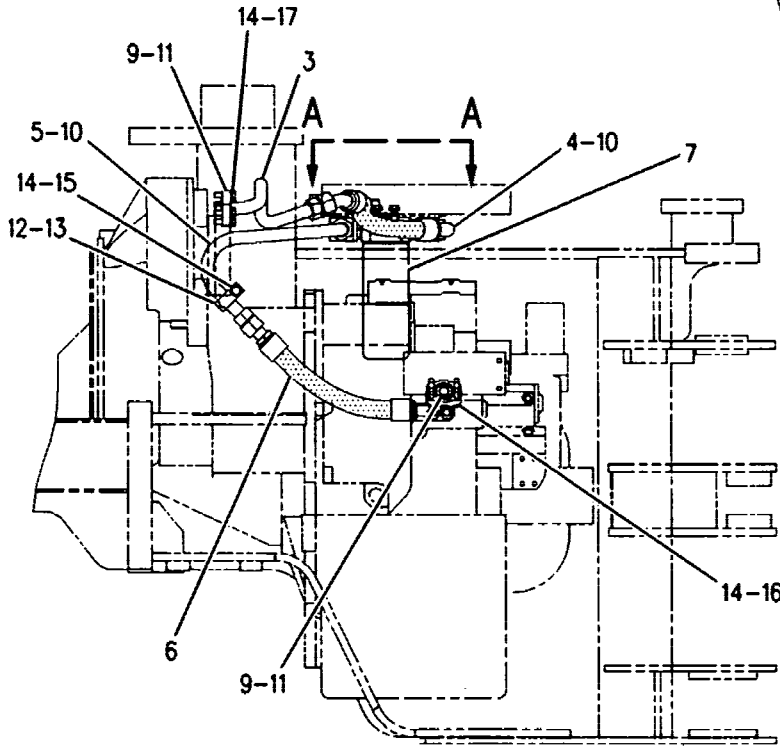

RIGHT SIDE VIEW

GRAPHIC #1 <END> g00867686

204-9262 LINES GP-POWER TRAIN FILTER

S/N: CRD947-UP

PART OF 199-2820 POWER TRAIN AR

SMCS-3016, 3067 i02150892

NOTE	REF NO	GRAPHIC REF	PART NUMBER	QTY	PART NAME 1 2 3 4 5 6 (PRODUCT LEVEL)	SEE PAGE
	1	1	8T-6684	1	ELBOW (90-DEG)	
	2	1	8T-7970	1	ELBOW	
	3	1	139-1451	1	TUBE AS	
I	4	1	149-7544	1	HOSE AS	
	5	1	205-7133	1	TUBE AS	
I	6	1	216-3372	1	HOSE AS	
CY	7	1	249-1750	1	FILTER GP-OIL (POWER TRAIN)	401
	8	1	3D-2824	2	SEAL-O-RING	
	9	1	4J-0520	2	SEAL-O-RING	
	10	1	5K-9090	4	SEAL-O-RING	
	11	1	8C-3206	4	FLANGE-HALF	
	12	1	8T-1889	1	CLIP (SLOT)	
	13	1	8T-1890	1	CLIP (TAB)	
	14	1	8T-4121	13	WASHER-HARD (11X21X2.5-MM THK)	
M	15	1	8T-4137	5	BOLT (M10X1.5X20-MM)	
M	16	1	8T-4186	4	BOLT (M10X1.5X40-MM)	
M	17	1	8T-4196	4	BOLT (M10X1.5X35-MM)	

C-CHANGE FROM PREVIOUS TYPE
I-REFER TO HYDRAULIC INFORMATION SYSTEM
M-METRIC PART
Y-SEPARATE ILLUSTRATION

204-9262 LINES GP-POWER TRAIN FILTER (contd.) i02150892

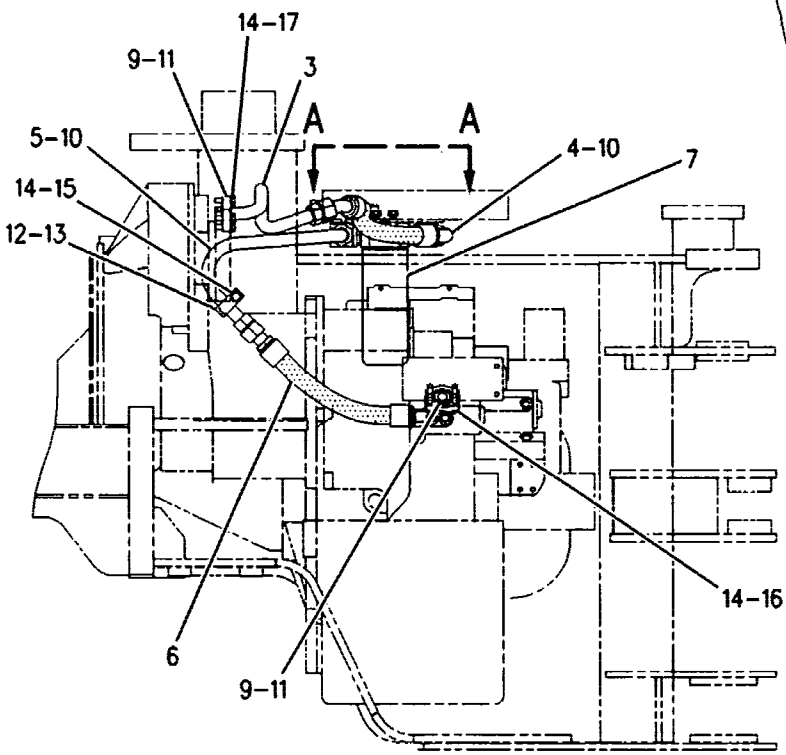

RIGHT SIDE VIEW

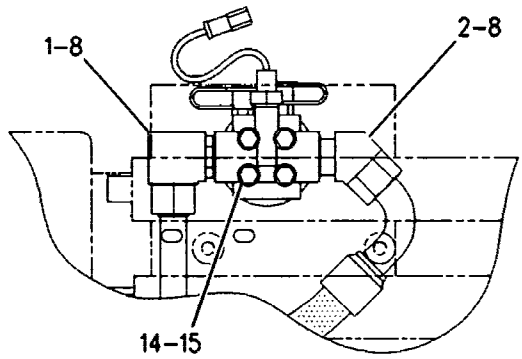

VIEW A-A

GRAPHIC #1 <END> g00867686

POWER TRAIN

198-2756 LINES GP-TORQUE CONV COOLER

S/N: CRD1-UP

PART OF 199-2816 CHASSIS AR

SMCS-1375, 3016 i01987930

NOTE	REF NO	GRAPHIC REF	PART NUMBER	QTY	PART NAME 1 2 3 4 5 6 (PRODUCT LEVEL)	SEE PAGE
Y	1	1	4T-6117	1	VALVE GP-BYPASS (TORQUE CONVERTER COOLER)	459
	2	1	6V-0852	1	CAP-DUST	
	3	1	8T-1674	1	TEE	
	4	1	9J-3866	1	ADAPTER	
I	5	1	100-4502	1	HOSE AS	
	6	1	118-6878	1	BRACKET AS	
M		1	8T-3490	1	NUT-WELD (M10X1.5-THD)	
M	7	1	8T-4195	3	BOLT (M10X1.5X30-MM)	
	8	1	163-5507	1	BRACKET	
I	9	1	197-6564	1	HOSE AS	
I	10	1	214-5828	1	HOSE AS	
I	11	1	214-5829	1	HOSE AS	
	12	1	3J-1907	2	SEAL-O-RING	
	13	1	4D-7388	4	CLIP	
	14	1	4J-0520	3	SEAL-O-RING	
	15	1	5K-9090	4	SEAL-O-RING	
	16	1	6V-3965	1	FITTING AS (QUICK DISCONNECT)	
	17	1	6V-8077	1	ELBOW	
	18	1	6V-8635	3	CONNECTOR	
	19	1	7M-8485	6	SEAL-O-RING	
	20	1	7X-7729	5	WASHER (11X25X3-MM THK)	
	21	1	8C-3206	4	FLANGE-HALF	
	22	1	8T-4121	15	WASHER-HARD (11X21X2.5-MM THK)	
M	23	1	8T-4133	6	NUT (M10X1.5-THD)	
M	26	1	8T-4178	3	BOLT (M10X1.5X90-MM)	
M	27	1	8T-4196	4	BOLT (M10X1.5X35-MM)	
M	28	1	8T-5005	4	BOLT (M10X1.5X70-MM)	

I-REFER TO HYDRAULIC INFORMATION SYSTEM
M-METRIC PART
Y-SEPARATE ILLUSTRATION

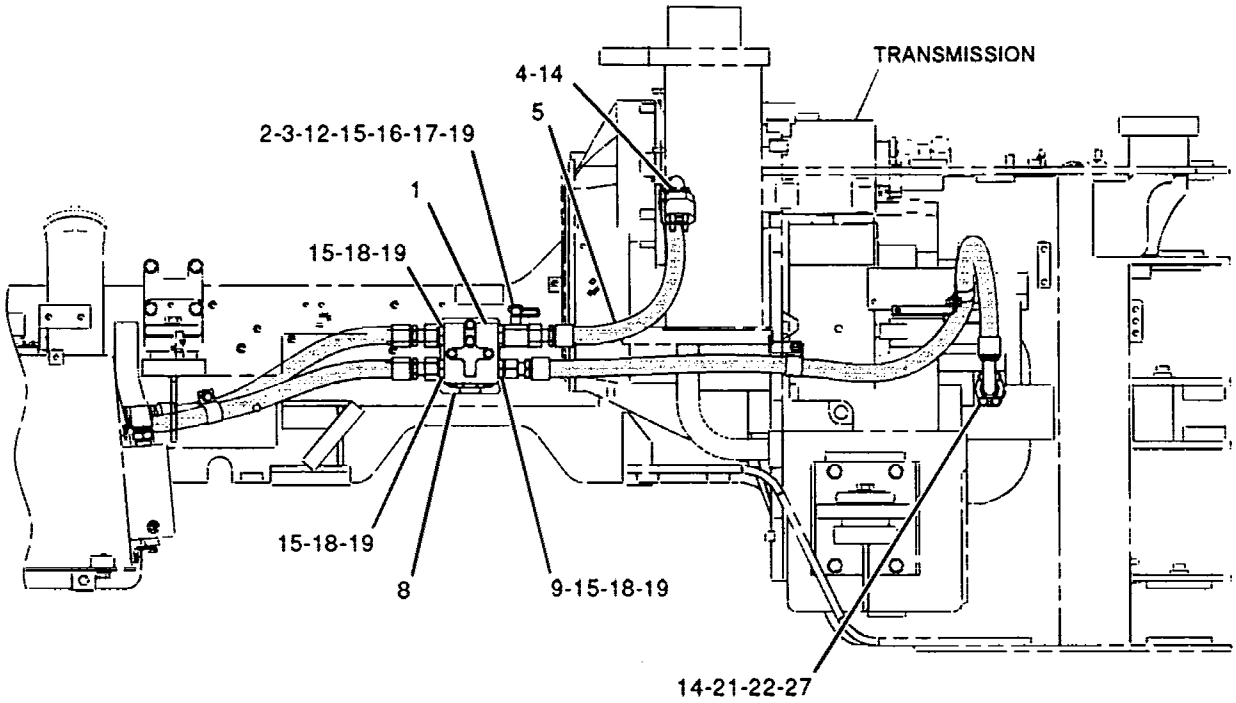

RIGHT SIDE VIEW

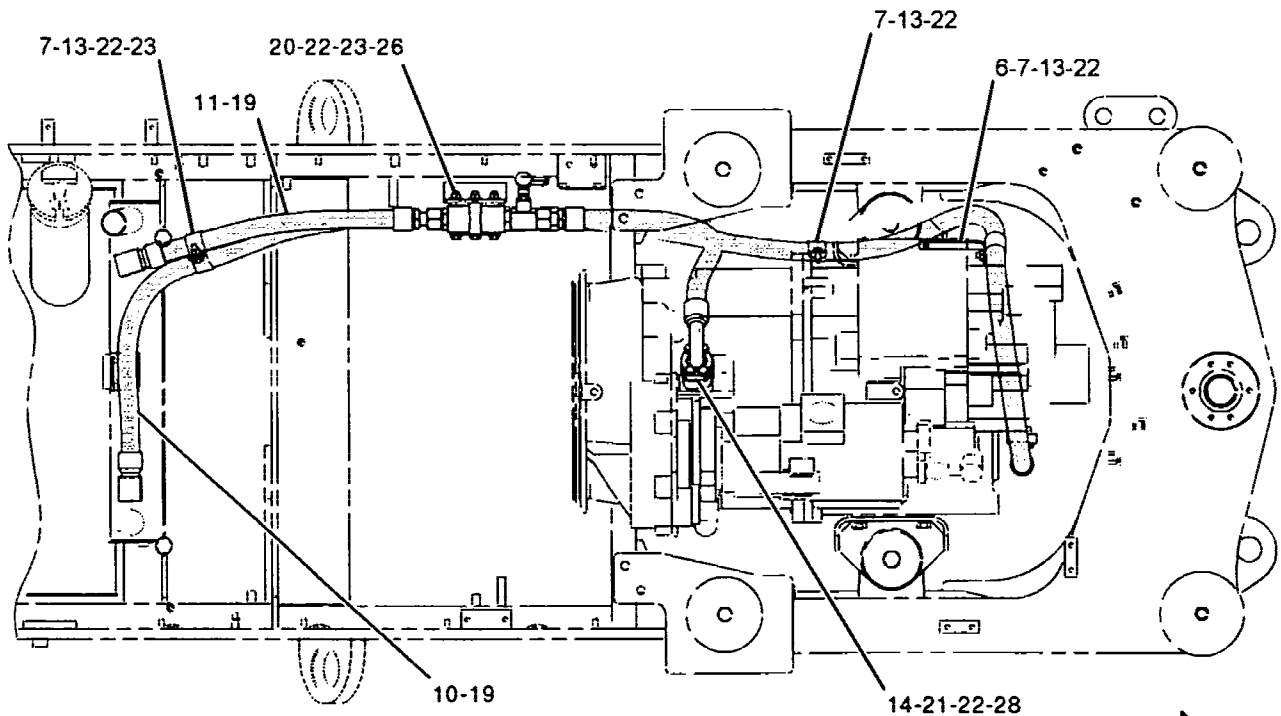

TOP VIEW

GRAPHIC #1 **<END>** g01029608

152-8403 MOUNTING GP-AXLE

S/N: CRD1-UP

PART OF 199-2820 POWER TRAIN AR

SMCS-3268, 3278 i00730093

NOTE	REF NO	GRAPHIC REF	PART NUMBER	QTY	PART NAME 1 2 3 4 5 6 (PRODUCT LEVEL)	SEE PAGE
M	1	1	7X-2465	8	BOLT (M24X3.0X180MM)	
	2	1	8T-4167	16	WASHER (4.0MM THK)	
M	3	1	7X-2567	8	BOLT (M24X3X160 MM)	
	4	1	6C-2356	2	DOWEL	

M-METRIC PART

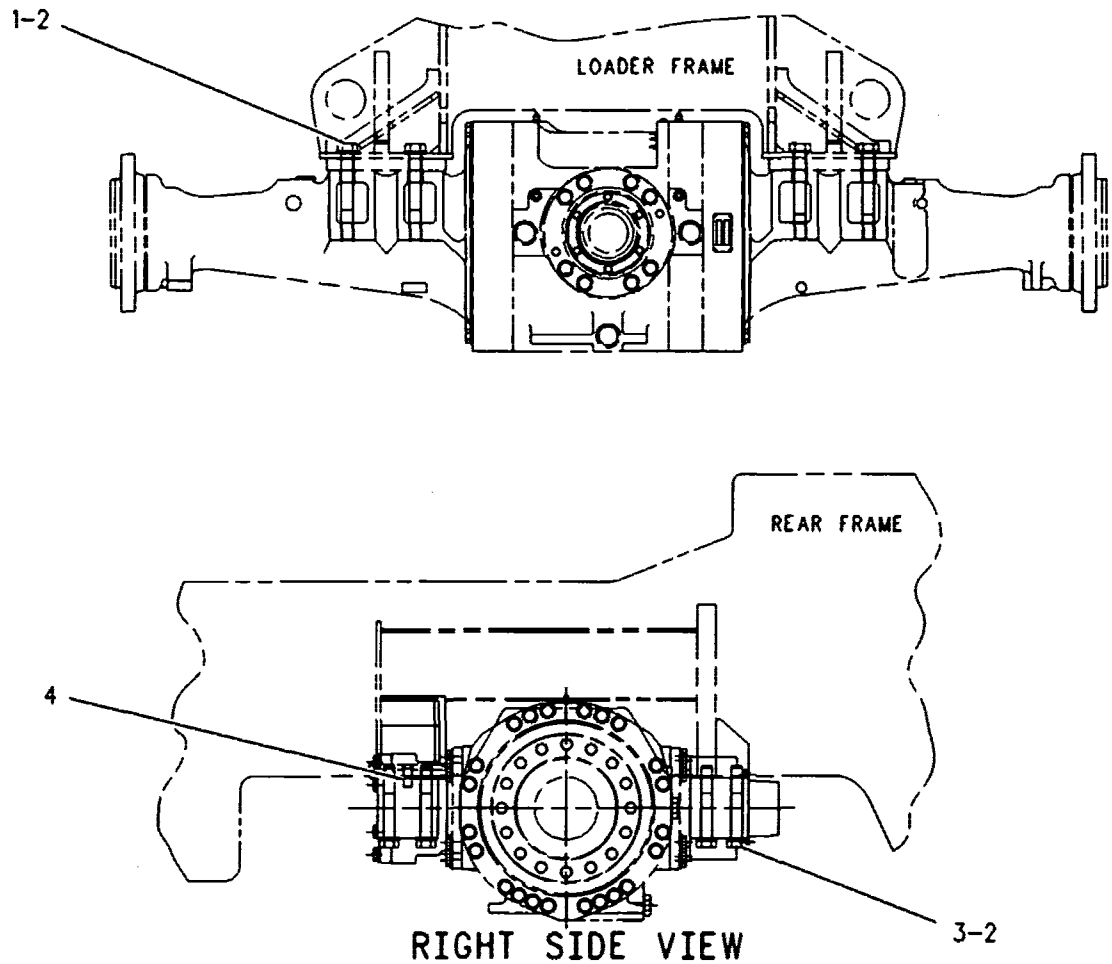

RIGHT SIDE VIEW

GRAPHIC #1 <END> g00325155

168-2035 MOUNTING GP-AXLE OIL COOLER

S/N: CRD1-UP

PART OF 201-8906 COOLER AR-AXLE OIL

AN ATTACHMENT

SMCS-1365 i01294282

NOTE	REF NO	GRAPHIC REF	PART NUMBER	QTY	PART NAME 1 2 3 4 5 6 (PRODUCT LEVEL)	SEE PAGE
	1	1	8T-8900	2	TEE-O-RING PORT	
	2	1	130-5202	2	VALVE GP-CHECK (AXLE OIL COOLER BYPASS)	
	3	1	151-5711	1	CORE AS-AXLE OIL COOLER	
	4	1	167-7760	1	PLATE AS	
M		1	8T-3490	2	NUT-WELD (M10X1.5-THD)	
	5	1	167-7764	1	PLATE AS	
M		1	8T-3490	1	NUT-WELD (M10X1.5-THD)	
	6	1	167-7775	1	TUBE AS	
	7	1	167-7776	1	TUBE AS	
	8	1	3D-2824	4	SEAL-O-RING	
	9	1	6V-0301	2	ADAPTER	
	10	1	6V-9746	5	SEAL-O-RING	
	11	1	6V-9853	1	ELBOW	
	12	1	7M-8485	4	SEAL-O-RING	
	13	1	8T-1685	2	TEE	
	14	1	8T-4121	8	WASHER-HARD (11X21X2.5-MM THK)	
M	15	1	8T-4136	8	BOLT (M10X1.5X25-MM)	
	16	1	9R-2060	5	BOSS (M10X1.5X21-MM)	

M-METRIC PART

168-2035 MOUNTING GP-AXLE OIL COOLER *(contd.)* i01294282

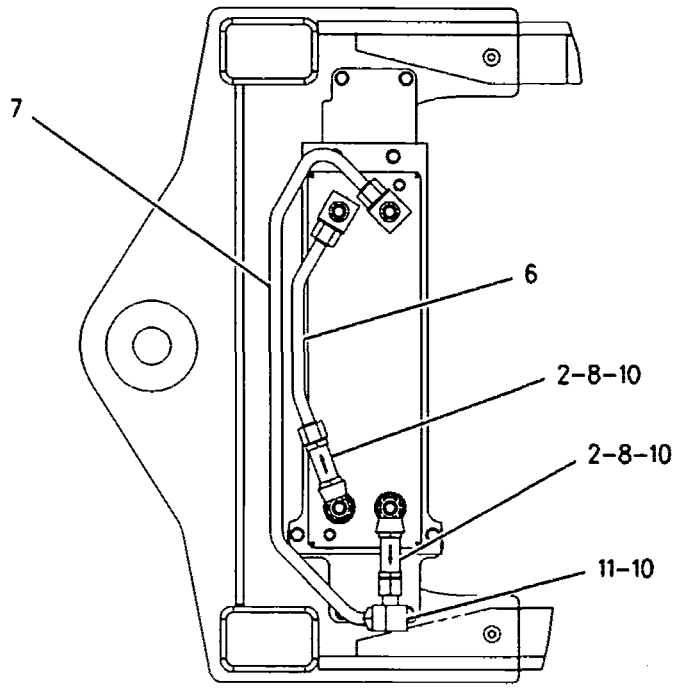

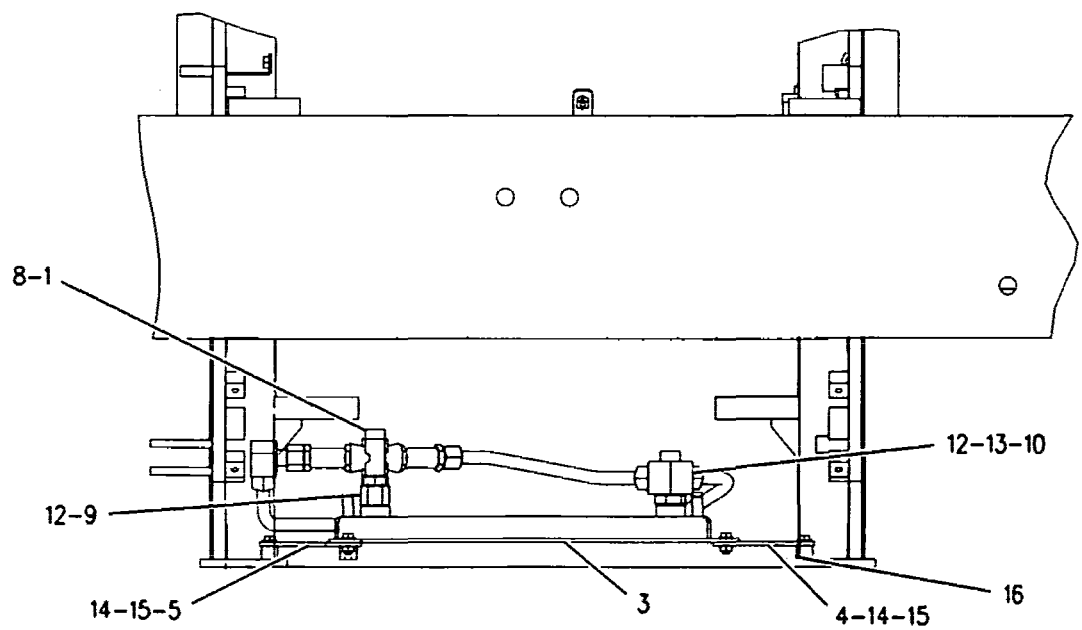

GRAPHIC #1 <END> g00602373

117-7838 MOUNTING GP-RIM

S/N: CRD1-UP
PART OF 119-7314, 246-1575 RIM AR
AN ATTACHMENT

SMCS-4202, 4209 — i00731559

NOTE	PART NUMBER	QTY	PART NAME 1 2 3 4 5 6 (PRODUCT LEVEL)	SEE PAGE
M	8T-0380	16	BOLT (M24X3X60MM)	
	6V-8237	16	WASHER (4.0MM THK)	

M-METRIC PART

<END>

199-2820 POWER TRAIN AR

S/N: CRD1-UP
PART OF 199-2812 GENERAL AR

SMCS-3000, 4000 — i01787204

NOTE	PART NUMBER	QTY	PART NAME 1 2 3 4 5 6 (PRODUCT LEVEL)	SEE PAGE
Y	*206-4539*	1	AXLE AR-FIXED (FRONT)	374
Y	*206-4540*	1	AXLE AR-OSCILLATING (REAR)	375
Y	*149-2958*	1	FILLER GP-POWER TRAIN OIL	399
Y	*204-9262*	1	LINES GP-POWER TRAIN FILTER	421
Y	*152-8403*	1	MOUNTING GP-AXLE	427
Y	*162-8435*	1	SHAFT GP-DRIVE	439
Y	201-3265	1	TRANSMISSION AR	455

Y-SEPARATE ILLUSTRATION

<END>

215-3022 PUMP & MTG GP-AXLE OIL COOLER

S/N: CRD1-UP
PART OF 201-8906 COOLER AR-AXLE OIL
AN ATTACHMENT

SMCS-5073 i02164283

NOTE	REF NO	GRAPHIC REF	PART NUMBER	QTY	PART NAME 1 2 3 4 5 6 (PRODUCT LEVEL)	SEE PAGE
Y	1	1	192-1563	1	IDLER GP-BELT (ALTERNATOR, REFRIGERANT COMPR)	49
	2	1	215-3013	1	PUMP GP-GEAR (AXLE OIL COOLER)	
	3	1	215-3014	1	CLUTCH GP-ELECTRIC (AXLE OIL COOLER PUMP)	
	4	1	215-3015	1	BELT-SERPENTINE (WITH AIR CONDITIONING)	
	5	1	217-3027	1	BRACKET AS	
M		1	8T-3490	4	NUT-WELD (M10X1.5-THD)	
	6	1	217-3031	1	BELT-SERPENTINE (WITHOUT AIR CONDITIONING)	
	7	1	8T-4121	6	WASHER-HARD (11X21X2.5-MM THK)	
M	8	1	8T-4196	4	BOLT (M10X1.5X35-MM)	
	9	1	8T-4205	1	WASHER-HARD (7.2X14.5X2-MM THK)	
M	10	1	8T-0271	2	BOLT-SOCKET HEAD (M10X1.5X35-MM)	
	11	1	6V-3960	1	BOLT (1/4-28X0.875-IN)	

M-METRIC PART
Y-SEPARATE ILLUSTRATION

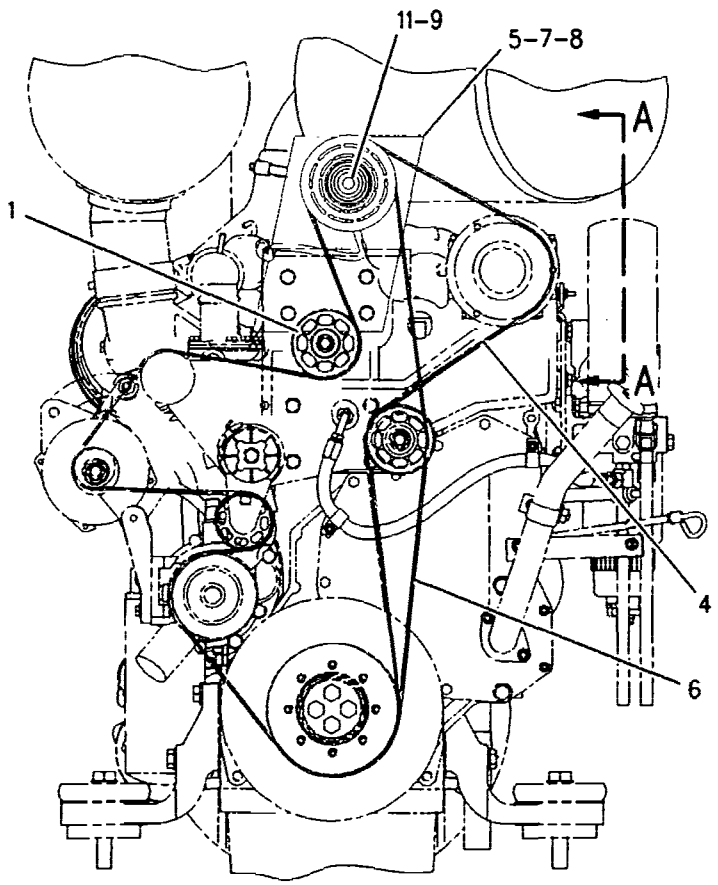

FRONT VIEW OF ENGINE

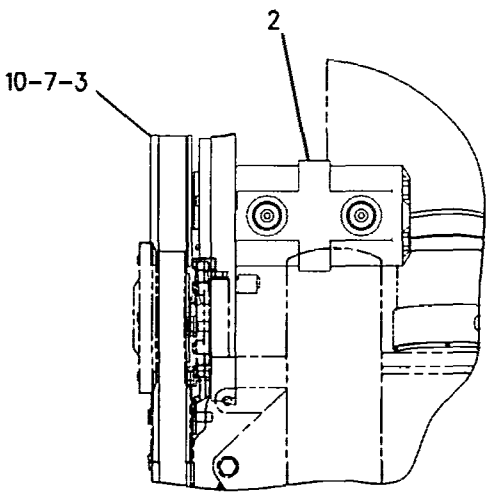

VIEW A-A

GRAPHIC #1 <END> g00915086

6Y-4614 PUMP GP-TRANSMISSION

S/N: WNF1-UP
1 SECTION
PART OF 8E-0416 PUMP GP-TRANSMISSION

SMCS-3066 i01822965

NOTE	REF NO	GRAPHIC REF	PART NUMBER	QTY	PART NAME 1 2 3 4 5 6 (PRODUCT LEVEL)	SEE PAGE
	1	1	6Y-4615	1	BODY AS-OIL PUMP	
		1	5M-4987	2	DOWEL	
		1	8T-5353	2	DOWEL	
		1	3T-2094	2	BEARING-SLEEVE	
	2	1	6Y-4621	1	COVER AS-PUMP	
		1	3T-2094	2	BEARING-SLEEVE	
	3	1	6Y-4620	1	GEAR AS-OIL PUMP (17 TEETH)	
	4	1	6Y-4619	1	GEAR-OIL PUMP (17 TEETH)	
	5	1	5H-3252	1	SEAL-O-RING	
M	6	1	6V-7981	5	BOLT (M10X1.50X70MM)	
M	7	1	6V-5842	1	BOLT (M10X1.50X40MM)	
	8	1	6Y-5010	1	WASHER (10.16X19X.84MM THK)	

M-METRIC PART

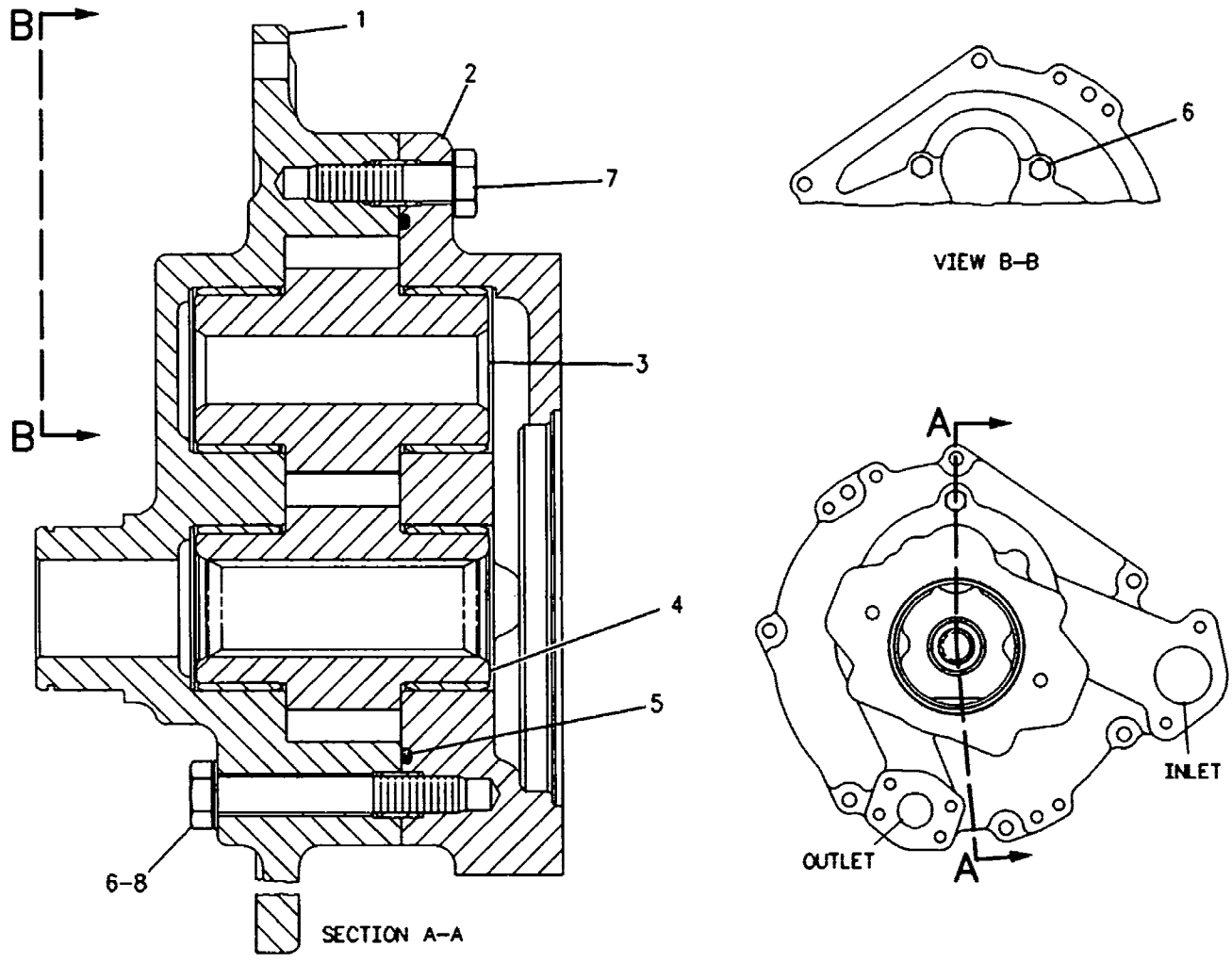

GRAPHIC #1 <END> g00930832

8E-0416 PUMP GP-TRANSMISSION

S/N: WNF1-UP

PART OF 201-3265 TRANSMISSION AR

SMCS-3066 i00189194

NOTE	REF NO	GRAPHIC REF	PART NUMBER	QTY	PART NAME 1 2 3 4 5 6 (PRODUCT LEVEL)	SEE PAGE
Y	1	1	6Y-4614	1	PUMP GP-TRANSMISSION	432
M	2	1	6V-4248	7	BOLT (M10X1.50X25MM)	
	3	1	6I-8909	1	GEAR (72 TEETH)	
M	4	1	6V-6317	6	BOLT (M10X1.50X20MM)	
	5	1	2J-7550	1	RING-RETAINING	
	6	1	6Y-4618	1	SHAFT-GOVERNOR CONTROL	
	7	1	4B-3665	1	BALL BEARING	

M-METRIC PART
Y-SEPARATE ILLUSTRATION

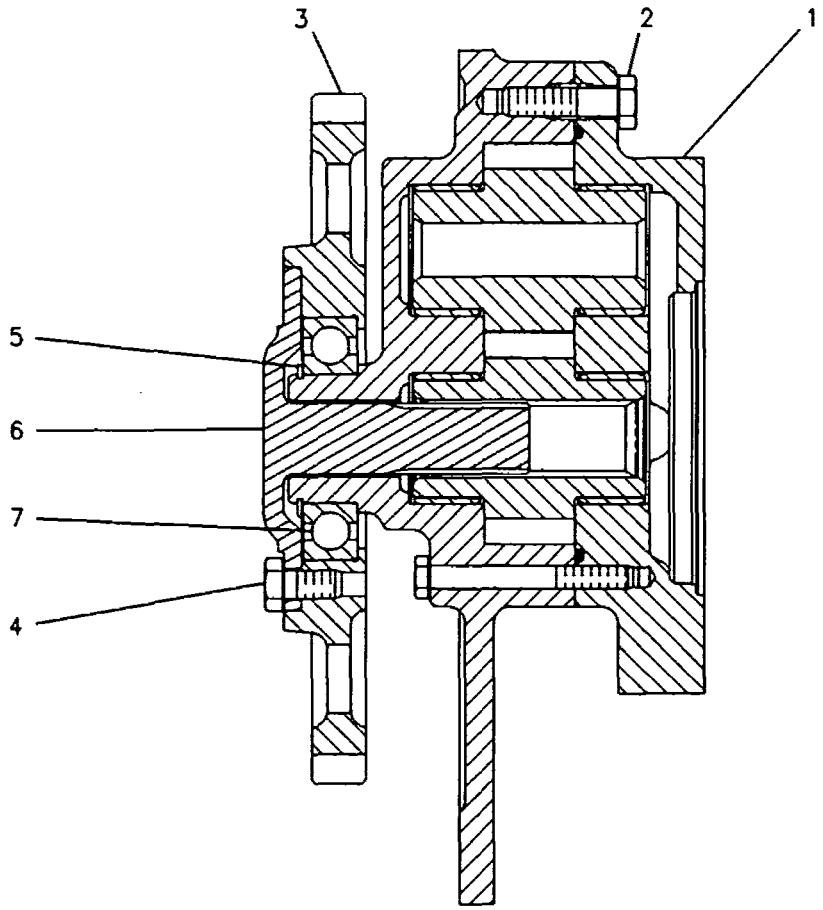

GRAPHIC #1 <END> g00120615

119-7314 RIM AR

S/N: CRD1-UP

20.5 X 25 TUBELESS TIRE

PART OF 111-9162, 111-9163, 111-9164, 123-6447, 128-5156, 128-5157, 128-5158, 128-5159, 128-5160, 128-5161, 129-8702, 133-3378, 134-0785, 134-0786, 134-0787, 134-9633, 136-4235, 137-4694, 137-4695, 137-4696, 142-0827, 152-1628, 160-2464, 172-1130, 175-0099, 175-5038, 192-7910, 194-1572, 196-2325, 205-5410, 217-1478, 229-5041, 245-9809, 256-7813, 258-1017, 261-0343, 262-0561, 267-3729, 267-3731 TIRE & RIM AR

AN ATTACHMENT

SMCS-4209 **i01339053**

NOTE	PART NUMBER	QTY	PART NAME 1 2 3 4 5 6 (PRODUCT LEVEL)	SEE PAGE
Y	*117-7838*	1	MOUNTING GP-RIM	430
Y	*171-8690*	4	RIM GP-DEMOUNTABLE	435

Y-SEPARATE ILLUSTRATION

<END>

246-1575 RIM AR

S/N: CRD1-UP

PART OF 246-1583, 251-2171 TIRE & RIM AR

AN ATTACHMENT

SMCS-4209 **i02141225**

NOTE	PART NUMBER	QTY	PART NAME 1 2 3 4 5 6 (PRODUCT LEVEL)	SEE PAGE
Y	*117-7838*	1	MOUNTING GP-RIM	430
Y	*246-1578*	4	RIM GP-DEMOUNTABLE	438

Y-SEPARATE ILLUSTRATION

<END>

171-8690 RIM GP-DEMOUNTABLE–4 REQUIRED

S/N: CRD1-UP
17.0 X 25.0 TUBELESS TIRE
PART OF 119-7314 RIM AR
AN ATTACHMENT

SMCS-4209 i01478566

NOTE	REF NO	GRAPHIC REF	PART NUMBER	QTY	PART NAME 1 2 3 4 5 6 (PRODUCT LEVEL)	SEE PAGE
Y	1	1	*194-9373*	1	RIM GP-DEMOUNTABLE	436
	2	1	**4K-4879**	1	SEAL-O-RING	
	3	1	**2D-2511**	1	VALVE GP-TIRE	
		1	**6F-3930**	1	CORE-VALVE	
		1	**9K-7951**	1	CAP-VALVE (STEM)	
		1	**7D-5252**	1	SPUD AS	
		1	**2D-2507**	1	SPUD	
		1	**2D-2508**	1	GROMMET	
		1	**2D-2509**	1	LOCKNUT	

Y-SEPARATE ILLUSTRATION

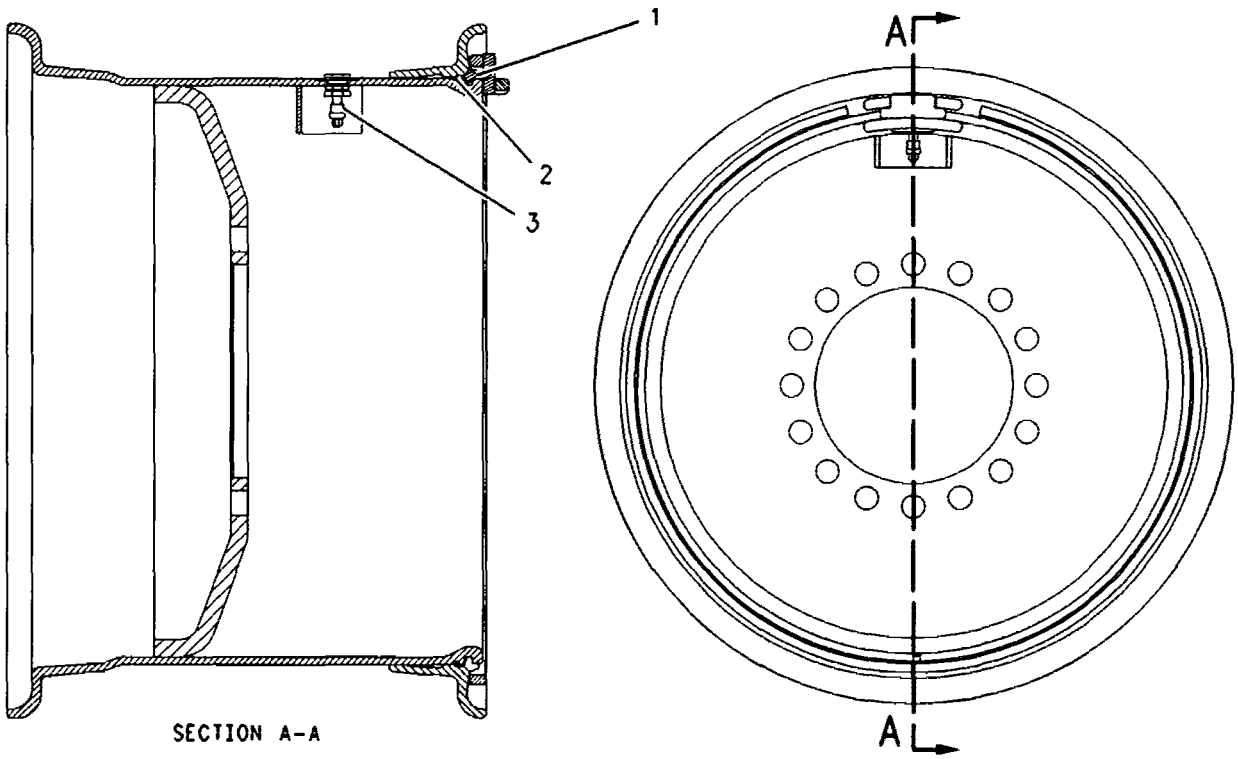

SECTION A-A

GRAPHIC #1 <END> g00769967

194-9373 RIM GP-DEMOUNTABLE-4-REQUIRED

S/N: CRD1-UP
17X25
PART OF 171-8690 RIM GP-DEMOUNTABLE
AN ATTACHMENT

SMCS-4209 i02156570

NOTE	REF NO	GRAPHIC REF	PART NUMBER	QTY	PART NAME 1 2 3 4 5 6 (PRODUCT LEVEL)	SEE PAGE
	1	1	4K-4881	1	RING-LOCK	
	2	1	171-8689	1	FLANGE AS	
	3	1	176-0118	1	DRIVER	
	4	1	252-2161	1	RIM AS	

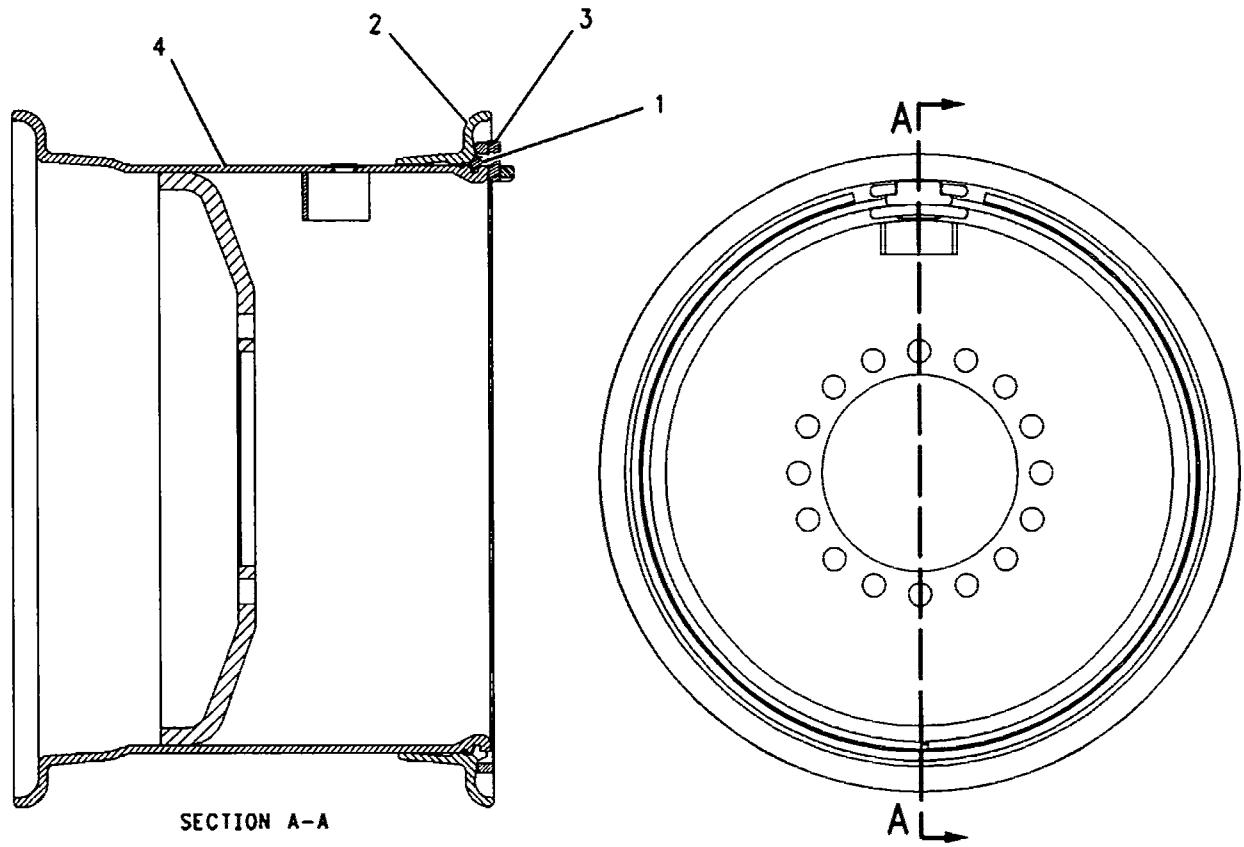

GRAPHIC #1 <END> g00837405

245-7607 RIM GP-DEMOUNTABLE

S/N: CRD1-UP

(19.5X25)

PART OF 246-1578 RIM GP-DEMOUNTABLE

AN ATTACHMENT

SMCS-4209 i02163770

NOTE	REF NO	GRAPHIC REF	PART NUMBER	QTY	PART NAME 1 2 3 4 5 6 (PRODUCT LEVEL)	SEE PAGE
	1	1	5T-5682	1	DRIVER	
	2	1	7D-7469	1	RING-LOCK	
	3	1	208-7472	1	FLANGE AS	
	4	1	245-7611	1	RIM AS	

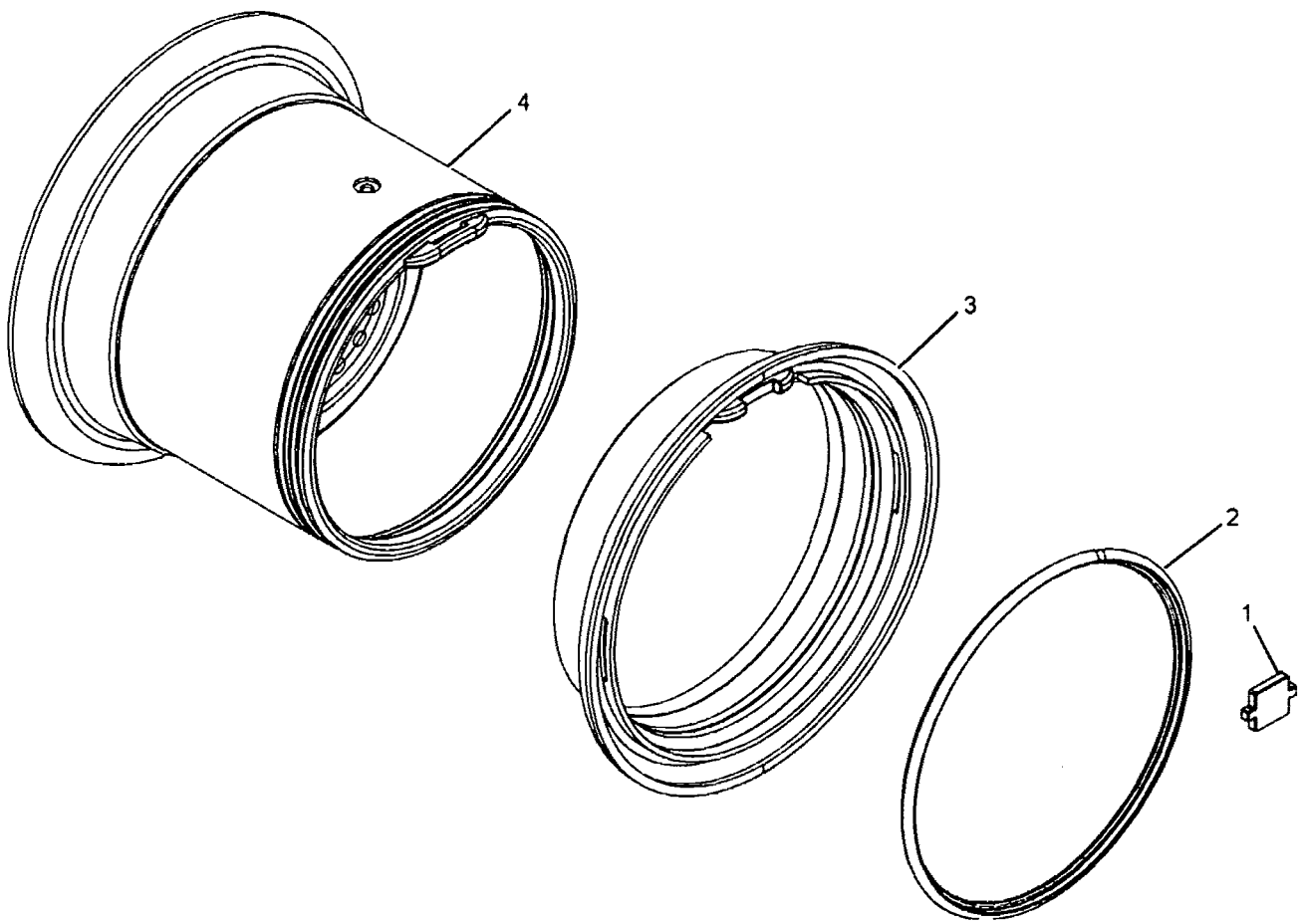

GRAPHIC #1 <END> g01098940

246-1578 RIM GP-DEMOUNTABLE

S/N: CRD1-UP
PART OF 246-1575 RIM AR
AN ATTACHMENT

SMCS-4209 i02141234

NOTE	PART NUMBER	QTY	PART NAME 1 2 3 4 5 6 (PRODUCT LEVEL)	SEE PAGE
Y	245-7607	1	RIM GP-DEMOUNTABLE	437
	2D-2443	1	SEAL-O-RING	
	2D-2511	1	VALVE GP-TIRE	
	6F-3930	1	CORE-VALVE	
	9K-7951	1	CAP-VALVE (STEM)	
	7D-5252	1	SPUD AS	
	2D-2508	1	GROMMET	
	2D-2509	1	LOCKNUT (11/16-16-THD)	

Y-SEPARATE ILLUSTRATION

<END>

162-8435 SHAFT GP-DRIVE

S/N: CRD1-UP

PART OF 199-2820 POWER TRAIN AR

SMCS-3253 i01419208

NOTE	REF NO	GRAPHIC REF	PART NUMBER	QTY	PART NAME 1 2 3 4 5 6 (PRODUCT LEVEL)	SEE PAGE
	1	1	4E-5984	4	STRAP	
M	2	1	4E-5985	20	BOLT-12 POINT HEAD (M10X1.25X20MM)	
Y	3	1	162-8434	1	UNIVERSAL JOINT GP	457
Y	4	1	166-6761	1	SLIP JOINT GP	441
	5	1	4E-3273	6	STRAP	
Y	6	1	*166-6759*	1	SHAFT GP-DRIVE	440
M	7	1	6V-3303	2	BOLT (M16X2.0X60MM)	
	8	1	5P-8247	2	WASHER-HARD (17X32X3.5MM THK)	

M-METRIC PART
Y-SEPARATE ILLUSTRATION

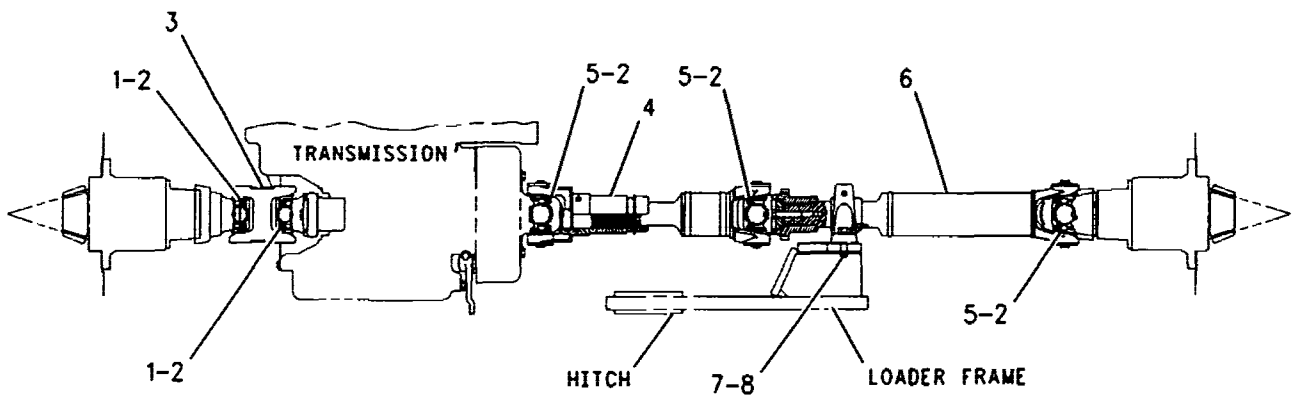

GRAPHIC #1 <END> g00744021

POWER TRAIN

166-6759 SHAFT GP-DRIVE

S/N: CRD1-UP

PART OF 162-8435 SHAFT GP-DRIVE

SMCS-3253 **i01402367**

NOTE	REF NO	GRAPHIC REF	PART NUMBER	QTY	PART NAME 1 2 3 4 5 6 (PRODUCT LEVEL)	SEE PAGE
M	1	1	**8T-0372**	1	BOLT (M12X1.75X90-MM)	
	2	1	**9V-2412**	1	RETAINER	
	3	1	**166-6760**	1	YOKE	
	4	1	**6I-8531**	1	BEARING GP-PILLOW BLOCK	
		1	**3B-8489**	1	FITTING-GREASE	
		1	**9L-7712**	1	NUT (3/8-24-THD)	
		1	**022-3108**	1	SETSCREW	
Y	5	1	**166-6758**	1	UNIVERSAL JOINT GP	458

M-METRIC PART
Y-SEPARATE ILLUSTRATION

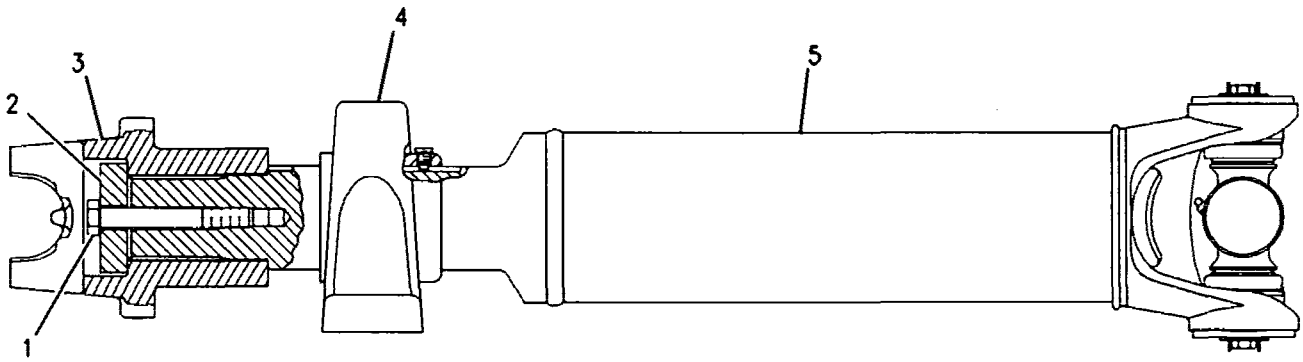

GRAPHIC #1 **<END>** g00697952

166-6761 SLIP JOINT GP

S/N: CRD1-UP

PART OF 162-8435 SHAFT GP-DRIVE

SMCS-3251 i01866231

NOTE	REF NO	GRAPHIC REF	PART NUMBER	QTY	PART NAME 1 2 3 4 5 6 (PRODUCT LEVEL)	SEE PAGE
	1	1	3B-8489	1	FITTING-GREASE	
	2	1	4E-9324	2	SPIDER & BEARING GP	
					(EACH INCLUDES)	
M	3	1	3E-4315	4	BOLT-LOCKING (M8X1X14-MM)	
	4	1	6W-4126	2	STRAP-LOCKING	
	5	1	5P-8334	1	FITTING-HYDRAULIC	
	6	1	8V-1412	1	RETAINER	
	7	1	196-8488	1	CAP-DUST	

M-METRIC PART

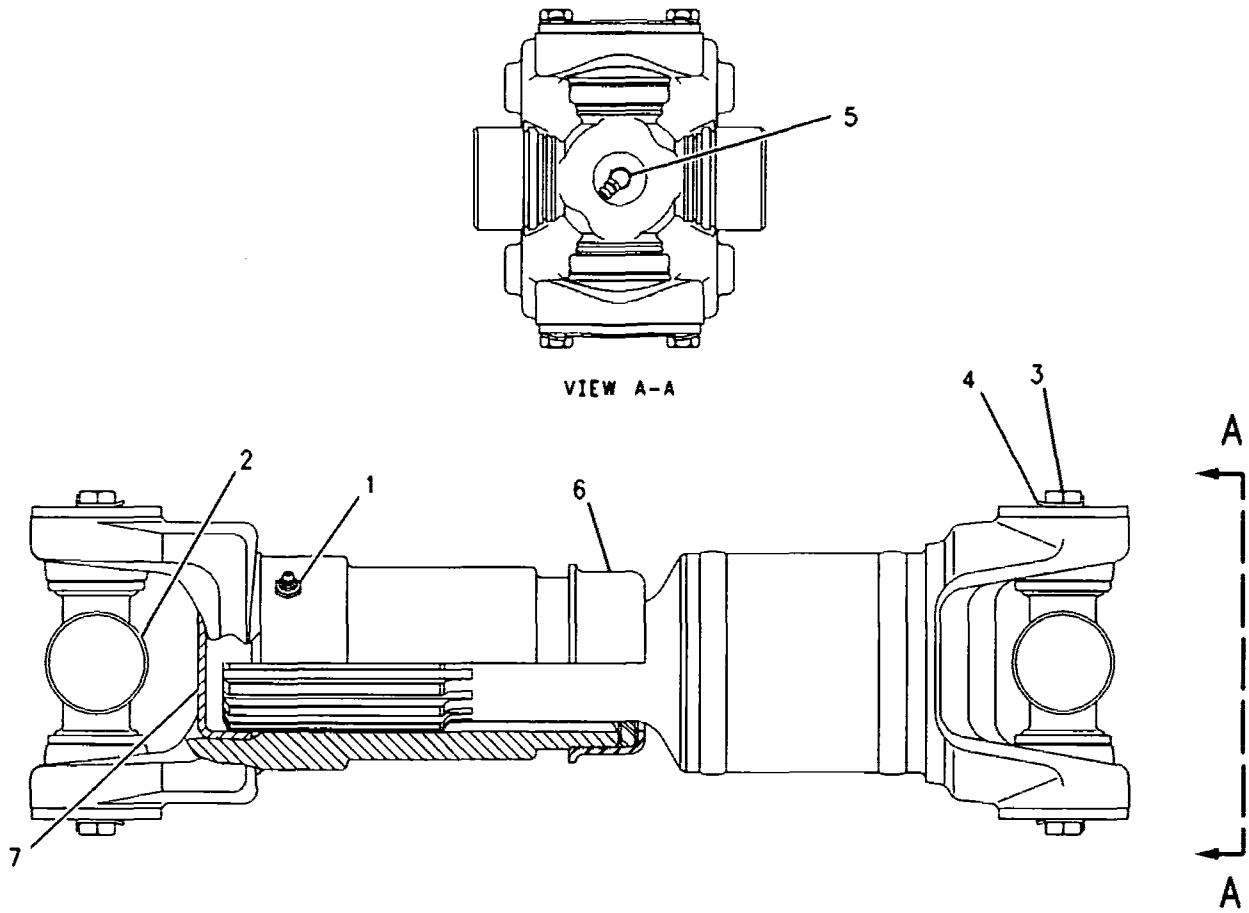

GRAPHIC #1 <END> g00951940

POWER TRAIN

111-9162 TIRE & RIM AR

S/N: CRD1-UP
20.5 R25 L-2
AN ATTACHMENT

SMCS-4202 i00668362

NOTE	PART NUMBER	QTY	PART NAME 1 2 3 4 5 6 (PRODUCT LEVEL)	SEE PAGE
Y	*119-7314*	4	RIM AR	434

Y-SEPARATE ILLUSTRATION

<END>

111-9163 TIRE & RIM AR

S/N: CRD1-UP
20.5 R25 L-3. 3 PIECE
AN ATTACHMENT

SMCS-4202 i00668366

NOTE	PART NUMBER	QTY	PART NAME 1 2 3 4 5 6 (PRODUCT LEVEL)	SEE PAGE
Y	*119-7314*	1	RIM AR	434

Y-SEPARATE ILLUSTRATION

<END>

111-9164 TIRE & RIM AR

S/N: CRD1-UP
20.5 R25 L-2/3
AN ATTACHMENT

SMCS-4202 i00668368

NOTE	PART NUMBER	QTY	PART NAME 1 2 3 4 5 6 (PRODUCT LEVEL)	SEE PAGE
Y	*119-7314*	1	RIM AR	434

Y-SEPARATE ILLUSTRATION

<END>

123-6447 TIRE & RIM AR

S/N: CRD1-UP
20.5 R25 * L-5
FOR USE WITH WASTE ARS ONLY
AN ATTACHMENT

SMCS-4202 i00707044

NOTE	PART NUMBER	QTY	PART NAME 1 2 3 4 5 6 (PRODUCT LEVEL)	SEE PAGE
Y	*119-7314*	1	RIM AR	434

Y-SEPARATE ILLUSTRATION

<END>

128-5156 TIRE & RIM AR

S/N: CRD1-UP
20.5-25 12 PR L-2
AN ATTACHMENT

SMCS-4202 i00694079

NOTE	PART NUMBER	QTY	PART NAME 1 2 3 4 5 6 (PRODUCT LEVEL)	SEE PAGE
Y	119-7314	1	RIM AR	434

Y-SEPARATE ILLUSTRATION

<END>

128-5157 TIRE & RIM AR

S/N: CRD1-UP
20.5-25 12 PR L-2
AN ATTACHMENT

SMCS-4202 i00694081

NOTE	PART NUMBER	QTY	PART NAME 1 2 3 4 5 6 (PRODUCT LEVEL)	SEE PAGE
Y	119-7314	1	RIM AR	434

Y-SEPARATE ILLUSTRATION

<END>

128-5158 TIRE & RIM AR

S/N: CRD1-UP
20.5-25 12 PR L-2
AN ATTACHMENT

SMCS-4202 i00694082

NOTE	PART NUMBER	QTY	PART NAME 1 2 3 4 5 6 (PRODUCT LEVEL)	SEE PAGE
Y	119-7314	1	RIM AR	434

Y-SEPARATE ILLUSTRATION

<END>

128-5159 TIRE & RIM AR

S/N: CRD1-UP
20.5-25 12 PR L-3
AN ATTACHMENT

SMCS-4202 i00694083

NOTE	PART NUMBER	QTY	PART NAME 1 2 3 4 5 6 (PRODUCT LEVEL)	SEE PAGE
Y	119-7314	1	RIM AR	434

Y-SEPARATE ILLUSTRATION

<END>

128-5160 TIRE & RIM AR

S/N: CRD1-UP
20.5-25 12 PR L-3
AN ATTACHMENT

SMCS-4202 i00694084

NOTE	PART NUMBER	QTY	PART NAME 1 2 3 4 5 6 (PRODUCT LEVEL)	SEE PAGE
Y	*119-7314*	1	RIM AR	434

Y-SEPARATE ILLUSTRATION

<END>

128-5161 TIRE & RIM AR

S/N: CRD1-UP
20.5-25 12 PR L-3
AN ATTACHMENT

SMCS-4202 i00694086

NOTE	PART NUMBER	QTY	PART NAME 1 2 3 4 5 6 (PRODUCT LEVEL)	SEE PAGE
Y	*119-7314*	1	RIM AR	434

Y-SEPARATE ILLUSTRATION

<END>

129-8702 TIRE & RIM AR

S/N: CRD1-UP
20.5-25 12 PR L-5
AN ATTACHMENT

SMCS-4202 i01878195

NOTE	PART NUMBER	QTY	PART NAME 1 2 3 4 5 6 (PRODUCT LEVEL)	SEE PAGE
Y	*119-7314*	1	RIM AR	434

Y-SEPARATE ILLUSTRATION

<END>

133-3378 TIRE & RIM AR

S/N: CRD1-UP
20.5-25 20 PR L-3
AN ATTACHMENT

SMCS-4202 i01878200

NOTE	PART NUMBER	QTY	PART NAME 1 2 3 4 5 6 (PRODUCT LEVEL)	SEE PAGE
Y	*119-7314*	1	RIM AR	434

Y-SEPARATE ILLUSTRATION

<END>

134-0785 TIRE & RIM AR

S/N: CRD1-UP
20.5-25 16-PR L-2
AN ATTACHMENT

SMCS-4202 i01878207

NOTE	PART NUMBER	QTY	PART NAME 1 2 3 4 5 6 (PRODUCT LEVEL)	SEE PAGE
Y	119-7314	1	RIM AR	434

Y-SEPARATE ILLUSTRATION

<END>

134-0786 TIRE & RIM AR

S/N: CRD1-UP
20.5-25 16 PR L-2
AN ATTACHMENT

SMCS-4202 i01878254

NOTE	PART NUMBER	QTY	PART NAME 1 2 3 4 5 6 (PRODUCT LEVEL)	SEE PAGE
Y	119-7314	1	RIM AR	434

Y-SEPARATE ILLUSTRATION

<END>

134-0787 TIRE & RIM AR

S/N: CRD1-UP
20.5-25 16 PR L-2
AN ATTACHMENT

SMCS-4202 i01878266

NOTE	PART NUMBER	QTY	PART NAME 1 2 3 4 5 6 (PRODUCT LEVEL)	SEE PAGE
Y	119-7314	1	RIM AR	434

Y-SEPARATE ILLUSTRATION

<END>

134-9633 TIRE & RIM AR

S/N: CRD1-UP
20.5 R25 1-STAR L-5
AN ATTACHMENT

SMCS-4202 i01878284

NOTE	PART NUMBER	QTY	PART NAME 1 2 3 4 5 6 (PRODUCT LEVEL)	SEE PAGE
Y	119-7314	1	RIM AR	434

Y-SEPARATE ILLUSTRATION

<END>

136-4235 TIRE & RIM AR

S/N: CRD1-UP
20.5 R 25 1-STAR L-4
AN ATTACHMENT

SMCS-4202 i01878296

NOTE	PART NUMBER	QTY	PART NAME 1 2 3 4 5 6 (PRODUCT LEVEL)	SEE PAGE
Y	119-7314	1	RIM AR	434

Y-SEPARATE ILLUSTRATION

<END>

137-4694 TIRE & RIM AR

S/N: CRD1-UP
20.5-25 16 PR L-3
AN ATTACHMENT

SMCS-4202 i01878304

NOTE	PART NUMBER	QTY	PART NAME 1 2 3 4 5 6 (PRODUCT LEVEL)	SEE PAGE
Y	119-7314	1	RIM AR	434

Y-SEPARATE ILLUSTRATION

<END>

137-4695 TIRE & RIM AR

S/N: CRD1-UP
20.5-25 16 PR L-3
AN ATTACHMENT

SMCS-4202 i01878307

NOTE	PART NUMBER	QTY	PART NAME 1 2 3 4 5 6 (PRODUCT LEVEL)	SEE PAGE
Y	119-7314	1	RIM AR	434

Y-SEPARATE ILLUSTRATION

<END>

137-4696 TIRE & RIM AR

S/N: CRD1-UP
20.5-25 16 PR L-3
AN ATTACHMENT

SMCS-4202 i01878310

NOTE	PART NUMBER	QTY	PART NAME 1 2 3 4 5 6 (PRODUCT LEVEL)	SEE PAGE
Y	119-7314	1	RIM AR	434

Y-SEPARATE ILLUSTRATION

<END>

142-0827 TIRE & RIM AR

S/N: CRD1-UP
20.5-25 20 PR L-3
AN ATTACHMENT

SMCS-4202 i00694087

NOTE	PART NUMBER	QTY	PART NAME 1 2 3 4 5 6 (PRODUCT LEVEL)	SEE PAGE
Y	119-7314	1	RIM AR	434

Y-SEPARATE ILLUSTRATION

<END>

152-1628 TIRE & RIM AR

S/N: CRD1-UP
20.5 R25 * L-3
AN ATTACHMENT

SMCS-4202 i00738401

NOTE	PART NUMBER	QTY	PART NAME 1 2 3 4 5 6 (PRODUCT LEVEL)	SEE PAGE
Y	119-7314	1	RIM AR	434

Y-SEPARATE ILLUSTRATION

<END>

160-2464 TIRE & RIM AR

S/N: CRD1-UP
20.5-25 20 PR L-2 / L-3
AN ATTACHMENT

SMCS-4202 i00845097

NOTE	PART NUMBER	QTY	PART NAME 1 2 3 4 5 6 (PRODUCT LEVEL)	SEE PAGE
Y	119-7314	1	RIM AR	434

Y-SEPARATE ILLUSTRATION

<END>

172-1130 TIRE & RIM AR

S/N: CRD1-UP
20.5-25 12PR L-5
AN ATTACHMENT

SMCS-4202 i01838986

NOTE	PART NUMBER	QTY	PART NAME 1 2 3 4 5 6 (PRODUCT LEVEL)	SEE PAGE
Y	119-7314	1	RIM AR	434

Y-SEPARATE ILLUSTRATION

<END>

175-0099 TIRE & RIM AR

S/N: CRD1-UP
20.5 R25 * L2/L3
AN ATTACHMENT

SMCS-4202 i01839111

NOTE	PART NUMBER	QTY	PART NAME 1 2 3 4 5 6 (PRODUCT LEVEL)	SEE PAGE
Y	119-7314	1	RIM AR	434

Y-SEPARATE ILLUSTRATION

<END>

175-5038 TIRE & RIM AR

S/N: CRD1-UP
20.5 R25 * L-4
AN ATTACHMENT

SMCS-4202 i01839204

NOTE	PART NUMBER	QTY	PART NAME 1 2 3 4 5 6 (PRODUCT LEVEL)	SEE PAGE
Y	119-7314	1	RIM AR	434

Y-SEPARATE ILLUSTRATION

<END>

192-7910 TIRE & RIM AR

S/N: CRD1-UP
20.5-25 16 PR L-3
AN ATTACHMENT

SMCS-4202 i01878312

NOTE	PART NUMBER	QTY	PART NAME 1 2 3 4 5 6 (PRODUCT LEVEL)	SEE PAGE
Y	119-7314	1	RIM AR	434

Y-SEPARATE ILLUSTRATION

<END>

194-1572 TIRE & RIM AR

S/N: CRD1-UP
20.5 R25 * G-2
AN ATTACHMENT

SMCS-4202 i01878316

NOTE	PART NUMBER	QTY	PART NAME 1 2 3 4 5 6 (PRODUCT LEVEL)	SEE PAGE
Y	119-7314	1	RIM AR	434

Y-SEPARATE ILLUSTRATION

<END>

196-2325 TIRE & RIM AR

S/N: CRD1-UP
20.5 R25 L-2
AN ATTACHMENT

SMCS-4202 i01379608

NOTE	PART NUMBER	QTY	PART NAME 1 2 3 4 5 6 (PRODUCT LEVEL)	SEE PAGE
Y	119-7314	1	RIM AR	434

Y-SEPARATE ILLUSTRATION

<END>

205-5410 TIRE & RIM AR

S/N: CRD1-UP
550/65 R25 L-3
AN ATTACHMENT

SMCS-4202 i01525125

NOTE	PART NUMBER	QTY	PART NAME 1 2 3 4 5 6 (PRODUCT LEVEL)	SEE PAGE
Y	119-7314	1	RIM AR	434

Y-SEPARATE ILLUSTRATION

<END>

217-1478 TIRE & RIM AR

S/N: CRD1-UP
20.5-25 20 PR L-3
AN ATTACHMENT

SMCS-4202 i01653163

NOTE	PART NUMBER	QTY	PART NAME 1 2 3 4 5 6 (PRODUCT LEVEL)	SEE PAGE
Y	119-7314	1	RIM AR	434

Y-SEPARATE ILLUSTRATION

<END>

229-5041 TIRE & RIM AR

S/N: CRD1-UP
20.5-25 16 PR L-3
AN ATTACHMENT

SMCS-4202 i01833445

NOTE	PART NUMBER	QTY	PART NAME 1 2 3 4 5 6 (PRODUCT LEVEL)	SEE PAGE
Y	119-7314	1	RIM AR	434

Y-SEPARATE ILLUSTRATION

<END>

POWER TRAIN

245-9809 TIRE & RIM AR

S/N: CRD1-UP
AN ATTACHMENT

SMCS-4202 i02140399

NOTE	PART NUMBER	QTY	PART NAME 1 2 3 4 5 6 (PRODUCT LEVEL)	SEE PAGE
Y	119-7314	1	RIM AR	434
	245-9808	4	TIRE (20.5-R25)	

Y-SEPARATE ILLUSTRATION

<END>

246-1583 TIRE & RIM AR

S/N: CRD1-UP
AN ATTACHMENT

SMCS-4202 i02141218

NOTE	PART NUMBER	QTY	PART NAME 1 2 3 4 5 6 (PRODUCT LEVEL)	SEE PAGE
Y	246-1575	1	RIM AR	434
	248-0278	1	BLOCK GP-MOUNTING	
	247-9815	2	BLOCK	
	203-9782	4	TIRE (650/65-R25)	

Y-SEPARATE ILLUSTRATION

<END>

251-2171 TIRE & RIM AR

S/N: CRD1-UP
AN ATTACHMENT

SMCS-4202 i02142832

NOTE	PART NUMBER	QTY	PART NAME 1 2 3 4 5 6 (PRODUCT LEVEL)	SEE PAGE
Y	246-1575	1	RIM AR	434
	248-0278	1	BLOCK GP-MOUNTING	
	247-9815	2	BLOCK	
	251-2173	4	TIRE (650/65-R25)	

Y-SEPARATE ILLUSTRATION

<END>

256-7813 TIRE & RIM AR

S/N: CRD1-UP
AN ATTACHMENT

SMCS-4202 i02158583

NOTE	PART NUMBER	QTY	PART NAME 1 2 3 4 5 6 (PRODUCT LEVEL)	SEE PAGE
Y	119-7314	1	RIM AR	434
	119-0013	4	TIRE (20.5-R25)	

Y-SEPARATE ILLUSTRATION

<END>

258-1017 TIRE & RIM AR

S/N: CRD1-UP
AN ATTACHMENT

SMCS-4202 i02159118

NOTE	PART NUMBER	QTY	PART NAME 1 2 3 4 5 6 (PRODUCT LEVEL)	SEE PAGE
Y	119-7314	1	RIM AR	434
	258-1016	4	TIRE (20.5-25)	

Y-SEPARATE ILLUSTRATION

<END>

261-0343 TIRE & RIM AR

S/N: CRD1-UP
AN ATTACHMENT

SMCS-4202 i02303754

NOTE	PART NUMBER	QTY	PART NAME 1 2 3 4 5 6 (PRODUCT LEVEL)	SEE PAGE
Y	119-7314	1	RIM AR	434
	260-1803	4	TIRE (20.5-25)	

Y-SEPARATE ILLUSTRATION

<END>

262-0561 TIRE & RIM AR

S/N: CRD1-UP
AN ATTACHMENT

SMCS-4202 i02199409

NOTE	PART NUMBER	QTY	PART NAME 1 2 3 4 5 6 (PRODUCT LEVEL)	SEE PAGE
Y	119-7314	1	RIM AR	434
	262-0560	4	TIRE (20.5-R25)	

Y-SEPARATE ILLUSTRATION

<END>

267-3729 TIRE & RIM AR

S/N: CRD1-UP
AN ATTACHMENT

SMCS-4202 i02338051

NOTE	PART NUMBER	QTY	PART NAME 1 2 3 4 5 6 (PRODUCT LEVEL)	SEE PAGE
Y	119-7314	1	RIM AR	434
	267-3728	4	TIRE (20.5-25)	

Y-SEPARATE ILLUSTRATION

<END>

267-3731 TIRE & RIM AR

S/N: CRD1-UP

AN ATTACHMENT

SMCS-4202 **i02338031**

NOTE	PART NUMBER	QTY	PART NAME 1 2 3 4 5 6 (PRODUCT LEVEL)	SEE PAGE
Y	*119-7314*	1	RIM AR	434
	267-3730	4	TIRE (20.5-25)	

Y-SEPARATE ILLUSTRATION

<END>

POWER TRAIN

204-1285 TORQUE CONVERTER GP

S/N: TCC1-UP

PART OF 201-3265 TRANSMISSION AR

SMCS-3101 i01678953

NOTE	REF NO	GRAPHIC REF	PART NUMBER	QTY	PART NAME 1 2 3 4 5 6 (PRODUCT LEVEL)	SEE PAGE
	1	1	6Y-4859	1	HOUSING	
M	2	1	6V-1820	34	BOLT (M10X1.50X30MM)	
	3	1	6V-5839	34	WASHER (11X21X2.5MM THK)	
	4	1	6Y-1085	1	IMPELLER-CONVERTER	
	5	1	204-0641	1	GEAR (85 TEETH)	
	6	1	1T-1621	1	RING-SEAL	
	7	1	9U-9018	1	CARRIER AS	
		1	4S-8541	1	DOWEL	
M	8	1	6V-3823	8	BOLT (M12X1.75X60MM)	
	9	1	129-2380	1	BALL BEARING	
	10	1	8E-6647	1	SPACER-CARRIER	
	11	1	6Y-1093	1	ADAPTER-SPLINED	
	12	1	6Y-3151	1	STATOR-CONVERTER	
	13	1	6Y-3149	1	TURBINE-CONVERTER	
	14	1	3E-6799	1	SEAL-O-RING	
	15	1	6V-8128	2	RING-RETAINING	
	16	1	6Y-1087	1	COVER-END	
	17	1	8E-6539	1	HUB AS	
		1	4S-8541	1	DOWEL	
	18	1	064-3843	1	RING-SNAP	
	19	1	8E-6648	1	SPACER-HUB	
	20	1	5K-9065	1	RING-RETAINING	
	21	1	8E-5247	1	BALL BEARING	
	22	1	5P-6414	2	RING-RETAINING	

M-METRIC PART

204-1285 TORQUE CONVERTER GP (contd.) i01678953

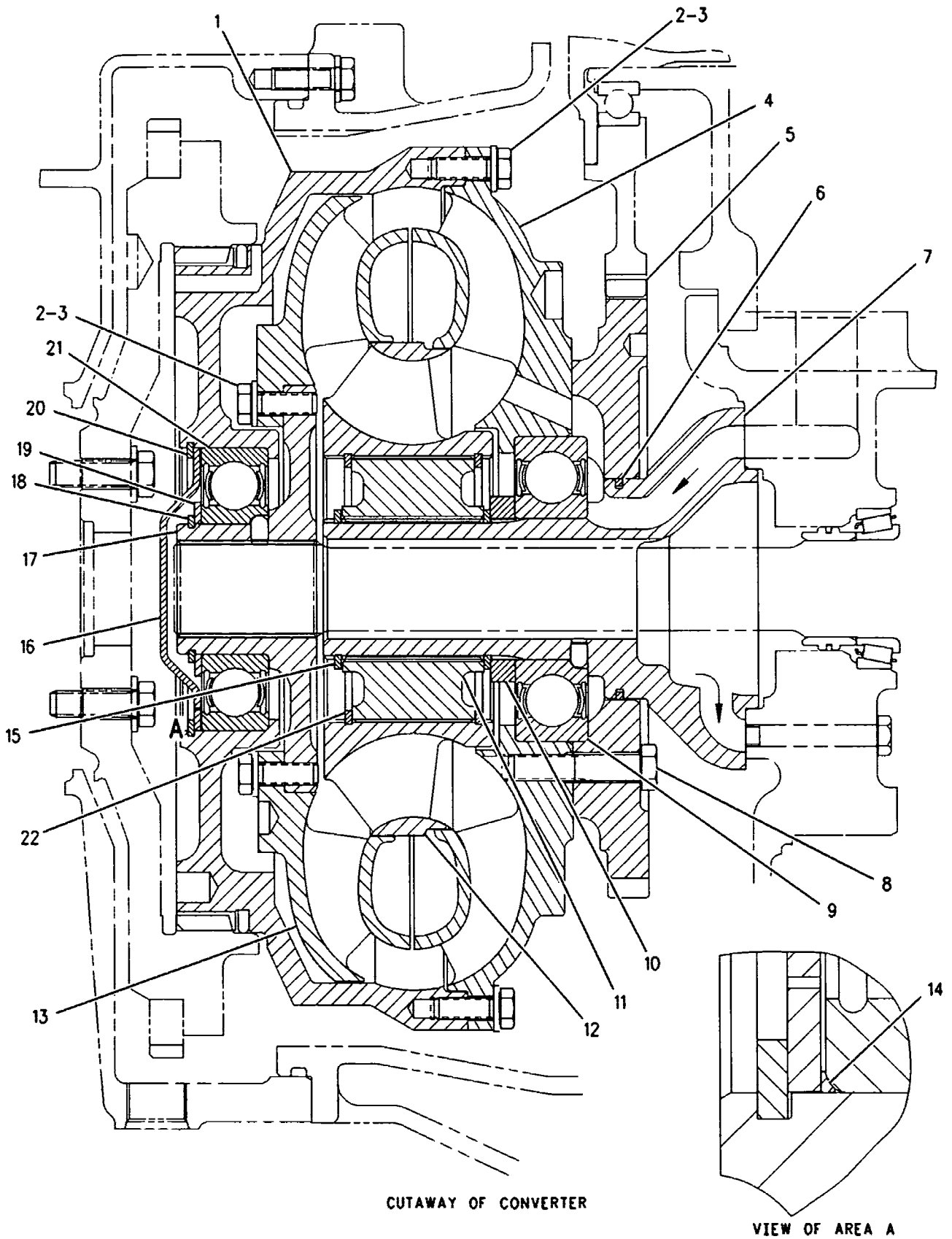

GRAPHIC #1 <END> g00866707

POWER TRAIN

201-3265 TRANSMISSION AR

S/N: WNF1-15

PART OF 199-2820 POWER TRAIN AR

SMCS-3030 i01956811

NOTE	REF NO	GRAPHIC REF	PART NUMBER	QTY	PART NAME 1 2 3 4 5 6 (PRODUCT LEVEL)	SEE PAGE
Y	1	2	**204-1285**	1	TORQUE CONVERTER GP	453
Y	2	2	*6I-8598*	1	COVER GP-SHIPPING	392
Y	3	2	*8E-0416*	1	PUMP GP-TRANSMISSION	433
Y	4	2	*190-2899*	1	CASE & PARTS GP-PLANETARY	379
Y	5	1	*200-2048*	1	VALVE GP-TRANSMISSION CONTROL	463
Y	6	2	*204-9602*	1	INPUT GP-TRANSMISSION	416
Y	7	2	*230-3664*	1	CLUTCH GP (FORWARD LOW & FORWARD HIGH)	384
Y	8	2	*230-3665*	1	CLUTCH GP (REVERSE & 2ND)	386
Y	9	2	*197-3260*	1	CLUTCH GP (1ST & 3RD)	382
Y	10	2	*170-1857*	1	OUTPUT GP-TRANSMISSION	406

Y-SEPARATE ILLUSTRATION

REFER TO ALL ILLUSTRATIONS OF THIS GROUP FOR AUXILIARY VIEWS

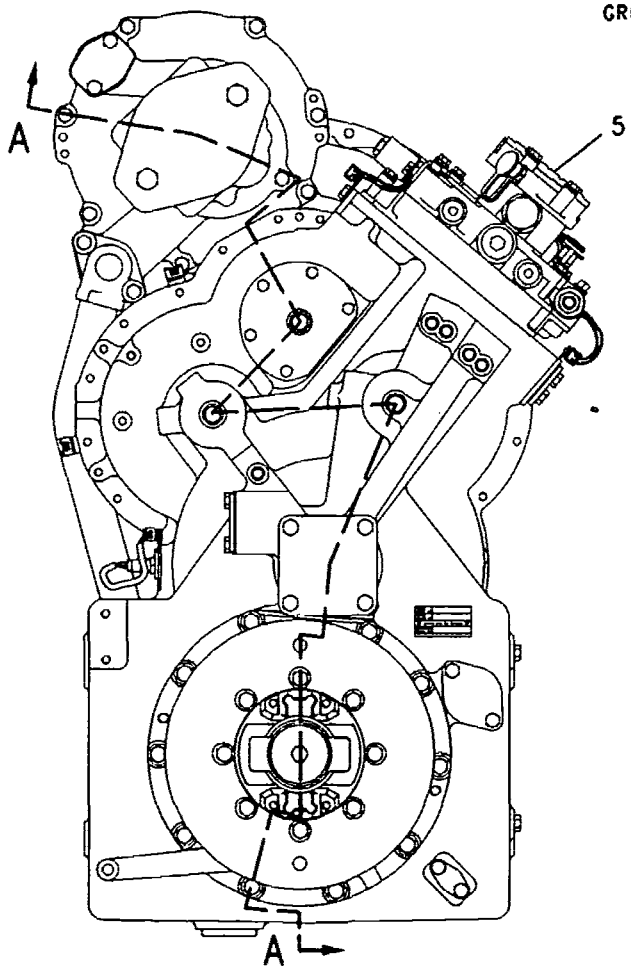

GRAPHIC #1 g00874783

201-3265 **TRANSMISSION AR** *(contd.)* **101956811**

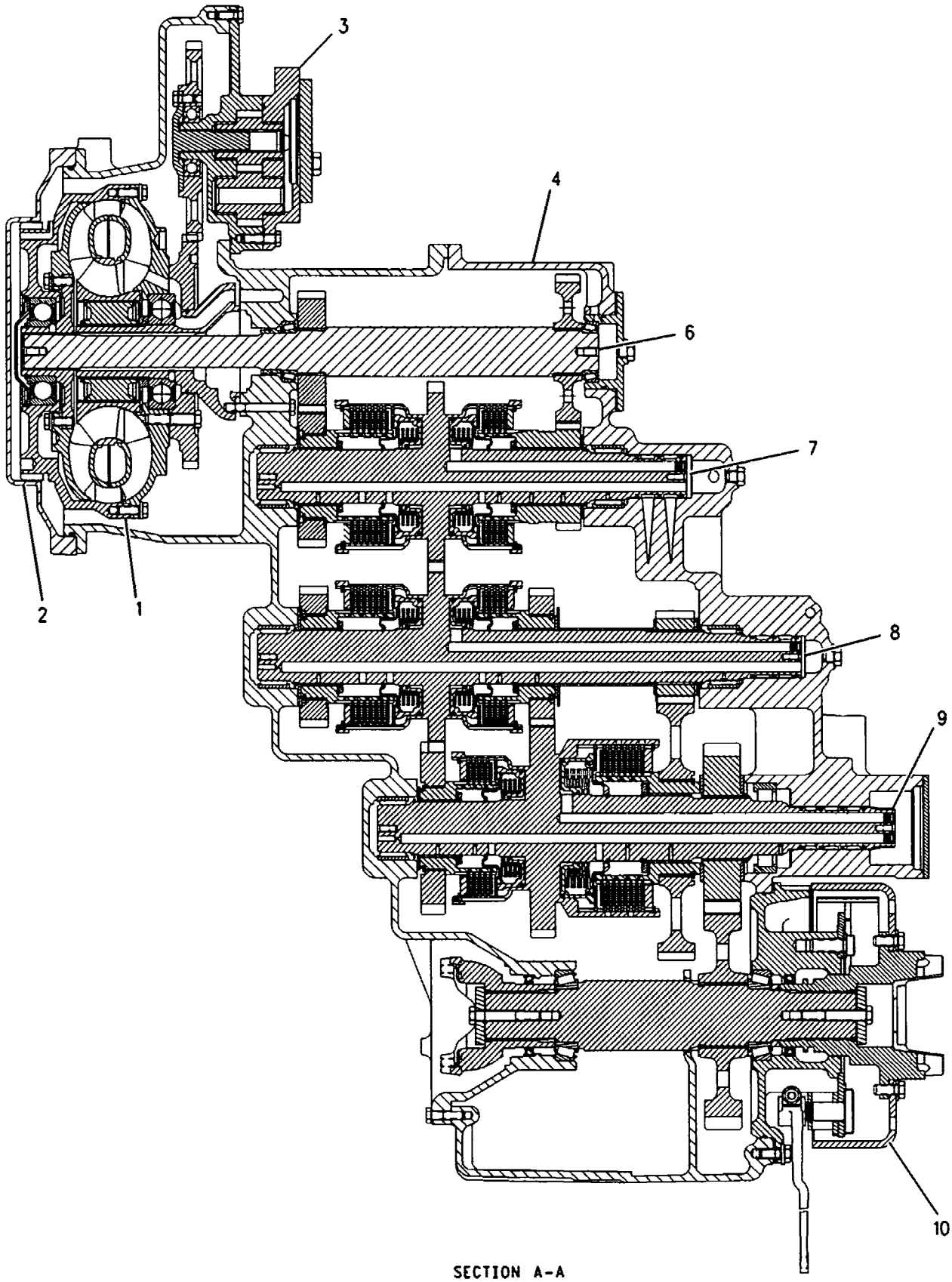

SECTION A-A

GRAPHIC #2 **<END>** g00874785

POWER TRAIN

162-8434 UNIVERSAL JOINT GP

S/N: CRD1-UP

PART OF 162-8435 SHAFT GP-DRIVE

SMCS-3251, 3253 i01419299

NOTE	REF NO	GRAPHIC REF	PART NUMBER	QTY	PART NAME 1 2 3 4 5 6 (PRODUCT LEVEL)	SEE PAGE
	1	1	8V-6435	2	KIT-SPIDER & BEARING	
	2	1	8V-7315	2	RING	
	3	1	8V-6432	2	PLATE-THRUST	
	4	1	0S-1570	4	BOLT (1/4-28X.625IN)	
	5	1	5B-0935	1	FITTING	

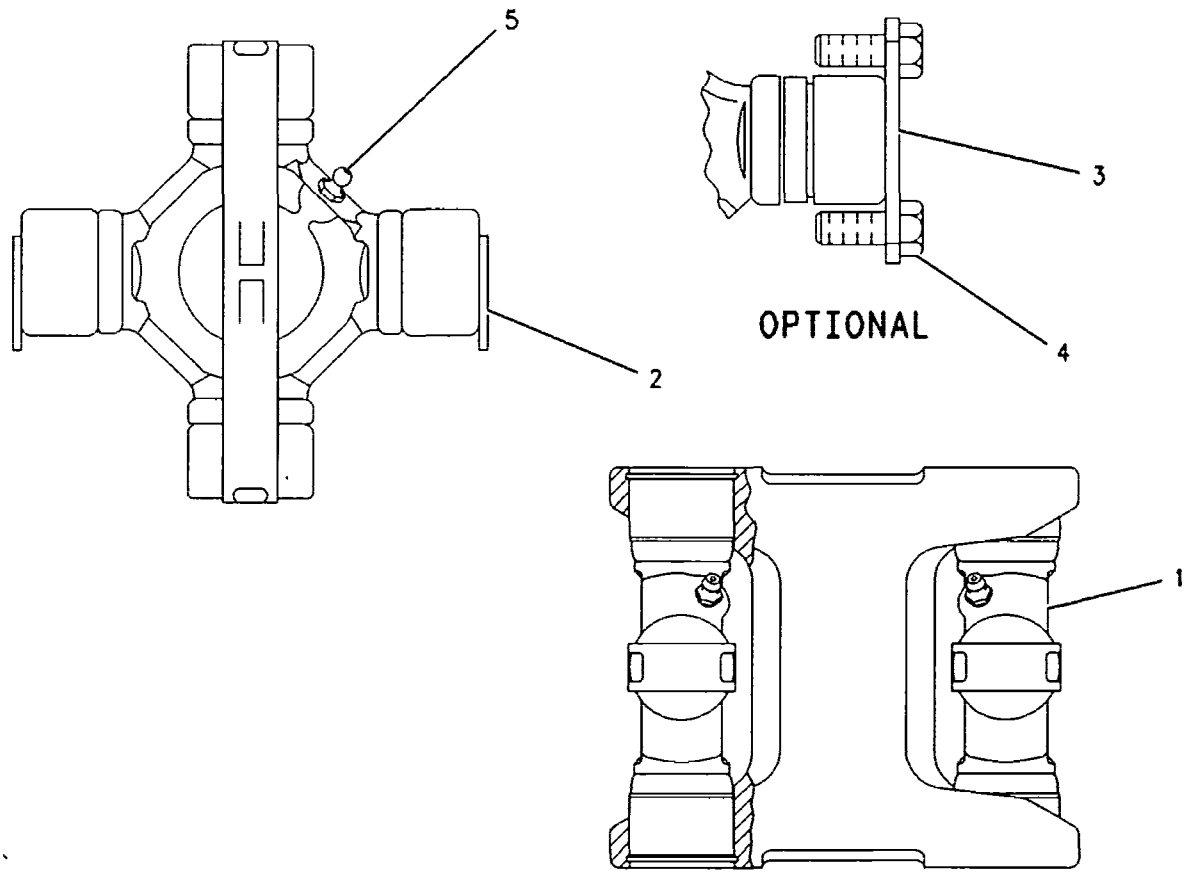

GRAPHIC #1 <END> g00739307

POWER TRAIN

166-6758 UNIVERSAL JOINT GP

S/N: CRD1-UP

PART OF 166-6759 SHAFT GP-DRIVE

SMCS-3251, 3253 **i01421281**

NOTE	REF NO	GRAPHIC REF	PART NUMBER	QTY	PART NAME 1 2 3 4 5 6 (PRODUCT LEVEL)	SEE PAGE
	1	1	**4E-9324**	1	SPIDER & BEARING GP	
	2	1	**5P-8334**	1	FITTING-HYDRAULIC	
M	3	1	**3E-4315**	4	BOLT-LOCKING (M8X1X14MM)	
	4	1	**6W-4126**	2	STRAP-LOCKING	

M-METRIC PART

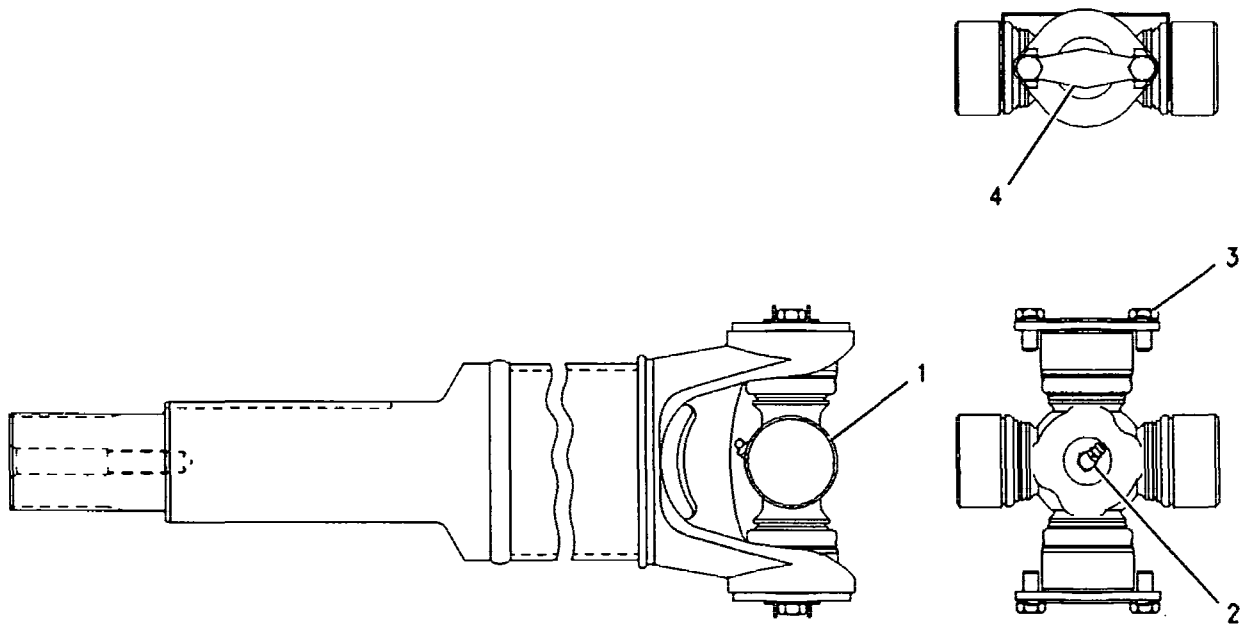

GRAPHIC #1 **<END>** g00743914

4T-6117 VALVE GP-BYPASS–TORQUE CONVERTER COOLER

S/N: CRD1-UP

PART OF 198-2756 LINES GP-TORQUE CONV COOLER

SMCS-5093 i01987443

NOTE	REF NO	GRAPHIC REF	PART NUMBER	QTY	PART NAME 1 2 3 4 5 6 (PRODUCT LEVEL)	SEE PAGE
	1	1	4T-6116	1	BODY-VALVE	
	2	1	121-9231	1	GASKET	
	3	1	6P-3206	1	VALVE AS-CONTROL	
	4	1	*148-8407*	1	PLUG AS	
		1	9S-4191	1	PLUG	
		1	3J-1907	1	SEAL-O-RING	

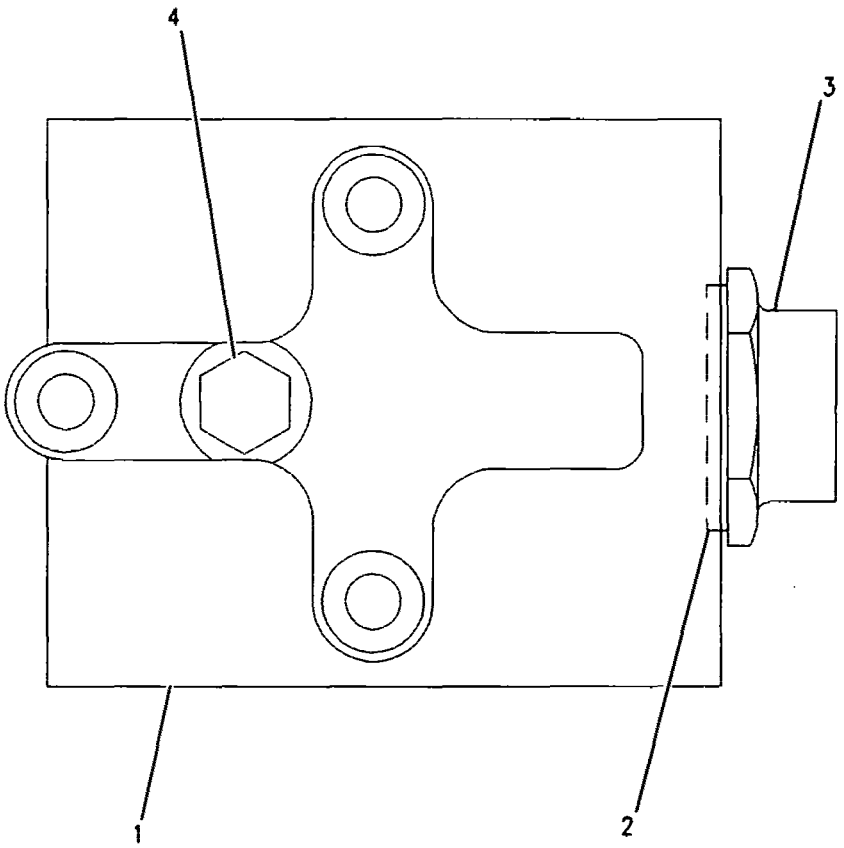

GRAPHIC #1 <END> g00870850

216-5338 VALVE GP-MODULATING-TRANSMISSION CLUTCH

S/N: WNF1-UP

24-VOLT

PART OF 200-2049 VALVE GP-TRANSMISSION CONTROL

SMCS-3139 i01795187

NOTE	REF NO	GRAPHIC REF	PART NUMBER	QTY	PART NAME 1 2 3 4 5 6 (PRODUCT LEVEL)	SEE PAGE
	1	1	6V-3965	1	FITTING AS (QUICK DISCONNECT)	
	2	1	145-1144	1	COIL AS	
	3	1	3J-1907	1	SEAL-O-RING	
	4	1	164-2108	1	WASHER (13.03X25.4X2.38-MM THK)	
	5	1	167-9524	1	NUT-SELF-LOCKING (1/2-28-THD)	

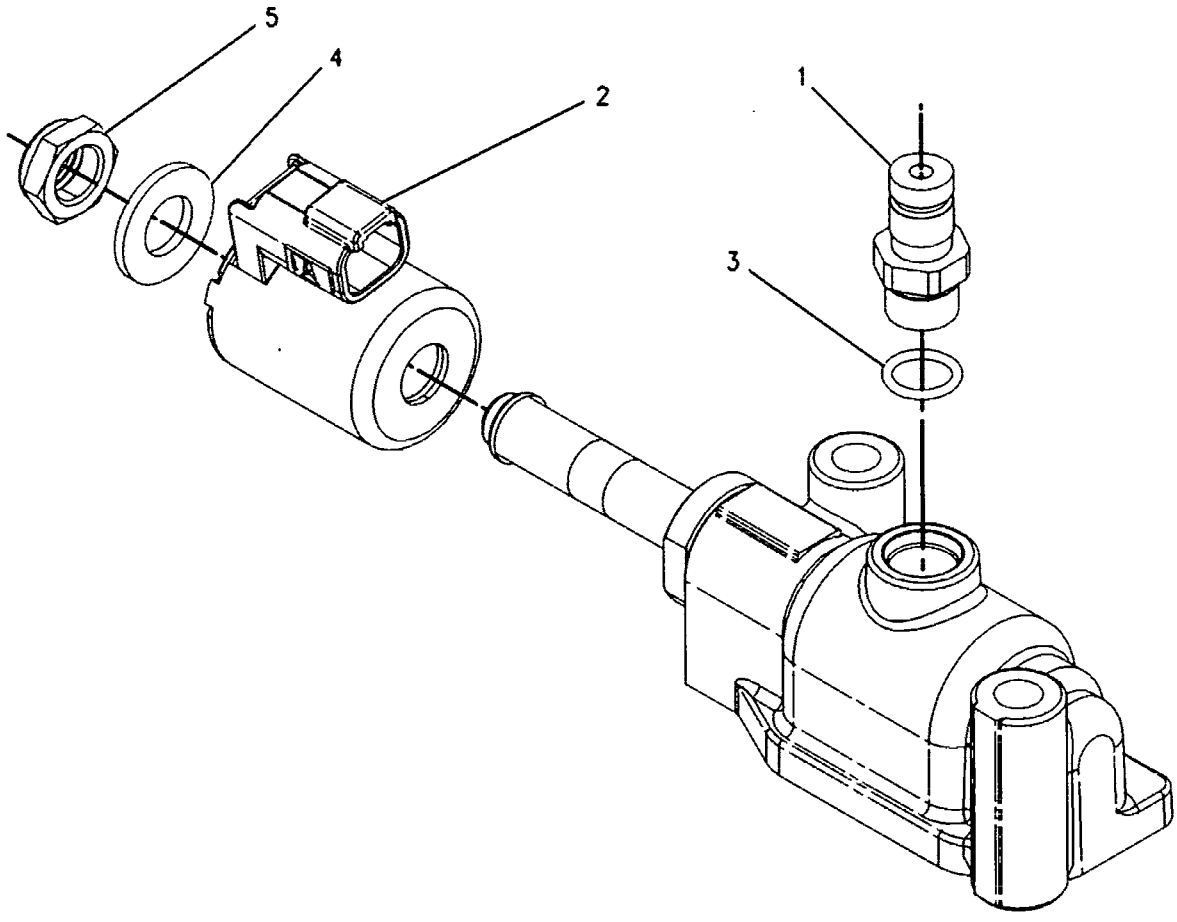

GRAPHIC #1 <END> g00919065

201-3322 VALVE GP-RELIEF-
TRANSMISSION, HYDRAULIC CONTROL
S/N: WNF1-UP

PART OF 200-2049 VALVE GP-TRANSMISSION CONTROL

SMCS-3133, 3182, 3210, 3213 i02162140

NOTE	REF NO	GRAPHIC REF	PART NUMBER	QTY	PART NAME 1 2 3 4 5 6 (PRODUCT LEVEL)	SEE PAGE
	1	1	2S-4663	1	SEAL-O-RING	
	2	1	2S-5835	1	PISTON-LOAD	
	3	1	3J-1907	2	SEAL-O-RING	
	4	1	3K-0360	1	SEAL-O-RING	
	5	1	4M-5905	1	SCREW-ADJUSTMENT (5/16-18X1-IN)	
	6	1	6V-0852	2	CAP-DUST	
	8	1	8E-1143	1	SLUG	
	9	1	8M-5253	1	SEAL-O-RING	
	10	1	9M-2110	1	COVER-ADJUSTMENT	
	11	1	115-4550	1	COVER	
	12	1	172-7966	1	BODY	
	13	1	172-7968	1	SPOOL AS	
		1	3D-8317	1	RING-RETAINING	
		1	4B-9880	1	BALL	
		1	4M-2381	1	SPRING	
		1	9U-8669	1	RETAINER	
	14	1	174-7449	1	SPRING	
M	16	1	6V-3940	2	BOLT (M8X1.25X25-MM)	
	17	1	6V-3965	2	FITTING AS (QUICK DISCONNECT)	
M	18	1	6V-5218	2	BOLT (M8X1.25X35-MM)	
	19	1	9M-1974	2	WASHER-HARD (8.8X16X2-MM THK)	
	20	1	241-6205	1	PLUG	

M-METRIC PART

201-3322 VALVE GP-RELIEF *(contd.)* i02162140

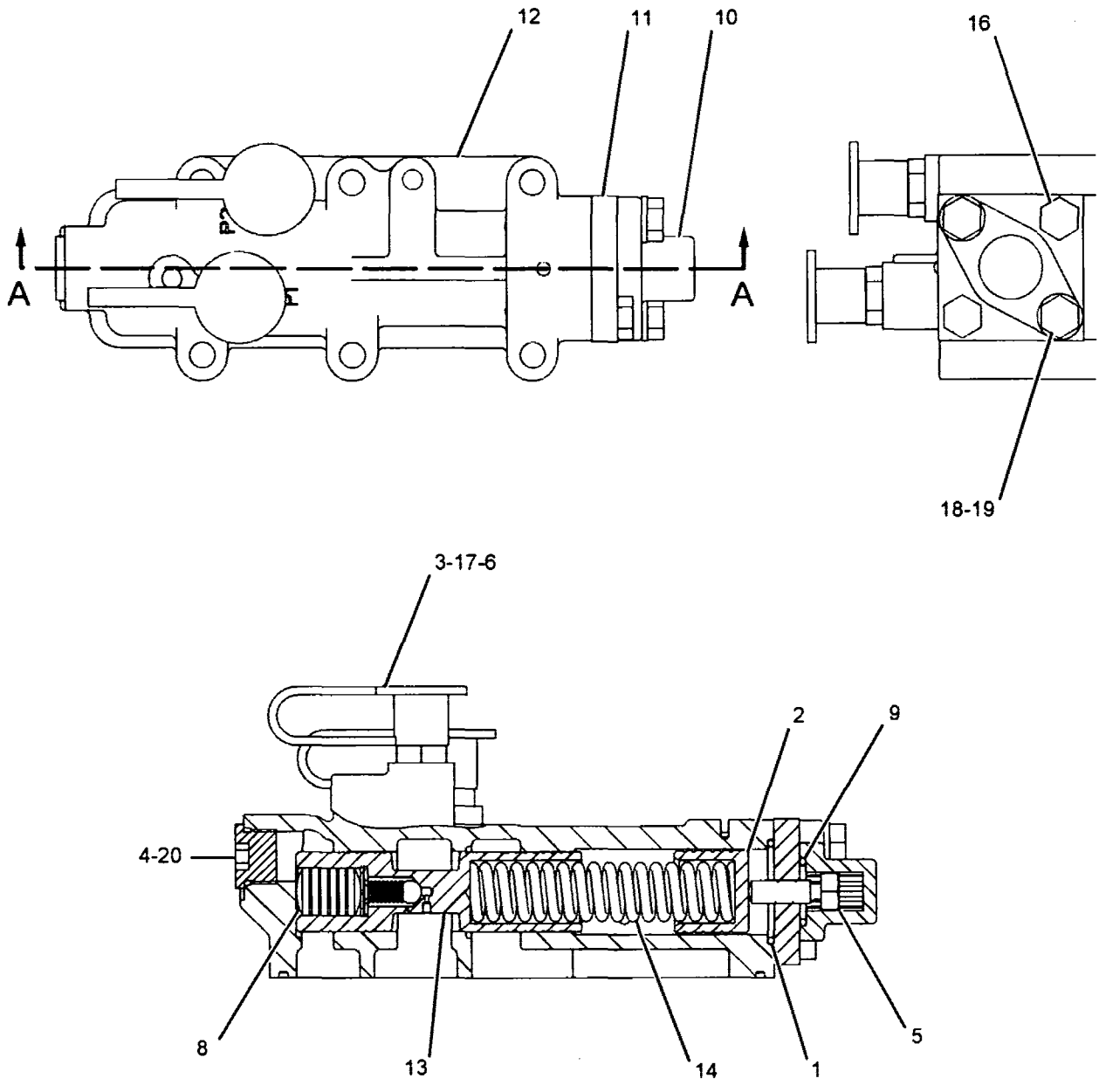

SECTION A-A

GRAPHIC #1

<END>

g01096412

POWER TRAIN

200-2048 VALVE GP-TRANSMISSION CONTROL

S/N: WNF1-UP

PART OF 201-3265 TRANSMISSION AR

SMCS-3073, 3167 i01877825

NOTE	REF NO	GRAPHIC REF	PART NUMBER	QTY	PART NAME 1 2 3 4 5 6 (PRODUCT LEVEL)	SEE PAGE
	1	1,2	3S-2093	12	STRAP-CABLE	
	2	2	9L-9068	2	DOWEL	
Y	3	2	183-8597	2	SENSOR GP-SPEED (TMSN INTERMEDIATE OUTPUT)	251
	4	1,2	196-1185	1	SENSOR GP-SPEED (TORQUE CONVERTER OUTPUT)	
		1,2	102-8802	1	KIT-RECEPTACLE (2-PIN)	
		1,2	3E-3365	1	WEDGE-RECEPTACLE LOCK (2-PIN)	
		1,2	8T-8729	2	PIN-CONNECTOR	
E		1,2	9X-1813		SLEEVE (14CM)	
		1,2	171-5349	1	MARKER	
	4A	1,2	196-1185	2	SENSOR GP-SPEED (TMSN OUTPUT)	
					(EACH INCLUDES)	
		1,2	102-8802	1	KIT-RECEPTACLE (2-PIN)	
		1,2	3E-3365	1	WEDGE-RECEPTACLE LOCK (2-PIN)	
		1,2	8T-8729	2	PIN-CONNECTOR	
E		1,2	9X-1813		SLEEVE (14CM)	
		1,2	171-5349	1	MARKER	
Y	5	1	200-2049	1	VALVE GP-TRANSMISSION CONTROL	466
	6	2	201-3320	1	HARNESS AS-TRANSMISSION (HYDRAULIC CONTROL)	
		2	155-2260	1	KIT-CONNECTING PLUG (3-PIN)	
		2	155-2270	1	KIT-CONNECTING PLUG (2-PIN)	
		2	8N-1525	1	PLUG AS-CONNECTOR (20-PIN)	
		2	8N-1535	1	BELL AS-END	
		2	9X-6772	1	STRAP-CABLE	
	7	2	201-3321	1	SEAL-O-RING	
	8	1,2	130-5300	6	CLIP	
	9	1,2	132-5789	12	CLIP	
	10	1,2	3K-0360	5	SEAL-O-RING	
M	11	1,2	6V-2317	5	BOLT (M8X1.25X30-MM)	
M	12	1	6V-3821	1	BOLT (M8X1.25X110-MM)	
M	13	1,2	6V-5215	6	BOLT (M8X1.25X16-MM)	
M	14	1	6V-5223	10	BOLT (M8X1.25X100-MM)	
	15	2	8M-5251	8	SEAL-O-RING	
M	16	1	8T-0276	4	BOLT (M8X1.25X45-MM)	
	17	1,2	9M-1974	26	WASHER-HARD (8.8X16X2-MM THK)	

E-ORDER BY THE CENTIMETER
M-METRIC PART
Y-SEPARATE ILLUSTRATION

200-2048 VALVE GP-TRANSMISSION CONTROL *(contd.)* i01877825

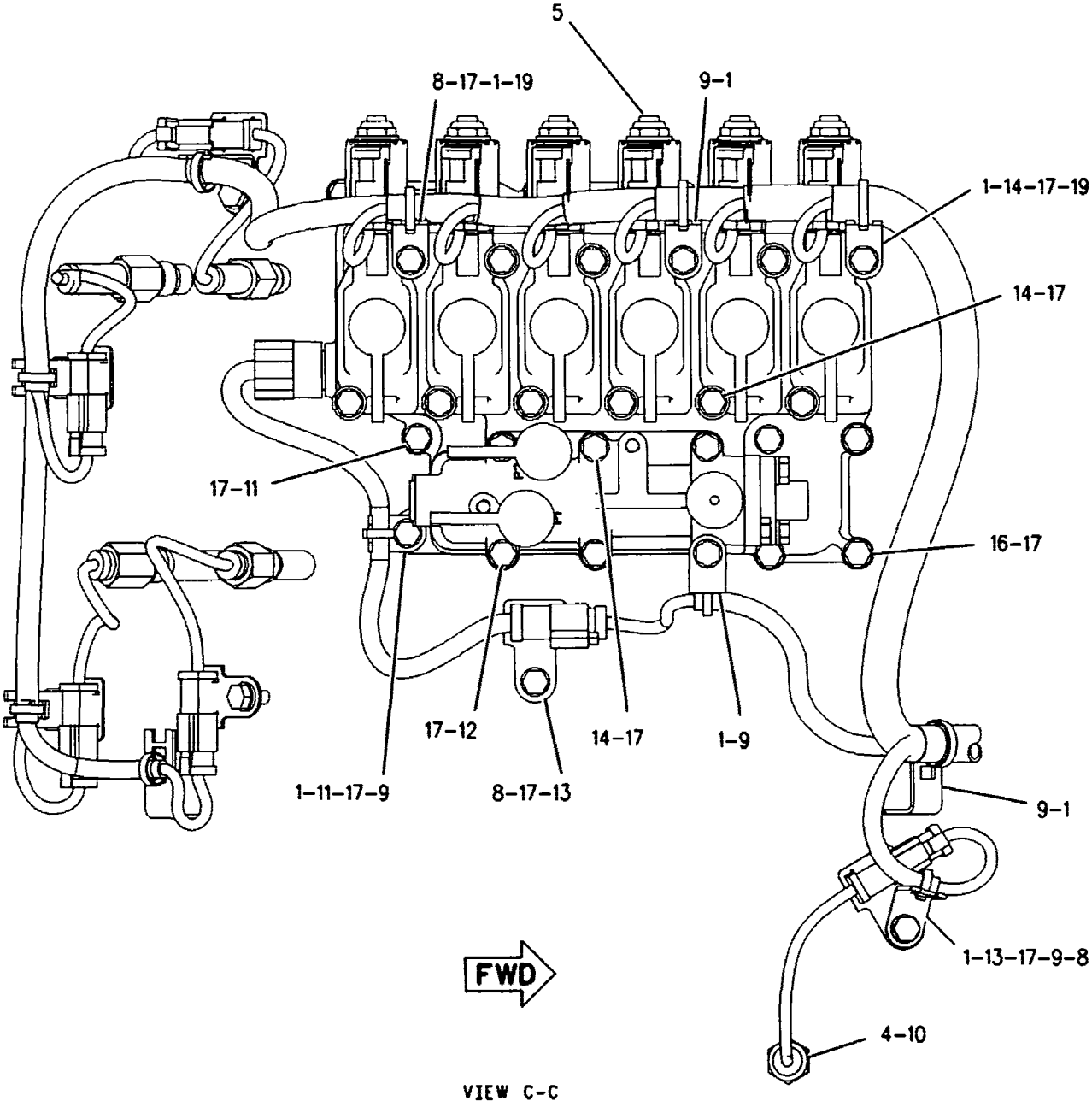

VIEW C-C

GRAPHIC #1 g00955662

200-2048 VALVE GP-TRANSMISSION CONTROL (contd.) i01877825

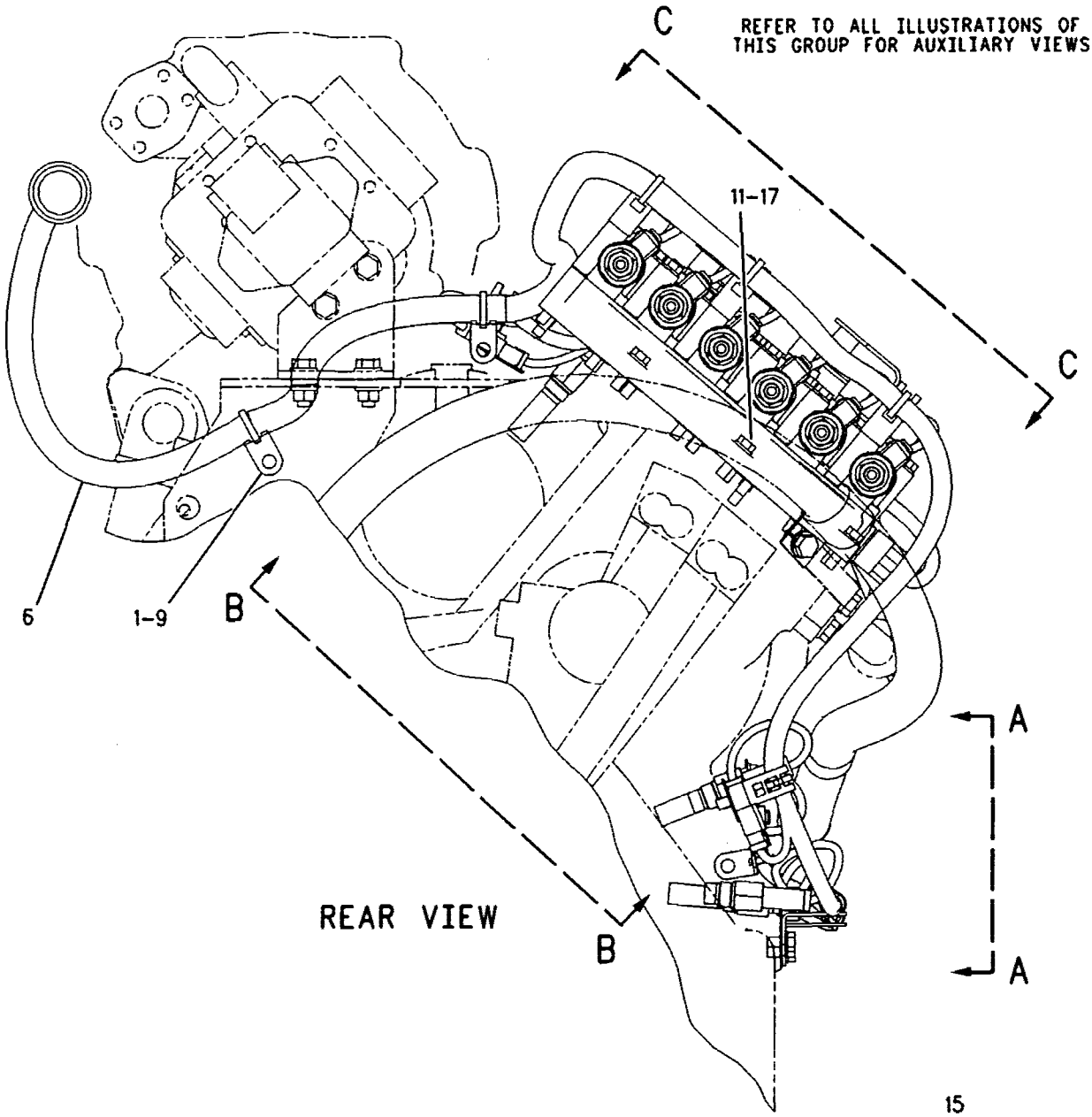

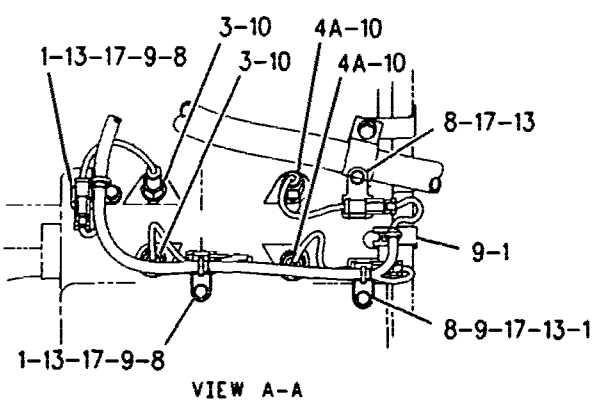

VIEW A-A

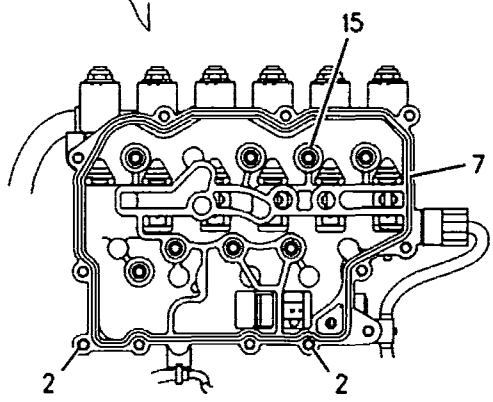

VIEW B-B

GRAPHIC #2 <END> g00955668

200-2049 VALVE GP-TRANSMISSION CONTROL

S/N: WNF1-UP

PART OF 200-2048 VALVE GP-TRANSMISSION CONTROL

SMCS-3073, 3167 i01866341

NOTE	REF NO	GRAPHIC REF	PART NUMBER	QTY	PART NAME 1 2 3 4 5 6 (PRODUCT LEVEL)	SEE PAGE
	1	1	6V-0852	6	CAP-DUST	
	2	1	8S-0768	6	SEAL-O-RING	
	3	1	9L-9068	2	DOWEL	
Y	4	1	216-5338	6	VALVE GP-MODULATING (24-VOLT) (TRANSMISSION CLUTCH)	460
	5	1	200-2050	1	MANIFOLD	
Y	6	1	201-3322	1	VALVE GP-RELIEF (TRANSMISSION HYDRAULIC CONTROL)	461
Y	7	1	118-7226	1	SENSOR GP-TEMPERATURE (TRANSMISSION OIL)	254
	8	1	3J-1907	1	SEAL-O-RING	
	9	1	5J-3886	1	SEAL-O-RING	
M	10	1	5P-8347	5	BOLT (M8X1.25X70-MM)	
M	11	1	6V-5221	2	BOLT (M8X1.25X80-MM)	
	12	1	9M-1974	7	WASHER-HARD (8.8X16X2-MM THK)	

M-METRIC PART
Y-SEPARATE ILLUSTRATION

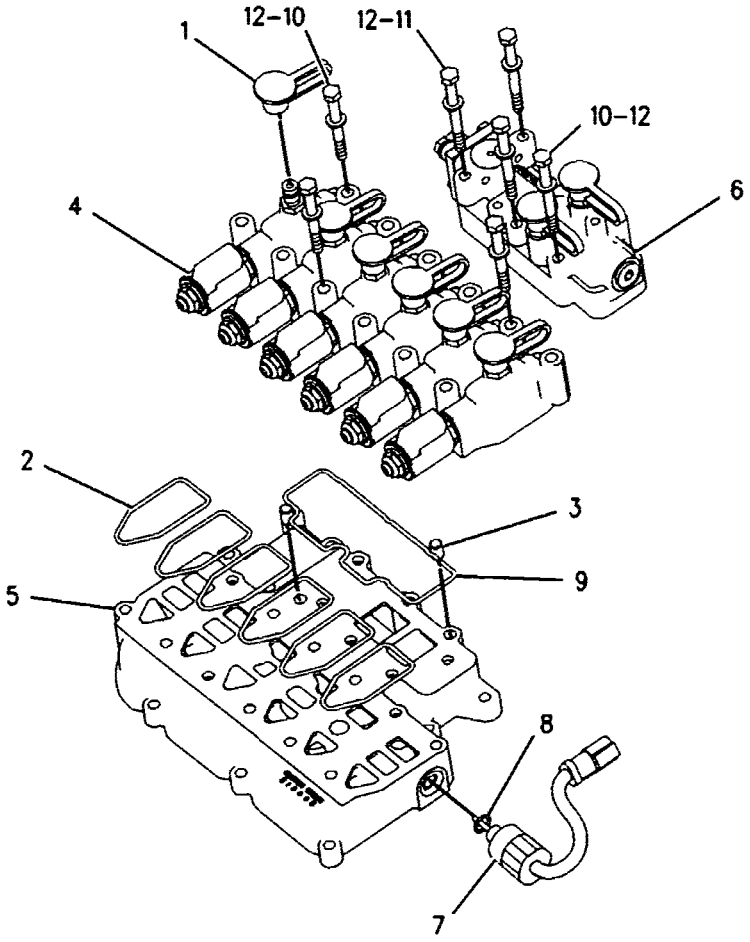

GRAPHIC #1 <END> g00951334

PART NUMBER INDEX

Part	Page
0	
0A-2926	109
0S-0175	888
0S-1570	228
	229
	231
	457
0S-1594	725
	839
	841
0T-0244	952
	956
	965
	972
0T-0573	566
1	
1A-4350	955
1B-0676	483
1B-4430	975
1B-8705	7
	14
1C-0569	958
1G-8878	400
	401
1H-1023	586
1H-3244	162
	164
	228
	229
	231
1H-3338	269
	271
	272
	497
1H-4393	277
	933
1H-6227	720
1H-8296	977
	979
1H-8306	155
1H-9696	625
	727
	729
1J-2303	627
	631
	633
1J-5353	727
	729
1J-5607	820
	821
1J-6298	954
	957
1J-9671	22
	25
	35
	95
	96
	379
	539
	540
	541
1K-3113	319
	323
	327
	332
1K-6872	839
	841
	842
	843
1L-4349	727
	729
1L-5072	393
	621
1L-9080	955
1M-6718	768
	770
	771
1N-4403	111
1N-5999	22
	25
	33
	35
	38
1P-1010	172
1P-2694	402
	404
1P-2695	402
	404
1P-3703	678
	680
	702
	704
	706
1P-3704	578
1P-3706	667
1P-3707	379
	399
1P-4278	90
	92
1P-4577	578
	580
	596
1P-4578	727
	729
1P-6356	904
	908
1P-6522	836
	891
1R-0722	727
	729
1R-0762	133
	135
	137
	139
	142
1R-0770	127
1R-1807	71
1S-0670	625
1S-0994	348
	351
	358
	363
	669
	673
1S-1015	319
	323
	327
	332
1S-2563	73
	74
1S-3399	1001
1S-3847	1002
1S-6595	379
1S-7251	172
	264
	358
	362
1S-7252	172
	264
	358
	362
1S-9593	567
	785
	786
	787
	788
1T-1621	453
1T-1639	379
1U-0257	800
1U-0465	727
	729
1U-0466	727
	729
1U-0601	814
1U-3251	829
1U-3252	828
1U-3505	566
1U-3506	566
1U-3507	566
1U-3508	566
1U-3867	566
1U-8846	9
	47
	48
	65
	114
	115
	379
	408
	410
	412
	414
1U-9053	287
1V-2647	485
	488
1V-3113	263
1V-6688	533
1W-2715	31
	37
1W-8407	16
2	
2A-1162	47
2A-2677	72
	359
	363
2A-4429	31
2B-2404	37
	528
	530
	645
	648
2B-2695	958
2D-0094	392
2D-0388	369
2D-2443	438
2D-2507	435
2D-2508	435
	438
2D-2509	435
	438
2D-2511	435
	438
2D-4202	727
	729
2D-4867	792
	794
	797
2D-6642	50
2F-7306	928
2G-1133	918
2G-5298	286
	293
	302
2G-9524	887
	888
2H-1142	725
2H-3088	402
	406
2H-3429	366
	369
	768
	770
	771
	772
	773
2H-3920	279
	286
	288
	294
	304
	833
	834
	890
2H-3922	267
	836
2H-3923	836
2H-6184	379
2H-9247	627
	629
	631
	633
2H-9524	370
2J-3507	800
	814
	820
	821
2J-7550	433
2J-7761	393
	621
2K-0715	412
	414

► PRIMARY REFERENCE

PART NUMBER INDEX

Part	Page
2K-1594	727
	729
2K-2961	627
	629
	631
	633
2K-4821	164
	721
2K-4973	831
	958
	975
	977
	979
2K-8199	398
2K-9295	408
	410
	412
	414
2L-6726	366
	370
2M-0849	839
	841
2M-3433	348
	351
2M-4453	94
	95
	727
	729
2M-6471	18
2M-8191	725
2M-9780	18
	22
	25
	33
	35
	38
	71
	95
	96
	145
	146
	417
	578
	588
	597
	599
	667
	687
	691
	694
	698
	738
	740
	745
	747
	780
	783
	912
2N-2658	377
2N-3477	551
	552
2N-7006	379
2N-7007	379
2P-2537	71
2P-8099	162
2P-8986	379
	406
2P-8987	406
2Q-1578	▶824
2Q-1637	517
2Q-2772	504
2Q-2773	504
2Q-3846	643
2Q-3847	799
2Q-3857	501
2Q-3907	509
	511
2Q-3908	509
	511
2Q-4178	473
2Q-4181	▶472
	473
2Q-4182	472
2Q-4395	501
2Q-4484	509
	511
2Q-7327	509
	511
2Q-7623	564
2Q-7875	659
	665
2Q-7876	▶659
	799
2Q-7890	▶792
	799
2Q-7891	792
2Q-7892	792
2Q-7980	483
2Q-7981	483
2S-2053	72
2S-2596	596
	597
2S-2981	1000
2S-3745	836
	891
2S-4078	379
	667
	669
	673
2S-4663	461
2S-5835	461
2S-9503	562
2S-9600	593
2T-2951	4
	▶81
2T-3019	176
2T-3360	569
	571
2V-3216	109
2V-6034	473
2W-0027	57
	59
2W-6544	9
2W-6546	8
2W-7213	18
2W-7381	39
2W-8147	14
2W-9499	13
2Y-5671	781
2Y-5829	67
	406
2Z-9155	2
	3
	▶504

3

Part	Page
3B-0551	408
	410
	412
	414
3B-2062	483
	499
3B-4124	408
	410
	412
	414
3B-4501	836
3B-4508	824
3B-4512	545
3B-4605	520
	521
3B-4610	478
	549
	554
3B-4611	524
3B-4615	483
	499
3B-4617	473
3B-4628	473
3B-4629	520
	521
	825
	826
	827
3B-4631	509
	511
3B-6487	109
3B-6552	109
	528
	530
3B-7722	86
3B-8489	440
	441
	520
	521
	522
	573
	792
	794
	797
3B-8491	792
	794
	797
3D-0053	721
3D-2824	60
	65
	85
	95
	96
	417
	421
	423
	428
	580
	597
	637
	667
	669
	673
	678
	680
	687
	691
	694
	698
	721
	738
	745
	747
	749
3D-8317	461
	725
3D-8752	366
3D-9872	349
	352
3E-0075	261
	▶268
3E-0624	1001
3E-0625	1002
3E-0626	1001
3E-0845	1001
3E-0846	1002
3E-0847	1001
3E-1841	836
	891
3E-3213	42
3E-3361	891
3E-3365	155
	159
	200
	202
	211
	228
	251
	280
	281
	283
	284
	316
	319
	323
	354
	400
	401
	463
	472
	567
	645
	648
	787
	836
	891
3E-3368	235
	242
	244
3E-3371	186
	187
	200

▶ PRIMARY REFERENCE

PART NUMBER INDEX

Part	Page
	210
	237
	238
	240
	241
	243
	250
	253
	254
	278
	327
	348
	351
	354
	358
	362
	555
	558
3E-3377	286
	293
	302
	348
	351
	785
	786
3E-3383	205
	207
	286
	287
	288
	293
	295
	302
	356
	389
	608
	609
	611
	613
	615
3E-3389	279
	286
	293
	302
	356
	718
	756
	764
	941
3E-3584	741
3E-3805	857
	859
	862
	864
	866
	869
	875
	878
3E-3826	483
3E-4051	904
	908
3E-4052	904
	908
3E-4056	904
	908
3E-4057	904
	908
3E-4058	904
	908
3E-4090	904
	908
3E-4250	625
3E-4312	840
3E-4315	441
	458
3E-4335	928
3E-4336	928
3E-4352	235
3E-4353	133
	135
	137
	139
	142
3E-4354	593
3E-4362	928
3E-4367	287
	294
	313
	918
3E-4883	54
3E-5165	918
3E-5169	348
	351
3E-5239	286
	293
	302
	358
	362
3E-5464	836
3E-6328	▶159
	286
	293
	302
3E-6450	358
3E-6466	▶209
	224
3E-6575	928
3E-6748	588
3E-6753	128
3E-6799	453
3E-7277	272
3E-7410	133
	135
	137
	139
	142
	555
	558
	669
	673
3E-7844	▶186
	641
3E-7852	265
3E-7853	265
3E-7855	265
3E-7857	265
3E-7858	265
3E-7860	265
3E-7861	265
3E-8017	125
3E-8020	497
3E-8320	172
3E-8349	100
3E-8558	287
	294
	313
	918
3E-8575	743
	▶785
3E-8581	785
	786
3E-9205	744
	▶786
3E-9375	240
3E-9412	66
	133
	135
3F-0379	265
3F-5792	606
3F-9556	164
	273
3G-1820	606
3G-3498	727
	729
3G-4704	576
3G-5285	627
	629
	631
	633
3G-5980	727
	729
3G-6660	109
3G-6891	586
3G-6906	586
3G-6907	586
3G-8175	787
3H-2900	904
	908
3H-5552	18
3H-7180	712
3H-7654	66
3H-8538	551
	552
3J-1907	22
	25
	33
	35
	38
	76
	81
	112
	115
	128
	130
	133
	135
	137
	139
	142
	145
	146
	147
	153
	263
	319
3J-3679	95
3J-4818	975
	977
	979
3J-6021	593
3J-7354	65
	71
	81
	90
	92
	128
	130
	235
	400
	323
	327
	332
	379
	400
	401
	417
	425
	459
	460
	461
	466
	555
	558
	562
	578
	580
	597
	603
	609
	611
	613
	615
	637
	645
	648
	652
	654
	657
	667
	669
	673
	682
	684
	686
	687
	691
	694
	698
	708
	740
	752
	754
	756
	758
	760
	762
	764
	766
	991
	994

▶ PRIMARY REFERENCE

PART NUMBER INDEX

Part	Page	Part	Page	Part	Page	Part	Page
	401		717		986	4B-9782	399
	539		723	3S-6162	626		597
	540		738	3S-8665	682	4B-9880	461
	541		768		684	4C-2959	850
	555		770	3T-0203	319	4C-9612	8
	558		771		323		56
	580		772		327	4D-6432	955
	593		773		332		958
	597		776	3T-0204	287	4D-6988	645
	599		912		294		648
	603	3K-3257	264		303	4D-7388	348
	604	3K-4897	931	3T-2094	432		351
	669	3K-5093	412	3T-2662	228		425
	673		414		231	4D-7733	558
	754	3K-8460	235		233	4D-7735	284
	758		379		951	4D-7794	74
	762	3K-9879	566		952		313
	766	3L-5893	107		965		370
	774		108		972	4D-8123	370
	818	3L-7334	53	3T-3008	386	4D-9517	90
	819	3L-8187	551	3T-5201	857		92
3J-7479	596		552		859		130
3K-0360	9	3P-1156	75		862		319
	22		76		864		323
	25		82		866		327
	35	3P-1932	71		869		332
	40	3P-2404	418		875	4D-9986	379
	61	3P-9554	219		878	4E-0211	377
	85		221	3T-6580	382	4E-1026	720
	86	3P-9847	686	3T-6581	406	4E-1062	609
	88	3P-9900	977	3T-8724	▶195		611
	95		979		▶196		613
	96	3R-8530	99	3V-0778	72		615
	284		103		335	4E-1373	54
	319	3S-1223	727		338	4E-1384	99
	323		729		341		103
	327	3S-2093	132	3V-0905	397		483
	332		147	3V-0906	397		852
	359		172	3V-0908	397		853
	363		261	3V-2793	490		857
	370		262		494		859
	390		281	3V-4694	933		862
	408		287	3V-6909	641		864
	410		316		643		866
	412		317	3W-6116	801		869
	414		319	3W-9226	473		875
	417		323	3Y-2888	263		878
	461		327				887
	463		332				888
	555		335	**4**		4E-1385	517
	558		338			4E-1387	517
	562		341	4B-2043	356	4E-1411	895
	564		354	4B-2049	228	4E-2161	897
	578		358	4B-3665	433		899
	580		362	4B-4158	1000		901
	595		366	4B-4274	228	4E-2165	377
	597		463		231	4E-2166	377
	637		637		233	4E-2167	377
	669		654		356	4E-2168	377
	673		687		366	4E-2289	669
	687		691		370		673
	691		694	4B-4278	977	4E-2448	366
	694		698		979	4E-2841	720
	698		836	4B-5324	551	4E-3191	394
	713		891		552		396

▶ PRIMARY REFERENCE

PART NUMBER INDEX

Part	Page
4E-3273	439
4E-3488	375
	▶396
4E-3760	522
4E-3896	402
	404
4E-3897	402
	404
4E-3997	408
	410
	412
	414
4E-3999	408
	410
	412
	414
4E-4007	412
	414
4E-4029	402
	404
4E-4030	402
	404
4E-4031	402
	404
4E-5984	439
4E-5985	439
4E-6364	792
	794
	797
4E-7088	366
4E-7316	982
4E-8293	896
	903
4E-8958	544
4E-9324	441
	458
4E-9413	404
4E-9664	542
	544
4E-9667	548
4E-9668	548
4F-2294	228
	270
	274
	275
4F-4042	800
	814
4F-4879	951
	970
4F-5695	20
	24
4F-9653	145
	146
4H-1225	580
4I-3038	286
	293
	302
4I-6289	485
	488
	490
	659
	791
	792
4J-0519	596
4J-0520	421
	423
	425
	578
	580
	597
	637
	659
	661
	663
	665
	667
	702
	704
	706
4J-0522	727
	729
4J-0524	94
	95
4J-4606	627
	629
	631
	633
4J-4630	626
4J-5267	580
	678
	680
4J-5477	128
	130
	555
	558
	580
	645
	648
	652
	657
	669
	673
	818
	819
	991
	994
4J-6555	613
	615
4J-8251	727
	729
4J-8252	727
	729
4J-9058	800
4J-9221	626
4J-9448	369
4K-2039	740
	768
	770
	771
	772
	773
4K-4879	435
4K-4881	436
4K-7464	522
4K-8864	335
	338
	341
	370
4K-9097	958
4K-9429	930
4L-6454	842
	843
4M-0189	392
4M-1831	265
4M-2381	461
4M-5905	461
4M-6425	943
4M-7470	520
	521
	524
	986
4N-8227	195
4P-0659	124
4P-5524	111
4P-5918	9
	151
	152
4P-7581	9
	147
	281
	283
	288
	294
	304
	335
	338
	341
	348
	351
4P-8134	261
	262
	288
	294
	304
	335
	346
4P-8681	1000
4Q-1346	792
4Q-2531	501
4R-9999	64
4S-1962	90
	92
	335
	338
	341
	348
	351
	417
	578
4S-5824	406
4S-5971	392
4S-8264	897
	899
	901
4S-8287	928
4S-8541	453
4S-8598	379
4S-8603	379
4T-3148	738
	745
	747
	749
4T-3658	669
	673
4T-4942	776
4T-5173	627
	629
	631
	633
4T-6116	459
4T-6117	425
	▶459
4T-6695	820
4T-6907	576
4T-7571	776
4T-8091	821
4T-8101	814
4T-9369	725
4V-2588	792
	794
	797
4V-2872	791
	794
	797
4V-2873	791
	794
	797
4V-2879	792
	794
	797
4V-2883	794
	797
	815
	816
4V-3619	792
	794
	797
4V-3625	792
	794
	797
4V-5099	412
	414
4V-6999	641
	643
4V-7884	975
4V-8256	831
4V-8556	975
4V-8577	977
	979
4V-8674	626
4W-0253	96
	98
4W-2026	11
4W-2232	75
4W-3462	4
	▶8
4W-7592	96
	98
4Y-9652	9
4Z-6119	627
	629
4Z-6122	▶627
	▶629
	799
5A-3604	752
	756

5

▶ PRIMARY REFERENCE

PART NUMBER INDEX

Part	Page
	758
	760
	764
	766
5B-0651	792
	794
	797
5B-0935	457
	528
	530
5B-1866	67
5B-7890	118
5C-2874	162
5C-2890	109
	162
	214
	215
	216
	218
	219
	221
	223
	224
	228
	269
	271
	272
	283
	366
	515
	603
	604
	709
	710
	711
	712
	758
	766
	857
	859
	862
	864
	866
	869
	875
	878
	897
	899
	901
	933
	977
	979
5C-7261	72
	73
	74
	90
	92
	100
	104
	128
	133
	135
	137
	139
	142
	162
	319
	323
	327
	332
	359
	363
	483
	517
	549
	554
	609
	611
	613
	615
	852
	853
	857
	859
	862
	864
	866
	869
	875
	878
	887
	888
	891
	916
	1003
	417
	674
	85
	390
	505
	507
	912
	545
	621
	319
	323
	327
	332
	669
	673
	727
	729
	47
	729
	626
5C-8312	162
	277
	933
5C-8811	986
5C-9553	100
	104
	176
	219
	221
	515
	535
	537
	836
	887
	888
	891
	916
5C-9625	1003
5D-0718	417
	674
5D-1026	85
	390
	505
	507
	912
5D-1242	545
5D-1911	621
5D-2651	319
	323
	327
	332
	669
	673
5D-7927	727
	729
5F-0304	47
5F-3488	729
5F-3999	626
5F-8000	379
5F-9144	586
	588
5F-9657	196
	198
5F-9757	348
	351
5G-7820	641
	643
5H-3193	597
5H-3252	432
5H-3701	408
	410
	412
	414
5H-4019	659
	661
	663
	665
5H-4020	727
	729
5H-6005	727
	729
5I-3878	100
	104
5I-4370	667
5J-2974	597
5J-3488	627
	629
	631
	633
5J-3886	466
5J-8275	629
5K-0806	659
	661
	663
	665
5K-1568	399
5K-2298	528
	530
5K-3772	528
	530
5K-4778	370
5K-9065	453
5K-9090	417
	421
	423
	425
	578
	580
	637
	659
	661
	663
	665
	667
	669
	673
	678
	680
	687
	691
	694
	698
	702
	704
	706
	991
	994
5K-9242	528
	530
5K-9243	528
	530
5L-1100	586
5L-2030	402
	404
5L-2031	402
	404
5L-2952	11
5L-4035	566
5L-4183	824
5L-4507	228
	231
	233
5L-4758	593
5L-7200	277
5M-2894	943
5M-3062	600
5M-3154	379
5M-4987	432
5M-6668	228
	231
	233
	356
5P-0076	588
5P-0372	497
	499
5P-0537	13
	109
5P-0599	122
5P-0695	358
	362
5P-0747	172
	264
	358
	362
5P-0761	172
	358
	362
5P-0763	86
	88
5P-0767	85
	390
	505
	507
	912
5P-1075	168
	170
	348
	351
5P-1076	100
	104
	166
	481
	501
	505
	507
	513
	514
	518

▶ PRIMARY REFERENCE

PART NUMBER INDEX

Part	Page
	519
	702
	704
	720
5P-1175	1000
5P-1251	90
	92
5P-1295	667
5P-1367	1004
5P-1377	1004
5P-1404	147
5P-2199	597
5P-2341	729
5P-2566	166
5P-3779	540
	541
	601
5P-4115	895
5P-4116	9
	90
	92
	319
	323
	327
	332
	641
	643
	845
	847
	855
	880
	888
5P-4325	682
	684
5P-4423	977
	979
5P-4484	408
	410
	412
	414
	417
5P-4536	126
5P-4961	132
5P-5148	359
	363
	417
	580
5P-5461	528
	530
5P-5463	528
	530
5P-5637	478
	897
	899
	901
5P-5639	216
	218
	609
	611
	613
	615
5P-5643	833
	834
	837
	890
5P-5649	104
	478
5P-5677	200
	281
	354
5P-5678	13
5P-5774	218
5P-5777	417
5P-5908	836
	891
5P-5923	534
5P-5927	216
	218
	880
5P-6010	977
	979
5P-6039	214
	215
5P-6313	263
5P-6314	263
5P-6414	453
5P-6442	90
	92
5P-6872	916
5P-7070	837
5P-7211	478
	533
5P-7244	1000
5P-7466	580
	637
5P-7467	580
	637
5P-7468	335
	338
	341
	417
	580
5P-7469	335
	338
	341
	417
	580
5P-7483	499
	524
5P-7648	517
5P-7657	899
5P-7803	233
5P-7813	565
5P-7814	235
5P-7957	930
5P-7958	914
	999
5P-7970	9
	11
5P-8066	76
5P-8112	580
	637
5P-8118	738
5P-8136	800
5P-8167	975
5P-8196	71
5P-8245	11
	43
	44
	379
	394
	396
	406
	824
	825
	826
	827
	842
	843
5P-8247	17
	164
	408
	410
	412
	414
	439
	503
5P-8248	727
	729
5P-8334	441
	458
5P-8347	86
	88
	178
	179
	180
	466
5P-8444	335
	338
	341
	417
	580
5P-8500	393
	621
	885
	914
	998
5P-8502	393
	501
	998
5P-8524	895
5P-8837	532
5P-8874	578
	670
	674
5P-9085	316
	335
	338
	341
	359
	363
	370
	698
5P-9119	729
5P-9262	774
5P-9297	319
	323
	327
	332
	335
	338
	341
	359
	363
	369
5P-9617	81
	670
	674
5P-9683	366
5P-9768	933
5P-9806	379
5R-0939	678
	680
5R-0940	678
	680
5S-7001	780
5S-7018	780
5S-7349	164
	265
5S-7383	943
5S-7598	825
	826
	827
5T-5682	437
5V-1274	394
5V-1496	962
5V-1498	839
	841
5V-1783	808
5V-1784	808
5V-2998	277
5V-4998	532
5V-4999	532
5V-6454	792
	794
	797
5V-6455	792
	794
	797
5V-7574	412
	414
5V-8780	99
	103
	6
6A-3034	1003
6A-5591	379
6B-2882	562
6C-2356	427
6C-3679	887
	888
6D-1641	912
6D-3025	366
	370
6D-4244	319

► PRIMARY REFERENCE

PART NUMBER INDEX

Part	Page
	323
	327
	332
	335
	338
	341
	348
	351
6D-4246	288
	294
	304
	319
	323
	327
	332
	654
	669
	673
6D-4636	319
	323
	327
	332
6D-8305	555
	558
6D-9157	727
	729
6E-0231	593
6E-0410	597
6E-1835	776
6E-1979	606
6E-2508	597
6E-3008	777
6E-3078	682
	684
	▶780
6E-3268	774
6E-3269	774
6E-3272	774
6E-3273	774
6E-3274	774
6E-3275	774
6E-3276	774
6E-3447	▶595
	597
6E-3632	727
	729
6E-3877	727
	729
6E-5397	597
6E-5431	738
	745
	747
	749
6E-5434	738
	745
	747
	749
6E-5436	738
	745
	747
	749
6E-5437	745
	747
	749
6E-5438	745
	747
	749
6E-5439	738
	745
	747
	749
6E-5440	738
	745
	747
	749
6E-5457	738
	745
	747
	749
6E-5643	738
	745
	747
	749
6E-5958	▶738
	749
6E-6129	738
6E-6473	725
6E-6477	▶606
	725
6E-6479	725
6E-6480	725
6E-6481	588
6E-6484	588
6E-6488	606
6E-6490	606
6E-6491	606
6E-6492	606
6E-6493	606
6E-6494	606
6E-6513	725
6E-6527	774
6E-6528	774
6E-6536	774
6E-6537	774
6E-6538	774
6E-6539	774
6E-6540	774
6F-3930	435
	438
6F-4718	408
	410
	412
	414
6F-4855	727
	729
6F-5188	399
6F-7045	267
6F-7062	60
6G-4195	551
	552
6H-5139	399
6H-8021	122
6H-9361	727
	729
6I-1418	199
	200
	286
	293
	302
	354
6I-2504	111
	▶116
6I-4464	111
6I-8310	802
	803
	804
	806
	807
	810
	811
	812
	813
6I-8311	802
	803
	804
	806
	807
	810
	811
	812
	813
6I-8531	440
6I-8598	▶392
	455
6I-8849	522
6I-8860	522
6I-8909	433
6I-9250	800
6I-9251	800
6J-1889	625
6J-1890	625
6J-1972	576
6J-2680	667
6J-5731	576
6J-5733	576
6J-6439	776
6J-6506	599
6J-6516	599
6J-6517	599
6J-7854	725
6J-9996	712
6K-0806	975
6K-2430	412
	414
6K-4185	522
6K-4186	522
6K-4191	522
6K-8178	128
	130
	904
	908
6L-2609	11
6L-3616	528
	530
6L-8617	107
	108
6M-5062	768
	770
	771
	772
	773
6N-0009	118
6N-1604	197
6N-8863	483
6P-3206	459
6R-3354	781
6R-7626	659
	791
	792
6R-8146	586
6S-6646	535
	537
	551
	552
	888
6S-7826	586
6S-7827	586
6T-3382	785
6T-3631	278
	348
	351
	356
6T-3632	278
	348
	351
	356
6T-3633	278
	348
	351
	356
6T-3643	228
	231
	233
	288
6T-3644	228
	231
	233
6T-9244	786
6V-0301	428
6V-0359	522
6V-0484	133
	135
	137
	147
	578
	682
	684
	740
6V-0852	400
	401
	425
	461
	466
	555
	558
	580
	654
	667
	669
	673
	682
	684
	740
	991
	994
6V-0894	366
	370
	939
6V-1355	90

▶ PRIMARY REFERENCE

PART NUMBER INDEX

Part	Page
	92
6V-1392	837
	891
6V-1438	85
6V-1668	836
	891
6V-1722	85
6V-1820	133
	135
	137
	139
	379
	453
6V-1889	417
	669
	673
	904
	908
6V-1946	1001
	1002
	1003
	1004
6V-1970	1
	▶914
6V-2313	366
	370
6V-2317	9
	11
	71
	261
	262
	463
6V-2394	382
	384
	386
6V-2456	931
6V-2495	904
	908
6V-2686	263
6V-2687	840
6V-2722	175
6V-3265	73
	74
6V-3303	439
6V-3531	412
	414
6V-3538	8
	16
6V-3668	379
	406
6V-3821	70
	463
6V-3823	453
6V-3918	48
	56
	96
	98
6V-3940	7
	8
	57
	59
	75
	86
	88
	235
	379
	461
6V-3960	431
6V-3965	400
	401
	425
	460
	461
	555
	558
	580
	654
	667
	669
	673
	682
	684
	740
6V-4248	433
	727
	729
6V-4249	142
6V-4356	904
	908
6V-4357	904
	908
6V-4589	147
6V-4604	524
6V-4611	1000
6V-4612	1001
6V-4615	1002
6V-5048	22
	25
	33
	35
	38
	248
	249
6V-5049	133
	135
	137
	139
	142
	147
	154
	247
	565
6V-5142	783
6V-5195	599
6V-5203	629
6V-5210	162
	277
6V-5215	9
	463
6V-5217	48
	379
6V-5218	261
	262
	461
6V-5219	153
6V-5220	53
6V-5221	466
6V-5223	86
	88
	178
	179
	463
6V-5645	288
	294
	302
6V-5683	613
	615
6V-5686	412
	414
6V-5696	11
	66
	406
6V-5778	725
6V-5815	79
	80
6V-5839	11
	27
	28
	29
	30
	79
	80
	145
	146
	379
	406
	453
	727
	729
6V-5842	47
	145
	146
	379
	432
	727
	729
6V-5843	41
	45
	379
	406
6V-6210	986
6V-6317	11
	392
	433
6V-6609	258
6V-6635	225
	226
	227
6V-6703	189
	190
6V-7238	40
	390
	669
	673
	912
6V-7357	216
	218
6V-7419	986
6V-7420	912
6V-7636	497
6V-7646	962
6V-7687	825
	826
	827
6V-7728	13
6V-7732	727
	729
6V-7744	172
	727
	729
6V-7981	379
	432
6V-7991	406
6V-8073	497
6V-8077	425
6V-8128	453
6V-8133	631
	633
6V-8149	11
6V-8182	545
6V-8186	228
	273
	275
	366
6V-8187	233
6V-8188	166
	265
6V-8189	164
6V-8197	824
	825
	826
	827
6V-8201	406
6V-8211	369
6V-8212	379
	392
6V-8225	228
	231
	233
	288
	294
	304
	319
	323
	327
	332
	988
6V-8227	592
6V-8237	430
	576
	631
	633
	641
	643
6V-8336	43
6V-8352	774
6V-8369	279
	286
	293
	302
	833
	834
	890
6V-8373	551
	552
6V-8376	228
	231
	233

▶ PRIMARY REFERENCE

PART NUMBER INDEX

Part	Page
	288
	356
	951
	952
	965
	972
6V-8378	265
	273
6V-8397	76
	128
	130
	133
	135
	137
	139
	142
	417
	555
	558
	562
	580
	609
	611
	613
	615
	637
	652
	654
	657
	667
	669
	673
	682
	684
	686
	687
	691
	694
	698
6V-8398	417
	562
	580
	667
	669
	673
	682
	684
	687
	691
	694
	698
6V-8467	721
6V-8490	896
	903
	933
6V-8555	637
	687
	691
	694
	698
6V-8556	687
	691
	694
	698
6V-8557	637
	687
	691
	694
	698
6V-8625	562
6V-8627	645
	648
	669
	673
6V-8628	128
	130
	669
	673
6V-8632	687
	691
	694
	698
6V-8634	698
6V-8635	417
	425
	659
	661
	663
	665
	669
	673
6V-8636	130
	133
	135
	137
	139
	142
	146
	417
	555
	558
	562
	609
	611
	613
	615
	637
	652
	654
	657
	669
	673
	682
	684
	687
	691
	694
	752
	754
	756
	758
	760
	762
	764
	766
6V-8637	669
	673
	678
	680
	687
	691
	694
6V-8639	580
	687
	691
	694
	698
6V-8641	555
	558
	645
	648
	991
	994
6V-8642	578
	687
	691
	694
	698
6V-8647	818
	819
6V-8675	392
6V-8715	147
6V-8716	555
	558
6V-8722	578
6V-8723	555
	558
6V-8724	76
	128
	130
	133
	135
	137
	139
	152
	555
	558
	562
	609
	611
	613
	615
	654
	682
	684
	686
	687
6V-8758	549
	554
6V-8774	698
6V-8775	669
	673
6V-8777	687
	691
	694
	698
6V-8781	555
	558
	562
	637
	654
6V-8782	687
	691
	694
	698
6V-8785	687
	691
	694
	698
6V-8788	555
6V-8837	288
	295
	304
6V-8928	896
	903
6V-8934	652
	657
6V-8938	637
6V-8939	687
	691
	694
	698
6V-8941	687
	691
	694
	698
6V-8944	637
	687
	691
	694
	698
6V-8980	562
6V-8994	637
6V-9001	133
	135
	137
	139
	142
	555
	558
6V-9005	580
	667
6V-9007	580
	669
	673
	687
	691
	694
	698
6V-9008	667
6V-9027	49
6V-9158	417
6V-9161	558
6V-9168	562
6V-9175	687
	691
	694
	698
6V-9182	555
	558
6V-9189	887
6V-9200	555
	558
	580
6V-9492	162
6V-9632	99
	103
	221
	261
	358
	362
	497
	571

► PRIMARY REFERENCE

PART NUMBER INDEX

Part	Page
	687
	691
	694
	836
	862
	866
	891
	895
	899
	918
	933
	981
6V-9673	162
	288
	295
	304
6V-9746	417
	428
	555
	558
	578
	580
	637
	669
	673
	678
	680
	682
	684
	687
	691
	694
	698
6V-9804	153
	180
6V-9828	555
	558
	645
	648
	652
	657
6V-9832	682
	684
6V-9836	682
	684
6V-9837	562
	682
	684
6V-9838	637
	687
	691
	694
	698
6V-9839	669
	673
6V-9840	637
6V-9844	669
	673
6V-9850	555
	562
	637
	669
	673
6V-9852	578
	637
	687
	691
	694
	699
6V-9853	417
	428
	687
	691
	694
	699
6V-9854	667
6V-9872	580
6V-9873	670
	674
	682
	684
	691
	694
6V-9874	578
	637
6V-9875	667
	670
	674
6V-9876	687
	691
	694
	699
6W-1638	402
	404
6W-2523	499
6W-2888	637
6W-2890	637
6W-3288	637
6W-4126	441
	458
6W-5817	483
	499
6W-6005	172
6W-8246	522
6Y-0373	382
6Y-0570	566
6Y-0809	379
6Y-0869	379
6Y-1031	408
	410
	412
	414
6Y-1032	408
	410
	412
	414
6Y-1085	453
6Y-1087	453
6Y-1093	453
6Y-1758	382
6Y-2082	377
6Y-2539	402
	404
6Y-2540	402
	404
6Y-3149	453
6Y-3151	453
6Y-4045	562
6Y-4614	▶432
	433
6Y-4615	432
6Y-4618	433
6Y-4619	432
6Y-4620	432
6Y-4621	432
6Y-4859	453
6Y-4873	406
6Y-5010	432
6Y-5632	382
6Y-7922	382
	384
	386
6Y-7932	382
6Y-8262	416
6Y-8265	382
	384
	386
6Y-8266	384
	386
6Y-8275	382
	386
6Y-8278	386
6Y-8285	382
	384
	386
6Y-8286	382
6Y-8288	382
6Y-8289	382
6Y-8293	406
6Y-8506	379
6Y-8508	379
6Y-8512	382
	384
	386
6Y-8514	382
	384
	386
7B-7525	958
7C-0111	57
	59
7C-1493	71
7C-1770	4
	▶65
7C-2475	4
	▶75
7C-5403	75
7C-6670	126
7C-6672	126
7C-6976	57
	59
7C-6977	57
	59
7C-7431	125
7C-7980	14
7D-5252	435
	438
7D-6922	551
	552
7D-7233	11
	417
	580
	667
	670
	674
7D-7469	437
7E-0519	4
	▶44
7E-1397	121
7E-2968	17
7E-3509	6
	▶121
7E-3870	120
7E-6794	50
7E-7779	31
	37
7F-0560	175
7F-2050	836
7F-2060	836
7F-8267	586
7F-8268	379
	392
7F-8607	625
7F-9223	99
	103
	524
	897
	899
7F-9571	545
7F-9572	545
7F-9578	545
7F-9579	545
7G-2132	392
7G-3832	580
7G-3833	580
7G-3834	581
7G-5984	580
	667
7G-5985	580
	667
7G-5986	581
	667
7G-7053	335
	338
	341
	501
7G-7917	319
	323
	327
	332
	348
	351
7G-7918	319
	323
	327
	332
	348
	351
7G-7919	287
	294
	303
	348
	351
7G-7920	287
	294
	303
	348

7

▶ PRIMARY REFERENCE

PART NUMBER INDEX

Part	Page
	351
7G-8839	522
	573
7H-1447	727
	729
7H-4566	522
7I-3236	366
7I-5422	555
7I-6601	770
	771
	772
	773
7I-6756	966
	968
7I-8310	688
	692
	695
	699
7J-0204	22
	25
	33
	35
	38
	588
	768
	770
	771
	772
	773
7J-1089	597
7J-3554	392
7J-4321	599
7J-5311	687
	691
	694
	698
7J-5544	390
7J-6839	586
7J-8009	586
7J-8209	379
7J-8210	416
7J-9108	417
	578
	637
	688
	692
	695
	699
7J-9933	738
	776
7K-1181	90
	92
	109
	130
	155
	199
	200
	283
	284
	286
	287
	293
	294
	302
	303
	313
	315
	319
	323
	327
	332
	338
	341
	345
	346
	348
	351
	354
	356
	368
	369
	417
	555
	558
	562
	580
	637
	645
	648
	670
	674
	682
	684
	687
	691
	694
	698
	818
	819
	904
	908
	918
7K-5634	393
7K-5636	▶393
	998
7K-9203	575
	792
	794
	797
7K-9205	792
	794
	797
7K-9208	623
	792
	794
	797
7K-9209	622
	623
	792
	794
	797
7K-9216	792
	794
	797
7L-0688	588
7L-2894	265
7L-6479	231
7L-8316	593
7M-8485	90
	92
	155
	398
	408
	410
	412
	414
	417
	425
	428
	555
	558
	581
	596
	637
	659
	661
	663
	665
	667
	670
	674
	678
	680
	688
	692
	695
	699
	702
	704
	706
	991
	994
7M-9918	126
7N-0718	172
	▶267
7N-2059	263
7N-3718	352
7N-5274	172
7N-5683	16
7N-7779	788
7N-7780	788
7N-9737	788
7N-9801	280
7P-3454	791
	794
	797
7S-6369	115
	261
	262
7S-8553	780
7T-1099	107
	108
	228
	231
	233
	473
	485
	488
	490
	493
	494
	555
	558
	609
	613
7T-2703	379
7T-3451	265
7T-3454	265
7T-4532	850
7T-6799	286
	293
	302
7T-7370	241
7T-8682	386
7T-8698	382
7T-8890	983
7T-9326	▶820
7T-9752	588
7T-9753	588
7T-9754	588
7T-9755	588
7U-4898	958
7V-2885	1
	▶532
7V-9275	228
	231
	233
7V-9791	535
	537
7V-9797	473
7W-2108	857
	859
	862
	864
	866
	869
	875
	878
7W-3871	9
7W-3872	9
	52
	53
7W-5095	44
7W-5340	75
7W-6492	86
	88
7W-8106	527
7W-9737	77
	78
7W-9738	77
	78
7W-9740	77
	78
7W-9930	77
	78
7X-0338	166
7X-0456	839
	841
7X-0510	54
7X-0515	100
	104
	155
7X-0562	265
7X-0563	524
7X-0579	833

▶ PRIMARY REFERENCE

PART NUMBER INDEX

Part	Page
	834
	890
	974
7X-0593	922
	924
7X-0603	569
	571
7X-0608	483
	831
7X-0618	483
	503
	797
7X-0633	476
	477
7X-0752	221
	485
	488
	490
	493
	494
7X-0838	558
7X-0873	682
	684
7X-1886	781
7X-1950	265
7X-1952	265
7X-2459	555
	558
	654
	682
	684
7X-2465	427
7X-2478	836
7X-2497	857
	859
	862
	864
	866
	869
	875
	878
7X-2534	688
	692
	695
	699
7X-2537	52
	53
	359
	363
7X-2538	281
	851
7X-2543	562
	581
7X-2544	637
	734
	735
7X-2549	578
7X-2551	513
7X-2552	319
	323
	328
	332
	359
	363
	912
7X-2553	100
	104
	155
7X-2554	100
	104
	732
	733
7X-2567	427
7X-2577	627
	629
7X-2581	476
	477
7X-2583	476
	477
7X-2621	478
7X-2622	54
7X-3182	228
	229
	231
7X-3229	1000
7X-3308	286
	293
	302
7X-3344	44
7X-3373	265
7X-4776	595
7X-6222	287
	294
	303
	313
	918
7X-6315	178
	181
	185
	189
	190
	191
	260
7X-7700	155
7X-7729	83
	84
	90
	92
	100
	104
	319
	323
	327
	332
	425
	478
	481
	483
	499
	501
	505
	507
	514
	524
	534
	535
	537
	585
	641
	643
	702
	704
	706
	852
	853
	922
7X-7731	86
	88
7X-7732	124
7X-7877	922
	924
7Y-1976	90
	92
7Y-5238	417
7Y-7256	918
7Y-9099	483

8

Part	Page
8C-0538	223
8C-0563	20
	24
8C-3078	854
8C-3079	606
8C-3091	8
8C-3097	595
8C-3205	678
	680
8C-3206	421
	423
	425
	581
	597
	637
	659
	661
	663
	665
	667
	702
	704
	706
8C-3210	155
8C-3334	284
8C-3426	897
	899
	901
8C-3445	71
	81
8C-3446	71
	81
	400
	401
	670
	674
8C-3447	400
	401
8C-3451	670
	674
8C-3560	1004
8C-3841	629
8C-3842	629
8C-3979	382
8C-4586	836
	891
8C-5346	1000
8C-5607	176
	366
	369
8C-5608	176
	366
	369
8C-6141	162
8C-6142	162
8C-6143	162
8C-6144	162
8C-6146	162
8C-6147	162
8C-6148	162
8C-6149	162
8C-6150	162
8C-6160	549
	554
8C-6162	687
	691
	698
	790
8C-6354	286
	293
	302
8C-6358	175
8C-6440	895
8C-6855	54
8C-6875	417
8C-8451	176
	562
8C-8457	836
	891
8C-8499	991
	994
8C-8550	382
8C-8778	517
8C-8988	637
8C-8989	581
8C-9987	567
	787
	788
	933
8D-9671	670
	674
8E-0416	▶433
	455
8E-0849	922
	924
8E-1118	216
8E-1143	461
8E-1278	382
	384
	386
8E-1279	382
8E-3416	382
	384
	386
8E-3433	382
8E-3435	384
8E-3750	▶828
8E-4950	406
8E-5247	453
8E-5261	379

▶ PRIMARY REFERENCE

PART NUMBER INDEX

Part	Page	Part	Page	Part	Page	Part	Page
8E-5380	379		370	8N-2694	109	8T-0282	503
8E-5735	382	8M-2773	284	8N-4617	111	8T-0285	652
8E-5737	382		319	8N-8846	107		654
8E-5742	382		323		108		657
8E-6258	828		327	8N-9033	897	8T-0293	60
8E-6259	828		332		901	8T-0306	984
8E-6539	453		370	8P-1438	392	8T-0328	162
8E-6647	453		555	8R-0512	408		265
8E-6648	453		558		410		962
8E-7114	562		562		412	8T-0336	408
8E-8292	983		904		414		410
8E-8317	382		908	8R-0640	534		412
	384	8M-3267	975	8R-0642	534		414
	386	8M-5251	463	8R-1537	562	8T-0370	922
8E-8321	382	8M-5253	461	8R-1703	394		924
8E-8652	382	8M-5860	20	8R-1704	394	8T-0372	402
8E-8653	386		24	8R-1891	377		440
8E-8654	382	8M-7160	379	8R-2211	394	8T-0375	408
	384	8N-0869	172	8R-2912	792		410
	386		358		794		412
8E-9550	406		362		797		414
8E-9571	9	8N-1517	287	8R-2913	792	8T-0380	430
8F-0212	738		294		794	8T-0389	205
	745		303		797		207
	747		348	8R-2918	571	8T-0643	379
	749		351	8R-6359	922	8T-0644	94
8F-1434	162	8N-1518	319		924		95
	265		323	8R-7092	522	8T-0646	394
	273		327	8R-7911	517		396
8F-1462	928		332	8R-7912	517	8T-0649	408
8F-5340	586		348	8R-8088	721		410
8F-9206	588		351	8R-9830	397		412
	597	8N-1521	287	8R-9831	397		414
8G-1098	792		294	8R-9832	397	8T-0666	631
	794		303	8R-9833	396		633
	797		319		▶397	8T-0669	641
8H-2046	70		327	8S-0768	466		643
8H-5244	67		335	8S-0934	954	8T-0785	626
8H-5303	267		341		957	8T-0788	638
8H-5306	267		348	8S-2225	544	8T-1138	709
8H-7521	379		351	8S-4723	954		711
8J-2933	800	8N-1522	287		957	8T-1605	626
8J-6815	599		294	8S-4950	178	8T-1674	425
8J-8308	588		348		179		991
8J-9348	567		351	8S-7803	840		994
8K-1253	366	8N-1525	463		958	8T-1683	417
8K-1433	551	8N-1534	287	8T-0083	669	8T-1685	428
	552		294		673	8T-1715	912
8L-2779	777		303	8T-0100	11	8T-1887	417
8L-2786	71	8N-1535	287		66	8T-1888	418
	133		294		86	8T-1889	421
	137		303		88		423
	147		319	8T-0119	85		638
	257		327	8T-0154	836		659
	565		463		891		661
	715	8N-1536	287	8T-0198	637		663
	718		294		702		665
8L-4496	366	8N-1540	468		704		702
8L-8413	975		470	8T-0226	47		704
	977	8N-1541	468	8T-0251	382		706
	979		470		384	8T-1890	421
8M-2770	128	8N-1725	172		386		423
	130		358	8T-0271	431		638
	359		362	8T-0276	71		659
	363	8N-2622	277		463		661

▶ PRIMARY REFERENCE

PART NUMBER INDEX

Part	Page	Part	Page	Part	Page	Part	Page
	663		483	8T-3653	54		338
	665		490	8T-3666	39		341
	702		505	8T-3727	408		344
	704		507		410		345
	706		524		412		346
8T-2275	727		534		414		348
	729		555	8T-3734	490		351
8T-2335	667		558		494		356
8T-2396	149		562		845		359
8T-2561	41		571		847		363
	366		591	8T-3851	221		366
	904		648		485		370
	908		654		488		390
8T-2883	721		659		490		392
8T-2893	99		665		493		399
	103		667		494		417
8T-2895	524		669		667		421
8T-2899	542		673		847		423
8T-2925	377		674	8T-3995	897		425
8T-2926	284		678		899		428
8T-3282	27		680		901		431
	28		682	8T-4121	51		468
	29		684		54		470
	30		687		62		473
	412		691		63		478
	414		694		72		480
8T-3298	727		721		90		483
	729		836		92		497
8T-3490	11		891		109		499
	53		912		120		504
	84		922		124		515
	99		924		128		520
	103		974		130		521
	107	8T-3518	175		133		522
	108	8T-3519	175		135		524
	128	8T-3597	83		137		528
	130		84		139		530
	137		168		142		533
	139		358		147		534
	142		362		155		549
	172		509		166		554
	176		511		168		555
	221		513		170		558
	228		518		172		562
	231		519		214		569
	233		904		215		571
	284		908		219		578
	286	8T-3601	641		221		581
	293		643		223		596
	302	8T-3612	99		228		597
	313		103		231		609
	319		137		233		611
	323		139		263		613
	327		142		264		615
	332		483		276		638
	356		552		284		641
	358		569		288		643
	362		571		295		645
	369		609		304		648
	379		613		313		652
	417		974		320		654
	425		982		323		657
	428	8T-3635	490		327		659
	431		493		332		661
	473		494		335		663

► **PRIMARY REFERENCE**

PART NUMBER INDEX

Part	Page
	665
	667
	670
	674
	678
	680
	682
	684
	688
	692
	695
	699
	702
	704
	706
	720
	721
	734
	735
	845
	847
	887
	888
	893
	894
	904
	908
	912
	922
	924
	948
	951
	952
	965
	972
	982
	991
	994
8T-4122	284
	721
	732
	733
8T-4123	54
8T-4130	515
8T-4132	100
	104
8T-4133	72
	90
	92
	100
	104
	124
	170
	203
	214
	215
	219
	221
	276
	288
	295
	304
	313
	328
	335
	338
	341
	348
	351
	370
	392
	417
	425
	468
	470
	473
	480
	483
	499
	501
	514
	515
	524
	530
	533
	535
	537
	555
	558
	674
	682
	684
	688
	692
	695
	699
	706
	720
	904
	922
8T-4134	895
8T-4136	51
	90
	92
	128
	130
	133
	135
	137
	139
	142
	172
	219
	221
	223
	320
	323
	327
	332
	335
	338
	341
	346
	348
	351
	359
	363
	370
	417
	428
	478
	483
	497
	524
	556
	558
	562
	569
	571
	578
	596
	645
	648
	654
	670
	674
	688
	692
	695
	699
	888
	894
	904
	908
8T-4137	63
	72
	90
	92
	100
	104
	109
	128
	133
	135
	139
	142
	147
	155
	166
	168
	170
	172
	216
	218
	219
	221
	228
	231
	233
	263
	284
	288
	295
	304
	313
	320
	324
	327
	332
	335
	338
	341
	348
	351
	356
	359
	363
	370
	390
	417
	421
	423
	468
	470
	473
	478
	528
	530
	534
	535
	537
	549
	554
	556
	559
	562
	581
	609
	611
	613
	615
	638
	645
	648
	652
	654
	657
	659
	661
	663
	665
	667
	670
	674
	678
	680
	682
	684
	688
	692
	695
	699
	702
	704
	706
	720
	845
	847
	852
	853
	893
	924
	948
	982
	991
	994
8T-4138	109
	288
	295
	304

PART NUMBER INDEX

Part	Page
	609
	611
	613
	615
8T-4139	100
	104
	151
	152
	176
	359
	363
	366
	370
	473
	483
	501
	505
	507
	509
	511
	513
	514
	515
	518
	519
	527
	534
	556
	559
	678
	680
	721
	904
	908
8T-4140	535
	537
8T-4149	670
	674
8T-4167	427
	627
	629
	797
8T-4171	359
	363
	836
	891
	918
8T-4172	62
	63
	124
	344
	345
	522
8T-4175	732
	733
8T-4177	115
8T-4178	425
8T-4179	219
	221
	667
	678
	680
8T-4180	857
	859
	862
	864
	866
	869
	875
	878
8T-4181	857
	859
	862
	864
	866
	869
	875
	878
8T-4182	721
8T-4183	335
	338
	341
	509
	511
	581
	667
	720
	908
8T-4184	168
8T-4185	170
	313
	370
	399
	638
	641
	643
	678
	680
	688
	692
	695
	699
	734
	735
8T-4186	359
	363
	366
	418
	421
	423
	481
	483
	562
	638
	645
	648
	659
	661
	663
	665
	670
	674
	678
	680
	702
	704
	706
8T-4189	214
	215
	263
	288
	295
	304
	370
	551
	552
	845
	847
	897
	899
	901
	915
	940
	982
8T-4191	264
	515
	535
	537
	569
	571
8T-4192	370
	522
	573
	797
8T-4194	418
	522
	581
8T-4195	54
	83
	84
	100
	104
	118
	120
	284
	288
	295
	304
	335
	338
	341
	366
	370
	418
	425
	483
	504
	505
	507
	515
	524
	533
	534
	578
	581
	585
	638
	641
	643
	659
	661
	663
	665
	670
	674
	678
	680
	702
	704
	706
8T-4196	63
	100
	104
	133
	135
	139
	142
	166
	168
	170
	370
	418
	421
	423
	425
	431
	499
	527
	581
	596
	597
	706
8T-4198	682
	684
8T-4200	73
	74
	320
	324
	327
	332
	517
	641
	643
	897
	899
	901
8T-4201	727
	729
8T-4205	162
	164
	216
	218
	228
	229
	231
	233
	265
	288
	295
	304
	431
	609
	611
	613
	615

► PRIMARY REFERENCE

PART NUMBER INDEX

Part	Page
	836
	857
	859
	862
	864
	866
	869
	875
	878
	891
	897
	899
	901
	916
	933
	935
	936
	937
	962
8T-4219	83
	485
	490
	494
8T-4222	348
	352
	533
8T-4223	166
	168
	172
	176
	219
	221
	320
	324
	327
	333
	335
	338
	341
	349
	352
	359
	363
	366
	370
	473
	509
	511
	522
	527
	534
	556
	559
	578
	581
	641
	643
	667
	678
	680
	721
	904
	908
	922
	924
8T-4224	53
	72
	73
	74
	76
	128
	133
	135
	137
	139
	142
	151
	152
	162
	164
	172
	214
	215
	263
	281
	288
	295
	304
	359
	363
	366
	370
	408
	410
	412
	414
	501
	517
	547
	551
	552
	609
	611
	613
	615
	638
	738
	745
	747
	749
	776
	845
	847
	851
	887
	897
	899
	901
	915
	940
	943
	982
8T-4226	63
	99
	100
	103
	104
	133
	135
	139
	142
	172
	216
	218
8T-4244	172
	335
	338
	341
	349
	352
	359
	363
	366
	481
	581
	609
	611
	613
	615
	619
	641
	643
	667
	702
	704
	922
	924
8T-4648	721
8T-4742	857
	859
	862
	864
	866
	869
	875
	878
8T-4747	857
	859
	862
	864
	866
	869
	875
	878
8T-4766	682
	684
8T-4779	54
	535
	537
8T-4780	792
	794
	797
8T-4904	1004
8T-4908	288
	295
	304
	501
	833
	834
	855
	880
	890
	974
8T-4910	581
	667
8T-4935	228
	231
	233
	490
	494
	847
8T-4956	100
	104
	503
	991
	994
8T-4967	490
	494
	524
8T-4970	261
8T-4971	100
	104
	857
	859
	862
	864
	866
	869
	875
	878
8T-4983	86
	90
	92
8T-4984	90
	92
8T-4994	825
	826
	827
8T-5002	408
	410
	412
	414
	503
8T-5004	99
	103
	524
	897
	899
8T-5005	72
	205
	207
	425
	581
	597
	645
	648
	654
	667
	678
	680
	688
	692
	695
	699
8T-5041	320
	324
	327
	333
	522
8T-5089	588

► PRIMARY REFERENCE

PART NUMBER INDEX

Part	Page
8T-5093	408
	410
	412
	414
8T-5353	379
	432
8T-5360	955
8T-5372	837
	891
8T-5387	370
8T-5389	417
8T-5400	986
8T-5413	524
8T-5432	781
8T-5436	738
8T-5439	792
	794
	797
8T-5460	792
	794
	797
8T-5878	627
	629
8T-5913	983
8T-5914	983
8T-6338	580
8T-6356	678
	680
8T-6381	54
8T-6430	792
	794
	797
8T-6431	369
8T-6466	100
	104
	168
	392
	578
	597
	638
	682
	684
	688
	692
	695
	699
	702
	704
	706
	721
	904
	908
8T-6631	836
8T-6663	667
8T-6684	418
	421
	423
8T-6685	581
8T-6767	86
	88
8T-6850	401
8T-6868	667
8T-6869	147
	569
	571
	641
	643
8T-6870	738
	745
	747
	749
8T-6885	319
	323
8T-6912	172
	638
	641
	643
8T-7020	627
	629
	631
	633
8T-7044	119
8T-7338	670
	674
8T-7352	147
8T-7525	723
8T-7547	52
	53
	76
	151
	152
	887
	888
8T-7566	929
8T-7931	593
8T-7934	166
	170
8T-7950	27
	28
	29
	30
8T-7970	421
	423
8T-8376	627
	629
	631
	633
8T-8442	66
	774
8T-8569	265
8T-8641	840
8T-8729	186
	187
	202
	209
	211
	228
	231
	233
	279
	281
	284
	286
	293
	302
	316
	327
	348
	351
	358
8T-8730	188
	239
8T-8731	239
	323
	332
8T-8732	255
8T-8737	200
	205
	207
	235
	277
	279
	284
	286
	287
	288
	293
	294
	295
	302
	303
	319
	323
	327
	332
	335
	338
	341
	345
	348
	351
	354
	356
	358
	362
	369
	392
	609
	611
	613
	615
	718
	754
	762
	891
	920
	921
	941
8T-8806	637
8T-8874	490
8T-8886	240
8T-8887	652
	657
8T-8894	569
	571
8T-8897	637
8T-8898	706
8T-8900	428
8T-8902	669
	673
8T-9082	962
8T-9371	977
	979
8T-9405	781
8T-9471	991
	994
8T-9515	395
	723
8T-9597	723
8T-9655	147
	178
	179
	180
	199
	200
	286
	293
	302
	354
	369
8T-9884	265
8V-1412	441
8V-6432	457
8V-6435	457
8V-6963	702
8V-7315	457
8V-7659	573
8V-9830	667
8W-6132	637
8W-8673	545
8W-8674	545
8X-1147	682
	684
8X-5147	490
	494
8Y-4200	▶839
	961
8Y-4489	284
8Y-4501	497
	857
	859
	862
	864
	866
	869
	875
	878
8Y-4807	857
	862
	864
	878
8Y-5711	968
8Y-5737	836
	891
8Y-5877	882
8Y-5892	931
8Y-5897	839
8Y-5898	841
8Y-5903	928

▶ PRIMARY REFERENCE

PART NUMBER INDEX

Part	Page
8Y-5904	839
	▶840
	841
	842
	843
8Y-5906	840
8Y-5928	958
8Y-5929	958
8Y-5930	958
8Y-5931	958
8Y-5932	958
8Y-5936	958
8Y-5937	958
8Y-5938	958
8Y-5947	882
	958
8Y-5972	928
8Y-5981	958
8Y-5988	840
8Y-5992	▶931
	958
8Y-5995	931
8Y-5998	931
8Y-5999	931
8Y-6000	▶841
	961
8Y-6006	928
8Y-6010	928
8Y-6028	840
8Y-6051	958
8Y-6277	962
8Y-6364	393
	501
	998
8Y-6377	845
	847
8Y-6386	857
	859
	862
	864
	866
	869
	875
	878
8Y-6388	880
8Y-6391	880
8Y-6833	958
8Y-6834	958
8Y-6882	▶958
	961
8Y-6883	▶882
	961
8Y-6917	975
8Y-6922	975
8Y-6928	975
8Y-6933	958
8Y-8387	682
	684
8Y-8388	682
	684
8Y-8826	549
	554
8Y-9603	264

9

Part	Page
9B-2596	111
9B-7233	162
	228
	231
	233
	277
	288
	356
	781
	951
	952
	965
	972
9C-0119	509
	511
9C-4935	791
	792
	794
9C-5974	641
	643
9C-6041	408
	410
	412
	414
9C-6312	408
	412
	504
9C-6313	408
	410
	412
	414
9C-6317	377
9C-6318	377
9C-6329	377
9C-6335	377
9C-6342	377
9C-6460	678
	680
9C-6461	678
	680
9C-6809	485
	488
	494
	645
	648
9C-7863	485
	488
9C-7907	792
	794
	797
9C-7929	485
	488
	490
	494
9C-8287	402
	404
9D-3769	515
	517
9D-7924	569
	571
9F-5644	267
9F-6656	727
	729

Part	Page
9G-1950	836
	891
9G-2759	859
	866
	869
	875
9G-2761	857
	862
	864
	878
9G-3695	348
	351
	356
	389
	592
9G-5127	379
9G-5315	408
	410
	412
	414
9G-5687	781
9G-8909	172
9G-9150	637
9G-9288	▶621
	998
9H-1958	228
	356
9H-6454	727
	729
9H-7759	727
	729
9J-1985	727
	729
9J-1988	727
	729
9J-3169	828
9J-3178	▶829
	830
9J-3866	425
	580
	667
9J-5442	586
9J-5686	586
9J-6379	727
	729
9J-6381	727
	729
9J-8076	586
9K-0700	335
	338
	341
9K-4939	497
9K-5635	216
9K-7951	435
	438
9L-6770	164
9L-7469	958
9L-7712	440
9L-8781	99
	103
9L-9068	463
	466
9M-0164	975
9M-1974	8
	9

Part	Page
	11
	48
	56
	66
	71
	73
	74
	75
	86
	88
	96
	98
	115
	153
	178
	179
	180
	261
	262
	461
	463
	466
	599
9M-2008	416
9M-2110	461
9M-2904	72
9M-4335	377
9M-4972	556
	559
9M-5137	545
9M-5138	545
9M-5139	545
9M-5140	545
9M-5201	122
9M-5590	641
	643
9M-5733	928
	931
9M-7394	393
	621
9M-8406	335
	370
	904
	908
9N-0869	70
	147
	178
	179
	180
	199
	200
	288
	295
	304
	354
	370
9N-1756	778
	779
9N-4252	828
9N-5253	197
9N-9906	566
9P-3066	732
	733
9P-7121	155
9R-1948	609

▶ PRIMARY REFERENCE

PART NUMBER INDEX

Part	Page
	611
	613
	615
9R-2060	428
	485
	488
	493
	494
	645
	648
	791
9R-2596	986
9R-2613	490
	494
9R-2630	727
	729
9R-2672	137
	139
	142
9R-2821	228
	231
	233
9R-3203	981
9R-3204	981
9R-3205	981
9R-3854	674
9R-5383	142
	369
9R-6247	991
	994
9R-7941	216
	218
9R-7942	212
9R-7958	212
9R-7980	216
9R-8151	107
	108
9R-9110	551
	552
9R-9111	551
	552
9S-2396	166
	168
9S-4167	133
	135
	137
	139
	142
9S-4181	408
	410
	412
	414
9S-4182	47
9S-4183	47
	597
9S-4185	9
	418
	597
9S-4187	565
9S-4190	588
	738
	745
	747
9S-4191	35
	112
	133
	135
	137
	139
	142
	153
	379
	459
	565
	603
	708
	756
	758
	760
	766
9S-4693	228
	229
	231
9S-6130	379
9S-6154	597
9S-7712	528
	530
9S-8002	16
	22
	25
	33
	35
	38
	593
	597
	599
	603
	625
	754
	758
	762
	766
	774
9S-8003	22
	25
	35
	95
	96
	593
9S-8004	22
	25
	33
	35
	38
	115
	133
	135
	137
	139
	142
9S-8005	22
	25
	35
	61
	86
	88
	95
	96
	408
	410
	412
	414
	564
	723
9S-8006	18
	22
	25
	33
	35
	38
	95
	96
	147
	599
9S-8007	565
	588
9S-8008	60
	95
	96
9S-9334	20
	22
	24
	25
	33
	35
	38
	155
	408
	410
	412
	414
9T-1636	588
9T-1710	588
9T-1752	588
9T-2000	588
9T-2001	588
9T-2002	588
9T-2003	588
9T-2168	588
9T-2171	588
9T-2172	588
9T-2173	588
9T-3096	682
	684
	▶736
9T-3809	593
9T-3810	593
9T-3812	593
9T-3813	593
9T-3814	593
9T-3815	593
9T-3816	593
9T-3857	590
9T-3858	590
9T-3859	590
9T-3860	590
9T-3861	590
9T-3862	590
9T-3864	590
9T-3867	588
9T-4788	576
9T-5042	606
9T-5087	606
9T-5112	606
9T-5952	727
	729
9T-6014	727
	729
9T-6015	727
	729
9T-6858	593
9T-7062	593
9T-7220	597
9T-7266	777
9T-7419	597
9T-7420	580
	▶597
9T-7421	597
	▶599
9T-7634	▶737
	745
	747
	749
9T-7818	627
	629
	631
	633
9T-7822	627
	629
	631
	633
9T-7823	627
	629
	631
	633
9T-8248	588
	▶590
9T-8249	590
9T-8250	590
9T-8251	588
9T-8270	727
	729
9T-8560	586
9T-8672	599
9U-0512	922
	924
9U-0710	549
	554
9U-1912	402
	404
9U-1913	402
	404
9U-2966	555
9U-4145	562
9U-8263	895
9U-8669	461
9U-9018	453
9U-9322	382
9V-0247	527
9V-0334	483
	499
9V-0453	499
9V-1777	524
9V-1820	524
9V-2412	440
9V-2429	402
9V-4484	805
	806
	807
	810

▶ PRIMARY REFERENCE

PART NUMBER INDEX

Part	Page
	811
	812
9V-6162	522
9V-6471	522
9V-6573	808
9V-9116	645
	648
9V-9295	147
9W-0719	382
	384
	386
9W-0742	▶175
	358
	362
9W-0852	279
	286
	287
	288
	293
	295
	302
	472
	836
	891
9W-1441	286
	293
	302
9W-1442	286
	293
	302
9W-1793	162
9W-1794	162
9W-1900	162
9W-1901	162
9W-1904	162
9W-1912	162
9W-3043	▶162
	168
	170
9W-7226	379
9W-8142	▶828
9W-8143	▶830
9W-9271	386
9W-9272	382
9W-9278	382
	384
	386
9W-9399	382
	384
	386
9W-9436	382
	384
	386
9W-9920	54
9W-9940	922
	924
9W-9952	732
	733
9X-0196	303
9X-0261	133
	135
	137
	139
	142
	145
	146
9X-0262	235
9X-1046	933
	935
	936
	937
9X-1054	287
	294
	303
	358
	362
9X-1484	157
9X-1813	228
	241
	242
	243
	244
	245
	250
	251
	253
	254
	269
	271
	272
	281
	327
	362
	400
	401
	463
9X-2027	738
9X-2040	497
	499
	887
9X-2041	176
	229
	231
	233
	483
	609
	611
	613
	615
	845
	847
	953
	960
9X-2042	277
	609
	611
	613
	615
	857
	859
	862
	864
	866
	869
	875
	878
	895
	897
	899
	901
	918
	935
	936
	937
	981
9X-2043	918
9X-2044	497
	836
	891
9X-2045	569
	571
	609
	611
	613
	615
	896
	899
	903
	933
	981
	986
9X-2097	9
9X-2098	71
9X-2099	9
	11
	76
9X-2125	951
	952
	965
	972
9X-2185	836
	891
9X-2201	118
9X-2205	155
9X-2305	77
	78
9X-2480	366
9X-2532	984
9X-2616	524
9X-2619	402
	404
9X-2620	402
	404
9X-3066	209
9X-3265	287
	294
	313
	918
9X-3294	▶197
	▶198
9X-3463	201
	202
	203
	204
	214
	215
	216
9X-3465	205
	207
9X-3495	319
	323
	327
	332
9X-4174	202
9X-4243	202
9X-4244	202
	203
	205
	207
9X-4271	265
9X-4493	205
	207
	209
	211
9X-4609	379
9X-4821	265
9X-4824	265
9X-4825	265
9X-5617	186
	187
	188
9X-6165	176
	366
	370
	781
9X-6274	792
	794
9X-6395	776
9X-6492	402
	404
9X-6562	1000
9X-6772	303
	319
	323
	327
	332
	463
9X-7264	626
9X-7345	320
	324
	327
	333
9X-7378	283
	850
9X-7380	904
	908
9X-7381	904
	908
9X-7382	904
	908
9X-7383	904
	908
9X-7385	850
9X-7557	149
9X-7680	774
9X-7712	20
	22
	24
	25
	33
	35
	38
9X-7849	212
9X-8121	212
9X-8139	212
9X-8250	320
	324
	328
	333
	335

▶ PRIMARY REFERENCE

PART NUMBER INDEX

Part	Page
	338
	341
9X-8256	100
	104
	109
	155
	219
	221
	223
	224
	261
	283
	288
	294
	304
	320
	324
	328
	333
	515
	535
	537
	562
	613
	615
	688
	692
	695
	699
	887
	888
	918
9X-8257	54
	100
	104
	320
	324
	328
	333
	359
	363
	522
	535
	537
	670
	674
	912
9X-8267	359
	363
9X-8268	406
9X-8486	288
9X-8600	155
9X-8873	839
	841
	842
	843
9X-8887	725
9X-8916	17
9X-9825	358
	362
9X-9865	205
	207
9Y-9236	90
	92

0

Part	Page
002-0639	528
002-3455	588
004-1683	590
004-1963	588
004-3212	573
005-4834	522
009-2062	566
009-3101	542
	544
	548
012-0380	269
	271
	272
022-3108	440
030-0060	402
	404
030-0061	402
	404
030-1712	262
030-8188	133
	137
	147
030-8194	147
030-8196	145
	146
031-0214	943
031-0216	588
033-5853	16
033-5879	778
	779
033-6027	737
	778
	779
033-6028	588
	777
033-6043	774
033-8248	335
	338
	341
033-9139	752
	756
	758
	760
	764
	766
036-9823	265
037-4426	836
	891
037-4838	836
	891
061-7540	738
061-8803	958
061-9455	11
061-9457	606
064-0230	522
064-3843	453
068-4209	951
	952
	965
	972
068-9526	71
069-2535	600
070-0259	515

Part	Page
077-3241	398
081-5648	580
087-5421	641
	643
090-8247	493
	494
091-0079	944
	945
	947
091-9006	682
	684
092-1136	488
093-0386	721
095-0673	408
	410
	412
	414
095-0843	962
095-0878	958
095-1314	958
095-1751	783
096-0194	708
096-2323	859
	862
	866
	872
	878
096-3781	497
	499
096-6166	162
	377
	652
	654
	657
096-6467	792
	794
	797
098-2843	566
099-3047	723
099-3645	999
099-3649	199
	200
	288
	294
	303
	354
	369
	547

1

Part	Page
100-3143	836
	891
100-3245	205
	207
100-3248	205
	207
100-3250	205
	207
100-3251	205
	207
100-3253	205
	207
100-3254	205

Part	Page
	207
100-3255	205
	207
100-3320	317
100-3414	▶566
	725
100-3426	836
	891
100-3650	412
	414
100-3651	412
	414
100-3852	522
100-3853	522
100-3854	1
	▶522
100-3856	522
100-3976	566
100-4230	588
100-4231	588
100-4336	562
100-4502	425
100-4676	1004
100-6551	47
100-8010	596
100-8011	596
101-0003	977
	979
101-0852	189
	190
101-1785	854
101-2850	111
101-2867	943
101-3128	178
	179
	180
101-9161	389
102-0341	836
	891
102-2240	▶253
	319
	323
	327
	332
102-2252	588
102-2253	588
102-2804	586
102-5912	366
102-6229	22
	31
102-6317	975
102-8801	277
	287
	288
	293
	294
	302
	303
	317
	335
	338
	341
	348
	351
	358

▶ PRIMARY REFERENCE

PART NUMBER INDEX

Part	Page	Part	Page	Part	Page	Part	Page
	362		238		611		1003
	369		240		613	104-6731	395
	918		241		615	104-6732	395
102-8802	147		243		836	104-6733	395
	155		250		891	104-6734	395
	159		253		920	104-6737	395
	160		254		921	104-6738	395
	199		278	102-8806	279	104-7336	382
	200		287		286	105-0864	667
	202		293		287	105-0866	667
	209		303		293	105-0870	667
	211		317		302	105-0873	667
	228		319		303	105-0876	667
	251		323		304	105-1540	555
	269		327		356	105-1541	555
	271		332		369	105-1553	555
	272		335		718		558
	273		338		754	105-1797	317
	280		341		756	105-2063	162
	281		344		758	105-2140	720
	283		345		762		▶725
	284		348		764	105-2145	774
	287		351		766	105-2345	802
	288		354		941		803
	293		358	102-9863	265		804
	294		362	103-0212	732		805
	303		555		733		806
	316		558	103-1260	588		807
	317		799	103-1262	588		810
	319	102-8804	216	103-1712	406		811
	323		218	103-2006	609		812
	327		286		611		813
	332		287		613	105-2834	678
	335		293		615		680
	338		302	103-2529	132	105-3330	1000
	341		303	103-5406	687	105-4849	▶205
	344		335		691		223
	345		338		694	105-4850	▶207
	346		341		698		223
	348		348	103-5413	▶518	105-4915	562
	351		351	103-5780	1	105-6117	542
	354		369		▶528	105-7704	555
	400		785		▶530		558
	401		786	103-5788	636	106-1137	792
	463	102-8805	205		▶702		794
	472		207		▶704	106-1159	792
	567		228		▶706		794
	592		231	103-5790	636	106-2481	▶801
	637		233		▶720	106-7149	265
	645		286	103-5796	476	106-7378	641
	648		287		477		643
	742		288		801	106-7771	485
	787		293	104-2091	880		488
	836		294	104-5661	702		490
	850		295		704	106-7772	528
	891		302	104-5662	702	106-7773	528
	975		303		704	106-7775	528
	977		304	104-5663	702		530
	979		313	104-6407	1003	106-7776	528
102-8803	186		335	104-6408	1003		530
	187		341	104-6409	1002	106-7781	528
	199		356	104-6416	1003		530
	200		389	104-6417	1003	106-7831	528
	210		608	104-6418	1002		530
	237		609	104-6455	1002	106-8704	645

▶ PRIMARY REFERENCE

PART NUMBER INDEX

Part	Page
	648
106-9010	478
106-9012	518
106-9013	518
	519
107-3284	580
107-3285	580
107-3746	821
107-3747	▶821
107-4629	844
	▶890
107-4630	844
	▶880
107-4634	844
	▶896
107-4641	▶981
107-4642	▶915
107-4643	▶916
107-6013	935
	936
	937
107-6021	935
	936
107-6032	896
	903
107-6033	225
107-6050	609
	611
	613
	615
107-6072	935
	936
	937
107-6079	880
107-6104	857
	859
	862
	866
	872
	878
107-6117	857
	862
	864
	878
107-6120	872
	878
107-6125	857
	859
	862
	866
	872
	878
107-6127	857
	862
107-6141	569
	571
107-6142	▶225
107-6144	845
	847
107-6145	845
	847
107-6146	845
	847
107-6147	845
	847
107-7491	737
107-7694	7
107-7708	14
107-9404	565
107-9530	588
	▶593
107-9532	▶588
	725
108-0358	277
108-0502	566
108-1029	▶212
	225
	226
	227
108-2148	568
108-2192	960
	▶966
108-3320	286
	293
	302
108-3866	780
108-4311	845
	847
108-6428	745
	747
	749
	▶776
108-8421	▶928
	958
108-8423	928
108-8424	928
109-1321	562
109-1322	562
109-1323	562
109-1324	562
109-1327	562
109-1329	562
109-1331	562
109-2356	286
	293
	302
109-3036	788
109-3207	149
109-4731	412
	414
109-5150	493
	494
109-5151	493
	494
109-7041	214
	215
	216
	218
109-7078	369
109-7079	369
109-7080	369
109-7330	▶250
	369
109-8981	216
110-2023	485
	488
	490
	494
110-5051	966
110-5052	966
	968
110-5054	966
110-5056	966
	968
110-5058	966
110-5059	966
	968
110-5060	966
	968
110-5061	966
	968
110-5062	966
	968
110-5063	966
	968
110-5064	966
	968
110-5065	966
	968
110-5066	966
	968
110-5067	966
110-5068	966
	968
110-5071	966
	968
110-5072	966
	968
110-5073	966
	968
110-5074	966
	968
110-6109	286
	293
	302
110-6393	835
110-6844	287
110-6846	287
	294
	303
	369
110-6848	287
	294
	303
	369
110-7618	9
110-7886	279
	286
110-7887	286
	293
	302
110-7890	286
111-0157	216
	218
111-0177	845
	847
111-0178	845
	847
111-0200	857
	862
	878
111-0201	859
	866
	872
111-0202	859
	866
	869
	875
111-0204	845
	847
111-0209	845
	847
111-0343	567
	787
	788
111-2416	317
111-4013	223
111-4275	6
	▶264
111-5718	727
	730
111-5719	727
	730
111-6143	490
	494
111-7158	659
	702
	704
111-7175	659
	661
111-7399	682
	684
111-7758	172
111-7855	735
111-7874	569
111-7875	609
	611
	613
	615
111-7878	569
	571
111-7881	897
	899
111-7899	213
	225
	226
	227
	276
	277
	286
	288
	293
	294
	302
	303
	311
	591
	637
	645
	648
	833
111-8685	682
	684
111-8738	883
	884
111-9136	528
	530
111-9162	▶442
111-9163	▶442
111-9164	▶442

▶ PRIMARY REFERENCE

PART NUMBER INDEX

Part	Page
112-0759	377
112-0885	580
112-1255	410
	414
112-1528	859
	866
	869
	875
112-1817	652
	654
	657
	▶751
112-2240	694
	▶790
112-4425	702
	704
	706
112-4550	255
112-4577	958
112-5219	903
112-5345	99
	103
112-5352	565
112-6174	286
112-7511	493
	494
112-9073	485
	488
112-9861	751
	781
113-0061	580
	▶586
113-0899	958
113-4799	▶939
	940
113-6069	45
113-6087	5
	▶14
113-7752	542
	544
113-8449	358
	362
113-9232	951
	952
	953
	960
	965
	972
113-9234	684
	686
	752
	754
	756
	758
114-1071	382
	384
	386
114-3140	836
	891
114-3469	850
114-3937	613
	615
114-3940	609
	611
	613
114-3944	883
	884
114-3953	895
114-3954	895
114-3956	916
114-4231	399
114-5132	586
114-5180	586
114-5190	586
114-5333	283
114-6604	216
	218
114-9491	548
115-1552	857
	859
	862
	866
	872
	878
115-1559	214
	215
115-1561	897
115-1748	286
	293
	302
	918
115-2247	542
	544
115-2422	172
115-4072	45
115-4120	64
115-4210	4
	▶64
115-4219	45
115-4550	461
115-4968	524
115-5327	377
116-0080	172
116-2659	124
116-4491	358
	362
	912
116-4527	768
	770
	771
	772
	773
116-4556	4
	▶43
116-6509	535
	537
116-7856	883
	884
116-9713	▶800
117-1559	468
	470
117-1801	377
117-1911	606
117-2311	286
	293
	302
117-3437	96
	98
117-3468	▶201
	214
117-3643	5
	▶82
117-3787	935
	936
	937
117-3788	935
	936
	937
117-3789	935
	936
	937
117-4492	831
117-5268	584
117-6105	562
117-6487	5
	▶41
117-7773	400
117-7838	▶430
	434
118-0275	151
	152
118-0626	989
118-0808	849
	▶974
118-0809	849
	▶855
118-0817	849
	▶960
118-0819	▶951
	▶952
118-1305	586
118-2073	4
	▶40
118-4341	586
118-5044	836
	891
118-5046	836
	891
118-6722	586
118-6878	319
	323
	327
	332
	425
118-7226	▶254
	466
118-7236	953
	960
118-7250	▶950
118-7255	948
118-7259	833
	834
	890
118-7313	522
118-7362	286
	293
	302
118-9573	264
118-9587	524
119-0013	450
119-0281	524
119-0781	216
	847
119-0959	774
119-2073	950
119-2921	64
119-3025	96
	98
119-4167	369
119-4769	844
	▶883
119-5026	277
119-6723	109
119-7127	958
119-7128	951
	▶961
119-7130	882
119-7141	958
119-7314	▶434
	442
	443
	444
	445
	446
	447
	448
	449
	450
	451
	452
119-8310	974
120-0596	897
	899
	901
120-6125	872
120-7732	968
120-7733	968
120-7734	968
120-8514	740
121-0191	903
121-0192	903
121-0254	781
121-0256	781
121-3307	99
	103
121-3395	626
121-4824	641
	643
121-8786	4
	▶42
121-9231	459
122-0493	358
	362
122-0630	520
	521
122-1162	687
	691
	694
	698
122-4233	468
	470
122-5053	151
	152
	▶157
122-6799	501
122-8352	399
123-0708	885
123-3398	637

▶ PRIMARY REFERENCE

PART NUMBER INDEX

Part	Page
123-3399	637
123-3400	637
123-3401	637
123-3402	637
123-3403	637
123-3404	637
123-3405	637
123-4003	408
	410
	412
	414
123-4511	115
123-4980	535
	537
123-6447	▶442
123-6449	281
123-6621	915
123-6622	915
123-8157	975
123-8421	637
123-8645	637
123-8851	836
123-9128	975
123-9131	975
123-9431	939
123-9814	168
	170
124-0174	90
	92
124-0686	197
124-0687	195
124-2456	1000
124-3019	128
	130
	369
124-3237	109
	▶122
124-4227	524
124-4228	524
124-4230	535
	537
124-4231	535
	537
124-4401	609
	611
	613
	615
	619
124-4672	▶241
	366
124-5638	286
	293
	302
124-7126	975
124-7128	975
124-8494	836
	891
124-8495	836
	891
124-9015	897
	899
	901
124-9439	▶600
	698
125-1302	228
	231
	233
	▶269
125-2871	390
125-2873	852
	853
125-3295	542
125-3657	▶783
	784
125-7037	524
125-7043	897
	899
125-7045	897
	899
	901
125-7046	897
	899
	901
125-7944	702
126-1034	899
126-1035	899
126-1036	899
126-1367	899
126-1757	11
126-5011	317
126-5466	86
	88
126-5869	86
	88
126-5948	785
	786
126-8472	524
126-8473	599
126-9524	▶998
126-9531	1
	▶549
126-9535	1
	▶481
126-9579	1
	▶527
127-3273	636
	▶734
127-3577	824
127-6510	897
127-8613	883
	884
127-9323	379
128-0506	490
	494
128-0613	975
128-0899	897
	899
	901
128-1008	54
128-2678	966
	968
128-2682	5
	▶70
128-3473	151
	152
128-3883	48
128-5156	▶443
128-5157	▶443
128-5158	▶443
128-5159	▶443
128-5160	▶444
128-5161	▶444
128-7674	626
128-7678	622
	▶626
128-8525	669
129-0336	225
	226
129-0337	227
129-1165	5
	▶16
129-1170	96
	98
129-2107	475
129-2380	453
129-3178	836
	891
	933
129-3270	571
129-5096	166
129-6791	366
129-6792	366
129-7163	348
	351
	468
	470
129-7164	348
	351
	468
	470
129-7184	933
129-7253	▶954
	960
129-8111	366
129-8702	▶444
129-9690	854
130-1676	777
130-3280	124
130-4730	▶366
	917
130-5202	428
130-5300	155
	219
	221
	228
	231
	233
	263
	283
	315
	319
	323
	327
	332
	335
	338
	341
	344
	345
	346
	348
	351
	356
	358
	362
	369
	463
	645
	648
	687
	691
	694
	698
130-5301	9
	316
	358
	363
130-8300	654
130-9211	528
	530
130-9505	417
130-9811	257
	258
130-9927	128
131-0359	348
	351
131-0427	▶255
	319
	323
	327
	332
131-1237	982
131-1586	524
131-1845	151
	152
131-1901	515
131-2639	709
	711
131-2752	481
131-2753	481
131-3253	641
131-3469	792
	794
	797
131-5879	499
131-6593	490
	494
131-8624	578
131-8626	578
132-0338	831
132-1448	195
	197
132-1829	▶160
	276
132-1915	483
132-1916	483
132-1924	483
132-1925	483
132-1927	520
	521
132-1928	520
	521
132-1929	483
132-1931	483
132-4763	828
	829
132-5789	283
	288
	294
	303

▶ PRIMARY REFERENCE

PART NUMBER INDEX

Part	Page
	335
	338
	341
	352
	369
	463
132-6964	485
132-6970	524
132-7165	111
132-7370	90
	92
132-7551	654
132-8502	533
133-1963	667
133-3378	▶444
133-3630	490
	494
133-3715	149
133-3730	86
	88
133-3742	5
	▶27
	▶28
	▶29
	▶30
133-4238	734
	▶745
133-4239	735
	▶747
133-4241	637
	▶749
133-4849	477
133-4995	27
	28
	29
	30
133-5055	5
	▶48
133-5678	476
133-6379	66
133-6517	195
133-6578	723
133-8305	394
134-0785	▶445
134-0786	▶445
134-0787	▶445
134-1374	388
134-3379	194
134-3988	133
	135
	137
	139
	142
134-4096	935
	937
134-4126	178
	189
	190
	260
134-4483	31
	37
134-4784	626
134-5106	555
	558
134-5330	533
134-5550	505
134-6741	667
134-8221	168
	170
134-8593	▶917
134-8628	636
	▶732
	▶733
134-9454	481
134-9458	481
134-9473	682
	684
134-9569	277
134-9628	▶922
	926
134-9633	▶445
134-9637	1
	▶477
135-0426	▶210
	219
	221
135-1922	918
135-2543	261
	262
135-2601	286
135-2607	917
	▶918
135-2922	▶622
	636
135-2969	5
	▶66
135-3235	678
	680
135-3569	527
135-4391	562
135-5970	57
135-9819	11
136-0607	86
	88
136-0812	86
	88
136-0822	11
136-0823	11
136-1543	930
136-1544	831
136-1953	837
	891
136-2522	555
	558
136-2584	555
136-2622	555
	558
136-2623	555
	558
136-3188	988
136-3190	988
136-3312	580
136-3313	580
136-3620	824
136-3845	205
136-3846	207
136-3848	205
	207
136-3866	732
	733
136-4183	45
136-4235	▶446
136-6379	926
	▶982
136-6980	885
136-6982	885
136-6984	885
136-8342	555
	558
136-8423	723
136-9029	708
136-9030	708
136-9190	918
136-9191	918
136-9192	918
136-9239	1000
136-9241	922
	924
136-9242	922
	924
136-9243	922
136-9244	922
	924
136-9292	752
	756
	758
	760
	764
	766
136-9297	713
	717
136-9298	713
	717
136-9304	770
	771
137-0266	752
	754
	756
	758
	760
	762
	764
	766
	▶768
137-2104	555
	558
137-2105	982
137-2170	984
137-4238	99
	103
137-4510	669
	673
137-4511	669
	673
137-4694	▶446
137-4695	▶446
137-4696	▶446
137-5946	636
	▶735
137-6715	22
	25
	31
	37
137-6717	67
137-6718	31
	37
137-7602	▶856
	944
137-7854	631
	633
137-7855	623
	▶631
	▶633
137-8165	941
137-8444	▶623
	636
138-1645	377
138-1840	408
	410
	412
	414
138-1917	▶476
	799
138-1965	6
	▶54
138-2980	604
138-3252	27
	28
	29
	30
138-3334	580
138-3335	580
138-3387	682
	684
138-4411	580
138-5853	580
138-6155	602
138-7198	67
138-7500	344
	345
138-8370	490
	494
138-8402	67
138-8403	67
138-9487	535
	537
138-9868	67
139-0689	555
	558
139-1451	421
	423
139-1598	659
	665
139-1599	659
	665
139-1601	659
139-1602	659
139-3285	562
139-3312	575
	▶576
139-3313	576
139-3314	576
139-3526	11
139-3553	659
	665
139-4081	▶50
	66
139-4084	50
139-4189	709
	710

▶ PRIMARY REFERENCE

PART NUMBER INDEX

Part	Page
	711
139-5852	678
	680
139-5853	678
	680
139-5953	1
	▶580
139-8439	824
139-9071	636
	▶661
	▶663
139-9476	50
140-1344	781
140-2394	989
140-2961	939
140-2962	939
140-2963	939
140-6188	31
	37
140-9501	636
	▶678
140-9670	22
	25
	31
	37
140-9926	604
	758
	766
141-1095	758
	766
141-1481	687
	691
	694
	698
	▶784
141-1556	715
	717
	718
141-2032	715
	717
	718
141-2597	578
	▶596
141-2820	524
141-3869	483
141-3870	483
141-3871	483
	▶520
141-3872	483
	▶521
141-3873	483
141-3874	483
141-3875	483
141-3876	483
141-3878	483
141-3879	520
	521
141-3880	483
141-3881	483
141-4852	754
	758
	762
	766
141-4859	781
141-7481	709
141-7552	369
141-7553	369
141-8275	133
	135
	137
	139
	142
141-8546	603
141-8580	857
	859
	862
	864
	866
	869
	875
	878
141-9188	609
	611
	613
	615
141-9191	609
	611
141-9192	613
	615
141-9193	617
	618
141-9194	619
	620
141-9236	752
	754
	756
	758
	760
	762
	764
	766
141-9784	836
	891
141-9817	369
142-0105	549
142-0827	▶447
142-1657	674
142-2624	533
142-2928	288
	294
	304
142-4247	406
142-4431	379
142-5789	214
	215
	216
	218
143-1288	842
	843
	962
143-1312	953
	▶968
143-2471	391
	546
	591
143-2472	391
	546
	591
143-4703	727
	729
143-5378	844
	▶953
143-8300	1003
143-8874	833
	834
	890
143-9436	1001
143-9437	1002
143-9438	1001
143-9440	1003
143-9441	1001
143-9444	1002
143-9445	1004
143-9446	1003
143-9447	1003
143-9448	1002
143-9686	588
144-0195	986
144-0367	667
144-1569	984
144-1652	989
144-1653	989
144-2257	228
	231
	233
144-3472	113
144-4464	374
	375
	▶395
144-4466	395
144-4467	395
144-4613	313
144-5282	201
	204
144-5283	201
144-5284	201
144-5417	374
	375
	376
	▶394
144-5611	49
144-7339	151
	152
144-7850	715
145-0162	14
145-0164	14
145-0168	14
145-0170	14
145-0326	975
	977
	979
145-1015	358
	362
145-1135	885
145-1136	885
145-1140	885
145-1144	460
145-2322	▶709
	752
145-2334	715
	717
	718
145-2901	49
145-4926	261
145-5307	896
	903
145-5607	885
145-7376	67
145-7385	67
145-7390	31
	37
145-7977	603
	604
145-8428	713
	715
	717
	718
145-8670	▶187
	643
145-8707	768
	770
	771
145-8711	754
	▶770
145-8983	669
	673
146-0240	348
	351
146-1892	542
146-3197	417
146-3337	709
	711
146-3728	789
146-6315	709
	710
	711
	712
146-6316	768
	770
	771
	772
	773
146-6317	709
	711
	712
146-6318	768
	770
	771
146-6319	768
	770
	771
	772
	773
146-8477	752
	756
	758
	760
	764
	766
146-8478	754
	758
	760
	764
	766

▶ PRIMARY REFERENCE

PART NUMBER INDEX

Part	Page
	762
	766
146-8479	709
	710
	711
146-8981	752
	756
	758
	760
	764
	766
146-9047	609
	611
	613
	615
147-0856	319
	323
	332
147-2038	▶710
	752
	756
	760
	764
147-3322	▶712
	754
	758
	762
	766
147-3509	682
	684
147-4549	975
147-5088	96
	98
147-5454	562
147-6522	975
147-6541	975
147-6976	▶854
	918
147-7633	803
	808
	825
	826
	827
147-8211	31
	37
147-8214	22
	25
	31
	37
147-8218	20
	24
147-8220	22
	25
	31
	37
147-8798	580
147-8855	580
148-1928	379
148-2903	149
148-3587	1000
148-3626	880
148-3669	626
148-5689	286
	293
	302
148-6471	286
	293
	302
148-6621	627
	629
	631
	633
148-6988	128
	130
148-7027	142
148-7335	897
	899
148-7922	715
	717
	718
148-8336	142
	652
	654
	657
148-8353	142
148-8367	366
148-8378	654
148-8395	95
148-8407	459
	752
	758
	760
	766
148-8409	95
148-8413	652
	657
148-8435	654
148-8443	654
148-8867	781
148-9562	▶607
	609
	611
	613
	615
149-0777	592
149-1930	580
149-1931	580
149-2398	975
149-2399	975
149-2400	975
149-2403	975
149-2610	687
	691
	698
	▶787
	790
149-2611	787
149-2612	228
	231
	233
149-2957	399
149-2958	▶399
	430
149-3253	918
149-4456	399
149-4693	527
149-4745	958
149-5240	149
149-5470	713
	717
149-5733	828
	829
149-7393	1
	▶573
149-7443	▶805
149-7444	▶806
149-7445	▶807
149-7470	806
149-7471	807
149-7485	805
	806
	807
149-7486	805
	806
	807
149-7489	805
	806
	807
149-7490	805
	806
	807
149-7491	805
	806
	807
149-7492	805
	806
	807
149-7544	421
	423
149-7702	844
	▶986
149-7738	674
149-8177	480
149-9112	377
149-9114	377
150-0359	805
150-0365	806
150-0806	791
	794
	797
150-1293	608
	609
	611
	613
	615
150-1743	▶480
150-3065	147
	740
150-3378	708
150-4105	149
150-4621	57
150-4651	377
150-5177	524
150-6582	915
150-6766	199
	354
150-7271	524
150-7718	951
	▶975
150-7824	524
150-8015	984
151-0894	836
	891
151-1385	904
	908
151-2898	49
151-2900	49
	62
	63
	166
	168
	170
151-5711	428
151-5715	880
151-6320	199
152-1628	▶447
152-2763	983
152-2764	982
	▶983
152-3503	573
	▶575
152-3764	369
152-3952	96
	98
152-5260	555
	558
152-5778	924
152-6497	▶924
	926
152-7356	369
152-8351	637
	▶788
152-8383	567
152-8385	565
	▶567
152-8403	▶427
	430
153-0150	478
153-1036	39
153-1277	124
153-3711	667
153-4906	151
153-5043	256
153-5100	417
153-6249	652
	657
153-6273	542
153-7821	669
153-8467	67
153-8470	67
153-8920	317
153-8924	770
153-8925	768
	770
	771
	772
	773
153-8926	768
	770
	771
	772
	773
153-8929	770
153-8941	709
	710
153-8945	712
153-8946	709
	711
153-8947	754
	758

▶ PRIMARY REFERENCE

PART NUMBER INDEX

Part	Page
	762
	766
153-8952	713
	717
153-9772	1
	▶794
	▶797
154-0273	417
154-5629	935
	936
	937
154-8025	20
	24
154-8595	609
	611
	613
	615
	▶781
154-9023	90
	92
154-9025	86
155-0576	200
155-0639	899
155-2105	277
155-2255	199
	287
	293
	294
	303
	317
	348
	351
	354
155-2256	287
	293
	303
155-2257	287
	293
	303
155-2259	389
155-2260	147
	242
	244
	245
	287
	293
	294
	303
	315
	317
	319
	323
	327
	332
	335
	338
	341
	348
	351
	358
	362
	369
	463
	648
	687
	691
	694
	698
	799
	918
155-2261	228
	256
155-2262	389
155-2265	287
	293
	294
	303
	369
	389
155-2267	188
155-2269	356
155-2270	147
	199
	228
	256
	270
	274
	275
	277
	283
	284
	287
	288
	294
	303
	315
	316
	317
	319
	323
	327
	332
	335
	338
	341
	346
	348
	351
	354
	358
	362
	463
	542
	648
	687
	691
	694
	698
	836
155-2271	277
	284
	287
	294
	303
	335
	338
	341
155-2274	277
	287
	288
	294
	303
	335
	341
	344
	345
	348
	351
	356
155-2276	188
	245
155-4791	356
155-5779	986
155-5781	986
155-5783	▶920
	986
155-5784	▶921
	986
155-7327	366
155-8154	645
	648
155-8998	316
155-8999	284
155-9112	726
155-9115	726
155-9116	726
155-9117	726
155-9125	723
155-9127	723
155-9132	723
155-9133	723
155-9136	726
155-9504	20
156-1148	▶955
	961
156-3673	478
156-3849	1000
156-4449	833
	834
	890
156-5545	831
156-5726	781
156-6155	200
	260
156-6175	283
	288
	294
	304
	316
	317
	319
	323
	327
	332
156-6819	891
156-9811	613
	615
157-0670	86
	90
	92
157-1356	356
157-1364	356
157-2152	768
	772
157-2153	770
	771
	773
157-2284	785
	786
157-5537	600
158-0851	90
	92
158-6072	126
158-6314	2
	3
	▶501
158-6479	402
158-6482	404
158-6634	348
	351
158-7479	▶810
158-7480	▶811
158-7481	▶812
158-7864	1000
159-0288	149
159-0303	4
	▶60
159-0861	810
	811
	812
159-0862	810
	811
	812
159-0863	810
	811
	812
159-0864	810
	811
	812
159-0865	810
	811
	812
159-0866	810
	811
	812
159-1846	404
159-3204	▶808
	814
	▶814
159-3777	609
	611
	613
	615
159-3781	709
	710
	711
	712
159-7646	▶601
	687
	691
	694
159-8036	801

▶ PRIMARY REFERENCE

PART NUMBER INDEX

Part	Page
159-8600	698
159-9322	317
	323
	332
	354
159-9539	609
	613
	862
	866
	872
	878
159-9541	609
	613
160-2464	▶447
160-3408	▶727
	732
160-3424	727
160-3434	727
	729
160-3441	727
	729
160-3448	727
	730
160-3451	727
	729
160-3454	727
	729
160-4816	404
160-5843	785
	786
160-5844	785
	786
160-6354	939
160-6365	939
160-6366	939
160-7689	319
	323
	327
	332
160-7690	317
160-7765	975
160-7766	975
160-7767	975
160-8123	235
160-8230	44
161-1333	592
161-4005	468
161-4006	468
161-6149	783
161-6161	783
161-6963	126
161-7620	880
161-8420	5
	▶57
161-8932	240
161-9289	951
161-9639	872
	878
161-9640	857
	859
	862
	864
	866
	869
	875
	878
161-9641	857
	859
	862
	864
	866
	869
	875
	878
161-9642	857
	859
	862
	864
	866
	869
	875
	878
161-9645	845
	847
161-9647	857
	859
	862
	864
	866
	869
	875
	878
162-2073	▶211
	223
	224
162-2074	211
162-2188	857
	862
162-2189	857
	859
	875
	878
162-2190	857
	859
	862
	866
162-8068	4
	▶61
162-8434	439
	▶457
162-8435	430
	▶439
162-8447	▶842
	964
162-8448	▶843
	964
162-8772	394
162-9610	152
162-9612	151
	152
162-9728	358
	362
163-0021	698
163-0022	698
163-0023	687
	698
163-0024	698
163-0025	687
	691
	694
	698
163-0027	687
	691
	694
	698
163-0028	687
	691
	694
	698
163-0029	687
	691
	694
	698
163-0032	637
	687
	691
	694
	698
163-0033	687
	691
	694
	698
163-0095	687
	691
	694
	698
163-0872	▶850
	851
163-1135	977
	979
163-1148	843
163-1149	842
163-1201	894
163-2478	25
	37
163-3343	637
163-3926	542
	544
163-5507	425
163-5512	713
	715
	717
	718
163-6407	687
	691
	694
163-6408	551
163-6412	551
	552
164-0210	70
164-1234	977
	979
164-2108	460
	568
	609
	▶752
164-2797	617
	▶754
164-2800	613
	▶756
164-2801	619
	▶758
164-4413	99
	103
164-4531	831
164-4557	872
164-4562	859
	866
164-4563	▶857
164-4564	▶859
164-4883	929
164-4885	609
	611
	613
	615
164-5509	216
164-5619	95
164-5752	682
	684
164-5753	686
164-5754	682
	684
164-6871	366
164-7435	1004
164-7556	201
	203
	204
165-2273	390
	669
	673
	912
165-4064	490
	494
165-4104	1
	▶999
165-4557	5
	▶39
165-4586	1
	▶478
165-5655	199
	200
	354
165-5970	147
	▶278
166-2232	366
	369
166-2905	56
166-6358	62
	63
	166
	168
	170
166-6757	402
166-6758	440
	▶458
166-6759	439
	▶440
166-6760	440
166-6761	439
	▶441
166-6762	406
166-7223	975
166-9286	880
166-9287	855
167-0138	228
	231
	233
	▶270
167-0979	374
	▶402

▶ PRIMARY REFERENCE

PART NUMBER INDEX

Part	Page	Part	Page	Part	Page	Part	Page
167-0980	375	168-7224	59	172-7966	461	174-9560	204
	376	168-7226	57	172-7968	461	174-9570	▶127
	▶404	168-7861	723	172-8713	284		158
167-2190	576	168-7863	723	172-9389	▶189	175-0099	▶448
167-2201	626	168-8772	895		286	175-2322	268
167-2207	627	168-8774	366		293		▶271
	631	169-1616	783		302	175-2324	268
	633	169-1617	783	172-9391	▶190		▶272
167-2300	576	169-1743	▶802		369	175-3244	555
167-2312	626	169-3111	178	172-9973	▶202		558
167-2317	627		179		219	175-3678	941
	633	169-3995	857	173-0064	90	175-4966	398
167-2439	631		859		92	175-5038	▶448
167-2567	631		862	173-0143	59	175-6746	887
167-7756	503		864	173-0272	904	175-6749	887
167-7757	503		866	173-0566	398		888
167-7758	503		869	173-1028	▶831	175-6754	887
167-7759	519		875		962	175-6759	887
167-7760	428		878	173-1498	62	175-6760	▶887
167-7764	428	169-5861	235		63	175-7896	576
167-7773	417	169-7380	977		166	175-9443	▶711
167-7774	417		979		168		756
167-7775	428	170-0493	600		170		758
167-7776	428		602	173-1500	63		764
167-7777	417	170-0503	600		166		766
167-7778	417	170-1112	831		168	176-0118	436
167-8121	39	170-1114	831		170	176-0326	99
167-8361	13	170-1115	831	173-2052	930		103
167-9524	460	170-1807	379	173-3064	277		852
168-0402	366	170-1857	▶406	173-5549	67		853
	369		455	173-5787	951	176-1252	133
168-1877	754	170-3717	478		970		135
	762	170-3718	478	173-6532	▶941		137
168-1878	758	170-3720	478		942	176-2468	497
	766	170-4735	580	173-7035	970	176-3900	904
168-1879	▶603		991	173-7126	127		908
	752		994	173-7439	382	176-5459	▶188
	760	170-4871	194	173-7471	284		641
168-1880	▶604	170-5770	478	173-7472	284		643
	756	170-6573	490	173-9779	576	176-7261	202
	764		494	174-1486	836	177-0333	497
168-1968	366	170-7485	788		891	177-0581	117
168-2035	391	170-9198	176	174-3016	288	177-1862	943
	▶428	171-1230	962		294	177-1863	962
168-2037	▶85	171-1512	645		302	177-3047	667
	391	171-2210	233		319	177-4752	149
168-2039	391	171-3716	468		323	177-4930	930
	▶519		470		327	177-4937	952
168-2040	391	171-5349	251		332		965
	▶503		294	174-3085	497		972
168-2166	468		303	174-3086	497	177-6845	825
	470		338	174-5807	99		826
168-2457	857		463		100		827
	862	171-6682	962		103	177-7500	5
	864	171-8689	436		104		▶59
	878	171-8690	434	174-6381	524	178-0603	▶962
168-2458	859		▶435	174-7449	461		964
	866	172-0154	904	174-7599	133	178-0604	▶929
	869	172-1130	▶447		135		962
	875	172-2416	962		137	178-0605	929
168-3504	723	172-5754	4		139		▶930
168-6453	417		▶62		142	178-2593	857
168-7000	▶551	172-6284	119	174-7875	893		859
	844	172-6298	119	174-9169	263		862
	849	172-6833	284	174-9558	204		864

▶ PRIMARY REFERENCE

PART NUMBER INDEX

Part	Page
	866
	869
	875
	878
178-6343	5
	▶149
178-7877	711
	712
178-7907	930
178-7914	▶964
	970
179-0091	126
179-3552	824
179-4324	468
	470
179-7001	▶69
	145
179-7002	69
179-7004	151
179-9278	578
179-9348	147
179-9355	261
179-9850	178
180-0801	740
180-2835	824
180-3044	555
	558
180-3045	555
	558
180-3528	836
180-3732	▶279
180-3871	862
	864
	866
	869
	▶984
180-5098	896
180-5100	216
	218
180-7341	▶151
	▶152
	153
180-7451	228
180-7486	883
	884
180-7487	883
	884
180-8585	654
	▶742
180-9068	742
180-9069	742
180-9339	243
180-9340	242
180-9873	833
	834
	▶836
180-9874	890
	▶891
183-1195	4
	▶178
	▶179
183-3399	76
	146
183-3406	133
	135
	139
	142
183-3409	16
183-4182	2
	3
	▶475
183-4365	67
183-6845	4
	▶119
183-6854	119
183-6856	119
183-6967	584
183-6970	584
183-7528	836
	891
183-7556	▶645
	814
183-7557	645
	648
183-7559	645
	648
183-7560	645
	648
183-7595	741
	▶789
183-8597	▶251
	463
184-0846	99
	103
184-2298	962
184-2299	962
184-2472	178
	181
	185
	191
	260
184-3650	219
	221
184-3651	219
	221
184-9843	576
185-1145	5
	▶125
185-1560	835
	▶852
185-1689	682
	684
185-1914	53
185-1948	825
	826
	827
185-2068	118
185-2069	4
	▶147
185-2142	1000
185-2269	743
	744
185-2270	645
	▶743
185-2638	164
185-2639	164
185-2642	164
185-2644	164
185-2645	164
185-2647	164
185-2648	164
185-2650	164
185-2651	164
185-2653	164
185-2654	164
185-2655	164
185-2658	164
185-2768	591
185-3241	153
185-4043	645
	648
185-4139	645
	648
185-5294	▶164
	166
185-5502	▶861
	945
	947
185-5629	933
185-5634	277
185-5770	861
	▶862
	▶864
185-5771	861
	▶866
	▶869
	▶814
185-5785	645
185-5883	648
	818
185-5884	819
	580
185-6250	991
	994
	287
185-6335	288
	293
	295
	302
	745
185-7712	747
	749
	▶777
	125
185-8016	▶126
	11
185-9356	99
186-0116	103
	83
186-0125	645
186-0192	648
	749
186-0901	▶778
	738
186-0908	745
	747
	749
	▶779
186-2487	778
	779
186-2488	778
	779
186-2741	941
186-3408	814
	815
	▶818
186-3735	155
	159
	160
	199
	200
	205
	207
	210
	237
	238
	240
	241
	250
	251
	253
	254
	255
	269
	271
	272
	273
	278
	280
	283
	319
	323
	354
	362
	389
	401
	567
	592
	607
	608
	635
	742
	786
	920
	921
	941
186-3736	270
	274
	275
	389
186-4415	551
	552
186-5107	977
	979
187-1878	609
	611
	613
	615
187-2082	609
	611
	613
	615
187-4007	99
	103
187-5122	984
187-5123	984
187-5124	984
187-5125	984
187-5126	984
187-5127	984

▶ PRIMARY REFERENCE

PART NUMBER INDEX

Part	Page
187-5128	984
187-6277	4
	▶133
	▶135
187-6279	4
	▶76
187-6290	133
	135
	137
	139
187-6294	76
187-8191	789
187-8595	82
188-3091	83
	84
188-3092	83
	84
188-5039	99
	103
188-6252	348
	351
188-6253	303
188-7181	490
	494
188-7260	1000
188-7726	4
	▶180
188-8044	1000
188-8665	1001
188-8666	1001
188-8667	1002
188-8668	1001
188-8669	1002
188-8670	1002
188-8673	1003
188-8675	1003
188-8677	1004
188-8679	1004
188-8950	99
	103
189-0172	788
189-0189	567
	787
189-0224	99
	103
189-1707	836
189-5433	4
	▶71
189-5470	4
	▶11
189-5594	99
	103
189-5604	358
	362
189-6648	497
189-6649	497
189-6654	99
	103
189-6656	99
	103
189-6657	99
	103
189-6658	99
	103
189-6659	99
189-7305	513
189-7308	513
189-7309	2
	3
	▶513
189-7556	651
189-7558	815
189-8080	515
189-8199	509
	511
189-8200	509
	511
189-8319	483
189-8772	119
189-8777	77
189-8779	▶112
	113
	114
189-8780	4
	▶113
	▶114
190-0643	62
	63
190-1125	99
	103
	533
190-2899	▶379
	455
190-4563	933
190-4605	▶833
	835
190-4705	896
190-4706	896
190-4707	896
190-4708	896
190-5038	4
	▶317
190-6061	1000
190-7614	288
	294
	303
	335
	338
	341
190-7615	335
	338
	341
191-1782	147
191-1932	▶83
	99
191-2933	970
	▶977
191-2943	99
	103
	▶708
191-3028	768
	771
	772
	773
191-3029	768
	771
	772
	773
191-3678	721
191-3679	721
191-5213	11
191-6113	4
	▶261
191-6587	▶256
	259
191-7582	723
191-7583	723
191-7699	11
191-7733	4
	▶115
191-8735	669
	673
	▶741
191-8920	713
	715
	717
	718
191-8921	988
192-0087	528
	530
192-0108	4
	▶73
	▶74
192-0111	73
192-0495	1001
192-0496	1001
192-0497	1002
192-0498	1001
192-0499	1002
192-0500	1002
192-0501	1003
192-0502	1003
192-0504	1003
192-0506	1004
192-0508	1004
192-1285	73
192-1563	▶49
	431
	851
192-2201	4
	▶86
	▶88
192-4980	527
192-5017	358
	362
192-7054	941
192-7625	648
192-7752	977
	979
192-7755	977
	979
192-7760	977
	979
192-7767	977
	979
192-7783	977
	979
192-7787	977
	979
192-7790	977
	979
192-7795	977
	979
192-7799	977
192-7805	977
	979
192-7810	977
	979
192-7812	977
	979
192-7820	977
	979
192-7822	977
	979
192-7848	977
192-7910	▶448
192-7979	99
	103
193-0953	794
	797
193-1036	774
193-2200	379
	406
193-4620	4
	▶9
193-8532	369
193-8552	228
	231
	233
193-8557	228
	231
	233
193-8571	228
	231
	233
193-9237	4
	▶94
	▶95
193-9238	94
	▶96
193-9239	96
193-9240	96
194-1572	▶448
194-4602	669
	673
194-5032	758
	▶771
194-5226	244
	245
	256
194-5227	245
	256
194-5278	99
	103
194-6722	▶242
	247
194-6723	▶243
	249
194-6725	▶244
	248
194-9373	435
	▶436
194-9453	723
	▶726
194-9461	723
194-9471	723
194-9472	723
194-9473	723

▶ PRIMARY REFERENCE

PART NUMBER INDEX

Part	Page
194-9474	723
194-9478	726
194-9479	726
194-9480	726
194-9481	726
194-9632	708
195-0321	57
	59
195-0349	99
195-0882	319
	323
	327
	332
	669
	673
195-0913	833
195-0924	277
195-0925	226
	227
195-2274	213
195-7336	317
196-0109	609
	611
	613
	615
196-0268	126
196-0351	126
196-1185	463
196-2325	▶449
196-4484	999
196-8488	441
196-9519	14
197-0416	115
197-1993	▶400
	421
197-3260	▶382
	455
197-3761	852
197-5210	4
	▶47
197-6453	654
197-6564	425
197-8391	235
	▶257
197-8392	235
	▶258
197-9277	57
	59
197-9354	57
	59
197-9386	57
	59
198-2750	1
	▶669
	▶673
198-2751	1
	▶128
	▶130
198-2752	1
	▶912
198-2756	1
	▶425
198-2761	1
	▶90
	▶92
198-2769	835
	▶904
	▶908
198-3393	845
	847
198-4331	740
198-4332	740
198-5389	199
	200
	354
198-5914	1
	▶4
198-5915	4
	▶5
198-6570	287
	293
	302
198-7248	▶398
198-7922	490
	494
198-8355	669
	673
198-8532	2
198-8533	2
198-9331	90
	92
198-9332	904
	908
198-9333	1
	▶117
198-9334	117
198-9335	117
198-9336	390
198-9340	1
	▶390
199-2812	▶1
199-2816	1
199-2817	1
	▶192
199-2818	1
	▶636
199-2820	1
	▶430
199-2830	1
	▶555
	▶558
199-2833	636
	▶682
	▶684
199-2842	▶835
199-2857	1
	▶6
199-2860	6
	▶109
199-2862	109
	▶111
199-2864	6
	▶118
199-2865	6
	▶120
199-3128	636
	▶721
199-3144	1
	▶99
	▶103
199-3441	1
	▶926
199-3445	▶609
	▶611
	926
199-3446	▶613
	▶615
	636
199-3459	▶844
	926
199-3460	▶388
	844
	849
199-3461	844
	▶895
199-3462	844
	849
	▶933
199-3463	844
	849
	▶935
	▶936
199-3465	844
	849
	▶940
199-3466	▶547
	844
	849
199-3467	▶617
	▶618
199-3468	▶619
	▶620
199-3469	▶926
199-3755	99
	103
199-3809	1
	▶490
	493
199-3810	1
	▶488
199-3811	▶505
	▶507
199-3853	1
	▶524
199-3854	1
	▶533
199-3855	1
	▶534
199-3856	1
	▶155
199-6103	149
199-6309	885
199-7891	164
199-8436	164
200-1315	406
	▶545
200-1316	545
200-1734	825
	826
	827
200-1735	825
200-2046	379
200-2048	455
	▶463
200-2049	463
	▶466
200-2050	466
200-2150	▶849
	926
200-2217	542
200-2218	542
200-2219	542
200-2220	542
200-2725	▶283
	835
200-4152	192
	▶893
200-4495	45
200-4497	▶77
	80
200-4516	56
200-4528	145
200-5024	120
200-5125	354
200-6200	168
	170
200-7137	▶123
200-7138	123
200-8577	231
	233
200-8637	636
	▶686
201-0160	52
201-0211	388
	▶389
201-2088	534
201-2733	935
	936
	937
201-3265	430
	▶455
201-3315	379
201-3320	463
201-3321	463
201-3322	▶461
	466
201-3399	228
	231
	233
201-4049	▶636
201-4053	4
	▶51
201-4054	51
201-4055	118
201-4276	772
201-4825	569
	571
	▶592
201-6761	▶482
201-6775	482
201-6776	482
201-6777	482
201-6778	482
201-6850	4
	▶56
201-6851	4

2

▶ PRIMARY REFERENCE

PART NUMBER INDEX

Part	Page
	▶235
201-7947	99
	103
201-8409	▶286
	844
201-8410	▶293
	▶302
	849
201-8411	282
	▶284
201-8412	192
	▶335
	▶338
	▶341
201-8413	192
	▶319
	▶323
201-8414	▶172
	192
201-8415	192
	▶348
	▶351
201-8416	▶358
	▶362
	591
201-8418	▶316
	391
201-8422	▶369
	546
	564
201-8906	▶391
201-8909	▶546
201-9774	71
201-9785	515
202-0042	778
	779
202-0318	2
	3
	▶515
202-0436	219
202-0437	219
202-0440	219
	221
202-0671	751
202-0673	751
202-0674	751
202-0977	467
202-2258	764
202-2558	752
	760
	762
	766
	▶772
202-2629	1
	▶1000
202-3240	294
	302
202-3241	284
202-3242	284
202-3243	335
	341
202-3244	319
202-3245	▶228
	▶231
	▶233
	348
	351
202-3246	348
202-3247	358
	362
202-3249	316
202-3250	369
202-3251	369
202-3252	369
202-3522	155
202-6569	72
202-6614	203
202-7385	4
	▶52
202-7479	277
202-7656	818
	▶825
202-7935	117
203-3694	358
	362
203-3697	358
	362
203-3768	119
203-3940	252
203-4350	524
203-4606	740
203-4612	530
	▶740
203-6028	740
203-6470	468
	470
203-6473	468
	470
203-7613	416
203-7643	801
203-7644	801
203-7703	970
203-7730	801
203-7990	669
	673
203-8464	391
	▶493
	546
	591
203-9782	450
204-0176	844
	▶944
204-0177	▶845
	944
	947
204-0178	845
204-0311	762
	766
	▶773
204-0314	773
204-0320	235
	▶259
204-0348	944
	947
	948
204-0641	453
204-0724	214
	▶224
204-0826	99
	103
204-0827	99
	103
204-0835	▶591
204-1285	▶453
	455
204-2516	▶281
204-2587	▶569
	844
204-2588	569
	571
204-3403	155
204-6330	▶897
	926
204-7185	547
	▶548
204-7186	548
204-7450	228
	231
	233
204-7451	228
	231
	233
204-7552	228
	231
	233
204-7949	▶237
	939
204-7961	99
	103
204-7967	107
204-7968	90
	▶107
204-8068	5
204-9262	▶421
	▶423
	430
204-9602	▶416
	455
204-9603	416
204-9605	384
204-9877	99
	103
205-0353	172
	348
	351
205-0826	199
	200
	354
205-1171	897
	899
205-1172	897
	899
	901
205-1271	▶20
	22
	31
205-1272	▶22
205-1273	▶31
	33
	35
205-1274	27
	29
	▶33
205-1275	▶35
205-1320	45
205-1321	5
	▶45
205-1322	7
205-1701	933
205-1702	933
205-1703	288
	294
	303
205-1704	288
205-1784	288
	294
	303
205-3197	377
205-4125	933
205-5410	▶449
205-5465	99
	103
205-5678	▶213
205-5682	▶214
205-5747	▶282
	391
205-6029	468
	470
205-6388	952
	956
	965
	972
205-7087	90
	92
205-7133	421
	423
205-7266	613
	615
205-7299	172
	358
	363
205-7387	▶947
205-7662	613
	615
205-7808	613
	615
205-8257	199
205-9113	288
	294
	303
205-9236	▶542
	548
205-9237	▶544
	548
206-1350	515
206-2748	▶713
	754
	762
206-2749	▶715
	756
	764
206-2750	▶717
	758
	766
206-2817	▶199
206-2828	▶176
	199
206-2830	199
	▶313
206-2831	176

▶ PRIMARY REFERENCE

PART NUMBER INDEX

Part	Page
206-2834	176
206-4049	▶814
206-4316	636
	▶791
	814
	815
	816
206-4539	▶374
	430
206-4540	▶375
	430
206-4542	374
	375
	376
	▶377
206-4544	374
	▶408
206-4545	408
	410
206-4546	408
206-4547	375
	▶412
206-4548	412
	414
206-4549	412
206-5162	200
	260
	354
206-5165	260
206-5208	200
	354
206-5683	637
206-5685	311
206-5688	288
	294
	303
206-6305	989
206-6465	126
206-6876	133
	135
	139
	142
	147
206-7316	542
206-7345	▶161
	213
206-7958	192
	▶219
206-8784	265
206-8917	▶608
206-9177	192
	▶894
206-9183	619
	620
206-9249	849
	▶948
207-0001	617
	618
207-0060	490
207-0697	723
	▶774
207-1320	213
	▶214
	▶215
207-1321	213
	214
	▶277
207-1517	264
	▶265
207-1602	948
207-1639	▶571
	849
207-1642	▶899
	926
207-1810	687
	691
	694
	698
207-2530	294
	303
207-3688	▶374
207-3689	▶375
207-3690	▶375
207-3691	▶374
	546
207-3692	▶376
	546
207-3693	374
	▶410
207-3694	376
	▶414
207-3695	410
	564
207-3696	414
	564
207-5262	193
	199
	▶260
	354
207-6797	176
207-6809	565
	▶568
207-6810	568
207-7937	▶216
	944
	945
	947
207-7940	533
207-9828	935
	936
	937
208-0038	6
	▶72
208-0324	669
	673
208-0828	▶624
	825
	826
208-2429	216
	218
208-6055	117
208-6097	608
	▶635
208-6561	515
208-6785	533
208-7472	437
209-0381	288
	294
	303
209-1523	661
	663
209-1524	661
	663
209-1525	661
	663
	665
209-1526	661
	663
	665
209-1527	661
	663
209-1528	661
	663
209-4579	117
209-5526	133
	135
	137
	139
	142
209-5582	273
209-5789	853
209-5790	852
	853
209-5806	835
	▶853
209-6417	176
209-6477	117
209-7659	147
	417
209-8441	147
209-9587	▶181
	182
	183
209-9588	180
	▶182
	▶183
209-9794	199
210-0849	179
	▶184
210-2046	1001
210-2047	1001
210-2048	1002
210-2049	1001
210-2050	1002
210-2051	1002
210-2052	1003
210-2053	1003
210-2055	1004
210-2057	1004
210-2059	1003
210-2262	943
210-2263	943
210-2266	943
210-2268	943
210-2270	▶943
	962
210-2613	▶468
	535
210-3321	11
210-3323	13
210-5559	78
210-5574	5
	▶145
	▶146
210-5575	5
	▶153
210-6286	645
	648
210-7722	119
210-8842	897
	901
211-0255	283
211-1071	669
	673
211-4770	4
	▶13
211-5358	977
	979
211-6007	133
	137
211-6611	192
	▶194
211-9290	3
211-9291	3
211-9294	977
	979
212-0828	678
212-0829	678
212-0833	678
	680
212-0836	678
	680
212-0837	678
	680
212-1529	▶213
212-1531	▶213
212-1547	213
212-2269	▶78
	79
212-2270	5
	▶79
	▶80
212-3413	358
	362
212-3415	358
	362
212-3501	288
	294
	303
212-3657	147
	▶158
212-4247	578
212-4248	578
212-4266	▶578
	591
212-4893	14
212-6799	636
	▶667
212-6854	468
	470
212-7121	667
212-7449	▶311
	546
	564
212-7779	979
212-8709	912
213-0355	669
213-0423	669
	673
213-1198	▶193

▶ PRIMARY REFERENCE

PART NUMBER INDEX

Part	Page
	200
213-1364	412
	414
213-1369	412
	414
213-1576	669
	673
213-1787	219
	221
213-3193	57
	59
213-3940	669
	673
213-4252	669
	673
213-5170	979
213-5179	904
	908
213-7315	933
213-8433	625
213-8542	161
	▶166
213-8569	▶53
	161
213-8773	▶539
	555
	558
214-4797	505
214-4801	505
	507
214-4863	▶238
	542
214-5372	277
214-5828	425
214-5829	425
214-7567	246
214-7568	69
	76
	146
	152
	259
214-7636	986
	▶988
214-9457	90
	92
215-1132	▶885
	926
215-1276	▶803
215-1277	▶813
215-1278	▶804
215-1879	223
215-1882	344
215-1883	344
215-1888	213
	▶223
215-1889	213
	▶344
	▶345
215-2451	535
	537
215-2452	535
	537
215-2467	192
	▶535
	▶537
215-3008	417
215-3009	417
215-3010	417
215-3011	417
215-3012	417
215-3013	431
215-3014	431
215-3015	431
215-3017	417
215-3018	417
215-3019	417
215-3021	391
	▶417
215-3022	391
	▶431
215-3357	172
215-3611	172
215-3687	555
	558
215-3860	319
	323
	327
	332
215-4683	73
215-4722	682
	684
215-4723	682
	684
215-5558	▶200
215-5612	100
	104
215-7248	584
215-8298	721
	▶723
215-9550	313
216-0220	802
216-1278	991
	994
216-1279	991
	994
216-1280	991
	994
216-1285	▶991
216-2415	▶687
	▶691
	▶694
216-2416	▶698
216-2417	687
	691
	694
	698
216-2512	991
	994
216-2513	991
	994
216-2534	128
216-3372	421
	423
216-3902	213
	▶277
216-3903	213
216-4102	499
216-4320	802
	803
	804
	813
216-4575	63
	133
	135
	139
	142
216-4972	546
	▶562
	564
216-5023	813
216-5032	804
216-5181	4
	▶63
216-5338	▶460
	466
216-5586	18
216-6919	53
216-6938	172
216-6939	172
216-6940	358
	362
216-7921	7
216-7922	5
	▶7
216-9559	▶585
	591
216-9818	835
	▶851
216-9825	166
	168
	170
217-1478	▶449
217-1511	▶648
	651
	815
217-1512	▶815
217-1513	▶815
217-2928	803
217-3027	431
217-3031	431
217-3062	161
	▶327
	▶332
217-3064	327
217-3889	▶637
217-4154	592
217-4155	592
217-5149	4
	▶137
217-5152	133
	135
	137
	139
	142
217-5154	6
	▶168
	▶170
217-5213	24
217-5283	168
217-5287	124
217-5288	124
217-5289	▶124
217-7331	223
217-7933	943
217-7937	569
217-8166	277
217-8250	▶194
	546
	564
217-8339	158
217-8602	509
217-9049	962
218-0236	▶989
	1000
218-0241	989
218-0242	989
218-0344	808
218-0345	808
218-0346	808
218-0706	6
	▶132
218-0861	962
218-2373	568
218-2717	499
218-2735	499
218-3694	▶1001
218-3745	118
218-4935	283
	352
218-5003	885
218-5004	885
218-5005	885
218-8836	▶226
218-8837	▶227
219-0017	476
	477
219-0057	▶218
	948
219-0306	99
	103
219-0310	192
	▶641
219-0311	641
	643
219-2384	▶239
	366
219-2386	▶240
	369
219-3303	166
	168
	170
219-3304	851
219-3309	66
219-4213	713
	717
219-4215	▶718
	752
	760
219-4755	▶1001
219-4756	▶1001
219-4757	▶1002
219-4759	▶1002
219-4760	▶1002
219-4761	▶1003
219-4762	▶1003
219-4763	▶1003
219-4765	▶1004
219-4767	▶1004
219-6314	260

▶ **PRIMARY REFERENCE**

PART NUMBER INDEX

Part	Page
	354
219-6588	499
219-6594	499
219-6601	499
219-8096	952
	▶970
	972
220-3967	▶799
220-3968	▶799
220-4105	▶643
	799
220-5638	499
220-7100	2
	▶517
220-8365	499
220-8678	127
221-1755	▶602
221-3494	76
	146
	152
221-4480	▶17
	18
221-4481	16
	▶18
221-4579	933
221-6997	▶497
	524
221-6998	2
	3
	▶499
221-7005	499
221-7051	2
	3
	▶494
221-7054	2
	3
	▶485
221-7057	467
	▶473
221-8128	▶2
221-8131	501
221-8145	514
221-8146	514
221-8179	▶564
222-0345	952
222-0574	933
222-1185	67
222-1186	67
222-3870	354
222-4866	166
222-4944	687
	691
	694
	698
222-4981	826
	827
222-4992	819
	▶826
	▶827
222-5002	814
	815
	816
	817
	▶819
222-6730	473
222-6821	797
223-3381	199
	200
223-3917	▶540
223-4820	524
223-4821	524
223-4822	524
223-7577	262
	▶273
223-8167	▶822
223-8168	▶823
224-4536	▶245
	246
224-5132	539
	540
	541
224-5152	539
	540
	541
224-5588	▶2
224-5717	562
	▶565
224-5882	90
	92
224-5895	100
224-6638	57
	59
224-8633	2
	3
	▶514
224-9929	592
225-1460	74
225-1461	74
225-3281	626
225-3283	627
	633
225-3317	104
225-5927	199
	200
225-6303	276
226-1117	2
	3
	▶509
	▶511
226-2674	669
	673
226-2898	287
	293
226-2901	287
226-2902	287
	303
226-2903	294
226-9622	568
227-2911	20
	24
227-4347	467
227-4777	▶467
227-5350	576
227-5480	14
227-5928	145
	146
227-5951	▶24
	25
	37
227-5952	▶25
227-5953	▶37
	38
227-5954	28
	30
	▶38
227-6744	401
227-7392	988
227-9981	▶942
228-0015	648
	▶744
228-0417	377
228-1845	▶199
228-2516	345
228-2517	345
228-3626	417
228-3627	417
228-4342	680
228-4709	76
228-7463	170
228-7549	533
228-9377	680
229-1494	964
229-2237	908
229-2238	908
229-2273	▶356
	467
229-2274	356
229-2276	356
229-2903	473
229-2965	467
229-5041	▶449
229-5153	14
229-5154	14
229-5155	14
229-5156	14
229-5353	704
	706
229-5355	704
	706
229-5372	704
	706
229-8851	262
229-8870	154
230-1239	552
230-1240	▶552
	844
230-1242	901
230-1246	901
230-1247	▶901
	926
230-1255	847
230-1256	▶847
	945
230-1257	844
	▶945
230-1258	▶844
	926
230-3643	▶926
	927
230-3644	844
	▶903
230-3660	384
230-3661	386
230-3662	416
230-3663	384
	386
230-3664	▶384
	455
230-3665	▶386
	455
230-4611	530
230-5771	362
230-7058	652
	657
230-7247	844
	▶937
230-7248	937
230-8123	815
	816
230-9957	558
230-9958	558
230-9959	558
231-0299	872
231-0308	872
231-0318	869
	▶872
	875
231-0320	856
	▶875
231-2236	384
	386
231-3539	576
231-3728	▶483
231-5012	504
232-0343	139
	142
	▶154
232-1374	147
232-1376	147
232-3325	192
	▶221
232-3363	221
232-3364	221
232-3646	13
232-4711	903
232-4712	903
232-4714	903
232-4715	903
232-4716	903
232-5826	680
232-5827	680
232-9737	354
233-4465	▶815
233-4467	▶651
	815
233-6577	515
233-6729	▶554
	927
233-6745	929
233-7654	71
233-7655	82
233-8008	864
	878
233-8013	856
	▶878
233-8763	533
233-9477	2
	3
	▶927
234-0621	351

▶ PRIMARY REFERENCE

PART NUMBER INDEX

Part	Page
234-0622	338
234-2985	554
234-3539	580
	991
	994
234-4323	▶203
	221
234-6923	844
234-7730	203
234-7731	203
235-0162	927
235-0369	354
235-0607	901
235-0734	636
	▶680
235-2426	319
235-3501	323
235-3502	332
235-5527	67
235-5528	66
	▶67
235-8632	▶354
235-9679	4
	▶262
236-1861	103
236-2101	13
236-2295	833
	834
236-2324	108
236-2325	92
	▶108
236-2508	▶84
	103
236-2509	84
236-2541	382
	384
	386
236-4232	936
236-4413	95
	▶98
236-4420	98
236-4421	98
236-5197	943
236-6220	235
	▶246
236-6221	235
	▶252
236-7019	▶956
	965
	972
236-7530	▶990
236-7737	130
236-8117	990
237-0946	▶625
	827
237-0947	625
237-2263	4
	▶139
	▶142
237-2609	691
	694
237-3943	977
	979
237-3970	▶832
	977
	979
237-5176	88
237-7267	673
237-7268	673
237-9878	584
238-2726	57
238-2729	59
238-4770	663
	665
238-4771	706
238-9015	194
239-0583	8
239-1134	263
	▶280
239-2395	235
	▶247
239-2396	235
	▶248
239-3380	▶888
239-6779	706
239-6780	706
239-6986	1000
240-1864	673
240-2031	▶3
240-2032	▶3
240-2635	534
240-3245	611
	▶760
240-3248	618
	▶762
240-3249	615
	▶764
240-3251	620
	▶766
240-5304	184
	▶185
240-5307	183
	▶191
240-5961	3
	▶346
240-5962	346
240-7343	▶729
	733
240-7344	729
241-0501	▶584
	585
241-2862	580
241-4194	263
241-6205	461
241-6912	▶652
	816
241-6913	652
241-6914	652
241-7723	654
241-7724	654
241-7725	▶654
	816
241-8368	▶274
241-8411	654
241-8412	654
241-8442	654
241-8461	346
241-9820	▶994
242-3519	▶204
	215
242-3523	204
242-3864	71
242-5921	654
243-6464	193
	260
244-3601	501
245-4630	252
245-6795	112
245-7355	816
245-7356	▶816
245-7456	721
245-7607	▶437
	438
245-7611	437
245-9808	450
245-9809	▶450
245-9893	▶657
	816
245-9895	657
245-9896	657
246-0667	953
	▶957
246-1049	▶816
	817
246-1050	▶817
246-1575	▶434
	450
246-1578	434
	▶438
246-1583	▶450
246-2641	621
	885
246-3266	584
246-5103	580
246-5717	74
246-8627	196
246-8628	198
246-8630	196
246-8631	198
247-0302	235
	▶249
247-3755	146
247-9815	450
248-0278	450
248-2284	884
248-2863	844
	▶884
248-6194	965
	▶971
248-6318	▶665
	799
249-1750	▶401
	423
249-2438	▶972
250-1424	152
250-4628	929
250-9215	▶276
	816
250-9721	901
251-0025	▶315
	816
251-2171	▶450
251-2173	450
251-6636	▶965
252-0040	315
252-0574	888
252-0586	888
252-0590	888
252-2161	436
253-2111	233
253-7358	▶263
254-3783	▶275
255-2743	569
255-2748	569
256-7813	▶450
256-8768	971
	▶979
258-0733	263
258-1016	451
258-1017	▶451
259-0509	768
259-0616	▶541
259-7164	368
259-7165	263
	▶368
260-1803	451
261-0343	▶451
261-5545	303
262-0560	451
262-0561	▶451
262-4914	▶470
	537
262-4917	470
262-4918	470
263-6708	▶834
	835
263-6883	566
265-9481	507
265-9482	507
266-2371	511
267-3728	451
267-3729	▶451
267-3730	452
267-3731	▶452

▶ PRIMARY REFERENCE

MEMORANDA

CATERPILLAR®

© 2005 Caterpillar
All Rights Reserved

Printed in U.S.A.