CATERPILLAR®

SEBP4673-08
June 2010

RUTHZIL TRATOR COMERCIAL DE PEÇAS LTDA 11 97083-6812 ROLANDO

Parts Manual

SIS

See “General Information” for New Parts Manual Features.

938H Wheel Loader

JKM1-Up (Machine)
C6E1-Up (Engine)
G9G1-Up (Engine)
MWL1-Up (Transmission)
T8K1-Up (Torque Converter)

Powered By C6.6 Engine
This Parts Manual is also Available in .PDF Format on Compact Disc(CD-ROM)-Caterpillar Form No. SERP4673

Product and Dealer Information

Note: For product identification plate locations, see the section “Product Identification Information” in the Operation and Maintenance Manual.

Delivery Date: _____

Product Information

Model: _____

Product Identification Number: _____

Engine Serial Number: _____

Transmission Serial Number: _____

Generator Serial Number: _____

Attachment Serial Numbers: _____

Attachment Information: _____

Customer Equipment Number: _____

Dealer Equipment Number: _____

Dealer Information

Name: _____ Branch: _____

Address: _____

_____

_____

	Dealer Contact	Phone Number	Hours
Sales:	_____	_____	_____
Parts:	_____	_____	_____
Service:	_____	_____	_____

MEMORANDA

TABLE OF CONTENTS

Name	Page
GENERAL INFORMATION	A5
REPAIR ALTERNATIVES	A8
SUPPLEMENTAL COOLANT ADDITIVES	A9
MAINTENANCE PARTS	A10
INDEX	A14
MACHINE ARRANGEMENT	1
CHASSIS AR	1
COLD WEATHER AR	2
CONFIGURATION AR	2
CONVERSION AR-MACHINE	8
GENERAL AR	9
OPTION AR-CAB	9
OPTION AR-LIGHTING	9
ENGINE ARRANGEMENT	10
ENGINE AR-PRIMARY	10
INSTALLATION AR-ENGINE	11
BASIC ENGINE	12
BELT TENSIONER GP	12
CAMSHAFT GP	14
COVER GP-VALVE MECHANISM	15
CRANKSHAFT GP	24
CYLINDER BLOCK GP	25
CYLINDER HEAD AS	29
CYLINDER HEAD GP	31
DRAIN GP-ECOLOGY	32
FLYWHEEL GP	33
HOUSING GP-FLYWHEEL	34
HOUSING GP-FRONT	36
IDLER GP-BELT	40
LIFTING GP-ENGINE	41
MOUNTING GP-ENGINE	42
MOUNTING GP-ENGINE & TMSN	43
PAN GP-OIL	44
PISTON & ROD GP	48
PLUG GP-CYLINDER BLOCK	50
PLUG GP-ENGINE	51
PULLEY GP-CRANKSHAFT	52
ROCKER ARM GP	53
LUBRICATION SYSTEM	57
FILLER GP-ENGINE OIL	57
FILTER GP-ENGINE OIL	59
PUMP GP-ENGINE OIL	60
VALVE GP-FLUID SAMPLING	61
COOLING SYSTEM	62
COOLER GP-ENGINE OIL	62
COOLER GP-FLTR BASE & ENG OIL	64
COOLING AR-HIGH AMBIENT TEMP	65
COOLING GP-SUPPLEMENTAL	66
LINES GP-WATER	68
PUMP GP-WATER	74
RADIATOR & FAN GP	78
REGULATOR GP-TEMPERATURE	82
AIR INLET AND EXHAUST SYSTEM	83
AIR CLEANER GP	83
EXTENSION GP-EXHAUST	85
LINES GP-AFTERCOOLER AIR	86
LINES GP-TURBOCHARGER AIR	87
MANIFOLD GP-INLET	92
MODULE AR-EXHAUST	94
MUFFLER GP	95
PRECLEANER AS	96
PRECLEANER GP	97
TURBOCHARGER GP	99
FUEL SYSTEM	105
FILTER GP-FUEL	105
FILTER GP-WATER SEP & FUEL	108
INJECTOR GP-FUEL	110
LINES GP-FUEL	113
LINES GP-FUEL FILTER	128
PUMP GP-FUEL INJECTION	131
PUMP GP-FUEL PRM & WATER SEP	153
PUMP GP-FUEL TRANSFER	154
TANK & MTG GP-FUEL	155
TANK GP-FUEL	157
ELECTRICAL AND STARTING SYSTEM	158
ALARM GP	158
ALTERNATOR AR-CHARGING	161
ALTERNATOR GP-CHARGING	162
BATTERY & WIRING GP	168
BLOCK GP-JUNCTION	177
BRACKET GP-MOUNTING	178
CAMERA AR	179
CAMERA GP	180
CONTROL GP-LIFT KICKOUT	181
CONTROL GP-POSITION	182
ELECTRICAL AR	183
ELECTRONICS GP-COMMUNICATION	183
ELECTRONICS GP-MONITOR	184
ELECTRONICS GP-POWER TRAIN	195
GLOW PLUG GP	196
HEATER GP-JACKET WATER	197
INSTALLATION AR-COMMUNICATION	199
INSTALLATION GP-SECURITY	200
LAMP GP-FLOOD	203
LAMP GP-HEAD & SIGNAL	206
LAMP GP-STOP & TAIL	214
LAMP GP-WARNING BEACON	215

TABLE OF CONTENTS

Name	Page
LIGHTING AR-AUXILIARY	217
LIGHTING GP-AUXILIARY	218
LIGHTING GP-FLOOD	219
LIGHTING GP-ROADING	225
LIGHTING GP-WARNING BEACON	231
LINES GP-ALTERNATOR AIR	233
PANEL GP-CIRCUIT BREAKER	234
PANEL GP-FUSE	236
RECEPTACLE GP-AUXILIARY START	238
RELAY GP	239
SENSOR & MTG GP-POSITION	240
SENSOR & MTG GP-PRESSURE	244
SENSOR GP-POSITION	245
SENSOR GP-PRESSURE	248
SENSOR GP-SPEED	249
SENSOR GP-TEMPERATURE	252
STARTING AID GP-ETHER	255
STARTING MOTOR GP-ELECTRIC	260
SWITCH GP-DIFFERENTIAL LOCK	261
SWITCH GP-DISCONNECT	262
SWITCH GP-MAGNETIC	263
SWITCH GP-ROCKER	265
SWITCH GP-WIPER	266
VALVE GP-ETHER STARTING	267
WARNING GP-BACKUP	268
WIRING AR-AXLE TEMPERATURE	269
WIRING GP-AUTOLUBE CONTROL	270
WIRING GP-AXLE OIL COOLER	272
WIRING GP-AXLE TEMPERATURE	273
WIRING GP-CAB	275
WIRING GP-CHASSIS	325
WIRING GP-COMMUNICATION	335
WIRING GP-ENGINE	339
WIRING GP-FRONT	345
WIRING GP-LIGHTING	352
WIRING GP-QUICK COUPLER	353
WIRING GP-RIDE CONTROL	356
WIRING GP-SECONDARY STEERING	360
WIRING GP-SENSOR	362
POWER TRAIN	369
AXLE AR-FIXED	369
AXLE AR-FIXED & OSCILLATING	369
AXLE AR-OSCILLATING	370
CARRIER GP-PLANETARY	371
CASE GP-TRANSMISSION	372
CLUTCH GP	380
CONTROL AR-DIFFERENTIAL LOCK	387
CONTROL GP-DIFFERENTIAL LOCK	388
CONTROL GP-TRANSMISSION HYD	402
COOLER AR-AXLE OIL	406
COOLER GP-TRANSMISSION OIL	407
COVER GP-SHIPPING	408
COVER GP-XMSN OIL FILLER CAP	409
DIFFERENTIAL & BEVEL GEAR GP	410
DIFFERENTIAL GP	416
FILLER GP-POWER TRAIN OIL	419
FILTER GP-OIL	421
GEAR GP-OUTPUT TRANSFER	423
HOUSING GP-AXLE	425
HOUSING GP-FIXED AXLE	427
HOUSING GP-OSCILLATING AXLE	430
INPUT GP-TRANSMISSION	433
LINES GP-AXLE OIL COOLER	434
LINES GP-POWER TRAIN OIL	445
LINES GP-TORQUE CONV COOLER	449
MANIFOLD GP-CONTROL	451
MOUNTING GP-AXLE	454
MOUNTING GP-AXLE OIL COOLER	455
MOUNTING GP-RIM	457
PISTON GP-DIFFERENTIAL LOCK	458
POWER TRAIN AR	459
PUMP & MTG GP-AXLE OIL COOLER	460
PUMP GP-TRANSMISSION	462
RIM AR	464
RIM GP-DEMOUNTABLE	464
SHAFT GP-DRIVE	466
SLIP JOINT GP	468
TIRE & RIM AR	470
TORQUE CONVERTER GP	473
TRANSMISSION AR	475
VALVE GP-BYPASS	476
VALVE GP-CHECK	477
VALVE GP-MODULATING	478
VALVE GP-PRESSURE REDUCING	479
VALVE GP-RELIEF	480
VALVE GP-SOLENOID	482
VALVE GP-TIRE	483
VALVE GP-TRANSMISSION CONTROL	484
WHEEL & FINAL DRIVE GP	486
FRAME AND BODY	490
ACTUATOR GP-POWER	490
BOSS GP-LOADER FRAME	491
BOSS GP-REAR FRAME	492
BOX GP-BATTERY	494
COUNTERWEIGHT GP	499
DOOR GP-ACCESS	502
DOOR GP-TOOL BOX	503
EXTENSION GP-FENDER	504
FENDER AR-ROADING	505
FENDER GP	506
FENDER GP-ROADING	508
FRAME AS-LOADER	515
FRAME AS-REAR	521
GRILL GP-RADIATOR	525
GUARD GP-AXLE SEAL	527
GUARD GP-BOTTOM	528
GUARD GP-DRIVE SHAFT	530

TABLE OF CONTENTS

Name	Page
GUARD GP-FRONT	531
GUARD GP-HITCH & STEERING	534
GUARD GP-LINES	536
GUARD GP-POWER TRAIN	537
GUARD GP-ROADING LIGHTS	540
GUARD GP-SENSOR	544
HARDWARE GP-LOADER FRAME	545
HARDWARE GP-REAR FRAME	546
HINGE GP-ROADING FENDER	549
HITCH GP-ARTICULATING	551
HOOD & GUARD GP	553
LADDER GP	563
LINES GP-CENTRAL LUBRICATION	565
LINES GP-FRONT LUBRICATION	567
LINES GP-GREASE	569
LINES GP-REAR LUBRICATION	575
LINK GP-STEERING FRAME LOCK	577
LUBRICATION AR-AUTOMATIC	578
PANEL GP-HOOD	580
PANEL GP-TOP	582
PUMP & MTG GP-LUBRICATION	583
PUMP GP-LUBRICATION	585
SHIELD GP-ENGINE COMPARTMENT	587
STEP GP	593
SUPPORT GP-AIR INLET	594
SUPPRESSION AR-SOUND	595
SUPPRESSION GP-SOUND	596
TILT GP-HOOD	599
VALVE & LINES GP-LUBRICATION	603
VALVE GP-LUBE DISTRIBUTION	606
BRAKING SYSTEM	609
ACCUMULATOR GP-BRAKE	609
BRAKE GP-PARKING	611
BRAKE GP-SERVICE	613
CONTROL GP-FOOT BRAKE	615
CONTROL GP-PARKING BRAKE	617
CONTROL GP-SERVICE BRAKE	625
PISTON GP-BRAKE	637
VALVE GP-BRAKE CONTROL	638
STEERING SYSTEM	640
CYLINDER & MTG GP-STEERING	640
CYLINDER & SEAL GP-STEERING	642
CYLINDER GP-STEERING	644
LINES GP-SECONDARY STEERING	647
LINES GP-STEERING	649
PUMP & MOTOR GP-SEC STEERING	657
PUMP & MTG GP-SECONDARY STEER	658
PUMP GP-METERING	659
STEERING AR-SECONDARY	661
STEERING COLUMN GP-ADJUSTABLE	662
HYDRAULIC SYSTEM	664
ACCUMULATOR GP-PILOT OIL	664
ACCUMULATOR GP-RIDE CONTROL	667
BODY GP-PILOT VALVE	669
CONTROL AR-FAN	672
CONTROL AR-HIGH LIFT	673
CONTROL AR-RIDE	674
CYLINDER & SEAL GP-LIFT	675
CYLINDER & SEAL GP-TILT	676
CYLINDER GP-COUPLER	680
CYLINDER GP-LIFT	681
CYLINDER GP-TILT	682
DRAIN GP-ECOLOGY	688
FILTER GP-OIL	689
GUARD GP-TILT CYLINDER	693
HEAD GP-PUMP	694
HYDRAULIC AR-2 VALVE	698
HYDRAULIC AR-3 VALVE	698
HYDRAULIC AR-4 VALVE	699
KICKOUT & POSITIONER GP	700
LINES GP-COUPLER	702
LINES GP-FRONT	717
LINES GP-HYDRAULIC	724
LINES GP-HYDRAULIC FAN	742
LINES GP-HYDRAULIC OIL COOLER	746
LINES GP-LIFT CYLINDER	758
LINES GP-PILOT	763
LINES GP-RIDE CONTROL	776
LINES GP-TILT CYLINDER	779
LINES GP-WORK TOOL	781
MANIFOLD GP-CONTROL	783
MANIFOLD GP-HYDRAULIC	791
MOTOR GP-GEAR	793
PIVOT GP-PILOT VALVE	794
PLATE GP-PILOT VALVE	801
PUMP & MTG GP-HYDRAULIC	802
PUMP GP-AIR	803
PUMP GP-PISTON	804
ROTATING GP-PUMP	809
TANK & MTG GP-HYDRAULIC	810
TANK GP-HYDRAULIC	811
VALVE & MTG GP-MAIN CONTROL	815
VALVE GP-CHECK	820
VALVE GP-CONTROL	823
VALVE GP-DIVERTER	830
VALVE GP-DRAIN	832
VALVE GP-MAIN CONTROL	833
VALVE GP-MANUAL	840
VALVE GP-PILOT	845
VALVE GP-PILOT CARTRIDGE	873
VALVE GP-PRESSURE REDUCING	877
VALVE GP-PUMP CONTROL	878
VALVE GP-RELIEF	880
VALVE GP-RIDE CONTROL	883
VALVE GP-SHUTTLE	887

TABLE OF CONTENTS

Name	Page
VALVE GP-SOLENOID	890
IMPLEMENTS	897
ARM AS-LIFT	897
BOSS GP-LIFT ARM	899
CONTROL GP-WORK TOOL	900
LEVER & BEARING AS	905
LIFT AR	906
OPERATOR STATION	907
ACCUMULATOR GP-REFRIGERANT	907
ADJUSTER GP-SEAT	909
AIR COMPRESSOR GP-SEAT	910
AIR CONDITIONER & MOUNTING GP	911
AIR CONDITIONER AR	912
AIR CONDITIONER GP	913
ARM GP-WINDOW WIPER	915
ARMREST GP	916
CAB AR-ENCLOSED ROPS	917
CAB GP-ENCLOSED ROPS	918
CANOPY AR-OPEN ROPS	921
COMPRESSOR GP-REFRIGERANT	922
CONDENSER & MTG GP-REFRIGERANT	924
CONTROL GP-HANDLE	926
CONTROL GP-PILOT OPERATED HYD	928
CONTROL GP-STEERING	942
CONTROL GP-TRANSMISSION	946
CONTROL GP-UNPRGMED MONITOR	948
DASH GP	950
DISPLAY GP-CAMERA	951
DOOR GP-CAB	954
DUCT GP-CAB AIR	960
FILTER GP-CAB AIR	962
GUARD GP-VANDALISM	963
GUARD GP-WINDOW	967
HEATER & MTG GP-CAB	968
HEATER GP-CAB	969
HORN GP-ELECTRIC	971
INSTALLATION GP-RADIO	972
LINER GP-CAB	973
LINER GP-OPEN ROPS	978
LINES GP-AIR CONDITIONER	979
LINES GP-CAB HEATER	981
MIRROR GP-REAR VIEW	983
MOTOR GP-WINDOW WIPER	989
MOUNTING GP-CAB	992
MOUNTING GP-DISPLAY	993
OPERATOR AR-ENCLOSED ROPS	995
OPERATOR AR-OPEN ROPS	995
PAN GP-BACKREST	996
PANEL GP-INSTRUMENT	998
BASE GP-FOOT BRAKE	1000
PEDAL GP-GOVERNOR	1003
RADIO GP	1004
RADIO GP-COMMUNICATION	1006
RECLINER GP-SEAT	1007
ROPS GP-ENCLOSED	1008
ROPS GP-OPEN	1009
SCREEN GP-SUN	1010
SEAT & MOUNTING GP	1011
SEAT BELT GP	1015
SEAT GP	1019
SEAT GP-SUSPENSION	1022
SKIRT GP-CAB	1025
SUPPORT GP-SEAT	1028
SUSPENSION GP-SEAT	1029
VALVE GP-WATER	1033
VISOR GP-CAB	1034
WASHER GP-WINDOW	1035
WINDOW GP-CAB	1037
WINDOW GP-DOOR	1038
WIPER GP-WINDOW	1042
WORK TOOLS	1044
ADAPTER GP-TIP	1044
ARM GP-MATERIAL HANDLING	1045
BUCKET AS-GENERAL PURPOSE	1047
BUCKET AS-MATERIAL HANDLING	1056
BUCKET GP-GENERAL PURPOSE	1063
BUCKET GP-MATERIAL HANDLING	1067
CARRIAGE GP-FORK	1069
CONTROL AR-QUICK COUPLER	1071
COUPLER AR-QUICK	1072
COUPLER GP-QUICK	1073
EDGE GP-CUTTING	1079
FORK GP-PALLET	1080
PIN GP-FORK	1081
TINE GP	1082
TIP GP-PENETRATION	1083
SERVICE EQUIPMENT AND SUPPLIES	1084
ENCLOSURE GP-SERVICE CENTER	1084
FILM GP	1085
FILM GP-U.S.	1089
LINES GP-DIAGNOSTIC	1090
LOCK GP-VANDALISM	1092
PLATE & FILM GP	1093
PART NUMBER INDEX	B1

GENERAL INFORMATION

1. MACHINE IDENTIFICATION

Caterpillar machines are identified by Product Identification Numbers (PIN). Some components included in a machine may be identified by Serial Numbers (S/N). Typical components that will be serialized include engines, transmissions, bulldozers, and rippers. The machine and engine are further identified by arrangement numbers and in some cases modification numbers. These numbers are shown on the product identification plate(s) and on the master plate in the operator's compartment.

Caterpillar dealers need all of these numbers to determine accurate parts identification.

SIS *New Feature*

Effective First Quarter 2001 the Caterpillar Product Identification Number (PIN) changed from 8 to 17 characters. In an effort to provide uniform equipment identification, Caterpillar and other construction equipment manufacturers are moving to comply with the latest version of the product identification numbering standard. Non-road machine PINs are defined by ISO 10261. The new PIN format will apply to all Caterpillar machines and generator sets. The PIN plates and frame marking will display the 17 character PIN. The new format will look like the following:

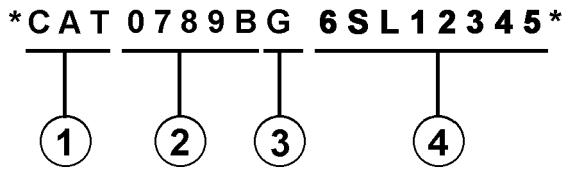

Where:

1. Caterpillar's World Manufacturing Code (characters 1-3)

2. Machine Descriptor (characters 4-8)

3. Check Character (character 9)

4. Machine Indicator Section (MIS) or Product Sequence Number (characters 10-17). These were previously referred to as the Serial Number.

Machines and generator sets produced before First Quarter 2001 will maintain their 8 character PIN format.

Components such as engines, transmissions, axles, etc. and work tools will continue to use an 8 character Serial Number (S/N).

2. ORDERING PARTS

⚠ WARNING

When replacement parts are required for this product Caterpillar recommends using Caterpillar replacement parts or parts with equivalent specifications including, but not limited to, physical dimensions, type, strength and material.

Failure to heed this warning can lead to premature failures, product damage, personal injury or death.

Quality Caterpillar replacement parts are available from Caterpillar dealers throughout the world. Their parts inventories are up to date and include all parts normally required to protect your investment in Caterpillar machines. Dealers may offer repair kits or remanufactured parts to allow selection of the most effective repair alternative for a particular situation. When ordering parts, your order should specify the quantity, part number, part name, and the serial number/product identification number of the machine for which the parts are needed.

3. PARTS MANUAL ORGANIZATION

Product information in this manual is presented as "information elements" that represent all of the components for the specific model. Engine Arrangement and Seat Group are examples of information elements. The information elements are organized alphabetically by part name and secondarily by part number within each major section of the manual.

4. TABLE OF CONTENTS

A table of contents (TOC) is found at the beginning of the manual. The TOC lists each section of the manual with a complete list of all information elements organized as they appear in the manual. Page numbers are provided for quick reference to detailed parts identification illustrations and serviceable consist lists.

5. MAINTENANCE PARTS INDEX

The Maintenance Parts Index, located near the beginning of the manual, references most frequently used maintenance part numbers, providing description, quantity, usage and page number. This information is organized alphabetically by part description.

6. INDEX

The index located near the front of the manual is an alphabetical listing of all information elements included in the manual. Page numbers are provided for quick reference to detailed parts identification illustrations and serviceable consist lists.

7. PART NUMBER INDEX

A numerical index listing all part numbers and the corresponding page number(s) appears at the back of the manual.

8. CAPTIONS

Captions located at the beginning of each information element identify the part number and part name along with additional descriptive information. PIN and S/N information found in each caption should be used to select correct information for a specific machine. Field replacement options, identification of optional attachment components, and where used ("part of") information is also provided.

The first line of a caption is shown in larger type font to indicate the beginning of an information element. Captions for additional pages that may be required to illustrate an information element will be shown in standard type font and will include the term *(contd.)* .

9. NON-SERVICED PARTS

In some instances it is necessary to display non-serviced parts that are a link to a lower level serviceable consist lists. These non-serviced part numbers are shown in *italic* type indicating that they are not available.

10. PARTS LIST REFERENCE NUMBERS

Numbers shown in the Ref No column correspond to numbers used in the associated graphic(s). An alphabetic suffix may be added to a reference number to identify lower level consist items. Numbers shown in the Graphic Ref column refer to the graphic number identifier displayed in the lower left corner of each illustration. The Graphic Ref number may be used in combination with the item Ref No to determine the correct part number. There may be intentional omission of a Ref No in a consist list as information is updated to reflect the latest serviceable part numbers.

11. INDENTED PART NAMES

When a part name is indented in a parts list, it is part of (included in) the group or assembly under which it is indented.

12. ILLUSTRATION REFERENCE LETTERS

When necessary, illustrations contain reference letters (A, B, C etc.) that are intended to track lines and harnesses from one point to another. They are also used to show where to reconnect illustrations that have been separated.

13. ABBREVIATIONS AND SYMBOLS

O.D. – Outside Diameter
I.D. – Inside Diameter
A – Not Part Of This Group
B – Use As Required
C – Change From Previous Type
D – Order By The Meter
E – Order By The Centimeter
F – Not Shown
G – Order By The Inch
I – Refer To Hydraulic Information System
M – Metric Part
R – Remfg Part May Be Available
Y – Separate Illustration
Z – Not Serviced Separately

SIS *New Feature*

14. DESCRIPTION OF TYPE CHANGES

Type - A type is defined as any configuration change that requires an additional Information Element for an Arrangement, Group, or Assembly. If serial number breaks for types are not available, a type # (Type 1, Type 2, etc.) will be displayed in the caption. These "type" changes are identified with a "C" note (change from previous type) in the Parts List. Only the "types" that apply to this Parts Manual will be included. Additional types may exist causing "C" notes to appear on an Information Element when no other types are shown.

15.<END>

This symbol indicates the end of an information element.

NOTE:

Continuing improvement and advancement of product design may cause changes to your machine which may not be included in this publication. Whenever a question arises regarding your Caterpillar product or this publication, please consult your Caterpillar dealer for the latest available information.

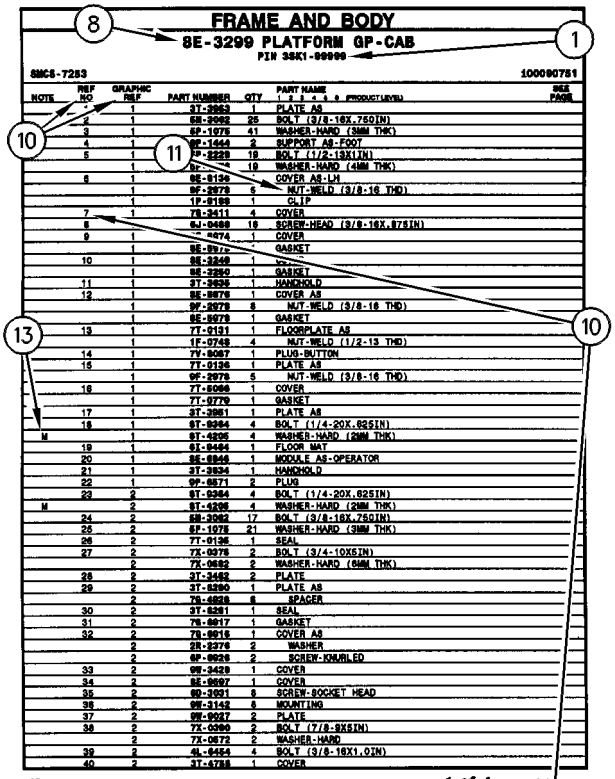

FRAME AND BODY

8E-3299 PLATFORM GP-CAB

PIN 3SK1-99999

SMCS-7253 100090751

NOTE	REF NO	GRAPHIC REF	PART NUMBER	QTY	PART NAME 1 2 3 4 5 6 (PRODUCT LEVEL)	SEE PAGE
	*	1	3T-3953	1	PLATE AS	
	2	1	6E-2992	25	BOLT (3/8-16X.750IN)	
	3	1	6F-1976	41	WASHER-HARD (3MM THK)	
	4	1	9F-1444	2	SUPPORT AS-FOOT	
	5	1	7P-2229	18	BOLT (1/2-13X1IN)	
		1	6F-	18	WASHER-HARD (4MM THK)	
	6	1	6E-6136		COVER AS-LH	
		1	9F-2978	6	NUT-WELD (3/8-16 THD)	
		1	1P-0188	1	CLIP	
	7	1	7S-3411	4	COVER	
	8	1	9J-0498	18	SCREW-HEAD (3/8-16X.875IN)	
	9	1	-4474	1	COVER	
		1	6E-897		GASKET	
	10	1	6E-3249	1		
		1	6E-3250	1	GASKET	
	11	1	3T-3638	1	HANDHOLD	
	12	1	6E-9978	1	COVER AS	
		1	9F-2978	8	NUT-WELD (3/8-16 THD)	
		1	6E-9979	1	GASKET	
	13	1	7T-0131	1	FLOORPLATE AS	
		1	1F-0748	4	NUT-WELD (1/2-13 THD)	
	14	1	7V-9067	1	PLUG-BUTTON	
	15	1	7T-0136	1	PLATE AS	
		1	9F-2978	5	NUT-WELD (3/8-16 THD)	
	16	1	7T-9066	1	COVER	
		1	7T-9779	1	GASKET	
	17	1	3T-3861	1	PLATE AS	
	18	1	6T-9264	4	BOLT (1/4-20X.625IN)	
M		1	9T-4205	4	WASHER-HARD (2MM THK)	
	19	1	6L-9494	1	FLOOR MAT	
	20	1	8E-6846	1	MODULE AS-OPERATOR	
	21	1	3T-3834	1	HANDHOLD	
	22	1	9F-6671	2	PLUG	
	23	2	6T-9264	4	BOLT (1/4-20X.625IN)	
M		2	9T-4205	4	WASHER-HARD (2MM THK)	
	24	2	6E-3062	17	BOLT (3/8-16X.750IN)	
	26	2	6F-1976	21	WASHER-HARD (3MM THK)	
	26	2	7T-0135	1	SEAL	
	27	2	7X-0975	2	BOLT (3/4-10X5IN)	
		2	7X-0682	2	WASHER-HARD (6MM THK)	
	28	2	3T-3462	2	PLATE	
	29	2	3T-3290	1	PLATE AS	
		2	7S-6828	8	SPACER	
	30	2	3T-6281	1	SEAL	
	31	2	7S-6817	1	GASKET	
	32	2	7S-9616	1	COVER AS	
		2	2R-3276	2	WASHER	
		2	6F-9926	2	SCREW-KNURLED	
	33	2	9W-3429	1	COVER	
	34	2	8E-9697	1	COVER	
	35	2	6D-3931	8	SCREW-SOCKET HEAD	
	36	2	9W-3142	8	MOUNTING	
	37	2	9W-9027	2	PLATE	
	38	2	7X-0990	2	BOLT (7/8-9X5IN)	
		2	7X-0672	2	WASHER-HARD	
	39	2	4L-6454	4	BOLT (3/8-16X1.0IN)	
	40	2	3T-4788	1	COVER	

12 FRAME AND BODY 1 of 4 SELP4570-01

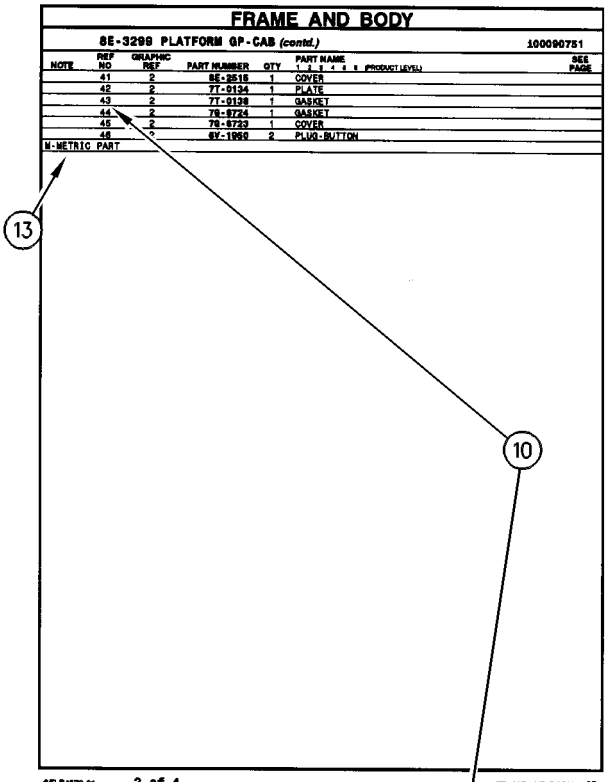

FRAME AND BODY

8E-3299 PLATFORM GP-CAB (contd.) 100090751

NOTE	REF NO	GRAPHIC REF	PART NUMBER	QTY	PART NAME 1 2 3 4 5 6 (PRODUCT LEVEL)	SEE PAGE
	41	2	6E-2516	1	COVER	
	42	2	7T-0134	1	PLATE	
	43	2	7T-0138	1	GASKET	
	44	2	7S-9724	1	GASKET	
	45	2	7S-8723	1	COVER	
	46	2	6V-1950	2	PLUG-BUTTON	

M-METRIC PART

SELP4570-01 2 of 4 FRAME AND BODY 13

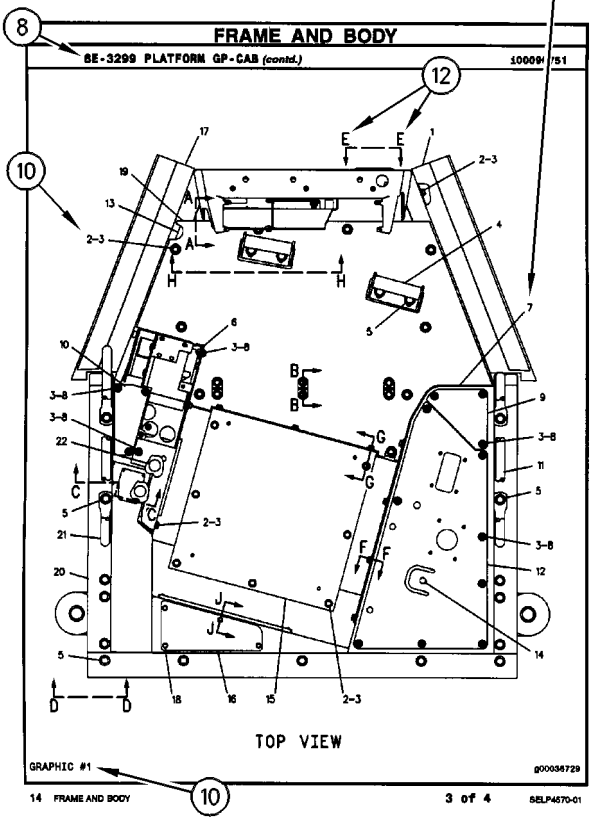

FRAME AND BODY

8E-3299 PLATFORM GP-CAB (contd.) 100090751

TOP VIEW

GRAPHIC #1 g00036729

14 FRAME AND BODY 3 of 4 SELP4570-01

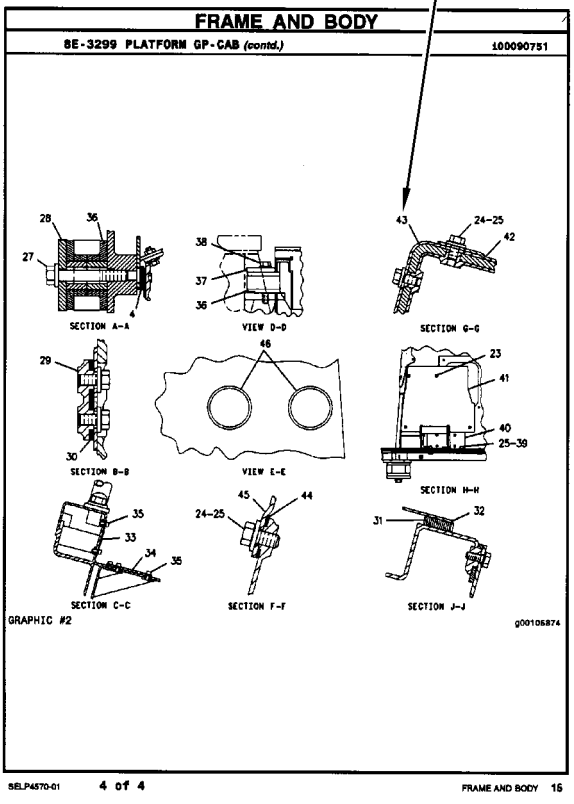

FRAME AND BODY

8E-3299 PLATFORM GP-CAB (contd.) 100090751

SECTION A-A

VIEW D-D

SECTION G-G

SECTION B-B

VIEW E-E

SECTION H-H

SECTION C-C

SECTION F-F

SECTION J-J

GRAPHIC #2 g00105874

SELP4570-01 4 of 4 FRAME AND BODY 16

REPAIR ALTERNATIVES

REMANUFACTURED COMPONENTS

As an option when making repairs consider Caterpillar Remanufactured Components. Components that are available through the Caterpillar Remanufactured Program are identified three ways in the parts book:

- with the letter R in the note field of the parts list
- with an R* at the beginning of the first line of the caption
- with an *R at the end of the first line of the caption

Typical components included in the Remanufacturing Program include:

ALTERNATORS
CONNECTING RODS
CRANKSHAFTS - UNDERSIZE
CRANKSHAFTS - UPGRADE TO NEW
CYLINDER HEADS
ELECTRONIC CONTROL MODULES (ECM)
ELECTRONIC SENSORS
FUEL INJECTORS
FUEL NOZZLES
FUEL PUMPS
GOVERNORS
OIL PUMPS
PISTONS
SHORT BLOCKS
STARTERS
TURBOCHARGERS - COMPLETE
TURBOCHARGER CARTRIDGES
WATER PUMPS

Caterpillar Remanufactured engines for many engine arrangements are also available.

SUPPLEMENTAL COOLANT ADDITIVES

CUSTOMER BENEFITS:

Protects against cavitation, foam, erosion, corrosion, and scale buildup in cooling systems.

- Provides measured coolant conditioner.

DESCRIPTION:

Additives deplete from the coolant with normal operation. For this reason, Supplemental Coolant Additives (SCA) must be added to all heavy duty coolants at regular intervals. In addition, when not using a fully formulated, pre-charged antifreeze, like Caterpillar's DEAC, an initial charge of SCA must be added to the cooling system. The amount of SCA added to the system is dependent on the capacity of the system.

The SCA for initial fill is provided as a liquid. SCA's for maintenance intervals are available in liquid form and as a spin-on element. (No Spin-on available for 3600 Family of Engines)

NOTE:

The amount of SCA added at initial fill is not the same as the amount added at maintenance intervals.

The coolant additive elements can be used with any ethylene or propylene glycol type antifreeze which meets ASTM D4985 or ASTM D5345 Specifications.

NOTE:

For use with standard heavy duty coolant only, not for use with Extended Life Coolant.

PARTS NEEDED:

Cooling System Capacity		Liquid SCA at Initial Fill	Liquid SCA at Maintenance*	Spin-on SCA Maintenance Element*
Liters	Gallons			
22-30	(6-8)	3P-2044 (1)	6V-3542 (1)	111-2370 (1)
30-38	(8-10)	3P-2044 (1) 6V-3542 (1)	111-2372 (1)	111-2369 (1)
38-49	(10-13)	3P-2044 (1) 8T-1589 (1)	111-2372 (1)	111-2369 (1)
49-64	(13-17)	3P-2044 (2)	8T-1589 (1)	9N-3368 (1)
64-83	(17-22)	3P-2044 (2) 8T-1589 (1)	111-2372 (1) 6V-3542 (1)	111-2371 (1)
83-114	(22-30)	3P-2044 (3) 8T-1589 (1)	3P-2044 (1)	9N-3718 (1)
114-163	(30-43)	3P-2044 (5)	3P-2044 (1) 6V-3542 (1)	111-2371 (2)
163-242	(43-64)	3P-2044 (8)	3P-2044 (2)	9N-3718 (2)

** Normal maintenance period is 250 hrs. See your Operation and Maintenance Manual for complete coolant maintenance instructions.*

( ) Indicates quantity required.

MAINTENANCE PARTS

DESCRIPTION	PART NUMBER	QTY	WHERE USED	PAGE
AIR INLET AND EXHAUST SYSTEM				
FILTER ELEMENT AS-AIR (PRIMARY)	256-7902	1	AIR CLEANER GP	84
FILTER ELEMENT AS-AIR (SECONDARY)	256-7903	1	AIR CLEANER GP	84
BASIC ENGINE				
FILTER ELEMENT-BREATHER (CRANKCASE)	185-3159	1	COVER GP-VALVE MECHANISM	15
GASKET-COVER (VALVE MECHANISM)	317-3064	1	COVER GP-VALVE MECHANISM	18
		1	COVER GP-VALVE MECHANISM	20
		1	COVER GP-VALVE MECHANISM	22
PLUG-DRAIN (ENGINE OIL)	7C-0351	2	PAN GP-OIL	44
		2	PAN GP-OIL	46
COOLING SYSTEM				
CAP AS-COOLANT TANK	251-3227	1	LINES GP-WATER	68
GASKET-WATER REGULATOR	281-8744	1	REGULATOR GP-TEMPERATURE	82
REGULATOR AS-WATER TEMPERATURE (CONNECTOR INCLUDED)	277-2974	1	REGULATOR GP-TEMPERATURE	82
ELECTRICAL AND STARTING SYSTEM				
BATTERY (12-VOLT, MAINTENANCE FREE)	263-9574	2	BATTERY & WIRING GP	168
		2	BATTERY & WIRING GP	171
		2	BATTERY & WIRING GP	174
BELT-DRIVE (WARNING BEACON)	9X-8139	1	LAMP GP-WARNING BEACON	215
BELT-SERPENTINE (ALTERNATOR, FAN DRIVE)	243-2143	1	ALTERNATOR GP-CHARGING	166
		1	ALTERNATOR GP-CHARGING	167
CIRCUIT BREAKER AS (15-AMPERE, MANUAL RESET) (AIR CONDITIONER, HEATER FAN)	280-2709	1	PANEL GP-FUSE	236
CIRCUIT BREAKER AS (20-AMPERE, MANUAL RESET) (HOOD TILT ACTUATOR)	280-2710	1	PANEL GP-FUSE	236
CIRCUIT BREAKER AS (40-AMPERE) (CAB POWER)	171-2205	1	PANEL GP-CIRCUIT BREAKER	234
CIRCUIT BREAKER AS (40-AMPERE) (GLOW PLUG)	171-2205	1	PANEL GP-CIRCUIT BREAKER	234
CIRCUIT BREAKER AS (80-AMPERE) (MAIN)	171-2210	1	PANEL GP-CIRCUIT BREAKER	234
ELEMENT AS-HEATER	198-6571	1	WIRING GP-CAB	275
		1	WIRING GP-CAB	293
		1	WIRING GP-CAB	300
		1	WIRING GP-CAB	307
		1	WIRING GP-CAB	315
ELEMENT AS-JACKET WATER HEATER (240-VOLT, 1000-WATT)	260-1556	1	HEATER GP-JACKET WATER	198
FILTER (ETHER START)	358-4889	1	VALVE GP-ETHER STARTING	267
FLASHER AS (24-VOLT)	217-8166	1	WIRING GP-CAB	276
		1	WIRING GP-CAB	282
		1	WIRING GP-CAB	288
		1	WIRING GP-CAB	293

MAINTENANCE PARTS

DESCRIPTION	PART NUMBER	QTY	WHERE USED	PAGE
		1	WIRING GP-CAB	300
		1	WIRING GP-CAB	308
		1	WIRING GP-CAB	316
FUSE (10-AMPERE)	113-8490	27	PANEL GP-FUSE	236
FUSE (15-AMPERE)	113-8491	14	PANEL GP-FUSE	236
GLOW PLUG	292-9881	6	GLOW PLUG GP	196
KEY (BATTERY DISCONNECT)	8H-5306	1	SWITCH GP-DISCONNECT	262
KEY AS-ELECTRONIC (SECURITY)	206-5162	2	INSTALLATION GP-SECURITY	200
LAMP (24-VOLT)	100-3245	2	LAMP GP-HEAD & SIGNAL	206
LAMP (24-VOLT) (SIGNAL)	100-3245	2	LAMP GP-HEAD & SIGNAL	208
LAMP (24-VOLT, 21-WATT)	242-0588	1	LAMP GP-HEAD & SIGNAL	210
		1	LAMP GP-HEAD & SIGNAL	211
		1	LAMP GP-HEAD & SIGNAL	212
LAMP (24-VOLT, 21-WATT) (SIGNAL)	9X-4493	1	LAMP GP-HEAD & SIGNAL	206
		1	LAMP GP-HEAD & SIGNAL	208
LAMP (24-VOLT, 21-WATT) (STOP, TAIL)	9X-4493	1	LAMP GP-STOP & TAIL	214
LAMP (24-VOLT, 21-WATT) (TURN SIGNAL)	242-0588	1	LAMP GP-HEAD & SIGNAL	213
LAMP (24-VOLT, 3-WATT)	115-1748	4	WIRING GP-CAB	275
		4	WIRING GP-CAB	281
		4	WIRING GP-CAB	287
		1	WIRING GP-CAB	293
		1	WIRING GP-CAB	300
		1	WIRING GP-CAB	307
		1	WIRING GP-CAB	315
LAMP (24-VOLT, 5-WATT)	130-3515	1	LAMP GP-HEAD & SIGNAL	210
		1	LAMP GP-HEAD & SIGNAL	211
		1	LAMP GP-HEAD & SIGNAL	212
LAMP (24-VOLT, 5-WATT) (FLOODLIGHT)	130-3515	1	LAMP GP-HEAD & SIGNAL	213
LAMP (24-VOLT, 5-WATT) (STOP, TAIL)	9X-4492	1	LAMP GP-STOP & TAIL	214
LAMP (24-VOLT, 70-WATT) (WARNING BEACON)	9X-7849	1	LAMP GP-WARNING BEACON	215
LAMP (24-VOLT, 75/70-WATT)	9X-3465	1	LAMP GP-HEAD & SIGNAL	206
		1	LAMP GP-HEAD & SIGNAL	210
		1	LAMP GP-HEAD & SIGNAL	211
		1	LAMP GP-HEAD & SIGNAL	212
LAMP (24-VOLT, 75/70-WATT) (HEAD)	9X-3465	1	LAMP GP-HEAD & SIGNAL	208
LAMP (24-VOLT, 75/70-WATT) (HIGH, LOW BEAM)	9X-3465	1	LAMP GP-HEAD & SIGNAL	213
LAMP (24-VOLT, HID)	290-8160	1	LAMP GP-FLOOD	204
		1	LAMP GP-FLOOD	205
LAMP-HALOGEN (24-VOLT, 70-WATT)	9X-3463	1	LAMP GP-FLOOD	203
		1	LIGHTING GP-FLOOD	219
		1	LIGHTING GP-FLOOD	222

MAINTENANCE PARTS

DESCRIPTION	PART NUMBER	QTY	WHERE USED	PAGE
FUEL SYSTEM				
CAP AS-FUEL (DEBRIS BOOT)	338-0912	1	TANK GP-FUEL	157
CAP-FUEL	284-9039	1	TANK GP-FUEL	157
FILTER AS-WATER SEP & FUEL	308-7298	1	FILTER GP-WATER SEP & FUEL	109
FILTER AS-WATER SEP & FUEL (PRIMARY)	326-1644	1	FILTER GP-WATER SEP & FUEL	108
FILTER ELEMENT-FUEL (ULTRA HIGH EFFICIENCY)	299-8229	1	FILTER GP-FUEL	105
		1	FILTER GP-FUEL	106
		1	FILTER GP-FUEL	107
STRAINER-FUEL (FILLER NECK SCREEN)	180-3730	1	TANK GP-FUEL	157
HYDRAULIC SYSTEM				
BREATHER (HYDRAULIC TANK)	258-2829	1	LINES GP-HYDRAULIC	733
CAP-FILLER (HYDRAULIC OIL)	7H-1447	1	TANK GP-HYDRAULIC	811
		1	TANK GP-HYDRAULIC	813
FILTER-OIL (ULTRA HIGH EFFICIENCY)	225-4118	1	FILTER GP-OIL	689
FILTER-OIL (ULTRA HIGH EFFICIENCY) (CASE DRAIN)	144-0832	1	FILTER GP-OIL	690
FILTER-OIL (ULTRA HIGH EFFICIENCY) (HYDRAULIC)	144-0832	1	FILTER GP-OIL	692
FILTER-OIL (ULTRA HIGH EFFICIENCY) (POWER TRAIN)	225-4118	1	FILTER GP-OIL	691
PLUG	5P-9436	2	LINES GP-FRONT	719
PLUG-DRAIN (HYDRAULIC TANK OIL)	9J-7031	1	VALVE GP-DRAIN	832
SCREEN	299-7997	1	TANK GP-HYDRAULIC	813
	6E-5066	1	MANIFOLD GP-HYDRAULIC	791
SCREEN (CONTROL MANIFOLD)	6E-5066	1	MANIFOLD GP-CONTROL	783
		1	MANIFOLD GP-CONTROL	784
		1	MANIFOLD GP-CONTROL	785
SCREEN AS	141-9236	1	VALVE GP-PILOT	845
		1	VALVE GP-PILOT	848
		1	VALVE GP-PILOT	855
		1	VALVE GP-PILOT	859
		1	VALVE GP-PILOT	865
SCREEN AS (HYDRAULIC TANK)	9T-9227	1	TANK GP-HYDRAULIC	811
		1	TANK GP-HYDRAULIC	813
SCREEN AS (PILOT OIL)	141-9236	1	VALVE GP-PILOT	851
		1	VALVE GP-PILOT	862
		1	VALVE GP-PILOT	869
STRAINER AS-OIL (HYDRAULIC TANK FILL)	5D-7927	1	TANK GP-HYDRAULIC	811
		1	TANK GP-HYDRAULIC	813
LUBRICATION SYSTEM				
CAP-OIL FILLER (ENGINE)	130-9888	1	FILLER GP-ENGINE OIL	57
FILTER-ENGINE OIL	269-8325	1	FILTER GP-ENGINE OIL	59

MAINTENANCE PARTS

DESCRIPTION	PART NUMBER	QTY	WHERE USED	PAGE
OPERATOR STATION				
BLADE AS-WIPER (500-MM)	5C-8811	1	WIPER GP-WINDOW	1042
BLADE AS-WIPER (700-MM)	6V-7419	1	WIPER GP-WINDOW	1042
CAP-VENTED	8E-8292	1	WASHER GP-WINDOW	1035
FILTER ELEMENT-CAB AIR (PRIMARY)	111-8738	1	FILTER GP-CAB AIR	962
FILTER ELEMENT-CAB AIR (SECONDARY)	180-7487	1	FILTER GP-CAB AIR	962
SCREEN-FILTER	8T-5913	2	WASHER GP-WINDOW	1035
SEAT BELT GP (RETRACTABLE)	246-0667	1	SEAT & MOUNTING GP	1012
		1	SEAT & MOUNTING GP	1014
SEAT BELT GP (RETRACTABLE, 51-MM)	236-7019	1	SEAT & MOUNTING GP	1011
		1	SEAT & MOUNTING GP	1013
POWER TRAIN				
BELT-SERPENTINE	263-1862	1	PUMP & MTG GP-AXLE OIL COOLER	460
BREATHER (TRANSMISSION)	9G-5127	1	FILLER GP-POWER TRAIN OIL	419
CAP-FILLER (POWER TRAIN)	5K-1568	1	FILLER GP-POWER TRAIN OIL	419
FILTER ELEMENT-OIL	341-6643	1	FILTER GP-OIL	422
FILTER-MAGNETIC (AXLE OIL COOLER)	251-6351	2	LINES GP-AXLE OIL COOLER	434
		2	LINES GP-AXLE OIL COOLER	439
FILTER-OIL (ADVANCED EFFICIENCY) (POWER TRAIN)	1G-8878	1	FILTER GP-OIL	421
PLUG-MAGNETIC	5P-4484	1	HOUSING GP-FIXED AXLE	427
		1	HOUSING GP-OSCILLATING AXLE	430
SCREEN GP-MAGNETIC (TRANSFER GEAR)	4S-8603	1	CASE GP-TRANSMISSION	372
SCREEN GP-MAGNETIC (TRANSMISSION)	240-8259	1	CASE GP-TRANSMISSION	377
SCREEN-SUCTION	4S-8598	1	CASE GP-TRANSMISSION	372
		1	CASE GP-TRANSMISSION	377
STEERING SYSTEM				
RELAY	183-6970	1	PUMP & MOTOR GP-SEC STEERING	657

INDEX

Name	Page

A

ACCUMULATOR GP-BRAKE–CHARGED 610
ACCUMULATOR GP-BRAKE–UNCHARGED 609
ACCUMULATOR GP-PILOT OIL–CHARGED 664
666
ACCUMULATOR GP-PILOT OIL–
UNCHARGED 665
ACCUMULATOR GP-REFRIGERANT–
WITH DESICCANT 907
908
ACCUMULATOR GP-RIDE CONTROL–
CHARGED 667
ACCUMULATOR GP-RIDE CONTROL–
UNCHARGED 668
ACTUATOR GP-POWER 490
ADAPTER GP-OIL PAN DRAIN 44
46
ADAPTER GP-TIP 1044
ADJUSTER GP-SEAT 909
AIR CLEANER GP 83
84
AIR COMPRESSOR GP-SEAT 910
AIR CONDITIONER & MOUNTING GP 911
AIR CONDITIONER AR 912
AIR CONDITIONER GP 913
ALARM AS (BACKUP) 268
ALARM GP 159
160
ALARM GP–ACTION 158
ALTERNATOR AR-CHARGING–
24-VOLT, 80-AMPERE 161
ALTERNATOR GP-CHARGING 162
164
166
167
ARM AS-LIFT 897
898
ARM GP-MATERIAL HANDLING 1045
ARM GP-MATERIAL HANDLING–
QUICK COUPLER 1046
ARM GP-WINDOW WIPER 915
ARMREST GP–LH 916
ATOMIZER GP-ETHER 258
AXLE AR-FIXED & OSCILLATING–
MANUAL DIFF LOCK W/AOC, FRONT 369
AXLE AR-FIXED–AUTO DIFFERENTIAL LOCK
WITH AXLE OIL COOLER, FRONT 369
AXLE AR-FIXED–MANUAL DIFFERENTIAL
LOCK WITH AXLE OIL COOLER, FRONT 369
AXLE AR-OSCILLATING–AUTO DIFFERENTIAL
LOCK WITH AXLE OIL COOLER, REAR 370
AXLE AR-OSCILLATING–OPEN DIFFERENTIAL
WITH AXLE OIL COOLER, REAR 370

B

BASE GP-FOOT BRAKE–PEDAL, LH 1001
BASE GP-FOOT BRAKE–PEDAL, RH 1000
BASE GP-VALVE COVER & INJ HARN 18
20
22
BATTERY & WIRING GP 168
171
174
176
BATTERY (12-VOLT, MAINTENANCE FREE) 168
171
174
BATTERY COMPARTMENT DRIP PAN 46
BEARING AS-DIFFERENTIAL 410
412
414
BEARING GP-PILLOW BLOCK 467
BELT TENSIONER GP 12
BELT-DRIVE (WARNING BEACON) 215
BELT-SERPENTINE 460
BELT-SERPENTINE
(ALTERNATOR, FAN DRIVE) 166
167
BLADE AS-WIPER (500-MM) 1042
BLADE AS-WIPER (700-MM) 1042
BLOCK AS-JUNCTION (BATTERY) 168
177
BLOCK GP-JUNCTION 177
BODY GP-PILOT VALVE 669
670
671
848
851
BOLT (M6X1X14-MM) 234
BOSS GP-LIFT ARM 899
BOSS GP-LOADER FRAME 491
BOSS GP-REAR FRAME 492
493
BOX GP-BATTERY 494
497
498
BRACKET GP-MOUNTING 178
BRAKE GP-PARKING 611
BRAKE GP-SERVICE 613
BREATHER (HYDRAULIC TANK) 733
BREATHER (TRANSMISSION) 419
BUCKET AS-GENERAL PURPOSE 1047
1048
1052
1054
BUCKET AS-GENERAL PURPOSE–
QUICK COUPLER 1049
1050

INDEX

Name	Page
BUCKET AS-MATERIAL HANDLING	1056, 1057, 1058, 1059, 1061, 1062
BUCKET GP-GENERAL PURPOSE	1063, 1064, 1065
BUCKET GP-GENERAL PURPOSE–QUICK COUPLER	1066
BUCKET GP-MATERIAL HANDLING	1067, 1068
CAB AR-ENCLOSED ROPS	917
CAB GP-ENCLOSED ROPS	918
CAMERA AR–WORK AREA VISUAL SYSTEM	179
CAMERA GP (115-DEG, COLOR)	180
CAMERA GP–WORK AREA VISUAL SYSTEM	180
CAMSHAFT GP	14
CANOPY AR-OPEN ROPS	921
CAP AS-COOLANT TANK	68
CAP AS-FUEL (DEBRIS BOOT)	157
CAP-FILLER (HYDRAULIC OIL)	811, 813
CAP-FILLER (POWER TRAIN)	419
CAP-FUEL	157
CAP-OIL FILLER (ENGINE)	57
CAP-VENTED	1035
CARRIAGE GP-FORK–84-IN	1069, 1070
CARRIER GP-PLANETARY–FINAL DRIVE	371
CASE GP-TRANSMISSION	372, 377
CHASSIS AR	1
CIRCUIT BREAKER AS (15-AMPERE, MANUAL RESET) (AIR CONDITIONER, HEATER FAN)	236
CIRCUIT BREAKER AS (20-AMPERE, MANUAL RESET) (HOOD TILT ACTUATOR)	236
CIRCUIT BREAKER AS (40-AMPERE) (CAB POWER)	234
CIRCUIT BREAKER AS (40-AMPERE) (GLOW PLUG)	234
CIRCUIT BREAKER AS (80-AMPERE) (MAIN)	234
CLAMP GP	951
CLUTCH GP–FIRST, THIRD	384
CLUTCH GP–FORWARD HIGH, FORWARD LOW	382
CLUTCH GP–REVERSE, SECOND	380
CLUTCH GP-ELECTRIC (AXLE OIL COOLER PUMP)	460
COLD WEATHER AR–COLD START, 120-VOLT HEATER	2
COLD WEATHER AR–COLD START, 240-VOLT HEATER	2
COMPRESSOR GP-REFRIGERANT	922, 923
CONDENSER & MTG GP-REFRIGERANT	924
CONFIGURATION AR–2-VALVE HYDRAULICS, RIDE CONTROL, AUTO DIFFERENTIAL LOCK CONTROL	8
CONFIGURATION AR–2-VALVE HYDRAULICS, RIDE CONTROL, MANUAL DIFFERENTIAL LOCK CONTROL	2, 3
CONFIGURATION AR–2-VALVE HYDRAULICS, RIDE CONTROL, QUICK COUPLER, AUTO DIFFERENTIAL LOCK CONTROL	3
CONFIGURATION AR–3-VALVE HYDRAULICS, RIDE CONTROL, AUTO DIFFERENTIAL LOCK CONTROL	4
CONFIGURATION AR–3-VALVE HYDRAULICS, RIDE CONTROL, MANUAL DIFFERENTIAL LOCK CONTROL	4
CONFIGURATION AR–3-VALVE HYDRAULICS, RIDE CONTROL, QUICK COUPLER, AUTO DIFFERENTIAL LOCK CONTROL	4
CONFIGURATION AR–3-VALVE HYDRAULICS, RIDE CONTROL, QUICK COUPLER, MANUAL DIFF LOCK CONTROL	3
CONFIGURATION AR–4-VALVE HYDRAULICS, RIDE CONTROL, QUICK COUPLER, AUTO DIFFERENTIAL LOCK CONTROL	5
CONFIGURATION AR–ECOLOGY DRAIN, PRECLEANER	5
CONFIGURATION AR–HEATED AIR SEAT, MIRRORS	5
CONFIGURATION AR–HID LIGHTS, WARNING BEACON	5
CONFIGURATION AR–MACHINE LOWER PROTECTION	6
CONFIGURATION AR–MACHINE SECURITY SYSTEM, SECONDARY STEERING, CAMERA	8
CONFIGURATION AR–MACHINE UPPER PROTECTION	7
CONFIGURATION AR–MANUAL DIFF LOCK W/AOC FRONT, OPEN DIFF W/AOC REAR, QUICK COUPLER	8
CONNECTOR	1077
CONNECTOR GP-ELECTRONIC	952
CONTROL AR-DIFFERENTIAL LOCK–AUTOMATIC, FRONT, REAR	387
CONTROL AR-FAN–VARIABLE PITCH FAN	672
CONTROL AR-HIGH LIFT–3-VALVE	673

C

INDEX

Name	Page
CONTROL AR-HIGH LIFT–3-VALVE HYD, QUICK COUPLER	673
CONTROL AR-HIGH LIFT–3-VALVE HYDRAULICS, QUICK COUPLER	673
CONTROL AR-QUICK COUPLER	1071
CONTROL AR-QUICK COUPLER–HIGH LIFT MACHINES	1071
CONTROL AR-QUICK COUPLER–HORIZONTAL PIN LOCK	1071, 1072
CONTROL AR-RIDE–2-VALVE	674
CONTROL AR-RIDE–3-VALVE	674
CONTROL AR-RIDE–4-VALVE	674
CONTROL GP-DIFFERENTIAL LOCK–AUTOMATIC, FRONT, REAR	394, 398
CONTROL GP-DIFFERENTIAL LOCK–STANDARD, FRONT	388, 391
CONTROL GP-FOOT BRAKE	615, 616
CONTROL GP-HANDLE–DIRECTION, DOWNSHIFT, HORN	926, 927
CONTROL GP-LIFT KICKOUT	181
CONTROL GP-MONITOR (MESSENGER)	948
CONTROL GP-PARKING BRAKE	617, 619, 621, 623
CONTROL GP-PILOT OPERATED HYD–2-FUNCTION	928, 930
CONTROL GP-PILOT OPERATED HYD–3-FUNCTION	932, 934
CONTROL GP-PILOT OPERATED HYD–4-FUNCTION	936, 938
CONTROL GP-PILOT OPERATED HYD–JOYSTICK, 2-FUNCTION	940
CONTROL GP-PILOT OPERATED HYD–JOYSTICK, 3-FUNCTION	941
CONTROL GP-POSITION	182
CONTROL GP-SERVICE BRAKE	625, 629, 633
CONTROL GP-STEERING	942, 944
CONTROL GP-TRANSMISSION	946, 947
CONTROL GP-TRANSMISSION HYD	402, 404
CONTROL GP-UNPRGMED MONITOR	949
CONTROL GP-UNPRGMED MONITOR (MESSENGER)	289, 308, 316
CONTROL GP-UNPRGMED MONITOR–MESSENGER	948
CONTROL GP-UNPROGRAMMED	323
CONTROL GP-UNPROGRAMMED (ENGINE)	133, 138, 143, 148
CONTROL GP-UNPROGRAMMED (POWER TRAIN)	276, 282, 288, 293, 300, 308, 316
CONTROL GP-WORK TOOL	900
CONTROL GP-WORK TOOL–HIGH LIFT MACHINES	903
CONVERSION AR-MACHINE	9
CONVERSION AR-MACHINE–AFRICA, MIDDLE EAST MARKET	8
COOLANT HEATER LINES	981
COOLER AR-AXLE OIL–MANUAL DIFFERENTIAL LOCK, FRONT	406
COOLER GP-ENGINE OIL	62
COOLER GP-FLTR BASE & ENG OIL	64
COOLER GP-TRANSMISSION OIL	407
COOLING AR-HIGH AMBIENT TEMP	65
COOLING GP-SUPPLEMENTAL–VARIABLE PITCH FAN	66
CORE AS-AFTERCOOLER	78
CORE AS-AXLE OIL COOLER	455
CORE AS-CONDENSER (REFRIGERANT)	65
CORE AS-HYDRAULIC OIL COOLER	78
CORE AS-POWER TRAIN OIL COOLER	407
CORE AS-RADIATOR	65, 78
COUNTERWEIGHT GP	499, 500, 501
COUPLER AR-QUICK–HIGH LIFT MACHINES	1072
COUPLER GP-QUICK–HORIZONTAL PIN LOCK	1073, 1075, 1077
COVER GP	585
COVER GP (PROTECTIVE)	586
COVER GP (TANK)	586
COVER GP-CYLINDER HEAD	18, 20, 22

INDEX

Name	Page
COVER GP-SHIPPING	408
COVER GP-VALVE MECHANISM	15
	18
	20
	22
COVER GP-XMSN OIL FILLER CAP	409
CRANKSHAFT GP	24
CYLINDER & MTG GP-STEERING	640
CYLINDER & SEAL GP-LIFT	675
CYLINDER & SEAL GP-STEERING	642
	643
CYLINDER & SEAL GP-TILT	676
	677
CYLINDER & SEAL GP-TILT–HIGH LIFT MACHINES	678
	679
CYLINDER BLOCK GP	25
	26
	27
CYLINDER GP-COUPLER	680
	1073
	1075
CYLINDER GP-LIFT	681
CYLINDER GP-STEERING	644
	646
CYLINDER GP-TILT	684
	685
CYLINDER GP-TILT–HIGH LIFT MACHINES	682
	686
CYLINDER HEAD AS	29
CYLINDER HEAD GP	31

D

DASH GP	950
DIFFERENTIAL & BEVEL GEAR GP–FIXED AXLE, LOCKING DIFFERENTIAL	412
DIFFERENTIAL & BEVEL GEAR GP–OSCILLATING AXLE, LOCKING DIFFERENTIAL	410
DIFFERENTIAL & BEVEL GEAR GP–OSCILLATING AXLE, OPEN DIFFERENTIAL	414
DIFFERENTIAL GP–LOCKING	417
DIFFERENTIAL GP–OPEN	416
DISPLAY GP-CAMERA–WORK AREA VISUAL SYSTEM	951
	952
DOOR GP-ACCESS–HOOD SIDE, RH	502
DOOR GP-CAB–SLIDING WINDOW, LH	954
DOOR GP-CAB–SLIDING WINDOW, RH	957
	959
DOOR GP-TOOL BOX	503
DRAIN GP-ECOLOGY	32
	688
DRAIN GP-ECOLOGY–AXLE, FRONT, REAR	688
DUCT GP-CAB AIR	960

E

EDGE GP-CUTTING	1079
ELECTRICAL AR	183
ELECTRONICS GP-COMMUNICATION–PRODUCT LINK 300	183
	184
ELECTRONICS GP-MONITOR	195
ELECTRONICS GP-MONITOR–MESSENGER, CROATIAN, SERBIAN, SLOVENIAN	194
ELECTRONICS GP-MONITOR–MESSENGER, ENGLISH, FRENCH, ARABIC	184
ELECTRONICS GP-MONITOR–MESSENGER, ENGLISH, FRENCH, CHINESE	186
ELECTRONICS GP-MONITOR–MESSENGER, ENGLISH, FRENCH, CZECH	188
ELECTRONICS GP-MONITOR–MESSENGER, ENGLISH, FRENCH, DANISH	188
ELECTRONICS GP-MONITOR–MESSENGER, ENGLISH, FRENCH, DUTCH	185
ELECTRONICS GP-MONITOR–MESSENGER, ENGLISH, FRENCH, ESTONIAN	188
ELECTRONICS GP-MONITOR–MESSENGER, ENGLISH, FRENCH, FINNISH	189
ELECTRONICS GP-MONITOR–MESSENGER, ENGLISH, FRENCH, GERMAN	185
ELECTRONICS GP-MONITOR–MESSENGER, ENGLISH, FRENCH, GREEK	189
ELECTRONICS GP-MONITOR–MESSENGER, ENGLISH, FRENCH, HEBREW	190
ELECTRONICS GP-MONITOR–MESSENGER, ENGLISH, FRENCH, HUNGARIAN	189
ELECTRONICS GP-MONITOR–MESSENGER, ENGLISH, FRENCH, ICELANDIC	190
ELECTRONICS GP-MONITOR–MESSENGER, ENGLISH, FRENCH, INDONESIAN	187
ELECTRONICS GP-MONITOR–MESSENGER, ENGLISH, FRENCH, ITALIAN	185
	195
ELECTRONICS GP-MONITOR–MESSENGER, ENGLISH, FRENCH, KOREAN	186
ELECTRONICS GP-MONITOR–MESSENGER, ENGLISH, FRENCH, LATVIAN	191
ELECTRONICS GP-MONITOR–MESSENGER, ENGLISH, FRENCH, LITHUANIAN	190
ELECTRONICS GP-MONITOR–MESSENGER, ENGLISH, FRENCH, MALAYSIAN	187
ELECTRONICS GP-MONITOR–MESSENGER, ENGLISH, FRENCH, NORWEGIAN	193
ELECTRONICS GP-MONITOR–MESSENGER, ENGLISH, FRENCH, POLISH	191

INDEX

Name	Page
ELECTRONICS GP-MONITOR–MESSENGER, ENGLISH, FRENCH, PORTUGUESE	193, 194
ELECTRONICS GP-MONITOR–MESSENGER, ENGLISH, FRENCH, RUSSIAN	191
ELECTRONICS GP-MONITOR–MESSENGER, ENGLISH, FRENCH, SLOVAKIAN	192
ELECTRONICS GP-MONITOR–MESSENGER, ENGLISH, FRENCH, SLOVENIAN	192
ELECTRONICS GP-MONITOR–MESSENGER, ENGLISH, FRENCH, SPANISH	186
ELECTRONICS GP-MONITOR–MESSENGER, ENGLISH, FRENCH, SWEDISH	192
ELECTRONICS GP-MONITOR–MESSENGER, ENGLISH, FRENCH, THAI	187
ELECTRONICS GP-MONITOR–MESSENGER, ENGLISH, FRENCH, TURKISH	193
ELECTRONICS GP-MONITOR–MESSENGER, ENGLISH, JAPANESE	194
ELECTRONICS GP-MONITOR–MESSENGER, ENGLISH, SPANISH, PORTUGUESE	184
ELECTRONICS GP-POWER TRAIN	195
ELEMENT AS-HEATER	275, 293, 300, 307, 315
ELEMENT AS-JACKET WATER HEATER (240-VOLT, 1000-WATT)	198
ENCLOSURE GP-SERVICE CENTER	1084
ENGINE AR-PRIMARY	10
EXTENSION GP-BACKREST (CLOTH)	1021
EXTENSION GP-EXHAUST	85
EXTENSION GP-FENDER	504

F

Name	Page
FENDER AR-ROADING	505
FENDER GP	506, 507
FENDER GP-ROADING	508
FILLER GP-ENGINE OIL	57
FILLER GP-POWER TRAIN OIL	419
FILM GP	1087, 1088, 1089
FILM GP–REFLECTIVE, RED, YELLOW	1085
FILM GP-U.S.	1089
FILM-FUSE PANEL	973, 975
FILM-IDENTIFICATION (CONTROL PANEL)	234
FILM-IDENTIFICATION (CONTROL PANEL, FRONT)	276, 282, 288, 293, 300, 308, 316
FILM-IDENTIFICATION (CONTROL PANEL, REAR)	276, 282, 288
FILM-IDENTIFICATION (DOWNSHIFT SWITCH)	928, 930, 932, 934, 936, 938
FILM-IDENTIFICATION (GROUP NO., SEQUENCE NO.)	913, 969
FILM-IDENTIFICATION (HORN)	928, 930, 932, 934, 936, 938
FILM-IDENTIFICATION (IGNITION SWITCH)	200, 202
FILM-IDENTIFICATION (PAYLOAD STORE)	323
FILM-IDENTIFICATION (WINDOW WIPER CONTROLS, RH)	277, 283, 289, 994
FILM-INFORMATION (12-VOLT)	275, 281, 293, 300, 307, 973
FILM-INFORMATION (24-VOLT)	1093
FILM-INFORMATION (HYDO ADVANCED 10)	1087
FILM-INFORMATION (INPUT/OUTPUT)	275, 281, 287, 293, 300, 307, 315
FILM-INFORMATION (INSTRUMENT PANEL COVER)	998
FILM-INFORMATION (PRODUCT LINK, READ OMM)	199
FILM-INSTRUCTION	182, 940, 941
FILM-INSTRUCTION (BUCKET POSITION)	928

INDEX

Name	Page
	930
FILM-INSTRUCTION (ENGINE START)	998
FILM-INSTRUCTION (KICKOUT, POSITIONER CONTROL)	181
FILM-INSTRUCTION (LIFT, TILT, AUXILIARY)	936
	938
FILM-INSTRUCTION (MACHINE SECURITY, CONSOLE)	200
	202
FILM-INSTRUCTION (MACHINE SECURITY, READ OMM)	200
	201
FILM-INSTRUCTION (NO STEP)	509
FILM-INSTRUCTION (PULL RING, ALTERNATE EXIT)	959
FILM-INSTRUCTION (SEAT ADJUSTMENT)	1029
	1031
FILM-PANEL (AUTOSHIFT, LIGHT SWITCH, LH)	276
	282
	288
	293
	300
	308
	316
FILM-RATING	1045
FILM-STRIPE (YELLOW, REFLECTIVE)	1085
FILM-WARNING (ACCUMULATOR)	665
FILM-WARNING (ACCUMULATOR) (HIGH PRESSURE CYLINDER)	664
FILM-WARNING (CRUSH HAZARD, STAY BACK)	1046
FILM-WARNING (CRUSH HAZARD, STAY BACK, INTL)	1093
FILM-WARNING (FLYING DEBRIS, READ OMM)	672
FILM-WARNING (FLYING DEBRIS, STAY BACK, U.S.)	1089
FILM-WARNING (HAND CRUSH HAZARD, READ OMM)	1075
FILM-WARNING (HIGH PRESSURE CYLINDER)	776
	777
FILM-WARNING (HIGH PRESSURE, READ OMM)	609
	610
	666
	667
	668
FILM-WARNING (HIGH PRESSURE, READ OMM, INTL)	776
	777
FILM-WARNING (HOT FLUID UNDER PRESSURE, U.S.)	1089
FILM-WARNING (PRODUCT LINK RADIO, INTL)	199
FILM-WARNING (PRODUCT LINK RADIO, U.S.)	337
FILM-WARNING (READ OMM)	1045
	1046
	1073
FILM-WINDOW (FRONT)	1088
FILTER (ETHER START)	267
FILTER AS-WATER SEP & FUEL	109
FILTER AS-WATER SEP & FUEL (PRIMARY)	108
FILTER BASE & ENG OIL COOLER	64
FILTER ELEMENT AS-AIR (PRIMARY)	84
FILTER ELEMENT AS-AIR (SECONDARY)	84
FILTER ELEMENT-BREATHER (CRANKCASE)	15
FILTER ELEMENT-CAB AIR (PRIMARY)	962
FILTER ELEMENT-CAB AIR (SECONDARY)	962
FILTER ELEMENT-FUEL (ULTRA HIGH EFFICIENCY)	105
	106
	107
FILTER ELEMENT-OIL	422
FILTER GP-CAB AIR	962
FILTER GP-ENGINE OIL	59
FILTER GP-FUEL	106
	107
FILTER GP-FUEL–SECONDARY	105
FILTER GP-OIL	422
	691
	692
FILTER GP-OIL–HYDRAULIC	689
FILTER GP-OIL–HYDRAULIC CASE DRAIN	690
FILTER GP-OIL–POWER TRAIN	421
FILTER GP-WATER SEP & FUEL–PRIMARY	108
	109
FILTER-ENGINE OIL	59
FILTER-MAGNETIC (AXLE OIL COOLER)	434
	439
FILTER-OIL (ADVANCED EFFICIENCY) (POWER TRAIN)	421
FILTER-OIL (ULTRA HIGH EFFICIENCY)	689
FILTER-OIL (ULTRA HIGH EFFICIENCY) (CASE DRAIN)	690
FILTER-OIL (ULTRA HIGH EFFICIENCY) (HYDRAULIC)	692
FILTER-OIL (ULTRA HIGH EFFICIENCY) (POWER TRAIN)	691
FINAL DRIVE & WHEEL	486
	488
FLASHER AS (24-VOLT)	276
	282
	288
	293
	300

INDEX

Name	Page
	308
	316
FLOOR MAT	973
	975
FLYWHEEL GP	33
FORK GP-PALLET	1080
FRAME AS-LOADER	515
	518
FRAME AS-REAR	521
FUSE (10-AMPERE)	236
FUSE (15-AMPERE)	236

G

GASKET-COVER (VALVE MECHANISM)	18
	20
	22
GASKET-WATER REGULATOR	82
GAUGE AS (OIL)	419
GAUGE-LIQUID LEVEL (SIGHT GLASS)	811
	813
GEAR GP-OUTPUT TRANSFER	423
GENERAL AR	9
GLOW PLUG	196
GLOW PLUG GP	196
GRILL GP-RADIATOR	525
GUARD GP-AXLE SEAL	527
GUARD GP-BOTTOM	528
	529
GUARD GP-DRIVE SHAFT	530
GUARD GP-FRONT	531
	532
	533
GUARD GP-HITCH & STEERING	534
GUARD GP-LINES–AXLE OIL COOLER	536
GUARD GP-POWER TRAIN	539
GUARD GP-POWER TRAIN–AXLE OIL COOLER	537
GUARD GP-ROADING LIGHTS	540
	542
GUARD GP-SENSOR–WHEEL SPEED	544
GUARD GP-TILT CYLINDER	693
GUARD GP-VANDALISM–ELECTRONIC CONTROLS	965
GUARD GP-VANDALISM–INSTRUMENT PANEL, MONITOR, RH CONSOLE	963
GUARD GP-WINDOW–FRONT	967

H

HARDWARE GP-LOADER FRAME	545
HARDWARE GP-REAR FRAME	546
	547
	548
HARNESS AS-AUXILIARY	270
HARNESS AS-AXLE (AXLE OIL COOLER RELAY)	272
HARNESS AS-BRAKE (STOP LIGHT)	1001
HARNESS AS-CAB	276
	282
	288
	294
	301
	308
	316
HARNESS AS-CHASSIS (MAIN)	234
HARNESS AS-CHASSIS (SERVICE CENTER)	325
	329
HARNESS AS-CHASSIS (VARIABLE PITCH FAN)	333
HARNESS AS-CONTROL (AUTOMATIC LUBRICATION)	585
	586
HARNESS AS-CONTROL (MACHINE ECM)	323
HARNESS AS-ENGINE	339
	343
HARNESS AS-FRONT	345
	348
HARNESS AS-HEATER & AIR COND	913
	969
HARNESS AS-LIGHTING	219
	222
HARNESS AS-LIGHTING (LH)	352
HARNESS AS-LIGHTING (RH)	352
HARNESS AS-LIGHTING (TURN SIGNAL, HAZARD)	275
	281
	287
	293
	300
	307
	315
HARNESS AS-MONITOR	337
HARNESS AS-PUMP (AUTOMATIC LUBRICATION)	585
	586
HARNESS AS-PUMP (JUMPER)	270
HARNESS AS-RADIO	1004
HARNESS AS-SENSOR	273
	335
HARNESS AS-SENSOR (FRONT AXLE)	364
HARNESS AS-SENSOR (REAR AXLE)	364
HARNESS AS-SOLENOID	358
	359
	367
HARNESS AS-STEERING (SECONDARY)	360
HARNESS AS-SWITCH	273
HARNESS AS-SWITCH (LEVEL)	585
	586

INDEX

Name	Page
HARNESS AS-SWITCH (LUBRICATION PRESSURE)	270
HARNESS AS-TRANSMISSION	404
HARNESS AS-TRANSMISSION (HYDRAULIC CONTROL)	402
HARNESS AS-VALVE (SEAT AIR COMPRESSOR)	1029
	1031
HARNESS AS-WIRING	952
HARNESS AS-WIRING (INJECTOR)	15
	18
	20
	22
HARNESS AS-WORK TOOL (QUICK COUPLER)	353
	354
HEAD GP-PUMP–IMPLEMENT, STEERING	694
HEATER & MTG GP-CAB	968
HEATER GP-CAB	969
HEATER GP-JACKET WATER	197
	198
HINGE GP-ROADING FENDER–LH	550
HINGE GP-ROADING FENDER–RH	549
HITCH GP-ARTICULATING	551
HOOD & GUARD GP	553
	555
	557
	560
HORN GP-ELECTRIC	971
HOUSING GP-AXLE–LONG	425
	426
HOUSING GP-FIXED AXLE–FRONT	427
HOUSING GP-FLYWHEEL	34
HOUSING GP-FRONT	36
	38
HOUSING GP-OSCILLATING AXLE–REAR	430
HYDRAULIC AR-2 VALVE	698
HYDRAULIC AR-3 VALVE	698
HYDRAULIC AR-4 VALVE	699

I

Name	Page
IDLER GP-BELT	40
IDLER GP-BELT (ALTERNATOR, REFRIGERANT COMPR)	460
INDICATOR AS-BRAKE WEAR	427
	430
INDICATOR-AIR FILTER CHANGE	87
	88
	90
INJECTOR GP-FUEL	110
	111
	112
INPUT GP-TRANSMISSION	433
INSTALLATION AR-COMMUNICATION	199
INSTALLATION AR-COMMUNICATION–PRODUCT LINK 300	199
INSTALLATION AR-ENGINE	11
INSTALLATION GP-RADIO	972
INSTALLATION GP-SECURITY	200
	201
	202

K

Name	Page
KEY (BATTERY DISCONNECT)	262
KEY AS-ELECTRONIC (SECURITY)	200
KICKOUT & POSITIONER GP	700
KIT-SEAL (DIVERTER VALVE) (HYDRAULIC FAN FLUID FLOW)	831
KIT-SENSOR (AIR PRESSURE)	133
	138
	143
	148
KIT-SENSOR (AIR TEMPERATURE)	133
	138
	143
	148
KIT-SENSOR (COOLANT TEMPERATURE)	133
	138
	143
	148
KIT-SENSOR (ENGINE OIL PRESSURE)	133
	138
	143
	148
KIT-SENSOR (ENGINE SPEED)	133
	138
	143
	149

L

Name	Page
LADDER GP	563
	564
LAMP (24-VOLT)	206
LAMP (24-VOLT) (SIGNAL)	208
LAMP (24-VOLT, 21-WATT)	210
	211
	212
LAMP (24-VOLT, 21-WATT) (SIGNAL)	206
	208
LAMP (24-VOLT, 21-WATT) (STOP, TAIL)	214
LAMP (24-VOLT, 21-WATT) (TURN SIGNAL)	213
LAMP (24-VOLT, 3-WATT)	275
	281
	287
	293
	300
	307

INDEX

Name	Page
	315
LAMP (24-VOLT, 5-WATT)	210
	211
	212
LAMP (24-VOLT, 5-WATT) (FLOODLIGHT)	213
LAMP (24-VOLT, 5-WATT) (STOP, TAIL)	214
LAMP (24-VOLT, 70-WATT) (WARNING BEACON)	215
LAMP (24-VOLT, 75/70-WATT)	206
	210
	211
	212
LAMP (24-VOLT, 75/70-WATT) (HEAD)	208
LAMP (24-VOLT, 75/70-WATT) (HIGH, LOW BEAM)	213
LAMP (24-VOLT, HID)	204
	205
LAMP GP-DOME (24-VOLT)	978
LAMP GP-FLOOD	203
LAMP GP-FLOOD (24-VOLT)	219
	222
LAMP GP-FLOOD–HID	204
	205
LAMP GP-HEAD & SIGNAL	210
	211
LAMP GP-HEAD & SIGNAL–LH	206
	213
LAMP GP-HEAD & SIGNAL–RH	208
	212
LAMP GP-STOP & TAIL–24-VOLT	214
LAMP GP-WARNING BEACON–AMBER	215
LAMP GP-WARNING BEACON–AMBER, STROBE	216
LAMP-HALOGEN (24-VOLT, 70-WATT)	203
	219
	222
LEVER & BEARING AS	905
LIFT AR–HIGH LIFT MACHINES	906
LIFTING GP-ENGINE	41
LIGHTER GP (12-VOLT)	293
	300
	307
	315
LIGHTER GP (12-VOLT) (CIGAR)	275
	281
	287
LIGHTING AR-AUXILIARY–CAB FRONT	217
LIGHTING GP-AUXILIARY–CAB FRONT	218
LIGHTING GP-FLOOD–CAB FRONT, REAR	219
	223
	224
LIGHTING GP-FLOOD–CANOPY FRONT, REAR	222
LIGHTING GP-ROADING	225
	227
	229
LIGHTING GP-WARNING BEACON	231
	232
LINER GP-CAB	973
	975
LINER GP-OPEN ROPS	978
LINES GP-AFTERCOOLER AIR	86
LINES GP-AIR CONDITIONER	979
LINES GP-ALTERNATOR AIR	233
LINES GP-AXLE OIL COOLER	434
	439
	444
LINES GP-CAB HEATER	981
LINES GP-CENTRAL LUBRICATION	565
LINES GP-COUPLER	702
	703
	706
LINES GP-COUPLER–KIT, HIGH LIFT MACHINES	716
LINES GP-COUPLER–KIT, STANDARD LIFT MACHINES	714
LINES GP-COUPLER–LIFT ARMS	710
	712
LINES GP-DIAGNOSTIC–REMOTE PRESSURE TAPS, TMSN, TORQUE CONVERTER	1090
LINES GP-FRONT	717
	719
	722
LINES GP-FRONT LUBRICATION	567
LINES GP-FUEL	113
	115
	116
	119
	122
	125
LINES GP-FUEL FILTER	128
LINES GP-GREASE	569
	572
LINES GP-HYDRAULIC	724
	733
LINES GP-HYDRAULIC FAN	742
LINES GP-HYDRAULIC FAN–COLD START	744
LINES GP-HYDRAULIC OIL COOLER	746
	752
LINES GP-LIFT CYLINDER	758
	760
LINES GP-OIL	44
LINES GP-PILOT	763
	766
	769
LINES GP-PILOT–3RD VALVE	773
LINES GP-PILOT–4TH VALVE	774
LINES GP-POWER TRAIN OIL	445
	447
LINES GP-REAR LUBRICATION	575

INDEX

Name	Page
LINES GP-RIDE CONTROL	776
	777
LINES GP-SECONDARY STEERING	647
LINES GP-STEERING	649
	653
LINES GP-TILT CYLINDER	779
LINES GP-TORQUE CONV COOLER	449
LINES GP-TURBOCHARGER AIR	87
	88
	90
LINES GP-WATER– AXLE OIL COOLER, CAB HEATER	70
	72
LINES GP-WATER–RADIATOR	68
LINES GP-WORK TOOL	781
LINK GP-STEERING FRAME LOCK	577
LOCK GP	585
	586
LOCK GP-CYLINDER	78
LOCK GP-VANDALISM	1092
LUBRICATION AR-AUTOMATIC	578

M

Name	Page
MANIFOLD GP-CONTROL (IMPL, STER PUMP MARGIN RELIEF)	724
	733
MANIFOLD GP-CONTROL– AUTO DIFFERENTIAL LOCK	452
MANIFOLD GP-CONTROL– BRAKE CHARGE, HYD FAN CONTROL	785
MANIFOLD GP-CONTROL– MANUAL DIFFERENTIAL LOCK	451
MANIFOLD GP-CONTROL– PUMP CONTROL TORQUE LIMITER	783
	784
MANIFOLD GP-CONTROL–RIDE CONTROL, 4-FUNCTION CONTROL VALVE	787
	789
MANIFOLD GP-EXHAUST	99
MANIFOLD GP-HYDRAULIC–HYDRAULIC	791
MANIFOLD GP-INLET	92
	93
MIRROR GP-REAR VIEW–EXTERIOR	983
	984
	985
MIRROR GP-REAR VIEW– EXTERIOR, HEATED	986
MIRROR GP-REAR VIEW–INTERIOR	988
MODULE AR-EXHAUST	94
MODULE GP-DISPLAY (AUTOMATIC LUBRICATION SYSTEM)	994
MODULE GP-DISPLAY (MESSENGER)	277
	283
	289
	294
	301
	309
	317
MODULE GP-DISPLAY (WORK AREA VISUAL SYSTEM)	951
MODULE GP-INTERFACE (KEY)	200
	202
MOTOR GP-ELECTRIC (AUTOLUBE, 24-VOLT)	585
	586
MOTOR GP-ELECTRIC (SECONDARY STEERING)	657
MOTOR GP-GEAR–HYDRAULIC FAN	793
MOTOR GP-WINDOW WIPER (24-VOLT, 2-SPEED)	989
	991
MOTOR GP-WINDOW WIPER–FRONT	989
MOTOR GP-WINDOW WIPER–REAR	990
	991
MOUNTING GP-AXLE	454
MOUNTING GP-AXLE OIL COOLER	455
MOUNTING GP-CAB	992
MOUNTING GP-DISPLAY (WORK AREA VISUAL SYSTEM)	951
MOUNTING GP-DISPLAY– AUTOMATIC LUBRICATION SYSTEM	994
MOUNTING GP-DISPLAY–MESSENGER	993
MOUNTING GP-ENGINE	42
MOUNTING GP-ENGINE & TMSN	43
MOUNTING GP-RIM	457
MUFFLER GP	95

O

Name	Page
OPERATOR AR-ENCLOSED ROPS	995
OPERATOR AR-OPEN ROPS	995
OPTION AR-CAB–AIR SEAT	9
OPTION AR-LIGHTING– AUX LIGHTS, WARNING BEACON	9
ORIFICE AS-AIR CONDITIONER	913

P

Name	Page
PADLOCK GP	409
	963
	1092
PAN GP-BACKREST–CLOTH, LUMBAR	997
PAN GP-BACKREST–LUMBAR	996
PAN GP-OIL	44
	46
PANEL GP-CIRCUIT BREAKER	234
PANEL GP-FUSE	236
PANEL GP-HOOD– SOUND SUPPRESSION, LH	580

INDEX

Name	Page
PANEL GP-HOOD–SOUND SUPPRESSION, RH	581
PANEL GP-INSTRUMENT–FRONT	998
PANEL GP-TOP–HOOD	582
PEDAL GP-GOVERNOR	1003
PIN GP-FORK–ANTI-SWING	1081
PISTON & ROD GP	48
	49
PISTON GP-BRAKE–SERVICE	637
PISTON GP-DIFFERENTIAL LOCK	458
PIVOT GP-PILOT VALVE	797
	800
PIVOT GP-PILOT VALVE–AUXILIARY	796
	799
PIVOT GP-PILOT VALVE–LIFT	794
	798
PIVOT GP-PILOT VALVE–TILT	795
PLATE & FILM GP	1093
PLATE GP-PILOT VALVE–JOYSTICK	801
PLATE-IDENTIFICATION (CAT)	1046
	1050
	1052
	1054
	1059
	1061
	1062
	1069
PLUG	719
PLUG GP	585
	586
PLUG GP (LOAD)	825
PLUG GP-CYLINDER BLOCK	50
PLUG GP-ENGINE	51
PLUG-DRAIN (ENGINE OIL)	44
	46
PLUG-DRAIN (HYDRAULIC TANK OIL)	832
PLUG-MAGNETIC	427
	430
POTENTIOMETER AS (TEMPERATURE CONTROL)	276
	282
	288
POWER TRAIN AR	459
PRECLEANER AS	96
PRECLEANER GP	97
	98
PROTECTION GP-FUEL SYSTEM	115
	116
	119
	122
	125
	128
PROTECTION GP-FUEL SYSTEM (LINE, LOW PRESSURE)	106
	107
	134
	139
	144
	149
PULLEY GP-CRANKSHAFT	52
PUMP & MOTOR GP-SEC STEERING	657
PUMP & MTG GP-AXLE OIL COOLER	460
PUMP & MTG GP-HYDRAULIC	802
PUMP & MTG GP-LUBRICATION	583
	584
PUMP & MTG GP-SECONDARY STEER	658
PUMP AS-AIR (VARIABLE PITCH FAN)	803
PUMP GP-AIR–VARIABLE PITCH FAN	803
PUMP GP-ENGINE OIL	60
PUMP GP-FUEL INJECTION	131
	132
	133
	138
	143
	148
PUMP GP-FUEL PRM & WATER SEP–ELECTRIC	153
PUMP GP-FUEL TRANSFER	131
	132
	154
PUMP GP-GEAR (AXLE OIL COOLER)	460
PUMP GP-LUBRICATION	585
PUMP GP-LUBRICATION–AUTOMATIC LUBRICATION CONTROL	586
PUMP GP-METERING	659
	660
PUMP GP-PISTON	804
	806
PUMP GP-TRANSMISSION	462
PUMP GP-TRANSMISSION–1-SECTION GEAR	463
PUMP GP-WATER	74
	76

R

RADIATOR & FAN GP	78
RADIO GP–AM/FM CD PLAYER	1004
RADIO GP–AM/FM/WB CD PLAYER	1004
RADIO GP–AM/FM/WB/CD PLAYER	1005
RADIO GP-COMMUNICATION–PRODUCT LINK 121SR	1006
RECEPTACLE GP-AUXILIARY START	238
RECLINER GP-SEAT	1007
REGULATOR AS-VOLTAGE (24-VOLT)	162
REGULATOR AS-VOLTAGE (24-VOLT) (ALTERNATOR)	164
REGULATOR AS-WATER TEMPERATURE (CONNECTOR INCLUDED)	82
REGULATOR GP-TEMPERATURE–WATER	82

INDEX

Name	Page
RELAY	657
RELAY AS (24-VOLT)	239
	333
	360
	986
RELAY AS (24-VOLT) (FRONT CAB FLOODLIGHTS)	236
RELAY AS (24-VOLT) (HOOD TILT MOTOR)	234
RELAY AS (24-VOLT) (HORN)	236
RELAY AS (24-VOLT) (STARTING AID)	236
RELAY GP	239
RIM AR	464
RIM GP-DEMOUNTABLE	464
	465
ROCKER ARM GP	53
	55
ROPS GP-ENCLOSED	1008
ROPS GP-OPEN	1009
ROTATING GP-PUMP–HYDRAULIC FAN	809

S

SCREEN	791
	813
SCREEN (CONTROL MANIFOLD)	783
	784
	785
SCREEN AS	845
	848
	855
	859
	865
SCREEN AS (HYDRAULIC TANK)	811
	813
SCREEN AS (PILOT OIL)	851
	862
	869
SCREEN GP	725
	734
SCREEN GP-MAGNETIC (TRANSFER GEAR)	372
SCREEN GP-MAGNETIC (TRANSMISSION)	377
SCREEN GP-SUN	1010
SCREEN-FILTER	1035
SCREEN-SUCTION	372
	377
SEAL-CRANKSHAFT (REAR)	34
SEAT & MOUNTING GP	1011
	1012
	1013
	1014
SEAT BELT GP	1015
	1016
	1017
	1018
SEAT BELT GP (RETRACTABLE)	1012
	1014
SEAT BELT GP (RETRACTABLE, 51-MM)	1011
	1013
SEAT BELT GP–RETRACTABLE, 3-IN	1018
SEAT GP–CLOTH	1019
	1021
SEAT GP-SUSPENSION	1022
	1023
	1024
SEAT GP-SUSPENSION–HEATED	1023
SENDER AS-FUEL LEVEL	155
SENSOR & MTG GP-POSITION–ARTICULATION ANGLE	240
	242
SENSOR & MTG GP-PRESSURE–LIFT CYLINDER OIL	244
SENSOR AS-POSITION	245
SENSOR AS-TEMPERATURE (HYDRAULIC OIL)	325
	329
SENSOR AS-TEMPERATURE (REAR AXLE OIL)	273
SENSOR GP-POSITION	245
SENSOR GP-POSITION (ARTICULATION ANGLE)	240
SENSOR GP-POSITION (ROTARY) (ARTICULATION ANGLE)	242
SENSOR GP-POSITION (ROTARY) (LEFT BRAKE PEDAL)	1001
SENSOR GP-POSITION–ROTARY	246
	247
SENSOR GP-PRESSURE	248
SENSOR GP-PRESSURE (LIFT CYLINDER OIL)	244
SENSOR GP-SPEED	144
	149
	154
	249
	250
	251
SENSOR GP-SPEED (SECONDARY, TIMING)	131
	132
SENSOR GP-SPEED (TMSN INTERMEDIATE OUTPUT 1)	402
SENSOR GP-SPEED (TMSN INTERMEDIATE OUTPUT 2)	402
SENSOR GP-SPEED (TORQUE CONVERTER OUTPUT)	402
	404
SENSOR GP-SPEED (TRANSMISSION OUTPUT 1)	402
	404
SENSOR GP-SPEED (TRANSMISSION OUTPUT 2)	402
	404

INDEX

Name	Page
SENSOR GP-SPEED (WHEEL)	364
SENSOR GP-TEMPERATURE	252
	253
	254
SENSOR GP-TEMPERATURE (ENGINE AIR)	367
SENSOR GP-TEMPERATURE (TORQUE CONVERTER OIL)	449
SENSOR GP-TEMPERATURE (TRANSMISSION OIL)	484
SENSOR-PRESSURE (FUEL)	109
	134
	139
	144
	149
SERVICE GP-MONITOR	195
SERVICE GP-MONITOR (MESSENGER, CRO, SCC, SLV)	194
SERVICE GP-MONITOR (MESSENGER, ENG, FRE, ARA)	184
SERVICE GP-MONITOR (MESSENGER, ENG, FRE, CHI)	186
SERVICE GP-MONITOR (MESSENGER, ENG, FRE, CZE)	188
SERVICE GP-MONITOR (MESSENGER, ENG, FRE, DAN)	188
SERVICE GP-MONITOR (MESSENGER, ENG, FRE, DUT)	185
SERVICE GP-MONITOR (MESSENGER, ENG, FRE, GER)	185
SERVICE GP-MONITOR (MESSENGER, ENG, FRE, GRE)	189
SERVICE GP-MONITOR (MESSENGER, ENG, FRE, HEB)	190
SERVICE GP-MONITOR (MESSENGER, ENG, FRE, HUN)	189
SERVICE GP-MONITOR (MESSENGER, ENG, FRE, ICE)	190
SERVICE GP-MONITOR (MESSENGER, ENG, FRE, IND)	187
SERVICE GP-MONITOR (MESSENGER, ENG, FRE, ITA)	185
	195
SERVICE GP-MONITOR (MESSENGER, ENG, FRE, KOR)	186
SERVICE GP-MONITOR (MESSENGER, ENG, FRE, LAV)	191
SERVICE GP-MONITOR (MESSENGER, ENG, FRE, LIT)	190
SERVICE GP-MONITOR (MESSENGER, ENG, FRE, MAY)	187
SERVICE GP-MONITOR (MESSENGER, ENG, FRE, NOR)	193
SERVICE GP-MONITOR (MESSENGER, ENG, FRE, POL)	191
SERVICE GP-MONITOR (MESSENGER, ENG, FRE, POR)	193
	194
SERVICE GP-MONITOR (MESSENGER, ENG, FRE, RUS)	191
SERVICE GP-MONITOR (MESSENGER, ENG, FRE, SLO)	192
SERVICE GP-MONITOR (MESSENGER, ENG, FRE, SLV)	192
SERVICE GP-MONITOR (MESSENGER, ENG, FRE, SPA)	186
SERVICE GP-MONITOR (MESSENGER, ENG, FRE, SWE)	192
SERVICE GP-MONITOR (MESSENGER, ENG, FRE, THA)	187
SERVICE GP-MONITOR (MESSENGER, ENG, FRE, TUR)	193
SERVICE GP-MONITOR (MESSENGER, ENG, JPN)	194
SHAFT GP-DRIVE	466
SHAFT GP-DRIVE–FRONT	467
SHIELD GP-ENGINE COMPARTMENT	587
	589
	591
SKIRT GP-CAB	1025
	1027
SLIP JOINT GP–CENTER	468
SLIP JOINT GP–REAR	469
SOFTWARE GP-COMMUNICATION	183
	184
SOFTWARE GP-COMMUNICATION (PRODUCT LINK 121SR)	1006
SOFTWARE GP-MONITOR	195
SOFTWARE GP-MONITOR (MESSENGER)	189
SOFTWARE GP-MONITOR (MESSENGER, CRO, SCC, SLV)	194
SOFTWARE GP-MONITOR (MESSENGER, ENG, FRE, ARA)	184
SOFTWARE GP-MONITOR (MESSENGER, ENG, FRE, CHI)	186
SOFTWARE GP-MONITOR (MESSENGER, ENG, FRE, CZE)	188
SOFTWARE GP-MONITOR (MESSENGER, ENG, FRE, DAN)	188
SOFTWARE GP-MONITOR (MESSENGER, ENG, FRE, DUT)	185
SOFTWARE GP-MONITOR (MESSENGER, ENG, FRE, GER)	185
SOFTWARE GP-MONITOR (MESSENGER, ENG, FRE, GRE)	189
SOFTWARE GP-MONITOR (MESSENGER, ENG, FRE, HEB)	190
SOFTWARE GP-MONITOR (MESSENGER, ENG, FRE, ICE)	190

INDEX

Name	Page
SOFTWARE GP-MONITOR (MESSENGER, ENG, FRE, IND)	187
SOFTWARE GP-MONITOR (MESSENGER, ENG, FRE, ITA)	185
	195
SOFTWARE GP-MONITOR (MESSENGER, ENG, FRE, KOR)	186
SOFTWARE GP-MONITOR (MESSENGER, ENG, FRE, LAV)	191
SOFTWARE GP-MONITOR (MESSENGER, ENG, FRE, LIT)	190
SOFTWARE GP-MONITOR (MESSENGER, ENG, FRE, MAY)	187
SOFTWARE GP-MONITOR (MESSENGER, ENG, FRE, NOR)	193
SOFTWARE GP-MONITOR (MESSENGER, ENG, FRE, POL)	191
SOFTWARE GP-MONITOR (MESSENGER, ENG, FRE, POR)	193
	194
SOFTWARE GP-MONITOR (MESSENGER, ENG, FRE, RUS)	191
SOFTWARE GP-MONITOR (MESSENGER, ENG, FRE, SLO)	192
SOFTWARE GP-MONITOR (MESSENGER, ENG, FRE, SLV)	192
SOFTWARE GP-MONITOR (MESSENGER, ENG, FRE, SPA)	186
SOFTWARE GP-MONITOR (MESSENGER, ENG, FRE, SWE)	192
SOFTWARE GP-MONITOR (MESSENGER, ENG, FRE, THA)	187
SOFTWARE GP-MONITOR (MESSENGER, ENG, FRE, TUR)	193
SOFTWARE GP-MONITOR (MESSENGER, ENG, JPN)	194
SOLENOID AS (WASTEGATE)	99
	102
SPIDER & BEARING GP	467
	468
SPRING AS-GAS (STEERING COLUMN TILT)	662
SPRING AS-GAS (STEERING COLUMN)	663
STARTING AID GP-ETHER	255
	256
	258
STARTING MOTOR GP-ELECTRIC	260
STEERING AR-SECONDARY	661
STEERING COLUMN GP-ADJUSTABLE	662
	663
STEP GP–REAR FRAME	593
STRAINER AS-OIL (HYDRAULIC TANK FILL)	811
	813
STRAINER-FUEL (FILLER NECK SCREEN)	157
SUN VISOR	1034
SUPPORT GP-AIR INLET	594
SUPPORT GP-SEAT	1028
SUPPRESSION AR-SOUND	595
SUPPRESSION GP-SOUND	596
	597
SUSPENSION GP-SEAT–AIR	1029
	1031
SWITCH AS (AUTOMATIC LUBRICATION TEST)	585
	586
SWITCH AS-FOOT (DIFFERENTIAL LOCK)	261
SWITCH AS-LEVEL (GREASE)	585
	586
SWITCH AS-LIMIT (PARKING BRAKE)	617
	619
SWITCH AS-LIMIT (STOP LIGHT)	1001
SWITCH AS-PRESSURE (COMPRESSOR)	923
SWITCH AS-PRESSURE (SECONDARY STEERING OIL)	360
SWITCH AS-PRESSURE (SERVICE BRAKE OIL)	325
	329
SWITCH AS-PUSH BUTTON (DOWNSHIFT)	928
	930
	932
	934
	936
	938
SWITCH AS-PUSH BUTTON (HORN)	928
	930
	932
	934
	936
	938
SWITCH AS-PUSH BUTTON (PAYLOAD STORE)	323
SWITCH AS-ROCKER (24-VOLT)	160
SWITCH AS-ROCKER (24-VOLT) (FRONT FLOODLIGHTS)	276
	282
	288
	293
	300
	308
	316
SWITCH AS-ROCKER (24-VOLT) (HAZARD WARNING LIGHTS)	276
	282
	288
	293
	300
	308
	316
SWITCH AS-ROCKER (24-VOLT) (HEADLIGHT DIMMER)	276
	282

INDEX

Name	Page
	288
	293
	300
	308
	316
SWITCH AS-ROCKER (24-VOLT) (PAYLOAD ZERO, REWEIGH)	323
SWITCH AS-ROCKER (24-VOLT) (QUICK COUPLER)	353
SWITCH AS-ROCKER (24-VOLT) (REAR FLOODLIGHTS)	223
	224
SWITCH AS-ROCKER (24-VOLT) (RIDE CONTROL)	265
	356
	358
SWITCH AS-ROCKER (24-VOLT) (RUNNING LIGHTS)	276
	282
	288
	293
	300
	308
	316
SWITCH AS-ROCKER (AIR CONDITIONER, HEATER)	276
	282
	288
SWITCH AS-ROCKER (FAN BLOWER SPEED)	276
	282
	288
SWITCH AS-ROCKER (FORWARD, NEUTRAL, REVERSE)	276
	282
	288
	294
	301
	308
	316
SWITCH AS-ROCKER (HEATED MIRRORS) (HEATED MIRRORS)	986
SWITCH AS-ROCKER (HYDRAULIC LOCKOUT)	276
	282
	288
	294
	301
	308
	316
SWITCH AS-ROCKER (WARNING BEACON)	231
	232
SWITCH AS-ROTARY (24-VOLT) (AUTOSHIFT CONTROL)	275
	281
	287
	293
	300
	307
	315
SWITCH AS-ROTARY (WIPER, WASHER) (REAR)	275
	281
	287
SWITCH AS-START (KEY)	275
	281
	287
	293
	300
	307
	315
SWITCH AS-TEMPERATURE (FRONT AXLE OIL)	273
SWITCH AS-TOGGLE (FUEL PRIMING PUMP)	339
SWITCH AS-TOGGLE (HOOD TILT ACTUATOR)	234
SWITCH AS-TURN SIGNAL	275
	281
	287
	293
	300
	307
	315
SWITCH GP-DIFF PRESSURE	421
SWITCH GP-DIFF PRESSURE (FILTER OIL)	422
SWITCH GP-DIFF PRESSURE (POWER TRAIN OIL FILTER BYPASS)	691
SWITCH GP-DIFFERENTIAL LOCK	261
SWITCH GP-DISCONNECT–BATTERY	262
SWITCH GP-MAGNETIC–24-VOLT–MAIN RELAY	264
SWITCH GP-MAGNETIC–GLOW PLUG RELAY	263
SWITCH GP-PRESSURE (CASE DRAIN FILTER BYPASS)	690
SWITCH GP-PRESSURE (HYDRAULIC FILTER BYPASS)	689
SWITCH GP-ROCKER	265
SWITCH GP-ROCKER (HEATED MIRRORS)	986
SWITCH GP-TOGGLE (ENGINE SHUTDOWN)	234
SWITCH GP-WIPER (24-VOLT, INTERMITTENT) (FRONT)	275
	281
	287
SWITCH GP-WIPER–INTERMITTENT	266
SWITCH-PRESSURE (AUTOLUBE ACTUATION)	607

INDEX

Name	Page
T	
TANK & MTG GP-FUEL	155
TANK & MTG GP-HYDRAULIC	810
TANK GP-EXPANSION (COOLANT)	68
TANK GP-FUEL	157
TANK GP-HYDRAULIC	811
	813
TILT GP-HOOD	599
	601
TINE GP	1082
TIP GP-PENETRATION	1083
TIRE & RIM AR	470
	471
	472
TORQUE CONVERTER GP	473
TRANSMISSION AR	475
TUBE GP-HYDRAULIC PUMP	44
	46
TURBOCHARGER GP	99
	102
V	
VALVE & LINES GP-LUBRICATION–FRONT	604
VALVE & LINES GP-LUBRICATION–REAR	603
VALVE & MTG GP-MAIN CONTROL–2-FUNCTION	815
VALVE & MTG GP-MAIN CONTROL–2-FUNCTION, WITH RIDE CONTROL	817
VALVE & MTG GP-MAIN CONTROL–3-FUNCTION	816
VALVE & MTG GP-MAIN CONTROL–3-FUNCTION, WITH RIDE CONTROL	818
VALVE & MTG GP-MAIN CONTROL–4-FUNCTION	819
VALVE AS-RELIEF (FUEL RAIL)	148
VALVE GP-BRAKE CONTROL	638
VALVE GP-BRAKE CONTROL (SERVICE)	625
VALVE GP-BYPASS–TORQUE CONVERTER COOLER	476
VALVE GP-CHECK	445
	447
	451
	452
	455
	823
	883
	1073
	1075
VALVE GP-CHECK (HIGH PRESSURE, RIDE CONTROL)	885
VALVE GP-CHECK (HYDRAULIC OIL COOLER BYPASS)	746
	752
VALVE GP-CHECK (LOAD)	825
	827
VALVE GP-CHECK (RIDE CONT, LIFT CYL HEAD END)	787
	789
	883
VALVE GP-CHECK (RIDE CONTROL)	789
VALVE GP-CHECK (STEERING)	649
	653
VALVE GP-CHECK–AXLE OIL COOLER BYPASS	477
VALVE GP-CHECK–BRAKE OIL, PILOT OIL	820
VALVE GP-CHECK–LOAD	822
VALVE GP-CHECK–PILOT OIL	821
VALVE GP-CONTROL	877
VALVE GP-CONTROL–AUXILIARY	823
VALVE GP-CONTROL–LIFT	825
VALVE GP-CONTROL–TILT	827
VALVE GP-DIVERTER (BRAKE CHARGE)	785
VALVE GP-DIVERTER–HYDRAULIC FAN	831
VALVE GP-DIVERTER–QUICK COUPLER	830
VALVE GP-DRAIN–ECOLOGY, HYDRAULIC	832
VALVE GP-ETHER STARTING	267
VALVE GP-ETHER STARTING (24-VOLT)	258
VALVE GP-FLUID SAMPLING	68
VALVE GP-FLUID SAMPLING–ENGINE OIL	61
VALVE GP-FUEL	157
VALVE GP-LUBE DISTRIBUTION–13-INJECTOR, REAR	607
VALVE GP-LUBE DISTRIBUTION–8-INJECTOR, FRONT	606
VALVE GP-MAIN CONTROL–2-FUNCTION	838
VALVE GP-MAIN CONTROL–2-FUNCTION, WITH RIDE CONTROL	836
	837
VALVE GP-MAIN CONTROL–3-FUNCTION	833
VALVE GP-MAIN CONTROL–3-FUNCTION, WITH RIDE CONTROL	834
	835
VALVE GP-MAIN CONTROL–4-FUNCTION	839
VALVE GP-MANUAL	840
VALVE GP-MANUAL (LOWERING CONTROL)	841
	843
VALVE GP-MANUAL–LIFT ARM LOWERING CONTROL	841
	843
VALVE GP-MODULATING–TRANSMISSION CLUTCH	478
VALVE GP-PILOT–2-FUNCTION	848
	851
VALVE GP-PILOT–3-FUNCTION	859
	862
VALVE GP-PILOT–4-FUNCTION	865
	869
VALVE GP-PILOT CARTRIDGE	873

INDEX

Name	Page
	874
	875
	876
VALVE GP-PILOT–JOYSTICK, 2-FUNCTION	845
VALVE GP-PILOT–JOYSTICK, 3-FUNCTION	855
VALVE GP-PRESSURE REDUCING	791
VALVE GP-PRESSURE REDUCING–DIFFERENTIAL LOCK RELIEF	479
VALVE GP-PRESSURE REDUCING–SIGNAL DUPLICATION	877
VALVE GP-PRIORITY (FLOW DIVIDER) (STEERING)	725
	734
VALVE GP-PUMP CONTROL–PRESSURE, FLOW COMPENSATOR–BRAKE, HYDRAULIC FAN	878
VALVE GP-RELIEF & DIVERTER (HYDRAULIC TANK)	785
VALVE GP-RELIEF (BRAKE)	785
VALVE GP-RELIEF (MAIN)	791
VALVE GP-RELIEF–LINE	880
	881
	882
VALVE GP-RELIEF–TRANSMISSION HYDRAULIC CONTROL	480
VALVE GP-RIDE CONTROL	885
VALVE GP-RIDE CONTROL–2-FUNCTION, 3-FUNCTION CONTROL VALVE	883
VALVE GP-SHUTOFF	32
	407
VALVE GP-SHUTTLE	787
	789
	883
	885
	887
	888
	889
VALVE GP-SHUTTLE (BRAKE, HYDRAULIC FAN)	785
VALVE GP-SOLENOID	482
	890
	891
	892
	893
	894
	896
VALVE GP-SOLENOID (24-VOLT)	885
VALVE GP-SOLENOID (24-VOLT) (DIFF LOCK PROPORTIONING)	452
VALVE GP-SOLENOID (24-VOLT) (HYDRAULIC LOCKOUT)	791
VALVE GP-SOLENOID (24-VOLT) (PUMP TORQUE LIMITER CONTROL)	784
VALVE GP-SOLENOID (24-VOLT) (RIDE CONT, LIFT CYL HEAD END)	787
	789
VALVE GP-SOLENOID (24-VOLT) (RIDE CONTROL, LIFT CYL ROD END)	787
	789
	883
VALVE GP-SOLENOID (COLD START, FAN MOTOR SHUTOFF)	744
VALVE GP-SOLENOID (DIFFERENTIAL LOCK ON, OFF)	451
	452
VALVE GP-SOLENOID (PUMP TORQUE LIMITER CONTROL)	783
VALVE GP-SOLENOID (RIDE CONT, LIFT CYL HEAD END)	883
VALVE GP-SOLENOID–24-VOLT	895
VALVE GP-TIRE	464
	483
VALVE GP-TRANSMISSION CONTROL	484
VALVE GP-WATER–HEATER CONTROL	1033
VISOR GP-CAB	1034

W

WARNING GP-BACKUP	268
WASHER GP-WINDOW	1035
	1036
WATER SEP & FUEL PRM PUMP GP	153
WHEEL & FINAL DRIVE GP	486
	488
WINDOW GP-CAB	1037
WINDOW GP-DOOR	1038
WINDOW GP-DOOR–SLIDING	1039
	1041
WIPER GP-WINDOW	1042
WIRING AR-AXLE TEMPERATURE	269
WIRING GP-AUTOLUBE CONTROL	270
WIRING GP-AXLE OIL COOLER	272
WIRING GP-AXLE TEMPERATURE–OIL TEMPERATURE	273
WIRING GP-CAB	275
	281
	287
	293
	300
	307
	315
WIRING GP-CAB–PAYLOAD CONTROL SYSTEM	323
WIRING GP-CHASSIS	325
	329
	333
WIRING GP-COMMUNICATION	335
WIRING GP-COMMUNICATION–PRODUCT LINK 300	337
WIRING GP-ENGINE	339

INDEX

Name	Page	Name	Page
	343		
WIRING GP-FRONT	345		
	348		
WIRING GP-LIGHTING–LOADER FRAME FLOODLIGHTS	352		
WIRING GP-QUICK COUPLER	353		
	354		
WIRING GP-RIDE CONTROL	356		
	357		
	358		
	359		
WIRING GP-SECONDARY STEERING	360		
WIRING GP-SENSOR	362		
WIRING GP-SENSOR–COLD START, FAN MOTOR SHUTOFF	367		
WIRING GP-SENSOR–WHEEL SPEED	364		

MEMORANDA

MACHINE ARRANGEMENT

237-7540 CHASSIS AR

S/N: JKM1-UP

PART OF 237-7545 GENERAL AR

SMCS-7000 **i02897391**

NOTE	PART NUMBER	QTY	PART NAME 1 2 3 4 5 6 (PRODUCT LEVEL)	SEE PAGE
Y	*255-4819*	1	BOX GP-BATTERY	494
Y	*260-8834*	1	CONTROL GP-DIFFERENTIAL LOCK (STANDARD, FRONT)	388
Y	*233-6729*	1	CONTROL GP-PARKING BRAKE	621
Y	*239-3365*	1	CONTROL GP-SERVICE BRAKE	625
Y	*255-4807*	1	CONTROL GP-WORK TOOL	900
Y	*255-4814*	1	COOLER GP-TRANSMISSION OIL	407
Y	*237-7544*	1	COUNTERWEIGHT GP	499
Y	*149-7393*	1	CYLINDER & MTG GP-STEERING	640
Y	*239-3367*	1	ENCLOSURE GP-SERVICE CENTER	1084
Y	*150-1743*	1	EXTENSION GP-FENDER	504
Y	*126-9535*	1	FENDER GP	506
Y	*283-5434*	1	FILM GP (REFLECTIVE, RED, YELLOW)	1085
Y	**237-7542**	1	FRAME AS-LOADER	515
Y	**237-7541**	1	FRAME AS-REAR	521
Y	*262-5098*	1	GUARD GP-BOTTOM	529
Y	*262-0377*	1	GUARD GP-FRONT	531
Y	*261-5642*	1	HITCH GP-ARTICULATING	551
Y	*307-8440*	1	HOOD & GUARD GP	557
Y	*237-7543*	1	LADDER GP	563
Y	*255-4813*	1	LINES GP-AFTERCOOLER AIR	86
Y	*255-4822*	1	LINES GP-CAB HEATER	981
Y	*260-8828*	1	LINES GP-DIAGNOSTIC (REMOTE PRESSURE TAPS, XMSN, TC)	1090
Y	*255-4821*	1	LINES GP-FUEL	113
Y	*239-3369*	1	LINES GP-GREASE	569
Y	*255-4817*	1	LINES GP-HYDRAULIC OIL COOLER	746
Y	*239-3370*	1	LINES GP-STEERING	649
Y	*255-4823*	1	LINES GP-TORQUE CONV COOLER	449
Y	*255-4812*	1	LINES GP-WATER (RADIATOR)	68
Y	*258-8766*	1	LINK GP-STEERING FRAME LOCK	577
Y	*258-8765*	1	LOCK GP-VANDALISM	1092
Y	*239-3371*	1	PLATE & FILM GP	1093
Y	*255-4815*	1	RADIATOR & FAN GP	78
Y	*255-4824*	1	SHIELD GP-ENGINE COMPARTMENT	587
Y	*255-4827*	1	SKIRT GP-CAB	1025
Y	*308-4340*	1	SUPPORT GP-AIR INLET	594
Y	*255-4810*	1	TANK & MTG GP-FUEL	155
Y	*262-0337*	1	WARNING GP-BACKUP	268
	6V-1970	1	LITERATURE GP	
	5P-7958	1	SLEEVE-CABLE SPLICE	
	5P-8500	2	KEY	

Y-SEPARATE ILLUSTRATION

<END>

MACHINE ARRANGEMENT

317-9485 COLD WEATHER AR—COLD START, 240-VOLT HEATER

S/N: JKM1-UP

AN ATTACHMENT

SMCS-7000 **i02928321**

NOTE	PART NUMBER	QTY	PART NAME 1 2 3 4 5 6 (PRODUCT LEVEL)	SEE PAGE
Y	*265-9736*	1	ALTERNATOR AR-CHARGING	161
Y	*308-4278*	1	BATTERY & WIRING GP	176
Y	*267-0339*	1	HEATER GP-JACKET WATER	198
Y	*318-1760*	1	LINES GP-HYDRAULIC FAN (COLD START)	744
Y	*265-9646*	1	STARTING AID GP-ETHER	255
Y	*307-3122*	1	WIRING GP-SENSOR (COLD START, FAN MOTOR SHUTOFF)	367

Y-SEPARATE ILLUSTRATION

<END>

317-9486 COLD WEATHER AR—COLD START, 120-VOLT HEATER

S/N: JKM1-UP

AN ATTACHMENT

SMCS-7000 **i02928322**

NOTE	PART NUMBER	QTY	PART NAME 1 2 3 4 5 6 (PRODUCT LEVEL)	SEE PAGE
Y	*265-9736*	1	ALTERNATOR AR-CHARGING	161
Y	*308-4278*	1	BATTERY & WIRING GP	176
Y	*265-7724*	1	HEATER GP-JACKET WATER	197
Y	*318-1760*	1	LINES GP-HYDRAULIC FAN (COLD START)	744
Y	*265-9646*	1	STARTING AID GP-ETHER	255
Y	*307-3122*	1	WIRING GP-SENSOR (COLD START, FAN MOTOR SHUTOFF)	367

Y-SEPARATE ILLUSTRATION

<END>

317-8359 CONFIGURATION AR—2-VALVE HYDRAULICS, RIDE CONTROL, MANUAL DIFFERENTIAL LOCK CONTROL

S/N: JKM1-UP

AN ATTACHMENT

SMCS-7000 **i02928305**

NOTE	PART NUMBER	QTY	PART NAME 1 2 3 4 5 6 (PRODUCT LEVEL)	SEE PAGE
Y	*272-4990*	1	AXLE AR-FIXED (MANUAL DIFF LOCK W/AOC, FRONT)	369
Y	*271-2344*	1	AXLE AR-OSCILLATING (OPEN DIFF W/AOC, REAR)	370
Y	*265-9740*	1	CONTROL AR-RIDE (2-VALVE)	674

Y-SEPARATE ILLUSTRATION

<END>

MACHINE ARRANGEMENT

317-8360 CONFIGURATION AR–2-VALVE HYDRAULICS, RIDE CONTROL, MANUAL DIFFERENTIAL LOCK CONTROL

S/N: JKM1-UP

AN ATTACHMENT

SMCS-7000 **i02928172**

NOTE	PART NUMBER	QTY	PART NAME 1 2 3 4 5 6 (PRODUCT LEVEL)	SEE PAGE
Y	*272-4990*	1	AXLE AR-FIXED (MANUAL DIFF LOCK W/AOC, FRONT)	369
Y	*271-2344*	1	AXLE AR-OSCILLATING (OPEN DIFF W/AOC, REAR)	370
Y	*265-9738*	1	CONTROL AR-QUICK COUPLER	1071
Y	*265-9740*	1	CONTROL AR-RIDE (2-VALVE)	674
Y-SEPARATE ILLUSTRATION				

<END>

317-8361 CONFIGURATION AR–2-VALVE HYDRAULICS, RIDE CONTROL, QUICK COUPLER, AUTO DIFFERENTIAL LOCK CONTROL

S/N: JKM1-UP

AN ATTACHMENT

SMCS-7000 **i02928265**

NOTE	PART NUMBER	QTY	PART NAME 1 2 3 4 5 6 (PRODUCT LEVEL)	SEE PAGE
Y	*265-9753*	1	CONTROL AR-DIFFERENTIAL LOCK (AUTOMATIC, FRONT, REAR)	387
Y	*265-9738*	1	CONTROL AR-QUICK COUPLER	1071
Y	*265-9740*	1	CONTROL AR-RIDE (2-VALVE)	674
Y-SEPARATE ILLUSTRATION				

<END>

317-8362 CONFIGURATION AR–3-VALVE HYDRAULICS, RIDE CONTROL, QUICK COUPLER, MANUAL DIFF LOCK CONTROL

S/N: JKM1-797

AN ATTACHMENT

SMCS-7000 **i03836229**

NOTE	PART NUMBER	QTY	PART NAME 1 2 3 4 5 6 (PRODUCT LEVEL)	SEE PAGE
Y	*272-4990*	1	AXLE AR-FIXED (MANUAL DIFF LOCK W/AOC, FRONT)	369
Y	*271-2344*	1	AXLE AR-OSCILLATING (OPEN DIFF W/AOC, REAR)	370
Y	*265-9738*	1	CONTROL AR-QUICK COUPLER	1071
Y	*265-9741*	1	CONTROL AR-RIDE (3-VALVE)	674
Y	*265-9750*	1	HYDRAULIC AR-3 VALVE	698
Y	*151-2402*	1	LINES GP-COUPLER	702
Y-SEPARATE ILLUSTRATION				

<END>

MACHINE ARRANGEMENT

317-8363 CONFIGURATION AR–3-VALVE HYDRAULICS, RIDE CONTROL, QUICK COUPLER, AUTO DIFFERENTIAL LOCK CONTROL

S/N: JKM1-UP

AN ATTACHMENT

SMCS-7000 **i03868129**

NOTE	PART NUMBER	QTY	PART NAME 1 2 3 4 5 6 (PRODUCT LEVEL)	SEE PAGE
Y	*265-9753*	1	CONTROL AR-DIFFERENTIAL LOCK (AUTOMATIC, FRONT, REAR)	387
Y	*265-9738*	1	CONTROL AR-QUICK COUPLER	1071
			S/N: JKM1-797	
Y	*265-9741*	1	CONTROL AR-RIDE (3-VALVE)	674
Y	*266-9862*	1	COUNTERWEIGHT GP	501
			S/N: JKM798-UP	
Y	*310-9392*	1	COUPLER GP-QUICK (HORIZONTAL PIN LOCK)	1073
			S/N: JKM798-UP	
Y	*265-9750*	1	HYDRAULIC AR-3 VALVE	698
Y	*151-2402*	1	LINES GP-COUPLER	702
Y	*260-8830*	1	LINES GP-COUPLER	703
			S/N: JKM798-UP	
Y	*267-7546*	1	WIRING GP-QUICK COUPLER	353
			S/N: JKM798-UP	

Y-SEPARATE ILLUSTRATION

<END>

317-8364 CONFIGURATION AR–3-VALVE HYDRAULICS, RIDE CONTROL, MANUAL DIFFERENTIAL LOCK CONTROL

S/N: JKM1-UP

AN ATTACHMENT

SMCS-7000 **i02928308**

NOTE	PART NUMBER	QTY	PART NAME 1 2 3 4 5 6 (PRODUCT LEVEL)	SEE PAGE
Y	*272-4990*	1	AXLE AR-FIXED (MANUAL DIFF LOCK W/AOC, FRONT)	369
Y	*271-2344*	1	AXLE AR-OSCILLATING (OPEN DIFF W/AOC, REAR)	370
Y	*265-9741*	1	CONTROL AR-RIDE (3-VALVE)	674
Y	*265-9750*	1	HYDRAULIC AR-3 VALVE	698

Y-SEPARATE ILLUSTRATION

<END>

317-8366 CONFIGURATION AR–3-VALVE HYDRAULICS, RIDE CONTROL, AUTO DIFFERENTIAL LOCK CONTROL

S/N: JKM1-UP

AN ATTACHMENT

SMCS-7000 **i02928310**

NOTE	PART NUMBER	QTY	PART NAME 1 2 3 4 5 6 (PRODUCT LEVEL)	SEE PAGE
Y	*265-9753*	1	CONTROL AR-DIFFERENTIAL LOCK (AUTOMATIC, FRONT, REAR)	387
Y	*265-9741*	1	CONTROL AR-RIDE (3-VALVE)	674
Y	*265-9750*	1	HYDRAULIC AR-3 VALVE	698

Y-SEPARATE ILLUSTRATION

<END>

MACHINE ARRANGEMENT

317-8368 CONFIGURATION AR—4-VALVE HYDRAULICS, RIDE CONTROL, QUICK COUPLER, AUTO DIFFERENTIAL LOCK CONTROL

S/N: JKM1-UP

AN ATTACHMENT

SMCS-7000 **i03853556**

NOTE	PART NUMBER	QTY	PART NAME 1 2 3 4 5 6 (PRODUCT LEVEL)	SEE PAGE
Y	*265-9738*	1	CONTROL AR-QUICK COUPLER	1071
Y	*265-9753*	1	CONTROL AR-DIFFERENTIAL LOCK (AUTOMATIC, FRONT, REAR)	387
Y	*265-9756*	1	CONTROL AR-RIDE (4-VALVE)	674
Y	*265-9760*	1	HYDRAULIC AR-4 VALVE	699
Y	*344-2367*	1	LINES GP-WORK TOOL	781
			S/N: JKM810-UP	
Y-SEPARATE ILLUSTRATION				

<END>

317-9483 CONFIGURATION AR—HEATED AIR SEAT, MIRRORS

S/N: JKM1-UP

AN ATTACHMENT

SMCS-7000 **i02928318**

NOTE	PART NUMBER	QTY	PART NAME 1 2 3 4 5 6 (PRODUCT LEVEL)	SEE PAGE
Y	*290-6181*	1	MIRROR GP-REAR VIEW (EXTERIOR, HEATED)	986
Y	**118-7250**	1	SCREEN GP-SUN	1010
Y	*257-9837*	1	SEAT & MOUNTING GP	1011
Y-SEPARATE ILLUSTRATION				

<END>

317-9484 CONFIGURATION AR—ECOLOGY DRAIN, PRECLEANER

S/N: JKM1-UP

AN ATTACHMENT

SMCS-7000 **i02928320**

NOTE	PART NUMBER	QTY	PART NAME 1 2 3 4 5 6 (PRODUCT LEVEL)	SEE PAGE
Y	*267-3135*	1	DOOR GP-TOOL BOX	503
Y	*267-9400*	1	DRAIN GP-ECOLOGY (AXLE, FRONT, REAR)	688
Y	*265-7723*	1	PRECLEANER GP	97
Y-SEPARATE ILLUSTRATION				

<END>

317-9488 CONFIGURATION AR—HID LIGHTS, WARNING BEACON

S/N: JKM1-UP

AN ATTACHMENT

SMCS-7000 **i02928324**

NOTE	PART NUMBER	QTY	PART NAME 1 2 3 4 5 6 (PRODUCT LEVEL)	SEE PAGE
Y	*265-9736*	1	ALTERNATOR AR-CHARGING	161
Y	*302-5414*	1	LIGHTING GP-FLOOD (CAB FRONT, REAR)	223
Y	*283-6945*	1	LIGHTING GP-WARNING BEACON	231
Y-SEPARATE ILLUSTRATION				

<END>

MACHINE ARRANGEMENT

317-9489 CONFIGURATION AR–MACHINE LOWER PROTECTION

S/N: JKM1-UP

AN ATTACHMENT

SMCS-7000 **i02932402**

NOTE	REF NO	GRAPHIC REF	PART NUMBER	QTY	PART NAME 1 2 3 4 5 6 (PRODUCT LEVEL)	SEE PAGE
Y	1	1	*260-4749*	1	STEP GP (REAR FRAME)	593
Y	2	1	*260-4750*	1	GUARD GP-BOTTOM	528
Y	3	1	*263-6088*	1	GUARD GP-DRIVE SHAFT	530
Y	4	1	*273-5785*	1	GUARD GP-AXLE SEAL	527
Y	5	1	*273-9730*	1	HARDWARE GP-LOADER FRAME	545
Y	6	1	*273-9731*	1	BOSS GP-REAR FRAME	492
Y	7	1	*273-9760*	1	GUARD GP-HITCH & STEERING	534

Y-SEPARATE ILLUSTRATION

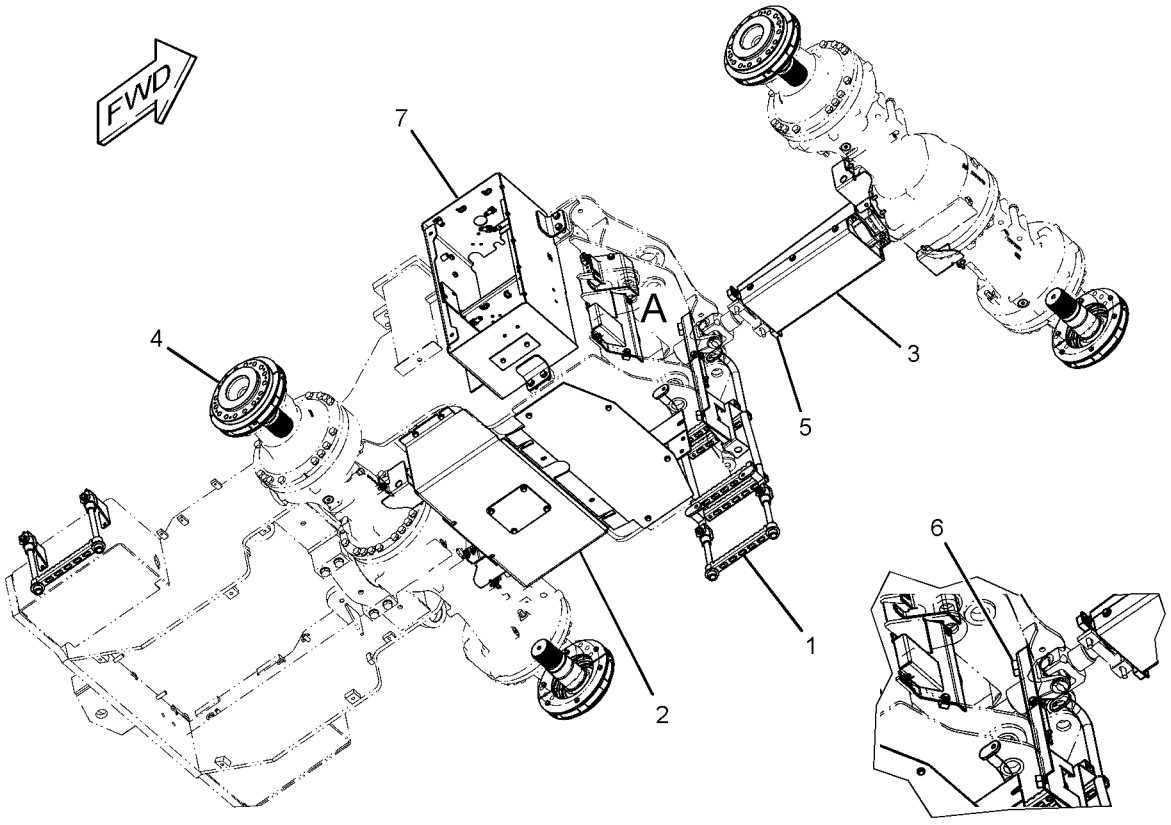

VIEW OF AREA A

GRAPHIC #1 **<END>** g01436868

MACHINE ARRANGEMENT

317-9490 CONFIGURATION AR–MACHINE UPPER PROTECTION

S/N: JKM1-UP

AN ATTACHMENT

SMCS-7000 **i02909106**

NOTE	REF NO	GRAPHIC REF	PART NUMBER	QTY	PART NAME 1 2 3 4 5 6 (PRODUCT LEVEL)	SEE PAGE
Y	1	1	*239-3375*	1	GUARD GP-WINDOW (FRONT)	967
Y	2	1	*267-3135*	1	DOOR GP-TOOL BOX	503
Y	3	1	*267-9400*	1	DRAIN GP-ECOLOGY (AXLE, FRONT, REAR)	688
Y	4	1	*284-7682*	1	PRECLEANER GP	98
Y	5	1	*285-0421*	1	GUARD GP-ROADING LIGHTS	540
Y	6	1	*318-3762*	1	GUARD GP-TILT CYLINDER	693

Y-SEPARATE ILLUSTRATION

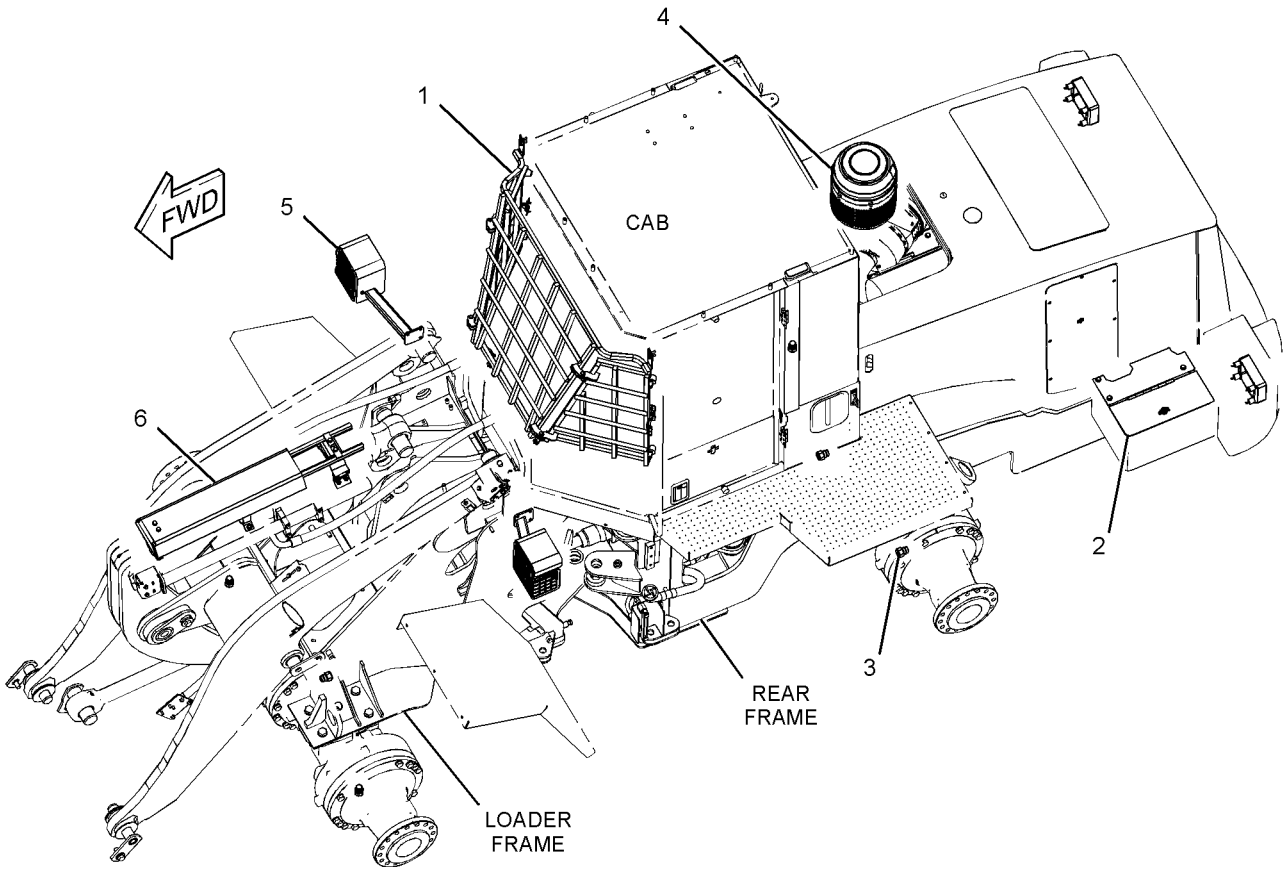

GRAPHIC #1 **<END>** g01440690

MACHINE ARRANGEMENT

317-9491 CONFIGURATION AR–
MACHINE SECURITY SYSTEM, SECONDARY STEERING, CAMERA
S/N: JKM1-UP
AN ATTACHMENT

SMCS-7000 **i02909104**

NOTE	PART NUMBER	QTY	PART NAME 1 2 3 4 5 6 (PRODUCT LEVEL)	SEE PAGE
Y	*284-1300*	1	CAMERA AR (WORK AREA VISUAL SYSTEM)	179
Y	*265-9751*	1	INSTALLATION GP-SECURITY	200
Y	*265-9746*	1	STEERING AR-SECONDARY	661
Y-SEPARATE ILLUSTRATION				

<END>

318-0647 CONFIGURATION AR–2-VALVE HYDRAULICS, RIDE CONTROL, AUTO DIFFERENTIAL LOCK CONTROL
S/N: JKM1-UP
AN ATTACHMENT

SMCS-7000 **i02928312**

NOTE	PART NUMBER	QTY	PART NAME 1 2 3 4 5 6 (PRODUCT LEVEL)	SEE PAGE
Y	*265-9753*	1	CONTROL AR-DIFFERENTIAL LOCK (AUTOMATIC, FRONT, REAR)	387
Y	*265-9740*	1	CONTROL AR-RIDE (2-VALVE)	674
Y-SEPARATE ILLUSTRATION				

<END>

340-6088 CONFIGURATION AR–MANUAL DIFF LOCK W/AOC FRONT, OPEN DIFF W/AOC REAR, QUICK COUPLER
S/N: JKM1-UP
CANNOT BE USED WITH 265-9755–PAGE 673, 329-3943–PAGE 673, 257-5665–PAGE 941
AN ATTACHMENT

SMCS-7000 **i03636792**

NOTE	PART NUMBER	QTY	PART NAME 1 2 3 4 5 6 (PRODUCT LEVEL)	SEE PAGE
Y	*272-4990*	1	AXLE AR-FIXED (MANUAL DIFF LOCK W/AOC, FRONT)	369
Y	*271-2344*	1	AXLE AR-OSCILLATING (OPEN DIFF W/AOC, REAR)	370
Y	*265-9738*	1	CONTROL AR-QUICK COUPLER	1071
Y-SEPARATE ILLUSTRATION				

<END>

322-7948 CONVERSION AR-MACHINE–
AFRICA, MIDDLE EAST MARKET
S/N: JKM1-UP
AN ATTACHMENT

SMCS-7000 **i02926995**

NOTE	PART NUMBER	QTY	PART NAME 1 2 3 4 5 6 (PRODUCT LEVEL)	SEE PAGE
Y	*255-4820*	1	AIR CONDITIONER AR	912
Y	*265-9748*	1	COOLING AR-HIGH AMBIENT TEMP	65
Y	*260-8837*	1	GUARD GP-POWER TRAIN (AXLE OIL COOLER)	537
Y	*265-7723*	1	PRECLEANER GP	97
Y-SEPARATE ILLUSTRATION				

<END>

MACHINE ARRANGEMENT

329-5761 CONVERSION AR-MACHINE

S/N: JKM1-UP

AN ATTACHMENT

SMCS-7000 **i03875167**

NOTE	PART NUMBER	QTY	PART NAME 1 2 3 4 5 6 (PRODUCT LEVEL)	SEE PAGE
Y	*255-4820*	1	AIR CONDITIONER AR	912
Y	*267-3501*	1	GUARD GP-POWER TRAIN	539
Y	*266-8583*	1	INSTALLATION AR-COMMUNICATION (PRODUCT LINK 300)	199
Y	*287-2371*	1	FILM GP	1087
Y	*265-9746*	1	STEERING AR-SECONDARY	661
Y	*266-8584*	1	SUPPRESSION AR-SOUND	595

Y-SEPARATE ILLUSTRATION

<END>

237-7545 GENERAL AR

S/N: JKM1-UP

SMCS-7000 **i02897135**

NOTE	PART NUMBER	QTY	PART NAME 1 2 3 4 5 6 (PRODUCT LEVEL)	SEE PAGE
Y	*237-7540*	1	CHASSIS AR	1
Y	*237-7539*	1	ELECTRICAL AR	183
Y	**242-1382**	1	ENGINE AR-PRIMARY	10
Y	*237-7535*	1	HYDRAULIC AR-2 VALVE	698
Y	*239-3372*	1	INSTALLATION AR-ENGINE	11
Y	*258-4543*	1	OPERATOR AR-ENCLOSED ROPS	995
Y	*237-7538*	1	POWER TRAIN AR	459

Y-SEPARATE ILLUSTRATION

<END>

317-9482 OPTION AR-CAB—AIR SEAT

S/N: JKM1-UP

AN ATTACHMENT

SMCS-7000, 7301 **i02928313**

NOTE	PART NUMBER	QTY	PART NAME 1 2 3 4 5 6 (PRODUCT LEVEL)	SEE PAGE
Y	**118-7250**	1	SCREEN GP-SUN	1010
Y	*257-9847*	1	SEAT & MOUNTING GP	1013

Y-SEPARATE ILLUSTRATION

<END>

317-9487 OPTION AR-LIGHTING—AUX LIGHTS, WARNING BEACON

S/N: JKM1-UP

AN ATTACHMENT

SMCS-7000 **i02928323**

NOTE	PART NUMBER	QTY	PART NAME 1 2 3 4 5 6 (PRODUCT LEVEL)	SEE PAGE
Y	*265-9736*	1	ALTERNATOR AR-CHARGING	161
Y	*265-9762*	1	LIGHTING AR-AUXILIARY (CAB FRONT)	217
Y	*283-6945*	1	LIGHTING GP-WARNING BEACON	231

Y-SEPARATE ILLUSTRATION

<END>

ENGINE ARRANGEMENT

242-1382 ENGINE AR-PRIMARY

S/N: C6E1-3335, 4820-UP; G9G1-UP
129 BRAKE KW (173 BHP) AT 2200 RPM. TURBOCHARGED
PART OF 237-7545 GENERAL AR

SMCS-1000 **i03910080**

NOTE	PART NUMBER	QTY	PART NAME 1 2 3 4 5 6 (PRODUCT LEVEL)	SEE PAGE
Y	*288-7983*	1	BELT TENSIONER GP	12
Y	*292-5867*	1	CAMSHAFT GP	14
Y	*283-4558*	1	COOLER GP-FLTR BASE & ENG OIL	64
Y	*294-5393*	1	COVER GP-VALVE MECHANISM	15
Y	*292-5859*	1	CRANKSHAFT GP	24
Y	*292-5856*	1	CYLINDER BLOCK GP	26
Y	**277-6990**	1	CYLINDER BLOCK GP (SHORT)	25
Y	*292-5860*	1	CYLINDER HEAD GP	31
Y	*297-9538*	1	FILLER GP-ENGINE OIL	57
Y	*277-2912*	1	FILTER GP-ENGINE OIL	59
Y	*277-6826*	1	FILTER GP-FUEL	105
			S/N: C6E1-3335	
Y	*319-7864*	1	FILTER GP-FUEL	106
			S/N: C6E4820-UP	
Y	*277-0590*	1	FLYWHEEL GP	33
Y	*277-4410*	1	GLOW PLUG GP	196
Y	*288-7979*	1	HOUSING GP-FLYWHEEL	34
Y	*286-0035*	1	HOUSING GP-FRONT	36
Y	*279-9653*	1	LIFTING GP-ENGINE	41
Y	*286-7060*	1	LINES GP-FUEL	115
			S/N: C6E1-3335	
Y	*294-3301*	1	LINES GP-FUEL FILTER	128
			S/N: C6E1-3335	
Y	*319-7863*	1	LINES GP-FUEL	116
			S/N: C6E4820-UP	
Y	*288-7985*	1	MANIFOLD GP-INLET	92
Y	*277-4541*	1	MOUNTING GP-ENGINE	42
Y	*288-7981*	1	PAN GP-OIL	44
Y	*292-5857*	1	PISTON & ROD GP	48
Y	*286-0039*	1	PLUG GP-CYLINDER BLOCK	50
Y	*320-4733*	1	PLUG GP-ENGINE	51
Y	*274-1929*	1	PULLEY GP-CRANKSHAFT	52
Y	*277-4262*	1	PUMP GP-ENGINE OIL	60
Y	*317-7966*	1	PUMP GP-FUEL INJECTION	133
Y	*277-2939*	1	PUMP GP-WATER	74
Y	*277-2976*	1	REGULATOR GP-TEMPERATURE (CONNECTOR INCLUDED)	82
Y	*292-5865*	1	ROCKER ARM GP	55
Y	*288-7980*	1	STARTING MOTOR GP-ELECTRIC	260
Y	*288-7984*	1	TURBOCHARGER GP	99
			S/N: C6E1-3335	
Y	*319-7862*	1	TURBOCHARGER GP	102
			S/N: C6E4820-UP	
Y	*277-4694*	1	VALVE GP-FLUID SAMPLING (ENGINE OIL)	61
Y	*292-8508*	1	WIRING GP-ENGINE	343
	322-6402	1	ELECTRONICS GP-ENGINE RATINGS	

Y-SEPARATE ILLUSTRATION

ENGINE ARRANGEMENT

239-3372 INSTALLATION AR-ENGINE

S/N: JKM1-UP

PART OF 237-7545 GENERAL AR

SMCS-1000 **i02897515**

NOTE	PART NUMBER	QTY	PART NAME 1 2 3 4 5 6 (PRODUCT LEVEL)	SEE PAGE
Y	*255-4804*	1	AIR CLEANER GP	83
Y	*255-4808*	1	ALTERNATOR GP-CHARGING	166
Y	*313-4006*	1	LINES GP-ALTERNATOR AIR	233
Y	*255-4809*	1	DRAIN GP-ECOLOGY (ENGINE OIL, FUEL)	32
Y	*255-4805*	1	LINES GP-TURBOCHARGER AIR	87
Y	*253-5210*	1	MOUNTING GP-ENGINE & XMSN	43
Y	*255-4806*	1	MUFFLER GP	95

Y-SEPARATE ILLUSTRATION

BASIC ENGINE

288-7983 BELT TENSIONER GP

S/N: C6E1-UP; G9G1-UP

PART OF 242-1382 ENGINE AR-PRIMARY

SMCS-1357, 1358, 1397 **i02919764**

NOTE	REF NO	GRAPHIC REF	PART NUMBER	QTY	PART NAME 1 2 3 4 5 6 (PRODUCT LEVEL)	SEE PAGE
M	1	1	**6I-0593**	5	BOLT (M10X1.5X30-MM)	
M	2	1	**6I-0654**	3	BOLT (M10X1.5X25-MM)	
	4	1	**7X-0591**	2	WASHER-HARD (17X29X3-MM THK)	
	5	1	**261-0376**	1	BELT TENSIONER	
	6	1	**320-2868**	1	BRACKET	
	7	1	**277-6075**	2	BOLT	
	9	1	**277-6078**	1	BRACKET	

M-METRIC PART

288-7983 **BELT TENSIONER GP** *(contd.)* **i02919764**

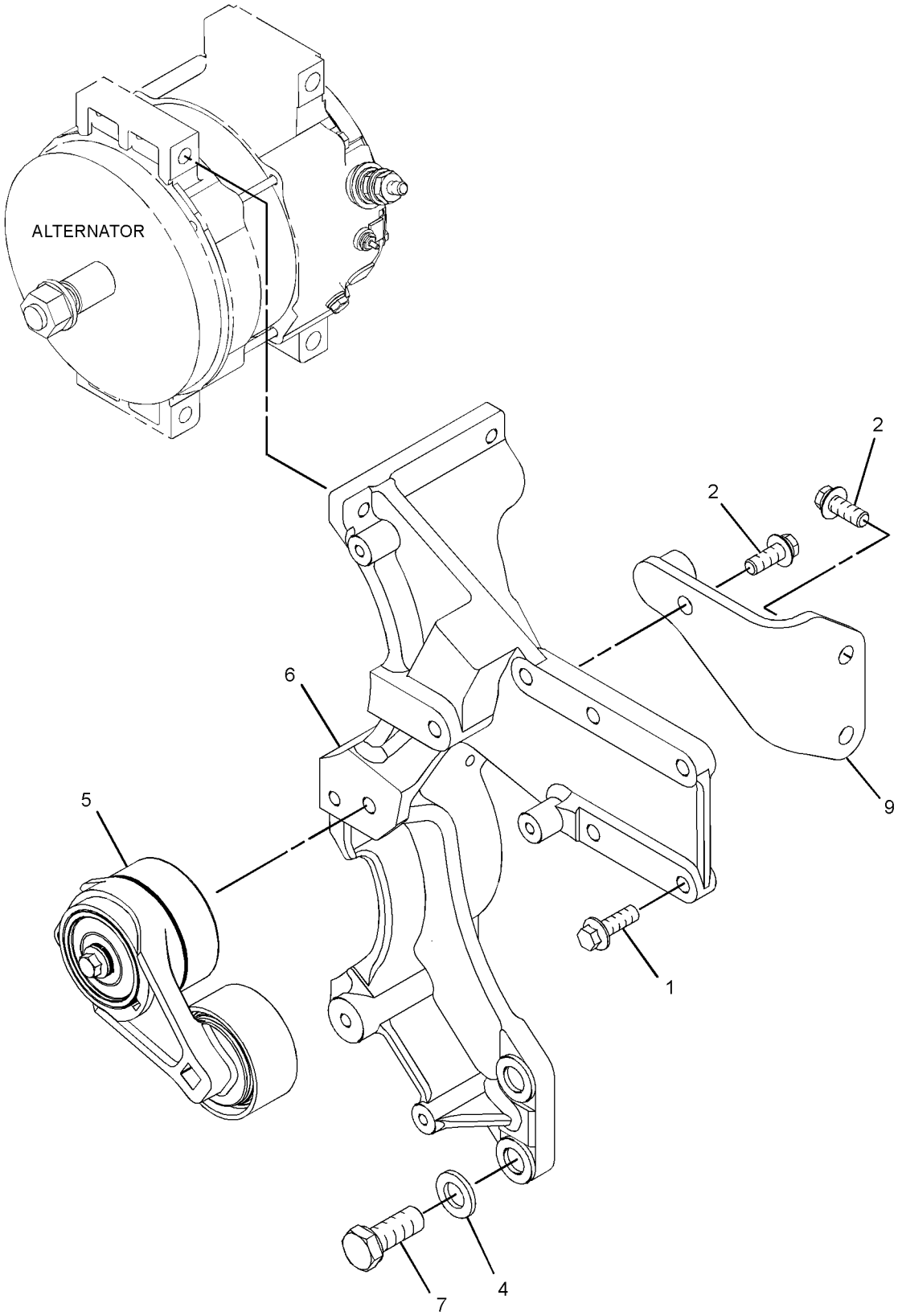

GRAPHIC #1 **<END>** g01334687

BASIC ENGINE

292-5867 CAMSHAFT GP

S/N: C6E1-UP; G9G1-UP

PART OF 242-1382 ENGINE AR-PRIMARY

SMCS-1210, 1211, 1212 **i03586443**

NOTE	REF NO	GRAPHIC REF	PART NUMBER	QTY	PART NAME 1 2 3 4 5 6 (PRODUCT LEVEL)	SEE PAGE
	1	1	**278-5125**	12	TAPPET	
	2	1	**278-5126**	12	PUSHROD	
	3	1	**347-1133**	1	CAMSHAFT	
	3A	1	**1B-8736**	1	KEY-WOODRUFF	

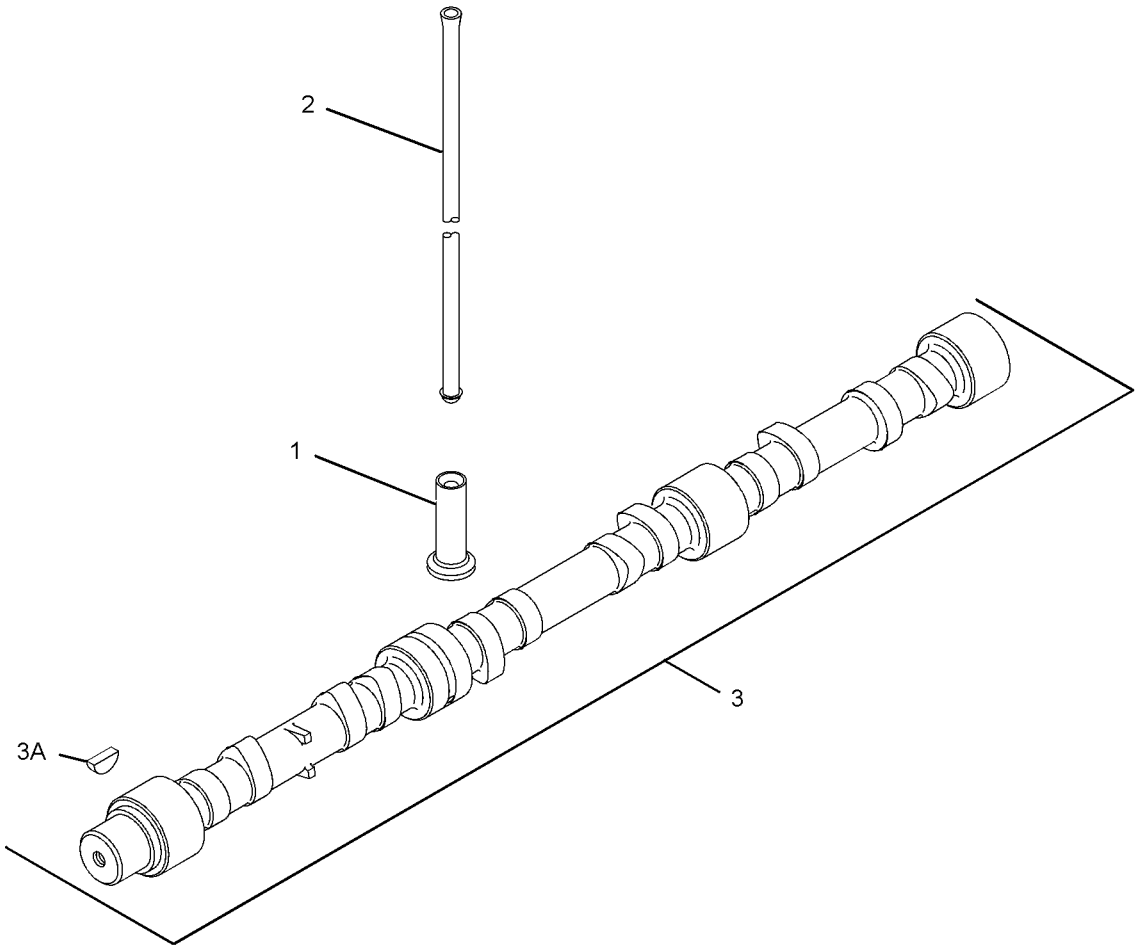

GRAPHIC #1 **<END>** g01923092

294-5393 COVER GP-VALVE MECHANISM

S/N: C6E1-2839

PART OF 242-1382 ENGINE AR-PRIMARY

SMCS-1107 **i03996789**

NOTE	REF NO	GRAPHIC REF	PART NUMBER	QTY	PART NAME 1 2 3 4 5 6 (PRODUCT LEVEL)	SEE PAGE
	1	1	**103-1066**	2	CLAMP-HOSE	
M	2	1	**6I-0217**	1	BOLT (M8X1.25X20-MM)	
M	3	1	**100-4841**	5	BOLT (M6X1X10-MM)	
	4	1	**277-5067**	6	SLEEVE	
	5	1	**277-5094**	1	COVER AS	
	5A	1	**277-5096**	1	SEAL-O-RING	
	6	1	**278-4695**	1	HOSE (CRANKCASE BREATHER)	
	7	1	**278-5927**	1	TUBE-BREATHER	
	8	1	**302-7818**	1	COVER AS-CYLINDER HEAD	
	8A	1	**277-5030**	1	SEAL-O-RING	
	8B	1	**278-4693**	1	GASKET-VALVE COVER	
	8C	1	**278-4694**	1	BREATHER AS (CRANKCASE)	
	8D	2	**124-0506**	1	SEAL	
	8E	2	**160-0526**	1	SEAL-O-RING	
	8F	2	**185-3159**	1	FILTER ELEMENT-BREATHER (CRANKCASE)	
	8G	1	**295-1042**	4	SCREW-TAPPING	
	8H	1	**300-3907**	1	ADAPTER	
	9	1	**277-5031**	9	BOLT-SPECIAL (SHOULDER)	
	10	1	**312-3084**	1	COVER AS-CYLINDER HEAD	
	10A	1	**309-6664**	1	GASKET-COVER (VALVE)	
	10B	1	**277-5064**	3	SEAL-O-RING	
	10C	1	**277-5065**	3	CLIP	
	10D	1	**285-1975**	3	HARNESS AS-WIRING (INJECTOR)	
	11	1	**294-5408**	1	COVER AS	
M	11A	1	**100-4841**	5	BOLT (M6X1X10-MM)	
	12	1	**298-4550**	6	BOLT-SPECIAL (SHOULDER)	
F			**2S-3440**	2	CLAMP-HOSE	

F-NOT SHOWN
M-METRIC PART

294-5393 **COVER GP-VALVE MECHANISM** *(contd.)* **i03996789**

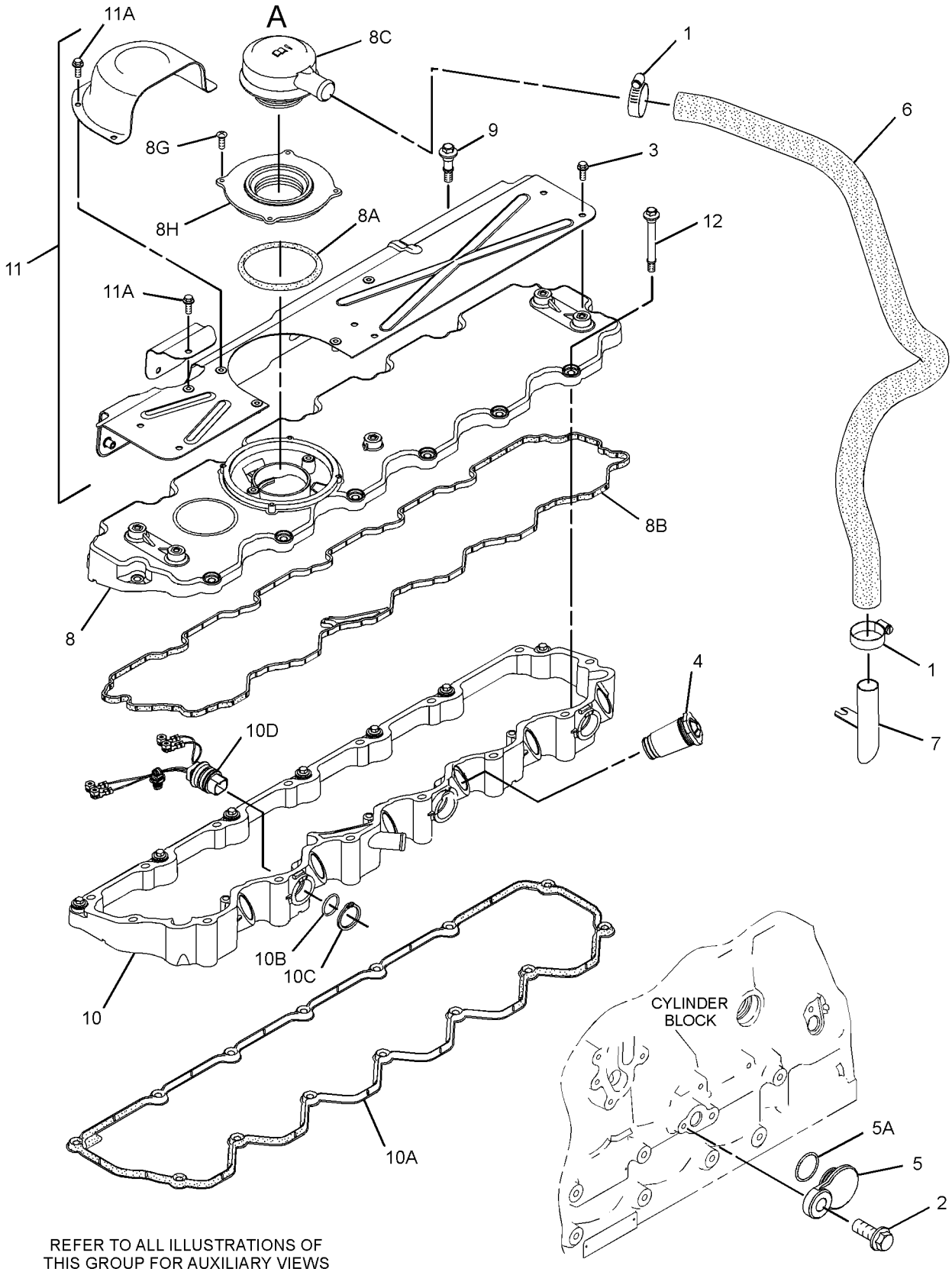

REFER TO ALL ILLUSTRATIONS OF THIS GROUP FOR AUXILIARY VIEWS

GRAPHIC #1

g01416820

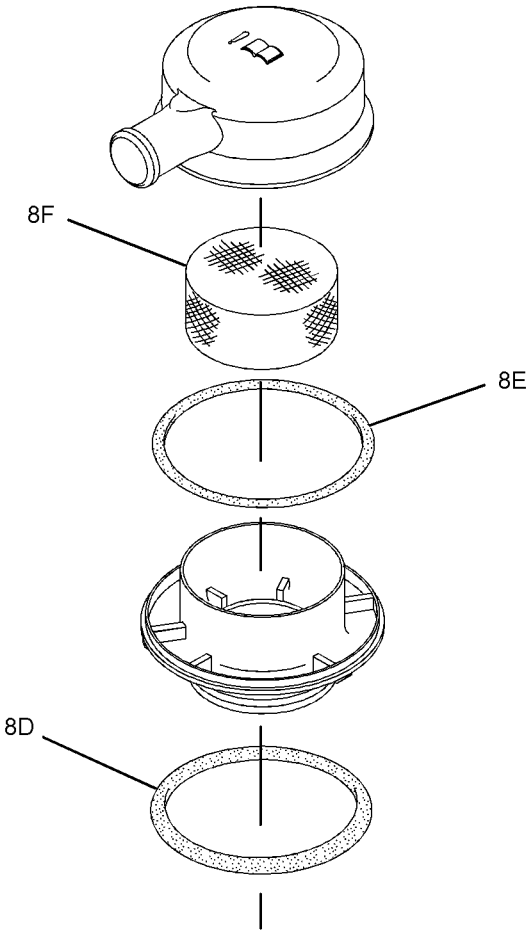

VIEW OF AREA A

GRAPHIC #2

<END>

g01361202

BASIC ENGINE

294-5393 COVER GP-VALVE MECHANISM

S/N: C6E2840-6975

PART OF 242-1382 ENGINE AR-PRIMARY

SMCS-1107 **i03116068**

NOTE	REF NO	GRAPHIC REF	PART NUMBER	QTY	PART NAME 1 2 3 4 5 6 (PRODUCT LEVEL)	SEE PAGE
C	1	1	**032-9020**	2	CLIP	
M	2	1	**6I-0217**	1	BOLT (M8X1.25X20-MM)	
M	3	1	**100-4841**	5	BOLT (M6X1X10-MM)	
	4	1	**277-5067**	6	SLEEVE	
	5	1	**277-5094**	1	COVER AS	
	5A	1	**277-5096**	1	SEAL-O-RING	
C	6	1	**198-8645**	1	HOSE (CRANKCASE BREATHER)	
C	7	1	**7C-1281**	1	BRACKET	
C	8	1	**318-8038**	1	COVER GP-CYLINDER HEAD	
	8A	1	**317-3064**	1	GASKET-COVER (VALVE MECHANISM)	
	8B	1	**318-1726**	4	BOLT	
	8C	1	**326-7288**	1	BREATHER (CRANKCASE)	
	8D	1	**326-7289**	1	SEAL-O-RING	
	9	1	**277-5031**	9	BOLT-SPECIAL (SHOULDER)	
C	10	1	**317-2717**	1	BASE GP-VALVE COVER & INJ HARN	
	10A	1	**277-5064**	3	SEAL-O-RING	
	10B	1	**277-5065**	3	CLIP	
	10C	1	**285-1975**	3	HARNESS AS-WIRING (INJECTOR)	
	10D	1	**309-6664**	1	GASKET-COVER	
	11	1	**320-6551**	1	SHIELD-HEAT	
	12	1	**298-4550**	6	BOLT-SPECIAL (SHOULDER)	
C	13	1	**6I-1090**	1	BOLT (M8X1.25X40-MM)	
C	14	1	**162-1565**	1	SPRING (CRANKCASE BREATHER HOSE)	
C	15	1	**201-1029**	1	SPACER	
C	16	1	**127-8281**	1	CLIP	
F			**2S-3440**	2	CLAMP-HOSE	

C-CHANGE FROM PREVIOUS TYPE
F-NOT SHOWN
M-METRIC PART

294-5393 **COVER GP-VALVE MECHANISM** *(contd.)* **i03116068**

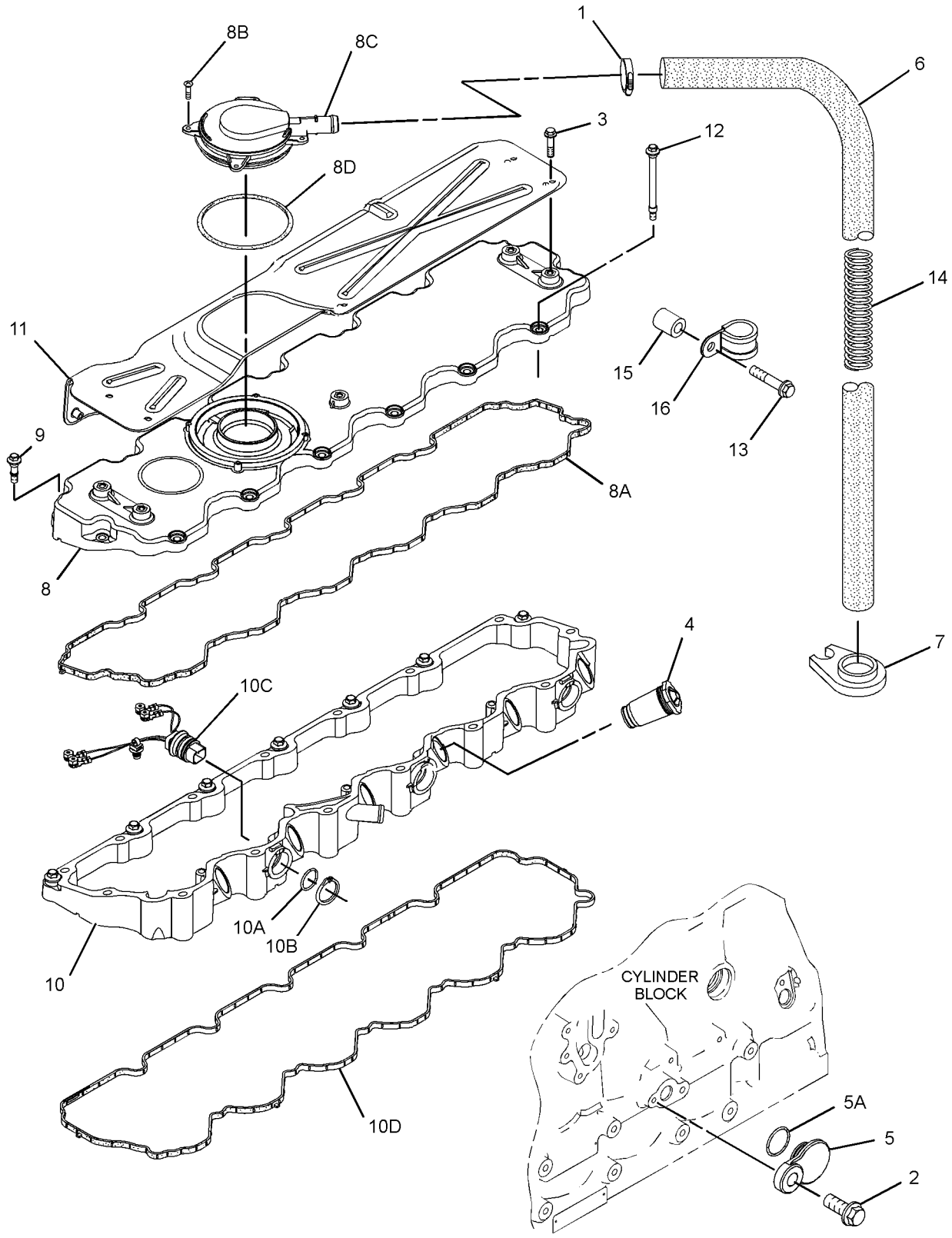

GRAPHIC #1 **<END>** g01633713

BASIC ENGINE

294-5393 COVER GP-VALVE MECHANISM

S/N: C6E6976-8677

PART OF 242-1382 ENGINE AR-PRIMARY

SMCS-1107 **i03238764**

NOTE	REF NO	GRAPHIC REF	PART NUMBER	QTY	PART NAME 1 2 3 4 5 6 (PRODUCT LEVEL)	SEE PAGE
	1	1	**032-9020**	2	CLIP	
M	2	1	**6I-0217**	1	BOLT (M8X1.25X20-MM)	
M	3	1	**100-4841**	5	BOLT (M6X1X10-MM)	
	4	1	**277-5067**	6	SLEEVE	
C	5	1	**331-8052**	1	PLATE AS	
	5A	1	**331-8053**	1	SEAL-O-RING	
	6	1	**198-8645**	1	HOSE (CRANKCASE BREATHER)	
	7	1	**7C-1281**	1	BRACKET	
	8	1	**318-8038**	1	COVER GP-CYLINDER HEAD	
	8A	1	**317-3064**	1	GASKET-COVER (VALVE MECHANISM)	
	9	1	**277-5031**	9	BOLT-SPECIAL (SHOULDER)	
	10	1	**317-2717**	1	BASE GP-VALVE COVER & INJ HARN	
	10A	1	**277-5064**	3	SEAL-O-RING	
	10B	1	**277-5065**	3	CLIP	
	10C	1	**285-1975**	3	HARNESS AS-WIRING (INJECTOR)	
	10D	1	**309-6664**	1	GASKET-COVER	
	11	1	**320-6551**	1	SHIELD-HEAT	
	12	1	**298-4550**	6	BOLT-SPECIAL (SHOULDER)	
	13	1	**6I-1090**	1	BOLT (M8X1.25X40-MM)	
	14	1	**162-1565**	1	SPRING (CRANKCASE BREATHER HOSE)	
	15	1	**201-1029**	1	SPACER	
	16	1	**127-8281**	1	CLIP	
F			**2S-3440**	2	CLAMP-HOSE	

C-CHANGE FROM PREVIOUS TYPE
F-NOT SHOWN
M-METRIC PART

294-5393 **COVER GP-VALVE MECHANISM** *(contd.)* **i03238764**

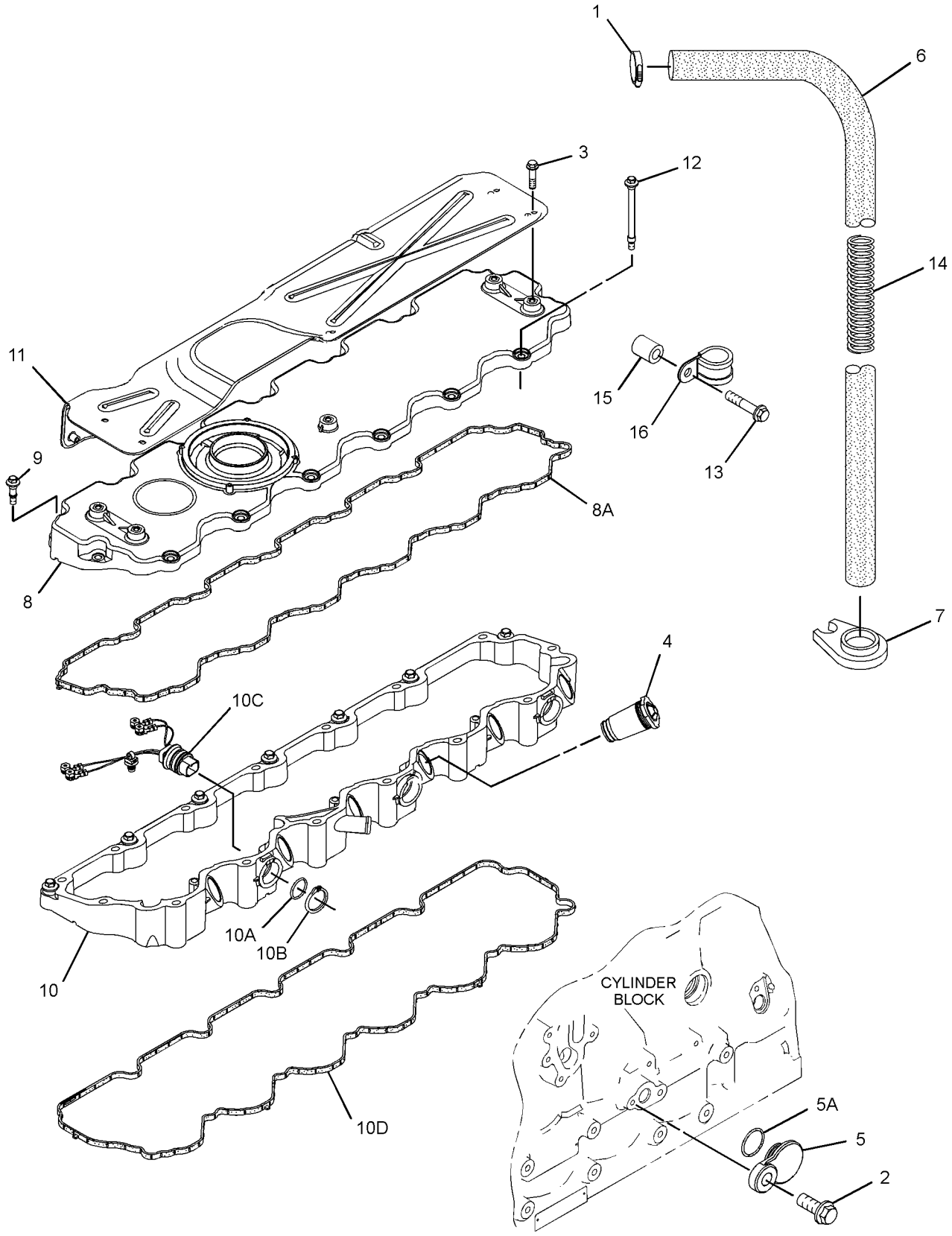

GRAPHIC #1 **<END>** g01655733

BASIC ENGINE

294-5393 COVER GP-VALVE MECHANISM

S/N: C6E8678-UP; G9G1-UP

PART OF 242-1382 ENGINE AR-PRIMARY

SMCS-1107 **i03279236**

NOTE	REF NO	GRAPHIC REF	PART NUMBER	QTY	PART NAME 1 2 3 4 5 6 (PRODUCT LEVEL)	SEE PAGE
	1	1	**032-9020**	2	CLIP	
M	3	1	**100-4841**	5	BOLT (M6X1X10-MM)	
	4	1	**277-5067**	6	SLEEVE	
	6	1	**198-8645**	1	HOSE (CRANKCASE BREATHER)	
	7	1	**7C-1281**	1	BRACKET	
	8	1	**318-8038**	1	COVER GP-CYLINDER HEAD	
	8A	1	**317-3064**	1	GASKET-COVER (VALVE MECHANISM)	
	9	1	**277-5031**	9	BOLT-SPECIAL (SHOULDER)	
	10	1	**317-2717**	1	BASE GP-VALVE COVER & INJ HARN	
	10A	1	**277-5064**	3	SEAL-O-RING	
	10B	1	**277-5065**	3	CLIP	
	10C	1	**285-1975**	3	HARNESS AS-WIRING (INJECTOR)	
	10D	1	**309-6664**	1	GASKET-COVER	
	11	1	**320-6551**	1	SHIELD-HEAT	
	12	1	**298-4550**	6	BOLT-SPECIAL (SHOULDER)	
	13	1	**6I-1090**	1	BOLT (M8X1.25X40-MM)	
	14	1	**162-1565**	1	SPRING (CRANKCASE BREATHER HOSE)	
	15	1	**201-1029**	1	SPACER	
	16	1	**127-8281**	1	CLIP	
F			**2S-3440**	2	CLAMP-HOSE	

F-NOT SHOWN
M-METRIC PART

294-5393 **COVER GP-VALVE MECHANISM** *(contd.)* **i03279236**

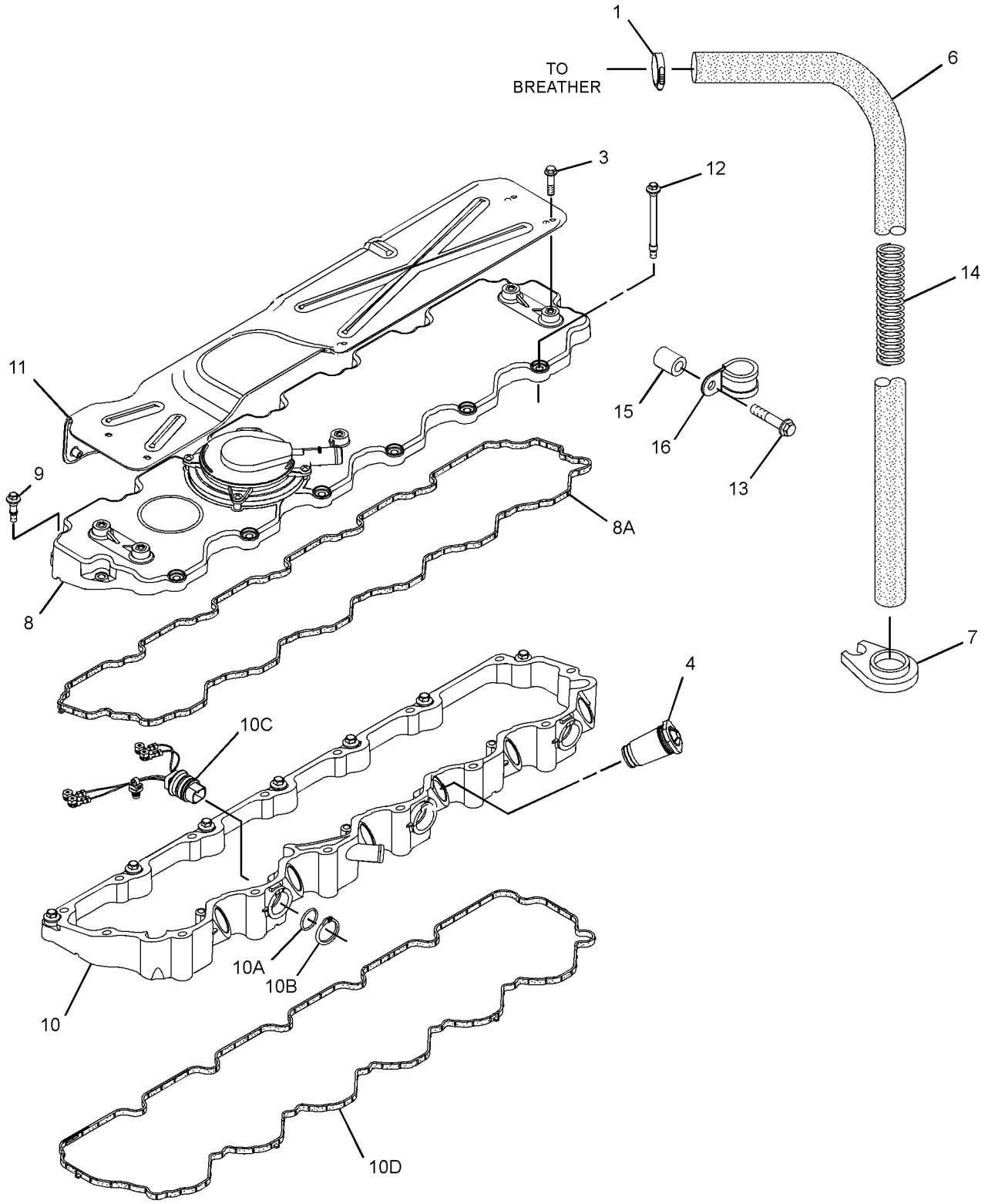

GRAPHIC #1 **<END>** g01670315

BASIC ENGINE

292-5859 CRANKSHAFT GP

S/N: C6E1-UP; G9G1-UP

PART OF 242-1382 ENGINE AR-PRIMARY

SMCS-1202 **i03635030**

NOTE	REF NO	GRAPHIC REF	PART NUMBER	QTY	PART NAME 1 2 3 4 5 6 (PRODUCT LEVEL)	SEE PAGE
	1	1	**276-7387**	1	CRANKSHAFT AS	
	1A	1	**1B-8736**	1	KEY-WOODRUFF	
	1B	1	**225-8839**	1	DOWEL	
	1C	1	**276-7388**	1	KIT-BEARING	
	1D	1	**276-7389**	1	KIT-BEARING	
	1E	1	**276-7390**	2	WASHER-THRUST	
	1F	1	**276-7391**	1	GEAR (34-TEETH)	
	2	1	**276-7393**	1	RING-TIMING	
	3	1	**276-7394**	3	BOLT	

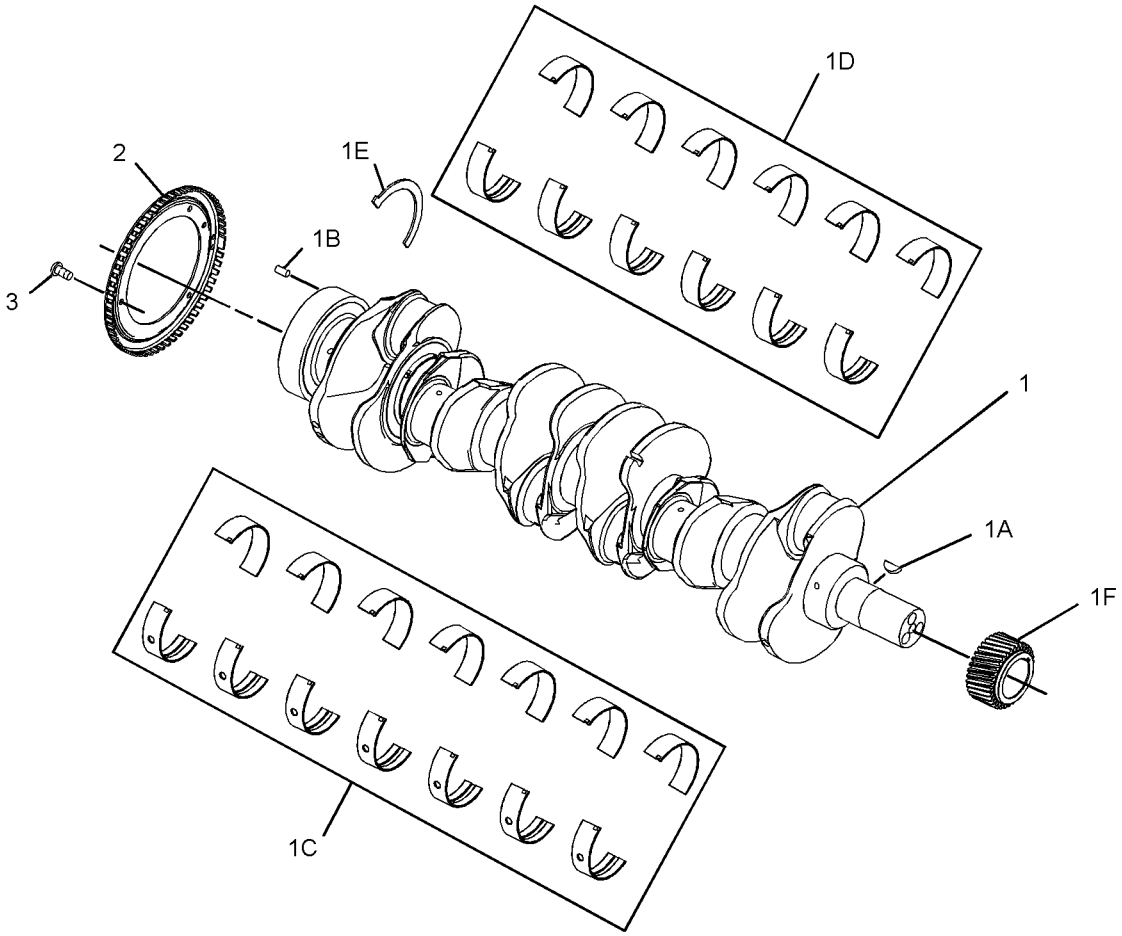

GRAPHIC #1 **<END>** g01358997

BASIC ENGINE

277-6990 CYLINDER BLOCK GP

S/N: C6E4820-UP; G9G1-UP

PART OF 242-1382 ENGINE AR-PRIMARY

SMCS-1201 **i03910053**

NOTE	PART NUMBER	QTY	PART NAME 1 2 3 4 5 6 (PRODUCT LEVEL)	SEE PAGE
M	**100-4841**	6	BOLT (M6X1X10-MM)	
M	**209-9219**	1	BOLT (M8X1.25X16-MM)	
	225-5439	2	BOLT-SPECIAL (CONNECTING ROD)	
	276-5600	14	BOLT-SPECIAL (BEARING CAP)	
	276-7394	1	BOLT	
	276-7478	1	BUSHING	
	276-5601	1	BUSHING-CAMSHAFT	
	185-0884	2	DOWEL	
	225-8839	1	DOWEL	
	276-5604	1	DOWEL	
	276-7391	1	GEAR (34-TEETH)	
	276-5648	1	HOUSING AS	
	276-5605	6	JET AS-PISTON COOLING	
	1B-8736	1	KEY-WOODRUFF	
	276-7388	1	KIT-BEARING (MAIN)	
	276-7389	1	KIT-BEARING (B)	
	276-7475	1	PISTON AS	
	124-3536	2	RING-RETAINING	
	225-8858	1	PLUG	
	232-1322	1	PLUG (BLANKING)	
	232-7596	1	PLUG	
	232-7597	2	PLUG	
	232-7599	2	PLUG	
	276-5602	6	PLUG-CORE	
	2B-0858	1	PLUG-PIPE	
	067-6043	5	PLUG-SIDE	
	276-7393	1	RING-TIMING	
	276-5603	1	SEAL-O-RING	
	276-7390	2	WASHER-THRUST	

M-METRIC PART

<END>

292-5856 CYLINDER BLOCK GP

S/N: C6E1-UP; G9G1-UP

PART OF 242-1382 ENGINE AR-PRIMARY

SMCS-1201 **i02750504**

NOTE	REF NO	GRAPHIC REF	PART NUMBER	QTY	PART NAME 1 2 3 4 5 6 (PRODUCT LEVEL)	SEE PAGE
M	1	1	**209-9219**	8	BOLT (M8X1.25X16-MM)	
	2	1	**292-0886**	1	HOUSING-REAR	
Y	3	1	**306-6845**	1	CYLINDER BLOCK GP	27

M-METRIC PART
Y-SEPARATE ILLUSTRATION

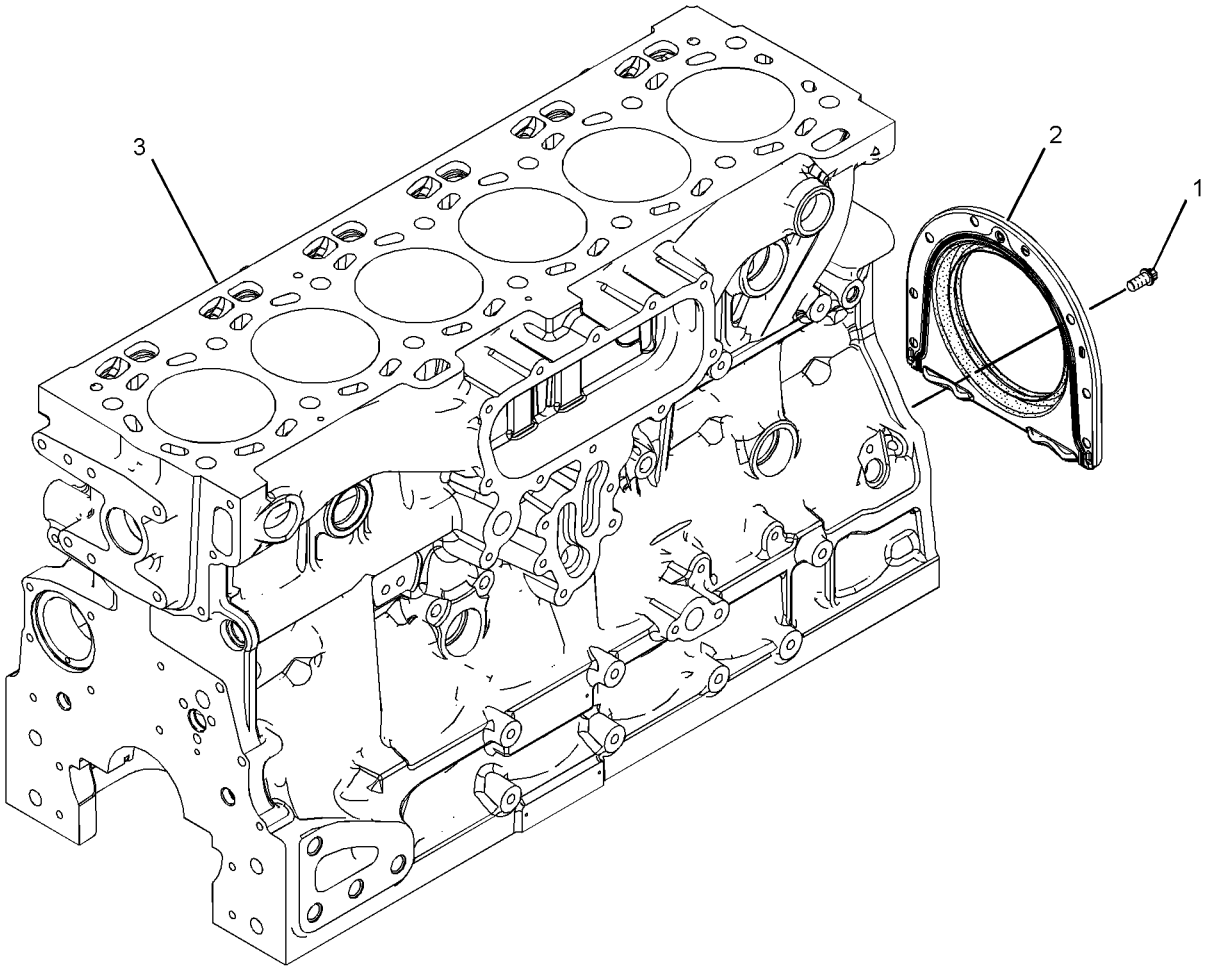

GRAPHIC #1 **<END>** g01355960

306-6845 CYLINDER BLOCK GP

S/N: C6E1-UP; G9G1-UP

PART OF 292-5856 CYLINDER BLOCK GP

SMCS-1201 **i02752448**

NOTE	REF NO	GRAPHIC REF	PART NUMBER	QTY	PART NAME 1 2 3 4 5 6 (PRODUCT LEVEL)	SEE PAGE
	1	1	**2B-0858**	1	PLUG-PIPE	
	2	1	**067-6043**	5	PLUG-SIDE	
M	3	1	**100-4841**	6	BOLT (M6X1X10-MM)	
	4	1	**185-0884**	2	DOWEL	
	5	1	**225-8858**	1	PLUG	
	6	1	**232-1322**	1	PLUG	
	7	1	**232-7596**	1	PLUG	
	8	1	**232-7597**	2	PLUG	
	9	1	**232-7599**	2	PLUG	
	10	1	**276-5600**	14	BOLT-SPECIAL (BEARING CAP)	
	11	1	**276-5601**	1	BUSHING-CAMSHAFT	
	12	1	**276-5602**	6	PLUG-CORE	
	13	1	**276-5603**	1	SEAL-O-RING	
	14	1	**276-5604**	1	DOWEL	
	15	1	**276-5605**	6	JET AS-PISTON COOLING	

M-METRIC PART

306-6845 **CYLINDER BLOCK GP** *(contd.)* **i02752448**

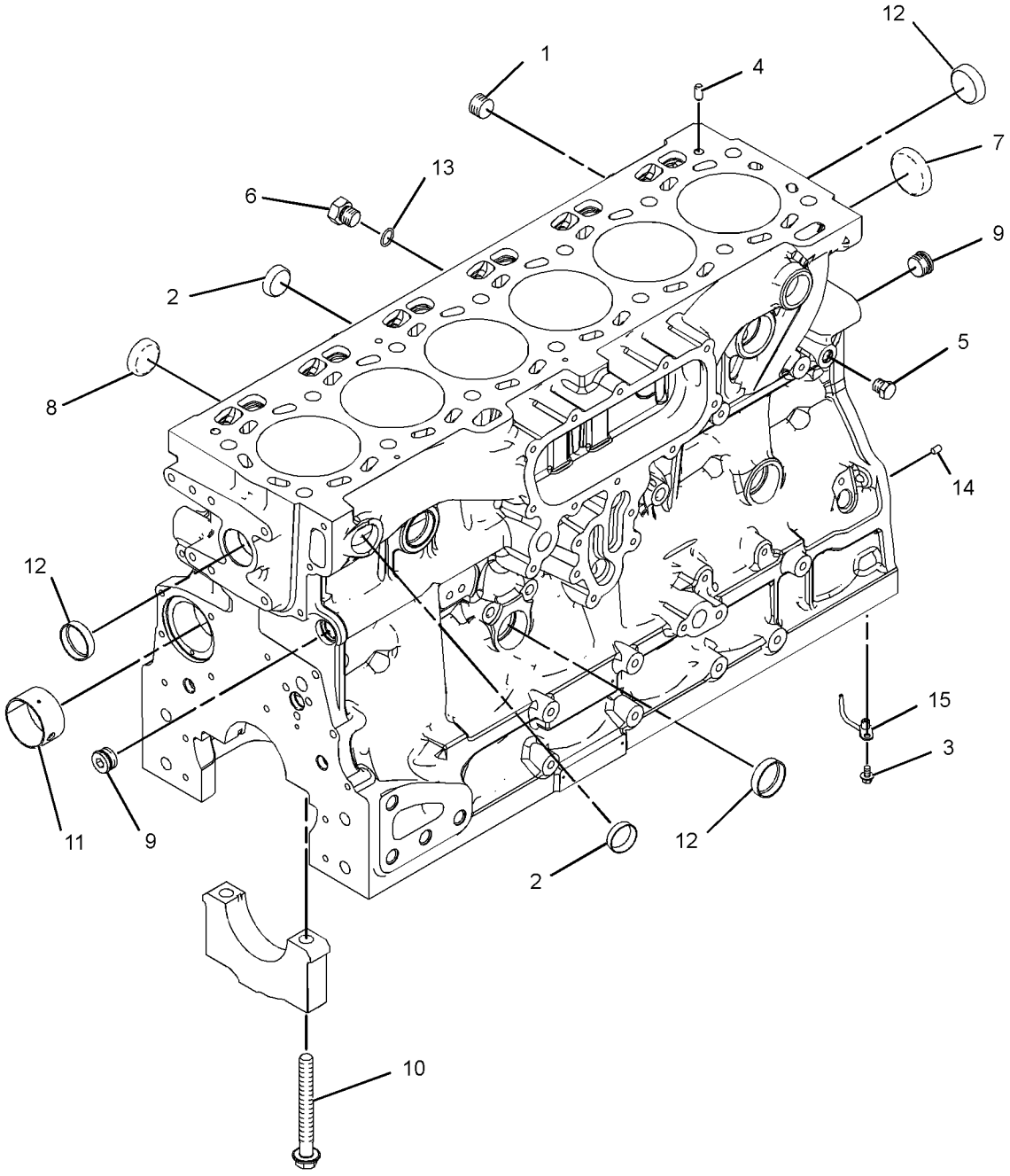

GRAPHIC #1 **<END>** g01339916

309-6663 CYLINDER HEAD AS

S/N: C6E1-UP; G9G1-UP

PART OF 292-5860 CYLINDER HEAD GP

SMCS-1100, 1101 **i03419106**

NOTE	REF NO	GRAPHIC REF	PART NUMBER	QTY	PART NAME 1 2 3 4 5 6 (PRODUCT LEVEL)	SEE PAGE
	1	1	**2B-0858**	2	PLUG-PIPE	
	2	1	**199-9751**	1	SEAL-O-RING	
	3	1	**232-1322**	1	PLUG	
	4	1	**276-8116**	6	PLUG-CORE	
	5	1	**276-8117**	13	PLUG-CORE	
	6	1	**276-8123**	48	RETAINER	
	7	1	**339-9637**	12	VALVE-EXHAUST	
J	8	1	**276-8132**	24	SPRING-VALVE	
	9	1	**276-8133**	24	CAP-VALVE	
	10	1	**295-6661**	1	PLUG	
	11	1	**299-5511**	24	SEAL-VALVE STEM	
	12	1	**309-6678**	12	VALVE-INLET	

J-SERVICED IN PAIRS

309-6663 CYLINDER HEAD AS *(contd.)* **i03419106**

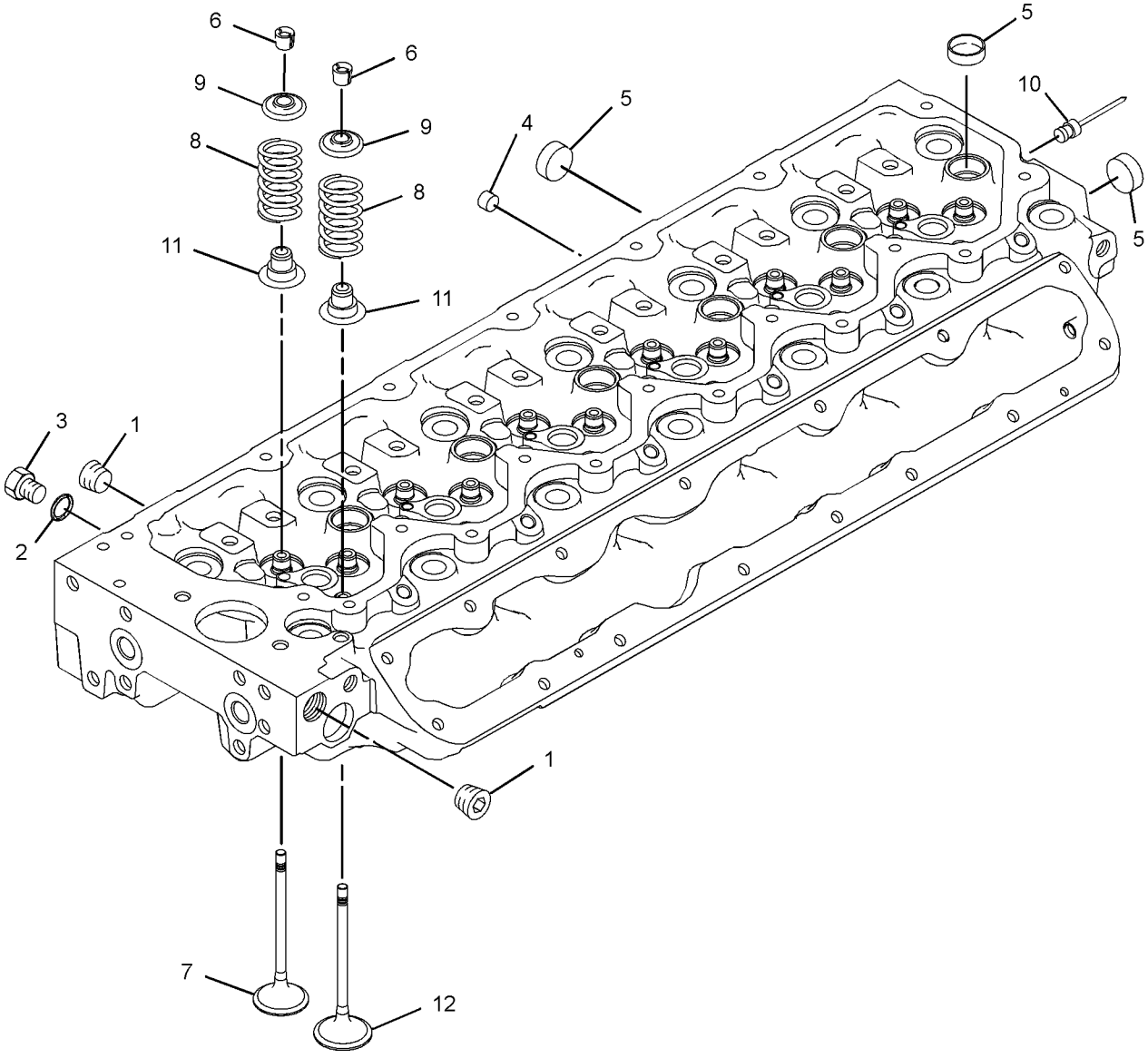

GRAPHIC #1 **<END>** g01400657

292-5860 CYLINDER HEAD GP

S/N: C6E1-UP; G9G1-UP

PART OF 242-1382 ENGINE AR-PRIMARY

SMCS-1100 **i02897025**

NOTE	REF NO	GRAPHIC REF	PART NUMBER	QTY	PART NAME 1 2 3 4 5 6 (PRODUCT LEVEL)	SEE PAGE
	1	1	**176-3141**	1	GASKET-HEAD	
CY	2	1	**309-6663**	1	CYLINDER HEAD AS	29
	3	1	**276-8134**	14	BOLT-SPECIAL (CYLINDER HEAD)	

C-CHANGE FROM PREVIOUS TYPE
Y-SEPARATE ILLUSTRATION

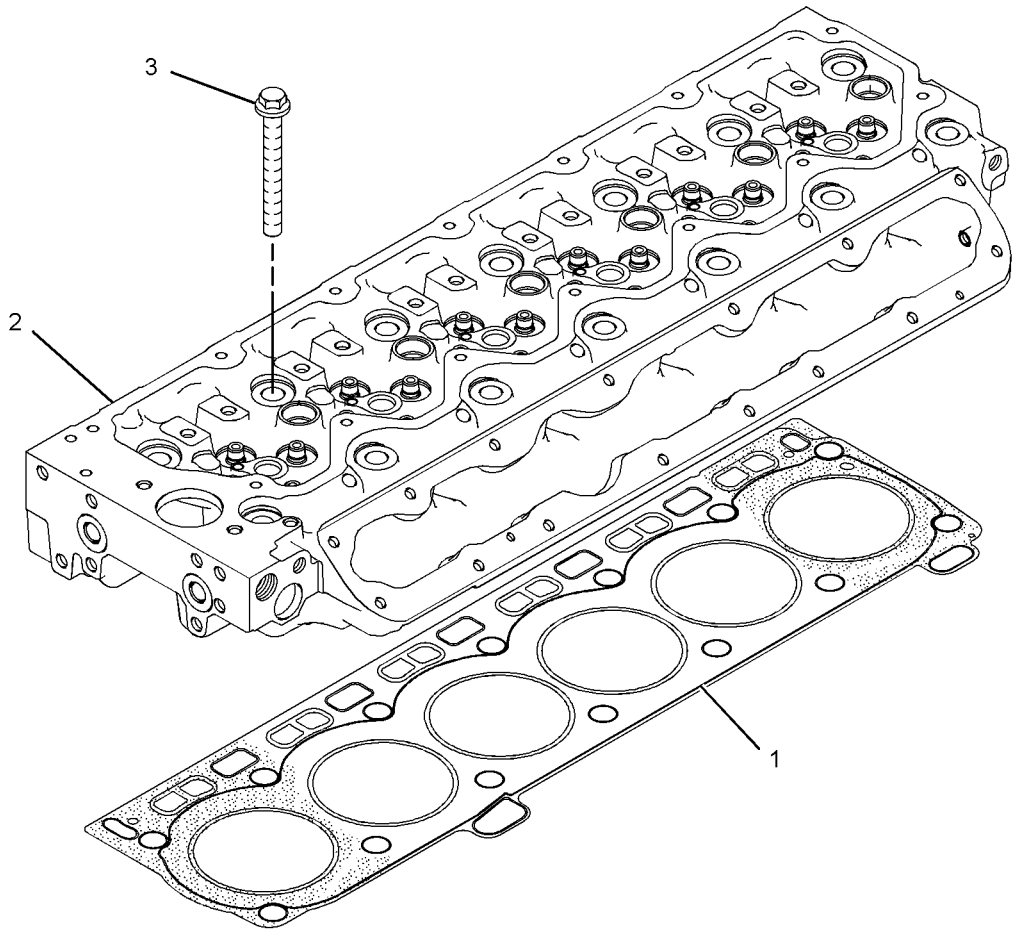

GRAPHIC #1 **<END>** g01265477

255-4809 DRAIN GP-ECOLOGY

S/N: JKM1-UP

PART OF 239-3372 INSTALLATION AR-ENGINE

SMCS-1302 **i03185480**

NOTE	REF NO	GRAPHIC REF	PART NUMBER	QTY	PART NAME 1 2 3 4 5 6 (PRODUCT LEVEL)	SEE PAGE
	1	1	**3S-2093**	1	STRAP-CABLE	
	2	1	**5D-1026**	1	CLAMP-BAND	
	3	1	*165-2273*	1	VALVE GP-SHUTOFF	
		1	**3K-0360**	1	SEAL-O-RING	
		1	**6V-7238**	1	VALVE-SHUTOFF	
E	4	1	**5P-0767**		HOSE (11-CM)	
E	5	1	**8C-6959**		HOSE (51-CM)	
	6	1	**159-5255**	1	ADAPTER	
	7	1	**5P-6718**	1	SEAL-O-RING	

E-ORDER BY THE CENTIMETER

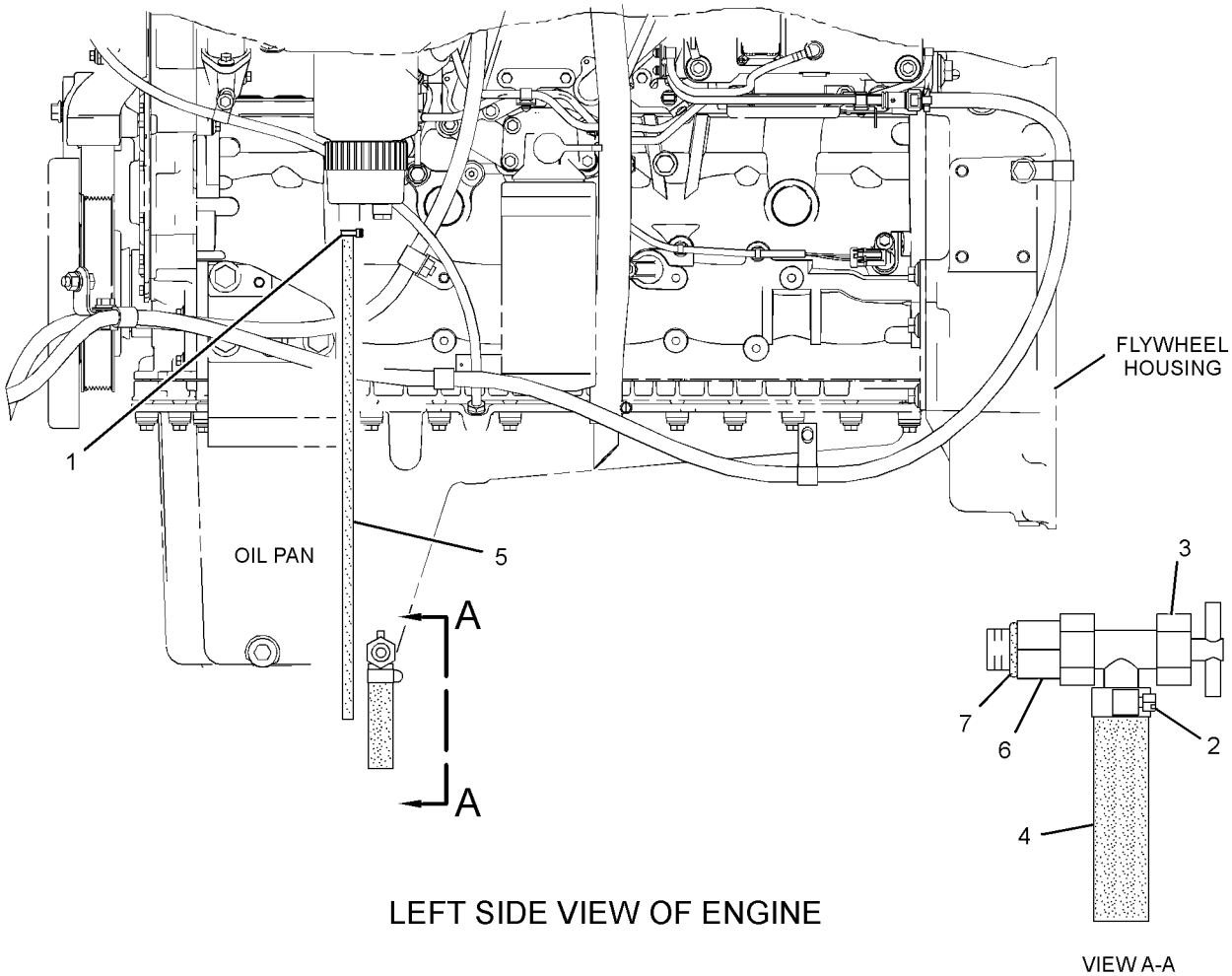

LEFT SIDE VIEW OF ENGINE

GRAPHIC #1 **<END>** g01661973

277-0590 FLYWHEEL GP

S/N: C6E1-UP; G9G1-UP

PART OF 242-1382 ENGINE AR-PRIMARY

SMCS-1156 **i02896973**

NOTE	REF NO	GRAPHIC REF	PART NUMBER	QTY	PART NAME 1 2 3 4 5 6 (PRODUCT LEVEL)	SEE PAGE
	1	1	**0S-1603**	12	BOLT (1/2-20X1.5-IN)	
	2	1	**5P-8245**	12	WASHER-HARD (13.5X25.5X3-MM THK)	
	3	1	**277-0587**	1	FLYWHEEL AS	
	3A	1	**277-0588**	1	GEAR-STARTING MOTOR RING	

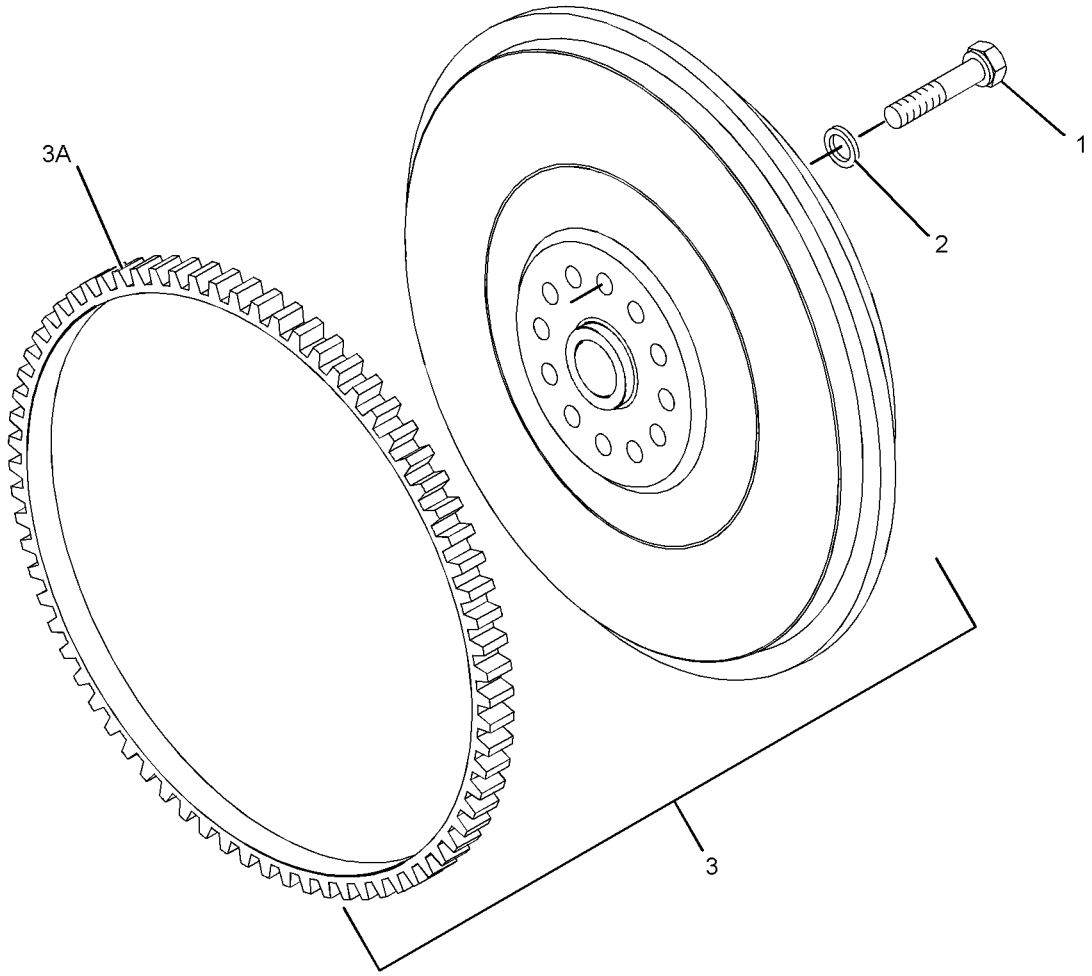

GRAPHIC #1 **<END>** g01270049

BASIC ENGINE

288-7979 HOUSING GP-FLYWHEEL

S/N: C6E1-UP; G9G1-UP

PART OF 242-1382 ENGINE AR-PRIMARY

SMCS-1157 **i02897000**

NOTE	REF NO	GRAPHIC REF	PART NUMBER	QTY	PART NAME 1 2 3 4 5 6 (PRODUCT LEVEL)	SEE PAGE
M	1	1	**102-9941**	3	BOLT (M12X1.75X25-MM)	
	2	1	**277-0116**	1	SEAL-CRANKSHAFT (REAR)	
	3	1	**302-6112**	1	GASKET	
	4	1	**277-0118**	1	SEAL	
	5	1	**277-0121**	2	PLUG	
	6	1	**277-0122**	1	COVER	
	7	1	**290-5728**	1	GASKET	
	8	1	**283-4662**	2	BOLT-FLANGE HEAD	
	9	1	**284-0071**	1	HOUSING-FLYWHEEL	
	10	1	**287-8597**	2	DOWEL	
	11	1	**288-6974**	4	BOLT	
	12	1	**288-6975**	2	BOLT	

M-METRIC PART

288-7979 **HOUSING GP-FLYWHEEL** *(contd.)* **i02897000**

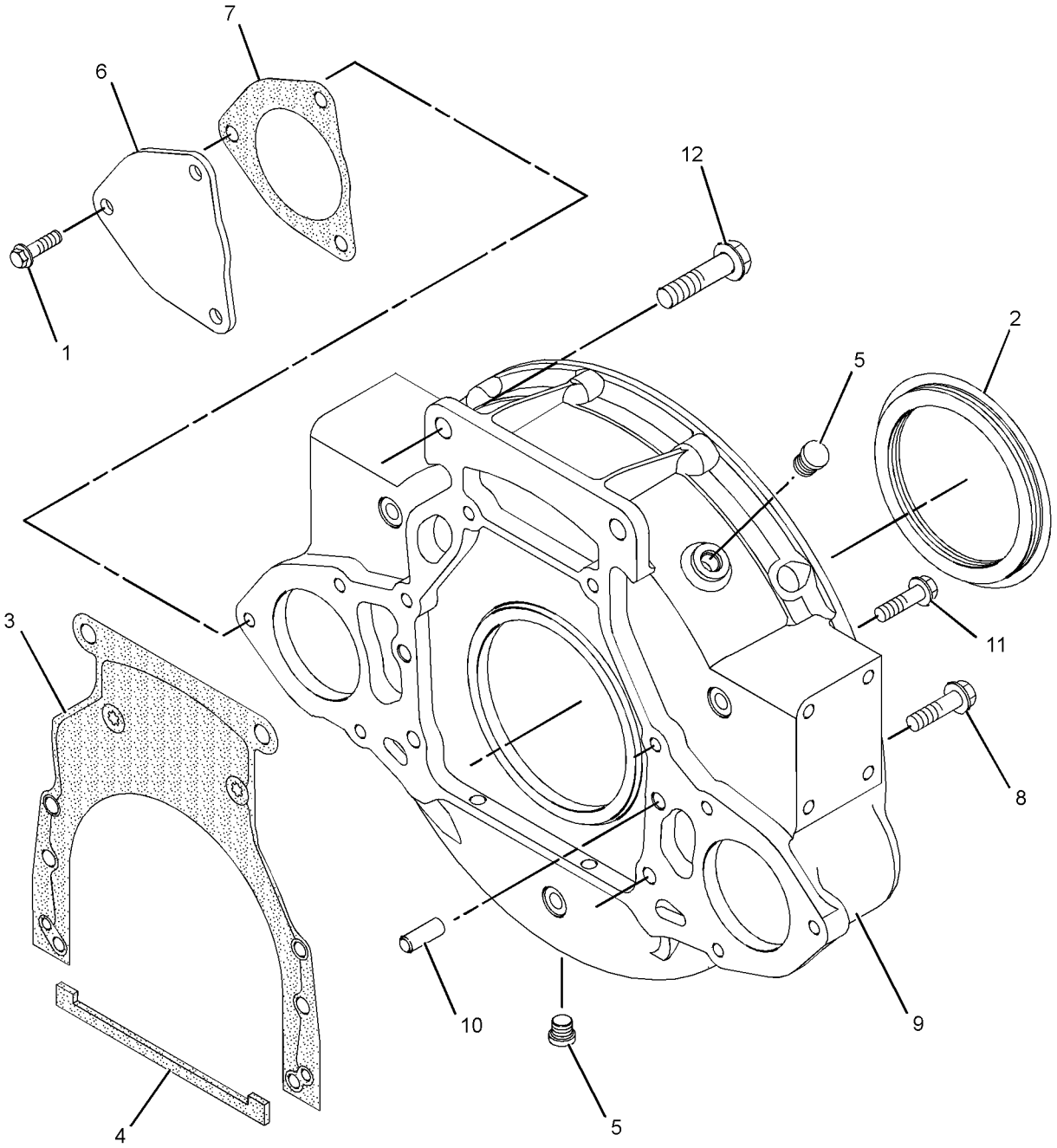

GRAPHIC #1 **<END>** g01270115

BASIC ENGINE

286-0035 HOUSING GP-FRONT

S/N: C6E1-19699

PART OF 242-1382 ENGINE AR-PRIMARY

SMCS-1151, 1162, 1206 **i03563172**

NOTE	REF NO	GRAPHIC REF	PART NUMBER	QTY	PART NAME 1 2 3 4 5 6 (PRODUCT LEVEL)	SEE PAGE
M	1	1	**6I-0217**	6	BOLT (M8X1.25X20-MM)	
M	2	1	**6I-0645**	4	BOLT (M8X1.25X25-MM)	
M	3	1	**6I-0650**	3	BOLT (M10X1.5X65-MM)	
	4	1	**7C-4616**	1	BOLT (M12X1.75X45-MM)	
	5	1	**067-6179**	1	DOWEL	
M	6	1	**100-3751**	1	BOLT (M8X1.25X65-MM)	
M	7	1	**101-3895**	2	BOLT (M8X1.25X35-MM)	
M	8	1	**124-3815**	10	BOLT (M8X16X1.25-MM)	
	9	1	**133-1011**	1	WASHER	
	10	1	**216-8634**	1	GEAR-CAMSHAFT (68-TEETH)	
	12	1	**232-3657**	1	COVER AS-FRONT	
	12A	1	**225-8287**	1	GASKET	
	13	1	**232-3666**	1	WASHER-THRUST	
	14	1	**251-4336**	1	GEAR AS-IDLER (73-TEETH)	
	15	1	**295-1711**	1	PLATE-RETAINING	
	16	1	**277-3012**	1	GASKET-COVER	
	17	1	**277-3013**	1	SEAL	
	18	1	**324-0444**	1	HUB-IDLER GEAR	
	19	1	**294-0286**	1	KIT-COVER	

M-METRIC PART

286-0035 **HOUSING GP-FRONT** *(contd.)* **i03563172**

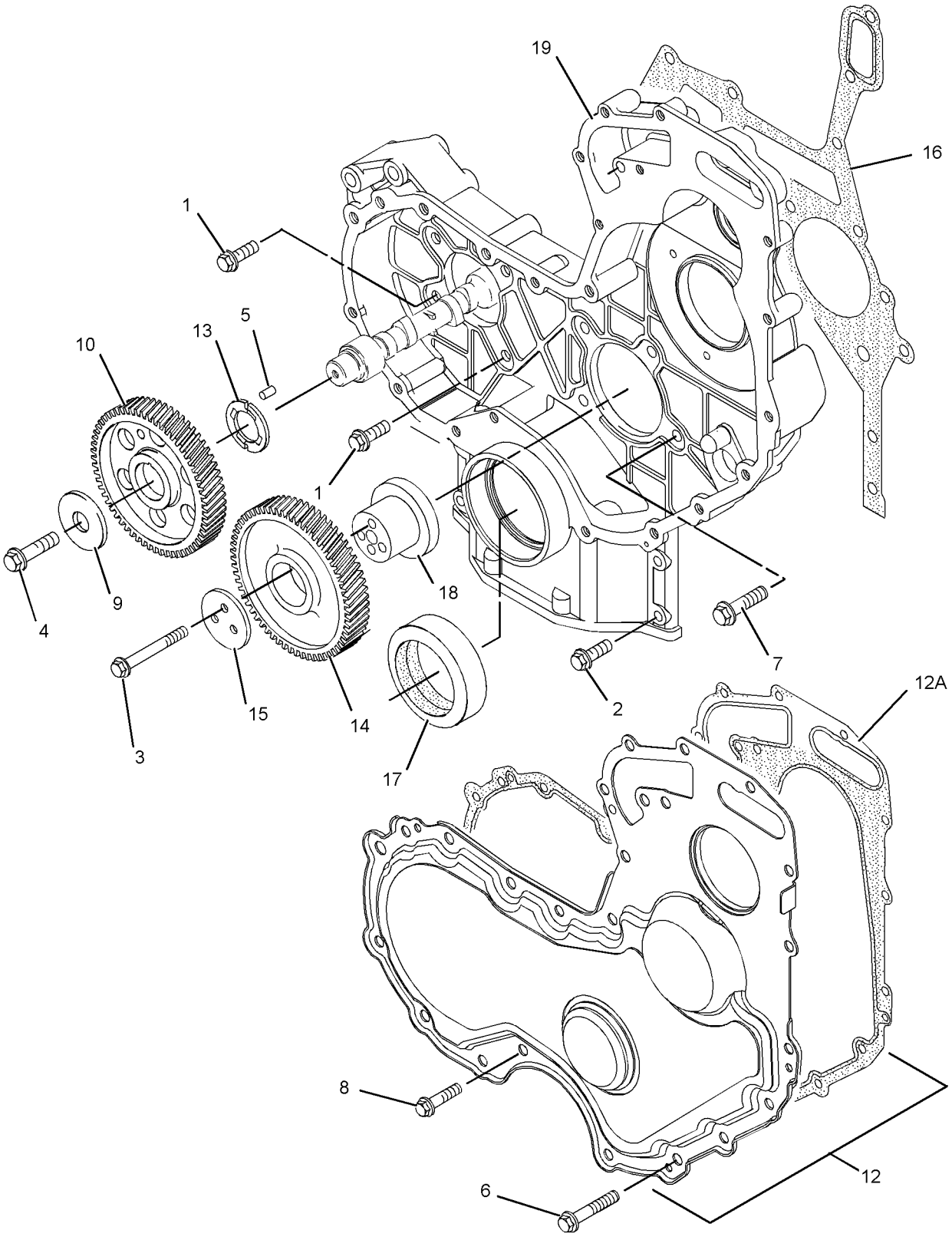

GRAPHIC #1 **<END>** g01233975

BASIC ENGINE

286-0035 HOUSING GP-FRONT

S/N: C6E19700-UP; G9G1-UP

PART OF 242-1382 ENGINE AR-PRIMARY

SMCS-1151, 1162, 1206 **i03686605**

NOTE	REF NO	GRAPHIC REF	PART NUMBER	QTY	PART NAME 1 2 3 4 5 6 (PRODUCT LEVEL)	SEE PAGE
M	1	1	**6I-0217**	6	BOLT (M8X1.25X20-MM)	
M	2	1	**6I-0645**	4	BOLT (M8X1.25X25-MM)	
M	3	1	**6I-0650**	3	BOLT (M10X1.5X65-MM)	
	4	1	**7C-4616**	1	BOLT (M12X1.75X45-MM)	
	5	1	**067-6179**	1	DOWEL	
M	6	1	**100-3751**	1	BOLT (M8X1.25X65-MM)	
M	7	1	**101-3895**	2	BOLT (M8X1.25X35-MM)	
M	8	1	**124-3815**	10	BOLT (M8X1.25X16-MM)	
	9	1	**133-1011**	1	WASHER	
	10	1	**216-8634**	1	GEAR-CAMSHAFT (68-TEETH)	
	12	1	**232-3657**	1	COVER AS-FRONT	
	12A	1	**225-8287**	1	GASKET	
	13	1	**232-3666**	1	WASHER-THRUST	
CJ	14	1	**346-0407**	1	GEAR-IDLER (73-TEETH)	
CJ	15	1	**346-0408**	1	PLATE	
	16	1	**277-3012**	1	GASKET-COVER	
	17	1	**277-3013**	1	SEAL	
J	18	1	**324-0444**	1	HUB-IDLER GEAR	
	19	1	**294-0286**	1	KIT-COVER	

C-CHANGE FROM PREVIOUS TYPE
J-CAN ONLY BE USED IN CONJUNCTION WITH 346-0408 & 324-0444
M-METRIC PART

286-0035 **HOUSING GP-FRONT** *(contd.)* **i03686605**

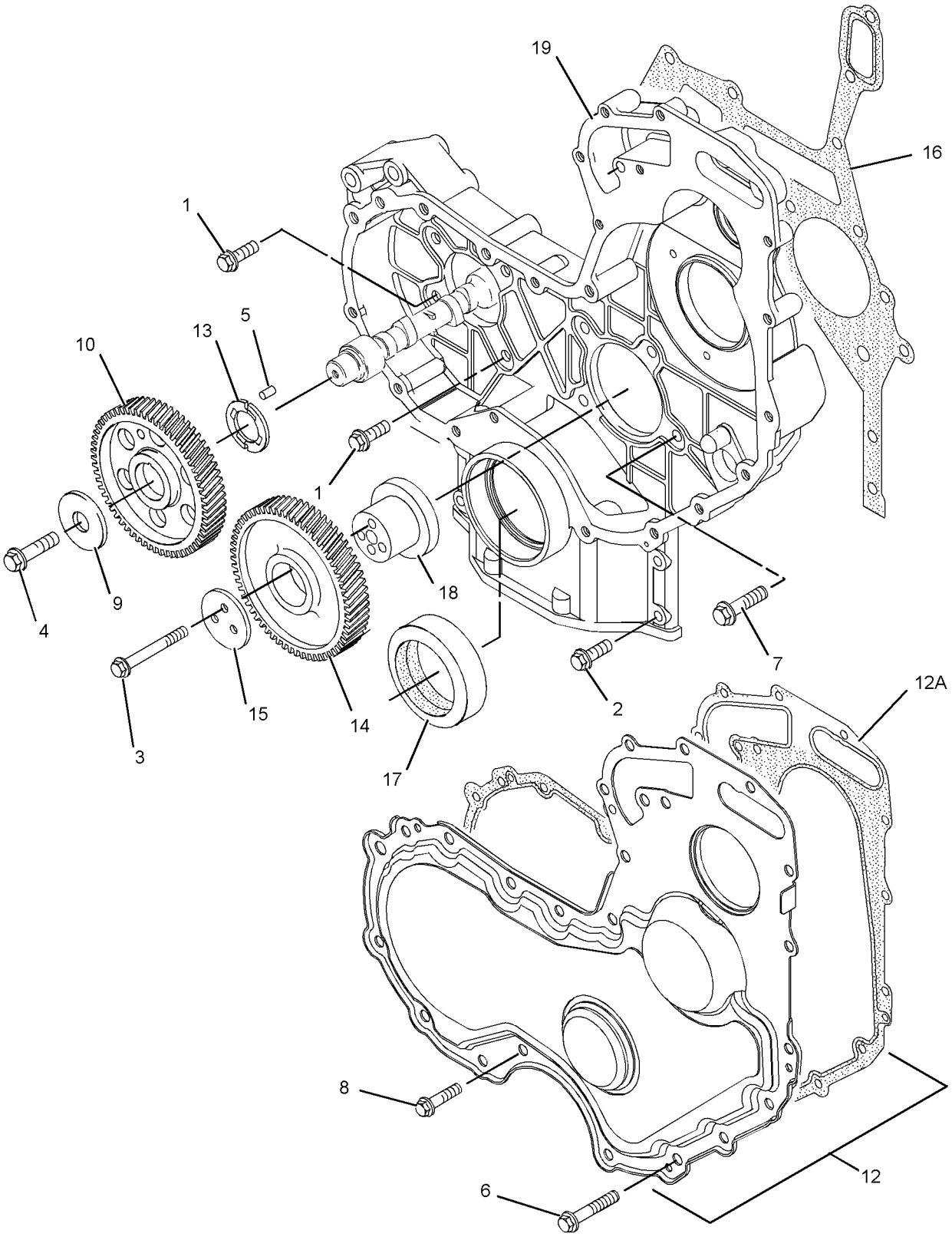

GRAPHIC #1 **<END>** g01233975

192-1563 IDLER GP-BELT

S/N: JKM1-UP
PART OF 263-1860 PUMP & MTG GP-AXLE OIL COOLER
AN ATTACHMENT

SMCS-1358, 1365, 1397, 1802 **i02046131**

NOTE	REF NO	GRAPHIC REF	PART NUMBER	QTY	PART NAME 1 2 3 4 5 6 (PRODUCT LEVEL)	SEE PAGE
	1	1	**151-2898**	1	SPACER (10.4X38.1X20-MM THK)	
	2	1	**144-5611**	1	PULLEY AS-IDLER	
	3	1	**145-2901**	1	COVER-DUST	
M	4	1	**151-2900**	1	BOLT (M10X1.5X54.25-MM)	
	5	1	**6V-9027**	1	SEAL-O-RING	

M-METRIC PART

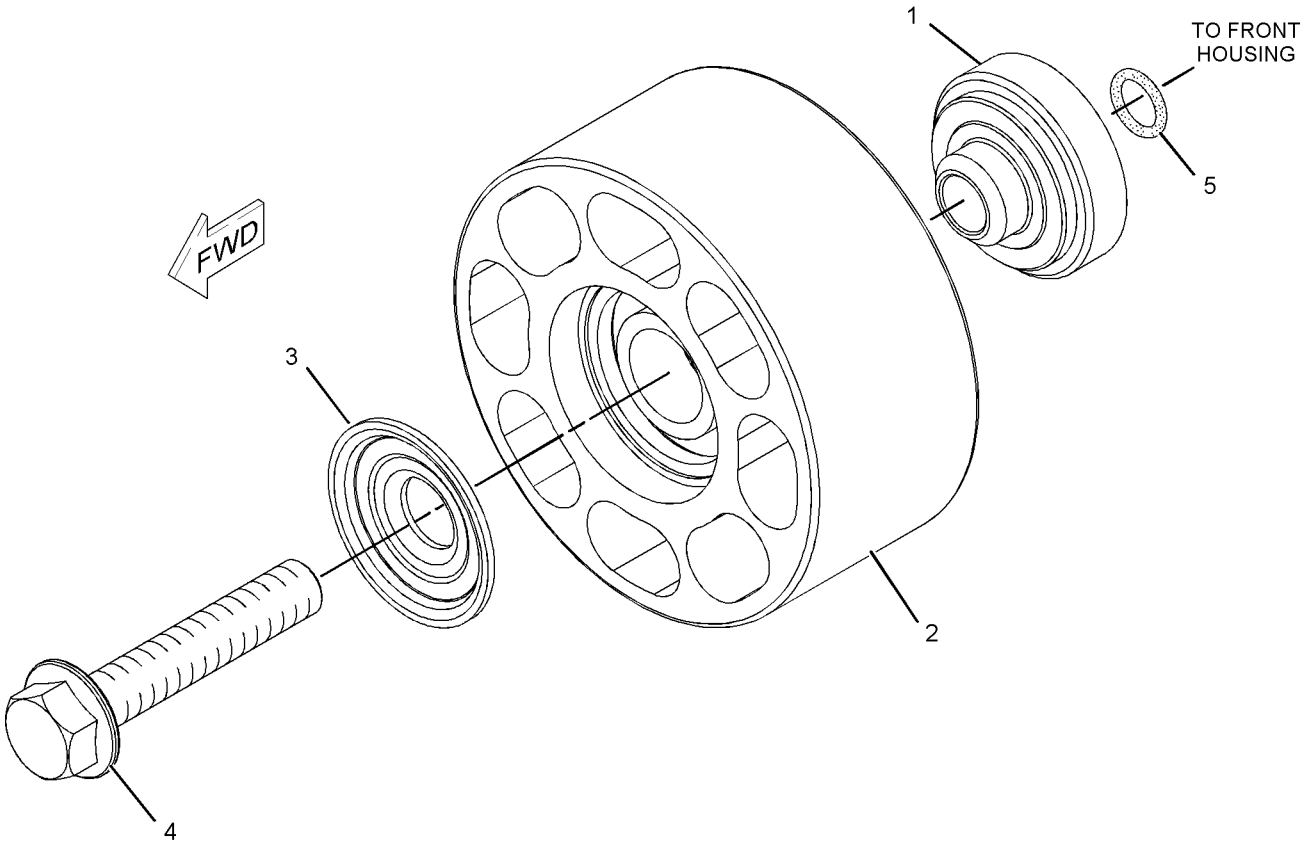

GRAPHIC #1 **<END>** g01051933

BASIC ENGINE

279-9653 LIFTING GP-ENGINE

S/N: C6E1-UP; G9G1-UP

PART OF 242-1382 ENGINE AR-PRIMARY

SMCS-1122 **i02854733**

NOTE	REF NO	GRAPHIC REF	PART NUMBER	QTY	PART NAME 1 2 3 4 5 6 (PRODUCT LEVEL)	SEE PAGE
	1	1	**279-9651**	1	PLATE-LIFTING	
M	2	1	**6I-0654**	4	BOLT (M10X1.5X25-MM)	
	3	1	**279-9652**	1	PLATE-LIFTING	

M-METRIC PART

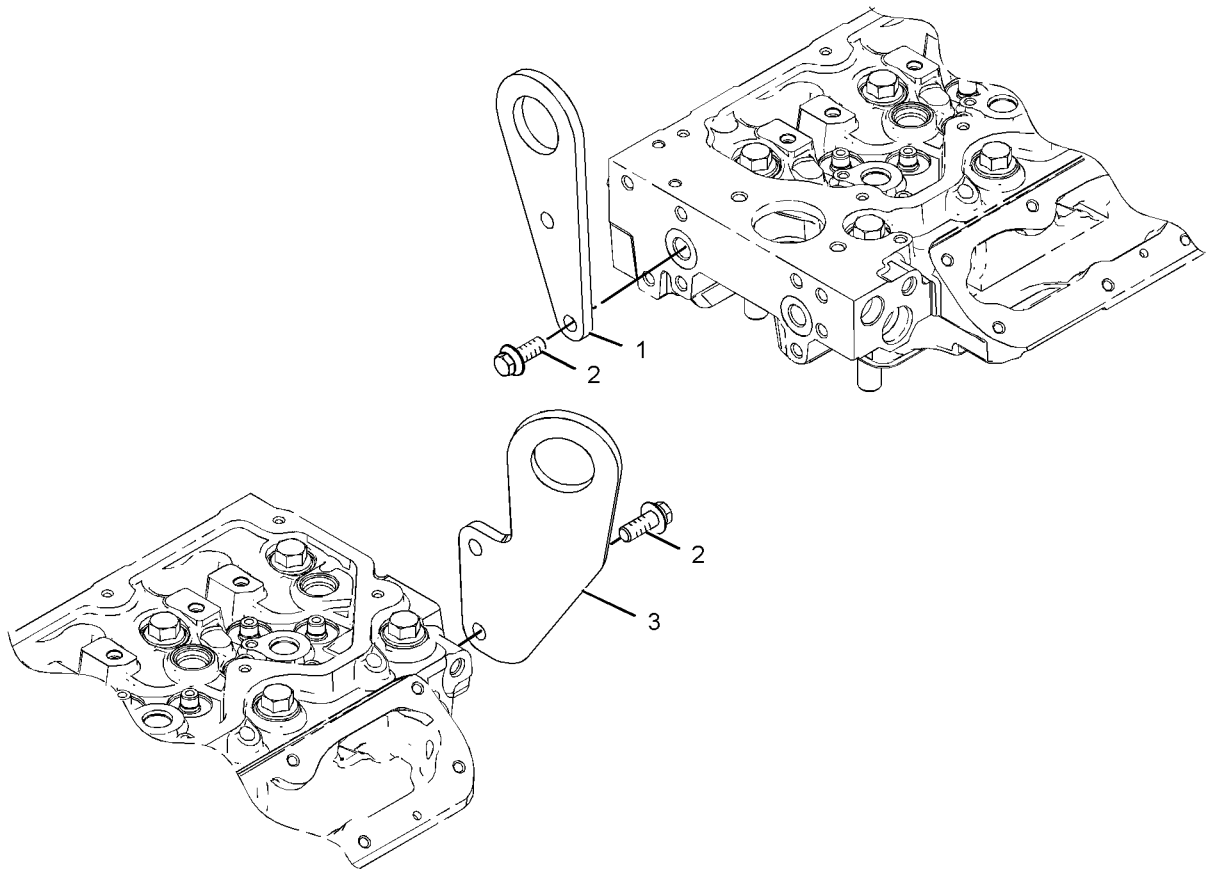

GRAPHIC #1 **<END>** g01195531

BASIC ENGINE

277-4541 MOUNTING GP-ENGINE

S/N: C6E1-UP; G9G1-UP

PART OF 242-1382 ENGINE AR-PRIMARY

SMCS-1152, 1153, 1154 **i02896985**

NOTE	REF NO	GRAPHIC REF	PART NUMBER	QTY	PART NAME 1 2 3 4 5 6 (PRODUCT LEVEL)	SEE PAGE
	1	1	**277-4490**	2	BRACKET-MOUNTING	
	2	1	**283-8302**	6	BOLT	
	3	1	**283-8301**	2	BOLT	

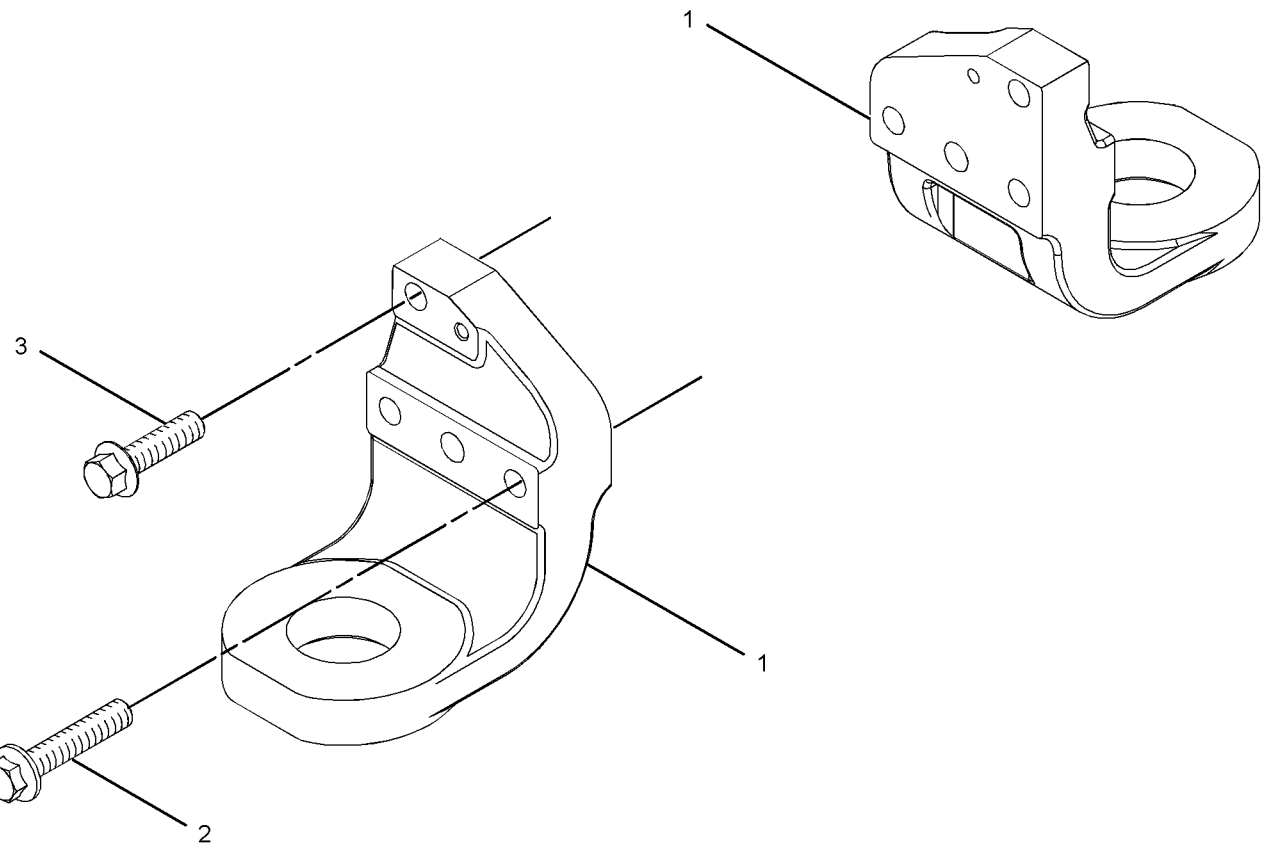

GRAPHIC #1 **<END>** g01193978

253-5210 MOUNTING GP-ENGINE & TMSN

S/N: JKM1-UP

PART OF 239-3372 INSTALLATION AR-ENGINE

SMCS-1152, 1154, 3082 **i02900349**

NOTE	REF NO	GRAPHIC REF	PART NUMBER	QTY	PART NAME 1 2 3 4 5 6 (PRODUCT LEVEL)	SEE PAGE
	1	1	**3E-4883**	4	SLEEVE	
	2	1	**4E-1373**	2	BRACKET AS	
	3	1	**7X-2622**	4	WASHER (22X115X10-MM THK)	
	4	1	**9W-9920**	4	MOUNT AS	
	5	1	**8T-4121**	12	WASHER-HARD (11X21X2.5-MM THK)	
	6	1	**8T-4123**	4	WASHER (22X35X3.5-MM THK)	
M	7	1	**8T-4195**	12	BOLT (M10X1.5X30-MM)	
M	8	1	**8T-4779**	8	BOLT (M16X2X35-MM)	
M	9	1	**8T-6381**	4	BOLT (M20X2.5X120-MM)	
	10	1	**9X-8257**	8	WASHER (17.5X30X3.5-MM THK)	

M-METRIC PART

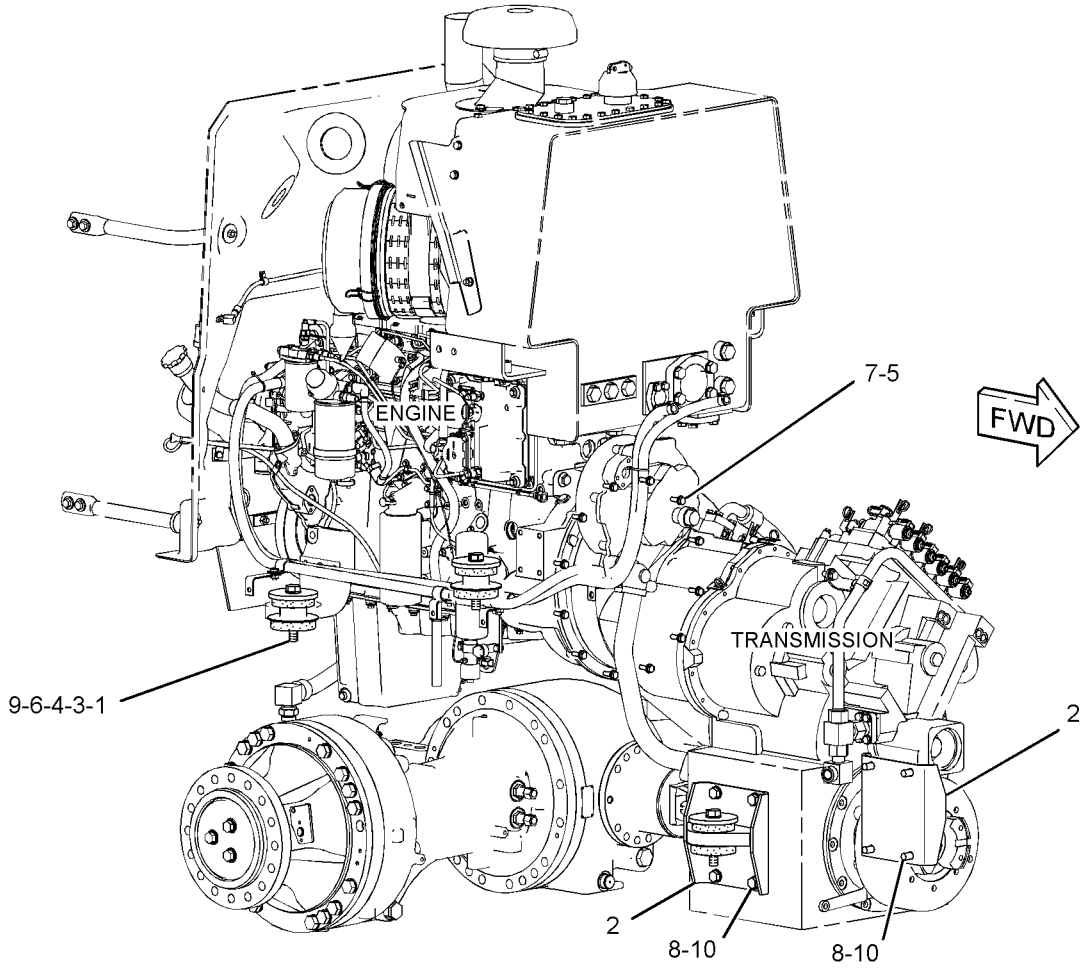

GRAPHIC #1 **<END>** g01385547

BASIC ENGINE

288-7981 PAN GP-OIL

S/N: C6E1-5530

PART OF 242-1382 ENGINE AR-PRIMARY

SMCS-1302 **i02897005**

NOTE	REF NO	GRAPHIC REF	PART NUMBER	QTY	PART NAME 1 2 3 4 5 6 (PRODUCT LEVEL)	SEE PAGE
M	1	1	**6I-0260**	2	BOLT (M8X1.25X25-MM)	
	2	1	**6I-0289**	1	PLUG	
	3	1	**6I-4681**	1	GASKET	
	4	1	**7C-0351**	2	PLUG-DRAIN (ENGINE OIL)	
M	5	1	**124-3815**	1	BOLT (M8X16X1.25-MM)	
	6	1	**275-9883**	2	SEAL	
	7	1	**275-9884**	1	GASKET	
	8	1	**275-9888**	28	BOLT-SPECIAL	
	9	1	**275-9889**	2	BOLT-SPECIAL	
	10	1	**276-0142**	6	BOLT-SPECIAL (TORX)	
	11	1	**280-1383**	1	GASKET	
	12	1	**286-7847**	1	ADAPTER GP-OIL PAN DRAIN	
	13	1	**286-8817**	1	TUBE GP-HYDRAULIC PUMP	
	14	1	**289-9430**	1	PAN-OIL	
	15	1	*294-8550*	1	LINES GP-OIL	
	15A	1	**6I-1497**	1	SEAL	
	15B	1	**6I-4079**	1	NUT	
	15C	1	**187-0555**	1	CLIP	
	16	1	**294-8551**	1	GAUGE AS-OIL LEVEL (DIPSTICK) (ENGINE)	
	16A	1	**275-9891**	2	SEAL-O-RING	

M-METRIC PART

288-7981 **PAN GP-OIL** *(contd.)* **i02897005**

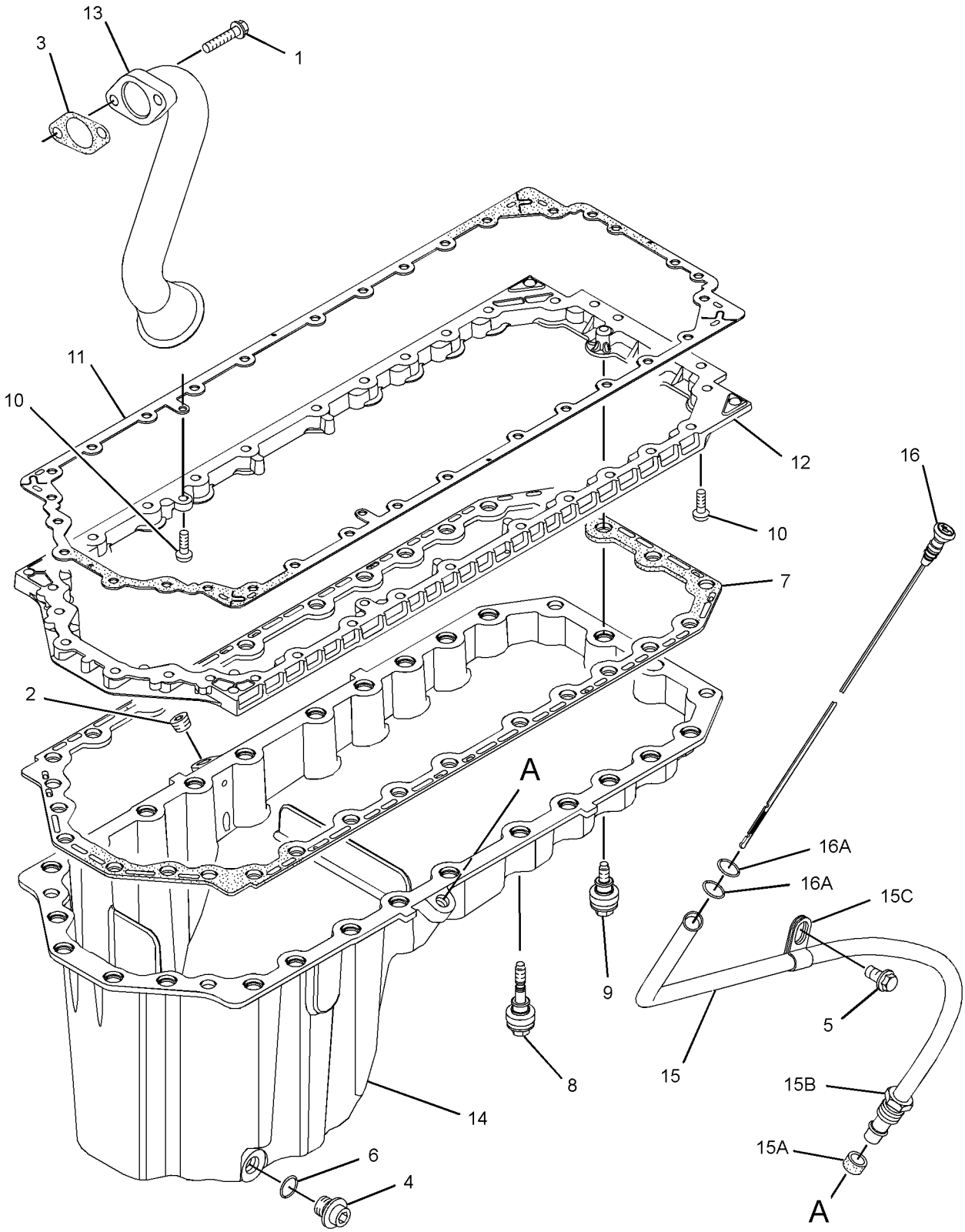

GRAPHIC #1 **<END>** g01340291

BASIC ENGINE

288-7981 PAN GP-OIL

S/N: C6E5531-UP; G9G1-UP

PART OF 242-1382 ENGINE AR-PRIMARY

SMCS-1302 **i03576702**

NOTE	REF NO	GRAPHIC REF	PART NUMBER	QTY	PART NAME 1 2 3 4 5 6 (PRODUCT LEVEL)	SEE PAGE
M	1	1	**6I-0260**	2	BOLT (M8X1.25X25-MM)	
	2	1	**102-9690**	1	PLUG	
	3	1	**6I-4681**	1	GASKET	
	4	1	**7C-0351**	2	PLUG-DRAIN (ENGINE OIL)	
M	5	1	**124-3815**	1	BOLT (M8X16X1.25-MM)	
	6	1	**275-9883**	2	SEAL	
	7	1	**275-9884**	1	GASKET	
	8	1	**275-9888**	28	BOLT-SPECIAL	
	9	1	**275-9889**	2	BOLT-SPECIAL	
	10	1	**276-0142**	6	BOLT-SPECIAL (TORX)	
	11	1	**331-4400**	1	GASKET	
	12	1	**286-7847**	1	ADAPTER GP-OIL PAN DRAIN	
	13	1	**286-8817**	1	TUBE GP-HYDRAULIC PUMP	
	14	1	**289-9430**	1	PAN-OIL	
	14A	1	**7C-1224**	1	INSERT	
C	15	1	**324-2960**	1	TUBE	
C	16	1	**324-2959**	1	GAUGE-OIL LEVEL (DIPSTICK) (ENGINE)	
	16A	1	**275-9891**	2	SEAL-O-RING	
C	17	1	**324-2961**	1	BRACKET	

C-CHANGE FROM PREVIOUS TYPE
M-METRIC PART

288-7981 **PAN GP-OIL** *(contd.)* **i03576702**

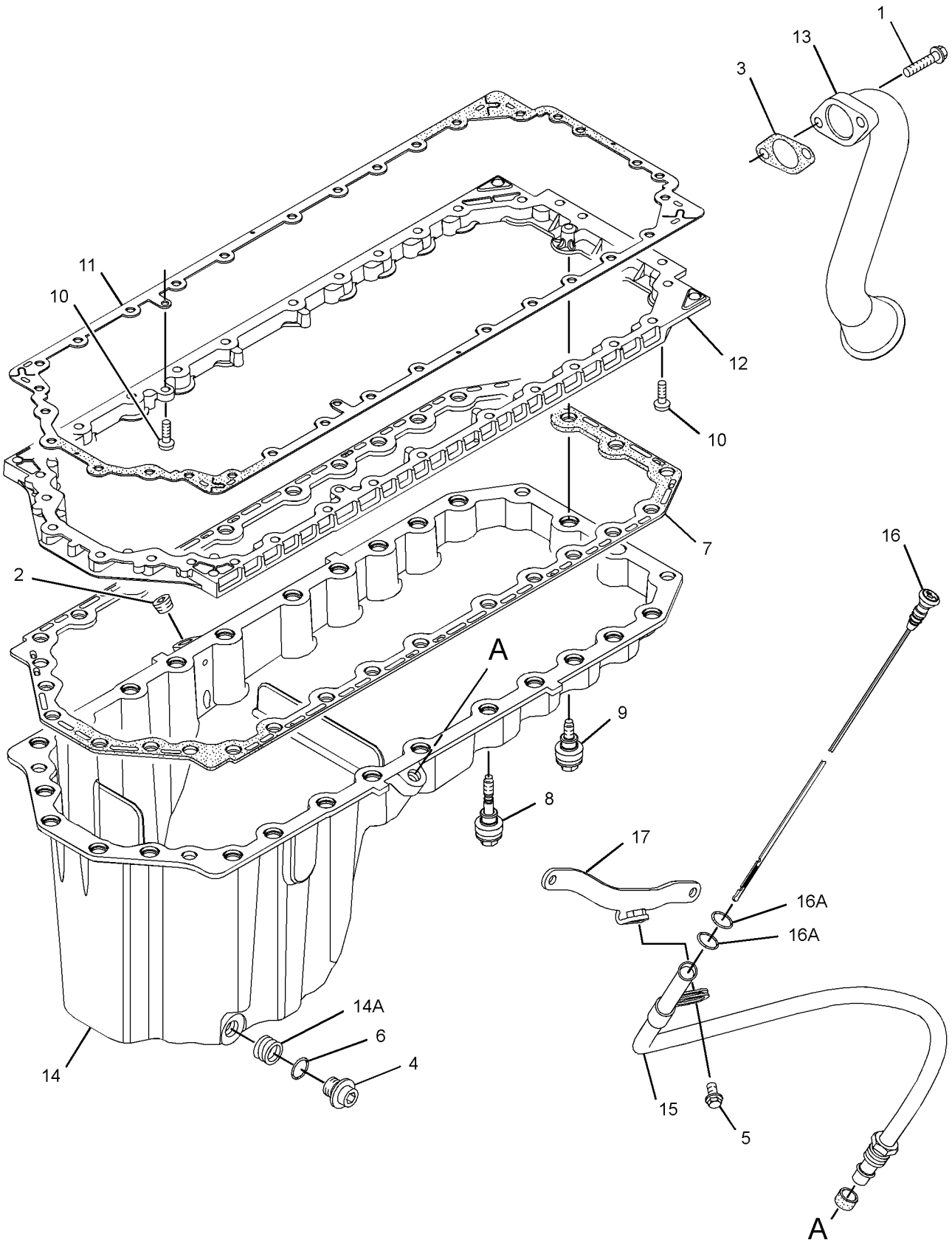

GRAPHIC #1 **<END>** g01655994

BASIC ENGINE

292-5857 PISTON & ROD GP

S/N: C6E1-23830

PART OF 242-1382 ENGINE AR-PRIMARY

SMCS-1225 **i02796829**

NOTE	REF NO	GRAPHIC REF	PART NUMBER	QTY	PART NAME 1 2 3 4 5 6 (PRODUCT LEVEL)	SEE PAGE
	1	1	**276-7475**	6	PISTON AS	
					(EACH INCLUDES)	
	1A	1	**124-3536**	2	RING-RETAINING	
	2	1	**276-7476**	6	KIT-PISTON RING	
J	3	1	**276-7479**	6	ROD AS (F-GRADE)	
					—OR—	
J		1	**276-7481**	6	ROD AS (L-GRADE)	
					—OR—	
J		1	**276-7483**	6	ROD AS (J-GRADE)	
					(EACH ROD AS INCLUDES)	
	3A	1	**225-5439**	2	BOLT-SPECIAL (CONNECTING ROD)	
	3B	1	**276-7478**	1	BUSHING	

J-ENSURE THAT CORRECT ROD LENGTH IS FITTED

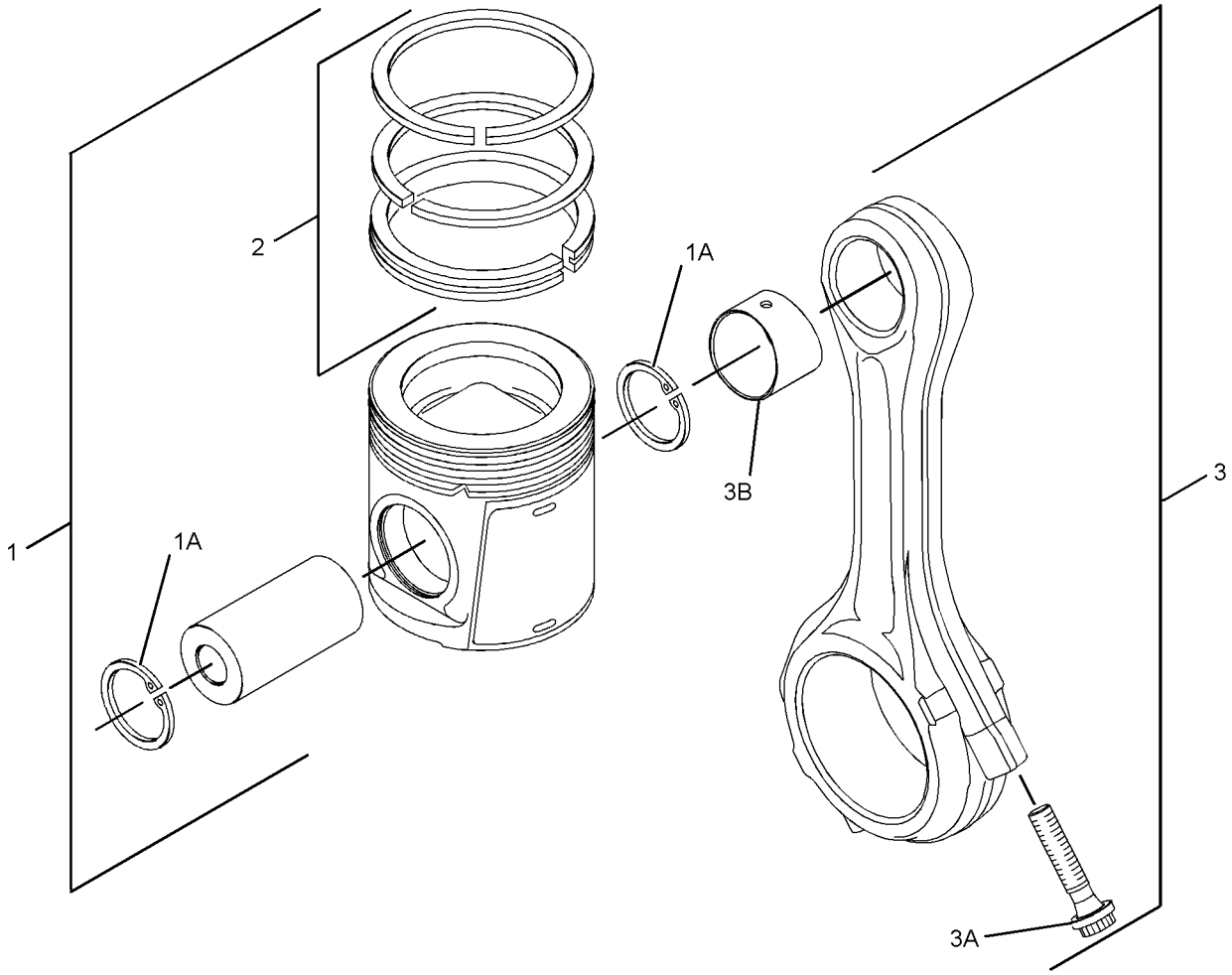

GRAPHIC #1 **<END>** g01265224

292-5857 PISTON & ROD GP

S/N: C6E23831-UP

PART OF 242-1382 ENGINE AR-PRIMARY

SMCS-1225 **i03997215**

NOTE	REF NO	GRAPHIC REF	PART NUMBER	QTY	PART NAME 1 2 3 4 5 6 (PRODUCT LEVEL)	SEE PAGE
	1	1	**276-7475**	6	PISTON AS	
					(EACH INCLUDES)	
	1A	1	**124-3536**	2	RING-RETAINING	
	2	1	**276-7476**	6	KIT-PISTON RING	
J	3	1	**331-0290**	6	CONNECTING ROD GP (F)	
					—OR—	
J		1	**331-0292**	6	CONNECTING ROD GP (L)	
					—OR—	
J		1	**331-0291**	6	CONNECTING ROD GP (J)	
					(EACH ROD AS INCLUDES)	
	3A	1	**323-9312**	2	BOLT	
	3B	1	**276-7478**	1	BUSHING	

J-ENSURE THAT CORRECT ROD LENGTH IS FITTED

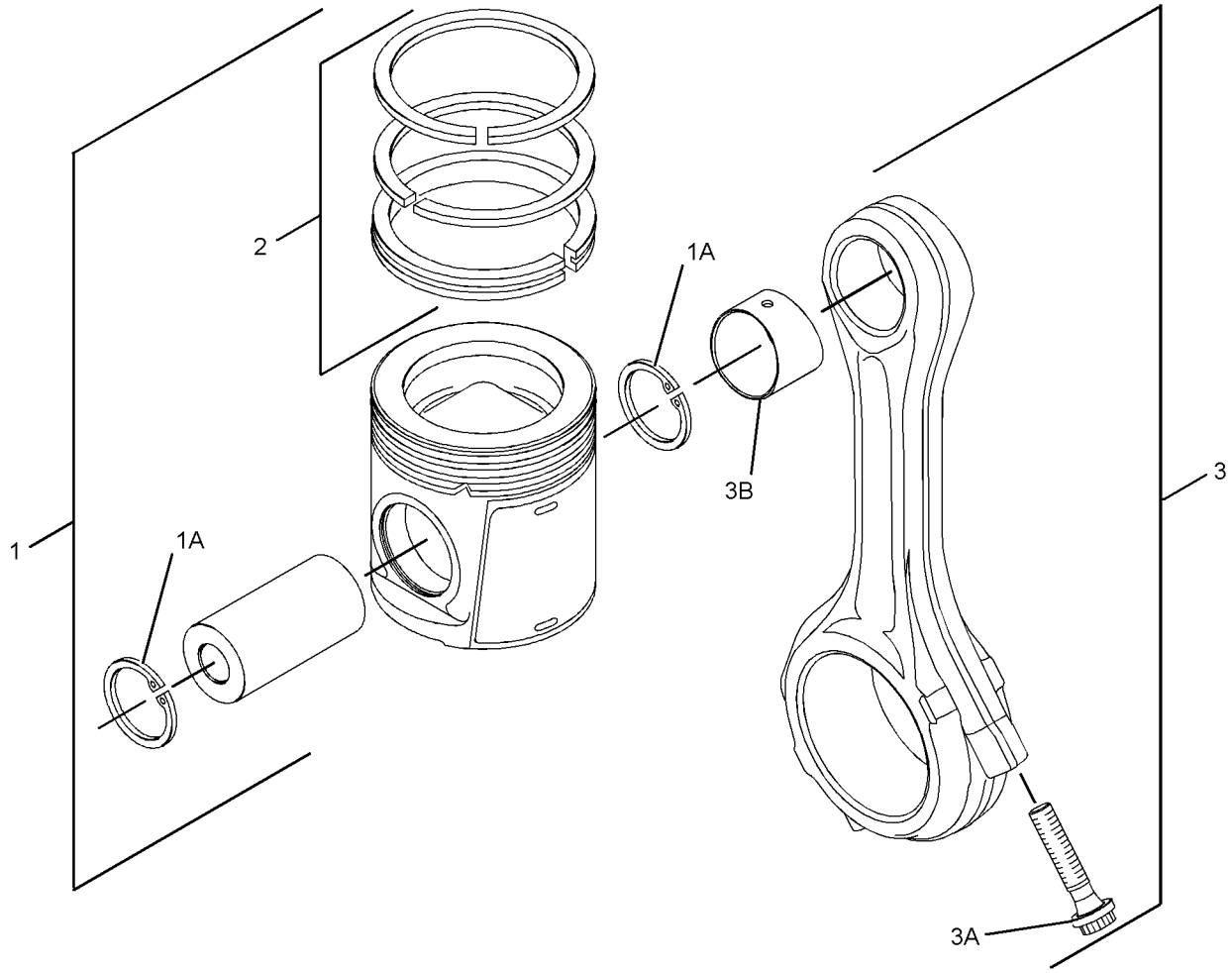

GRAPHIC #1 **<END>** g01265224

BASIC ENGINE

286-0039 PLUG GP-CYLINDER BLOCK

S/N: C6E1-UP; G9G1-UP

PART OF 242-1382 ENGINE AR-PRIMARY

SMCS-1201 **i02752505**

NOTE	REF NO	GRAPHIC REF	PART NUMBER	QTY	PART NAME 1 2 3 4 5 6 (PRODUCT LEVEL)	SEE PAGE
	1	1	**277-4223**	1	PLUG	

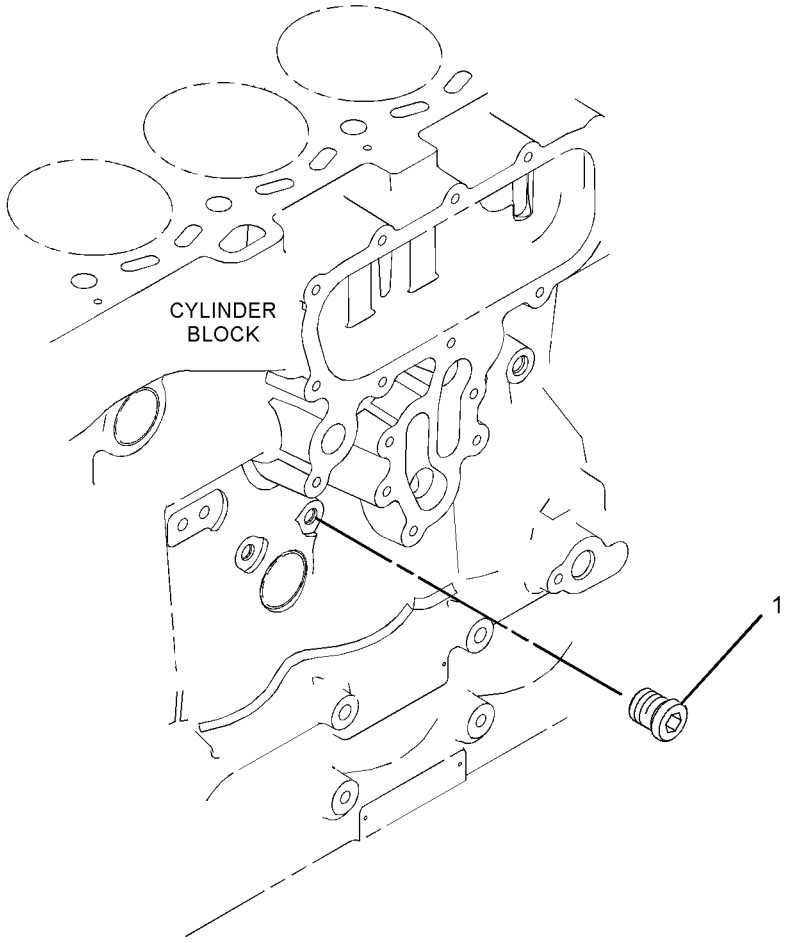

GRAPHIC #1 **<END>** g01235249

320-4733 PLUG GP-ENGINE

S/N: C6E1-UP; G9G1-UP

PART OF 242-1382 ENGINE AR-PRIMARY

SMCS-1000 **i02950532**

NOTE	REF NO	GRAPHIC REF	PART NUMBER	QTY	PART NAME 1 2 3 4 5 6 (PRODUCT LEVEL)	SEE PAGE
	1	1	**2B-0858**	1	PLUG-PIPE	
	2	1	**7W-4669**	1	ADAPTER	
	3	1	**6V-0675**	1	ELBOW	

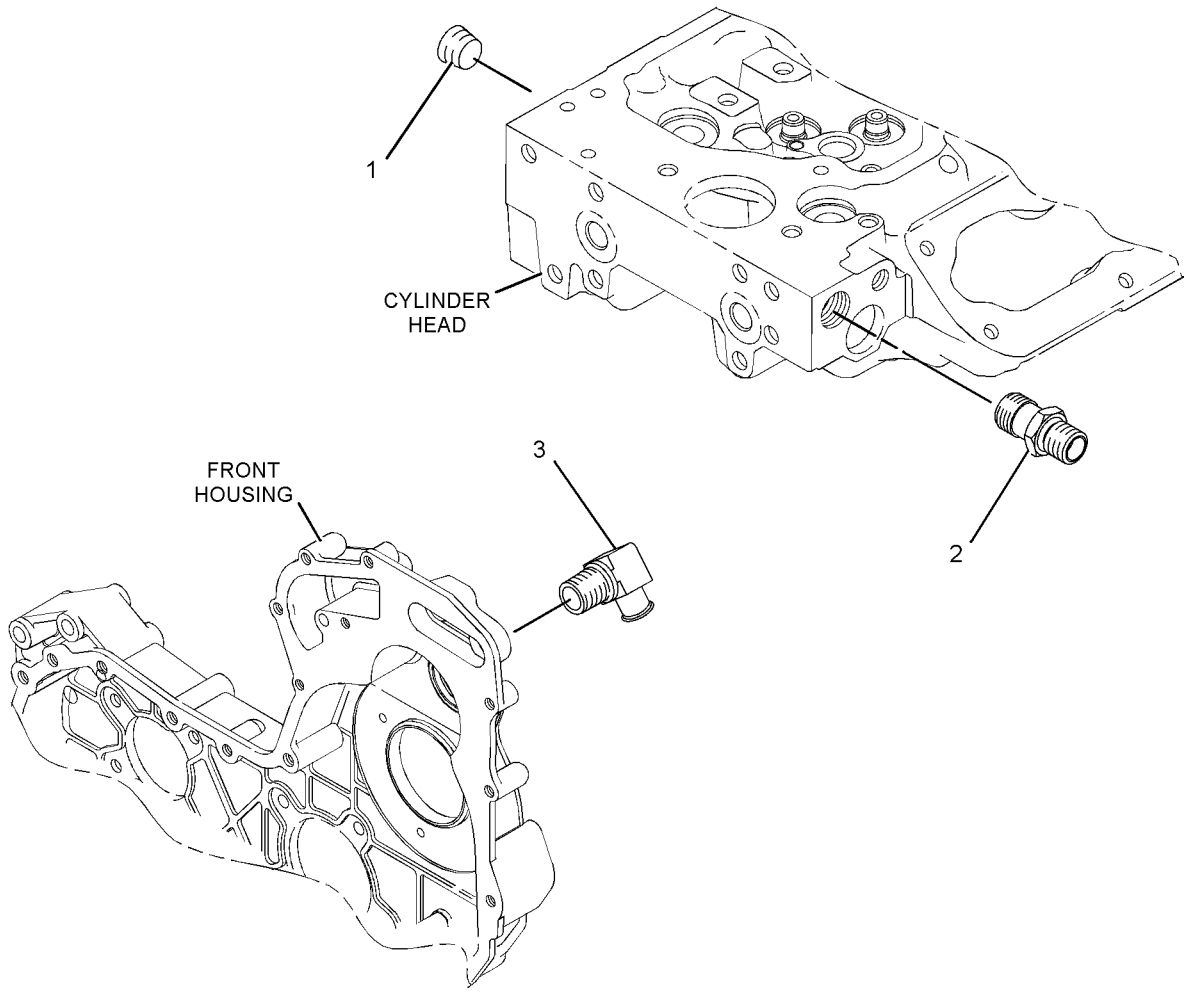

GRAPHIC #1 **<END>** g01440782

BASIC ENGINE

274-1929 PULLEY GP-CRANKSHAFT

S/N: C6E1-UP; G9G1-UP

PART OF 242-1382 ENGINE AR-PRIMARY

SMCS-1205 **i03756077**

NOTE	REF NO	GRAPHIC REF	PART NUMBER	QTY	PART NAME 1 2 3 4 5 6 (PRODUCT LEVEL)	SEE PAGE
	1	1	**274-1930**	1	DAMPER	
	2	1	**274-1931**	1	PULLEY	
	3	1	**351-9778**	1	HUB	
	4	1	**274-1933**	1	BLOCK	
	5	1	**274-1934**	3	BOLT-SPECIAL (TORX)	
	6	1	**274-1935**	6	BOLT	

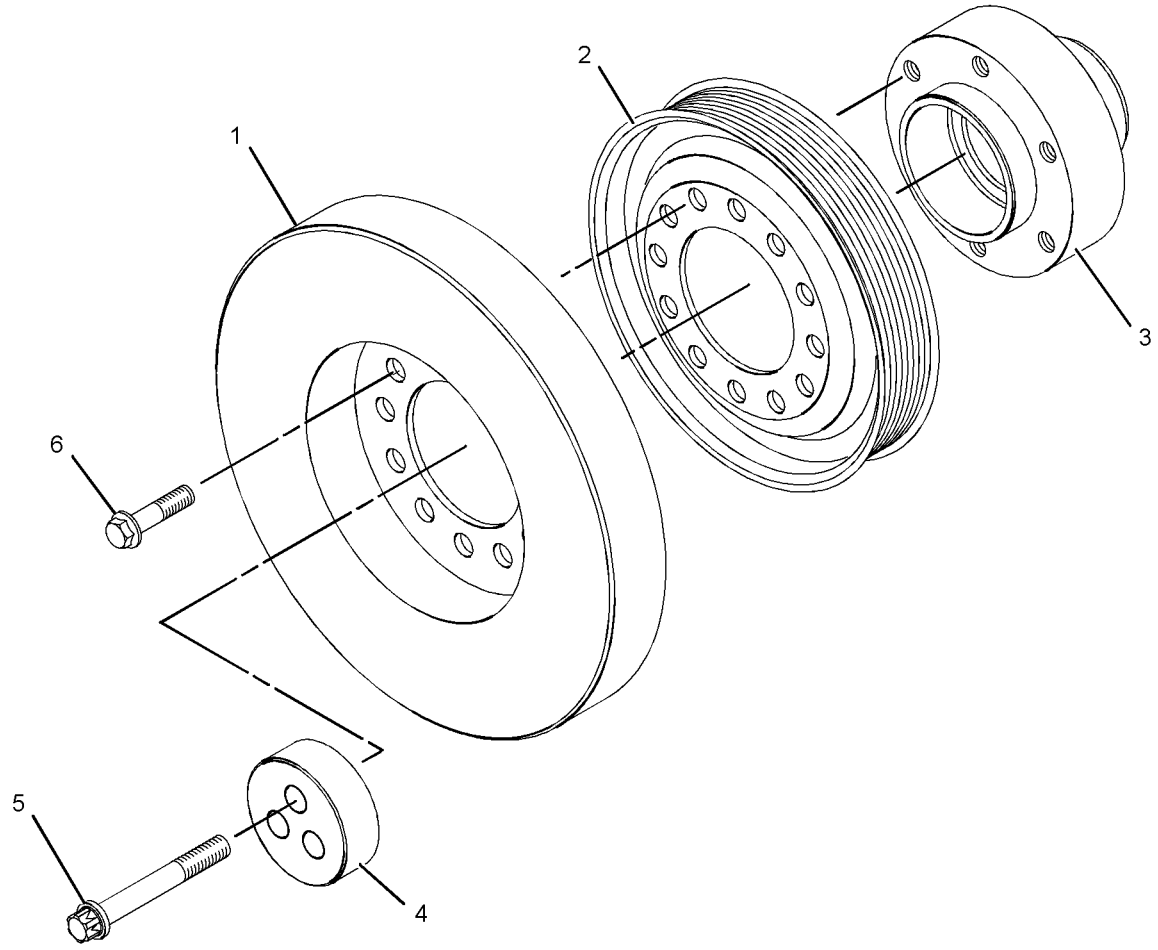

GRAPHIC #1 **<END>** g01157851

280-1911 ROCKER ARM GP

S/N: C6E1-UP; G9G1-UP

PART OF 292-5865 ROCKER ARM GP

SMCS-1123 **i02752423**

NOTE	REF NO	GRAPHIC REF	PART NUMBER	QTY	PART NAME 1 2 3 4 5 6 (PRODUCT LEVEL)	SEE PAGE
	1	1	**276-9201**	1	CLIP	
	2	1	**276-9206**	5	SPRING-SHAFT	
	3	1	**276-9207**	1	SPRING-SHAFT	
	4	1	**277-5307**	1	SHAFT AS-ROCKER ARM	
	4A	1	**276-9200**	1	PLUG-SHAFT END	
	5	1	**278-5111**	6	ROCKER ARM AS	
					(EACH INCLUDES)	
	5A	1	**276-9230**	1	NUT	
	5B	1	**278-5113**	1	ADJUSTING SCREW (TORX)	
	6	1	**278-5112**	6	ROCKER ARM AS	
					(EACH INCLUDES)	
	6A	1	**276-9230**	1	NUT	
	6B	1	**278-5113**	1	ADJUSTING SCREW (TORX)	
	7	1	**280-1912**	6	BRACKET	
	8	1	**280-1913**	6	RETAINER	
	9	1	**280-1914**	12	BOLT (M8X1.25X55-MM)	

280-1911 **ROCKER ARM GP** *(contd.)* **i02752423**

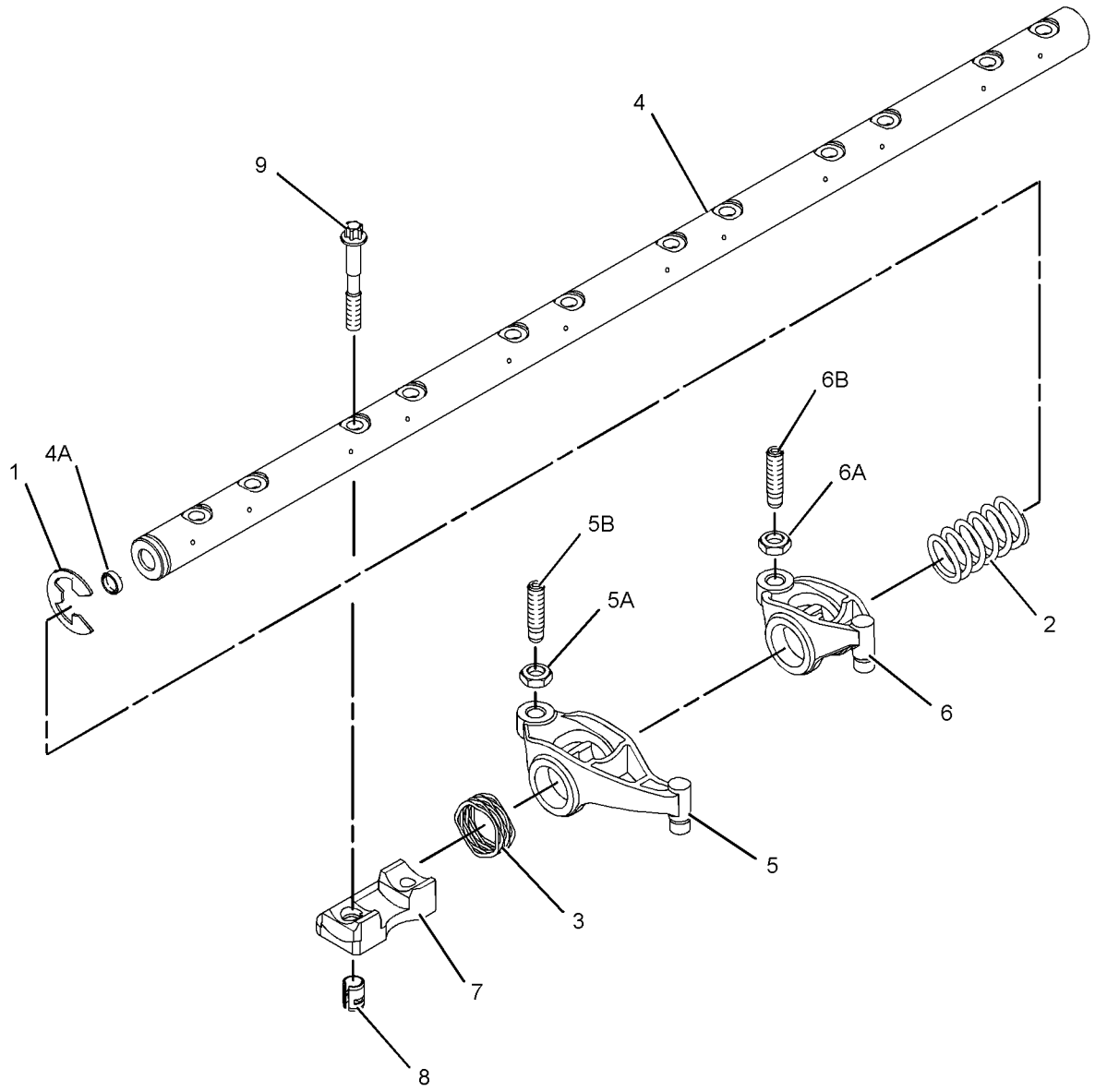

GRAPHIC #1 **<END>** g01235750

292-5865 ROCKER ARM GP

S/N: C6E1-UP; G9G1-UP

PART OF 242-1382 ENGINE AR-PRIMARY

SMCS-1123 **i03592563**

NOTE	REF NO	GRAPHIC REF	PART NUMBER	QTY	PART NAME 1 2 3 4 5 6 (PRODUCT LEVEL)	SEE PAGE
	1	1	**339-3397**	12	LINK	
Y	2	1	**280-1911**	1	ROCKER ARM GP	53

Y-SEPARATE ILLUSTRATION

292-5865 **ROCKER ARM GP** *(contd.)* **i03592563**

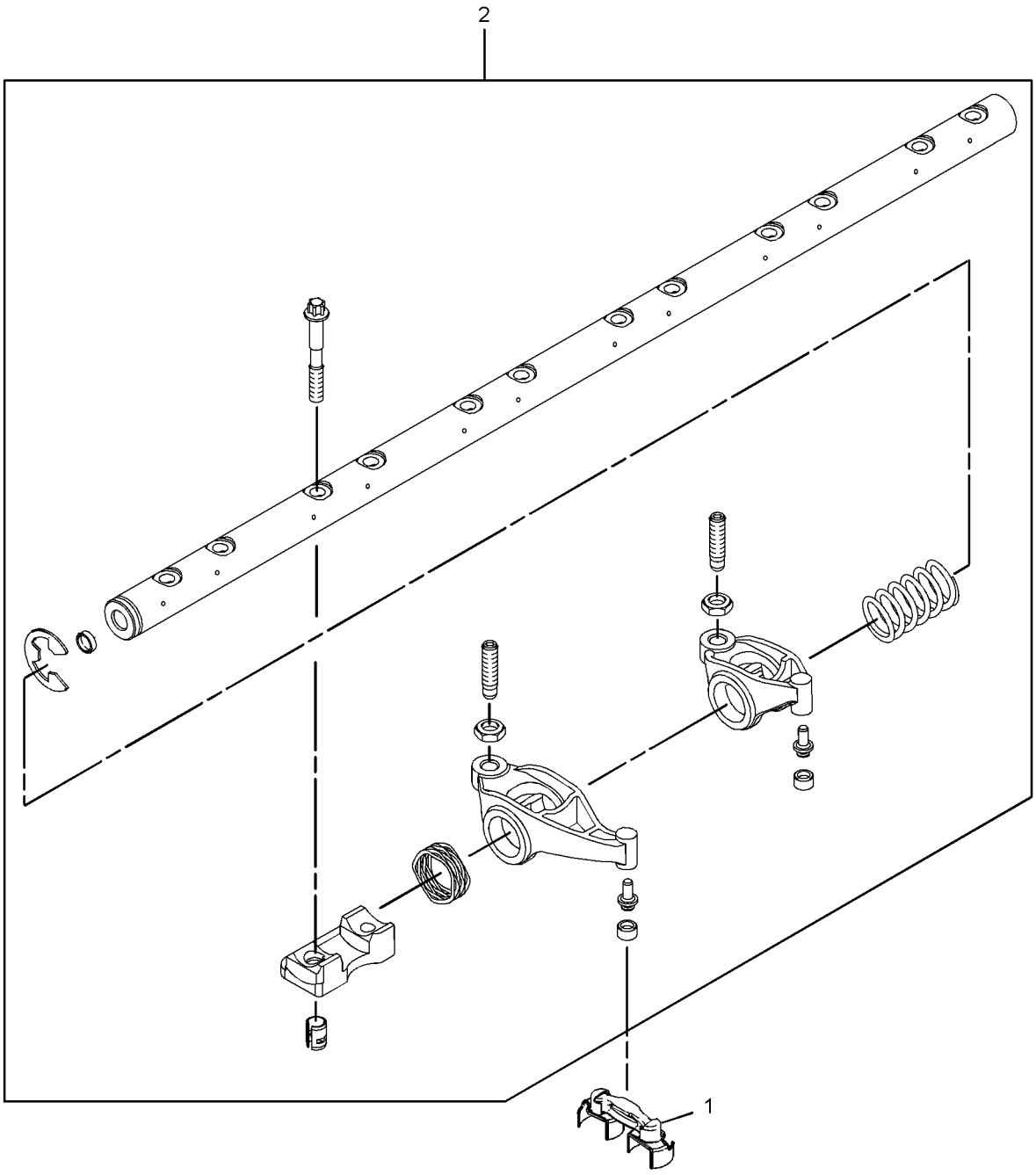

GRAPHIC #1 **<END>** g01923253

297-9538 FILLER GP-ENGINE OIL

S/N: C6E1-UP; G9G1-UP

PART OF 242-1382 ENGINE AR-PRIMARY

SMCS-1316 **i03022598**

NOTE	REF NO	GRAPHIC REF	PART NUMBER	QTY	PART NAME 1 2 3 4 5 6 (PRODUCT LEVEL)	SEE PAGE
M	1	1	**6I-0217**	3	BOLT (M8X1.25X20-MM)	
M	2	1	**6I-0254**	1	BOLT (M8X1.25X30-MM)	
	3	1	**317-9299**	2	BOLT	
	4	1	**6I-4374**	1	BOLT (M8X1.25X60-MM)	
M	5	1	**124-3815**	1	BOLT (M8X16X1.25-MM)	
	6	1	**225-6524**	1	PLUG-CUP	
	7	1	**277-1974**	1	PLATE AS	
	7A	1	**277-1975**	1	SEAL-O-RING	
	8	1	**280-1430**	1	GASKET	
	9	1	**324-2969**	1	FILLER-OIL	
	9A	1	**130-9888**	1	CAP-OIL FILLER (ENGINE)	
	9B	1	**113-1504**	1	SEAL-O-RING	
	10	1	**324-2968**	1	BRACKET	
	11	1	**317-3775**	1	FILLER GP-ENGINE OIL	
	11A	1	**306-2337**	1	SEAL-O-RING	
	12	1	**324-2967**	1	BRACKET	

M-METRIC PART

297-9538 **FILLER GP-ENGINE OIL** *(contd.)* **i03022598**

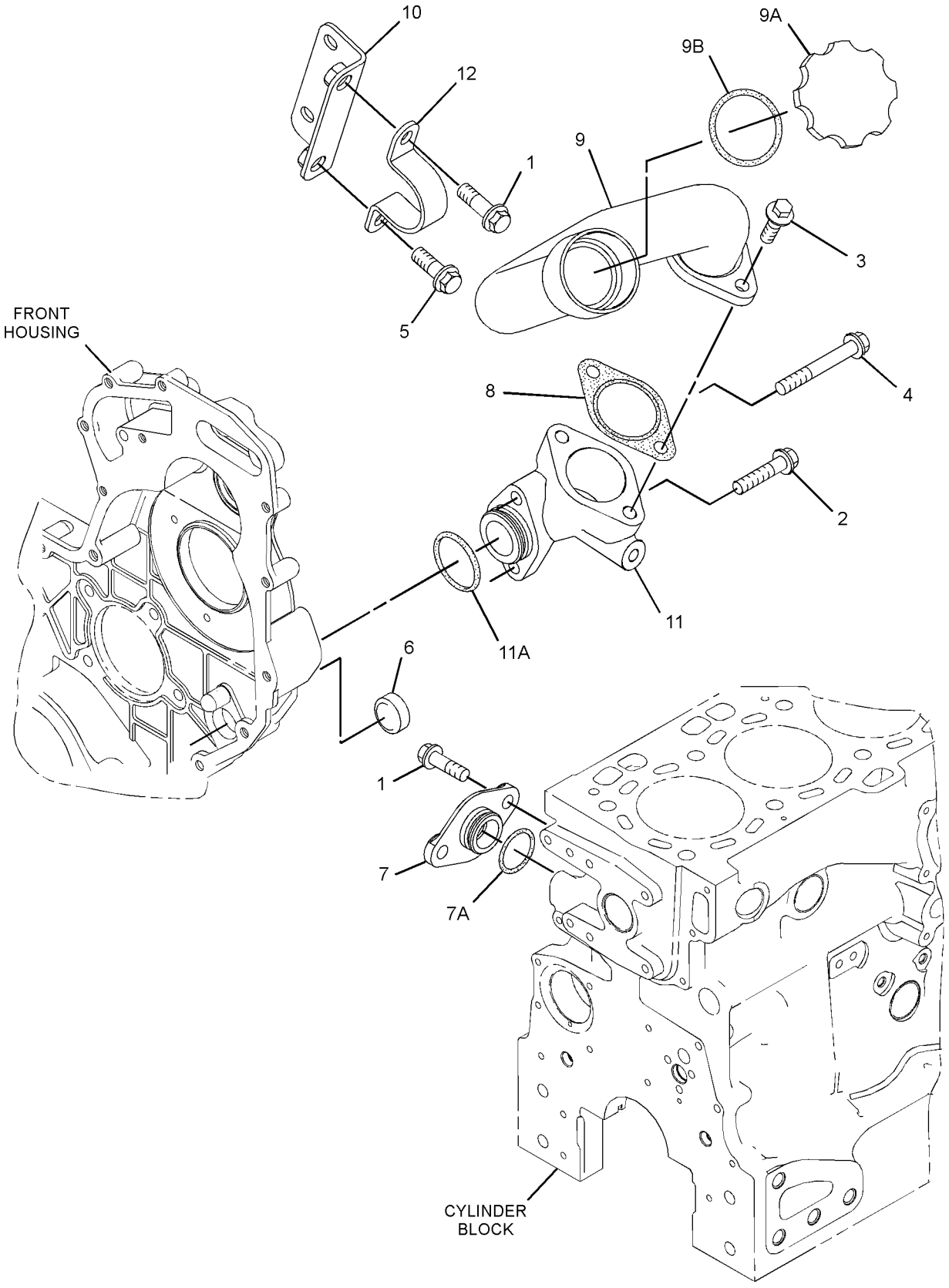

GRAPHIC #1 **<END>** g01631695

277-2912 FILTER GP-ENGINE OIL

S/N: C6E1-UP; G9G1-UP

PART OF 242-1382 ENGINE AR-PRIMARY

SMCS-1306, 1308 **i03327305**

NOTE	REF NO	GRAPHIC REF	PART NUMBER	QTY	PART NAME 1 2 3 4 5 6 (PRODUCT LEVEL)	SEE PAGE
	1	1	**269-8325**	1	FILTER-ENGINE OIL	

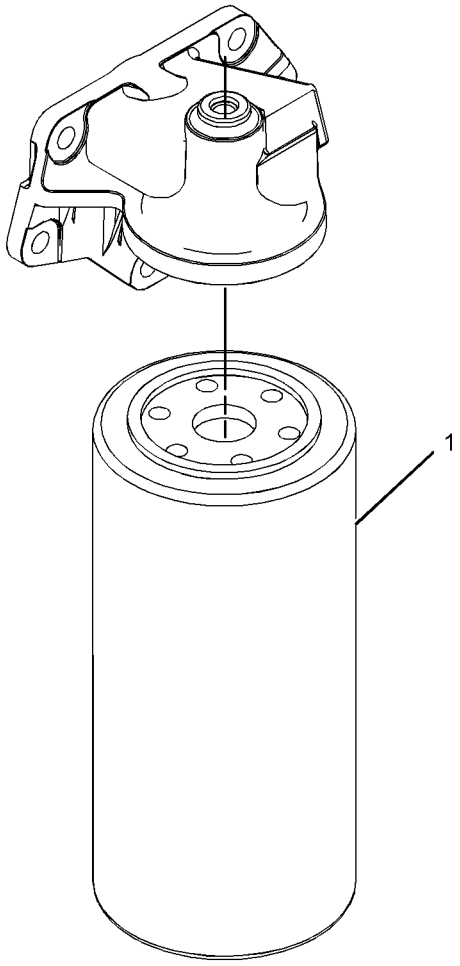

GRAPHIC #1 **<END>** g01198493

LUBRICATION SYSTEM

277-4262 PUMP GP-ENGINE OIL

S/N: C6E1-UP; G9G1-UP

PART OF 242-1382 ENGINE AR-PRIMARY

SMCS-1304, 1315 **i02751973**

NOTE	REF NO	GRAPHIC REF	PART NUMBER	QTY	PART NAME 1 2 3 4 5 6 (PRODUCT LEVEL)	SEE PAGE
	1	1	**312-4545**	1	PUMP-OIL (ENGINE)	
	2	1	**6I-1090**	4	BOLT (M8X1.25X40-MM)	

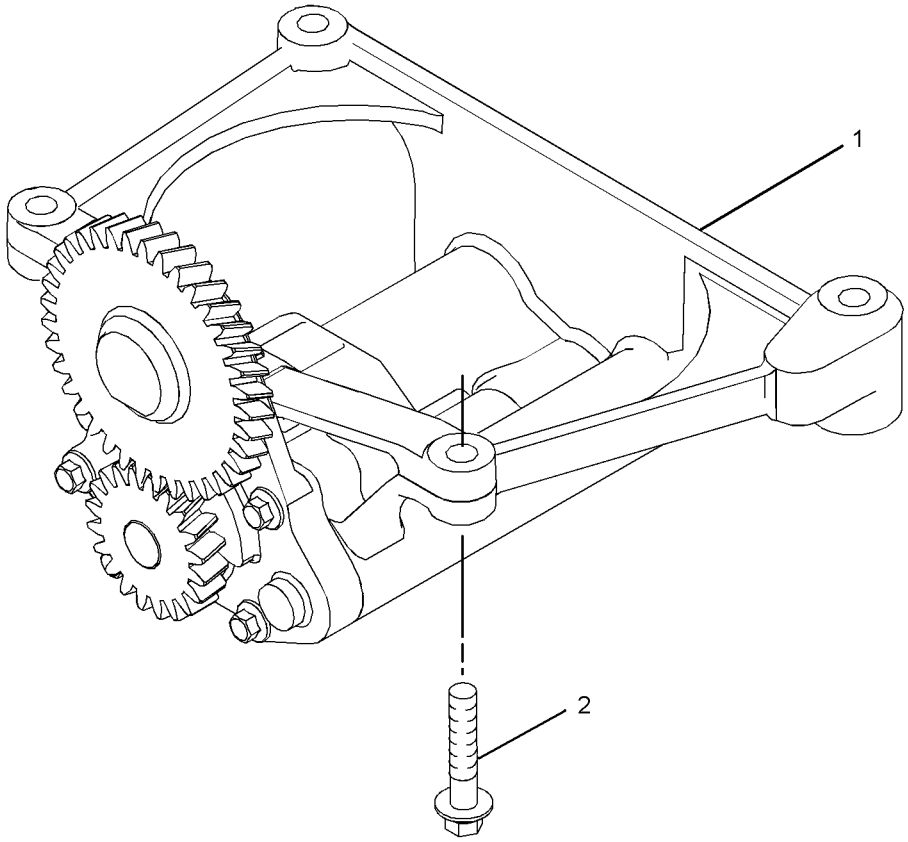

GRAPHIC #1 **<END>** g01380671

277-4694 VALVE GP-FLUID SAMPLING–ENGINE OIL

S/N: C6E1-UP; G9G1-UP

PART OF 242-1382 ENGINE AR-PRIMARY

SMCS-7542 **i02790076**

NOTE	REF NO	GRAPHIC REF	PART NUMBER	QTY	PART NAME 1 2 3 4 5 6 (PRODUCT LEVEL)	SEE PAGE
	1	1	**216-9633**	1	VALVE AS-FLUID SAMPLING (ENGINE OIL)	
	2	1	**8C-3445**	1	CAP-DUST	
	3	1	**232-3861**	1	PLUG (BLANKING)	
	4	1	**199-9267**	1	SEAL-O-RING	

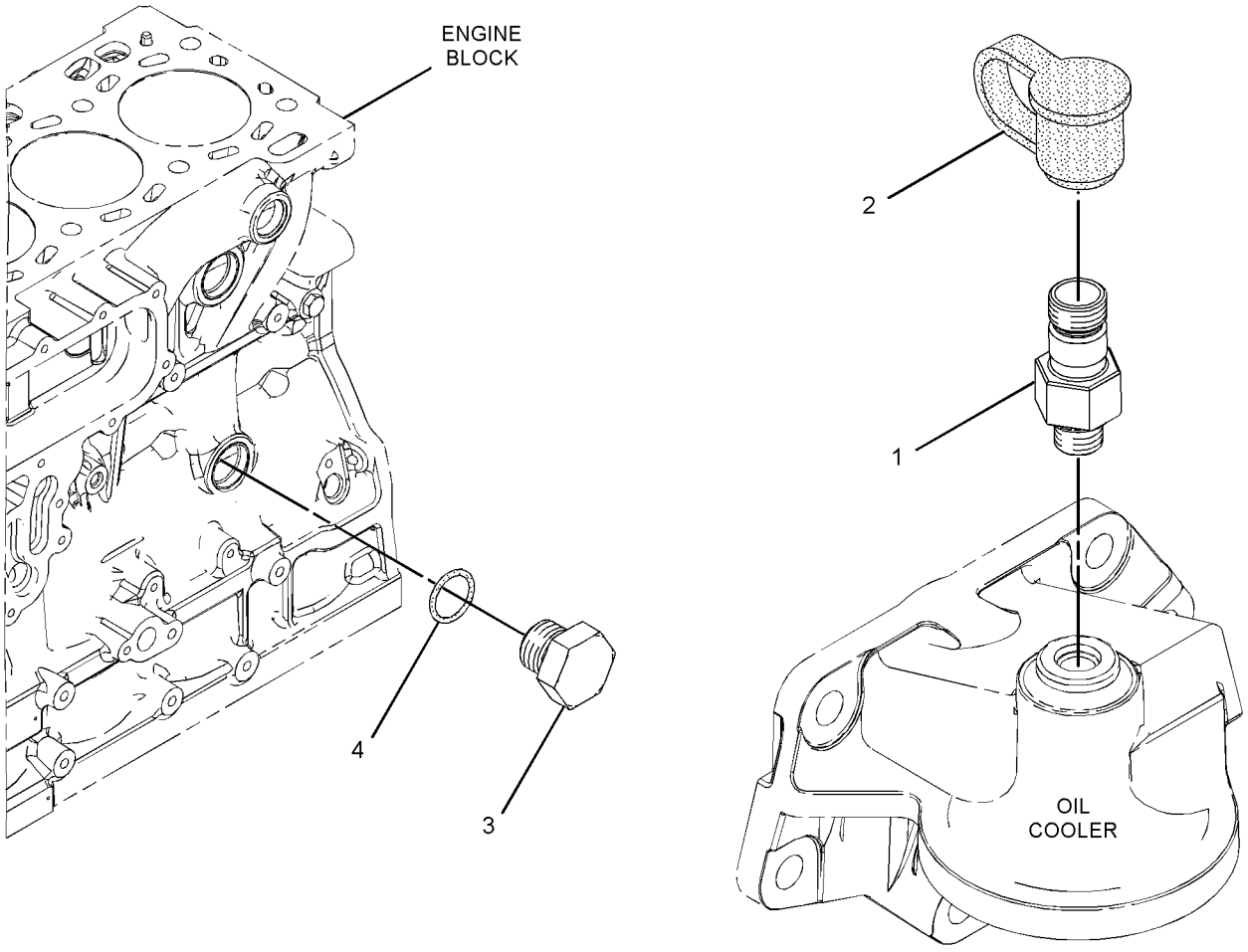

GRAPHIC #1 **<END>** g01198300

326-7401 COOLER GP-ENGINE OIL

S/N: C6E1-UP; G9G1-UP

PART OF 283-4558 COOLER GP-FLTR BASE & ENG OIL

SMCS-1378 **i03246403**

NOTE	REF NO	GRAPHIC REF	PART NUMBER	QTY	PART NAME 1 2 3 4 5 6 (PRODUCT LEVEL)	SEE PAGE
M	1	1	**6I-0260**	1	BOLT (M8X1.25X25-MM)	
	2	1	**6I-4793**	6	BOLT (M8X1.25X50-MM)	
	3	1	**277-2500**	1	GASKET	
	4	1	**281-7039**	1	COOLER-OIL	
	5	1	**281-7040**	1	GASKET	

M-METRIC PART

326-7401 **COOLER GP-ENGINE OIL** *(contd.)* **i03246403**

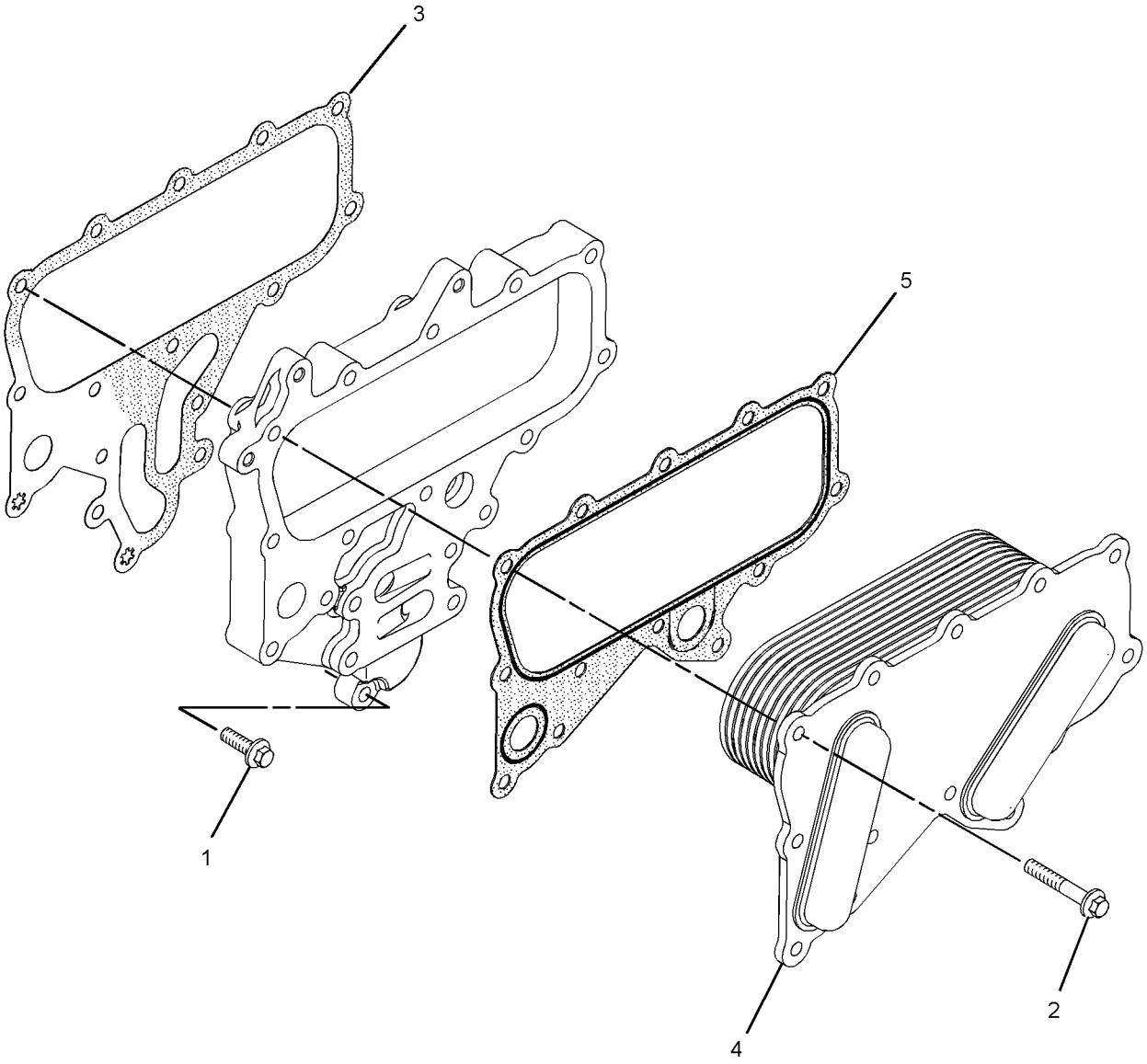

GRAPHIC #1 **<END>** g01508024

283-4558 COOLER GP-FLTR BASE & ENG OIL

S/N: C6E1-UP; G9G1-UP

PART OF 242-1382 ENGINE AR-PRIMARY

SMCS-1306, 1378 **i03632311**

NOTE	REF NO	GRAPHIC REF	PART NUMBER	QTY	PART NAME 1 2 3 4 5 6 (PRODUCT LEVEL)	SEE PAGE
Y	1	1	**326-7401**	1	COOLER GP-ENGINE OIL	62
	2	1	**225-7944**	3	GASKET	
	3	1	**6I-0455**	4	BOLT (M8X1.25X55-MM)	
	4	1	**232-3751**	2	PLATE	
	5	1	**277-2537**	1	PLATE	
	6	1	**277-2538**	1	GASKET	
M	7	1	**6I-0217**	10	BOLT (M8X1.25X20-MM)	
	8	1	**6I-4793**	7	BOLT (M8X1.25X50-MM)	
	9	1	**283-4559**	1	HEAD AS-OIL FILTER	

M-METRIC PART
Y-SEPARATE ILLUSTRATION

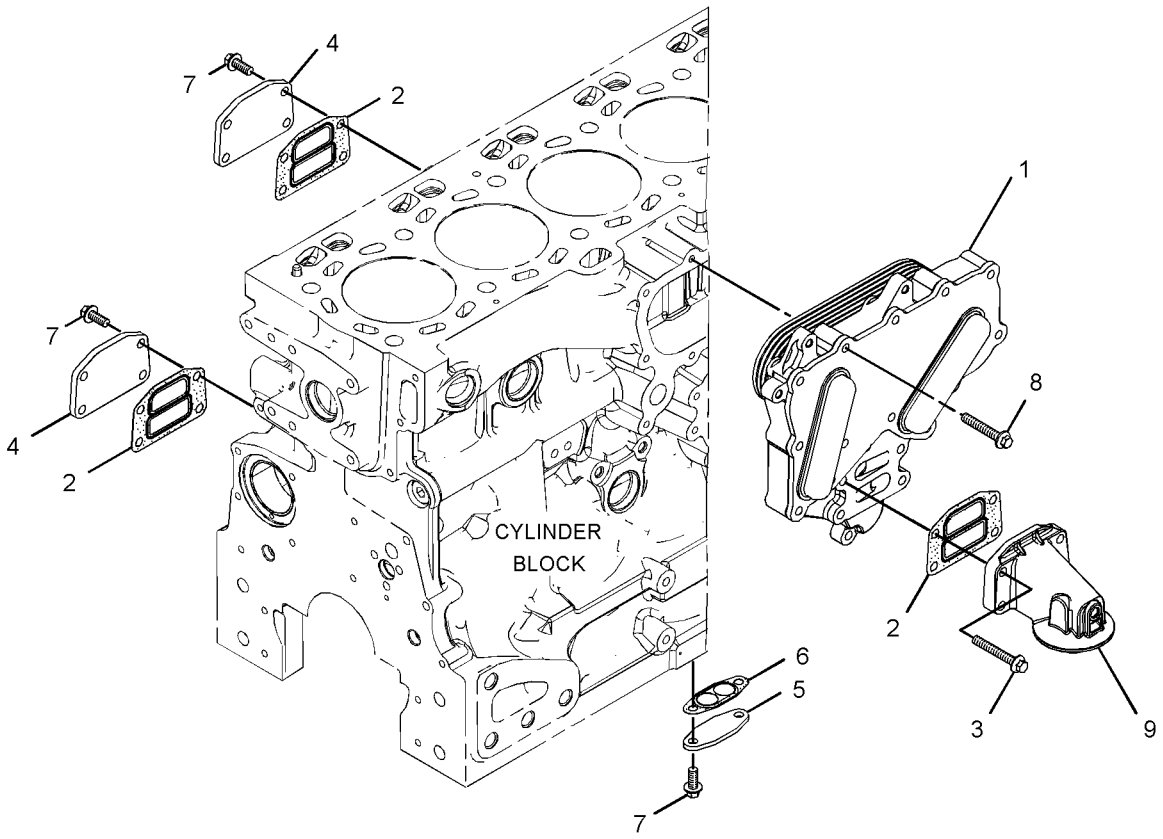

GRAPHIC #1 **<END>** g01948624

265-9742 COOLING AR-HIGH AMBIENT TEMP

S/N: JKM1-UP
CANNOT BE USED WITH 265-9748—PAGE 65
AN ATTACHMENT

SMCS-1350, 1353, 1386, 1387, 5057 **i02930727**

NOTE	PART NUMBER	QTY	PART NAME 1 2 3 4 5 6 (PRODUCT LEVEL)	SEE PAGE
	266-1495	1	CORE AS-RADIATOR	

<END>

265-9748 COOLING AR-HIGH AMBIENT TEMP

S/N: JKM1-UP
PART OF 322-7948 CONVERSION AR-MACHINE
CANNOT BE USED WITH 265-9742—PAGE 65
AN ATTACHMENT

SMCS-1350, 1353, 1386, 1387, 5057 **i02930717**

NOTE	PART NUMBER	QTY	PART NAME 1 2 3 4 5 6 (PRODUCT LEVEL)	SEE PAGE
	266-3275	1	CORE AS-CONDENSER (REFRIGERANT)	
	266-1495	1	CORE AS-RADIATOR	

<END>

311-0014 COOLING GP-SUPPLEMENTAL–VARIABLE PITCH FAN

S/N: JKM1-UP
PART OF 311-0013 CONTROL AR-FAN
AN ATTACHMENT

SMCS-1353 **i03545923**

NOTE	REF NO	GRAPHIC REF	PART NUMBER	QTY	PART NAME 1 2 3 4 5 6 (PRODUCT LEVEL)	SEE PAGE
	2	1	**308-1189**	1	FLANGE	
	3	1	**311-3163**	1	SUPPORT AS	
	4	1	*311-3166*	1	FAN AS (9-BLADE)	
		1	**324-7870**	1	KIT-FAN BLADE (INCLUDES 3-BLADES)	
Y	5	1	*311-3206*	1	SHIELD GP-ENGINE COMPARTMENT	591
	6	1	**312-1596**	1	GUARD AS-FAN	
	7	1	**337-0182**	1	PLATE AS	
M	8	1	**8T-1160**	6	BOLT-SOCKET HEAD (M10X1.5X50-MM)	
	9	1	**8T-4224**	6	WASHER-HARD (8.8X16X2-MM THK)	
M	10	1	**8T-4908**	6	BOLT (M8X1.25X25-MM)	

M-METRIC PART
Y-SEPARATE ILLUSTRATION

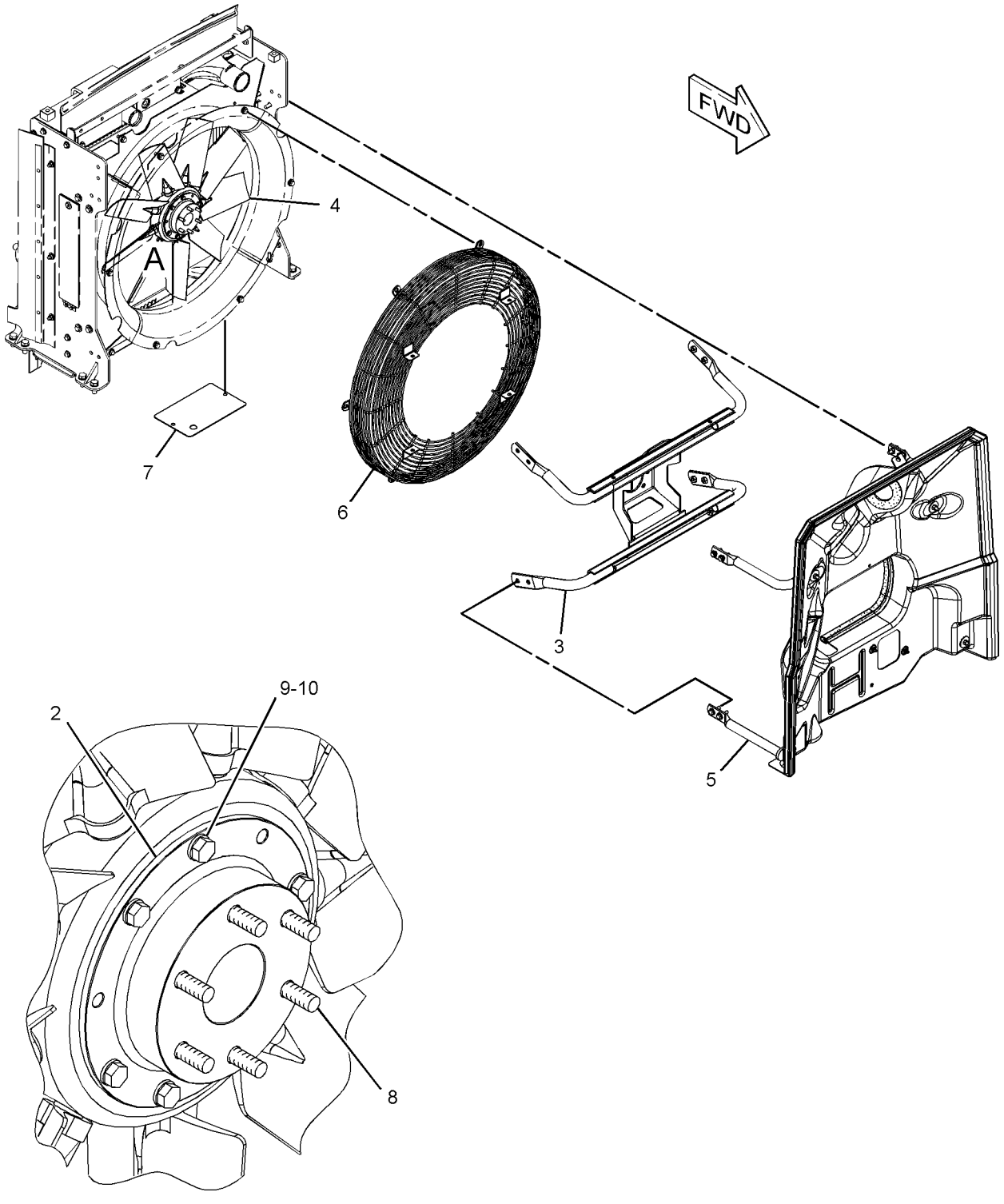

VIEW OF AREA A

GRAPHIC #1 **<END>** g01878950

COOLING SYSTEM

255-4812 LINES GP-WATER—RADIATOR

S/N: JKM1-UP

PART OF 237-7540 CHASSIS AR

SMCS-1380 **i03978390**

NOTE	REF NO	GRAPHIC REF	PART NUMBER	QTY	PART NAME 1 2 3 4 5 6 (PRODUCT LEVEL)	SEE PAGE
	1	1	**1P-4278**	1	CLAMP-HOSE	
	2	1	**5D-1026**	2	CLAMP-BAND	
	3	1	**8T-4983**	2	CLAMP-HOSE	
	4	1	**111-7092**	2	HOSE	
	5	1	**124-3019**	2	BRACKET AS	
					(EACH INCLUDES)	
M		1	**8T-3490**	1	NUT-WELD (M10X1.5-THD)	
	6	1	**150-8381**	1	BRACKET AS	
M		1	**8T-3490**	1	NUT-WELD (M10X1.5-THD)	
	7	1	**157-0670**	1	CAP-DUST	
	8	1	**201-0624**	1	ADAPTER	
	9	1	**253-1383**	1	ELBOW AS	
	10	1	**260-7454**	1	TANK GP-EXPANSION (COOLANT)	
		1	**251-3227**	1	CAP AS-COOLANT TANK	
	11	1	**260-7469**	1	HOSE	
	12	1	**262-4597**	1	TUBE	
	13	1	**262-4598**	1	TUBE AS	
	14	1	**262-4599**	1	HOSE	
	15	1	**278-2563**	1	BRACKET AS	
M		1	**8T-3490**	4	NUT-WELD (M10X1.5-THD)	
	16	1	**283-1977**	1	HOSE	
	17	1	**318-2487**	1	TUBE	
	18	1	**033-8248**	2	CLIP	
	19	1	**154-9024**	1	VALVE GP-FLUID SAMPLING	
	20	1	**212-6934**	10	CLAMP	
	21	1	**216-4983**	2	CLAMP	
	22	1	**3P-9847**	1	CLIP	
	23	1	**4D-7388**	1	CLIP	
	24	1	**5P-4116**	4	WASHER-HARD (8.8X20.5X2-MM THK)	
	25	1	**132-7370**	1	HOSE	
	26	1	**7X-7729**	4	WASHER (11X25X3-MM THK)	
	27	1	**8T-4121**	3	WASHER-HARD (11X21X2.5-MM THK)	
M	28	1	**8T-4133**	1	NUT (M10X1.5-THD)	
M	29	1	**8T-4195**	8	BOLT (M10X1.5X30-MM)	
M	30	1	**8T-4200**	4	BOLT (M8X1.25X16-MM)	
	31	1	**8T-4226**	3	WASHER-PLATED (10.5X45X3-MM THK)	
E	32	1	**5P-1505**		HOSE (34-CM)	
E	33	1	**5P-1251**		HOSE (102-CM)	
E	34	1	**8C-3681**		HOSE (199-CM)	

E-ORDER BY THE CENTIMETER
M-METRIC PART

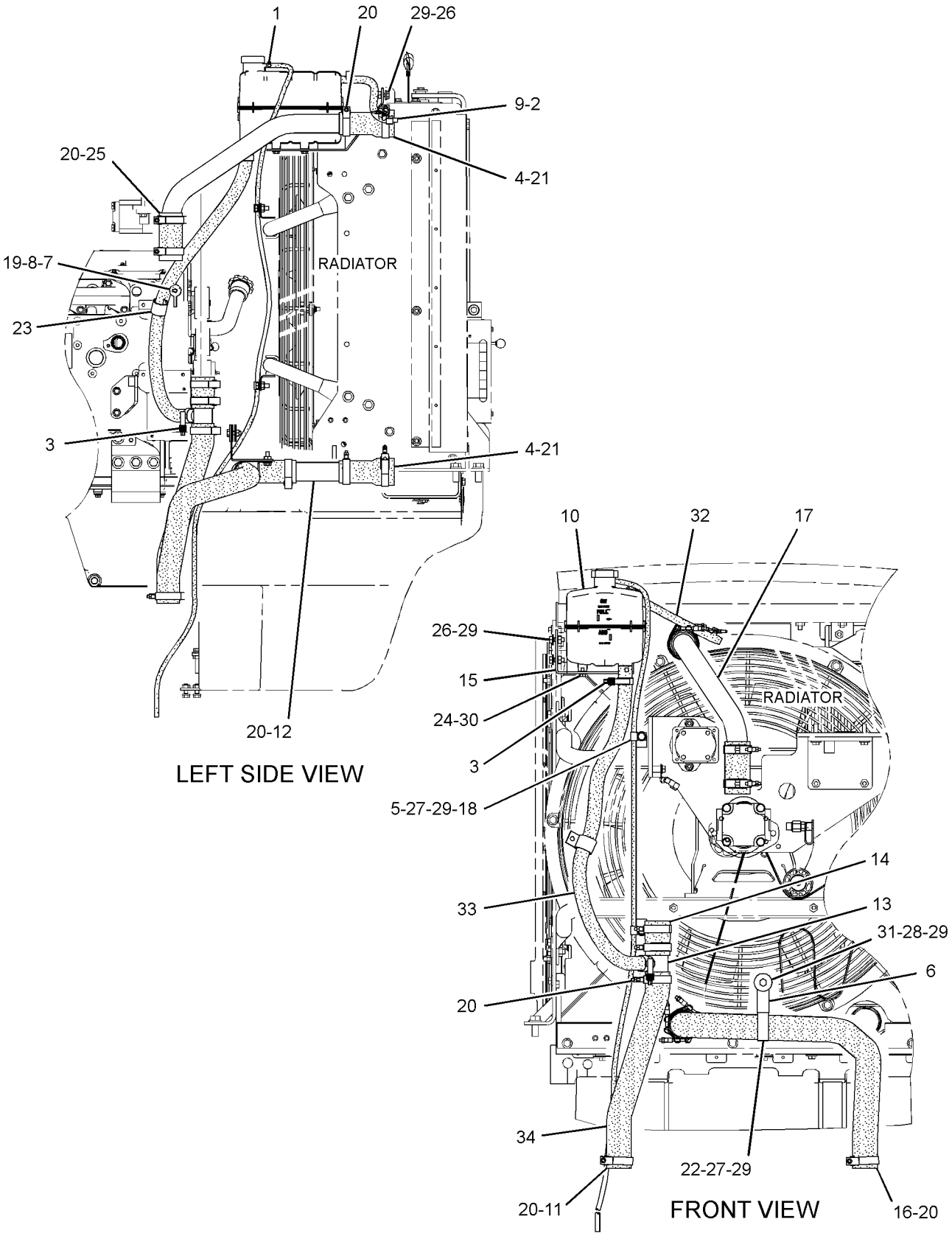

GRAPHIC #1 **<END>** g02174245

270-3318 LINES GP-WATER—AXLE OIL COOLER, CAB HEATER

S/N: JKM1-749

PART OF 265-9745 COOLER AR-AXLE OIL

AN ATTACHMENT

SMCS-1380 **i02921130**

NOTE	REF NO	GRAPHIC REF	PART NUMBER	QTY	PART NAME 1 2 3 4 5 6 (PRODUCT LEVEL)	SEE PAGE
	1	1	**2V-9121**	1	FITTING	
	2	1	**5D-1026**	7	CLAMP-BAND	
	3	1	**5I-3883**	1	BRACKET AS	
	4	1	**7C-0754**	1	TEE	
	5	1	**178-3620**	2	STRAP-DUAL CLAMP	
	6	1	**200-6345**	1	MOUNT (DUAL SWIVEL)	
	7	1	**204-2281**	2	STRAP-CABLE	
	8	1	**1V-6256**	1	SPACER (0.493X0.675X0.85-IN THK)	
	9	1	**4S-1962**	4	CLIP	
	10	1	**8T-4121**	6	WASHER-HARD (11X21X2.5-MM THK)	
M	11	1	**8T-4136**	1	BOLT (M10X1.5X25-MM)	
M	12	1	**8T-4137**	3	BOLT (M10X1.5X20-MM)	
M	13	1	**8T-4186**	1	BOLT (M10X1.5X40-MM)	
	14	1	**9X-8250**	2	CLIP	
E	15	1	**5P-0767**		HOSE (165.1-CM)	
E	15A	1	**5P-0767**		HOSE (142.9-CM)	
E	15B	1	**5P-0767**		HOSE (100-CM)	
E	15C	1	**5P-0767**		HOSE (231.2-CM)	
E	15D	1	**5P-0767**		HOSE (114.1-CM)	

E-ORDER BY THE CENTIMETER
M-METRIC PART

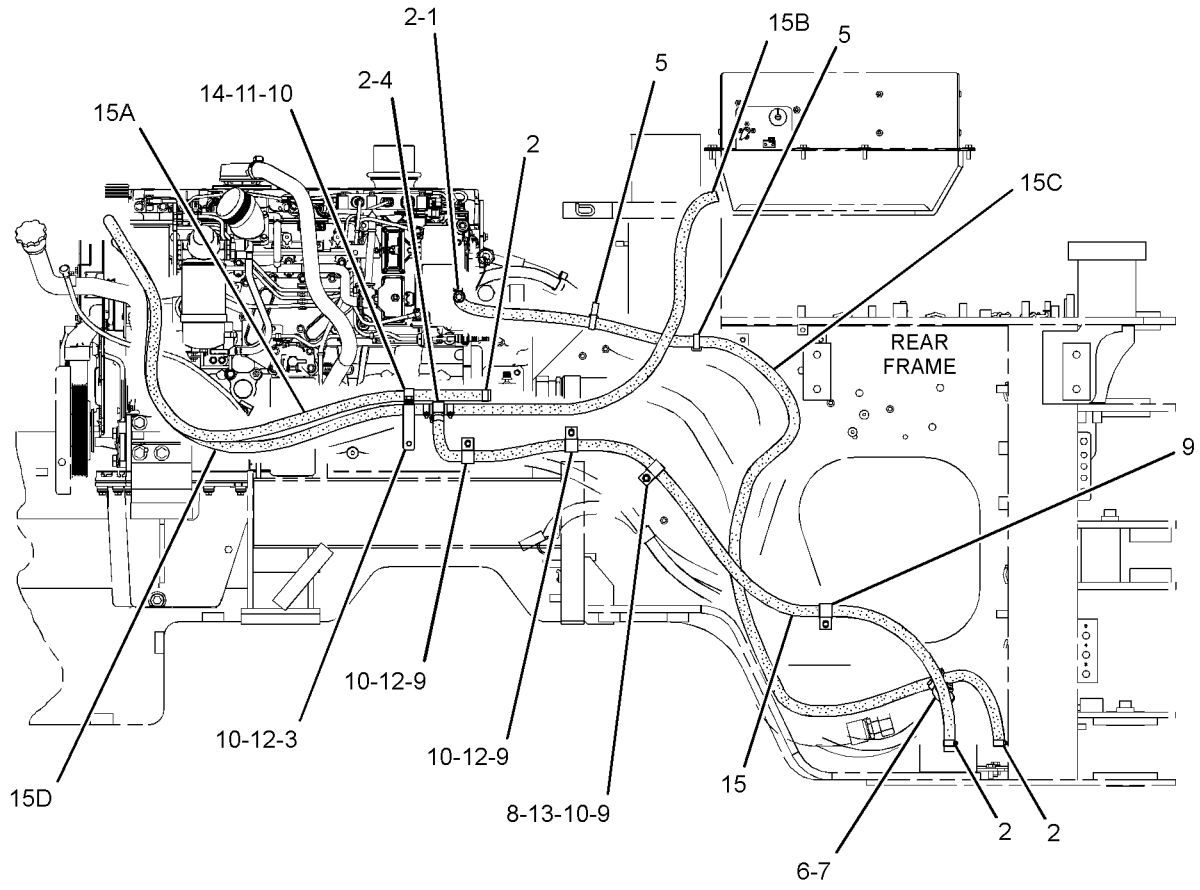

RIGHT SIDE VIEW

GRAPHIC #1 **<END>** g01424937

270-3318 LINES GP-WATER—AXLE OIL COOLER, CAB HEATER

S/N: JKM750-UP

PART OF 265-9745 COOLER AR-AXLE OIL

AN ATTACHMENT

SMCS-1380 **i03642331**

NOTE	REF NO	GRAPHIC REF	PART NUMBER	QTY	PART NAME 1 2 3 4 5 6 (PRODUCT LEVEL)	SEE PAGE
	1	1	**2V-9121**	1	FITTING	
	2	1	**5D-1026**	7	CLAMP-BAND	
	3	1	**5I-3883**	1	BRACKET AS	
M		1	**8T-3490**	1	NUT-WELD (M10X1.5-THD)	
	4	1	**7C-0754**	1	TEE	
C	5	1	**178-3620**	4	STRAP-DUAL CLAMP	
	6	1	**200-6345**	1	MOUNT (DUAL SWIVEL)	
	7	1	**204-2281**	2	STRAP-CABLE	
C	8	1	**7W-9094**	1	SPACER (10.5X20X9-MM THK)	
C	9	1	**4S-1962**	2	CLIP	
	10	1	**8T-4121**	6	WASHER-HARD (11X21X2.5-MM THK)	
M	11	1	**8T-4136**	1	BOLT (M10X1.5X25-MM)	
M	12	1	**8T-4137**	3	BOLT (M10X1.5X20-MM)	
CM	13	1	**8T-4195**	1	BOLT (M10X1.5X30-MM)	
C	14	1	**9X-8250**	4	CLIP	
CE	15	1	**5P-0767**		HOSE (160-CM)	
E	15A	1	**5P-0767**		HOSE (143-CM)	
E	15B	1	**5P-0767**		HOSE (100-CM)	
E	15C	1	**5P-0767**		HOSE (231.5-CM)	
E	15D	1	**5P-0767**		HOSE (114-CM)	

C-CHANGE FROM PREVIOUS TYPE
E-ORDER BY THE CENTIMETER
M-METRIC PART

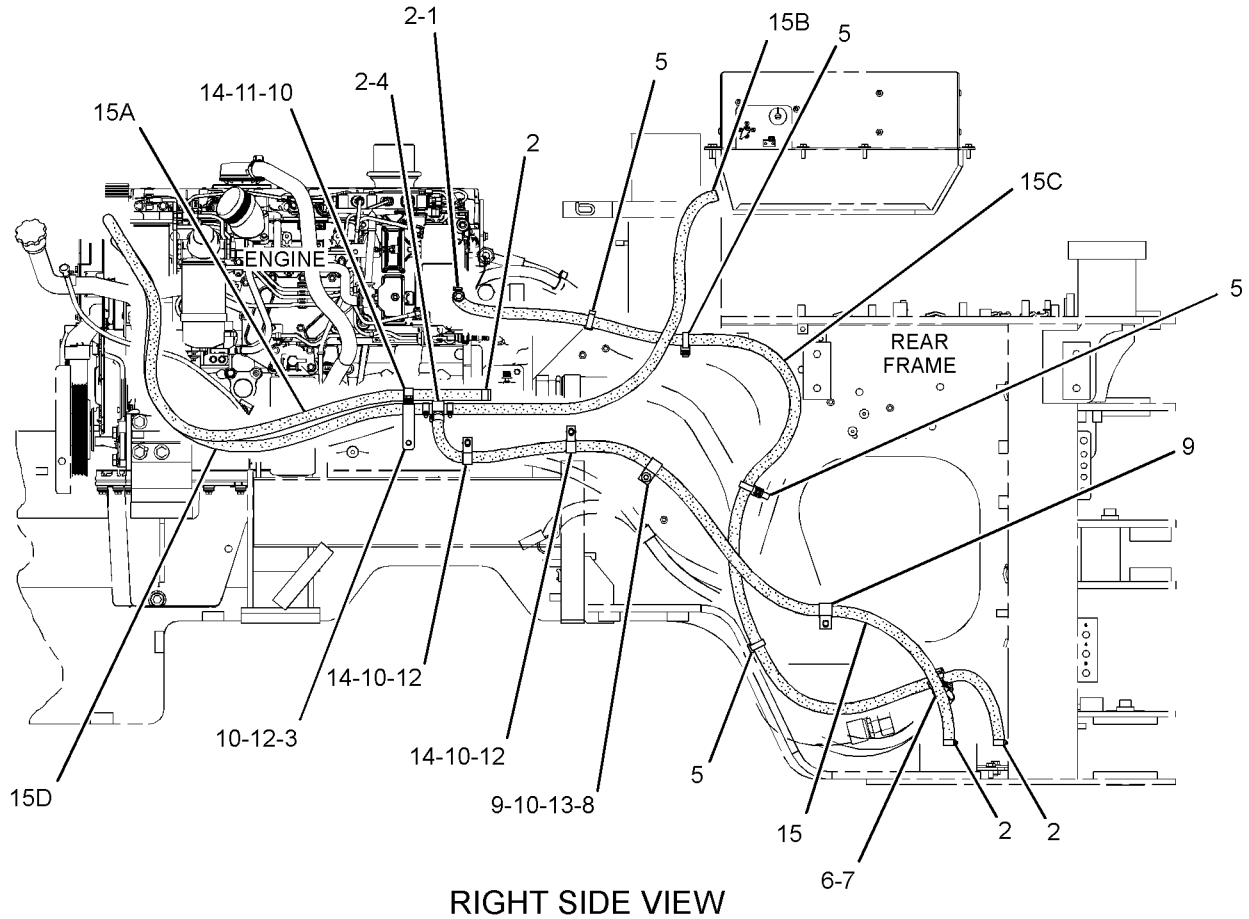

RIGHT SIDE VIEW

GRAPHIC #1 **<END>** g02174527

COOLING SYSTEM

277-2939 PUMP GP-WATER

S/N: C6E1-UP

PART OF 242-1382 ENGINE AR-PRIMARY

SMCS-1361 **i02752429**

NOTE	REF NO	GRAPHIC REF	PART NUMBER	QTY	PART NAME 1 2 3 4 5 6 (PRODUCT LEVEL)	SEE PAGE
	1	1	**307-9843**	1	PUMP GP-WATER	
	1A	1	**287-7430**	1	GASKET-COVER	
	1B	1	**225-8019**	1	GASKET	
	1C	1	**278-3242**	2	BOLT-FLANGE HEAD	
M	2	1	**6I-0254**	2	BOLT (M8X1.25X30-MM)	
	3	1	**113-8129**	7	BOLT (M8X75-MM)	
	4	1	**277-2925**	1	CONNECTION AS	
	4A	1	**225-7738**	1	SEAL-O-RING	
	4B	1	**277-2923**	1	GASKET	
M	5	1	**6I-0217**	2	BOLT (M8X1.25X20-MM)	

M-METRIC PART

277-2939 **PUMP GP-WATER** *(contd.)* **i02752429**

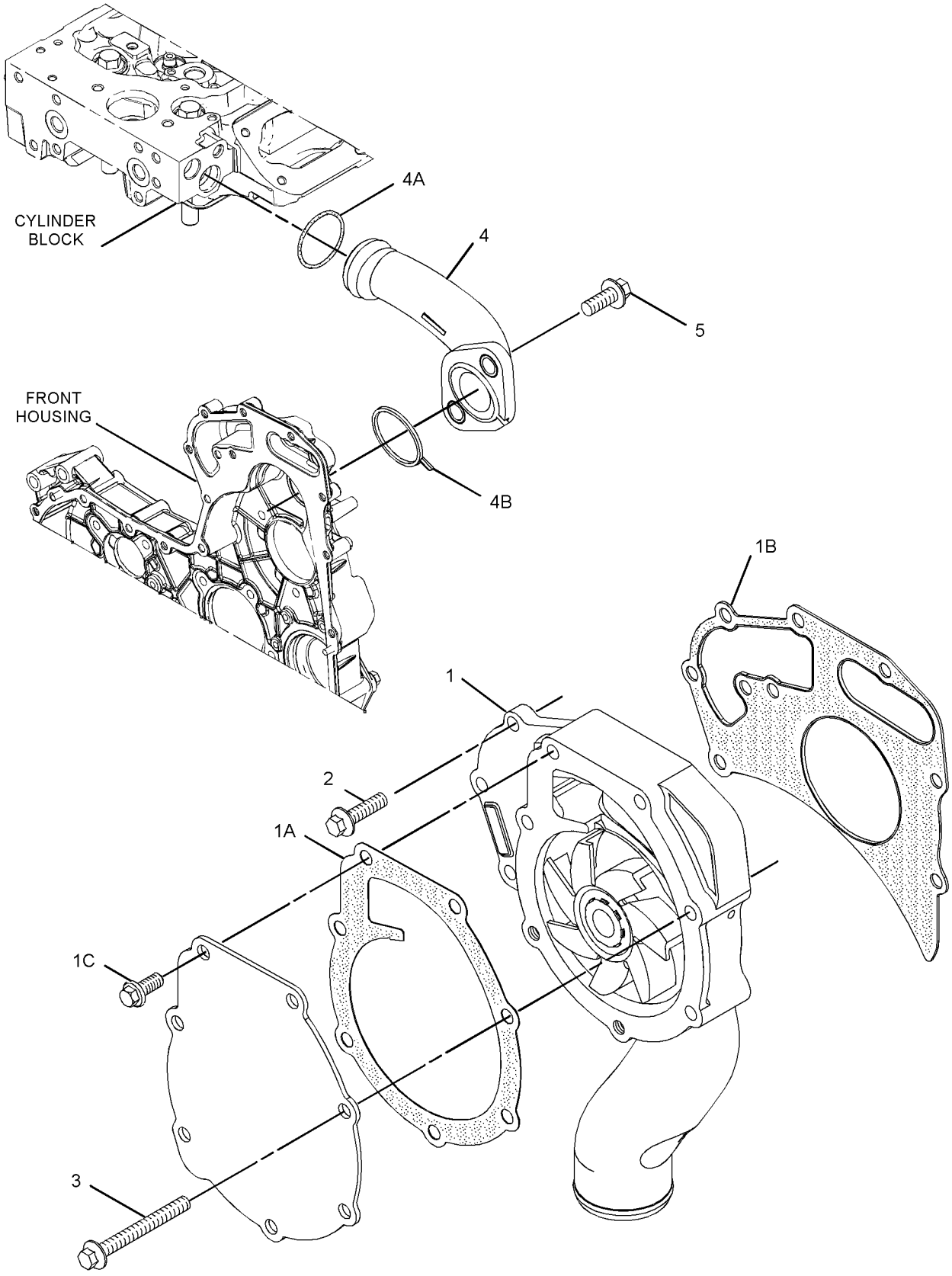

GRAPHIC #1 **<END>** g01378294

COOLING SYSTEM

277-2939 PUMP GP-WATER

S/N: C6E1-UP; G9G1-UP

PART OF 242-1382 ENGINE AR-PRIMARY

SMCS-1361 **i03630187**

NOTE	REF NO	GRAPHIC REF	PART NUMBER	QTY	PART NAME 1 2 3 4 5 6 (PRODUCT LEVEL)	SEE PAGE
C	1	1	**322-9662**	1	PUMP GP-WATER	
	1A	1	**225-8019**	1	GASKET	
M	2	1	**6I-0254**	2	BOLT (M8X1.25X30-MM)	
	3	1	**113-8129**	7	BOLT (M8X1.25X75-MM)	
	4	1	**277-2925**	1	CONNECTION AS	
	4A	1	**225-7738**	1	SEAL-O-RING	
	4B	1	**277-2923**	1	GASKET	
M	5	1	**6I-0217**	2	BOLT (M8X1.25X20-MM)	

C-CHANGE FROM PREVIOUS TYPE
M-METRIC PART

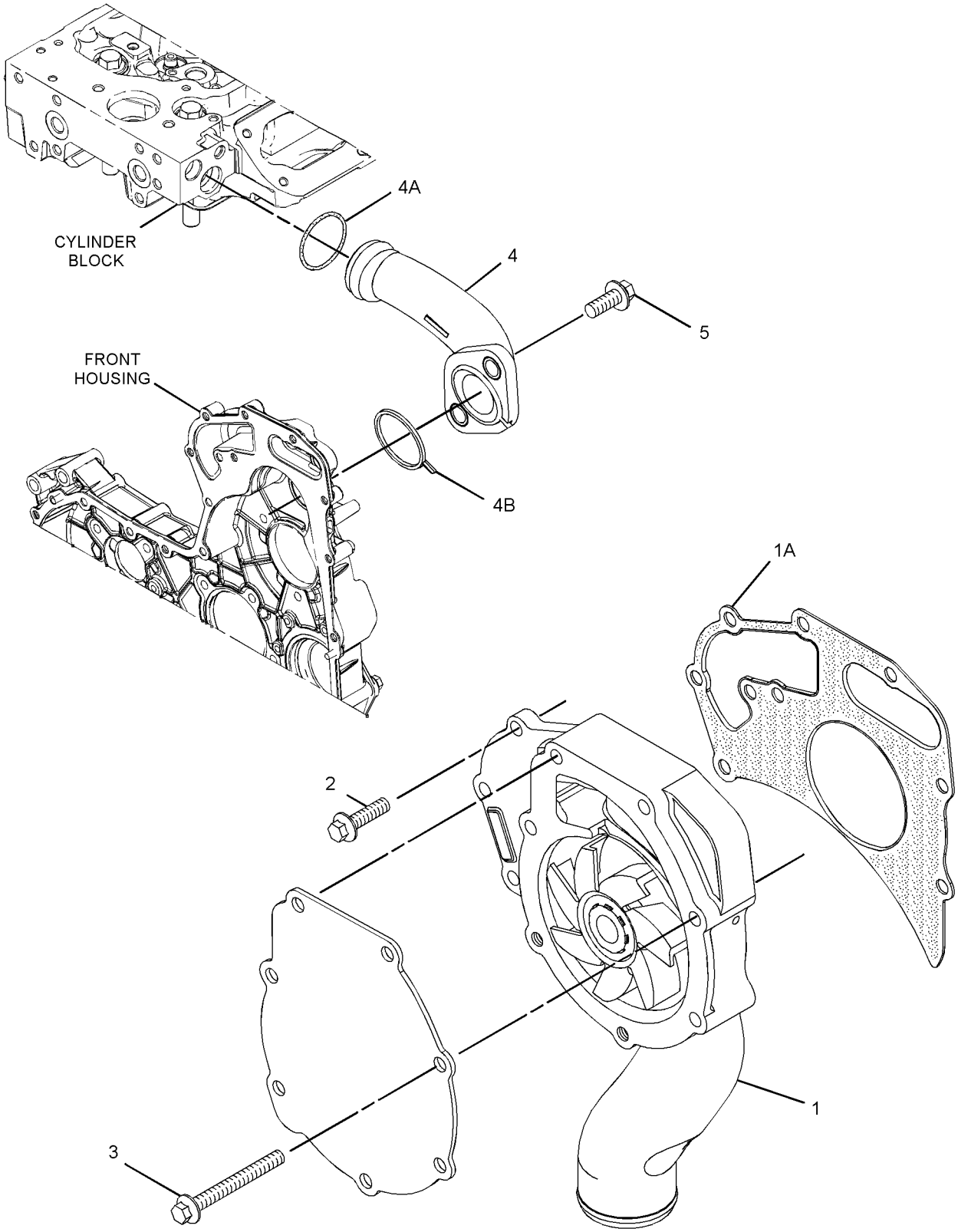

GRAPHIC #1 **<END>** g01947178

COOLING SYSTEM

255-4815 RADIATOR & FAN GP

S/N: JKM1-UP

PART OF 237-7540 CHASSIS AR

SMCS-1353, 1356 **i03395520**

NOTE	REF NO	GRAPHIC REF	PART NUMBER	QTY	PART NAME 1 2 3 4 5 6 (PRODUCT LEVEL)	SEE PAGE
	1	2	**4E-1384**	1	BUMPER-CONICAL	
	2	2	**5V-8780**	1	KNOB	
	3	2	*8T-2893*	1	LOCK GP-CYLINDER	
J		2	**226-0291**	1	LOCK AS	
		2	**226-0321**	1	CAM	
	4	2	**112-5344**	1	LATCH AS-DOOR	
	5	3	**121-3307**	2	MOUNT AS-RESILIENT	
	6	2	**189-5594**	1	COVER AS	
		2	**194-5278**	1	HINGE	
	7	2	**209-5528**	1	STRIKER	
	8	1	**235-9822**	1	CONE	
	9	2	**243-2289**	2	MOUNT AS	
	10	3	**243-3416**	1	ADAPTER	
	11	3	**246-0511**	1	SPACER (50.3X127X8-MM THK)	
	12	2	**256-3254**	1	SUPPORT AS (RH)	
	13	2	**256-3255**	1	SUPPORT AS (LH)	
	14	2	**256-3258**	1	BRACKET AS	
	15	1	**256-3261**	1	SUPPORT AS	
	16	2	**256-3262**	1	PLATE	
	17	3	**256-3263**	1	GUARD AS-FAN	
	18	1	**256-3265**	1	SHROUD AS	
	19	1	**256-3267**	1	SUPPORT AS	
	20	3	**256-3269**	1	BRACKET AS	
	21	3	**256-3270**	1	BRACKET AS	
	22	3	**256-3276**	1	PLATE AS	
	23	3	**256-3278**	1	BAFFLE AS	
	24	3	**259-0577**	1	CORE AS-RADIATOR	
	25	2	**260-7452**	1	HINGE AS	
	26	1	**260-7470**	1	BAFFLE	
	27	1	**260-7472**	1	BAFFLE	
Y	28	3	**265-4925**	1	MOTOR GP-GEAR (HYDRAULIC FAN)	793
	29	3	**271-3086**	1	BAFFLE AS	
	30	3	**277-8628**	2	MOUNT	
	31	3	**277-8985**	1	PLATE	
	32	3	**278-2656**	1	DEFLECTOR	
	33	1	**278-4788**	1	BRACKET	
	34	1	**281-2844**	1	BAFFLE	
	35	1	**282-2024**	1	CORE AS-HYDRAULIC OIL COOLER	
	36	1	**283-1958**	1	BAFFLE AS	
	37	1	**284-6016**	1	CORE AS-AFTERCOOLER	
	38	3	**295-6889**	1	SPIDER AS-FAN	
	39	2	**302-2343**	1	BAFFLE AS (LH)	
	40	2	**302-2344**	1	BAFFLE AS (RH)	
M	41	2	**5C-2890**	4	NUT (M6X1-THD)	
M	42	2	**5C-7261**	1	NUT (M8X1.25-THD)	
	43	1,2	**5P-1076**	10	WASHER-HARD (13.5X30X4-MM THK)	
	44	3	**7X-0515**	1	WASHER-HARD (17X35X5-MM THK)	
M	45	1,3	**7X-2546**	4	BOLT (M10X1.5X180-MM)	
M	46	3	**7X-2553**	8	BOLT (M16X2X40-MM)	
	47	1,2,3	**7X-7729**	68	WASHER (11X25X3-MM THK)	
	48	1	**8T-4121**	14	WASHER-HARD (11X21X2.5-MM THK)	
M	49	3	**8T-4132**	1	NUT (M16X2-THD)	
M	50	1,2	**8T-4133**	10	NUT (M10X1.5-THD)	
M	51	1,2	**8T-4136**	17	BOLT (M10X1.5X25-MM)	
M	52	3	**8T-4186**	7	BOLT (M10X1.5X40-MM)	
M	53	1,2,3	**8T-4195**	42	BOLT (M10X1.5X30-MM)	

255-4815 **RADIATOR & FAN GP** *(contd.)* **i03395520**

NOTE	REF NO	GRAPHIC REF	PART NUMBER	QTY	PART NAME 1 2 3 4 5 6 (PRODUCT LEVEL)	SEE PAGE
M	54	2,3	**8T-4196**	4	BOLT (M10X1.5X35-MM)	
	55	2,3	**8T-4226**	4	WASHER-PLATED (10.5X45X3-MM THK)	
M	56	1,2	**8T-4956**	10	BOLT (M12X1.75X35-MM)	
M	57	2	**8T-4971**	2	BOLT (M6X1X30-MM)	
M	58	3	**8T-6466**	2	BOLT (M10X1.5X60-MM)	
	59	3	**183-6121**	1	WASHER (10.31X38.1X4.78-MM THK)	
	60	2	**9X-8256**	6	WASHER (6.6X12X2-MM THK)	
	61	3	**9X-8257**	8	WASHER (17.5X30X3.5-MM THK)	
D	62	3	**054-7915**		SEAL (0.5-M EACH)	
D	63	1	**5P-8309**		SEAL (0.9-M EACH)	
E	64	1	**296-8592**		SEAL (92-CM)	
B	65	1	**312-6458**		TAPE-REFLECTIVE	

B-USE AS REQUIRED
D-ORDER BY THE METER
E-ORDER BY THE CENTIMETER
J-REQUIRES CORPORATE KEY
M-METRIC PART
Y-SEPARATE ILLUSTRATION

REFER TO ALL ILLUSTRATIONS OF
THIS GROUP FOR AUXILIARY VIEWS

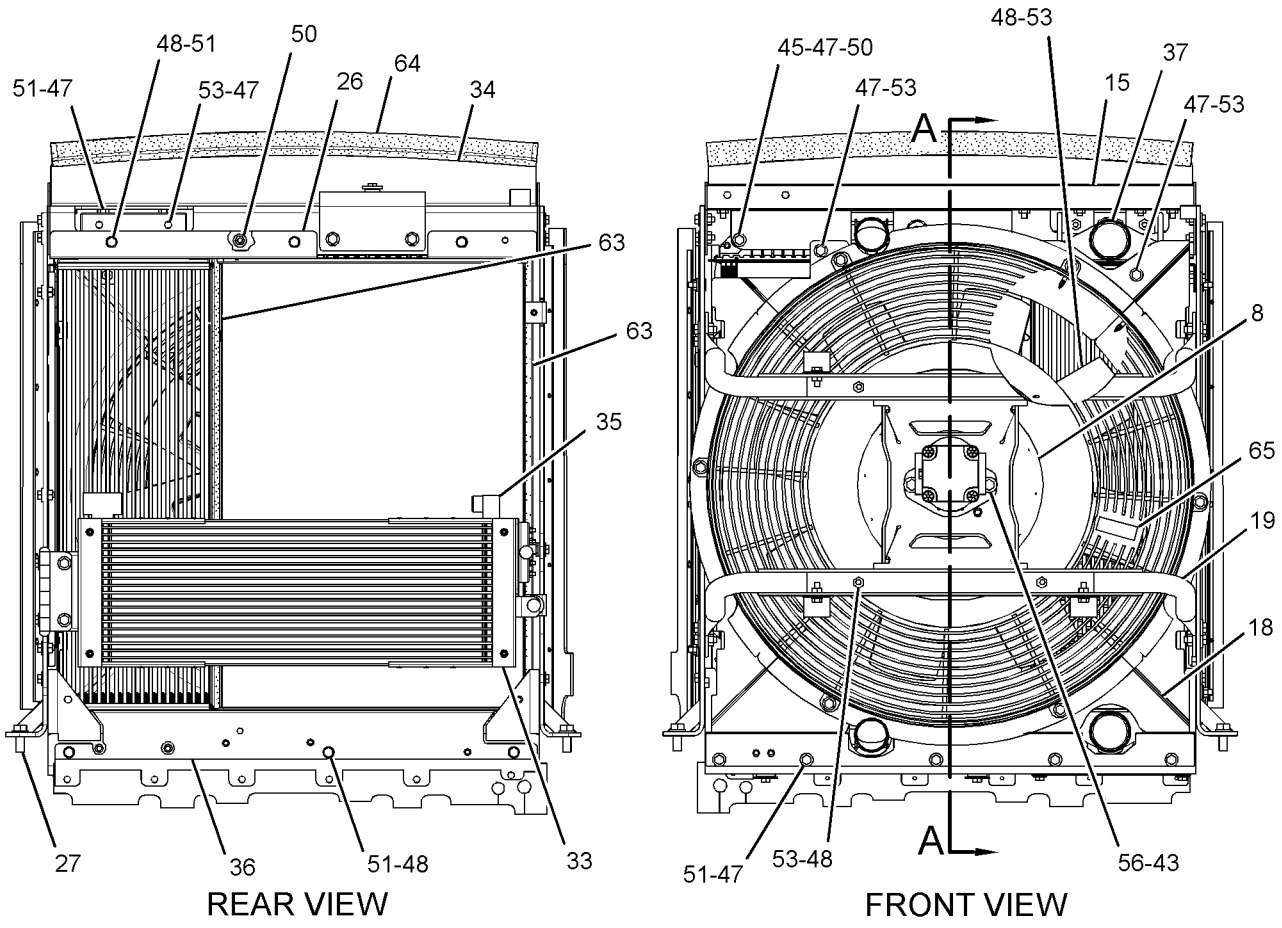

GRAPHIC #1

g01637002

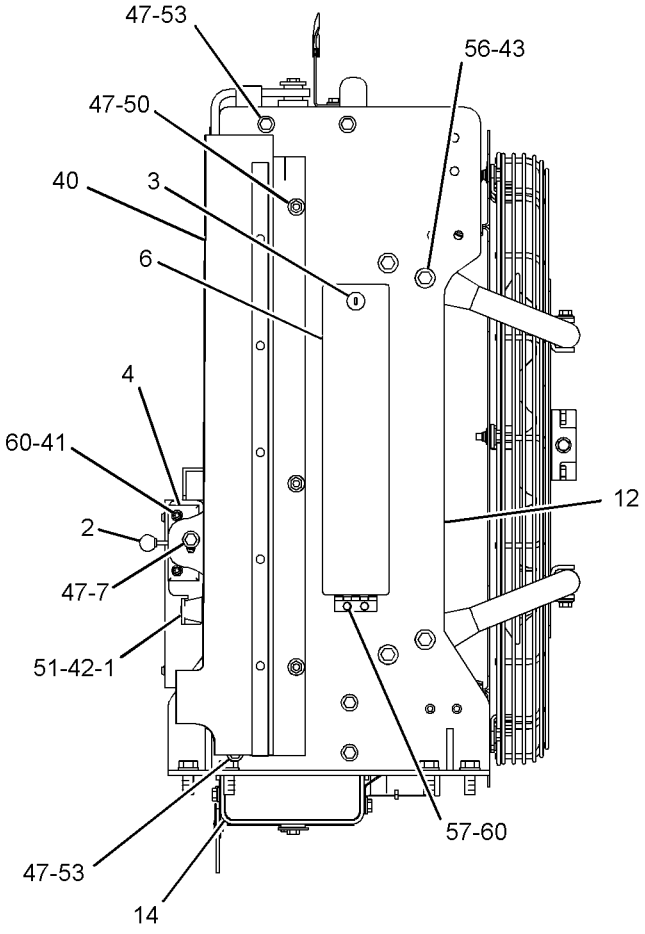

RIGHT SIDE VIEW

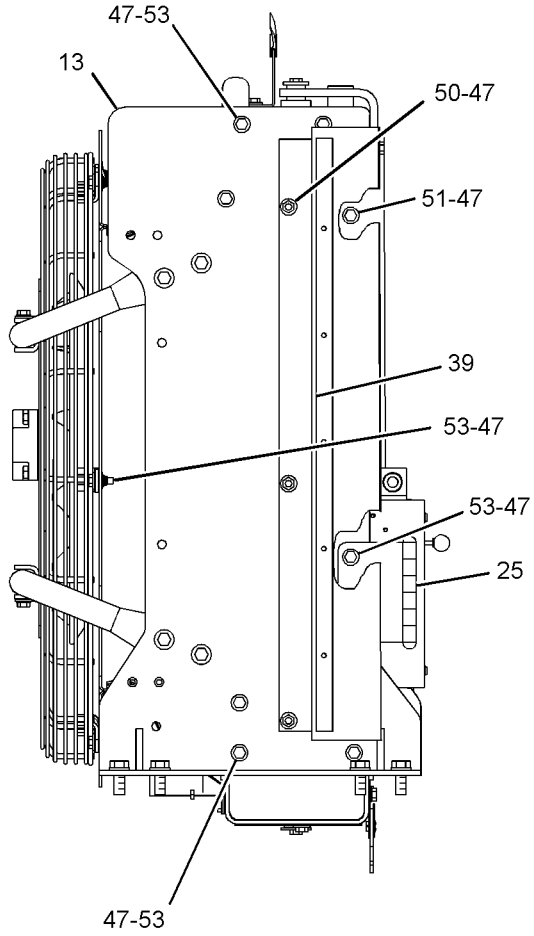

LEFT SIDE VIEW

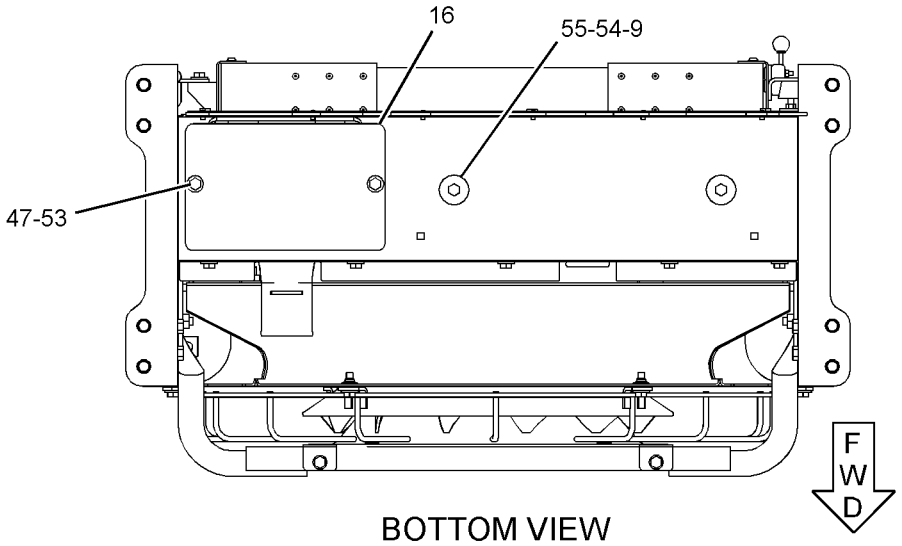

BOTTOM VIEW

GRAPHIC #2

g01422540

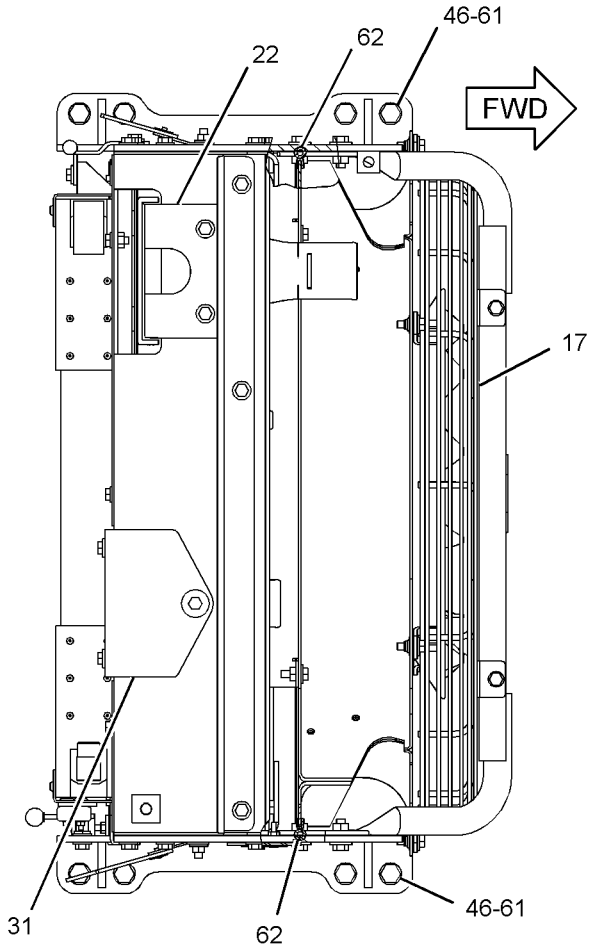

TOP VIEW

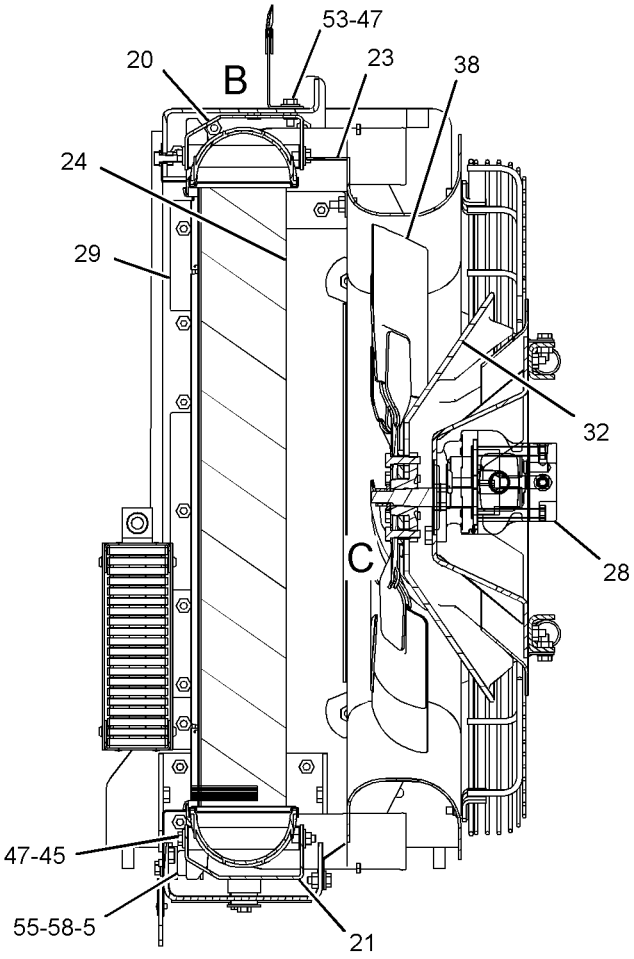

SECTION A-A

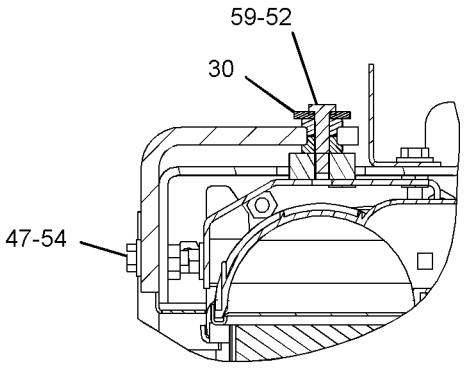

VIEW OF AREA B

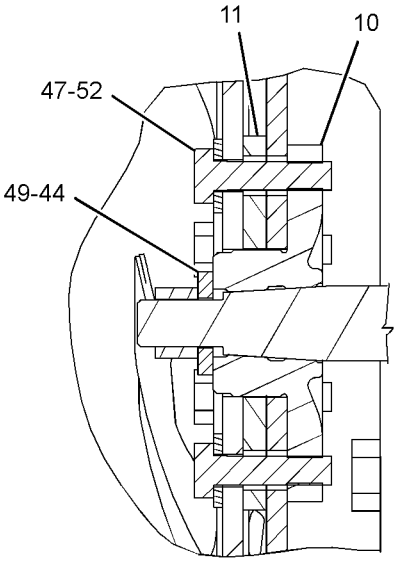

VIEW OF AREA C

GRAPHIC #3 **<END>** g01422671

277-2976 REGULATOR GP-TEMPERATURE–WATER

S/N: C6E1-UP; G9G1-UP

PART OF 242-1382 ENGINE AR-PRIMARY

SMCS-1355 **i02847374**

NOTE	REF NO	GRAPHIC REF	PART NUMBER	QTY	PART NAME 1 2 3 4 5 6 (PRODUCT LEVEL)	SEE PAGE
	1	1	**277-2974**	1	REGULATOR AS-WATER TEMPERATURE (CONNECTOR INCLUDED)	
	2	1	**281-8744**	1	GASKET-WATER REGULATOR	
	3	1	**123-2899**	2	BOLT (M10X1.5X40-MM)	

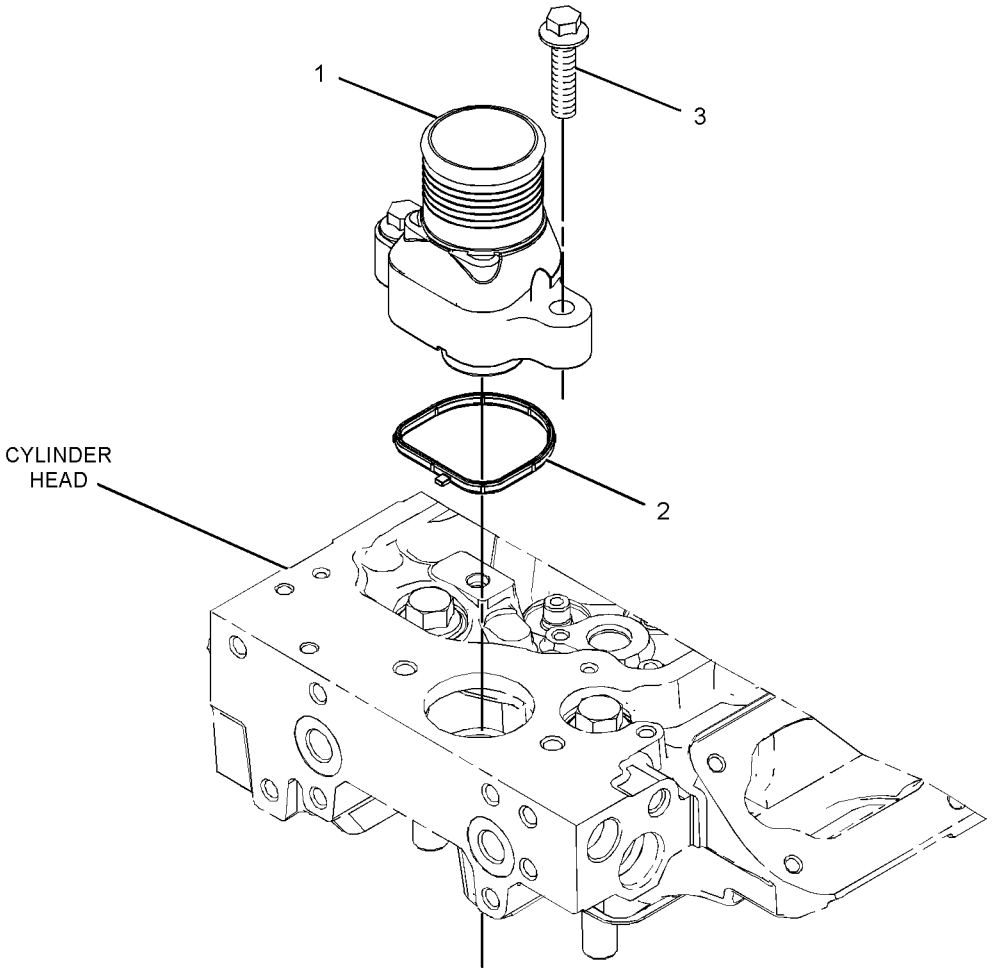

GRAPHIC #1 **<END>** g01195539

AIR INLET AND EXHAUST SYSTEM

255-4804 AIR CLEANER GP

S/N: JKM1-UP

PART OF 239-3372 INSTALLATION AR-ENGINE

SMCS-1051, 1054 **i02900352**

NOTE	REF NO	GRAPHIC REF	PART NUMBER	QTY	PART NAME 1 2 3 4 5 6 (PRODUCT LEVEL)	SEE PAGE
Y	1	1	**256-7900**	1	AIR CLEANER GP	84
	2	1	**256-7926**	1	CAP AS-AIR CLEANER	
	3	1	**277-3318**	1	TUBE	
	4	1	**277-3319**	1	HOSE	
	5	1	**230-3671**	2	CLAMP	
	6	1	**7X-0579**	2	WASHER-HARD (8.8X25.5X2-MM THK)	
M	7	1	**7X-2537**	2	BOLT (M8X1.25X35-MM)	
	8	1	**8T-4121**	2	WASHER-HARD (11X21X2.5-MM THK)	
M	9	1	**8T-4136**	2	BOLT (M10X1.5X25-MM)	

M-METRIC PART
Y-SEPARATE ILLUSTRATION

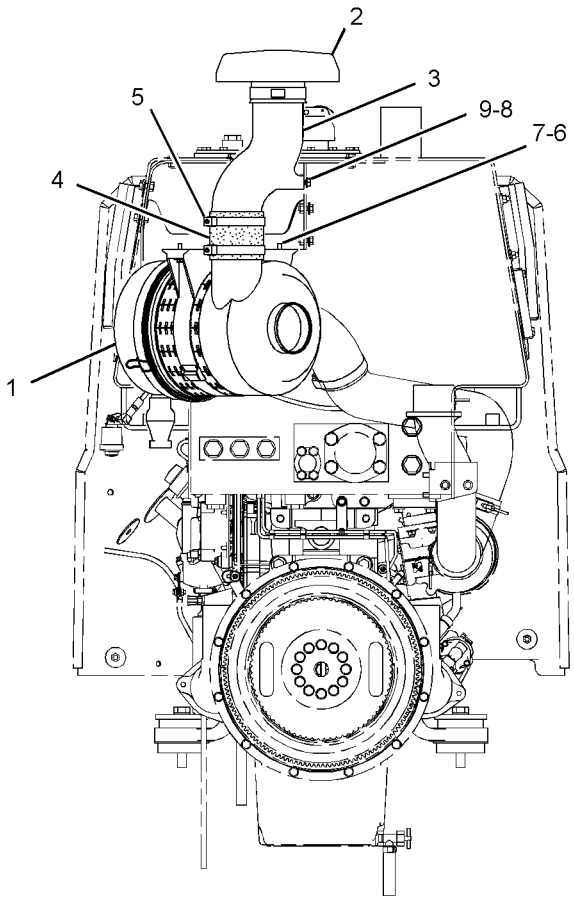

FRONT VIEW

GRAPHIC #1 **<END>** g01385570

AIR INLET AND EXHAUST SYSTEM

256-7900 AIR CLEANER GP

S/N: JKM1-UP

PART OF 255-4804 AIR CLEANER GP

SMCS-1051, 1054 **i02900357**

NOTE	REF NO	GRAPHIC REF	PART NUMBER	QTY	PART NAME 1 2 3 4 5 6 (PRODUCT LEVEL)	SEE PAGE
	1	1	**224-2263**	1	VALVE AS-AIR	
	2	1	**256-7901**	1	COVER AS-AIR CLEANER	
	3	1	**256-7902**	1	FILTER ELEMENT AS-AIR (PRIMARY)	
	4	1	**256-7903**	1	FILTER ELEMENT AS-AIR (SECONDARY)	
	5	1	**256-7904**	1	BRACKET AS	

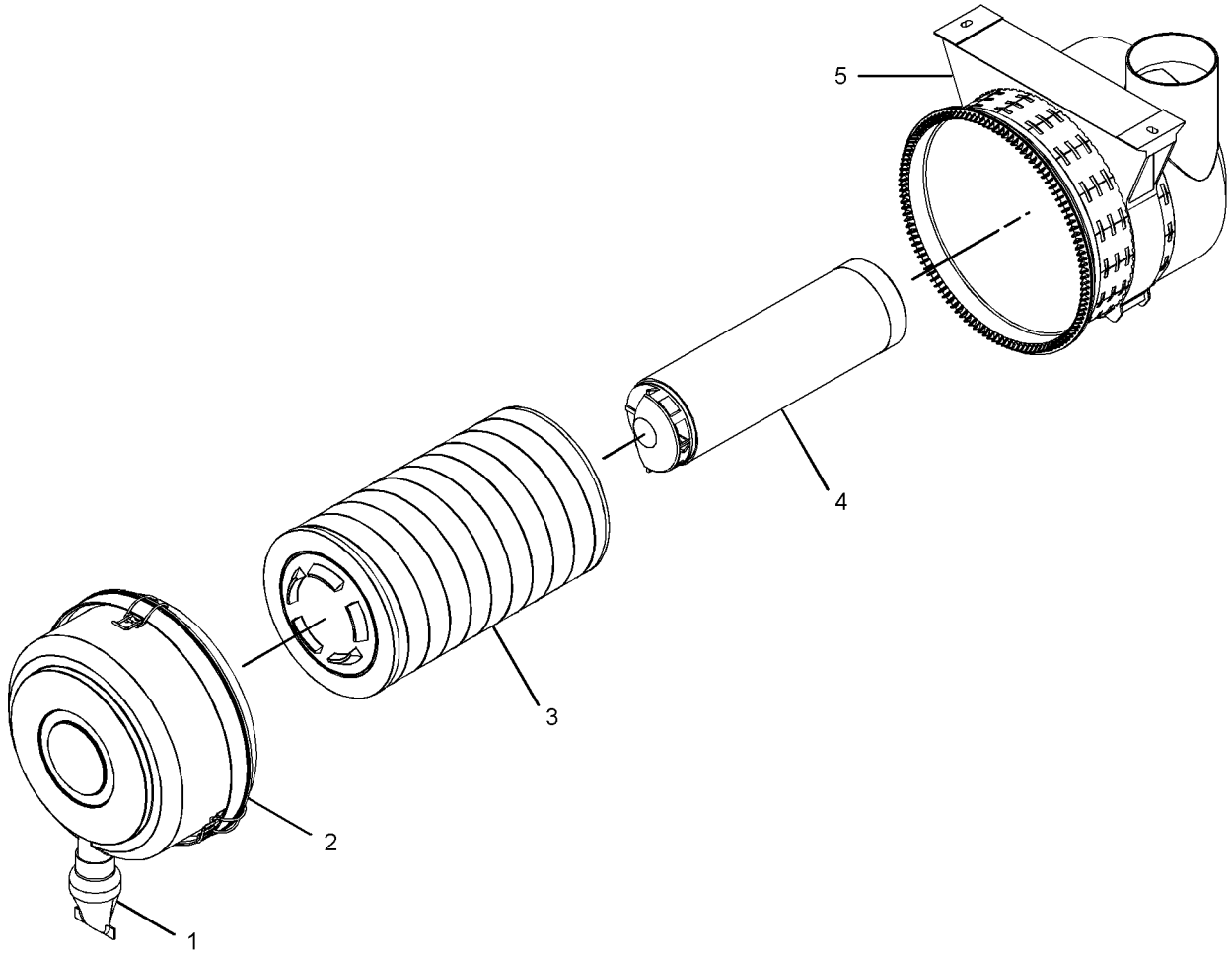

GRAPHIC #1 **<END>** g01385535

AIR INLET AND EXHAUST SYSTEM

6I-0138 EXTENSION GP-EXHAUST

S/N: JKM1-UP

PART OF 308-4340 SUPPORT GP-AIR INLET

SMCS-1061 **i02912289**

NOTE	REF NO	GRAPHIC REF	PART NUMBER	QTY	PART NAME 1 2 3 4 5 6 (PRODUCT LEVEL)	SEE PAGE
	1	1	**6I-0139**	1	EXTENSION-EXHAUST	
	2	1	**7N-5685**	1	CLAMP	
	3	1	**8T-8915**	1	BOLT (3/8-16X3.25-IN)	
	4	1	**6V-8801**	1	NUT (3/8-16-THD)	
	5	1	**8T-4896**	2	WASHER-HARD (10.2X18.5X2.5-MM THK)	

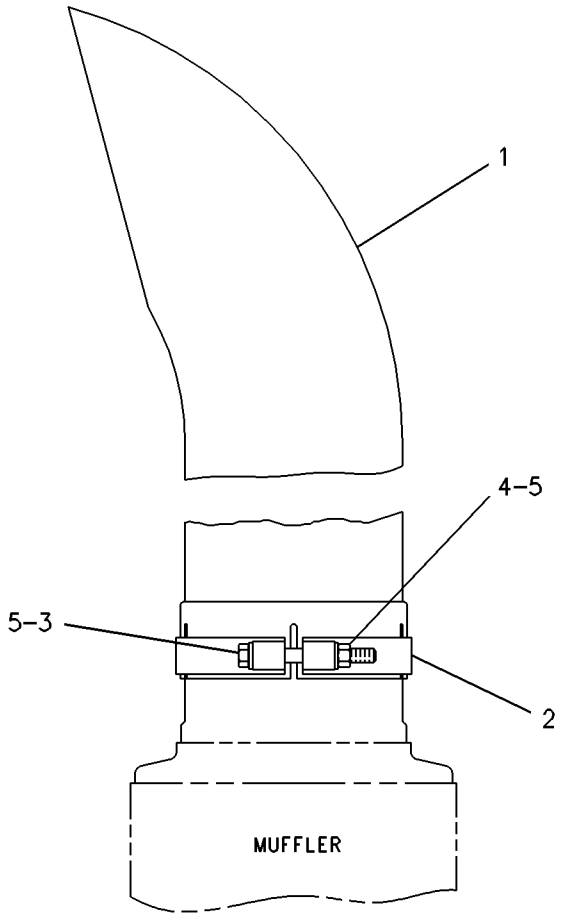

FRONT VIEW

GRAPHIC #1 **<END>** g00229513

AIR INLET AND EXHAUST SYSTEM

255-4813 LINES GP-AFTERCOOLER AIR

S/N: JKM1-UP

PART OF 237-7540 CHASSIS AR

SMCS-1063, 1071 **i02910501**

NOTE	REF NO	GRAPHIC REF	PART NUMBER	QTY	PART NAME 1 2 3 4 5 6 (PRODUCT LEVEL)	SEE PAGE
	1	1	**115-6948**	1	HOSE-REDUCER (3-IN TO 2-IN)	
	2	1	**177-0581**	1	HOSE	
	3	1	**322-8274**	2	HOSE	
	4	1	**258-5447**	1	TUBE	
	5	1	**258-5448**	1	TUBE	
	6	1	**208-6055**	3	CLAMP	
	7	1	**209-4579**	4	CLAMP	
	8	1	**214-7457**	1	CLAMP	

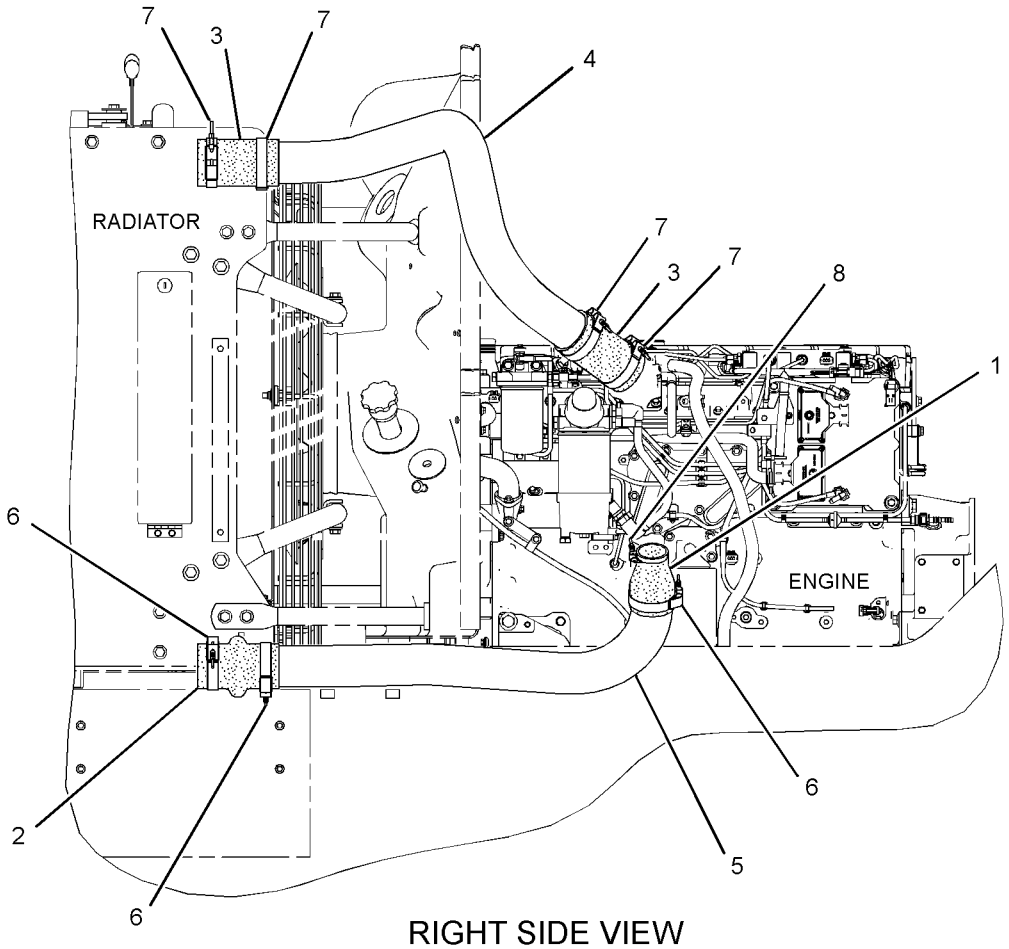

RIGHT SIDE VIEW

GRAPHIC #1 **<END>** g01425199

AIR INLET AND EXHAUST SYSTEM

255-4805 LINES GP-TURBOCHARGER AIR

S/N: JKM1-554

PART OF 239-3372 INSTALLATION AR-ENGINE

SMCS-1052, 1071 **i02900377**

NOTE	REF NO	GRAPHIC REF	PART NUMBER	QTY	PART NAME 1 2 3 4 5 6 (PRODUCT LEVEL)	SEE PAGE
	1	1	**2V-0482**	1	HOSE AS	
	2	1	**8N-2694**	1	INDICATOR-AIR FILTER CHANGE	
	3	1	**119-6723**	1	FITTING	
	4	1	**262-5565**	1	HOSE	
	5	1	**262-5566**	1	HOSE	
	6	1	**262-5568**	1	TUBE AS	
	7	1	**208-7448**	1	CLAMP	
	8	1	**224-0807**	1	CLAMP	
	9	1	**230-3671**	2	CLAMP	
	10	1	**2V-3216**	2	CLIP	
	11	1	**3B-6487**	1	COUPLING (PIPE)	
	12	1	**3B-6552**	1	ELBOW-PIPE	
M	13	1	**5C-2890**	4	NUT (M6X1-THD)	
	14	1	**8C-7575**	1	ADAPTER	
M	15	1	**8T-4138**	4	BOLT (M6X1X20-MM)	
	16	1	**9X-8256**	8	WASHER (6.6X12X2-MM THK)	
	17	1	**6V-5049**	1	SEAL-O-RING	
	18	1	**287-8399**	1	PLUG-DRAIN	
	19	1	**308-5065**	1	TUBE AS	

M-METRIC PART

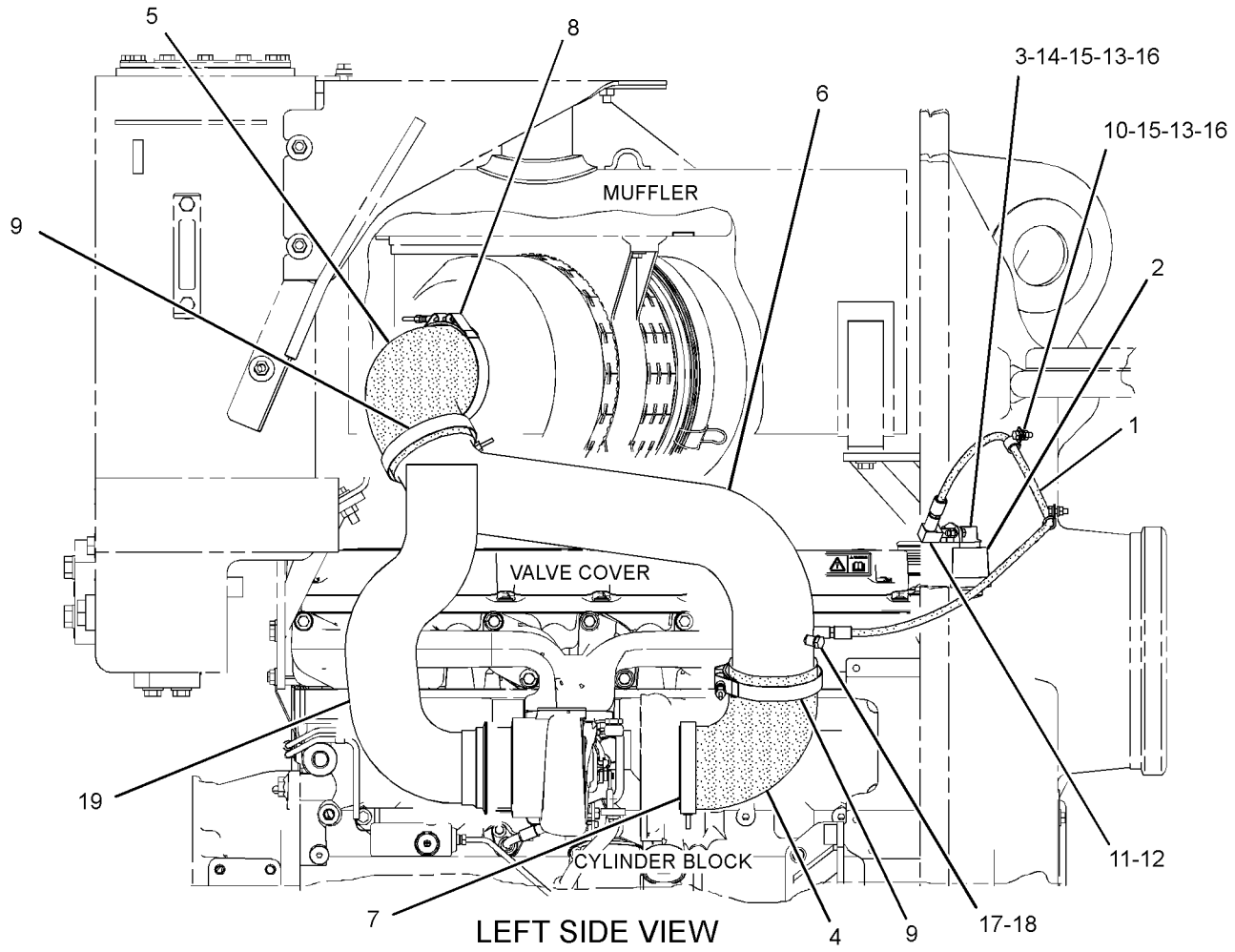

LEFT SIDE VIEW

GRAPHIC #1

<END>

g01424044

AIR INLET AND EXHAUST SYSTEM

255-4805 LINES GP-TURBOCHARGER AIR

S/N: JKM555-942

PART OF 239-3372 INSTALLATION AR-ENGINE

SMCS-1052, 1071 **i03686625**

NOTE	REF NO	GRAPHIC REF	PART NUMBER	QTY	PART NAME 1 2 3 4 5 6 (PRODUCT LEVEL)	SEE PAGE
C	1	1	**3G-7875**	1	HOSE AS	
	2	1	**8N-2694**	1	INDICATOR-AIR FILTER CHANGE	
	3	1	**119-6723**	1	FITTING	
	4	1	**262-5565**	1	HOSE	
	5	1	**262-5566**	1	HOSE	
C	6	1	**328-1054**	1	TUBE AS	
	7	1	**208-7448**	1	CLAMP	
	8	1	**224-0807**	1	CLAMP	
C	9	1	**216-2211**	2	CLAMP	
C	10	1	**2V-3216**	3	CLIP	
	11	1	**3B-6487**	1	COUPLING (PIPE)	
	12	1	**3B-6552**	1	ELBOW-PIPE	
CM	13	1	**8T-4138**	5	BOLT (M6X1X20-MM)	
	14	1	**8C-7575**	1	ADAPTER	
M	15	1	**5C-2890**	4	NUT (M6X1-THD)	
C	16	1	**9X-8256**	9	WASHER (6.6X12X2-MM THK)	
	17	1	**214-7568**	1	SEAL-O-RING	
	18	1	**287-8399**	1	PLUG-DRAIN	
	19	1	**308-5065**	1	TUBE AS	
C	20	1	**5L-3233**	1	FITTING	
C	21	1	**8B-4884**	1	ELBOW	

C-CHANGE FROM PREVIOUS TYPE
M-METRIC PART

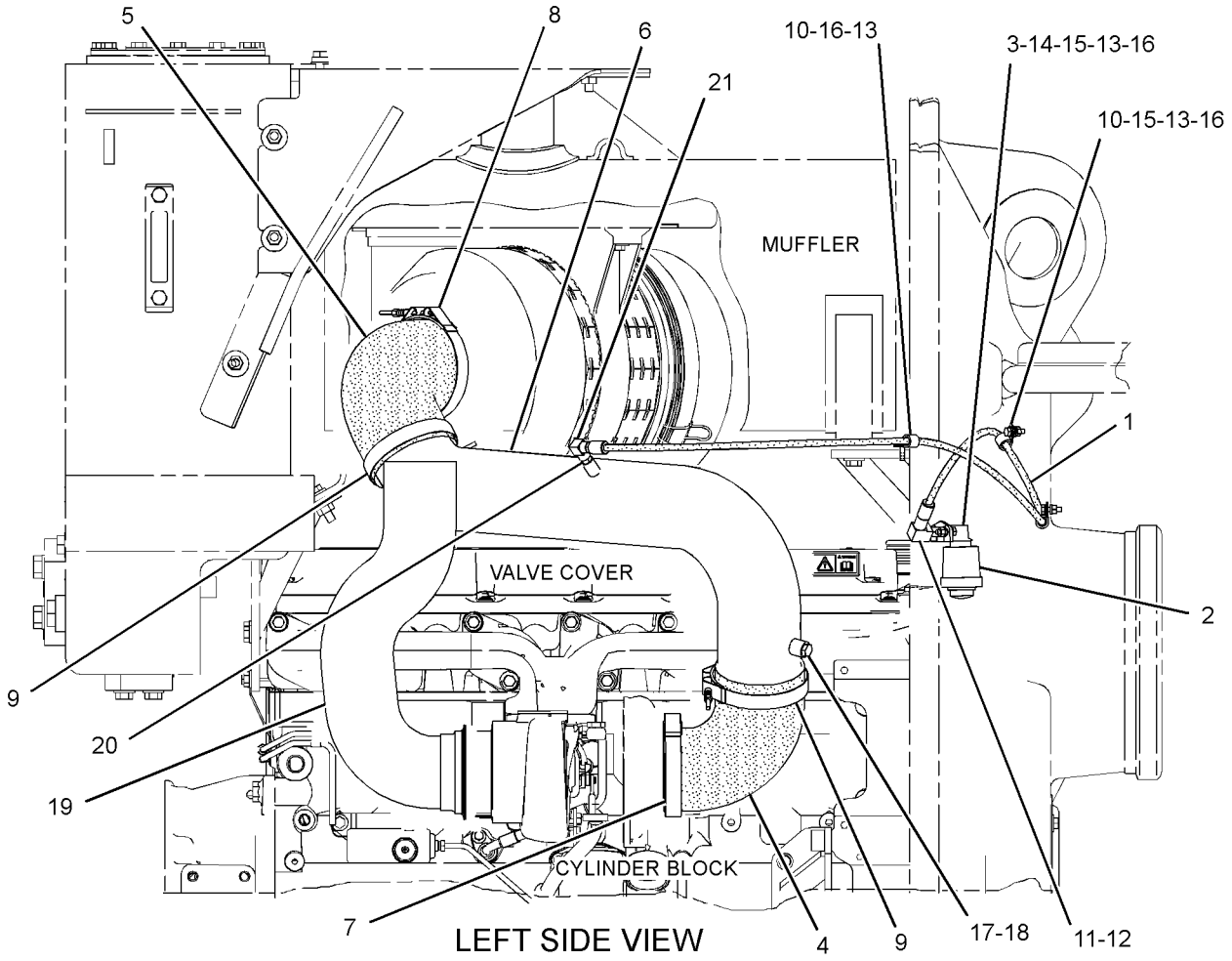

LEFT SIDE VIEW

GRAPHIC #1

<END>

g01985433

AIR INLET AND EXHAUST SYSTEM

255-4805 LINES GP-TURBOCHARGER AIR

S/N: JKM943-UP

PART OF 239-3372 INSTALLATION AR-ENGINE

SMCS-1052, 1071 **i03903319**

NOTE	REF NO	GRAPHIC REF	PART NUMBER	QTY	PART NAME 1 2 3 4 5 6 (PRODUCT LEVEL)	SEE PAGE
	1	1	**3G-7875**	1	HOSE AS	
	2	1	**8N-2694**	1	INDICATOR-AIR FILTER CHANGE	
	3	1	**119-6723**	1	FITTING	
	4	1	**262-5565**	1	HOSE	
	5	1	**262-5566**	1	HOSE	
	6	1	**328-1054**	1	TUBE AS	
C	7	1	**346-4791**	3	CLAMP-BAND	
C	8	1	**346-4788**	1	CLAMP-BAND	
	10	1	**2V-3216**	3	CLIP	
	11	1	**3B-6487**	1	COUPLING (PIPE)	
	12	1	**3B-6552**	1	ELBOW-PIPE	
M	13	1	**8T-4138**	5	BOLT (M6X1X20-MM)	
	14	1	**8C-7575**	1	ADAPTER	
M	15	1	**5C-2890**	4	NUT (M6X1-THD)	
C	16	1	**8T-4205**	9	WASHER-HARD (7.2X14.5X2-MM THK)	
	17	1	**214-7568**	1	SEAL-O-RING	
	18	1	**287-8399**	1	PLUG-DRAIN	
	19	1	**308-5065**	1	TUBE AS	
	20	1	**5L-3233**	1	FITTING	
	21	1	**8B-4884**	1	ELBOW	

C-CHANGE FROM PREVIOUS TYPE
M-METRIC PART

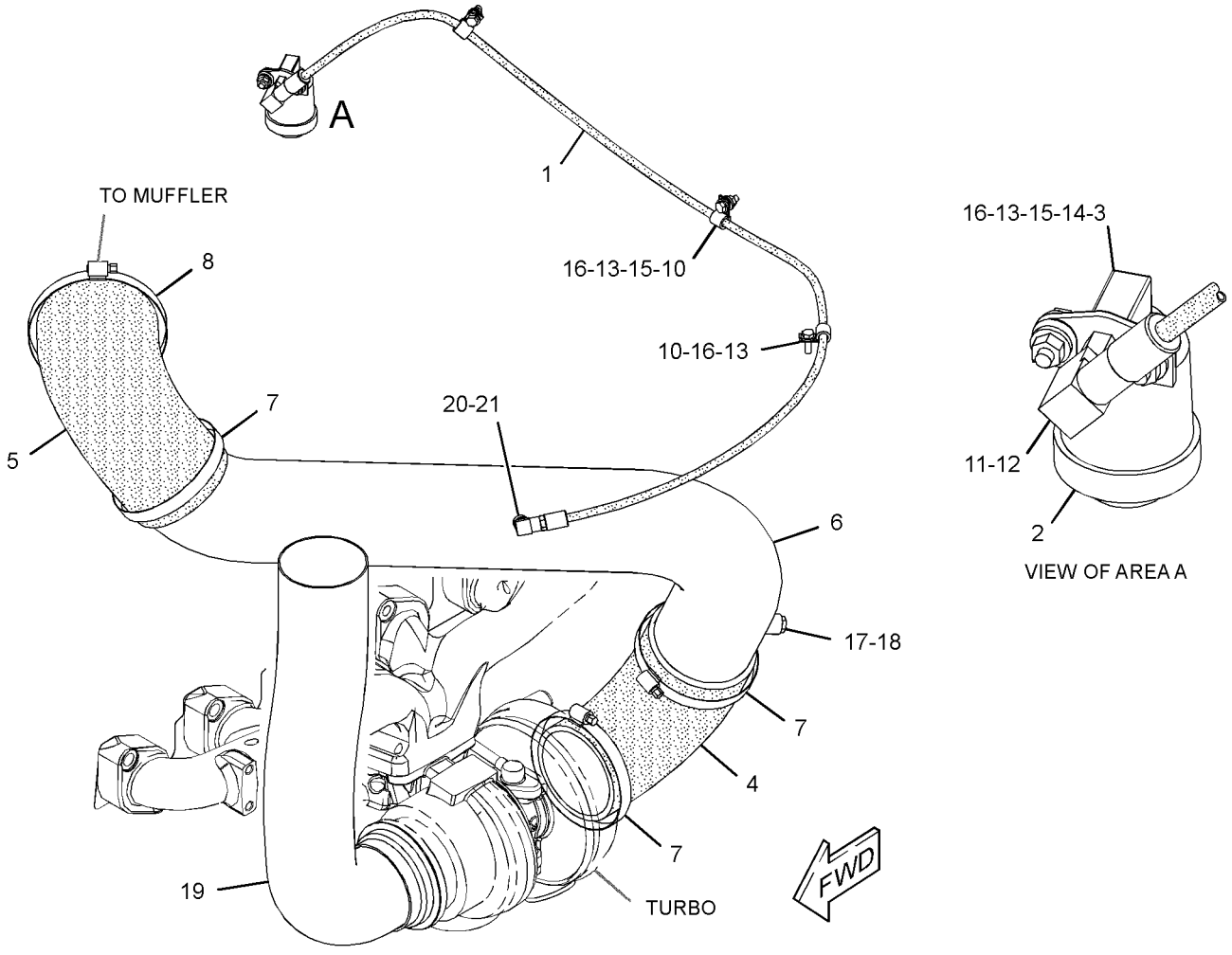

GRAPHIC #1 **<END>** g02156456

AIR INLET AND EXHAUST SYSTEM

288-7985 MANIFOLD GP-INLET

S/N: C6E1-UP

PART OF 242-1382 ENGINE AR-PRIMARY

SMCS-1058 **i03929315**

NOTE	REF NO	GRAPHIC REF	PART NUMBER	QTY	PART NAME 1 2 3 4 5 6 (PRODUCT LEVEL)	SEE PAGE
M	1	1	**6I-0645**	19	BOLT (M8X1.25X25-MM)	
	2	1	**9F-2247**	1	PLUG-PIPE	
	3	1	**234-3030**	1	GASKET-INLET	
	4	1	**295-0912**	1	COVER AS	
	4A	1	**277-4302**	2	DOWEL	
	4B	1	**278-5128**	1	GASKET-MANIFOLD	
	5	1	**280-1291**	1	ELBOW AS	

M-METRIC PART

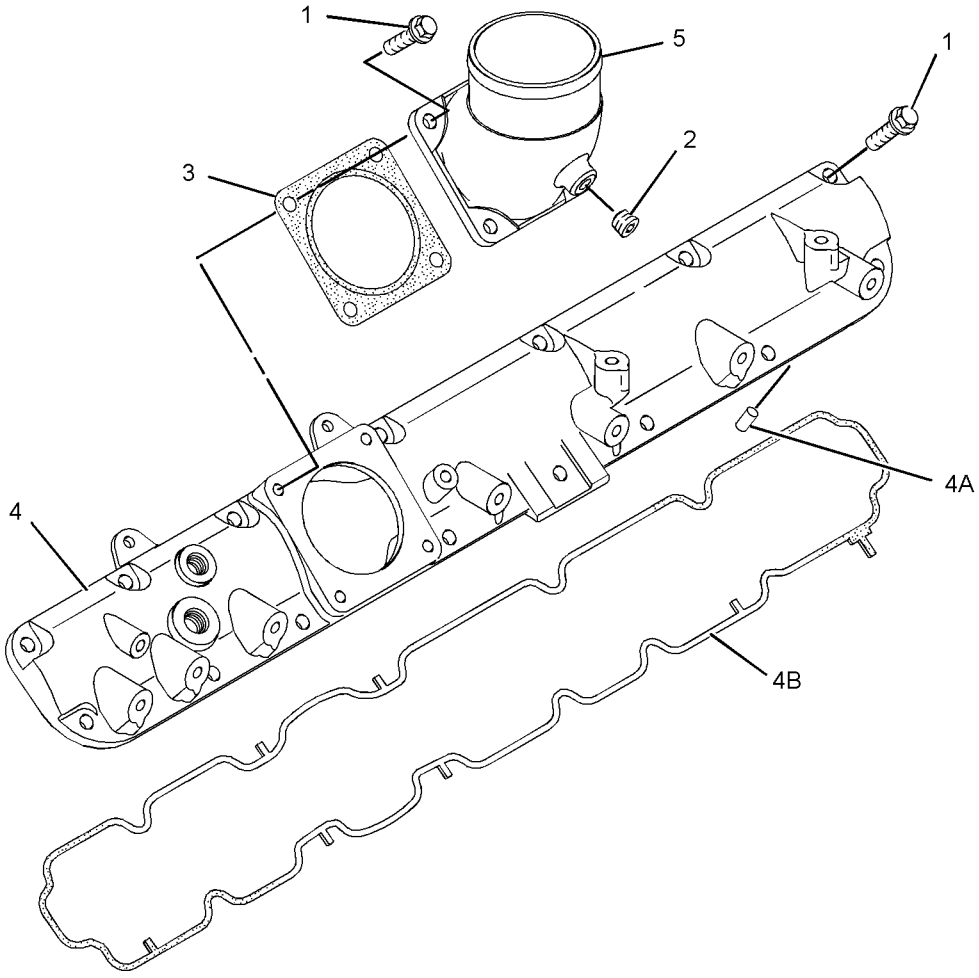

GRAPHIC #1 **<END>** g01271480

288-7985 MANIFOLD GP-INLET

S/N: C6E1-UP; G9G1-UP

PART OF 242-1382 ENGINE AR-PRIMARY

SMCS-1058 **i03929316**

NOTE	REF NO	GRAPHIC REF	PART NUMBER	QTY	PART NAME 1 2 3 4 5 6 (PRODUCT LEVEL)	SEE PAGE
M	1	1	**6I-0645**	19	BOLT (M8X1.25X25-MM)	
	2	1	**295-0912**	1	COVER AS	
	2A	1	**277-4302**	2	DOWEL	
	2B	1	**278-5128**	1	GASKET-MANIFOLD	
	3	1	**317-2684**	1	ELBOW GP-AIR INLET	
	3A	1	**238-8288**	1	GASKET-INLET	
	3B	1	**292-3462**	1	PLUG-PIPE	

M-METRIC PART

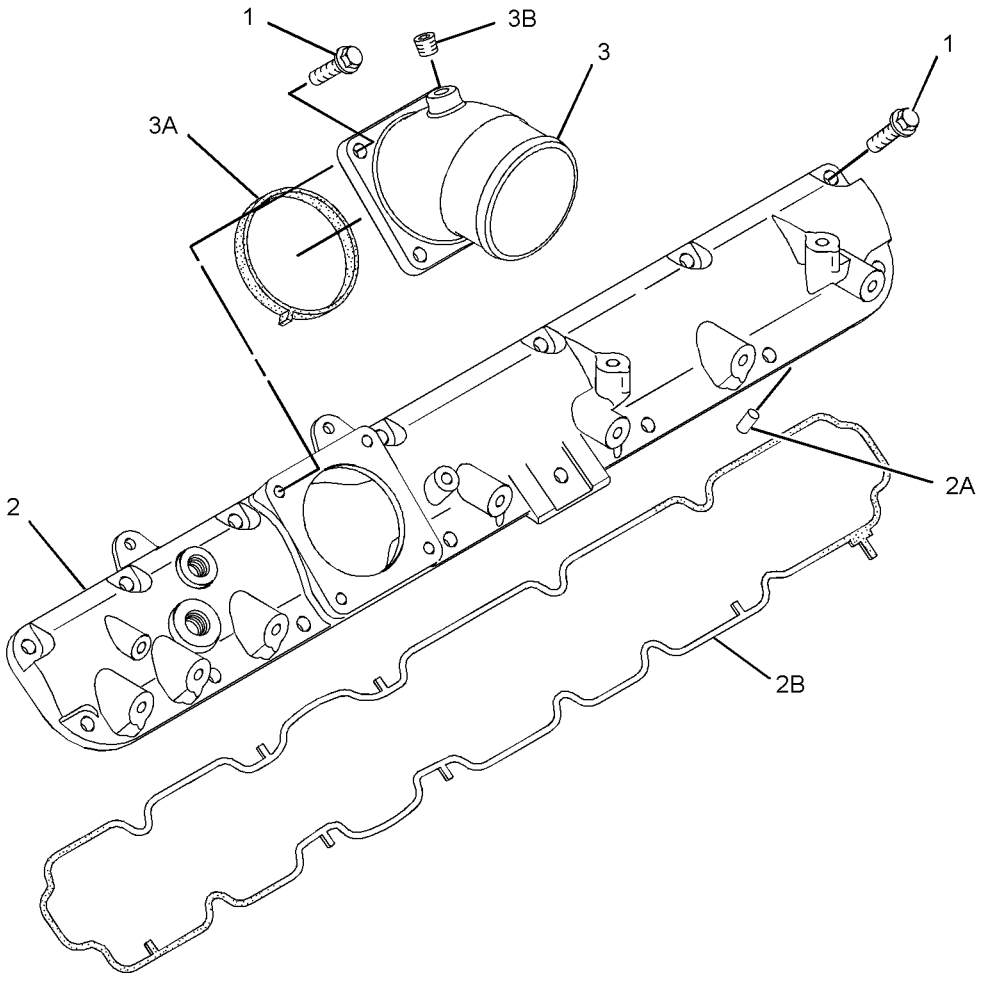

GRAPHIC #1 **<END>** g01526586

AIR INLET AND EXHAUST SYSTEM

344-5644 MODULE AR-EXHAUST

S/N: JKM1-UP

AN ATTACHMENT

SMCS-1050 **i03744225**

NOTE	PART NUMBER	QTY	PART NAME 1 2 3 4 5 6 (PRODUCT LEVEL)	SEE PAGE
Y	*255-4820*	1	AIR CONDITIONER AR	912
Y	*266-8583*	1	INSTALLATION AR-COMMUNICATION (PRODUCT LINK 300)	199

Y-SEPARATE ILLUSTRATION

<END>

AIR INLET AND EXHAUST SYSTEM

255-4806 MUFFLER GP

S/N: JKM1-UP

PART OF 239-3372 INSTALLATION AR-ENGINE

SMCS-1062 **i03203608**

NOTE	REF NO	GRAPHIC REF	PART NUMBER	QTY	PART NAME 1 2 3 4 5 6 (PRODUCT LEVEL)	SEE PAGE
	1	1	**128-8678**	4	SPACER (10.5X25X15-MM THK)	
	2	1	**327-6256**	1	BRACKET AS	
	3	1	**263-5018**	1	SHIELD-HEAT	
	4	1	**266-7627**	1	BRACKET AS	
	5	1	**299-5420**	1	MUFFLER AS	
		1	**9Y-8315**	1	CLAMP-PIPE	
	6	1	**319-6294**	1	PLATE AS	
	7	1	**5P-8167**	4	BOLT (3/8-16X0.625-IN)	
	8	1	**7X-7729**	2	WASHER (11X25X3-MM THK)	
	9	1	**8T-4121**	8	WASHER-HARD (11X21X2.5-MM THK)	
M	10	1	**8T-4195**	8	BOLT (M10X1.5X30-MM)	
M	11	1	**8T-4182**	2	BOLT (M10X1.5X45-MM)	
M	12	1	**085-8091**	2	BOLT (M10X1.5X55-MM)	
M	13	1	**8T-4186**	2	BOLT (M10X1.5X40-MM)	
	14	1	**8T-4896**	4	WASHER-HARD (10.2X18.5X2.5-MM THK)	

M-METRIC PART

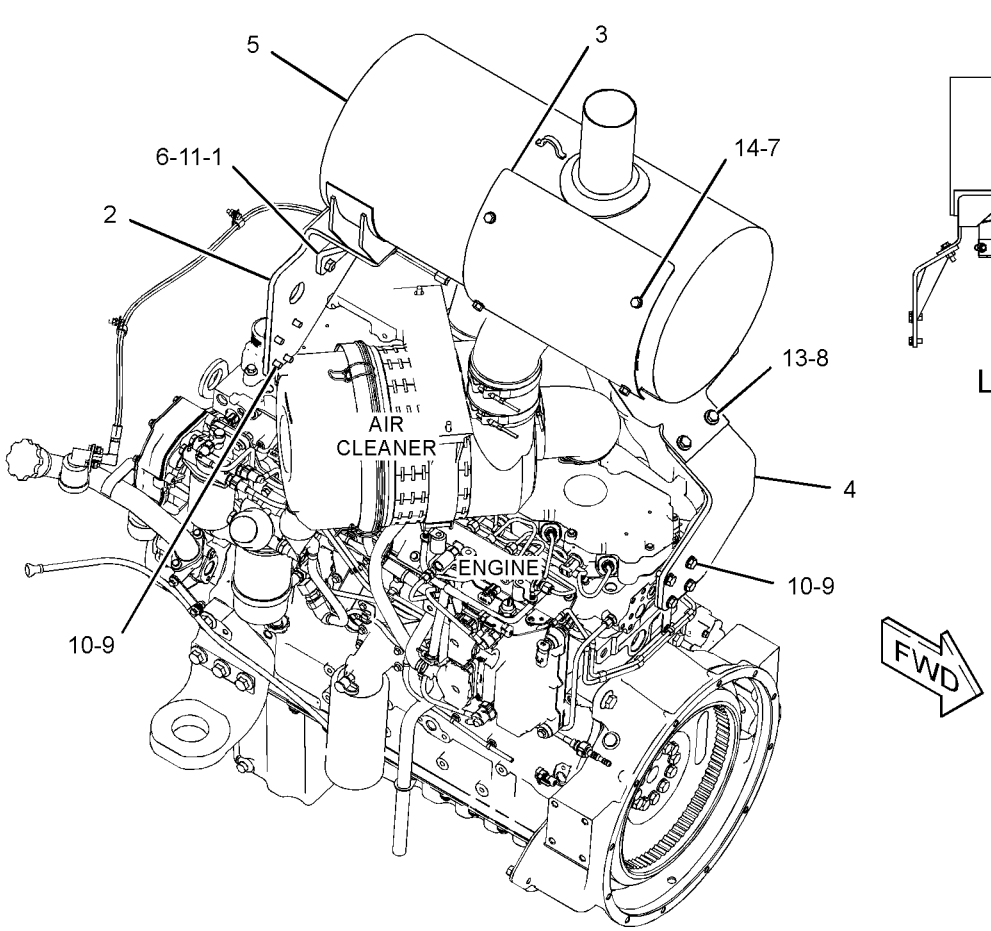

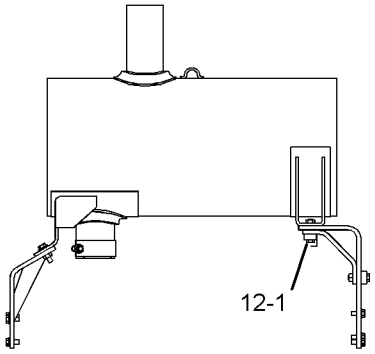

LEFT SIDE VIEW

GRAPHIC #1 **<END>** g01437714

AIR INLET AND EXHAUST SYSTEM

284-9624 PRECLEANER AS

S/N: JKM1-UP
PART OF 284-7682 PRECLEANER GP
AN ATTACHMENT

SMCS-1055 **i02932400**

NOTE	REF NO	GRAPHIC REF	PART NUMBER	QTY	PART NAME 1 2 3 4 5 6 (PRODUCT LEVEL)	SEE PAGE
	1	1	**116-2659**	2	DAMPER	
	2	1	**130-3280**	1	PRECLEANER AS	
		1	**174-5415**	1	CLAMP	
	3	1	**153-1277**	1	KIT-SCREEN (PRECLEANER)	
					(INCLUDES CLAMP, SCREWS, TUBE, DAMPER, & PRESCREEN)	
	4	1	**145-6669**	6	SCREW-SELF-TAPPING (NO 10X19.05-MM)	
	5	1	**284-8893**	1	PIPE-EXTENSION	

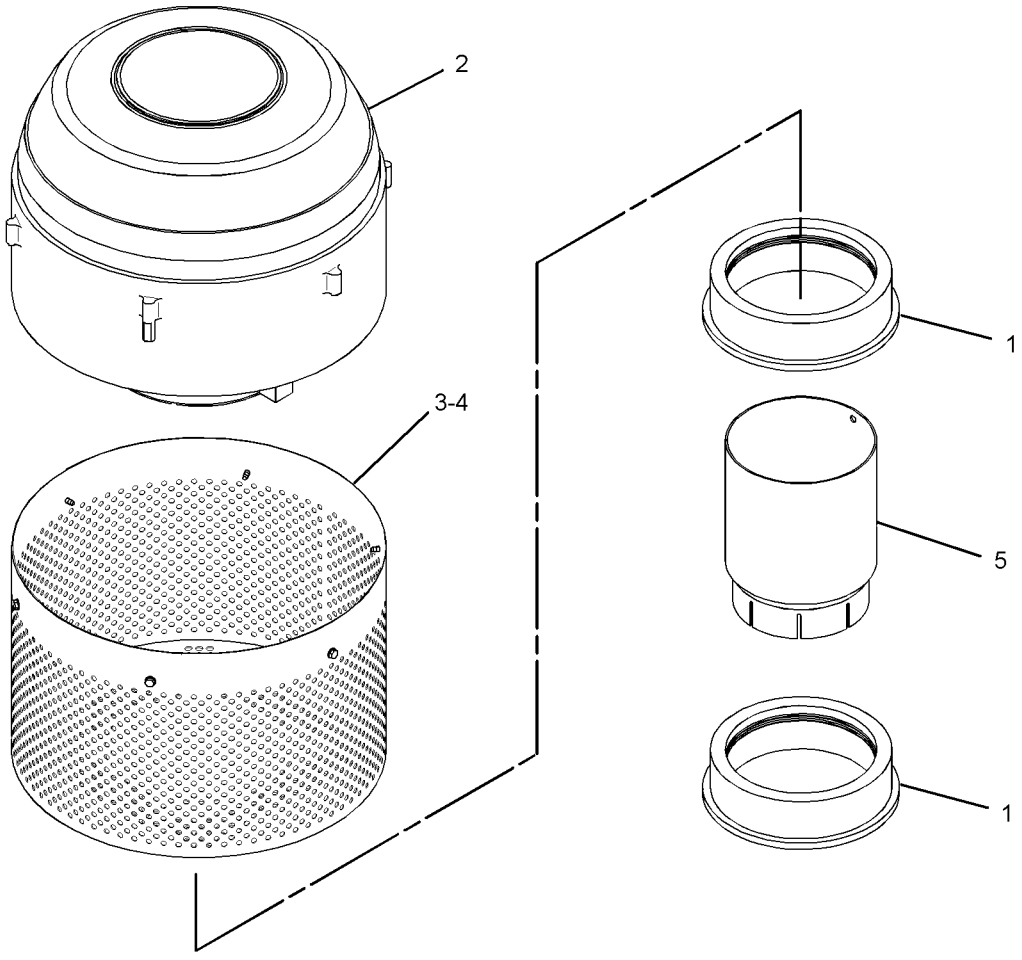

GRAPHIC #1 **<END>** g01435502

AIR INLET AND EXHAUST SYSTEM

265-7723 PRECLEANER GP

S/N: JKM1-UP

PART OF 317-9484 CONFIGURATION AR, 322-7948 CONVERSION AR-MACHINE

AN ATTACHMENT

SMCS-1055 **i02930679**

NOTE	REF NO	GRAPHIC REF	PART NUMBER	QTY	PART NAME 1 2 3 4 5 6 (PRODUCT LEVEL)	SEE PAGE
	1	1	**284-9623**	1	PRECLEANER AS	
		1	**174-5415**	1	CLAMP	
		1	**268-2935**	1	PIPE-EXTENSION	
	2	1	**216-2211**	1	CLAMP	

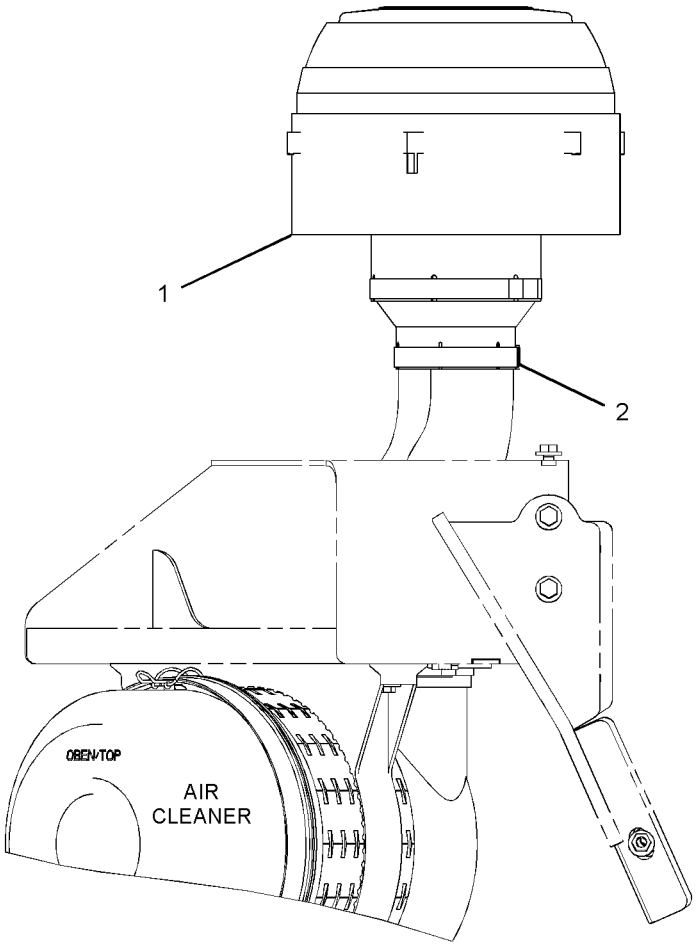

RIGHT SIDE VIEW

GRAPHIC #1

<END>

g01427737

AIR INLET AND EXHAUST SYSTEM

284-7682 PRECLEANER GP

S/N: JKM1-UP
PART OF 317-9490 CONFIGURATION AR
AN ATTACHMENT

SMCS-1055 **i02932399**

NOTE	REF NO	GRAPHIC REF	PART NUMBER	QTY	PART NAME 1 2 3 4 5 6 (PRODUCT LEVEL)	SEE PAGE
Y	1	1	*284-9624*	1	PRECLEANER AS	96
	2	1	**216-2211**	1	CLAMP	

Y-SEPARATE ILLUSTRATION

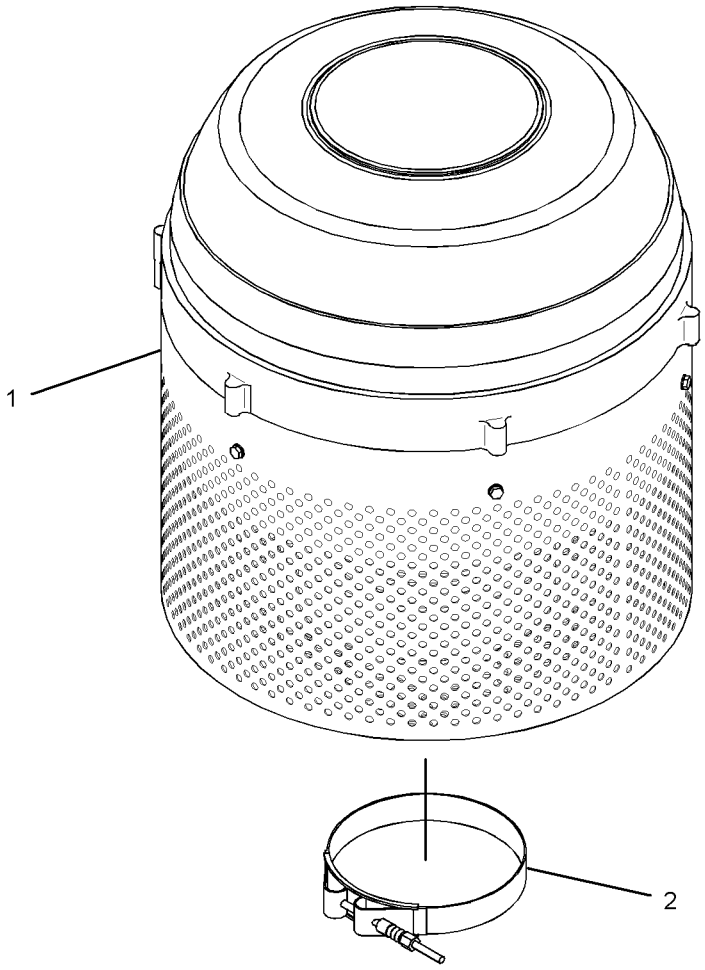

GRAPHIC #1 **<END>** g01435557

AIR INLET AND EXHAUST SYSTEM

288-7984 TURBOCHARGER GP

S/N: C6E1-4819

PART OF 242-1382 ENGINE AR-PRIMARY

SMCS-1052, 1053 **i02916105**

NOTE	REF NO	GRAPHIC REF	PART NUMBER	QTY	PART NAME 1 2 3 4 5 6 (PRODUCT LEVEL)	SEE PAGE
M	1	1,2	**6I-0217**	7	BOLT (M8X1.25X20-MM)	
	3	2	**6I-0817**	1	ADAPTER	
	4	2	**9Y-9381**	1	WASHER-HARD	
M	5	1	**100-4830**	4	BOLT (M10X1.5X20-MM)	
	6	1	**277-9501**	1	ACTUATOR AS (TURBO)	
	7	1	**277-9941**	1	TUBE AS-TURBOCHARGER	
M	7A	1	**277-9938**	1	BOLT-SPECIAL (BANJO)	
	7B	1	**277-9939**	2	WASHER	
	7C	1	**277-9940**	1	SEAL-O-RING	
	8	1	**278-0015**	1	TUBE AS-TURBOCHARGER	
	9	1	**278-0016**	1	GASKET	
	10	1	**278-0017**	1	GASKET	
	11	2	**278-0310**	1	SOLENOID AS (WASTEGATE)	
	12	2	**278-0311**	1	TUBE AS	
	12A	2	**4B-8774**	1	NUT-FLARED	
	12B	2	**032-8047**	1	FERRULE	
	12C	2	**107-2348**	2	CLIP	
	12D	2	**133-9469**	1	CLIP	
	12E	2	**277-9605**	1	HOSE	
	15	2	**278-0316**	1	CLIP	
	16	1	**278-0361**	4	BOLT (M10X1.5X45-MM)	
	17	1	**279-9361**	2	GASKET-EXHAUST	
	18	1	**280-2424**	1	ADAPTER	
	19	2	**285-3197**	1	TUBE AS	
	19A	2	**4B-8774**	1	NUT-FLARED	
	19B	2	**032-8047**	2	FERRULE	
	19C	2	**035-8014**	1	NUT (7/16-IN)	
	20	1	**238-8292**	8	BOLT-FLANGE HEAD	
	21	1	**286-7850**	1	TURBOCHARGER GP	
	21A	1	**277-9598**	2	NUT	
	21B	1	**277-9603**	1	CLAMP	
	21C	1	**277-9602**	1	CLAMP	
	21D	1	**141-8589**	1	GASKET	
	21E	1	**147-5553**	4	STUD	
	21F	1	**6I-0563**	4	NUT (M10X1.5-THD)	
	22	1	**286-7851**	8	SPACER	
	23	1	**288-6983**	1	ELBOW-EXHAUST	
	24	1	**288-6984**	1	BRACKET SUPPORT	
	25	1	**288-6985**	1	MANIFOLD GP-EXHAUST	
	26	2	**290-5735**	1	BRACKET AS	
	26A	2	**278-0315**	1	CLIP-PIPE	

M-METRIC PART

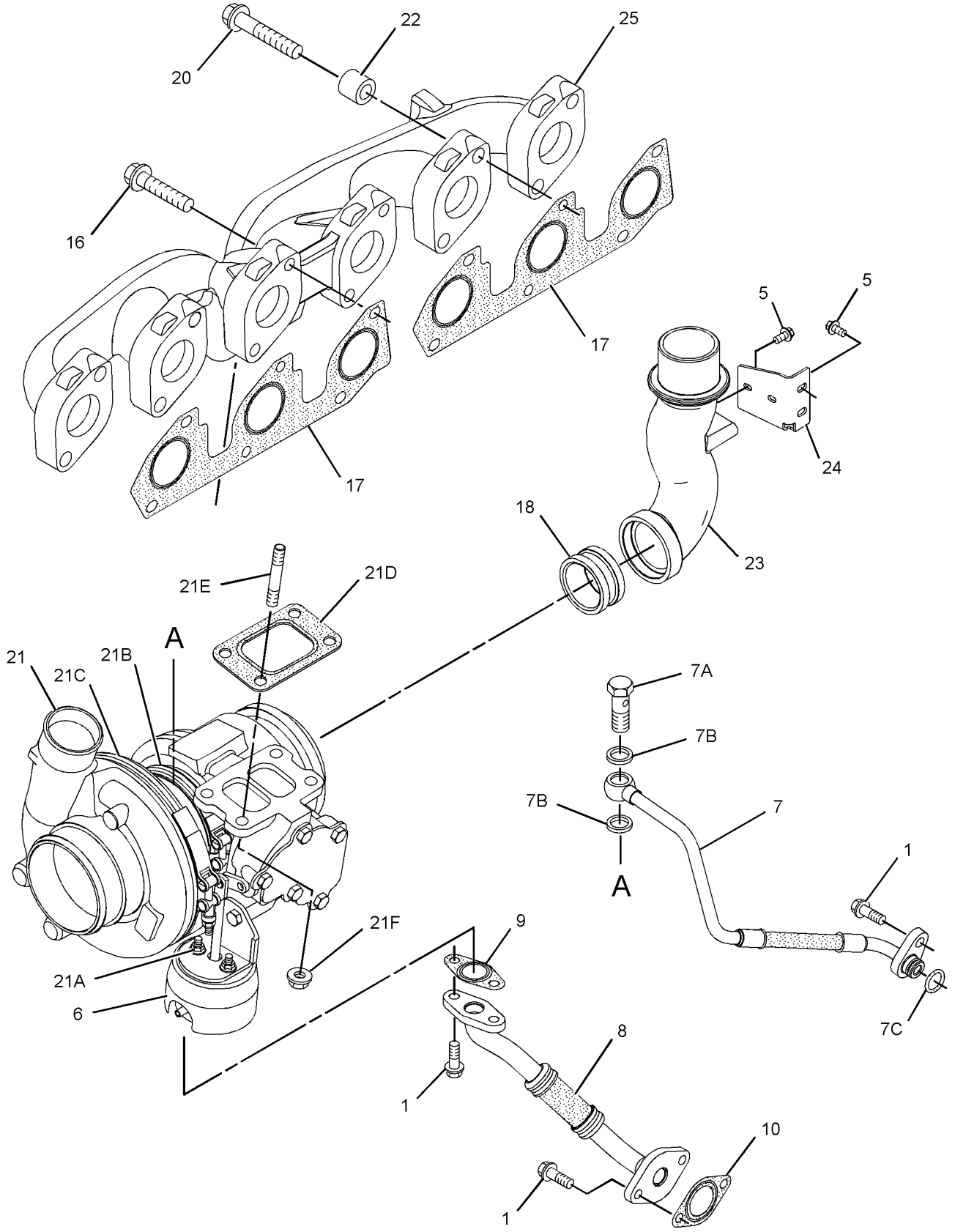

GRAPHIC #1 g01340886

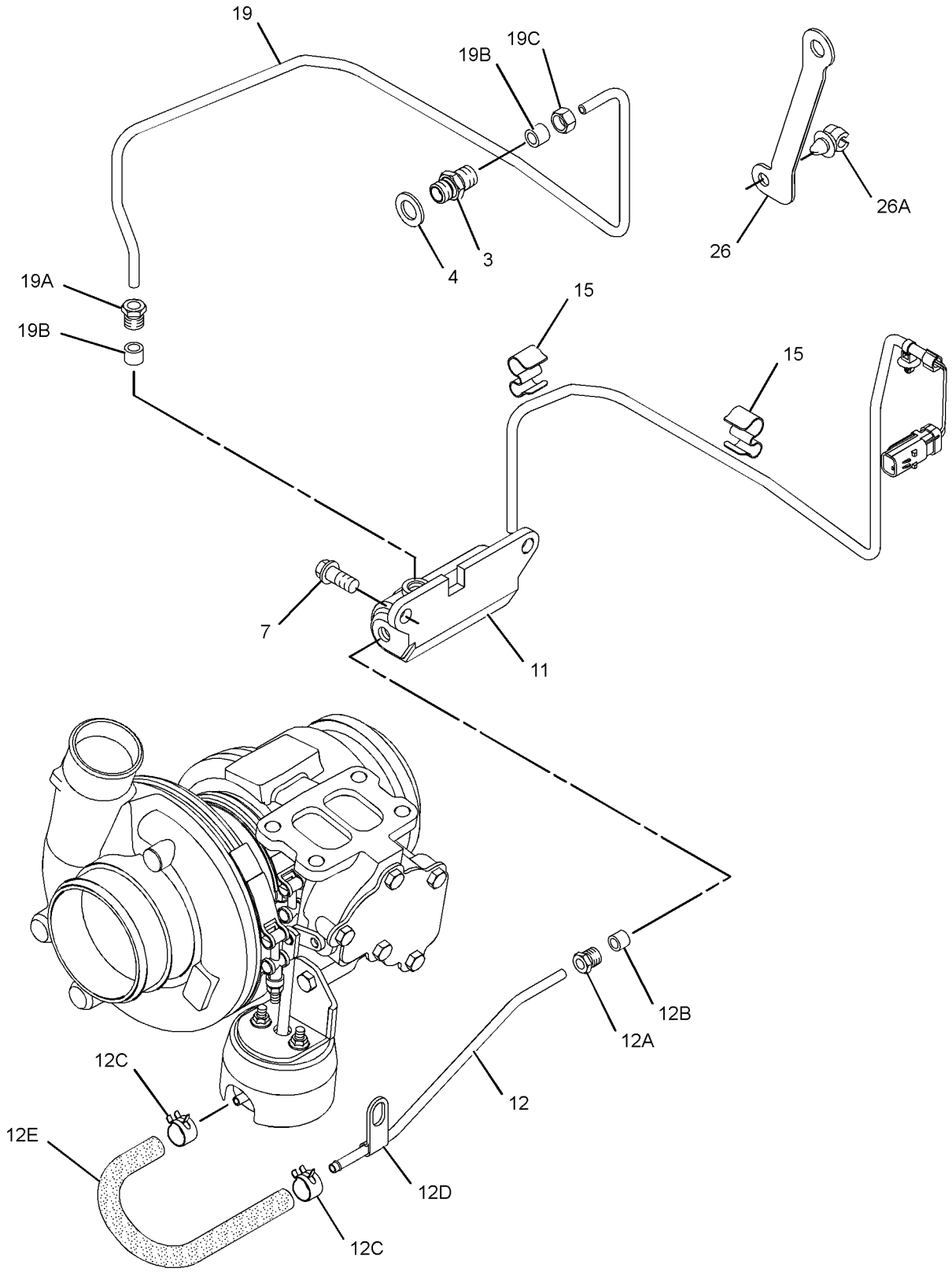

GRAPHIC #2 **<END>** g01440761

AIR INLET AND EXHAUST SYSTEM

319-7862 TURBOCHARGER GP

S/N: C6E4820-UP; G9G1-UP

PART OF 242-1382 ENGINE AR-PRIMARY

SMCS-1052, 1053 **i03419122**

NOTE	REF NO	GRAPHIC REF	PART NUMBER	QTY	PART NAME 1 2 3 4 5 6 (PRODUCT LEVEL)	SEE PAGE
M	1	1	**6I-0217**	5	BOLT (M8X1.25X20-MM)	
	2	1	**6I-0563**	4	NUT (M10X1.5-THD)	
	3	2	**6I-0817**	1	ADAPTER	
	4	2	**9Y-9381**	1	WASHER-HARD	
M	5	2	**100-4830**	2	BOLT (M10X1.5X20-MM)	
	6	1	**141-8589**	1	GASKET	
	7	1	**147-5553**	4	STUD	
	8	1	**238-8292**	12	BOLT-FLANGE HEAD	
	9	1	**277-9463**	1	CLAMP	
	10	1	**277-9941**	1	TUBE AS-TURBOCHARGER	
M	10A	1	**277-9938**	1	BOLT-SPECIAL (BANJO)	
	10B	1	**277-9939**	2	WASHER	
	10C	1	**277-9940**	1	SEAL-O-RING	
	11	1	**278-0015**	1	TUBE AS-TURBOCHARGER	
	12	1	**278-0016**	1	GASKET	
	13	1	**278-0017**	1	GASKET	
	14	2	**278-0310**	1	SOLENOID AS (WASTEGATE)	
	15	2	**278-0311**	1	TUBE AS	
	15A	2	**4B-8774**	1	NUT-FLARED	
	15B	2	**032-8047**	1	FERRULE	
	15C	2	**107-2348**	2	CLIP	
	15D	2	**133-9469**	1	CLIP	
	15E	2	**300-6520**	1	HOSE AS	
	17	1	**279-9361**	2	GASKET-EXHAUST	
	18	2	**285-3197**	1	TUBE AS	
	18A	2	**4B-8774**	1	NUT-FLARED	
	18B	2	**032-8047**	2	FERRULE	
	18C	2	**035-8014**	1	NUT (7/16-IN)	
	19	1	**286-7851**	12	SPACER	
	20	1	**331-8917**	1	MANIFOLD-EXHAUST	
	21	2	**303-2116**	6	CLIP	
	22	1	**316-0413**	1	TURBOCHARGER AS	
	22A	1	**277-9602**	1	CLAMP	
	22B	1	**277-9603**	1	CLAMP	

M-METRIC PART

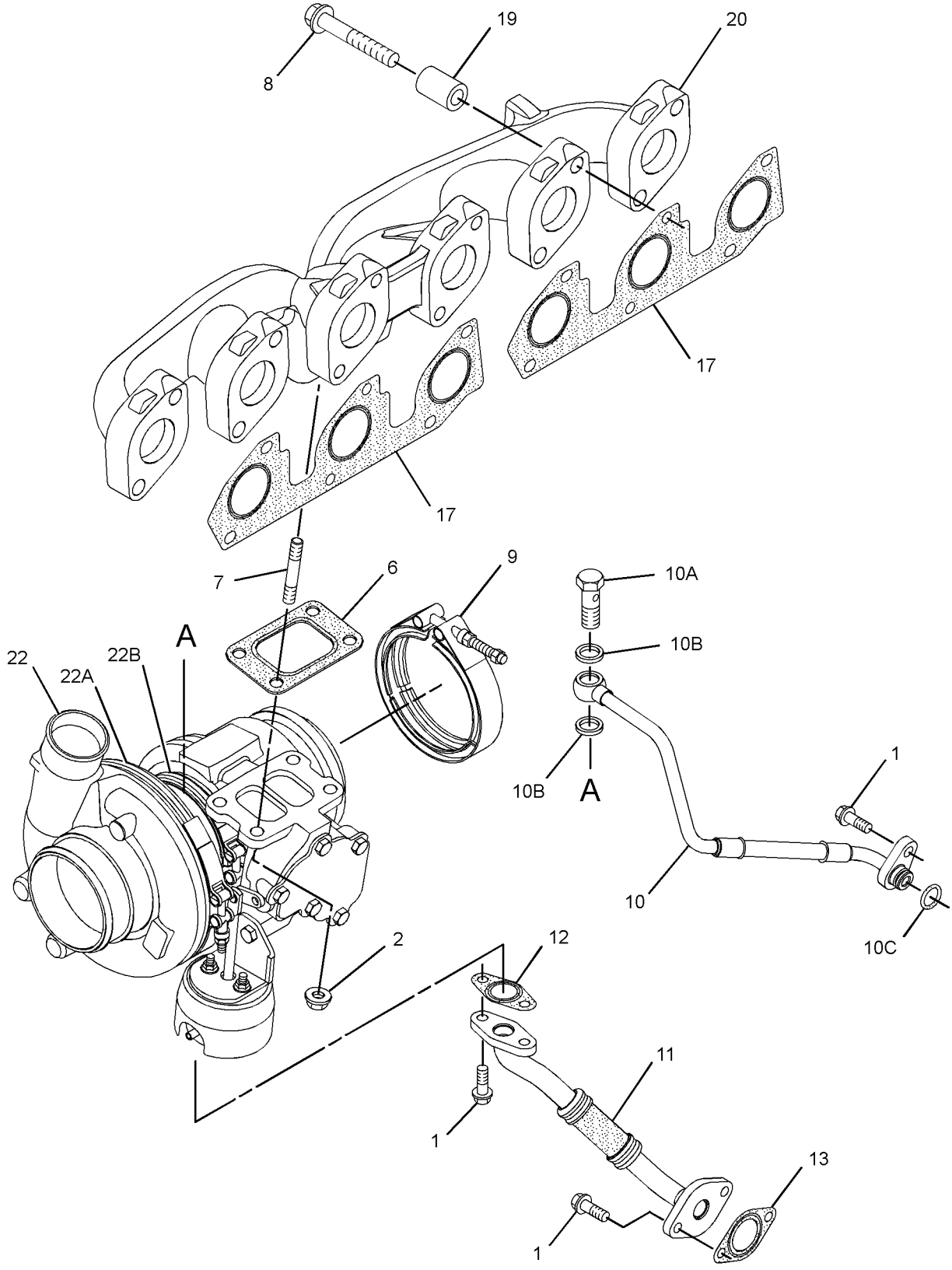

GRAPHIC #1 g01878136

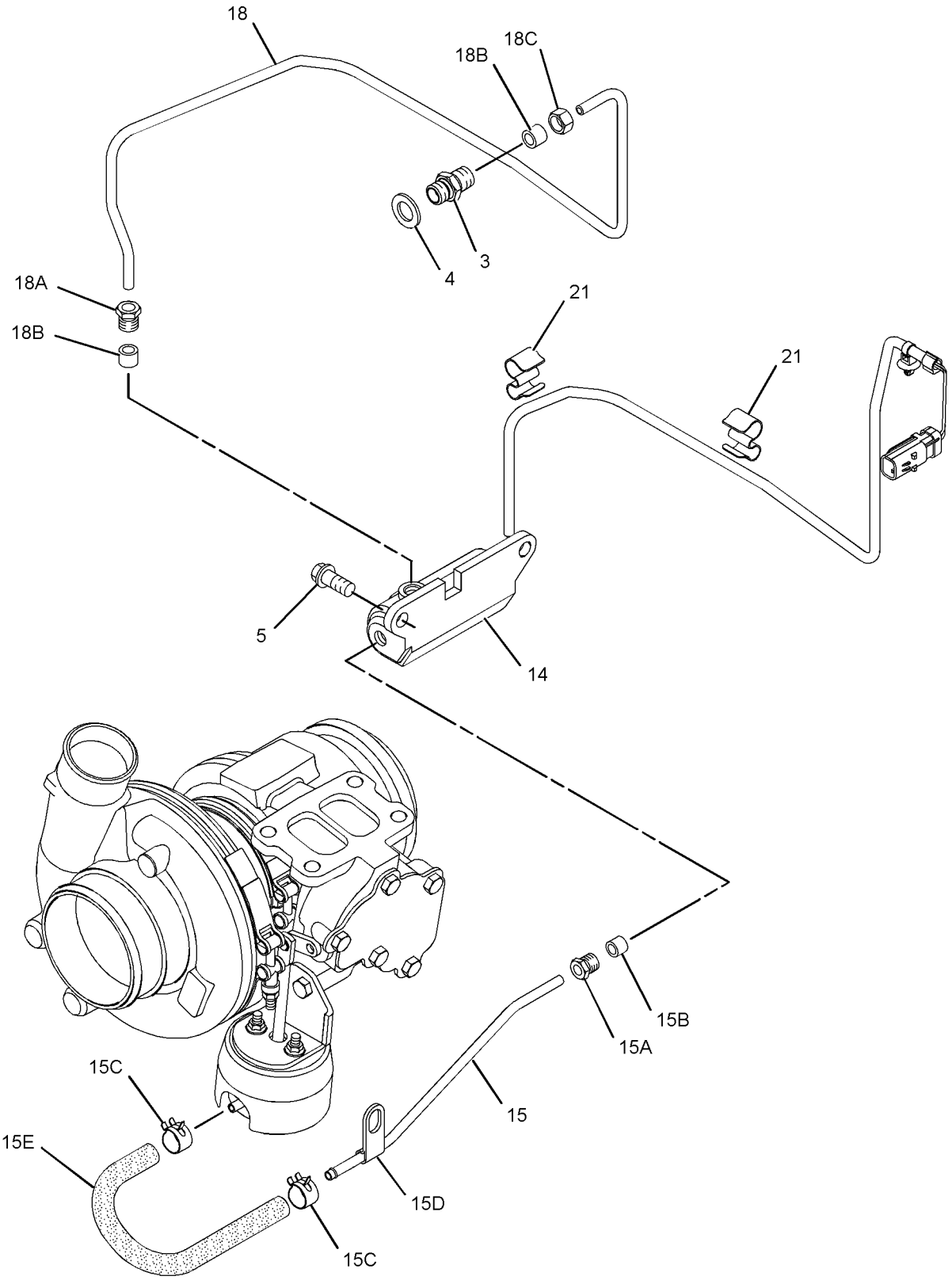

GRAPHIC #2 **<END>** g01441323

277-6826 FILTER GP-FUEL–SECONDARY

S/N: C6E1-3335

PART OF 242-1382 ENGINE AR-PRIMARY

SMCS-1261 **i03328860**

NOTE	REF NO	GRAPHIC REF	PART NUMBER	QTY	PART NAME 1 2 3 4 5 6 (PRODUCT LEVEL)	SEE PAGE
	1	1	**308-7480**	1	FILTER GP-FUEL (ULTRA HIGH EFFICIENCY)	
	1A	1	**299-8229**	1	FILTER ELEMENT-FUEL (ULTRA HIGH EFFICIENCY)	

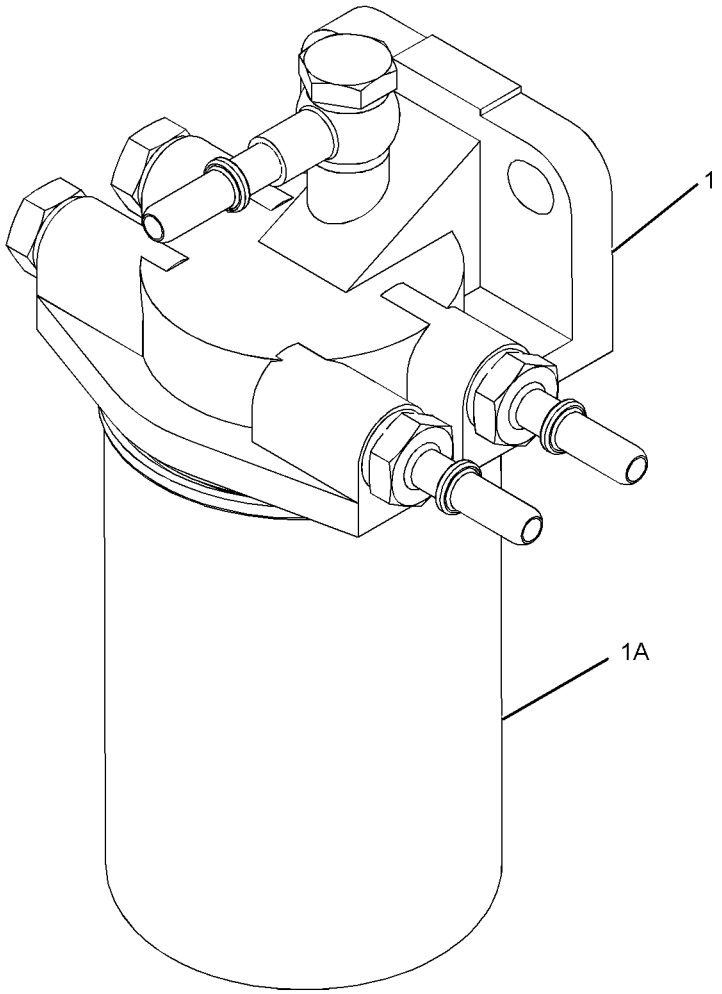

GRAPHIC #1 **<END>** g01707244

319-7864 FILTER GP-FUEL

S/N: C6E3336-5530

PART OF 242-1382 ENGINE AR-PRIMARY

SMCS-1261 **i02929498**

NOTE	REF NO	GRAPHIC REF	PART NUMBER	QTY	PART NAME 1 2 3 4 5 6 (PRODUCT LEVEL)	SEE PAGE
	1	1	**313-7110**	1	FILTER AS-FUEL (SECONDARY)	
	1A	1	**299-8229**	1	FILTER ELEMENT-FUEL (ULTRA HIGH EFFICIENCY)	
F			**278-4138**	1	PROTECTION GP-FUEL SYSTEM (LINE, LOW PRESSURE)	

F-NOT SHOWN

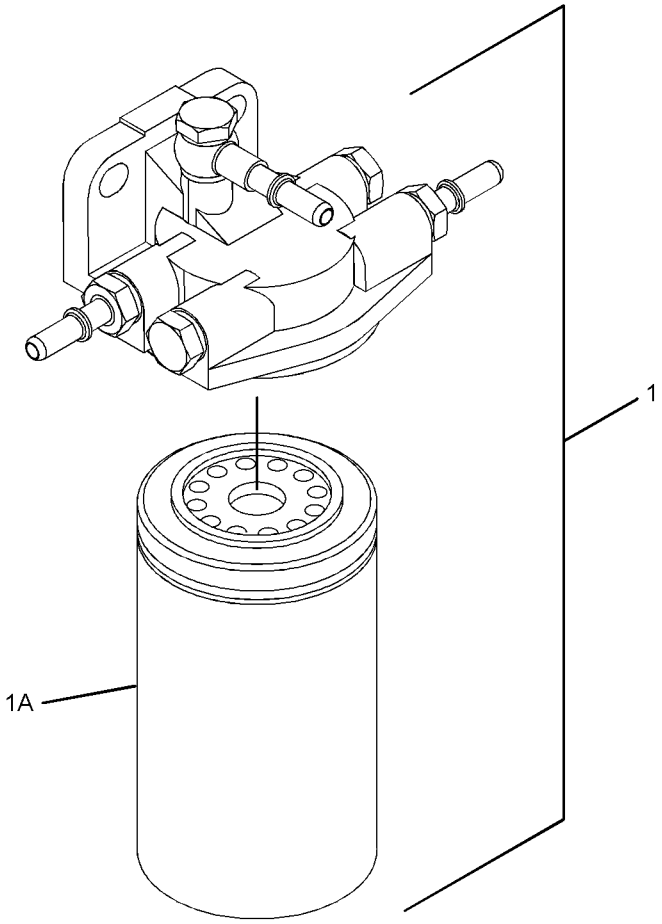

GRAPHIC #1 **<END>** g01471014

FUEL SYSTEM

319-7864 FILTER GP-FUEL

S/N: C6E5531-UP; G9G1-UP

PART OF 242-1382 ENGINE AR-PRIMARY

SMCS-1261 **i02980257**

NOTE	REF NO	GRAPHIC REF	PART NUMBER	QTY	PART NAME 1 2 3 4 5 6 (PRODUCT LEVEL)	SEE PAGE
C	1	1	**322-9532**	1	FILTER-FUEL (SECONDARY)	
	1A	1	**299-8229**	1	FILTER ELEMENT-FUEL (ULTRA HIGH EFFICIENCY)	
F			**278-4138**	1	PROTECTION GP-FUEL SYSTEM (LINE, LOW PRESSURE)	

C-CHANGE FROM PREVIOUS TYPE
F-NOT SHOWN

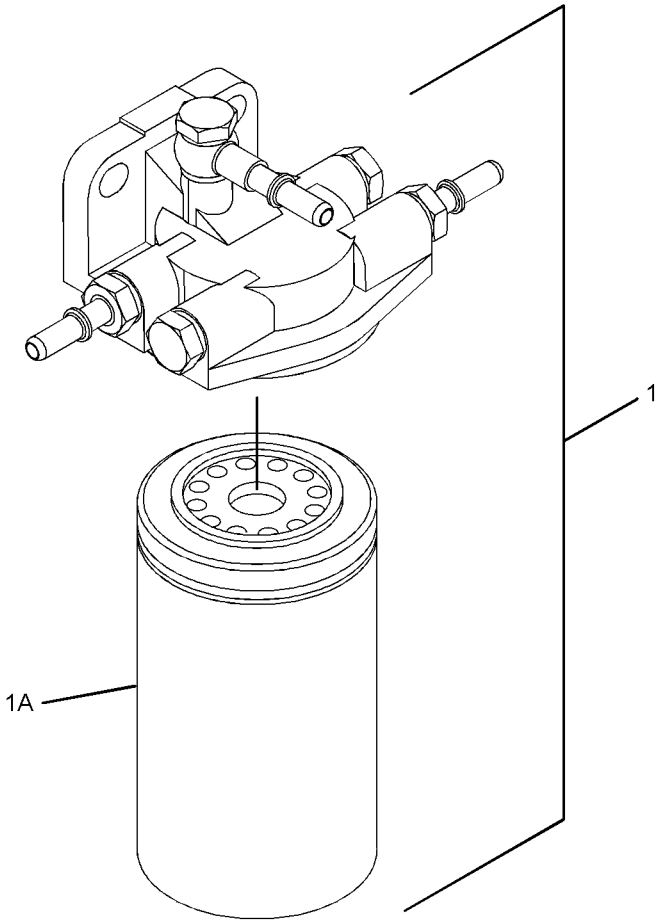

GRAPHIC #1 **<END>** g01471014

174-9570 FILTER GP-WATER SEP & FUEL–PRIMARY

S/N: JKM1-UP

PART OF 212-3657 PUMP GP-FUEL PRM & WATER SEP

SMCS-1260, 1261, 1263 **i03671369**

NOTE	REF NO	GRAPHIC REF	PART NUMBER	QTY	PART NAME 1 2 3 4 5 6 (PRODUCT LEVEL)	SEE PAGE
	1	1	**326-1644**	1	FILTER AS-WATER SEP & FUEL (PRIMARY)	
	1A	1	**220-8678**	1	SEAL-RING (FUEL, WATER SEPARATOR)	
	2	1	**343-5527**	1	BOWL AS (FUEL, WATER SEPARATOR)	
		1	**3J-1907**	1	SEAL-O-RING	
		1	**5F-9144**	1	SEAL-O-RING	
		1	**8F-7219**	1	SEAL-O-RING	
		1	**9S-8004**	1	PLUG-O-RING	

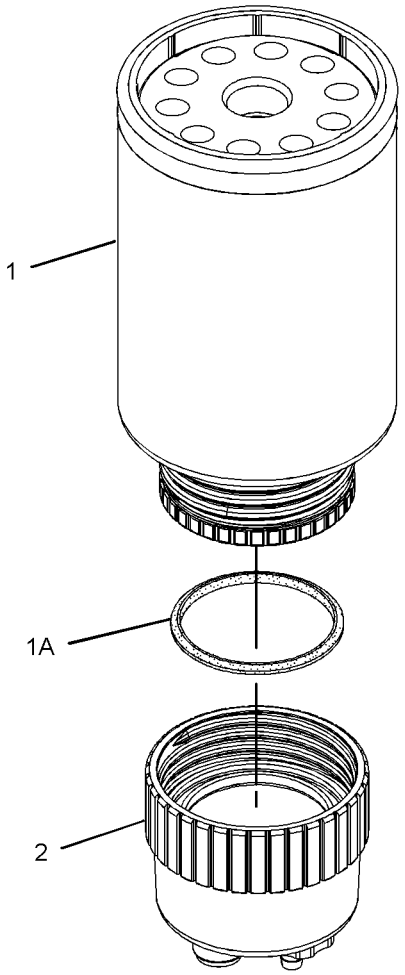

GRAPHIC #1 **<END>** g01179858

263-7148 FILTER GP-WATER SEP & FUEL–PRIMARY

S/N: C6E1-UP

PART OF 286-7060 LINES GP-FUEL

SMCS-1260, 1261, 1263 **i03322146**

NOTE	REF NO	GRAPHIC REF	PART NUMBER	QTY	PART NAME 1 2 3 4 5 6 (PRODUCT LEVEL)	SEE PAGE
	1	1	**308-7576**	1	FILTER GP-WATER SEP & FUEL	
	1A	1	**308-7298**	1	FILTER AS-WATER SEP & FUEL	
	1B	1	**310-5912**	1	BOWL AS	
	2	1	**313-1663**	1	SENSOR-PRESSURE (FUEL)	

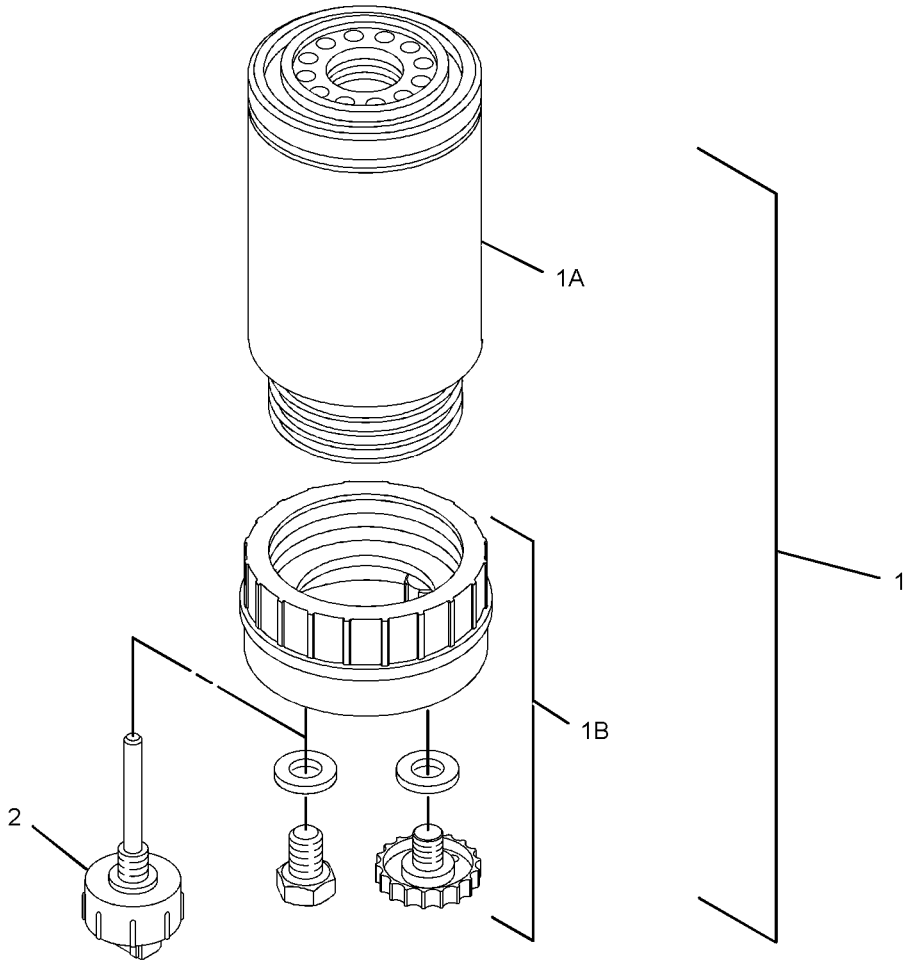

GRAPHIC #1 **<END>** g01702414

FUEL SYSTEM

292-3790 INJECTOR GP-FUEL

S/N: C6E1-UP

PART OF 317-7966 PUMP GP-FUEL INJECTION

SMCS-1251, 1254, 1290, 1713 **i02814312**

NOTE	REF NO	GRAPHIC REF	PART NUMBER	QTY	PART NAME 1 2 3 4 5 6 (PRODUCT LEVEL)	SEE PAGE
	1	1	**287-7637**	1	WASHER	
	2	1	**274-1639**	1	SEAL	

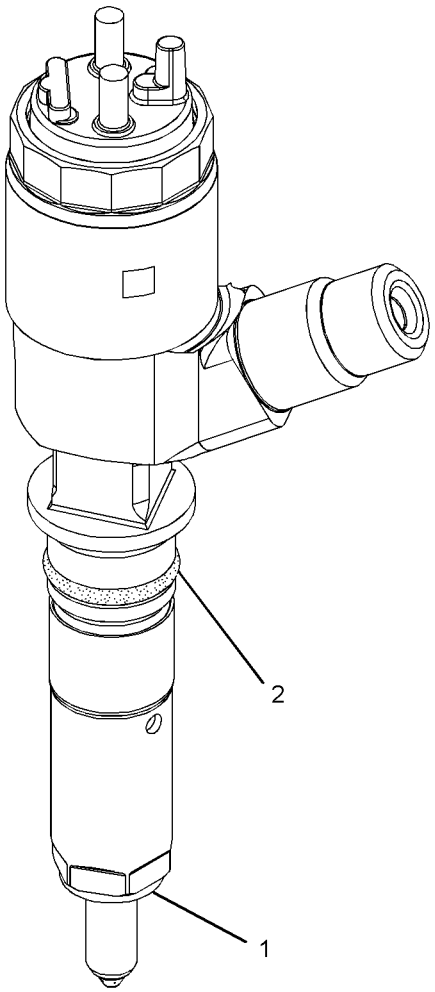

GRAPHIC #1 **<END>** g01321917

FUEL SYSTEM

306-9390 INJECTOR GP-FUEL

S/N: C6E3160-5530

PART OF 317-7966 PUMP GP-FUEL INJECTION

SMCS-1251, 1254, 1290, 1713 **i02861659**

NOTE	REF NO	GRAPHIC REF	PART NUMBER	QTY	PART NAME 1 2 3 4 5 6 (PRODUCT LEVEL)	SEE PAGE
	1	1	**287-7637**	1	WASHER	
	2	1	**274-1639**	1	SEAL	

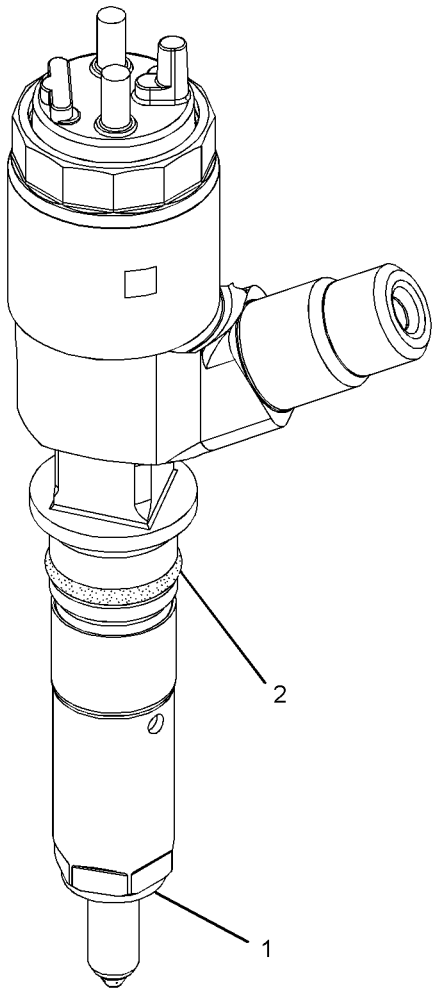

GRAPHIC #1 **<END>** g01321917

FUEL SYSTEM

320-0690 INJECTOR GP-FUEL

S/N: C6E5531-UP; G9G1-UP

PART OF 317-7966 PUMP GP-FUEL INJECTION

SMCS-1251, 1254, 1290, 1713 **i03088183**

NOTE	REF NO	GRAPHIC REF	PART NUMBER	QTY	PART NAME 1 2 3 4 5 6 (PRODUCT LEVEL)	SEE PAGE
	1	1	**287-7637**	1	WASHER	
	2	1	**274-1639**	1	SEAL	

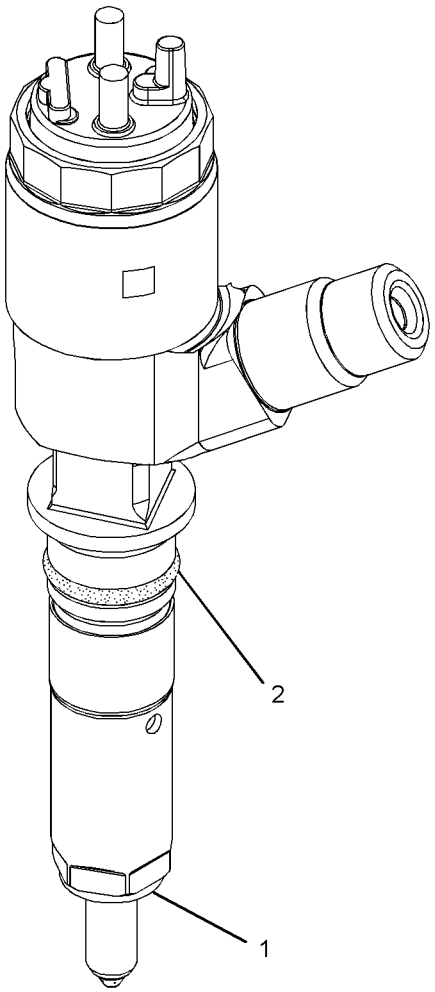

GRAPHIC #1 **<END>** g01321917

FUEL SYSTEM

255-4821 LINES GP-FUEL

S/N: JKM1-UP

PART OF 237-7540 CHASSIS AR

SMCS-1274 **i03502945**

NOTE	REF NO	GRAPHIC REF	PART NUMBER	QTY	PART NAME 1 2 3 4 5 6 (PRODUCT LEVEL)	SEE PAGE
	1	1	**5P-4961**	2	CLAMP-HOSE	
	2	1	**8T-9655**	8	MOUNT-ISOLATION	
	3	1	**116-4491**	1	BRACKET AS	
M		1	**8T-3490**	1	NUT-WELD (M10X1.5-THD)	
	4	1	**124-3019**	1	BRACKET AS	
M		1	**8T-3490**	1	NUT-WELD (M10X1.5-THD)	
	5	1	**191-1782**	1	SPACER (8.5X12.7X38.2-MM THK)	
Y	6	1	**212-3657**	1	PUMP GP-FUEL PRM & WATER SEP (ELECTRIC)	153
	7	1	**232-1374**	1	BRACKET	
	8	1	**232-1376**	2	SPACER (8.5X12.7X139.1-MM THK)	
I	9	1	**267-6214**	1	HOSE AS	
I	10	1	**267-9828**	1	HOSE AS	
	11	1	**278-5698**	1	BRACKET AS	
M		1	**8T-3490**	1	NUT-WELD (M10X1.5-THD)	
I	12	1	**284-6625**	1	HOSE AS	
	13	1	**304-7047**	1	BRACKET	
	14	1	**067-2551**	2	CLIP	
	15	1	*148-8319*	2	CONNECTOR AS	
					(EACH INCLUDES)	
		1	**2M-9780**	1	SEAL-O-RING	
		1	**6V-8397**	1	SEAL-O-RING	
		1	**6V-8715**	1	CONNECTOR	
	16	1	**164-4225**	1	CLIP	
	17	1	*164-5619*	2	PLUG AS	
					(EACH INCLUDES)	
		1	**2M-9780**	1	SEAL-O-RING	
		1	**9S-8006**	1	PLUG-O-RING	
	18	1	*2U-6826*	1	CONNECTOR AS	
		1	**6V-8397**	1	SEAL-O-RING	
		1	**6V-9028**	1	SEAL-O-RING	
		1	**260-9155**	1	CONNECTOR	
	19	1	**3P-9847**	1	CLIP	
	20	1	**4D-7733**	1	CLIP	
	21	1	**6K-8178**	4	CLIP	
	22	1	**7X-0579**	6	WASHER-HARD (8.8X25.5X2-MM THK)	
	23	1	**7X-7729**	2	WASHER (11X25X3-MM THK)	
	24	1	**8T-4121**	7	WASHER-HARD (11X21X2.5-MM THK)	
M	25	1	**8T-4133**	2	NUT (M10X1.5-THD)	
M	26	1	**8T-4136**	4	BOLT (M10X1.5X25-MM)	
M	27	1	**8T-4137**	1	BOLT (M10X1.5X20-MM)	
M	28	1	**8T-4185**	2	BOLT (M10X1.5X50-MM)	
M	29	1	**8T-4192**	1	BOLT (M12X1.75X25-MM)	
	30	1	**8T-4223**	1	WASHER-HARD (13.5X25.5X3-MM THK)	
M	31	1	**8T-6869**	1	BOLT (M8X1.25X60-MM)	
M	32	1	**8T-7352**	2	BOLT (M8X1.25X160-MM)	

I-REFER TO HYDRAULIC INFORMATION SYSTEM
M-METRIC PART
Y-SEPARATE ILLUSTRATION

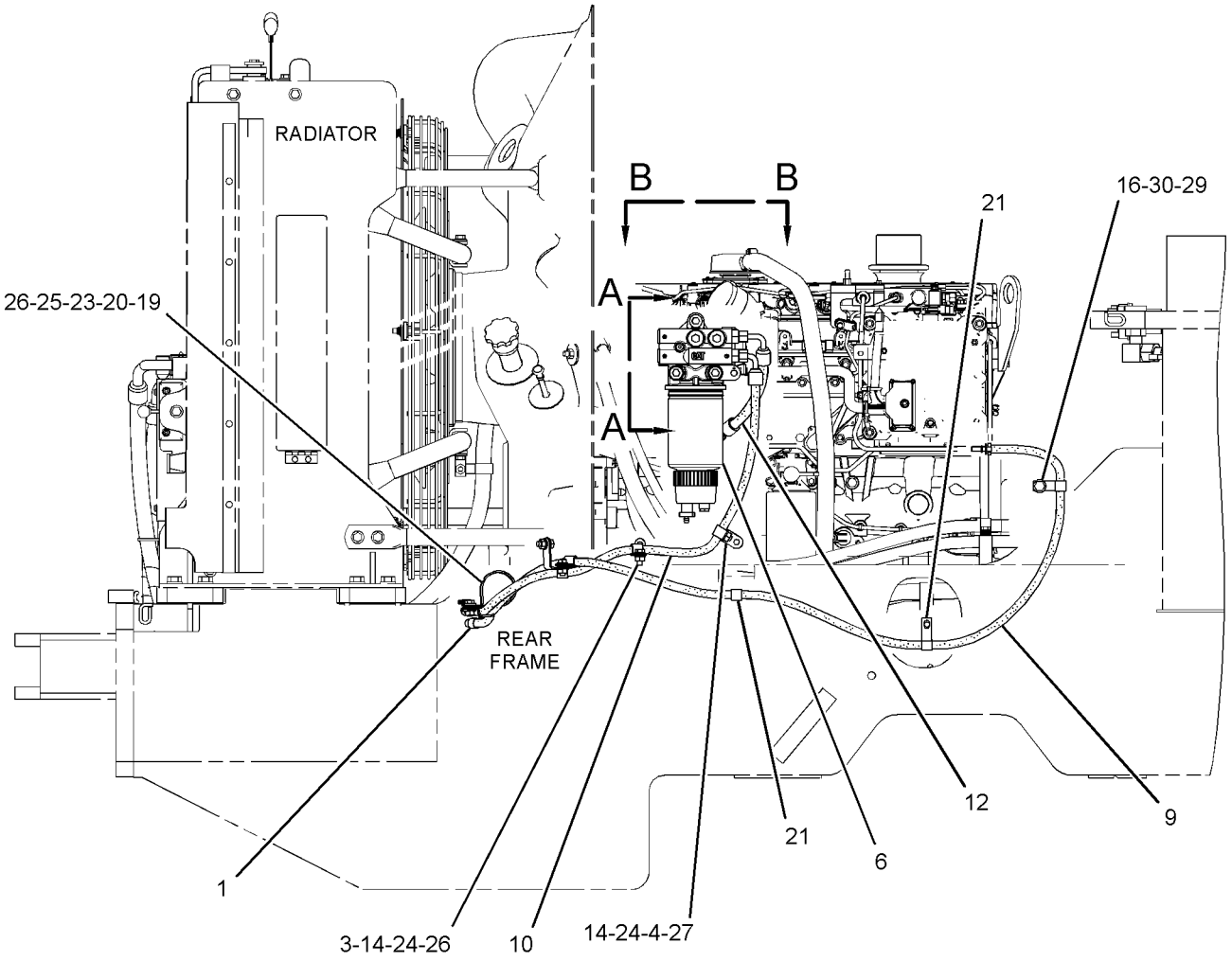

RIGHT SIDE VIEW

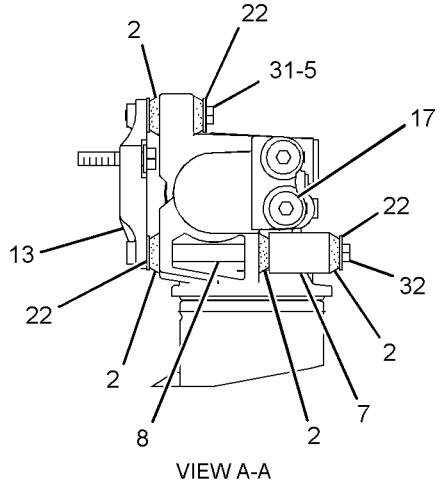

VIEW A-A

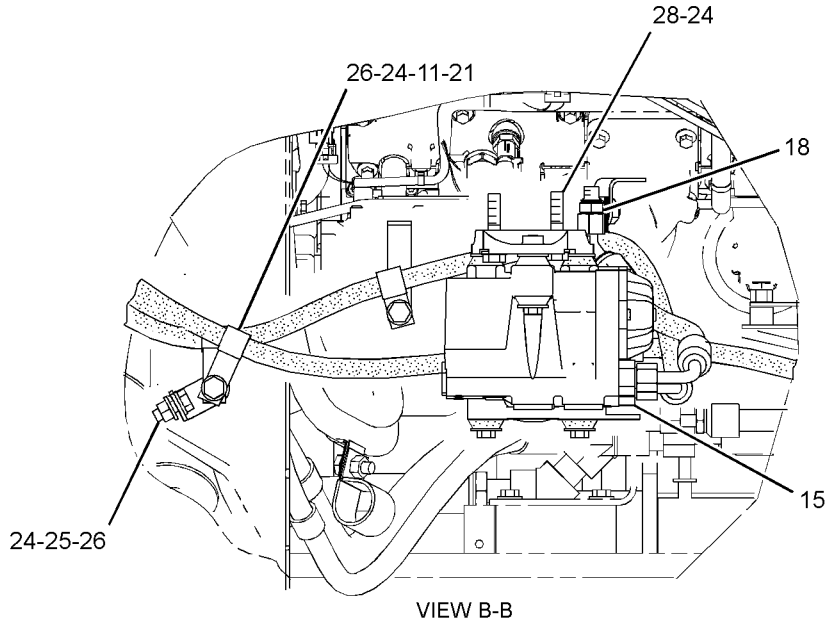

VIEW B-B

GRAPHIC #1 **<END>** g01427226

286-7060 LINES GP-FUEL

S/N: C6E1-3335

PART OF 242-1382 ENGINE AR-PRIMARY

SMCS-1274 **i02940106**

NOTE	REF NO	GRAPHIC REF	PART NUMBER	QTY	PART NAME 1 2 3 4 5 6 (PRODUCT LEVEL)	SEE PAGE
M	1	1	**6I-0593**	2	BOLT (M10X1.5X30-MM)	
Y	2	1	**263-7148**	1	FILTER GP-WATER SEP & FUEL (PRIMARY)	109
	3	1	**277-4990**	1	ELBOW	
	4	1	**277-4991**	1	CONNECTION	
	5	1	**277-4993**	1	SEAL-O-RING	
	6	1	**304-9710**	1	TUBE	
F			**278-4138**	2	PROTECTION GP-FUEL SYSTEM	

F-NOT SHOWN
M-METRIC PART
Y-SEPARATE ILLUSTRATION

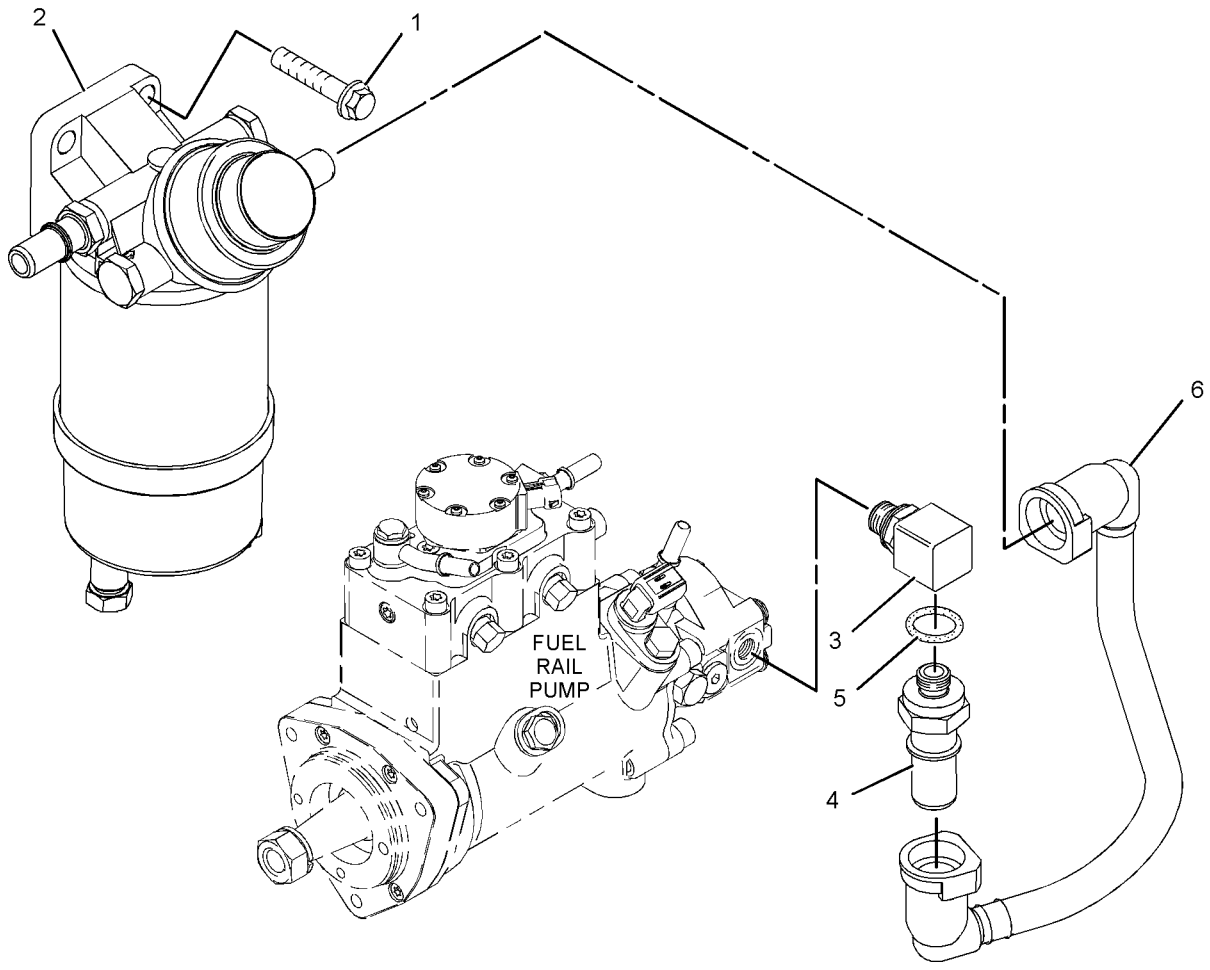

GRAPHIC #1 **<END>** g01383063

FUEL SYSTEM

319-7863 LINES GP-FUEL

S/N: C6E3336-5530

PART OF 242-1382 ENGINE AR-PRIMARY

SMCS-1274 **i02927110**

NOTE	REF NO	GRAPHIC REF	PART NUMBER	QTY	PART NAME 1 2 3 4 5 6 (PRODUCT LEVEL)	SEE PAGE
M	1	1	**6I-0260**	5	BOLT (M8X1.25X25-MM)	
M	2	1	**6I-0593**	2	BOLT (M10X1.5X30-MM)	
	3	1	**6I-0594**	2	NUT (M10X1.5-THD)	
M	4	2	**6I-0654**	1	BOLT (M10X1.5X25-MM)	
	5	2	**106-8916**	2	BOLT (M6X16-MM)	
	6	1	**111-0859**	1	BOLT (M10X1.5X35-MM)	
	7	1	**215-9509**	1	FITTING (QUICK DISCONNECT, FEMALE)	
	8	2	**216-9752**	2	WASHER	
	9	2	**232-1115**	1	CLIP-PIPE	
	10	1,2	**234-3063**	2	CLIP	
	11	1,2	**277-6165**	2	CONNECTION-FUEL	
	12	2	**278-0314**	1	SPACER	
	13	2	**287-6853**	1	BRACKET AS	
	13A	2	**232-1115**	2	CLIP-PIPE	
	14	2	**293-8068**	1	TUBE-FUEL	
	15	2	**295-4670**	1	BOLT-SPECIAL (BANJO)	
	16	2	**302-5695**	1	BRACKET AS	
	16A	2	**298-4576**	1	CLIP	
	17	1	**305-6471**	1	BRACKET AS	
	17A	1	**232-1115**	6	CLIP-PIPE	
	18	2	**306-5432**	1	BRACKET	
	19	2	**309-0857**	1	TUBE	
	20	1	**311-1331**	1	TUBE-FUEL	
	21	1	**311-1677**	1	TUBE	
	22	2	**311-1722**	1	TUBE	
	23	1	**311-1737**	1	BRACKET AS	
	23A	1	**303-0366**	1	STUD	
	24	1	**311-1927**	1	BRACKET AS	
	24A	1	**232-1115**	2	CLIP-PIPE	
	25	1	**311-1952**	1	BRACKET AS	
	25A	1	**232-1115**	4	CLIP-PIPE	
	26	1	**311-2232**	1	BRACKET AS	
	26A	1	**232-1115**	1	CLIP-PIPE	
	27	1	**319-7873**	1	BRACKET	
	27A	1	**232-1115**	1	CLIP-PIPE	
	28	1	**319-7874**	1	SPACER	
	29	1	**319-7875**	1	BRACKET	
	29A	1	**232-1115**	2	CLIP-PIPE	
	30	2	**317-7147**	1	CLIP	
F			**278-4138**	1	PROTECTION GP-FUEL SYSTEM	

F-NOT SHOWN
M-METRIC PART

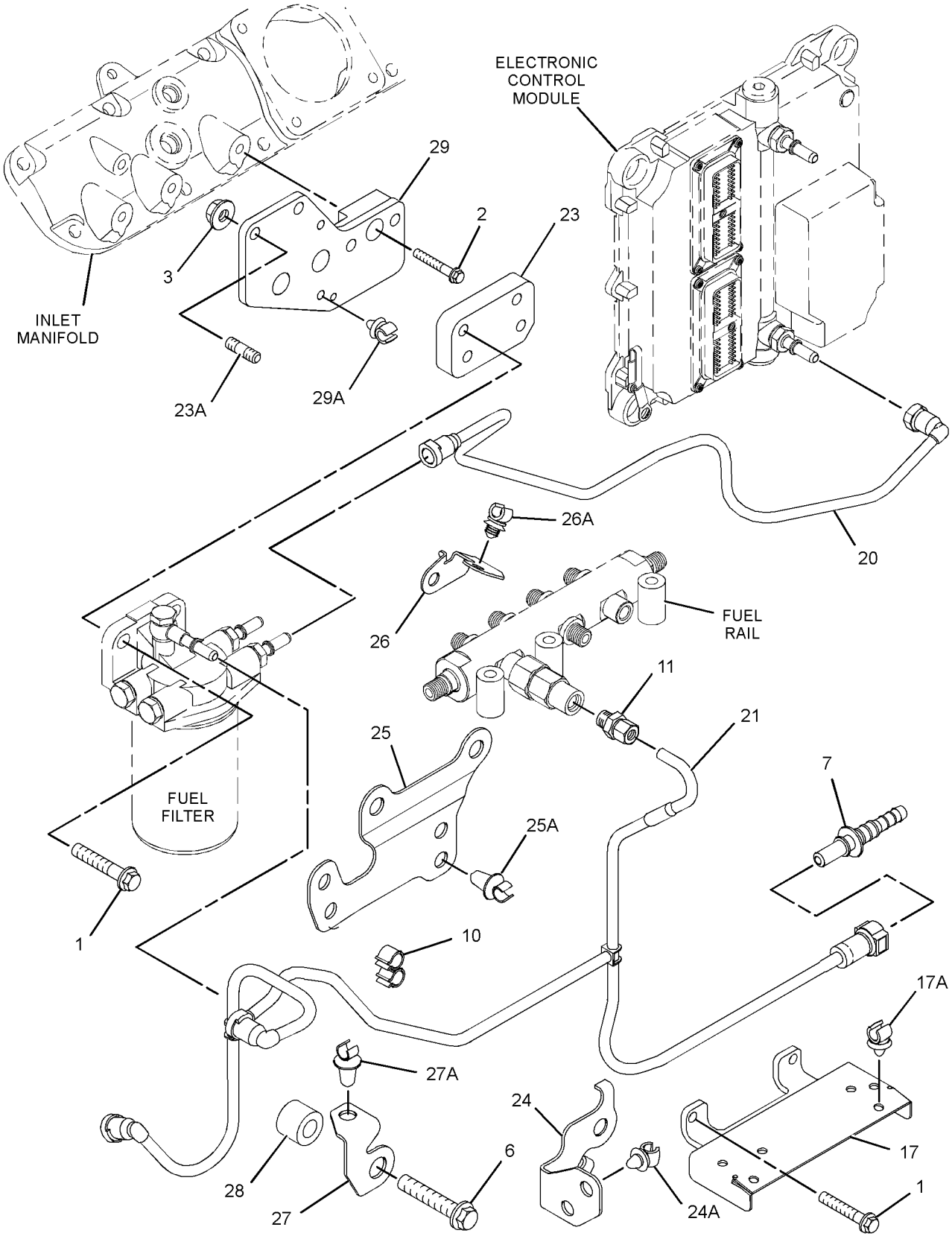

GRAPHIC #1 g01472015

319-7863 **LINES GP-FUEL** *(contd.)* **i02927110**

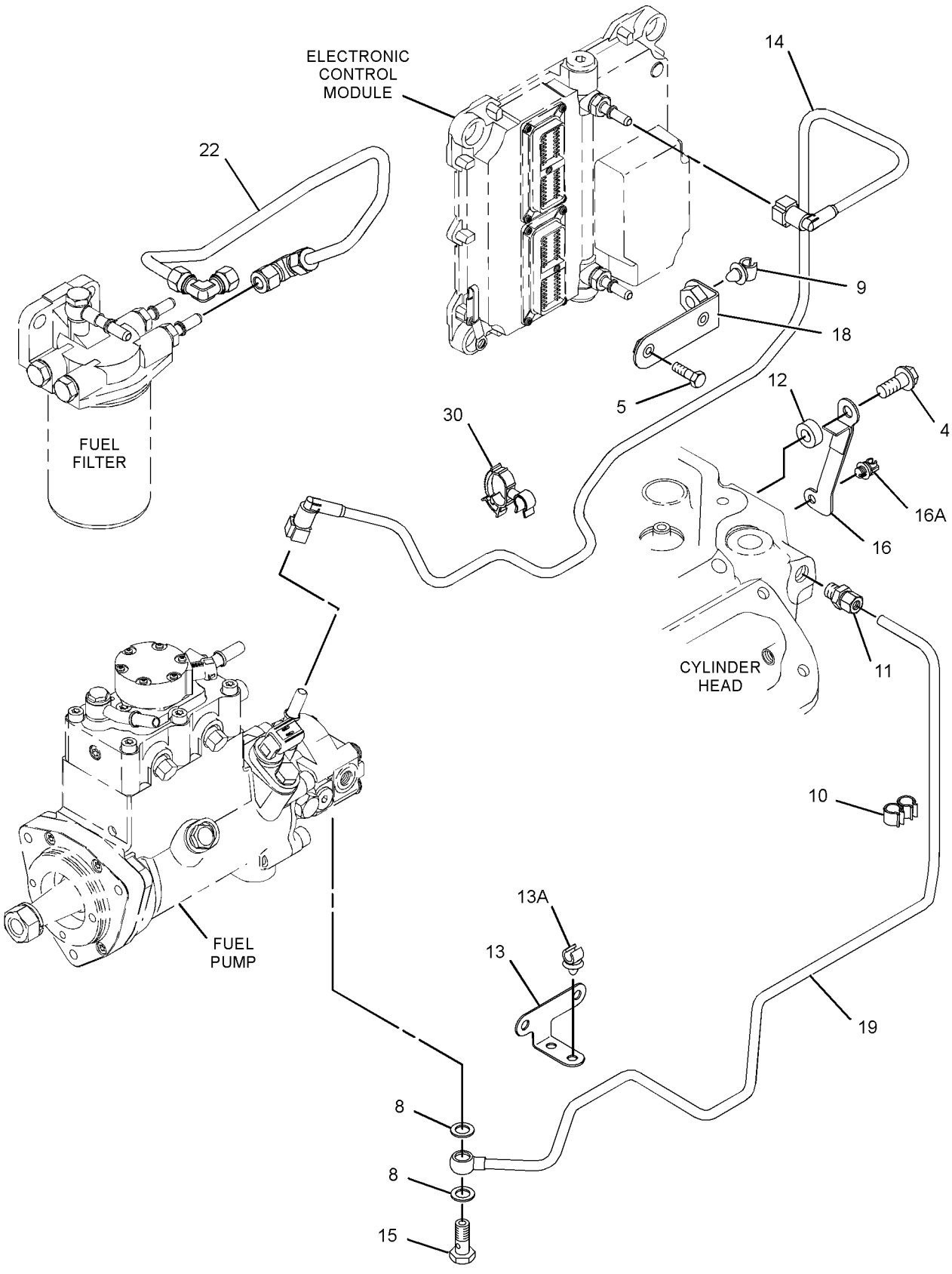

GRAPHIC #2 **<END>** g01472017

FUEL SYSTEM

319-7863 LINES GP-FUEL

S/N: C6E5531-12210

PART OF 242-1382 ENGINE AR-PRIMARY

SMCS-1274 **i02962603**

NOTE	REF NO	GRAPHIC REF	PART NUMBER	QTY	PART NAME 1 2 3 4 5 6 (PRODUCT LEVEL)	SEE PAGE
M	1	1	**6I-0260**	5	BOLT (M8X1.25X25-MM)	
M	2	1	**6I-0593**	2	BOLT (M10X1.5X30-MM)	
	3	1	**6I-0594**	2	NUT (M10X1.5-THD)	
M	4	2	**6I-0654**	1	BOLT (M10X1.5X25-MM)	
	5	2	**106-8916**	2	BOLT (M6X16-MM)	
C	6	1	**123-2899**	1	BOLT (M10X1.5X40-MM)	
	7	1	**215-9509**	1	FITTING (QUICK DISCONNECT, FEMALE)	
C	8	2	**317-8476**	2	WASHER-SEAL	
	9	2	**232-1115**	1	CLIP-PIPE	
	10	1,2	**234-3063**	2	CLIP	
	11	1,2	**277-6165**	2	CONNECTION-FUEL	
	12	2	**278-0314**	1	SPACER	
	13	2	**287-6853**	1	BRACKET AS	
	13A	2	**232-1115**	2	CLIP-PIPE	
	14	2	**293-8068**	1	TUBE-FUEL	
	15	2	**295-4670**	1	BOLT-SPECIAL (BANJO)	
	16	2	**302-5695**	1	BRACKET AS	
	16A	2	**298-4576**	1	CLIP	
	17	1	**305-6471**	1	BRACKET AS	
	17A	1	**232-1115**	6	CLIP-PIPE	
	18	2	**306-5432**	1	BRACKET	
	19	2	**309-0857**	1	TUBE	
	20	1	**311-1331**	1	TUBE-FUEL	
C	21	1	**319-7347**	1	LINE AS-FUEL	
C	22	2	**322-9530**	1	TUBE	
	23	1	**311-1737**	1	BRACKET AS	
	23A	1	**303-0366**	1	STUD	
	24	1	**311-1927**	1	BRACKET AS	
	24A	1	**232-1115**	2	CLIP-PIPE	
	25	1	**311-1952**	1	BRACKET AS	
	25A	1	**232-1115**	4	CLIP-PIPE	
	26	1	**311-2232**	1	BRACKET AS	
	26A	1	**232-1115**	1	CLIP-PIPE	
C	27	1	**327-3398**	1	BRACKET AS-SUPPORT	
	27A	1	**232-1115**	1	CLIP-PIPE	
C	28	1	**327-3397**	1	BRACKET	
C	29	1	**322-9531**	1	BRACKET	
	29A	1	**232-1115**	2	CLIP-PIPE	
	30	2	**317-7147**	1	CLIP	
F			**278-4138**	1	PROTECTION GP-FUEL SYSTEM	

C-CHANGE FROM PREVIOUS TYPE
F-NOT SHOWN
M-METRIC PART

319-7863 **LINES GP-FUEL** *(contd.)* **i02962603**

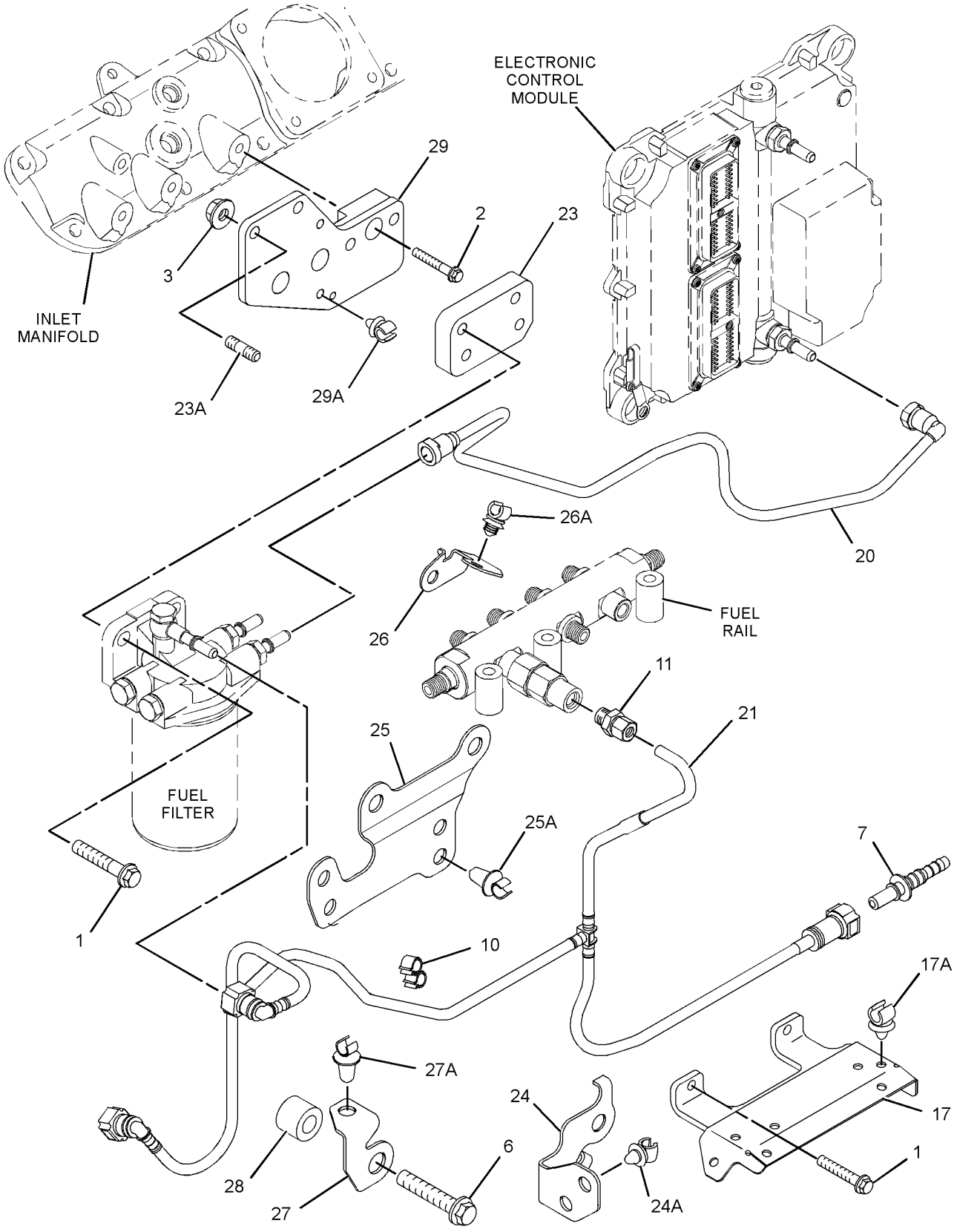

GRAPHIC #1 g01649256

319-7863 **LINES GP-FUEL** *(contd.)* **i02962603**

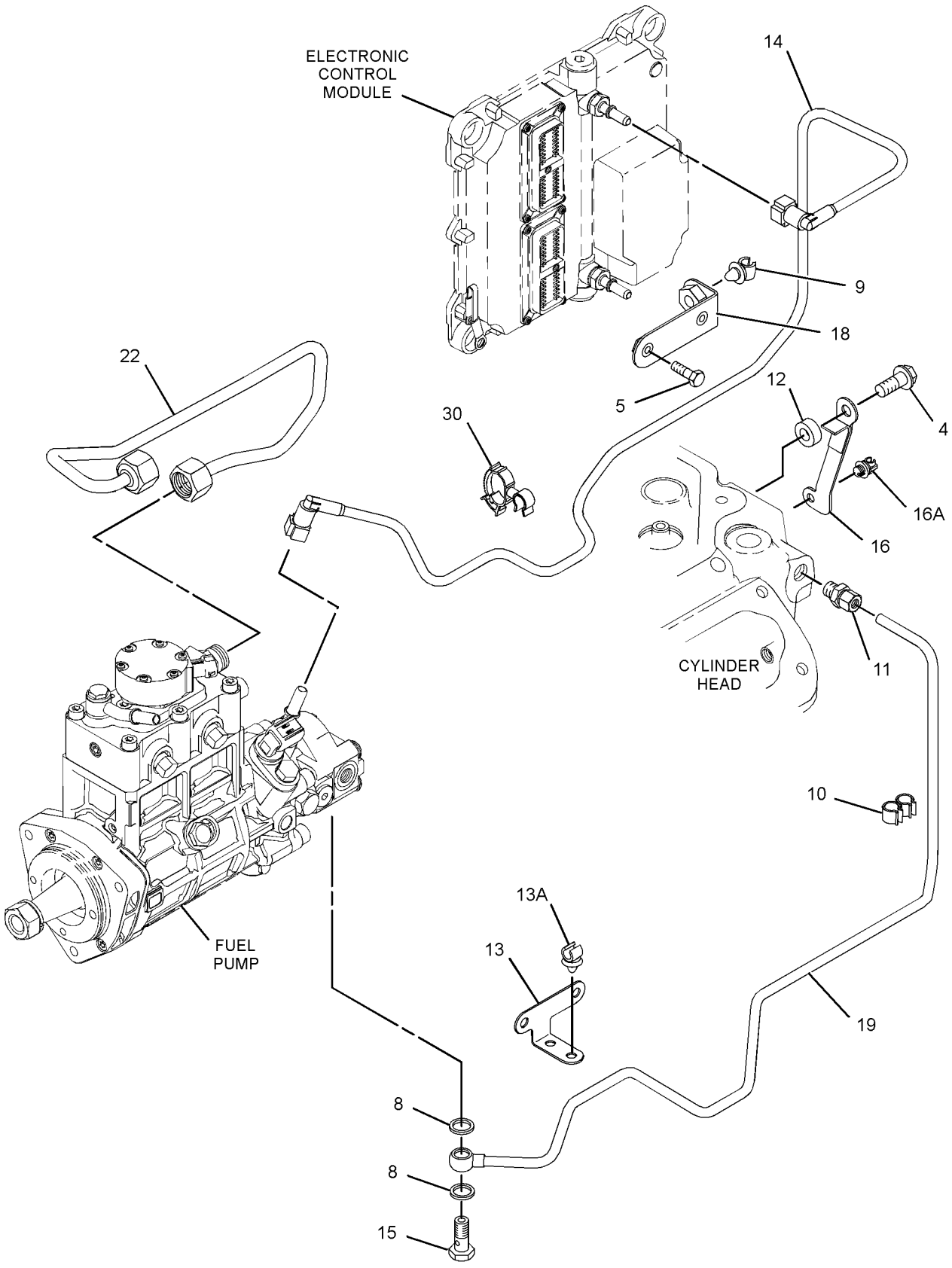

GRAPHIC #2 **<END>** g01649258

FUEL SYSTEM

319-7863 LINES GP-FUEL

S/N: C6E12211-15845

PART OF 242-1382 ENGINE AR-PRIMARY

SMCS-1274 **i03251144**

NOTE	REF NO	GRAPHIC REF	PART NUMBER	QTY	PART NAME 1 2 3 4 5 6 (PRODUCT LEVEL)	SEE PAGE
M	1	1	**6I-0260**	5	BOLT (M8X1.25X25-MM)	
M	2	1	**6I-0593**	2	BOLT (M10X1.5X30-MM)	
	3	1	**6I-0594**	2	NUT (M10X1.5-THD)	
M	4	2	**6I-0654**	1	BOLT (M10X1.5X25-MM)	
	5	2	**106-8916**	2	BOLT (M6X16-MM)	
	6	1	**123-2899**	1	BOLT (M10X1.5X40-MM)	
	7	1	**215-9509**	1	FITTING (QUICK DISCONNECT, FEMALE)	
C	8	2	**286-2890**	2	WASHER	
	9	2	**232-1115**	1	CLIP-PIPE	
	10	1,2	**234-3063**	2	CLIP	
	11	1,2	**277-6165**	2	CONNECTION-FUEL	
	12	2	**278-0314**	1	SPACER	
	13	2	**287-6853**	1	BRACKET AS	
	13A	2	**232-1115**	2	CLIP-PIPE	
	14	2	**293-8068**	1	TUBE-FUEL	
	15	2	**295-4670**	1	BOLT-SPECIAL (BANJO)	
	16	2	**302-5695**	1	BRACKET AS	
	16A	2	**298-4576**	1	CLIP	
C	17	1	**331-3776**	1	BRACKET	
	18	2	**306-5432**	1	BRACKET	
	19	2	**309-0857**	1	TUBE	
	20	1	**311-1331**	1	TUBE-FUEL	
	21	1	**319-7347**	1	LINE AS-FUEL	
	22	2	**322-9530**	1	TUBE	
	23	1	**311-1737**	1	BRACKET AS	
	23A	1	**303-0366**	1	STUD	
	24	1	**311-1927**	1	BRACKET AS	
	24A	1	**232-1115**	2	CLIP-PIPE	
	25	1	**311-1952**	1	BRACKET AS	
	25A	1	**232-1115**	4	CLIP-PIPE	
	26	1	**311-2232**	1	BRACKET AS	
	26A	1	**232-1115**	1	CLIP-PIPE	
	27	1	**327-3398**	1	BRACKET AS-SUPPORT	
	27A	1	**232-1115**	1	CLIP-PIPE	
	28	1	**327-3397**	1	BRACKET	
	29	1	**322-9531**	1	BRACKET	
	29A	1	**232-1115**	2	CLIP-PIPE	
	30	2	**317-7147**	1	CLIP	
F			**278-4138**	1	PROTECTION GP-FUEL SYSTEM	

C-CHANGE FROM PREVIOUS TYPE
F-NOT SHOWN
M-METRIC PART

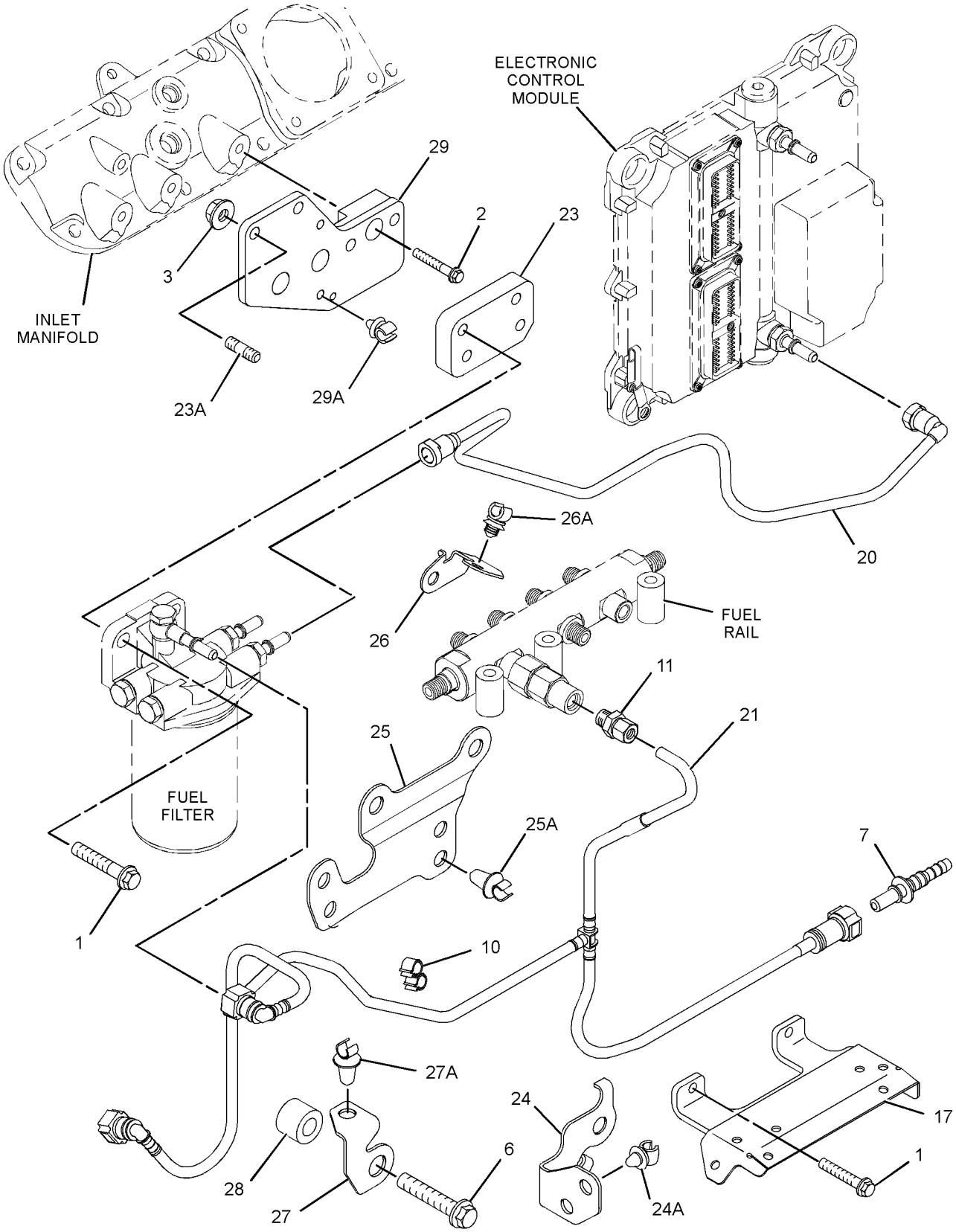

GRAPHIC #1 g01662977

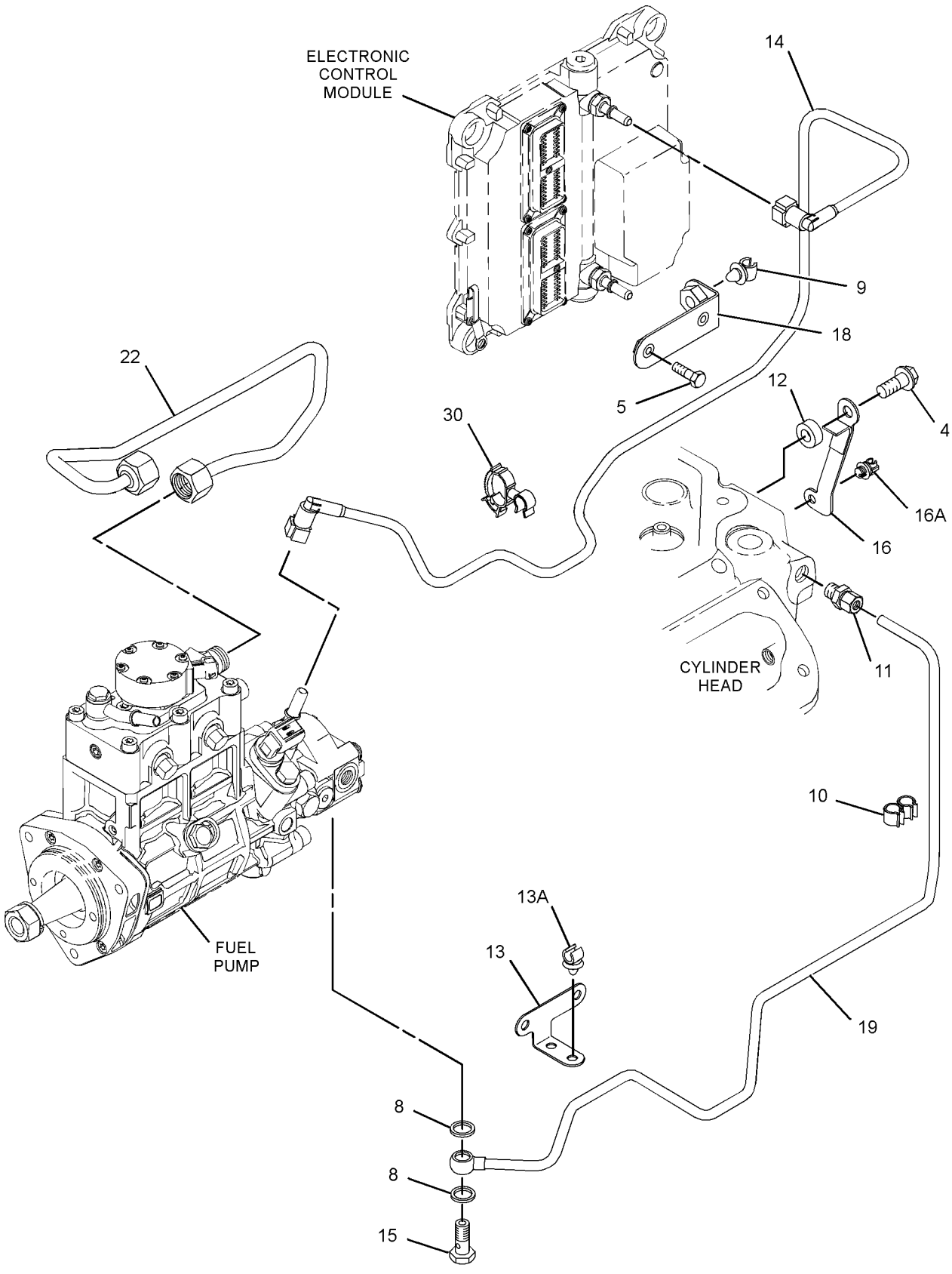

GRAPHIC #2 **<END>** g01649258

FUEL SYSTEM

319-7863 LINES GP-FUEL

S/N: C6E15846-UP; G9G1-UP

PART OF 242-1382 ENGINE AR-PRIMARY

SMCS-1274 **i03334041**

NOTE	REF NO	GRAPHIC REF	PART NUMBER	QTY	PART NAME 1 2 3 4 5 6 (PRODUCT LEVEL)	SEE PAGE
M	1	1	**6I-0260**	5	BOLT (M8X1.25X25-MM)	
M	2	1	**6I-0593**	2	BOLT (M10X1.5X30-MM)	
	3	1	**6I-0594**	2	NUT (M10X1.5-THD)	
M	4	2	**6I-0654**	1	BOLT (M10X1.5X25-MM)	
	5	2	**106-8916**	2	BOLT (M6X16-MM)	
C	6	1	**111-0859**	1	BOLT (M10X1.5X35-MM)	
	7	1	**215-9509**	1	FITTING (QUICK DISCONNECT, FEMALE)	
	8	2	**286-2890**	2	WASHER	
	9	2	**232-1115**	1	CLIP-PIPE	
C	10	1,2	**234-3063**	3	CLIP	
	11	1,2	**277-6165**	2	CONNECTION-FUEL	
	12	2	**278-0314**	1	SPACER	
	13	2	**287-6853**	1	BRACKET AS	
	13A	2	**232-1115**	2	CLIP-PIPE	
	14	2	**293-8068**	1	TUBE-FUEL	
	15	2	**295-4670**	1	BOLT-SPECIAL (BANJO)	
	16	2	**302-5695**	1	BRACKET AS	
	16A	2	**298-4576**	1	CLIP	
	17	1	**331-3776**	1	BRACKET	
	18	2	**306-5432**	1	BRACKET	
	19	2	**309-0857**	1	TUBE	
	20	1	**311-1331**	1	TUBE-FUEL	
	21	1	**319-7347**	1	LINE AS-FUEL	
	22	2	**338-1398**	1	TUBE	
	23	1	**311-1737**	1	BRACKET AS	
	23A	1	**303-0366**	1	STUD	
	24	1	**311-1927**	1	BRACKET AS	
	24A	1	**232-1115**	2	CLIP-PIPE	
	25	1	**311-1952**	1	BRACKET AS	
	25A	1	**232-1115**	4	CLIP-PIPE	
	26	1	**311-2232**	1	BRACKET AS	
	26A	1	**232-1115**	1	CLIP-PIPE	
C	27	1	**319-7873**	1	BRACKET	
	27A	1	**232-1115**	1	CLIP-PIPE	
	29	1	**322-9531**	1	BRACKET	
	29A	1	**232-1115**	2	CLIP-PIPE	
	30	2	**317-7147**	1	CLIP	
C	31	1	**319-7874**	1	SPACER	
F			**278-4138**	1	PROTECTION GP-FUEL SYSTEM	

C-CHANGE FROM PREVIOUS TYPE
F-NOT SHOWN
M-METRIC PART

319-7863 **LINES GP-FUEL** *(contd.)* **i03334041**

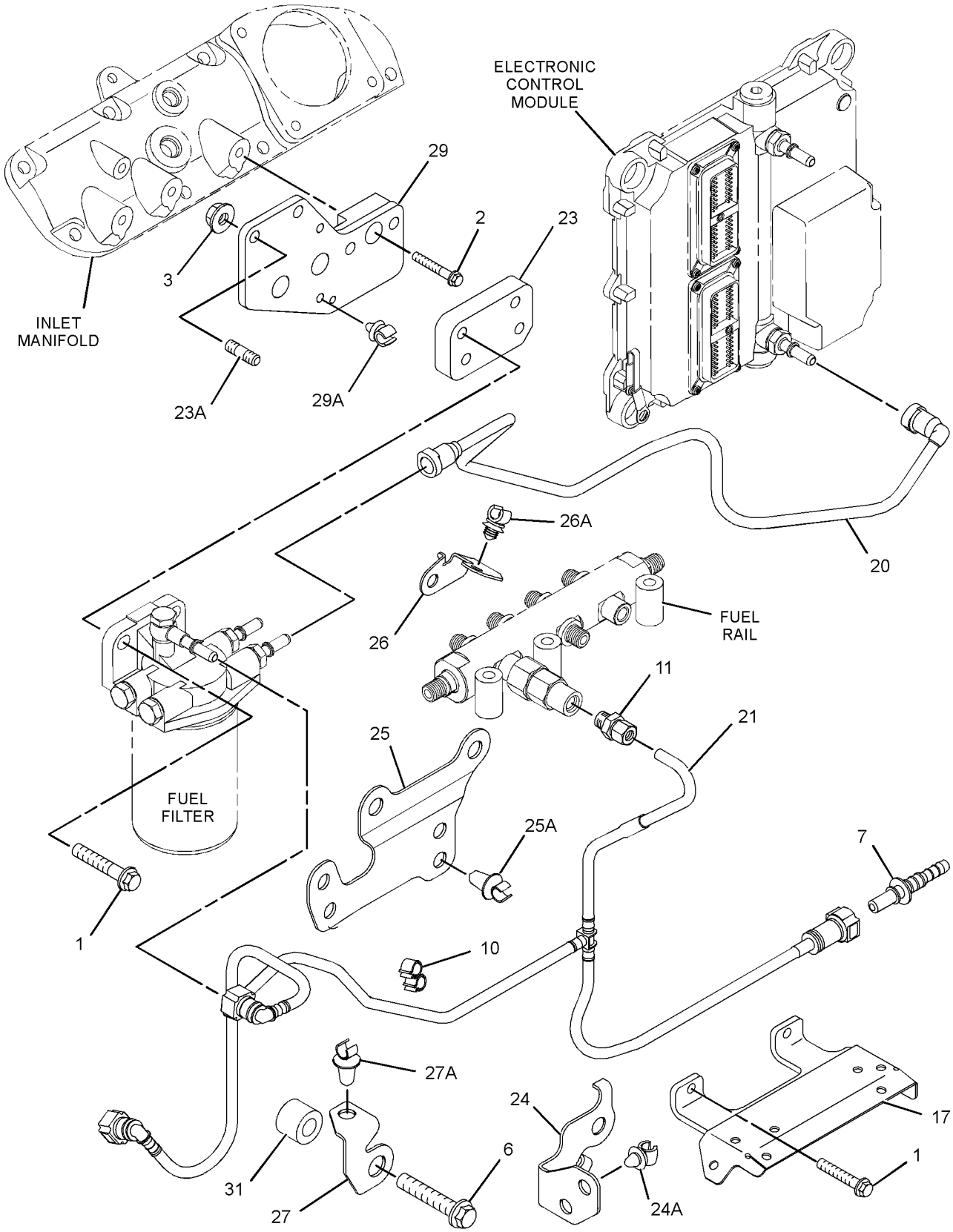

GRAPHIC #1 g01686574

319-7863 **LINES GP-FUEL** *(contd.)* **i03334041**

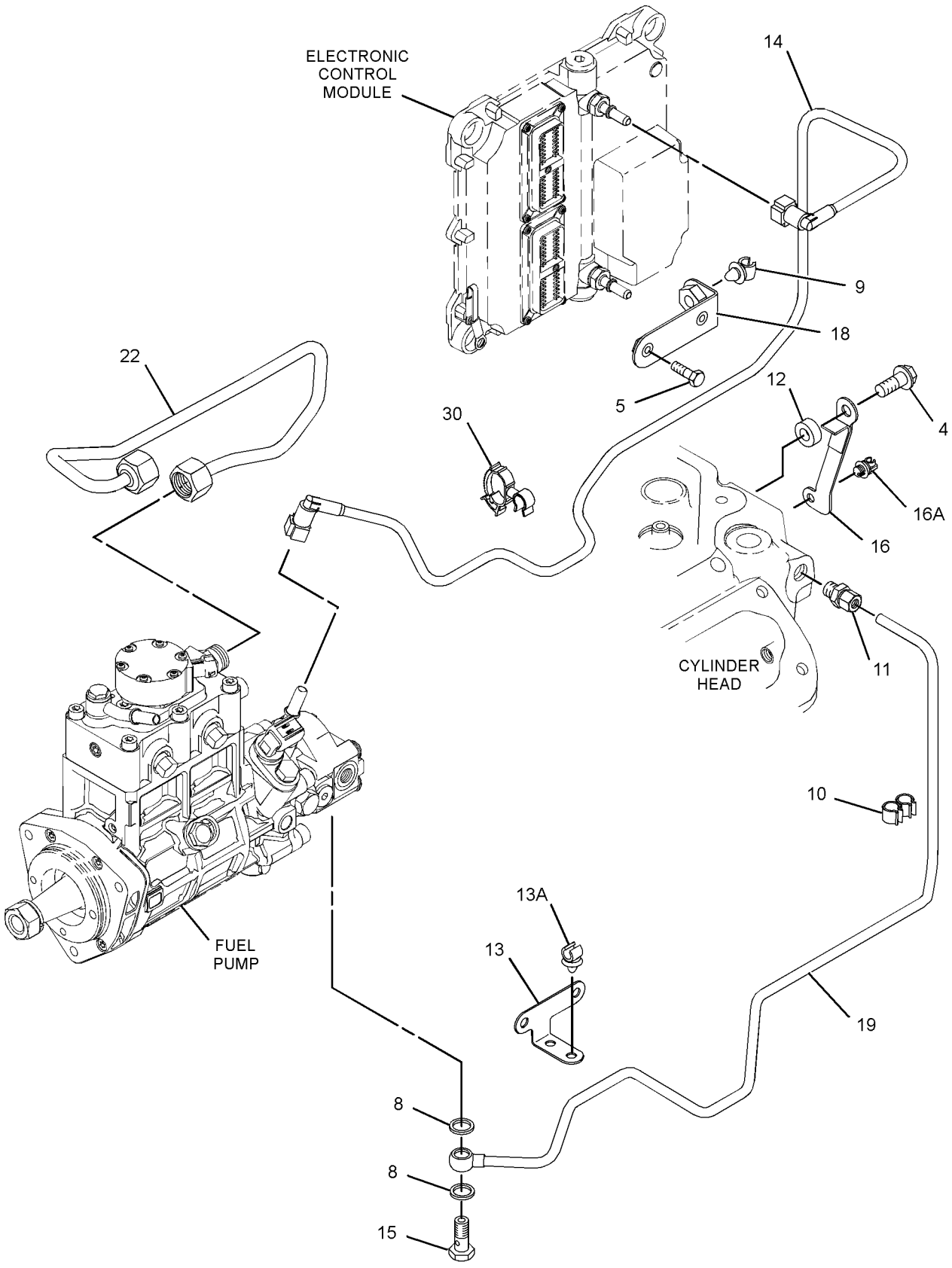

GRAPHIC #2 **<END>** g01649258

294-3301 LINES GP-FUEL FILTER

S/N: C6E1-3335

PART OF 242-1382 ENGINE AR-PRIMARY

SMCS-1261, 1274 **i02917002**

NOTE	REF NO	GRAPHIC REF	PART NUMBER	QTY	PART NAME 1 2 3 4 5 6 (PRODUCT LEVEL)	SEE PAGE
	1	2	**309-0857**	1	TUBE	
	2	1,2	**277-6165**	2	CONNECTION-FUEL	
	3	2	**295-4670**	1	BOLT-SPECIAL (BANJO)	
	4	2	**216-9752**	2	WASHER	
	5	2	**287-6853**	1	BRACKET AS	
	5A	2	**232-1115**	2	CLIP-PIPE	
	6	1	**6I-0594**	2	NUT (M10X1.5-THD)	
	7	2	**302-5695**	1	BRACKET AS	
	7A	2	**298-4576**	1	CLIP	
M	8	2	**6I-0654**	1	BOLT (M10X1.5X25-MM)	
	9	2	**278-0314**	1	SPACER	
	10	2	**311-1721**	1	TUBE	
	11	1	**319-7875**	1	BRACKET	
	11A	1	**232-1115**	2	CLIP-PIPE	
M	12	1	**6I-0593**	2	BOLT (M10X1.5X30-MM)	
M	13	1	**6I-0260**	3	BOLT (M8X1.25X25-MM)	
	14	1	**311-1737**	1	BRACKET AS	
	14A	1	**303-0366**	1	STUD	
	15	1	**311-1677**	1	TUBE	
	16	1	**215-9509**	1	FITTING (QUICK DISCONNECT, FEMALE)	
	17	1,2	**234-3063**	2	CLIP	
	18	1	**305-6471**	1	BRACKET AS	
	18A	1	**232-1115**	6	CLIP-PIPE	
	19	1	**311-1952**	1	BRACKET AS	
	19A	1	**232-1115**	4	CLIP-PIPE	
	20	2	**293-8068**	1	TUBE-FUEL	
	21	1	**311-1331**	1	TUBE-FUEL	
M	22	2	**124-3815**	2	BOLT (M8X16X1.25-MM)	
	23	2	**306-5432**	1	BRACKET	
	24	2	**232-1115**	1	CLIP-PIPE	
	25	2	**106-8916**	2	BOLT (M6X16-MM)	
	26	1	**311-2232**	1	BRACKET AS	
	26A	1	**232-1115**	1	CLIP-PIPE	
	27	1	**311-1927**	1	BRACKET AS	
	27A	1	**232-1115**	2	CLIP-PIPE	
	28	1	**311-1919**	1	BRACKET AS	
	28A	1	**232-1115**	1	CLIP-PIPE	
F			**278-4138**	5	PROTECTION GP-FUEL SYSTEM	

F-NOT SHOWN
M-METRIC PART

294-3301 **LINES GP-FUEL FILTER** *(contd.)* **i02917002**

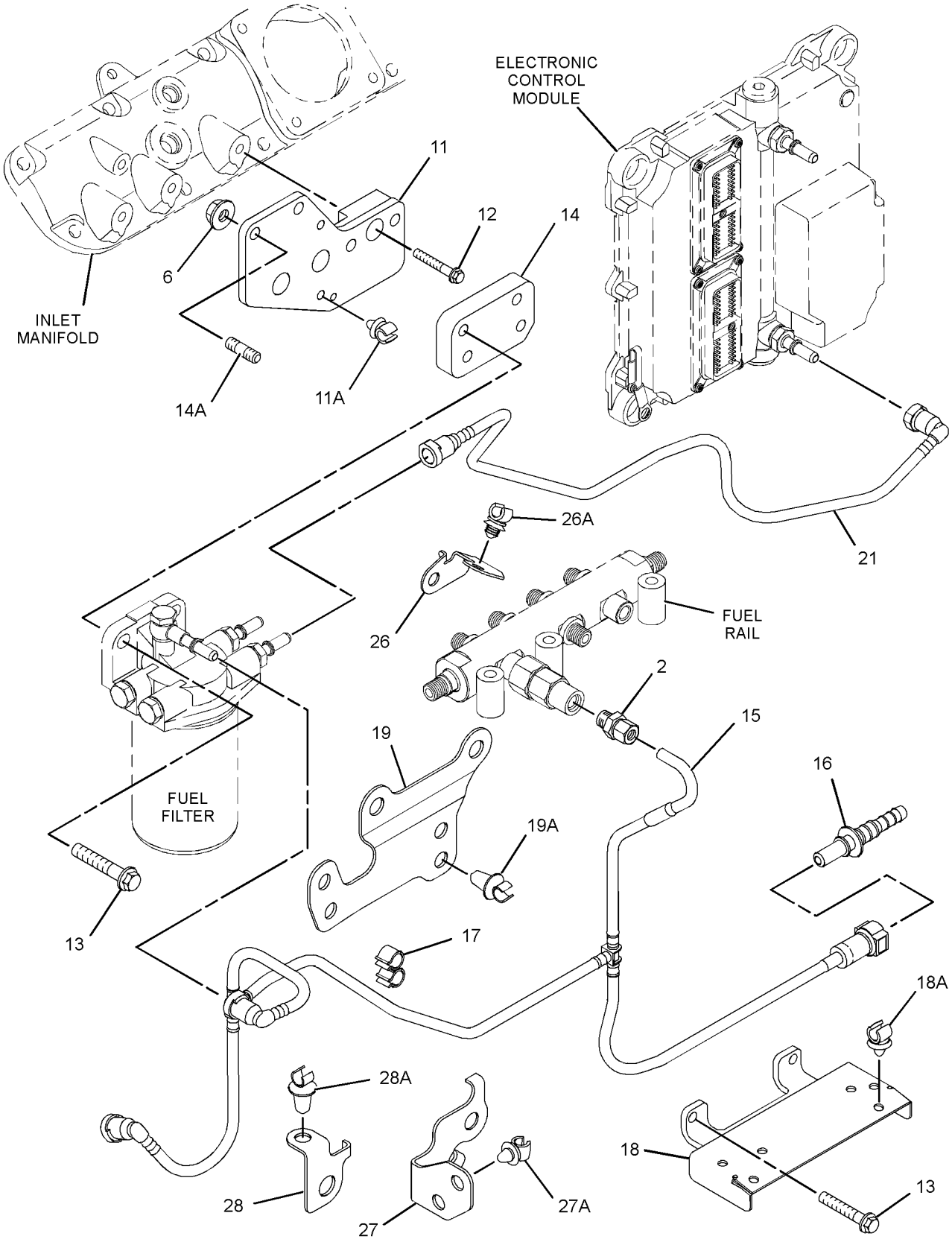

GRAPHIC #1 g01436140

294-3301 **LINES GP-FUEL FILTER** *(contd.)* **i02917002**

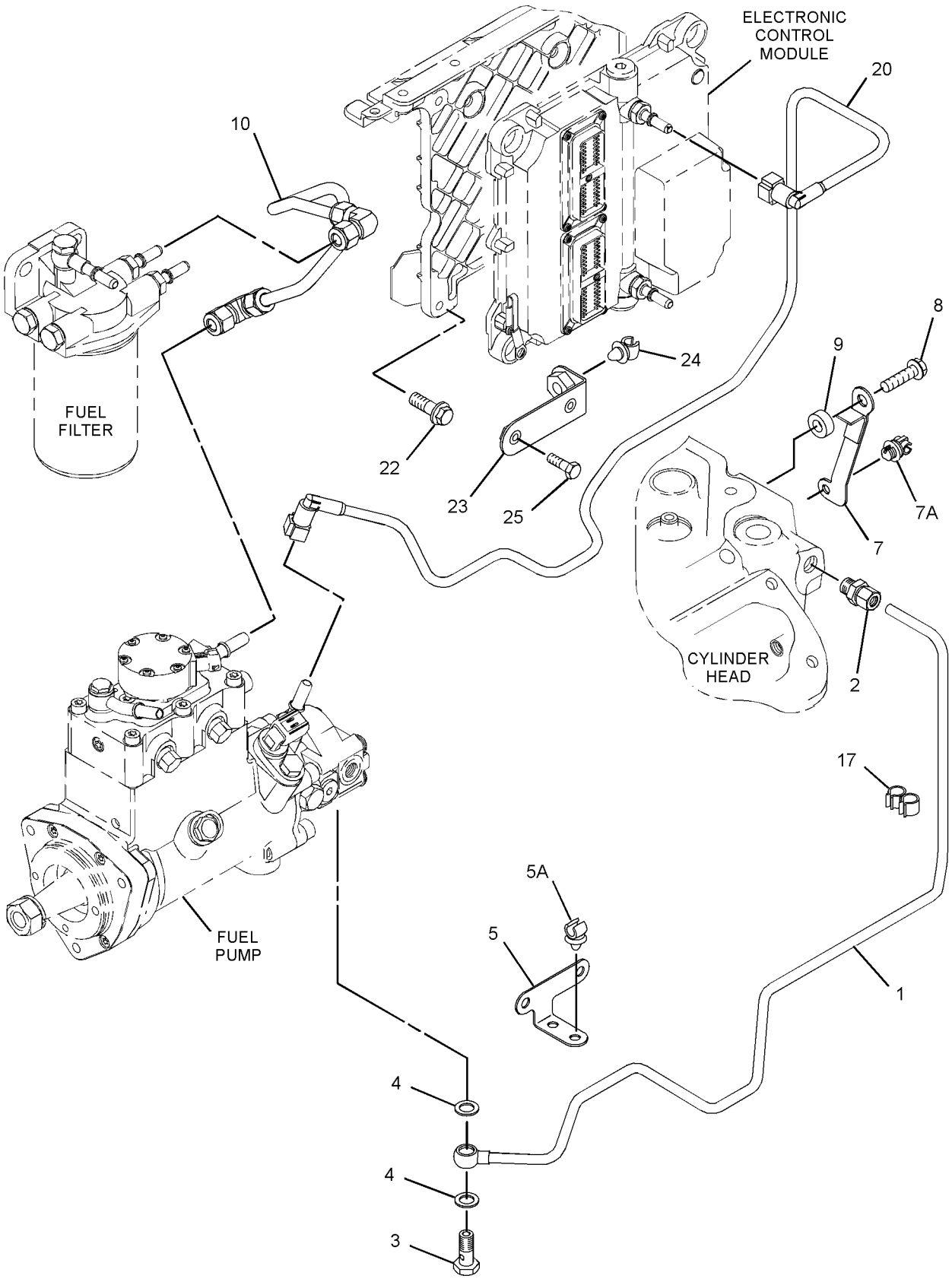

GRAPHIC #2 **<END>** g01436143

276-8398 PUMP GP-FUEL INJECTION

S/N: C6E1-5432

PART OF 317-7966 PUMP GP-FUEL INJECTION

SMCS-1251, 1290 **i03322764**

NOTE	REF NO	GRAPHIC REF	PART NUMBER	QTY	PART NAME 1 2 3 4 5 6 (PRODUCT LEVEL)	SEE PAGE
	1	1	**228-7100**	1	SEAL-O-RING	
	2	1	**238-0120**	1	SENSOR GP-SPEED (SECONDARY, TIMING)	
	3	1	**247-6019**	1	SEAL	
	4	1	**248-1066**	1	FITTING-FUEL	
	5	1	**293-0249**	1	PUMP GP-FUEL TRANSFER	
	6	1	**117-1385**	1	SEAL-O-RING	
M	7	1	**5A-3604**	5	BOLT-SOCKET HEAD (M8X1.25X25-MM)	
	8	1	**6D-7889**	1	SEAL-O-RING	
M	9	1	**8T-4200**	1	BOLT (M8X1.25X16-MM)	

M-METRIC PART

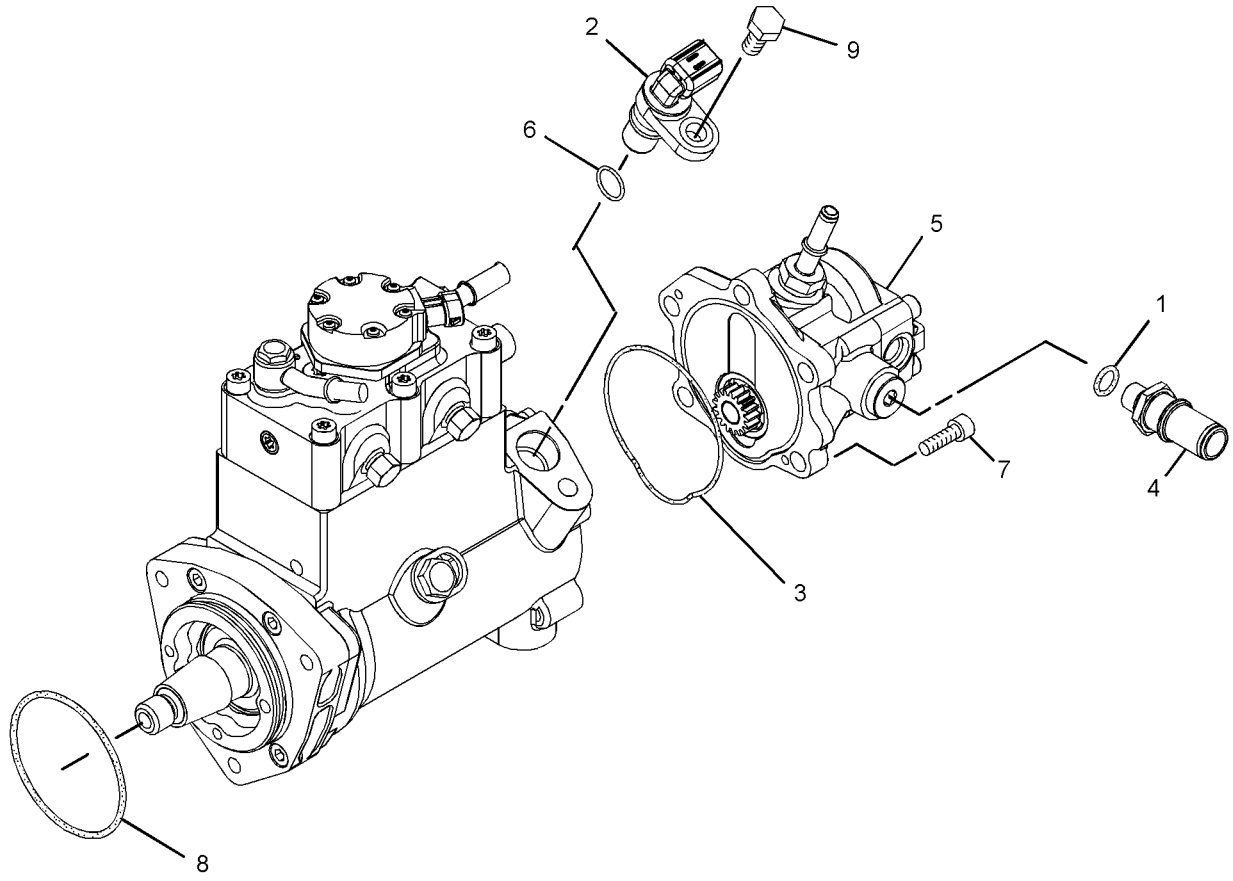

GRAPHIC #1 **<END>** g01427445

291-5919 PUMP GP-FUEL INJECTION*R

S/N: C6E5433-5530

PART OF 317-7966 PUMP GP-FUEL INJECTION

SMCS-1251, 1290 **i03641472**

NOTE	REF NO	GRAPHIC REF	PART NUMBER	QTY	PART NAME 1 2 3 4 5 6 (PRODUCT LEVEL)	SEE PAGE
	1	1	**228-0172**	1	FITTING-FUEL	
	2	1	**228-7100**	3	SEAL-O-RING	
	3	1	**247-6019**	1	SEAL	
	4	1	**248-1066**	1	FITTING-FUEL	
	5	1	**293-0249**	1	PUMP GP-FUEL TRANSFER	
	6	1	**294-3031**	1	BOLT	
	7	1	**294-3032**	1	WASHER	
	8	1	**295-0189**	1	CONNECTOR AS	
	9	1	**295-4801**	1	NUT (M14X1.5-THD)	
	10	1	**296-3542**	1	LOCKWASHER	
	11	1	**117-1385**	1	SEAL-O-RING	
M	12	1	**5A-3604**	5	BOLT-SOCKET HEAD (M8X1.25X25-MM)	
	13	1	**6D-7889**	1	SEAL-O-RING	
	14	1	**8L-2779**	1	SEAL-O-RING	
M	15	1	**8T-4200**	1	BOLT (M8X1.25X16-MM)	
	16	1	**238-0120**	1	SENSOR GP-SPEED (SECONDARY, TIMING)	

M-METRIC PART

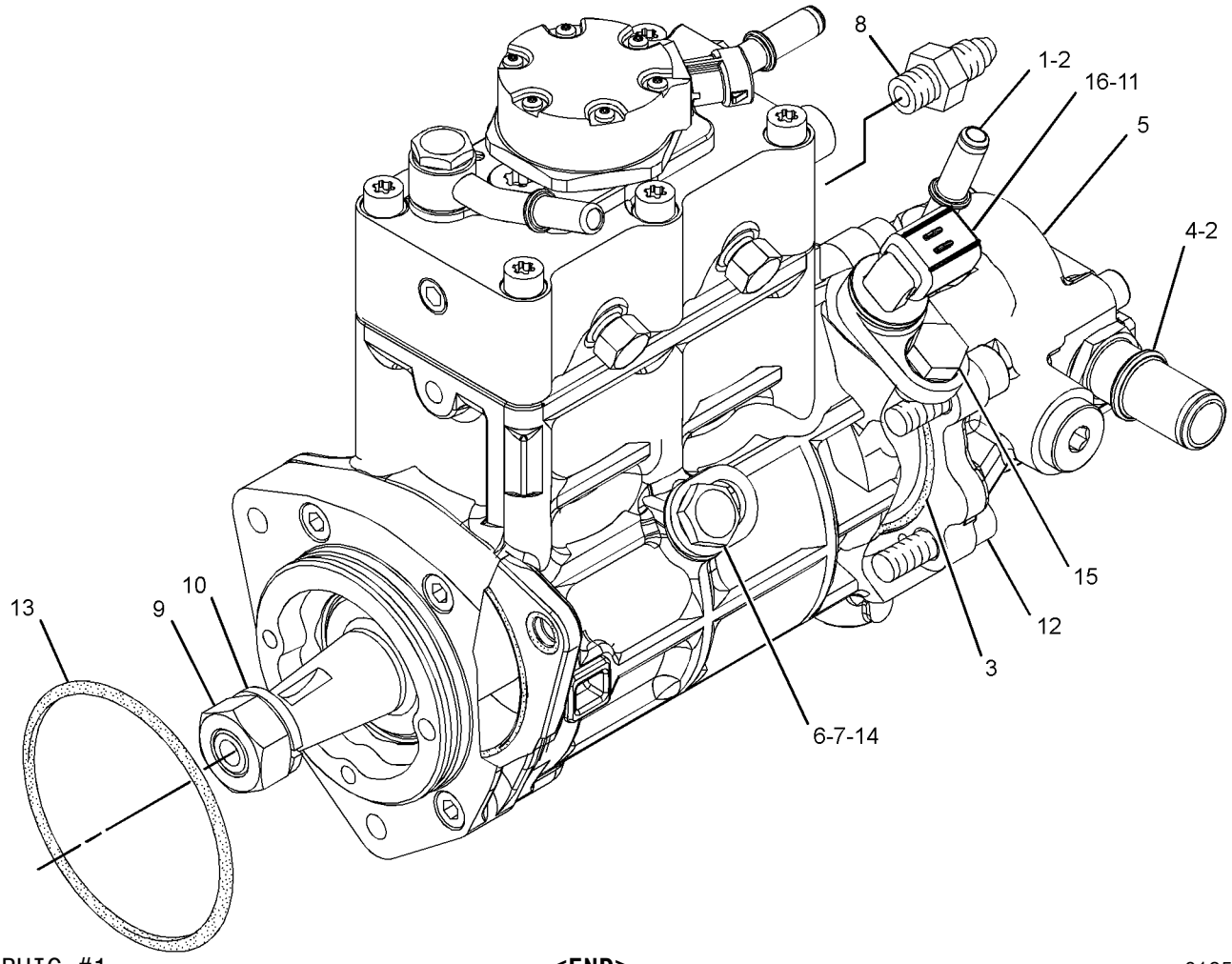

GRAPHIC #1 **<END>** g01954066

FUEL SYSTEM

317-7966 PUMP GP-FUEL INJECTION

S/N: C6E1-3159

PART OF 242-1382 ENGINE AR-PRIMARY

SMCS-1251, 1290 **i02915689**

NOTE	REF NO	GRAPHIC REF	PART NUMBER	QTY	PART NAME 1 2 3 4 5 6 (PRODUCT LEVEL)	SEE PAGE
M	1	1	**6I-0217**	6	BOLT (M8X1.25X20-MM)	
M	2	2	**6I-0254**	4	BOLT (M8X1.25X30-MM)	
M	3	1	**6I-0260**	4	BOLT (M8X1.25X25-MM)	
	4	1	**6I-0456**	4	BOLT (M8X1.25X45-MM)	
	5	2	**6I-4374**	2	BOLT (M8X1.25X60-MM)	
	6	2	**6I-4793**	1	BOLT (M8X1.25X50-MM)	
	7	1	**7W-2632**	1	WASHER (8.5X16.8X1.6-MM THK)	
M	8	1	**101-3895**	1	BOLT (M8X1.25X35-MM)	
M	9	3	**124-3815**	1	BOLT (M8X1.25X16-MM)	
	10	1	**155-0576**	8	MOUNT-ISOLATION	
	11	1	**216-9752**	2	WASHER	
	12	1	**217-0099**	4	SPACER (8.2X25X2-MM THK)	
	13	2	**217-9039**	1	STRAP-CABLE	
	14	1	**225-8524**	1	BOLT-SPECIAL (BANJO)	
	15	1	**230-8989**	1	GEAR-FUEL PUMP (68-TEETH)	
	16	1	**232-3149**	6	WASHER (8.35X16.85X1.55-MM THK)	
	17	2	**241-4291**	4	SCREW	
	18	1	**268-6677**	1	BRACKET AS	
	18A	1	**260-3939**	1	SCREW-HEX HEAD	
	19	1	**268-6678**	1	BRACKET AS	
	19A	1	**260-3939**	1	SCREW-HEX HEAD	
Y	20	1	**276-8398**	1	PUMP GP-FUEL INJECTION	131
	21	2	**278-5168**	6	CLAMP-INJECTOR	
	22	2	**278-5170**	6	BOLT	
	23	2	**278-5180**	2	CLIP	
	24	1	**278-5201**	2	CONNECTION	
	25	1	**278-5202**	2	SEAL-O-RING	
	26	1	**278-5203**	4	SPACER	
	27	3	**278-5225**	1	KIT-SENSOR (ENGINE OIL PRESSURE)	
	27A	3	**199-9267**	1	SEAL-O-RING	
	28	3	**278-5272**	1	KIT-SENSOR (AIR TEMPERATURE)	
	28A	3	**278-5226**	1	SEAL-O-RING	
	29	3	**278-5273**	1	KIT-SENSOR (AIR PRESSURE)	
	29A	3	**199-9252**	1	SEAL-O-RING	
	30	3	**278-5307**	1	KIT-SENSOR (COOLANT TEMPERATURE)	
	30A	3	**199-9267**	1	SEAL-O-RING	
	31	2	**280-1889**	4	CLAMP	
	32	2	**280-1890**	4	CLAMP	
	33	2	**280-1891**	4	ISOLATOR	
R	34	1	**286-3683**	1	CONTROL GP-UNPROGRAMMED (ENGINE)	
	35	1	**287-6838**	1	BRACKET	
	36	1	**287-6839**	2	BOLT	
	37	2	**290-3910**	1	LINE-FUEL INJECTION	
	38	2	**290-3911**	1	LINE-FUEL INJECTION (CYL NO. 1)	
	39	2	**290-3912**	1	LINE-FUEL INJECTION (CYL NO. 2)	
	40	2	**290-3913**	1	LINE-FUEL INJECTION (CYL NO. 3)	
	41	2	**290-3914**	1	LINE-FUEL INJECTION (CYL NO. 4)	
	42	2	**290-3915**	1	LINE-FUEL INJECTION (CYL NO. 5)	
	43	2	**290-3916**	1	LINE-FUEL INJECTION (CYL NO. 6)	
	44	1	**292-0848**	1	TUBE	
Y	45	2	**292-3790**	6	INJECTOR GP-FUEL	110
	46	1	**293-9901**	1	BRACKET	
	47	2	**300-2940**	1	BRACKET	
	48	2	**308-8426**	1	RAIL AS-FUEL	
	49	1	**310-7918**	1	BRACKET-SUPPORT	
	50	3	**311-3858**	1	KIT-SENSOR (ENGINE SPEED)	

317-7966 **PUMP GP-FUEL INJECTION** *(contd.)* **i02915689**

NOTE	REF NO	GRAPHIC REF	PART NUMBER	QTY	PART NAME 1 2 3 4 5 6 (PRODUCT LEVEL)	SEE PAGE
	50A	3	**274-1639**	1	SEAL	
	51	2	**311-6342**	1	SENSOR-PRESSURE (FUEL)	
	51A	2	**309-8006**	1	WASHER	
F			**278-4138**	4	PROTECTION GP-FUEL SYSTEM (LINE, LOW PRESSURE)	

F-NOT SHOWN
M-METRIC PART
R-REMFG PART MAY BE AVAILABLE
Y-SEPARATE ILLUSTRATION

317-7966 **PUMP GP-FUEL INJECTION** *(contd.)* **i02915689**

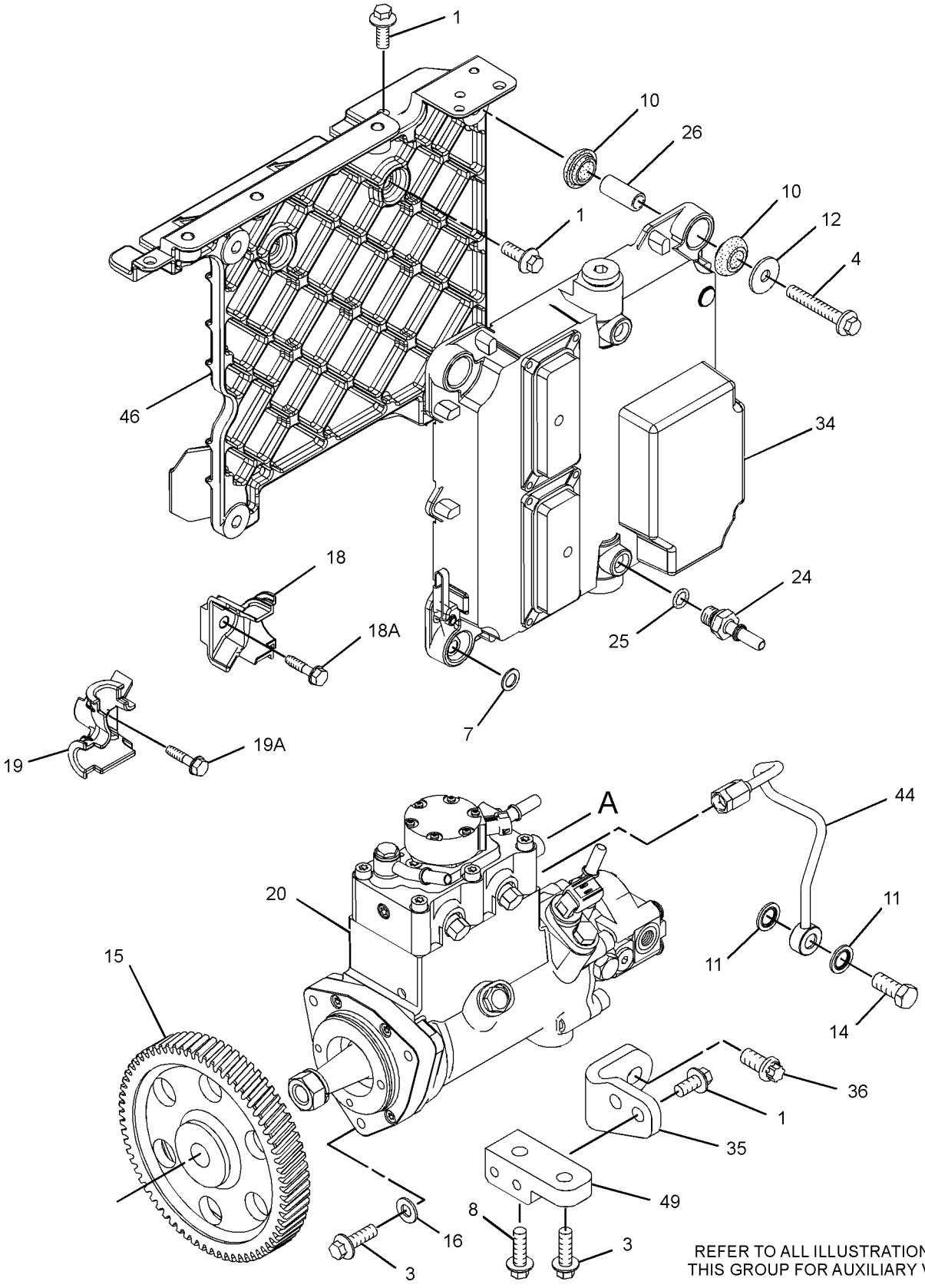

REFER TO ALL ILLUSTRATIONS OF THIS GROUP FOR AUXILIARY VIEWS

GRAPHIC #1

g01443546

317-7966 **PUMP GP-FUEL INJECTION** *(contd.)* **i02915689**

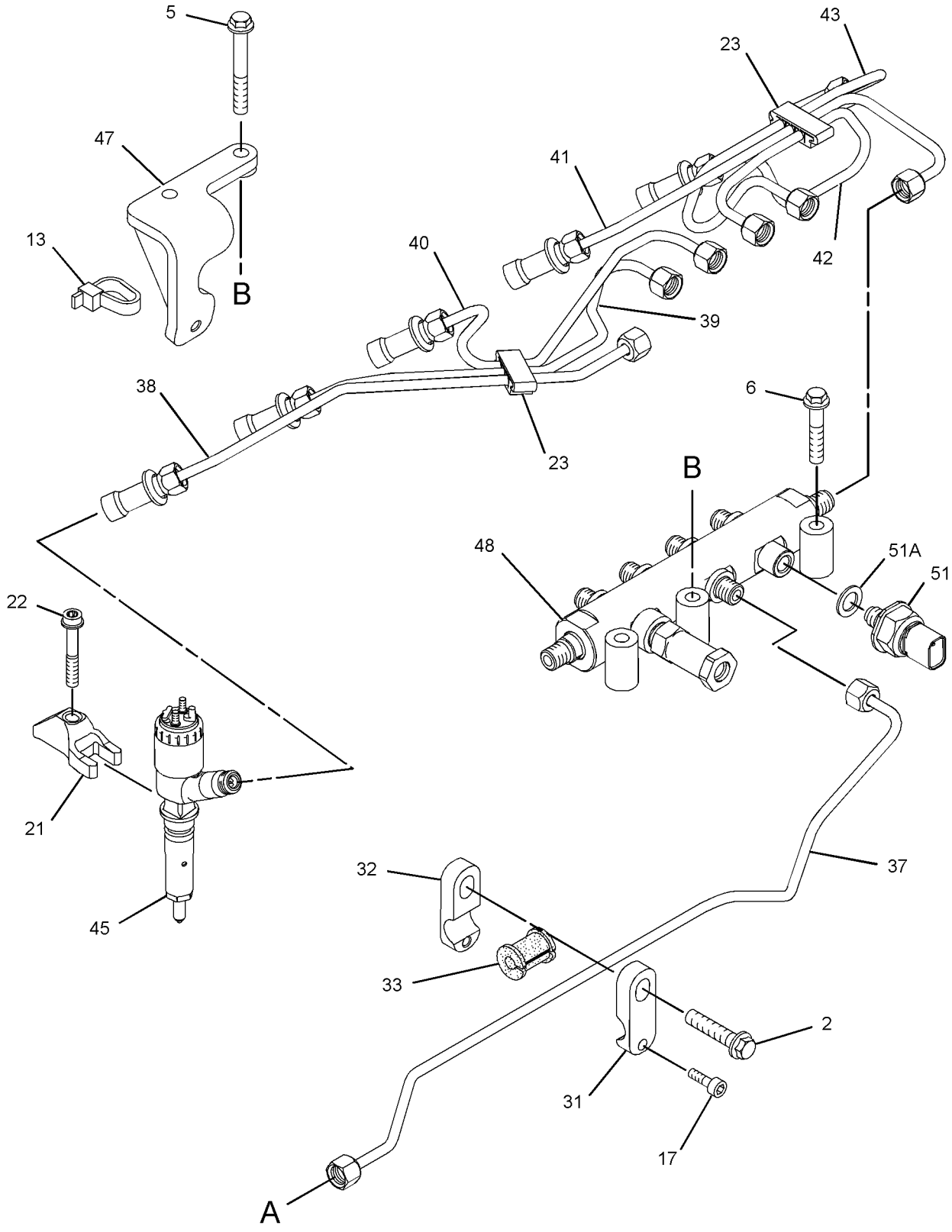

GRAPHIC #2 g01443547

317-7966 **PUMP GP-FUEL INJECTION** *(contd.)* **i02915689**

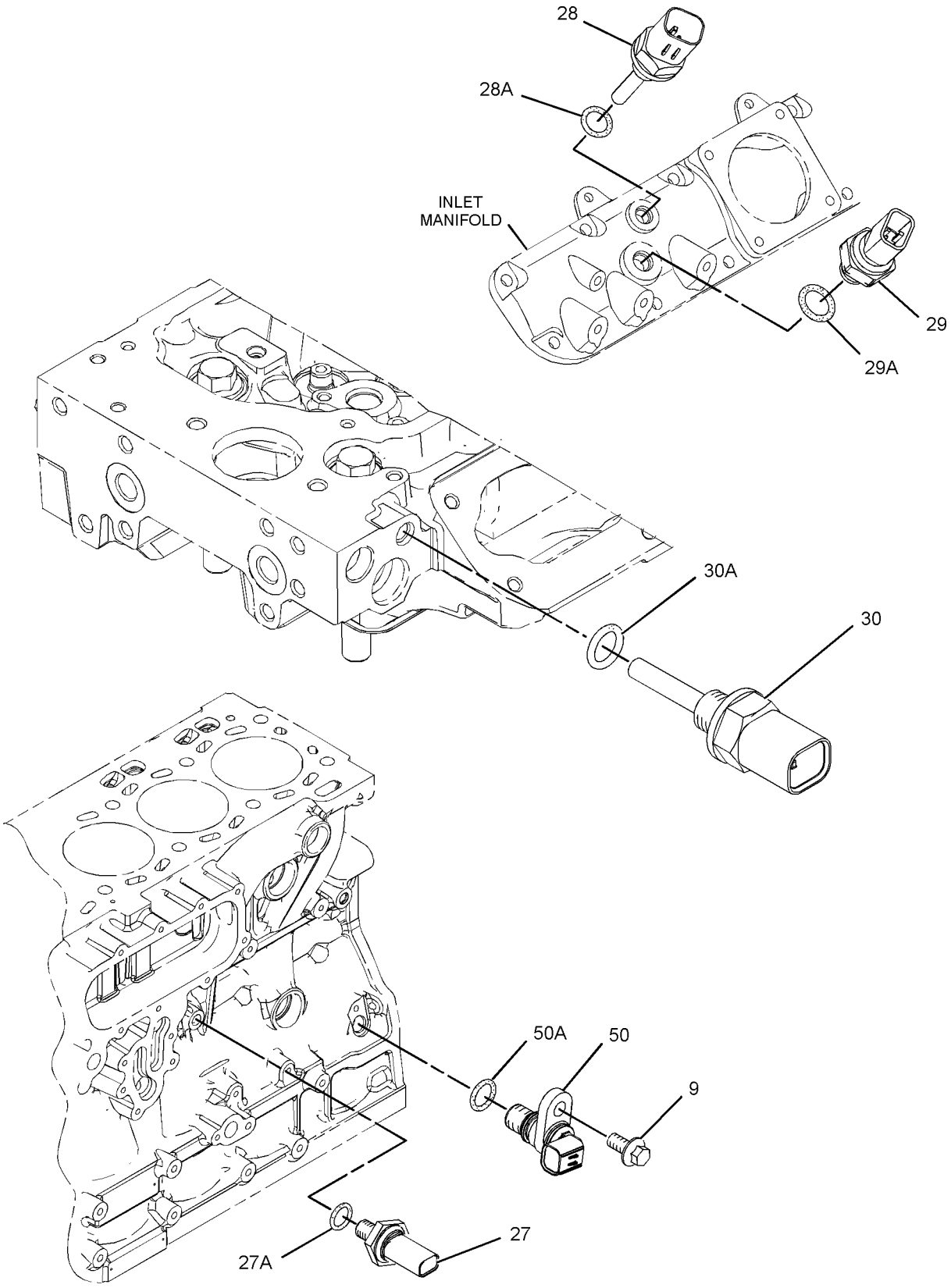

GRAPHIC #3 **<END>** g01443549

FUEL SYSTEM

317-7966 PUMP GP-FUEL INJECTION

S/N: C6E3160-5432

PART OF 242-1382 ENGINE AR-PRIMARY

SMCS-1251, 1290 **i02934665**

NOTE	REF NO	GRAPHIC REF	PART NUMBER	QTY	PART NAME 1 2 3 4 5 6 (PRODUCT LEVEL)	SEE PAGE
M	1	1	**6I-0217**	6	BOLT (M8X1.25X20-MM)	
M	2	2	**6I-0254**	4	BOLT (M8X1.25X30-MM)	
M	3	1	**6I-0260**	4	BOLT (M8X1.25X25-MM)	
	4	1	**6I-0456**	4	BOLT (M8X1.25X45-MM)	
	5	2	**6I-4374**	2	BOLT (M8X1.25X60-MM)	
	6	2	**6I-4793**	1	BOLT (M8X1.25X50-MM)	
	7	1	**7W-2632**	1	WASHER (8.5X16.8X1.6-MM THK)	
M	8	1	**101-3895**	1	BOLT (M8X1.25X35-MM)	
M	9	3	**124-3815**	1	BOLT (M8X1.25X16-MM)	
	10	1	**155-0576**	8	MOUNT-ISOLATION	
C	11	1	**320-2391**	2	WASHER	
	12	1	**217-0099**	4	SPACER (8.2X25X2-MM THK)	
	13	2	**217-9039**	1	STRAP-CABLE	
	14	1	**225-8524**	1	BOLT-SPECIAL (BANJO)	
	15	1	**230-8989**	1	GEAR-FUEL PUMP (68-TEETH)	
	16	1	**232-3149**	6	WASHER (8.35X16.85X1.55-MM THK)	
	17	2	**241-4291**	4	SCREW	
	18	1	**268-6677**	1	BRACKET AS	
	18A	1	**260-3939**	1	SCREW-HEX HEAD	
	19	1	**268-6678**	1	BRACKET AS	
	19A	1	**260-3939**	1	SCREW-HEX HEAD	
Y	20	1	**276-8398**	1	PUMP GP-FUEL INJECTION	131
	21	2	**278-5168**	6	CLAMP-INJECTOR	
	22	2	**278-5170**	6	BOLT	
	23	2	**278-5180**	2	CLIP	
	24	1	**278-5201**	2	CONNECTION	
	25	1	**278-5202**	2	SEAL-O-RING	
	26	1	**278-5203**	4	SPACER	
	27	3	**278-5225**	1	KIT-SENSOR (ENGINE OIL PRESSURE)	
	27A	3	**199-9267**	1	SEAL-O-RING	
	28	3	**278-5272**	1	KIT-SENSOR (AIR TEMPERATURE)	
	28A	3	**278-5226**	1	SEAL-O-RING	
	29	3	**278-5273**	1	KIT-SENSOR (AIR PRESSURE)	
	29A	3	**199-9252**	1	SEAL-O-RING	
	30	3	**278-5307**	1	KIT-SENSOR (COOLANT TEMPERATURE)	
	30A	3	**199-9267**	1	SEAL-O-RING	
	31	2	**280-1889**	4	CLAMP	
	32	2	**280-1890**	4	CLAMP	
	33	2	**280-1891**	4	ISOLATOR	
R	34	1	**286-3683**	1	CONTROL GP-UNPROGRAMMED (ENGINE)	
	35	1	**287-6838**	1	BRACKET	
	36	1	**287-6839**	2	BOLT	
	37	2	**290-3910**	1	LINE-FUEL INJECTION	
	38	2	**290-3911**	1	LINE-FUEL INJECTION (CYL NO. 1)	
	39	2	**290-3912**	1	LINE-FUEL INJECTION (CYL NO. 2)	
	40	2	**290-3913**	1	LINE-FUEL INJECTION (CYL NO. 3)	
	41	2	**290-3914**	1	LINE-FUEL INJECTION (CYL NO. 4)	
	42	2	**290-3915**	1	LINE-FUEL INJECTION (CYL NO. 5)	
	43	2	**290-3916**	1	LINE-FUEL INJECTION (CYL NO. 6)	
C	44	1	**321-1270**	1	TUBE-OIL	
CYR	45	2	**306-9390**	6	INJECTOR GP-FUEL	111
	46	1	**293-9901**	1	BRACKET	
	47	2	**300-2940**	1	BRACKET	
C	48	2	**311-6632**	1	RAIL AS-FUEL	
	49	1	**310-7918**	1	BRACKET-SUPPORT	
	50	3	**311-3858**	1	KIT-SENSOR (ENGINE SPEED)	

317-7966 **PUMP GP-FUEL INJECTION** *(contd.)* **i02934665**

NOTE	REF NO	GRAPHIC REF	PART NUMBER	QTY	PART NAME 1 2 3 4 5 6 (PRODUCT LEVEL)	SEE PAGE
	50A	3	**274-1639**	1	SEAL	
	51	2	**311-6342**	1	SENSOR-PRESSURE (FUEL)	
	51A	2	**309-8006**	1	WASHER	
F			**278-4138**	4	PROTECTION GP-FUEL SYSTEM (LINE, LOW PRESSURE)	

C-CHANGE FROM PREVIOUS TYPE
F-NOT SHOWN
M-METRIC PART
R-REMFG PART MAY BE AVAILABLE
Y-SEPARATE ILLUSTRATION

317-7966 **PUMP GP-FUEL INJECTION** *(contd.)* **i02934665**

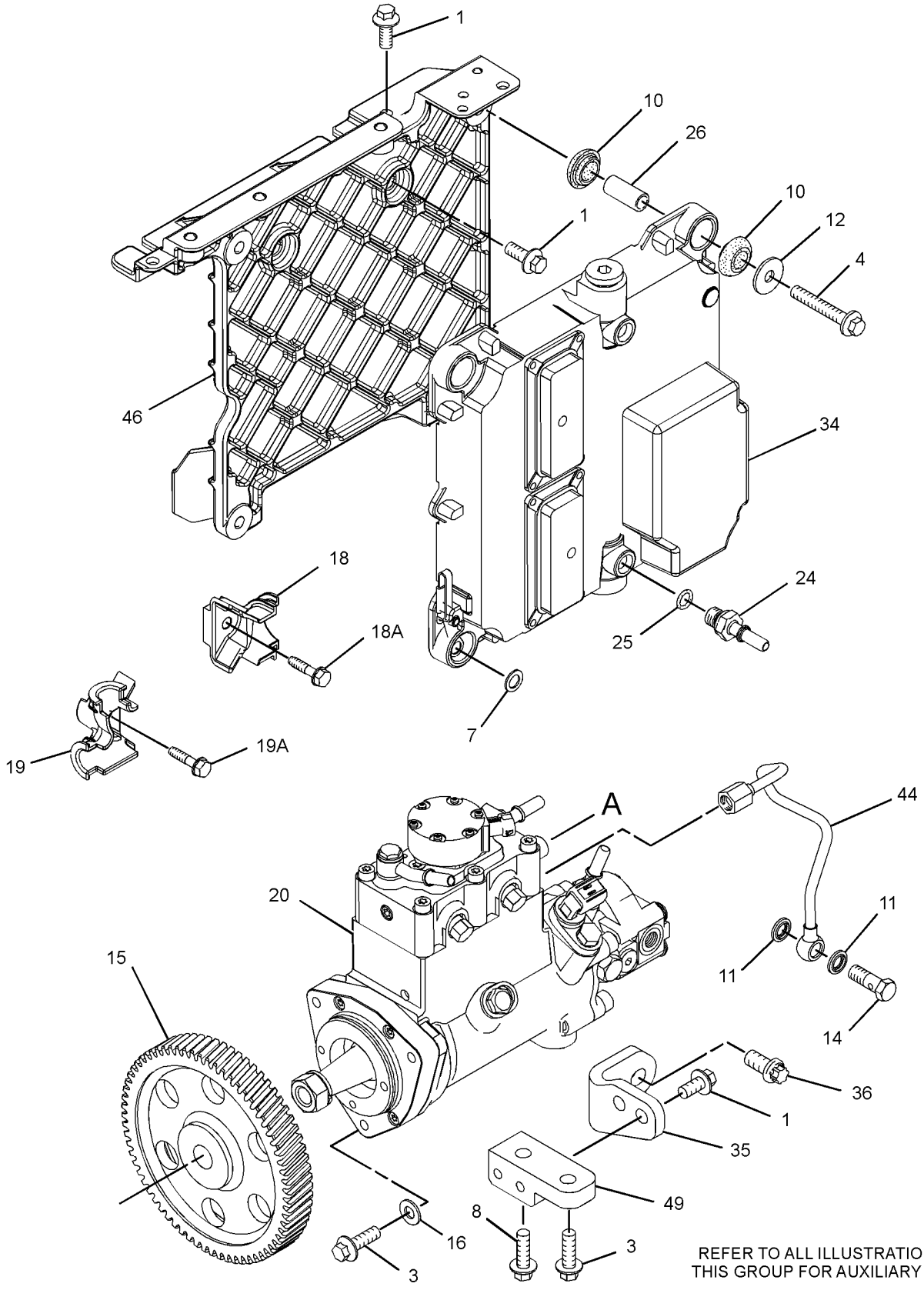

REFER TO ALL ILLUSTRATIONS OF THIS GROUP FOR AUXILIARY VIEWS

GRAPHIC #1

g01457561

317-7966 **PUMP GP-FUEL INJECTION** *(contd.)* **i02934665**

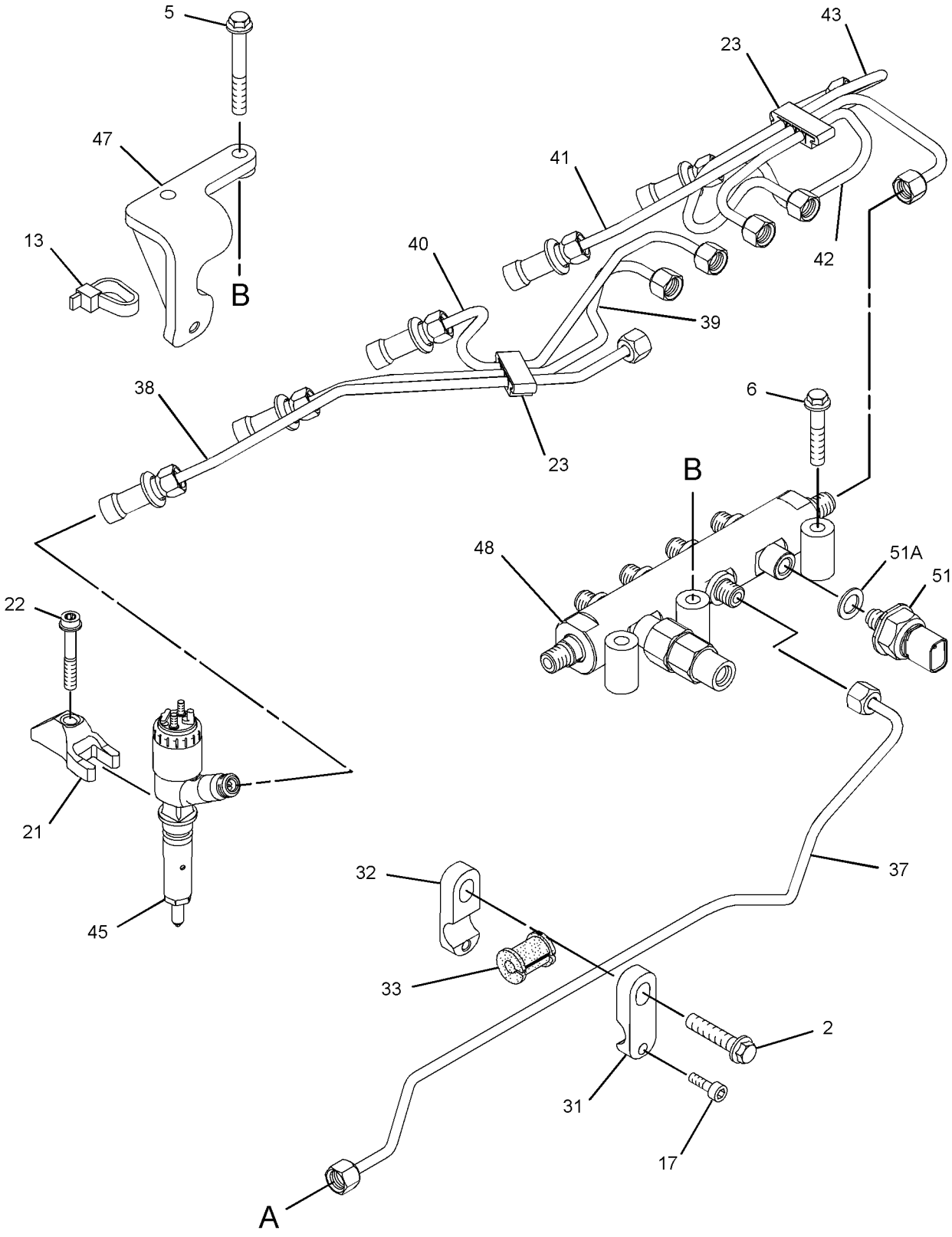

GRAPHIC #2 g01457566

317-7966 **PUMP GP-FUEL INJECTION** *(contd.)* **i02934665**

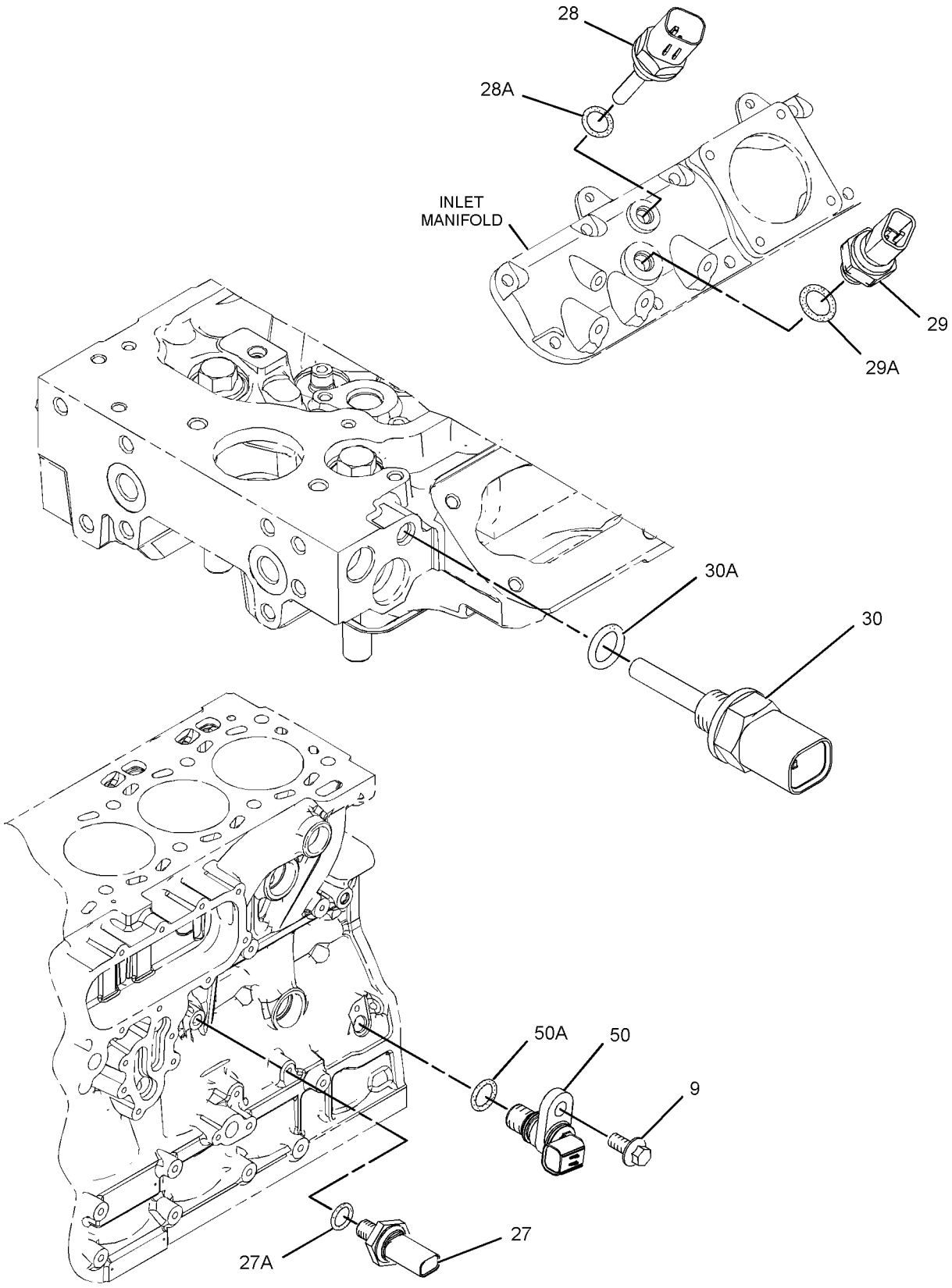

GRAPHIC #3 **<END>** g01443549

317-7966 PUMP GP-FUEL INJECTION

S/N: C6E5433-5530

PART OF 242-1382 ENGINE AR-PRIMARY

SMCS-1251, 1290 **i03195740**

NOTE	REF NO	GRAPHIC REF	PART NUMBER	QTY	PART NAME 1 2 3 4 5 6 (PRODUCT LEVEL)	SEE PAGE
M	1	1	**6I-0217**	6	BOLT (M8X1.25X20-MM)	
M	2	2	**6I-0254**	4	BOLT (M8X1.25X30-MM)	
M	3	1	**6I-0260**	4	BOLT (M8X1.25X25-MM)	
	4	1	**6I-0456**	4	BOLT (M8X1.25X45-MM)	
	5	2	**6I-4374**	2	BOLT (M8X1.25X60-MM)	
	6	2	**6I-4793**	1	BOLT (M8X1.25X50-MM)	
	7	1	**7W-2632**	1	WASHER (8.5X16.8X1.6-MM THK)	
M	8	1	**101-3895**	1	BOLT (M8X1.25X35-MM)	
M	9	3	**124-3815**	1	BOLT (M8X1.25X16-MM)	
	10	1	**155-0576**	8	MOUNT-ISOLATION	
	11	1	**160-0162**	2	WASHER	
	12	1	**217-0099**	4	SPACER (8.2X25X2-MM THK)	
	13	2	**217-9039**	1	STRAP-CABLE	
	14	1	**225-8524**	1	BOLT-SPECIAL (BANJO)	
	15	1	**230-8989**	1	GEAR-FUEL PUMP (68-TEETH)	
	16	1	**232-3149**	6	WASHER (8.35X16.85X1.55-MM THK)	
	17	2	**241-4291**	4	SCREW	
	18	1	**268-6677**	1	BRACKET AS	
	18A	1	**260-3939**	1	SCREW-HEX HEAD	
	19	1	**268-6678**	1	BRACKET AS	
	19A	1	**260-3939**	1	SCREW-HEX HEAD	
CYR	20	1	**291-5919**	1	PUMP GP-FUEL INJECTION	132
	21	2	**278-5168**	6	CLAMP-INJECTOR	
	22	2	**278-5170**	6	BOLT	
	23	2	**278-5180**	2	CLIP	
	24	1	**278-5201**	2	CONNECTION	
	25	1	**278-5202**	2	SEAL-O-RING	
	26	1	**278-5203**	4	SPACER	
	27	3	**278-5225**	1	KIT-SENSOR (ENGINE OIL PRESSURE)	
	27A	3	**199-9267**	1	SEAL-O-RING	
	28	3	**278-5272**	1	KIT-SENSOR (AIR TEMPERATURE)	
	28A	3	**278-5226**	1	SEAL-O-RING	
	29	3	**278-5273**	1	KIT-SENSOR (AIR PRESSURE)	
	29A	3	**199-9252**	1	SEAL-O-RING	
	30	3	**278-5307**	1	KIT-SENSOR (COOLANT TEMPERATURE)	
	30A	3	**199-9267**	1	SEAL-O-RING	
	31	2	**280-1889**	4	CLAMP	
	32	2	**280-1890**	4	CLAMP	
	33	2	**330-5467**	4	ISOLATOR	
R	34	1	**286-3683**	1	CONTROL GP-UNPROGRAMMED (ENGINE)	
	35	1	**287-6838**	1	BRACKET	
	36	1	**287-6839**	2	BOLT	
	37	2	**290-3910**	1	LINE-FUEL INJECTION	
	38	2	**290-3911**	1	LINE-FUEL INJECTION (CYL NO. 1)	
	39	2	**290-3912**	1	LINE-FUEL INJECTION (CYL NO. 2)	
	40	2	**290-3913**	1	LINE-FUEL INJECTION (CYL NO. 3)	
	41	2	**290-3914**	1	LINE-FUEL INJECTION (CYL NO. 4)	
	42	2	**290-3915**	1	LINE-FUEL INJECTION (CYL NO. 5)	
	43	2	**290-3916**	1	LINE-FUEL INJECTION (CYL NO. 6)	
	44	1	**321-1270**	1	TUBE-OIL	
YR	45	2	**306-9390**	6	INJECTOR GP-FUEL	111
	46	1	**293-9901**	1	BRACKET	
	47	2	**300-2940**	1	BRACKET	
	48	2	**311-6632**	1	RAIL AS-FUEL	
	49	1	**310-7918**	1	BRACKET-SUPPORT	
	50	3	**311-3858**	1	KIT-SENSOR (ENGINE SPEED)	

317-7966 **PUMP GP-FUEL INJECTION** *(contd.)* **i03195740**

NOTE	REF NO	GRAPHIC REF	PART NUMBER	QTY	PART NAME 1 2 3 4 5 6 (PRODUCT LEVEL)	SEE PAGE
			238-0120		SENSOR GP-SPEED	
	50A	3	**274-1639**	1	SEAL	
	51	2	**311-6342**	1	SENSOR-PRESSURE (FUEL)	
	51A	2	**309-8006**	1	WASHER	
F			**278-4138**	4	PROTECTION GP-FUEL SYSTEM (LINE, LOW PRESSURE)	

C-CHANGE FROM PREVIOUS TYPE
F-NOT SHOWN
M-METRIC PART
R-REMFG PART MAY BE AVAILABLE
Y-SEPARATE ILLUSTRATION

317-7966 **PUMP GP-FUEL INJECTION** *(contd.)* **i03195740**

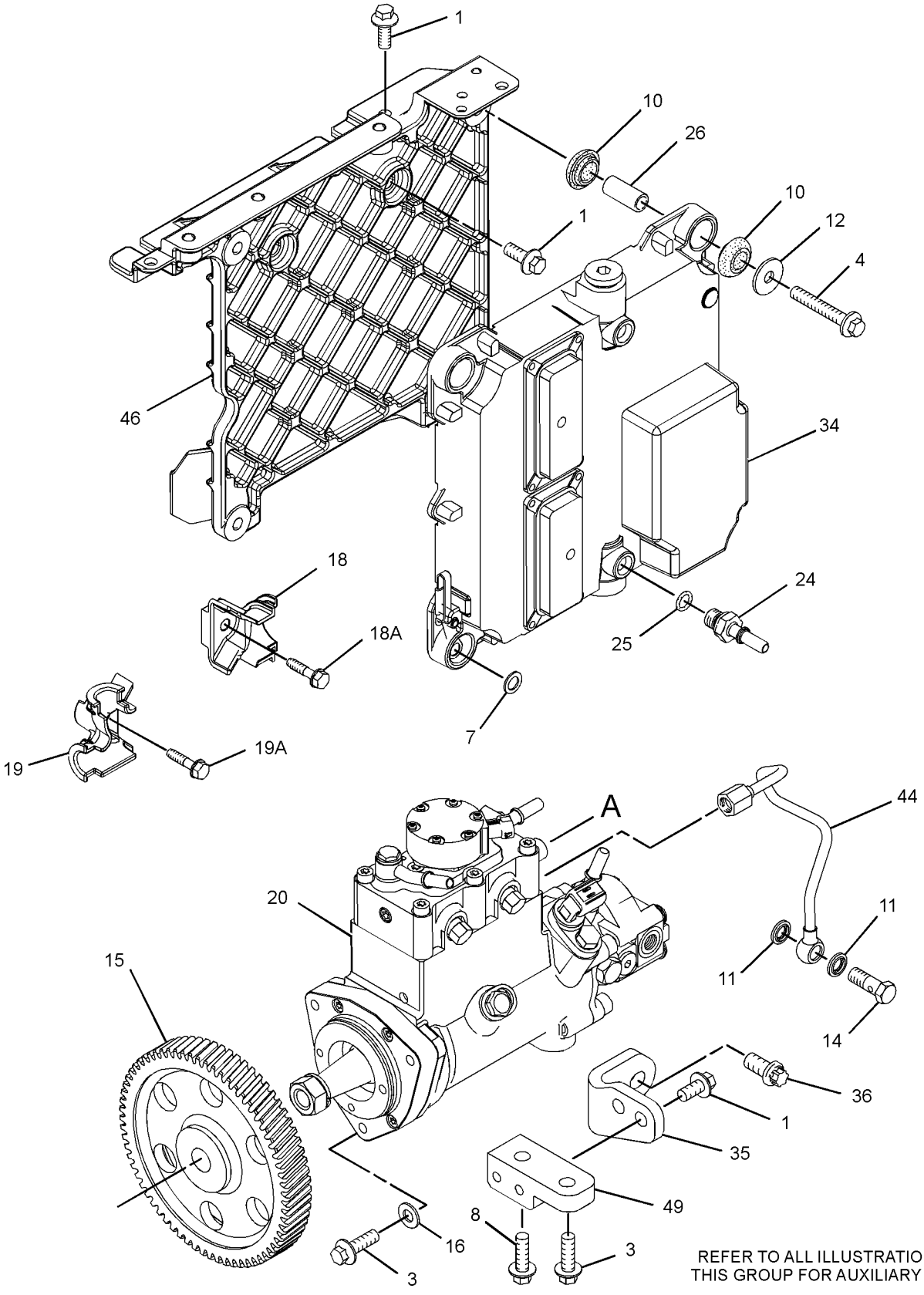

REFER TO ALL ILLUSTRATIONS OF THIS GROUP FOR AUXILIARY VIEWS

GRAPHIC #1

g01457561

317-7966 **PUMP GP-FUEL INJECTION** *(contd.)* **i03195740**

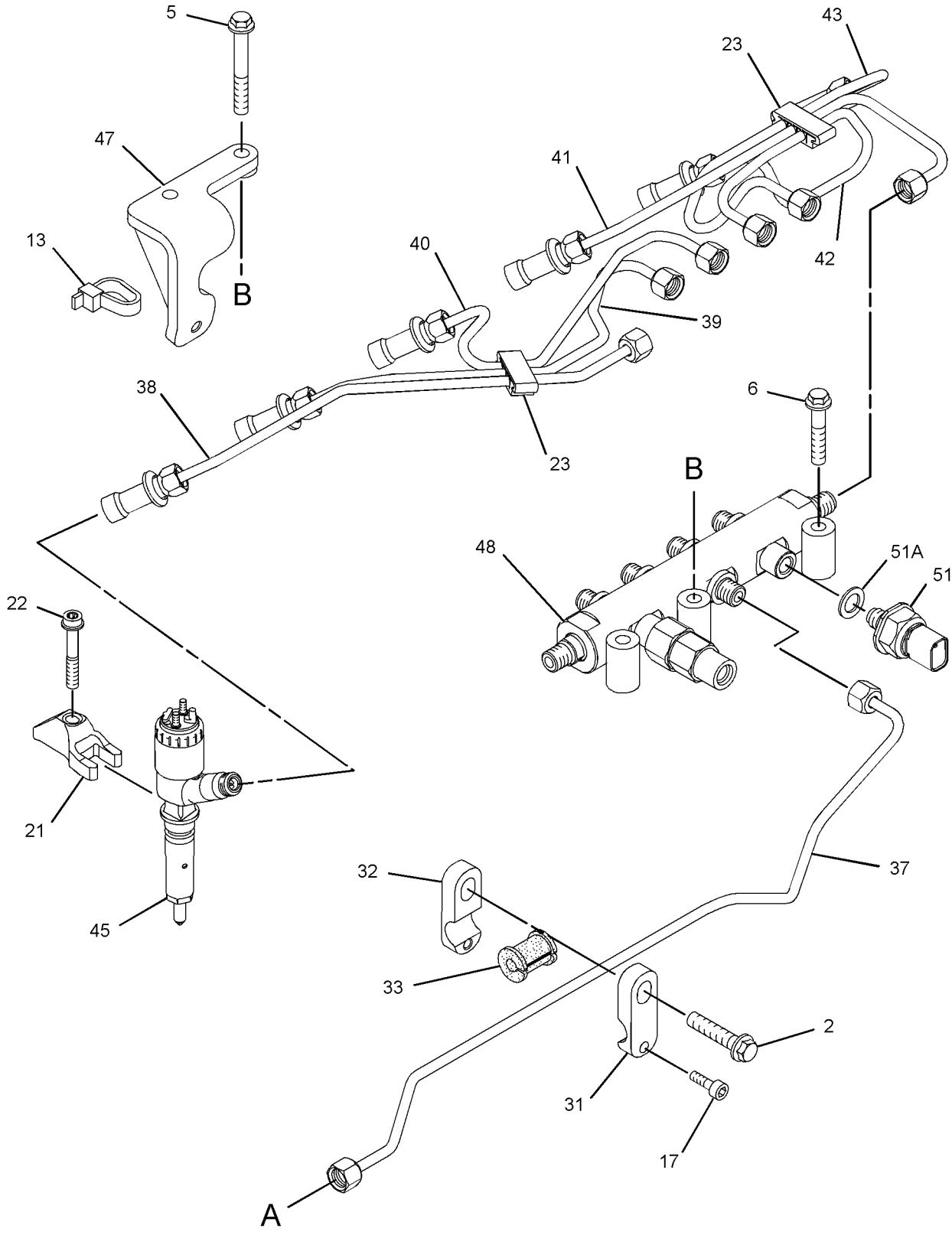

GRAPHIC #2 g01457566

317-7966 **PUMP GP-FUEL INJECTION** *(contd.)* **i03195740**

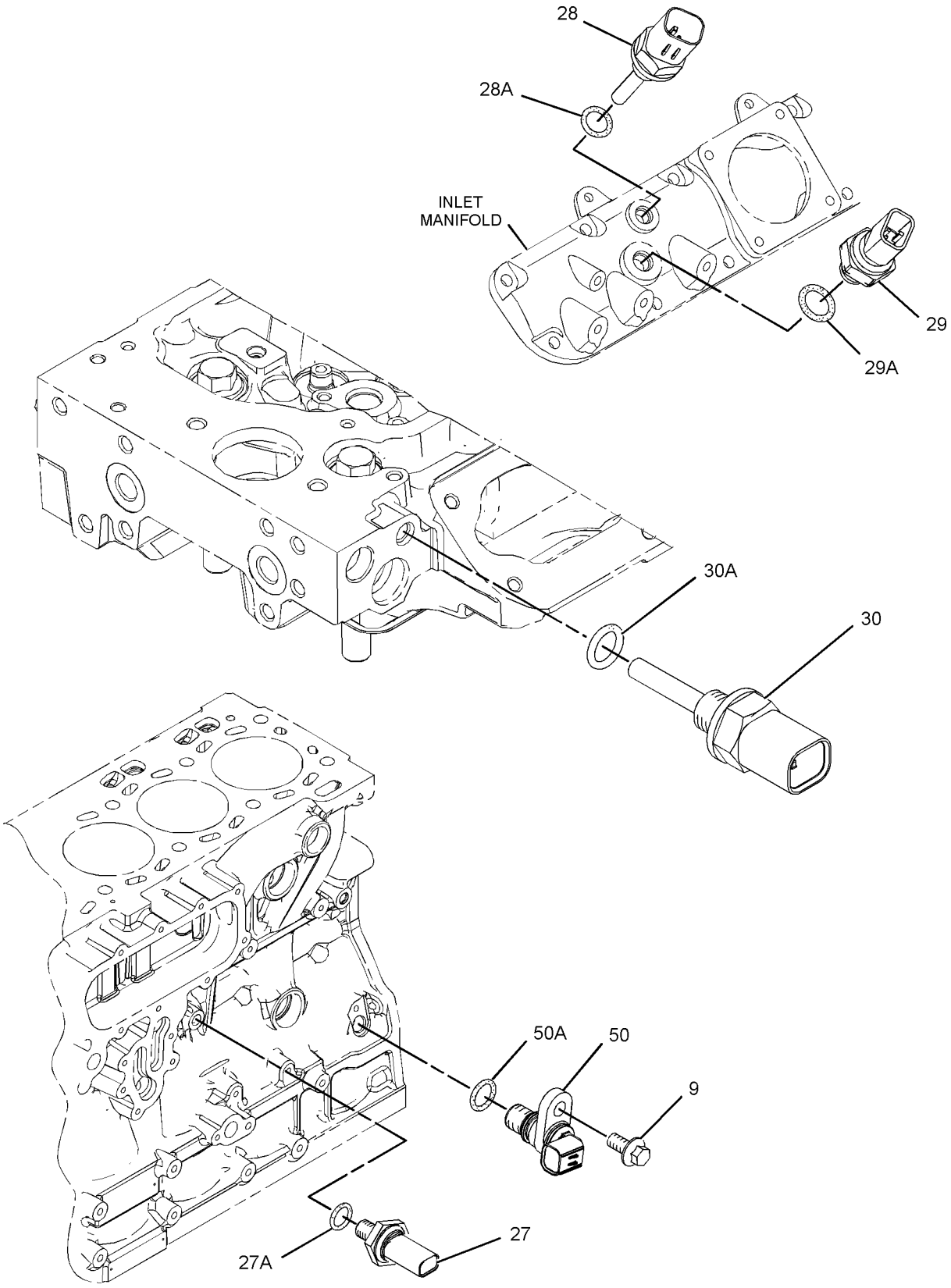

GRAPHIC #3 **<END>** g01443549

FUEL SYSTEM

317-7966 PUMP GP-FUEL INJECTION

S/N: C6E5531-UP; G9G1-UP

PART OF 242-1382 ENGINE AR-PRIMARY

SMCS-1251, 1290 **i03888826**

NOTE	REF NO	GRAPHIC REF	PART NUMBER	QTY	PART NAME 1 2 3 4 5 6 (PRODUCT LEVEL)	SEE PAGE
M	1	1	**6I-0217**	6	BOLT (M8X1.25X20-MM)	
M	2	2	**6I-0254**	4	BOLT (M8X1.25X30-MM)	
M	3	1	**6I-0260**	4	BOLT (M8X1.25X25-MM)	
	4	1	**6I-0456**	4	BOLT (M8X1.25X45-MM)	
	5	2	**6I-4374**	2	BOLT (M8X1.25X60-MM)	
	6	2	**6I-4793**	1	BOLT (M8X1.25X50-MM)	
	7	1	**7W-2632**	1	WASHER (8.5X16.8X1.6-MM THK)	
M	8	1	**101-3895**	1	BOLT (M8X1.25X35-MM)	
M	9	3	**124-3815**	1	BOLT (M8X1.25X16-MM)	
	10	1	**155-0576**	8	MOUNT-ISOLATION	
	11	1	**160-0162**	2	WASHER	
	12	1	**217-0099**	4	SPACER (8.2X25X2-MM THK)	
	13	2	**217-9039**	1	STRAP-CABLE	
	14	1	**225-8524**	1	BOLT-SPECIAL (BANJO)	
	15	1	**230-8989**	1	GEAR-FUEL PUMP (68-TEETH)	
	16	1	**232-3149**	6	WASHER (8.35X16.85X1.55-MM THK)	
	17	2	**241-4291**	4	SCREW	
	18	1	**268-6677**	1	BRACKET AS	
	18A	1	**260-3939**	1	SCREW-HEX HEAD	
	19	1	**268-6678**	1	BRACKET AS	
	19A	1	**260-3939**	1	SCREW-HEX HEAD	
CY	20	1	**324-0533**	1	PUMP GP-FUEL TRANSFER	154
	21	2	**278-5168**	6	CLAMP-INJECTOR	
	22	2	**278-5170**	6	BOLT	
	23	2	**278-5180**	2	CLIP	
	24	1	**278-5201**	2	CONNECTION	
	25	1	**278-5202**	2	SEAL-O-RING	
	26	1	**278-5203**	4	SPACER	
	27	3	**278-5225**	1	KIT-SENSOR (ENGINE OIL PRESSURE)	
	27A	3	**199-9267**	1	SEAL-O-RING	
	28	3	**278-5272**	1	KIT-SENSOR (AIR TEMPERATURE)	
	28A	3	**278-5226**	1	SEAL-O-RING	
	29	3	**278-5273**	1	KIT-SENSOR (AIR PRESSURE)	
	29A	3	**199-9252**	1	SEAL-O-RING	
	30	3	**278-5307**	1	KIT-SENSOR (COOLANT TEMPERATURE)	
	30A	3	**199-9267**	1	SEAL-O-RING	
C	31	2	**330-3685**	4	CLAMP	
C	32	2	**330-3687**	4	CLAMP	
	33	2	**330-5467**	4	ISOLATOR	
CR	34	1	**331-7539**	1	CONTROL GP-UNPROGRAMMED (ENGINE)	
	35	1	**287-6838**	1	BRACKET	
	36	1	**287-6839**	2	BOLT	
	37	2	**336-8180**	1	LINE-FUEL INJECTION	
	38	2	**336-8174**	1	LINE-FUEL INJECTION (CYL NO. 1)	
	39	2	**336-8175**	1	LINE-FUEL INJECTION (CYL NO. 2)	
	40	2	**336-8176**	1	LINE-FUEL INJECTION (CYL NO. 3)	
	41	2	**336-8177**	1	LINE-FUEL INJECTION (CYL NO. 4)	
	42	2	**336-8178**	1	LINE-FUEL INJECTION (CYL NO. 5)	
	43	2	**336-8179**	1	LINE-FUEL INJECTION (CYL NO. 6)	
	44	1	**321-1270**	1	TUBE-OIL	
CYR	45	2	**320-0690**	6	INJECTOR GP-FUEL	112
	46	1	**293-9901**	1	BRACKET	
	47	2	**300-2940**	1	BRACKET	
	48	2	**318-2396**	1	RAIL AS-FUEL	
	48A	2	**305-5291**	1	VALVE AS-RELIEF (FUEL RAIL)	
		2	**228-7102**	1	SEAL-O-RING	

317-7966 **PUMP GP-FUEL INJECTION** *(contd.)* **i03888826**

NOTE	REF NO	GRAPHIC REF	PART NUMBER	QTY	PART NAME 1 2 3 4 5 6 (PRODUCT LEVEL)	SEE PAGE
	49	1	**310-7918**	1	BRACKET-SUPPORT	
	50	3	**311-3858**	1	KIT-SENSOR (ENGINE SPEED)	
		3	**238-0120**		SENSOR GP-SPEED	
	50A	3	**274-1639**	1	SEAL	
	51	2	**311-6342**	1	SENSOR-PRESSURE (FUEL)	
	51A	2	**309-8006**	1	WASHER	
F			**278-4138**	4	PROTECTION GP-FUEL SYSTEM (LINE, LOW PRESSURE)	

C-CHANGE FROM PREVIOUS TYPE
F-NOT SHOWN
M-METRIC PART
R-REMFG PART MAY BE AVAILABLE
Y-SEPARATE ILLUSTRATION

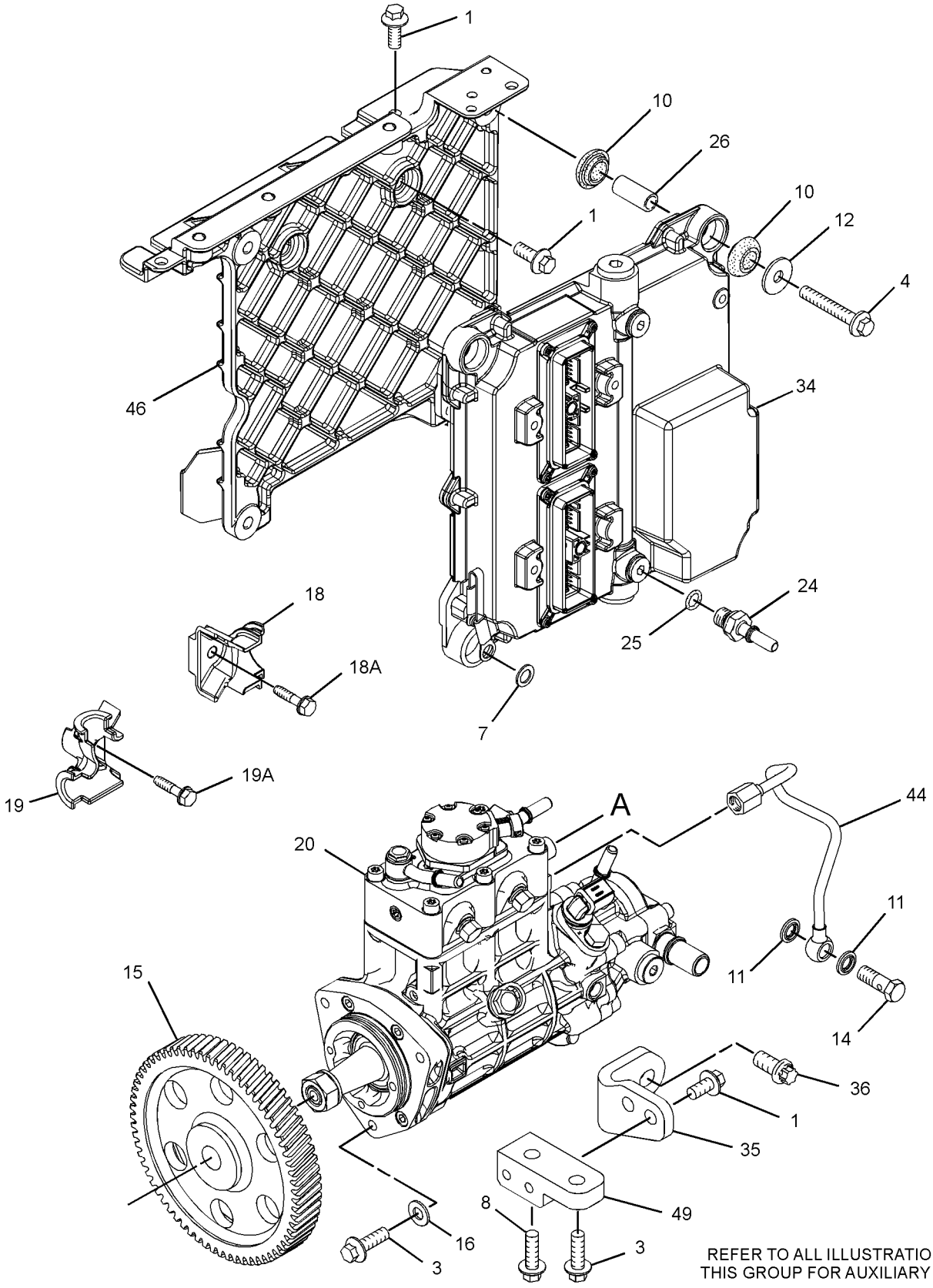

REFER TO ALL ILLUSTRATIONS OF THIS GROUP FOR AUXILIARY VIEWS

GRAPHIC #1

g01862673

317-7966 **PUMP GP-FUEL INJECTION** *(contd.)* **i03888826**

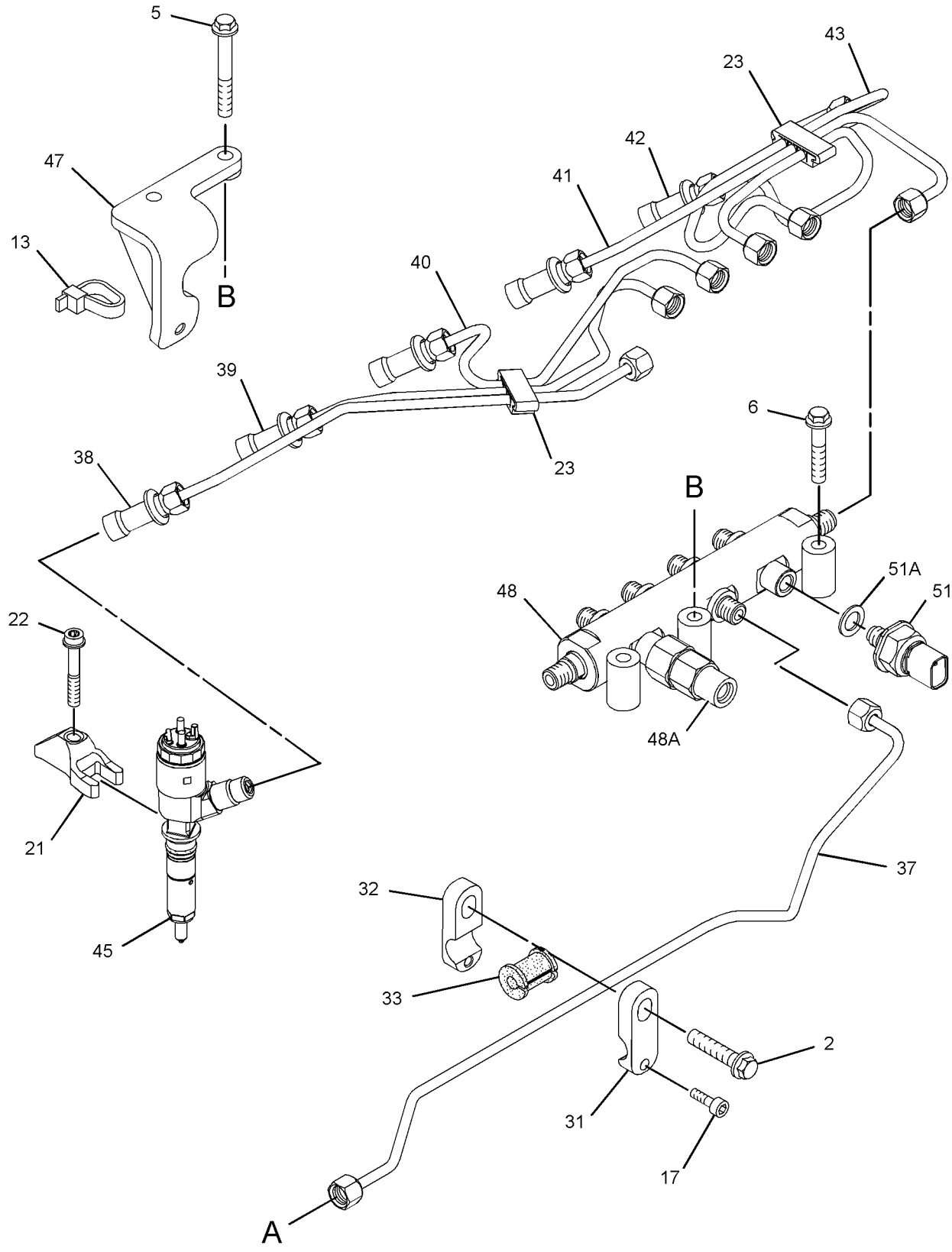

GRAPHIC #2 g01862674

317-7966 **PUMP GP-FUEL INJECTION** *(contd.)* **i03888826**

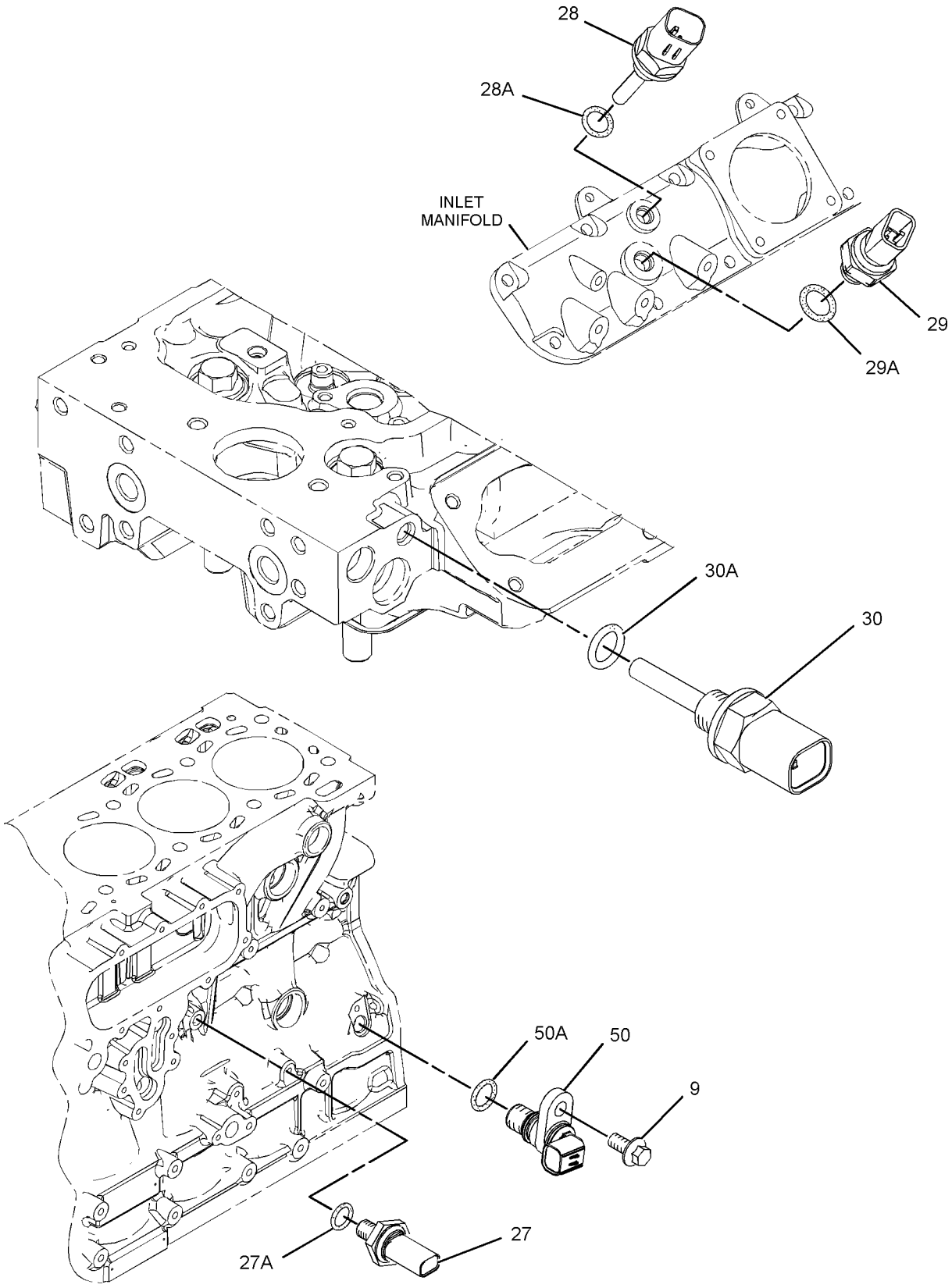

GRAPHIC #3 **<END>** g01443549

212-3657 PUMP GP-FUEL PRM & WATER SEP–ELECTRIC

S/N: JKM1-UP

PART OF 255-4821 LINES GP-FUEL

SMCS-1258, 1261, 1263 **i02259296**

NOTE	REF NO	GRAPHIC REF	PART NUMBER	QTY	PART NAME 1 2 3 4 5 6 (PRODUCT LEVEL)	SEE PAGE
Y	1	1	*174-9570*	1	FILTER GP-WATER SEP & FUEL	108
	2	1	**217-8339**	1	PUMP AS-FUEL PRIMING (24-VOLT)	

Y-SEPARATE ILLUSTRATION

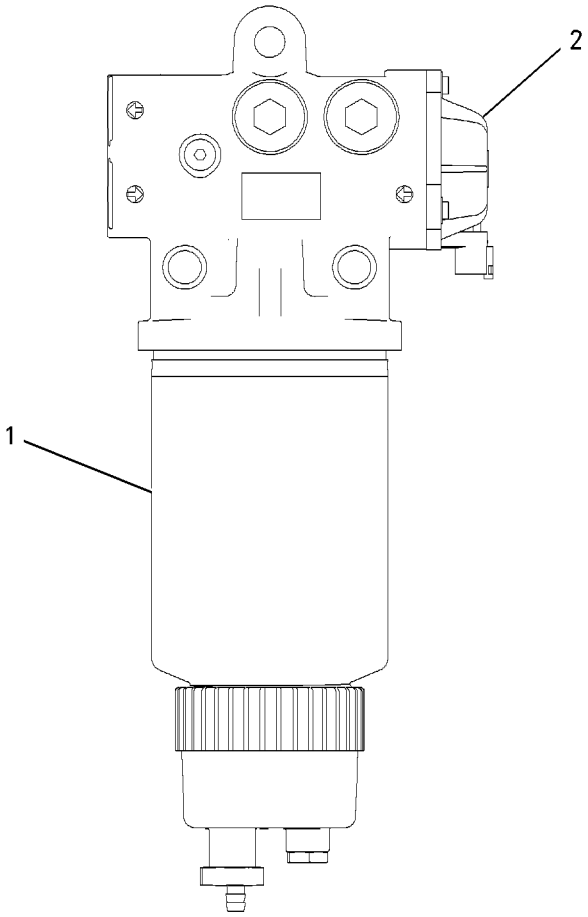

GRAPHIC #1 **<END>** g00875466

324-0533 PUMP GP-FUEL TRANSFER

S/N: C6E5331-UP; G9G1-UP

PART OF 317-7966 PUMP GP-FUEL INJECTION

SMCS-1256 **i03541603**

NOTE	REF NO	GRAPHIC REF	PART NUMBER	QTY	PART NAME 1 2 3 4 5 6 (PRODUCT LEVEL)	SEE PAGE
	1	1	**228-0172**	1	FITTING-FUEL	
	2	1	**228-7100**	3	SEAL-O-RING	
	3	1	**238-0120**	1	SENSOR GP-SPEED	
	4	1	**247-6019**	1	SEAL	
	5	1	**248-1066**	1	FITTING-FUEL	
	6	1	**293-0249**	1	PUMP GP-FUEL TRANSFER	
	7	1	**117-1385**	1	SEAL-O-RING	
	8	1	**228-7089**	1	SEAL-O-RING	
M	9	1	**5A-3604**	5	BOLT-SOCKET HEAD (M8X1.25X25-MM)	
	10	1	**334-2932**	1	SEAL-O-RING	
	11	1	**8L-2779**	1	SEAL-O-RING	
M	12	1	**8T-4200**	1	BOLT (M8X1.25X16-MM)	
	13	1	**295-4801**	1	NUT (M14X1.5-THD)	
	14	1	**296-3542**	1	LOCKWASHER	

M-METRIC PART

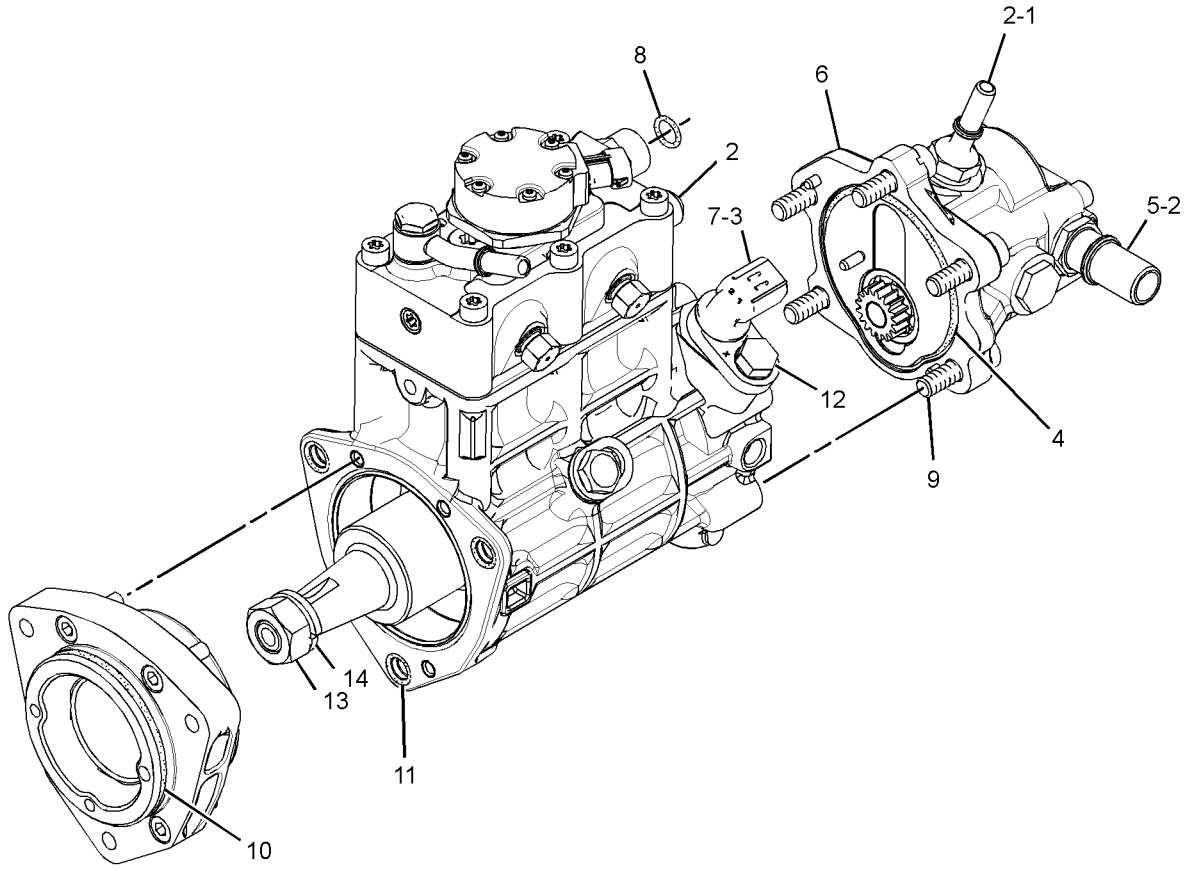

GRAPHIC #1 **<END>** g01874763

255-4810 TANK & MTG GP-FUEL

S/N: JKM1-UP

PART OF 237-7540 CHASSIS AR

SMCS-1273 **i03674640**

NOTE	REF NO	GRAPHIC REF	PART NUMBER	QTY	PART NAME 1 2 3 4 5 6 (PRODUCT LEVEL)	SEE PAGE
	1	1	**5D-1026**	2	CLAMP-BAND	
	2	1	**154-6626**	1	BRACKET AS	
	3	1	*155-7321*	1	ADAPTER AS	
		1	**3D-2824**	1	SEAL-O-RING	
		1	**6V-1722**	1	ADAPTER-O-RING	
	4	1	**176-5868**	1	ADAPTER	
	5	1	**188-8844**	1	VALVE-BREAKER RELIEF	
	6	1	**204-1370**	1	GASKET	
	7	1	**264-4517**	2	BRACKET AS	
	8	1	**266-0298**	1	SENDER AS-FUEL LEVEL	
		1	**102-8802**	1	KIT-RECEPTACLE (2-PIN)	
					(INCLUDES RECEPTACLE AS & WEDGE)	
		1	**186-3735**	2	PIN-CONNECTOR (16-GA TO 18-GA)	
	9	1	*268-1517*	1	CONNECTOR AS	
		1	**3K-0360**	1	SEAL-O-RING	
		1	**149-8142**	1	CONNECTOR	
Y	10	1	**305-8608**	1	TANK GP-FUEL	157
	11	1	**308-7121**	2	STRAP AS	
	12	1	**264-3637**	2	BOLT (M10X1.5X55-MM)	
	13	1	**3D-2824**	1	SEAL-O-RING	
	14	1	**4P-8134**	1	CLIP	
M	15	1	**5C-9553**	7	BOLT (M6X1X16-MM)	
	16	1	**336-8614**	1	CLIP	
	17	1	**8T-4121**	7	WASHER-HARD (11X21X2.5-MM THK)	
M	18	1	**8T-4137**	1	BOLT (M10X1.5X20-MM)	
M	19	1	**8T-4138**	1	BOLT (M6X1X20-MM)	
M	20	1	**8T-4195**	4	BOLT (M10X1.5X30-MM)	
	21	1	**8T-4205**	9	WASHER-HARD (7.2X14.5X2-MM THK)	
E	22	1	**5P-0721**		HOSE (41-CM)	

E-ORDER BY THE CENTIMETER
M-METRIC PART
Y-SEPARATE ILLUSTRATION

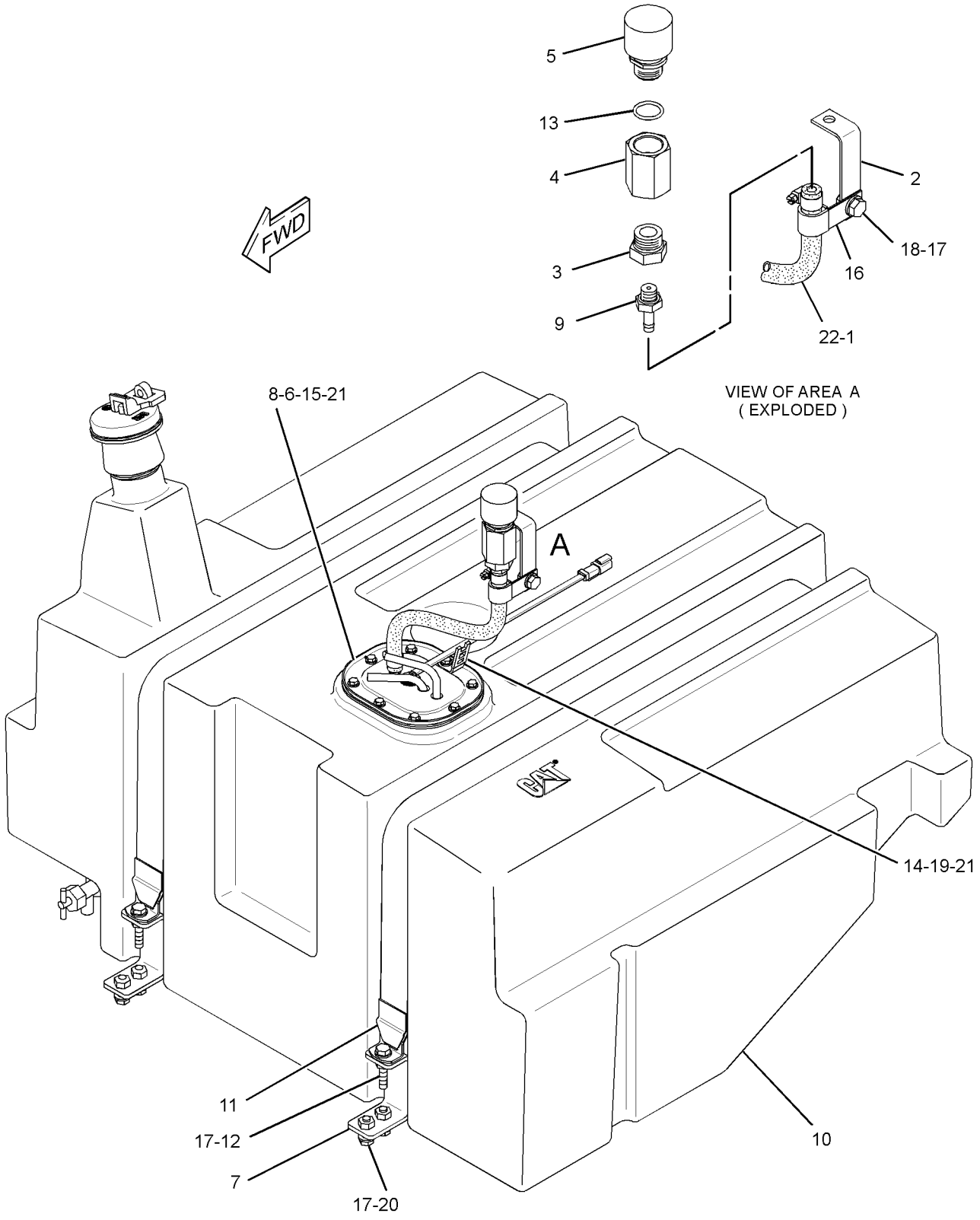

GRAPHIC #1 **<END>** g01441694

FUEL SYSTEM

305-8608 TANK GP-FUEL

S/N: JKM1-UP

PART OF 255-4810 TANK & MTG GP-FUEL

SMCS-1273 **i03783214**

NOTE	REF NO	GRAPHIC REF	PART NUMBER	QTY	PART NAME 1 2 3 4 5 6 (PRODUCT LEVEL)	SEE PAGE
	1	1	**9M-7958**	1	CLAMP-HOSE	
	2	1	**180-3730**	1	STRAINER-FUEL (FILLER NECK SCREEN)	
	3	1	**206-4441**	1	ADAPTER-FUEL CAP	
	4	1	**338-0912**	1	CAP AS-FUEL (DEBRIS BOOT)	
		1	**284-9039**	1	CAP-FUEL	
		1	**355-8947**	1	BOOT-FUEL CAP	
	5	1	**305-8607**	1	TANK AS-FUEL	
	6	1	**308-7122**	1	VALVE GP-FUEL	
		1	**8C-6523**	1	ADAPTER	
		1	**3K-0360**	1	SEAL-O-RING	
		1	**6V-7238**	1	VALVE-SHUTOFF	

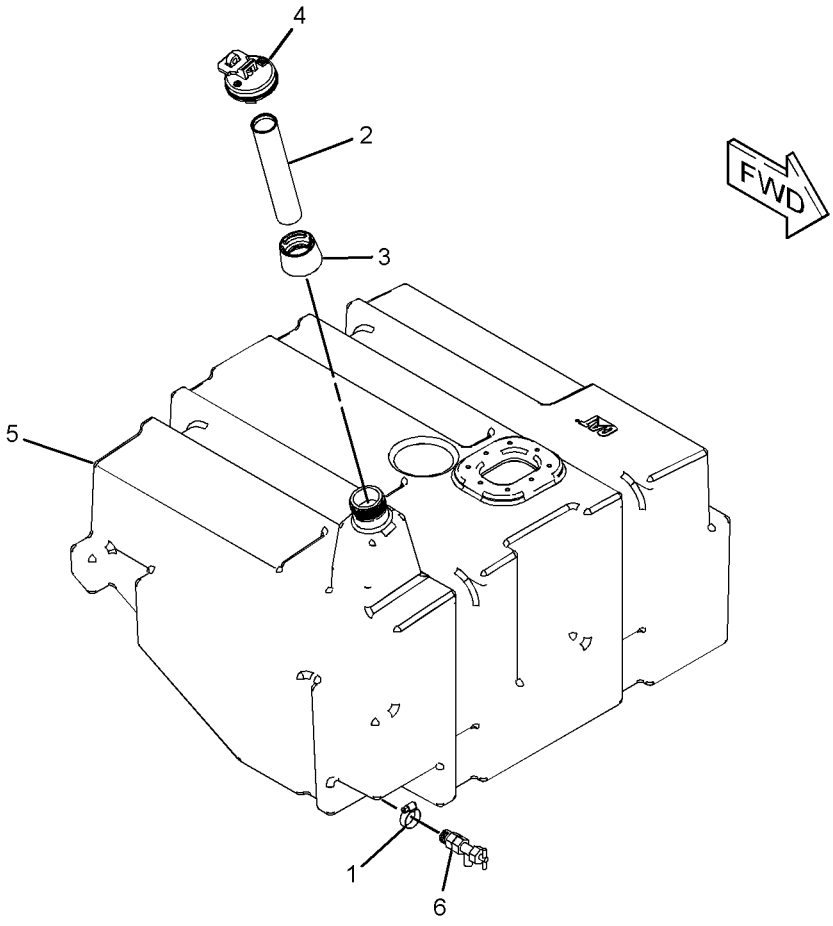

GRAPHIC #1 **<END>** g01435951

3E-6328 ALARM GP–ACTION

S/N: JKM1-UP
24-VOLT
PART OF 265-3259, 266-3717 WIRING GP-CAB
ALSO AN ATTACHMENT

SMCS-7400, 7402, 7407 **i02942905**

NOTE	REF NO	GRAPHIC REF	PART NUMBER	QTY	PART NAME 1 2 3 4 5 6 (PRODUCT LEVEL)	SEE PAGE
	1	1	**102-8802**	1	KIT-RECEPTACLE (2-PIN)	
					(INCLUDES RECEPTACLE AS & WEDGE)	
	2	1	**186-3735**	2	PIN-CONNECTOR (16-GA TO 18-GA)	

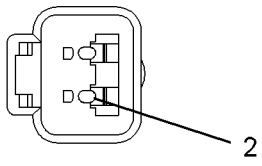

VIEW A–A

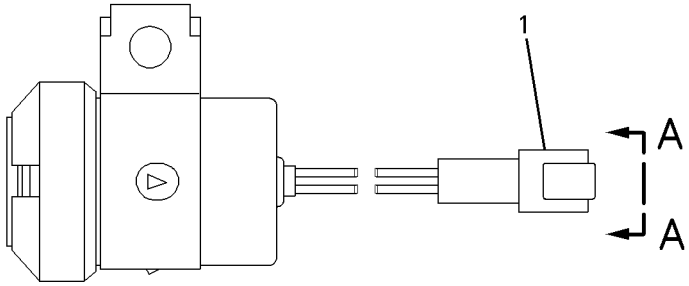

GRAPHIC #1 **<END>** g00697818

132-1829 ALARM GP

S/N: JKM1-UP
24-VOLT
PART OF 336-6799 ALARM GP, 267-7546 WIRING GP-QUICK COUPLER AN ATTACHMENT

SMCS-7400, 7402, 7407 **i03601165**

NOTE	REF NO	GRAPHIC REF	PART NUMBER	QTY	PART NAME 1 2 3 4 5 6 (PRODUCT LEVEL)	SEE PAGE
	1	1	**102-8802**	1	KIT-RECEPTACLE (2-PIN)	
					(INCLUDES RECEPTACLE AS & WEDGE)	
	2	1	**186-3735**	2	PIN-CONNECTOR (16-GA TO 18-GA)	

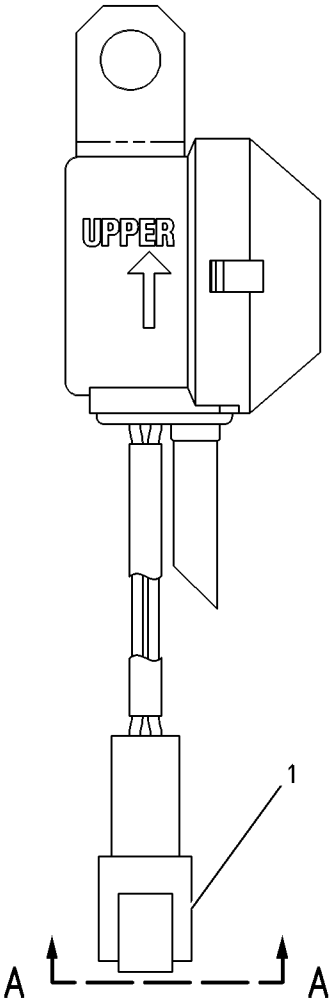

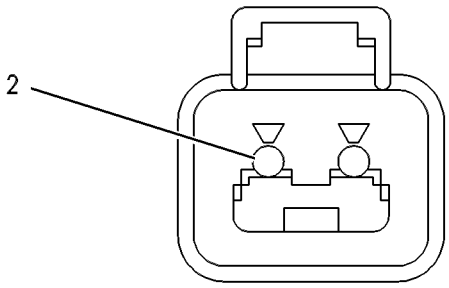

VIEW A-A

GRAPHIC #1 **<END>** g00272185

336-6799 ALARM GP

S/N: JKM1-UP
PART OF 267-7546 WIRING GP-QUICK COUPLER
AN ATTACHMENT

SMCS-7400, 7402, 7407 **i03747122**

NOTE	REF NO	GRAPHIC REF	PART NUMBER	QTY	PART NAME 1 2 3 4 5 6 (PRODUCT LEVEL)	SEE PAGE
Y	1	1	**132-1829**	1	ALARM GP (24-VOLT)	159
	2	1	**280-4244**	1	SWITCH AS-ROCKER (24-VOLT)	
	3	1	**8T-4121**	1	WASHER-HARD (11X21X2.5-MM THK)	
M	4	1	**8T-4133**	1	NUT (M10X1.5-THD)	

M-METRIC PART
Y-SEPARATE ILLUSTRATION

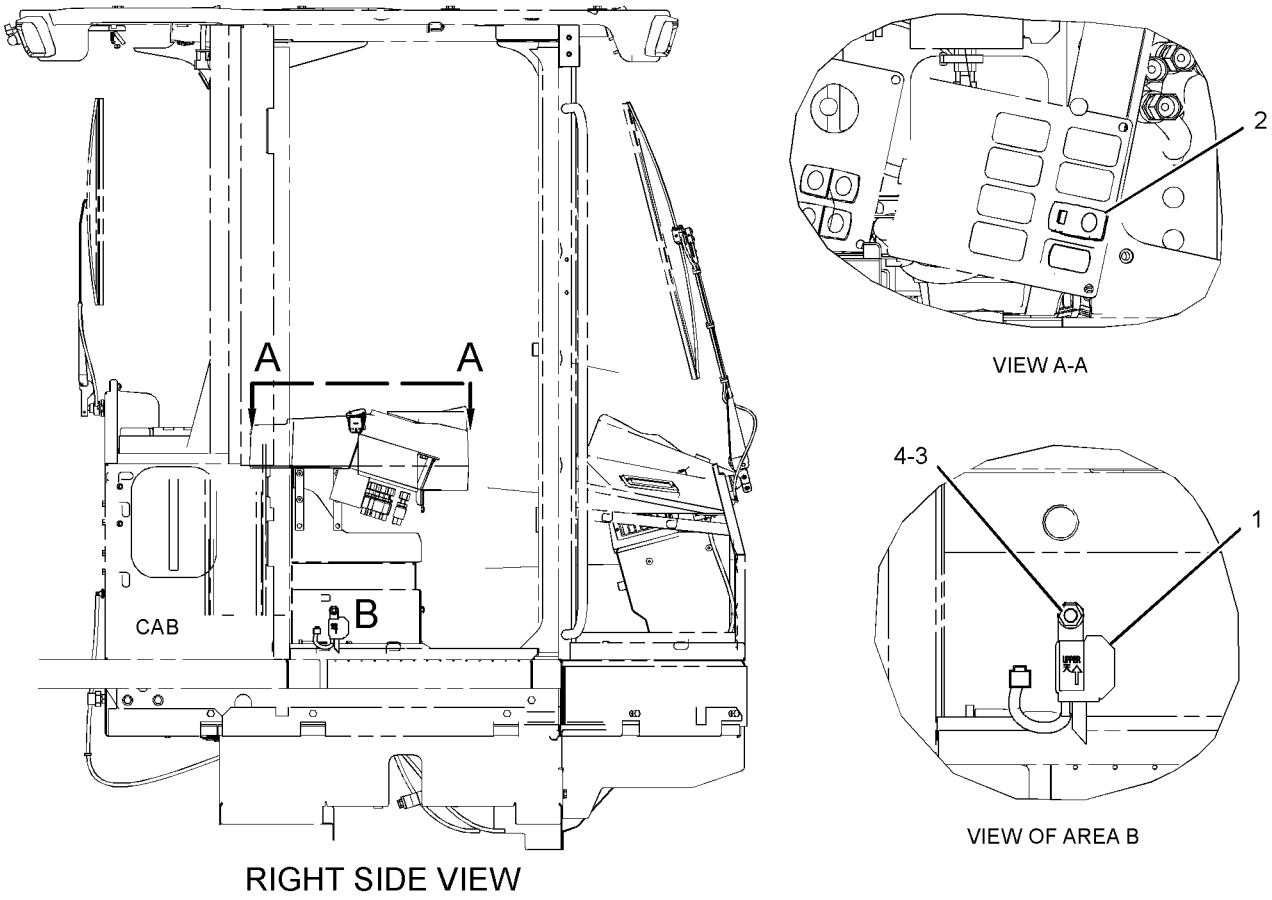

RIGHT SIDE VIEW

VIEW A-A

VIEW OF AREA B

GRAPHIC #1 **<END>** g02142154

265-9736 ALTERNATOR AR-CHARGING–24-VOLT, 80-AMPERE

S/N: JKM1-UP

PART OF 317-9485, 317-9486 COLD WEATHER AR, 317-9488 CONFIGURATION AR, 317-9487 OPTION AR-LIGHTING

AN ATTACHMENT

SMCS-1405, 1410, 1425 **i02845427**

NOTE	PART NUMBER	QTY	PART NAME 1 2 3 4 5 6 (PRODUCT LEVEL)	SEE PAGE
Y	*266-4514*	1	ALTERNATOR GP-CHARGING	167
Y-SEPARATE ILLUSTRATION				

<END>

ELECTRICAL AND STARTING SYSTEM

235-7132 ALTERNATOR GP-CHARGING*R

S/N: JKM1-UP
24-VOLT, 65-AMPERE
PART OF 255-4808 ALTERNATOR GP-CHARGING

SMCS-1405 **i03847730**

NOTE	REF NO	GRAPHIC REF	PART NUMBER	QTY	PART NAME 1 2 3 4 5 6 (PRODUCT LEVEL)	SEE PAGE
	1	1	**228-9656**	1	FRAME AS-DRIVE END	
	2	1	**5S-7349**	1	BOLT (1/4-20X0.5-IN)	
	3	1	**185-2639**	1	FAN AS	
	4	1	**1H-3244**	1	LOCKWASHER	
	5	1	**228-9655**	1	FRAME AS-ALTERNATOR	
	6	1	**2K-4821**	1	LOCKNUT (5/8-18-THD)	
	7	1	**5P-8247**	1	WASHER-HARD (17X32X3.5-MM THK)	
	8	1	**228-9657**	1	COVER AS	
	9	1	**8T-4205**	1	WASHER-HARD (7.2X14.5X2-MM THK)	
	10	1	**185-2647**	1	GROMMET	
	11	1	**9L-6770**	1	CAP-DUST	
	12	1	**185-2642**	1	STATOR AS	
	13	1	**185-2638**	2	COLLAR	
	14	1	**185-2654**	1	PLATE	
	15	1	**185-2650**	1	ROTOR AS	
	16	1	**185-2644**	1	COIL AS	
	17	1	**185-2648**	1	REGULATOR AS-VOLTAGE (24-VOLT)	
	18	1	**6V-8189**	1	NUT (5/16-18-THD)	
	19	1	**8T-4224**	1	WASHER-HARD (8.8X16X2-MM THK)	
	20	1	**3F-9556**	1	LOCKWASHER	
					AVAILABLE REPAIR KIT(S):	
			185-2655	1	KIT-BEARING	
					(INCLUDES BEARINGS)	
			199-8436	1	KIT-TERMINAL (ALTERNATOR)	
					(INCLUDES HOLDER AS, PLATE, INSULATOR, PIN, BOLT, GROMMET AND NUT)	
			199-7891	1	KIT-TERMINAL (ALTERNATOR)	
					(INCLUDES INSULATORS, WASHERS, AND NUTS)	
			185-2658	1	KIT-HARDWARE (ALTERNATOR)	
					(INCLUDES BOLTS)	

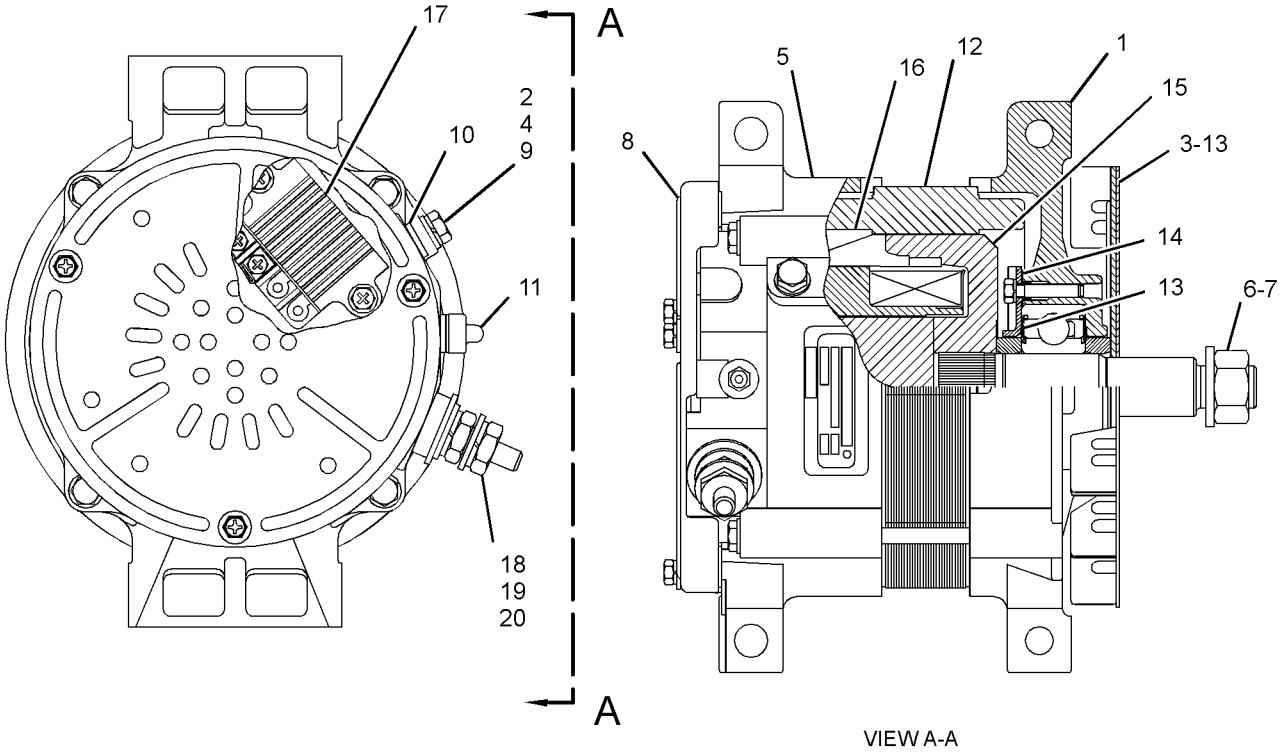

VIEW A-A

GRAPHIC #1 **<END>** g01385594

235-7133 ALTERNATOR GP-CHARGING

S/N: JKM1-UP
24-VOLT, 80 AMPERE
PART OF 266-4514 ALTERNATOR GP-CHARGING
AN ATTACHMENT

SMCS-1405 **i02580780**

NOTE	REF NO	GRAPHIC REF	PART NUMBER	QTY	PART NAME 1 2 3 4 5 6 (PRODUCT LEVEL)	SEE PAGE
	1	1	**228-9656**	1	FRAME AS-DRIVE END	
	2	1	**5S-7349**	1	BOLT (1/4-20X0.5-IN)	
	3	1	**185-2639**	1	FAN AS	
	4	1	**1H-3244**	1	LOCKWASHER	
	5	1	**228-9655**	1	FRAME AS-ALTERNATOR	
	6	1	**2K-4821**	1	LOCKNUT (5/8-18-THD)	
	7	1	**5P-8247**	1	WASHER-HARD (17X32X3.5-MM THK)	
	8	1	**228-9657**	1	COVER AS	
	9	1	**8T-4205**	1	WASHER-HARD (7.2X14.5X2-MM THK)	
	10	1	**185-2647**	1	GROMMET	
	11	1	**9L-6770**	1	CAP-DUST	
	12	1	**185-2643**	1	STATOR AS	
	13	1	**185-2638**	2	COLLAR	
	14	1	**185-2654**	1	PLATE	
	15	1	**185-2650**	1	ROTOR AS	
	16	1	**185-2644**	1	COIL AS	
	17	1	**185-2648**	1	REGULATOR AS-VOLTAGE (24-VOLT) (ALTERNATOR)	
	18	1	**6V-8189**	1	NUT (5/16-18-THD)	
	19	1	**8T-4224**	1	WASHER-HARD (8.8X16X2-MM THK)	
	20	1	**3F-9556**	1	LOCKWASHER	
					AVAILABLE REPAIR KIT(S):	
			185-2655	1	KIT-BEARING (ALTERNATOR)	
					(INCLUDES 3 BEARINGS)	
			185-2658	1	KIT-HARDWARE (ALTERNATOR)	
					(INCLUDES BOLTS)	
			199-7891	1	KIT-TERMINAL (ALTERNATOR)	
					(INCLUDES INSULATORS, WASHERS, NUT & STEP NUT)	
			199-8436	1	KIT-TERMINAL (ALTERNATOR)	
					(INCLUDES HOLDER AS, PLATE, INSULATOR, PIN, BOLT, GROMMET, & NUT)	

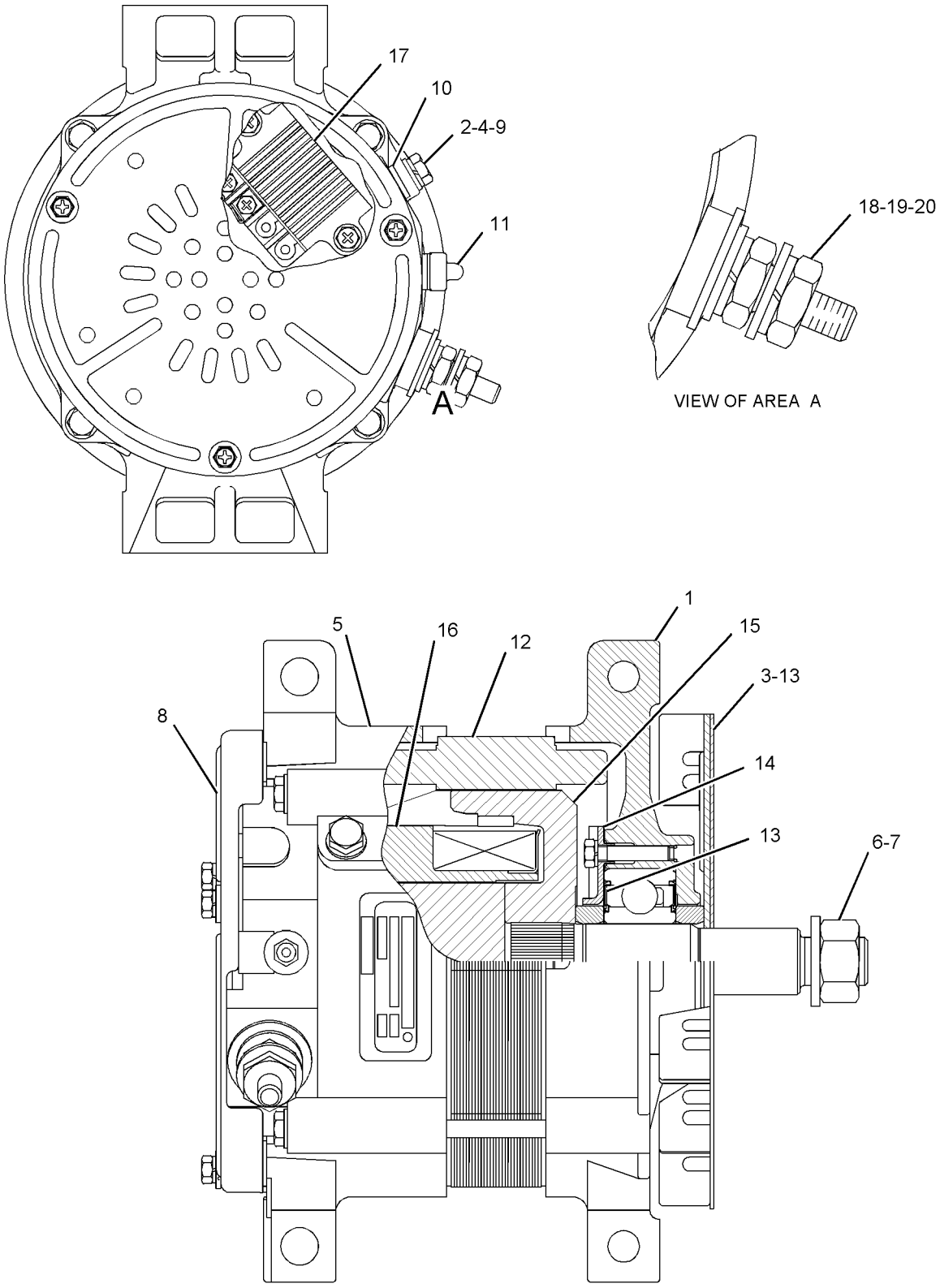

GRAPHIC #1

<END>

g01102532

ELECTRICAL AND STARTING SYSTEM

255-4808 ALTERNATOR GP-CHARGING

S/N: JKM1-UP

PART OF 239-3372 INSTALLATION AR-ENGINE

SMCS-1405 **i03907450**

NOTE	REF NO	GRAPHIC REF	PART NUMBER	QTY	PART NAME 1 2 3 4 5 6 (PRODUCT LEVEL)	SEE PAGE
	1	1	**238-0364**	1	PULLEY-ALTERNATOR (8-GROOVE)	
	3	1	**173-1498**	1	PULLEY AS-IDLER (8-GROOVE)	
M		1	**151-2900**	1	BOLT (M10X1.5X54.25-MM)	
		1	**166-6358**	1	COVER-DUST	
YR	4	1	**235-7132**	1	ALTERNATOR GP-CHARGING (24-VOLT, 65-AMPERE)	162
	5	1	**243-2143**	1	BELT-SERPENTINE (ALTERNATOR, FAN DRIVE)	
	6	1	**8T-4121**	4	WASHER-HARD (11X21X2.5-MM THK)	
M	7	1	**8T-4198**	4	BOLT (M10X1.5X100-MM)	

M-METRIC PART
R-REMFG PART MAY BE AVAILABLE
Y-SEPARATE ILLUSTRATION

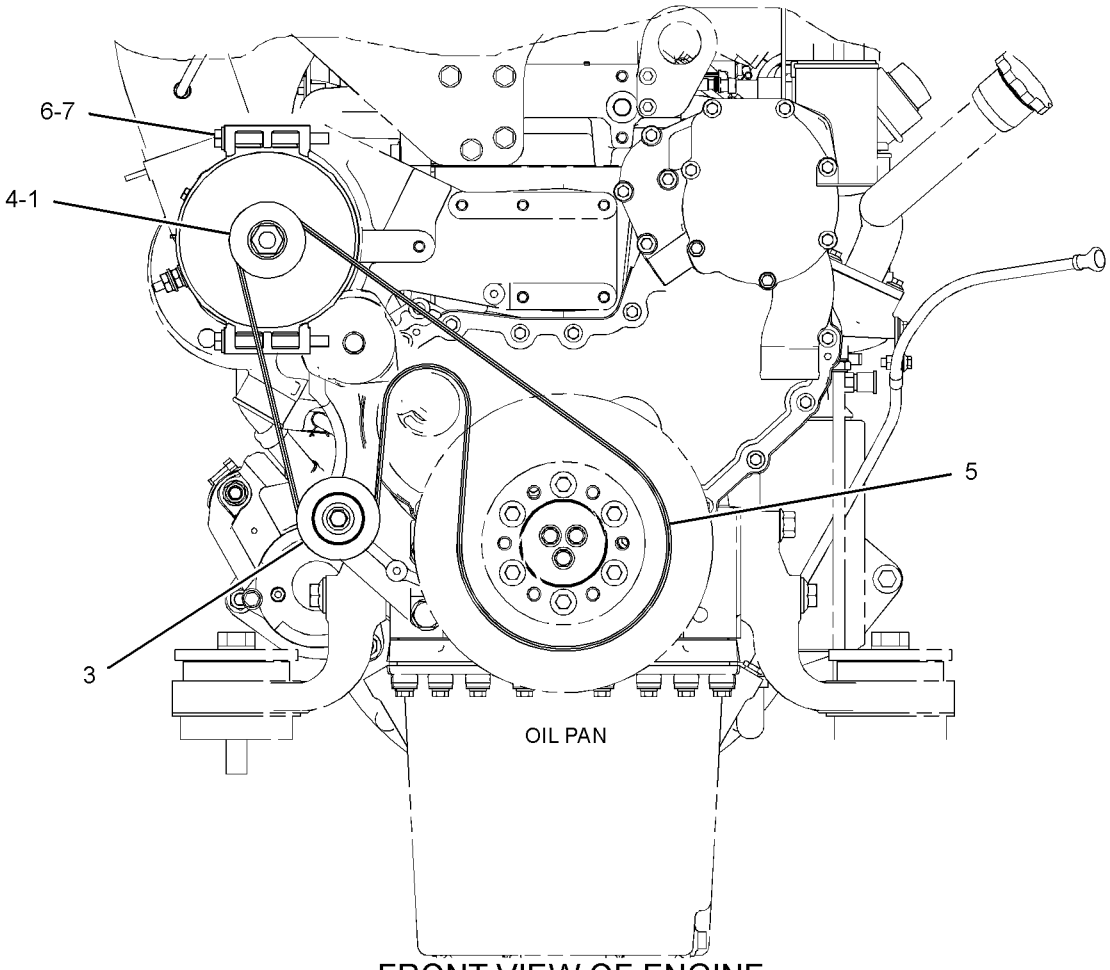

FRONT VIEW OF ENGINE

GRAPHIC #1 **<END>** g01422454

266-4514 ALTERNATOR GP-CHARGING

S/N: JKM1-UP
PART OF 265-9736 ALTERNATOR AR-CHARGING
AN ATTACHMENT

SMCS-1405 **i03655045**

NOTE	REF NO	GRAPHIC REF	PART NUMBER	QTY	PART NAME 1 2 3 4 5 6 (PRODUCT LEVEL)	SEE PAGE
	1	1	**238-0364**	1	PULLEY-ALTERNATOR (8-GROOVE)	
M	2	1	**8T-4198**	4	BOLT (M10X1.5X100-MM)	
	3	1	**173-1498**	1	PULLEY AS-IDLER (8-GROOVE)	
YR	4	1	**235-7133**	1	ALTERNATOR GP-CHARGING (24-VOLT, 80-AMPERE)	164
	5	1	**243-2143**	1	BELT-SERPENTINE (ALTERNATOR, FAN DRIVE)	
	6	1	**8T-4121**	4	WASHER-HARD (11X21X2.5-MM THK)	

M-METRIC PART
R-REMFG PART MAY BE AVAILABLE
Y-SEPARATE ILLUSTRATION

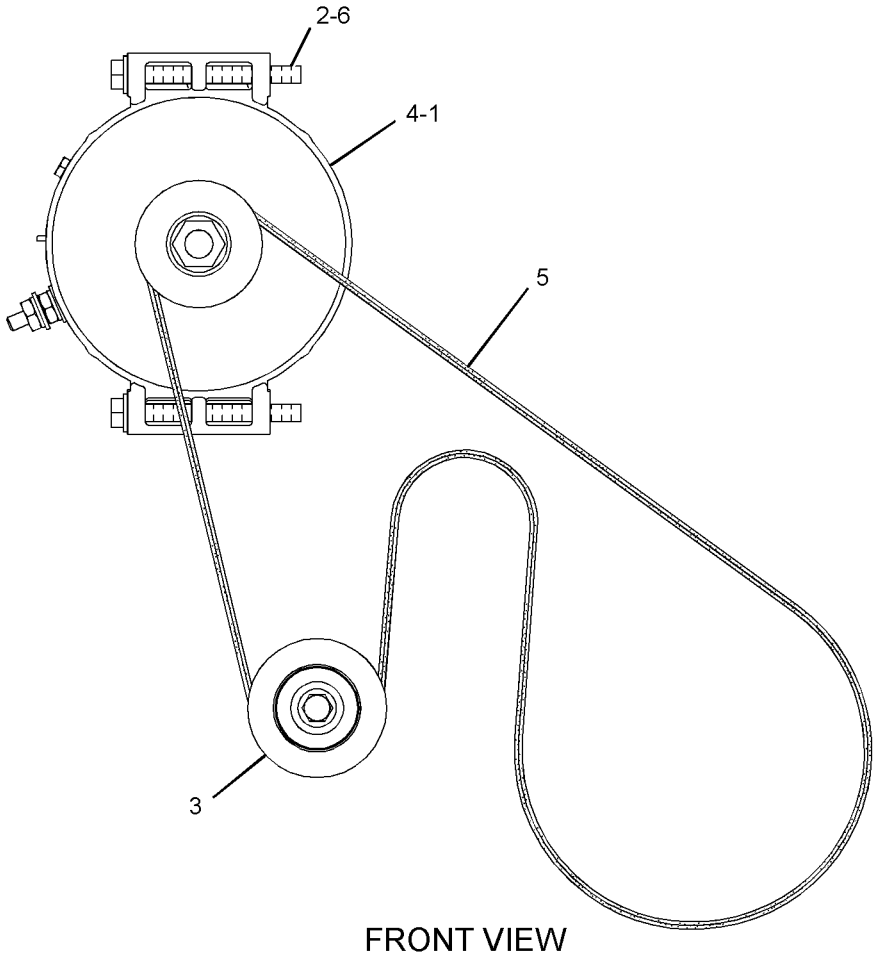

FRONT VIEW

GRAPHIC #1 **<END>** g01961416

ELECTRICAL AND STARTING SYSTEM

263-5074 BATTERY & WIRING GP

S/N: JKM1-746

PART OF 237-7539 ELECTRICAL AR

SMCS-1401, 1402, 1408 **i02906296**

NOTE	REF NO	GRAPHIC REF	PART NUMBER	QTY	PART NAME 1 2 3 4 5 6 (PRODUCT LEVEL)	SEE PAGE
	1	2	**5T-3907**	2	CLAMP	
	2	2	**8R-0768**	2	ROD-RETAINING	
	3	2	**8W-0301**	1	FLANGE	
	4	1	**121-1340**	2	ANGLE AS	
					(EACH INCLUDES)	
M		1	**8T-3490**	1	NUT-WELD (M10X1.5-THD)	
	5	2	**263-9574**	2	BATTERY (12-VOLT, MAINTENANCE FREE)	
	6	2	**300-6448**	1	CABLE AS	
		2	**1S-7251**	2	TERMINAL-CABLE (00-GA, 1/2-IN SCREW)	
E		2	**159-8049**		CABLE (00-GA, RED) (232-CM)	
		2	**8N-0869**	2	COVER-TERMINAL (RED)	
	7	2	**305-4384**	1	CABLE AS	
		2	**1S-7251**	1	TERMINAL-CABLE (00-GA, 1/2-IN SCREW)	
E		2	**159-8050**		CABLE (00-GA, BLACK) (59-CM)	
		2	**9X-9825**	1	TERMINAL-CABLE (00-GA, 1/2-IN SCREW)	
	8	1	**306-5398**	1	CABLE AS	
		1	**1S-7251**	1	TERMINAL-CABLE (00-GA, 1/2-IN SCREW)	
E		1	**159-8049**		CABLE (00-GA, RED) (51-CM)	
		1	**8N-0869**	1	COVER-TERMINAL (RED)	
		1	**9G-0004**	1	COVER AS-TERMINAL (RED)	
	9	1	**306-5399**	1	CABLE AS	
		1	**9G-0005**	1	COVER-TERMINAL (BLACK)	
		1	**9R-4286**	1	TERMINAL-RING (00-GA, 3/8-IN SCREW)	
E		1	**159-8050**		CABLE (00-GA, BLACK) (57-CM)	
	10	1	**306-5400**	1	CABLE AS	
E		1	**159-8050**		CABLE (00-GA, BLACK) (27-CM)	
		1	**9R-4286**	1	TERMINAL-RING (00-GA, 3/8-IN SCREW)	
	11	2	**306-5401**	1	CABLE AS	
		2	**1S-7251**	1	TERMINAL-CABLE (00-GA, 1/2-IN SCREW)	
		2	**216-7790**	1	TERMINAL-CABLE (00-GA, 3/8-IN SCREW)	
E		2	**159-8050**	1	CABLE (00-GA, BLACK) (54-CM)	
	12	2	**306-8066**	1	HOLD-DOWN AS-BATTERY	
	13	2	**307-3089**	1	CABLE AS	
E		2	**159-8049**		CABLE (00-GA, RED) (29-CM)	
		2	**8N-1725**	2	COVER AS-TERMINAL (RED)	
	14	1,2	**2V-1771**	13	GROMMET	
	15	1,2	**3S-2093**	7	STRAP-CABLE	
M	16	2	**5C-7261**	2	NUT (M8X1.25-THD)	
	17	1	**5G-6505**	3	WASHER (25X38X14-MM THK)	
	18	2	**5P-4116**	2	WASHER-HARD (8.8X20.5X2-MM THK)	
	19	1,2	**6D-4246**	13	CLIP	
	20	1	**6V-8188**	6	NUT (1/2-13-THD)	
	21	2	**8C-6358**	1	BLOCK AS-JUNCTION (BATTERY)	
		2	**1D-5117**	3	NUT-JAM (1/2-13-THD)	
		2	**8T-3519**	3	BOLT-BRONZE (1/2-13X2-IN)	
	22	1,2	**8T-4121**	16	WASHER-HARD (11X21X2.5-MM THK)	
M	23	1,2	**8T-4133**	2	NUT (M10X1.5-THD)	
M	24	2	**8T-4136**	2	BOLT (M10X1.5X25-MM)	
M	25	1,2	**8T-4137**	12	BOLT (M10X1.5X20-MM)	
M	26	2	**8T-4183**	2	BOLT (M12X1.75X40-MM)	
M	27	2	**8T-4192**	2	BOLT (M12X1.75X25-MM)	
	28	1,2	**8T-4223**	11	WASHER-HARD (13.5X25.5X3-MM THK)	
M	29	2	**8T-4244**	1	NUT (M12X1.75-THD)	

E-ORDER BY THE CENTIMETER
M-METRIC PART

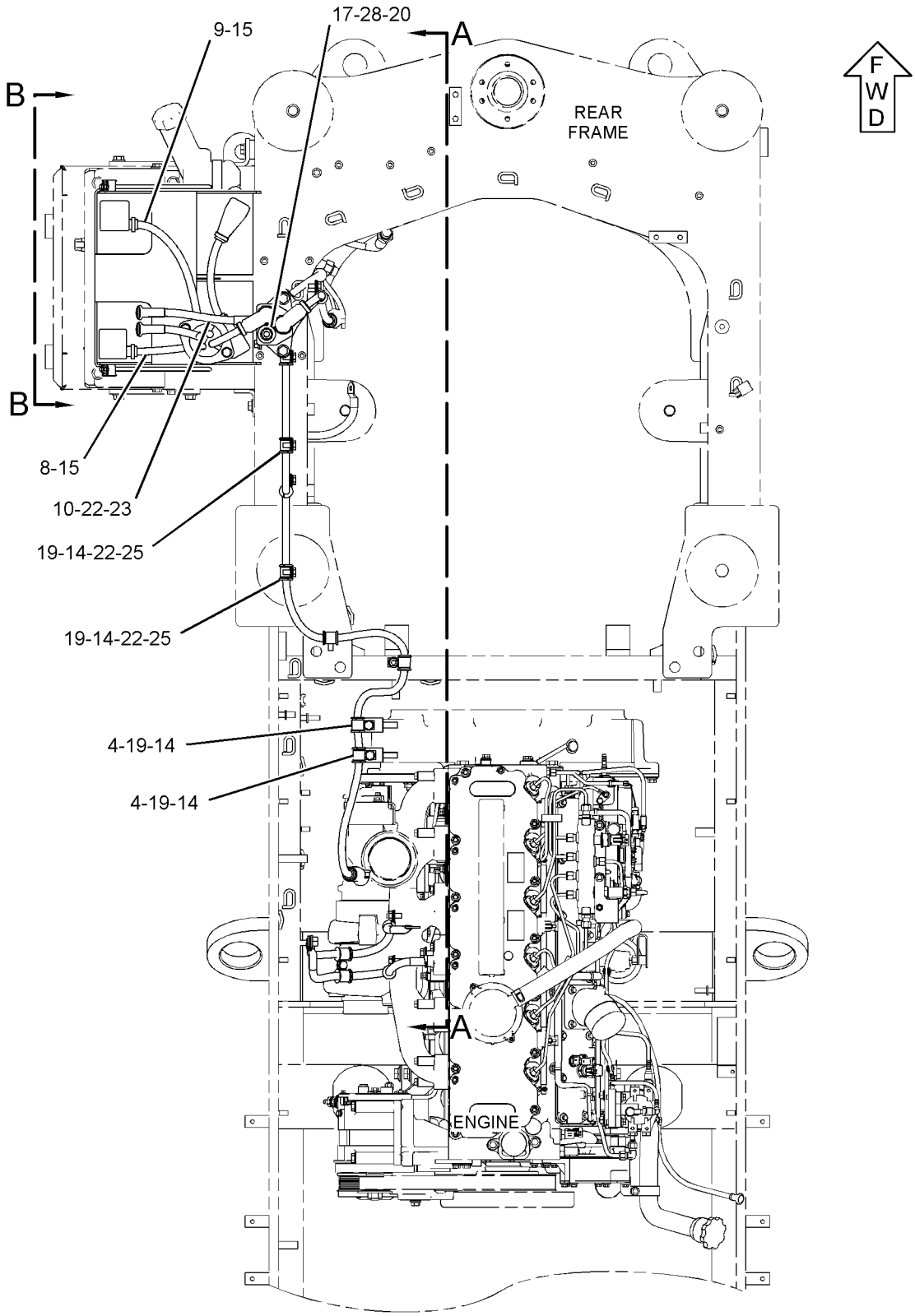

REFER TO ALL ILLUSTRATIONS OF THIS GROUP FOR AUXILIARY VIEWS

TOP VIEW

GRAPHIC #1

g01420850

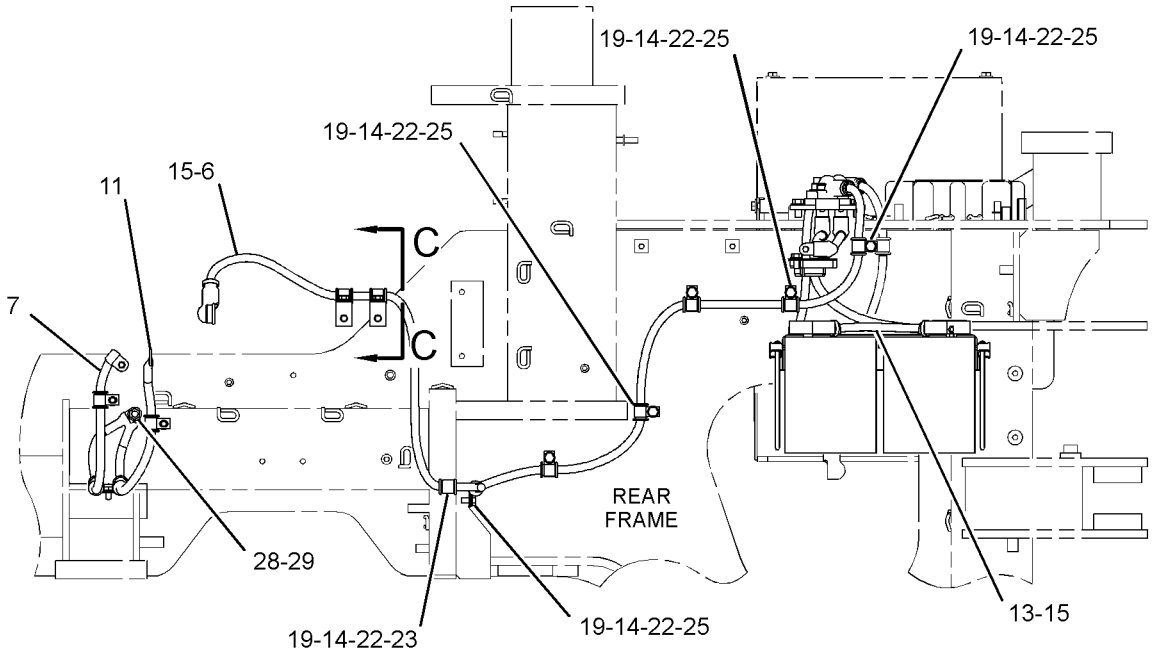

VIEW A-A

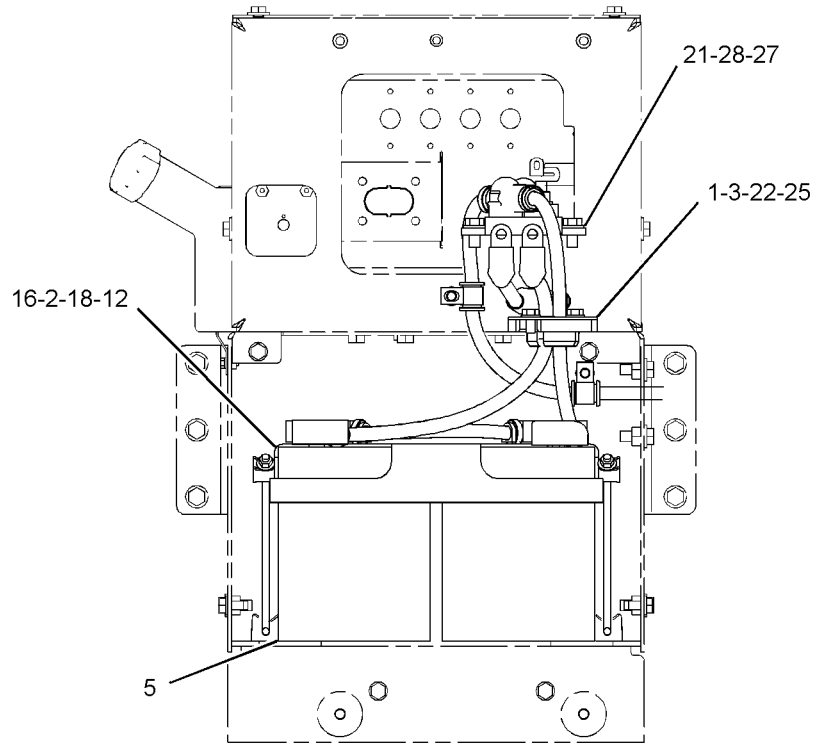

VIEW B-B

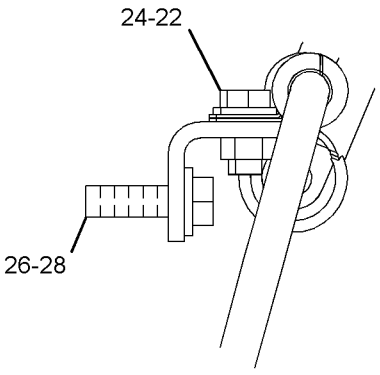

SECTION C-C

GRAPHIC #2 **<END>** g01420851

ELECTRICAL AND STARTING SYSTEM

263-5074 BATTERY & WIRING GP

S/N: JKM747-UP

PART OF 237-7539 ELECTRICAL AR

SMCS-1401, 1402, 1408 **i03652643**

NOTE	REF NO	GRAPHIC REF	PART NUMBER	QTY	PART NAME 1 2 3 4 5 6 (PRODUCT LEVEL)	SEE PAGE
	1	2	**5T-3907**	2	CLAMP	
	2	2	**8R-0768**	2	ROD-RETAINING	
	3	2	**8W-0301**	1	FLANGE	
C	4	1	**289-9520**	2	BRACKET AS	
					(EACH INCLUDES)	
M		1	**8T-3490**	1	NUT-WELD (M10X1.5-THD)	
		1	**289-9519**	1	BRACKET	
	5	2	**263-9574**	2	BATTERY (12-VOLT, MAINTENANCE FREE)	
	6	2	**300-6448**	1	CABLE AS	
		2	**1S-7251**	2	TERMINAL-CABLE (00-GA, 1/2-IN SCREW)	
E		2	**159-8049**		CABLE (00-GA, RED) (232-CM)	
		2	**8N-0869**	2	COVER-TERMINAL (RED)	
B		2	**1P-0810**	1	TAPE-ELECTRICAL	
	7	2	**305-4384**	1	CABLE AS	
		2	**1S-7251**	1	TERMINAL-CABLE (00-GA, 1/2-IN SCREW)	
E		2	**159-8050**		CABLE (00-GA, BLACK) (59-CM)	
		2	**315-0180**	1	TERMINAL-RING	
	8	1	**306-5398**	1	CABLE AS	
		1	**1S-7251**	1	TERMINAL-CABLE (00-GA, 1/2-IN SCREW)	
E		1	**159-8049**		CABLE (00-GA, RED) (51-CM)	
		1	**8N-0869**	1	COVER-TERMINAL (RED)	
		1	**9G-0004**	1	COVER AS-TERMINAL (RED)	
B		1	**1P-0810**	1	TAPE-ELECTRICAL	
	9	1	**306-5399**	1	CABLE AS	
		1	**9G-0005**	1	COVER-TERMINAL (BLACK)	
		1	**9R-4286**	1	TERMINAL-RING (00-GA, 3/8-IN SCREW)	
E		1	**159-8050**		CABLE (00-GA, BLACK) (57-CM)	
	10	1	**306-5400**	1	CABLE AS	
E		1	**159-8050**		CABLE (00-GA, BLACK) (27-CM)	
		1	**9R-4286**	1	TERMINAL-RING (00-GA, 3/8-IN SCREW)	
	11	2	**306-5401**	1	CABLE AS	
		2	**1S-7251**	1	TERMINAL-CABLE (00-GA, 1/2-IN SCREW)	
E		2	**159-8050**		CABLE (00-GA, BLACK) (54-CM)	
	12	2	**306-8066**	1	HOLD-DOWN AS-BATTERY	
	13	2	**307-3089**	1	CABLE AS	
E		2	**159-8049**		CABLE (00-GA, RED) (29-CM)	
		2	**8N-1725**	2	COVER AS-TERMINAL (RED)	
	14	1,2	**2V-1771**	13	GROMMET	
	15	1,2	**3S-2093**	7	STRAP-CABLE	
M	16	2	**5C-7261**	2	NUT (M8X1.25-THD)	
	18	2	**5P-4116**	2	WASHER-HARD (8.8X20.5X2-MM THK)	
	19	1,2	**6D-4246**	13	CLIP	
CY	21	2	*322-3305*	1	BLOCK GP-JUNCTION	177
	22	1,2	**8T-4121**	16	WASHER-HARD (11X21X2.5-MM THK)	
M	23	1,2	**8T-4133**	2	NUT (M10X1.5-THD)	
CM	25	1,2	**8T-4137**	14	BOLT (M10X1.5X20-MM)	
CM	27	2	**8T-4192**	4	BOLT (M12X1.75X25-MM)	
C	28	2	**8T-4223**	5	WASHER-HARD (13.5X25.5X3-MM THK)	
M	29	2	**8T-4244**	1	NUT (M12X1.75-THD)	

B-USE AS REQUIRED
C-CHANGE FROM PREVIOUS TYPE
E-ORDER BY THE CENTIMETER
M-METRIC PART
Y-SEPARATE ILLUSTRATION

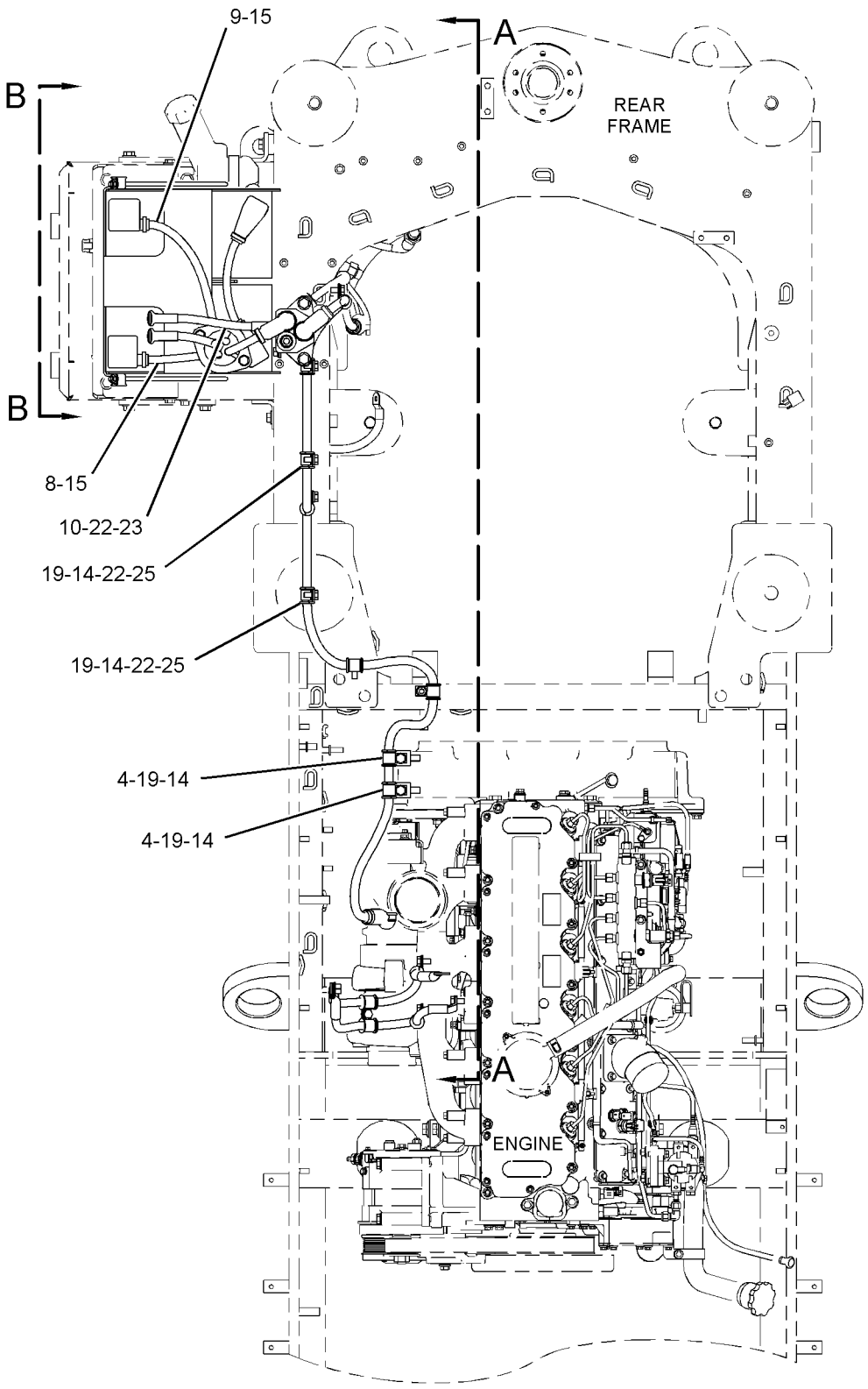

REFER TO ALL ILLUSTRATIONS OF THIS GROUP FOR AUXILIARY VIEWS

TOP VIEW

GRAPHIC #1

g01861177

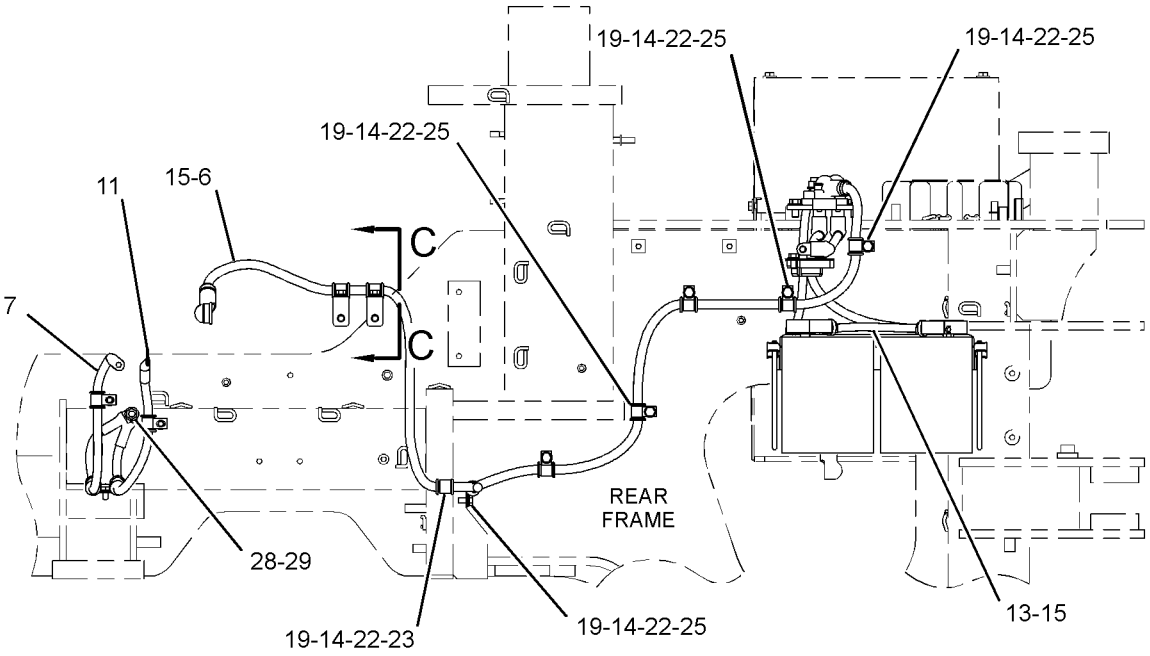

VIEW A-A

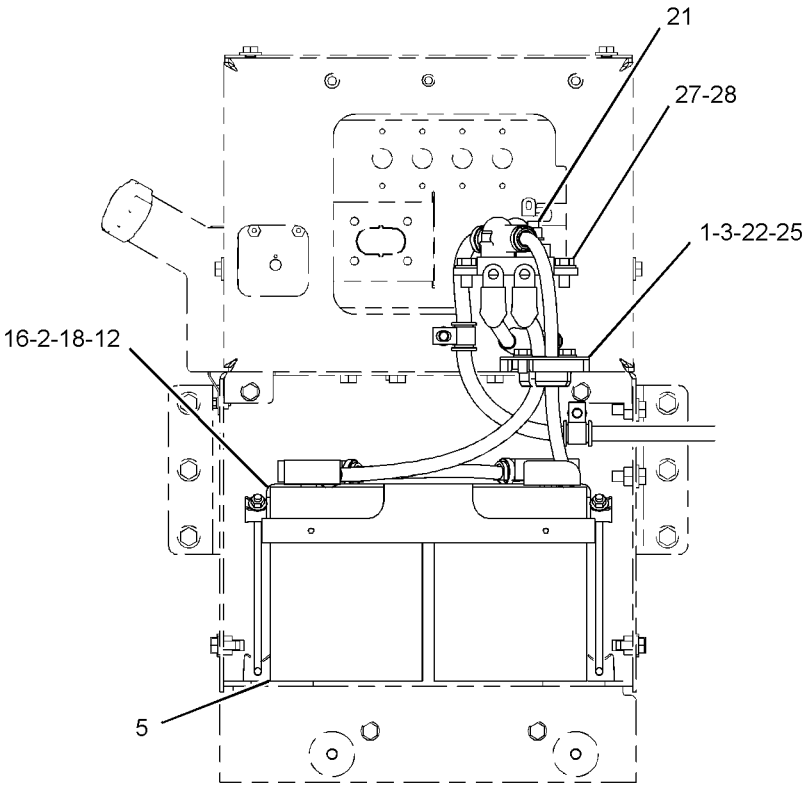

VIEW B-B

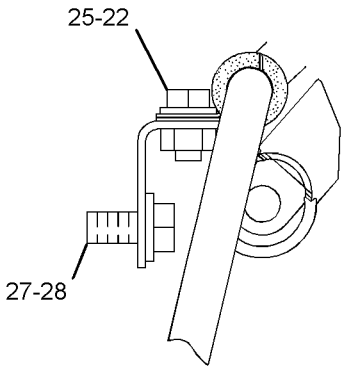

VIEW C-C

GRAPHIC #2 **<END>** g01861178

ELECTRICAL AND STARTING SYSTEM

305-4376 BATTERY & WIRING GP

S/N: JKM1-UP
PART OF 308-4278 BATTERY & WIRING GP
AN ATTACHMENT

SMCS-1401, 1402, 1408 **i03085300**

NOTE	REF NO	GRAPHIC REF	PART NUMBER	QTY	PART NAME 1 2 3 4 5 6 (PRODUCT LEVEL)	SEE PAGE
	1	1	**8R-0768**	2	ROD-RETAINING	
	2	1	**263-9574**	2	BATTERY (12-VOLT, MAINTENANCE FREE)	
	3	1	**305-4372**	1	CABLE AS	
		1	**290-2077**	1	COVER-TERMINAL (RED)	
		1	**9S-5754**	1	TERMINAL AS (POSITIVE)	
		1	**1M-6119**	1	BOLT (5/16-18X1.375-IN)	
		1	**1M-6120**	1	NUT (5/16-18-THD)	
		1	**7T-4924**	1	COVER-TERMINAL (RED)	
		1	**8N-0869**	1	COVER-TERMINAL (RED)	
E		1	**159-8049**		CABLE (00-GA, RED) (89-CM)	
B		1	**1P-0810**		TAPE-ELECTRICAL	
		1	*290-1219*	1	TERMINAL AS-BATTERY (POSITIVE)	
		1	**1M-6119**	1	BOLT (5/16-18X1.375-IN)	
		1	**1M-6120**	1	NUT (5/16-18-THD)	
		1	**1S-7251**	1	TERMINAL-CABLE (00-GA, 1/2-IN SCREW)	
	4	1	**305-4373**	1	CABLE AS	
		1	**9S-5755**	1	TERMINAL AS (NEGATIVE)	
		1	**1M-6119**	1	BOLT (5/16-18X1.375-IN)	
		1	**1M-6120**	1	NUT (5/16-18-THD)	
		1	**7T-4925**	1	COVER-TERMINAL (BLACK)	
		1	**9R-4286**	1	TERMINAL-RING (00-GA, 3/8-IN SCREW)	
E		1	**159-8050**		CABLE (00-GA, BLACK) (94-CM)	
B		1	**1P-0810**		TAPE-ELECTRICAL	
		1	**249-9042**	1	TERMINAL-BATTERY	
		1	**1M-6119**	1	BOLT (5/16-18X1.375-IN)	
		1	**1M-6120**	1	NUT (5/16-18-THD)	
		1	**249-9066**	1	COVER-TERMINAL (BLACK)	
	5	1	**306-8066**	1	HOLD-DOWN AS-BATTERY	
	6	1	**307-3089**	1	CABLE AS	
		1	**8N-1725**	2	COVER AS-TERMINAL (RED)	
		1	**3S-6050**	1	TERMINAL AS-BATTERY (NEGATIVE)	
		1	**1M-6119**	1	BOLT (5/16-18X1.375-IN)	
		1	**1M-6120**	1	NUT (5/16-18-THD)	
		1	**3S-6049**	1	TERMINAL AS-BATTERY (POSITIVE)	
		1	**1M-6119**	1	BOLT (5/16-18X1.375-IN)	
		1	**1M-6120**	1	NUT (5/16-18-THD)	
E		1	**159-8049**		CABLE (00-GA, RED) (29-CM)	
	7	1	**307-3097**	2	BRACKET AS	
	8	1	**2V-1771**	2	GROMMET	
	9	1	**3S-2093**	3	STRAP-CABLE	
M	10	1	**5C-7261**	2	NUT (M8X1.25-THD)	
	11	1	**5P-4116**	2	WASHER-HARD (8.8X20.5X2-MM THK)	
	12	1	**6D-4246**	2	CLIP	
	13	1	**8T-4121**	2	WASHER-HARD (11X21X2.5-MM THK)	
M	14	1	**8T-4136**	2	BOLT (M10X1.5X25-MM)	

B-USE AS REQUIRED
E-ORDER BY THE CENTIMETER
M-METRIC PART

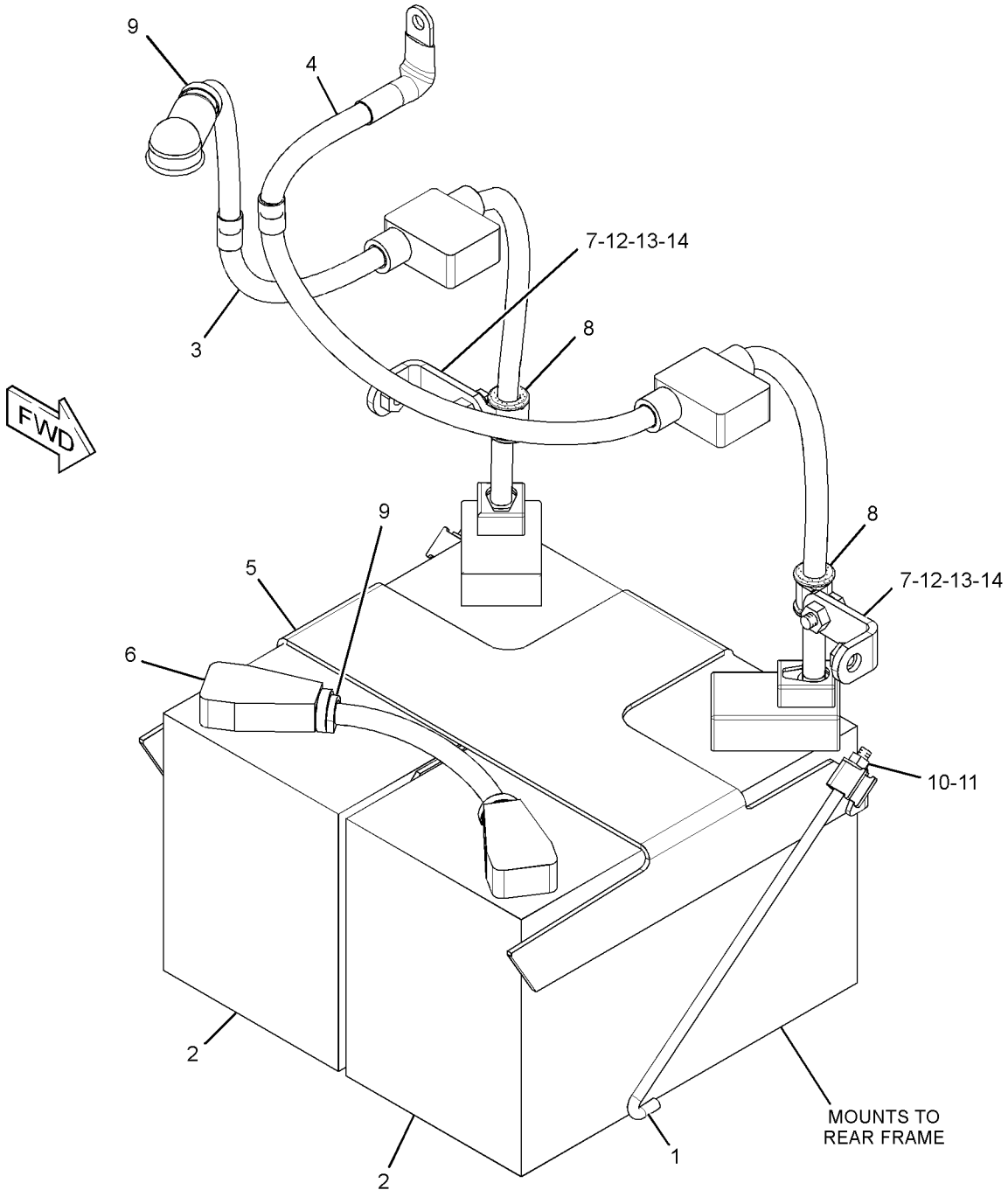

GRAPHIC #1 **<END>** g01572414

ELECTRICAL AND STARTING SYSTEM

308-4278 BATTERY & WIRING GP

S/N: JKM1-UP
PART OF 317-9485, 317-9486 COLD WEATHER AR, 266-8583 INSTALLATION
AR-COMMUNICATION
AN ATTACHMENT

SMCS-1401, 1402, 1408 **i02927807**

NOTE	PART NUMBER	QTY	PART NAME 1 2 3 4 5 6 (PRODUCT LEVEL)	SEE PAGE
Y	*305-4376*	1	BATTERY & WIRING GP	174
Y	*305-2557*	1	BOX GP-BATTERY	498

Y-SEPARATE ILLUSTRATION

<END>

322-3305 BLOCK GP-JUNCTION

S/N: JKM747-UP

PART OF 263-5074 BATTERY & WIRING GP

SMCS-1408, 7426 **i03258120**

NOTE	REF NO	GRAPHIC REF	PART NUMBER	QTY	PART NAME 1 2 3 4 5 6 (PRODUCT LEVEL)	SEE PAGE
	1	1	**8T-3518**	6	NUT-FULL (1/2-13-THD)	
	2	1	**5G-6505**	3	WASHER (25X38X14-MM THK)	
	3	1	**7F-0560**	6	WASHER (0.516X0.938X0.101-IN THK)	
	4	1	**8C-6358**	1	BLOCK AS-JUNCTION (BATTERY)	
		1	**1D-5117**	3	NUT-JAM (1/2-13-THD)	
		1	**8T-3519**	3	BOLT-BRONZE (1/2-13X2-IN)	

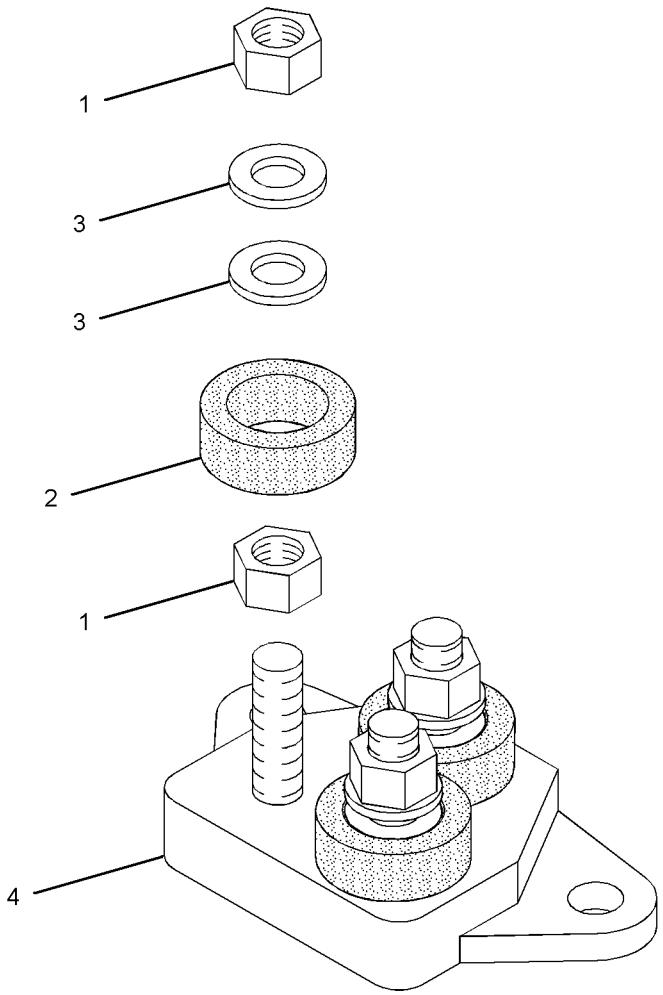

GRAPHIC #1 **<END>** g01931793

307-3124 BRACKET GP-MOUNTING

S/N: JKM1-UP

PART OF 265-3259, 266-3717 WIRING GP-CAB, 263-5075 WIRING GP-CHASSIS

ALSO AN ATTACHMENT

SMCS-0635, 1408 **i02917807**

NOTE	REF NO	GRAPHIC REF	PART NUMBER	QTY	PART NAME 1 2 3 4 5 6 (PRODUCT LEVEL)	SEE PAGE
	1	1	**319-4210**	1	BRACKET AS	
	2	1	**6D-4246**	2	CLIP	
	3	1	**8T-4121**	3	WASHER-HARD (11X21X2.5-MM THK)	
M	4	1	**8T-4136**	2	BOLT (M10X1.5X25-MM)	
M	5	1	**8T-4137**	1	BOLT (M10X1.5X20-MM)	

M-METRIC PART

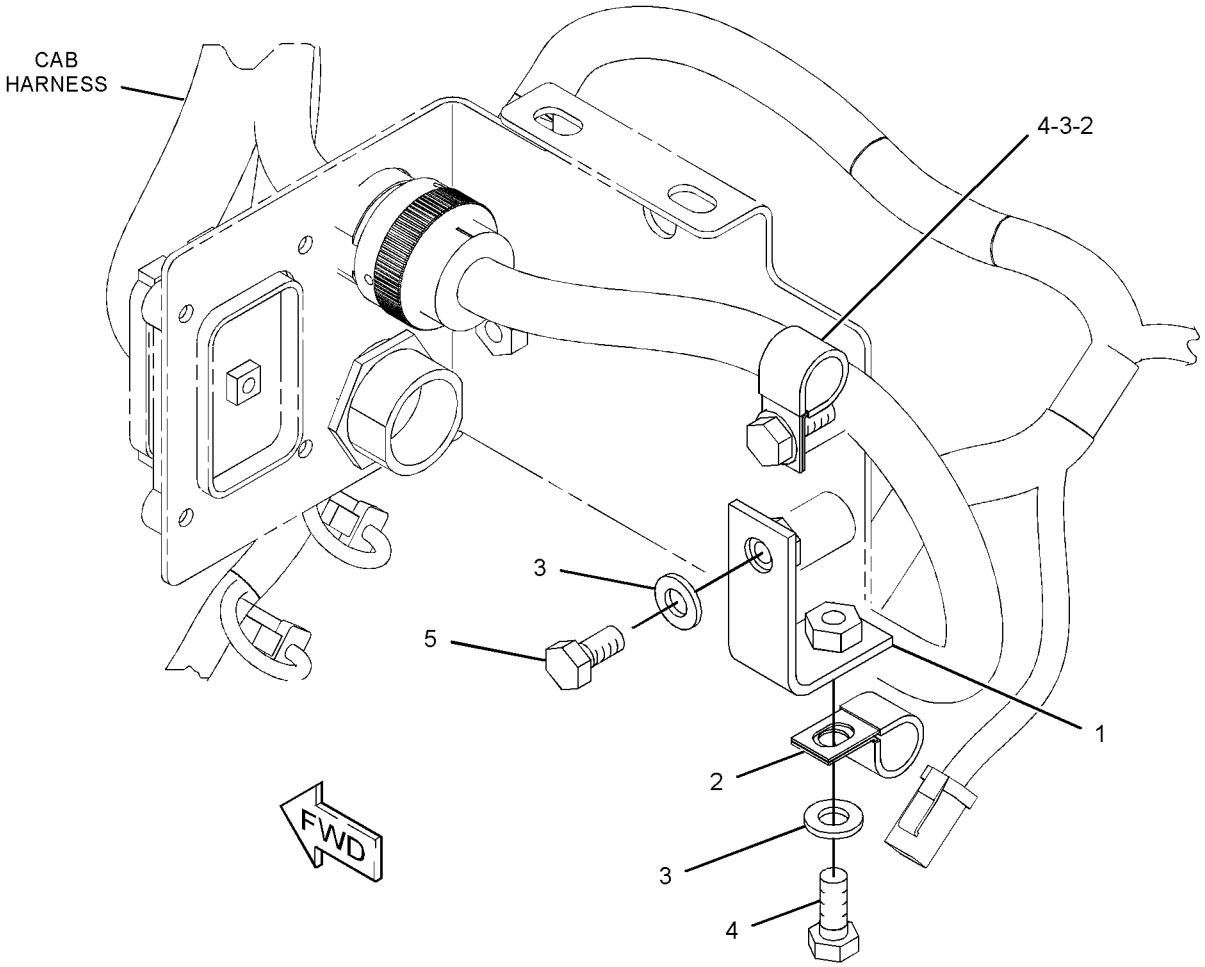

GRAPHIC #1 **<END>** g01425676

284-1300 CAMERA AR–WORK AREA VISUAL SYSTEM

S/N: JKM1-UP

PART OF 317-9491 CONFIGURATION AR

AN ATTACHMENT

SMCS-7348 **i02927609**

NOTE	PART NUMBER	QTY	PART NAME 1 2 3 4 5 6 (PRODUCT LEVEL)	SEE PAGE
Y	*284-2273*	1	CAMERA GP (WORK AREA VISUAL SYSTEM)	180
Y	*284-2272*	1	DISPLAY GP-CAMERA (WORK AREA VISUAL SYSTEM)	952

Y-SEPARATE ILLUSTRATION

<END>

284-2273 CAMERA GP—WORK AREA VISUAL SYSTEM

S/N: JKM1-UP
PART OF 284-1300 CAMERA AR
AN ATTACHMENT

SMCS-7348 **i03550501**

NOTE	REF NO	GRAPHIC REF	PART NUMBER	QTY	PART NAME 1 2 3 4 5 6 (PRODUCT LEVEL)	SEE PAGE
B	1	1	**3S-2093**	28	STRAP-CABLE	
J	2	1	**251-4160**	1	CAMERA GP (115-DEG, COLOR)	
	3	1	**251-8248**	1	CABLE AS-COMMUNICATION (CAMERA)	
	4	1	**258-7484**	1	BRACKET AS	
	5	1	**284-2364**	1	PANEL AS-HOOD	
	6	1	**132-5789**	5	CLIP	
M	7	1	**6V-9189**	4	LOCKNUT (M8X1.25-THD)	
	8	1	**8M-2772**	2	CLIP	
	9	1	**8T-4121**	1	WASHER-HARD (11X21X2.5-MM THK)	
M	10	1	**8T-4137**	1	BOLT (M10X1.5X20-MM)	
	11	1	**8T-4224**	4	WASHER-HARD (8.8X16X2-MM THK)	
					AVAILABLE REPAIR KIT(S):	
J			**251-4162**	1	KIT-BRACKET (CAMERA)	
					(INCLUDES BRACKET, BOLTS, LOCK NUTS, GASKET & ALLEN KEY)	

B-USE AS REQUIRED
J-KIT MARKED J SERVICES PART MARKED J
M-METRIC PART

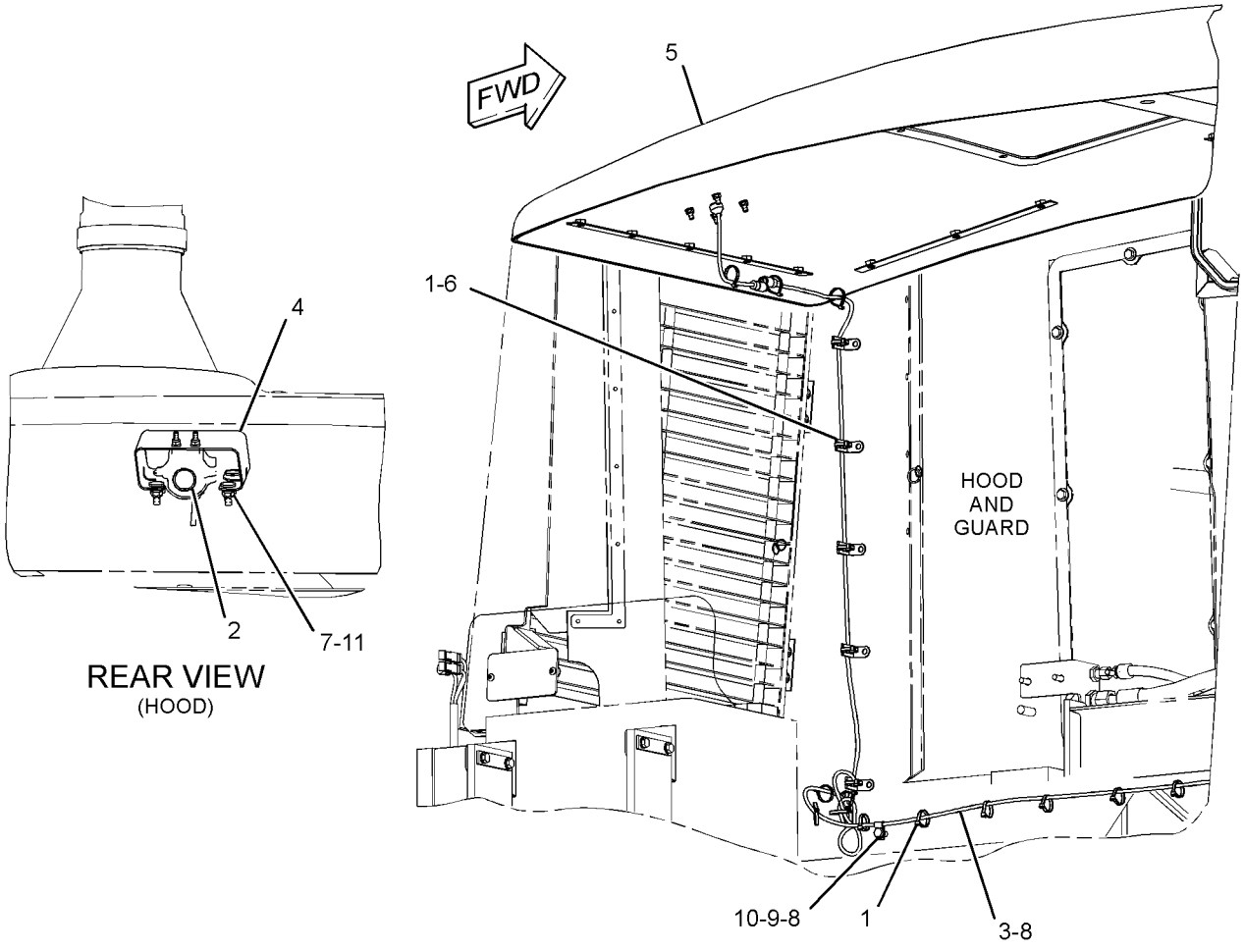

GRAPHIC #1 **<END>** g01830934

3E-7844 CONTROL GP-LIFT KICKOUT

S/N: JKM1-UP

PART OF 239-3361 KICKOUT & POSITIONER GP

SMCS-5109 **i03832009**

NOTE	REF NO	GRAPHIC REF	PART NUMBER	QTY	PART NAME 1 2 3 4 5 6 (PRODUCT LEVEL)	SEE PAGE
	1	1	**9X-5617**	1	FILM-INSTRUCTION (KICKOUT, POSITIONER CONTROL)	
	2	1	**102-8803**	1	KIT-RECEPTACLE (3-PIN)	
					(INCLUDES RECEPTACLE AS & WEDGE)	

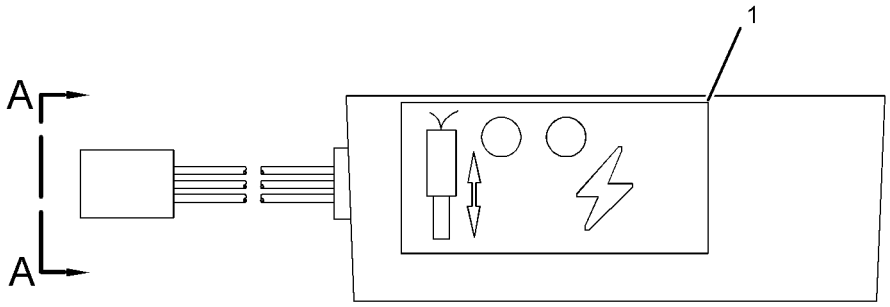

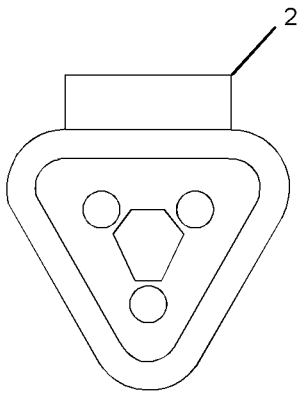

VIEW A-A

GRAPHIC #1 **<END>** g01960614

176-5459 CONTROL GP-POSITION

S/N: JKM1-UP

PART OF 239-3361 KICKOUT & POSITIONER GP

SMCS-5112 **i03896276**

NOTE	REF NO	GRAPHIC REF	PART NUMBER	QTY	PART NAME 1 2 3 4 5 6 (PRODUCT LEVEL)	SEE PAGE
	1	1	**9X-5617**	1	FILM-INSTRUCTION	
	2	1	**155-2260**	1	KIT-CONNECTING PLUG (3-PIN)	
					(INCLUDES PLUG AS, WEDGE, & INTERFACE SEAL)	

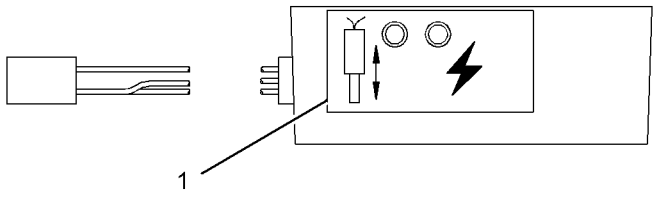

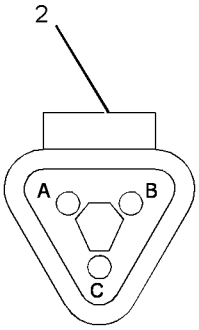

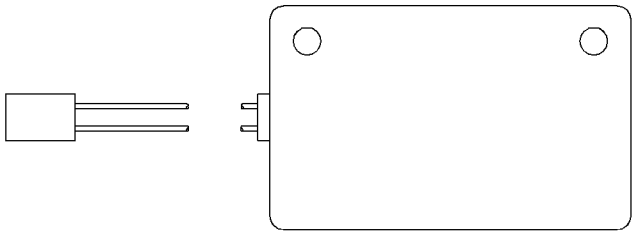

GRAPHIC #1 **<END>** g02140216

237-7539 ELECTRICAL AR

S/N: JKM1-UP

PART OF 237-7545 GENERAL AR

SMCS-1408, 1429, 7402, 7406 **i02897201**

NOTE	PART NUMBER	QTY	PART NAME 1 2 3 4 5 6 (PRODUCT LEVEL)	SEE PAGE
Y	*263-5074*	1	BATTERY & WIRING GP	168
Y	*237-7546*	1	ELECTRONICS GP-POWER TRAIN	195
Y	*248-0420*	1	HORN GP-ELECTRIC	971
Y	*239-3361*	1	KICKOUT & POSITIONER GP	700
Y	*263-3171*	1	LIGHTING GP-ROADING	225
Y	*267-2276*	1	RECEPTACLE GP-AUXILIARY START	238
Y	*262-7087*	1	TILT GP-HOOD	599
Y	*283-5233*	1	WIRING AR-AXLE TEMPERATURE	269
Y	*263-5075*	1	WIRING GP-CHASSIS	325
Y	*263-5073*	1	WIRING GP-ENGINE	339
Y	*263-5072*	1	WIRING GP-FRONT	345
Y	*266-9461*	1	WIRING GP-LIGHTING (LOADER FRAME FLOODLIGHTS)	352

Y-SEPARATE ILLUSTRATION

<END>

262-1421 ELECTRONICS GP-COMMUNICATION–

PRODUCT LINK 300

S/N: JKM1-UP

PART OF 281-9476 WIRING GP-COMMUNICATION

AN ATTACHMENT

SMCS-7606, 7610, 7620 **i03907358**

NOTE	PART NUMBER	QTY	PART NAME 1 2 3 4 5 6 (PRODUCT LEVEL)	SEE PAGE
	355-5105	1	SOFTWARE GP-COMMUNICATION	
			-OR-	
	355-9764	1	SERVICE GP-COMMUNICATION	
			(OPTIONAL SERVICE REPLACEMENT)(INCLUDES CONTROL GP & SOFTWARE)	
	7X-6315	1	STRAP AS-GROUND	
	126-7574	1	SCREW-PAN HEAD (8-32X9.52-MM)	
	134-4126	1	WASHER (4.52X8.28X0.76-MM THK)	

<END>

262-2043 ELECTRONICS GP-COMMUNICATION–

PRODUCT LINK 300

S/N: JKM1-UP

PART OF 266-8583 INSTALLATION AR-COMMUNICATION

AN ATTACHMENT

SMCS-7606, 7610, 7620 **i03894361**

NOTE	PART NUMBER	QTY	PART NAME 1 2 3 4 5 6 (PRODUCT LEVEL)	SEE PAGE
	355-5105	1	SOFTWARE GP-COMMUNICATION	
			-OR-	
	355-9764	1	SERVICE GP-COMMUNICATION	
			(OPTIONAL SERVICE REPLACEMENT) (INCLUDES CONTROL GP & SOFTWARE)	
	7X-6315	1	STRAP AS-GROUND	
	126-7574	1	SCREW-PAN HEAD (8-32X9.52-MM)	
	134-4126	1	WASHER (4.52X8.28X0.76-MM THK)	

<END>

296-3667 ELECTRONICS GP-MONITOR–

MESSENGER, ENGLISH, SPANISH, PORTUGUESE

S/N: JKM1-UP

AN ATTACHMENT

SMCS-7490, 7494, 7601, 7603, 7610, 7620 **i03475344**

NOTE	PART NUMBER	QTY	PART NAME 1 2 3 4 5 6 (PRODUCT LEVEL)	SEE PAGE
	333-3267	1	SOFTWARE GP-MONITOR (MESSENGER, ENG, SPA, POR)	
			-OR-	
	333-3268	1	SERVICE GP-MONITOR (MESSENGER, ENG, SPA, POR)	
			(OPTIONAL SERVICE REPLACEMENT)(INCLUDES CONTROL GP & SOFTWARE)	

<END>

296-3668 ELECTRONICS GP-MONITOR–

MESSENGER, ENGLISH, FRENCH, ARABIC

S/N: JKM1-UP

AN ATTACHMENT

SMCS-7490, 7494, 7601, 7603, 7610, 7620 **i03636305**

NOTE	PART NUMBER	QTY	PART NAME 1 2 3 4 5 6 (PRODUCT LEVEL)	SEE PAGE
	333-3219	1	SOFTWARE GP-MONITOR (MESSENGER, ENG, FRE, ARA)	
			-OR-	
	333-3220	1	SERVICE GP-MONITOR (MESSENGER, ENG, FRE, ARA)	
			(OPTIONAL SERVICE REPLACEMENT)(INCLUDES CONTROL GP & SOFTWARE)	

<END>

296-3669 ELECTRONICS GP-MONITOR–MESSENGER, ENGLISH, FRENCH, GERMAN

S/N: JKM1-UP

AN ATTACHMENT

SMCS-7490, 7494, 7601, 7603, 7610, 7620 **i03636302**

NOTE	PART NUMBER	QTY	PART NAME 1 2 3 4 5 6 (PRODUCT LEVEL)	SEE PAGE
	333-3253	1	SOFTWARE GP-MONITOR (MESSENGER, ENG, FRE, GER)	
			-OR-	
	300-0392	1	SERVICE GP-MONITOR (MESSENGER, ENG, FRE, GER)	
			(OPTIONAL SERVICE REPLACEMENT)(INCLUDES CONTROL GP & SOFTWARE)	
			<END>	

296-3670 ELECTRONICS GP-MONITOR–MESSENGER, ENGLISH, FRENCH, ITALIAN

S/N: JKM1-UP

AN ATTACHMENT

SMCS-7490, 7494, 7601, 7603, 7610, 7620 **i03636301**

NOTE	PART NUMBER	QTY	PART NAME 1 2 3 4 5 6 (PRODUCT LEVEL)	SEE PAGE
	333-3255	1	SOFTWARE GP-MONITOR (MESSENGER, ENG, FRE, ITA)	
			-OR-	
	300-0394	1	SERVICE GP-MONITOR (MESSENGER, ENG, FRE, ITA)	
			(OPTIONAL SERVICE REPLACEMENT)(INCLUDES CONTROL GP & SOFTWARE)	
			<END>	

296-3671 ELECTRONICS GP-MONITOR–MESSENGER, ENGLISH, FRENCH, DUTCH

S/N: JKM1-UP

AN ATTACHMENT

SMCS-7490, 7494, 7601, 7603, 7610, 7620 **i03636300**

NOTE	PART NUMBER	QTY	PART NAME 1 2 3 4 5 6 (PRODUCT LEVEL)	SEE PAGE
	333-3257	1	SOFTWARE GP-MONITOR (MESSENGER, ENG, FRE, DUT)	
			-OR-	
	333-3258	1	SERVICE GP-MONITOR (MESSENGER, ENG, FRE, DUT)	
			(OPTIONAL SERVICE REPLACEMENT)(INCLUDES CONTROL GP & SOFTWARE)	
			<END>	

317-4532 ELECTRONICS GP-MONITOR–
MESSENGER, ENGLISH, FRENCH, SPANISH
S/N: JKM1-UP
AN ATTACHMENT

SMCS-7490, 7494, 7601, 7603, 7610, 7620 **i03475411**

NOTE	PART NUMBER	QTY	PART NAME 1 2 3 4 5 6 (PRODUCT LEVEL)	SEE PAGE
	333-3207	1	SOFTWARE GP-MONITOR (MESSENGER, ENG, FRE, SPA)	
			-OR-	
	333-3208	1	SERVICE GP-MONITOR (MESSENGER, ENG, FRE, SPA)	
			(OPTIONAL SERVICE REPLACEMENT)(INCLUDES CONTROL GP & SOFTWARE)	

<END>

317-4533 ELECTRONICS GP-MONITOR–
MESSENGER, ENGLISH, FRENCH, CHINESE
S/N: JKM1-UP
AN ATTACHMENT

SMCS-7490, 7494, 7601, 7603, 7610, 7620 **i03475410**

NOTE	PART NUMBER	QTY	PART NAME 1 2 3 4 5 6 (PRODUCT LEVEL)	SEE PAGE
	333-3209	1	SOFTWARE GP-MONITOR (MESSENGER, ENG, FRE, CHI)	
			-OR-	
	333-3210	1	SERVICE GP-MONITOR (MESSENGER, ENG, FRE, CHI)	
			(OPTIONAL SERVICE REPLACEMENT)(INCLUDES CONTROL GP & SOFTWARE)	

<END>

317-4534 ELECTRONICS GP-MONITOR–
MESSENGER, ENGLISH, FRENCH, KOREAN
S/N: JKM1-UP
AN ATTACHMENT

SMCS-7490, 7494, 7601, 7603, 7610, 7620 **i03475409**

NOTE	PART NUMBER	QTY	PART NAME 1 2 3 4 5 6 (PRODUCT LEVEL)	SEE PAGE
	333-3211	1	SOFTWARE GP-MONITOR (MESSENGER, ENG, FRE, KOR)	
			-OR-	
	333-3212	1	SERVICE GP-MONITOR (MESSENGER, ENG, FRE, KOR)	
			(OPTIONAL SERVICE REPLACEMENT)(INCLUDES CONTROL GP & SOFTWARE)	

<END>

317-4535 ELECTRONICS GP-MONITOR–
MESSENGER, ENGLISH, FRENCH, INDONESIAN
S/N: JKM1-UP
AN ATTACHMENT

SMCS-7490, 7494, 7601, 7603, 7610, 7620 **i03475414**

NOTE	PART NUMBER	QTY	PART NAME 1 2 3 4 5 6 (PRODUCT LEVEL)	SEE PAGE
	333-3213	1	SOFTWARE GP-MONITOR (MESSENGER, ENG, FRE, IND)	
			-OR-	
	333-3214	1	SERVICE GP-MONITOR (MESSENGER, ENG, FRE, IND)	
			(OPTIONAL SERVICE REPLACEMENT)(INCLUDES CONTROL GP & SOFTWARE)	

<END>

317-4536 ELECTRONICS GP-MONITOR–
MESSENGER, ENGLISH, FRENCH, MALAYSIAN
S/N: JKM1-UP
AN ATTACHMENT

SMCS-7490, 7494, 7601, 7603, 7610, 7620 **i03475413**

NOTE	PART NUMBER	QTY	PART NAME 1 2 3 4 5 6 (PRODUCT LEVEL)	SEE PAGE
	333-3215	1	SOFTWARE GP-MONITOR (MESSENGER, ENG, FRE, MAY)	
			-OR-	
	333-3216	1	SERVICE GP-MONITOR (MESSENGER, ENG, FRE, MAY)	
			(OPTIONAL SERVICE REPLACEMENT)(INCLUDES CONTROL GP & SOFTWARE)	

<END>

317-4537 ELECTRONICS GP-MONITOR–
MESSENGER, ENGLISH, FRENCH, THAI
S/N: JKM1-UP
AN ATTACHMENT

SMCS-7490, 7494, 7601, 7603, 7610, 7620 **i03475412**

NOTE	PART NUMBER	QTY	PART NAME 1 2 3 4 5 6 (PRODUCT LEVEL)	SEE PAGE
	333-3217	1	SOFTWARE GP-MONITOR (MESSENGER, ENG, FRE, THA)	
			-OR-	
	333-3218	1	SERVICE GP-MONITOR (MESSENGER, ENG, FRE, THA)	
			(OPTIONAL SERVICE REPLACEMENT)(INCLUDES CONTROL GP & SOFTWARE)	

<END>

317-4538 ELECTRONICS GP-MONITOR–MESSENGER, ENGLISH, FRENCH, CZECH

S/N: JKM1-UP

AN ATTACHMENT

SMCS-7490, 7494, 7601, 7603, 7610, 7620 **i03475407**

NOTE	PART NUMBER	QTY	PART NAME 1 2 3 4 5 6 (PRODUCT LEVEL)	SEE PAGE
	333-3221	1	SOFTWARE GP-MONITOR (MESSENGER, ENG, FRE, CZE)	
			-OR-	
	333-3222	1	SERVICE GP-MONITOR (MESSENGER, ENG, FRE, CZE)	
			(OPTIONAL SERVICE REPLACEMENT)(INCLUDES CONTROL GP & SOFTWARE)	

<END>

317-4539 ELECTRONICS GP-MONITOR–MESSENGER, ENGLISH, FRENCH, DANISH

S/N: JKM1-UP

AN ATTACHMENT

SMCS-7490, 7494, 7601, 7603, 7610, 7620 **i03475401**

NOTE	PART NUMBER	QTY	PART NAME 1 2 3 4 5 6 (PRODUCT LEVEL)	SEE PAGE
	333-3223	1	SOFTWARE GP-MONITOR (MESSENGER, ENG, FRE, DAN)	
			-OR-	
	333-3224	1	SERVICE GP-MONITOR (MESSENGER, ENG, FRE, DAN)	
			(OPTIONAL SERVICE REPLACEMENT)(INCLUDES CONTROL GP & SOFTWARE)	

<END>

317-4540 ELECTRONICS GP-MONITOR–MESSENGER, ENGLISH, FRENCH, ESTONIAN

S/N: JKM1-UP

AN ATTACHMENT

SMCS-7490, 7494, 7601, 7603, 7610, 7620 **i03560061**

NOTE	PART NUMBER	QTY	PART NAME 1 2 3 4 5 6 (PRODUCT LEVEL)	SEE PAGE
	333-3225	1	SOFTWARE GP-MONITOR (MESSENGER, ENG, FRE, EST)	
			-OR-	
	333-3226	1	SERVICE GP-MONITOR (MESSENGER, ENG, FRE, EST)	
			(OPTIONAL SERVICE REPLACEMENT)(INCLUDES CONTROL GP & SOFTWARE)	

<END>

317-4541 ELECTRONICS GP-MONITOR–MESSENGER, ENGLISH, FRENCH, FINNISH

S/N: JKM1-UP

AN ATTACHMENT

SMCS-7490, 7494, 7601, 7603, 7610, 7620 **i03560063**

NOTE	PART NUMBER	QTY	PART NAME 1 2 3 4 5 6 (PRODUCT LEVEL)	SEE PAGE
	333-3227	1	SOFTWARE GP-MONITOR (MESSENGER, ENG, FRE, FIN)	
			-OR-	
	333-3228	1	SERVICE GP-MONITOR (MESSENGER, ENG, FRE, FIN)	
			(OPTIONAL SERVICE REPLACEMENT)(INCLUDES CONTROL GP & SOFTWARE)	

<END>

317-4543 ELECTRONICS GP-MONITOR–MESSENGER, ENGLISH, FRENCH, GREEK

S/N: JKM1-UP

AN ATTACHMENT

SMCS-7490, 7494, 7601, 7603, 7610, 7620 **i03475400**

NOTE	PART NUMBER	QTY	PART NAME 1 2 3 4 5 6 (PRODUCT LEVEL)	SEE PAGE
	333-3229	1	SOFTWARE GP-MONITOR (MESSENGER, ENG, FRE, GRE)	
			-OR-	
	333-3230	1	SERVICE GP-MONITOR (MESSENGER, ENG, FRE, GRE)	
			(OPTIONAL SERVICE REPLACEMENT)(INCLUDES CONTROL GP & SOFTWARE)	

<END>

317-4544 ELECTRONICS GP-MONITOR–MESSENGER, ENGLISH, FRENCH, HUNGARIAN

S/N: JKM1-UP

AN ATTACHMENT

SMCS-7490, 7494, 7601, 7603, 7610, 7620 **i03475430**

NOTE	PART NUMBER	QTY	PART NAME 1 2 3 4 5 6 (PRODUCT LEVEL)	SEE PAGE
	333-3231	1	SOFTWARE GP-MONITOR (MESSENGER)	
			-OR-	
	333-3232	1	SERVICE GP-MONITOR (MESSENGER, ENG, FRE, HUN)	
			(OPTIONAL SERVICE REPLACEMENT)(INCLUDES CONTROL GP & SOFTWARE)	

<END>

317-4545 ELECTRONICS GP-MONITOR–
MESSENGER, ENGLISH, FRENCH, HEBREW
S/N: JKM1-UP
AN ATTACHMENT

SMCS-7490, 7494, 7601, 7603, 7610, 7620 **i03475406**

NOTE	PART NUMBER	QTY	PART NAME 1 2 3 4 5 6 (PRODUCT LEVEL)	SEE PAGE
	333-3233	1	SOFTWARE GP-MONITOR (MESSENGER, ENG, FRE, HEB)	
			-OR-	
	333-3234	1	SERVICE GP-MONITOR (MESSENGER, ENG, FRE, HEB)	
			(OPTIONAL SERVICE REPLACEMENT)(INCLUDES CONTROL GP & SOFTWARE)	

<END>

317-4546 ELECTRONICS GP-MONITOR–
MESSENGER, ENGLISH, FRENCH, ICELANDIC
S/N: JKM1-UP
AN ATTACHMENT

SMCS-7490, 7494, 7601, 7603, 7610, 7620 **i03475404**

NOTE	PART NUMBER	QTY	PART NAME 1 2 3 4 5 6 (PRODUCT LEVEL)	SEE PAGE
	333-3235	1	SOFTWARE GP-MONITOR (MESSENGER, ENG, FRE, ICE)	
			-OR-	
	333-3236	1	SERVICE GP-MONITOR (MESSENGER, ENG, FRE, ICE)	
			(OPTIONAL SERVICE REPLACEMENT)(INCLUDES CONTROL GP & SOFTWARE)	

<END>

317-4547 ELECTRONICS GP-MONITOR–
MESSENGER, ENGLISH, FRENCH, LITHUANIAN
S/N: JKM1-UP
AN ATTACHMENT

SMCS-7490, 7494, 7601, 7603, 7610, 7620 **i03475402**

NOTE	PART NUMBER	QTY	PART NAME 1 2 3 4 5 6 (PRODUCT LEVEL)	SEE PAGE
	333-3237	1	SOFTWARE GP-MONITOR (MESSENGER, ENG, FRE, LIT)	
			-OR-	
	333-3238	1	SERVICE GP-MONITOR (MESSENGER, ENG, FRE, LIT)	
			(OPTIONAL SERVICE REPLACEMENT)(INCLUDES CONTROL GP & SOFTWARE)	

<END>

317-4548 ELECTRONICS GP-MONITOR–MESSENGER, ENGLISH, FRENCH, LATVIAN

S/N: JKM1-UP

AN ATTACHMENT

SMCS-7490, 7494, 7601, 7603, 7610, 7620 **i03475415**

NOTE	PART NUMBER	QTY	PART NAME 1 2 3 4 5 6 (PRODUCT LEVEL)	SEE PAGE
	333-3239	1	SOFTWARE GP-MONITOR (MESSENGER, ENG, FRE, LAV)	
			-OR-	
	333-3240	1	SERVICE GP-MONITOR (MESSENGER, ENG, FRE, LAV)	
			(OPTIONAL SERVICE REPLACEMENT)(INCLUDES CONTROL GP & SOFTWARE)	
			<END>	

317-4549 ELECTRONICS GP-MONITOR–MESSENGER, ENGLISH, FRENCH, POLISH

S/N: JKM1-UP

AN ATTACHMENT

SMCS-7490, 7494, 7601, 7603, 7610, 7620 **i03475423**

NOTE	PART NUMBER	QTY	PART NAME 1 2 3 4 5 6 (PRODUCT LEVEL)	SEE PAGE
	333-3241	1	SOFTWARE GP-MONITOR (MESSENGER, ENG, FRE, POL)	
			-OR-	
	333-3242	1	SERVICE GP-MONITOR (MESSENGER, ENG, FRE, POL)	
			(OPTIONAL SERVICE REPLACEMENT)(INCLUDES CONTROL GP & SOFTWARE)	
			<END>	

317-4550 ELECTRONICS GP-MONITOR–MESSENGER, ENGLISH, FRENCH, RUSSIAN

S/N: JKM1-UP

AN ATTACHMENT

SMCS-7490, 7494, 7601, 7603, 7610, 7620 **i03475422**

NOTE	PART NUMBER	QTY	PART NAME 1 2 3 4 5 6 (PRODUCT LEVEL)	SEE PAGE
	333-3243	1	SOFTWARE GP-MONITOR (MESSENGER, ENG, FRE, RUS)	
			-OR-	
	333-3244	1	SERVICE GP-MONITOR (MESSENGER, ENG, FRE, RUS)	
			(OPTIONAL SERVICE REPLACEMENT)(INCLUDES CONTROL GP & SOFTWARE)	
			<END>	

317-4551 ELECTRONICS GP-MONITOR–
MESSENGER, ENGLISH, FRENCH, SLOVAKIAN
S/N: JKM1-UP
AN ATTACHMENT

SMCS-7490, 7494, 7601, 7603, 7610, 7620 **i03475421**

NOTE	PART NUMBER	QTY	PART NAME 1 2 3 4 5 6 (PRODUCT LEVEL)	SEE PAGE
	333-3245	1	SOFTWARE GP-MONITOR (MESSENGER, ENG, FRE, SLO)	
			-OR-	
	333-3246	1	SERVICE GP-MONITOR (MESSENGER, ENG, FRE, SLO)	
			(OPTIONAL SERVICE REPLACEMENT)(INCLUDES CONTROL GP & SOFTWARE)	

<END>

317-4552 ELECTRONICS GP-MONITOR–
MESSENGER, ENGLISH, FRENCH, SLOVENIAN
S/N: JKM1-UP
AN ATTACHMENT

SMCS-7490, 7494, 7601, 7603, 7610, 7620 **i03475428**

NOTE	PART NUMBER	QTY	PART NAME 1 2 3 4 5 6 (PRODUCT LEVEL)	SEE PAGE
	333-3247	1	SOFTWARE GP-MONITOR (MESSENGER, ENG, FRE, SLV)	
			-OR-	
	333-3248	1	SERVICE GP-MONITOR (MESSENGER, ENG, FRE, SLV)	
			(OPTIONAL SERVICE REPLACEMENT)(INCLUDES CONTROL GP & SOFTWARE)	

<END>

317-4553 ELECTRONICS GP-MONITOR–
MESSENGER, ENGLISH, FRENCH, SWEDISH
S/N: JKM1-UP
AN ATTACHMENT

SMCS-7490, 7494, 7601, 7603, 7610, 7620 **i03475426**

NOTE	PART NUMBER	QTY	PART NAME 1 2 3 4 5 6 (PRODUCT LEVEL)	SEE PAGE
	333-3249	1	SOFTWARE GP-MONITOR (MESSENGER, ENG, FRE, SWE)	
			-OR-	
	333-3250	1	SERVICE GP-MONITOR (MESSENGER, ENG, FRE, SWE)	
			(OPTIONAL SERVICE REPLACEMENT)(INCLUDES CONTROL GP & SOFTWARE)	

<END>

317-4554 ELECTRONICS GP-MONITOR–
MESSENGER, ENGLISH, FRENCH, TURKISH
S/N: JKM1-UP
AN ATTACHMENT

SMCS-7490, 7494, 7601, 7603, 7610, 7620 **i03475425**

NOTE	PART NUMBER	QTY	PART NAME 1 2 3 4 5 6 (PRODUCT LEVEL)	SEE PAGE
	333-3251	1	SOFTWARE GP-MONITOR (MESSENGER, ENG, FRE, TUR)	
			-OR-	
	333-3252	1	SERVICE GP-MONITOR (MESSENGER, ENG, FRE, TUR)	
			(OPTIONAL SERVICE REPLACEMENT)(INCLUDES CONTROL GP & SOFTWARE)	

<END>

317-4555 ELECTRONICS GP-MONITOR–
MESSENGER, ENGLISH, FRENCH, NORWEGIAN
S/N: JKM1-UP
AN ATTACHMENT

SMCS-7490, 7494, 7601, 7603, 7610, 7620 **i03636304**

NOTE	PART NUMBER	QTY	PART NAME 1 2 3 4 5 6 (PRODUCT LEVEL)	SEE PAGE
	333-3259	1	SOFTWARE GP-MONITOR (MESSENGER, ENG, FRE, NOR)	
			-OR-	
	333-3260	1	SERVICE GP-MONITOR (MESSENGER, ENG, FRE, NOR)	
			(OPTIONAL SERVICE REPLACEMENT)(INCLUDES CONTROL GP & SOFTWARE)	

<END>

317-4556 ELECTRONICS GP-MONITOR–
MESSENGER, ENGLISH, FRENCH, PORTUGUESE
S/N: JKM1-UP
BRAZIL
AN ATTACHMENT

SMCS-7490, 7494, 7601, 7603, 7610, 7620 **i03475419**

NOTE	PART NUMBER	QTY	PART NAME 1 2 3 4 5 6 (PRODUCT LEVEL)	SEE PAGE
	333-3261	1	SOFTWARE GP-MONITOR (MESSENGER, ENG, FRE, POR)	
			-OR-	
	333-3262	1	SERVICE GP-MONITOR (MESSENGER, ENG, FRE, POR)	
			(OPTIONAL SERVICE REPLACEMENT)(INCLUDES CONTROL GP & SOFTWARE)	

<END>

317-4557 ELECTRONICS GP-MONITOR–
MESSENGER, ENGLISH, FRENCH, PORTUGUESE
S/N: JKM1-UP
PORTUGAL
AN ATTACHMENT

SMCS-7490, 7494, 7601, 7603, 7610, 7620 **i03475417**

NOTE	PART NUMBER	QTY	PART NAME 1 2 3 4 5 6 (PRODUCT LEVEL)	SEE PAGE
	333-3263	1	SOFTWARE GP-MONITOR (MESSENGER, ENG, FRE, POR)	
			-OR-	
	333-3264	1	SERVICE GP-MONITOR (MESSENGER, ENG, FRE, POR)	
			(OPTIONAL SERVICE REPLACEMENT)(INCLUDES CONTROL GP & SOFTWARE)	

<END>

317-4558 ELECTRONICS GP-MONITOR–
MESSENGER, ENGLISH, JAPANESE
S/N: JKM1-UP
AN ATTACHMENT

SMCS-7490, 7494, 7601, 7603, 7610, 7620 **i03627108**

NOTE	PART NUMBER	QTY	PART NAME 1 2 3 4 5 6 (PRODUCT LEVEL)	SEE PAGE
	346-5146	1	SOFTWARE GP-MONITOR (MESSENGER, ENG, JPN)	
			-OR-	
	346-5147	1	SERVICE GP-MONITOR (MESSENGER, ENG, JPN)	
			(OPTIONAL SERVICE REPLACEMENT)(INCLUDES CONTROL GP & SOFTWARE)	

<END>

317-4559 ELECTRONICS GP-MONITOR–
MESSENGER, CROATIAN, SERBIAN, SLOVENIAN
S/N: JKM1-UP
AN ATTACHMENT

SMCS-7490, 7494, 7601, 7603, 7610, 7620 **i03475416**

NOTE	PART NUMBER	QTY	PART NAME 1 2 3 4 5 6 (PRODUCT LEVEL)	SEE PAGE
	333-3269	1	SOFTWARE GP-MONITOR (MESSENGER, CRO, SCC, SLV)	
			-OR-	
	333-3270	1	SERVICE GP-MONITOR (MESSENGER, CRO, SCC, SLV)	
			(OPTIONAL SERVICE REPLACEMENT)(INCLUDES CONTROL GP & SOFTWARE)	

<END>

317-4560 ELECTRONICS GP-MONITOR–
MESSENGER, ENGLISH, FRENCH, ITALIAN
S/N: JKM1-UP
AN ATTACHMENT

SMCS-7490, 7494, 7601, 7603, 7610, 7620 **i03475420**

NOTE	PART NUMBER	QTY	PART NAME 1 2 3 4 5 6 (PRODUCT LEVEL)	SEE PAGE
	333-3271	1	SOFTWARE GP-MONITOR (MESSENGER, ENG, FRE, ITA)	
			-OR-	
	333-3272	1	SERVICE GP-MONITOR (MESSENGER, ENG, FRE, ITA)	
			(OPTIONAL SERVICE REPLACEMENT)(INCLUDES CONTROL GP & SOFTWARE)	
			<END>	

330-5363 ELECTRONICS GP-MONITOR
S/N: JKM1-UP
PART OF 330-5954 INSTALLATION AR-COMMUNICATION
AN ATTACHMENT

SMCS-7490, 7494, 7601, 7603, 7610, 7620 **i03637907**

NOTE	PART NUMBER	QTY	PART NAME 1 2 3 4 5 6 (PRODUCT LEVEL)	SEE PAGE
	289-2217	1	SOFTWARE GP-MONITOR	
			-OR-	
	286-3274	1	SERVICE GP-MONITOR	
			(OPTIONAL SERVICE REPLACEMENT)(INCLUDES CONTROL GP & SOFTWARE)	
			<END>	

237-7546 ELECTRONICS GP-POWER TRAIN
S/N: JKM1-UP
PART OF 237-7539 ELECTRICAL AR

SMCS-4800, 4808, 7610, 7620 **i03879078**

NOTE	PART NUMBER	QTY	PART NAME 1 2 3 4 5 6 (PRODUCT LEVEL)	SEE PAGE
	359-6766	1	SOFTWARE GP-POWER TRAIN	
			—OR—	
	359-6767	1	SERVICE GP-POWER TRAIN	
			(OPTIONAL SERVICE REPLACEMENT)(INCLUDES CONTROL GP & SOFTWARE)	
			<END>	

277-4410 GLOW PLUG GP

S/N: C6E1-UP; G9G1-UP

PART OF 242-1382 ENGINE AR-PRIMARY

SMCS-1412 **i03092228**

NOTE	REF NO	GRAPHIC REF	PART NUMBER	QTY	PART NAME 1 2 3 4 5 6 (PRODUCT LEVEL)	SEE PAGE
	1	1	**292-9881**	6	GLOW PLUG	
	2	1	**316-9073**	1	CABLE GP (GLOW PLUG)	
	2A	1	**277-4408**	1	CABLE AS	
M	2B	1	**5C-2890**	1	NUT (M6X1-THD)	
	4	1	**275-2428**	1	INSULATOR	
M	5	1	**5C-2890**	2	NUT (M6X1-THD)	
	6	1	**277-4409**	1	CAP	
	8	1	**100-4838**	1	BOLT (M6X20-MM)	

M-METRIC PART

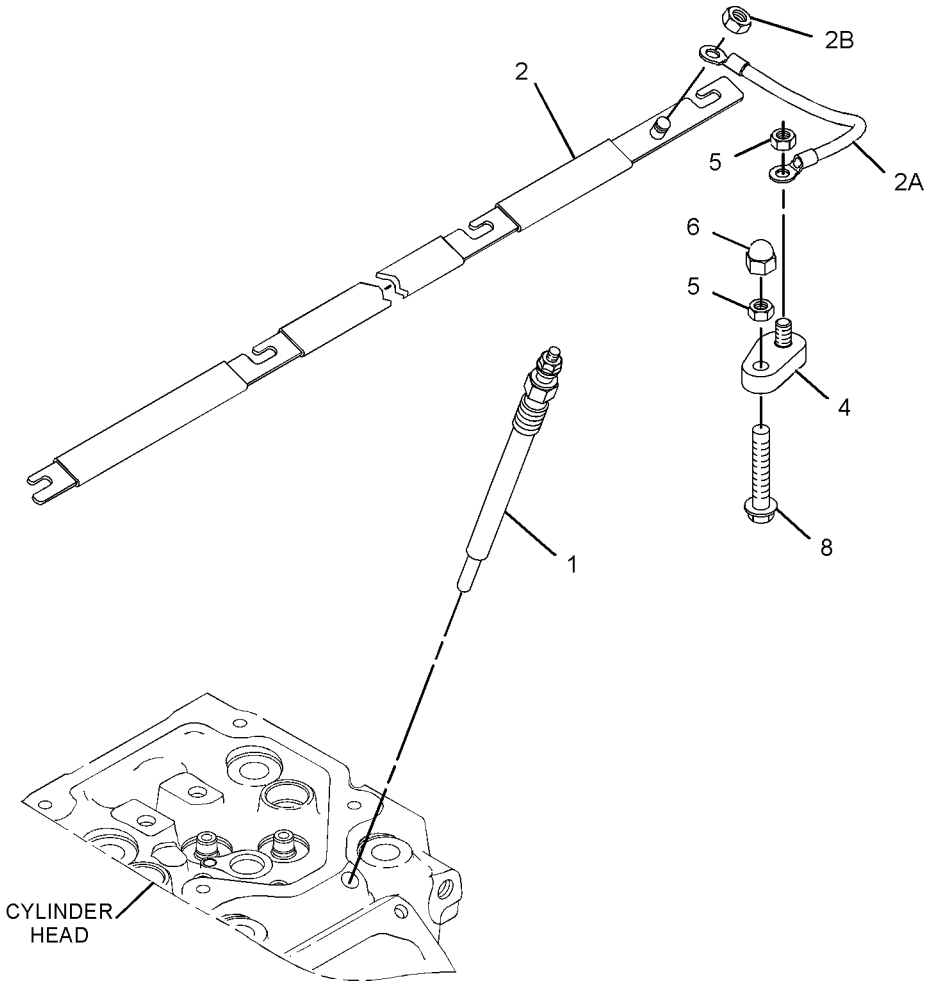

GRAPHIC #1 **<END>** g01636787

265-7724 HEATER GP-JACKET WATER

S/N: JKM1-UP
PART OF 317-9486 COLD WEATHER AR
AN ATTACHMENT

SMCS-1383 **i02930692**

NOTE	REF NO	GRAPHIC REF	PART NUMBER	QTY	PART NAME 1 2 3 4 5 6 (PRODUCT LEVEL)	SEE PAGE
	1	1	**6N-1604**	1	CAP AS-DUST	
	2	1	**9X-6772**	1	STRAP-CABLE	
	3	1	**260-1555**	1	ELEMENT AS-JACKET WATER HEATER (120-VOLT, 1000-WATT)	
		1	**4D-9986**	1	SEAL-O-RING	
	4	1	**260-1566**	1	CORD AS-HEATER	
M	5	1	**8T-4200**	1	BOLT (M8X1.25X16-MM)	
	6	1	**8T-4224**	1	WASHER-HARD (8.8X16X2-MM THK)	

M-METRIC PART

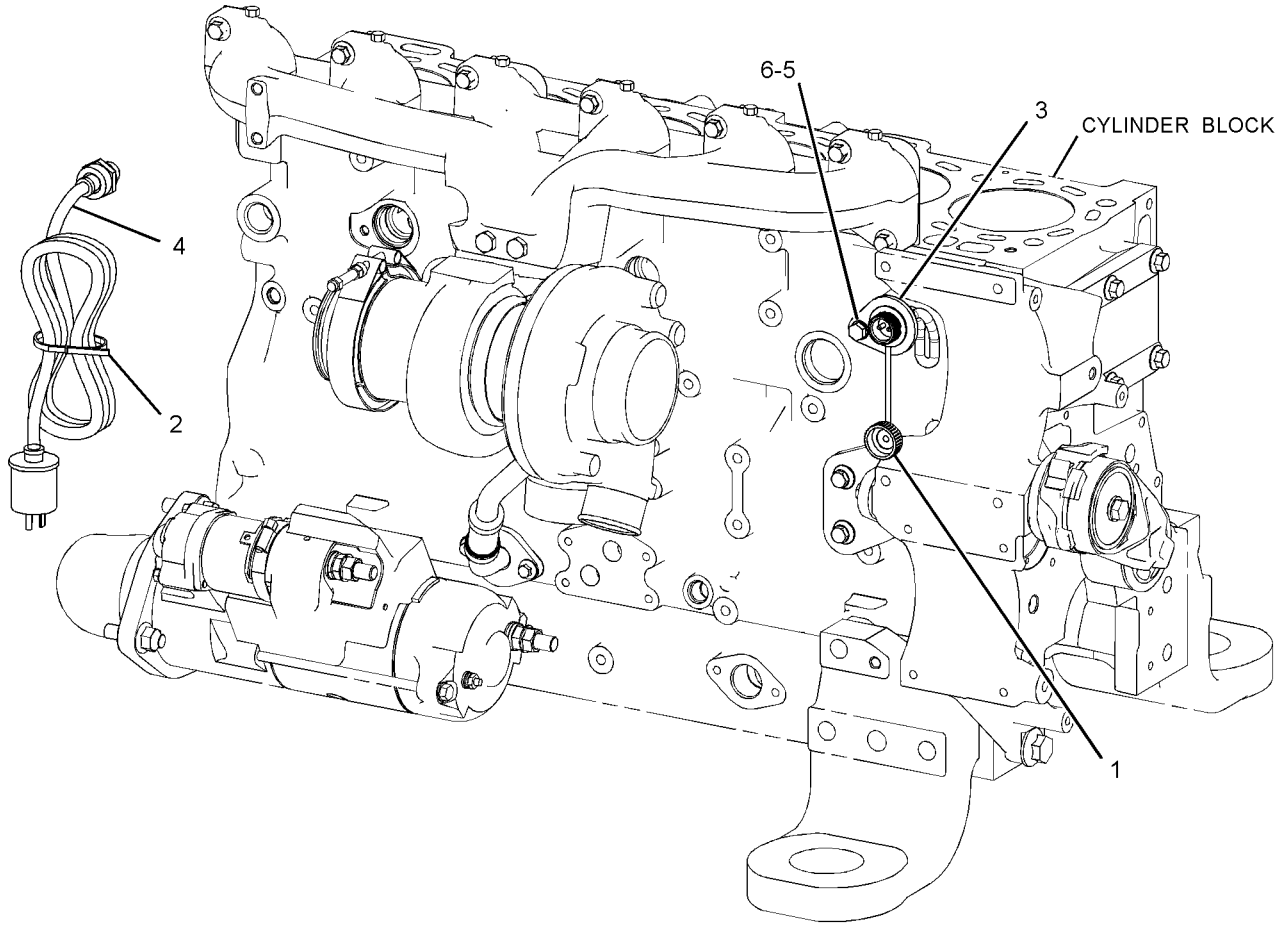

GRAPHIC #1 **<END>** g01343350

267-0339 HEATER GP-JACKET WATER

S/N: JKM1-UP
PART OF 317-9485 COLD WEATHER AR
AN ATTACHMENT

SMCS-1383 **i02932394**

NOTE	REF NO	GRAPHIC REF	PART NUMBER	QTY	PART NAME 1 2 3 4 5 6 (PRODUCT LEVEL)	SEE PAGE
	1	1	**6N-1604**	1	CAP AS-DUST	
	2	1	**9X-6772**	1	STRAP-CABLE	
	3	1	**260-1556**	1	ELEMENT AS-JACKET WATER HEATER (240-VOLT, 1000-WATT)	
		1	**4D-9986**	1	SEAL-O-RING	
	4	1	**260-1569**	1	CORD AS-HEATER	
M	5	1	**8T-4200**	1	BOLT (M8X1.25X16-MM)	
	6	1	**8T-4224**	1	WASHER-HARD (8.8X16X2-MM THK)	

M-METRIC PART

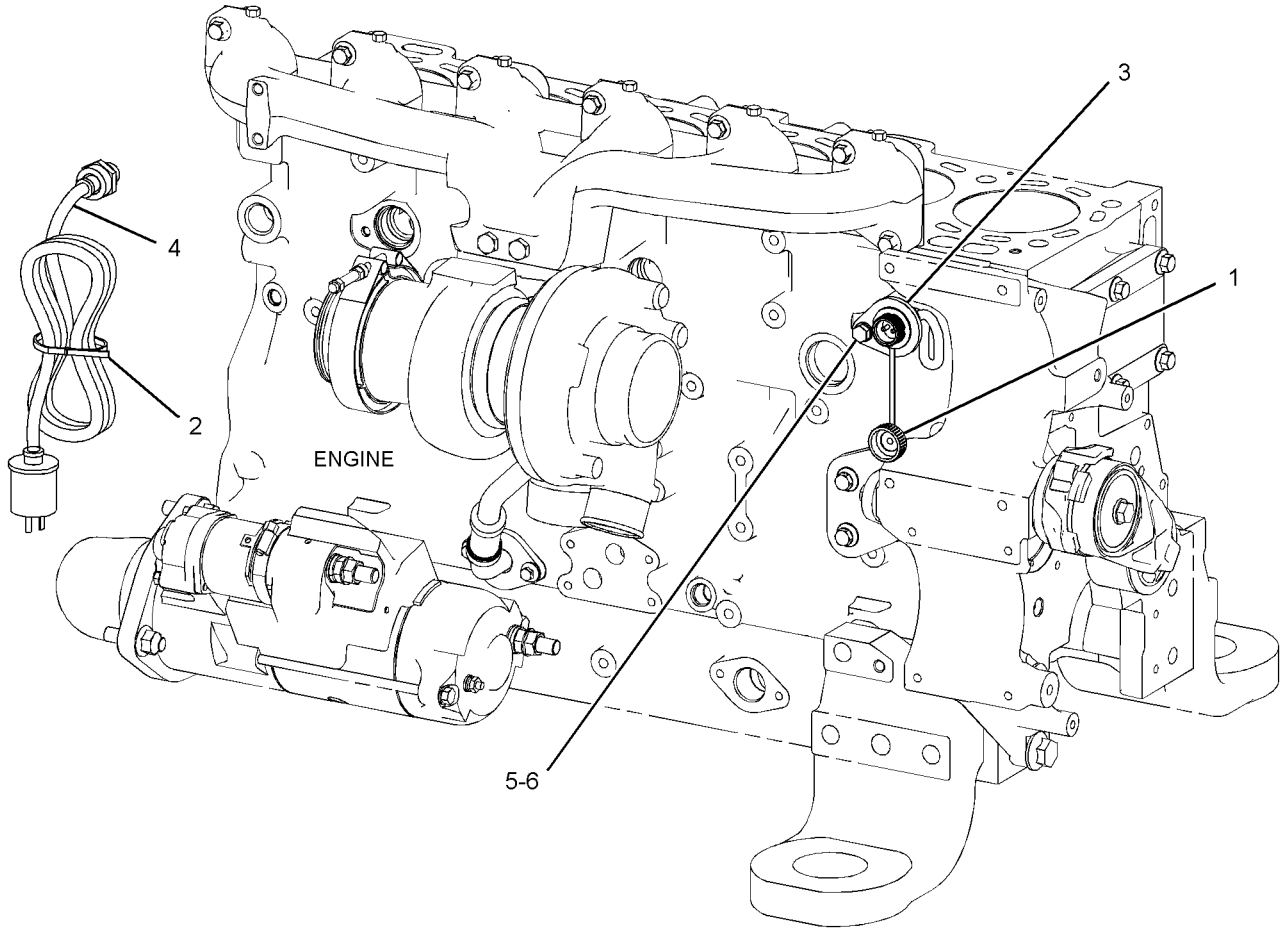

GRAPHIC #1 **<END>** g01426588

266-8583 INSTALLATION AR-COMMUNICATION–

PRODUCT LINK 300

S/N: JKM1-UP

PART OF 329-5761 CONVERSION AR-MACHINE, 322-1217 INSTALLATION AR-COMMUNICATION, 344-5644 MODULE AR-CLEAN EMISSIONS

AN ATTACHMENT

SMCS-7606 **i03100402**

NOTE	PART NUMBER	QTY	PART NAME 1 2 3 4 5 6 (PRODUCT LEVEL)	SEE PAGE
Y	*308-4278*	1	BATTERY & WIRING GP	176
Y	*262-2043*	1	ELECTRONICS GP-COMMUNICATION (PRODUCT LINK 300)	184
Y	*281-9476*	1	WIRING GP-COMMUNICATION (PRODUCT LINK 300)	337
	307-0047	1	FILM-INFORMATION (PRODUCT LINK, READ OMM)	
			(INSIDE CAB ON PLATE OFF OF RH, REAR CAB POST, NEXT TO FILM-WARN UNIV)	
	274-4284	1	FILM-WARNING (PRODUCT LINK RADIO, INTL)	
			(INSIDE CAB ON PLATE OFF OF RH, REAR CAB POST)	
Y-SEPARATE ILLUSTRATION				

<END>

322-1217 INSTALLATION AR-COMMUNICATION–

PRODUCT LINK 300

S/N: JKM1-UP

AN ATTACHMENT

SMCS-7606 **i02934774**

NOTE	PART NUMBER	QTY	PART NAME 1 2 3 4 5 6 (PRODUCT LEVEL)	SEE PAGE
Y	*266-8583*	1	INSTALLATION AR-COMMUNICATION (PRODUCT LINK 300)	199
Y-SEPARATE ILLUSTRATION				

<END>

330-5954 INSTALLATION AR-COMMUNICATION

S/N: JKM1-UP

AN ATTACHMENT

SMCS-7606 **i03881261**

NOTE	PART NUMBER	QTY	PART NAME 1 2 3 4 5 6 (PRODUCT LEVEL)	SEE PAGE
Y	*330-5363*	1	ELECTRONICS GP-MONITOR	195
Y	*239-4850*	1	SENSOR & MTG GP-PRESSURE (LIFT CYLINDER OIL)	244
Y	*267-4800*	1	WIRING GP-COMMUNICATION	335
Y	*265-5828*	1	WIRING GP-SENSOR	362
	334-6035	1	CONFIGURATION-PREMIUM	
			DLR INSTALL CONFIG:SEE IRM:EES03-01	
Y-SEPARATE ILLUSTRATION				

<END>

ELECTRICAL AND STARTING SYSTEM

265-9751 INSTALLATION GP-SECURITY

S/N: JKM1-UP
PART OF 317-9491 CONFIGURATION AR
AN ATTACHMENT
TYPE 1

SMCS-7631 **i02927665**

NOTE	REF NO	GRAPHIC REF	PART NUMBER	QTY	PART NAME 1 2 3 4 5 6 (PRODUCT LEVEL)	SEE PAGE
	1	1	**102-8802**	1	KIT-RECEPTACLE (2-PIN)	
					(INCLUDES RECEPTACLE AS & WEDGE)	
	2	1	**8C-5607**	4	MOUNT-ISOLATION	
	3	1	**8C-5608**	2	SPACER (6.5X9.5X25.4-MM THK)	
	4	1	**198-5389**	1	FILM-IDENTIFICATION (IGNITION SWITCH)	
B	5	1	**205-0826**	1	FILM-INSTRUCTION (MACHINE SECURITY, CONSOLE)	
	6	1	**205-8257**	1	COIL AS (EXCITER)	
D		1	**5P-5677**		WIRE (18-GA, BLACK) (0.4-M)	
		1	**186-3735**	2	PIN-CONNECTOR (16-GA TO 18-GA)	
	7	1	**206-5162**	2	KEY AS-ELECTRONIC (SECURITY)	
	8	1	**218-0404**	1	MODULE GP-INTERFACE (KEY)	
	9	1	**219-6314**	2	KEY RING (IDENTIFICATION)	
B	11	1	**225-5927**	1	FILM-INSTRUCTION (MACHINE SECURITY, READ OMM)	
M	13	1	**7X-2533**	2	BOLT (M6X1X35-MM)	
	14	1	**9X-6165**	2	WASHER (6.5X22X2.5-MM THK)	

B-USE AS REQUIRED
D-ORDER BY THE METER
M-METRIC PART

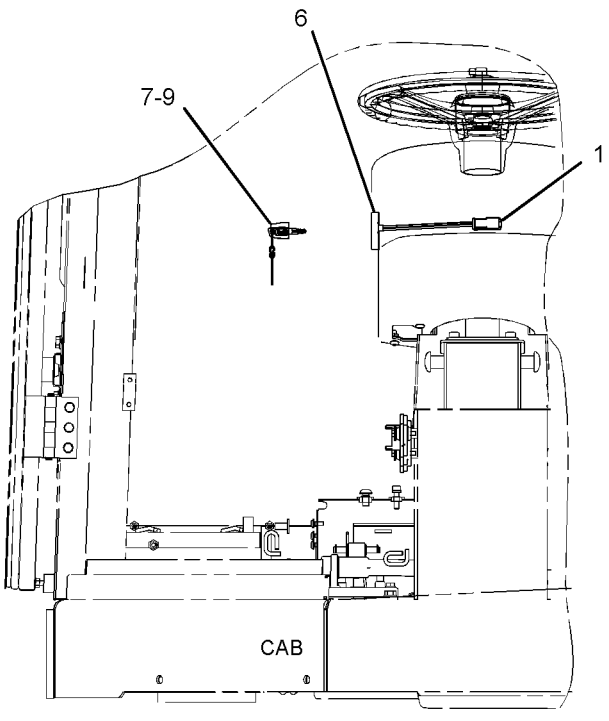

FRONT VIEW

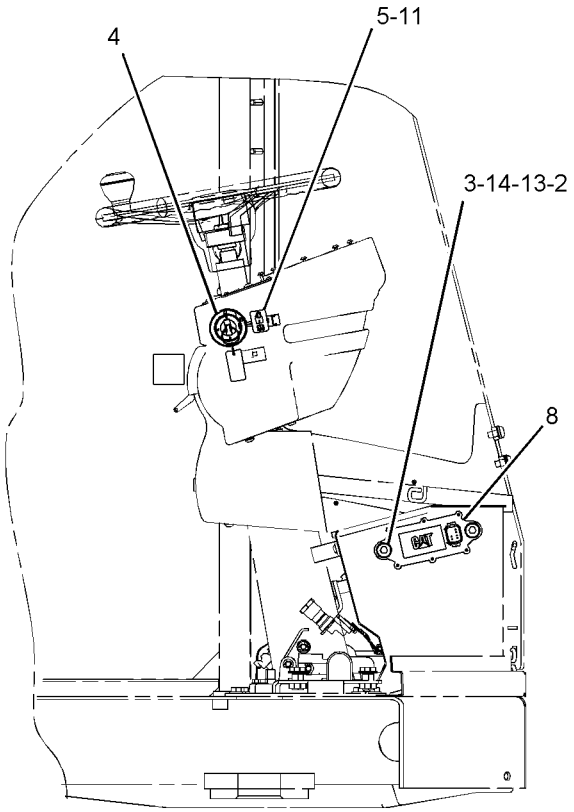

RIGHT SIDE VIEW

GRAPHIC #1 **<END>** g01427605

265-9751 INSTALLATION GP-SECURITY

S/N: JKM1-UP
PART OF 317-9491 CONFIGURATION AR
AN ATTACHMENT
TYPE 2

SMCS-7631 **i03547385**

NOTE	REF NO	GRAPHIC REF	PART NUMBER	QTY	PART NAME 1 2 3 4 5 6 (PRODUCT LEVEL)	SEE PAGE
C	1	1	**206-5162**	2	KEY AS-ELECTRONIC (SECURITY)	
	2	1	**219-6314**	2	KEY RING (IDENTIFICATION)	
BC	4	1	**225-5927**	1	FILM-INSTRUCTION (MACHINE SECURITY, READ OMM)	
CY	5	1	*334-0584*	1	INSTALLATION GP-SECURITY	202

B-USE AS REQUIRED
C-CHANGE FROM PREVIOUS TYPE
Y-SEPARATE ILLUSTRATION

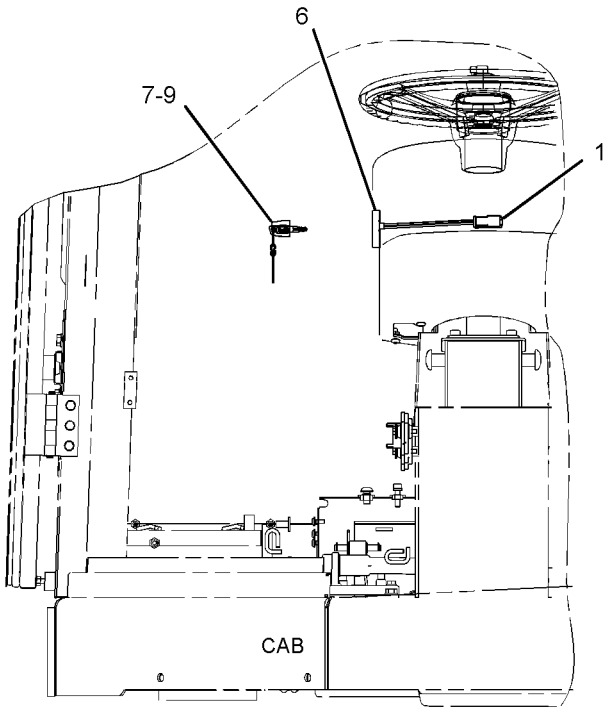

FRONT VIEW

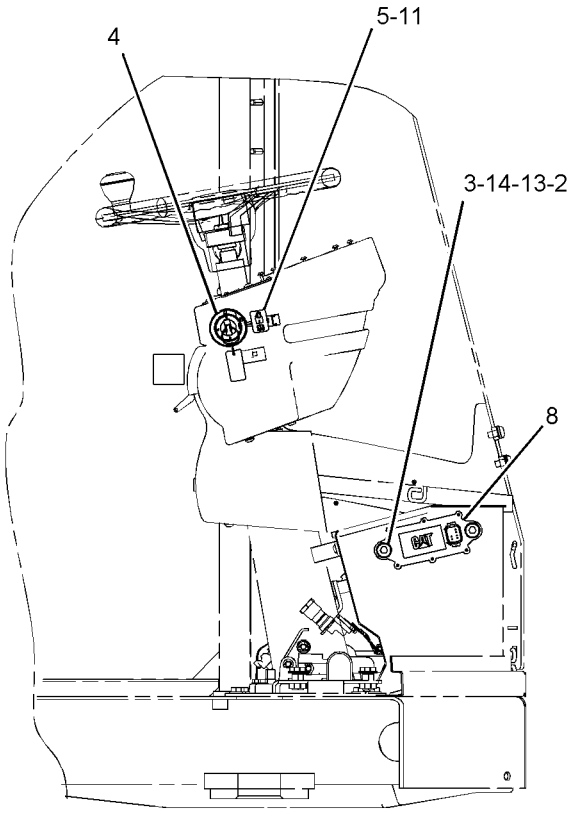

RIGHT SIDE VIEW

GRAPHIC #1 **<END>** g01427605

334-0584 INSTALLATION GP-SECURITY

S/N: JKM1-UP

PART OF 265-9751 INSTALLATION GP-SECURITY

AN ATTACHMENT

SMCS-7631 **i03547582**

NOTE	REF NO	GRAPHIC REF	PART NUMBER	QTY	PART NAME 1 2 3 4 5 6 (PRODUCT LEVEL)	SEE PAGE
	1	1	**102-8802**	1	KIT-RECEPTACLE (2-PIN)	
					(INCLUDES RECEPTACLE AS & WEDGE)	
	2	1	**8C-5607**	4	MOUNT-ISOLATION	
	3	1	**8C-5608**	2	SPACER (6.5X9.5X25.4-MM THK)	
	4	1	**198-5389**	1	FILM-IDENTIFICATION (IGNITION SWITCH)	
	5	1	**205-0826**	1	FILM-INSTRUCTION (MACHINE SECURITY, CONSOLE)	
	6	1	**205-8257**	1	COIL AS (EXCITER)	
	7	1	**218-0404**	1	MODULE GP-INTERFACE (KEY)	
M	9	1	**7X-2533**	2	BOLT (M6X1X35-MM)	
	10	1	**9X-6165**	2	WASHER (6.5X22X2.5-MM THK)	

M-METRIC PART

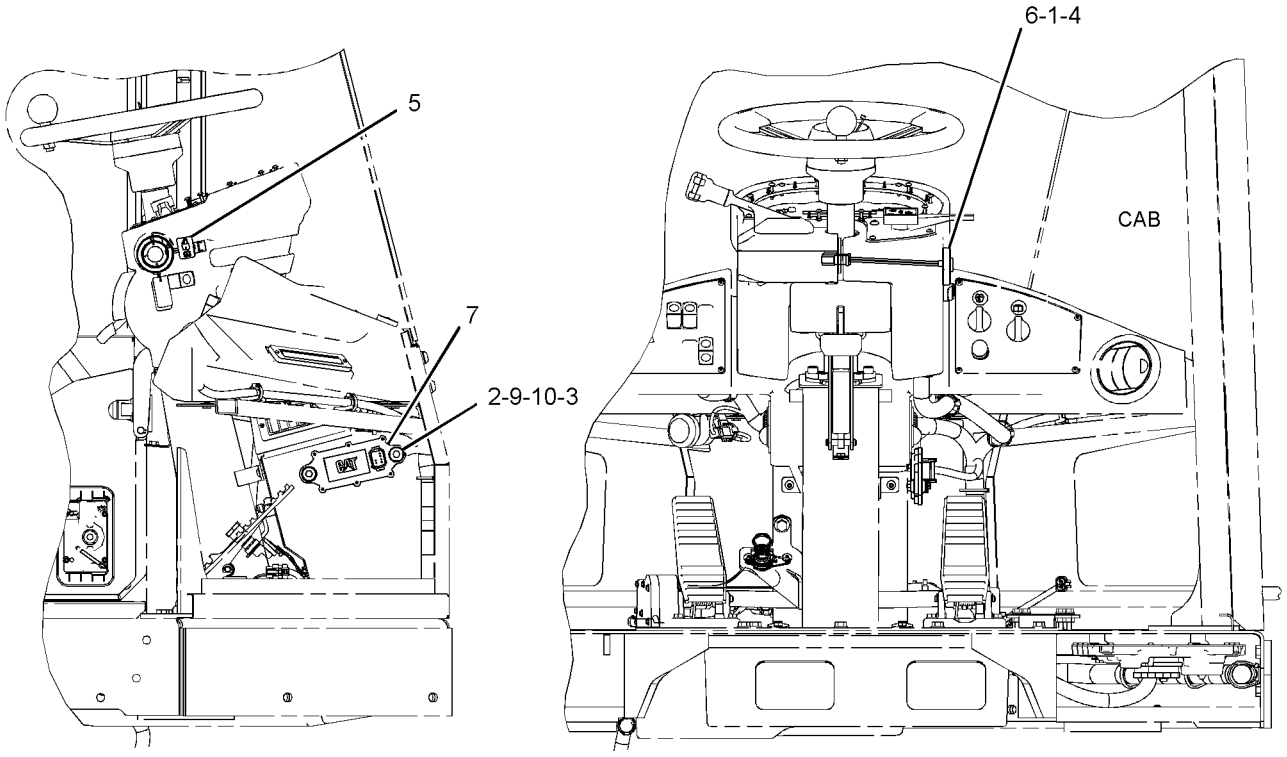

RIGHT SIDE VIEW REAR VIEW

GRAPHIC #1 **<END>** g01795313

234-4325 LAMP GP-FLOOD

S/N: JKM1-UP
24-VOLT
PART OF 115-1558 LIGHTING GP-AUXILIARY
AN ATTACHMENT

SMCS-1434 **i03804610**

NOTE	REF NO	GRAPHIC REF	PART NUMBER	QTY	PART NAME 1 2 3 4 5 6 (PRODUCT LEVEL)	SEE PAGE
	1	1	**9X-3463**	1	LAMP-HALOGEN (24-VOLT, 70-WATT)	
M	2	1	**8T-0389**	1	LOCKNUT (M10X1.5-THD)	
	3	1	**9X-4244**	2	SCREW-SPECIAL (M4X1.79X25-MM)	
	4	1	**202-6614**	1	LENS AS (FLOODLIGHT)	
	5	1	**234-7730**	1	BODY AS (FLOODLIGHT)	
	6	1	**164-7556**	1	BRACKET (LAMP RETAINING)	
	7	1	**234-7731**	1	BRACKET AS	
	8	1	**8T-4121**	1	WASHER-HARD (11X21X2.5-MM THK)	

M-METRIC PART

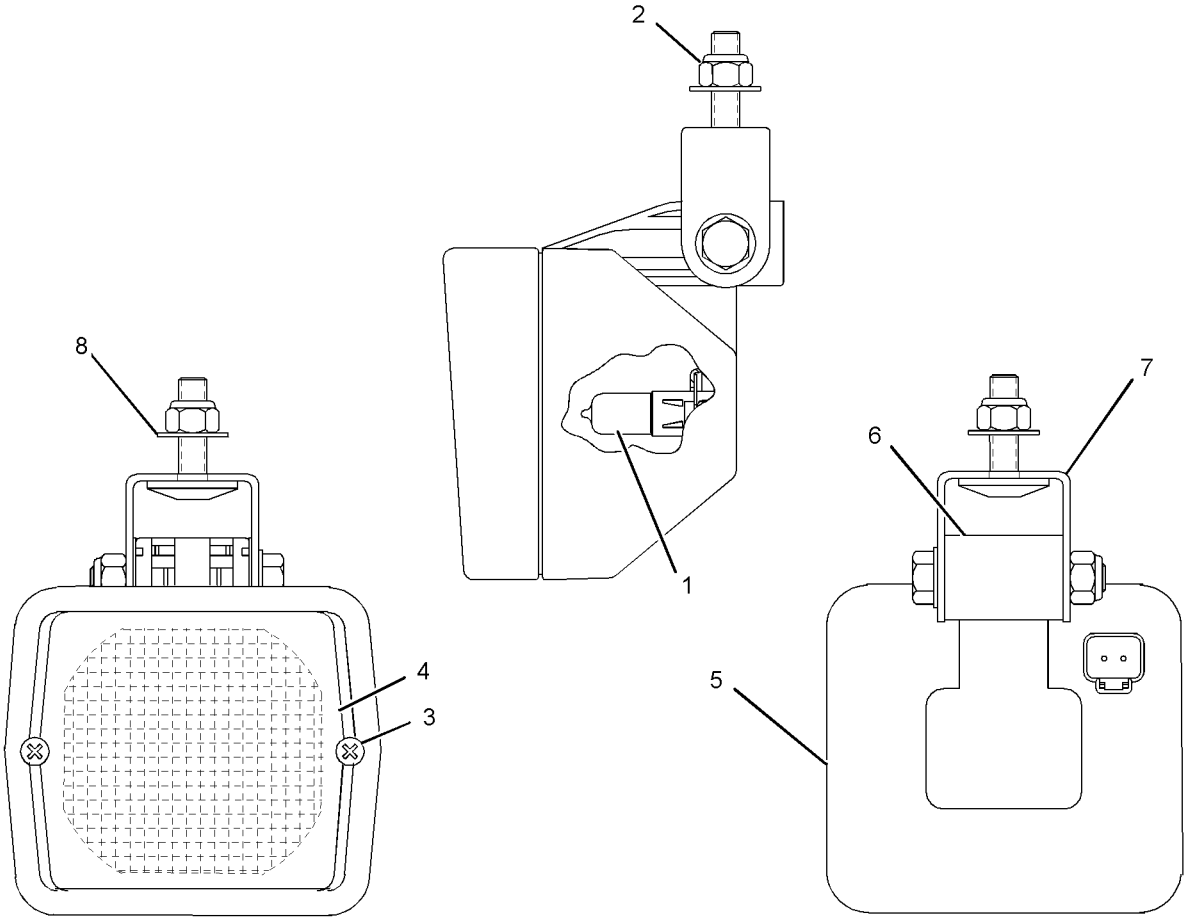

GRAPHIC #1 **<END>** g01329238

289-3828 LAMP GP-FLOOD–HID

S/N: JKM1-454

PART OF 302-5414 LIGHTING GP-FLOOD

AN ATTACHMENT

SMCS-1434 **i02938221**

NOTE	REF NO	GRAPHIC REF	PART NUMBER	QTY	PART NAME 1 2 3 4 5 6 (PRODUCT LEVEL)	SEE PAGE
	1	1	**291-2942**	1	LENS	
	2	1	**290-8160**	1	LAMP (24-VOLT, HID)	
	3	1	**8T-4121**	1	WASHER-HARD (11X21X2.5-MM THK)	
	4	1	**9X-4244**	2	SCREW-SPECIAL	
	5	1	**291-2939**	1	BRACKET	
	6	1	**229-9974**	1	BEZEL	
	7	1	**290-8159**	1	BALLAST AS (24-VOLT, 35-WATT, HID)	

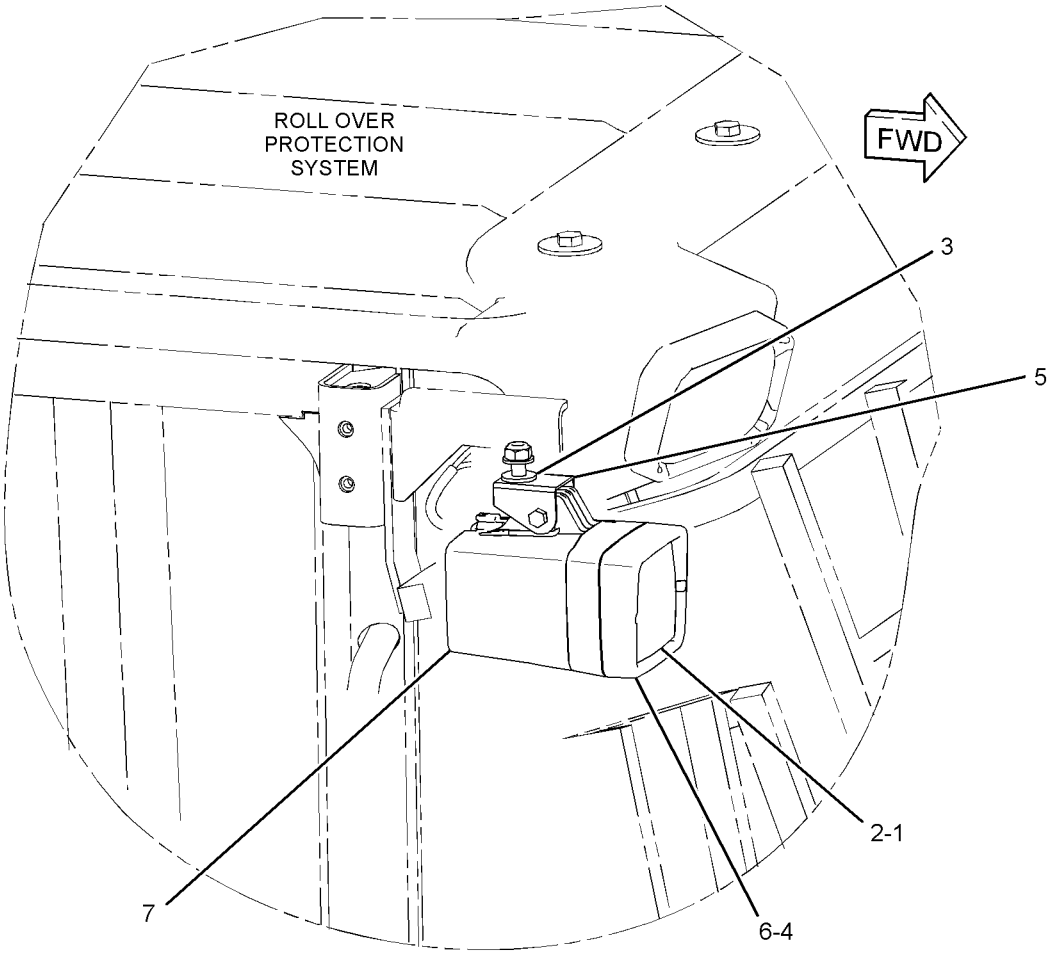

GRAPHIC #1 **<END>** g01427112

319-7382 LAMP GP-FLOOD–HID

S/N: JKM455-UP
24-VOLT, 35-WATT
PART OF 302-5414 LIGHTING GP-FLOOD
AN ATTACHMENT

SMCS-1434 **i03250608**

NOTE	REF NO	GRAPHIC REF	PART NUMBER	QTY	PART NAME 1 2 3 4 5 6 (PRODUCT LEVEL)	SEE PAGE
	1	1	**291-2942**	1	LENS	
	2	1	**290-8160**	1	LAMP (24-VOLT, HID)	
	3	1	**8T-4121**	2	WASHER-HARD (11X21X2.5-MM THK)	
	4	1	**9X-4244**	2	SCREW-SPECIAL (M4X1.79X25-MM)	
	5	1	**291-2939**	1	BRACKET	
	6	1	**229-9974**	1	BEZEL	
	7	1	**319-7384**	1	BALLAST AS (24-VOLT, 35-WATT, HID)	
M	8	1	**6V-7744**	1	LOCKNUT (M10X1.5-THD)	
M	9	1	**8T-4189**	1	BOLT (M8X1.25X20-MM)	
M	10	1	**6V-9189**	1	LOCKNUT (M8X1.25-THD)	

M-METRIC PART

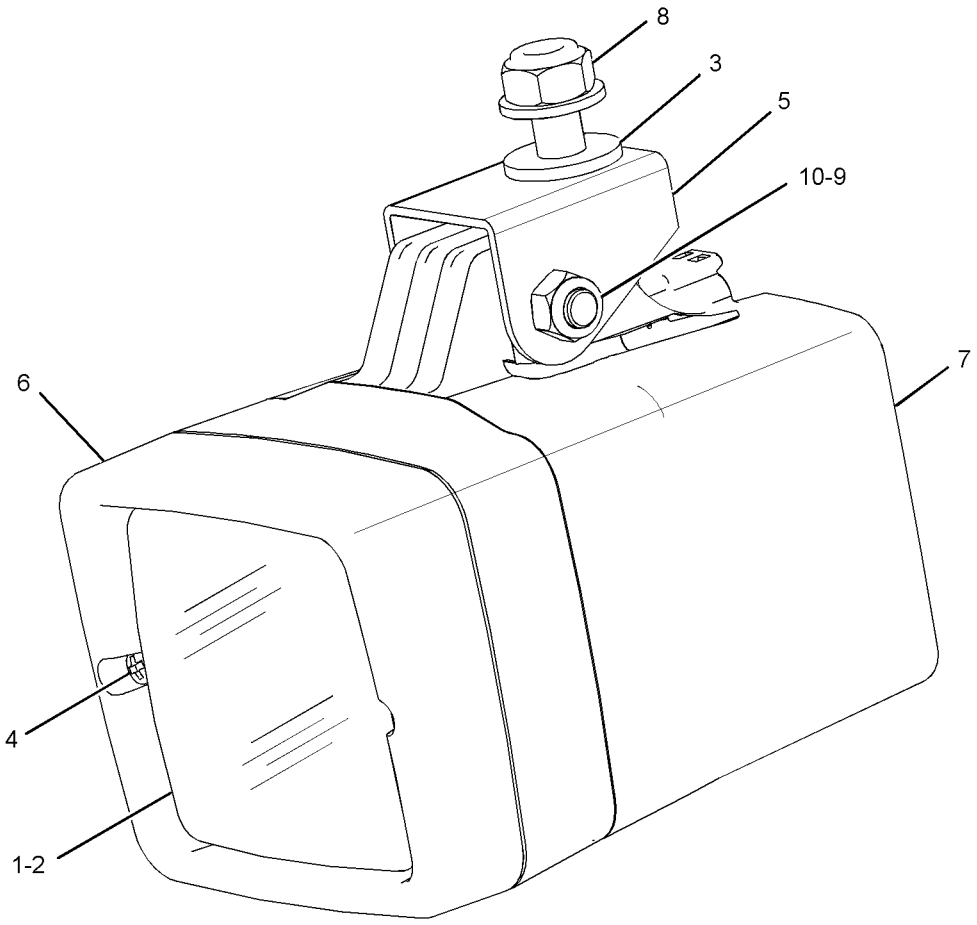

GRAPHIC #1 **<END>** g01660773

105-4849 LAMP GP-HEAD & SIGNAL–LH

S/N: JKM1-845

PART OF 263-3171 LIGHTING GP-ROADING

SMCS-1429, 1430 **i02205177**

NOTE	REF NO	GRAPHIC REF	PART NUMBER	QTY	PART NAME 1 2 3 4 5 6 (PRODUCT LEVEL)	SEE PAGE
	1	1	**9X-4244**	4	SCREW-SPECIAL (M4X1.79X25-MM)	
	2	1	**100-3251**	2	SCREW-LENS	
	3	1	**9X-9865**	1	SEAL	
	4	1	**100-3248**	1	LENS AS (HEADLIGHT)	
	5	1	**9X-3465**	1	LAMP (24-VOLT, 75/70-WATT)	
	6	1	**136-3848**	1	LENS AS (AMBER) (SIGNAL)	
M	7	1	**8T-5005**	1	BOLT (M10X1.5X70-MM)	
M	8	1	**8T-0389**	1	LOCKNUT (M10X1.5-THD)	
	9	1	**100-3253**	1	SPACER (SPHERICAL)	
	10	1	**100-3254**	1	SPACER (SPHERICAL)	
	11	1	**100-3255**	1	WASHER (SPHERICAL)	
	13	1	**8T-8729**	5	PIN-CONNECTOR (16-GA TO 18-GA)	
	14	1	**3E-3383**	1	WEDGE-RECEPTACLE LOCK (6-PIN)	
	15	1	**8T-8737**	1	PLUG-SEAL	
	16	1	**100-3245**	2	LAMP (24-VOLT)	
	17	1	**9X-4493**	1	LAMP (24-VOLT, 21-WATT) (SIGNAL)	
	18	1	**100-3250**	1	LENS (AMBER) (SIGNAL)	
	19	1	**136-3845**	1	BODY AS-LAMP	
	20	1	**102-8805**	1	KIT-RECEPTACLE (6-PIN)	
					(INCLUDES RECEPTACLE AS & WEDGE)	

M-METRIC PART

105-4849 LAMP GP-HEAD & SIGNAL *(contd.)* **i02205177**

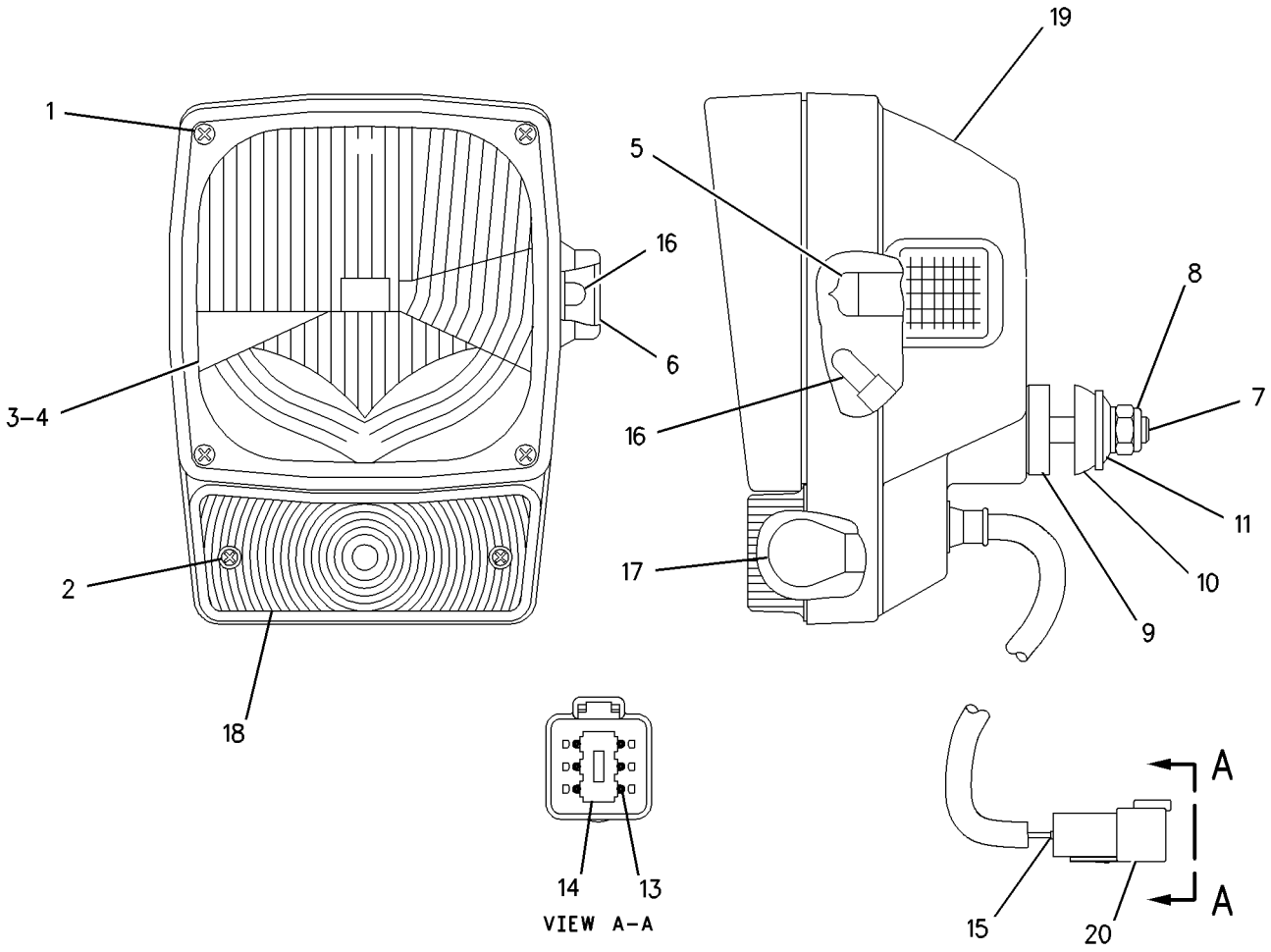

GRAPHIC #1 **<END>** g00661265

105-4850 LAMP GP-HEAD & SIGNAL–RH

S/N: JKM1-845

PART OF 263-3171 LIGHTING GP-ROADING

SMCS-1429, 1430 **i02205178**

NOTE	REF NO	GRAPHIC REF	PART NUMBER	QTY	PART NAME 1 2 3 4 5 6 (PRODUCT LEVEL)	SEE PAGE
	1	1	**9X-4244**	4	SCREW-SPECIAL (M4X1.79X25-MM)	
	2	1	**100-3251**	2	SCREW-LENS	
	3	1	**9X-9865**	1	SEAL	
	4	1	**100-3248**	1	LENS AS (HEADLIGHT)	
	5	1	**9X-3465**	1	LAMP (24-VOLT, 75/70-WATT) (HEAD)	
	6	1	**136-3848**	1	LENS AS (AMBER) (SIGNAL)	
M	7	1	**8T-5005**	1	BOLT (M10X1.5X70-MM)	
M	8	1	**8T-0389**	1	LOCKNUT (M10X1.5-THD)	
	9	1	**100-3253**	1	SPACER (SPHERICAL)	
	10	1	**100-3254**	1	SPACER (SPHERICAL)	
	11	1	**100-3255**	1	WASHER (SPHERICAL)	
	12	1	**102-8805**	1	KIT-RECEPTACLE (6-PIN)	
					(INCLUDES RECEPTACLE AS & WEDGE)	
	13	1	**186-3735**	5	PIN-CONNECTOR (16-GA TO 18-GA)	
	14	1	**3E-3383**	1	WEDGE-RECEPTACLE LOCK (6-PIN)	
	15	1	**8T-8737**	1	PLUG-SEAL	
	16	1	**100-3245**	2	LAMP (24-VOLT) (SIGNAL)	
	17	1	**9X-4493**	1	LAMP (24-VOLT, 21-WATT) (SIGNAL)	
	18	1	**100-3250**	1	LENS (AMBER) (SIGNAL)	
	19	1	**136-3846**	1	BODY AS-LAMP	

M-METRIC PART

105-4850 LAMP GP-HEAD & SIGNAL *(contd.)* **i02205178**

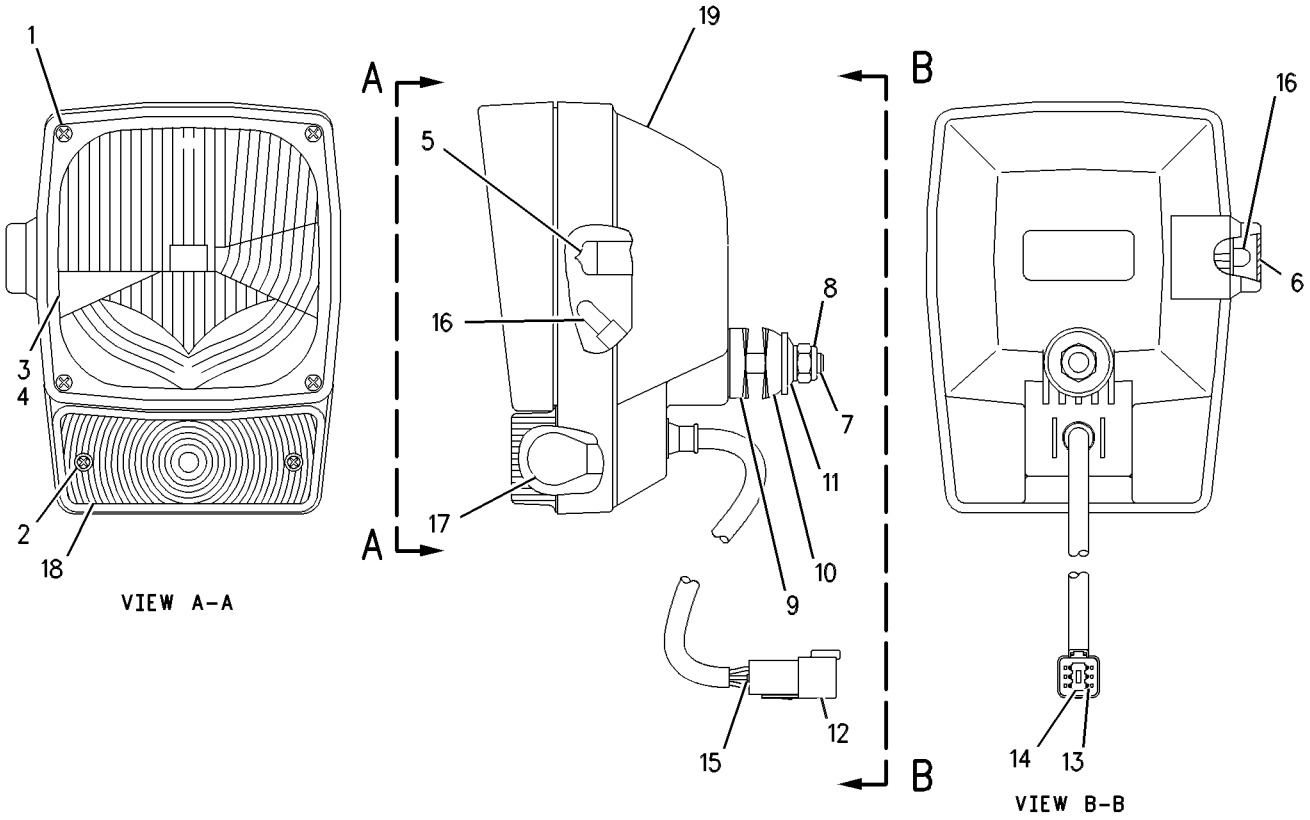

GRAPHIC #1 **<END>** g00610742

302-0409 LAMP GP-HEAD & SIGNAL

S/N: JKM846-853
24-VOLT
PART OF 263-3171 LIGHTING GP-ROADING

SMCS-1429, 1430 **i03727241**

NOTE	REF NO	GRAPHIC REF	PART NUMBER	QTY	PART NAME 1 2 3 4 5 6 (PRODUCT LEVEL)	SEE PAGE
	1	1	**320-1515**	1	BODY AS	
	2	1	**228-6054**	1	BEZEL	
	3	1	**228-6051**	1	LENS AS (HEADLIGHT)	
	4	1	**228-6052**	1	LENS AS (TURN SIGNAL)	
	5	1	**228-6056**	6	SCREW (4-32X1.26-IN)	
	6	1	**9X-3465**	1	LAMP (24-VOLT, 75/70-WATT)	
	7	1	**130-3515**	1	LAMP (24-VOLT, 5-WATT)	
	8	1	**242-0588**	1	LAMP (24-VOLT, 21-WATT)	
M	9	1	**8T-0389**	1	LOCKNUT (M10X1.5-THD)	
	10	1	**100-3253**	1	SPACER (SPHERICAL)	
	11	1	**100-3254**	1	SPACER (SPHERICAL)	
	12	1	**100-3255**	1	WASHER (SPHERICAL)	
	13	1	**102-8805**	1	KIT-RECEPTACLE (6-PIN)	
					(INCLUDES RECEPTACLE AS AND WEDGE)	
	14	1	**186-3735**	5	PIN-CONNECTOR (16-GA TO 18-GA)	
	15	1	**8T-8737**	1	PLUG-SEAL	

M-METRIC PART

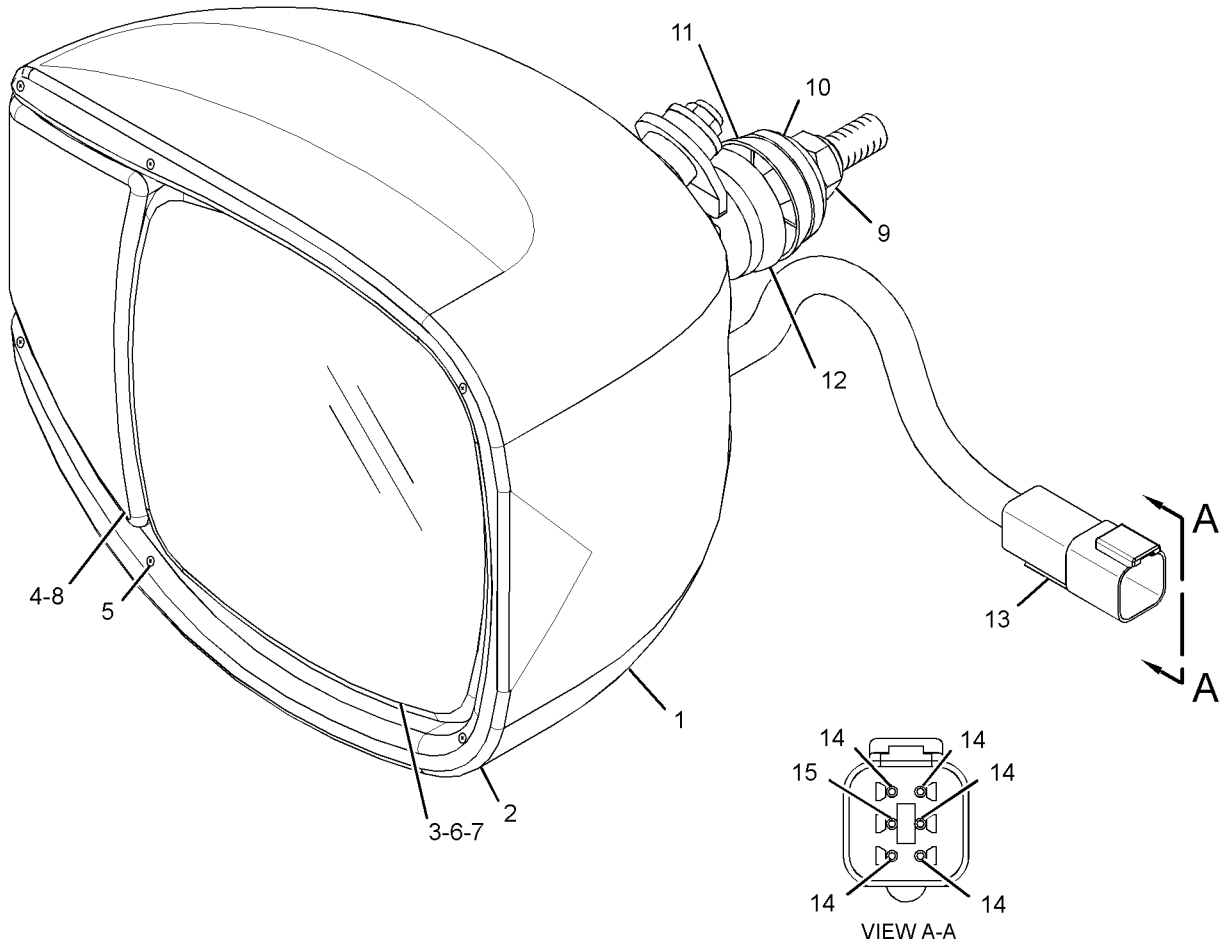

GRAPHIC #1 **<END>** g01949537

302-0411 LAMP GP-HEAD & SIGNAL

S/N: JKM846-853
24-VOLT
PART OF 263-3171 LIGHTING GP-ROADING

SMCS-1429, 1430 **i03727245**

NOTE	REF NO	GRAPHIC REF	PART NUMBER	QTY	PART NAME 1 2 3 4 5 6 (PRODUCT LEVEL)	SEE PAGE
	1	1	**320-1515**	1	BODY AS	
	2	1	**228-6054**	1	BEZEL	
	3	1	**228-6051**	1	LENS AS (HEADLIGHT)	
	4	1	**228-6052**	1	LENS AS (TURN SIGNAL)	
	5	1	**228-6056**	6	SCREW (4-32X1.26-IN)	
	6	1	**9X-3465**	1	LAMP (24-VOLT, 75/70-WATT)	
	7	1	**130-3515**	1	LAMP (24-VOLT, 5-WATT)	
	8	1	**242-0588**	1	LAMP (24-VOLT, 21-WATT)	
M	9	1	**8T-0389**	1	LOCKNUT (M10X1.5-THD)	
	10	1	**100-3253**	1	SPACER (SPHERICAL)	
	11	1	**100-3254**	1	SPACER (SPHERICAL)	
	12	1	**100-3255**	1	WASHER (SPHERICAL)	
	13	1	**102-8805**	1	KIT-RECEPTACLE (6-PIN)	
					(INCLUDES RECEPTACLE AS AND WEDGE)	
	14	1	**186-3735**	5	PIN-CONNECTOR (16-GA TO 18-GA)	
	15	1	**8T-8737**	1	PLUG-SEAL	

M-METRIC PART

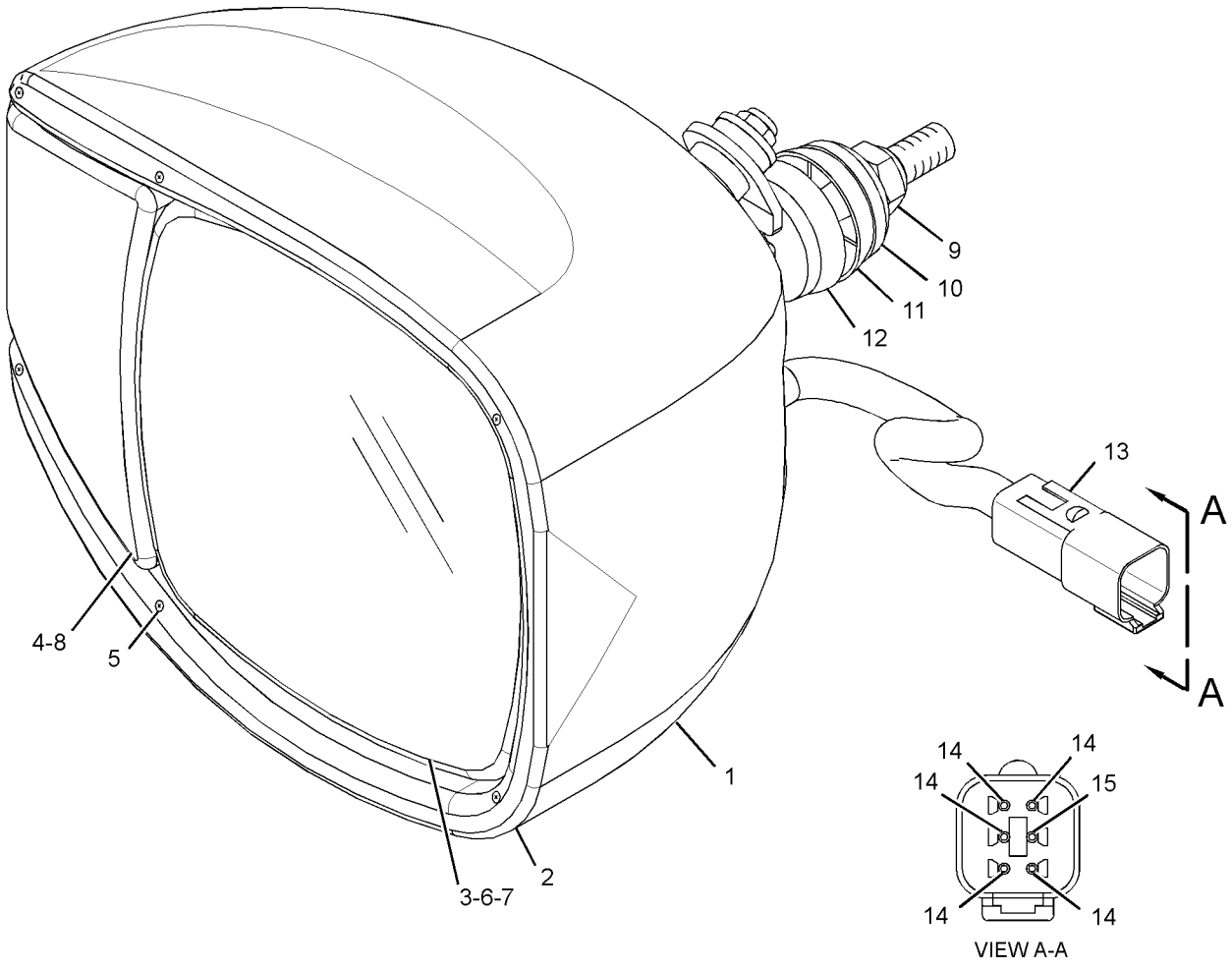

GRAPHIC #1 **<END>** g01949538

344-3455 LAMP GP-HEAD & SIGNAL–RH

S/N: JKM854-UP

PART OF 263-3171 LIGHTING GP-ROADING

SMCS-1429, 1430 **i03852812**

NOTE	REF NO	GRAPHIC REF	PART NUMBER	QTY	PART NAME 1 2 3 4 5 6 (PRODUCT LEVEL)	SEE PAGE
	1	1	**320-1515**	1	BODY AS	
	2	1	**228-6054**	1	BEZEL	
	3	1	**348-7240**	1	LENS AS (HEADLIGHT)	
	4	1	**228-6052**	1	LENS AS (TURN SIGNAL)	
	5	1	**228-6056**	6	SCREW (4-32X1.26-IN)	
	6	1	**9X-3465**	1	LAMP (24-VOLT, 75/70-WATT)	
	7	1	**130-3515**	1	LAMP (24-VOLT, 5-WATT)	
	8	1	**242-0588**	1	LAMP (24-VOLT, 21-WATT)	
M	9	1	**8T-0389**	1	LOCKNUT (M10X1.5-THD)	
	10	1	**100-3253**	1	SPACER (SPHERICAL)	
	11	1	**100-3254**	1	SPACER (SPHERICAL)	
	12	1	**100-3255**	2	WASHER (SPHERICAL)	
	13	1	**102-8805**	1	KIT-RECEPTACLE (6-PIN)	
					(INCLUDES RECEPTACLE AS & WEDGE)	
	14	1	**186-3735**	5	PIN-CONNECTOR (16-GA TO 18-GA)	
	15	1	**8T-8737**	1	PLUG-SEAL	

M-METRIC PART

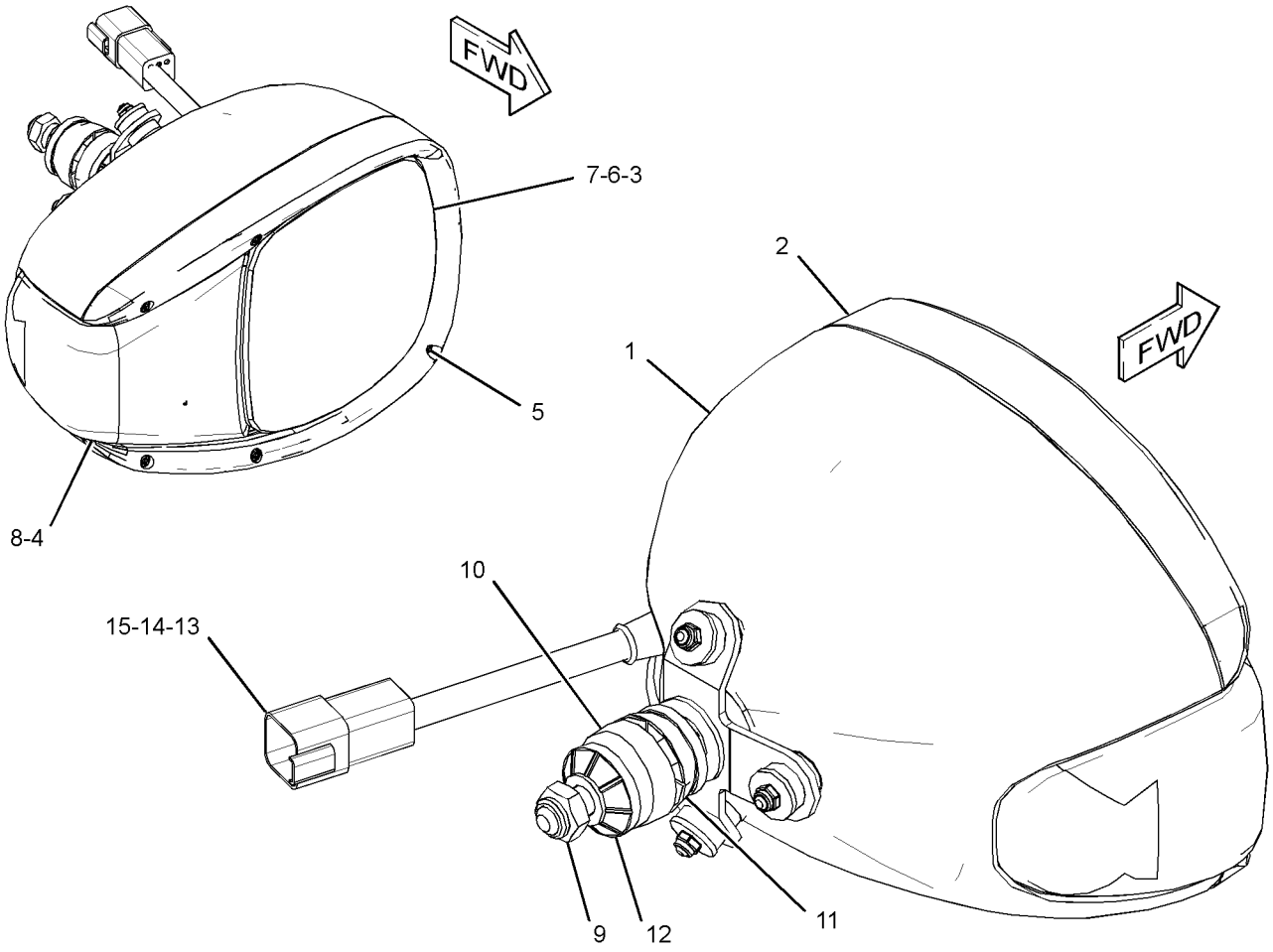

GRAPHIC #1 **<END>** g02098593

344-3456 LAMP GP-HEAD & SIGNAL–LH

S/N: JKM854-UP

PART OF 263-3171 LIGHTING GP-ROADING

SMCS-1429, 1430 **i03852816**

NOTE	REF NO	GRAPHIC REF	PART NUMBER	QTY	PART NAME 1 2 3 4 5 6 (PRODUCT LEVEL)	SEE PAGE
	1	1	**320-1515**	1	BODY AS	
	2	1	**228-6054**	1	BEZEL	
	3	1	**348-7240**	1	LENS AS (HEADLIGHT)	
	4	1	**228-6052**	1	LENS AS (TURN SIGNAL)	
	5	1	**228-6056**	6	SCREW (4-32X1.26-IN)	
	6	1	**9X-3465**	1	LAMP (24-VOLT, 75/70-WATT) (HIGH, LOW BEAM)	
	7	1	**130-3515**	1	LAMP (24-VOLT, 5-WATT) (FLOODLIGHT)	
	8	1	**242-0588**	1	LAMP (24-VOLT, 21-WATT) (TURN SIGNAL)	
M	9	1	**8T-0389**	1	LOCKNUT (M10X1.5-THD)	
	10	1	**100-3253**	1	SPACER (SPHERICAL)	
	11	1	**100-3254**	1	SPACER (SPHERICAL)	
	12	1	**100-3255**	2	WASHER (SPHERICAL)	
	13	1	**102-8805**	1	KIT-RECEPTACLE (6-PIN)	
					(INCLUDES RECEPTACLE AS & WEDGE)	
	14	1	**186-3735**	5	PIN-CONNECTOR (16-GA TO 18-GA)	
	15	1	**8T-8737**	1	PLUG-SEAL	

M-METRIC PART

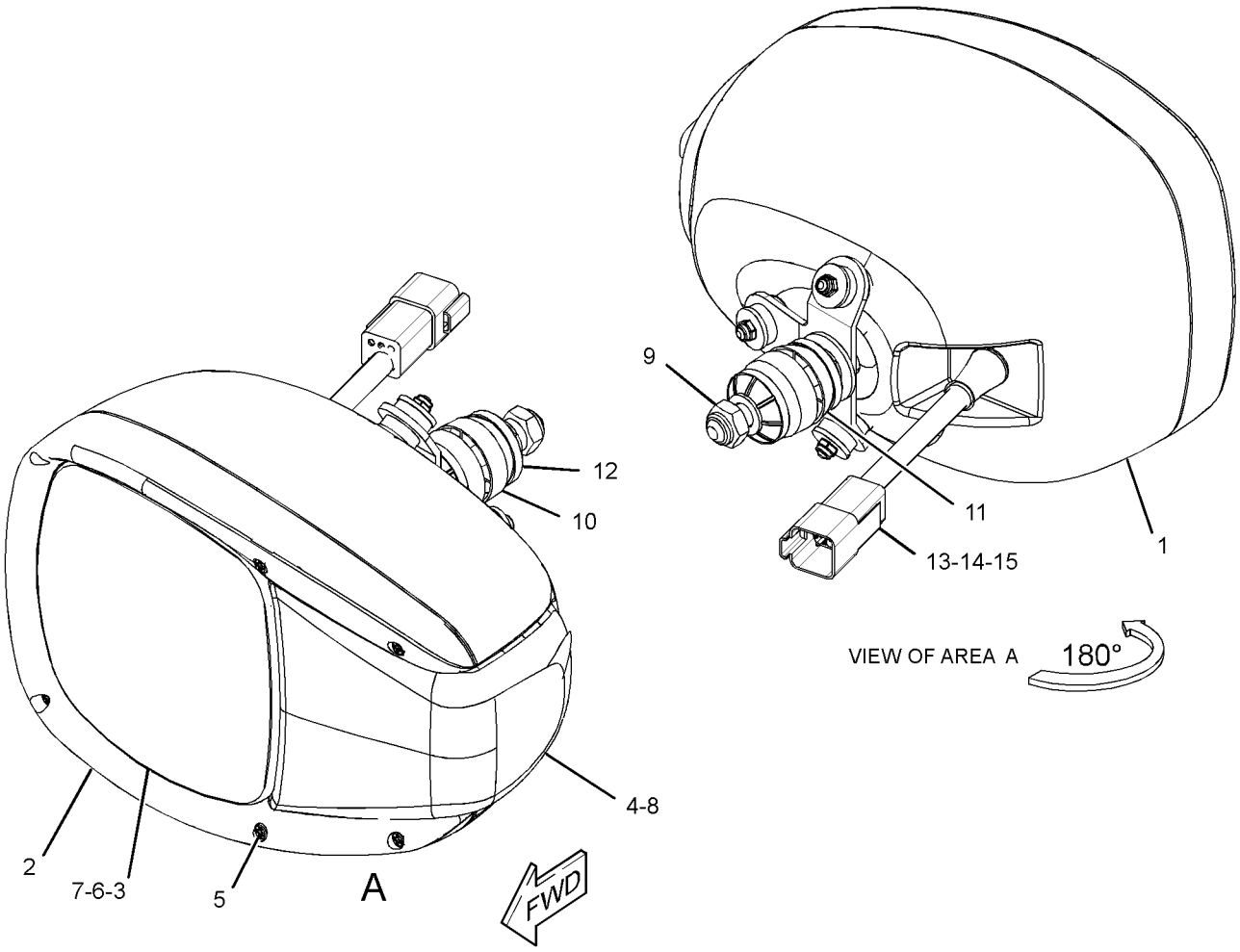

GRAPHIC #1 **<END>** g02079773

145-6929 LAMP GP-STOP & TAIL–24-VOLT

S/N: JKM1-UP

PART OF 263-3171 LIGHTING GP-ROADING

SMCS-1432 **i03116460**

NOTE	REF NO	GRAPHIC REF	PART NUMBER	QTY	PART NAME 1 2 3 4 5 6 (PRODUCT LEVEL)	SEE PAGE
	1	1	**9X-4493**	1	LAMP (24-VOLT, 21-WATT) (STOP, TAIL)	
	2	1	**9X-4492**	1	LAMP (24-VOLT, 5-WATT) (STOP, TAIL)	
	3	1	**102-8802**	1	KIT-RECEPTACLE (2-PIN)	
					(KIT INCLUDES RECEPTACLE AS & WEDGE)	
	4	1	**102-8803**	1	KIT-RECEPTACLE (3-PIN)	
					(KIT INCLUDES RECEPTACLE AS & WEDGE)	
M	5	1	**5C-2890**	2	NUT (M6X1-THD)	
	6	1	**1H-3244**	2	LOCKWASHER	
	7	1	**186-3735**	5	PIN-CONNECTOR (16-GA TO 18-GA)	
	8	1	**267-2809**	1	LENS (STOP, TAIL, TURN)	

M-METRIC PART

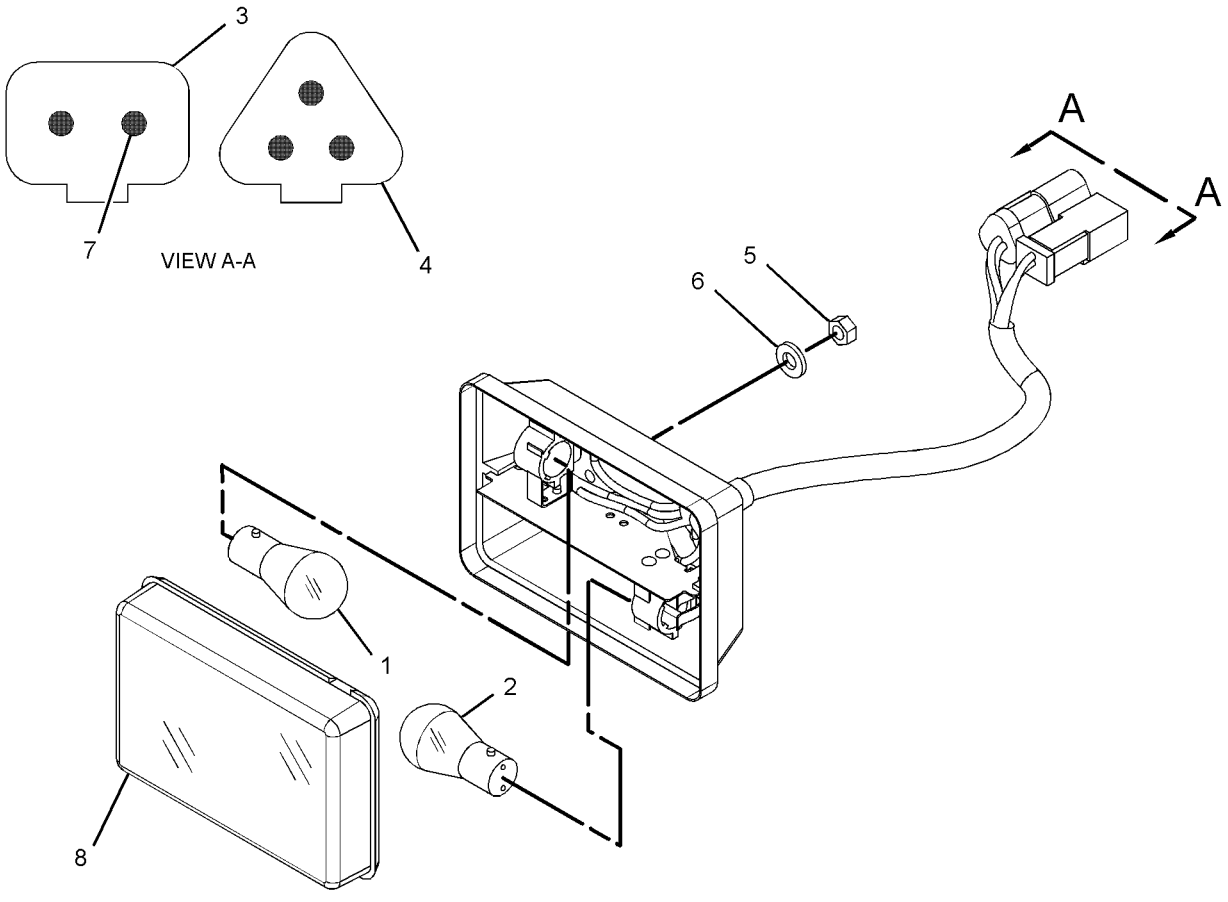

GRAPHIC #1 **<END>** g01393133

108-1029 LAMP GP-WARNING BEACON–AMBER

S/N: JKM1-965
24-VOLT
PART OF 283-6945 LIGHTING GP-WARNING BEACON
AN ATTACHMENT

SMCS-1431 **i03116501**

NOTE	REF NO	GRAPHIC REF	PART NUMBER	QTY	PART NAME 1 2 3 4 5 6 (PRODUCT LEVEL)	SEE PAGE
	1	1	**272-9800**	1	LENS (AMBER)	
	2	1	**9X-7849**	1	LAMP (24-VOLT, 70-WATT) (WARNING BEACON)	
	3	1	**9X-8139**	1	BELT-DRIVE (WARNING BEACON)	
	4	1	**9R-7958**	1	CORD AS	
	5	1	**9R-7942**	1	PLUG AS	

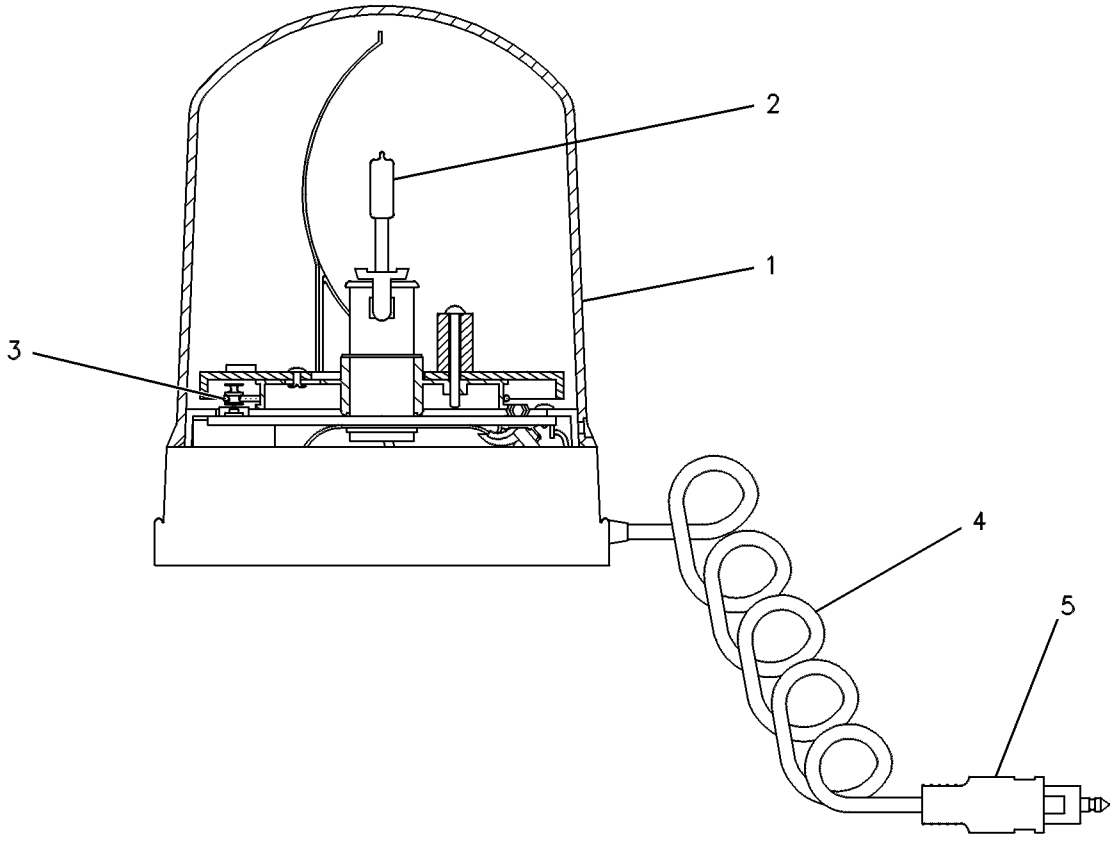

GRAPHIC #1 **<END>** g00131297

140-3668 LAMP GP-WARNING BEACON–AMBER, STROBE

S/N: JKM966-UP
12-24V
PART OF 283-6945 LIGHTING GP-WARNING BEACON
AN ATTACHMENT

SMCS-1431 **i03349883**

NOTE	REF NO	GRAPHIC REF	PART NUMBER	QTY	PART NAME 1 2 3 4 5 6 (PRODUCT LEVEL)	SEE PAGE
	1	1	**9R-7942**	1	PLUG AS	

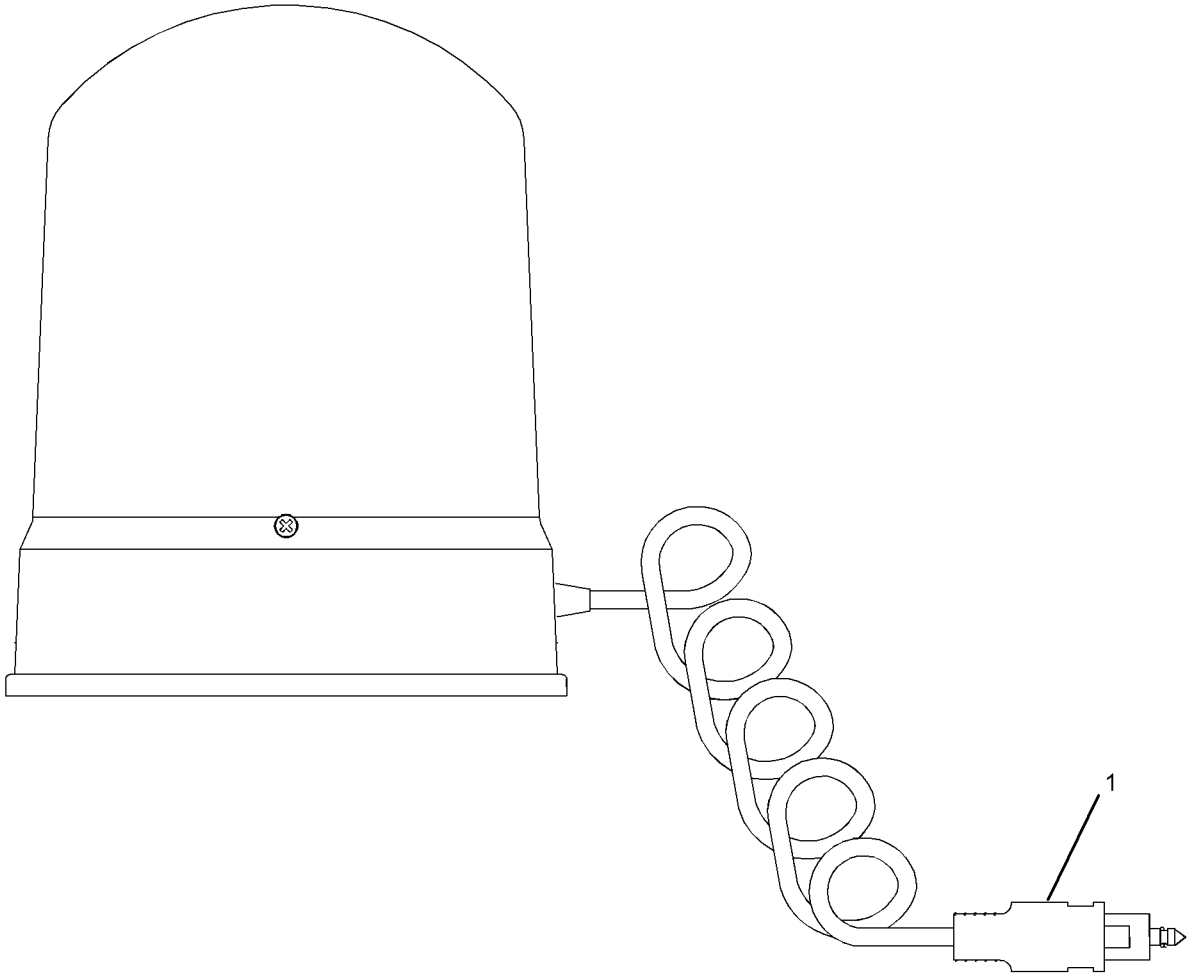

GRAPHIC #1 **<END>** g01232367

ELECTRICAL AND STARTING SYSTEM

265-9762 LIGHTING AR-AUXILIARY—CAB FRONT

S/N: JKM1-UP

PART OF 317-9487 OPTION AR-LIGHTING

AN ATTACHMENT

SMCS-1429 **i02930694**

NOTE	PART NUMBER	QTY	PART NAME 1 2 3 4 5 6 (PRODUCT LEVEL)	SEE PAGE
Y	*115-1558*	1	LIGHTING GP-AUXILIARY	218
Y-SEPARATE ILLUSTRATION				

<END>

115-1558 LIGHTING GP-AUXILIARY—CAB FRONT

S/N: JKM1-UP
PART OF 265-9762 LIGHTING AR-AUXILIARY
AN ATTACHMENT

SMCS-1429 **i03116520**

NOTE	REF NO	GRAPHIC REF	PART NUMBER	QTY	PART NAME 1 2 3 4 5 6 (PRODUCT LEVEL)	SEE PAGE
	1	1	**115-1559**	2	PLATE	
CY	2	1	**234-4325**	2	LAMP GP-FLOOD (24-VOLT) (SUSPENDED)	203
C	3	1	**235-5762**	2	WIRE AS	
M	4	1	**5C-2890**	4	NUT (M6X1-THD)	
M	5	1	**8T-4189**	4	BOLT (M8X1.25X20-MM)	
	6	1	**8T-4224**	4	WASHER-HARD (8.8X16X2-MM THK)	

C-CHANGE FROM PREVIOUS TYPE
M-METRIC PART
Y-SEPARATE ILLUSTRATION

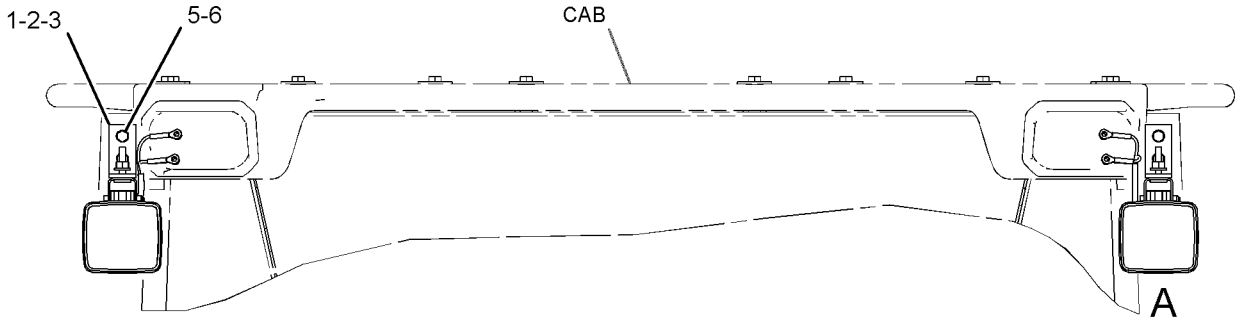

FRONT VIEW

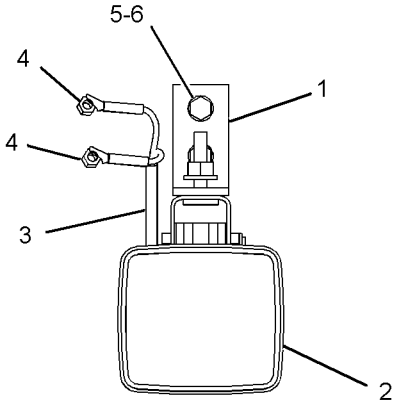

VIEW OF AREA A

GRAPHIC #1 **<END>** g01408481

266-9953 LIGHTING GP-FLOOD—CAB FRONT, REAR

S/N: JKM1-UP

PART OF 252-4553 CAB AR-ENCLOSED ROPS

SMCS-1434 **i02917809**

NOTE	REF NO	GRAPHIC REF	PART NUMBER	QTY	PART NAME 1 2 3 4 5 6 (PRODUCT LEVEL)	SEE PAGE
	1	1	**8E-1118**	1	ANTENNA AS	
	2	1	**9R-7941**	1	SOCKET AS	
		1	**9R-7980**	1	COVER	
	3	1	**109-7041**	4	LAMP GP-FLOOD (24-VOLT)	
					(EACH INCLUDES)	
		1	**9X-3463**	1	LAMP-HALOGEN (24-VOLT, 70-WATT)	
		1	**142-5789**	4	SCREW	
	4	1	**109-8981**	1	CABLE AS-COAXIAL	
	5	2	**114-6604**	16	NUT-SPEED	
	6	1	**164-5509**	1	BLOCK	
	7	2	**266-8620**	1	HARNESS AS-LIGHTING	
	8	1	**307-2634**	1	ROOF	
M	10	1,2	**5C-2890**	10	NUT (M6X1-THD)	
	11	1	**5P-5774**	3	PLUG	
M	12	1,2	**6V-7357**	10	BOLT (M6X1X25-MM)	
M	13	2	**8T-4137**	12	BOLT (M10X1.5X20-MM)	
	14	1,2	**8T-4205**	20	WASHER-HARD (7.2X14.5X2-MM THK)	
	15	2	**8T-4226**	12	WASHER-PLATED (10.5X45X3-MM THK)	
	16	1	**5P-5639**		SEAL (0.51-M)	
	16A	1	**5P-5639**		SEAL (0.32-M EACH)	
	16B	1	**5P-5639**		SEAL (0.27-M EACH)	
BF			**311-3898**		ADHESIVE	

B-USE AS REQUIRED
F-NOT SHOWN
M-METRIC PART

REFER TO ALL ILLUSTRATIONS OF
THIS GROUP FOR AUXILIARY VIEWS

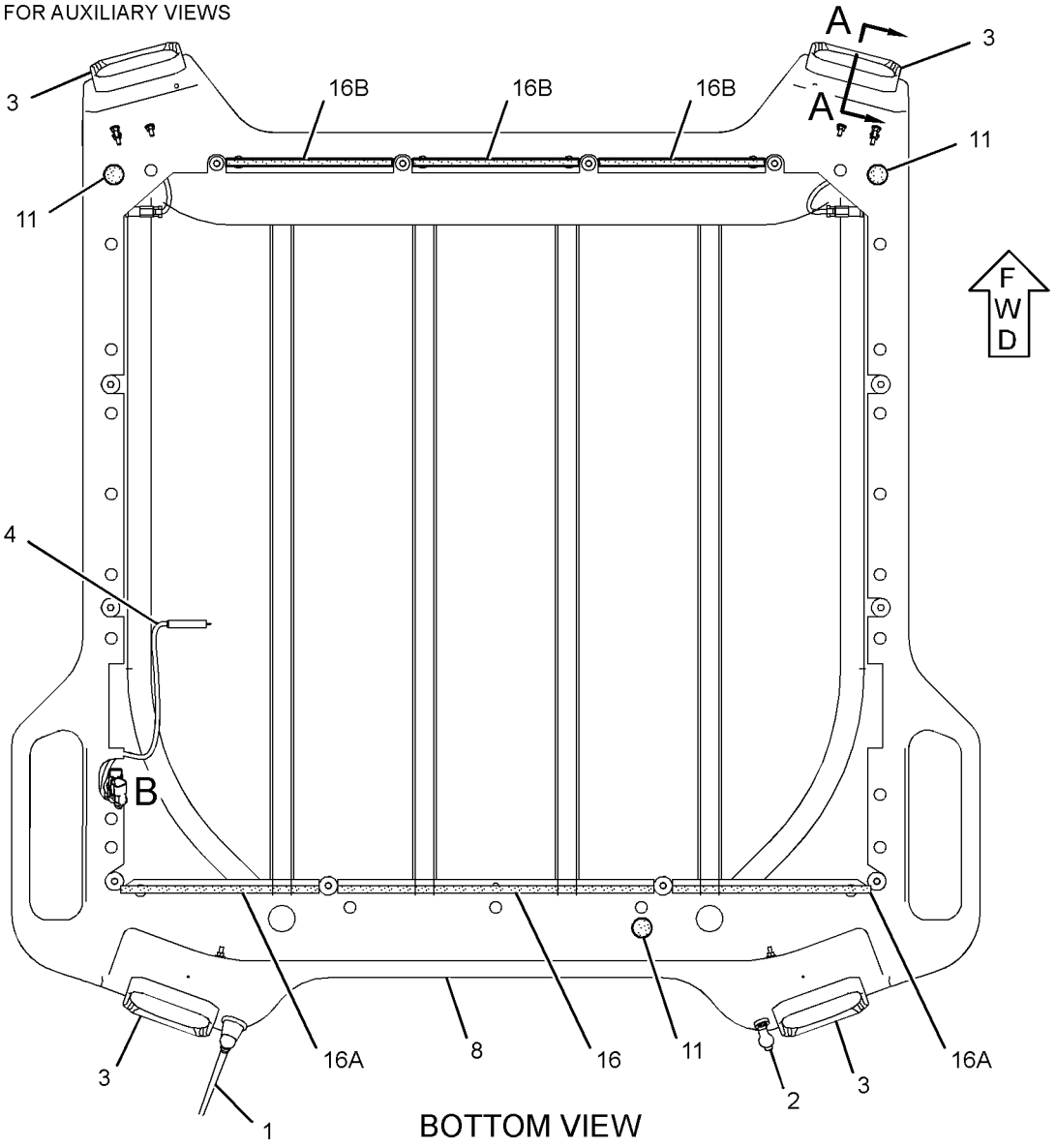

BOTTOM VIEW

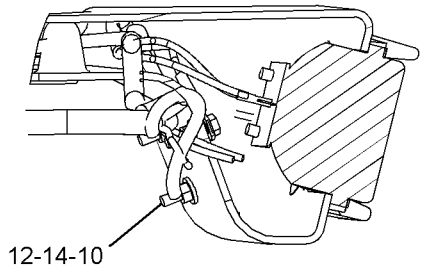

SECTION A-A

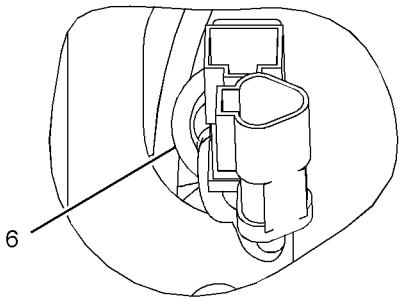

VIEW OF AREA B

GRAPHIC #1

g01422869

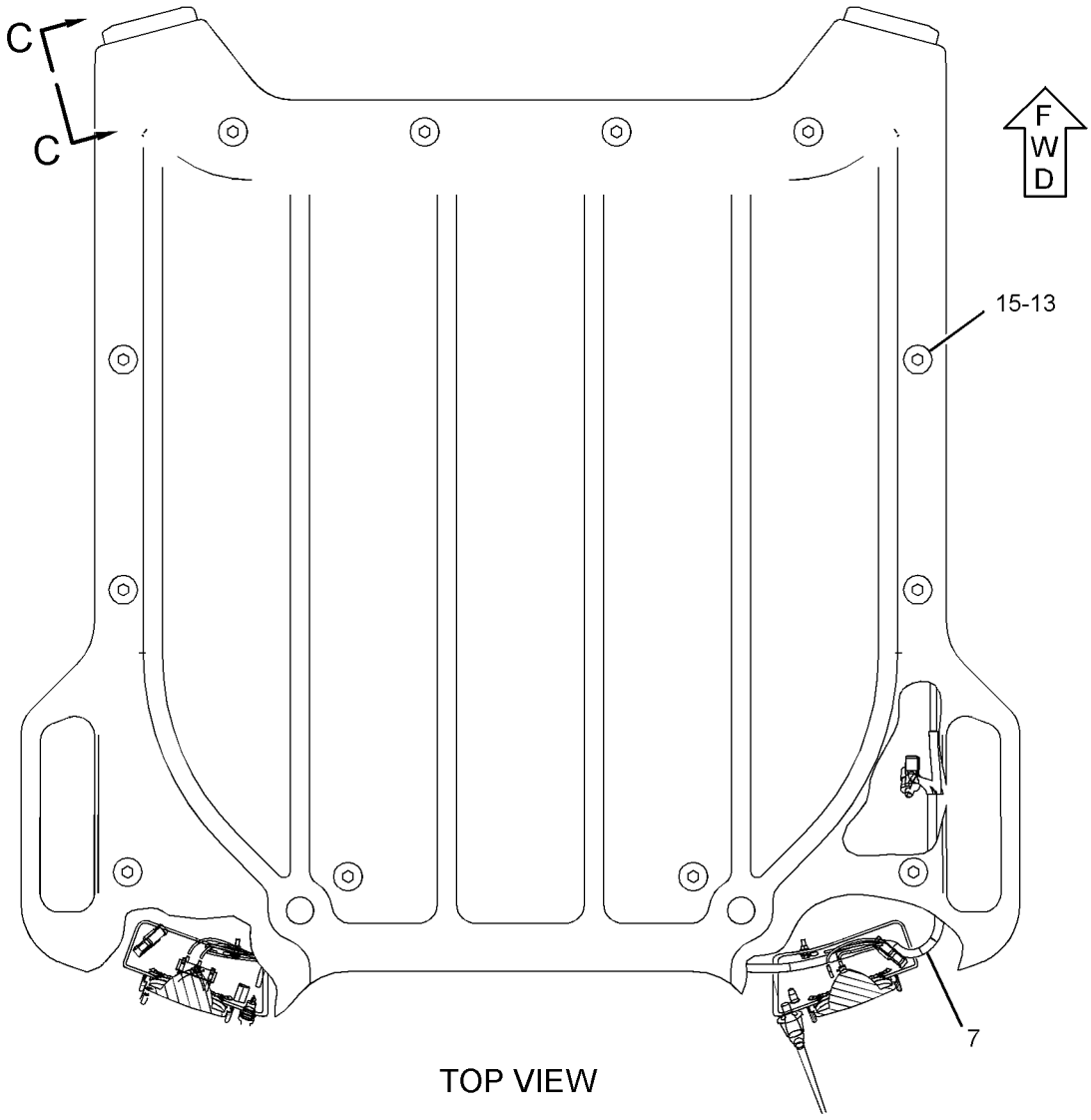

TOP VIEW

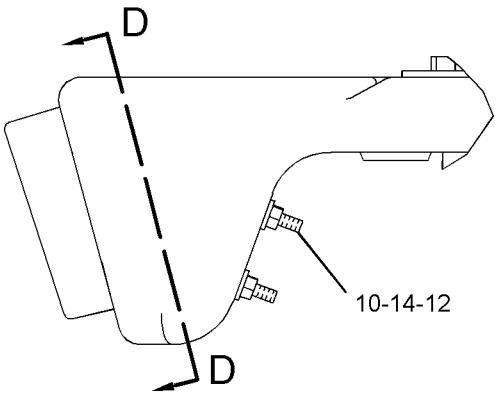

VIEW C-C

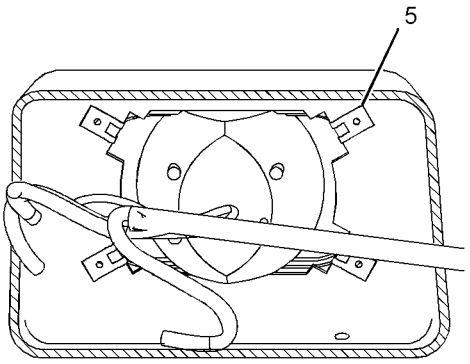

SECTION D-D

GRAPHIC #2 **<END>** g01422870

269-4876 LIGHTING GP-FLOOD—CANOPY FRONT, REAR

S/N: JKM1-UP
PART OF 269-4873 CANOPY AR-OPEN ROPS
AN ATTACHMENT

SMCS-1434 **i02926756**

NOTE	REF NO	GRAPHIC REF	PART NUMBER	QTY	PART NAME 1 2 3 4 5 6 (PRODUCT LEVEL)	SEE PAGE
	1	1	**9R-7941**	1	SOCKET AS	
		1	**9R-7980**	1	COVER	
	2	1	**109-7041**	4	LAMP GP-FLOOD (24-VOLT)	
					(EACH INCLUDES)	
		1	**9X-3463**	1	LAMP-HALOGEN (24-VOLT, 70-WATT)	
		1	**142-5789**	4	SCREW	
	3	1	**114-6604**	16	NUT-SPEED	
	4	1	**266-8620**	1	HARNESS AS-LIGHTING	
	5	1	**307-2634**	1	ROOF	
M	6	1	**5C-2890**	10	NUT (M6X1-THD)	
	7	1	**5P-5774**	4	PLUG	
M	8	1	**6V-7357**	10	BOLT (M6X1X25-MM)	
M	9	1	**8T-4137**	12	BOLT (M10X1.5X20-MM)	
	10	1	**8T-4205**	20	WASHER-HARD (7.2X14.5X2-MM THK)	
	11	1	**8T-4226**	12	WASHER-PLATED (10.5X45X3-MM THK)	
D	12	1	**5P-5639**		SEAL (0.3-M EACH)	
D	12A	1	**5P-5639**		SEAL (0.5-M)	

D-ORDER BY THE METER
M-METRIC PART

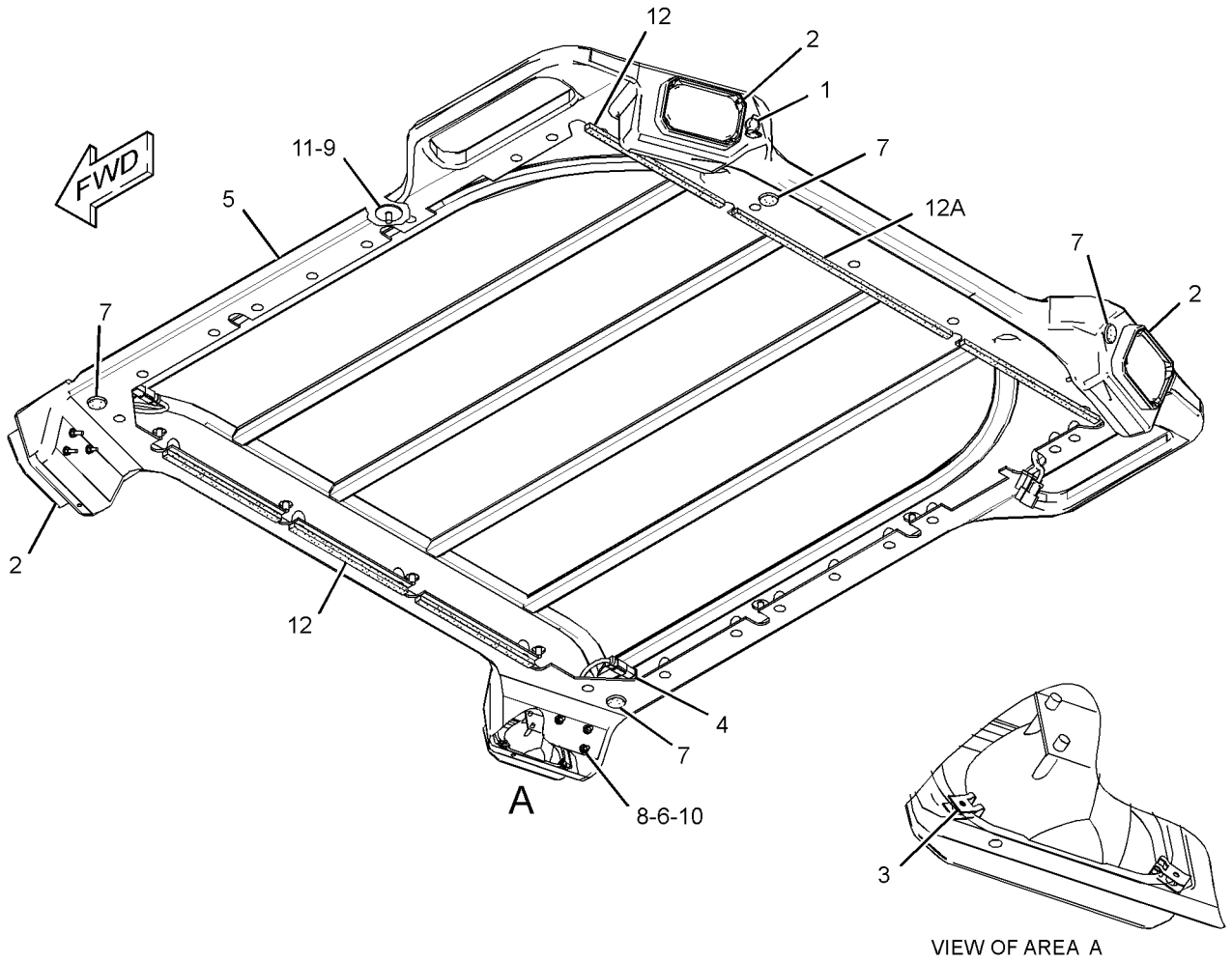

GRAPHIC #1 **<END>** g01453930

302-5414 LIGHTING GP-FLOOD—CAB FRONT, REAR

S/N: JKM1-454
PART OF 317-9488 CONFIGURATION AR
AN ATTACHMENT

SMCS-1434 **i02930704**

NOTE	REF NO	GRAPHIC REF	PART NUMBER	QTY	PART NAME 1 2 3 4 5 6 (PRODUCT LEVEL)	SEE PAGE
	1	1	**251-4339**	1	SWITCH AS-ROCKER (24-VOLT) (REAR FLOODLIGHTS)	
	2	1	**302-5410**	1	BRACKET (RH)	
	3	1	**302-5411**	1	BRACKET (LH)	
	4	1	**304-6911**	2	WIRE AS	
	5	1	**307-0543**	2	WIRE AS	
	6	1	**307-4806**	1	BRACKET (RH)	
	7	1	**307-4807**	1	BRACKET (LH)	
Y	8	1	**289-3828**	4	LAMP GP-FLOOD (HID)	204
	9	1	**5P-4116**	4	WASHER-HARD (8.8X20.5X2-MM THK)	
M	10	1	**8T-4192**	2	BOLT (M12X1.75X25-MM)	
	11	1	**8T-4223**	2	WASHER-HARD (13.5X25.5X3-MM THK)	
M	12	1	**8T-7547**	4	BOLT (M8X1.25X30-MM)	

M-METRIC PART
Y-SEPARATE ILLUSTRATION

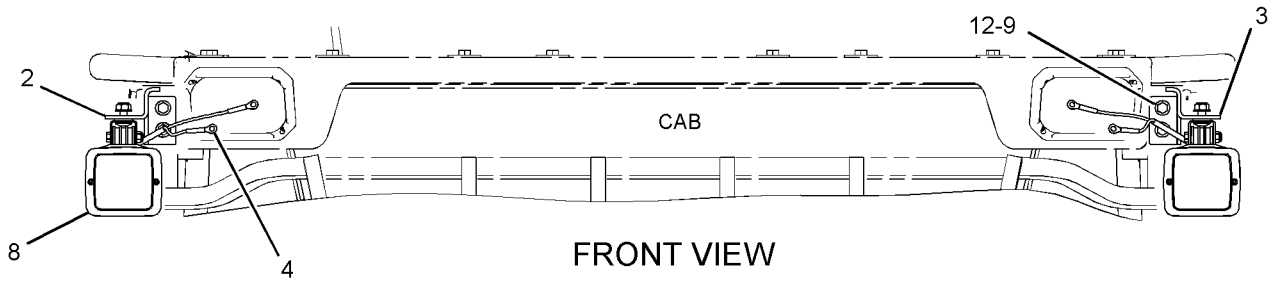

FRONT VIEW

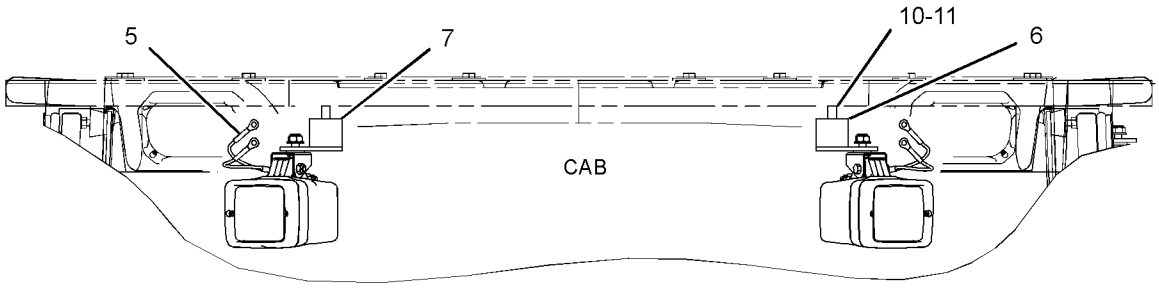

REAR VIEW

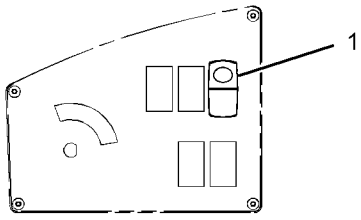

RIGHT SIDE VIEW
(LEFT HAND SWITCH PANEL)

GRAPHIC #1 **<END>** g01427157

302-5414 LIGHTING GP-FLOOD–CAB FRONT, REAR

S/N: JKM455-UP
PART OF 317-9488 CONFIGURATION AR
AN ATTACHMENT

SMCS-1434 **i03181804**

NOTE	REF NO	GRAPHIC REF	PART NUMBER	QTY	PART NAME 1 2 3 4 5 6 (PRODUCT LEVEL)	SEE PAGE
	1	1	**251-4339**	1	SWITCH AS-ROCKER (24-VOLT) (REAR FLOODLIGHTS)	
	2	1	**302-5410**	1	BRACKET (RH)	
	3	1	**302-5411**	1	BRACKET (LH)	
	4	1	**304-6911**	2	WIRE AS	
	5	1	**307-0543**	2	WIRE AS	
	6	1	**307-4806**	1	BRACKET (RH)	
	7	1	**307-4807**	1	BRACKET (LH)	
CY	8	1	**319-7382**	4	LAMP GP-FLOOD (HID) (HID)	205
	9	1	**5P-4116**	4	WASHER-HARD (8.8X20.5X2-MM THK)	
M	10	1	**8T-4192**	2	BOLT (M12X1.75X25-MM)	
	11	1	**8T-4223**	2	WASHER-HARD (13.5X25.5X3-MM THK)	
M	12	1	**8T-7547**	4	BOLT (M8X1.25X30-MM)	

C-CHANGE FROM PREVIOUS TYPE
M-METRIC PART
Y-SEPARATE ILLUSTRATION

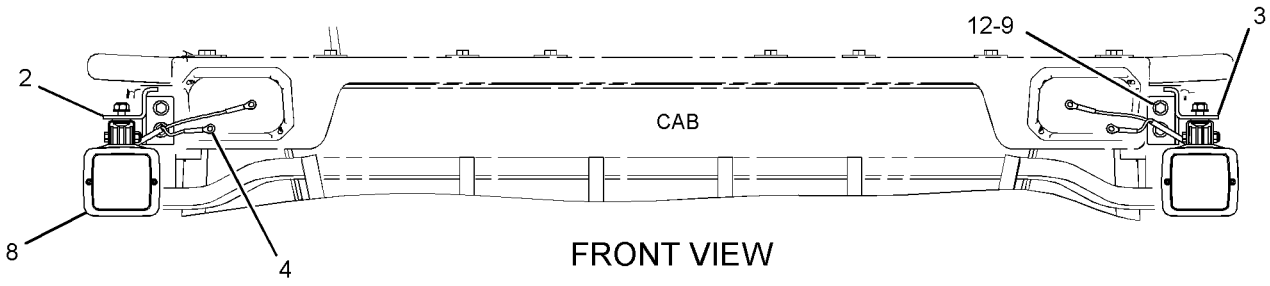

FRONT VIEW

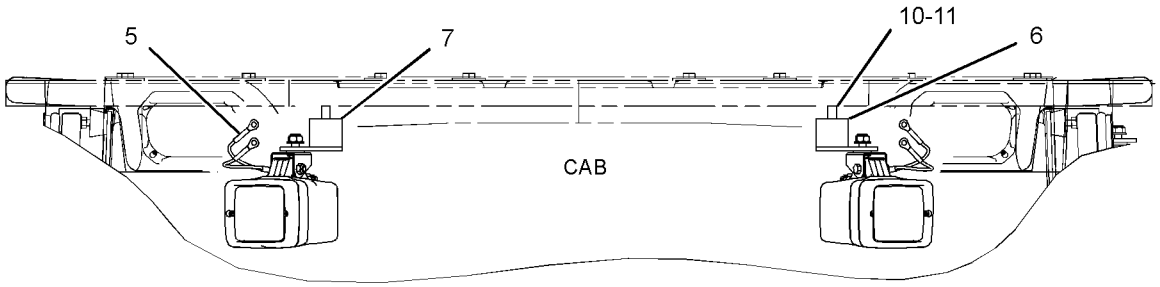

REAR VIEW

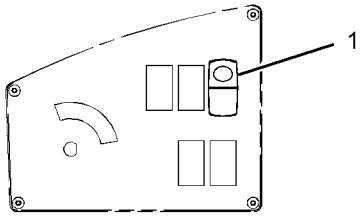

RIGHT SIDE VIEW
(LEFT HAND SWITCH PANEL)

GRAPHIC #1 **<END>** g01427157

263-3171 LIGHTING GP-ROADING

S/N: JKM1-845

PART OF 237-7539 ELECTRICAL AR

SMCS-1429 **i03041559**

NOTE	REF NO	GRAPHIC REF	PART NUMBER	QTY	PART NAME 1 2 3 4 5 6 (PRODUCT LEVEL)	SEE PAGE
	1	1	**8C-0538**	2	GROMMET	
Y	2	1	**105-4849**	1	LAMP GP-HEAD & SIGNAL (LH)	206
Y	3	1	**105-4850**	1	LAMP GP-HEAD & SIGNAL (RH)	208
	4	1	**111-4013**	2	GROMMET	
Y	5	1	**145-6929**	2	LAMP GP-STOP & TAIL (24-VOLT)	214
	6	1	**246-3295**	2	PLATE AS	
					(EACH INCLUDES)	
M		1	**8T-4935**	1	BOSS-WELD (M10X1.5X45-MM)	
	7	1	**265-1048**	1	BRACKET AS (RH)	
	8	1	**265-3145**	1	BRACKET AS (LH)	
	9	1	**130-5300**	4	CLIP	
	10	1	**8T-4121**	8	WASHER-HARD (11X21X2.5-MM THK)	
M	11	1	**8T-4136**	6	BOLT (M10X1.5X25-MM)	
M	12	1	**9X-2044**	8	SCREW-TRUSS HEAD (M6X1X16-MM)	
M	13	1	**8T-4137**	2	BOLT (M10X1.5X20-MM)	

M-METRIC PART
Y-SEPARATE ILLUSTRATION

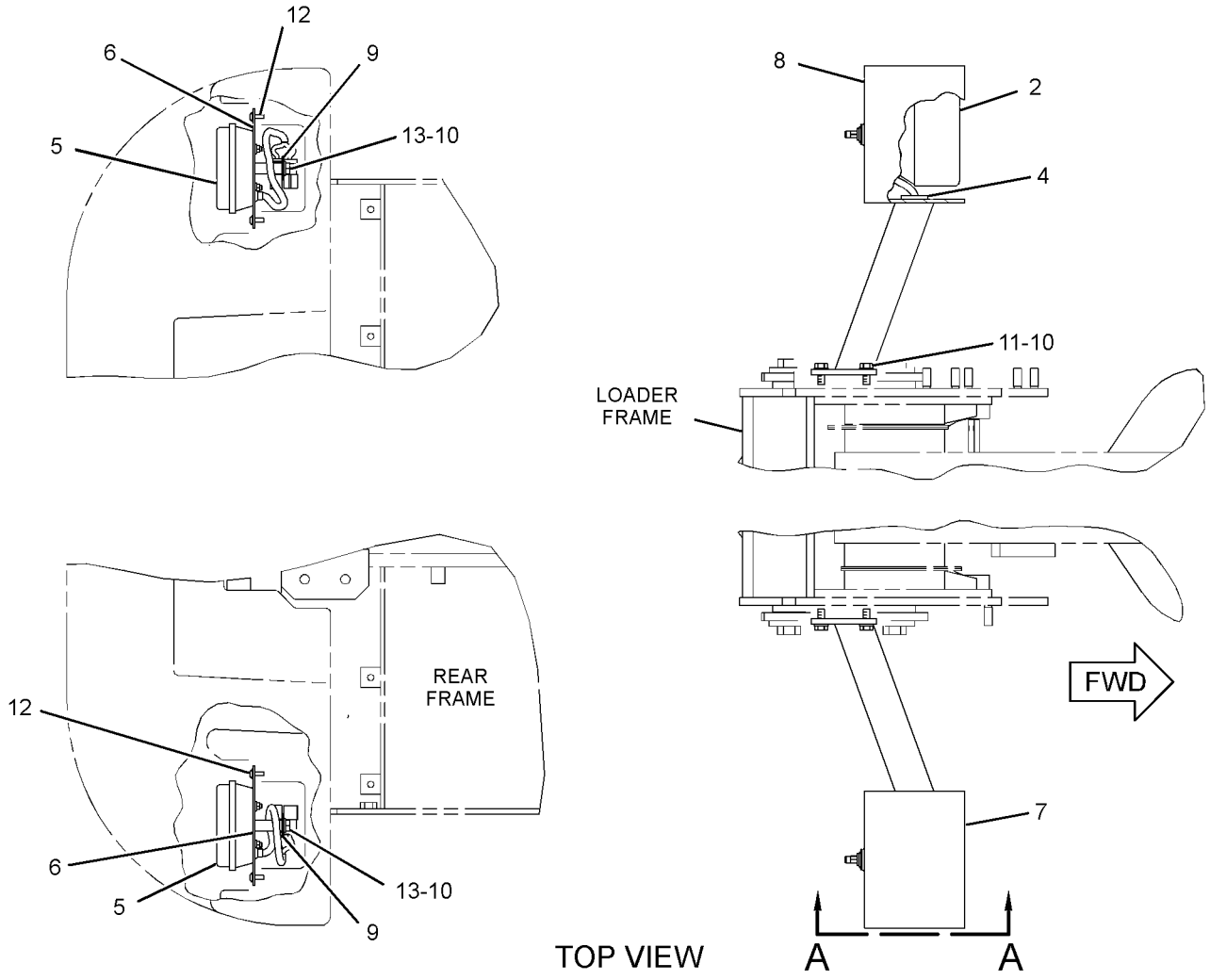

GRAPHIC #1

<END>

g01663734

263-3171 LIGHTING GP-ROADING

S/N: JKM846-853

PART OF 237-7539 ELECTRICAL AR

SMCS-1429 **i03715221**

NOTE	REF NO	GRAPHIC REF	PART NUMBER	QTY	PART NAME 1 2 3 4 5 6 (PRODUCT LEVEL)	SEE PAGE
	1	2	**8C-0538**	2	GROMMET	
	2	2	**111-4013**	2	GROMMET	
Y	3	2	**145-6929**	2	LAMP GP-STOP & TAIL (24-VOLT)	214
	4	2	**246-3295**	2	PLATE AS	
					(EACH INCLUDES)	
M		2	**8T-4935**	1	BOSS-WELD (M10X1.5X45-MM)	
CY	5	2	**302-0409**	1	LAMP GP-HEAD & SIGNAL	210
CY	6	2	**302-0411**	1	LAMP GP-HEAD & SIGNAL	211
C	7	1	**320-9867**	1	BRACKET AS (LH)	
C	8	1	**320-9868**	1	BRACKET AS (RH)	
	9	2	**130-5300**	4	CLIP	
	10	2	**8T-4121**	8	WASHER-HARD (11X21X2.5-MM THK)	
M	11	2	**8T-4136**	6	BOLT (M10X1.5X25-MM)	
M	12	2	**8T-4137**	2	BOLT (M10X1.5X20-MM)	
M	13	2	**9X-2044**	8	SCREW-TRUSS HEAD (M6X1X16-MM)	

C-CHANGE FROM PREVIOUS TYPE
M-METRIC PART
Y-SEPARATE ILLUSTRATION

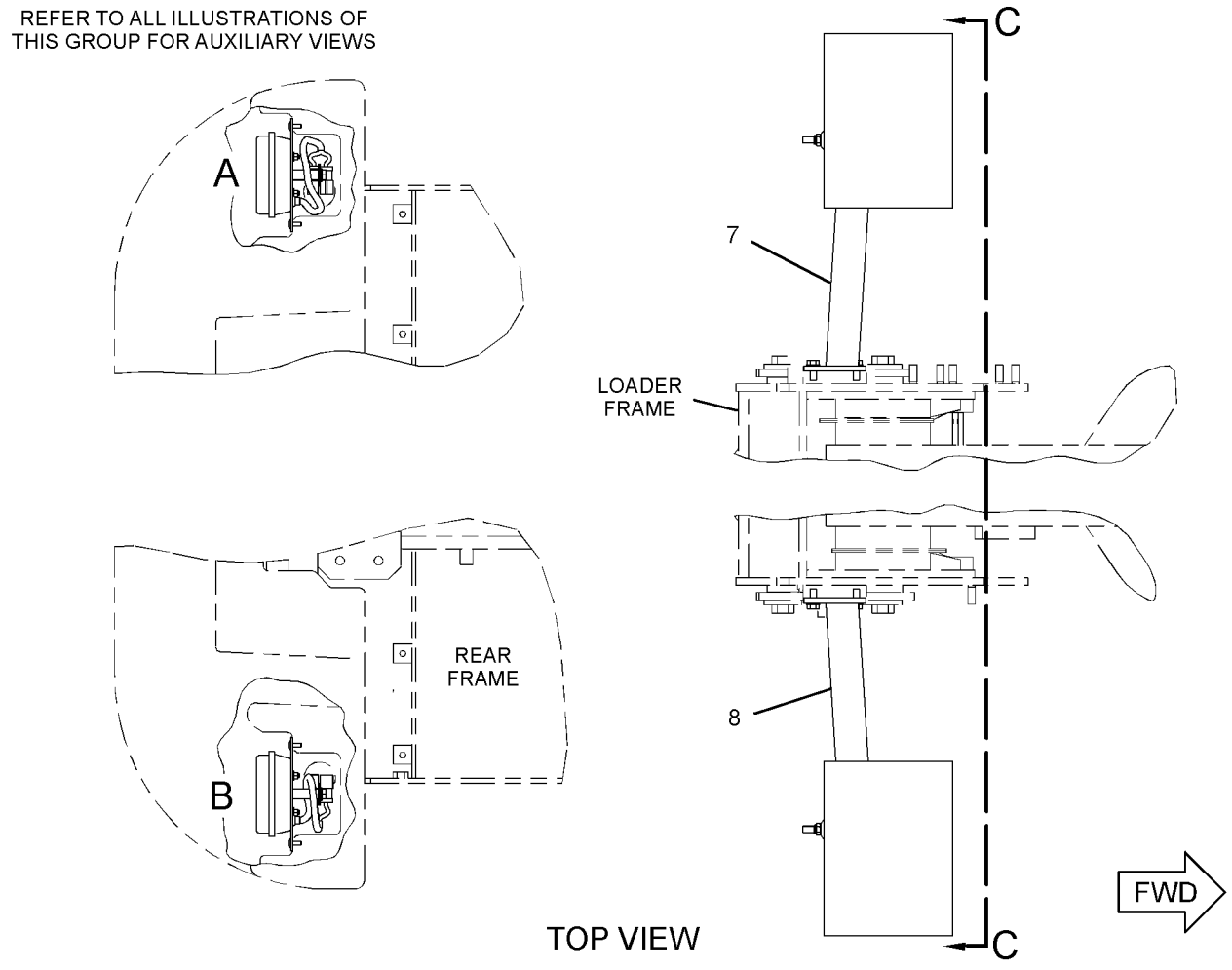

GRAPHIC #1 g01949346

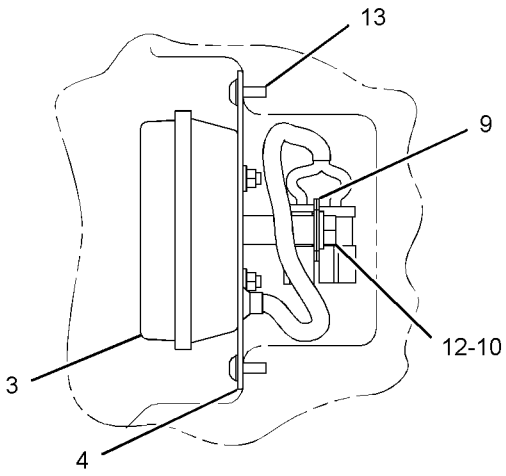

VIEW OF AREA A

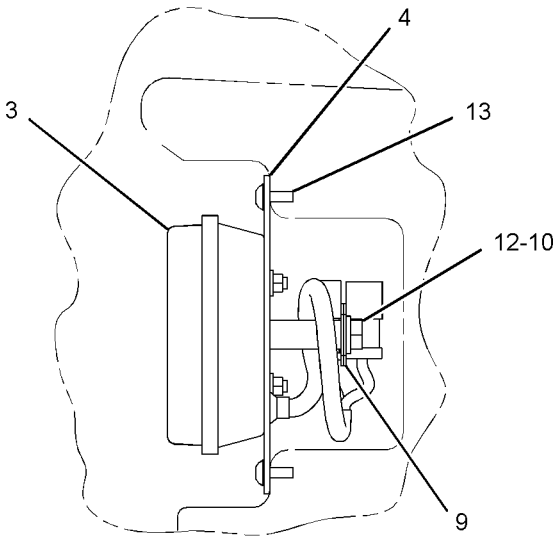

VIEW OF AREA B

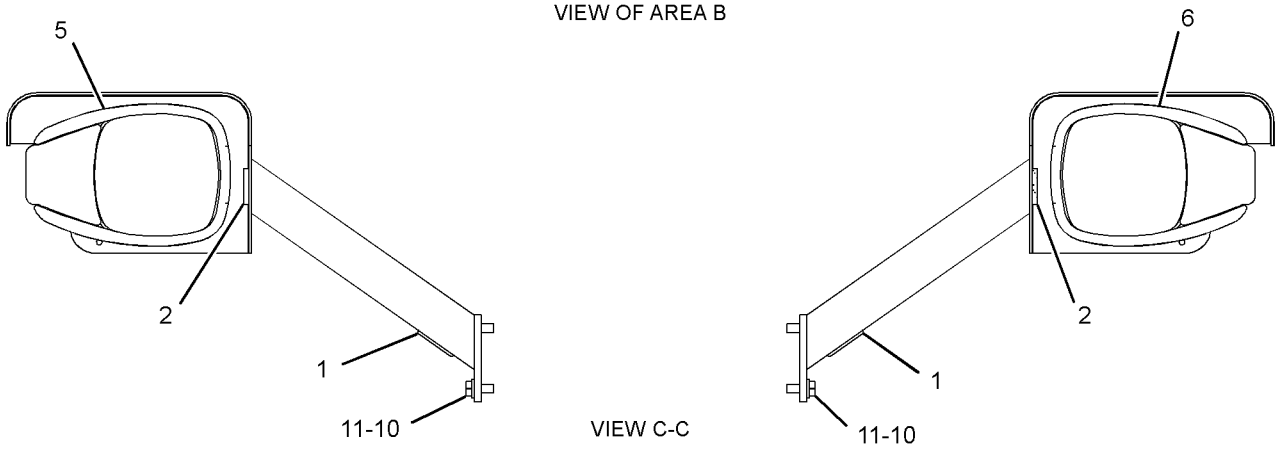

VIEW C-C

GRAPHIC #2 **<END>** g01949430

263-3171 LIGHTING GP-ROADING

S/N: JKM854-UP

PART OF 237-7539 ELECTRICAL AR

SMCS-1429 **i03880382**

NOTE	REF NO	GRAPHIC REF	PART NUMBER	QTY	PART NAME 1 2 3 4 5 6 (PRODUCT LEVEL)	SEE PAGE
	1	2	**8C-0538**	2	GROMMET	
C	2	2	**117-9409**	2	GROMMET	
Y	3	2	**145-6929**	2	LAMP GP-STOP & TAIL (24-VOLT)	214
	4	2	**246-3295**	2	PLATE AS	
					(EACH INCLUDES)	
M		2	**8T-4935**	1	BOSS-WELD (M10X1.5X45-MM)	
CY	5	2	**344-3455**	1	LAMP GP-HEAD & SIGNAL (RH)	212
CY	6	2	**344-3456**	1	LAMP GP-HEAD & SIGNAL (LH)	213
	7	1	**320-9867**	1	BRACKET AS (LH)	
	8	1	**320-9868**	1	BRACKET AS (RH)	
	9	2	**130-5300**	4	CLIP	
	10	2	**8T-4121**	8	WASHER-HARD (11X21X2.5-MM THK)	
M	11	2	**8T-4136**	6	BOLT (M10X1.5X25-MM)	
M	12	2	**8T-4137**	2	BOLT (M10X1.5X20-MM)	
M	13	2	**9X-2044**	8	SCREW-TRUSS HEAD (M6X1X16-MM)	

C-CHANGE FROM PREVIOUS TYPE
M-METRIC PART
Y-SEPARATE ILLUSTRATION

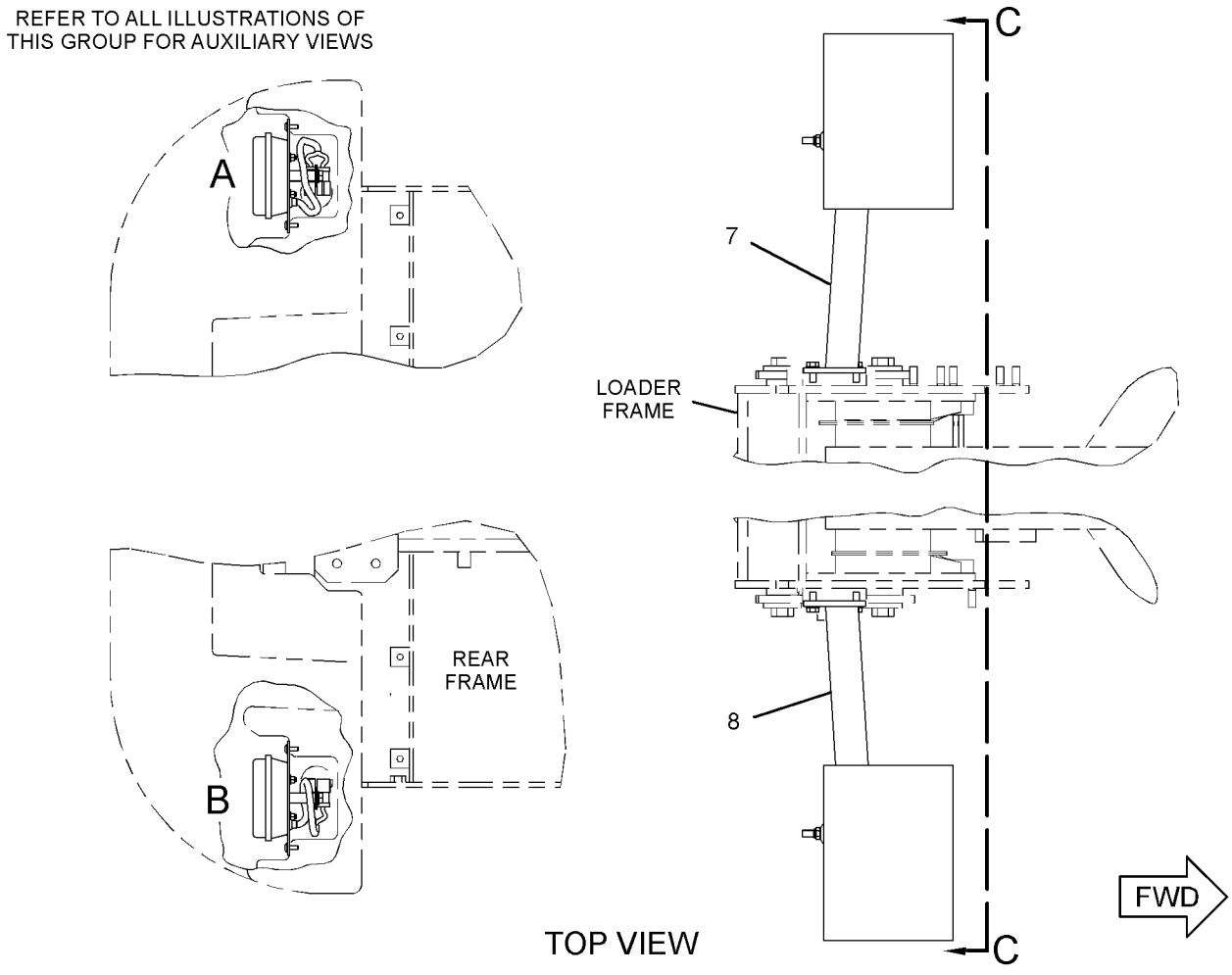

GRAPHIC #1 g01949346

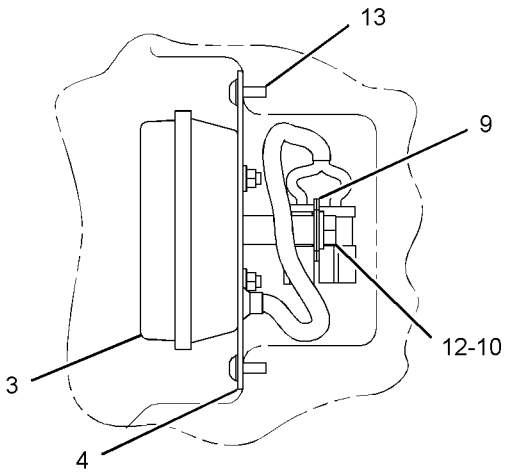

VIEW OF AREA A

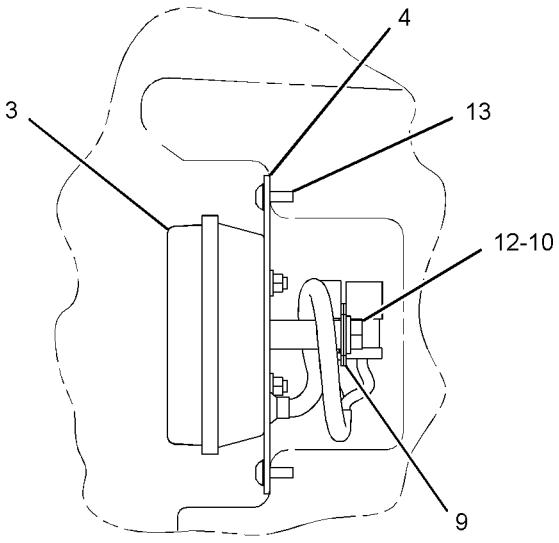

VIEW OF AREA B

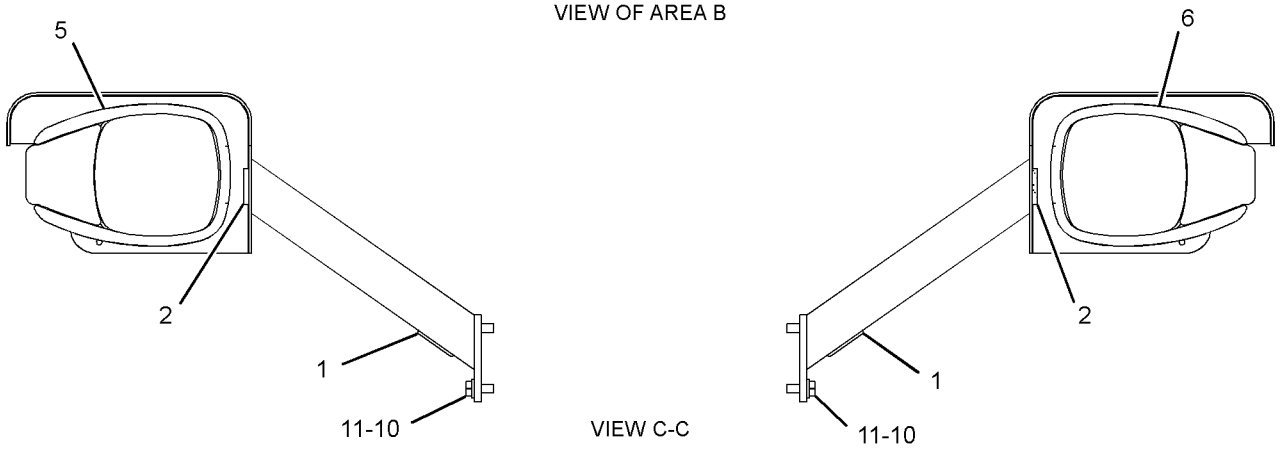

VIEW C-C

GRAPHIC #2 **<END>** g01949430

283-6945 LIGHTING GP-WARNING BEACON

S/N: JKM1-UP

PART OF 317-9488 CONFIGURATION AR, 317-9487 OPTION AR-LIGHTING AN ATTACHMENT

SMCS-1431 **i02930702**

NOTE	REF NO	GRAPHIC REF	PART NUMBER	QTY	PART NAME 1 2 3 4 5 6 (PRODUCT LEVEL)	SEE PAGE
Y	1	1	**108-1029**	1	LAMP GP-WARNING BEACON (24-VOLT)	215
	2	1	**237-9736**	1	SWITCH AS-ROCKER (WARNING BEACON)	
	3	1	**129-0336**	1	PLATE	
	4	1	**6V-6635**	4	SCREW-PAN HEAD	

Y-SEPARATE ILLUSTRATION

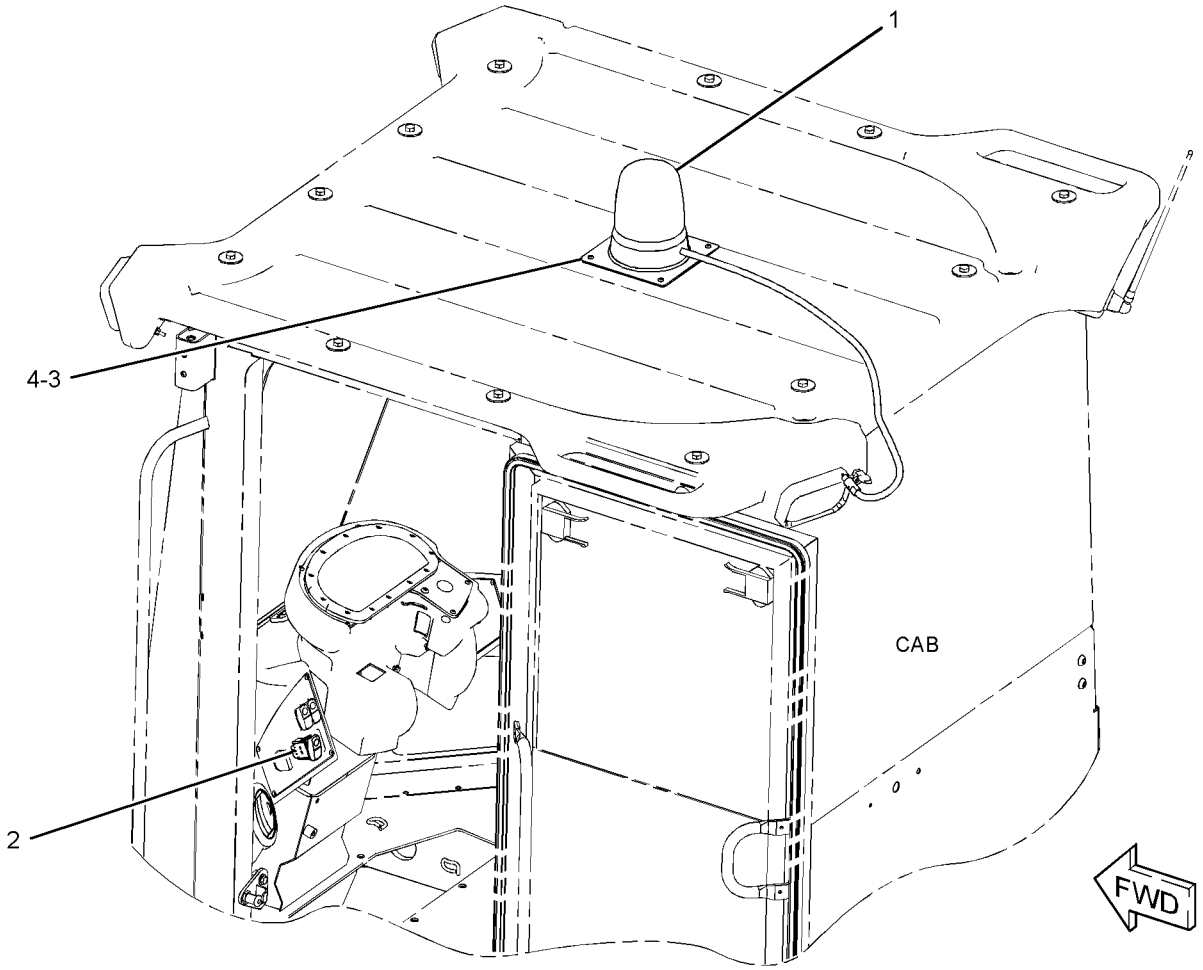

GRAPHIC #1 **<END>** g01426659

ELECTRICAL AND STARTING SYSTEM

283-6945 LIGHTING GP-WARNING BEACON

S/N: JKM966-UP
PART OF 317-9488 CONFIGURATION AR, 317-9487 OPTION AR-LIGHTING
AN ATTACHMENT

SMCS-1431 **i03914033**

NOTE	REF NO	GRAPHIC REF	PART NUMBER	QTY	PART NAME 1 2 3 4 5 6 (PRODUCT LEVEL)	SEE PAGE
CY	1	1	**140-3668**	1	LAMP GP-WARNING BEACON (AMBER, STROBE)	216
	2	1	**237-9736**	1	SWITCH AS-ROCKER (WARNING BEACON)	
	3	1	**129-0336**	1	PLATE	
	4	1	**6V-6635**	4	SCREW-PAN HEAD	

C-CHANGE FROM PREVIOUS TYPE
Y-SEPARATE ILLUSTRATION

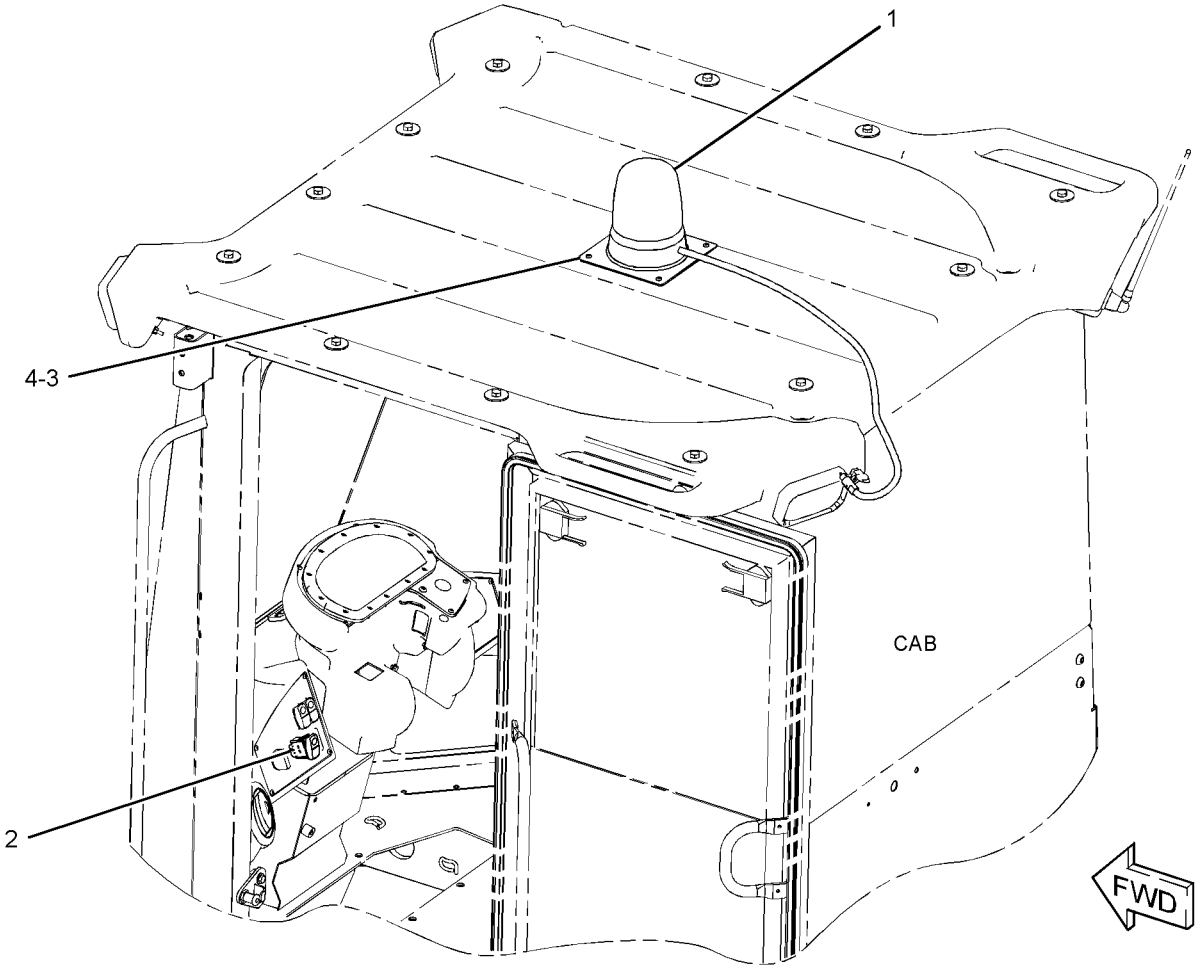

GRAPHIC #1 **<END>** g01426659

313-4006 LINES GP-ALTERNATOR AIR

S/N: JKM1-UP

PART OF 239-3372 INSTALLATION AR-ENGINE

SMCS-1405 **i02900390**

NOTE	REF NO	GRAPHIC REF	PART NUMBER	QTY	PART NAME 1 2 3 4 5 6 (PRODUCT LEVEL)	SEE PAGE
	1	1	**5P-0597**	2	CLAMP-HOSE	
	2	1	**164-5798**	1	CAP-RAIN	
	3	1	**226-4909**	1	SCREEN	
	4	1	**272-8384**	1	PLUG-BUTTON	
	5	1	**314-6458**	1	COVER AS	
	6	1	**317-9992**	1	HOSE	
	7	1	**5P-4325**	2	CLIP	
	8	1	**8T-4121**	2	WASHER-HARD (11X21X2.5-MM THK)	
M	9	1	**8T-4137**	1	BOLT (M10X1.5X20-MM)	
M	10	1	**8T-4191**	1	BOLT (M10X1.5X16-MM)	
E	11	1	**231-0858**		SEAL (44-CM)	

E-ORDER BY THE CENTIMETER
M-METRIC PART

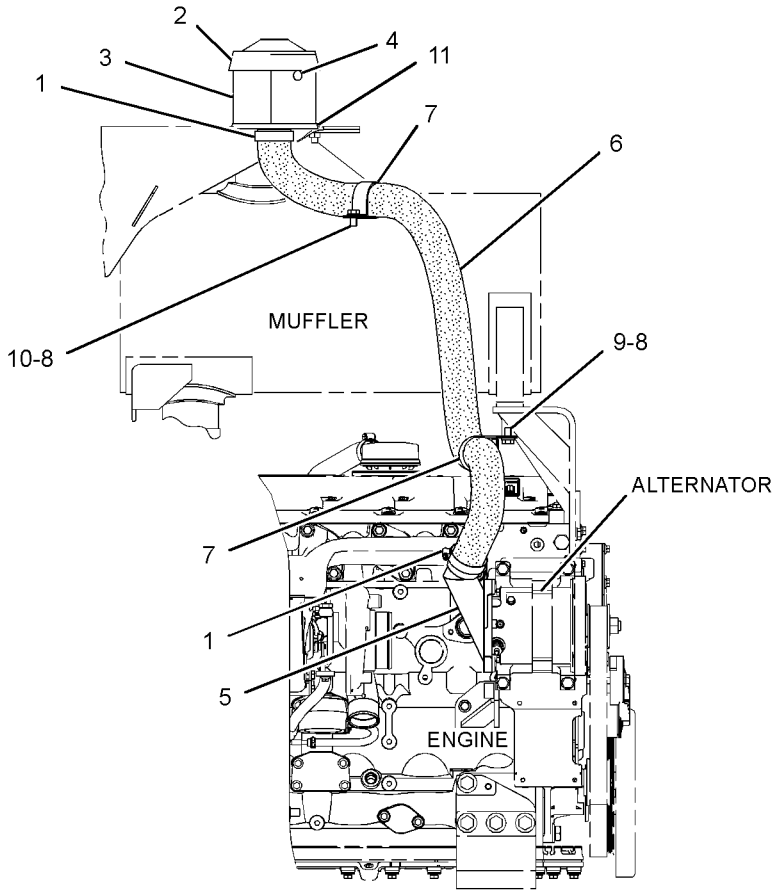

RIGHT SIDE VIEW

GRAPHIC #1 **<END>** g01447690

ELECTRICAL AND STARTING SYSTEM

307-3159 PANEL GP-CIRCUIT BREAKER

S/N: JKM1-UP

PART OF 263-5075 WIRING GP-CHASSIS

SMCS-1417, 1420 **i03539780**

NOTE	REF NO	GRAPHIC REF	PART NUMBER	QTY	PART NAME 1 2 3 4 5 6 (PRODUCT LEVEL)	SEE PAGE
	1	1	**3E-5169**	1	GUARD-SWITCH	
	2	1	**3E-8320**	1	PLATE-INSTRUCTION (BATTERY)	
Y	3	1	**7N-0718**	1	SWITCH GP-DISCONNECT (BATTERY)	262
	4	1	**149-2612**	1	RELAY AS (24-VOLT) (HOOD TILT MOTOR)	
		1	**186-3735**	2	PIN-CONNECTOR (16-GA TO 18-GA)	
		1	**9W-0852**	4	PIN-CONNECTOR (14-GA)	
		1	**102-8805**	1	KIT-RECEPTACLE (6-PIN)	
					(INCLUDES RECEPTACLE AS & WEDGE)	
	5	1	**171-2205**	1	CIRCUIT BREAKER AS (40-AMPERE) (CAB POWER)	
		1	**6V-8187**	2	NUT (1/4-28-THD)	
		1	**8T-4205**	2	WASHER-HARD (7.2X14.5X2-MM THK)	
		1	**253-2111**	2	LOCKWASHER	
	5A	1	**171-2205**	1	CIRCUIT BREAKER AS (40-AMPERE) (GLOW PLUG)	
		1	**6V-8187**	2	NUT (1/4-28-THD)	
		1	**8T-4205**	2	WASHER-HARD (7.2X14.5X2-MM THK)	
		1	**253-2111**	2	LOCKWASHER	
	6	1	**171-2210**	1	CIRCUIT BREAKER AS (80-AMPERE) (MAIN)	
		1	**6V-8187**	2	NUT (1/4-28-THD)	
		1	**8T-4205**	2	WASHER-HARD (7.2X14.5X2-MM THK)	
		1	**253-2111**	2	LOCKWASHER	
Y	7	1	**209-5582**	1	SWITCH GP-MAGNETIC (24-VOLT) (GLOW PLUG RELAY)	263
	8	1	**267-2265**	1	BAR-BUS	
	9	1	**289-2452**	1	PANEL AS	
M		1	**6V-9632**	8	NUT-WELD (M6X1-THD)	
		1	**7T-1099**	5	LINK	
M		1	**9R-2672**	1	BOSS-THREADED (M10X1.5-THD)	
		1	**130-5300**	2	CLIP	
	10	1	**300-6442**	1	HARNESS AS-CHASSIS (MAIN)	
	11	1	**300-6449**	1	WIRE AS	
	12	1	**301-2979**	1	SWITCH GP-TOGGLE (ENGINE SHUTDOWN)	
	13	1	**301-2980**	1	SWITCH AS-TOGGLE (HOOD TILT ACTUATOR)	
					(INCLUDES RECEPTACLE AS & WEDGE)	
		1	**102-8803**	1	KIT-RECEPTACLE (3-PIN)	
					(INCLUDES RECEPTACLE AS & WEDGE)	
		1	**8T-8729**	3	PIN-CONNECTOR (16-GA TO 18-GA)	
	14	1	**328-0919**	1	FILM-IDENTIFICATION (CONTROL PANEL)	
	16	1	**307-3894**	1	WIRE AS	
	17	1	**308-7489**	1	WIRE AS	
	18	1	**033-8248**	1	CLIP	
	19	1	**095-0910**	1	CLIP	
Y	20	1	**241-8368**	1	SWITCH GP-MAGNETIC (24-VOLT) (MAIN RELAY)	264
	24	1	**4B-4274**	6	WASHER (5.5X13X1.2-MM THK)	
	25	1	**5L-4507**	6	SCREW-MACHINE (10-32X0.875-IN)	
	26	1	**8T-4121**	1	WASHER-HARD (11X21X2.5-MM THK)	
M	27	1	**8T-4137**	1	BOLT (M10X1.5X20-MM)	
M	28	1	**8T-4138**	2	BOLT (M6X1X20-MM)	
	29	1	**8T-4205**	8	WASHER-HARD (7.2X14.5X2-MM THK)	
M	30	1	**8T-4970**	6	BOLT (M6X1X14-MM)	

M-METRIC PART
Y-SEPARATE ILLUSTRATION

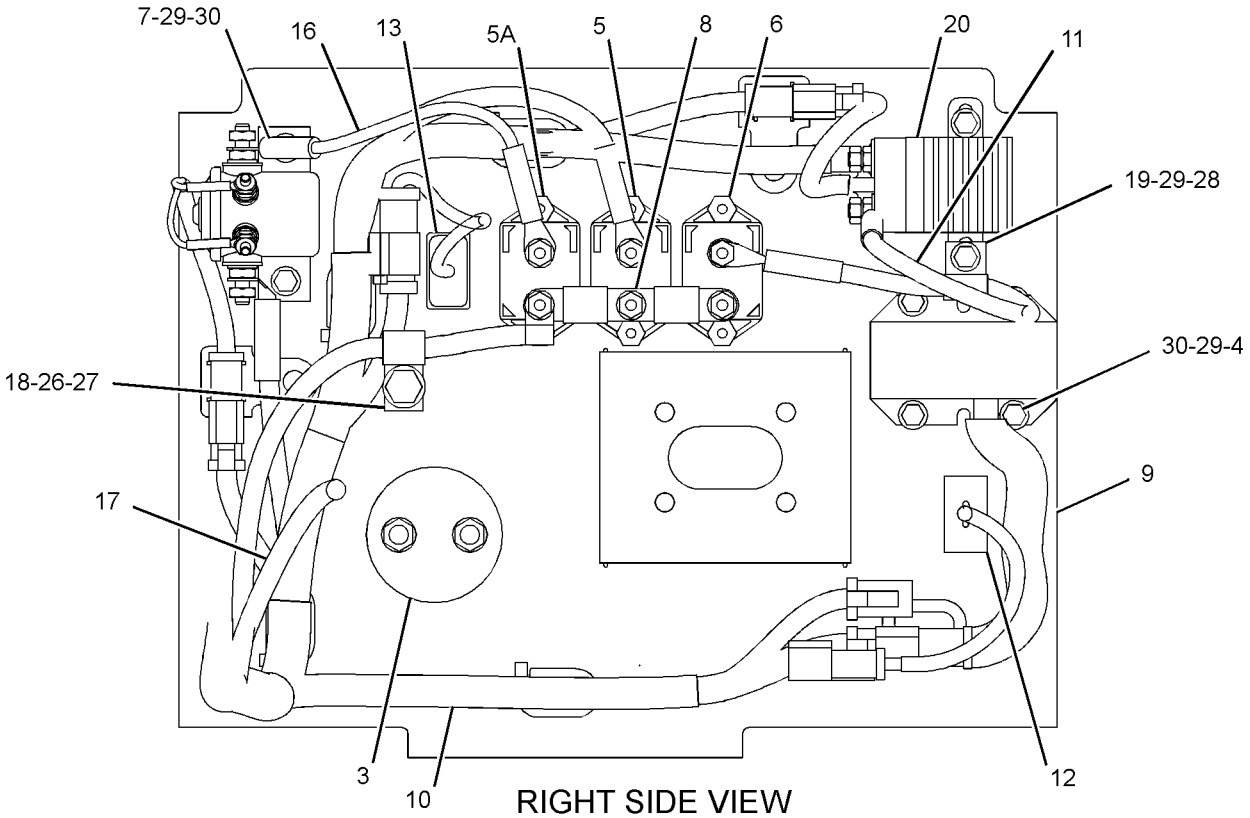

RIGHT SIDE VIEW

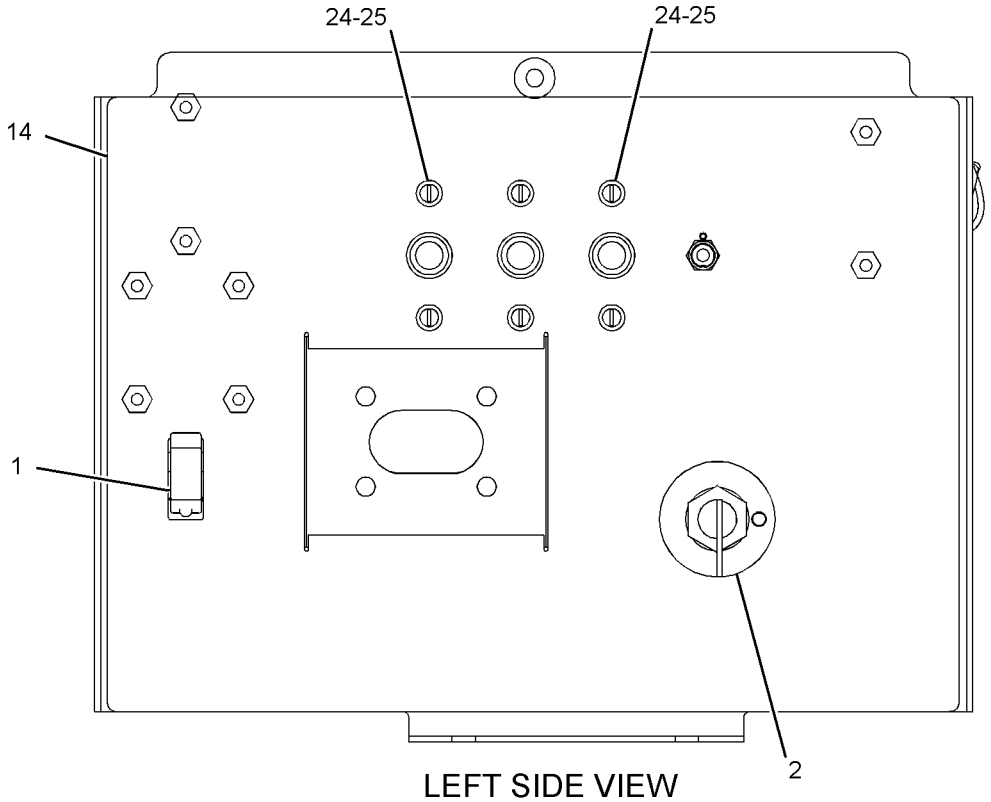

LEFT SIDE VIEW

GRAPHIC #1

<END>

g01662005

278-1667 PANEL GP-FUSE

S/N: JKM1-UP

PART OF 265-3259, 266-3717 WIRING GP-CAB

ALSO AN ATTACHMENT

SMCS-1417, 1422 **i02917804**

NOTE	REF NO	GRAPHIC REF	PART NUMBER	QTY	PART NAME 1 2 3 4 5 6 (PRODUCT LEVEL)	SEE PAGE
	1	1	**113-8490**	27	FUSE (10-AMPERE)	
	2	1	**113-8491**	14	FUSE (15-AMPERE)	
	3	1	**281-2880**	2	SUPPRESSOR-ARC	
	4	1	**280-2710**	1	CIRCUIT BREAKER AS (20-AMPERE, MANUAL RESET) (HOOD TILT ACTUATOR)	
	5	1	**248-2841**	2	RELAY AS (24-VOLT) (FRONT CAB FLOODLIGHTS)	
	5A	1	**248-2841**	1	RELAY AS (24-VOLT) (HORN)	
	5B	1	**248-2841**	1	RELAY AS (24-VOLT) (STARTING AID)	
	6	1	**280-2709**	1	CIRCUIT BREAKER AS (15-AMPERE, MANUAL RESET) (AIR CONDITIONER, HEATER FAN)	
	7	1	**265-8182**	1	COVER-FUSE BLOCK	
M	8	1	**5C-7261**	4	NUT (M8X1.25-THD)	
	9	1	**9F-5644**	4	LOCKWASHER	
	10	1	**7X-0608**	4	WASHER-HARD (10.2X16X2-MM THK)	

M-METRIC PART

278-1667 PANEL GP-FUSE *(contd.)* **i02917804**

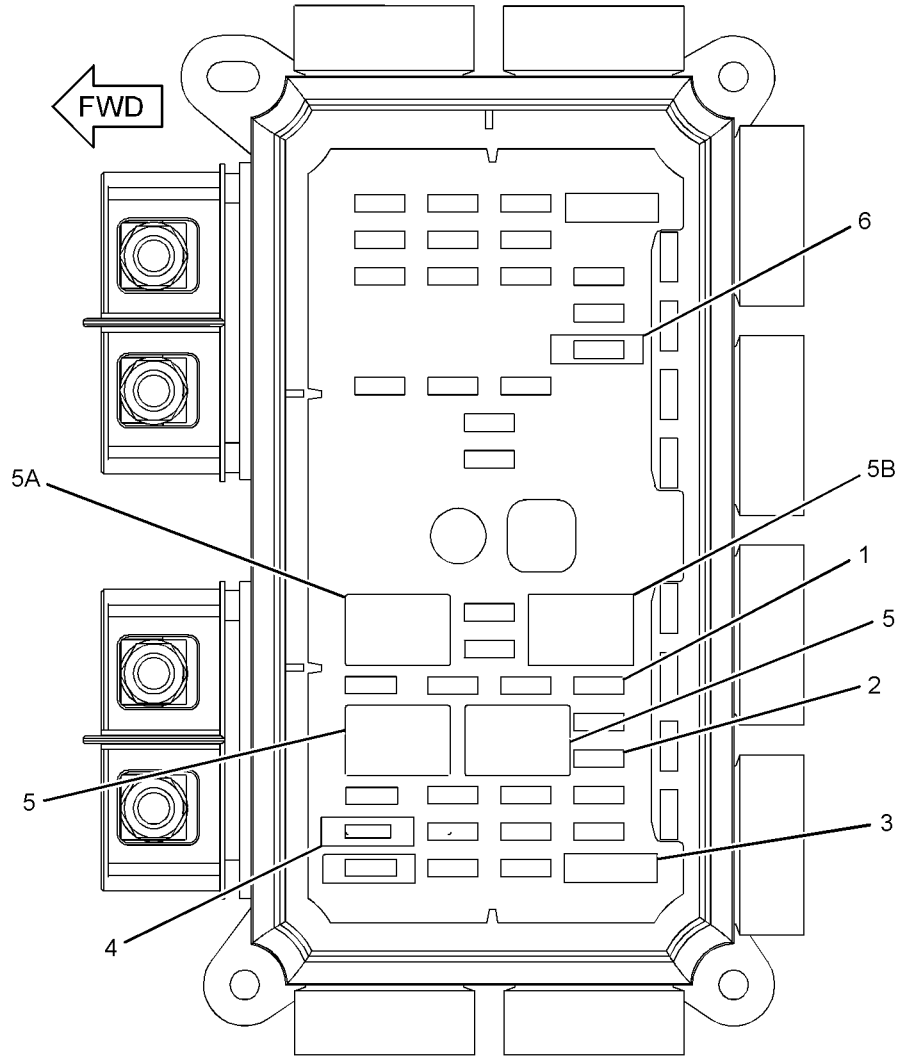

TOP VIEW
(COVER REMOVED FOR CLARITY)

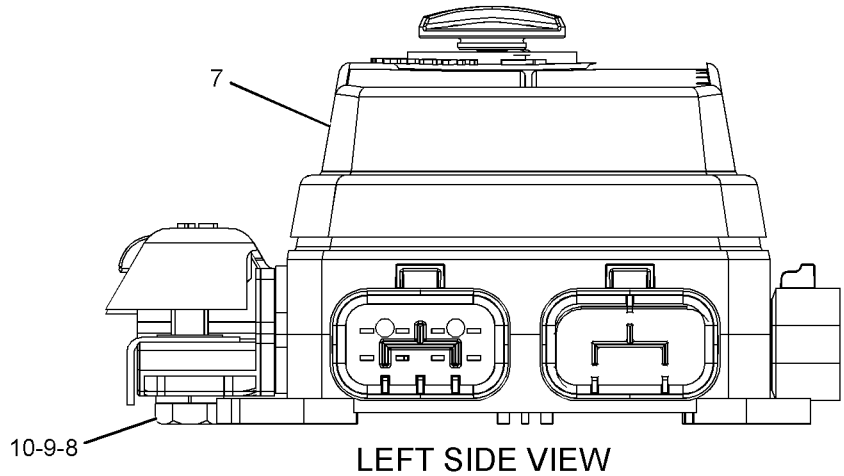

LEFT SIDE VIEW

GRAPHIC #1

<END>

g01429176

ELECTRICAL AND STARTING SYSTEM

267-2276 RECEPTACLE GP-AUXILIARY START

S/N: JKM1-UP

PART OF 237-7539 ELECTRICAL AR

SMCS-1463 **i02906343**

NOTE	REF NO	GRAPHIC REF	PART NUMBER	QTY	PART NAME 1 2 3 4 5 6 (PRODUCT LEVEL)	SEE PAGE
	1	1	**146-6747**	1	FILM-INFORMATION (24-VOLT)	
	2	1	**225-0313**	1	FILM-WARNING (JUMP START, READ OMM, U.S.)	
	3	1	**305-4383**	1	RECEPTACLE AS	
		1	**8N-0869**	1	COVER-TERMINAL (RED)	
		1	**9G-8909**	1	COVER-TERMINAL (BLACK)	
E		1	**159-8049**		CABLE (00-GA, RED) (56-CM)	
E		1	**159-8050**		CABLE (00-GA, BLACK) (9-CM)	
		1	**216-7790**	1	TERMINAL-CABLE (00-GA, 3/8-IN SCREW)	
	4	1	**205-7299**	2	CLIP	
	5	1	**3S-2093**	1	STRAP-CABLE	
M	6	1	**5C-7261**	4	NUT (M8X1.25-THD)	
	7	1	**8S-2634**	1	COVER AS	
	8	1	**8T-4224**	8	WASHER-HARD (8.8X16X2-MM THK)	
M	9	1	**8T-7547**	4	BOLT (M8X1.25X30-MM)	

E-ORDER BY THE CENTIMETER
M-METRIC PART

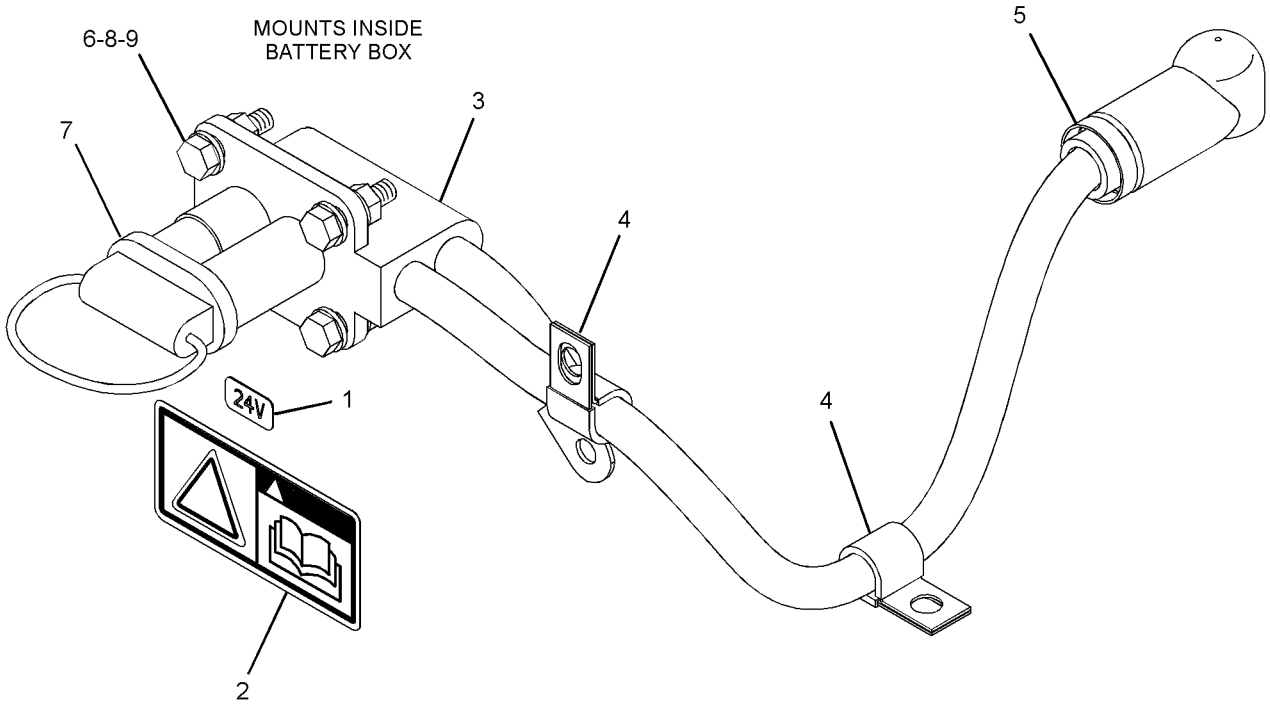

GRAPHIC #1 **<END>** g01441768

335-2609 RELAY GP

S/N: JKM1-UP

PART OF 267-4794 WIRING GP-AXLE OIL COOLER

AN ATTACHMENT

SMCS-1422, 4493 **i03625908**

NOTE	REF NO	GRAPHIC REF	PART NUMBER	QTY	PART NAME 1 2 3 4 5 6 (PRODUCT LEVEL)	SEE PAGE
	1	1	**248-2841**	1	RELAY AS (24-VOLT)	

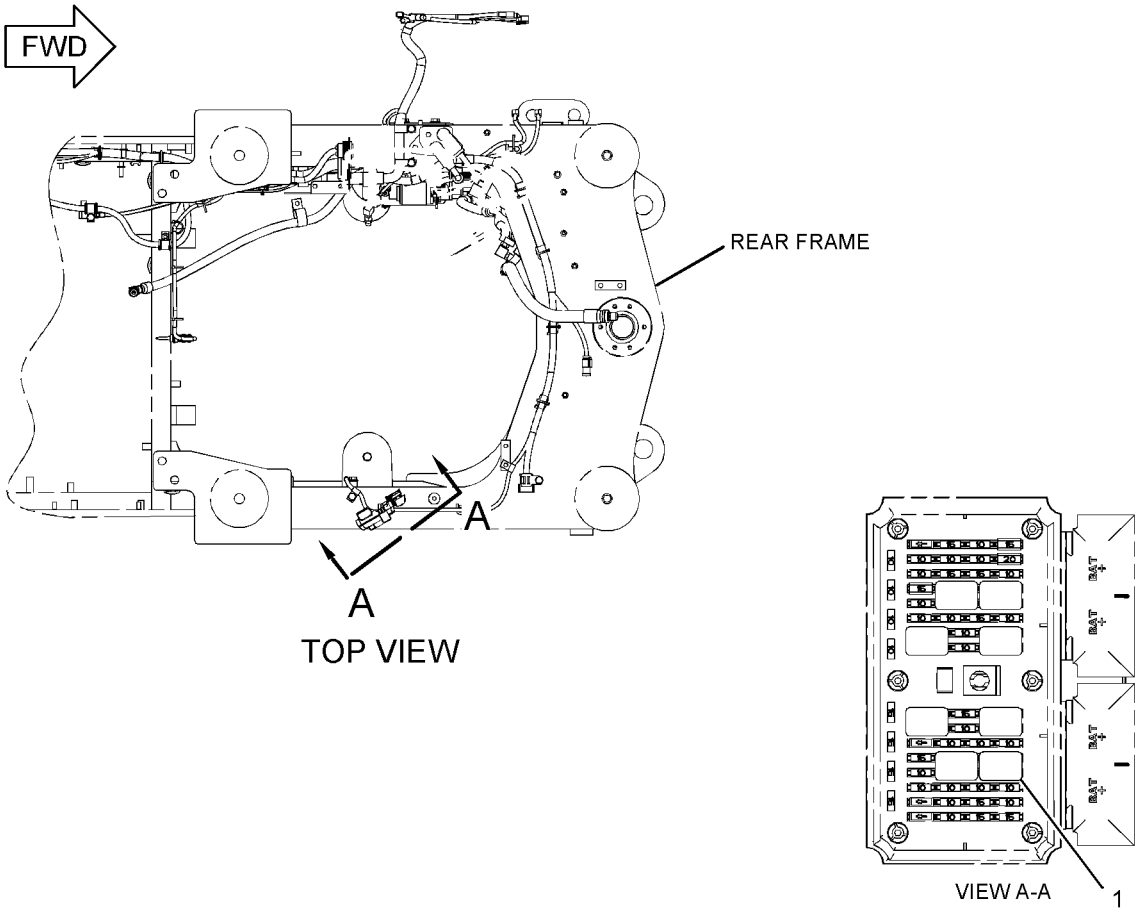

GRAPHIC #1 **<END>** g01949493

266-4523 SENSOR & MTG GP-POSITION—ARTICULATION ANGLE

S/N: JKM1-853
PART OF 265-9753 CONTROL AR-DIFFERENTIAL LOCK
AN ATTACHMENT

SMCS-5736 **i02935186**

NOTE	REF NO	GRAPHIC REF	PART NUMBER	QTY	PART NAME 1 2 3 4 5 6 (PRODUCT LEVEL)	SEE PAGE
	1	1	**8C-7315**	2	ROD END	
	2	1	**110-2974**	1	ROD-THREADED	
Y	3	1	**169-0417**	1	SENSOR GP-POSITION (ARTICULATION ANGLE)	245
	4	1	**278-0372**	1	PLATE	
	5	1	**305-7505**	1	BRACKET	
	6	1	**318-9181**	1	BAR	
	7	1	**319-3554**	1	PLATE	
	8	1	**130-5300**	1	CLIP	
	9	1	**3S-2713**	3	NUT-FULL (3/8-24-THD)	
M	10	1	**5C-7261**	5	NUT (M8X1.25-THD)	
	11	1	**7K-1181**	1	STRAP-CABLE	
M	12	1	**7X-2537**	1	BOLT (M8X1.25X35-MM)	
	13	1	**7X-3183**	1	BOLT (3/8-24X1-IN)	
	14	1	**8T-4121**	4	WASHER-HARD (11X21X2.5-MM THK)	
M	15	1	**8T-4137**	4	BOLT (M10X1.5X20-MM)	
M	16	1	**8T-4197**	5	BOLT (M8X1.25X40-MM)	
	17	1	**8T-4224**	12	WASHER-HARD (8.8X16X2-MM THK)	
	18	1	**8T-4896**	3	WASHER-HARD (10.2X18.5X2.5-MM THK)	
M	19	1	**8T-4971**	2	BOLT (M6X1X30-MM)	
M	20	1	**8T-6870**	1	BOLT (M8X1.25X70-MM)	
	21	1	**9X-8256**	2	WASHER (6.6X12X2-MM THK)	
	22	1	**9Y-2700**	1	SPACER (11X20X42-MM THK)	

M-METRIC PART
Y-SEPARATE ILLUSTRATION

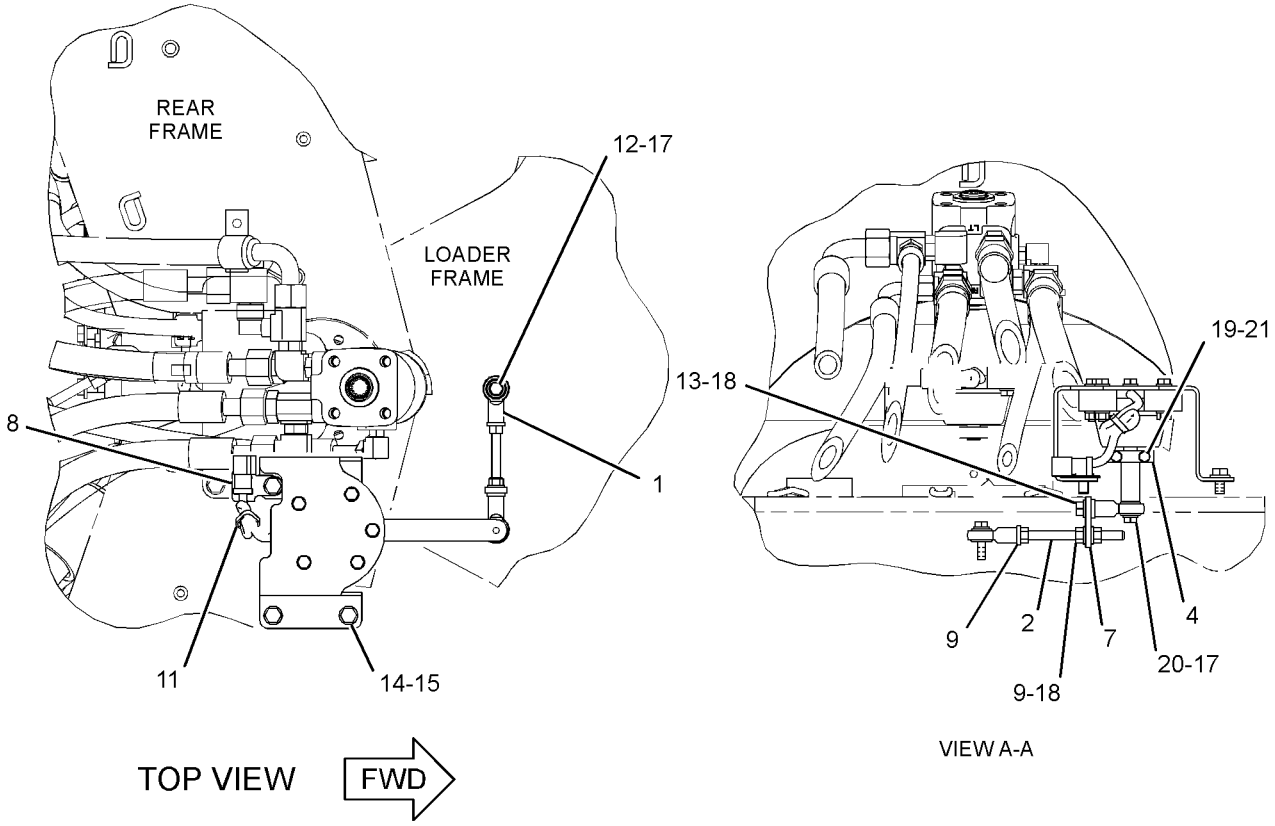

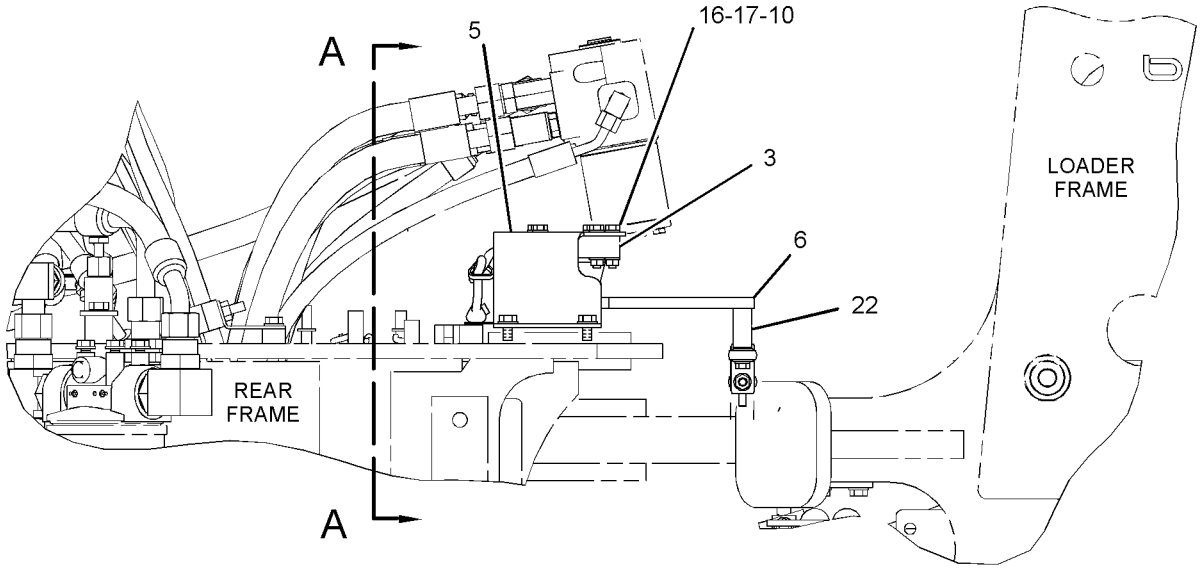

RIGHT SIDE VIEW

GRAPHIC #1 **<END>** g01433776

266-4523 SENSOR & MTG GP-POSITION—ARTICULATION ANGLE

S/N: JKM854-UP
PART OF 265-9753 CONTROL AR-DIFFERENTIAL LOCK
AN ATTACHMENT

SMCS-5736 **i03852875**

NOTE	REF NO	GRAPHIC REF	PART NUMBER	QTY	PART NAME 1 2 3 4 5 6 (PRODUCT LEVEL)	SEE PAGE
	1	1	**8C-7315**	2	ROD END	
	2	1	**110-2974**	1	ROD-THREADED	
CY	3	1	**266-2337**	1	SENSOR GP-POSITION (ROTARY) (ARTICULATION ANGLE)	247
	4	1	**278-0372**	1	PLATE	
	5	1	**305-7505**	1	BRACKET	
	6	1	**318-9181**	1	BAR	
	7	1	**319-3554**	1	PLATE	
	8	1	**130-5300**	1	CLIP	
	9	1	**3S-2713**	3	NUT-FULL (3/8-24-THD)	
M	10	1	**5C-7261**	5	NUT (M8X1.25-THD)	
	11	1	**7K-1181**	1	STRAP-CABLE	
M	12	1	**7X-2537**	1	BOLT (M8X1.25X35-MM)	
	13	1	**7X-3183**	1	BOLT (3/8-24X1-IN)	
	14	1	**8T-4121**	4	WASHER-HARD (11X21X2.5-MM THK)	
M	15	1	**8T-4137**	4	BOLT (M10X1.5X20-MM)	
M	16	1	**8T-4197**	5	BOLT (M8X1.25X40-MM)	
	17	1	**8T-4224**	12	WASHER-HARD (8.8X16X2-MM THK)	
	18	1	**8T-4896**	3	WASHER-HARD (10.2X18.5X2.5-MM THK)	
M	19	1	**8T-4971**	2	BOLT (M6X1X30-MM)	
M	20	1	**8T-6870**	1	BOLT (M8X1.25X70-MM)	
	21	1	**9X-8256**	2	WASHER (6.6X12X2-MM THK)	
	22	1	**9Y-2700**	1	SPACER (11X20X42-MM THK)	

C-CHANGE FROM PREVIOUS TYPE
M-METRIC PART
Y-SEPARATE ILLUSTRATION

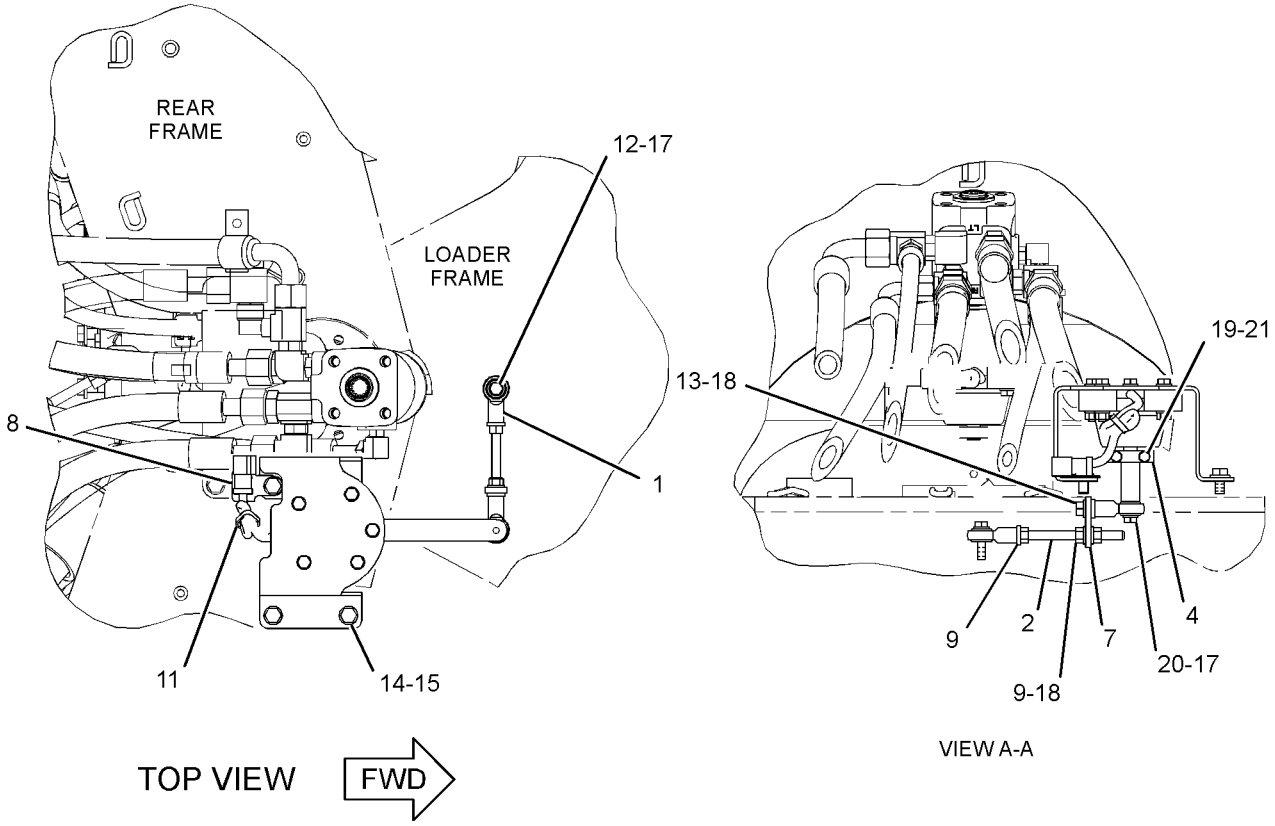

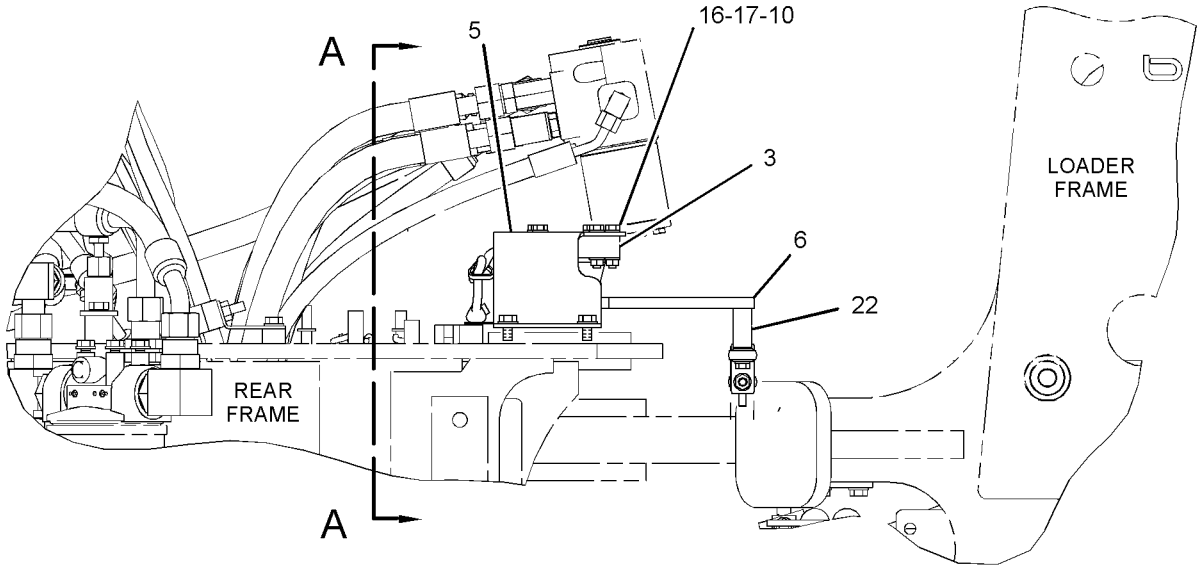

RIGHT SIDE VIEW

GRAPHIC #1 **<END>** g01433776

239-4850 SENSOR & MTG GP-PRESSURE–LIFT CYLINDER OIL

S/N: JKM1-UP
PART OF 330-5954 INSTALLATION AR-COMMUNICATION
AN ATTACHMENT

SMCS-1923 **i02449344**

NOTE	REF NO	GRAPHIC REF	PART NUMBER	QTY	PART NAME 1 2 3 4 5 6 (PRODUCT LEVEL)	SEE PAGE
	1	1	**5I-4376**	1	FITTING	
	2	1	**6V-0852**	1	CAP-DUST	
	3	1	**164-6871**	1	ADAPTER AS	
		1	**6V-8397**	1	SEAL-O-RING	
Y	4	1	**221-3416**	1	SENSOR GP-PRESSURE (LIFT CYLINDER OIL)	248
	5	1	*164-5567*	1	COUPLER AS-QUICK DISCONNECT (MALE)	
		1	**3J-1907**	1	SEAL-O-RING	
		1	**6V-3965**	1	FITTING (QUICK DISCONNECT)	
	6	1	**3J-1907**	1	SEAL-O-RING	

Y-SEPARATE ILLUSTRATION

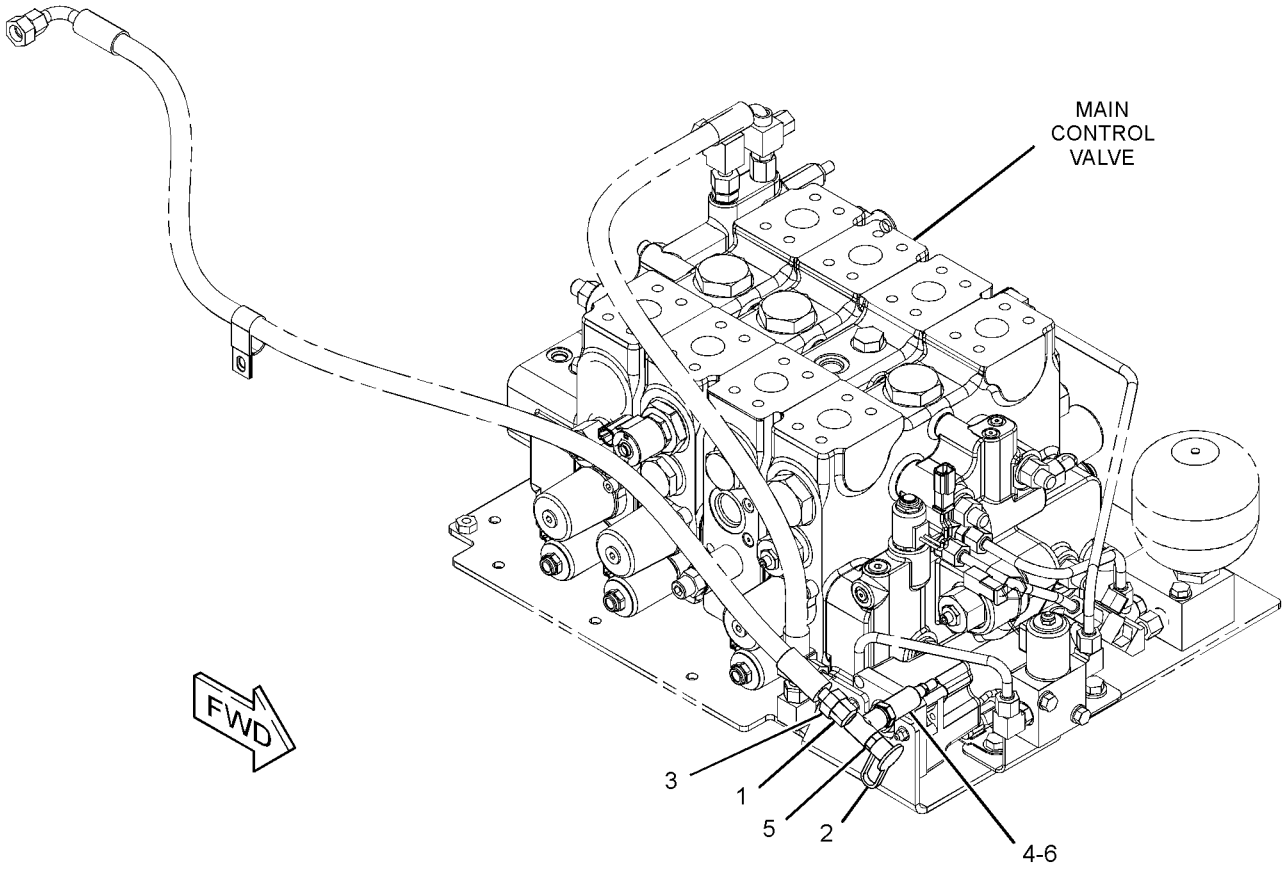

GRAPHIC #1 **<END>** g01198997

169-0417 SENSOR GP-POSITION

S/N: JKM1-853
PART OF 266-4523 SENSOR & MTG GP-POSITION
AN ATTACHMENT

SMCS-4269, 5702, 5736, 5737, 7494 **i02454090**

NOTE	REF NO	GRAPHIC REF	PART NUMBER	QTY	PART NAME 1 2 3 4 5 6 (PRODUCT LEVEL)	SEE PAGE
	1	1	*169-0418*	1	SENSOR AS-POSITION	
M		1	**6V-9671**	4	SCREW-MACHINE (M3X0.5X12-MM)	
	2	1	**102-8803**	1	KIT-RECEPTACLE (3-PIN)	
					(KIT INCLUDES RECEPTACLE AS AND WEDGE)	
	3	1	**9X-3401**	3	PIN-CONNECTOR (16-GA TO 18-GA)	
	4	1	**3E-3371**	1	WEDGE-RECEPTACLE LOCK (3-PIN)	
E	5	1	**119-3662**		TUBE-HEAT SHRINK (10.85-MM DIA) (5CM)	
E	6	1	**9X-1813**		SLEEVE (17CM)	
	7	1	**172-1482**	1	CLAMP	
M	8	1	**3E-8048**	2	SCREW-MACHINE (M3X0.5X6-MM)	

E-ORDER BY THE CENTIMETER
M-METRIC PART

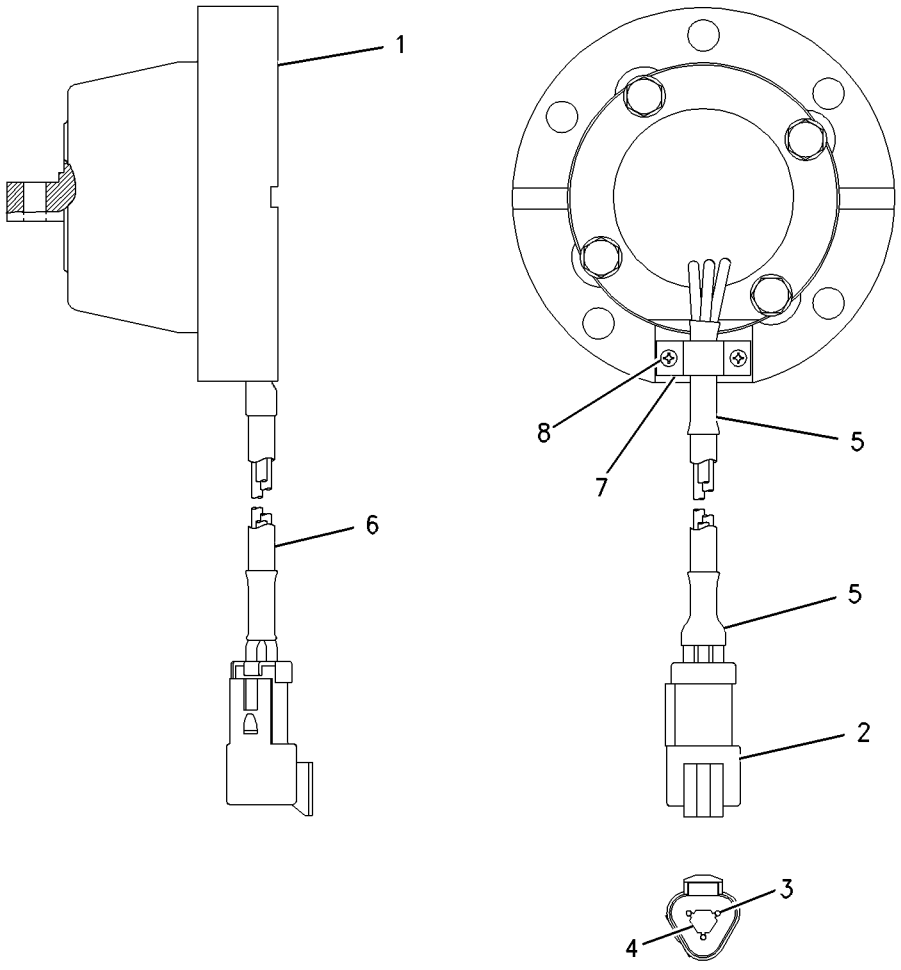

GRAPHIC #1 **<END>** g00887019

266-1484 SENSOR GP-POSITION–ROTARY

S/N: JKM1-UP
PART OF 265-5828 WIRING GP-SENSOR
AN ATTACHMENT

SMCS-4269, 5702, 5736, 5737, 7494 **i03881351**

NOTE	REF NO	GRAPHIC REF	PART NUMBER	QTY	PART NAME 1 2 3 4 5 6 (PRODUCT LEVEL)	SEE PAGE
	1	1	**180-9339**	3	PIN-CONNECTOR (14-GA TO 18-GA)	
	2	1	**102-8803**	1	KIT-RECEPTACLE (3-PIN)	
					(INCLUDES RECEPTACLE AS & WEDGE)	
	3	1	**3E-3371**	1	WEDGE-RECEPTACLE LOCK (3-PIN)	
E	4	1	**9X-1813**		SLEEVE (13-CM)	

E-ORDER BY THE CENTIMETER

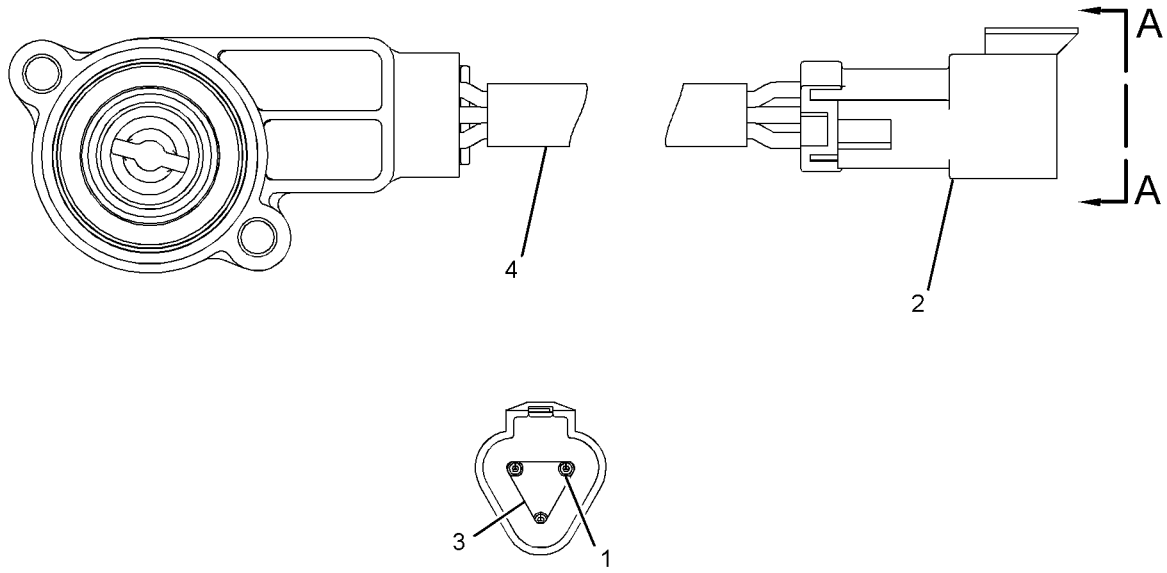

VIEW A-A

GRAPHIC #1 **<END>** g01958346

266-2337 SENSOR GP-POSITION–ROTARY

S/N: JKM854-UP

PART OF 266-4523 SENSOR & MTG GP-POSITION

AN ATTACHMENT

SMCS-4269, 5702, 5736, 5737, 7494 **i03753238**

NOTE	REF NO	GRAPHIC REF	PART NUMBER	QTY	PART NAME 1 2 3 4 5 6 (PRODUCT LEVEL)	SEE PAGE
	1	1	**102-8803**	1	KIT-RECEPTACLE (3-PIN)	
					(INCLUDES RECEPTACLE AS & WEDGE)	
	2	1	**9X-3401**	3	PIN-CONNECTOR (16-GA TO 18-GA)	
					–OR–	
		1	**126-1767**	3	PIN-CONNECTOR (14-GA)	
E	3	1	**9X-1813**		SLEEVE (17-CM)	

E-ORDER BY THE CENTIMETER

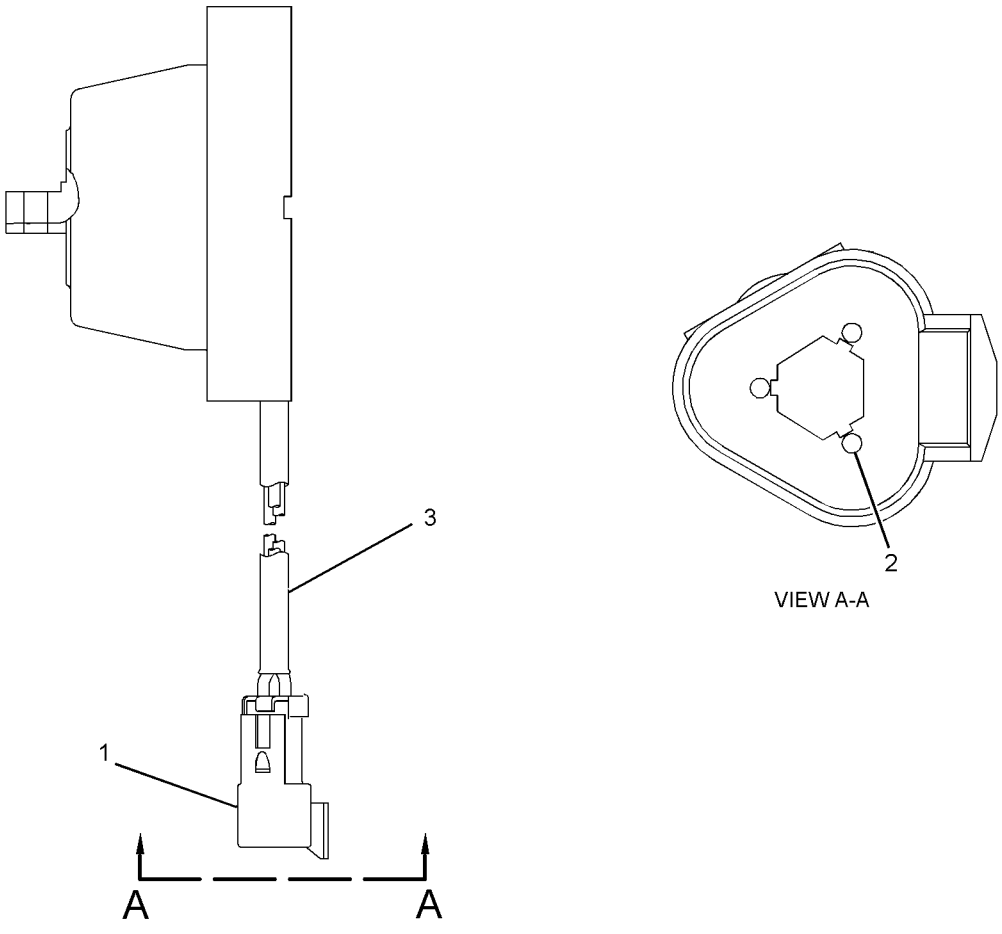

GRAPHIC #1 **<END>** g01954240

221-3416 SENSOR GP-PRESSURE

S/N: JKM1-UP
PART OF 239-4850 SENSOR & MTG GP-PRESSURE
AN ATTACHMENT

SMCS-1408, 1925, 7494 **i02449362**

NOTE	REF NO	GRAPHIC REF	PART NUMBER	QTY	PART NAME 1 2 3 4 5 6 (PRODUCT LEVEL)	SEE PAGE
	1	1	**155-2260**	1	KIT-CONNECTING PLUG (3-PIN)	
					(INCLUDES PLUG AS AND WEDGE)	
	2	1	**180-9340**	3	SOCKET-CONNECTOR (14-GA TO 18-GA)	
	3	1	**155-2276**	1	WEDGE-PLUG LOCK (3-PIN)	

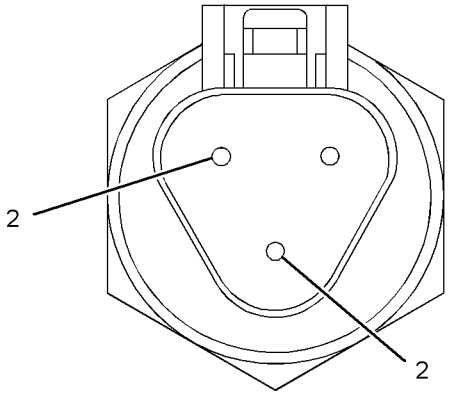

VIEW A-A

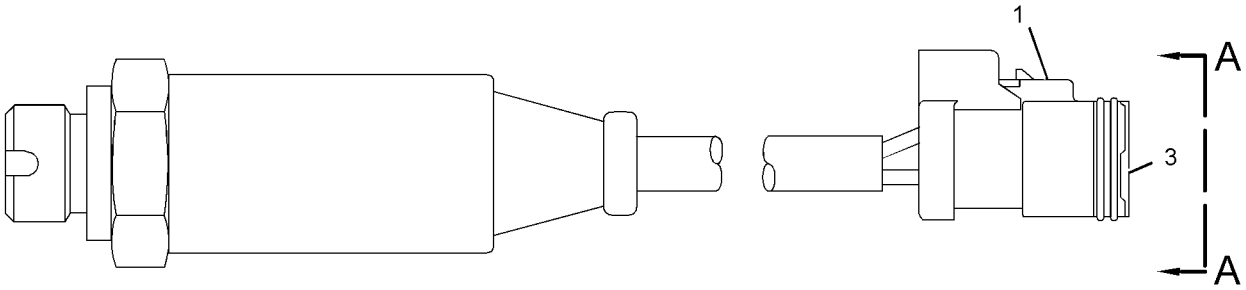

GRAPHIC #1 **<END>** g01175734

183-8597 SENSOR GP-SPEED

S/N: MWL1-2064

PART OF 252-9720 CONTROL GP-TRANSMISSION HYD

SMCS-1907, 1912, 3175, 4803, 7493 **i02914638**

NOTE	REF NO	GRAPHIC REF	PART NUMBER	QTY	PART NAME 1 2 3 4 5 6 (PRODUCT LEVEL)	SEE PAGE
	1	1	**171-5349**	1	STRAP-MARKER	
	2	1	**102-8802**	1	KIT-RECEPTACLE (2-PIN)	
					(INCLUDES RECEPTACLE AS & WEDGE)	
	3	1	**186-3735**	2	PIN-CONNECTOR (16-GA TO 18-GA)	
	4	1	**3E-3365**	1	WEDGE-RECEPTACLE LOCK (2-PIN)	
E	5	1	**9X-1813**		SLEEVE (14-CM)	

E-ORDER BY THE CENTIMETER

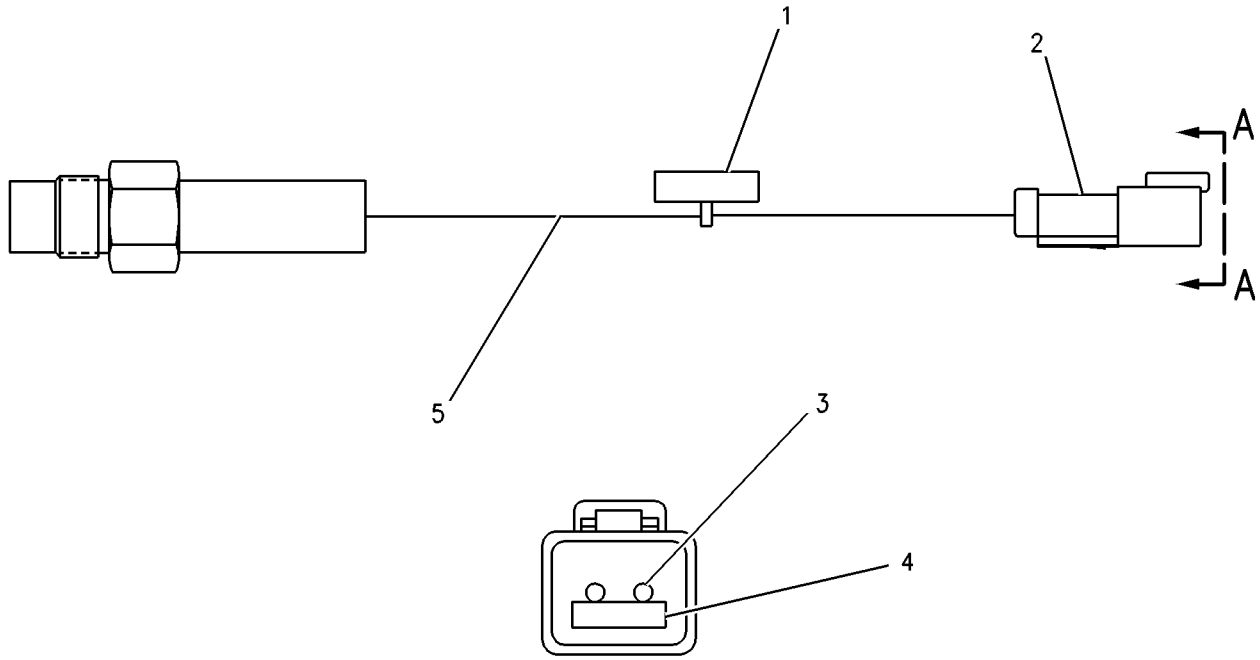

VIEW A-A

GRAPHIC #1 **<END>** g00680294

196-1185 SENSOR GP-SPEED

S/N: MWL2065-UP

PART OF 252-9720 CONTROL GP-TRANSMISSION HYD

SMCS-1907, 1912, 3175, 4803, 7493 **i03996024**

NOTE	REF NO	GRAPHIC REF	PART NUMBER	QTY	PART NAME 1 2 3 4 5 6 (PRODUCT LEVEL)	SEE PAGE
	1	1	**171-5349**	1	STRAP-MARKER	
	2	1	**102-8802**	1	KIT-RECEPTACLE (2-PIN)	
					(INCLUDES RECEPTACLE AS & WEDGE)	
	3	1	**186-3735**	2	PIN-CONNECTOR (16-GA TO 18-GA)	
	4	1	**3E-3365**	1	WEDGE-RECEPTACLE LOCK (2-PIN)	
BE	5	1	**9X-1813**		SLEEVE	

B-USE AS REQUIRED
E-ORDER BY THE CENTIMETER

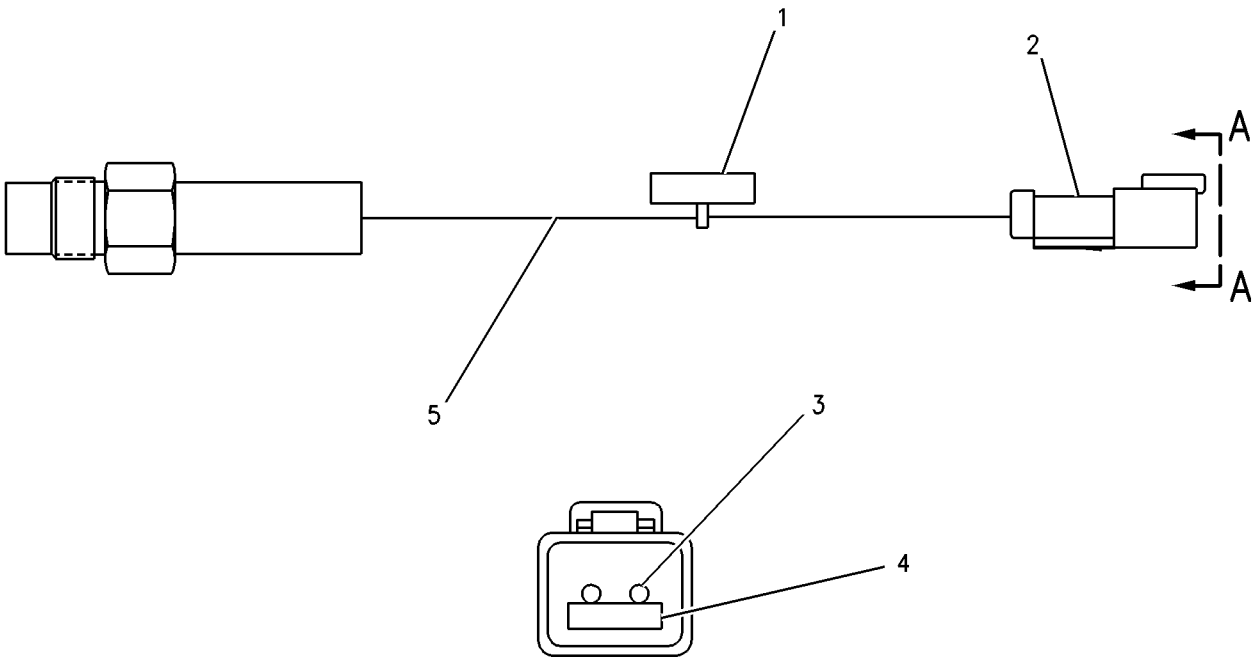

VIEW A-A

GRAPHIC #1 **<END>** g00680294

264-0148 SENSOR GP-SPEED

S/N: JKM1-UP

PART OF 267-4799 WIRING GP-SENSOR

AN ATTACHMENT

SMCS-1907, 1912, 3175, 4803, 7493 **i02935407**

NOTE	REF NO	GRAPHIC REF	PART NUMBER	QTY	PART NAME 1 2 3 4 5 6 (PRODUCT LEVEL)	SEE PAGE
	1	1	**3E-3377**	1	WEDGE-RECEPTACLE LOCK (4-PIN)	
	2	1	**180-9339**	4	PIN-CONNECTOR (14-GA TO 18-GA)	
	3	1	**102-8804**	1	KIT-RECEPTACLE (4-PIN)	
					(INCLUDES RECEPTACLE AS & WEDGE)	
	4	1	**6J-2245**	1	SEAL-O-RING	
E	5	1	**9X-1813**		SLEEVE (8-CM)	
	6	1	**171-5349**	1	STRAP-MARKER	

E-ORDER BY THE CENTIMETER

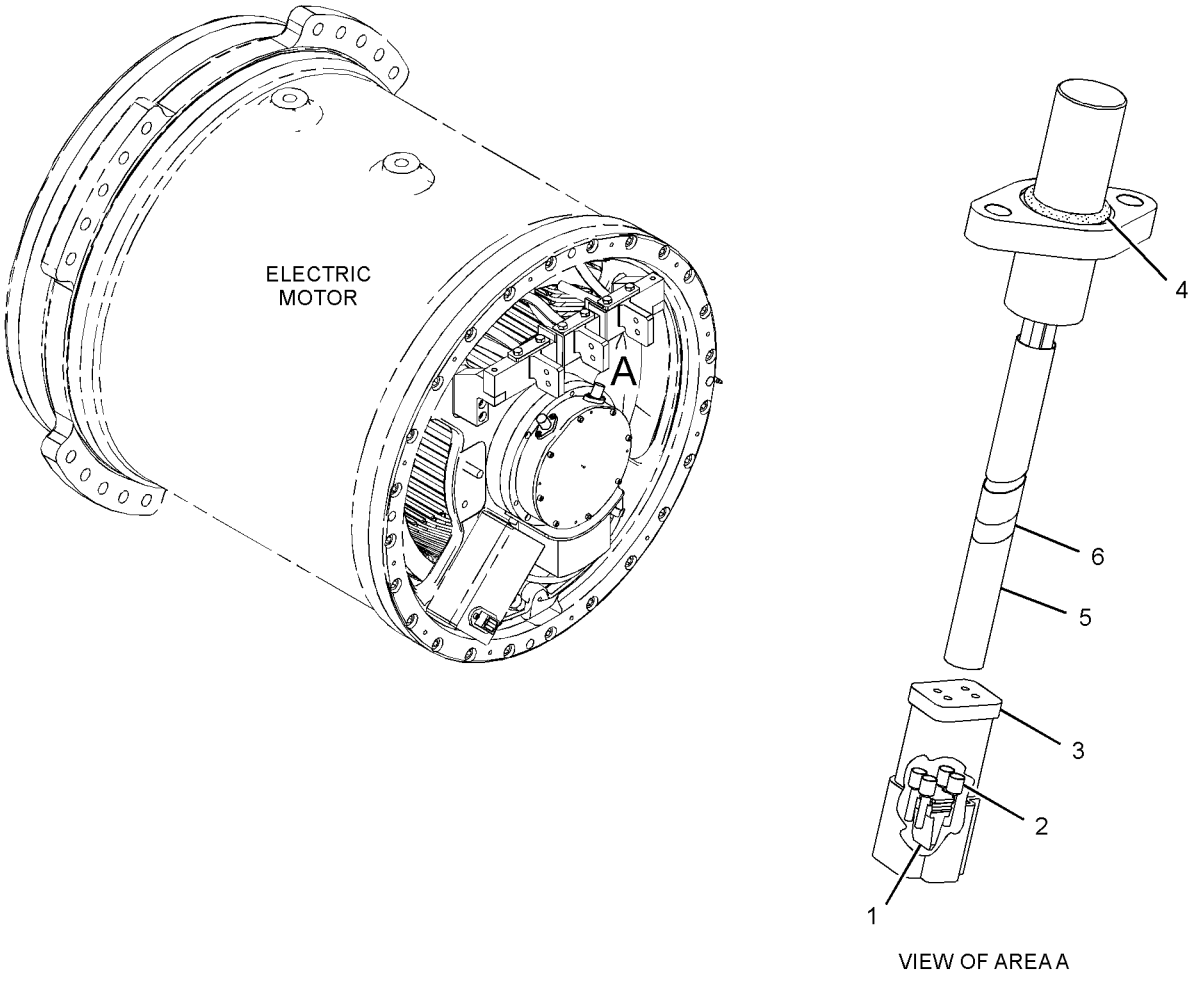

GRAPHIC #1 **<END>** g01433658

131-0427 SENSOR GP-TEMPERATURE

S/N: JKM1-UP
8 VOLT. PULSE WIDTH MODULATION
PART OF 255-4823 LINES GP-TORQUE CONV COOLER

SMCS-1408, 1906, 1919, 1921, 1922, 1928, 1929, 301T, 3194, 429T, 509T

i01875925

NOTE	REF NO	GRAPHIC REF	PART NUMBER	QTY	PART NAME 1 2 3 4 5 6 (PRODUCT LEVEL)	SEE PAGE
E	1	1	**112-4550**		SLEEVE (33CM)	
	2	1	**8T-8729**	3	PIN-CONNECTOR (16-GA TO 18-GA)	
	3	1	**8T-8732**	1	RECEPTACLE-CONNECTOR (3-PIN)	

E-ORDER BY THE CENTIMETER

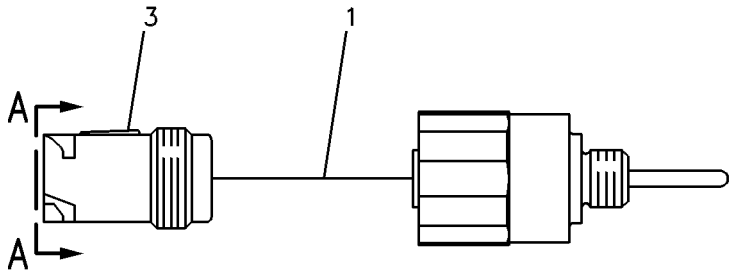

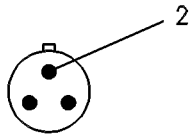

VIEW A-A

GRAPHIC #1 **<END>** g00084552

145-7028 SENSOR GP-TEMPERATURE

S/N: MWL1-UP

PART OF 266-2470 VALVE GP-TRANSMISSION CONTROL

SMCS-1408, 1906, 1919, 1921, 1922, 1928, 1929, 301T, 3194, 429T, 509T

i01828633

NOTE	REF NO	GRAPHIC REF	PART NUMBER	QTY	PART NAME 1 2 3 4 5 6 (PRODUCT LEVEL)	SEE PAGE
	1	1	**102-8802**	1	KIT-RECEPTACLE (2-PIN)	
					(INCLUDES RECEPTACLE AS & WEDGE)	
BJ	2	1	**153-5043**		SLEEVE	
	3	1	**8T-8729**	2	PIN-CONNECTOR (16-GA TO 18-GA)	
	4	1	**3E-3365**	1	WEDGE-RECEPTACLE LOCK (2-PIN)	

B-USE AS REQUIRED
J-ORDER BY THE DECIMETER

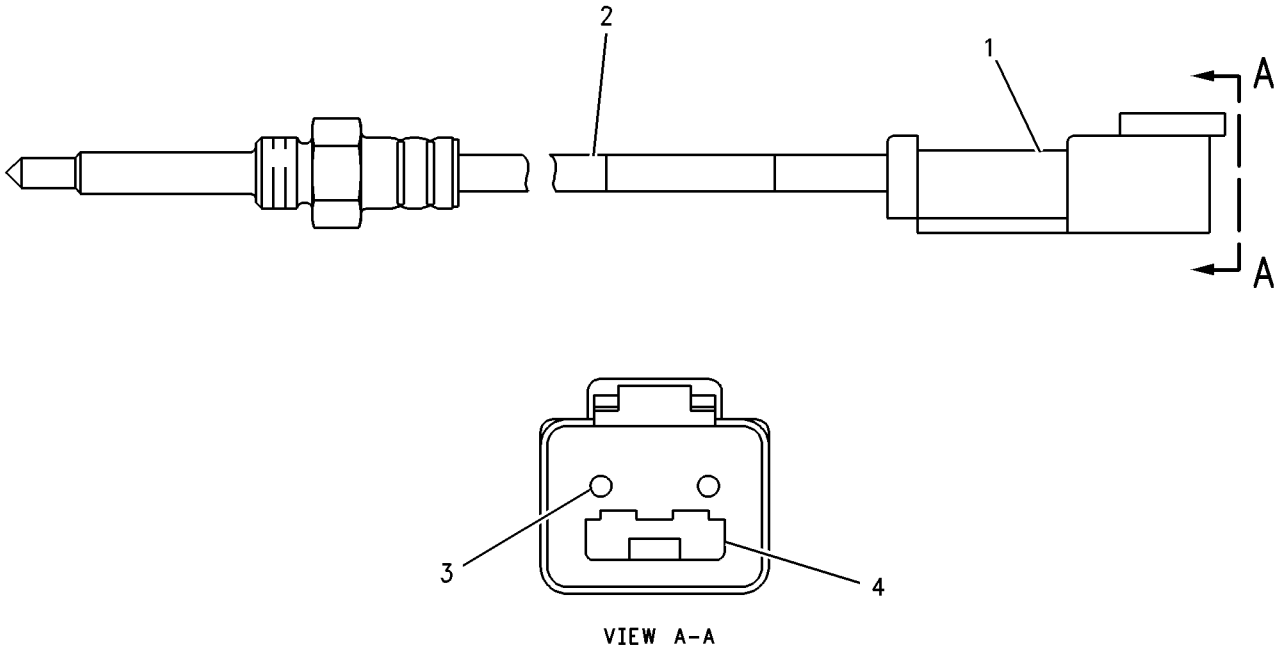

VIEW A-A

GRAPHIC #1

<END>

g00917620

177-0071 SENSOR GP-TEMPERATURE

S/N: JKM1-UP
PART OF 307-3122 WIRING GP-SENSOR
AN ATTACHMENT

SMCS-1408, 1906, 1919, 1921, 1922, 1928, 1929, 301T, 3194, 429T, 509T

i02938124

NOTE	REF NO	GRAPHIC REF	PART NUMBER	QTY	PART NAME 1 2 3 4 5 6 (PRODUCT LEVEL)	SEE PAGE
	1	1	**102-8803**	1	KIT-RECEPTACLE (3-PIN)	
					(INCLUDES RECEPTACLE AS AND WEDGE)	
	2	1	**3E-3371**	1	WEDGE-RECEPTACLE LOCK (3-PIN)	
	3	1	**186-3735**	3	PIN-CONNECTOR (16-GA TO 18-GA)	
B	4	1	**9X-1813**		SLEEVE	

B-USE AS REQUIRED

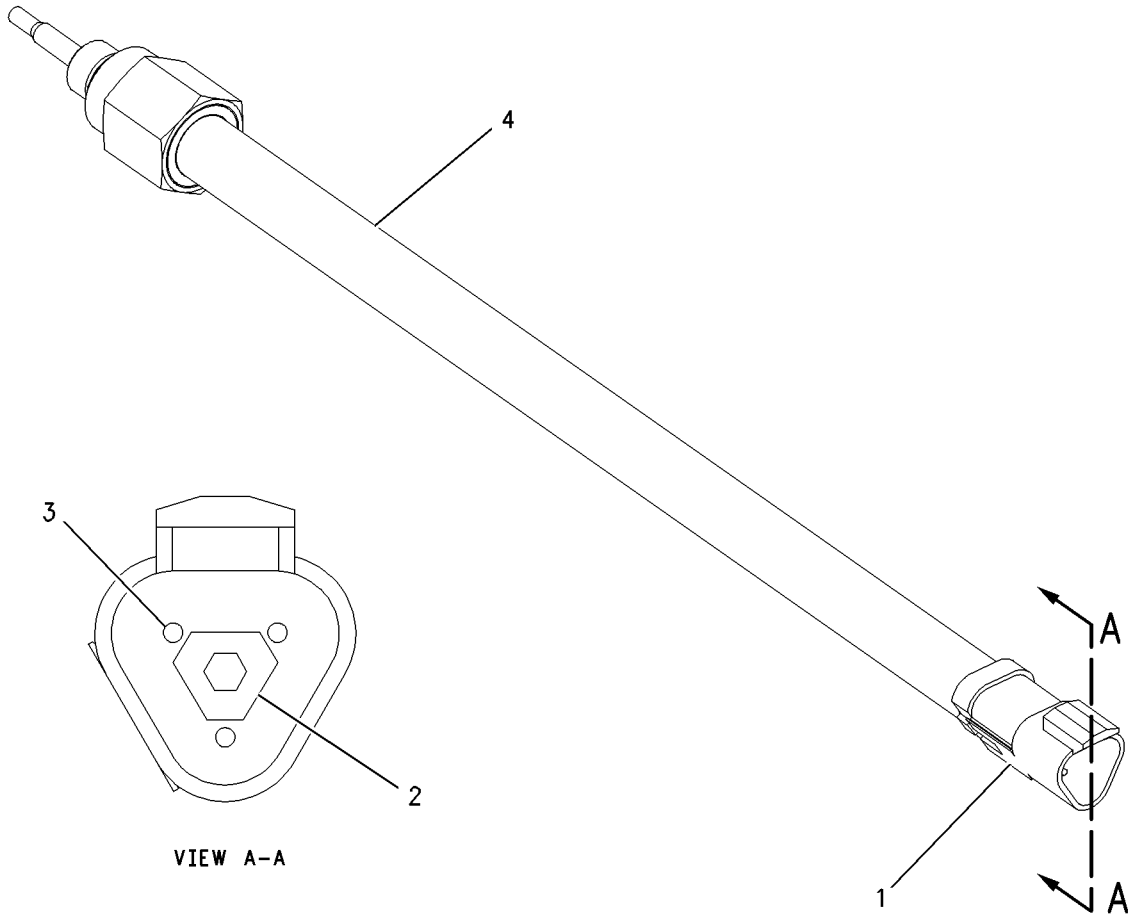

GRAPHIC #1

<END>

g00731354

ELECTRICAL AND STARTING SYSTEM

265-9646 STARTING AID GP-ETHER

S/N: JKM1-604
PART OF 317-9485, 317-9486 COLD WEATHER AR
AN ATTACHMENT

SMCS-1456 **i02930688**

NOTE	REF NO	GRAPHIC REF	PART NUMBER	QTY	PART NAME 1 2 3 4 5 6 (PRODUCT LEVEL)	SEE PAGE
	1	1	**6N-6984**	3	MOUNT-RUBBER	
	2	1	**7K-1181**	3	STRAP-CABLE	
	3	1	**265-9647**	1	PLATE AS	
Y	4	1	*267-0337*	1	STARTING AID GP-ETHER	258
	5	1	**134-3196**	6	WASHER (10.2X39.6X2.3-MM THK)	
M	6	1	**8T-4196**	3	BOLT (M10X1.5X35-MM)	
M	7	1	**8T-4200**	4	BOLT (M8X1.25X16-MM)	
	8	1	**8T-4224**	4	WASHER-HARD (8.8X16X2-MM THK)	
A		1	**275-3634**	1	CYLINDER AS-ETHER (U.S.) (MUST BE PROCURED LOCALLY FROM YOUR CATERPILLAR DEALER)	

A-NOT PART OF THIS GROUP
M-METRIC PART
Y-SEPARATE ILLUSTRATION

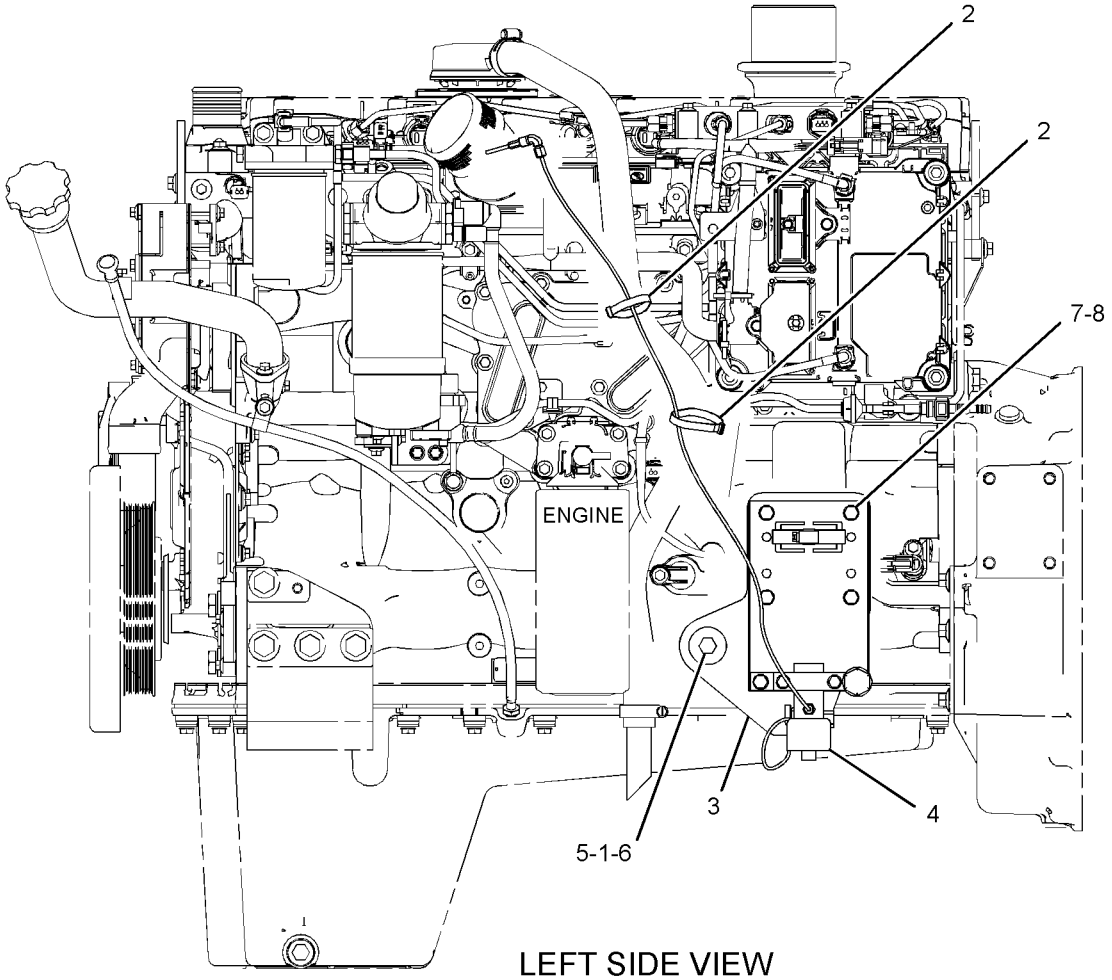

LEFT SIDE VIEW

GRAPHIC #1 **<END>** g01427998

ELECTRICAL AND STARTING SYSTEM

265-9646 STARTING AID GP-ETHER

S/N: JKM605-UP
PART OF 317-9485, 317-9486 COLD WEATHER AR
AN ATTACHMENT

SMCS-1456 **i03611907**

NOTE	REF NO	GRAPHIC REF	PART NUMBER	QTY	PART NAME 1 2 3 4 5 6 (PRODUCT LEVEL)	SEE PAGE
	1	1	**7K-1181**	3	STRAP-CABLE	
C	2	1	**7N-2059**	1	CLAMP AS	
C	3	1	**127-7443**	1	ATOMIZER AS	
		1	**236-4545**	1	NUT-SLEEVE (5/16-24-THD)	
C	4	1	**208-2479**	1	SPACER (10X13.1X5.5-MM THK)	
C	5	1	**236-4545**	1	NUT-SLEEVE (5/16-24-THD)	
CY	6	1	**239-1134**	1	VALVE GP-ETHER STARTING (24-VOLT)	267
C	7	1	**241-4194**	1	FITTING AS (CONTROL)	
		1	**236-4545**	1	NUT-SLEEVE (5/16-24-THD)	
C	8	1	**4D-8123**	2	CLIP	
C	9	1	**4P-7581**	1	CLIP	
C	10	1	**8T-4121**	1	WASHER-HARD (11X21X2.5-MM THK)	
CM	11	1	**8T-4137**	1	BOLT (M10X1.5X20-MM)	
CM	12	1	**8T-4189**	3	BOLT (M8X1.25X20-MM)	
	13	1	**8T-4224**	4	WASHER-HARD (8.8X16X2-MM THK)	
CM	14	1	**8T-4908**	1	BOLT (M8X1.25X25-MM)	
CD	15	1	**5P-5630**		TUBE (0.6-M)	
A			**275-3634**	1	CYLINDER AS-ETHER (U.S.)	
					(MUST BE PROCURED LOCALLY FROM YOUR CATERPILLAR DEALER)	

A-NOT PART OF THIS GROUP
C-CHANGE FROM PREVIOUS TYPE
D-ORDER BY THE METER
M-METRIC PART
Y-SEPARATE ILLUSTRATION

265-9646 **STARTING AID GP-ETHER** *(contd.)* **i03611907**

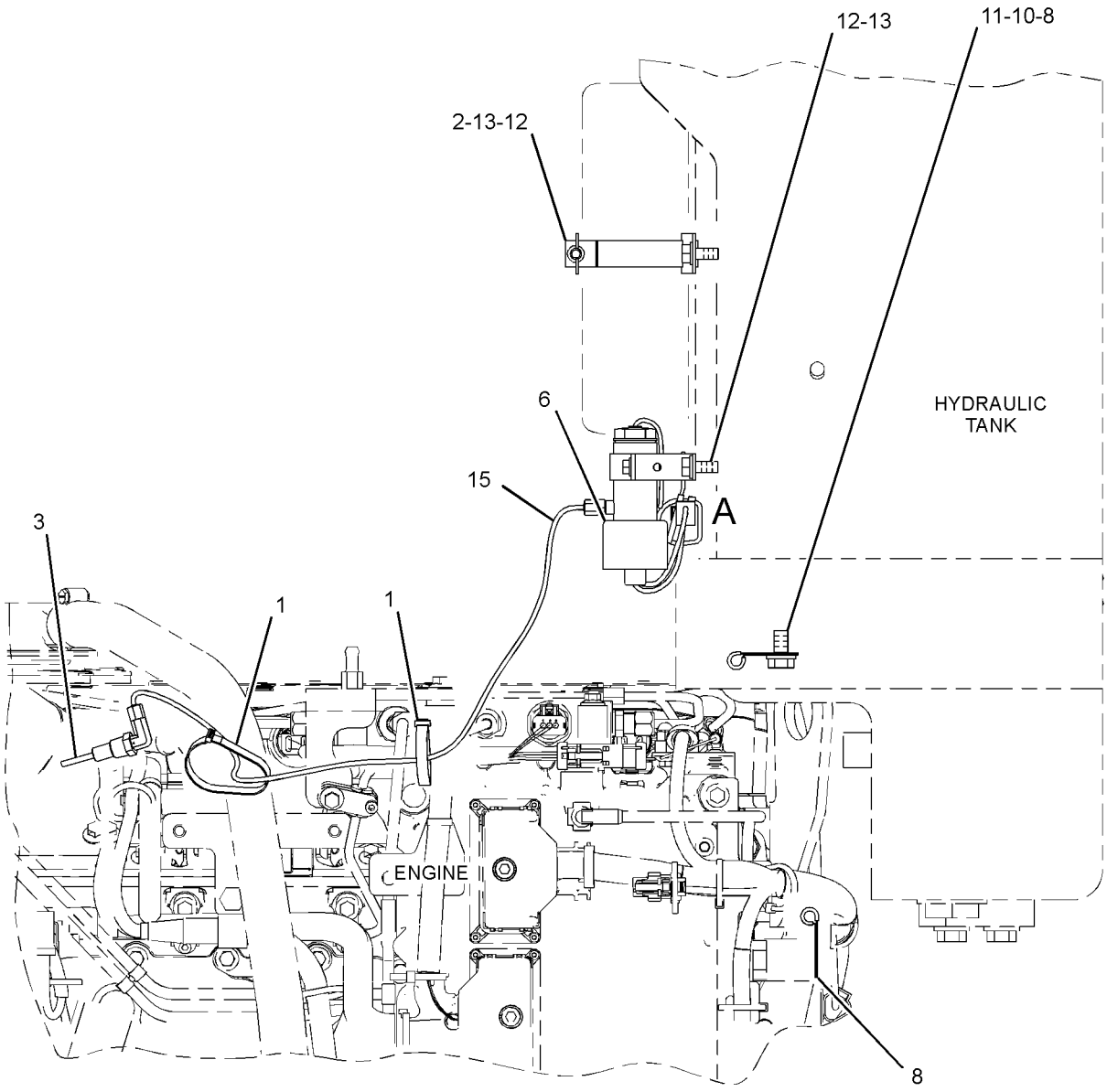

LEFT SIDE VIEW

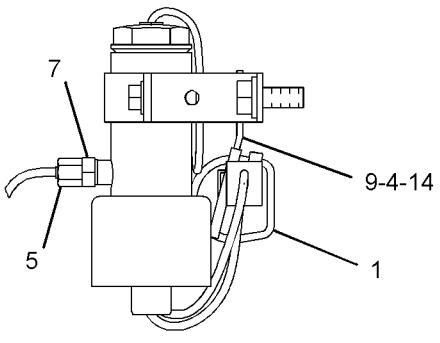

VIEW OF AREA A

GRAPHIC #1 **<END>** g01938613

267-0337 STARTING AID GP-ETHER

S/N: JKM1-604
PART OF 265-9646 STARTING AID GP-ETHER
AN ATTACHMENT

SMCS-1456 **i03502905**

NOTE	REF NO	GRAPHIC REF	PART NUMBER	QTY	PART NAME 1 2 3 4 5 6 (PRODUCT LEVEL)	SEE PAGE
	1	1	**7T-7624**	1	ATOMIZER GP-ETHER	
		1	**236-4545**	1	NUT-SLEEVE (5/16-24-THD)	
	2	1	**236-4545**	1	NUT-SLEEVE (5/16-24-THD)	
	3	1	**236-8013**	1	BRACKET	
Y	4	1	**239-1134**	1	VALVE GP-ETHER STARTING (24-VOLT)	267
	5	1	**241-4194**	1	FITTING AS (CONTROL)	
	6	1	**276-6596**	1	CLAMP	
M	7	1	**5C-7261**	2	NUT (M8X1.25-THD)	
M	8	1	**8T-4189**	2	BOLT (M8X1.25X20-MM)	
	9	1	**8T-4224**	2	WASHER-HARD (8.8X16X2-MM THK)	
D	10	1	**5P-5630**		TUBE (0.9-M)	
	11	1	**5P-4116**	2	WASHER-HARD (8.8X20.5X2-MM THK)	
	12	1	**130-5300**	1	CLIP	

D-ORDER BY THE METER
M-METRIC PART
Y-SEPARATE ILLUSTRATION

267-0337 **STARTING AID GP-ETHER** *(contd.)* **i03502905**

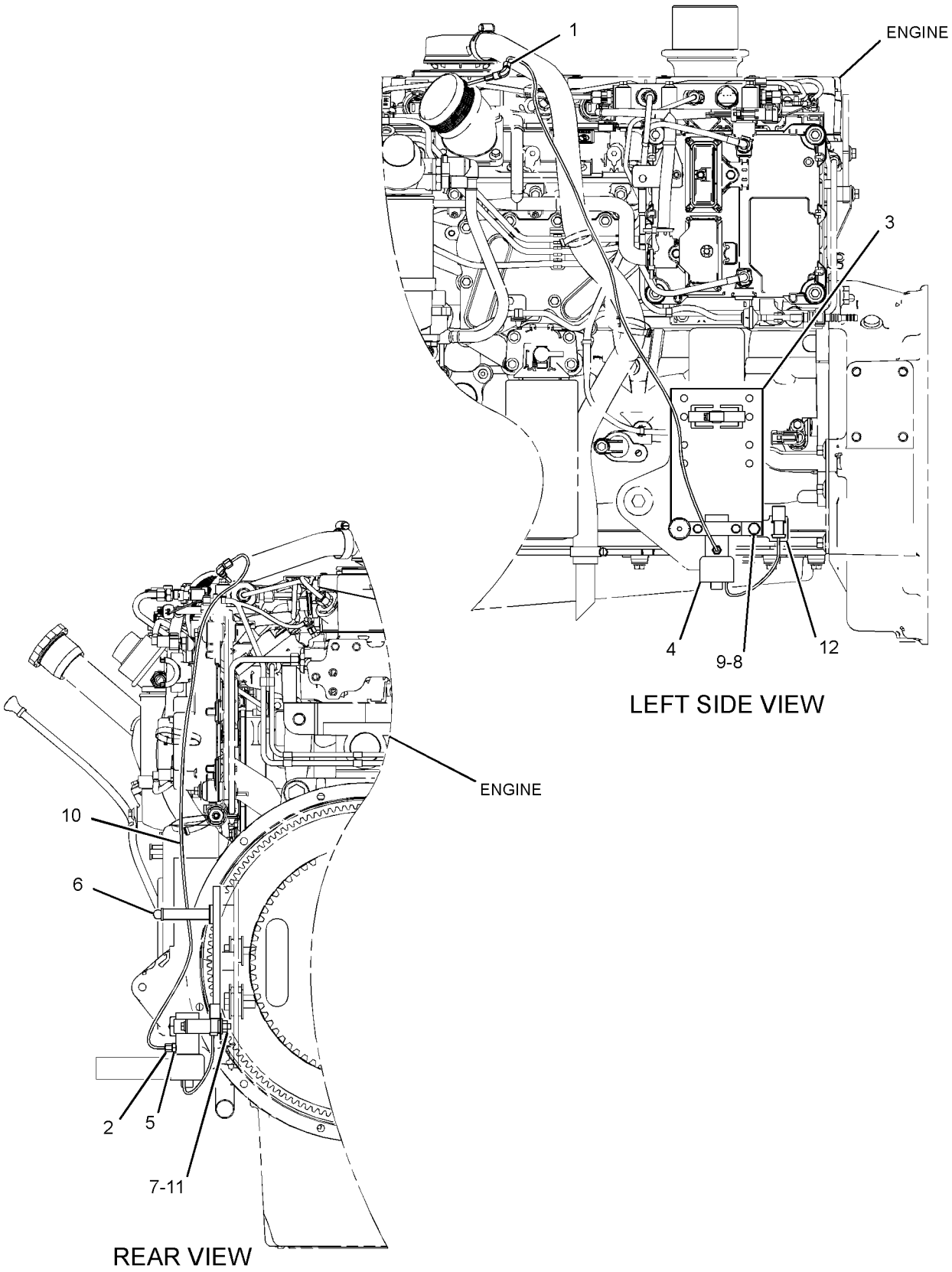

GRAPHIC #1 **<END>** g01662219

ELECTRICAL AND STARTING SYSTEM

288-7980 STARTING MOTOR GP-ELECTRIC

S/N: C6E1-UP; G9G1-UP

PART OF 242-1382 ENGINE AR-PRIMARY

SMCS-1453 **i02897004**

NOTE	REF NO	GRAPHIC REF	PART NUMBER	QTY	PART NAME 1 2 3 4 5 6 (PRODUCT LEVEL)	SEE PAGE
M	1	1	**6I-0233**	3	NUT (M12X1.75-THD)	
	2	1	**183-1343**	3	STUD	
	3	1	**290-5728**	1	GASKET	
	4	1	**288-6976**	1	STARTING MOTOR GP-ELECTRIC	

M-METRIC PART

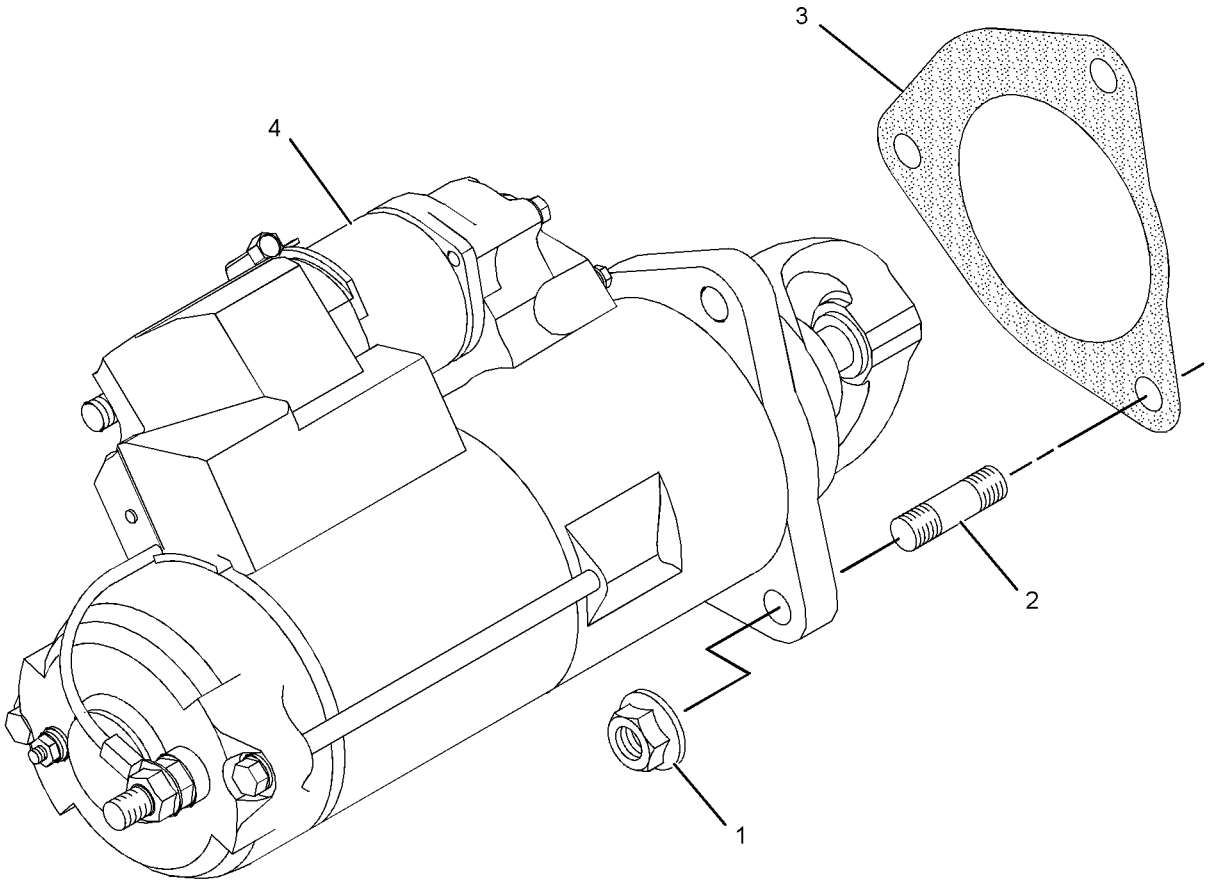

GRAPHIC #1 **<END>** g01270084

257-5690 SWITCH GP-DIFFERENTIAL LOCK

S/N: JKM1-UP

PART OF 252-4553 CAB AR-ENCLOSED ROPS, 269-4873 CANOPY AR-OPEN ROPS

ALSO AN ATTACHMENT

SMCS-1435, 3264 **i02941627**

NOTE	REF NO	GRAPHIC REF	PART NUMBER	QTY	PART NAME 1 2 3 4 5 6 (PRODUCT LEVEL)	SEE PAGE
	1	1	**147-1380**	1	SWITCH AS-FOOT (DIFFERENTIAL LOCK)	
		1	**186-3735**	2	PIN-CONNECTOR (16-GA TO 18-GA)	
		1	**102-8802**	1	KIT-RECEPTACLE (2-PIN)	
					(INCLUDES RECEPTACLE AS & WEDGE)	
	2	1	**257-5689**	1	BRACKET	
M	3	1	**2Y-5829**	1	NUT (M10X1.5-THD)	
	4	1	**3E-4353**	2	WASHER-HARD (11X25X3-MM THK)	
	5	1	**6V-3884**	2	SCREW-HEX SOCKET (1/4-20X0.5-IN)	
M	6	1	**6V-4248**	1	BOLT (M10X1.5X25-MM)	

M-METRIC PART

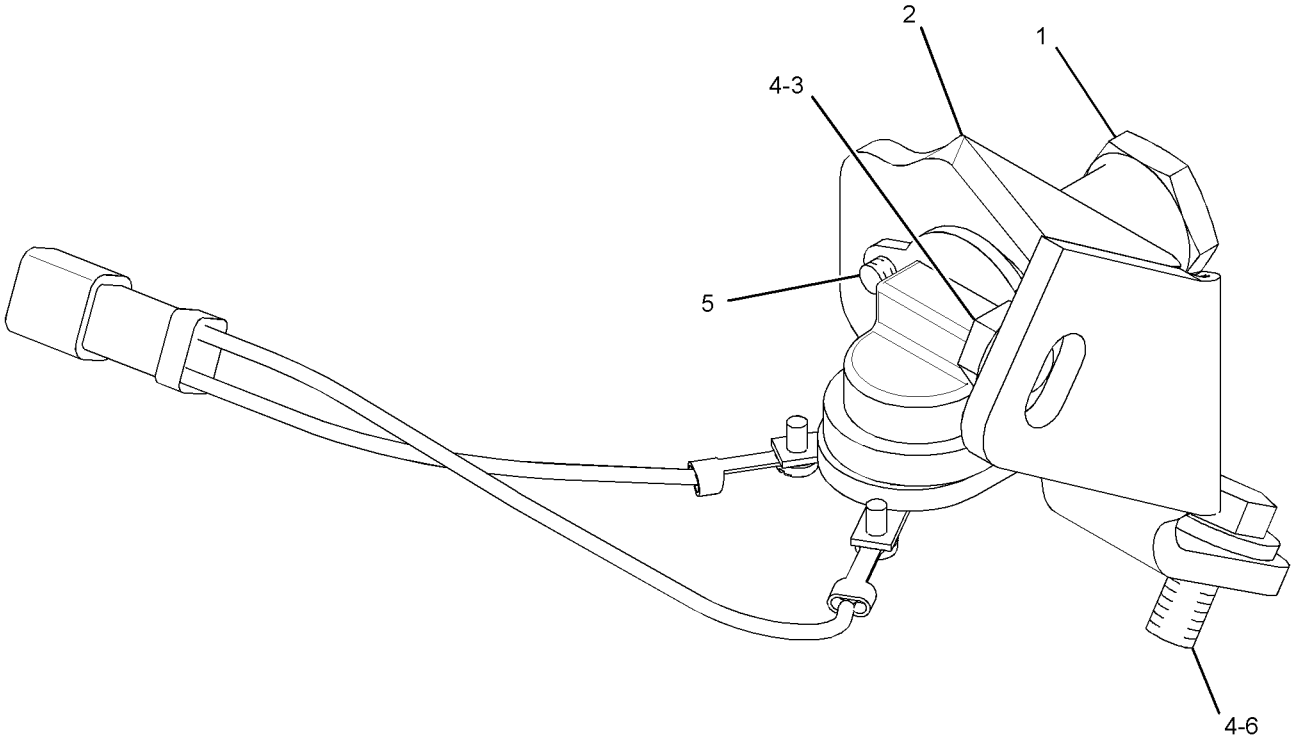

GRAPHIC #1 **<END>** g01422657

7N-0718 SWITCH GP-DISCONNECT–BATTERY

S/N: JKM1-UP
12-VOLT
PART OF 307-3159 PANEL GP-CIRCUIT BREAKER

SMCS-1411 **i02587657**

NOTE	REF NO	GRAPHIC REF	PART NUMBER	QTY	PART NAME 1 2 3 4 5 6 (PRODUCT LEVEL)	SEE PAGE
	1	1	**8H-5306**	1	KEY (BATTERY DISCONNECT)	
	2	1	**8H-5303**	1	NUT (3/4-16-THD)	
	3	1	**2H-3922**	2	LOCKWASHER	
	4	1	**9F-5644**	2	LOCKWASHER	
	5	1	**6F-7045**	2	NUT-FULL (3/8-24-THD)	

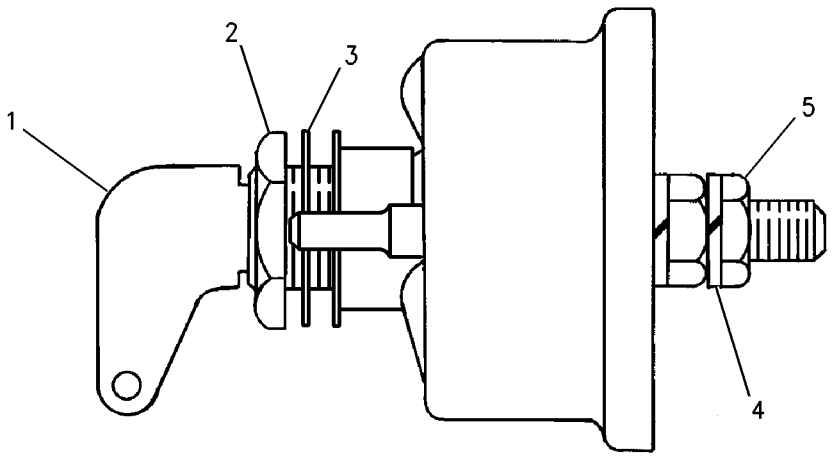

GRAPHIC #1 **<END>** g00715584

209-5582 SWITCH GP-MAGNETIC–GLOW PLUG RELAY

S/N: JKM1-UP

PART OF 307-3159 PANEL GP-CIRCUIT BREAKER

SMCS-7499 **i03753269**

NOTE	REF NO	GRAPHIC REF	PART NUMBER	QTY	PART NAME 1 2 3 4 5 6 (PRODUCT LEVEL)	SEE PAGE
	1	1	**102-8802**	1	KIT-RECEPTACLE (2-PIN)	
					(INCLUDES RECEPTACLE AS & WEDGE)	
	2	1	**8T-8729**	2	PIN-CONNECTOR (16-GA TO 18-GA)	
	3	1	**3F-9556**	2	LOCKWASHER	
	4	1	**6V-8186**	2	NUT-FULL (5/16-24-THD)	
	5	1	**6V-8378**	2	NUT (10-32-THD)	
	6	1	**8F-1434**	2	LOCKWASHER	

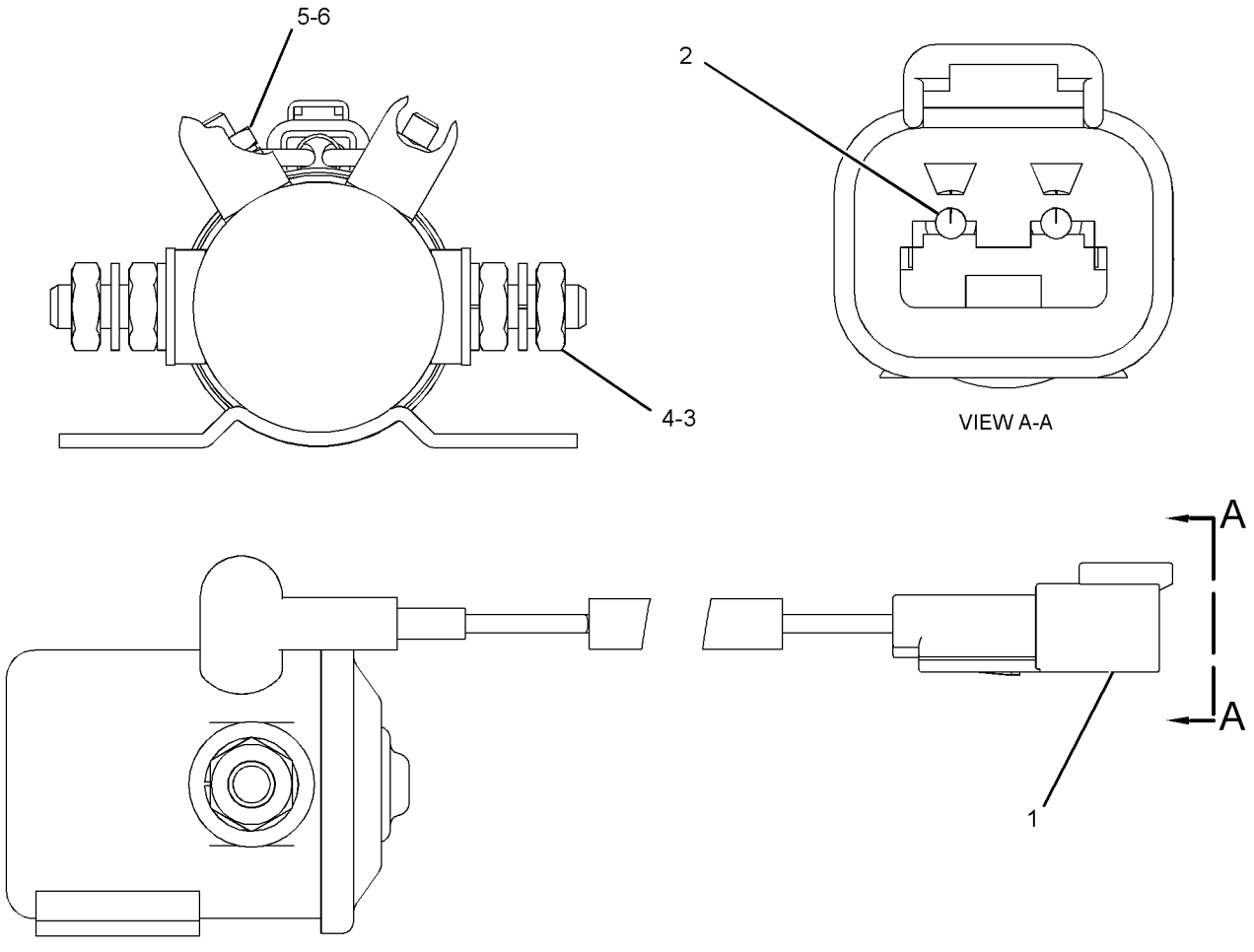

GRAPHIC #1 **<END>** g01279452

241-8368 SWITCH GP-MAGNETIC–24-VOLT–MAIN RELAY

S/N: JKM1-UP

PART OF 307-3159 PANEL GP-CIRCUIT BREAKER

SMCS-7499 **i02290099**

NOTE	REF NO	GRAPHIC REF	PART NUMBER	QTY	PART NAME 1 2 3 4 5 6 (PRODUCT LEVEL)	SEE PAGE
	1	1	**155-2270**	1	KIT-CONNECTING PLUG (2-PIN)	
					(INCLUDES PLUG AS, WEDGE & INTERFACE SEAL)	
	2	1	**4F-2294**	2	NUT-JAM (5/16-24-THD)	
	3	1	**186-3736**	2	SOCKET-CONNECTOR (16-GA TO 18-GA)	

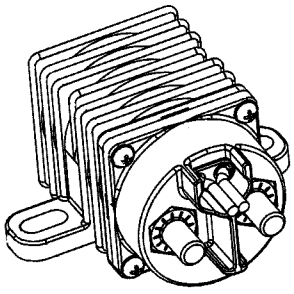

ISOMETRIC VIEW

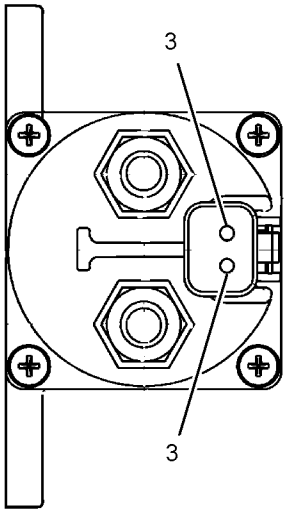

VIEW A-A

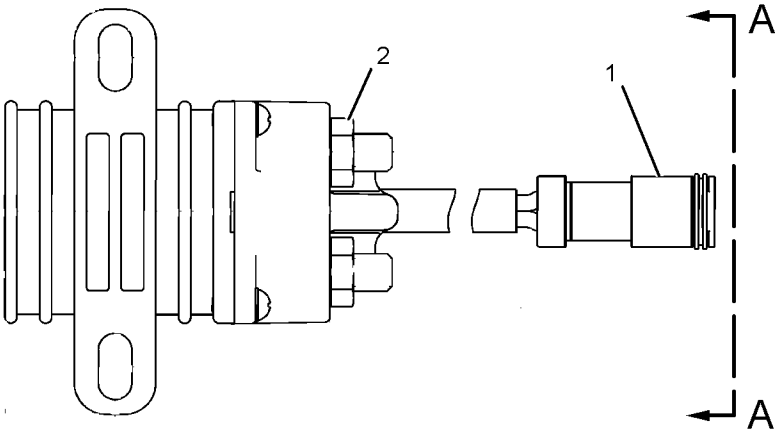

GRAPHIC #1 **<END>** g01077362

336-1845 SWITCH GP-ROCKER

S/N: JKM854-UP
PART OF 266-9438, 280-2794 WIRING GP-RIDE CONTROL
AN ATTACHMENT

SMCS-7332 **i03852900**

NOTE	REF NO	GRAPHIC REF	PART NUMBER	QTY	PART NAME 1 2 3 4 5 6 (PRODUCT LEVEL)	SEE PAGE
	1	1	**236-4612**	1	SWITCH AS-ROCKER (24-VOLT) (RIDE CONTROL)	

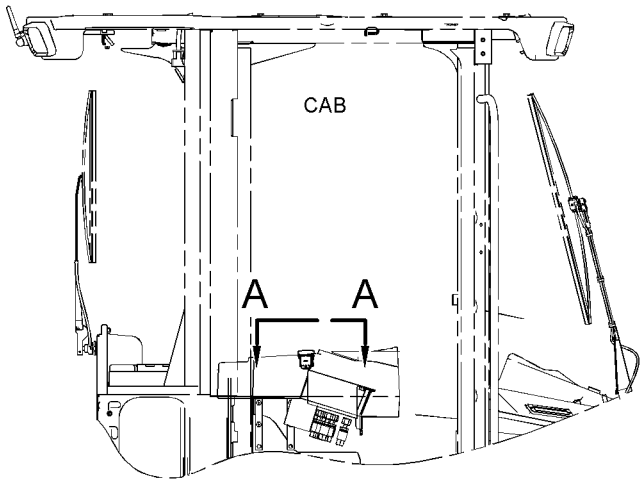

RIGHT SIDE VIEW

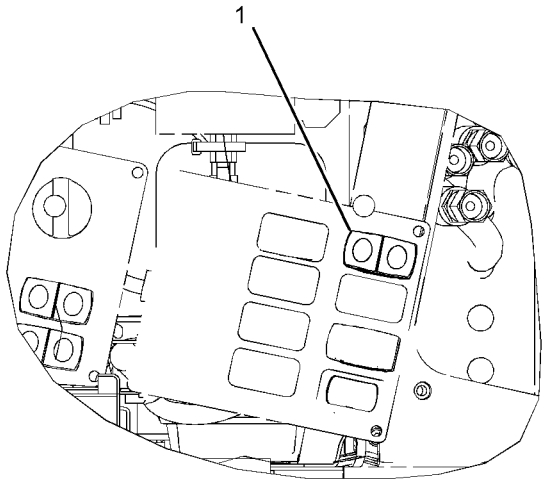

VIEW A-A

GRAPHIC #1 **<END>** g02100516

275-7741 SWITCH GP-WIPER–INTERMITTENT

S/N: JKM1-UP
24-VOLT
PART OF 265-3259 WIRING GP-CAB

SMCS-7332 **i02992478**

NOTE	REF NO	GRAPHIC REF	PART NUMBER	QTY	PART NAME 1 2 3 4 5 6 (PRODUCT LEVEL)	SEE PAGE
	1	1	**6V-8369**	1	NUT (7/16-28-THD)	
	2	1	**2H-3920**	1	LOCKWASHER	
	3	1	**8T-8737**	2	PLUG-SEAL	
	4	1	**186-3735**	6	PIN-CONNECTOR (16-GA TO 18-GA)	
	5	1	**102-8806**	1	KIT-RECEPTACLE (8-PIN)	
					(INCLUDES RECEPTACLE AS & WEDGE)	

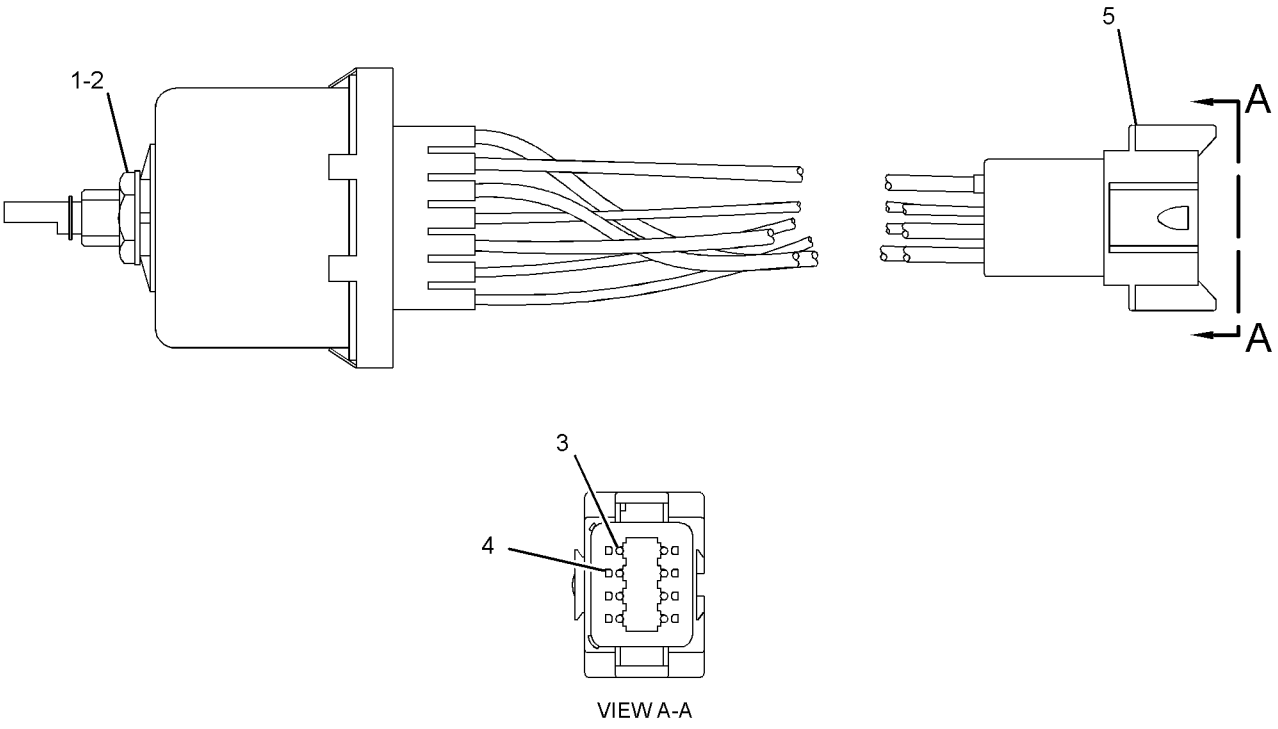

GRAPHIC #1 **<END>** g01445891

239-1134 VALVE GP-ETHER STARTING

S/N: JKM1-UP
24-VOLT
PART OF 265-9646, 267-0337 STARTING AID GP-ETHER
AN ATTACHMENT

SMCS-1456 **i03907816**

NOTE	REF NO	GRAPHIC REF	PART NUMBER	QTY	PART NAME 1 2 3 4 5 6 (PRODUCT LEVEL)	SEE PAGE
	1	1	**7N-9801**	1	GASKET	
	2	1	**102-8802**	1	KIT-RECEPTACLE (2-PIN)	
					(INCLUDES RECEPTACLE AS & WEDGE)	
	3	1	**8T-8729**	2	PIN-CONNECTOR (16-GA TO 18-GA)	
	4	1	**358-4889**	1	FILTER (ETHER START)	

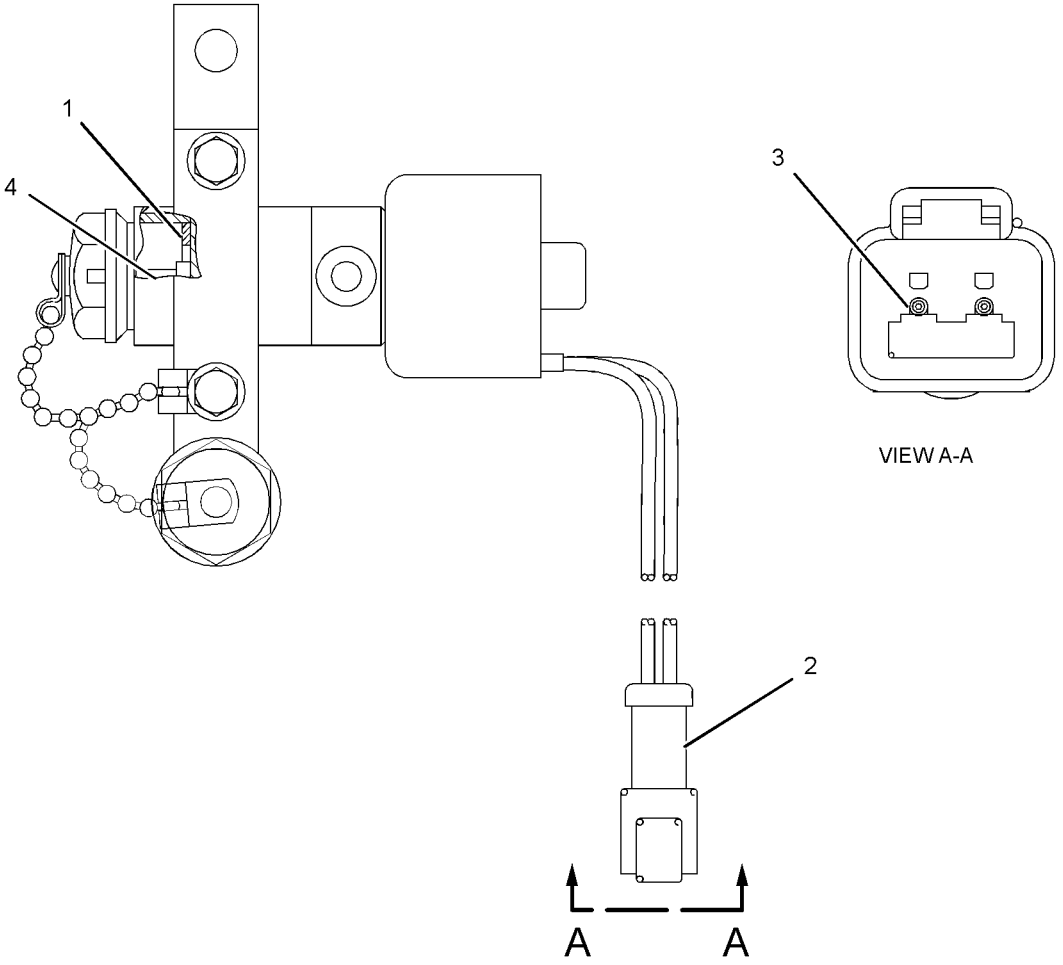

GRAPHIC #1 **<END>** g02138138

ELECTRICAL AND STARTING SYSTEM

262-0337 WARNING GP-BACKUP

S/N: JKM1-UP

PART OF 237-7540 CHASSIS AR

SMCS-7406 **i03845351**

NOTE	REF NO	GRAPHIC REF	PART NUMBER	QTY	PART NAME 1 2 3 4 5 6 (PRODUCT LEVEL)	SEE PAGE
	1	1	**220-0229**	1	ALARM AS (BACKUP)	
		1	**102-8802**	1	KIT-RECEPTACLE (2-PIN)	
					(KIT INCLUDES RECEPTACLE AS & WEDGE)	
D		1	**5P-5623**		WIRE-ELECTRICAL (16-GA, BLACK) (0.4-M EACH)	
		1	**8T-8729**	2	PIN-CONNECTOR (16-GA TO 18-GA)	
E		1	**9X-1813**		SLEEVE (31-CM)	
	2	1	**132-5789**	1	CLIP (LADDER)	
	3	1	**7K-1181**	1	STRAP-CABLE	
	4	1	**7X-0772**	3	WASHER-HARD (10.2X25.5X2.5-MM THK)	
	5	1	**8T-4121**	2	WASHER-HARD (11X21X2.5-MM THK)	
M	6	1	**8T-4133**	1	NUT (M10X1.5-THD)	
M	7	1	**8T-4137**	3	BOLT (M10X1.5X20-MM)	
M	8	1	**8T-4195**	1	BOLT (M10X1.5X30-MM)	
	9	1	**9X-7344**	1	GROMMET	

D-ORDER BY THE METER
E-ORDER BY THE CENTIMETER
M-METRIC PART

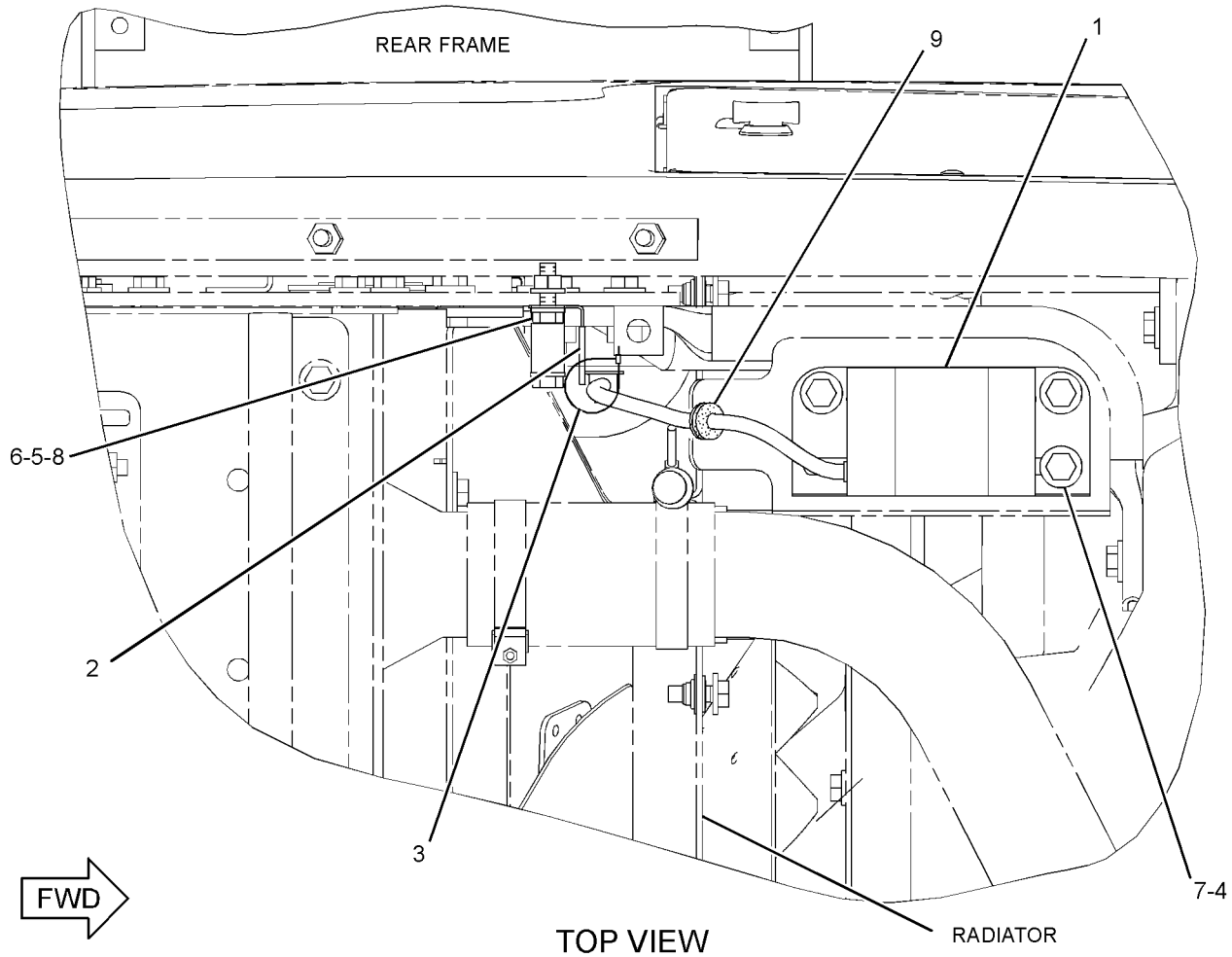

TOP VIEW

GRAPHIC #1

<END>

g02144061

283-5233 WIRING AR-AXLE TEMPERATURE

S/N: JKM1-UP
PART OF 237-7539 ELECTRICAL AR
CANNOT BE USED WITH 265-9745 COOLER AR-AXLE OIL, 283-5231 COOLER AR-AXLE OIL, 283-5232 COOLER AR-AXLE OIL
ALSO AN ATTACHMENT

SMCS-1408, 3278, 429T **i02906408**

NOTE	PART NUMBER	QTY	PART NAME 1 2 3 4 5 6 (PRODUCT LEVEL)	SEE PAGE
Y	*267-4795*	1	WIRING GP-AXLE TEMPERATURE	273
M	**8T-4139**	4	BOLT (M12X1.75X30-MM)	
	295-8323	2	COVER	
	5P-1076	4	WASHER-HARD (13.5X30X4-MM THK)	

M-METRIC PART
Y-SEPARATE ILLUSTRATION

<END>

287-5766 WIRING GP-AUTOLUBE CONTROL

S/N: JKM1-UP
PART OF 284-5011 LUBRICATION AR-AUTOMATIC
AN ATTACHMENT

SMCS-1408, 7540 **i03841909**

NOTE	REF NO	GRAPHIC REF	PART NUMBER	QTY	PART NAME 1 2 3 4 5 6 (PRODUCT LEVEL)	SEE PAGE
	1	1	**277-8271**	1	HARNESS AS-PUMP (JUMPER)	
		1	**102-8806**	1	KIT-RECEPTACLE (8-PIN)	
					(INCLUDES RECEPTACLE AS & WEDGE)	
		1	**8T-8729**	14	PIN-CONNECTOR (16-GA TO 18-GA)	
		1	**8T-8737**	2	PLUG-SEAL	
E		1	**114-8844**		SLEEVE-PLASTIC (20-CM)	
		1	**146-4055**	1	RECEPTACLE AS	
	2	1	**277-8272**	1	HARNESS AS-SWITCH (LUBRICATION PRESSURE)	
		1	**102-8802**	1	KIT-RECEPTACLE (2-PIN)	
					(INCLUDES RECEPTACLE AS & WEDGE)	
		1	**8T-8729**	4	PIN-CONNECTOR (16-GA TO 18-GA)	
E		1	**114-8843**		SLEEVE-PLASTIC (20-CM)	
		1	**146-4073**	1	RECEPTACLE AS	
	3	1	**305-4382**	1	HARNESS AS-AUXILIARY	
		1	**102-8804**	1	KIT-RECEPTACLE (4-PIN)	
					(INCLUDES RECEPTACLE AS & WEDGE)	
		1	**9X-3402**	8	SOCKET-CONNECTOR (16-GA TO 18-GA)	
		1	**9X-3401**	3	PIN-CONNECTOR (16-GA TO 18-GA)	
		1	**155-2270**	1	KIT-CONNECTING PLUG (2-PIN)	
		1	**155-2265**	1	KIT-CONNECTING PLUG (8-PIN)	
					(EACH PLUG KIT INCLUDES PLUG AS, WEDGE & INTERFACE SEAL)	
		1	**8T-8737**	3	PLUG-SEAL	
E		1	**125-7875**		TUBE-HEAT SHRINK (7.44-MM DIA) (5-CM)	
	4	1	**149-9129**	1	CLIP	
	5	1	**4K-8864**	1	CLIP	
	6	1	**4P-8134**	2	CLIP	
	7	1	**8M-2770**	3	CLIP	
B	8	1	**7K-1181**	6	STRAP-CABLE	

B-USE AS REQUIRED
E-ORDER BY THE CENTIMETER

287-5766 **WIRING GP-AUTOLUBE CONTROL** *(contd.)* **i03841909**

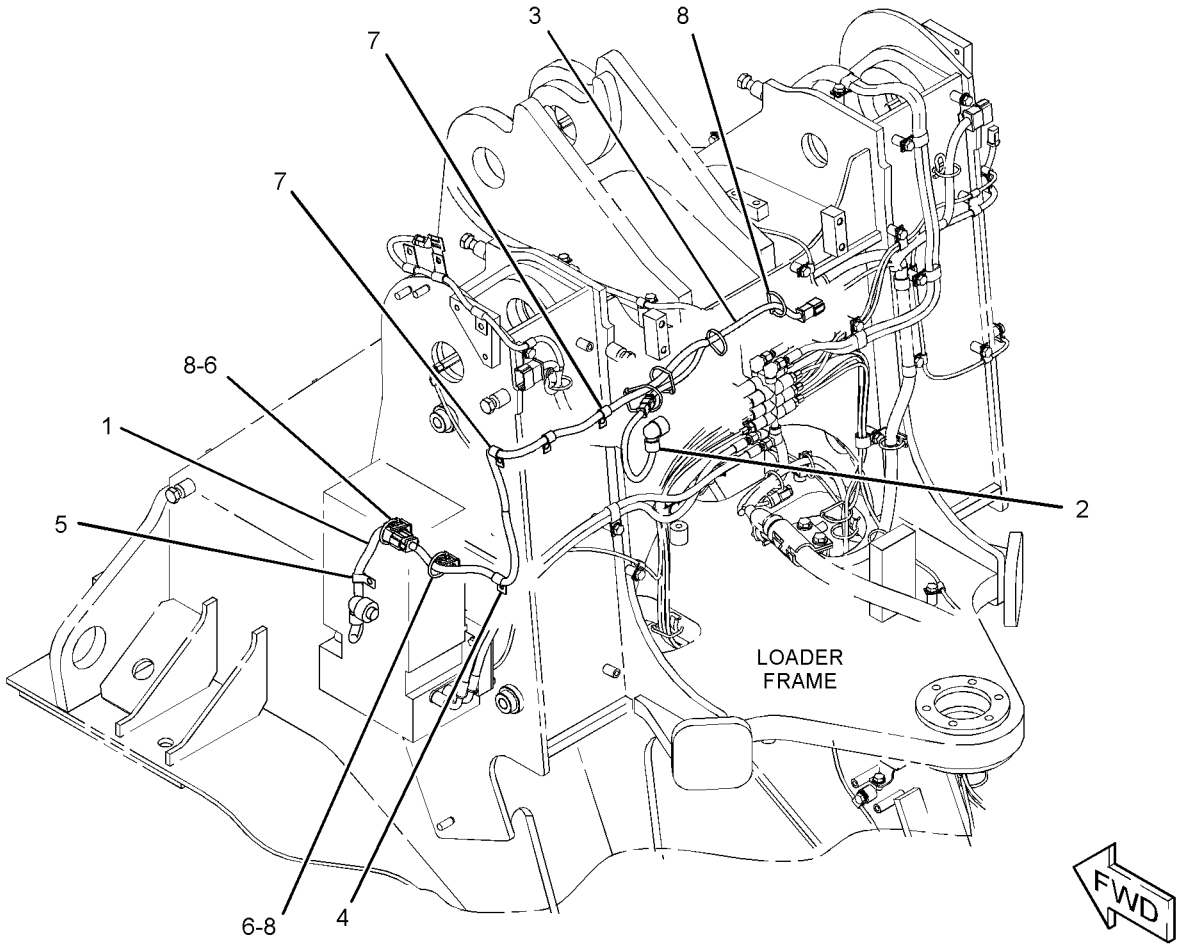

GRAPHIC #1 **<END>** g02092895

267-4794 WIRING GP-AXLE OIL COOLER

S/N: JKM1-UP
PART OF 265-9745 COOLER AR-AXLE OIL
AN ATTACHMENT

SMCS-1365, 1408 **i03625905**

NOTE	REF NO	GRAPHIC REF	PART NUMBER	QTY	PART NAME 1 2 3 4 5 6 (PRODUCT LEVEL)	SEE PAGE
	1	1	**282-9047**	1	HARNESS AS-AXLE (AXLE OIL COOLER RELAY)	
		1	**9X-3402**	2	SOCKET-CONNECTOR (16-GA TO 18-GA)	
		1	**9X-3401**	2	PIN-CONNECTOR (16-GA TO 18-GA)	
					—OR—	
		1	**126-1767**	2	PIN-CONNECTOR (14-GA)	
		1	**102-8802**	1	KIT-RECEPTACLE (2-PIN)	
					(INCLUDES RECEPTACLE AS & WEDGE)	
E		1	**114-8843**		SLEEVE-PLASTIC (40-CM)	
		1	**155-2270**	1	KIT-CONNECTING PLUG (2-PIN)	
					(INCLUDES PLUG AS, WEDGE, & INTERFACE SEAL)	
Y	2	1	*335-2609*	1	RELAY GP (AXLE OIL COOLER)	239

E-ORDER BY THE CENTIMETER
Y-SEPARATE ILLUSTRATION

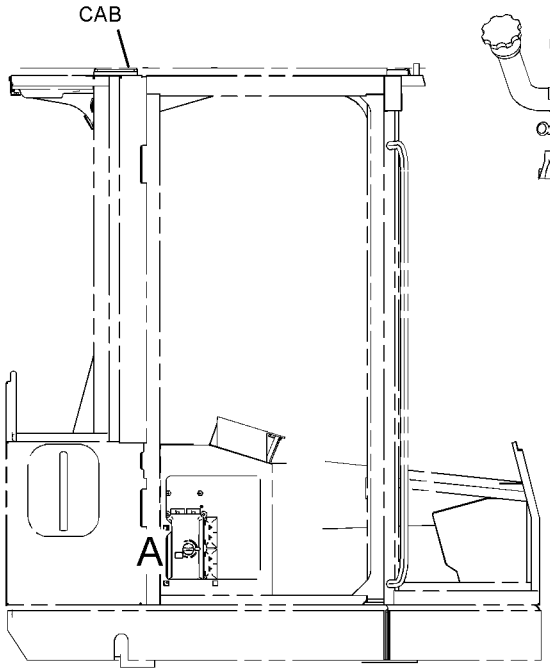

RIGHT SIDE VIEW

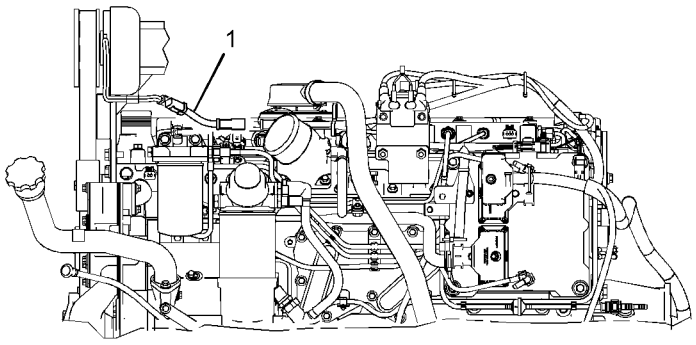

RIGHT SIDE VIEW OF ENGINE

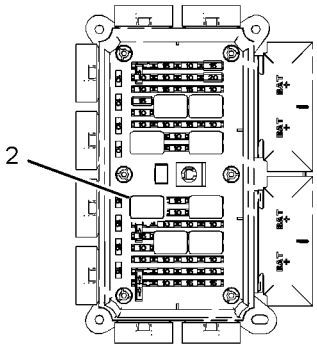

VIEW OF AREA A
(COVER REMOVED)

GRAPHIC #1 **<END>** g01441703

267-4795 WIRING GP-AXLE TEMPERATURE–OIL TEMPERATURE

S/N: JKM1-UP

PART OF 283-5233 WIRING AR-AXLE TEMPERATURE

ALSO AN ATTACHMENT

SMCS-1408, 3278, 429T **i02906410**

NOTE	REF NO	GRAPHIC REF	PART NUMBER	QTY	PART NAME 1 2 3 4 5 6 (PRODUCT LEVEL)	SEE PAGE
	1	1	**7K-1181**	11	STRAP-CABLE	
	2	1	**155-8999**	1	SWITCH AS-TEMPERATURE (FRONT AXLE OIL)	
		1	**102-8802**	1	KIT-RECEPTACLE (2-PIN)	
					(INCLUDES RECEPTACLE AS & WEDGE)	
		1	**186-3735**	2	PIN-CONNECTOR (16-GA TO 18-GA)	
	3	1	**256-6453**	1	SENSOR AS-TEMPERATURE (REAR AXLE OIL)	
	4	1	**303-1230**	1	BRACKET AS	
		1	**7T-1099**	1	LINK	
M		1	**8T-3490**	7	NUT-WELD (M10X1.5-THD)	
	5	1	**305-4374**	1	HARNESS AS-SENSOR	
	6	1	**305-4375**	1	HARNESS AS-SWITCH	
	7	1	**033-6028**	2	SEAL-O-RING	
	8	1	**4P-7582**	2	CLIP	
	9	1	**5P-9085**	2	CLIP	
	10	1	**8T-4121**	5	WASHER-HARD (11X21X2.5-MM THK)	
M	11	1	**8T-4136**	2	BOLT (M10X1.5X25-MM)	
M	12	1	**8T-4137**	3	BOLT (M10X1.5X20-MM)	
M	13	1	**8T-4190**	2	BOLT (M16X2X25-MM)	
M	14	1	**8T-4192**	2	BOLT (M12X1.75X25-MM)	
	15	1	**8T-4223**	2	WASHER-HARD (13.5X25.5X3-MM THK)	
	16	1	**9X-8250**	3	CLIP	
	17	1	**9X-8268**	2	WASHER (17.5X30X3.5-MM THK)	

M-METRIC PART

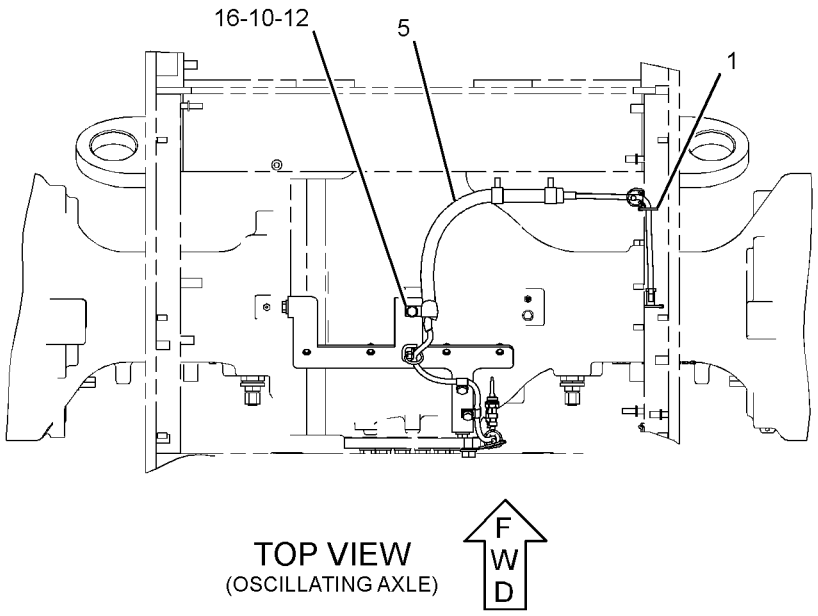

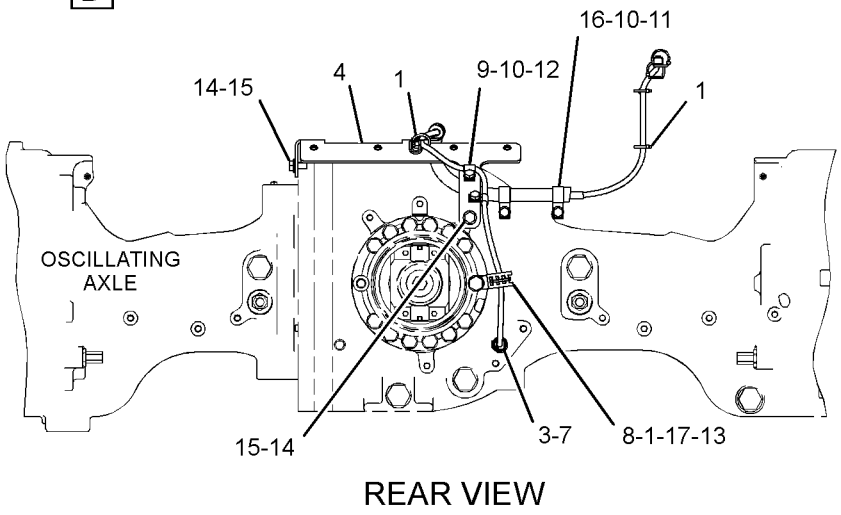

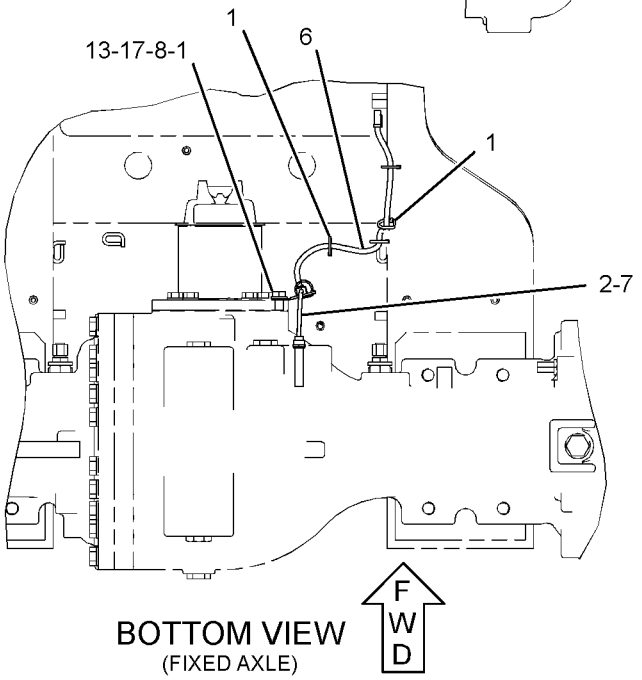

GRAPHIC #1 **<END>** g01396274

265-3259 WIRING GP-CAB

S/N: JKM1-333

PART OF 252-4553 CAB AR-ENCLOSED ROPS

SMCS-1408, 7301 **i03872018**

NOTE	REF NO	GRAPHIC REF	PART NUMBER	QTY	PART NAME 1 2 3 4 5 6 (PRODUCT LEVEL)	SEE PAGE
	1	3	**1H-4393**	3	LOCKWASHER	
	2	3	**2H-3920**	1	LOCKWASHER	
Y	3	2	**3E-6328**	1	ALARM GP (24-VOLT) (ACTION)	158
	4	1,2,3	**3S-2093**	63	STRAP-CABLE	
	5	3	**4I-3038**	4	WASHER (3.3X8X0.5-MM THK)	
	6	3	**5P-7958**	1	SLEEVE-CABLE SPLICE	
	7	1	**6I-1418**	4	SPACER (8.2X12.7X28.7-MM THK)	
	8	3	**6V-8369**	1	NUT (7/16-28-THD)	
	9	1,3	**7K-1181**	19	STRAP-CABLE	
	10	3	**7X-3308**	4	BOLT-SOCKET HEAD (4-40X0.375-IN)	
	11	3	**8C-6354**	1	CAP-RECEPTACLE	
	12	3	**8N-2622**	1	LEVER (TURN SIGNAL SWITCH)	
	13	1	**8T-9655**	8	MOUNT-ISOLATION	
	14	1	**8X-9618**	1	STRAP AS-GROUND	
	15	2,3	**110-6109**	4	KNOB-CONTROL (CONTROL PANEL SWITCHES)	
Y	16	3	**275-7741**	1	SWITCH GP-WIPER (24-VOLT, INTERMITTENT) (FRONT)	266
	17	3	**110-7887**	1	SWITCH AS-START (KEY)	
		3	**7T-6799**	1	NUT-MOUNTING (1-32-THD)	
		3	**102-8804**	1	KIT-RECEPTACLE (4-PIN)	
					(INCLUDES RECEPTACLE AS & WEDGE)	
		3	**8T-8729**	4	PIN-CONNECTOR (16-GA TO 18-GA)	
	18	3	**112-6174**	1	SWITCH AS-ROTARY (WIPER, WASHER) (REAR)	
		3	**2H-3920**	1	LOCKWASHER	
		3	**3E-3389**	1	WEDGE-RECEPTACLE LOCK (8-PIN)	
		3	**6V-8369**	1	NUT (7/16-28-THD)	
		3	**8T-8729**	6	PIN-CONNECTOR (16-GA TO 18-GA)	
		3	**8T-8737**	2	PLUG-SEAL	
		3	**102-8806**	1	KIT-RECEPTACLE (8-PIN)	
					(INCLUDES RECEPTACLE AS & WEDGE)	
	19	2	**115-1748**	4	LAMP (24-VOLT, 3-WATT)	
	20	1	**117-2311**	1	SOCKET-AUXILIARY POWER (12-VOLT)	
	21	1	**118-7362**	1	GROMMET-SPLIT	
	22	1	**124-5638**	1	FILM-INFORMATION (12-VOLT)	
	23	3	**134-9569**	1	SWITCH AS-TURN SIGNAL	
		3	**5L-7200**	1	SCREW (8-32X0.375-IN)	
		3	**9B-7233**	1	LOCKWASHER	
	24	3	**148-5689**	1	GROMMET-SPLIT	
	25	3	**155-2105**	1	PLATE-INSTRUCTION (TURN SIGNAL)	
	26	3	**179-9392**	1	LANYARD	
	27	3	**185-5634**	1	PLATE AS	
	28	3	**185-6335**	1	SWITCH AS-ROTARY (24-VOLT) (AUTOSHIFT CONTROL)	
		3	**8T-8737**	2	PLUG-SEAL	
		3	**9W-0852**	4	PIN-CONNECTOR (14-GA)	
		3	**102-8805**	1	KIT-RECEPTACLE (6-PIN)	
					(INCLUDES RECEPTACLE AS & WEDGE)	
	29	3	**198-6570**	1	LIGHTER GP (12-VOLT) (CIGAR)	
		3	**198-6571**	1	ELEMENT AS-HEATER	
	30	3	**201-2733**	1	FILM-INFORMATION (INPUT/OUTPUT)	
	31	1	**209-0381**	1	CONVERTER-POWER (24-VOLT TO 12-VOLT)	
	32	3	**214-5372**	1	HARNESS AS-LIGHTING (TURN SIGNAL, HAZARD)	
		3	**155-2270**	1	KIT-CONNECTING PLUG (2-PIN)	
		3	**155-2271**	1	KIT-CONNECTING PLUG (4-PIN)	

265-3259 **WIRING GP-CAB** *(contd.)* **i03872018**

NOTE	REF NO	GRAPHIC REF	PART NUMBER	QTY	PART NAME 1 2 3 4 5 6 (PRODUCT LEVEL)	SEE PAGE
		3	**155-2274**	1	KIT-CONNECTING PLUG (6-PIN)	
					(EACH PLUG KIT INCLUDES PLUG AS, WEDGE & INTERFACE SEAL)	
		3	**102-8801**	1	KIT-RECEPTACLE (12-PIN)	
					(INCLUDES RECEPTACLE AS & WEDGE)	
		3	**8T-8729**	10	PIN-CONNECTOR (16-GA TO 18-GA)	
		3	**8T-8737**	3	PLUG-SEAL	
E		3	**114-8843**		SLEEVE-PLASTIC (60-CM)	
E		3	**114-8844**		SLEEVE-PLASTIC (20-CM)	
		3	**8T-8730**	11	SOCKET-CONNECTOR (16-GA TO 18-GA)	
		3	**172-9200**	1	SUPPRESSOR-ARC	
		3	**189-3158**	1	SUPPRESSOR-ARC	
		3	**5P-4571**	6	TERMINAL-BLADE (14-GA TO 16-GA)	
	33	3	**217-8166**	1	FLASHER AS (24-VOLT)	
	34	2	**236-4610**	1	SWITCH AS-ROCKER (AIR CONDITIONER, HEATER)	
	35	2	**236-4611**	1	SWITCH AS-ROCKER (FAN BLOWER SPEED)	
	36	3	**249-5479**	1	SWITCH AS-ROCKER (24-VOLT) (HEADLIGHT DIMMER)	
	37	3	**251-1195**	1	SWITCH AS-ROCKER (24-VOLT) (FRONT FLOODLIGHTS)	
	38	3	**251-2031**	1	SWITCH AS-ROCKER (24-VOLT) (RUNNING LIGHTS)	
	39	3	**256-7823**	1	SWITCH AS-ROCKER (24-VOLT) (HAZARD WARNING LIGHTS)	
R	40	1	**262-1408**	1	CONTROL GP-UNPROGRAMMED (POWER TRAIN)	
	41	3	**268-6653**	1	FILM-PANEL (AUTOSHIFT, LIGHT SWITCH, LH)	
	42	2	**269-2731**	1	FILM-IDENTIFICATION (CONTROL PANEL, FRONT)	
	43	2	**269-2732**	1	FILM-IDENTIFICATION (CONTROL PANEL, REAR)	
Y	44	3	**278-1667**	1	PANEL GP-FUSE	236
	45	2	**283-4960**	2	WIRE AS	
	46	2	**284-3623**	1	SWITCH AS-ROCKER (HYDRAULIC LOCKOUT)	
	47	2	**291-2165**	1	POTENTIOMETER AS (TEMPERATURE CONTROL)	
		2	**102-8803**	1	KIT-RECEPTACLE (3-PIN)	
					(INCLUDES RECEPTACLE AS & WEDGE)	
		2	**8T-8729**	1	PIN-CONNECTOR (16-GA TO 18-GA)	
		2	**236-8722**	1	WASHER (10.5X22.2X1.6-MM THK)	
	48	2	**303-9566**	1	SWITCH AS-ROCKER (FORWARD, NEUTRAL, REVERSE)	
		2	**9X-3401**	4	PIN-CONNECTOR (16-GA TO 18-GA)	
		2	**151-9274**	1	KIT-RECEPTACLE (4-PIN)	
					(INCLUDES RECEPTACLE AS & WEDGE)	
	49	2	**304-0329**	1	BRACKET AS	
M		2	**8T-3490**	1	NUT-WELD (M10X1.5-THD)	
Y	50	1	*307-3124*	1	BRACKET GP-MOUNTING	178
	51	3	**307-6155**	1	BRACKET AS	
M		3	**6V-9632**	4	NUT-WELD (M6X1-THD)	
	52	1	**307-6156**	1	HARNESS AS-CAB	
		1	**8N-1535**	1	BELL AS-END	
		1	**8N-1537**	1	LOCKWASHER	
		1	**102-8802**	1	KIT-RECEPTACLE (2-PIN)	
		1	**102-8803**	2	KIT-RECEPTACLE (3-PIN)	
		1	**102-8804**	2	KIT-RECEPTACLE (4-PIN)	
		1	**102-8806**	1	KIT-RECEPTACLE (8-PIN)	
		1	**102-8801**	1	KIT-RECEPTACLE (12-PIN)	
					(EACH RECEPTACLE KIT INCLUDES RECEPTACLE AS & WEDGE)	
		1	**8N-1540**	3	PIN-CONNECTOR (12-GA TO 14-GA)	
		1	**8N-1544**	1	PIN-CONNECTOR (8-GA)	
		1	**8N-1548**	1	PIN-CONNECTOR (4-GA)	
		1	**7R-2751**	15	PLUG-CONNECTOR	
		1	**7G-7917**	1	PLUG-SEAL	
		1	**7G-7919**	1	PLUG-SEAL	
		1	**8T-8737**	136	PLUG-SEAL	

265-3259 **WIRING GP-CAB** ***(contd.)*** **i03872018**

NOTE	REF NO	GRAPHIC REF	PART NUMBER	QTY	PART NAME 1 2 3 4 5 6 (PRODUCT LEVEL)	SEE PAGE
		1	**7X-6222**	1	PLUG AS-CONNECTOR (24-PIN)	
		1	**3E-4367**	1	RING-RETAINING	
M		1	**3E-8558**	1	BOLT (M5X0.8X39.37-MM)	
		1	**9W-1951**	1	RECEPTACLE-CONNECTOR (9-PIN)	
		1	**113-0583**	1	RECEPTACLE AS-CONNECTOR (40-PIN)	
		1	**106-4155**	1	KIT-BOLT (ELECTRICAL CONNECTORS)	
		1	**8N-1532**	1	RECEPTACLE AS-CONNECTOR (6-PIN)	
		1	**8N-1536**	1	NUT (1-5/8-18-THD)	
		1	**7R-2750**	38	SEAL-CONNECTOR	
		1	**113-5183**	4	SOCKET-LAMP	
		1	**3S-2093**	9	STRAP-CABLE	
		1	**9X-6772**	1	STRAP-CABLE	
		1	**5P-4571**	4	TERMINAL-BLADE (14-GA TO 16-GA)	
		1	**113-5184**	8	TERMINAL-RECEPTACLE (16-GA TO 18-GA)	
		1	**9X-0196**	2	WIRE AS	
		1	**196-2412**	38	TERMINAL AS	
		1	**7R-2750**	1	SEAL-CONNECTOR	
Y	53	1	**239-5025**	1	CONTROL GP-UNPRGMED MONITOR (MESSENGER)	948
	54	3	**311-0038**	1	MODULE GP-DISPLAY (MESSENGER)	
M	55	1	**099-3649**	4	BOLT (M8X1.25X40-MM)	
	56	1	**130-5300**	2	CLIP	
	57	1,3	**132-5789**	3	CLIP	
	58	3	**134-2540**	1	RESISTOR AS-CONNECTION (3-PIN)	
	59	3	**142-2928**	4	LOCKNUT (4-40-THD)	
	60	1	**156-6175**	2	CLIP	
	61	2,3	**228-6089**	9	PLUG (ROCKER SWITCH)	
	62	3	**268-6654**	1	FILM-IDENTIFICATION (WINDOW WIPER CONTROLS, RH)	
	63	3	**281-2880**	1	SUPPRESSOR-ARC	
	64	2,3	**4P-8134**	5	CLIP	
M	65	3	**5C-7261**	3	NUT (M8X1.25-THD)	
M	66	3	**5C-8312**	3	NUT (M4X0.7-THD)	
M	67	3	**5C-9553**	4	BOLT (M6X1X16-MM)	
M	68	3	**6V-5210**	2	SCREW-MACHINE (M4X0.7X10-MM)	
M	69	1	**6V-9673**	4	SCREW-MACHINE (M5X0.8X12-MM)	
	70	1	**7D-7233**	1	CLIP	
	71	3	**7X-0608**	3	WASHER-HARD (10.2X16X2-MM THK)	
	72	1,2	**8T-4121**	9	WASHER-HARD (11X21X2.5-MM THK)	
M	73	1	**8T-4133**	4	NUT (M10X1.5-THD)	
M	74	1,2	**8T-4137**	5	BOLT (M10X1.5X20-MM)	
M	75	2	**8T-4138**	4	BOLT (M6X1X20-MM)	
M	76	1	**8T-4171**	2	BOLT (M6X1X12-MM)	
M	77	2,3	**8T-4189**	7	BOLT (M8X1.25X20-MM)	
	78	2,3	**8T-4224**	7	WASHER-HARD (8.8X16X2-MM THK)	
	79	3	**9F-5644**	3	LOCKWASHER	
	80	1	**9N-0869**	4	WASHER-HARD (8.8X25.5X2-MM THK)	
M	81	3	**9X-2042**	2	SCREW-TRUSS HEAD (M6X1X12-MM)	
	82	1,2,3	**9X-8256**	10	WASHER (6.6X12X2-MM THK)	

E-ORDER BY THE CENTIMETER
M-METRIC PART
R-REMFG PART MAY BE AVAILABLE
Y-SEPARATE ILLUSTRATION

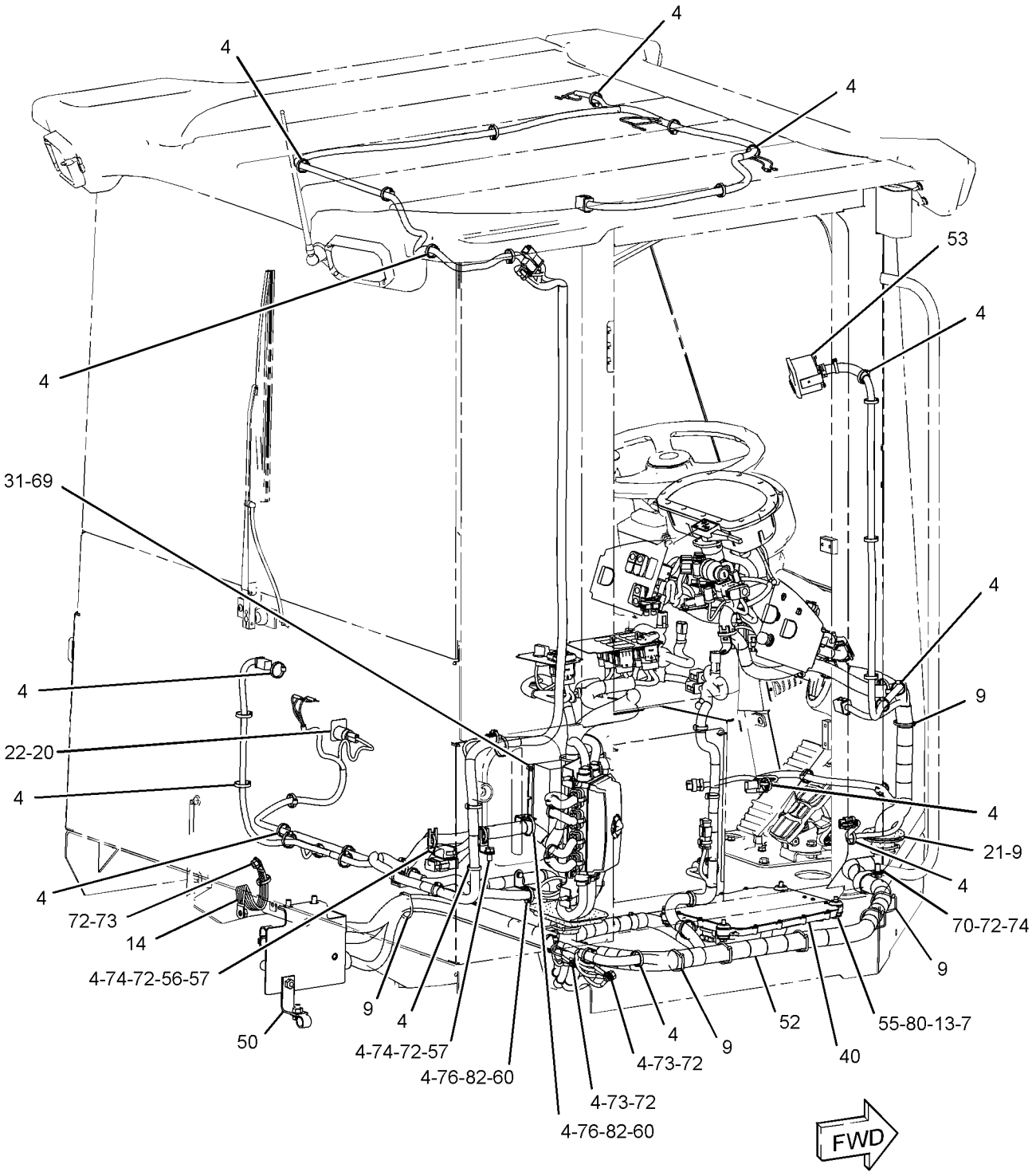

GRAPHIC #1 g01435110

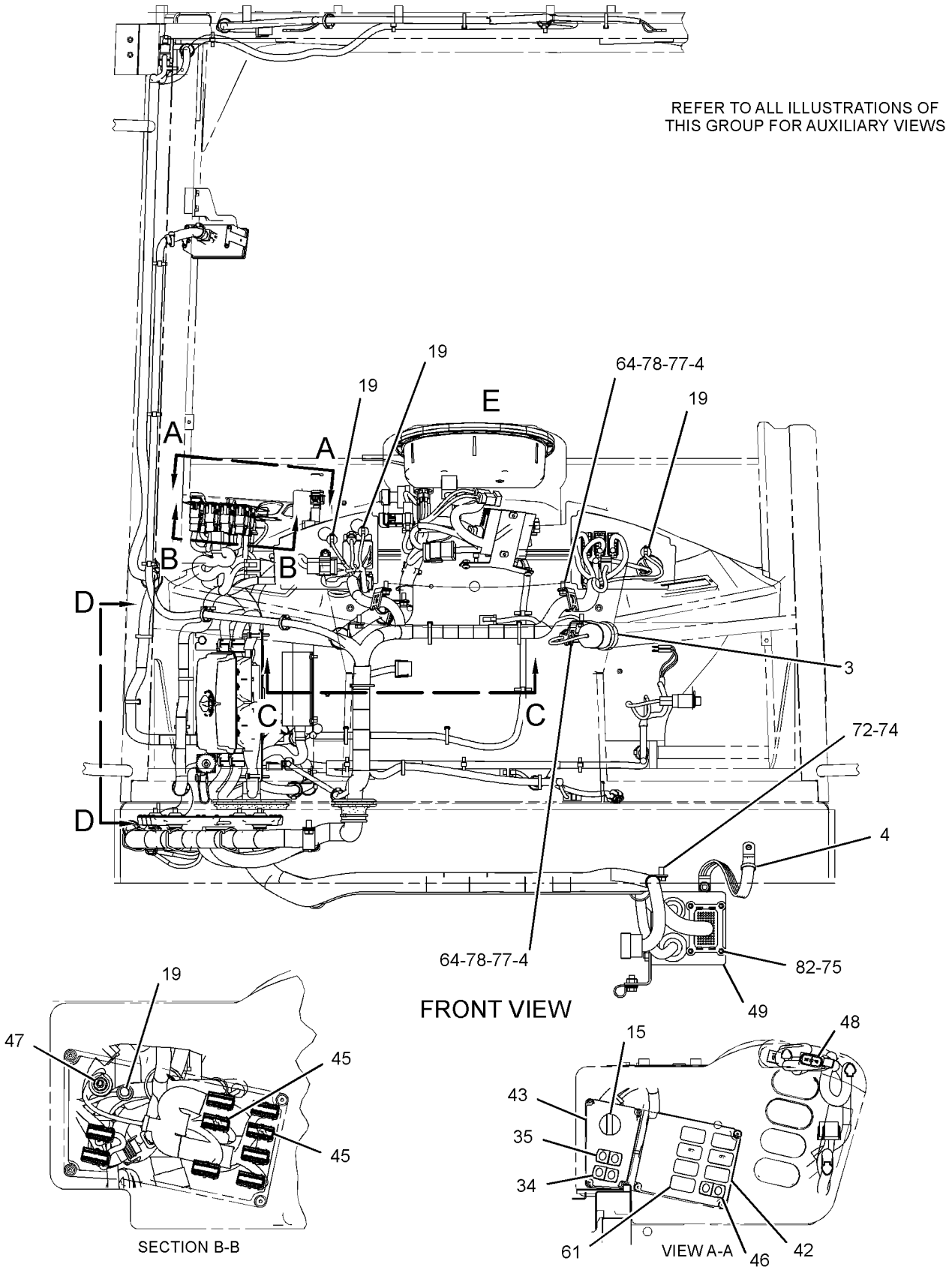

GRAPHIC #2

g01435111

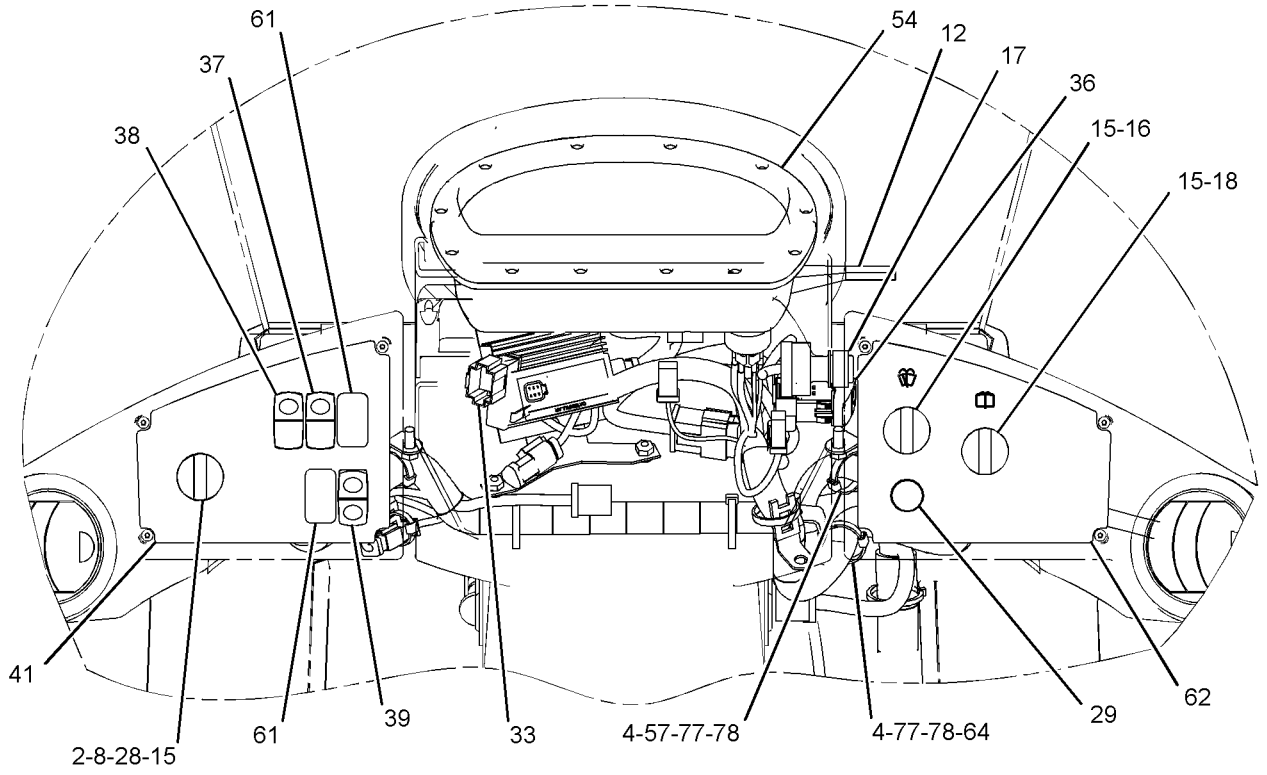

VIEW OF AREA E

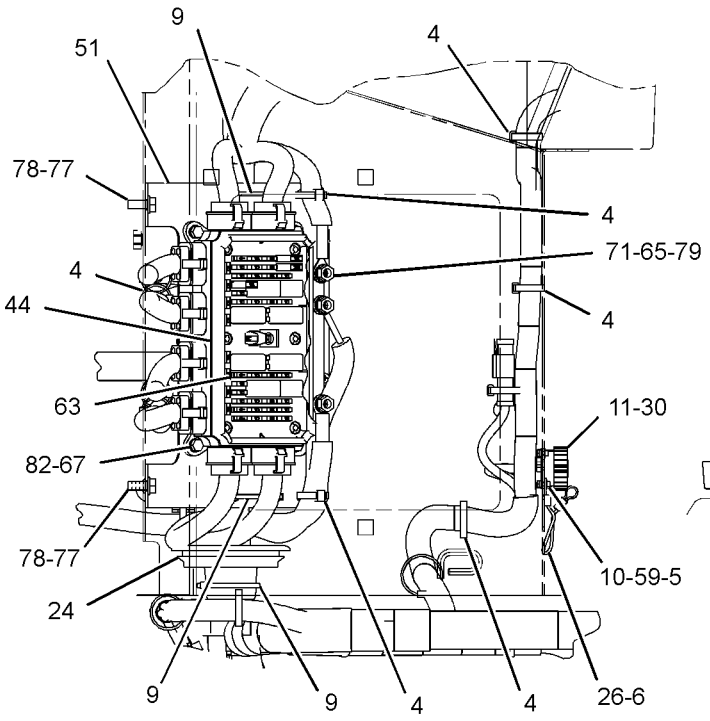

VIEW D-D

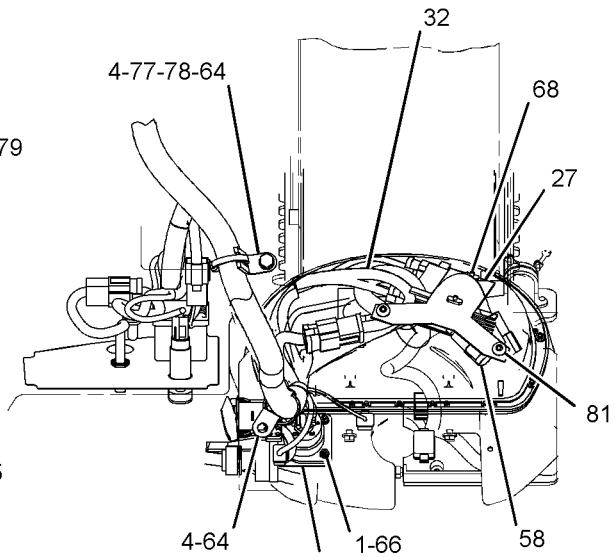

SECTION C-C

GRAPHIC #3 **<END>** g01435112

ELECTRICAL AND STARTING SYSTEM

265-3259 WIRING GP-CAB

S/N: JKM334-852

PART OF 252-4553 CAB AR-ENCLOSED ROPS

SMCS-1408, 7301 **i03872019**

NOTE	REF NO	GRAPHIC REF	PART NUMBER	QTY	PART NAME 1 2 3 4 5 6 (PRODUCT LEVEL)	SEE PAGE
	1	3	**1H-4393**	3	LOCKWASHER	
	2	3	**2H-3920**	1	LOCKWASHER	
Y	3	2	**3E-6328**	1	ALARM GP (24-VOLT) (ACTION)	158
	4	1,2,3	**3S-2093**	63	STRAP-CABLE	
	5	3	**4I-3038**	4	WASHER (3.3X8X0.5-MM THK)	
	6	3	**5P-7958**	1	SLEEVE-CABLE SPLICE	
	7	1	**6I-1418**	4	SPACER (8.2X12.7X28.7-MM THK)	
	8	3	**6V-8369**	1	NUT (7/16-28-THD)	
	9	1,3	**7K-1181**	19	STRAP-CABLE	
	10	3	**7X-3308**	4	BOLT-SOCKET HEAD (4-40X0.375-IN)	
	11	3	**8C-6354**	1	CAP-RECEPTACLE	
	12	3	**8N-2622**	1	LEVER (TURN SIGNAL SWITCH)	
	13	1	**8T-9655**	8	MOUNT-ISOLATION	
	14	1	**8X-9618**	1	STRAP AS-GROUND	
	15	2,3	**110-6109**	4	KNOB-CONTROL (CONTROL PANEL SWITCHES)	
CY	16	3	**275-7741**	1	SWITCH GP-WIPER (24-VOLT, INTERMITTENT) (FRONT)	266
	17	3	**110-7887**	1	SWITCH AS-START (KEY)	
		3	**7T-6799**	1	NUT-MOUNTING (1-32-THD)	
		3	**102-8804**	1	KIT-RECEPTACLE (4-PIN)	
					(INCLUDES RECEPTACLE AS & WEDGE)	
		3	**8T-8729**	4	PIN-CONNECTOR (16-GA TO 18-GA)	
	18	3	**112-6174**	1	SWITCH AS-ROTARY (WIPER, WASHER) (REAR)	
		3	**2H-3920**	1	LOCKWASHER	
		3	**6V-8369**	1	NUT (7/16-28-THD)	
		3	**186-3735**	6	PIN-CONNECTOR (16-GA TO 18-GA)	
		3	**8T-8737**	2	PLUG-SEAL	
		3	**102-8806**	1	KIT-RECEPTACLE (8-PIN)	
					(INCLUDES RECEPTACLE AS & WEDGE)	
	19	2	**115-1748**	4	LAMP (24-VOLT, 3-WATT)	
	20	1	**117-2311**	1	SOCKET-AUXILIARY POWER (12-VOLT)	
	21	1	**118-7362**	1	GROMMET-SPLIT	
	22	1	**124-5638**	1	FILM-INFORMATION (12-VOLT)	
	23	3	**134-9569**	1	SWITCH AS-TURN SIGNAL	
		3	**5L-7200**	1	SCREW (8-32X0.375-IN)	
		3	**9B-7233**	1	LOCKWASHER	
	24	3	**148-5689**	1	GROMMET-SPLIT	
	25	3	**155-2105**	1	PLATE-INSTRUCTION (TURN SIGNAL)	
	26	3	**179-9392**	1	LANYARD	
	27	3	**185-5634**	1	PLATE AS	
	28	3	**185-6335**	1	SWITCH AS-ROTARY (24-VOLT) (AUTOSHIFT CONTROL)	
		3	**8T-8737**	2	PLUG-SEAL	
		3	**9W-0852**	4	PIN-CONNECTOR (14-GA)	
		3	**102-8805**	1	KIT-RECEPTACLE (6-PIN)	
					(INCLUDES RECEPTACLE AS & WEDGE)	
	29	3	**198-6570**	1	LIGHTER GP (12-VOLT) (CIGAR)	
	30	3	**201-2733**	1	FILM-INFORMATION (INPUT/OUTPUT)	
	31	1	**209-0381**	1	CONVERTER-POWER (24-VOLT TO 12-VOLT)	
	32	3	**214-5372**	1	HARNESS AS-LIGHTING (TURN SIGNAL, HAZARD)	
		3	**155-2270**	1	KIT-CONNECTING PLUG (2-PIN)	
		3	**155-2271**	1	KIT-CONNECTING PLUG (4-PIN)	
		3	**155-2274**	1	KIT-CONNECTING PLUG (6-PIN)	
					(EACH PLUG KIT INCLUDES PLUG AS, WEDGE & INTERFACE SEAL)	

265-3259 **WIRING GP-CAB** *(contd.)* **i03872019**

NOTE	REF NO	GRAPHIC REF	PART NUMBER	QTY	PART NAME 1 2 3 4 5 6 (PRODUCT LEVEL)	SEE PAGE
		3	**102-8801**	1	KIT-RECEPTACLE (12-PIN)	
					(INCLUDES RECEPTACLE AS & WEDGE)	
		3	**8T-8729**	10	PIN-CONNECTOR (16-GA TO 18-GA)	
		3	**8T-8737**	3	PLUG-SEAL	
E		3	**114-8843**		SLEEVE-PLASTIC (60-CM)	
E		3	**114-8844**		SLEEVE-PLASTIC (20-CM)	
		3	**8T-8730**	11	SOCKET-CONNECTOR (16-GA TO 18-GA)	
		3	**172-9200**	1	SUPPRESSOR-ARC	
		3	**189-3158**	1	SUPPRESSOR-ARC	
		3	**5P-4571**	6	TERMINAL-BLADE (14-GA TO 16-GA)	
	33	3	**217-8166**	1	FLASHER AS (24-VOLT)	
	34	2	**236-4610**	1	SWITCH AS-ROCKER (AIR CONDITIONER, HEATER)	
	35	2	**236-4611**	1	SWITCH AS-ROCKER (FAN BLOWER SPEED)	
	36	3	**249-5479**	1	SWITCH AS-ROCKER (24-VOLT) (HEADLIGHT DIMMER)	
	37	3	**251-1195**	1	SWITCH AS-ROCKER (24-VOLT) (FRONT FLOODLIGHTS)	
	38	3	**251-2031**	1	SWITCH AS-ROCKER (24-VOLT) (RUNNING LIGHTS)	
	39	3	**256-7823**	1	SWITCH AS-ROCKER (24-VOLT) (HAZARD WARNING LIGHTS)	
CR	40	1	**304-5687**	1	CONTROL GP-UNPROGRAMMED (POWER TRAIN)	
	41	3	**268-6653**	1	FILM-PANEL (AUTOSHIFT, LIGHT SWITCH, LH)	
	42	2	**269-2731**	1	FILM-IDENTIFICATION (CONTROL PANEL, FRONT)	
	43	2	**269-2732**	1	FILM-IDENTIFICATION (CONTROL PANEL, REAR)	
Y	44	3	**278-1667**	1	PANEL GP-FUSE	236
	45	2	**283-4960**	2	WIRE AS	
	46	2	**284-3623**	1	SWITCH AS-ROCKER (HYDRAULIC LOCKOUT)	
	47	2	**291-2165**	1	POTENTIOMETER AS (TEMPERATURE CONTROL)	
		2	**102-8803**	1	KIT-RECEPTACLE (3-PIN)	
					(INCLUDES RECEPTACLE AS & WEDGE)	
		2	**8T-8729**	1	PIN-CONNECTOR (16-GA TO 18-GA)	
		2	**236-8722**	1	WASHER (10.5X22.2X1.6-MM THK)	
	48	2	**303-9566**	1	SWITCH AS-ROCKER (FORWARD, NEUTRAL, REVERSE)	
		2	**9X-3401**	4	PIN-CONNECTOR (16-GA TO 18-GA)	
		2	**151-9274**	1	KIT-RECEPTACLE (4-PIN)	
					(INCLUDES RECEPTACLE AS & WEDGE)	
	49	2	**304-0329**	1	BRACKET AS	
M		2	**8T-3490**	1	NUT-WELD (M10X1.5-THD)	
Y	50	1	*307-3124*	1	BRACKET GP-MOUNTING	178
	51	3	**307-6155**	1	BRACKET AS	
M		3	**6V-9632**	4	NUT-WELD (M6X1-THD)	
	52	1	**307-6156**	1	HARNESS AS-CAB	
		1	**8N-1535**	1	BELL AS-END	
		1	**8N-1537**	1	LOCKWASHER	
		1	**102-8802**	1	KIT-RECEPTACLE (2-PIN)	
		1	**102-8803**	2	KIT-RECEPTACLE (3-PIN)	
		1	**102-8804**	2	KIT-RECEPTACLE (4-PIN)	
		1	**102-8806**	1	KIT-RECEPTACLE (8-PIN)	
		1	**102-8801**	1	KIT-RECEPTACLE (12-PIN)	
					(EACH RECEPTACLE KIT INCLUDES RECEPTACLE AS & WEDGE)	
		1	**8N-1540**	3	PIN-CONNECTOR (12-GA TO 14-GA)	
		1	**8N-1544**	1	PIN-CONNECTOR (8-GA)	
		1	**8N-1548**	1	PIN-CONNECTOR (4-GA)	
		1	**7R-2751**	15	PLUG-CONNECTOR	
		1	**7G-7917**	1	PLUG-SEAL	
		1	**7G-7919**	1	PLUG-SEAL	
		1	**8T-8737**	136	PLUG-SEAL	
		1	**7X-6222**	1	PLUG AS-CONNECTOR (24-PIN)	
		1	**3E-4367**	1	RING-RETAINING	
M		1	**3E-8558**	1	BOLT (M5X0.8X39.37-MM)	

265-3259 **WIRING GP-CAB** *(contd.)* **i03872019**

NOTE	REF NO	GRAPHIC REF	PART NUMBER	QTY	PART NAME 1 2 3 4 5 6 (PRODUCT LEVEL)	SEE PAGE
		1	**9W-1951**	1	RECEPTACLE-CONNECTOR (9-PIN)	
		1	**113-0583**	1	RECEPTACLE AS-CONNECTOR (40-PIN)	
		1	**106-4155**	1	KIT-BOLT (ELECTRICAL CONNECTORS)	
		1	**8N-1532**	1	RECEPTACLE AS-CONNECTOR (6-PIN)	
		1	**8N-1536**	1	NUT (1-5/8-18-THD)	
		1	**7R-2750**	38	SEAL-CONNECTOR	
		1	**113-5183**	4	SOCKET-LAMP	
		1	**3S-2093**	9	STRAP-CABLE	
		1	**9X-6772**	1	STRAP-CABLE	
		1	**5P-4571**	4	TERMINAL-BLADE (14-GA TO 16-GA)	
		1	**113-5184**	8	TERMINAL-RECEPTACLE (16-GA TO 18-GA)	
		1	**9X-0196**	2	WIRE AS	
		1	**196-2412**	38	TERMINAL AS	
		1	**7R-2750**	1	SEAL-CONNECTOR	
Y	53	1	**239-5025**	1	CONTROL GP-UNPRGMED MONITOR (MESSENGER)	948
	54	3	**311-0038**	1	MODULE GP-DISPLAY (MESSENGER)	
M	55	1	**099-3649**	4	BOLT (M8X1.25X40-MM)	
	57	1,3	**132-5789**	3	CLIP	
	58	3	**134-2540**	1	RESISTOR AS-CONNECTION (3-PIN)	
	59	3	**142-2928**	4	LOCKNUT (4-40-THD)	
	60	1	**156-6175**	2	CLIP	
	61	2,3	**228-6089**	9	PLUG (ROCKER SWITCH)	
	62	3	**268-6654**	1	FILM-IDENTIFICATION (WINDOW WIPER CONTROLS, RH)	
	63	3	**281-2880**	1	SUPPRESSOR-ARC	
	64	2,3	**4P-8134**	5	CLIP	
M	65	3	**5C-7261**	3	NUT (M8X1.25-THD)	
M	66	3	**5C-8312**	3	NUT (M4X0.7-THD)	
M	67	3	**5C-9553**	4	BOLT (M6X1X16-MM)	
M	68	3	**6V-5210**	2	SCREW-MACHINE (M4X0.7X10-MM)	
M	69	1	**6V-9673**	4	SCREW-MACHINE (M5X0.8X12-MM)	
	70	1	**7D-7233**	1	CLIP	
	71	3	**7X-0608**	3	WASHER-HARD (10.2X16X2-MM THK)	
	72	1,2	**8T-4121**	9	WASHER-HARD (11X21X2.5-MM THK)	
M	73	1	**8T-4133**	4	NUT (M10X1.5-THD)	
M	74	1,2	**8T-4137**	5	BOLT (M10X1.5X20-MM)	
M	75	2	**8T-4138**	4	BOLT (M6X1X20-MM)	
M	76	1	**8T-4171**	2	BOLT (M6X1X12-MM)	
M	77	2,3	**8T-4189**	7	BOLT (M8X1.25X20-MM)	
	78	2,3	**8T-4224**	7	WASHER-HARD (8.8X16X2-MM THK)	
	79	3	**9F-5644**	3	LOCKWASHER	
	80	1	**9N-0869**	4	WASHER-HARD (8.8X25.5X2-MM THK)	
M	81	3	**9X-2042**	2	SCREW-TRUSS HEAD (M6X1X12-MM)	
	82	1,2,3	**9X-8256**	14	WASHER (6.6X12X2-MM THK)	

C-CHANGE FROM PREVIOUS TYPE
E-ORDER BY THE CENTIMETER
M-METRIC PART
R-REMFG PART MAY BE AVAILABLE
Y-SEPARATE ILLUSTRATION

265-3259 **WIRING GP-CAB** *(contd.)* **i03872019**

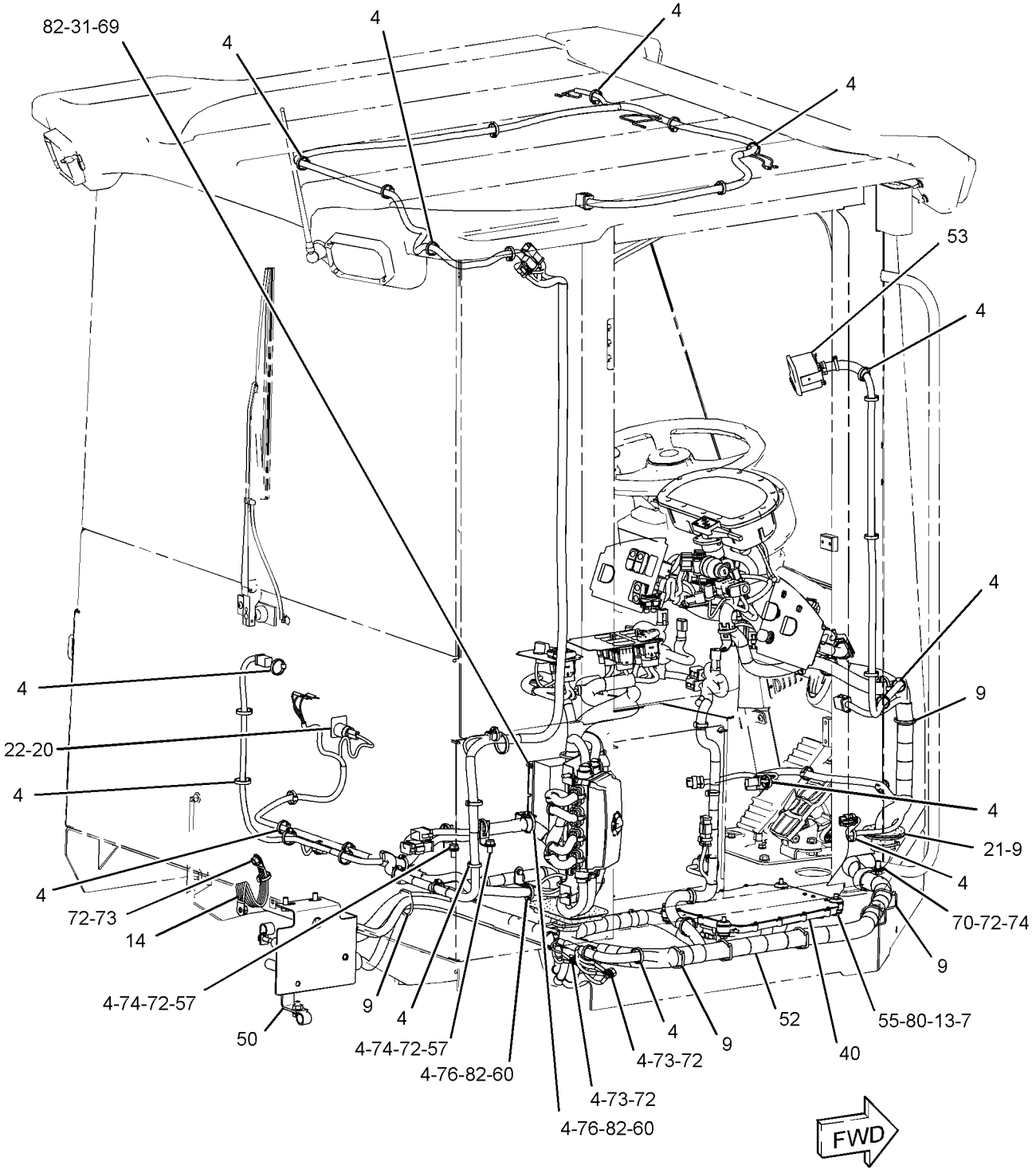

GRAPHIC #1 g01661955

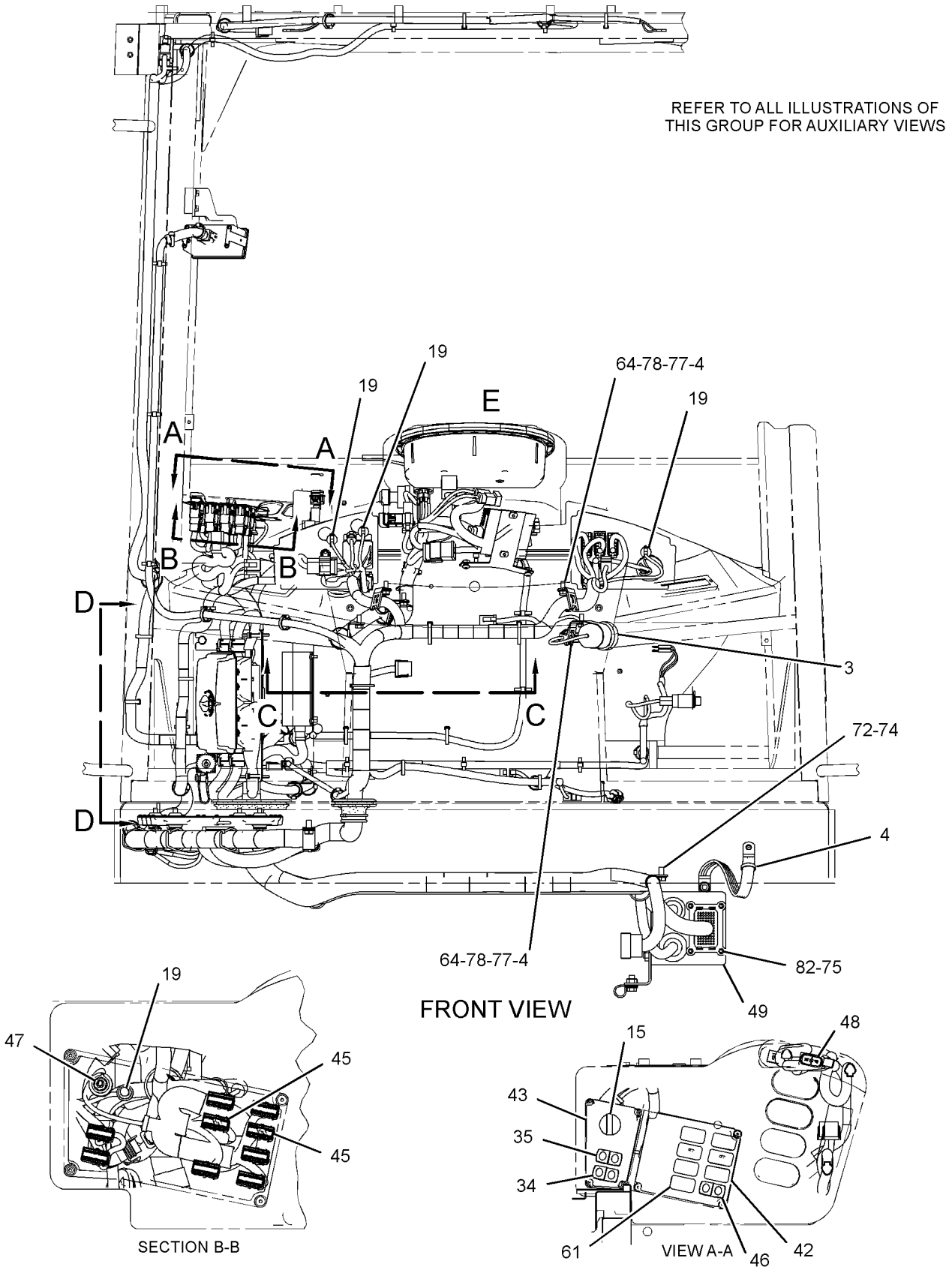

GRAPHIC #2

g01435111

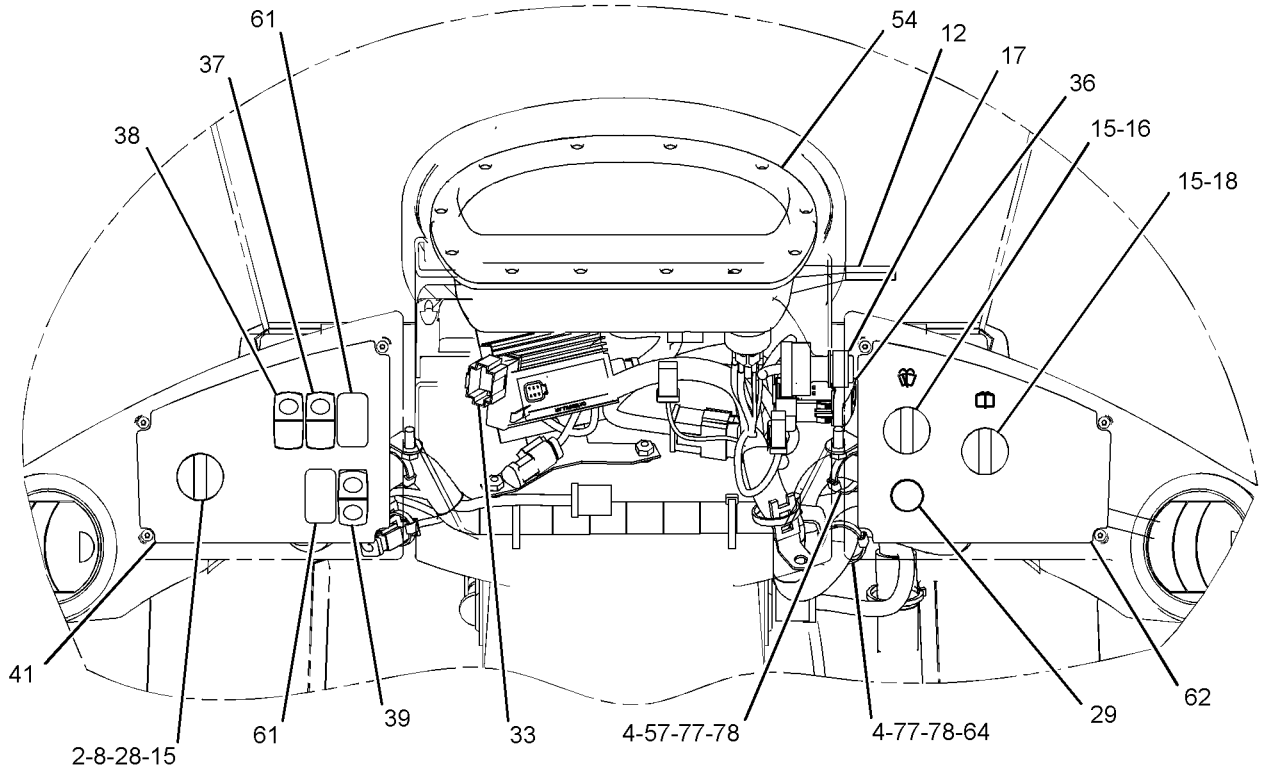

VIEW OF AREA E

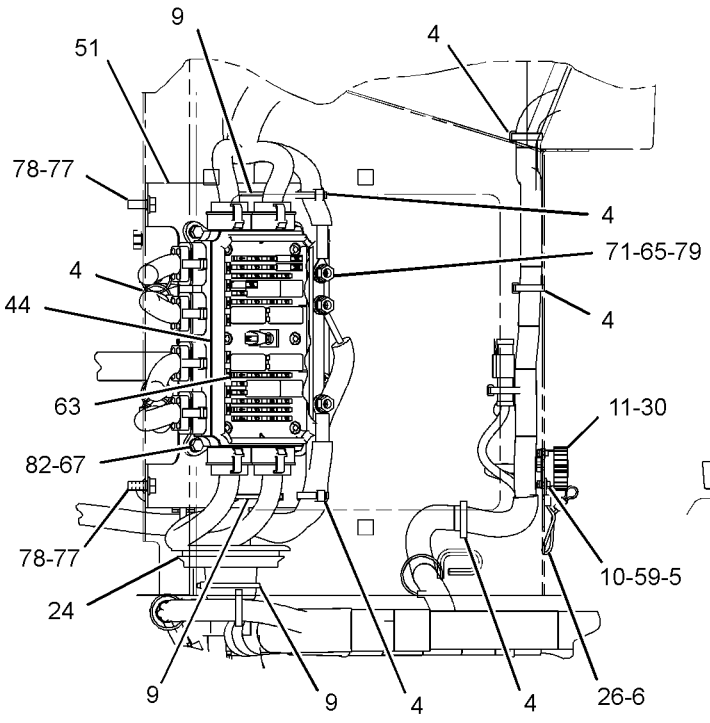

VIEW D-D

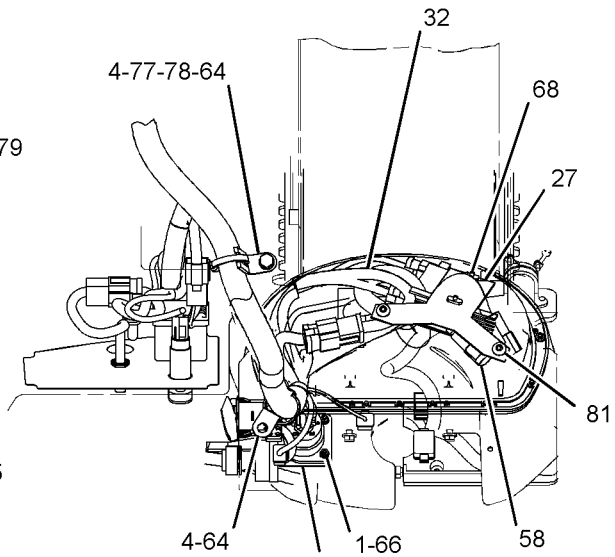

SECTION C-C

GRAPHIC #3 **<END>** g01435112

265-3259 WIRING GP-CAB

S/N: JKM853-UP

PART OF 252-4553 CAB AR-ENCLOSED ROPS

SMCS-1408, 7301 **i03821115**

NOTE	REF NO	GRAPHIC REF	PART NUMBER	QTY	PART NAME 1 2 3 4 5 6 (PRODUCT LEVEL)	SEE PAGE
	1	3	**1H-4393**	3	LOCKWASHER	
	2	3	**2H-3920**	1	LOCKWASHER	
Y	3	2	**3E-6328**	1	ALARM GP (24-VOLT) (ACTION)	158
	4	1,2,3	**3S-2093**	63	STRAP-CABLE	
	5	3	**4I-3038**	4	WASHER (3.3X8X0.5-MM THK)	
	6	3	**5P-7958**	1	SLEEVE-CABLE SPLICE	
	7	1	**6I-1418**	4	SPACER (8.2X12.7X28.7-MM THK)	
	8	3	**6V-8369**	1	NUT (7/16-28-THD)	
C	9	1,3	**7K-1181**	26	STRAP-CABLE	
	10	3	**7X-3308**	4	BOLT-SOCKET HEAD (4-40X0.375-IN)	
	11	3	**8C-6354**	1	CAP-RECEPTACLE	
	12	3	**8N-2622**	1	LEVER (TURN SIGNAL SWITCH)	
	13	1	**8T-9655**	8	MOUNT-ISOLATION	
	14	1	**8X-9618**	1	STRAP AS-GROUND	
	15	2,3	**110-6109**	4	KNOB-CONTROL (CONTROL PANEL SWITCHES)	
Y	16	3	**275-7741**	1	SWITCH GP-WIPER (24-VOLT, INTERMITTENT) (FRONT)	266
	17	3	**110-7887**	1	SWITCH AS-START (KEY)	
		3	**7T-6799**	1	NUT-MOUNTING (1-32-THD)	
		3	**102-8804**	1	KIT-RECEPTACLE (4-PIN)	
					(INCLUDES RECEPTACLE AS & WEDGE)	
		3	**8T-8729**	4	PIN-CONNECTOR (16-GA TO 18-GA)	
	18	3	**112-6174**	1	SWITCH AS-ROTARY (WIPER, WASHER) (REAR)	
		3	**2H-3920**	1	LOCKWASHER	
		3	**6V-8369**	1	NUT (7/16-28-THD)	
		3	**8T-8729**	6	PIN-CONNECTOR (16-GA TO 18-GA)	
		3	**8T-8737**	2	PLUG-SEAL	
		3	**102-8806**	1	KIT-RECEPTACLE (8-PIN)	
					(INCLUDES RECEPTACLE AS & WEDGE)	
	19	2	**115-1748**	4	LAMP (24-VOLT, 3-WATT)	
	21	1	**118-7362**	1	GROMMET-SPLIT	
	23	3	**134-9569**	1	SWITCH AS-TURN SIGNAL	
		3	**5L-7200**	1	SCREW (8-32X0.375-IN)	
		3	**9B-7233**	1	LOCKWASHER	
	24	3	**148-5689**	1	GROMMET-SPLIT	
	25	3	**155-2105**	1	PLATE-INSTRUCTION (TURN SIGNAL)	
	26	3	**179-9392**	1	LANYARD	
	27	3	**185-5634**	1	PLATE AS	
	28	3	**185-6335**	1	SWITCH AS-ROTARY (24-VOLT) (AUTOSHIFT CONTROL)	
		3	**8T-8737**	2	PLUG-SEAL	
		3	**9W-0852**	4	PIN-CONNECTOR (14-GA)	
		3	**102-8805**	1	KIT-RECEPTACLE (6-PIN)	
					(INCLUDES RECEPTACLE AS & WEDGE)	
	29	3	**198-6570**	1	LIGHTER GP (12-VOLT) (CIGAR)	
	30	3	**201-2733**	1	FILM-INFORMATION (INPUT/OUTPUT)	
	31	1	**209-0381**	1	CONVERTER-POWER (24-VOLT TO 12-VOLT)	
	32	3	**214-5372**	1	HARNESS AS-LIGHTING (TURN SIGNAL, HAZARD)	
		3	**155-2270**	1	KIT-CONNECTING PLUG (2-PIN)	
		3	**155-2271**	1	KIT-CONNECTING PLUG (4-PIN)	
		3	**155-2274**	1	KIT-CONNECTING PLUG (6-PIN)	
					(EACH PLUG KIT INCLUDES PLUG AS, WEDGE & INTERFACE SEAL)	
		3	**102-8801**	1	KIT-RECEPTACLE (12-PIN)	
					(INCLUDES RECEPTACLE AS & WEDGE)	
		3	**8T-8729**	10	PIN-CONNECTOR (16-GA TO 18-GA)	

265-3259 **WIRING GP-CAB** *(contd.)* **i03821115**

NOTE	REF NO	GRAPHIC REF	PART NUMBER	QTY	PART NAME 1 2 3 4 5 6 (PRODUCT LEVEL)	SEE PAGE
		3	**8T-8737**	3	PLUG-SEAL	
E		3	**114-8843**		SLEEVE-PLASTIC (60-CM)	
E		3	**114-8844**		SLEEVE-PLASTIC (20-CM)	
		3	**8T-8730**	11	SOCKET-CONNECTOR (16-GA TO 18-GA)	
		3	**172-9200**	1	SUPPRESSOR-ARC	
		3	**189-3158**	1	SUPPRESSOR-ARC	
		3	**5P-4571**	6	TERMINAL-BLADE (14-GA TO 16-GA)	
	33	3	**217-8166**	1	FLASHER AS (24-VOLT)	
	34	2	**236-4610**	1	SWITCH AS-ROCKER (AIR CONDITIONER, HEATER)	
	35	2	**236-4611**	1	SWITCH AS-ROCKER (FAN BLOWER SPEED)	
	36	3	**249-5479**	1	SWITCH AS-ROCKER (24-VOLT) (HEADLIGHT DIMMER)	
	37	3	**251-1195**	1	SWITCH AS-ROCKER (24-VOLT) (FRONT FLOODLIGHTS)	
	38	3	**251-2031**	1	SWITCH AS-ROCKER (24-VOLT) (RUNNING LIGHTS)	
	39	3	**256-7823**	1	SWITCH AS-ROCKER (24-VOLT) (HAZARD WARNING LIGHTS)	
R	40	1	**304-5687**	1	CONTROL GP-UNPROGRAMMED (POWER TRAIN)	
	41	3	**268-6653**	1	FILM-PANEL (AUTOSHIFT, LIGHT SWITCH, LH)	
	42	2	**269-2731**	1	FILM-IDENTIFICATION (CONTROL PANEL, FRONT)	
	43	2	**269-2732**	1	FILM-IDENTIFICATION (CONTROL PANEL, REAR)	
Y	44	3	**278-1667**	1	PANEL GP-FUSE	236
	45	2	**283-4960**	2	WIRE AS	
	46	2	**284-3623**	1	SWITCH AS-ROCKER (HYDRAULIC LOCKOUT)	
	47	2	**291-2165**	1	POTENTIOMETER AS (TEMPERATURE CONTROL)	
		2	**102-8803**	1	KIT-RECEPTACLE (3-PIN)	
					(INCLUDES RECEPTACLE AS & WEDGE)	
		2	**8T-8729**	1	PIN-CONNECTOR (16-GA TO 18-GA)	
		2	**236-8722**	1	WASHER (10.5X22.2X1.6-MM THK)	
	48	2	**303-9566**	1	SWITCH AS-ROCKER (FORWARD, NEUTRAL, REVERSE)	
		2	**9X-3401**	4	PIN-CONNECTOR (16-GA TO 18-GA)	
		2	**151-9274**	1	KIT-RECEPTACLE (4-PIN)	
					(INCLUDES RECEPTACLE AS & WEDGE)	
	49	2	**304-0329**	1	BRACKET AS	
M		2	**8T-3490**	1	NUT-WELD (M10X1.5-THD)	
	51	3	**307-6155**	1	BRACKET AS	
M		3	**6V-9632**	4	NUT-WELD (M6X1-THD)	
	52	1	**307-6156**	1	HARNESS AS-CAB	
		1	**8N-1535**	1	BELL AS-END	
		1	**8N-1537**	1	LOCKWASHER	
		1	**102-8802**	1	KIT-RECEPTACLE (2-PIN)	
		1	**102-8803**	2	KIT-RECEPTACLE (3-PIN)	
		1	**102-8804**	2	KIT-RECEPTACLE (4-PIN)	
		1	**102-8806**	1	KIT-RECEPTACLE (8-PIN)	
		1	**102-8801**	1	KIT-RECEPTACLE (12-PIN)	
					(EACH RECEPTACLE KIT INCLUDES RECEPTACLE AS & WEDGE)	
		1	**8N-1540**	3	PIN-CONNECTOR (12-GA TO 14-GA)	
		1	**8N-1544**	1	PIN-CONNECTOR (8-GA)	
		1	**8N-1548**	1	PIN-CONNECTOR (4-GA)	
		1	**7R-2751**	15	PLUG-CONNECTOR	
		1	**7G-7917**	1	PLUG-SEAL	
		1	**7G-7919**	1	PLUG-SEAL	
		1	**8T-8737**	136	PLUG-SEAL	
		1	**7X-6222**	1	PLUG AS-CONNECTOR (24-PIN)	
		1	**3E-4367**	1	RING-RETAINING	
M		1	**3E-8558**	1	BOLT (M5X0.8X39.37-MM)	
		1	**9W-1951**	1	RECEPTACLE-CONNECTOR (9-PIN)	
		1	**113-0583**	1	RECEPTACLE AS-CONNECTOR (40-PIN)	
		1	**106-4155**	1	KIT-BOLT (ELECTRICAL CONNECTORS)	
		1	**8N-1532**	1	RECEPTACLE AS-CONNECTOR (6-PIN)	

265-3259 **WIRING GP-CAB** ***(contd.)*** **i03821115**

NOTE	REF NO	GRAPHIC REF	PART NUMBER	QTY	PART NAME 1 2 3 4 5 6 (PRODUCT LEVEL)	SEE PAGE
		1	**8N-1536**	1	NUT (1-5/8-18-THD)	
		1	**7R-2750**	38	SEAL-CONNECTOR	
		1	**113-5183**	4	SOCKET-LAMP	
		1	**3S-2093**	9	STRAP-CABLE	
		1	**9X-6772**	1	STRAP-CABLE	
		1	**5P-4571**	4	TERMINAL-BLADE (14-GA TO 16-GA)	
		1	**113-5184**	8	TERMINAL-RECEPTACLE (16-GA TO 18-GA)	
		1	**9X-0196**	2	WIRE AS	
		1	**196-2412**	38	TERMINAL AS	
		1	**7R-2750**	1	SEAL-CONNECTOR	
CY	53	1	**308-3869**	1	CONTROL GP-UNPRGMED MONITOR (MESSENGER)	949
	54	3	**311-0038**	1	MODULE GP-DISPLAY (MESSENGER)	
M	55	1	**099-3649**	4	BOLT (M8X1.25X40-MM)	
	57	1,3	**132-5789**	3	CLIP	
	58	3	**134-2540**	1	RESISTOR AS-CONNECTION (3-PIN)	
	59	3	**142-2928**	4	LOCKNUT (4-40-THD)	
	60	1	**156-6175**	2	CLIP	
	61	2,3	**228-6089**	9	PLUG (ROCKER SWITCH)	
	62	3	**268-6654**	1	FILM-IDENTIFICATION (WINDOW WIPER CONTROLS, RH)	
	63	3	**281-2880**	1	SUPPRESSOR-ARC	
	64	2,3	**4P-8134**	5	CLIP	
M	65	3	**5C-7261**	3	NUT (M8X1.25-THD)	
M	66	3	**5C-8312**	3	NUT (M4X0.7-THD)	
M	67	3	**5C-9553**	4	BOLT (M6X1X16-MM)	
M	68	3	**6V-5210**	2	SCREW-MACHINE (M4X0.7X10-MM)	
M	69	1	**6V-9673**	4	SCREW-MACHINE (M5X0.8X12-MM)	
	70	1	**7D-7233**	1	CLIP	
	71	3	**7X-0608**	3	WASHER-HARD (10.2X16X2-MM THK)	
	72	1,2	**8T-4121**	8	WASHER-HARD (11X21X2.5-MM THK)	
M	73	1	**8T-4133**	3	NUT (M10X1.5-THD)	
M	74	1,2	**8T-4137**	5	BOLT (M10X1.5X20-MM)	
M	75	2	**8T-4138**	4	BOLT (M6X1X20-MM)	
M	76	1	**8T-4171**	2	BOLT (M6X1X12-MM)	
M	77	2,3	**8T-4189**	7	BOLT (M8X1.25X20-MM)	
	78	2,3	**8T-4224**	7	WASHER-HARD (8.8X16X2-MM THK)	
	79	3	**9F-5644**	3	LOCKWASHER	
	80	1	**9N-0869**	4	WASHER-HARD (8.8X25.5X2-MM THK)	
M	81	3	**9X-2042**	2	SCREW-TRUSS HEAD (M6X1X12-MM)	
	82	1,2,3	**9X-8256**	14	WASHER (6.6X12X2-MM THK)	

C-CHANGE FROM PREVIOUS TYPE
E-ORDER BY THE CENTIMETER
M-METRIC PART
R-REMFG PART MAY BE AVAILABLE
Y-SEPARATE ILLUSTRATION

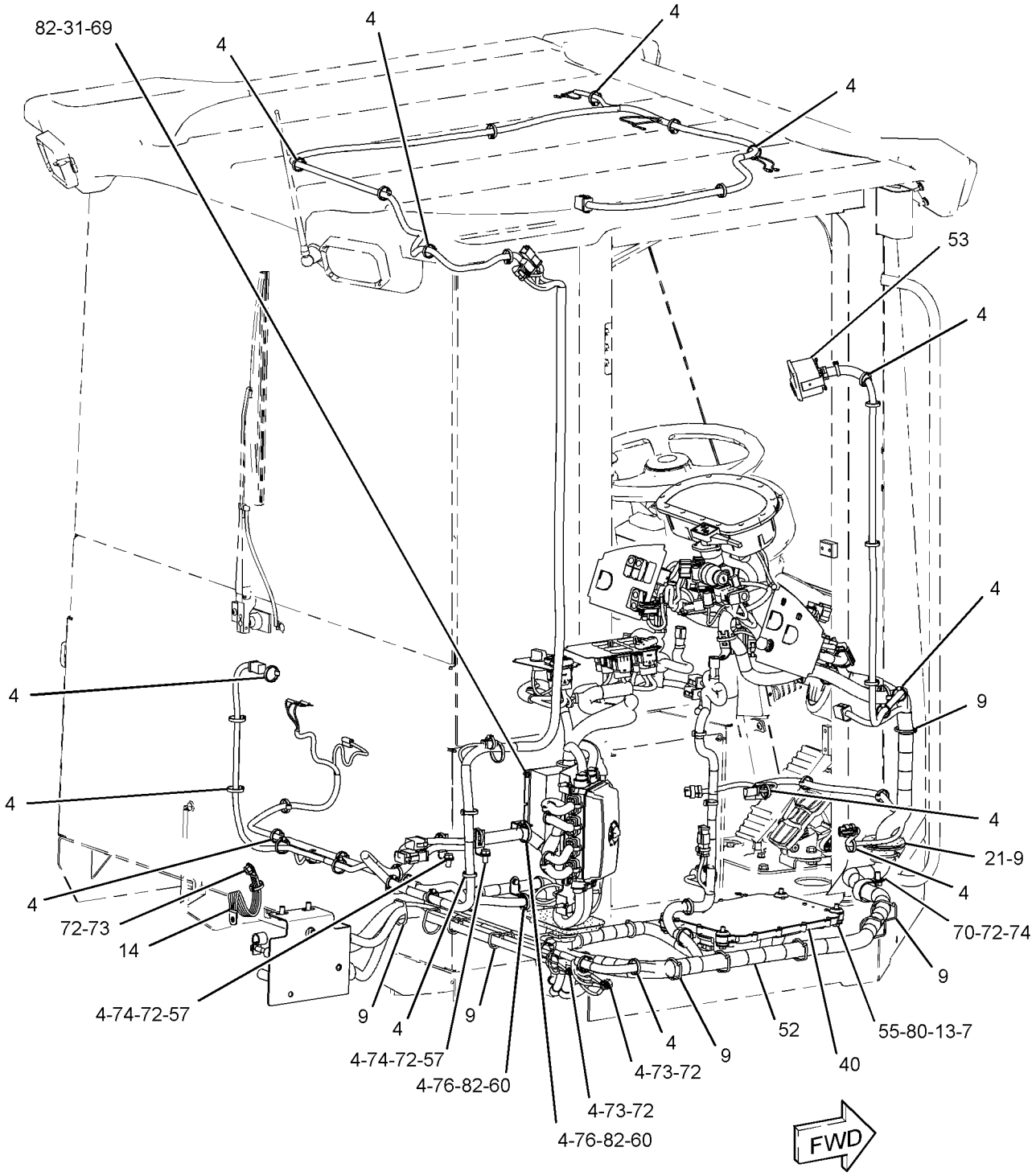

GRAPHIC #1 g02142801

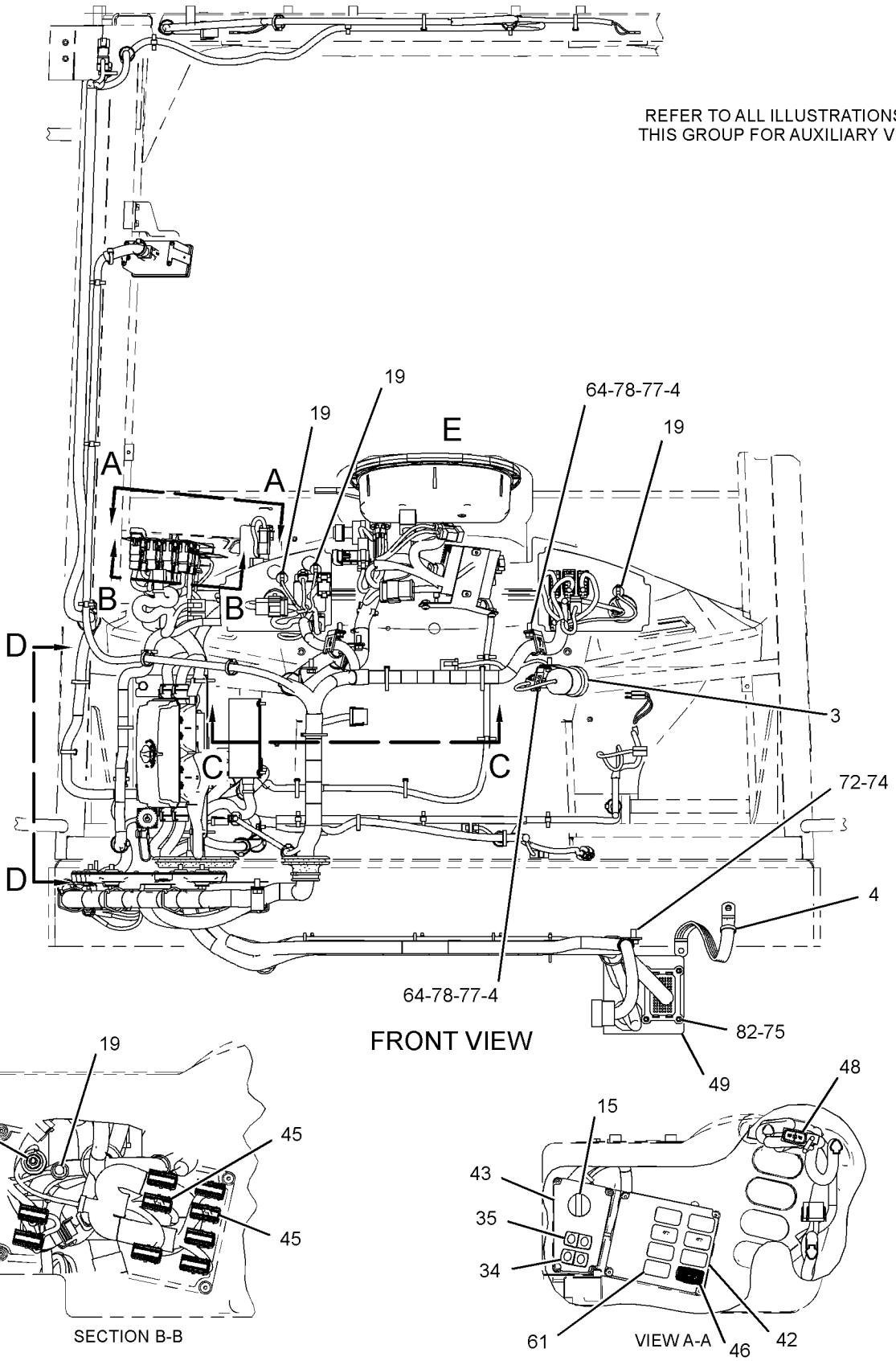

GRAPHIC #2

g02142816

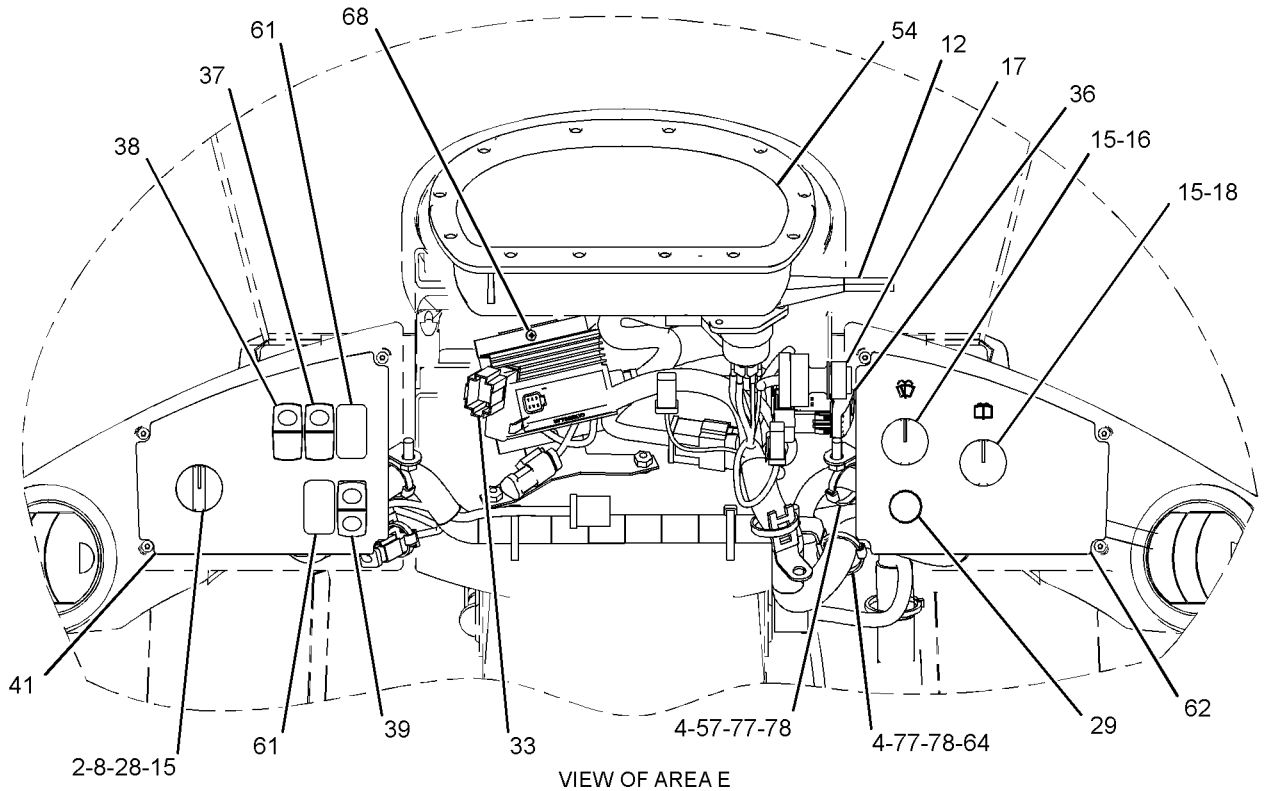

VIEW OF AREA E
(ROTATED 180 DEGREES)

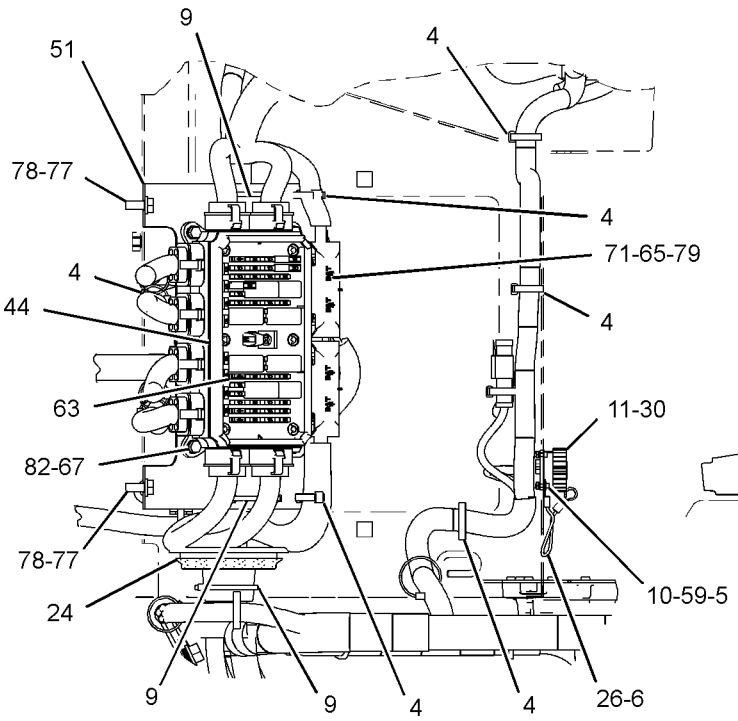

VIEW D-D

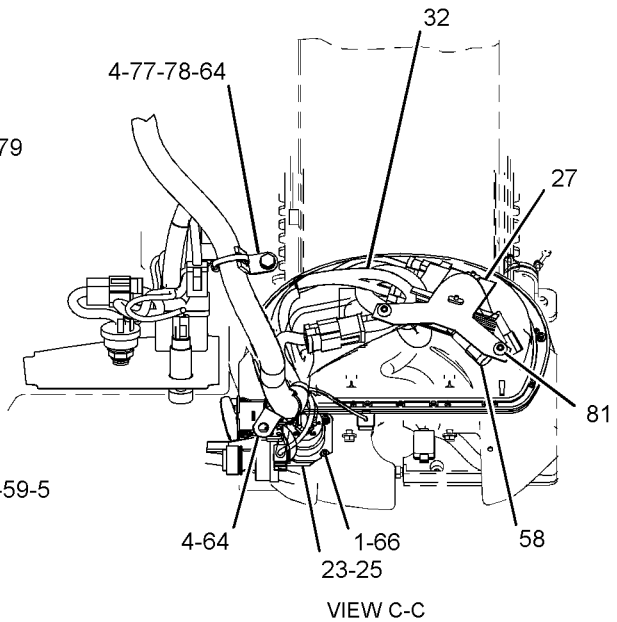

VIEW C-C

GRAPHIC #3 **<END>** g01872316

ELECTRICAL AND STARTING SYSTEM

266-3717 WIRING GP-CAB

S/N: JKM1-657
PART OF 269-4873 CANOPY AR-OPEN ROPS
AN ATTACHMENT

SMCS-1408, 7301 **i02926767**

NOTE	REF NO	GRAPHIC REF	PART NUMBER	QTY	PART NAME 1 2 3 4 5 6 (PRODUCT LEVEL)	SEE PAGE
	1	2	**1H-4393**	3	LOCKWASHER	
	2	2	**2H-3920**	1	LOCKWASHER	
Y	3	1	**3E-6328**	1	ALARM GP (24-VOLT) (ACTION)	158
	4	1,2,3, 4,5	**3S-2093**	60	STRAP-CABLE	
	5	3	**4I-3038**	4	WASHER (3.3X8X0.5-MM THK)	
	6	3	**5P-7958**	1	SLEEVE-CABLE SPLICE	
	7	4	**6I-1418**	4	SPACER (8.2X12.7X28.7-MM THK)	
	8	2	**6V-8369**	1	NUT (7/16-28-THD)	
	9	3,4,5	**7K-1181**	19	STRAP-CABLE	
	10	3	**7X-3308**	4	BOLT-SOCKET HEAD (4-40X0.375-IN)	
	11	3	**8C-6354**	1	CAP-RECEPTACLE	
	12	2	**8N-2622**	1	LEVER (TURN SIGNAL SWITCH)	
	13	4	**8T-9655**	8	MOUNT-ISOLATION	
	14	4	**8X-9618**	1	STRAP AS-GROUND	
	15	2	**110-6109**	1	KNOB-CONTROL (AUTOSHIFT SWITCH)	
	16	2	**110-7887**	1	SWITCH AS-START (KEY)	
		2	**7T-6799**	1	NUT-MOUNTING (1-32-THD)	
		2	**102-8804**	1	KIT-RECEPTACLE (4-PIN)	
					(INCLUDES RECEPTACLE AS & WEDGE)	
		2	**186-3735**	4	PIN-CONNECTOR (16-GA TO 18-GA)	
	17	1	**115-1748**	1	LAMP (24-VOLT, 3-WATT)	
	18	2	**117-2311**	1	SOCKET-AUXILIARY POWER (12-VOLT)	
	19	5	**118-7362**	1	GROMMET-SPLIT	
	20	2	**124-5638**	1	FILM-INFORMATION (12-VOLT)	
	21	2	**134-9569**	1	SWITCH AS-TURN SIGNAL	
		2	**5L-7200**	1	SCREW (8-32X0.375-IN)	
		2	**9B-7233**	1	LOCKWASHER	
	22	3	**148-5689**	1	GROMMET-SPLIT	
	23	2	**155-2105**	1	PLATE-INSTRUCTION (TURN SIGNAL)	
	24	3	**179-9392**	1	LANYARD	
	25	2	**185-5634**	1	PLATE AS	
	26	2	**185-6335**	1	SWITCH AS-ROTARY (24-VOLT) (AUTOSHIFT CONTROL)	
		2	**3E-3383**	1	WEDGE-RECEPTACLE LOCK (6-PIN)	
		2	**8T-8737**	2	PLUG-SEAL	
		2	**9W-0852**	4	PIN-CONNECTOR (14-GA)	
		2	**102-8805**	1	KIT-RECEPTACLE (6-PIN)	
					(INCLUDES RECEPTACLE AS & WEDGE)	
	27	2	**198-6570**	1	LIGHTER GP (12-VOLT)	
		2	**198-6571**	1	ELEMENT AS-HEATER	
	28	3	**201-2733**	1	FILM-INFORMATION (INPUT/OUTPUT)	
	29	5	**209-0381**	1	CONVERTER-POWER (24-VOLT TO 12-VOLT)	
	30	2	**214-5372**	1	HARNESS AS-LIGHTING (TURN SIGNAL, HAZARD)	
	31	2	**217-8166**	1	FLASHER AS (24-VOLT)	
Y	32	2	**239-5025**	1	CONTROL GP-UNPRGMED MONITOR (MESSENGER)	948
	33	2	**249-5479**	1	SWITCH AS-ROCKER (24-VOLT) (HEADLIGHT DIMMER)	
	34	2	**251-1195**	1	SWITCH AS-ROCKER (24-VOLT) (FRONT FLOODLIGHTS)	
	35	2	**251-2031**	1	SWITCH AS-ROCKER (24-VOLT) (RUNNING LIGHTS)	
	36	2	**256-7823**	1	SWITCH AS-ROCKER (24-VOLT) (HAZARD WARNING LIGHTS)	
R	37	4	**262-1408**	1	CONTROL GP-UNPROGRAMMED (POWER TRAIN)	
	38	2	**268-6653**	1	FILM-PANEL (AUTOSHIFT, LIGHT SWITCH, LH)	
	39	3	**269-2731**	1	FILM-IDENTIFICATION (CONTROL PANEL, FRONT)	
	40	3	**274-3775**	1	CAP-CONNECTOR	

266-3717 **WIRING GP-CAB** *(contd.)* **i02926767**

NOTE	REF NO	GRAPHIC REF	PART NUMBER	QTY	PART NAME 1 2 3 4 5 6 (PRODUCT LEVEL)	SEE PAGE
	41	1,5	**274-3777**	2	CAP-CONNECTOR	
	42	1,5	**274-3778**	3	CAP-SEAL	
Y	43	3	**278-1667**	1	PANEL GP-FUSE	236
	44	3	**283-4960**	2	WIRE AS	
	45	3	**284-3623**	1	SWITCH AS-ROCKER (HYDRAULIC LOCKOUT)	
	46	2	**287-2435**	1	FILM-PANEL (CIGAR LIGHTER, RH)	
	47	3	**287-2436**	1	FILM-IDENTIFICATION (CONTROL PANEL, REAR)	
	48	3	**303-9566**	1	SWITCH AS-ROCKER (FORWARD, NEUTRAL, REVERSE)	
		3	**9X-3401**	4	PIN-CONNECTOR (16-GA TO 18-GA)	
		3	**151-9274**	1	KIT-RECEPTACLE (4-PIN)	
					(INCLUDES RECEPTACLE AS & WEDGE)	
	49	4	**304-0329**	1	BRACKET AS	
Y	50	1	*307-3124*	1	BRACKET GP-MOUNTING	178
	51	3	**307-6155**	1	BRACKET AS	
M		3	**6V-9632**	4	NUT-WELD (M6X1-THD)	
	52	1	**307-6156**	1	HARNESS AS-CAB	
	53	2	**311-0038**	1	MODULE GP-DISPLAY (MESSENGER)	
M	54	4	**099-3649**	4	BOLT (M8X1.25X40-MM)	
	55	5	**130-5300**	2	CLIP	
	56	1,5	**132-5789**	3	CLIP	
	57	2	**134-2540**	1	RESISTOR AS-CONNECTION (3-PIN)	
	58	3	**142-2928**	4	LOCKNUT (4-40-THD)	
	59	5	**156-6175**	2	CLIP	
	60	2,3	**228-6089**	11	PLUG (ROCKER SWITCH)	
	61	3	**281-2880**	1	SUPPRESSOR-ARC	
	62	1	**4P-8134**	5	CLIP	
M	63	3	**5C-7261**	3	NUT (M8X1.25-THD)	
M	64	2	**5C-8312**	3	NUT (M4X0.7-THD)	
M	65	3	**5C-9553**	4	BOLT (M6X1X16-MM)	
M	66	2	**6V-5210**	2	SCREW-MACHINE (M4X0.7X10-MM)	
M	67	5	**6V-9673**	4	SCREW-MACHINE (M5X0.8X12-MM)	
	68	4	**7D-7233**	1	CLIP	
	69	3	**7X-0608**	3	WASHER-HARD (10.2X16X2-MM THK)	
	70	4,5	**8T-4121**	9	WASHER-HARD (11X21X2.5-MM THK)	
M	71	4	**8T-4133**	4	NUT (M10X1.5-THD)	
M	72	4,5	**8T-4137**	5	BOLT (M10X1.5X20-MM)	
M	73	4	**8T-4138**	4	BOLT (M6X1X20-MM)	
M	74	5	**8T-4171**	2	BOLT (M6X1X12-MM)	
M	75	1,3	**8T-4189**	7	BOLT (M8X1.25X20-MM)	
	76	5	**8T-4205**	1	WASHER-HARD (7.2X14.5X2-MM THK)	
	77	1,3	**8T-4224**	7	WASHER-HARD (8.8X16X2-MM THK)	
	78	3	**9F-5644**	3	LOCKWASHER	
	79	4	**9N-0869**	4	WASHER-HARD (8.8X25.5X2-MM THK)	
M	80	2	**9X-2042**	2	SCREW-TRUSS HEAD (M6X1X12-MM)	
	81	3,5	**9X-8256**	9	WASHER (6.6X12X2-MM THK)	

M-METRIC PART
R-REMFG PART MAY BE AVAILABLE
Y-SEPARATE ILLUSTRATION

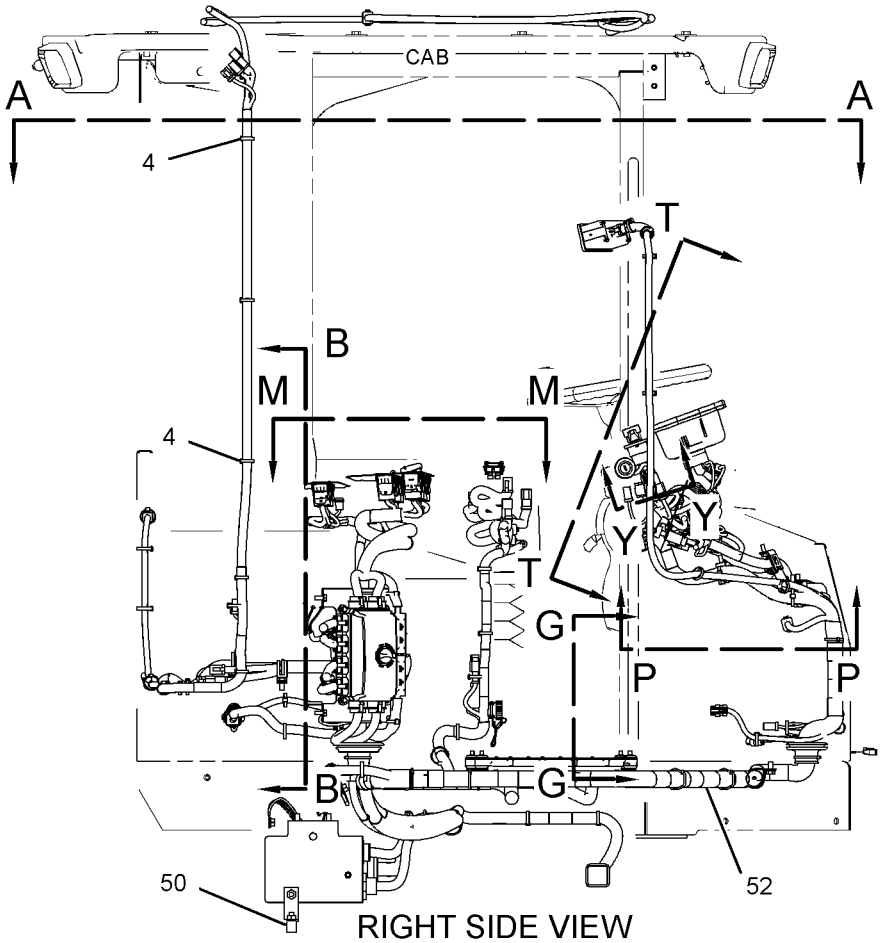

RIGHT SIDE VIEW

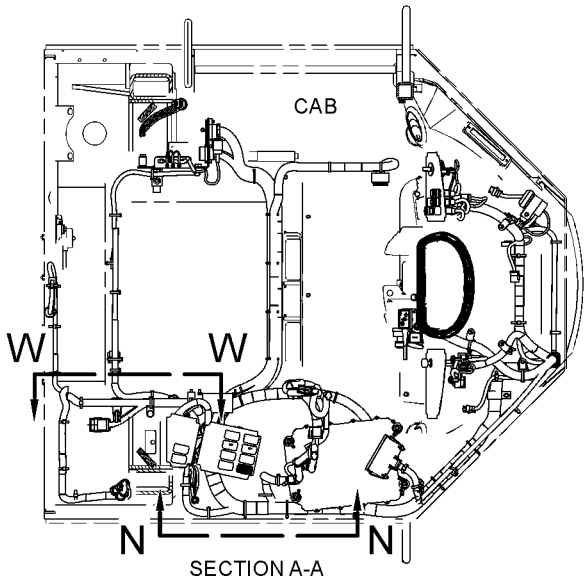

SECTION A-A

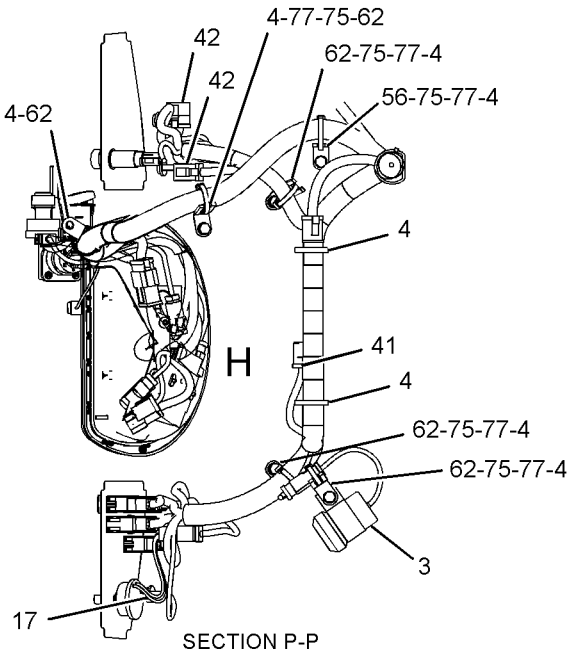

SECTION P-P

REFER TO ALL ILLUSTRATIONS OF
THIS GROUP FOR AUXILIARY VIEWS

GRAPHIC #1

g01454602

REFER TO ALL ILLUSTRATIONS OF THIS GROUP FOR AUXILIARY VIEWS

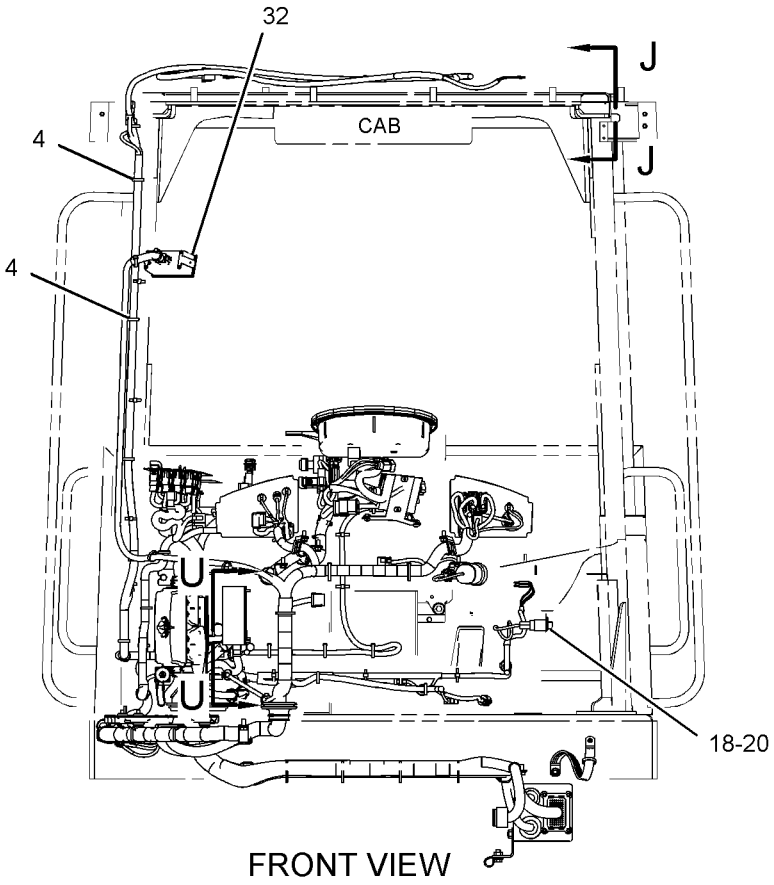

FRONT VIEW

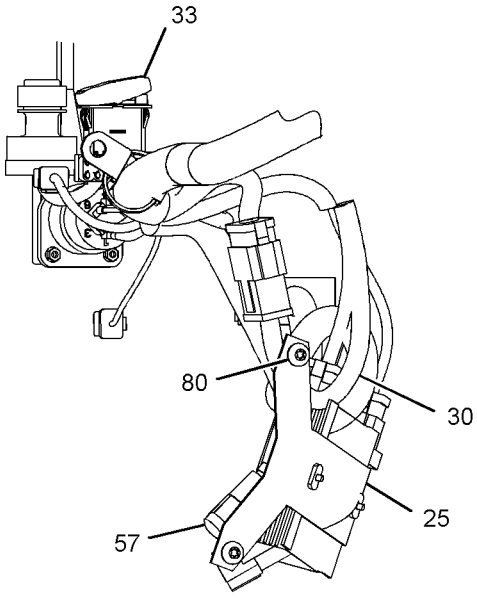

VIEW OF AREA H

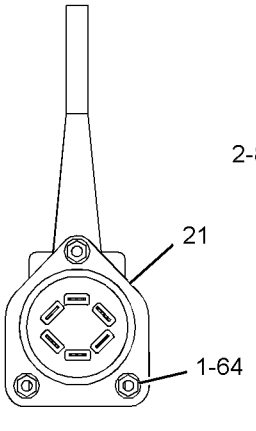

SECTION Y-Y

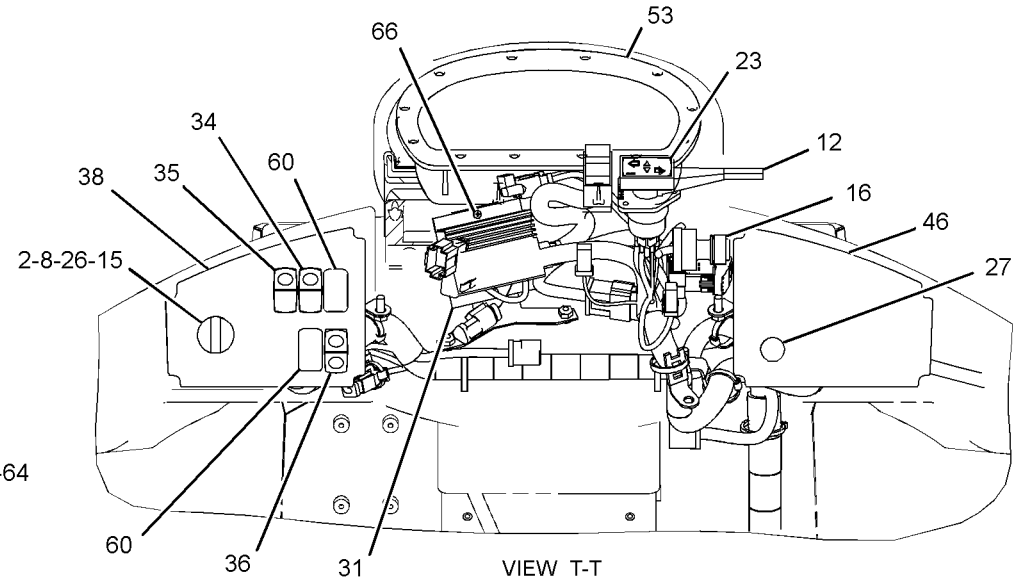

VIEW T-T

GRAPHIC #2 g01453984

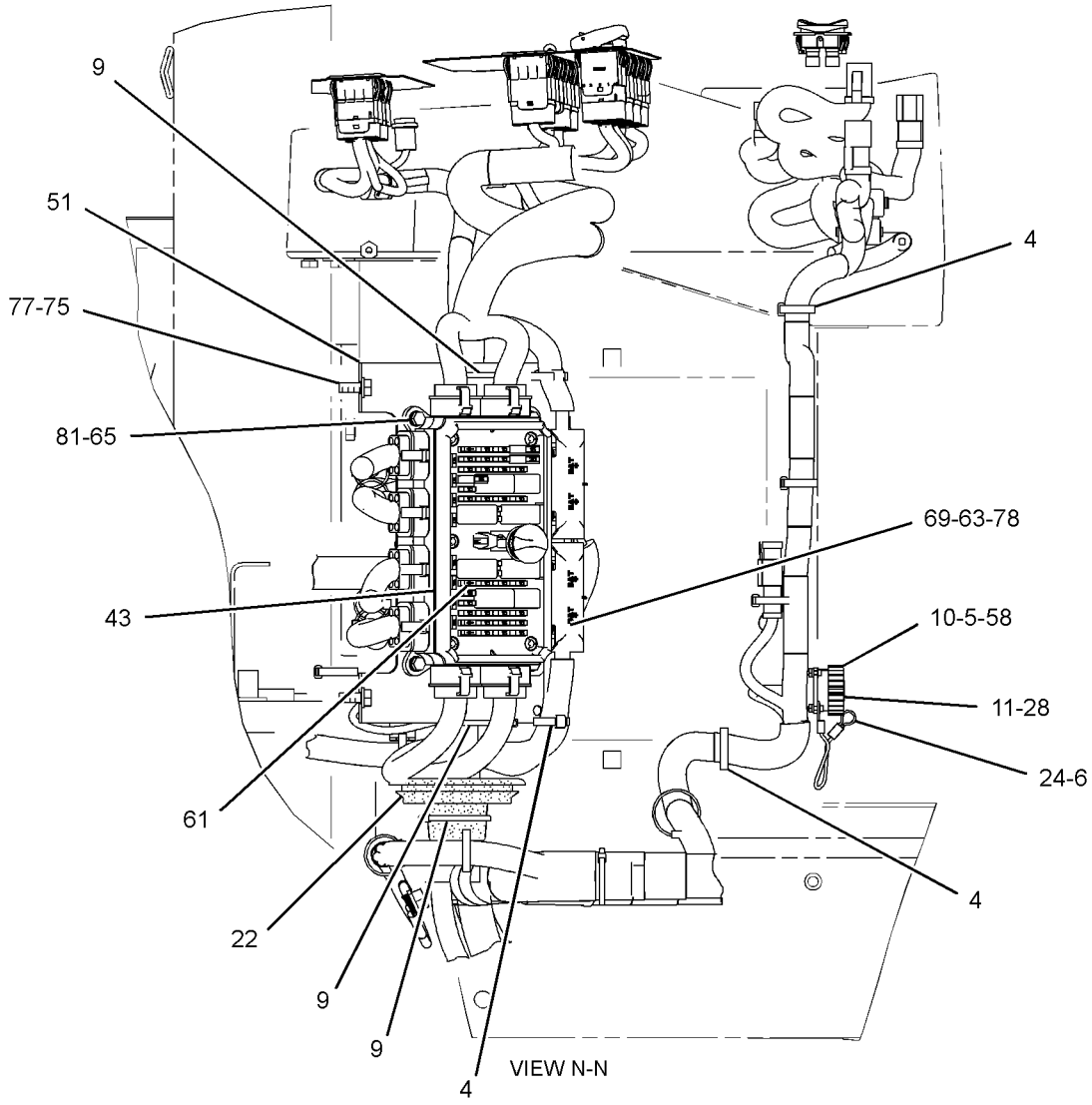

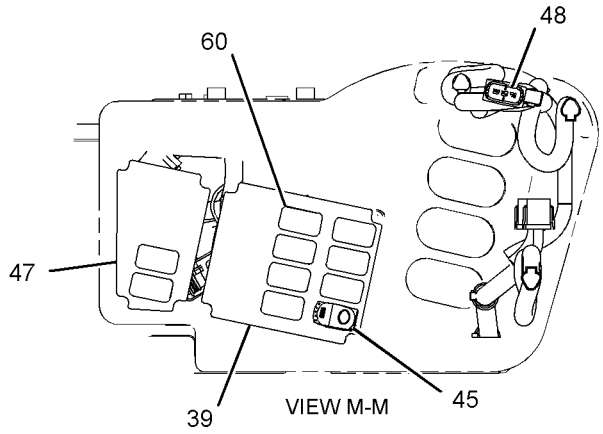

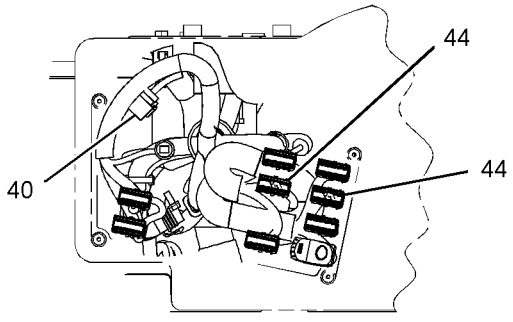

GRAPHIC #3 g01454603

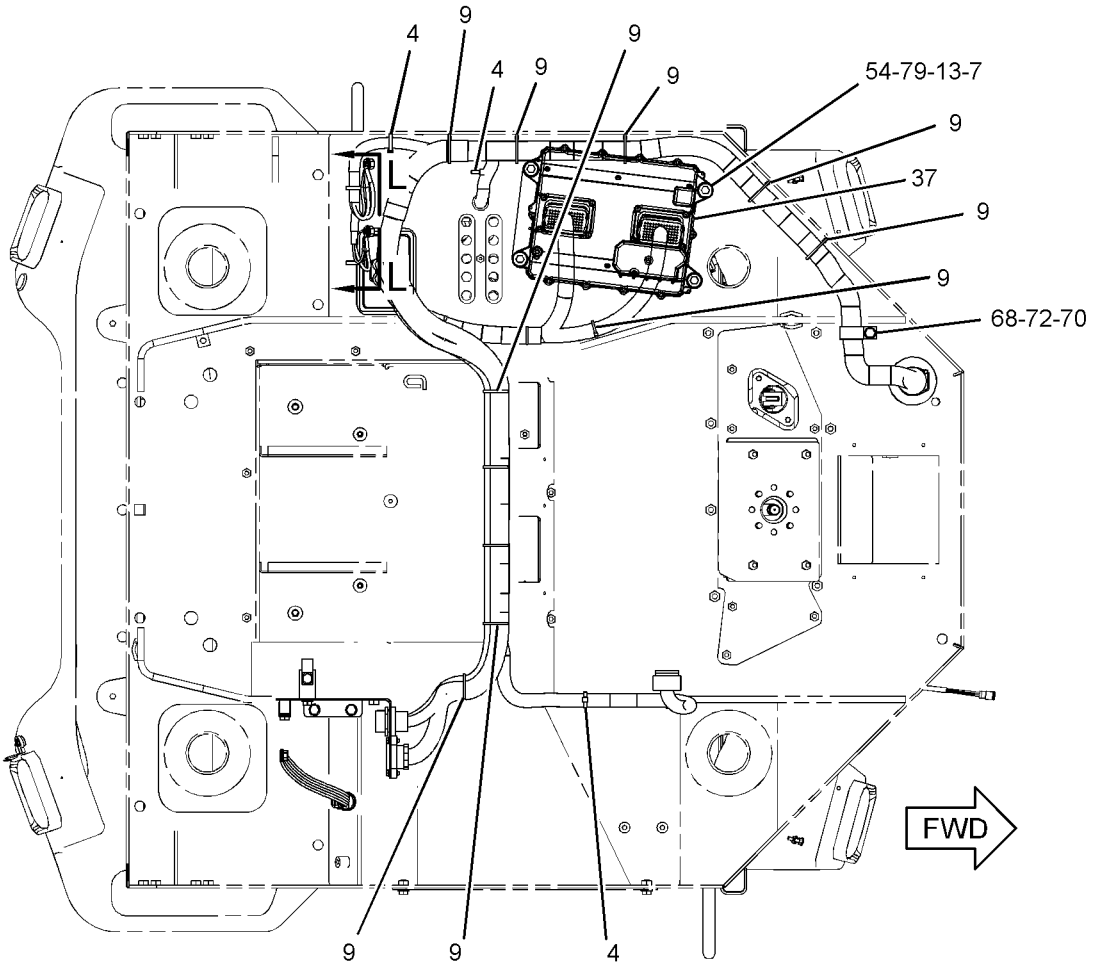

BOTTOM VIEW

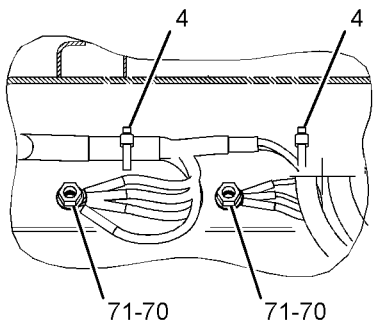

VIEW L-L

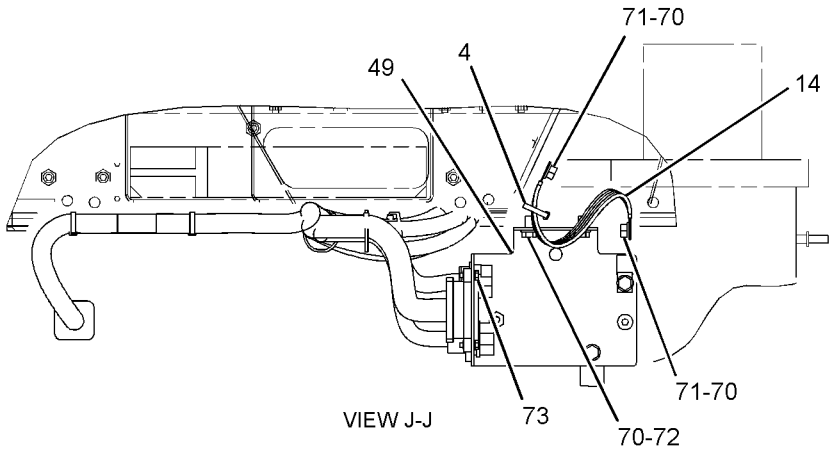

VIEW J-J

GRAPHIC #4

g01454604

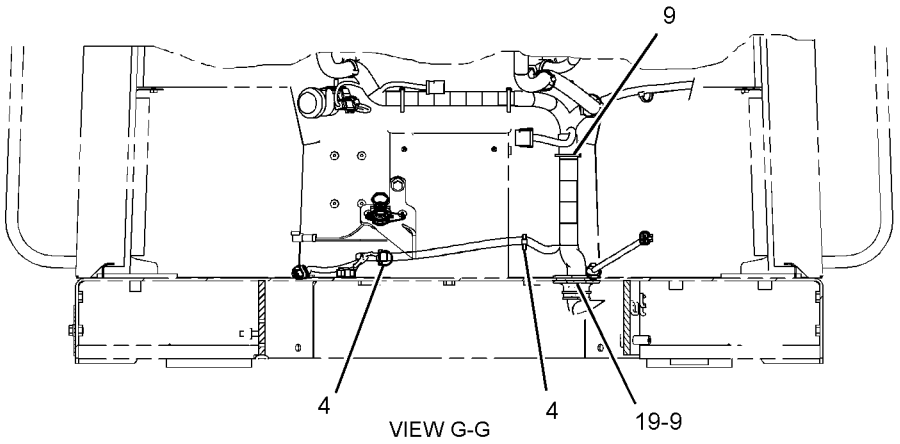

VIEW G-G

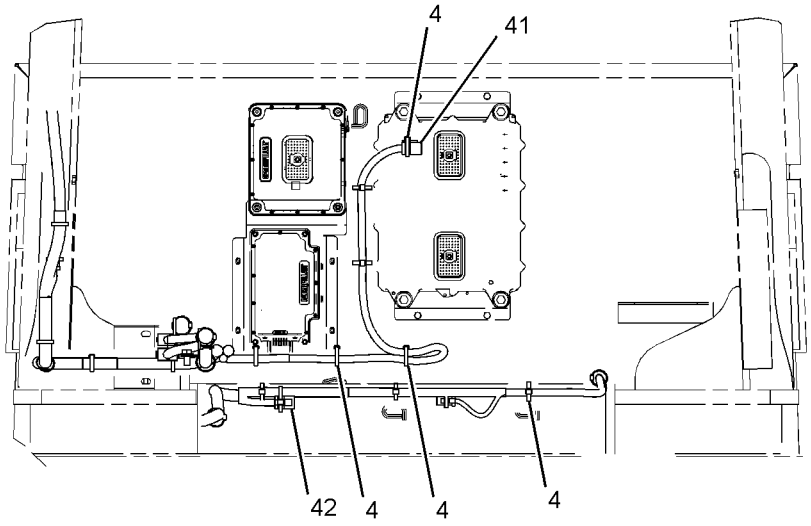

VIEW B-B

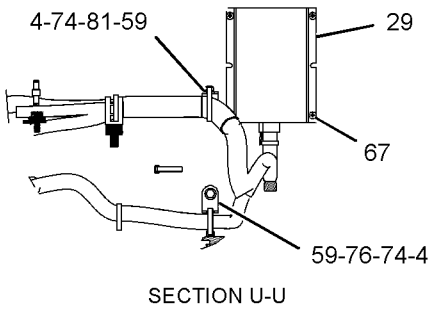

SECTION U-U

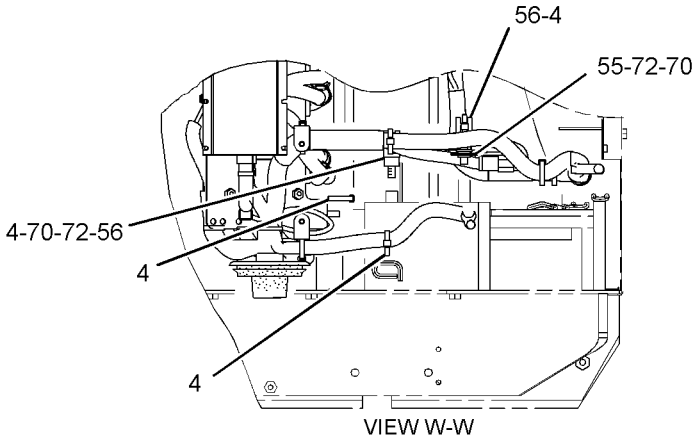

VIEW W-W

GRAPHIC #5 **<END>** g01454605

ELECTRICAL AND STARTING SYSTEM

266-3717 WIRING GP-CAB

S/N: JKM658-910
PART OF 269-4873 CANOPY AR-OPEN ROPS
AN ATTACHMENT

SMCS-1408, 7301 **i03496889**

NOTE	REF NO	GRAPHIC REF	PART NUMBER	QTY	PART NAME 1 2 3 4 5 6 (PRODUCT LEVEL)	SEE PAGE
	1	2	**1H-4393**	3	LOCKWASHER	
	2	2	**2H-3920**	1	LOCKWASHER	
Y	3	1	**3E-6328**	1	ALARM GP (24-VOLT) (ACTION)	158
	4	1,2,3, 4,5	**3S-2093**	60	STRAP-CABLE	
	5	3	**4I-3038**	4	WASHER (3.3X8X0.5-MM THK)	
	6	3	**5P-7958**	1	SLEEVE-CABLE SPLICE	
	7	4	**6I-1418**	4	SPACER (8.2X12.7X28.7-MM THK)	
	8	2	**6V-8369**	1	NUT (7/16-28-THD)	
	9	3,4,5	**7K-1181**	19	STRAP-CABLE	
	10	3	**7X-3308**	4	BOLT-SOCKET HEAD (4-40X0.375-IN)	
	11	3	**8C-6354**	1	CAP-RECEPTACLE	
	12	2	**8N-2622**	1	LEVER (TURN SIGNAL SWITCH)	
	13	4	**8T-9655**	8	MOUNT-ISOLATION	
	14	4	**8X-9618**	1	STRAP AS-GROUND	
	15	2	**110-6109**	1	KNOB-CONTROL (AUTOSHIFT SWITCH)	
	16	2	**110-7887**	1	SWITCH AS-START (KEY)	
		2	**7T-6799**	1	NUT-MOUNTING (1-32-THD)	
		2	**102-8804**	1	KIT-RECEPTACLE (4-PIN)	
					(INCLUDES RECEPTACLE AS & WEDGE)	
		2	**186-3735**	4	PIN-CONNECTOR (16-GA TO 18-GA)	
	17	1	**115-1748**	1	LAMP (24-VOLT, 3-WATT)	
	18	2	**117-2311**	1	SOCKET-AUXILIARY POWER (12-VOLT)	
	19	5	**118-7362**	1	GROMMET-SPLIT	
	20	2	**124-5638**	1	FILM-INFORMATION (12-VOLT)	
	21	2	**134-9569**	1	SWITCH AS-TURN SIGNAL	
		2	**5L-7200**	1	SCREW (8-32X0.375-IN)	
		2	**9B-7233**	1	LOCKWASHER	
	22	3	**148-5689**	1	GROMMET-SPLIT	
	23	2	**155-2105**	1	PLATE-INSTRUCTION (TURN SIGNAL)	
	24	3	**179-9392**	1	LANYARD	
	25	2	**185-5634**	1	PLATE AS	
	26	2	**185-6335**	1	SWITCH AS-ROTARY (24-VOLT) (AUTOSHIFT CONTROL)	
		2	**3E-3383**	1	WEDGE-RECEPTACLE LOCK (6-PIN)	
		2	**8T-8737**	2	PLUG-SEAL	
		2	**9W-0852**	4	PIN-CONNECTOR (14-GA)	
		2	**102-8805**	1	KIT-RECEPTACLE (6-PIN)	
					(INCLUDES RECEPTACLE AS & WEDGE)	
	27	2	**198-6570**	1	LIGHTER GP (12-VOLT)	
		2	**198-6571**	1	ELEMENT AS-HEATER	
	28	3	**201-2733**	1	FILM-INFORMATION (INPUT/OUTPUT)	
	29	5	**209-0381**	1	CONVERTER-POWER (24-VOLT TO 12-VOLT)	
	30	2	**214-5372**	1	HARNESS AS-LIGHTING (TURN SIGNAL, HAZARD)	
	31	2	**217-8166**	1	FLASHER AS (24-VOLT)	
Y	32	2	**239-5025**	1	CONTROL GP-UNPRGMED MONITOR (MESSENGER)	948
	33	2	**249-5479**	1	SWITCH AS-ROCKER (24-VOLT) (HEADLIGHT DIMMER)	
	34	2	**251-1195**	1	SWITCH AS-ROCKER (24-VOLT) (FRONT FLOODLIGHTS)	
	35	2	**251-2031**	1	SWITCH AS-ROCKER (24-VOLT) (RUNNING LIGHTS)	
	36	2	**256-7823**	1	SWITCH AS-ROCKER (24-VOLT) (HAZARD WARNING LIGHTS)	
CR	37	4	**304-5687**	1	CONTROL GP-UNPROGRAMMED (POWER TRAIN)	
	38	2	**268-6653**	1	FILM-PANEL (AUTOSHIFT, LIGHT SWITCH, LH)	
	39	3	**269-2731**	1	FILM-IDENTIFICATION (CONTROL PANEL, FRONT)	
	40	3	**274-3775**	1	CAP-CONNECTOR	

266-3717 **WIRING GP-CAB** ***(contd.)*** **i03496889**

NOTE	REF NO	GRAPHIC REF	PART NUMBER	QTY	PART NAME 1 2 3 4 5 6 (PRODUCT LEVEL)	SEE PAGE
	41	1,5	**274-3777**	2	CAP-CONNECTOR	
	42	1,5	**274-3778**	3	CAP-SEAL	
Y	43	3	**278-1667**	1	PANEL GP-FUSE	236
	44	3	**283-4960**	2	WIRE AS	
	45	3	**284-3623**	1	SWITCH AS-ROCKER (HYDRAULIC LOCKOUT)	
	46	2	**287-2435**	1	FILM-PANEL (CIGAR LIGHTER, RH)	
	47	3	**287-2436**	1	FILM-IDENTIFICATION (CONTROL PANEL, REAR)	
	48	3	**303-9566**	1	SWITCH AS-ROCKER (FORWARD, NEUTRAL, REVERSE)	
		3	**9X-3401**	4	PIN-CONNECTOR (16-GA TO 18-GA)	
		3	**151-9274**	1	KIT-RECEPTACLE (4-PIN)	
					(INCLUDES RECEPTACLE AS & WEDGE)	
	49	4	**304-0329**	1	BRACKET AS	
Y	50	1	*307-3124*	1	BRACKET GP-MOUNTING	178
	51	3	**307-6155**	1	BRACKET AS	
M		3	**6V-9632**	4	NUT-WELD (M6X1-THD)	
	52	1	**307-6156**	1	HARNESS AS-CAB	
	53	2	**311-0038**	1	MODULE GP-DISPLAY (MESSENGER)	
M	54	4	**099-3649**	4	BOLT (M8X1.25X40-MM)	
	56	1,5	**132-5789**	3	CLIP	
	57	2	**134-2540**	1	RESISTOR AS-CONNECTION (3-PIN)	
	58	3	**142-2928**	4	LOCKNUT (4-40-THD)	
	59	5	**156-6175**	2	CLIP	
	60	2,3	**228-6089**	11	PLUG (ROCKER SWITCH)	
	61	3	**281-2880**	1	SUPPRESSOR-ARC	
	62	1	**4P-8134**	5	CLIP	
M	63	3	**5C-7261**	3	NUT (M8X1.25-THD)	
M	64	2	**5C-8312**	3	NUT (M4X0.7-THD)	
M	65	3	**5C-9553**	4	BOLT (M6X1X16-MM)	
M	66	2	**6V-5210**	2	SCREW-MACHINE (M4X0.7X10-MM)	
M	67	5	**6V-9673**	4	SCREW-MACHINE (M5X0.8X12-MM)	
	68	4	**7D-7233**	1	CLIP	
	69	3	**7X-0608**	3	WASHER-HARD (10.2X16X2-MM THK)	
	70	4,5	**8T-4121**	9	WASHER-HARD (11X21X2.5-MM THK)	
M	71	4	**8T-4133**	4	NUT (M10X1.5-THD)	
M	72	4,5	**8T-4137**	5	BOLT (M10X1.5X20-MM)	
M	73	4	**8T-4138**	4	BOLT (M6X1X20-MM)	
M	74	5	**8T-4171**	2	BOLT (M6X1X12-MM)	
M	75	1,3	**8T-4189**	7	BOLT (M8X1.25X20-MM)	
	76	5	**8T-4205**	1	WASHER-HARD (7.2X14.5X2-MM THK)	
	77	1,3	**8T-4224**	7	WASHER-HARD (8.8X16X2-MM THK)	
	78	3	**9F-5644**	3	LOCKWASHER	
	79	4	**9N-0869**	4	WASHER-HARD (8.8X25.5X2-MM THK)	
M	80	2	**9X-2042**	2	SCREW-TRUSS HEAD (M6X1X12-MM)	
	81	3,5	**9X-8256**	13	WASHER (6.6X12X2-MM THK)	

C-CHANGE FROM PREVIOUS TYPE
M-METRIC PART
R-REMFG PART MAY BE AVAILABLE
Y-SEPARATE ILLUSTRATION

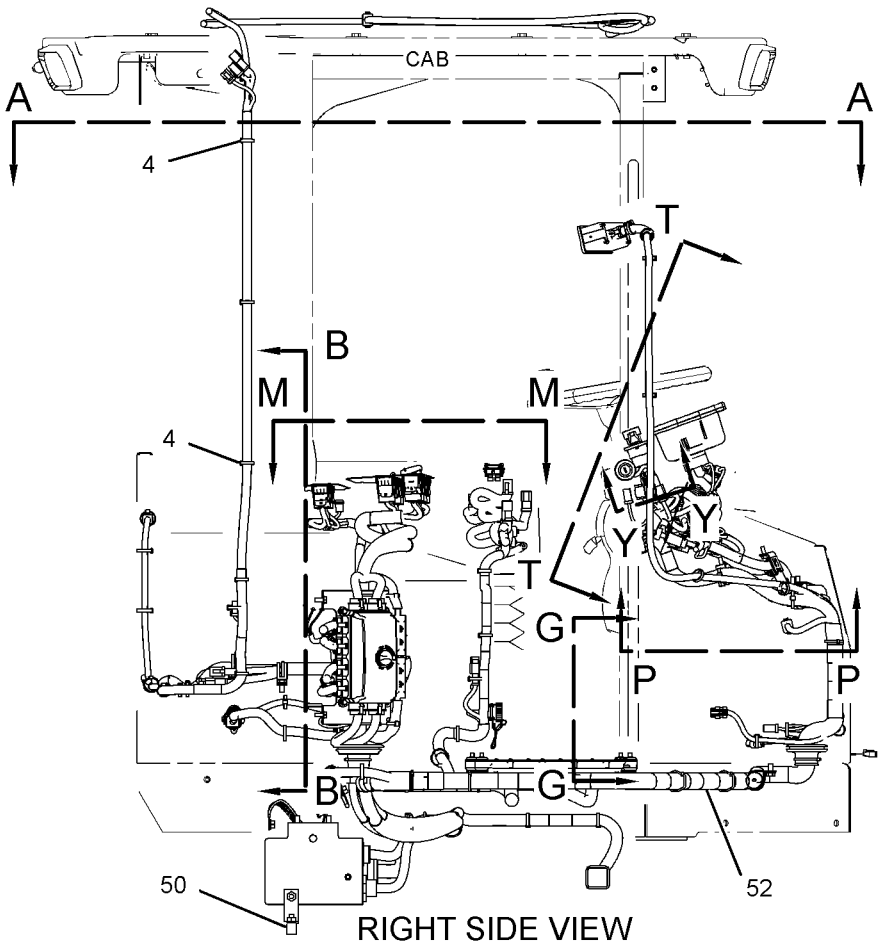

RIGHT SIDE VIEW

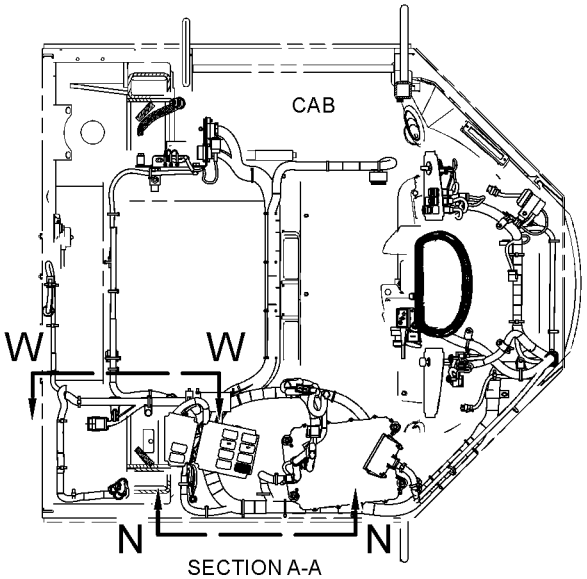

SECTION A-A

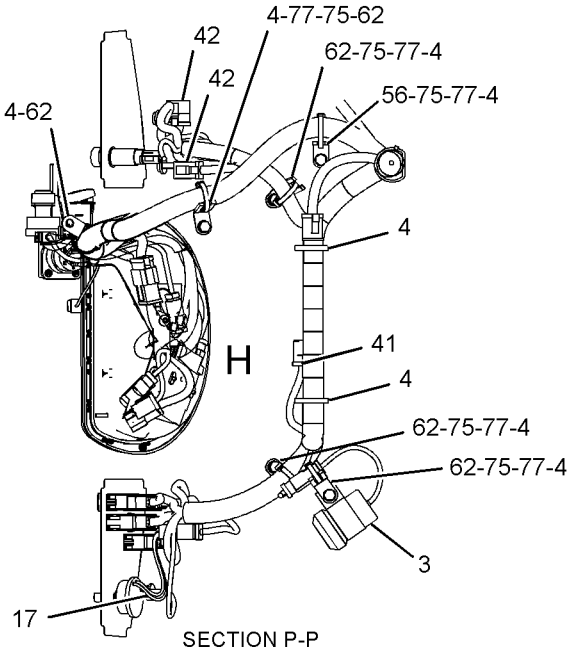

SECTION P-P

REFER TO ALL ILLUSTRATIONS OF THIS GROUP FOR AUXILIARY VIEWS

GRAPHIC #1

g01454602

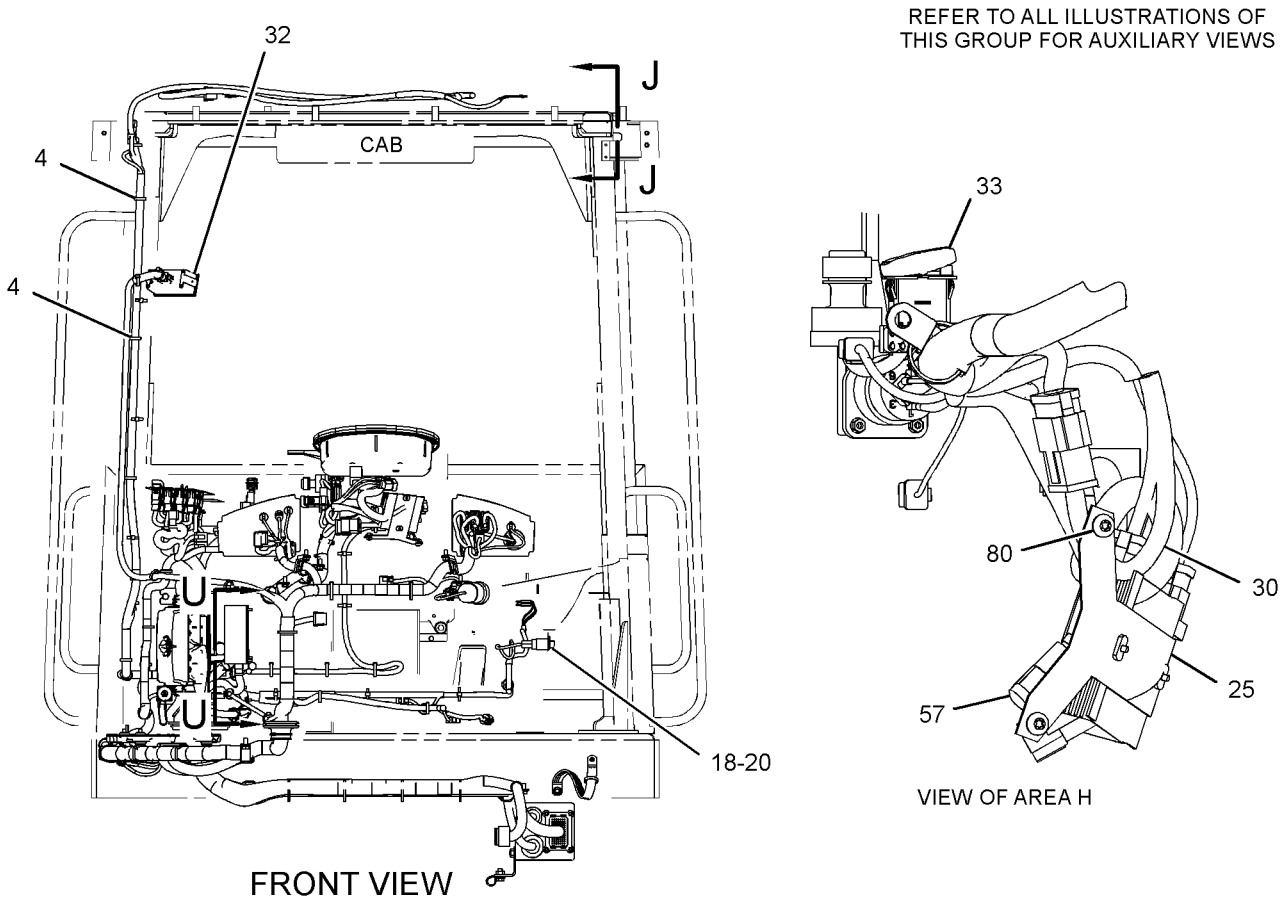

GRAPHIC #2 g01453984

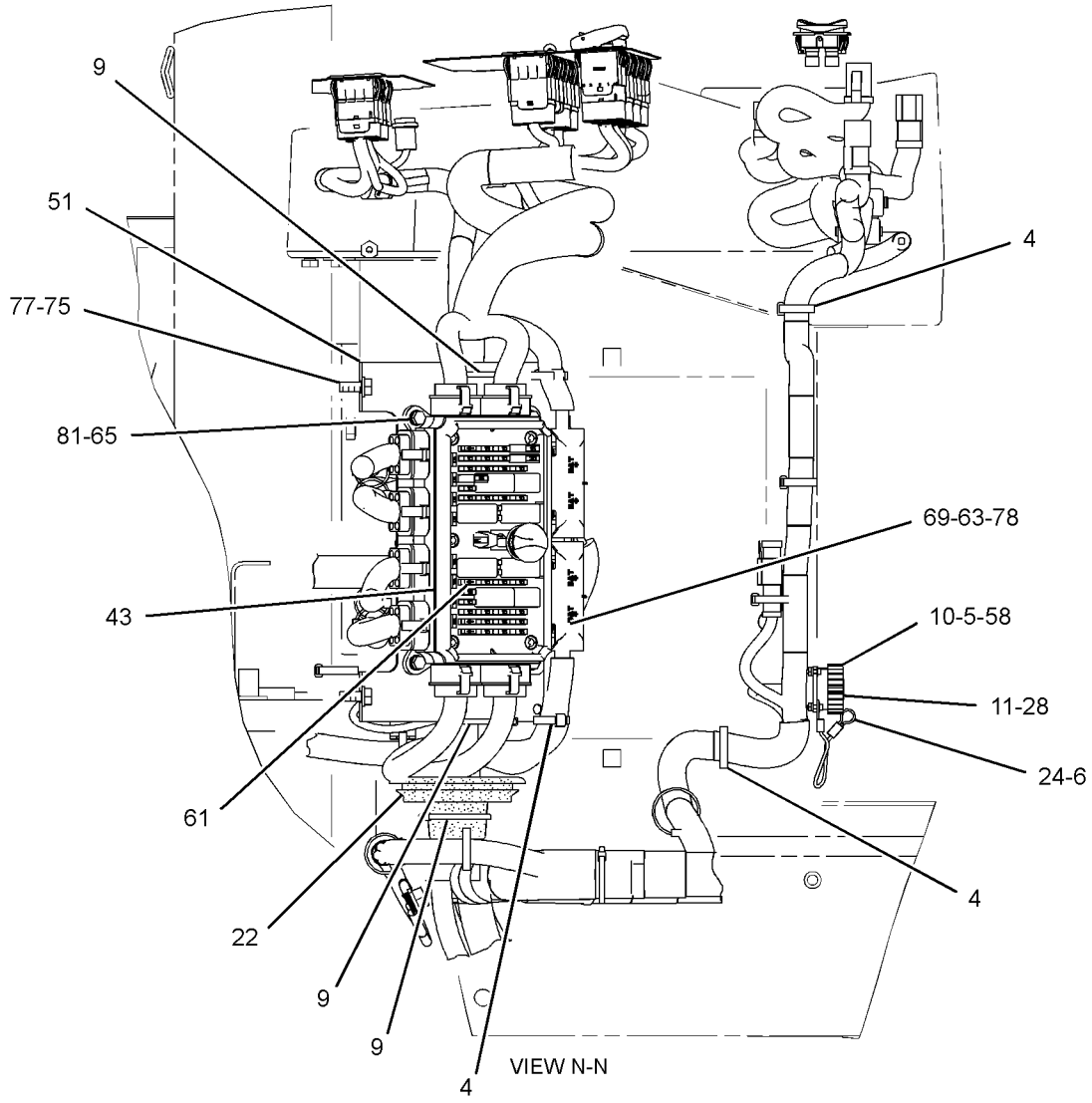

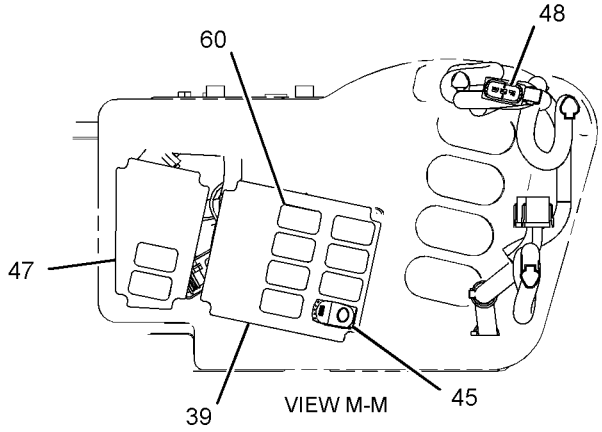

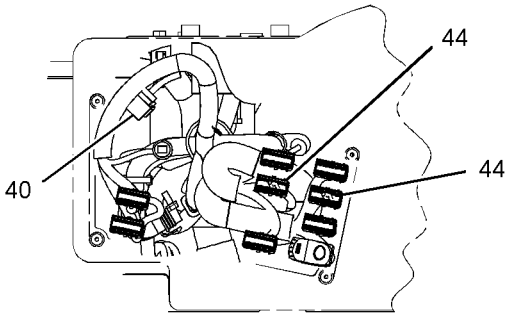

GRAPHIC #3 g01454603

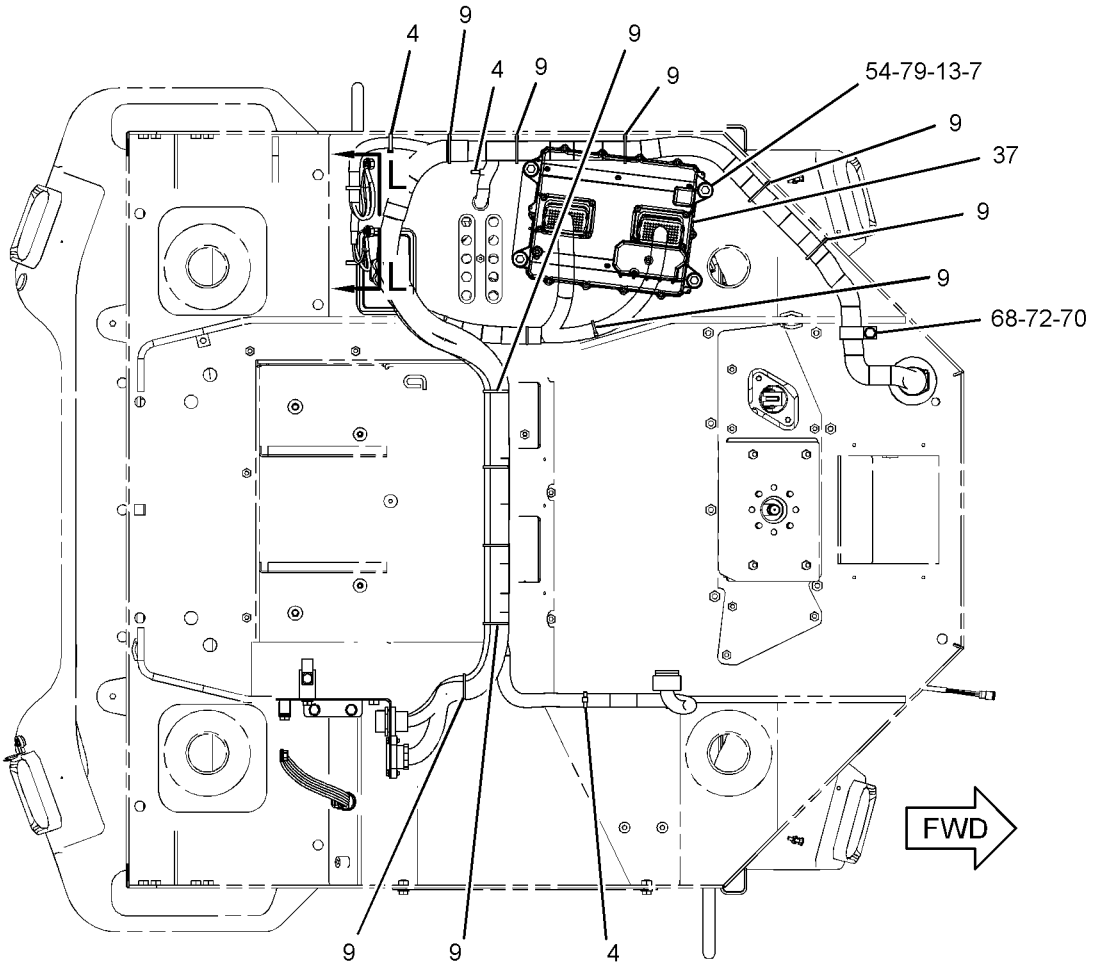

BOTTOM VIEW

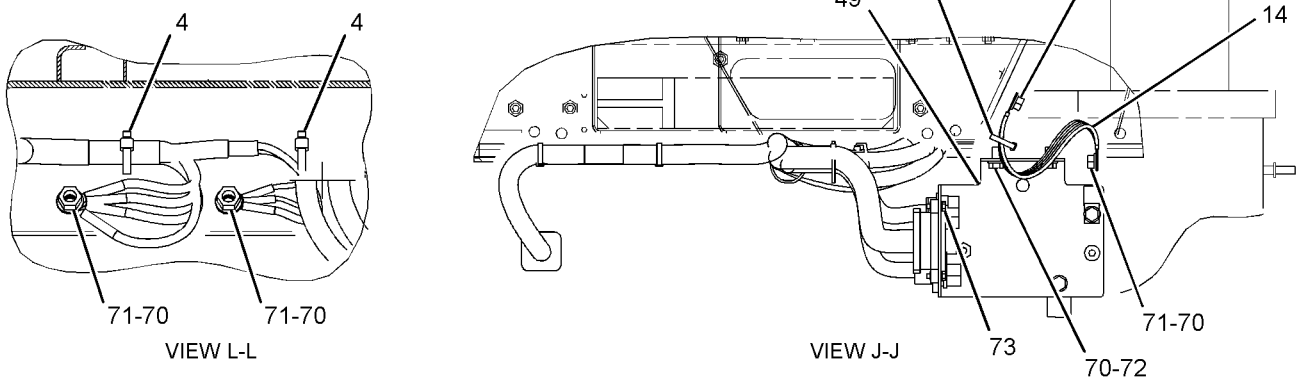

GRAPHIC #4 g01944093

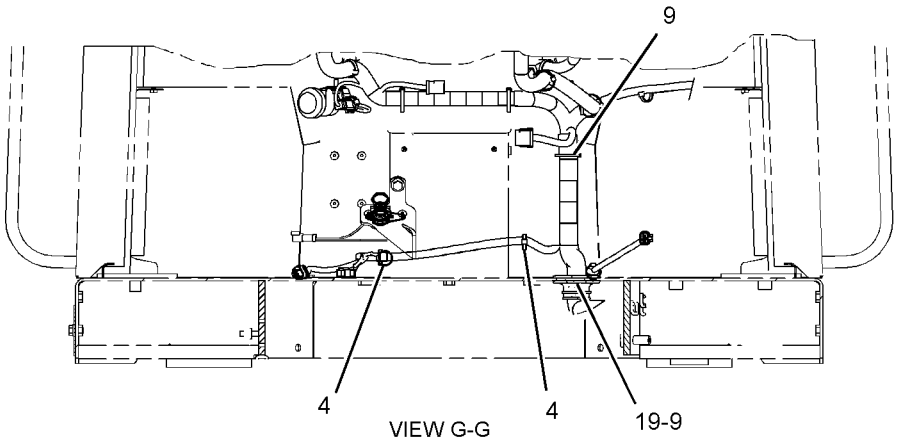

VIEW G-G

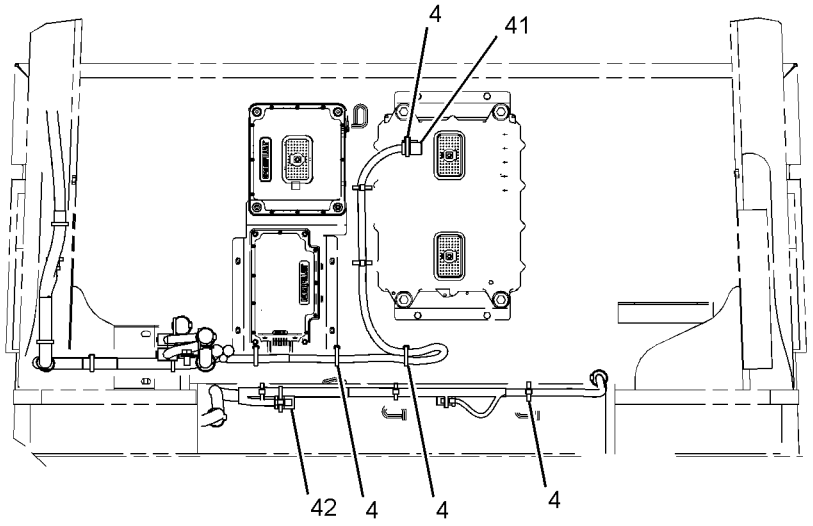

VIEW B-B

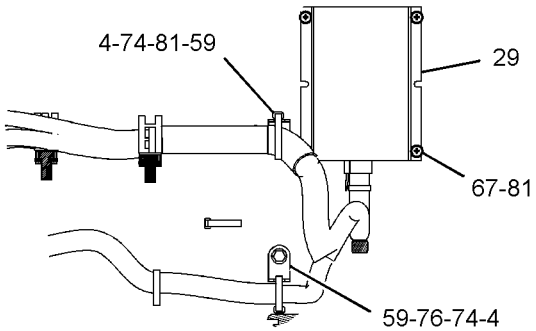

SECTION U-U

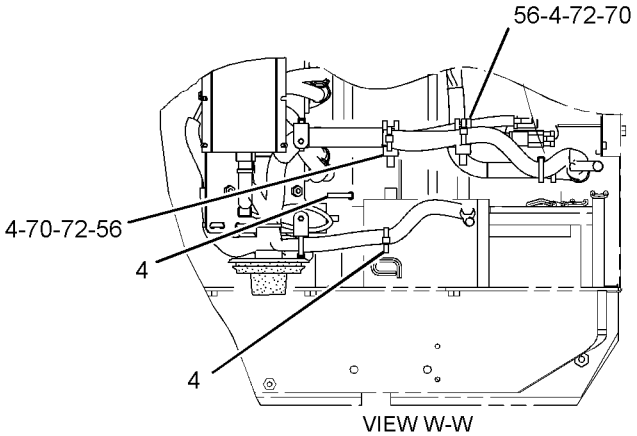

VIEW W-W

GRAPHIC #5 **<END>** g01944071

266-3717 WIRING GP-CAB

S/N: JKM911-1037

PART OF 269-4873 CANOPY AR-OPEN ROPS

AN ATTACHMENT

SMCS-1408, 7301 **i03822375**

NOTE	REF NO	GRAPHIC REF	PART NUMBER	QTY	PART NAME 1 2 3 4 5 6 (PRODUCT LEVEL)	SEE PAGE
	1	2	**1H-4393**	3	LOCKWASHER	
	2	2	**2H-3920**	1	LOCKWASHER	
Y	3	1	**3E-6328**	1	ALARM GP (24-VOLT) (ACTION)	158
	4	1,2,3, 4,5	**3S-2093**	60	STRAP-CABLE	
	5	3	**4I-3038**	4	WASHER (3.3X8X0.5-MM THK)	
	6	3	**5P-7958**	1	SLEEVE-CABLE SPLICE	
	7	4	**6I-1418**	4	SPACER (8.2X12.7X28.7-MM THK)	
	8	2	**6V-8369**	1	NUT (7/16-28-THD)	
C	9	3,4,5	**7K-1181**	26	STRAP-CABLE	
	10	3	**7X-3308**	4	BOLT-SOCKET HEAD (4-40X0.375-IN)	
	11	3	**8C-6354**	1	CAP-RECEPTACLE	
	12	2	**8N-2622**	1	LEVER (TURN SIGNAL SWITCH)	
	13	4	**8T-9655**	8	MOUNT-ISOLATION	
	14	4	**8X-9618**	1	STRAP AS-GROUND	
	15	2	**110-6109**	1	KNOB-CONTROL (AUTOSHIFT SWITCH)	
	16	2	**110-7887**	1	SWITCH AS-START (KEY)	
		2	**7T-6799**	1	NUT-MOUNTING (1-32-THD)	
		2	**102-8804**	1	KIT-RECEPTACLE (4-PIN)	
					(INCLUDES RECEPTACLE AS & WEDGE)	
		2	**186-3735**	4	PIN-CONNECTOR (16-GA TO 18-GA)	
	17	1	**115-1748**	1	LAMP (24-VOLT, 3-WATT)	
	18	2	**117-2311**	1	SOCKET-AUXILIARY POWER (12-VOLT)	
	19	5	**118-7362**	1	GROMMET-SPLIT	
	20	2	**124-5638**	1	FILM-INFORMATION (12-VOLT)	
	21	2	**134-9569**	1	SWITCH AS-TURN SIGNAL	
		2	**5L-7200**	1	SCREW (8-32X0.375-IN)	
		2	**9B-7233**	1	LOCKWASHER	
	22	3	**148-5689**	1	GROMMET-SPLIT	
	23	2	**155-2105**	1	PLATE-INSTRUCTION (TURN SIGNAL)	
	24	3	**179-9392**	1	LANYARD	
	25	2	**185-5634**	1	PLATE AS	
	26	2	**185-6335**	1	SWITCH AS-ROTARY (24-VOLT) (AUTOSHIFT CONTROL)	
		2	**3E-3383**	1	WEDGE-RECEPTACLE LOCK (6-PIN)	
		2	**8T-8737**	2	PLUG-SEAL	
		2	**9W-0852**	4	PIN-CONNECTOR (14-GA)	
		2	**102-8805**	1	KIT-RECEPTACLE (6-PIN)	
					(INCLUDES RECEPTACLE AS & WEDGE)	
	27	2	**198-6570**	1	LIGHTER GP (12-VOLT)	
		2	**198-6571**	1	ELEMENT AS-HEATER	
	28	3	**201-2733**	1	FILM-INFORMATION (INPUT/OUTPUT)	
	29	5	**209-0381**	1	CONVERTER-POWER (24-VOLT TO 12-VOLT)	
	30	2	**214-5372**	1	HARNESS AS-LIGHTING (TURN SIGNAL, HAZARD)	
		2	**155-2270**	1	KIT-CONNECTING PLUG (2-PIN)	
		2	**155-2271**	1	KIT-CONNECTING PLUG (4-PIN)	
		2	**155-2274**	1	KIT-CONNECTING PLUG (6-PIN)	
					(EACH PLUG KIT INCLUDES PLUG AS, WEDGE & INTERFACE SEAL)	
		2	**102-8801**	1	KIT-RECEPTACLE (12-PIN)	
					(INCLUDES RECEPTACLE AS & WEDGE)	
		2	**8T-8729**	10	PIN-CONNECTOR (16-GA TO 18-GA)	
		2	**8T-8737**	3	PLUG-SEAL	
		2	**189-3158**	1	SUPPRESSOR-ARC	
		2	**8T-8730**	11	SOCKET-CONNECTOR (16-GA TO 18-GA)	

266-3717 **WIRING GP-CAB** *(contd.)* **i03822375**

NOTE	REF NO	GRAPHIC REF	PART NUMBER	QTY	PART NAME 1 2 3 4 5 6 (PRODUCT LEVEL)	SEE PAGE
		2	*130-6789*	6	TERMINAL AS-BLADE	
					(EACH INCLUDES)	
		2	**5P-4571**	1	TERMINAL-BLADE (14-GA TO 16-GA)	
D		2	**6V-2689**		TUBE-HEAT SHRINK (6.35-MM DIA) (0.1-M)	
	31	2	**217-8166**	1	FLASHER AS (24-VOLT)	
CY	32	2	**308-3869**	1	CONTROL GP-UNPRGMED MONITOR (MESSENGER)	949
	33	2	**249-5479**	1	SWITCH AS-ROCKER (24-VOLT) (HEADLIGHT DIMMER)	
	34	2	**251-1195**	1	SWITCH AS-ROCKER (24-VOLT) (FRONT FLOODLIGHTS)	
	35	2	**251-2031**	1	SWITCH AS-ROCKER (24-VOLT) (RUNNING LIGHTS)	
	36	2	**256-7823**	1	SWITCH AS-ROCKER (24-VOLT) (HAZARD WARNING LIGHTS)	
R	37	4	**304-5687**	1	CONTROL GP-UNPROGRAMMED (POWER TRAIN)	
	38	2	**268-6653**	1	FILM-PANEL (AUTOSHIFT, LIGHT SWITCH, LH)	
	39	3	**269-2731**	1	FILM-IDENTIFICATION (CONTROL PANEL, FRONT)	
	40	3	**274-3775**	1	CAP-CONNECTOR	
	41	1,5	**274-3777**	2	CAP-CONNECTOR	
	42	1,5	**274-3778**	3	CAP-SEAL	
Y	43	3	**278-1667**	1	PANEL GP-FUSE	236
	44	3	**283-4960**	2	WIRE AS	
	45	3	**284-3623**	1	SWITCH AS-ROCKER (HYDRAULIC LOCKOUT)	
	46	2	**287-2435**	1	FILM-PANEL (CIGAR LIGHTER, RH)	
	47	3	**287-2436**	1	FILM-IDENTIFICATION (CONTROL PANEL, REAR)	
	48	3	**303-9566**	1	SWITCH AS-ROCKER (FORWARD, NEUTRAL, REVERSE)	
		3	**9X-3401**	4	PIN-CONNECTOR (16-GA TO 18-GA)	
		3	**151-9274**	1	KIT-RECEPTACLE (4-PIN)	
					(INCLUDES RECEPTACLE AS & WEDGE)	
	49	4	**304-0329**	1	BRACKET AS	
Y	50	1	*307-3124*	1	BRACKET GP-MOUNTING	178
	51	3	**307-6155**	1	BRACKET AS	
M		3	**6V-9632**	4	NUT-WELD (M6X1-THD)	
	52	1	**307-6156**	1	HARNESS AS-CAB	
		1	**8N-1535**	1	BELL AS-END	
		1	**102-8802**	1	KIT-RECEPTACLE (2-PIN)	
		1	**102-8803**	2	KIT-RECEPTACLE (3-PIN)	
		1	**102-8804**	2	KIT-RECEPTACLE (4-PIN)	
		1	**102-8806**	1	KIT-RECEPTACLE (8-PIN)	
		1	**102-8801**	1	KIT-RECEPTACLE (12-PIN)	
					(EACH RECEPTACLE KIT INCLUDES RECEPTACLE AS & WEDGE)	
		1	**8N-1537**	1	LOCKWASHER	
		1	**8N-1540**	3	PIN-CONNECTOR (12-GA TO 14-GA)	
		1	**8N-1544**	1	PIN-CONNECTOR (8-GA)	
		1	**8N-1548**	1	PIN-CONNECTOR (4-GA)	
		1	**7R-2751**	15	PLUG-CONNECTOR	
		1	**7G-7917**	1	PLUG-SEAL	
		1	**7G-7919**	1	PLUG-SEAL	
		1	**8T-8737**	136	PLUG-SEAL	
		1	**7X-6222**	1	PLUG AS-CONNECTOR (24-PIN)	
		1	**3E-4367**	1	RING-RETAINING	
M		1	**3E-8558**	1	BOLT (M5X0.8X39.37-MM)	
		1	**9W-1951**	1	RECEPTACLE-CONNECTOR (9-PIN)	
		1	**113-0583**	1	RECEPTACLE AS-CONNECTOR (40-PIN)	
		1	**106-4155**	1	KIT-BOLT (ELECTRICAL CONNECTORS)	
					(INCLUDES BOLT, RING & SEALS)	
		1	**8N-1532**	1	RECEPTACLE AS-CONNECTOR (6-PIN)	
		1	**8N-1536**	1	NUT (1-5/8-18-THD)	
		1	**7R-2750**	38	SEAL-CONNECTOR	
		1	**113-5183**	4	SOCKET-LAMP	
		1	**3S-2093**	9	STRAP-CABLE	

266-3717 **WIRING GP-CAB** ***(contd.)*** **i03822375**

NOTE	REF NO	GRAPHIC REF	PART NUMBER	QTY	PART NAME 1 2 3 4 5 6 (PRODUCT LEVEL)	SEE PAGE
		1	**9X-6772**	1	STRAP-CABLE	
		1	**5P-4571**	4	TERMINAL-BLADE (14-GA TO 16-GA)	
		1	**113-5184**	8	TERMINAL-RECEPTACLE (16-GA TO 18-GA)	
		1	**196-2412**	38	TERMINAL AS	
		1	**7R-2750**	1	SEAL-CONNECTOR	
		1	**9X-0196**	2	WIRE AS	
	53	2	**311-0038**	1	MODULE GP-DISPLAY (MESSENGER)	
M	54	4	**099-3649**	4	BOLT (M8X1.25X40-MM)	
	56	1,5	**132-5789**	3	CLIP	
	57	2	**134-2540**	1	RESISTOR AS-CONNECTION (3-PIN)	
	58	3	**142-2928**	4	LOCKNUT (4-40-THD)	
	59	5	**156-6175**	2	CLIP	
	60	2,3	**228-6089**	11	PLUG (ROCKER SWITCH)	
	61	3	**281-2880**	1	SUPPRESSOR-ARC	
	62	1	**4P-8134**	5	CLIP	
M	63	3	**5C-7261**	3	NUT (M8X1.25-THD)	
M	64	2	**5C-8312**	3	NUT (M4X0.7-THD)	
M	65	3	**5C-9553**	4	BOLT (M6X1X16-MM)	
M	66	2	**6V-5210**	2	SCREW-MACHINE (M4X0.7X10-MM)	
M	67	5	**6V-9673**	4	SCREW-MACHINE (M5X0.8X12-MM)	
	68	4	**7D-7233**	1	CLIP	
	69	3	**7X-0608**	3	WASHER-HARD (10.2X16X2-MM THK)	
	70	4,5	**8T-4121**	9	WASHER-HARD (11X21X2.5-MM THK)	
M	71	4	**8T-4133**	4	NUT (M10X1.5-THD)	
M	72	4,5	**8T-4137**	5	BOLT (M10X1.5X20-MM)	
M	73	4	**8T-4138**	4	BOLT (M6X1X20-MM)	
M	74	5	**8T-4171**	2	BOLT (M6X1X12-MM)	
M	75	1,3	**8T-4189**	7	BOLT (M8X1.25X20-MM)	
	76	5	**8T-4205**	1	WASHER-HARD (7.2X14.5X2-MM THK)	
	77	1,3	**8T-4224**	7	WASHER-HARD (8.8X16X2-MM THK)	
	78	3	**9F-5644**	3	LOCKWASHER	
	79	4	**9N-0869**	4	WASHER-HARD (8.8X25.5X2-MM THK)	
M	80	2	**9X-2042**	2	SCREW-TRUSS HEAD (M6X1X12-MM)	
	81	3,5	**9X-8256**	13	WASHER (6.6X12X2-MM THK)	

C-CHANGE FROM PREVIOUS TYPE
D-ORDER BY THE METER
M-METRIC PART
R-REMFG PART MAY BE AVAILABLE
Y-SEPARATE ILLUSTRATION

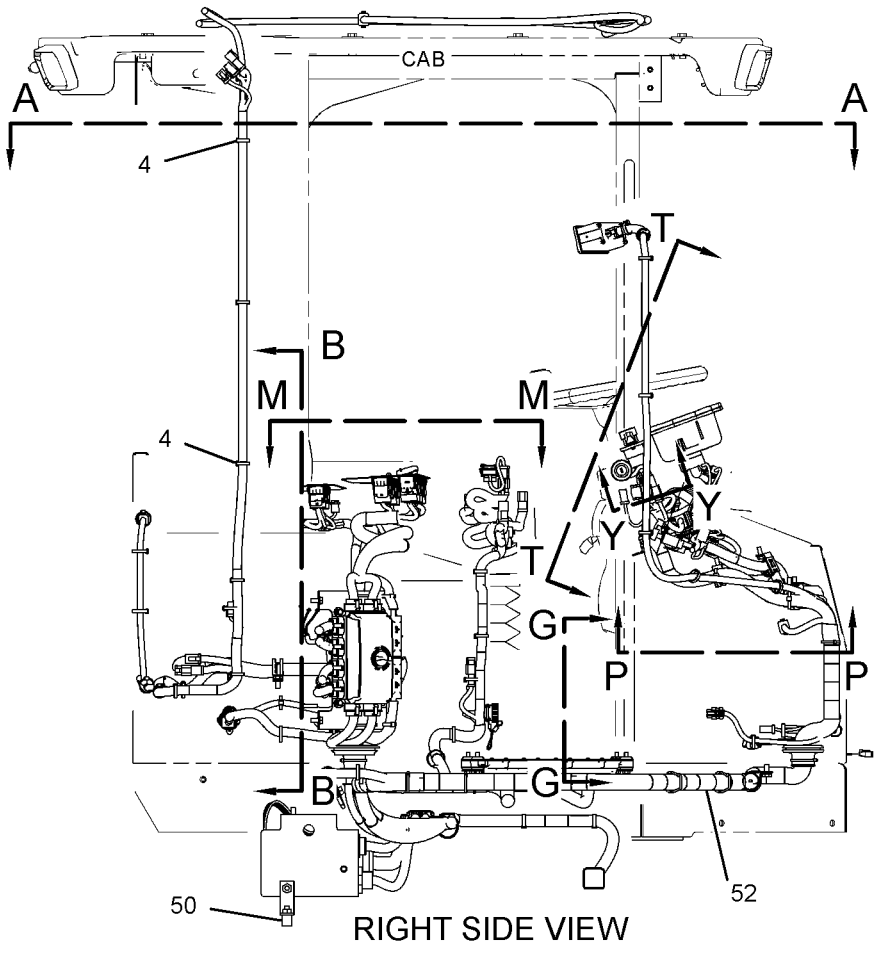

RIGHT SIDE VIEW

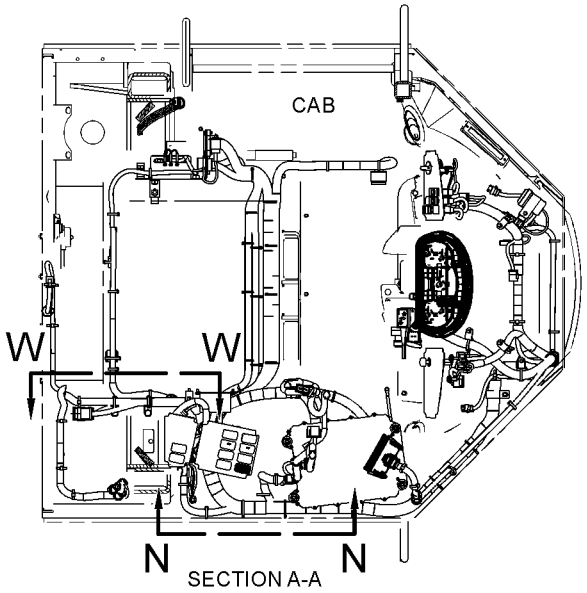

SECTION A-A

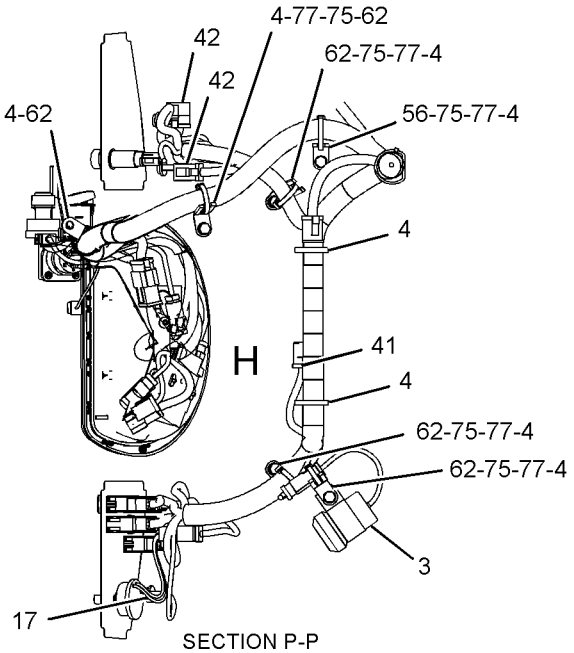

SECTION P-P

REFER TO ALL ILLUSTRATIONS OF THIS GROUP FOR AUXILIARY VIEWS

GRAPHIC #1

g02159510

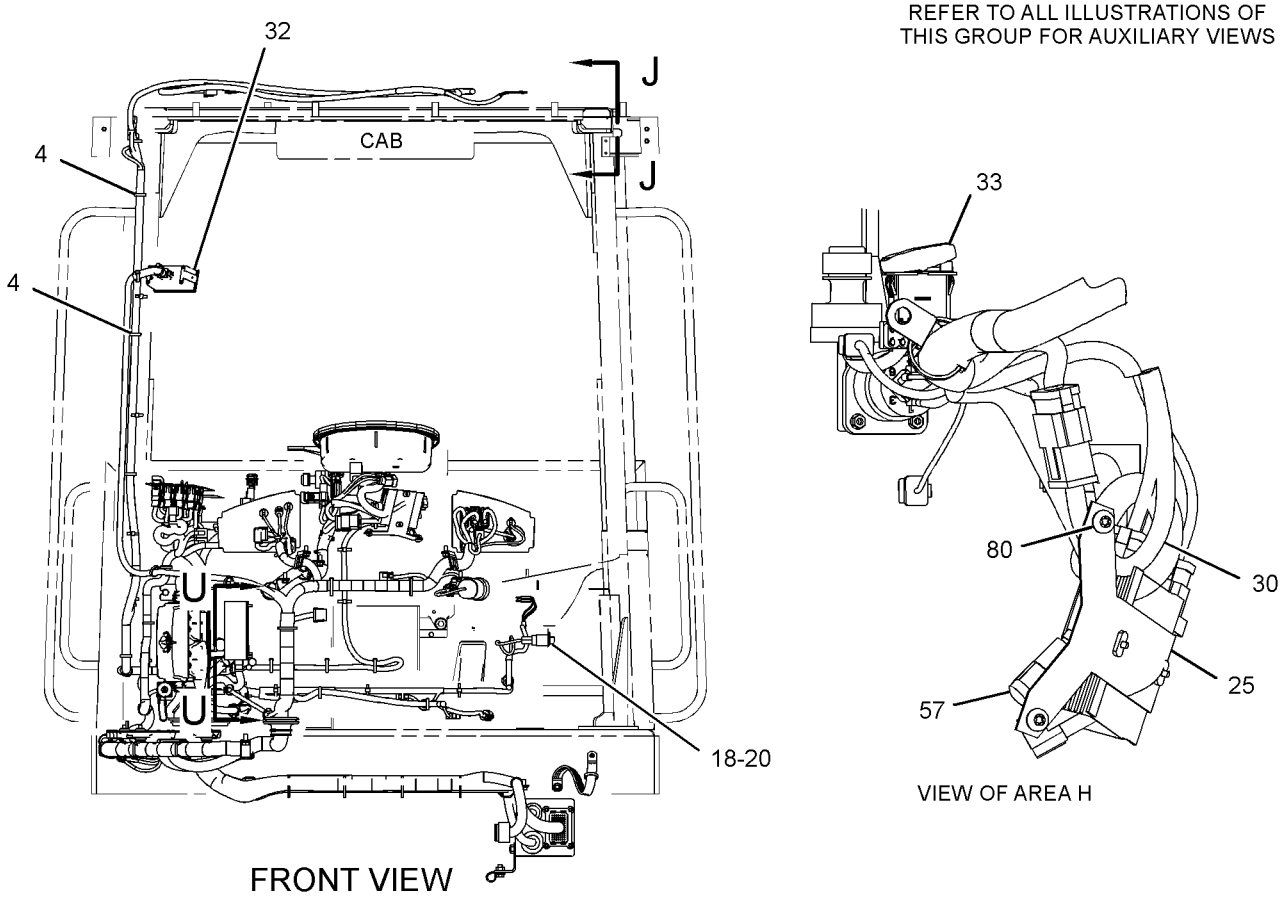

GRAPHIC #2 g01453984

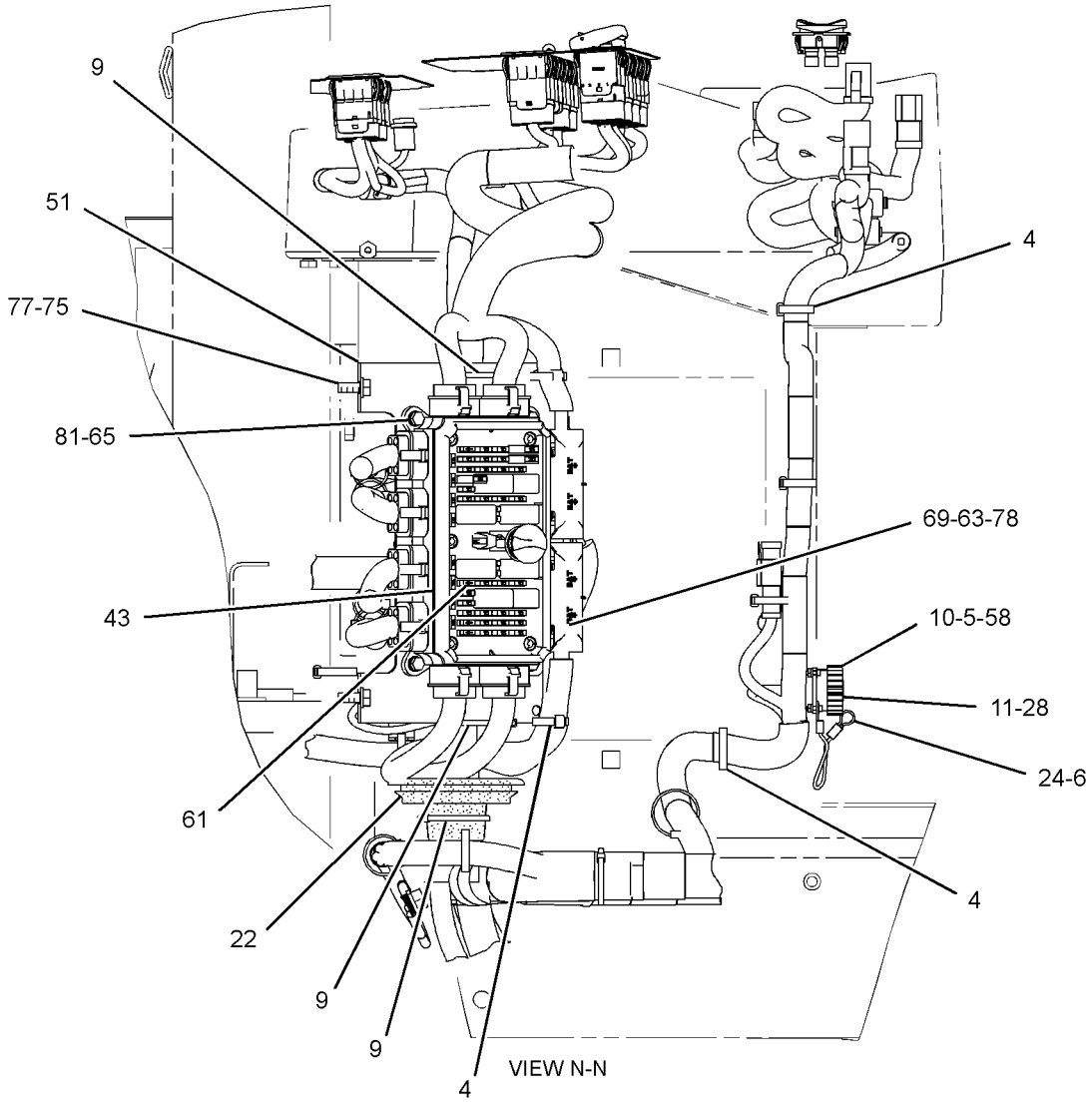

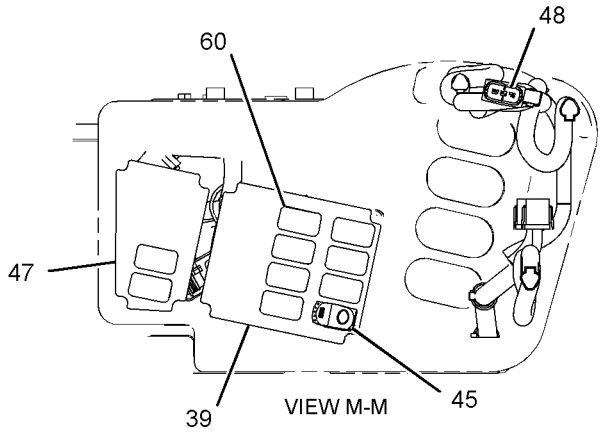

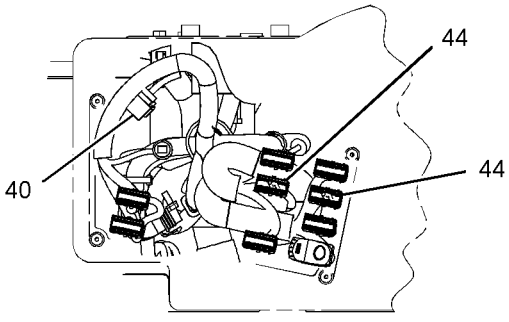

GRAPHIC #3 g01454603

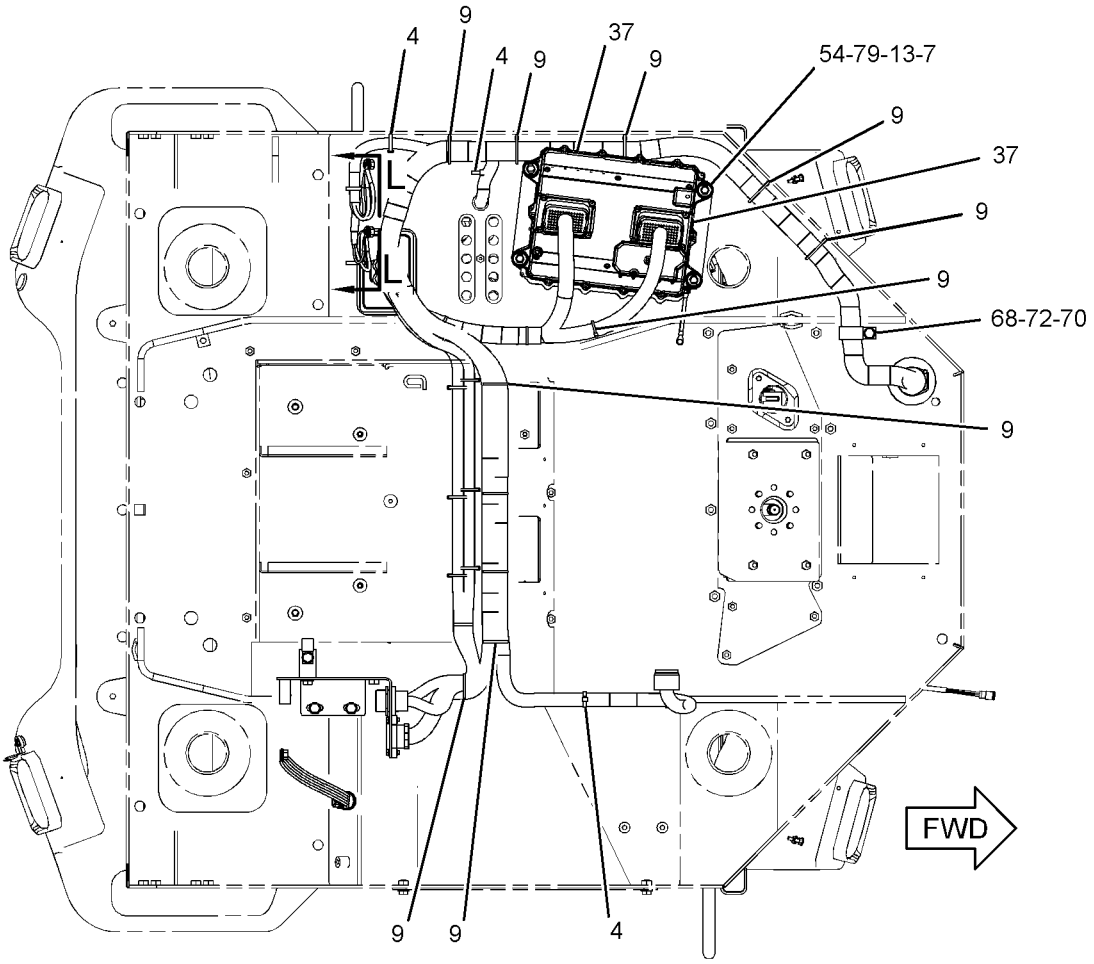

BOTTOM VIEW

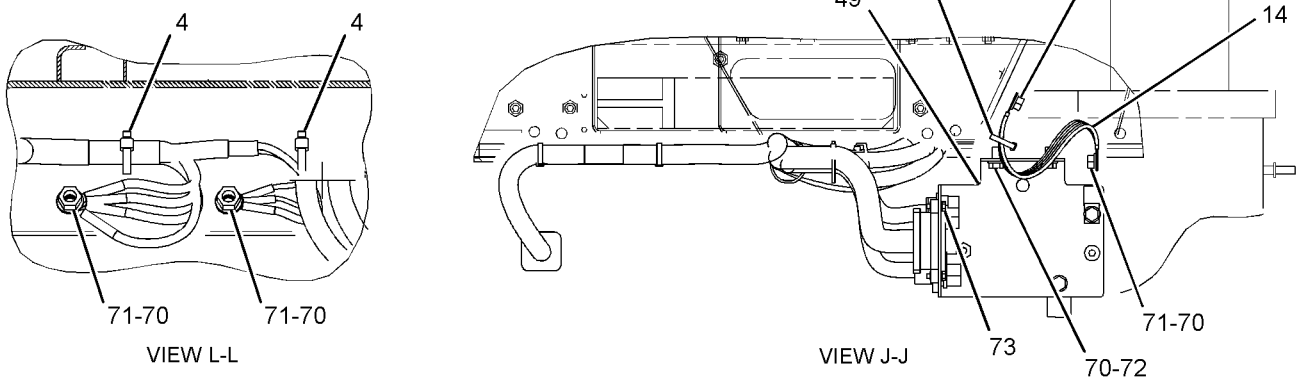

GRAPHIC #4

g02159534

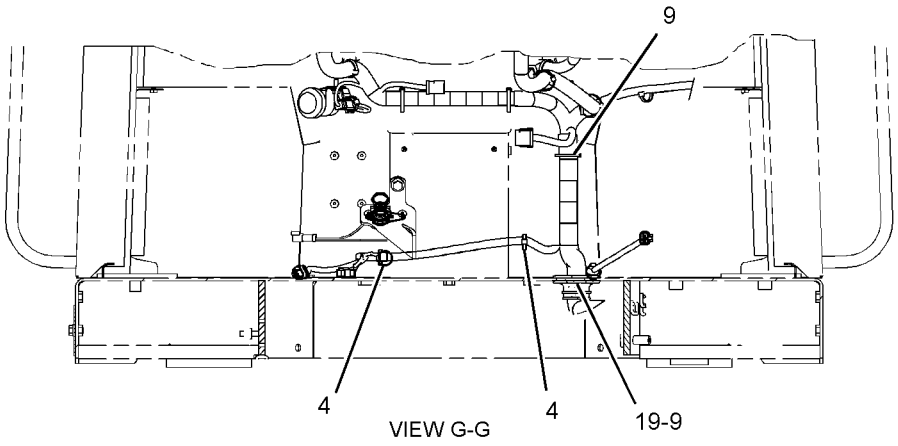

VIEW G-G

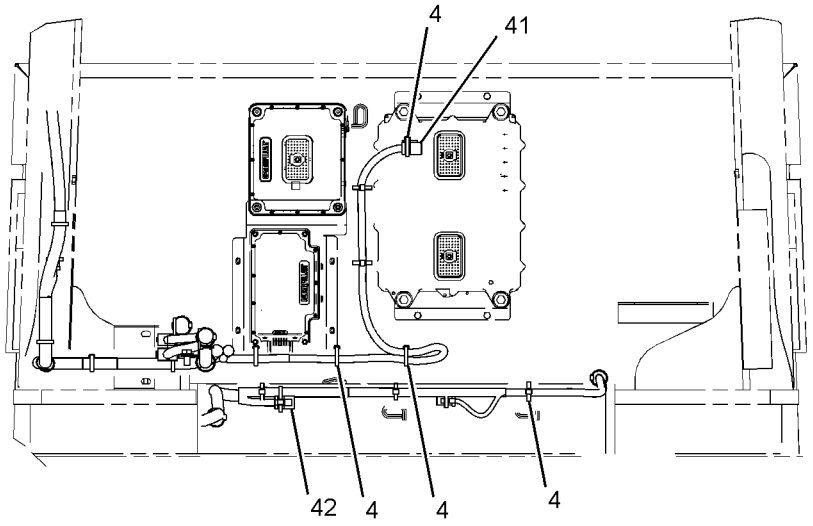

VIEW B-B

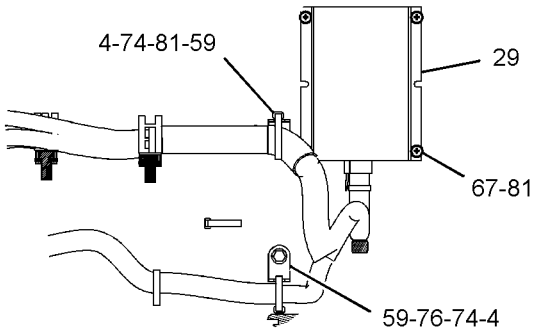

SECTION U-U

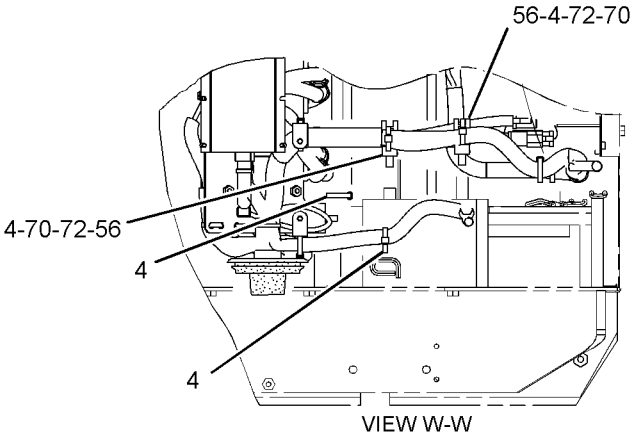

VIEW W-W

GRAPHIC #5 **<END>** g01944071

ELECTRICAL AND STARTING SYSTEM

266-3717 WIRING GP-CAB

S/N: JKM1038-UP
PART OF 269-4873 CANOPY AR-OPEN ROPS
AN ATTACHMENT

SMCS-1408, 7301 **i03989531**

NOTE	REF NO	GRAPHIC REF	PART NUMBER	QTY	PART NAME 1 2 3 4 5 6 (PRODUCT LEVEL)	SEE PAGE
	1	2	**1H-4393**	3	LOCKWASHER	
	2	2	**2H-3920**	1	LOCKWASHER	
Y	3	1	**3E-6328**	1	ALARM GP (24-VOLT) (ACTION)	158
	4	1,2,3, 4,5	**3S-2093**	60	STRAP-CABLE	
	5	3	**4I-3038**	4	WASHER (3.3X8X0.5-MM THK)	
	6	3	**5P-7958**	1	SLEEVE-CABLE SPLICE	
	7	4	**6I-1418**	4	SPACER (8.2X12.7X28.7-MM THK)	
	8	2	**6V-8369**	1	NUT (7/16-28-THD)	
C	9	3,4,5	**7K-1181**	26	STRAP-CABLE	
	10	3	**7X-3308**	4	BOLT-SOCKET HEAD (4-40X0.375-IN)	
	11	3	**8C-6354**	1	CAP-RECEPTACLE	
	12	2	**8N-2622**	1	LEVER (TURN SIGNAL SWITCH)	
	13	4	**8T-9655**	8	MOUNT-ISOLATION	
	14	4	**8X-9618**	1	STRAP AS-GROUND	
	15	2	**110-6109**	1	KNOB-CONTROL (AUTOSHIFT SWITCH)	
	16	2	**110-7887**	1	SWITCH AS-START (KEY)	
		2	**7T-6799**	1	NUT-MOUNTING (1-32-THD)	
		2	**102-8804**	1	KIT-RECEPTACLE (4-PIN)	
					(INCLUDES RECEPTACLE AS & WEDGE)	
		2	**186-3735**	4	PIN-CONNECTOR (16-GA TO 18-GA)	
	17	1	**115-1748**	1	LAMP (24-VOLT, 3-WATT)	
	19	5	**118-7362**	1	GROMMET-SPLIT	
	21	2	**134-9569**	1	SWITCH AS-TURN SIGNAL	
		2	**5L-7200**	1	SCREW (8-32X0.375-IN)	
		2	**9B-7233**	1	LOCKWASHER	
	22	3	**148-5689**	1	GROMMET-SPLIT	
	23	2	**155-2105**	1	PLATE-INSTRUCTION (TURN SIGNAL)	
	24	3	**179-9392**	1	LANYARD	
	25	2	**185-5634**	1	PLATE AS	
	26	2	**185-6335**	1	SWITCH AS-ROTARY (24-VOLT) (AUTOSHIFT CONTROL)	
		2	**3E-3383**	1	WEDGE-RECEPTACLE LOCK (6-PIN)	
		2	**8T-8737**	2	PLUG-SEAL	
		2	**9W-0852**	4	PIN-CONNECTOR (14-GA)	
		2	**102-8805**	1	KIT-RECEPTACLE (6-PIN)	
					(INCLUDES RECEPTACLE AS & WEDGE)	
	27	2	**198-6570**	1	LIGHTER GP (12-VOLT)	
		2	**198-6571**	1	ELEMENT AS-HEATER	
	28	3	**201-2733**	1	FILM-INFORMATION (INPUT/OUTPUT)	
	29	5	**209-0381**	1	CONVERTER-POWER (24-VOLT TO 12-VOLT)	
	30	2	**214-5372**	1	HARNESS AS-LIGHTING (TURN SIGNAL, HAZARD)	
		2	**155-2270**	1	KIT-CONNECTING PLUG (2-PIN)	
		2	**155-2271**	1	KIT-CONNECTING PLUG (4-PIN)	
		2	**155-2274**	1	KIT-CONNECTING PLUG (6-PIN)	
					(EACH PLUG KIT INCLUDES PLUG AS, WEDGE & INTERFACE SEAL)	
		2	**102-8801**	1	KIT-RECEPTACLE (12-PIN)	
					(INCLUDES RECEPTACLE AS & WEDGE)	
		2	**8T-8729**	10	PIN-CONNECTOR (16-GA TO 18-GA)	
		2	**8T-8737**	3	PLUG-SEAL	
		2	**189-3158**	1	SUPPRESSOR-ARC	
		2	**8T-8730**	11	SOCKET-CONNECTOR (16-GA TO 18-GA)	
		2	*130-6789*	6	TERMINAL AS-BLADE	
					(EACH INCLUDES)	

266-3717 **WIRING GP-CAB** *(contd.)* **i03989531**

NOTE	REF NO	GRAPHIC REF	PART NUMBER	QTY	PART NAME 1 2 3 4 5 6 (PRODUCT LEVEL)	SEE PAGE
		2	**5P-4571**	1	TERMINAL-BLADE (14-GA TO 16-GA)	
D		2	**6V-2689**		TUBE-HEAT SHRINK (6.35-MM DIA) (0.1-M)	
	31	2	**217-8166**	1	FLASHER AS (24-VOLT)	
CY	32	2	**308-3869**	1	CONTROL GP-UNPRGMED MONITOR (MESSENGER)	949
	33	2	**249-5479**	1	SWITCH AS-ROCKER (24-VOLT) (HEADLIGHT DIMMER)	
	34	2	**251-1195**	1	SWITCH AS-ROCKER (24-VOLT) (FRONT FLOODLIGHTS)	
	35	2	**251-2031**	1	SWITCH AS-ROCKER (24-VOLT) (RUNNING LIGHTS)	
	36	2	**256-7823**	1	SWITCH AS-ROCKER (24-VOLT) (HAZARD WARNING LIGHTS)	
R	37	4	**304-5687**	1	CONTROL GP-UNPROGRAMMED (POWER TRAIN)	
	38	2	**268-6653**	1	FILM-PANEL (AUTOSHIFT, LIGHT SWITCH, LH)	
	39	3	**269-2731**	1	FILM-IDENTIFICATION (CONTROL PANEL, FRONT)	
	40	3	**274-3775**	1	CAP-CONNECTOR	
	41	1,5	**274-3777**	2	CAP-CONNECTOR	
	42	1,5	**274-3778**	3	CAP-SEAL	
Y	43	3	**278-1667**	1	PANEL GP-FUSE	236
	44	3	**283-4960**	2	WIRE AS	
	45	3	**284-3623**	1	SWITCH AS-ROCKER (HYDRAULIC LOCKOUT)	
	46	2	**287-2435**	1	FILM-PANEL (CIGAR LIGHTER, RH)	
	47	3	**287-2436**	1	FILM-IDENTIFICATION (CONTROL PANEL, REAR)	
	48	3	**303-9566**	1	SWITCH AS-ROCKER (FORWARD, NEUTRAL, REVERSE)	
		3	**9X-3401**	4	PIN-CONNECTOR (16-GA TO 18-GA)	
		3	**151-9274**	1	KIT-RECEPTACLE (4-PIN)	
					(INCLUDES RECEPTACLE AS & WEDGE)	
	49	4	**304-0329**	1	BRACKET AS	
	51	3	**307-6155**	1	BRACKET AS	
M		3	**6V-9632**	4	NUT-WELD (M6X1-THD)	
	52	1	**307-6156**	1	HARNESS AS-CAB	
		1	**8N-1535**	1	BELL AS-END	
		1	**102-8802**	1	KIT-RECEPTACLE (2-PIN)	
		1	**102-8803**	2	KIT-RECEPTACLE (3-PIN)	
		1	**102-8804**	2	KIT-RECEPTACLE (4-PIN)	
		1	**102-8806**	1	KIT-RECEPTACLE (8-PIN)	
		1	**102-8801**	1	KIT-RECEPTACLE (12-PIN)	
					(EACH RECEPTACLE KIT INCLUDES RECEPTACLE AS & WEDGE)	
		1	**8N-1537**	1	LOCKWASHER	
		1	**8N-1540**	3	PIN-CONNECTOR (12-GA TO 14-GA)	
		1	**8N-1544**	1	PIN-CONNECTOR (8-GA)	
		1	**8N-1548**	1	PIN-CONNECTOR (4-GA)	
		1	**7R-2751**	15	PLUG-CONNECTOR	
		1	**7G-7917**	1	PLUG-SEAL	
		1	**7G-7919**	1	PLUG-SEAL	
		1	**8T-8737**	136	PLUG-SEAL	
		1	**7X-6222**	1	PLUG AS-CONNECTOR (24-PIN)	
		1	**3E-4367**	1	RING-RETAINING	
M		1	**3E-8558**	1	BOLT (M5X0.8X39.37-MM)	
		1	**9W-1951**	1	RECEPTACLE-CONNECTOR (9-PIN)	
		1	**113-0583**	1	RECEPTACLE AS-CONNECTOR (40-PIN)	
		1	**106-4155**	1	KIT-BOLT (ELECTRICAL CONNECTORS)	
					(INCLUDES BOLT, RING & SEALS)	
		1	**8N-1532**	1	RECEPTACLE AS-CONNECTOR (6-PIN)	
		1	**8N-1536**	1	NUT (1-5/8-18-THD)	
		1	**7R-2750**	38	SEAL-CONNECTOR	
		1	**113-5183**	4	SOCKET-LAMP	
		1	**3S-2093**	9	STRAP-CABLE	
		1	**9X-6772**	1	STRAP-CABLE	
		1	**5P-4571**	4	TERMINAL-BLADE (14-GA TO 16-GA)	
		1	**113-5184**	8	TERMINAL-RECEPTACLE (16-GA TO 18-GA)	

266-3717 **WIRING GP-CAB** *(contd.)* **i03989531**

NOTE	REF NO	GRAPHIC REF	PART NUMBER	QTY	PART NAME 1 2 3 4 5 6 (PRODUCT LEVEL)	SEE PAGE
		1	**196-2412**	38	TERMINAL AS	
		1	**7R-2750**	1	SEAL-CONNECTOR	
		1	**9X-0196**	2	WIRE AS	
	53	2	**311-0038**	1	MODULE GP-DISPLAY (MESSENGER)	
M	54	4	**099-3649**	4	BOLT (M8X1.25X40-MM)	
	56	1,5	**132-5789**	3	CLIP	
	57	2	**134-2540**	1	RESISTOR AS-CONNECTION (3-PIN)	
	58	3	**142-2928**	4	LOCKNUT (4-40-THD)	
	59	5	**156-6175**	2	CLIP	
	60	2,3	**228-6089**	11	PLUG (ROCKER SWITCH)	
	61	3	**281-2880**	1	SUPPRESSOR-ARC	
	62	1	**4P-8134**	5	CLIP	
M	63	3	**5C-7261**	3	NUT (M8X1.25-THD)	
M	64	2	**5C-8312**	3	NUT (M4X0.7-THD)	
M	65	3	**5C-9553**	4	BOLT (M6X1X16-MM)	
M	66	2	**6V-5210**	2	SCREW-MACHINE (M4X0.7X10-MM)	
M	67	5	**6V-9673**	4	SCREW-MACHINE (M5X0.8X12-MM)	
	68	4	**7D-7233**	1	CLIP	
	69	3	**7X-0608**	3	WASHER-HARD (10.2X16X2-MM THK)	
	70	4,5	**8T-4121**	8	WASHER-HARD (11X21X2.5-MM THK)	
M	71	4	**8T-4133**	3	NUT (M10X1.5-THD)	
M	72	4,5	**8T-4137**	5	BOLT (M10X1.5X20-MM)	
M	73	4	**8T-4138**	4	BOLT (M6X1X20-MM)	
M	74	5	**8T-4171**	2	BOLT (M6X1X12-MM)	
M	75	1,3	**8T-4189**	7	BOLT (M8X1.25X20-MM)	
	76	5	**8T-4205**	1	WASHER-HARD (7.2X14.5X2-MM THK)	
	77	1,3	**8T-4224**	7	WASHER-HARD (8.8X16X2-MM THK)	
	78	3	**9F-5644**	3	LOCKWASHER	
	79	4	**9N-0869**	4	WASHER-HARD (8.8X25.5X2-MM THK)	
M	80	2	**9X-2042**	2	SCREW-TRUSS HEAD (M6X1X12-MM)	
	81	3,5	**9X-8256**	13	WASHER (6.6X12X2-MM THK)	

C-CHANGE FROM PREVIOUS TYPE
D-ORDER BY THE METER
M-METRIC PART
R-REMFG PART MAY BE AVAILABLE
Y-SEPARATE ILLUSTRATION

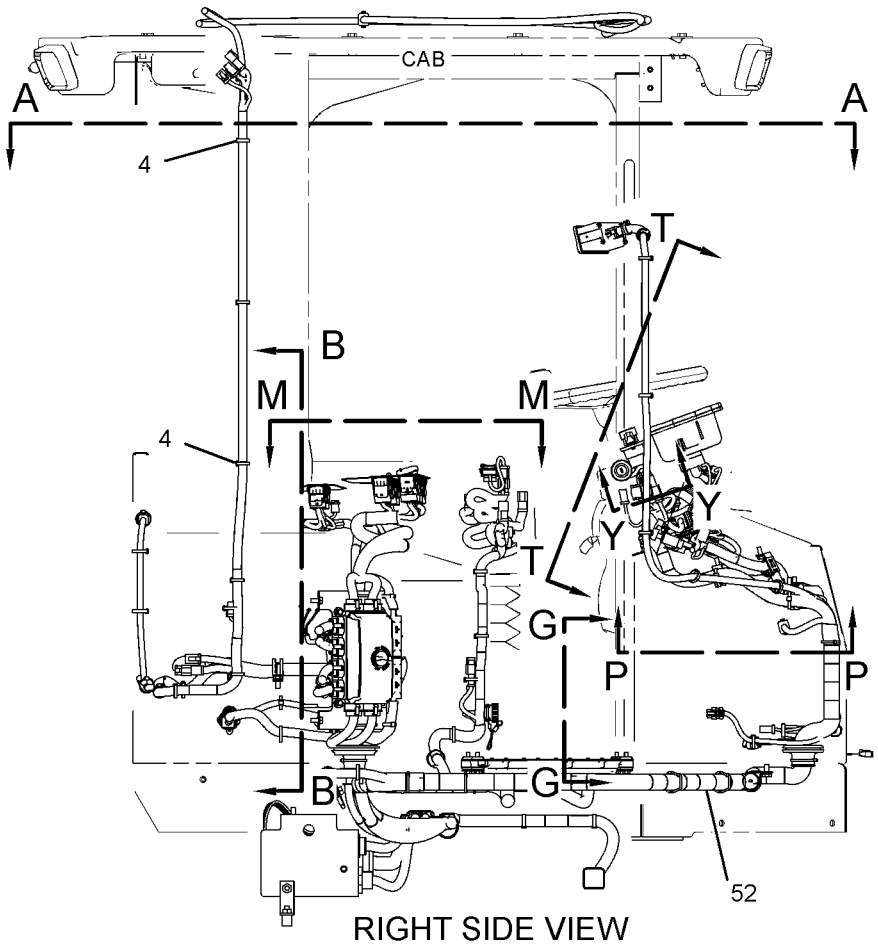

RIGHT SIDE VIEW

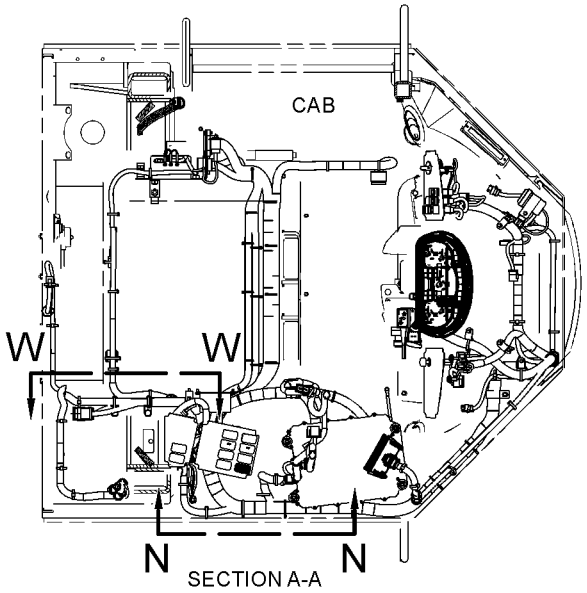

SECTION A-A

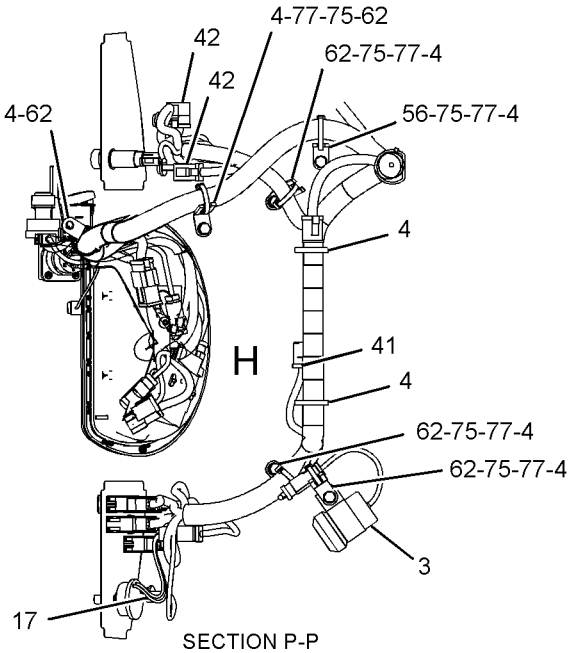

SECTION P-P

REFER TO ALL ILLUSTRATIONS OF
THIS GROUP FOR AUXILIARY VIEWS

GRAPHIC #1

g02172374

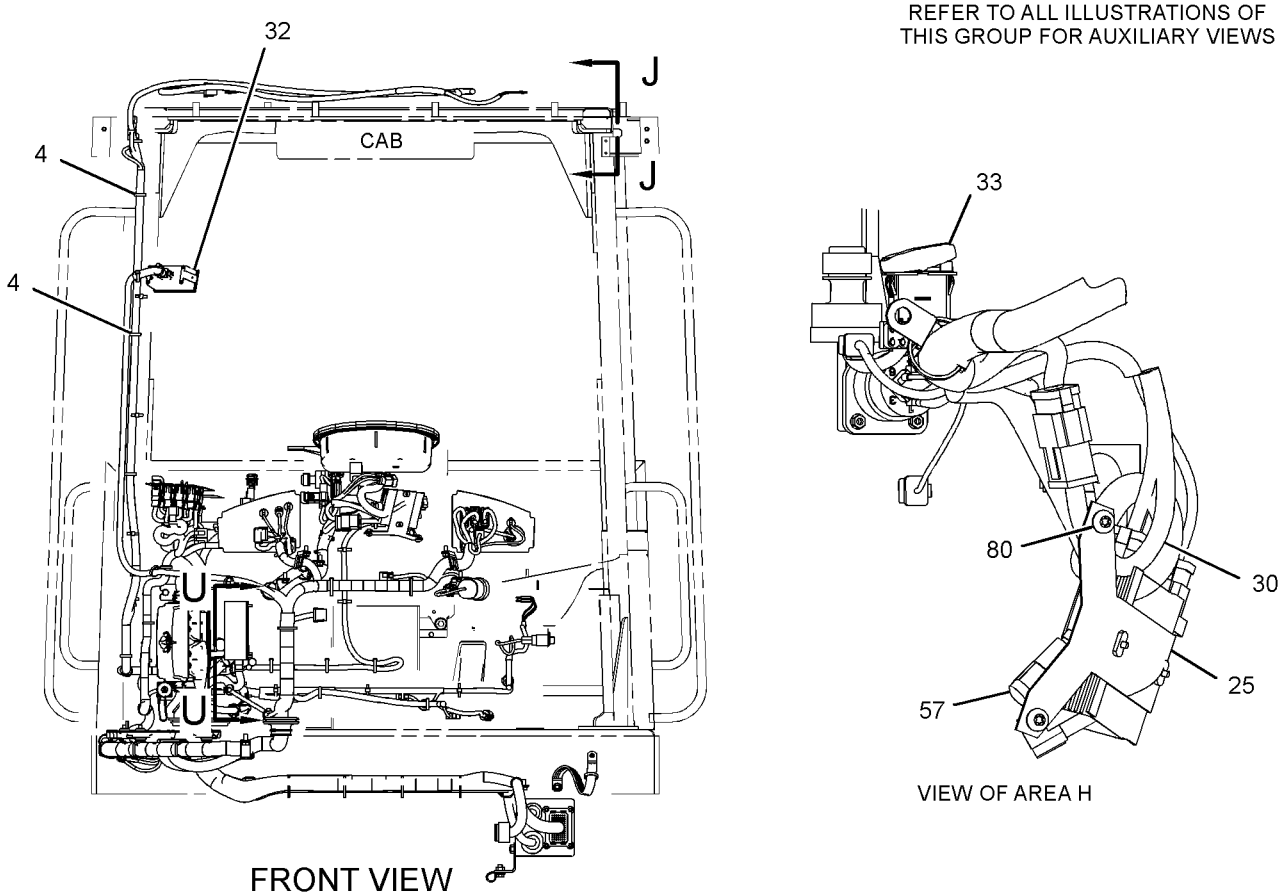

GRAPHIC #2 g02172395

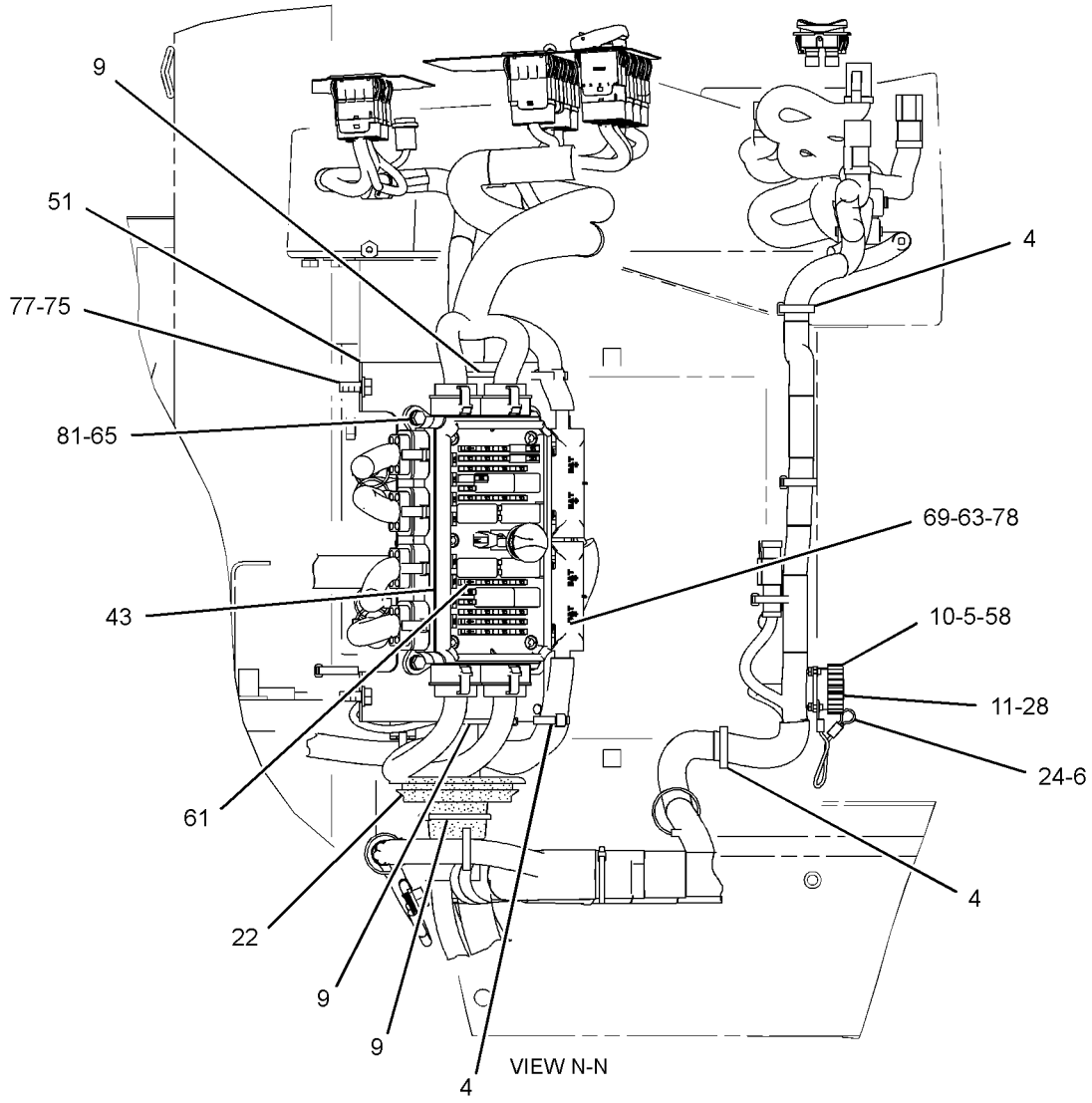

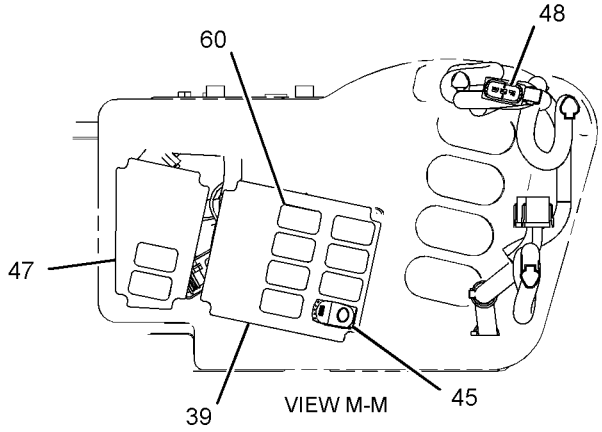

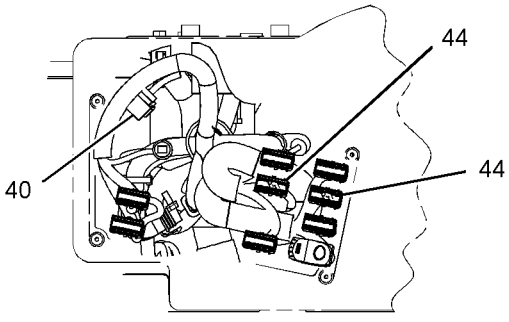

GRAPHIC #3 g01454603

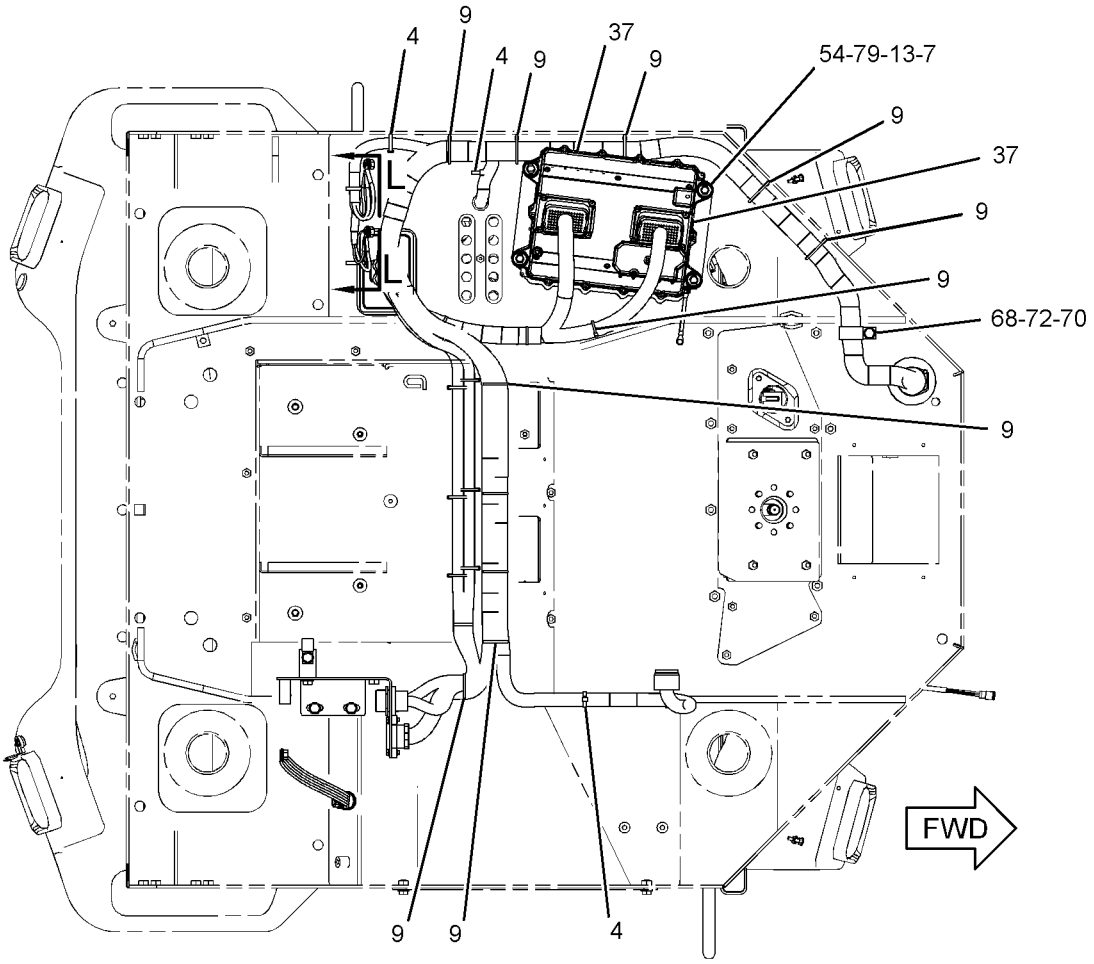

BOTTOM VIEW

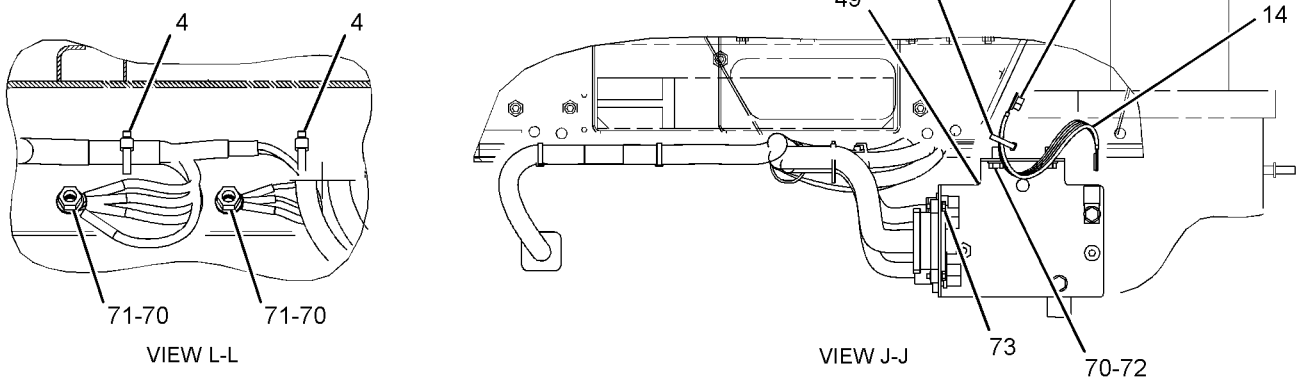

GRAPHIC #4

g02172418

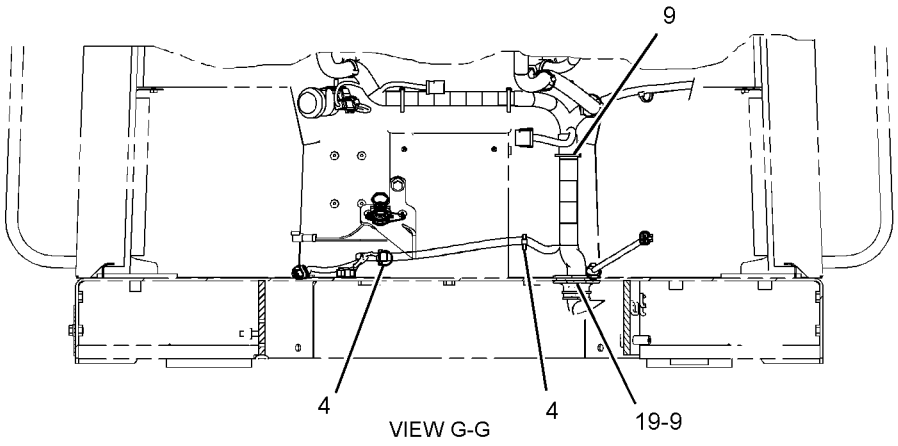

VIEW G-G

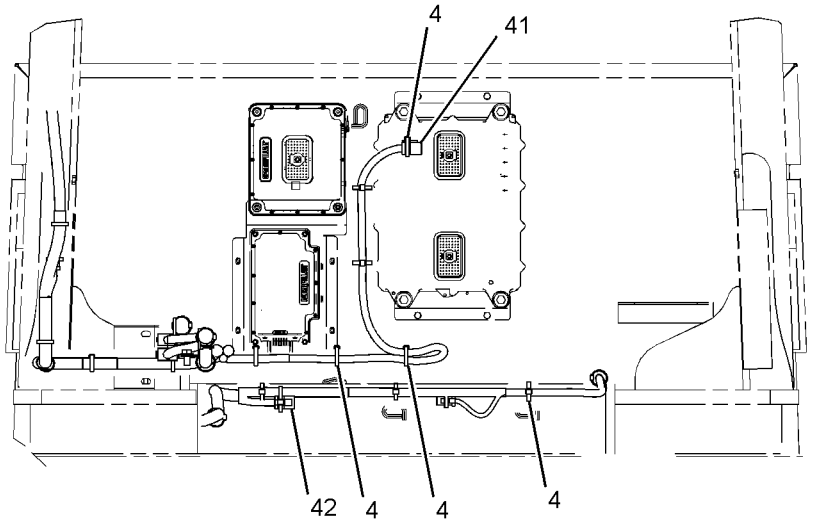

VIEW B-B

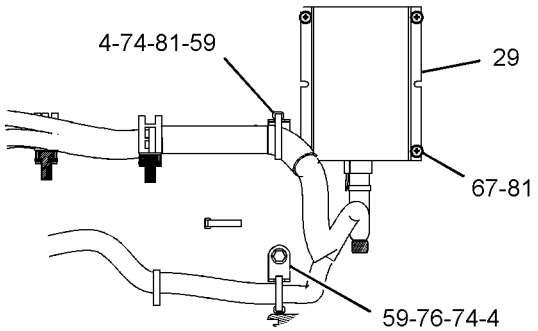

SECTION U-U

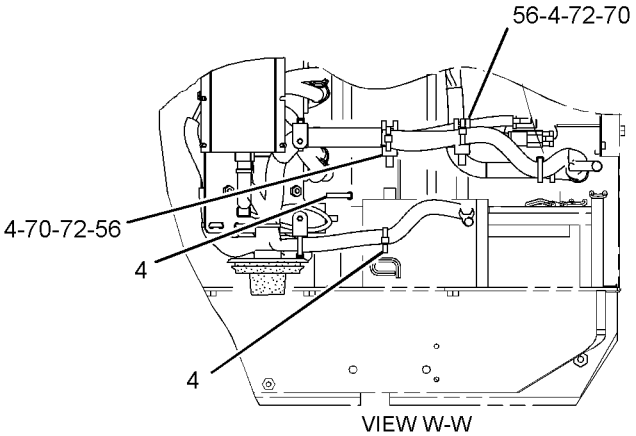

VIEW W-W

GRAPHIC #5 **<END>** g01944071

ELECTRICAL AND STARTING SYSTEM

342-8428 WIRING GP-CAB—PAYLOAD CONTROL SYSTEM

S/N: JKM1-UP

PART OF 267-4800 WIRING GP-COMMUNICATION

AN ATTACHMENT

SMCS-1408, 7301 **i03881410**

NOTE	REF NO	GRAPHIC REF	PART NUMBER	QTY	PART NAME 1 2 3 4 5 6 (PRODUCT LEVEL)	SEE PAGE
	1	1	**3S-2093**	5	STRAP-CABLE	
	2	1	**6I-1418**	4	SPACER (8.2X12.7X28.7-MM THK)	
	3	1	**263-1493**	1	SWITCH AS-PUSH BUTTON (PAYLOAD STORE)	
		1	**155-2260**	1	KIT-CONNECTING PLUG (3-PIN)	
					(INCLUDES PLUG AS, WEDGE & INTERFACE SEAL)	
		1	**6F-0253**	1	LOCKWASHER	
		1	**172-3511**	1	NUT (5/8-24-THD)	
		1	**9X-3402**	3	SOCKET-CONNECTOR (16-GA TO 18-GA)	
	4	1	**268-1708**	1	SWITCH AS-ROCKER (24-VOLT) (PAYLOAD ZERO, REWEIGH)	
	5	1	**268-6497**	1	FILM-IDENTIFICATION (PAYLOAD STORE)	
	6	1	**280-7285**	2	BRACKET AS	
M		1	**159-9540**	2	NUT-WELD (M8X1.25-THD)	
	7	1	**281-9481**	1	HARNESS AS-CONTROL (MACHINE ECM)	
		1	**274-3777**	1	CAP-CONNECTOR	
		1	**126-1774**	2	COVER-CONNECTOR	
		1	**155-2257**	1	KIT-CONNECTING PLUG (12-PIN)	
		1	**174-0503**	1	KIT-CONNECTING PLUG (3-PIN)	
		1	**155-2274**	1	KIT-CONNECTING PLUG (6-PIN)	
		1	**155-2260**	1	KIT-CONNECTING PLUG (3-PIN)	
					(EACH PLUG KIT INCLUDES PLUG AS, WEDGE & INTERFACE SEAL)	
		1	**8T-8737**	128	PLUG-SEAL	
		1	**147-1445**	1	PLUG AS-CONNECTOR (70-PIN)	
		1	**159-9322**	1	SEAL-O-RING	
		1	**147-1446**	1	PLUG AS-CONNECTOR (70-PIN)	
		1	**159-9322**	1	SEAL-O-RING	
		1	**9X-3402**	33	SOCKET-CONNECTOR (16-GA TO 18-GA)	
		1	**9X-6772**	4	STRAP-CABLE	
E		1	**125-7874**		TUBE-HEAT SHRINK (5.72-MM DIA) (15-CM)	
E		1	**125-7875**		TUBE-HEAT SHRINK (7.44-MM DIA) (5-CM)	
		1	**155-2258**	1	WEDGE-PLUG LOCK (12-PIN)	
R	8	1	**304-5691**	1	CONTROL GP-UNPROGRAMMED	
	9	1	**134-2540**	1	RESISTOR AS-CONNECTION (3-PIN)	
M	10	1	**5C-9553**	4	BOLT (M6X1X16-MM)	
	11	1	**5P-4115**	4	WASHER-HARD (7.2X19X2-MM THK)	
M	12	1	**7X-0818**	4	BOLT (M8X1.25X45-MM)	
	13	1	**8T-9655**	8	MOUNT-ISOLATION	
	14	1	**9N-0869**	4	WASHER-HARD (8.8X25.5X2-MM THK)	

E-ORDER BY THE CENTIMETER
M-METRIC PART
R-REMFG PART MAY BE AVAILABLE

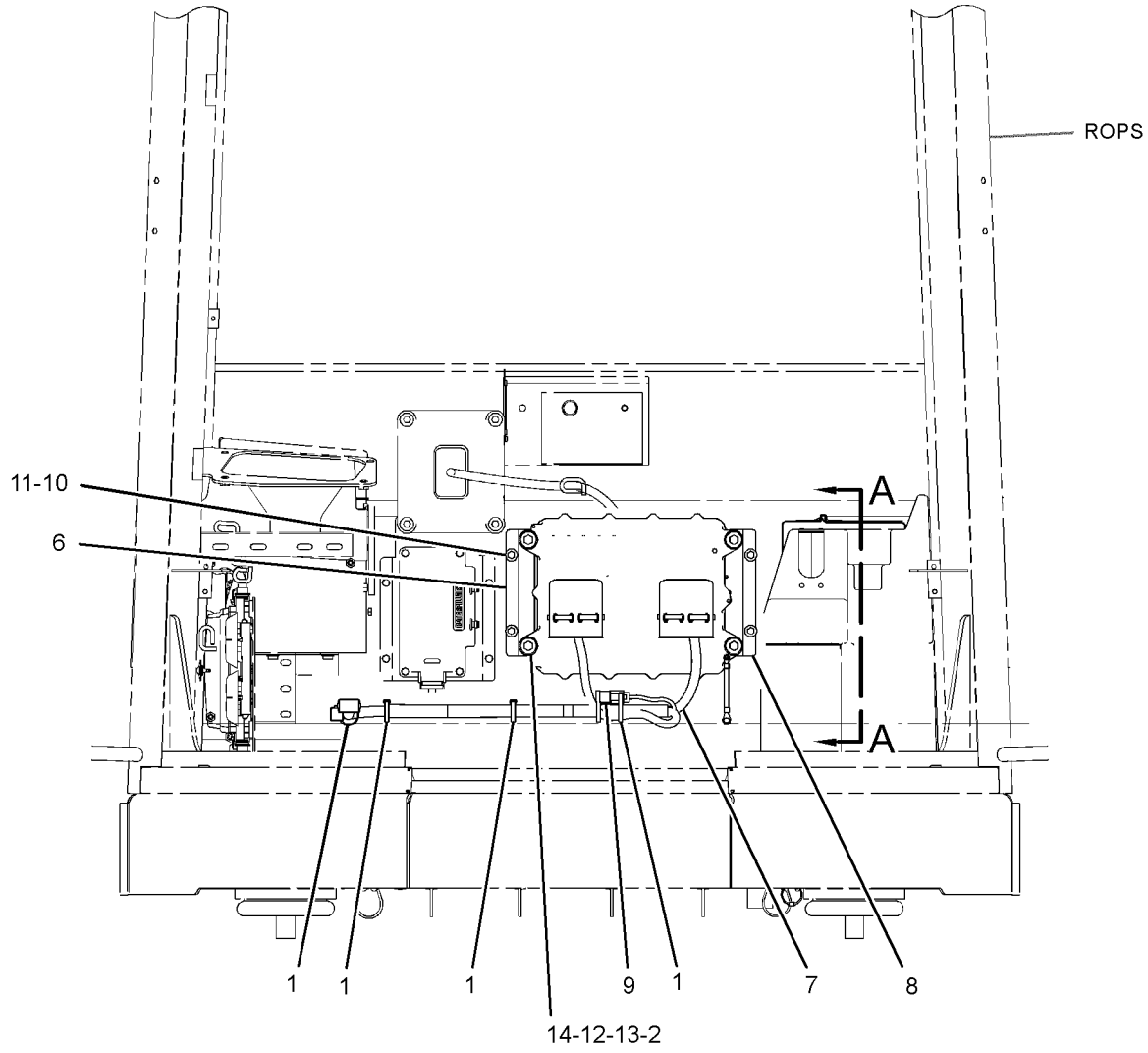

FRONT VIEW

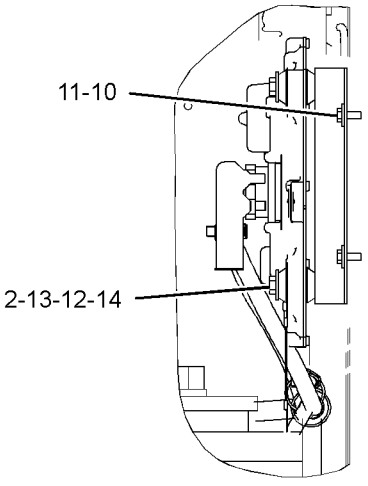

VIEW A-A

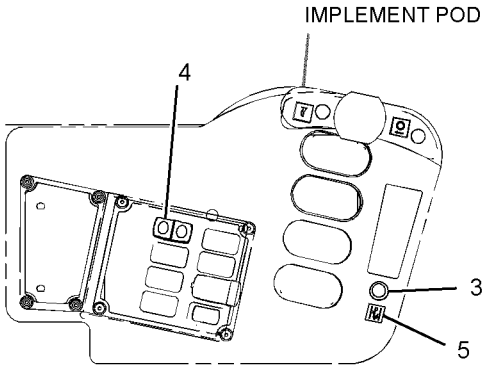

TOP VIEW
(RIGHT HAND CONSOLE)

FWD

GRAPHIC #1 **<END>** g02108074

263-5075 WIRING GP-CHASSIS

S/N: JKM1-1037

PART OF 237-7539 ELECTRICAL AR

SMCS-1408 **i03750617**

NOTE	REF NO	GRAPHIC REF	PART NUMBER	QTY	PART NAME 1 2 3 4 5 6 (PRODUCT LEVEL)	SEE PAGE
	1	1,2,3	**7K-1181**	59	STRAP-CABLE	
	2	3	**205-0353**	1	GROMMET	
	3	1	**256-6453**	1	SENSOR AS-TEMPERATURE (HYDRAULIC OIL)	
	4	2	**263-5640**	2	SPACER (11X20X40-MM THK)	
	5	2	**300-6451**	1	HARNESS AS-CHASSIS (SERVICE CENTER)	
		2	**274-3774**	2	CAP-CONNECTOR	
		2	**155-2255**	1	KIT-CONNECTING PLUG (12-PIN)	
		2	**155-2270**	7	KIT-CONNECTING PLUG (2-PIN)	
		2	**155-2260**	1	KIT-CONNECTING PLUG (3-PIN)	
					(EACH PLUG KIT INCLUDES PLUG AS, WEDGE & INTERFACE SEAL)	
		2	**8T-8737**	2	PLUG-SEAL	
E		2	**114-8844**		SLEEVE-PLASTIC (20-CM)	
		2	**9X-3402**	27	SOCKET-CONNECTOR (16-GA TO 18-GA)	
B		2	**1P-0810**		TAPE-ELECTRICAL	
E		2	**125-7875**		TUBE-HEAT SHRINK (7.44-MM DIA) (10-CM)	
	6	2	**305-7939**	1	BRACKET	
Y	7	1	**307-3159**	1	PANEL GP-CIRCUIT BREAKER	234
	8	1	**033-6028**	1	SEAL-O-RING	
	9	1,2,3	**130-5300**	4	CLIP	
	10	2	**132-5789**	1	CLIP (LADDER)	
	11	2	**314-2405**	1	SWITCH AS-PRESSURE (SERVICE BRAKE OIL)	
		2	**102-8803**	1	KIT-RECEPTACLE (3-PIN)	
					(INCLUDES RECEPTACLE AS & WEDGE)	
		2	**8T-8729**	3	PIN-CONNECTOR (16-GA TO 18-GA)	
E		2	**9X-1813**		SLEEVE (28-CM)	
	12	2	**3J-1907**	1	SEAL-O-RING	
	13	1	**4D-7794**	1	CLIP	
	14	2	**8Y-7833**	1	WIRE AS	
	15	1,2,3	**5P-9085**	6	CLIP	
	16	2	**6D-3479**	3	CLIP	
	17	1	**6D-4244**	2	CLIP	
	18	2,3	**6V-1889**	3	CLIP	
	19	2	**7M-3361**	2	GROMMET	
	20	2	**7W-9094**	1	SPACER (10.5X20X9-MM THK)	
M	21	2	**7X-2548**	2	BOLT (M12X1.75X16-MM)	
	22	1	**7X-7729**	2	WASHER (11X25X3-MM THK)	
	23	2,3	**8M-2773**	6	CLIP	
	24	1	**8S-0948**	1	CLIP	
	25	1,2,3	**8T-4121**	25	WASHER-HARD (11X21X2.5-MM THK)	
M	26	2	**8T-4133**	2	NUT (M10X1.5-THD)	
M	27	1	**8T-4136**	1	BOLT (M10X1.5X25-MM)	
M	28	1,2,3	**8T-4137**	17	BOLT (M10X1.5X20-MM)	
M	29	2	**8T-4195**	2	BOLT (M10X1.5X30-MM)	
	30	2,3	**8T-4223**	3	WASHER-HARD (13.5X25.5X3-MM THK)	
M	31	2	**8T-5005**	2	BOLT (M10X1.5X70-MM)	
M	32	1,3	**8T-4196**	2	BOLT (M10X1.5X35-MM)	
	33	2	**4S-4455**	1	CLIP	
	34	1	**7C-4354**	1	CLIP	
M	35	3	**8T-4244**	1	NUT (M12X1.75-THD)	

B-USE AS REQUIRED
E-ORDER BY THE CENTIMETER
M-METRIC PART
Y-SEPARATE ILLUSTRATION

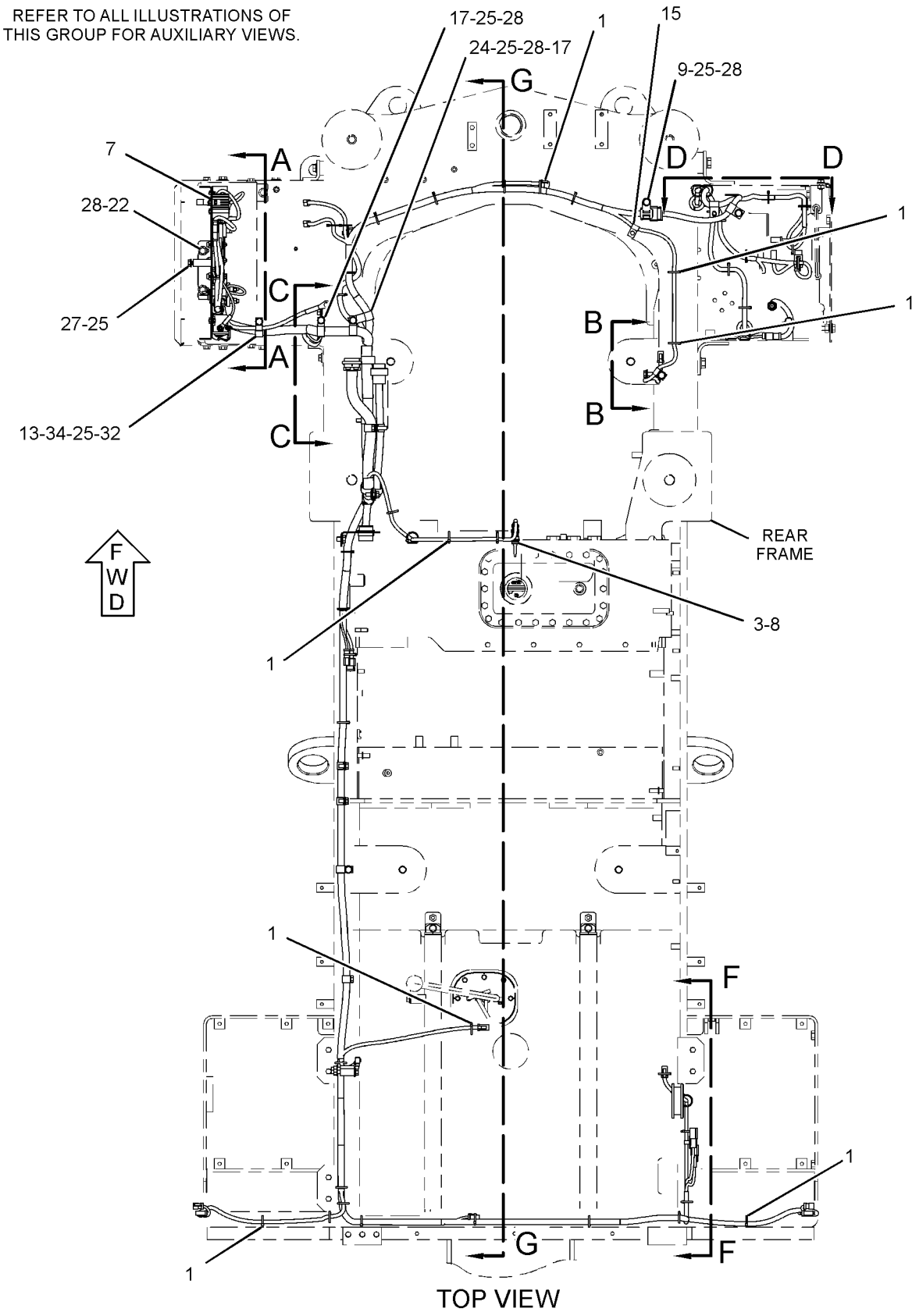

GRAPHIC #1

g01878925

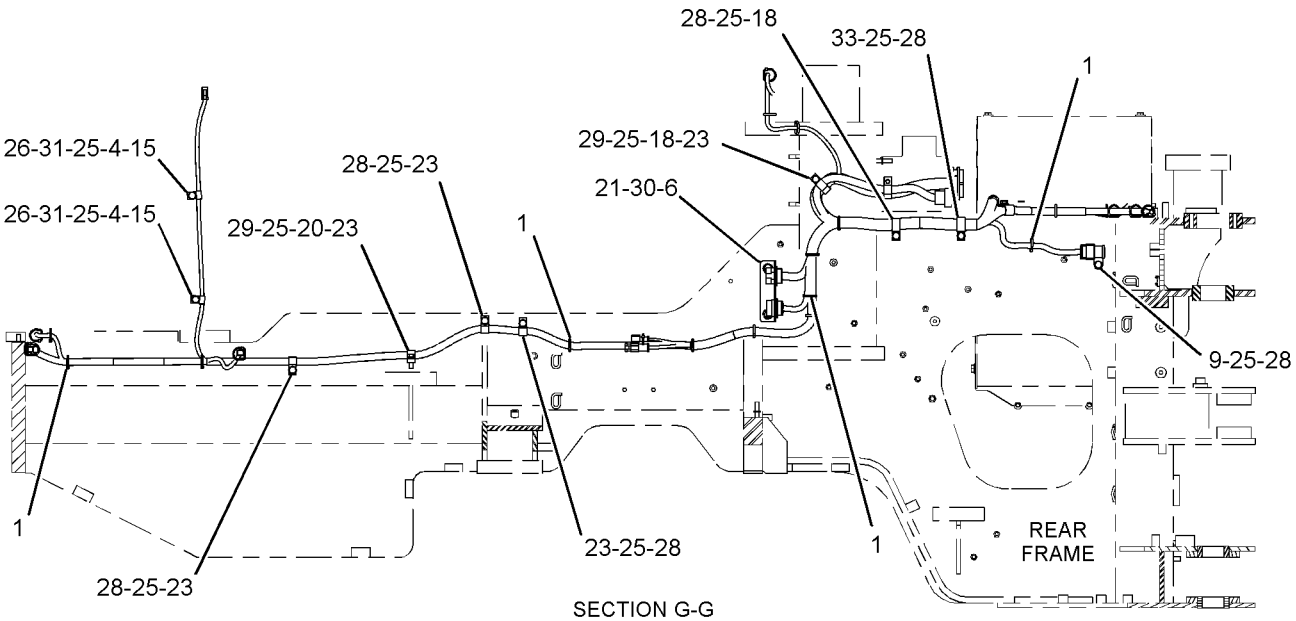

SECTION G-G

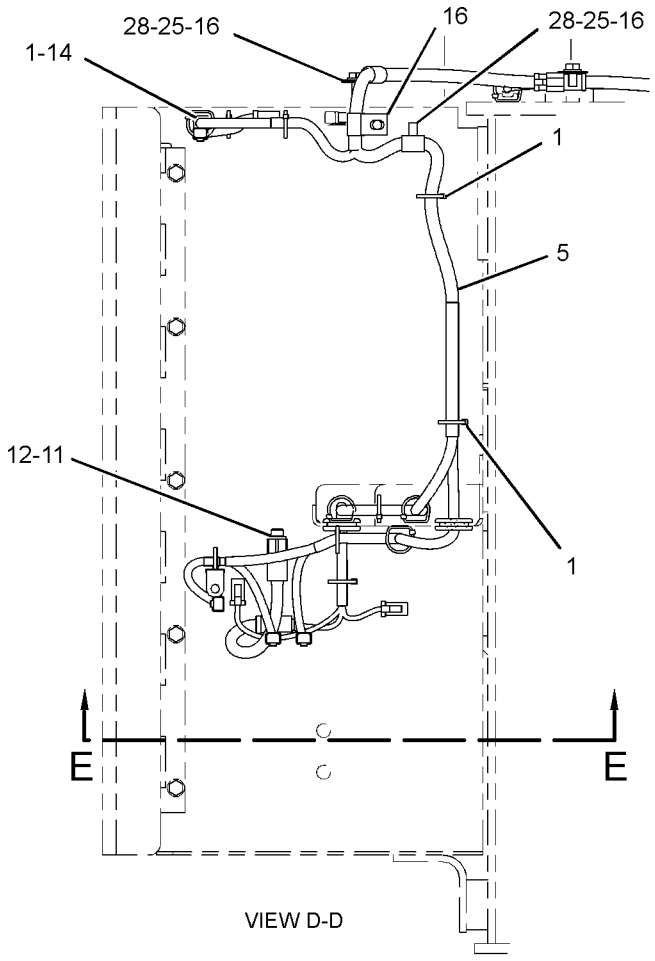

VIEW D-D

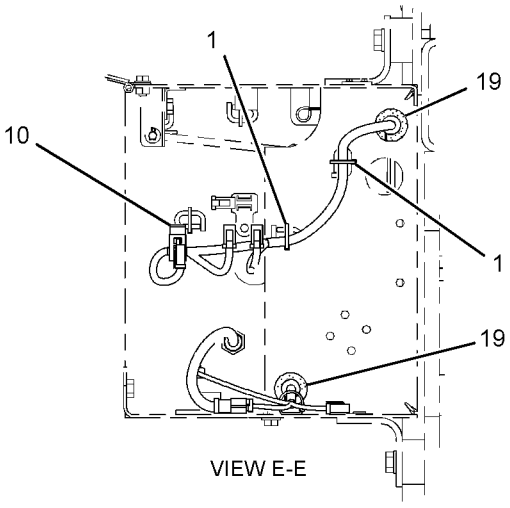

VIEW E-E

GRAPHIC #2

g01978594

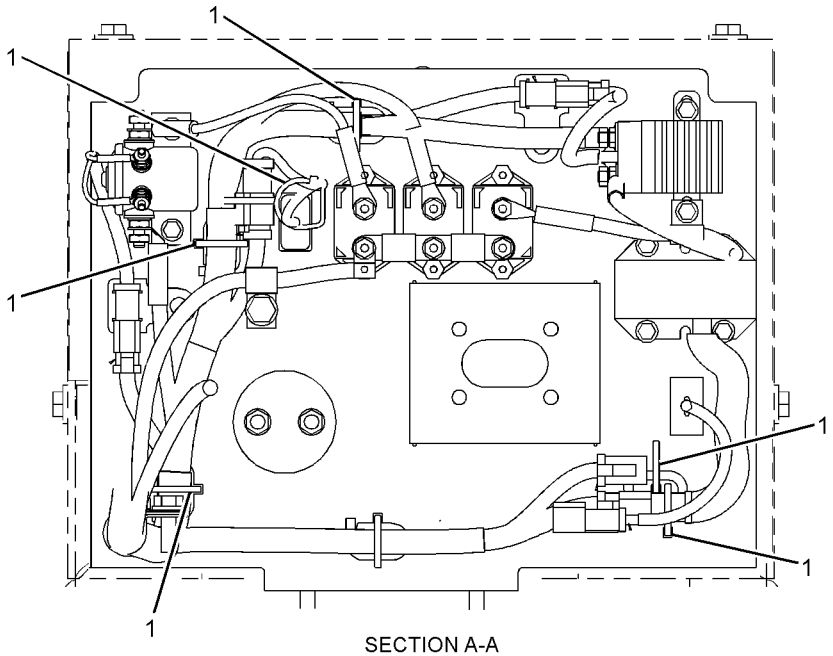

SECTION A-A

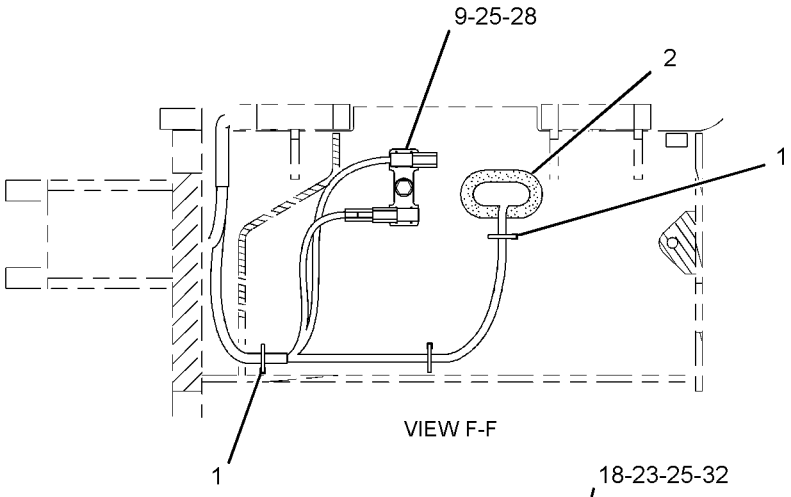

VIEW F-F

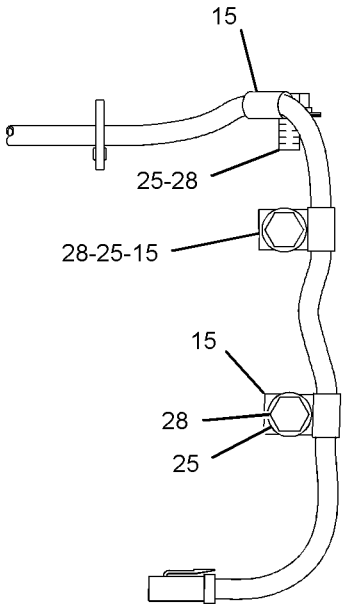

VIEW B-B

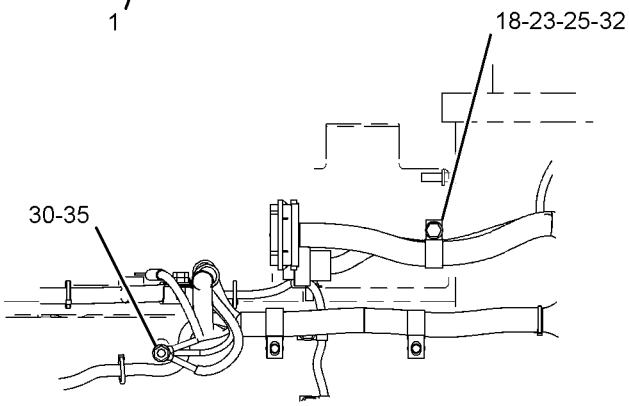

VIEW C-C

GRAPHIC #3 **<END>** g01978597

263-5075 WIRING GP-CHASSIS

S/N: JKM1038-UP

PART OF 237-7539 ELECTRICAL AR

SMCS-1408 **i03987318**

NOTE	REF NO	GRAPHIC REF	PART NUMBER	QTY	PART NAME 1 2 3 4 5 6 (PRODUCT LEVEL)	SEE PAGE
	1	1,2	**7K-1181**	59	STRAP-CABLE	
	2	1	**205-0353**	1	GROMMET	
	3	2	**256-6453**	1	SENSOR AS-TEMPERATURE (HYDRAULIC OIL)	
	4	1	**263-5640**	2	SPACER (11X20X40-MM THK)	
	5	2	**300-6451**	1	HARNESS AS-CHASSIS (SERVICE CENTER)	
		2	**274-3774**	2	CAP-CONNECTOR	
		2	**155-2255**	1	KIT-CONNECTING PLUG (12-PIN)	
		2	**155-2270**	7	KIT-CONNECTING PLUG (2-PIN)	
		2	**155-2260**	1	KIT-CONNECTING PLUG (3-PIN)	
					(EACH PLUG KIT INCLUDES PLUG AS, WEDGE & INTERFACE SEAL)	
		2	**8T-8737**	2	PLUG-SEAL	
E		2	**114-8844**		SLEEVE-PLASTIC (20-CM)	
		2	**9X-3402**	27	SOCKET-CONNECTOR (16-GA TO 18-GA)	
					—OR—	
		2	**126-1768**	27	SOCKET-CONNECTOR (14-GA)	
B		2	**1P-0810**		TAPE-ELECTRICAL	
E		2	**125-7875**		TUBE-HEAT SHRINK (7.44-MM DIA) (10-CM)	
		2	**155-2258**	1	WEDGE-PLUG LOCK (12-PIN)	
	6	2	**305-7939**	1	BRACKET	
Y	7	1	**307-3159**	1	PANEL GP-CIRCUIT BREAKER	234
	8	2	**033-6028**	1	SEAL-O-RING	
	9	1,2	**130-5300**	4	CLIP	
	10	2	**132-5789**	1	CLIP (LADDER)	
	11	2	**314-2405**	1	SWITCH AS-PRESSURE (SERVICE BRAKE OIL)	
		2	**102-8803**	1	KIT-RECEPTACLE (3-PIN)	
					(INCLUDES RECEPTACLE AS & WEDGE)	
		2	**186-3735**	3	PIN-CONNECTOR (16-GA TO 18-GA)	
E		2	**9X-1813**		SLEEVE (28-CM)	
	12	2	**3J-1907**	1	SEAL-O-RING	
	13	2	**4D-7794**	1	CLIP	
	14	2	**8Y-7833**	1	WIRE AS	
	15	1,2	**5P-9085**	6	CLIP	
	16	2	**6D-3479**	3	CLIP	
	17	2	**6D-4244**	2	CLIP	
	18	2	**6V-1889**	3	CLIP	
	19	2	**7M-3361**	2	GROMMET	
	20	1	**7W-9094**	1	SPACER (10.5X20X9-MM THK)	
M	21	2	**7X-2548**	2	BOLT (M12X1.75X16-MM)	
	22	2	**7X-7729**	2	WASHER (11X25X3-MM THK)	
	23	1,2	**8M-2773**	6	CLIP	
	24	2	**8S-0948**	1	CLIP	
C	25	1,2	**8T-4121**	26	WASHER-HARD (11X21X2.5-MM THK)	
CM	26	1	**8T-4133**	3	NUT (M10X1.5-THD)	
M	27	2	**8T-4136**	1	BOLT (M10X1.5X25-MM)	
M	28	1,2	**8T-4137**	17	BOLT (M10X1.5X20-MM)	
M	29	1,2	**8T-4195**	2	BOLT (M10X1.5X30-MM)	
	30	2	**8T-4223**	3	WASHER-HARD (13.5X25.5X3-MM THK)	
M	31	1	**8T-5005**	2	BOLT (M10X1.5X70-MM)	
M	32	2	**8T-4196**	2	BOLT (M10X1.5X35-MM)	
	33	2	**4S-4455**	1	CLIP	
	34	2	**7C-4354**	1	CLIP	
M	35	2	**8T-4244**	1	NUT (M12X1.75-THD)	
CY	36	2	*307-3124*	1	BRACKET GP-MOUNTING	178

B-USE AS REQUIRED
C-CHANGE FROM PREVIOUS TYPE
E-ORDER BY THE CENTIMETER
M-METRIC PART
Y-SEPARATE ILLUSTRATION

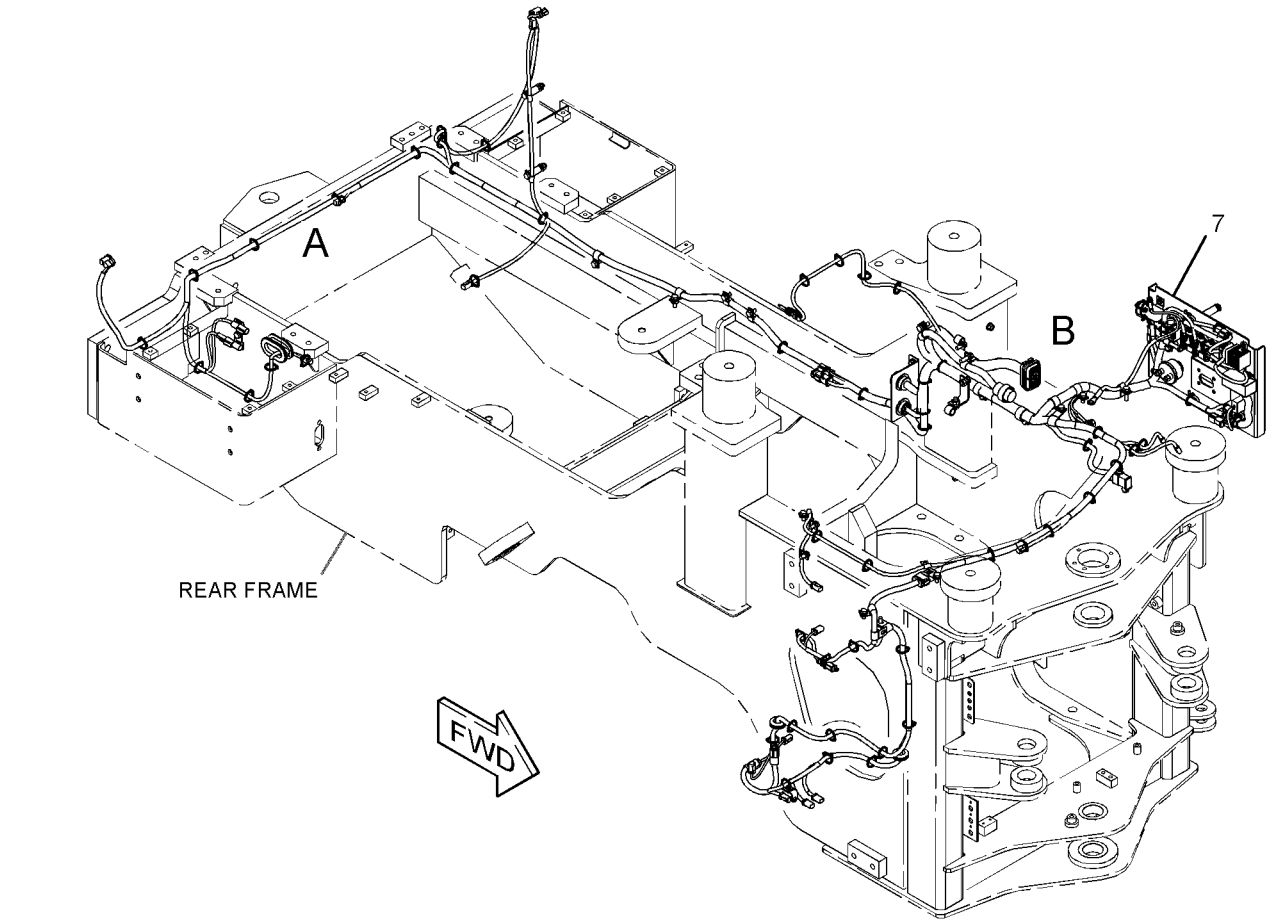

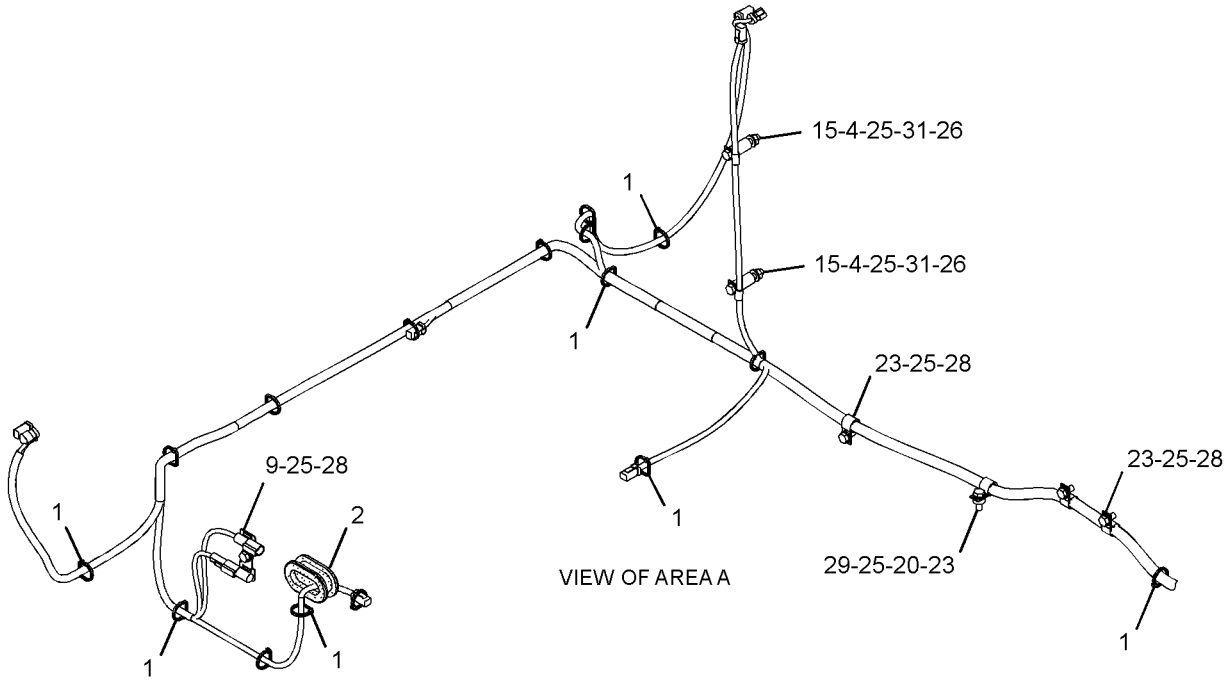

GRAPHIC #1 g02161117

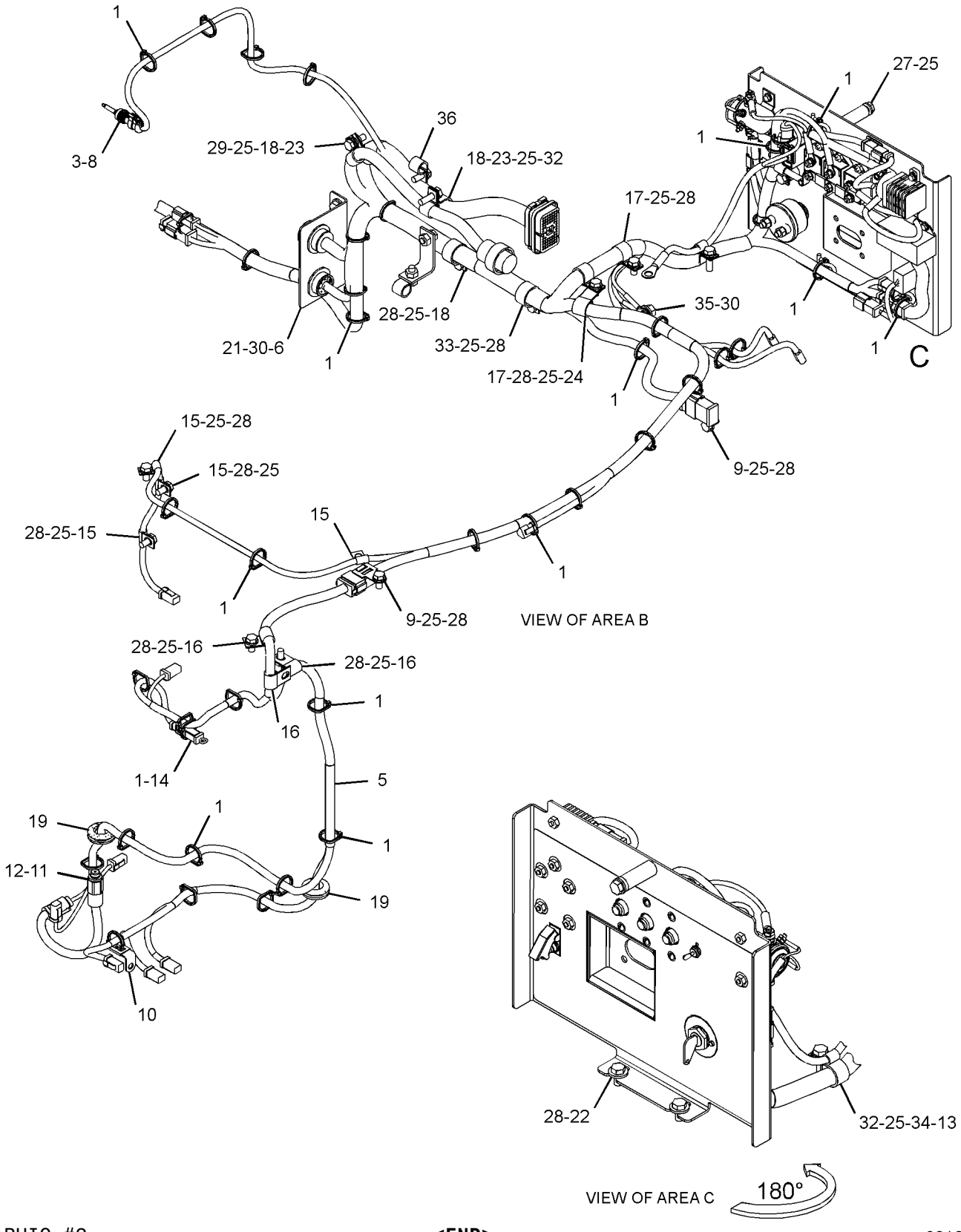

GRAPHIC #2 **<END>** g02161118

311-0017 WIRING GP-CHASSIS

S/N: JKM1-UP

PART OF 311-0013 CONTROL AR-FAN

AN ATTACHMENT

SMCS-1408 **i03635467**

NOTE	REF NO	GRAPHIC REF	PART NUMBER	QTY	PART NAME 1 2 3 4 5 6 (PRODUCT LEVEL)	SEE PAGE
B	1	1	**7K-1181**	16	STRAP-CABLE	
	2	1	**319-9349**	1	HARNESS AS-CHASSIS (VARIABLE PITCH FAN)	
		1	**155-2270**	2	KIT-CONNECTING PLUG (2-PIN)	
					(EACH PLUG KIT INCLUDES PLUG AS, WEDGE & INTERFACE SEAL)	
		1	**102-8803**	1	KIT-RECEPTACLE (3-PIN)	
					(INCLUDES RECEPTACLE AS & WEDGE)	
		1	**9X-3401**	2	PIN-CONNECTOR (16-GA TO 18-GA)	
					—OR—	
		1	**126-1767**	2	PIN-CONNECTOR (14-GA)	
		1	**8T-8737**	1	PLUG-SEAL	
E		1	**114-8843**		SLEEVE-PLASTIC (60-CM)	
		1	**9X-3402**	4	SOCKET-CONNECTOR (16-GA TO 18-GA)	
					—OR—	
		1	**126-1768**	4	SOCKET-CONNECTOR (14-GA)	
E		1	**125-7874**		TUBE-HEAT SHRINK (5.72-MM DIA) (10-CM)	
		1	**3E-3371**	1	WEDGE-RECEPTACLE LOCK (3-PIN)	
	3	1	**248-2841**	1	RELAY AS (24-VOLT)	

B-USE AS REQUIRED
E-ORDER BY THE CENTIMETER

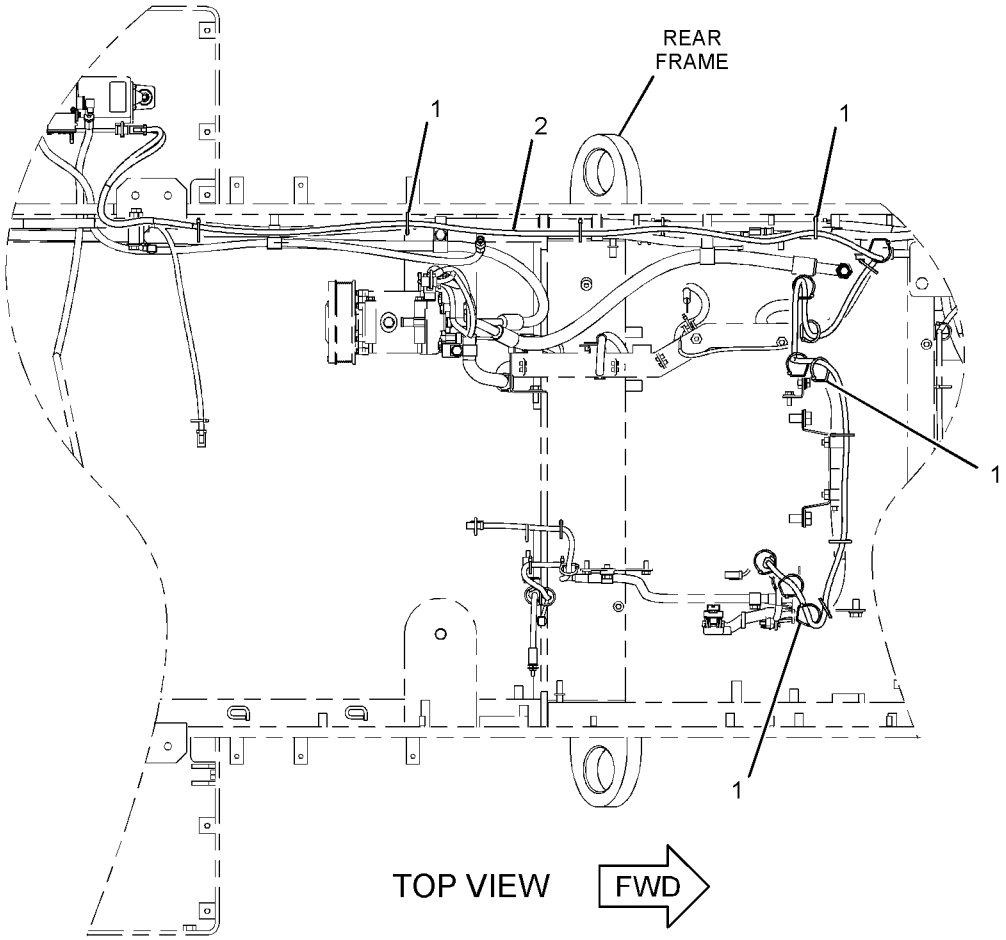

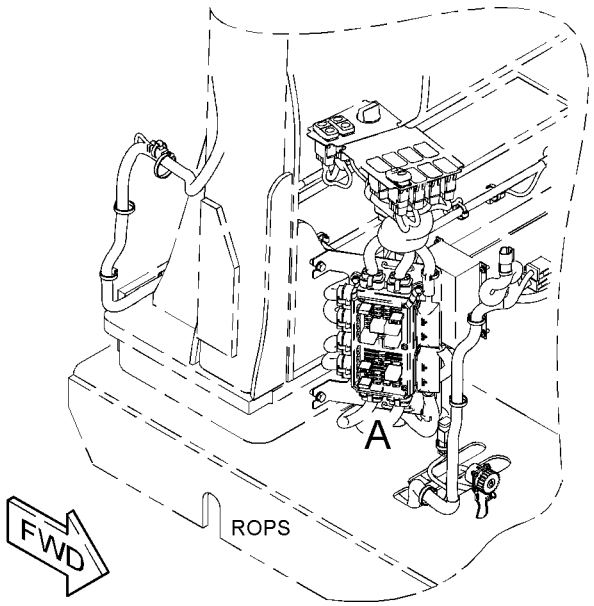

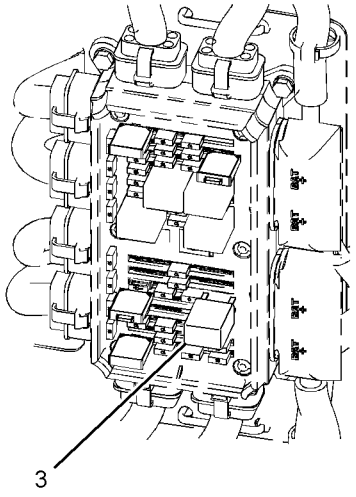

VIEW OF AREA A

GRAPHIC #1 **<END>** g01958280

267-4800 WIRING GP-COMMUNICATION

S/N: JKM1-UP

PART OF 330-5954 INSTALLATION AR-COMMUNICATION

AN ATTACHMENT

SMCS-1408, 7606 **i03881371**

NOTE	REF NO	GRAPHIC REF	PART NUMBER	QTY	PART NAME 1 2 3 4 5 6 (PRODUCT LEVEL)	SEE PAGE
	1	1	**3S-2093**	4	STRAP-CABLE	
	2	1	**305-4377**	1	HARNESS AS-SENSOR	
		1	**155-2260**	2	KIT-CONNECTING PLUG (3-PIN)	
					(EACH INCLUDES PLUG AS, WEDGE & INTERFACE SEAL)	
E		1	**114-8843**		SLEEVE-PLASTIC (40-CM)	
		1	**9X-3402**	6	SOCKET-CONNECTOR (16-GA TO 18-GA)	
					—OR—	
		1	**126-1768**	6	SOCKET-CONNECTOR (14-GA)	
Y	3	1	*342-8428*	1	WIRING GP-CAB	323
	4	1	**130-5300**	1	CLIP	
	5	1	**132-5789**	2	CLIP	
	6	1	**2M-3432**	1	GROMMET	
	7	1	**4P-7581**	1	CLIP	
	8	1	**5P-9297**	1	CLIP	
	9	1	**8T-4121**	4	WASHER-HARD (11X21X2.5-MM THK)	
M	10	1	**8T-4137**	4	BOLT (M10X1.5X20-MM)	

E-ORDER BY THE CENTIMETER
M-METRIC PART
Y-SEPARATE ILLUSTRATION

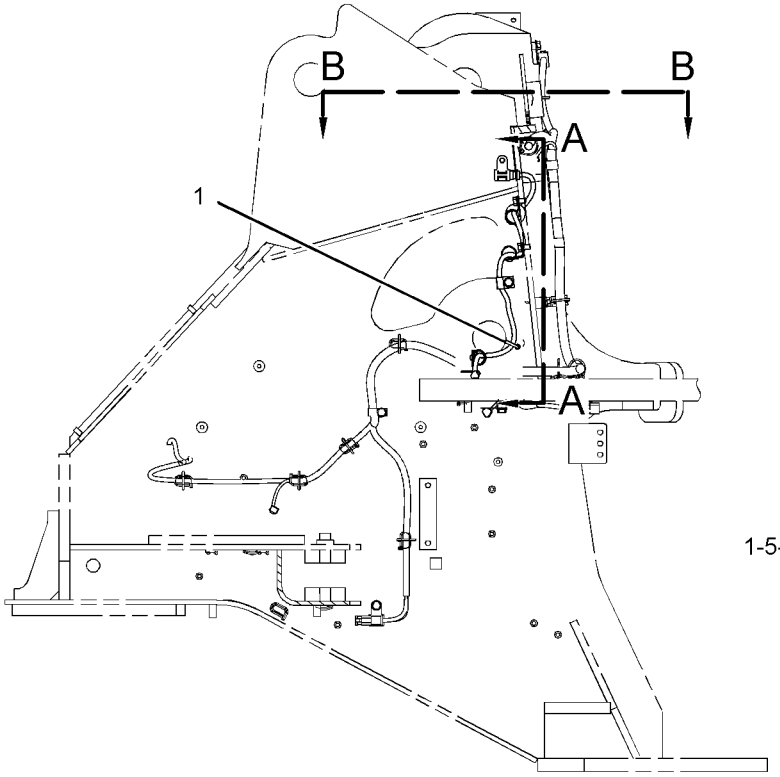

RIGHT SIDE VIEW
(INSIDE VIEW OF TOWER)

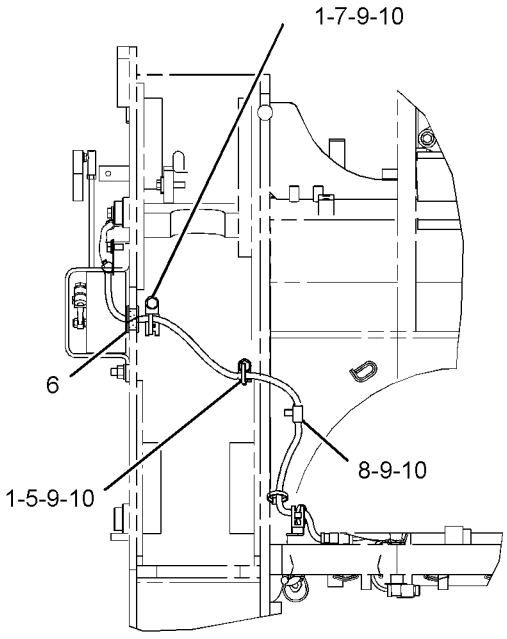

VIEW A-A

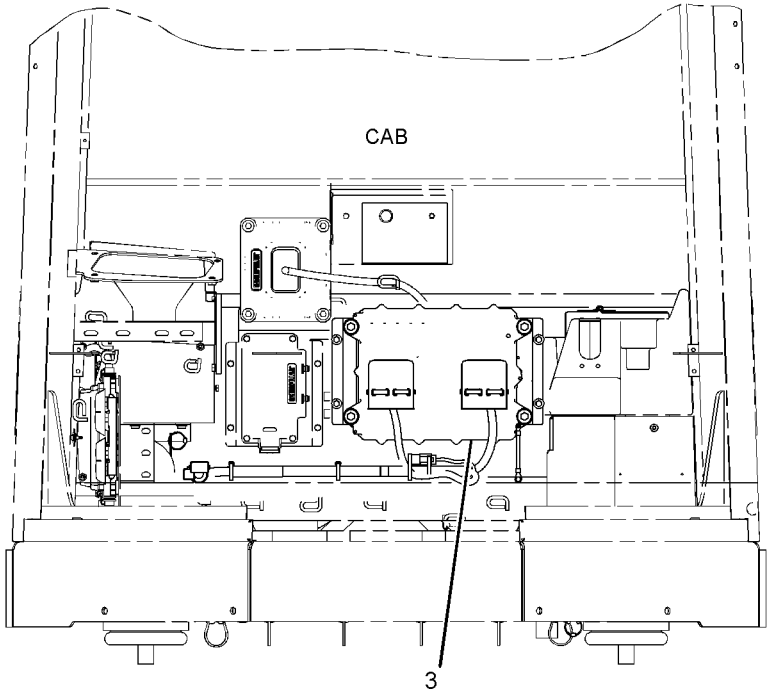

REAR VIEW

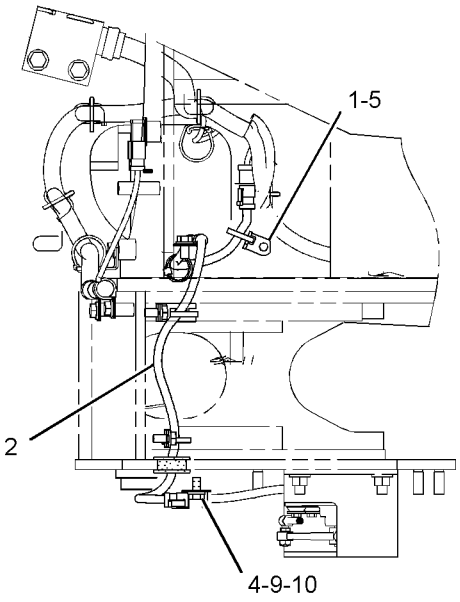

VIEW B-B

GRAPHIC #1 **<END>** g02082439

281-9476 WIRING GP-COMMUNICATION–PRODUCT LINK 300

S/N: JKM1-UP
PART OF 266-8583 INSTALLATION AR-COMMUNICATION
AN ATTACHMENT

SMCS-1408, 7606 **i03548582**

NOTE	REF NO	GRAPHIC REF	PART NUMBER	QTY	PART NAME 1 2 3 4 5 6 (PRODUCT LEVEL)	SEE PAGE
	1	1	**3S-2093**	17	STRAP-CABLE	
	2	1	**209-7530**	1	SPACER (14X25X40-MM THK)	
	3	1	**8C-5607**	8	MOUNT-ISOLATION	
	4	1	**8C-5608**	4	SPACER (6.5X9.5X25.4-MM THK)	
	5	1	**230-1340**	1	FILM-WARNING (PRODUCT LINK RADIO, U.S.)	
Y	6	1	**262-1421**	1	ELECTRONICS GP-COMMUNICATION (PRODUCT LINK 300)	183
Y	7	1	**263-9088**	1	RADIO GP-COMMUNICATION (PRODUCT LINK 121SR)	1006
	8	1	**266-9958**	1	PLATE	
	9	1	**280-7287**	1	BRACKET AS	
M		1	**6V-9632**	6	NUT-WELD (M6X1-THD)	
	10	1	**281-9480**	1	HARNESS AS-MONITOR	
	11	1	**132-5789**	1	CLIP	
	12	1	**2D-2751**	1	GROMMET	
	13	1	**319-6804**	1	ANTENNA AS	
		1	**301-0589**	1	ANTENNA (FLEXIBLE)	
M	14	1	**5C-9553**	4	BOLT (M6X1X16-MM)	
	15	1	**5P-1076**	2	WASHER-HARD (13.5X30X4-MM THK)	
M	16	1	**7X-2533**	4	BOLT (M6X1X35-MM)	
M	17	1	**8T-4138**	4	BOLT (M6X1X20-MM)	
M	18	1	**8T-4244**	1	NUT (M12X1.75-THD)	
M	19	1	**8T-6868**	1	BOLT (M12X1.75X80-MM)	
	20	1	**9X-6165**	4	WASHER (6.5X22X2.5-MM THK)	
	21	1	**9X-8256**	8	WASHER (6.6X12X2-MM THK)	

M-METRIC PART
Y-SEPARATE ILLUSTRATION

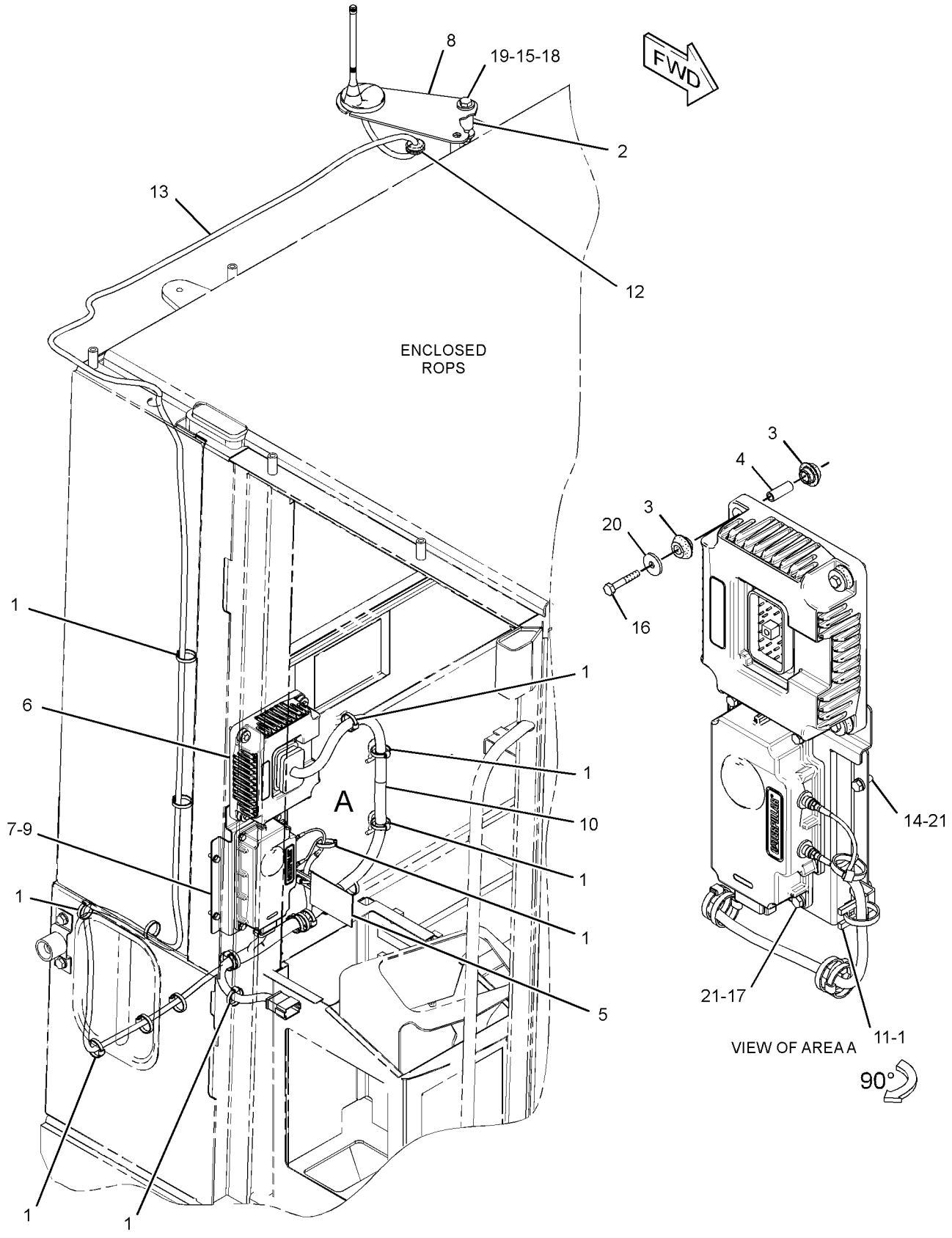

GRAPHIC #1 **<END>** g01442054

263-5073 WIRING GP-ENGINE

S/N: JKM1-UP

PART OF 237-7539 ELECTRICAL AR

SMCS-1403, 1408 **i03811251**

NOTE	REF NO	GRAPHIC REF	PART NUMBER	QTY	PART NAME 1 2 3 4 5 6 (PRODUCT LEVEL)	SEE PAGE
	1	1,2	**7K-1181**	33	STRAP-CABLE	
	2	1,2	**124-3019**	2	BRACKET AS	
					(EACH INCLUDES)	
M		1,2	**8T-3490**	1	NUT-WELD (M10X1.5-THD)	
	3	2	**305-3684**	1	PLATE-IDENTIFICATION (FUEL PRIMING PUMP ON, OFF)	
	4	1	**218-4935**	1	SUPPRESSOR-ARC	
	5	2	**260-2024**	1	BRACKET AS	
	6	1	**300-6443**	1	HARNESS AS-ENGINE	
		1	**7T-0094**	6	SOCKET-CONNECTOR (12-GA TO 14-GA)	
B		1	**1P-0810**		TAPE-ELECTRICAL	
		1	**9G-4343**	1	TERMINAL-RING (4-GA, 1/4-IN SCREW)	
		1	**9G-4344**		TERMINAL-RING (4-GA, 1/2-IN SCREW)	
		1	**152-5542**	1	TERMINAL AS (6-GA TO 8-GA)	
		1	**7N-9017**	1	TERMINAL-RING (18-GA TO 22-GA, NO. 10 SCREW)	
		1	**3T-4688**	1	TERMINAL-RING (4-GA, 7/16-IN SCREW)	
E		1	**125-7874**		TUBE-HEAT SHRINK (5.72-MM DIA) (30-CM)	
E		1	**125-7875**		TUBE-HEAT SHRINK (7.44-MM DIA) (15-CM)	
E		1	**210-8958**		TUBE-HEAT SHRINK (24-MM DIA) (10-CM)	
		1	**8T-8827**	1	BOOT (RED)	
		1	**135-2543**	1	BOOT (RED)	
		1	**9X-3401**	214	PIN-CONNECTOR (16-GA TO 18-GA)	
		1	**155-2270**	6	KIT-CONNECTING PLUG (2-PIN)	
		1	**155-2260**	4	KIT-CONNECTING PLUG (3-PIN)	
					(EACH PLUG KIT INCLUDES PLUG AS, WEDGE & INTERFACE SEAL)	
		1	**8T-8737**	15	PLUG-SEAL	
		1	**7G-7919**	1	PLUG-SEAL	
		1	**7G-7920**	1	PLUG-SEAL	
		1	**102-8802**	1	KIT-RECEPTACLE (2-PIN)	
					(INCLUDES RECEPTACLE AS & WEDGE)	
		1	**126-1766**	23	SOCKET-CONNECTOR (14-GA TO 18-GA)	
		1	**204-6195**	1	SOCKET-CONNECTOR (18-PIN)	
	7	1	**305-4378**	1	BRACKET AS	
	8	1	**307-3100**	1	BRACKET AS	
	9	1	**307-3101**	1	BRACKET	
	10	1	**326-6550**	1	BRACKET AS	
	11	2	**101-9759**	1	SPACER (9X20X39.2-MM THK)	
	12	1,2	**130-5300**	3	CLIP	
	13	1,2	**132-5789**	4	CLIP	
	14	2	**134-2540**	1	RESISTOR AS-CONNECTION (3-PIN)	
	15	1,2	**1S-0994**	3	CLIP	
	16	2	**204-8000**	1	MOUNTING-CABLE TIE	
	17	2	**260-5864**	1	SWITCH AS-TOGGLE (FUEL PRIMING PUMP)	
		2	**102-8803**	1	KIT-RECEPTACLE (3-PIN)	
					(INCLUDES RECEPTACLE AS & WEDGE)	
		2	**8T-8729**	3	PIN-CONNECTOR (16-GA TO 18-GA)	
E		2	**112-4550**		SLEEVE (21-CM)	
	18	2	**3E-4352**	1	WASHER-HARD (8.8X20.5X2.5-MM THK)	
	19	1	**3S-2093**	2	STRAP-CABLE	
	20	1	**4K-8864**	1	CLIP	
	21	1	**4P-7429**	1	CLIP	
	22	2	**5P-4116**	1	WASHER-HARD (8.8X20.5X2-MM THK)	
	23	2	**5P-9085**	1	CLIP	
	24	1,2	**6D-4246**	5	CLIP	

263-5073 **WIRING GP-ENGINE** *(contd.)* **i03811251**

NOTE	REF NO	GRAPHIC REF	PART NUMBER	QTY	PART NAME 1 2 3 4 5 6 (PRODUCT LEVEL)	SEE PAGE
M	25	2	**7X-2552**	2	BOLT (M16X2X30-MM)	
	26	1	**7X-7729**	2	WASHER (11X25X3-MM THK)	
	27	1,2	**8T-4121**	10	WASHER-HARD (11X21X2.5-MM THK)	
	28	2	**8T-4122**	2	WASHER-HARD (17X32X3.5-MM THK)	
M	29	1,2	**8T-4136**	8	BOLT (M10X1.5X25-MM)	
M	30	1,2	**8T-4137**	4	BOLT (M10X1.5X20-MM)	
M	31	1	**8T-4179**	1	BOLT (M12X1.75X20-MM)	
M	32	1,2	**8T-4189**	2	BOLT (M8X1.25X20-MM)	
M	33	1	**8T-4192**	1	BOLT (M12X1.75X25-MM)	
	34	1	**8T-4223**	2	WASHER-HARD (13.5X25.5X3-MM THK)	
	35	1	**8T-4224**	1	WASHER-HARD (8.8X16X2-MM THK)	
M	36	2	**8T-7329**	1	BOLT (M8X1.25X55-MM)	

B-USE AS REQUIRED
E-ORDER BY THE CENTIMETER
M-METRIC PART

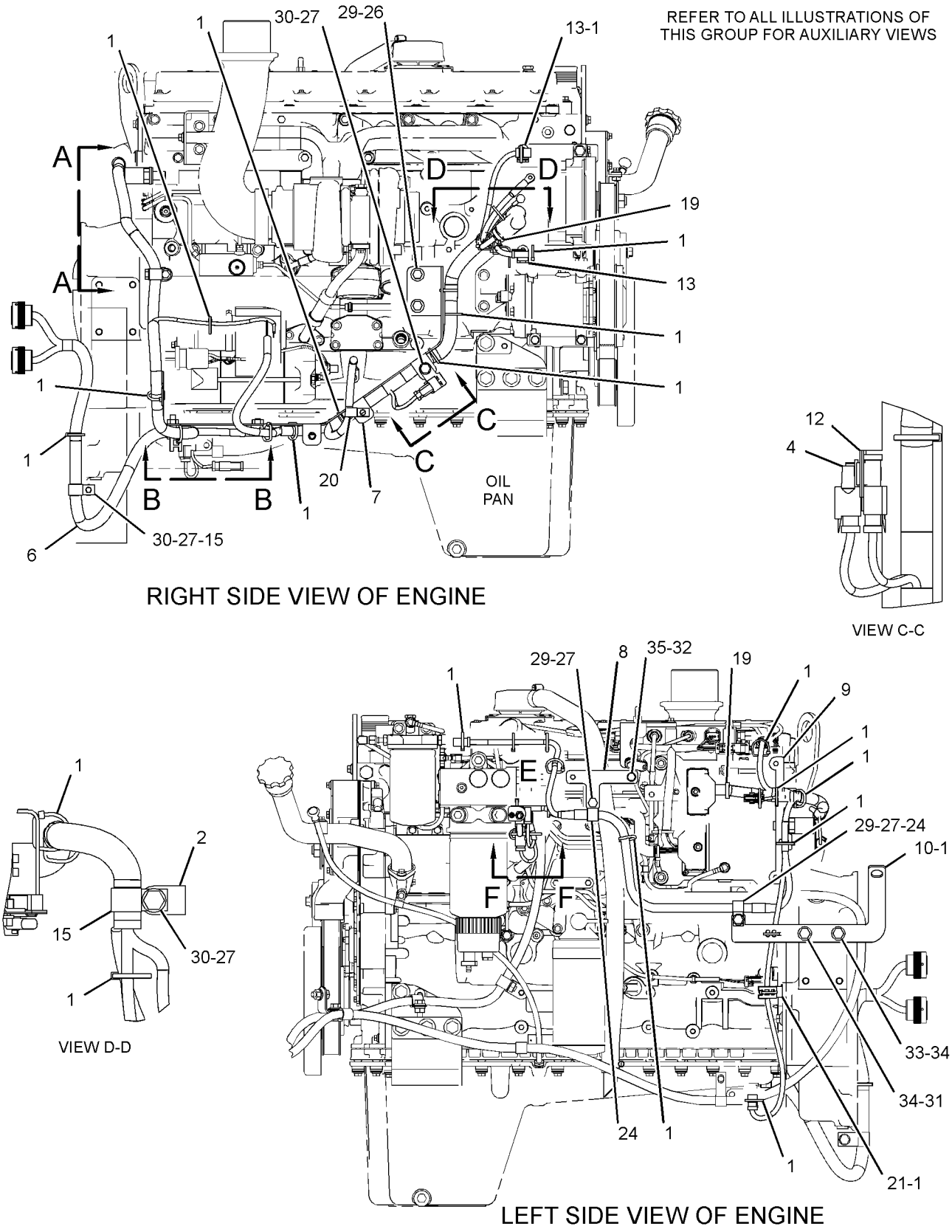

GRAPHIC #1 g02144817

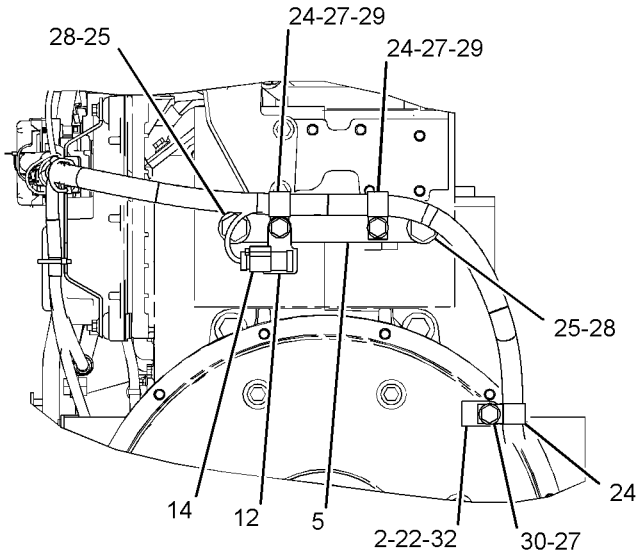

VIEW A-A

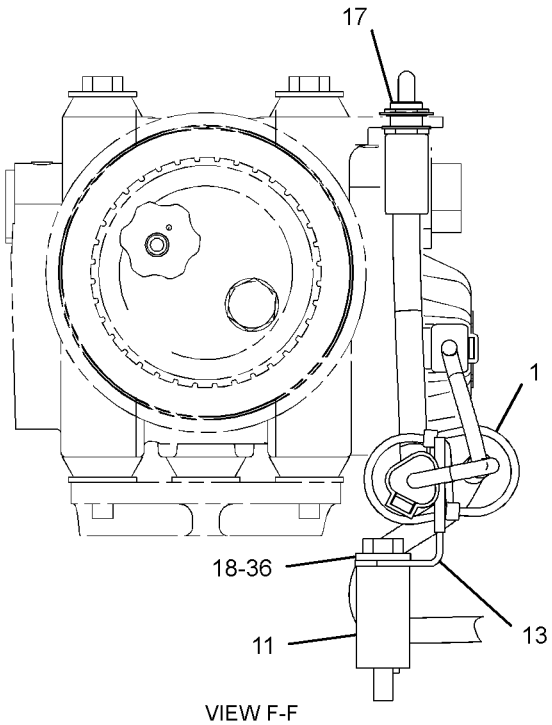

VIEW F-F

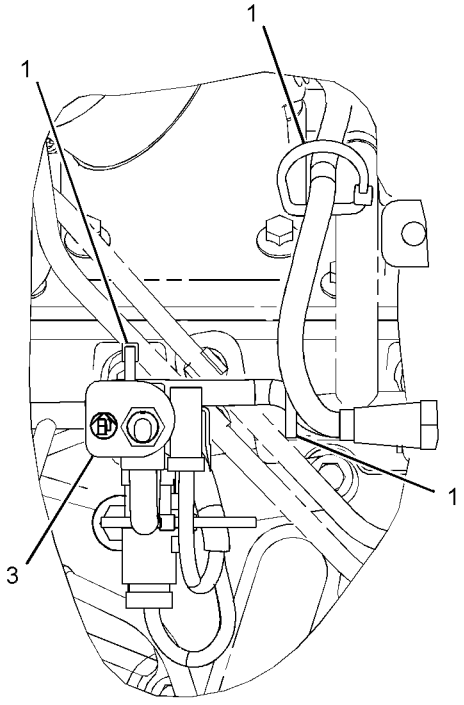

VIEW OF AREA E

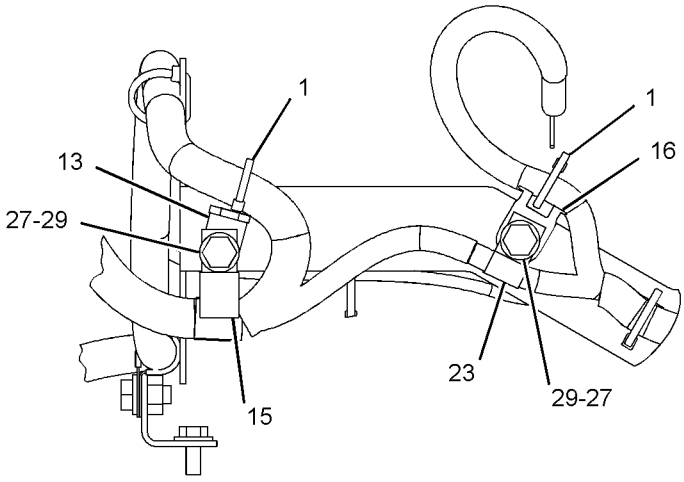

VIEW B-B

GRAPHIC #2 **<END>** g02144818

292-8508 WIRING GP-ENGINE

S/N: C6E1-UP; G9G1-UP

PART OF 242-1382 ENGINE AR-PRIMARY

SMCS-1403, 1408 **i02917017**

NOTE	REF NO	GRAPHIC REF	PART NUMBER	QTY	PART NAME 1 2 3 4 5 6 (PRODUCT LEVEL)	SEE PAGE
	1	1	**293-1880**	1	BRACKET	
	2	1	**217-9039**	3	STRAP-CABLE	
	3	1	**278-5209**	1	BRACKET	
	4	1	**278-5210**	1	BOLT	
	5	1	**260-5541**	1	HARNESS AS-ENGINE	

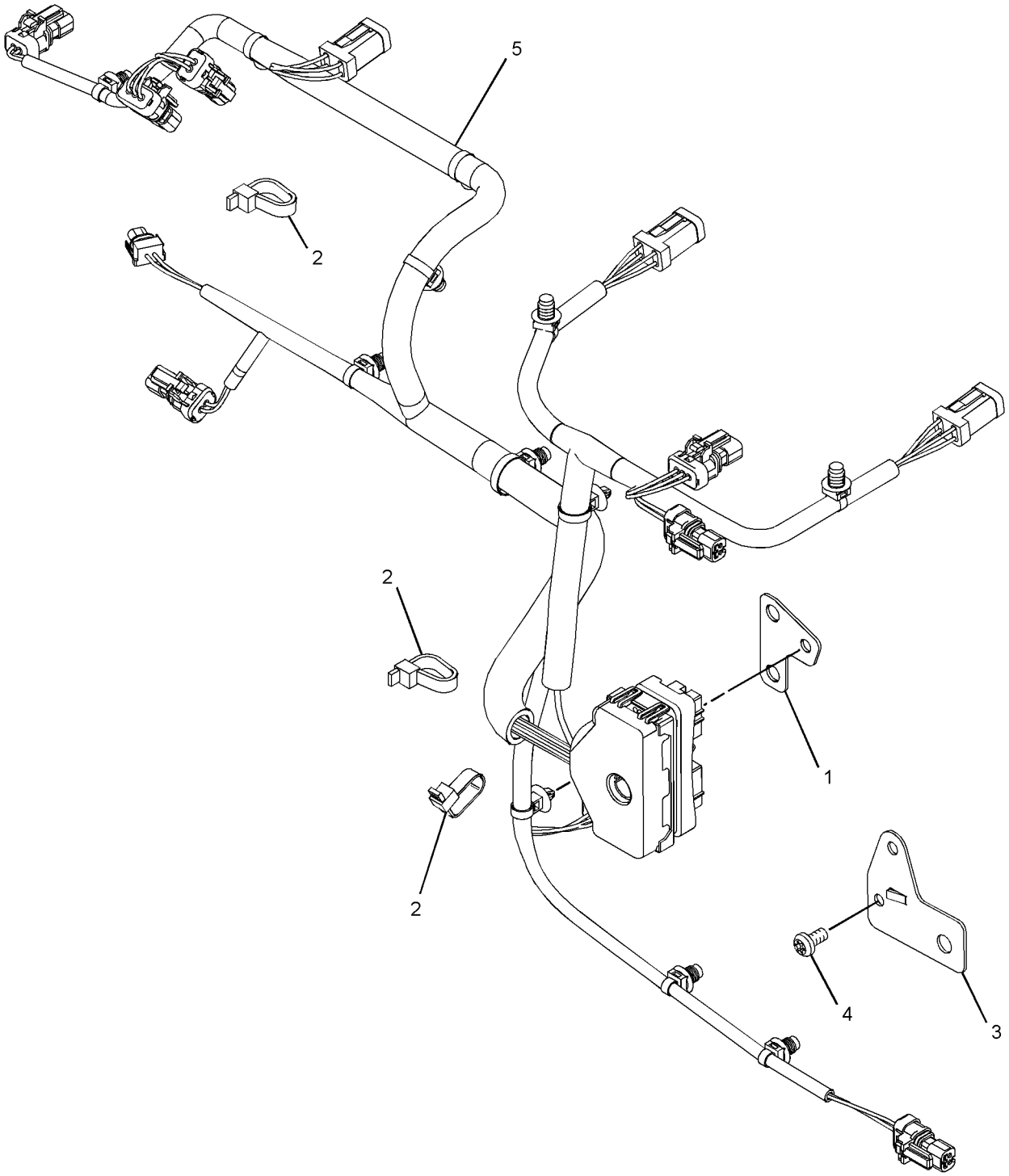

GRAPHIC #1 **<END>** g01447756

263-5072 WIRING GP-FRONT

S/N: JKM1-439

PART OF 237-7539 ELECTRICAL AR

SMCS-5734 **i02906543**

NOTE	REF NO	GRAPHIC REF	PART NUMBER	QTY	PART NAME 1 2 3 4 5 6 (PRODUCT LEVEL)	SEE PAGE
	1	2	**4V-1939**	2	CLAMP	
	2	2	**107-4749**	1	PLATE	
	3	1,2	**7K-1181**	20	STRAP-CABLE	
	4	1	**172-4871**	1	BRACKET AS	
	5	1	**300-6440**	1	HARNESS AS-FRONT	
	6	1	**305-4370**	1	BRACKET AS	
	7	1	**067-2551**	1	CLIP	
	8	1	**124-9633**	3	CLIP	
	9	1,2	**130-5300**	7	CLIP	
	10	1,2	**132-5789**	2	CLIP (LADDER)	
	11	1	**1S-0994**	2	CLIP	
	12	1,2	**4D-7794**	6	CLIP	
	13	1,2	**4K-8864**	4	CLIP	
	14	1	**8K-2665**	4	CLAMP-HALF	
	15	1,2	**8T-4121**	23	WASHER-HARD (11X21X2.5-MM THK)	
M	16	1,2	**8T-4137**	22	BOLT (M10X1.5X20-MM)	
M	17	1	**8T-4139**	2	BOLT (M12X1.75X30-MM)	
M	18	2	**8T-4191**	1	BOLT (M10X1.5X16-MM)	
M	19	1	**8T-4192**	4	BOLT (M12X1.75X25-MM)	
	20	1	**8T-4223**	6	WASHER-HARD (13.5X25.5X3-MM THK)	
M	21	2	**9X-2480**	2	BOLT (M6X1X45-MM)	
	22	1,2	**9X-8256**	2	WASHER (6.6X12X2-MM THK)	
	23	1	**205-7299**	4	CLIP	
	24	1	**4P-7581**	1	CLIP	

M-METRIC PART

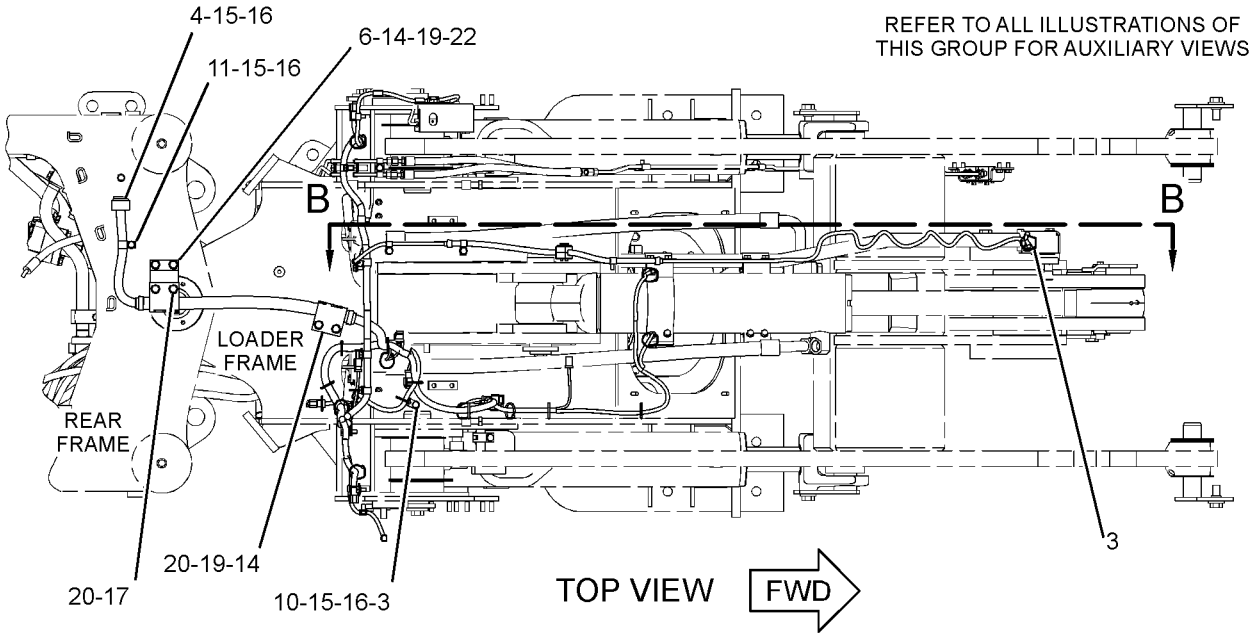

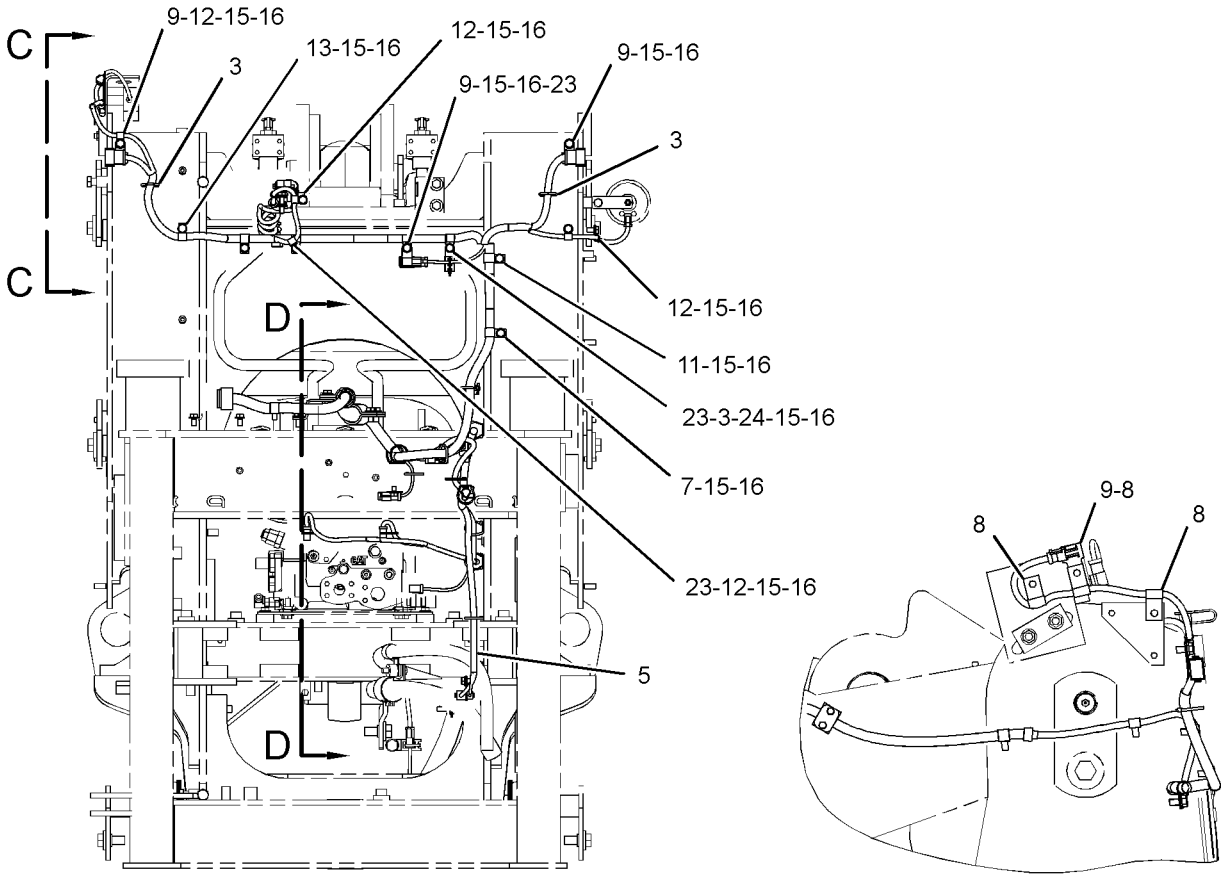

GRAPHIC #1 g01420547

263-5072 **WIRING GP-FRONT** *(contd.)* **i02906543**

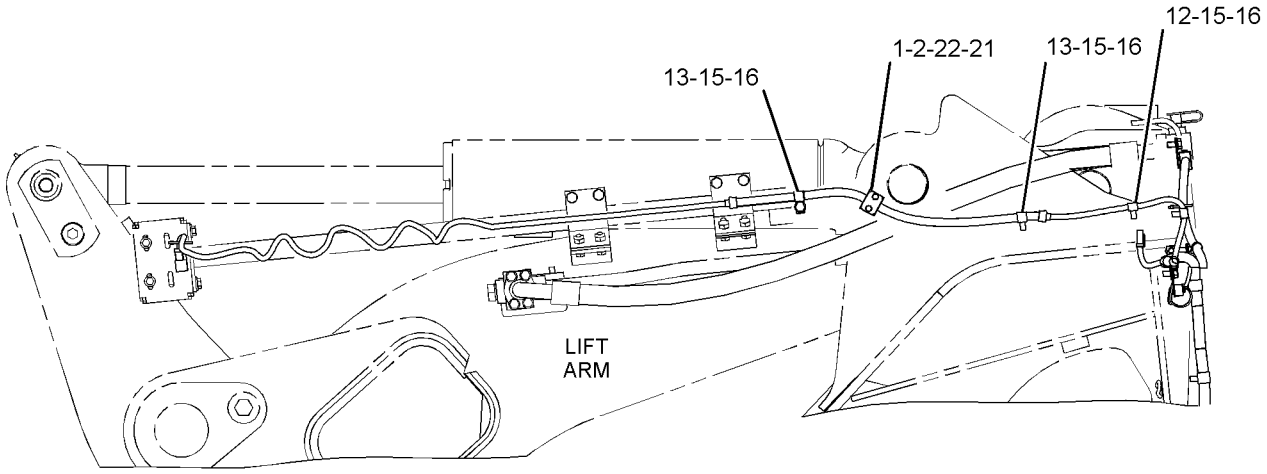

SECTION B-B

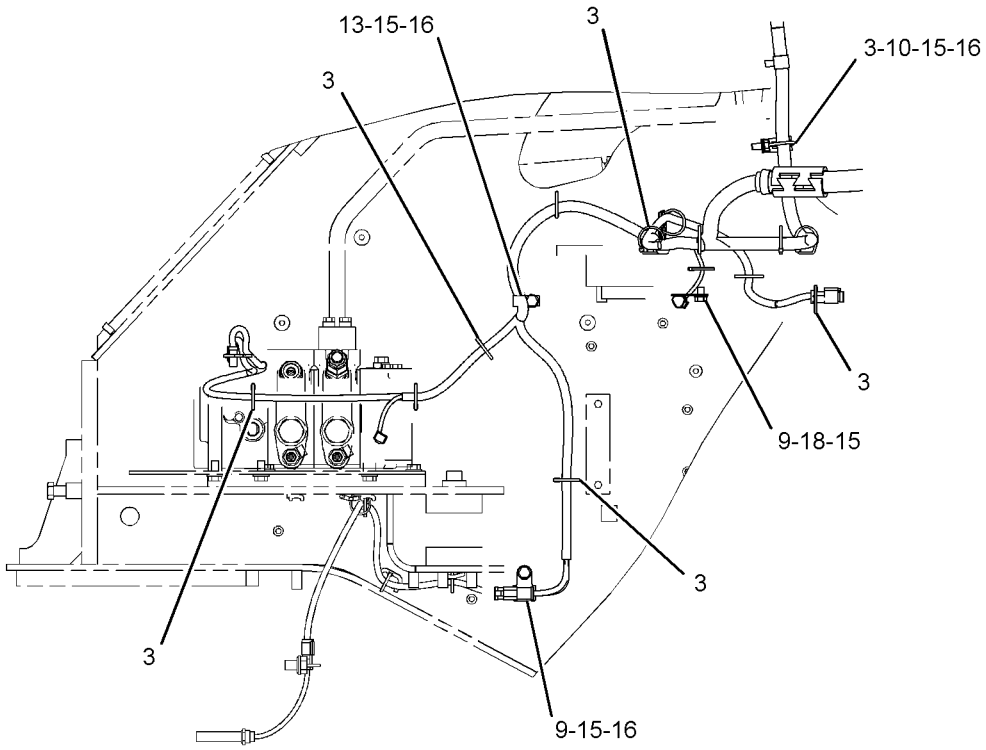

SECTION D-D

GRAPHIC #2 **<END>** g01420550

ELECTRICAL AND STARTING SYSTEM

263-5072 WIRING GP-FRONT

S/N: JKM440-UP

PART OF 237-7539 ELECTRICAL AR

SMCS-5734 **i03782554**

NOTE	REF NO	GRAPHIC REF	PART NUMBER	QTY	PART NAME 1 2 3 4 5 6 (PRODUCT LEVEL)	SEE PAGE
CM	1	1	**8T-4195**	1	BOLT (M10X1.5X30-MM)	
	3	1,2	**7K-1181**	20	STRAP-CABLE	
	4	1	**172-4871**	1	BRACKET AS	
	5	1	**300-6440**	1	HARNESS AS-FRONT	
		1	**102-8802**	1	KIT-RECEPTACLE (2-PIN)	
		1	**102-8803**	4	KIT-RECEPTACLE (3-PIN)	
		1	**102-8804**	1	KIT-RECEPTACLE (4-PIN)	
		1	**102-8805**	1	KIT-RECEPTACLE (6-PIN)	
		1	**102-8801**	2	KIT-RECEPTACLE (12-PIN)	
					(EACH RECEPTACLE KIT INCLUDES RECEPTACLE AS & WEDGE)	
E		1	**5P-1442**		HOSE (72-CM)	
E		1	**5P-1506**		HOSE (61-CM)	
		1	**8T-8737**	39	PLUG-SEAL	
		1	**9X-3401**	25	PIN-CONNECTOR (16-GA TO 18-GA)	
		1	**110-6848**	1	PLUG AS-CONNECTOR (40-PIN)	
		1	**110-6844**	1	SEAL	
E		1	**114-8843**		SLEEVE-PLASTIC (240-CM)	
E		1	**114-8845**		SLEEVE-PLASTIC (20-CM)	
E		1	**119-3662**		TUBE-HEAT SHRINK (10.85-MM DIA) (7-CM)	
E		1	**125-7874**		TUBE-HEAT SHRINK (5.72-MM DIA) (30-CM)	
E		1	**125-7875**		TUBE-HEAT SHRINK (7.44-MM DIA) (20-CM)	
E		1	**125-7876**		TUBE-HEAT SHRINK (17.78-MM DIA) (10-CM)	
		1	**9X-3402**	43	SOCKET-CONNECTOR (16-GA TO 18-GA)	
		1	**126-1767**	9	PIN-CONNECTOR (14-GA)	
		1	**126-1768**	4	SOCKET-CONNECTOR (14-GA)	
		1	**155-2270**	5	KIT-CONNECTING PLUG (2-PIN)	
		1	**155-2271**	1	KIT-CONNECTING PLUG (4-PIN)	
		1	**155-2260**	4	KIT-CONNECTING PLUG (3-PIN)	
		1	**155-2274**	1	KIT-CONNECTING PLUG (6-PIN)	
					(EACH PLUG KIT INCLUDES PLUG AS, WEDGE & INTERFACE SEAL)	
B		1	**1P-0810**		TAPE-ELECTRICAL	
		1	**274-3774**	2	CAP-CONNECTOR	
	6	1	**305-4370**	1	BRACKET AS	
	7	1	**067-2551**	1	CLIP	
	8	1	**124-9633**	3	CLIP	
	9	1,2	**130-5300**	7	CLIP	
	10	1,2	**132-5789**	4	CLIP	
	11	1	**1S-0994**	2	CLIP	
	12	1,2	**4D-7794**	6	CLIP	
C	13	1,2	**4K-8864**	3	CLIP	
	14	1	**8K-2665**	4	CLAMP-HALF	
	15	1,2	**8T-4121**	23	WASHER-HARD (11X21X2.5-MM THK)	
M	16	1,2	**8T-4137**	20	BOLT (M10X1.5X20-MM)	
M	17	1	**8T-4139**	2	BOLT (M12X1.75X30-MM)	
M	18	2	**8T-4191**	1	BOLT (M10X1.5X16-MM)	
M	19	1	**8T-4192**	4	BOLT (M12X1.75X25-MM)	
	20	1	**8T-4223**	6	WASHER-HARD (13.5X25.5X3-MM THK)	
C	23	1	**8M-2773**	4	CLIP	
	24	1	**4P-7581**	1	CLIP	
C	25	1	**091-0081**	1	SPACER (10.5X20X10-MM THK)	
C	26	2	**4S-1936**	1	CLIP	
M	27	1	**8T-4136**	1	BOLT (M10X1.5X25-MM)	
	28	1	**4H-1225**	1	WASHER (11X22X6-MM THK)	

263-5072 **WIRING GP-FRONT** *(contd.)* **i03782554**

B-USE AS REQUIRED
C-CHANGE FROM PREVIOUS TYPE
E-ORDER BY THE CENTIMETER
M-METRIC PART

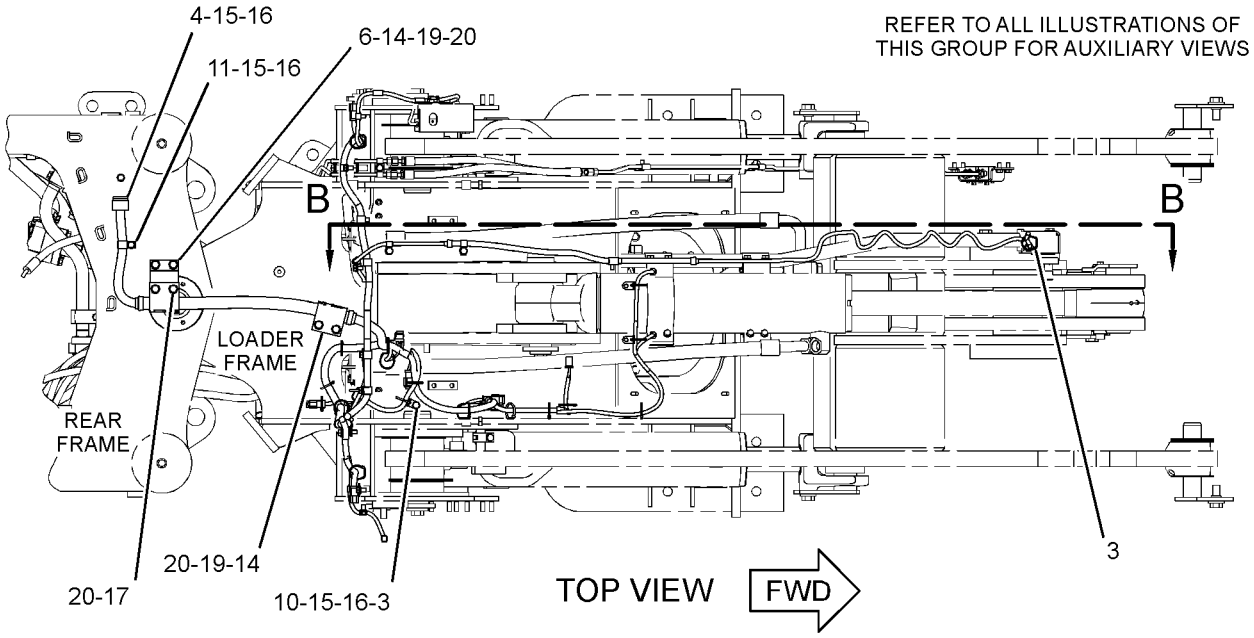

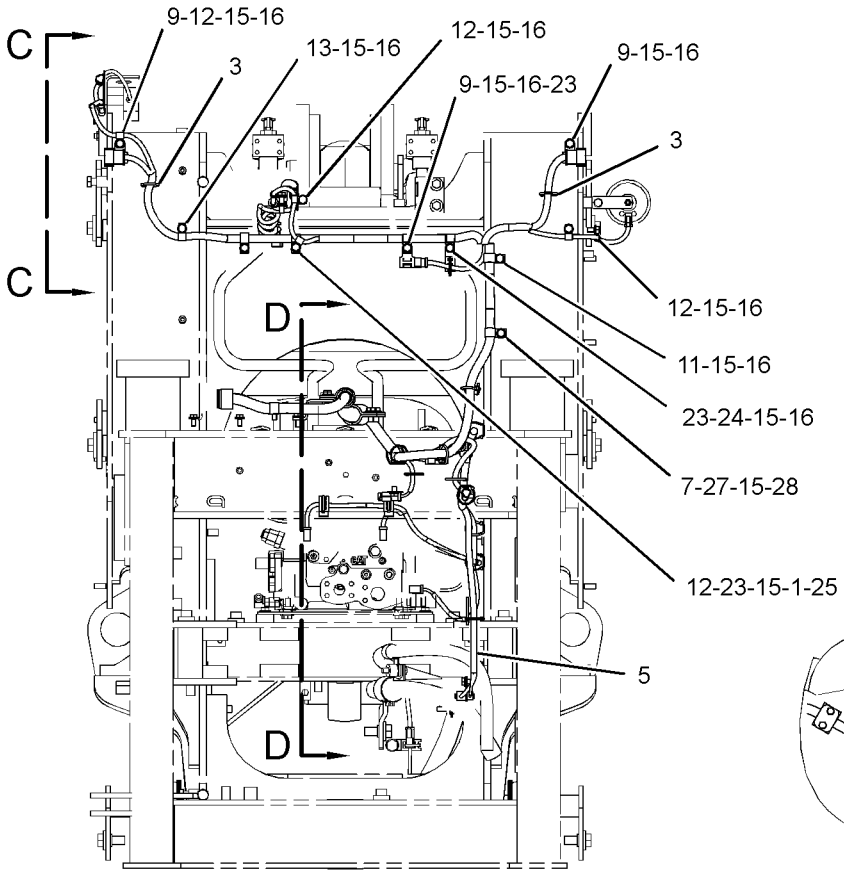

REAR VIEW

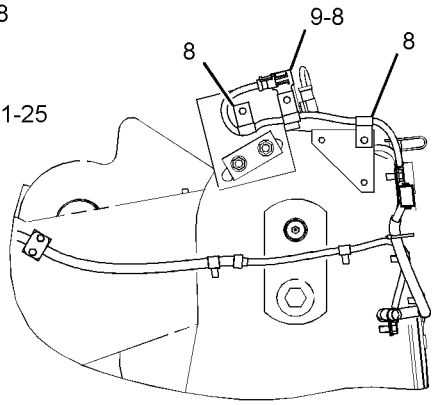

VIEW C-C

GRAPHIC #1

g01669334

263-5072 **WIRING GP-FRONT** *(contd.)* **i03782554**

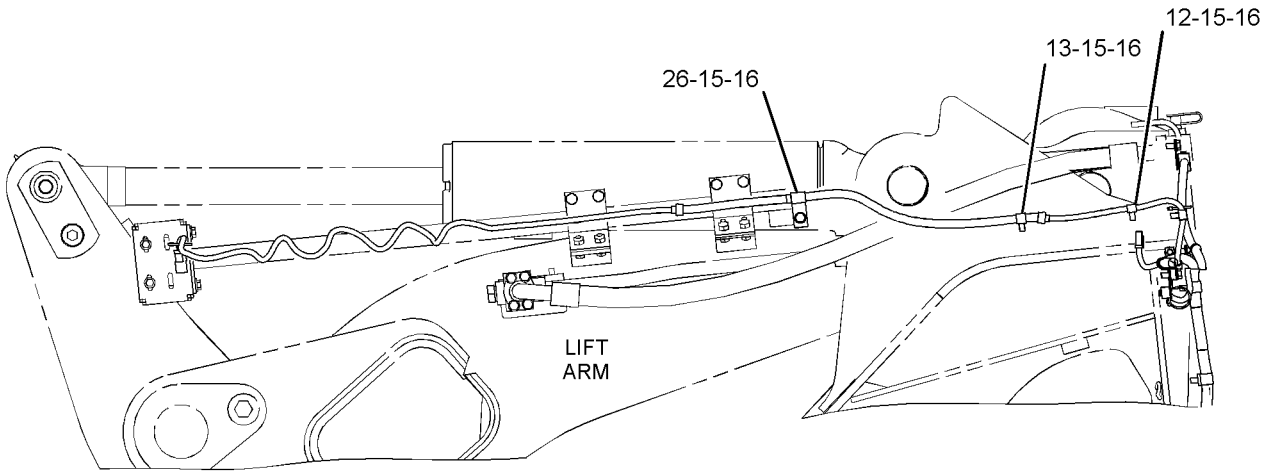

SECTION B-B

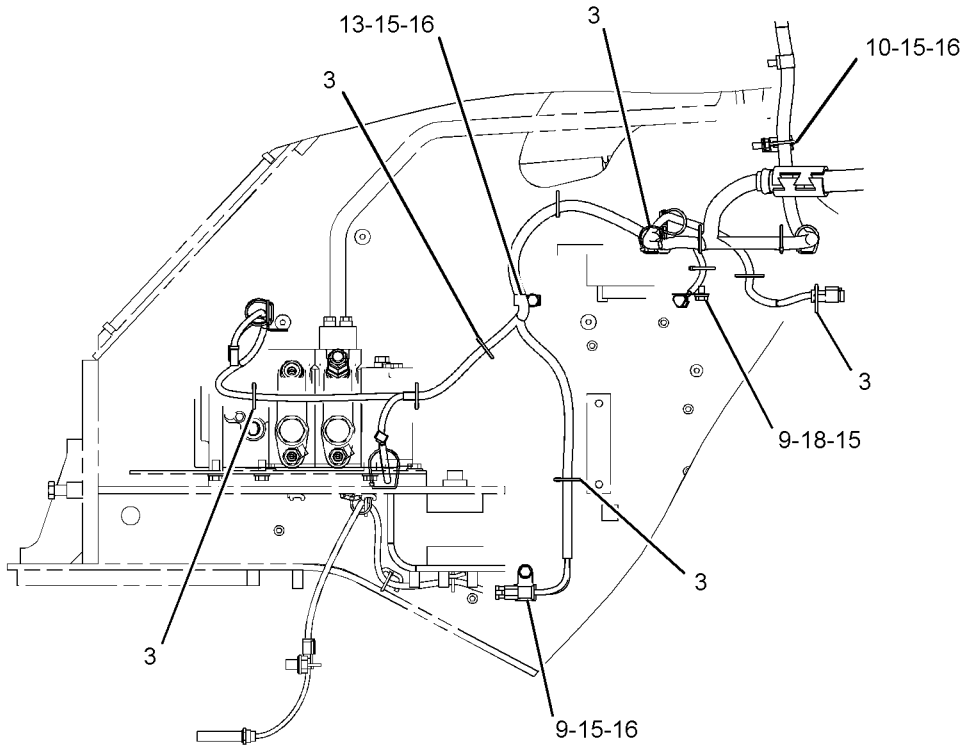

SECTION D-D

GRAPHIC #2 **<END>** g02091753

266-9461 WIRING GP-LIGHTING—LOADER FRAME FLOODLIGHTS

S/N: JKM1-UP

PART OF 237-7539 ELECTRICAL AR

SMCS-1408, 1429 **i02906588**

NOTE	REF NO	GRAPHIC REF	PART NUMBER	QTY	PART NAME 1 2 3 4 5 6 (PRODUCT LEVEL)	SEE PAGE
	1	1	**267-2998**	1	HARNESS AS-LIGHTING (RH)	
	2	1	**267-2999**	1	HARNESS AS-LIGHTING (LH)	
	3	1	**5P-9297**	2	CLIP	

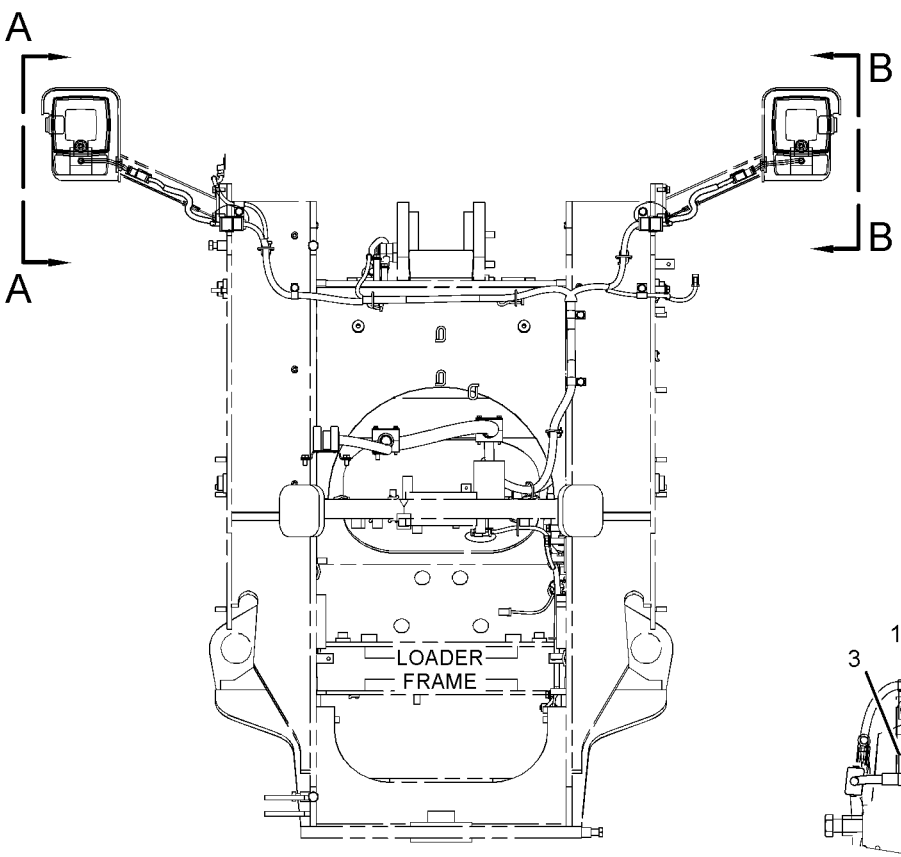

REAR VIEW

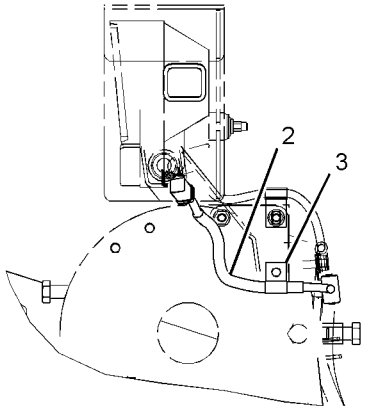

VIEW A-A

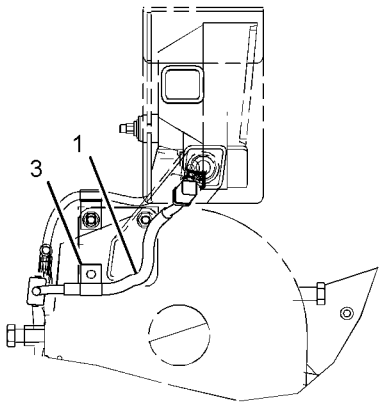

VIEW B-B

GRAPHIC #1 **<END>** g01397335

267-7546 WIRING GP-QUICK COUPLER

S/N: JKM1-UP
PART OF 317-8363 CONFIGURATION AR, 265-9739, 286-8244 CONTROL AR-QUICK COUPLER, 324-2651, 324-2652 LINES GP-COUPLER
AN ATTACHMENT
TYPE 1

SMCS-1408, 6129 **i02919757**

NOTE	REF NO	GRAPHIC REF	PART NUMBER	QTY	PART NAME 1 2 3 4 5 6 (PRODUCT LEVEL)	SEE PAGE
	1	1	**7K-1181**	4	STRAP-CABLE	
Y	2	1	**132-1829**	1	ALARM GP (24-VOLT) (ACTION)	159
	3	1	**252-0040**	1	HARNESS AS-WORK TOOL (QUICK COUPLER)	
	4	1	**280-4244**	1	SWITCH AS-ROCKER (24-VOLT) (QUICK COUPLER)	
	5	1	**130-5300**	1	CLIP	

Y-SEPARATE ILLUSTRATION

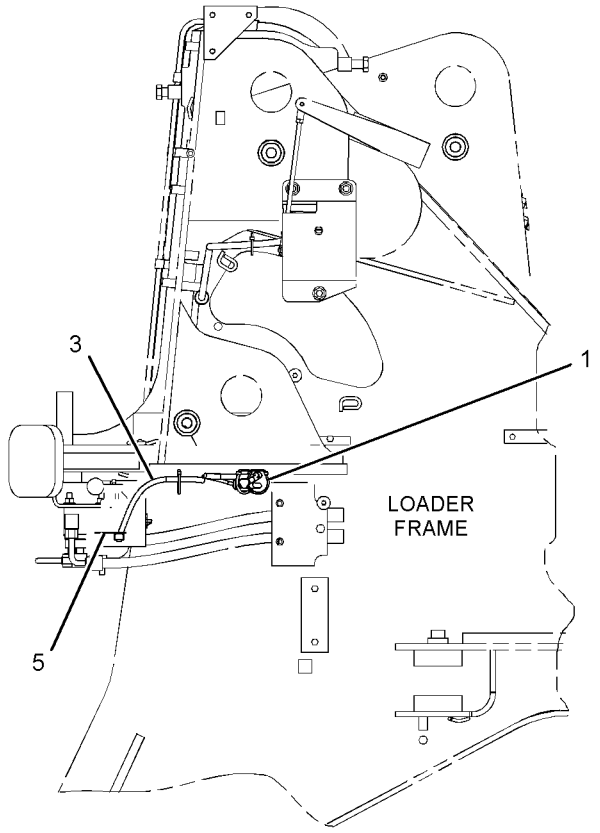

RIGHT SIDE VIEW
(OF LOADER FRAME)

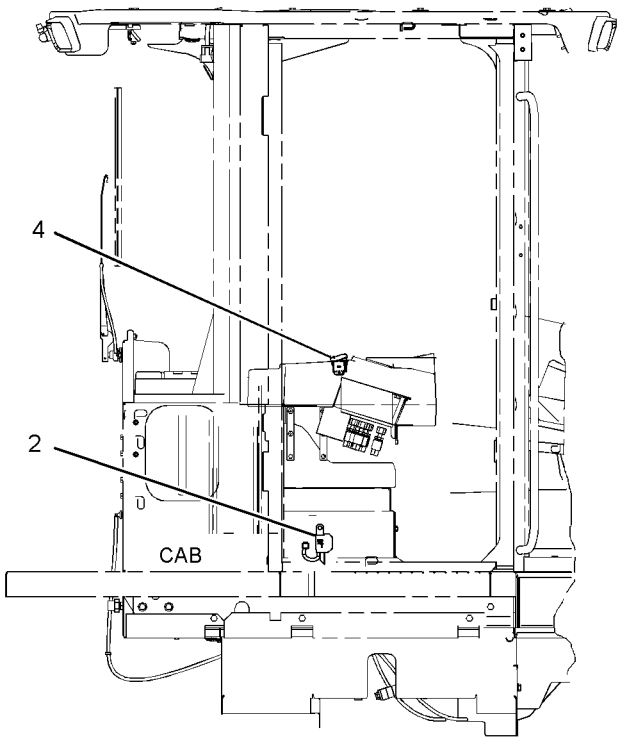

RIGHT SIDE VIEW
(OF CAB)

GRAPHIC #1 **<END>** g01431125

267-7546 WIRING GP-QUICK COUPLER

S/N: JKM1-UP
PART OF 317-8363 CONFIGURATION AR, 265-9739, 286-8244 CONTROL AR-QUICK COUPLER, 324-2651, 324-2652 LINES GP-COUPLER
AN ATTACHMENT
TYPE 2

SMCS-1408, 6129 **i03747105**

NOTE	REF NO	GRAPHIC REF	PART NUMBER	QTY	PART NAME 1 2 3 4 5 6 (PRODUCT LEVEL)	SEE PAGE
	1	1	**7K-1181**	4	STRAP-CABLE	
	2	1	**252-0040**	1	HARNESS AS-WORK TOOL (QUICK COUPLER)	
		1	**8T-8737**	1	PLUG-SEAL	
E		1	**114-8843**		SLEEVE-PLASTIC (60-CM)	
E		1	**125-7874**		TUBE-HEAT SHRINK (5.72-MM DIA) (10-CM)	
		1	**9X-3402**	6	SOCKET-CONNECTOR (16-GA TO 18-GA)	
		1	**155-2260**	1	KIT-CONNECTING PLUG (3-PIN)	
		1	**155-2270**	2	KIT-CONNECTING PLUG (2-PIN)	
					(EACH CONECTING KIT INCLUDES A PLUG AS & WEDGE)	
		1	**218-4935**	1	SUPPRESSOR-ARC	
CY	3	1	*336-6799*	1	ALARM GP (ACTION)	160
	4	1	**130-5300**	1	CLIP	
C	5	1	**8T-4121**	1	WASHER-HARD (11X21X2.5-MM THK)	
CM	6	1	**8T-4133**	1	NUT (M10X1.5-THD)	

C-CHANGE FROM PREVIOUS TYPE
E-ORDER BY THE CENTIMETER
M-METRIC PART
Y-SEPARATE ILLUSTRATION

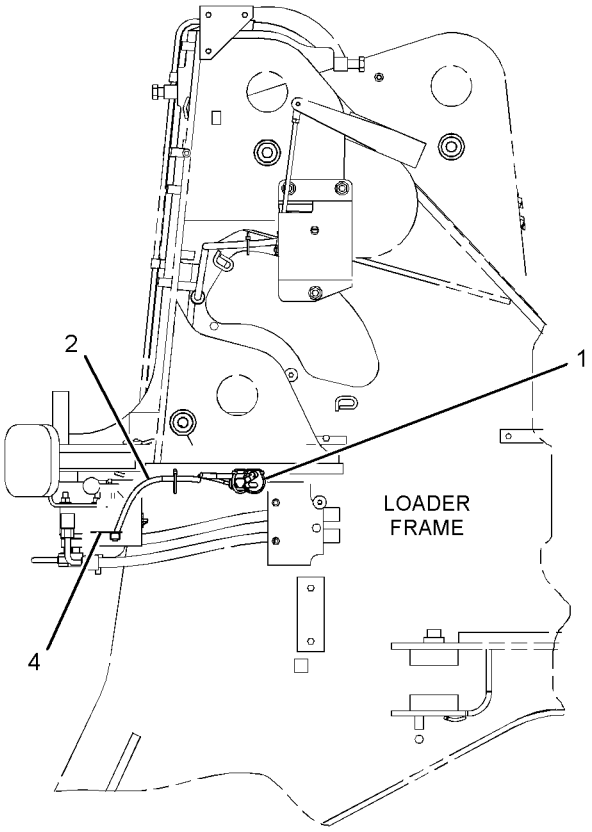

RIGHT SIDE VIEW
(OF LOADER FRAME)

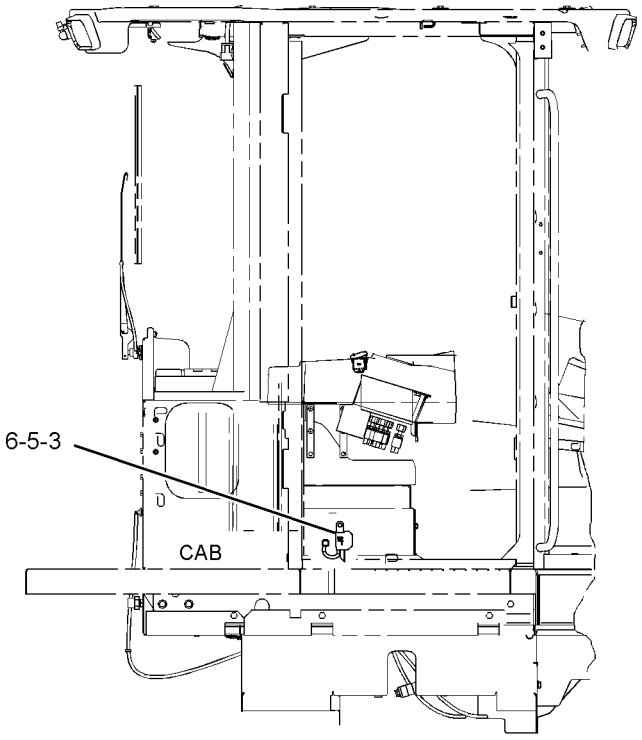

RIGHT SIDE VIEW
(OF CAB)

GRAPHIC #1 **<END>** g02144833

266-9438 WIRING GP-RIDE CONTROL

S/N: JKM1-853
PART OF 265-9740, 265-9741 CONTROL AR-RIDE
AN ATTACHMENT

SMCS-5004, 5734 **i02926960**

NOTE	REF NO	GRAPHIC REF	PART NUMBER	QTY	PART NAME 1 2 3 4 5 6 (PRODUCT LEVEL)	SEE PAGE
	1	1	**7K-1181**	2	STRAP-CABLE	
	2	1	**236-4612**	1	SWITCH AS-ROCKER (24-VOLT) (RIDE CONTROL)	

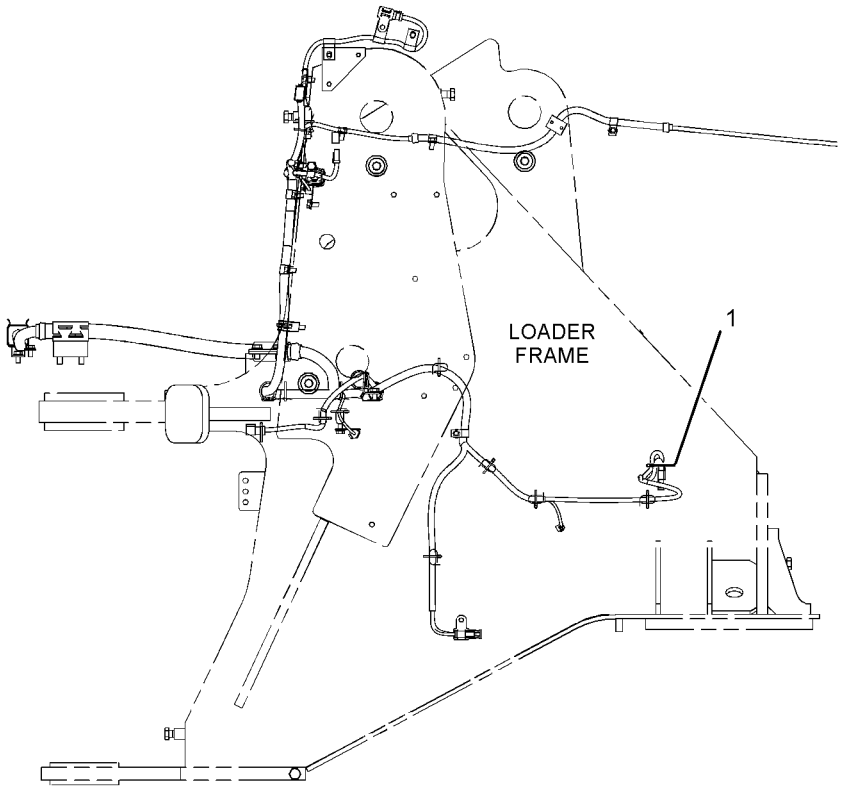

RIGHT SIDE VIEW

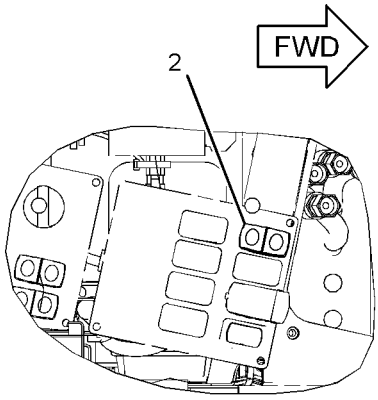

TOP VIEW
(RIGHT HAND CONSOLE)

GRAPHIC #1 **<END>** g01430378

266-9438 WIRING GP-RIDE CONTROL

S/N: JKM854-UP
PART OF 265-9740, 265-9741 CONTROL AR-RIDE
AN ATTACHMENT

SMCS-5004, 5734 **i03852895**

NOTE	REF NO	GRAPHIC REF	PART NUMBER	QTY	PART NAME 1 2 3 4 5 6 (PRODUCT LEVEL)	SEE PAGE
	1	1	**7K-1181**	2	STRAP-CABLE	
Y	2	1	*336-1845*	1	SWITCH GP-ROCKER (RIDE CONTROL)	265

Y-SEPARATE ILLUSTRATION

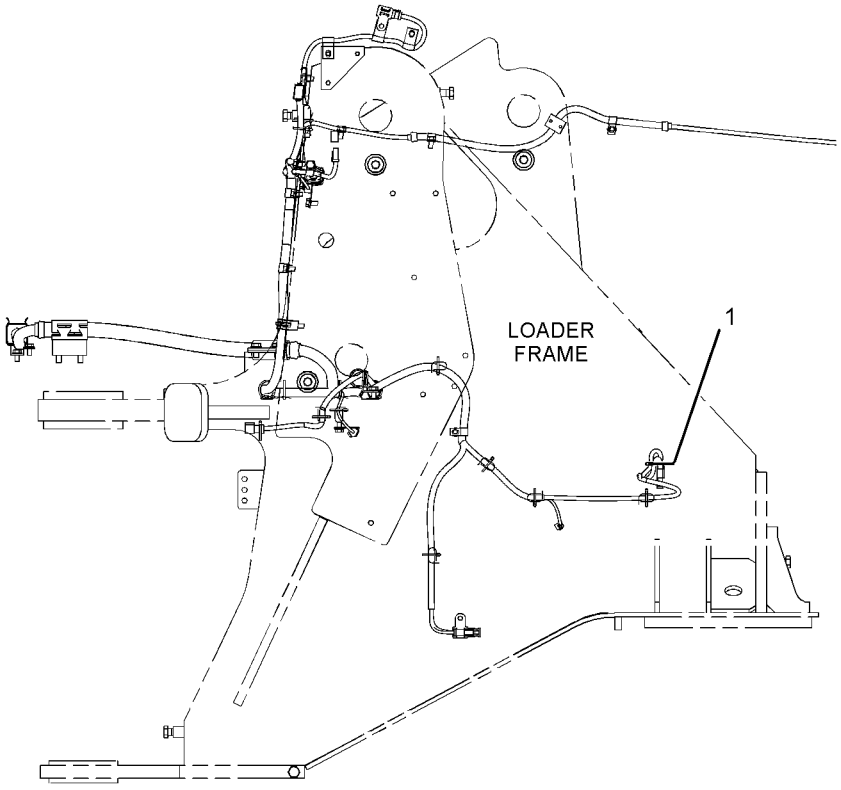

RIGHT SIDE VIEW

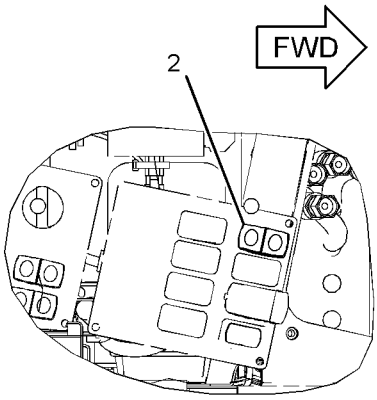

TOP VIEW
(RIGHT HAND CONSOLE)

GRAPHIC #1 **<END>** g01430378

280-2794 WIRING GP-RIDE CONTROL

S/N: JKM1-853
PART OF 265-9756 CONTROL AR-RIDE
AN ATTACHMENT

SMCS-5004, 5734 **i02927089**

NOTE	REF NO	GRAPHIC REF	PART NUMBER	QTY	PART NAME 1 2 3 4 5 6 (PRODUCT LEVEL)	SEE PAGE
	1	1	**7K-1181**	5	STRAP-CABLE	
	2	1	**236-4612**	1	SWITCH AS-ROCKER (24-VOLT) (RIDE CONTROL)	
	3	1	**305-4381**	1	HARNESS AS-SOLENOID	
	4	1	**130-5300**	1	CLIP	
	5	1	**4D-8123**	1	CLIP	
	6	1	**5P-9085**	1	CLIP	
	7	1	**8T-4121**	2	WASHER-HARD (11X21X2.5-MM THK)	

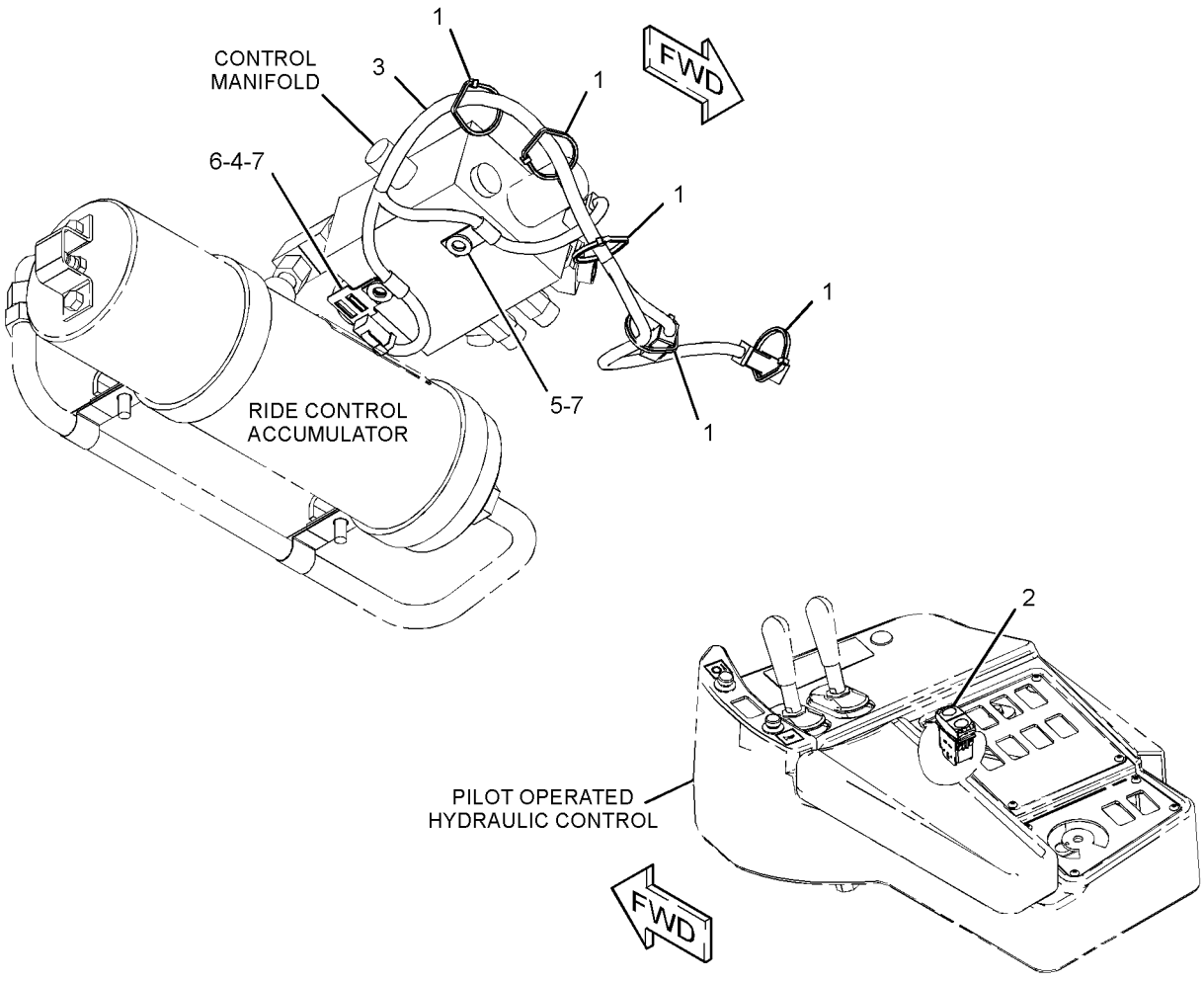

GRAPHIC #1 **<END>** g01438077

280-2794 WIRING GP-RIDE CONTROL

S/N: JKM854-UP
PART OF 265-9756 CONTROL AR-RIDE
AN ATTACHMENT

SMCS-5004, 5734 **i03853191**

NOTE	REF NO	GRAPHIC REF	PART NUMBER	QTY	PART NAME 1 2 3 4 5 6 (PRODUCT LEVEL)	SEE PAGE
	1	1	**7K-1181**	5	STRAP-CABLE	
CY	2	1	*336-1845*	1	SWITCH GP-ROCKER (RIDE CONTROL)	265
	3	1	**305-4381**	1	HARNESS AS-SOLENOID	
		1	**9X-3401**	4	PIN-CONNECTOR (16-GA TO 18-GA)	
					-OR-	
		1	**126-1767**	4	PIN-CONNECTOR (14-GA)	
		1	**155-2270**	2	KIT-CONNECTING PLUG (2-PIN)	
					(EACH INCLUDES PLUG AS, WEDGE & INTERFACE SEAL)	
		1	**102-8802**	2	KIT-RECEPTACLE (2-PIN)	
					(EACH INCLUDES RECEPTACLE AS & WEDGE)	
E		1	**114-8843**		SLEEVE-PLASTIC (80-CM)	
		1	**126-1766**	4	SOCKET-CONNECTOR (14-GA TO 18-GA)	
	4	1	**130-5300**	1	CLIP	
	5	1	**4D-8123**	1	CLIP	
	6	1	**5P-9085**	1	CLIP	
	7	1	**8T-4121**	2	WASHER-HARD (11X21X2.5-MM THK)	

C-CHANGE FROM PREVIOUS TYPE
E-ORDER BY THE CENTIMETER
Y-SEPARATE ILLUSTRATION

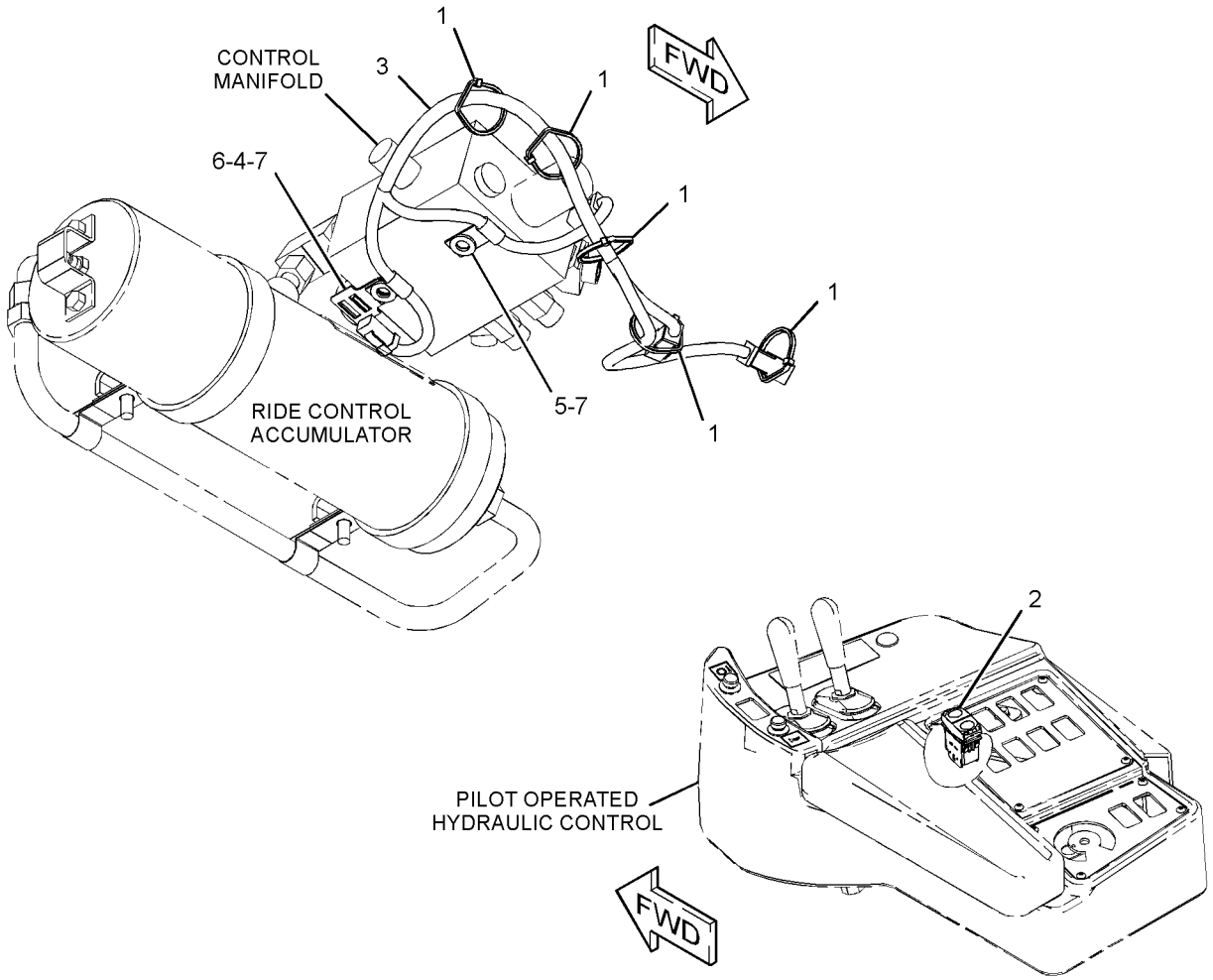

GRAPHIC #1 **<END>** g01438077

265-8148 WIRING GP-SECONDARY STEERING

S/N: JKM1-UP
PART OF 265-9746 STEERING AR-SECONDARY
AN ATTACHMENT

SMCS-1408, 4334 **i03651136**

NOTE	REF NO	GRAPHIC REF	PART NUMBER	QTY	PART NAME 1 2 3 4 5 6 (PRODUCT LEVEL)	SEE PAGE
	1	1	**7K-1181**	2	STRAP-CABLE	
	2	1	**194-4046**	1	COVER-TERMINAL (00-GA, POSITIVE, RED)	
	3	1	**218-4935**	1	SUPPRESSOR-ARC	
	4	1	**264-3637**	1	BOLT (M10X1.5X55-MM)	
	5	1	**307-3087**	1	HARNESS AS-STEERING (SECONDARY)	
	6	1	**307-3093**	1	CABLE AS	
		1	**1S-7251**	1	TERMINAL-CABLE (00-GA, 1/2-IN SCREW)	
		1	**1S-7252**	1	TERMINAL-CABLE (00-GA, 3/8-IN SCREW)	
E		1	**159-8050**		CABLE (00-GA, BLACK) (29-CM)	
	7	1	**307-3095**	1	CABLE AS	
		1	**9R-4286**	1	TERMINAL-RING (00-GA, 3/8-IN SCREW)	
		1	**1S-7251**	1	TERMINAL-CABLE (00-GA, 1/2-IN SCREW)	
		1	**8N-0869**	1	COVER-TERMINAL (RED)	
E		1	**159-8049**		CABLE (00-GA, RED) (107-CM)	
B		1	**1P-0810**		TAPE-ELECTRICAL	
	8	1	**130-5300**	2	CLIP	
	9	1	**130-5301**	1	CLIP	
	10	1	**248-2841**	1	RELAY AS (24-VOLT)	
	11	1	**2P-7806**	1	CLAMP	
	12	1	**2V-1771**	4	GROMMET	
	13	1	**313-5104**	2	SWITCH AS-PRESSURE (SECONDARY STEERING OIL)	
					(EACH INCLUDES)	
		1	**102-8803**	1	KIT-RECEPTACLE (3-PIN)	
					(INCLUDES RECEPTACLE AS & WEDGE)	
		1	**186-3735**	2	PIN-CONNECTOR (16-GA TO 18-GA)	
E		1	**9X-1813**		SLEEVE (28-CM)	
	14	1	**3K-0360**	2	SEAL-O-RING	
	15	1	**3S-2093**	2	STRAP-CABLE	
	16	1	**5K-3294**	2	CLIP	
	17	1	**6D-4246**	4	CLIP	
	18	1	**8T-4121**	5	WASHER-HARD (11X21X2.5-MM THK)	
M	19	1	**8T-4133**	1	NUT (M10X1.5-THD)	
M	20	1	**8T-4136**	3	BOLT (M10X1.5X25-MM)	
	21	1	**8T-4223**	1	WASHER-HARD (13.5X25.5X3-MM THK)	
M	22	1	**8T-4244**	1	NUT (M12X1.75-THD)	

B-USE AS REQUIRED
E-ORDER BY THE CENTIMETER
M-METRIC PART

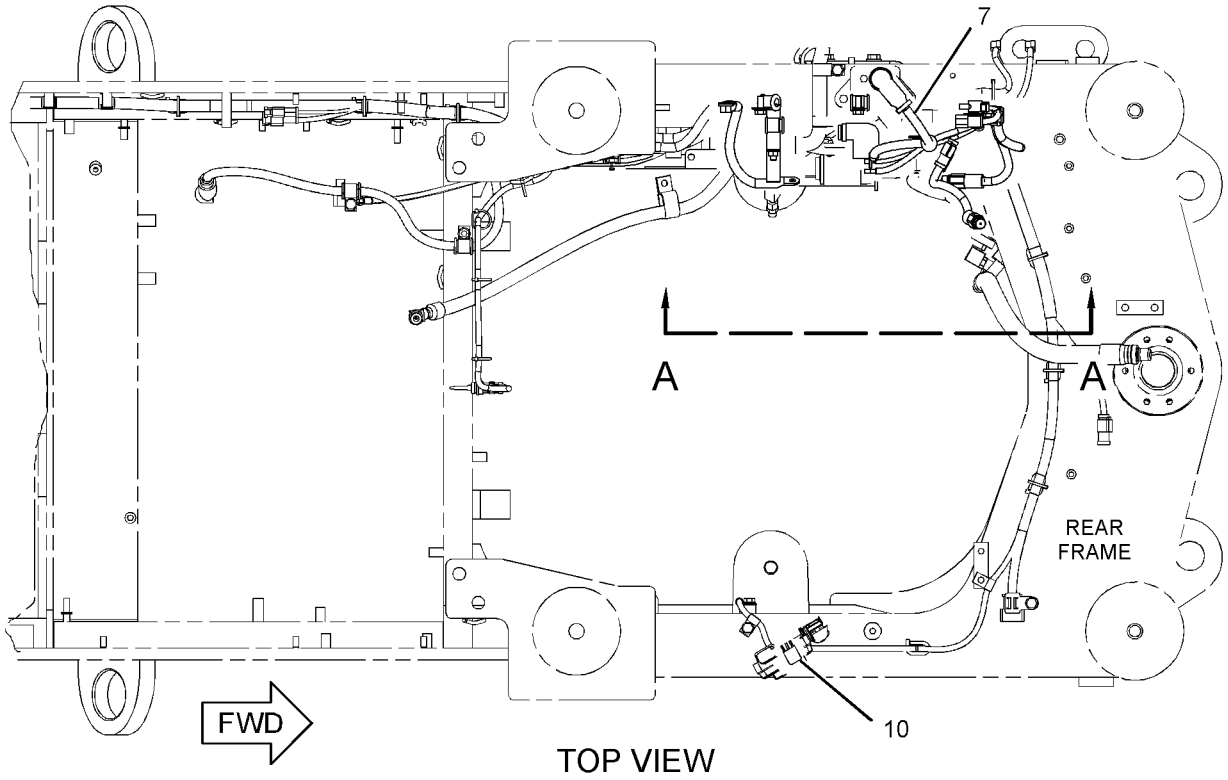

TOP VIEW

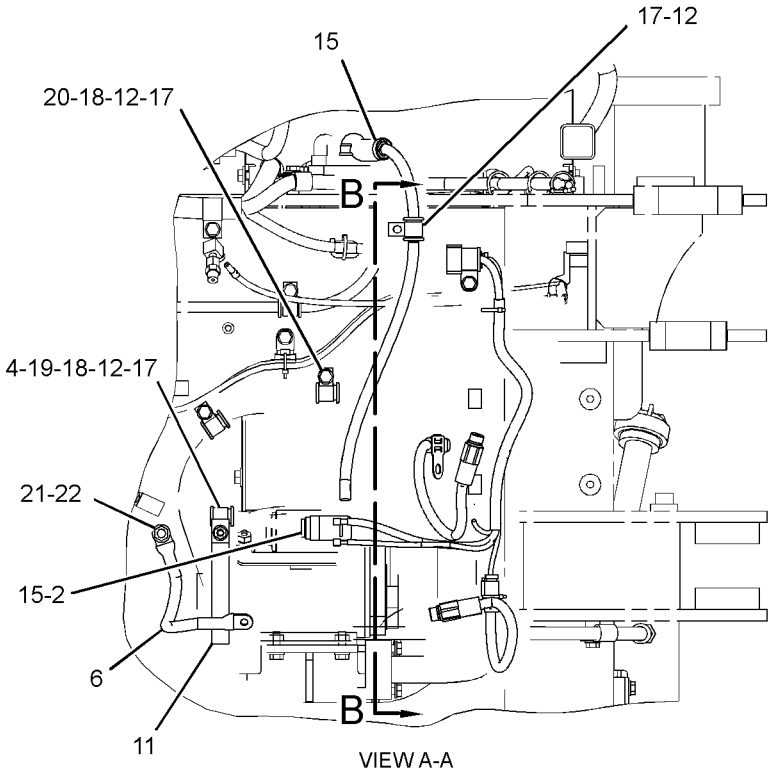

VIEW A-A

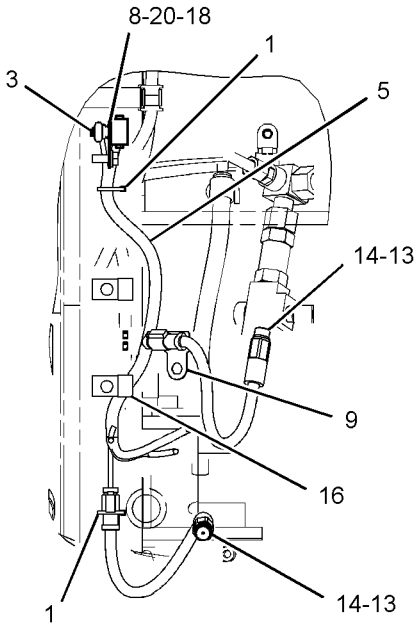

SECTION B-B

GRAPHIC #1 **<END>** g01454398

265-5828 WIRING GP-SENSOR

S/N: JKM1-UP
PART OF 330-5954 INSTALLATION AR-COMMUNICATION
AN ATTACHMENT

SMCS-1408 **i03881291**

NOTE	REF NO	GRAPHIC REF	PART NUMBER	QTY	PART NAME 1 2 3 4 5 6 (PRODUCT LEVEL)	SEE PAGE
	1	1	**3D-8752**	1	LOCKNUT (5/16-24-THD)	
	2	1	**5P-9683**	1	ROD END	
	3	1	**7I-3236**	1	SUPPORT AS	
	4	1	**8C-5607**	6	MOUNT-ISOLATION	
	5	1	**8C-5608**	3	SPACER (6.5X9.5X25.4-MM THK)	
	6	1	**8K-1253**	1	ROD END	
	7	1	**129-6791**	1	ROD	
	8	1	**129-6792**	1	ARM-BAIL	
Y	9	1	**266-1484**	1	SENSOR GP-POSITION (ROTARY) (TILT)	246
	10	1	**166-2232**	1	SEAL-LIP TYPE	
	11	1	**168-0402**	1	HOUSING	
	12	1	**168-8774**	1	SHAFT	
	13	1	**2H-3429**	1	RING-RETAINING	
	14	1	**2L-6726**	2	RING-RETAINING	
	15	1	**8T-0328**	2	WASHER-HARD (5.5X10X1-MM THK)	
	16	1	**4E-7088**	1	LEVER	
M	17	1	**5C-2890**	3	NUT (M6X1-THD)	
	18	1	**6D-3025**	2	BALL BEARING	
	19	1	**6V-0894**	1	SEAL-O-RING	
M	20	1	**6V-2313**	2	BOLT (M5X0.8X30-MM)	
	21	1	**6V-8186**	1	NUT-FULL (5/16-24-THD)	
	22	1	**8L-4496**	1	NUT-JAM (5/16-24 LH-THD)	
	23	1	**8T-2561**	2	WASHER-HARD (10.5X28.5X5-MM THK)	
	24	1	**8T-4121**	1	WASHER-HARD (11X21X2.5-MM THK)	
M	25	1	**8T-4186**	2	BOLT (M10X1.5X40-MM)	
M	26	1	**8T-4195**	1	BOLT (M10X1.5X30-MM)	
	27	1	**8T-4223**	3	WASHER-HARD (13.5X25.5X3-MM THK)	
	28	1	**8T-4224**	1	WASHER-HARD (8.8X16X2-MM THK)	
M	29	1	**8T-4244**	3	NUT (M12X1.75-THD)	
M	30	1	**9X-2480**	3	BOLT (M6X1X45-MM)	
	31	1	**9X-6165**	6	WASHER (6.5X22X2.5-MM THK)	

M-METRIC PART
Y-SEPARATE ILLUSTRATION

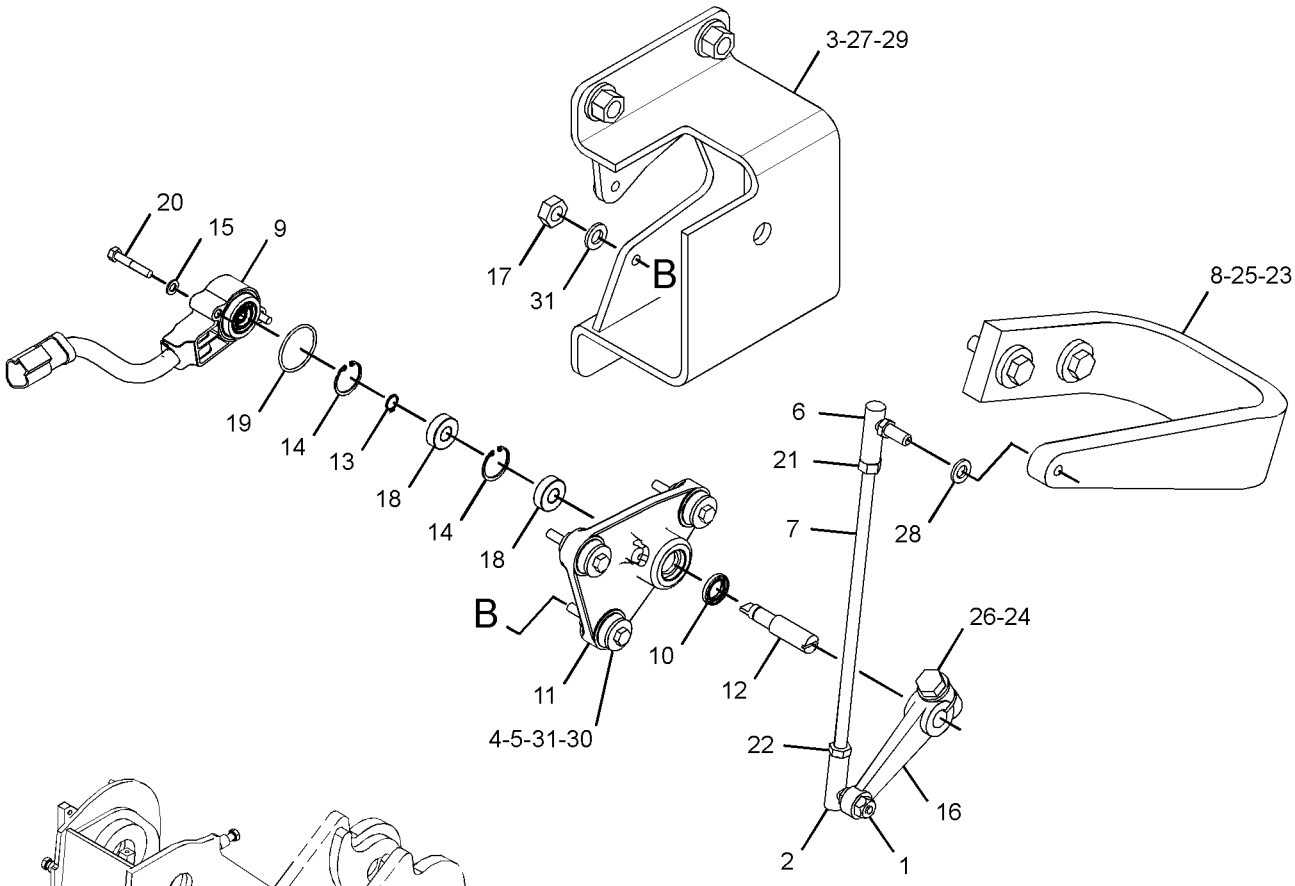

VIEW OF AREA A
(EXPLODED)

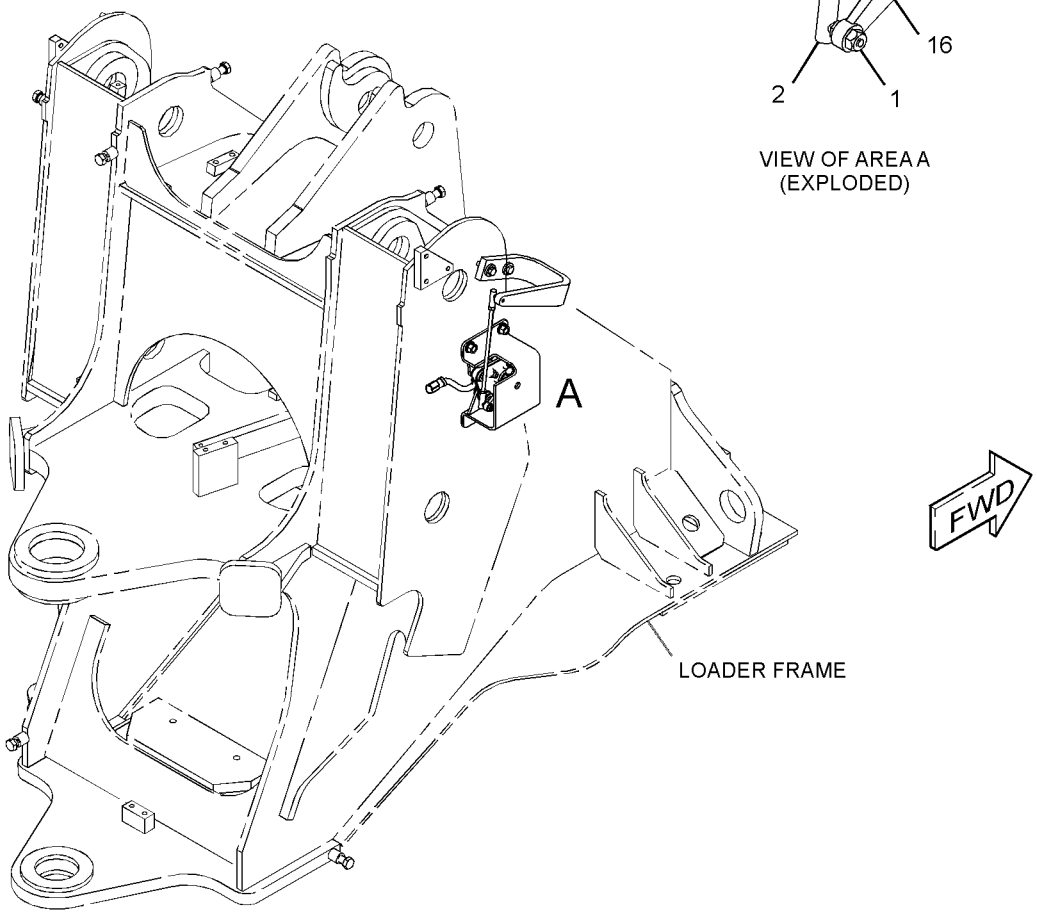

GRAPHIC #1 **<END>** g02151353

267-4799 WIRING GP-SENSOR—WHEEL SPEED

S/N: JKM1-UP
PART OF 265-9753 CONTROL AR-DIFFERENTIAL LOCK
AN ATTACHMENT

SMCS-1408 **i02935189**

NOTE	REF NO	GRAPHIC REF	PART NUMBER	QTY	PART NAME 1 2 3 4 5 6 (PRODUCT LEVEL)	SEE PAGE
	1	2	**7K-1181**	11	STRAP-CABLE	
	2	2	**116-0118**	4	CLIP	
Y	3	1	**264-0148**	4	SENSOR GP-SPEED (WHEEL)	251
	4	1	**300-6444**	1	HARNESS AS-SENSOR (FRONT AXLE)	
	5	1	**300-6446**	1	HARNESS AS-SENSOR (REAR AXLE)	
	6	1	**303-1226**	1	BRACKET AS	
	7	1	**303-1227**	1	BRACKET	
	8	1	**303-1228**	1	BRACKET AS	
	9	1	**303-1229**	1	BRACKET AS	
	10	1	**303-1230**	1	BRACKET AS	
	11	2	**5P-9297**	2	CLIP	
M	12	1	**8T-0267**	8	BOLT-SOCKET HEAD (M6X1X12-MM)	
	13	1,2	**8T-4121**	27	WASHER-HARD (11X21X2.5-MM THK)	
M	14	2	**8T-4133**	4	NUT (M10X1.5-THD)	
M	15	2	**8T-4136**	2	BOLT (M10X1.5X25-MM)	
M	16	1,2	**8T-4137**	17	BOLT (M10X1.5X20-MM)	
M	17	1,2	**8T-4192**	9	BOLT (M12X1.75X25-MM)	
M	18	2	**8T-4195**	4	BOLT (M10X1.5X30-MM)	
	19	1,2	**8T-4223**	9	WASHER-HARD (13.5X25.5X3-MM THK)	
	20	1,2	**9X-8250**	17	CLIP	

M-METRIC PART
Y-SEPARATE ILLUSTRATION

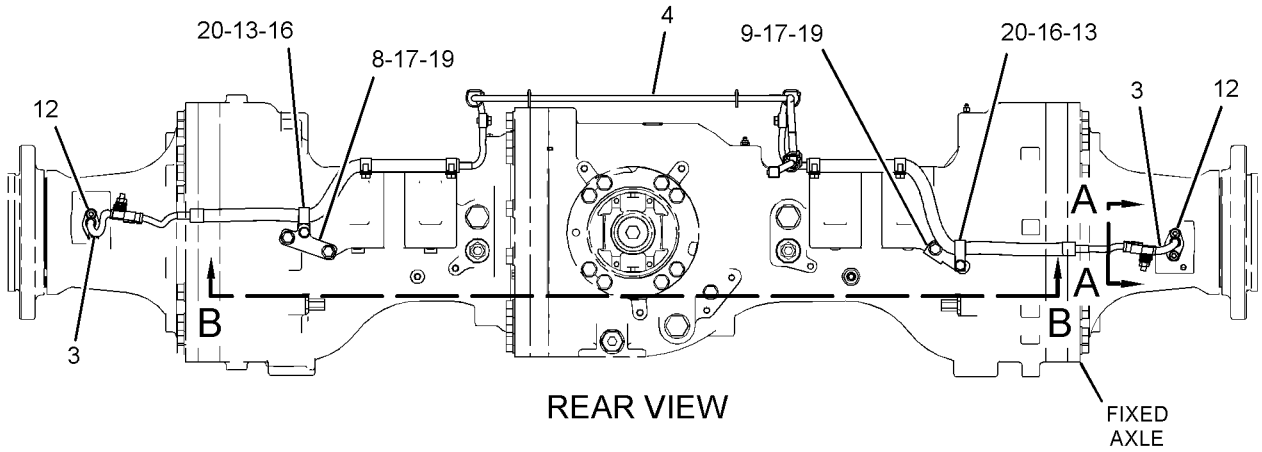

REFER TO ALL ILLUSTRATIONS OF
THIS GROUP FOR AUXILIARY VIEWS

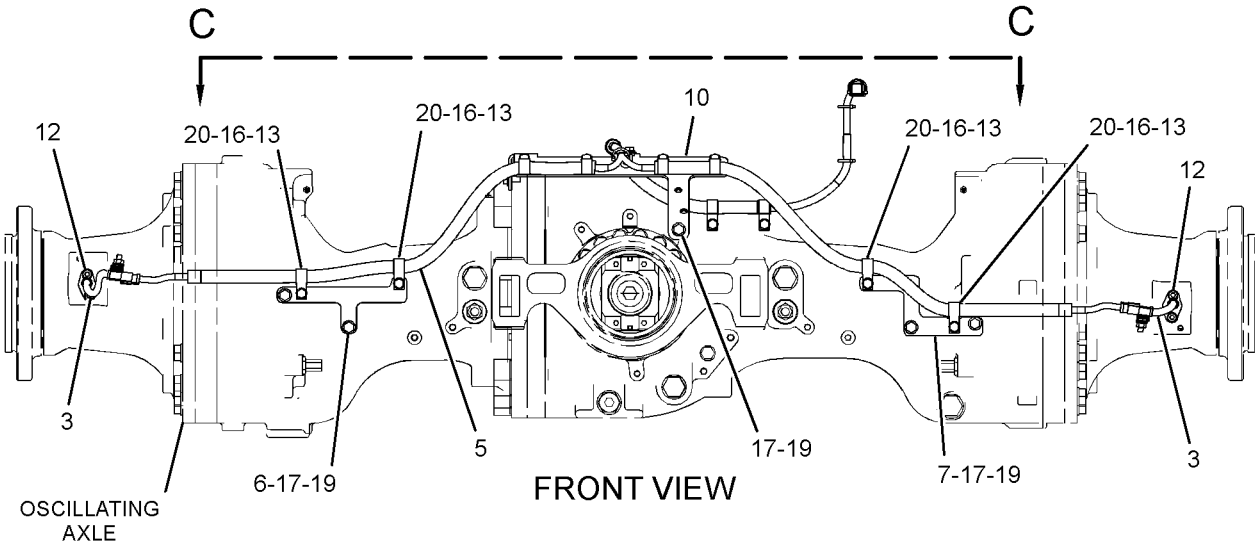

GRAPHIC #1 g01434313

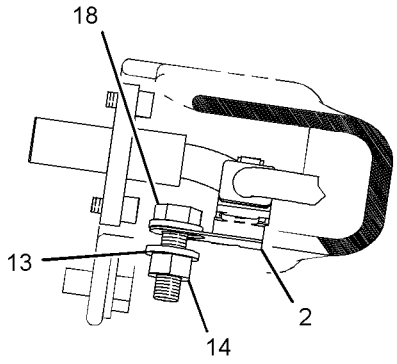

VIEW A-A

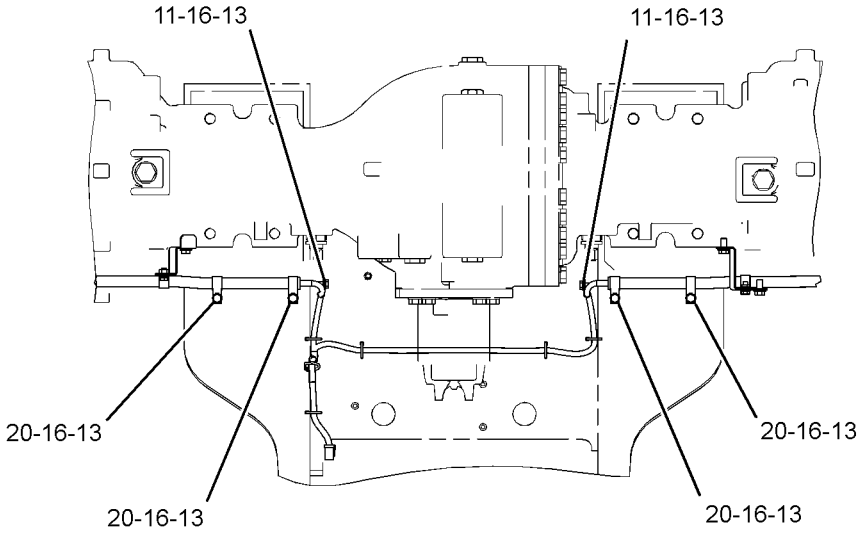

VIEW B-B

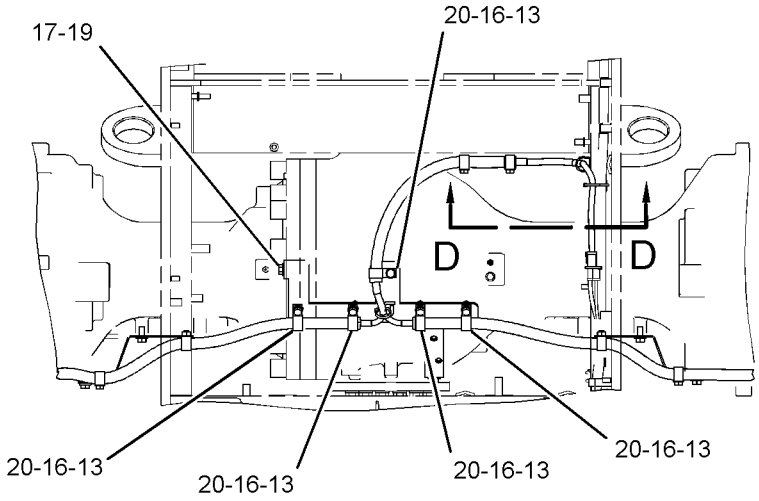

VIEW C-C

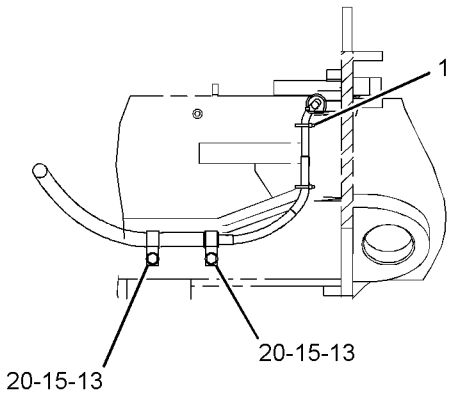

VIEW D-D

GRAPHIC #2 **<END>** g01434668

307-3122 WIRING GP-SENSOR—COLD START, FAN MOTOR SHUTOFF

S/N: JKM1-UP

PART OF 317-9485, 317-9486 COLD WEATHER AR

AN ATTACHMENT

SMCS-1408 **i03675506**

NOTE	REF NO	GRAPHIC REF	PART NUMBER	QTY	PART NAME 1 2 3 4 5 6 (PRODUCT LEVEL)	SEE PAGE
	1	1	**7K-1181**	5	STRAP-CABLE	
	2	1	**307-3123**	1	HARNESS AS-SOLENOID	
		1	**155-2270**	1	KIT-CONNECTING PLUG (2-PIN)	
					(INCLUDES PLUG AS, WEDGE & INTERFACE SEAL)	
		1	**102-8802**	1	KIT-RECEPTACLE (2-PIN)	
					(INCLUDES RECEPTACLE AS & WEDGE)	
E		1	**114-8843**		SLEEVE-PLASTIC (40-CM)	
		1	**9X-3402**	2	SOCKET-CONNECTOR (16-GA TO 18-GA)	
					—OR—	
		1	**126-1768**	2	SOCKET-CONNECTOR (14-GA)	
		1	**9X-3401**	2	PIN-CONNECTOR (16-GA TO 18-GA)	
					—OR—	
		1	**126-1767**	2	PIN-CONNECTOR (14-GA)	
	3	1	**132-5789**	2	CLIP	
Y	4	1	**177-0071**	1	SENSOR GP-TEMPERATURE (ENGINE AIR)	254
	5	1	**6V-5049**	1	SEAL-O-RING	
	6	1	**8T-4121**	1	WASHER-HARD (11X21X2.5-MM THK)	
M	7	1	**8T-4137**	1	BOLT (M10X1.5X20-MM)	

E-ORDER BY THE CENTIMETER
M-METRIC PART
Y-SEPARATE ILLUSTRATION

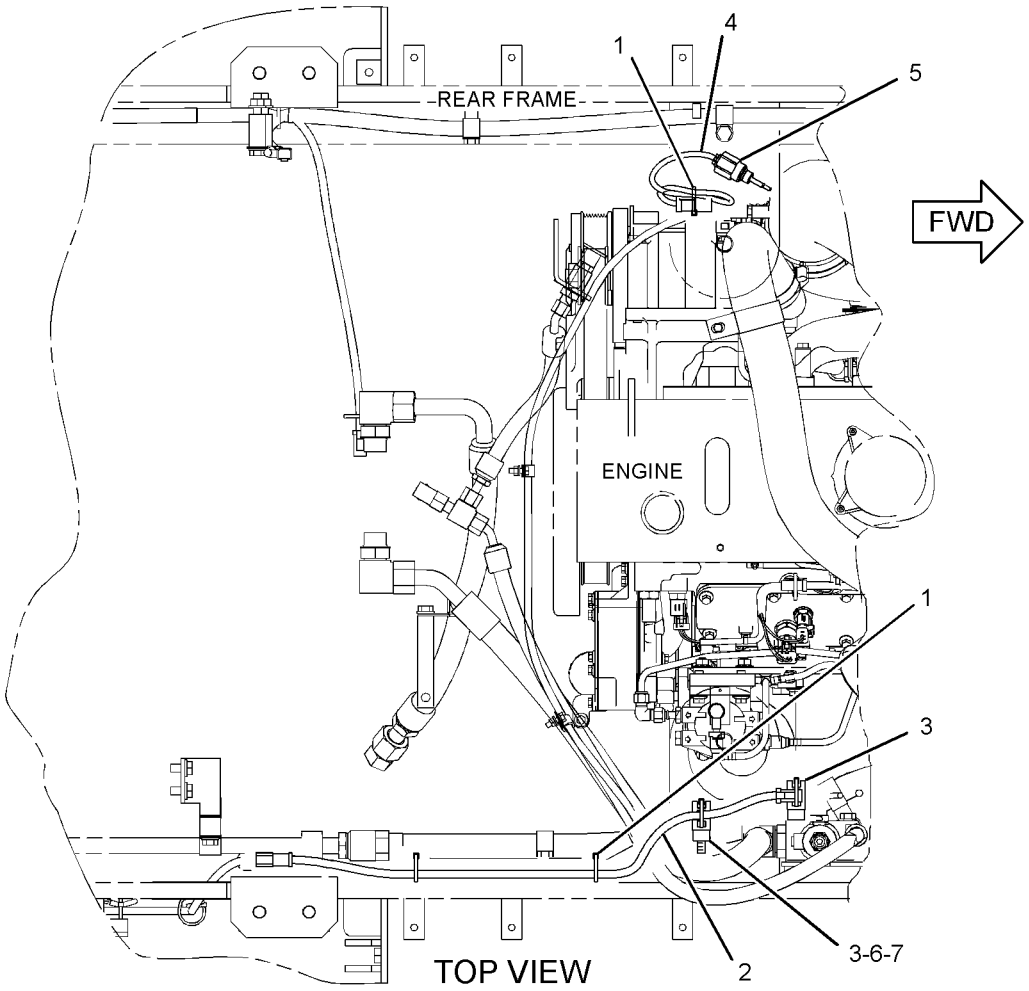

GRAPHIC #1 **<END>** g02003898

272-4990 AXLE AR-FIXED–
MANUAL DIFFERENTIAL LOCK WITH AXLE OIL COOLER, FRONT
S/N: JKM1-UP
PART OF 317-8356 AXLE AR-FIXED & OSCILLATING, 317-8359, 317-8360, 317-8362, 317-8364, 340-6088 CONFIGURATION AR
AN ATTACHMENT

SMCS-3013, 3278 **i02930624**

NOTE	PART NUMBER	QTY	PART NAME 1 2 3 4 5 6 (PRODUCT LEVEL)	SEE PAGE
Y	*272-2448*	2	BRAKE GP-SERVICE	613
Y	*271-8711*	1	DIFFERENTIAL & BEVEL GEAR GP (FIXED AXLE, LOCKING DIFF)	412
Y	*288-9478*	1	HOUSING GP-FIXED AXLE (FRONT)	427
Y	*288-9488*	1	LINES GP-AXLE OIL COOLER	444
Y	*288-9482*	1	PISTON GP-DIFFERENTIAL LOCK	458
Y	*288-9483*	2	WHEEL & FINAL DRIVE GP	486

Y-SEPARATE ILLUSTRATION

<END>

272-4992 AXLE AR-FIXED–
AUTO DIFFERENTIAL LOCK WITH AXLE OIL COOLER, FRONT
S/N: JKM1-UP
PART OF 265-9753 CONTROL AR-DIFFERENTIAL LOCK
AN ATTACHMENT

SMCS-3013, 3278 **i02935179**

NOTE	PART NUMBER	QTY	PART NAME 1 2 3 4 5 6 (PRODUCT LEVEL)	SEE PAGE
Y	*272-2448*	2	BRAKE GP-SERVICE	613
Y	*271-8711*	1	DIFFERENTIAL & BEVEL GEAR GP (FIXED AXLE, LOCKING DIFF)	412
Y	*288-9478*	1	HOUSING GP-FIXED AXLE (FRONT)	427
Y	*288-9488*	1	LINES GP-AXLE OIL COOLER	444
Y	*288-9482*	1	PISTON GP-DIFFERENTIAL LOCK	458
Y	*288-9484*	2	WHEEL & FINAL DRIVE GP	488

Y-SEPARATE ILLUSTRATION

<END>

317-8356 AXLE AR-FIXED & OSCILLATING–
MANUAL DIFF LOCK W/AOC, FRONT
S/N: JKM1-UP
AN ATTACHMENT

SMCS-3013, 3278 **i02928302**

NOTE	PART NUMBER	QTY	PART NAME 1 2 3 4 5 6 (PRODUCT LEVEL)	SEE PAGE
Y	*272-4990*	1	AXLE AR-FIXED (MANUAL DIFF LOCK W/AOC, FRONT)	369
Y	*271-2344*	1	AXLE AR-OSCILLATING (OPEN DIFF W/AOC, REAR)	370

Y-SEPARATE ILLUSTRATION

<END>

271-2344 AXLE AR-OSCILLATING–
OPEN DIFFERENTIAL WITH AXLE OIL COOLER, REAR
S/N: JKM1-UP
PART OF 317-8356 AXLE AR-FIXED & OSCILLATING, 317-8359, 317-8360, 317-8362, 317-8364, 340-6088 CONFIGURATION AR
AN ATTACHMENT

SMCS-3013, 3278 **i02930528**

NOTE	PART NUMBER	QTY	PART NAME 1 2 3 4 5 6 (PRODUCT LEVEL)	SEE PAGE
Y	*272-2448*	2	BRAKE GP-SERVICE	613
Y	*271-8713*	1	DIFFERENTIAL & BEVEL GEAR GP (OSCILLATING AXLE, OPEN DIFF)	414
Y	*288-9479*	1	HOUSING GP-OSCILLATING AXLE (REAR)	430
Y	*288-9488*	1	LINES GP-AXLE OIL COOLER	444
Y	*288-9483*	2	WHEEL & FINAL DRIVE GP	486

Y-SEPARATE ILLUSTRATION

<END>

272-4996 AXLE AR-OSCILLATING–
AUTO DIFFERENTIAL LOCK WITH AXLE OIL COOLER, REAR
S/N: JKM1-UP
PART OF 265-9753 CONTROL AR-DIFFERENTIAL LOCK
AN ATTACHMENT

SMCS-3013, 3278 **i02935176**

NOTE	PART NUMBER	QTY	PART NAME 1 2 3 4 5 6 (PRODUCT LEVEL)	SEE PAGE
Y	*272-2448*	2	BRAKE GP-SERVICE	613
Y	*271-8710*	1	DIFFERENTIAL & BEVEL GEAR GP (OSCILLATING AXLE, LOCKING DIFF)	410
Y	*288-9479*	1	HOUSING GP-OSCILLATING AXLE (REAR)	430
Y	*288-9488*	1	LINES GP-AXLE OIL COOLER	444
Y	*288-9482*	1	PISTON GP-DIFFERENTIAL LOCK	458
Y	*288-9484*	2	WHEEL & FINAL DRIVE GP	488

Y-SEPARATE ILLUSTRATION

<END>

270-9306 CARRIER GP-PLANETARY–FINAL DRIVE

S/N: JKM1-UP

PART OF 288-9483, 288-9484 WHEEL & FINAL DRIVE GP

AN ATTACHMENT

SMCS-4050, 4084 **i02934183**

NOTE	REF NO	GRAPHIC REF	PART NUMBER	QTY	PART NAME 1 2 3 4 5 6 (PRODUCT LEVEL)	SEE PAGE
	1	1	**270-7672**	1	CARRIER-PLANETARY	
	2	1	**270-9307**	3	SHAFT (PLANET)	
	3	1	**270-9308**	3	BEARING	
	4	1	**271-2342**	6	WASHER-THRUST	
	5	1	**271-2354**	3	GEAR-PLANETARY	
	6	1	**138-1645**	3	PIN-SPRING	
	7	1	**8T-2925**	3	PIN-SPRING	

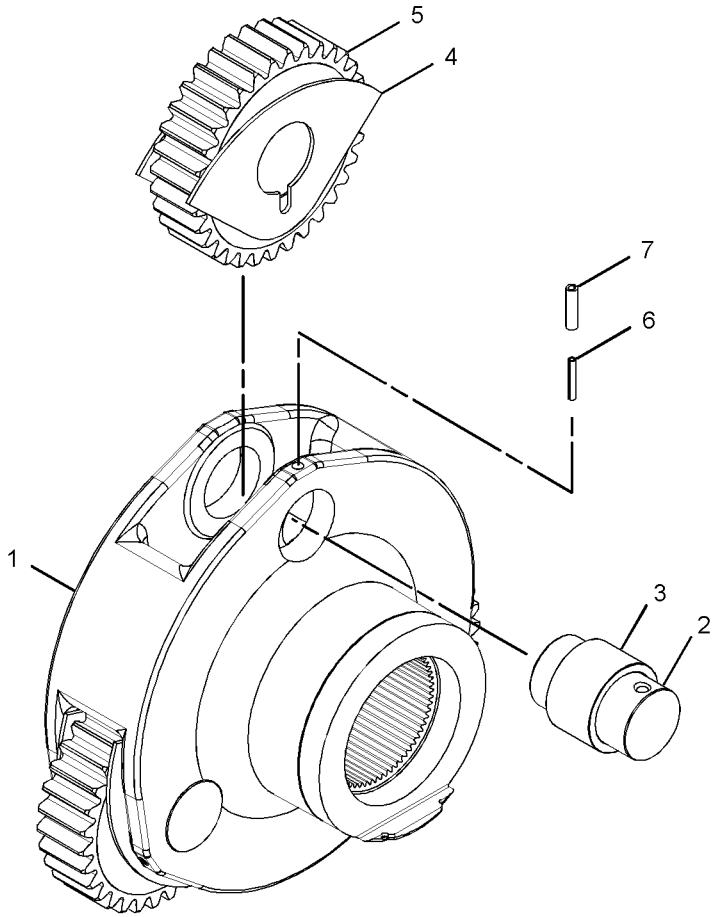

GRAPHIC #1 **<END>** g01398372

POWER TRAIN

252-5134 CASE GP-TRANSMISSION

S/N: MWL1-2064

PART OF 252-5135 TRANSMISSION AR

SMCS-3064 **i03631687**

NOTE	REF NO	GRAPHIC REF	PART NUMBER	QTY	PART NAME 1 2 3 4 5 6 (PRODUCT LEVEL)	SEE PAGE
	1	2	**286-9127**	1	CASE AS-TRANSMISSION	
		2	**6Y-0869**	2	PLUG	
		2	**8T-5353**	2	DOWEL	
		2	**9W-7226**	13	PLUG	
	2	2	**252-5133**	1	COVER	
	3	2	**252-5129**	1	TUBE AS	
	5	2	**1P-3707**	2	SEAL-RECTANGULAR	
	6	3	**193-2200**	1	SEAL-LIP TYPE	
	7	2	**142-4431**	1	SHIM PACK (INCLUDES 19-SHIMS)	
M	8	1	**6V-8212**	2	BOLT (M10X1.5X16-MM)	
	9	3	**4D-9986**	1	SEAL-O-RING	
B	10	2	**1U-8846**		SEALANT-GASKET	
	11	3	*183-7262*	1	PLUG AS	
		3	**2S-4078**	1	SEAL-O-RING	
		3	**9S-8010**	1	PLUG	
CM	13	3	**6V-5842**	24	BOLT (M10X1.5X40-MM)	
M	14	1	**6V-3940**	5	BOLT (M8X1.25X25-MM)	
	15	3	*164-4180*	1	PLUG AS	
		3	**7M-8485**	1	SEAL-O-RING	
		3	**9S-4181**	1	PLUG-O-RING	
M	16	1	**6V-1820**	1	BOLT (M10X1.5X30-MM)	
M	17	1	**6V-7981**	1	BOLT (M10X1.5X70-MM)	
	18	1	**6V-1720**	1	PLATE-SERIAL NUMBER (TRANSMISSION)	
M	19	1	**6A-5591**	4	BOLT (M12X1.75X25-MM)	
	20	3	**4S-8598**	1	SCREEN-SUCTION	
	21	3	**4S-8603**	1	SCREEN GP-MAGNETIC (TRANSFER GEAR)	
		3	**8M-7160**	3	MAGNET	
	22	3	**8H-7521**	1	SEAL-O-RING	
	23	3	**6Y-0809**	1	COVER	
M	24	2	**8T-0643**	6	BOLT (M10X1.5X80-MM)	
	25	2	**7J-8209**	2	CUP-BEARING	
	26	2	**2H-6184**	1	SEAL-O-RING	
	27	2	**8E-5261**	1	SHIM PACK (INCLUDES 24-SHIMS)	
	28	1,2	*148-8407*	3	PLUG AS	
					(EACH INCLUDES)	
		1,2	**3J-1907**	1	SEAL-O-RING	
		1,2	**9S-4191**	1	PLUG-O-RING	
	30	1,2	**8E-5380**	5	BEARING-ROLLER	
	31	2	**1T-1639**	1	RING	
	32	2	**5P-9806**	1	SEAL-O-RING	
	33	1	**170-1807**	1	BEARING-SPECIAL RACE	
	34	1	**2N-7007**	1	GASKET	
	35	1	**2N-7006**	1	COVER	
M	36	1	**6V-3668**	10	BOLT (M12X1.75X30-MM)	
	37	1	**148-1928**	1	VALVE-RELIEF (TORQUE CONVERTER INLET)	
	38	1	**9X-4609**	1	SEAL-O-RING	
	39	2	**6Y-8506**	1	CAGE-BEARING	
	40	3	**2P-8986**	1	CUP-BEARING	
M	41	3	**6V-5217**	3	BOLT (M8X1.25X20-MM)	
	42	1	**5P-8245**	14	WASHER-HARD (13.5X25.5X3-MM THK)	
	43	1	*148-8405*	2	PLUG AS	
					(EACH INCLUDES)	
		1	**3K-8460**	1	PLUG	
		1	**1J-9671**	1	SEAL-O-RING	
	45	1	**5M-3154**	1	COVER	
	46	1	**1S-6595**	1	GASKET-OIL SUPPLY	

252-5134 **CASE GP-TRANSMISSION** *(contd.)* **i03631687**

NOTE	REF NO	GRAPHIC REF	PART NUMBER	QTY	PART NAME 1 2 3 4 5 6 (PRODUCT LEVEL)	SEE PAGE
	47	3	**264-6824**	1	BRACKET AS	
M		3	**8T-3490**	4	NUT-WELD (M10X1.5-THD)	
C	48	2,3	**6V-5839**	3	WASHER (11X21X2.5-MM THK)	
CM	49	2,3	**6V-4249**	3	BOLT (M10X1.5X50-MM)	
C	50	2	**118-6878**	1	BRACKET AS	
M		2	**8T-3490**	1	NUT-WELD (M10X1.5-THD)	

B-USE AS REQUIRED
C-CHANGE FROM PREVIOUS TYPE
M-METRIC PART

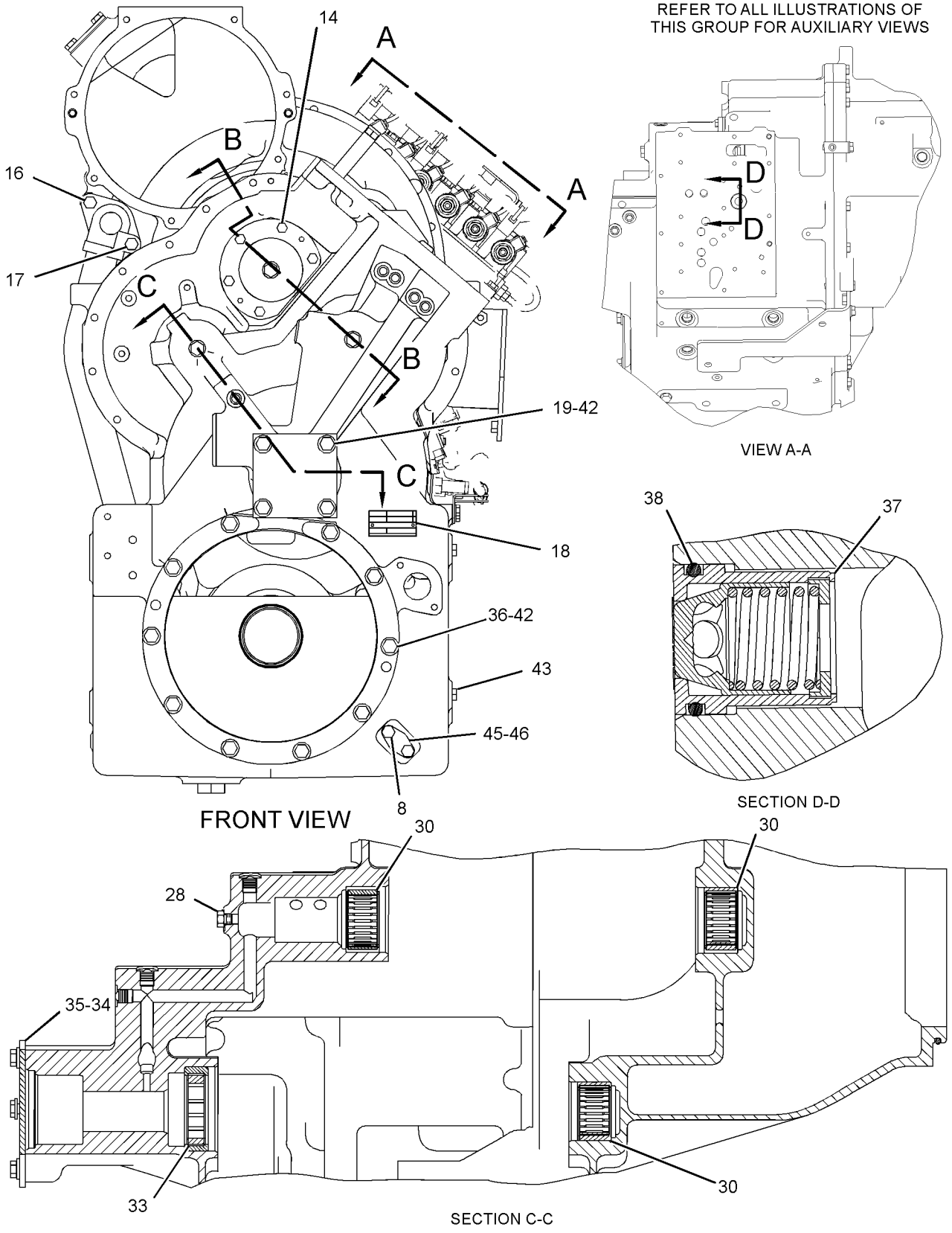

GRAPHIC #1

g01811577

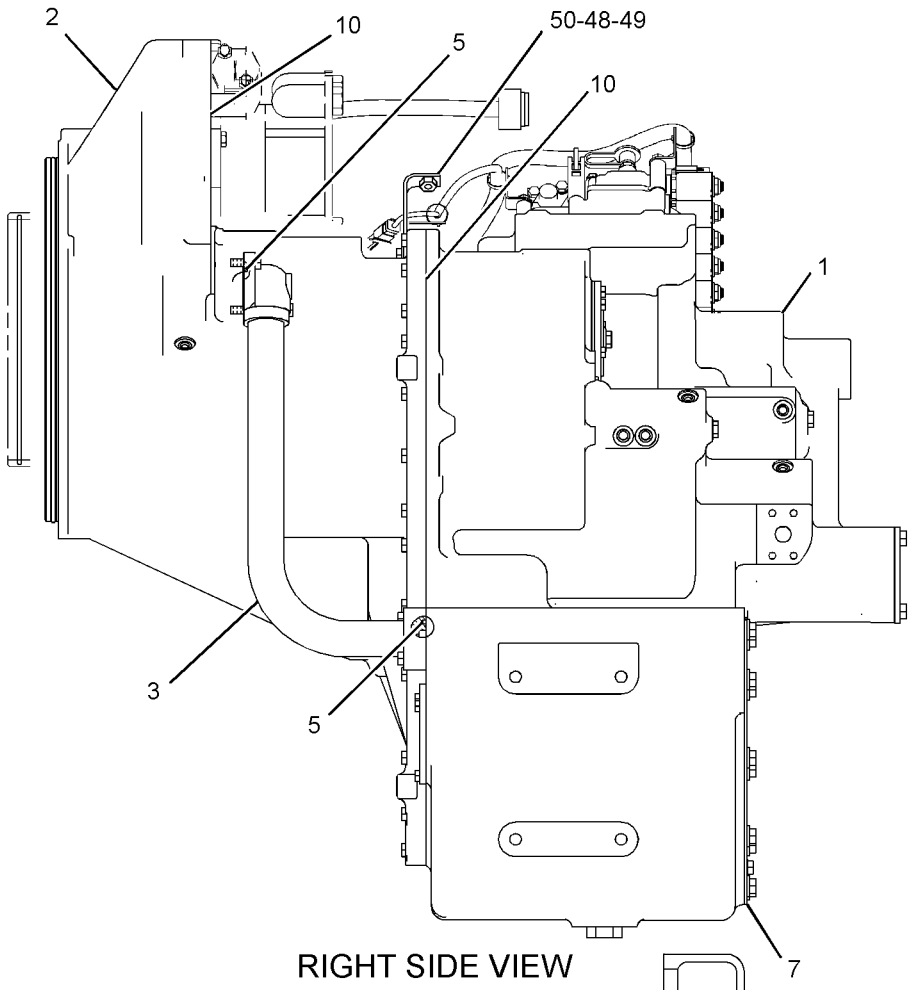

RIGHT SIDE VIEW

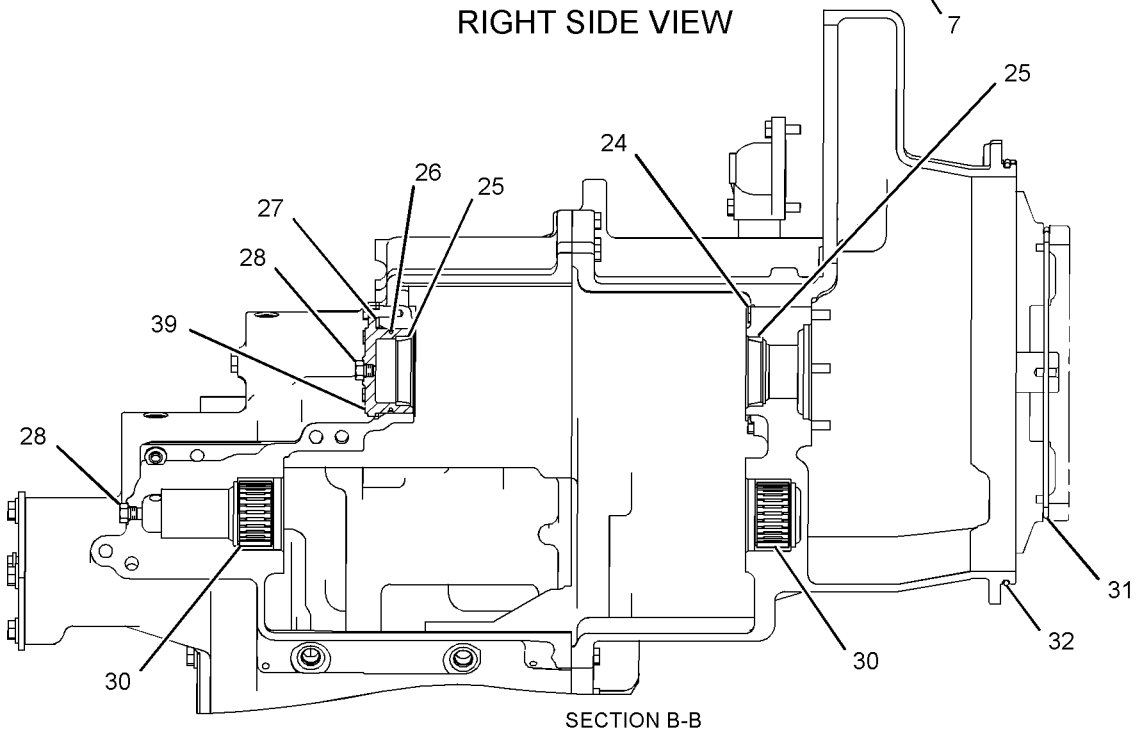

SECTION B-B

GRAPHIC #2

g01951897

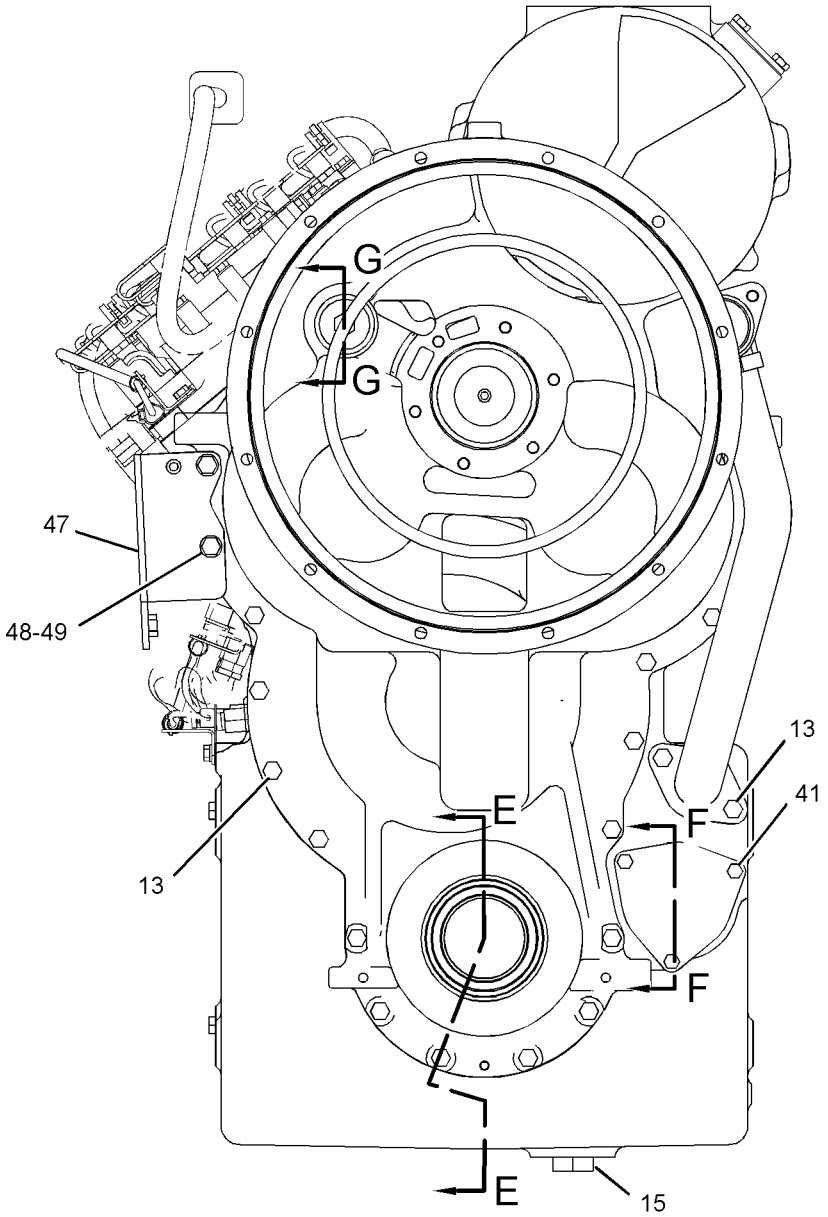

REAR VIEW

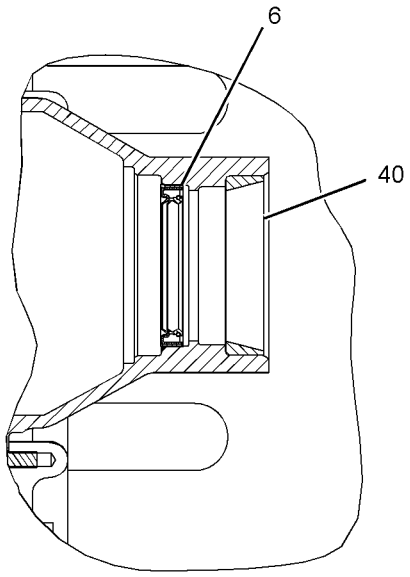

SECTION E-E

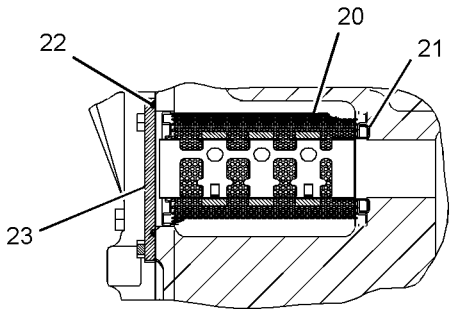

SECTION F-F

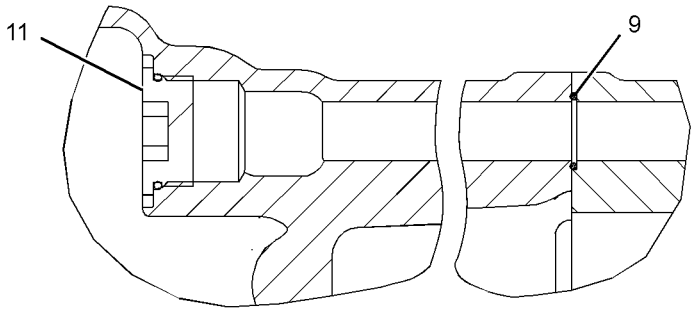

SECTION G-G

GRAPHIC #3 **<END>** g01661719

252-5134 CASE GP-TRANSMISSION

S/N: MWL2065-UP

PART OF 252-5135 TRANSMISSION AR

SMCS-3064 **i03961273**

NOTE	REF NO	GRAPHIC REF	PART NUMBER	QTY	PART NAME 1 2 3 4 5 6 (PRODUCT LEVEL)	SEE PAGE
	1	1	**286-9127**	1	CASE AS-TRANSMISSION	
		1	**6Y-0869**	2	PLUG	
		1	**8T-5353**	2	DOWEL	
		1	**9W-7226**	13	PLUG	
	2	2	**252-5133**	1	COVER	
	3	2	**252-5129**	1	TUBE AS	
C	4	1	*148-8395*	2	PLUG AS	
					(EACH INCLUDES)	
		1	**3K-0360**	1	SEAL-O-RING	
		1	**9S-8005**	1	PLUG-O-RING	
	5	2	**1P-3707**	2	SEAL-RECTANGULAR	
	6	2	**193-2200**	1	SEAL-LIP TYPE	
	7	1	**142-4431**	1	SHIM PACK (INCLUDES 19-SHIMS)	
CM	8	1	**6V-6317**	2	BOLT (M10X1.5X20-MM)	
	9	2	**4D-9986**	1	SEAL-O-RING	
B	10	2	**1U-8846**	1	SEALANT-GASKET	
	11	2	*183-7262*	1	PLUG AS	
		2	**2S-4078**	1	SEAL-O-RING	
		2	**9S-8010**	1	PLUG	
M	13	2	**6V-5842**	24	BOLT (M10X1.5X40-MM)	
M	14	1	**6V-3940**	5	BOLT (M8X1.25X25-MM)	
	15	1	*164-4180*	1	PLUG AS	
		1	**7M-8485**	1	SEAL-O-RING	
		1	**9S-4181**	1	PLUG-O-RING	
M	16	2	**6V-1820**	1	BOLT (M10X1.5X30-MM)	
M	17	2	**6V-7981**	1	BOLT (M10X1.5X70-MM)	
	18	1	**6V-1720**	1	PLATE-SERIAL NUMBER (TRANSMISSION)	
M	19	1	**6A-5591**	4	BOLT (M12X1.75X25-MM)	
	20	2	**4S-8598**	1	SCREEN-SUCTION	
C	21	2	**240-8259**	1	SCREEN GP-MAGNETIC (TRANSMISSION)	
		2	**8M-7160**	3	MAGNET	
	22	2	**8H-7521**	1	SEAL-O-RING	
	23	2	**6Y-0809**	1	COVER	
M	24	2	**8T-0643**	6	BOLT (M10X1.5X80-MM)	
	25	1,2	**7J-8209**	2	CUP-BEARING	
	26	1	**2H-6184**	1	SEAL-O-RING	
	27	1	**8E-5261**	1	SHIM PACK (INCLUDES 24-SHIMS)	
	28	1	*148-8407*	3	PLUG AS	
					(EACH INCLUDES)	
		1	**3J-1907**	1	SEAL-O-RING	
		1	**9S-4191**	1	PLUG-O-RING	
	30	1,2	**8E-5380**	5	BEARING-ROLLER	
	31	2	**1T-1639**	1	RING	
	32	2	**5P-9806**	1	SEAL-O-RING	
	33	1	**170-1807**	1	BEARING-SPECIAL RACE	
	34	1	**2N-7007**	1	GASKET	
	35	1	**2N-7006**	1	COVER	
M	36	1	**6V-3668**	10	BOLT (M12X1.75X30-MM)	
	37	1	**148-1928**	1	VALVE-RELIEF (TORQUE CONVERTER INLET)	
	38	1	**9X-4609**	1	SEAL-O-RING	
	39	1	**6Y-8506**	1	CAGE-BEARING	
	40	2	**2P-8986**	1	CUP-BEARING	
M	41	2	**6V-5217**	3	BOLT (M8X1.25X20-MM)	
	42	1	**5P-8245**	14	WASHER-HARD (13.5X25.5X3-MM THK)	
	43	1	*148-8405*	2	PLUG AS	
					(EACH INCLUDES)	

252-5134 **CASE GP-TRANSMISSION** *(contd.)* **i03961273**

NOTE	REF NO	GRAPHIC REF	PART NUMBER	QTY	PART NAME 1 2 3 4 5 6 (PRODUCT LEVEL)	SEE PAGE
		1	**3K-8460**	1	PLUG	
		1	**1J-9671**	1	SEAL-O-RING	
	45	1	**5M-3154**	1	COVER	
	46	1	**1S-6595**	1	GASKET-OIL SUPPLY	
	47	2	**264-6824**	1	BRACKET AS	
M		2	**8T-3490**	4	NUT-WELD (M10X1.5-THD)	
	48	2	**6V-5839**	3	WASHER (11X21X2.5-MM THK)	
M	49	2	**6V-4249**	3	BOLT (M10X1.5X50-MM)	
	50	2	**118-6878**	1	BRACKET AS	
M		2	**8T-3490**	1	NUT-WELD (M10X1.5-THD)	

B-USE AS REQUIRED
C-CHANGE FROM PREVIOUS TYPE
M-METRIC PART

REFER TO ALL ILLUSTRATIONS OF THIS GROUP FOR AUXILIARY VIEWS

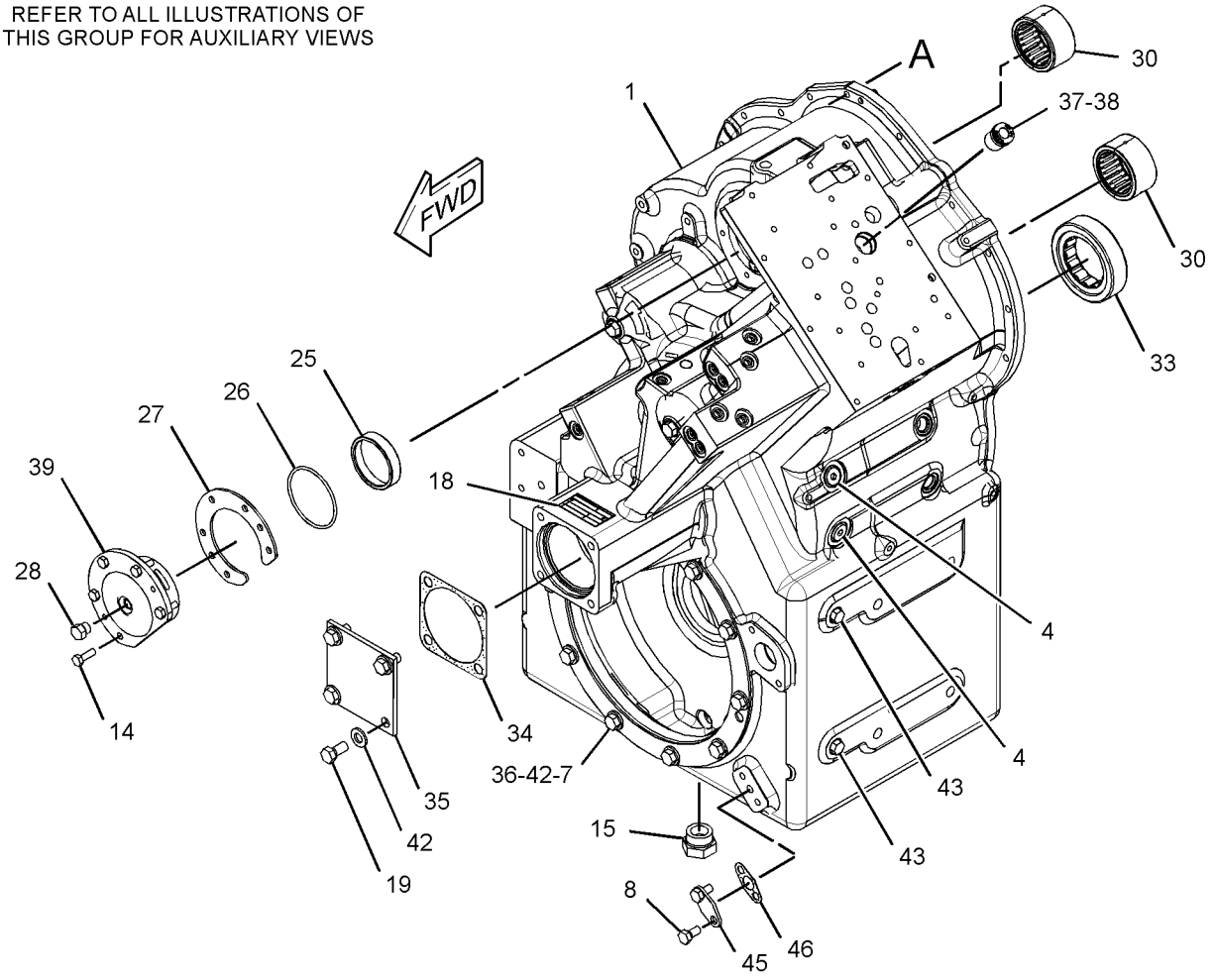

GRAPHIC #1

g02163765

252-5134 **CASE GP-TRANSMISSION** *(contd.)* **i03961273**

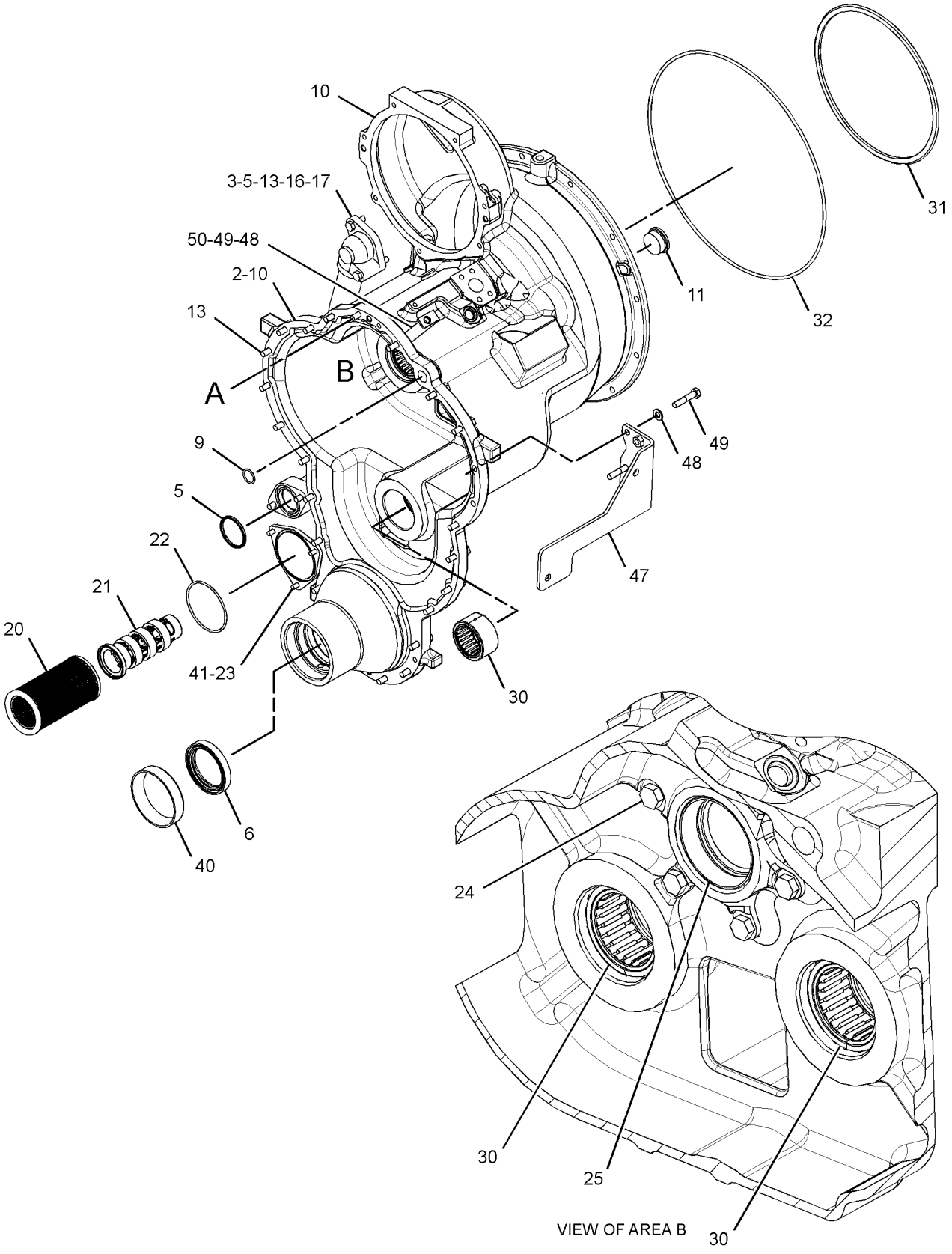

GRAPHIC #2 **<END>** g02163766

257-5929 CLUTCH GP–REVERSE, SECOND

S/N: MWL1-UP

PART OF 252-5135 TRANSMISSION AR

SMCS-3155 **i03189604**

NOTE	REF NO	GRAPHIC REF	PART NUMBER	QTY	PART NAME 1 2 3 4 5 6 (PRODUCT LEVEL)	SEE PAGE
	1	1	**230-3661**	1	SHAFT AS	
	1A	1	**9W-0719**	2	PLUG	
	2	1	**8T-0251**	6	RING-RETAINING	
	3	1	**8E-8654**	2	DISC-THRUST	
	4	1	**6V-2394**	2	RING-RETAINING	
	5	1	**230-3663**	1	GEAR (51-TEETH)	
	6	1	**6Y-8266**	1	HUB AS	
	6A	1	**8E-3416**	1	BEARING-SLEEVE	
	7	1	**236-2541**	2	RING-RETAINING	
	8	1	**6Y-8514**	2	PLATE-END	
	9	1	**6Y-8512**	13	PLATE-CLUTCH	
	10	1	**251-9335**	2	SPRING-WAVE	
	11	1	**114-1071**	2	PISTON	
	12	1	**6Y-7922**	5	DISC-FRICTION	
	13	1	**6Y-8275**	1	HUB AS	
	13A	1	**8E-3416**	1	BEARING-SLEEVE	
	14	1	**7T-8682**	1	GEAR (49-TEETH)	
	15	1	**6Y-8278**	1	SPACER AS	
	16	1	**3T-3008**	1	GEAR (32-TEETH)	
	17	1	**265-5287**	3	RING-SEAL	
	18	1	**9W-9271**	1	WASHER	
	19	1	**8E-8317**	2	DISC-THRUST	
	20	1	**9W-9278**	2	RETAINER	
	21	1	**6Y-8265**	2	SEAL AS-BALANCE	
	22	1	**9W-9436**	2	RING-SEAL	
	23	1	**9W-9399**	2	RING-SEAL	
	24	1	**8E-8653**	1	DISC-THRUST	
	25	1	**231-2236**	8	DISC AS-FRICTION	

257-5929 **CLUTCH GP** *(contd.)* **i03189604**

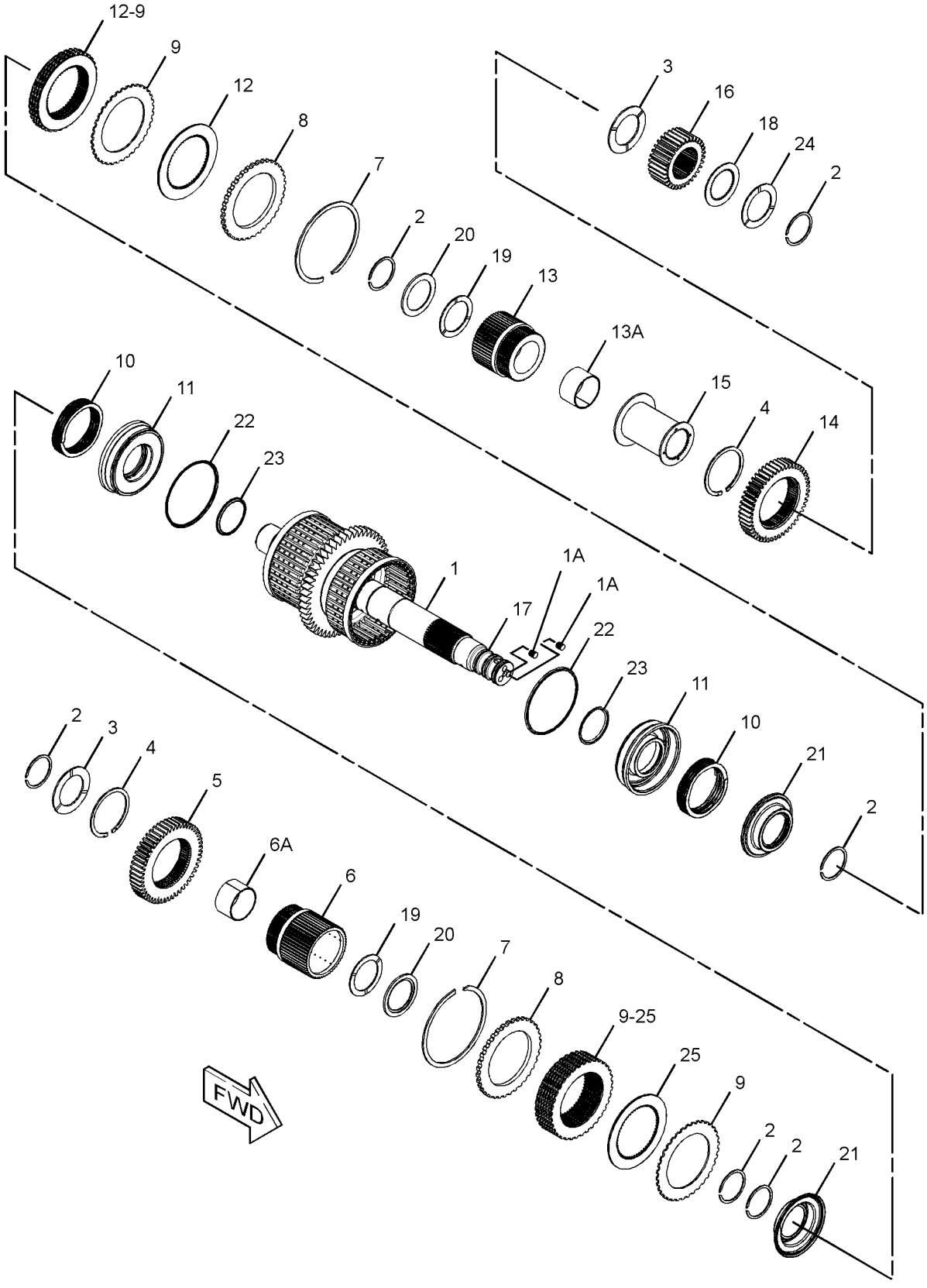

GRAPHIC #1 **<END>** g01661998

257-5930 CLUTCH GP–FORWARD HIGH, FORWARD LOW

S/N: MWL1-UP

PART OF 252-5135 TRANSMISSION AR

SMCS-3155 **i02914661**

NOTE	REF NO	GRAPHIC REF	PART NUMBER	QTY	PART NAME 1 2 3 4 5 6 (PRODUCT LEVEL)	SEE PAGE
	1	1	**299-3502**	1	SHAFT AS	
		1	**9W-0719**	2	PLUG	
	2	1	**8T-0251**	6	RING-RETAINING	
	3	1	**8E-8654**	2	DISC-THRUST	
	4	1	**6V-2394**	1	RING-RETAINING	
	5	1	**230-3663**	1	GEAR (51-TEETH)	
	6	1	**6Y-8266**	1	HUB AS	
		1	**8E-3416**	1	BEARING-SLEEVE	
	7	1	**236-2541**	2	RING-RETAINING	
	8	1	**6Y-8514**	2	PLATE-END	
	9	1	**6Y-8512**	13	PLATE-CLUTCH	
	10	1	**251-9335**	2	SPRING-WAVE	
	11	1	**114-1071**	2	PISTON	
	12	1	**6Y-7922**	5	DISC-FRICTION	
	13	1	**204-9605**	1	GEAR AS	
		1	**8E-3416**	1	BEARING-SLEEVE	
		1	**8E-3435**	1	BEARING-SLEEVE	
	14	1	**265-5287**	3	RING-SEAL	
	15	1	**8E-8317**	2	DISC-THRUST	
	16	1	**9W-9278**	2	RETAINER	
	17	1	**6Y-8265**	2	SEAL AS-BALANCE	
	18	1	**9W-9436**	2	RING-SEAL	
	19	1	**9W-9399**	2	RING-SEAL	
	20	1	**231-2236**	8	DISC AS-FRICTION	

257-5930 **CLUTCH GP** *(contd.)* **i02914661**

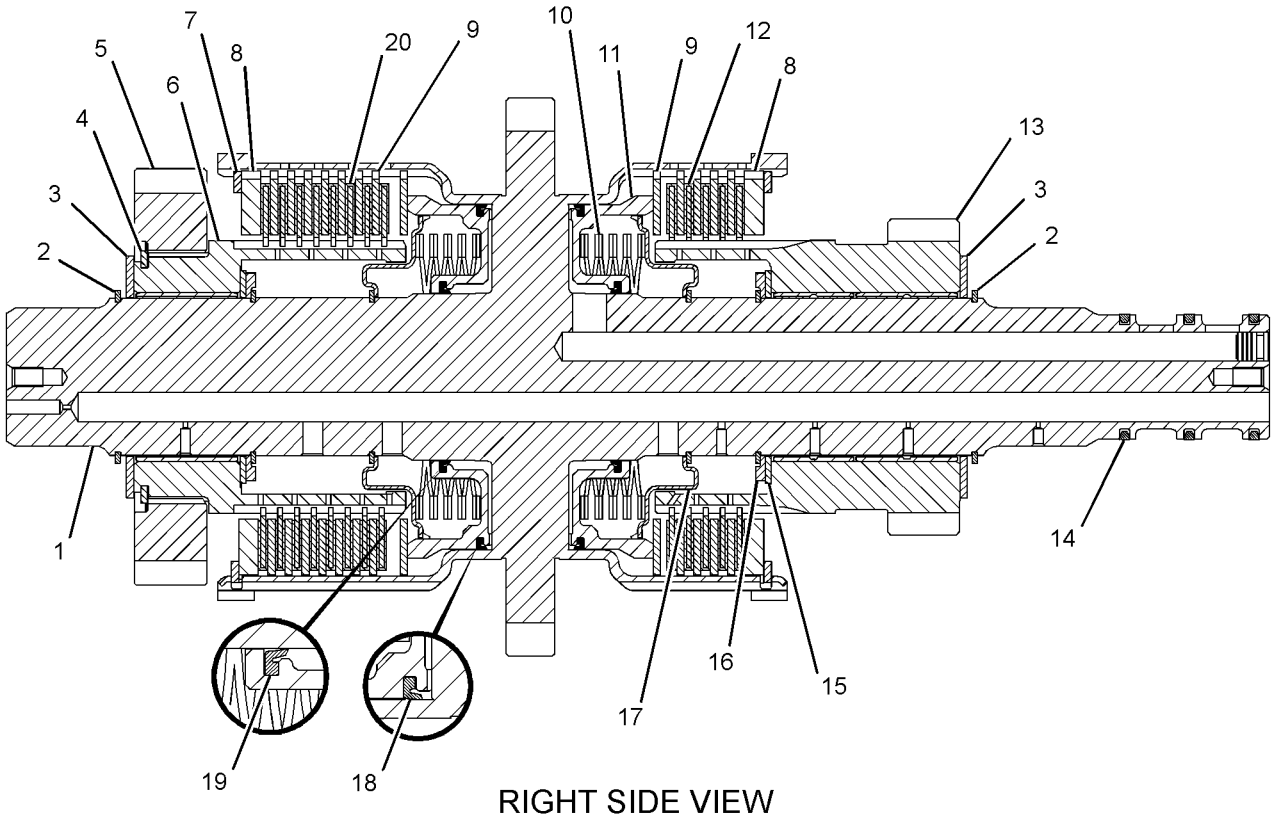

RIGHT SIDE VIEW

GRAPHIC #1 **<END>** g01398672

266-0059 CLUTCH GP–FIRST, THIRD

S/N: MWL1-UP

PART OF 252-5135 TRANSMISSION AR

SMCS-3155 **i03233401**

NOTE	REF NO	GRAPHIC REF	PART NUMBER	QTY	PART NAME 1 2 3 4 5 6 (PRODUCT LEVEL)	SEE PAGE
	1	1	**173-7439**	1	SHAFT AS	
	1A	1	**9W-0719**	3	PLUG	
	2	1	**8T-0251**	3	RING-RETAINING	
	3	1	**8E-8654**	1	DISC-THRUST	
	4	1	**6V-2394**	1	RING-RETAINING	
	5	1	**6Y-1758**	1	GEAR (46-TEETH)	
	6	1	**236-2541**	1	RING-RETAINING	
	7	1	**6Y-8514**	1	PLATE-END	
	8	1	**6Y-7922**	5	DISC-FRICTION	
	9	1	**6Y-8512**	5	PLATE-CLUTCH	
	10	1	**251-9335**	1	SPRING-WAVE	
	11	1	**114-1071**	1	PISTON	
	12	1	**8E-5737**	1	RING-SEAL	
	13	1	**6Y-8286**	1	PISTON	
	14	1	**8E-5735**	1	RING-SEAL	
	15	2	**6Y-5632**	8	PLATE-CLUTCH	
	16	2	**6Y-7932**	8	DISC-FRICTION	
	17	2	**9W-9272**	1	PLATE-END	
	18	2	**9U-9322**	1	RING-RETAINING	
	19	2	**8E-8321**	2	DISC-THRUST	
	20	2	**8C-3979**	1	RING-RETAINING	
	21	2	**265-5287**	4	RING-SEAL	
	22	2	**9W-6661**	1	GEAR (38-TEETH)	
	23	2	**6Y-8289**	1	HUB AS	
	23A	2	**8E-3433**	1	BEARING-SLEEVE	
	24	2	**8C-8550**	1	RING-RETAINING	
	25	2	**7T-8698**	1	GEAR (97-TEETH)	
	26	2	**8E-8652**	1	DISC-THRUST	
	27	2	**6Y-0373**	1	RETAINER-RING	
	28	2	**104-7336**	2	RING-RETAINING	
	29	1	**6Y-8288**	1	PISTON-BALANCE	
	30	1	**8E-5742**	1	RING-SEAL	
	31	1	**8E-1279**	1	SPRING-WAVE	
	32	1	**6Y-8265**	1	SEAL AS-BALANCE	
	33	1	**9W-9278**	1	RETAINER	
	34	1	**8E-8317**	1	DISC-THRUST	
	35	1	**6Y-8275**	1	HUB AS	
	35A	1	**8E-3416**	1	BEARING-SLEEVE	
	36	1	**9W-9436**	1	RING-SEAL	
	37	1	**9W-9399**	1	RING-SEAL	

266-0059 **CLUTCH GP** *(contd.)* **i03233401**

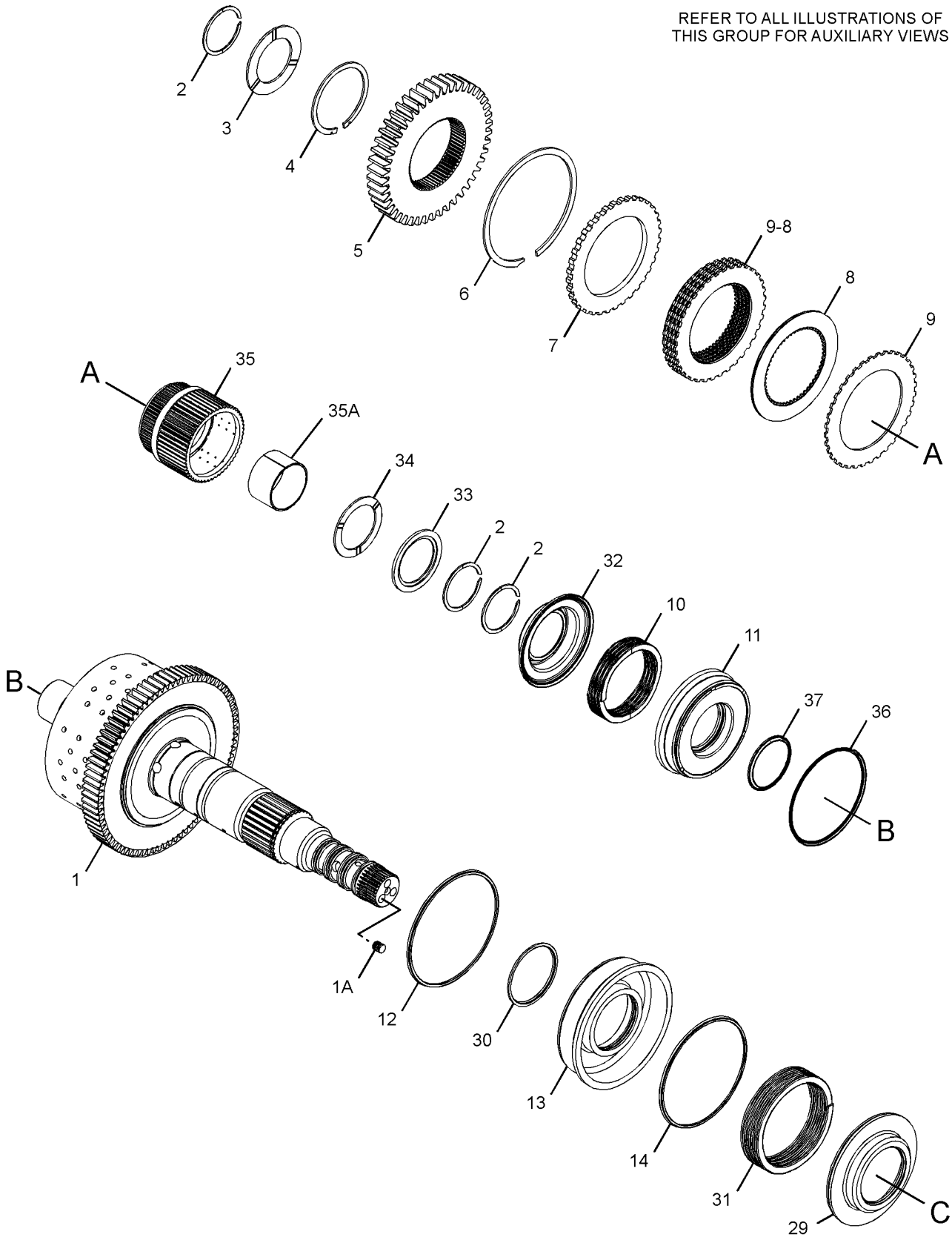

GRAPHIC #1 g01401678

REFER TO ALL ILLUSTRATIONS OF
THIS GROUP FOR AUXILIARY VIEWS

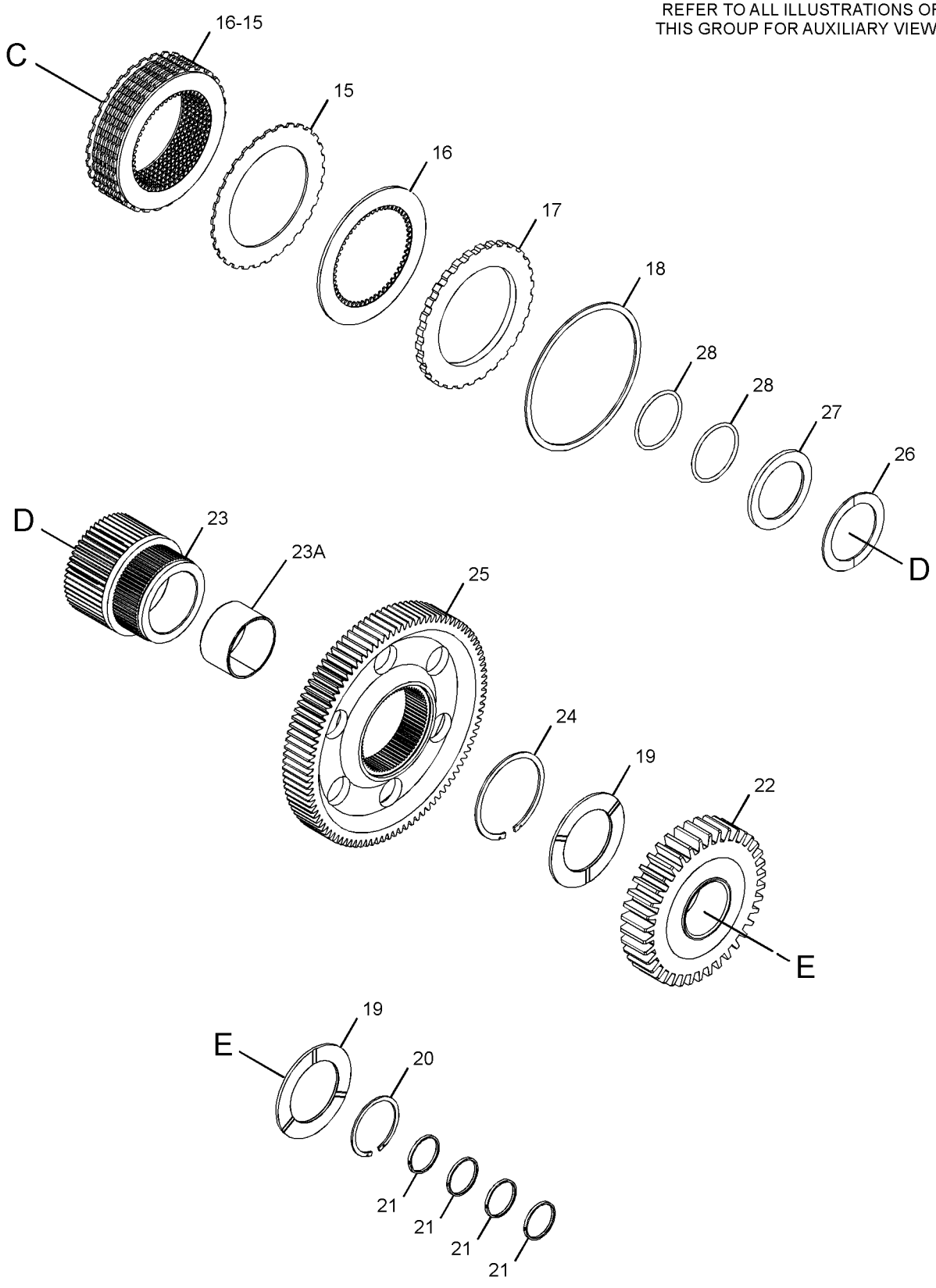

GRAPHIC #2 **<END>** g01401679

265-9753 CONTROL AR-DIFFERENTIAL LOCK–AUTOMATIC, FRONT, REAR

S/N: JKM1-UP

PART OF 317-8361, 317-8363, 317-8366, 317-8368, 318-0647 CONFIGURATION AR

AN ATTACHMENT

SMCS-3264 **i02930719**

NOTE	PART NUMBER	QTY	PART NAME 1 2 3 4 5 6 (PRODUCT LEVEL)	SEE PAGE
Y	*272-4992*	1	AXLE AR-FIXED (AUTO DIFF LOCK W/AOC, FRONT)	369
Y	*272-4996*	1	AXLE AR-OSCILLATING (AUTO DIFF LOCK W/AOC, REAR)	370
Y	*260-8836*	1	CONTROL GP-DIFFERENTIAL LOCK (AUTOMATIC, FRONT, REAR)	394
Y	*262-2950*	1	GUARD GP-SENSOR (WHEEL SPEED)	544
Y	*266-1688*	1	HARDWARE GP-REAR FRAME	546
Y	*266-4523*	1	SENSOR & MTG GP-POSITION (ARTICULATION ANGLE)	240
Y	*267-4799*	1	WIRING GP-SENSOR (WHEEL SPEED)	364

Y-SEPARATE ILLUSTRATION

<END>

POWER TRAIN

260-8834 CONTROL GP-DIFFERENTIAL LOCK–
STANDARD, FRONT
S/N: JKM1-180
PART OF 237-7540 CHASSIS AR

SMCS-3264, 3272 **i02911211**

NOTE	REF NO	GRAPHIC REF	PART NUMBER	QTY	PART NAME 1 2 3 4 5 6 (PRODUCT LEVEL)	SEE PAGE
	1	1	*148-8443*	1	TEE AS	
		1	**3J-1907**	1	SEAL-O-RING	
		1	**6V-8397**	1	SEAL-O-RING	
		1	**7X-2459**	1	TEE-O-RING	
	2	1	*165-6365*	1	FITTING AS	
		1	**3J-1907**	1	SEAL-O-RING	
		1	**7W-7381**	1	FITTING-OUTLET	
Y	3	1	**244-7139**	1	MANIFOLD GP-CONTROL (MANUAL DIFFERENTIAL LOCK)	451
Y	4	1	*245-2975*	1	ACCUMULATOR GP-PILOT OIL (CHARGED)	664
	5	1	*260-9187*	2	CONNECTOR AS	
					(EACH INCLUDES)	
		1	**6V-8397**	1	SEAL-O-RING	
		1	**8T-9358**	1	CONNECTOR	
	6	1	**262-1510**	1	BRACKET AS	
	7	1	**262-1512**	1	TUBE AS	
	8	1	**269-4949**	1	ADAPTER	
	9	1	**269-4964**	1	ELBOW-ADAPTER	
I	10	1	**278-9079**	1	HOSE AS	
	11	1	**280-3350**	1	BRACKET AS	
M		1	**8T-3490**	2	NUT-WELD (M10X1.5-THD)	
	12	1	**280-3353**	1	TUBE AS	
I	13	1	**308-1403**	1	HOSE AS	
I	14	1	**310-5919**	1	HOSE AS	
	15	1	**318-6511**	1	TUBE AS	
	16	1	**318-7395**	1	TUBE AS	
	17	1	**124-0174**	1	CLIP	
	18	1	*148-8340*	1	CONNECTOR AS	
		1	**3K-0360**	1	SEAL-O-RING	
		1	**6V-8398**	1	SEAL-O-RING	
		1	**6V-8639**	1	CONNECTOR	
	19	1	*148-8367*	1	ELBOW AS	
		1	**6V-8397**	1	SEAL-O-RING	
		1	**6V-9850**	1	ELBOW	
	20	1	*148-8378*	2	ELBOW AS	
					(EACH INCLUDES)	
		1	**3J-1907**	1	SEAL-O-RING	
		1	**6V-8397**	1	SEAL-O-RING	
		1	**6V-8724**	1	ELBOW	
	21	1	*164-5567*	2	COUPLER AS-QUICK DISCONNECT (MALE)	
					(EACH INCLUDES)	
		1	**3J-1907**	1	SEAL-O-RING	
		1	**6V-3965**	1	FITTING (QUICK DISCONNECT)	
	22	1	**183-3401**	1	ELBOW AS	
		1	**6V-5049**	1	SEAL-O-RING	
		1	**6V-9001**	1	ELBOW	
		1	**8L-2779**	1	SEAL-O-RING	
	23	1	*184-2420*	1	ADAPTER AS	
		1	**3E-7401**	1	ADAPTER	
		1	**6V-8397**	1	SEAL-O-RING	
	24	1	**269-4961**	1	ELBOW-ADAPTER	
	25	1	**269-4962**	1	ELBOW-ADAPTER	
	26	1	**269-4967**	1	ELBOW-ADAPTER	
	27	1	**6D-4636**	3	CLIP	
	28	1	**6V-0852**	2	CAP-DUST	

260-8834 CONTROL GP-DIFFERENTIAL LOCK *(contd.)* i02911211

NOTE	REF NO	GRAPHIC REF	PART NUMBER	QTY	PART NAME 1 2 3 4 5 6 (PRODUCT LEVEL)	SEE PAGE
	29	1	**6V-9168**	3	NUT (11/16-16-THD)	
	30	1	**7X-7729**	3	WASHER (11X25X3-MM THK)	
	31	1	**8T-4121**	10	WASHER-HARD (11X21X2.5-MM THK)	
M	32	1	**8T-4137**	10	BOLT (M10X1.5X20-MM)	
M	33	1	**8T-6685**	3	BOLT (M10X1.5X110-MM)	

I-REFER TO HYDRAULIC INFORMATION SYSTEM
M-METRIC PART
Y-SEPARATE ILLUSTRATION

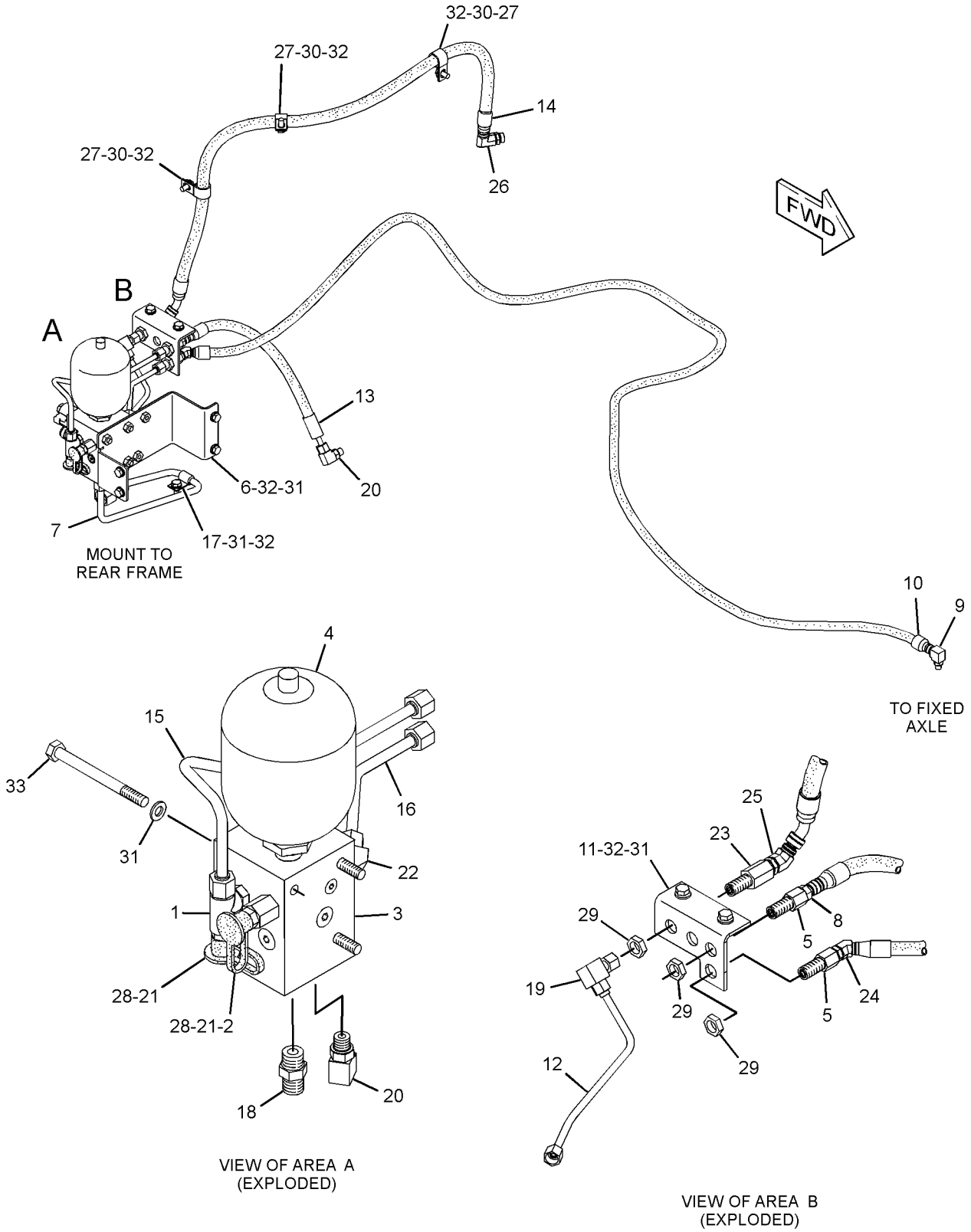

GRAPHIC #1 **<END>** g01434578

260-8834 CONTROL GP-DIFFERENTIAL LOCK–
STANDARD, FRONT
S/N: JKM181-UP
PART OF 237-7540 CHASSIS AR

SMCS-3264, 3272 **i03339416**

NOTE	REF NO	GRAPHIC REF	PART NUMBER	QTY	PART NAME 1 2 3 4 5 6 (PRODUCT LEVEL)	SEE PAGE
	1	1	*148-8443*	1	TEE AS	
		1	**3J-1907**	1	SEAL-O-RING	
		1	**6V-8397**	1	SEAL-O-RING	
		1	**7X-2459**	1	TEE-O-RING	
	2	1	*165-6365*	1	FITTING AS	
		1	**3J-1907**	1	SEAL-O-RING	
		1	**7W-7381**	1	FITTING-OUTLET	
Y	3	1	**244-7139**	1	MANIFOLD GP-CONTROL (MANUAL DIFFERENTIAL LOCK)	451
Y	4	1	*245-2975*	1	ACCUMULATOR GP-PILOT OIL (CHARGED)	664
C	5	1	*260-9187*	1	CONNECTOR AS	
		1	**6V-8397**	1	SEAL-O-RING	
		1	**8T-9358**	1	CONNECTOR	
	6	1	**262-1510**	1	BRACKET AS	
	7	1	**262-1512**	1	TUBE AS	
	8	1	**269-4949**	1	ADAPTER	
	9	1	**269-4964**	1	ELBOW-ADAPTER	
I	10	1	**278-9079**	1	HOSE AS	
	11	1	**280-3350**	1	BRACKET AS	
M		1	**8T-3490**	2	NUT-WELD (M10X1.5-THD)	
	12	1	**280-3353**	1	TUBE AS	
I	13	1	**308-1403**	1	HOSE AS	
I	14	1	**310-5919**	1	HOSE AS	
	15	1	**318-6511**	1	TUBE AS	
	16	1	**318-7395**	1	TUBE AS	
	17	1	**124-0174**	1	CLIP	
	18	1	*148-8340*	1	CONNECTOR AS	
		1	**3K-0360**	1	SEAL-O-RING	
		1	**6V-8398**	1	SEAL-O-RING	
		1	**6V-8639**	1	CONNECTOR	
	19	1	*148-8367*	1	ELBOW AS	
		1	**6V-8397**	1	SEAL-O-RING	
		1	**6V-9850**	1	ELBOW	
	20	1	*148-8378*	2	ELBOW AS	
					(EACH INCLUDES)	
		1	**3J-1907**	1	SEAL-O-RING	
		1	**6V-8397**	1	SEAL-O-RING	
		1	**6V-8724**	1	ELBOW	
	21	1	*164-5567*	2	COUPLER AS-QUICK DISCONNECT (MALE)	
					(EACH INCLUDES)	
		1	**214-7568**	1	SEAL-O-RING	
		1	**6V-3965**	1	FITTING (QUICK DISCONNECT)	
	22	1	**183-3401**	1	ELBOW AS	
		1	**6V-5049**	1	SEAL-O-RING	
		1	**6V-9001**	1	ELBOW	
		1	**8L-2779**	1	SEAL-O-RING	
	23	1	*184-2420*	1	ADAPTER AS	
		1	**3E-7401**	1	ADAPTER	
		1	**6V-8397**	1	SEAL-O-RING	
C	24	1	**313-3484**	1	ADAPTER	
	25	1	**269-4962**	1	ELBOW-ADAPTER	
	26	1	**269-4967**	1	ELBOW-ADAPTER	
	27	1	**6D-4636**	3	CLIP	
	28	1	**6V-0852**	2	CAP-DUST	
	29	1	**6V-9168**	3	NUT (11/16-16-THD)	

260-8834 CONTROL GP-DIFFERENTIAL LOCK *(contd.)* i03339416

NOTE	REF NO	GRAPHIC REF	PART NUMBER	QTY	PART NAME 1 2 3 4 5 6 (PRODUCT LEVEL)	SEE PAGE
	30	1	**7X-7729**	3	WASHER (11X25X3-MM THK)	
	31	1	**8T-4121**	10	WASHER-HARD (11X21X2.5-MM THK)	
M	32	1	**8T-4137**	10	BOLT (M10X1.5X20-MM)	
M	33	1	**8T-6685**	3	BOLT (M10X1.5X110-MM)	
C	34	1	**3D-2824**	1	SEAL-O-RING	
C	35	1	*148-8366*	1	ELBOW AS	
		1	**6V-8397**	2	SEAL-O-RING	
		1	**6V-8987**	1	ELBOW	

C-CHANGE FROM PREVIOUS TYPE
I-REFER TO HYDRAULIC INFORMATION SYSTEM
M-METRIC PART
Y-SEPARATE ILLUSTRATION

260-8834 **CONTROL GP-DIFFERENTIAL LOCK** *(contd.)* **i03339416**

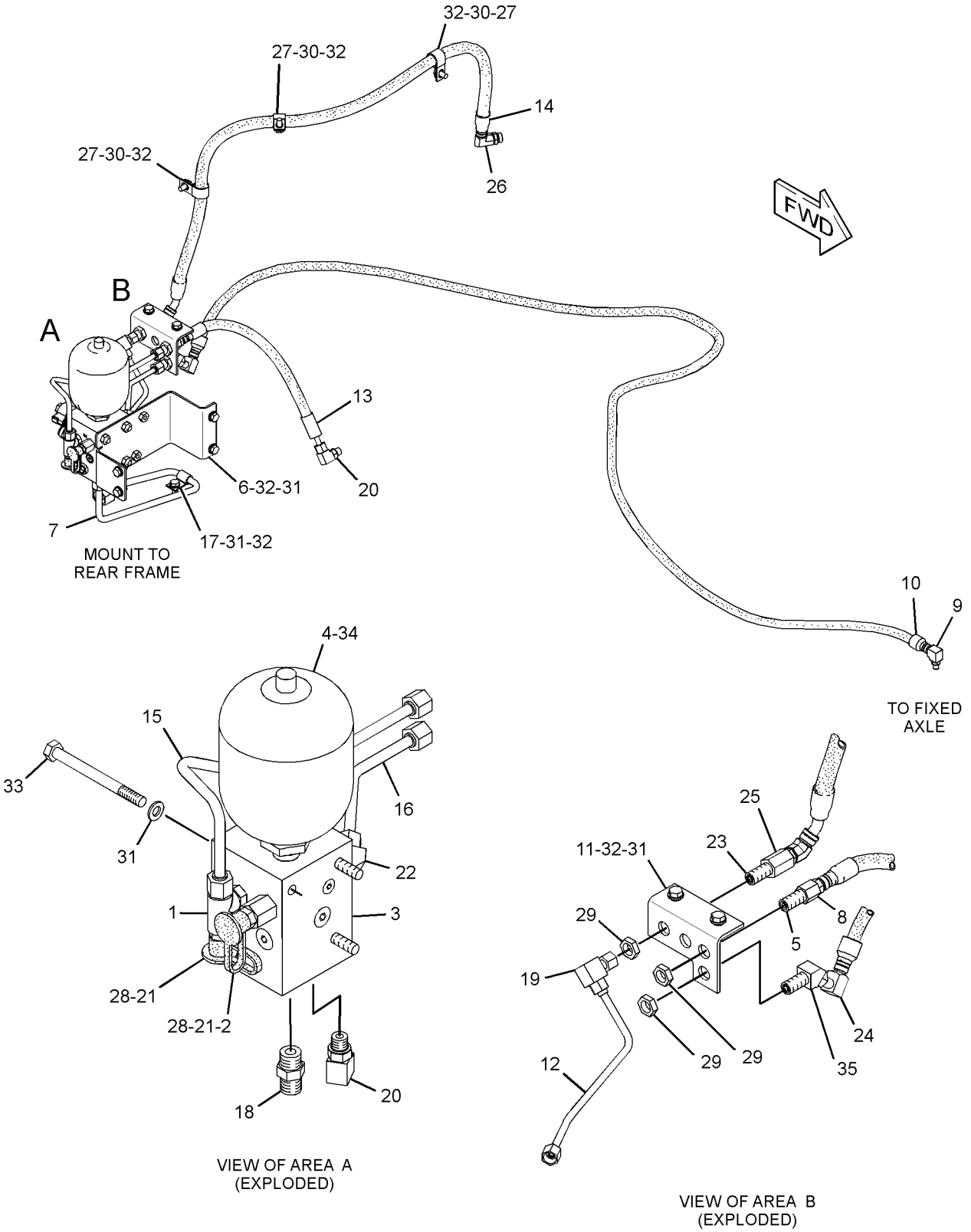

GRAPHIC #1 **<END>** g01661433

260-8836 CONTROL GP-DIFFERENTIAL LOCK–
AUTOMATIC, FRONT, REAR
S/N: JKM1-233
PART OF 265-9753 CONTROL AR-DIFFERENTIAL LOCK
AN ATTACHMENT

SMCS-3264, 3272 **i02935181**

NOTE	REF NO	GRAPHIC REF	PART NUMBER	QTY	PART NAME 1 2 3 4 5 6 (PRODUCT LEVEL)	SEE PAGE
	1	2	*148-8443*	1	TEE AS	
		2	**3J-1907**	1	SEAL-O-RING	
		2	**6V-8397**	1	SEAL-O-RING	
		2	**7X-2459**	1	TEE-O-RING	
	2	1	*165-6365*	1	FITTING AS	
		1	**3J-1907**	1	SEAL-O-RING	
		1	**7W-7381**	1	FITTING-OUTLET	
Y	3	2	**244-7140**	1	MANIFOLD GP-CONTROL (AUTO DIFFERENTIAL LOCK)	452
Y	4	2	*245-2975*	1	ACCUMULATOR GP-PILOT OIL (CHARGED)	664
	5	2	*260-9187*	3	CONNECTOR AS	
					(EACH INCLUDES)	
		2	**6V-8397**	1	SEAL-O-RING	
		2	**8T-9358**	1	CONNECTOR	
	6	1	**262-1510**	1	BRACKET AS	
	7	2	**262-1512**	1	TUBE AS	
	8	1	**269-4964**	2	ELBOW-ADAPTER	
I	9	1	**278-9079**	1	HOSE AS	
I	10	2	**279-1176**	1	HOSE AS	
	11	2	**280-3350**	1	BRACKET AS	
M		2	**8T-3490**	2	NUT-WELD (M10X1.5-THD)	
	12	2	**280-3353**	1	TUBE AS	
	13	2	**280-3355**	1	TUBE AS	
I	14	1	**308-1403**	1	HOSE AS	
I	15	1	**310-5919**	1	HOSE AS	
	16	2	**318-6510**	1	TUBE AS	
	17	2	**318-6511**	1	TUBE AS	
	18	2	**124-0174**	1	CLIP	
	19	2	*148-8340*	1	CONNECTOR AS	
		2	**3K-0360**	1	SEAL-O-RING	
		2	**6V-8398**	1	SEAL-O-RING	
		2	**6V-8639**	1	CONNECTOR	
	20	2	*148-8367*	3	ELBOW AS	
					(EACH INCLUDES)	
		2	**6V-8397**	1	SEAL-O-RING	
		2	**6V-9850**	1	ELBOW	
	21	1,2	*148-8378*	3	ELBOW AS	
					(EACH INCLUDES)	
		1,2	**3J-1907**	1	SEAL-O-RING	
		1,2	**6V-8397**	1	SEAL-O-RING	
		1,2	**6V-8724**	1	ELBOW	
	22	2	*164-5567*	2	COUPLER AS-QUICK DISCONNECT (MALE)	
					(EACH INCLUDES)	
		2	**3J-1907**	1	SEAL-O-RING	
		2	**6V-3965**	1	FITTING (QUICK DISCONNECT)	
	23	2	*172-9287*	1	CONNECTOR AS	
		2	**3J-1907**	1	SEAL-O-RING	
		2	**6V-8397**	1	SEAL-O-RING	
		2	**7E-9898**	1	CONNECTOR	
	24	2	*184-2420*	1	ADAPTER AS	
		2	**3E-7401**	1	ADAPTER	
		2	**6V-8397**	1	SEAL-O-RING	
	25	1	**269-4949**	1	ADAPTER	
	26	2	**269-4961**	2	ELBOW-ADAPTER	
	27	2	**269-4962**	1	ELBOW-ADAPTER	

260-8836 **CONTROL GP-DIFFERENTIAL LOCK** *(contd.)* **i02935181**

NOTE	REF NO	GRAPHIC REF	PART NUMBER	QTY	PART NAME 1 2 3 4 5 6 (PRODUCT LEVEL)	SEE PAGE
	28	1	**269-4967**	1	ELBOW-ADAPTER	
	29	1	**5K-5338**	1	CLIP	
	30	1	**6D-4636**	3	CLIP	
	31	2	**6V-0852**	2	CAP-DUST	
	32	2	**6V-9168**	4	NUT (11/16-16-THD)	
	33	1	**7X-7729**	3	WASHER (11X25X3-MM THK)	
	34	1	**8M-2773**	5	CLIP	
	35	1,2	**8T-4121**	15	WASHER-HARD (11X21X2.5-MM THK)	
M	36	1,2	**8T-4137**	15	BOLT (M10X1.5X20-MM)	
M	37	2	**8T-4178**	1	BOLT (M10X1.5X90-MM)	
M	38	2	**8T-6685**	2	BOLT (M10X1.5X110-MM)	
E	39	1	**7I-7439**		GUARD (45-CM)	

E-ORDER BY THE CENTIMETER
I-REFER TO HYDRAULIC INFORMATION SYSTEM
M-METRIC PART
Y-SEPARATE ILLUSTRATION

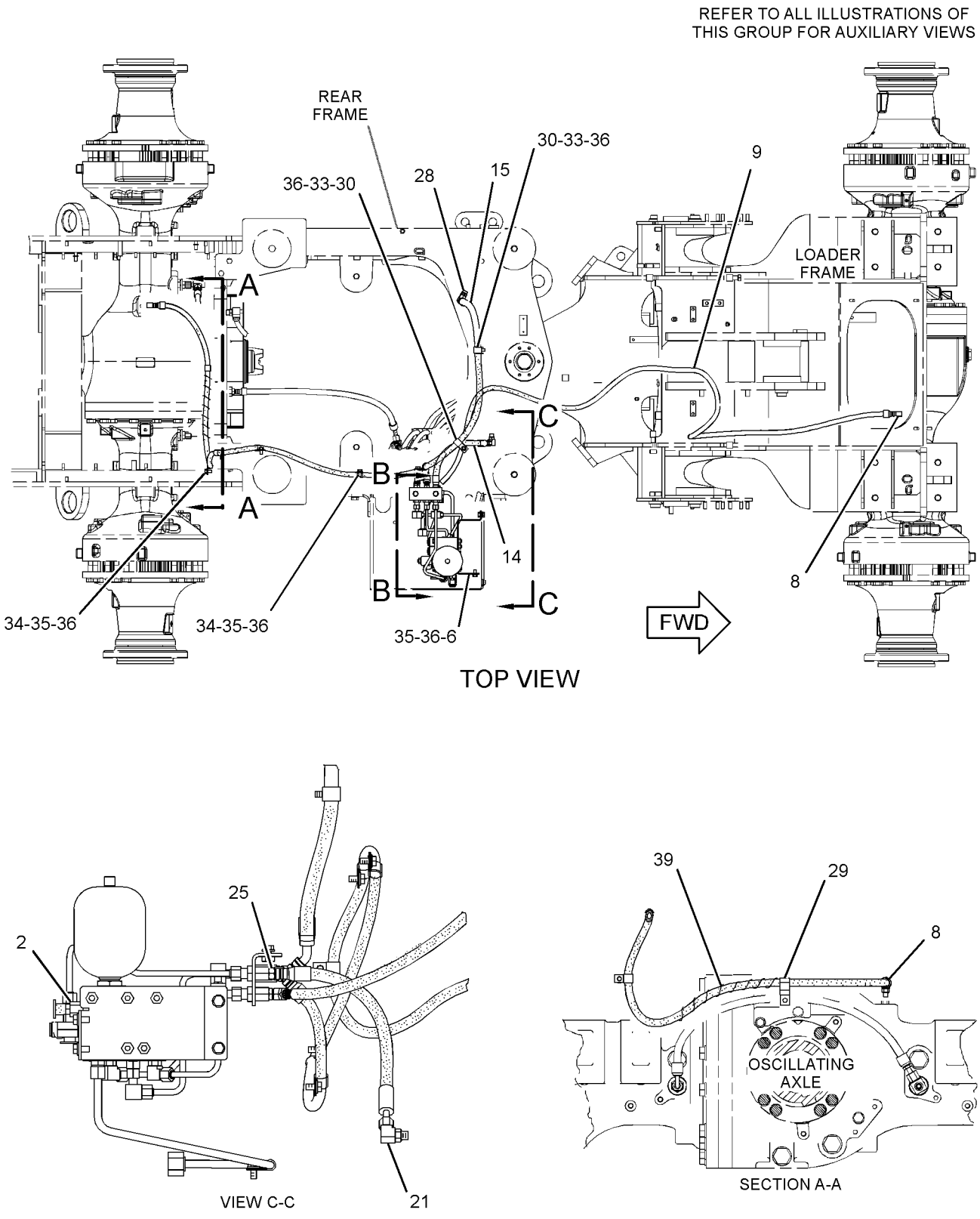

GRAPHIC #1

g01439839

260-8836 **CONTROL GP-DIFFERENTIAL LOCK** *(contd.)* **i02935181**

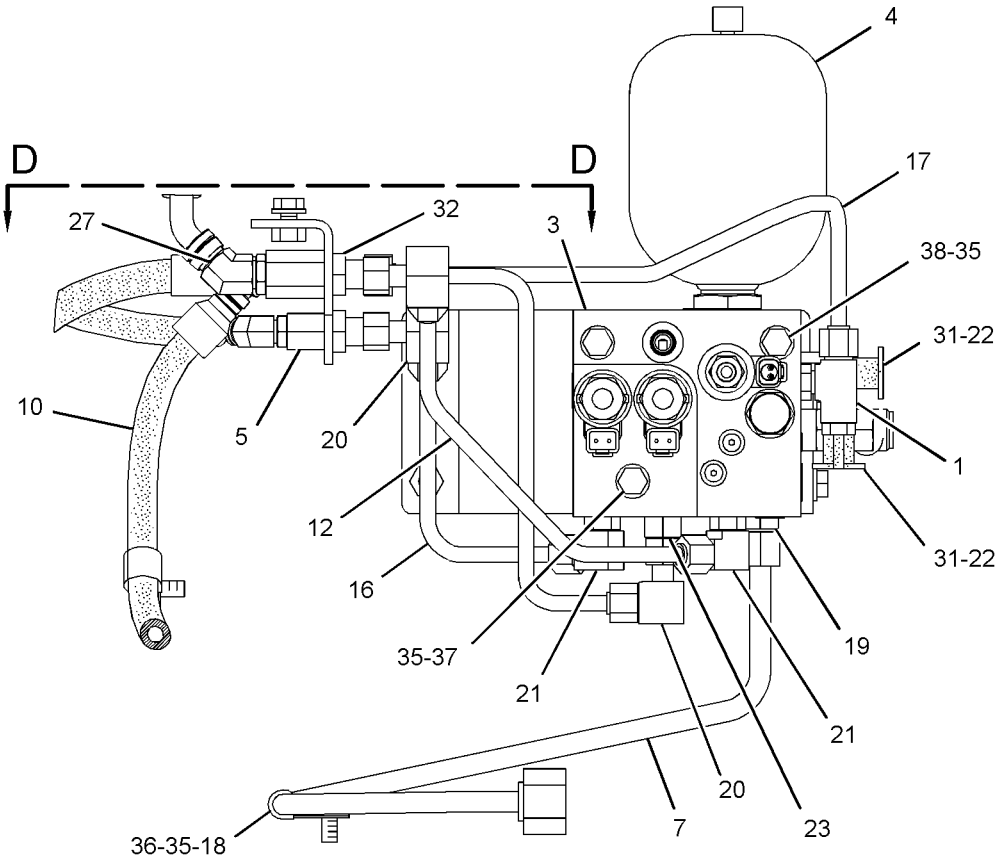

SECTION B-B

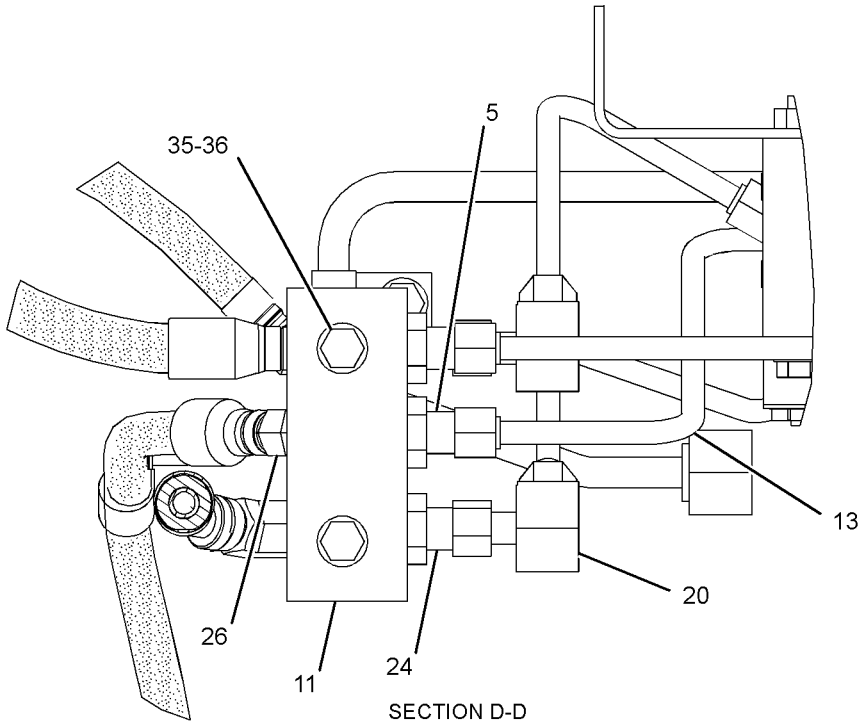

SECTION D-D

GRAPHIC #2 **<END>** g01439970

260-8836 CONTROL GP-DIFFERENTIAL LOCK–
AUTOMATIC, FRONT, REAR
S/N: JKM234-UP
PART OF 265-9753 CONTROL AR-DIFFERENTIAL LOCK
AN ATTACHMENT

SMCS-3264, 3272 **i03146651**

NOTE	REF NO	GRAPHIC REF	PART NUMBER	QTY	PART NAME 1 2 3 4 5 6 (PRODUCT LEVEL)	SEE PAGE
	1	2	*148-8443*	1	TEE AS	
		2	**3J-1907**	1	SEAL-O-RING	
		2	**6V-8397**	1	SEAL-O-RING	
		2	**7X-2459**	1	TEE-O-RING	
	2	1	*165-6365*	1	FITTING AS	
		1	**3J-1907**	1	SEAL-O-RING	
		1	**7W-7381**	1	FITTING-OUTLET	
Y	3	2	**244-7140**	1	MANIFOLD GP-CONTROL (AUTO DIFFERENTIAL LOCK)	452
Y	4	2	*245-2975*	1	ACCUMULATOR GP-PILOT OIL (CHARGED)	664
C	5	2	*260-9187*	2	CONNECTOR AS	
					(EACH INCLUDES)	
		2	**6V-8397**	1	SEAL-O-RING	
		2	**8T-9358**	1	CONNECTOR	
	6	1	**262-1510**	1	BRACKET AS	
	7	2	**262-1512**	1	TUBE AS	
	8	1	**269-4964**	2	ELBOW-ADAPTER	
I	9	1	**278-9079**	1	HOSE AS	
I	10	2	**279-1176**	1	HOSE AS	
	11	2	**280-3350**	1	BRACKET AS	
M		2	**8T-3490**	2	NUT-WELD (M10X1.5-THD)	
	12	2	**280-3353**	1	TUBE AS	
	13	2	**280-3355**	1	TUBE AS	
I	14	1	**308-1403**	1	HOSE AS	
I	15	1	**310-5919**	1	HOSE AS	
	16	2	**318-6510**	1	TUBE AS	
	17	2	**318-6511**	1	TUBE AS	
	18	2	**124-0174**	1	CLIP	
	19	2	*148-8340*	1	CONNECTOR AS	
		2	**3K-0360**	1	SEAL-O-RING	
		2	**6V-8398**	1	SEAL-O-RING	
		2	**6V-8639**	1	CONNECTOR	
	20	2	*148-8367*	3	ELBOW AS	
					(EACH INCLUDES)	
		2	**6V-8397**	1	SEAL-O-RING	
		2	**6V-9850**	1	ELBOW	
	21	1,2	*148-8378*	3	ELBOW AS	
					(EACH INCLUDES)	
		1,2	**3J-1907**	1	SEAL-O-RING	
		1,2	**6V-8397**	1	SEAL-O-RING	
		1,2	**6V-8724**	1	ELBOW	
	22	2	*164-5567*	2	COUPLER AS-QUICK DISCONNECT (MALE)	
					(EACH INCLUDES)	
		2	**214-7568**	1	SEAL-O-RING	
		2	**6V-3965**	1	FITTING (QUICK DISCONNECT)	
	23	2	*172-9287*	1	CONNECTOR AS	
		2	**3J-1907**	1	SEAL-O-RING	
		2	**6V-8397**	1	SEAL-O-RING	
		2	**7E-9898**	1	CONNECTOR	
	24	2	*184-2420*	1	ADAPTER AS	
		2	**3E-7401**	1	ADAPTER	
		2	**6V-8397**	1	SEAL-O-RING	
	25	1	**269-4949**	1	ADAPTER	
C	26	2	**269-4961**	1	ELBOW-ADAPTER	
	27	2	**269-4962**	1	ELBOW-ADAPTER	

260-8836 **CONTROL GP-DIFFERENTIAL LOCK** *(contd.)* **i03146651**

NOTE	REF NO	GRAPHIC REF	PART NUMBER	QTY	PART NAME 1 2 3 4 5 6 (PRODUCT LEVEL)	SEE PAGE
	28	1	**269-4967**	1	ELBOW-ADAPTER	
	29	1	**5K-5338**	1	CLIP	
	30	1	**6D-4636**	3	CLIP	
	31	2	**6V-0852**	2	CAP-DUST	
	32	2	**6V-9168**	4	NUT (11/16-16-THD)	
	33	1	**7X-7729**	3	WASHER (11X25X3-MM THK)	
	34	1	**8M-2773**	5	CLIP	
	35	1,2	**8T-4121**	15	WASHER-HARD (11X21X2.5-MM THK)	
M	36	1,2	**8T-4137**	15	BOLT (M10X1.5X20-MM)	
M	37	2	**8T-4178**	1	BOLT (M10X1.5X90-MM)	
M	38	2	**8T-6685**	2	BOLT (M10X1.5X110-MM)	
E	39	1	**7I-7439**		GUARD (45-CM)	
C	40	2	**3D-2824**	1	SEAL-O-RING	
C	41	1	*148-8366*	1	ELBOW AS	
		1	**6V-8397**	2	SEAL-O-RING	
		1	**6V-8987**	1	ELBOW	
C	42	1	**313-3484**	1	ADAPTER	

C-CHANGE FROM PREVIOUS TYPE
E-ORDER BY THE CENTIMETER
I-REFER TO HYDRAULIC INFORMATION SYSTEM
M-METRIC PART
Y-SEPARATE ILLUSTRATION

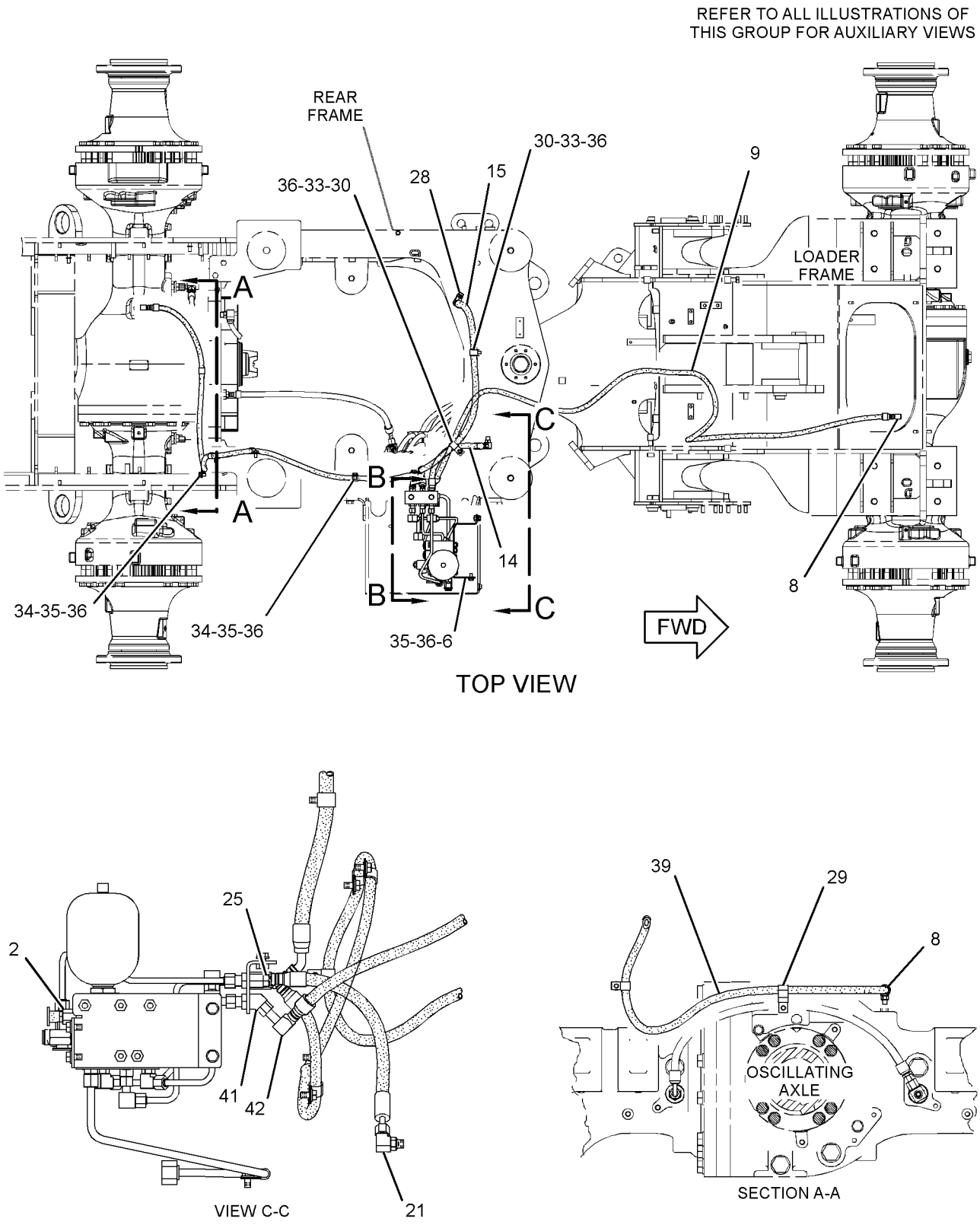

GRAPHIC #1

g01664115

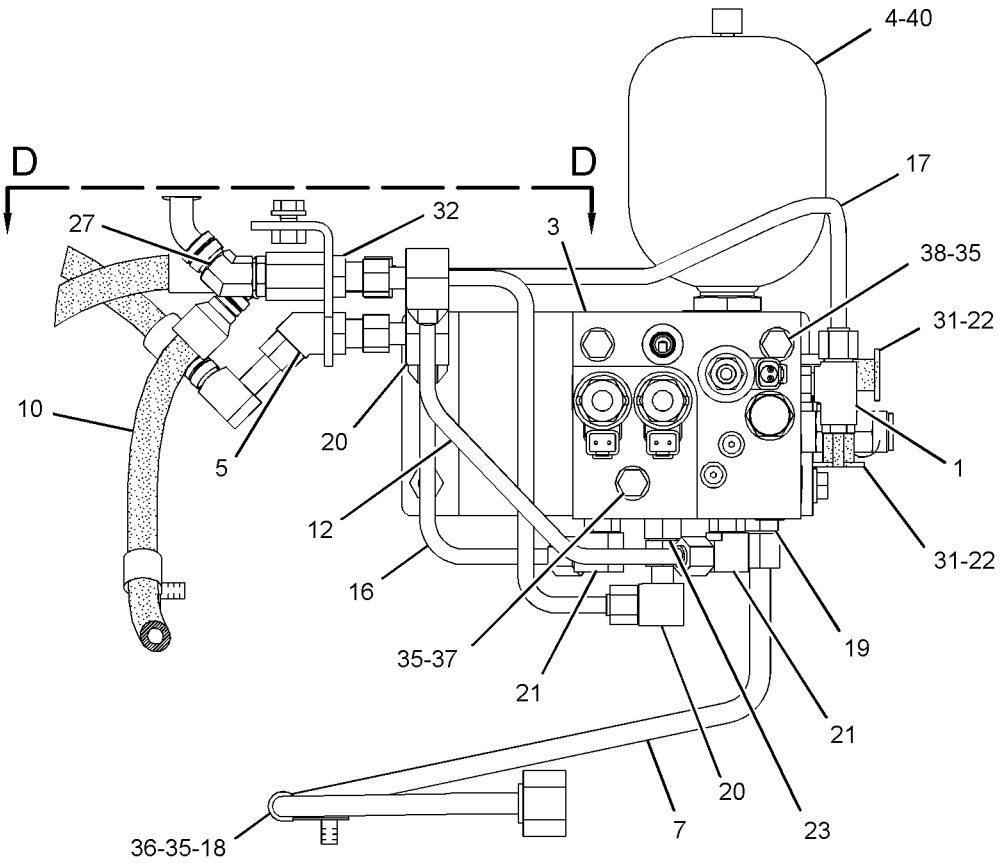

SECTION B-B

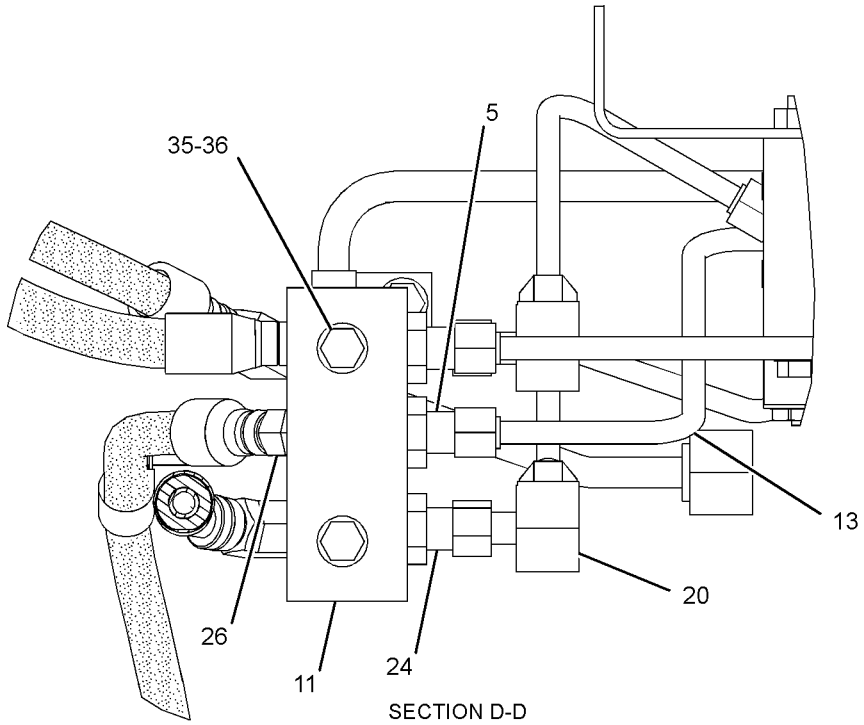

SECTION D-D

GRAPHIC #2 **<END>** g01664116

252-9720 CONTROL GP-TRANSMISSION HYD

S/N: MWL1-2064

PART OF 252-5135 TRANSMISSION AR

SMCS-3073, 3167 **i02914259**

NOTE	REF NO	GRAPHIC REF	PART NUMBER	QTY	PART NAME 1 2 3 4 5 6 (PRODUCT LEVEL)	SEE PAGE
	1	1	**3S-2093**	10	STRAP-CABLE	
	2	1	**9L-9068**	2	DOWEL	
Y	3	1	**183-8597**	1	SENSOR GP-SPEED (TMSN INTERMEDIATE OUTPUT 1)	249
Y	3A	1	**183-8597**	1	SENSOR GP-SPEED (TMSN INTERMEDIATE OUTPUT 2)	249
	4	1	**196-1185**	1	SENSOR GP-SPEED (TORQUE CONVERTER OUTPUT)	
	4A	1	**196-1185**	1	SENSOR GP-SPEED (TRANSMISSION OUTPUT 1)	
	4B	1	**196-1185**	1	SENSOR GP-SPEED (TRANSMISSION OUTPUT 2)	
					(EACH SENSOR GP INCLUDES)	
		1	**102-8802**	1	KIT-RECEPTACLE (2-PIN)	
					(INCLUDES RECEPTACLE AS AND WEDGE)	
		1	**186-3735**	2	PIN-CONNECTOR (16-GA TO 18-GA)	
E		1	**9X-1813**		SLEEVE (14-CM)	
		1	**171-5349**	1	STRAP-MARKER	
	5	1	**201-3321**	1	SEAL-O-RING	
	6	1	**303-1225**	1	HARNESS AS-TRANSMISSION (HYDRAULIC CONTROL)	
	7	1	**130-5300**	6	CLIP	
	8	1	**132-5789**	10	CLIP	
Y	9	1	*266-2470*	1	VALVE GP-TRANSMISSION CONTROL	484
	10	1	**3K-0360**	5	SEAL-O-RING	
M	11	1	**6V-2317**	5	BOLT (M8X1.25X30-MM)	
M	12	1	**6V-3821**	1	BOLT (M8X1.25X110-MM)	
M	13	1	**6V-5215**	6	BOLT (M8X1.25X16-MM)	
M	14	1	**6V-5223**	10	BOLT (M8X1.25X100-MM)	
	15	1	**8M-5251**	8	SEAL-O-RING	
M	16	1	**8T-0276**	4	BOLT (M8X1.25X45-MM)	
	17	1	**9M-1974**	26	WASHER-HARD (8.8X16X2-MM THK)	
	18	1	**6D-4246**	1	CLIP	
	19	1	**033-8248**	1	CLIP	

E-ORDER BY THE CENTIMETER
M-METRIC PART
Y-SEPARATE ILLUSTRATION

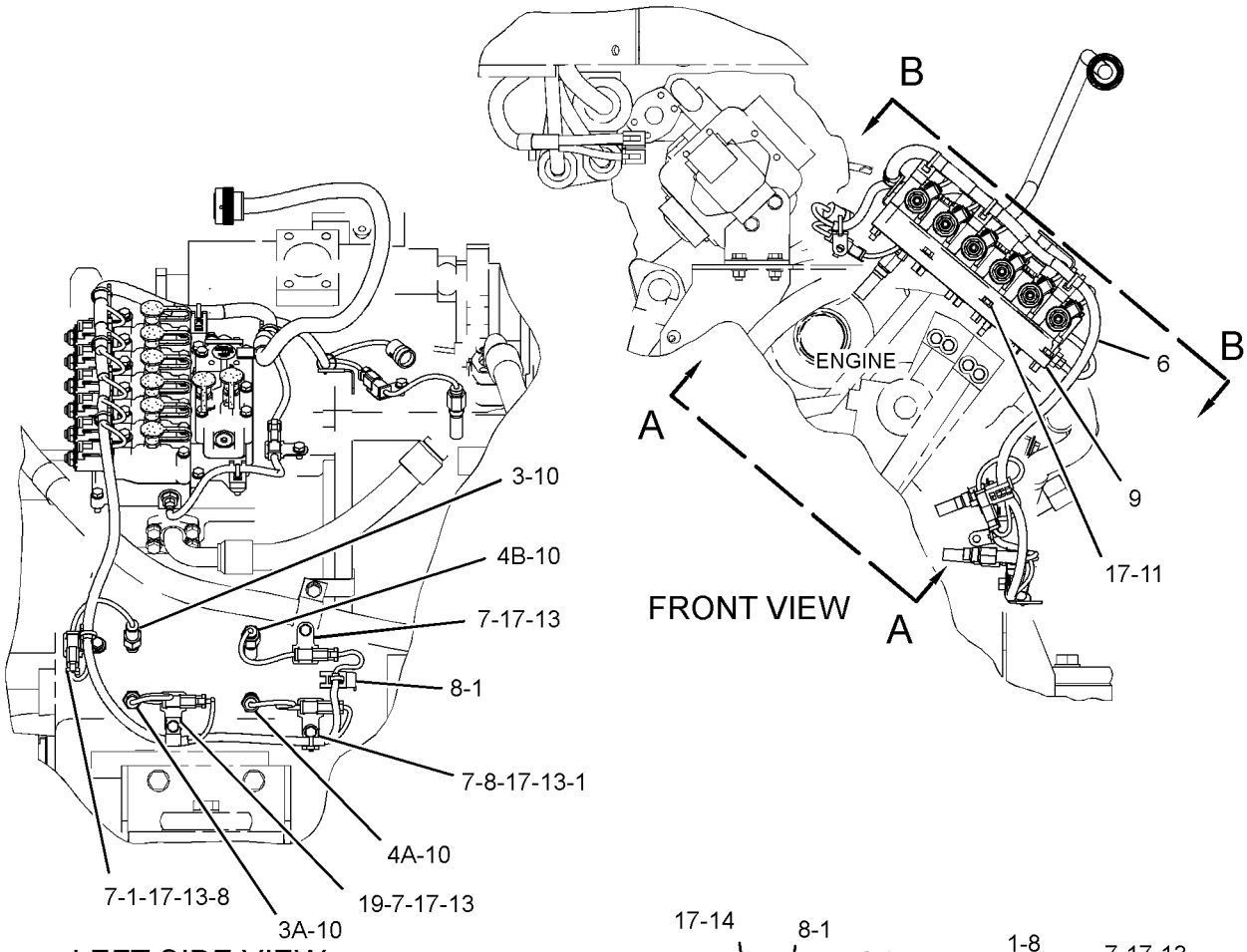

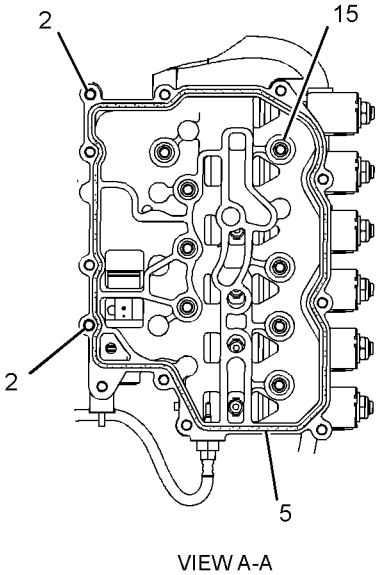

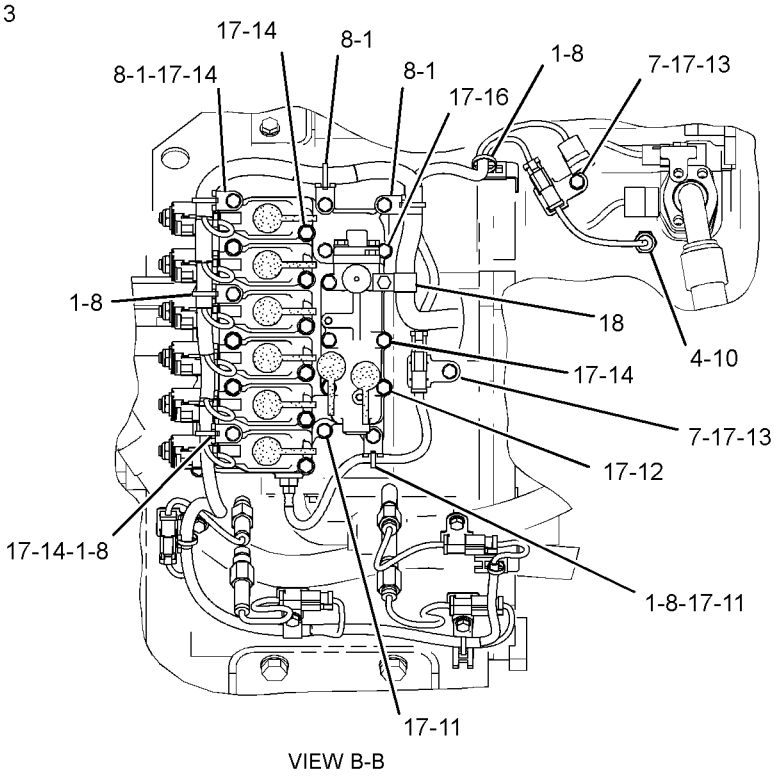

GRAPHIC #1 **<END>** g01428136

252-9720 CONTROL GP-TRANSMISSION HYD

S/N: MWL2065-UP

PART OF 252-5135 TRANSMISSION AR

SMCS-3073, 3167 **i03954010**

NOTE	REF NO	GRAPHIC REF	PART NUMBER	QTY	PART NAME 1 2 3 4 5 6 (PRODUCT LEVEL)	SEE PAGE
C	1	1	**3S-2093**	9	STRAP-CABLE	
	2	1	**9L-9068**	2	DOWEL	
C	3	1	**7K-1181**	1	STRAP-CABLE	
Y	4	1	**196-1185**	1	SENSOR GP-SPEED (TORQUE CONVERTER OUTPUT)	250
Y	4A	1	**196-1185**	1	SENSOR GP-SPEED (TRANSMISSION OUTPUT 1)	250
Y	4B	1	**196-1185**	1	SENSOR GP-SPEED (TRANSMISSION OUTPUT 2)	250
	5	1	**201-3321**	1	SEAL-O-RING	
C	6	1	**344-7928**	1	HARNESS AS-TRANSMISSION	
		1	**8T-8731**	1	PLUG-CONNECTOR (3-PIN)	
		1	**8T-8737**	11	PLUG-SEAL	
		1	**102-8803**	1	KIT-RECEPTACLE (3-PIN)	
					(INCLUDES RECEPTACLE AS & WEDGE)	
E		1	**114-8843**		SLEEVE-PLASTIC (240-CM)	
E		1	**114-8845**		SLEEVE-PLASTIC (20-CM)	
E		1	**125-7874**		TUBE-HEAT SHRINK (5.72-MM DIA) (5-CM)	
E		1	**125-7875**		TUBE-HEAT SHRINK (7.44-MM DIA) (5-CM)	
		1	**9X-3401**	26	PIN-CONNECTOR (16-GA TO 18-GA)	
					—OR—	
		1	**126-1767**	26	PIN-CONNECTOR (14-GA)	
		1	**9X-3402**	23	SOCKET-CONNECTOR (16-GA TO 18-GA)	
					—OR—	
		1	**126-1768**	23	SOCKET-CONNECTOR (14-GA)	
		1	**155-2260**	1	KIT-CONNECTING PLUG (3-PIN)	
		1	**155-2270**	10	KIT-CONNECTING PLUG (2-PIN)	
					(EACH INCLUDES PLUG AS, WEDGE, & INTERFACE SEAL)	
		1	**225-3854**	1	PLUG AS	
C	7	1	**130-5300**	4	CLIP	
	8	1	**132-5789**	10	CLIP	
Y	9	1	*266-2470*	1	VALVE GP-TRANSMISSION CONTROL	484
C	10	1	**3K-0360**	3	SEAL-O-RING	
M	11	1	**6V-2317**	5	BOLT (M8X1.25X30-MM)	
M	12	1	**6V-3821**	1	BOLT (M8X1.25X110-MM)	
M	13	1	**6V-5215**	6	BOLT (M8X1.25X16-MM)	
M	14	1	**6V-5223**	10	BOLT (M8X1.25X100-MM)	
	15	1	**8M-5251**	8	SEAL-O-RING	
M	16	1	**8T-0276**	4	BOLT (M8X1.25X45-MM)	
	17	1	**9M-1974**	26	WASHER-HARD (8.8X16X2-MM THK)	
C	18	1	**8M-2773**	1	CLIP	
	19	1	**033-8248**	1	CLIP	

C-CHANGE FROM PREVIOUS TYPE
E-ORDER BY THE CENTIMETER
M-METRIC PART
Y-SEPARATE ILLUSTRATION

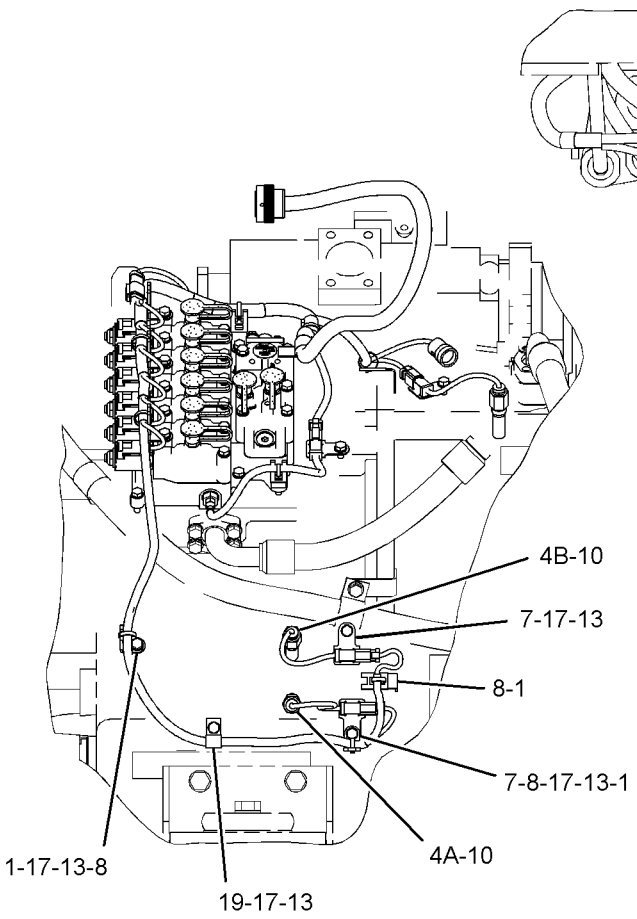

LEFT SIDE VIEW

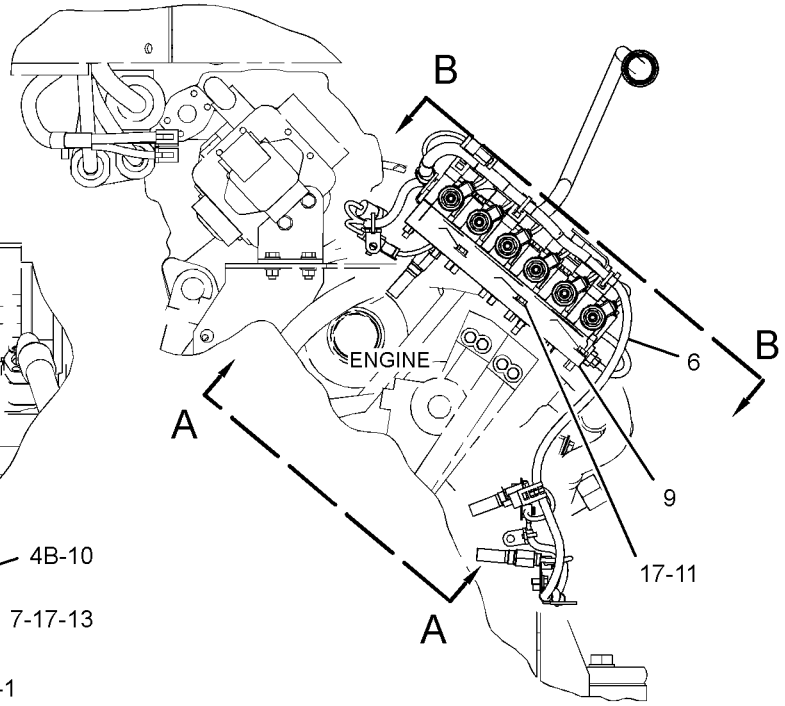

FRONT VIEW

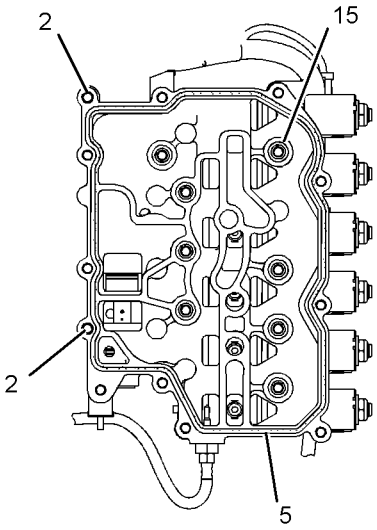

VIEW A-A

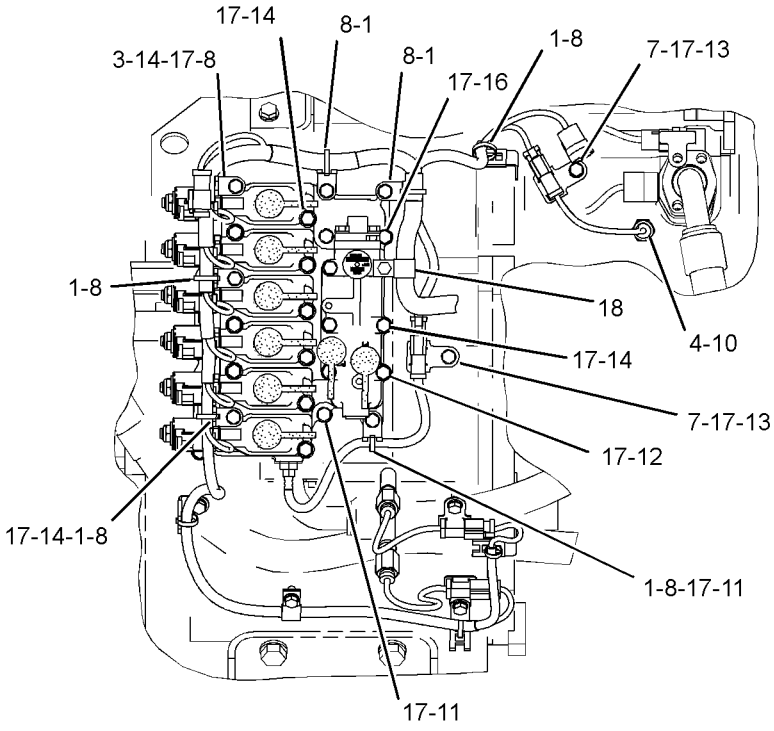

VIEW B-B

GRAPHIC #1 **<END>** g02162933

265-9745 COOLER AR-AXLE OIL–
MANUAL DIFFERENTIAL LOCK, FRONT
S/N: JKM1-UP
AN ATTACHMENT

SMCS-1365 **i02919990**

NOTE	PART NUMBER	QTY	PART NAME 1 2 3 4 5 6 (PRODUCT LEVEL)	SEE PAGE
Y	*295-8332*	1	GUARD GP-LINES (AXLE OIL COOLER)	536
Y	*260-8837*	1	GUARD GP-POWER TRAIN (AXLE OIL COOLER)	537
Y	*266-1688*	1	HARDWARE GP-REAR FRAME	546
Y	*260-8823*	1	LINES GP-AXLE OIL COOLER	434
Y	*270-3318*	1	LINES GP-WATER (AXLE OIL COOLER, CAB HEATER)	70
Y	*296-8069*	1	MOUNTING GP-AXLE OIL COOLER	455
Y	*263-1860*	1	PUMP & MTG GP-AXLE OIL COOLER	460
Y	*267-4794*	1	WIRING GP-AXLE OIL COOLER	272

Y-SEPARATE ILLUSTRATION

<END>

255-4814 COOLER GP-TRANSMISSION OIL

S/N: JKM1-UP

PART OF 237-7540 CHASSIS AR

SMCS-1375 **i02908698**

NOTE	REF NO	GRAPHIC REF	PART NUMBER	QTY	PART NAME 1 2 3 4 5 6 (PRODUCT LEVEL)	SEE PAGE
	1	1	**5D-1026**	1	CLAMP-BAND	
	2	1	*165-2273*	1	VALVE GP-SHUTOFF	
		1	**3K-0360**	1	SEAL-O-RING	
		1	**6V-7238**	1	VALVE-SHUTOFF	
	3	1	**258-5443**	1	COOLER AS-TRANSMISSION OIL (RADIATOR BOTTOM)	
		1	**7J-5544**	1	FITTING (3/4X16-THD)	
M		1	**8T-3490**	6	NUT-WELD (M10X1.5-THD)	
		1	**125-2871**	1	CORE AS-POWER TRAIN OIL COOLER	
	4	1	**5P-0767**		HOSE (18-CM)	

M-METRIC PART

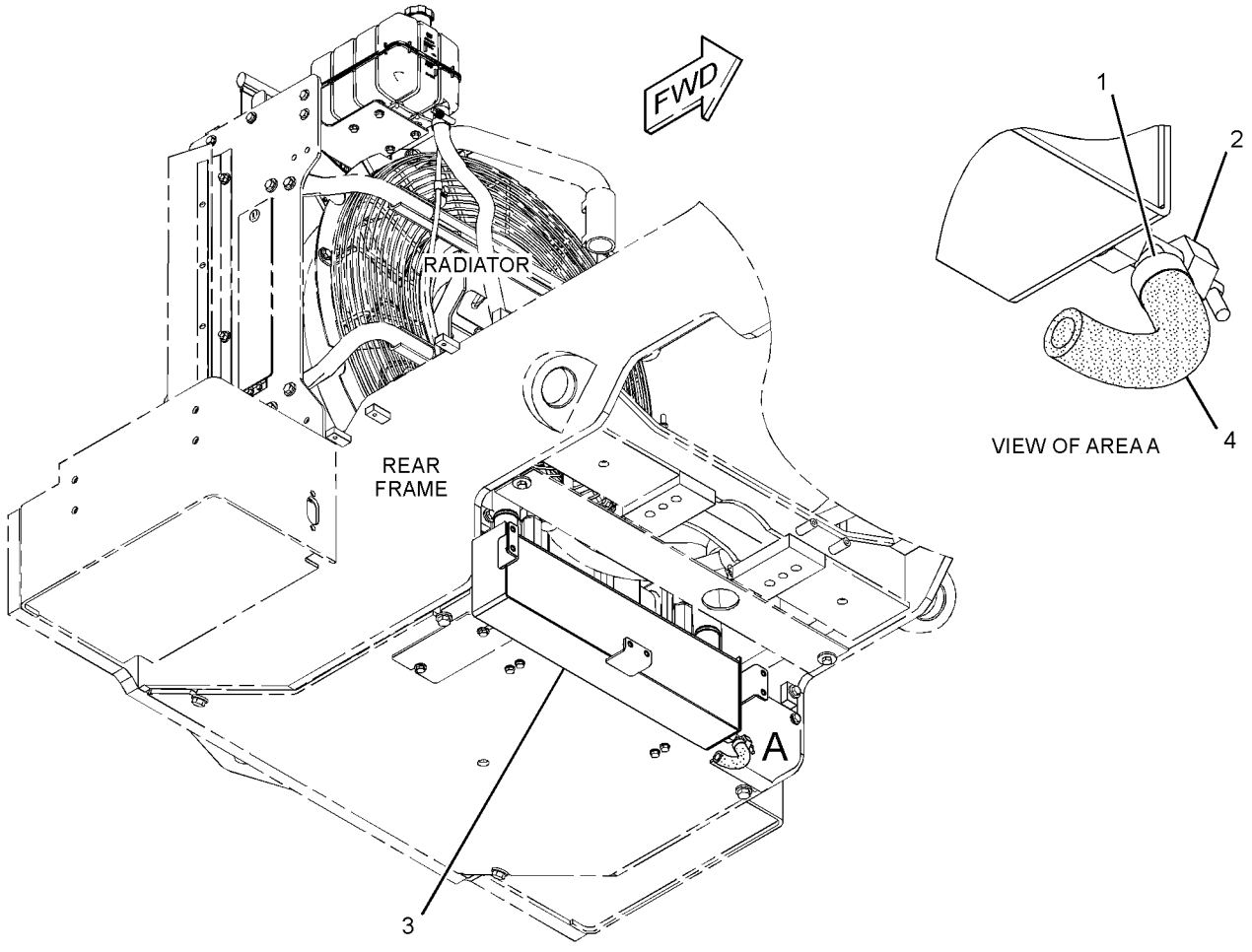

GRAPHIC #1 **<END>** g01425330

266-0750 COVER GP-SHIPPING

S/N: MWL1-UP

PART OF 252-5135 TRANSMISSION AR

SMCS-3064 **i02913676**

NOTE	REF NO	GRAPHIC REF	PART NUMBER	QTY	PART NAME 1 2 3 4 5 6 (PRODUCT LEVEL)	SEE PAGE
	1	1	**174-5386**	1	COVER-SHIPPING	
M	2	1	**6V-7981**	6	BOLT (M10X1.5X70-MM)	
	3	1	**8T-4121**	6	WASHER-HARD (11X21X2.5-MM THK)	
M	4	1	**8T-4133**	6	NUT (M10X1.5-THD)	
	5	1	**7J-3554**	4	COVER	
	6	1	**2D-0094**	4	GASKET	
M	7	1	**6V-8212**	6	BOLT (M10X1.5X16-MM)	
M	8	1	**6V-6317**	4	BOLT (M10X1.5X20-MM)	
	9	1	**4S-5971**	1	COVER	
	10	1	**7F-8268**	1	SEAL-O-RING	

M-METRIC PART

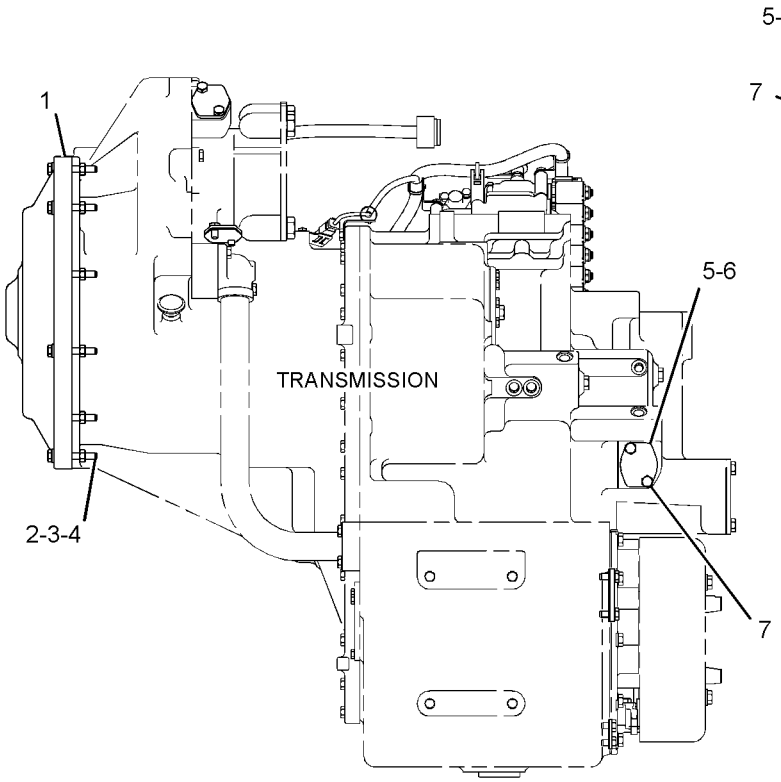

RIGHT SIDE VIEW

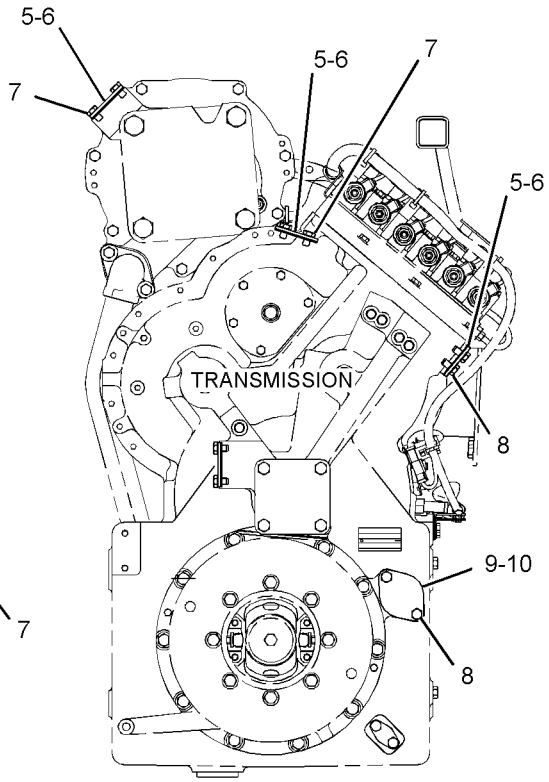

FRONT VIEW

GRAPHIC #1 **<END>** g01396630

7K-5636 COVER GP-XMSN OIL FILLER CAP

S/N: JKM1-UP

PART OF 258-8765 LOCK GP-VANDALISM

SMCS-3005, 3030, 7315 **i01857645**

NOTE	REF NO	GRAPHIC REF	PART NUMBER	QTY	PART NAME 1 2 3 4 5 6 (PRODUCT LEVEL)	SEE PAGE
	1	1	**1L-5072**	1	DOWEL	
	2	1	**9M-7394**	1	LEVER	
	3	1	**7K-5634**	1	COVER	
	4	1	**2J-7761**	1	RING-RETAINING	
	5	1	**5P-8502**	1	PADLOCK GP	
		1	**8Y-6364**	1	SLEEVE	
		1	**5P-8500**	2	KEY	

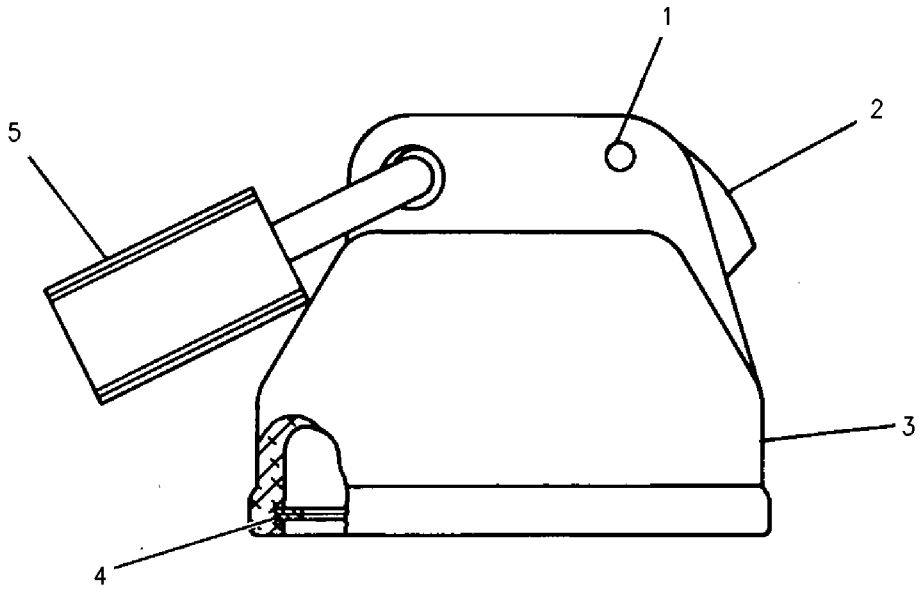

GRAPHIC #1 **<END>** g00638681

271-8710 DIFFERENTIAL & BEVEL GEAR GP–
OSCILLATING AXLE, LOCKING DIFFERENTIAL
S/N: JKM1-UP
PART OF 272-4996 AXLE AR-OSCILLATING
AN ATTACHMENT

SMCS-3254, 3256, 3258 **i02935876**

NOTE	REF NO	GRAPHIC REF	PART NUMBER	QTY	PART NAME 1 2 3 4 5 6 (PRODUCT LEVEL)	SEE PAGE
	1	1	**240-2020**	1	RACE-BEARING	
	2	1	**5L-2030**	1	CONE-BEARING	
	3	1	**5L-2031**	1	CUP-BEARING	
	4	1	**7S-4001**	1	SEAL-O-RING	
	5	1	**201-8481**	1	LOCKNUT AS	
	6	1	**239-5231**	1	BEARING AS-DIFFERENTIAL	
	7	1	**240-3657**	1	SHIM (4-MM THK)	
	8	1	**240-3658**	1	SHIM (2.65-MM THK)	
	9	1	**240-3659**	1	SHROUD	
	10	1	**270-7241**	1	SEAL-LIP TYPE	
	11	1	**271-8517**	1	HOUSING-PINION	
	12	1	**271-8521**	1	YOKE AS	
		1	**271-8720**	1	GUARD (DIRT)	
	13	1	**271-8528**	1	SHIM PACK (INCLUDES 18-SHIMS)	
	14	1	**271-8529**	1	RETAINER	
	15	1	**271-9095**	1	BEARING AS	
	16	1	**279-4345**	1	BEARING AS	
Y	17	1	**289-8604**	1	DIFFERENTIAL GP (LOCKING)	417
	18	1	**290-7296**	20	BOLT (M16X2X40-MM)	
	19	1	**311-4759**	1	SET-BEVEL GEAR	
	20	1	**159-3046**	3	BOLT (M8X1.25X20-MM)	
	21	1	**2K-2939**	1	SEAL-O-RING	
M	22	1	**6V-5686**	12	BOLT (M16X2X50-MM)	
	23	1	**8C-3979**	1	RING-RETAINING	
M	24	1	**8T-0282**	1	BOLT (M16X2X120-MM)	
	25	1	**9X-8268**	32	WASHER (17.5X30X3.5-MM THK)	

M-METRIC PART
Y-SEPARATE ILLUSTRATION

271-8710 **DIFFERENTIAL & BEVEL GEAR GP** *(contd.)* **i02935876**

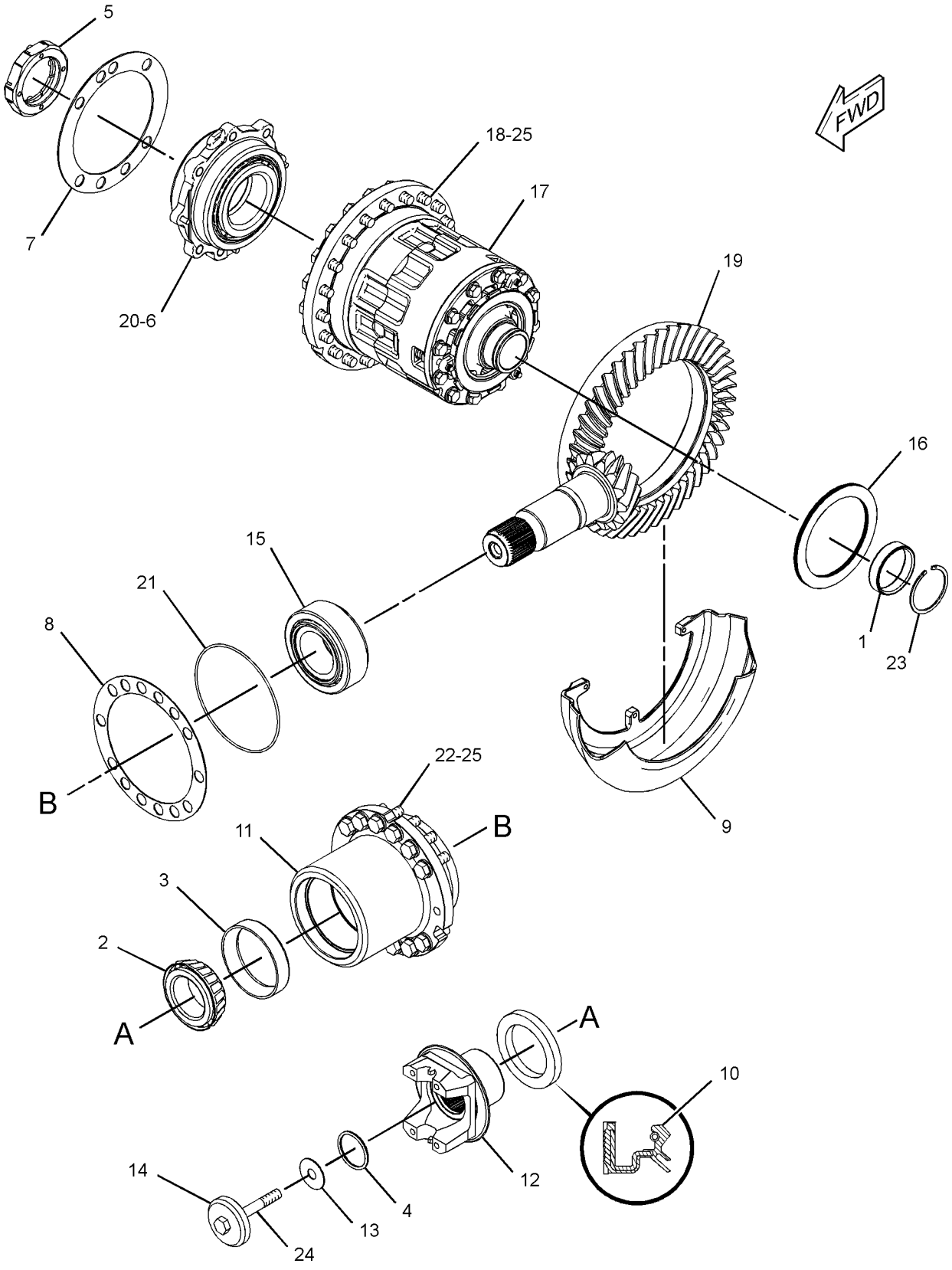

GRAPHIC #1 **<END>** g01436715

271-8711 DIFFERENTIAL & BEVEL GEAR GP–

FIXED AXLE, LOCKING DIFFERENTIAL

S/N: JKM1-UP

PART OF 272-4990, 272-4992 AXLE AR-FIXED

AN ATTACHMENT

SMCS-3254, 3256, 3258 **i02933551**

NOTE	REF NO	GRAPHIC REF	PART NUMBER	QTY	PART NAME 1 2 3 4 5 6 (PRODUCT LEVEL)	SEE PAGE
	1	1	**240-2020**	1	RACE-BEARING	
	2	1	**5L-2030**	1	CONE-BEARING	
	3	1	**5L-2031**	1	CUP-BEARING	
	4	1	**7S-4001**	1	SEAL-O-RING	
	5	1	**201-8481**	1	LOCKNUT AS	
	5A	1	**159-3046**	4	BOLT (M8X1.25X20-MM)	
	6	1	**239-5231**	1	BEARING AS-DIFFERENTIAL	
	7	1	**240-3657**	1	SHIM (4-MM THK)	
	8	1	**240-3658**	1	SHIM (2.65-MM THK)	
	9	1	**240-3659**	1	SHROUD	
	10	1	**270-7241**	1	SEAL-LIP TYPE	
	11	1	**271-8522**	1	YOKE AS	
	11A	1	**271-8720**	1	GUARD (DIRT)	
B	12	1	**271-8528**	1	SHIM PACK (INCLUDES 18-SHIMS)	
	13	1	**271-8529**	1	RETAINER	
	14	1	**271-9095**	1	BEARING AS	
	15	1	**272-5609**	1	HOUSING-PINION	
	16	1	**279-4345**	1	BEARING AS	
Y	17	1	**289-8604**	1	DIFFERENTIAL GP (LOCKING)	417
	18	1	**290-7296**	20	BOLT (M16X2X40-MM)	
	19	1	**311-4759**	1	SET-BEVEL GEAR	
	20	1	**159-3046**	3	BOLT (M8X1.25X20-MM)	
	21	1	**2K-2939**	1	SEAL-O-RING	
M	22	1	**6V-5686**	8	BOLT (M16X2X50-MM)	
	23	1	**8C-3979**	1	RING-RETAINING	
M	24	1	**8T-0282**	1	BOLT (M16X2X120-MM)	
	25	1	**9X-8268**	28	WASHER (17.5X30X3.5-MM THK)	

B-USE AS REQUIRED
M-METRIC PART
Y-SEPARATE ILLUSTRATION

271-8711 **DIFFERENTIAL & BEVEL GEAR GP** *(contd.)* **i02933551**

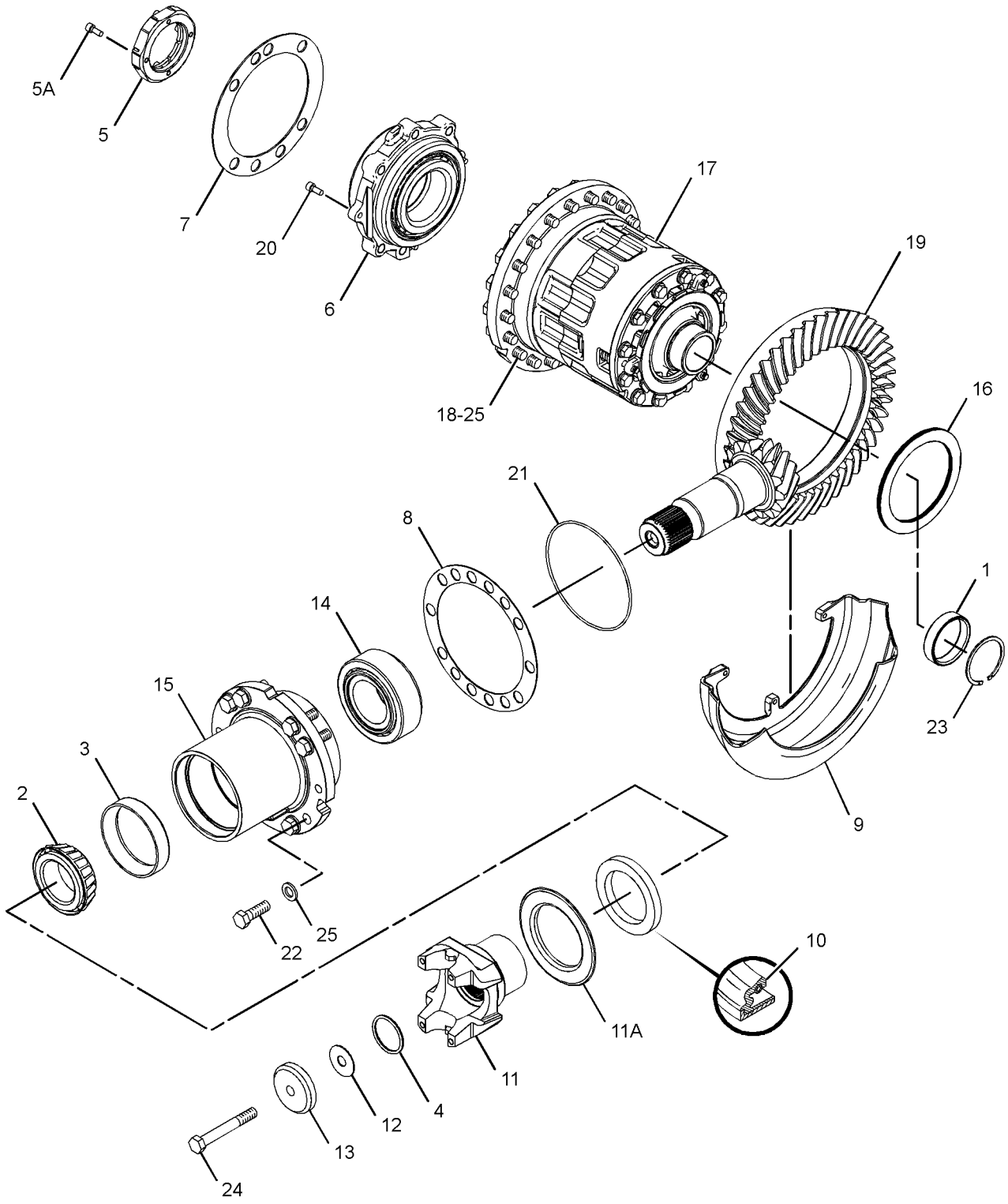

GRAPHIC #1 **<END>** g01389602

271-8713 DIFFERENTIAL & BEVEL GEAR GP–
OSCILLATING AXLE, OPEN DIFFERENTIAL
S/N: JKM1-UP
PART OF 271-2344 AXLE AR-OSCILLATING
AN ATTACHMENT

SMCS-3254, 3256, 3258 **i02933552**

NOTE	REF NO	GRAPHIC REF	PART NUMBER	QTY	PART NAME 1 2 3 4 5 6 (PRODUCT LEVEL)	SEE PAGE
	1	1	**240-2020**	1	RACE-BEARING	
	2	1	**5L-2030**	1	CONE-BEARING	
	3	1	**5L-2031**	1	CUP-BEARING	
	4	1	**7S-4001**	1	SEAL-O-RING	
	5	1	**201-8481**	1	LOCKNUT AS	
	5A	1	**159-3046**	4	BOLT (M8X1.25X20-MM)	
	6	1	**239-5231**	1	BEARING AS-DIFFERENTIAL	
	7	1	**240-3657**	1	SHIM (4-MM THK)	
	8	1	**240-3658**	1	SHIM (2.65-MM THK)	
	9	1	**240-3659**	1	SHROUD	
	10	1	**270-7241**	1	SEAL-LIP TYPE	
	11	1	**271-8517**	1	HOUSING-PINION	
	12	1	**271-8521**	1	YOKE AS	
	12A	1	**271-8720**	1	GUARD (DIRT)	
B	13	1	**271-8528**	1	SHIM PACK (INCLUDES 18-SHIMS)	
	14	1	**271-8529**	1	RETAINER	
	15	1	**271-9095**	1	BEARING AS	
Y	16	1	**289-8602**	1	DIFFERENTIAL GP (OPEN)	416
	17	1	**290-7296**	20	BOLT (M16X2X40-MM)	
	18	1	**311-4759**	1	SET-BEVEL GEAR	
	19	1	**159-3046**	3	BOLT (M8X1.25X20-MM)	
	20	1	**2K-2939**	1	SEAL-O-RING	
M	21	1	**6V-5686**	12	BOLT (M16X2X50-MM)	
	22	1	**8C-3979**	1	RING-RETAINING	
M	23	1	**8T-0282**	1	BOLT (M16X2X120-MM)	
	24	1	**9X-8268**	32	WASHER (17.5X30X3.5-MM THK)	

B-USE AS REQUIRED
M-METRIC PART
Y-SEPARATE ILLUSTRATION

271-8713 **DIFFERENTIAL & BEVEL GEAR GP** *(contd.)* **i02933552**

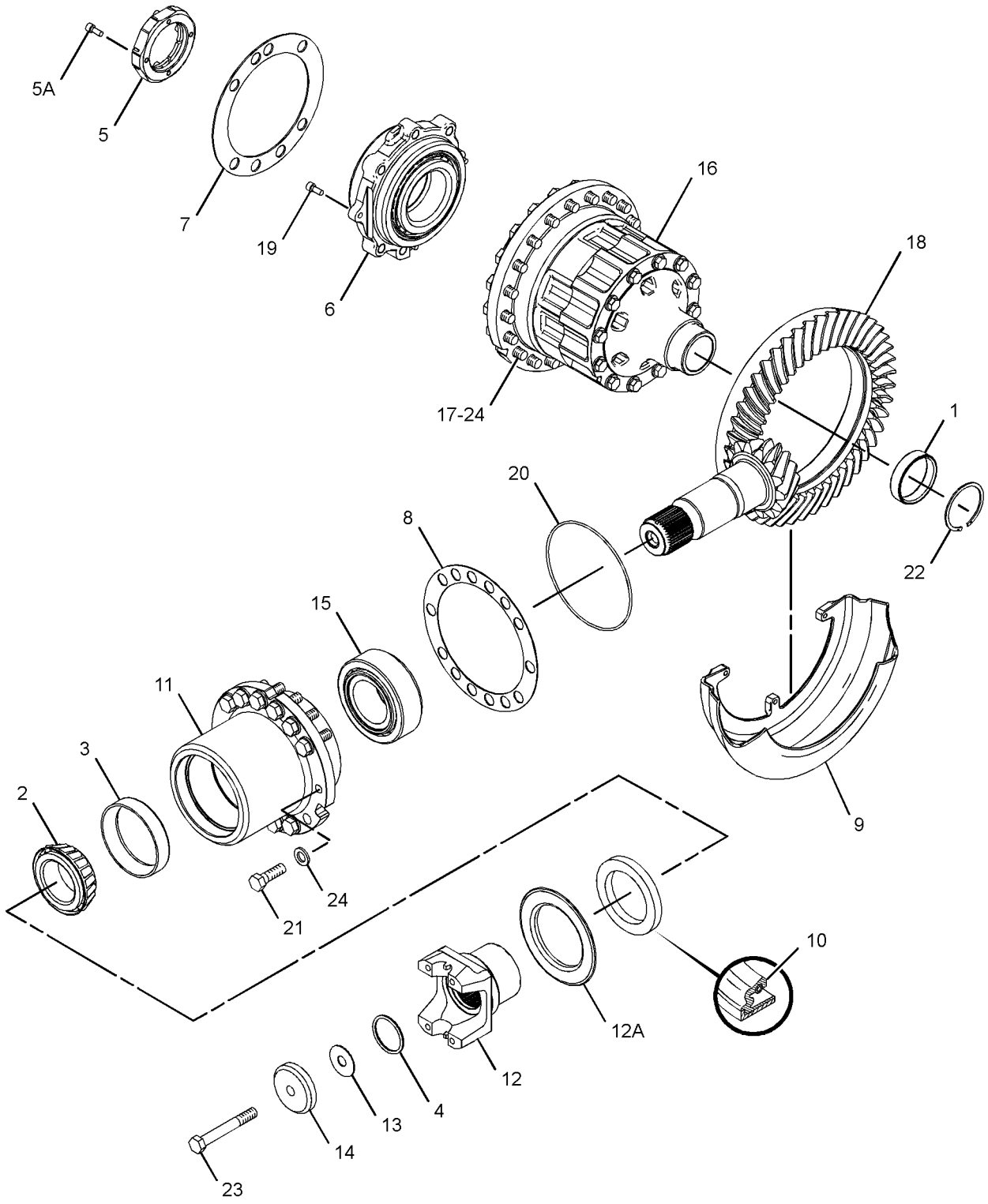

GRAPHIC #1 **<END>** g01389573

289-8602 DIFFERENTIAL GP–OPEN

S/N: JKM1-UP
PART OF 271-8713 DIFFERENTIAL & BEVEL GEAR GP
AN ATTACHMENT

SMCS-3258 **i02934185**

NOTE	REF NO	GRAPHIC REF	PART NUMBER	QTY	PART NAME 1 2 3 4 5 6 (PRODUCT LEVEL)	SEE PAGE
	1	1	**138-1511**	4	PINION	
	2	1	**138-3642**	2	GEAR-DIFFERENTIAL (16-TEETH)	
	3	1	**188-2467**	4	BEARING-SLEEVE	
	4	1	**289-8601**	1	CASE AS-DIFFERENTIAL	
	4A	1	**5P-8245**	12	WASHER-HARD (13.5X25.5X3-MM THK)	
M	4B	1	**8T-0106**	12	BOLT (M12X1.75X100-MM)	
	5	1	**288-1025**	1	SPIDER	
	6	1	**305-3337**	2	WASHER-THRUST	
	7	1	**305-3339**	4	WASHER-THRUST	

M-METRIC PART

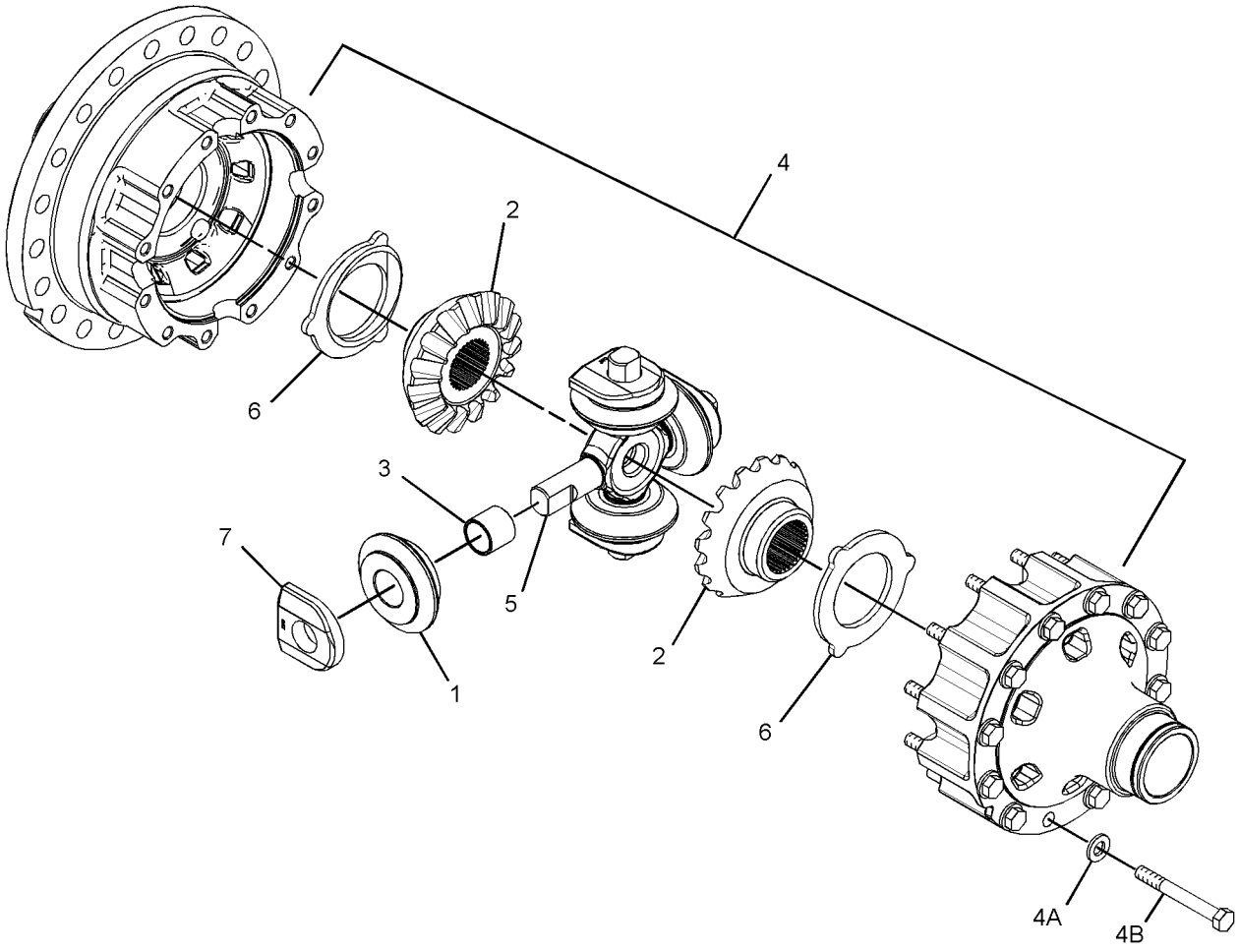

GRAPHIC #1 **<END>** g01426461

289-8604 DIFFERENTIAL GP–LOCKING

S/N: JKM1-UP

PART OF 271-8710, 271-8711 DIFFERENTIAL & BEVEL GEAR GP

AN ATTACHMENT

SMCS-3258 **i02934170**

NOTE	REF NO	GRAPHIC REF	PART NUMBER	QTY	PART NAME 1 2 3 4 5 6 (PRODUCT LEVEL)	SEE PAGE
	1	1	**5F-9144**	3	SEAL-O-RING	
	2	1	**138-1511**	4	PINION	
	3	1	**138-3642**	1	GEAR-DIFFERENTIAL (16-TEETH)	
	4	1	**148-7841**	3	SPRING	
	5	1	**188-2467**	4	BEARING-SLEEVE	
	6	1	**221-8040**	3	DOWEL	
	7	1	**240-3665**	1	GEAR-DIFFERENTIAL	
	8	1	**240-3668**	8	PLATE-SEPARATOR	
	9	1	**240-3669**	8	DISC-FRICTION	
	10	1	**240-3671**	1	RING-THRUST	
	11	1	**240-3672**	1	PLATE-THRUST	
	12	1	**288-1025**	1	SPIDER	
	13	1	**289-8600**	1	CASE AS-DIFFERENTIAL	
	13A	1	**5P-8245**	12	WASHER-HARD (13.5X25.5X3-MM THK)	
M	13B	1	**8T-0162**	12	BOLT (M12X1.75X160-MM)	
	14	1	**305-3337**	2	WASHER-THRUST	
	15	1	**305-3339**	4	WASHER-THRUST	

M-METRIC PART

289-8604 DIFFERENTIAL GP *(contd.)* **i02934170**

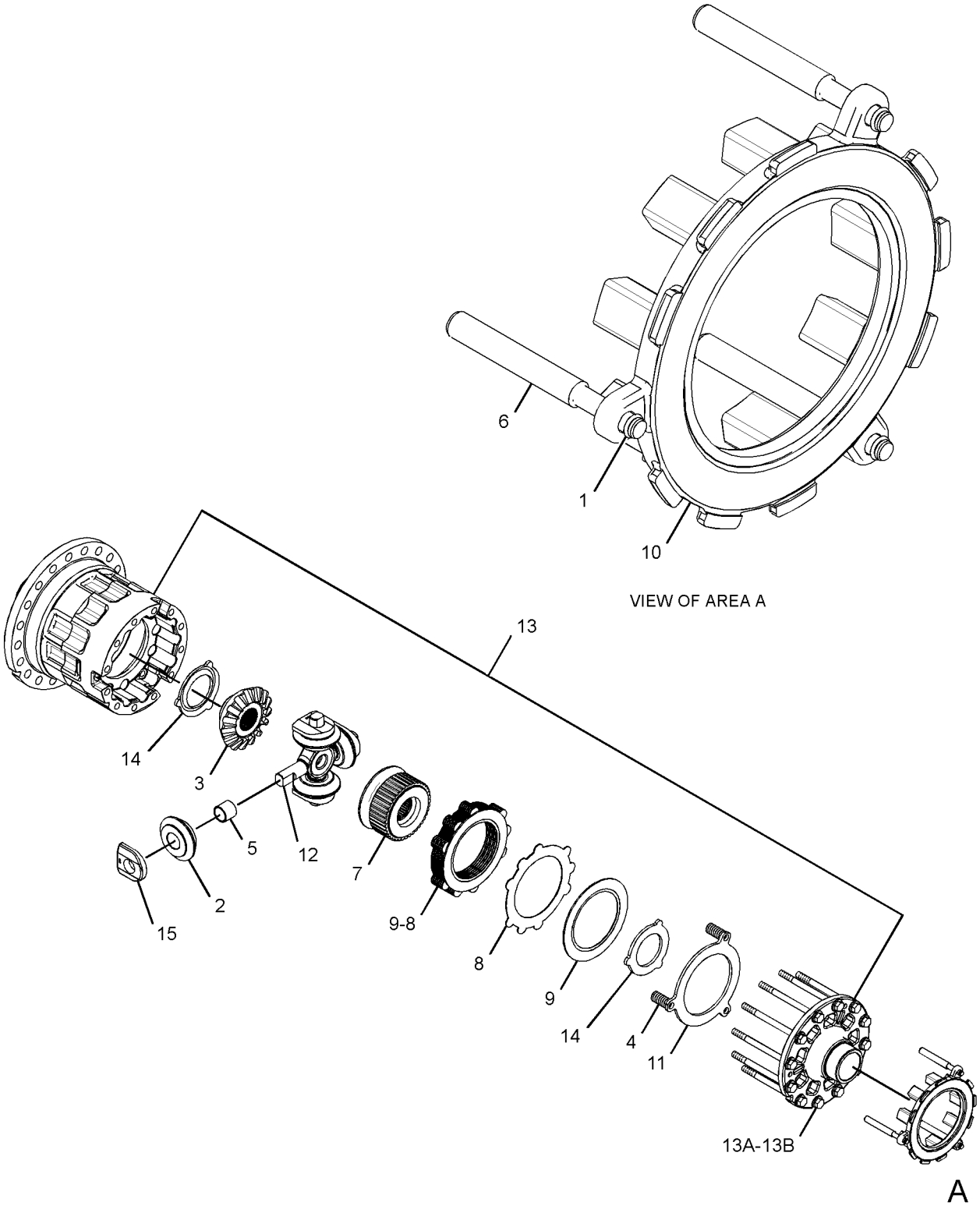

GRAPHIC #1 **<END>** g01426482

255-4818 FILLER GP-POWER TRAIN OIL

S/N: JKM1-UP

PART OF 237-7538 POWER TRAIN AR

SMCS-3005, 3081 **i03623774**

NOTE	REF NO	GRAPHIC REF	PART NUMBER	QTY	PART NAME 1 2 3 4 5 6 (PRODUCT LEVEL)	SEE PAGE
	1	1	**4B-9782**	1	BALL	
	2	1	**5K-1568**	1	CAP-FILLER (POWER TRAIN)	
	3	1	**6F-5188**	1	SEAL-RING	
	4	1	**6H-5139**	1	PLATE-PRESSURE	
	5	1	**9M-0164**	2	CLAMP-HOSE	
	6	1	**124-0689**	2	ADAPTER	
	7	1	**149-4456**	1	GAUGE AS (OIL)	
		1	**114-4231**	2	BOLT-MOUNTING	
		1	**5J-2974**	4	SEAL-O-RING	
	8	1	**153-8463**	1	CLIP (TAB)	
I	9	1	**154-5650**	2	HOSE AS	
	10	1	**283-4985**	1	TUBE AS	
	11	1	**306-4181**	1	BRACKET AS	
	12	1	**306-4182**	1	TUBE AS	
M	13	1	**085-8091**	2	BOLT (M10X1.5X55-MM)	
	14	1	**153-8462**	1	CLIP (SLOT)	
	15	1	*170-1061*	2	CONNECTOR AS	
					(EACH INCLUDES)	
		1	**5P-7814**	1	SEAL-O-RING	
		1	**8L-2779**	1	SEAL-O-RING	
		1	**8T-5043**	1	CONNECTOR	
	16	1	**1P-3707**	1	SEAL-RECTANGULAR	
	17	1	**4D-7735**	2	CLIP	
	18	1	**5P-8444**	1	GROMMET	
	19	1	**6V-8397**	2	SEAL-O-RING	
	20	1	**6V-9168**	2	NUT (11/16-16-THD)	
	21	1	**8T-4121**	9	WASHER-HARD (11X21X2.5-MM THK)	
M	22	1	**8T-4136**	4	BOLT (M10X1.5X25-MM)	
M	23	1	**8T-4137**	2	BOLT (M10X1.5X20-MM)	
	24	1	**322-2932**	1	HOSE	
	25	1	**5H-8936**	1	ADAPTER	
	26	1	**6V-9169**	1	NUT-BULKHEAD (13/16-16-THD)	
	27	1	**8T-4123**	1	WASHER (22X35X3.5-MM THK)	
	28	1	**9G-5127**	1	BREATHER (TRANSMISSION)	
	29	1	*164-5597*	1	CONNECTOR AS	
		1	**6V-8397**	1	SEAL-O-RING	
		1	**8C-6868**	1	CONNECTOR	
	30	1	*169-7395*	1	ADAPTER AS	
		1	**6V-8398**	1	SEAL-O-RING	
		1	**156-6129**	1	ADAPTER	
I	31	1	**324-5849**	1	HOSE AS	

I-REFER TO HYDRAULIC INFORMATION SYSTEM
M-METRIC PART

255-4818 **FILLER GP-POWER TRAIN OIL** *(contd.)* **i03623774**

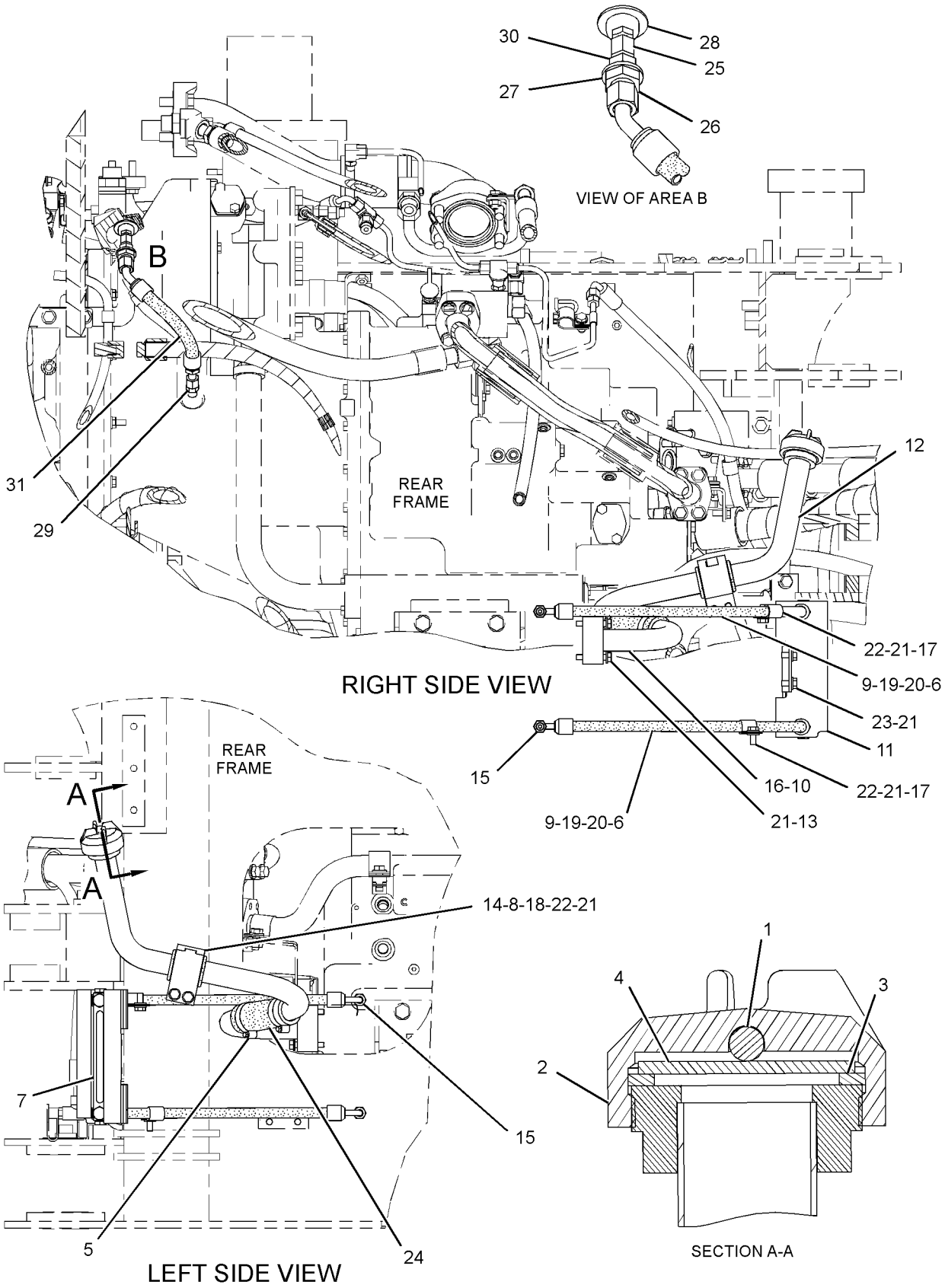

GRAPHIC #1 **<END>** g01598116

249-1750 FILTER GP-OIL—POWER TRAIN

S/N: JKM1-920

PART OF 255-4811 LINES GP-POWER TRAIN OIL

SMCS-3004, 3067 **i03022137**

NOTE	REF NO	GRAPHIC REF	PART NUMBER	QTY	PART NAME 1 2 3 4 5 6 (PRODUCT LEVEL)	SEE PAGE
	1	1	**6V-0852**	1	CAP-DUST	
	2	1	**8C-3447**	1	CAP-DUST	
	3	1	**227-6744**	1	SWITCH GP-DIFF PRESSURE	
		1	**102-8802**	1	KIT-RECEPTACLE (2-PIN)	
					(INLCUDES RECEPTACLE AS & WEDGE)	
		1	**3E-3365**	1	WEDGE-RECEPTACLE LOCK (2-PIN)	
		1	**186-3735**	1	PIN-CONNECTOR (16-GA TO 18-GA)	
BE		1	**9X-1813**		SLEEVE	
	4	1	**1G-8878**	1	FILTER-OIL (ADVANCED EFFICIENCY) (POWER TRAIN)	
	5	1	**3J-1907**	2	SEAL-O-RING	
	6	1	**3J-7354**	1	SEAL-O-RING	
	7	1	**6V-3965**	1	FITTING (QUICK DISCONNECT)	
	8	1	**8C-3446**	1	VALVE-FLUID SAMPLING (POWER TRAIN OIL)	
	9	1	**5F-9144**	1	SEAL-O-RING	

B-USE AS REQUIRED
E-ORDER BY THE CENTIMETER

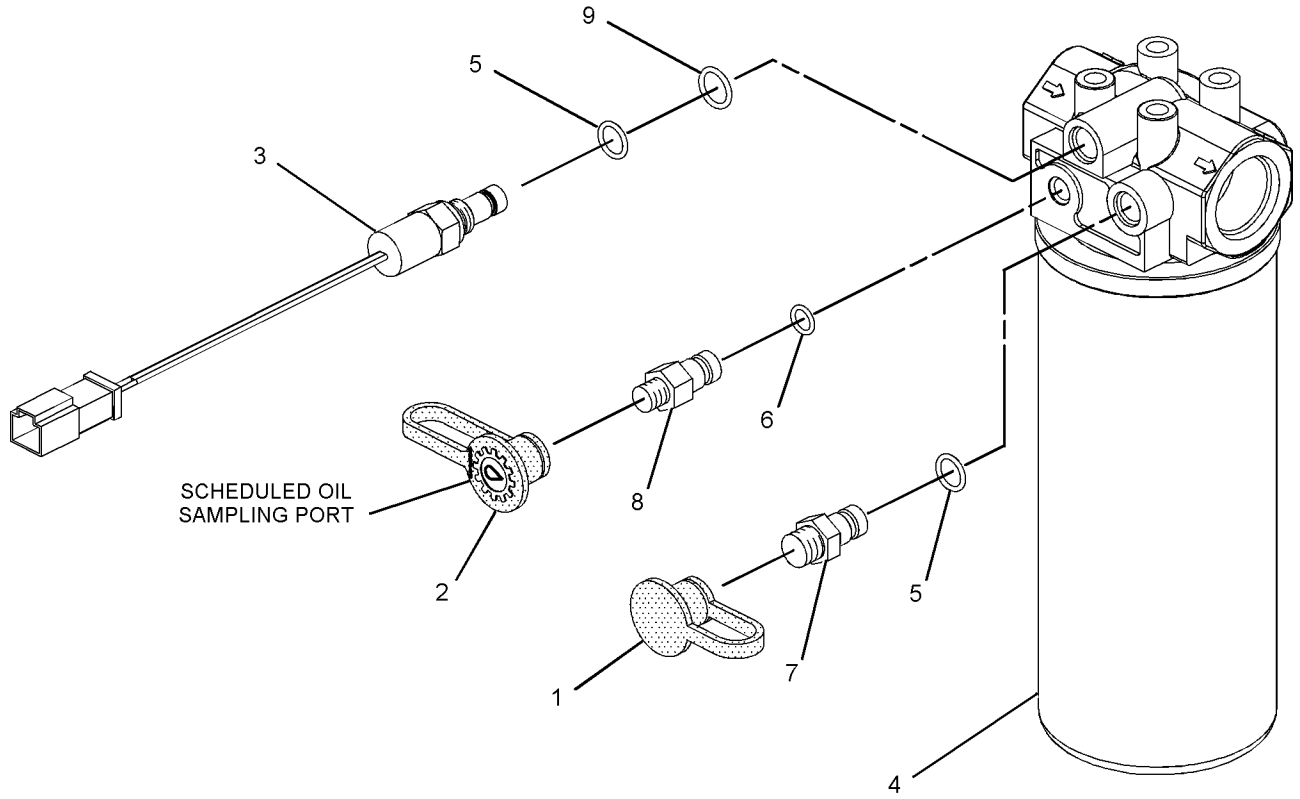

GRAPHIC #1 **<END>** g01063971

337-0831 FILTER GP-OIL

S/N: JKM921-UP

PART OF 255-4811 LINES GP-POWER TRAIN OIL

SMCS-3004, 3067 **i03815810**

NOTE	REF NO	GRAPHIC REF	PART NUMBER	QTY	PART NAME 1 2 3 4 5 6 (PRODUCT LEVEL)	SEE PAGE
	1	1	**6V-0852**	1	CAP-DUST	
	2	1	**6V-3965**	1	FITTING (QUICK DISCONNECT)	
	3	1	**8C-3446**	1	VALVE-FLUID SAMPLING	
	4	1	**8C-3447**	1	CAP-DUST	
	5	1	**214-7566**	1	SEAL-O-RING	
	6	1	**214-7568**	2	SEAL-O-RING	
	7	1	**227-6744**	1	SWITCH GP-DIFF PRESSURE (FILTER OIL)	
		1	**102-8802**	1	KIT-RECEPTACLE (2-PIN)	
					(INCLUDES RECEPTICAL AS & WEDGE)	
		1	**3J-1907**	1	SEAL-O-RING	
		1	**5F-9144**	1	SEAL-O-RING	
		1	**8T-8729**	2	PIN-CONNECTOR (16-GA TO 18-GA)	
E		1	**9X-1813**		SLEEVE (14-CM)	
	8	1	**283-0266**	1	SEAL-O-RING	
	9	1	**341-6643**	1	FILTER ELEMENT-OIL	

E-ORDER BY THE CENTIMETER

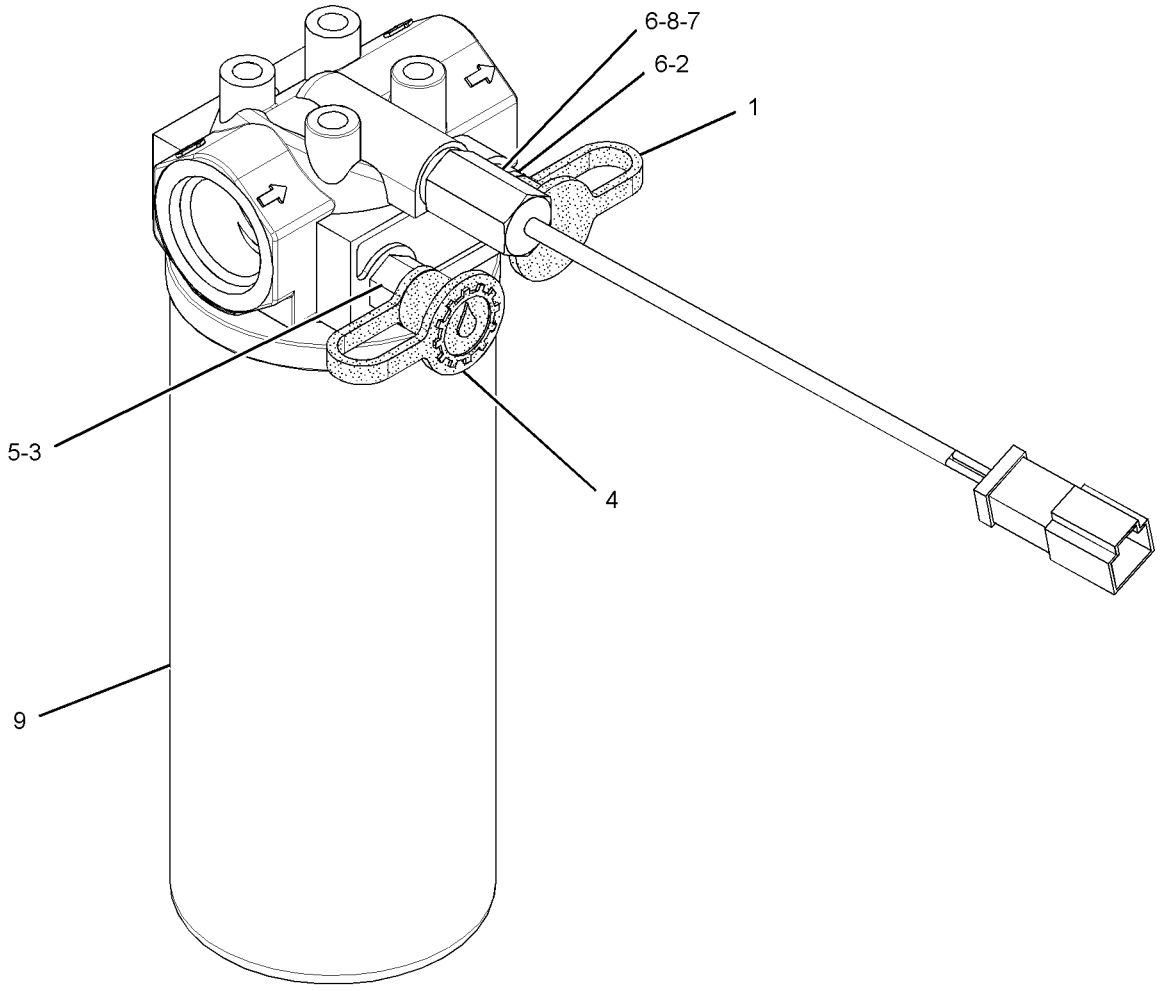

GRAPHIC #1 **<END>** g02132453

252-5132 GEAR GP-OUTPUT TRANSFER

S/N: MWL1-UP

PART OF 252-5135 TRANSMISSION AR

SMCS-3075, 3159 **i02915127**

NOTE	REF NO	GRAPHIC REF	PART NUMBER	QTY	PART NAME 1 2 3 4 5 6 (PRODUCT LEVEL)	SEE PAGE
	1	1	**4S-5824**	2	RETAINER	
	2	1	**6Y-4873**	1	LEVER	
	3	1	**6Y-8293**	1	SHAFT-OUTPUT	
	4	1	**8E-9550**	1	SPACER (61X75X9.85-MM THK)	
	5	1	**9W-6662**	1	GEAR (47-TEETH)	
	6	1	**103-1712**	1	DRUM	
	7	1	**142-4247**	1	CAGE-BEARING	
	8	1	**166-6762**	1	YOKE-BRAKE	
	9	1	**193-2200**	1	SEAL-LIP TYPE	
Y	10	1	**283-9977**	1	BRAKE GP-PARKING	611
	11	1	**293-8279**	1	YOKE	
	12	1	**2H-3088**	2	SEAL-O-RING	
	13	1	**2P-8986**	1	CUP-BEARING	
	14	1	**2P-8987**	2	CONE-BEARING	
M	15	1	**2Y-5829**	1	NUT (M10X1.5-THD)	
	16	1	**5P-8245**	8	WASHER-HARD (13.5X25.5X3-MM THK)	
M	17	1	**6V-3668**	8	BOLT (M12X1.75X30-MM)	
M	18	1	**6V-5696**	2	BOLT (M12X1.75X80-MM)	
	19	1	**6V-5839**	1	WASHER (11X21X2.5-MM THK)	
M	20	1	**6V-5843**	1	BOLT (M10X1.5X45-MM)	
	21	1	**6V-7991**	1	SEAL-O-RING	
M	22	1	**6V-8201**	4	BOLT-SOCKET HEAD (M16X2X45-MM)	
	23	1	**9X-8268**	4	WASHER (17.5X30X3.5-MM THK)	

M-METRIC PART
Y-SEPARATE ILLUSTRATION

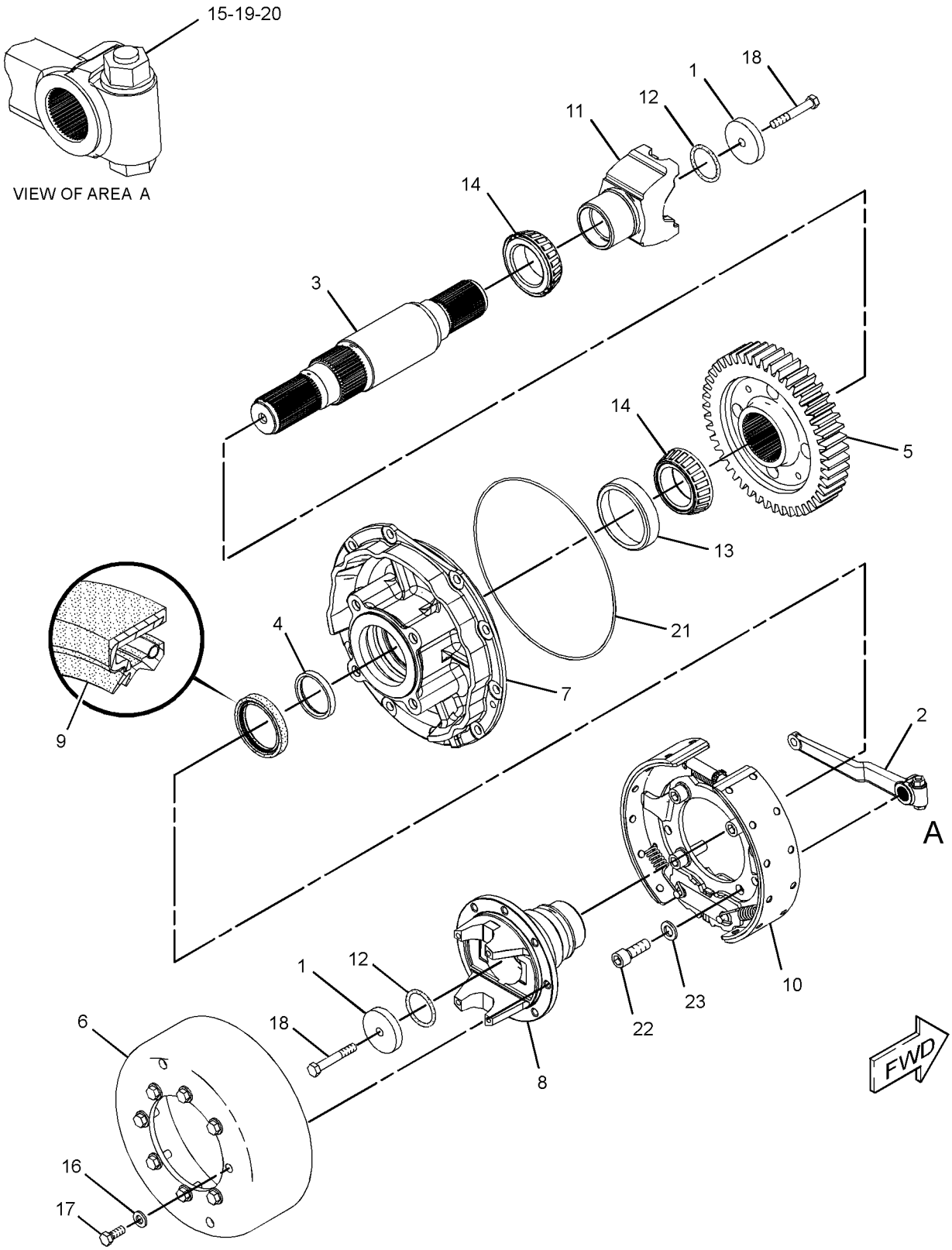

GRAPHIC #1 **<END>** g01389595

288-9487 HOUSING GP-AXLE–LONG

S/N: JKM1-UP

PART OF 288-9479 HOUSING GP-OSCILLATING AXLE

AN ATTACHMENT

SMCS-3260, 3278 **i02934180**

NOTE	REF NO	GRAPHIC REF	PART NUMBER	QTY	PART NAME 1 2 3 4 5 6 (PRODUCT LEVEL)	SEE PAGE
	1	1	**287-8833**	1	HOUSING-AXLE (LONG)	
	2	1	**288-9485**	1	HOUSING-AXLE (INTERMEDIATE)	
	3	1	**288-9486**	1	HOUSING	
M	4	1	**8T-0273**	4	BOLT-SOCKET HEAD (M12X1.75X40-MM)	
M	5	1	**8T-7811**	2	BOLT-SOCKET HEAD (M12X1.75X50-MM)	

M-METRIC PART

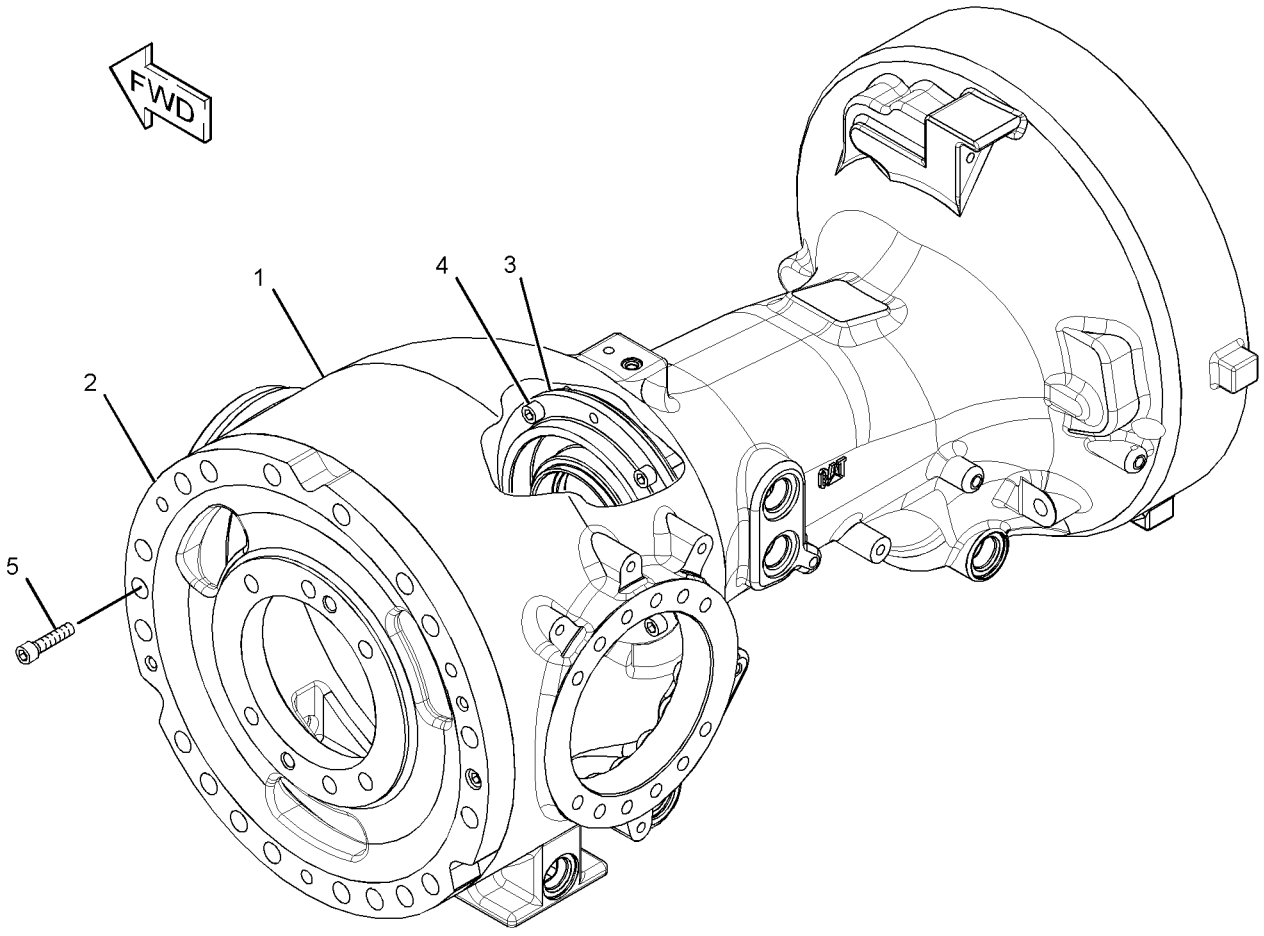

GRAPHIC #1 **<END>** g01397836

290-2768 HOUSING GP-AXLE—LONG

S/N: JKM1-UP
PART OF 288-9478 HOUSING GP-FIXED AXLE
AN ATTACHMENT

SMCS-3260, 3278 **i02934176**

NOTE	REF NO	GRAPHIC REF	PART NUMBER	QTY	PART NAME 1 2 3 4 5 6 (PRODUCT LEVEL)	SEE PAGE
	1	1	**287-8835**	1	HOUSING-AXLE (LONG)	
	2	1	**288-9485**	1	HOUSING-AXLE (INTERMEDIATE)	
	3	1	**288-9486**	1	HOUSING	
M	4	1	**8T-0273**	4	BOLT-SOCKET HEAD (M12X1.75X40-MM)	
M	5	1	**8T-7811**	2	BOLT-SOCKET HEAD (M12X1.75X50-MM)	

M-METRIC PART

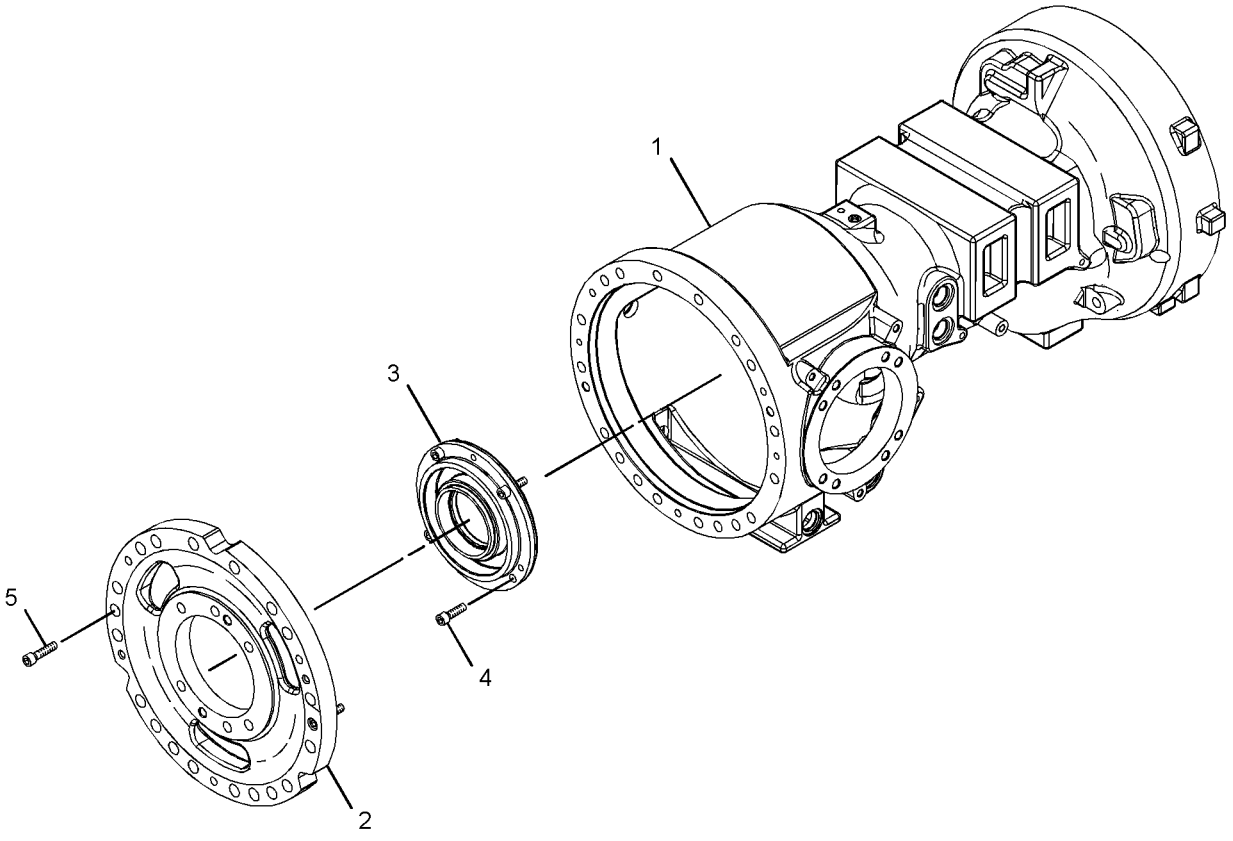

GRAPHIC #1 **<END>** g01389326

288-9478 HOUSING GP-FIXED AXLE—FRONT

S/N: JKM1-UP
PART OF 272-4990, 272-4992 AXLE AR-FIXED
AN ATTACHMENT

SMCS-3260 **i02933553**

NOTE	REF NO	GRAPHIC REF	PART NUMBER	QTY	PART NAME 1 2 3 4 5 6 (PRODUCT LEVEL)	SEE PAGE
	1	2	**287-8836**	1	HOUSING-AXLE (SHORT)	
	2	2	**240-2021**	1	BEARING AS-ROLLER	
	3	1	**1H-8171**	2	SEAL-O-RING	
	4	1	**5H-3701**	3	SCREW-PURGE	
	5	1	**8T-0336**	1	FITTING-PRESSURE RELIEF	
	6	2	**125-0965**	2	RING-RETAINING	
	7	1	**125-0966**	2	PLUG	
	8	1	*165-4929*	1	PLUG AS	
		1	**5P-4484**	1	PLUG-MAGNETIC	
		1	**7M-8485**	1	SEAL-O-RING	
	9	1	**249-0204**	2	INDICATOR AS-BRAKE WEAR	
					(EACH INCLUDES)	
		1	**3J-1907**	1	SEAL-O-RING	
		1	**6H-9691**	1	SEAL-O-RING	
		1	**8C-3098**	1	SEAL-O-RING	
	10	2	**271-2336**	1	TUBE AS-BRAKE	
	11	2	**271-2337**	1	TUBE AS-BRAKE	
Y	12	2	**290-2768**	1	HOUSING GP-AXLE (LONG)	426
	13	1	*148-8411*	1	PLUG AS	
		1	**3K-0360**	1	SEAL-O-RING	
		1	**9S-4185**	1	PLUG-O-RING	
	14	1	*155-3624*	1	PLUG AS	
		1	**3J-7354**	1	SEAL-O-RING	
		1	**9S-4182**	1	PLUG-O-RING	
	15	1,2	*164-4180*	7	PLUG AS	
					(EACH INCLUDES)	
		1,2	**7M-8485**	1	SEAL-O-RING	
		1,2	**9S-4181**	1	PLUG-O-RING	
	16	2	**5P-8119**	2	SEAL-O-RING	
	17	1	**6V-8398**	2	SEAL-O-RING	
	18	1	**6V-9169**	2	NUT-BULKHEAD (13/16-16-THD)	
M	19	1	**6V-9667**	18	BOLT (M20X2.5X100-MM)	
	20	1	**7M-8485**	2	SEAL-O-RING	
	21	2	**7X-4805**	2	SEAL-O-RING	
M	22	2	**8T-0088**	6	BOLT (M16X2X65-MM)	
	23	1	**8T-3282**	18	WASHER-HARD (22X35X3.5-MM THK)	
	24	1	**8T-5439**	2	WASHER-HARD (21.5X45X6-MM THK)	
	25	1	**9M-4335**	3	DOWEL-REACTION	
	26	2	**9X-8268**	6	WASHER (17.5X30X3.5-MM THK)	
B	27	2	**1U-8846**		SEALANT-GASKET	

B-USE AS REQUIRED
M-METRIC PART
Y-SEPARATE ILLUSTRATION

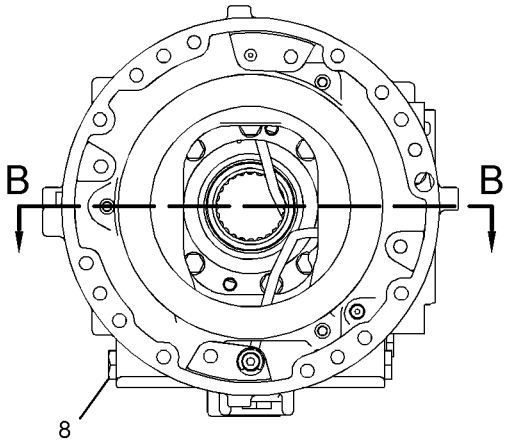

LEFT SIDE VIEW

REFER TO ALL ILLUSTRATIONS OF THIS GROUP FOR AUXILIARY VIEWS

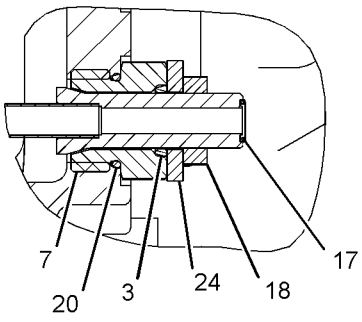

VIEW OF AREA E

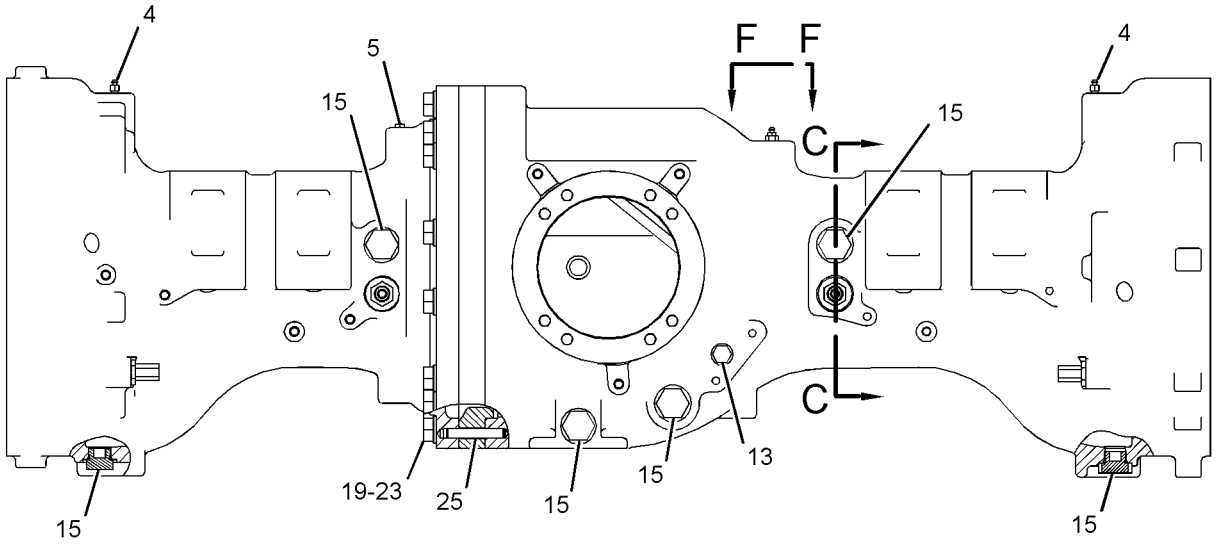

REAR VIEW

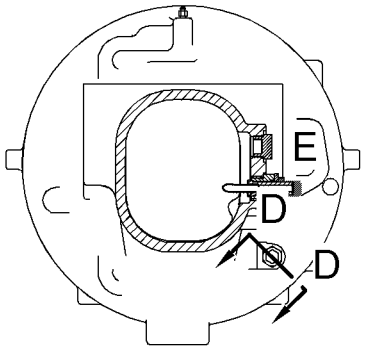

SECTION C-C

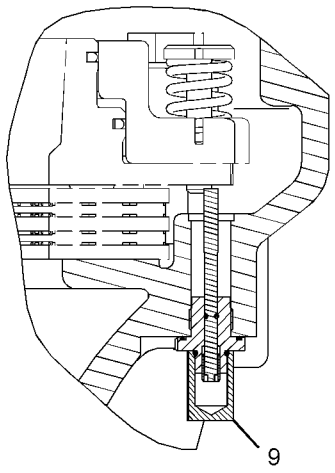

SECTION D-D

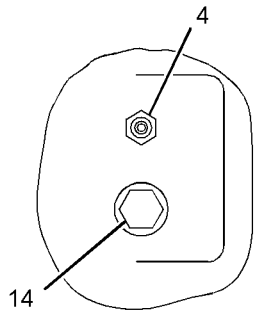

VIEW F-F

GRAPHIC #1

g01398614

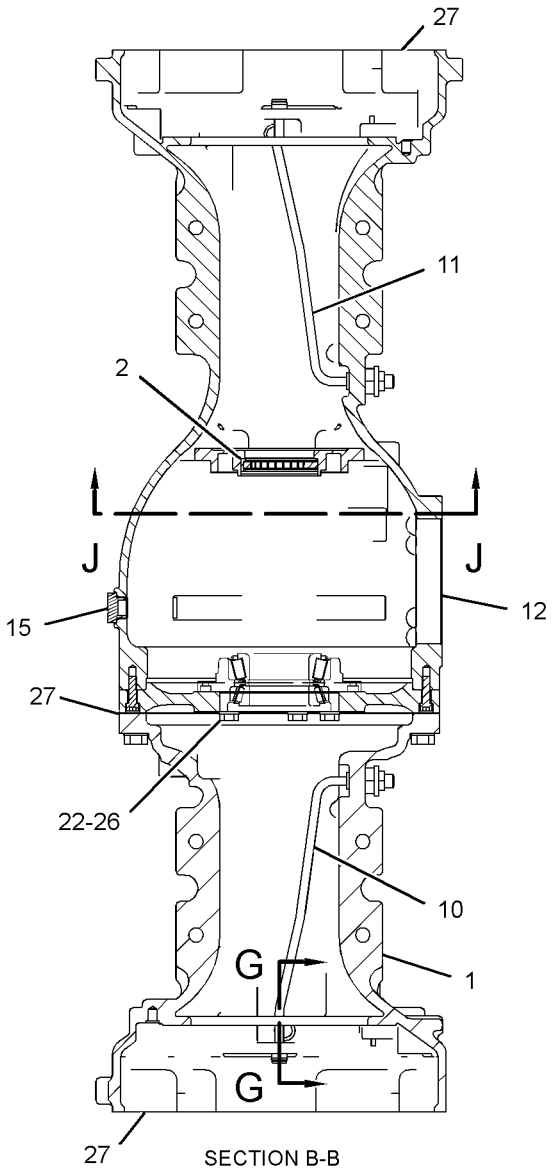

SECTION B-B

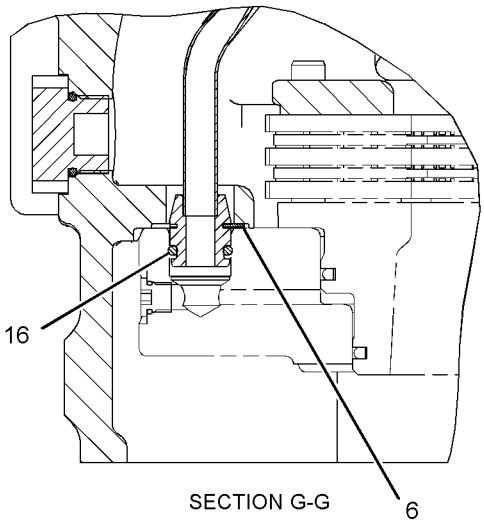

SECTION G-G

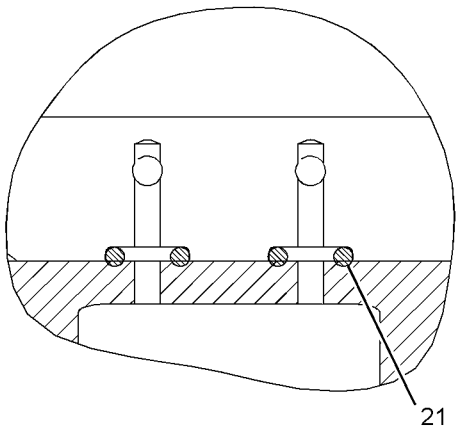

SECTION H-H

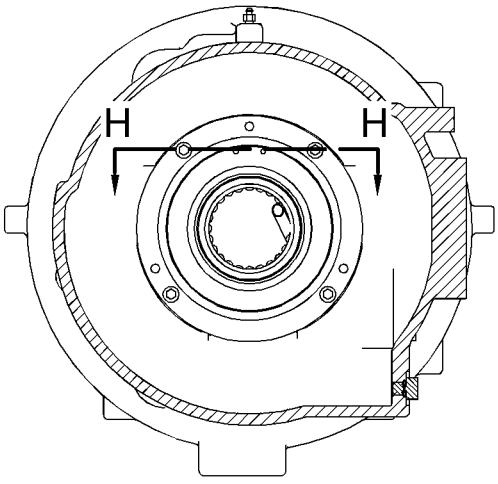

SECTION J-J

GRAPHIC #2 **<END>** g01398615

288-9479 HOUSING GP-OSCILLATING AXLE—REAR

S/N: JKM1-UP

PART OF 271-2344, 272-4996 AXLE AR-OSCILLATING

AN ATTACHMENT

SMCS-3260, 3268 **i02933554**

NOTE	REF NO	GRAPHIC REF	PART NUMBER	QTY	PART NAME 1 2 3 4 5 6 (PRODUCT LEVEL)	SEE PAGE
	1	1	**1H-8171**	2	SEAL-O-RING	
	2	1	**5H-3701**	3	SCREW-PURGE	
	3	1	**8T-0336**	2	FITTING-PRESSURE RELIEF	
	4	2	**125-0965**	2	RING-RETAINING	
	5	1	**125-0966**	2	PLUG	
	6	1	*165-4929*	1	PLUG AS	
		1	**5P-4484**	1	PLUG-MAGNETIC	
		1	**7M-8485**	1	SEAL-O-RING	
	7	2	**240-2021**	1	BEARING AS-ROLLER	
	8	2	**242-6251**	1	TRUNNION	
	9	2	**242-6252**	2	WASHER-THRUST	
	10	1	**249-0204**	2	INDICATOR AS-BRAKE WEAR	
					(EACH INCLUDES)	
		1	**3J-1907**	1	SEAL-O-RING	
		1	**6H-9691**	1	SEAL-O-RING	
		1	**8C-3098**	1	SEAL-O-RING	
	11	2	**271-2336**	1	TUBE AS-BRAKE	
	12	2	**271-2337**	1	TUBE AS-BRAKE	
	13	2	**272-4989**	1	SUPPORT AS	
		2	**3K-0158**	2	SEAL-LIP TYPE	
		2	**3K-0159**	1	RING-RETAINING	
		2	**241-6347**	1	BUSHING	
	14	2	**272-4993**	1	SUPPORT AS	
		2	**253-4008**	1	BUSHING	
	15	2	**287-8834**	1	HOUSING-AXLE (SHORT)	
Y	16	2	**288-9487**	1	HOUSING GP-AXLE (LONG)	425
	17	1	*148-8411*	1	PLUG AS	
		1	**3K-0360**	1	SEAL-O-RING	
		1	**9S-4185**	1	PLUG-O-RING	
	18	1	*155-3624*	1	PLUG AS	
		1	**3J-7354**	1	SEAL-O-RING	
		1	**9S-4182**	1	PLUG-O-RING	
	19	1,2	*164-4180*	7	PLUG AS	
					(EACH INCLUDES)	
		1,2	**7M-8485**	1	SEAL-O-RING	
		1,2	**9S-4181**	1	PLUG-O-RING	
	20	2	**4F-9652**	2	SEAL-O-RING	
	21	2	**5P-8119**	2	SEAL-O-RING	
	22	1	**6V-8398**	2	SEAL-O-RING	
	23	1	**6V-9169**	2	NUT-BULKHEAD (13/16-16-THD)	
M	24	1	**6V-9667**	18	BOLT (M20X2.5X100-MM)	
	25	1	**7M-8485**	2	SEAL-O-RING	
	26	2	**7X-4805**	2	SEAL-O-RING	
M	27	2	**8T-0088**	6	BOLT (M16X2X65-MM)	
M	28	2	**8T-0655**	8	BOLT (M20X2.5X130-MM)	
	29	1,2	**8T-3282**	26	WASHER-HARD (22X35X3.5-MM THK)	
	30	1	**8T-5439**	2	WASHER-HARD (21.5X45X6-MM THK)	
	31	1	**9M-4335**	3	DOWEL-REACTION	
	32	2	**9X-8268**	6	WASHER (17.5X30X3.5-MM THK)	
B	33	2	**1U-8846**		SEALANT-GASKET	

B-USE AS REQUIRED
M-METRIC PART
Y-SEPARATE ILLUSTRATION

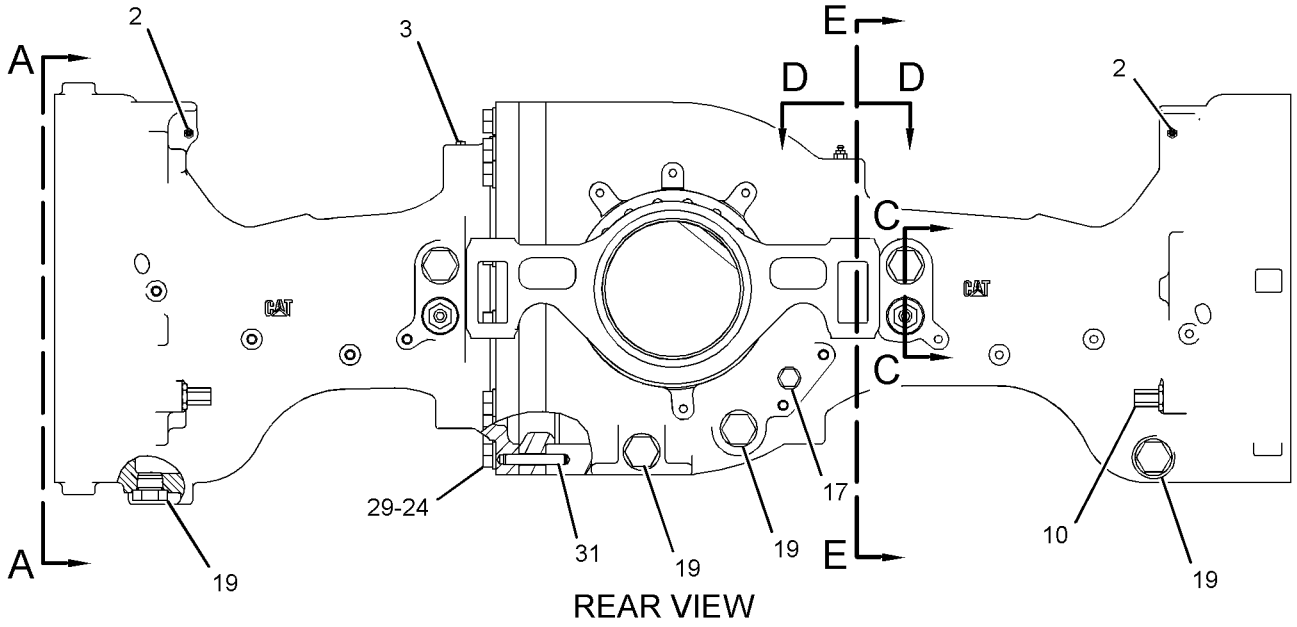

REAR VIEW

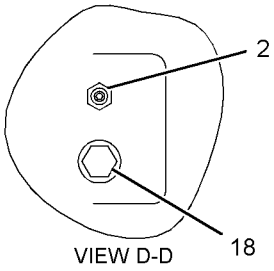

VIEW D-D

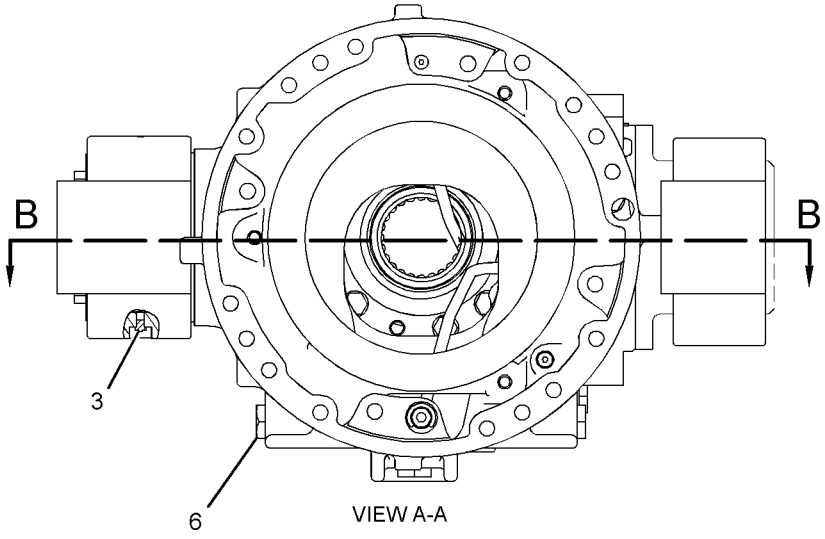

VIEW A-A

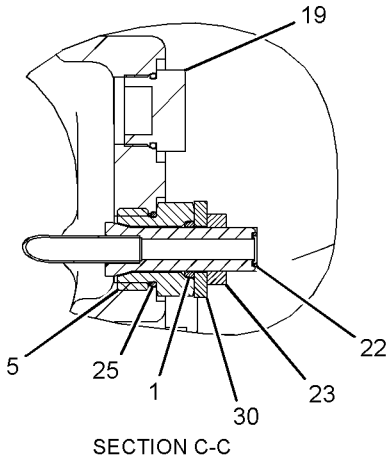

SECTION C-C

REFER TO ALL ILLUSTRATIONS OF
THIS GROUP FOR AUXILIARY VIEWS.

GRAPHIC #1

g01398308

288-9479 **HOUSING GP-OSCILLATING AXLE** *(contd.)* **i02933554**

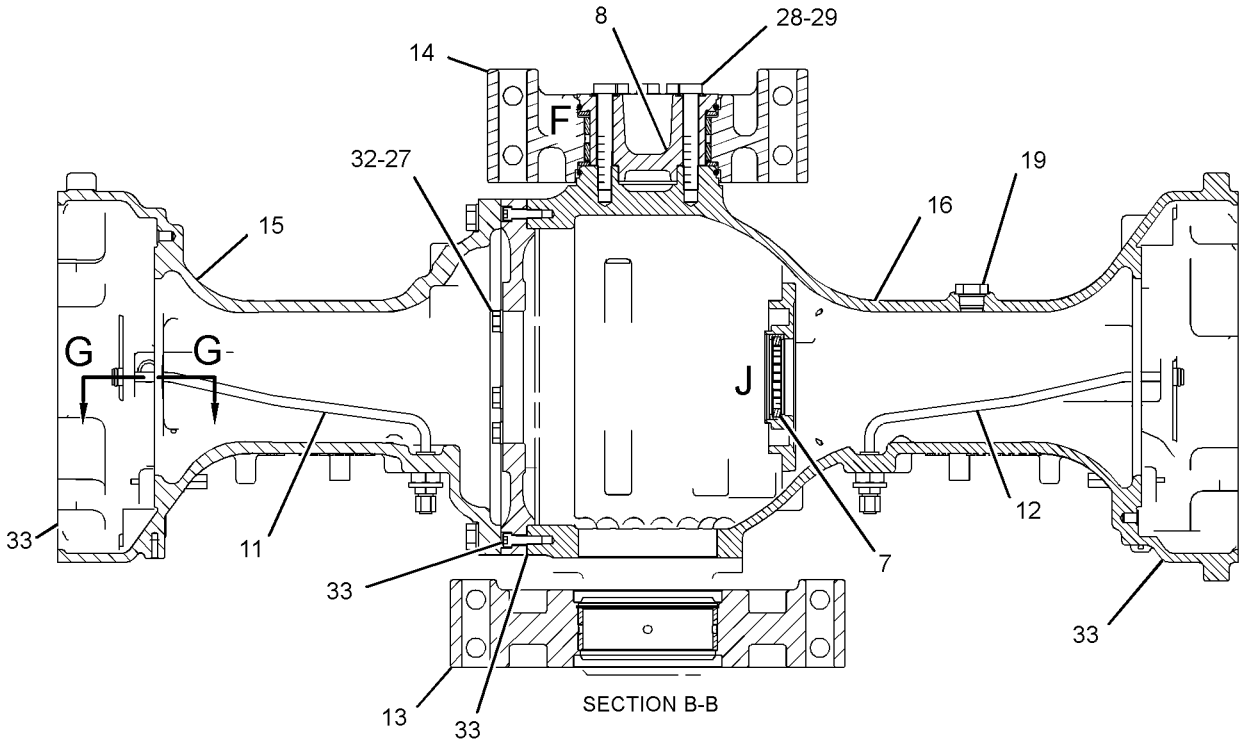

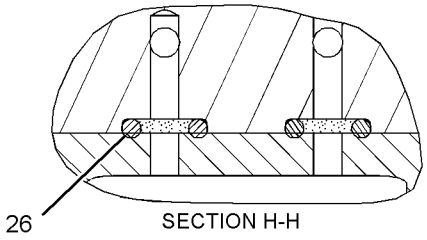

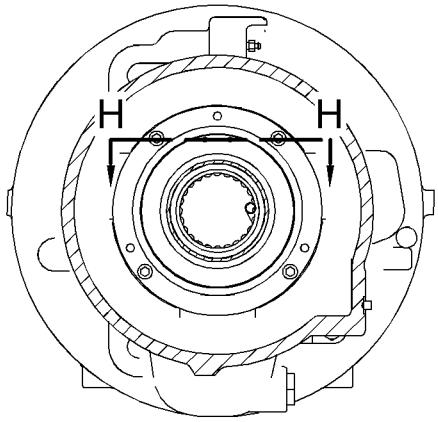

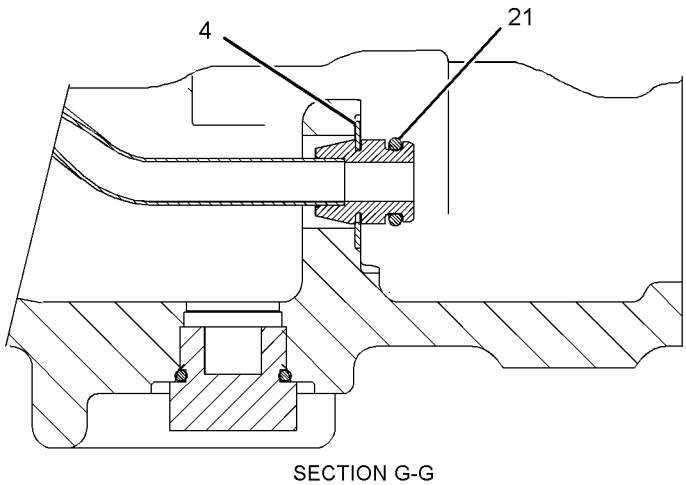

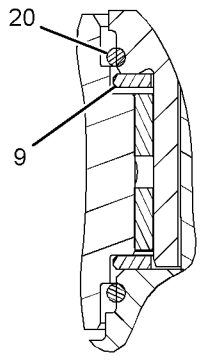

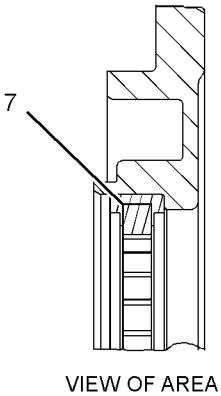

GRAPHIC #2 **<END>** g01398307

204-9602 INPUT GP-TRANSMISSION

S/N: MWL1-UP

PART OF 252-5135 TRANSMISSION AR

SMCS-3002, 3063, 3159 **i02914650**

NOTE	REF NO	GRAPHIC REF	PART NUMBER	QTY	PART NAME 1 2 3 4 5 6 (PRODUCT LEVEL)	SEE PAGE
	1	1	**204-9603**	1	SHAFT	
	2	1	**6Y-8262**	1	CARRIER-RING	
	3	1	**9M-2008**	1	RING-METAL SEAL	
	4	1	**230-3662**	1	GEAR (43-TEETH)	
	5	1	**203-7613**	1	GEAR (56-TEETH)	
	6	1	**7J-8210**	2	CONE-BEARING	

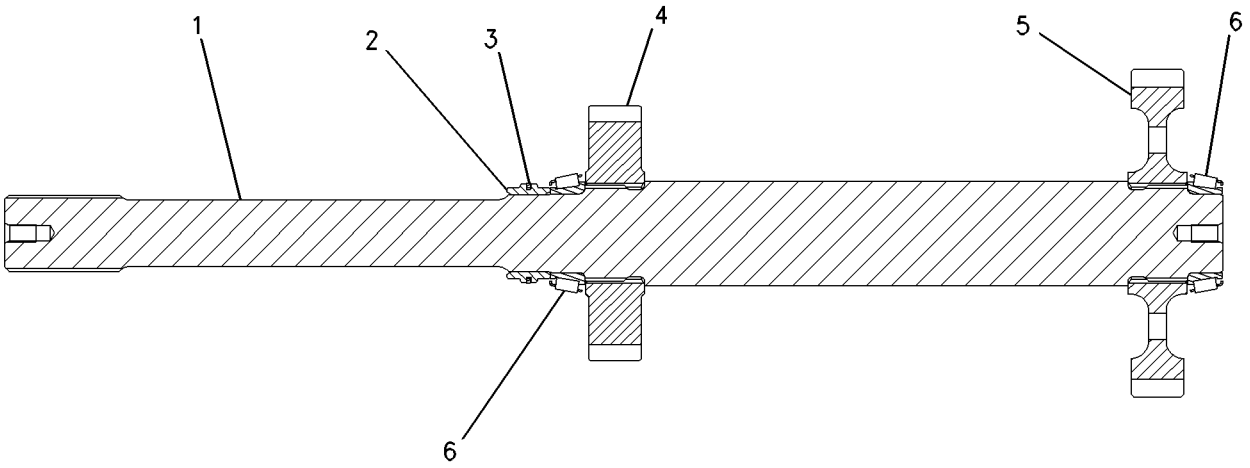

GRAPHIC #1 **<END>** g00951568

POWER TRAIN

260-8823 LINES GP-AXLE OIL COOLER

S/N: JKM1-712
PART OF 265-9745 COOLER AR-AXLE OIL
AN ATTACHMENT

SMCS-1365, 3016 **i02920656**

NOTE	REF NO	GRAPHIC REF	PART NUMBER	QTY	PART NAME 1 2 3 4 5 6 (PRODUCT LEVEL)	SEE PAGE
	1	1	**9R-5008**	1	SPACER (11X20X6-MM THK)	
	2	2	*177-1061*	1	ELBOW AS	
		2	**5K-9090**	1	SEAL-O-RING	
		2	**142-0038**	1	ELBOW	
	3	1,2	**251-6351**	2	FILTER-MAGNETIC (AXLE OIL COOLER)	
I	4	2	**262-1458**	1	HOSE AS	
I	5	2	**262-1459**	1	HOSE AS	
	6	2	**262-1460**	1	TUBE AS	
	7	2	**262-1462**	1	TUBE AS	
I	8	2	**262-1467**	1	HOSE AS	
	9	2	**262-1472**	1	TUBE AS	
	10	2	**262-1474**	1	TUBE AS	
	11	1,2	**266-3775**	2	BRACKET AS	
	12	2	*268-1572*	1	TEE AS	
		2	**6V-8398**	2	SEAL-O-RING	
		2	**6V-9158**	1	TEE-UNION	
		2	**7J-9108**	1	SEAL-O-RING	
	13	1	**268-4500**	1	BRACKET AS	
M		1	**9R-2613**	2	BOSS-WELD (M10X1.5X25-MM)	
	14	1	**285-9233**	1	BRACKET AS	
M		1	**8T-3490**	2	NUT-WELD (M10X1.5-THD)	
	15	1	**285-9234**	1	BRACKET AS	
M		1	**8T-3490**	2	NUT-WELD (M10X1.5-THD)	
I	16	2	**300-6550**	2	HOSE AS	
	17	2	**300-6554**	1	MANIFOLD	
I	18	2	**303-6371**	1	HOSE AS	
	19	2	**303-6373**	1	TUBE AS	
	20	2	**303-6374**	1	TUBE AS	
I	21	2	**303-6375**	1	HOSE AS	
I	22	2	**303-6376**	1	HOSE AS	
I	23	2	**318-7396**	1	HOSE AS	
I	24	2	**318-7397**	1	HOSE AS	
	25	2	**132-7551**	1	SPACER (11X19X6-MM THK)	
	26	2	*148-8315*	1	CONNECTOR AS	
		2	**2M-9780**	1	SEAL-O-RING	
		2	**6V-8642**	1	CONNECTOR	
		2	**7J-9108**	1	SEAL-O-RING	
	27	2	*148-8322*	1	CONNECTOR AS	
		2	**2M-9780**	1	SEAL-O-RING	
		2	**6V-8640**	1	CONNECTOR	
		2	**6V-9746**	1	SEAL-O-RING	
	28	1,2	*148-8323*	4	CONNECTOR AS	
					(EACH INCLUDES)	
		1,2	**2S-4078**	1	SEAL-O-RING	
		1,2	**5K-9090**	1	SEAL-O-RING	
		1,2	**6V-9875**	1	CONNECTOR	
	29	2	*148-8335*	1	CONNECTOR AS	
		2	**5K-9090**	1	SEAL-O-RING	
		2	**6V-8635**	1	CONNECTOR	
		2	**7M-8485**	1	SEAL-O-RING	
	30	2	*148-8336*	2	CONNECTOR AS	
					(EACH INCLUDES)	
		2	**3J-1907**	1	SEAL-O-RING	
		2	**6V-8397**	1	SEAL-O-RING	
		2	**6V-8636**	1	CONNECTOR	

260-8823 LINES GP-AXLE OIL COOLER *(contd.)* i02920656

NOTE	REF NO	GRAPHIC REF	PART NUMBER	QTY	PART NAME 1 2 3 4 5 6 (PRODUCT LEVEL)	SEE PAGE
	31	2	*148-8355*	1	ELBOW AS	
		2	**5K-9090**	1	SEAL-O-RING	
		2	**6V-9005**	1	ELBOW	
		2	**7M-8485**	1	SEAL-O-RING	
	32	2	*148-8370*	1	ELBOW AS	
		2	**6V-8398**	1	SEAL-O-RING	
		2	**6V-9851**	1	ELBOW	
	33	2	*148-8388*	1	ELBOW AS	
		2	**2M-9780**	1	SEAL-O-RING	
		2	**6V-8629**	1	ELBOW	
		2	**6V-9746**	1	SEAL-O-RING	
	34	1,2	*148-8392*	5	ELBOW AS	
					(EACH INCLUDES)	
		1,2	**6V-9746**	1	SEAL-O-RING	
		1,2	**6V-9853**	1	ELBOW	
	35	2	*148-8393*	1	ELBOW AS	
		2	**6V-9852**	1	ELBOW	
		2	**7J-9108**	1	SEAL-O-RING	
	36	2	*153-6256*	1	ELBOW AS	
		2	**7J-9108**	1	SEAL-O-RING	
		2	**8C-7563**	1	ELBOW	
	37	2	*155-7328*	2	ELBOW AS	
					(EACH INCLUDES)	
		2	**5P-7701**	1	SEAL-O-RING	
		2	**6V-9008**	1	ELBOW	
		2	**8C-3093**	1	SEAL-O-RING	
	38	1,2	**162-8352**	2	U-BOLT	
	39	1	*171-6723*	2	ELBOW AS	
					(EACH INCLUDES)	
		1	**6V-9746**	1	SEAL-O-RING	
		1	**8T-8899**	1	ELBOW	
	40	1	**1W-8793**	1	SPACER (13.8X30X20-MM THK)	
	41	1	**3K-0360**	1	SEAL-O-RING	
	42	1	**3P-2404**	1	CLIP	
	43	1,2	**4S-1962**	4	CLIP	
	44	2	**5D-0718**	2	CLIP	
	45	2	**5K-9090**	2	SEAL-O-RING	
	46	1	**5P-7468**	2	CLIP (SLOT)	
	47	1	**5P-7469**	2	CLIP (TAB)	
	48	1	**5P-8444**	2	GROMMET	
	49	1	**6D-4246**	6	CLIP	
	50	1,2	**6V-1889**	9	CLIP	
	51	2	**6V-9746**	2	SEAL-O-RING	
	52	2	**6W-7636**	1	SPACER (11.13X19.05X30-MM THK)	
	53	1	**7C-4355**	1	CLIP	
	54	1	**7D-3512**	1	SPACER	
	55	1,2	**7D-7233**	5	CLIP	
	56	2	**7N-3718**	2	CLIP	
	57	1	**7X-7729**	1	WASHER (11X25X3-MM THK)	
	58	2	**8M-2773**	2	CLIP	
	59	1,2	**8T-4121**	39	WASHER-HARD (11X21X2.5-MM THK)	
M	60	1,2	**8T-4133**	12	NUT (M10X1.5-THD)	
M	61	1,2	**8T-4136**	11	BOLT (M10X1.5X25-MM)	
M	62	1,2	**8T-4137**	8	BOLT (M10X1.5X20-MM)	
M	63	1	**8T-4139**	2	BOLT (M12X1.75X30-MM)	
M	64	1	**8T-4183**	2	BOLT (M12X1.75X40-MM)	
M	65	1	**8T-4194**	1	BOLT (M12X1.75X50-MM)	
M	66	1,2	**8T-4195**	4	BOLT (M10X1.5X30-MM)	
M	67	1	**8T-4196**	2	BOLT (M10X1.5X35-MM)	

260-8823 LINES GP-AXLE OIL COOLER *(contd.)* i02920656

NOTE	REF NO	GRAPHIC REF	PART NUMBER	QTY	PART NAME 1 2 3 4 5 6 (PRODUCT LEVEL)	SEE PAGE
	68	1	**8T-4223**	6	WASHER-HARD (13.5X25.5X3-MM THK)	
M	69	1	**8T-4648**	1	BOLT (M12X1.75X70-MM)	
M	70	2	**8T-6466**	3	BOLT (M10X1.5X60-MM)	
	71	1	**8T-7529**	1	CLIP	
	72	1	**9M-8406**	1	CLIP	
	73	1	**9R-4764**	1	ROD	
	74	1	**9S-4185**	1	PLUG-O-RING	
E	75	2	**206-2737**		GUARD-HOSE (30-CM)	

E-ORDER BY THE CENTIMETER
I-REFER TO HYDRAULIC INFORMATION SYSTEM
M-METRIC PART

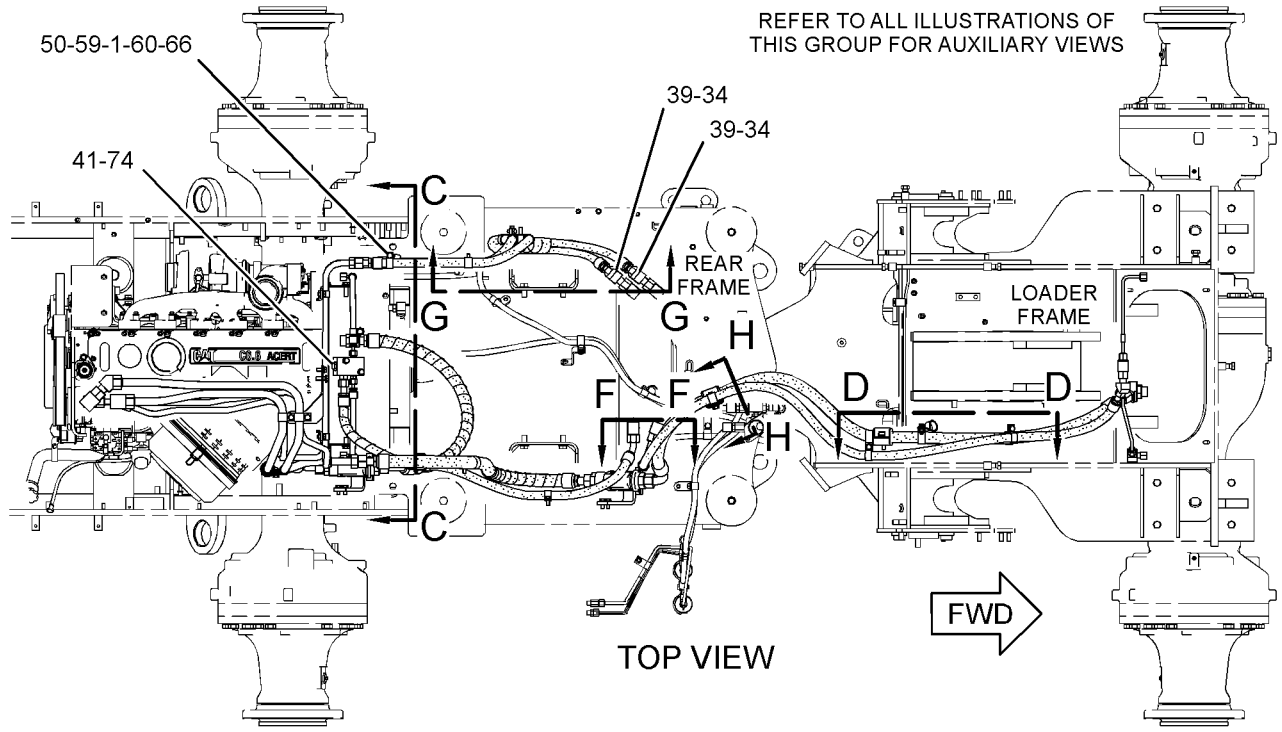

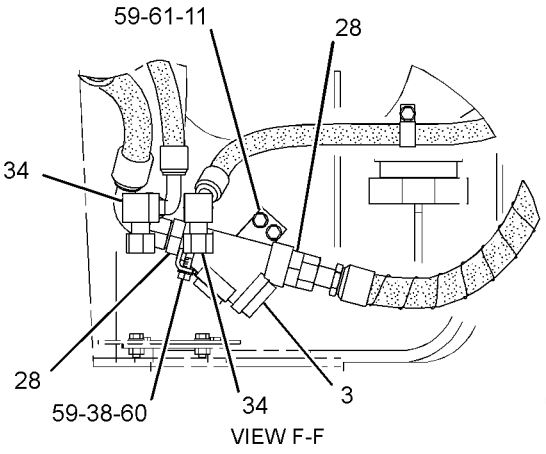

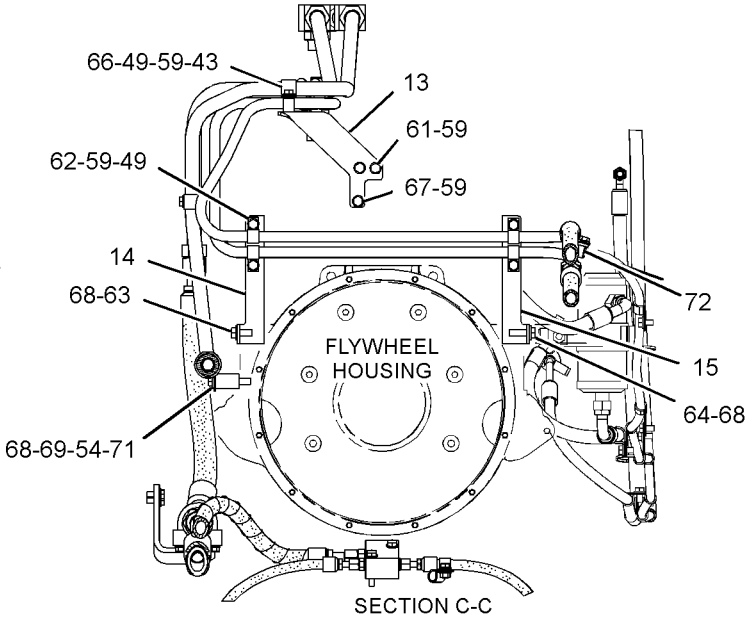

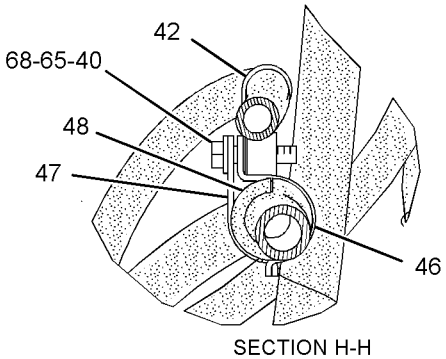

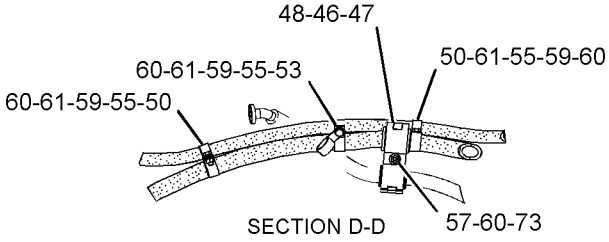

GRAPHIC #1

g01446381

260-8823 **LINES GP-AXLE OIL COOLER** *(contd.)* **i02920656**

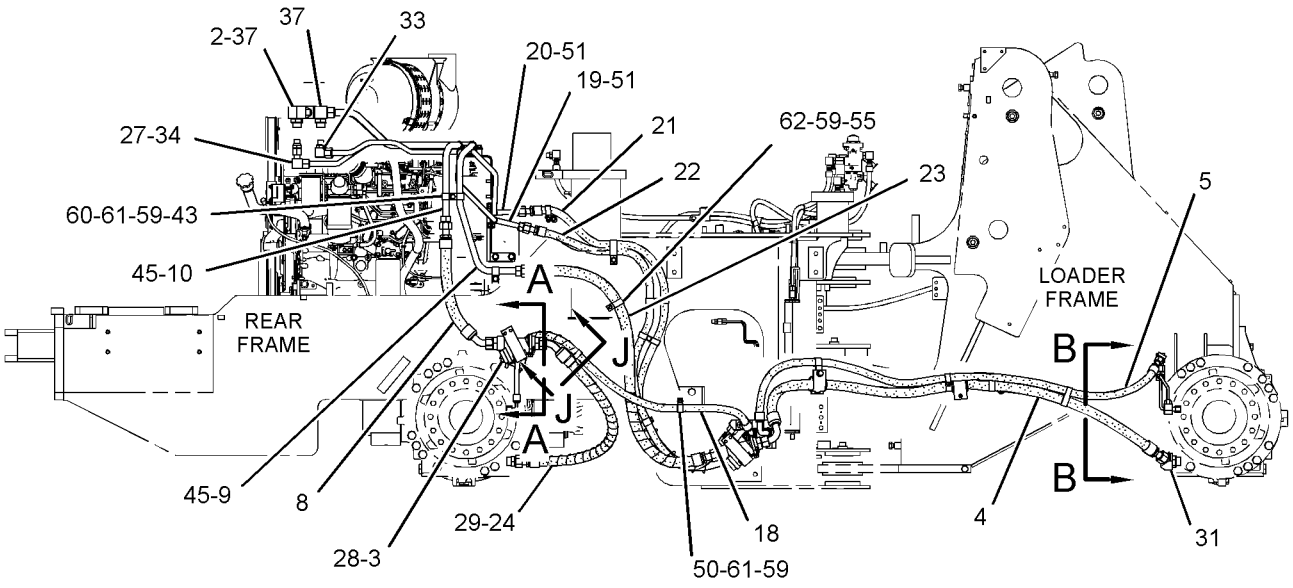

RIGHT SIDE VIEW

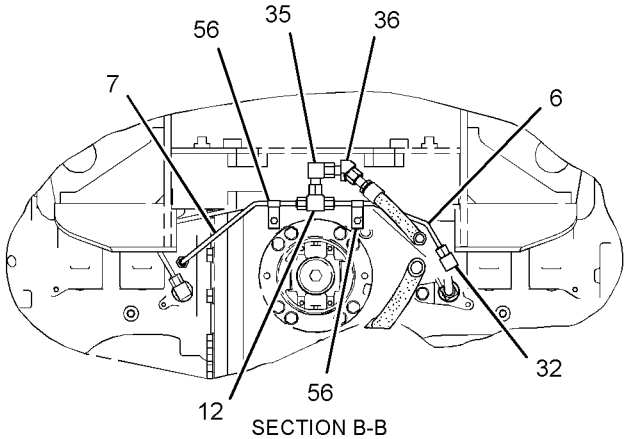

SECTION B-B

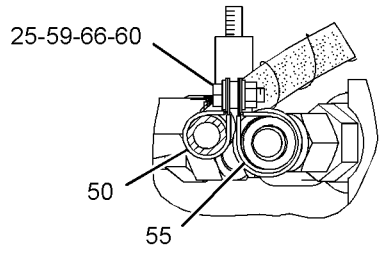

SECTION J-J

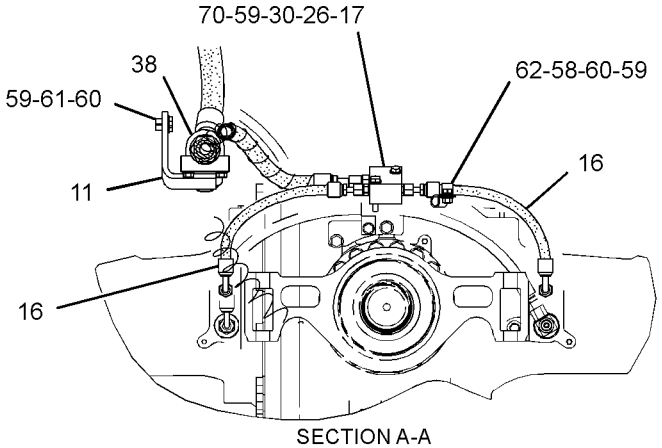

SECTION A-A

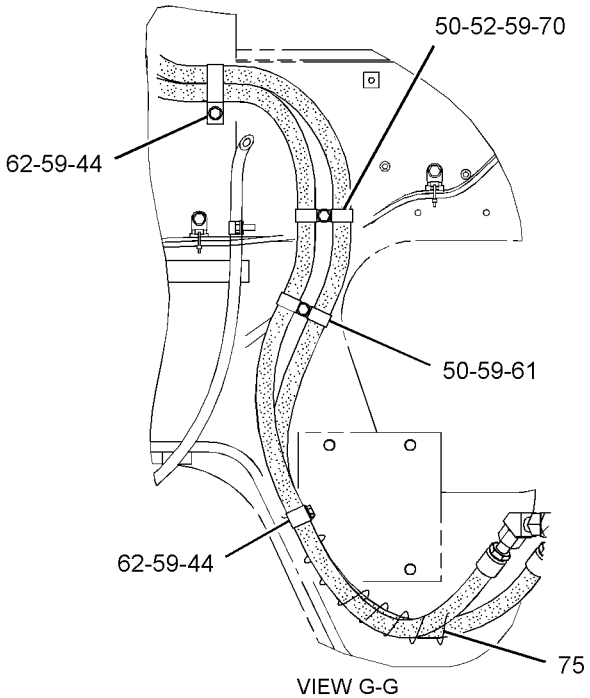

VIEW G-G

GRAPHIC #2 **<END>** g01446382

260-8823 LINES GP-AXLE OIL COOLER

S/N: JKM713-UP
PART OF 265-9745 COOLER AR-AXLE OIL
AN ATTACHMENT

SMCS-1365, 3016 **i03840590**

NOTE	REF NO	GRAPHIC REF	PART NUMBER	QTY	PART NAME 1 2 3 4 5 6 (PRODUCT LEVEL)	SEE PAGE
	1	1	**9R-5008**	1	SPACER (11X20X6-MM THK)	
	2	2	*177-1061*	1	ELBOW AS	
		2	**5K-9090**	1	SEAL-O-RING	
		2	**142-0038**	1	ELBOW	
	3	1,2	**251-6351**	2	FILTER-MAGNETIC (AXLE OIL COOLER)	
I	4	2	**262-1458**	1	HOSE AS	
I	5	2	**262-1459**	1	HOSE AS	
	6	2	**262-1460**	1	TUBE AS	
	7	2	**262-1462**	1	TUBE AS	
I	8	2	**262-1467**	1	HOSE AS	
	9	2	**262-1472**	1	TUBE AS	
	10	2	**262-1474**	1	TUBE AS	
	11	1,2	**266-3775**	2	BRACKET AS	
	12	2	*268-1572*	1	TEE AS	
		2	**6V-8398**	2	SEAL-O-RING	
		2	**6V-9158**	1	TEE-UNION	
		2	**7J-9108**	1	SEAL-O-RING	
	13	1	**268-4500**	1	BRACKET AS	
M		1	**9R-2613**	2	BOSS-WELD (M10X1.5X25-MM)	
	14	1	**285-9233**	1	BRACKET AS	
M		1	**8T-3490**	2	NUT-WELD (M10X1.5-THD)	
	15	1	**285-9234**	1	BRACKET AS	
M		1	**8T-3490**	2	NUT-WELD (M10X1.5-THD)	
I	16	2	**300-6550**	2	HOSE AS	
	17	2	**300-6554**	1	MANIFOLD	
I	18	2	**303-6371**	1	HOSE AS	
	19	2	**303-6373**	1	TUBE AS	
	20	2	**303-6374**	1	TUBE AS	
I	21	2	**303-6375**	1	HOSE AS	
I	22	2	**303-6376**	1	HOSE AS	
I	23	2	**318-7396**	1	HOSE AS	
I	24	2	**318-7397**	1	HOSE AS	
	25	2	**132-7551**	1	SPACER (11X19X6-MM THK)	
	26	2	*148-8315*	1	CONNECTOR AS	
		2	**2M-9780**	1	SEAL-O-RING	
		2	**6V-8642**	1	CONNECTOR	
		2	**7J-9108**	1	SEAL-O-RING	
	27	2	*148-8322*	1	CONNECTOR AS	
		2	**2M-9780**	1	SEAL-O-RING	
		2	**6V-8640**	1	CONNECTOR	
		2	**6V-9746**	1	SEAL-O-RING	
	28	1,2	*148-8323*	4	CONNECTOR AS	
					(EACH INCLUDES)	
		1,2	**2S-4078**	1	SEAL-O-RING	
		1,2	**5K-9090**	1	SEAL-O-RING	
		1,2	**6V-9875**	1	CONNECTOR	
	29	2	*148-8335*	1	CONNECTOR AS	
		2	**5K-9090**	1	SEAL-O-RING	
		2	**6V-8635**	1	CONNECTOR	
		2	**7M-8485**	1	SEAL-O-RING	
	30	2	*148-8336*	2	CONNECTOR AS	
					(EACH INCLUDES)	
		2	**3J-1907**	1	SEAL-O-RING	
		2	**6V-8397**	1	SEAL-O-RING	
		2	**6V-8636**	1	CONNECTOR	

260-8823 LINES GP-AXLE OIL COOLER *(contd.)* i03840590

NOTE	REF NO	GRAPHIC REF	PART NUMBER	QTY	PART NAME 1 2 3 4 5 6 (PRODUCT LEVEL)	SEE PAGE
	31	2	*148-8355*	1	ELBOW AS	
		2	**5K-9090**	1	SEAL-O-RING	
		2	**6V-9005**	1	ELBOW	
		2	**7M-8485**	1	SEAL-O-RING	
	32	2	*148-8370*	1	ELBOW AS	
		2	**6V-8398**	1	SEAL-O-RING	
		2	**6V-9851**	1	ELBOW	
	33	2	*148-8388*	1	ELBOW AS	
		2	**2M-9780**	1	SEAL-O-RING	
		2	**6V-8629**	1	ELBOW	
		2	**6V-9746**	1	SEAL-O-RING	
C	34	1,2	*148-8392*	4	ELBOW AS	
					(EACH INCLUDES)	
		1,2	**6V-9746**	1	SEAL-O-RING	
		1,2	**6V-9853**	1	ELBOW	
	35	2	*148-8393*	1	ELBOW AS	
		2	**6V-9852**	1	ELBOW	
		2	**7J-9108**	1	SEAL-O-RING	
	36	2	*153-6256*	1	ELBOW AS	
		2	**7J-9108**	1	SEAL-O-RING	
		2	**8C-7563**	1	ELBOW	
	37	2	*155-7328*	2	ELBOW AS	
					(EACH INCLUDES)	
		2	**5P-7701**	1	SEAL-O-RING	
		2	**6V-9008**	1	ELBOW	
		2	**8C-3093**	1	SEAL-O-RING	
	38	1,2	**162-8352**	2	U-BOLT	
C	39	1	*171-6723*	3	ELBOW AS	
					(EACH INCLUDES)	
		1	**6V-9746**	1	SEAL-O-RING	
		1	**8T-8899**	1	ELBOW	
	40	1	**1W-8793**	1	SPACER (13.8X30X20-MM THK)	
C	41	2	**199-7854**	1	SPACER (11.8X20X45-MM THK)	
	42	1	**3P-2404**	1	CLIP	
	43	1,2	**4S-1962**	4	CLIP	
	44	2	**5D-0718**	2	CLIP	
	45	2	**5K-9090**	2	SEAL-O-RING	
	46	1	**5P-7468**	2	CLIP (SLOT)	
	47	1	**5P-7469**	2	CLIP (TAB)	
	48	1	**5P-8444**	2	GROMMET	
	49	1	**6D-4246**	6	CLIP	
	50	1,2	**6V-1889**	9	CLIP	
	51	2	**6V-9746**	2	SEAL-O-RING	
	52	2	**6W-7636**	1	SPACER (11.13X19.05X30-MM THK)	
	53	1	**7C-4355**	1	CLIP	
	54	1	**7D-3512**	1	SPACER	
	55	1,2	**7D-7233**	5	CLIP	
	56	2	**7N-3718**	2	CLIP	
	57	1	**7X-7729**	1	WASHER (11X25X3-MM THK)	
	58	2	**8M-2773**	2	CLIP	
	59	1,2	**8T-4121**	39	WASHER-HARD (11X21X2.5-MM THK)	
M	60	1,2	**8T-4133**	12	NUT (M10X1.5-THD)	
M	61	1,2	**8T-4136**	11	BOLT (M10X1.5X25-MM)	
CM	62	1,2	**8T-4137**	7	BOLT (M10X1.5X20-MM)	
M	63	1	**8T-4139**	2	BOLT (M12X1.75X30-MM)	
M	64	1	**8T-4183**	2	BOLT (M12X1.75X40-MM)	
M	65	1	**8T-4194**	1	BOLT (M12X1.75X50-MM)	
M	66	1,2	**8T-4195**	4	BOLT (M10X1.5X30-MM)	
M	67	1	**8T-4196**	2	BOLT (M10X1.5X35-MM)	

260-8823 LINES GP-AXLE OIL COOLER *(contd.)* i03840590

NOTE	REF NO	GRAPHIC REF	PART NUMBER	QTY	PART NAME 1 2 3 4 5 6 (PRODUCT LEVEL)	SEE PAGE
	68	1	**8T-4223**	6	WASHER-HARD (13.5X25.5X3-MM THK)	
M	69	1	**8T-4648**	1	BOLT (M12X1.75X70-MM)	
M	70	2	**8T-6466**	3	BOLT (M10X1.5X60-MM)	
	71	1	**8T-7529**	1	CLIP	
	72	1	**9M-8406**	1	CLIP	
	73	1	**9R-4764**	1	ROD	
C	74	1	*148-8411*	1	PLUG AS	
		1	**3K-0360**	1	SEAL-O-RING	
		1	**9S-4185**	1	PLUG-O-RING	
E	75	2	**206-2737**		GUARD-HOSE (30-CM)	
CM	76	2	**8T-5035**	1	BOLT (M10X1.5X65-MM)	

C-CHANGE FROM PREVIOUS TYPE
E-ORDER BY THE CENTIMETER
I-REFER TO HYDRAULIC INFORMATION SYSTEM
M-METRIC PART

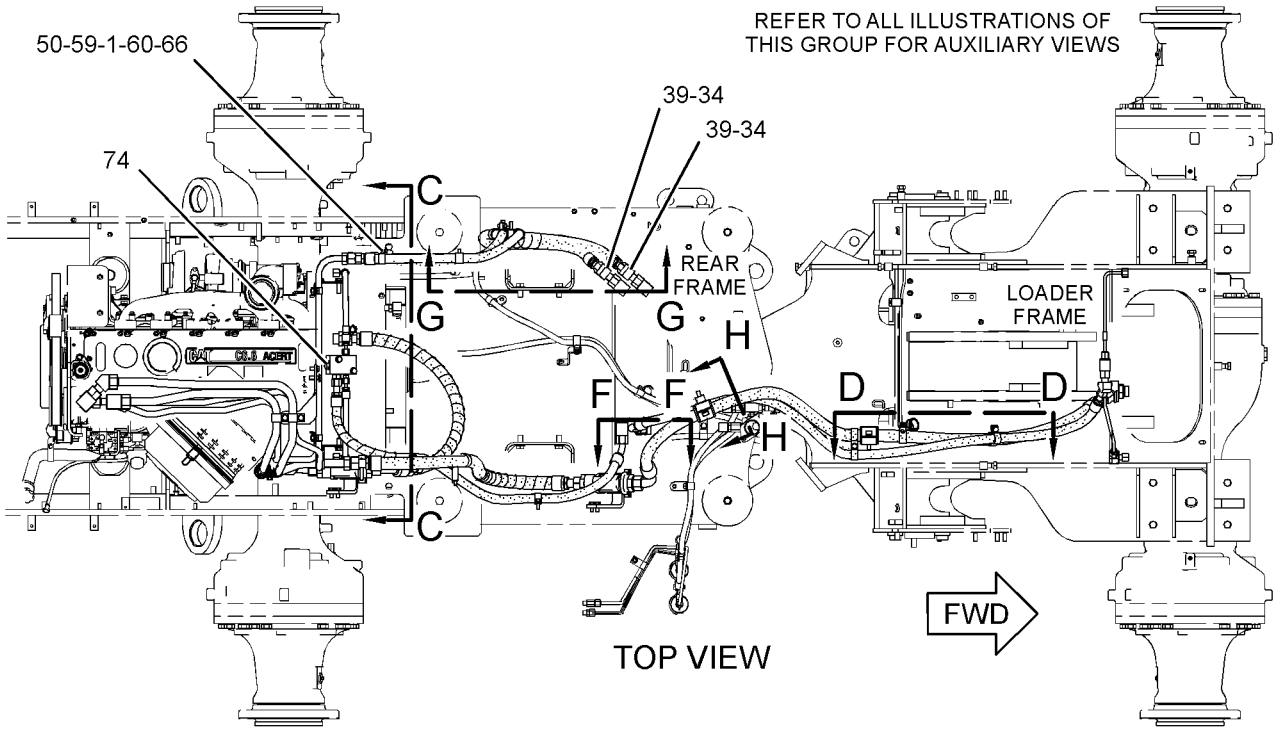

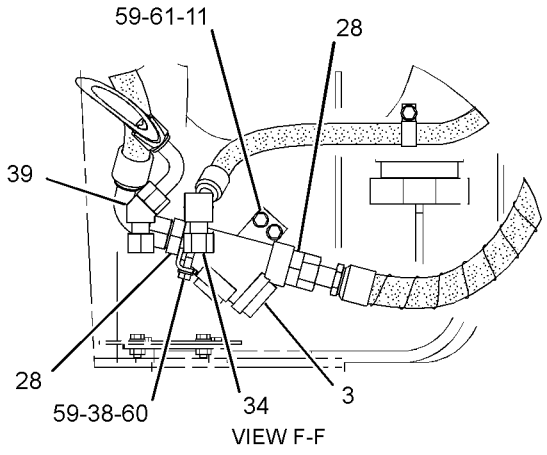

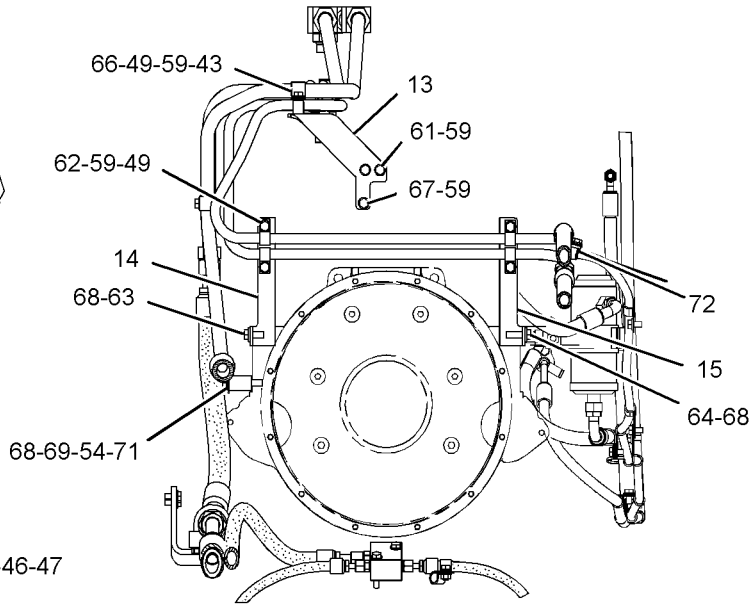

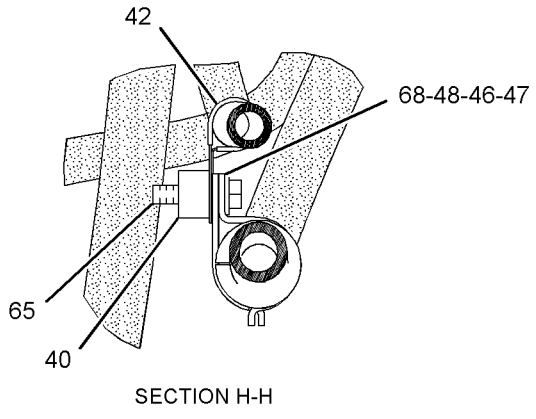

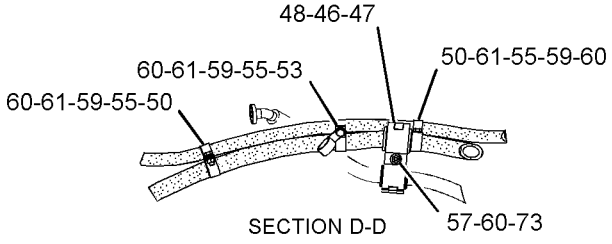

GRAPHIC #1

g01942080

260-8823 **LINES GP-AXLE OIL COOLER** *(contd.)* **i03840590**

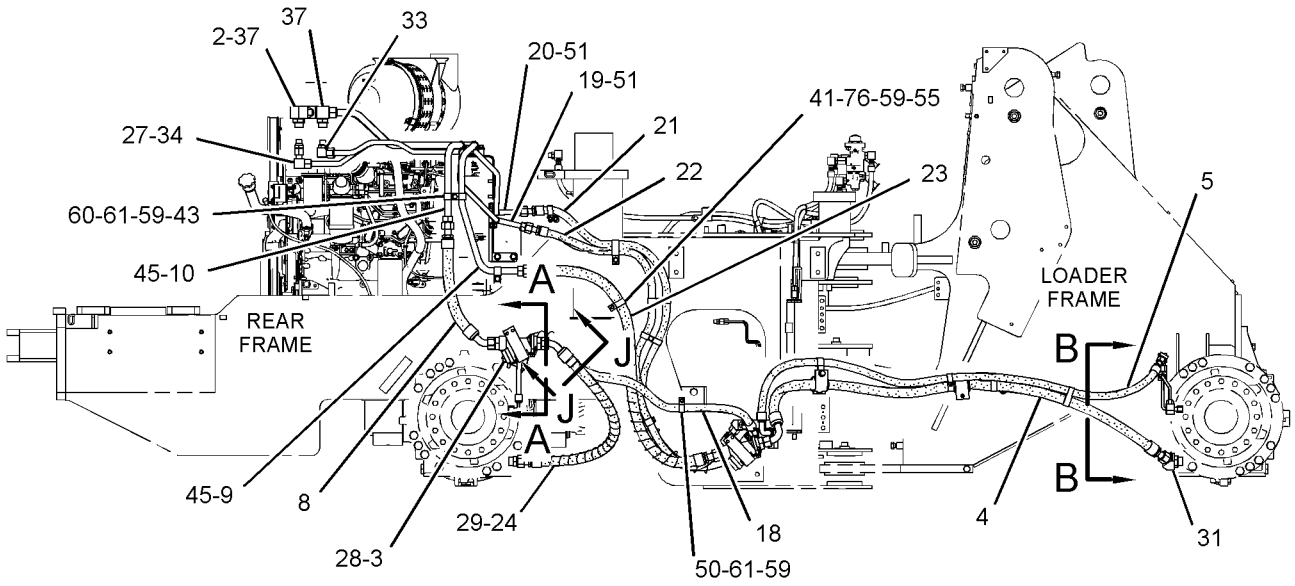

RIGHT SIDE VIEW

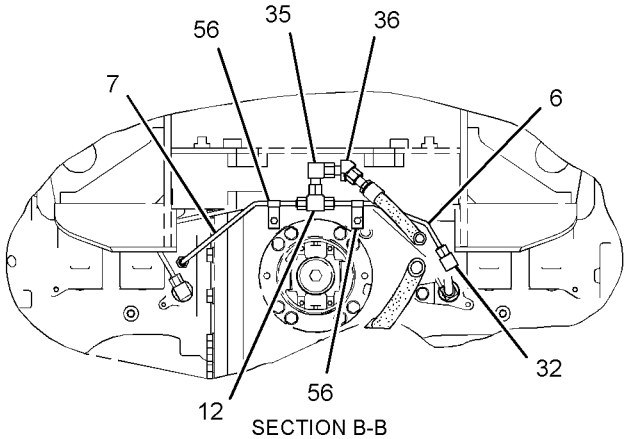

SECTION B-B

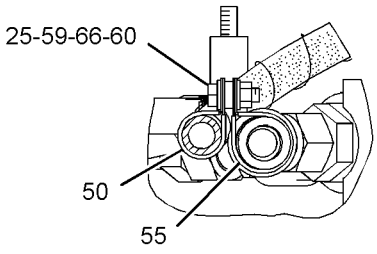

SECTION J-J

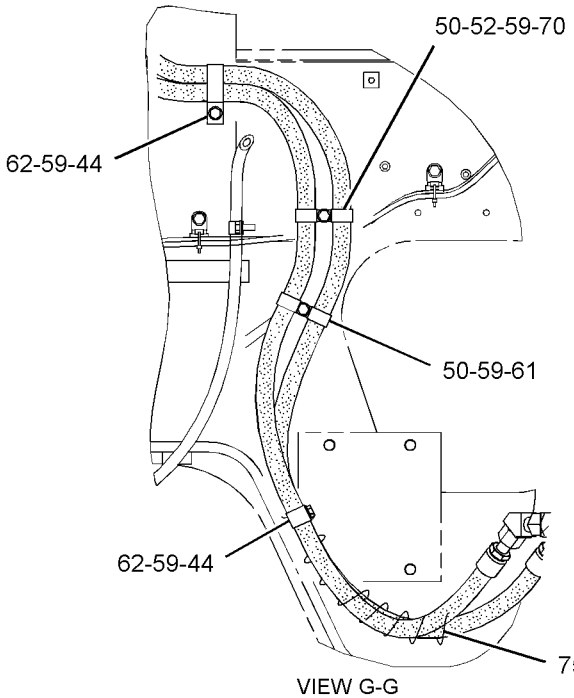

VIEW G-G

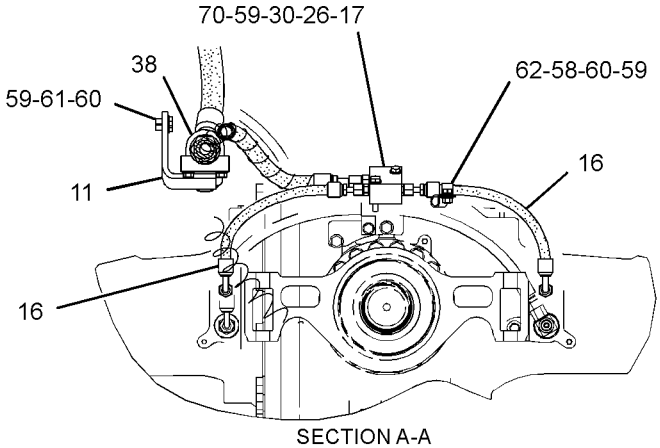

SECTION A-A

GRAPHIC #2 **<END>** g01942093

288-9488 LINES GP-AXLE OIL COOLER

S/N: JKM1-UP
PART OF 272-4990, 272-4992 AXLE AR-FIXED, 271-2344, 272-4996 AXLE AR-OSCILLATING
AN ATTACHMENT

SMCS-1365, 3016 **i02933549**

NOTE	REF NO	GRAPHIC REF	PART NUMBER	QTY	PART NAME 1 2 3 4 5 6 (PRODUCT LEVEL)	SEE PAGE
	1	1	**1H-8171**	2	SEAL-O-RING	
	2	1	**125-0966**	2	PLUG	
	3	1	**271-2335**	1	TUBE AS-OIL COOLER	
	4	1	**271-2338**	1	TUBE AS-OIL COOLER	
	5	1	**6V-8398**	2	SEAL-O-RING	
	6	1	**6V-9169**	2	NUT-BULKHEAD (13/16-16-THD)	
	7	1	**7M-8485**	2	SEAL-O-RING	
	8	1	**8T-5439**	2	WASHER-HARD (21.5X45X6-MM THK)	

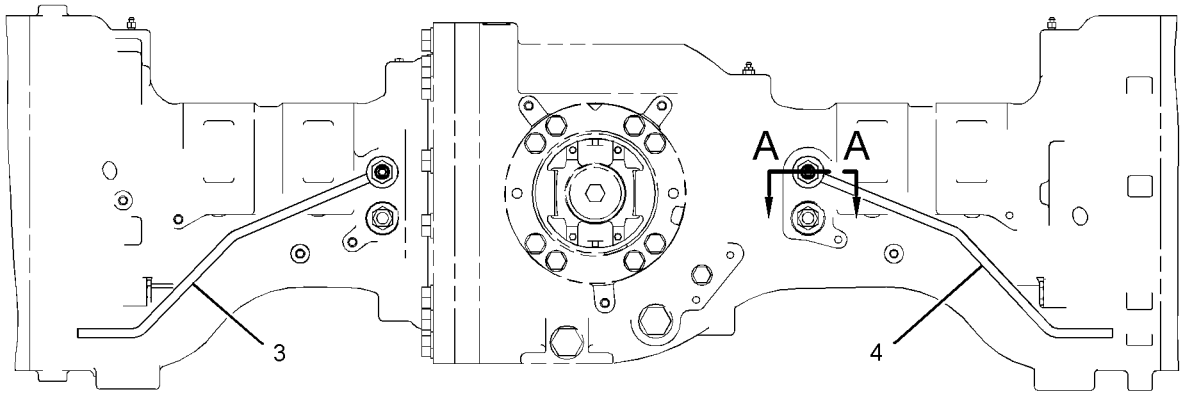

REAR VIEW

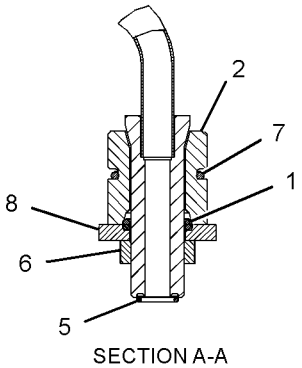

SECTION A-A

GRAPHIC #1

<END>

g01431724

255-4811 LINES GP-POWER TRAIN OIL

S/N: JKM1-920

PART OF 237-7538 POWER TRAIN AR

SMCS-3016 **i03085321**

NOTE	REF NO	GRAPHIC REF	PART NUMBER	QTY	PART NAME 1 2 3 4 5 6 (PRODUCT LEVEL)	SEE PAGE
	1	1	**111-1460**	1	VALVE-CHECK (TRANSMISSION OIL)	
	2	1	**133-3260**	4	SPACER (11X19X10-MM THK)	
	3	1	*241-6215*	1	ELBOW AS	
		1	**3J-1907**	1	SEAL-O-RING	
		1	**6V-8076**	1	ELBOW	
Y	4	1	**249-1750**	1	FILTER GP-OIL (POWER TRAIN)	421
I	5	1	**263-9006**	1	HOSE AS	
I	6	1	**263-9007**	1	HOSE AS	
	7	1	**266-0248**	1	TUBE AS	
	8	1	**053-0558**	1	CLIP	
	9	1	*148-8317*	1	CONNECTOR AS	
		1	**3D-2824**	1	SEAL-O-RING	
		1	**5K-9090**	1	SEAL-O-RING	
		1	**6V-8714**	1	CONNECTOR	
	10	1	*162-6802*	1	ELBOW AS	
		1	**3J-7354**	1	SEAL-O-RING	
		1	**151-5145**	1	ELBOW	
	11	1	**241-3974**	1	VALVE GP-CHECK	
		1	**3D-2824**	1	SEAL-O-RING	
		1	**6V-9746**	1	SEAL-O-RING	
	12	1	**3A-3692**	2	CLIP	
	13	1	**3D-2824**	1	SEAL-O-RING	
	14	1	**4J-0520**	3	SEAL-O-RING	
	15	1	**6V-5258**	1	ADAPTER	
	17	1	**8C-3206**	6	FLANGE-HALF	
	18	1	**8T-4121**	17	WASHER-HARD (11X21X2.5-MM THK)	
M	19	1	**8T-4133**	2	NUT (M10X1.5-THD)	
M	20	1	**8T-4136**	1	BOLT (M10X1.5X25-MM)	
M	21	1	**8T-4137**	5	BOLT (M10X1.5X20-MM)	
M	22	1	**8T-4182**	4	BOLT (M10X1.5X45-MM)	
M	23	1	**8T-4196**	8	BOLT (M10X1.5X35-MM)	
	24	1	**9X-2538**	1	ELBOW	
	25	1	**4D-7388**	1	CLIP	
M	26	1	**8T-4195**	1	BOLT (M10X1.5X30-MM)	
	27	1	**9X-8250**	1	CLIP	

I-REFER TO HYDRAULIC INFORMATION SYSTEM
M-METRIC PART
Y-SEPARATE ILLUSTRATION

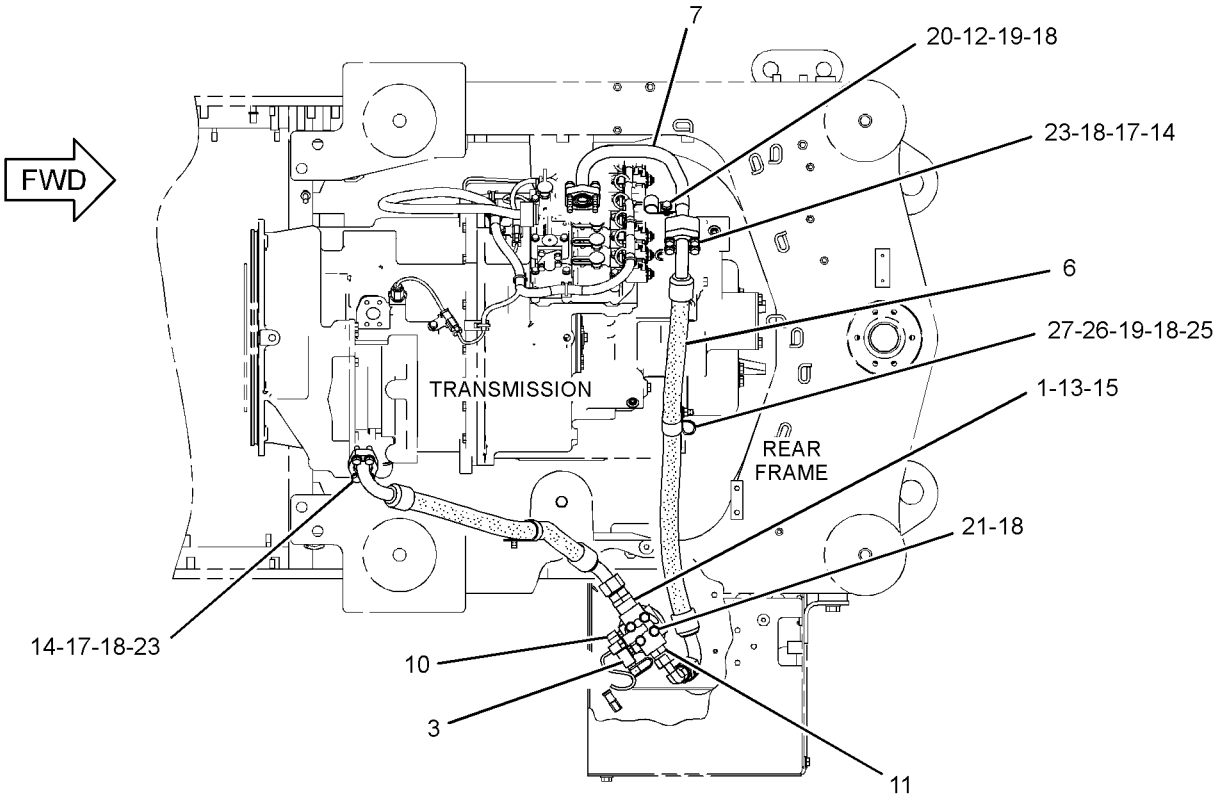

TOP VIEW

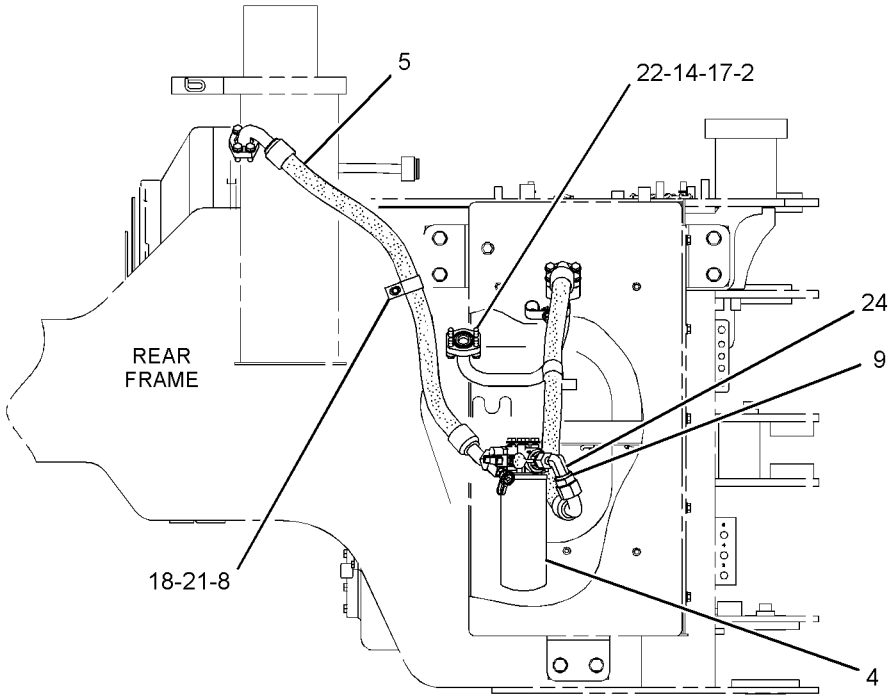

RIGHT SIDE VIEW

GRAPHIC #1 **<END>** g01570893

255-4811 LINES GP-POWER TRAIN OIL

S/N: JKM921-UP

PART OF 237-7538 POWER TRAIN AR

SMCS-3016 **i03815791**

NOTE	REF NO	GRAPHIC REF	PART NUMBER	QTY	PART NAME 1 2 3 4 5 6 (PRODUCT LEVEL)	SEE PAGE
	1	1	**111-1460**	1	VALVE-CHECK (TRANSMISSION OIL)	
	2	1	**133-3260**	4	SPACER (11X19X10-MM THK)	
	3	1	*241-6215*	1	ELBOW AS	
		1	**3J-1907**	1	SEAL-O-RING	
		1	**6V-8076**	1	ELBOW	
CY	4	1	*337-0831*	1	FILTER GP-OIL (POWER TRAIN)	422
I	5	1	**263-9006**	1	HOSE AS	
I	6	1	**263-9007**	1	HOSE AS	
	7	1	**266-0248**	1	TUBE AS	
	9	1	*148-8317*	1	CONNECTOR AS	
		1	**3D-2824**	1	SEAL-O-RING	
		1	**5K-9090**	1	SEAL-O-RING	
		1	**6V-8714**	1	CONNECTOR	
	10	1	*162-6802*	1	ELBOW AS	
		1	**3J-7354**	1	SEAL-O-RING	
		1	**151-5145**	1	ELBOW	
	11	1	**241-3974**	1	VALVE GP-CHECK	
		1	**3D-2824**	1	SEAL-O-RING	
		1	**6V-9746**	1	SEAL-O-RING	
	12	1	**3A-3692**	2	CLIP	
	13	1	**3D-2824**	1	SEAL-O-RING	
	14	1	**4J-0520**	3	SEAL-O-RING	
	15	1	**6V-5258**	1	ADAPTER	
	17	1	**8C-3206**	6	FLANGE-HALF	
	18	1	**8T-4121**	17	WASHER-HARD (11X21X2.5-MM THK)	
M	19	1	**8T-4133**	2	NUT (M10X1.5-THD)	
M	20	1	**8T-4136**	1	BOLT (M10X1.5X25-MM)	
M	21	1	**8T-4137**	5	BOLT (M10X1.5X20-MM)	
M	22	1	**8T-4182**	4	BOLT (M10X1.5X45-MM)	
M	23	1	**8T-4196**	8	BOLT (M10X1.5X35-MM)	
	24	1	**9X-2538**	1	ELBOW	
C	25	1	**4D-7388**	2	CLIP	
M	26	1	**8T-4195**	1	BOLT (M10X1.5X30-MM)	
	27	1	**9X-8250**	1	CLIP	

C-CHANGE FROM PREVIOUS TYPE
I-REFER TO HYDRAULIC INFORMATION SYSTEM
M-METRIC PART
Y-SEPARATE ILLUSTRATION

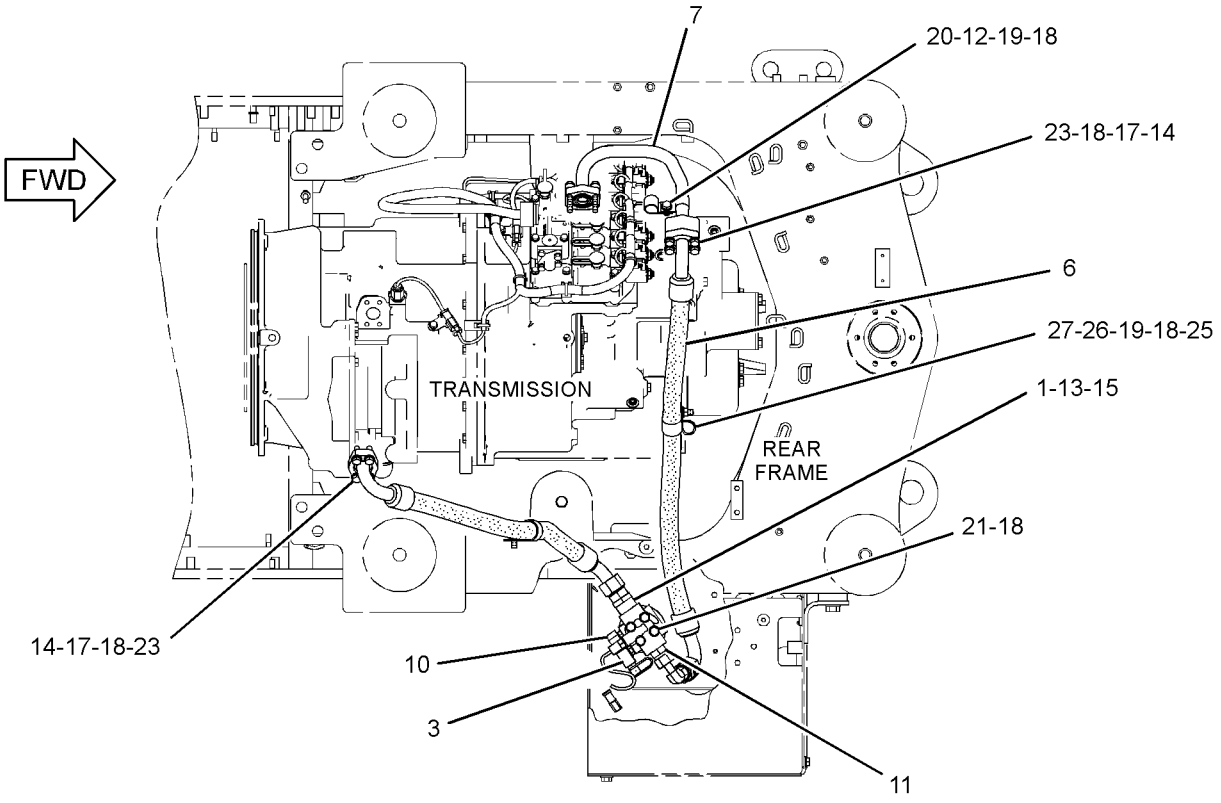

TOP VIEW

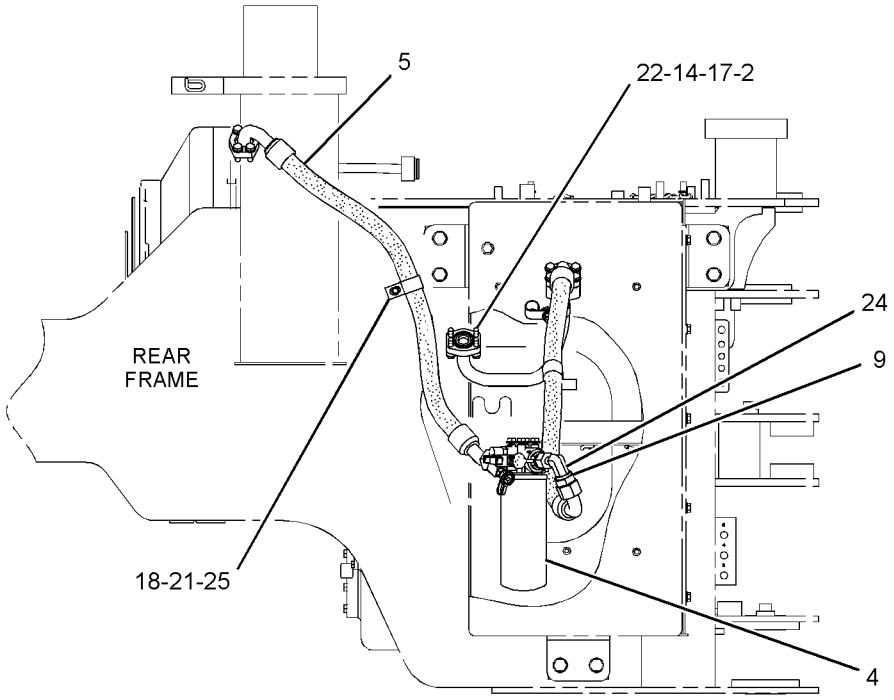

RIGHT SIDE VIEW

GRAPHIC #1 **<END>** g01993902

POWER TRAIN

255-4823 LINES GP-TORQUE CONV COOLER

S/N: JKM1-UP

PART OF 237-7540 CHASSIS AR

SMCS-1375, 3016 **i03545022**

NOTE	REF NO	GRAPHIC REF	PART NUMBER	QTY	PART NAME 1 2 3 4 5 6 (PRODUCT LEVEL)	SEE PAGE
	1	1	**3S-2093**	1	STRAP-CABLE	
Y	2	1	**4T-6117**	1	VALVE GP-BYPASS (TORQUE CONVERTER COOLER)	476
	3	1	**7Y-3731**	1	FLANGE	
	4	1	**9J-3866**	1	ADAPTER	
	5	1	**097-0832**	1	SPACER (13.5X22X14-MM THK)	
Y	6	1	**131-0427**	1	SENSOR GP-TEMPERATURE (TORQUE CONVERTER OIL)	252
	7	1	*150-3059*	2	TEE AS	
					(EACH INCLUDES)	
		1	**5K-9090**	1	SEAL-O-RING	
		1	**7M-8485**	1	SEAL-O-RING	
		1	**8T-1674**	1	TEE	
	8	1	**322-4617**	1	BRACKET	
	9	1	**264-0597**	1	TUBE AS	
	10	1	**264-6823**	1	BRACKET AS	
M		1	**8T-3490**	1	NUT-WELD (M10X1.5-THD)	
I	11	1	**264-8234**	1	HOSE AS	
I	12	1	**264-8961**	1	HOSE AS	
	13	1	**315-9798**	1	TUBE AS	
	14	1	**315-9799**	1	TUBE AS	
	15	1	*148-8335*	2	CONNECTOR AS	
					(EACH INCLUDES)	
		1	**5K-9090**	1	SEAL-O-RING	
		1	**6V-8635**	1	CONNECTOR	
		1	**7M-8485**	1	SEAL-O-RING	
	16	1	*148-8352*	3	ELBOW AS	
					(EACH INCLUDES)	
		1	**5K-9090**	1	SEAL-O-RING	
		1	**6V-9854**	1	ELBOW	
	17	1	*155-2027*	2	CONNECTOR AS	
					(EACH INCLUDES)	
		1	**5K-9090**	1	SEAL-O-RING	
		1	**7M-8485**	1	SEAL-O-RING	
		1	**8T-8898**	1	CONNECTOR	
M	18	1	**280-8912**	1	BOLT (M10X1.5X75-MM)	
	19	1	**1P-3703**	1	SEAL-RECTANGULAR	
	20	1	**3J-1907**	1	SEAL-O-RING	
	21	1	**4J-0520**	2	SEAL-O-RING	
	22	1	**275-7803**	1	SPACER (11.7X19.8X25.4-MM THK)	
	23	1	**4P-7581**	1	CLIP	
	24	1	**5K-9090**	2	SEAL-O-RING	
	25	1	**7X-7729**	5	WASHER (11X25X3-MM THK)	
	26	1	**8C-3206**	2	FLANGE-HALF	
	27	1	**8T-1889**	4	CLIP (SLOT)	
	28	1	**8T-1890**	4	CLIP (TAB)	
	29	1	**8T-4121**	15	WASHER-HARD (11X21X2.5-MM THK)	
M	30	1	**8T-4133**	6	NUT (M10X1.5-THD)	
M	31	1	**8T-4139**	1	BOLT (M12X1.75X30-MM)	
M	32	1	**8T-4178**	3	BOLT (M10X1.5X90-MM)	
M	33	1	**8T-4182**	1	BOLT (M10X1.5X45-MM)	
M	34	1	**8T-4196**	5	BOLT (M10X1.5X35-MM)	
	35	1	**8T-4223**	1	WASHER-HARD (13.5X25.5X3-MM THK)	
M	36	1	**8T-5005**	3	BOLT (M10X1.5X70-MM)	
M	37	1	**8T-6466**	1	BOLT (M10X1.5X60-MM)	

I-REFER TO HYDRAULIC INFORMATION SYSTEM
M-METRIC PART
Y-SEPARATE ILLUSTRATION

255-4823 **LINES GP-TORQUE CONV COOLER** *(contd.)* **i03545022**

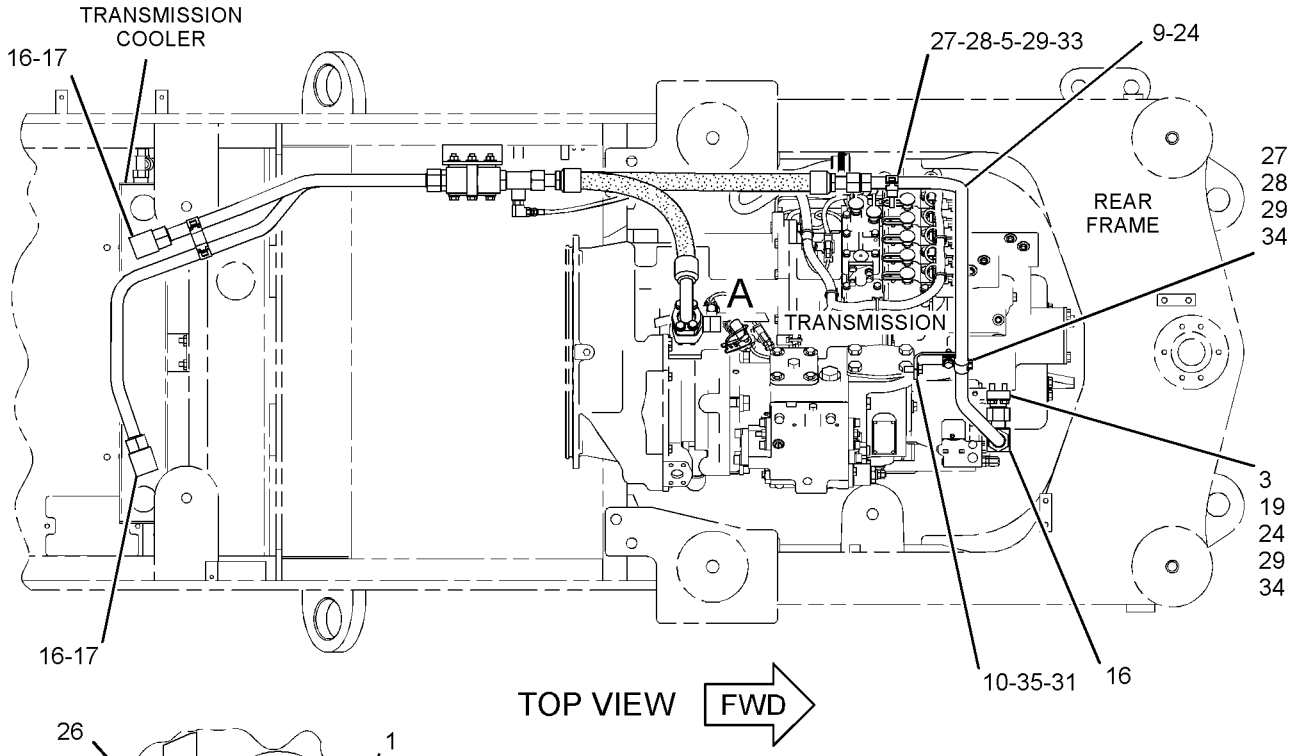

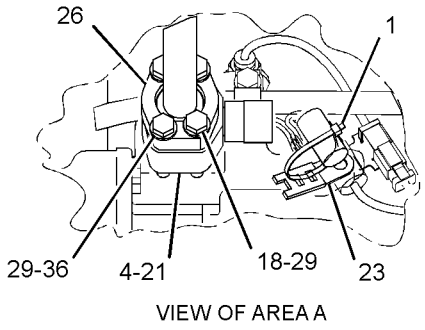

VIEW OF AREA A

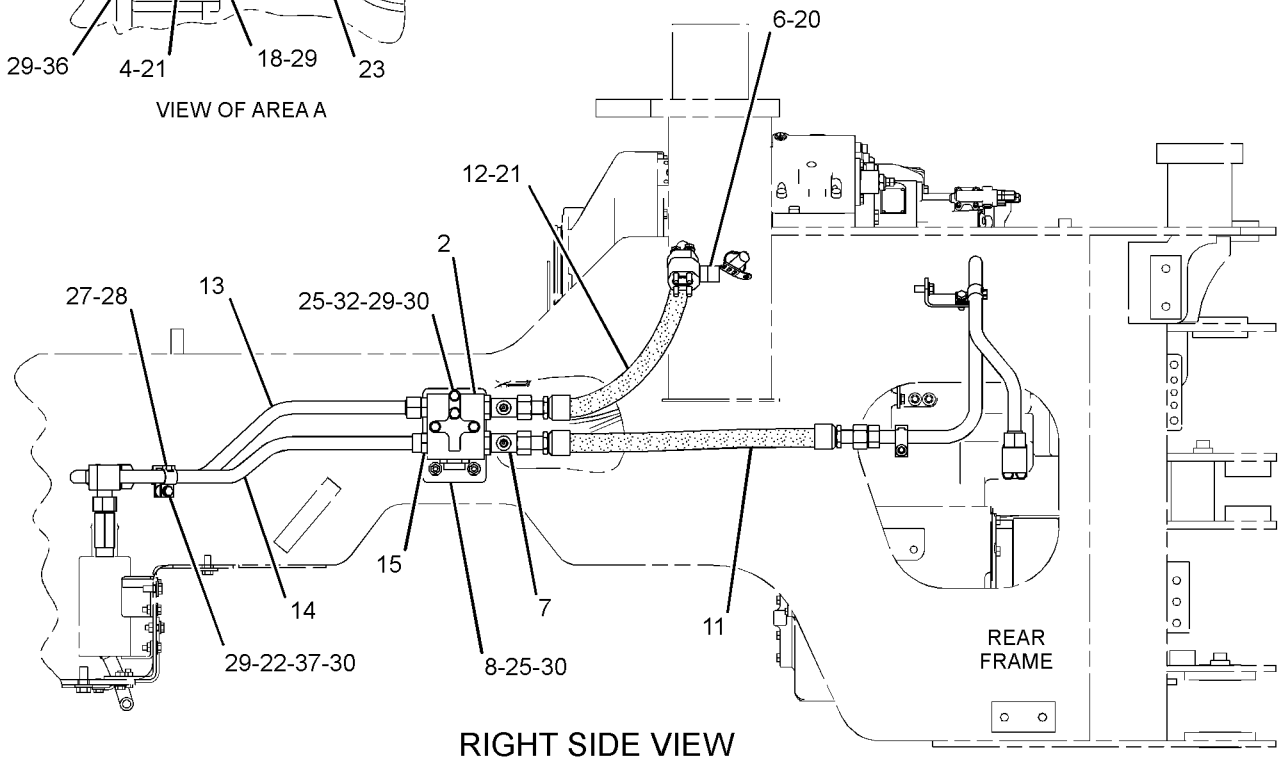

RIGHT SIDE VIEW

GRAPHIC #1

<END>

g01433526

244-7139 MANIFOLD GP-CONTROL–MANUAL DIFFERENTIAL LOCK

S/N: JKM1-UP

PART OF 260-8834 CONTROL GP-DIFFERENTIAL LOCK

SMCS-3206, 3272, 5137 **i02912030**

NOTE	REF NO	GRAPHIC REF	PART NUMBER	QTY	PART NAME 1 2 3 4 5 6 (PRODUCT LEVEL)	SEE PAGE
Y	1	1	**174-4916**	1	VALVE GP-SOLENOID (DIFFERENTIAL LOCK ON, OFF)	482
	3	1	**288-8932**	1	VALVE GP-CHECK	
Y	4	1	**318-4747**	1	VALVE GP-PRESSURE REDUCING (DIFFERENTIAL LOCK RELIEF)	479
					PARTS SHOWN IN GRAPHIC(S) WITHOUT A REFERENCE NUMBER ARE NOT SERVICED SEPARATELY	

Y-SEPARATE ILLUSTRATION

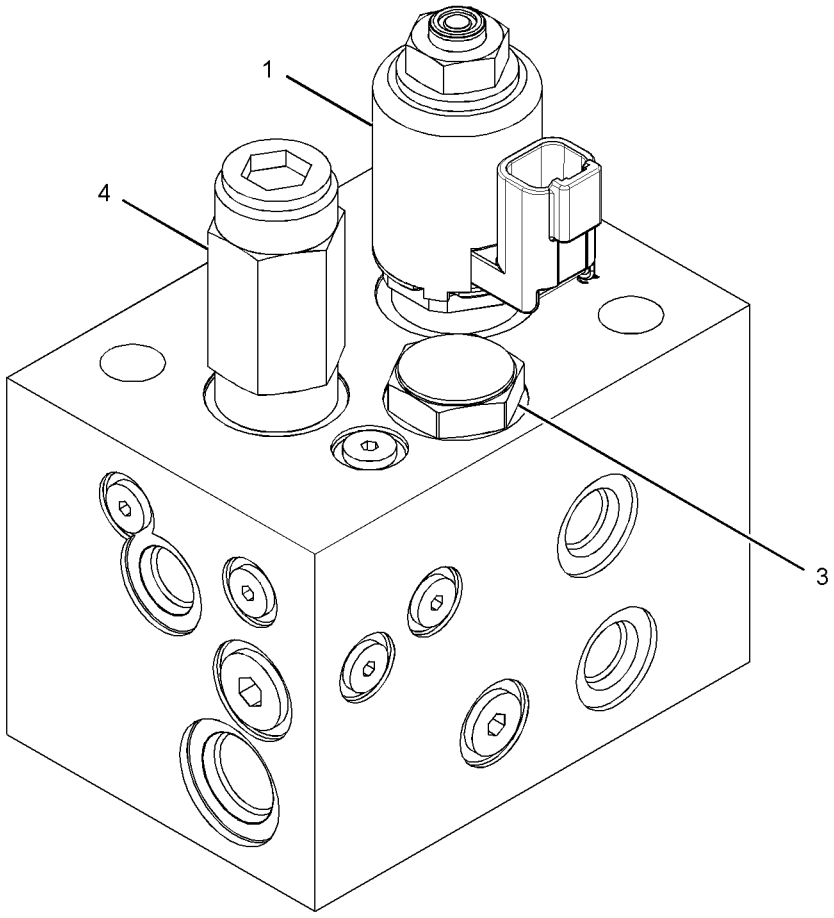

GRAPHIC #1 **<END>** g01426366

244-7140 MANIFOLD GP-CONTROL—AUTO DIFFERENTIAL LOCK

S/N: JKM1-UP

PART OF 260-8836 CONTROL GP-DIFFERENTIAL LOCK

AN ATTACHMENT

SMCS-3206, 3272, 5137 **i02940148**

NOTE	REF NO	GRAPHIC REF	PART NUMBER	QTY	PART NAME 1 2 3 4 5 6 (PRODUCT LEVEL)	SEE PAGE
Y	1	1	**174-4916**	1	VALVE GP-SOLENOID (DIFFERENTIAL LOCK ON, OFF)	482
	2	1	**241-5895**	2	VALVE GP-SOLENOID (24-VOLT) (DIFF LOCK PROPORTIONING)	
					(EACH INCLUDES)	
		1	**250-6148**	1	COIL AS (24-VOLT)	
	4	1	**288-8932**	1	VALVE GP-CHECK	
Y	5	1	**318-4747**	1	VALVE GP-PRESSURE REDUCING (DIFFERENTIAL LOCK RELIEF)	479

Y-SEPARATE ILLUSTRATION

244-7140 MANIFOLD GP-CONTROL *(contd.)* **i02940148**

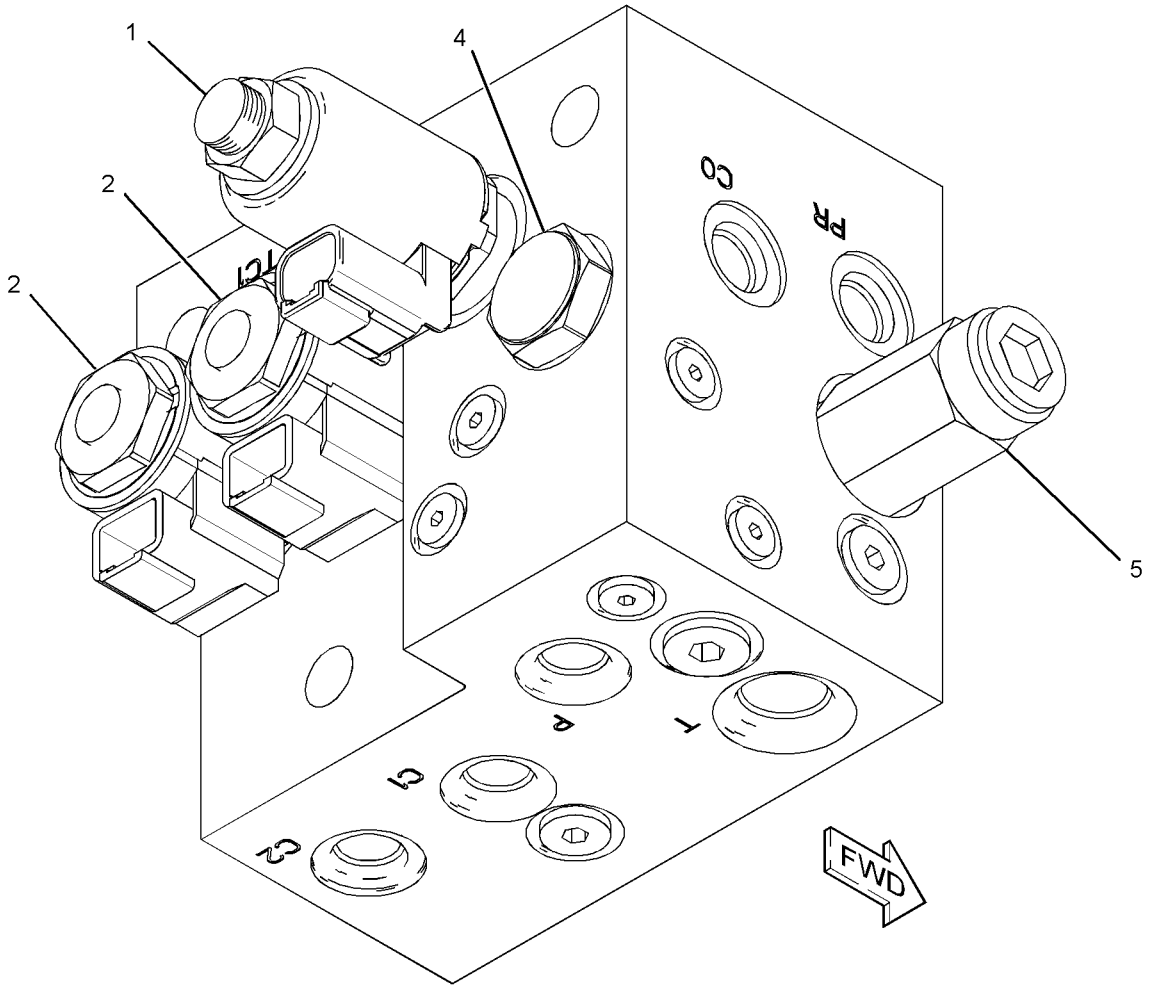

GRAPHIC #1 **<END>** g01434799

258-8759 MOUNTING GP-AXLE

S/N: JKM1-UP

PART OF 237-7538 POWER TRAIN AR

SMCS-3268, 3278 **i03507665**

NOTE	REF NO	GRAPHIC REF	PART NUMBER	QTY	PART NAME 1 2 3 4 5 6 (PRODUCT LEVEL)	SEE PAGE
	1	1	**6C-2356**	2	DOWEL	
M	2	1	**163-8682**	8	BOLT (M30X3.5X200-MM)	
	3	1	**3S-7023**	8	WASHER (34X57X6-MM THK)	
M	4	1	**116-2434**	8	BOLT (M24X3X170-MM)	
	5	1	**267-3506**	8	WASHER-HARD (26X44X4-MM THK)	

M-METRIC PART

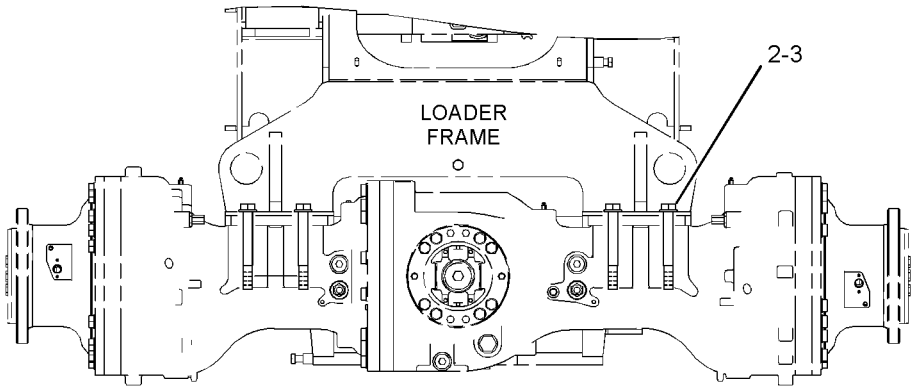

FRONT VIEW

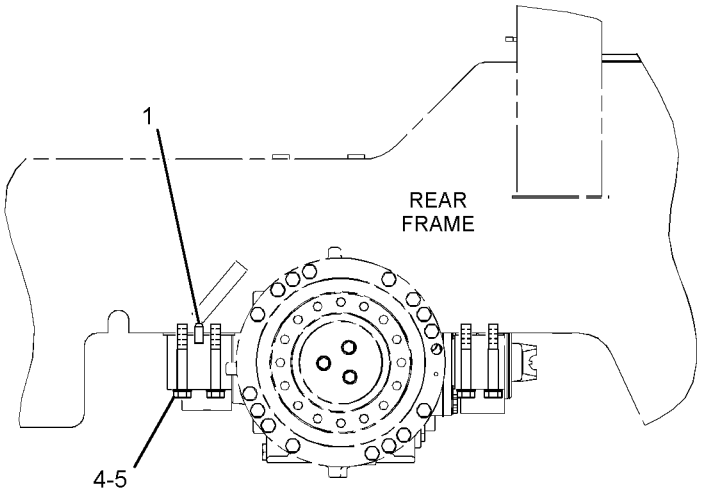

RIGHT SIDE VIEW

GRAPHIC #1 **<END>** g01425007

296-8069 MOUNTING GP-AXLE OIL COOLER

S/N: JKM1-UP
PART OF 265-9745 COOLER AR-AXLE OIL
AN ATTACHMENT

SMCS-1365 **i02921126**

NOTE	REF NO	GRAPHIC REF	PART NUMBER	QTY	PART NAME 1 2 3 4 5 6 (PRODUCT LEVEL)	SEE PAGE
Y	1	1	**130-5202**	2	VALVE GP-CHECK	477
	2	1	**151-5711**	1	CORE AS-AXLE OIL COOLER	
		1	**1N-5999**	1	PLUG-O-RING	
		1	**7J-0204**	1	SEAL-O-RING	
	3	1	**167-7760**	1	PLATE AS	
M		1	**8T-3490**	2	NUT-WELD (M10X1.5-THD)	
	4	1	**167-7764**	1	PLATE AS	
	5	1	**167-7775**	1	TUBE AS	
	6	1	**167-7776**	1	TUBE AS	
	7	1	*194-1497*	2	TEE AS	
					(EACH INCLUDES)	
		1	**3D-2824**	1	SEAL-O-RING	
		1	**6V-9746**	1	SEAL-O-RING	
		1	**8T-8900**	1	TEE-O-RING PORT	
	8	1	*148-8442*	2	TEE AS	
					(EACH INCLUDES)	
		1	**6V-9746**	2	SEAL-O-RING	
		1	**7M-8485**	1	SEAL-O-RING	
		1	**8T-1685**	1	TEE	
	9	1	**3D-2824**	2	SEAL-O-RING	
	10	1	**6V-0301**	2	ADAPTER	
	11	1	**6V-9746**	3	SEAL-O-RING	
	12	1	**6V-9853**	1	ELBOW	
	13	1	**7M-8485**	2	SEAL-O-RING	
	14	1	**8T-4121**	8	WASHER-HARD (11X21X2.5-MM THK)	
M	15	1	**8T-4136**	8	BOLT (M10X1.5X25-MM)	

M-METRIC PART
Y-SEPARATE ILLUSTRATION

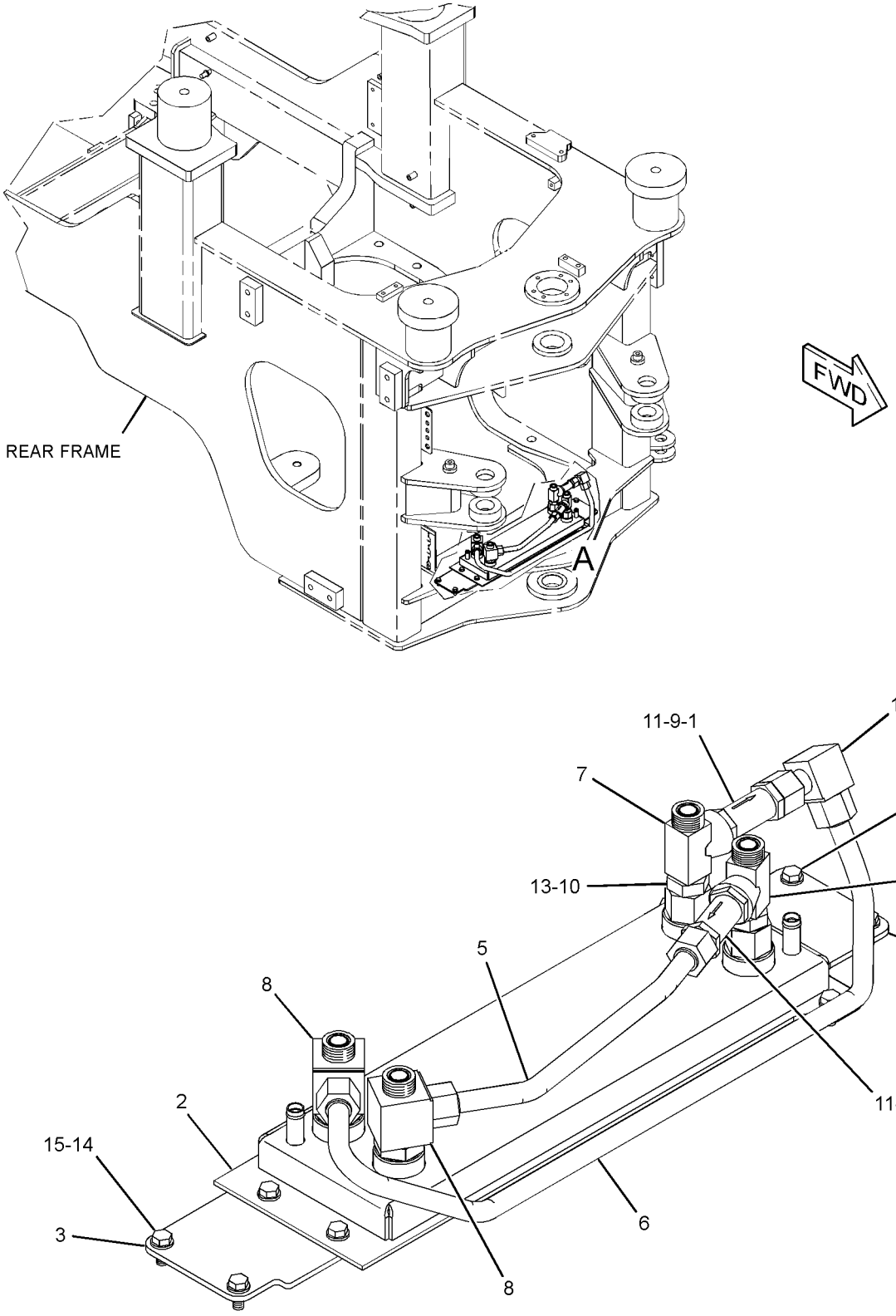

VIEW OF AREA A

GRAPHIC #1 **<END>** g01442236

117-7838 MOUNTING GP-RIM

S/N: JKM1-UP
PART OF 252-2165 RIM AR
AN ATTACHMENT

SMCS-4202, 4209 **i00670473**

NOTE	PART NUMBER	QTY	PART NAME 1 2 3 4 5 6 (PRODUCT LEVEL)	SEE PAGE
M	**8T-0380**	16	BOLT (M24X3X60MM)	
	6V-8237	16	WASHER (4.0MM THK)	

M-METRIC PART

<END>

288-9482 PISTON GP-DIFFERENTIAL LOCK

S/N: JKM1-UP

PART OF 272-4990, 272-4992 AXLE AR-FIXED, 272-4996 AXLE AR-OSCILLATING AN ATTACHMENT

SMCS-3258, 3264, 3273 **i02933556**

NOTE	REF NO	GRAPHIC REF	PART NUMBER	QTY	PART NAME 1 2 3 4 5 6 (PRODUCT LEVEL)	SEE PAGE
	1	1	**240-3670**	1	PISTON	
	2	1	**245-3358**	1	SEAL-D-RING	
	3	1	**245-3359**	1	SEAL-D-RING	

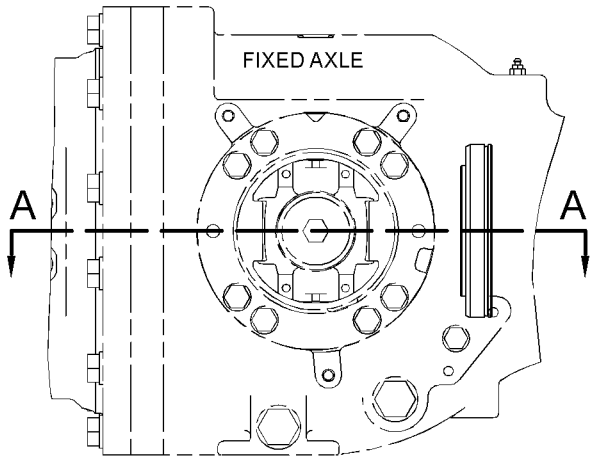

REAR VIEW

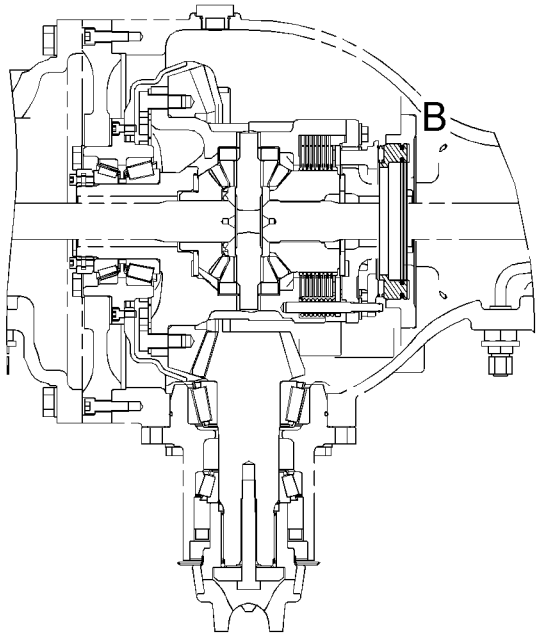

SECTION A-A

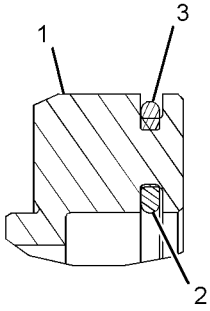

VIEW OF AREA B

GRAPHIC #1 **<END>** g01398824

237-7538 POWER TRAIN AR

S/N: JKM1-UP

PART OF 237-7545 GENERAL AR

SMCS-3000, 4000 **i02897205**

NOTE	PART NUMBER	QTY	PART NAME 1 2 3 4 5 6 (PRODUCT LEVEL)	SEE PAGE
Y	*255-4818*	1	FILLER GP-POWER TRAIN OIL	419
Y	*255-4811*	1	LINES GP-POWER TRAIN OIL	445
Y	*258-8759*	1	MOUNTING GP-AXLE	454
Y	*231-3571*	1	SHAFT GP-DRIVE	466
Y	**252-5135**	1	TRANSMISSION AR	475

Y-SEPARATE ILLUSTRATION

<END>

263-1860 PUMP & MTG GP-AXLE OIL COOLER

S/N: JKM1-UP
PART OF 265-9745 COOLER AR-AXLE OIL
AN ATTACHMENT

SMCS-5073 **i03502961**

NOTE	REF NO	GRAPHIC REF	PART NUMBER	QTY	PART NAME 1 2 3 4 5 6 (PRODUCT LEVEL)	SEE PAGE
	1	1	**7K-1181**	1	STRAP-CABLE	
	2	1	**128-8678**	4	SPACER (10.5X25X15-MM THK)	
Y	3	1	**192-1563**	1	IDLER GP-BELT (ALTERNATOR, REFRIGERANT COMPR)	40
	4	1	**197-9641**	1	PULLEY AS-IDLER	
	5	1	**263-1861**	1	BRACKET AS	
		1	**7T-1099**	1	LINK	
	6	1	**263-1862**	1	BELT-SERPENTINE	
J	7	1	**273-1807**	1	PUMP GP-GEAR (AXLE OIL COOLER)	
	8	1	**297-1860**	1	CLUTCH GP-ELECTRIC (AXLE OIL COOLER PUMP)	
	9	1	**319-6294**	1	PLATE AS	
	10	1	**6V-3265**	1	CLIP	
	11	1	**6V-3960**	1	BOLT (1/4-28X0.875-IN)	
M	12	1	**8T-0271**	2	BOLT-SOCKET HEAD (M10X1.5X35-MM)	
	13	1	**8T-4121**	9	WASHER-HARD (11X21X2.5-MM THK)	
M	14	1	**8T-4195**	6	BOLT (M10X1.5X30-MM)	
M	15	1	**8T-4182**	2	BOLT (M10X1.5X45-MM)	
M	16	1	**085-8091**	2	BOLT (M10X1.5X55-MM)	
M	17	1	**8T-4191**	1	BOLT (M10X1.5X16-MM)	
	18	1	**8T-4205**	1	WASHER-HARD (7.2X14.5X2-MM THK)	
					AVAILABLE REPAIR KIT(S):	
J			**282-2640**	1	KIT-SEAL	
					(INCLUDES SEALS, RINGS AND PLUG)	

J-KIT MARKED J SERVICES PART MARKED J
M-METRIC PART
Y-SEPARATE ILLUSTRATION

263-1860 **PUMP & MTG GP-AXLE OIL COOLER** *(contd.)* **i03502961**

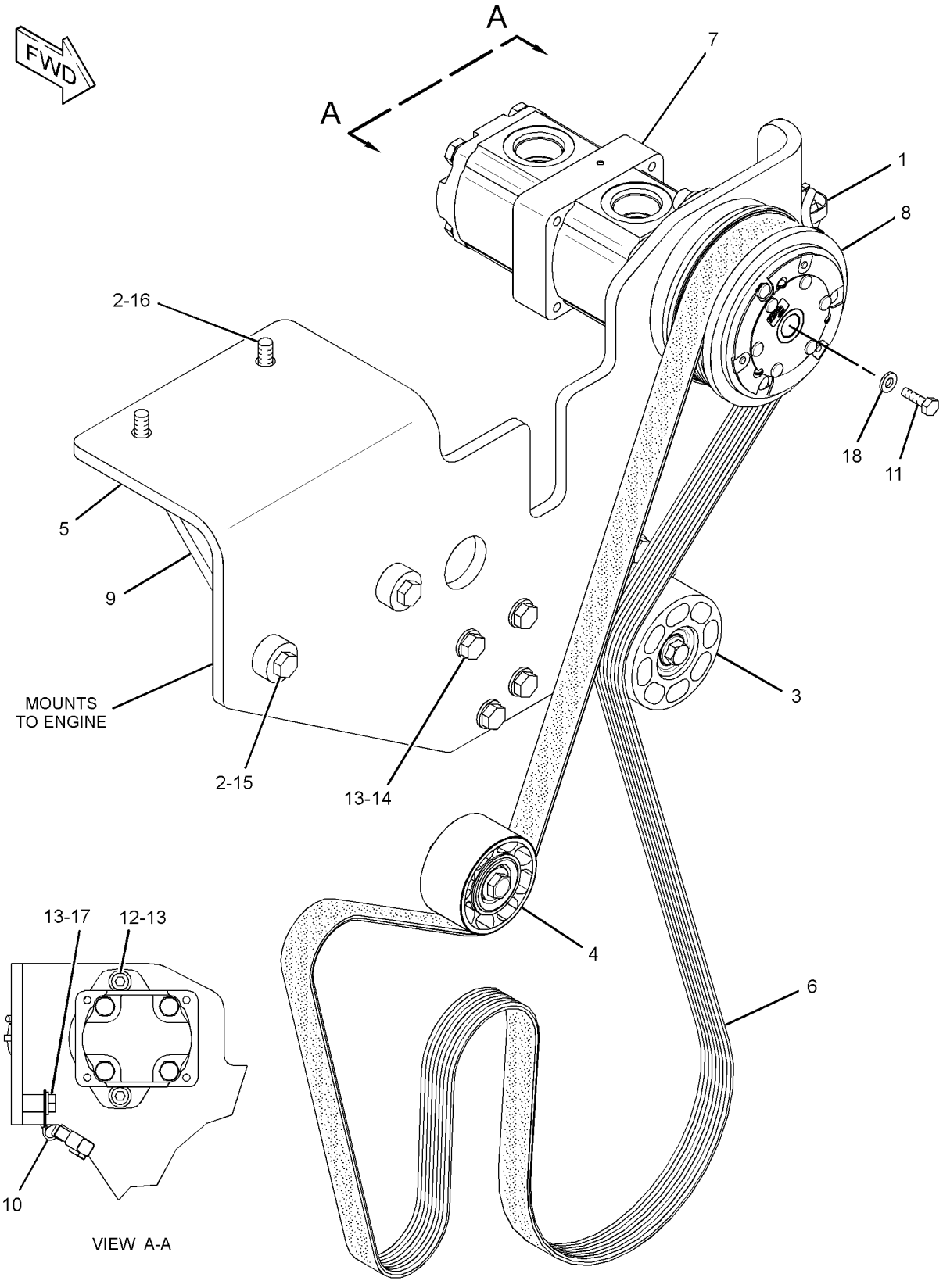

GRAPHIC #1 **<END>** g01442695

250-4241 PUMP GP-TRANSMISSION

S/N: MWL1-UP

PART OF 252-5135 TRANSMISSION AR

SMCS-3066 **i03250606**

NOTE	REF NO	GRAPHIC REF	PART NUMBER	QTY	PART NAME 1 2 3 4 5 6 (PRODUCT LEVEL)	SEE PAGE
Y	1	1	*250-4242*	1	PUMP GP-TRANSMISSION (1-SECTION GEAR)	463
	2	1	**255-0768**	1	GEAR	
	3	1	**255-0769**	1	SHAFT	
	4	1	**2D-5658**	1	BALL BEARING	
	5	1	**4K-4284**	1	RING-RETAINING	
M	6	1	**6V-4248**	7	BOLT (M10X1.5X25-MM)	
M	7	1	**6V-6317**	6	BOLT (M10X1.5X20-MM)	

M-METRIC PART
Y-SEPARATE ILLUSTRATION

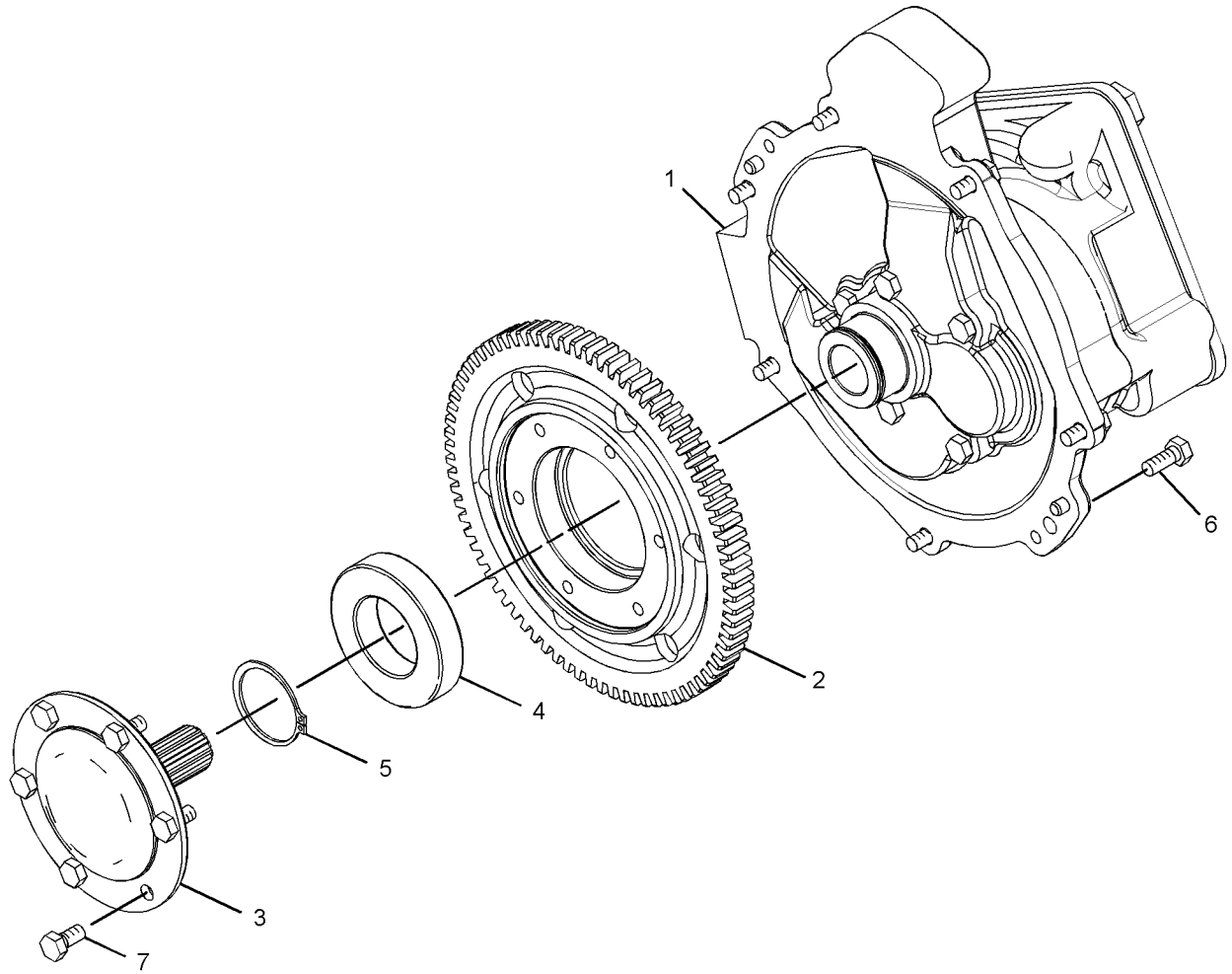

GRAPHIC #1 **<END>** g01661915

250-4242 PUMP GP-TRANSMISSION—1-SECTION GEAR

S/N: MWL1-UP

PART OF 250-4241 PUMP GP-TRANSMISSION

SMCS-3066 **i02914144**

NOTE	REF NO	GRAPHIC REF	PART NUMBER	QTY	PART NAME 1 2 3 4 5 6 (PRODUCT LEVEL)	SEE PAGE
	1	1	**6Y-5010**	1	WASHER (10.16X19X0.84-MM THK)	
	3	1	**255-0761**	1	BODY AS	
		1	**5M-4987**	2	DOWEL	
		1	**8T-5353**	2	DOWEL	
	4	1	**255-0764**	1	COVER AS	
	5	1	**255-0766**	1	GEAR (OIL PUMP)	
	6	1	**255-0767**	1	GEAR AS-PUMP	
		1	**2B-9373**	1	KEY-WOODRUFF	
	8	1	**5H-3252**	1	SEAL-O-RING	
M	9	1	**6V-1819**	5	BOLT (M10X1.5X100-MM)	
M	10	1	**8T-0342**	1	BOLT-SOCKET HEAD (M10X1.5X80-MM)	

M-METRIC PART

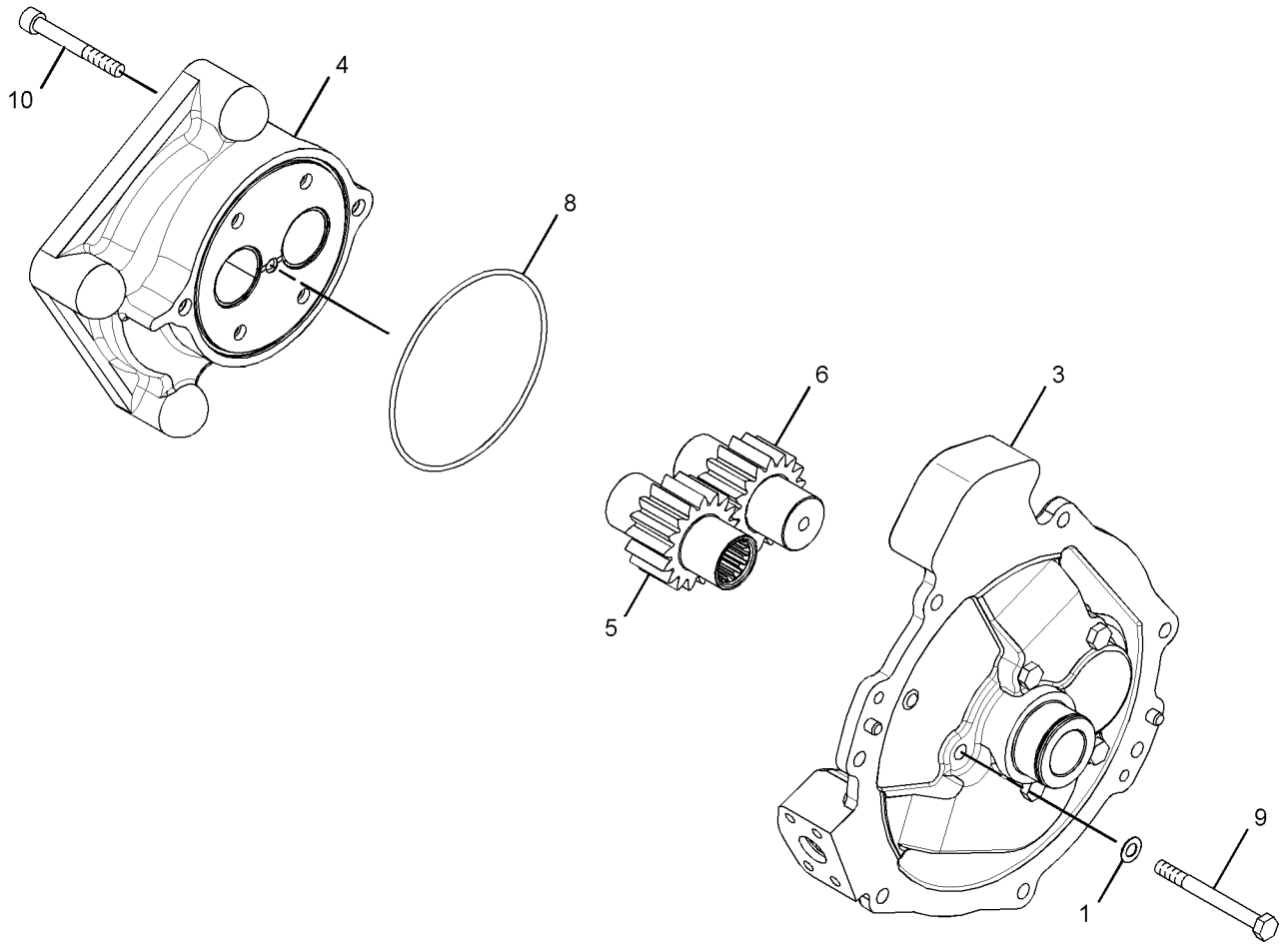

GRAPHIC #1 **<END>** g01395238

252-2165 RIM AR

S/N: JKM1-UP
PART OF 264-1337, 264-1338, 264-1339, 264-1354, 264-1356, 264-1358, 264-1363, 264-1364, 264-1366, 264-1370, 264-1371, 312-4586 TIRE & RIM AR
AN ATTACHMENT

SMCS-4209 **i02927820**

NOTE	PART NUMBER	QTY	PART NAME 1 2 3 4 5 6 (PRODUCT LEVEL)	SEE PAGE
Y	*117-7838*	1	MOUNTING GP-RIM	457
Y	*270-7827*	4	RIM GP-DEMOUNTABLE	464

Y-SEPARATE ILLUSTRATION

<END>

270-7827 RIM GP-DEMOUNTABLE

S/N: JKM1-UP
PART OF 252-2165 RIM AR
AN ATTACHMENT

SMCS-4209 **i02927880**

NOTE	PART NUMBER	QTY	PART NAME 1 2 3 4 5 6 (PRODUCT LEVEL)	SEE PAGE
Y	*270-7828*	1	RIM GP-DEMOUNTABLE (17X25)	465
Y	**264-8214**	1	VALVE GP-TIRE	483
	4K-4879	1	SEAL-O-RING	

Y-SEPARATE ILLUSTRATION

<END>

270-7828 RIM GP-DEMOUNTABLE

S/N: JKM1-UP
(17X25)
PART OF 270-7827 RIM GP-DEMOUNTABLE
AN ATTACHMENT

SMCS-4209 **i02927910**

NOTE	REF NO	GRAPHIC REF	PART NUMBER	QTY	PART NAME 1 2 3 4 5 6 (PRODUCT LEVEL)	SEE PAGE
	1	1	**4K-4881**	1	RING-LOCK	
	2	1	**171-8689**	1	FLANGE AS	
	3	1	**176-0118**	1	DRIVER	
	4	1	**270-7829**	1	RIM AS (17X25)	

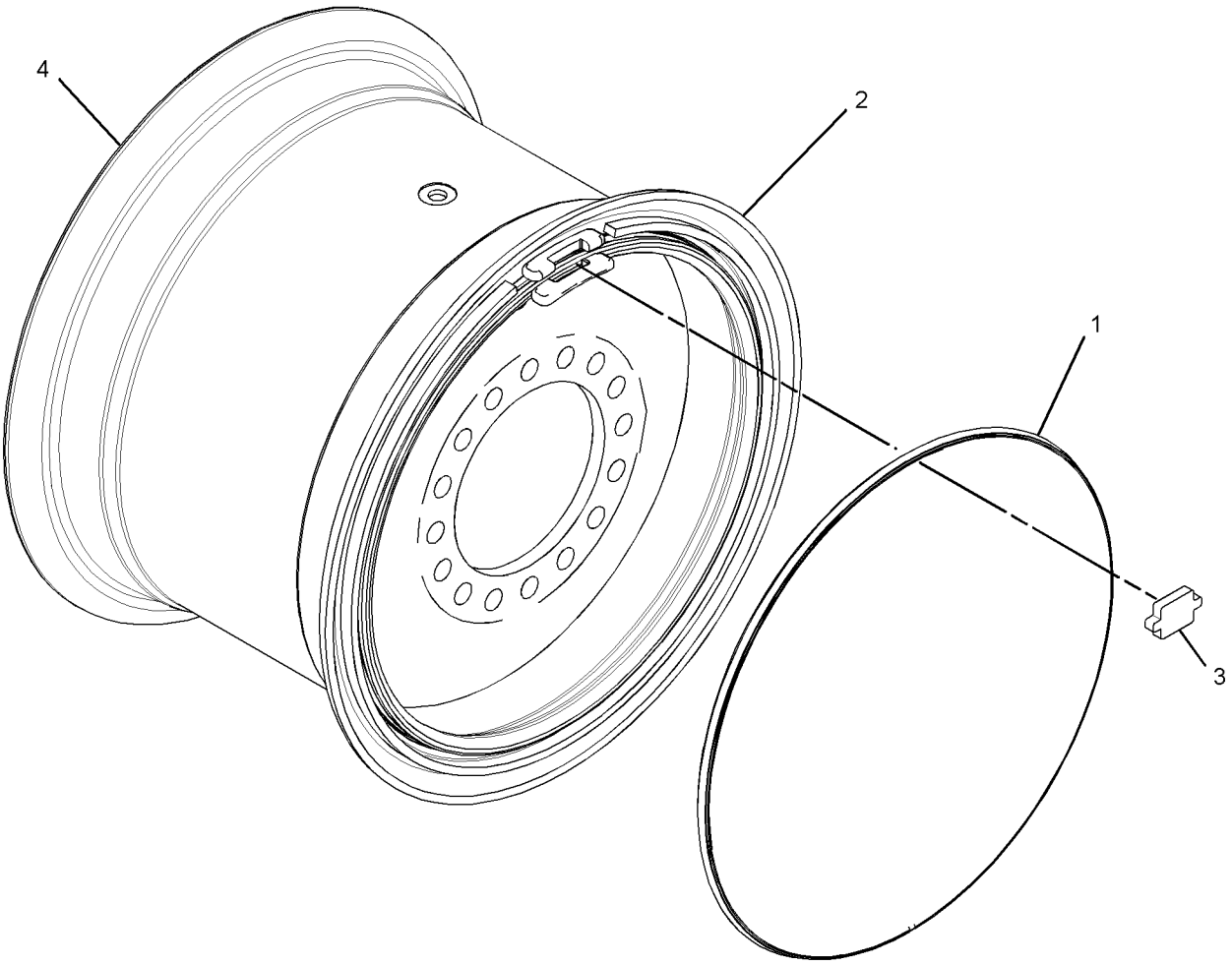

GRAPHIC #1 **<END>** g01426253

231-3571 SHAFT GP-DRIVE

S/N: JKM1-UP

PART OF 237-7538 POWER TRAIN AR

SMCS-3253 **i02900570**

NOTE	REF NO	GRAPHIC REF	PART NUMBER	QTY	PART NAME 1 2 3 4 5 6 (PRODUCT LEVEL)	SEE PAGE
	1	1	**4E-3273**	6	STRAP	
	2	1	**4E-5984**	4	STRAP	
Y	3	1	**166-6761**	1	SLIP JOINT GP (CENTER)	468
Y	4	1	**231-3574**	1	SLIP JOINT GP (REAR)	469
Y	5	1	*235-5235*	1	SHAFT GP-DRIVE (FRONT)	467
M	6	1	**4E-5985**	20	BOLT-12 POINT HEAD (M10X1.25X20-MM)	
	7	1	**5P-8247**	2	WASHER-HARD (17X32X3.5-MM THK)	
M	8	1	**6V-3303**	2	BOLT (M16X2X60-MM)	

M-METRIC PART
Y-SEPARATE ILLUSTRATION

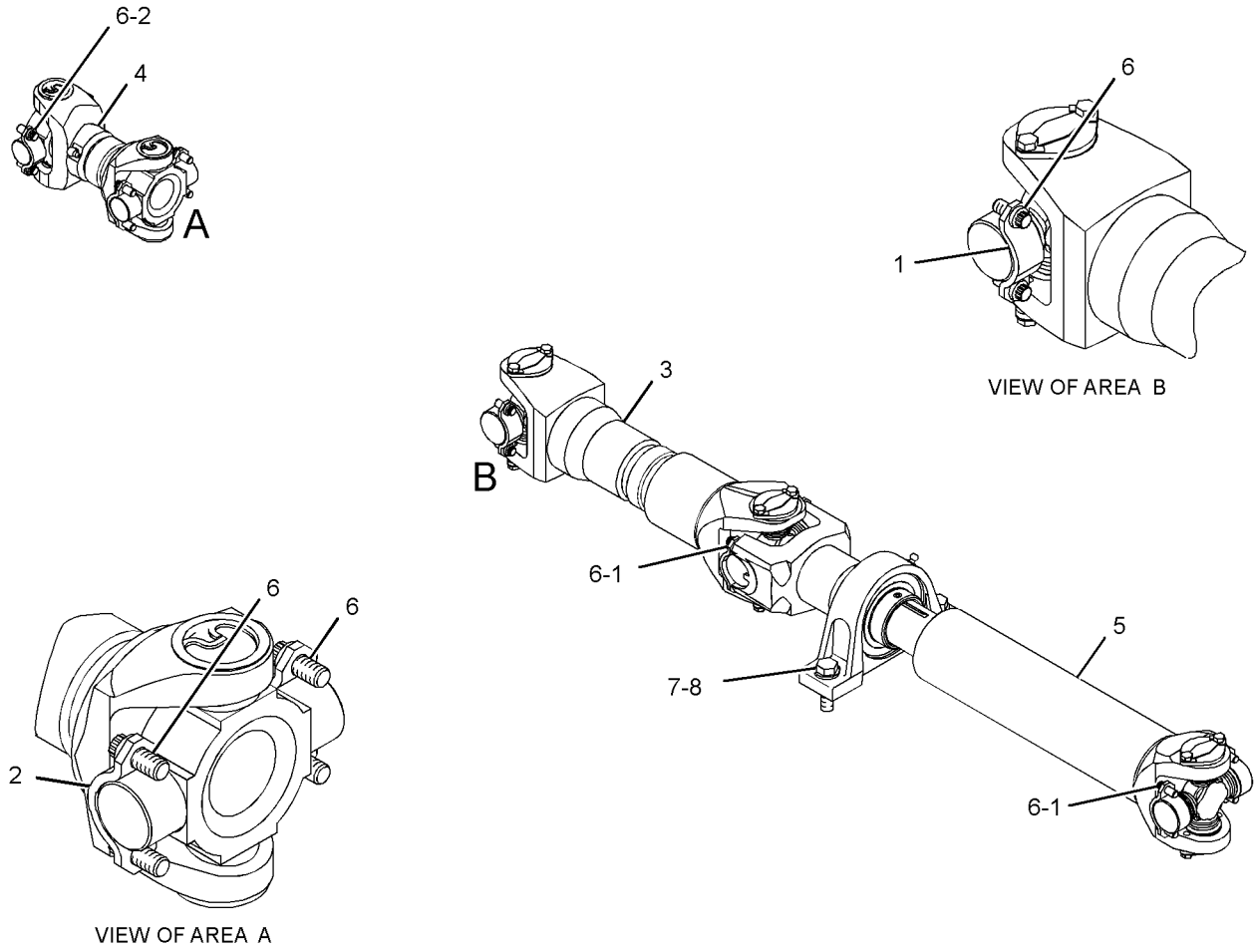

GRAPHIC #1 **<END>** g01389752

235-5235 SHAFT GP-DRIVE–FRONT

S/N: JKM1-UP

PART OF 231-3571 SHAFT GP-DRIVE

SMCS-3253 **i02900904**

NOTE	REF NO	GRAPHIC REF	PART NUMBER	QTY	PART NAME 1 2 3 4 5 6 (PRODUCT LEVEL)	SEE PAGE
	1	1	**9V-2412**	1	RETAINER	
J	2	1	**6I-8531**	1	BEARING GP-PILLOW BLOCK	
		1	**3B-8489**	1	FITTING-GREASE	
	3	1	**231-3576**	1	SLIP JOINT GP	
		1	**4E-9324**	1	SPIDER & BEARING GP	
M		1	**3E-4315**	4	BOLT-LOCKING (M8X1X14-MM)	
		1	**5P-8334**	1	FITTING-HYDRAULIC	
		1	**6W-4126**	2	STRAP-LOCKING	
M	4	1	**8T-0372**	1	BOLT (M12X1.75X90-MM)	
	5	1	**166-6760**	1	YOKE	
					AVAILABLE REPAIR KIT(S):	
J			**197-7995**	1	KIT-SETSCREW	
					(INCLUDES NUT AND SET SCREWS)	

J-KIT MARKED J SERVICES PART MARDED J
M-METRIC PART

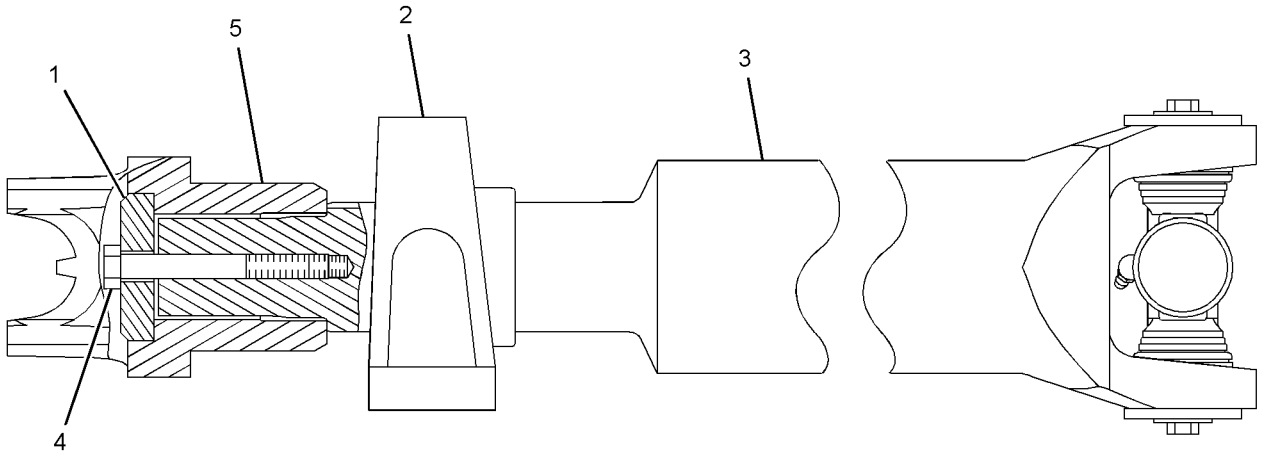

GRAPHIC #1 **<END>** g01259149

166-6761 SLIP JOINT GP–CENTER

S/N: JKM1-UP

PART OF 231-3571 SHAFT GP-DRIVE

SMCS-3251 **i02594047**

NOTE	REF NO	GRAPHIC REF	PART NUMBER	QTY	PART NAME 1 2 3 4 5 6 (PRODUCT LEVEL)	SEE PAGE
	1	1	**3B-8489**	1	FITTING-GREASE	
	2	1	**8V-1412**	1	RETAINER	
	3	1	**4E-9324**	2	SPIDER & BEARING GP	
					(EACH INCLUDES)	
M		1	**3E-4315**	4	BOLT-LOCKING (M8X1X14-MM)	
		1	**6W-4126**	2	STRAP-LOCKING	
		1	**5P-8334**	1	FITTING-HYDRAULIC	
	4	1	**196-8488**	1	CAP-DUST	

M-METRIC PART

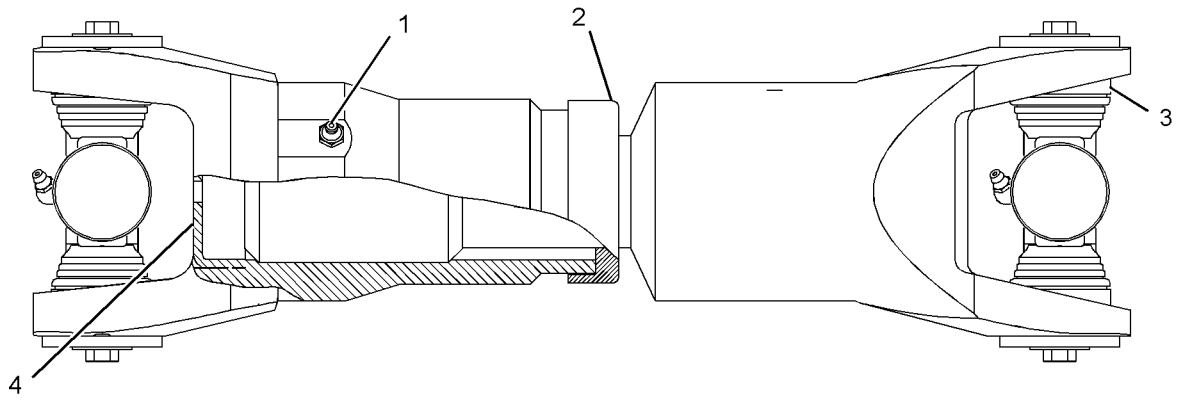

GRAPHIC #1 **<END>** g01166441

231-3574 SLIP JOINT GP–REAR

S/N: JKM1-UP

PART OF 231-3571 SHAFT GP-DRIVE

SMCS-3251 **i02900899**

NOTE	REF NO	GRAPHIC REF	PART NUMBER	QTY	PART NAME 1 2 3 4 5 6 (PRODUCT LEVEL)	SEE PAGE
	1	1	**3B-8489**	1	FITTING-GREASE	
	2	1	**116-8540**	2	KIT-SPIDER & BEARING	
					(EACH INCLUDES RINGS)	
	3	1	**280-9461**	1	RETAINER	

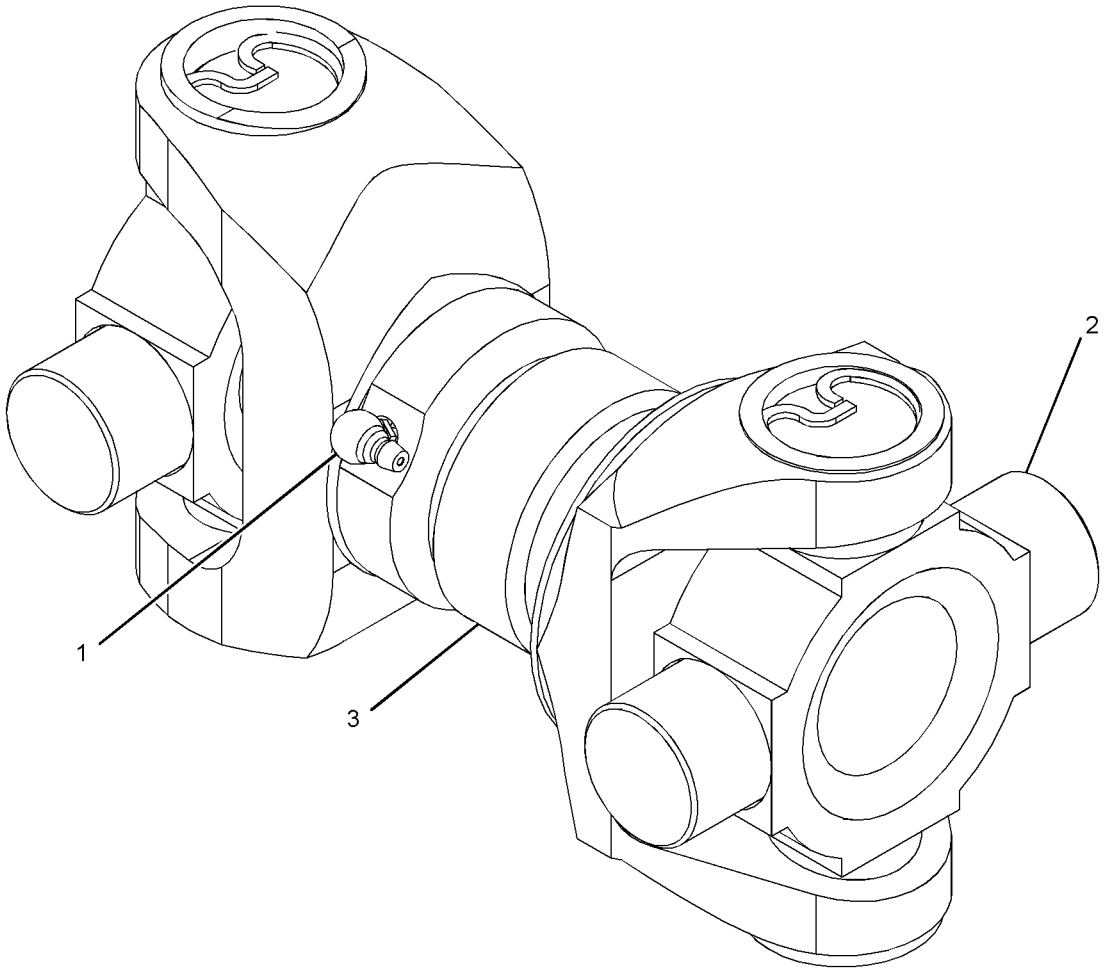

GRAPHIC #1 **<END>** g01396045

264-1337 TIRE & RIM AR

S/N: JKM1-UP
AN ATTACHMENT

SMCS-4202 **i02927564**

NOTE	PART NUMBER	QTY	PART NAME 1 2 3 4 5 6 (PRODUCT LEVEL)	SEE PAGE
Y	*252-2165*	1	RIM AR	464
	106-4837	4	TIRE (20.5-R25)	

Y-SEPARATE ILLUSTRATION

<END>

264-1338 TIRE & RIM AR

S/N: JKM1-UP
AN ATTACHMENT

SMCS-4202 **i02928080**

NOTE	PART NUMBER	QTY	PART NAME 1 2 3 4 5 6 (PRODUCT LEVEL)	SEE PAGE
Y	*252-2165*	1	RIM AR	464
	6C-3247	4	TIRE (20.5-R25)	

Y-SEPARATE ILLUSTRATION

<END>

264-1339 TIRE & RIM AR

S/N: JKM1-UP
AN ATTACHMENT

SMCS-4202 **i02928079**

NOTE	PART NUMBER	QTY	PART NAME 1 2 3 4 5 6 (PRODUCT LEVEL)	SEE PAGE
Y	*252-2165*	1	RIM AR	464
	6C-7367	4	TIRE (20.5-R25)	

Y-SEPARATE ILLUSTRATION

<END>

264-1354 TIRE & RIM AR

S/N: JKM1-UP
AN ATTACHMENT

SMCS-4202 **i03073109**

NOTE	PART NUMBER	QTY	PART NAME 1 2 3 4 5 6 (PRODUCT LEVEL)	SEE PAGE
Y	*252-2165*	1	RIM AR	464
	134-0795	4	TIRE (20.5-25)	

Y-SEPARATE ILLUSTRATION

<END>

264-1356 TIRE & RIM AR

S/N: JKM1-UP
AN ATTACHMENT

SMCS-4202 **i02927562**

NOTE	PART NUMBER	QTY	PART NAME 1 2 3 4 5 6 (PRODUCT LEVEL)	SEE PAGE
Y	*252-2165*	1	RIM AR	464
	134-0797	4	TIRE-TUBELESS (20.5-25)	

Y-SEPARATE ILLUSTRATION

<END>

264-1358 TIRE & RIM AR

S/N: JKM1-UP
AN ATTACHMENT

SMCS-4202 **i02928078**

NOTE	PART NUMBER	QTY	PART NAME 1 2 3 4 5 6 (PRODUCT LEVEL)	SEE PAGE
Y	*252-2165*	1	RIM AR	464
	207-6031	4	TIRE (20.5-R25)	

Y-SEPARATE ILLUSTRATION

<END>

264-1363 TIRE & RIM AR

S/N: JKM1-UP
AN ATTACHMENT

SMCS-4202 **i02928077**

NOTE	PART NUMBER	QTY	PART NAME 1 2 3 4 5 6 (PRODUCT LEVEL)	SEE PAGE
Y	*252-2165*	1	RIM AR	464
	190-8985	4	TIRE (20.5-R25)	

Y-SEPARATE ILLUSTRATION

<END>

264-1364 TIRE & RIM AR

S/N: JKM1-UP
AN ATTACHMENT

SMCS-4202 **i02928076**

NOTE	PART NUMBER	QTY	PART NAME 1 2 3 4 5 6 (PRODUCT LEVEL)	SEE PAGE
Y	*252-2165*	1	RIM AR	464
	205-5409	4	TIRE (550/65-R25)	

Y-SEPARATE ILLUSTRATION

<END>

264-1366 TIRE & RIM AR

S/N: JKM1-UP

AN ATTACHMENT

SMCS-4202 **i02927560**

NOTE	PART NUMBER	QTY	PART NAME 1 2 3 4 5 6 (PRODUCT LEVEL)	SEE PAGE
Y	*252-2165*	1	RIM AR	464
	229-5039	4	TIRE (20.5-R25)	

Y-SEPARATE ILLUSTRATION

<END>

264-1370 TIRE & RIM AR

S/N: JKM1-UP

AN ATTACHMENT

SMCS-4202 **i02927559**

NOTE	PART NUMBER	QTY	PART NAME 1 2 3 4 5 6 (PRODUCT LEVEL)	SEE PAGE
Y	*252-2165*	1	RIM AR	464
	119-0013	4	TIRE (20.5-R25)	

Y-SEPARATE ILLUSTRATION

<END>

264-1371 TIRE & RIM AR

S/N: JKM1-UP

AN ATTACHMENT

SMCS-4202 **i02927557**

NOTE	PART NUMBER	QTY	PART NAME 1 2 3 4 5 6 (PRODUCT LEVEL)	SEE PAGE
Y	*252-2165*	1	RIM AR	464
	260-1803	4	TIRE (20.5-R25)	

Y-SEPARATE ILLUSTRATION

<END>

312-4586 TIRE & RIM AR

S/N: JKM1-UP

AN ATTACHMENT

SMCS-4202 **i02927568**

NOTE	PART NUMBER	QTY	PART NAME 1 2 3 4 5 6 (PRODUCT LEVEL)	SEE PAGE
Y	*252-2165*	1	RIM AR	464
	264-1395	4	TIRE (20.5-25)	

Y-SEPARATE ILLUSTRATION

<END>

256-7365 TORQUE CONVERTER GP

S/N: MWL1-UP

PART OF 252-5135 TRANSMISSION AR

SMCS-3101 **i02913176**

NOTE	REF NO	GRAPHIC REF	PART NUMBER	QTY	PART NAME 1 2 3 4 5 6 (PRODUCT LEVEL)	SEE PAGE
	1	1	**6Y-4859**	1	HOUSING	
M	2	1	**6V-1820**	34	BOLT (M10X1.5X30-MM)	
	3	1	**6V-5839**	34	WASHER (11X21X2.5-MM THK)	
	4	1	**6Y-1085**	1	IMPELLER-CONVERTER	
	5	1	**251-5781**	1	GEAR-PUMP DRIVE	
	6	1	**1T-1621**	1	RING-SEAL	
	7	1	**9U-9018**	1	CARRIER AS	
		1	**4S-8541**	1	DOWEL	
M	8	1	**6V-3823**	8	BOLT (M12X1.75X60-MM)	
	9	1	**129-2380**	1	BALL BEARING	
	10	1	**8E-6647**	1	SPACER (64.8X85X11-MM THK)	
	11	1	**6Y-1093**	1	ADAPTER-SPLINED	
	12	1	**6Y-3151**	1	STATOR-CONVERTER	
	13	1	**6Y-3149**	1	TURBINE-CONVERTER	
	14	1	**3E-6799**	1	SEAL-O-RING	
	15	1	**6V-8128**	2	RING-RETAINING	
	16	1	**6Y-1087**	1	COVER-END	
	17	1	**8E-6539**	1	HUB AS	
		1	**4S-8541**	1	DOWEL	
	18	1	**064-3843**	1	RING-SNAP	
	19	1	**8E-6648**	1	SPACER (60.2X80X3-MM THK)	
	20	1	**5K-9065**	1	RING-RETAINING	
	21	1	**8E-5247**	1	BALL BEARING	
	22	1	**5P-6414**	2	RING-RETAINING	

M-METRIC PART

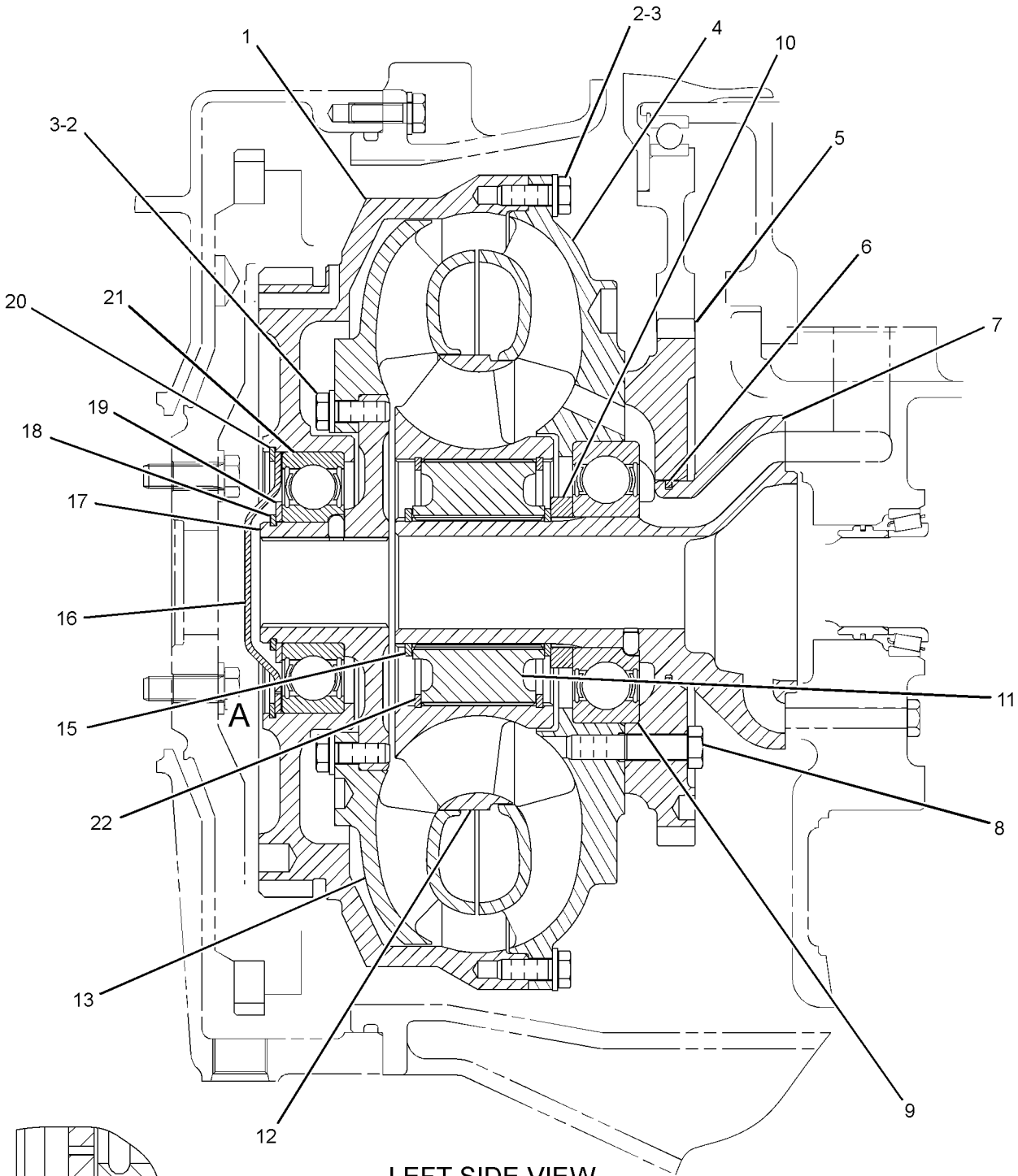

GRAPHIC #1 **<END>** g01397915

252-5135 TRANSMISSION AR

S/N: MWL1-UP

PART OF 237-7538 POWER TRAIN AR

SMCS-3030 **i02897209**

NOTE	REF NO	GRAPHIC REF	PART NUMBER	QTY	PART NAME 1 2 3 4 5 6 (PRODUCT LEVEL)	SEE PAGE
Y	1	1	*256-7365*	1	TORQUE CONVERTER GP	473
Y	2	1	*266-0750*	1	COVER GP-SHIPPING	408
Y	3	1	*250-4241*	1	PUMP GP-TRANSMISSION	462
Y	4	1	*252-5134*	1	CASE GP-TRANSMISSION	372
Y	5	1	*252-9720*	1	CONTROL GP-TRANSMISSION HYD	402
Y	6	1	*204-9602*	1	INPUT GP-TRANSMISSION	433
Y	7	1	*257-5930*	1	CLUTCH GP (FORWARD HIGH, FORWARD LOW)	382
Y	8	1	*257-5929*	1	CLUTCH GP (REVERSE, SECOND)	380
Y	9	1	*266-0059*	1	CLUTCH GP (FIRST, THIRD)	384
Y	10	1	*252-5132*	1	GEAR GP-OUTPUT TRANSFER	423

Y-SEPARATE ILLUSTRATION

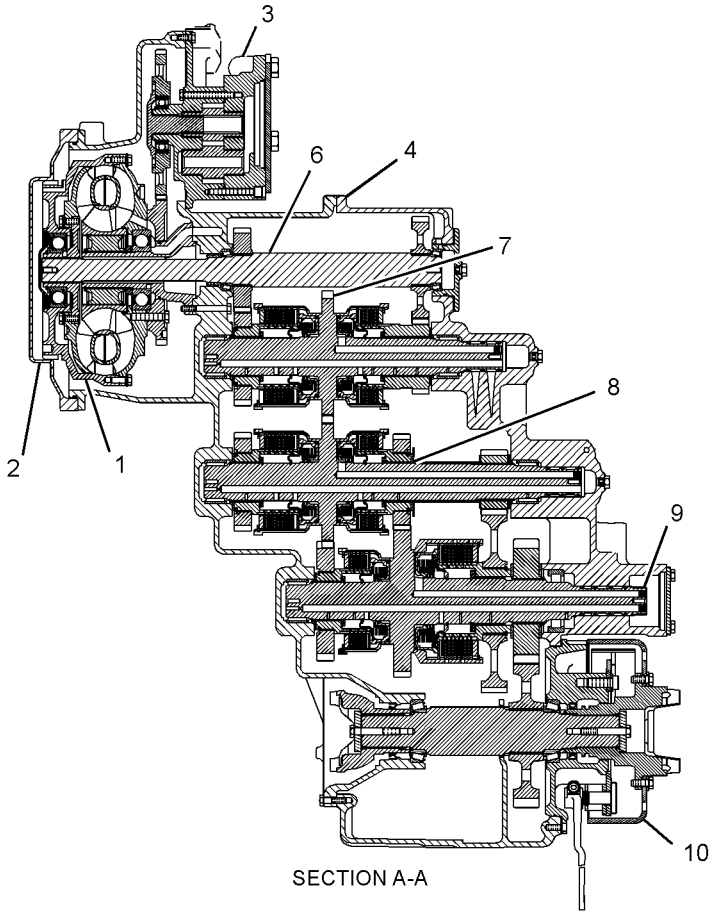

SECTION A-A

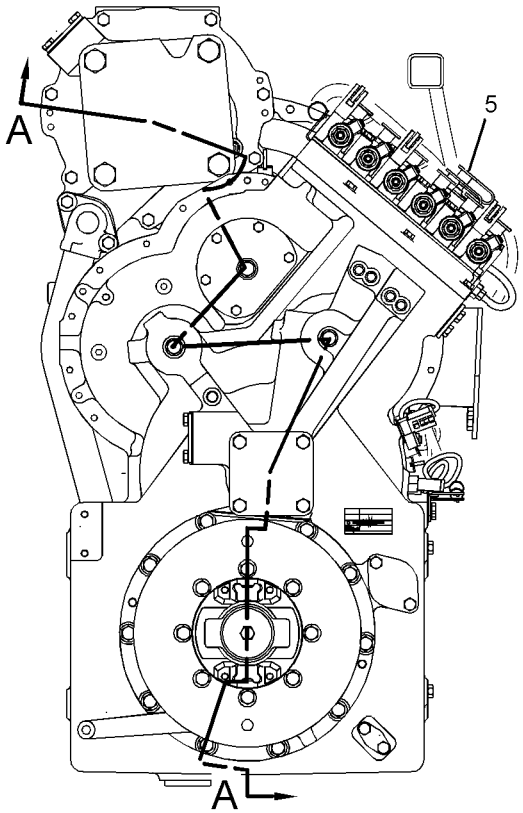

REAR VIEW

GRAPHIC #1 **<END>** g01389605

4T-6117 VALVE GP-BYPASS–TORQUE CONVERTER COOLER

S/N: JKM1-UP

PART OF 255-4823 LINES GP-TORQUE CONV COOLER

SMCS-3184 **i01987446**

NOTE	REF NO	GRAPHIC REF	PART NUMBER	QTY	PART NAME 1 2 3 4 5 6 (PRODUCT LEVEL)	SEE PAGE
	1	1	**4T-6116**	1	BODY-VALVE	
	2	1	**121-9231**	1	GASKET	
	3	1	**6P-3206**	1	VALVE AS-CONTROL	
	4	1	*148-8407*	1	PLUG AS	
		1	**9S-4191**	1	PLUG-O-RING	
		1	**3J-1907**	1	SEAL-O-RING	

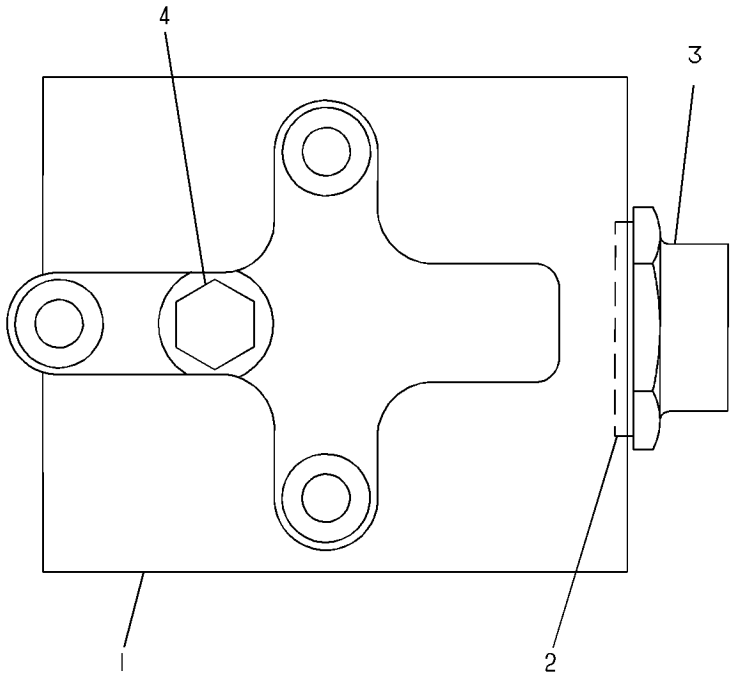

GRAPHIC #1 **<END>** g00196462

130-5202 VALVE GP-CHECK–AXLE OIL COOLER BYPASS

S/N: JKM1-UP

PART OF 296-8069 MOUNTING GP-AXLE OIL COOLER

AN ATTACHMENT

SMCS-5067 **i02598584**

NOTE	PART NUMBER	QTY	PART NAME 1 2 3 4 5 6 (PRODUCT LEVEL)	SEE PAGE
	201-1742	1	VALVE GP-CHECK	
	3D-2824	1	SEAL-O-RING	
	4K-1388	1	SEAL-O-RING	
	6V-9746	1	SEAL-O-RING	
			OR	
	206-8809	1	VALVE GP-CHECK	
	3D-2824	1	SEAL-O-RING	
	6V-9746	1	SEAL-O-RING	

<END>

244-3114 VALVE GP-MODULATING—TRANSMISSION CLUTCH

S/N: MWL1-UP

24-VOLT

PART OF 266-2470 VALVE GP-TRANSMISSION CONTROL

SMCS-3139 **i03627113**

NOTE	REF NO	GRAPHIC REF	PART NUMBER	QTY	PART NAME 1 2 3 4 5 6 (PRODUCT LEVEL)	SEE PAGE
	1	1	**6V-3965**	1	FITTING (QUICK DISCONNECT)	
	2	1	**323-9531**	1	COIL AS (24-VOLT)	
	3	1	**214-7568**	1	SEAL-O-RING	
	4	1	**164-2108**	1	WASHER (13.03X25.4X2.38-MM THK)	
	5	1	**218-2373**	1	NUT (1/2-28-THD)	
					PARTS SHOWN IN GRAPHIC(S) WITHOUT A REFERENCE NUMBER ARE NOT SERVICED SEPARATELY	

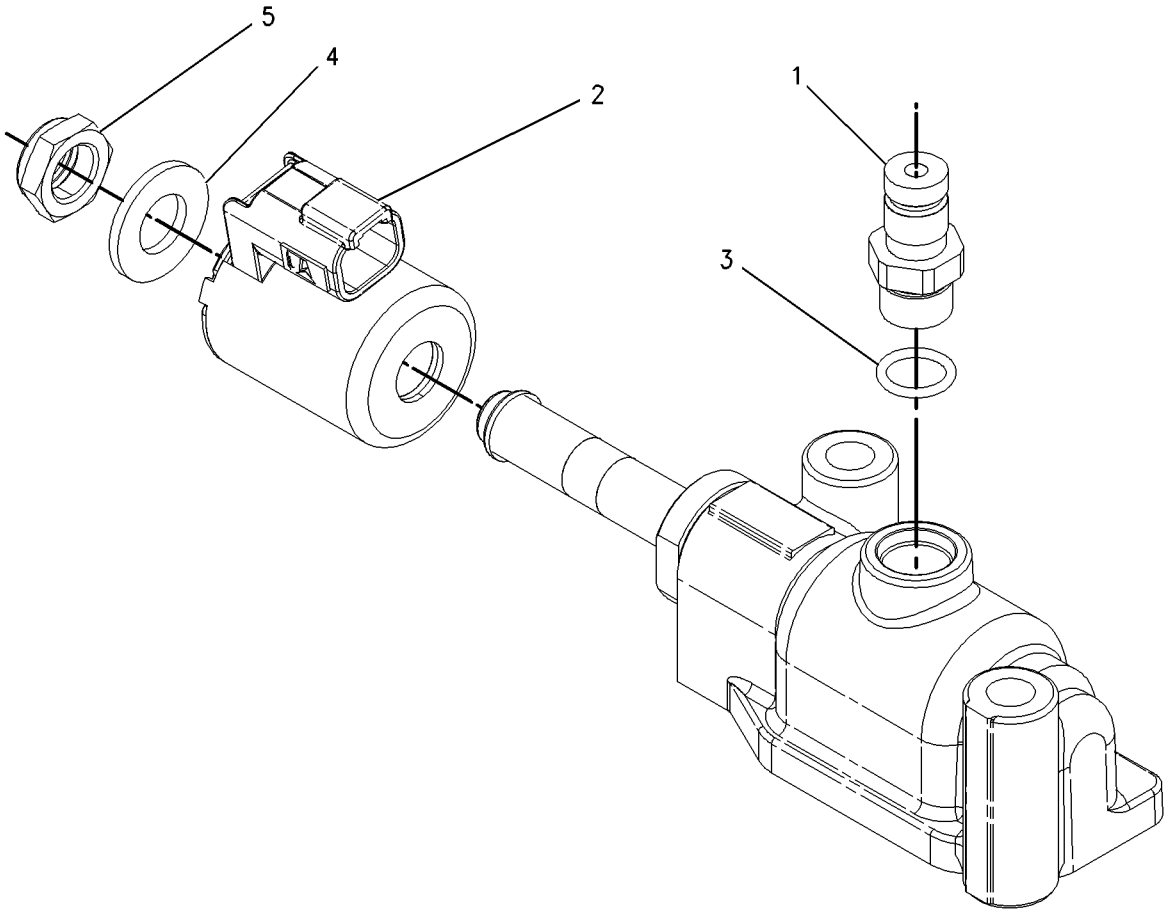

GRAPHIC #1 **<END>** g00919065

318-4747 VALVE GP-PRESSURE REDUCING–
DIFFERENTIAL LOCK RELIEF
S/N: JKM1-UP
PART OF 244-7139, 244-7140 MANIFOLD GP-CONTROL
ALSO AN ATTACHMENT

SMCS-5311 **i02911930**

NOTE	REF NO	GRAPHIC REF	PART NUMBER	QTY	PART NAME 1 2 3 4 5 6 (PRODUCT LEVEL)	SEE PAGE
	1	1	**095-1750**	1	SEAL-O-RING	
	2	1	**100-7000**	1	RING-BACKUP	
	3	1	**161-6149**	1	SEAL-O-RING	
	4	1	**187-0541**	2	RING-BACKUP	
	5	1	**3K-0360**	1	SEAL-O-RING	

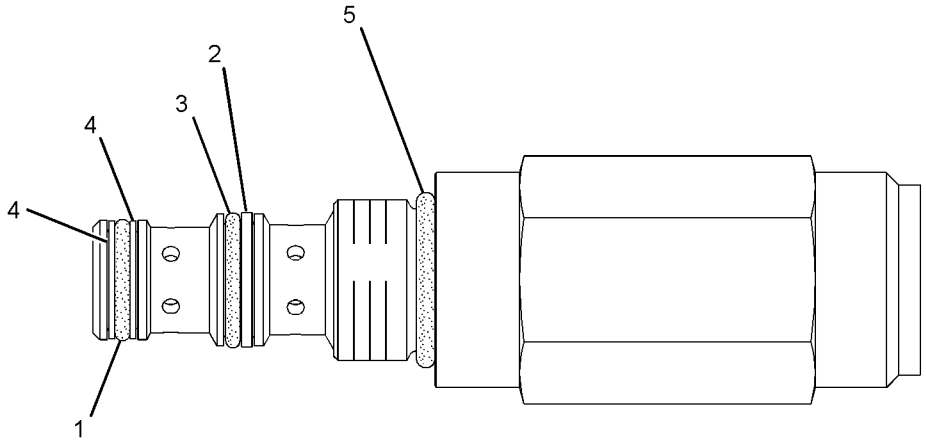

GRAPHIC #1 **<END>** g01423960

201-3322 VALVE GP-RELIEF—TRANSMISSION HYDRAULIC CONTROL

S/N: MWL1-UP

PART OF 266-2470 VALVE GP-TRANSMISSION CONTROL

SMCS-3133, 3182, 3210, 3213 **i02914636**

NOTE	REF NO	GRAPHIC REF	PART NUMBER	QTY	PART NAME 1 2 3 4 5 6 (PRODUCT LEVEL)	SEE PAGE
	1	1	**2S-4663**	1	SEAL-O-RING	
	2	1	**2S-5835**	1	PISTON-LOAD	
	3	1	**3J-1907**	2	SEAL-O-RING	
	4	1	**3K-0360**	1	SEAL-O-RING	
	5	1	**4M-5905**	1	SCREW-ADJUSTMENT (5/16-18X1-IN)	
	6	1	**6V-0852**	2	CAP-DUST	
	8	1	**8E-1143**	1	SLUG	
	9	1	**8M-5253**	1	SEAL-O-RING	
	10	1	**9M-2110**	1	COVER-ADJUSTMENT	
	11	1	**115-4550**	1	COVER	
	12	1	**172-7966**	1	BODY	
	13	1	**172-7968**	1	SPOOL AS	
		1	**3D-8317**	1	RING-RETAINING	
		1	**4B-9880**	1	BALL	
		1	**4M-2381**	1	SPRING	
		1	**9U-8669**	1	RETAINER	
	14	1	**174-7449**	1	SPRING	
M	16	1	**6V-3940**	2	BOLT (M8X1.25X25-MM)	
	17	1	**6V-3965**	2	FITTING (QUICK DISCONNECT)	
M	18	1	**6V-5218**	2	BOLT (M8X1.25X35-MM)	
	19	1	**9M-1974**	2	WASHER-HARD (8.8X16X2-MM THK)	
	20	1	**241-6205**	1	PLUG	

M-METRIC PART

201-3322 **VALVE GP-RELIEF** *(contd.)* **i02914636**

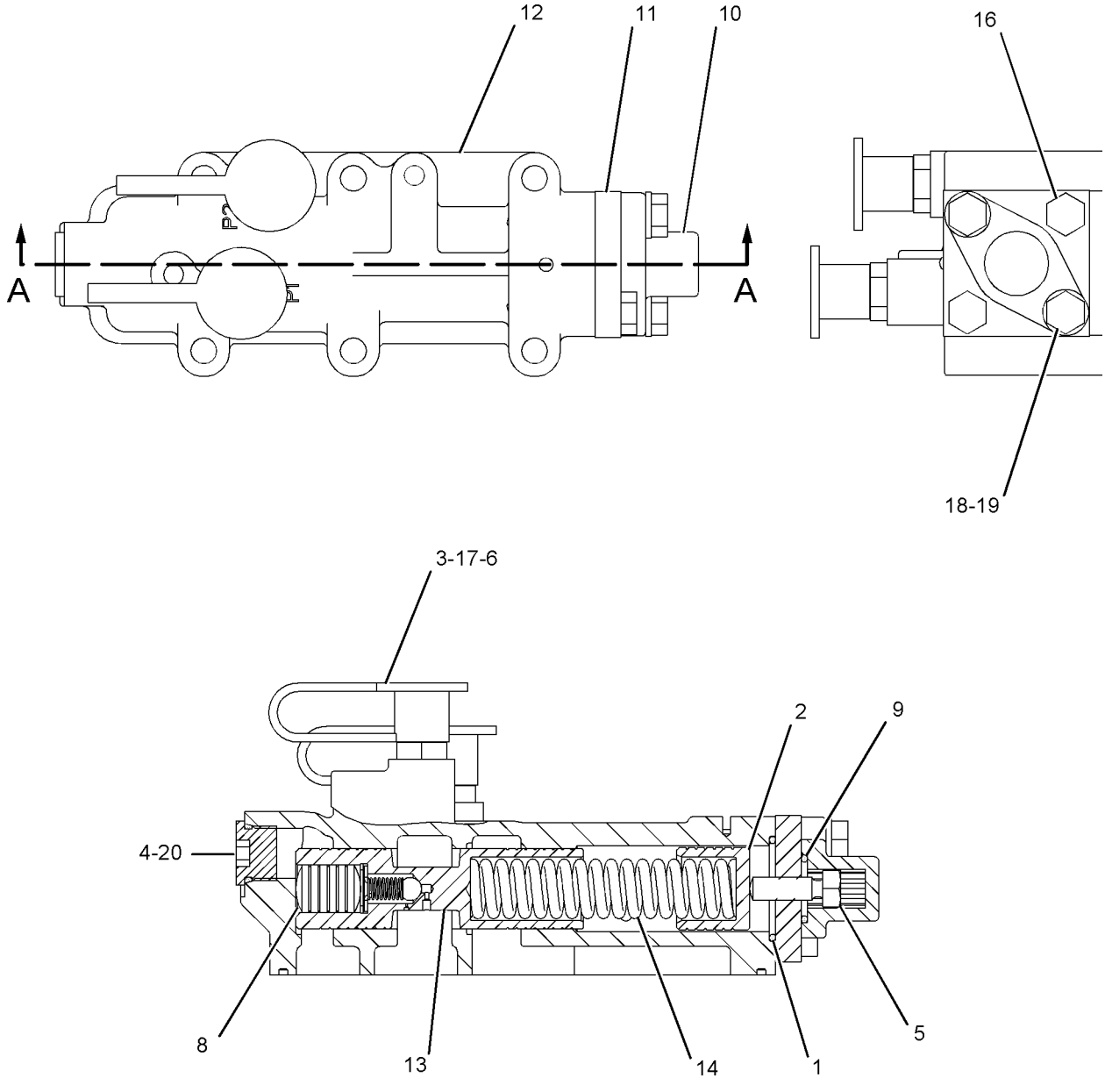

SECTION A-A

GRAPHIC #1 **<END>** g01096412

174-4916 VALVE GP-SOLENOID

S/N: JKM1-UP
PART OF 244-7139, 244-7140 MANIFOLD GP-CONTROL
ALSO AN ATTACHMENT

SMCS-3174, 4804, 4805, 5479 **i02911987**

NOTE	REF NO	GRAPHIC REF	PART NUMBER	QTY	PART NAME 1 2 3 4 5 6 (PRODUCT LEVEL)	SEE PAGE
	1	1	**226-9622**	1	COIL AS-SOLENOID (24-VOLT)	
	2	1	**164-2108**	1	WASHER (13.03X25.4X2.38-MM THK)	
	3	1	**218-2373**	1	NUT (1/2-28-THD)	
Z	4	1		1	SPOOL AS-VALVE	
					AVAILABLE REPAIR KIT(S):	
			108-2148	1	KIT-SEAL (SOLENOID VALVE)	
					(INCLUDES SEAL-O-RINGS)	

Z-NOT SERVICED SEPARATELY

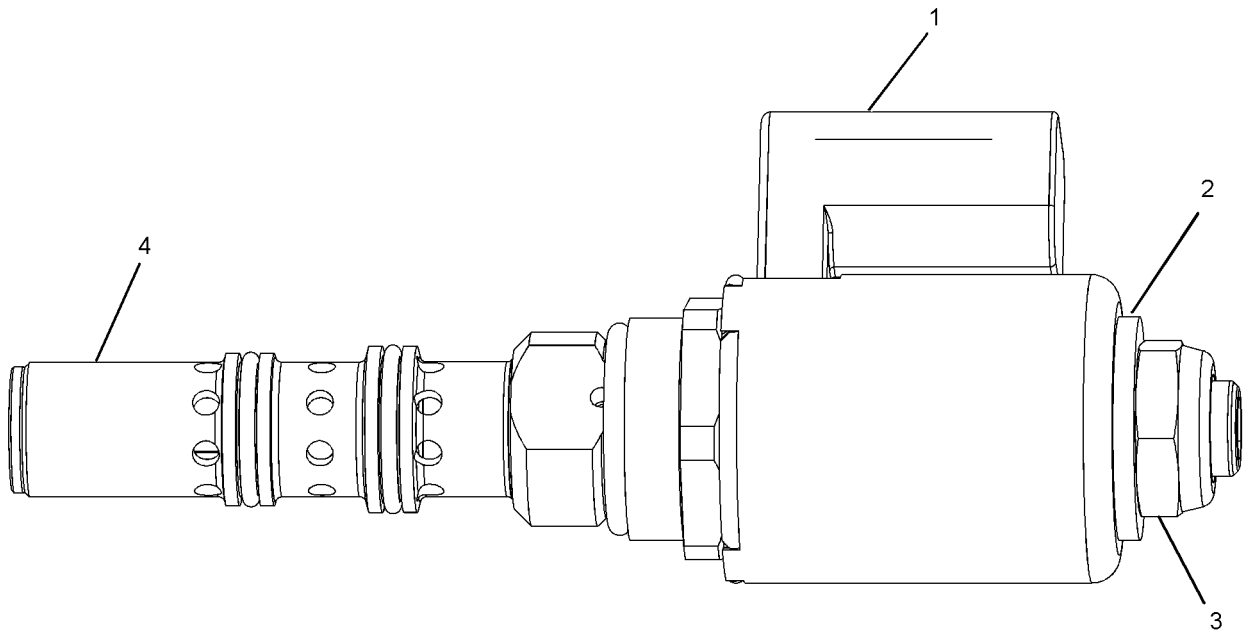

GRAPHIC #1 **<END>** g01140901

264-8214 VALVE GP-TIRE

S/N: JKM1-UP
PART OF 270-7827 RIM GP-DEMOUNTABLE
AN ATTACHMENT

SMCS-4203 **i02933057**

NOTE	REF NO	GRAPHIC REF	PART NUMBER	QTY	PART NAME 1 2 3 4 5 6 (PRODUCT LEVEL)	SEE PAGE
	1	1	**7D-5252**	1	SPUD AS	
		1	**2D-2508**	1	GROMMET	
		1	**2D-2509**	1	LOCKNUT (11/16-16-THD)	
	2	1	**264-8233**	1	STEM AS-VALVE	
		1	**6F-3930**	1	CORE-VALVE	
		1	**9K-7951**	1	CAP-VALVE (STEM)	

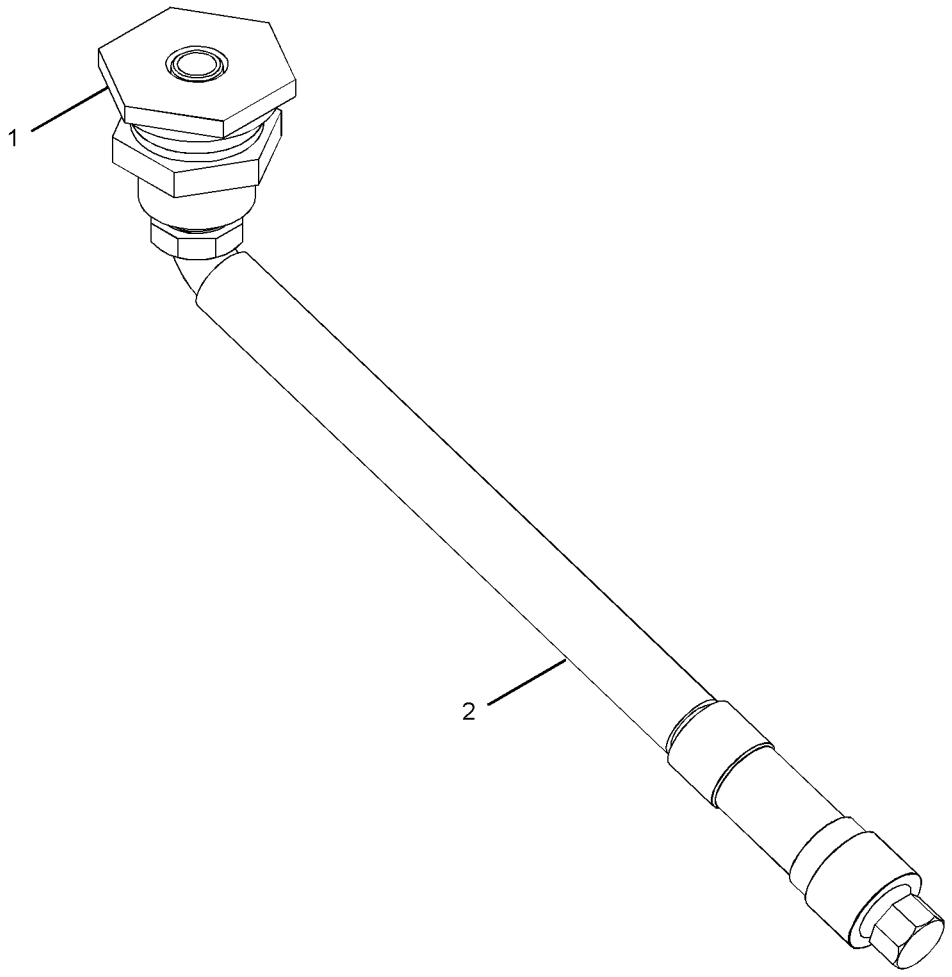

GRAPHIC #1 **<END>** g01432788

266-2470 VALVE GP-TRANSMISSION CONTROL

S/N: MWL1-UP

PART OF 252-9720 CONTROL GP-TRANSMISSION HYD

SMCS-3073, 3167 **i03233363**

NOTE	REF NO	GRAPHIC REF	PART NUMBER	QTY	PART NAME 1 2 3 4 5 6 (PRODUCT LEVEL)	SEE PAGE
	1	1	**6V-0852**	6	CAP-DUST	
	2	1	**7J-0204**	1	SEAL-O-RING	
	3	1	**6D-7889**	6	SEAL-O-RING	
	4	1	**9L-9068**	1	DOWEL	
	5	1	**200-2050**	1	MANIFOLD (TRANSMISSION CONTROL VALVE)	
Y	6	1	**201-3322**	1	VALVE GP-RELIEF (TRANSMISSION HYDRAULIC CONTROL)	480
Y	7	1	**244-3114**	6	VALVE GP-MODULATING (24-VOLT) (TRANSMISSION CLUTCH)	478
Y	8	1	**145-7028**	1	SENSOR GP-TEMPERATURE (TRANSMISSION OIL)	253
	9	1	**164-3651**	1	ADAPTER	
	10	1	**3J-1907**	1	SEAL-O-RING	
	11	1	**2P-1692**	1	SEAL-O-RING	
M	12	1	**5P-8347**	5	BOLT (M8X1.25X70-MM)	
M	13	1	**6V-5221**	2	BOLT (M8X1.25X80-MM)	
	14	1	**9M-1974**	7	WASHER-HARD (8.8X16X2-MM THK)	

M-METRIC PART
Y-SEPARATE ILLUSTRATION

266-2470 **VALVE GP-TRANSMISSION CONTROL** *(contd.)* **i03233363**

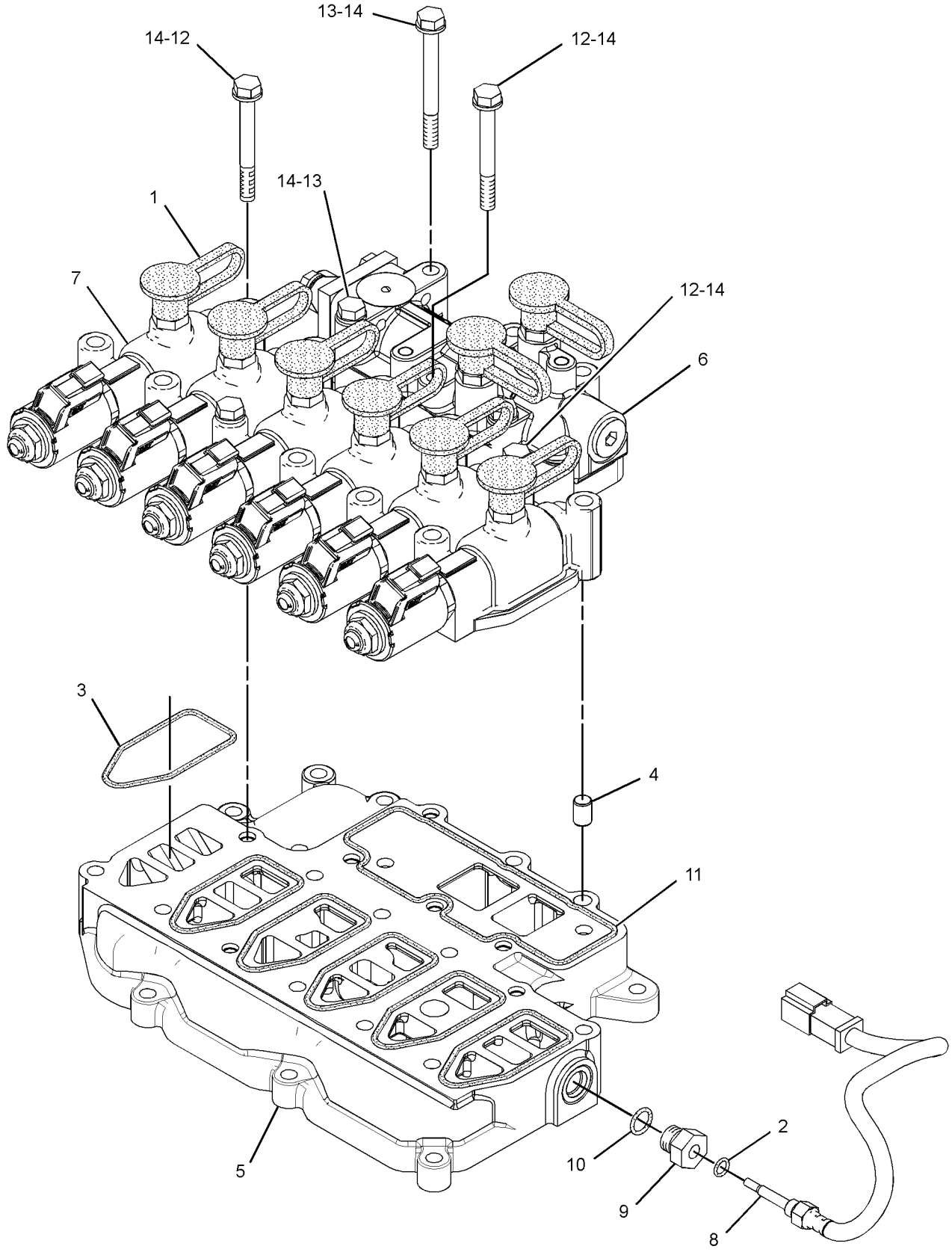

GRAPHIC #1 **<END>** g01388767

288-9483 WHEEL & FINAL DRIVE GP

S/N: JKM1-UP

PART OF 272-4990 AXLE AR-FIXED, 271-2344 AXLE AR-OSCILLATING

AN ATTACHMENT

SMCS-4051 **i02933550**

NOTE	REF NO	GRAPHIC REF	PART NUMBER	QTY	PART NAME 1 2 3 4 5 6 (PRODUCT LEVEL)	SEE PAGE
	1	1	**2P-1373**	1	CUP-BEARING	
	2	1	**4B-9374**	1	CUP-BEARING	
	3	1	**9G-5315**	1	SEAL GP-DUO-CONE	
	4	1	**157-0687**	1	RING-RETAINING	
	5	1	**239-4203**	1	GEAR-SUN	
	6	1	**270-7673**	1	SHAFT-AXLE	
	7	1	**270-7731**	1	SHAFT-AXLE	
Y	8	1	**270-9306**	1	CARRIER GP-PLANETARY (FINAL DRIVE)	371
	9	1	**279-2567**	1	GEAR-RING (84-TEETH)	
	10	1	**290-7406**	1	HOUSING-BEARING	
	11	1	**4B-9373**	1	CONE-BEARING	
	12	1	**4S-5875**	1	RING-RETAINING	
	13	1	**295-9234**	1	SEAL-O-RING	
	14	1	**5P-3119**	1	RING-RETAINING	
	15	1	**5P-8245**	3	WASHER-HARD (13.5X25.5X3-MM THK)	
M	16	1	**6V-5684**	3	BOLT (M12X1.75X45-MM)	
M	17	1	**6V-9667**	16	BOLT (M20X2.5X100-MM)	
	18	1	**6Y-2538**	1	CONE-BEARING	
	19	1	**8T-3282**	16	WASHER-HARD (22X35X3.5-MM THK)	
	20	1	**9C-8419**	1	NUT-BEARING	

M-METRIC PART
Y-SEPARATE ILLUSTRATION

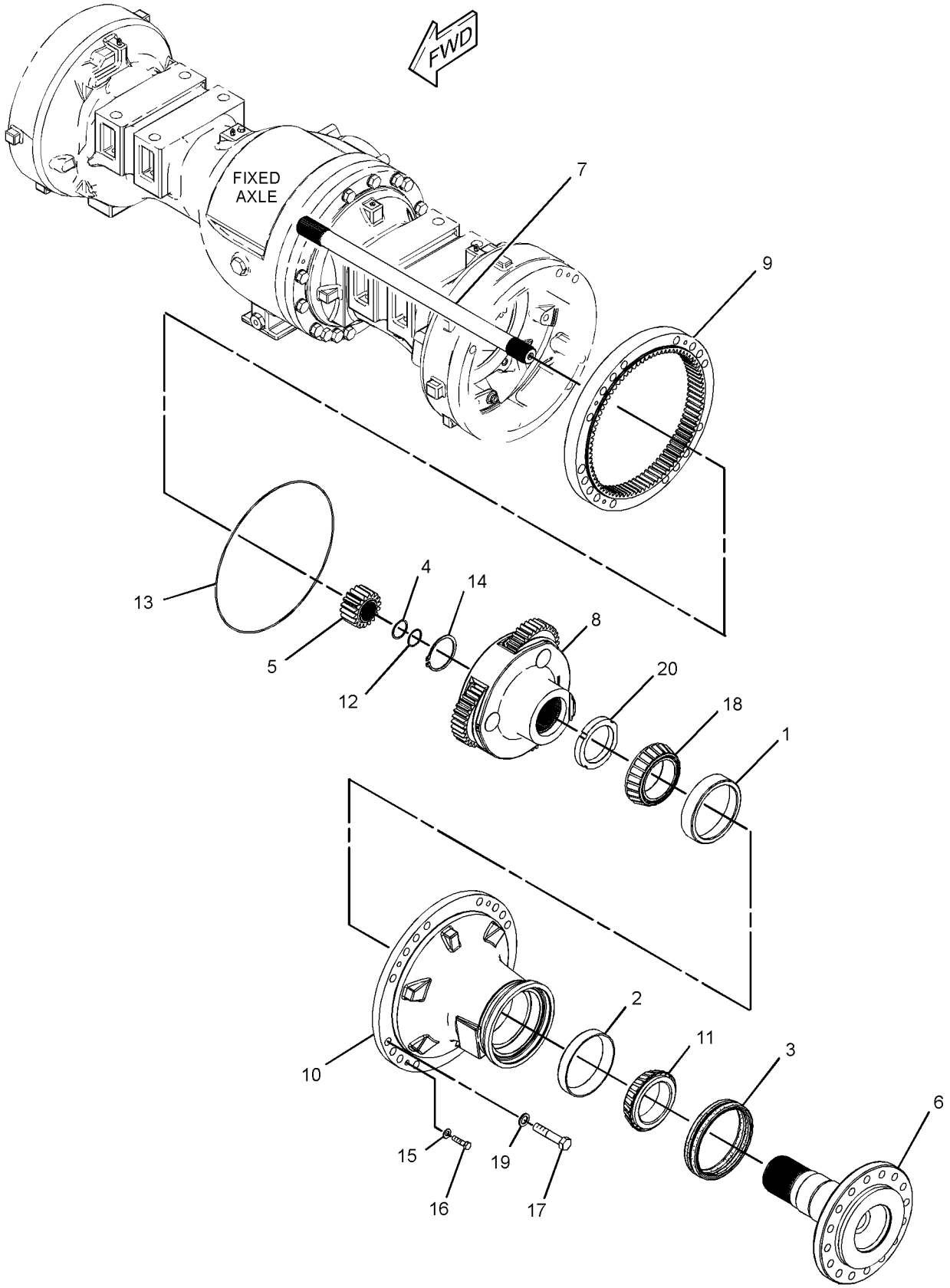

GRAPHIC #1 **<END>** g01423973

288-9484 WHEEL & FINAL DRIVE GP

S/N: JKM1-UP

PART OF 272-4992 AXLE AR-FIXED, 272-4996 AXLE AR-OSCILLATING

AN ATTACHMENT

SMCS-4051 **i02935627**

NOTE	REF NO	GRAPHIC REF	PART NUMBER	QTY	PART NAME 1 2 3 4 5 6 (PRODUCT LEVEL)	SEE PAGE
	1	1	**2P-1373**	1	CUP-BEARING	
	2	1	**4B-9374**	1	CUP-BEARING	
	3	1	**9G-5315**	1	SEAL GP-DUO-CONE	
	4	1	**157-0687**	1	RING-RETAINING	
	5	1	**239-4203**	1	GEAR-SUN	
	6	1	**270-7673**	1	SHAFT-AXLE	
	7	1	**270-7731**	1	SHAFT-AXLE	
Y	8	1	**270-9306**	1	CARRIER GP-PLANETARY (FINAL DRIVE)	371
	9	1	**272-4998**	1	RING	
	10	1	**279-2567**	1	GEAR-RING	
	11	1	**295-9234**	1	SEAL-O-RING	
	12	1	**303-5189**	1	HOUSING-BEARING	
	13	1	**4B-9373**	1	CONE-BEARING	
	14	1	**4S-5875**	1	RING-RETAINING	
	15	1	**5P-3119**	1	RING-RETAINING	
	16	1	**5P-8245**	3	WASHER-HARD (13.5X25.5X3-MM THK)	
M	17	1	**6V-5684**	3	BOLT (M12X1.75X45-MM)	
M	18	1	**6V-9667**	16	BOLT (M20X2.5X100-MM)	
	19	1	**6Y-2538**	1	CONE-BEARING	
	20	1	**8T-3282**	16	WASHER-HARD (22X35X3.5-MM THK)	
	21	1	**9C-8419**	1	NUT-BEARING	

M-METRIC PART
Y-SEPARATE ILLUSTRATION

288-9484 **WHEEL & FINAL DRIVE GP** *(contd.)* **i02935627**

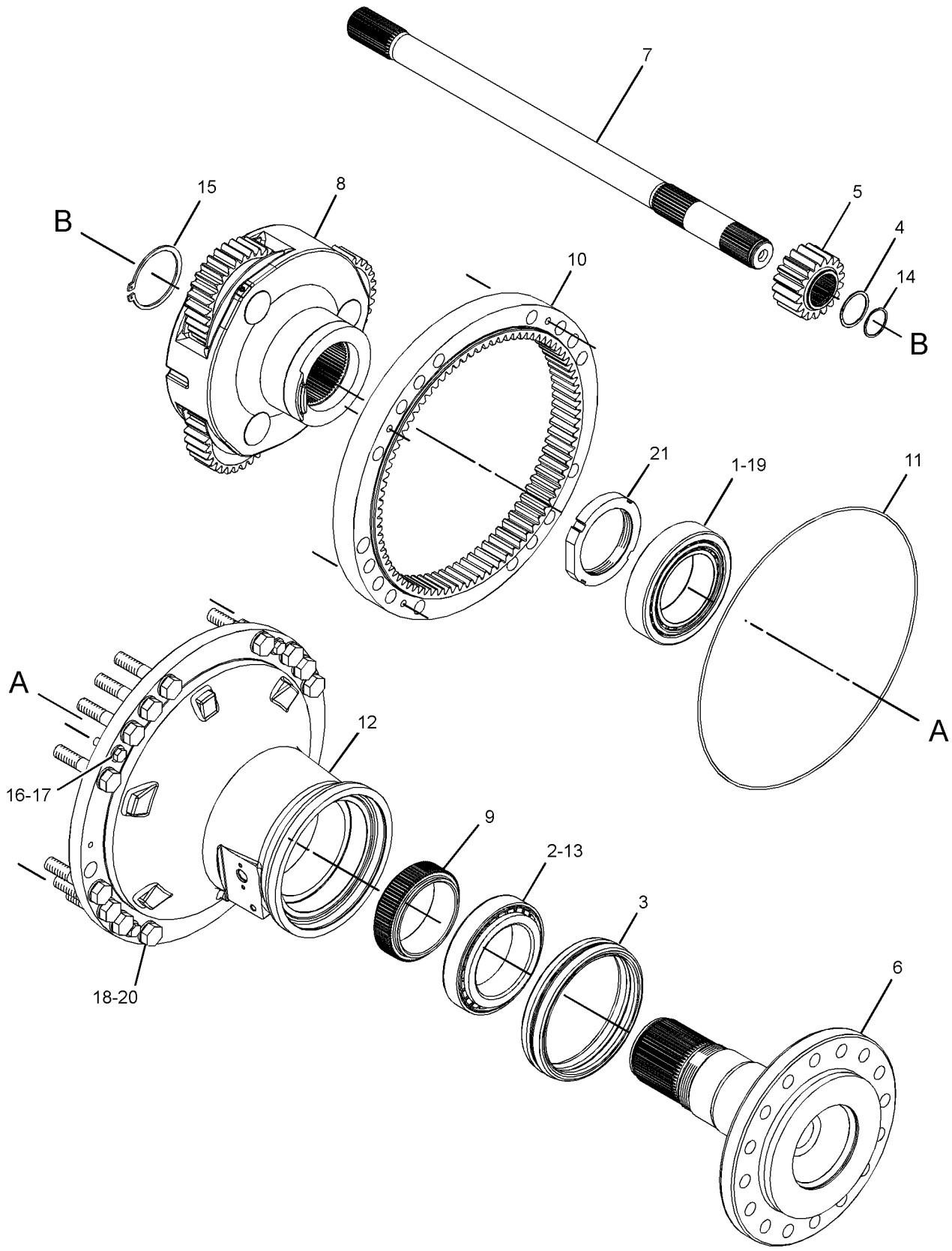

GRAPHIC #1 **<END>** g01435848

FRAME AND BODY

305-8958 ACTUATOR GP-POWER

S/N: JKM1-UP

PART OF 262-7087 TILT GP-HOOD

SMCS-1427, 7153, 7275 **i02908744**

NOTE	REF NO	GRAPHIC REF	PART NUMBER	QTY	PART NAME 1 2 3 4 5 6 (PRODUCT LEVEL)	SEE PAGE
	1	1	**117-1559**	1	MOUNT AS	
	2	1	**122-4233**	1	WIPER	
	3	1	**305-8969**	1	POST AS	
	4	1	**305-8966**	1	POWERHEAD AS	
M	5	1	**179-4324**	2	LOCKNUT (M5X0.8-THD)	
	6	1	**168-2166**	1	GASKET-MOTOR (HOOD TILT)	
	7	1	**203-6473**	1	GASKET	
	8	1	**205-6029**	1	MOTOR AS-ELECTRIC (HOOD TILT)	
	9	1	**308-2071**	1	ROD END	
	10	1	**8T-4121**	4	WASHER-HARD (11X21X2.5-MM THK)	
M	11	1	**8T-4133**	4	NUT (M10X1.5-THD)	
M	12	1	**8T-4137**	2	BOLT (M10X1.5X20-MM)	
	13	1	**278-0644**	1	GASKET-COVER	

M-METRIC PART

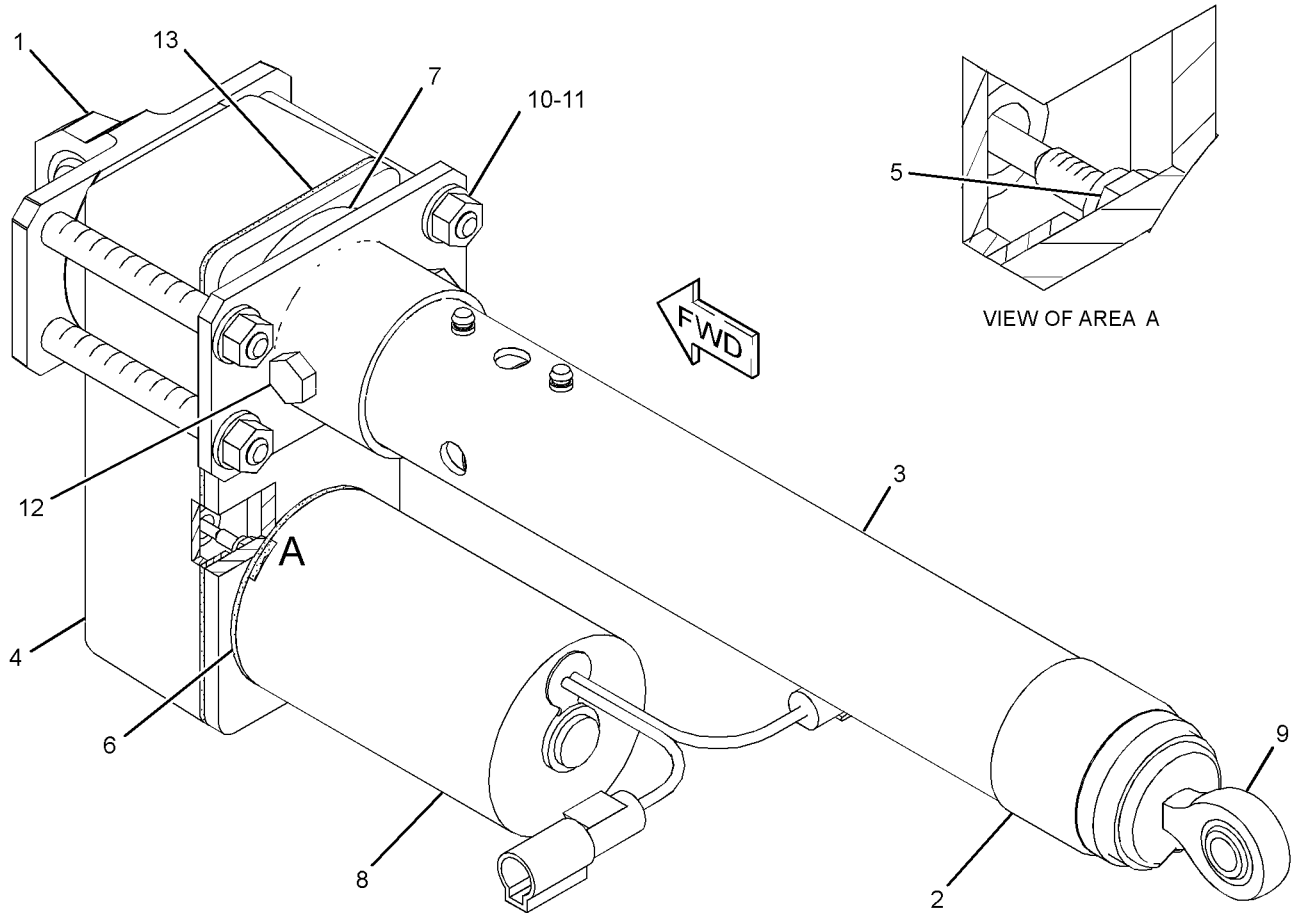

GRAPHIC #1 **<END>** g01447785

FRAME AND BODY

287-5594 BOSS GP-LOADER FRAME

S/N: JKM1-UP
PART OF 284-5011 LUBRICATION AR-AUTOMATIC
AN ATTACHMENT

SMCS-7054 **i03426942**

NOTE	REF NO	GRAPHIC REF	PART NUMBER	QTY	PART NAME 1 2 3 4 5 6 (PRODUCT LEVEL)	SEE PAGE
	1	1	**169-2554**	1	PLATE	
	2	1	**287-5593**	1	PLATE	
	3	1	**7T-1099**	1	LINK	
M	4	1	**8T-3851**	8	BOSS-WELD (M10X1.5X17.5-MM)	
M	5	1	**8T-4935**	1	BOSS-WELD (M10X1.5X45-MM)	
M	6	1	**8T-6462**	2	BOSS-WELD (M10X1.5X25-MM OAL)	
	7	1	**9C-7929**	1	BLOCK	
	8	1	**9R-2060**	2	BOSS (M10X1.5X21-MM)	
M	9	1	**7X-0750**	1	BOSS-WELD (M10X1.5X55-MM)	

M-METRIC PART

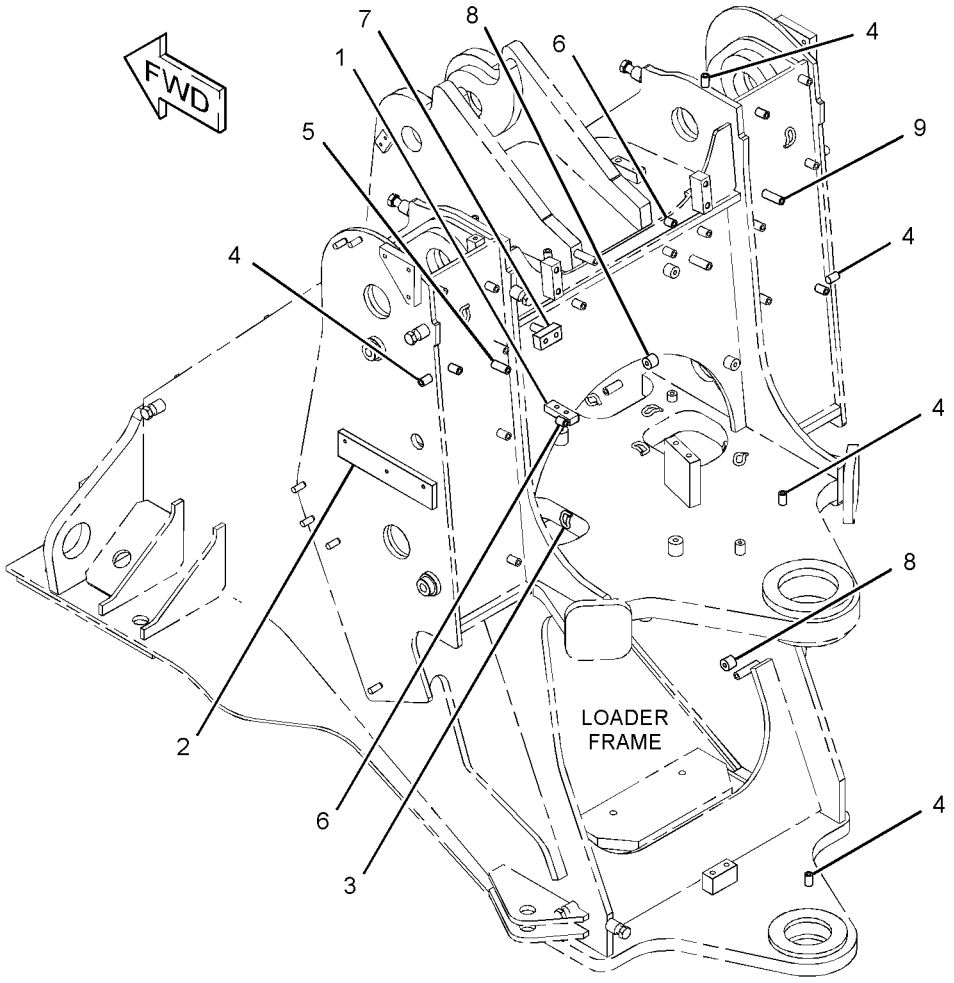

GRAPHIC #1 **<END>** g01870434

273-9731 BOSS GP-REAR FRAME

S/N: JKM1-UP
PART OF 317-9489 CONFIGURATION AR, 284-3569 SUPPRESSION AR-SOUND
AN ATTACHMENT

SMCS-7051 **i02930653**

NOTE	REF NO	GRAPHIC REF	PART NUMBER	QTY	PART NAME 1 2 3 4 5 6 (PRODUCT LEVEL)	SEE PAGE
	1	1	**131-6593**	4	BOSS (M12X1.75X20-MM)	
	2	1	**308-1188**	1	BOSS (M12X1.75X20-MM)	
M	3	1	**8T-4219**	12	STUD-WELD (M10X1.5X17.5-MM)	

M-METRIC PART

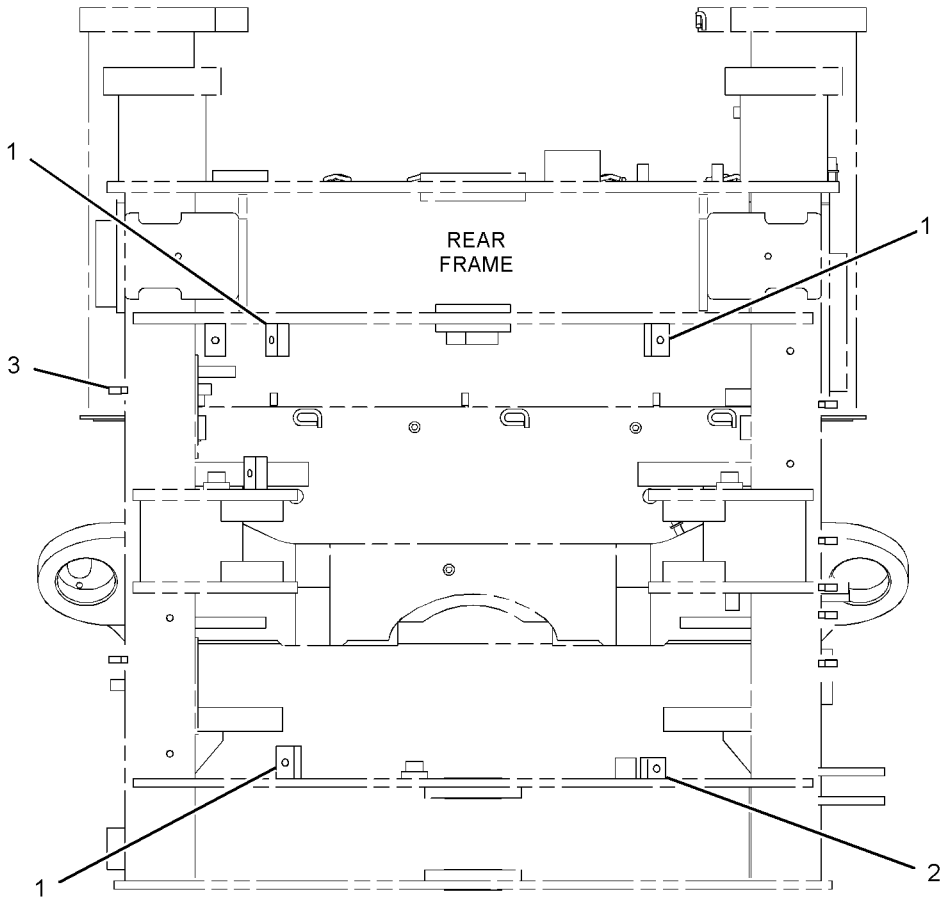

FRONT VIEW

GRAPHIC #1 **<END>** g01431223

FRAME AND BODY

287-5635 BOSS GP-REAR FRAME

S/N: JKM1-UP

PART OF 284-5011 LUBRICATION AR-AUTOMATIC

AN ATTACHMENT

SMCS-7051 **i03270170**

NOTE	REF NO	GRAPHIC REF	PART NUMBER	QTY	PART NAME 1 2 3 4 5 6 (PRODUCT LEVEL)	SEE PAGE
M	1	1	**8T-3851**	2	BOSS-WELD (M10X1.5X17.5-MM)	

M-METRIC PART

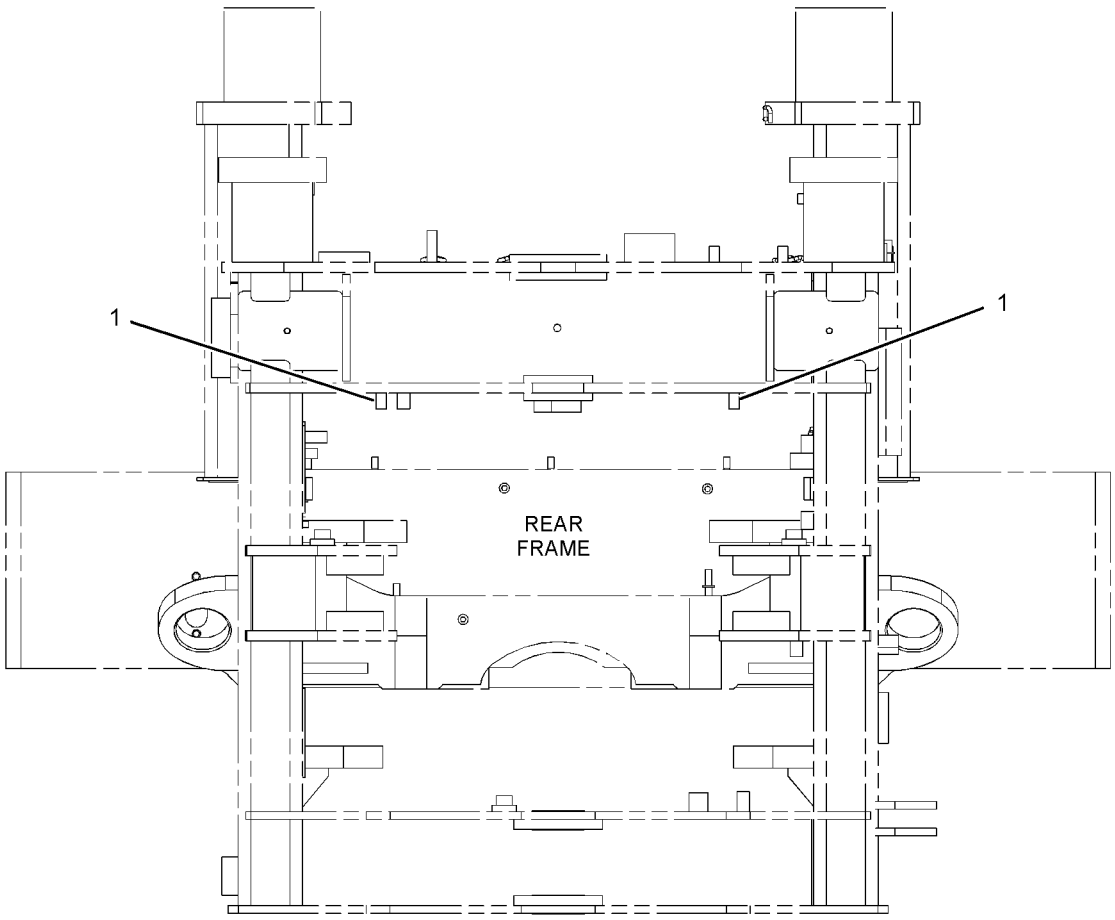

FRONT VIEW

GRAPHIC #1 **<END>** g01429217

FRAME AND BODY

255-4819 BOX GP-BATTERY

S/N: JKM1-UP

PART OF 237-7540 CHASSIS AR

SMCS-7257 **i03948730**

NOTE	REF NO	GRAPHIC REF	PART NUMBER	QTY	PART NAME 1 2 3 4 5 6 (PRODUCT LEVEL)	SEE PAGE
	1	2	**170-3014**	2	BUMPER	
	2	2	**275-0571**	1	CAM-LATCH	
J	3	2	**275-0572**	1	LATCH AS	
	4	2	**289-2451**	1	BOX AS	
		2	**3R-9322**	1	HINGE	
M		2	**8T-3490**	2	NUT-WELD (M10X1.5-THD)	
M		2	**8T-3597**	2	NUT-WELD (M12X1.75-THD)	
	5	2	**289-2453**	1	COVER AS-BATTERY	
M		2	**8T-3490**	2	NUT-WELD (M10X1.5-THD)	
	6	2	**305-2533**	1	COVER	
Y	7	2	**305-2543**	1	BOX GP-BATTERY	497
	8	2	**1S-0685**	1	PIN-COTTER	
	9	2	**3P-9554**	1	GROMMET	
	10	2	**7X-7729**	7	WASHER (11X25X3-MM THK)	
	11	2	**8T-4121**	8	WASHER-HARD (11X21X2.5-MM THK)	
M	12	2	**8T-4133**	2	NUT (M10X1.5-THD)	
M	13	2	**8T-4137**	13	BOLT (M10X1.5X20-MM)	
M	14	2	**8T-4139**	13	BOLT (M12X1.75X30-MM)	
	15	2	**8T-4223**	13	WASHER-HARD (13.5X25.5X3-MM THK)	

J-REQUIRES CORPORATE KEY
M-METRIC PART
Y-SEPARATE ILLUSTRATION

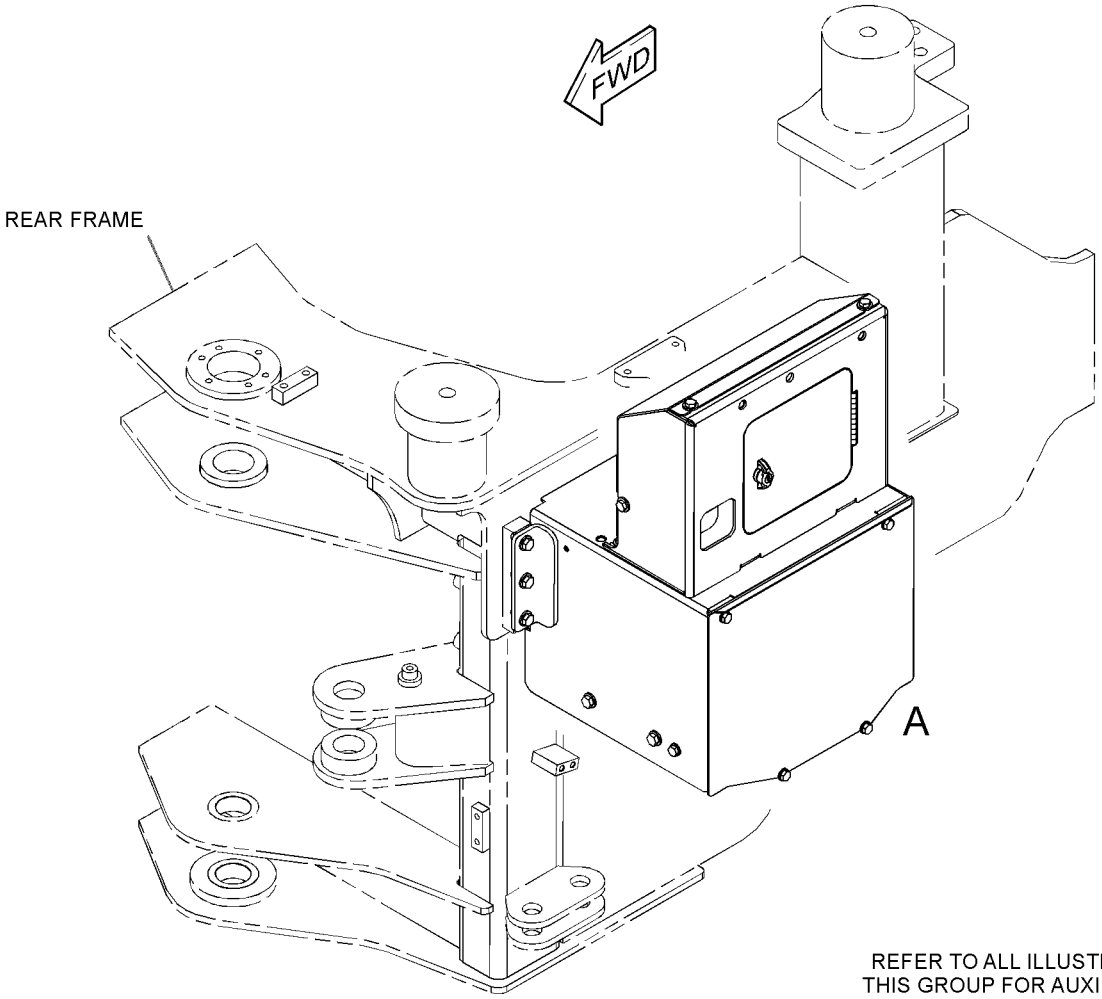

REFER TO ALL ILLUSTRATIONS OF
THIS GROUP FOR AUXILIARY VIEWS

GRAPHIC #1

g02174064

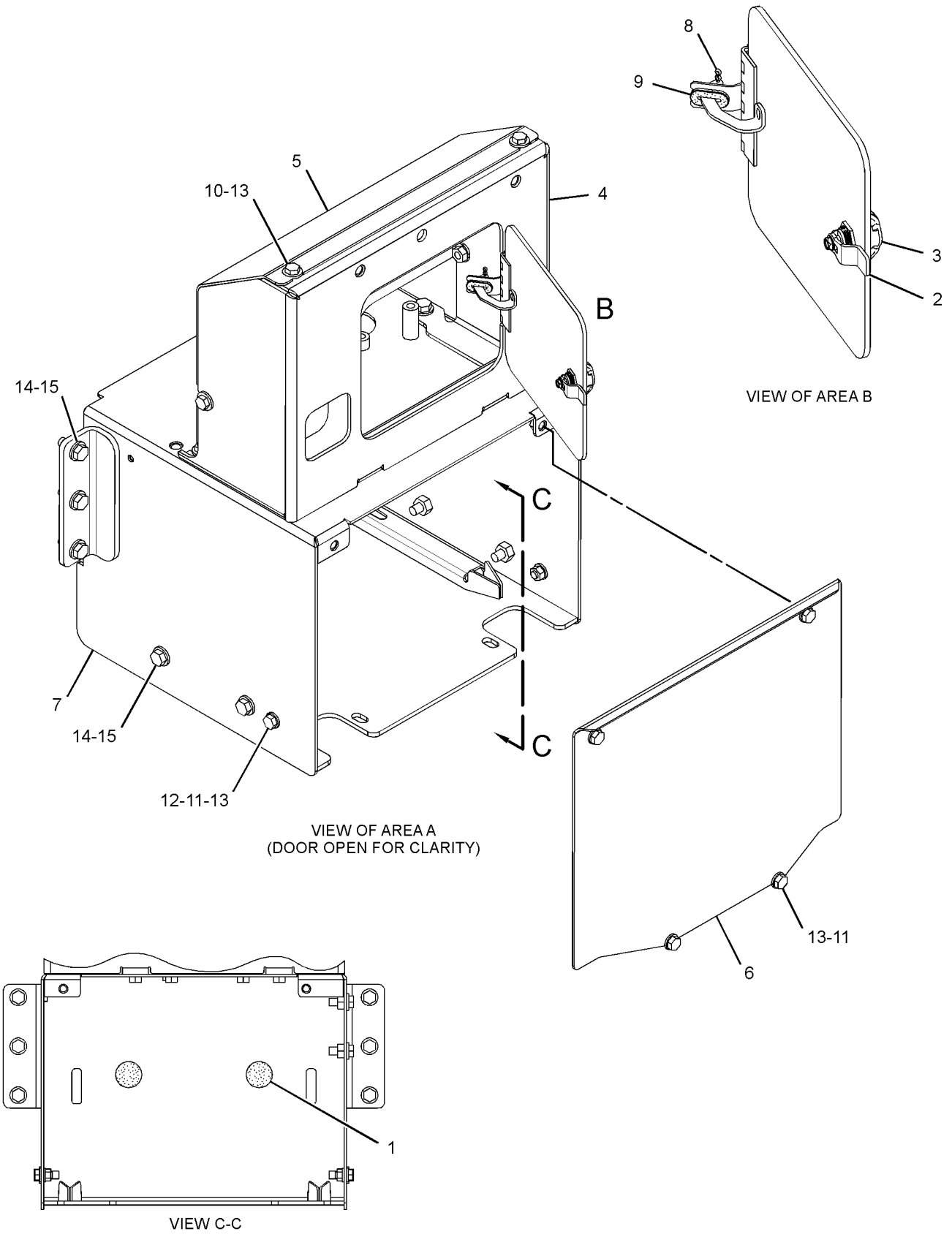

GRAPHIC #2 **<END>** g02174067

FRAME AND BODY

305-2543 BOX GP-BATTERY

S/N: JKM1-UP

PART OF 255-4819 BOX GP-BATTERY

SMCS-7257 **i02911702**

NOTE	REF NO	GRAPHIC REF	PART NUMBER	QTY	PART NAME 1 2 3 4 5 6 (PRODUCT LEVEL)	SEE PAGE
M	1	1	**6V-9632**	2	NUT-WELD (M6X1-THD)	
M	2	1	**8T-3490**	7	NUT-WELD (M10X1.5-THD)	
M	3	1	**8T-3597**	8	NUT-WELD (M12X1.75-THD)	
M	4	1	**9R-2821**	2	BOSS (M10X1.5X15-MM)	
M	5	1	**9R-9866**	1	BOSS-THREADED (M10X1.5-THD)	

M-METRIC PART

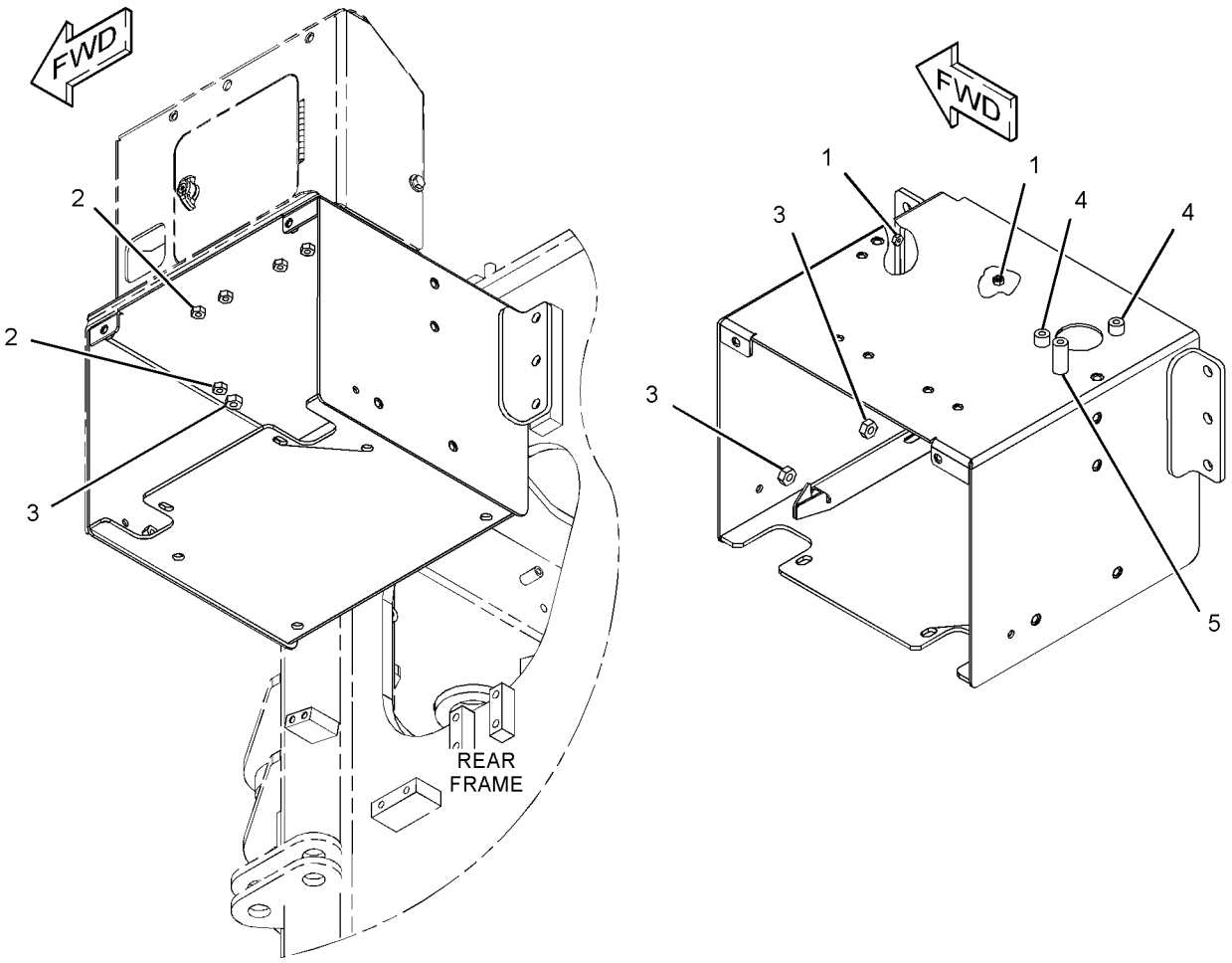

GRAPHIC #1 **<END>** g01424388

305-2557 BOX GP-BATTERY

S/N: JKM1-UP
PART OF 308-4278 BATTERY & WIRING GP
AN ATTACHMENT

SMCS-7257 **i02928066**

NOTE	REF NO	GRAPHIC REF	PART NUMBER	QTY	PART NAME 1 2 3 4 5 6 (PRODUCT LEVEL)	SEE PAGE
	1	1	**170-3014**	2	BUMPER	
	3	1	**305-2559**	1	BOX AS-BATTERY	
M		1	**8T-3490**	4	NUT-WELD (M10X1.5-THD)	
M		1	**8T-3597**	4	NUT-WELD (M12X1.75-THD)	
	4	1	**305-6308**	1	COVER AS	
M		1	**8T-3490**	2	NUT-WELD (M10X1.5-THD)	
	5	1	**5P-1076**	2	WASHER-HARD (13.5X30X4-MM THK)	
	6	1	**8T-4121**	4	WASHER-HARD (11X21X2.5-MM THK)	
M	7	1	**8T-4137**	4	BOLT (M10X1.5X20-MM)	
M	8	1	**8T-4139**	10	BOLT (M12X1.75X30-MM)	
	9	1	**8T-4223**	8	WASHER-HARD (13.5X25.5X3-MM THK)	
D	10	1	**5P-5643**		SEAL (1.2-M)	

D-ORDER BY THE METER
M-METRIC PART

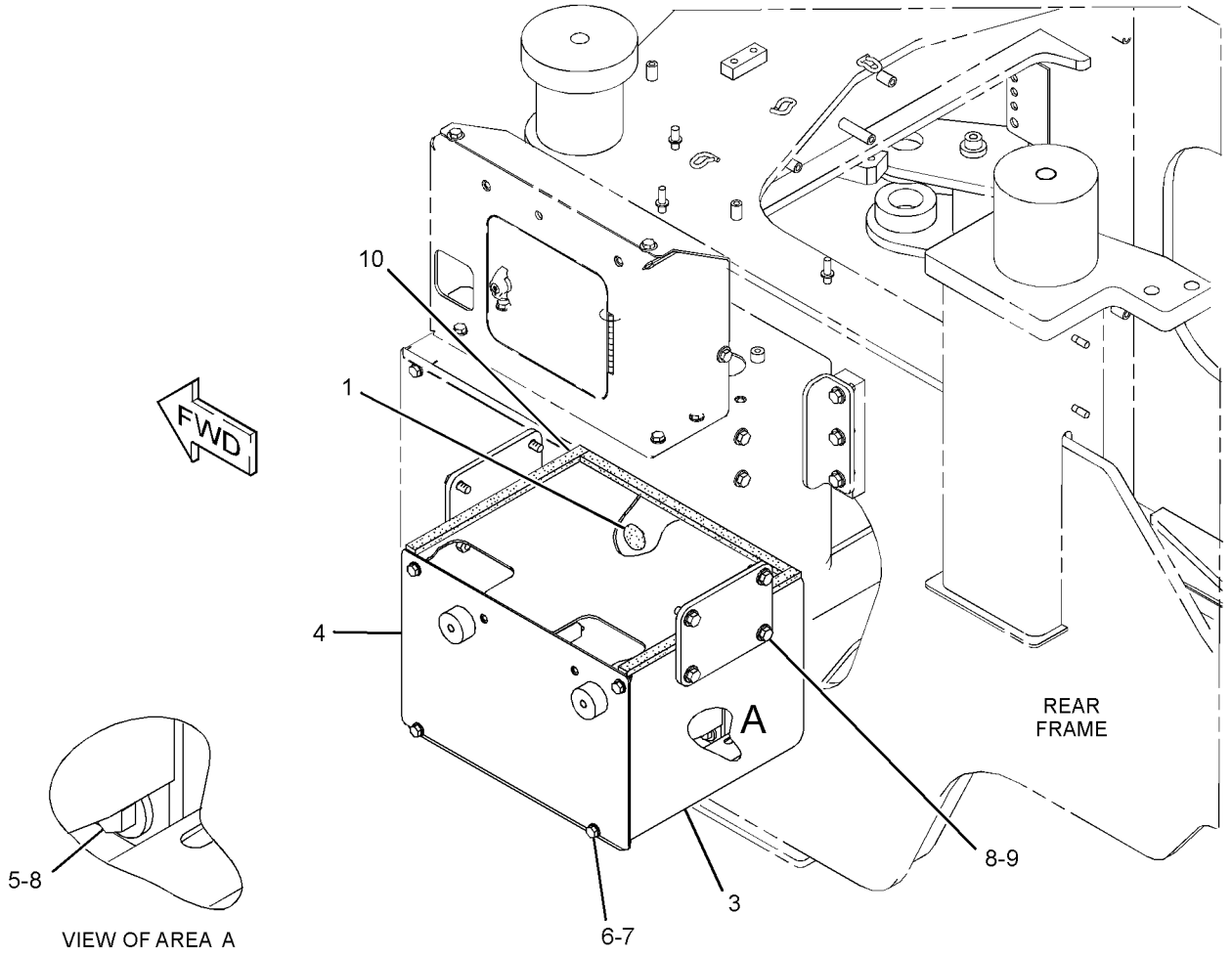

GRAPHIC #1 **<END>** g01427174

FRAME AND BODY

237-7544 COUNTERWEIGHT GP

S/N: JKM1-712

PART OF 237-7540 CHASSIS AR

SMCS-7056 **i02908701**

NOTE	REF NO	GRAPHIC REF	PART NUMBER	QTY	PART NAME 1 2 3 4 5 6 (PRODUCT LEVEL)	SEE PAGE
	1	1	**162-7120**	1	PIN	
	2	1	**262-1616**	1	COUNTERWEIGHT (LH)	
	3	1	**262-1617**	1	COUNTERWEIGHT (RH)	
	4	1	**266-9861**	1	PIN	
M	5	1	**7X-2454**	6	BOLT (M24X3X110-MM)	
	6	1	**8T-1482**	6	WASHER-HARD (26X50X8-MM THK)	

M-METRIC PART

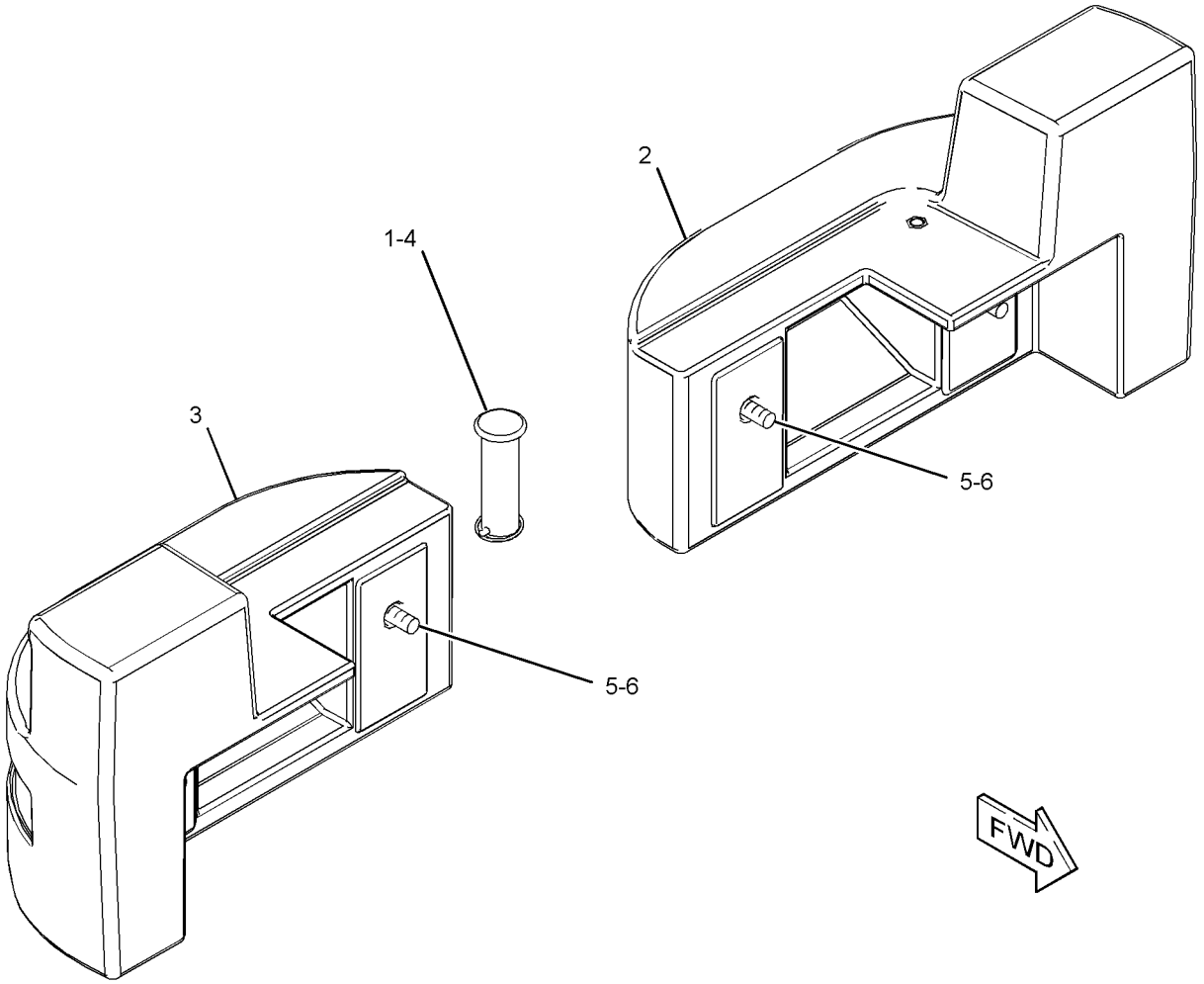

GRAPHIC #1 **<END>** g01392387

FRAME AND BODY

237-7544 COUNTERWEIGHT GP

S/N: JKM713-UP

PART OF 237-7540 CHASSIS AR

SMCS-7056 **i03966689**

NOTE	REF NO	GRAPHIC REF	PART NUMBER	QTY	PART NAME 1 2 3 4 5 6 (PRODUCT LEVEL)	SEE PAGE
	1	1	**162-7120**	1	PIN	
	2	1	**266-9861**	1	PIN	
C	3	1	**327-9091**	1	COUNTERWEIGHT	
C	4	1	**327-9092**	1	COUNTERWEIGHT	
M	5	1	**7X-2454**	6	BOLT (M24X3X110-MM)	
	6	1	**8T-1482**	6	WASHER-HARD (26X50X8-MM THK)	
	7	1	**7X-0515**	2	WASHER-HARD (17X35X5-MM THK)	
M	8	1	**8T-4779**	2	BOLT (M16X2X35-MM)	

C-CHANGE FROM PREVIOUS TYPE
M-METRIC PART

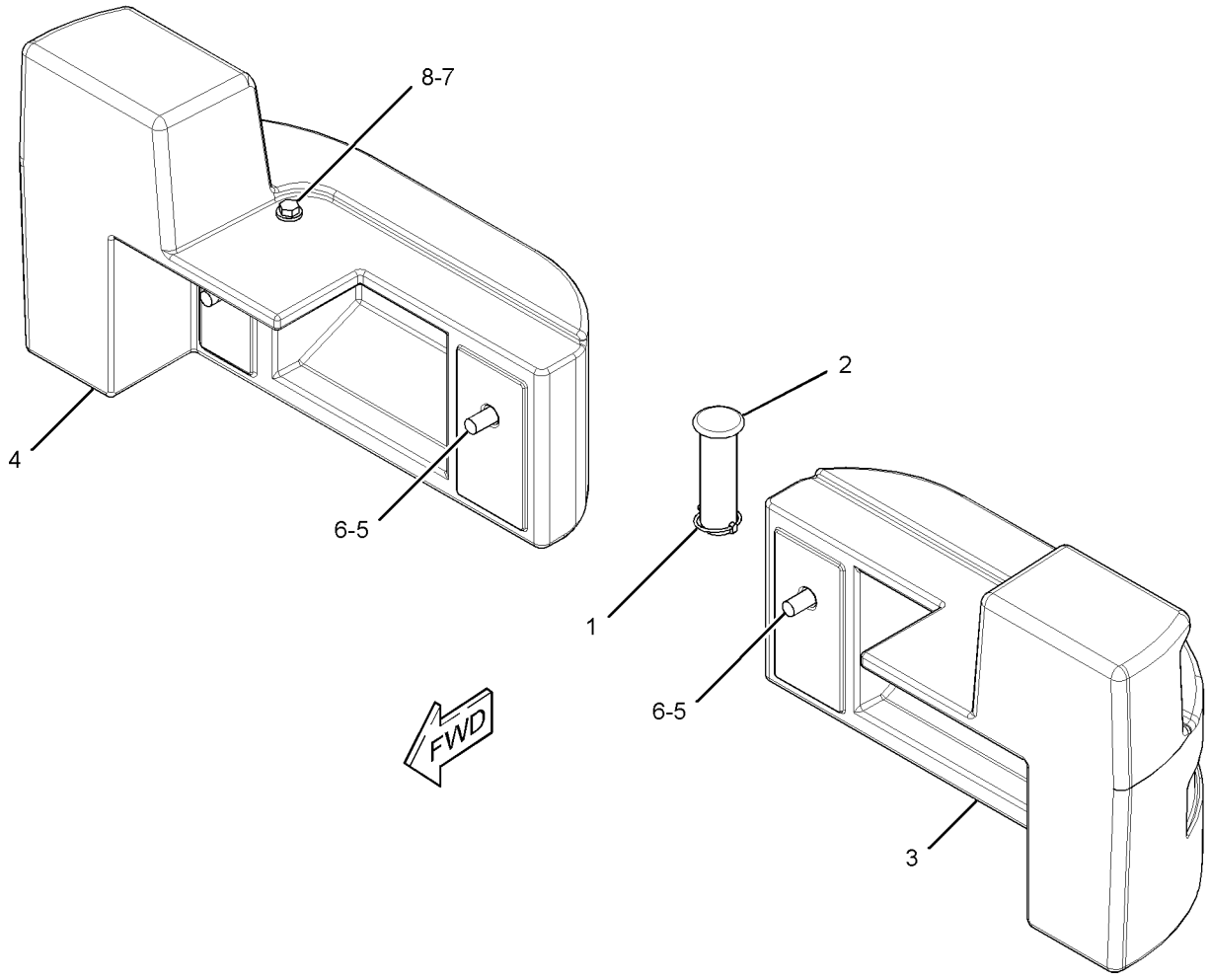

GRAPHIC #1 **<END>** g02162841

FRAME AND BODY

266-9862 COUNTERWEIGHT GP

S/N: JKM1-UP

PART OF 317-8363 CONFIGURATION AR, 265-9755 CONTROL AR-HIGH LIFT, 265-9738, 318-9717 CONTROL AR-QUICK COUPLER, 265-9754 LIFT AR AN ATTACHMENT

SMCS-7056 **i03750869**

NOTE	REF NO	GRAPHIC REF	PART NUMBER	QTY	PART NAME 1 2 3 4 5 6 (PRODUCT LEVEL)	SEE PAGE
	1	1	**162-7120**	1	PIN	
	2	1	**266-9861**	1	PIN	
	3	1	**327-9093**	1	COUNTERWEIGHT	
	4	1	**327-9094**	1	COUNTERWEIGHT	
M	5	1	**7X-2454**	6	BOLT (M24X3X110-MM)	
	6	1	**8T-1482**	6	WASHER-HARD (26X50X8-MM THK)	

M-METRIC PART

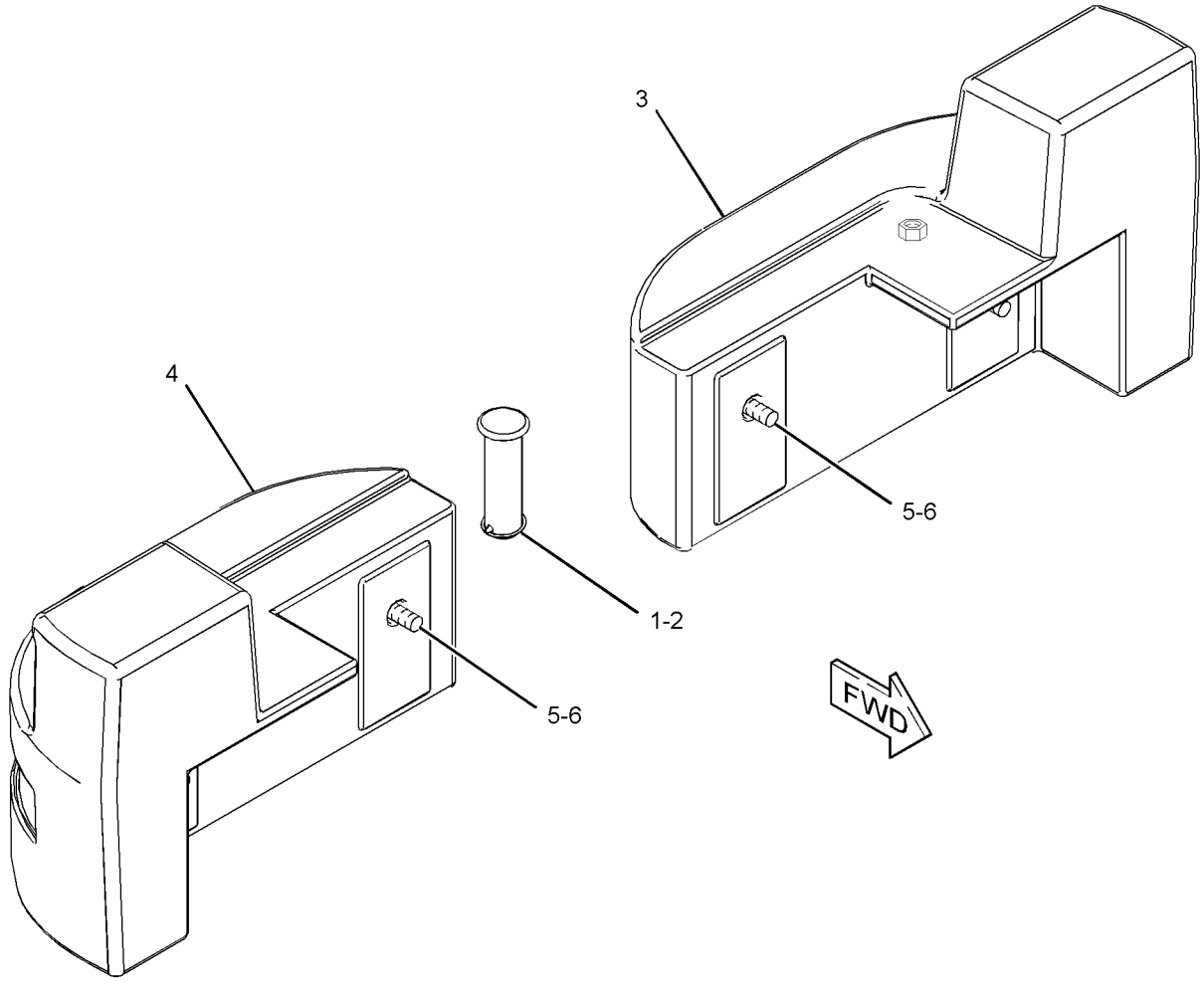

GRAPHIC #1 **<END>** g01881973

FRAME AND BODY

302-3800 DOOR GP-ACCESS—HOOD SIDE, RH

S/N: JKM1-UP

PART OF 307-8435, 307-8440 HOOD & GUARD GP

ALSO AN ATTACHMENT

SMCS-7273 **i03545045**

NOTE	REF NO	GRAPHIC REF	PART NUMBER	QTY	PART NAME 1 2 3 4 5 6 (PRODUCT LEVEL)	SEE PAGE
	1	1	**118-9587**	1	CAM-LATCH	
J	2	1	**275-0572**	1	LATCH AS	
	3	1	**302-3801**	1	DOOR AS-ACCESS (RH)	
		1	**119-0281**	2	HINGE AS	

J-REQUIRES CORPORATE KEY

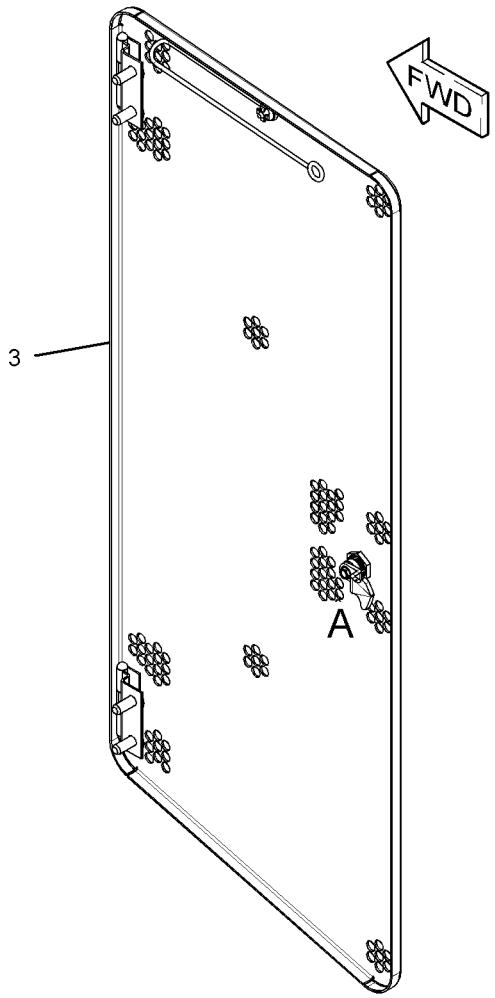

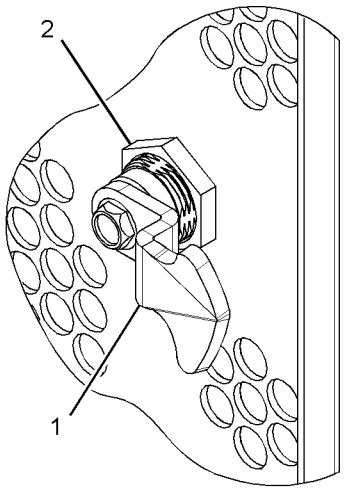

VIEW OF AREA A

GRAPHIC #1 **<END>** g01878932

FRAME AND BODY

267-3135 DOOR GP-TOOL BOX

S/N: JKM1-UP
PART OF 317-9484, 317-9490 CONFIGURATION AR
AN ATTACHMENT

SMCS-7273 **i02930673**

NOTE	REF NO	GRAPHIC REF	PART NUMBER	QTY	PART NAME 1 2 3 4 5 6 (PRODUCT LEVEL)	SEE PAGE
	1	1	**260-3568**	1	LATCH AS	
	2	1	**262-4748**	1	PAWL	
	3	1	**267-3081**	1	DOOR AS-STORAGE (LH)	
	4	1	**7X-7729**	3	WASHER (11X25X3-MM THK)	
M	5	1	**8T-4137**	3	BOLT (M10X1.5X20-MM)	
D	6	1	**5P-5637**		SEAL (1.1-M)	
E	7	1	**316-9189**		SEAL (42-CM)	

D-ORDER BY THE METER
E-ORDER BY THE CENTIMETER
M-METRIC PART

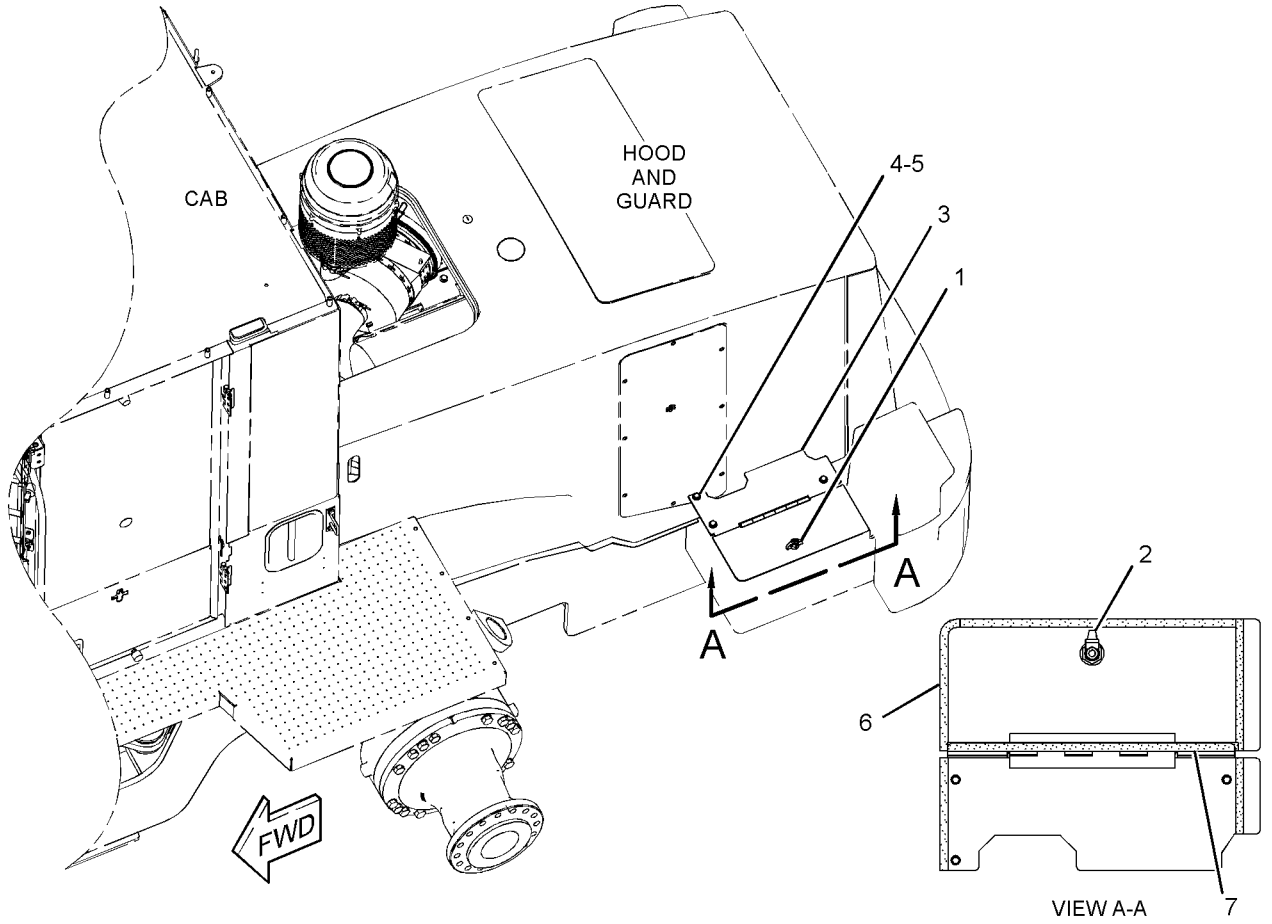

GRAPHIC #1 **<END>** g01439926

150-1743 EXTENSION GP-FENDER

S/N: JKM1-UP
PART OF 237-7540 CHASSIS AR
ALSO AN ATTACHMENT

SMCS-7252 **i01615208**

NOTE	REF NO	GRAPHIC REF	PART NUMBER	QTY	PART NAME 1 2 3 4 5 6 (PRODUCT LEVEL)	SEE PAGE
	1	1	**149-8177**	2	DEFLECTOR AS	
	2	1	**8T-4121**	8	WASHER-HARD (11X21X2.5-MM THK)	
M	3	1	**8T-4133**	8	NUT (M10X1.5-THD)	

M-METRIC PART

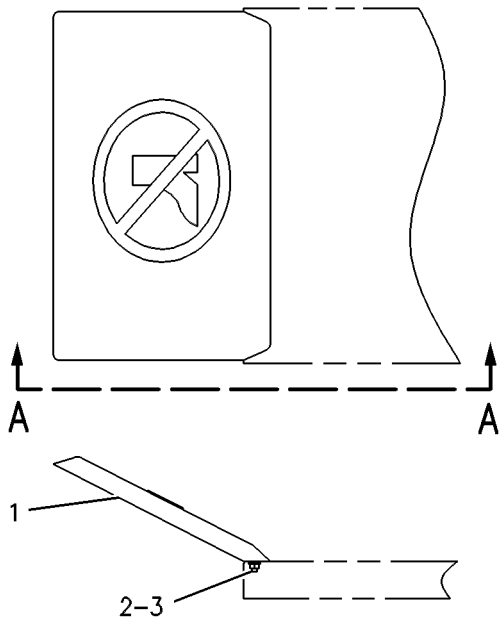

VIEW A-A

GRAPHIC #1 **<END>** g00316586

265-9758 FENDER AR-ROADING

S/N: JKM1-UP
CANNOT BE USED WITH 258-4543—PAGE 995, 269-4871—PAGE 995
AN ATTACHMENT

SMCS-7252 **i02930745**

NOTE	PART NUMBER	QTY	PART NAME 1 2 3 4 5 6 (PRODUCT LEVEL)	SEE PAGE
Y	*264-1300*	1	FENDER GP-ROADING	508
Y	*266-1690*	1	HARDWARE GP-REAR FRAME	547

Y-SEPARATE ILLUSTRATION

<END>

300-9596 FENDER AR-ROADING

S/N: JKM1-UP
AN ATTACHMENT

SMCS-7252 **i02932401**

NOTE	PART NUMBER	QTY	PART NAME 1 2 3 4 5 6 (PRODUCT LEVEL)	SEE PAGE
Y	*264-1300*	1	FENDER GP-ROADING	508
Y	*266-1690*	1	HARDWARE GP-REAR FRAME	547
M	**8T-4193**	4	BOLT (M16X2X50-MM)	
	300-1927	2	PLATE	

M-METRIC PART
Y-SEPARATE ILLUSTRATION

<END>

126-9535 FENDER GP

S/N: JKM1-UP

PART OF 237-7540 CHASSIS AR

SMCS-7252 **i01877212**

NOTE	REF NO	GRAPHIC REF	PART NUMBER	QTY	PART NAME 1 2 3 4 5 6 (PRODUCT LEVEL)	SEE PAGE
	1	1	**131-2752**	1	FENDER AS-FRONT (LH)	
	2	1	**131-2753**	1	FENDER AS-FRONT (RH)	
	3	1	**134-9454**	1	FENDER AS-REAR (RH)	
	4	1	**134-9458**	1	FENDER AS-REAR (LH)	
	5	1	**5P-1076**	8	WASHER-HARD (13.5X30X4-MM THK)	
	6	1	**7X-7729**	12	WASHER (11X25X3-MM THK)	
M	7	1	**8T-4186**	12	BOLT (M10X1.5X40-MM)	
M	8	1	**8T-4244**	8	NUT (M12X1.75-THD)	

M-METRIC PART

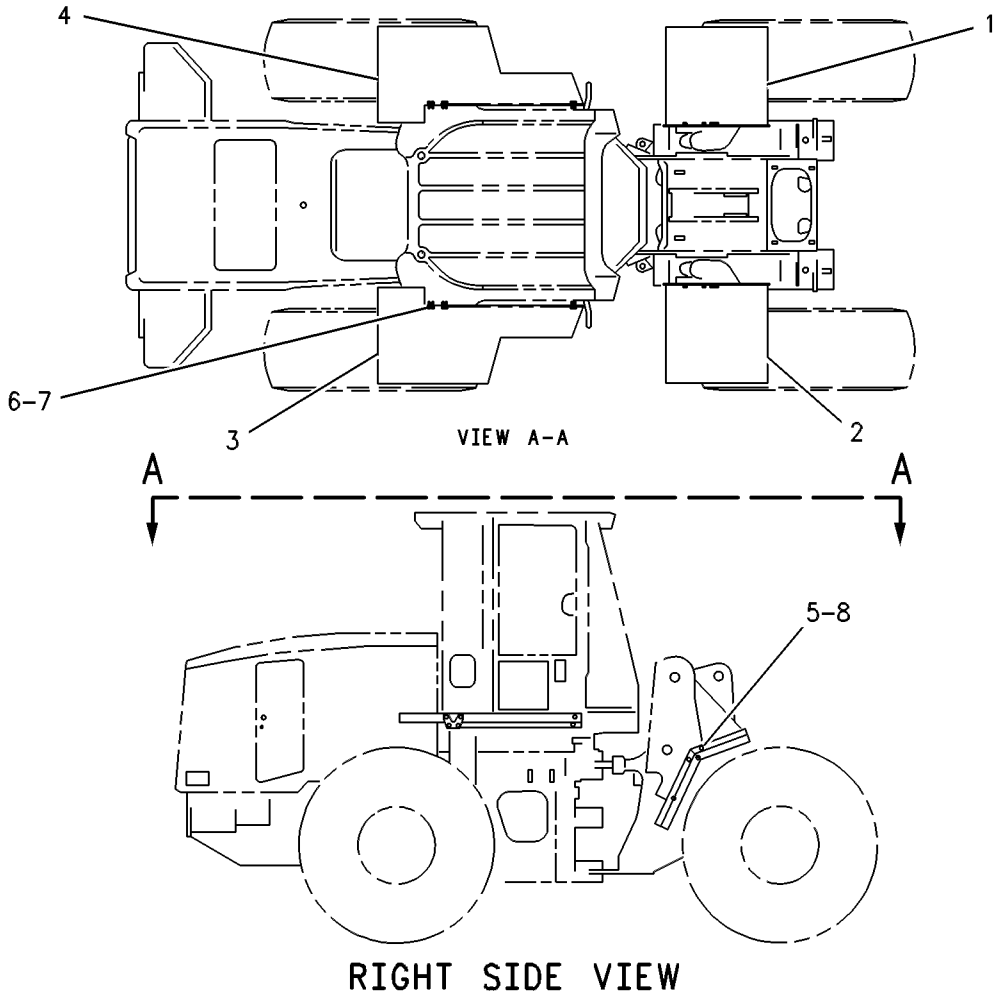

GRAPHIC #1 **<END>** g00269837

FRAME AND BODY

201-6761 FENDER GP

S/N: JKM1-UP
NARROW
AN ATTACHMENT

SMCS-7252 **i02938556**

NOTE	PART NUMBER	QTY	PART NAME 1 2 3 4 5 6 (PRODUCT LEVEL)	SEE PAGE
	201-6775	1	FENDER AS-FRONT (LH)	
	201-6776	1	FENDER AS-FRONT (RH)	
	201-6777	1	FENDER AS-REAR (LH)	
	201-6778	1	FENDER AS-REAR (RH)	

<END>

FRAME AND BODY

264-1300 FENDER GP-ROADING

S/N: JKM1-UP

PART OF 265-9758, 300-9596 FENDER AR-ROADING

AN ATTACHMENT

SMCS-7252 **i03538440**

NOTE	REF NO	GRAPHIC REF	PART NUMBER	QTY	PART NAME 1 2 3 4 5 6 (PRODUCT LEVEL)	SEE PAGE
	1	3	**3B-4615**	4	PIN-COTTER	
	2	3	**6W-5817**	2	SPRING	
	3	3	**8T-3985**	2	KNOB	
	4	3	**8T-4968**	2	END-YOKE ROD	
	5	1	**102-5846**	2	ANGLE	
	6	1	**102-5848**	2	DEFLECTOR	
	7	1	**102-5849**	2	STRIP	
M	8	5	**129-3178**	16	LOCKNUT (M6X1-THD)	
	9	3	**132-1924**	1	SUPPORT AS-FENDER LATCH (RH)	
	10	3	**132-1929**	1	SUPPORT AS-FENDER LATCH (LH)	
	11	3	**178-2594**	2	BUMPER	
	12	4	**201-6777**	1	FENDER AS-REAR (LH)	
	13	4	**201-6778**	1	FENDER AS-REAR (RH)	
	14	3	**220-2612**	2	LATCH	
Y	15	1	*264-1271*	1	LADDER GP	564
	16	1	**264-1276**	2	BAR	
Y	17	1	*264-1281*	1	HINGE GP-ROADING FENDER (RH)	549
	18	5	**264-1290**	2	DEFLECTOR	
	19	5	**269-1995**	2	DEFLECTOR	
	20	4	**276-9729**	1	FENDER AS-FRONT (RH)	
M		4	**6V-9632**	3	NUT-WELD (M6X1-THD)	
M		4	**8T-3490**	11	NUT-WELD (M10X1.5-THD)	
		4	**9R-2060**	4	BOSS (M10X1.5X21-MM)	
	21	4	**276-9730**	1	FENDER AS-FRONT (LH)	
M		4	**6V-9632**	3	NUT-WELD (M6X1-THD)	
M		4	**8T-3490**	11	NUT-WELD (M10X1.5-THD)	
		4	**9R-2060**	4	BOSS (M10X1.5X21-MM)	
	22	2	**276-9733**	1	COVER (RH)	
	23	2	**276-9734**	1	COVER (LH)	
	24	4	**276-9735**	1	DEFLECTOR (RH)	
	25	4	**276-9736**	1	DEFLECTOR (LH)	
	26	4	**276-9737**	1	DEFLECTOR (RH)	
	27	4	**276-9738**	1	DEFLECTOR (LH)	
	28	3	**276-9749**	2	ROD AS	
	29	5	**292-4458**	1	PLATE	
	30	5	**292-4459**	1	PLATE	
	31	5	**292-4460**	1	BRACKET	
	32	5	**292-4461**	1	BRACKET	
Y	33	4	*299-9078*	1	HINGE GP-ROADING FENDER (LH)	550
	34	2	**314-2566**	1	CHANNEL AS (RH)	
	35	2	**314-2567**	1	CHANNEL AS (LH)	
	36	3	**314-3332**	1	SUPPORT AS (RH)	
	37	3	**314-3333**	1	SUPPORT AS (LH)	
	38	3	**317-9088**	2	GUIDE AS	
	39	3	**092-9741**	2	GROMMET	
M	40	5	**3E-8020**	16	SCREW-TRUSS HEAD (M6X1X25-MM)	
	41	3	**198-4778**	4	WASHER-HARD (13.5X30X12-MM THK)	
	42	3	**1B-0676**	2	PIN	
	43	3	**3B-2062**	2	PIN	
M	44	3	**5C-7261**	2	NUT (M8X1.25-THD)	
	45	5	**5P-1076**	6	WASHER-HARD (13.5X30X4-MM THK)	
	46	1,4	**7X-0515**	4	WASHER-HARD (17X35X5-MM THK)	
	47	5	**7X-0578**	16	WASHER-HARD (10.2X32X2.5-MM THK)	
M	48	1,4	**110-4821**	4	BOLT-SOCKET HEAD (M16X2X55-MM)	
	49	2,3,5	**7X-7729**	26	WASHER (11X25X3-MM THK)	

264-1300 **FENDER GP-ROADING** *(contd.)* **i03538440**

NOTE	REF NO	GRAPHIC REF	PART NUMBER	QTY	PART NAME 1 2 3 4 5 6 (PRODUCT LEVEL)	SEE PAGE
	50	3,5	**8T-4121**	18	WASHER-HARD (11X21X2.5-MM THK)	
M	51	1,3,5	**8T-4133**	12	NUT (M10X1.5-THD)	
M	52	5	**8T-4136**	2	BOLT (M10X1.5X25-MM)	
M	53	3	**8T-4137**	8	BOLT (M10X1.5X20-MM)	
M	54	5	**8T-4139**	6	BOLT (M12X1.75X30-MM)	
M	55	1	**8T-4181**	6	BOLT (M6X1X20-MM)	
M	56	3	**8T-4183**	4	BOLT (M12X1.75X40-MM)	
M	57	3	**8T-4191**	6	BOLT (M10X1.5X16-MM)	
M	58	1	**8T-4192**	6	BOLT (M12X1.75X25-MM)	
M	59	2,5	**8T-4195**	18	BOLT (M10X1.5X30-MM)	
M	60	5	**8T-4201**	16	BOLT-LOCKING (M10X1.5X20-MM)	
	61	1	**8T-4223**	6	WASHER-HARD (13.5X25.5X3-MM THK)	
M	62	1	**8T-4244**	6	NUT (M12X1.75-THD)	
M	63	1	**9X-2040**	8	SCREW-TRUSS HEAD (M10X1.5X25-MM)	
M	64	3	**9X-2041**	6	SCREW-TRUSS HEAD (M10X1.5X20-MM)	
	65	1,5	**9X-6165**	38	WASHER (6.5X22X2.5-MM THK)	
D	66	3	**5P-5901**		SEAL (4.7-M EACH)	
	67	4	**124-2456**	2	FILM-INSTRUCTION (NO STEP)	

D-ORDER BY THE METER
M-METRIC PART
Y-SEPARATE ILLUSTRATION

REFER TO ALL ILLUSTRATIONS OF
THIS GROUP FOR AUXILIARY VIEWS

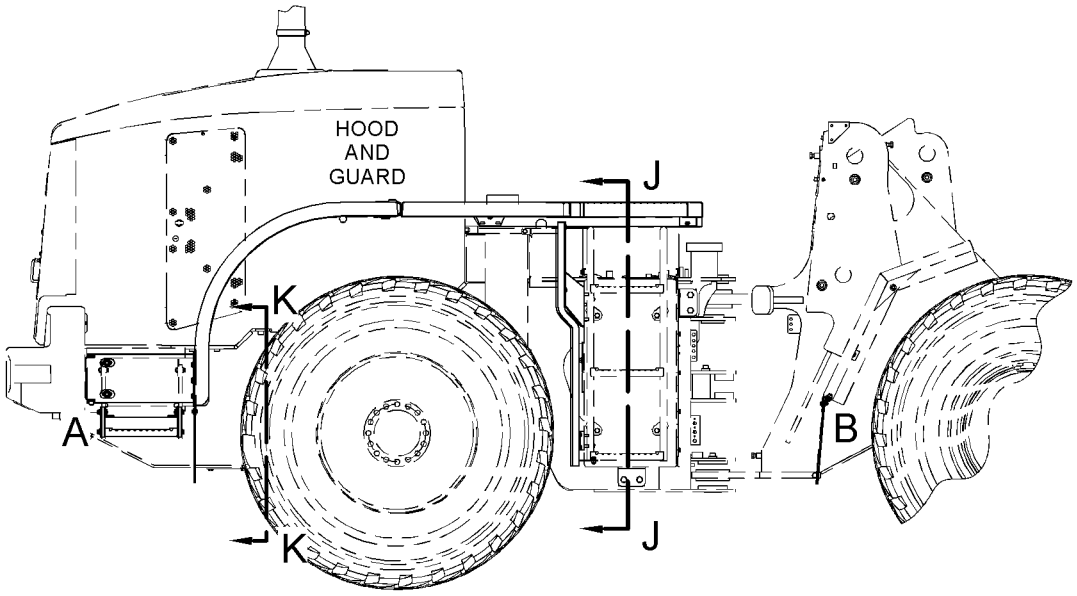

RIGHT SIDE VIEW

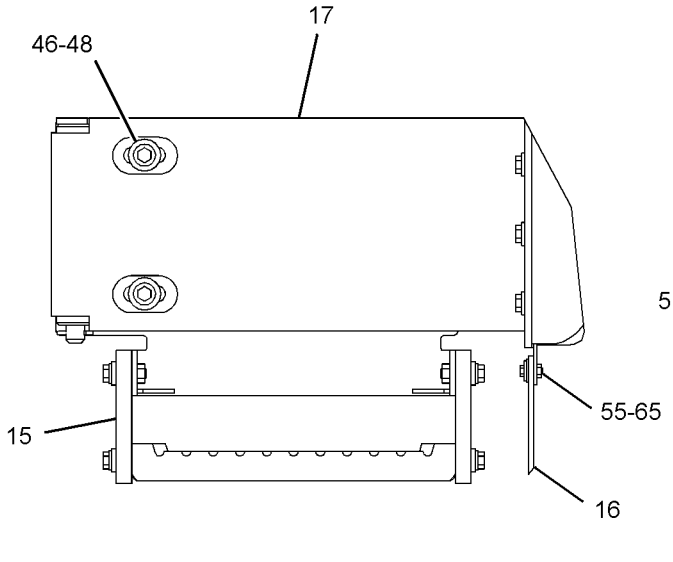

VIEW OF AREA A

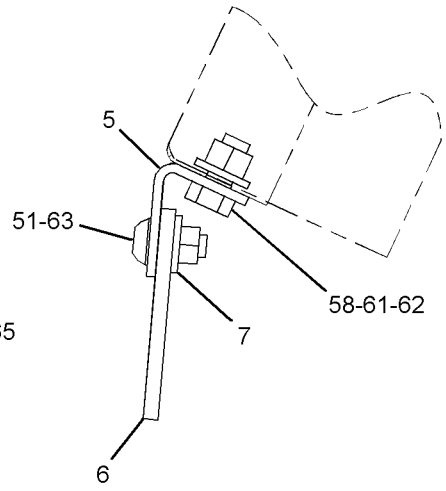

VIEW OF AREA B

GRAPHIC #1

g01869669

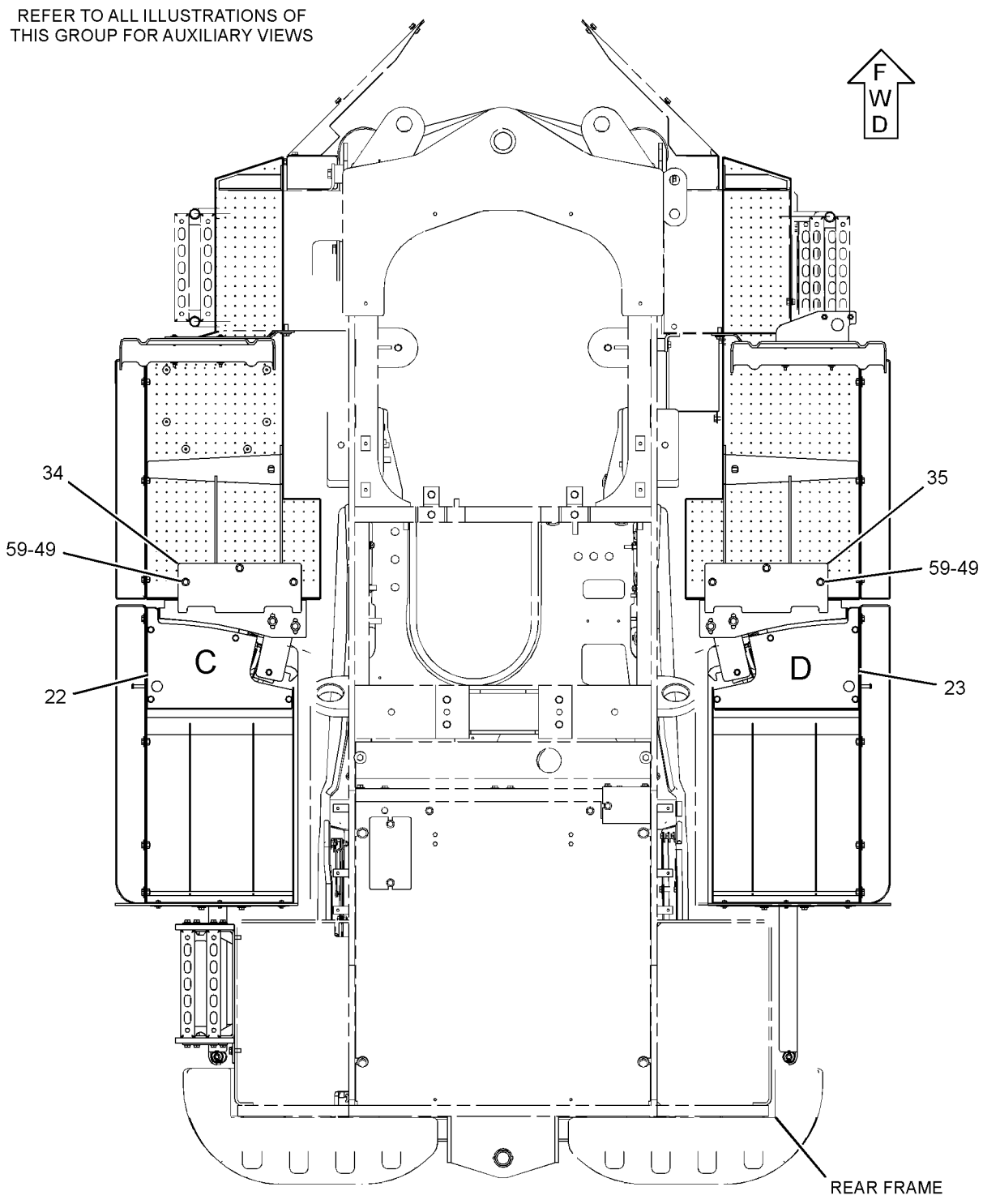

BOTTOM VIEW

GRAPHIC #2 g01442837

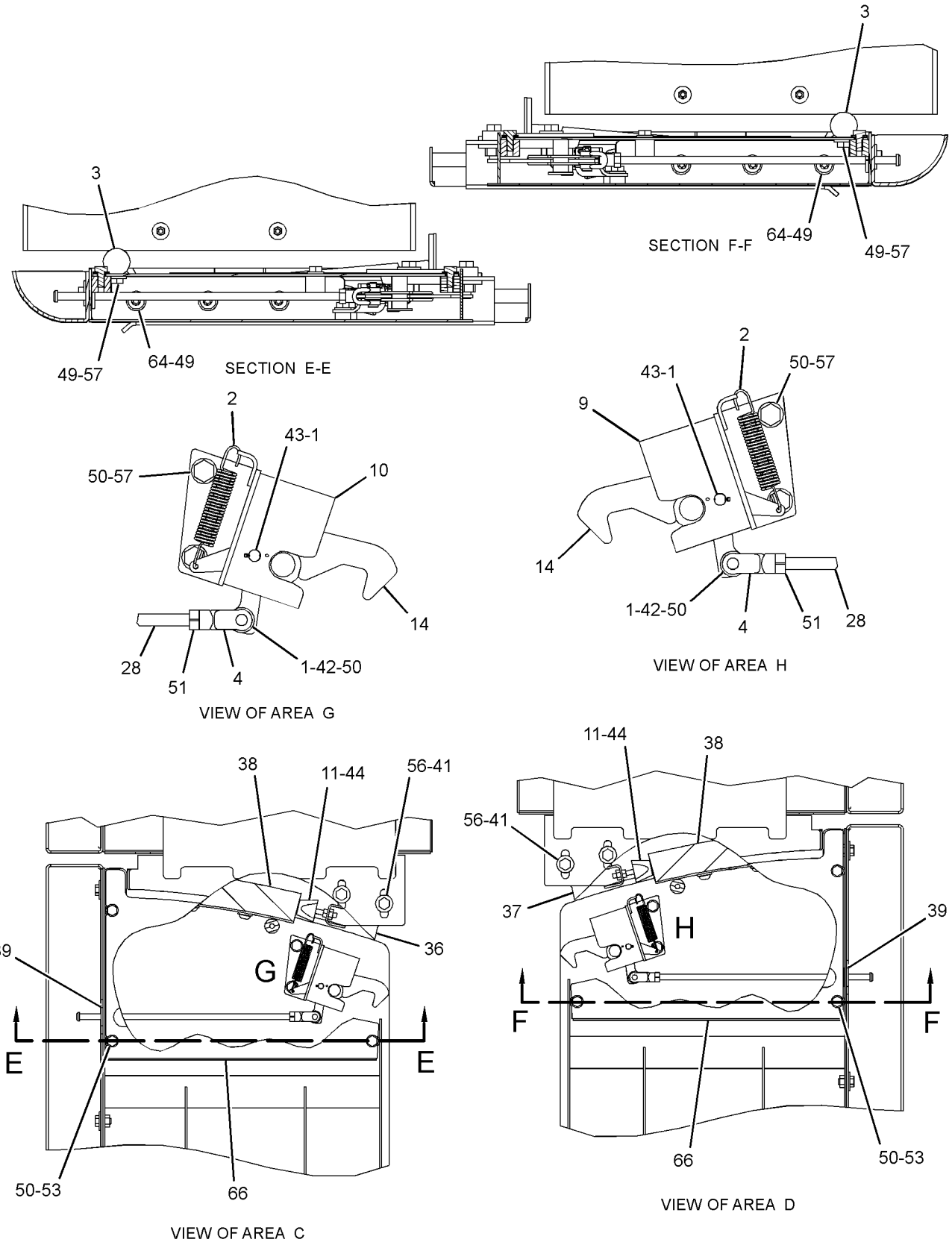

GRAPHIC #3

g01442838

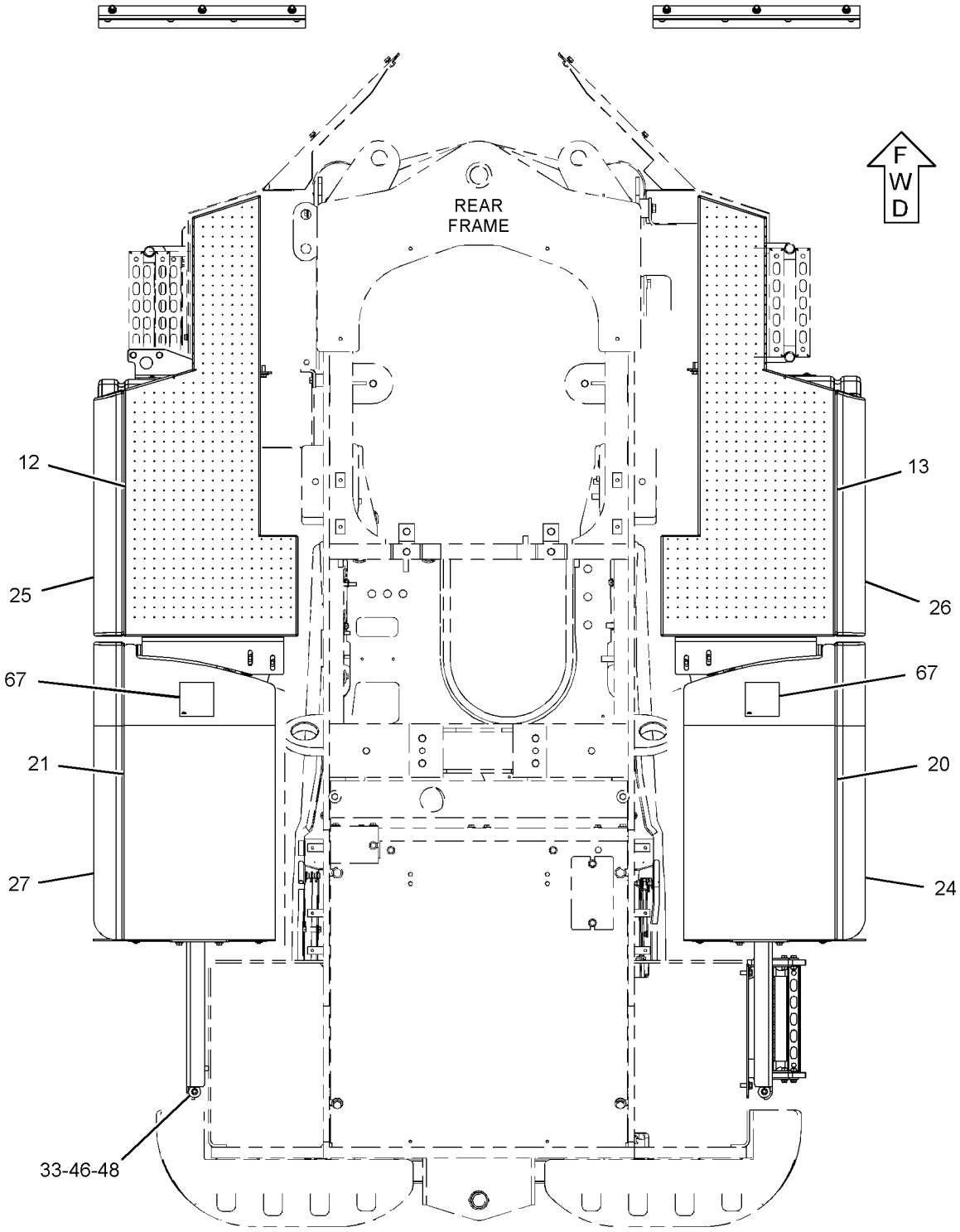

TOP VIEW

GRAPHIC #4

g01869670

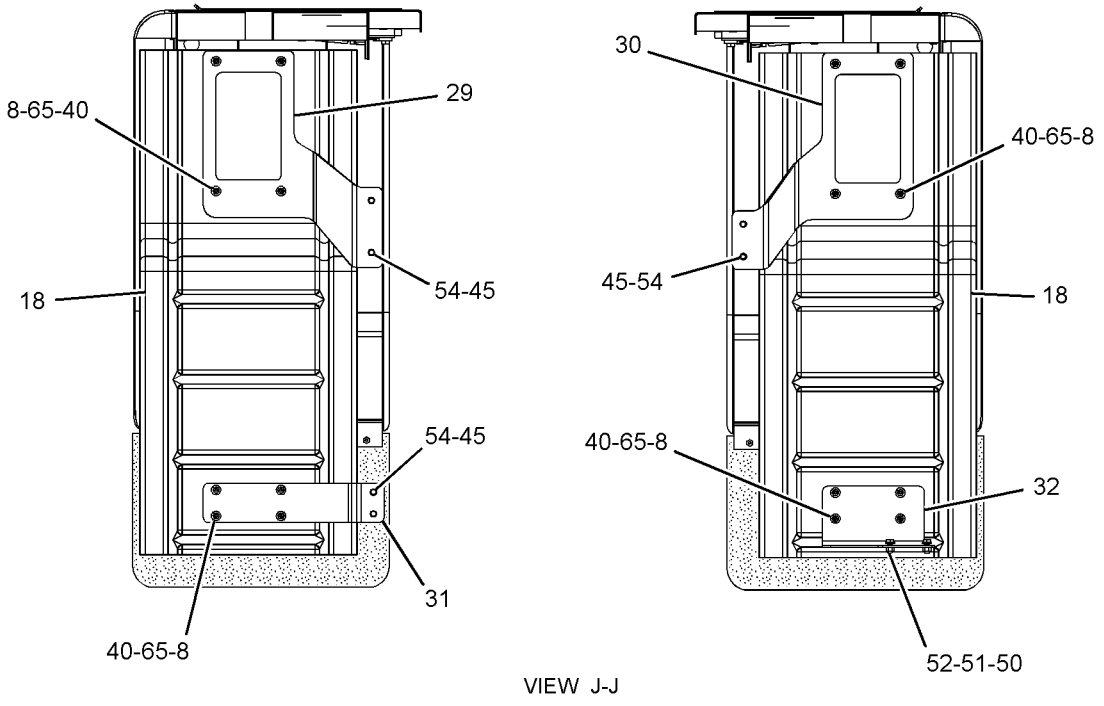

VIEW J-J

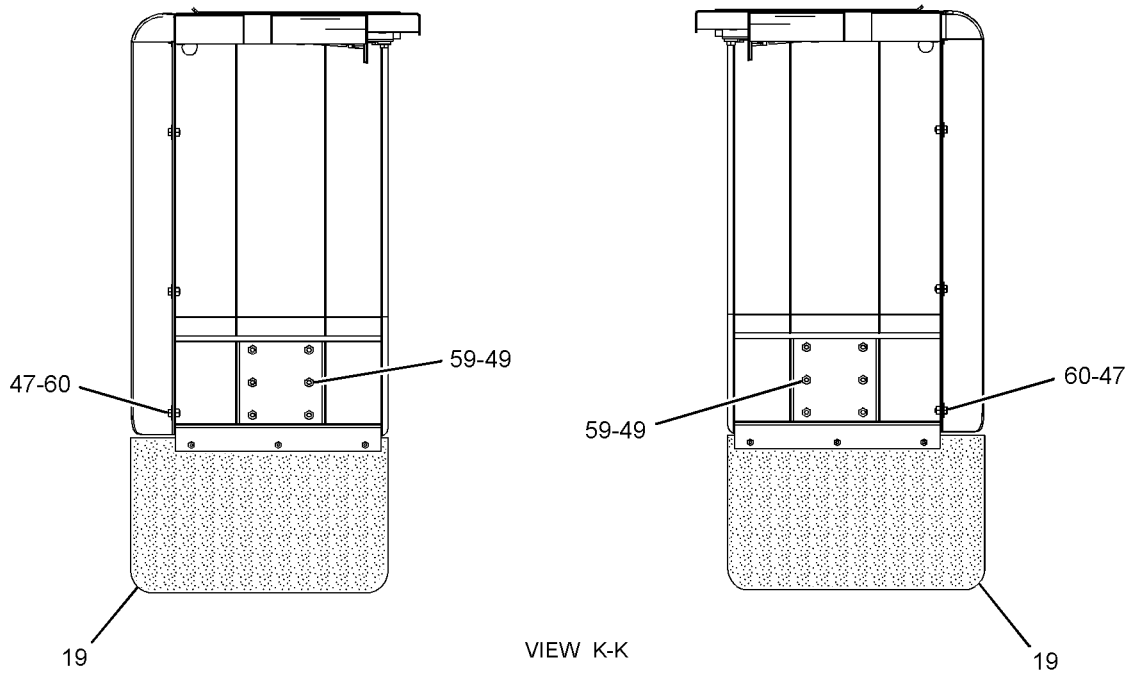

VIEW K-K

GRAPHIC #5 **<END>** g01442839

FRAME AND BODY

237-7542 FRAME AS-LOADER

S/N: JKM1-845

PART OF 237-7540 CHASSIS AR

SMCS-7054 **i03184802**

NOTE	REF NO	GRAPHIC REF	PART NUMBER	QTY	PART NAME 1 2 3 4 5 6 (PRODUCT LEVEL)	SEE PAGE
	1	2	**1V-2647**	2	BLOCK	
	2	1	**7Y-4594**	2	PLATE	
	3	1	**106-7771**	1	PLATE	
	4	1	**169-2554**	1	PLATE	
	5	1	*257-8413*	1	SUPPORT AS	
	5A	1	**7T-1099**	1	LINK	
	5B	1	**8Y-7023**	2	BOSS (M12X1.75-THD)	
M	6	2	**9X-8487**	4	BOSS-WELD (M10X1.5X35-MM)	
M	7	1	**7X-0751**	1	BOSS-WELD (M10X1.5-THD)	
	8	1	**3W-9117**	1	BAR	
M	9	1	**112-9073**	13	STUD-WELD (M12X1.75X21.1-MM)	
M	10	2	**107-2344**	2	BOSS (M10X1.5X60-MM)	
	11	1	*259-2510*	1	SUPPORT AS	
	11A	2	**7T-1099**	2	LINK	
M	11B	1	**9R-2613**	1	BOSS-WELD (M10X1.5X25-MM)	
	11C	2	**125-9738**	1	BLOCK	
	12	2	**5G-8480**	1	LUG	
	13	2	**4I-3398**	2	PLATE	
	14	1	**7T-1099**	24	LINK	
M	15	1	**7X-0750**	1	BOSS-WELD (M10X1.5X55-MM)	
M	16	1	**7X-0752**	2	BOSS-WELD (M10X1.5X65-MM OAL)	
	17	1	**7Y-2522**	2	PLATE	
M	18	1	**7Y-8763**	2	BOSS (M10X1.5X25-MM)	
M	19	1	**8T-3734**	2	BOSS-WELD (M10X1.5X40-MM)	
M	20	1	**8T-3851**	19	BOSS-WELD (M10X1.5X17.5-MM)	
M	21	2	**8T-4935**	6	BOSS-WELD (M10X1.5X45-MM)	
M	22	1	**8T-4967**	4	STUD-WELD (M10X1.5X23-MM OAL)	
	23	2	**9C-6809**	2	BOSS-THREADED (M10X1.5-THD)	
	24	1	**9R-2060**	3	BOSS (M10X1.5X21-MM)	
M	25	2	**9R-2640**	3	BOSS (M12X1.75X25-MM)	
M	26	2	**9R-2821**	3	BOSS (M10X1.5X15-MM)	
M	27	1	**9R-2160**	1	BOSS (M8X1.25X25-MM)	
M	28	2	**9R-3845**	2	BOSS (M12X1.75X38-MM)	

M-METRIC PART

237-7542 FRAME AS-LOADER *(contd.)* **i03184802**

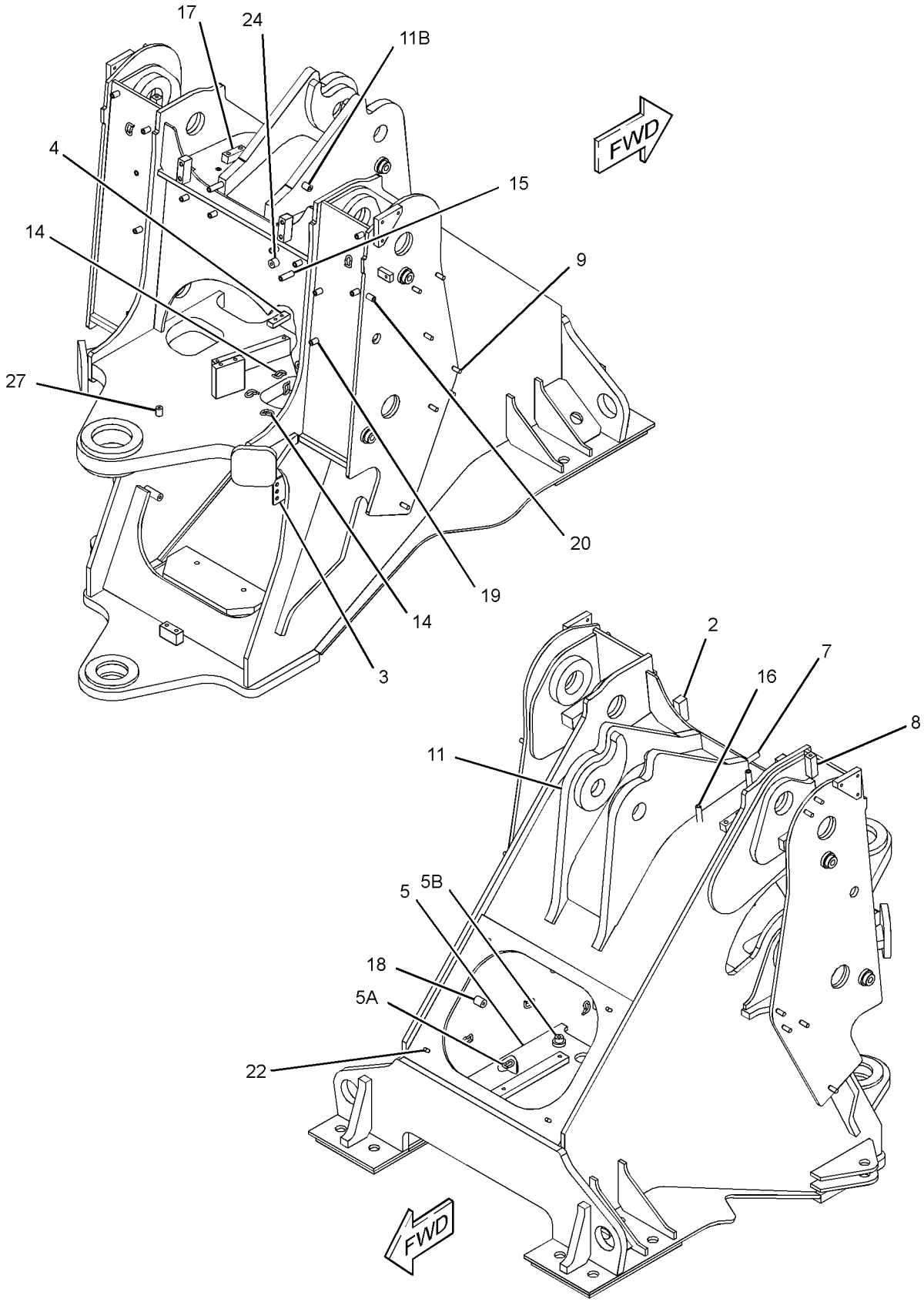

GRAPHIC #1

g01662981

237-7542 FRAME AS-LOADER *(contd.)* **i03184802**

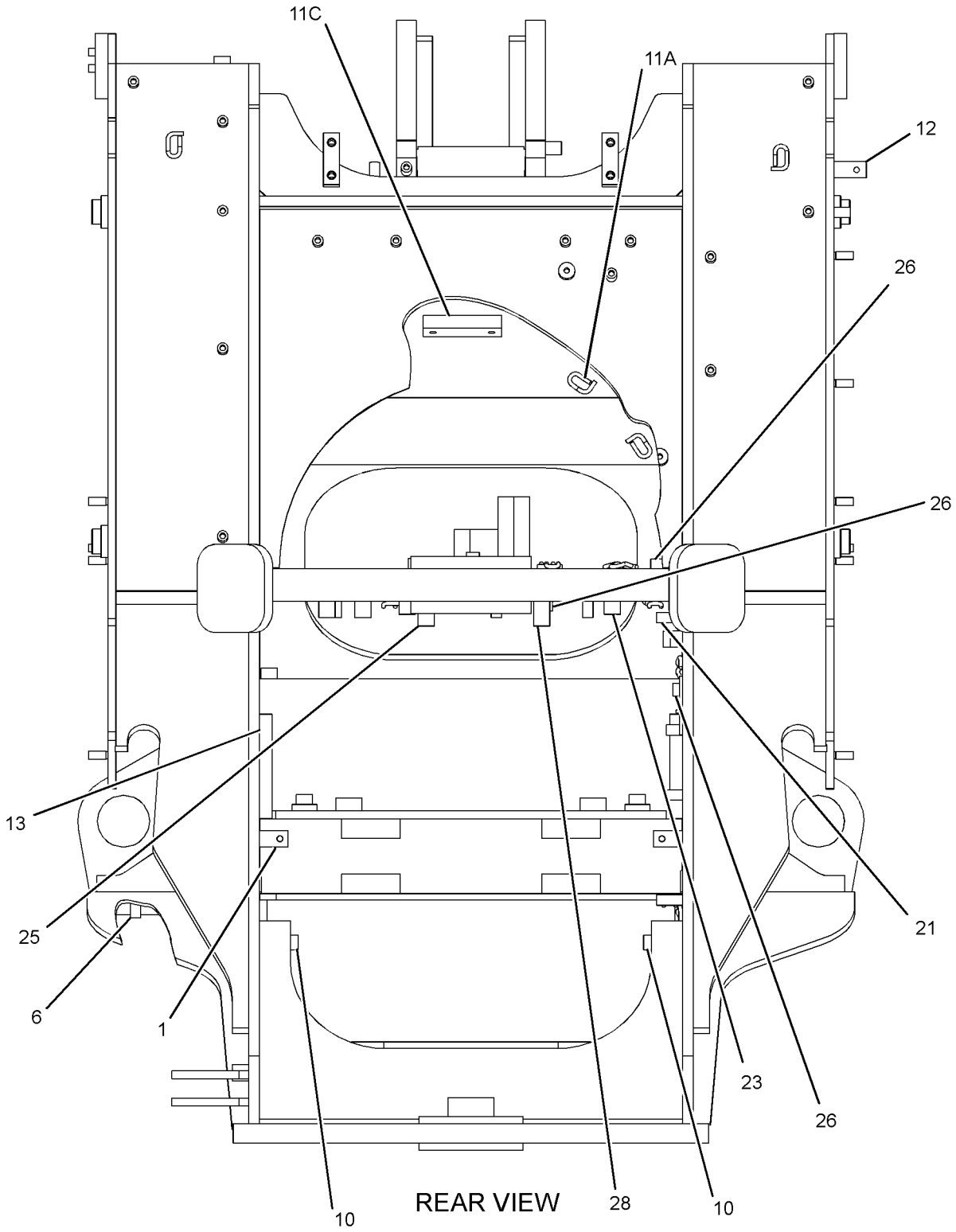

GRAPHIC #2 **<END>** g01662982

FRAME AND BODY

237-7542 FRAME AS-L0ADER

S/N: JKM846-UP

PART OF 237-7540 CHASSIS AR

SMCS-7054 **i03730781**

NOTE	REF NO	GRAPHIC REF	PART NUMBER	QTY	PART NAME 1 2 3 4 5 6 (PRODUCT LEVEL)	SEE PAGE
	1	2	**1V-2647**	2	BLOCK	
	2	1	**7Y-4594**	2	PLATE	
	3	1	**106-7771**	1	PLATE	
	4	1	**169-2554**	1	PLATE	
	5	1	*257-8413*	1	SUPPORT AS	
	5A	1	**7T-1099**	1	LINK	
	5B	1	**8Y-7023**	2	BOSS (M12X1.75-THD)	
M	6	2	**9X-8487**	4	BOSS-WELD (M10X1.5X35-MM)	
M	7	1	**7X-0751**	1	BOSS-WELD (M10X1.5-THD)	
	8	1	**3W-9117**	1	BAR	
M	9	1	**112-9073**	13	STUD-WELD (M12X1.75X21.1-MM)	
	11	1	*259-2510*	1	SUPPORT AS	
	11A	2	**7T-1099**	2	LINK	
M	11B	1	**9R-2613**	1	BOSS-WELD (M10X1.5X25-MM)	
	11C	2	**125-9738**	1	BLOCK	
	12	2	**5G-8480**	1	LUG	
	13	2	**4I-3398**	2	PLATE	
	14	1	**7T-1099**	24	LINK	
CM	15	1,2	**7X-0750**	2	BOSS-WELD (M10X1.5X55-MM)	
M	16	1	**7X-0752**	2	BOSS-WELD (M10X1.5X65-MM OAL)	
	17	1	**7Y-2522**	2	PLATE	
CM	18	1,2	**7Y-8763**	3	BOSS (M10X1.5X25-MM)	
M	19	1	**8T-3734**	2	BOSS-WELD (M10X1.5X40-MM)	
CM	20	1	**8T-3851**	18	BOSS-WELD (M10X1.5X17.5-MM)	
M	21	2	**8T-4935**	6	BOSS-WELD (M10X1.5X45-MM)	
M	22	1	**8T-4967**	4	STUD-WELD (M10X1.5X23-MM OAL)	
	23	2	**9C-6809**	2	BOSS-THREADED (M10X1.5-THD)	
C	24	2	**9R-2060**	2	BOSS (M10X1.5X21-MM)	
M	25	2	**9R-2640**	3	BOSS (M12X1.75X25-MM)	
M	26	2	**9R-2821**	3	BOSS (M10X1.5X15-MM)	
M	27	1	**9R-2160**	1	BOSS (M8X1.25X25-MM)	
M	28	2	**9R-3845**	2	BOSS (M12X1.75X38-MM)	
C	29	1	**4I-3884**	2	PLATE	
CM	43	1	**9R-1733**	2	BOSS (M10X1.5X66.5-MM)	

C-CHANGE FROM PREVIOUS TYPE
M-METRIC PART

237-7542 FRAME AS-LOADER *(contd.)* **i03730781**

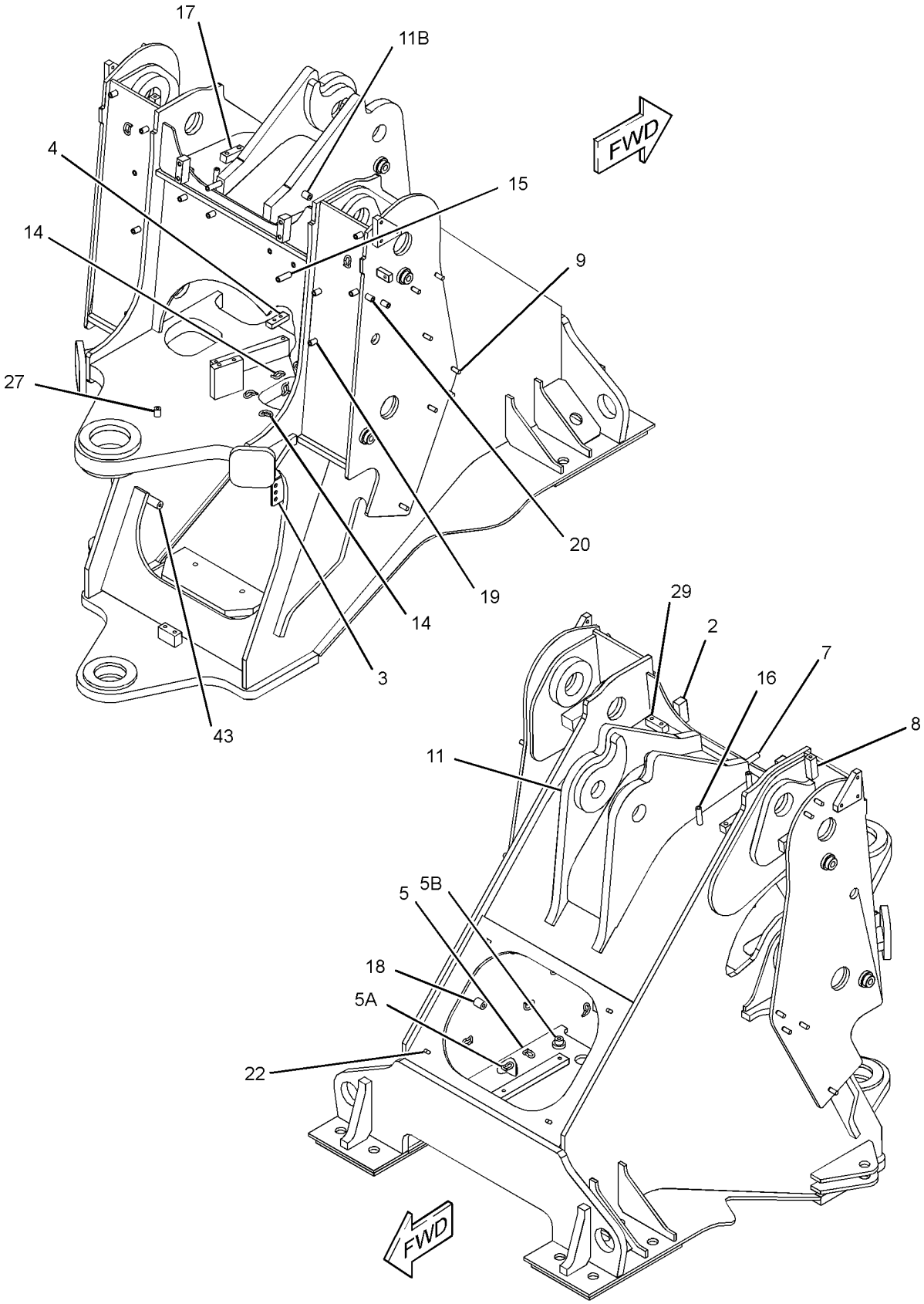

GRAPHIC #1 g01936734

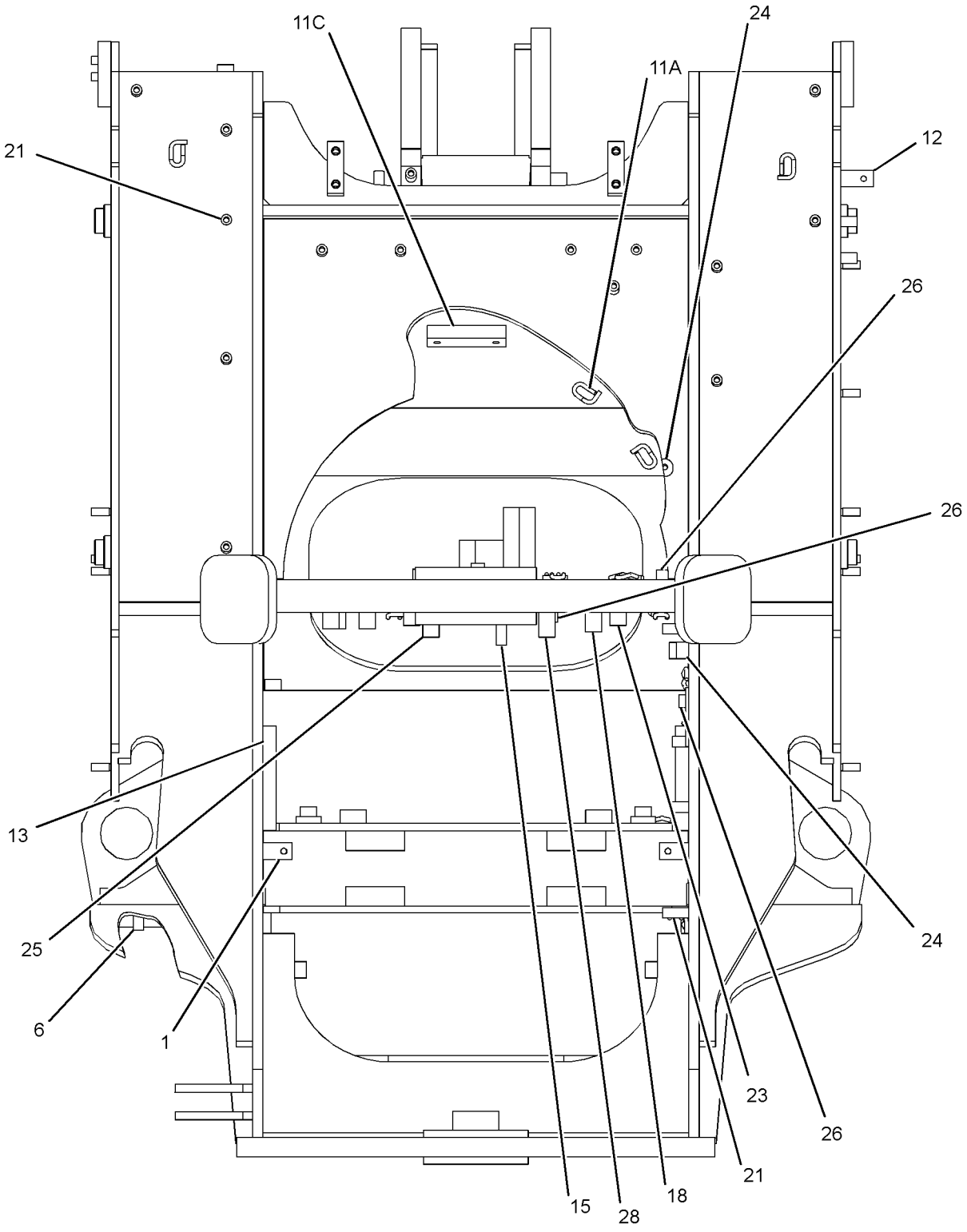

REAR VIEW

GRAPHIC #2

<END>

g01936735

FRAME AND BODY

237-7541 FRAME AS-REAR

S/N: JKM1-UP

PART OF 237-7540 CHASSIS AR

SMCS-7051 **i03301920**

NOTE	REF NO	GRAPHIC REF	PART NUMBER	QTY	PART NAME 1 2 3 4 5 6 (PRODUCT LEVEL)	SEE PAGE
	1	1	**3V-2793**	2	EYE	
	2	1	**3W-9117**	3	BAR	
	3	3	**8Y-7023**	3	BOSS (M12X1.75-THD)	
	12	1,2	**131-6593**	8	BOSS (M12X1.75X20-MM)	
	17	2	**178-0711**	1	PLATE	
	20	1	**259-5632**	1	BOX AS (RH)	
M		1	**8T-3490**	2	NUT-WELD (M10X1.5-THD)	
M		1	**8T-3597**	4	NUT-WELD (M12X1.75-THD)	
		1	**8X-5147**	2	BLOCK	
	23	1	**259-5638**	1	BOX AS (LH)	
		1	**8X-5147**	3	BLOCK	
	36	3	**090-8247**	1	BLOCK	
M	38	1,2,3	**110-2023**	4	STUD-WELD (M10X1.5X25-MM)	
	40	1	**141-0008**	4	PLATE	
	42	2	**4I-6289**	2	PLATE	
	43	1	**4I-6602**	2	BOSS (M12X1.75X20-MM)	
	44	3	**5G-6978**	1	LUG	
	45	1	**5G-8480**	6	LUG	
	46	1	**5V-1007**	2	BUSHING	
	47	1,2,3	**7T-1099**	42	LINK	
M	48	1,3	**7X-0750**	2	BOSS-WELD (M10X1.5X55-MM)	
M	49	1,3	**7X-0752**	2	BOSS-WELD (M10X1.5X65-MM OAL)	
	51	2	**7Y-2522**	2	PLATE	
M	52	1,2	**8T-3635**	2	STUD-WELD (M12X1.75X34.93-MM OAL)	
M	53	1,3	**8T-3734**	3	BOSS-WELD (M10X1.5X40-MM)	
M	54	1,2,3	**8T-3851**	39	BOSS-WELD (M10X1.5X17.5-MM)	
M	55	2	**8T-4219**	4	STUD-WELD (M10X1.5X17.5-MM)	
M	56	1,3	**8T-4935**	11	BOSS-WELD (M10X1.5X45-MM)	
M	57	1,3	**8T-4967**	13	STUD-WELD (M10X1.5X23-MM OAL)	
	58	1	**8X-5147**	4	BLOCK	
	59	3	**9C-4935**	1	PLATE	
M	61	1,3	**9R-2613**	4	BOSS-WELD (M10X1.5X25-MM)	
M	62	3	**9R-2640**	2	BOSS (M12X1.75X25-MM)	
M	63	3	**9R-2672**	1	BOSS-THREADED (M10X1.5-THD)	
M	64	2	**9R-2821**	1	BOSS (M10X1.5X15-MM)	
	65	1	**9R-4595**	1	BOSS (M12X1.75X30-MM)	
M	66	2	**9R-9866**	2	BOSS-THREADED (M10X1.5-THD)	
M	67	1,3	**9X-8487**	3	BOSS-WELD (M10X1.5X35-MM)	

M-METRIC PART

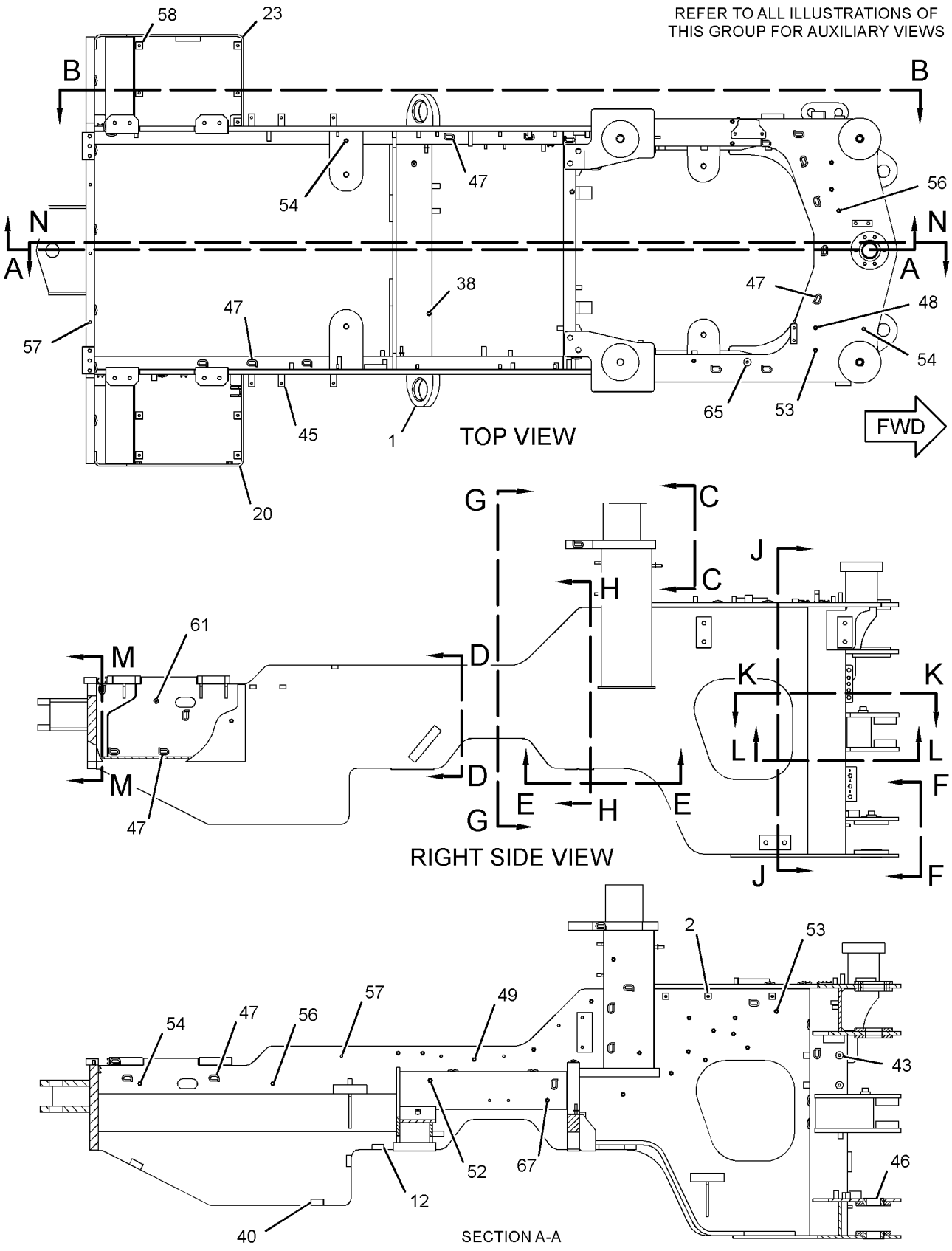

GRAPHIC #1

g01849697

237-7541 FRAME AS-REAR *(contd.)* **i03301920**

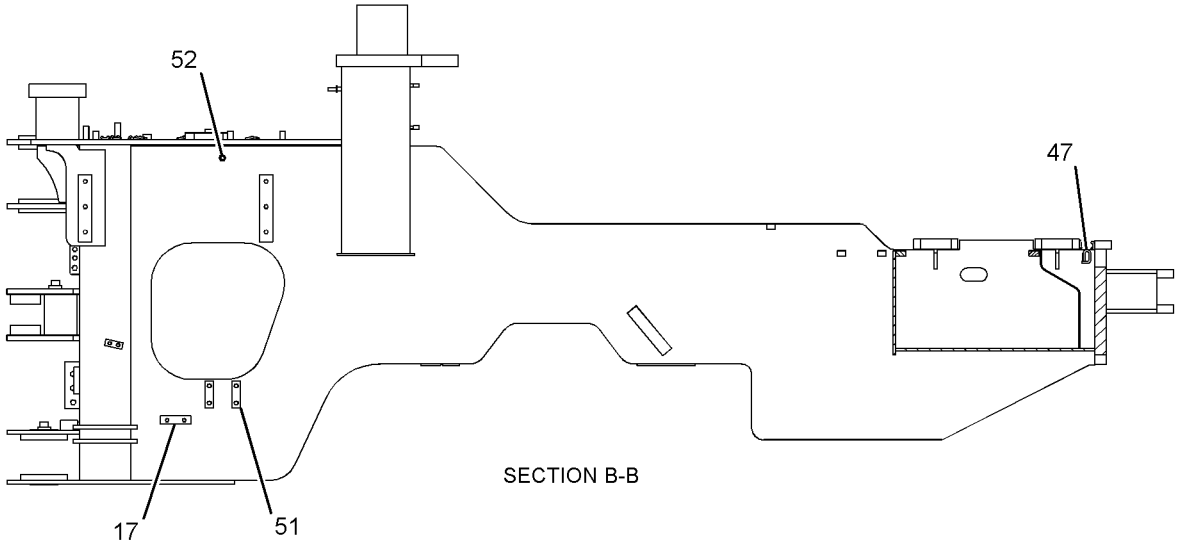

SECTION B-B

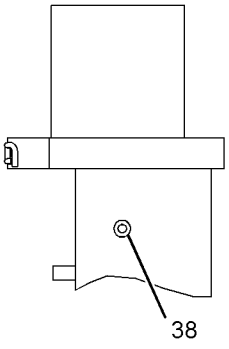

VIEW C-C

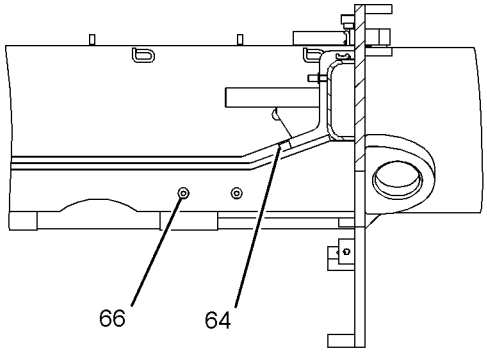

SECTION D-D

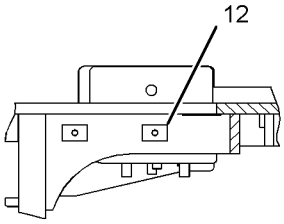

SECTION E-E

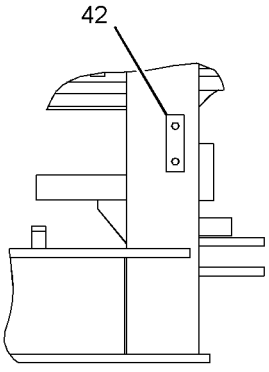

VIEW F-F

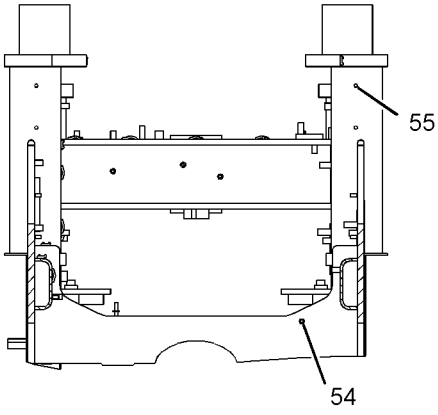

SECTION G-G

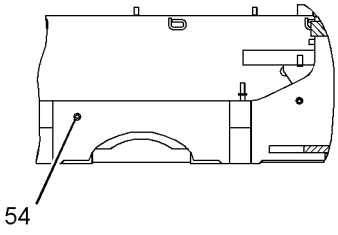

SECTION H-H

GRAPHIC #2 g01451613

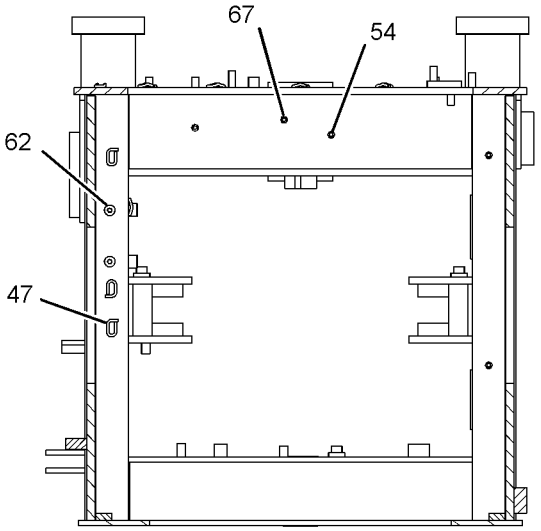

SECTION J-J

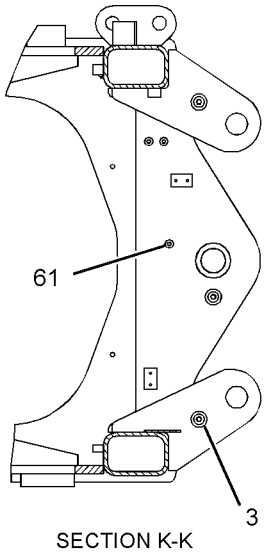

SECTION K-K

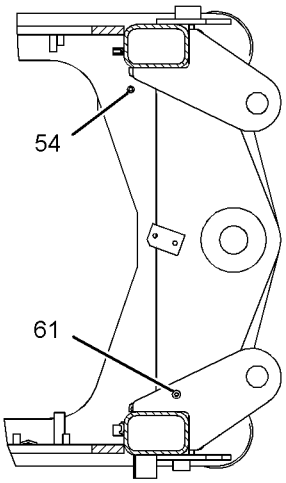

SECTION L-L

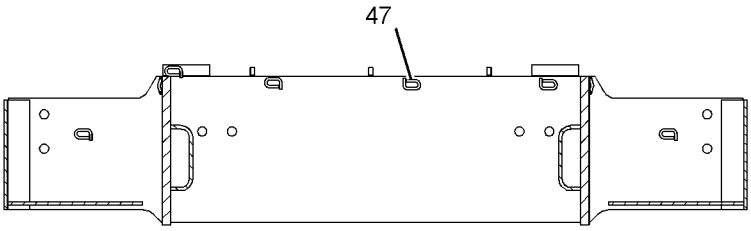

SECTION M-M

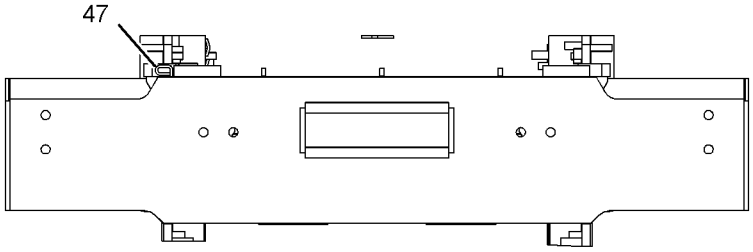

REAR VIEW

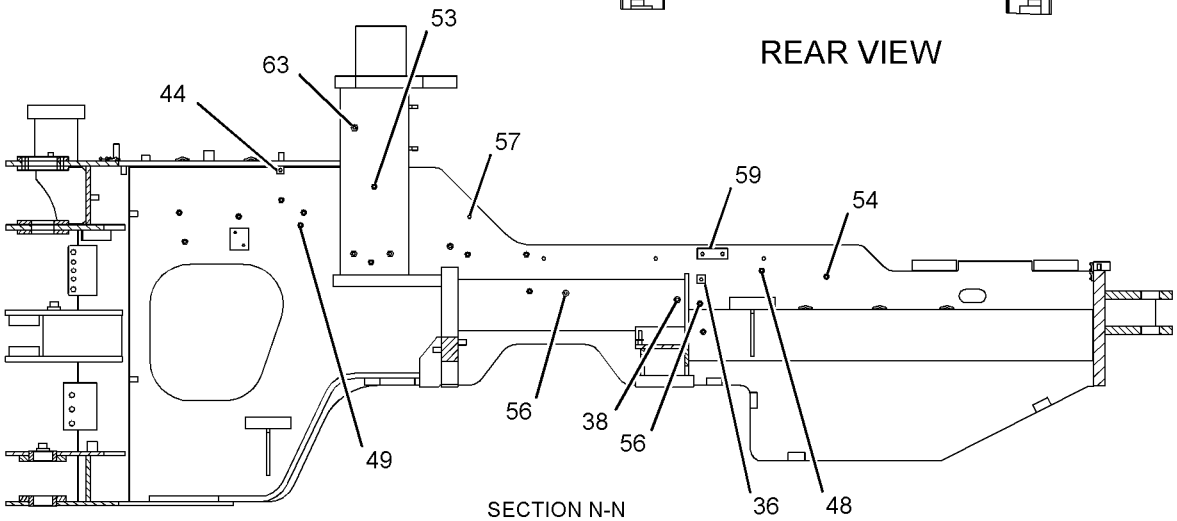

SECTION N-N

GRAPHIC #3

<END>

g01849696

263-6065 GRILL GP-RADIATOR

S/N: JKM1-UP

PART OF 307-8435, 307-8440 HOOD & GUARD GP

ALSO AN ATTACHMENT

SMCS-7170 **i03185380**

NOTE	REF NO	GRAPHIC REF	PART NUMBER	QTY	PART NAME 1 2 3 4 5 6 (PRODUCT LEVEL)	SEE PAGE
	1	1	**5P-0372**	2	LOCK PIN	
	2	1	**6W-5817**	1	SPRING	
	3	1	**6W-5818**	1	LATCH	
	4	1	**220-8365**	1	SCREEN AS	
	5	1	**227-5716**	1	PIN AS	
	6	1	**229-7534**	1	LATCH AS	
	7	1	**236-9939**	1	PLATE AS	
		1	**8T-4121**	2	WASHER-HARD (11X21X2.5-MM THK)	
	8	1	**266-4597**	1	BAFFLE	
	9	1	**266-4603**	1	BAFFLE	
	10	1	**302-2360**	1	GRILL AS-REAR	
		1	**174-3085**	2	HINGE AS	
		1	**8G-0871**	1	HANDLE	
		1	**9V-0334**	1	ANGLE	
		1	**9V-0453**	1	BUSHING-TERMINAL	
	11	1	**302-2366**	1	BRACKET AS	
	12	1	**096-3781**	1	PIN-CLEVIS	
	13	1	**3B-2062**	1	PIN	
	14	1	**5P-1076**	3	WASHER-HARD (13.5X30X4-MM THK)	
	15	1	**7X-7729**	4	WASHER (11X25X3-MM THK)	
	16	1	**8T-4121**	8	WASHER-HARD (11X21X2.5-MM THK)	
M	17	1	**8T-4133**	7	NUT (M10X1.5-THD)	
M	18	1	**8T-4136**	4	BOLT (M10X1.5X25-MM)	
	19	1	**9V-0450**	1	PIN (15-MM OD)	
M	20	1	**9X-2040**	4	SCREW-TRUSS HEAD (M10X1.5X25-MM)	
E	21	1	**246-0435**		SEAL (87-CM)	
E	22	1	**300-7318**		SEAL (94-CM)	
N	23	1	**310-7066**		SEAL (920-MM)	
N	23A	1	**310-7066**		SEAL (730-MM)	
D	24	1	**6V-6604**		SEAL (0.13-M)	
D	24A	1	**6V-6604**		SEAL (0.4-M)	
D	24B	1	**6V-6604**		SEAL (0.09-M)	

D-ORDER BY THE METER
E-ORDER BY THE CENTIMETER
M-METRIC PART
N-ORDER BY THE MILLIMETER

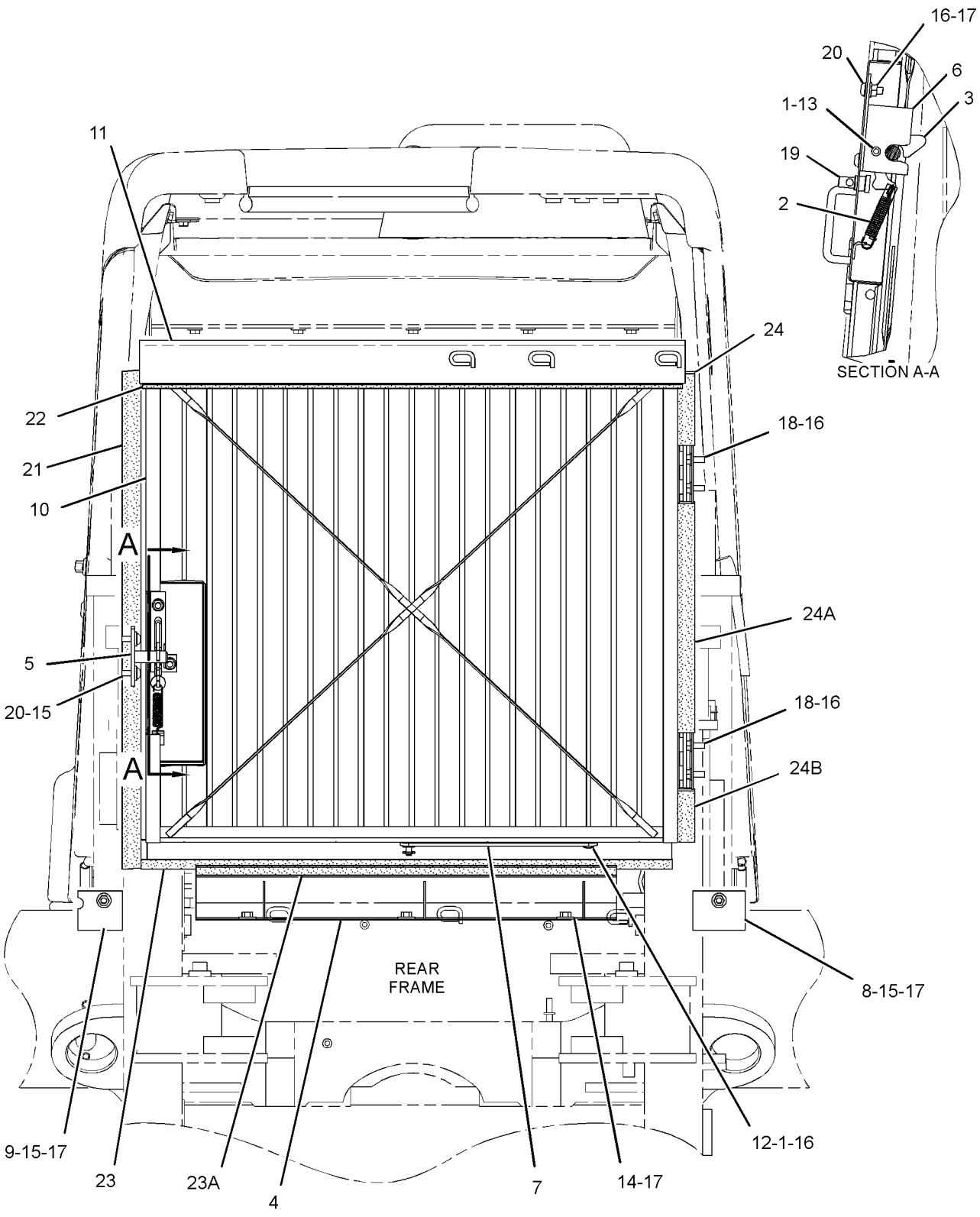

FRONT VIEW

GRAPHIC #1 **<END>** g01662433

273-5785 GUARD GP-AXLE SEAL

S/N: JKM1-UP
PART OF 317-9489 CONFIGURATION AR
AN ATTACHMENT

SMCS-3259, 3260 **i02932406**

NOTE	REF NO	GRAPHIC REF	PART NUMBER	QTY	PART NAME 1 2 3 4 5 6 (PRODUCT LEVEL)	SEE PAGE
	1	1	**273-5800**	4	SHAFT-AXLE	
	3	1	**279-6040**	8	PLATE AS	
	4	1	**8T-4121**	56	WASHER-HARD (11X21X2.5-MM THK)	
M	5	1	**8T-4191**	32	BOLT (M10X1.5X16-MM)	
M	6	1	**8T-4195**	24	BOLT (M10X1.5X30-MM)	

M-METRIC PART

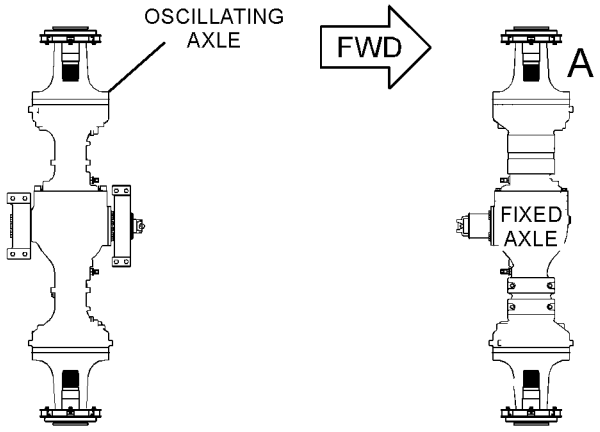

TOP VIEW

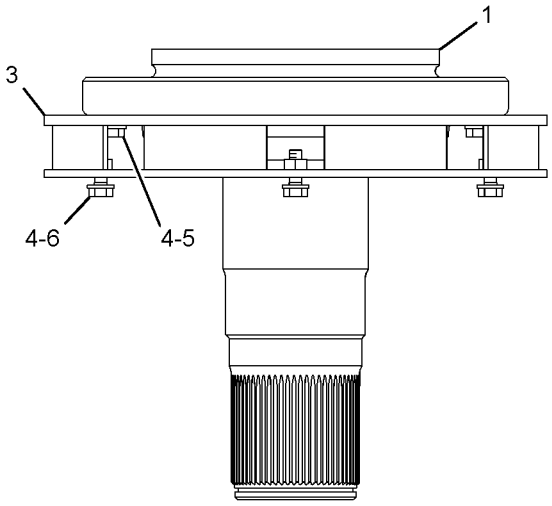

VIEW OF AREA A

GRAPHIC #1 **<END>** g01433015

260-4750 GUARD GP-BOTTOM

S/N: JKM1-UP
PART OF 317-9489 CONFIGURATION AR
AN ATTACHMENT

SMCS-7153 **i03080221**

NOTE	REF NO	GRAPHIC REF	PART NUMBER	QTY	PART NAME 1 2 3 4 5 6 (PRODUCT LEVEL)	SEE PAGE
	1	1	**322-6143**	1	PLATE	
	2	1	**2Q-7327**	1	PLATE AS	
	3	1	**5P-8837**	2	LOCK PIN	
	4	1	**9C-0119**	2	PIN	
	5	1	**323-1604**	1	PLATE AS	
	7	1	**295-8324**	2	COVER AS	
	8	1	**295-8327**	2	COVER AS	
	9	1	**5P-1076**	10	WASHER-HARD (13.5X30X4-MM THK)	
	10	1	**8T-4121**	4	WASHER-HARD (11X21X2.5-MM THK)	
M	11	1	**8T-4139**	24	BOLT (M12X1.75X30-MM)	
M	12	1	**8T-4195**	4	BOLT (M10X1.5X30-MM)	
	13	1	**8T-4223**	14	WASHER-HARD (13.5X25.5X3-MM THK)	

M-METRIC PART

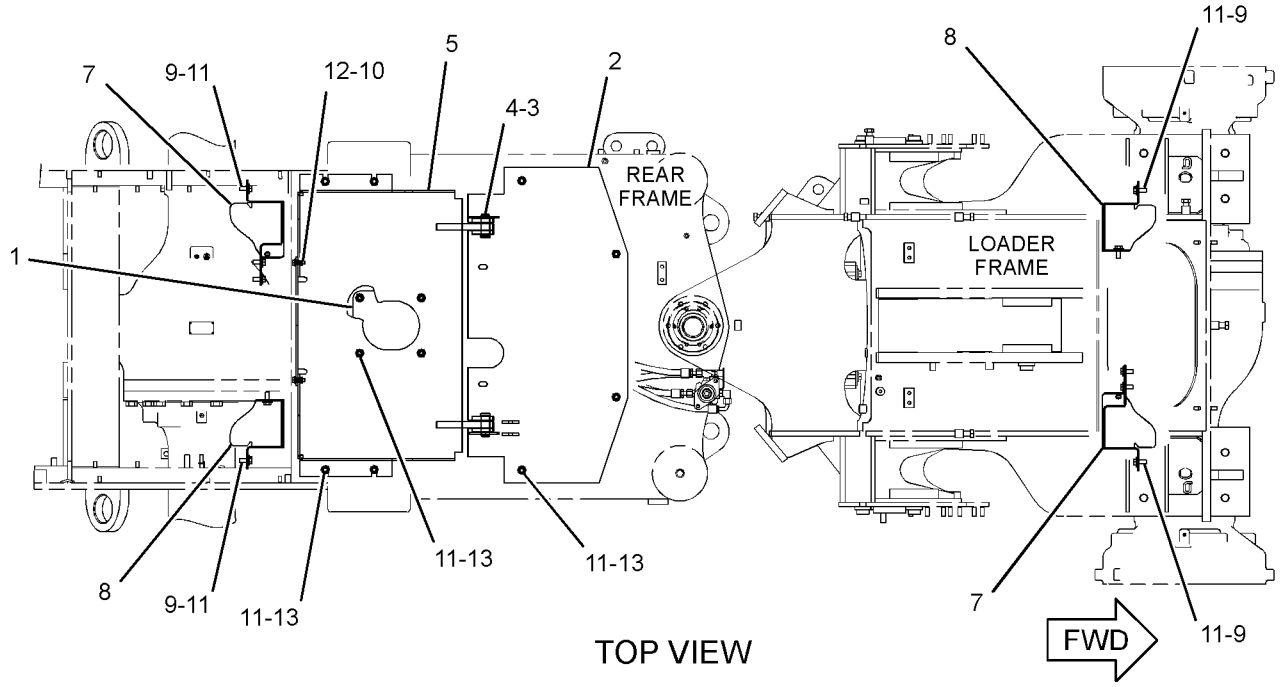

TOP VIEW

GRAPHIC #1 **<END>** g01440180

262-5098 GUARD GP-BOTTOM

S/N: JKM1-UP

PART OF 237-7540 CHASSIS AR

SMCS-7153 **i02908805**

NOTE	REF NO	GRAPHIC REF	PART NUMBER	QTY	PART NAME 1 2 3 4 5 6 (PRODUCT LEVEL)	SEE PAGE
	1	1	**262-5099**	1	PLATE AS	
M		1	**8T-3490**	5	NUT-WELD (M10X1.5-THD)	
	2	1	**264-0469**	1	PLATE	
	3	1	**264-0470**	1	PLATE	
	4	1	**264-0471**	1	PLATE	
	5	1	**308-6606**	1	PLATE AS	
	6	1	**198-4777**	5	WASHER-HARD (11X25X10-MM THK)	
	7	1	**5P-1076**	2	WASHER-HARD (13.5X30X4-MM THK)	
	8	1	**7X-0515**	4	WASHER-HARD (17X35X5-MM THK)	
	9	1	**7X-0618**	2	WASHER-HARD (13.5X40X5-MM THK)	
M	10	1	**7X-2553**	4	BOLT (M16X2X40-MM)	
	11	1	**7X-7729**	8	WASHER (11X25X3-MM THK)	
M	12	1	**8T-4139**	4	BOLT (M12X1.75X30-MM)	
M	13	1	**8T-4195**	10	BOLT (M10X1.5X30-MM)	
M	14	1	**8T-4196**	3	BOLT (M10X1.5X35-MM)	

M-METRIC PART

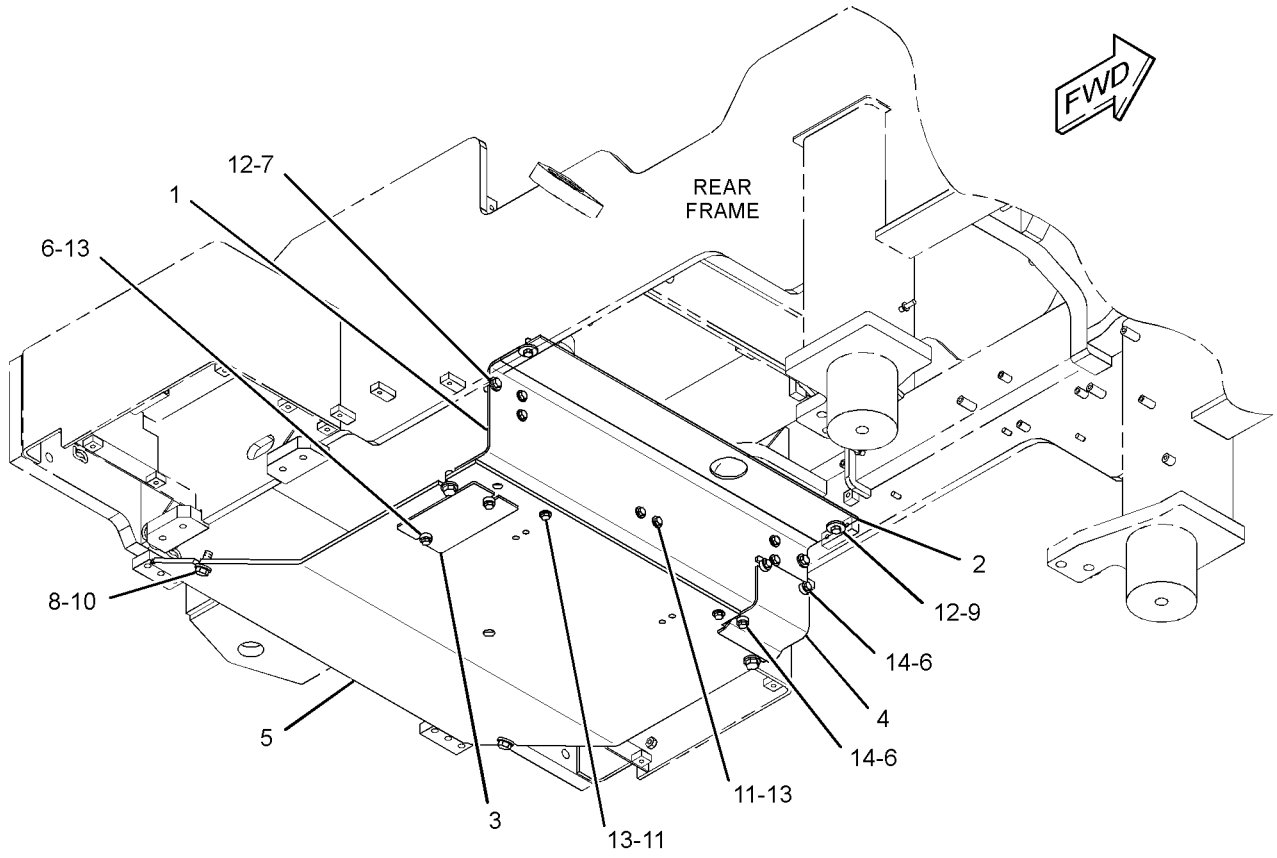

GRAPHIC #1 **<END>** g01422194

263-6088 GUARD GP-DRIVE SHAFT

S/N: JKM1-UP
PART OF 317-9489 CONFIGURATION AR
AN ATTACHMENT

SMCS-7153 **i03537574**

NOTE	REF NO	GRAPHIC REF	PART NUMBER	QTY	PART NAME 1 2 3 4 5 6 (PRODUCT LEVEL)	SEE PAGE
	1	1	**263-7753**	1	CHANNEL AS	
M		1	**8T-3490**	2	NUT-WELD (M10X1.5-THD)	
M		1	**8T-3597**	6	NUT-WELD (M12X1.75-THD)	
	2	1	**263-7756**	1	CHANNEL AS	
	3	1	**263-7759**	1	PLATE	
	4	1	**5P-1076**	8	WASHER-HARD (13.5X30X4-MM THK)	
	5	1	**8T-4121**	2	WASHER-HARD (11X21X2.5-MM THK)	
M	6	1	**8T-4956**	8	BOLT (M12X1.75X35-MM)	
M	7	1	**8T-6466**	2	BOLT (M10X1.5X60-MM)	
	8	1	**209-4035**	2	SPACER	

M-METRIC PART

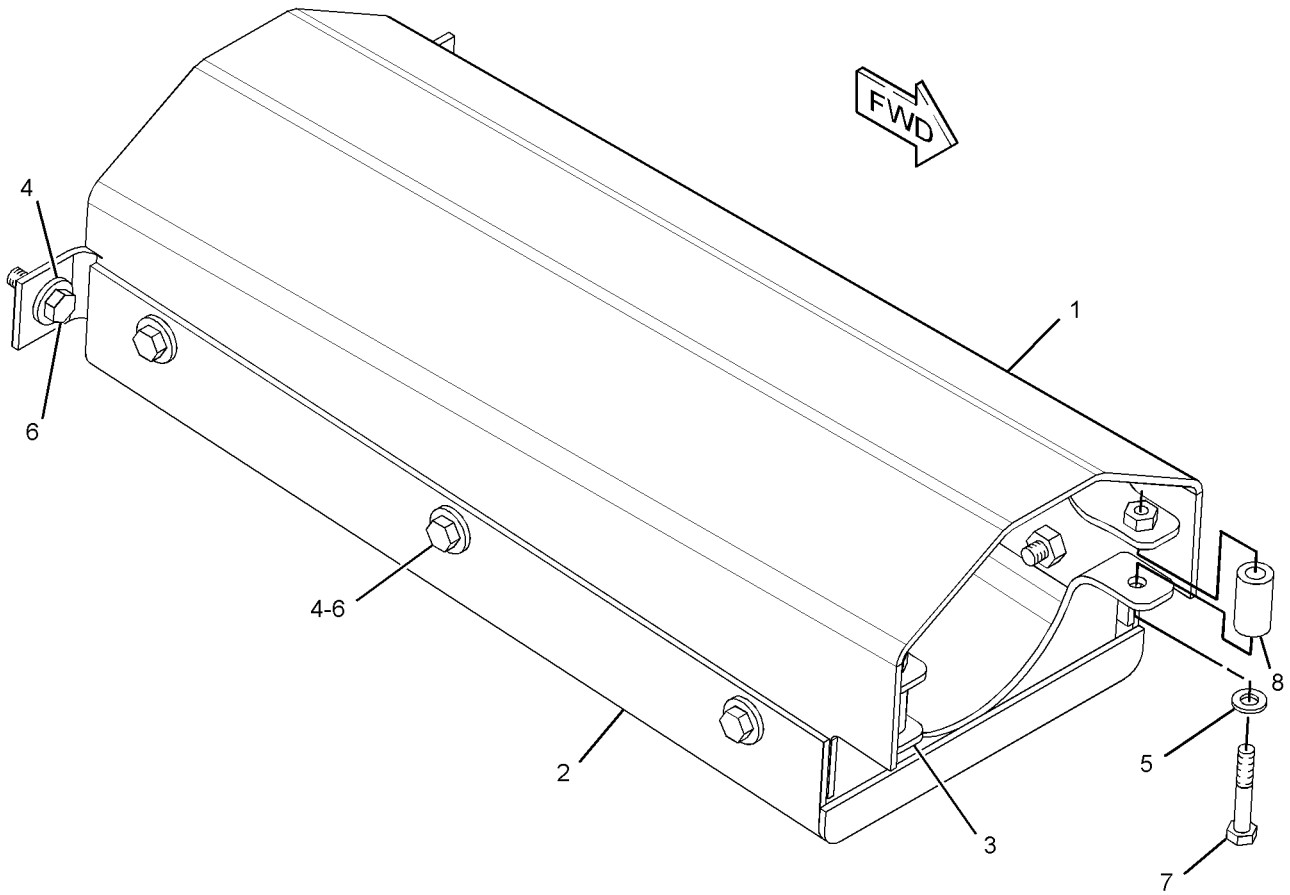

GRAPHIC #1 **<END>** g01869674

FRAME AND BODY

262-0377 GUARD GP-FRONT

S/N: JKM1-UP

PART OF 237-7540 CHASSIS AR

SMCS-7167 **i02908807**

NOTE	REF NO	GRAPHIC REF	PART NUMBER	QTY	PART NAME 1 2 3 4 5 6 (PRODUCT LEVEL)	SEE PAGE
	1	1	**266-0258**	1	PLATE	
	2	1	**7X-7729**	4	WASHER (11X25X3-MM THK)	
M	3	1	**8T-4133**	4	NUT (M10X1.5-THD)	

M-METRIC PART

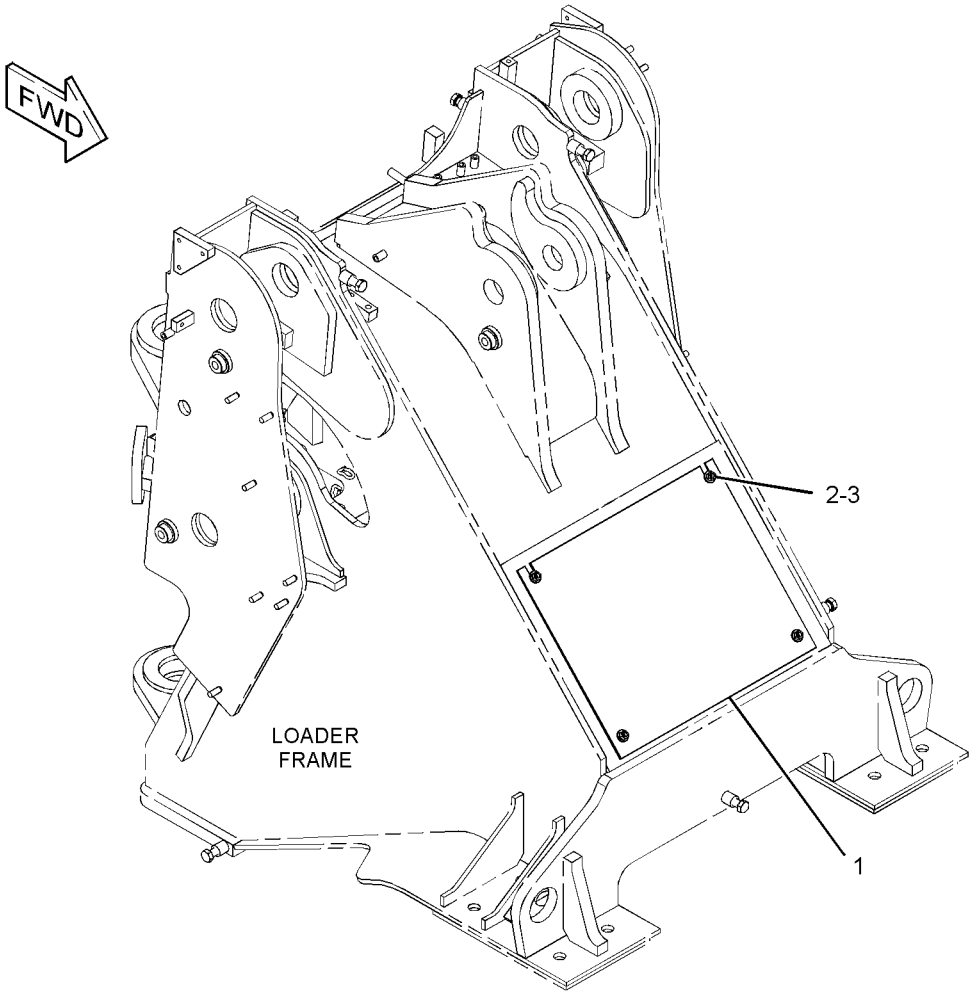

GRAPHIC #1 **<END>** g01421945

318-2889 GUARD GP-FRONT

S/N: JKM1-797
PART OF 265-9750 HYDRAULIC AR-3 VALVE, 265-9760 HYDRAULIC AR-4 VALVE AN ATTACHMENT

SMCS-7167 **i02934554**

NOTE	REF NO	GRAPHIC REF	PART NUMBER	QTY	PART NAME 1 2 3 4 5 6 (PRODUCT LEVEL)	SEE PAGE
	1	1	**318-2891**	1	ANGLE	
	2	1	**318-2892**	2	PLATE	
	3	1	**318-2893**	2	BAFFLE	
	4	1	**318-2894**	1	PLATE AS	
	5	1	**8T-2561**	4	WASHER-HARD (10.5X28.5X5-MM THK)	
	6	1	**8T-4121**	8	WASHER-HARD (11X21X2.5-MM THK)	
M	7	1	**8T-4133**	4	NUT (M10X1.5-THD)	
M	8	1	**8T-4136**	8	BOLT (M10X1.5X25-MM)	

M-METRIC PART

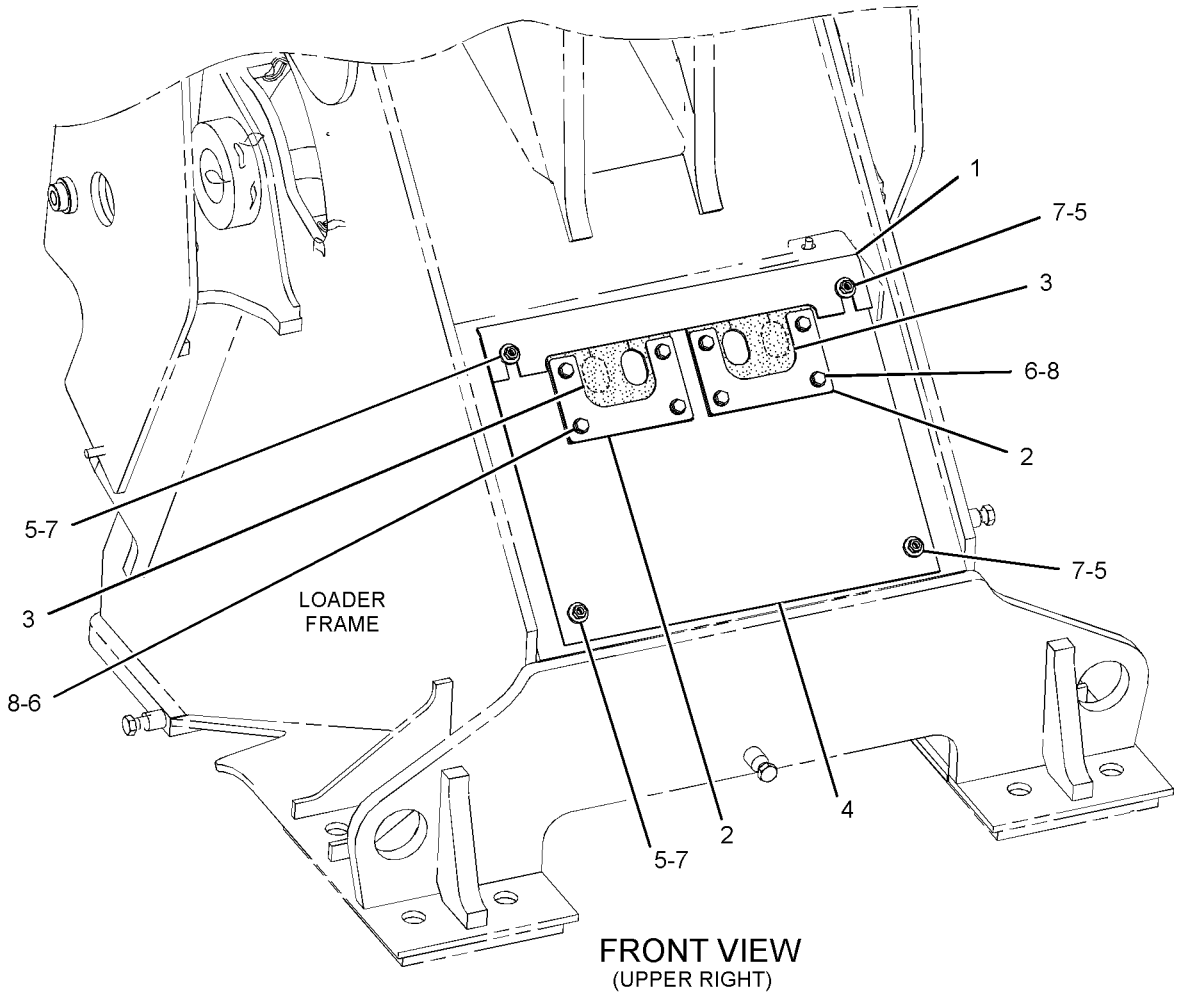

FRONT VIEW
(UPPER RIGHT)

GRAPHIC #1 **<END>** g01436560

FRAME AND BODY

323-4737 GUARD GP-FRONT

S/N: JKM405-UP

PART OF 265-9750 HYDRAULIC AR-3 VALVE, 265-9760 HYDRAULIC AR-4 VALVE AN ATTACHMENT

SMCS-7167 **i03632105**

NOTE	REF NO	GRAPHIC REF	PART NUMBER	QTY	PART NAME 1 2 3 4 5 6 (PRODUCT LEVEL)	SEE PAGE
	1	1	**323-4732**	1	BAFFLE	
	2	1	**323-4733**	1	PLATE AS	
	3	1	**323-4735**	1	PLATE	
	4	1	**323-4736**	1	ANGLE	
M	5	1	**6V-7732**	9	BOLT (M10X1.5X25-MM)	
	6	1	**8T-2561**	4	WASHER-HARD (10.5X28.5X5-MM THK)	
	7	1	**8T-4121**	9	WASHER-HARD (11X21X2.5-MM THK)	
M	8	1	**8T-4133**	4	NUT (M10X1.5-THD)	

M-METRIC PART

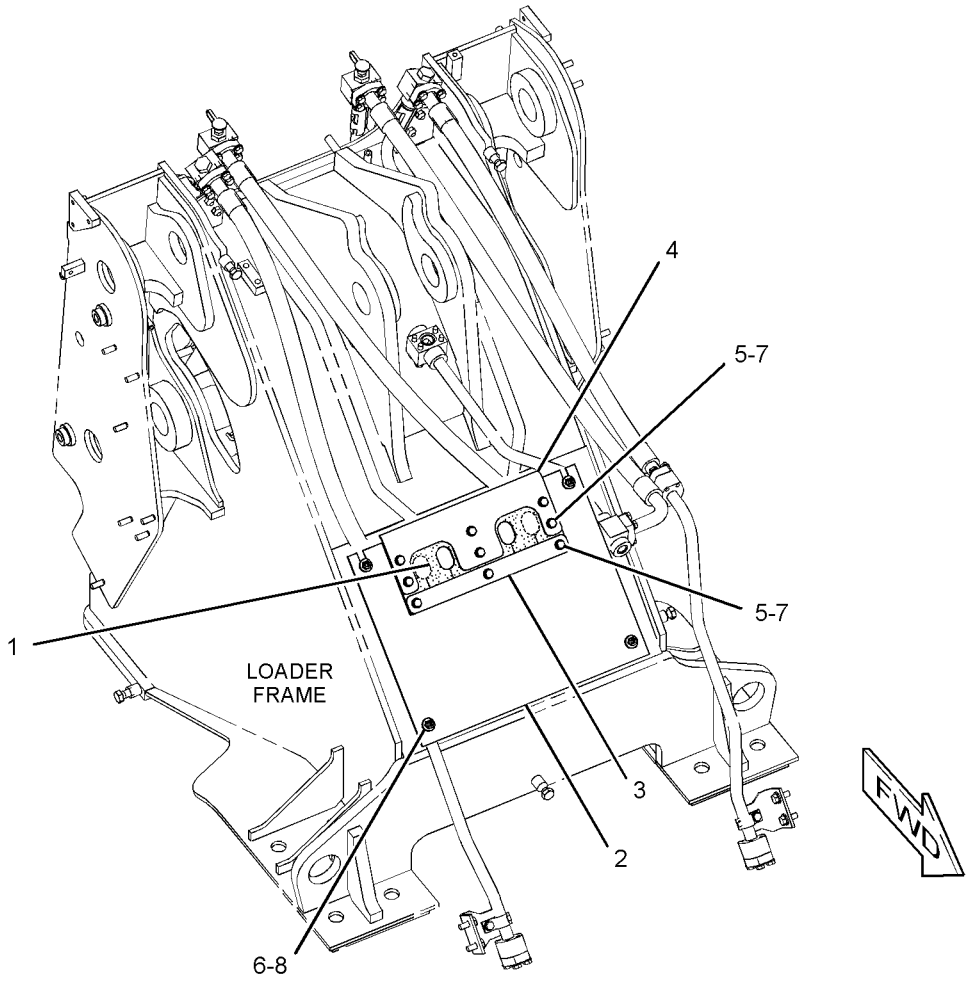

GRAPHIC #1 **<END>** g01663333

FRAME AND BODY

273-9760 GUARD GP-HITCH & STEERING

S/N: JKM1-UP
PART OF 317-9489 CONFIGURATION AR
AN ATTACHMENT

SMCS-7150 **i02932408**

NOTE	REF NO	GRAPHIC REF	PART NUMBER	QTY	PART NAME 1 2 3 4 5 6 (PRODUCT LEVEL)	SEE PAGE
	1	1	**247-1115**	1	PLATE	
	2	1	**273-9940**	1	PLATE AS	
	3	1	**273-9943**	1	PLATE	
	4	1	**273-9947**	1	PLATE (RH)	
	5	1	**273-9949**	1	PLATE (LH)	
	6	1	**273-9950**	1	COVER	
	7	1	**273-9951**	1	PLATE (LH)	
	8	1	**273-9952**	1	ENCLOSURE AS-SERVICE CENTER	
	9	1	**307-0408**	1	PLATE AS	
	10	1	**307-0410**	1	PLATE	
	11	1	**308-4267**	1	COVER	
	12	1	**5P-1076**	6	WASHER-HARD (13.5X30X4-MM THK)	
M	13	1	**7X-2553**	6	BOLT (M16X2X40-MM)	
	14	1	**7X-7729**	14	WASHER (11X25X3-MM THK)	
	15	1	**8T-4121**	2	WASHER-HARD (11X21X2.5-MM THK)	
M	16	1	**8T-4133**	12	NUT (M10X1.5-THD)	
M	17	1	**8T-4136**	2	BOLT (M10X1.5X25-MM)	
M	18	1	**8T-4137**	2	BOLT (M10X1.5X20-MM)	
M	19	1	**8T-4139**	7	BOLT (M12X1.75X30-MM)	
	20	1	**8T-4223**	1	WASHER-HARD (13.5X25.5X3-MM THK)	
	21	1	**9X-8257**	6	WASHER (17.5X30X3.5-MM THK)	

M-METRIC PART

273-9760 **GUARD GP-HITCH & STEERING** *(contd.)* **i02932408**

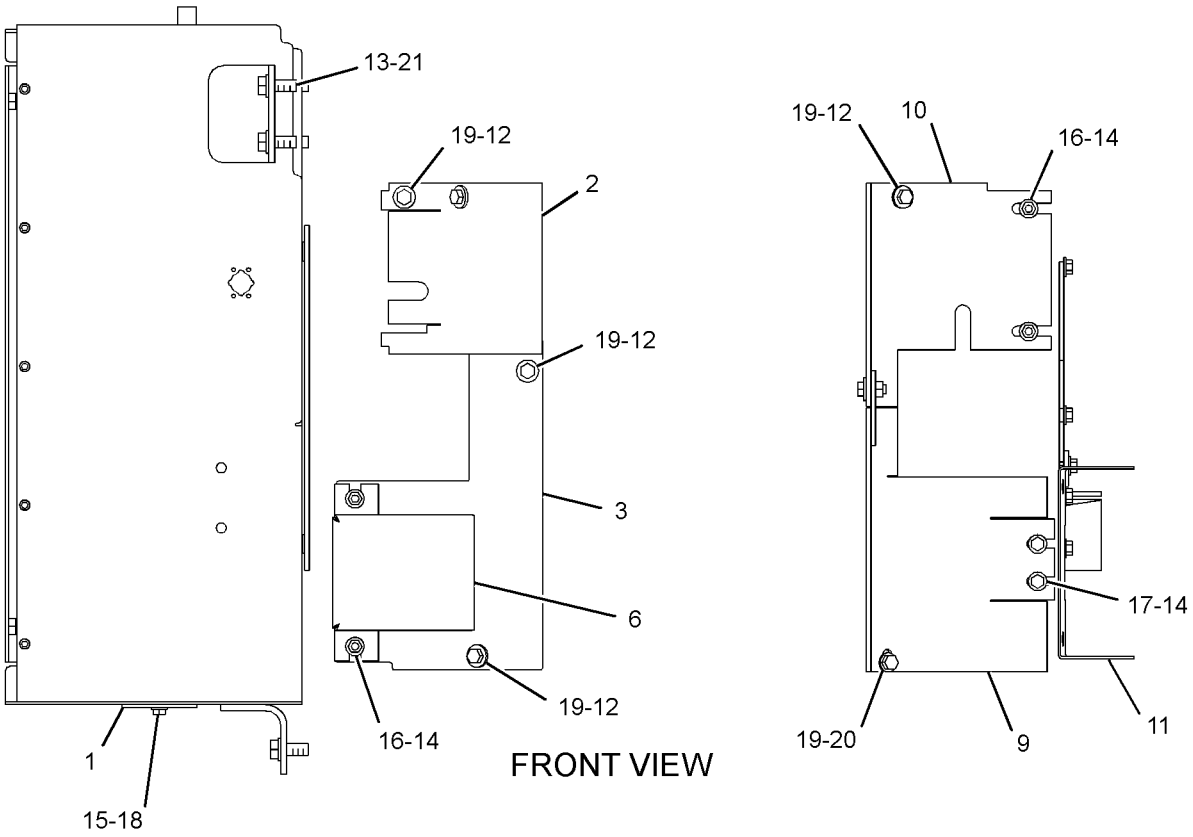

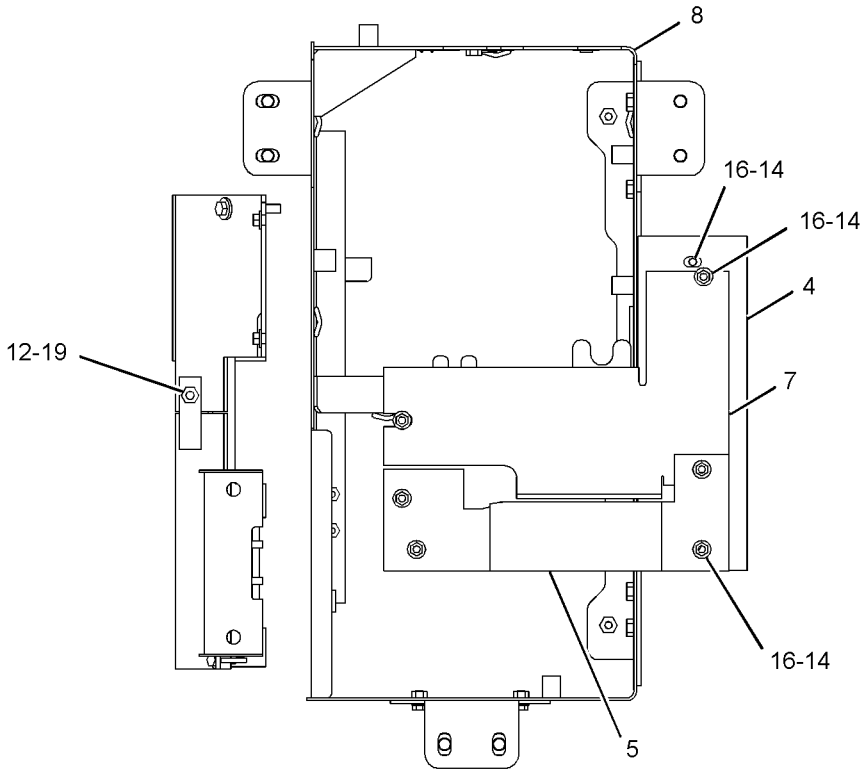

GRAPHIC #1

<END>

g01430649

295-8332 GUARD GP-LINES–AXLE OIL COOLER

S/N: JKM1-UP
PART OF 265-9745 COOLER AR-AXLE OIL
AN ATTACHMENT

SMCS-7167 **i02920670**

NOTE	REF NO	GRAPHIC REF	PART NUMBER	QTY	PART NAME 1 2 3 4 5 6 (PRODUCT LEVEL)	SEE PAGE
	1	1	**295-8333**	1	COVER	
	2	1	**295-8334**	1	COVER	
	3	1	**5P-1076**	4	WASHER-HARD (13.5X30X4-MM THK)	
M	4	1	**8T-4139**	2	BOLT (M12X1.75X30-MM)	

M-METRIC PART

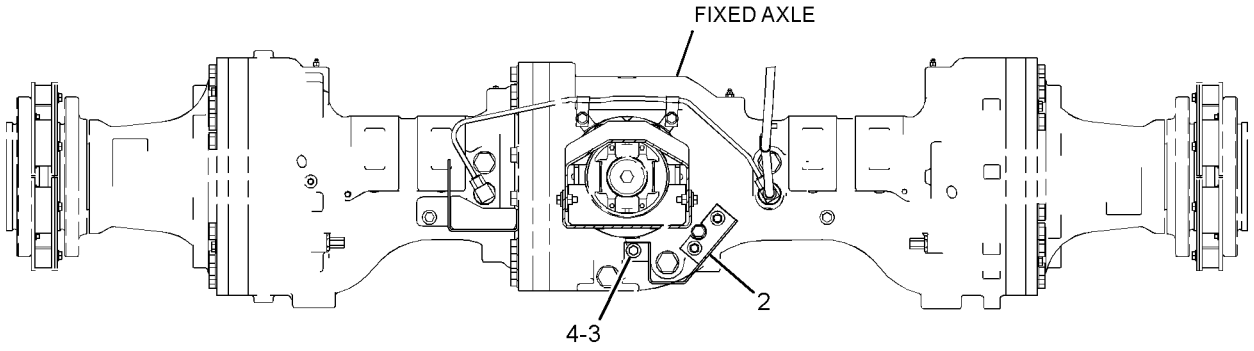

REAR VIEW

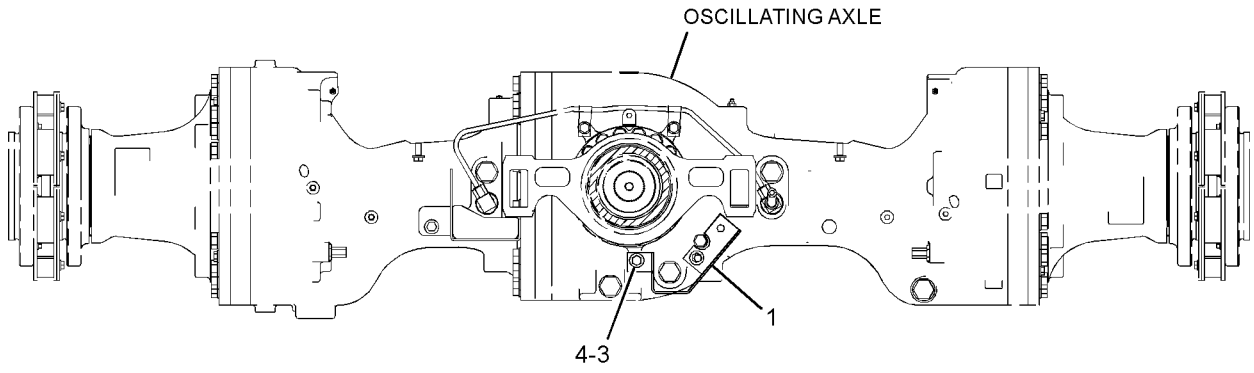

FRONT VIEW

GRAPHIC #1 **<END>** g01441676

260-8837 GUARD GP-POWER TRAIN–AXLE OIL COOLER

S/N: JKM1-UP

PART OF 322-7948 CONVERSION AR-MACHINE, 265-9745 COOLER AR-AXLE OIL, 266-8584, 284-3569 SUPPRESSION AR-SOUND AN ATTACHMENT

SMCS-7153 **i02920674**

NOTE	REF NO	GRAPHIC REF	PART NUMBER	QTY	PART NAME 1 2 3 4 5 6 (PRODUCT LEVEL)	SEE PAGE
	1	1	**106-9013**	1	PLATE	
	2	1	**276-0036**	1	PLATE AS	
M		1	**8T-3490**	4	NUT-WELD (M10X1.5-THD)	
M		1	**8T-3597**	2	NUT-WELD (M12X1.75-THD)	
		1	**8T-4121**	4	WASHER-HARD (11X21X2.5-MM THK)	
M		1	**8T-4195**	4	BOLT (M10X1.5X30-MM)	
	3	1	**5P-1076**	10	WASHER-HARD (13.5X30X4-MM THK)	
M	4	1	**8T-4139**	10	BOLT (M12X1.75X30-MM)	

M-METRIC PART

260-8837 **GUARD GP-POWER TRAIN** *(contd.)* **i02920674**

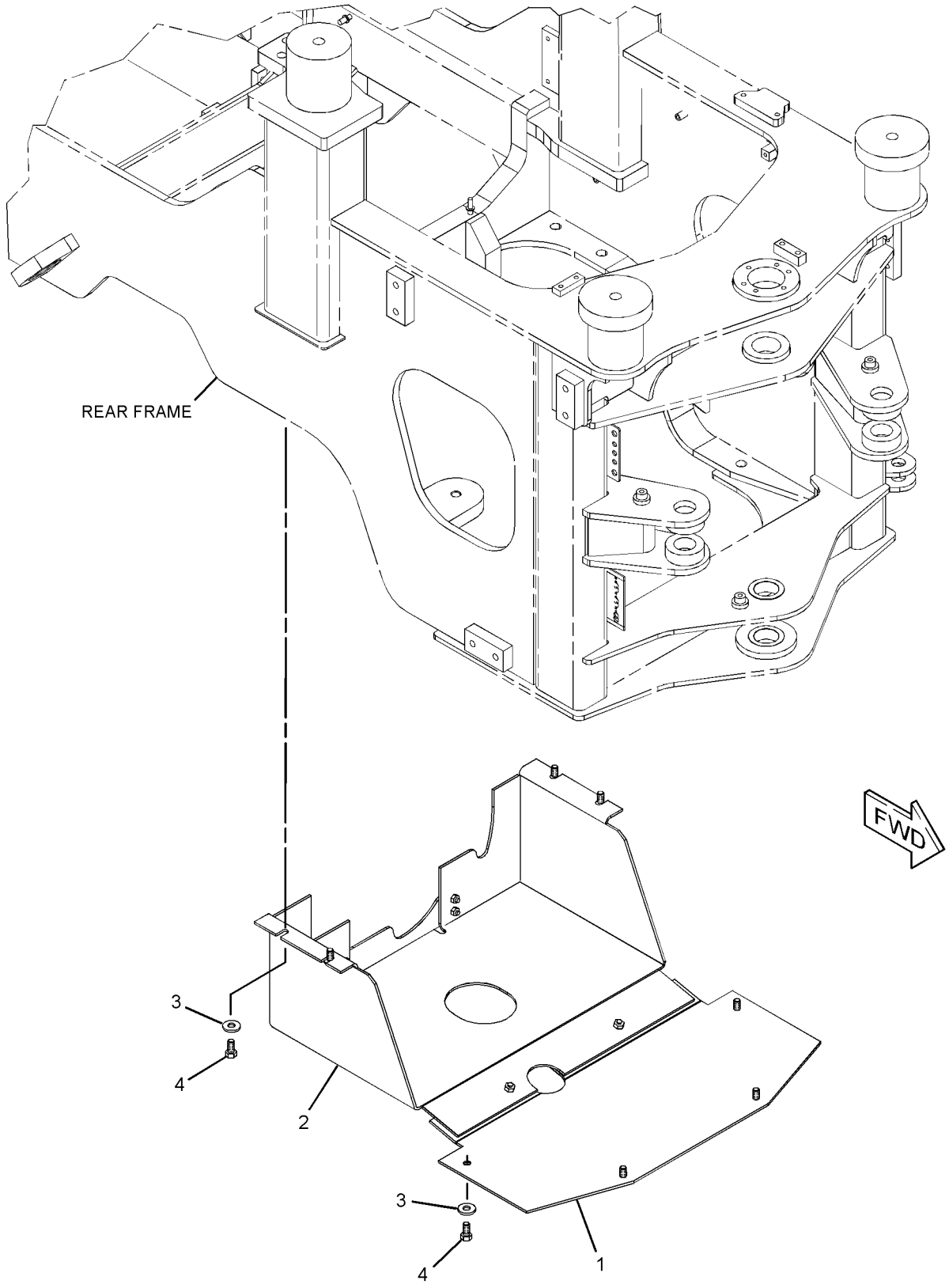

GRAPHIC #1 **<END>** g01442183

267-3501 GUARD GP-POWER TRAIN

S/N: JKM1-UP
PART OF 329-5761 CONVERSION AR-MACHINE
AN ATTACHMENT

SMCS-7153 **i02927667**

NOTE	REF NO	GRAPHIC REF	PART NUMBER	QTY	PART NAME 1 2 3 4 5 6 (PRODUCT LEVEL)	SEE PAGE
	1	1	**106-9013**	1	PLATE	
	2	1	**267-3500**	1	PLATE AS	
M		1	**8T-3597**	2	NUT-WELD (M12X1.75-THD)	
	3	1	**5P-1076**	10	WASHER-HARD (13.5X30X4-MM THK)	
M	4	1	**8T-4139**	10	BOLT (M12X1.75X30-MM)	

M-METRIC PART

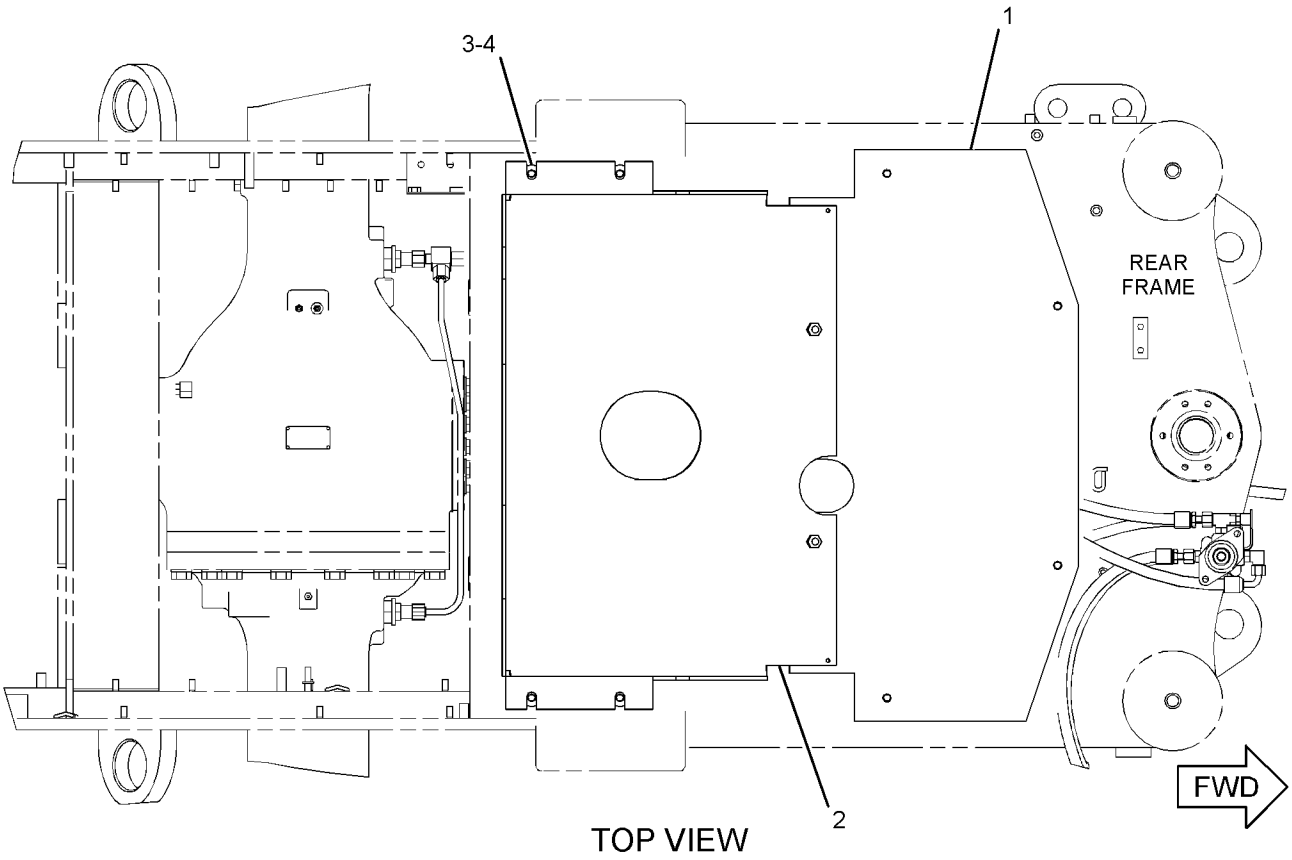

TOP VIEW

GRAPHIC #1 **<END>** g01442265

285-0421 GUARD GP-ROADING LIGHTS

S/N: JKM1-809
PART OF 317-9490 CONFIGURATION AR
AN ATTACHMENT

SMCS-1429 **i02930723**

NOTE	REF NO	GRAPHIC REF	PART NUMBER	QTY	PART NAME 1 2 3 4 5 6 (PRODUCT LEVEL)	SEE PAGE
	1	1	**131-4798**	8	SPACER (6.6X25X27-MM THK)	
	2	1	**277-4219**	1	SUPPORT AS (RH)	
	3	1	**277-4220**	1	SUPPORT AS (LH)	
	4	1	**278-5850**	2	GUARD AS-REAR	
	5	1	**285-0422**	1	BRACKET AS (RH)	
		1	**265-1048**	1	BRACKET AS (RH)	
	6	1	**285-0423**	1	BRACKET AS (LH)	
		1	**265-3145**	1	BRACKET AS (LH)	
M	7	1	**7X-2534**	8	BOLT (M6X1X50-MM)	
M	8	1	**8T-4189**	6	BOLT (M8X1.25X20-MM)	
	9	1	**8T-4224**	6	WASHER-HARD (8.8X16X2-MM THK)	
	10	1	**9X-8256**	8	WASHER (6.6X12X2-MM THK)	

M-METRIC PART

285-0421 **GUARD GP-ROADING LIGHTS** *(contd.)* **i02930723**

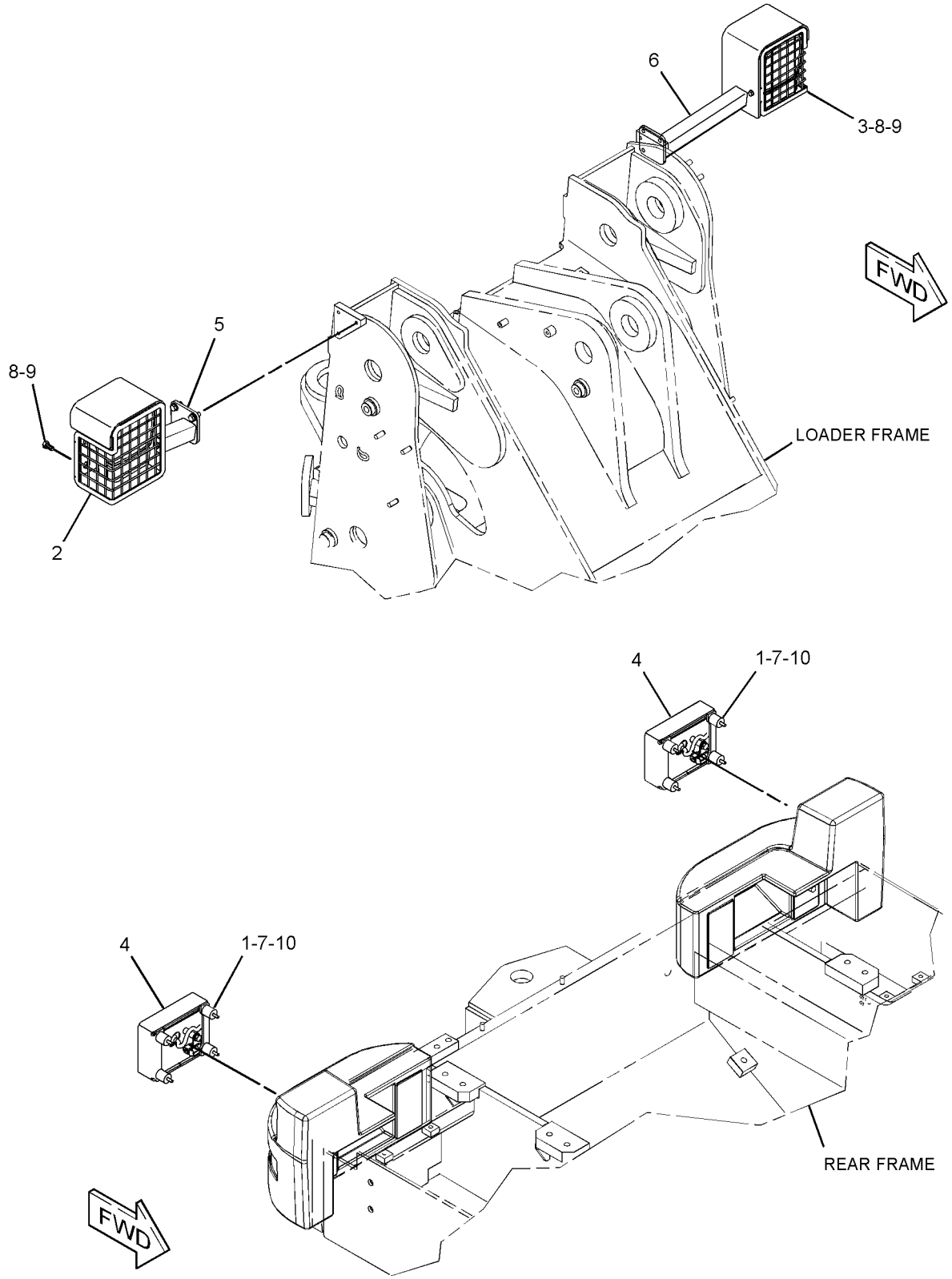

GRAPHIC #1 **<END>** g01439895

285-0421 GUARD GP-ROADING LIGHTS

S/N: JKM810-UP
PART OF 317-9490 CONFIGURATION AR
AN ATTACHMENT

SMCS-1429 **i03853570**

NOTE	REF NO	GRAPHIC REF	PART NUMBER	QTY	PART NAME 1 2 3 4 5 6 (PRODUCT LEVEL)	SEE PAGE
	1	1	**131-4798**	8	SPACER (6.6X25X27-MM THK)	
	2	1	**278-5850**	2	GUARD AS-REAR	
C	3	1	**319-7220**	1	GUARD AS (LH)	
M		1	**8T-3612**	3	NUT-WELD (M8X1.25-THD)	
C	4	1	**319-7221**	1	GUARD AS (RH)	
M		1	**8T-3612**	3	NUT-WELD (M8X1.25-THD)	
M	5	1	**7X-2534**	8	BOLT (M6X1X50-MM)	
M	6	1	**8T-4189**	6	BOLT (M8X1.25X20-MM)	
	7	1	**8T-4224**	6	WASHER-HARD (8.8X16X2-MM THK)	
	8	1	**9X-8256**	8	WASHER (6.6X12X2-MM THK)	

C-CHANGE FROM PREVIOUS TYPE
M-METRIC PART

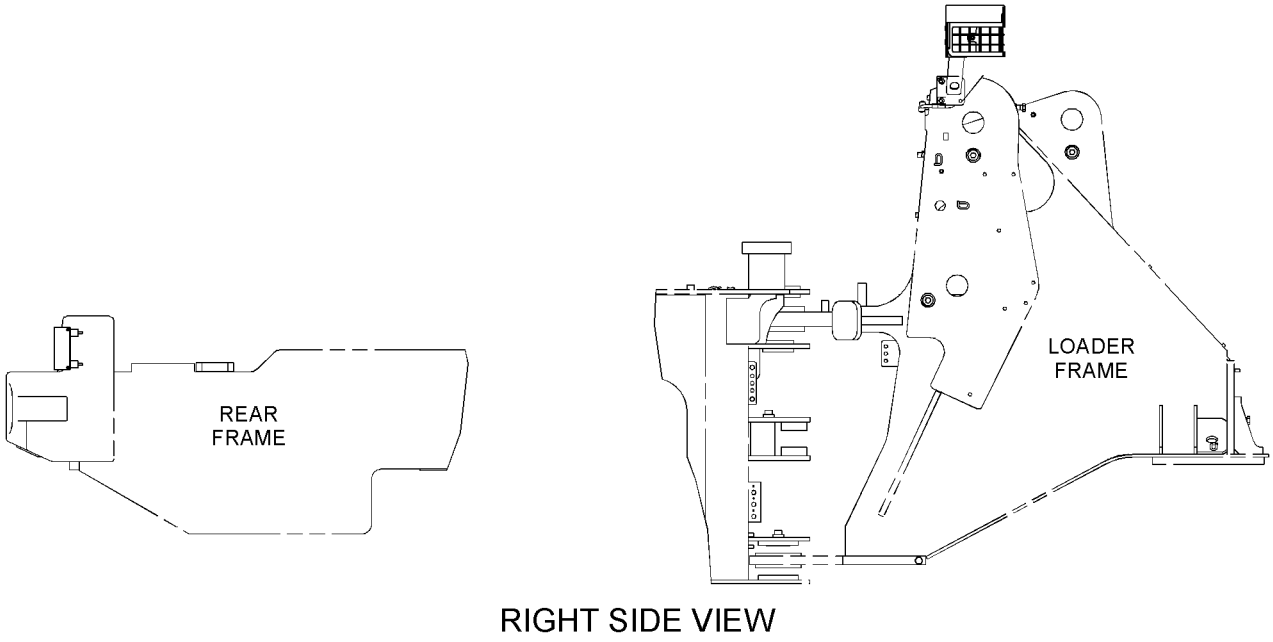

RIGHT SIDE VIEW

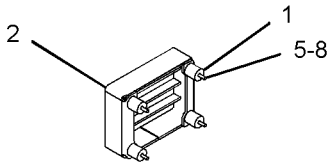

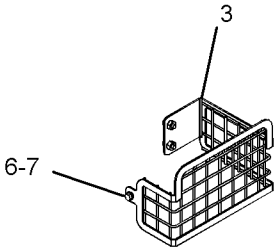

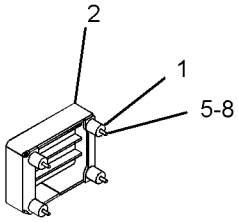

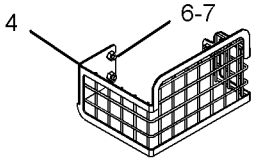



GRAPHIC #1 **<END>** g02100579

262-2950 GUARD GP-SENSOR—WHEEL SPEED

S/N: JKM1-UP
PART OF 265-9753 CONTROL AR-DIFFERENTIAL LOCK
AN ATTACHMENT

SMCS-301T, 4803, 5736, 7150 **i02935183**

NOTE	REF NO	GRAPHIC REF	PART NUMBER	QTY	PART NAME 1 2 3 4 5 6 (PRODUCT LEVEL)	SEE PAGE
	1	1	**308-3892**	4	GUARD	
	2	1	**7X-7729**	8	WASHER (11X25X3-MM THK)	
M	3	1	**8T-4137**	8	BOLT (M10X1.5X20-MM)	

M-METRIC PART

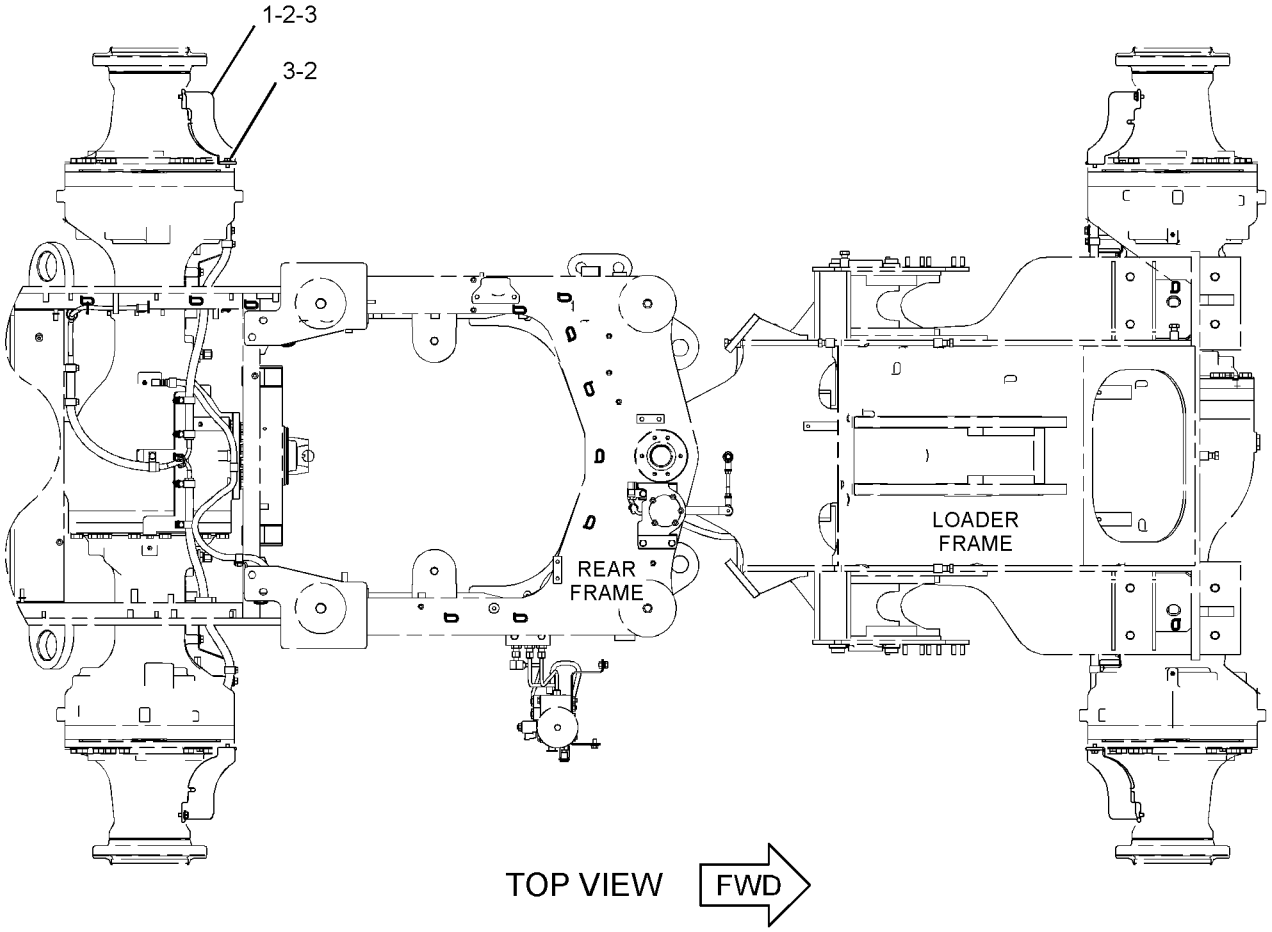

GRAPHIC #1 **<END>** g01432508

FRAME AND BODY

273-9730 HARDWARE GP-LOADER FRAME

S/N: JKM1-UP
PART OF 317-9489 CONFIGURATION AR
AN ATTACHMENT

SMCS-7054, 7553 **i02932407**

NOTE	REF NO	GRAPHIC REF	PART NUMBER	QTY	PART NAME 1 2 3 4 5 6 (PRODUCT LEVEL)	SEE PAGE
	1	1	*4E-0835*	2	BLOCK	

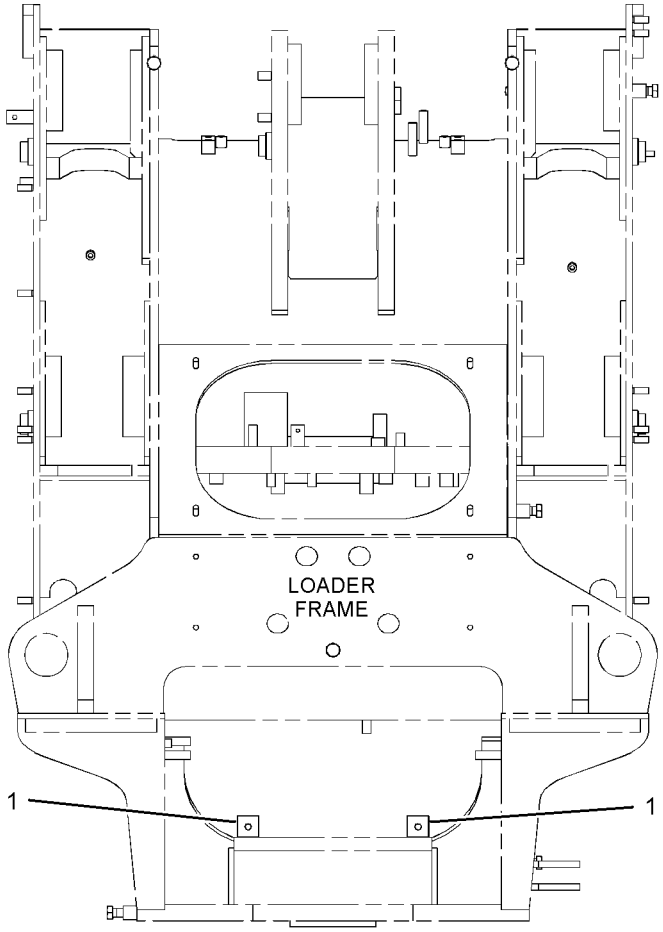

FRONT VIEW

GRAPHIC #1

<END>

g01441681

FRAME AND BODY

266-1688 HARDWARE GP-REAR FRAME

S/N: JKM1-UP

PART OF 265-9753 CONTROL AR-DIFFERENTIAL LOCK, 265-9745 COOLER AR-AXLE OIL AN ATTACHMENT

SMCS-7051, 7553 **i03547185**

NOTE	REF NO	GRAPHIC REF	PART NUMBER	QTY	PART NAME 1 2 3 4 5 6 (PRODUCT LEVEL)	SEE PAGE
	1	1	**132-6964**	2	PLATE	
	2	1	**4E-0019**	1	BOSS (M10X1.5-THD)	
M	3	1	**7Y-8763**	2	BOSS (M10X1.5X25-MM)	
M	4	1	**8T-3851**	5	BOSS-WELD (M10X1.5X17.5-MM)	
	5	1	**8X-6780**	2	BLOCK	
	6	1	**9R-2060**	5	BOSS (M10X1.5X21-MM)	

M-METRIC PART

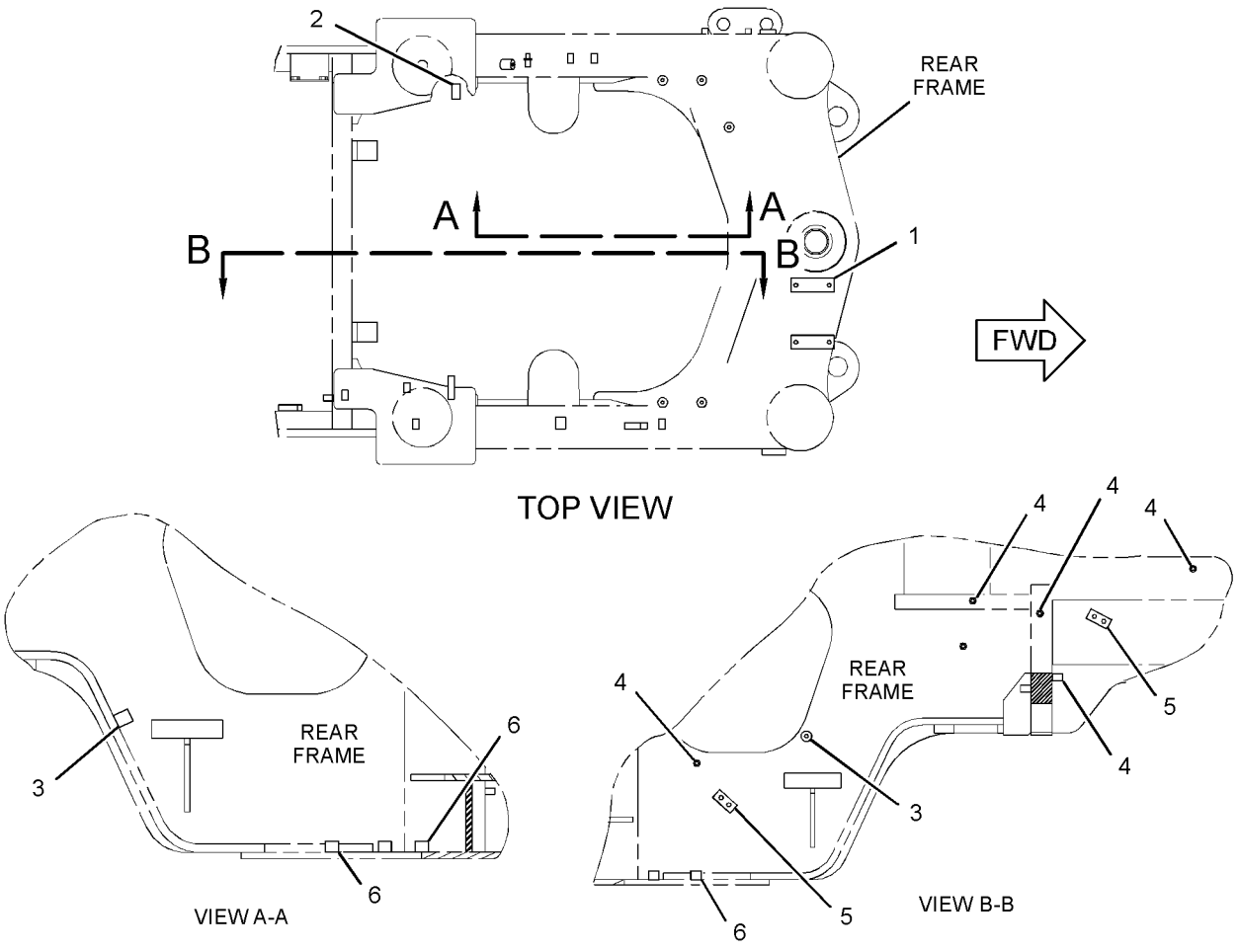

GRAPHIC #1 **<END>** g01823797

266-1690 HARDWARE GP-REAR FRAME

S/N: JKM1-UP
PART OF 265-9758, 300-9596 FENDER AR-ROADING
AN ATTACHMENT

SMCS-7051, 7553 **i02931658**

NOTE	REF NO	GRAPHIC REF	PART NUMBER	QTY	PART NAME 1 2 3 4 5 6 (PRODUCT LEVEL)	SEE PAGE
	1	1	**264-1294**	1	BLOCK	

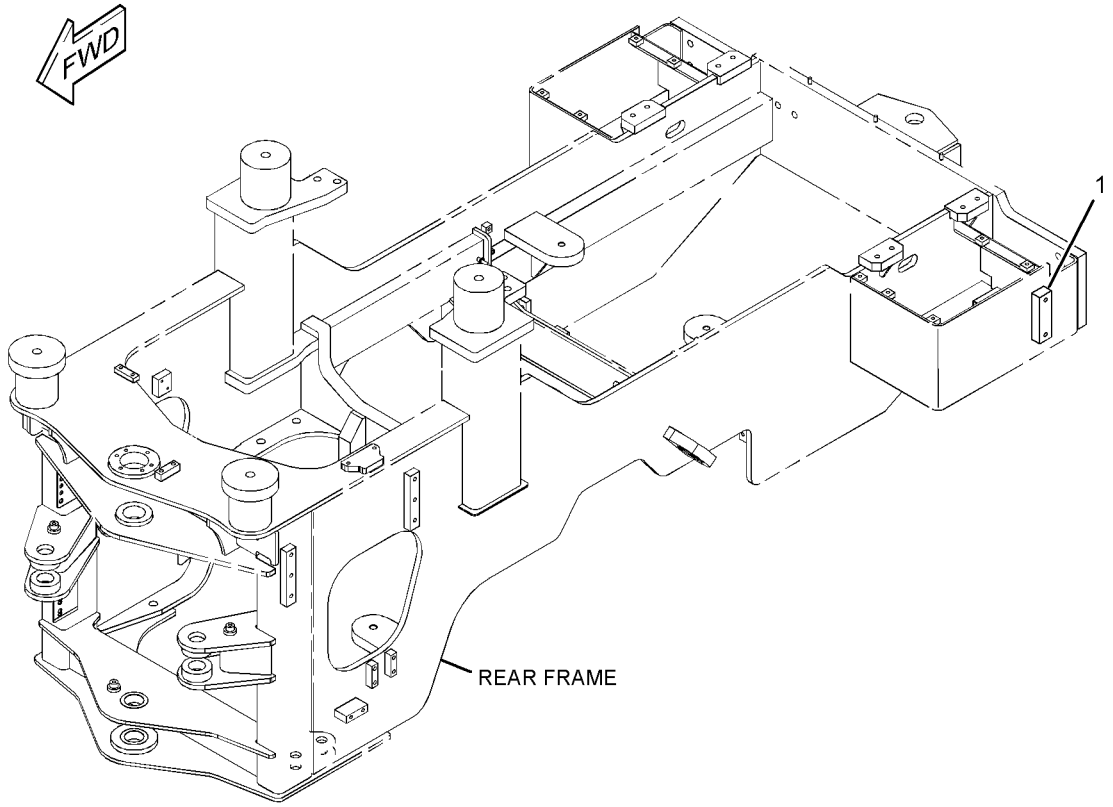

GRAPHIC #1 **<END>** g01442685

283-4353 HARDWARE GP-REAR FRAME

S/N: JKM1-UP
PART OF 284-3569 SUPPRESSION AR-SOUND
AN ATTACHMENT

SMCS-7051, 7553 **i02930709**

NOTE	REF NO	GRAPHIC REF	PART NUMBER	QTY	PART NAME 1 2 3 4 5 6 (PRODUCT LEVEL)	SEE PAGE
M	1	1	**8T-4219**	9	STUD-WELD (M10X1.5X17.5-MM)	

M-METRIC PART

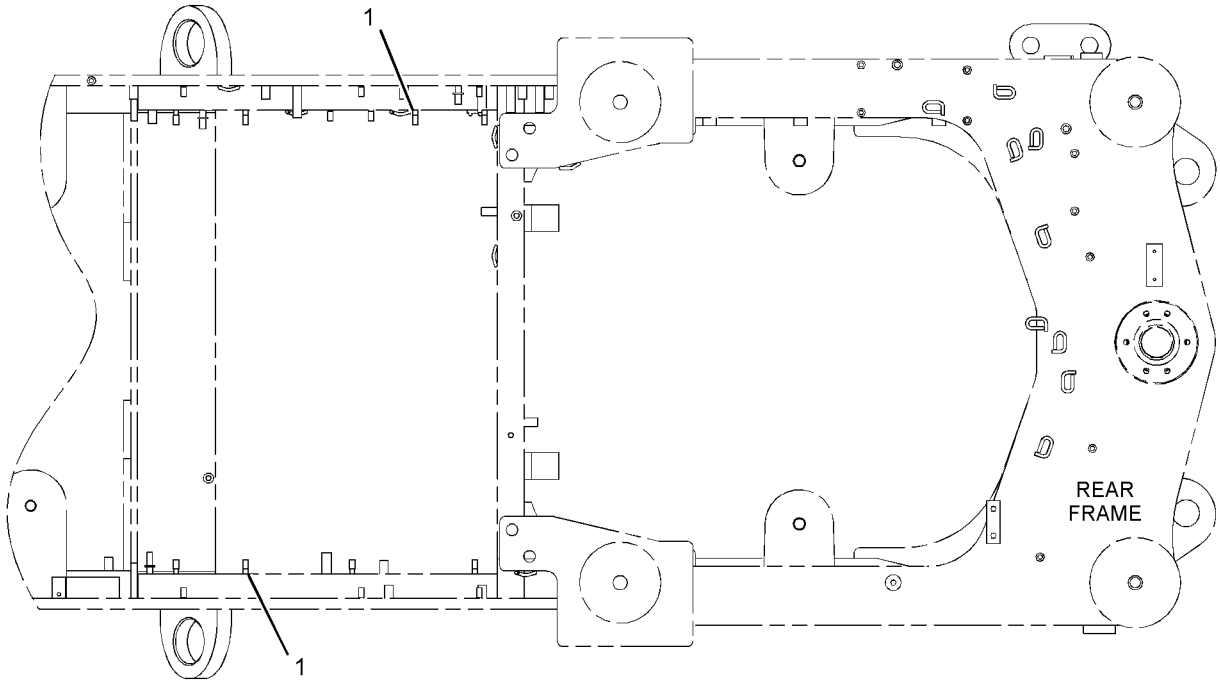

TOP VIEW FWD

GRAPHIC #1 **<END>** g01441475

264-1281 HINGE GP-ROADING FENDER—RH

S/N: JKM1-UP
PART OF 264-1300 FENDER GP-ROADING
AN ATTACHMENT

SMCS-7252 **i02931650**

NOTE	REF NO	GRAPHIC REF	PART NUMBER	QTY	PART NAME 1 2 3 4 5 6 (PRODUCT LEVEL)	SEE PAGE
	1	1	**3B-4605**	1	PIN-COTTER	
	2	1	**3B-8489**	1	FITTING-GREASE	
	3	1	**4M-7470**	2	GROMMET	
	4	1	**122-0630**	1	ROD AS	
	5	1	**132-1927**	1	HINGE AS	
	6	1	**132-1928**	1	PIN AS	
	7	1	**264-1283**	1	PLATE AS (RH)	
	8	1	**3B-4629**	1	PIN-COTTER	
	9	1	**8T-4121**	1	WASHER-HARD (11X21X2.5-MM THK)	

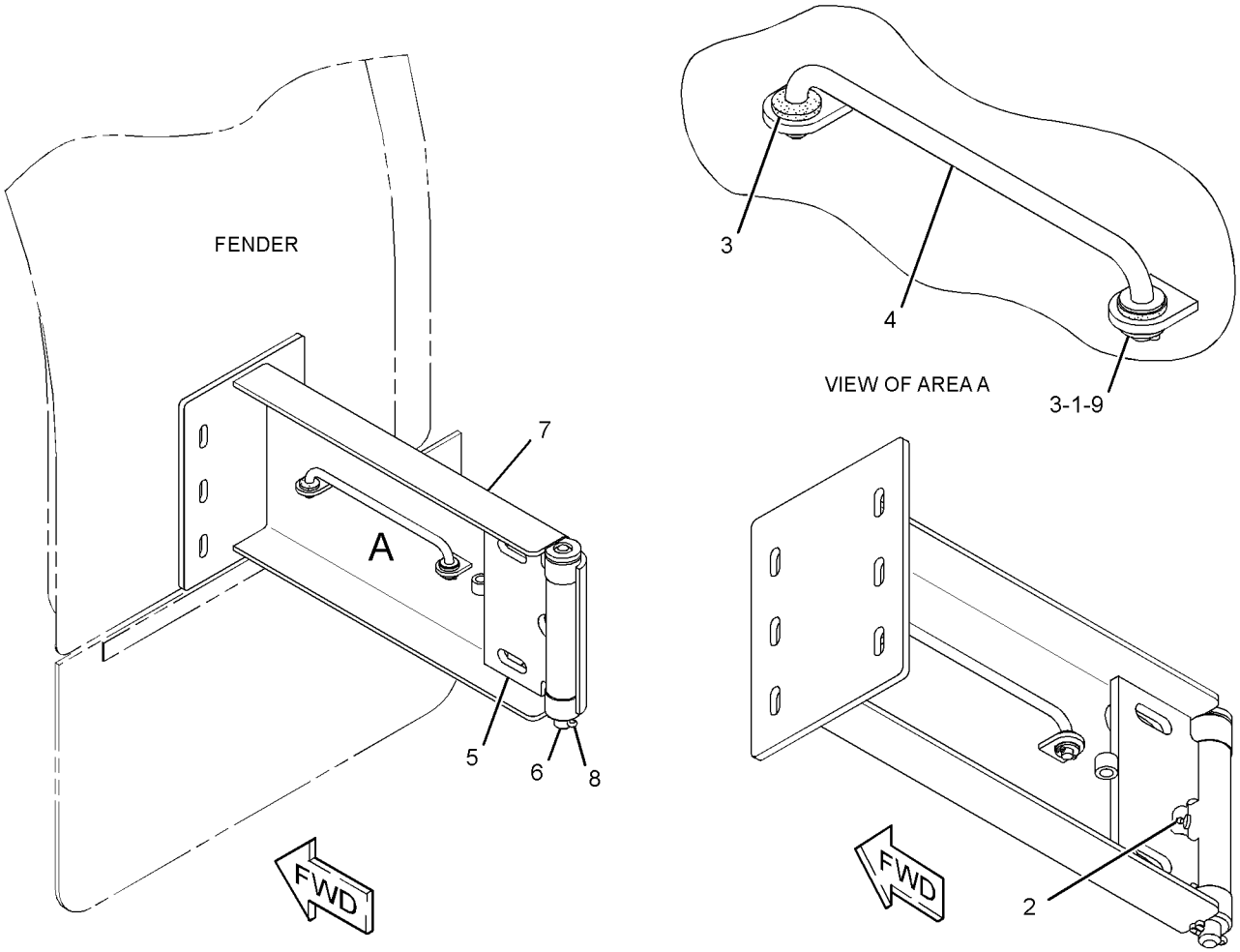

GRAPHIC #1 **<END>** g01391543

299-9078 HINGE GP-ROADING FENDER—LH

S/N: JKM1-UP
PART OF 264-1300 FENDER GP-ROADING
AN ATTACHMENT

SMCS-7252 **i02931655**

NOTE	REF NO	GRAPHIC REF	PART NUMBER	QTY	PART NAME 1 2 3 4 5 6 (PRODUCT LEVEL)	SEE PAGE
	1	1	**3B-4605**	1	PIN-COTTER	
	2	1	**3B-8489**	1	FITTING-GREASE	
	3	1	**4M-7470**	2	GROMMET	
	4	1	**122-0630**	1	ROD AS	
	5	1	**132-1927**	1	HINGE AS	
	6	1	**132-1928**	1	PIN AS	
	7	1	**299-9087**	1	PLATE AS	
	8	1	**3B-4629**	1	PIN-COTTER	
	9	1	**8T-4121**	1	WASHER-HARD (11X21X2.5-MM THK)	

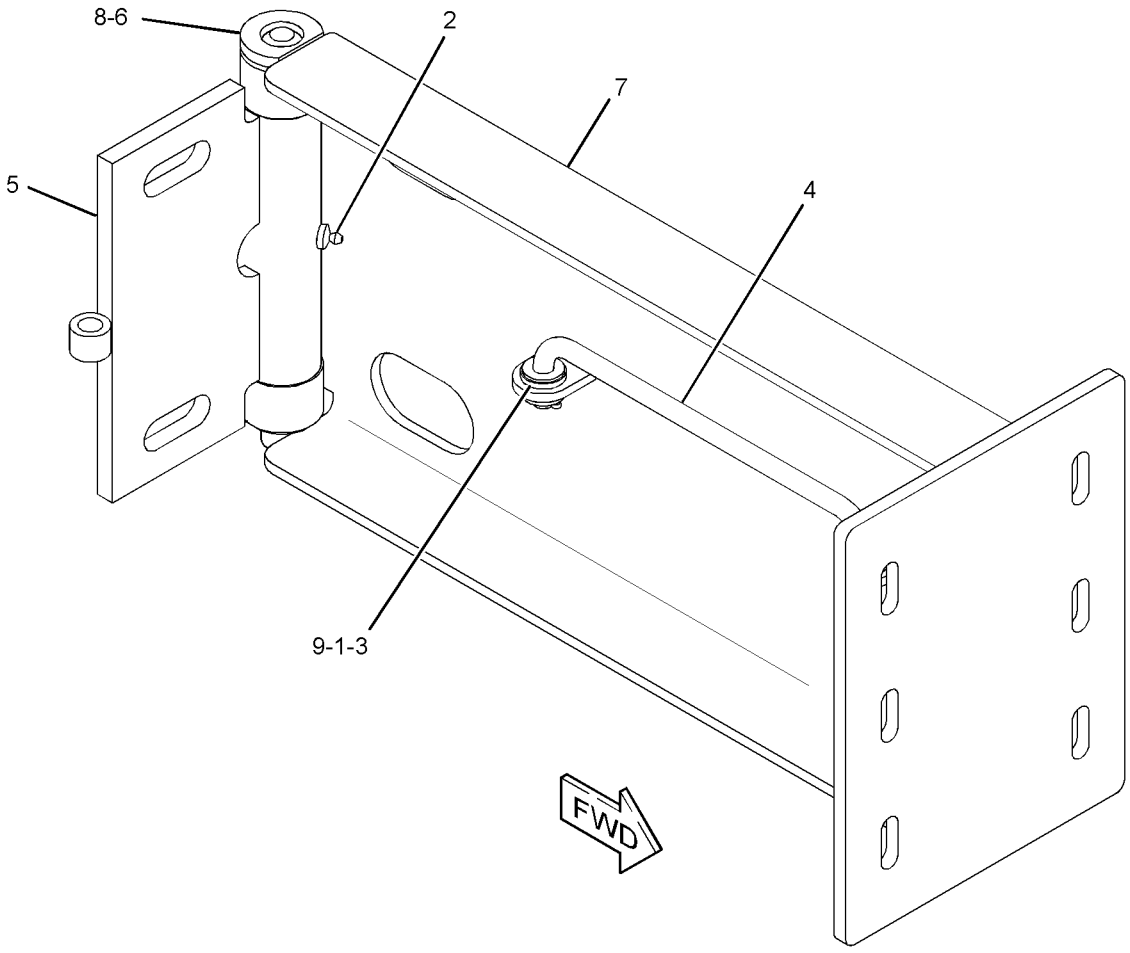

GRAPHIC #1 **<END>** g01441665

261-5642 HITCH GP-ARTICULATING

S/N: JKM1-UP

PART OF 237-7540 CHASSIS AR

SMCS-7057, 7100 **i02737198**

NOTE	REF NO	GRAPHIC REF	PART NUMBER	QTY	PART NAME 1 2 3 4 5 6 (PRODUCT LEVEL)	SEE PAGE
	1	1	**3B-8489**	2	FITTING-GREASE	
	2	1	**4E-3760**	1	CAP	
B	3	1	**4K-7464**	1	SHIM PACK (INCLUDES 19-SHIMS)	
	4	1	**6H-3568**	2	CUP-BEARING	
	5	1	**6K-4185**	1	SPACER-SPECIAL	
	6	1	**6K-4186**	2	SEAL-LIP TYPE	
	7	1	**6K-4191**	1	CAP-UPPER	
	8	1	**6V-0359**	1	SEAL-LIP TYPE	
B	9	1	**6W-8246**	1	SHIM PACK (INCLUDES 27-SHIMS)	
	10	1	**7H-4566**	2	CUP-BEARING (TAPERED ROLLER)	
	11	1	**6I-8849**	2	CONE-BEARING (TAPERED ROLLER)	
	12	1	**8R-7092**	1	CAP	
	13	1	**9V-6471**	1	CAP	
	14	1	**005-4834**	2	BEARING AS-TAPERED ROLLER	
	15	1	**064-0230**	1	SEAL-LIP TYPE	
	16	1	**100-3852**	1	PIN AS	
B	17	1	**100-3856**	2	SHIM PACK (INCLUDES 19-SHIMS)	
	18	1	**261-4546**	1	PIN AS	
	19	1	**100-3853**	1	PLATE	
M	20	1	**118-7313**	2	BOLT (M16X2X70-MM)	
	21	1	**7G-8839**	1	SPACER (13.5X57X6-MM THK)	
	22	1	**8T-4121**	6	WASHER-HARD (11X21X2.5-MM THK)	
M	23	1	**8T-4172**	6	BOLT (M10X1.5X80-MM)	
M	24	1	**8T-4192**	1	BOLT (M12X1.75X25-MM)	
M	25	1	**8T-4194**	6	BOLT (M12X1.75X50-MM)	
	26	1	**8T-4223**	12	WASHER-HARD (13.5X25.5X3-MM THK)	
M	27	1	**8T-5041**	6	BOLT (M12X1.75X120-MM)	
	28	1	**9X-8257**	2	WASHER (17.5X30X3.5-MM THK)	

B-USE AS REQUIRED
M-METRIC PART

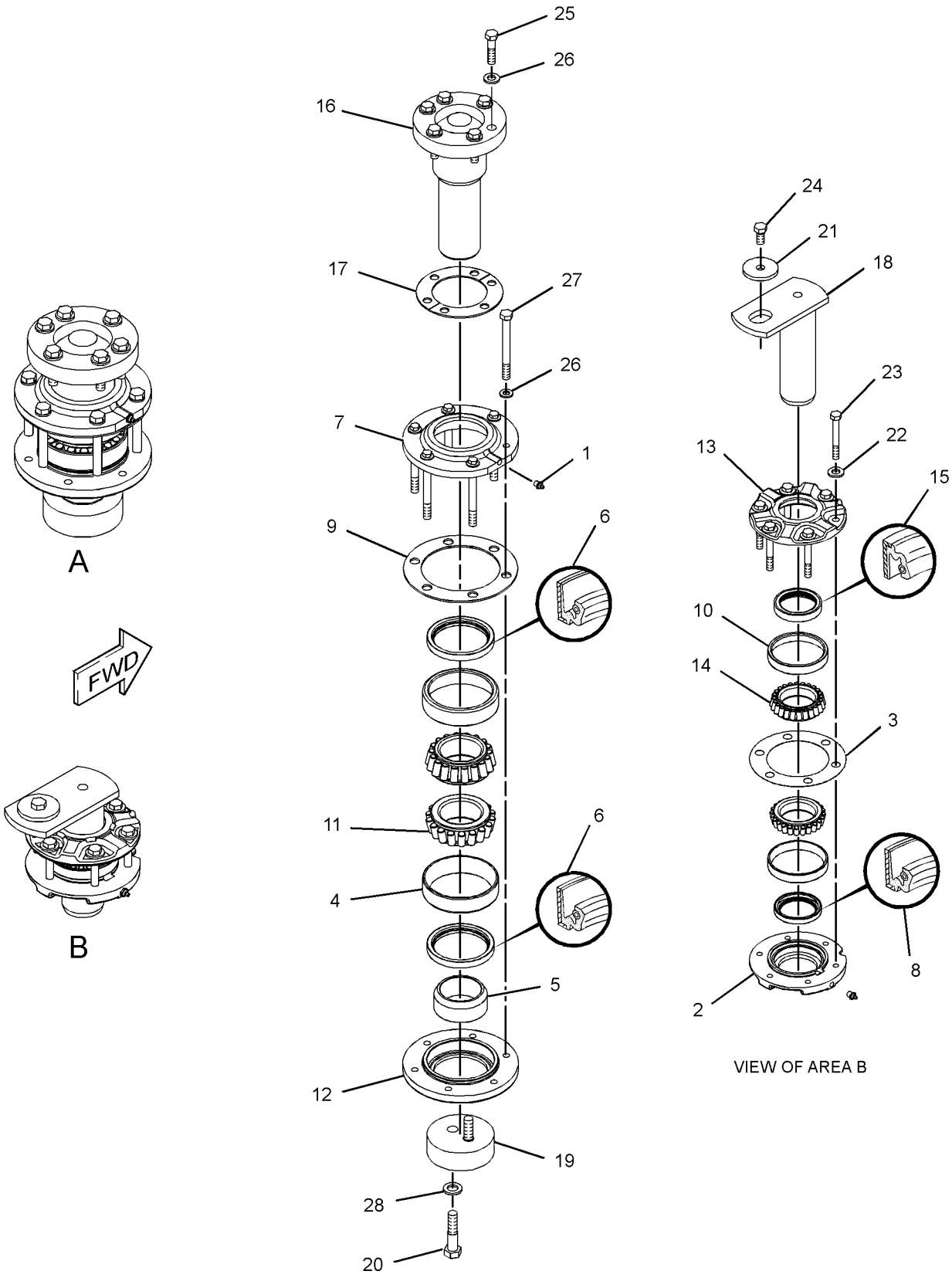

GRAPHIC #1

<END>

g01403461

FRAME AND BODY

307-8435 HOOD & GUARD GP

S/N: JKM1-398
PART OF 266-8584, 284-3569 SUPPRESSION AR-SOUND
AN ATTACHMENT

SMCS-7251 **i02929402**

NOTE	REF NO	GRAPHIC REF	PART NUMBER	QTY	PART NAME 1 2 3 4 5 6 (PRODUCT LEVEL)	SEE PAGE
	1	1	**124-4228**	1	PLATE	
	2	1	**125-7037**	1	INSERT	
Y	3	1	**244-1043**	1	PANEL GP-HOOD (SOUND SUPPRESSION, LH)	580
	4	1	**262-4480**	1	GUARD AS	
M		1	**8T-3490**	6	NUT-WELD (M10X1.5-THD)	
M		1	**8T-4967**	11	STUD-WELD (M10X1.5X23-MM OAL)	
		1	**115-4968**	4	BUSHING	
Y	5	1	*263-6065*	1	GRILL GP-RADIATOR	525
Y	6	1	**265-5864**	1	PANEL GP-HOOD (SOUND SUPPRESSION, RH)	581
	7	1	**283-1135**	1	PANEL AS	
	8	1	**290-3943**	1	PANEL AS-TOP (GRILL)	
	9	1	**301-9817**	1	ANGLE (LH)	
	10	1	**301-9818**	1	ANGLE (RH)	
Y	11	1	**302-3800**	1	DOOR GP-ACCESS (HOOD SIDE, RH)	502
Y	12	1	*307-8436*	1	PANEL GP-TOP (HOOD)	582
	13	1	**141-2820**	2	PANEL	
	14	1	**7X-0563**	4	WASHER-HARD (12X35X8-MM THK)	
	15	1	**7X-7729**	56	WASHER (11X25X3-MM THK)	
M	16	1	**8T-4133**	24	NUT (M10X1.5-THD)	
M	17	1	**8T-4136**	10	BOLT (M10X1.5X25-MM)	
M	18	1	**8T-4195**	25	BOLT (M10X1.5X30-MM)	
	19	1	**9M-5884**	3	BUMPER	
M	20	1	**9X-2044**	2	SCREW-TRUSS HEAD (M6X1X16-MM)	
E	21	1	**126-8472**		SEAL (7.5-CM EACH)	
E	22	1	**300-7318**		SEAL (50-CM)	
N	23	1	**310-7066**		SEAL (1070-MM)	
N	23A	1	**310-7066**		SEAL (1030-MM EACH)	
N	23B	1	**310-7066**		SEAL (1050-MM)	

E-ORDER BY THE CENTIMETER
M-METRIC PART
N-ORDER BY THE MILLIMETER
Y-SEPARATE ILLUSTRATION

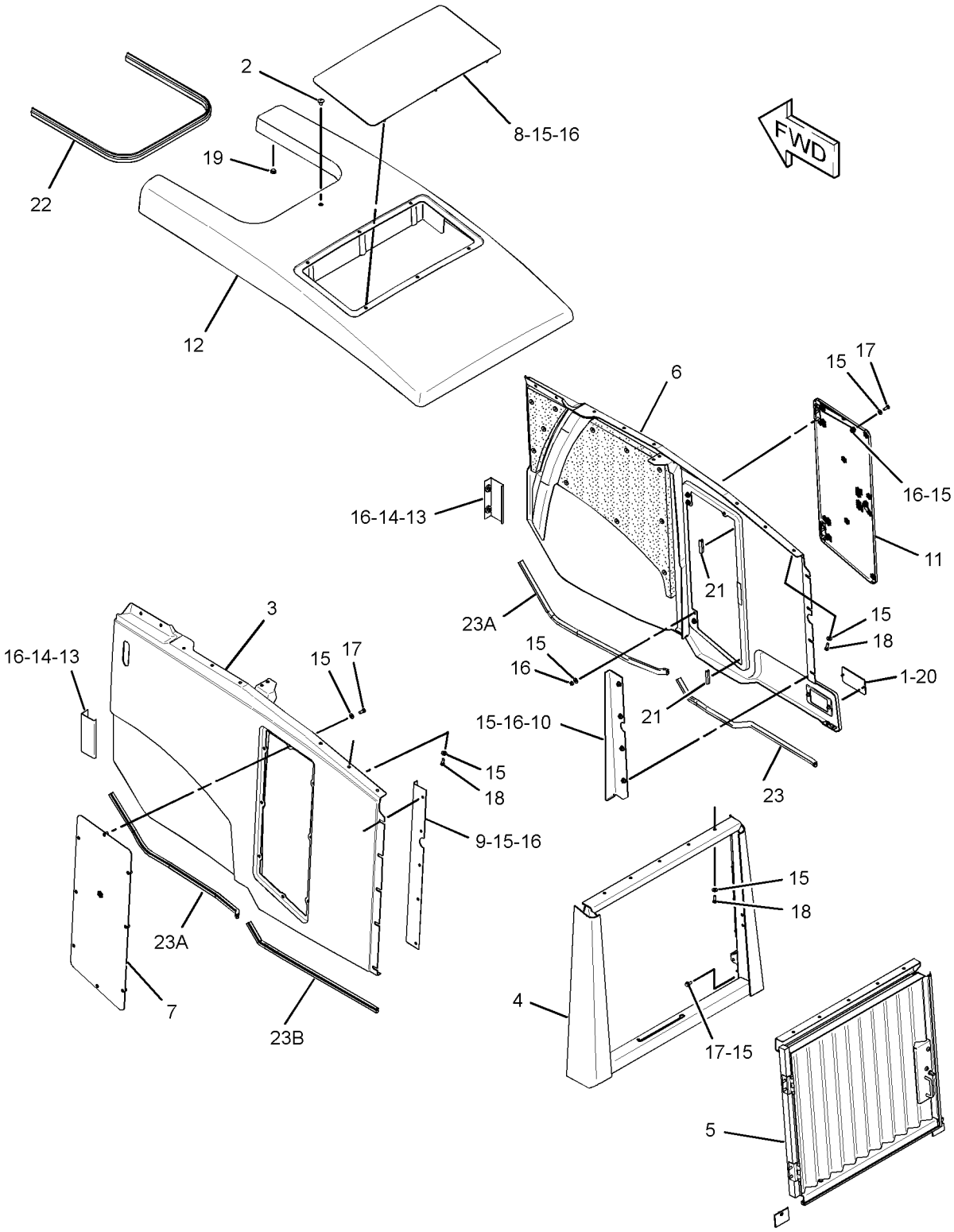

GRAPHIC #1 **<END>** g01442647

307-8435 HOOD & GUARD GP

S/N: JKM399-UP
PART OF 266-8584, 284-3569 SUPPRESSION AR-SOUND
AN ATTACHMENT

SMCS-7251 **i03644480**

NOTE	REF NO	GRAPHIC REF	PART NUMBER	QTY	PART NAME 1 2 3 4 5 6 (PRODUCT LEVEL)	SEE PAGE
	1	1	**124-4228**	1	PLATE	
	2	1	**125-7037**	1	INSERT	
Y	3	1	**244-1043**	1	PANEL GP-HOOD (SOUND SUPPRESSION, LH)	580
	4	1	**262-4480**	1	GUARD AS	
M		1	**8T-3490**	6	NUT-WELD (M10X1.5-THD)	
M		1	**8T-4967**	11	STUD-WELD (M10X1.5X23-MM OAL)	
		1	**115-4968**	4	BUSHING	
Y	5	1	*263-6065*	1	GRILL GP-RADIATOR	525
Y	6	1	**265-5864**	1	PANEL GP-HOOD (SOUND SUPPRESSION, RH)	581
	7	1	**283-1135**	1	PANEL AS	
	8	1	**290-3943**	1	PANEL AS-TOP (GRILL)	
		1	**124-4227**	1	PANEL AS-TOP	
	9	1	**301-9817**	1	ANGLE (LH)	
	10	1	**301-9818**	1	ANGLE (RH)	
Y	11	1	**302-3800**	1	DOOR GP-ACCESS (HOOD SIDE, RH)	502
Y	12	1	*307-8436*	1	PANEL GP-TOP (HOOD)	582
C	13	1	**141-2820**	2	PANEL	
	14	1	**7X-0563**	4	WASHER-HARD (12X35X8-MM THK)	
C	15	1	**7X-7729**	61	WASHER (11X25X3-MM THK)	
M	16	1	**8T-4133**	26	NUT (M10X1.5-THD)	
M	17	1	**8T-4136**	11	BOLT (M10X1.5X25-MM)	
M	18	1	**8T-4195**	25	BOLT (M10X1.5X30-MM)	
	19	1	**9M-5884**	3	BUMPER	
M	20	1	**9X-2044**	2	SCREW-TRUSS HEAD (M6X1X16-MM)	
E	21	1	**126-8472**		SEAL (7.5-CM EACH)	
E	22	1	**300-7318**		SEAL (182-CM)	
N	23	1	**310-7066**		SEAL (1070-MM)	
N	23A	1	**310-7066**		SEAL (1030-MM EACH)	
N	23B	1	**310-7066**		SEAL (1050-MM)	
CM	24	1	**9X-2040**	2	SCREW-TRUSS HEAD (M10X1.5X25-MM)	

C-CHANGE FROM PREVIOUS TYPE
E-ORDER BY THE CENTIMETER
M-METRIC PART
N-ORDER BY THE MILLIMETER
Y-SEPARATE ILLUSTRATION

307-8435 **HOOD & GUARD GP** *(contd.)* **i03644480**

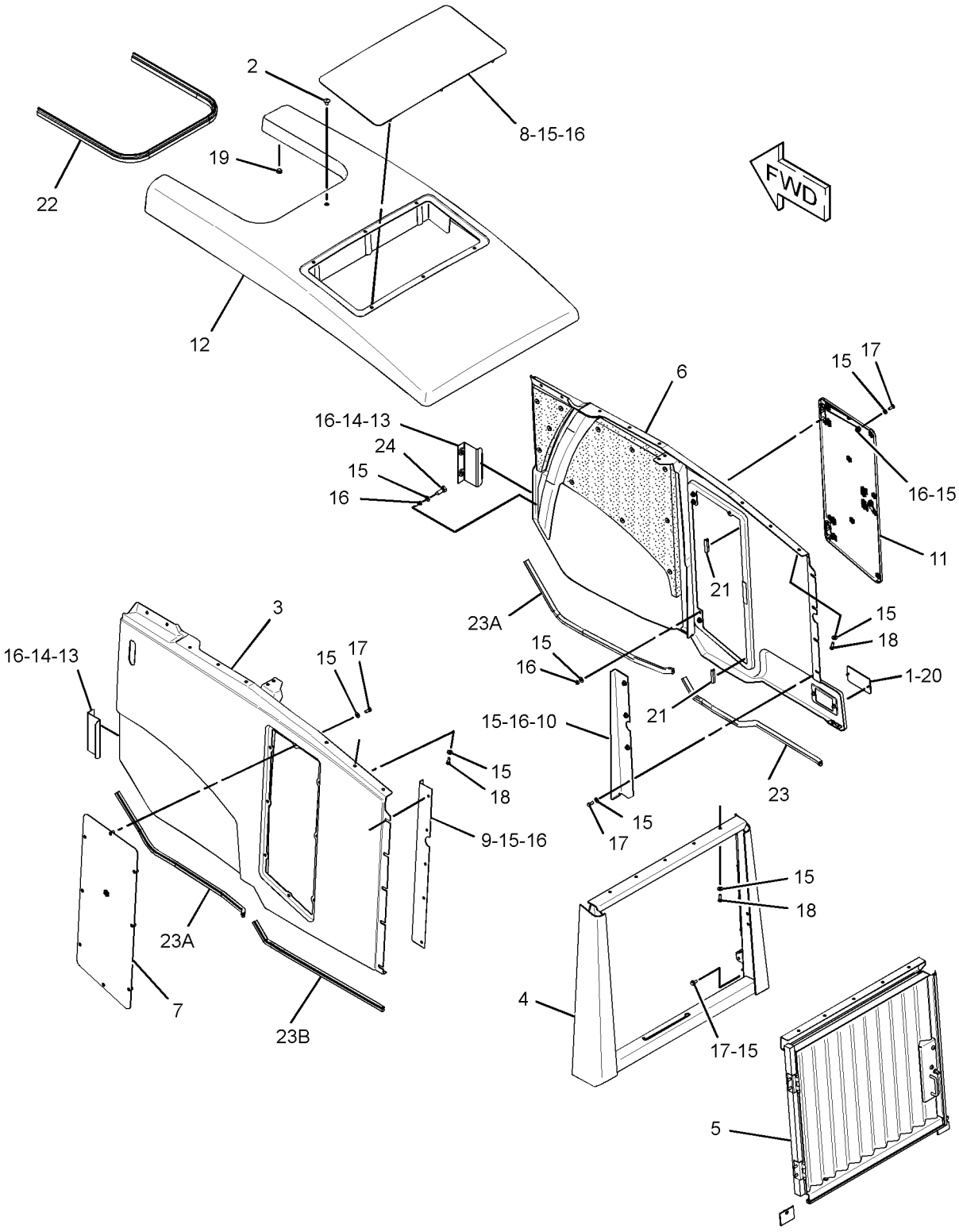

GRAPHIC #1 **<END>** g01947436

307-8440 HOOD & GUARD GP

S/N: JKM1-345

PART OF 237-7540 CHASSIS AR

SMCS-7251 **i02908825**

NOTE	REF NO	GRAPHIC REF	PART NUMBER	QTY	PART NAME 1 2 3 4 5 6 (PRODUCT LEVEL)	SEE PAGE
	1	1	**124-4228**	1	PLATE	
	2	1	**125-7037**	1	INSERT	
	3	2	**244-1040**	1	PANEL AS (LH)	
Y	4	1	*263-6065*	1	GRILL GP-RADIATOR	525
	5	1	**262-4480**	1	GUARD AS	
M		1	**8T-3490**	6	NUT-WELD (M10X1.5-THD)	
M		1	**8T-4967**	11	STUD-WELD (M10X1.5X23-MM OAL)	
		1	**115-4968**	4	BUSHING	
	6	2	**265-5865**	1	PANEL AS (RH)	
	7	2	**283-1135**	1	PANEL AS	
	8	1	**290-3943**	1	PANEL AS-TOP (GRILL)	
	9	1	**301-9817**	1	ANGLE (LH)	
	10	2	**301-9818**	1	ANGLE (RH)	
Y	11	1	**302-3800**	1	DOOR GP-ACCESS (HOOD SIDE, RH)	502
	12	1	**307-8437**	1	PANEL AS-TOP (HOOD)	
	13	2	**141-2820**	2	PANEL	
	14	2	**7X-0563**	4	WASHER-HARD (12X35X8-MM THK)	
	15	1,2	**7X-7729**	56	WASHER (11X25X3-MM THK)	
M	16	1,2	**8T-4133**	24	NUT (M10X1.5-THD)	
M	17	1,2	**8T-4136**	10	BOLT (M10X1.5X25-MM)	
M	18	1,2	**8T-4195**	25	BOLT (M10X1.5X30-MM)	
	19	2	**9M-5884**	3	BUMPER	
M	20	1	**9X-2044**	2	SCREW-TRUSS HEAD (M6X1X16-MM)	
E	21	1	**300-7318**		SEAL (50-CM)	
E	22	2	**126-8472**		SEAL (7.5-CM EACH)	
J	23	2	**310-7066**		SEAL (4200-MM)	

E-ORDER BY THE CENTIMETER
J-ORDER BY THE MILLIMETER
M-METRIC PART
Y-SEPARATE ILLUSTRATION

307-8440 **HOOD & GUARD GP** *(contd.)* **i02908825**

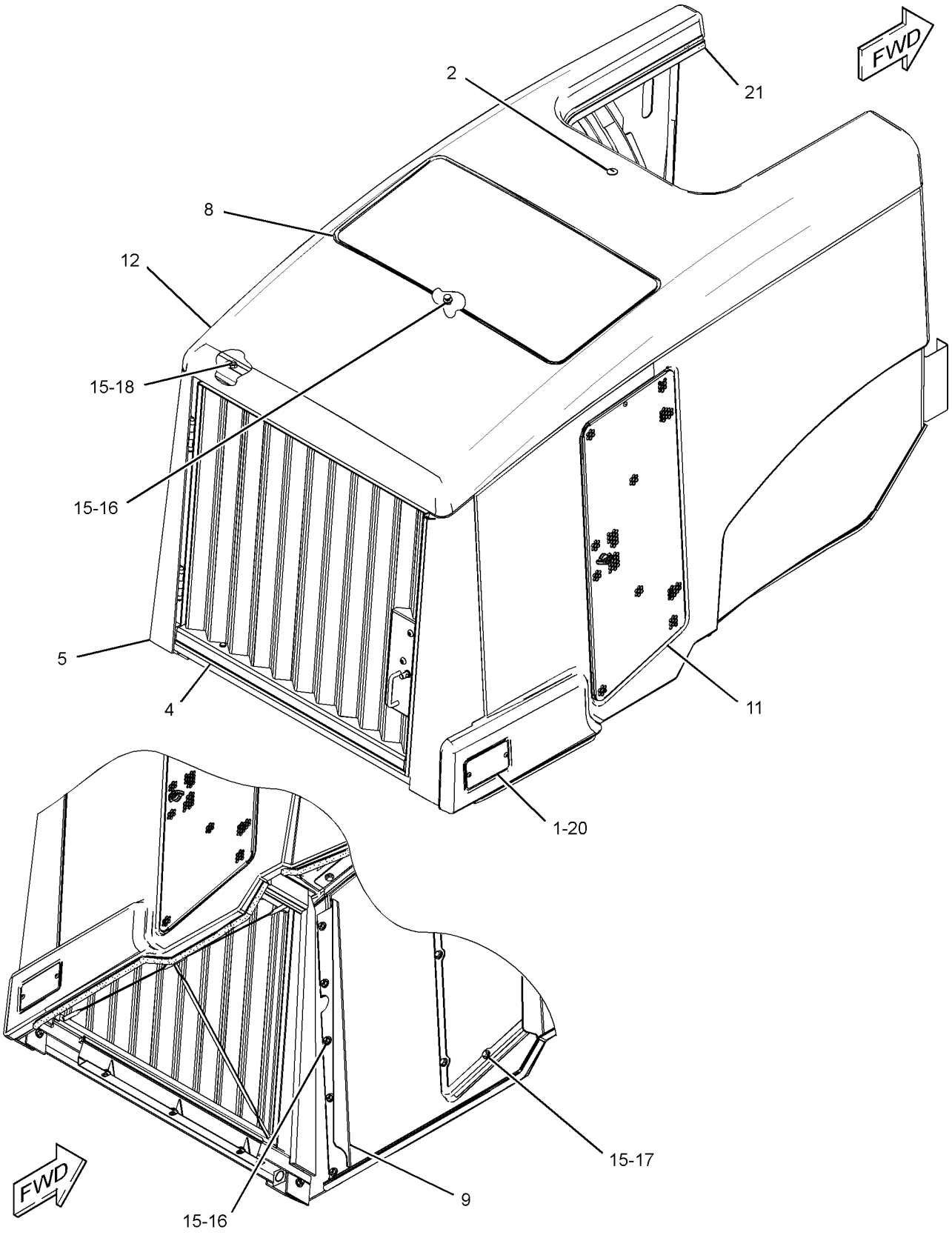

GRAPHIC #1 g01424489

307-8440 **HOOD & GUARD GP** *(contd.)* **i02908825**

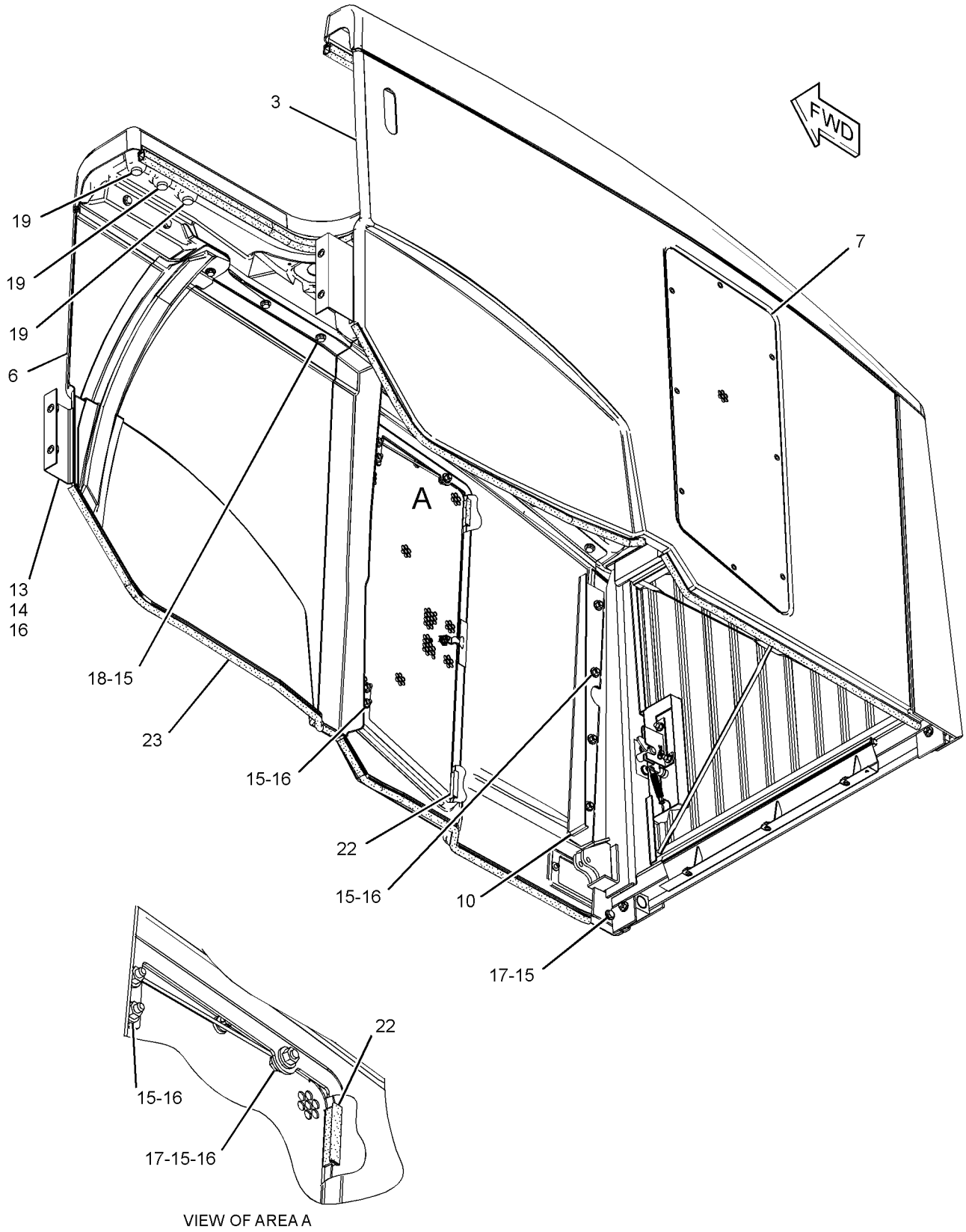

VIEW OF AREA A

GRAPHIC #2 **<END>** g01424490

FRAME AND BODY

307-8440 HOOD & GUARD GP

S/N: JKM346-UP

PART OF 237-7540 CHASSIS AR

SMCS-7251 **i03644576**

NOTE	REF NO	GRAPHIC REF	PART NUMBER	QTY	PART NAME 1 2 3 4 5 6 (PRODUCT LEVEL)	SEE PAGE
	1	2	**124-4228**	1	PLATE	
	2	2	**125-7037**	1	INSERT	
	3	2	**319-6099**	1	PANEL AS (LH) (LH)	
Y	4	2	*263-6065*	1	GRILL GP-RADIATOR	525
	5	2	**262-4480**	1	GUARD AS	
	6	1	**319-6096**	1	PANEL AS (RH)	
	7	1	**283-1135**	1	PANEL AS	
	8	2	**290-3943**	1	PANEL AS-TOP (GRILL)	
	9	2	**301-9817**	1	ANGLE (LH)	
	10	1	**301-9818**	1	ANGLE (RH)	
Y	11	2	**302-3800**	1	DOOR GP-ACCESS (HOOD SIDE, RH)	502
	12	2	**307-8437**	1	PANEL AS-TOP (HOOD)	
C	13	1,2	**141-2820**	2	PANEL	
	14	1,2	**7X-0563**	4	WASHER-HARD (12X35X8-MM THK)	
C	15	1,2	**7X-7729**	61	WASHER (11X25X3-MM THK)	
M	16	1,2	**8T-4133**	26	NUT (M10X1.5-THD)	
M	17	1,2	**8T-4136**	11	BOLT (M10X1.5X25-MM)	
M	18	1,2	**8T-4195**	25	BOLT (M10X1.5X30-MM)	
	19	1	**9M-5884**	3	BUMPER	
M	20	2	**9X-2044**	2	SCREW-TRUSS HEAD (M6X1X16-MM)	
E	21	2	**300-7318**		SEAL (182-CM)	
E	22	1	**126-8472**		SEAL (7.5-CM EACH)	
J	23	1	**310-7066**		SEAL (1030-MM EACH)	
J	23A	1	**310-7066**		SEAL (1050-MM)	
J	23B	1	**310-7066**		SEAL (1070-MM)	
CM	24	1	**9X-2040**	2	SCREW-TRUSS HEAD (M10X1.5X25-MM)	

C-CHANGE FROM PREVIOUS TYPE
E-ORDER BY THE CENTIMETER
J-ORDER BY THE MILLIMETER
M-METRIC PART
Y-SEPARATE ILLUSTRATION

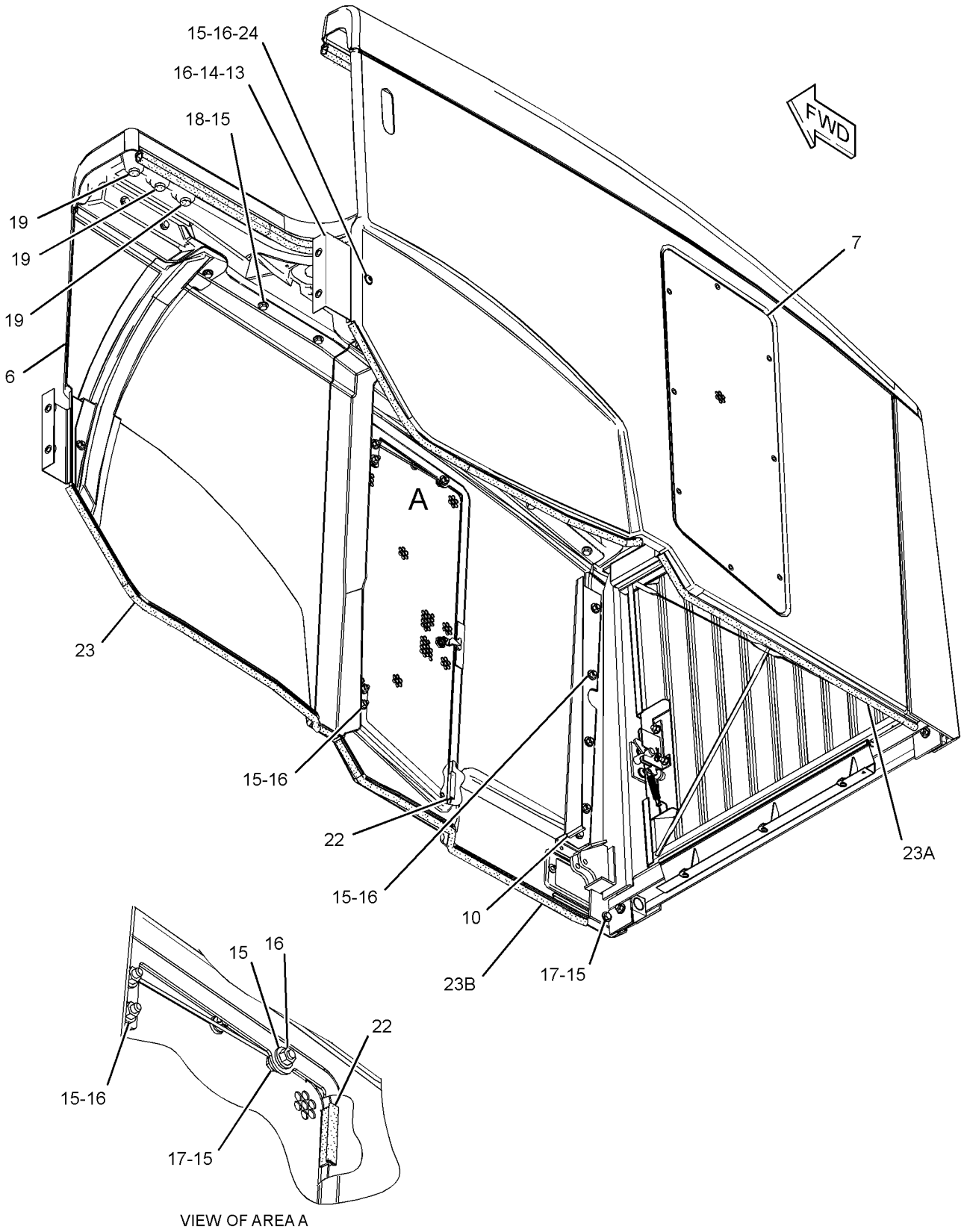

VIEW OF AREA A

GRAPHIC #1 g01641734

307-8440 **HOOD & GUARD GP** *(contd.)* **i03644576**

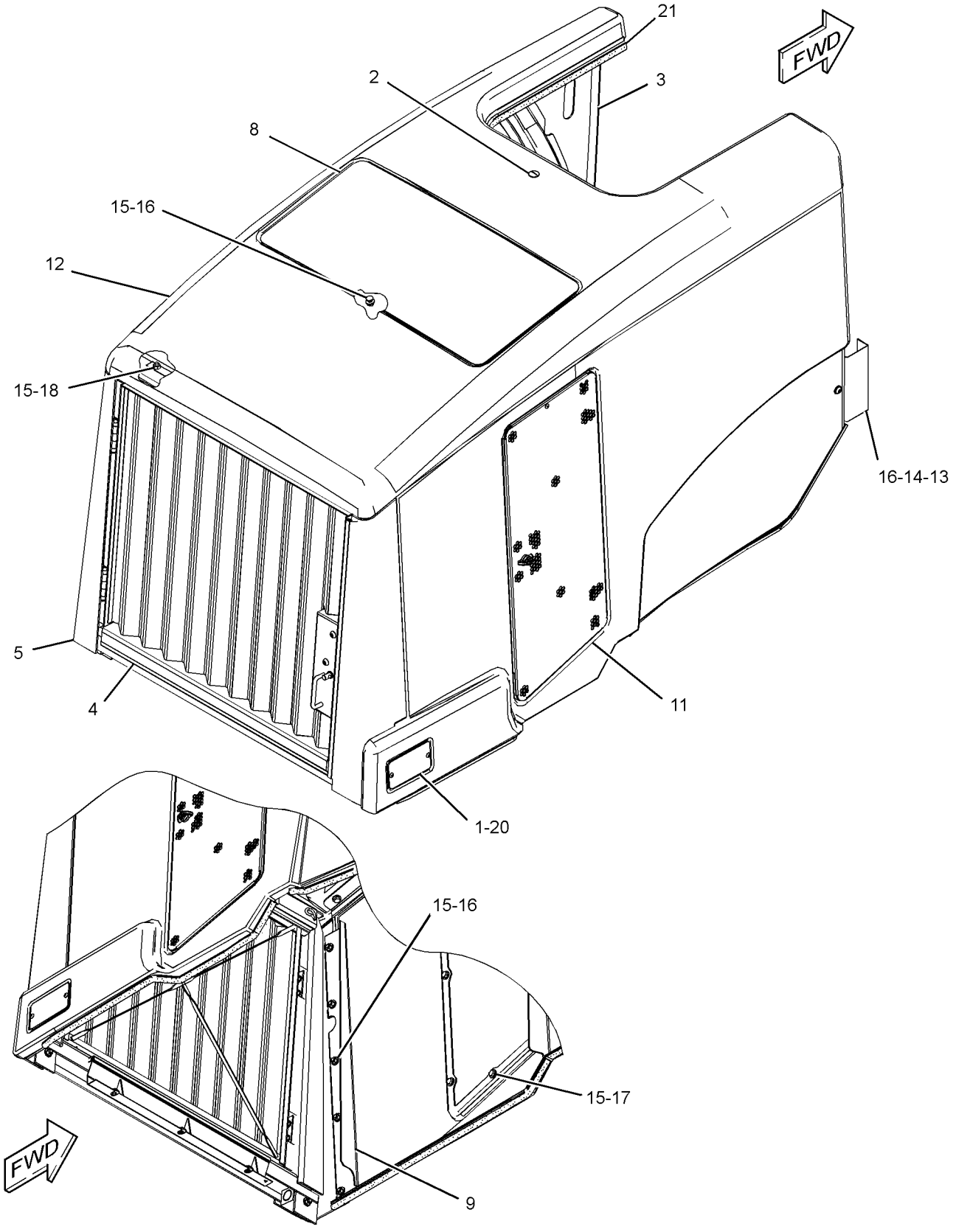

GRAPHIC #2 **<END>** g01641735

FRAME AND BODY

237-7543 LADDER GP

S/N: JKM1-UP

PART OF 237-7540 CHASSIS AR

SMCS-7254 **i02910481**

NOTE	REF NO	GRAPHIC REF	PART NUMBER	QTY	PART NAME 1 2 3 4 5 6 (PRODUCT LEVEL)	SEE PAGE
	1	1	**7W-8106**	8	SPACER (11.13X19.05X15-MM THK)	
	2	1	**234-1530**	1	STEP AS	
	3	1	**234-3545**	4	PLATE	
	4	1	**234-5107**	2	SUPPORT-STEP (RUBBER)	
	5	1	**246-6727**	2	BRACKET AS	
	6	1	**257-6282**	1	LADDER AS (LH)	
		1	**234-1531**	3	STEP	
	7	1	**257-6283**	1	LADDER AS (RH)	
		1	**234-1531**	3	STEP	
	8	1	**305-2530**	1	BRACKET AS	
M		1	**8T-3490**	2	NUT-WELD (M10X1.5-THD)	
M		1	**8T-3597**	2	NUT-WELD (M12X1.75-THD)	
	9	1	**8T-4121**	8	WASHER-HARD (11X21X2.5-MM THK)	
M	10	1	**8T-4139**	14	BOLT (M12X1.75X30-MM)	
M	11	1	**8T-4186**	8	BOLT (M10X1.5X40-MM)	
	12	1	**8T-4223**	14	WASHER-HARD (13.5X25.5X3-MM THK)	

M-METRIC PART

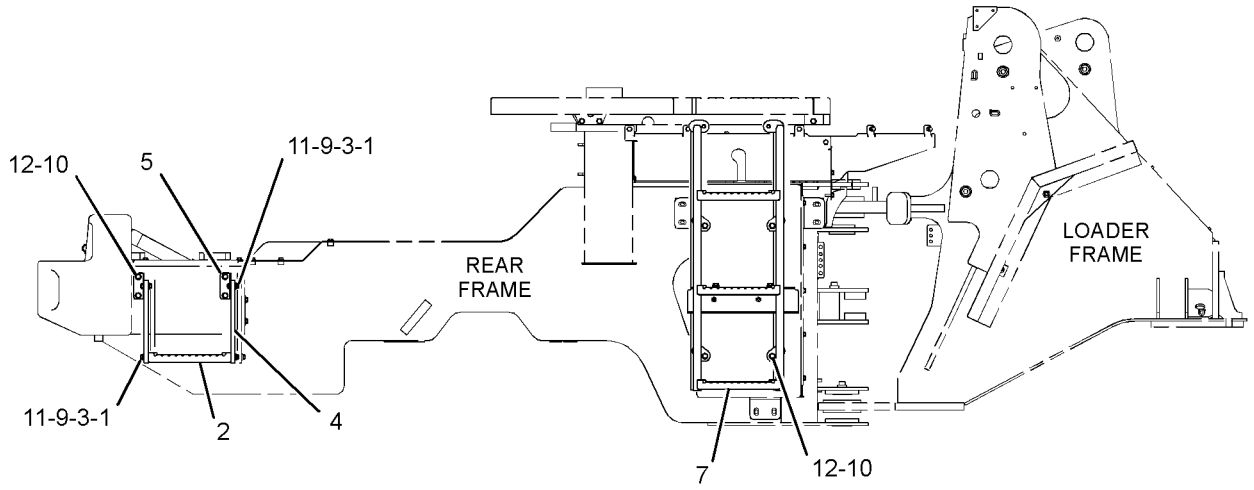

RIGHT SIDE VIEW

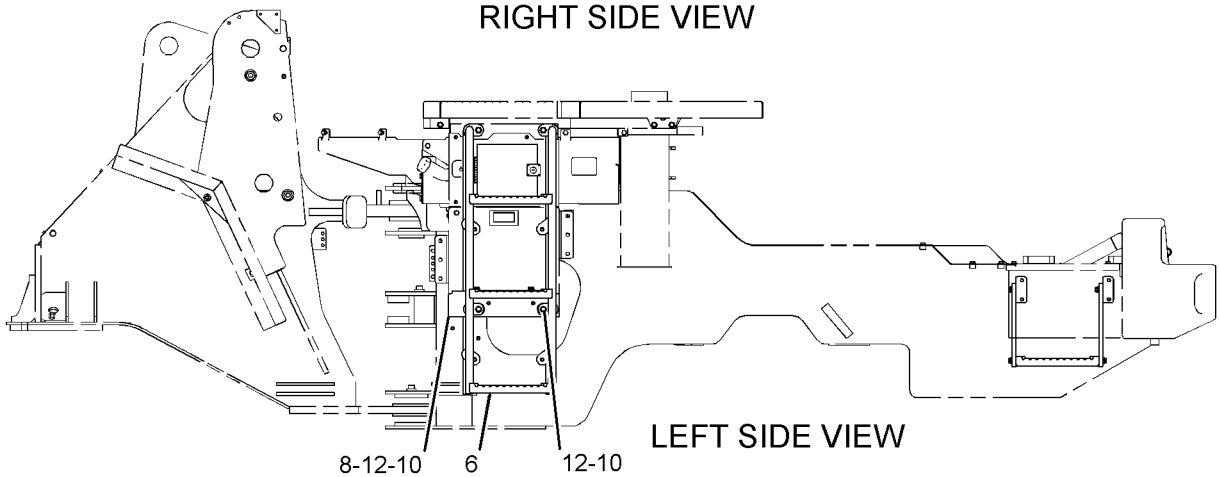

LEFT SIDE VIEW

GRAPHIC #1

<END>

g01392648

FRAME AND BODY

264-1271 LADDER GP

S/N: JKM1-UP
PART OF 264-1300 FENDER GP-ROADING
AN ATTACHMENT

SMCS-7254 **i03547815**

NOTE	REF NO	GRAPHIC REF	PART NUMBER	QTY	PART NAME 1 2 3 4 5 6 (PRODUCT LEVEL)	SEE PAGE
	1	1	**234-1530**	1	STEP AS	
	2	1	**234-3545**	4	PLATE	
	3	1	**234-5106**	2	SUPPORT-STEP (RUBBER)	
	4	1	**264-1273**	1	PLATE AS	
M		1	**8T-3490**	4	NUT-WELD (M10X1.5-THD)	
	5	1	**8T-4121**	8	WASHER-HARD (11X21X2.5-MM THK)	
M	6	1	**8T-4139**	4	BOLT (M12X1.75X30-MM)	
M	7	1	**8T-4186**	8	BOLT (M10X1.5X40-MM)	
	8	1	**8T-4223**	4	WASHER-HARD (13.5X25.5X3-MM THK)	
	9	1	**7W-8106**	8	SPACER (11.13X19.05X15-MM THK)	

M-METRIC PART

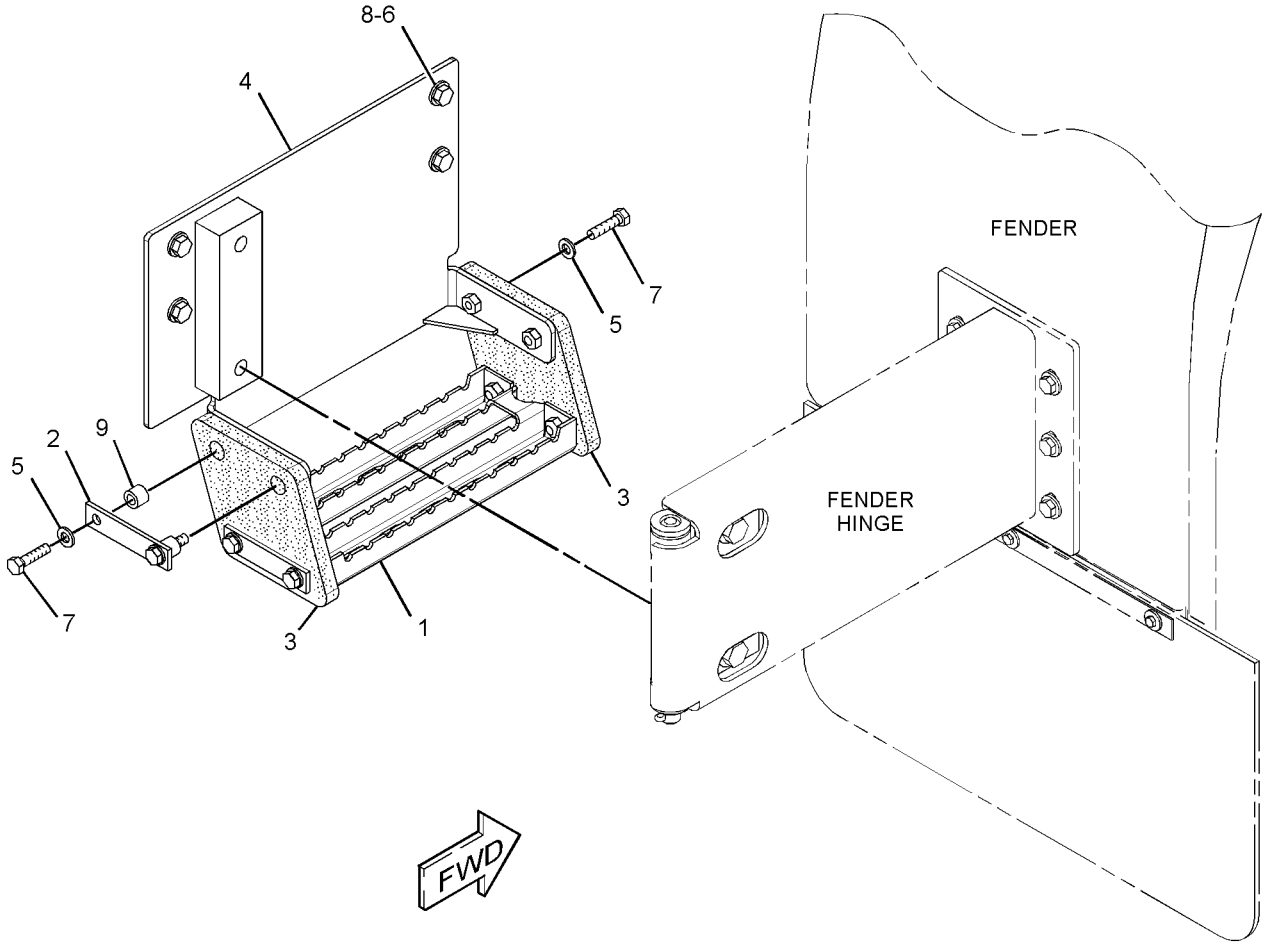

GRAPHIC #1 **<END>** g01660935

286-8880 LINES GP-CENTRAL LUBRICATION

S/N: JKM1-UP

PART OF 284-5011 LUBRICATION AR-AUTOMATIC

AN ATTACHMENT

SMCS-7510, 7540 **i03715160**

NOTE	REF NO	GRAPHIC REF	PART NUMBER	QTY	PART NAME 1 2 3 4 5 6 (PRODUCT LEVEL)	SEE PAGE
	1	1	**7K-1181**	1	STRAP-CABLE	
	2	1	**114-9325**	1	CLAMP-DOUBLE	
	3	1	**308-6414**	2	HOSE AS	
	4	1	**308-6415**	2	HOSE AS	
	5	1	**4J-3014**	2	SPACER (0.844-MM THK)	
M	6	1	**8C-8451**	1	BOLT (M6X1X40-MM)	
	7	1	**8T-4121**	7	WASHER-HARD (11X21X2.5-MM THK)	
M	8	1	**8T-4137**	4	BOLT (M10X1.5X20-MM)	
M	9	1	**8T-4182**	3	BOLT (M10X1.5X45-MM)	
	10	1	**9M-4995**	7	CLIP	
E	11	1	**206-2722**		GUARD-HOSE (65-CM)	

E-ORDER BY THE CENTIMETER
M-METRIC PART

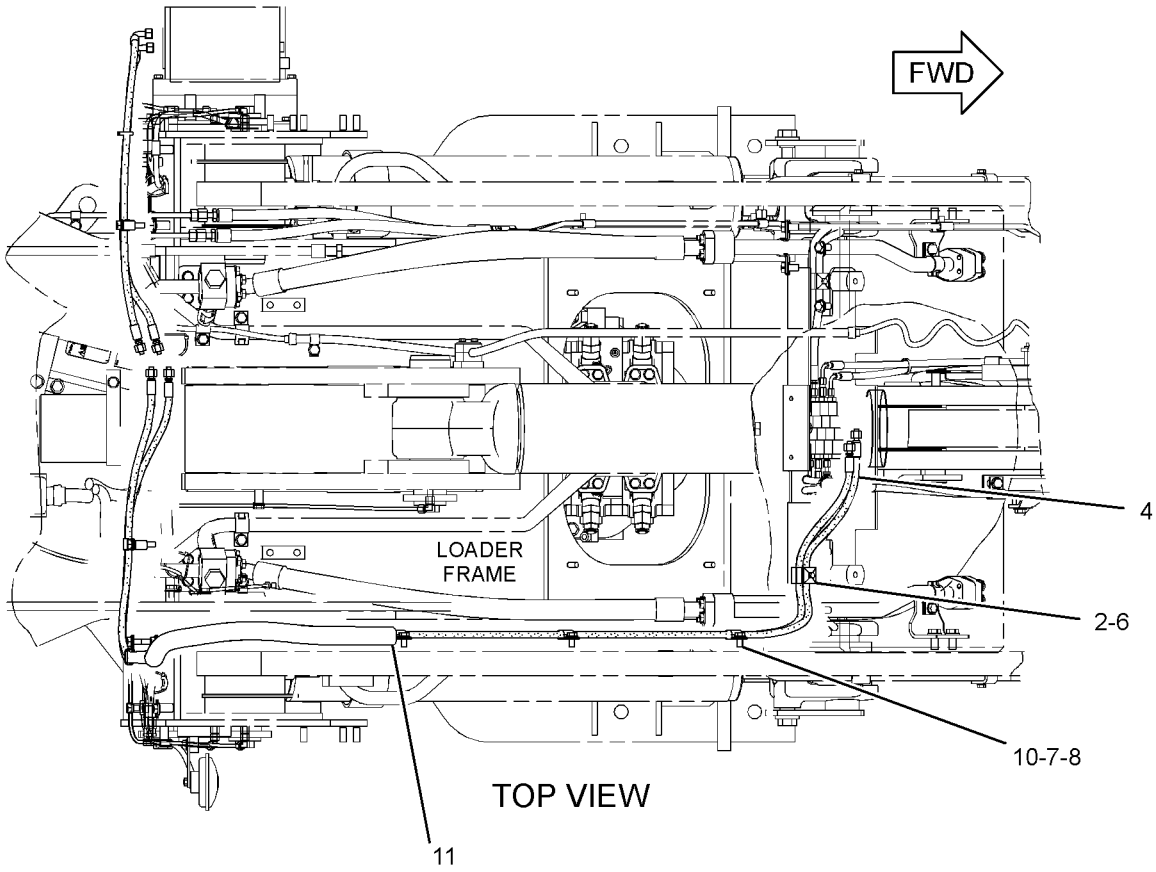

TOP VIEW

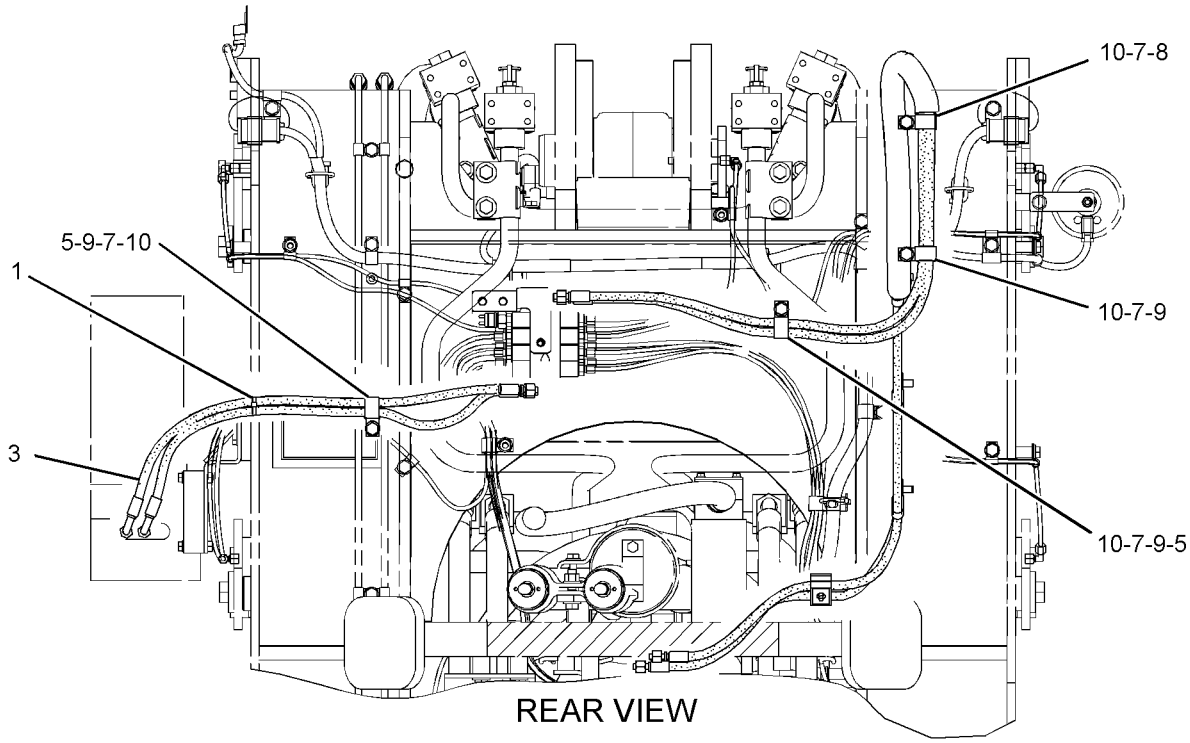

REAR VIEW

GRAPHIC #1 **<END>** g01978156

FRAME AND BODY

285-0545 LINES GP-FRONT LUBRICATION

S/N: JKM1-UP

PART OF 284-5011 LUBRICATION AR-AUTOMATIC

AN ATTACHMENT

SMCS-7510, 7540 **i03667944**

NOTE	REF NO	GRAPHIC REF	PART NUMBER	QTY	PART NAME 1 2 3 4 5 6 (PRODUCT LEVEL)	SEE PAGE
	1	1	**3S-2093**	3	STRAP-CABLE	
	2	1	**136-7966**	1	LINK AS-BEARING	
	2A	1	**4V-2883**	2	BUSHING	
	3	1	**177-3475**	2	CONNECTOR (REDUCER)	
	4	1	**177-3484**	2	BOLT AS-SPECIAL (BANJO)	
	5	1	**177-3490**	2	ELBOW AS	
	6	1	**178-2723**	2	ELBOW	
	7	1	**251-2138**	2	ELBOW	
	8	1	**251-2139**	8	BRACKET	
	9	1	**251-7294**	2	BUSHING-SPECIAL (BANJO)	
	10	1	**256-4884**	1	BRACKET	
	11	1	**278-2078**	1	ELBOW	
	12	1	**285-0570**	2	BRACKET AS	
					(EACH INCLUDES)	
M		1	**8T-3851**	2	BOSS-WELD (M10X1.5X17.5-MM)	
	13	1	**285-0579**	1	TUBE	
	14	1	**285-0580**	1	TUBE	
	15	1	**309-1606**	1	TUBE AS	
	16	1	**309-1609**	1	TUBE AS	
	17	1	**309-1776**	2	CLAMP AS	
Y	18	1	*309-9217*	1	VALVE & LINES GP-LUBRICATION (FRONT)	604
	19	1	**033-8248**	3	CLIP	
	20	1	**4D-9517**	1	CLIP	
	21	1	**4M-8973**	2	ELBOW	
M	22	1	**5C-9553**	2	BOLT (M6X1X16-MM)	
	23	1	**5P-9299**	12	CLIP	
	24	1	**6V-7383**	2	CLIP	
M	25	1	**6V-7744**	2	LOCKNUT (M10X1.5-THD)	
M	26	1	**7X-2536**	2	BOLT (M8X1.25X14-MM)	
	27	1	**7X-7729**	4	WASHER (11X25X3-MM THK)	
	28	1	**8T-4121**	9	WASHER-HARD (11X21X2.5-MM THK)	
M	29	1	**8T-4136**	11	BOLT (M10X1.5X25-MM)	
M	30	1	**8T-4192**	1	BOLT (M12X1.75X25-MM)	
M	31	1	**8T-4195**	2	BOLT (M10X1.5X30-MM)	
M	32	1	**8T-4200**	8	BOLT (M8X1.25X16-MM)	
	33	1	**8T-4223**	1	WASHER-HARD (13.5X25.5X3-MM THK)	
	34	1	**8T-4224**	10	WASHER-HARD (8.8X16X2-MM THK)	
	35	1	**9X-8256**	2	WASHER (6.6X12X2-MM THK)	
	36	1	**5H-4744**	1	SPACER (7/16-IN THK)	
	37	1	**177-3463**	1	CONNECTOR AS	
	38	1	**6K-6967**	2	ADAPTER-PIPE	

M-METRIC PART
Y-SEPARATE ILLUSTRATION

285-0545 **LINES GP-FRONT LUBRICATION** *(contd.)* **i03667944**

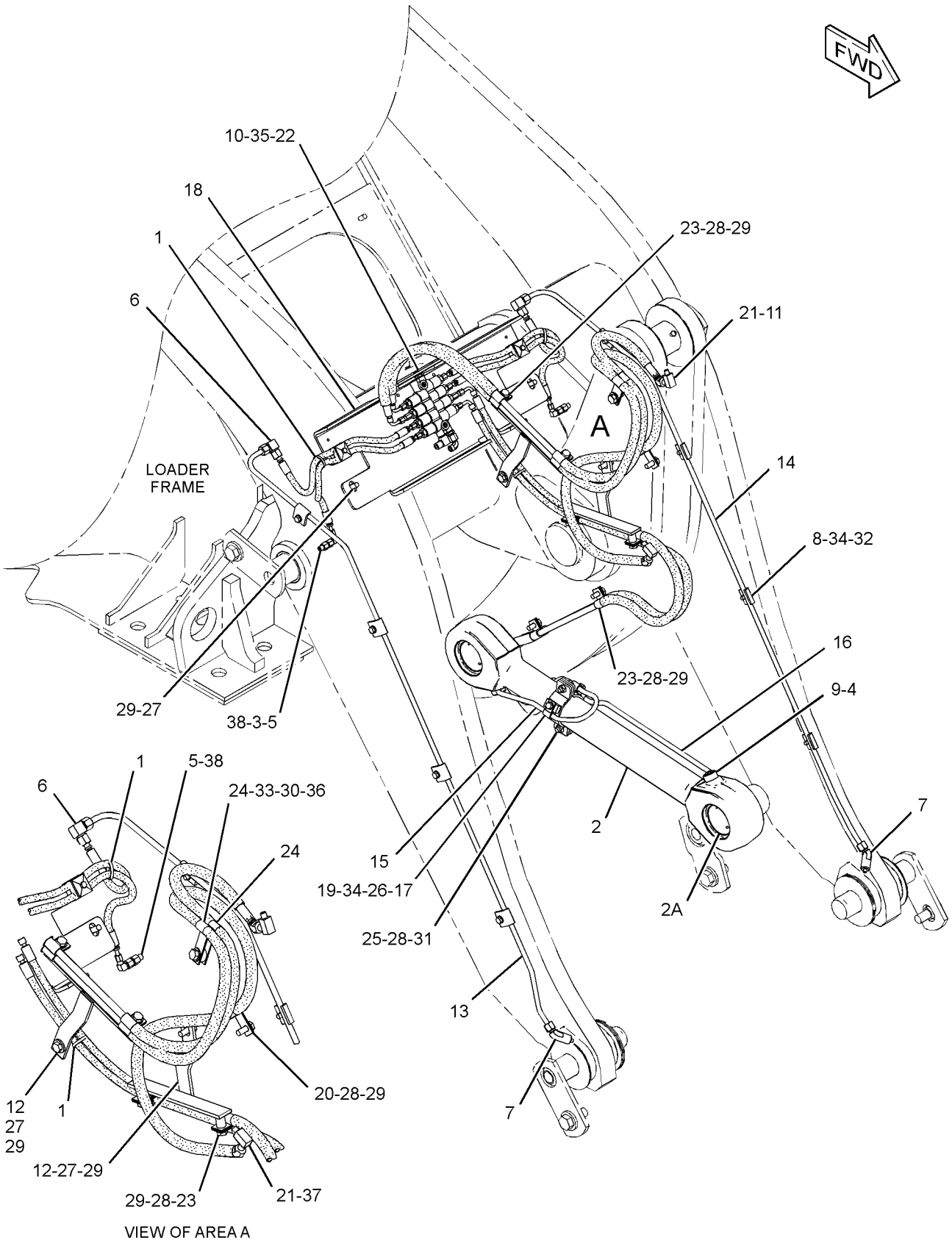

GRAPHIC #1 **<END>** g01872953

239-3369 LINES GP-GREASE

S/N: JKM1-955

PART OF 237-7540 CHASSIS AR

SMCS-7510 **i02910613**

NOTE	REF NO	GRAPHIC REF	PART NUMBER	QTY	PART NAME 1 2 3 4 5 6 (PRODUCT LEVEL)	SEE PAGE
	1	2	**5B-0935**	5	FITTING-GREASE	
	2	1,2	**5K-9242**	4	UNION-FLARED	
	3	1,2	**5K-9243**	9	ELBOW-FLARED	
	4	2	**5P-5461**	5	NUT (1/8-27-THD)	
	5	2	**5P-5463**	5	ADAPTER-LUBRICATION	
	6	1	**9S-7712**	1	ELBOW-FLARED	
	7	1	**192-0087**	1	FITTING-PIPE	
I	8	1	**279-9937**	2	HOSE AS	
	9	2	**311-2579**	1	TUBE AS	
	10	2	**311-2580**	1	TUBE AS	
	11	2	**311-2581**	1	TUBE AS	
	12	2	**311-2582**	1	TUBE AS	
	13	2	**311-2583**	1	TUBE AS	
	14	2	**311-2584**	1	TUBE AS	
	15	2	**311-2585**	1	TUBE AS	
	16	2	**311-2586**	1	TUBE AS	
	17	1	**311-2587**	1	TUBE AS	
	18	2	**3B-6552**	4	ELBOW-PIPE	
	19	1,2	**8M-2772**	18	CLIP	
	20	1,2	**8T-4121**	14	WASHER-HARD (11X21X2.5-MM THK)	
M	21	1,2	**8T-4137**	12	BOLT (M10X1.5X20-MM)	
M	22	1,2	**8T-4191**	2	BOLT (M10X1.5X16-MM)	

I-REFER TO HYDRAULIC INFORMATION SYSTEM
M-METRIC PART

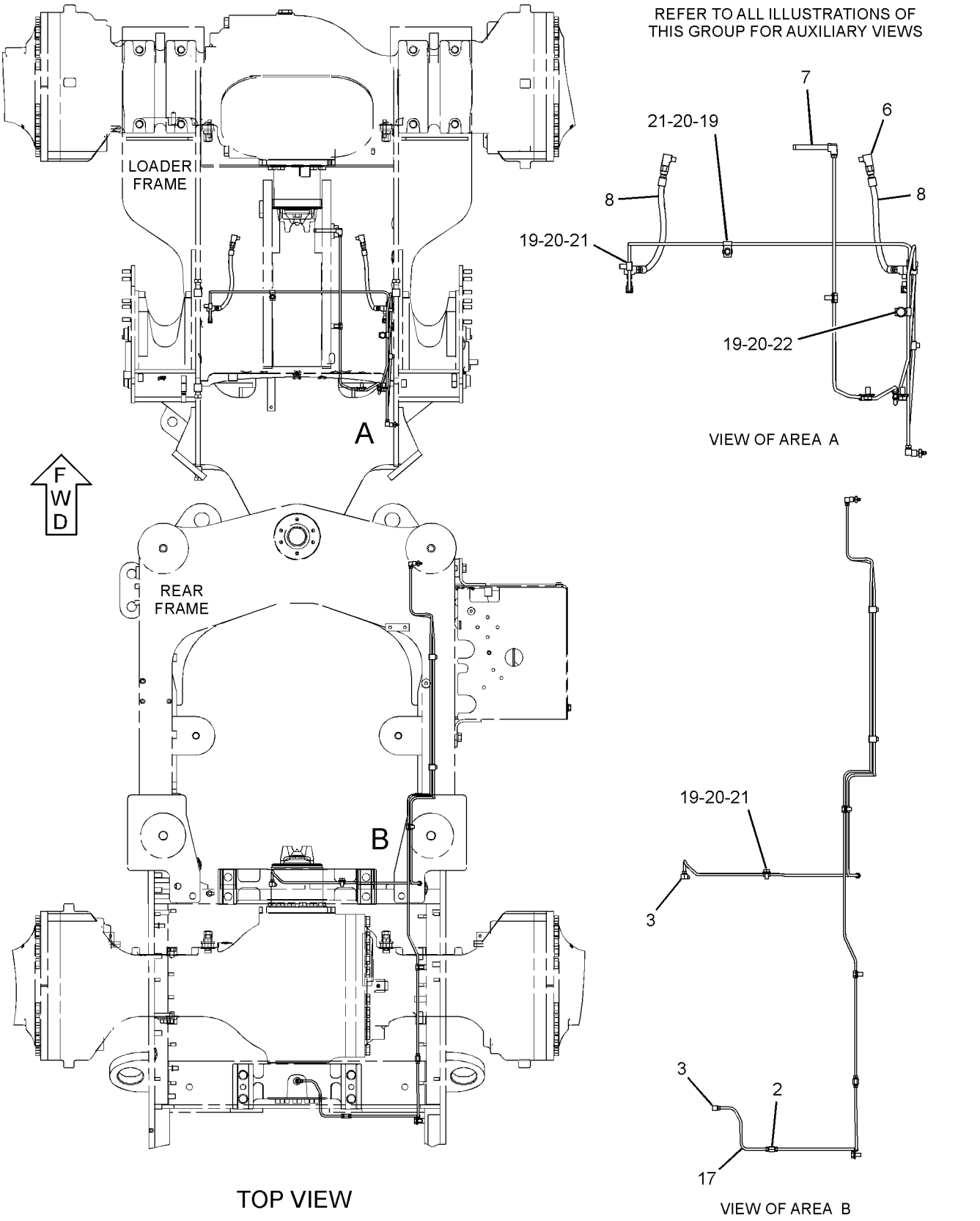

GRAPHIC #1

g01448795

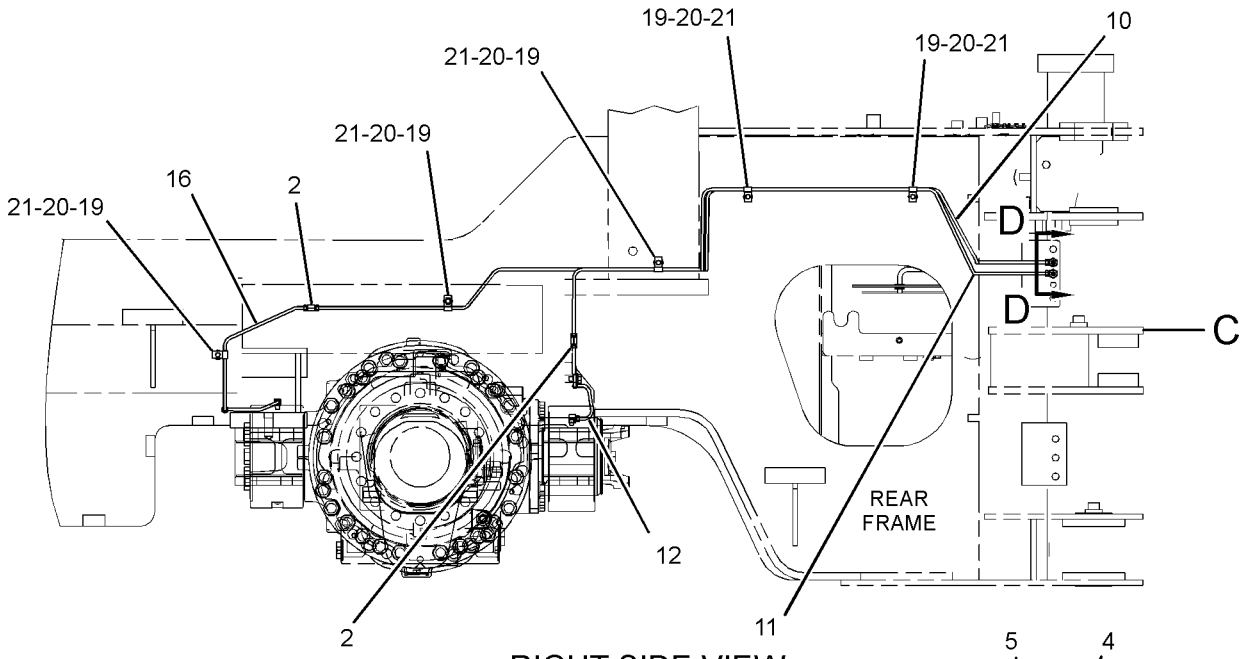

RIGHT SIDE VIEW

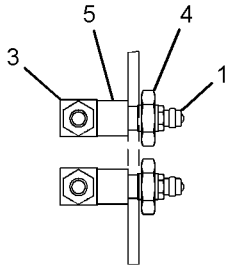

SECTION D-D

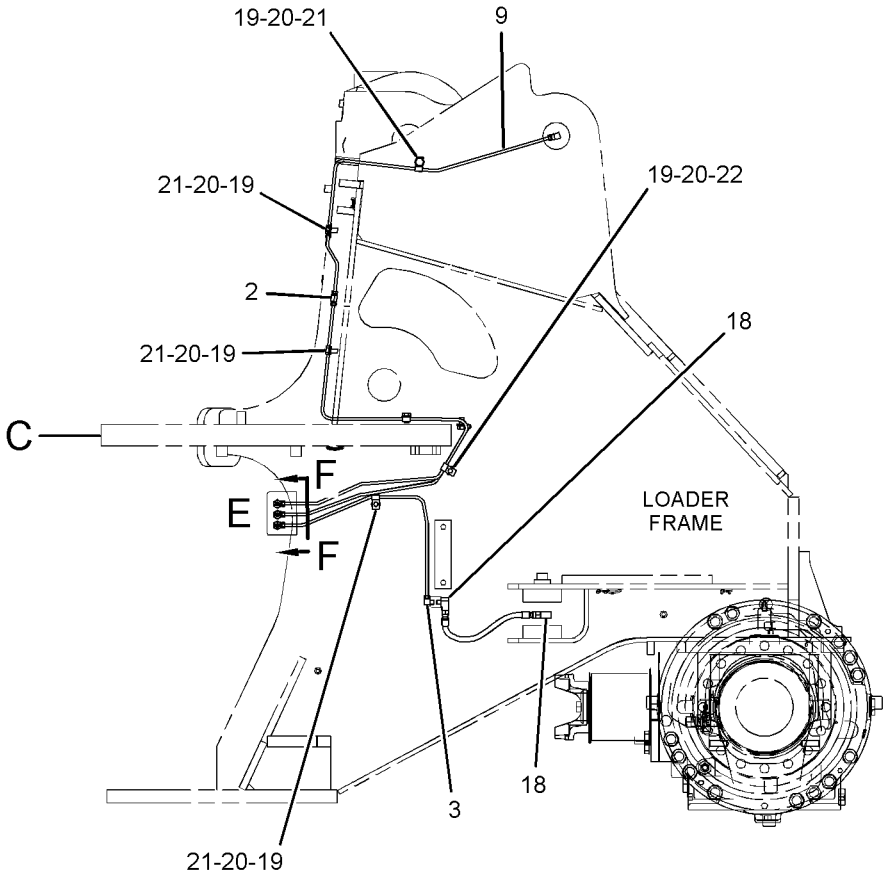

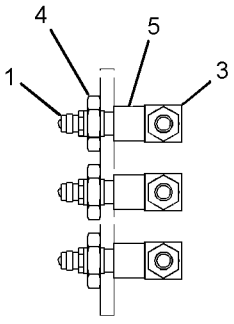

SECTION F-F

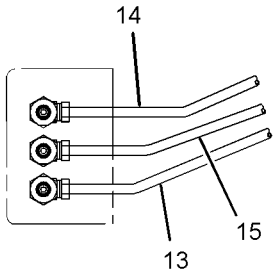

VIEW OF AREA E

GRAPHIC #2 **<END>** g01448797

FRAME AND BODY

239-3369 LINES GP-GREASE

S/N: JKM956-UP

PART OF 237-7540 CHASSIS AR

SMCS-7510 **i03879409**

NOTE	REF NO	GRAPHIC REF	PART NUMBER	QTY	PART NAME 1 2 3 4 5 6 (PRODUCT LEVEL)	SEE PAGE
	1	2	**5B-0935**	5	FITTING-GREASE	
	2	1,2	**5K-9242**	4	UNION-FLARED	
	3	2	**5K-9243**	9	ELBOW-FLARED	
	4	2	**5P-5461**	5	NUT (1/8-27-THD)	
	5	2	**5P-5463**	5	ADAPTER-LUBRICATION	
	6	1	**9S-7712**	1	ELBOW-FLARED	
	7	1	**192-0087**	1	FITTING-PIPE (NIPPLE)	
I	8	1	**279-9937**	2	HOSE AS	
	9	2	**311-2579**	1	TUBE AS	
	10	2	**311-2580**	1	TUBE AS	
	11	2	**311-2581**	1	TUBE AS	
	12	2	**311-2582**	1	TUBE AS	
	13	2	**311-2583**	1	TUBE AS	
	14	2	**311-2584**	1	TUBE AS	
	15	2	**311-2585**	1	TUBE AS	
	16	2	**311-2586**	1	TUBE AS	
	17	1	**311-2587**	1	TUBE AS	
	18	2	**3B-6552**	4	ELBOW-PIPE	
	19	1,2	**8M-2772**	18	CLIP	
	20	1,2	**8T-4121**	14	WASHER-HARD (11X21X2.5-MM THK)	
M	21	1,2	**8T-4137**	12	BOLT (M10X1.5X20-MM)	
M	22	1,2	**8T-4191**	2	BOLT (M10X1.5X16-MM)	

I-REFER TO HYDRAULIC INFORMATION SYSTEM
M-METRIC PART

REFER TO ALL ILLUSTRATIONS OF
THIS GROUP FOR AUXILIARY VIEWS

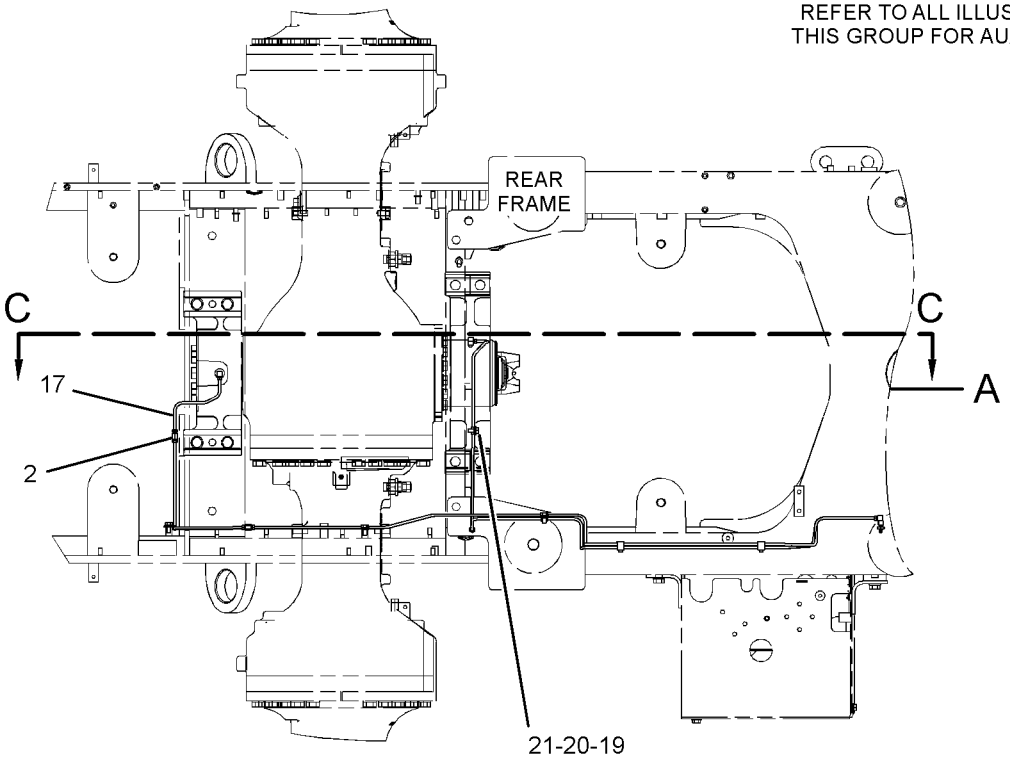

TOP VIEW

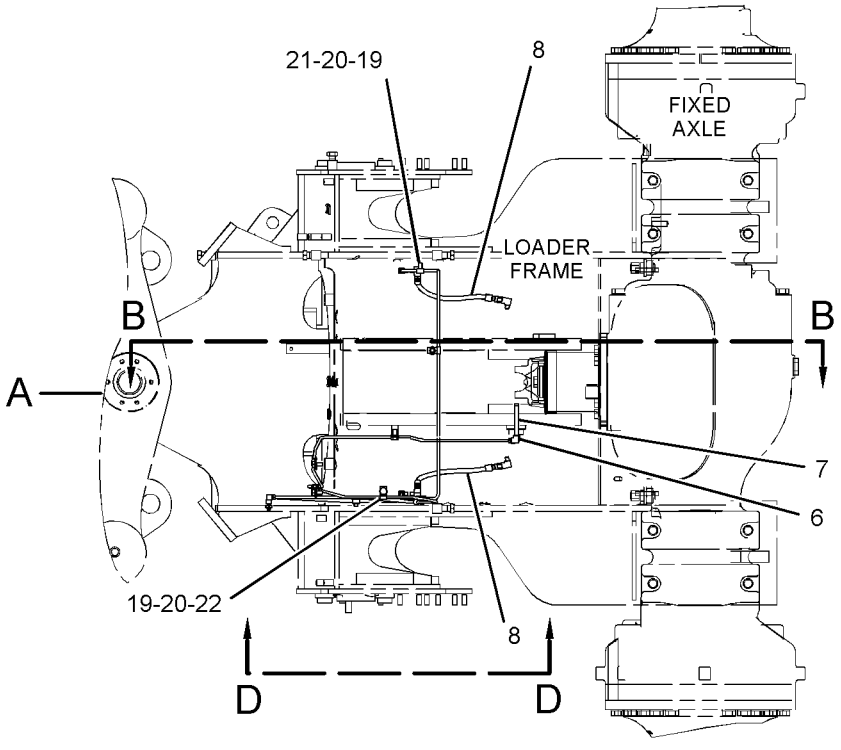

GRAPHIC #1

g02146355

239-3369 **LINES GP-GREASE** *(contd.)* **i03879409**

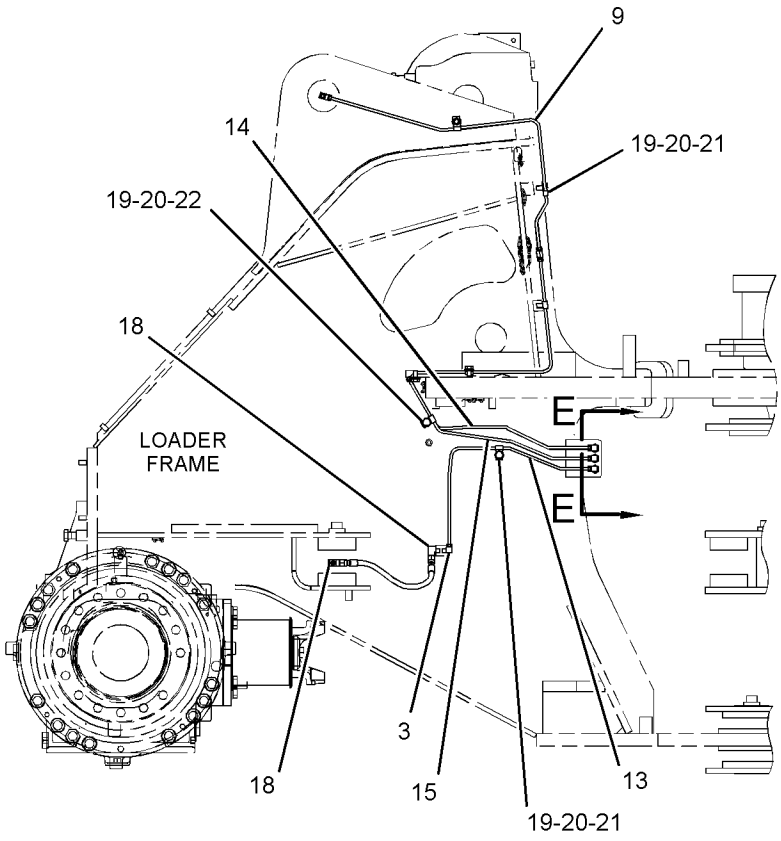

VIEW B-B

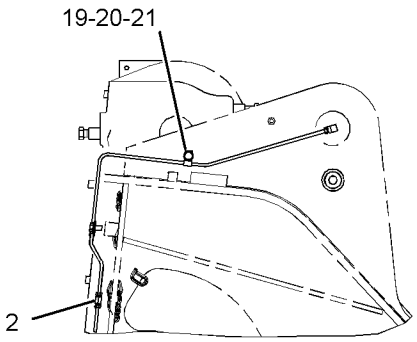

VIEW D-D

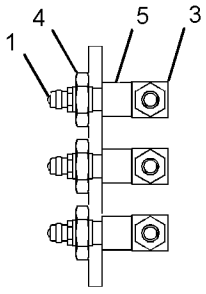

SECTION E-E

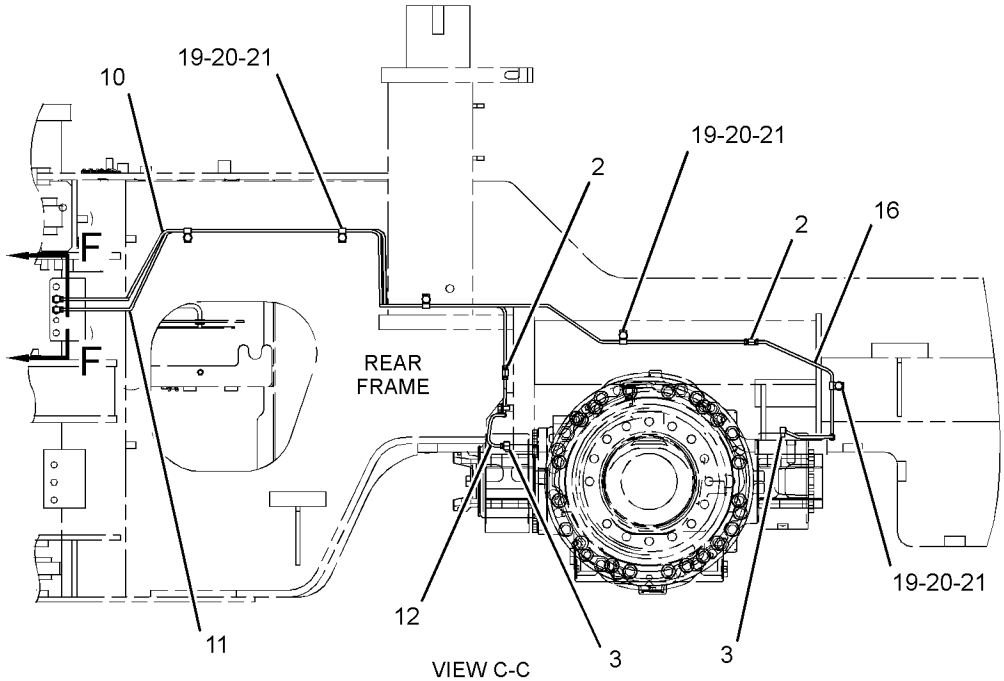

VIEW C-C

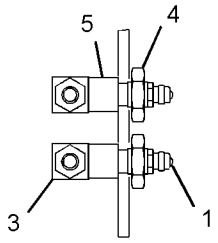

SECTION F-F

GRAPHIC #2 **<END>** g02146357

FRAME AND BODY

285-8337 LINES GP-REAR LUBRICATION

S/N: JKM1-UP

PART OF 284-5011 LUBRICATION AR-AUTOMATIC

AN ATTACHMENT

SMCS-7510, 7540 **i03878754**

NOTE	REF NO	GRAPHIC REF	PART NUMBER	QTY	PART NAME 1 2 3 4 5 6 (PRODUCT LEVEL)	SEE PAGE
	1	1	**3B-8489**	4	FITTING-GREASE	
	2	1	**3B-8686**	2	FITTING-GREASE	
	3	1	**5P-3422**	2	TEE-PIPE	
	4	1	**7K-1181**	8	STRAP-CABLE	
	5	1	**177-3463**	6	CONNECTOR AS	
					(EACH INCLUDES)	
		1	**277-3072**	1	NUT (M10X1-THD)	
		1	**277-3073**	1	FITTING-COMPRESSION	
	6	1	**177-3464**	7	ELBOW AS	
					(EACH INCLUDES)	
		1	**277-3072**	1	NUT (M10X1-THD)	
		1	**277-3073**	1	FITTING-COMPRESSION	
	7	1	**177-3465**	1	CONNECTOR AS	
		1	**277-3072**	2	NUT (M10X1-THD)	
		1	**277-3073**	2	FITTING-COMPRESSION	
	8	1	**177-3466**	4	CONNECTOR	
	9	1	**177-3468**	2	ELBOW	
	10	1	**177-3475**	5	CONNECTOR (REDUCER)	
	11	1	**250-0241**	4	CONNECTOR (TEE)	
	12	1	**276-8173**	2	ELBOW	
	13	1	**287-5279**	2	BRACKET AS	
					(EACH INCLUDES)	
M		1	**8T-3490**	1	NUT-WELD (M10X1.5-THD)	
Y	14	1	*308-6413*	1	VALVE & LINES GP-LUBRICATION (REAR)	603
	15	1	**308-6736**	1	BRACKET	
	16	1	**338-3525**	1	CONNECTOR	
	17	1	**309-3944**	1	TUBE	
	18	1	**8M-2770**	2	CLIP	
	19	1	**8M-2772**	22	CLIP	
	20	1	**8M-2773**	3	CLIP	
	21	1	**8T-4121**	25	WASHER-HARD (11X21X2.5-MM THK)	
M	22	1	**8T-4137**	3	BOLT (M10X1.5X20-MM)	
M	23	1	**8T-4191**	22	BOLT (M10X1.5X16-MM)	
	24	1	**9X-8582**	2	CLIP	

M-METRIC PART
Y-SEPARATE ILLUSTRATION

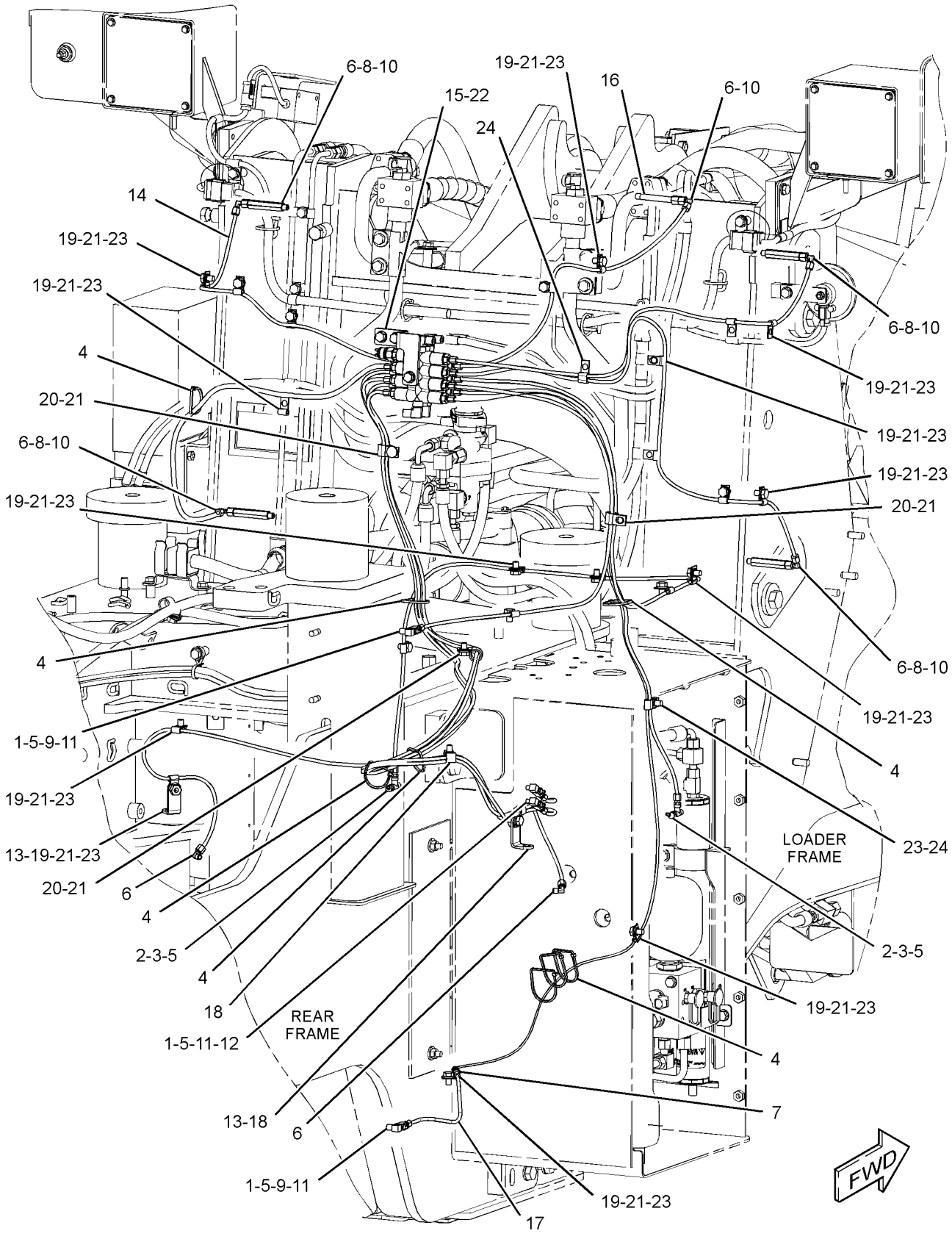

GRAPHIC #1 **<END>** g01870581

FRAME AND BODY

258-8766 LINK GP-STEERING FRAME LOCK

S/N: JKM1-UP

PART OF 237-7540 CHASSIS AR

SMCS-7506 **i02910757**

NOTE	REF NO	GRAPHIC REF	PART NUMBER	QTY	PART NAME 1 2 3 4 5 6 (PRODUCT LEVEL)	SEE PAGE
	1	1	**5P-8837**	2	LOCK PIN	
	2	1	**5V-4999**	2	PIN	
	3	1	**266-1983**	1	LINK	

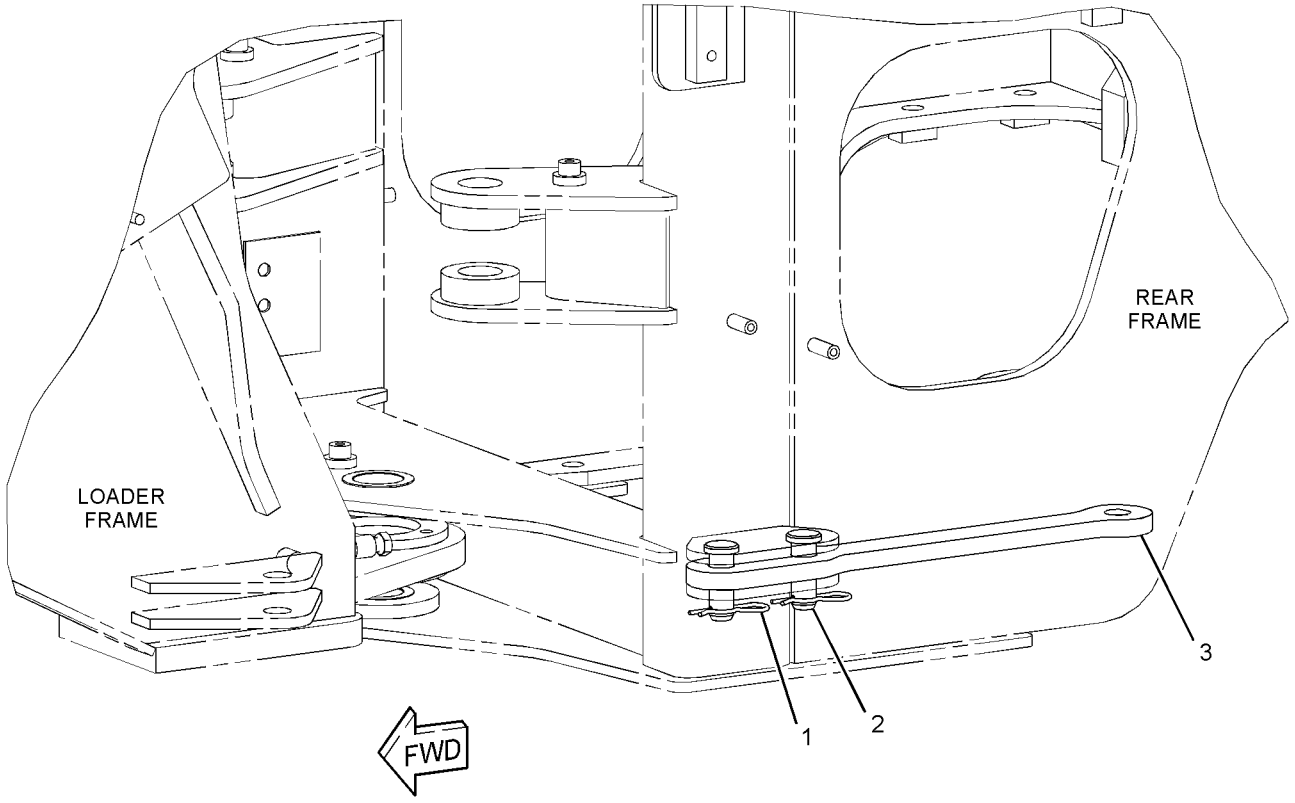

GRAPHIC #1 **<END>** g01421968

284-5011 LUBRICATION AR-AUTOMATIC

S/N: JKM1-UP

AN ATTACHMENT

SMCS-7540 **i03627076**

NOTE	REF NO	GRAPHIC REF	PART NUMBER	QTY	PART NAME 1 2 3 4 5 6 (PRODUCT LEVEL)	SEE PAGE
Y	1	1	*285-0545*	1	LINES GP-FRONT LUBRICATION	567
Y	2	1	*285-5028*	1	BOSS GP-LIFT ARM	899
Y	3	1	*285-5044*	1	LEVER & BEARING AS	905
Y	4	1	*285-5050*	1	PUMP & MTG GP-LUBRICATION	583
Y	5	1	*285-8337*	1	LINES GP-REAR LUBRICATION	575
Y	6	1	*286-8880*	1	LINES GP-CENTRAL LUBRICATION	565
Y	7	1	*287-2921*	1	MOUNTING GP-DISPLAY (AUTOMATIC LUBRICATION SYSTEM)	994
Y	8	1	*287-5594*	1	BOSS GP-LOADER FRAME	491
Y	9	1	*287-5635*	1	BOSS GP-REAR FRAME	493
Y	10	1	*287-5766*	1	WIRING GP-AUTOLUBE CONTROL	270

Y-SEPARATE ILLUSTRATION

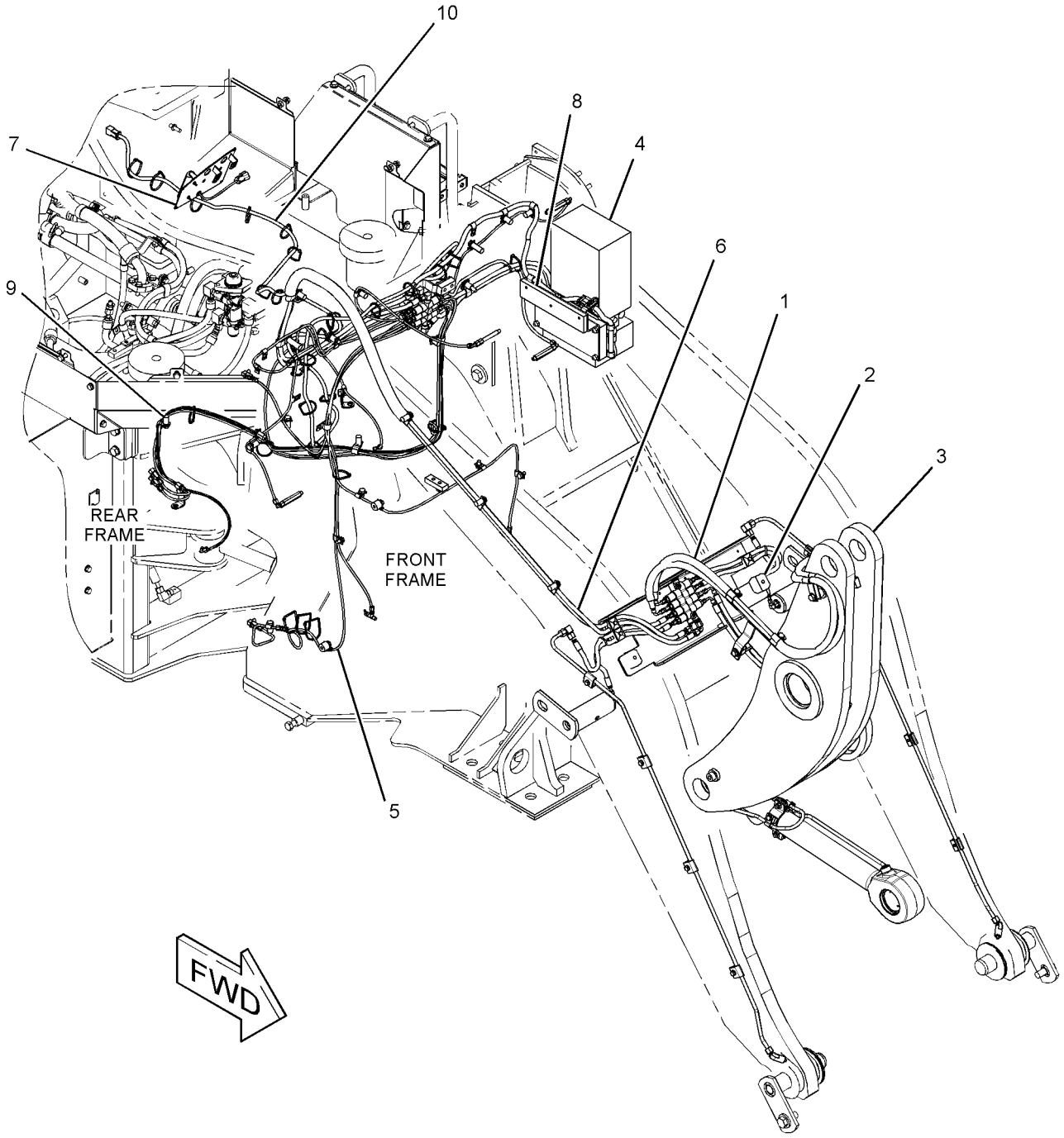

GRAPHIC #1 **<END>** g01874593

244-1043 PANEL GP-HOOD–SOUND SUPPRESSION, LH

S/N: JKM1-UP
PART OF 307-8435 HOOD & GUARD GP
AN ATTACHMENT

SMCS-7251 **i03502930**

NOTE	REF NO	GRAPHIC REF	PART NUMBER	QTY	PART NAME 1 2 3 4 5 6 (PRODUCT LEVEL)	SEE PAGE
	1	1	**124-6569**	7	FASTENER	
	2	1	**124-6570**	7	WASHER	
	3	1	**139-7423**	1	INSULATION	
	4	1	**319-6099**	1	PANEL AS (LH)	

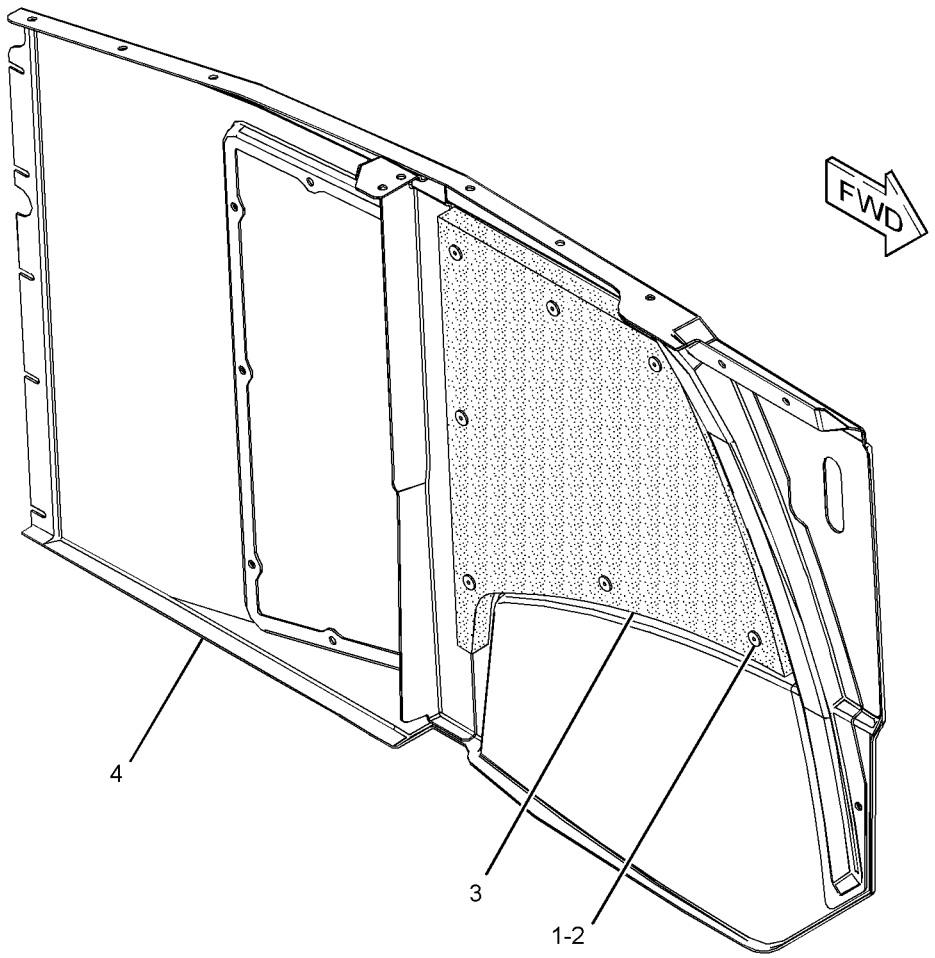

GRAPHIC #1 **<END>** g01841625

265-5864 PANEL GP-HOOD–SOUND SUPPRESSION, RH

S/N: JKM1-UP
PART OF 307-8435 HOOD & GUARD GP
AN ATTACHMENT

SMCS-7251 **i03502913**

NOTE	REF NO	GRAPHIC REF	PART NUMBER	QTY	PART NAME 1 2 3 4 5 6 (PRODUCT LEVEL)	SEE PAGE
	1	1	**124-6569**	11	FASTENER	
	2	1	**124-6570**	11	WASHER	
	3	1	**139-7421**	1	INSULATION	
	4	1	**139-7422**	1	INSULATION	
	5	1	**319-6096**	1	PANEL AS (RH)	

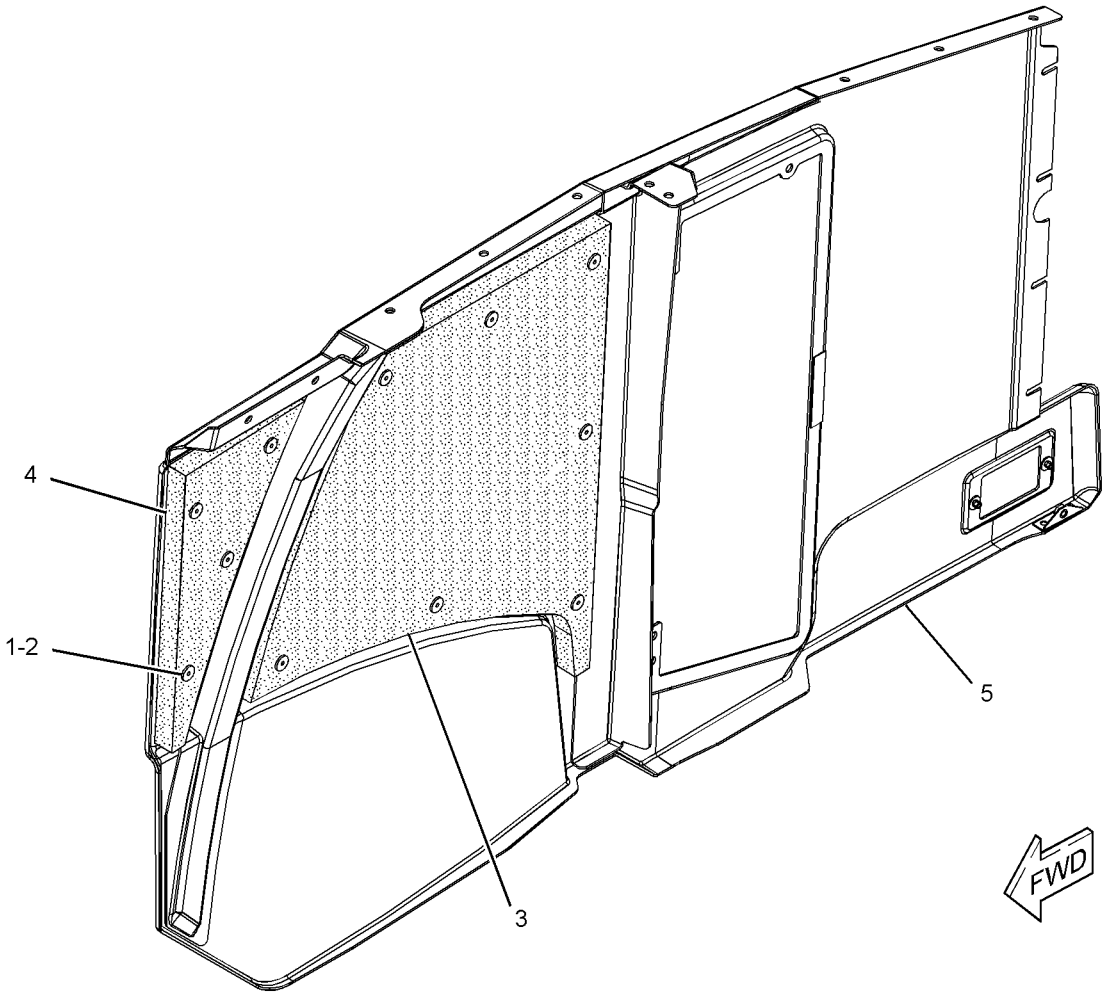

GRAPHIC #1 **<END>** g01443728

307-8436 PANEL GP-TOP–HOOD

S/N: JKM1-UP
PART OF 307-8435 HOOD & GUARD GP
AN ATTACHMENT

SMCS-7251 **i02929868**

NOTE	REF NO	GRAPHIC REF	PART NUMBER	QTY	PART NAME 1 2 3 4 5 6 (PRODUCT LEVEL)	SEE PAGE
	1	1	**148-8240**	4	CLIP	
	2	1	**307-8437**	1	PANEL AS-TOP (HOOD)	
	3	1	**309-6597**	1	INSULATION	
	4	1	**7X-0603**	4	WASHER-HARD (9.9X35X2.5-MM THK)	

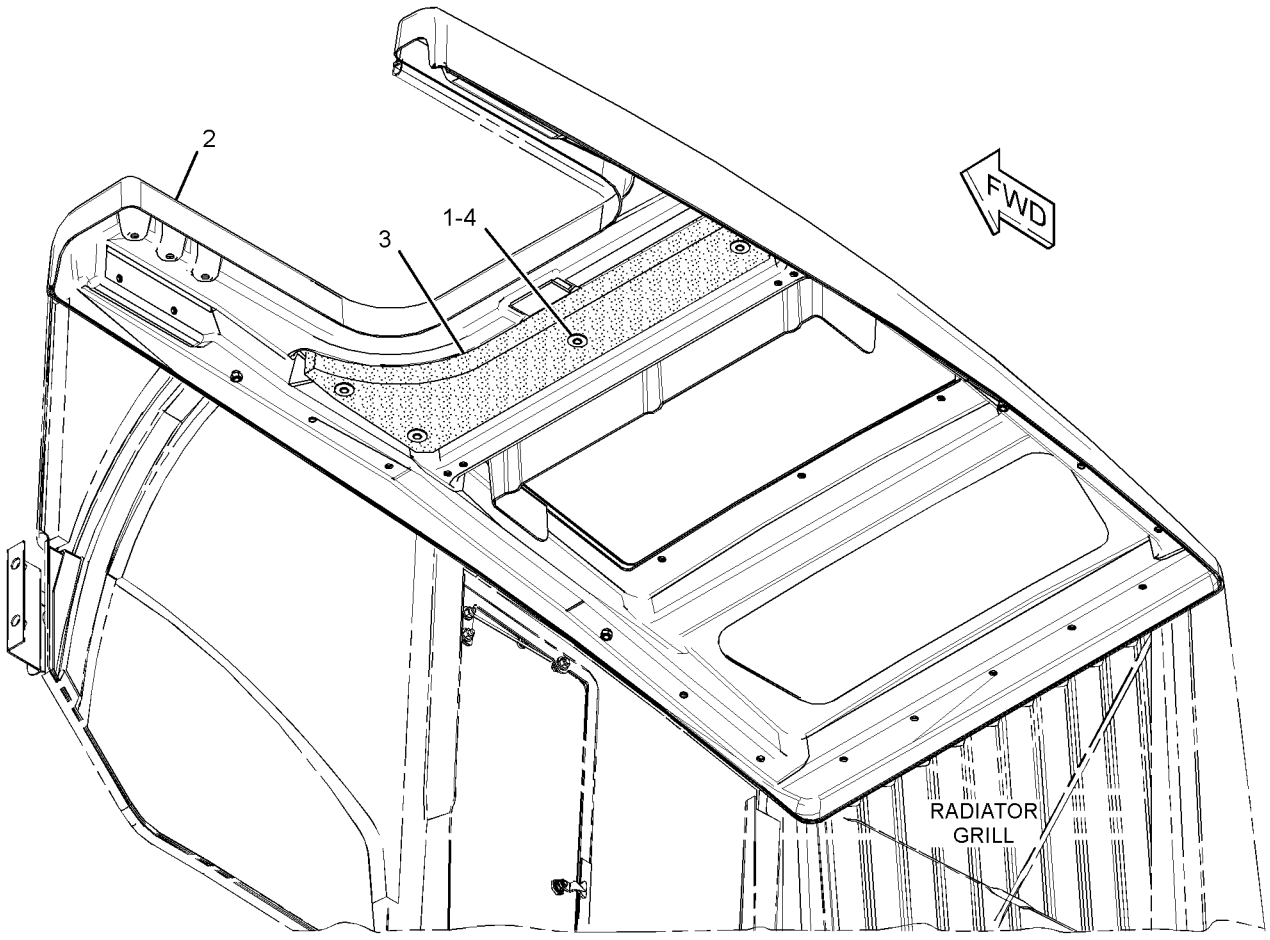

GRAPHIC #1 **<END>** g01442235

285-5050 PUMP & MTG GP-LUBRICATION

S/N: JKM1-797
PART OF 284-5011 LUBRICATION AR-AUTOMATIC
AN ATTACHMENT

SMCS-7540 **i03268404**

NOTE	REF NO	GRAPHIC REF	PART NUMBER	QTY	PART NAME 1 2 3 4 5 6 (PRODUCT LEVEL)	SEE PAGE
Y	1	1	**184-0704**	1	PUMP GP-LUBRICATION (AUTOMATIC LUBRICATION CONTROL)	585
	2	1	**285-5079**	1	BRACKET AS-PUMP	
M		1	**8T-2321**	4	NUT-WELD (M8X1.25-THD)	
M	3	1	**8T-4189**	3	BOLT (M8X1.25X20-MM)	
	4	1	**8T-4224**	7	WASHER-HARD (8.8X16X2-MM THK)	
M	5	1	**8T-6912**	4	BOLT (M8X1.25X50-MM)	

M-METRIC PART
Y-SEPARATE ILLUSTRATION

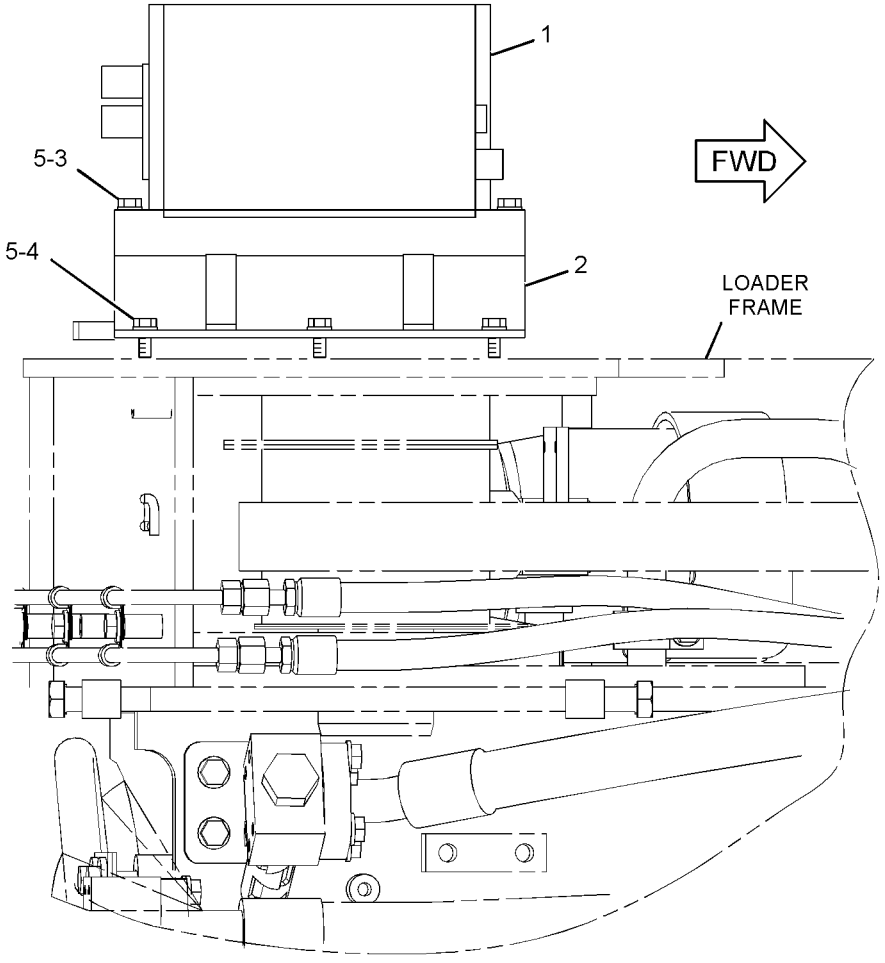

TOP VIEW

GRAPHIC #1

<END>

g01428747

285-5050 PUMP & MTG GP-LUBRICATION

S/N: JKM798-UP
PART OF 284-5011 LUBRICATION AR-AUTOMATIC
AN ATTACHMENT

SMCS-7540 **i03812333**

NOTE	REF NO	GRAPHIC REF	PART NUMBER	QTY	PART NAME 1 2 3 4 5 6 (PRODUCT LEVEL)	SEE PAGE
CY	1	1	**341-8583**	1	PUMP GP-LUBRICATION (AUTOMATIC LUBRICATION CONTROL)	586
	2	1	**285-5079**	1	BRACKET AS-PUMP	
M		1	**8T-2321**	4	NUT-WELD (M8X1.25-THD)	
M	3	1	**8T-4189**	3	BOLT (M8X1.25X20-MM)	
	4	1	**8T-4224**	7	WASHER-HARD (8.8X16X2-MM THK)	
M	5	1	**8T-6912**	4	BOLT (M8X1.25X50-MM)	

C-CHANGE FROM PREVIOUS TYPE
M-METRIC PART
Y-SEPARATE ILLUSTRATION

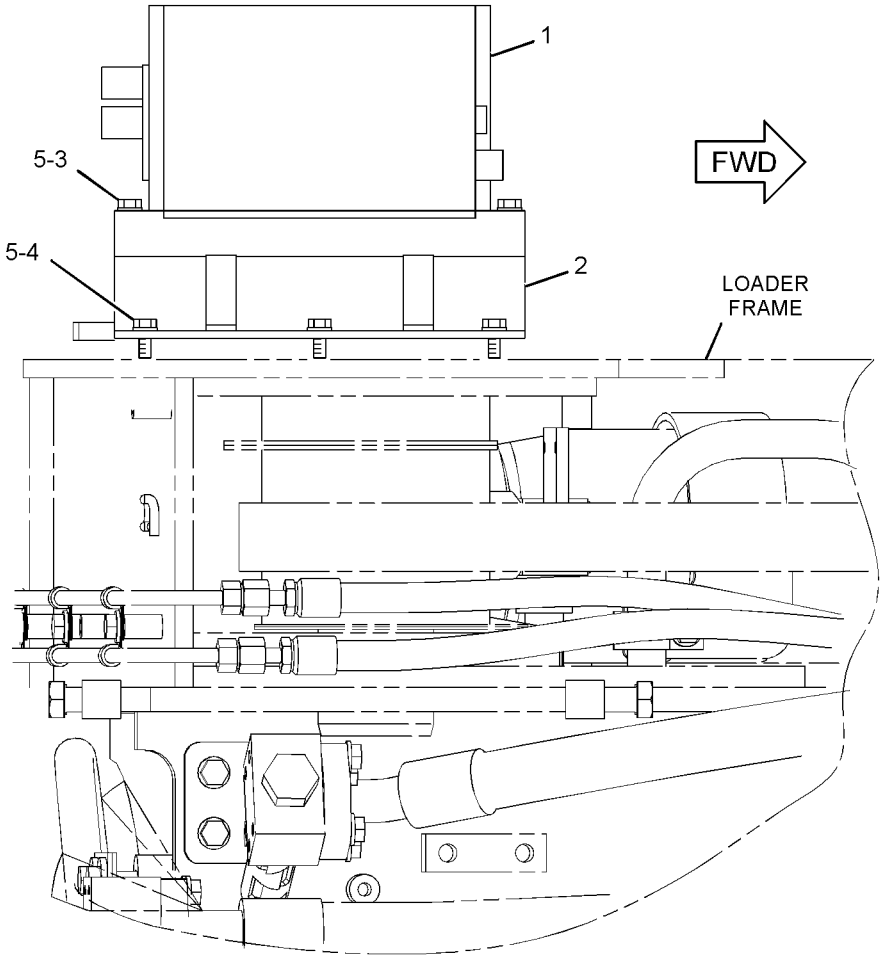

TOP VIEW

GRAPHIC #1 **<END>** g01428747

184-0704 PUMP GP-LUBRICATION

S/N: JKM1-797

PART OF 285-5050 PUMP & MTG GP-LUBRICATION

AN ATTACHMENT

SMCS-7516, 7540 **i02532896**

NOTE	PART NUMBER	QTY	PART NAME 1 2 3 4 5 6 (PRODUCT LEVEL)	SEE PAGE
	196-1055	1	BRACKET	
	196-1060	1	CAP	
	196-1074	1	BOARD AS-CIRCUIT	
	196-1075	4	CLIP	
	196-1077	1	COIL AS	
	196-1070	2	CONNECTOR	
	196-1061	1	COUPLING	
	196-1063	1	COUPLING	
	251-3564	1	COUPLING	
	196-1064	1	COVER	
	196-1047	1	COVER GP	
	196-1053	1	COVER GP	
	196-1062	1	FILTER AS-GREASE	
	254-8502	1	FITTING-GREASE	
	254-8503	1	FITTING-GREASE	
	196-1052	1	GASKET GP	
	196-1049	1	GUIDE ROD	
	196-1066	1	HARNESS AS-CONTROL (AUTOMATIC LUBRICATION)	
	196-1079	1	HARNESS AS-PUMP (AUTOMATIC LUBRICATION)	
	196-1069	1	HARNESS AS-SWITCH (LEVEL)	
	196-1046	1	LOCK GP	
	254-8501	1	MOTOR GP-ELECTRIC (AUTOLUBE, 24-VOLT)	
	196-1051	1	PLATE AS	
	196-1068	1	PLUG GP	
	196-1078	1	RING	
	196-1054	1	SEAL	
	196-1048	1	SEAL-O-RING	
	196-1056	1	SEAL-O-RING	
	196-1071	2	SEAL-O-RING	
	196-1072	2	SEAL-O-RING	
	196-1073	2	SEAL-O-RING	
	196-1065	1	SWITCH AS (AUTOMATIC LUBRICATION TEST)	
	196-1067	1	SWITCH AS-LEVEL (GREASE)	
	196-1050	1	TANK AS-LUBRICATION	
	196-1076	1	VALVE AS	

<END>

341-8583 PUMP GP-LUBRICATION–
AUTOMATIC LUBRICATION CONTROL
S/N: JKM798-UP
PART OF 285-5050 PUMP & MTG GP-LUBRICATION
AN ATTACHMENT

SMCS-7516, 7540 **i03732164**

NOTE	PART NUMBER	QTY	PART NAME 1 2 3 4 5 6 (PRODUCT LEVEL)	SEE PAGE
	196-1047	1	COVER GP (TANK)	
	196-1053	1	COVER GP (PROTECTIVE)	
	196-1046	1	LOCK GP	
	254-8501	1	MOTOR GP-ELECTRIC (AUTOLUBE, 24-VOLT)	
	196-1068	1	PLUG GP	
	196-1074	1	BOARD AS-CIRCUIT	
	196-1077	1	COIL AS	
	196-1062	1	FILTER AS-GREASE	
	196-1066	1	HARNESS AS-CONTROL (AUTOMATIC LUBRICATION)	
	196-1079	1	HARNESS AS-PUMP (AUTOMATIC LUBRICATION)	
	196-1069	1	HARNESS AS-SWITCH (LEVEL)	
	196-1051	1	PLATE AS	
	196-1065	1	SWITCH AS (AUTOMATIC LUBRICATION TEST)	
	196-1067	1	SWITCH AS-LEVEL (GREASE)	
	196-1050	1	TANK AS-LUBRICATION	
	196-1055	1	BRACKET	
	196-1060	1	CAP	
	196-1075	4	CLIP	
	196-1070	2	CONNECTOR	
	196-1061	1	COUPLING	
	196-1063	1	COUPLING	
	251-3564	1	COUPLING	
	196-1064	1	COVER	
	254-8502	1	FITTING-GREASE	
	254-8503	1	FITTING-GREASE	
	342-1263	1	GASKET	
	196-1049	1	GUIDE ROD	
	196-1078	1	RING	
	196-1054	1	SEAL	
	196-1048	1	SEAL-O-RING	
	196-1056	1	SEAL-O-RING	
	196-1071	2	SEAL-O-RING	
	196-1072	2	SEAL-O-RING	
	196-1073	2	SEAL-O-RING	
	342-1264	1	VALVE	

<END>

255-4824 SHIELD GP-ENGINE COMPARTMENT

S/N: JKM1-1004

PART OF 237-7540 CHASSIS AR

SMCS-7154, 7263 **i03681903**

NOTE	REF NO	GRAPHIC REF	PART NUMBER	QTY	PART NAME 1 2 3 4 5 6 (PRODUCT LEVEL)	SEE PAGE
	1	1	**134-5330**	1	GROMMET	
	2	1	**190-1125**	1	GROMMET	
	3	1	**258-6671**	1	SHIELD	
	4	1	**260-4698**	1	GROMMET	
	5	1	**265-5858**	2	TUBE AS	
	6	1	**265-5859**	1	TUBE AS	
	7	1	**265-5861**	1	PLATE	
	8	1	**278-6234**	1	TUBE AS	
	9	1	**281-2378**	1	GROMMET	
	10	1	**1S-1014**	1	GROMMET	
	11	1	**5P-4116**	2	WASHER-HARD (8.8X20.5X2-MM THK)	
	12	1	**7X-7729**	12	WASHER (11X25X3-MM THK)	
M	13	1	**8T-4133**	4	NUT (M10X1.5-THD)	
M	14	1	**8T-4186**	12	BOLT (M10X1.5X40-MM)	
	15	1	**8T-4226**	4	WASHER-PLATED (10.5X45X3-MM THK)	
M	16	1	**8T-4908**	2	BOLT (M8X1.25X25-MM)	
E	17	1	**132-8502**		SEAL (304.5-CM)	
E	18	1	**300-7318**		SEAL (128.5-CM)	

E-ORDER BY THE CENTIMETER
M-METRIC PART

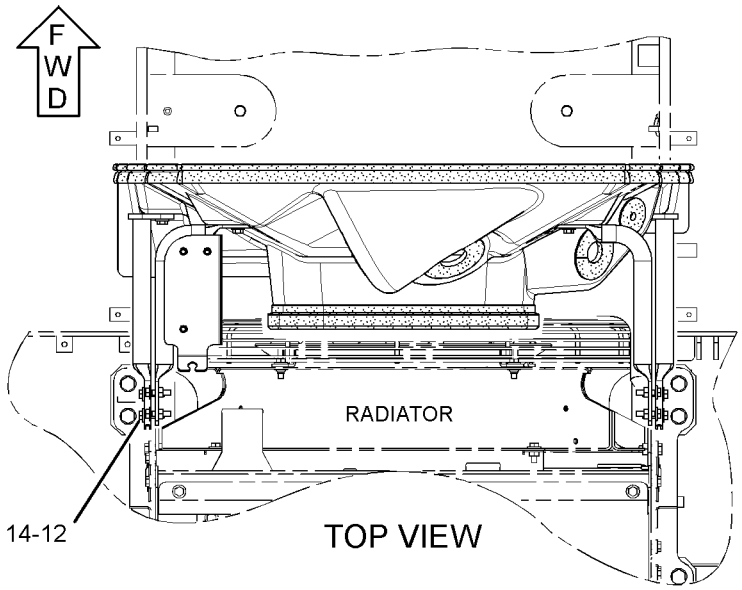

TOP VIEW

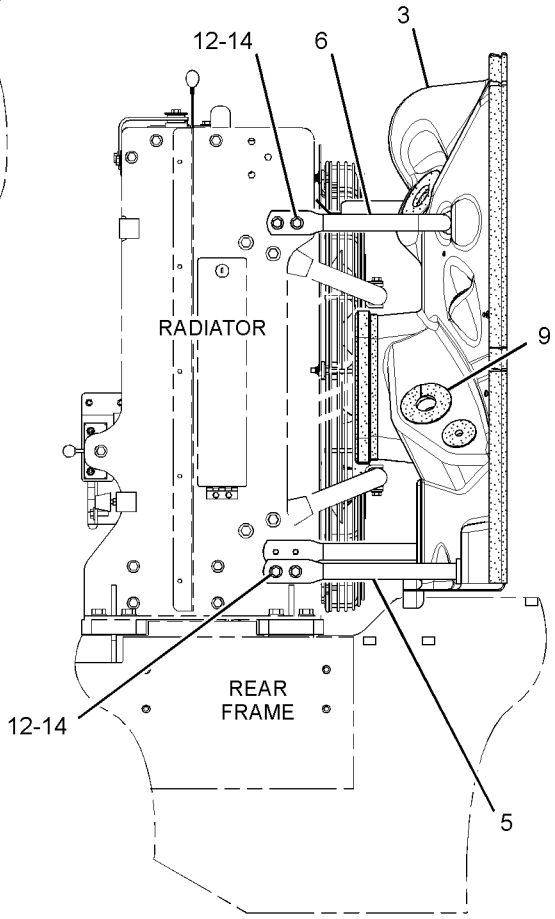

RIGHT SIDE VIEW

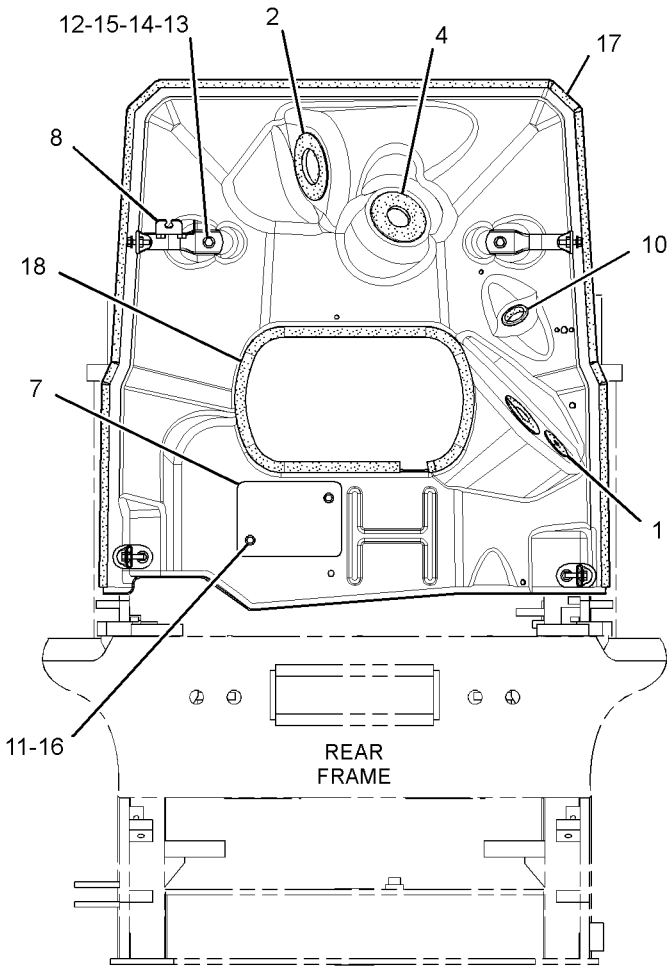

REAR VIEW

GRAPHIC #1 **<END>** g01428313

255-4824 SHIELD GP-ENGINE COMPARTMENT

S/N: JKM1005-UP

PART OF 237-7540 CHASSIS AR

SMCS-7154, 7263 **i03978594**

NOTE	REF NO	GRAPHIC REF	PART NUMBER	QTY	PART NAME 1 2 3 4 5 6 (PRODUCT LEVEL)	SEE PAGE
	1	1	**5P-9935**	2	RING-RETAINING	
	2	1	**118-9901**	2	SPACER (12X20X10-MM THK)	
	3	1	**134-5330**	1	GROMMET	
	4	1	**190-1125**	1	GROMMET	
	5	1	**258-6671**	1	SHIELD	
	6	1	**260-4698**	1	GROMMET	
C	7	1	**265-5858**	2	TUBE AS	
	8	1	**265-5859**	1	TUBE AS	
	9	1	**265-5861**	1	PLATE	
	10	1	**278-6234**	1	TUBE AS	
	11	1	**281-2378**	1	GROMMET	
	12	1	**351-2246**	2	BOLT (M8X1.25X35-MM)	
	13	1	**1S-1014**	1	GROMMET	
	14	1	**5P-4116**	4	WASHER-HARD (8.8X20.5X2-MM THK)	
	15	1	**7X-7729**	12	WASHER (11X25X3-MM THK)	
M	16	1	**8T-4133**	4	NUT (M10X1.5-THD)	
M	17	1	**8T-4186**	12	BOLT (M10X1.5X40-MM)	
	18	1	**8T-4226**	4	WASHER-PLATED (10.5X45X3-MM THK)	
E	19	1	**300-7318**		SEAL (129-CM)	
E	20	1	**132-8502**		SEAL (305-CM)	

C-CHANGE FROM PREVIOUS TYPE
E-ORDER BY THE CENTIMETER
M-METRIC PART

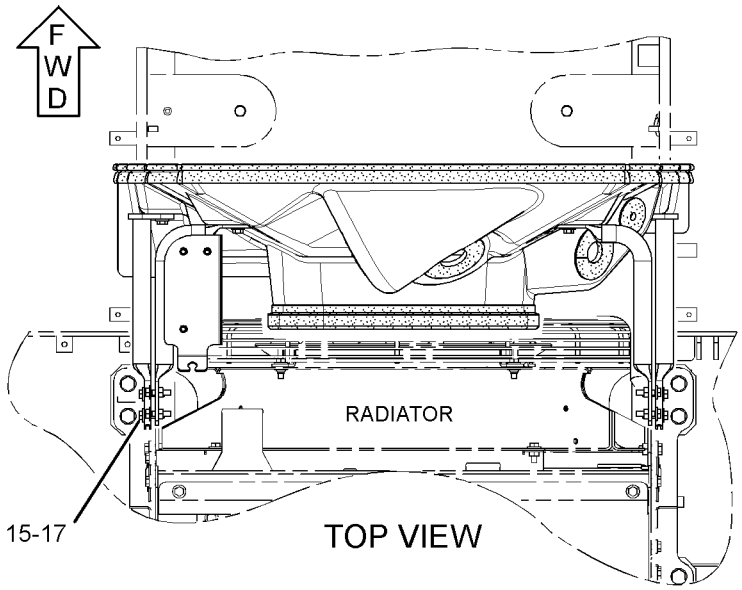

TOP VIEW

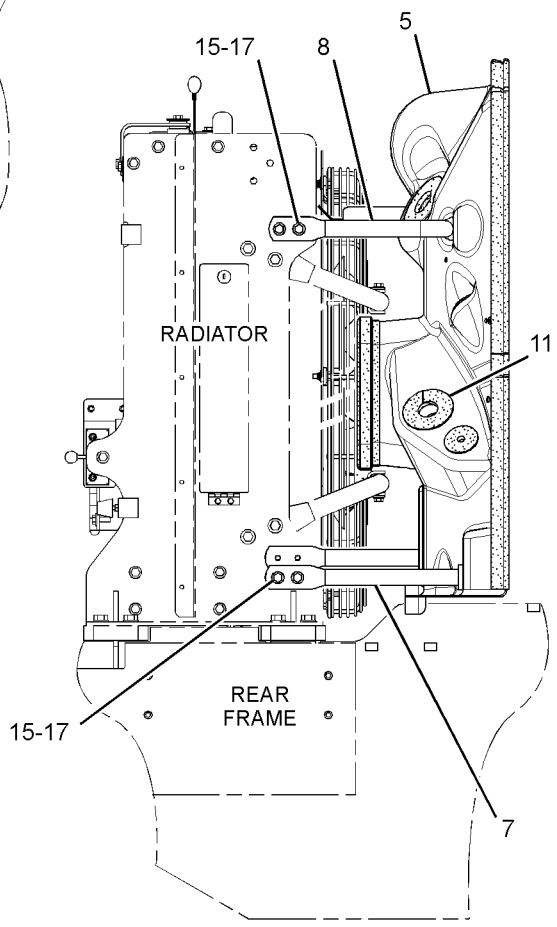

RIGHT SIDE VIEW

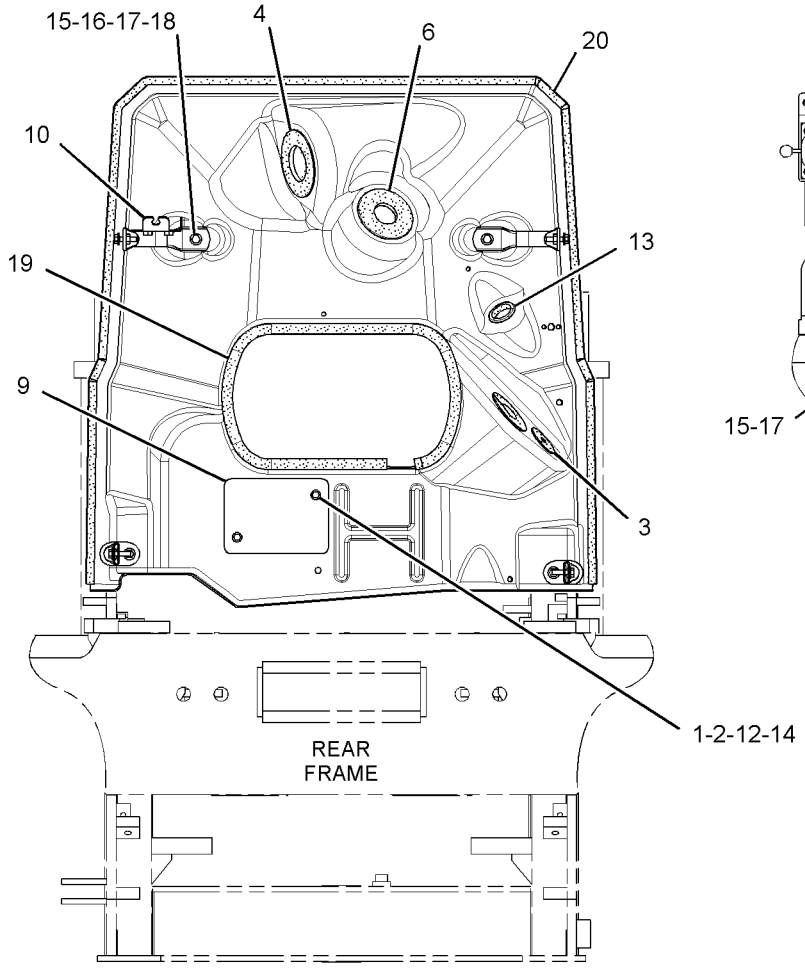

REAR VIEW

GRAPHIC #1 **<END>** g02164994

311-3206 SHIELD GP-ENGINE COMPARTMENT

S/N: JKM1-UP

PART OF 311-0014 COOLING GP-SUPPLEMENTAL

AN ATTACHMENT

SMCS-7154, 7263 **i03546020**

NOTE	REF NO	GRAPHIC REF	PART NUMBER	QTY	PART NAME 1 2 3 4 5 6 (PRODUCT LEVEL)	SEE PAGE
	1	1	**134-5330**	1	GROMMET	
	2	1	**190-1125**	1	GROMMET	
	3	1	**260-4698**	1	GROMMET	
	4	1	**265-5858**	2	TUBE AS	
	5	1	**265-5859**	1	TUBE AS	
	6	1	**265-5861**	1	PLATE	
	7	1	**278-6234**	1	TUBE AS	
	8	1	**281-2378**	1	GROMMET	
	9	1	*311-3207*	1	SHIELD AS	
		1	**258-6671**	1	SHIELD	
	10	1	**1S-1014**	1	GROMMET	
	11	1	**5P-4116**	2	WASHER-HARD (8.8X20.5X2-MM THK)	
	12	1	**7X-7729**	12	WASHER (11X25X3-MM THK)	
M	13	1	**8T-4133**	4	NUT (M10X1.5-THD)	
M	14	1	**8T-4186**	12	BOLT (M10X1.5X40-MM)	
	15	1	**8T-4226**	4	WASHER-PLATED (10.5X45X3-MM THK)	
M	16	1	**8T-4908**	2	BOLT (M8X1.25X25-MM)	
E	17	1	**132-8502**		SEAL (305-CM)	
E	18	1	**300-7318**		SEAL (121-CM)	

E-ORDER BY THE CENTIMETER
M-METRIC PART

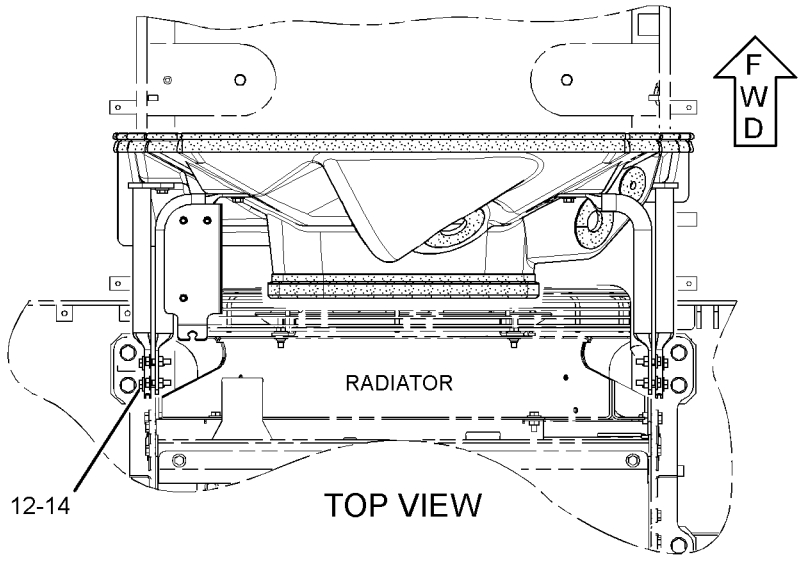

TOP VIEW

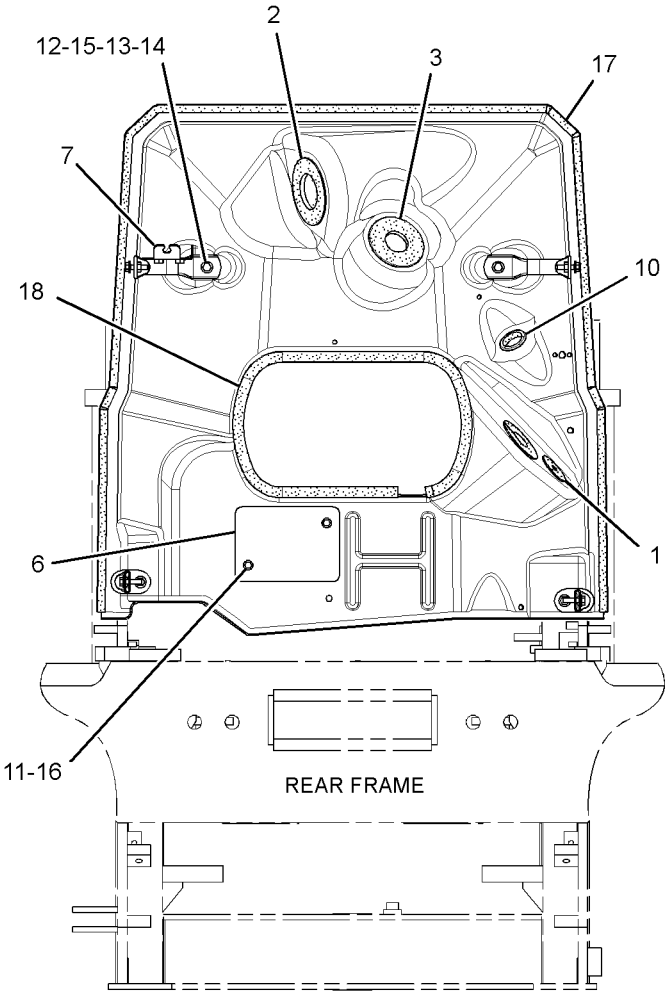

REAR VIEW

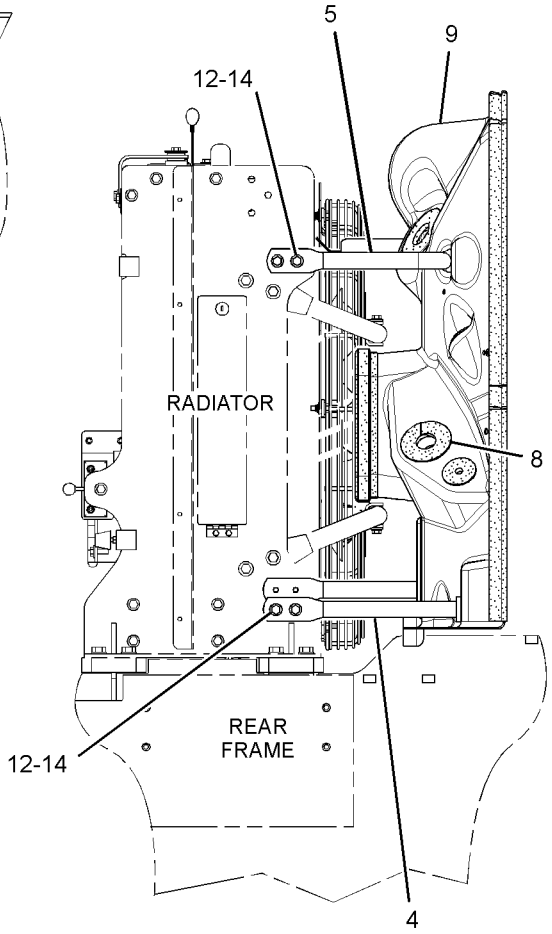

RIGHT SIDE VIEW

GRAPHIC #1 **<END>** g01662493

260-4749 STEP GP–REAR FRAME

S/N: JKM1-UP
PART OF 317-9489 CONFIGURATION AR
AN ATTACHMENT

SMCS-7254 **i02932403**

NOTE	REF NO	GRAPHIC REF	PART NUMBER	QTY	PART NAME 1 2 3 4 5 6 (PRODUCT LEVEL)	SEE PAGE
	1	1	**274-6580**	4	SPACER (13.5X22.2X60-MM THK)	
	2	1	**276-4188**	1	CABLE AS	
	3	1	**276-4220**	1	BRACKET AS (LH)	
	4	1	**276-4221**	1	BRACKET AS (RH)	
	5	1	**276-4222**	1	LADDER AS (LH)	
		1	**234-1531**	2	STEP	
	6	1	**308-9116**	1	CABLE AS	
	7	1	**7D-1649**	8	WASHER-HARD (13.5X32X5-MM THK)	
M	8	1	**8T-4176**	4	BOLT (M12X1.75X90-MM)	
M	9	1	**8T-4244**	4	NUT (M12X1.75-THD)	

M-METRIC PART

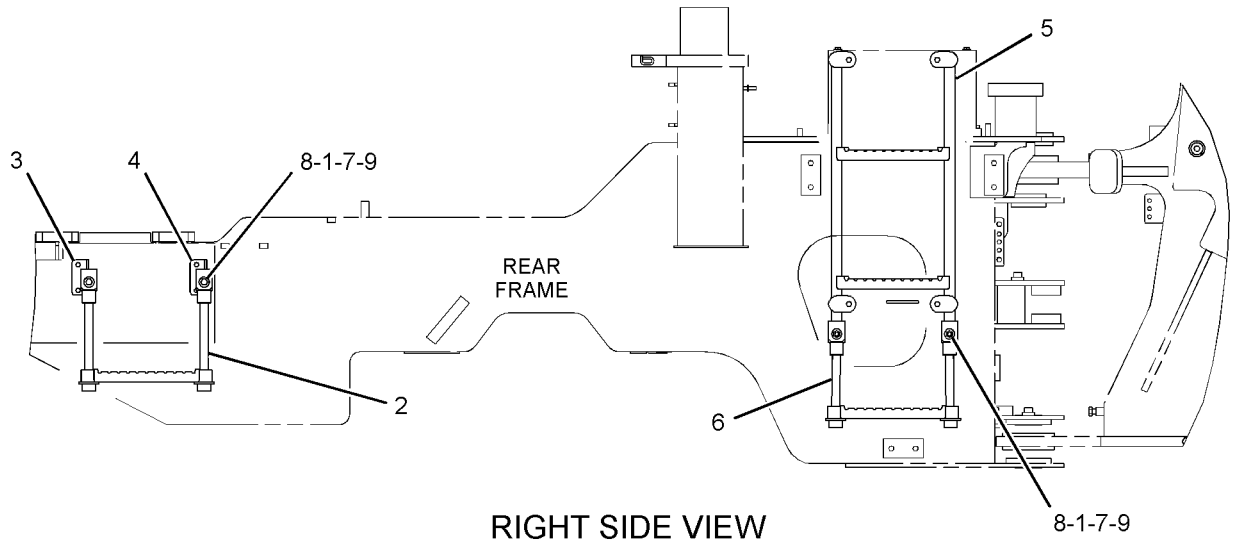

RIGHT SIDE VIEW

GRAPHIC #1 **<END>** g01432840

FRAME AND BODY

308-4340 SUPPORT GP-AIR INLET

S/N: JKM1-UP

PART OF 237-7540 CHASSIS AR

SMCS-1087 **i03454820**

NOTE	REF NO	GRAPHIC REF	PART NUMBER	QTY	PART NAME 1 2 3 4 5 6 (PRODUCT LEVEL)	SEE PAGE
Y	1	1	*6I-0138*	1	EXTENSION GP-EXHAUST	85
	2	1	**315-8050**	1	BRACKET AS	
	3	1	**308-3023**	1	BRACKET	
	4	1	**309-3910**	1	BRACKET AS	
M		1	**8T-3490**	2	NUT-WELD (M10X1.5-THD)	
	5	1	**131-5879**	6	WASHER (11X32X3-MM THK)	
	6	1	**132-7551**	4	SPACER (11X19X6-MM THK)	
	7	1	**8T-4121**	7	WASHER-HARD (11X21X2.5-MM THK)	
M	8	1	**8T-4133**	4	NUT (M10X1.5-THD)	
M	9	1	**8T-4195**	9	BOLT (M10X1.5X30-MM)	
D	10	1	**5P-5923**		SEAL (0.2-M)	
J	11	1	**308-9131**		SEAL (363-MM EACH)	
	12	1	**315-8049**	1	BRACKET	
M	13	1	**8T-4136**	7	BOLT (M10X1.5X25-MM)	
	14	1	**7X-7729**	7	WASHER (11X25X3-MM THK)	

D-ORDER BY THE METER
J-ORDER BY THE MILLIMETER
M-METRIC PART
Y-SEPARATE ILLUSTRATION

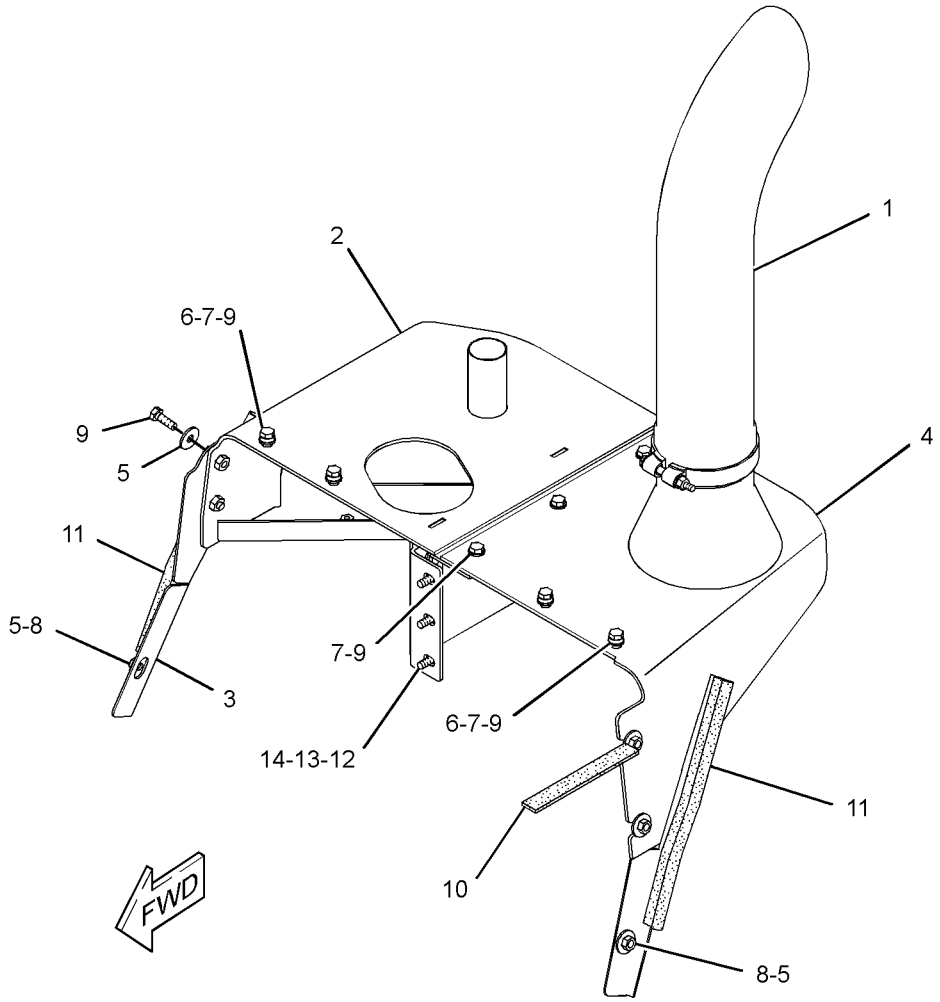

GRAPHIC #1 **<END>** g01634373

266-8584 SUPPRESSION AR-SOUND

S/N: JKM1-UP
PART OF 329-5761 CONVERSION AR-MACHINE
AN ATTACHMENT

SMCS-7261 **i02928369**

NOTE	PART NUMBER	QTY	PART NAME 1 2 3 4 5 6 (PRODUCT LEVEL)	SEE PAGE
Y	*260-8837*	1	GUARD GP-POWER TRAIN (AXLE OIL COOLER)	537
Y	*307-8435*	1	HOOD & GUARD GP	553
Y	*240-8642*	1	SUPPRESSION GP-SOUND	596
Y-SEPARATE ILLUSTRATION				

<END>

284-3569 SUPPRESSION AR-SOUND

S/N: JKM1-UP
CANNOT BE USED WITH 266-8584—PAGE 595
AN ATTACHMENT

SMCS-7261 **i02930666**

NOTE	PART NUMBER	QTY	PART NAME 1 2 3 4 5 6 (PRODUCT LEVEL)	SEE PAGE
Y	*273-9731*	1	BOSS GP-REAR FRAME	492
Y	*260-8837*	1	GUARD GP-POWER TRAIN (AXLE OIL COOLER)	537
Y	*283-4353*	1	HARDWARE GP-REAR FRAME	548
Y	*307-8435*	1	HOOD & GUARD GP	553
Y	*240-8643*	1	SUPPRESSION GP-SOUND	597
Y-SEPARATE ILLUSTRATION				

<END>

240-8642 SUPPRESSION GP-SOUND

S/N: JKM1-UP
PART OF 266-8584 SUPPRESSION AR-SOUND
AN ATTACHMENT

SMCS-7076, 7261 **i02928376**

NOTE	REF NO	GRAPHIC REF	PART NUMBER	QTY	PART NAME 1 2 3 4 5 6 (PRODUCT LEVEL)	SEE PAGE
	1	1	**267-2941**	1	INSULATION	
	2	1	**267-2942**	1	INSULATION	
	3	1	**308-4778**	1	INSULATION AS	
M	4	1	**8T-4195**	2	BOLT (M10X1.5X30-MM)	
	5	1	**8T-4226**	2	WASHER-PLATED (10.5X45X3-MM THK)	

M-METRIC PART

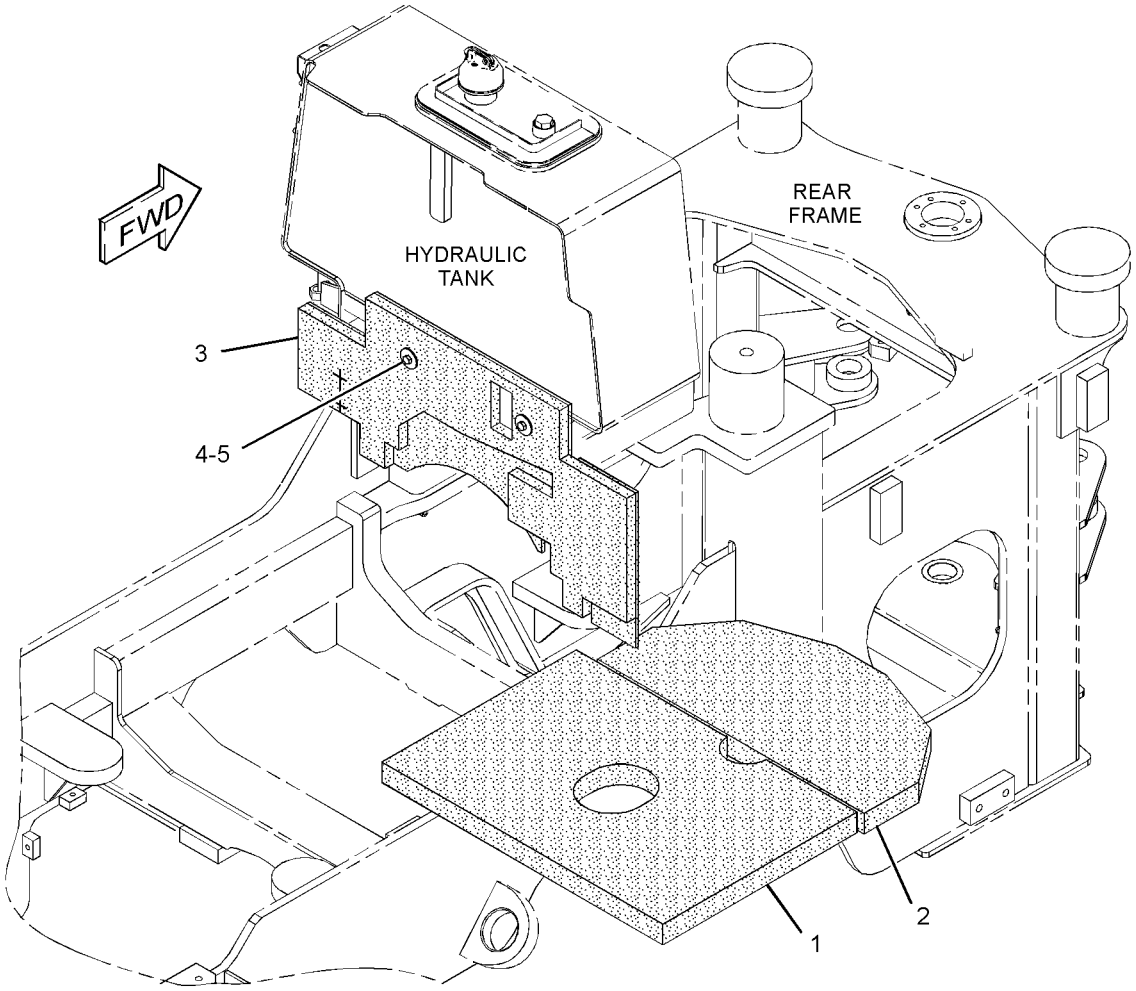

GRAPHIC #1 **<END>** g01442283

240-8643 SUPPRESSION GP-SOUND

S/N: JKM1-UP
PART OF 284-3569 SUPPRESSION AR-SOUND
AN ATTACHMENT

SMCS-7076, 7261 **i02930621**

NOTE	REF NO	GRAPHIC REF	PART NUMBER	QTY	PART NAME 1 2 3 4 5 6 (PRODUCT LEVEL)	SEE PAGE
	1	1	**224-1709**	3	PLATE	
	2	1	**266-1979**	1	INSULATION	
	3	1	**266-2293**	1	SHEET	
	4	1	**267-2941**	1	INSULATION	
	5	1	**267-2942**	1	INSULATION	
	6	1	**273-9940**	1	PLATE AS	
	7	1	**273-9943**	1	PLATE	
	8	1	**273-9947**	1	PLATE (RH)	
	9	1	**273-9949**	1	PLATE (LH)	
	10	1	**273-9950**	1	COVER	
	11	1	**273-9951**	1	PLATE (LH)	
	12	1	**284-8252**	1	INSULATION	
	13	1	**284-8253**	1	INSULATION	
	14	1	**284-8255**	1	INSULATION	
	15	1	**284-8256**	1	INSULATION	
	16	1	**284-8257**	1	INSULATION	
	17	1	**307-0408**	1	PLATE AS	
	18	1	**307-0410**	1	PLATE	
	19	1	**308-4778**	1	INSULATION AS	
	20	1	**5P-1076**	6	WASHER-HARD (13.5X30X4-MM THK)	
	21	1	**7X-7729**	14	WASHER (11X25X3-MM THK)	
	22	1	**8T-4121**	6	WASHER-HARD (11X21X2.5-MM THK)	
M	23	1	**8T-4133**	21	NUT (M10X1.5-THD)	
M	24	1	**8T-4136**	2	BOLT (M10X1.5X25-MM)	
M	25	1	**8T-4139**	7	BOLT (M12X1.75X30-MM)	
M	26	1	**8T-4195**	2	BOLT (M10X1.5X30-MM)	
	27	1	**8T-4223**	1	WASHER-HARD (13.5X25.5X3-MM THK)	
	28	1	**8T-4226**	5	WASHER-PLATED (10.5X45X3-MM THK)	

M-METRIC PART

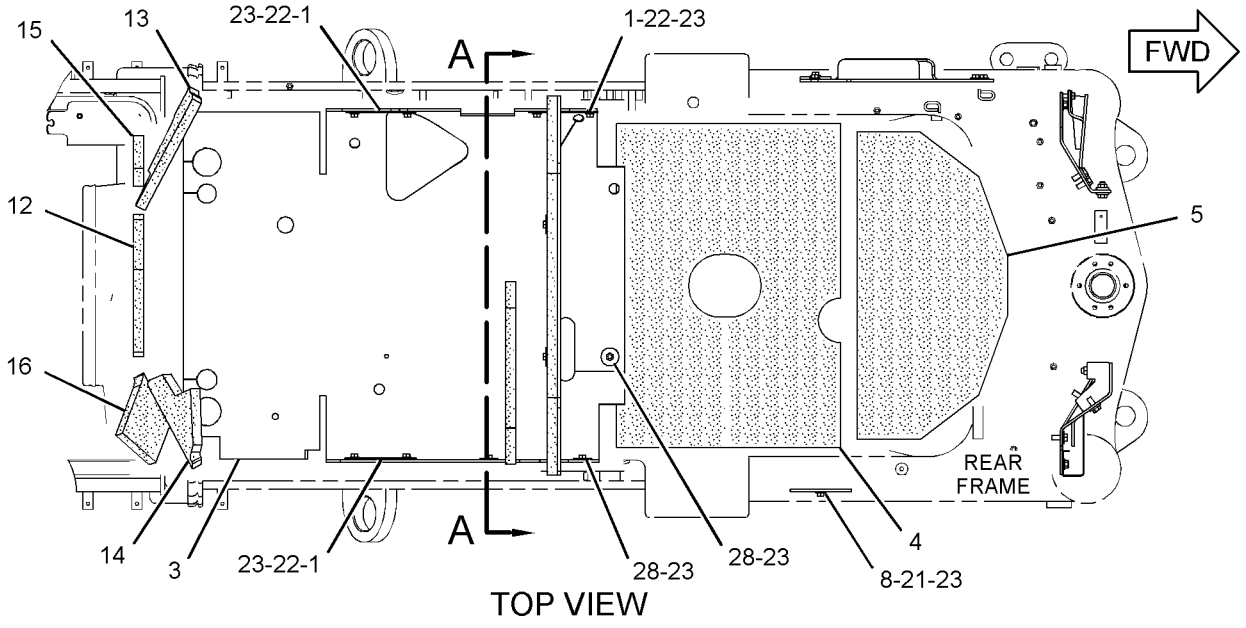

TOP VIEW

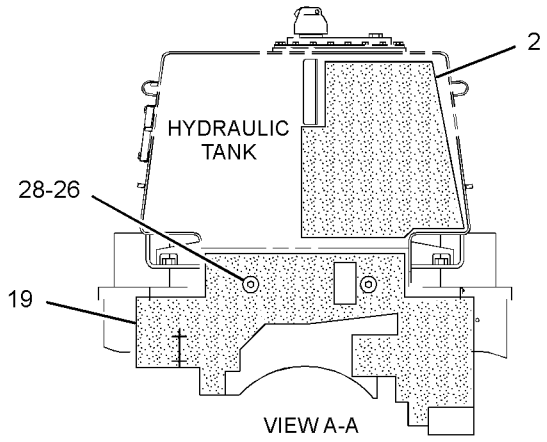

VIEW A-A

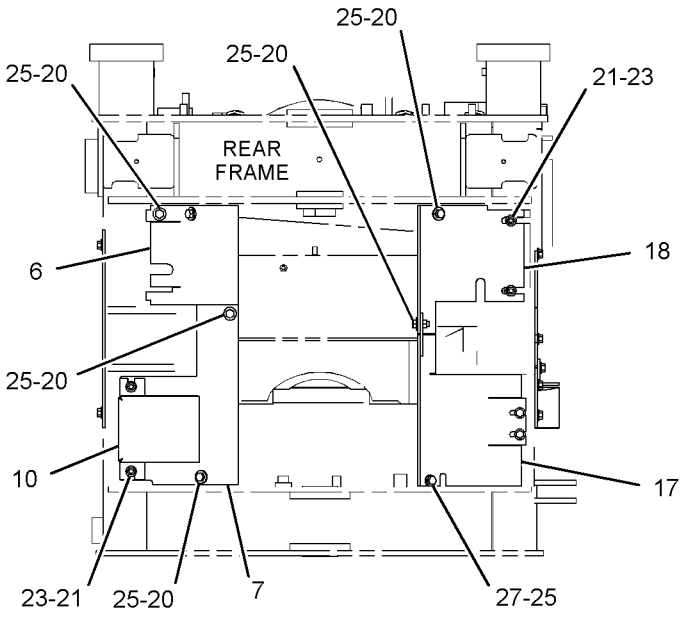

FRONT VIEW

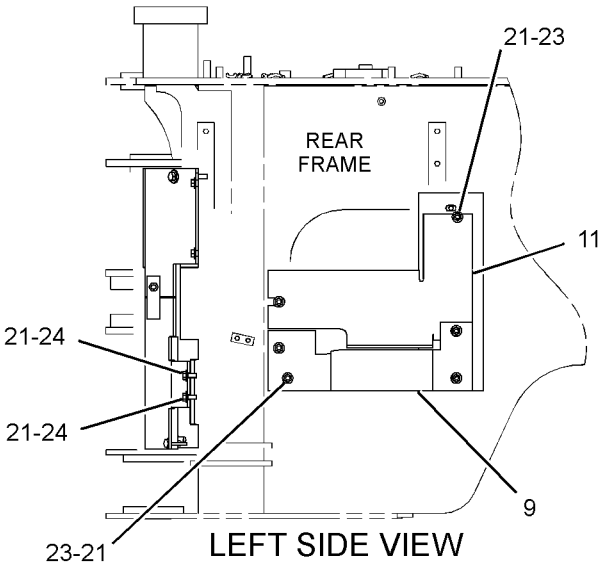

LEFT SIDE VIEW

GRAPHIC #1 **<END>** g01441780

FRAME AND BODY

262-7087 TILT GP-HOOD

S/N: JKM1-237

PART OF 237-7539 ELECTRICAL AR

SMCS-1427, 7251 **i02906350**

NOTE	REF NO	GRAPHIC REF	PART NUMBER	QTY	PART NAME 1 2 3 4 5 6 (PRODUCT LEVEL)	SEE PAGE
	1	1	**6S-6646**	2	PIN-COTTER	
	2	1	**123-4980**	1	COVER	
	3	1	**262-7088**	1	PLATE (RH)	
	4	1	**262-7089**	1	PLATE (LH)	
	5	1	**262-7095**	1	COVER (RH)	
	6	1	**262-7097**	1	COVER (LH)	
	7	1	**280-7076**	1	PIN AS (LH)	
	8	1	**280-7078**	1	PIN AS (RH)	
Y	9	1	**305-8958**	1	ACTUATOR GP-POWER	490
	10	1	**7V-9791**	2	PIN	
	11	1	**7X-0515**	6	WASHER-HARD (17X35X5-MM THK)	
	12	1	**7X-7729**	24	WASHER (11X25X3-MM THK)	
M	13	1	**8T-4133**	8	NUT (M10X1.5-THD)	
M	14	1	**8T-4137**	14	BOLT (M10X1.5X20-MM)	
M	15	1	**8T-4191**	2	BOLT (M10X1.5X16-MM)	
M	16	1	**8T-4193**	6	BOLT (M16X2X50-MM)	

M-METRIC PART
Y-SEPARATE ILLUSTRATION

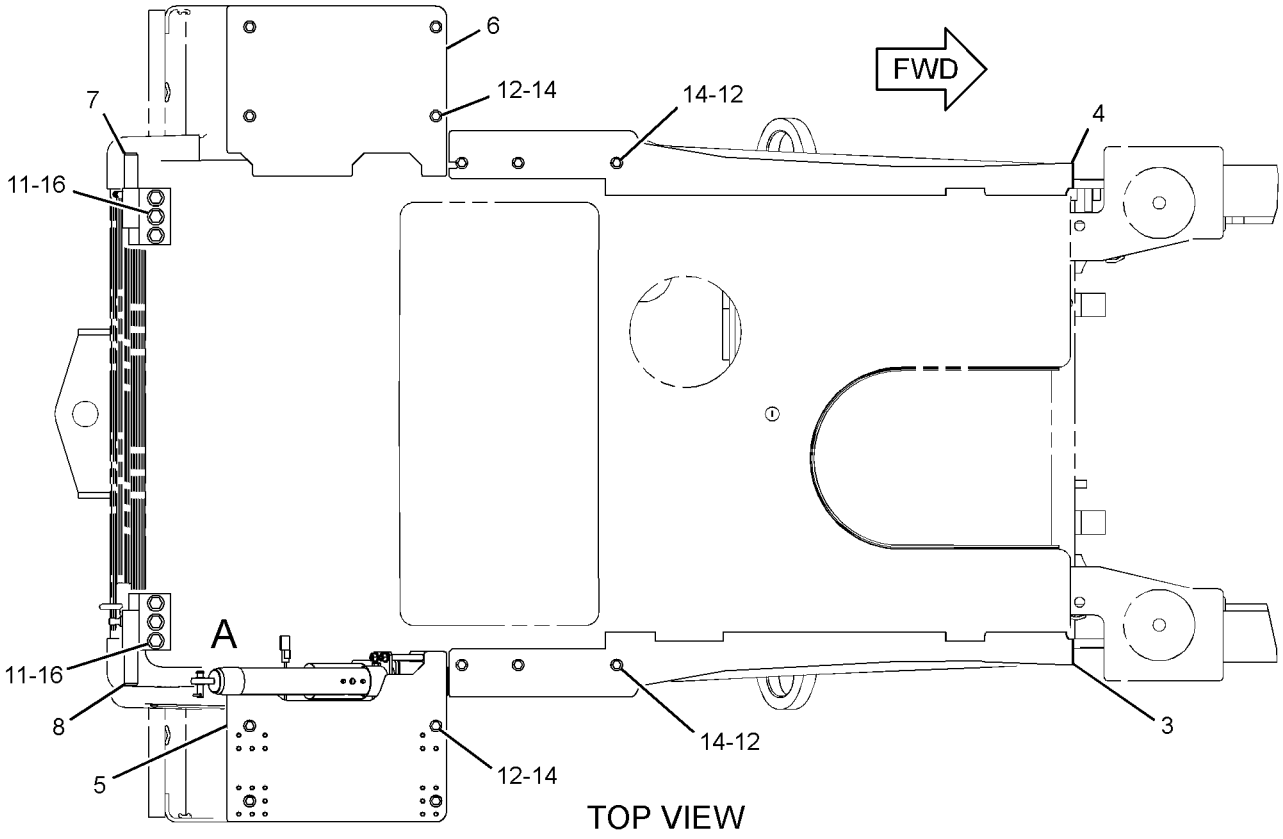

TOP VIEW

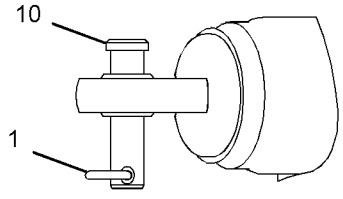

VIEW OF AREA A

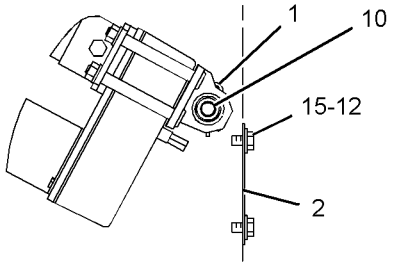

VIEW OF AREA B

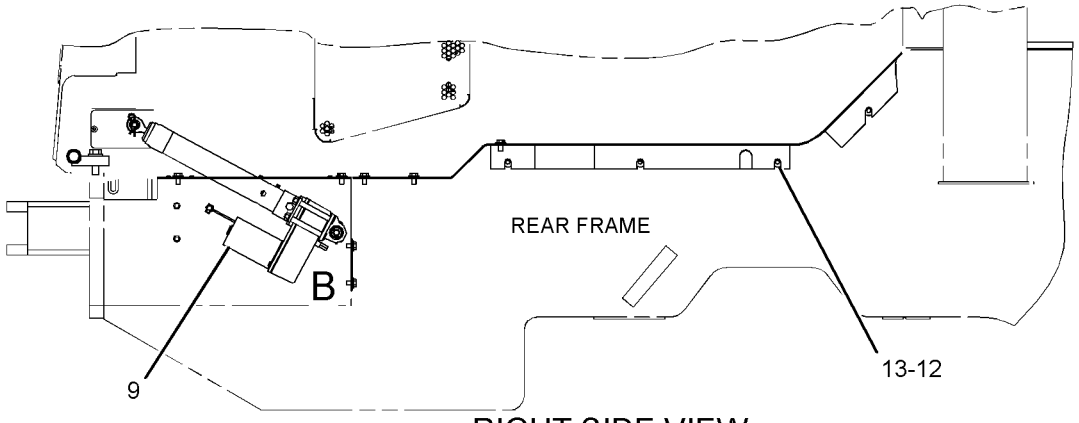

RIGHT SIDE VIEW

GRAPHIC #1

<END>

g01395197

262-7087 TILT GP-HOOD

S/N: JKM238-UP

PART OF 237-7539 ELECTRICAL AR

SMCS-1427, 7251 **i03539684**

NOTE	REF NO	GRAPHIC REF	PART NUMBER	QTY	PART NAME 1 2 3 4 5 6 (PRODUCT LEVEL)	SEE PAGE
	1	1	**6S-6646**	2	PIN-COTTER	
	2	1	**123-4980**	1	COVER	
	3	1	**262-7088**	1	PLATE (RH)	
	4	1	**262-7089**	1	PLATE (LH)	
	5	1	**262-7095**	1	COVER (RH)	
	6	1	**262-7097**	1	COVER (LH)	
	7	1	**280-7076**	1	PIN AS (LH)	
	8	1	**280-7078**	1	PIN AS (RH)	
Y	9	1	**305-8958**	1	ACTUATOR GP-POWER	490
	10	1	**7V-9791**	2	PIN	
	11	1	**7X-0515**	6	WASHER-HARD (17X35X5-MM THK)	
C	12	1	**7X-7729**	15	WASHER (11X25X3-MM THK)	
M	13	1	**8T-4133**	7	NUT (M10X1.5-THD)	
M	14	1	**8T-4137**	14	BOLT (M10X1.5X20-MM)	
CM	15	1	**8T-4136**	2	BOLT (M10X1.5X25-MM)	
M	16	1	**8T-4193**	6	BOLT (M16X2X50-MM)	
C	17	1	**131-5879**	8	WASHER (11X32X3-MM THK)	

C-CHANGE FROM PREVIOUS TYPE
M-METRIC PART
Y-SEPARATE ILLUSTRATION

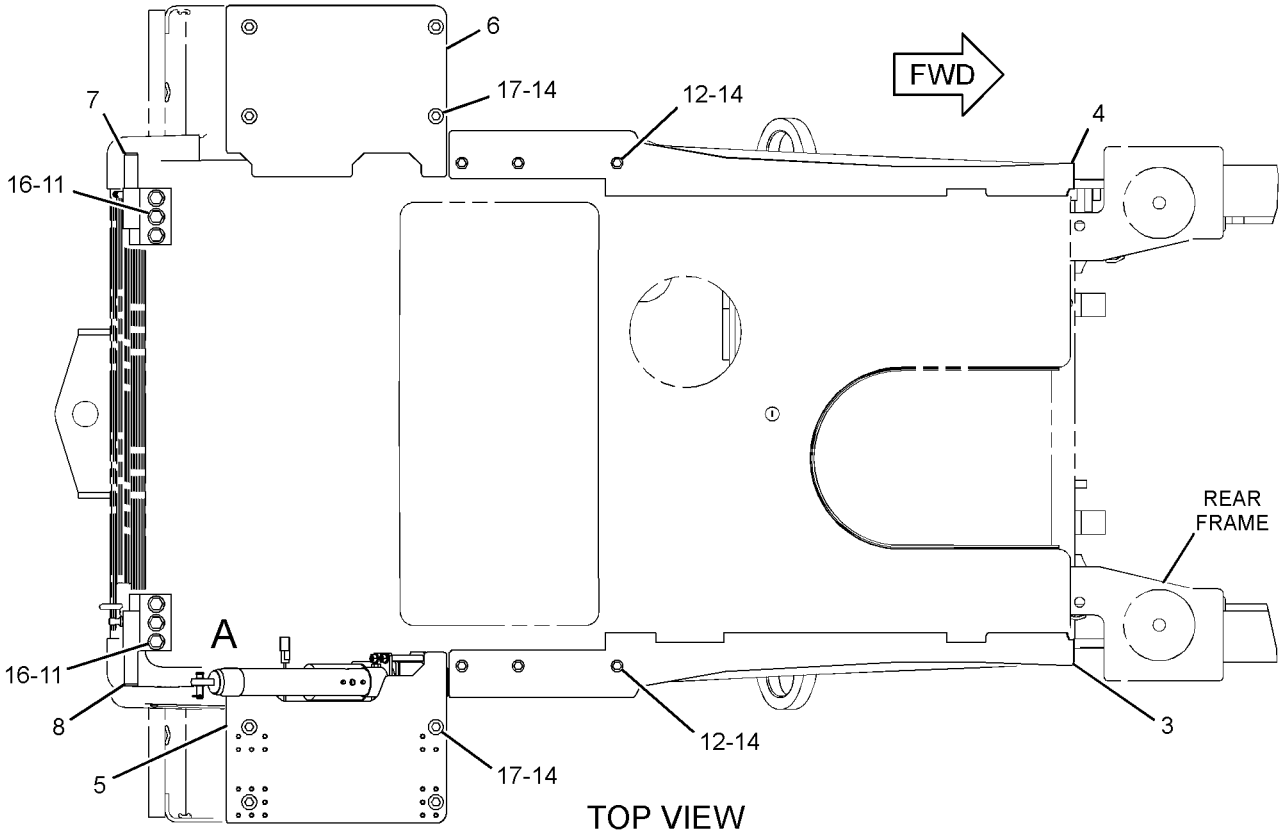

TOP VIEW

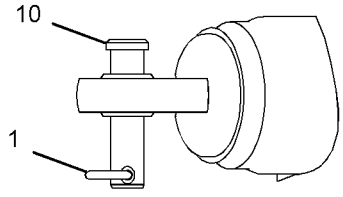

VIEW OF AREA A

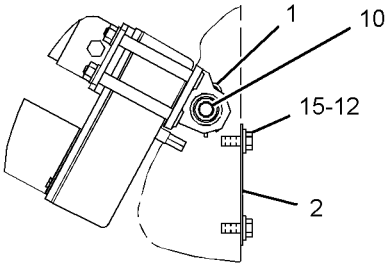

VIEW OF AREA B

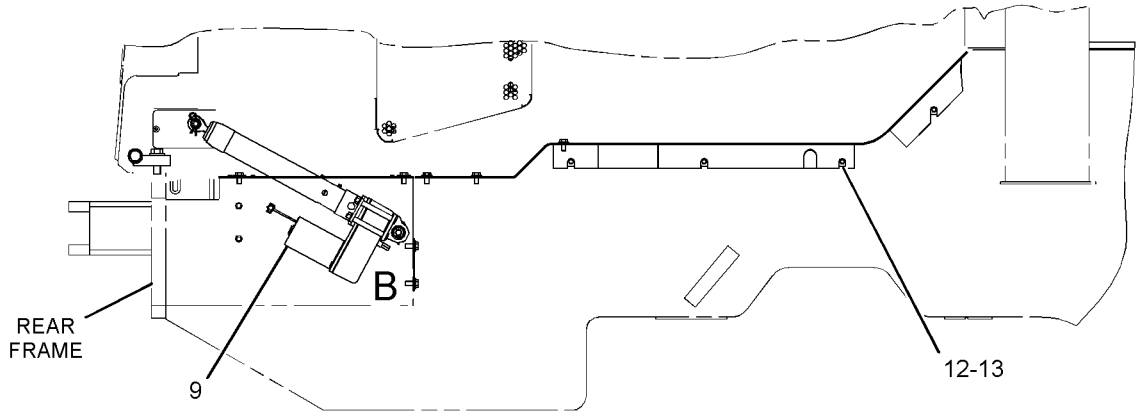

RIGHT SIDE VIEW

GRAPHIC #1

<END>

g01605674

308-6413 VALVE & LINES GP-LUBRICATION–REAR

S/N: JKM1-UP
PART OF 285-8337 LINES GP-REAR LUBRICATION
AN ATTACHMENT

SMCS-7540 **i03956650**

NOTE	REF NO	GRAPHIC REF	PART NUMBER	QTY	PART NAME 1 2 3 4 5 6 (PRODUCT LEVEL)	SEE PAGE
Y	1	1	**308-6412**	1	VALVE GP-LUBE DISTRIBUTION (13-INJECTOR, REAR)	607
E	2	1	**161-9030**		HOSE (98-CM)	
E	2A	1	**161-9030**		HOSE (90-CM)	
E	2B	1	**161-9030**		HOSE (127.5-CM)	
E	2C	1	**161-9030**		HOSE (195-CM)	
E	2D	1	**161-9030**		HOSE (113-CM)	
E	2E	1	**161-9030**		HOSE (116-CM)	
E	2F	1	**161-9030**		HOSE (190-CM)	
E	2G	1	**161-9030**		HOSE (70-CM)	
E	2H	1	**161-9030**		HOSE (80-CM)	
E	2J	1	**161-9030**		HOSE (205-CM EACH)	
E	2K	1	**161-9030**		HOSE (210-CM)	
E	2L	1	**161-9030**		HOSE (220-CM)	
	3	1	**277-3073**	26	FITTING-COMPRESSION	
	4	1	**277-3072**	26	NUT (M10X1-THD)	

E-ORDER BY THE CENTIMETER
Y-SEPARATE ILLUSTRATION

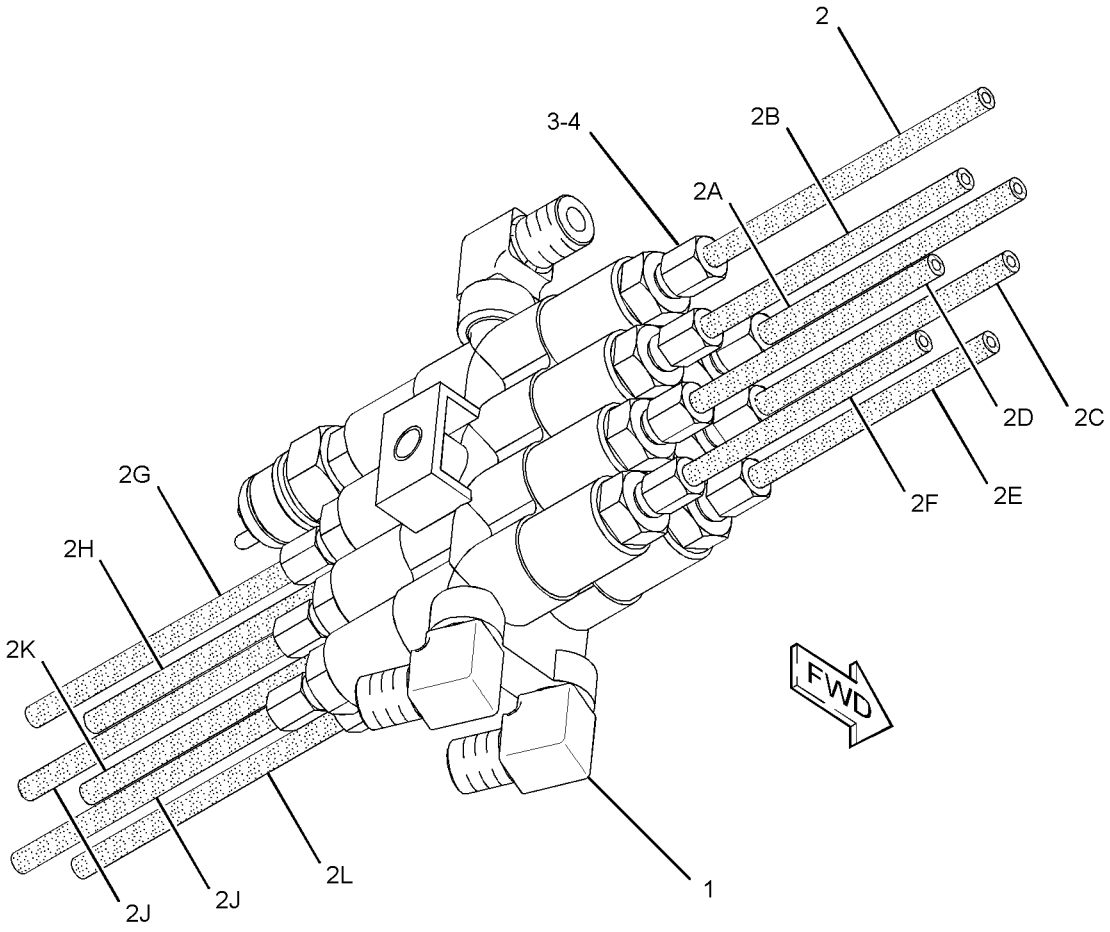

GRAPHIC #1 **<END>** g02144057

309-9217 VALVE & LINES GP-LUBRICATION–FRONT

S/N: JKM1-UP
PART OF 285-0545 LINES GP-FRONT LUBRICATION
AN ATTACHMENT

SMCS-7540 **i03637576**

NOTE	REF NO	GRAPHIC REF	PART NUMBER	QTY	PART NAME 1 2 3 4 5 6 (PRODUCT LEVEL)	SEE PAGE
	1	1	**178-2722**	2	COUPLING AS-STRAIGHT	
	2	1	**215-1246**	2	HOSE AS	
	3	1	**274-3948**	1	HOSE AS	
	4	1	**278-2073**	1	BRACKET (MOUNTING)	
Y	5	1	**285-0554**	1	VALVE GP-LUBE DISTRIBUTION (8-INJECTOR, FRONT)	606
	6	1	**285-0557**	2	HOSE AS	
	7	1	**285-0562**	1	HOSE AS	
	8	1	**309-1604**	2	HOSE AS	
	9	1	**095-0827**	2	LOCKWASHER	
M	10	1	**8T-8442**	2	BOLT-SOCKET HEAD (M6X1X30-MM)	
	11	1	**114-9325**	2	CLAMP-DOUBLE	
M	12	1	**8C-8451**	2	BOLT (M6X1X40-MM)	
E	13	1	**252-8211**		SLEEVE (47.5-CM EACH)	
E	13A	1	**252-8211**		SLEEVE (45-CM EACH)	
E	13B	1	**252-8211**		SLEEVE (62.5-CM)	
E	13C	1	**252-8211**		SLEEVE (30-CM)	
E	13D	1	**252-8211**		SLEEVE (42.5-CM EACH)	
E	13E	1	**252-8211**		SLEEVE (35-CM EACH)	

E-ORDER BY THE CENTIMETER
M-METRIC PART
Y-SEPARATE ILLUSTRATION

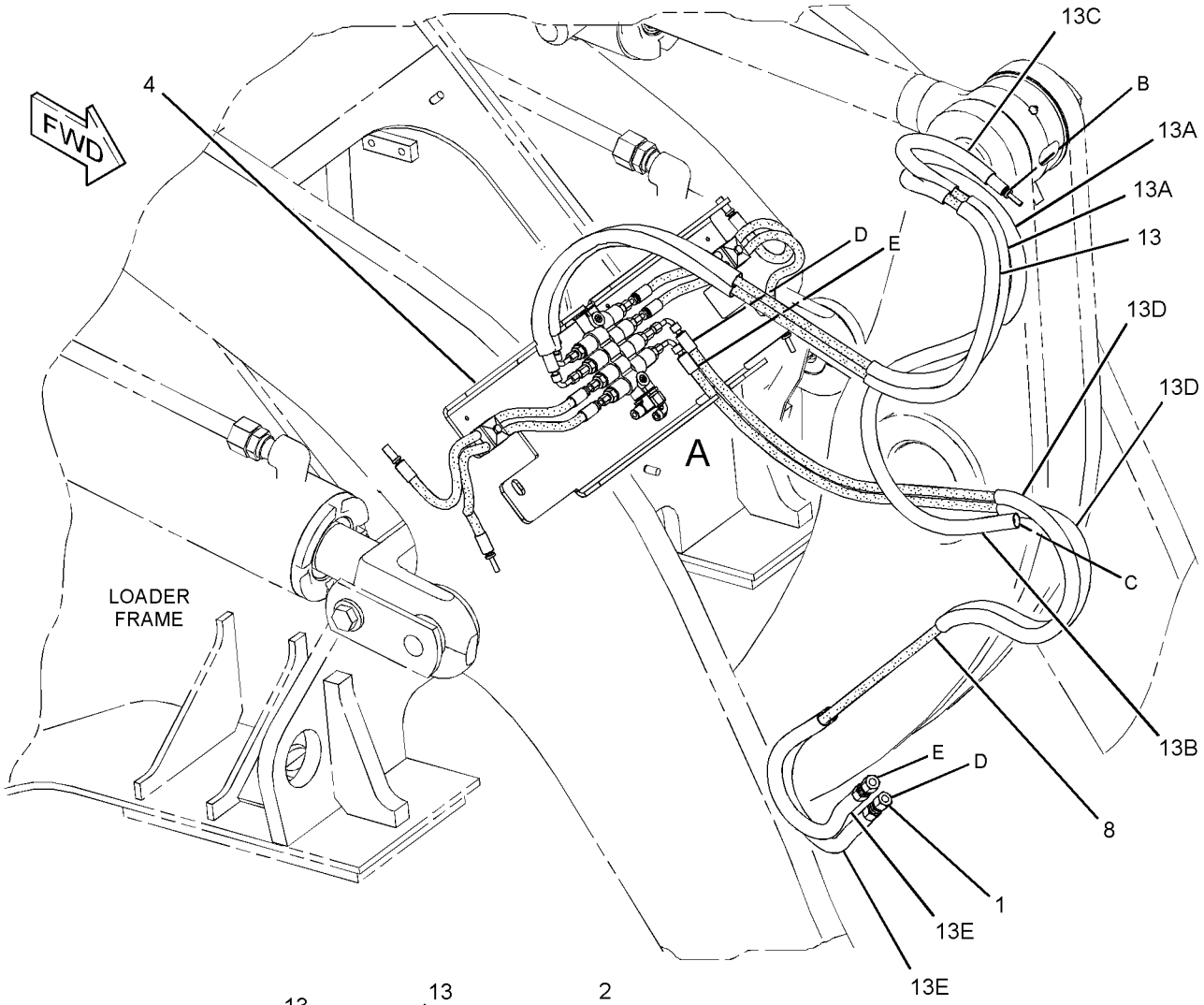

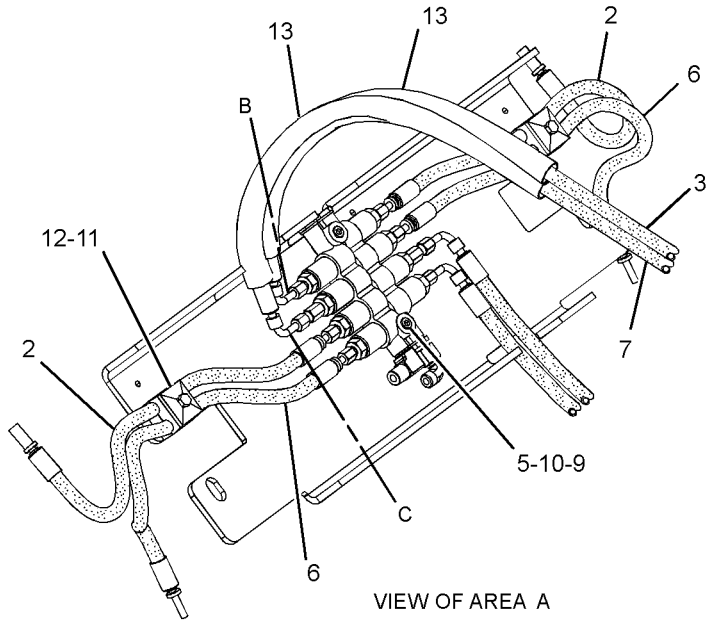

VIEW OF AREA A

GRAPHIC #1 **<END>** g01871023

285-0554 VALVE GP-LUBE DISTRIBUTION–

8-INJECTOR, FRONT

S/N: JKM1-UP

PART OF 309-9217 VALVE & LINES GP-LUBRICATION

AN ATTACHMENT

SMCS-7540 **i03276313**

NOTE	REF NO	GRAPHIC REF	PART NUMBER	QTY	PART NAME 1 2 3 4 5 6 (PRODUCT LEVEL)	SEE PAGE
	1	1	**177-3517**	1	INJECTOR-GREASE (F-PIN)	
	2	1	**177-3518**	1	INJECTOR-GREASE (NO. 8) (E-PIN)	
	2A	1	**177-3518**	1	INJECTOR-GREASE (NO. 8) (D-PIN)	
	2B	1	**177-3518**	1	INJECTOR-GREASE (NO. 8) (C-PIN)	
	3	1	**178-2737**	1	ELBOW	
	4	1	**178-2740**	1	INJECTOR-GREASE (K-PIN, LH)	
	4A	1	**178-2740**	1	INJECTOR-GREASE (K-PIN, RH)	
	5	1	**178-2746**	1	INJECTOR-GREASE (NO. 9) (B-PIN, LH)	
	5A	1	**178-2746**	1	INJECTOR-GREASE (NO. 9) (B-PIN, RH)	
	6	1	**179-1660**	2	PLUG	
	7	1	**179-1661**	1	COUPLING	
	8	1	**192-5987**	2	GASKET	
	9	1	**192-6036**	2	CONNECTOR	
	10	1	**248-7538**	1	BLOCK-HYDRAULIC	
	11	1	**253-9795**	1	ELBOW	

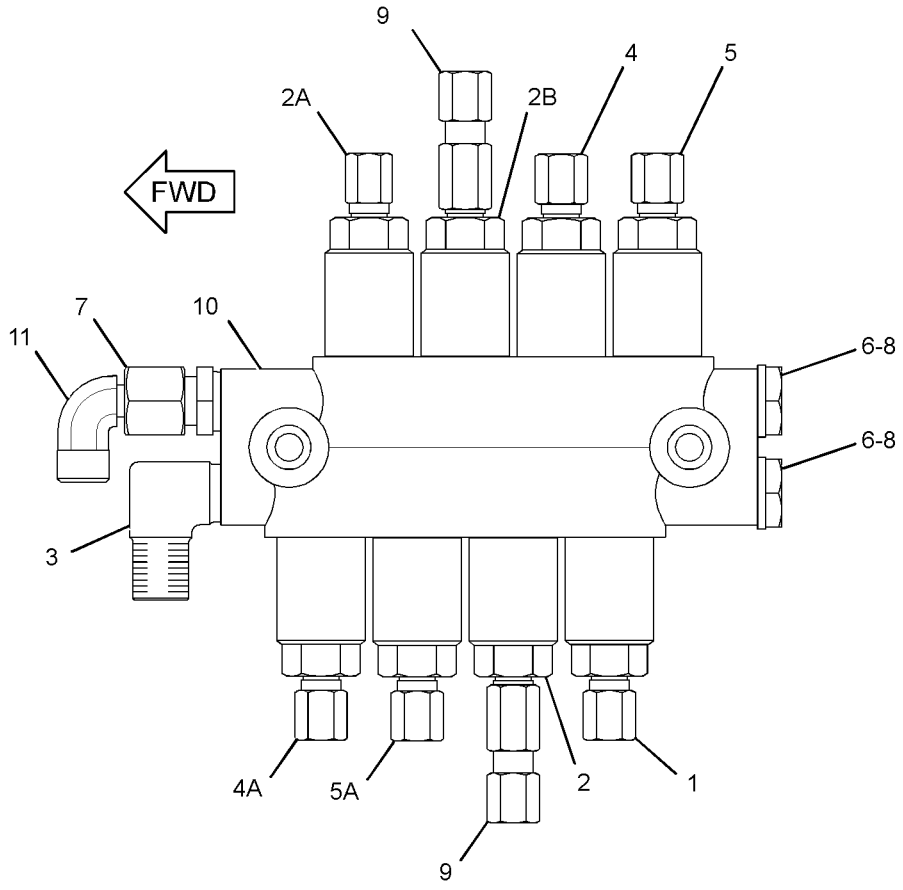

BOTTOM VIEW

GRAPHIC #1 **<END>** g01429235

308-6412 VALVE GP-LUBE DISTRIBUTION–

13-INJECTOR, REAR

S/N: JKM1-UP

PART OF 308-6413 VALVE & LINES GP-LUBRICATION

AN ATTACHMENT

SMCS-7540 **i03276274**

NOTE	REF NO	GRAPHIC REF	PART NUMBER	QTY	PART NAME 1 2 3 4 5 6 (PRODUCT LEVEL)	SEE PAGE
	1A	1	**177-3516**	1	INJECTOR-GREASE (STEERING CYLINDER, LH)	
	1B	1	**177-3516**	1	INJECTOR-GREASE (STEERING CYLINDER, RH)	
	1C	1	**177-3516**	1	INJECTOR-GREASE (Y-PIN, LIFT CYLINDER, RH)	
	1D	1	**177-3516**	1	INJECTOR-GREASE (Y-PIN, LH)	
	1E	1	**177-3516**	1	INJECTOR-GREASE (STEERING CYLINDER, LH)	
	1F	1	**177-3516**	1	INJECTOR-GREASE (STEERING CYLINDER, RH)	
	2A	1	**177-3517**	1	INJECTOR-GREASE (G-PIN, TILT CYLINDER)	
	2B	1	**177-3517**	1	INJECTOR-GREASE (ARTICULATED HITCH BRG, UPPER)	
	3A	1	**177-3518**	1	INJECTOR-GREASE (NO. 8) (ARTICULATED HITCH BRG, LOWER)	
	3B	1	**177-3518**	1	INJECTOR-GREASE (NO. 8) (REAR AXLE BEARING)	
	3C	1	**177-3518**	1	INJECTOR-GREASE (NO. 8) (REAR AXLE BEARING)	
	4	1	**177-3519**	1	SWITCH-PRESSURE (AUTOLUBE ACTUATION)	
	5	1	**177-3520**	1	VALVE	
	6	1	**178-2737**	4	ELBOW	
	7A	1	**178-2740**	1	INJECTOR-GREASE (A-PIN, LIFT ARM, RH)	
		1	**277-3072**	1	NUT	
		1	**277-3073**	1	FITTING-COMPRESSION	
	7B	1	**178-2740**	1	INJECTOR-GREASE (A-PIN, LIFT ARM, LH)	
		1	**277-3072**	1	NUT	
		1	**277-3073**	1	FITTING-COMPRESSION	
	8	1	**260-5764**	1	BLOCK	

308-6412 **VALVE GP-LUBE DISTRIBUTION** *(contd.)* **i03276274**

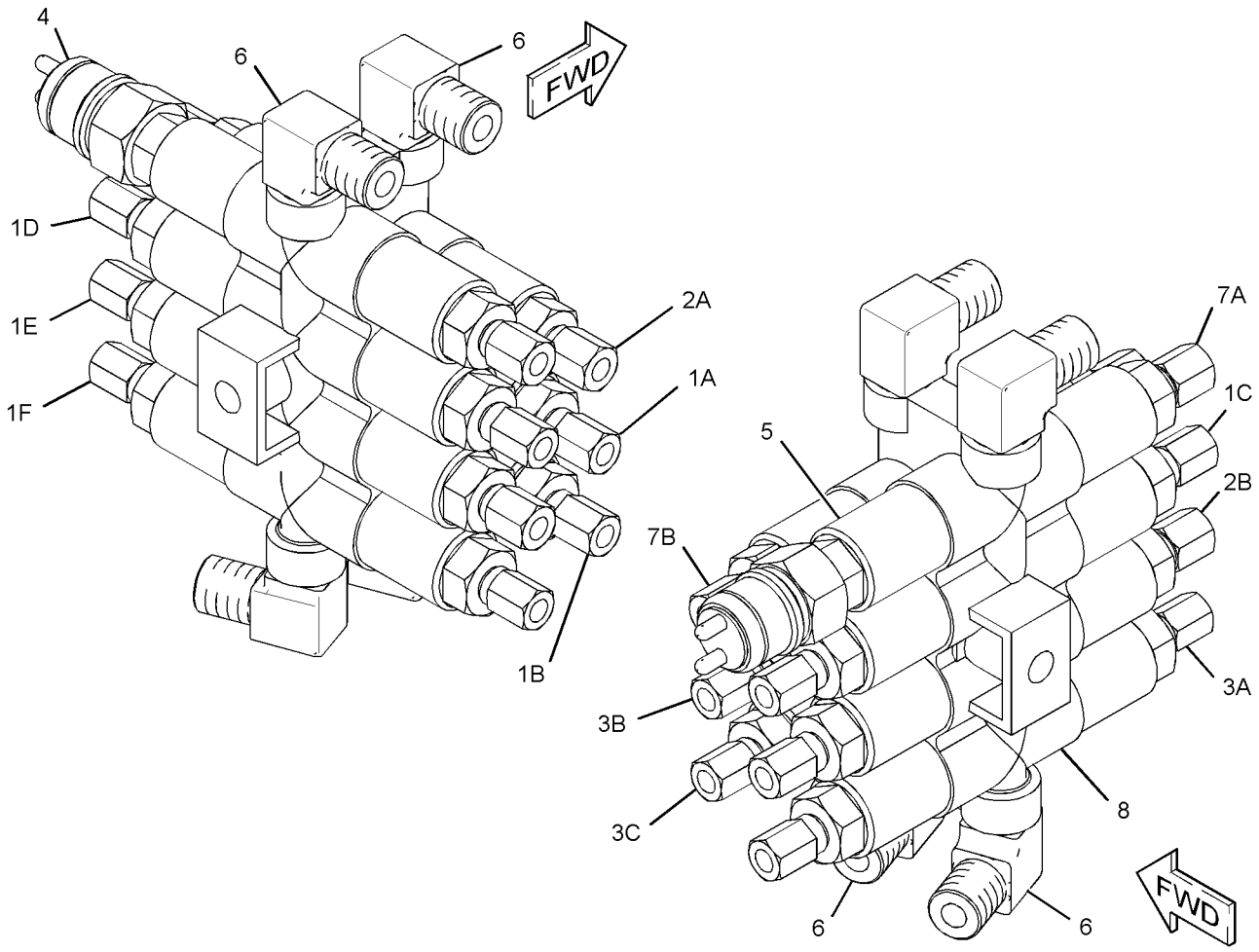

GRAPHIC #1 **<END>** g01433439

240-5972 ACCUMULATOR GP-BRAKE—UNCHARGED

S/N: JKM1-UP

FIELD INSTALLATION

SMCS-4263 **i02940235**

NOTE	REF NO	GRAPHIC REF	PART NUMBER	QTY	PART NAME 1 2 3 4 5 6 (PRODUCT LEVEL)	SEE PAGE
	1	1	**224-5132**	1	CAP (GAS VALVE)	
	2	1	**224-5152**	1	VALVE-GAS	
	3	1	**3J-7354**	1	SEAL-O-RING	
	4	1	**1J-9671**	1	SEAL-O-RING	
	5	1	**241-0037**	1	FILM-WARNING (HIGH PRESSURE, READ OMM)	
F			**5P-3779**	1	TAG-NOTICE (SHIPPING INSTRUCTIONS)	

F-NOT SHOWN

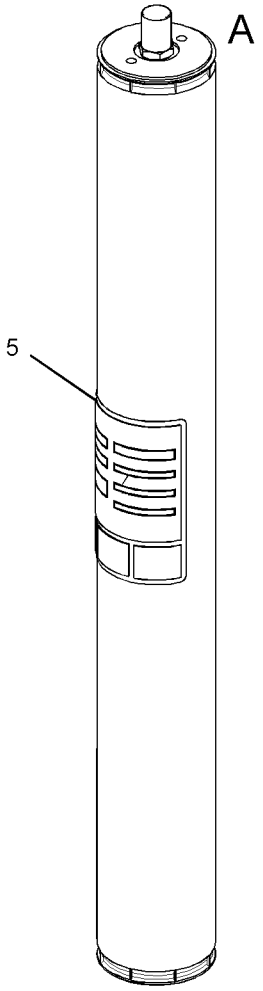

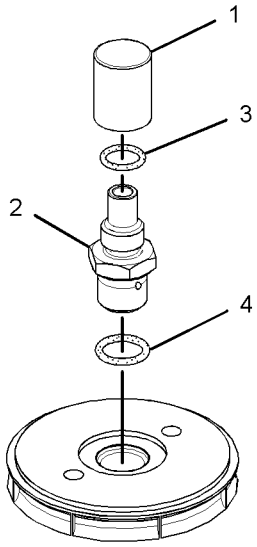

VIEW OF AREA A

GRAPHIC #1 **<END>** g01434489

279-0093 ACCUMULATOR GP-BRAKE–CHARGED

S/N: JKM1-UP

PART OF 239-3365 CONTROL GP-SERVICE BRAKE

FIELD REPLACEMENT ORDER 240-5972–PAGE 609

SMCS-4263 **i02910556**

NOTE	REF NO	GRAPHIC REF	PART NUMBER	QTY	PART NAME 1 2 3 4 5 6 (PRODUCT LEVEL)	SEE PAGE
	1	1	**224-5132**	1	CAP (GAS VALVE)	
	2	1	**224-5152**	1	VALVE-GAS (BRAKE ACCUMULATOR)	
	3	1	**3J-7354**	1	SEAL-O-RING	
	4	1	**1J-9671**	1	SEAL-O-RING	
	5	1	**241-0037**	1	FILM-WARNING (HIGH PRESSURE, READ OMM)	

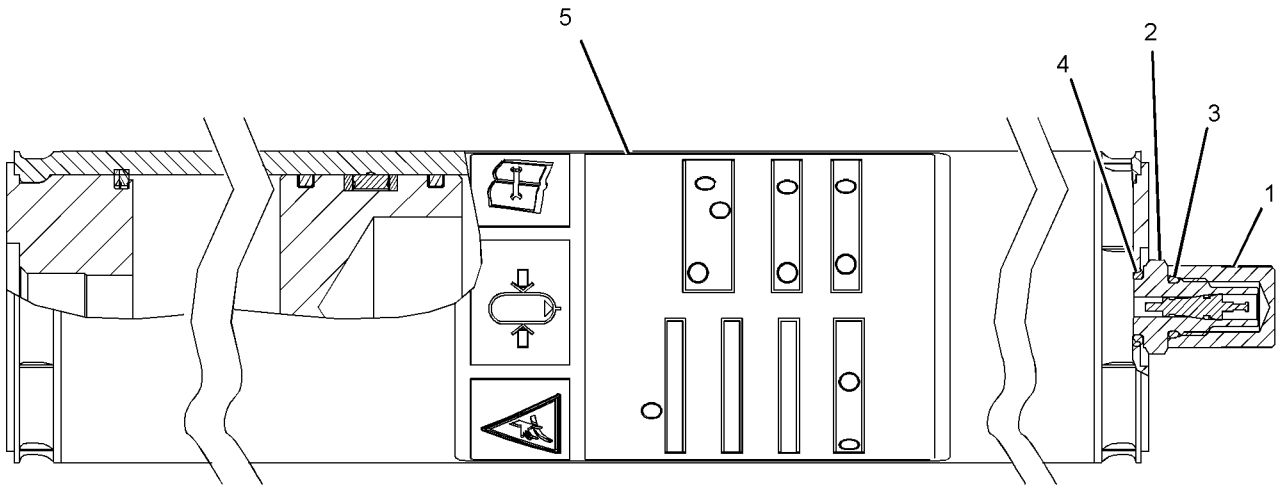

GRAPHIC #1 **<END>** g01424997

283-9977 BRAKE GP-PARKING

S/N: MWL1-UP

PART OF 252-5132 GEAR GP-OUTPUT TRANSFER

SMCS-4267 **i02915129**

NOTE	REF NO	GRAPHIC REF	PART NUMBER	QTY	PART NAME 1 2 3 4 5 6 (PRODUCT LEVEL)	SEE PAGE
	1	1	**5D-1242**	1	BRACKET	
	2	1	**7F-9571**	1	SCREW-ADJUSTMENT	
	3	1	**7F-9572**	1	NUT (1/2-20-THD)	
	4	1	**7F-9578**	1	SPRING	
	5	1	**7F-9579**	1	SOCKET	
	6	1	**9M-5137**	1	BRACE-ANCHOR PIN	
	7	1	**9M-5138**	2	PIN-ANCHOR	
	8	1	**9M-5139**	2	SPRING	
	9	1	**9M-5140**	1	PLATE AS	
	10	1	**200-1316**	1	CAMSHAFT	
	11	1	**283-9978**	2	SHOE AS-BRAKE	
	12	1	**3B-4512**	2	LOCKWASHER	
	13	1	**6B-6682**	2	NUT-FULL (3/4-16-THD)	
					AVAILABLE REPAIR KIT(S):	
			283-9979	1	KIT-BRAKE LINING	
					(INCLUDES LINING AND RIVET)	

283-9977 **BRAKE GP-PARKING** *(contd.)* **i02915129**

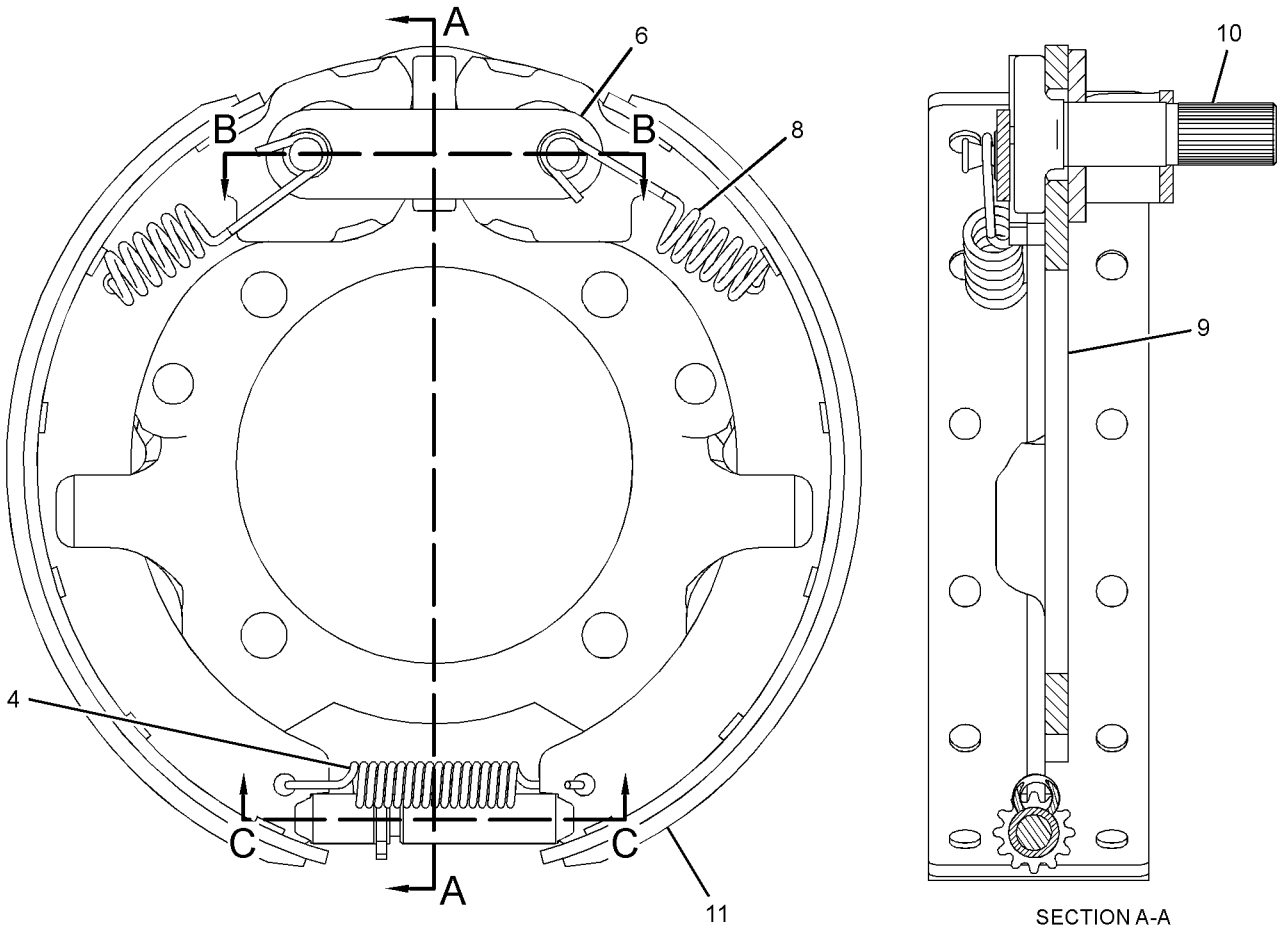

SECTION A-A

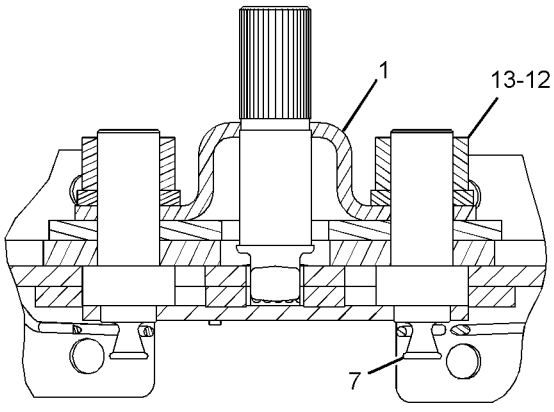

SECTION B-B

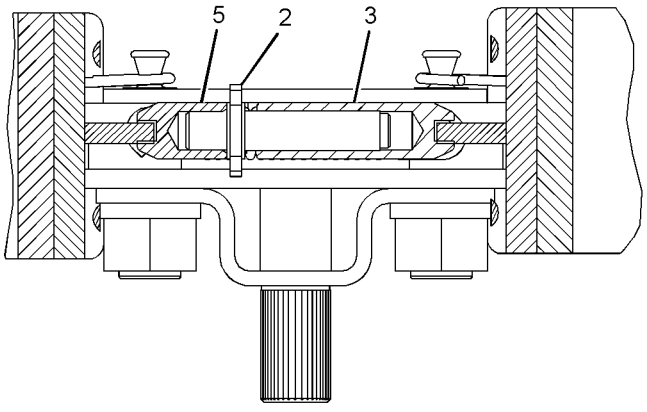

SECTION C-C

GRAPHIC #1 **<END>** g01278105

272-2448 BRAKE GP-SERVICE

S/N: JKM1-UP
PART OF 272-4990, 272-4992 AXLE AR-FIXED, 271-2344, 272-4996 AXLE AR-OSCILLATING
AN ATTACHMENT

SMCS-4251 **i02933555**

NOTE	REF NO	GRAPHIC REF	PART NUMBER	QTY	PART NAME 1 2 3 4 5 6 (PRODUCT LEVEL)	SEE PAGE
	1	1	**218-0268**	3	PLATE	
	2	1	**239-4202**	1	HUB	
Y	3	1	**272-2449**	1	PISTON GP-BRAKE (SERVICE)	637
	4	1	**154-1580**	4	WASHER-HARD (22X38X6-MM THK)	
M	5	1	**213-5007**	4	BOLT (M20X2.5X80-MM)	
	6	1	**213-7928**	2	DISC-FRICTION	
	7	1	**7X-4805**	1	SEAL-O-RING	
	8	1	**9M-4335**	3	DOWEL-REACTION	

M-METRIC PART
Y-SEPARATE ILLUSTRATION

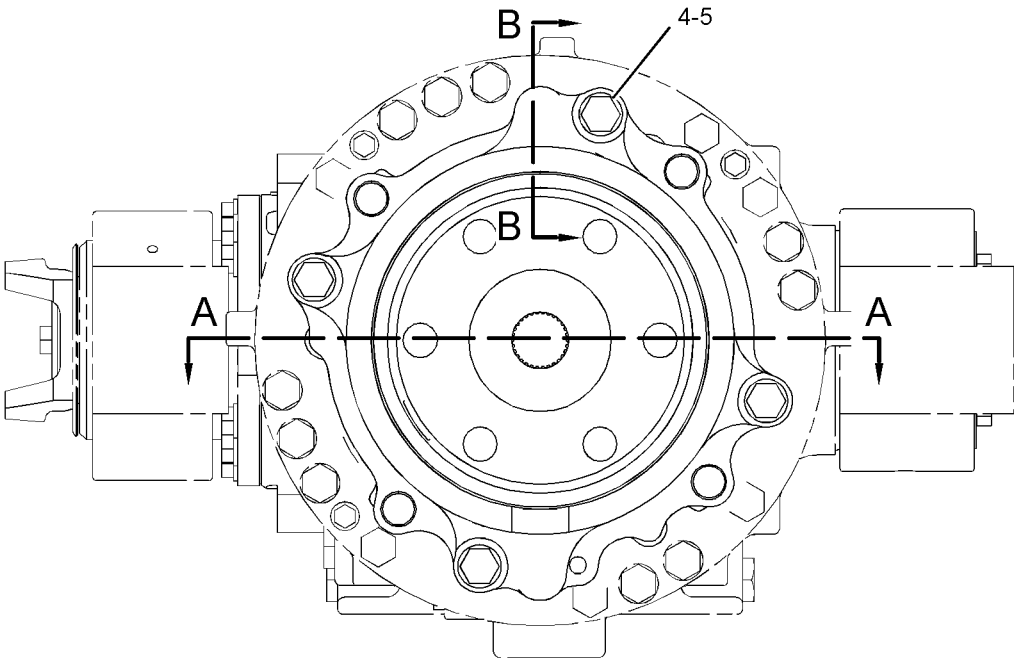

LEFT SIDE VIEW

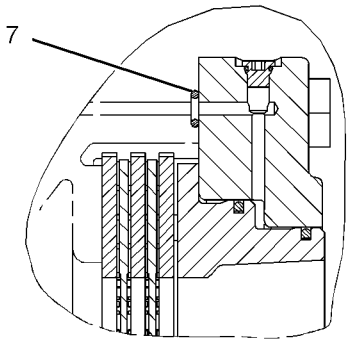

SECTION B-B

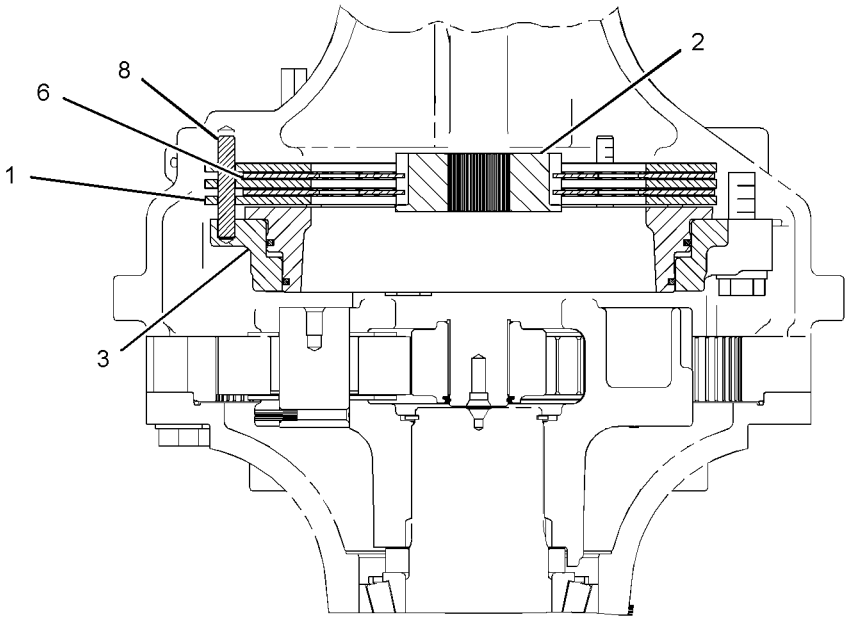

SECTION A-A

GRAPHIC #1 **<END>** g01386413

271-0260 CONTROL GP-FOOT BRAKE

S/N: JKM1-UP

PART OF 271-7808 CONTROL GP-FOOT BRAKE

ALSO AN ATTACHMENT

SMCS-4269 **i02917818**

NOTE	REF NO	GRAPHIC REF	PART NUMBER	QTY	PART NAME 1 2 3 4 5 6 (PRODUCT LEVEL)	SEE PAGE
	1	1	**204-7186**	1	SHAFT AS	
		1	**4E-9667**	1	ROLLER	
		1	**4E-9668**	1	PIN	
		1	**009-3101**	2	RING-RETAINING	
		1	**114-9491**	2	WASHER	
Y	2	1	**205-9237**	1	BASE GP-FOOT BRAKE (PEDAL, RH)	1000
Y	3	1	**271-0261**	1	BASE GP-FOOT BRAKE (PEDAL, LH)	1001

Y-SEPARATE ILLUSTRATION

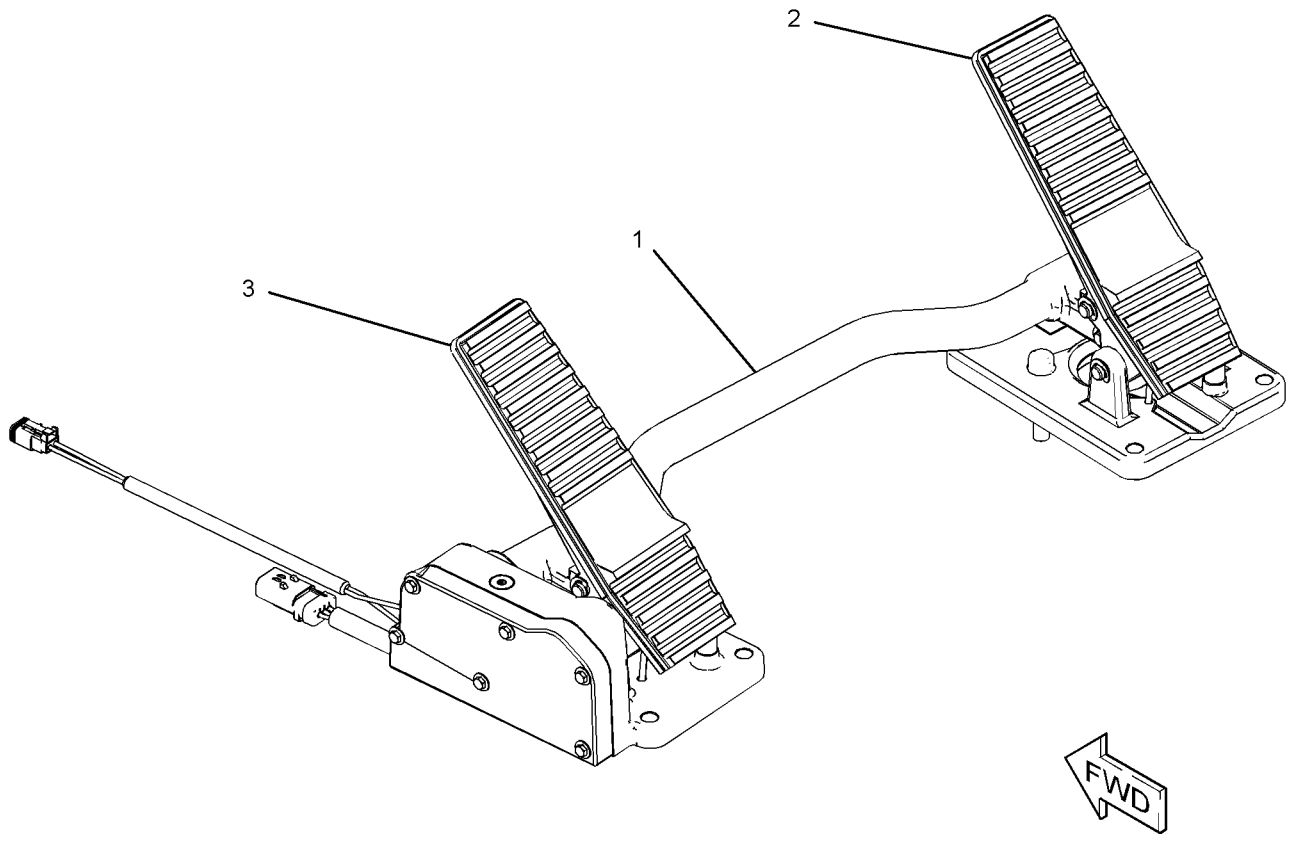

GRAPHIC #1 **<END>** g01426682

BRAKING SYSTEM

271-7808 CONTROL GP-FOOT BRAKE

S/N: JKM1-UP

PART OF 252-4553 CAB AR-ENCLOSED ROPS, 269-4873 CANOPY AR-OPEN ROPS

ALSO AN ATTACHMENT

SMCS-4269 **i02917817**

NOTE	REF NO	GRAPHIC REF	PART NUMBER	QTY	PART NAME 1 2 3 4 5 6 (PRODUCT LEVEL)	SEE PAGE
Y	1	1	**271-0260**	1	CONTROL GP-FOOT BRAKE	615
	2	1	**8T-4224**	6	WASHER-HARD (8.8X16X2-MM THK)	
M	3	1	**8T-7547**	6	BOLT (M8X1.25X30-MM)	

M-METRIC PART
Y-SEPARATE ILLUSTRATION

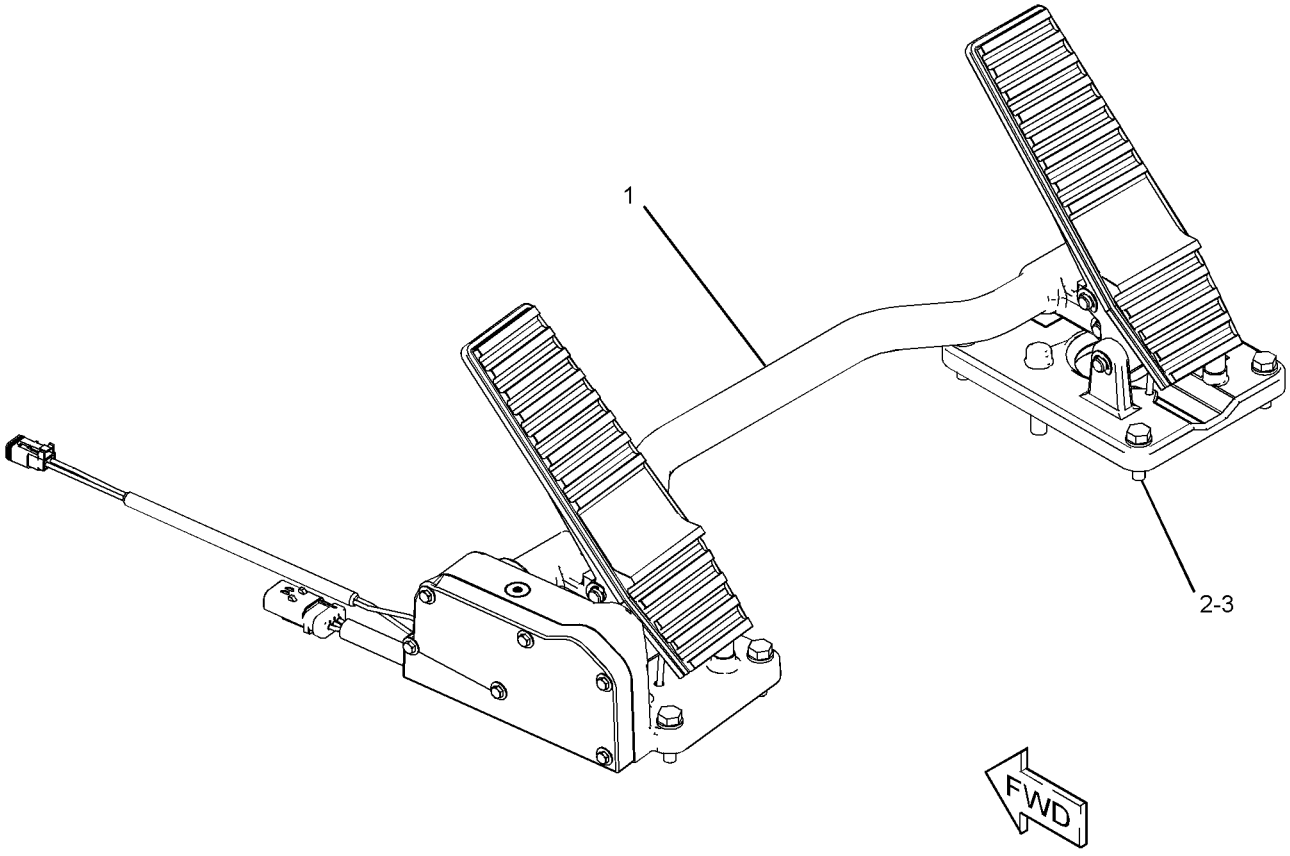

GRAPHIC #1 **<END>** g01426691

230-1240 CONTROL GP-PARKING BRAKE

S/N: JKM1-900

PART OF 252-4553 CAB AR-ENCLOSED ROPS, 269-4873 CANOPY AR-OPEN ROPS

ALSO AN ATTACHMENT

SMCS-4282, 4284 **i02154400**

NOTE	REF NO	GRAPHIC REF	PART NUMBER	QTY	PART NAME 1 2 3 4 5 6 (PRODUCT LEVEL)	SEE PAGE
	1	1	**6G-4195**	1	SWITCH AS-LIMIT (PARKING BRAKE)	
		1	**3L-8187**	3	LOCKWASHER	
		1	**6V-8373**	3	SCREW-MACHINE (6-32X0.187-IN)	
	2	1	**6S-6646**	1	PIN-COTTER	
	3	1	**163-6412**	1	LEVER AS	
		1	**9R-9110**	1	BUTTON	
		1	**9R-9111**	1	SPRING-COMPRESSION	
	4	1	**186-4415**	1	CLEVIS	
	5	1	**230-1239**	1	BRACKET AS	
M		1	**8T-3612**	3	NUT-WELD (M8X1.25-THD)	
	6	1	**2N-3477**	2	SCREW-MACHINE (6-32X1.25-IN)	
	7	1	**3H-8538**	1	PIN	
	8	1	**4B-5324**	4	WASHER (3.9X9.6X1.2-MM THK)	
	9	1	**7D-6922**	2	LOCKNUT (6-32-THD)	
	10	1	**8K-1433**	1	GROMMET	
M	11	1	**8T-4189**	4	BOLT (M8X1.25X20-MM)	
	12	1	**8T-4224**	4	WASHER-HARD (8.8X16X2-MM THK)	

M-METRIC PART

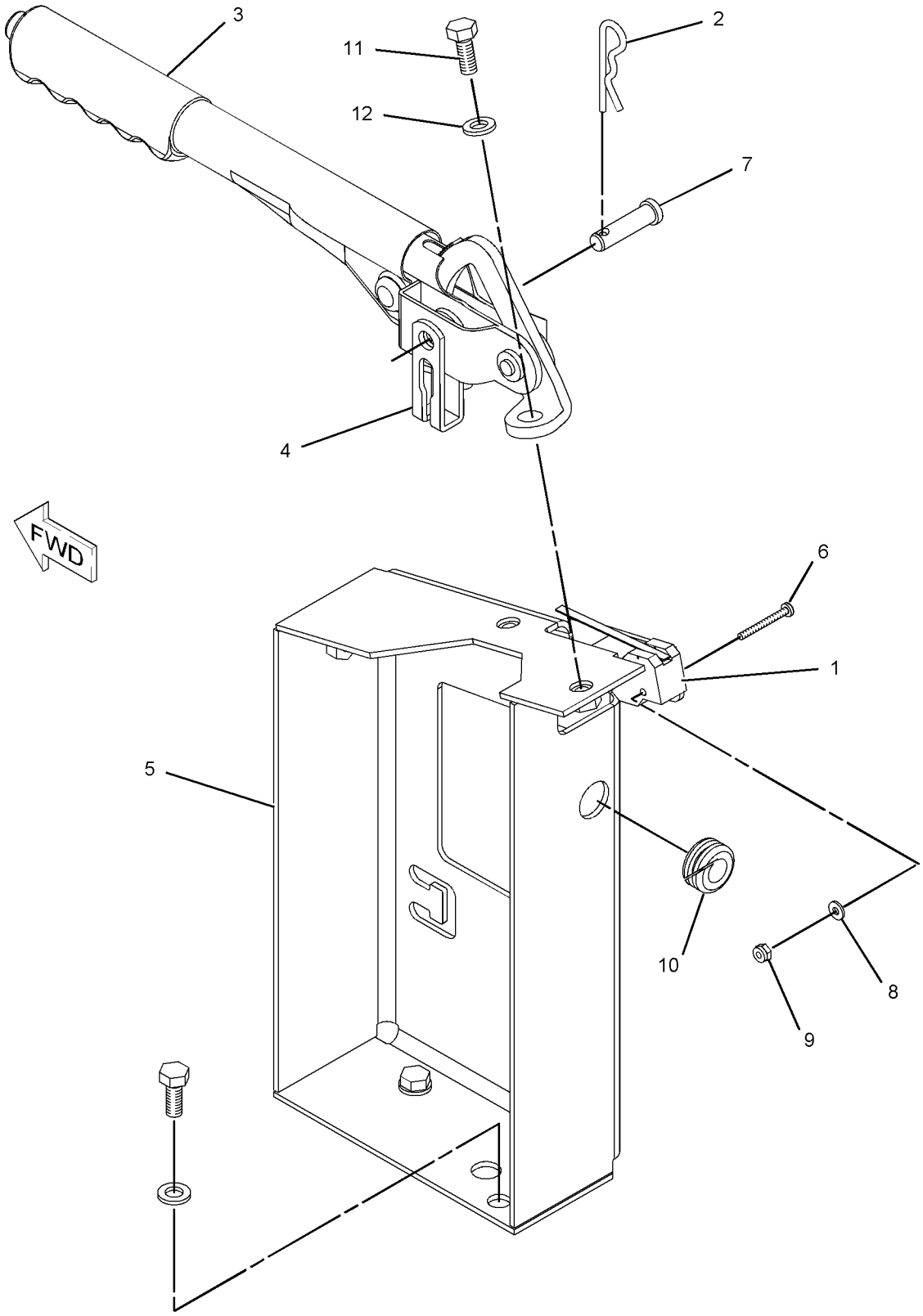

GRAPHIC #1 **<END>** g01092826

230-1240 CONTROL GP-PARKING BRAKE

S/N: JKM901-UP

PART OF 252-4553 CAB AR-ENCLOSED ROPS, 269-4873 CANOPY AR-OPEN ROPS

ALSO AN ATTACHMENT

SMCS-4282, 4284 **i03789110**

NOTE	REF NO	GRAPHIC REF	PART NUMBER	QTY	PART NAME 1 2 3 4 5 6 (PRODUCT LEVEL)	SEE PAGE
	1	1	**6G-4195**	1	SWITCH AS-LIMIT (PARKING BRAKE)	
		1	**3L-8187**	3	LOCKWASHER	
		1	**6V-8373**	3	SCREW-MACHINE (6-32X0.187-IN)	
	2	1	**6S-6646**	1	PIN-COTTER	
	3	1	**186-4415**	1	CLEVIS	
C	4	1	**339-8209**	1	LEVER AS-BRAKE	
		1	**9R-9110**	1	BUTTON	
		1	**9R-9111**	1	SPRING-COMPRESSION	
C	5	1	**339-8583**	1	BRACKET AS	
M		1	**8T-3612**	3	NUT-WELD (M8X1.25-THD)	
	6	1	**2N-3477**	2	SCREW-MACHINE (6-32X1.25-IN)	
	7	1	**4B-5324**	4	WASHER (3.9X9.6X1.2-MM THK)	
	8	1	**7D-6922**	2	LOCKNUT (6-32-THD)	
	9	1	**8K-1433**	1	GROMMET	
M	10	1	**8T-4189**	4	BOLT (M8X1.25X20-MM)	
	11	1	**8T-4224**	4	WASHER-HARD (8.8X16X2-MM THK)	

C-CHANGE FROM PREVIOUS TYPE
M-METRIC PART

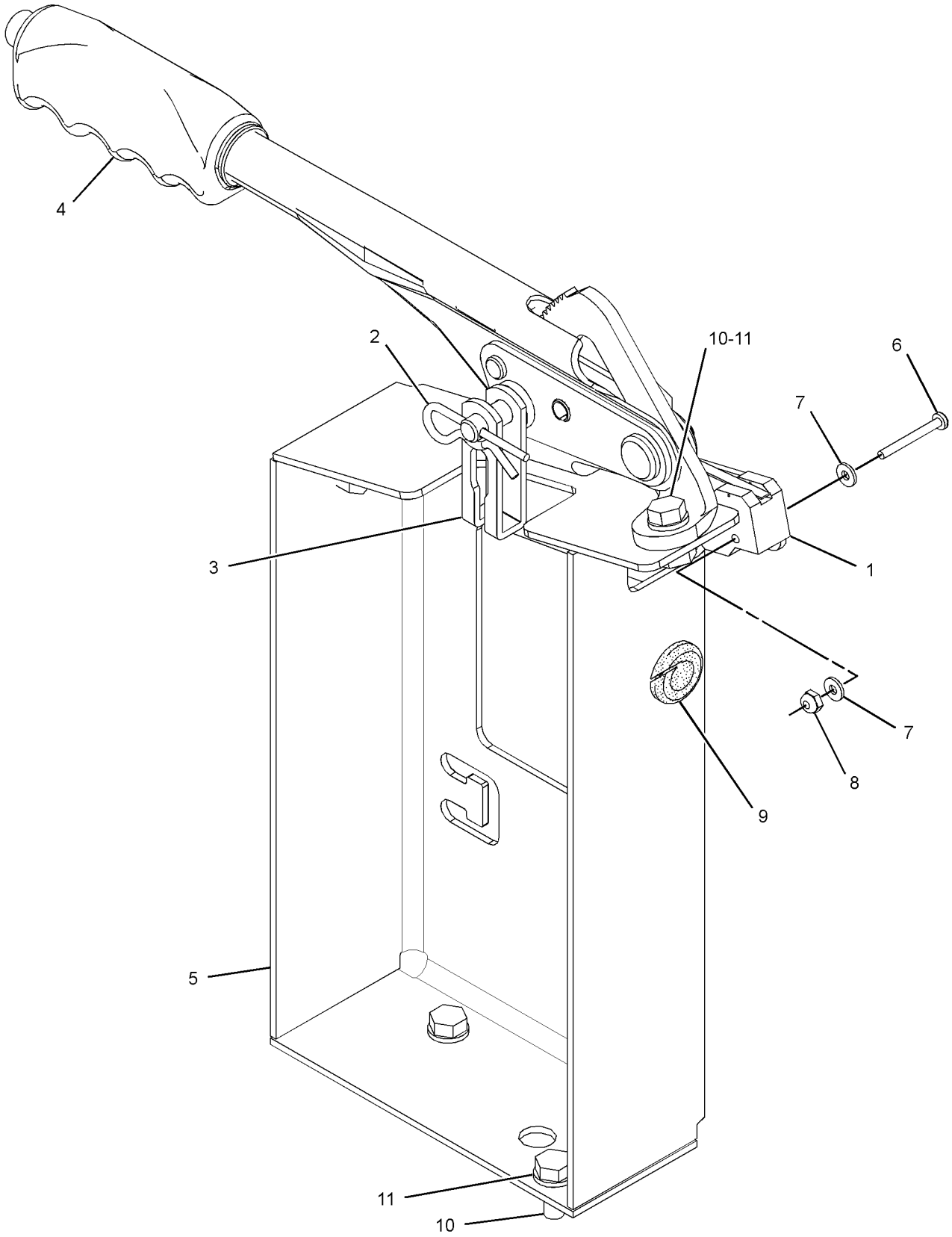

GRAPHIC #1 **<END>** g02100203

233-6729 CONTROL GP-PARKING BRAKE

S/N: JKM1-900

PART OF 237-7540 CHASSIS AR

SMCS-4282, 4284 **i03087200**

NOTE	REF NO	GRAPHIC REF	PART NUMBER	QTY	PART NAME 1 2 3 4 5 6 (PRODUCT LEVEL)	SEE PAGE
	1	1	**8C-6160**	1	CLEVIS AS	
	2	1	**8Y-8826**	1	BRACKET AS	
	3	1	**9U-0710**	2	CLIP	
	4	1	**324-3722**	1	CABLE AS-BRAKE	
	5	1	**3B-4610**	1	PIN-COTTER	
M	6	1	**5C-7261**	1	NUT (M8X1.25-THD)	
	7	1	**5P-9297**	2	CLIP	
	8	1	**6V-8758**	1	PIN-CLEVIS	
	9	1	**7D-7233**	1	CLIP	
	10	1	**8T-4121**	4	WASHER-HARD (11X21X2.5-MM THK)	
M	11	1	**8T-4133**	1	NUT (M10X1.5-THD)	
M	12	1	**8T-4136**	1	BOLT (M10X1.5X25-MM)	
M	13	1	**8T-4137**	2	BOLT (M10X1.5X20-MM)	
E	14	1	**7I-7439**		GUARD (1600-CM)	

E-ORDER BY THE CENTIMETER
M-METRIC PART

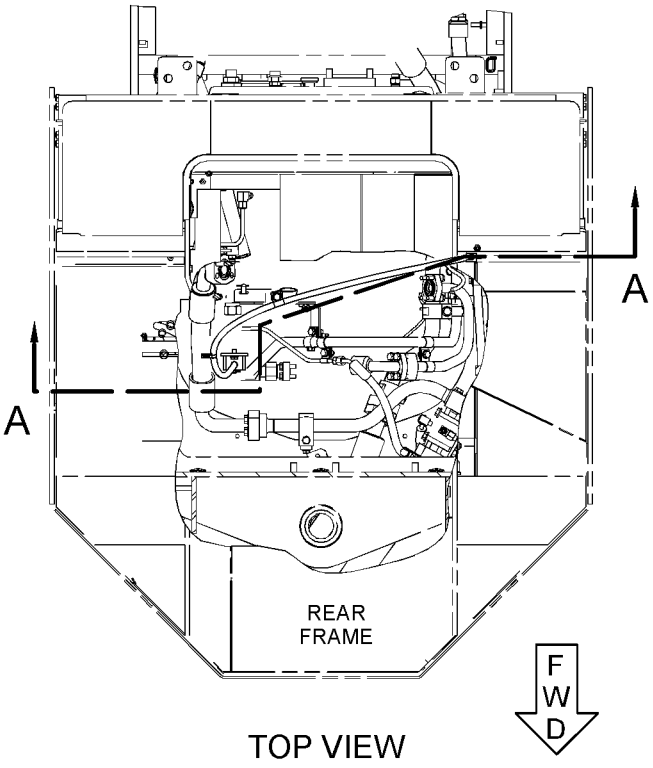

TOP VIEW

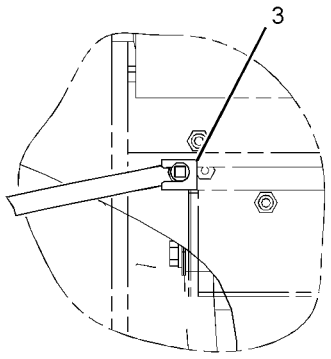

SECTION B-B

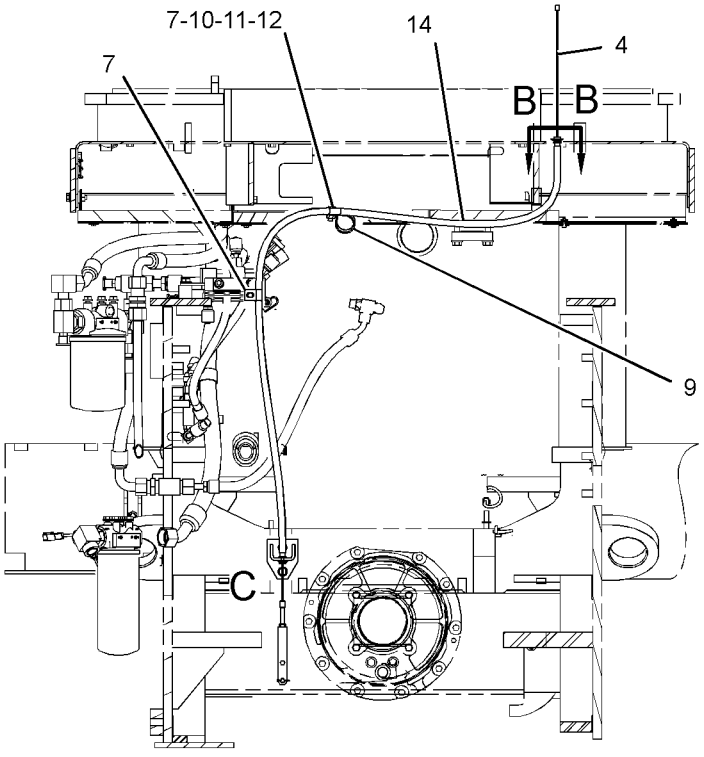

SECTION A-A

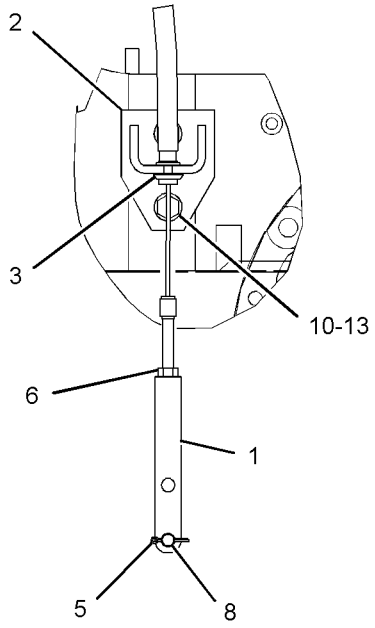

VIEW OF AREA C

GRAPHIC #1 **<END>** g01572453

233-6729 CONTROL GP-PARKING BRAKE

S/N: JKM901-UP

PART OF 237-7540 CHASSIS AR

SMCS-4282, 4284 **i03789050**

NOTE	REF NO	GRAPHIC REF	PART NUMBER	QTY	PART NAME 1 2 3 4 5 6 (PRODUCT LEVEL)	SEE PAGE
	1	1	**8C-6160**	1	CLEVIS AS	
	2	1	**8Y-8826**	1	BRACKET AS	
	3	1	**9U-0710**	2	CLIP	
C	4	1	**103-0010**	1	BRACKET AS	
M		1	**8T-3490**	1	NUT-WELD (M10X1.5-THD)	
	5	1	**341-1975**	1	CABLE AS	
C	6	1	**1P-7009**	1	CLIP	
	7	1	**3B-4610**	1	PIN-COTTER	
C	8	1	**4S-1936**	1	CLIP	
M	9	1	**5C-7261**	1	NUT (M8X1.25-THD)	
	10	1	**6V-8758**	1	PIN-CLEVIS	
C	11	1	**7X-7729**	4	WASHER (11X25X3-MM THK)	
C	12	1	**8T-1889**	1	CLIP (SLOT)	
C	13	1	**8T-1890**	1	CLIP (TAB)	
C	14	1	**8T-4121**	2	WASHER-HARD (11X21X2.5-MM THK)	
M	15	1	**8T-4133**	1	NUT (M10X1.5-THD)	
M	16	1	**8T-4137**	2	BOLT (M10X1.5X20-MM)	
CM	17	1	**8T-4186**	1	BOLT (M10X1.5X40-MM)	
CM	18	1	**8T-4195**	2	BOLT (M10X1.5X30-MM)	
CE	19	1	**7I-7439**		GUARD (138-CM)	

C-CHANGE FROM PREVIOUS TYPE
E-ORDER BY THE CENTIMETER
M-METRIC PART

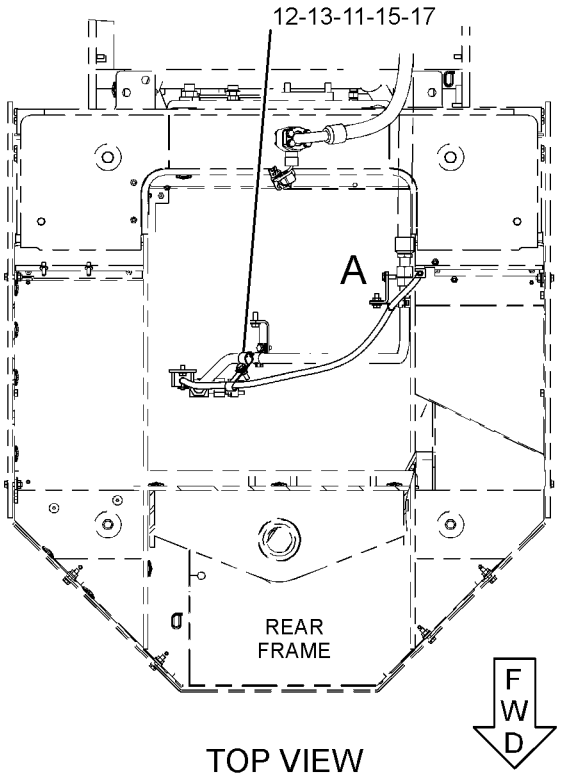

TOP VIEW

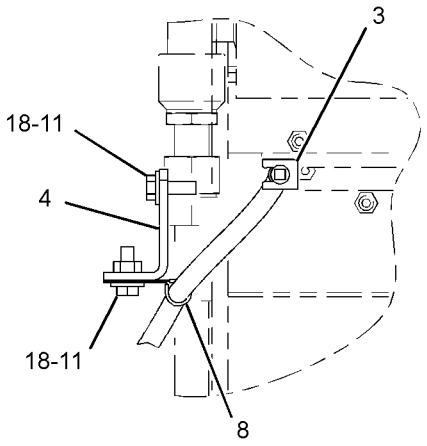

VIEW OF AREA A

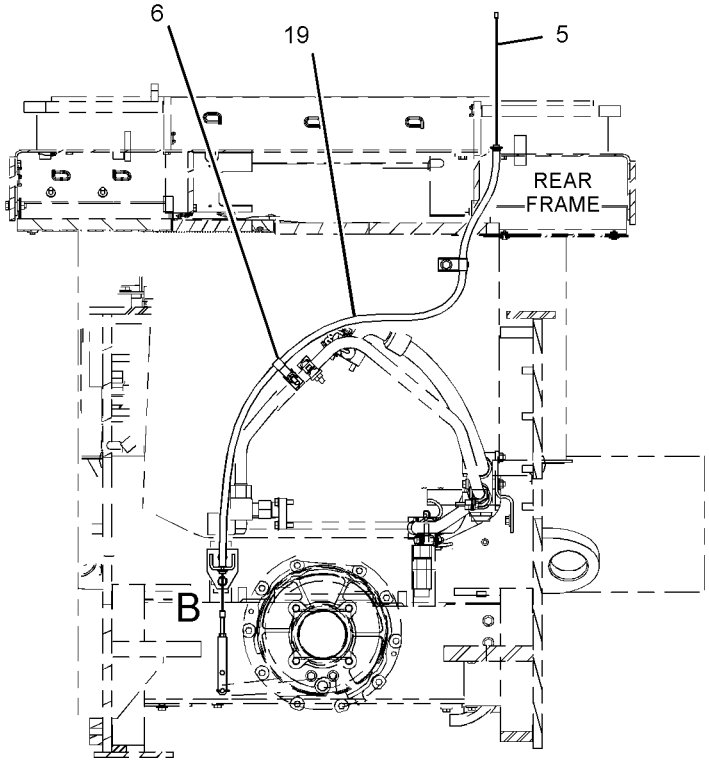

FRONT VIEW

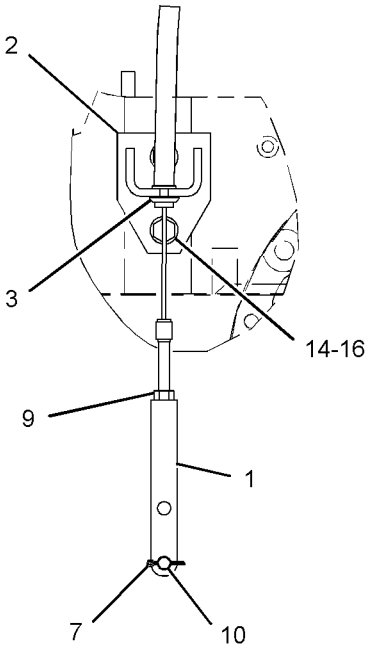

VIEW OF AREA B

GRAPHIC #1 **<END>** g02174034

239-3365 CONTROL GP-SERVICE BRAKE

S/N: JKM1-845

PART OF 237-7540 CHASSIS AR

SMCS-4257, 4258, 4263, 4265, 4269, 4280 **i03207624**

NOTE	REF NO	GRAPHIC REF	PART NUMBER	QTY	PART NAME 1 2 3 4 5 6 (PRODUCT LEVEL)	SEE PAGE
	1	2	**6V-0852**	2	CAP-DUST	
	2	2	**115-5411**	1	ELBOW	
	3	2	*225-0311*	2	TEE AS	
					(EACH INCLUDES)	
		2	**3K-0360**	1	SEAL-O-RING	
		2	**168-3332**	1	TEE-ADAPTER	
	4	2	**269-4951**	3	ADAPTER	
	5	2	**269-4965**	1	ADAPTER-ELBOW	
	6	2	**269-4966**	2	FITTING-ADAPTER	
	7	2	**278-5681**	1	BRACKET AS	
	8	1	**278-6391**	1	TUBE AS	
Y	9	1	*279-0093*	2	ACCUMULATOR GP-BRAKE (CHARGED)	610
J	10	2	**279-5719**	1	VALVE GP-BRAKE CONTROL (SERVICE)	
	11	1,2	**282-2593**	2	BRACKET AS	
					(EACH INCLUDES)	
M		1,2	**8T-3490**	1	NUT-WELD (M10X1.5-THD)	
I	12	1	**300-6551**	1	HOSE AS	
	13	1	**300-6552**	1	BRACKET AS	
M		1	**8T-3490**	1	NUT-WELD (M10X1.5-THD)	
	14	1	**317-7974**	1	TUBE AS	
	15	1	**317-7975**	1	TUBE AS	
I	16	2	**317-7976**	1	HOSE AS	
I	17	2	**317-7977**	1	HOSE AS	
I	18	2	**317-7978**	1	HOSE AS	
I	19	1	**317-9301**	1	HOSE AS	
I	20	2	**317-9302**	1	HOSE AS	
	21	1,2	**318-1763**	2	TAG-IDENTIFICATION (B1)	
	22	2	**318-1764**	2	TAG-IDENTIFICATION (B2)	
	23	1	**318-1765**	2	TAG-IDENTIFICATION (B3)	
	24	2	**318-1766**	2	TAG-IDENTIFICATION (B4)	
	25	2	**318-1767**	2	TAG-IDENTIFICATION (B5)	
	26	2	*148-8313*	2	ADAPTER AS	
					(EACH INCLUDES)	
		2	**3K-0360**	1	SEAL-O-RING	
		2	**5P-6944**	1	ADAPTER	
	27	1	*148-8336*	1	CONNECTOR AS	
		1	**3J-1907**	1	SEAL-O-RING	
		1	**6V-8397**	1	SEAL-O-RING	
		1	**6V-8636**	1	CONNECTOR	
	28	1	*148-8370*	1	ELBOW AS	
		1	**6V-8398**	1	SEAL-O-RING	
		1	**6V-9851**	1	ELBOW	
	29	1	*148-8378*	1	ELBOW AS	
		1	**3J-1907**	1	SEAL-O-RING	
		1	**6V-8397**	1	SEAL-O-RING	
		1	**6V-8724**	1	ELBOW	
	30	1	*148-8433*	1	TEE AS	
		1	**6V-8397**	2	SEAL-O-RING	
		1	**6V-9836**	1	TEE-SWIVEL	
	31	1	*148-8435*	1	TEE AS	
		1	**3J-1907**	1	SEAL-O-RING	
		1	**6V-8397**	2	SEAL-O-RING	
		1	**6V-8781**	1	TEE-FACE SEAL	
	32	1	*148-8444*	2	TEE AS-SWIVEL	
					(EACH INCLUDES)	
		1	**6V-8398**	2	SEAL-O-RING	

239-3365 **CONTROL GP-SERVICE BRAKE** *(contd.)* **i03207624**

NOTE	REF NO	GRAPHIC REF	PART NUMBER	QTY	PART NAME 1 2 3 4 5 6 (PRODUCT LEVEL)	SEE PAGE
		1	**6V-9837**	1	TEE-SWIVEL	
	33	1,2	**160-8708**	2	BRACKET AS	
	34	2	*164-5567*	2	COUPLER AS-QUICK DISCONNECT (MALE)	
					(EACH INCLUDES)	
		2	**214-7568**	1	SEAL-O-RING	
		2	**6V-3965**	1	FITTING (QUICK DISCONNECT)	
	35	2	*165-4931*	2	ELBOW AS	
					(EACH INCLUDES)	
		2	**3J-1907**	1	SEAL-O-RING	
		2	**6V-8077**	1	ELBOW	
	36	1	**183-3401**	1	ELBOW AS	
		1	**6V-5049**	1	SEAL-O-RING	
		1	**8L-2779**	1	SEAL-O-RING	
	37	2	**3K-0360**	1	SEAL-O-RING	
	38	1,2	**4D-7735**	3	CLIP	
	39	1,2	**5K-5338**	7	CLIP	
	40	1	**6D-8305**	2	CLAMP	
	41	1	**6V-3265**	2	CLIP	
	42	1	**7N-3718**	2	CLIP	
	43	1	**7X-7729**	1	WASHER (11X25X3-MM THK)	
	44	1,2	**8M-2773**	6	CLIP	
	45	2	**8R-0721**	1	SPACER (11X16X35-MM THK)	
	46	1,2	**8T-4121**	17	WASHER-HARD (11X21X2.5-MM THK)	
M	47	2	**8T-4133**	2	NUT (M10X1.5-THD)	
M	48	1,2	**8T-4136**	3	BOLT (M10X1.5X25-MM)	
M	49	1,2	**8T-4137**	12	BOLT (M10X1.5X20-MM)	
M	50	1	**8T-4139**	6	BOLT (M12X1.75X30-MM)	
	51	1	**8T-4223**	6	WASHER-HARD (13.5X25.5X3-MM THK)	
M	52	2	**8T-6466**	1	BOLT (M10X1.5X60-MM)	
					AVAILABLE REPAIR KIT(S):	
J			**266-0378**	1	KIT-REPAIR	

I-REFER TO HYDRAULIC INFORMATION SYSTEM
J-KIT MARKED J SERVICES PART MARKED J
M-METRIC PART
Y-SEPARATE ILLUSTRATION

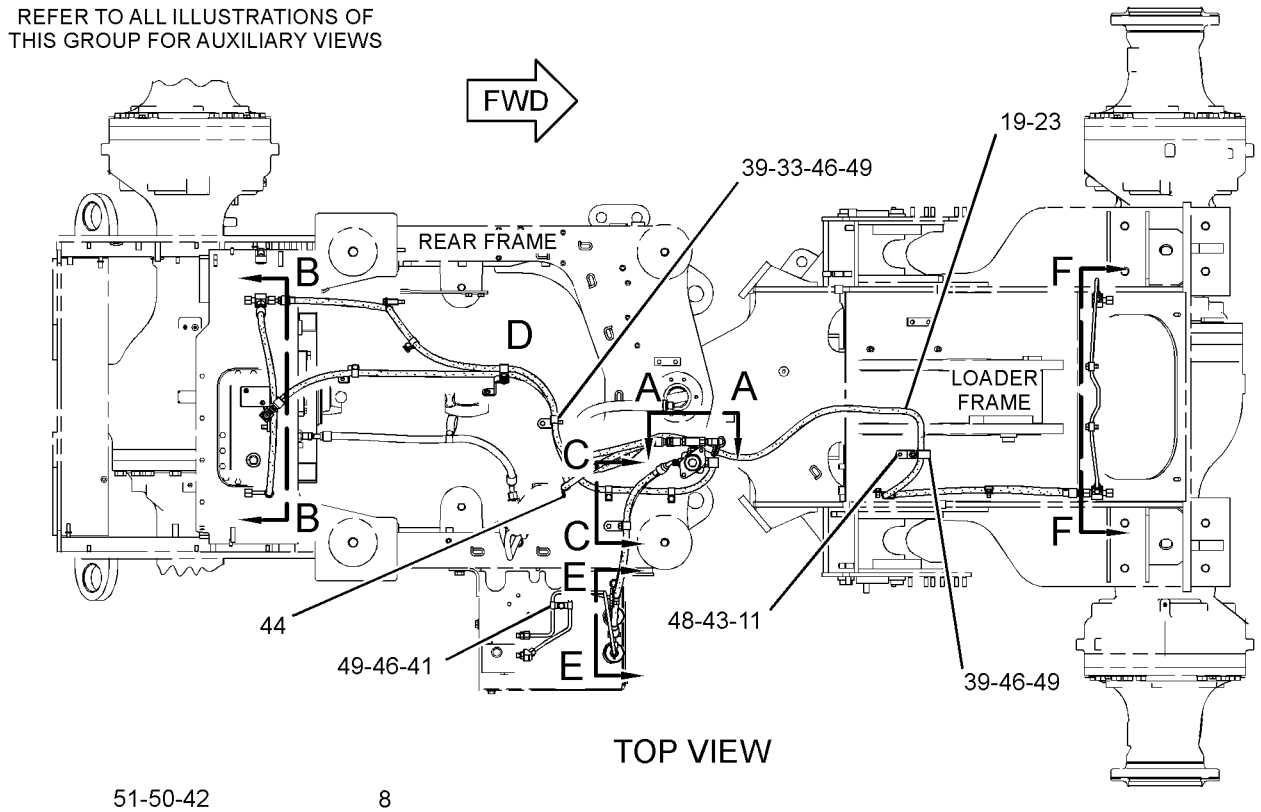

TOP VIEW

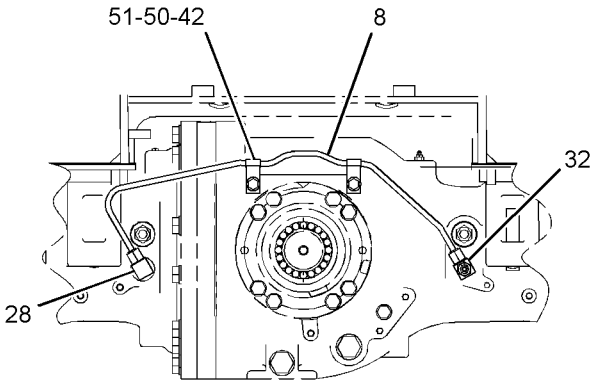

SECTION F-F

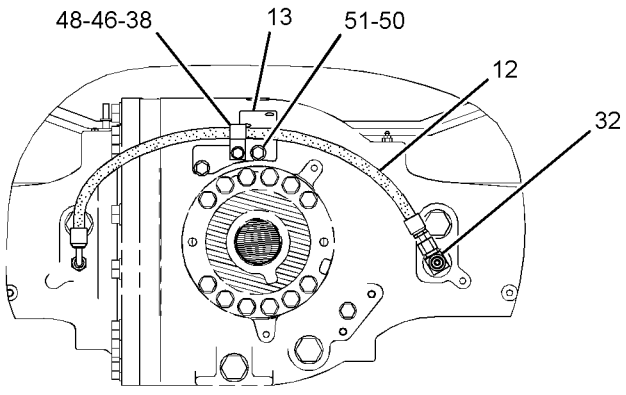

SECTION B-B

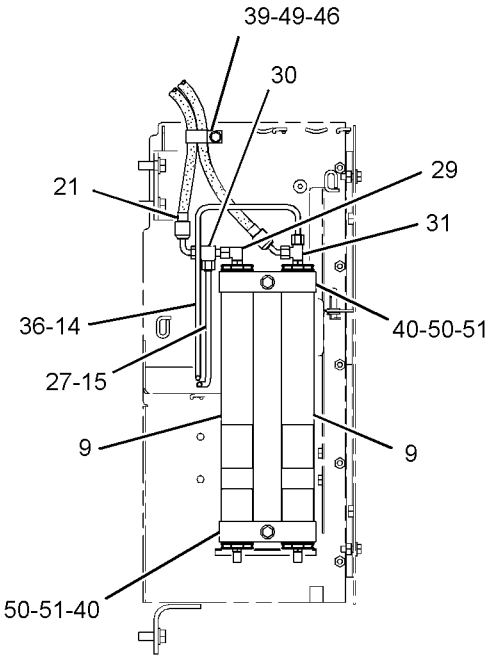

SECTION E-E

GRAPHIC #1 g01620310

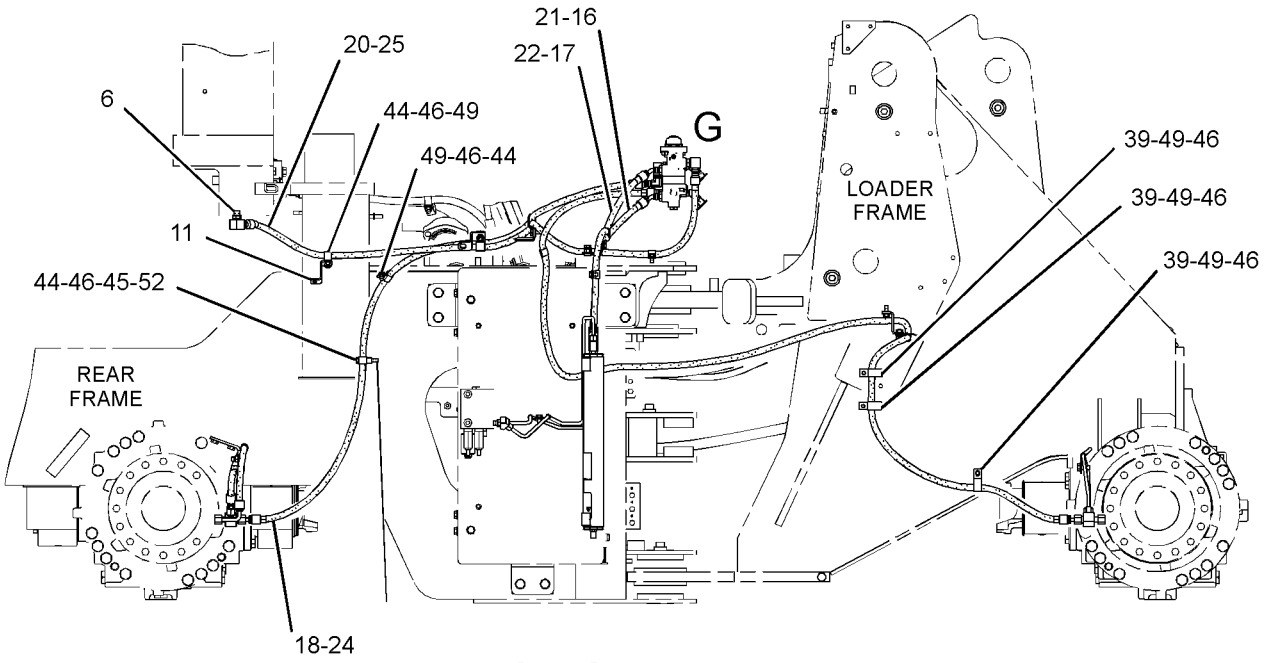

RIGHT SIDE VIEW

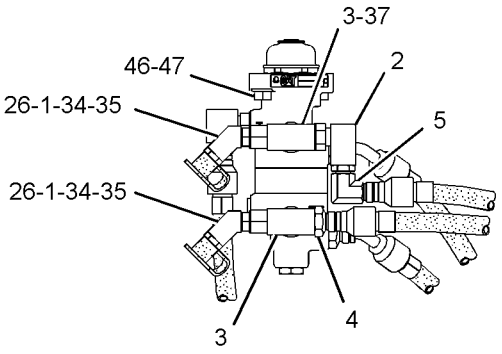

VIEW A-A

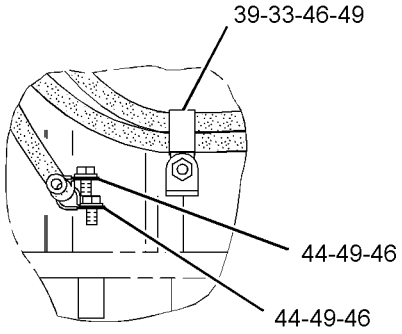

SECTION C-C

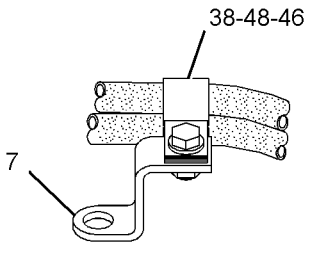

VIEW OF AREA D

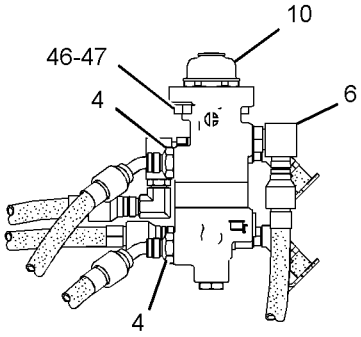

VIEW OF AREA G

GRAPHIC #2 **<END>** g01620311

239-3365 CONTROL GP-SERVICE BRAKE

S/N: JKM846-1004

PART OF 237-7540 CHASSIS AR

SMCS-4257, 4258, 4263, 4265, 4269, 4280 **i03745134**

NOTE	REF NO	GRAPHIC REF	PART NUMBER	QTY	PART NAME 1 2 3 4 5 6 (PRODUCT LEVEL)	SEE PAGE
C	1	1	**269-4966**	1	FITTING-ADAPTER	
C	2	1	**278-5681**	2	BRACKET AS	
	3	2	**278-6391**	1	TUBE AS	
Y	4	2	*279-0093*	2	ACCUMULATOR GP-BRAKE (CHARGED)	610
C	5	2	**282-2593**	1	BRACKET AS	
M		2	**8T-3490**	1	NUT-WELD (M10X1.5-THD)	
I	6	2	**300-6551**	1	HOSE AS	
	7	2	**300-6552**	1	BRACKET AS	
M		2	**8T-3490**	3	NUT-WELD (M10X1.5-THD)	
	8	2	**317-7974**	1	TUBE AS	
	9	1	**317-7975**	1	TUBE AS	
I	10	2	**317-7976**	1	HOSE AS	
I	11	2	**317-7977**	1	HOSE AS	
I	12	1	**317-7978**	1	HOSE AS	
I	13	1	**317-9301**	1	HOSE AS	
I	14	1	**317-9302**	1	HOSE AS	
	15	2	**318-1763**	2	TAG-IDENTIFICATION (B1)	
	16	2	**318-1764**	2	TAG-IDENTIFICATION (B2)	
	17	1	**318-1765**	2	TAG-IDENTIFICATION (B3)	
	18	1	**318-1766**	2	TAG-IDENTIFICATION (B4)	
	19	1	**318-1767**	2	TAG-IDENTIFICATION (B5)	
CY	20	2	*331-4029*	1	VALVE GP-BRAKE CONTROL	638
C	21	1	**067-2551**	1	CLIP	
	22	1	*148-8336*	1	CONNECTOR AS	
		1	**3J-1907**	1	SEAL-O-RING	
		1	**6V-8397**	1	SEAL-O-RING	
		1	**6V-8636**	1	CONNECTOR	
	23	2	*148-8370*	1	ELBOW AS	
		2	**6V-8398**	1	SEAL-O-RING	
		2	**6V-9851**	1	ELBOW	
	24	2	*148-8378*	1	ELBOW AS	
		2	**3J-1907**	1	SEAL-O-RING	
		2	**6V-8397**	1	SEAL-O-RING	
		2	**6V-8724**	1	ELBOW	
	25	2	*148-8433*	1	TEE AS	
		2	**6V-8397**	2	SEAL-O-RING	
		2	**6V-9836**	1	TEE-SWIVEL	
	26	2	*148-8435*	1	TEE AS	
		2	**3J-1907**	1	SEAL-O-RING	
		2	**6V-8397**	2	SEAL-O-RING	
		2	**6V-8781**	1	TEE-FACE SEAL	
	27	2	*148-8444*	2	TEE AS-SWIVEL	
					(EACH INCLUDES)	
		2	**6V-8398**	2	SEAL-O-RING	
		2	**6V-9837**	1	TEE-SWIVEL	
	28	1,2	**160-8708**	2	BRACKET AS	
	29	2	*183-3401*	1	ELBOW AS	
		2	**6V-9001**	1	ELBOW	
		2	**214-7568**	1	SEAL-O-RING	
		2	**8L-2779**	1	SEAL-O-RING	
	30	2	**4D-7735**	3	CLIP	
	31	1,2	**5K-5338**	7	CLIP	
	32	2	**6D-8305**	2	CLAMP	
	33	1	**6V-3265**	2	CLIP	
	34	2	**7N-3718**	2	CLIP	
	35	1	**7X-7729**	1	WASHER (11X25X3-MM THK)	

239-3365 **CONTROL GP-SERVICE BRAKE** *(contd.)* **i03745134**

NOTE	REF NO	GRAPHIC REF	PART NUMBER	QTY	PART NAME 1 2 3 4 5 6 (PRODUCT LEVEL)	SEE PAGE
	36	1,2	**8M-2773**	6	CLIP	
	37	1	**8R-0721**	1	SPACER (11X16X35-MM THK)	
C	38	1,2	**8T-4121**	15	WASHER-HARD (11X21X2.5-MM THK)	
M	39	1,2	**8T-4136**	3	BOLT (M10X1.5X25-MM)	
M	40	1,2	**8T-4137**	12	BOLT (M10X1.5X20-MM)	
M	41	2	**8T-4139**	6	BOLT (M12X1.75X30-MM)	
	42	2	**8T-4223**	6	WASHER-HARD (13.5X25.5X3-MM THK)	
M	43	1	**8T-6466**	1	BOLT (M10X1.5X60-MM)	
					AVAILABLE REPAIR KIT(S):	
J			**266-0378**	1	KIT-REPAIR	
					(INCLUDES O-RINGS, QUAD RING, BOOT & CUP)	

C-CHANGE FROM PREVIOUS TYPE
I-REFER TO HYDRAULIC INFORMATION SYSTEM
J-KIT MARKED J SERVICES PARTS MARKED J
M-METRIC PART
Y-SEPARATE ILLUSTRATION

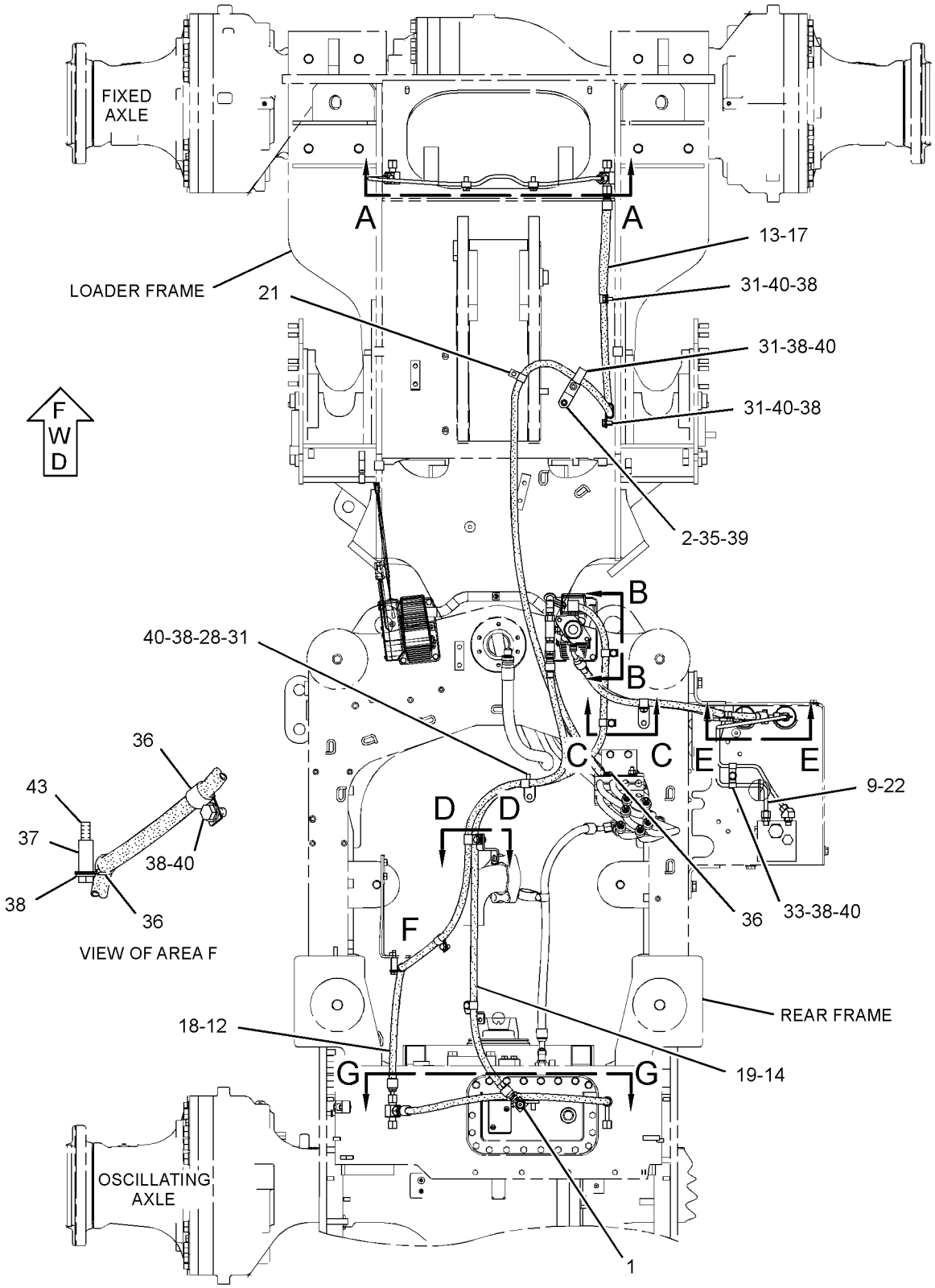

REFER TO ALL ILLUSTRATIONS OF THIS GROUP FOR AUXILIARY VIEWS

TOP VIEW

GRAPHIC #1

g01866595

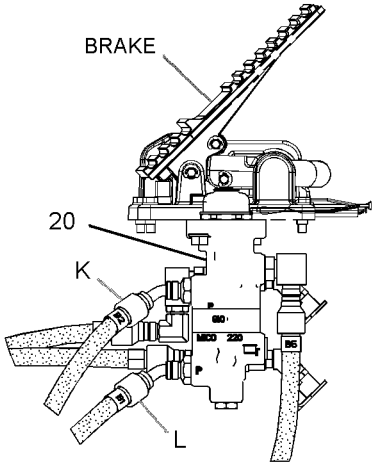

VIEW B-B

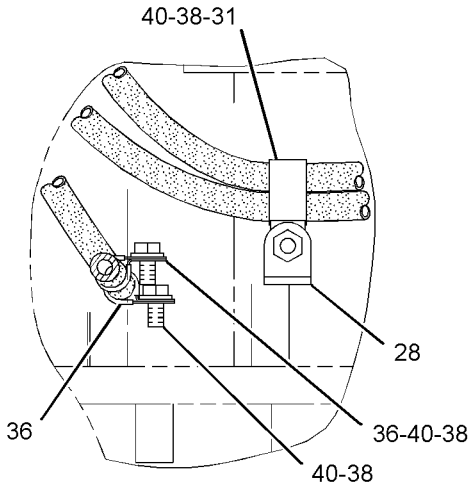

SECTION C-C

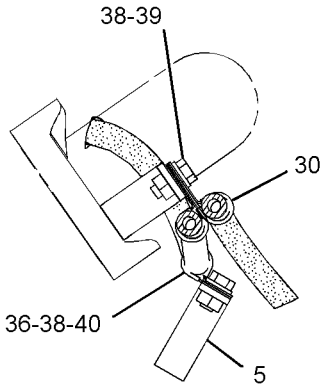

SECTION D-D

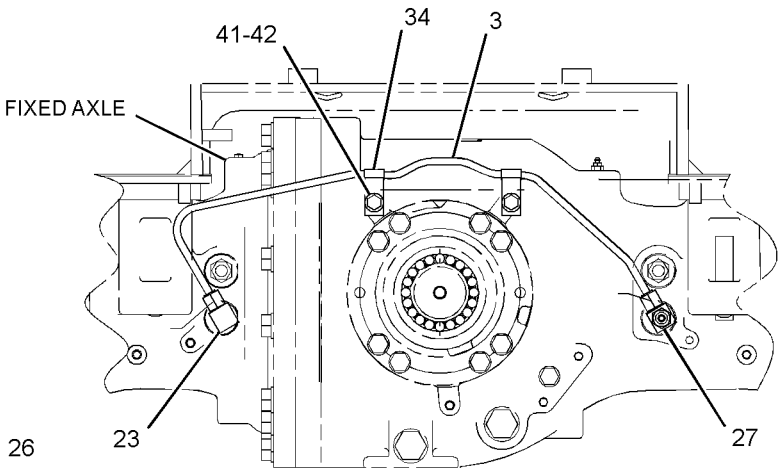

SECTION A-A

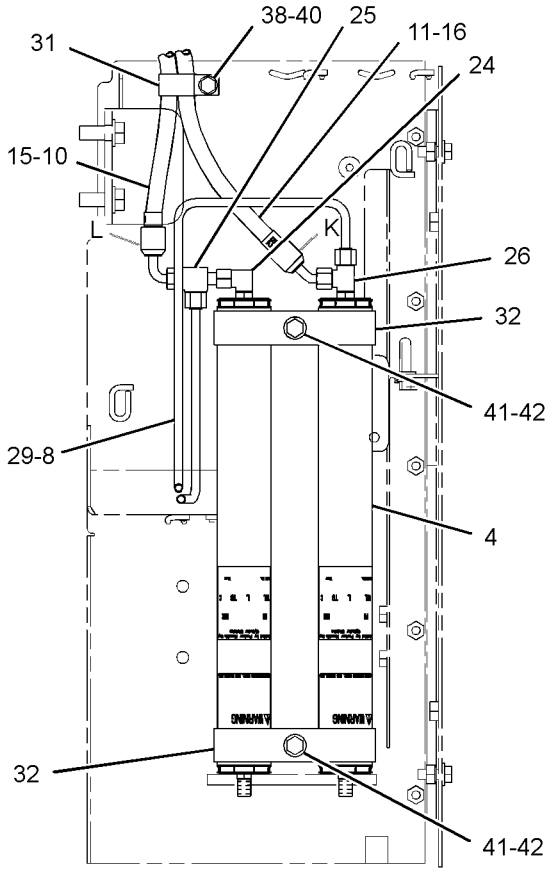

SECTION E-E

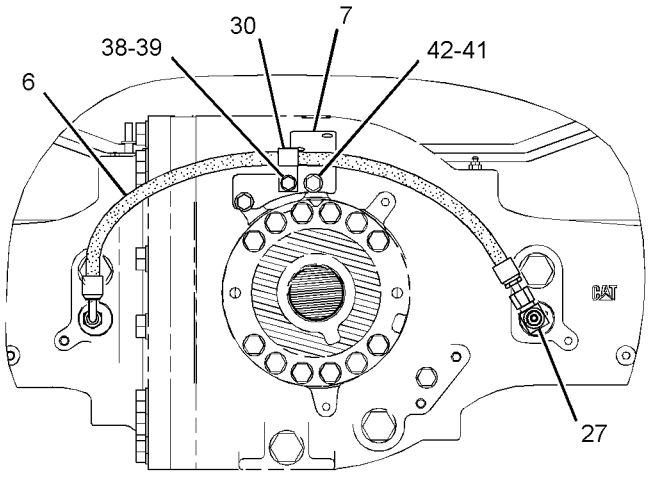

SECTION G-G

GRAPHIC #2 **<END>** g01866597

BRAKING SYSTEM

239-3365 CONTROL GP-SERVICE BRAKE

S/N: JKM1005-UP

PART OF 237-7540 CHASSIS AR

SMCS-4257, 4258, 4263, 4265, 4269, 4280 **i03980176**

NOTE	REF NO	GRAPHIC REF	PART NUMBER	QTY	PART NAME 1 2 3 4 5 6 (PRODUCT LEVEL)	SEE PAGE
C	1	2	**237-9575**	1	BRACKET AS	
M		2	**8T-3490**	1	NUT-WELD (M10X1.5-THD)	
C	2	1	**278-5681**	1	BRACKET AS	
	3	2	**278-6391**	1	TUBE AS	
Y	4	2	*279-0093*	2	ACCUMULATOR GP-BRAKE (CHARGED)	610
	5	1	**282-2593**	1	BRACKET AS	
M		1	**8T-3490**	1	NUT-WELD (M10X1.5-THD)	
CI	6	2	**291-6129**	1	HOSE AS	
I	7	1	**300-6551**	1	HOSE AS	
	8	1	**300-6552**	1	BRACKET AS	
M		1	**8T-3490**	3	NUT-WELD (M10X1.5-THD)	
	9	2	**317-7974**	1	TUBE AS	
	10	2	**317-7975**	1	TUBE AS	
	11	2	**318-1763**	2	TAG-IDENTIFICATION (B1)	
	12	2	**318-1764**	2	TAG-IDENTIFICATION (B2)	
	13	2	**318-1765**	2	TAG-IDENTIFICATION (B3)	
	14	1	**318-1766**	2	TAG-IDENTIFICATION (B4)	
	15	1	**318-1767**	2	TAG-IDENTIFICATION (B5)	
Y	16	2	*331-4029*	1	VALVE GP-BRAKE CONTROL	638
CI	17	2	**342-5837**	1	HOSE AS	
CI	18	1	**342-5838**	1	HOSE AS	
CI	19	2	**342-5839**	1	HOSE AS	
CI	20	1	**342-5841**	1	HOSE AS	
	21	2	*148-8336*	1	CONNECTOR AS	
		2	**3J-1907**	1	SEAL-O-RING	
		2	**6V-8397**	1	SEAL-O-RING	
		2	**6V-8636**	1	CONNECTOR	
C	22	1	*148-8364*	1	ELBOW AS	
		1	**3K-0360**	1	SEAL-O-RING	
		1	**6V-8398**	1	SEAL-O-RING	
		1	**6V-8625**	1	ELBOW	
	23	2	*148-8370*	1	ELBOW AS	
		2	**6V-8398**	1	SEAL-O-RING	
		2	**6V-9851**	1	ELBOW	
	24	2	*148-8378*	1	ELBOW AS	
		2	**3J-1907**	1	SEAL-O-RING	
		2	**6V-8397**	1	SEAL-O-RING	
		2	**6V-8724**	1	ELBOW	
	25	2	*148-8433*	1	TEE AS	
		2	**6V-8397**	2	SEAL-O-RING	
		2	**6V-9836**	1	TEE-SWIVEL	
	26	2	*148-8435*	1	TEE AS	
		2	**3J-1907**	1	SEAL-O-RING	
		2	**6V-8397**	2	SEAL-O-RING	
		2	**6V-8781**	1	TEE-FACE SEAL	
	27	1,2	*148-8444*	2	TEE AS-SWIVEL	
					(EACH INCLUDES)	
		1,2	**6V-8398**	2	SEAL-O-RING	
		1,2	**6V-9837**	1	TEE-SWIVEL	
	28	1,2	**160-8708**	2	BRACKET AS	
	29	2	*183-3401*	1	ELBOW AS	
		2	**6V-9001**	1	ELBOW	
		2	**6V-5049**	1	SEAL-O-RING	
		2	**8L-2779**	1	SEAL-O-RING	
	30	1	**4D-7735**	3	CLIP	
C	31	1,2	**5K-5338**	6	CLIP	

239-3365 CONTROL GP-SERVICE BRAKE *(contd.)* i03980176

NOTE	REF NO	GRAPHIC REF	PART NUMBER	QTY	PART NAME 1 2 3 4 5 6 (PRODUCT LEVEL)	SEE PAGE
	32	2	**6D-8305**	2	CLAMP	
	33	2	**6V-3265**	2	CLIP	
	34	2	**7N-3718**	2	CLIP	
C	35	1,2	**8M-2773**	9	CLIP	
	36	1	**8R-0721**	1	SPACER (11X16X35-MM THK)	
C	37	1,2	**8T-4121**	16	WASHER-HARD (11X21X2.5-MM THK)	
CM	38	1,2	**8T-4136**	4	BOLT (M10X1.5X25-MM)	
CM	39	1,2	**8T-4137**	11	BOLT (M10X1.5X20-MM)	
M	40	1,2	**8T-4139**	6	BOLT (M12X1.75X30-MM)	
	41	1,2	**8T-4223**	6	WASHER-HARD (13.5X25.5X3-MM THK)	
M	42	1	**8T-6466**	1	BOLT (M10X1.5X60-MM)	

C-CHANGE FROM PREVIOUS TYPE
I-REFER TO HYDRAULIC INFORMATION SYSTEM
M-METRIC PART
Y-SEPARATE ILLUSTRATION

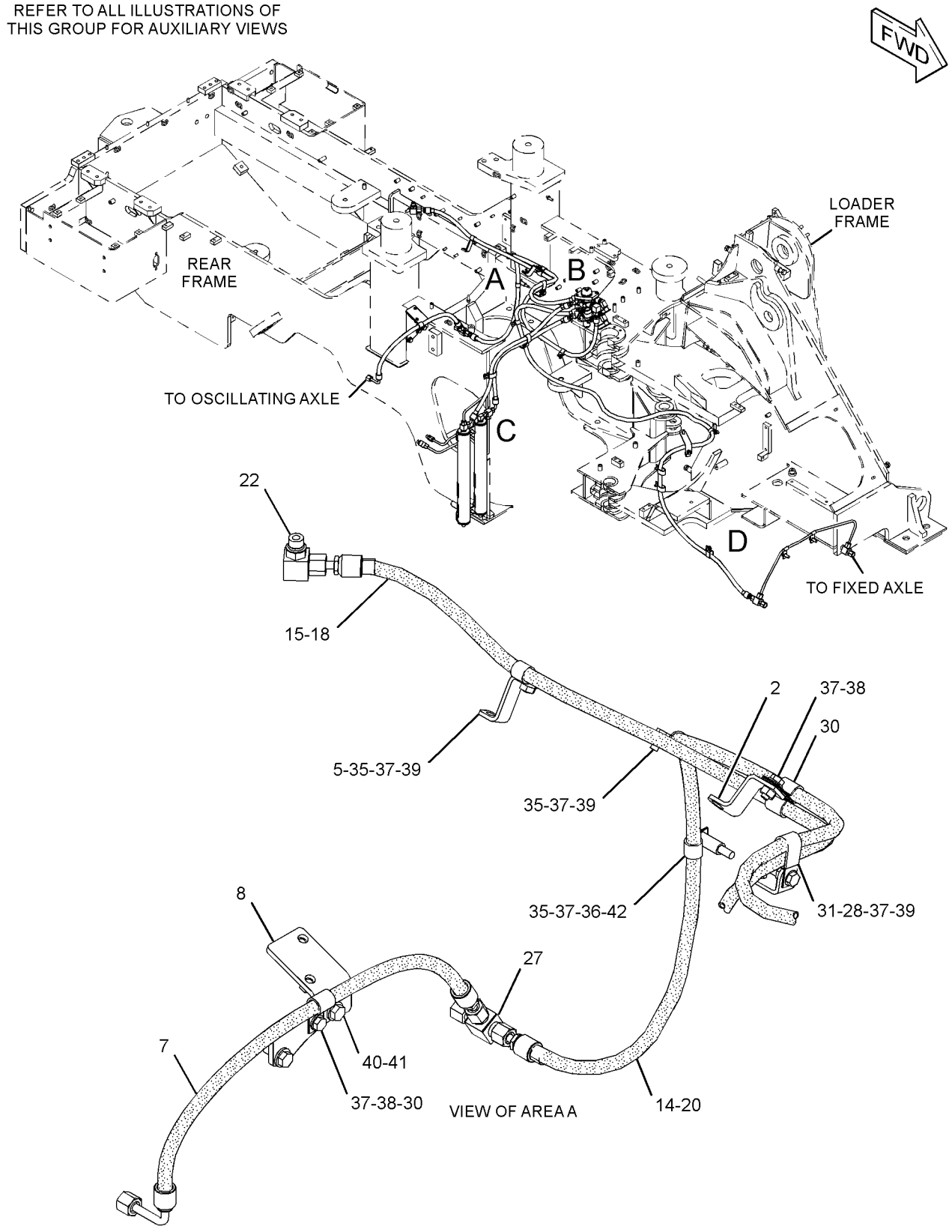

GRAPHIC #1 g02161753

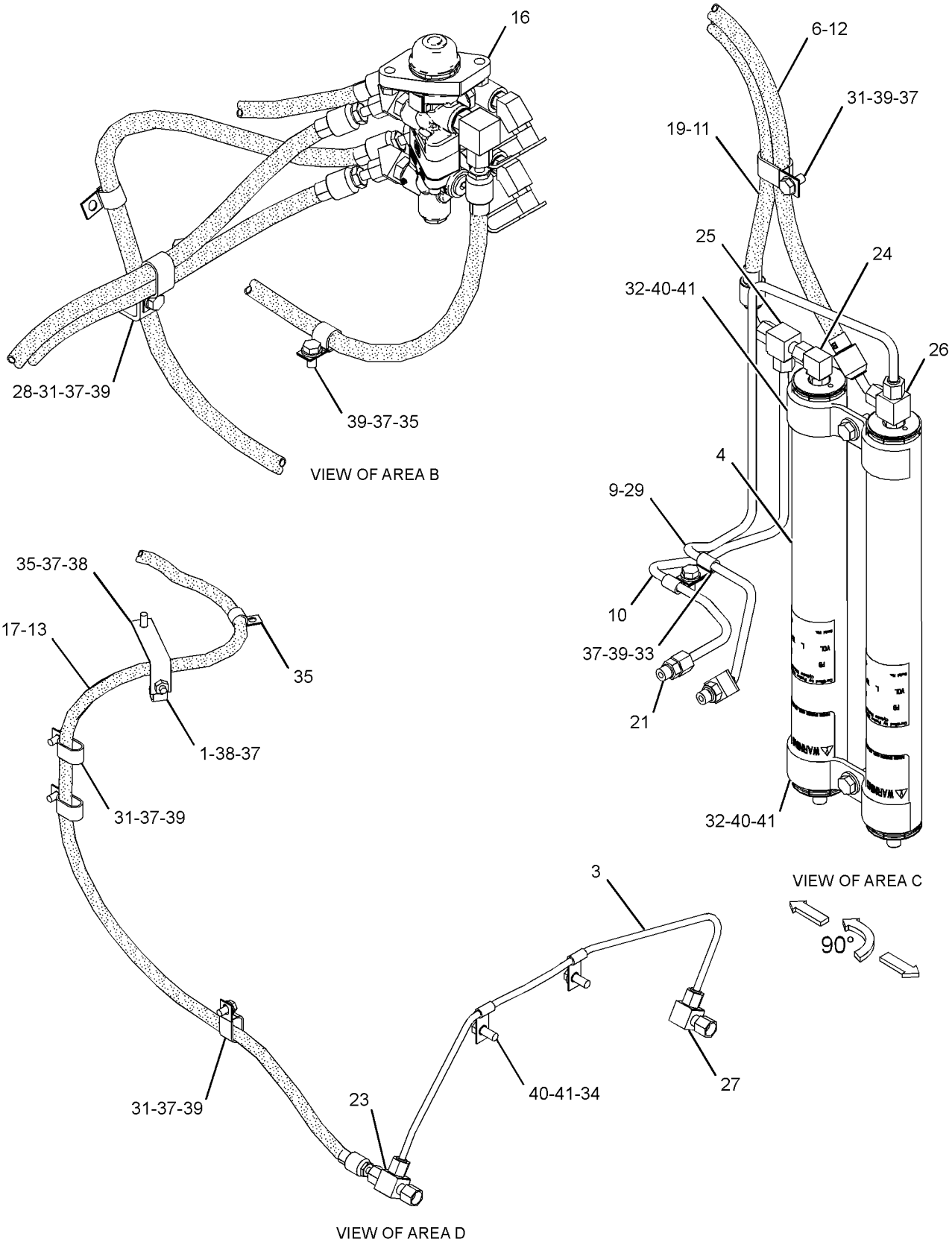

GRAPHIC #2 **<END>** g02161739

272-2449 PISTON GP-BRAKE–SERVICE

S/N: JKM1-UP

PART OF 272-2448 BRAKE GP-SERVICE

AN ATTACHMENT

SMCS-4251 **i02934165**

NOTE	REF NO	GRAPHIC REF	PART NUMBER	QTY	PART NAME 1 2 3 4 5 6 (PRODUCT LEVEL)	SEE PAGE
	1	1	**220-4335**	1	SEAL-BRAKE	
	2	1	**220-4336**	1	SEAL-BRAKE	
	3	1	**257-1701**	1	HOUSING-PISTON	
	4	1	**257-1702**	1	PISTON	
	5	1	**271-7841**	4	SPRING	
	6	1	**271-7842**	4	GUIDE-SPRING	
	7	1	*183-7263*	2	PLUG AS	
					(EACH INCLUDES)	
		1	**3J-7354**	1	SEAL-O-RING	
		1	**9S-8002**	1	PLUG-O-RING	
	8	1	**6M-9155**	4	PIN	

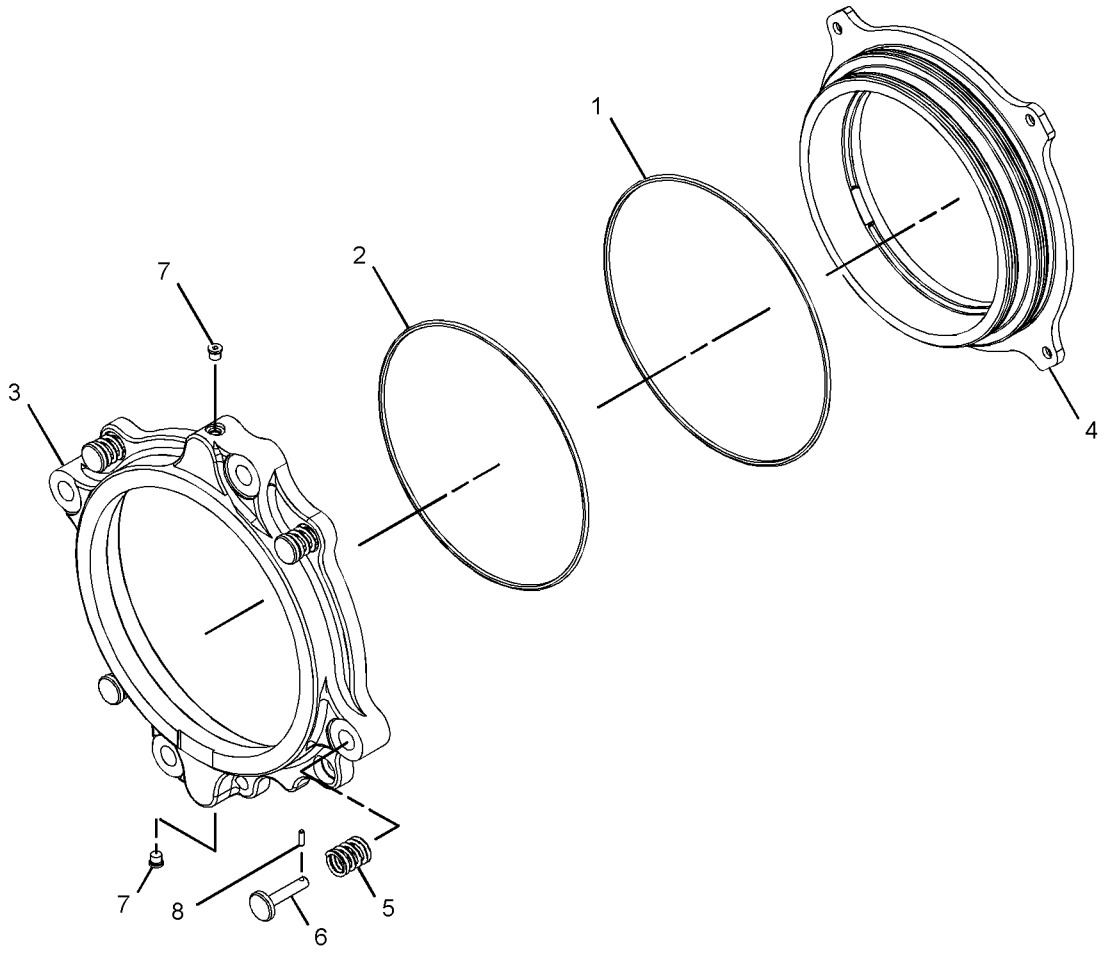

GRAPHIC #1 **<END>** g01389736

BRAKING SYSTEM

331-4029 VALVE GP-BRAKE CONTROL

S/N: JKM846-UP

PART OF 239-3365 CONTROL GP-SERVICE BRAKE

SMCS-4265, 4282 **i03745139**

NOTE	REF NO	GRAPHIC REF	PART NUMBER	QTY	PART NAME 1 2 3 4 5 6 (PRODUCT LEVEL)	SEE PAGE
	1	1	**6V-0852**	2	CAP-DUST	
	2	1	**115-5411**	1	ELBOW	
	3	1	*225-0311*	2	TEE AS	
					(EACH INCLUDES)	
		1	**3K-0360**	1	SEAL-O-RING	
		1	**168-3332**	1	TEE-ADAPTER	
	4	1	**269-4966**	1	FITTING-ADAPTER	
	5	1	**279-5719**	1	VALVE GP-BRAKE CONTROL	
	6	1	*148-8313*	2	ADAPTER AS	
		1	**3K-0360**	1	SEAL-O-RING	
		1	**5P-6944**	1	ADAPTER	
	7	1	*164-5567*	2	COUPLER AS-QUICK DISCONNECT (MALE)	
					(EACH INCLUDES)	
		1	**6V-3965**	1	FITTING (QUICK DISCONNECT)	
		1	**214-7568**	1	SEAL-O-RING	
	8	1	*165-4931*	2	ELBOW AS	
					(EACH INCLUDES)	
		1	**3J-1907**	1	SEAL-O-RING	
		1	**6V-8077**	1	ELBOW	
	9	1	**269-4951**	3	ADAPTER	
	10	1	**269-4965**	1	ADAPTER-ELBOW	
	11	1	**3K-0360**	1	SEAL-O-RING	
	12	1	**8T-4121**	2	WASHER-HARD (11X21X2.5-MM THK)	
M	13	1	**8T-4133**	2	NUT (M10X1.5-THD)	
					AVAILABLE REPAIR KIT(S):	
			266-0378	1	KIT-REPAIR	
					(INCLUDES O-RINGS, QUAD RING, BOOT & CUP)	

M-METRIC PART

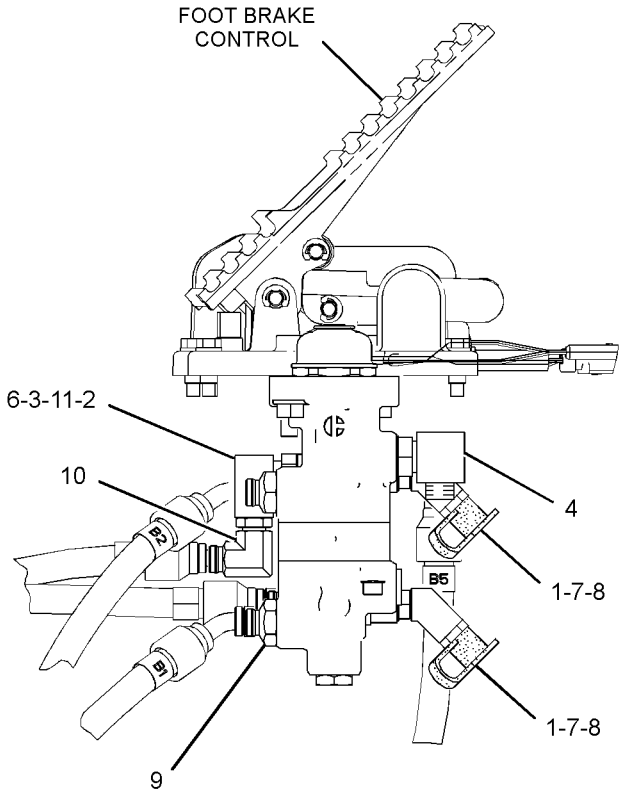

RIGHT SIDE VIEW

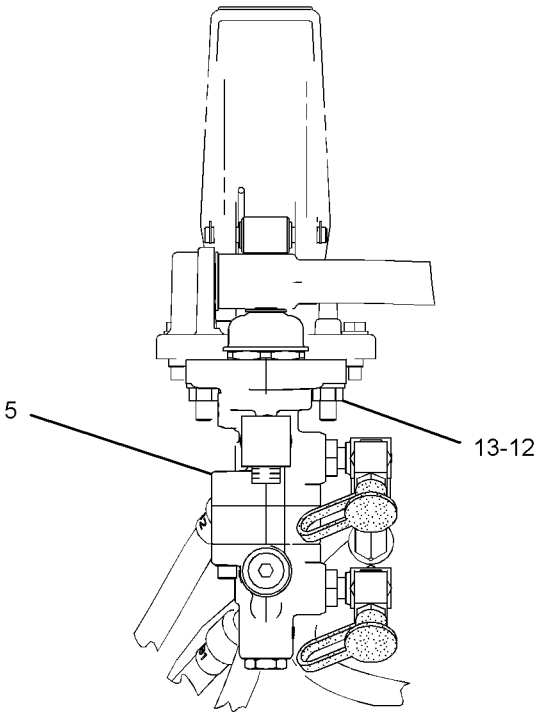

FRONT VIEW

GRAPHIC #1 **<END>** g01872893

STEERING SYSTEM

149-7393 CYLINDER & MTG GP-STEERING

S/N: JKM1-UP

PART OF 237-7540 CHASSIS AR

SMCS-4303 **i02908495**

NOTE	REF NO	GRAPHIC REF	PART NUMBER	QTY	PART NAME 1 2 3 4 5 6 (PRODUCT LEVEL)	SEE PAGE
	1	1,2	**3B-8489**	2	FITTING-GREASE	
	2	1,2	**8V-7659**	2	PIN AS	
	3	1,2	**004-3212**	2	WASHER (0.13-IN THK)	
Y	4	1,2	*152-3503*	2	CYLINDER & SEAL GP-STEERING	642
	5	1,2	**310-8658**	2	PIN AS	
	6	1,2	**7G-8839**	4	SPACER (13.5X57X6-MM THK)	
M	7	1,2	**8T-4192**	4	BOLT (M12X1.75X25-MM)	

M-METRIC PART
Y-SEPARATE ILLUSTRATION

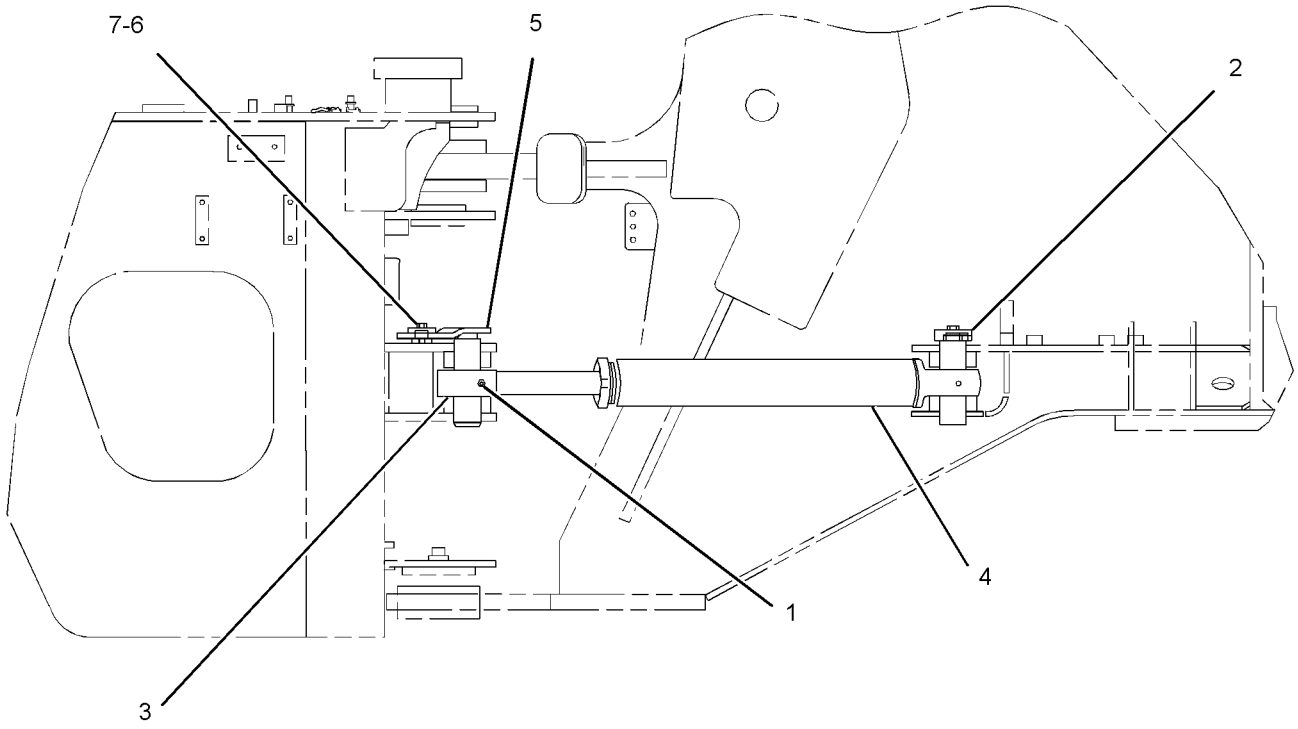

938G or IT38G RIGHT SIDE VIEW

GRAPHIC #1 g01433809

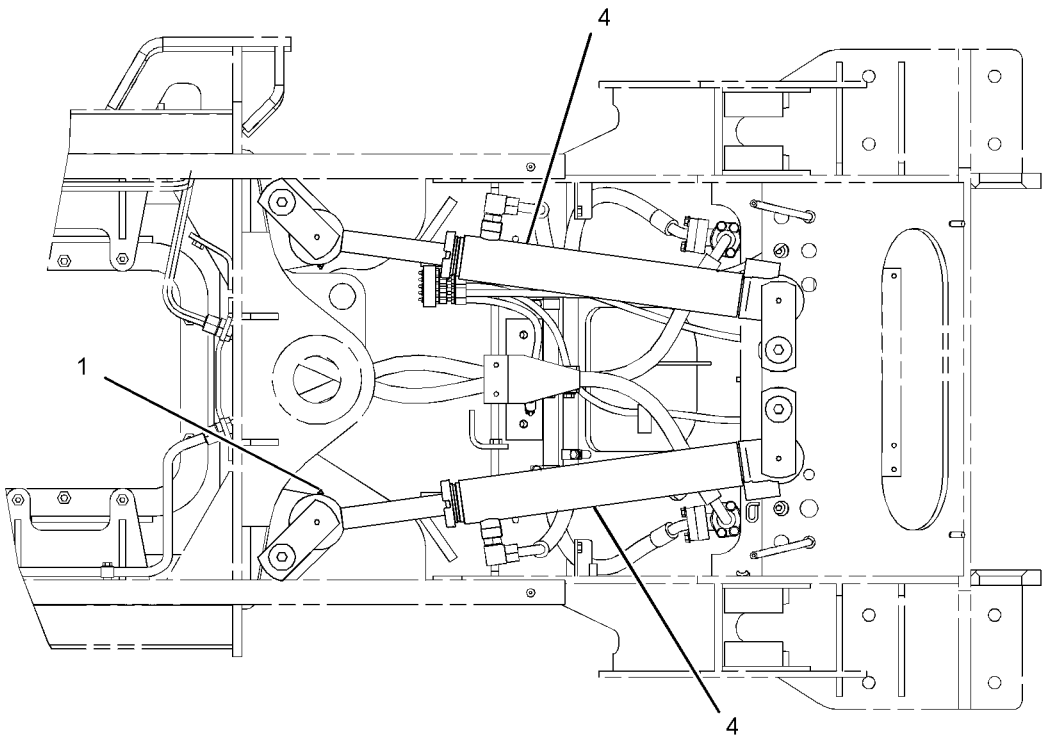

533 TOP VIEW

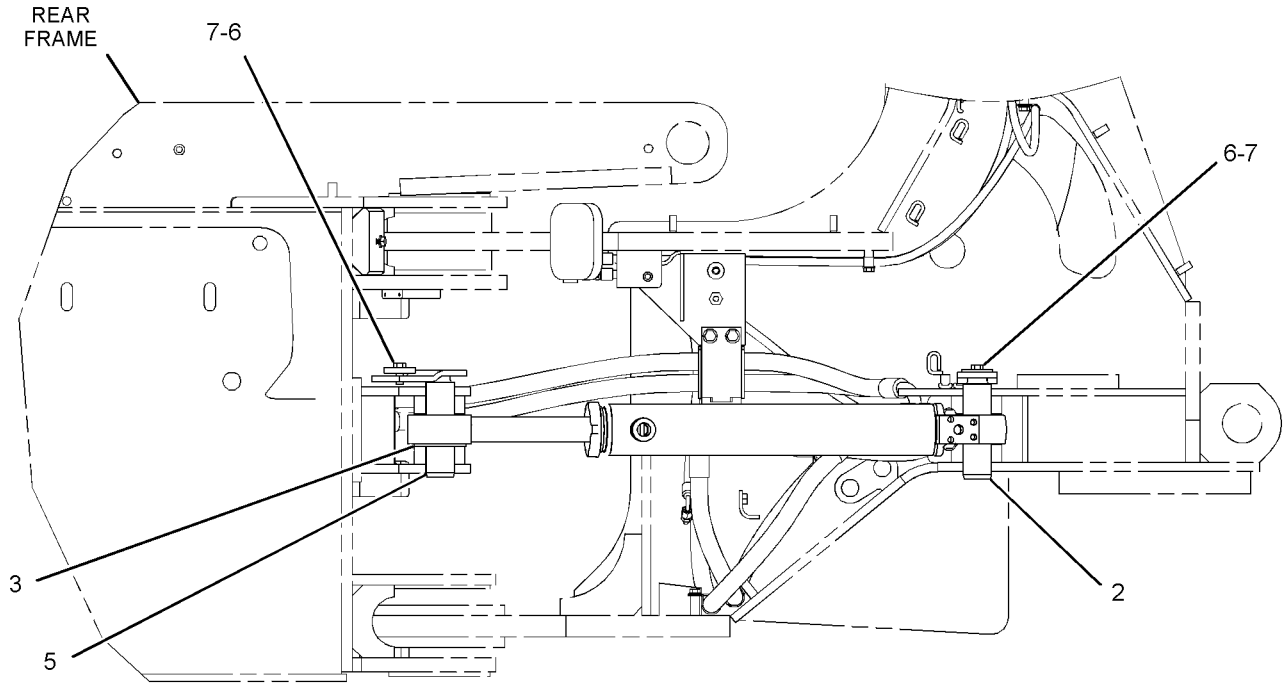

533 RIGHT SIDE VIEW

GRAPHIC #2 **<END>** g01434603

152-3503 CYLINDER & SEAL GP-STEERING

S/N: JKM1-153

PART OF 149-7393 CYLINDER & MTG GP-STEERING

SMCS-4303 **i00714301**

NOTE	REF NO	GRAPHIC REF	PART NUMBER	QTY	PART NAME 1 2 3 4 5 6 (PRODUCT LEVEL)	SEE PAGE
Y	1	1	**139-3312**	1	CYLINDER GP-STEERING	644
	2	1	**7K-9203**	4	SEAL-LIP	

Y-SEPARATE ILLUSTRATION

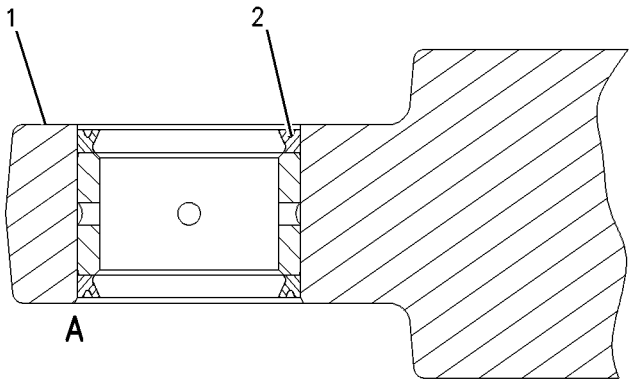

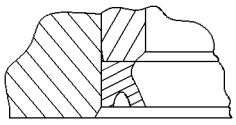

VIEW OF AREA A

GRAPHIC #1 **<END>** g00308298

152-3503 CYLINDER & SEAL GP-STEERING

S/N: JKM154-UP

PART OF 149-7393 CYLINDER & MTG GP-STEERING

SMCS-4303 **i03074155**

NOTE	REF NO	GRAPHIC REF	PART NUMBER	QTY	PART NAME 1 2 3 4 5 6 (PRODUCT LEVEL)	SEE PAGE
CY	1	1	**314-9340**	1	CYLINDER GP-STEERING	646
	2	1	**7K-9203**	4	SEAL-LIP TYPE	

C-CHANGE FROM PREVIOUS TYPE
Y-SEPARATE ILLUSTRATION

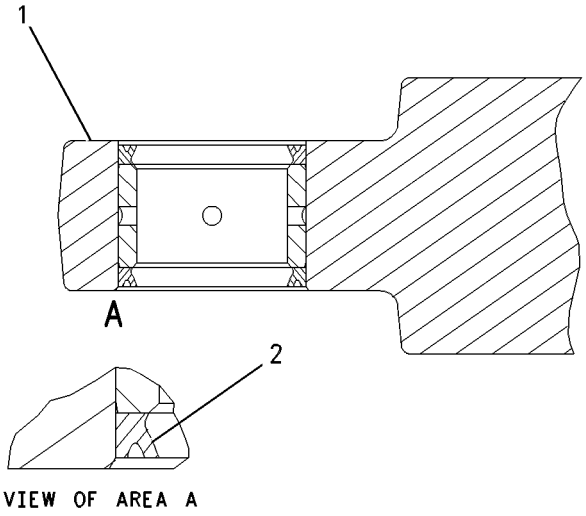

GRAPHIC #1 **<END>** g00319234

STEERING SYSTEM

139-3312 CYLINDER GP-STEERING

S/N: JKM1-UP
76.2MM BORE X 436MM STROKE
PART OF 152-3503 CYLINDER & SEAL GP-STEERING

SMCS-4303 **i03114189**

NOTE	REF NO	GRAPHIC REF	PART NUMBER	QTY	PART NAME 1 2 3 4 5 6 (PRODUCT LEVEL)	SEE PAGE
R	1	1	**139-3313**	1	CYLINDER AS	
		1	**3G-4704**	1	BEARING-SLEEVE	
J	2	1	**6J-1972**	1	SEAL AS	
J	3	1	**6J-5733**	1	RING-WEAR	
	4	1	**9T-4788**	1	PISTON	
	5	1	**184-9843**	1	HEAD	
R	6	1	**139-3314**	1	ROD AS	
		1	**3G-4704**	1	BEARING-SLEEVE	
J	8	1	**6J-5731**	1	RING-BACKUP	
J	9	1	**175-7896**	1	SEAL-O-RING	
	10	1	**6V-8237**	1	WASHER (26X44X4-MM THK)	
M	11	1	**173-9779**	1	BOLT (M24X3X80-MM)	
J	12	1	**231-3539**	1	SEAL-WIPER	
J	13	1	**167-2300**	1	SEAL-U-CUP	
J	14	1	**167-2190**	1	SEAL AS-BUFFER	
J	15	1	**4T-6907**	1	RING-WEAR	
					AVAILABLE REPAIR KIT(S):	
J			**227-5350**	1	KIT-SEAL	

J-KIT MARKED J INCLUDES PARTS MARKED J
M-METRIC PART
R-REMFG PART MAY BE AVAILABLE

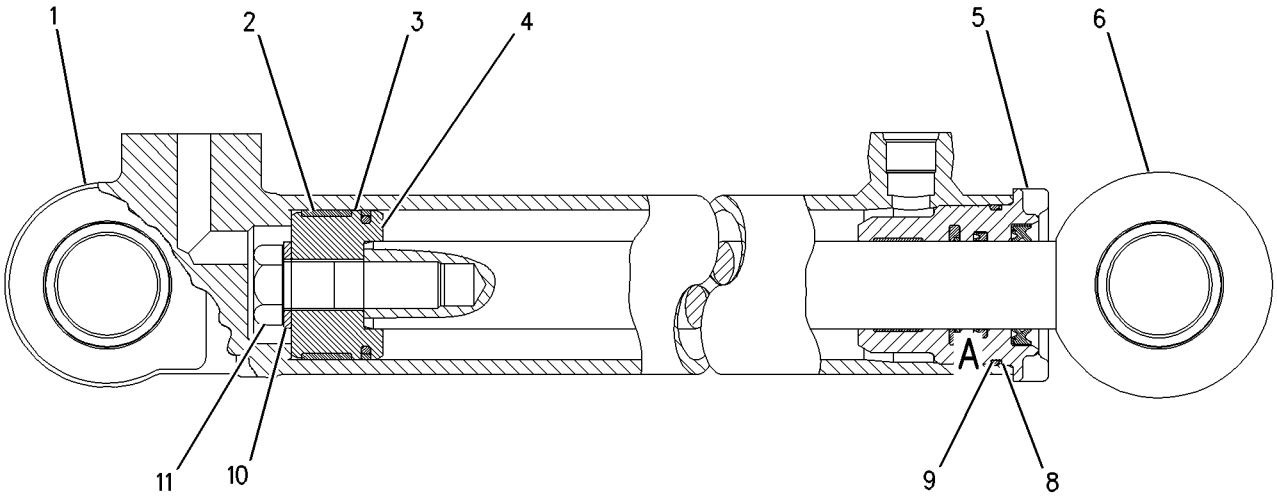

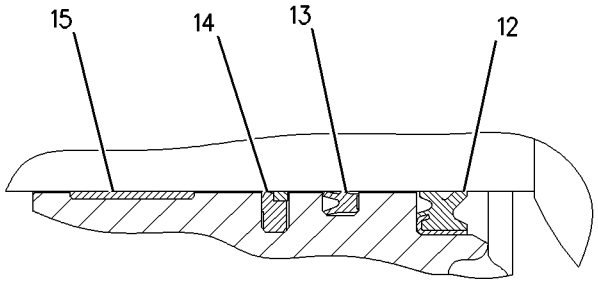

VIEW OF AREA A

GRAPHIC #1 **<END>** g00938295

STEERING SYSTEM

314-9340 CYLINDER GP-STEERING

S/N: JKM154-UP
76.2-MM BORE X 436-MM STROKE
PART OF 152-3503 CYLINDER & SEAL GP-STEERING

SMCS-4303 **i03114190**

NOTE	REF NO	GRAPHIC REF	PART NUMBER	QTY	PART NAME 1 2 3 4 5 6 (PRODUCT LEVEL)	SEE PAGE
	1	1	**9T-4788**	1	PISTON	
R	2	1	**139-3313**	1	CYLINDER AS	
R	3	1	**139-3314**	1	ROD AS	
		1	**3G-4704**	1	BEARING-SLEEVE	
	4	1	**314-9341**	1	HEAD	
M	5	1	**173-9779**	1	BOLT (M24X3X80-MM)	
J	6	1	**175-7896**	1	SEAL-O-RING	
J	7	1	**308-1880**	1	SEAL-WIPER	
J	8	1	**308-1883**	1	SEAL AS	
J	9	1	**308-1884**	1	SEAL AS	
J	10	1	**4T-6907**	1	RING-WEAR	
J	11	1	**6J-1972**	1	SEAL AS	
J	12	1	**6J-5731**	1	RING-BACKUP	
J	13	1	**6J-5733**	1	RING-WEAR	
	14	1	**6V-8237**	1	WASHER (26X44X4-MM THK)	
					AVAILABLE REPAIR KIT(S):	
J			**326-0504**	1	KIT-SEAL	

J-KIT MARKED J INCLUDES PARTS MARKED J
M-METRIC PART
R-REMFG PART MAY BE AVAILABLE

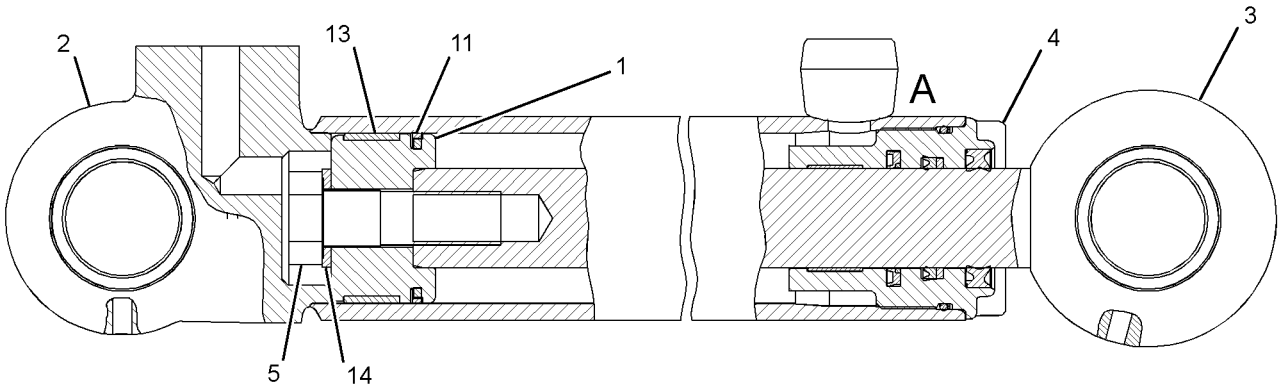

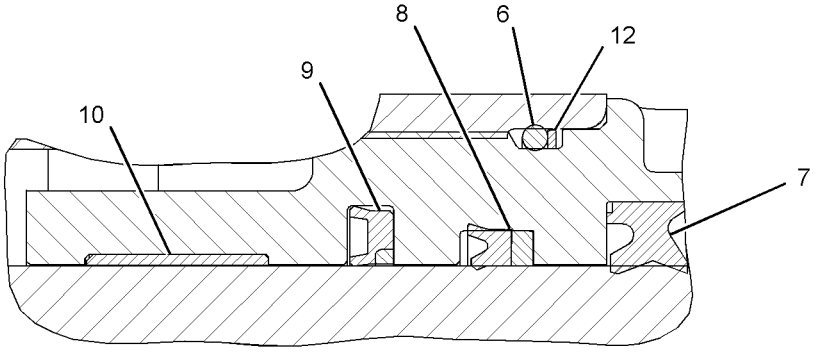

VIEW OF AREA A

GRAPHIC #1 **<END>** g01425116

STEERING SYSTEM

260-8829 LINES GP-SECONDARY STEERING

S/N: JKM1-UP
PART OF 265-9746 STEERING AR-SECONDARY
AN ATTACHMENT

SMCS-4304 **i03547230**

NOTE	REF NO	GRAPHIC REF	PART NUMBER	QTY	PART NAME 1 2 3 4 5 6 (PRODUCT LEVEL)	SEE PAGE
	1	1	**9T-1013**	1	VALVE AS-CHECK (SECONDARY STEERING)	
		1	**3K-0360**	1	SEAL-O-RING	
		1	**6V-8398**	1	SEAL-O-RING	
	2	1	*225-0311*	1	TEE AS	
		1	**3K-0360**	1	SEAL-O-RING	
		1	**168-3332**	1	TEE-ADAPTER	
	3	1	**269-4962**	2	ELBOW-ADAPTER	
I	4	1	**282-6734**	1	HOSE AS	
I	5	1	**282-6735**	1	HOSE AS	
I	6	1	**317-9994**	1	HOSE AS	
	7	1	*304-8017*	1	FITTING AS	
		1	**304-8016**	1	FITTING-SWIVEL	
		1	**6V-9746**	1	SEAL-O-RING	
	8	1	**100-4336**	2	CLIP	
	9	1	**160-8708**	1	BRACKET AS	
	10	1	*194-2903*	1	ELBOW AS	
		1	**3K-0360**	1	SEAL-O-RING	
		1	**8T-0119**	1	ELBOW	
	11	1	**269-4952**	1	ADAPTER	
	12	1	**269-4967**	2	ELBOW-ADAPTER	
	13	1	**317-4330**	1	HOSE AS	
	14	1	**296-6980**	1	SPACER (11X25X30-MM THK)	
	15	1	**8T-4121**	2	WASHER-HARD (11X21X2.5-MM THK)	
M	16	1	**8T-4136**	1	BOLT (M10X1.5X25-MM)	
M	17	1	**8T-4194**	1	BOLT (M12X1.75X50-MM)	
M	18	1	**8T-4185**	1	BOLT (M10X1.5X50-MM)	

I-REFER TO HYDRAULIC INFORMATION SYSTEM
M-METRIC PART

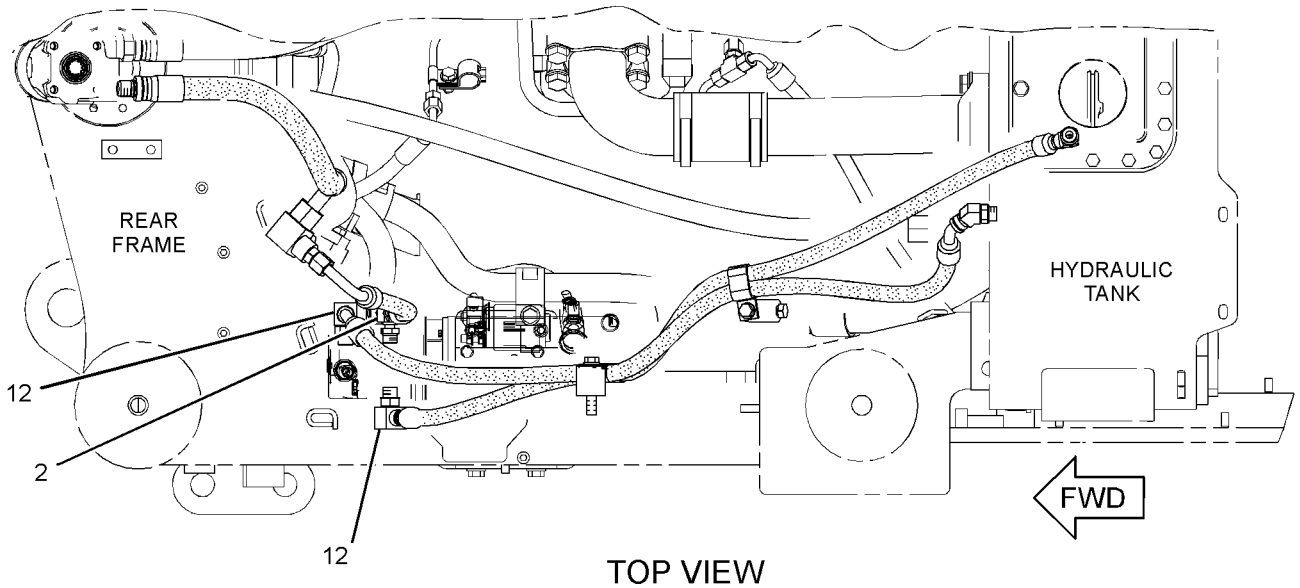

TOP VIEW

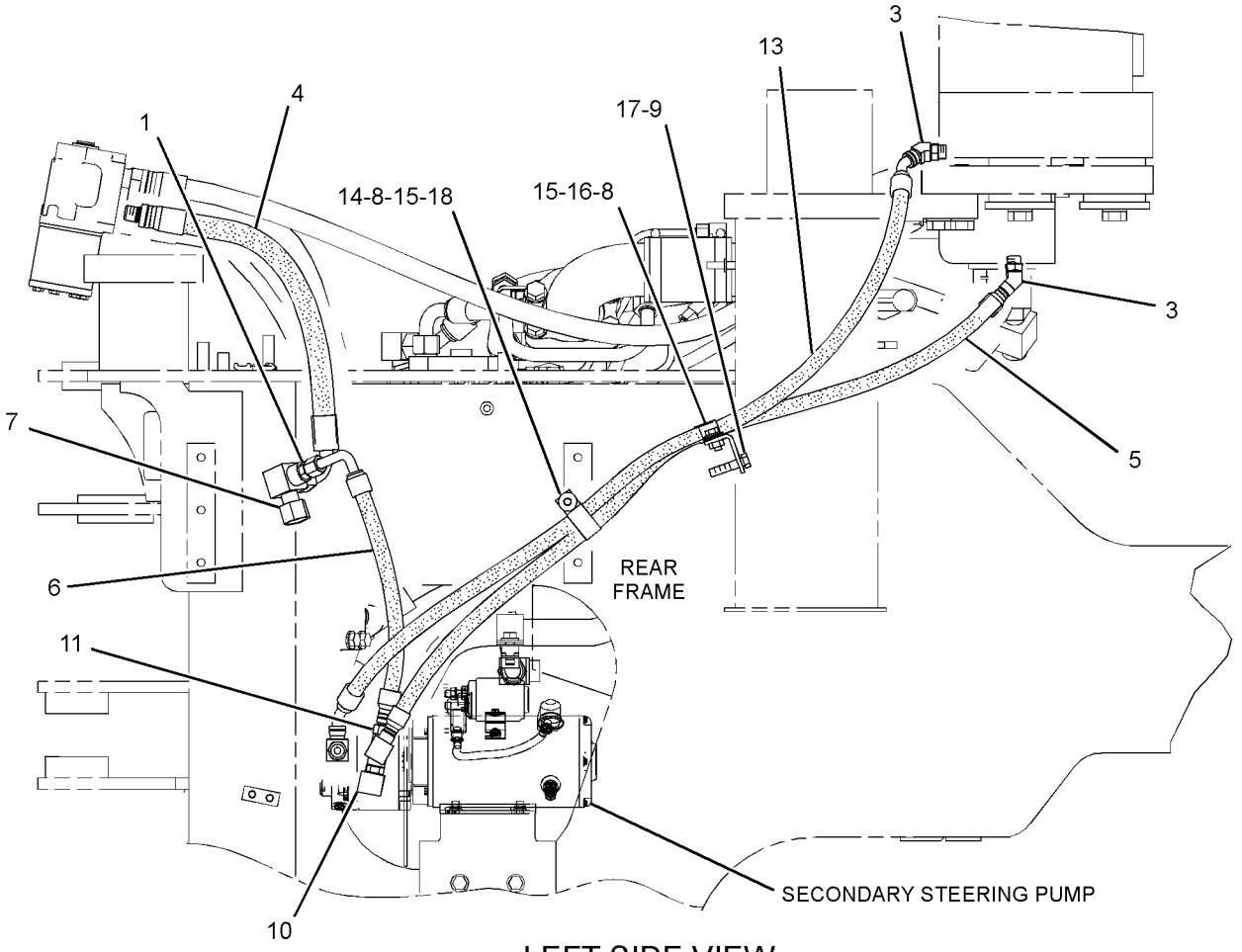

LEFT SIDE VIEW

GRAPHIC #1 **<END>** g01868293

STEERING SYSTEM

239-3370 LINES GP-STEERING

S/N: JKM1-904

PART OF 237-7540 CHASSIS AR

SMCS-4304 **i02910688**

NOTE	REF NO	GRAPHIC REF	PART NUMBER	QTY	PART NAME 1 2 3 4 5 6 (PRODUCT LEVEL)	SEE PAGE
	1	2	**112-0885**	2	PAD AS-RESILIENT	
	2	3	**128-6847**	1	VALVE GP-CHECK (STEERING)	
I	3	2	**138-3334**	1	HOSE AS	
I	4	2	**138-3335**	1	HOSE AS	
	5	2	**138-4411**	1	ELBOW (LH)	
	6	2	**138-5853**	1	ELBOW (RH)	
	7	3	*241-6215*	1	ELBOW AS	
		3	**3J-1907**	1	SEAL-O-RING	
		3	**6V-8076**	1	ELBOW	
	8	3	*260-9177*	1	UNION AS-CROSS	
		3	**3D-2824**	1	SEAL-O-RING	
		3	**260-9176**	1	CROSS	
	9	3	**317-9643**	1	BRACKET AS	
I	10	2	**265-2157**	1	HOSE AS	
I	11	2	**265-2158**	1	HOSE AS	
	12	3	**269-4965**	1	ADAPTER-ELBOW	
	13	3	*281-5872*	4	ADAPTER AS	
					(EACH INCLUDES)	
		3	**3K-0360**	1	SEAL-O-RING	
		3	**281-5871**	1	ADAPTER	
I	14	3	**282-6737**	1	HOSE AS	
I	15	3	**282-6738**	1	HOSE AS	
	16	1	**301-9692**	1	GUARD-HOSE	
I	17	1	**302-0076**	1	HOSE AS	
	18	1	**303-5974**	1	VALVE GP-CHECK (STEERING)	
		1	**3D-2824**	1	SEAL-O-RING	
		1	**6V-9746**	1	SEAL-O-RING	
	19	2	*148-8347*	2	ELBOW AS	
					(EACH INCLUDES)	
		2	**3D-2824**	1	SEAL-O-RING	
		2	**6V-9007**	1	ELBOW	
		2	**6V-9746**	1	SEAL-O-RING	
	20	3	*148-8411*	1	PLUG AS	
		3	**3K-0360**	1	SEAL-O-RING	
		3	**9S-4185**	1	PLUG-O-RING	
	21	3	*164-5567*	1	COUPLER AS-QUICK DISCONNECT (MALE)	
		3	**3J-1907**	1	SEAL-O-RING	
		3	**6V-3965**	1	FITTING (QUICK DISCONNECT)	
	22	3	**312-8601**	1	PUMP GP-METERING (HMU)	
	23	3	**269-4958**	4	ADAPTER	
	24	2	**1P-4577**	8	FLANGE-HALF	
	25	3	**1S-0994**	3	CLIP	
	26	2	**4J-0520**	4	SEAL-O-RING	
	27	2	**4J-5267**	2	SEAL-O-RING	
	28	3	**5P-7466**	2	CLIP (SLOT)	
	29	3	**5P-7467**	2	CLIP (TAB)	
	30	3	**5P-8112**	2	GROMMET	
	31	3	**6V-0852**	1	CAP-DUST	
	32	3	**6V-1889**	1	CLIP	
	33	1,3	**7G-3832**	2	GROMMET	
	34	1,3	**7G-3833**	2	CLIP (TAB)	
	35	1,3	**7G-3834**	2	CLIP (SLOT)	
	36	1,2,3	**8T-4121**	24	WASHER-HARD (11X21X2.5-MM THK)	
M	37	3	**8T-4133**	2	NUT (M10X1.5-THD)	
M	38	3	**8T-4136**	2	BOLT (M10X1.5X25-MM)	
M	39	1	**8T-4137**	2	BOLT (M10X1.5X20-MM)	

239-3370 **LINES GP-STEERING** *(contd.)* **i02910688**

NOTE	REF NO	GRAPHIC REF	PART NUMBER	QTY	PART NAME 1 2 3 4 5 6 (PRODUCT LEVEL)	SEE PAGE
M	40	1,3	**8T-4139**	4	BOLT (M12X1.75X30-MM)	
M	41	3	**8T-4183**	2	BOLT (M12X1.75X40-MM)	
M	42	2	**8T-4194**	4	BOLT (M12X1.75X50-MM)	
M	43	3	**8T-4195**	2	BOLT (M10X1.5X30-MM)	
M	44	2	**8T-4196**	16	BOLT (M10X1.5X35-MM)	
	45	1,2,3	**8T-4223**	16	WASHER-HARD (13.5X25.5X3-MM THK)	
M	46	3	**8T-4244**	2	NUT (M12X1.75-THD)	
M	47	2	**8T-4910**	4	BOLT (M12X1.75X60-MM)	

I-REFER TO HYDRAULIC INFORMATION SYSTEM
M-METRIC PART

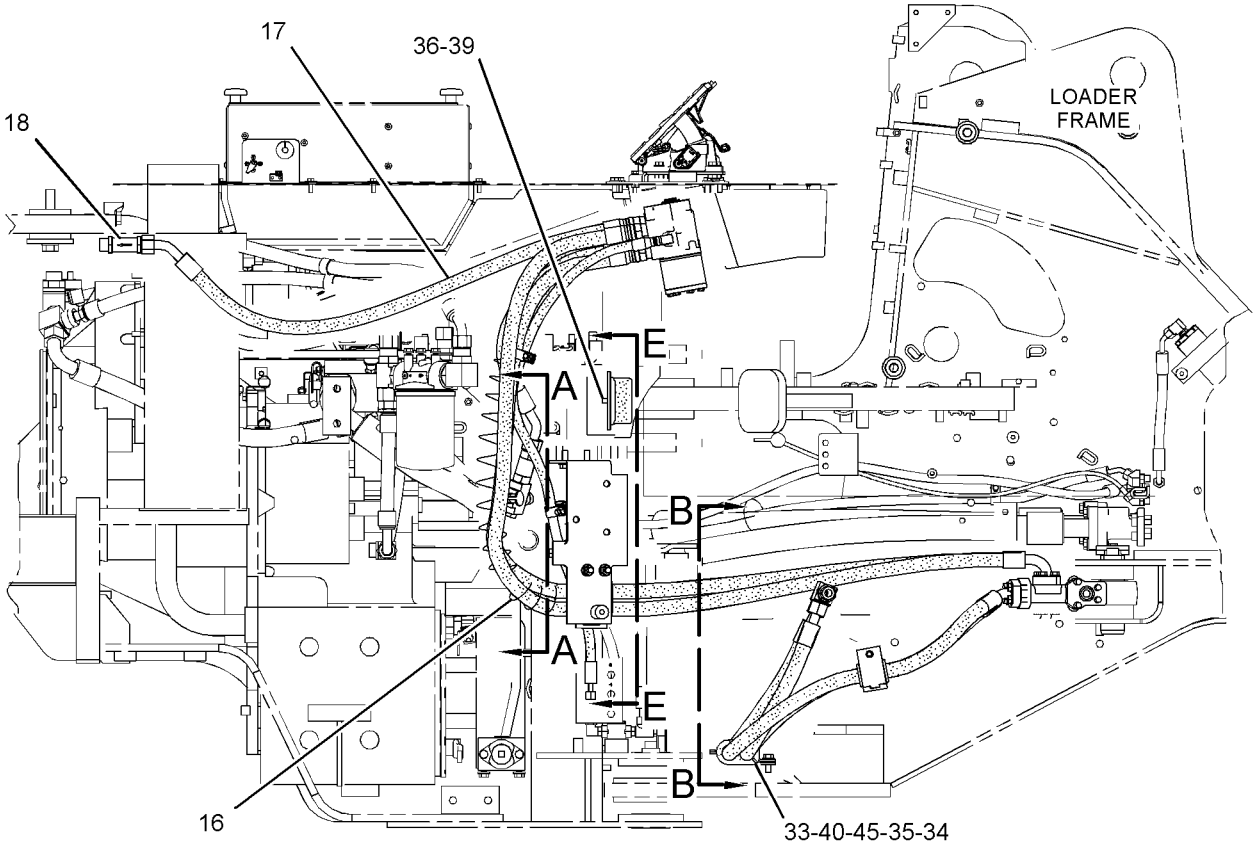

REFER TO ALL ILLUSTRATIONS OF THIS GROUP FOR AUXILIARY VIEWS.

RIGHT SIDE VIEW

GRAPHIC #1

g01392362

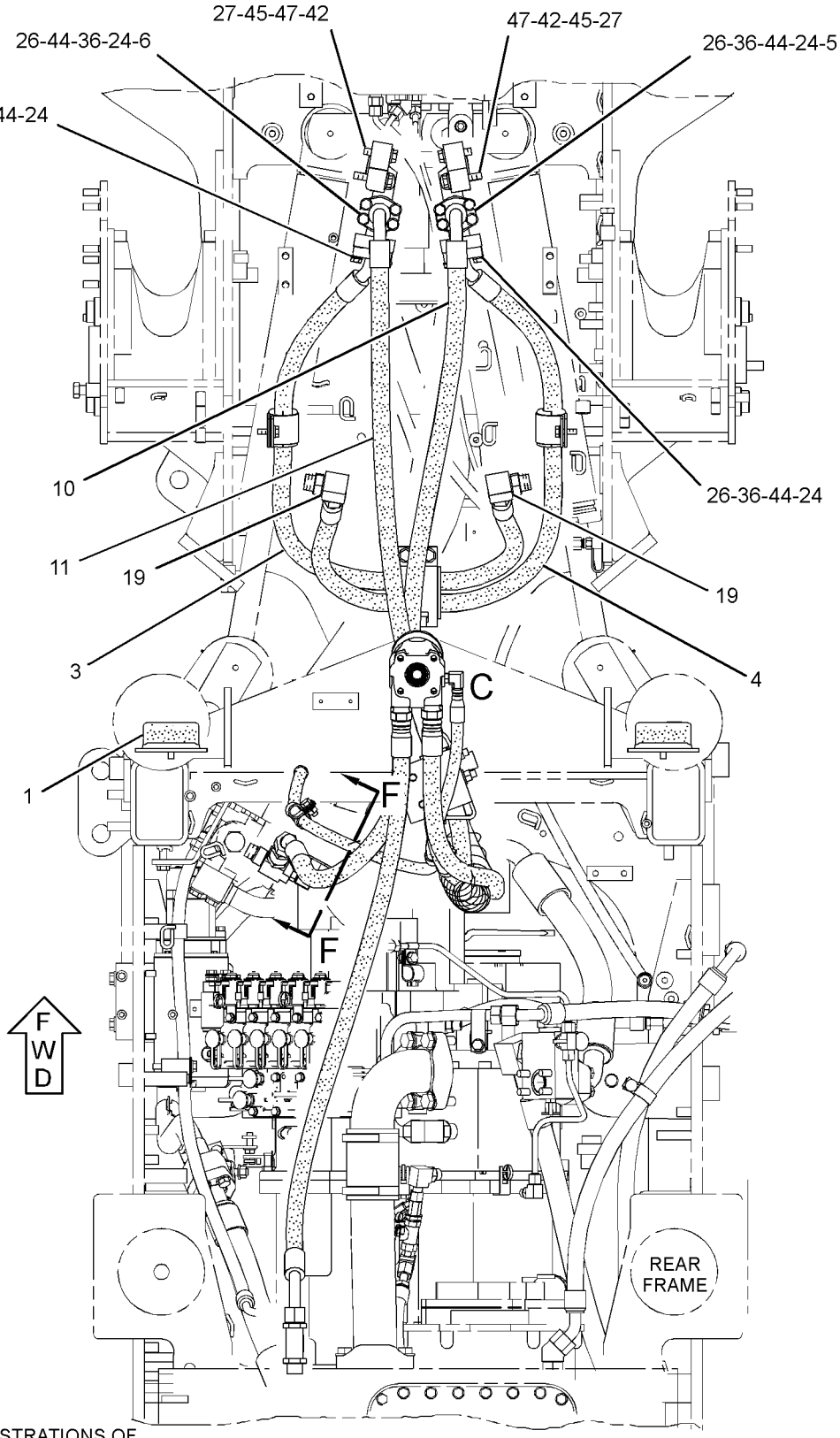

REFER TO ALL ILLUSTRATIONS OF THIS GROUP FOR AUXILIARY VIEWS

TOP VIEW

GRAPHIC #2

g01448772

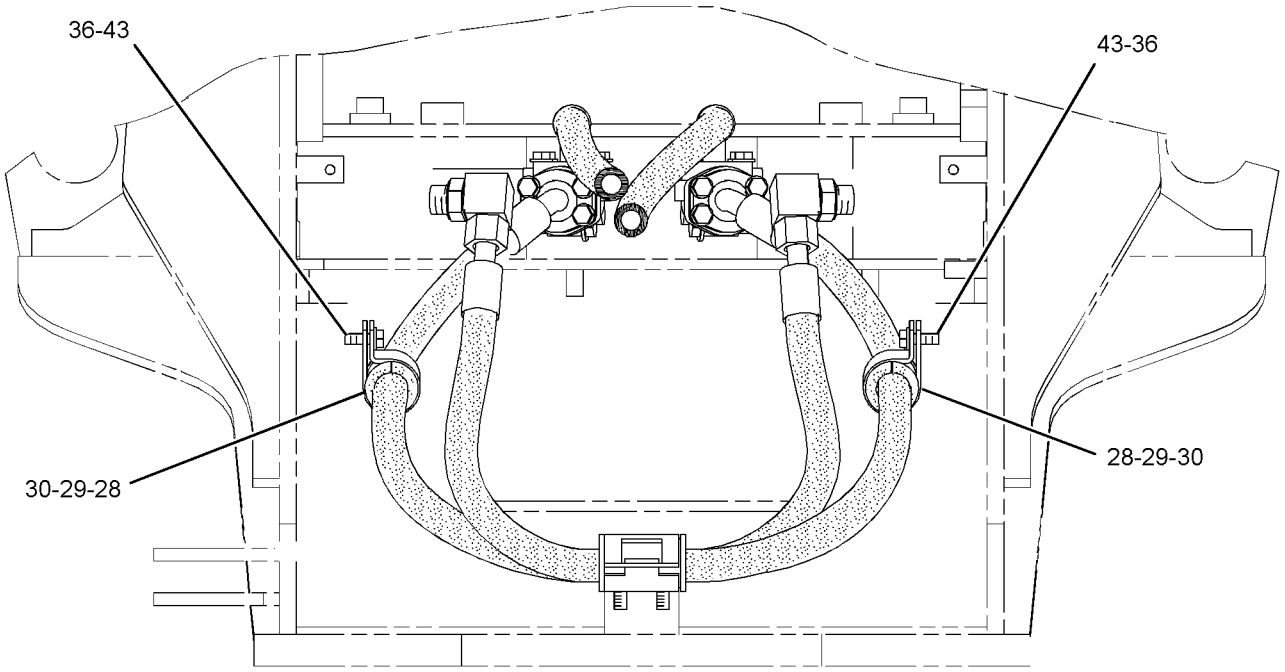

SECTION B-B

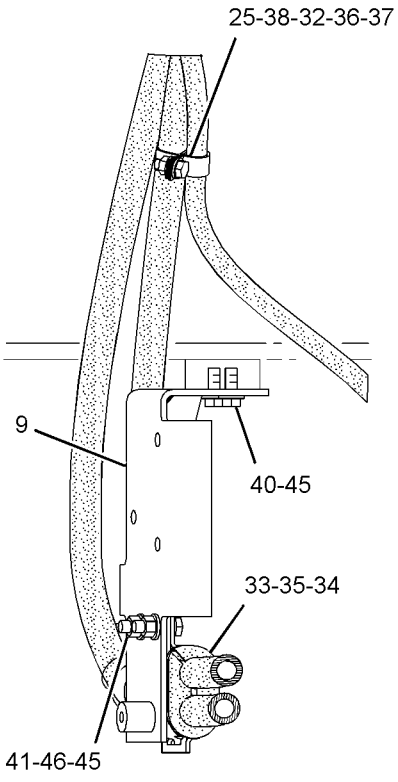

SECTION E-E

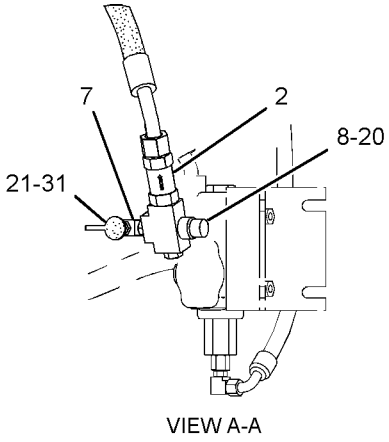

VIEW A-A

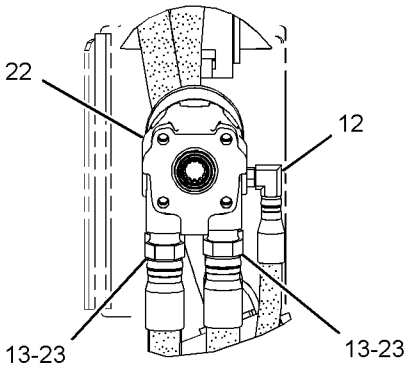

VIEW OF AREA C

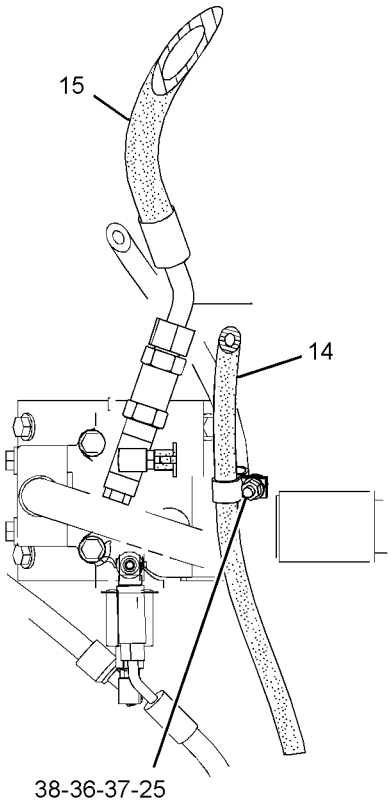

SECTION F-F

GRAPHIC #3

<END>

g01448773

STEERING SYSTEM

239-3370 LINES GP-STEERING

S/N: JKM905-UP

PART OF 237-7540 CHASSIS AR

SMCS-4304 **i03868784**

NOTE	REF NO	GRAPHIC REF	PART NUMBER	QTY	PART NAME 1 2 3 4 5 6 (PRODUCT LEVEL)	SEE PAGE
	1	2	**112-0885**	2	PAD AS-RESILIENT	
	2	3	**128-6847**	1	VALVE GP-CHECK (STEERING)	
I	3	2	**138-3334**	1	HOSE AS	
I	4	2	**138-3335**	1	HOSE AS	
	5	2	**138-4411**	1	ELBOW (LH)	
	6	2	**138-5853**	1	ELBOW (RH)	
	7	3	*241-6215*	1	ELBOW AS	
		3	**3J-1907**	1	SEAL-O-RING	
		3	**6V-8076**	1	ELBOW	
	8	3	*260-9177*	1	UNION AS-CROSS	
		3	**3D-2824**	1	SEAL-O-RING	
		3	**260-9176**	1	CROSS	
	9	3	**317-9643**	1	BRACKET AS	
I	10	2	**265-2157**	1	HOSE AS	
I	11	2	**265-2158**	1	HOSE AS	
M	12	2	**8T-4910**	4	BOLT (M12X1.75X60-MM)	
M	13	3	**8T-4244**	2	NUT (M12X1.75-THD)	
I	14	3	**282-6737**	1	HOSE AS	
I	15	3	**282-6738**	1	HOSE AS	
	16	1	**301-9692**	1	GUARD-HOSE	
I	17	1	**302-0076**	1	HOSE AS	
	18	1	**303-5974**	1	VALVE GP-CHECK (STEERING)	
		1	**3D-2824**	1	SEAL-O-RING	
		1	**6V-9746**	1	SEAL-O-RING	
	19	2	*148-8347*	2	ELBOW AS	
					(EACH INCLUDES)	
		2	**3D-2824**	1	SEAL-O-RING	
		2	**6V-9007**	1	ELBOW	
		2	**6V-9746**	1	SEAL-O-RING	
	20	3	*148-8411*	1	PLUG AS	
		3	**3K-0360**	1	SEAL-O-RING	
		3	**9S-4185**	1	PLUG-O-RING	
	21	3	*164-5567*	1	COUPLER AS-QUICK DISCONNECT (MALE)	
		3	**214-7568**	1	SEAL-O-RING	
		3	**6V-3965**	1	FITTING (QUICK DISCONNECT)	
CY	22	1	*331-2890*	1	PUMP GP-METERING (HMU)	660
	23	1,2,3	**8T-4223**	16	WASHER-HARD (13.5X25.5X3-MM THK)	
	24	2	**1P-4577**	8	FLANGE-HALF	
	25	3	**1S-0994**	3	CLIP	
	26	2	**4J-0520**	4	SEAL-O-RING	
	27	2	**4J-5267**	2	SEAL-O-RING	
	28	3	**5P-7466**	2	CLIP (SLOT)	
	29	3	**5P-7467**	2	CLIP (TAB)	
	30	3	**5P-8112**	2	GROMMET	
	31	3	**6V-0852**	1	CAP-DUST	
	32	3	**6V-1889**	1	CLIP	
	33	1,3	**7G-3832**	2	GROMMET	
	34	1,3	**7G-3833**	2	CLIP (TAB)	
	35	1,3	**7G-3834**	2	CLIP (SLOT)	
	36	1,2,3	**8T-4121**	24	WASHER-HARD (11X21X2.5-MM THK)	
M	37	3	**8T-4133**	2	NUT (M10X1.5-THD)	
M	38	3	**8T-4136**	2	BOLT (M10X1.5X25-MM)	
M	39	1	**8T-4137**	2	BOLT (M10X1.5X20-MM)	
M	40	1,3	**8T-4139**	4	BOLT (M12X1.75X30-MM)	
M	41	3	**8T-4183**	2	BOLT (M12X1.75X40-MM)	
M	42	2	**8T-4194**	4	BOLT (M12X1.75X50-MM)	

239-3370 **LINES GP-STEERING** *(contd.)* **i03868784**

NOTE	REF NO	GRAPHIC REF	PART NUMBER	QTY	PART NAME 1 2 3 4 5 6 (PRODUCT LEVEL)	SEE PAGE
M	43	3	**8T-4195**	2	BOLT (M10X1.5X30-MM)	
M	44	2	**8T-4196**	16	BOLT (M10X1.5X35-MM)	

C-CHANGE FROM PREVIOUS TYPE
I-REFER TO HYDRAULIC INFORMATION SYSTEM
M-METRIC PART
Y-SEPARATE ILLUSTRATION

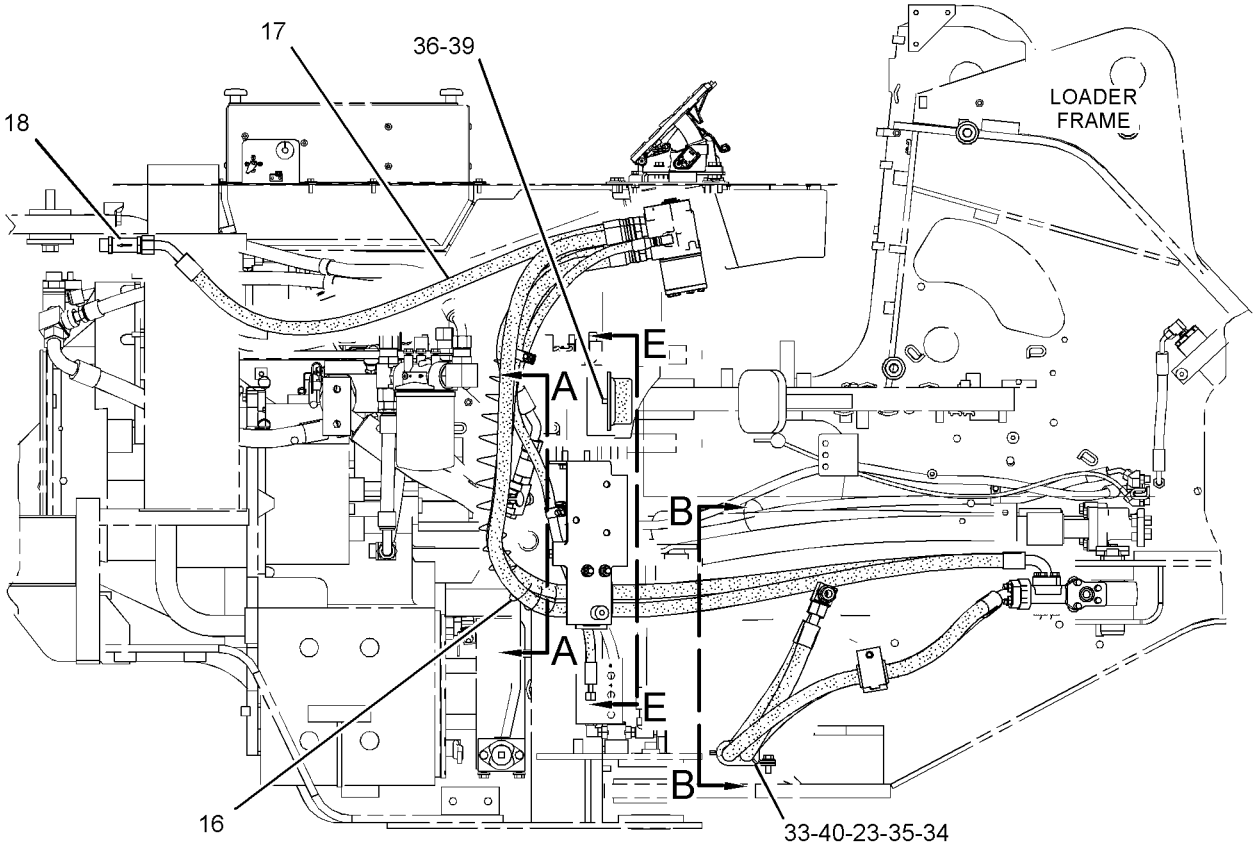

REFER TO ALL ILLUSTRATIONS OF THIS GROUP FOR AUXILIARY VIEWS.

RIGHT SIDE VIEW

GRAPHIC #1

g01823854

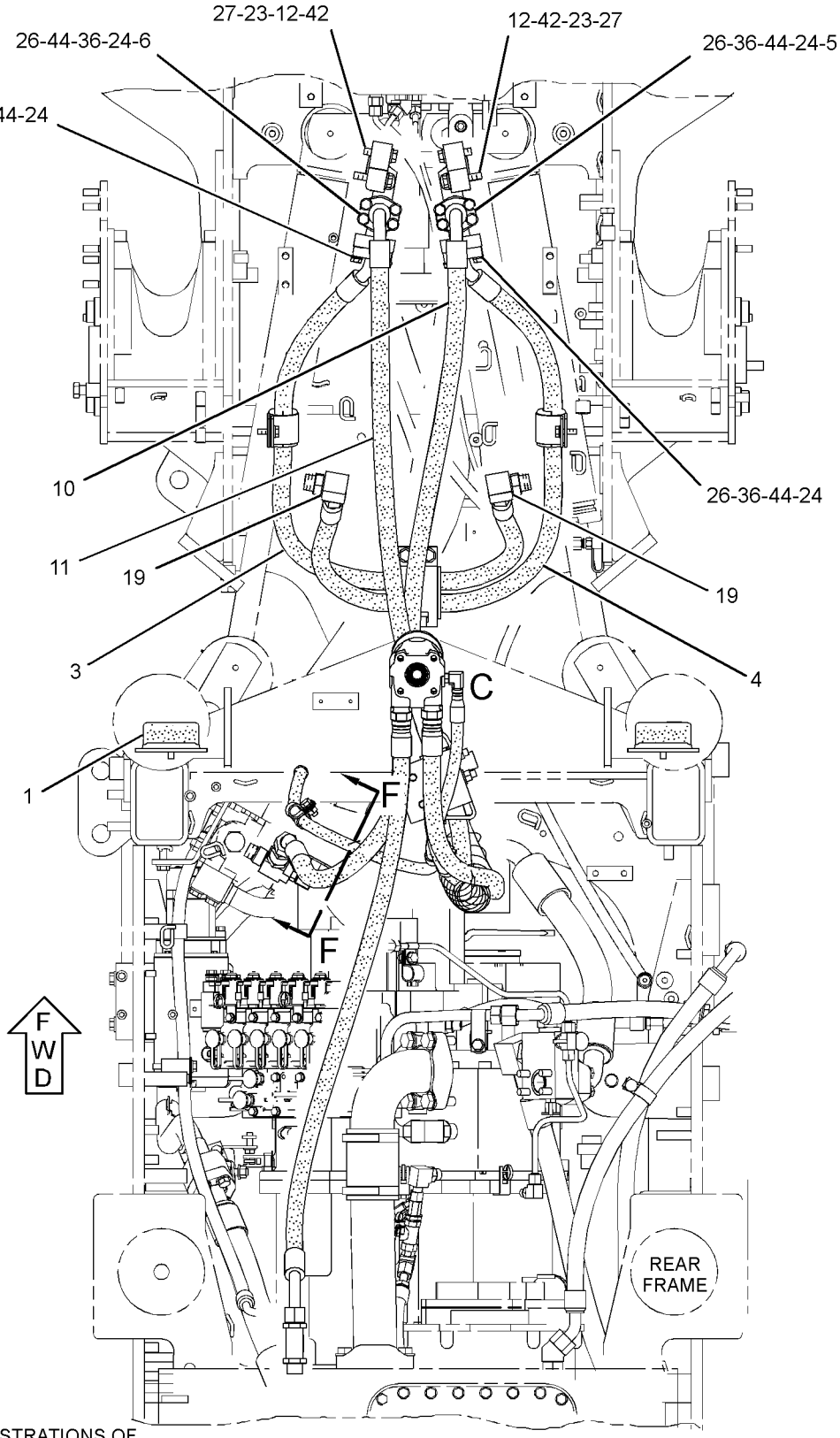

REFER TO ALL ILLUSTRATIONS OF THIS GROUP FOR AUXILIARY VIEWS

TOP VIEW

GRAPHIC #2

g01823853

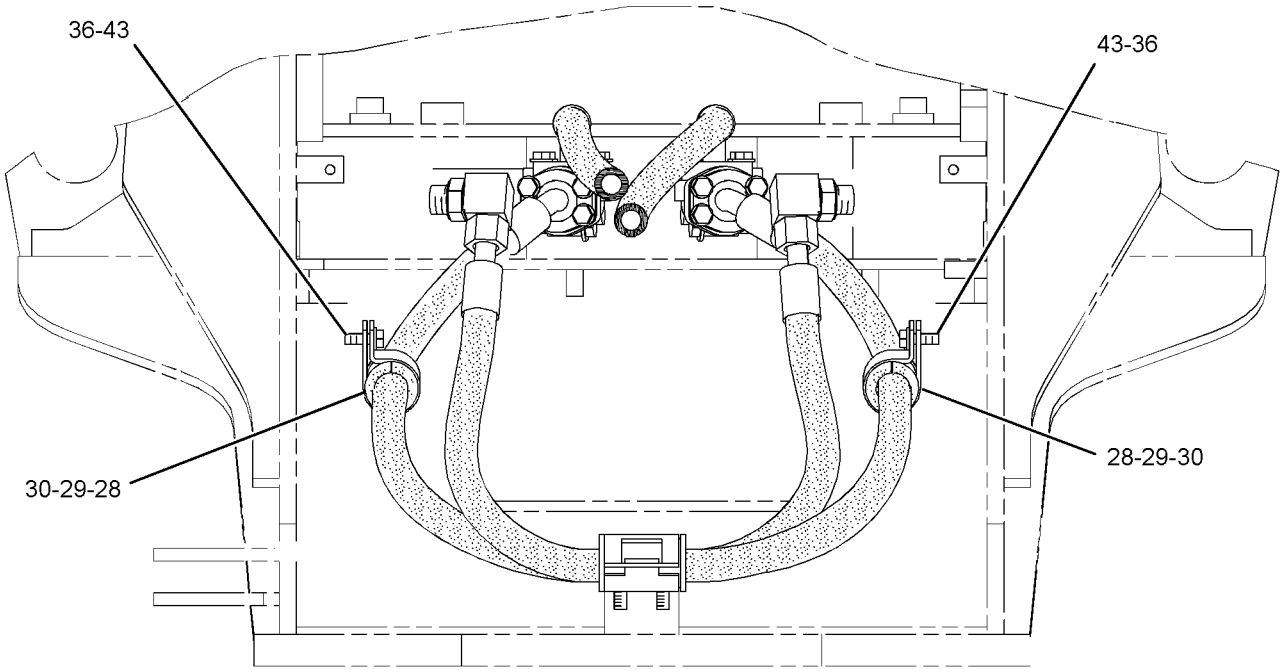

SECTION B-B

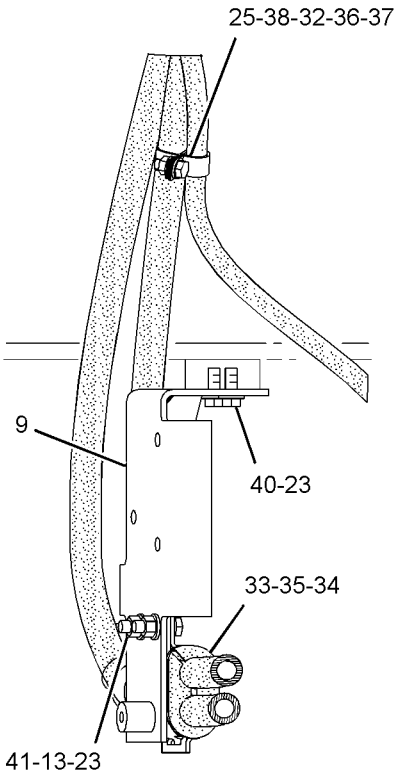

SECTION E-E

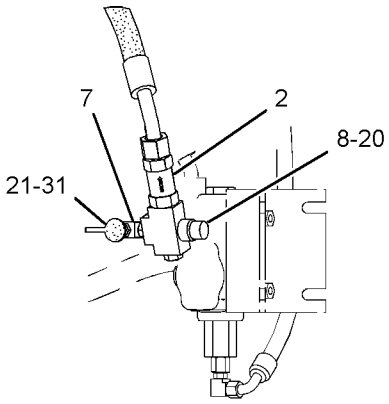

VIEW A-A

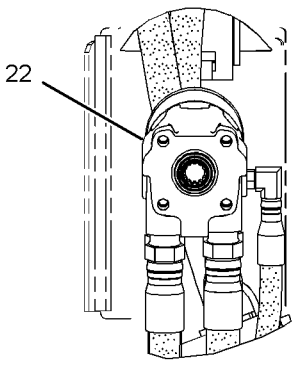

VIEW OF AREA C

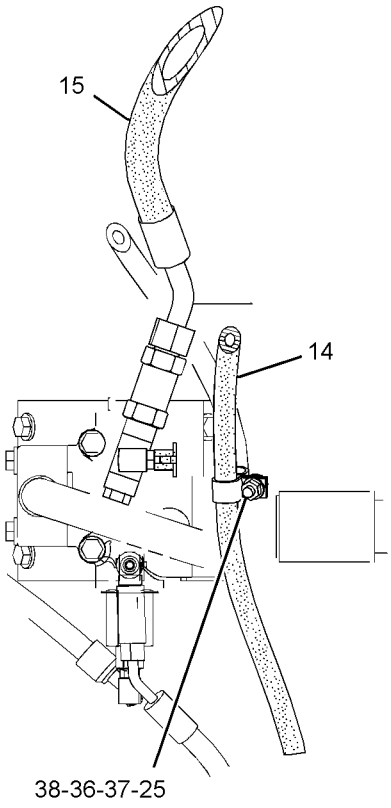

SECTION F-F

GRAPHIC #3 **<END>** g01823855

313-5855 PUMP & MOTOR GP-SEC STEERING

S/N: JKM1-UP

PART OF 264-7762 PUMP & MTG GP-SECONDARY STEER

AN ATTACHMENT

SMCS-4324, 4325 **i02929877**

NOTE	REF NO	GRAPHIC REF	PART NUMBER	QTY	PART NAME 1 2 3 4 5 6 (PRODUCT LEVEL)	SEE PAGE
	1	1	**117-5268**	1	GASKET	
	2	1	**183-6967**	1	MOTOR GP-ELECTRIC (SECONDARY STEERING)	
	3	1	**183-6970**	1	RELAY	
	4	1	**183-6971**	1	CABLE AS	
	5	1	**273-2536**	2	COVER-TERMINAL	
	6	1	**237-9878**	1	KIT-RELIEF VALVE	
					AVAILABLE REPAIR KIT(S):	
			200-4305	1	KIT-SEAL	
					(INCLUDES SEAL-SHAFT, O-RINGS, E-RINGS, & BACKUP RINGS)	

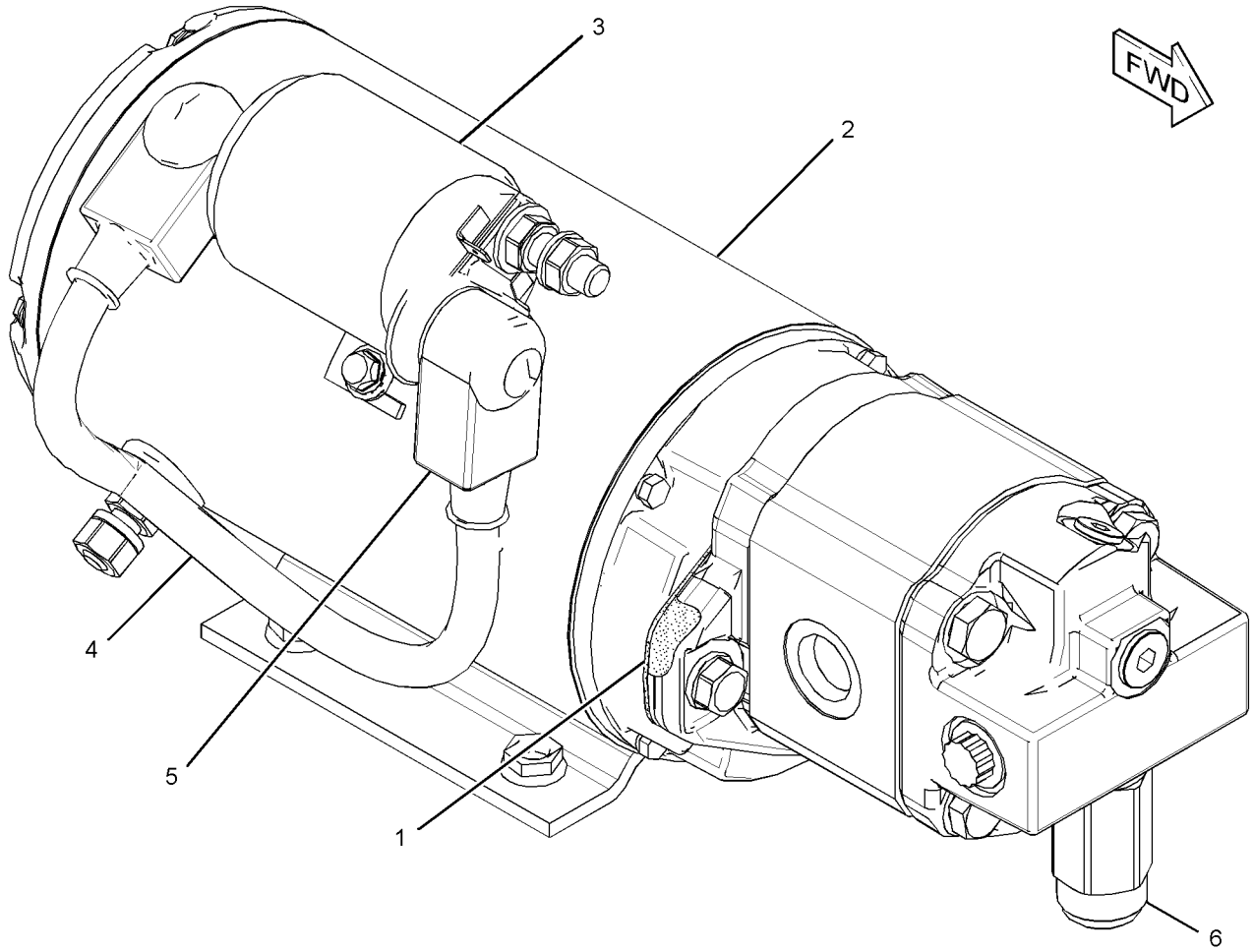

GRAPHIC #1 **<END>** g01427590

264-7762 PUMP & MTG GP-SECONDARY STEER

S/N: JKM1-UP
PART OF 265-9746 STEERING AR-SECONDARY
AN ATTACHMENT

SMCS-4324 **i02929876**

NOTE	REF NO	GRAPHIC REF	PART NUMBER	QTY	PART NAME 1 2 3 4 5 6 (PRODUCT LEVEL)	SEE PAGE
	1	1	**265-0857**	1	PLATE AS	
Y	2	1	**313-5855**	1	PUMP & MOTOR GP-SEC STEERING	657
	3	1	**8T-4121**	4	WASHER-HARD (11X21X2.5-MM THK)	
M	4	1	**8T-4139**	4	BOLT (M12X1.75X30-MM)	
M	5	1	**8T-4195**	4	BOLT (M10X1.5X30-MM)	
	6	1	**8T-4223**	4	WASHER-HARD (13.5X25.5X3-MM THK)	

M-METRIC PART
Y-SEPARATE ILLUSTRATION

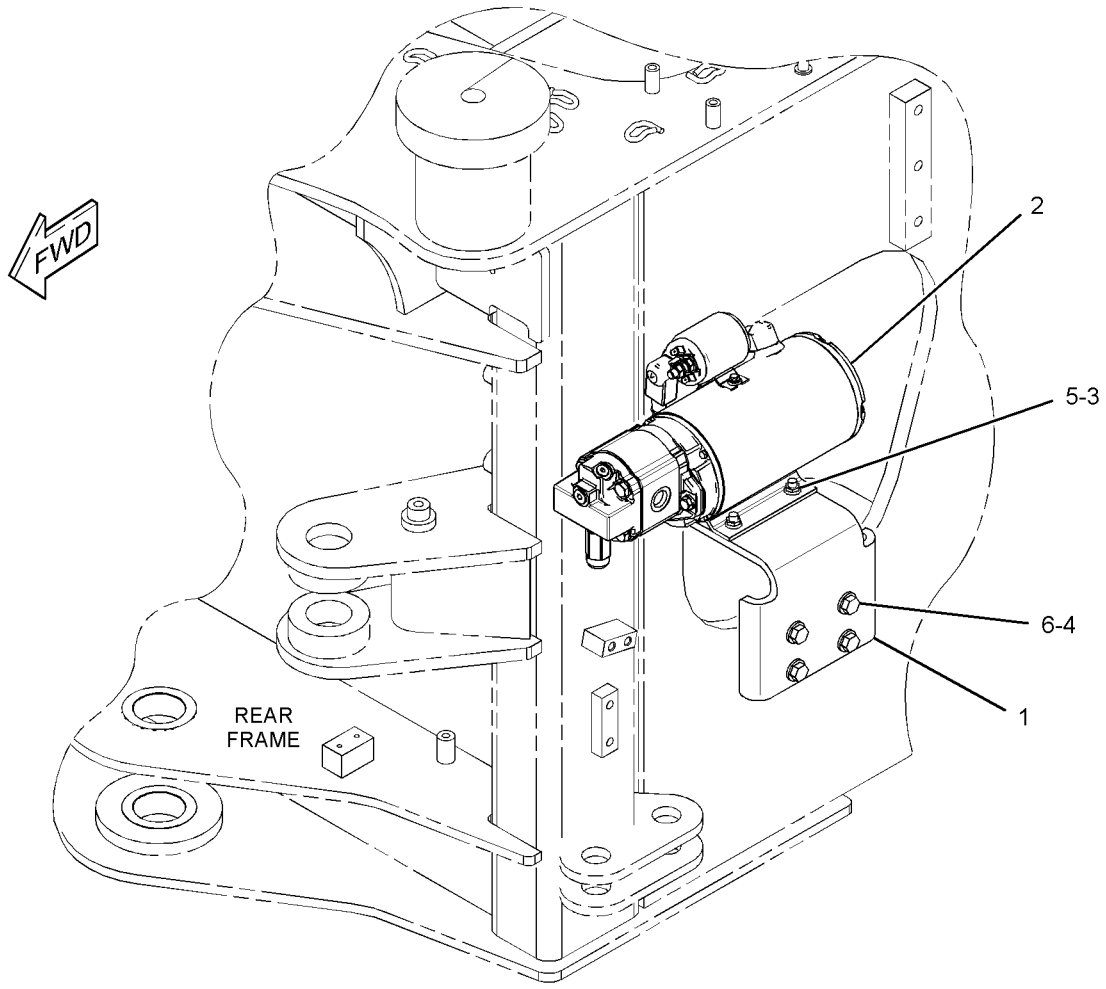

GRAPHIC #1 **<END>** g01427608

322-4638 PUMP GP-METERING

S/N: JKM905-UP

PART OF 331-2890 PUMP GP-METERING

SMCS-4312 **i03996125**

NOTE	REF NO	GRAPHIC REF	PART NUMBER	QTY	PART NAME 1 2 3 4 5 6 (PRODUCT LEVEL)	SEE PAGE
	1	1	**9J-5685**	1	BEARING	
	2	1	**142-7061**	2	RACE-BEARING	
					AVAILABLE REPAIR KIT(S):	
			258-8412	1	KIT-SEAL	
					(INCLUDES SEALS)	

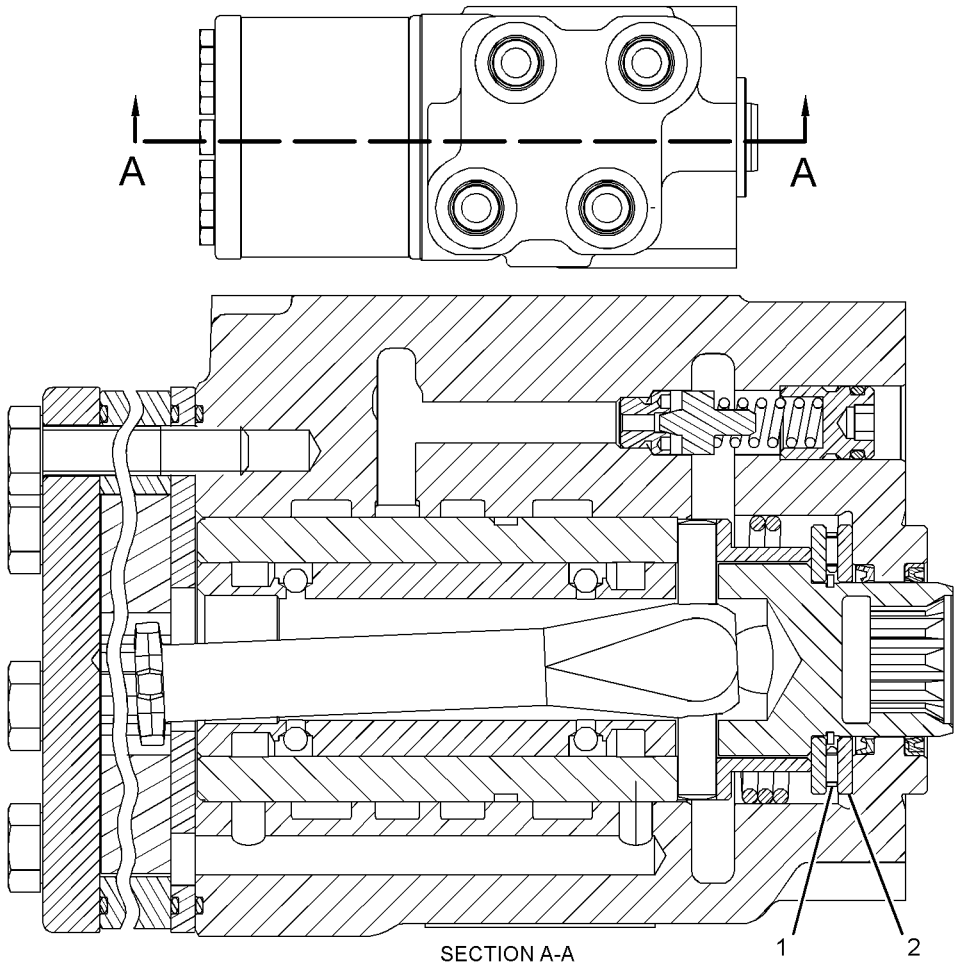

SECTION A-A

GRAPHIC #1 **<END>** g01941215

STEERING SYSTEM

331-2890 PUMP GP-METERING

S/N: JKM905-UP

PART OF 239-3370 LINES GP-STEERING

SMCS-4312 **i03868792**

NOTE	REF NO	GRAPHIC REF	PART NUMBER	QTY	PART NAME 1 2 3 4 5 6 (PRODUCT LEVEL)	SEE PAGE
	1	1	**9D-7924**	4	MOUNTING	
	2	1	**111-7874**	1	SEAL	
	3	1	**217-7937**	1	PLATE AS	
	4	1	*281-5872*	4	ADAPTER AS	
					(EACH INCLUDES)	
		1	**3K-0360**	1	SEAL-O-RING	
		1	**281-5871**	1	ADAPTER	
Y	5	1	**322-4638**	1	PUMP GP-METERING (HMU)	659
	6	1	**269-4958**	4	ADAPTER	
	7	1	**269-4965**	1	ADAPTER-ELBOW	
	8	1	**7X-0603**	4	WASHER-HARD (9.9X35X2.5-MM THK)	
M	9	1	**8T-4191**	4	BOLT (M10X1.5X16-MM)	
M	10	1	**8T-6869**	4	BOLT (M8X1.25X60-MM)	

M-METRIC PART
Y-SEPARATE ILLUSTRATION

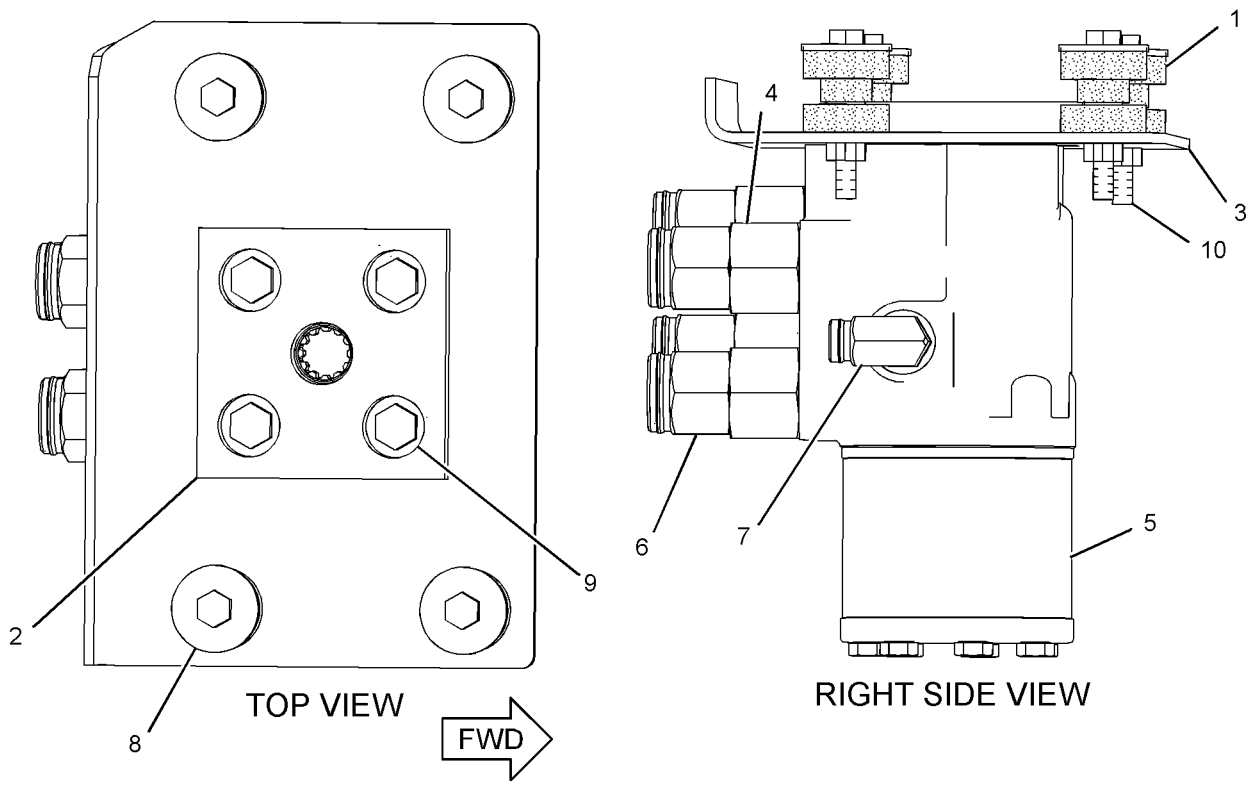

GRAPHIC #1 **<END>** g01867213

STEERING SYSTEM

265-9746 STEERING AR-SECONDARY

S/N: JKM1-UP

PART OF 317-9491 CONFIGURATION AR, 329-5761 CONVERSION AR-MACHINE

AN ATTACHMENT

SMCS-4300 **i02929873**

NOTE	PART NUMBER	QTY	PART NAME 1 2 3 4 5 6 (PRODUCT LEVEL)	SEE PAGE
Y	*260-8829*	1	LINES GP-SECONDARY STEERING	647
Y	*264-7762*	1	PUMP & MTG GP-SECONDARY STEER	658
Y	*265-8148*	1	WIRING GP-SECONDARY STEERING	360

Y-SEPARATE ILLUSTRATION

<END>

STEERING SYSTEM

280-6837 STEERING COLUMN GP-ADJUSTABLE

S/N: JKM1-432
PART OF 257-5688 CONTROL GP-STEERING
ALSO AN ATTACHMENT

SMCS-4338 **i03905552**

NOTE	REF NO	GRAPHIC REF	PART NUMBER	QTY	PART NAME 1 2 3 4 5 6 (PRODUCT LEVEL)	SEE PAGE
	1	1	**9G-3695**	1	PLUG-SEAL	
	2	1	**102-8802**	1	KIT-RECEPTACLE (2-PIN)	
					(INCLUDES RECEPTACLE AS & WEDGE)	
	3	1	**149-0777**	1	KNOB (STEERING COLUMN TILT)	
	4	1	**186-3735**	1	PIN-CONNECTOR (16-GA TO 18-GA)	
	5	1	**319-9510**	1	SPRING AS-GAS (STEERING COLUMN TILT)	
	6	1	**217-4155**	1	KIT-TILT LEVER (STEERING COLUMN)	
	7	1	**332-6884**	1	KIT-CONTACT (STEERING COLUMN)	
					(INCLUDES HORN CONTACT AS & SCREWS)	
	8	1	**321-6951**	1	KIT-PIVOT (STEERING COLUMN)	
					(INCLUDES PIVOT BUSHINGS & PIVOT PINS)	
M	9	1	**6V-8227**	1	NUT (M18X1.5-THD)	
	10	1	**311-8557**	1	COLUMN AS-STEERING	

M-METRIC PART

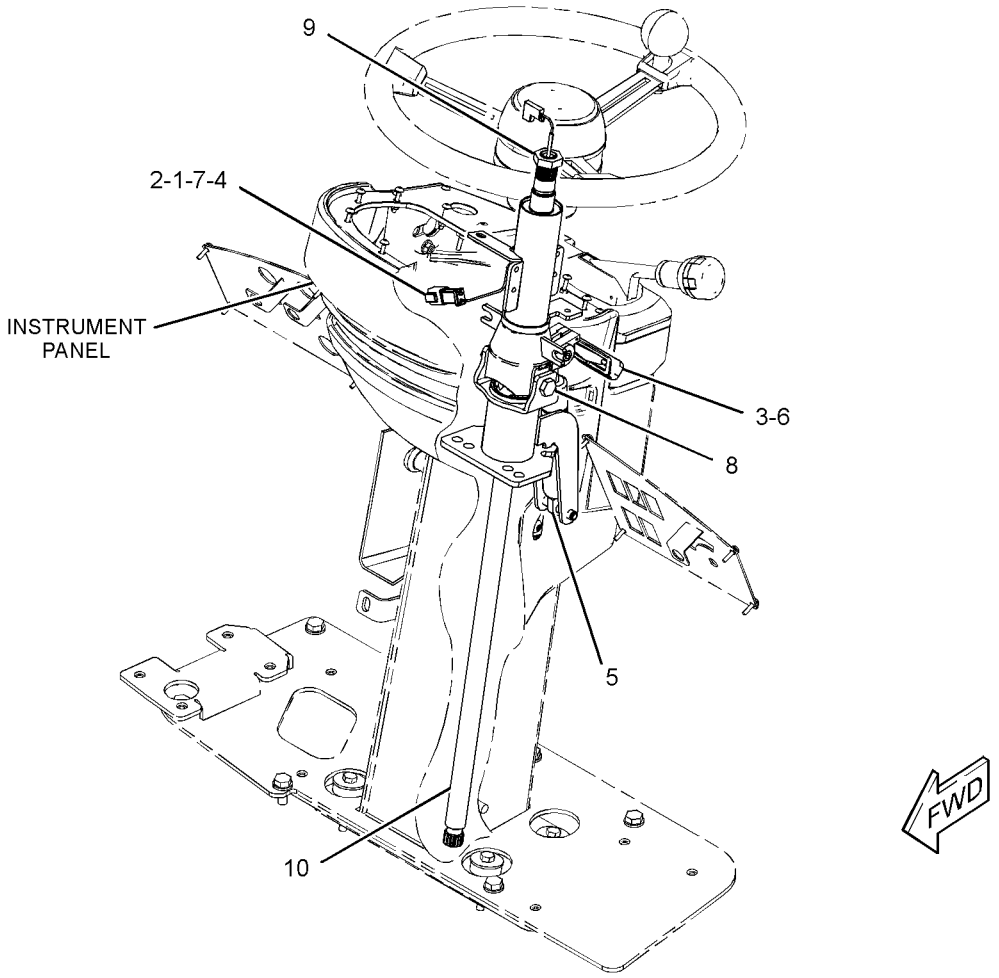

GRAPHIC #1 **<END>** g01423407

STEERING SYSTEM

319-1625 STEERING COLUMN GP-ADJUSTABLE

S/N: JKM433-UP
PART OF 257-5688 CONTROL GP-STEERING
ALSO AN ATTACHMENT

SMCS-4338 **i03569837**

NOTE	REF NO	GRAPHIC REF	PART NUMBER	QTY	PART NAME 1 2 3 4 5 6 (PRODUCT LEVEL)	SEE PAGE
	1	1	**9G-3695**	1	PLUG-SEAL	
	2	1	**102-8802**	1	KIT-RECEPTACLE (2-PIN)	
					(INCLUDES RECEPTACLE AS & WEDGE)	
	3	1	**186-3735**	1	PIN-CONNECTOR (16-GA TO 18-GA)	
	4	1	**149-0777**	1	KNOB (STEERING COLUMN TILT)	
	5	1	**319-9510**	1	SPRING AS-GAS (STEERING COLUMN)	
	6	1	**217-4155**	1	KIT-TILT LEVER (STEERING COLUMN)	
					(INCLUDES BOLTS, DOWEL, ROLL PIN, SPRING & TILT LEVER)	
	7	1	**332-6884**	1	KIT-CONTACT (HORN)	
					(INCLUDES HORN CONTACT AS & SCREWS)	
	8	1	**321-6951**	1	KIT-PIVOT (STEERING COLUMN TILT)	
					(INCLUDES PINS & BUSHINGS)	
	9	1	**311-8557**	1	COLUMN AS-STEERING	
M	10	1	**6V-8227**	1	NUT (M18X1.5-THD)	

M-METRIC PART

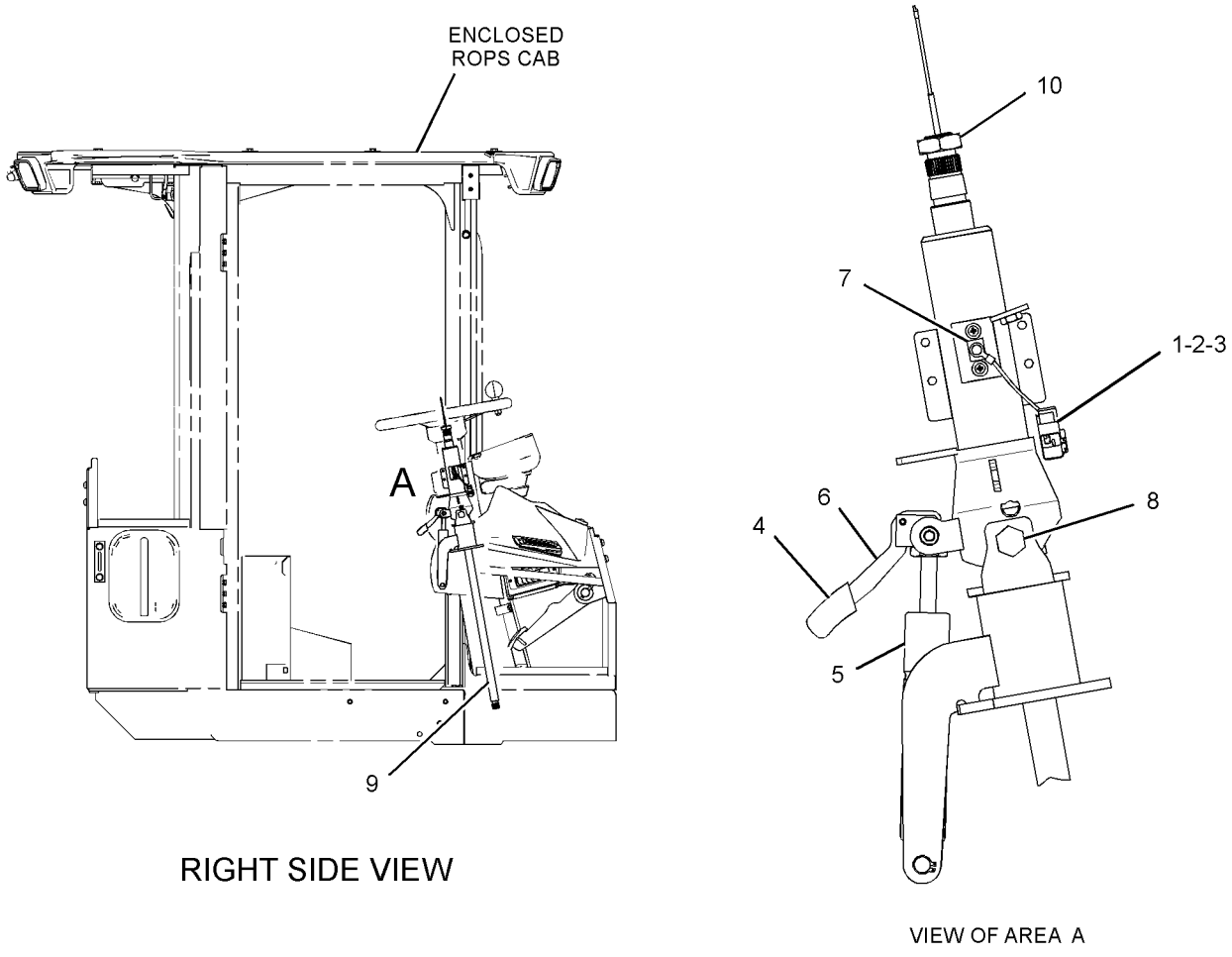

RIGHT SIDE VIEW

VIEW OF AREA A

GRAPHIC #1 **<END>** g01452575

245-2975 ACCUMULATOR GP-PILOT OIL–CHARGED

S/N: JKM1-UP
PART OF 260-8834, 260-8836 CONTROL GP-DIFFERENTIAL LOCK
FIELD REPLACEMENT ORDER 245-6566–PAGE 665
ALSO AN ATTACHMENT

SMCS-5077 **i02911936**

NOTE	REF NO	GRAPHIC REF	PART NUMBER	QTY	PART NAME 1 2 3 4 5 6 (PRODUCT LEVEL)	SEE PAGE
	1	1	**204-8758**	1	FILM-WARNING (ACCUMULATOR) (HIGH PRESSURE CYLINDER)	

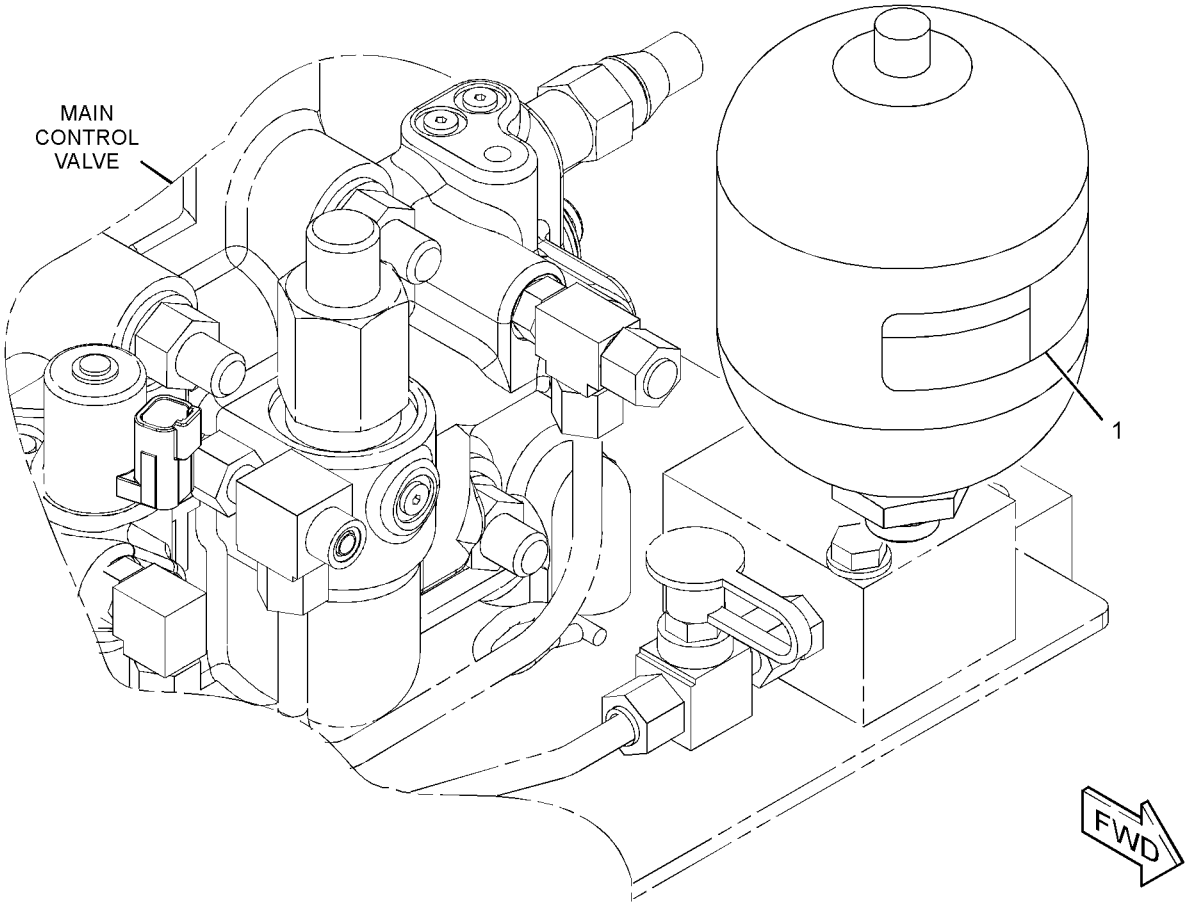

GRAPHIC #1 **<END>** g01407582

245-6566 ACCUMULATOR GP-PILOT OIL–UNCHARGED

S/N: JKM1-UP

FIELD REPLACEMENT FOR 245-2975–PAGE 664

FIELD INSTALLATION

SMCS-5077 **i02940237**

NOTE	REF NO	GRAPHIC REF	PART NUMBER	QTY	PART NAME 1 2 3 4 5 6 (PRODUCT LEVEL)	SEE PAGE
	1	1	**312-1139**	1	CAP	
	2	1	**222-3785**	1	SCREW-VENT (M8X1.5-THD)	
	3	1	**222-5765**	1	SEAL-RING	
	4	1	**5P-3779**	1	TAG-NOTICE (SHIPPING INSTRUCTIONS)	
	5	1	**204-8758**	1	FILM-WARNING (ACCUMULATOR)	

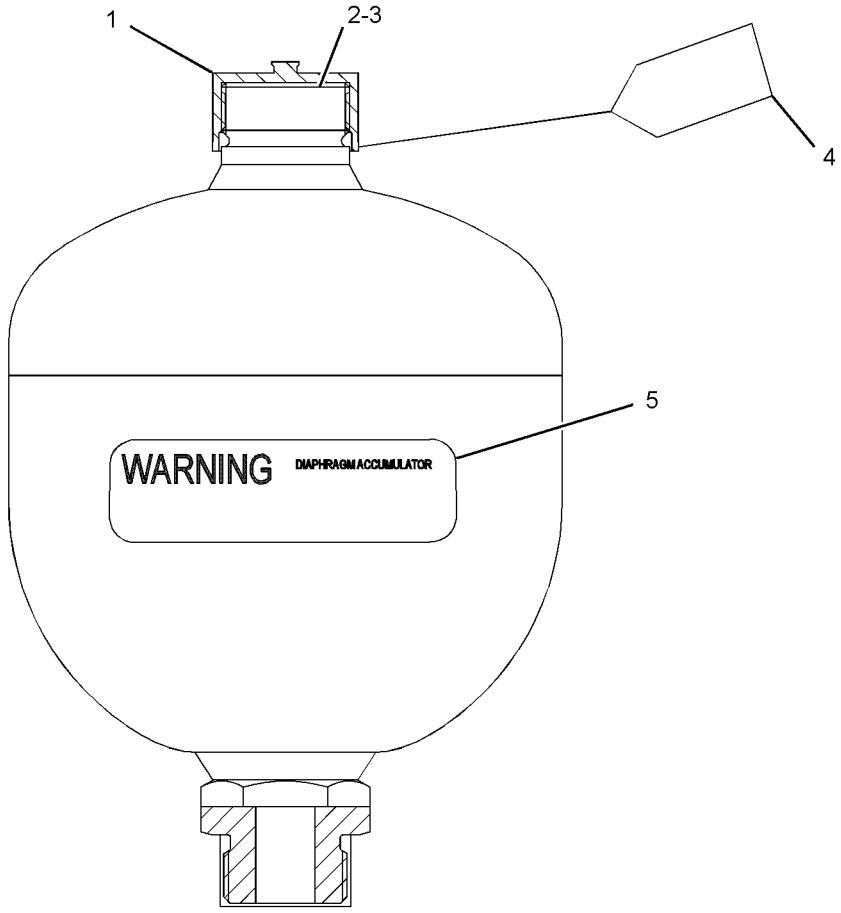

GRAPHIC #1 **<END>** g01441852

275-7875 ACCUMULATOR GP-PILOT OIL–CHARGED

S/N: JKM1-UP

PART OF 239-3357 LINES GP-HYDRAULIC

SMCS-5077 **i03354176**

NOTE	REF NO	GRAPHIC REF	PART NUMBER	QTY	PART NAME 1 2 3 4 5 6 (PRODUCT LEVEL)	SEE PAGE
	1	1	**224-5132**	1	CAP (GAS VALVE)	
	2	1	**224-5152**	1	VALVE-GAS	
	3	1	**3J-7354**	1	SEAL-O-RING	
	4	1	**1J-9671**	1	SEAL-O-RING	
	5	1	**241-0037**	1	FILM-WARNING (HIGH PRESSURE, READ OMM)	

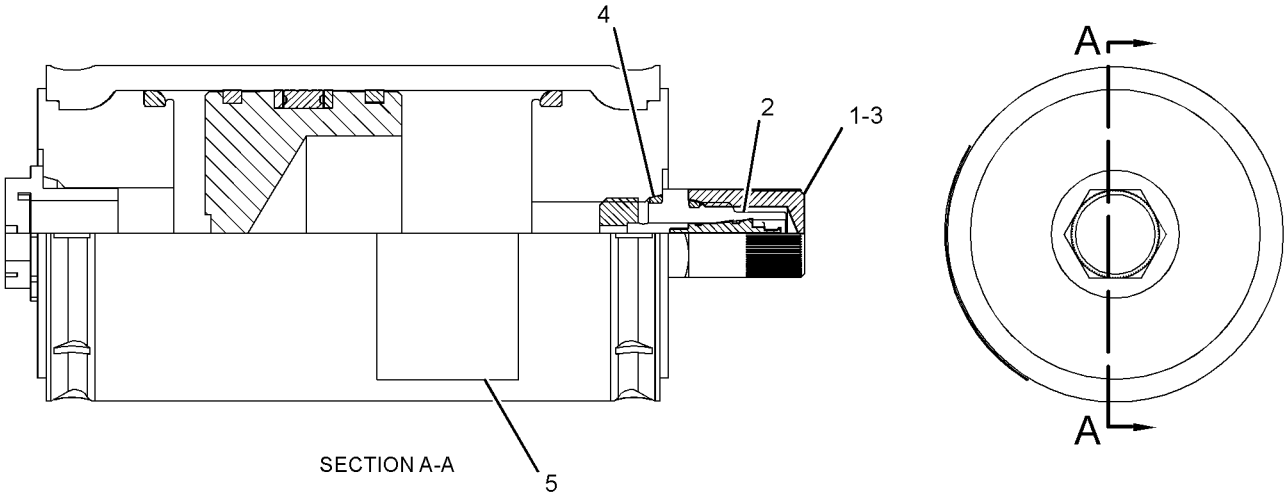

GRAPHIC #1 **<END>** g01821453

259-4685 ACCUMULATOR GP-RIDE CONTROL–CHARGED

S/N: JKM1-UP
PART OF 258-8757, 265-2150 LINES GP-RIDE CONTROL
FIELD REPLACEMENT ORDER 259-4691–PAGE 668
AN ATTACHMENT

SMCS-5004, 5077 **i02991730**

NOTE	REF NO	GRAPHIC REF	PART NUMBER	QTY	PART NAME 1 2 3 4 5 6 (PRODUCT LEVEL)	SEE PAGE
	1	1	**158-2336**	1	VALVE-GAS	
	2	1	**170-0493**	1	KIT-SEAL (HYDRAULIC ACCUMULATOR)	
					(INCLUDES SEALS, WASHERS, RINGS AND O-RINGS)	
	3	1	**241-0037**	1	FILM-WARNING (HIGH PRESSURE, READ OMM)	

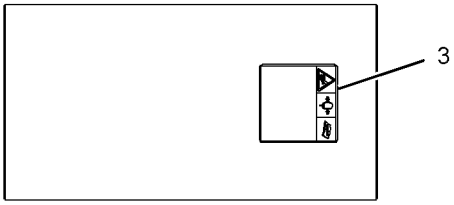

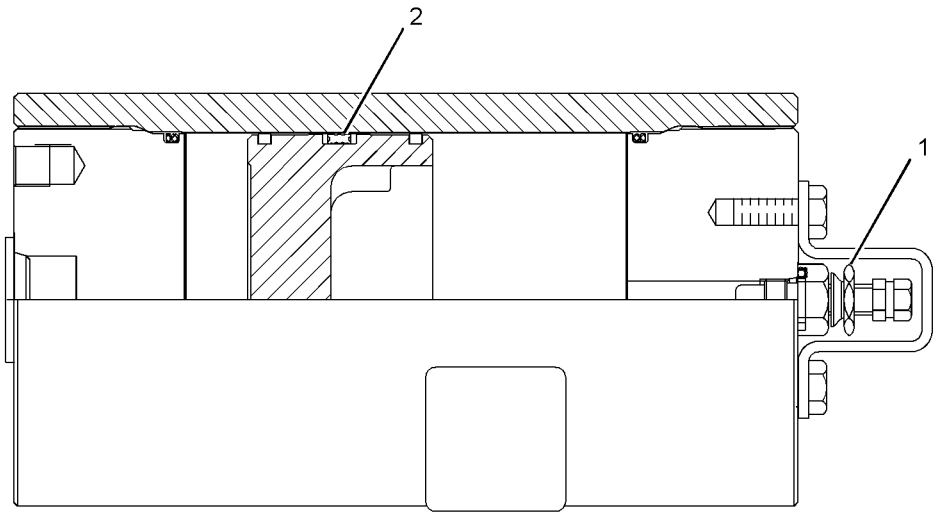

GRAPHIC #1 **<END>** g01459494

HYDRAULIC SYSTEM

259-4691 ACCUMULATOR GP-RIDE CONTROL—UNCHARGED

S/N: JKM1-UP

FIELD REPLACEMENT FOR 259-4685—PAGE 667

SMCS-5004, 5077 **i02991760**

NOTE	REF NO	GRAPHIC REF	PART NUMBER	QTY	PART NAME 1 2 3 4 5 6 (PRODUCT LEVEL)	SEE PAGE
	1	1	**158-2336**	1	VALVE-GAS	
	2	1	**170-0493**	1	KIT-SEAL (HYDRAULIC ACCUMULATOR)	
					(INCLUDES SEALS, WASHERS, RINGS AND O-RINGS)	
	3	1	**5P-3779**	1	TAG-NOTICE (SHIPPING INSTRUCTIONS)	
	4	1	**241-0037**	1	FILM-WARNING (HIGH PRESSURE, READ OMM)	

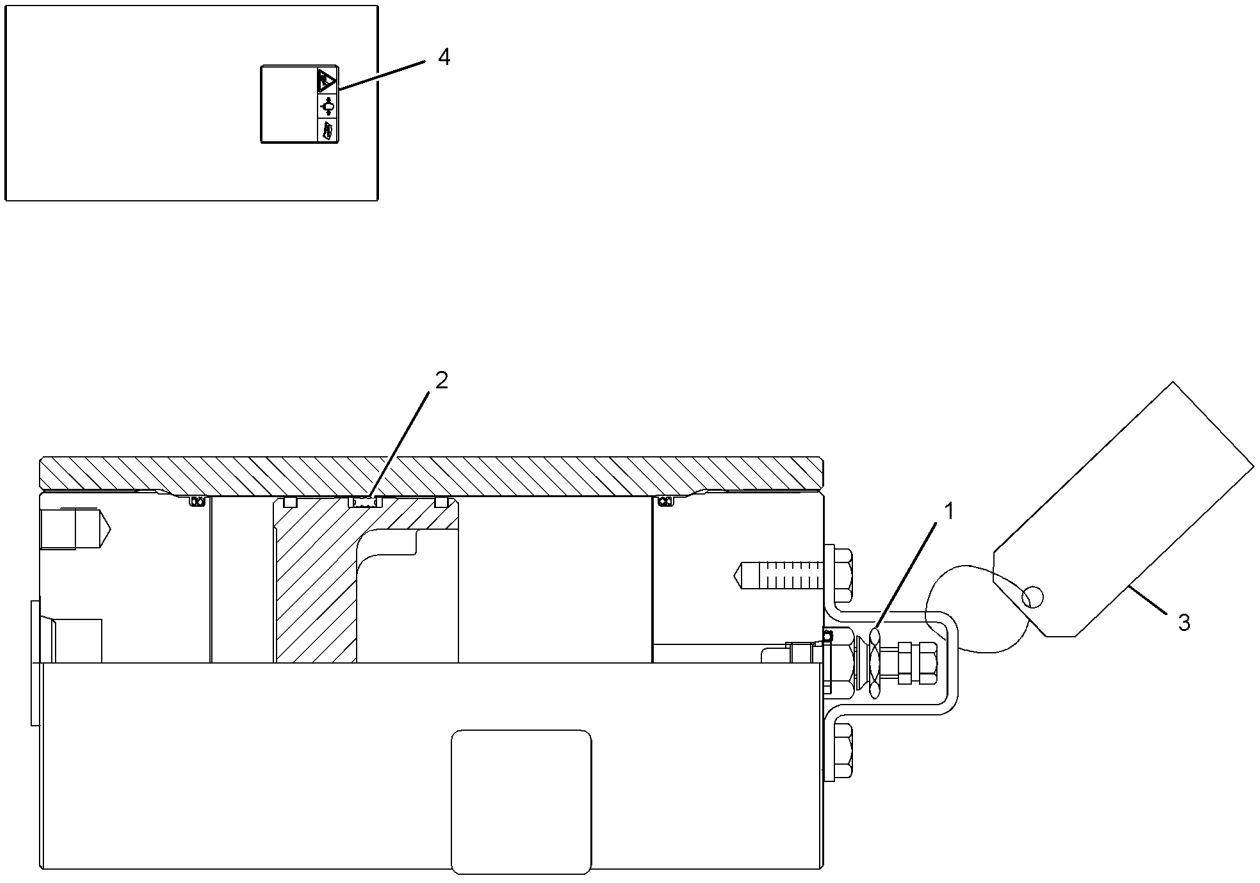

GRAPHIC #1 **<END>** g01459454

168-1879 BODY GP-PILOT VALVE

S/N: JKM1-UP
PART OF 261-8654 VALVE GP-PILOT
ALSO AN ATTACHMENT

SMCS-5059 **i01729510**

NOTE	REF NO	GRAPHIC REF	PART NUMBER	QTY	PART NAME 1 2 3 4 5 6 (PRODUCT LEVEL)	SEE PAGE
M	1	1	**141-8546**	2	BOLT-SOCKET HEAD (M6X1X100-MM)	
	2	1	**145-7977**	2	ADAPTER	
	3	1	**3J-1907**	2	SEAL-O-RING	
	4	1	**3J-7354**	16	SEAL-O-RING	
M	5	1	**5C-2890**	2	NUT (M6X1-THD)	
	6	1	**9S-4191**	2	PLUG-O-RING	
	7	1	**9S-8002**	12	PLUG-O-RING	

M-METRIC PART

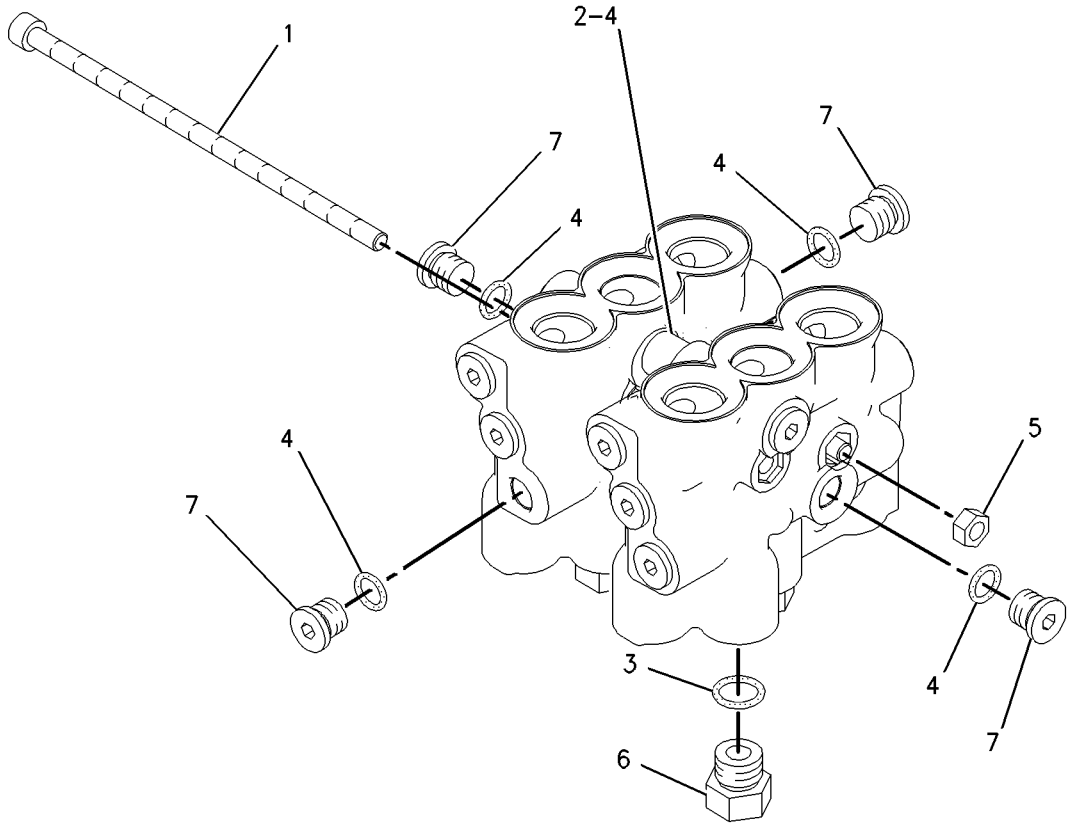

GRAPHIC #1 **<END>** g00890470

HYDRAULIC SYSTEM

168-1880 BODY GP-PILOT VALVE

S/N: JKM1-UP
PART OF 261-8656 VALVE GP-PILOT
AN ATTACHMENT

SMCS-5059 **i01727892**

NOTE	REF NO	GRAPHIC REF	PART NUMBER	QTY	PART NAME 1 2 3 4 5 6 (PRODUCT LEVEL)	SEE PAGE
M	1	1	**140-9926**	2	BOLT-SOCKET HEAD (M6X1X150-MM)	
	2	1	**145-7977**	4	ADAPTER	
	3	1	**3J-1907**	4	SEAL-O-RING	
	4	1	**3J-7354**	24	SEAL-O-RING	
M	5	1	**5C-2890**	2	NUT (M6X1-THD)	
	6	1	**9S-4191**	4	PLUG-O-RING	
	7	1	**9S-8002**	16	PLUG-O-RING	

M-METRIC PART

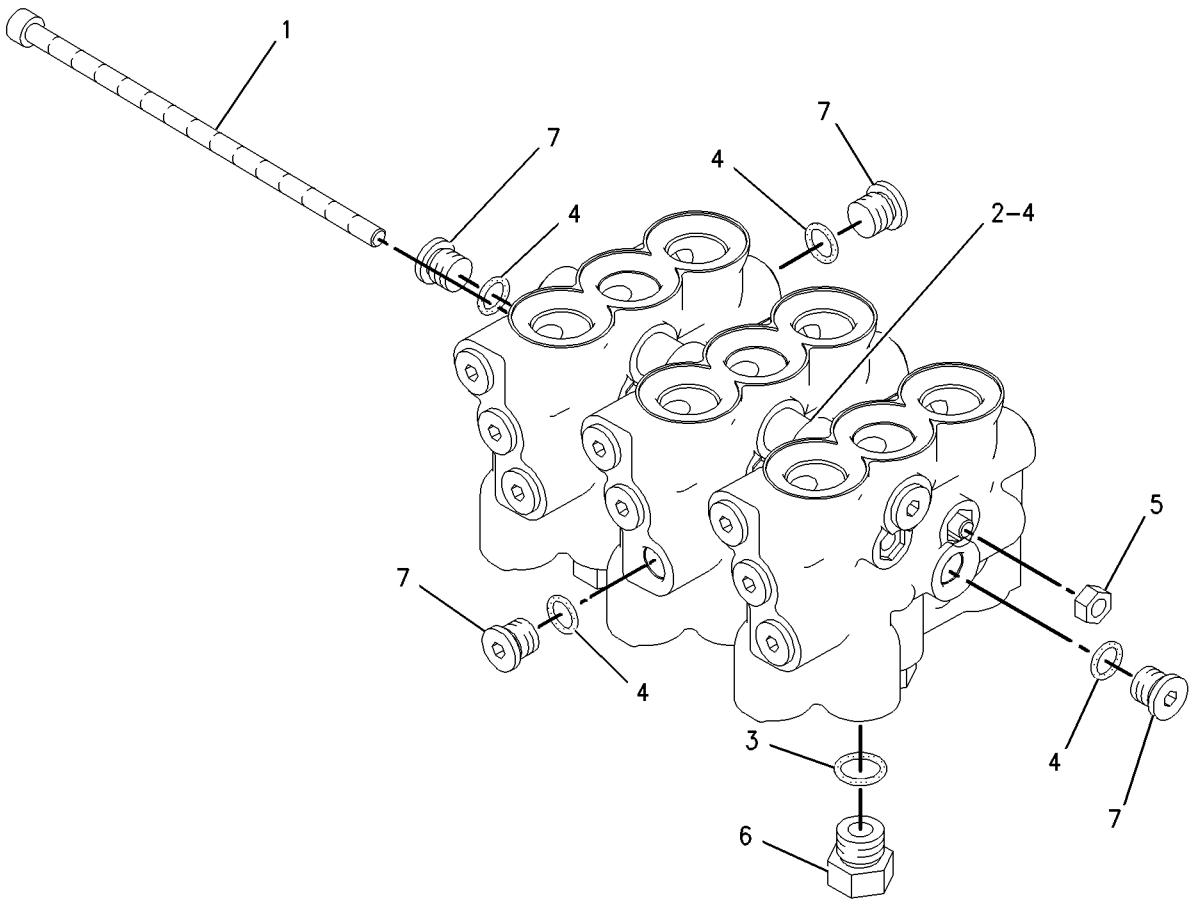

GRAPHIC #1 **<END>** g00890467

263-5436 BODY GP-PILOT VALVE

S/N: JKM1-UP
PART OF 261-8658 VALVE GP-PILOT
AN ATTACHMENT

SMCS-5059 **i02934163**

NOTE	REF NO	GRAPHIC REF	PART NUMBER	QTY	PART NAME 1 2 3 4 5 6 (PRODUCT LEVEL)	SEE PAGE
M	1	1	**5C-2890**	2	NUT (M6X1-THD)	
	2	1	**145-7977**	6	ADAPTER	
	3	1	*148-8407*	6	PLUG AS	
					(EACH INCLUDES)	
		1	**3J-1907**	1	SEAL-O-RING	
		1	**9S-4191**	1	PLUG-O-RING	
M	4	1	**157-6155**	2	BOLT-SOCKET HEAD (M6X1X200-MM)	
	5	1	*183-7263*	20	PLUG AS	
					(EACH INCLUDES)	
		1	**3J-7354**	1	SEAL-O-RING	
		1	**9S-8002**	1	PLUG-O-RING	
	6	1	**3J-7354**	12	SEAL-O-RING	

M-METRIC PART

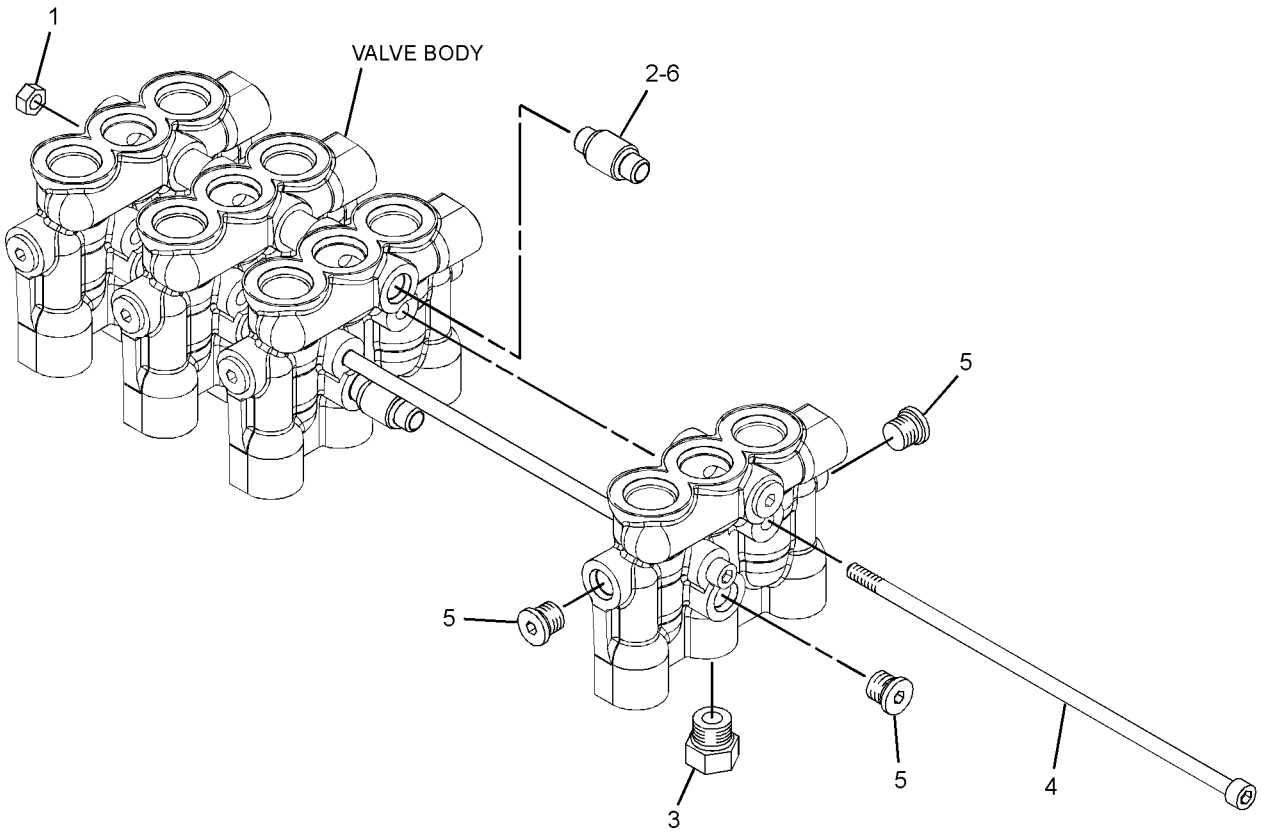

GRAPHIC #1 **<END>** g01439590

HYDRAULIC SYSTEM

311-0013 CONTROL AR-FAN–VARIABLE PITCH FAN

S/N: JKM1-UP

AN ATTACHMENT

SMCS-1386, 138R **i03545907**

NOTE	REF NO	GRAPHIC REF	PART NUMBER	QTY	PART NAME 1 2 3 4 5 6 (PRODUCT LEVEL)	SEE PAGE
	1	1	**224-1185**	2	FILM-WARNING (FLYING DEBRIS, READ OMM)	
Y	2	1	*311-0014*	1	COOLING GP-SUPPLEMENTAL (VARIABLE PITCH FAN)	66
Y	3	1	*311-0015*	1	LINES GP-HYDRAULIC FAN	742
Y	4	1	*311-0017*	1	WIRING GP-CHASSIS (VARIABLE PITCH FAN)	333
	5	1	**323-6976**	1	PLATE AS-MOUNTING (VARIABLE PITCH FAN AIR PUMP)	

Y-SEPARATE ILLUSTRATION

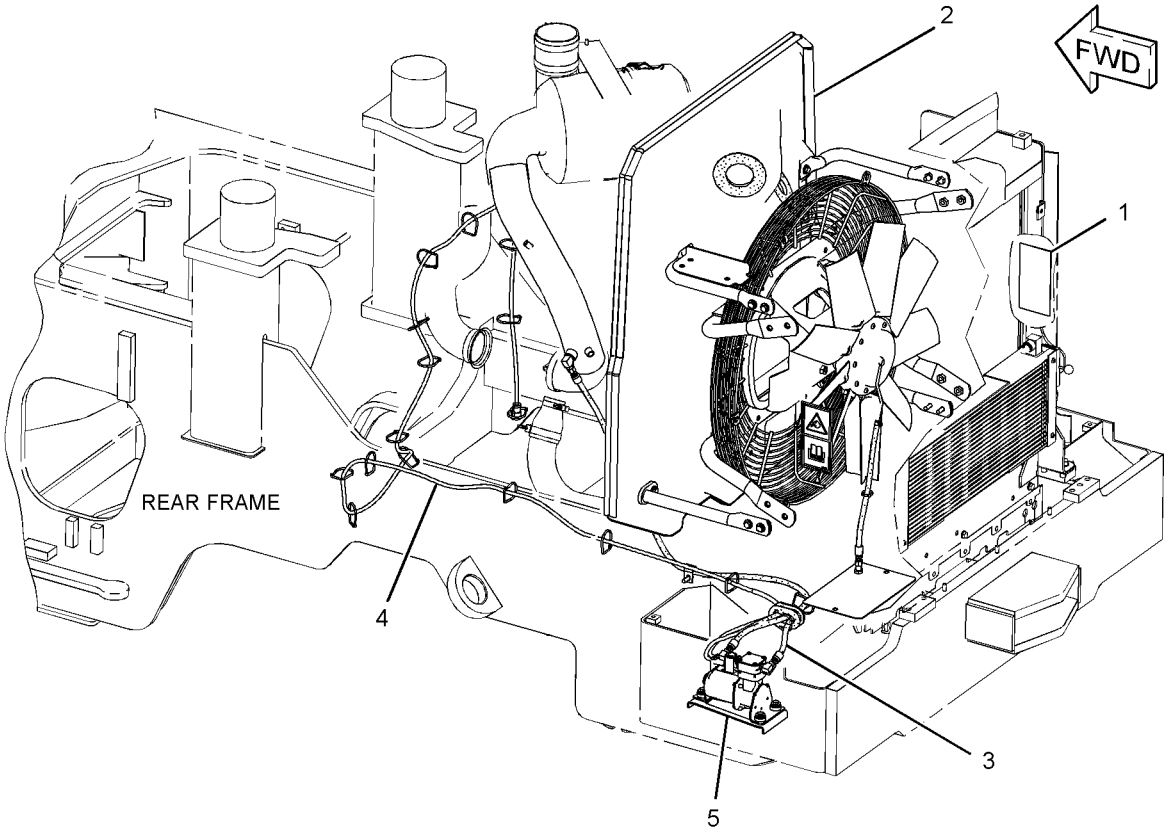

GRAPHIC #1 **<END>** g01871533

265-9755 CONTROL AR-HIGH LIFT–3-VALVE

S/N: JKM1-UP
PART OF 321-0127, 329-3943 CONTROL AR-HIGH LIFT
AN ATTACHMENT

SMCS-5104, 6119, 6129 **i03652512**

NOTE	PART NUMBER	QTY	PART NAME 1 2 3 4 5 6 (PRODUCT LEVEL)	SEE PAGE
Y	*267-8688*	1	CONTROL GP-WORK TOOL (HIGH LIFT MACHINES)	903
			S/N: JKM1-784	
Y	*266-9862*	1	COUNTERWEIGHT GP	501
Y	*265-7722*	1	CYLINDER & SEAL GP-TILT (HIGH LIFT MACHINES)	678
Y	**267-8689**	1	ARM AS-LIFT	898
			S/N: JKM785-UP	
I	**266-7265**	2	HOSE AS	
	4Q-1346	1	LINK & BEARING AS	
			S/N: JKM785-UP	
	4V-2883	2	BEARING-SLEEVE	

I-REFER TO HYDRAULIC INFORMATION SYSTEM
Y-SEPARATE ILLUSTRATION

<END>

321-0127 CONTROL AR-HIGH LIFT–3-VALVE HYDRAULICS, QUICK COUPLER

S/N: JKM1-UP
AN ATTACHMENT

SMCS-5104, 6119, 6129 **i02931481**

NOTE	PART NUMBER	QTY	PART NAME 1 2 3 4 5 6 (PRODUCT LEVEL)	SEE PAGE
Y	*265-9755*	1	CONTROL AR-HIGH LIFT (3-VALVE)	673
Y	*265-9757*	1	COUPLER AR-QUICK (HIGH LIFT MACHINES)	1072
Y	*315-6334*	1	COUPLER GP-QUICK (HORIZONTAL PIN LOCK)	1077

Y-SEPARATE ILLUSTRATION

<END>

329-3943 CONTROL AR-HIGH LIFT–3-VALVE HYD, QUICK COUPLER

S/N: JKM1-UP
FOR USE WITH 317-8364–PAGE 4, 317-8366–PAGE 4
AN ATTACHMENT

SMCS-5104, 6119, 6129 **i03643361**

NOTE	PART NUMBER	QTY	PART NAME 1 2 3 4 5 6 (PRODUCT LEVEL)	SEE PAGE
Y	*265-9755*	1	CONTROL AR-HIGH LIFT (3-VALVE)	673
Y	*265-9757*	1	COUPLER AR-QUICK (HIGH LIFT MACHINES)	1072
Y	*310-9392*	1	COUPLER GP-QUICK (HORIZONTAL PIN LOCK)	1073

Y-SEPARATE ILLUSTRATION

<END>

265-9740 CONTROL AR-RIDE–2-VALVE

S/N: JKM1-UP

PART OF 317-8359, 317-8360, 317-8361, 318-0647 CONFIGURATION AR

AN ATTACHMENT

SMCS-5004 **i02930716**

NOTE	PART NUMBER	QTY	PART NAME 1 2 3 4 5 6 (PRODUCT LEVEL)	SEE PAGE
Y	*258-8757*	1	LINES GP-RIDE CONTROL	776
Y	*260-8832*	1	VALVE & MTG GP-MAIN CONTROL (2-FUNCTION, WITH RIDE CONTROL)	817
Y	*266-9438*	1	WIRING GP-RIDE CONTROL	356

Y-SEPARATE ILLUSTRATION

<END>

265-9741 CONTROL AR-RIDE–3-VALVE

S/N: JKM1-UP

PART OF 317-8362, 317-8363, 317-8364, 317-8366 CONFIGURATION AR

AN ATTACHMENT

SMCS-5004 **i02930656**

NOTE	PART NUMBER	QTY	PART NAME 1 2 3 4 5 6 (PRODUCT LEVEL)	SEE PAGE
Y	*266-1588*	1	LINES GP-FRONT	722
Y	*258-8757*	1	LINES GP-RIDE CONTROL	776
Y	*261-0327*	1	VALVE & MTG GP-MAIN CONTROL (3-FUNCTION, WITH RIDE CONTROL)	818
Y	*266-9438*	1	WIRING GP-RIDE CONTROL	356

Y-SEPARATE ILLUSTRATION

<END>

265-9756 CONTROL AR-RIDE–4-VALVE

S/N: JKM1-UP

PART OF 317-8368 CONFIGURATION AR

AN ATTACHMENT

SMCS-5004 **i02932396**

NOTE	PART NUMBER	QTY	PART NAME 1 2 3 4 5 6 (PRODUCT LEVEL)	SEE PAGE
Y	*265-2150*	1	LINES GP-RIDE CONTROL	777
Y	*280-2794*	1	WIRING GP-RIDE CONTROL	358

Y-SEPARATE ILLUSTRATION

<END>

HYDRAULIC SYSTEM

237-7549 CYLINDER & SEAL GP-LIFT

S/N: JKM1-UP

PART OF 237-7535 HYDRAULIC AR-2 VALVE

SMCS-5102 **i02898098**

NOTE	REF NO	GRAPHIC REF	PART NUMBER	QTY	PART NAME 1 2 3 4 5 6 (PRODUCT LEVEL)	SEE PAGE
Y	1	1	**254-9037**	1	CYLINDER GP-LIFT	681
	2	1	**7K-9209**	2	SEAL-LIP TYPE	

Y-SEPARATE ILLUSTRATION

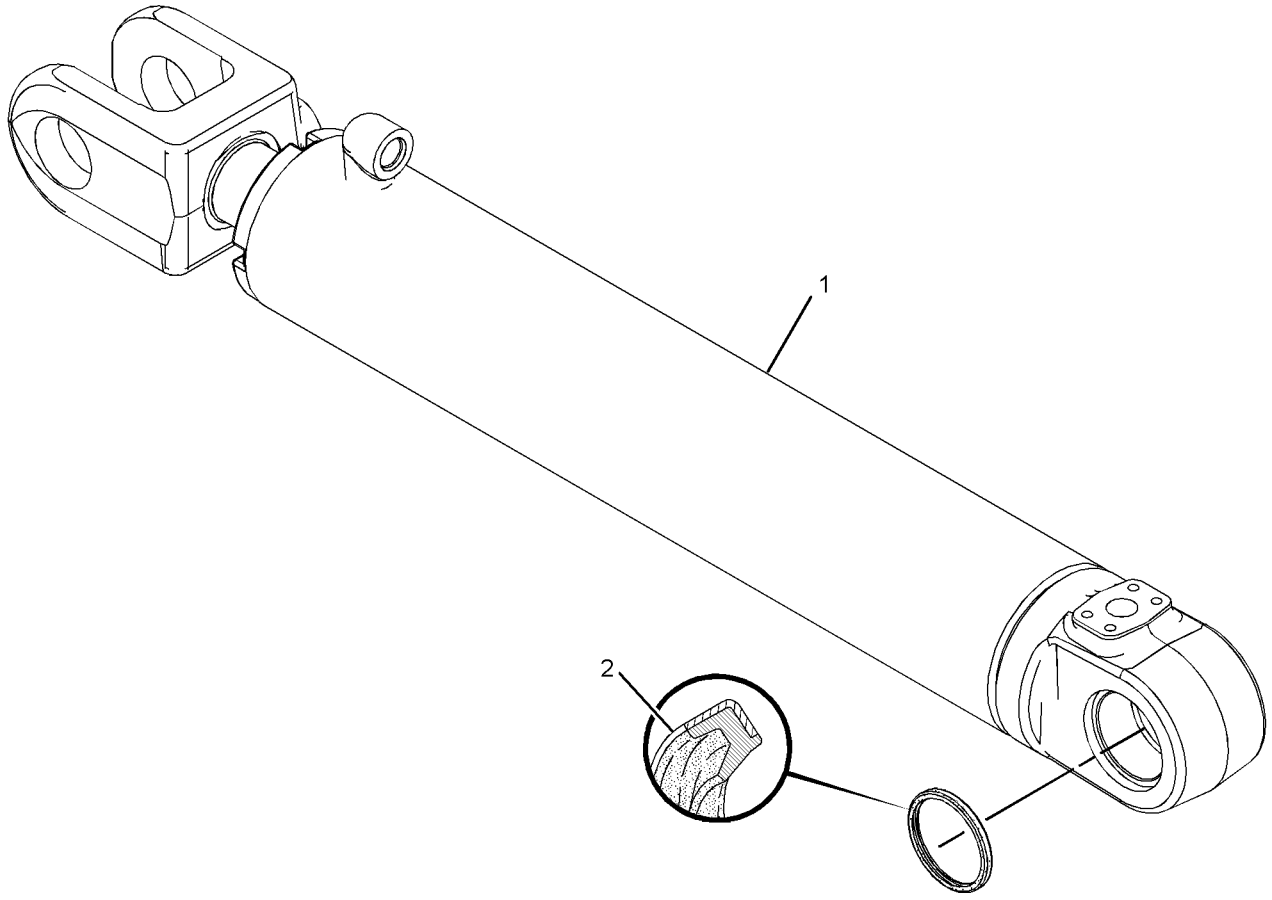

GRAPHIC #1 **<END>** g01385790

HYDRAULIC SYSTEM

237-7548 CYLINDER & SEAL GP-TILT

S/N: JKM1-905

PART OF 237-7535 HYDRAULIC AR-2 VALVE

SMCS-5104 **i03351630**

NOTE	REF NO	GRAPHIC REF	PART NUMBER	QTY	PART NAME 1 2 3 4 5 6 (PRODUCT LEVEL)	SEE PAGE
Y	1	1	**338-8416**	1	CYLINDER GP-TILT	684
	2	1	**7K-9208**	2	SEAL-LIP TYPE	
	3	1	**7K-9209**	2	SEAL-LIP TYPE	

Y-SEPARATE ILLUSTRATION

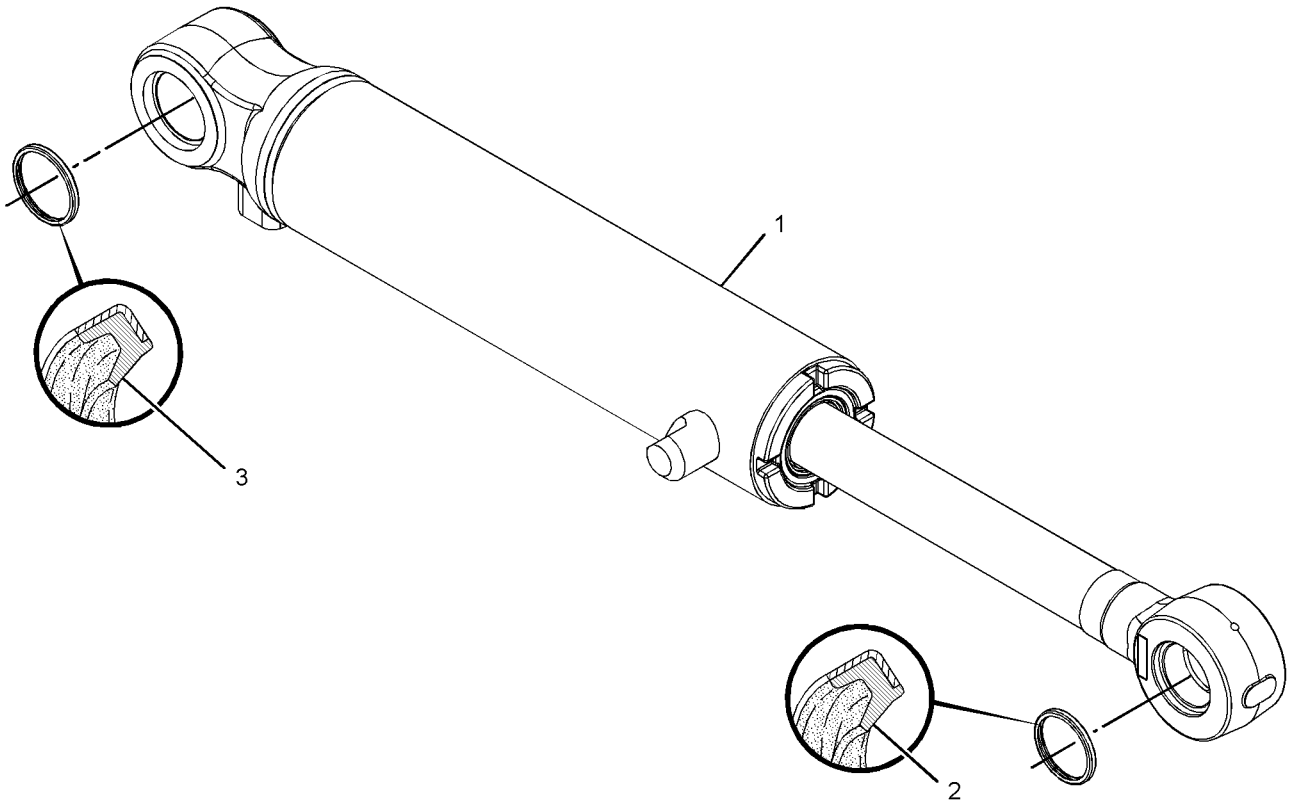

GRAPHIC #1 **<END>** g01385927

237-7548 CYLINDER & SEAL GP-TILT

S/N: JKM906-UP

PART OF 237-7535 HYDRAULIC AR-2 VALVE

SMCS-5104 **i03810372**

NOTE	REF NO	GRAPHIC REF	PART NUMBER	QTY	PART NAME 1 2 3 4 5 6 (PRODUCT LEVEL)	SEE PAGE
Y	1	1	**346-1093**	1	CYLINDER GP-TILT	685
	2	1	**7K-9208**	2	SEAL-LIP TYPE	
	3	1	**7K-9209**	2	SEAL-LIP TYPE	

Y-SEPARATE ILLUSTRATION

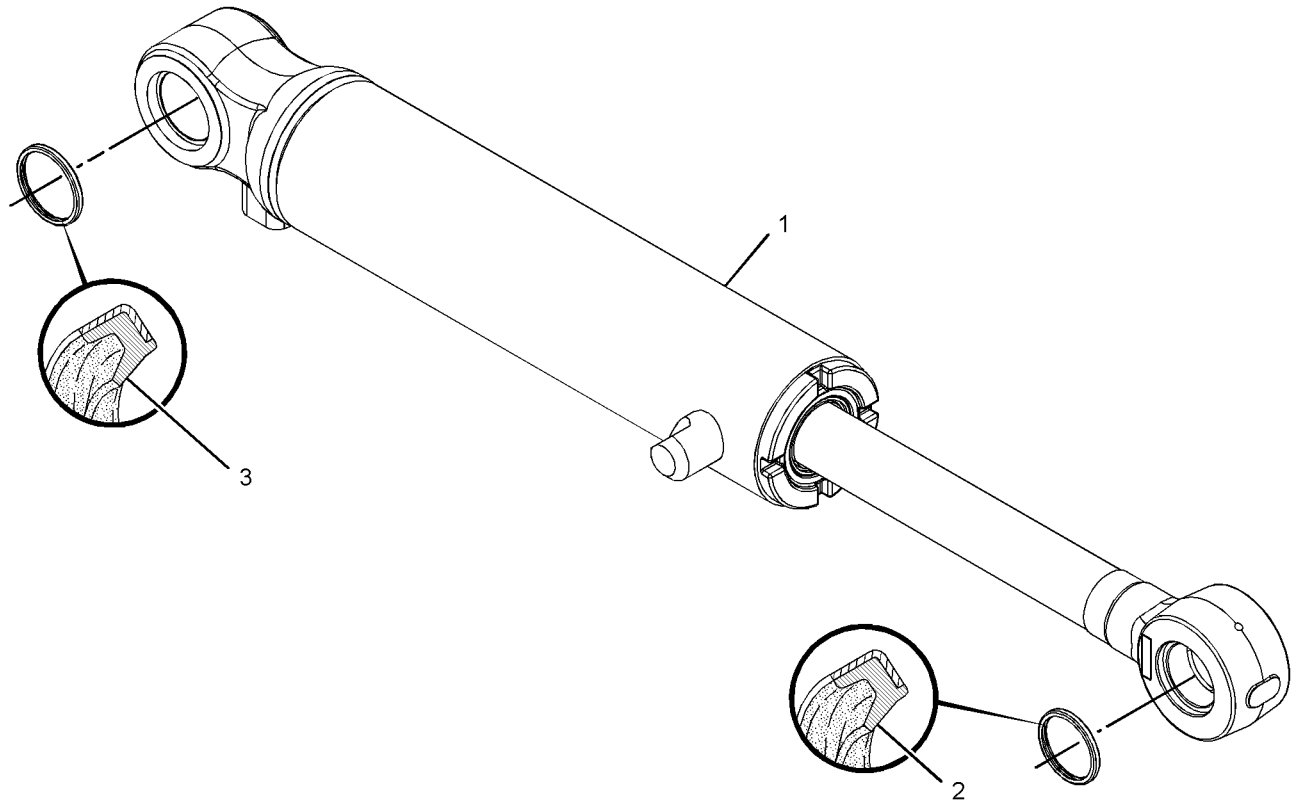

GRAPHIC #1 **<END>** g01385927

HYDRAULIC SYSTEM

265-7722 CYLINDER & SEAL GP-TILT–HIGH LIFT MACHINES

S/N: JKM1-988

PART OF 265-9755 CONTROL AR-HIGH LIFT, 265-9754 LIFT AR

AN ATTACHMENT

SMCS-5104 **i02929891**

NOTE	REF NO	GRAPHIC REF	PART NUMBER	QTY	PART NAME 1 2 3 4 5 6 (PRODUCT LEVEL)	SEE PAGE
Y	1	1	**317-1090**	1	CYLINDER GP-TILT (HIGH LIFT MACHINES)	682
	2	1	**7K-9208**	2	SEAL-LIP TYPE	
	3	1	**7K-9209**	2	SEAL-LIP TYPE	

Y-SEPARATE ILLUSTRATION

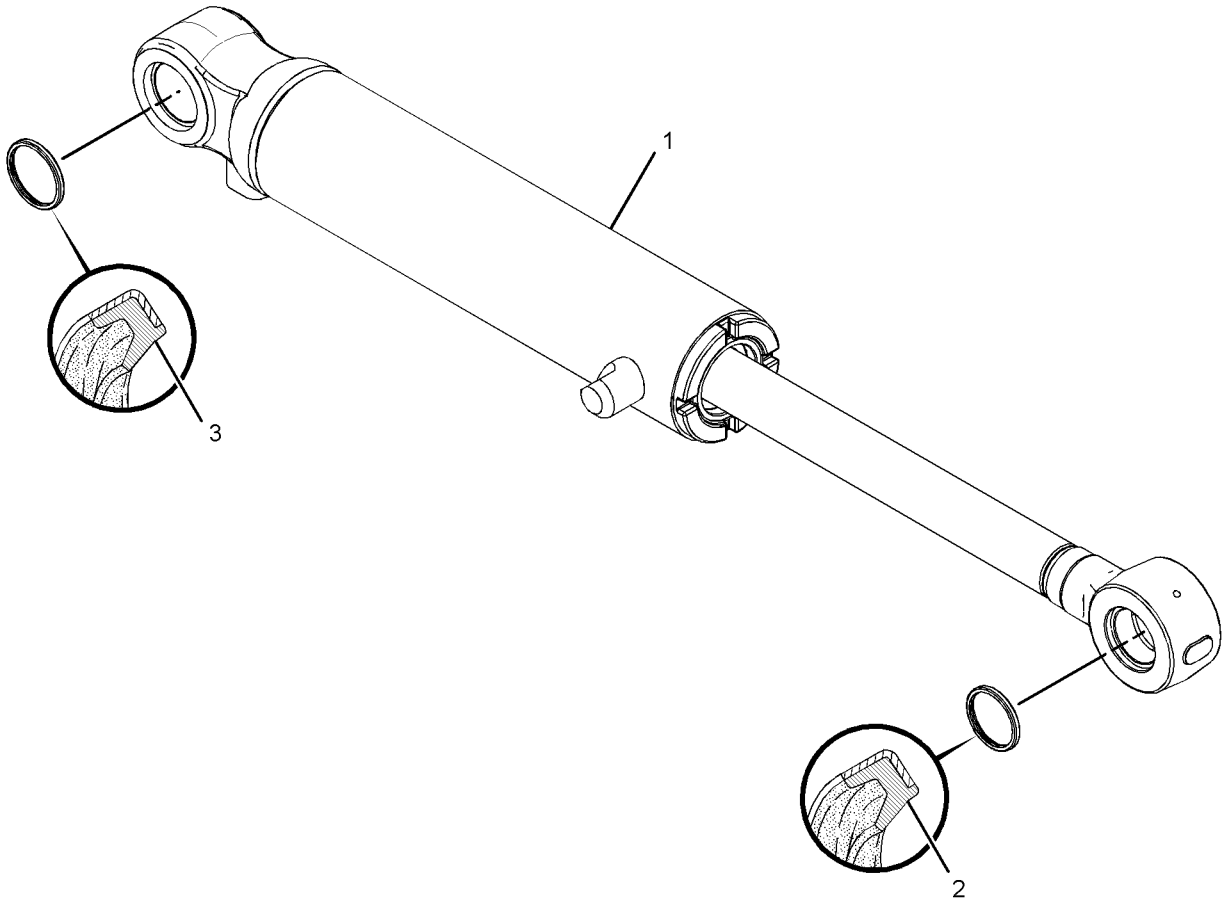

GRAPHIC #1 **<END>** g01429207

265-7722 CYLINDER & SEAL GP-TILT–HIGH LIFT MACHINES

S/N: JKM989-UP

PART OF 265-9755 CONTROL AR-HIGH LIFT, 265-9754 LIFT AR

AN ATTACHMENT

SMCS-5104 **i03902711**

NOTE	REF NO	GRAPHIC REF	PART NUMBER	QTY	PART NAME 1 2 3 4 5 6 (PRODUCT LEVEL)	SEE PAGE
CY	1	1	**346-1094**	1	CYLINDER GP-TILT (HIGH LIFT MACHINES)	686
	2	1	**7K-9208**	2	SEAL-LIP TYPE	
	3	1	**7K-9209**	2	SEAL-LIP TYPE	

C-CHANGE FROM PREVIOUS TYPE
Y-SEPARATE ILLUSTRATION

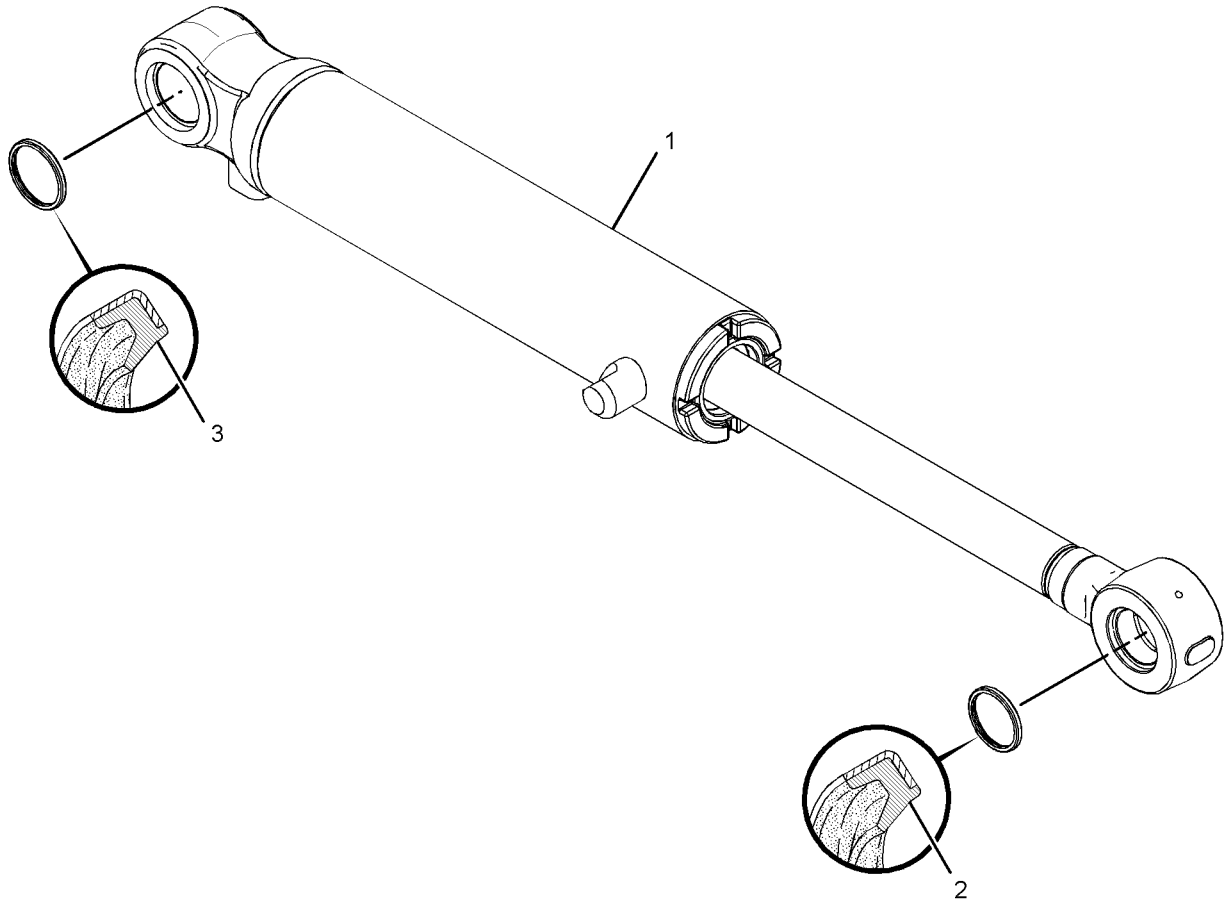

GRAPHIC #1 **<END>** g01429207

HYDRAULIC SYSTEM

237-0946 CYLINDER GP-COUPLER

S/N: JKM1-UP
50.8-MM (2-IN) BORE X 69.85-MM (2.75-IN) STROKE
PART OF 315-6334 COUPLER GP-QUICK
AN ATTACHMENT

SMCS-5133 **i02145566**

NOTE	REF NO	GRAPHIC REF	PART NUMBER	QTY	PART NAME 1 2 3 4 5 6 (PRODUCT LEVEL)	SEE PAGE
	1	1	**1H-9696**	1	SEAL-O-RING	
	2	1	**7F-8607**	1	SEAL-O-RING	
	3	1	**1S-0670**	1	RING-BACKUP	
	4	1	**3E-4250**	1	SEAL-PISTON RING	
	5	1	**6J-1889**	1	SEAL-U-CUP	
	6	1	**6J-1890**	1	WIPER-ROD	
	7	1	**9S-8002**	2	PLUG-O-RING	
	8	1	**237-0947**	1	VALVE GP-CHECK	
		1	**213-8433**	1	KIT-SEAL	

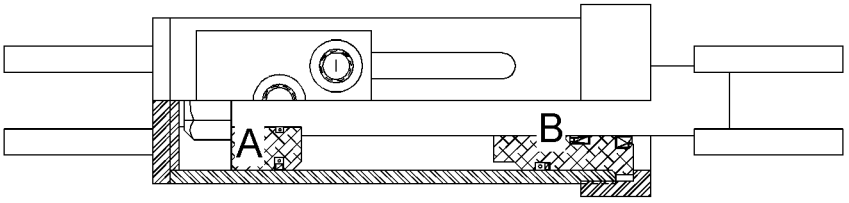

VIEW C-C

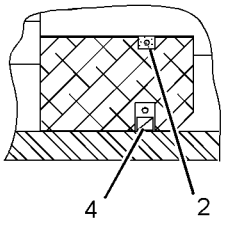

VIEW OF AREA A

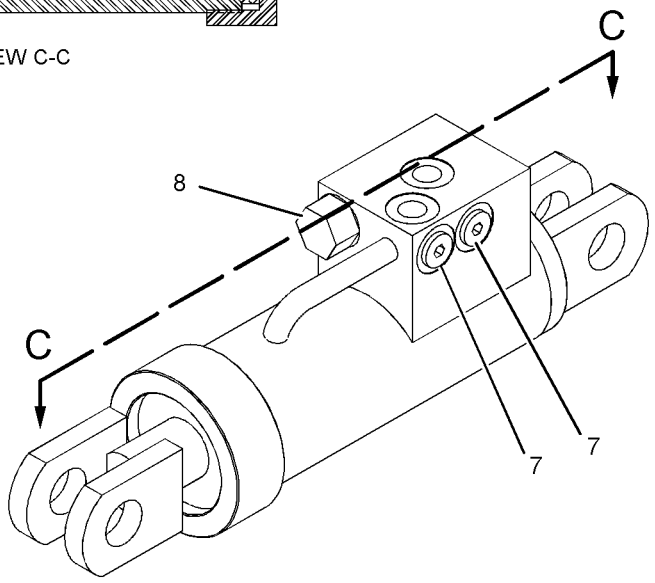

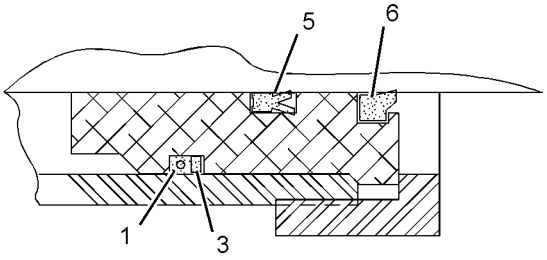

VIEW OF AREA B

GRAPHIC #1 **<END>** g01110646

254-9037 CYLINDER GP-LIFT

S/N: JKM1-UP
129.9-MM (5.11-IN) BORE X 693-MM (27.28-IN) STROKE
PART OF 237-7549 CYLINDER & SEAL GP-LIFT

SMCS-5102 **i02898161**

NOTE	REF NO	GRAPHIC REF	PART NUMBER	QTY	PART NAME 1 2 3 4 5 6 (PRODUCT LEVEL)	SEE PAGE
	1	1	**263-3386**	1	CYLINDER AS	
		1	**6E-1497**	1	BOSS	
		1	**4V-8674**	1	BEARING-SLEEVE	
	2	1	**263-3389**	1	ROD AS	
	3	1	**263-3391**	1	HEAD	
	4	1	**263-3401**	1	PISTON	
	5	1	**118-4019**	1	RING	
	6	1	**167-2235**	1	SEAL AS-BUFFER	
	7	1	**167-2299**	1	SEAL-U-CUP	
	8	1	**175-7903**	1	SEAL-O-RING	
	9	1	**175-7904**	1	SEAL-O-RING	
	10	1	**1F-6762**	1	BOLT (1-1/2-12X4.5-IN)	
	11	1	**278-2324**	1	SEAL-WIPER	
	12	1	**2K-4096**	1	RING-BACKUP	
	13	1	**3S-6162**	1	WASHER-HARD (40.5X67X6-MM THK)	
	14	1	**8C-9200**	1	RING-WEAR	
	15	1	**9X-3595**	1	SEAL AS	

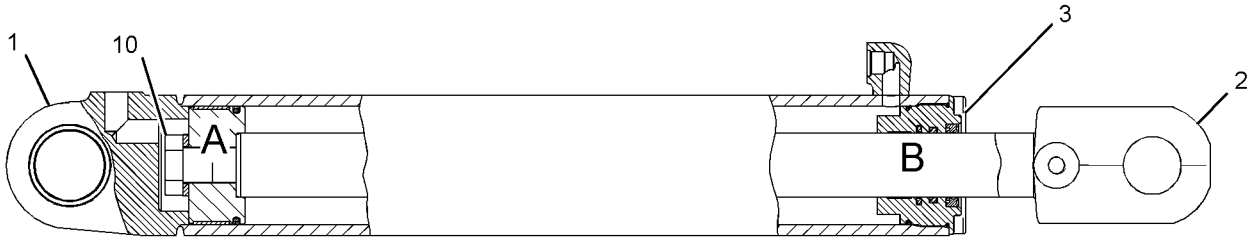

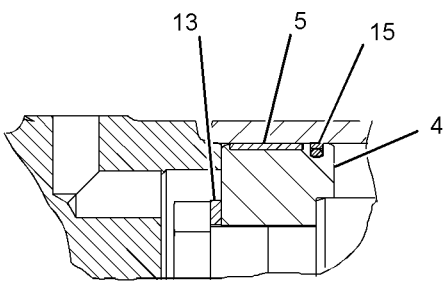

VIEW OF AREA A

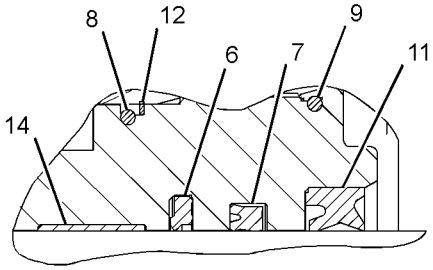

VIEW OF AREA B

GRAPHIC #1 **<END>** g01385879

317-1090 CYLINDER GP-TILT—HIGH LIFT MACHINES

S/N: JKM1-988
140-MM (5.5-IN) BORE X 512-MM (20.2-IN) STROKE
PART OF 265-7722 CYLINDER & SEAL GP-TILT
AN ATTACHMENT

SMCS-5104 **i03074106**

NOTE	REF NO	GRAPHIC REF	PART NUMBER	QTY	PART NAME 1 2 3 4 5 6 (PRODUCT LEVEL)	SEE PAGE
	1	1	**9T-7823**	1	WASHER	
	2	1	**264-0614**	1	HEAD	
	3	1	**264-0615**	1	PISTON	
	4	1	**317-1449**	1	CYLINDER AS	
	5	1	**317-1453**	1	ROD AS	
	6	1	**167-2235**	1	SEAL AS-BUFFER	
	7	1	**167-2299**	1	SEAL-U-CUP	
	8	1	**278-2324**	1	SEAL-WIPER	
	9	1	**2H-9247**	1	SEAL-O-RING	
	10	1	**2K-2961**	1	RING-BACKUP	
	11	1	**4J-4606**	1	RING-WEAR	
	12	1	**5J-3488**	1	LOCKNUT (2-1/4-12-THD)	
	13	1	**8C-9200**	1	RING-WEAR	
	14	1	**8F-9516**	1	SEAL-O-RING	
	15	1	**9X-3598**	1	SEAL AS	
	16	1	**5M-6214**	1	PLUG-PIPE	

317-1090 CYLINDER GP-TILT *(contd.)* **i03074106**

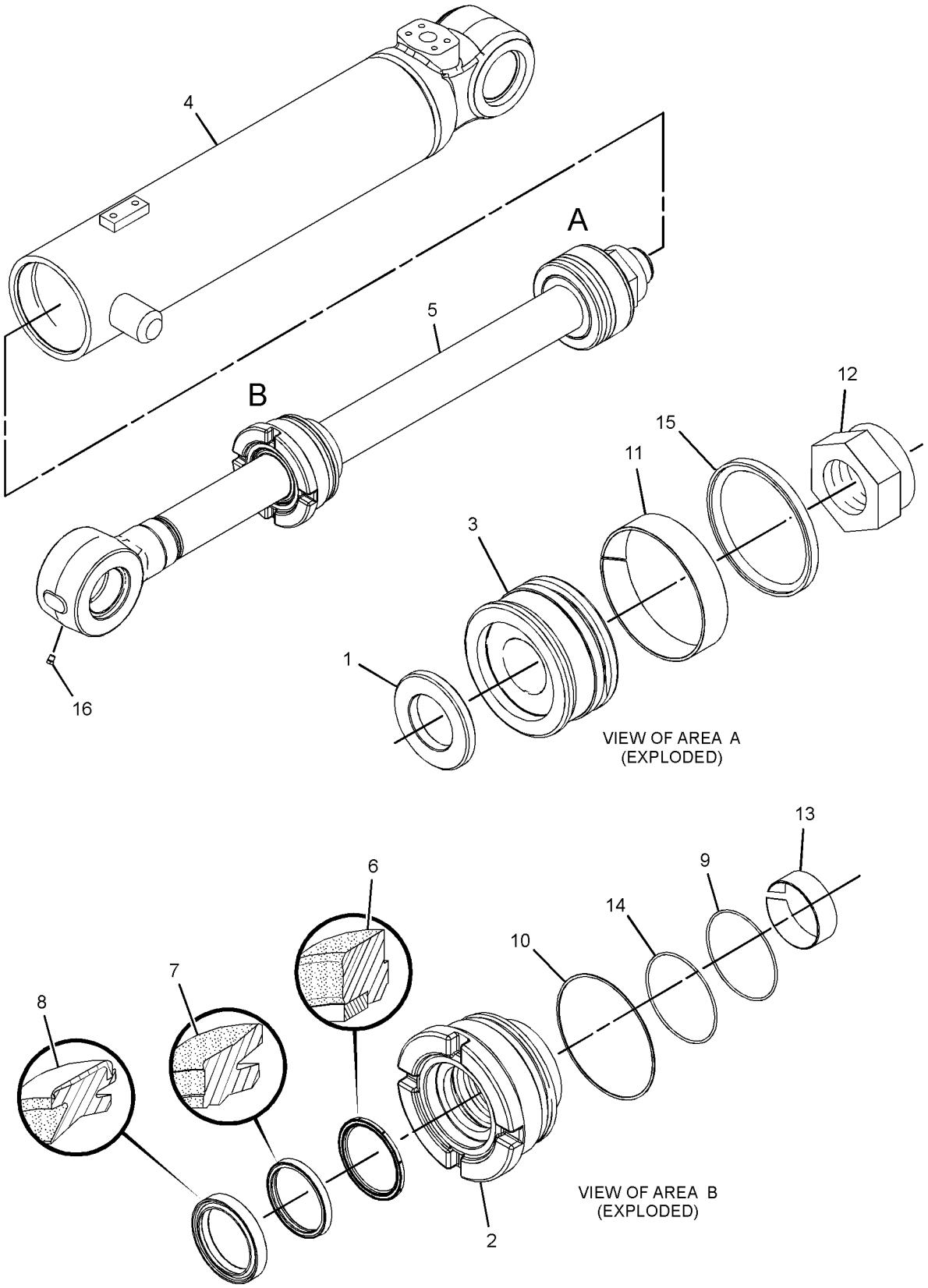

GRAPHIC #1 **<END>** g01664634

HYDRAULIC SYSTEM

338-8416 CYLINDER GP-TILT

S/N: JKM1-UP

PART OF 237-7548 CYLINDER & SEAL GP-TILT

SMCS-5104 **i03351659**

NOTE	REF NO	GRAPHIC REF	PART NUMBER	QTY	PART NAME 1 2 3 4 5 6 (PRODUCT LEVEL)	SEE PAGE
	1	1	**5J-3488**	1	LOCKNUT (2-1/4-12-THD)	
	2	1	**5M-6214**	1	PLUG-PIPE	
	3	1	**9T-7823**	1	WASHER	
	4	1	**264-0614**	1	HEAD	
	5	1	**264-0615**	1	PISTON	
	6	1	**317-1449**	1	CYLINDER AS	
	7	1	**338-7395**	1	ROD AS	
		1	**3G-5285**	1	BEARING-SLEEVE	
	8	1	**167-2235**	1	SEAL AS-BUFFER	
	9	1	**167-2299**	1	SEAL-U-CUP	
	10	1	**278-2324**	1	SEAL-WIPER	
	11	1	**2H-9247**	1	SEAL-O-RING	
	12	1	**2K-2961**	1	RING-BACKUP	
	13	1	**4J-4606**	1	RING-WEAR	
	14	1	**8C-9200**	1	RING-WEAR	
	15	1	**8F-9516**	1	SEAL-O-RING	
	16	1	**9X-3598**	1	SEAL AS	
		1	**9X-3596**	1	RING-SEAL	
		1	**9X-3597**	1	RING-EXPANDER	

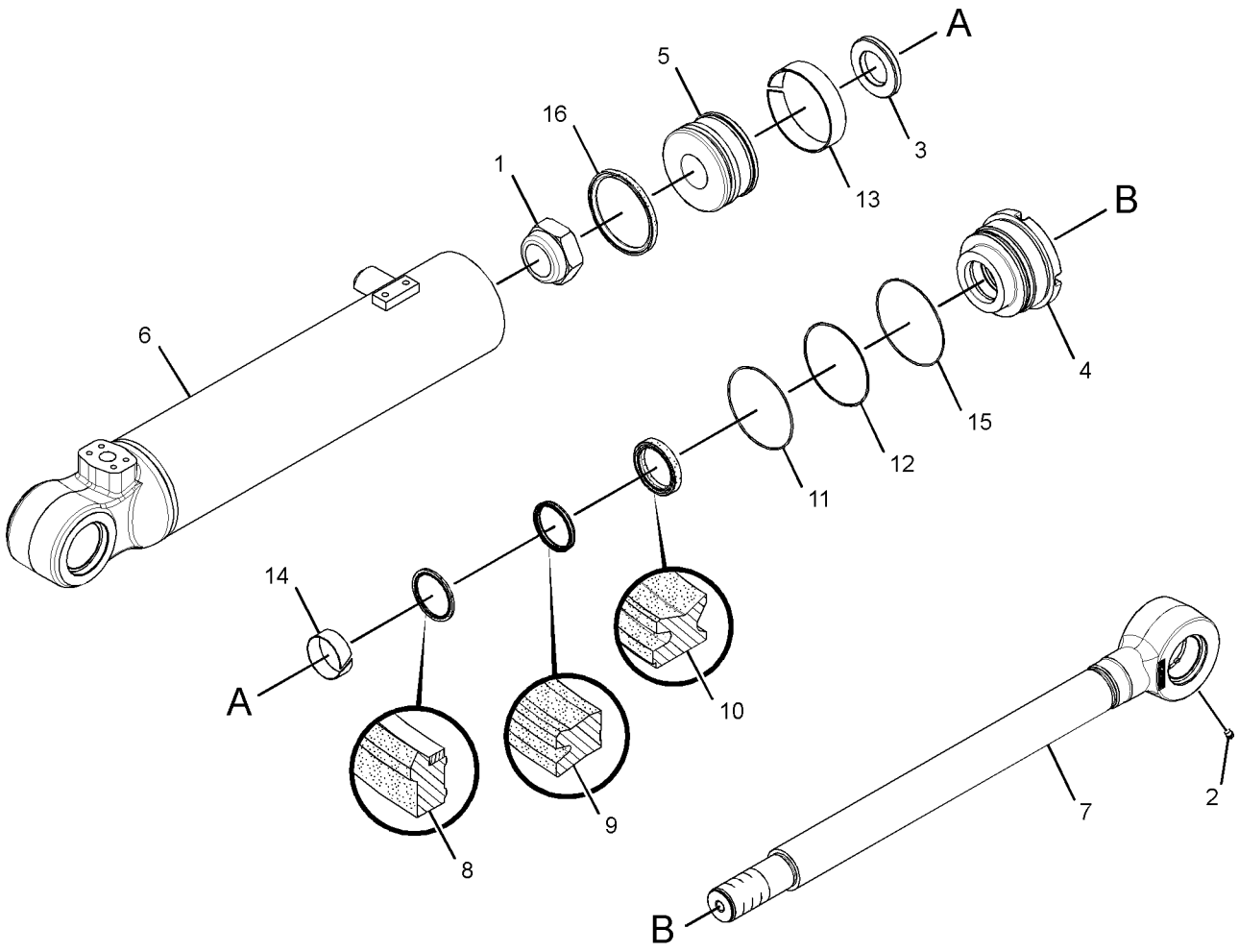

GRAPHIC #1 **<END>** g01786813

HYDRAULIC SYSTEM

346-1093 CYLINDER GP-TILT

S/N: JKM906-UP
140-MM BORE X 527-MM STROKE
PART OF 237-7548 CYLINDER & SEAL GP-TILT

SMCS-5104 **i03810373**

NOTE	REF NO	GRAPHIC REF	PART NUMBER	QTY	PART NAME 1 2 3 4 5 6 (PRODUCT LEVEL)	SEE PAGE
	1	1	**5J-3488**	1	LOCKNUT (2-1/4-12-THD)	
	2	1	**5M-6214**	1	PLUG-PIPE	
	3	1	**9T-7823**	1	WASHER	
	4	1	**346-1091**	1	HEAD	
	5	1	**264-0615**	1	PISTON	
	6	1	**317-1449**	1	CYLINDER AS	
	7	1	**338-7395**	1	ROD AS	
		1	**3G-5285**	1	BEARING-SLEEVE	
	8	1	**167-2235**	1	SEAL AS-BUFFER	
	9	1	**167-2299**	1	SEAL-U-CUP	
	10	1	**278-2324**	1	SEAL-WIPER	
	11	1	**2H-9247**	1	SEAL-O-RING	
	12	1	**2K-2961**	1	RING-BACKUP	
	13	1	**4J-4606**	1	RING-WEAR	
	14	1	**8C-9200**	1	RING-WEAR	
	15	1	**8F-9516**	1	SEAL-O-RING	
	16	1	**9X-3598**	1	SEAL AS	
		1	**9X-3596**	1	RING-SEAL	
		1	**9X-3597**	1	RING-EXPANDER	

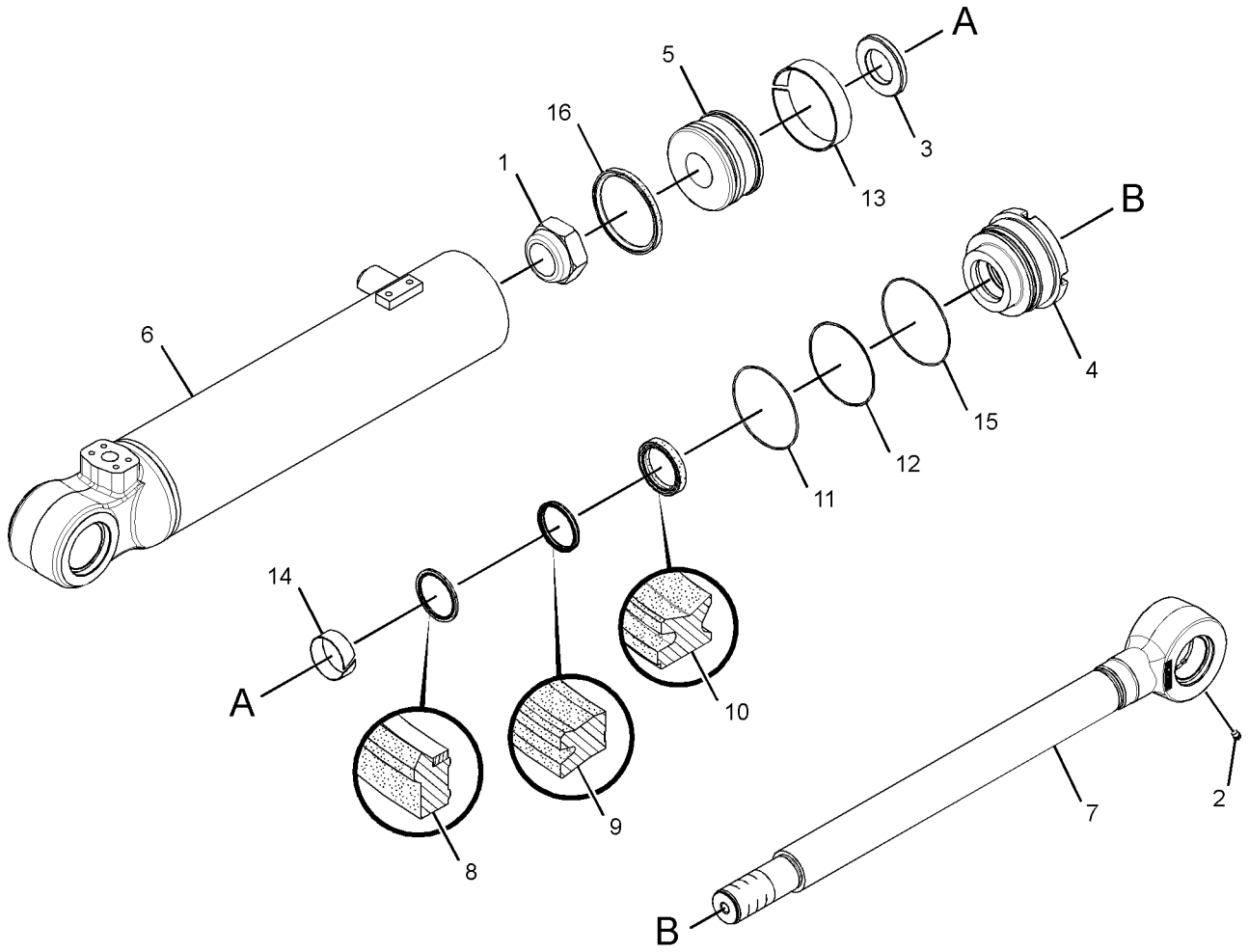

GRAPHIC #1 **<END>** g01786813

346-1094 CYLINDER GP-TILT—HIGH LIFT MACHINES

S/N: JKM989-UP
140-MM (5.5-IN) BORE X 512-MM (20.2-IN) STROKE
PART OF 265-7722 CYLINDER & SEAL GP-TILT
AN ATTACHMENT

SMCS-5104 **i03902715**

NOTE	REF NO	GRAPHIC REF	PART NUMBER	QTY	PART NAME 1 2 3 4 5 6 (PRODUCT LEVEL)	SEE PAGE
	1	1	**5M-6214**	1	PLUG-PIPE	
	2	1	**9T-7823**	1	WASHER	
	3	1	**9X-3598**	1	SEAL AS	
	4	1	**264-0615**	1	PISTON	
	5	1	**317-1449**	1	CYLINDER AS	
		1	**264-0608**	1	CAP AS	
		1	**1J-2303**	1	BUSHING	
	6	1	**317-1453**	1	ROD AS	
		1	**3G-5285**	1	BUSHING	
	7	1	**346-1091**	1	HEAD	
	8	1	**167-2235**	1	SEAL AS-BUFFER	
	9	1	**167-2299**	1	SEAL-U-CUP	
	10	1	**278-2324**	1	SEAL-WIPER	
	11	1	**2H-9247**	1	SEAL-O-RING	
	12	1	**2K-2961**	1	RING-BACKUP	
	13	1	**4J-4606**	1	RING-WEAR	
	14	1	**5J-3488**	1	LOCKNUT (2-1/4-12-THD)	
	15	1	**8C-9200**	1	RING-WEAR	
	16	1	**8F-9516**	1	SEAL-O-RING	

346-1094 CYLINDER GP-TILT *(contd.)* **i03902715**

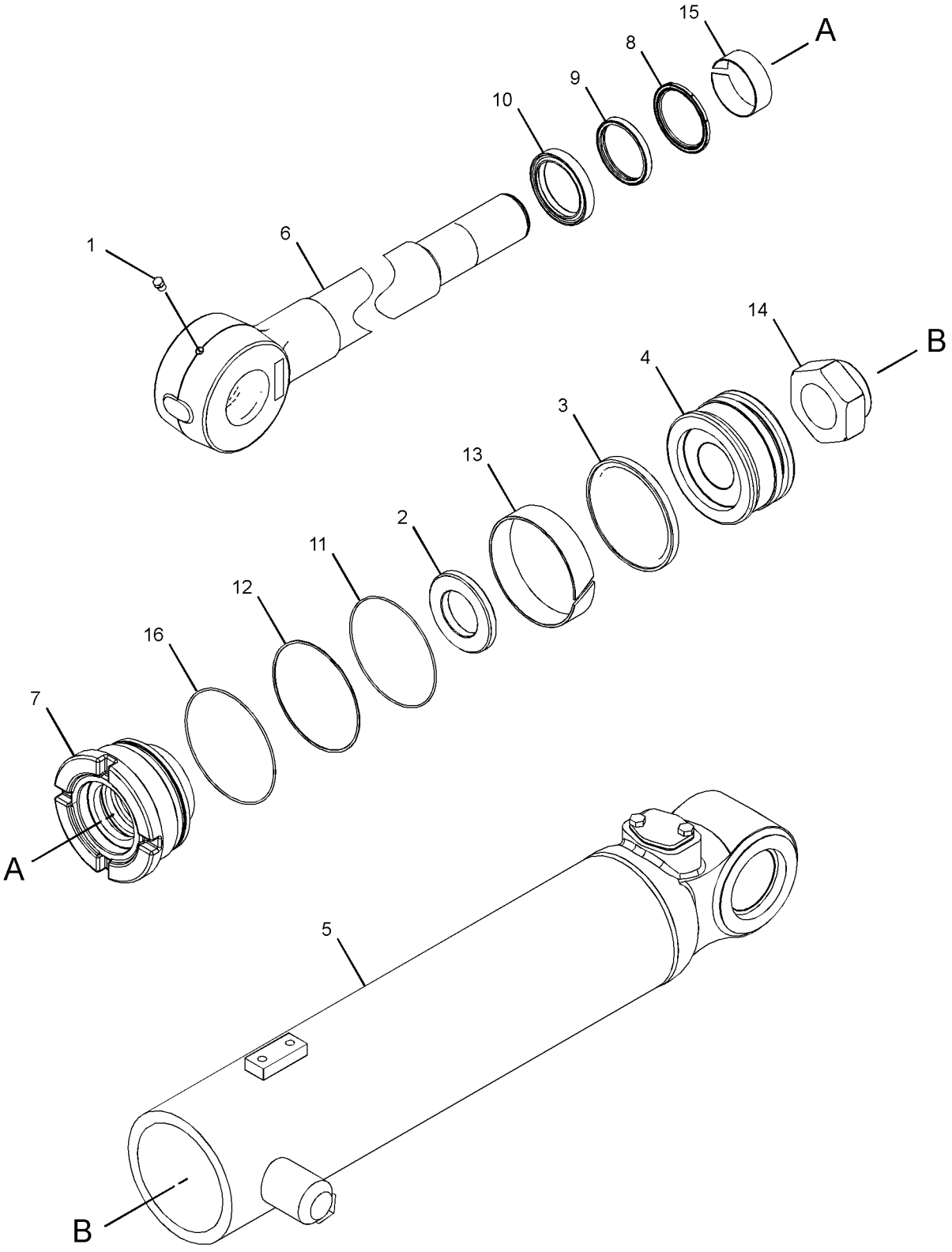

GRAPHIC #1 **<END>** g02120714

HYDRAULIC SYSTEM

267-9400 DRAIN GP-ECOLOGY–AXLE, FRONT, REAR

S/N: JKM1-UP
PART OF 317-9484, 317-9490 CONFIGURATION AR
AN ATTACHMENT

SMCS-1273, 5056 **i02930682**

NOTE	REF NO	GRAPHIC REF	PART NUMBER	QTY	PART NAME 1 2 3 4 5 6 (PRODUCT LEVEL)	SEE PAGE
	1	1	**248-0833**	6	DRAIN GP-ECOLOGY	
					(EACH INCLUDES)	
		1	**3S-9233**	1	SEAL-O-RING	
		1	**5L-4759**	1	SEAL-O-RING	
		1	**259-7138**	1	PLUG	
	2	1	**7M-8485**	6	SEAL-O-RING	

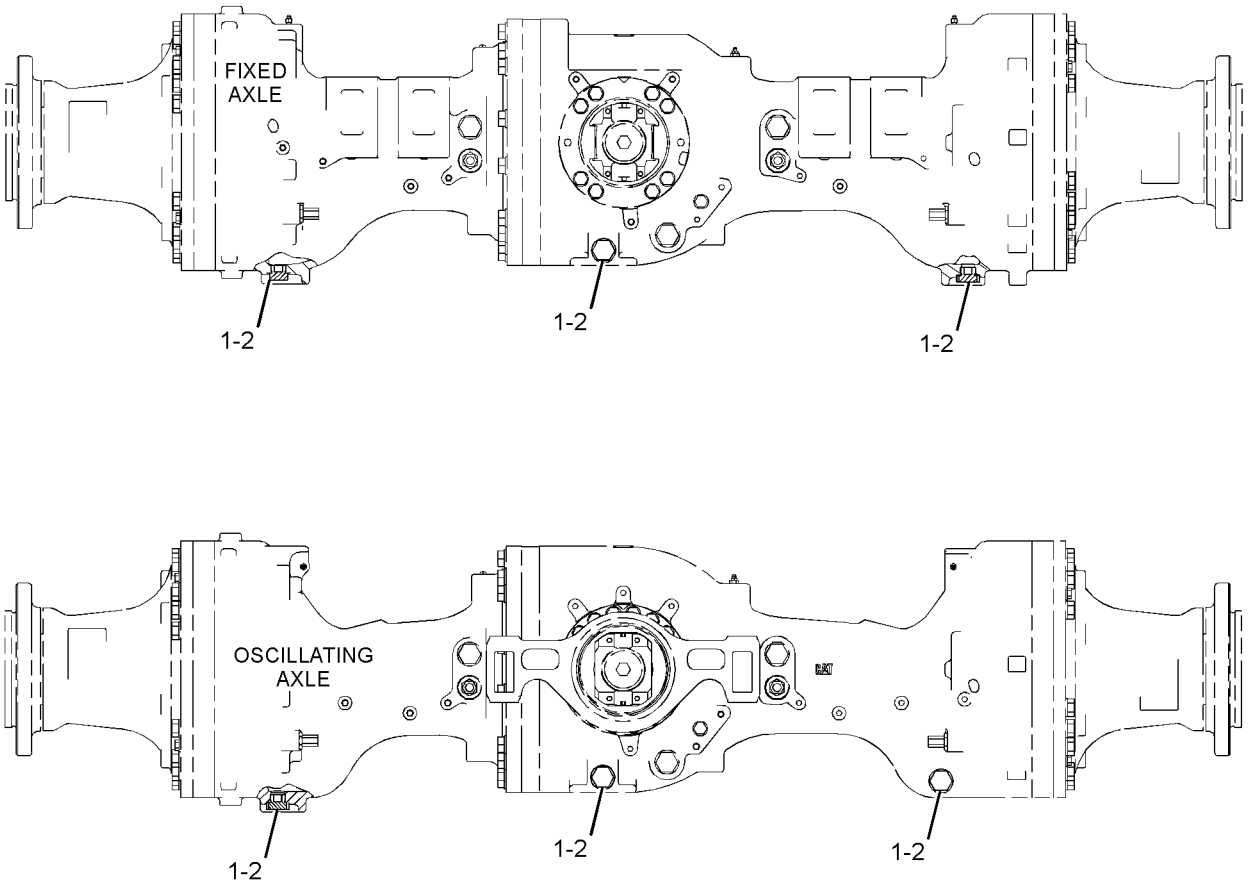

GRAPHIC #1 **<END>** g01433680

244-1031 FILTER GP-OIL–HYDRAULIC

S/N: JKM1-712

PART OF 255-4817 LINES GP-HYDRAULIC OIL COOLER

SMCS-5068, 5091, 5092 **i02612384**

NOTE	REF NO	GRAPHIC REF	PART NUMBER	QTY	PART NAME 1 2 3 4 5 6 (PRODUCT LEVEL)	SEE PAGE
	1	1	**8C-3451**	1	CAP-DUST	
	2	1	**8C-6712**	1	ELBOW	
	3	1	**253-2673**	1	SWITCH GP-PRESSURE (HYDRAULIC FILTER BYPASS)	
		1	**102-8802**	1	KIT-RECEPTACLE (2-PIN)	
					(INCLUDES RECEPTACLE AS AND WEDGE)	
		1	**186-3735**	1	PIN-CONNECTOR (16-GA TO 18-GA)	
E		1	**9X-1813**		SLEEVE (14-CM)	
	4	1	**225-4118**	1	FILTER-OIL (ULTRA HIGH EFFICIENCY)	
	5	1	**3J-1907**	2	SEAL-O-RING	
	6	1	**3J-7354**	1	SEAL-O-RING	
	7	1	**5F-9144**	1	SEAL-O-RING	
	8	1	**8C-3446**	1	VALVE-FLUID SAMPLING (FUEL)	

E-ORDER BY THE CENTIMETER

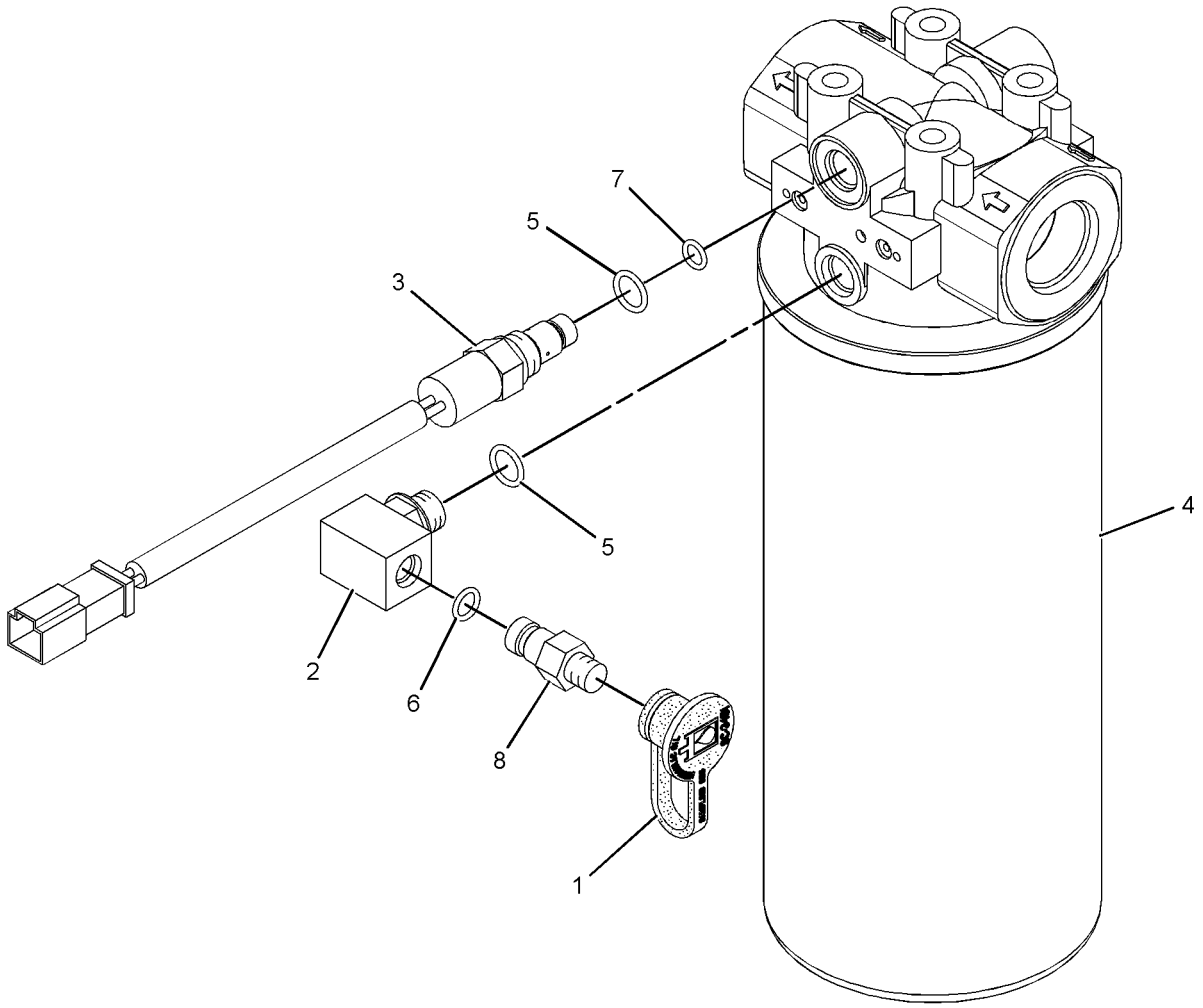

GRAPHIC #1 **<END>** g01114256

HYDRAULIC SYSTEM

285-2235 FILTER GP-OIL–HYDRAULIC CASE DRAIN

S/N: JKM1-862

PART OF 239-3357 LINES GP-HYDRAULIC

SMCS-5068, 5091, 5092 **i02903830**

NOTE	REF NO	GRAPHIC REF	PART NUMBER	QTY	PART NAME 1 2 3 4 5 6 (PRODUCT LEVEL)	SEE PAGE
	1	1	**144-0832**	1	FILTER-OIL (ULTRA HIGH EFFICIENCY) (CASE DRAIN)	
	2	1	**253-2673**	1	SWITCH GP-PRESSURE (CASE DRAIN FILTER BYPASS)	
		1	**102-8802**	1	KIT-RECEPTACLE (2-PIN)	
					(KIT INCLUDES RECEPTACLE AS AND WEDGE)	
		1	**3J-1907**	1	SEAL-O-RING	
		1	**5F-9144**	1	SEAL-O-RING	
		1	**186-3735**	2	PIN-CONNECTOR (16-GA TO 18-GA)	
E		1	**9X-1813**		SLEEVE (14-CM)	
	3	1	**3J-1907**	1	SEAL-O-RING	
	4	1	**5F-9144**	1	SEAL-O-RING	

E-ORDER BY THE CENTIMETER

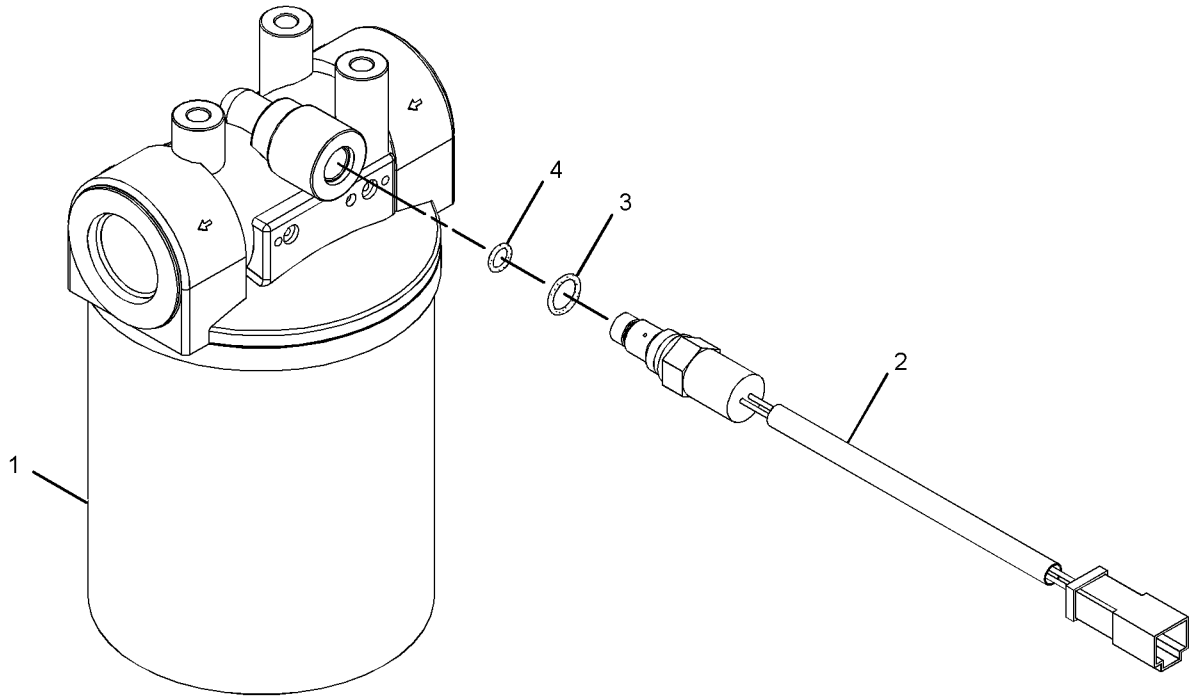

GRAPHIC #1 **<END>** g01387048

330-9358 FILTER GP-OIL

S/N: JKM713-UP

PART OF 255-4817 LINES GP-HYDRAULIC OIL COOLER

SMCS-5068, 5091, 5092 **i03480193**

NOTE	REF NO	GRAPHIC REF	PART NUMBER	QTY	PART NAME 1 2 3 4 5 6 (PRODUCT LEVEL)	SEE PAGE
	1	1	**8C-3446**	1	VALVE-FLUID SAMPLING (POWER TRAIN OIL)	
	2	1	**8C-3451**	1	CAP-DUST	
	3	1	**225-4118**	1	FILTER-OIL (ULTRA HIGH EFFICIENCY) (POWER TRAIN)	
	4	1	**227-6744**	1	SWITCH GP-DIFF PRESSURE (POWER TRAIN OIL FILTER BYPASS)	
		1	**102-8802**	1	KIT-RECEPTACLE (2-PIN)	
					(INCLUDES RECEPTACLE AS & WEDGE)	
		1	**3J-1907**	1	SEAL-O-RING	
		1	**5F-9144**	1	SEAL-O-RING	
		1	**186-3735**	1	PIN-CONNECTOR (16-GA TO 18-GA)	
E		1	**9X-1813**		SLEEVE (14-CM)	
	5	1	**3J-1907**	2	SEAL-O-RING	
	6	1	**3J-7354**	1	SEAL-O-RING	
	7	1	**5F-9144**	1	SEAL-O-RING	
	8	1	**8C-6712**	1	ELBOW	

E-ORDER BY THE CENTIMETER

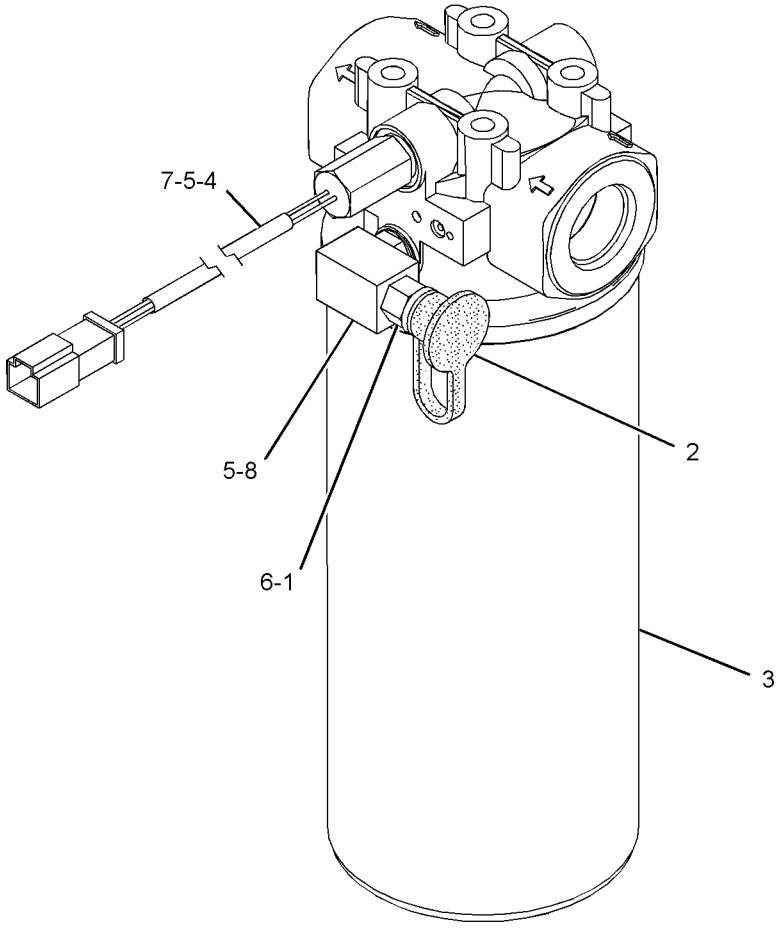

GRAPHIC #1 **<END>** g01662936

HYDRAULIC SYSTEM

337-4102 FILTER GP-OIL

S/N: JKM863-UP

PART OF 239-3357 LINES GP-HYDRAULIC

SMCS-5068, 5091, 5092 **i03767500**

NOTE	REF NO	GRAPHIC REF	PART NUMBER	QTY	PART NAME 1 2 3 4 5 6 (PRODUCT LEVEL)	SEE PAGE
	1	1	**144-0832**	1	FILTER-OIL (ULTRA HIGH EFFICIENCY) (HYDRAULIC)	
					PARTS SHOWN IN GRAPHIC(S) WITHOUT A REFERENCE NUMBER ARE NOT SERVICED SEPARATELY	

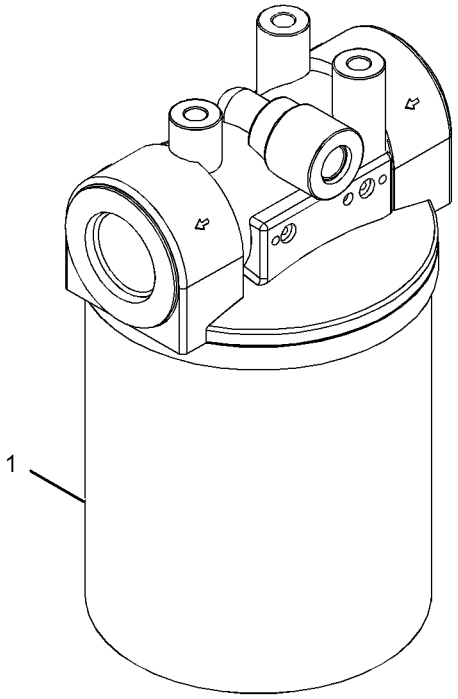

GRAPHIC #1 **<END>** g01956707

HYDRAULIC SYSTEM

318-3762 GUARD GP-TILT CYLINDER

S/N: JKM1-UP
PART OF 317-9490 CONFIGURATION AR
AN ATTACHMENT

SMCS-5104, 7164 **i02930711**

NOTE	REF NO	GRAPHIC REF	PART NUMBER	QTY	PART NAME 1 2 3 4 5 6 (PRODUCT LEVEL)	SEE PAGE
	1	1	**159-1666**	1	BRACKET AS	
	2	1	**159-1683**	1	GUARD AS	
		1	**4N-1650**	2	DOWEL	
M		1	**8T-3612**	2	NUT-WELD (M8X1.25-THD)	
	3	1	**318-5001**	1	SUPPORT AS	
	4	1	**318-5004**	1	CLAMP AS	
	5	1	**318-5007**	1	BEAM AS	
	6	1	**318-5008**	1	BEAM AS	
	7	1	**318-5009**	1	CLAMP	
	8	1	**128-2478**	2	SPACER (8.5X15X9-MM THK)	
	9	1	**161-4194**	4	BALL BEARING	
	10	1	**4E-5127**	1	CLAMP	
M	11	1	**7Y-7394**	2	SCREW-BUTTON HEAD (M8X1.25X25-MM)	
	12	1	**8T-4121**	6	WASHER-HARD (11X21X2.5-MM THK)	
M	13	1	**8T-4136**	4	BOLT (M10X1.5X25-MM)	
M	14	1	**8T-4137**	2	BOLT (M10X1.5X20-MM)	
M	15	1	**8T-4139**	4	BOLT (M12X1.75X30-MM)	
	16	1	**8T-4223**	6	WASHER-HARD (13.5X25.5X3-MM THK)	
M	17	1	**8T-4244**	2	NUT (M12X1.75-THD)	

M-METRIC PART

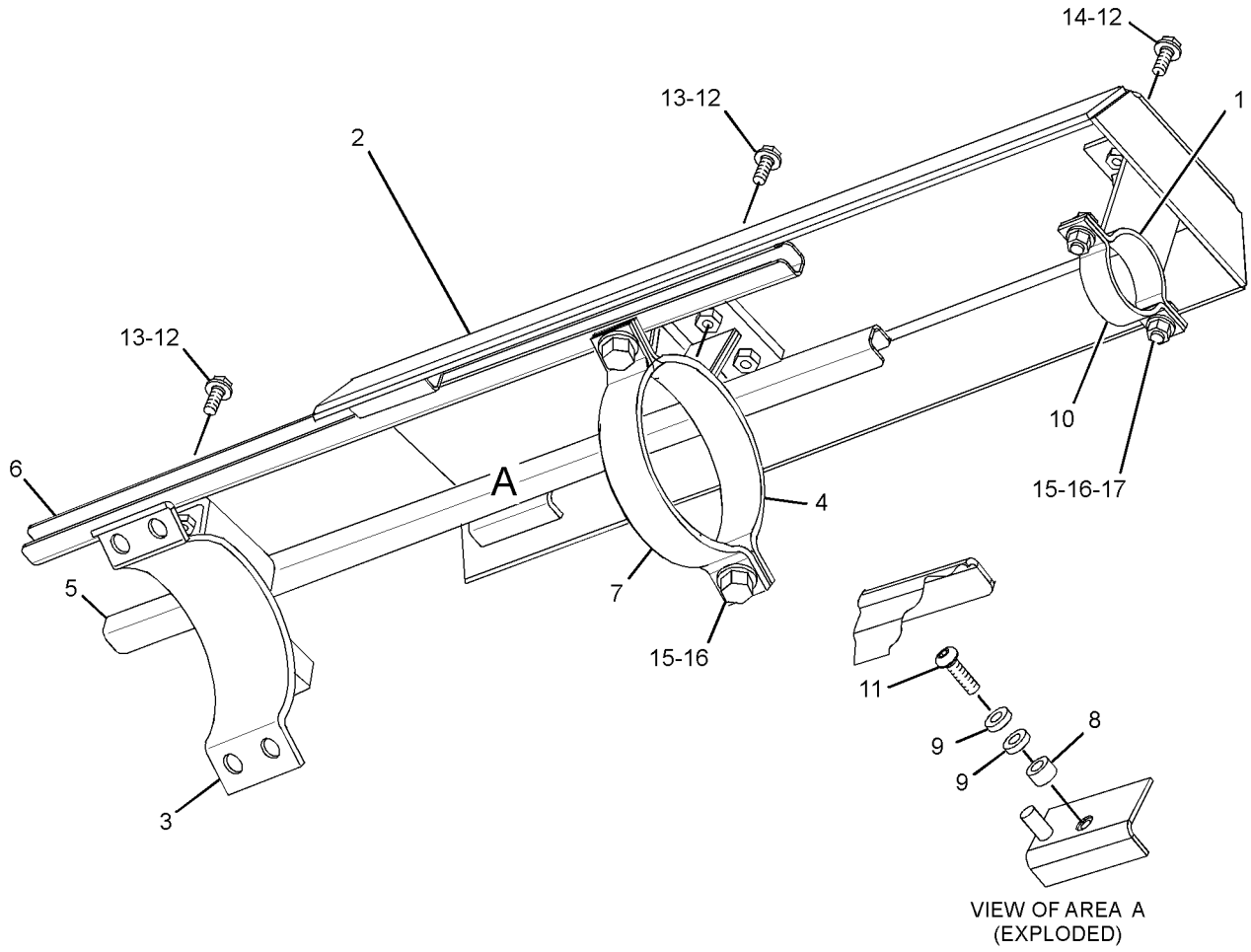

GRAPHIC #1 **<END>** g01441693

HYDRAULIC SYSTEM

298-8921 HEAD GP-PUMP—IMPLEMENT, STEERING

S/N: JKM1-UP

PART OF 304-9308 PUMP GP-PISTON

SMCS-5070 **i02904061**

NOTE	REF NO	GRAPHIC REF	PART NUMBER	QTY	PART NAME 1 2 3 4 5 6 (PRODUCT LEVEL)	SEE PAGE
	1	2	**199-0518**	6	SEAL-O-RING	
	2	2	**207-2985**	1	ORIFICE	
	3	2	**215-9962**	1	STOPPER	
M	4	1	**225-4607**	1	SETSCREW (M20X2.5X45-MM)	
	5	1	**248-9953**	1	RETAINER	
	6	1	**248-9954**	1	RETAINER	
	7	1	**248-9955**	1	GUIDE	
	8	1	**259-7889**	1	SPOOL AS	
	9	2	**263-1202**	1	SPRING	
	10	2	**263-1203**	1	COVER	
	11	2	**263-1204**	1	PISTON	
	12	1	**263-7501**	1	COVER	
	13	1	**263-7898**	1	BODY-CONTROL	
	14	2	**269-9530**	1	LEVER	
	15	1	**273-5464**	1	COVER	
	16	1	**273-8316**	1	SEAL-O-RING	
	17	1	**273-8317**	1	SEAL-O-RING	
	18	1	**273-8318**	1	SEAL-O-RING	
	19	1	**277-2545**	2	SEAL-O-RING	
	20	1	**277-2548**	2	SEAL-O-RING	
	21	2	**277-2550**	1	SEAL-O-RING	
	22	1	**288-1328**	1	PIN	
	23	1	**288-1331**	1	SPRING	
	24	1	**288-1332**	1	SPRING	
	25	1	**294-0701**	2	COVER	
	26	1	**294-0702**	2	SETSCREW	
	27	1	**295-7620**	1	PISTON AS	
	28	1	**301-6874**	1	RETAINER	
	29	1	**301-8294**	1	ADJUSTER	
	30	1	**303-3499**	2	PISTON	
	31	2	**094-1875**	1	DOWEL	
	32	2	**094-1881**	1	PLATE-SLIDE	
	33	2	**094-1882**	5	PLUG	
	34	1	**095-1785**	2	RING-BACKUP	
	35	1	**095-1787**	2	RING-BACKUP	
	36	2	**095-1788**	1	RING-BACKUP	
M	37	1	**8T-4131**	1	NUT (M20X2.5-THD)	
	38	1	**099-3671**	1	SPRING	
	39	2	**150-5797**	1	PIN	
	40	2	**153-8623**	1	RING-BACKUP	
	41	1	**185-0169**	1	GUIDE	
	42	2	**185-0201**	1	PIN AS	
		2	**129-7978**	1	DOWEL	
	43	2	**190-7673**	1	SEAL-O-RING	
	44	2	**190-7674**	1	SEAL-O-RING	
	45	1	**191-5707**	1	SPOOL AS	
M	46	1	**200-3255**	1	NUT (M20X1.5-THD)	
	47	1	**270-8937**	1	SPRING	
	48	1	**3D-2824**	1	SEAL-O-RING	
	49	1	**3D-2891**	1	BALL	
	50	2	**3J-1907**	1	SEAL-O-RING	
	51	1	**3K-6113**	4	WASHER-HARD (12X18.5X3-MM THK)	
	52	2	**6V-3319**	1	SEAL-O-RING	
	53	2	**7X-3392**	6	WASHER-HARD (13.5X22.5X3-MM THK)	
M	54	1	**8T-0273**	6	BOLT-SOCKET HEAD (M12X1.75X40-MM)	
M	55	1	**8T-4133**	3	NUT (M10X1.5-THD)	

298-8921 **HEAD GP-PUMP** ***(contd.)*** **i02904061**

NOTE	REF NO	GRAPHIC REF	PART NUMBER	QTY	PART NAME 1 2 3 4 5 6 (PRODUCT LEVEL)	SEE PAGE
M	56	1	**8T-4136**	2	BOLT (M10X1.5X25-MM)	
M	57	1	**9X-6032**	4	BOLT-SOCKET HEAD (M10X1.5X30-MM)	

M-METRIC PART

REFER TO ALL ILLUSTRATIONS OF
THIS GROUP FOR AUXILIARY VIEWS

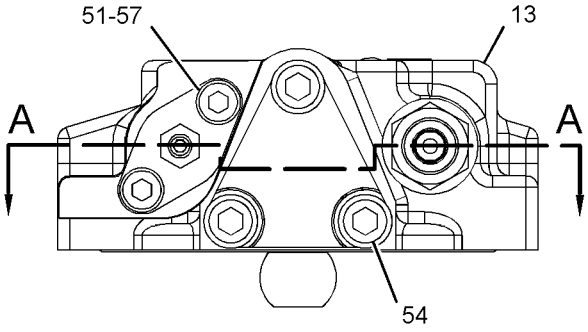

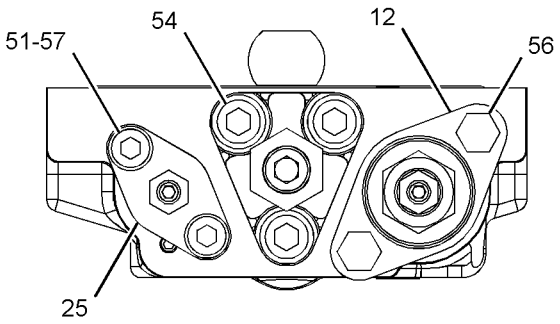

VIEW D-D

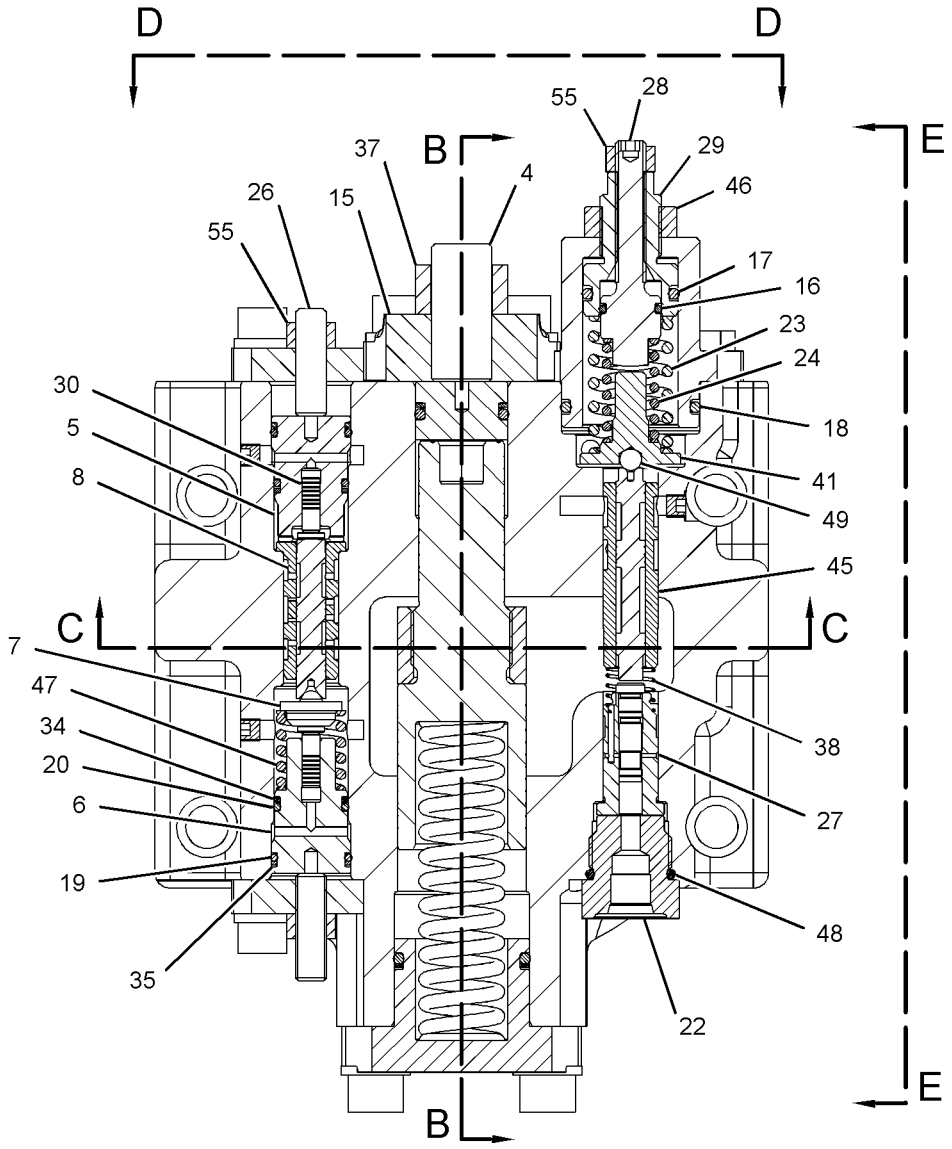

SECTION A-A

GRAPHIC #1

g01442279

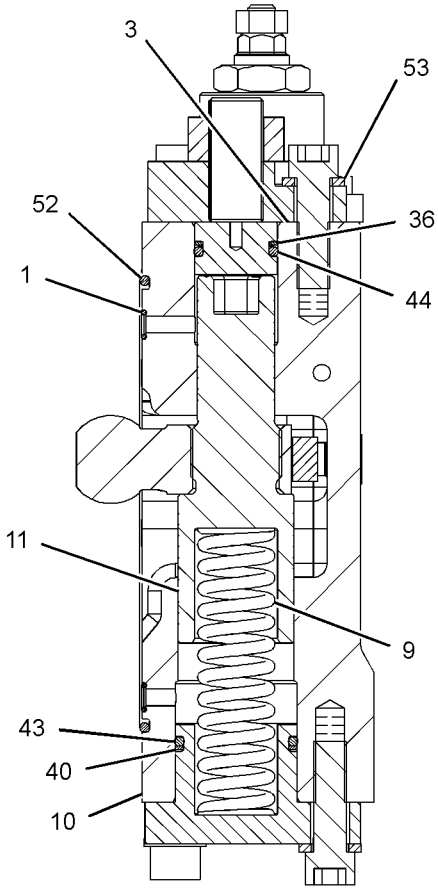

SECTION B-B

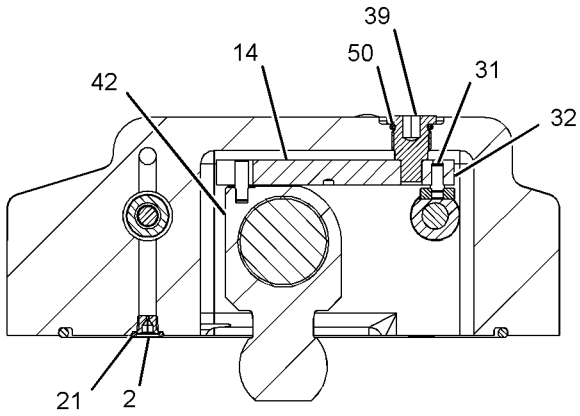

SECTION C-C

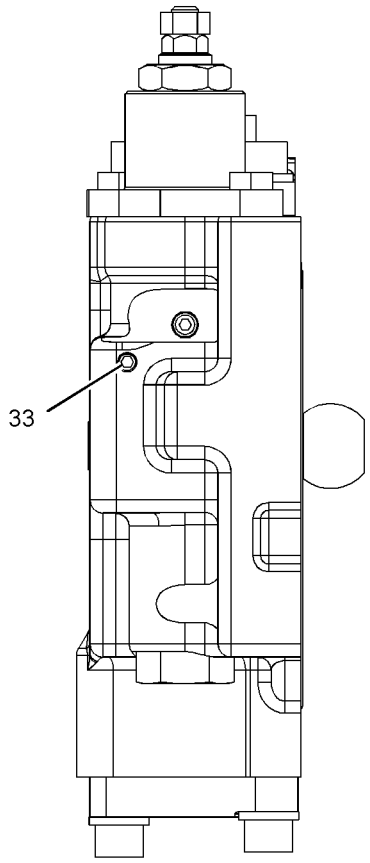

VIEW E-E

GRAPHIC #2 **<END>** g01442280

HYDRAULIC SYSTEM

237-7535 HYDRAULIC AR-2 VALVE

S/N: JKM1-UP

PART OF 237-7545 GENERAL AR

SMCS-5051 **i02897393**

NOTE	PART NUMBER	QTY	PART NAME 1 2 3 4 5 6 (PRODUCT LEVEL)	SEE PAGE
Y	*237-7549*	2	CYLINDER & SEAL GP-LIFT	675
Y	*237-7548*	1	CYLINDER & SEAL GP-TILT	676
Y	*239-3357*	1	LINES GP-HYDRAULIC	724
Y	*239-3359*	1	LINES GP-LIFT CYLINDER	758
Y	*239-3360*	1	LINES GP-PILOT	763
Y	*239-3358*	1	LINES GP-TILT CYLINDER	779
Y	*239-3362*	1	PUMP & MTG GP-HYDRAULIC	802
Y	*239-3364*	1	TANK & MTG GP-HYDRAULIC	810
Y	*255-2421*	1	TANK GP-HYDRAULIC	811
Y	*257-6969*	1	VALVE & MTG GP-MAIN CONTROL (2-FUNCTION)	815
Y	*260-8818*	1	VALVE GP-MANUAL (LIFT ARM LOWERING CONTROL)	841

Y-SEPARATE ILLUSTRATION

<END>

265-9750 HYDRAULIC AR-3 VALVE

S/N: JKM1-UP

PART OF 317-8362, 317-8363, 317-8364, 317-8366 CONFIGURATION AR

AN ATTACHMENT

SMCS-5051 **i03632042**

NOTE	PART NUMBER	QTY	PART NAME 1 2 3 4 5 6 (PRODUCT LEVEL)	SEE PAGE
Y	**267-2938**	1	ARM AS-LIFT	897
Y	*257-5662*	1	CONTROL GP-PILOT OPERATED HYD (3-FUNCTION)	932
Y	*318-2889*	1	GUARD GP-FRONT	532
			S/N: JKM1-404	
Y	*323-4737*	1	GUARD GP-FRONT	533
			S/N: JKM405-UP	
Y	*260-8825*	1	LINES GP-FRONT	717
Y	*260-8827*	1	LINES GP-PILOT (3RD VALVE)	773
Y	*257-6971*	1	VALVE & MTG GP-MAIN CONTROL (3-FUNCTION)	816

Y-SEPARATE ILLUSTRATION

<END>

HYDRAULIC SYSTEM

265-9760 HYDRAULIC AR-4 VALVE

S/N: JKM1-UP
PART OF 317-8368 CONFIGURATION AR
AN ATTACHMENT

SMCS-5051 **i03837014**

NOTE	PART NUMBER	QTY	PART NAME 1 2 3 4 5 6 (PRODUCT LEVEL)	SEE PAGE
Y	**267-2938**	1	ARM AS-LIFT	897
Y	*257-5663*	1	CONTROL GP-PILOT OPERATED HYD (4-FUNCTION)	936
Y	*318-2889*	1	GUARD GP-FRONT	532
			S/N: JKM1-797	
Y	*323-4737*	1	GUARD GP-FRONT	533
			S/N: JKM798-UP	
Y	*265-9081*	1	LINES GP-FRONT	719
Y	*266-9746*	1	LINES GP-PILOT (4TH VALVE)	774
Y	*266-7266*	1	VALVE & MTG GP-MAIN CONTROL (4-FUNCTION)	819

Y-SEPARATE ILLUSTRATION

<END>

HYDRAULIC SYSTEM

239-3361 KICKOUT & POSITIONER GP

S/N: JKM1-UP

PART OF 237-7539 ELECTRICAL AR

SMCS-5109, 5112 **i03502804**

NOTE	REF NO	GRAPHIC REF	PART NUMBER	QTY	PART NAME 1 2 3 4 5 6 (PRODUCT LEVEL)	SEE PAGE
Y	1	1	**3E-7844**	1	CONTROL GP-LIFT KICKOUT	181
	2	1	**3V-6909**	1	BLOCK	
	3	1	**4V-6999**	1	MAGNET AS	
	4	1	**5G-7820**	1	MAGNET AS	
	5	1	**9C-5974**	1	COVER	
	6	1	**317-7619**	2	SUPPORT AS	
	7	1	**121-4824**	1	SPACER	
	8	1	**328-1718**	2	SUPPORT AS	
Y	9	1	**176-5459**	1	CONTROL GP-POSITION	182
	10	1	**219-0311**	1	ANGLE	
	11	1	**295-2598**	1	TUBE AS	
	12	1	**295-2635**	4	CLIP	
	13	1	**010-2573**	2	SETSCREW-POINT	
	14	1	**087-5421**	1	PLATE	
	15	1	**5P-4116**	6	WASHER-HARD (8.8X20.5X2-MM THK)	
	16	1	**7G-7053**	1	GROMMET	
	17	1	**7X-7729**	10	WASHER (11X25X3-MM THK)	
M	19	1	**8T-4139**	4	BOLT (M12X1.75X30-MM)	
M	20	1	**8T-4195**	2	BOLT (M10X1.5X30-MM)	
M	21	1	**8T-4196**	8	BOLT (M10X1.5X35-MM)	
M	22	1	**8T-4200**	2	BOLT (M8X1.25X16-MM)	
	23	1	**8T-4223**	6	WASHER-HARD (13.5X25.5X3-MM THK)	
M	24	1	**8T-4244**	2	NUT (M12X1.75-THD)	
M	25	1	**8T-6869**	2	BOLT (M8X1.25X60-MM)	
M	26	1	**8T-6912**	2	BOLT (M8X1.25X50-MM)	

M-METRIC PART
Y-SEPARATE ILLUSTRATION

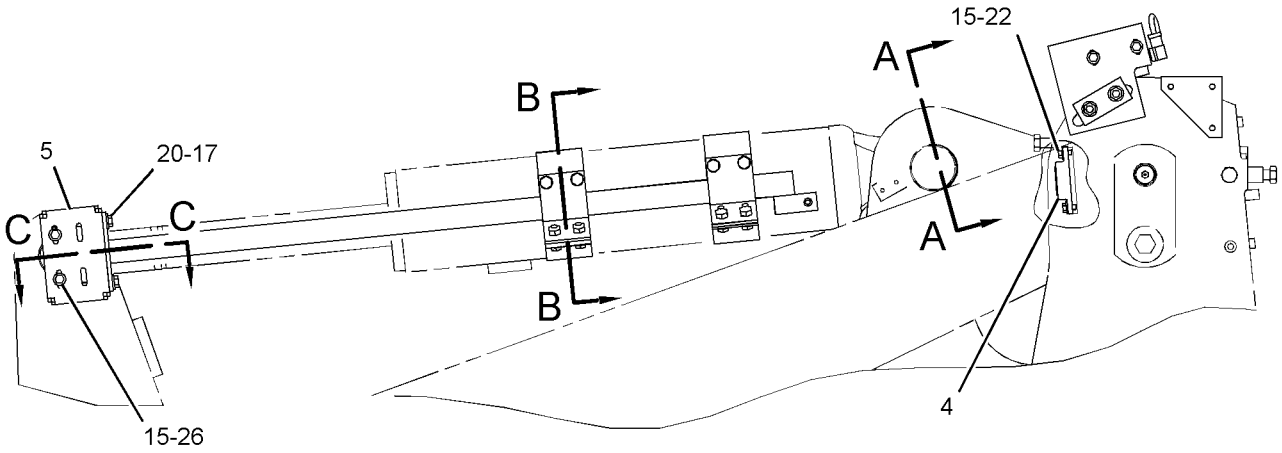

LEFT SIDE VIEW

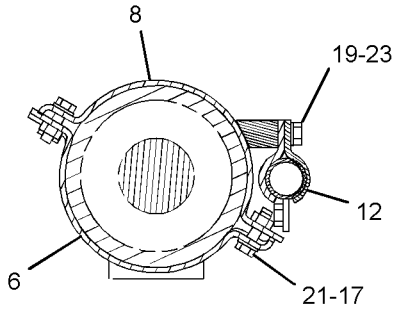

SECTION B-B

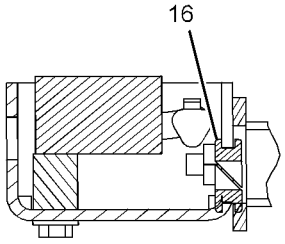

SECTION C-C

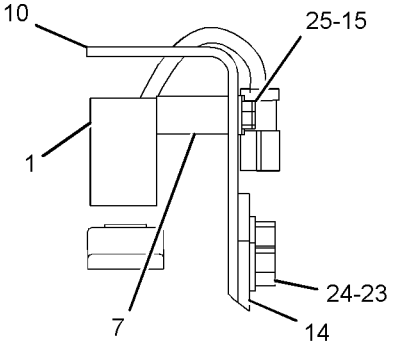

VIEW A-A

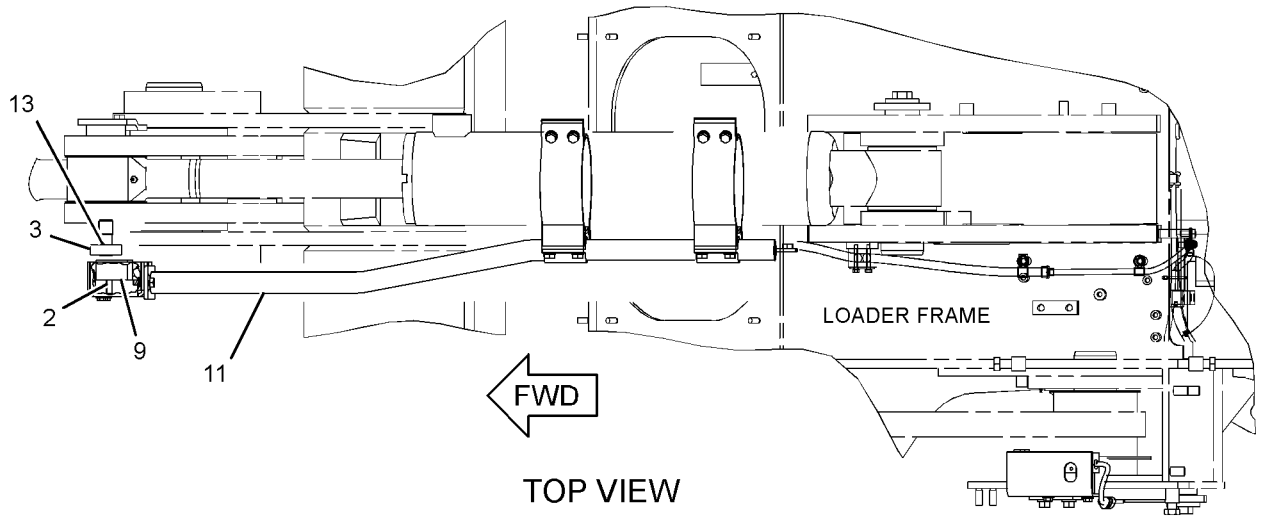

TOP VIEW

GRAPHIC #1

<END>

g01589715

HYDRAULIC SYSTEM

151-2402 LINES GP-COUPLER

S/N: JKM1-UP
PART OF 317-8362, 317-8363 CONFIGURATION AR
AN ATTACHMENT

SMCS-5057, 5133 **i03834855**

NOTE	REF NO	GRAPHIC REF	PART NUMBER	QTY	PART NAME 1 2 3 4 5 6 (PRODUCT LEVEL)	SEE PAGE
	1	1	**6W-2888**	2	FITTING AS (QUICK DISCONNECT, MALE)	
	2	1	**6W-2890**	2	CAP AS-DUST	
	3	1	**150-5430**	2	ADAPTER AS	
					(EACH INCLUDES)	
		1	**6V-9746**	1	SEAL-O-RING	
		1	**163-3343**	1	SEAL	
	4	1	**151-2184**	2	PLATE-BRACKET	
I	5	1	**151-2583**	2	HOSE AS	
	6	1	**2P-1293**	2	LOCKNUT (1-3/16-12-THD)	
	7	1	**4J-0520**	2	SEAL-O-RING	
	8	1	**8C-3206**	4	FLANGE-HALF	
	9	1	**8T-4121**	8	WASHER-HARD (11X21X2.5-MM THK)	
M	10	1	**8T-4186**	8	BOLT (M10X1.5X40-MM)	
M	11	1	**8T-4194**	4	BOLT (M12X1.75X50-MM)	
	12	1	**8T-4223**	8	WASHER-HARD (13.5X25.5X3-MM THK)	
M	13	1	**8T-4244**	4	NUT (M12X1.75-THD)	

I-REFER TO HYDRAULIC INFORMATION SYSTEM
M-METRIC PART

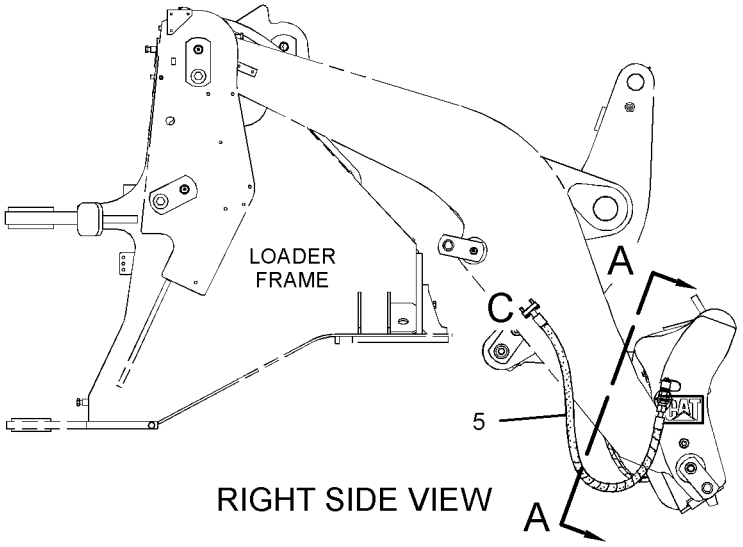

RIGHT SIDE VIEW

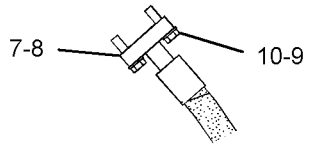

VIEW OF AREA C

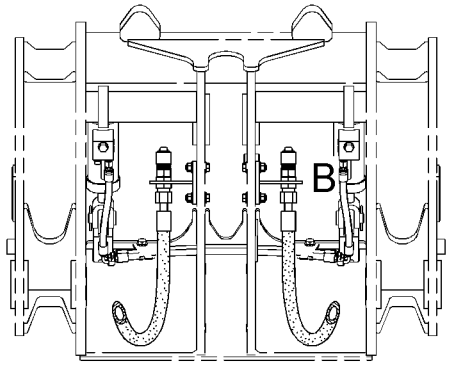

SECTION A-A

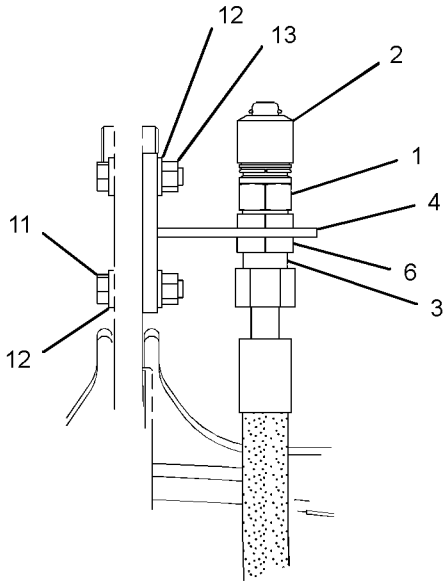

VIEW OF AREA B

GRAPHIC #1 **<END>** g02110613

HYDRAULIC SYSTEM

260-8830 LINES GP-COUPLER

S/N: JKM1-UP

PART OF 317-8363 CONFIGURATION AR, 265-9739 CONTROL AR-QUICK COUPLER, 324-2651 LINES GP-COUPLER AN ATTACHMENT

SMCS-5057, 5133 **i03605744**

NOTE	REF NO	GRAPHIC REF	PART NUMBER	QTY	PART NAME 1 2 3 4 5 6 (PRODUCT LEVEL)	SEE PAGE
I	1	1	**1G-7947**	1	HOSE AS	
Y	2	1	**112-1817**	1	VALVE GP-MANUAL (LOWERING CONTROL)	840
Y	3	1	**180-8585**	1	VALVE GP-DIVERTER (QUICK COUPLER)	830
I	4	1	**265-9455**	2	HOSE AS	
Y	5	1	*266-0799*	1	LINES GP-COUPLER (LIFT ARMS)	710
	6	1	**267-3057**	1	BRACKET AS	
M		1	**8T-3490**	3	NUT-WELD (M10X1.5-THD)	
	7	1	**283-9941**	1	TUBE AS	
I	8	1	**297-8102**	1	HOSE AS	
	9	1	**297-8103**	1	TUBE AS	
	10	1	**305-3755**	1	BRACKET AS	
M		1	**8T-3490**	2	NUT-WELD (M10X1.5-THD)	
	11	1	**306-4201**	1	TUBE AS	
	12	1	**306-4202**	1	TUBE AS	
	13	1	**313-3484**	3	ADAPTER	
I	14	1	**317-5873**	1	HOSE AS	
I	15	1	**317-5874**	1	HOSE AS	
E	16	1	**206-2728**		GUARD-HOSE (54-CM)	
	17	1	**317-8345**	1	TUBE AS	
	18	1	**096-6166**	4	WASHER-HARD (4.5X9X1-MM THK)	
	19	1	*148-8336*	1	CONNECTOR AS	
		1	**3J-1907**	1	SEAL-O-RING	
		1	**6V-8397**	1	SEAL-O-RING	
		1	**6V-8636**	1	CONNECTOR	
	20	1	*148-8367*	1	ELBOW AS	
		1	**6V-8397**	1	SEAL-O-RING	
		1	**6V-9850**	1	ELBOW	
	21	1	*148-8377*	3	ELBOW AS (90-DEG)	
					(EACH INCLUDES)	
		1	**6V-8397**	2	SEAL-O-RING	
		1	**6V-8980**	1	ELBOW	
	22	1	*148-8378*	3	ELBOW AS (90-DEG)	
					(EACH INCLUDES)	
		1	**3J-1907**	1	SEAL-O-RING	
		1	**6V-8397**	1	SEAL-O-RING	
		1	**6V-8724**	1	ELBOW	
	23	1	*148-8435*	1	TEE AS	
		1	**3J-1907**	1	SEAL-O-RING	
		1	**6V-8397**	2	SEAL-O-RING	
		1	**6V-8781**	1	TEE-FACE SEAL	
	24	1	*148-8444*	1	TEE AS-SWIVEL	
		1	**6V-8398**	2	SEAL-O-RING	
		1	**6V-9837**	1	TEE-SWIVEL	
	25	1	*150-3036*	1	ELBOW AS	
		1	**3J-1907**	1	SEAL-O-RING	
		1	**6V-8397**	1	SEAL-O-RING	
		1	**8T-1905**	1	ELBOW	
	26	1	**4D-7794**	8	CLIP	
	27	1	**6V-9168**	3	NUT (11/16-16-THD)	
M	28	1	**8T-0285**	4	SCREW-MACHINE (M4X0.7X12-MM)	
	29	1	**8T-4121**	6	WASHER-HARD (11X21X2.5-MM THK)	
M	30	1	**8T-4136**	3	BOLT (M10X1.5X25-MM)	
M	31	1	**8T-4137**	1	BOLT (M10X1.5X20-MM)	
M	32	1	**8T-4139**	3	BOLT (M12X1.75X30-MM)	

260-8830 **LINES GP-COUPLER** *(contd.)* **i03605744**

NOTE	REF NO	GRAPHIC REF	PART NUMBER	QTY	PART NAME 1 2 3 4 5 6 (PRODUCT LEVEL)	SEE PAGE
	33	1	**8T-4223**	3	WASHER-HARD (13.5X25.5X3-MM THK)	
M	34	1	**8T-5005**	2	BOLT (M10X1.5X70-MM)	
	35	1	**6V-8397**	2	SEAL-O-RING	

E-ORDER BY THE CENTIMETER
I-REFER TO HYDRAULIC INFORMATION SYSTEM
M-METRIC PART
Y-SEPARATE ILLUSTRATION

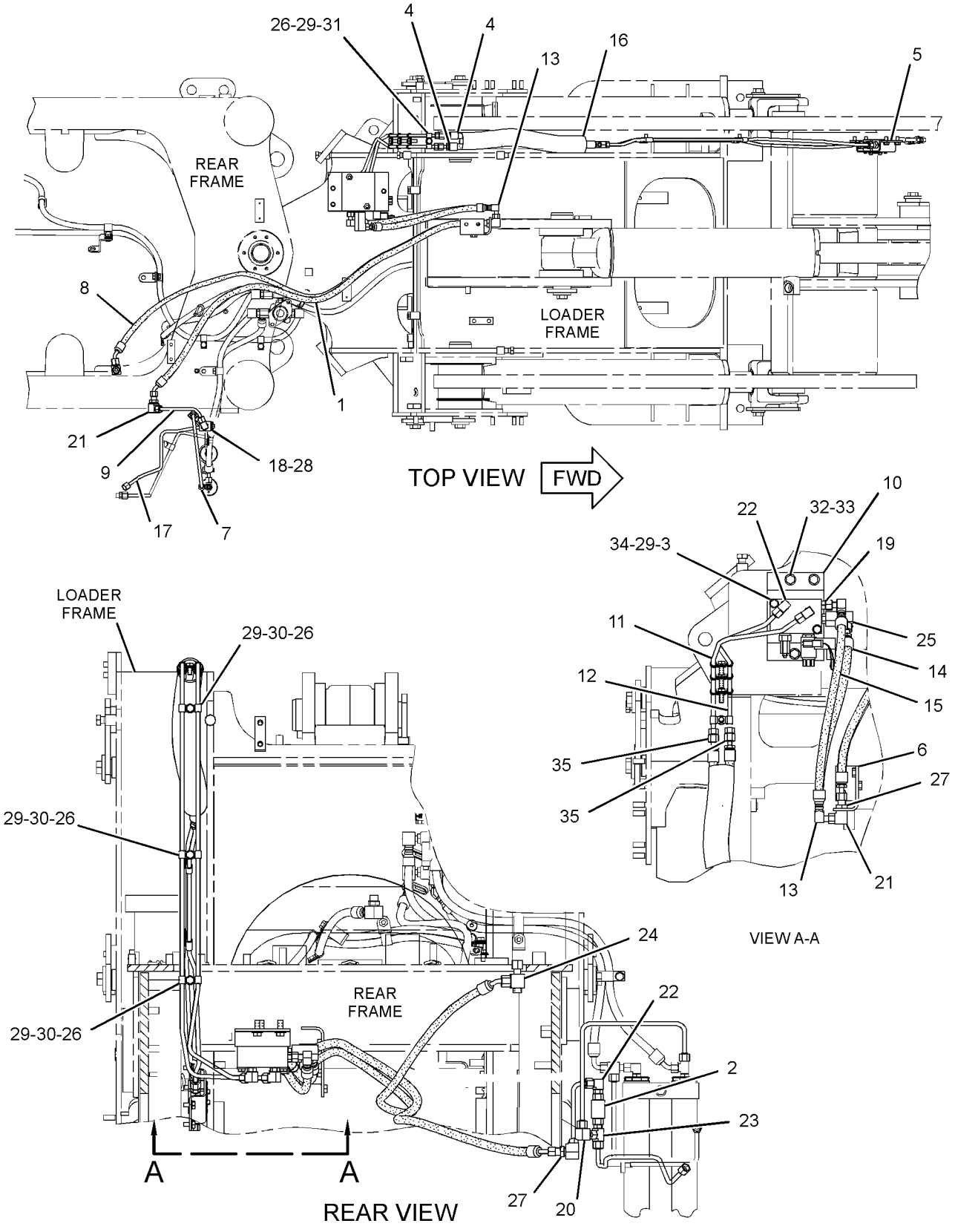

GRAPHIC #1 **<END>** g01638807

HYDRAULIC SYSTEM

260-8831 LINES GP-COUPLER

S/N: JKM1-UP

PART OF 286-8244 CONTROL AR-QUICK COUPLER, 324-2652 LINES GP-COUPLER

AN ATTACHMENT

SMCS-5057, 5133 **i03415482**

NOTE	REF NO	GRAPHIC REF	PART NUMBER	QTY	PART NAME 1 2 3 4 5 6 (PRODUCT LEVEL)	SEE PAGE
I	1	1	**1G-7949**	1	HOSE AS	
Y	2	2	**112-1817**	1	VALVE GP-MANUAL (LOWERING CONTROL)	840
Y	3	2	**180-8585**	1	VALVE GP-DIVERTER (QUICK COUPLER)	830
I	4	1	**265-9455**	2	HOSE AS	
	5	2	**267-3057**	1	BRACKET AS	
M		2	**8T-3490**	3	NUT-WELD (M10X1.5-THD)	
Y	6	1	*268-1061*	1	LINES GP-COUPLER (LIFT ARMS)	712
	7	2	**283-9941**	1	TUBE AS	
I	8	1	**297-8102**	1	HOSE AS	
	9	2	**297-8103**	1	TUBE AS	
	10	2	**305-3755**	1	BRACKET AS	
M		2	**8T-3490**	2	NUT-WELD (M10X1.5-THD)	
	11	1	**306-4201**	1	TUBE AS	
	12	1	**306-4202**	1	TUBE AS	
	13	2	**313-3484**	3	ADAPTER	
I	14	2	**317-5873**	1	HOSE AS	
I	15	2	**317-5874**	1	HOSE AS	
	16	1	**317-5899**	1	GUARD-HOSE	
	17	2	**317-8345**	1	TUBE AS	
	18	2	**096-6166**	4	WASHER-HARD (4.5X9X1-MM THK)	
	19	2	*148-8336*	1	CONNECTOR AS	
		2	**3J-1907**	1	SEAL-O-RING	
		2	**6V-8397**	1	SEAL-O-RING	
		2	**6V-8636**	1	CONNECTOR	
	20	2	*148-8367*	1	ELBOW AS	
		2	**6V-8397**	1	SEAL-O-RING	
		2	**6V-9850**	1	ELBOW	
	21	1,2	*148-8377*	3	ELBOW AS	
					(EACH INCLUDES)	
		1,2	**6V-8397**	2	SEAL-O-RING	
		1,2	**6V-8980**	1	ELBOW	
	22	2	*148-8378*	3	ELBOW AS	
					(EACH INCLUDES)	
		2	**3J-1907**	1	SEAL-O-RING	
		2	**6V-8397**	2	SEAL-O-RING	
		2	**6V-8724**	1	ELBOW	
	23	2	*148-8435*	1	TEE AS	
		2	**3J-1907**	1	SEAL-O-RING	
		2	**6V-8397**	2	SEAL-O-RING	
		2	**6V-8781**	1	TEE-FACE SEAL	
	24	2	*150-3036*	1	ELBOW AS	
		2	**3J-1907**	1	SEAL-O-RING	
		2	**6V-8397**	1	SEAL-O-RING	
		2	**8T-1905**	1	ELBOW	
	25	1	**4D-7794**	8	CLIP	
	26	1,2	**6V-9168**	3	NUT (11/16-16-THD)	
	27	1	**6V-9837**	1	TEE-SWIVEL	
M	28	2	**8T-0285**	4	SCREW-MACHINE (M4X0.7X12-MM)	
	29	1	**8T-4121**	6	WASHER-HARD (11X21X2.5-MM THK)	
M	30	1	**8T-4136**	3	BOLT (M10X1.5X25-MM)	
M	31	1	**8T-4137**	1	BOLT (M10X1.5X20-MM)	
M	32	2	**8T-4139**	3	BOLT (M12X1.75X30-MM)	
	33	2	**8T-4223**	3	WASHER-HARD (13.5X25.5X3-MM THK)	
M	34	2	**8T-5005**	2	BOLT (M10X1.5X70-MM)	
	35	1	**6V-8397**	2	SEAL-O-RING	

I-REFER TO HYDRAULIC INFORMATION SYSTEM
M-METRIC PART
Y-SEPARATE ILLUSTRATION

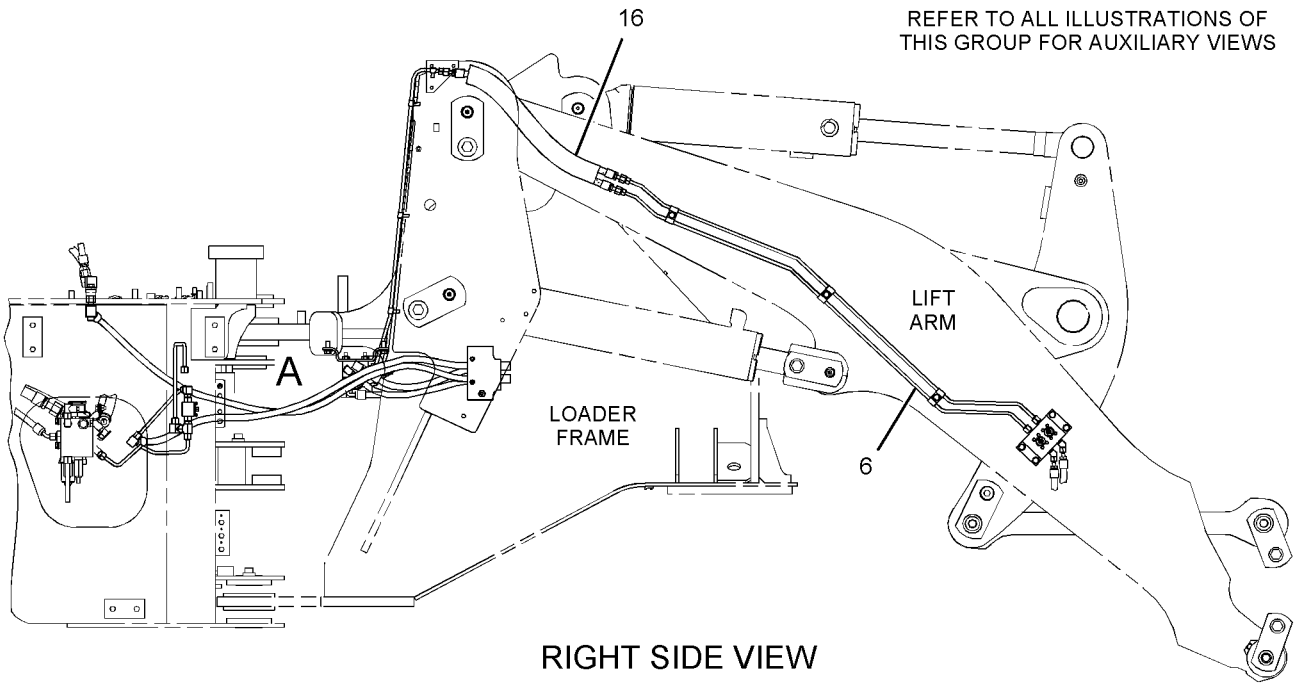

RIGHT SIDE VIEW

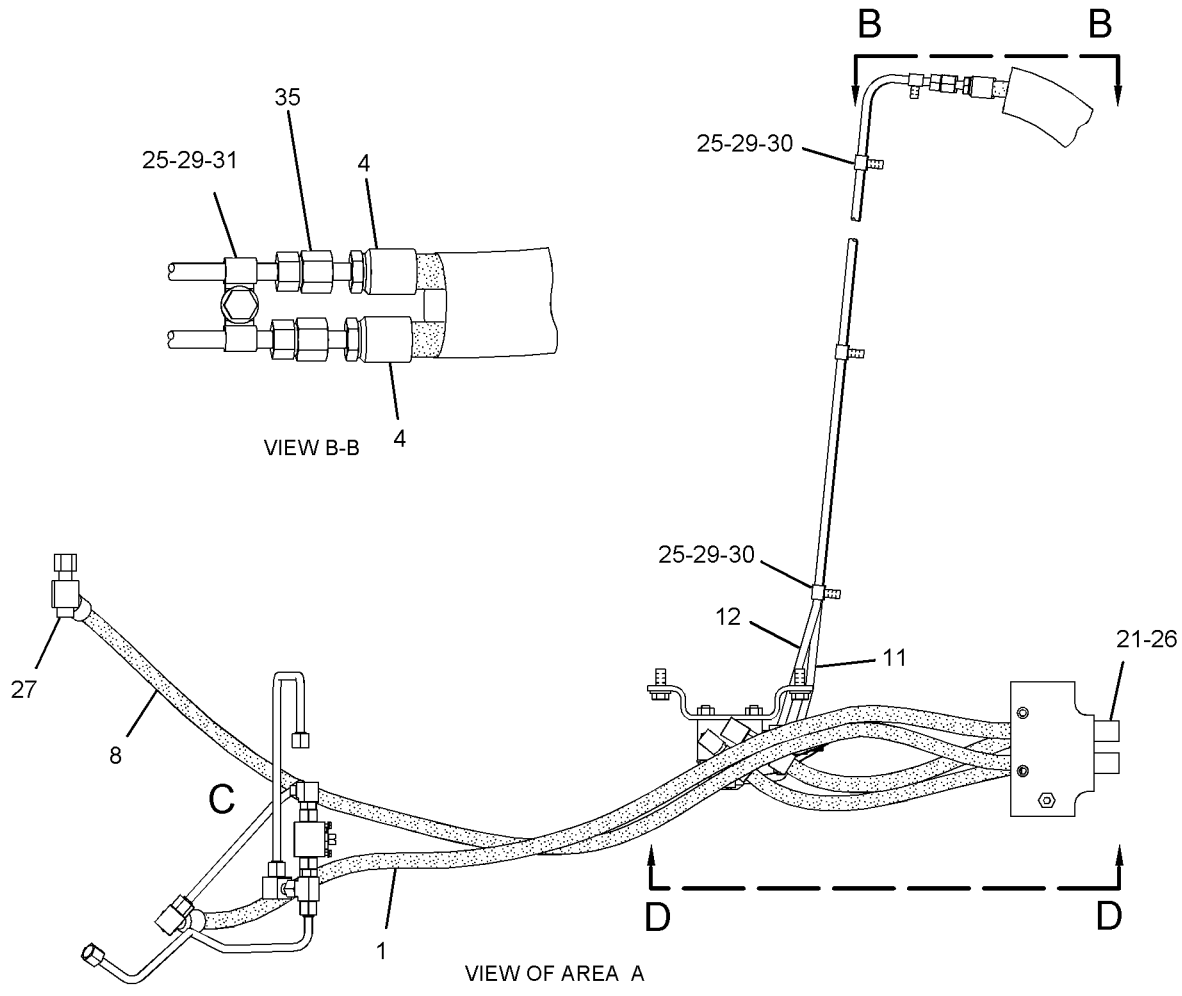

GRAPHIC #1

g01820863

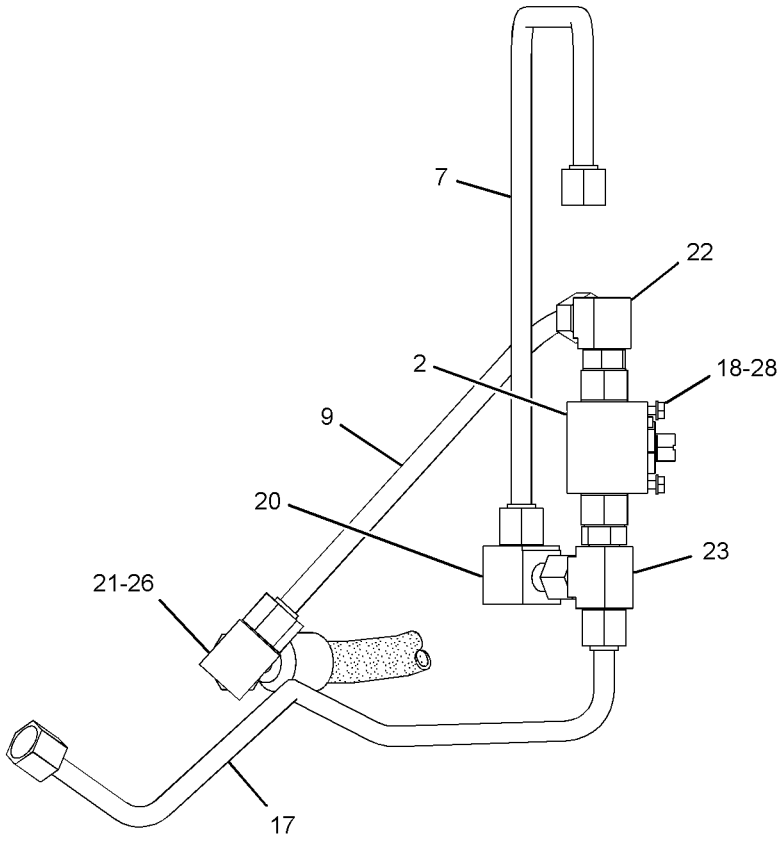

VIEW OF AREA C

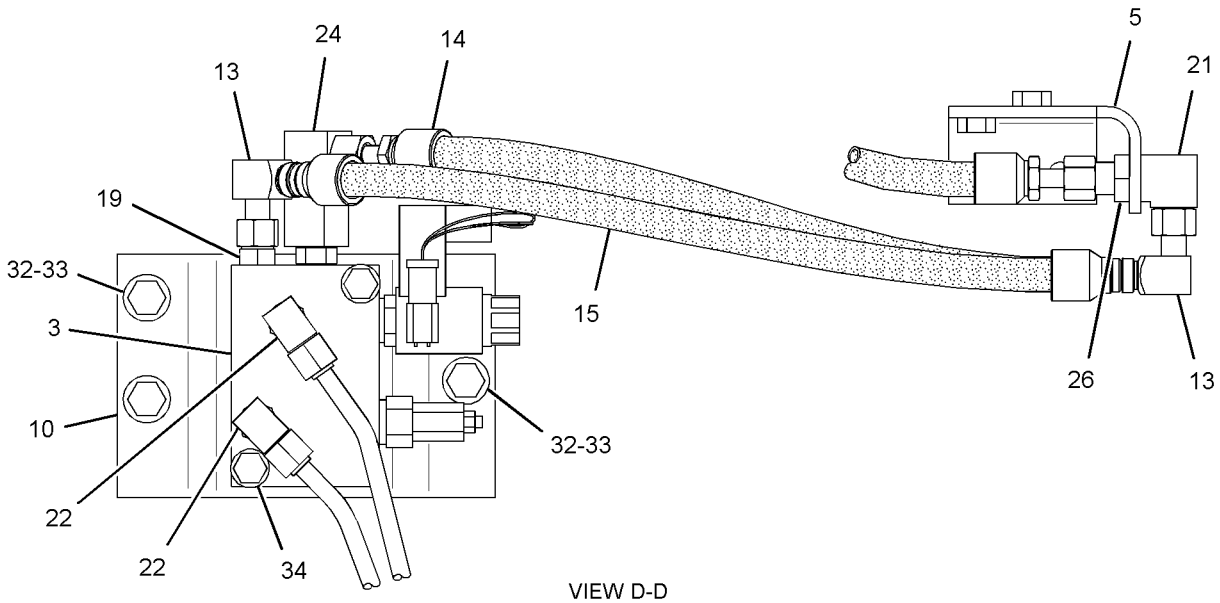

VIEW D-D

GRAPHIC #2 **<END>** g01436414

HYDRAULIC SYSTEM

266-0799 LINES GP-COUPLER—LIFT ARMS

S/N: JKM1-UP
PART OF 260-8830 LINES GP-COUPLER
AN ATTACHMENT

SMCS-5057, 5133 **i02929194**

NOTE	REF NO	GRAPHIC REF	PART NUMBER	QTY	PART NAME 1 2 3 4 5 6 (PRODUCT LEVEL)	SEE PAGE
Y	1	1	**112-1817**	2	VALVE GP-MANUAL (COUPLER PIN CONTROL)	840
	2	1	**230-7058**	1	BRACKET	
	3	1	**317-1631**	1	TUBE AS	
	4	1	**317-1632**	1	TUBE AS	
	5	1	**096-6166**	8	WASHER-HARD (4.5X9X1-MM THK)	
	6	1	*150-3033*	2	ELBOW AS	
					(EACH INCLUDES)	
		1	**3J-1907**	1	SEAL-O-RING	
		1	**4J-5477**	1	SEAL-O-RING	
		1	**8T-0164**	1	ELBOW	
	7	1	*155-7327*	2	CONNECTOR AS	
					(EACH INCLUDES)	
		1	**3J-1907**	1	SEAL-O-RING	
		1	**5H-8853**	1	SEAL-O-RING	
		1	**6V-8636**	1	CONNECTOR	
	8	1	**5P-9297**	4	CLIP	
	9	1	**6V-9828**	2	CAP AS	
M	10	1	**8T-0285**	8	SCREW-MACHINE (M4X0.7X12-MM)	
	11	1	**8T-4121**	6	WASHER-HARD (11X21X2.5-MM THK)	
M	12	1	**8T-4137**	6	BOLT (M10X1.5X20-MM)	

M-METRIC PART
Y-SEPARATE ILLUSTRATION

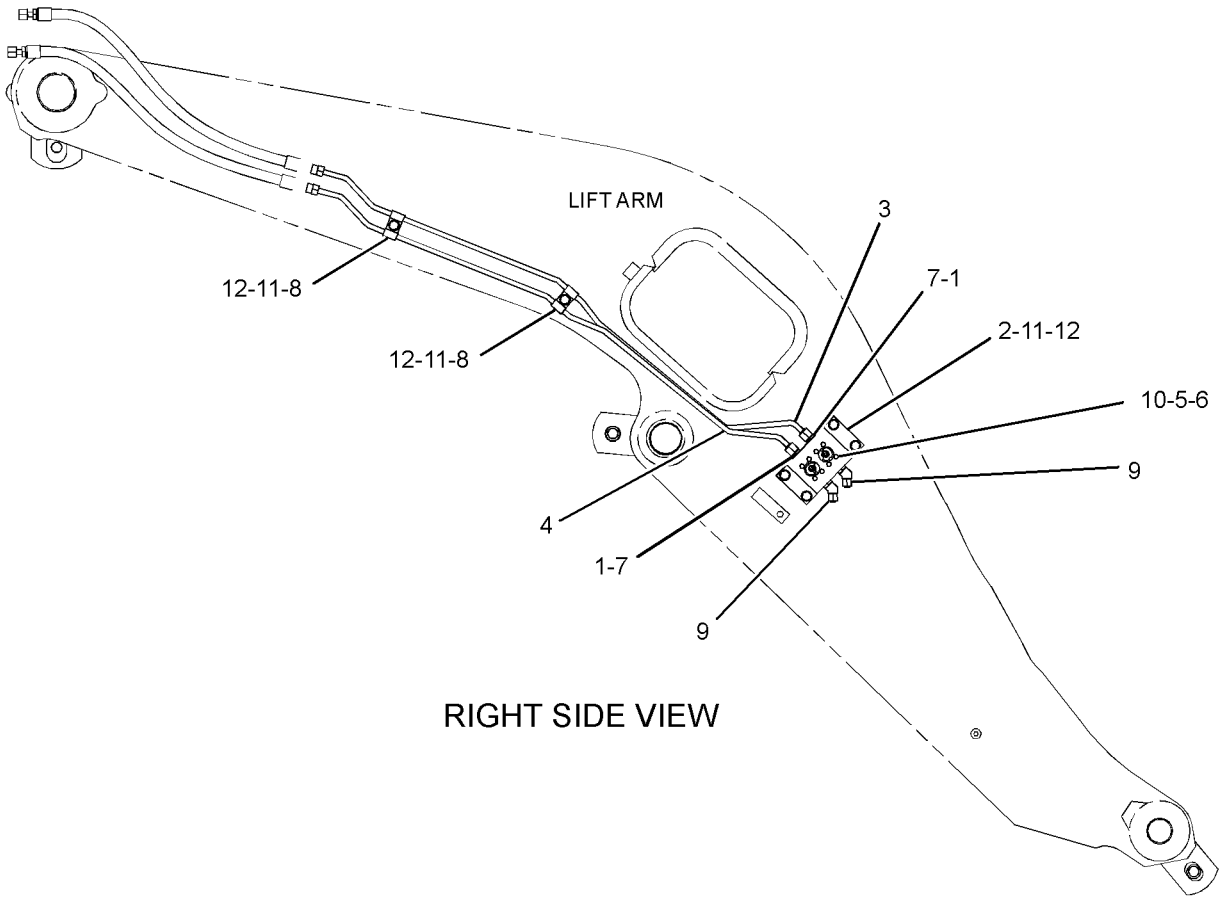

RIGHT SIDE VIEW

GRAPHIC #1 **<END>** g01430985

HYDRAULIC SYSTEM

268-1061 LINES GP-COUPLER—LIFT ARMS

S/N: JKM1-UP
PART OF 260-8831 LINES GP-COUPLER
AN ATTACHMENT

SMCS-5057, 5133 **i02919778**

NOTE	REF NO	GRAPHIC REF	PART NUMBER	QTY	PART NAME 1 2 3 4 5 6 (PRODUCT LEVEL)	SEE PAGE
Y	1	1	**112-1817**	2	VALVE GP-MANUAL (COUPLER PIN CONTROL)	840
	2	1	**230-7058**	1	BRACKET	
	3	1	**317-2885**	1	TUBE AS	
	4	1	**317-2886**	1	TUBE AS	
	5	1	**096-6166**	8	WASHER-HARD (4.5X9X1-MM THK)	
	6	1	*150-3033*	2	ELBOW AS	
					(EACH INCLUDES)	
		1	**3J-1907**	1	SEAL-O-RING	
		1	**4J-5477**	1	SEAL-O-RING	
		1	**8T-0164**	1	ELBOW	
	7	1	*155-7327*	2	CONNECTOR AS	
					(EACH INCLUDES)	
		1	**3J-1907**	1	SEAL-O-RING	
		1	**5H-8853**	1	SEAL-O-RING	
		1	**6V-8636**	1	CONNECTOR	
	8	1	**5P-9297**	6	CLIP	
	9	1	**6V-9828**	2	CAP AS	
M	10	1	**8T-0285**	8	SCREW-MACHINE (M4X0.7X12-MM)	
	11	1	**8T-4121**	7	WASHER-HARD (11X21X2.5-MM THK)	
M	12	1	**8T-4137**	7	BOLT (M10X1.5X20-MM)	

M-METRIC PART
Y-SEPARATE ILLUSTRATION

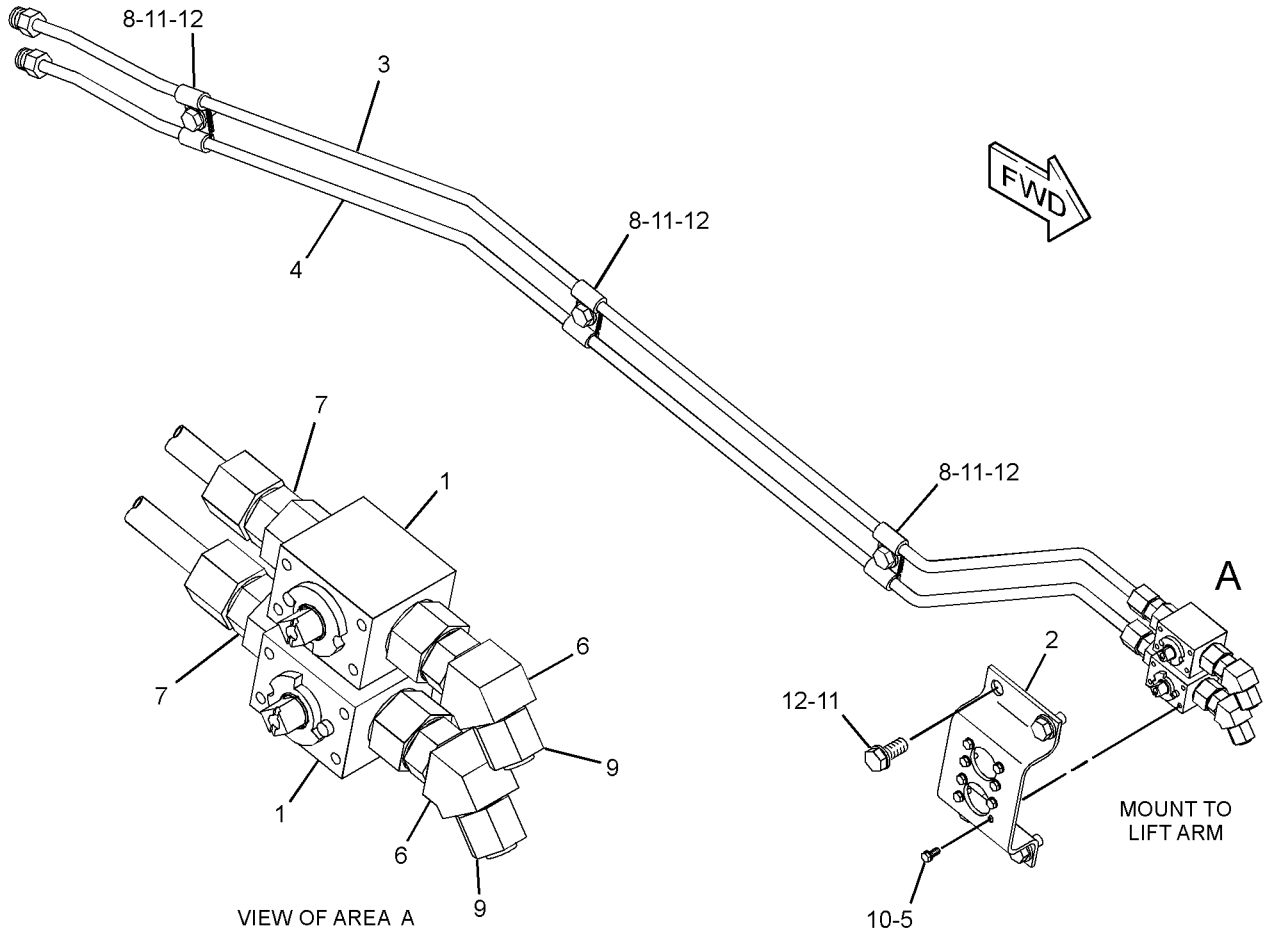

GRAPHIC #1 **<END>** g01435516

324-2651 LINES GP-COUPLER—KIT, STANDARD LIFT MACHINES

S/N: JKM1-UP
AN ATTACHMENT

SMCS-5057, 5133 **i03642407**

NOTE	REF NO	GRAPHIC REF	PART NUMBER	QTY	PART NAME 1 2 3 4 5 6 (PRODUCT LEVEL)	SEE PAGE
Y	1	1	*260-8830*	1	LINES GP-COUPLER	703
Y	2	1	*267-7546*	1	WIRING GP-QUICK COUPLER	353
M	3	1	**9R-2613**	2	BOSS-WELD (M10X1.5X25-MM)	

M-METRIC PART
Y-SEPARATE ILLUSTRATION

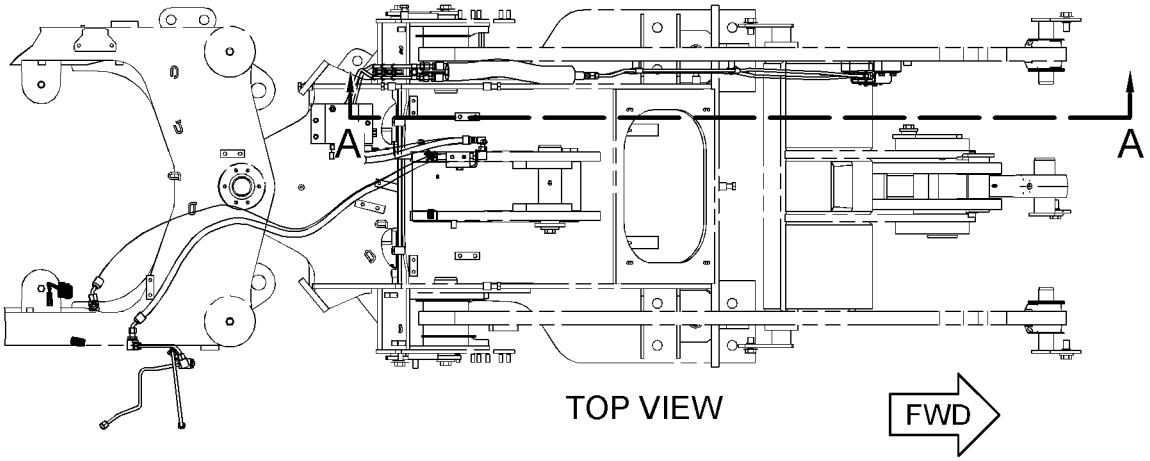

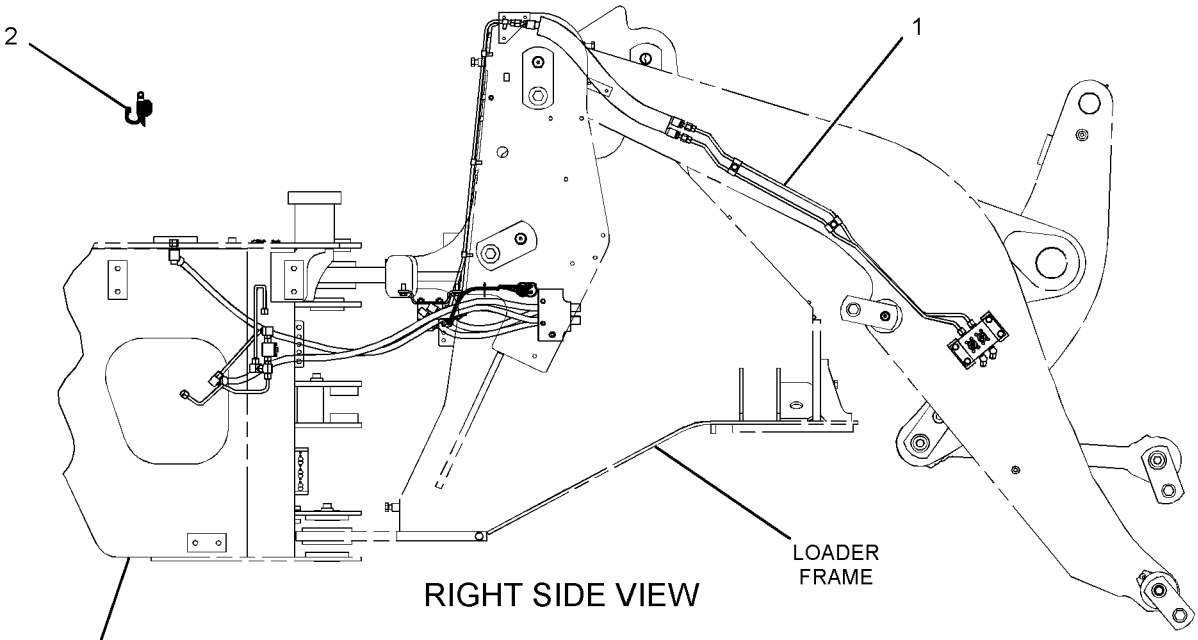

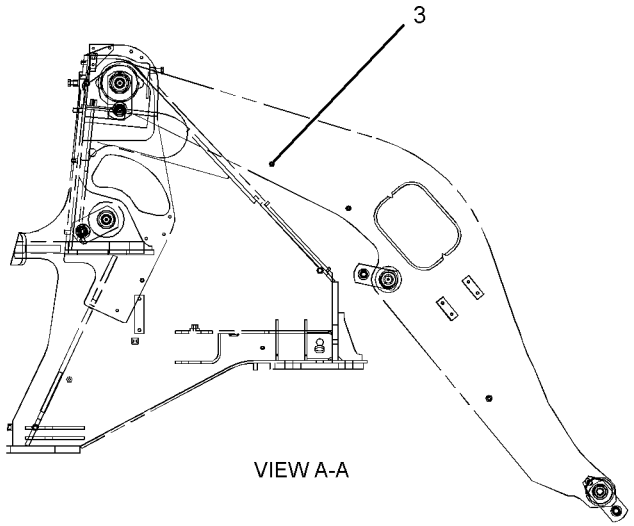

GRAPHIC #1 **<END>** g02102385

324-2652 LINES GP-COUPLER—KIT, HIGH LIFT MACHINES

S/N: JKM1-UP
AN ATTACHMENT

SMCS-5057, 5133 **i03642388**

NOTE	REF NO	GRAPHIC REF	PART NUMBER	QTY	PART NAME 1 2 3 4 5 6 (PRODUCT LEVEL)	SEE PAGE
Y	1	1	*260-8831*	1	LINES GP-COUPLER	706
Y	2	1	*267-7546*	1	WIRING GP-QUICK COUPLER	353

Y-SEPARATE ILLUSTRATION

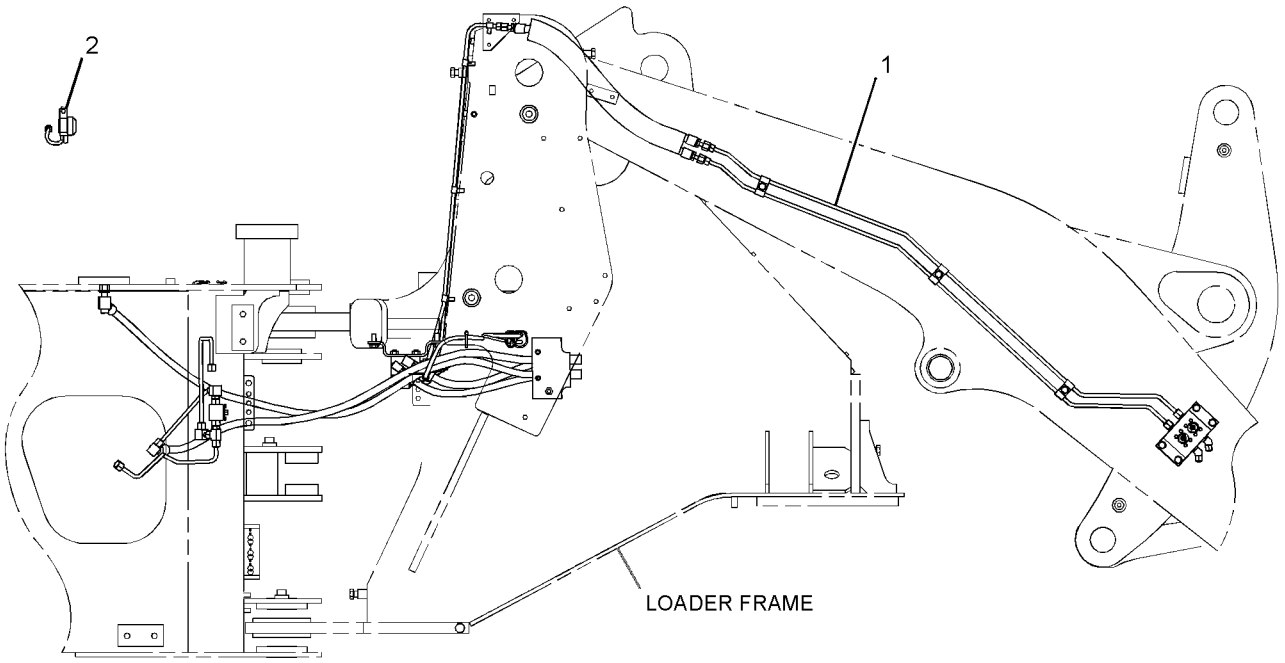

RIGHT SIDE VIEW

GRAPHIC #1 **<END>** g02114834

HYDRAULIC SYSTEM

260-8825 LINES GP-FRONT

S/N: JKM1-UP
PART OF 265-9750 HYDRAULIC AR-3 VALVE
AN ATTACHMENT

SMCS-5057 **i02934551**

NOTE	REF NO	GRAPHIC REF	PART NUMBER	QTY	PART NAME 1 2 3 4 5 6 (PRODUCT LEVEL)	SEE PAGE
	1	1	**5J-0253**	8	SPACER (0.24X0.51X0.34-IN)	
	2	1	**257-6979**	2	BRACKET AS	
	3	1	**261-3868**	1	TUBE AS	
	4	1	**261-3869**	1	TUBE AS	
	5	1	**266-0144**	1	TUBE AS	
	6	1	**266-0145**	1	TUBE AS	
I	7	1	**266-1604**	2	HOSE AS	
	8	1	**266-7174**	2	BRACKET AS	
	9	1	**284-6573**	1	BRACKET AS	
M		1	**8T-3490**	2	NUT-WELD (M10X1.5-THD)	
	10	1	**284-6574**	1	BRACKET AS	
M		1	**8T-3490**	2	NUT-WELD (M10X1.5-THD)	
	11	1	**1P-3703**	2	SEAL-RECTANGULAR	
	12	1	**3D-2824**	2	SEAL-O-RING	
	13	1	**4J-0520**	6	SEAL-O-RING	
	14	1	**5H-4019**	2	COVER	
	15	1	**5K-0806**	2	CLAMP	
	16	1	**5P-9436**	2	PLUG	
	17	1	**6V-1616**	4	CLAMP-HALF	
	18	1	**7X-7729**	4	WASHER (11X25X3-MM THK)	
	19	1	**8C-3206**	12	FLANGE-HALF	
	20	1	**8T-1889**	2	CLIP (SLOT)	
	21	1	**8T-1890**	2	CLIP (TAB)	
	22	1	**8T-4121**	38	WASHER-HARD (11X21X2.5-MM THK)	
M	23	1	**8T-4136**	8	BOLT (M10X1.5X25-MM)	
M	24	1	**8T-4139**	4	BOLT (M12X1.75X30-MM)	
M	25	1	**8T-4186**	24	BOLT (M10X1.5X40-MM)	
M	26	1	**8T-4195**	10	BOLT (M10X1.5X30-MM)	
	27	1	**8T-4223**	4	WASHER-HARD (13.5X25.5X3-MM THK)	
M	28	1	**8T-6466**	8	BOLT (M10X1.5X60-MM)	

I-REFER TO HYDRAULIC INFORMATION SYSTEM
M-METRIC PART

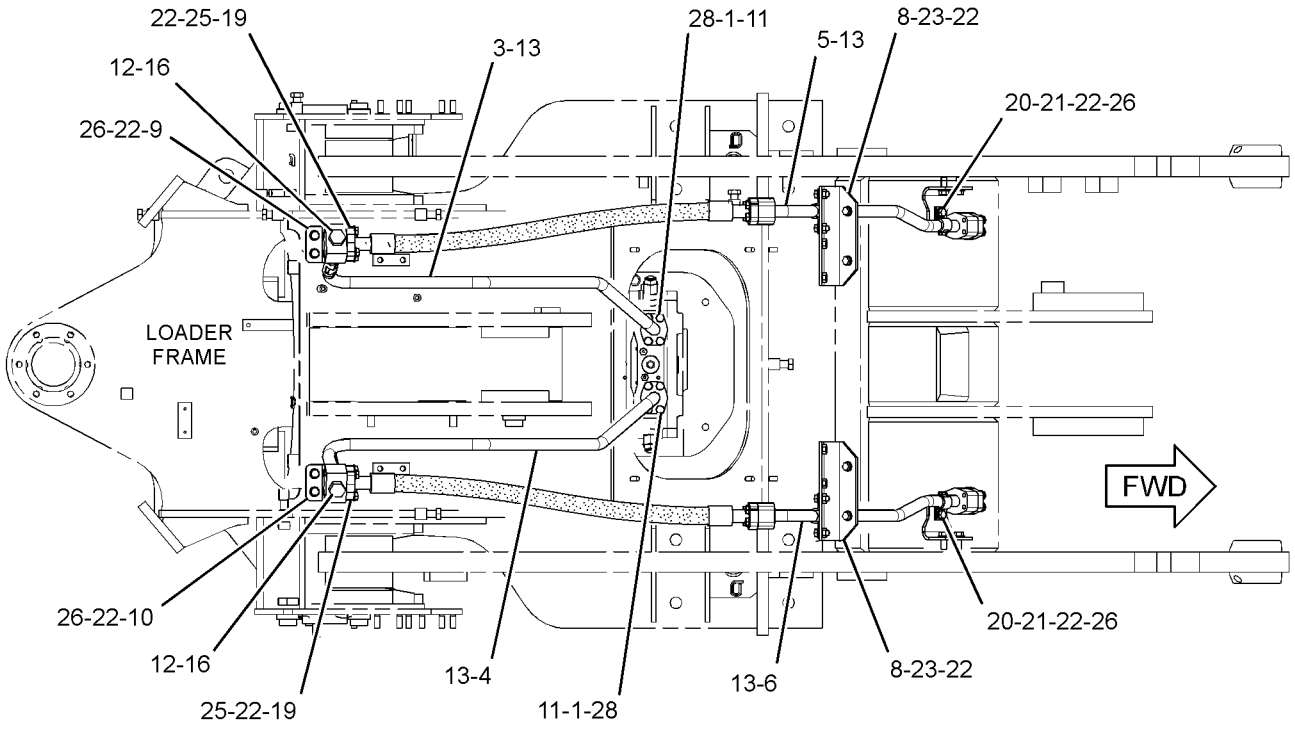

TOP VIEW

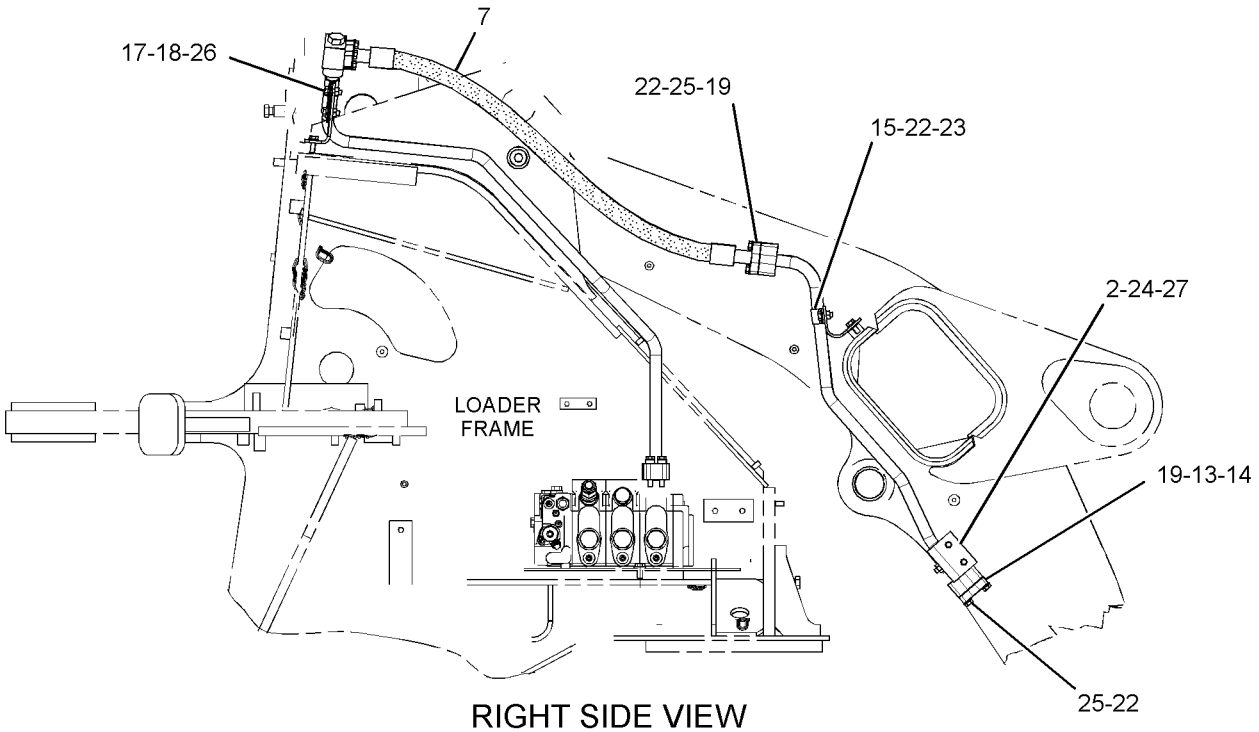

RIGHT SIDE VIEW

GRAPHIC #1 **<END>** g01442192

HYDRAULIC SYSTEM

265-9081 LINES GP-FRONT

S/N: JKM1-UP
PART OF 265-9760 HYDRAULIC AR-4 VALVE
AN ATTACHMENT

SMCS-5057 **i03904041**

NOTE	REF NO	GRAPHIC REF	PART NUMBER	QTY	PART NAME 1 2 3 4 5 6 (PRODUCT LEVEL)	SEE PAGE
	1	1	**5J-0253**	16	SPACER (0.24X0.51X0.34-IN)	
	2	1	**261-3868**	1	TUBE AS	
	3	1	**261-3869**	1	TUBE AS	
	4	1	**265-9082**	1	TUBE AS	
	5	1	**265-9083**	1	TUBE AS	
I	6	1	**265-9084**	2	HOSE AS	
	7	1	**266-0144**	1	TUBE AS	
	8	1	**266-0145**	1	TUBE AS	
I	9	1	**266-1604**	2	HOSE AS	
	10	1	**266-5982**	2	BRACKET AS	
	11	1	**266-7174**	2	BRACKET AS	
	12	1	**281-3170**	1	TUBE AS	
	13	1	**281-3171**	1	TUBE AS	
	14	1	**284-6573**	1	BRACKET AS	
	15	1	**284-6574**	1	BRACKET AS	
	16	1	**1P-3703**	4	SEAL-RECTANGULAR	
	17	1	**3D-2824**	2	SEAL-O-RING	
	18	1	**4J-0520**	12	SEAL-O-RING	
	19	1	**5H-4019**	4	COVER	
	20	1	**5K-0806**	4	CLAMP	
	21	2	**5P-1076**	4	WASHER-HARD (13.5X30X4-MM THK)	
	22	1	**5P-9436**	2	PLUG	
	23	2	**6V-1616**	8	CLAMP-HALF	
	24	2	**7X-7729**	4	WASHER (11X25X3-MM THK)	
	25	1,2	**8C-3206**	24	FLANGE-HALF	
	26	1	**8T-1889**	4	CLIP (SLOT)	
	27	1	**8T-1890**	4	CLIP (TAB)	
	28	1,2	**8T-4121**	68	WASHER-HARD (11X21X2.5-MM THK)	
M	29	1	**8T-4136**	12	BOLT (M10X1.5X25-MM)	
M	30	1,2	**8T-4139**	8	BOLT (M12X1.75X30-MM)	
M	31	1	**8T-4186**	40	BOLT (M10X1.5X40-MM)	
M	32	1,2	**8T-4195**	12	BOLT (M10X1.5X30-MM)	
M	33	2	**8T-4196**	8	BOLT (M10X1.5X35-MM)	
	34	1	**8T-4223**	4	WASHER-HARD (13.5X25.5X3-MM THK)	
M	35	1	**8T-6466**	16	BOLT (M10X1.5X60-MM)	

I-REFER TO HYDRAULIC INFORMATION SYSTEM
M-METRIC PART

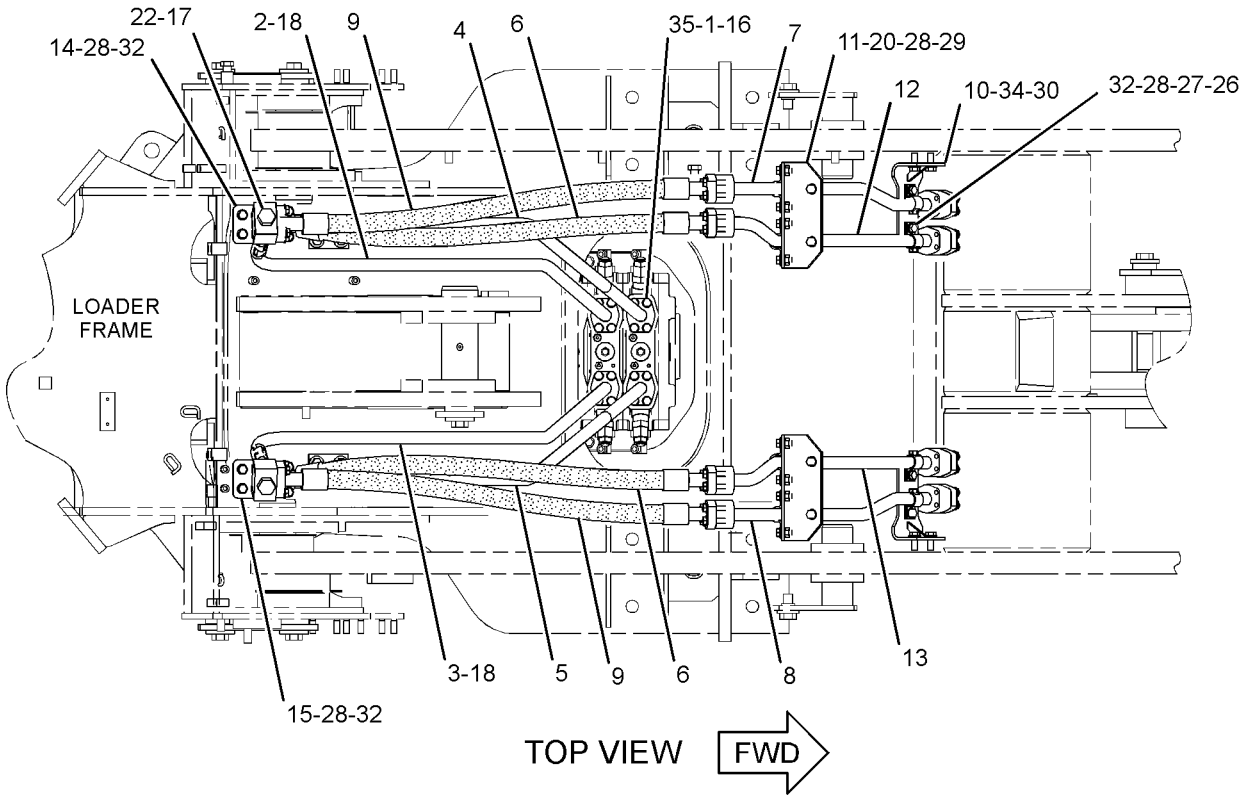

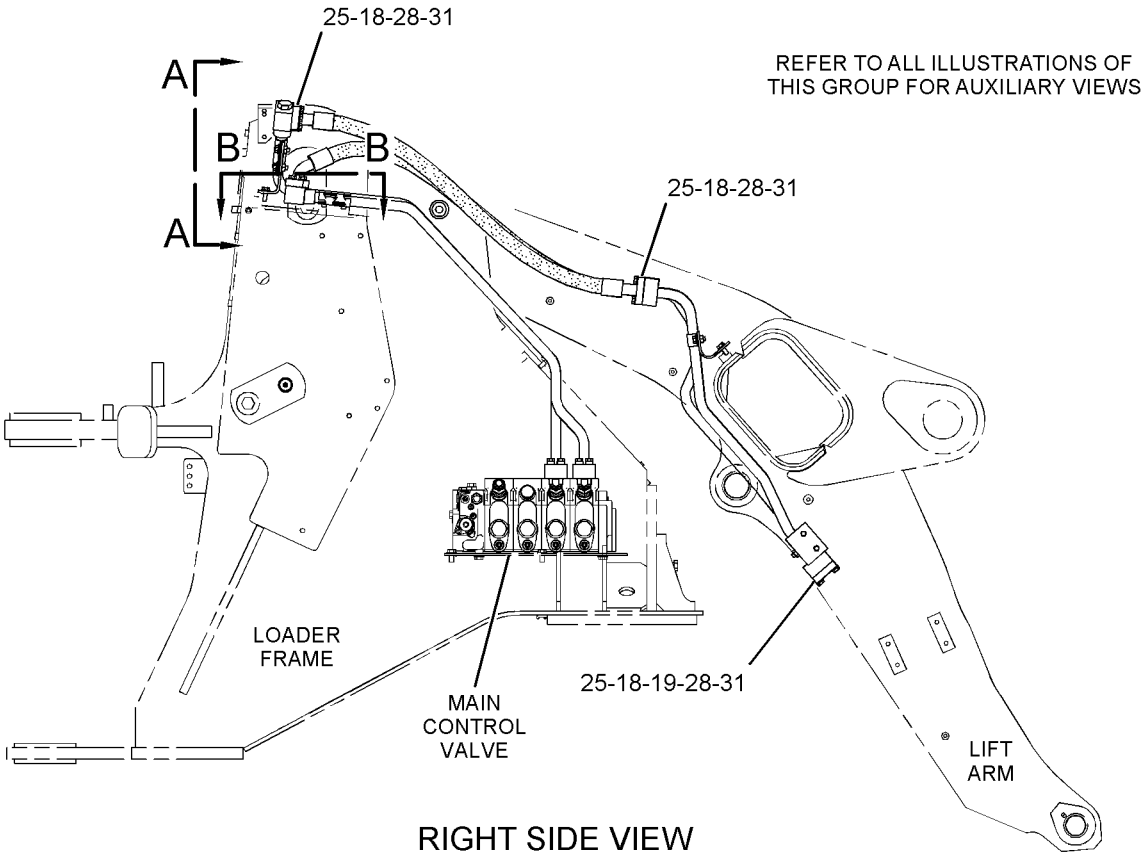

GRAPHIC #1 g02146141

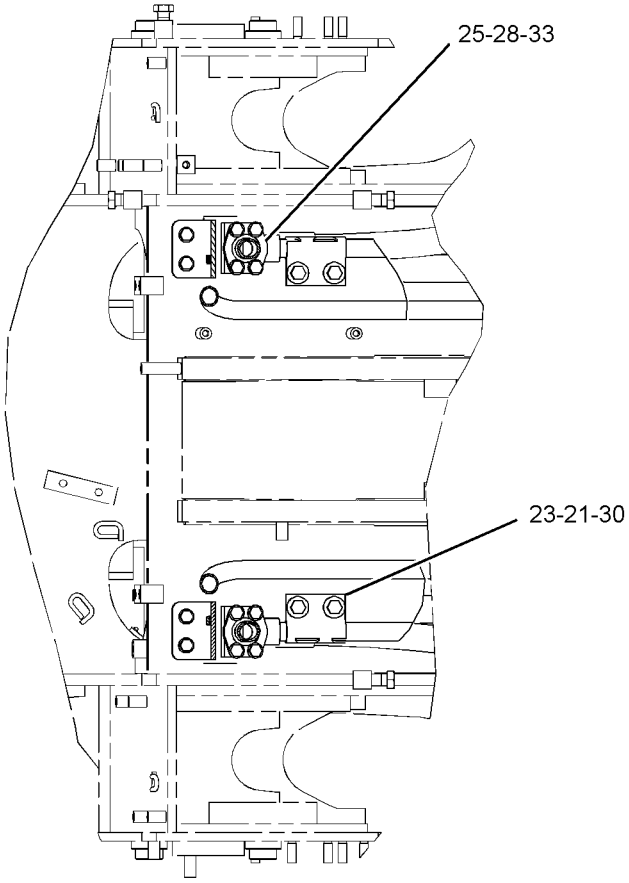

SECTION B-B

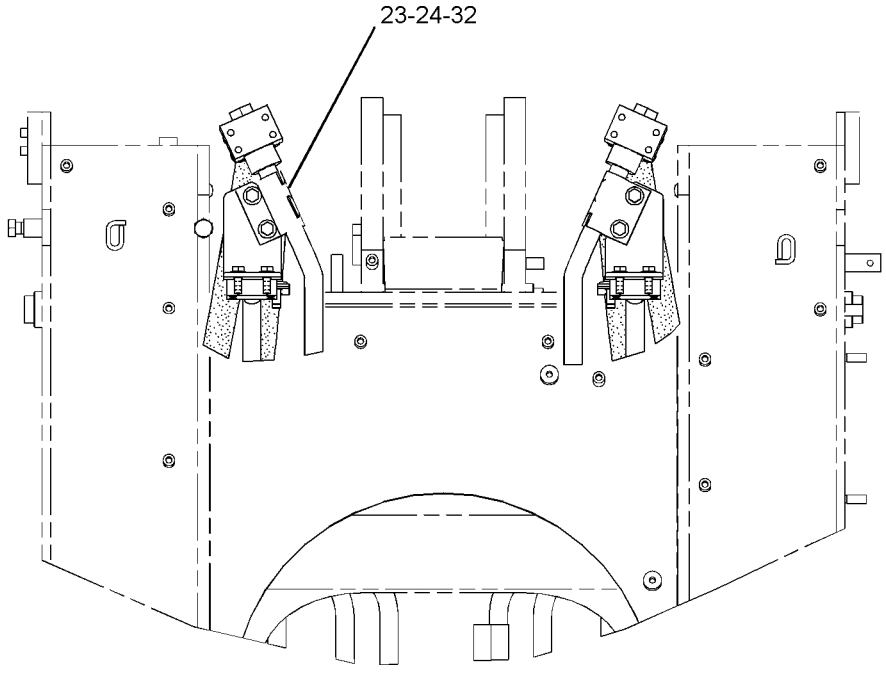

VIEW A-A

GRAPHIC #2 **<END>** g01441446

HYDRAULIC SYSTEM

266-1588 LINES GP-FRONT

S/N: JKM1-UP
PART OF 265-9741 CONTROL AR-RIDE
AN ATTACHMENT

SMCS-5057 **i02933009**

NOTE	REF NO	GRAPHIC REF	PART NUMBER	QTY	PART NAME 1 2 3 4 5 6 (PRODUCT LEVEL)	SEE PAGE
	1	1	**5J-0253**	8	SPACER (0.24X0.51X0.34-IN)	
	2	1	**257-6979**	2	BRACKET AS	
	3	1	**265-9496**	1	TUBE AS	
	4	1	**265-9497**	1	TUBE AS	
	5	1	**266-0144**	1	TUBE AS	
	6	1	**266-0145**	1	TUBE AS	
I	7	1	**266-1604**	2	HOSE AS	
	8	1	**266-7174**	2	BRACKET AS	
	9	1	**284-6573**	1	BRACKET AS	
M		1	**8T-3490**	2	NUT-WELD (M10X1.5-THD)	
	10	1	**284-6574**	1	BRACKET AS	
M		1	**8T-3490**	2	NUT-WELD (M10X1.5-THD)	
	11	1	**1P-3703**	2	SEAL-RECTANGULAR	
	12	1	**3D-2824**	2	SEAL-O-RING	
	13	1	**4J-0520**	6	SEAL-O-RING	
	14	1	**5H-4019**	2	COVER	
	15	1	**5K-0806**	2	CLAMP	
	16	1	**5P-9436**	2	PLUG	
	17	1	**6V-1616**	4	CLAMP-HALF	
	18	1	**7X-7729**	4	WASHER (11X25X3-MM THK)	
	19	1	**8C-3206**	12	FLANGE-HALF	
	20	1	**8T-1889**	2	CLIP (SLOT)	
	21	1	**8T-1890**	2	CLIP (TAB)	
	22	1	**8T-4121**	38	WASHER-HARD (11X21X2.5-MM THK)	
M	23	1	**8T-4136**	8	BOLT (M10X1.5X25-MM)	
M	24	1	**8T-4139**	4	BOLT (M12X1.75X30-MM)	
M	25	1	**8T-4186**	24	BOLT (M10X1.5X40-MM)	
M	26	1	**8T-4195**	10	BOLT (M10X1.5X30-MM)	
	27	1	**8T-4223**	4	WASHER-HARD (13.5X25.5X3-MM THK)	
M	28	1	**8T-6466**	8	BOLT (M10X1.5X60-MM)	

I-REFER TO HYDRAULIC INFORMATION SYSTEM
M-METRIC PART

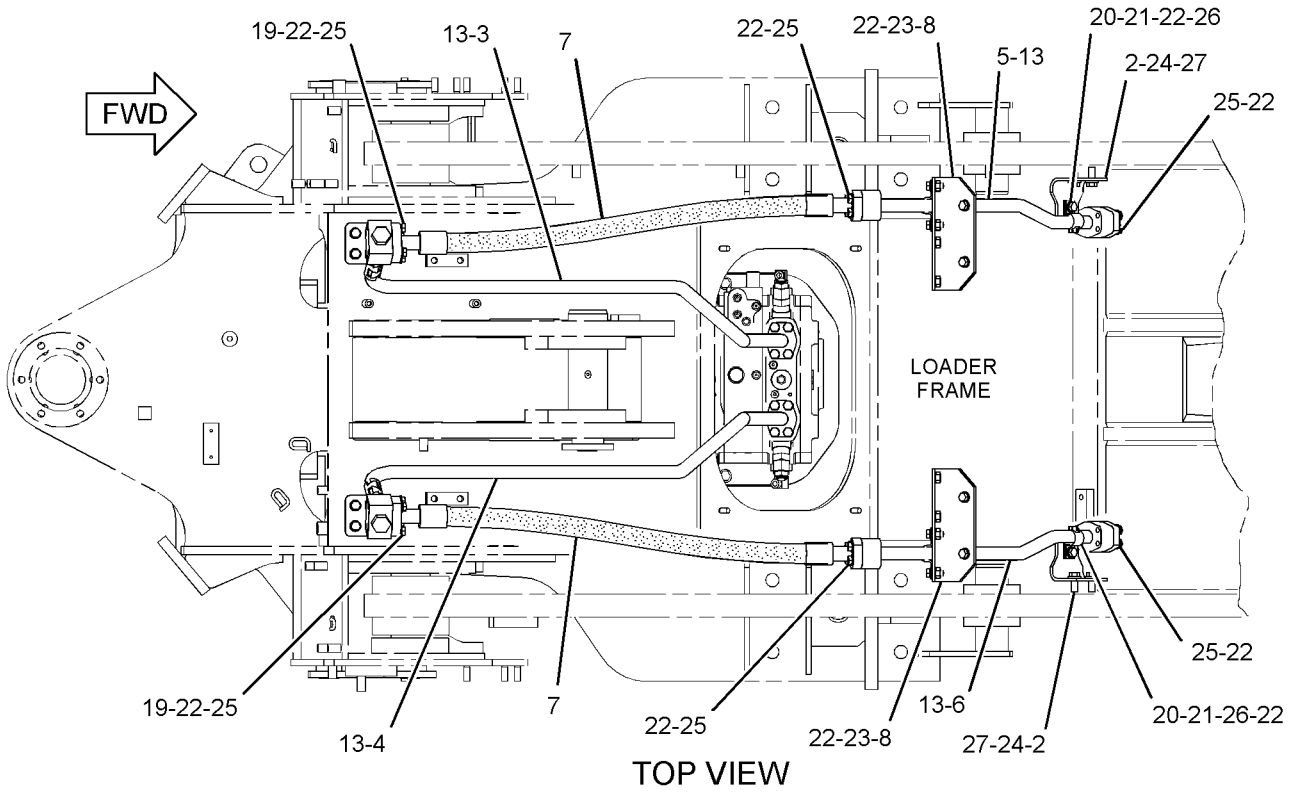

TOP VIEW

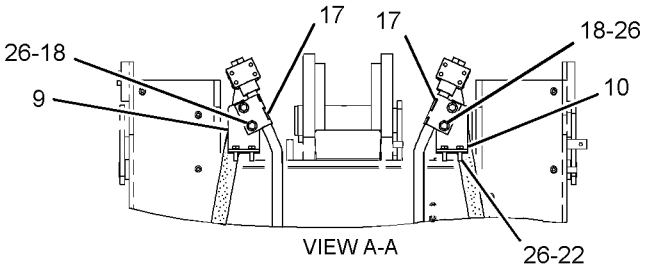

VIEW A-A

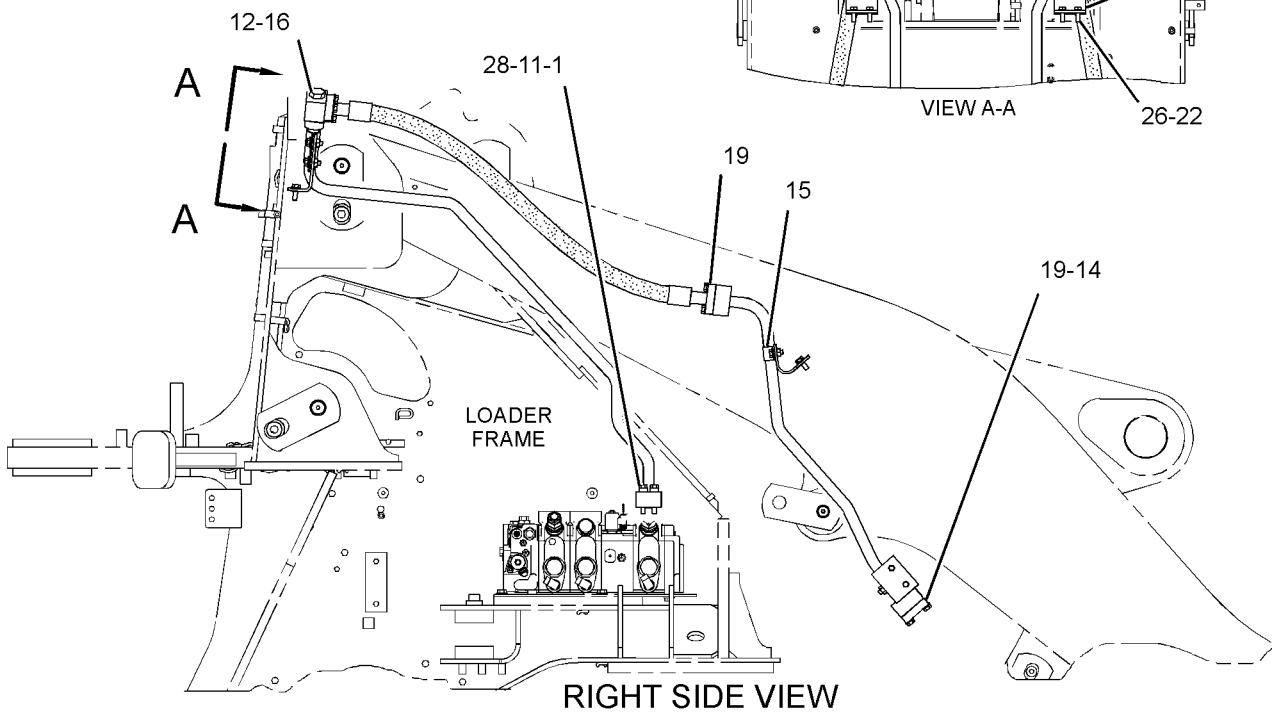

RIGHT SIDE VIEW

GRAPHIC #1

<END>

g01431859

HYDRAULIC SYSTEM

239-3357 LINES GP-HYDRAULIC

S/N: JKM1-862

PART OF 237-7535 HYDRAULIC AR-2 VALVE

SMCS-5057 **i03507720**

NOTE	REF NO	GRAPHIC REF	PART NUMBER	QTY	PART NAME 1 2 3 4 5 6 (PRODUCT LEVEL)	SEE PAGE
	1	2	**4V-1878**	1	HOSE	
	2	4	**5B-2183**	1	NUT-JAM (9/16-18-THD)	
Y	3	4	**8J-6875**	2	VALVE GP-SHUTTLE	887
I	4	2	**121-3812**	1	HOSE AS	
	5	1	**128-8678**	1	SPACER (10.5X25X15-MM THK)	
	6	4	*148-8424*	1	TEE AS	
		4	**6V-8397**	1	SEAL-O-RING	
		4	**8T-8902**	1	TEE	
	7	4	*148-8443*	1	TEE AS	
		4	**3J-1907**	1	SEAL-O-RING	
		4	**6V-8397**	1	SEAL-O-RING	
		4	**7X-2459**	1	TEE-O-RING	
	8	3	*164-5611*	1	TEE AS	
		3	**6V-9746**	1	SEAL-O-RING	
		3	**7M-8485**	1	SEAL-O-RING	
		3	**8T-3312**	1	TEE	
	9	4	*168-1968*	2	TEE AS	
					(EACH INCLUDES)	
		4	**126-6872**	1	TEE	
		4	**3J-1907**	1	SEAL-O-RING	
		4	**6V-8397**	1	SEAL-O-RING	
	10	4	*169-5863*	1	ADAPTER AS	
		4	**7X-7945**	1	ADAPTER	
		4	**4J-5477**	1	SEAL-O-RING	
	11	2	*183-8019*	1	UNION AS	
		2	**162-2896**	1	UNION	
		2	**6V-9746**	2	SEAL-O-RING	
	12	1	**185-6250**	1	FITTING AS (QUICK)	
I	13	1	**219-2907**	1	HOSE AS	
	14	4	**220-0814**	1	VALVE-BREAKER RELIEF (HYDRAULIC TANK)	
Y	15	3	**245-5943**	1	VALVE GP-DRAIN (ECOLOGY, HYDRAULIC)	832
I	16	1	**254-2501**	1	HOSE AS	
I	17	3	**262-1542**	1	HOSE AS	
I	18	3	**262-1546**	1	HOSE AS	
	19	3	**262-1548**	1	TUBE AS	
	20	2	**262-1549**	1	TUBE AS	
	21	2	**262-5578**	1	TUBE AS	
	22	1	**262-5579**	1	TUBE AS	
	23	4	**265-2160**	1	ADAPTER	
I	24	1	**265-2162**	1	HOSE AS	
I	25	2	**265-2163**	1	HOSE AS	
	26	4	**269-4961**	1	ELBOW-ADAPTER	
	27	2	**273-1751**	1	GUARD-HOSE	
Y	28	1	**275-7875**	1	ACCUMULATOR GP-PILOT OIL (CHARGED)	666
	29	2,4	**275-8880**	2	FLANGE	
I	30	2	**276-2817**	1	HOSE AS	
	31	2	**277-9660**	1	MANIFOLD GP-CONTROL (IMPL, STER PUMP MARGIN RELIEF)	
J		2	**269-6825**	1	VALVE GP-RELIEF (IMPL, STER PUMP MARGIN RELIEF)	
I	32	1	**282-6720**	1	HOSE AS	
I	33	1	**282-6721**	1	HOSE AS	
	34	2	**282-6724**	1	TUBE AS	
	35	4	**282-6726**	1	BRACKET AS	
	36	2	**282-6727**	1	TUBE AS	
I	37	2	**282-6728**	1	HOSE AS	

239-3357 **LINES GP-HYDRAULIC** *(contd.)* **i03507720**

NOTE	REF NO	GRAPHIC REF	PART NUMBER	QTY	PART NAME 1 2 3 4 5 6 (PRODUCT LEVEL)	SEE PAGE
	38	2	**282-6729**	1	TUBE AS	
I	39	2	**282-6730**	1	HOSE AS	
I	40	2	**282-6731**	1	HOSE AS	
I	41	4	**282-6732**	1	HOSE AS	
Y	42	3	**285-2235**	1	FILTER GP-OIL (ULTRA HIGH EFFICIENCY) (HYDRAULIC CASE DRAIN)	690
	43	4	**285-5816**	1	BRACKET	
I	44	2	**285-5817**	1	HOSE AS	
	45	1	**285-5818**	1	TUBE AS	
	46	1	**285-5819**	1	HOSE AS	
I	47	2	**285-5820**	1	HOSE AS	
Y	48	4	*286-8970*	1	MANIFOLD GP-CONTROL (PUMP TORQUE LIMITER CONTROL)	783
I	49	1	**287-2098**	1	HOSE AS	
	50	3	*297-7973*	1	TEE AS	
		3	**297-7972**	1	TEE-ORP TO ORFS	
		3	**6V-9746**	1	SEAL-O-RING	
	51	1	**303-7863**	1	TUBE AS	
	52	3	**303-7865**	1	BRACKET AS	
	53	3	**303-7866**	1	BRACKET AS	
	54	3	**306-4025**	1	SCREEN GP	
	55	4	**308-1401**	1	TUBE AS	
	56	4	**308-1402**	1	TUBE AS	
I	57	4	**310-1915**	1	HOSE AS	
	58	4	*313-3498*	1	ELBOW AS	
		4	**3J-1907**	1	SEAL-O-RING	
		4	**3J-7354**	1	SEAL-O-RING	
		4	**313-3497**	1	ELBOW	
	59	4	**317-0953**	1	VALVE GP-PRIORITY (FLOW DIVIDER) (STEERING)	
	60	4	**317-5574**	1	PLATE-ORIFICE	
M	61	4	**101-7402**	8	BOLT-SOCKET HEAD (M12X1.75X30-MM)	
	62	1	**131-8201**	2	CLIP (SLOT)	
	63	1	**131-8202**	2	CLIP (TAB)	
	64	2	**144-7090**	1	CLIP (SLOT)	
	65	2	**144-7091**	1	CLIP (TAB)	
	66	2	*148-8313*	1	ADAPTER AS	
		2	**3K-0360**	1	SEAL-O-RING	
		2	**5P-6944**	1	ADAPTER	
	67	2	*148-8347*	1	ELBOW AS	
		2	**3D-2824**	1	SEAL-O-RING	
		2	**6V-9007**	1	ELBOW	
		2	**6V-9746**	1	SEAL-O-RING	
	68	4	*148-8353*	1	ELBOW AS	
		4	**3J-1907**	1	SEAL-O-RING	
		4	**6V-8397**	1	SEAL-O-RING	
		4	**6V-9001**	1	ELBOW	
	69	4	*148-8355*	1	ELBOW AS	
		4	**5K-9090**	1	SEAL-O-RING	
		4	**6V-9005**	1	ELBOW	
		4	**7M-8485**	1	SEAL-O-RING	
	70	2	*148-8357*	1	ELBOW AS	
		2	**5K-9090**	1	SEAL-O-RING	
		2	**6V-9008**	1	ELBOW	
		2	**7M-8485**	1	SEAL-O-RING	
	71	2	*148-8367*	1	ELBOW AS	
		2	**6V-8397**	1	SEAL-O-RING	
		2	**6V-9850**	1	ELBOW	
	72	4	*148-8368*	1	ELBOW AS	
		4	**3J-1907**	1	SEAL-O-RING	
		4	**4J-5477**	1	SEAL-O-RING	

239-3357 **LINES GP-HYDRAULIC** *(contd.)* **i03507720**

NOTE	REF NO	GRAPHIC REF	PART NUMBER	QTY	PART NAME 1 2 3 4 5 6 (PRODUCT LEVEL)	SEE PAGE
		4	**6V-8627**	1	ELBOW	
	73	1	*148-8374*	1	ELBOW AS	
		1	**3K-0360**	1	SEAL-O-RING	
		1	**6V-8397**	1	SEAL-O-RING	
		1	**6V-8723**	1	ELBOW	
	74	4	*148-8378*	1	ELBOW AS	
		4	**3J-1907**	1	SEAL-O-RING	
		4	**6V-8397**	1	SEAL-O-RING	
		4	**6V-8724**	1	ELBOW	
	75	3	*148-8392*	1	ELBOW AS	
		3	**6V-9746**	1	SEAL-O-RING	
		3	**6V-9853**	1	ELBOW	
	76	4	*148-8411*	1	PLUG AS	
		4	**3K-0360**	1	SEAL-O-RING	
		4	**9S-4185**	1	PLUG-O-RING	
	77	1	*148-8428*	1	TEE AS	
		1	**6V-8398**	2	SEAL-O-RING	
		1	**3K-0360**	1	SEAL-O-RING	
		1	**6V-8782**	1	TEE	
	78	4	*148-8429*	1	TEE AS	
		4	**5K-9090**	2	SEAL-O-RING	
		4	**6V-9840**	1	TEE-SWIVEL	
	79	4	*148-8433*	1	TEE AS	
		4	**6V-8397**	2	SEAL-O-RING	
		4	**6V-9836**	1	TEE-SWIVEL	
	80	2	*148-8439*	2	TEE AS	
					(EACH INCLUDES)	
		2	**3J-1907**	1	SEAL-O-RING	
		2	**6V-8397**	2	SEAL-O-RING	
		2	**6V-8774**	1	TEE	
	81	4	*153-6237*	1	ELBOW AS	
		4	**3D-2824**	1	SEAL-O-RING	
		4	**6V-9004**	1	ELBOW	
		4	**6V-9746**	1	SEAL-O-RING	
	82	2	**160-8708**	2	BRACKET AS	
	83	2,3,4	*164-5567*	8	COUPLER AS-QUICK DISCONNECT (MALE)	
					(EACH INCLUDES)	
		2,3,4	**3J-1907**	1	SEAL-O-RING	
		2,3,4	**6V-3965**	1	FITTING (QUICK DISCONNECT)	
	84	3	*164-5574*	1	TEE AS	
		3	**6V-8784**	1	TEE-FACE SEAL	
		3	**6V-9746**	2	SEAL-O-RING	
		3	**3D-2824**	1	SEAL-O-RING	
	85	3	*164-6858*	1	TEE AS	
		3	**5K-9090**	2	SEAL-O-RING	
		3	**6V-8778**	1	TEE-FACE SEAL	
		3	**7M-8485**	1	SEAL-O-RING	
	86	3	*164-6862*	1	TEE AS	
		3	**6V-9160**	1	TEE-FACE SEAL	
		3	**6V-9746**	3	SEAL-O-RING	
	87	1	**170-4735**	1	RING-RETAINING	
	88	2,4	*172-9287*	4	CONNECTOR AS	
					(EACH INCLUDES)	
		2,4	**3J-1907**	1	SEAL-O-RING	
		2,4	**6V-8397**	1	SEAL-O-RING	
		2,4	**7E-9898**	1	CONNECTOR	
	89	2	*241-6215*	1	ELBOW AS	
		2	**3J-1907**	1	SEAL-O-RING	
		2	**6V-8076**	1	ELBOW	

239-3357 LINES GP-HYDRAULIC *(contd.)* i03507720

NOTE	REF NO	GRAPHIC REF	PART NUMBER	QTY	PART NAME 1 2 3 4 5 6 (PRODUCT LEVEL)	SEE PAGE
	90	2,4	*250-1424*	4	ELBOW AS	
					(EACH INCLUDES)	
		2,4	**6V-8724**	1	ELBOW	
		2,4	**214-7568**	1	SEAL-O-RING	
		2,4	**221-3494**	1	SEAL-O-RING	
	91	4	**1P-3703**	1	SEAL-RECTANGULAR	
	92	2,4	**1P-3704**	6	SEAL-RECTANGULAR	
	93	2,3,4	**1P-4579**	8	FLANGE-HALF	
	94	2,4	**1P-5767**	8	FLANGE-HALF	
	95	2	**1S-0496**	1	CLIP	
	96	1	**1S-0994**	1	CLIP	
	97	4	**1S-0996**	1	CLIP	
	98	2,4	**2H-6338**	2	SEAL-O-RING	
	99	2,3	**2P-1293**	2	LOCKNUT (1-3/16-12-THD)	
	100	4	**2Y-3812**	1	CLIP	
	101	4	**3D-2824**	1	SEAL-O-RING	
	102	4	**3J-1907**	1	SEAL-O-RING	
	103	4	**3J-7354**	1	SEAL-O-RING	
	104	4	**4J-0522**	1	SEAL-O-RING	
	105	2,3,4	**4J-0524**	4	SEAL-O-RING	
	106	1	**5D-0718**	1	CLIP	
	107	4	**5P-1076**	4	WASHER-HARD (13.5X30X4-MM THK)	
	108	1,2,3, 4	**6V-0852**	9	CAP-DUST	
	109	4	**6V-3265**	1	CLIP	
	110	2,3,4	**6V-8397**	3	SEAL-O-RING	
	111	2	**6V-9746**	1	SEAL-O-RING	
	112	3	**7S-8920**	3	CLIP (SLOT)	
	113	3	**7S-8921**	3	CLIP (TAB)	
M	114	4	**7X-0818**	2	BOLT (M8X1.25X45-MM)	
M	115	4	**7X-2534**	4	BOLT (M6X1X50-MM)	
M	116	2,4	**7X-2549**	7	BOLT (M12X1.75X100-MM)	
	117	1	**7X-7729**	1	WASHER (11X25X3-MM THK)	
	118	2	**8S-8820**	1	CLIP	
	119	2,3	**8T-1889**	2	CLIP (SLOT)	
	120	2,3	**8T-1890**	2	CLIP (TAB)	
	121	1,2,3, 4	**8T-4121**	17	WASHER-HARD (11X21X2.5-MM THK)	
	122	2,4	**8T-4122**	8	WASHER-HARD (17X32X3.5-MM THK)	
M	123	2	**8T-4133**	1	NUT (M10X1.5-THD)	
M	124	2,3,4	**8T-4136**	11	BOLT (M10X1.5X25-MM)	
M	125	1	**8T-4137**	1	BOLT (M10X1.5X20-MM)	
M	126	3,4	**8T-4139**	6	BOLT (M12X1.75X30-MM)	
M	127	2	**8T-4140**	1	BOLT (M16X2X60-MM)	
M	128	3,4	**8T-4183**	5	BOLT (M12X1.75X40-MM)	
M	129	2,3,4	**8T-4184**	12	BOLT (M12X1.75X45-MM)	
M	130	3	**8T-4192**	2	BOLT (M12X1.75X25-MM)	
M	131	2,4	**8T-4193**	7	BOLT (M16X2X50-MM)	
M	132	4	**8T-4194**	12	BOLT (M12X1.75X50-MM)	
M	133	1,2	**8T-4195**	4	BOLT (M10X1.5X30-MM)	
M	134	1	**8T-4196**	1	BOLT (M10X1.5X35-MM)	
	135	2,3,4	**8T-4223**	45	WASHER-HARD (13.5X25.5X3-MM THK)	
	136	4	**8T-4224**	2	WASHER-HARD (8.8X16X2-MM THK)	
M	137	3	**8T-4244**	1	NUT (M12X1.75-THD)	
M	138	4	**8T-4648**	4	BOLT (M12X1.75X70-MM)	
	139	2	**8T-4985**	2	CLAMP-HOSE	
	140	4	**9X-8256**	4	WASHER (6.6X12X2-MM THK)	
	141	4	**119-5708**	1	CLIP	
	142	4	**324-6983**	1	BRACKET AS	
	143	4	**324-7051**	1	BRACKET AS	

239-3357 **LINES GP-HYDRAULIC** *(contd.)* **i03507720**

NOTE	REF NO	GRAPHIC REF	PART NUMBER	QTY	PART NAME 1 2 3 4 5 6 (PRODUCT LEVEL)	SEE PAGE
					AVAILABLE REPAIR KIT(S):	
J			**239-6336**	1	KIT-SEAL	
					(INCLUDES SEAL-O-RINGS & BACK-UP RING SEALS)	

I-REFER TO HYDRAULIC INFORMATION SYSTEM
J-KIT MARKED J SERVICES PART MARKED J
M-METRIC PART
Y-SEPARATE ILLUSTRATION

REFER TO ALL ILLUSTRATIONS OF
THIS GROUP FOR AUXILIARY VIEWS

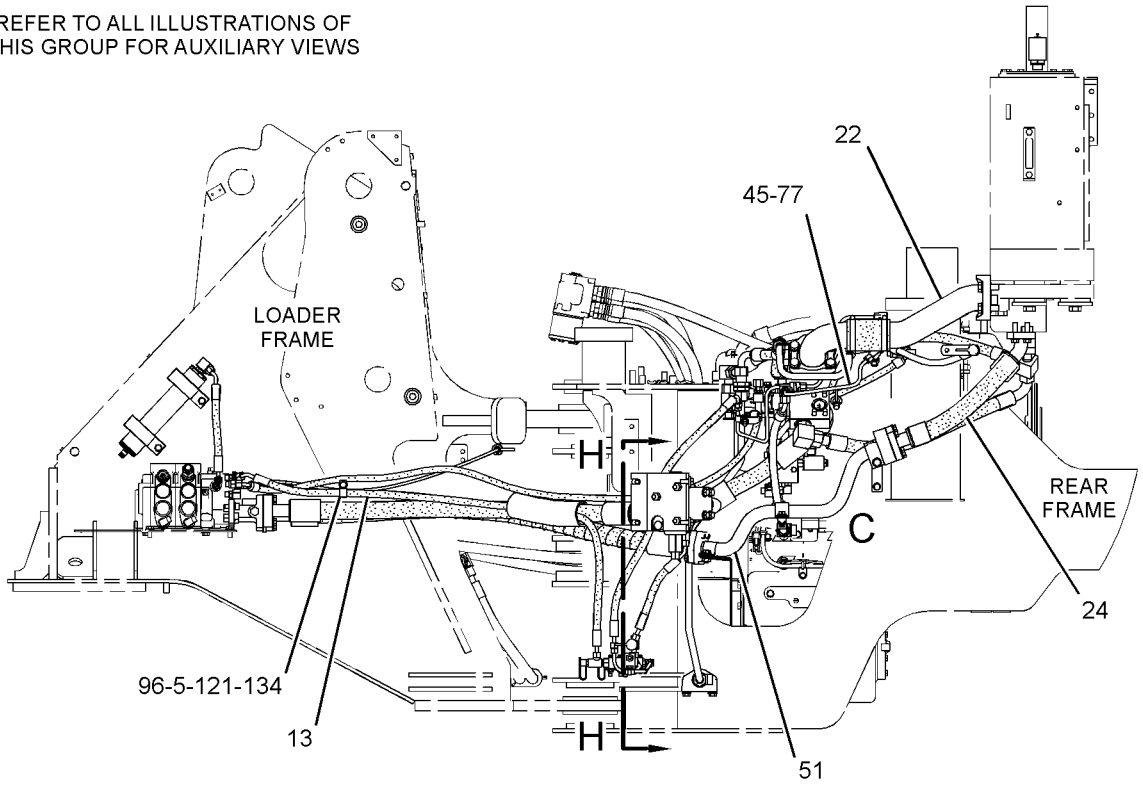

LEFT SIDE VIEW

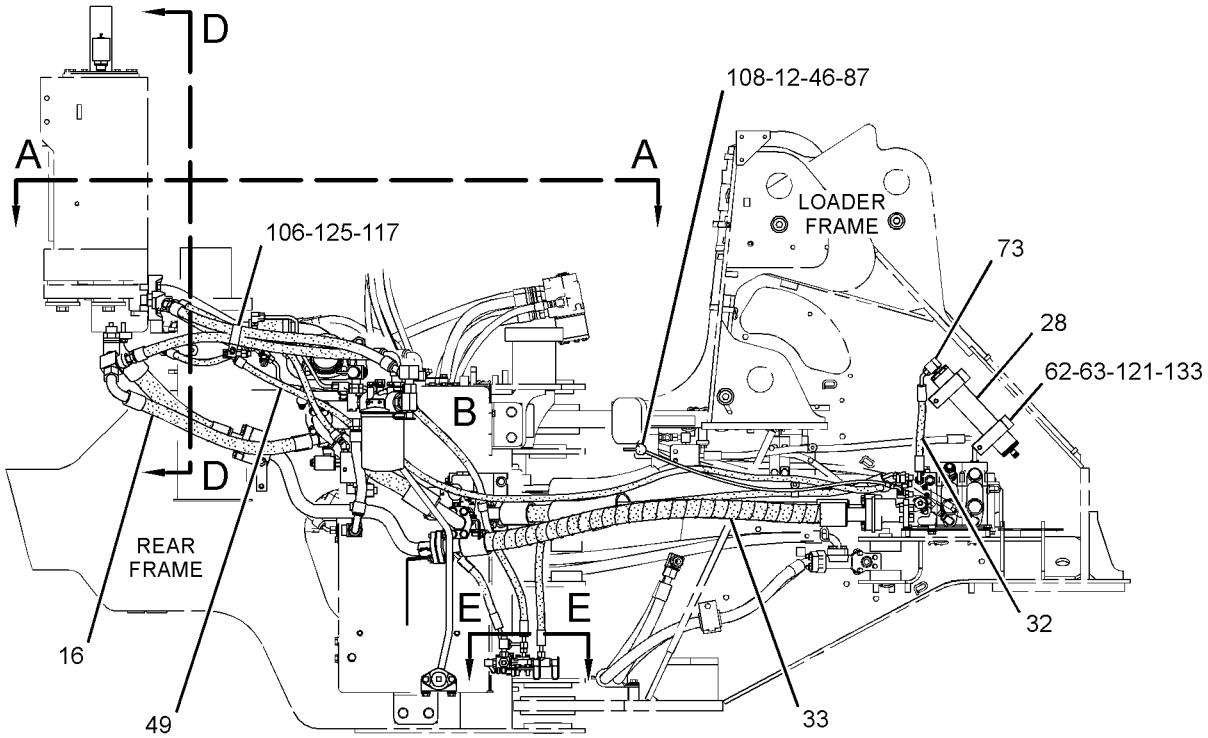

RIGHT SIDE VIEW

GRAPHIC #1

g01660276

REFER TO ALL ILLUSTRATIONS OF
THIS GROUP FOR AUXILIARY VIEWS

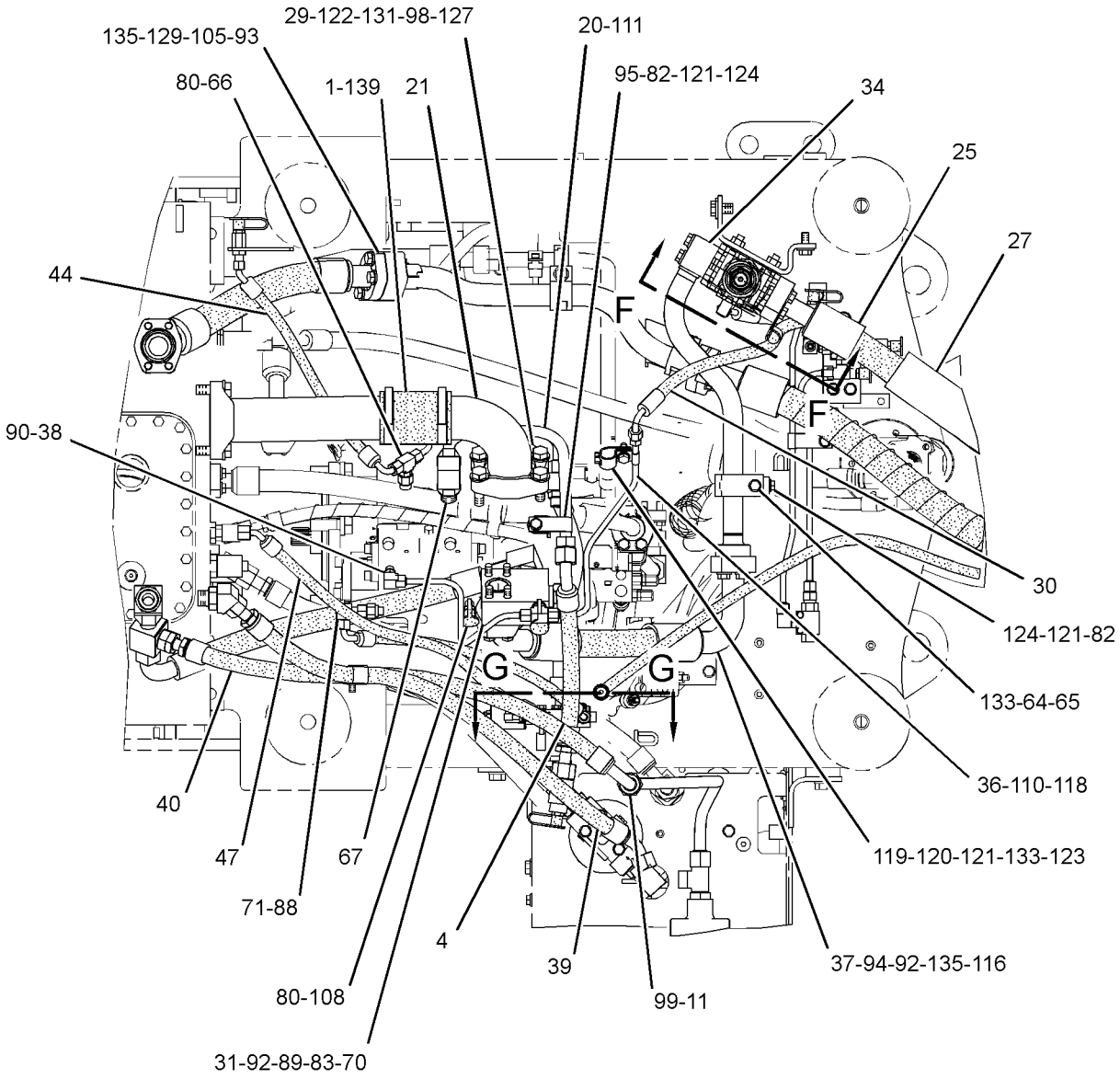

VIEW A-A

GRAPHIC #2

g01660275

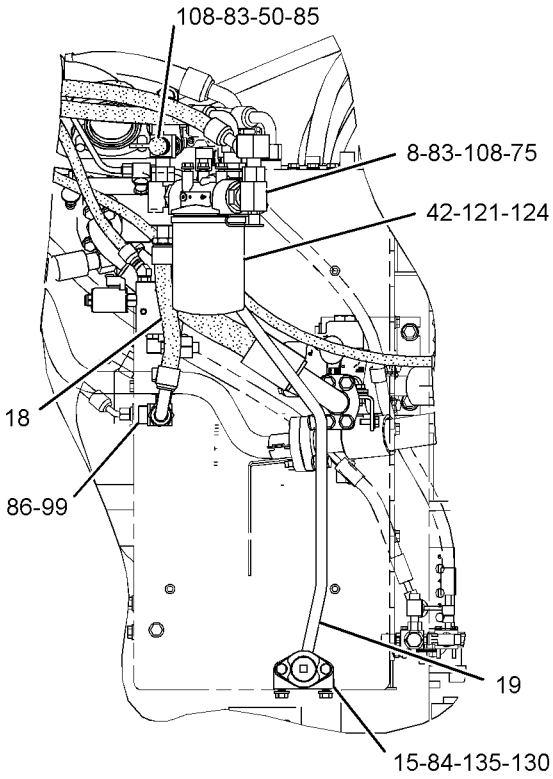

VIEW OF AREA B

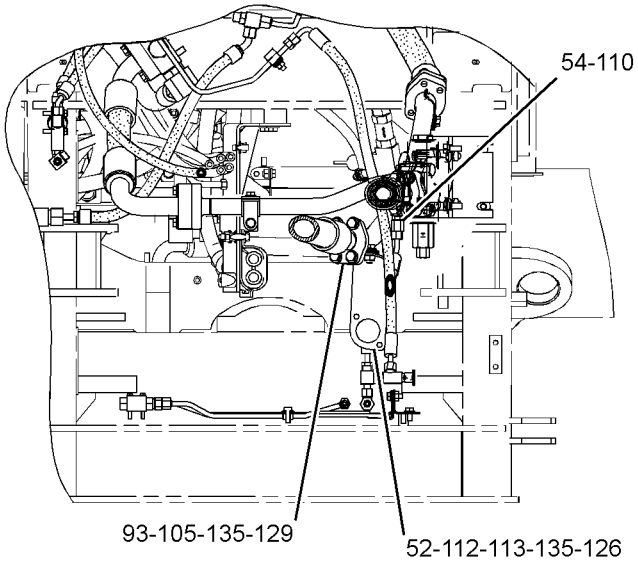

SECTION H-H

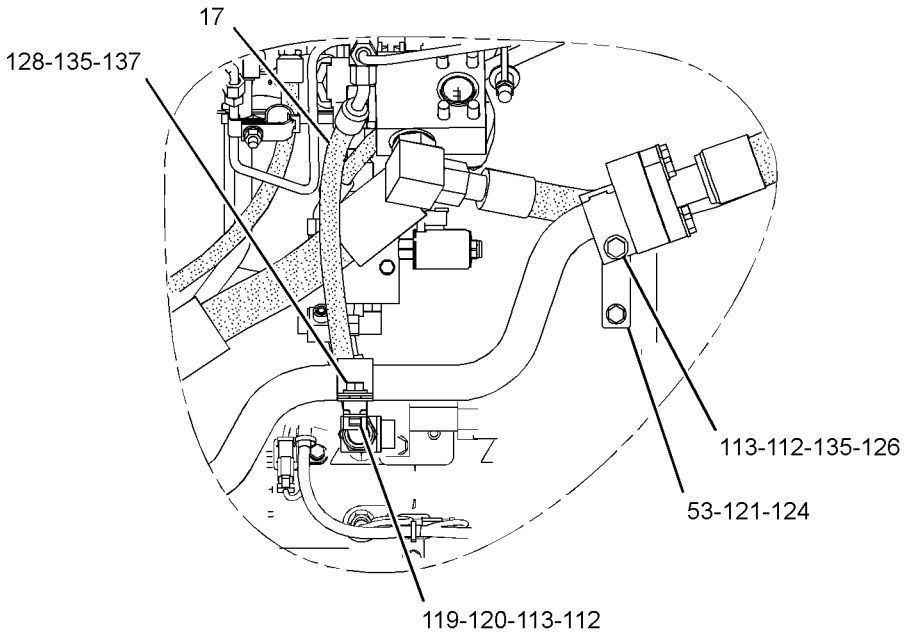

VIEW OF AREA C

GRAPHIC #3 g01660273

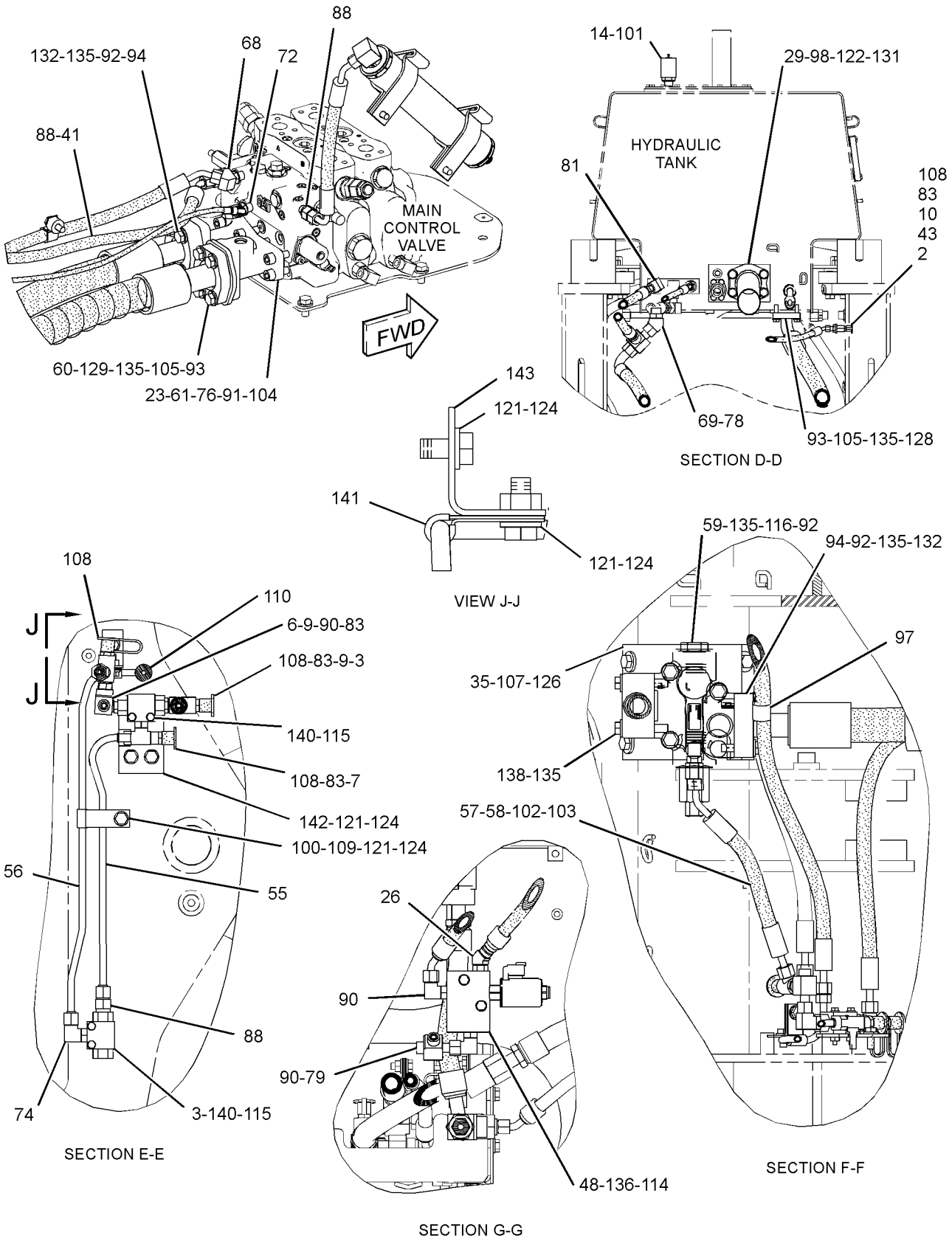

GRAPHIC #4 **<END>** g01843053

HYDRAULIC SYSTEM

239-3357 LINES GP-HYDRAULIC

S/N: JKM863-946

PART OF 237-7535 HYDRAULIC AR-2 VALVE

SMCS-5057 **i03754279**

NOTE	REF NO	GRAPHIC REF	PART NUMBER	QTY	PART NAME 1 2 3 4 5 6 (PRODUCT LEVEL)	SEE PAGE
	1	2	**4V-1878**	1	HOSE	
Y	3	4	**8J-6875**	2	VALVE GP-SHUTTLE (PUMP LINES)	887
I	4	2	**121-3812**	1	HOSE AS	
	5	1	**128-8678**	1	SPACER (10.5X25X15-MM THK)	
	6	4	*148-8424*	1	TEE AS	
		4	**6V-8397**	1	SEAL-O-RING	
		4	**8T-8902**	1	TEE	
	7	4	*148-8443*	1	TEE AS	
		4	**3J-1907**	1	SEAL-O-RING	
		4	**6V-8397**	1	SEAL-O-RING	
		4	**7X-2459**	1	TEE-O-RING	
	8	3	*164-5611*	1	TEE AS	
		3	**6V-9746**	1	SEAL-O-RING	
		3	**7M-8485**	1	SEAL-O-RING	
		3	**8T-3312**	1	TEE	
	9	4	*168-1968*	2	TEE AS	
					(EACH INCLUDES)	
		4	**126-6872**	1	TEE	
		4	**3J-1907**	1	SEAL-O-RING	
		4	**6V-8397**	1	SEAL-O-RING	
	10	4	*169-5863*	1	ADAPTER AS	
		4	**7X-7945**	1	ADAPTER	
		4	**4J-5477**	1	SEAL-O-RING	
	11	2	*183-8019*	1	UNION AS	
		2	**162-2896**	1	UNION	
		2	**6V-9746**	2	SEAL-O-RING	
C	12	1	**6V-3965**	1	FITTING (QUICK DISCONNECT)	
I	13	1	**219-2907**	1	HOSE AS	
C	14	4	**258-2829**	1	BREATHER (HYDRAULIC TANK)	
Y	15	3	**245-5943**	1	VALVE GP-DRAIN (ECOLOGY, HYDRAULIC)	832
I	16	1	**254-2501**	1	HOSE AS	
I	17	3	**262-1542**	1	HOSE AS	
I	18	3	**262-1546**	1	HOSE AS	
	19	3	**262-1548**	1	TUBE AS	
	20	2	**262-1549**	1	TUBE AS	
	21	2	**262-5578**	1	TUBE AS	
	22	1	**262-5579**	1	TUBE AS	
	23	4	**265-2160**	1	ADAPTER	
CI	24	1	**336-9099**	1	HOSE AS	
I	25	2	**265-2163**	1	HOSE AS	
	26	4	**269-4961**	1	ELBOW-ADAPTER	
	27	2	**273-1751**	1	GUARD-HOSE	
Y	28	1	*275-7875*	1	ACCUMULATOR GP-PILOT OIL (CHARGED) (DEAD ENGINE, LIFT ARM LOWER)	666
	29	2,4	**275-8880**	2	FLANGE	
CI	30	2	**339-6501**	1	HOSE AS	
	31	2	**277-9660**	1	MANIFOLD GP-CONTROL (IMPL, STER PUMP MARGIN RELIEF)	
J		2	**269-6825**	1	VALVE GP-RELIEF (IMPL, STER PUMP MARGIN RELIEF)	
I	32	1	**282-6720**	1	HOSE AS	
I	33	1	**282-6721**	1	HOSE AS	
	34	2	**282-6724**	1	TUBE AS	
	35	4	**282-6726**	1	BRACKET AS	
	36	2	**282-6727**	1	TUBE AS	
I	37	2	**282-6728**	1	HOSE AS	

239-3357 **LINES GP-HYDRAULIC** *(contd.)* **i03754279**

NOTE	REF NO	GRAPHIC REF	PART NUMBER	QTY	PART NAME 1 2 3 4 5 6 (PRODUCT LEVEL)	SEE PAGE
	38	2	**282-6729**	1	TUBE AS	
I	39	2	**282-6730**	1	HOSE AS	
I	40	2	**282-6731**	1	HOSE AS	
I	41	4	**282-6732**	1	HOSE AS	
CY	42	3	**337-4102**	1	FILTER GP-OIL (ULTRA HIGH EFFICIENCY) (HYDRAULIC CASE DRAIN)	692
	43	4	**285-5816**	1	BRACKET	
I	44	2	**285-5817**	1	HOSE AS	
	45	1	**285-5818**	1	TUBE AS	
	46	1	**285-5819**	1	HOSE AS	
I	47	2	**285-5820**	1	HOSE AS	
Y	48	4	**286-8970**	1	MANIFOLD GP-CONTROL (PUMP TORQUE LIMITER CONTROL)	783
I	49	1	**287-2098**	1	HOSE AS	
	50	3	*297-7973*	1	TEE AS	
		3	**297-7972**	1	TEE-ORP TO ORFS	
		3	**6V-9746**	1	SEAL-O-RING	
C	51	1	**328-5311**	1	TUBE AS	
	52	3	**303-7865**	1	BRACKET AS	
C	53	3	**329-2310**	1	BRACKET AS	
	54	3	**306-4025**	1	SCREEN GP	
	55	4	**308-1401**	1	TUBE AS	
	56	4	**308-1402**	1	TUBE AS	
I	57	4	**310-1915**	1	HOSE AS	
	58	4	*313-3498*	1	ELBOW AS	
		4	**3J-1907**	1	SEAL-O-RING	
		4	**3J-7354**	1	SEAL-O-RING	
		4	**313-3497**	1	ELBOW	
	59	4	**317-0953**	1	VALVE GP-PRIORITY (FLOW DIVIDER) (STEERING)	
	60	4	**317-5574**	1	PLATE-ORIFICE	
M	61	4	**101-7402**	8	BOLT-SOCKET HEAD (M12X1.75X30-MM)	
	62	1	**131-8201**	2	CLIP (SLOT)	
	63	1	**131-8202**	2	CLIP (TAB)	
	64	2	**144-7090**	1	CLIP (SLOT)	
	65	2	**144-7091**	1	CLIP (TAB)	
	66	2	*148-8313*	1	ADAPTER AS	
		2	**3K-0360**	1	SEAL-O-RING	
		2	**5P-6944**	1	ADAPTER	
	67	2	*148-8347*	1	ELBOW AS	
		2	**3D-2824**	1	SEAL-O-RING	
		2	**6V-9007**	1	ELBOW	
		2	**6V-9746**	1	SEAL-O-RING	
	68	4	*148-8353*	1	ELBOW AS	
		4	**3J-1907**	1	SEAL-O-RING	
		4	**6V-8397**	1	SEAL-O-RING	
		4	**6V-9001**	1	ELBOW	
	69	4	*148-8355*	1	ELBOW AS	
		4	**5K-9090**	1	SEAL-O-RING	
		4	**6V-9005**	1	ELBOW	
		4	**7M-8485**	1	SEAL-O-RING	
	70	2	*148-8357*	1	ELBOW AS	
		2	**5K-9090**	1	SEAL-O-RING	
		2	**6V-9008**	1	ELBOW	
		2	**7M-8485**	1	SEAL-O-RING	
	71	2	*148-8367*	1	ELBOW AS	
		2	**6V-8397**	1	SEAL-O-RING	
		2	**6V-9850**	1	ELBOW	
	72	4	*148-8368*	1	ELBOW AS	
		4	**3J-1907**	1	SEAL-O-RING	
		4	**4J-5477**	1	SEAL-O-RING	

239-3357 **LINES GP-HYDRAULIC** *(contd.)* **i03754279**

NOTE	REF NO	GRAPHIC REF	PART NUMBER	QTY	PART NAME 1 2 3 4 5 6 (PRODUCT LEVEL)	SEE PAGE
		4	**6V-8627**	1	ELBOW	
	73	1	*148-8374*	1	ELBOW AS	
		1	**3K-0360**	1	SEAL-O-RING	
		1	**6V-8397**	1	SEAL-O-RING	
		1	**6V-8723**	1	ELBOW	
	74	4	*148-8378*	1	ELBOW AS	
		4	**3J-1907**	1	SEAL-O-RING	
		4	**6V-8397**	1	SEAL-O-RING	
		4	**6V-8724**	1	ELBOW	
	75	3	*148-8392*	1	ELBOW AS	
		3	**6V-9746**	1	SEAL-O-RING	
		3	**6V-9853**	1	ELBOW	
	76	4	*148-8411*	1	PLUG AS	
		4	**3K-0360**	1	SEAL-O-RING	
		4	**9S-4185**	1	PLUG-O-RING	
	77	1	*148-8428*	1	TEE AS	
		1	**6V-8398**	2	SEAL-O-RING	
		1	**3K-0360**	1	SEAL-O-RING	
		1	**6V-8782**	1	TEE	
	78	4	*148-8429*	1	TEE AS	
		4	**5K-9090**	2	SEAL-O-RING	
		4	**6V-9840**	1	TEE-SWIVEL	
	79	4	*148-8433*	1	TEE AS	
		4	**6V-8397**	2	SEAL-O-RING	
		4	**6V-9836**	1	TEE-SWIVEL	
	80	2	*148-8439*	2	TEE AS	
					(EACH INCLUDES)	
		2	**3J-1907**	1	SEAL-O-RING	
		2	**6V-8397**	2	SEAL-O-RING	
		2	**6V-8774**	1	TEE	
	81	4	*153-6237*	1	ELBOW AS	
		4	**3D-2824**	1	SEAL-O-RING	
		4	**6V-9004**	1	ELBOW	
		4	**6V-9746**	1	SEAL-O-RING	
	82	2	**160-8708**	2	BRACKET AS	
	83	2,3,4	*164-5567*	8	COUPLER AS-QUICK DISCONNECT (MALE)	
					(EACH INCLUDES)	
		2,3,4	**214-7568**	1	SEAL-O-RING	
		2,3,4	**6V-3965**	1	FITTING (QUICK DISCONNECT)	
	84	3	*164-5574*	1	TEE AS	
		3	**6V-8784**	1	TEE-FACE SEAL	
		3	**6V-9746**	2	SEAL-O-RING	
		3	**3D-2824**	1	SEAL-O-RING	
	85	3	*164-6858*	1	TEE AS	
		3	**5K-9090**	2	SEAL-O-RING	
		3	**6V-8778**	1	TEE-FACE SEAL	
		3	**7M-8485**	1	SEAL-O-RING	
	86	3	*164-6862*	1	TEE AS	
		3	**6V-9160**	1	TEE-FACE SEAL	
		3	**6V-9746**	3	SEAL-O-RING	
	88	2,4	*172-9287*	4	CONNECTOR AS	
					(EACH INCLUDES)	
		2,4	**3J-1907**	1	SEAL-O-RING	
		2,4	**6V-8397**	1	SEAL-O-RING	
		2,4	**7E-9898**	1	CONNECTOR	
	89	2	*241-6215*	1	ELBOW AS	
		2	**3J-1907**	1	SEAL-O-RING	
		2	**6V-8076**	1	ELBOW	

239-3357 **LINES GP-HYDRAULIC** *(contd.)* **i03754279**

NOTE	REF NO	GRAPHIC REF	PART NUMBER	QTY	PART NAME 1 2 3 4 5 6 (PRODUCT LEVEL)	SEE PAGE
	90	2,4	*250-1424*	4	ELBOW AS	
					(EACH INCLUDES)	
		2,4	**6V-8724**	1	ELBOW	
		2,4	**214-7568**	1	SEAL-O-RING	
		2,4	**228-7089**	1	SEAL-O-RING	
	91	4	**1P-3703**	1	SEAL-RECTANGULAR	
	92	2,4	**1P-3704**	6	SEAL-RECTANGULAR	
	93	2,3,4	**1P-4579**	8	FLANGE-HALF	
	94	2,4	**1P-5767**	8	FLANGE-HALF	
	95	2	**1S-0496**	1	CLIP	
	96	1	**1S-0994**	1	CLIP	
	97	4	**1S-0996**	1	CLIP	
	98	2,4	**2H-6338**	2	SEAL-O-RING	
	99	2,3	**2P-1293**	2	LOCKNUT (1-3/16-12-THD)	
	100	4	**2Y-3812**	1	CLIP	
C	102	1,4	**3J-1907**	2	SEAL-O-RING	
	103	4	**3J-7354**	1	SEAL-O-RING	
	104	4	**4J-0522**	1	SEAL-O-RING	
	105	2,3,4	**4J-0524**	4	SEAL-O-RING	
	106	1	**5D-0718**	1	CLIP	
	107	4	**5P-1076**	4	WASHER-HARD (13.5X30X4-MM THK)	
	108	1,2,3, 4	**6V-0852**	9	CAP-DUST	
	109	4	**6V-3265**	1	CLIP	
	110	2,3,4	**6V-8397**	3	SEAL-O-RING	
	111	2	**6V-9746**	1	SEAL-O-RING	
	112	3	**7S-8920**	3	CLIP (SLOT)	
	113	3	**7S-8921**	3	CLIP (TAB)	
M	114	4	**7X-0818**	2	BOLT (M8X1.25X45-MM)	
M	115	4	**7X-2534**	4	BOLT (M6X1X50-MM)	
M	116	2,4	**7X-2549**	7	BOLT (M12X1.75X100-MM)	
	117	1	**7X-7729**	1	WASHER (11X25X3-MM THK)	
	118	2	**8S-8820**	1	CLIP	
	119	2,3	**8T-1889**	2	CLIP (SLOT)	
	120	2,3	**8T-1890**	2	CLIP (TAB)	
	121	1,2,3, 4	**8T-4121**	17	WASHER-HARD (11X21X2.5-MM THK)	
	122	2,4	**8T-4122**	8	WASHER-HARD (17X32X3.5-MM THK)	
M	123	2	**8T-4133**	1	NUT (M10X1.5-THD)	
M	124	2,3,4	**8T-4136**	11	BOLT (M10X1.5X25-MM)	
M	125	1	**8T-4137**	1	BOLT (M10X1.5X20-MM)	
M	126	3,4	**8T-4139**	6	BOLT (M12X1.75X30-MM)	
M	127	2	**8T-4140**	1	BOLT (M16X2X60-MM)	
M	128	3,4	**8T-4183**	5	BOLT (M12X1.75X40-MM)	
M	129	2,3,4	**8T-4184**	12	BOLT (M12X1.75X45-MM)	
M	130	3	**8T-4192**	2	BOLT (M12X1.75X25-MM)	
M	131	2,4	**8T-4193**	7	BOLT (M16X2X50-MM)	
M	132	4	**8T-4194**	12	BOLT (M12X1.75X50-MM)	
M	133	1,2	**8T-4195**	4	BOLT (M10X1.5X30-MM)	
M	134	1	**8T-4196**	1	BOLT (M10X1.5X35-MM)	
	135	2,3,4	**8T-4223**	45	WASHER-HARD (13.5X25.5X3-MM THK)	
	136	4	**8T-4224**	2	WASHER-HARD (8.8X16X2-MM THK)	
M	137	3	**8T-4244**	1	NUT (M12X1.75-THD)	
M	138	4	**8T-4648**	4	BOLT (M12X1.75X70-MM)	
	139	2	**8T-4985**	2	CLAMP-HOSE	
	140	4	**9X-8256**	4	WASHER (6.6X12X2-MM THK)	
	141	4	**119-5708**	1	CLIP	
	142	4	**324-6983**	1	BRACKET AS	
	143	4	**324-7051**	1	BRACKET AS	
C	144	1	**2P-1279**	1	LOCKNUT (9/16-18-THD)	

239-3357 **LINES GP-HYDRAULIC** *(contd.)* **i03754279**

NOTE	REF NO	GRAPHIC REF	PART NUMBER	QTY	PART NAME 1 2 3 4 5 6 (PRODUCT LEVEL)	SEE PAGE
C	145	1	**4J-5477**	1	SEAL-O-RING	
C	146	1	**7X-7945**	1	ADAPTER	
					AVAILABLE REPAIR KIT(S):	
J			**239-6336**	1	KIT-SEAL	
					(INCLUDES SEAL-O-RINGS & BACK-UP RING SEALS)	

C-CHANGE FROM PREVIOUS TYPE
I-REFER TO HYDRAULIC INFORMATION SYSTEM
J-KIT MARKED J SERVICES PART MARKED J
M-METRIC PART
Y-SEPARATE ILLUSTRATION

REFER TO ALL ILLUSTRATIONS OF
THIS GROUP FOR AUXILIARY VIEWS

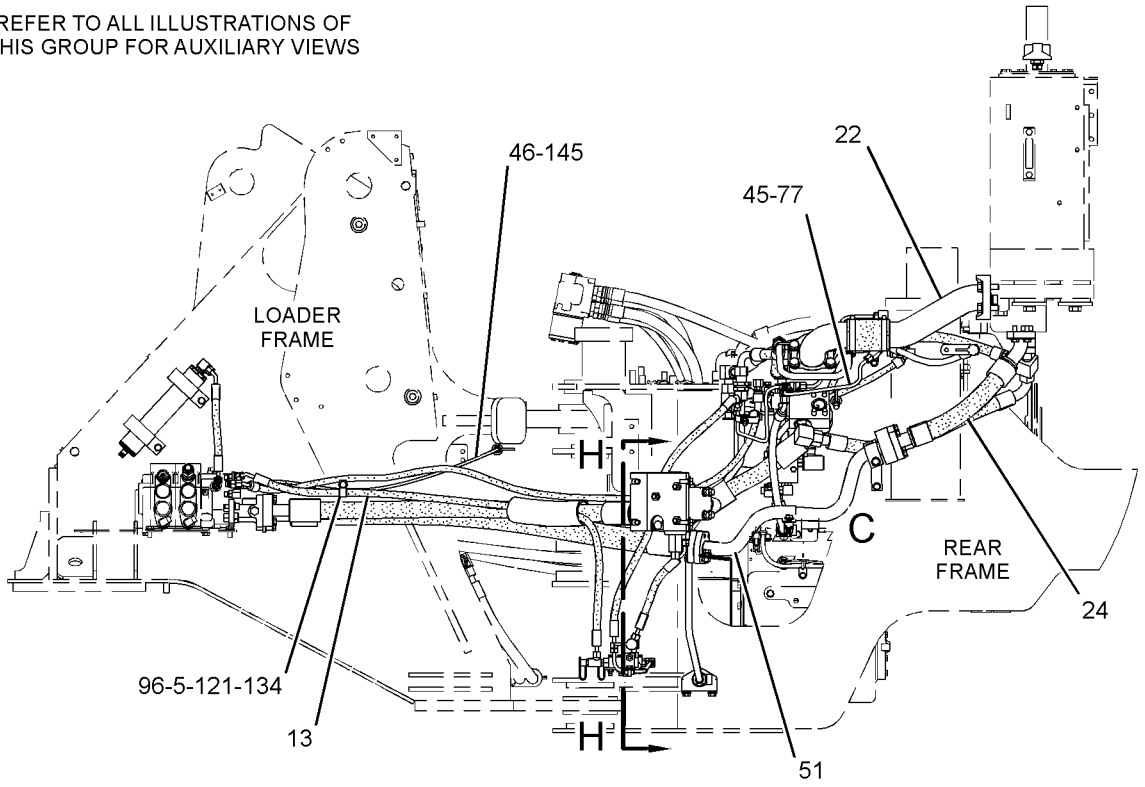

LEFT SIDE VIEW

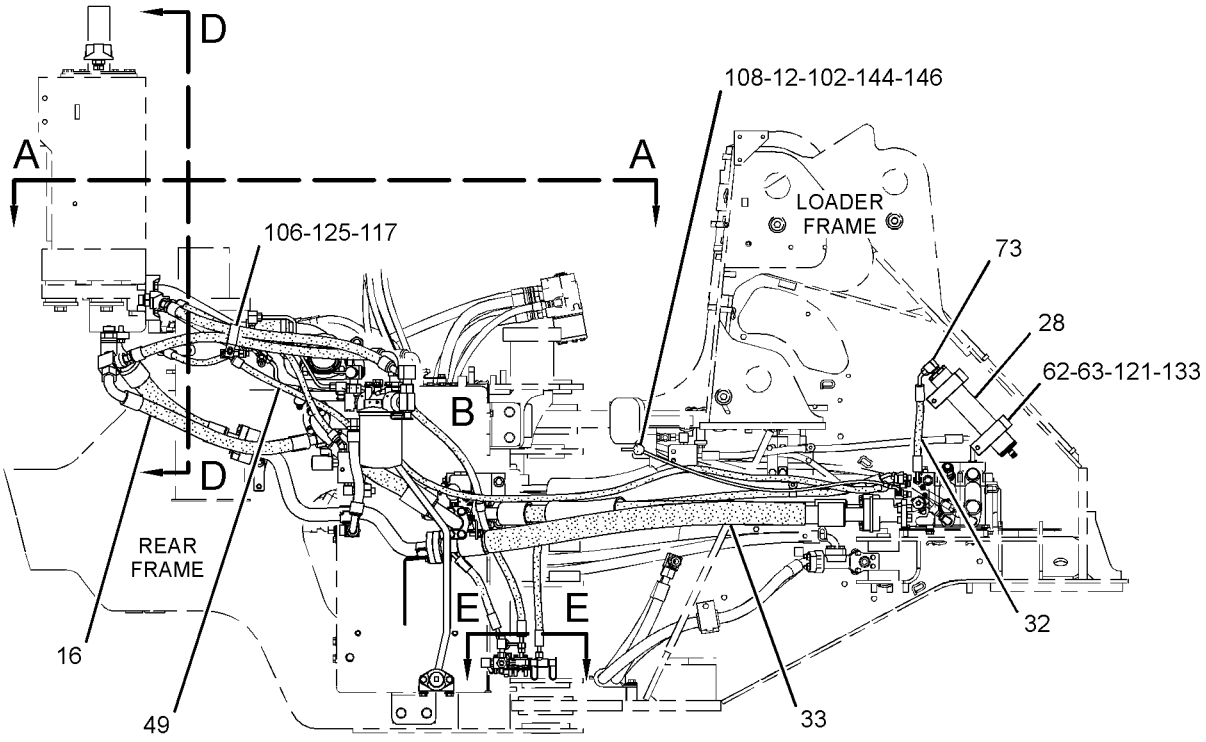

RIGHT SIDE VIEW

GRAPHIC #1

g02091316

REFER TO ALL ILLUSTRATIONS OF
THIS GROUP FOR AUXILIARY VIEWS

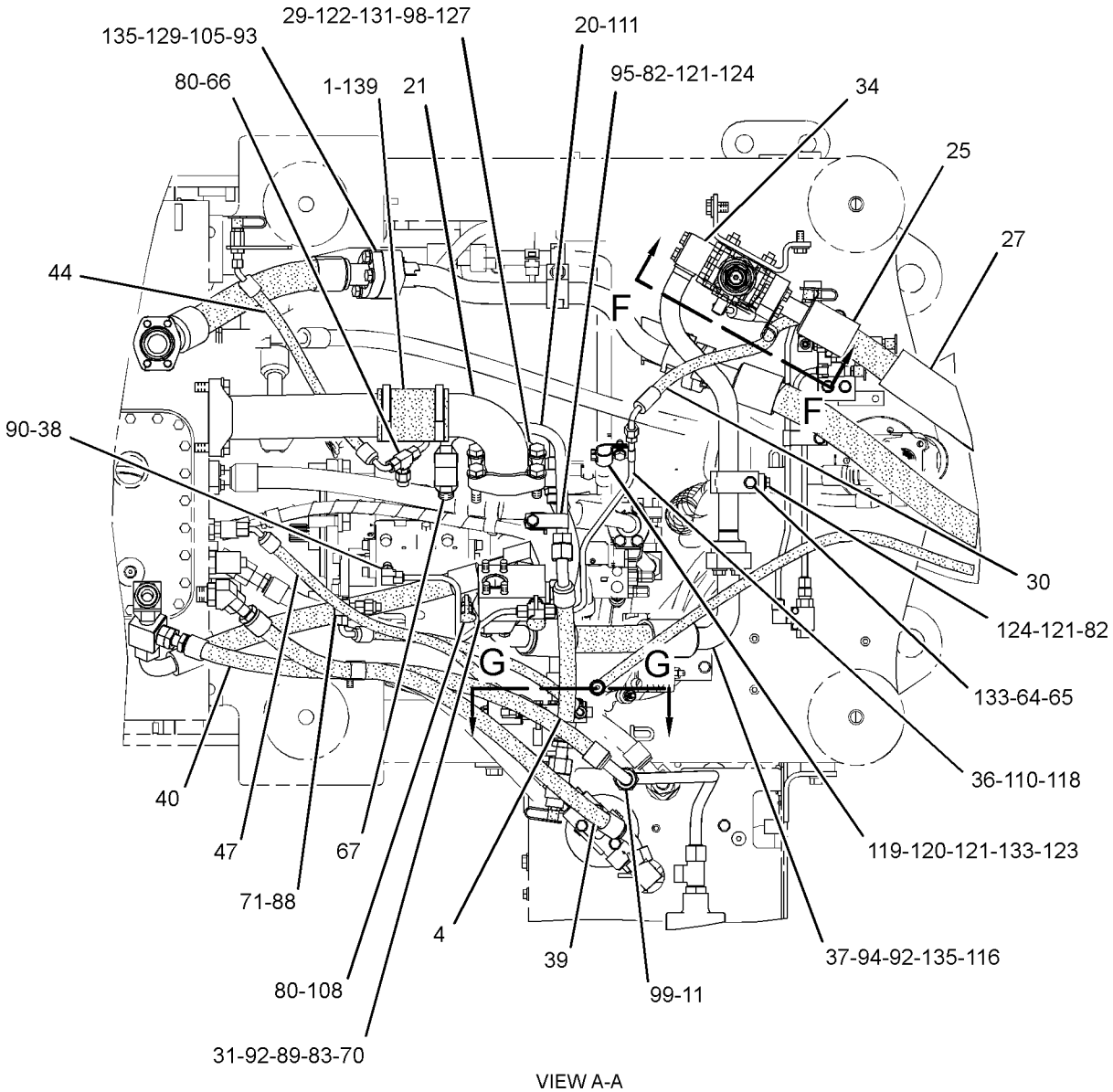

VIEW A-A

GRAPHIC #2

g02091317

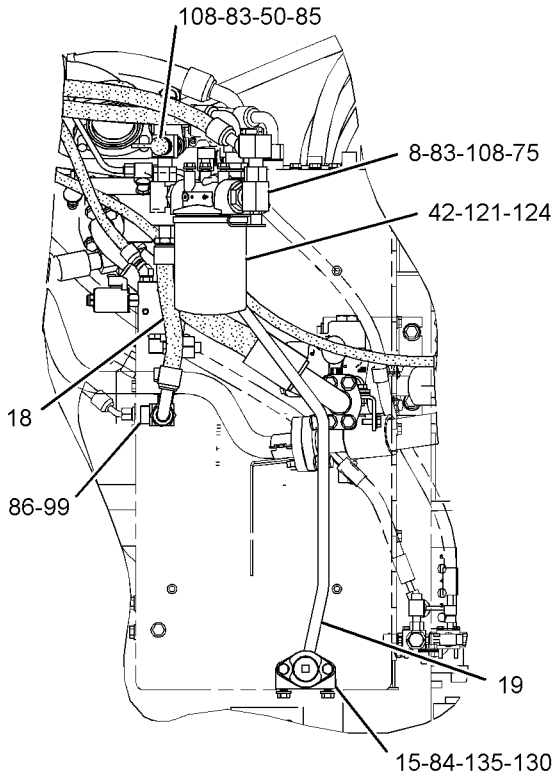

VIEW OF AREA B

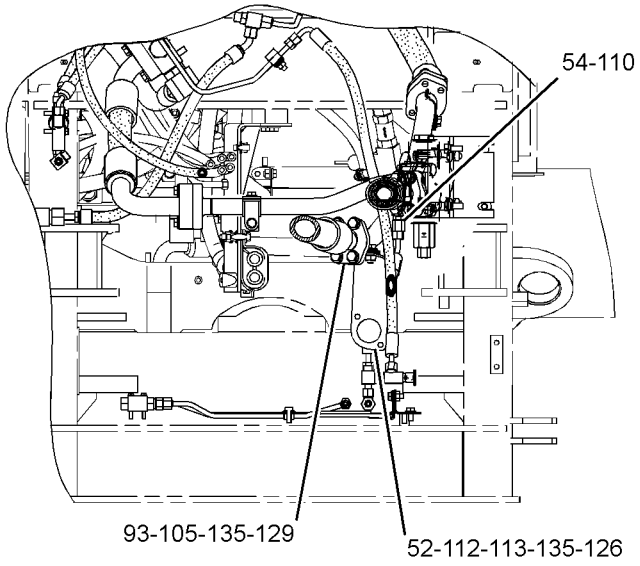

SECTION H-H

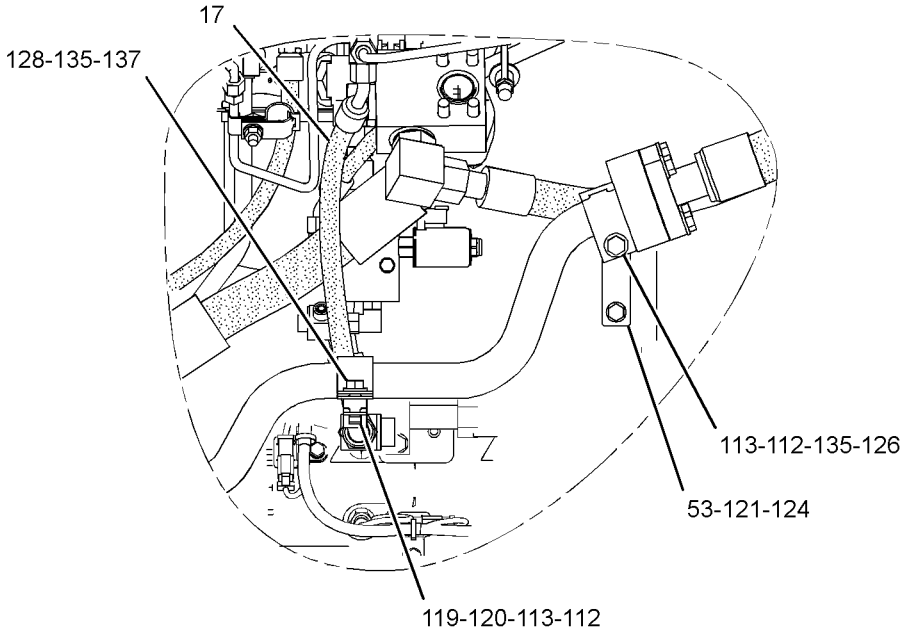

VIEW OF AREA C

GRAPHIC #3

g01660273

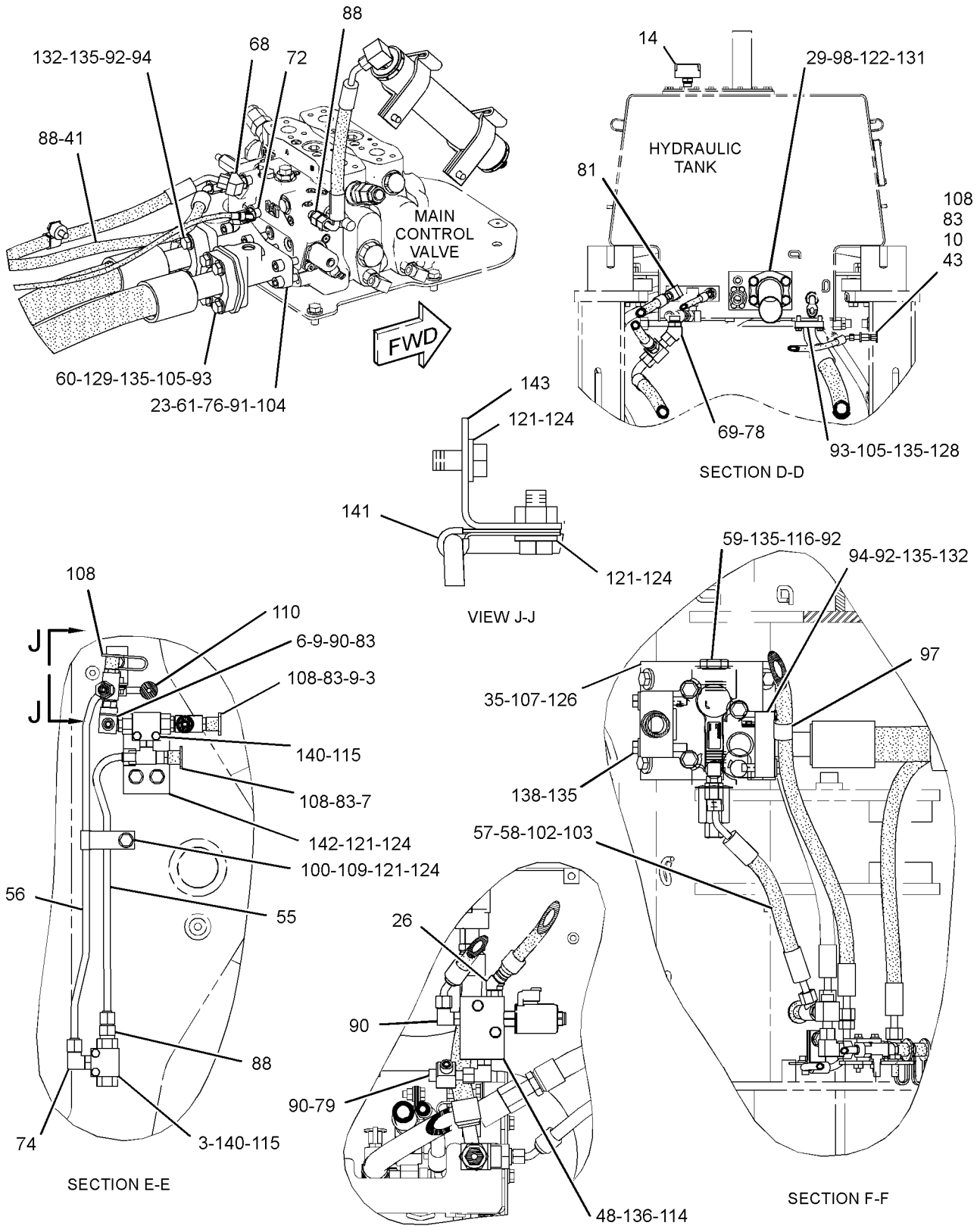

GRAPHIC #4

<END>

g02091318

HYDRAULIC SYSTEM

311-0015 LINES GP-HYDRAULIC FAN

S/N: JKM1-UP
PART OF 311-0013 CONTROL AR-FAN
AN ATTACHMENT

SMCS-1386, 1387, 5057 **i03545961**

NOTE	REF NO	GRAPHIC REF	PART NUMBER	QTY	PART NAME 1 2 3 4 5 6 (PRODUCT LEVEL)	SEE PAGE
	1	1	**1P-4278**	1	CLAMP-HOSE	
	2	1	**7K-1181**	3	STRAP-CABLE	
	3	1	**205-0353**	1	GROMMET	
Y	4	1	*311-3170*	1	PUMP GP-AIR (VARIABLE PITCH FAN)	803
I	5	1	**312-1598**	1	HOSE AS	
I	6	1	**312-1599**	1	HOSE AS	
	7	1	**320-1213**	1	TUBE AS	
I	8	1	**323-2006**	1	HOSE AS	
	9	1	*148-8368*	1	ELBOW AS	
		1	**3J-1907**	1	SEAL-O-RING	
		1	**4J-5477**	1	SEAL-O-RING	
		1	**6V-8627**	1	ELBOW	
	10	1	*148-8389*	1	ELBOW AS	
		1	**4J-5477**	1	SEAL-O-RING	
		1	**7X-0492**	1	ELBOW	
	11	1	*296-5749*	1	ELBOW AS	
		1	**4J-5477**	2	SEAL-O-RING	
		1	**6V-8993**	1	UNION	
	12	1	**2P-1279**	1	LOCKNUT (9/16-18-THD)	
	13	1	**4J-5477**	1	SEAL-O-RING	
	14	1	**5P-8440**	1	GROMMET	
	15	1	**6D-3479**	1	CLIP	
	16	1	**7X-5331**	1	ELBOW	
M	17	1	**8T-4195**	1	BOLT (M10X1.5X30-MM)	
M	18	1	**8T-4197**	3	BOLT (M8X1.25X40-MM)	
	19	1	**9N-0869**	3	WASHER-HARD (8.8X25.5X2-MM THK)	

I-REFER TO HYDRAULIC INFORMATION SYSTEM
M-METRIC PART
Y-SEPARATE ILLUSTRATION

311-0015 **LINES GP-HYDRAULIC FAN** *(contd.)* **i03545961**

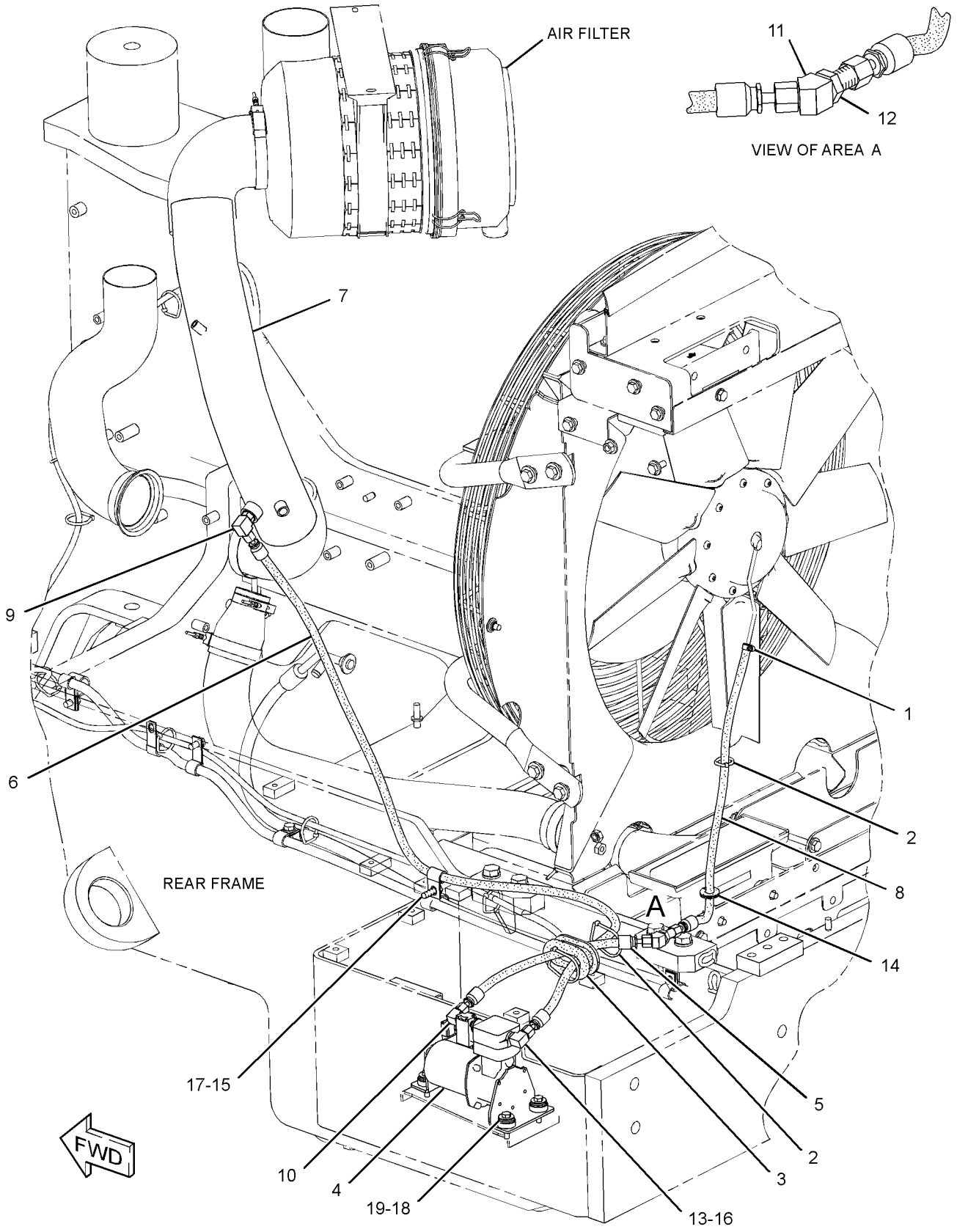

GRAPHIC #1 **<END>** g01878973

HYDRAULIC SYSTEM

318-1760 LINES GP-HYDRAULIC FAN–COLD START

S/N: JKM1-UP

PART OF 317-9485, 317-9486 COLD WEATHER AR

AN ATTACHMENT

SMCS-1386, 1387, 5057 **i03546592**

NOTE	REF NO	GRAPHIC REF	PART NUMBER	QTY	PART NAME 1 2 3 4 5 6 (PRODUCT LEVEL)	SEE PAGE
I	1	1	**2T-2209**	1	HOSE AS	
	2	1	**8T-4121**	2	WASHER-HARD (11X21X2.5-MM THK)	
	3	1	**127-4405**	1	MANIFOLD	
Y	4	1	**148-3551**	1	VALVE GP-SOLENOID (COLD START, FAN MOTOR SHUTOFF)	890
	5	1	*296-5750*	1	CONNECTOR AS	
		1	**6V-9746**	1	SEAL-O-RING	
		1	**7M-8485**	1	SEAL-O-RING	
		1	**109-5821**	1	CONNECTOR	
	6	1	**318-1762**	1	BRACKET	
	7	1	*148-8360*	1	ELBOW AS	
		1	**6V-9182**	1	ELBOW	
		1	**6V-9746**	1	SEAL-O-RING	
		1	**7M-8485**	1	SEAL-O-RING	
	8	1	*148-8377*	1	ELBOW AS	
		1	**6V-8397**	2	SEAL-O-RING	
		1	**6V-8980**	1	ELBOW	
M	9	1	**280-8912**	2	BOLT (M10X1.5X75-MM)	
	10	1	**6V-1889**	1	CLIP	

I-REFER TO HYDRAULIC INFORMATION SYSTEM
M-METRIC PART
Y-SEPARATE ILLUSTRATION

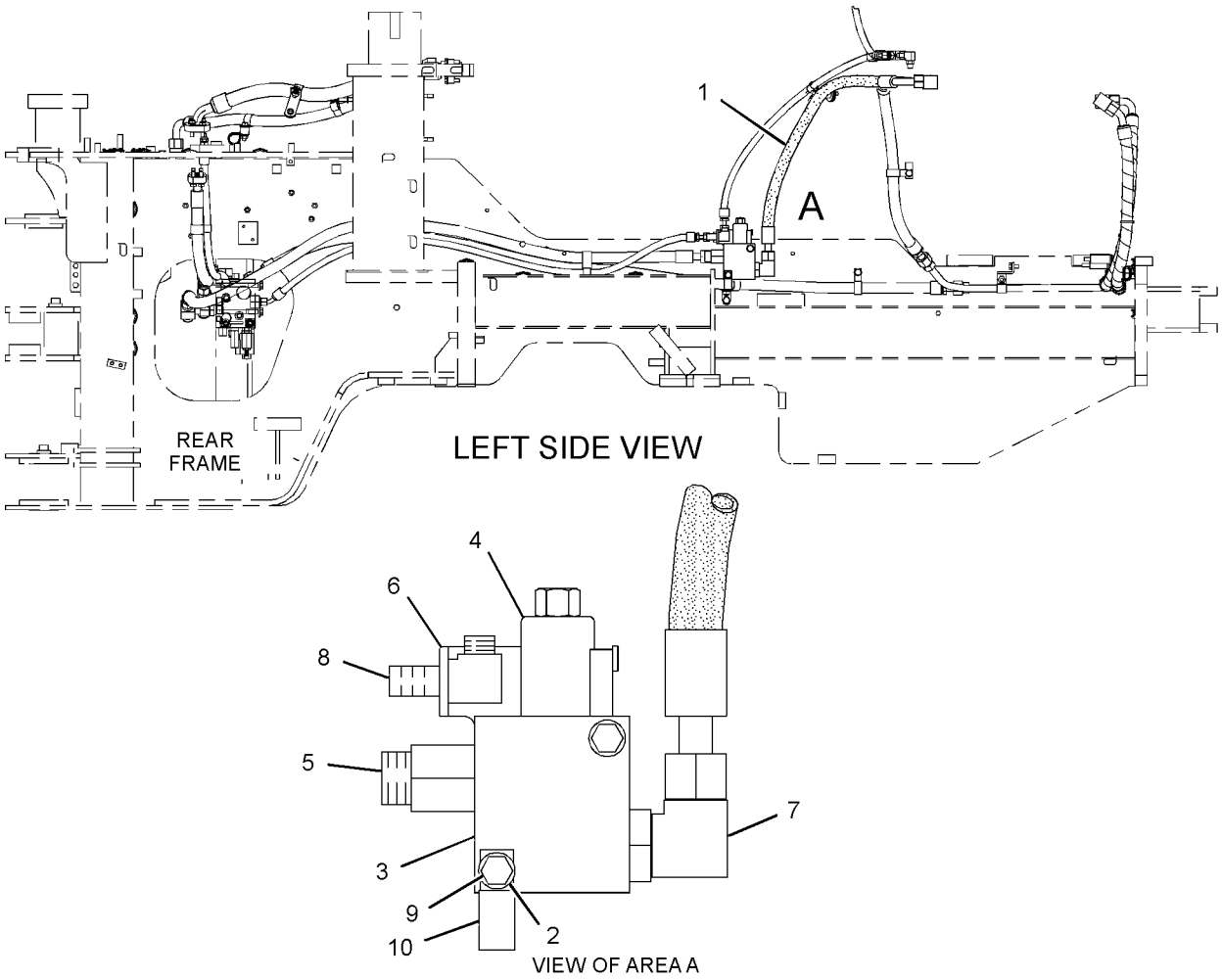

GRAPHIC #1

<END>

g01879013

HYDRAULIC SYSTEM

255-4817 LINES GP-HYDRAULIC OIL COOLER

S/N: JKM1-712

PART OF 237-7540 CHASSIS AR

SMCS-1374, 5057 **i03197676**

NOTE	REF NO	GRAPHIC REF	PART NUMBER	QTY	PART NAME 1 2 3 4 5 6 (PRODUCT LEVEL)	SEE PAGE
	1	3	**5B-2183**	1	NUT-JAM (9/16-18-THD)	
	2	2	**7K-1181**	1	STRAP-CABLE	
	3	1	**9R-5383**	1	BOSS (11X25X20-MM THK)	
	4	1	**9X-2538**	1	ELBOW	
	5	2	**122-5855**	1	SPACER (11.5X20X26-MM THK)	
	6	3	**124-3019**	1	BRACKET AS	
M		3	**8T-3490**	1	NUT-WELD (M10X1.5-THD)	
	7	3	**125-7484**	1	SPACER (11X25X36-MM THK)	
	8	2	**128-8678**	1	SPACER (10.5X25X15-MM THK)	
	9	2	**142-1657**	1	BRACKET AS	
M		2	**8T-3490**	1	NUT-WELD (M10X1.5-THD)	
	10	2	**145-8983**	1	VALVE GP-CHECK (HYDRAULIC OIL COOLER BYPASS)	
		2	**3D-2824**	1	SEAL-O-RING	
		2	**6V-9746**	1	SEAL-O-RING	
I	11	2	**148-7786**	1	HOSE AS	
	12	2	**151-6730**	2	SPACER (11X25X55-MM THK)	
	13	3	*169-5863*	1	ADAPTER AS	
		3	**4J-5477**	1	SEAL-O-RING	
		3	**7X-7945**	1	ADAPTER	
Y	14	1	**244-1031**	1	FILTER GP-OIL (HYDRAULIC)	689
I	15	1	**262-1491**	1	HOSE AS	
I	16	3	**262-1492**	1	HOSE AS	
	17	1	**262-1499**	1	TUBE AS	
I	18	1	**262-6762**	1	HOSE AS	
	19	1	**262-7603**	1	BRACKET AS	
M		1	**8T-3490**	1	NUT-WELD (M10X1.5-THD)	
I	20	3	**284-2291**	1	HOSE AS	
	21	2	**304-6771**	1	BOSS	
Y	22	3	**309-4907**	1	MANIFOLD GP-CONTROL (BRAKE CHARGE, HYD FAN CONTROL)	785
	23	1	*310-5910*	1	TEE AS	
		1	**2M-9780**	1	SEAL-O-RING	
		1	**310-5909**	1	TEE	
	24	3	*313-3472*	1	TEE AS	
		3	**3J-1907**	1	SEAL-O-RING	
		3	**313-3471**	1	TEE	
	25	1	**313-3473**	1	TEE	
I	26	1	**316-4891**	1	HOSE AS	
I	27	2	**316-4892**	1	HOSE AS	
I	28	1	**316-4893**	1	HOSE AS	
	29	1	**317-7595**	1	SNUBBER	
	30	1	**318-1509**	1	TUBE AS	
	31	3	**318-1510**	1	TUBE AS	
	32	1	**318-1511**	1	TUBE AS	
	33	1	**318-1512**	1	TUBE AS	
	34	1	**318-1513**	1	BRACKET	
	35	2	**318-1514**	1	BRACKET AS	
	36	2	**318-1518**	3	BRACKET AS	
I	37	2	**318-1757**	1	HOSE AS	
I	38	2	**318-1758**	1	HOSE AS	
I	39	2	**318-1759**	1	HOSE AS	
I	40	2	**318-1761**	1	HOSE AS	
I	41	3	**318-6512**	1	HOSE AS	
	42	2	**092-7385**	3	CLIP	
	43	1	**124-0174**	1	CLIP	
	44	3	**136-4992**	1	SPACER (11X19.05X40-MM THK)	

255-4817 LINES GP-HYDRAULIC OIL COOLER *(contd.)* i03197676

NOTE	REF NO	GRAPHIC REF	PART NUMBER	QTY	PART NAME 1 2 3 4 5 6 (PRODUCT LEVEL)	SEE PAGE
	45	1	*148-8322*	1	CONNECTOR AS	
		1	**2M-9780**	1	SEAL-O-RING	
		1	**6V-8640**	1	CONNECTOR	
		1	**6V-9746**	1	SEAL-O-RING	
	46	1	*148-8326*	1	CONNECTOR AS	
		1	**3J-7354**	1	SEAL-O-RING	
		1	**6V-8397**	1	SEAL-O-RING	
		1	**6V-9872**	1	CONNECTOR	
	47	2,3	*148-8347*	3	ELBOW AS	
					(EACH INCLUDES)	
		2,3	**3D-2824**	1	SEAL-O-RING	
		2,3	**6V-9007**	1	ELBOW	
		2,3	**6V-9746**	1	SEAL-O-RING	
	48	1	*148-8357*	1	ELBOW AS	
		1	**5K-9090**	1	SEAL-O-RING	
		1	**6V-9008**	1	ELBOW	
		1	**7M-8485**	1	SEAL-O-RING	
	49	3	*148-8365*	1	ELBOW AS	
		3	**3J-1907**	1	SEAL-O-RING	
		3	**6V-8398**	1	SEAL-O-RING	
		3	**8T-6876**	1	ELBOW	
	50	2	*148-8366*	1	ELBOW AS	
		2	**6V-8397**	2	SEAL-O-RING	
		2	**6V-8987**	1	ELBOW	
	51	3	*148-8378*	1	ELBOW AS	
		3	**3J-1907**	1	SEAL-O-RING	
		3	**6V-8397**	1	SEAL-O-RING	
		3	**6V-8724**	1	ELBOW	
	52	2	*148-8417*	1	REDUCER AS	
		2	**6V-8397**	1	SEAL-O-RING	
		2	**6V-8941**	1	REDUCER	
	53	3	*148-8433*	1	TEE AS	
		3	**6V-8397**	2	SEAL-O-RING	
		3	**6V-9836**	1	TEE-SWIVEL	
	54	2	*148-8449*	1	TEE AS-SWIVEL	
		2	**6V-9746**	2	SEAL-O-RING	
		2	**6V-9839**	1	TEE-SWIVEL	
	55	1	**149-7738**	2	CLIP	
	56	1	*150-4033*	1	TEE AS	
		1	**6V-9746**	2	SEAL-O-RING	
		1	**6V-9846**	1	TEE-SWIVEL	
	57	1	*150-4049*	1	ELBOW AS	
		1	**6V-9746**	1	SEAL-O-RING	
		1	**7M-8485**	1	SEAL-O-RING	
		1	**8T-4149**	1	ELBOW	
	58	1	*153-6236*	1	REDUCER AS	
		1	**6V-8946**	1	REDUCER	
		1	**6V-9746**	1	SEAL-O-RING	
	59	1,3	*164-5567*	4	COUPLER AS-QUICK DISCONNECT (MALE)	
					(EACH INCLUDES)	
		1,3	**214-7568**	1	SEAL-O-RING	
		1,3	**6V-3965**	1	FITTING (QUICK DISCONNECT)	
	60	2	*165-4933*	1	ELBOW AS	
		2	**6V-8990**	1	ELBOW	
		2	**6V-9746**	2	SEAL-O-RING	
	61	2	*171-6723*	1	ELBOW AS	
		2	**6V-9746**	1	SEAL-O-RING	
		2	**8T-8899**	1	ELBOW	
	62	2	**174-0828**	1	SPACER (11X25X13.5-MM THK)	

255-4817 LINES GP-HYDRAULIC OIL COOLER *(contd.)* i03197676

NOTE	REF NO	GRAPHIC REF	PART NUMBER	QTY	PART NAME 1 2 3 4 5 6 (PRODUCT LEVEL)	SEE PAGE
	63	1	**175-0447**	1	VALVE AS-CHECK	
		1	**3D-2824**	1	SEAL-O-RING	
		1	**6V-9746**	1	SEAL-O-RING	
	64	1	**176-4703**	1	WASHER (17X30X8-MM THK)	
	65	2	**1P-4577**	2	FLANGE-HALF	
	66	1	**1P-4578**	2	FLANGE-HALF	
	67	1	**269-4958**	2	ADAPTER	
	68	3	**269-4961**	1	ELBOW-ADAPTER	
	69	2	*281-5972*	1	CONNECTOR AS	
		2	**6V-8637**	1	CONNECTOR	
		2	**228-7092**	1	SEAL-O-RING	
		2	**238-5082**	1	SEAL-O-RING	
	70	3	**284-2292**	1	BRACKET	
	71	2	**2P-1293**	1	LOCKNUT (1-3/16-12-THD)	
	72	2	**4J-0520**	1	SEAL-O-RING	
	73	1	**4J-0522**	1	SEAL-O-RING	
	74	1	**4J-5267**	1	SEAL-O-RING	
	75	3	**4S-4455**	1	CLIP	
	76	3	**5P-1076**	2	WASHER-HARD (13.5X30X4-MM THK)	
	77	2,3	**5P-4295**	6	CLIP	
	78	2	**5P-7854**	4	CLIP	
	79	2,3	**6D-4246**	4	CLIP	
	80	1,3	**6V-0852**	5	CAP-DUST	
	81	1	**6V-1889**	3	CLIP	
	82	2	**6V-9168**	1	NUT (11/16-16-THD)	
	83	1,3	**6V-9746**	5	SEAL-O-RING	
	84	2,3	**7C-4355**	3	CLIP	
	85	1	**7D-7233**	1	CLIP	
	86	1	**8C-3205**	2	FLANGE-HALF	
	87	1	**8M-2773**	3	CLIP	
	88	1,2,3	**8T-4121**	47	WASHER-HARD (11X21X2.5-MM THK)	
M	89	1,3	**8T-4133**	5	NUT (M10X1.5-THD)	
M	90	1,2,3	**8T-4136**	12	BOLT (M10X1.5X25-MM)	
M	91	1,2,3	**8T-4137**	11	BOLT (M10X1.5X20-MM)	
M	92	2	**8T-4172**	3	BOLT (M10X1.5X80-MM)	
M	93	1	**8T-4182**	1	BOLT (M10X1.5X45-MM)	
M	94	3	**8T-4183**	2	BOLT (M12X1.75X40-MM)	
M	95	2	**8T-4185**	1	BOLT (M10X1.5X50-MM)	
M	96	1,2	**8T-4186**	2	BOLT (M10X1.5X40-MM)	
M	98	1,2	**8T-4196**	12	BOLT (M10X1.5X35-MM)	
	99	3	**8T-4226**	2	WASHER-PLATED (10.5X45X3-MM THK)	
M	100	3	**8T-6685**	1	BOLT (M10X1.5X110-MM)	
	101	2	**9X-6580**	1	NUT (1-3/16-12-THD)	
	102	1	**3J-1907**	1	SEAL-O-RING	

I-REFER TO HYDRAULIC INFORMATION SYSTEM
M-METRIC PART
Y-SEPARATE ILLUSTRATION

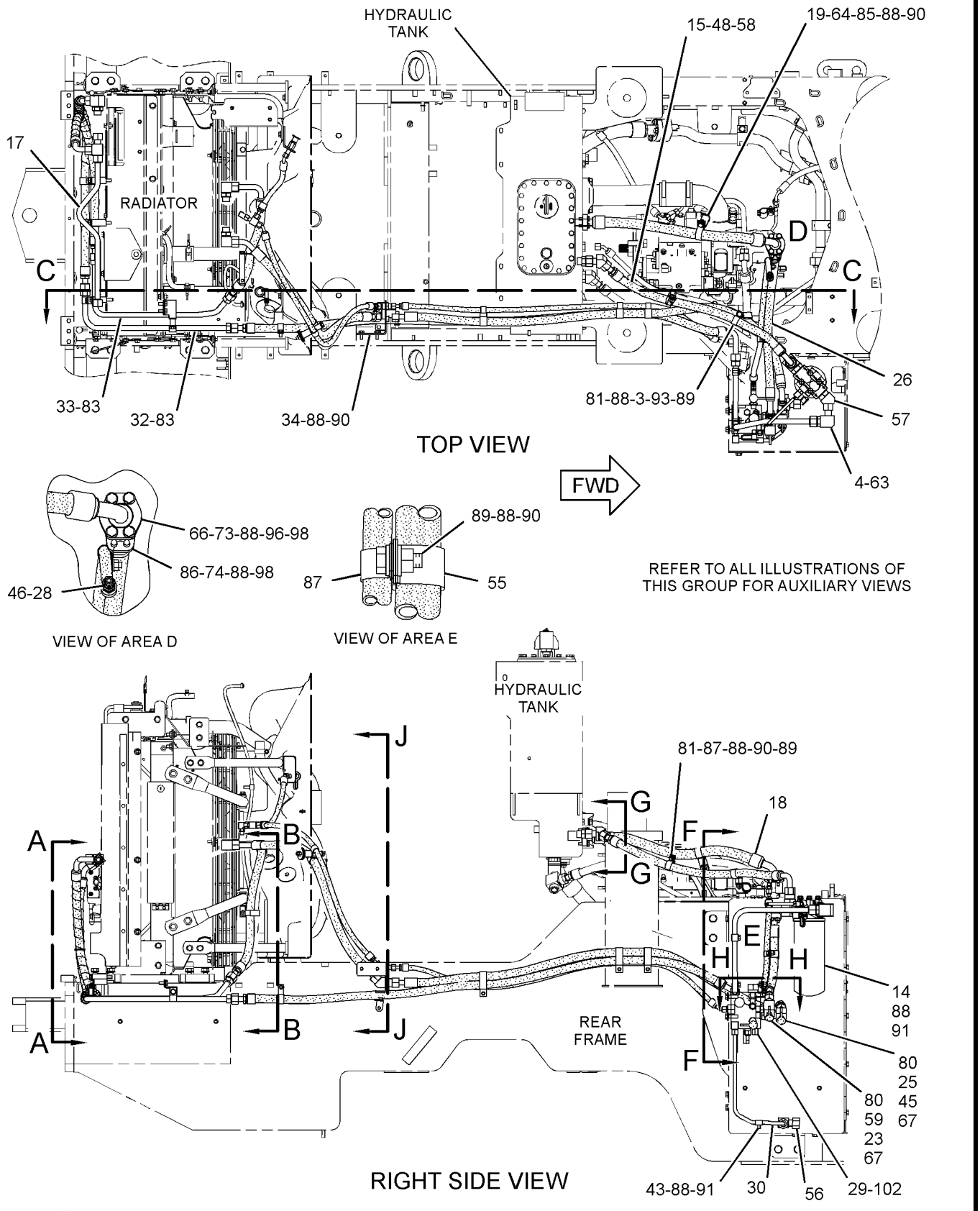

GRAPHIC #1 g01662093

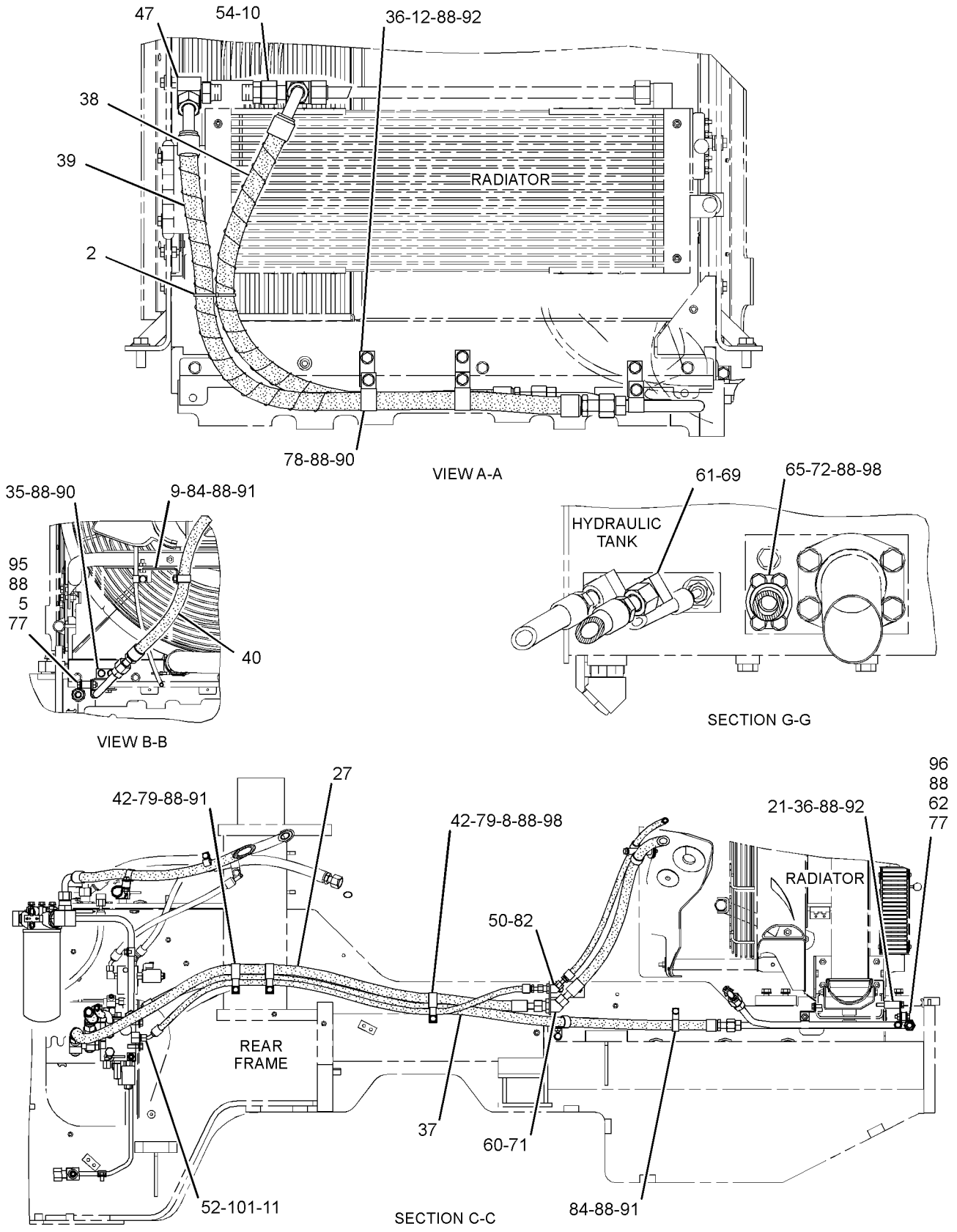

GRAPHIC #2 g01431718

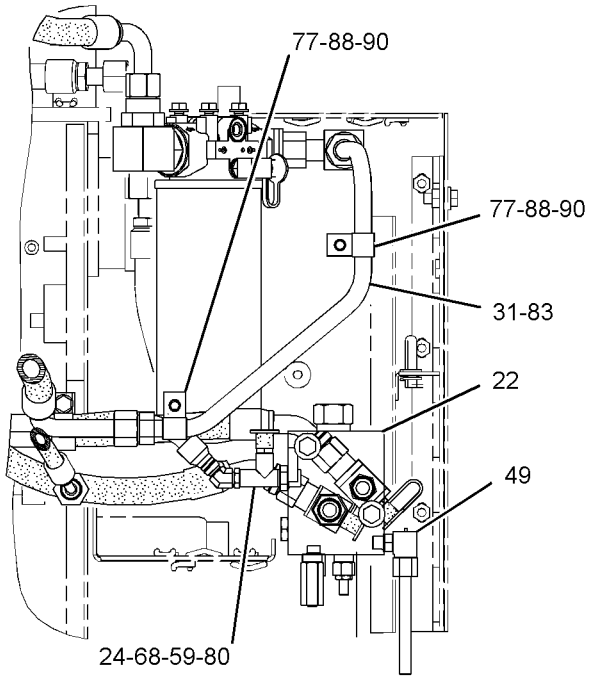

SECTION F-F

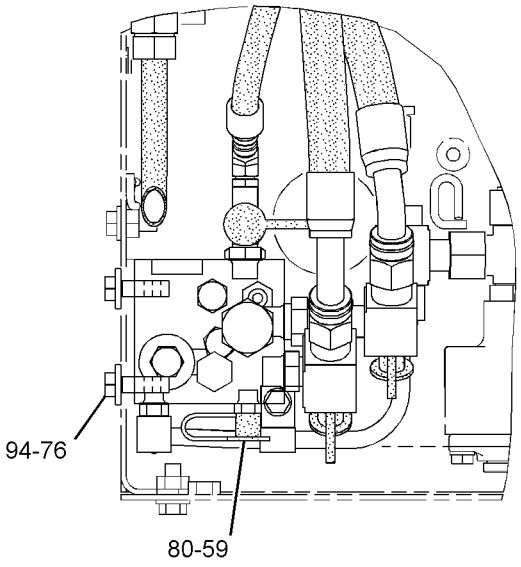

SECTION H-H

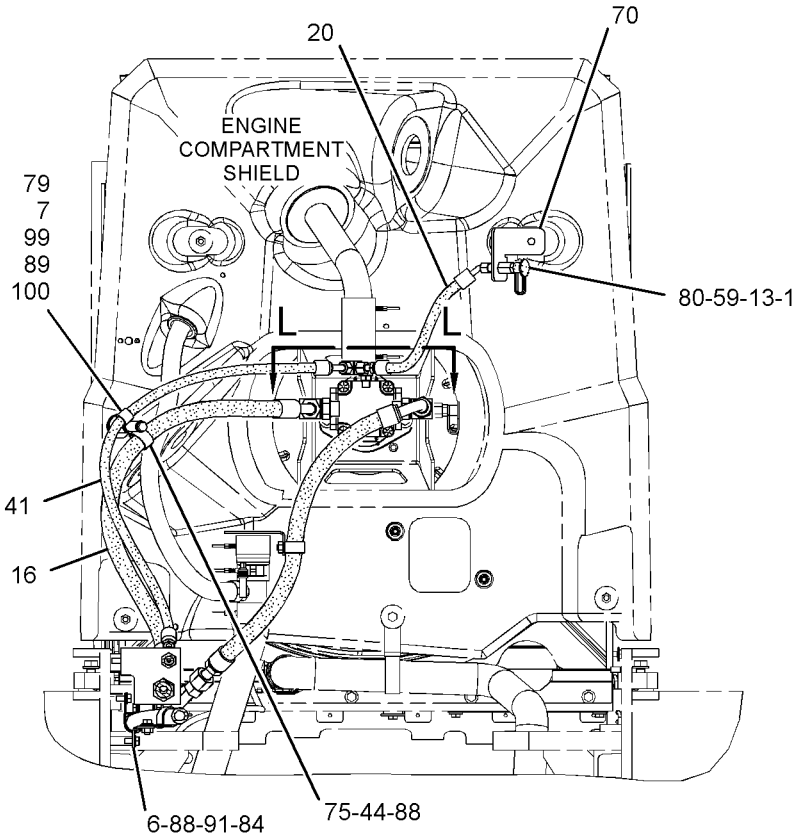

SECTION J-J

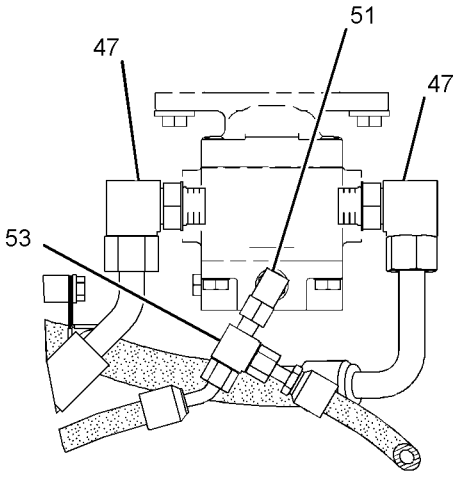

SECTION L-L

GRAPHIC #3 **<END>** g01662094

HYDRAULIC SYSTEM

255-4817 LINES GP-HYDRAULIC OIL COOLER

S/N: JKM713-UP

PART OF 237-7540 CHASSIS AR

SMCS-1374, 5057 **i03480140**

NOTE	REF NO	GRAPHIC REF	PART NUMBER	QTY	PART NAME 1 2 3 4 5 6 (PRODUCT LEVEL)	SEE PAGE
	1	3	**5B-2183**	1	NUT-JAM (9/16-18-THD)	
	2	1	**9X-2538**	1	ELBOW	
	3	2	**122-5855**	1	SPACER (11.5X20X26-MM THK)	
C	4	1,2	**128-8678**	3	SPACER (10.5X25X15-MM THK)	
	5	2	**142-1657**	1	BRACKET AS	
M		2	**8T-3490**	1	NUT-WELD (M10X1.5-THD)	
	6	2	**145-8983**	1	VALVE GP-CHECK (HYDRAULIC OIL COOLER BYPASS)	
		2	**3D-2824**	1	SEAL-O-RING	
		2	**6V-9746**	1	SEAL-O-RING	
I	7	2	**148-7786**	1	HOSE AS	
	8	2	**151-6730**	2	SPACER (11X25X55-MM THK)	
	9	3	*169-5863*	1	ADAPTER AS	
		3	**4J-5477**	1	SEAL-O-RING	
		3	**7X-7945**	1	ADAPTER	
C	10	3	**243-1353**	1	SPACER (11X20X35-MM THK)	
I	11	1	**262-1491**	1	HOSE AS	
I	12	3	**262-1492**	1	HOSE AS	
	13	1	**262-1499**	1	TUBE AS	
I	14	1	**262-6762**	1	HOSE AS	
	15	1	**262-7603**	1	BRACKET AS	
M		1	**8T-3490**	1	NUT-WELD (M10X1.5-THD)	
I	16	3	**284-2291**	1	HOSE AS	
	17	2	**304-6771**	1	BOSS	
Y	18	3	**309-4907**	1	MANIFOLD GP-CONTROL (BRAKE CHARGE, HYD FAN CONTROL)	785
	19	1	*310-5910*	1	TEE AS	
		1	**2M-9780**	1	SEAL-O-RING	
		1	**310-5909**	1	TEE	
	20	3	*313-3472*	1	TEE AS	
		3	**3J-1907**	1	SEAL-O-RING	
		3	**313-3471**	1	TEE	
	21	1	**313-3473**	1	TEE	
I	22	1	**316-4891**	1	HOSE AS	
I	23	2	**316-4892**	1	HOSE AS	
I	24	1	**316-4893**	1	HOSE AS	
	25	1	**318-1509**	1	TUBE AS	
	26	3	**318-1510**	1	TUBE AS	
	27	1	**318-1511**	1	TUBE AS	
	28	1	**318-1512**	1	TUBE AS	
	29	2	**318-1514**	1	BRACKET AS	
	30	2	**318-1518**	3	BRACKET AS	
I	31	2	**318-1757**	1	HOSE AS	
I	32	2	**318-1758**	1	HOSE AS	
I	33	2	**318-1759**	1	HOSE AS	
I	34	1	**318-1761**	1	HOSE AS	
I	35	3	**318-6512**	1	HOSE AS	
C	36	1	**329-5475**	1	SNUBBER AS	
		1	**3J-1907**	1	SEAL-O-RING	
		1	**317-7595**	1	SNUBBER	
CY	37	1	**330-9358**	1	FILTER GP-OIL (HYDRAULIC)	691
C	38	1	**335-5532**	1	BRACKET AS	
	39	2	**092-7385**	3	CLIP	
	40	1	**124-0174**	1	CLIP	
	41	1	*148-8322*	1	CONNECTOR AS	
		1	**2M-9780**	1	SEAL-O-RING	
		1	**6V-8640**	1	CONNECTOR	

255-4817 LINES GP-HYDRAULIC OIL COOLER *(contd.)* i03480140

NOTE	REF NO	GRAPHIC REF	PART NUMBER	QTY	PART NAME 1 2 3 4 5 6 (PRODUCT LEVEL)	SEE PAGE
		1	**6V-9746**	1	SEAL-O-RING	
	42	1	*148-8326*	1	CONNECTOR AS	
		1	**3J-7354**	1	SEAL-O-RING	
		1	**6V-8397**	1	SEAL-O-RING	
		1	**6V-9872**	1	CONNECTOR	
	43	2,3	*148-8347*	3	ELBOW AS	
					(EACH INCLUDES)	
		2,3	**3D-2824**	1	SEAL-O-RING	
		2,3	**6V-9007**	1	ELBOW	
		2,3	**6V-9746**	1	SEAL-O-RING	
	44	1	*148-8357*	1	ELBOW AS	
		1	**5K-9090**	1	SEAL-O-RING	
		1	**6V-9008**	1	ELBOW	
		1	**7M-8485**	1	SEAL-O-RING	
	45	3	*148-8365*	1	ELBOW AS	
		3	**3J-1907**	1	SEAL-O-RING	
		3	**6V-8398**	1	SEAL-O-RING	
		3	**8T-6876**	1	ELBOW	
	46	2	*148-8366*	1	ELBOW AS	
		2	**6V-8397**	2	SEAL-O-RING	
		2	**6V-8987**	1	ELBOW	
	47	3	*148-8378*	1	ELBOW AS	
		3	**3J-1907**	1	SEAL-O-RING	
		3	**6V-8397**	1	SEAL-O-RING	
		3	**6V-8724**	1	ELBOW	
	48	2	*148-8417*	1	REDUCER AS	
		2	**6V-8397**	1	SEAL-O-RING	
		2	**6V-8941**	1	REDUCER	
	49	3	*148-8433*	1	TEE AS	
		3	**6V-8397**	2	SEAL-O-RING	
		3	**6V-9836**	1	TEE-SWIVEL	
	50	2	*148-8449*	1	TEE AS-SWIVEL	
		2	**6V-9746**	2	SEAL-O-RING	
		2	**6V-9839**	1	TEE-SWIVEL	
	51	1,3	**149-7738**	2	CLIP	
	52	1	*150-4033*	1	TEE AS	
		1	**6V-9746**	2	SEAL-O-RING	
		1	**6V-9846**	1	TEE-SWIVEL	
	53	1	*150-4049*	1	ELBOW AS	
		1	**6V-9746**	1	SEAL-O-RING	
		1	**7M-8485**	1	SEAL-O-RING	
		1	**8T-4149**	1	ELBOW	
	54	1	*153-6236*	1	REDUCER AS	
		1	**6V-8946**	1	REDUCER	
		1	**6V-9746**	1	SEAL-O-RING	
	55	1,3	*164-5567*	4	COUPLER AS-QUICK DISCONNECT (MALE)	
					(EACH INCLUDES)	
		1,3	**214-7568**	1	SEAL-O-RING	
		1,3	**6V-3965**	1	FITTING (QUICK DISCONNECT)	
	56	2	*165-4933*	1	ELBOW AS	
		2	**6V-8990**	1	ELBOW	
		2	**6V-9746**	2	SEAL-O-RING	
	57	2	*171-6723*	1	ELBOW AS	
		2	**6V-9746**	1	SEAL-O-RING	
		2	**8T-8899**	1	ELBOW	
	58	1	**175-0447**	1	VALVE AS-CHECK	
		1	**3D-2824**	1	SEAL-O-RING	
		1	**6V-9746**	1	SEAL-O-RING	
	59	1	**176-4703**	1	WASHER (17X30X8-MM THK)	

255-4817 LINES GP-HYDRAULIC OIL COOLER *(contd.)* i03480140

NOTE	REF NO	GRAPHIC REF	PART NUMBER	QTY	PART NAME 1 2 3 4 5 6 (PRODUCT LEVEL)	SEE PAGE
	60	2	**1P-4577**	2	FLANGE-HALF	
	61	1	**1P-4578**	2	FLANGE-HALF	
	62	1	**269-4958**	2	ADAPTER	
	63	3	**269-4961**	1	ELBOW-ADAPTER	
	64	2	*281-5972*	1	CONNECTOR AS	
		2	**6V-8637**	1	CONNECTOR	
		2	**228-7092**	1	SEAL-O-RING	
		2	**238-5082**	1	SEAL-O-RING	
	65	3	**284-2292**	1	BRACKET	
	66	2	**2P-1293**	1	LOCKNUT (1-3/16-12-THD)	
	67	2	**4J-0520**	1	SEAL-O-RING	
	68	1	**4J-0522**	1	SEAL-O-RING	
	69	1	**4J-5267**	1	SEAL-O-RING	
	70	3	**4S-4455**	1	CLIP	
	71	3	**5P-1076**	2	WASHER-HARD (13.5X30X4-MM THK)	
C	72	2,3	**5P-4295**	7	CLIP	
	73	2	**5P-7854**	4	CLIP	
	74	2,3	**6D-4246**	4	CLIP	
	75	1,3	**6V-0852**	5	CAP-DUST	
C	76	1,2	**6V-1889**	6	CLIP	
	77	2	**6V-9168**	1	NUT (11/16-16-THD)	
	78	1,3	**6V-9746**	5	SEAL-O-RING	
	79	1	**7D-7233**	1	CLIP	
	80	1	**8C-3205**	2	FLANGE-HALF	
	81	1,3	**8M-2773**	3	CLIP	
C	82	1,2,3	**8T-4121**	46	WASHER-HARD (11X21X2.5-MM THK)	
M	83	1,3	**8T-4133**	5	NUT (M10X1.5-THD)	
CM	84	1,2,3	**8T-4136**	10	BOLT (M10X1.5X25-MM)	
CM	85	1,2	**8T-4137**	9	BOLT (M10X1.5X20-MM)	
M	86	2	**8T-4172**	3	BOLT (M10X1.5X80-MM)	
M	87	1	**8T-4182**	1	BOLT (M10X1.5X45-MM)	
M	88	3	**8T-4183**	2	BOLT (M12X1.75X40-MM)	
M	89	2	**8T-4185**	1	BOLT (M10X1.5X50-MM)	
M	90	1,2	**8T-4186**	2	BOLT (M10X1.5X40-MM)	
CM	91	1,2	**8T-4195**	3	BOLT (M10X1.5X30-MM)	
M	92	1,2	**8T-4196**	12	BOLT (M10X1.5X35-MM)	
	93	3	**8T-4226**	2	WASHER-PLATED (10.5X45X3-MM THK)	
M	94	3	**8T-6685**	1	BOLT (M10X1.5X110-MM)	
	95	2	**9X-6580**	1	NUT (1-3/16-12-THD)	
C	96	3	**9Y-2700**	1	SPACER (11X20X42-MM THK)	

C-CHANGE FROM PREVIOUS TYPE
I-REFER TO HYDRAULIC INFORMATION SYSTEM
M-METRIC PART
Y-SEPARATE ILLUSTRATION

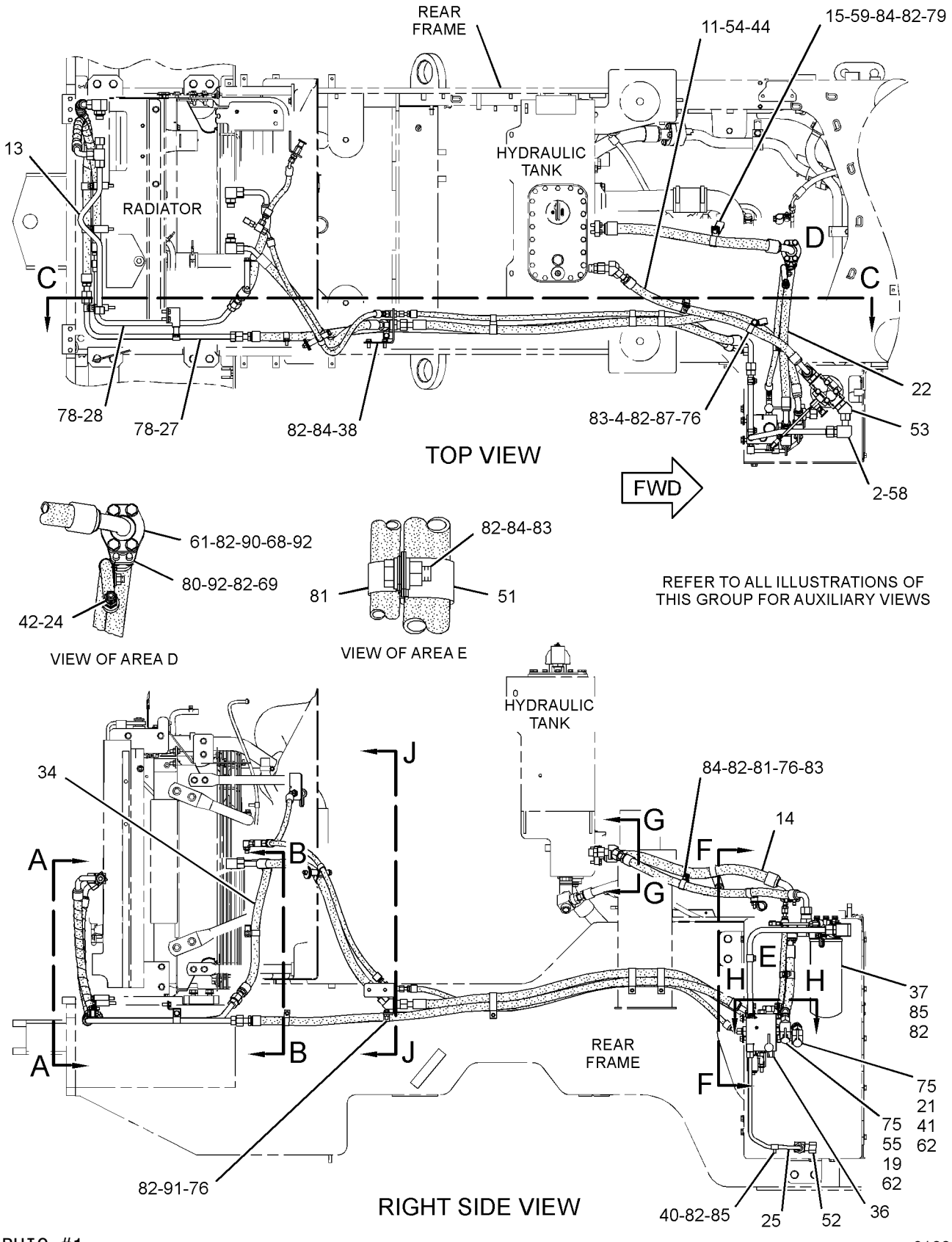

GRAPHIC #1

g01885213

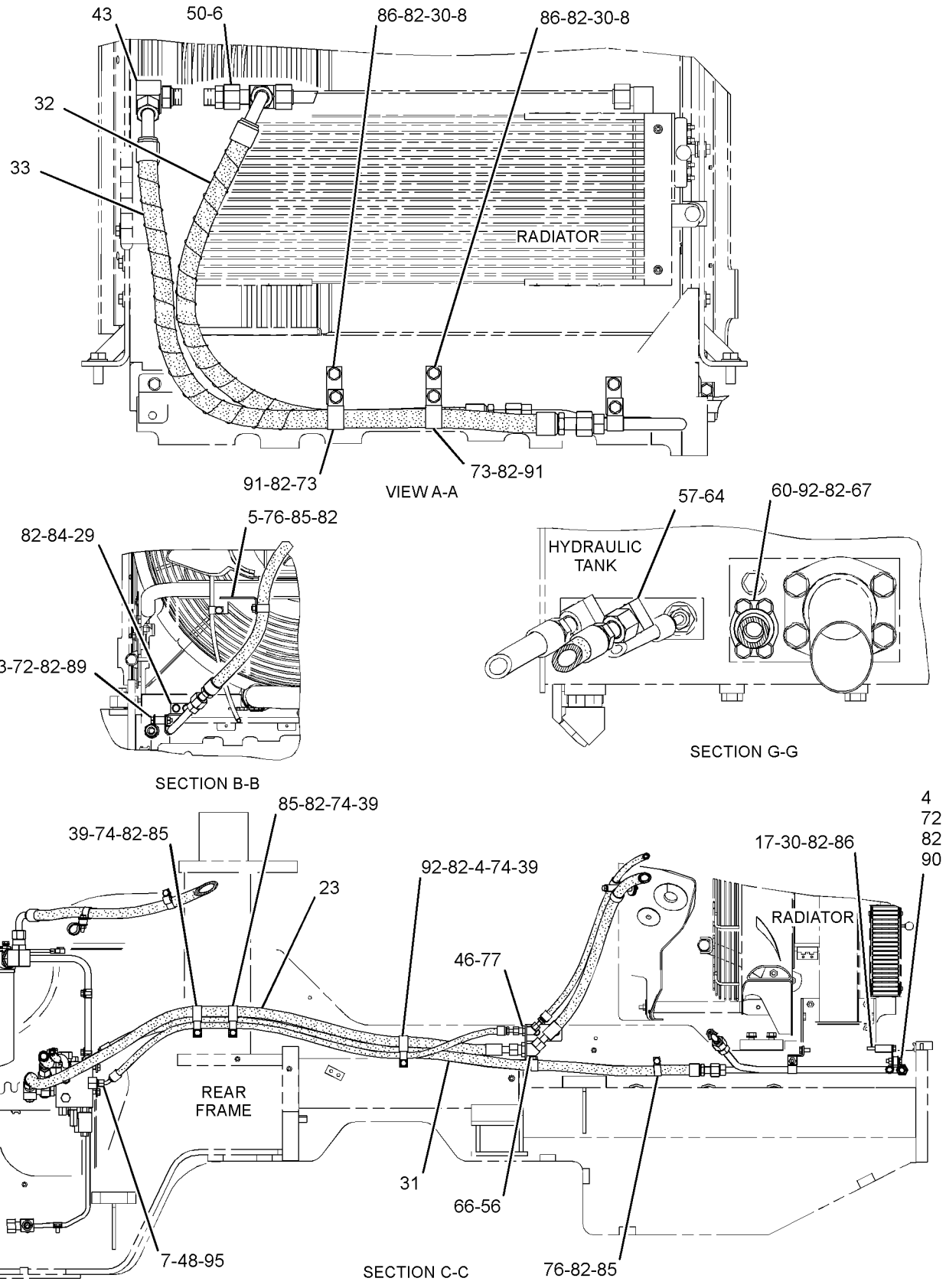

GRAPHIC #2

g01885214

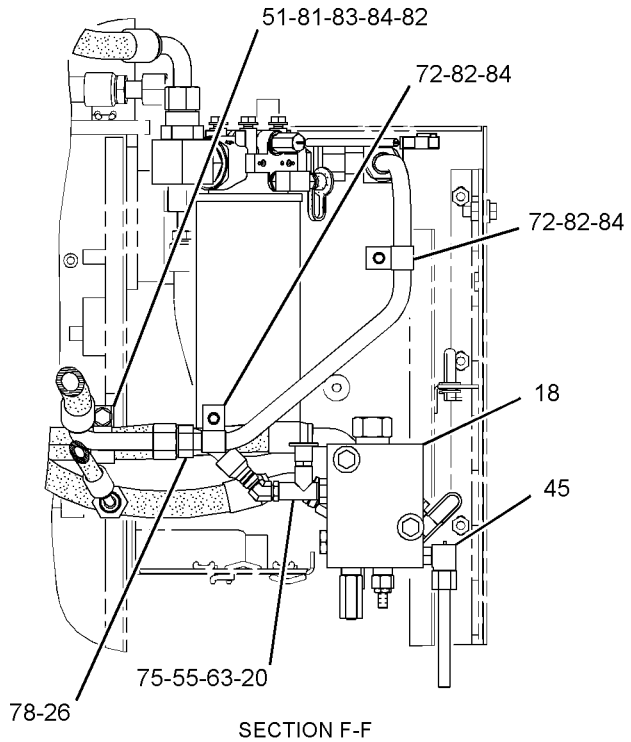

SECTION F-F

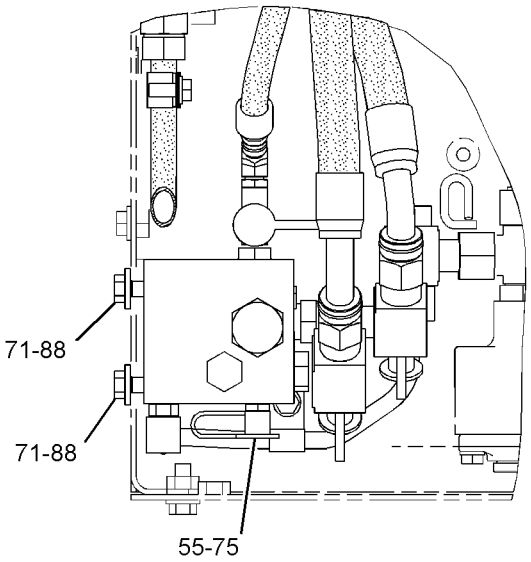

SECTION H-H

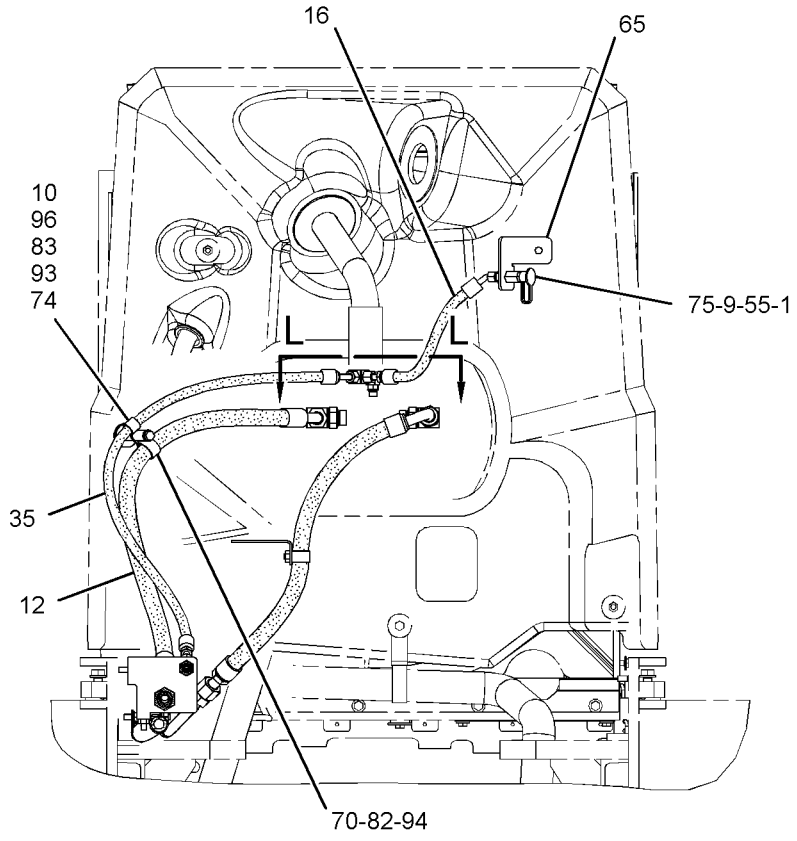

SECTION J-J

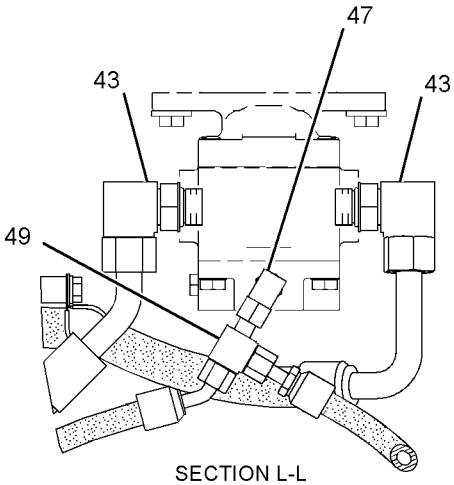

SECTION L-L

GRAPHIC #3 **<END>** g01885215

HYDRAULIC SYSTEM

239-3359 LINES GP-LIFT CYLINDER

S/N: JKM1-775

PART OF 237-7535 HYDRAULIC AR-2 VALVE

SMCS-5057, 5102 **i02903841**

NOTE	REF NO	GRAPHIC REF	PART NUMBER	QTY	PART NAME 1 2 3 4 5 6 (PRODUCT LEVEL)	SEE PAGE
	1	1	**263-1028**	2	MANIFOLD	
	2	1	**280-4127**	2	ELBOW	
	3	1	**280-4128**	1	TUBE AS	
	4	1	**280-4129**	1	TUBE AS	
	5	1	**280-4130**	2	TUBE AS	
I	6	1	**280-4151**	2	HOSE AS	
I	7	1	**280-4152**	2	HOSE AS	
	8	1	**280-6741**	2	SUPPORT	
	9	1	**280-6743**	2	SUPPORT AS	
	10	1	**280-6746**	1	BRACKET AS	
	11	1	**280-6749**	1	BRACKET AS	
	12	1	**300-5466**	1	HOSE AS	
	13	1	**300-5467**	1	HOSE AS	
	14	1	**301-9801**	1	BRACKET	
	15	1	**301-9802**	1	BRACKET	
	16	1	**302-1373**	1	TUBE AS	
	17	1	**302-1374**	1	TUBE AS	
	18	1	*148-8317*	2	CONNECTOR AS	
					(EACH INCLUDES)	
		1	**3D-2824**	1	SEAL-O-RING	
		1	**5K-9090**	1	SEAL-O-RING	
		1	**6V-8714**	1	CONNECTOR	
	19	1	*148-8327*	2	CONNECTOR AS	
					(EACH INCLUDES)	
		1	**3D-2824**	1	SEAL-O-RING	
		1	**6V-8637**	1	CONNECTOR	
		1	**6V-9746**	1	SEAL-O-RING	
	20	1	*153-6237*	2	ELBOW AS	
					(EACH INCLUDES)	
		1	**3D-2824**	1	SEAL-O-RING	
		1	**6V-9004**	1	ELBOW	
		1	**6V-9746**	1	SEAL-O-RING	
	21	1	**269-4958**	4	ADAPTER	
	22	1	**1P-3703**	4	SEAL-RECTANGULAR	
	23	1	**1P-3704**	4	SEAL-RECTANGULAR	
	24	1	**6V-9746**	4	SEAL-O-RING	
	25	1	**5P-1076**	4	WASHER-HARD (13.5X30X4-MM THK)	
	26	1	**8T-1889**	2	CLIP (SLOT)	
	27	1	**8T-1890**	2	CLIP (TAB)	
	28	1	**8T-4121**	46	WASHER-HARD (11X21X2.5-MM THK)	
M	29	1	**8T-4136**	4	BOLT (M10X1.5X25-MM)	
M	30	1	**8T-4139**	4	BOLT (M12X1.75X30-MM)	
M	31	1	**8T-4182**	20	BOLT (M10X1.5X45-MM)	
M	32	1	**8T-4185**	4	BOLT (M10X1.5X50-MM)	
M	33	1	**8T-4195**	6	BOLT (M10X1.5X30-MM)	
M	34	1	**8T-5005**	12	BOLT (M10X1.5X70-MM)	

I-REFER TO HYDRAULIC INFORMATION SYSTEM
M-METRIC PART

239-3359 LINES GP-LIFT CYLINDER *(contd.)* i02903841

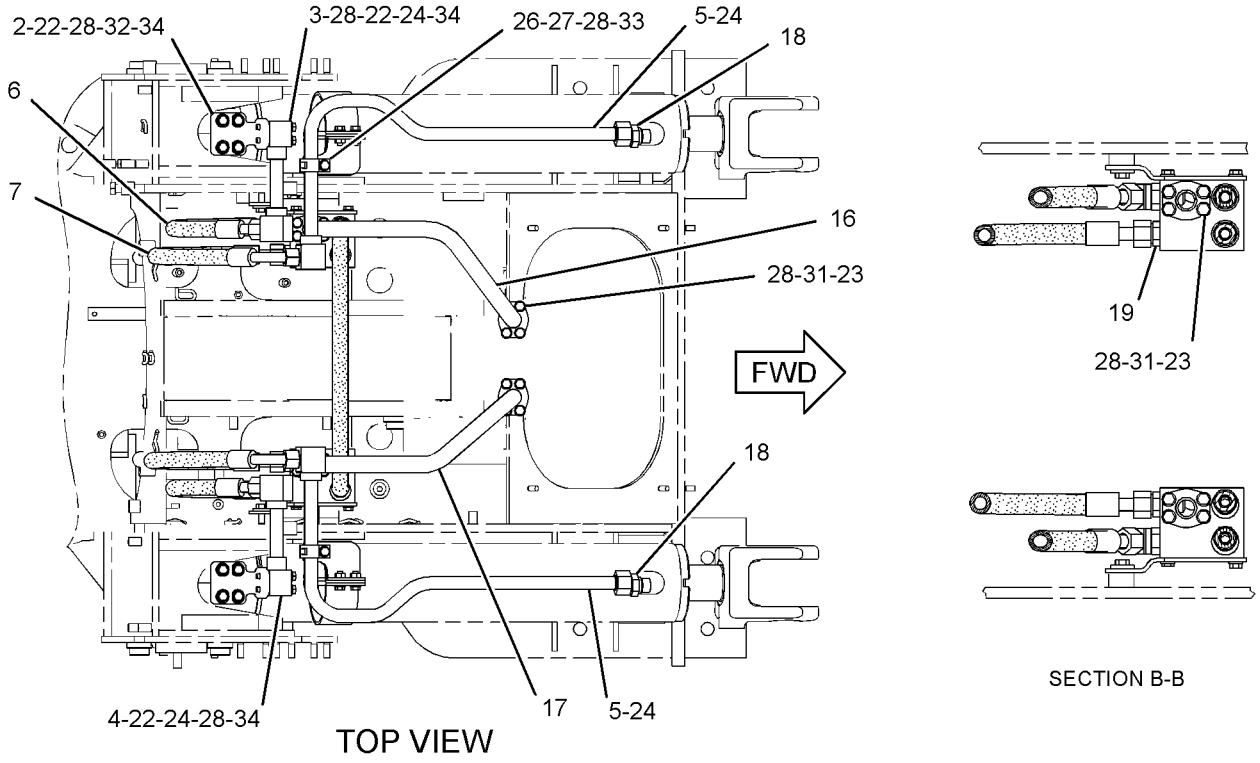

TOP VIEW

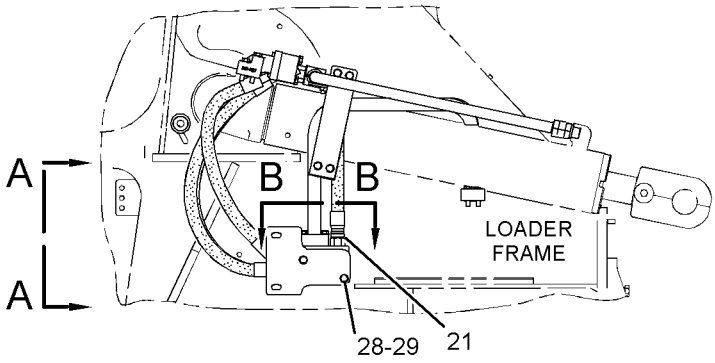

RIGHT SIDE VIEW

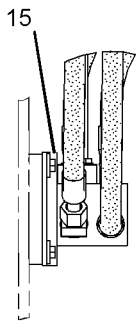

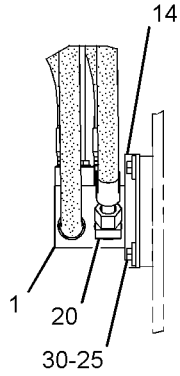

VIEW A-A

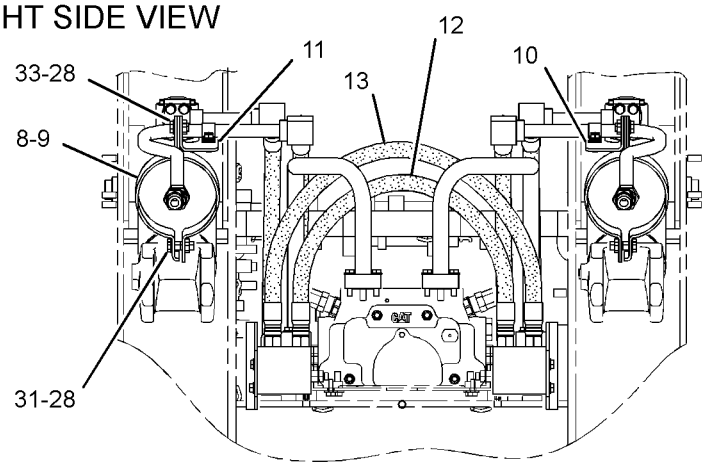

FRONT VIEW

GRAPHIC #1 **<END>** g01387844

HYDRAULIC SYSTEM

239-3359 LINES GP-LIFT CYLINDER

S/N: JKM776-UP

PART OF 237-7535 HYDRAULIC AR-2 VALVE

SMCS-5057, 5102 **i03675788**

NOTE	REF NO	GRAPHIC REF	PART NUMBER	QTY	PART NAME 1 2 3 4 5 6 (PRODUCT LEVEL)	SEE PAGE
	1	2	**263-1028**	2	MANIFOLD	
	2	1	**280-4127**	2	ELBOW	
	3	1	**280-4128**	1	TUBE AS	
	4	1	**280-4129**	1	TUBE AS	
	5	1	**280-4130**	2	TUBE AS	
I	6	1	**280-4151**	2	HOSE AS	
I	7	1	**280-4152**	2	HOSE AS	
	8	2	**280-6741**	2	SUPPORT	
	9	2	**280-6743**	2	SUPPORT AS	
	10	2	**280-6746**	1	BRACKET AS	
	11	2	**280-6749**	1	BRACKET AS	
I	12	2	**300-5466**	1	HOSE AS	
I	13	2	**300-5467**	1	HOSE AS	
C	14	2	**339-5116**	2	BRACKET	
CI	15	1	**339-5117**	2	HOSE AS	
	16	1	*148-8317*	2	CONNECTOR AS	
					(EACH INCLUDES)	
		1	**3D-2824**	1	SEAL-O-RING	
		1	**5K-9090**	1	SEAL-O-RING	
		1	**6V-8714**	1	CONNECTOR	
	17	2	*148-8327*	2	CONNECTOR AS	
					(EACH INCLUDES)	
		2	**3D-2824**	1	SEAL-O-RING	
		2	**6V-8637**	1	CONNECTOR	
		2	**6V-9746**	1	SEAL-O-RING	
	18	2	*153-6237*	2	ELBOW AS	
					(EACH INCLUDES)	
		2	**3D-2824**	1	SEAL-O-RING	
		2	**6V-9004**	1	ELBOW	
		2	**6V-9746**	1	SEAL-O-RING	
	19	2	**269-4958**	4	ADAPTER	
	20	1	**1P-3703**	4	SEAL-RECTANGULAR	
C	21	1,2	**4J-0520**	4	SEAL-O-RING	
	22	2	**5P-1076**	4	WASHER-HARD (13.5X30X4-MM THK)	
	23	1	**6V-9746**	4	SEAL-O-RING	
C	24	1,2	**8C-3206**	8	FLANGE-HALF	
	25	1	**8T-1889**	2	CLIP (SLOT)	
	26	1	**8T-1890**	2	CLIP (TAB)	
	27	1,2	**8T-4121**	46	WASHER-HARD (11X21X2.5-MM THK)	
M	28	2	**8T-4136**	4	BOLT (M10X1.5X25-MM)	
CM	29	2	**8T-4182**	4	BOLT (M10X1.5X45-MM)	
M	30	1	**8T-4185**	4	BOLT (M10X1.5X50-MM)	
CM	31	2	**8T-4192**	4	BOLT (M12X1.75X25-MM)	
M	32	1,2	**8T-4195**	6	BOLT (M10X1.5X30-MM)	
CM	33	1,2	**8T-4196**	16	BOLT (M10X1.5X35-MM)	
M	34	1	**8T-5005**	12	BOLT (M10X1.5X70-MM)	

C-CHANGE FROM PREVIOUS TYPE
I-REFER TO HYDRAULIC INFORMATION SYSTEM
M-METRIC PART

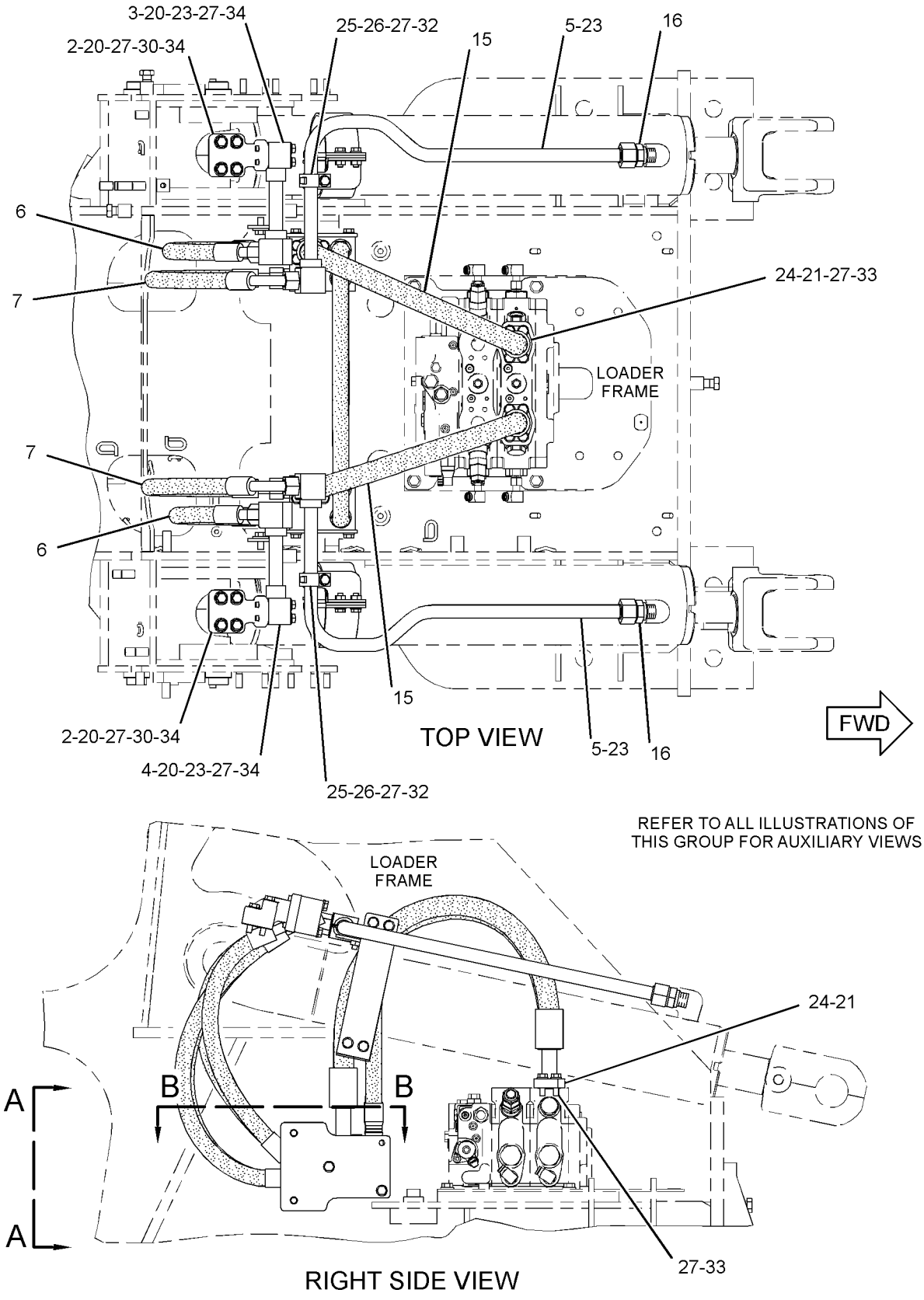

GRAPHIC #1 g01951314

239-3359 **LINES GP-LIFT CYLINDER** *(contd.)* **i03675788**

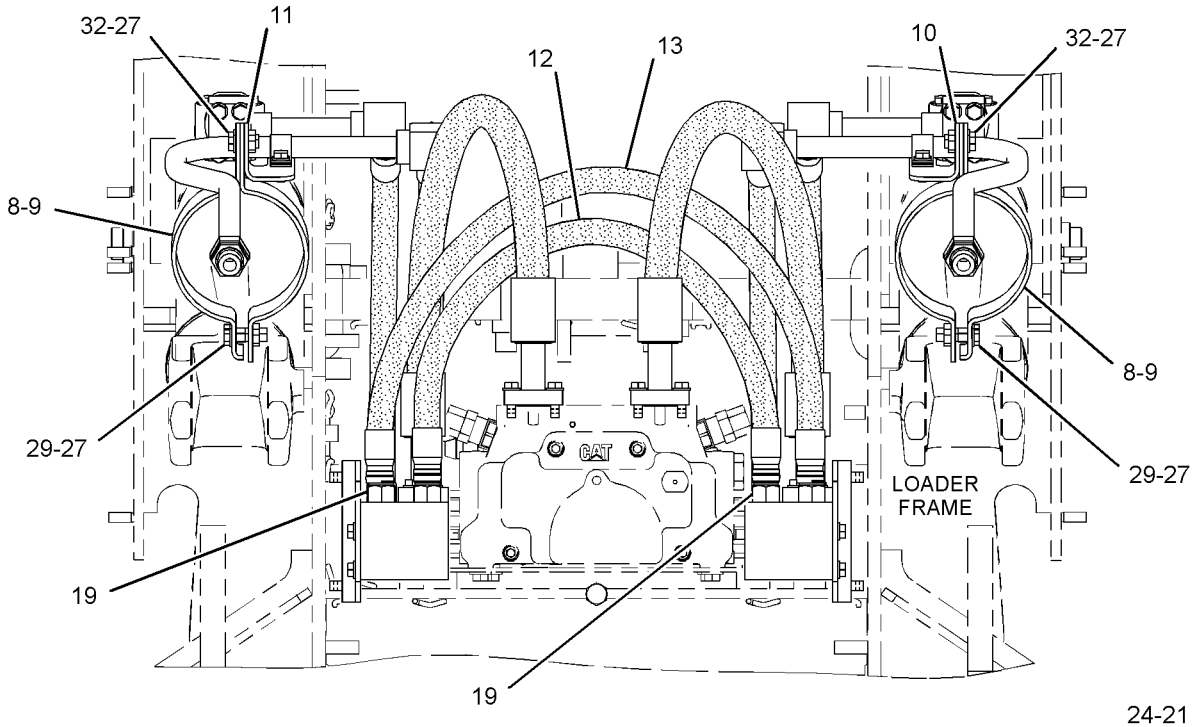

FRONT VIEW

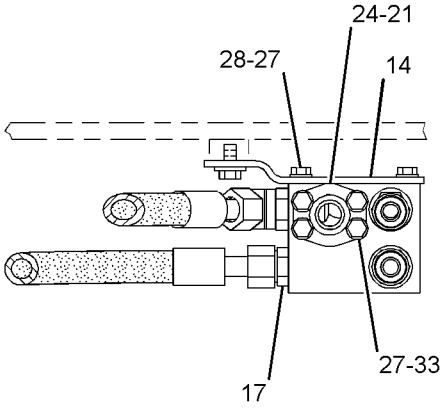

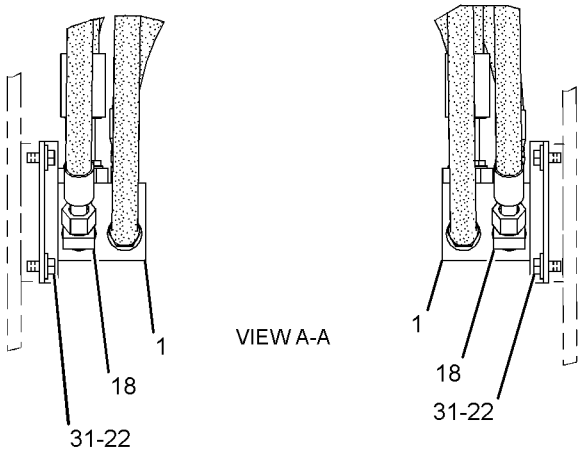

VIEW A-A

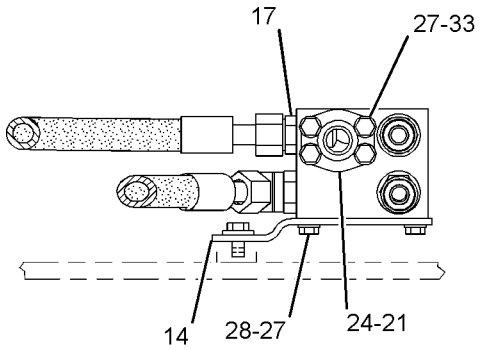

SECTION B-B

GRAPHIC #2 **<END>** g01951315

HYDRAULIC SYSTEM

239-3360 LINES GP-PILOT

S/N: JKM1-797

PART OF 237-7535 HYDRAULIC AR-2 VALVE

SMCS-5057, 5059 **i02903894**

NOTE	REF NO	GRAPHIC REF	PART NUMBER	QTY	PART NAME 1 2 3 4 5 6 (PRODUCT LEVEL)	SEE PAGE
	1	2	**6V-0852**	1	CAP-DUST	
	2	2	**7K-3971**	2	TAG-IDENTIFICATION (LETTER, NUMBER L1)	
	3	2	**7K-3972**	2	TAG-IDENTIFICATION (LETTER, NUMBER L2)	
	4	2	**7K-3974**	2	TAG-IDENTIFICATION (LETTER, NUMBER T1)	
	5	2	**7K-3975**	2	TAG-IDENTIFICATION (LETTER, NUMBER T2)	
	6	2	**8X-1147**	4	SPACER (10.3X15.9X74.7-MM THK)	
	7	2	**8Y-8387**	10	BLOCK	
	8	2	**147-3150**	1	ANGLE AS	
M		2	**8T-3490**	1	NUT-WELD (M10X1.5-THD)	
	10	2	**185-6250**	1	FITTING AS	
I	11	1	**264-5741**	1	HOSE AS	
I	12	2	**264-5742**	1	HOSE AS	
I	13	2	**265-5242**	1	HOSE AS	
I	14	2	**266-6628**	1	HOSE AS	
I	15	2	**266-6629**	1	HOSE AS	
I	16	2	**266-6630**	1	HOSE AS	
	17	2	**266-6705**	1	PLATE AS	
	18	2	**267-3057**	1	BRACKET AS	
	19	2	**317-9565**	1	BAR	
	20	1	**269-4965**	1	ADAPTER-ELBOW	
	21	2	**280-1636**	1	BRACKET	
I	22	1	**280-7484**	1	HOSE AS	
	23	1	**282-9588**	1	PLATE	
I	24	2	**287-2099**	1	HOSE AS	
	25	1	**317-9031**	1	GUARD-HOSE	
I	26	2	**308-0932**	1	HOSE AS	
	28	1	*148-8370*	1	ELBOW AS	
		1	**6V-8398**	1	SEAL-O-RING	
		1	**6V-9851**	1	ELBOW	
	29	1	*148-8375*	1	ELBOW AS	
		1	**6V-8398**	2	SEAL-O-RING	
		1	**6V-8981**	1	ELBOW	
	30	2	*148-8413*	1	REDUCER AS	
		2	**4J-5477**	1	SEAL-O-RING	
		2	**6V-8934**	1	REDUCER AS	
	31	2	*148-8443*	1	TEE AS	
		2	**3J-1907**	1	SEAL-O-RING	
		2	**6V-8397**	1	SEAL-O-RING	
		2	**7X-2459**	1	TEE-O-RING	
	32	1	*148-8428*	1	TEE AS	
		1	**3K-0360**	1	SEAL-O-RING	
		1	**6V-8398**	2	SEAL-O-RING	
		1	**6V-8782**	1	TEE	
	33	1	*148-8444*	1	TEE AS-SWIVEL	
		1	**6V-8398**	2	SEAL-O-RING	
		1	**6V-9837**	1	TEE-SWIVEL	
	34	1	*155-7321*	1	ADAPTER AS	
		1	**3D-2824**	1	SEAL-O-RING	
		1	**6V-1722**	1	ADAPTER-O-RING	
	35	2	**170-4735**	1	RING-RETAINING	
	36	2	**4J-5477**	2	SEAL-O-RING	
	37	2	**5P-1076**	2	WASHER-HARD (13.5X30X4-MM THK)	
	38	1	**6V-9169**	1	NUT-BULKHEAD (13/16-16-THD)	
	39	2	**7D-7233**	1	CLIP	
	40	2	**147-7142**	2	U-BOLT	
	41	2	**8M-2773**	1	CLIP	

239-3360 **LINES GP-PILOT** *(contd.)* **i02903894**

NOTE	REF NO	GRAPHIC REF	PART NUMBER	QTY	PART NAME 1 2 3 4 5 6 (PRODUCT LEVEL)	SEE PAGE
	42	2	**8R-0721**	2	SPACER (11X16X35-MM THK)	
	43	1,2	**8T-4121**	15	WASHER-HARD (11X21X2.5-MM THK)	
M	44	1	**8T-4133**	3	NUT (M10X1.5-THD)	
M	45	1	**8T-4136**	1	BOLT (M10X1.5X25-MM)	
M	46	2	**8T-4137**	5	BOLT (M10X1.5X20-MM)	
M	47	1	**8T-4139**	1	BOLT (M12X1.75X30-MM)	
	48	1,2	**8T-4223**	3	WASHER-HARD (13.5X25.5X3-MM THK)	
M	49	2	**8T-4244**	8	NUT (M12X1.75-THD)	
M	50	2	**8T-4956**	2	BOLT (M12X1.75X35-MM)	
M	51	2	**8T-6466**	2	BOLT (M10X1.5X60-MM)	
M	52	1,2	**8T-6685**	4	BOLT (M10X1.5X110-MM)	
	53	2	**8Y-8388**	2	PLATE	
	54	2	**9X-8582**	1	CLIP	

I-REFER TO HYDRAULIC INFORMATION SYSTEM
M-METRIC PART

REFER TO ALL ILLUSTRATIONS OF
THIS GROUP FOR AUXILIARY VIEWS

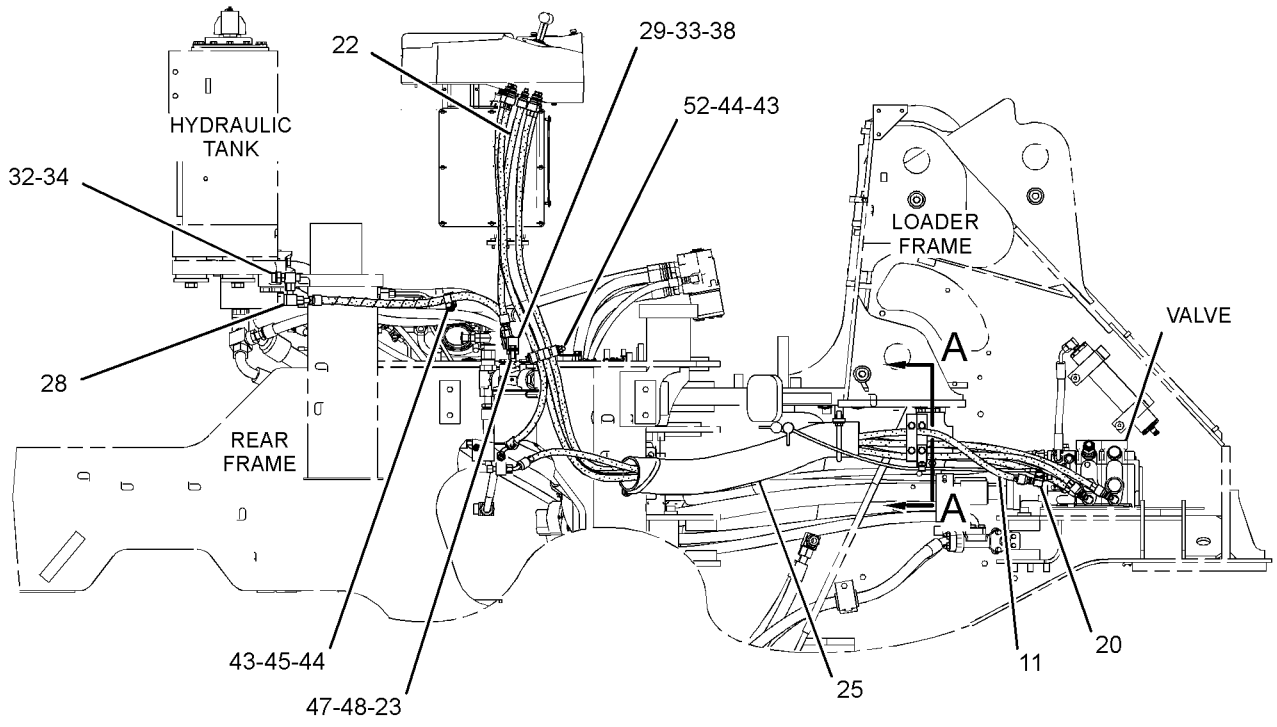

RIGHT SIDE VIEW

GRAPHIC #1

g01425008

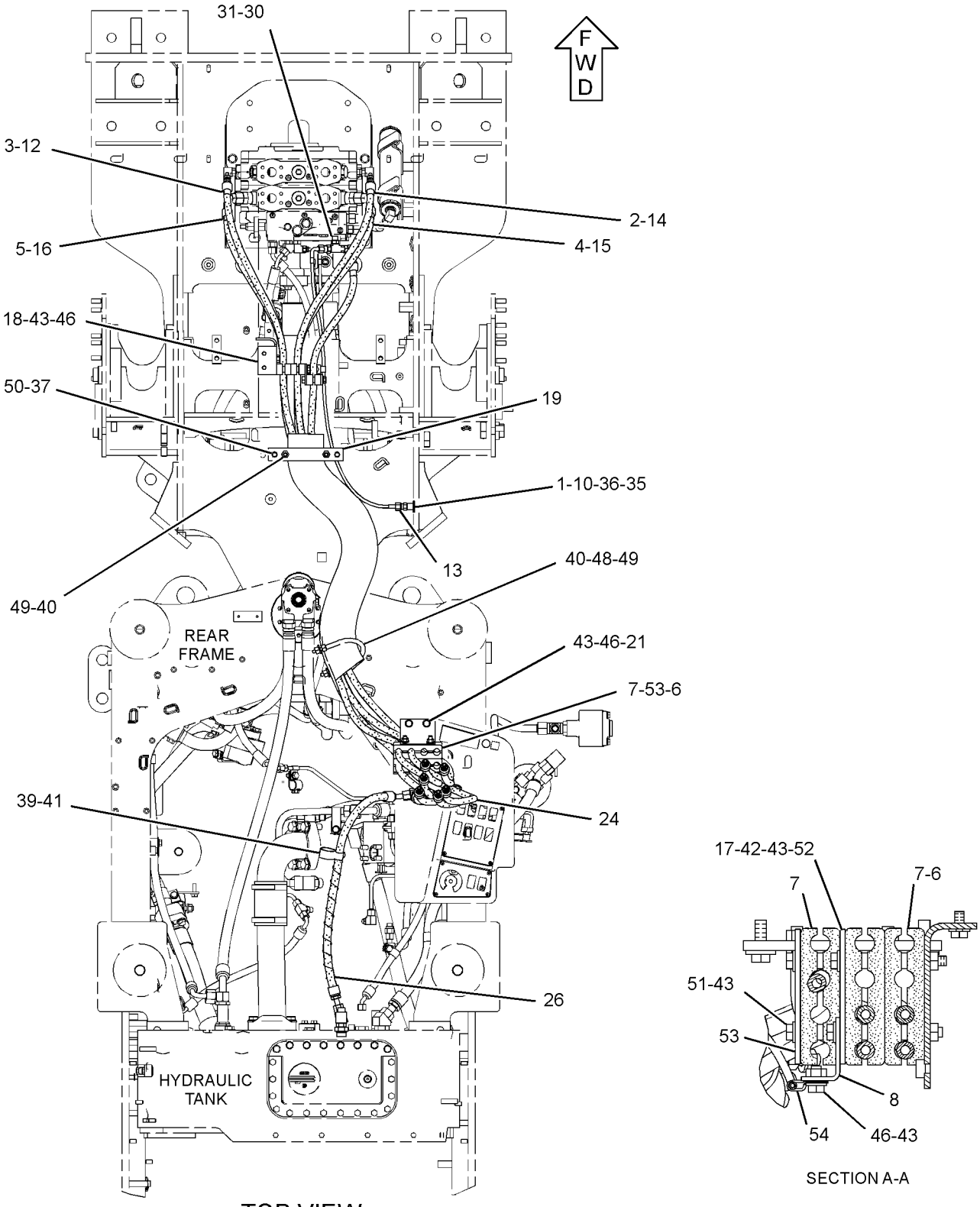

TOP VIEW

GRAPHIC #2 **<END>** g01425009

HYDRAULIC SYSTEM

239-3360 LINES GP-PILOT

S/N: JKM798-1004

PART OF 237-7535 HYDRAULIC AR-2 VALVE

SMCS-5057, 5059 **i03747930**

NOTE	REF NO	GRAPHIC REF	PART NUMBER	QTY	PART NAME 1 2 3 4 5 6 (PRODUCT LEVEL)	SEE PAGE
	1	2	**6V-0852**	1	CAP-DUST	
	2	2	**7K-3971**	2	TAG-IDENTIFICATION (LETTER, NUMBER L1)	
	3	2	**7K-3972**	2	TAG-IDENTIFICATION (LETTER, NUMBER L2)	
	4	2	**7K-3974**	2	TAG-IDENTIFICATION (LETTER, NUMBER T1)	
	5	2	**7K-3975**	2	TAG-IDENTIFICATION (LETTER, NUMBER T2)	
	6	2	**8X-1147**	4	SPACER (10.3X15.9X74.7-MM THK)	
	7	2	**8Y-8387**	10	BLOCK	
	8	2	**147-3150**	1	ANGLE AS	
M		2	**8T-3490**	1	NUT-WELD (M10X1.5-THD)	
C	10	2	**164-5567**	1	COUPLER AS-QUICK DISCONNECT (MALE)	
		2	**6V-3965**	1	FITTING (QUICK DISCONNECT)	
		2	**214-7568**	1	SEAL-O-RING	
I	11	1	**264-5741**	1	HOSE AS	
I	12	2	**264-5742**	1	HOSE AS	
I	13	2	**265-5242**	1	HOSE AS	
I	14	2	**266-6628**	1	HOSE AS	
I	15	2	**266-6629**	1	HOSE AS	
I	16	2	**266-6630**	1	HOSE AS	
	17	2	**266-6705**	1	PLATE AS	
	18	2	**267-3057**	1	BRACKET AS	
	19	2	**317-9565**	1	BAR	
	20	2	**269-4965**	1	ADAPTER-ELBOW	
	21	2	**280-1636**	1	BRACKET	
I	22	1	**280-7484**	1	HOSE AS	
	23	1	**282-9588**	1	PLATE	
I	24	2	**287-2099**	1	HOSE AS	
	25	1	**317-9031**	1	GUARD-HOSE	
I	26	2	**308-0932**	1	HOSE AS	
	28	1	*148-8370*	1	ELBOW AS	
		1	**6V-8398**	1	SEAL-O-RING	
		1	**6V-9851**	1	ELBOW	
	29	1	*148-8375*	1	ELBOW AS	
		1	**6V-8398**	2	SEAL-O-RING	
		1	**6V-8981**	1	ELBOW	
	30	2	*148-8413*	1	REDUCER AS	
		2	**4J-5477**	1	SEAL-O-RING	
		2	**6V-8934**	1	REDUCER AS	
	31	2	*148-8443*	1	TEE AS	
		2	**3J-1907**	1	SEAL-O-RING	
		2	**6V-8397**	1	SEAL-O-RING	
		2	**7X-2459**	1	TEE-O-RING	
	32	1	*148-8428*	1	TEE AS	
		1	**3K-0360**	1	SEAL-O-RING	
		1	**6V-8398**	2	SEAL-O-RING	
		1	**6V-8782**	1	TEE	
	33	1	*148-8444*	1	TEE AS-SWIVEL	
		1	**6V-8398**	2	SEAL-O-RING	
		1	**6V-9837**	1	TEE-SWIVEL	
	34	1	*155-7321*	1	ADAPTER AS	
		1	**3D-2824**	1	SEAL-O-RING	
		1	**6V-1722**	1	ADAPTER-O-RING	
C	35	2	**2P-1279**	1	LOCKNUT (9/16-18-THD)	
C	36	2	**4J-5477**	1	SEAL-O-RING	
	37	2	**5P-1076**	2	WASHER-HARD (13.5X30X4-MM THK)	
	38	1	**6V-9169**	1	NUT-BULKHEAD (13/16-16-THD)	
	39	2	**7D-7233**	1	CLIP	

239-3360 **LINES GP-PILOT** *(contd.)* **i03747930**

NOTE	REF NO	GRAPHIC REF	PART NUMBER	QTY	PART NAME 1 2 3 4 5 6 (PRODUCT LEVEL)	SEE PAGE
	40	2	**147-7142**	2	U-BOLT	
C	41	2	**6D-4246**	1	CLIP	
	42	2	**8R-0721**	2	SPACER (11X16X35-MM THK)	
	43	1,2	**8T-4121**	15	WASHER-HARD (11X21X2.5-MM THK)	
M	44	1	**8T-4133**	3	NUT (M10X1.5-THD)	
M	45	1	**8T-4136**	1	BOLT (M10X1.5X25-MM)	
M	46	2	**8T-4137**	5	BOLT (M10X1.5X20-MM)	
M	47	1	**8T-4139**	1	BOLT (M12X1.75X30-MM)	
	48	1,2	**8T-4223**	3	WASHER-HARD (13.5X25.5X3-MM THK)	
M	49	2	**8T-4244**	8	NUT (M12X1.75-THD)	
M	50	2	**8T-4956**	2	BOLT (M12X1.75X35-MM)	
M	51	2	**8T-6466**	2	BOLT (M10X1.5X60-MM)	
CM	52	1,2	**8T-6685**	3	BOLT (M10X1.5X110-MM)	
	53	2	**8Y-8388**	2	PLATE	
	54	2	**9X-8582**	1	CLIP	
C	55	2	*169-5863*	1	ADAPTER AS	
		2	**4J-5477**	1	SEAL-O-RING	
		2	**7X-7945**	1	ADAPTER	
C	56	1	**204-2281**	2	STRAP-CABLE	
CM	57	2	**8T-4198**	1	BOLT (M10X1.5X100-MM)	
	58	1	**1V-1122**	1	TAG-IDENTIFICATION (LETTERS SPL)	

C-CHANGE FROM PREVIOUS TYPE
I-REFER TO HYDRAULIC INFORMATION SYSTEM
M-METRIC PART

REFER TO ALL ILLUSTRATIONS OF
THIS GROUP FOR AUXILIARY VIEWS

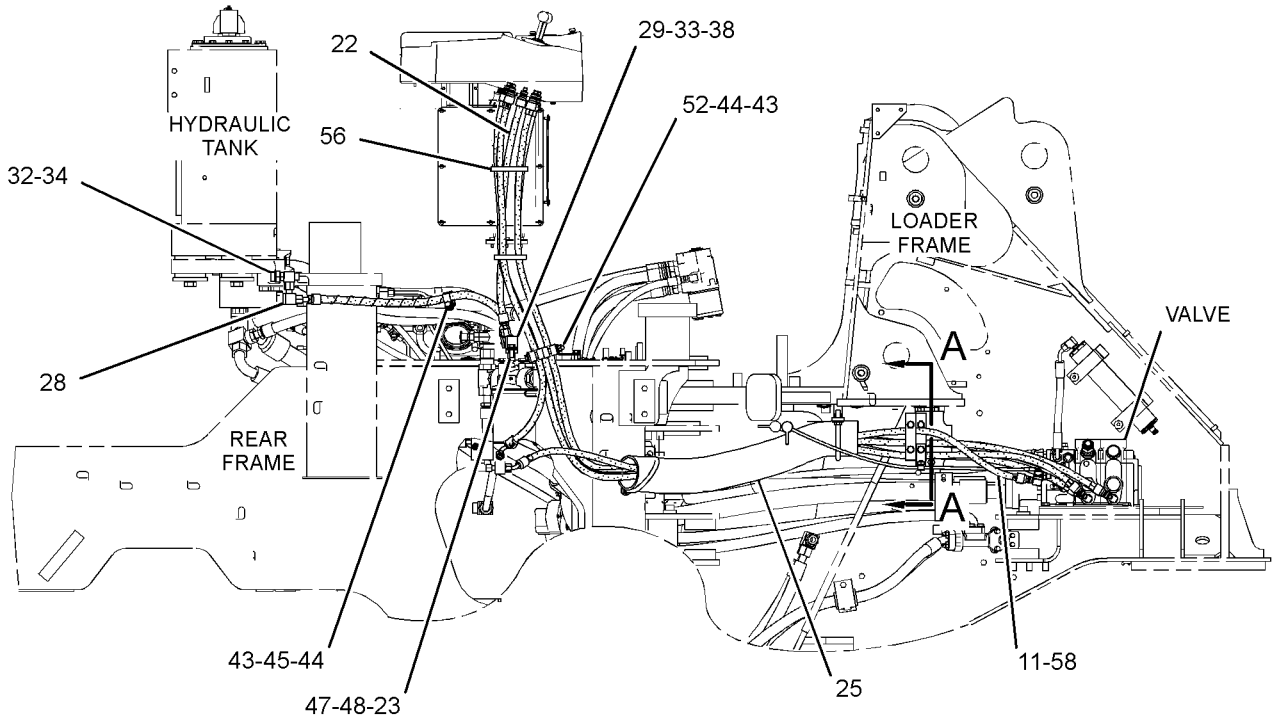

RIGHT SIDE VIEW

GRAPHIC #1 g02144406

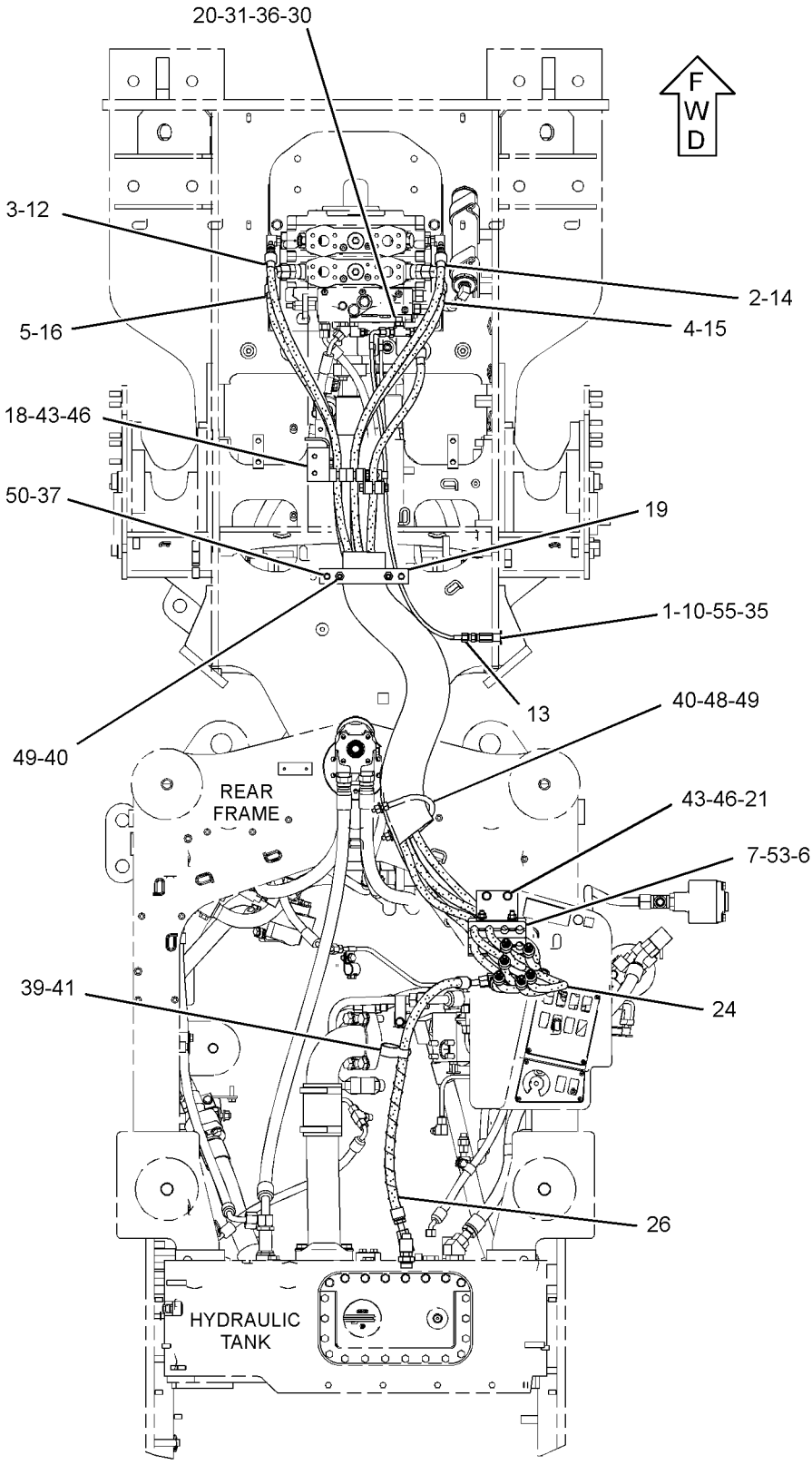

TOP VIEW

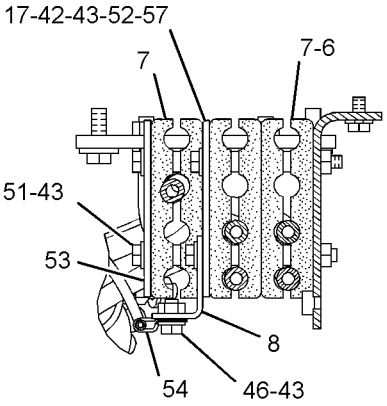

SECTION A-A

GRAPHIC #2 **<END>** g02144407

HYDRAULIC SYSTEM

239-3360 LINES GP-PILOT

S/N: JKM1005-UP

PART OF 237-7535 HYDRAULIC AR-2 VALVE

SMCS-5057, 5059 **i03980352**

NOTE	REF NO	GRAPHIC REF	PART NUMBER	QTY	PART NAME 1 2 3 4 5 6 (PRODUCT LEVEL)	SEE PAGE
	1	2	**6V-0852**	1	CAP-DUST	
	2	2	**7K-3971**	2	TAG-IDENTIFICATION (LETTER, NUMBER L1)	
	3	2	**7K-3972**	2	TAG-IDENTIFICATION (LETTER, NUMBER L2)	
	4	2	**7K-3974**	2	TAG-IDENTIFICATION (LETTER, NUMBER T1)	
	5	2	**7K-3975**	2	TAG-IDENTIFICATION (LETTER, NUMBER T2)	
	6	2	**8X-1147**	4	SPACER (10.3X15.9X74.7-MM THK)	
	7	2	**8Y-8387**	10	BLOCK	
	8	2	**147-3150**	1	ANGLE AS	
M		2	**8T-3490**	1	NUT-WELD (M10X1.5-THD)	
	10	2	*164-5567*	1	COUPLER AS-QUICK DISCONNECT (MALE)	
		2	**6V-3965**	1	FITTING (QUICK DISCONNECT)	
		2	**214-7568**	1	SEAL-O-RING	
C	11	2	**349-9851**	1	HOSE AS	
I	12	2	**264-5742**	1	HOSE AS	
C	13	2	**349-9852**	1	HOSE AS	
I	14	2	**266-6628**	1	HOSE AS	
I	15	2	**266-6629**	1	HOSE AS	
I	16	2	**266-6630**	1	HOSE AS	
	17	2	**266-6705**	1	PLATE AS	
	18	2	**267-3057**	1	BRACKET AS	
M		2	**8T-3490**	3	NUT-WELD (M10X1.5-THD)	
	19	2	**317-9565**	1	BAR	
	21	2	**280-1636**	1	BRACKET	
I	22	2	**280-7484**	1	HOSE AS	
	23	2	**282-9588**	1	PLATE	
I	24	2	**287-2099**	1	HOSE AS	
E	25	1	**206-2729**		GUARD-HOSE (86-CM)	
I	26	2	**308-0932**	1	HOSE AS	
	28	2	*148-8370*	1	ELBOW AS	
		2	**6V-8398**	1	SEAL-O-RING	
		2	**6V-9851**	1	ELBOW	
	29	2	*148-8375*	1	ELBOW AS	
		2	**6V-8398**	2	SEAL-O-RING	
		2	**6V-8981**	1	ELBOW	
	30	2	*148-8413*	1	REDUCER AS	
		2	**4J-5477**	1	SEAL-O-RING	
		2	**6V-8934**	1	REDUCER AS	
C	31	2	*148-8433*	1	TEE AS	
		2	**6V-8397**	2	SEAL-O-RING	
		2	**6V-9836**	1	TEE-SWIVEL	
	32	2	*148-8428*	1	TEE AS	
		2	**3K-0360**	1	SEAL-O-RING	
		2	**6V-8398**	2	SEAL-O-RING	
		2	**6V-8782**	1	TEE	
	33	2	*148-8444*	1	TEE AS-SWIVEL	
		2	**6V-8398**	2	SEAL-O-RING	
		2	**6V-9837**	1	TEE-SWIVEL	
	34	2	*155-7321*	1	ADAPTER AS	
		2	**3D-2824**	1	SEAL-O-RING	
		2	**6V-1722**	1	ADAPTER-O-RING	
	35	2	**2P-1279**	1	LOCKNUT (9/16-18-THD)	
C	36	2	*164-9869*	1	CONNECTOR AS	
		2	**3J-1907**	1	SEAL-O-RING	
		2	**6V-8397**	1	SEAL-O-RING	
		2	**9X-2297**	1	CONNECTOR	
	37	2	**5P-1076**	2	WASHER-HARD (13.5X30X4-MM THK)	

239-3360 **LINES GP-PILOT** *(contd.)* **i03980352**

NOTE	REF NO	GRAPHIC REF	PART NUMBER	QTY	PART NAME 1 2 3 4 5 6 (PRODUCT LEVEL)	SEE PAGE
	38	2	**6V-9169**	1	NUT-BULKHEAD (13/16-16-THD)	
	39	2	**7D-7233**	1	CLIP	
	40	2	**147-7142**	2	U-BOLT	
	41	2	**6D-4246**	1	CLIP	
	42	2	**8R-0721**	2	SPACER (11X16X35-MM THK)	
	43	2	**8T-4121**	15	WASHER-HARD (11X21X2.5-MM THK)	
M	44	2	**8T-4133**	3	NUT (M10X1.5-THD)	
M	45	2	**8T-4136**	1	BOLT (M10X1.5X25-MM)	
M	46	2	**8T-4137**	5	BOLT (M10X1.5X20-MM)	
M	47	2	**8T-4139**	1	BOLT (M12X1.75X30-MM)	
	48	2	**8T-4223**	3	WASHER-HARD (13.5X25.5X3-MM THK)	
M	49	2	**8T-4244**	8	NUT (M12X1.75-THD)	
M	50	2	**8T-4956**	2	BOLT (M12X1.75X35-MM)	
M	51	2	**8T-6466**	2	BOLT (M10X1.5X60-MM)	
M	52	2	**8T-6685**	3	BOLT (M10X1.5X110-MM)	
	53	2	**8Y-8388**	2	PLATE	
	54	2	**9X-8582**	1	CLIP	
	55	2	*169-5863*	1	ADAPTER AS	
		2	**4J-5477**	1	SEAL-O-RING	
		2	**7X-7945**	1	ADAPTER	
	56	2	**204-2281**	2	STRAP-CABLE	
M	57	2	**8T-4198**	1	BOLT (M10X1.5X100-MM)	
	58	2	**1V-1122**	1	TAG-IDENTIFICATION (LETTERS SPL)	

C-CHANGE FROM PREVIOUS TYPE
E-ORDER BY THE CENTIMETER
I-REFER TO HYDRAULIC INFORMATION SYSTEM
M-METRIC PART

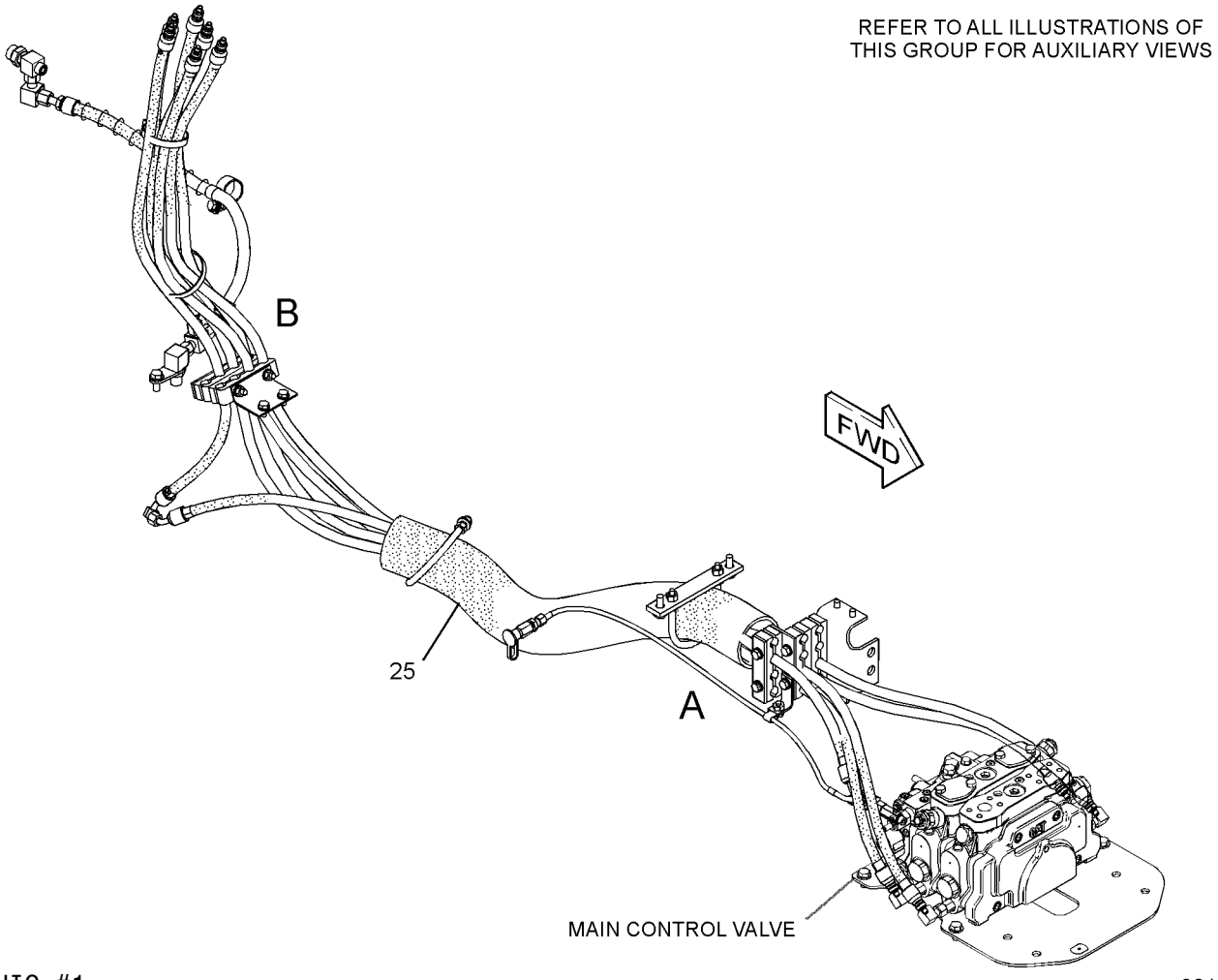

GRAPHIC #1 g02173200

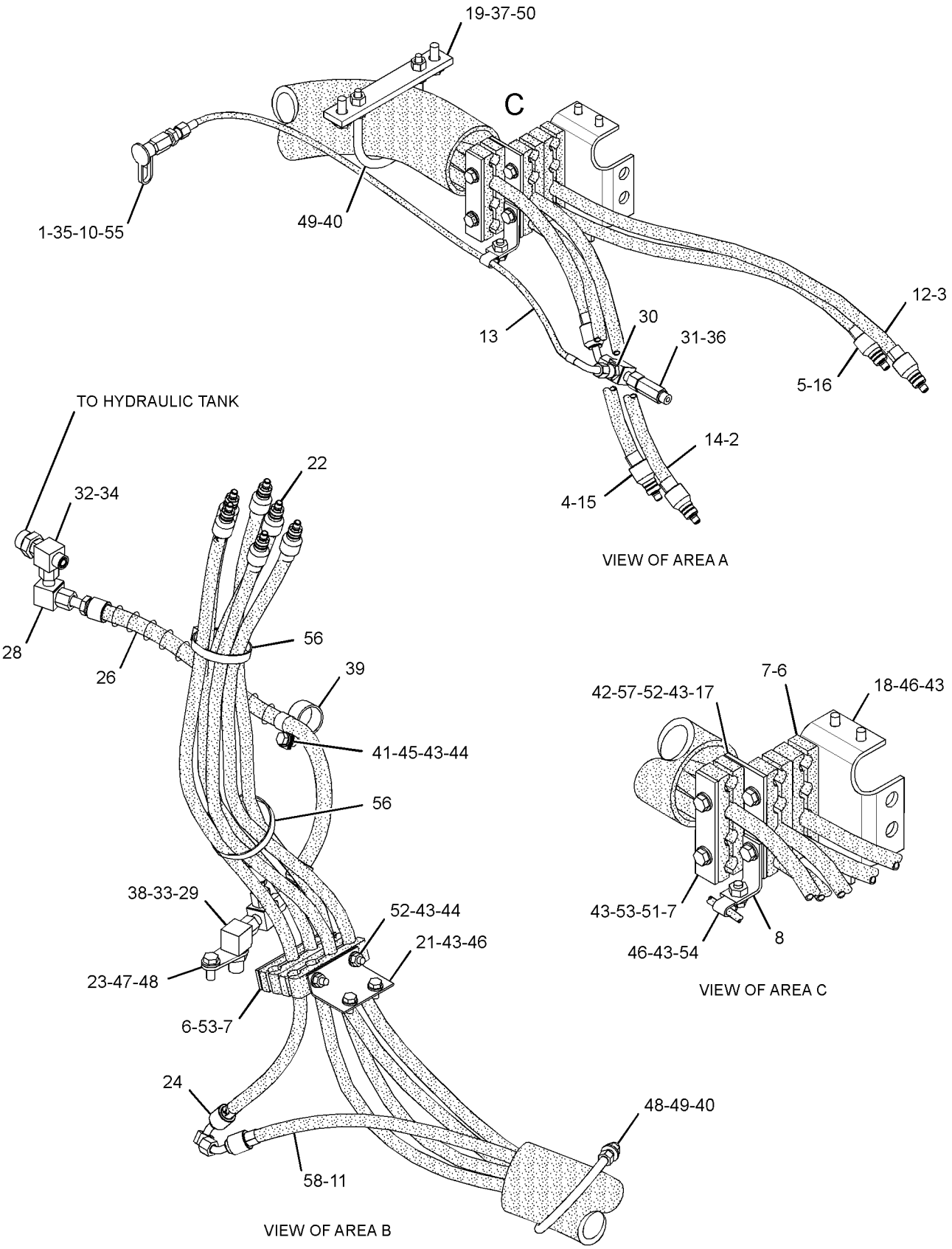

GRAPHIC #2 **<END>** g02173201

HYDRAULIC SYSTEM

260-8827 LINES GP-PILOT–3RD VALVE

S/N: JKM1-UP

PART OF 265-9750 HYDRAULIC AR-3 VALVE

AN ATTACHMENT

SMCS-5057, 5059 **i03868777**

NOTE	REF NO	GRAPHIC REF	PART NUMBER	QTY	PART NAME 1 2 3 4 5 6 (PRODUCT LEVEL)	SEE PAGE
	1	1	**4V-9798**	2	TAG-IDENTIFICATION (LETTER, NUMBER C2)	
	2	1	**4V-9799**	2	TAG-IDENTIFICATION (LETTER, NUMBER C1)	
I	3	1	**265-6986**	1	HOSE AS	
I	4	1	**266-9766**	1	HOSE AS	

I-REFER TO HYDRAULIC INFORMATION SYSTEM

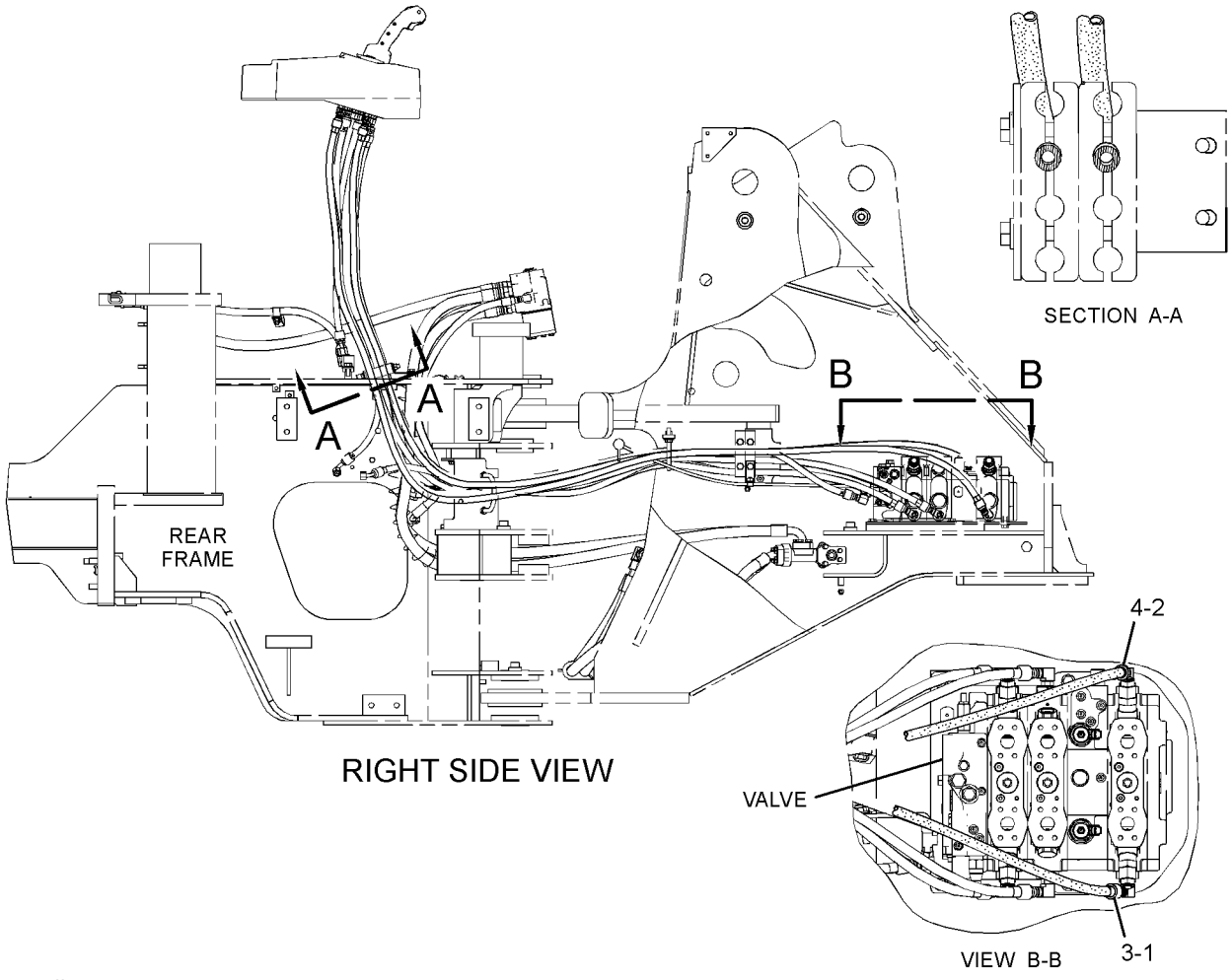

GRAPHIC #1 **<END>** g02146403

HYDRAULIC SYSTEM

266-9746 LINES GP-PILOT–4TH VALVE

S/N: JKM1-UP

PART OF 265-9760 HYDRAULIC AR-4 VALVE

AN ATTACHMENT

SMCS-5057, 5059 **i03848835**

NOTE	REF NO	GRAPHIC REF	PART NUMBER	QTY	PART NAME 1 2 3 4 5 6 (PRODUCT LEVEL)	SEE PAGE
	1	1	**4V-9798**	2	TAG-IDENTIFICATION (LETTER, NUMBER C2)	
	2	1	**4V-9799**	2	TAG-IDENTIFICATION (LETTER, NUMBER C1)	
	3	1	**9F-6188**	2	TAG-IDENTIFICATION (A2)	
	4	1	**9F-6189**	2	TAG-IDENTIFICATION (A1)	
I	5	1	**265-6987**	1	HOSE AS	
I	6	1	**266-6628**	1	HOSE AS	
I	7	1	**266-9766**	1	HOSE AS	
I	8	1	**283-5262**	1	HOSE AS	
	9	1	**8M-2773**	1	CLIP	

I-REFER TO HYDRAULIC INFORMATION SYSTEM

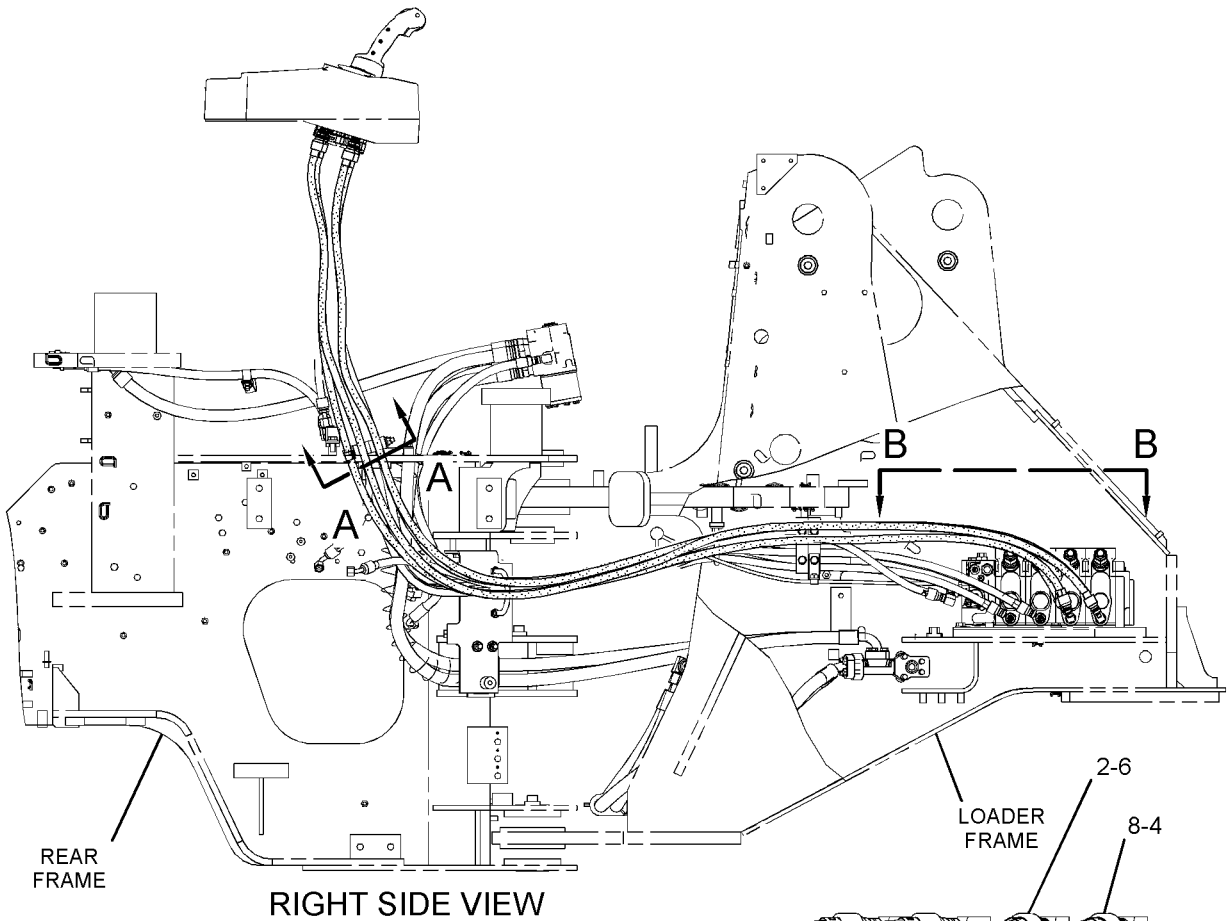

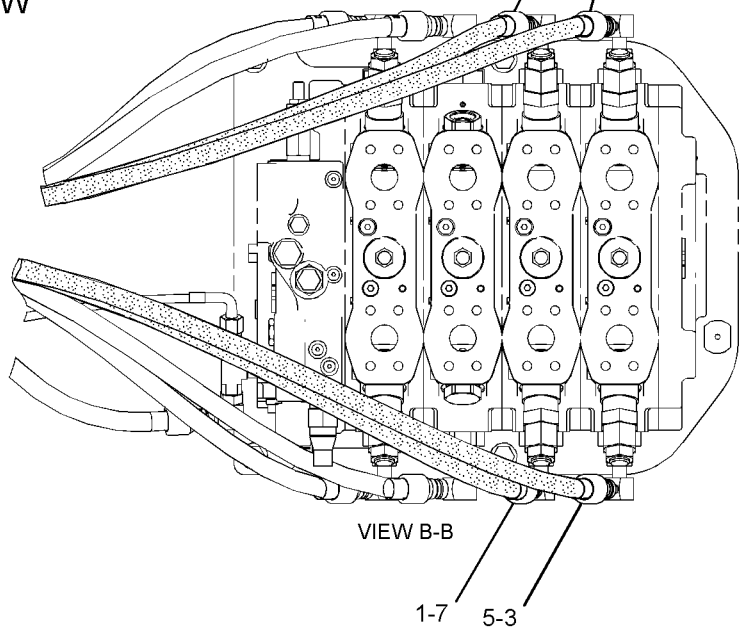

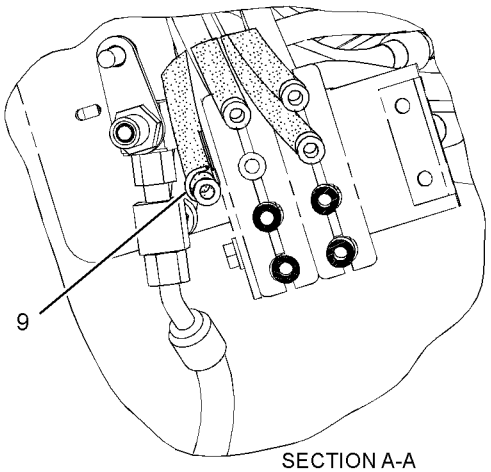

GRAPHIC #1 **<END>** g02144227

HYDRAULIC SYSTEM

258-8757 LINES GP-RIDE CONTROL

S/N: JKM1-UP
PART OF 265-9740, 265-9741 CONTROL AR-RIDE
AN ATTACHMENT

SMCS-5004, 5057, 5077 **i02991704**

NOTE	REF NO	GRAPHIC REF	PART NUMBER	QTY	PART NAME 1 2 3 4 5 6 (PRODUCT LEVEL)	SEE PAGE
	1	1	**103-5406**	1	FILM-WARNING (HIGH PRESSURE CYLINDER)	
	2	1	**224-0672**	1	FILM-WARNING (HIGH PRESSURE, READ OMM, INTL)	
Y	3	1	*259-4685*	1	ACCUMULATOR GP-RIDE CONTROL (CHARGED)	667
	4	1	**260-0638**	2	CLAMP	
I	5	1	**322-9980**	1	HOSE AS	
	6	1	*148-8327*	1	CONNECTOR AS	
		1	**3D-2824**	1	SEAL-O-RING	
		1	**6V-8637**	1	CONNECTOR	
		1	**6V-9746**	1	SEAL-O-RING	
	7	1	*148-8388*	1	ELBOW AS	
		1	**2M-9780**	1	SEAL-O-RING	
		1	**6V-8629**	1	ELBOW	
		1	**6V-9746**	1	SEAL-O-RING	
	8	1	**8T-4122**	2	WASHER-HARD (17X32X3.5-MM THK)	
M	9	1	**8T-4185**	2	BOLT (M10X1.5X50-MM)	

I-REFER TO HYDRAULIC INFORMATION SYSTEM
M-METRIC PART
Y-SEPARATE ILLUSTRATION

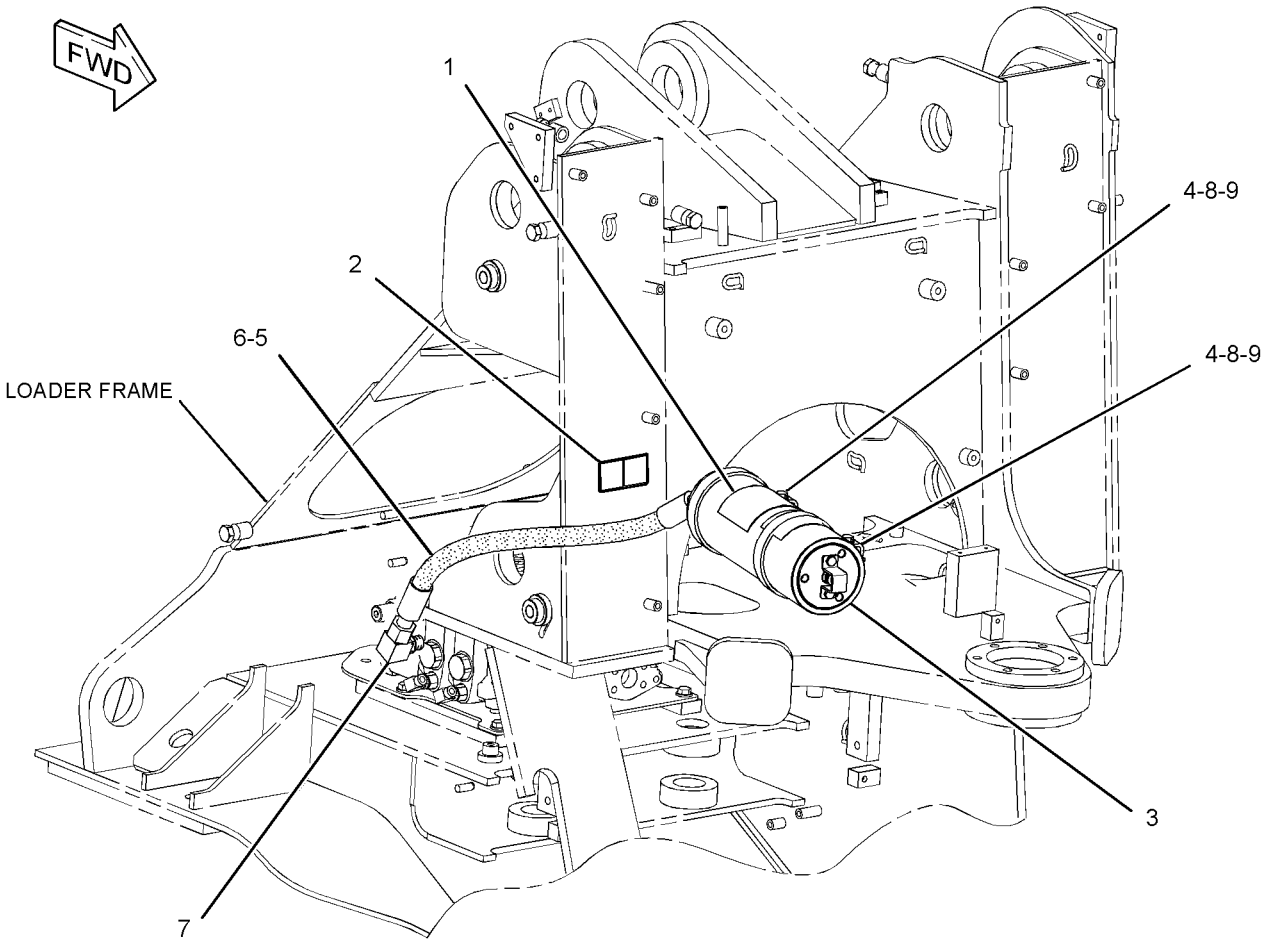

GRAPHIC #1 **<END>** g01518763

HYDRAULIC SYSTEM

265-2150 LINES GP-RIDE CONTROL

S/N: JKM1-UP
PART OF 265-9756 CONTROL AR-RIDE
AN ATTACHMENT

SMCS-5004, 5057, 5077 **i03675802**

NOTE	REF NO	GRAPHIC REF	PART NUMBER	QTY	PART NAME 1 2 3 4 5 6 (PRODUCT LEVEL)	SEE PAGE
	1	1	**9J-3866**	2	ADAPTER	
	2	1	**103-5406**	1	FILM-WARNING (HIGH PRESSURE CYLINDER)	
I	3	1	**109-4846**	1	HOSE AS	
	4	1	**224-0672**	1	FILM-WARNING (HIGH PRESSURE, READ OMM, INTL)	
Y	5	1	*259-4685*	1	ACCUMULATOR GP-RIDE CONTROL (CHARGED)	667
	6	1	**260-0638**	2	CLAMP	
I	9	1	**304-2713**	1	HOSE AS	
Y	10	1	*314-4008*	1	MANIFOLD GP-CONTROL (RIDE CONT, 4-FCTN CONT VALVE)	787
I	11	1	**318-6251**	1	HOSE AS	
I	12	1	**318-7434**	1	HOSE AS	
I	13	1	**318-7435**	1	HOSE AS	
I	14	1	**323-0231**	1	HOSE AS	
	15	1	*148-8328*	1	CONNECTOR AS	
		1	**3D-2824**	1	SEAL-O-RING	
		1	**6V-8398**	1	SEAL-O-RING	
		1	**6V-8633**	1	CONNECTOR	
	16	1	*148-8346*	1	ELBOW AS	
		1	**3K-0360**	1	SEAL-O-RING	
		1	**6V-8398**	1	SEAL-O-RING	
		1	**8T-1686**	1	ELBOW	
	17	1	*148-8354*	3	ELBOW AS	
					(EACH INCLUDES)	
		1	**3K-0360**	1	SEAL-O-RING	
		1	**6V-8398**	1	SEAL-O-RING	
		1	**6V-9002**	1	ELBOW	
	18	1	*148-8365*	1	ELBOW AS	
		1	**3J-1907**	1	SEAL-O-RING	
		1	**6V-8389**	1	FILM-INSTRUCTION	
		1	**8T-6876**	1	ELBOW	
	19	1	*148-8370*	1	ELBOW AS	
		1	**6V-8398**	1	SEAL-O-RING	
		1	**6V-9851**	1	ELBOW	
	20	1	*148-8428*	1	TEE AS	
		1	**3K-0360**	1	SEAL-O-RING	
		1	**6V-8398**	2	SEAL-O-RING	
		1	**6V-8782**	1	TEE	
	21	1	*164-5608*	2	CONNECTOR AS	
					(EACH INCLUDES)	
		1	**3K-0360**	1	SEAL-O-RING	
		1	**6V-8398**	1	SEAL-O-RING	
		1	**8T-1687**	1	CONNECTOR	
	22	1	*164-5624*	1	ELBOW AS	
		1	**3J-1907**	1	SEAL-O-RING	
		1	**6V-8398**	1	SEAL-O-RING	
		1	**9X-2085**	1	ELBOW	
	23	1	**4J-0520**	2	SEAL-O-RING	
	24	1	**8T-4121**	4	WASHER-HARD (11X21X2.5-MM THK)	
M	25	1	**8T-5005**	8	BOLT (M10X1.5X70-MM)	
M	26	1	**8T-4185**	2	BOLT (M10X1.5X50-MM)	
M	27	1	**8T-6685**	2	BOLT (M10X1.5X110-MM)	

I-REFER TO HYDRAULIC INFORMATION SYSTEM
M-METRIC PART
Y-SEPARATE ILLUSTRATION

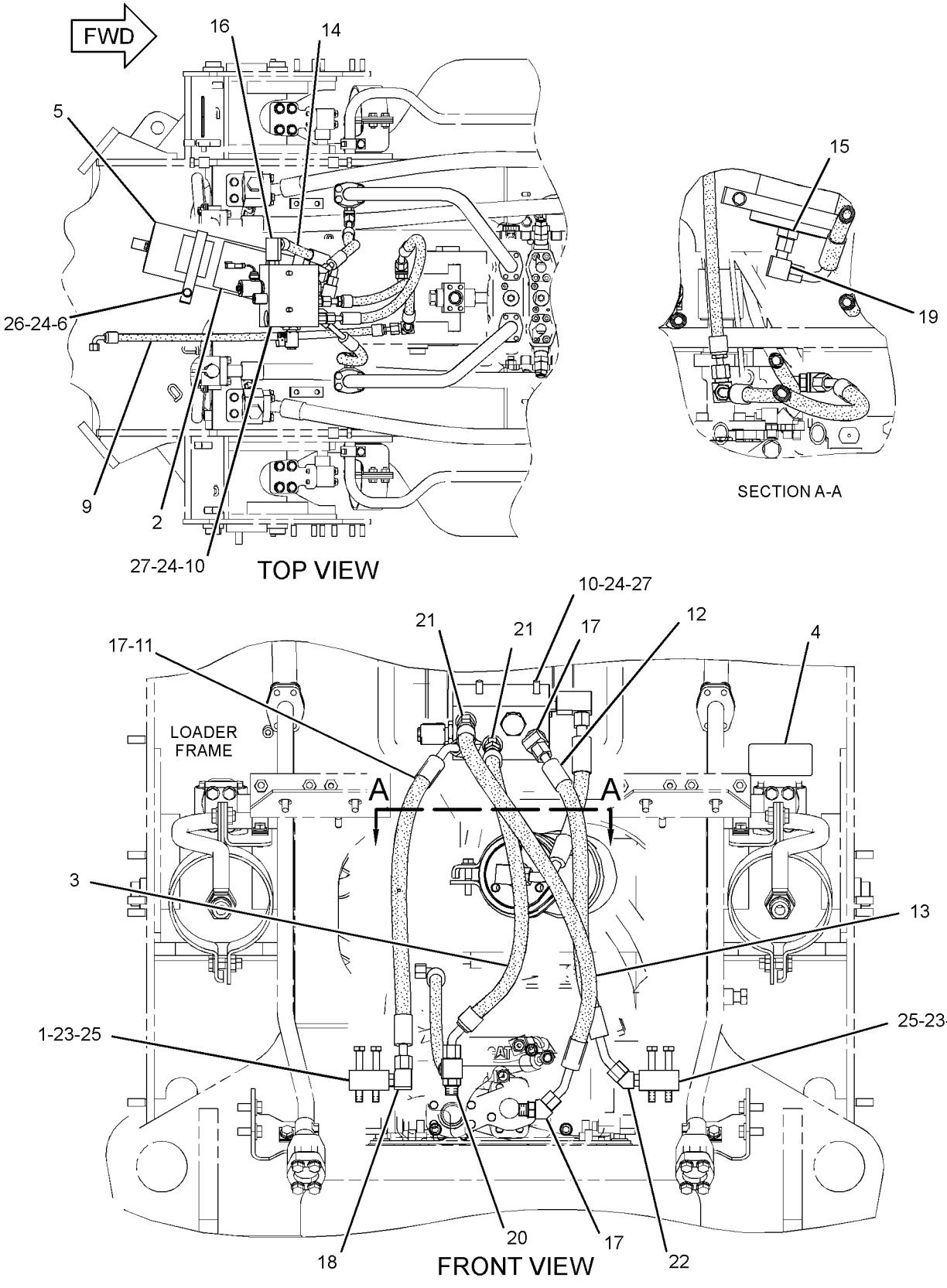

GRAPHIC #1 **<END>** g01955153

HYDRAULIC SYSTEM

239-3358 LINES GP-TILT CYLINDER

S/N: JKM1-UP

PART OF 237-7535 HYDRAULIC AR-2 VALVE

SMCS-5057, 5104 **i03080243**

NOTE	REF NO	GRAPHIC REF	PART NUMBER	QTY	PART NAME 1 2 3 4 5 6 (PRODUCT LEVEL)	SEE PAGE
	1	1	**5J-0253**	8	SPACER (0.24X0.51X0.34-IN)	
	2	1	**278-6202**	1	TUBE AS	
	3	1	**278-6203**	1	TUBE AS	
	4	1	**324-7619**	1	BRACKET	
	5	1	**280-8042**	1	TUBE AS	
I	6	1	**280-8934**	1	HOSE AS	
I	7	1	**280-8966**	1	HOSE AS	
	8	1	*148-8309*	2	ADAPTER AS	
					(EACH INCLUDES)	
		1	**2P-8421**	1	ADAPTER-O-RING	
		1	**3D-2824**	1	SEAL-O-RING	
	9	1	*148-8335*	1	CONNECTOR AS	
		1	**5K-9090**	1	SEAL-O-RING	
		1	**6V-8635**	1	CONNECTOR	
		1	**7M-8485**	1	SEAL-O-RING	
	10	1	*164-5567*	2	COUPLER AS-QUICK DISCONNECT (MALE)	
					(EACH INCLUDES)	
		1	**214-7568**	1	SEAL-O-RING	
		1	**6V-3965**	1	FITTING (QUICK DISCONNECT)	
	11	1	**1P-3703**	3	SEAL-RECTANGULAR	
	12	1	**4J-0520**	3	SEAL-O-RING	
	13	1	**5P-1076**	4	WASHER-HARD (13.5X30X4-MM THK)	
	14	1	**6V-0852**	2	CAP-DUST	
	15	1	**6V-1616**	4	CLAMP-HALF	
	16	1	**8C-3206**	6	FLANGE-HALF	
	17	1	**8T-4121**	20	WASHER-HARD (11X21X2.5-MM THK)	
M	18	1	**8T-4136**	2	BOLT (M10X1.5X25-MM)	
M	19	1	**8T-4137**	2	BOLT (M10X1.5X20-MM)	
M	20	1	**8T-4192**	4	BOLT (M12X1.75X25-MM)	
M	21	1	**8T-4196**	12	BOLT (M10X1.5X35-MM)	
M	22	1	**8T-6466**	12	BOLT (M10X1.5X60-MM)	

I-REFER TO HYDRAULIC INFORMATION SYSTEM
M-METRIC PART

239-3358 **LINES GP-TILT CYLINDER** *(contd.)* **i03080243**

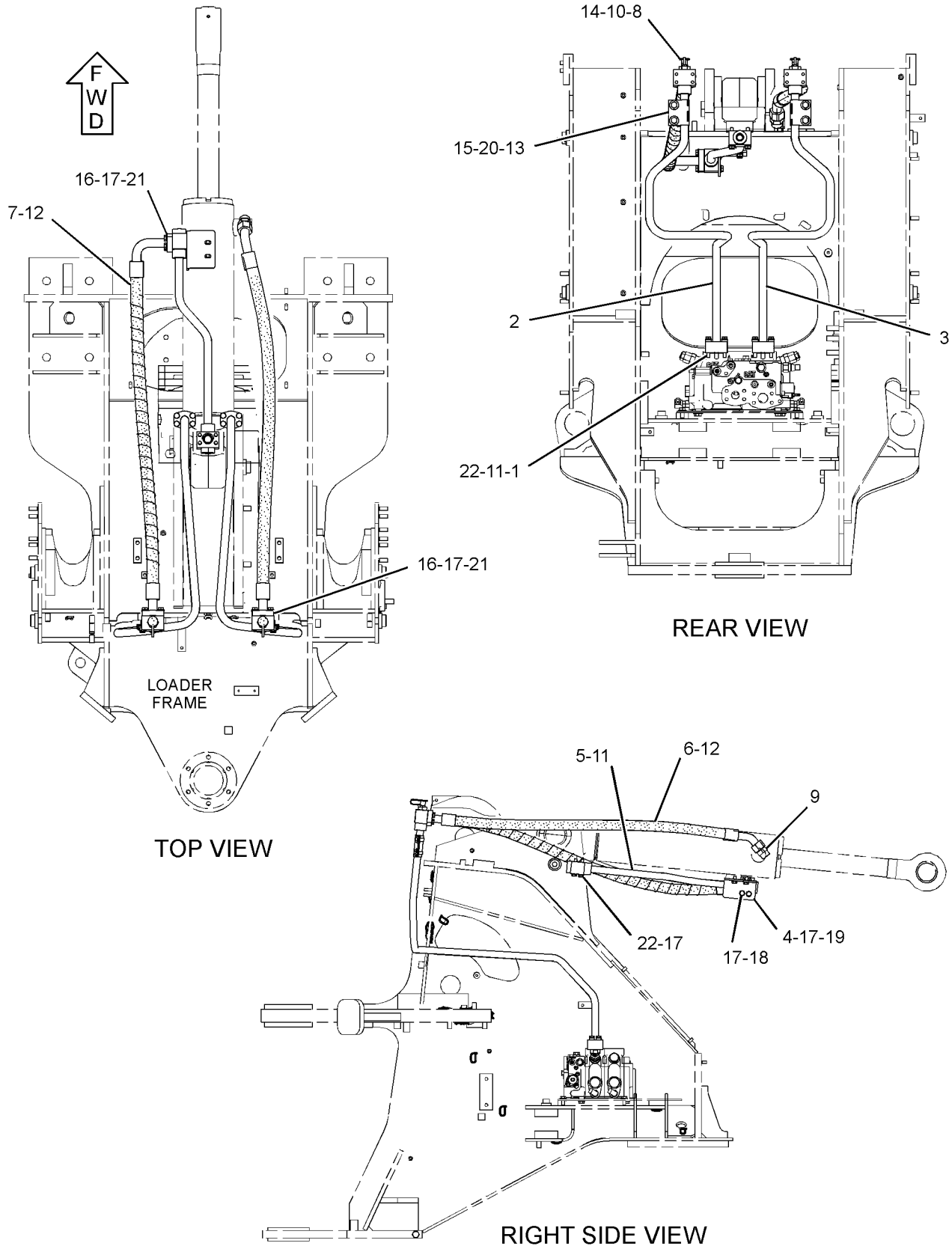

GRAPHIC #1 **<END>** g01663753

HYDRAULIC SYSTEM

344-2367 LINES GP-WORK TOOL

S/N: JKM1-UP
PART OF 317-8368 CONFIGURATION AR
FOR USE WITH 310-9392—PAGE 1073
AN ATTACHMENT

SMCS-5057 **i03838802**

NOTE	REF NO	GRAPHIC REF	PART NUMBER	QTY	PART NAME 1 2 3 4 5 6 (PRODUCT LEVEL)	SEE PAGE
	1	1	**6W-2888**	4	FITTING AS (QUICK DISCONNECT, MALE)	
	2	1	**6W-2890**	4	CAP AS-DUST	
	3	1	**150-5430**	4	ADAPTER AS	
		1	**6V-9746**	1	SEAL-O-RING	
		1	**163-3343**	1	SEAL	
I	4	1	**151-2583**	4	HOSE AS	
	5	1	**344-2368**	2	PLATE AS	
	6	1	**2P-1293**	4	LOCKNUT (1-3/16-12-THD)	
	7	1	**4J-0520**	4	SEAL-O-RING	
	8	1	**6V-5839**	16	WASHER (11X21X2.5-MM THK)	
	9	1	**8C-3206**	8	FLANGE-HALF	
M	10	1	**8T-4186**	16	BOLT (M10X1.5X40-MM)	
M	11	1	**8T-4194**	4	BOLT (M12X1.75X50-MM)	
	12	1	**8T-4223**	8	WASHER-HARD (13.5X25.5X3-MM THK)	
M	13	1	**8T-4244**	4	NUT (M12X1.75-THD)	

I-REFER TO HYDRAULIC INFORMATION SYSTEM
M-METRIC PART

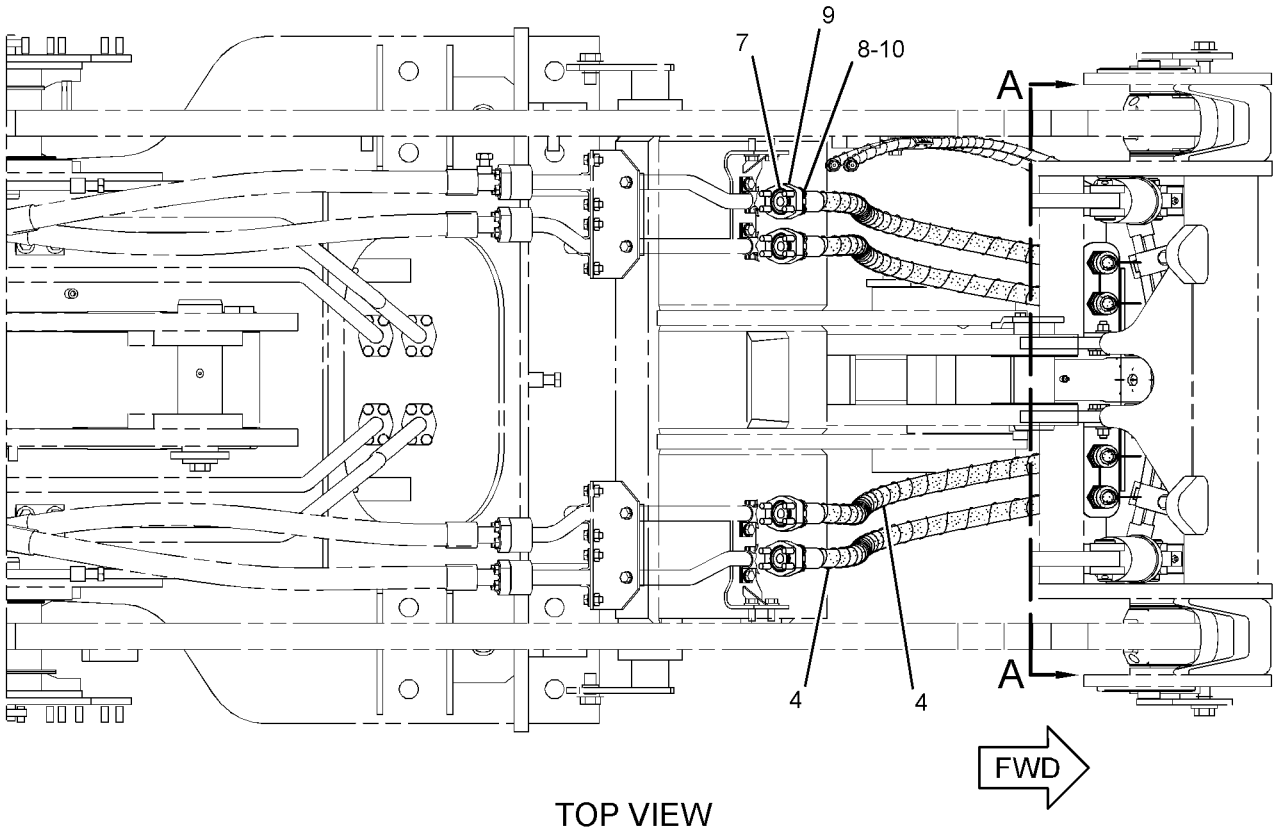

TOP VIEW

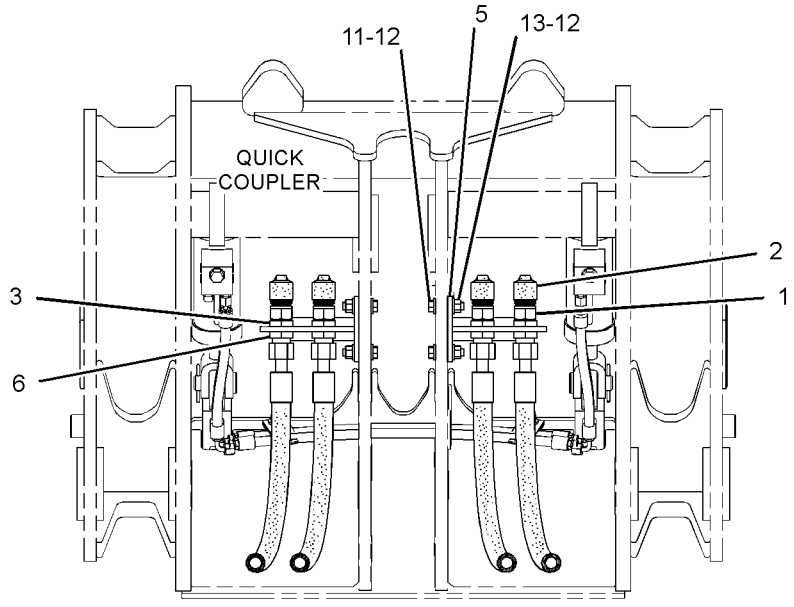

SECTION A-A

GRAPHIC #1 **<END>** g02118196

HYDRAULIC SYSTEM

286-8970 MANIFOLD GP-CONTROL–
PUMP CONTROL TORQUE LIMITER
S/N: JKM1-685

PART OF 239-3357 LINES GP-HYDRAULIC

SMCS-4264, 5072, 5264, 5467, 5479 **i03267781**

NOTE	REF NO	GRAPHIC REF	PART NUMBER	QTY	PART NAME 1 2 3 4 5 6 (PRODUCT LEVEL)	SEE PAGE
	1	1	**6E-5066**	1	SCREEN (CONTROL MANIFOLD)	
Y	2	1	**285-5730**	1	VALVE GP-SOLENOID (PUMP TORQUE LIMITER CONTROL)	894
	3	1	**286-8971**	1	MANIFOLD	

Y-SEPARATE ILLUSTRATION

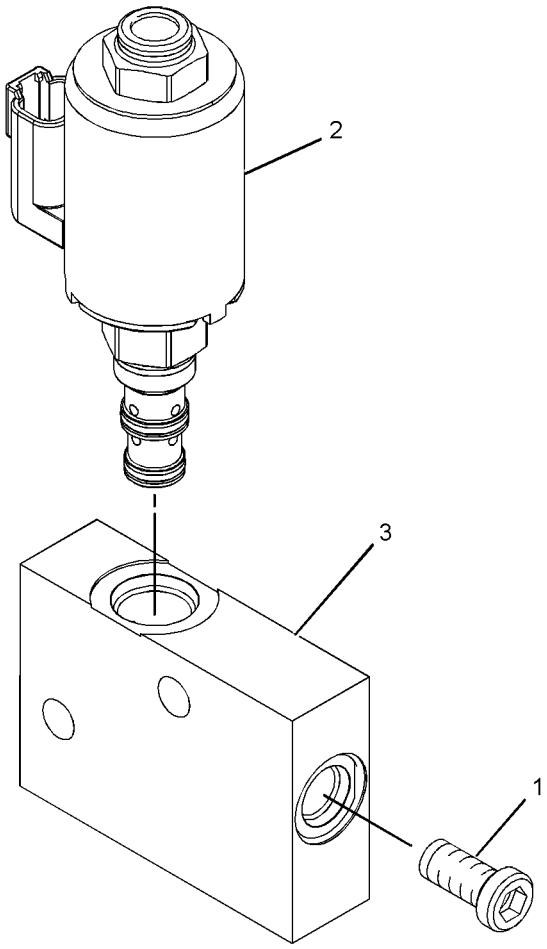

GRAPHIC #1 **<END>** g01387610

286-8970 MANIFOLD GP-CONTROL–

PUMP CONTROL TORQUE LIMITER

S/N: JKM686-1004

PART OF 239-3357 LINES GP-HYDRAULIC

SMCS-4264, 5072, 5264, 5467, 5479 **i03631303**

NOTE	REF NO	GRAPHIC REF	PART NUMBER	QTY	PART NAME 1 2 3 4 5 6 (PRODUCT LEVEL)	SEE PAGE
	1	1	**6E-5066**	1	SCREEN (CONTROL MANIFOLD)	
	2	1	**286-8971**	1	MANIFOLD	
CY	3	1	**300-6057**	1	VALVE GP-SOLENOID (24-VOLT) (PUMP TORQUE LIMITER CONTROL)	895

C-CHANGE FROM PREVIOUS TYPE
Y-SEPARATE ILLUSTRATION

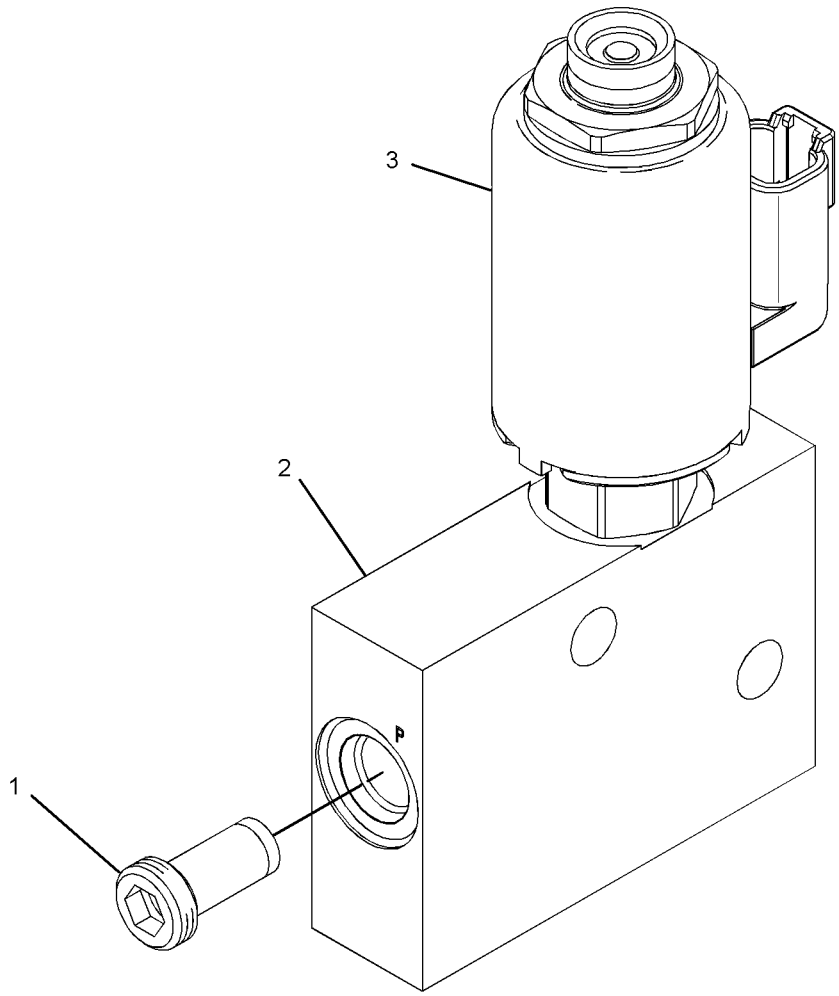

GRAPHIC #1 **<END>** g01794817

HYDRAULIC SYSTEM

309-4907 MANIFOLD GP-CONTROL–
BRAKE CHARGE, HYD FAN CONTROL
S/N: JKM1-UP

PART OF 255-4817 LINES GP-HYDRAULIC OIL COOLER

SMCS-4264, 5072, 5264, 5467, 5479 **i02912112**

NOTE	REF NO	GRAPHIC REF	PART NUMBER	QTY	PART NAME 1 2 3 4 5 6 (PRODUCT LEVEL)	SEE PAGE
Y	1	1	**252-9256**	1	VALVE GP-DIVERTER (HYDRAULIC FAN)	831
Y	2	1	**158-9956**	1	VALVE GP-CHECK (BRAKE OIL)	820
	3	1	**4J-7533**	8	SEAL-O-RING	
	4	1	**3J-7354**	2	SEAL-O-RING	
	5	1	**245-8355**	1	VALVE GP-RELIEF (BRAKE)	
Y	6	1	**257-8414**	1	VALVE GP-SHUTTLE (BRAKE ACCUMULATOR)	888
J	7	1	**239-0618**	1	VALVE GP-SHUTTLE (BRAKE, HYDRAULIC FAN)	
		1	**3H-0442**	1	SEAL-O-RING	
Y	8	1	**183-7595**	1	VALVE GP-SOLENOID (24-VOLT) (BRAKE, HYDRAULIC FAN)	892
	9	1	**6E-5066**	1	SCREEN (CONTROL MANIFOLD)	
	10	1	**282-5394**	1	PLUG-ORIFICE	
	11	1	**9S-8001**	8	PLUG-O-RING	
	12	1	**9S-8002**	2	PLUG-O-RING	
LT	13	1	**282-5397**	1	VALVE GP-RELIEF & DIVERTER (HYDRAULIC TANK)	
		1	**3K-0360**	1	SEAL-O-RING	
		1	**6E-0381**	1	RING-BACKUP	
		1	**161-6154**	1	SEAL-O-RING	
	14	1	**226-3799**	1	PLUG-ORIFICE	
	15	1	**314-2760**	1	VALVE GP-DIVERTER (BRAKE CHARGE)	
	16	1	**9S-8004**	3	PLUG-O-RING	
	17	1	**3J-1907**	3	SEAL-O-RING	
					AVAILABLE REPAIR KIT(S):	
J			**239-5195**	1	KIT-SEAL (SHUTTLE VALVE)	
					(INCLUDES O-RING SEAL & BACK UP RINGS)	
L			**200-6282**	1	KIT-SEAL (DIVERTER VALVE)	
					(INCLUDES O-RING SEALS & BACKUP RINGS)	

J-KIT MARKED J SERVICES PART MARKED J
L-KIT MARKED L SERVICES PART MARKED L
T-VALVE GP INCLUDES RELIEF VALVE & DIVERTER VALVE
Y-SEPARATE ILLUSTRATION

309-4907 MANIFOLD GP-CONTROL *(contd.)* i02912112

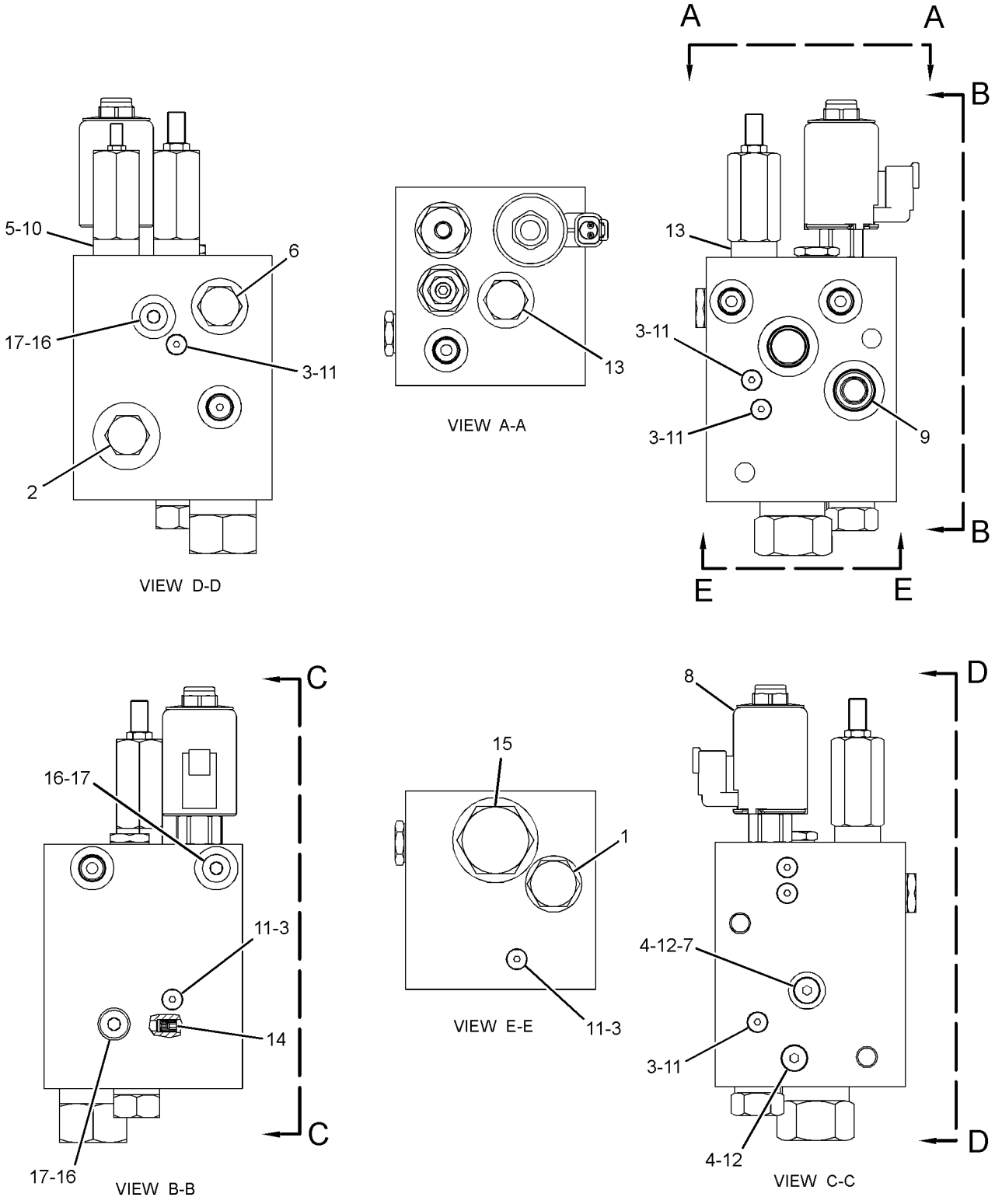

GRAPHIC #1 **<END>** g01433391

314-4008 MANIFOLD GP-CONTROL–
RIDE CONTROL, 4-FUNCTION CONTROL VALVE
S/N: JKM1-156
PART OF 265-2150 LINES GP-RIDE CONTROL
AN ATTACHMENT

SMCS-4264, 5072, 5264, 5467, 5479 **i02927805**

NOTE	REF NO	GRAPHIC REF	PART NUMBER	QTY	PART NAME 1 2 3 4 5 6 (PRODUCT LEVEL)	SEE PAGE
Y	1	1	**152-8340**	1	VALVE GP-SOLENOID (24-VOLT) (RIDE CONT, LIFT CYL HEAD END)	891
Y	2	1	**194-1723**	1	VALVE GP-CHECK (PILOT OIL)	821
J	3	1	**235-6156**	1	VALVE GP-CHECK (RIDE CONT, LIFT CYL HEAD END)	
L	4	1	**235-6157**	1	VALVE GP-SHUTTLE	
	5	1	**244-8686**	1	VALVE GP-SOLENOID (24-VOLT) (RIDE CONTROL, LIFT CYL ROD END)	
		1	**249-0981**	1	COIL AS	
	6	1	**3J-7354**	1	SEAL-O-RING	
	7	1	**3K-0360**	1	SEAL-O-RING	
	8	1	**4J-7533**	6	SEAL-O-RING	
	9	1	**9S-8001**	6	PLUG-O-RING	
	10	1	**9S-8002**	1	PLUG-O-RING	
	11	1	**9S-8005**	1	PLUG-O-RING	
					AVAILABLE REPAIR KIT(S):	
J			**238-9843**	1	KIT-SEAL (CHECK VALVE)	
L			**238-9844**	1	KIT-SEAL (SHUTTLE VALVE)	

J-KIT MARKED J SERVICES PART MARKED J
L-KIT MARKED L SERVICES PART MARKED L
Y-SEPARATE ILLUSTRATION

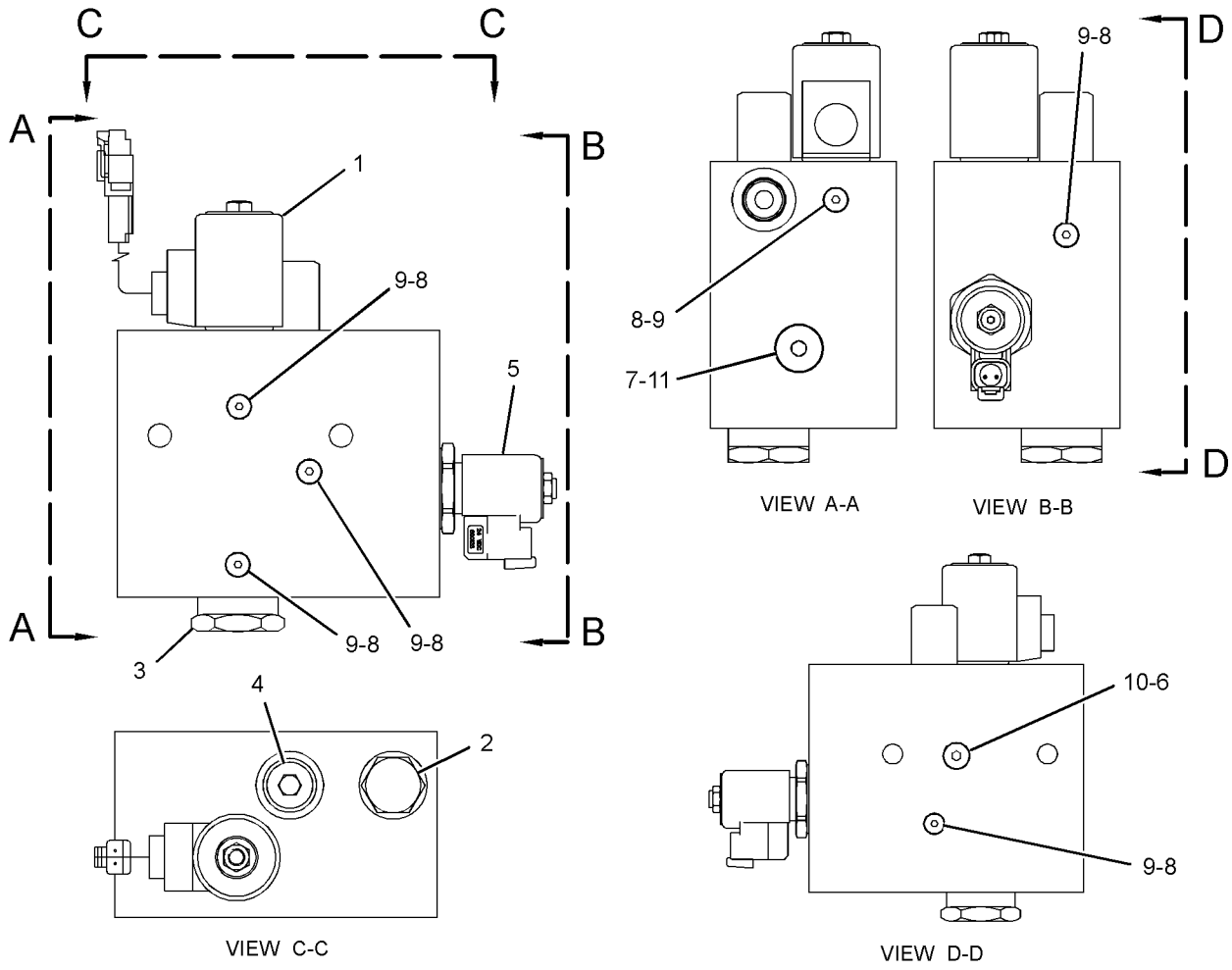

GRAPHIC #1 **<END>** g01436438

314-4008 MANIFOLD GP-CONTROL–
RIDE CONTROL, 4-FUNCTION CONTROL VALVE
S/N: JKM157-UP
PART OF 265-2150 LINES GP-RIDE CONTROL
AN ATTACHMENT

SMCS-4264, 5072, 5264, 5467, 5479 **i03112020**

NOTE	REF NO	GRAPHIC REF	PART NUMBER	QTY	PART NAME 1 2 3 4 5 6 (PRODUCT LEVEL)	SEE PAGE
Y	1	1	**152-8340**	1	VALVE GP-SOLENOID (24-VOLT) (RIDE CONT, LIFT CYL HEAD END)	891
C	2	1	**318-8833**	1	VALVE GP-CHECK (RIDE CONTROL)	
J	3	1	**235-6156**	1	VALVE GP-CHECK (RIDE CONT, LIFT CYL HEAD END)	
L	4	1	**235-6157**	1	VALVE GP-SHUTTLE	
	5	1	**244-8686**	1	VALVE GP-SOLENOID (24-VOLT) (RIDE CONTROL, LIFT CYL ROD END)	
		1	**249-0981**	1	COIL AS	
C	6	1	*173-3993*	6	PLUG AS	
					(EACH INCLUDES)	
		1	**4J-7533**	1	SEAL-O-RING	
		1	**9S-8001**	1	PLUG-O-RING	
C	7	1	*183-7263*	1	PLUG AS	
		1	**3J-7354**	1	SEAL-O-RING	
		1	**9S-8002**	1	PLUG-O-RING	
C	8	1	*148-8395*	1	PLUG AS	
		1	**3K-0360**	1	SEAL-O-RING	
		1	**9S-8005**	1	PLUG-O-RING	
					AVAILABLE REPAIR KIT(S):	
J			**238-9843**	1	KIT-SEAL (CHECK VALVE)	
					(INCLUDES BACK-UP RINGS & SEAL-O-RINGS)	
L			**238-9844**	1	KIT-SEAL (SHUTTLE VALVE)	
					(INCLUDES O-RINGS)	

C-CHANGE FROM PREVIOUS TYPE
J-KIT MARKED J SERVICES PART MARKED J
L-KIT MARKED L SERVICES PART MARKED L
Y-SEPARATE ILLUSTRATION

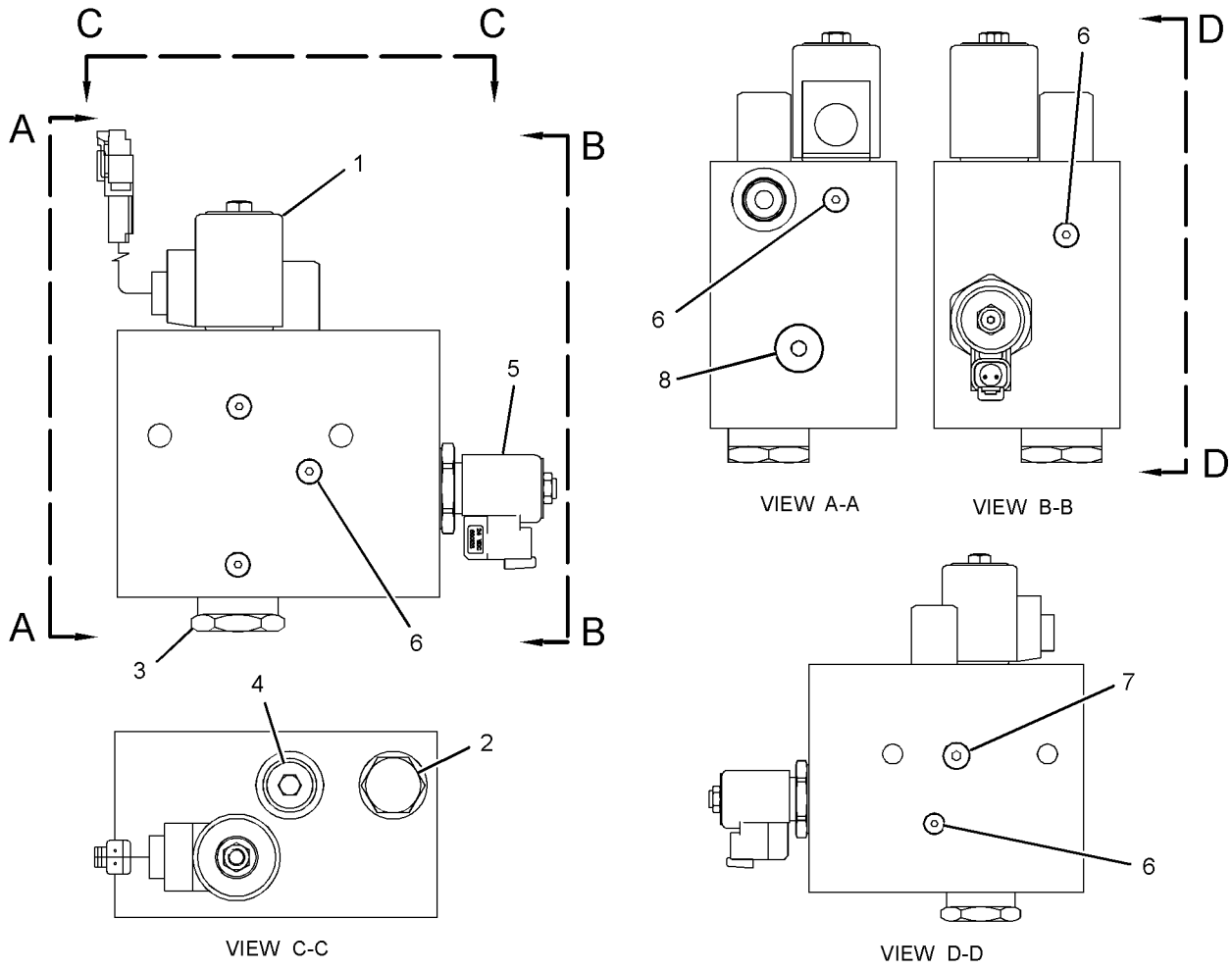

GRAPHIC #1 **<END>** g01598203

282-4971 MANIFOLD GP-HYDRAULIC—HYDRAULIC

S/N: JKM1-UP

PART OF 251-1675, 251-1676, 254-8100, 254-8101, 266-5977 VALVE GP-MAIN CONTROL

ALSO AN ATTACHMENT

SMCS-5264 **i02905800**

NOTE	REF NO	GRAPHIC REF	PART NUMBER	QTY	PART NAME 1 2 3 4 5 6 (PRODUCT LEVEL)	SEE PAGE
	1	1	**1T-0936**	1	PLUG-PIPE	
	3	1	**6E-5066**	1	SCREEN	
	4	1	**148-9359**	1	PLUG	
Y	5	1	**158-9956**	1	VALVE GP-CHECK (PILOT OIL)	820
Y	6	1	**193-1665**	1	VALVE GP-PRESSURE REDUCING (SIGNAL DUPLICATION)	877
	7	1	**241-5895**	1	VALVE GP-SOLENOID (24-VOLT) (HYDRAULIC LOCKOUT)	
		1	**250-6148**	1	COIL AS (24-VOLT)	
J	8	1	**251-4686**	1	VALVE GP-RELIEF (MAIN)	
	9	1	**254-6876**	1	MANIFOLD-INLET	
N	11	1	**294-9505**	1	VALVE GP-PRESSURE REDUCING	
	12	1	*148-8407*	1	PLUG AS	
		1	**3J-1907**	1	SEAL-O-RING	
		1	**9S-4191**	1	PLUG-O-RING	
	13	1	*148-8411*	1	PLUG AS	
		1	**3K-0360**	1	SEAL-O-RING	
		1	**9S-4185**	1	PLUG-O-RING	
	14	1	*155-3624*	1	PLUG AS	
		1	**3J-7354**	1	SEAL-O-RING	
		1	**9S-4182**	1	PLUG-O-RING	
	15	1	*162-0177*	1	PLUG AS	
		1	**3J-1907**	1	SEAL-O-RING	
		1	**9S-8004**	1	PLUG-O-RING	
	16	1	*173-3993*	9	PLUG AS	
					(EACH INCLUDES)	
		1	**4J-7533**	1	SEAL-O-RING	
		1	**9S-8001**	1	PLUG-O-RING	
	17	1	*183-7263*	3	PLUG AS	
					(EACH INCLUDES)	
		1	**3J-7354**	1	SEAL-O-RING	
		1	**9S-8002**	1	PLUG-O-RING	
	18	1	**1P-3703**	1	SEAL-RECTANGULAR	
	19	1	**4J-9535**	2	SEAL-O-RING	
	20	1	**5F-8000**	1	SEAL-O-RING	
	21	1	**6J-3134**	3	SEAL-O-RING	
					AVAILABLE REPAIR KIT(S):	
N			**224-7135**	1	KIT-SEAL (PRESSURE REDUCING VALVE)	
J			**225-9611**	1	KIT-SEAL (RELIEF VALVE)	
					(EACH KIT INCLUDES BACK-UP RINGS AND SEAL-O-RINGS)	

J-KIT MARKED J SERVICES PART MARKED J
N-KIT MARKED N SERVICES PART MARKED N
Y-SEPARATE ILLUSTRATION

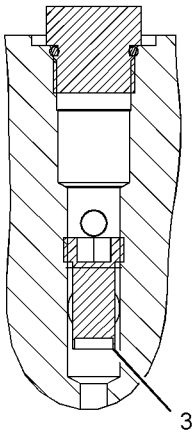

SECTION A-A

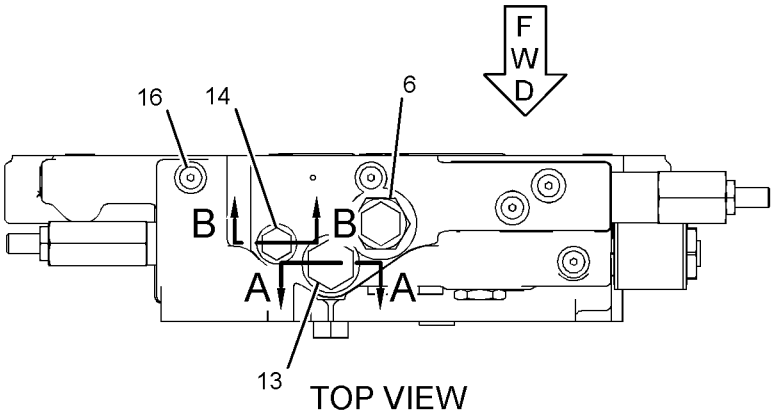

TOP VIEW

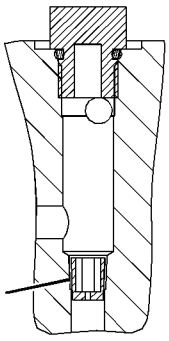

SECTION B-B

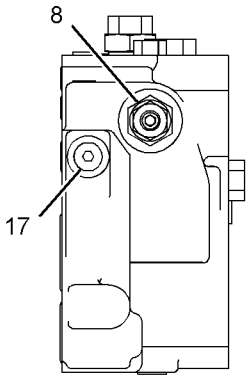

RIGHT SIDE VIEW

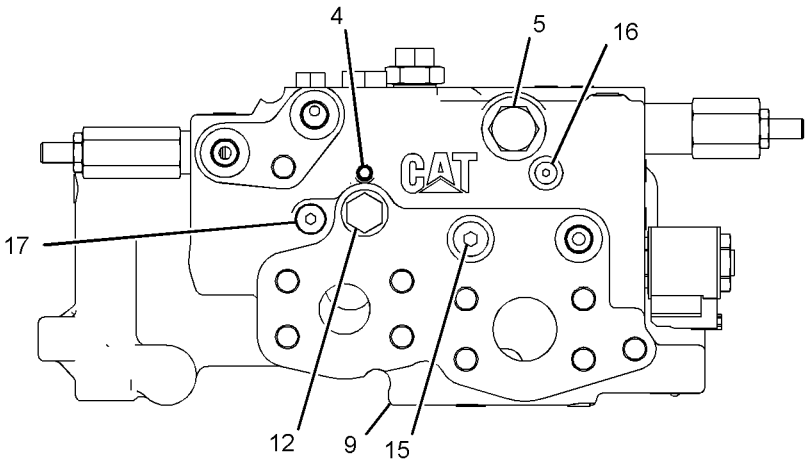

FRONT VIEW

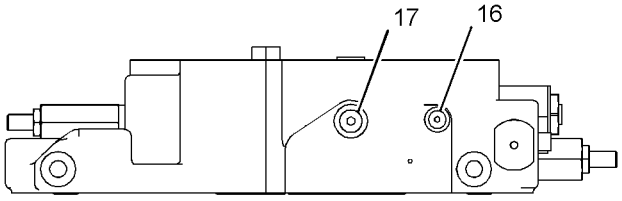

BOTTOM VIEW

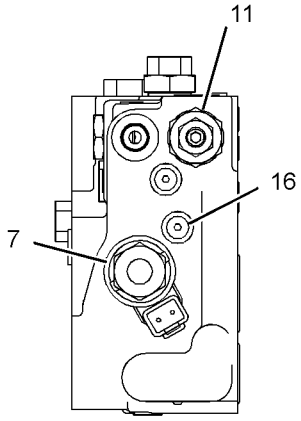

LEFT SIDE VIEW

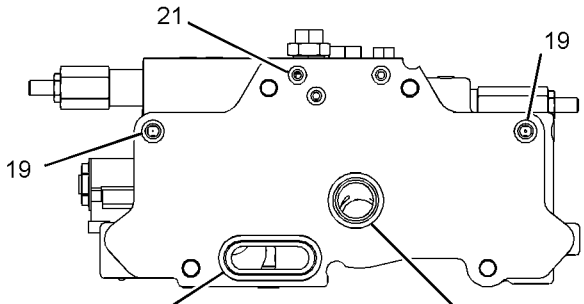

REAR VIEW

GRAPHIC #1 **<END>** g01430401

265-4925 MOTOR GP-GEAR–HYDRAULIC FAN

S/N: JKM1-UP

PART OF 255-4815 RADIATOR & FAN GP

SMCS-1386, 5061 **i02912259**

NOTE	REF NO	GRAPHIC REF	PART NUMBER	QTY	PART NAME 1 2 3 4 5 6 (PRODUCT LEVEL)	SEE PAGE
	1	1	**250-0492**	4	BOLT (M12X1.75X115-MM)	
	2	1	**136-9030**	4	WASHER (12.5X18X1.5-MM THK)	
J	3	1	**150-3378**	1	SEAL-SHAFT	
J	4	1	**096-0194**	1	RING-RETAINING	
	5	1	**9S-4191**	1	PLUG-O-RING	
	6	1	**3J-1907**	1	SEAL-O-RING	
					AVAILABLE REPAIR KIT(S):	
J			**194-9632**	1	KIT-SEAL	
					(INCLUDES BACK UP SEALS, O RING SEAL, SHAFT SEALS, ELEMENT SEALS, & SNAP RING)	

J-KIT MARKED J INCLUDES PARTS MARKED J

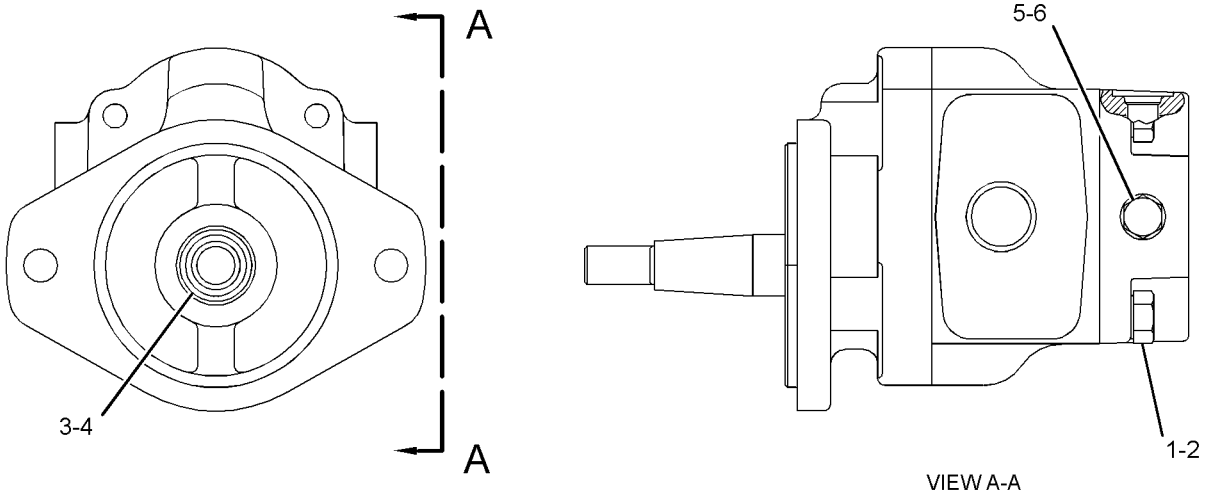

VIEW A-A

GRAPHIC #1 **<END>** g01422426

HYDRAULIC SYSTEM

145-2322 PIVOT GP-PILOT VALVE–LIFT

S/N: JKM1-UP
PART OF 261-8654 VALVE GP-PILOT
ALSO AN ATTACHMENT

SMCS-5059 **i01738563**

NOTE	REF NO	GRAPHIC REF	PART NUMBER	QTY	PART NAME 1 2 3 4 5 6 (PRODUCT LEVEL)	SEE PAGE
	1	1	**139-4189**	1	PLATE	
	2	1	**141-7481**	1	SPACER	
	3	1	**146-3337**	2	PLUNGER AS	
					(EACH INCLUDES)	
		1	**8T-1138**	2	RING-RETAINING	
		1	**131-2639**	1	WASHER (3.2X9X0.5-MM THK)	
	4	1	**146-6315**	2	PIN-ADJUSTMENT	
	5	1	**146-8479**	1	SWIVEL	
	6	1	**153-8941**	1	WASHER	
	7	1	**153-8946**	2	SPRING	
	8	1	**146-6317**	1	RETAINER	
	9	1	**159-3781**	2	SPRING	
M	10	1	**5C-2890**	2	NUT (M6X1-THD)	

M-METRIC PART

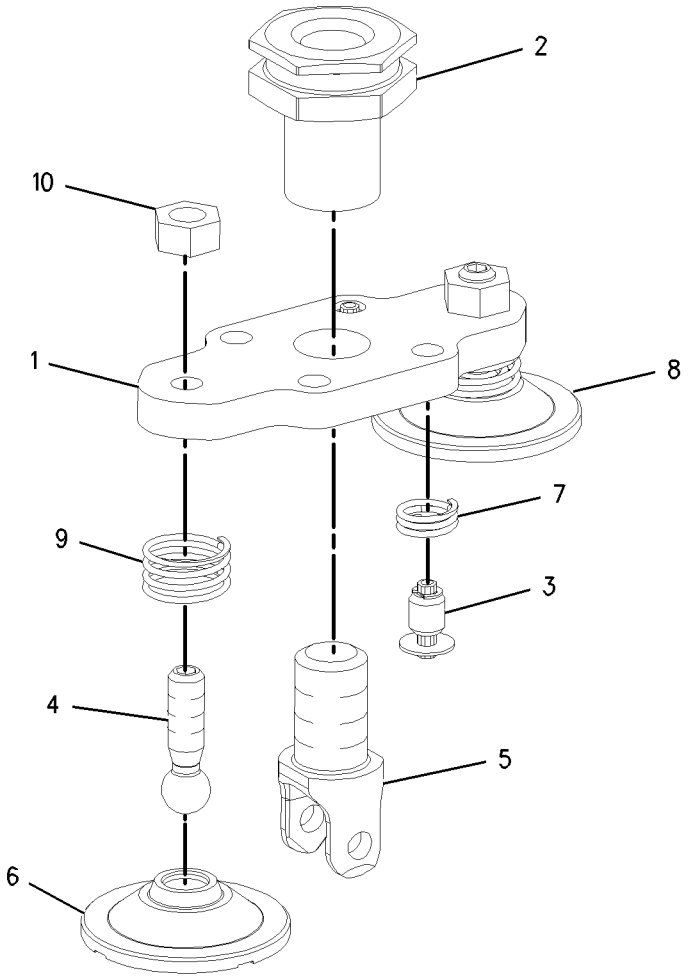

GRAPHIC #1 **<END>** g00890431

147-2038 PIVOT GP-PILOT VALVE–TILT

S/N: JKM1-UP

PART OF 261-8654, 261-8656, 261-8658 VALVE GP-PILOT

ALSO AN ATTACHMENT

SMCS-5059 **i01727901**

NOTE	REF NO	GRAPHIC REF	PART NUMBER	QTY	PART NAME 1 2 3 4 5 6 (PRODUCT LEVEL)	SEE PAGE
	1	1	**139-4189**	1	PLATE	
	2	1	**141-7481**	1	SPACER	
	3	1	**146-6315**	2	PIN-ADJUSTMENT	
	4	1	**146-8479**	1	SWIVEL	
	5	1	**153-8941**	1	WASHER	
	6	1	**159-3781**	1	SPRING	
M	7	1	**5C-2890**	2	NUT (M6X1-THD)	

M-METRIC PART

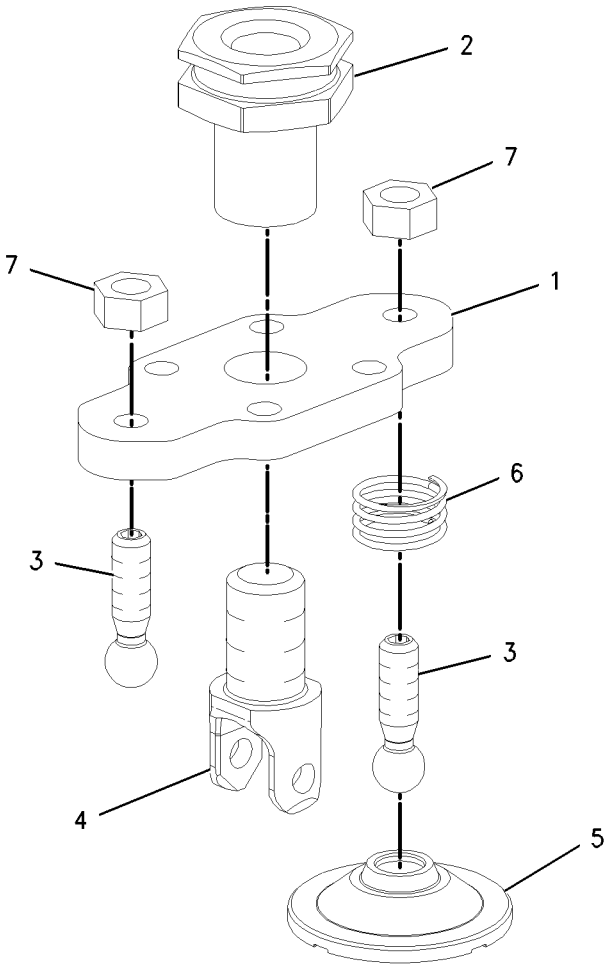

GRAPHIC #1 **<END>** g00890089

HYDRAULIC SYSTEM

147-3114 PIVOT GP-PILOT VALVE–AUXILIARY

S/N: JKM1-UP
PART OF 261-8658 VALVE GP-PILOT
AN ATTACHMENT

SMCS-5059 **i03893190**

NOTE	REF NO	GRAPHIC REF	PART NUMBER	QTY	PART NAME 1 2 3 4 5 6 (PRODUCT LEVEL)	SEE PAGE
	1	1	**174-1366**	1	PLATE	
	2	1	**141-7481**	1	SPACER	
	3	1	**146-8479**	1	SWIVEL	
	4	1	**146-6315**	2	PIN-ADJUSTMENT	
M	5	1	**5C-2890**	2	NUT (M6X1-THD)	

M-METRIC PART

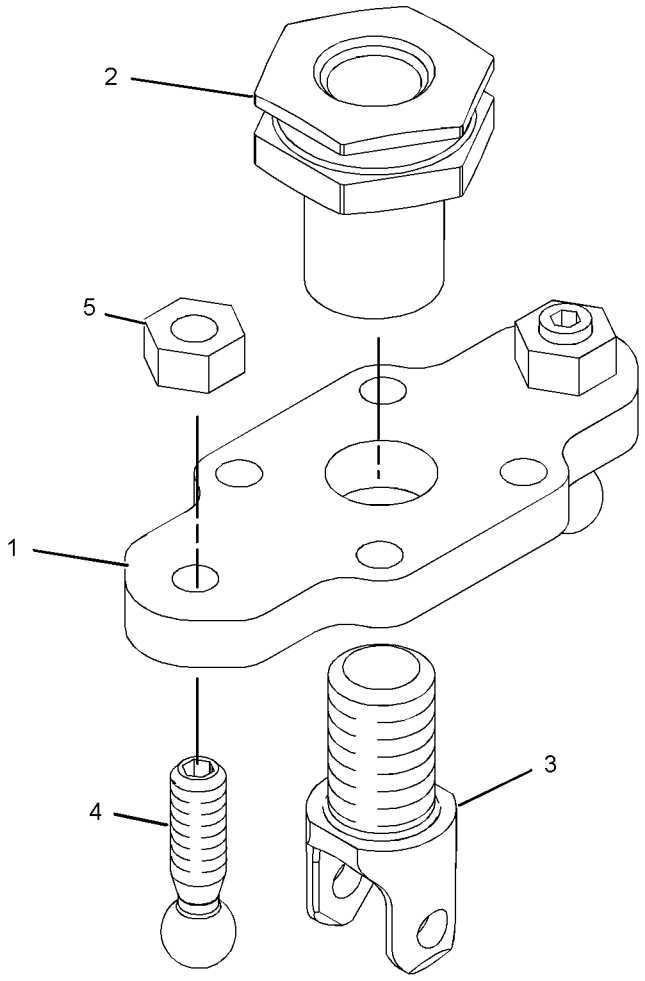

GRAPHIC #1 **<END>** g02139659

HYDRAULIC SYSTEM

160-6299 PIVOT GP-PILOT VALVE

S/N: JKM1-UP
PART OF 261-8656, 261-8658 VALVE GP-PILOT
AN ATTACHMENT

SMCS-5059 **i03657094**

NOTE	REF NO	GRAPHIC REF	PART NUMBER	QTY	PART NAME 1 2 3 4 5 6 (PRODUCT LEVEL)	SEE PAGE
	1	1	**141-7481**	1	SPACER	
	2	1	**146-6315**	2	PIN-ADJUSTMENT	
	3	1	**146-8479**	1	SWIVEL	
	4	1	**153-8945**	1	PLUNGER AS	
		1	**3H-7180**	1	SETSCREW (1/4-28X0.25-IN)	
		1	**6J-9996**	1	SPRING	
	5	1	**174-1366**	1	PLATE	
	6	1	**146-6317**	1	RETAINER	
	7	1	**159-3781**	1	SPRING	
M	8	1	**5C-2890**	2	NUT (M6X1-THD)	

M-METRIC PART

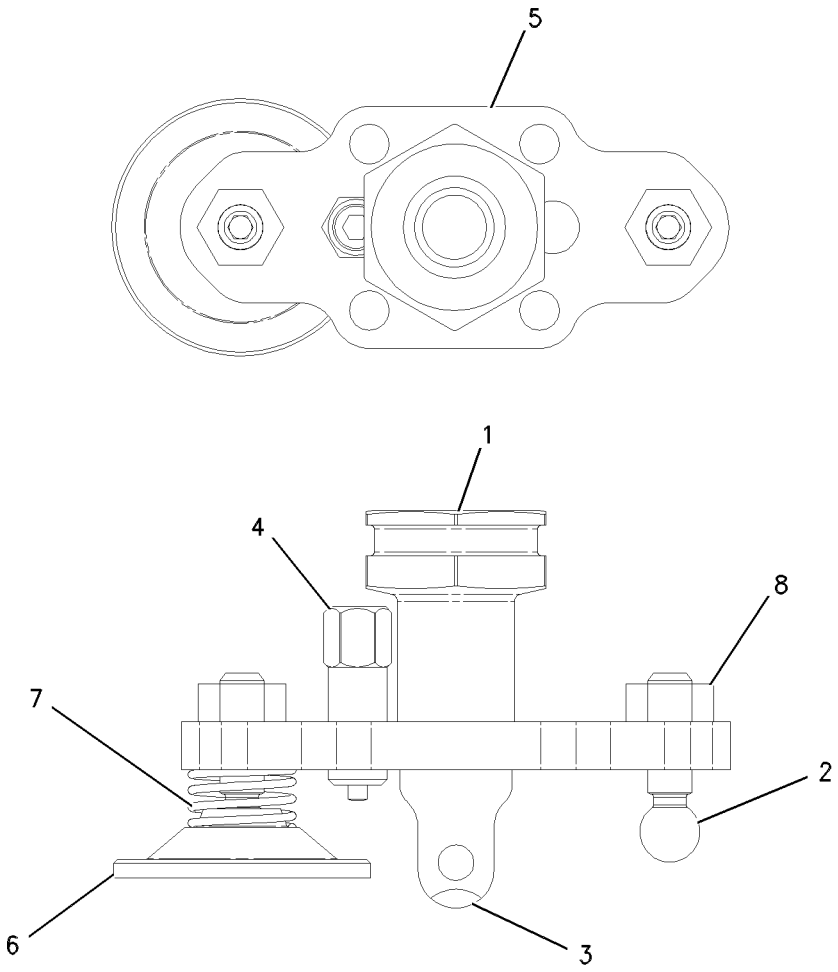

GRAPHIC #1 **<END>** g00620807

HYDRAULIC SYSTEM

160-6300 PIVOT GP-PILOT VALVE–LIFT

S/N: JKM1-UP

PART OF 261-8654, 261-8656, 261-8658 VALVE GP-PILOT

ALSO AN ATTACHMENT

SMCS-5059 **i01832308**

NOTE	REF NO	GRAPHIC REF	PART NUMBER	QTY	PART NAME 1 2 3 4 5 6 (PRODUCT LEVEL)	SEE PAGE
	1	1	**141-7481**	1	SPACER	
	2	1	**146-6315**	2	PIN-ADJUSTMENT	
	3	1	**146-8479**	1	SWIVEL	
	4	1	**153-8945**	2	PLUNGER AS	
		1	**3H-7180**	1	SETSCREW (1/4-28X0.25-IN)	
		1	**6J-9996**	1	SPRING	
	5	1	**174-1366**	1	PLATE	
	6	1	**146-6317**	2	RETAINER	
	7	1	**159-3781**	2	SPRING	
M	8	1	**5C-2890**	2	NUT (M6X1-THD)	

M-METRIC PART

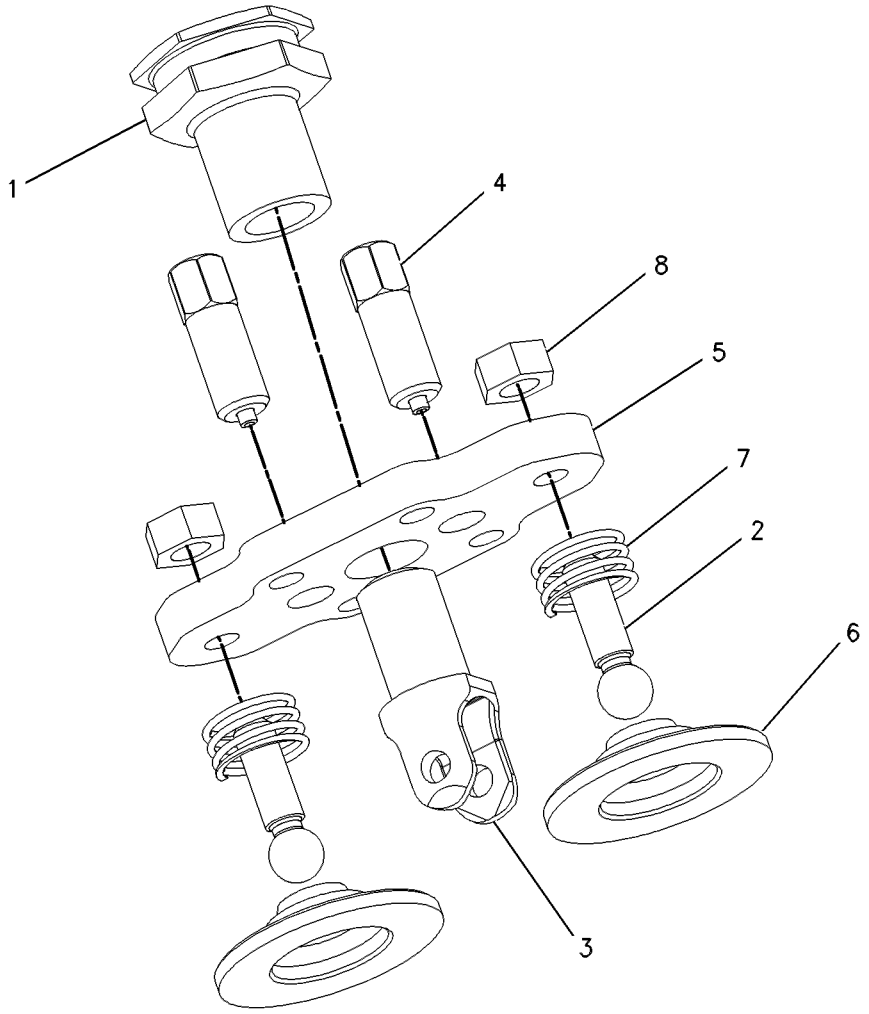

GRAPHIC #1 **<END>** g00636667

175-9443 PIVOT GP-PILOT VALVE–AUXILIARY

S/N: JKM1-UP

PART OF 261-8655, 261-8656, 261-8658 VALVE GP-PILOT

AN ATTACHMENT

SMCS-5059 **i03629310**

NOTE	REF NO	GRAPHIC REF	PART NUMBER	QTY	PART NAME 1 2 3 4 5 6 (PRODUCT LEVEL)	SEE PAGE
	1	1	**139-4189**	1	PLATE	
	2	1	**141-7481**	1	SPACER	
	3	1	**146-3337**	2	PLUNGER AS	
					(EACH INCLUDES)	
		1	**8T-1138**	2	RING-RETAINING	
		1	**131-2639**	2	WASHER (3.2X9X0.5-MM THK)	
	4	1	**146-6315**	1	PIN-ADJUSTMENT	
	5	1	**146-8479**	1	SWIVEL	
	6	1	**153-8946**	2	SPRING	
M	7	1	**178-7877**	1	SETSCREW (M6X1X25-MM)	
	8	1	**146-6317**	1	RETAINER	
	9	1	**159-3781**	1	SPRING	
M	10	1	**5C-2890**	2	NUT (M6X1-THD)	

M-METRIC PART

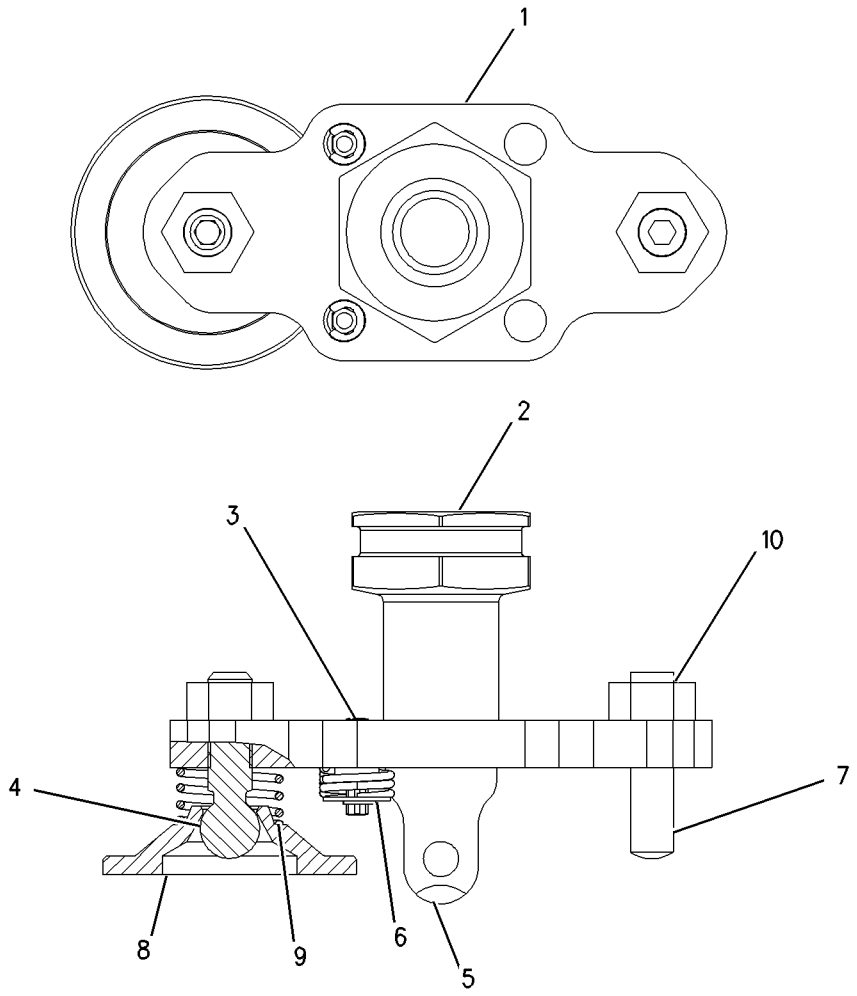

GRAPHIC #1 **<END>** g00683735

HYDRAULIC SYSTEM

325-5760 PIVOT GP-PILOT VALVE

S/N: JKM1-UP
PART OF 261-8656, 261-8658 VALVE GP-PILOT
AN ATTACHMENT

SMCS-5059 **i03657096**

NOTE	REF NO	GRAPHIC REF	PART NUMBER	QTY	PART NAME 1 2 3 4 5 6 (PRODUCT LEVEL)	SEE PAGE
	1	1	**141-7481**	1	SPACER	
	2	1	**146-6315**	2	PIN-ADJUSTMENT	
	3	1	**146-6317**	2	RETAINER	
	4	1	**146-8479**	1	SWIVEL	
	5	1	**153-8945**	1	PLUNGER AS	
		1	**3H-7180**	1	SETSCREW (1/4-28X0.25-IN)	
		1	**6J-9996**	1	SPRING	
	6	1	**159-3781**	2	SPRING	
	7	1	**174-1366**	1	PLATE	
M	8	1	**5C-2890**	2	NUT (M6X1-THD)	

M-METRIC PART

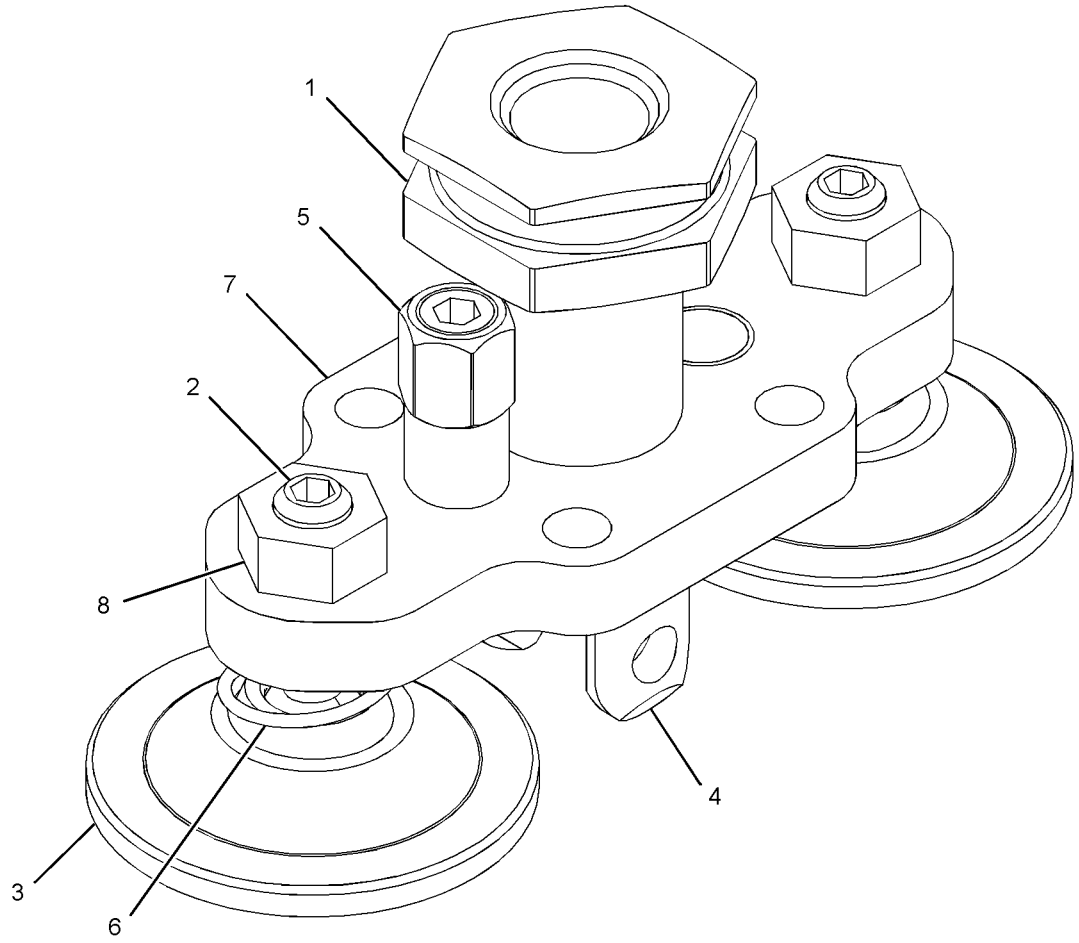

GRAPHIC #1 **<END>** g01871913

147-3322 PLATE GP-PILOT VALVE–JOYSTICK

S/N: JKM1-UP
PART OF 261-8653, 261-8655 VALVE GP-PILOT
AN ATTACHMENT

SMCS-5059 **i01832303**

NOTE	REF NO	GRAPHIC REF	PART NUMBER	QTY	PART NAME 1 2 3 4 5 6 (PRODUCT LEVEL)	SEE PAGE
M	1	1	**5C-2890**	4	NUT (M6X1-THD)	
	2	1	**146-6315**	3	PIN-ADJUSTMENT	
	3	1	**153-8945**	3	PLUNGER AS	
					(EACH INCLUDES)	
		1	**3H-7180**	1	SETSCREW (1/4-28X0.25-IN)	
		1	**6J-9996**	1	SPRING	
M	4	1	**178-7877**	1	SETSCREW (M6X1X25-MM)	
	5	1	**146-6317**	3	RETAINER	
	6	1	**159-3781**	3	SPRING	

M-METRIC PART

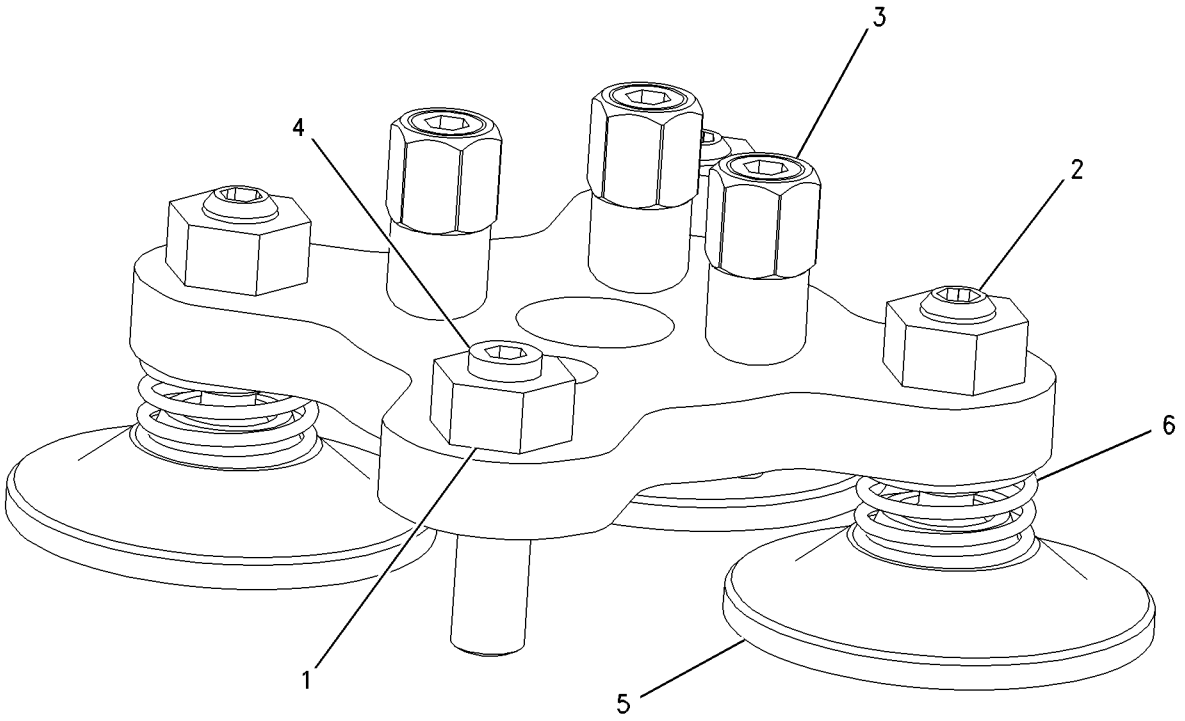

GRAPHIC #1 **<END>** g00810224

HYDRAULIC SYSTEM

239-3362 PUMP & MTG GP-HYDRAULIC

S/N: JKM1-UP

PART OF 237-7535 HYDRAULIC AR-2 VALVE

SMCS-5055, 5070, 5073, 5084 **i02904042**

NOTE	REF NO	GRAPHIC REF	PART NUMBER	QTY	PART NAME 1 2 3 4 5 6 (PRODUCT LEVEL)	SEE PAGE
	1	1	**263-1026**	1	BRACKET AS	
	2	1	**263-1372**	1	COUPLING AS	
		1	**2M-8191**	1	RING-SNAP	
	3	1	**263-3840**	1	BRACKET AS	
Y	4	1	**304-9308**	1	PUMP GP-PISTON (IMPLEMENT, STEERING)	806
	5	1	**226-4192**	4	WASHER-HARD (21.5X35X8-MM THK)	
Y	6	1	**254-5145**	1	PUMP GP-PISTON (BRAKE, HYDRAULIC FAN)	804
	7	1	**6V-8467**	1	SEAL-O-RING	
	8	1	**7D-9014**	1	SEAL-O-RING	
M	9	1	**7X-2563**	4	BOLT (M20X2.5X60-MM)	
	10	1	**8T-4121**	3	WASHER-HARD (11X21X2.5-MM THK)	
M	11	1	**8T-4137**	3	BOLT (M10X1.5X20-MM)	
M	12	1	**8T-4139**	2	BOLT (M12X1.75X30-MM)	
	13	1	**8T-4223**	4	WASHER-HARD (13.5X25.5X3-MM THK)	
M	14	1	**8T-4183**	2	BOLT (M12X1.75X40-MM)	

M-METRIC PART
Y-SEPARATE ILLUSTRATION

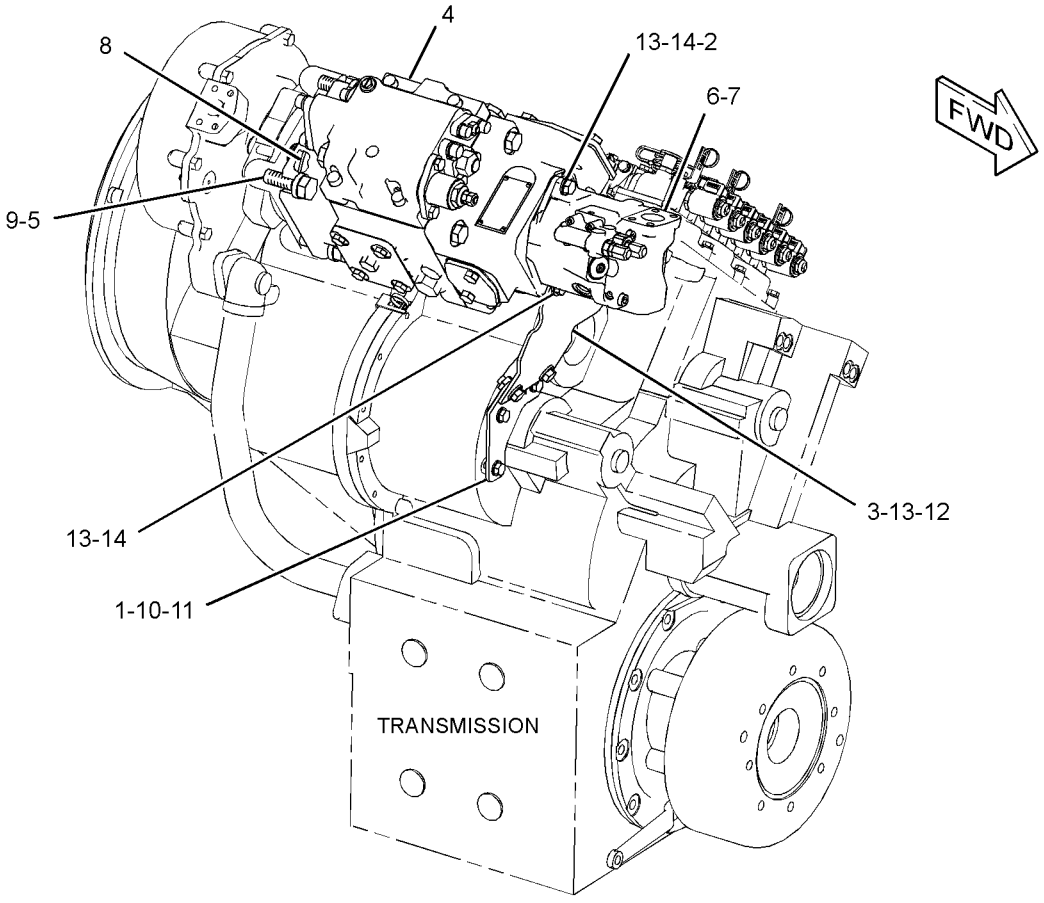

GRAPHIC #1 **<END>** g01419711

HYDRAULIC SYSTEM

311-3170 PUMP GP-AIR–VARIABLE PITCH FAN

S/N: JKM1-UP

PART OF 311-0015 LINES GP-HYDRAULIC FAN

AN ATTACHMENT

SMCS-107P **i03381083**

NOTE	REF NO	GRAPHIC REF	PART NUMBER	QTY	PART NAME 1 2 3 4 5 6 (PRODUCT LEVEL)	SEE PAGE
	1	1	**8T-8729**	2	PIN-CONNECTOR (16-GA TO 18-GA)	
	2	1	**8T-9658**	3	SPACER (8.2X12.7X25.4-MM THK)	
	3	1	**155-0576**	6	MOUNT-ISOLATION	
	4	1	**321-8167**	1	BRACKET AS	
M		1	**6V-8224**	1	NUT-WELD (M10X1.5-THD)	
	5	1	**321-8168**	1	BRACKET AS	
	6	1	**321-8191**	1	PUMP AS-AIR (VARIABLE PITCH FAN)	
	7	1	**130-5300**	2	CLIP	
	8	1	**102-8802**	2	KIT-RECEPTACLE (2-PIN)	
					(EACH KIT INCLUDES RECEPTACLE AS & WEDGE)	
	9	1	**0A-2926**	1	FITTING	
	10	1	**8T-4121**	1	WASHER-HARD (11X21X2.5-MM THK)	
M	11	1	**8T-4137**	1	BOLT (M10X1.5X20-MM)	
	12	1	**9W-0852**	2	PIN-CONNECTOR (14-GA)	
	13	1	**331-3257**	1	VALVE AS	

M-METRIC PART

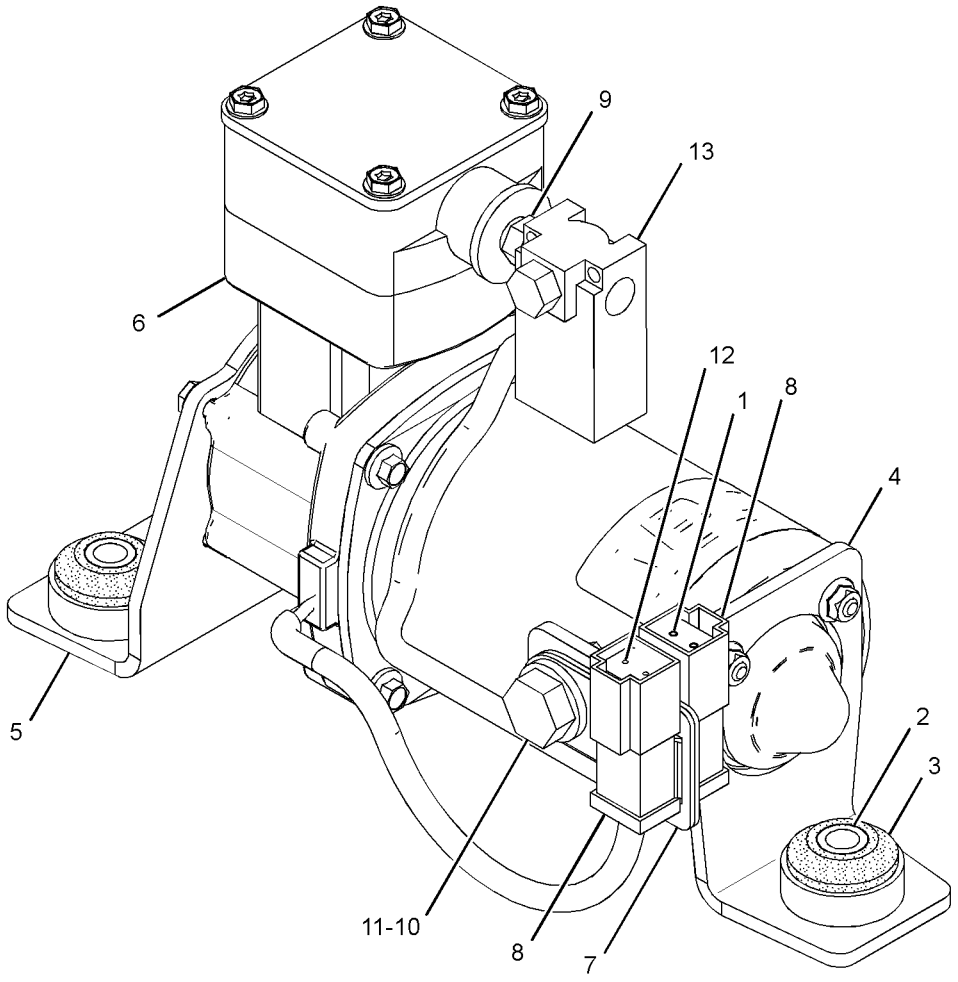

GRAPHIC #1 **<END>** g01766553

HYDRAULIC SYSTEM

254-5145 PUMP GP-PISTON

S/N: JKM1-UP

PART OF 239-3362 PUMP & MTG GP-HYDRAULIC

SMCS-5070 **i03102603**

NOTE	REF NO	GRAPHIC REF	PART NUMBER	QTY	PART NAME 1 2 3 4 5 6 (PRODUCT LEVEL)	SEE PAGE
Y	1	1	**194-9453**	1	ROTATING GP-PUMP (HYDRAULIC FAN)	809
	2	1	**168-7861**	1	PISTON-ACTUATOR	
	3	1	**194-9461**	1	ROD-PISTON	
	4	1	**194-9471**	1	SWASHPLATE	
	5	1	**191-7581**	1	SHAFT	
	6	1	**198-5351**	1	PLUG	
	7	1	**194-9472**	1	SPRING	
	8	1	**191-7582**	1	SHIM (2.5-MM THK)	
	9	1	**194-9473**	1	RING	
	10	1	**155-9125**	1	BEARING AS-ROLLER	
	11	1	**191-7583**	1	BEARING AS-ROLLER	
	12	1	**194-9474**	2	BEARING-CRADLE	
	13	1	**155-9127**	1	SEAL	
	14	1	**231-4707**	1	SEAL-O-RING	
	15	1	**228-7106**	1	SEAL-O-RING	
	16	1	**168-3504**	1	SEAL	
	17	1	**8T-9597**	1	RING-RETAINING	
M	18	1	**9X-6032**	4	BOLT-SOCKET HEAD (M10X1.5X30-MM)	
	19	1	**9S-8005**	1	PLUG-O-RING	
	20	1	**120-4394**	1	PLUG-BREAK OFF	
	21	1	**9X-8979**	1	DOWEL	
	22	1	**3K-0360**	1	SEAL-O-RING	
Y	23	1	**207-0697**	1	VALVE GP-PUMP CONTROL (PRESSURE, FLOW COMPENSATOR)	878
	24	1	**9S-8002**	1	PLUG-O-RING	
	25	1	**3J-7354**	1	SEAL-O-RING	
	26	1	**9X-7680**	3	SEAL-O-RING	
M	27	1	**8T-8442**	4	BOLT-SOCKET HEAD (M6X1X30-MM)	

M-METRIC PART
Y-SEPARATE ILLUSTRATION

254-5145 PUMP GP-PISTON *(contd.)* **i03102603**

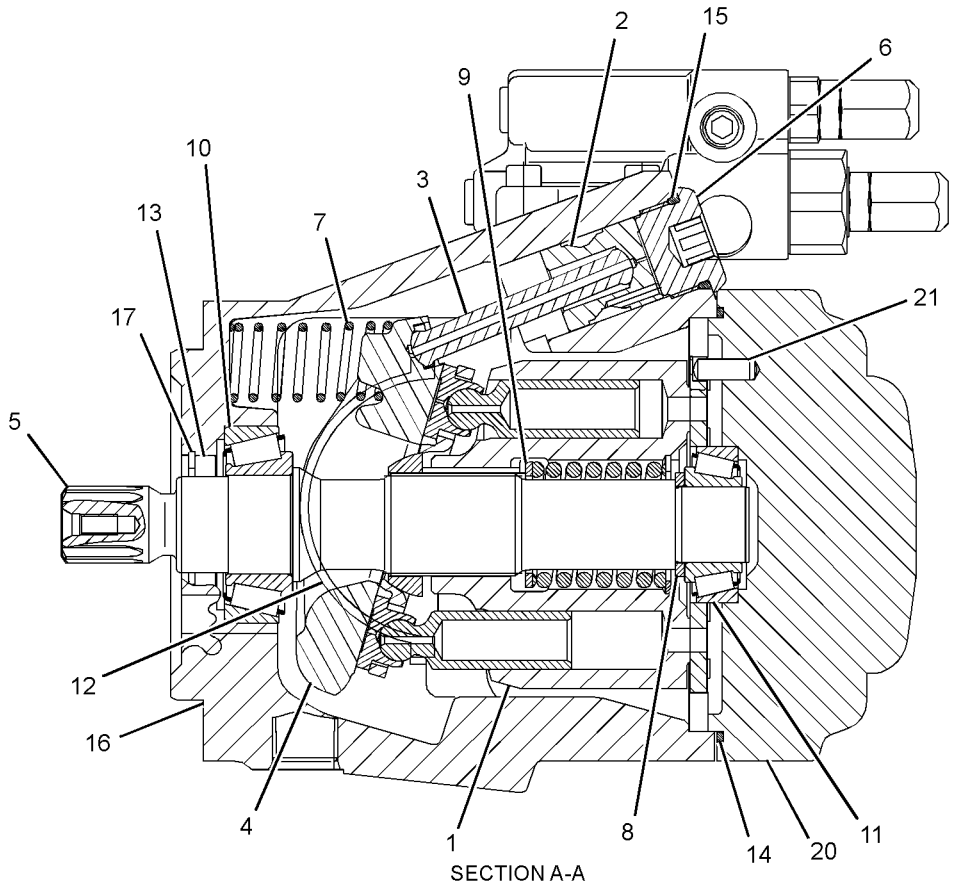

SECTION A-A

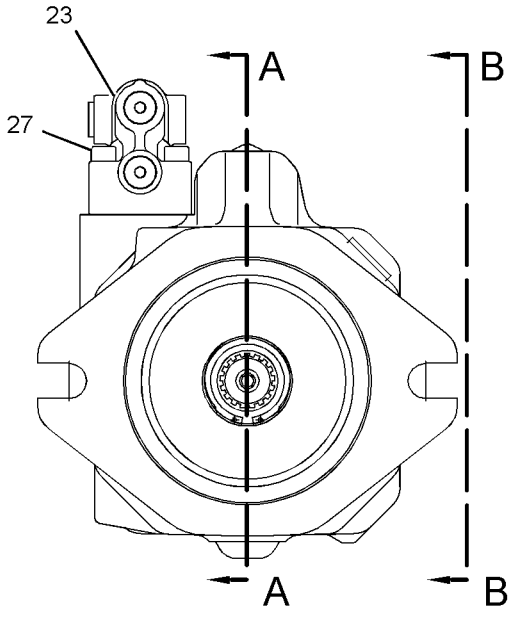

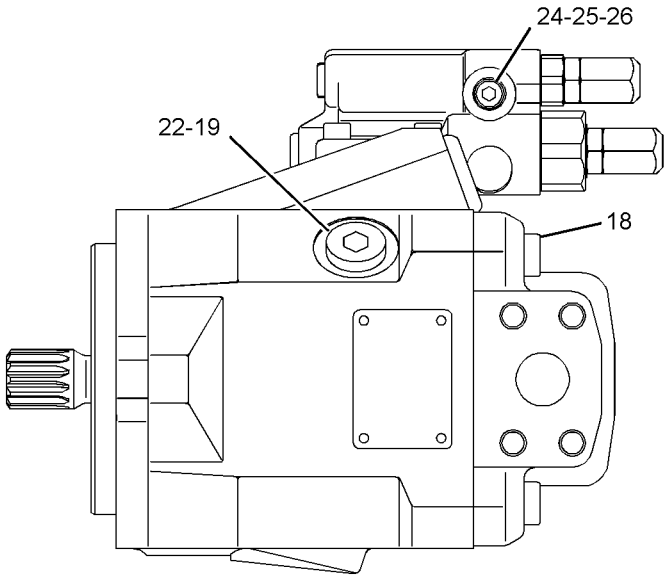

VIEW B-B

GRAPHIC #1 **<END>** g01389414

HYDRAULIC SYSTEM

304-9308 PUMP GP-PISTON

S/N: JKM1-UP

PART OF 239-3362 PUMP & MTG GP-HYDRAULIC

SMCS-5070 **i03849402**

NOTE	REF NO	GRAPHIC REF	PART NUMBER	QTY	PART NAME 1 2 3 4 5 6 (PRODUCT LEVEL)	SEE PAGE
	1	1	**4B-4158**	4	SCREW-DRIVE (4X0.25-IN)	
	2	2	**7Y-4215**	1	SPACER	
	3	1	**8J-0101**	1	PLATE-NOTICE (HYDRAULIC OIL FILL)	
	4	2	**096-4389**	9	SPRING	
	5	2	**129-7853**	1	PLATE-CREEP	
	6	2	**129-7921**	1	RING-RETAINING	
	7	2	**341-2862**	2	SEAL-LIP TYPE	
	8	2	**129-7927**	1	BEARING	
	9	1	**150-5782**	2	COVER	
	10	2	**173-3427**	1	GUIDE-BALL	
	11	1	**192-0573**	2	PIN-DOWEL	
	12	2	**199-0518**	2	SEAL-O-RING	
	13	2	**256-0083**	1	BARREL AS-PUMP	
	14	2	**263-7474**	1	SET-BEARING	
	15	1	**272-5672**	1	SHAFT	
	17	2	**292-3264**	1	SEAL-O-RING	
	18	2	**292-8771**	1	CASE	
	19	1	**298-5032**	1	BODY	
Y	20	1	**298-8921**	1	HEAD GP-PUMP	694
	21	2	**067-3161**	1	RING-RETAINING	
	22	2	**094-1875**	3	DOWEL	
	23	1,2	**094-1882**	7	PLUG	
	24	2	**094-1883**	1	PLUG	
	25	2	**095-0946**	1	RING-RETAINING	
	26	2	**129-7979**	2	DOWEL	
	27	1	**193-1736**	2	SEAL-O-RING	
	28	2	**236-6919**	1	SEAL-O-RING	
	29	2	**242-6801**	1	SWASHPLATE AS	
		2	**094-1875**	1	DOWEL	
		2	**173-3428**	1	BUSHING	
		2	**242-6803**	2	PIN-DOWEL	
	30	1	**242-6804**	2	BEARING	
	31	2	**256-7485**	1	PISTON AS	
	32	1	**3D-2824**	2	SEAL-O-RING	
	33	1	**3J-1907**	1	SEAL-O-RING	
	34	1,2	**3K-0360**	5	SEAL-O-RING	
	35	2	**4I-1022**	1	ORIFICE	
	36	1	**4K-1388**	1	SEAL-O-RING	
	37	2	**6V-3907**	1	SEAL-O-RING	
M	38	1	**8T-4136**	8	BOLT (M10X1.5X25-MM)	
M	39	2	**8T-4140**	4	BOLT (M16X2X60-MM)	
M	40	1	**8T-7811**	4	BOLT-SOCKET HEAD (M12X1.75X50-MM)	
	41	1	**9S-4183**	2	PLUG-O-RING	
	42	1	**9S-4185**	2	PLUG-O-RING	
	43	1	**9S-8004**	1	PLUG-O-RING	
	44	2	**9S-8005**	3	PLUG-O-RING	
	45	1	**9S-8009**	1	PLUG-O-RING	

M-METRIC PART
Y-SEPARATE ILLUSTRATION

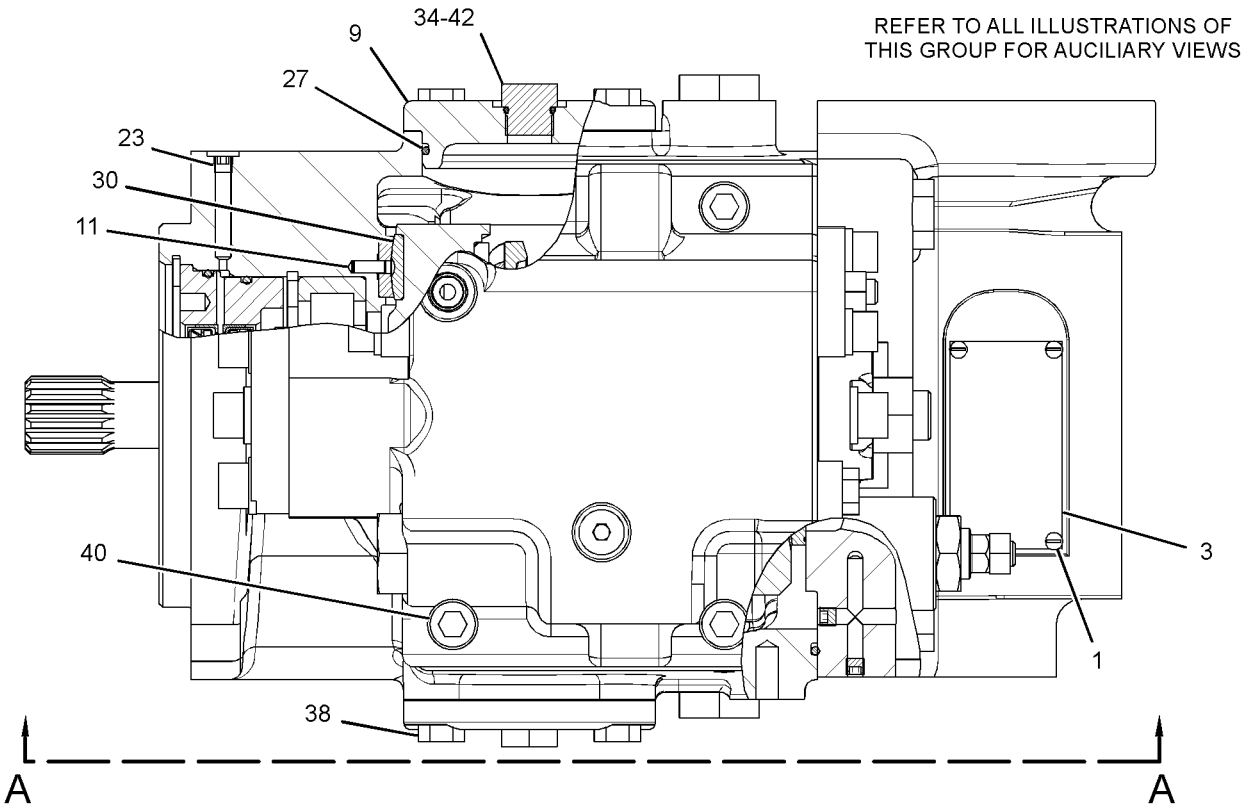

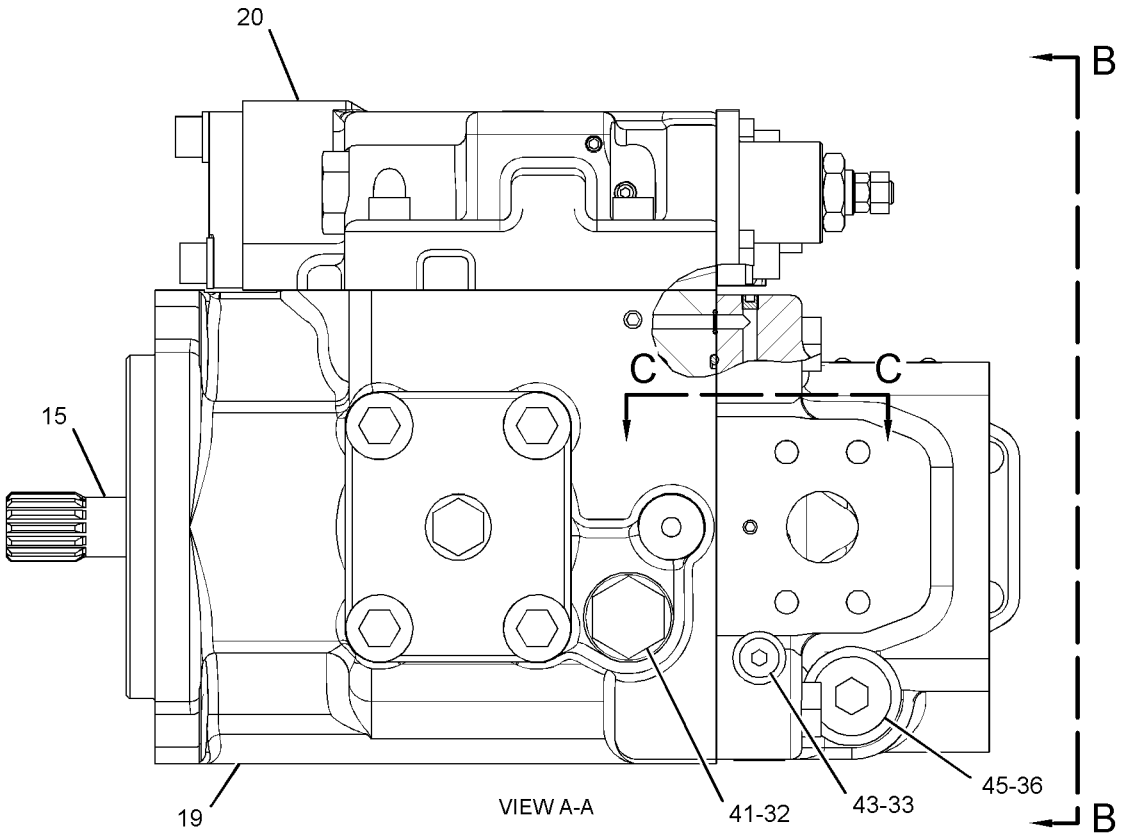

GRAPHIC #1

g01442350

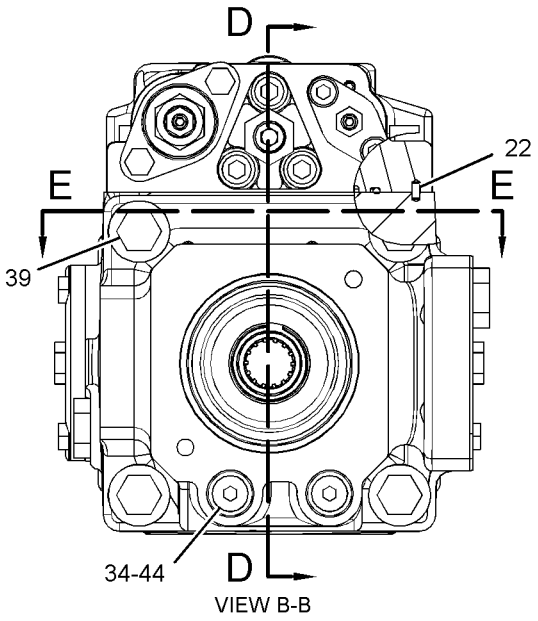

VIEW B-B

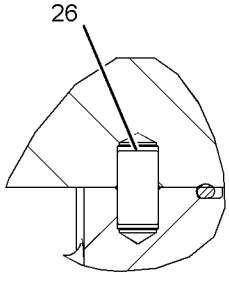

SECTION C-C

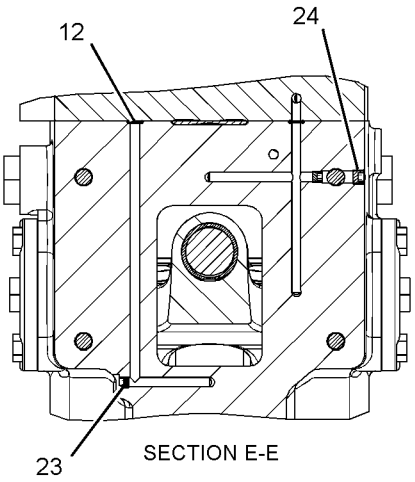

SECTION E-E

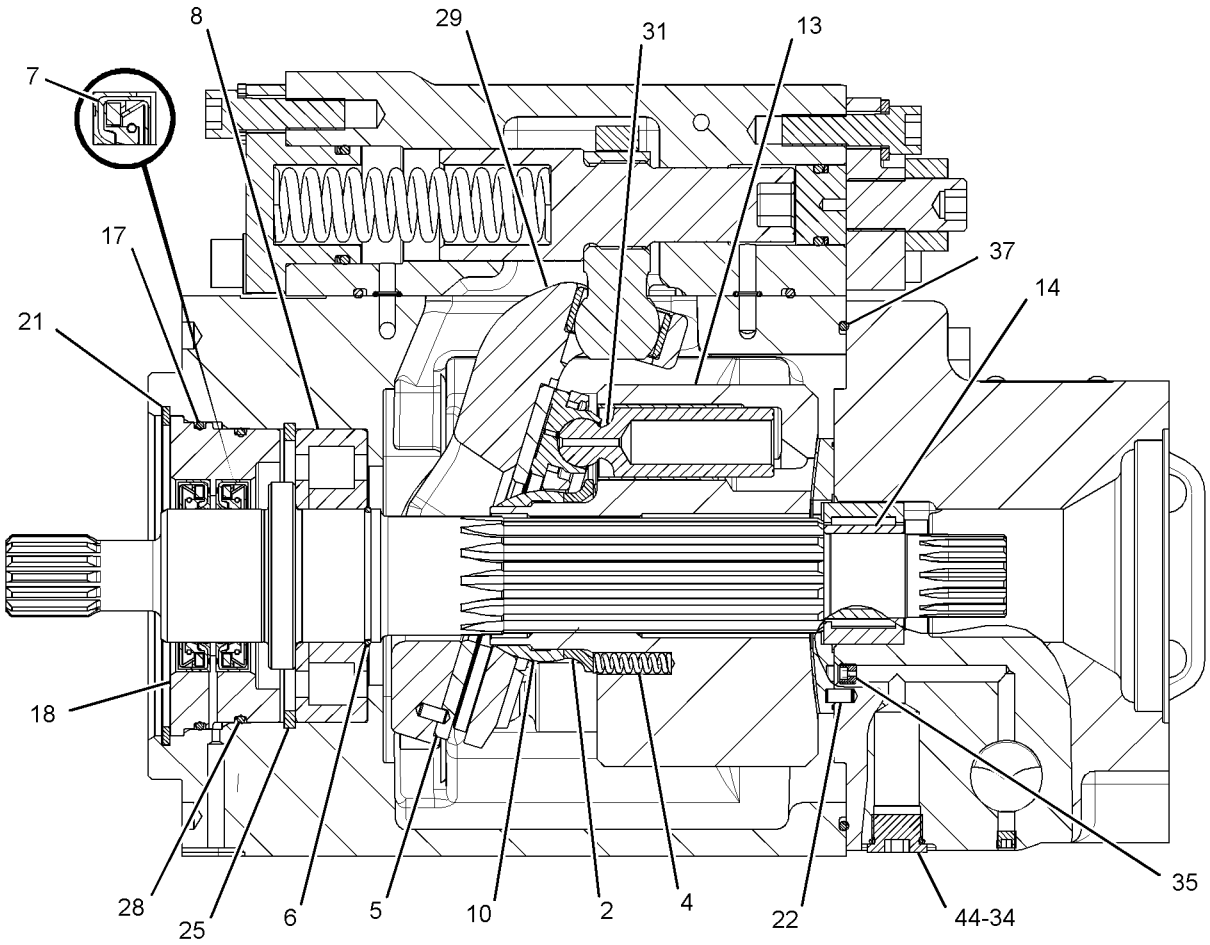

SECTION D-D

GRAPHIC #2 **<END>** g01442437

194-9453 ROTATING GP-PUMP–HYDRAULIC FAN

S/N: JKM1-UP

PART OF 254-5145 PUMP GP-PISTON

SMCS-1387, 5070, 5084 **i01529266**

NOTE	REF NO	GRAPHIC REF	PART NUMBER	QTY	PART NAME 1 2 3 4 5 6 (PRODUCT LEVEL)	SEE PAGE
	1	1	**155-9112**	9	PISTON AS	
	2	1	**155-9136**	1	BARREL	
	3	1	**155-9115**	1	PLATE	
	4	1	**155-9116**	1	GUIDE-BALL	
	5	1	**155-9117**	1	SPRING	
	6	1	**194-9479**	3	PIN	
	7	1	**194-9480**	1	RING-RETAINING	
	8	1	**194-9481**	1	DISC-THRUST	
	9	1	**194-9478**	1	PLATE-PORT	

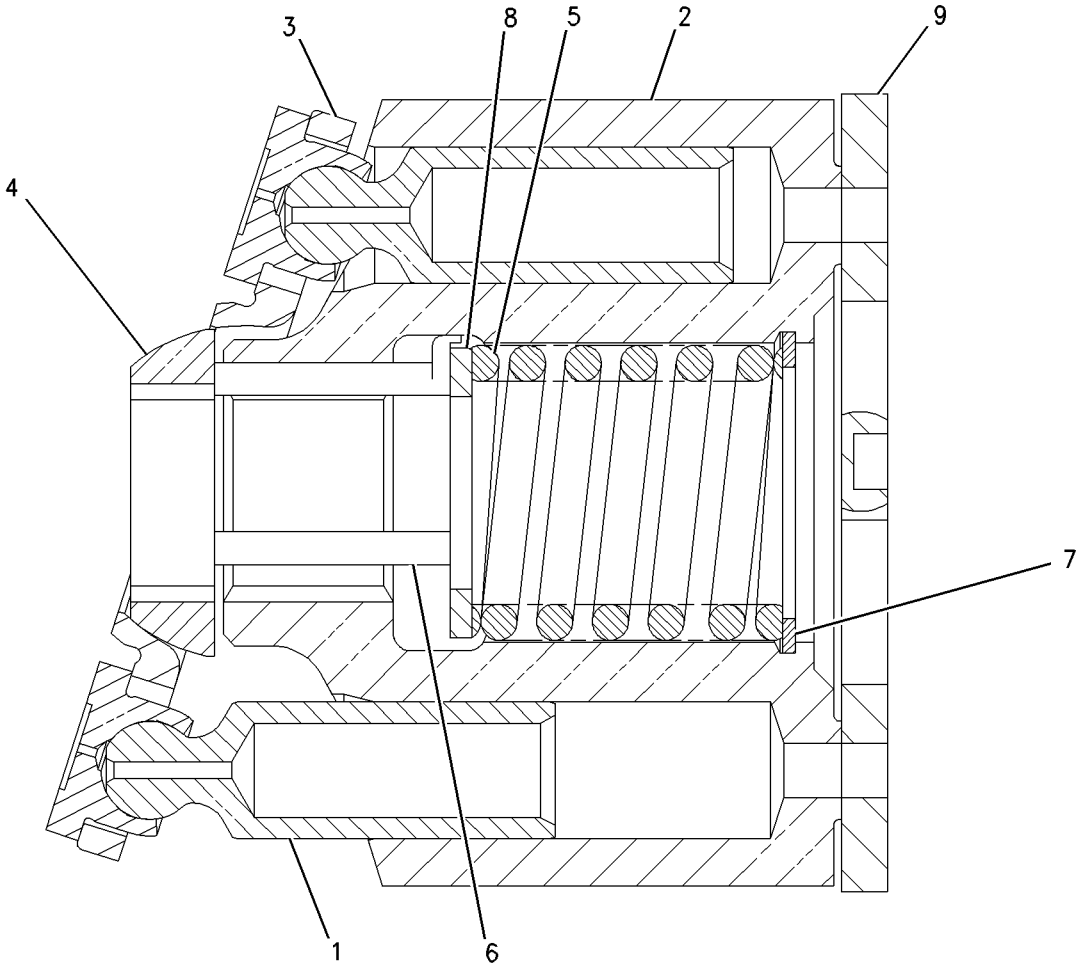

GRAPHIC #1 **<END>** g00796070

HYDRAULIC SYSTEM

239-3364 TANK & MTG GP-HYDRAULIC

S/N: JKM1-UP

PART OF 237-7535 HYDRAULIC AR-2 VALVE

SMCS-5056 **i02904065**

NOTE	REF NO	GRAPHIC REF	PART NUMBER	QTY	PART NAME 1 2 3 4 5 6 (PRODUCT LEVEL)	SEE PAGE
	1	1	**6T-6080**	8	MOUNT-RUBBER	
	2	1	**258-8315**	2	PLATE	
	3	1	**263-2191**	1	INSULATION	
	4	1	**8T-4123**	8	WASHER (22X35X3.5-MM THK)	
M	5	1	**8T-4187**	4	BOLT (M20X2.5X80-MM)	
M	6	1	**8T-6381**	4	BOLT (M20X2.5X120-MM)	
	7	1	**8X-0674**	4	WASHER (22X100X10-MM THK)	

M-METRIC PART

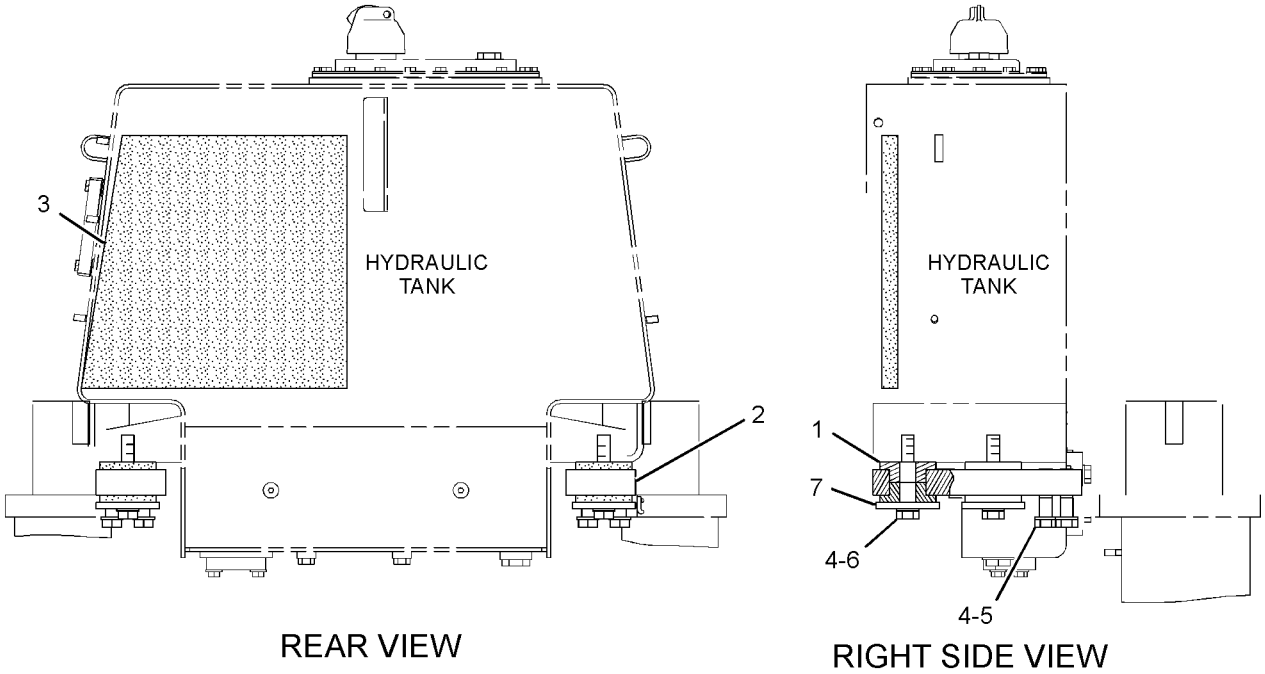

GRAPHIC #1 **<END>** g01392698

255-2421 TANK GP-HYDRAULIC

S/N: JKM1-737

PART OF 237-7535 HYDRAULIC AR-2 VALVE

SMCS-5056 **i03206801**

NOTE	REF NO	GRAPHIC REF	PART NUMBER	QTY	PART NAME 1 2 3 4 5 6 (PRODUCT LEVEL)	SEE PAGE
	1	1	**5D-1911**	1	COVER-HYDRAULIC CAP	
	2	1	**5D-7927**	1	STRAINER AS-OIL (HYDRAULIC TANK FILL)	
		1	**5F-3488**	1	END-STRAINER	
	3	1	**6E-5101**	1	PLATE	
	4	1	**7H-1447**	1	CAP-FILLER (HYDRAULIC OIL)	
	5	1	**9M-7394**	1	LEVER	
	6	1	**9T-9227**	1	SCREEN AS (HYDRAULIC TANK)	
	7	1	*148-8411*	1	PLUG AS	
		1	**3K-0360**	1	SEAL-O-RING	
		1	**9S-4185**	1	PLUG-O-RING	
	8	1	**255-2422**	1	TANK AS-HYDRAULIC	
		1	**7J-5225**	1	FITTING (1-1/16-12-THD)	
		1	**7J-5544**	3	FITTING (3/4X16-THD)	
		1	**7T-1099**	3	LINK	
M		1	**7Y-8763**	2	BOSS (M10X1.5X25-MM)	
M		1	**8T-4967**	4	STUD-WELD (M10X1.5X23-MM OAL)	
M		1	**6V-7742**	2	NUT-FULL (M20X2.5-THD)	
	9	1	**260-8636**	1	GAUGE-LIQUID LEVEL (SIGHT GLASS)	
	10	1	**262-4071**	1	COVER AS-TANK	
		1	**5J-5158**	1	FILLER	
		1	**7J-5225**	1	FITTING (1-1/16-12-THD)	
	11	1	**262-9920**	1	GASKET	
	12	1	**281-3335**	1	GUARD AS	
	13	1	**1L-5072**	1	DOWEL	
	14	1	**1P-4577**	2	FLANGE-HALF	
	15	1	**1P-4579**	2	FLANGE-HALF	
	16	1	**1P-4585**	2	FLANGE-HALF	
	17	1	**2D-4202**	1	PLATE	
	18	1	**2J-7761**	1	RING-RETAINING	
	19	1	**6H-9361**	1	RING-RETAINING	
M	20	1	**6V-7744**	1	LOCKNUT (M10X1.5-THD)	
	21	1	**7X-0591**	4	WASHER-HARD (17X29X3-MM THK)	
	22	1	**8T-2275**	1	BALL	
	23	1	**8T-4121**	12	WASHER-HARD (11X21X2.5-MM THK)	
M	24	1	**8T-4136**	22	BOLT (M10X1.5X25-MM)	
M	25	1	**8T-4193**	4	BOLT (M16X2X50-MM)	
M	26	1	**8T-4196**	4	BOLT (M10X1.5X35-MM)	
	27	1	**8T-4223**	4	WASHER-HARD (13.5X25.5X3-MM THK)	
M	28	1	**8T-4956**	4	BOLT (M12X1.75X35-MM)	
	29	1	**9H-6454**	1	GASKET	

M-METRIC PART

255-2421 **TANK GP-HYDRAULIC** *(contd.)* **i03206801**

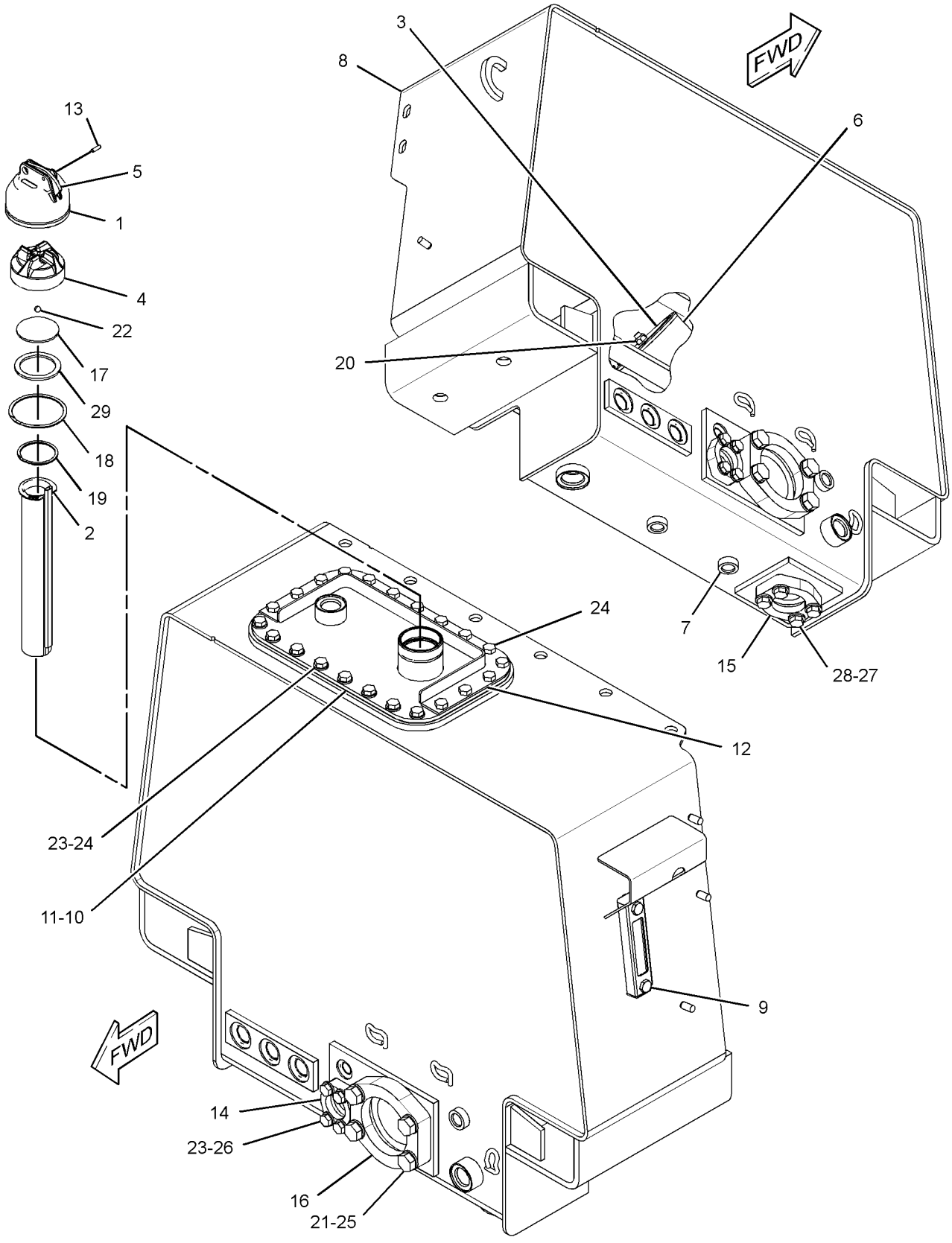

GRAPHIC #1 **<END>** g01421350

HYDRAULIC SYSTEM

255-2421 TANK GP-HYDRAULIC

S/N: JKM738-UP

PART OF 237-7535 HYDRAULIC AR-2 VALVE

SMCS-5056 **i03551384**

NOTE	REF NO	GRAPHIC REF	PART NUMBER	QTY	PART NAME 1 2 3 4 5 6 (PRODUCT LEVEL)	SEE PAGE
	1	1	**5D-1911**	1	COVER-HYDRAULIC CAP	
	2	1	**5D-7927**	1	STRAINER AS-OIL (HYDRAULIC TANK FILL)	
	3	1	**6E-5101**	1	PLATE	
	4	1	**7H-1447**	1	CAP-FILLER (HYDRAULIC OIL)	
	5	1	**9M-7394**	1	LEVER	
	6	1	**9T-9227**	1	SCREEN AS (HYDRAULIC TANK)	
	7	1	*148-8411*	1	PLUG AS	
		1	**3K-0360**	1	SEAL-O-RING	
		1	**9S-4185**	1	PLUG-O-RING	
	8	1	**255-2422**	1	TANK AS-HYDRAULIC	
	9	1	**260-8636**	1	GAUGE-LIQUID LEVEL (SIGHT GLASS)	
	10	1	**262-4071**	1	COVER AS-TANK	
	11	1	**262-9920**	1	GASKET	
	12	1	**281-3335**	1	GUARD AS	
	13	1	**1L-5072**	1	DOWEL	
	14	1	**1P-4577**	2	FLANGE-HALF	
	15	1	**1P-4579**	2	FLANGE-HALF	
	16	1	**1P-4585**	2	FLANGE-HALF	
	17	1	**2D-4202**	1	PLATE	
	18	1	**2J-7761**	1	RING-RETAINING	
	19	1	**6H-9361**	1	RING-RETAINING	
M	20	1	**6V-7744**	1	LOCKNUT (M10X1.5-THD)	
	21	1	**7X-0591**	4	WASHER-HARD (17X29X3-MM THK)	
	22	1	**8T-2275**	1	BALL	
	23	1	**8T-4121**	12	WASHER-HARD (11X21X2.5-MM THK)	
M	24	1	**8T-4136**	22	BOLT (M10X1.5X25-MM)	
M	25	1	**8T-4193**	4	BOLT (M16X2X50-MM)	
M	26	1	**8T-4196**	4	BOLT (M10X1.5X35-MM)	
	27	1	**8T-4223**	4	WASHER-HARD (13.5X25.5X3-MM THK)	
M	28	1	**8T-4956**	4	BOLT (M12X1.75X35-MM)	
	29	1	**9H-6454**	1	GASKET	
C	30	1	**299-7997**	1	SCREEN	
C	31	1	**299-7996**	1	PLATE	
CM	32	1	**121-9874**	1	BOLT (M8X1.25X50-MM)	
C	33	1	**5P-4116**	1	WASHER-HARD (8.8X20.5X2-MM THK)	

C-CHANGE FROM PREVIOUS TYPE
M-METRIC PART

255-2421 **TANK GP-HYDRAULIC** *(contd.)* **i03551384**

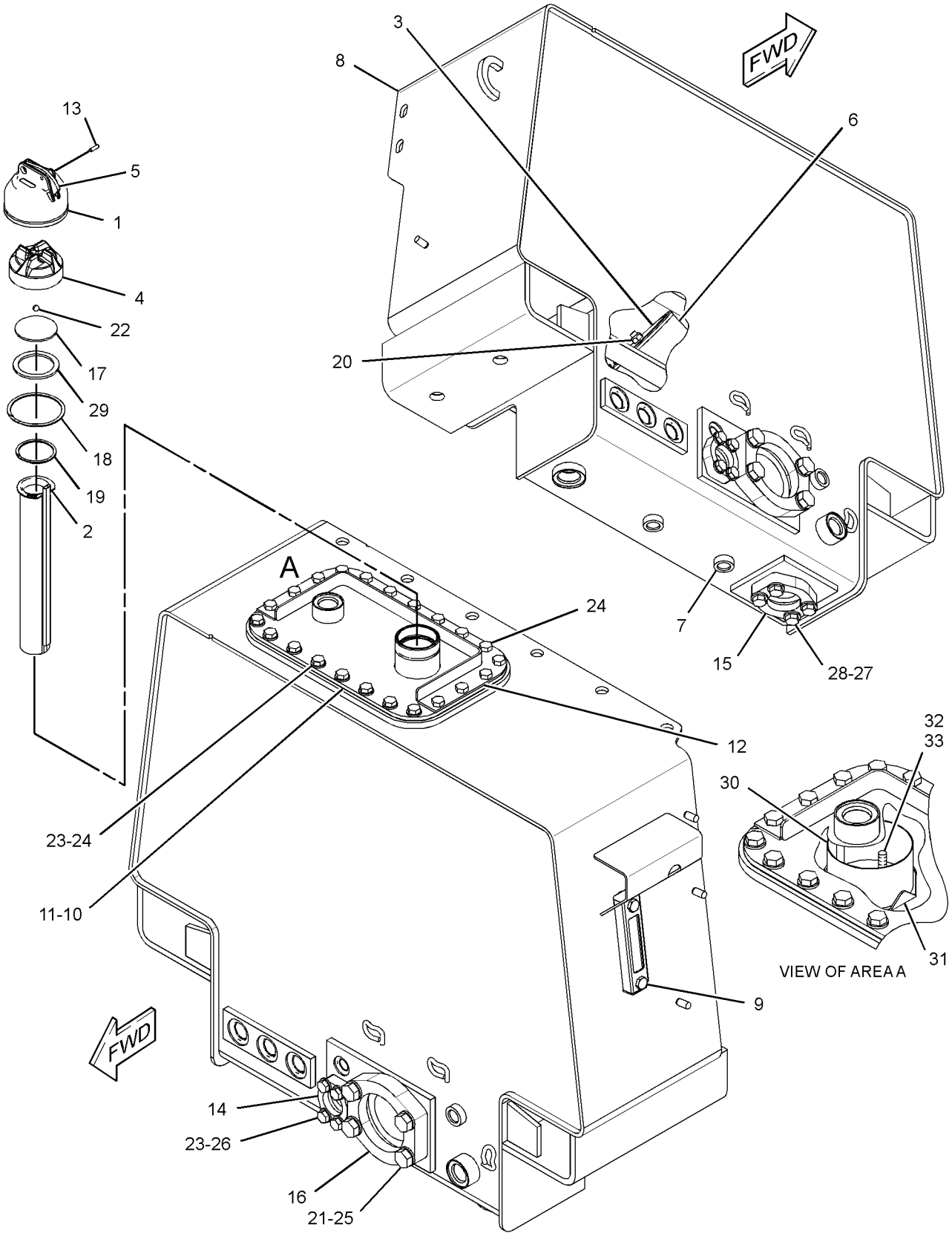

GRAPHIC #1 **<END>** g01886592

257-6969 VALVE & MTG GP-MAIN CONTROL–2-FUNCTION

S/N: JKM1-UP

PART OF 237-7535 HYDRAULIC AR-2 VALVE

SMCS-5051 **i02904227**

NOTE	REF NO	GRAPHIC REF	PART NUMBER	QTY	PART NAME 1 2 3 4 5 6 (PRODUCT LEVEL)	SEE PAGE
	2	1	*148-8338*	4	CONNECTOR AS	
					(EACH INCLUDES)	
		1	**3J-1907**	1	SEAL-O-RING	
		1	**6V-8397**	1	SEAL-O-RING	
		1	**8T-0075**	1	CONNECTOR	
	3	1	**253-9943**	1	SHEET	
	4	1	**255-0903**	2	SPACER (12.5X20X12.7-MM THK)	
	5	1	**313-3484**	4	ADAPTER	
Y	6	1	**254-8101**	1	VALVE GP-MAIN CONTROL (2-FUNCTION)	838
M	9	1	**8T-4183**	2	BOLT (M12X1.75X40-MM)	
M	10	1	**8T-4192**	6	BOLT (M12X1.75X25-MM)	
	11	1	**8T-4223**	8	WASHER-HARD (13.5X25.5X3-MM THK)	

M-METRIC PART
Y-SEPARATE ILLUSTRATION

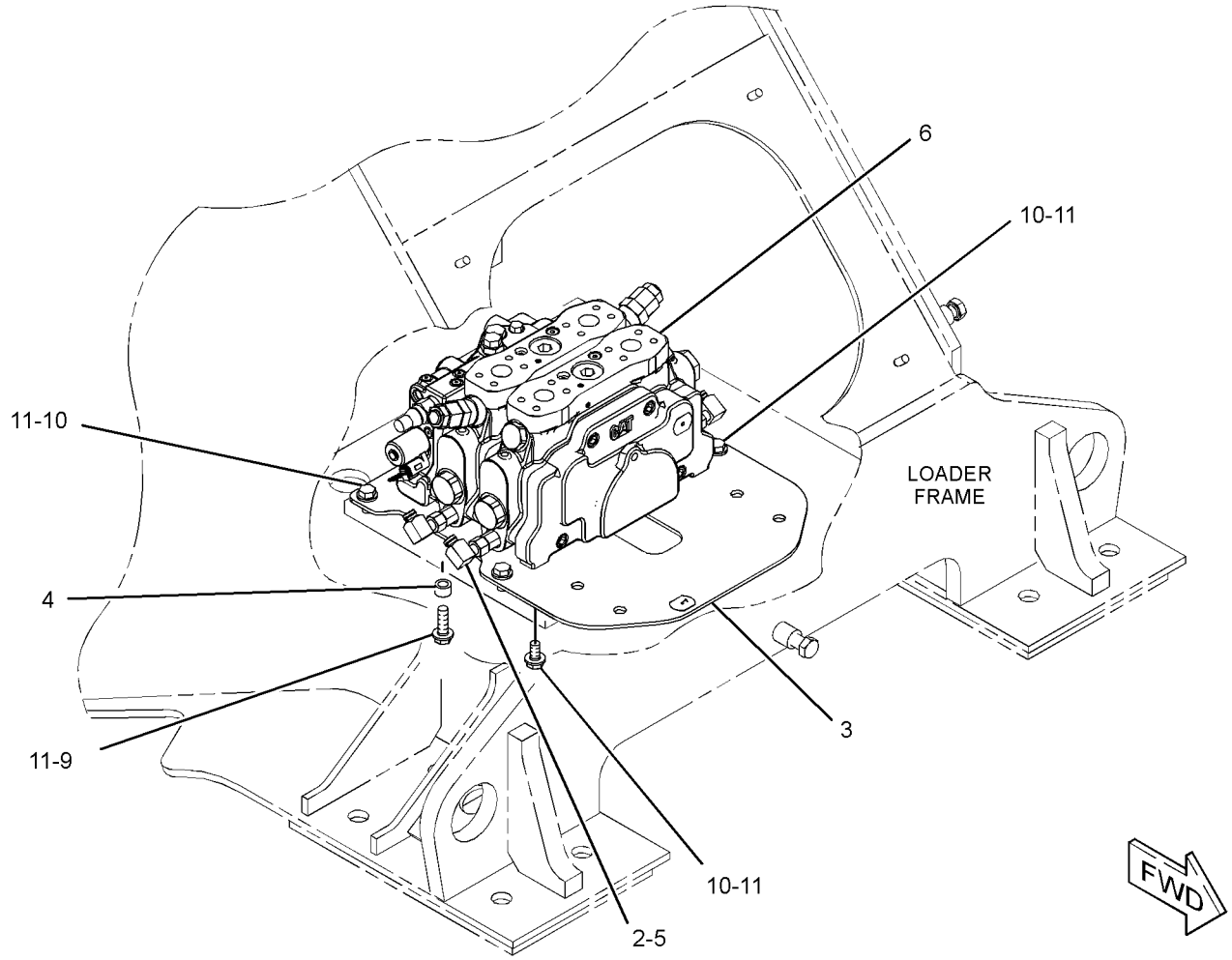

GRAPHIC #1 **<END>** g01419702

257-6971 VALVE & MTG GP-MAIN CONTROL–3-FUNCTION

S/N: JKM1-UP
PART OF 265-9750 HYDRAULIC AR-3 VALVE
AN ATTACHMENT

SMCS-5051 **i02934573**

NOTE	REF NO	GRAPHIC REF	PART NUMBER	QTY	PART NAME 1 2 3 4 5 6 (PRODUCT LEVEL)	SEE PAGE
	1	1	**8T-4223**	8	WASHER-HARD (13.5X25.5X3-MM THK)	
	2	1	**253-9943**	1	SHEET	
	3	1	**255-0903**	2	SPACER (12.5X20X12.7-MM THK)	
	4	1	**313-3484**	6	ADAPTER	
	5	1	*148-8338*	6	CONNECTOR AS	
					(EACH INCLUDES)	
		1	**3J-1907**	1	SEAL-O-RING	
		1	**6V-8397**	1	SEAL-O-RING	
		1	**8T-0075**	1	CONNECTOR	
Y	6	1	**251-1675**	1	VALVE GP-MAIN CONTROL (3-FUNCTION)	833
M	8	1	**8T-4183**	2	BOLT (M12X1.75X40-MM)	
M	9	1	**8T-4192**	6	BOLT (M12X1.75X25-MM)	

M-METRIC PART
Y-SEPARATE ILLUSTRATION

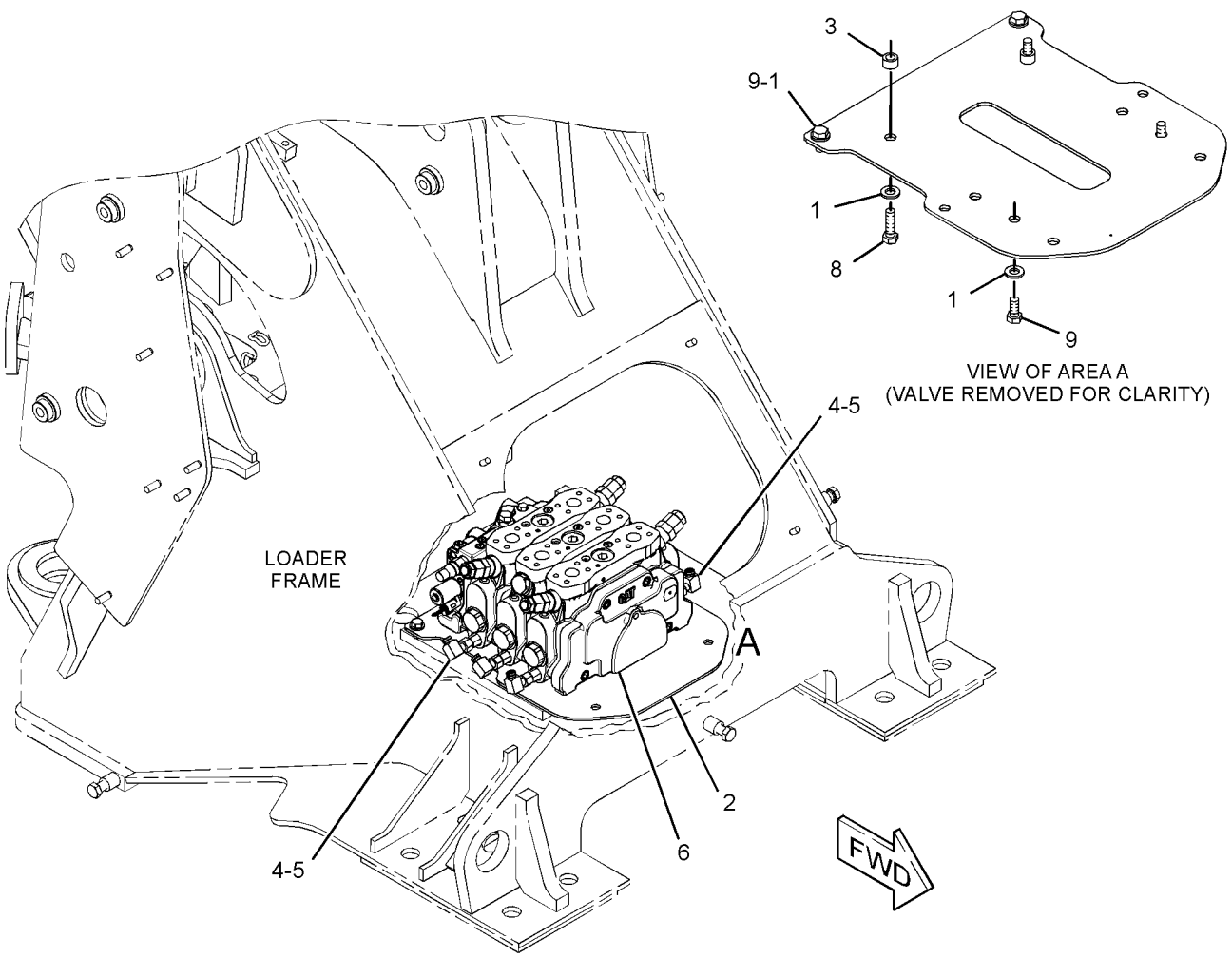

GRAPHIC #1 **<END>** g01436656

260-8832 VALVE & MTG GP-MAIN CONTROL–
2-FUNCTION, WITH RIDE CONTROL
S/N: JKM1-UP
PART OF 265-9740 CONTROL AR-RIDE
AN ATTACHMENT

SMCS-5051 **i02934478**

NOTE	REF NO	GRAPHIC REF	PART NUMBER	QTY	PART NAME 1 2 3 4 5 6 (PRODUCT LEVEL)	SEE PAGE
	2	1	**253-9943**	1	SHEET	
	3	1	**255-0903**	2	SPACER (12.5X20X12.7-MM THK)	
	4	1	**313-3484**	4	ADAPTER	
	5	1	*148-8338*	4	CONNECTOR AS	
					(EACH INCLUDES)	
		1	**3J-1907**	1	SEAL-O-RING	
		1	**6V-8397**	1	SEAL-O-RING	
		1	**8T-0075**	1	CONNECTOR	
Y	6	1	**254-8100**	1	VALVE GP-MAIN CONTROL (2-FUNCTION, WITH RIDE CONTROL)	836
M	8	1	**8T-4183**	2	BOLT (M12X1.75X40-MM)	
M	9	1	**8T-4192**	6	BOLT (M12X1.75X25-MM)	
	10	1	**8T-4223**	8	WASHER-HARD (13.5X25.5X3-MM THK)	

M-METRIC PART
Y-SEPARATE ILLUSTRATION

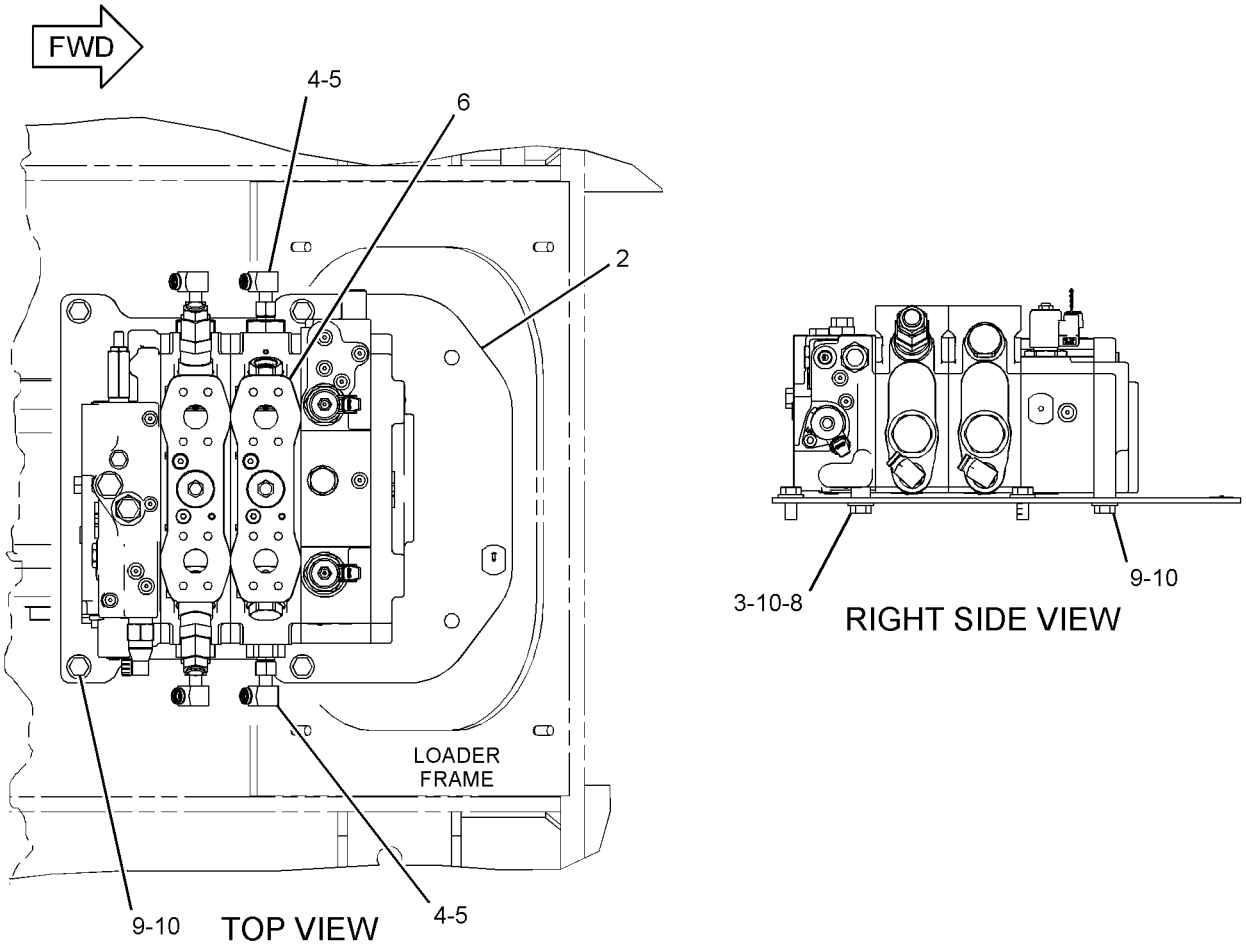

GRAPHIC #1 **<END>** g01430856

261-0327 VALVE & MTG GP-MAIN CONTROL–
3-FUNCTION, WITH RIDE CONTROL
S/N: JKM1-UP
PART OF 265-9741 CONTROL AR-RIDE
AN ATTACHMENT

SMCS-5051 **i02933011**

NOTE	REF NO	GRAPHIC REF	PART NUMBER	QTY	PART NAME 1 2 3 4 5 6 (PRODUCT LEVEL)	SEE PAGE
	1	1	**8T-4223**	8	WASHER-HARD (13.5X25.5X3-MM THK)	
	2	1	**253-9943**	1	SHEET	
	3	1	**255-0903**	2	SPACER (12.5X20X12.7-MM THK)	
	4	1	**313-3484**	6	ADAPTER	
	5	1	*148-8338*	6	CONNECTOR AS	
					(EACH INCLUDES)	
		1	**3J-1907**	1	SEAL-O-RING	
		1	**6V-8397**	1	SEAL-O-RING	
		1	**8T-0075**	1	CONNECTOR	
Y	6	1	**251-1676**	1	VALVE GP-MAIN CONTROL (3-FUNCTION, WITH RIDE CONTROL)	834
M	8	1	**8T-4183**	2	BOLT (M12X1.75X40-MM)	
M	9	1	**8T-4192**	6	BOLT (M12X1.75X25-MM)	

M-METRIC PART
Y-SEPARATE ILLUSTRATION

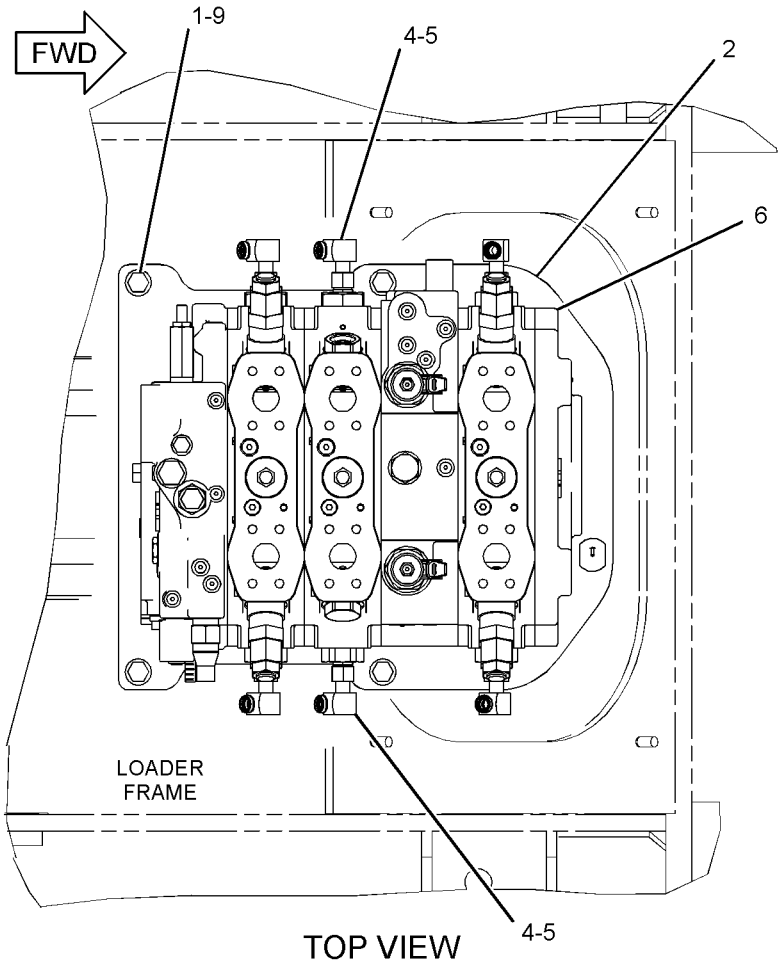

TOP VIEW

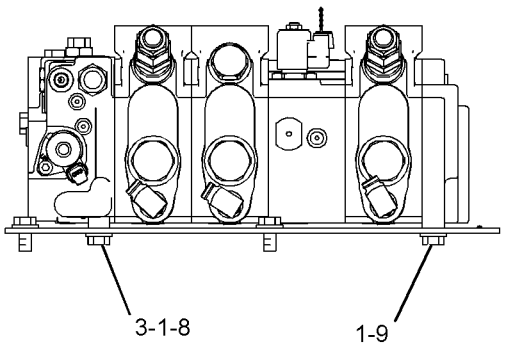

RIGHT SIDE VIEW

GRAPHIC #1 **<END>** g01431653

HYDRAULIC SYSTEM

266-7266 VALVE & MTG GP-MAIN CONTROL–4-FUNCTION

S/N: JKM1-UP
PART OF 265-9760 HYDRAULIC AR-4 VALVE
AN ATTACHMENT

SMCS-5051 **i02934664**

NOTE	REF NO	GRAPHIC REF	PART NUMBER	QTY	PART NAME 1 2 3 4 5 6 (PRODUCT LEVEL)	SEE PAGE
	1	1	**253-9943**	1	SHEET	
	3	1	**255-0903**	2	SPACER (12.5X20X12.7-MM THK)	
	4	1	**313-3484**	8	ADAPTER	
	5	1	*148-8338*	8	CONNECTOR AS	
					(EACH INCLUDES)	
		1	**3J-1907**	1	SEAL-O-RING	
		1	**6V-8397**	1	SEAL-O-RING	
		1	**8T-0075**	1	CONNECTOR	
Y	6	1	**266-5977**	1	VALVE GP-MAIN CONTROL (4-FUNCTION)	839
M	8	1	**8T-4183**	2	BOLT (M12X1.75X40-MM)	
M	9	1	**8T-4192**	6	BOLT (M12X1.75X25-MM)	
	10	1	**8T-4223**	8	WASHER-HARD (13.5X25.5X3-MM THK)	

M-METRIC PART
Y-SEPARATE ILLUSTRATION

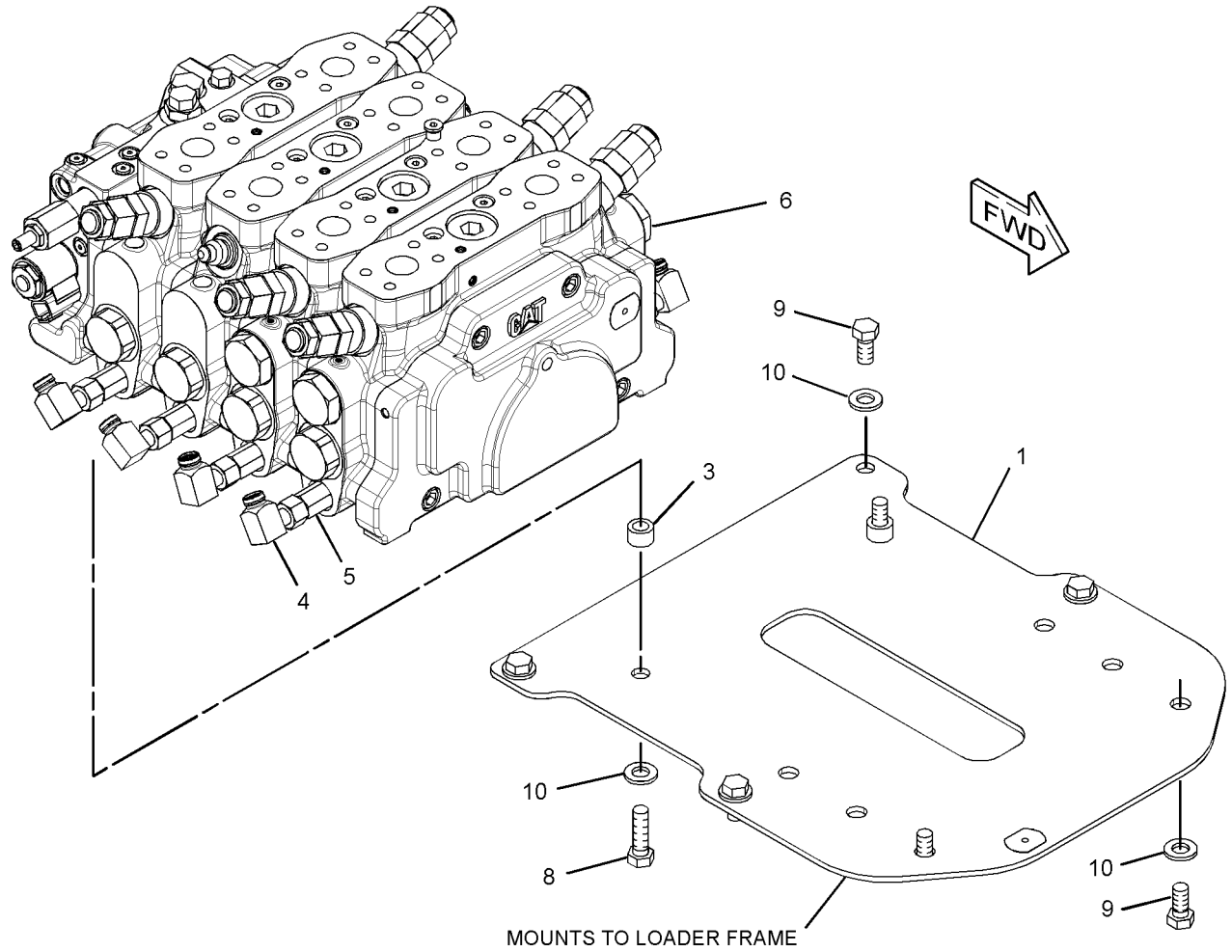

GRAPHIC #1

<END>

g01438046

158-9956 VALVE GP-CHECK–BRAKE OIL, PILOT OIL

S/N: JKM1-UP

PART OF 309-4907 MANIFOLD GP-CONTROL, 282-4971 MANIFOLD GP-HYDRAULIC

ALSO AN ATTACHMENT

SMCS-5067 **i02106248**

NOTE	REF NO	GRAPHIC REF	PART NUMBER	QTY	PART NAME 1 2 3 4 5 6 (PRODUCT LEVEL)	SEE PAGE
	1	1	**3K-0360**	1	SEAL-O-RING	
	2	1	**161-6154**	1	SEAL-O-RING	
	3	1	**6E-0381**	1	RING-BACKUP	

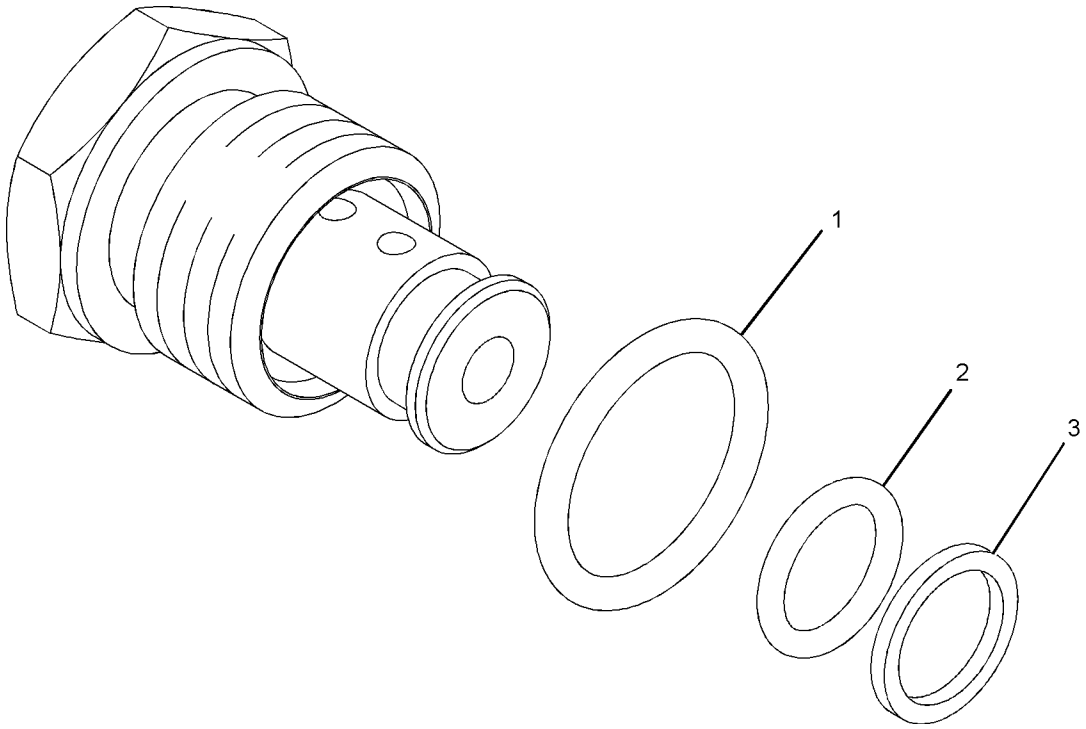

GRAPHIC #1 **<END>** g01016882

194-1723 VALVE GP-CHECK–PILOT OIL

S/N: JKM1-156
PART OF 314-4008 MANIFOLD GP-CONTROL
AN ATTACHMENT

SMCS-5067 **i02248420**

NOTE	REF NO	GRAPHIC REF	PART NUMBER	QTY	PART NAME 1 2 3 4 5 6 (PRODUCT LEVEL)	SEE PAGE
	1	1	**2M-9780**	1	SEAL-O-RING	
	2	1	**161-6149**	1	SEAL-O-RING	
	3	1	**7X-4776**	1	RING-BACKUP	

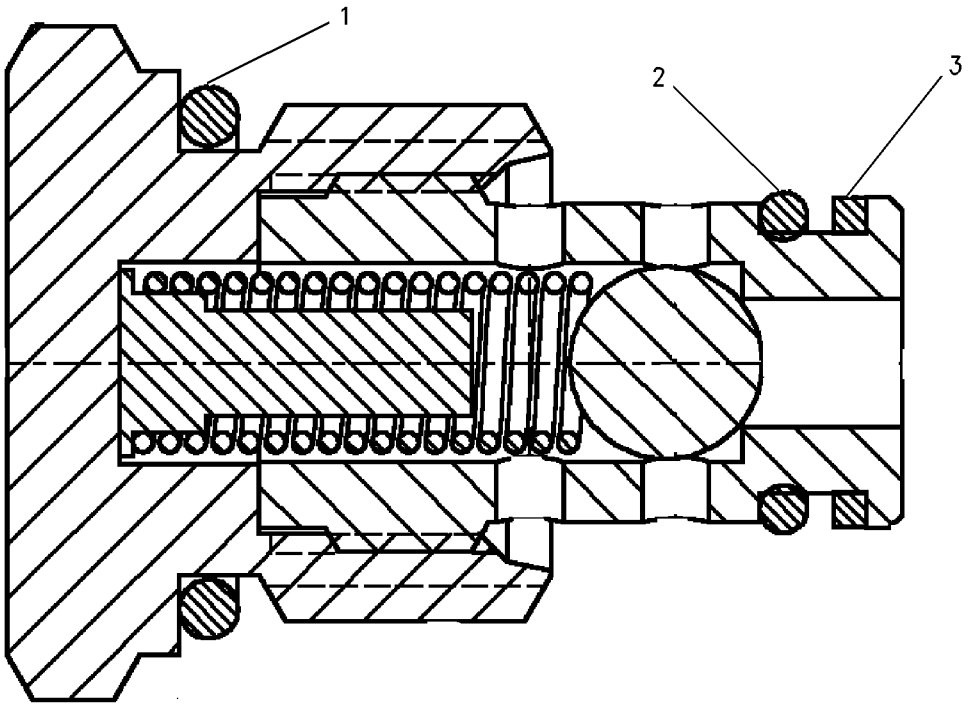

GRAPHIC #1 **<END>** g00748809

HYDRAULIC SYSTEM

270-0350 VALVE GP-CHECK–LOAD

S/N: JKM1-UP

PART OF 281-0041 VALVE GP-CONTROL

ALSO AN ATTACHMENT

SMCS-5067 **i02905155**

NOTE	REF NO	GRAPHIC REF	PART NUMBER	QTY	PART NAME 1 2 3 4 5 6 (PRODUCT LEVEL)	SEE PAGE
	1	1	**3D-2824**	1	SEAL-O-RING	
	2	1	**6F-4855**	1	SEAL-O-RING	
	3	1	**9J-0707**	1	RING-BACKUP	

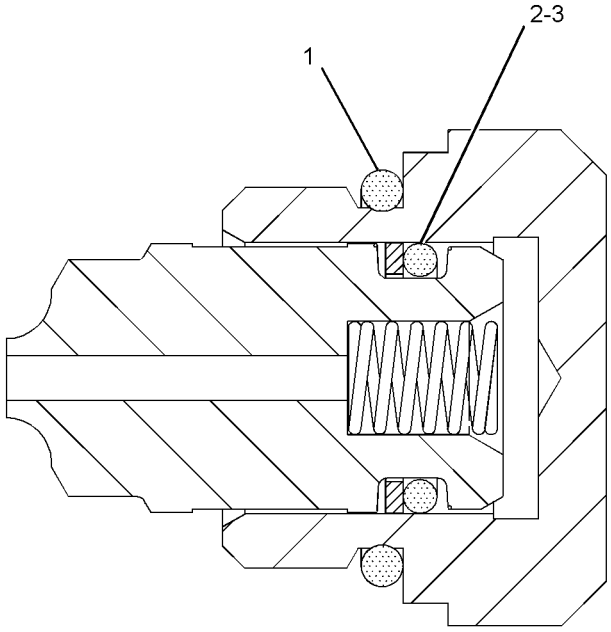

GRAPHIC #1 **<END>** g01113599

254-8095 VALVE GP-CONTROL–AUXILIARY

S/N: JKM1-UP

PART OF 251-1675, 251-1676, 266-5977 VALVE GP-MAIN CONTROL

AN ATTACHMENT

SMCS-5051 **i03547082**

NOTE	REF NO	GRAPHIC REF	PART NUMBER	QTY	PART NAME 1 2 3 4 5 6 (PRODUCT LEVEL)	SEE PAGE
	1	1	**1T-0936**	1	PLUG-PIPE	
	2	1	**2W-1776**	1	SPRING	
	3	1	**9W-7783**	2	PLUG	
	4	1	**148-2557**	1	PLUG	
	5	1	**148-9359**	2	PLUG	
	8	1	**240-1863**	2	SPRING	
	9	1	**240-1865**	2	SPRING	
	10	1	**240-1866**	2	RETAINER-SPRING	
	11	1	**240-1867**	2	PLUG-RETAINER	
	12	1	**240-6016**	1	PLUG-RETAINER	
	13	1	**240-6017**	1	SPRING	
Y	17	1	**260-8590**	1	VALVE GP-SHUTTLE	889
Y	18	1	**264-6000**	2	VALVE GP-RELIEF (LINE, AUXILIARY)	881
	19	1	*173-3993*	2	PLUG AS	
					(EACH INCLUDES)	
		1	**4J-7533**	1	SEAL-O-RING	
		1	**9S-8001**	1	PLUG-O-RING	
	20	1	*183-7263*	1	PLUG AS	
		1	**9S-8002**	1	PLUG-O-RING	
		1	**3J-7354**	1	SEAL-O-RING	
	21	1	**1P-3703**	1	SEAL-RECTANGULAR	
	22	1	**4J-9535**	2	SEAL-O-RING	
	23	1	**4K-1388**	1	SEAL-O-RING	
	24	1	**5F-8000**	1	SEAL-O-RING	
	25	1	**6J-3134**	2	SEAL-O-RING	
	26	1	**7M-8485**	2	SEAL-O-RING	
	27	1	**315-4711**	2	VALVE GP-CHECK	
		1	**276-5435**	1	KIT-SEAL (CHECK VALVE)	

Y-SEPARATE ILLUSTRATION

254-8095 VALVE GP-CONTROL *(contd.)* i03547082

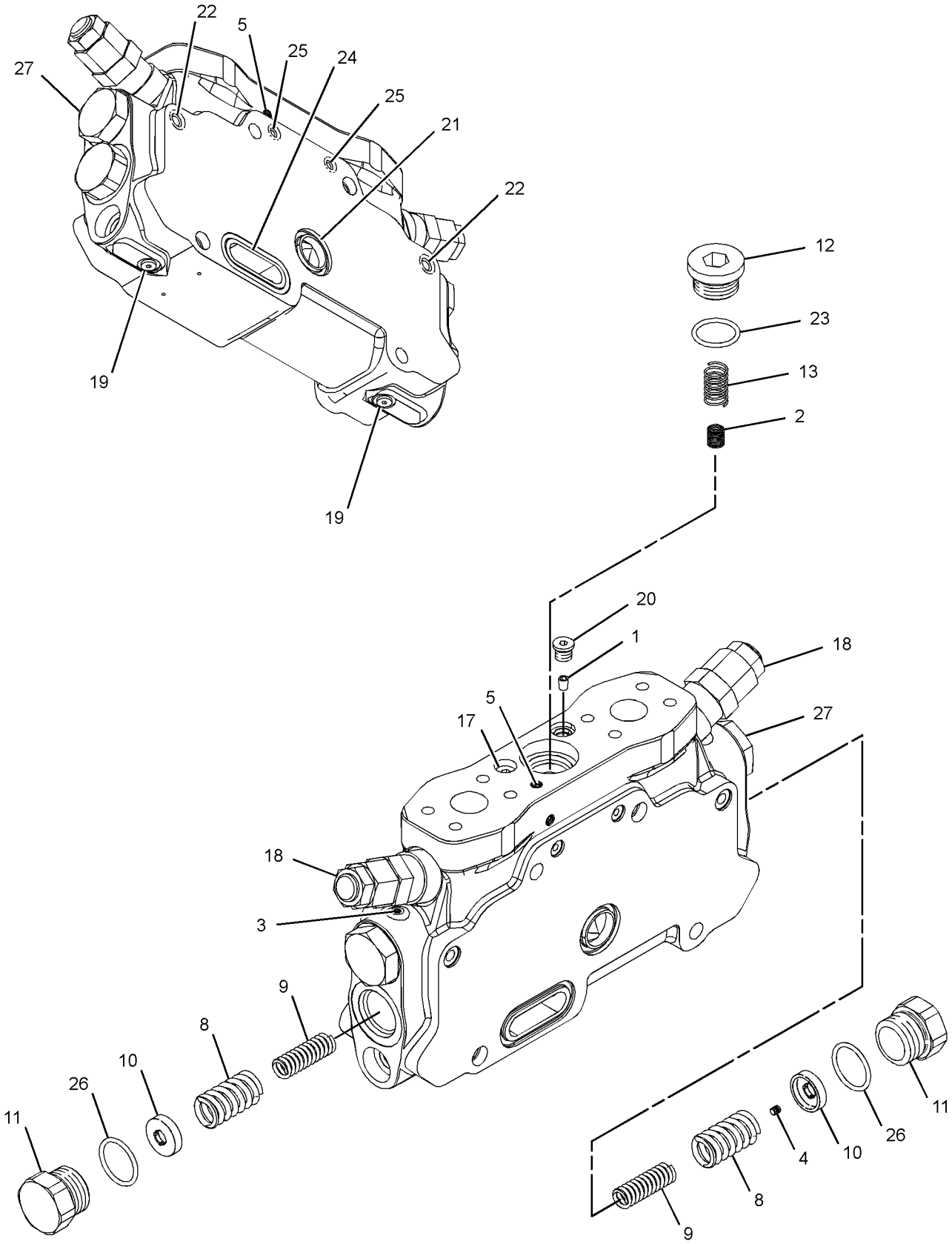

GRAPHIC #1 **<END>** g01663433

281-0041 VALVE GP-CONTROL—LIFT

S/N: JKM1-UP

PART OF 251-1675, 251-1676, 254-8100, 254-8101, 266-5977 VALVE GP-MAIN CONTROL

ALSO AN ATTACHMENT

SMCS-5051 **i02904902**

NOTE	REF NO	GRAPHIC REF	PART NUMBER	QTY	PART NAME 1 2 3 4 5 6 (PRODUCT LEVEL)	SEE PAGE
	1	1	**1T-0936**	1	PLUG-PIPE	
	2	1	**2W-1776**	1	SPRING	
	4	1	**4J-0521**	1	SEAL-O-RING	
	5	1	**9W-7783**	1	PLUG	
	6	1	**148-2557**	1	PLUG	
	7	1	**148-9359**	2	PLUG	
	10	1	**240-1863**	2	SPRING (INNER)	
	11	1	**240-1865**	2	SPRING (OUTER)	
	12	1	**240-1866**	2	RETAINER-SPRING	
	13	1	**240-1867**	2	PLUG-RETAINER	
	14	1	**240-6016**	1	PLUG-RETAINER	
	15	1	**240-6017**	1	SPRING	
Y	17	1	**260-8590**	1	VALVE GP-SHUTTLE	889
	18	1	*265-5277*	1	PLUG GP (LOAD)	
		1	**3D-2824**	1	SEAL-O-RING	
		1	**6M-5062**	1	SEAL-O-RING	
		1	**9T-7692**	1	RING	
		1	**265-5276**	1	PLUG	
Y	19	1	**270-0350**	1	VALVE GP-CHECK (LOAD)	822
J	20	1	**315-4711**	1	VALVE GP-CHECK (LOAD)	
	23	1	*173-3993*	2	PLUG AS	
					(EACH INCLUDES)	
		1	**4J-7533**	1	SEAL-O-RING	
		1	**9S-8001**	1	PLUG-O-RING	
	24	1	*183-7263*	1	PLUG AS	
		1	**3J-7354**	1	SEAL-O-RING	
		1	**9S-8002**	1	PLUG-O-RING	
	25	1	**1P-3703**	1	SEAL-RECTANGULAR	
	26	1	**4J-9535**	2	SEAL-O-RING	
	27	1	**4K-1388**	1	SEAL-O-RING	
	28	1	**5F-8000**	1	SEAL-O-RING	
	29	1	**5H-2767**	1	SEAL-O-RING	
	30	1	**6J-3134**	2	SEAL-O-RING	
	31	1	**7M-8485**	2	SEAL-O-RING	
					AVAILABLE REPAIR KIT(S):	
J			**276-5435**	1	KIT-SEAL (CHECK VALVE)	
					(INCLUDES O-RINGS & BACK-UP RINGS)	

J-KIT MARKED J SERVICES PART MARKED J
Y-SEPARATE ILLUSTRATION

281-0041 VALVE GP-CONTROL *(contd.)* **i02904902**

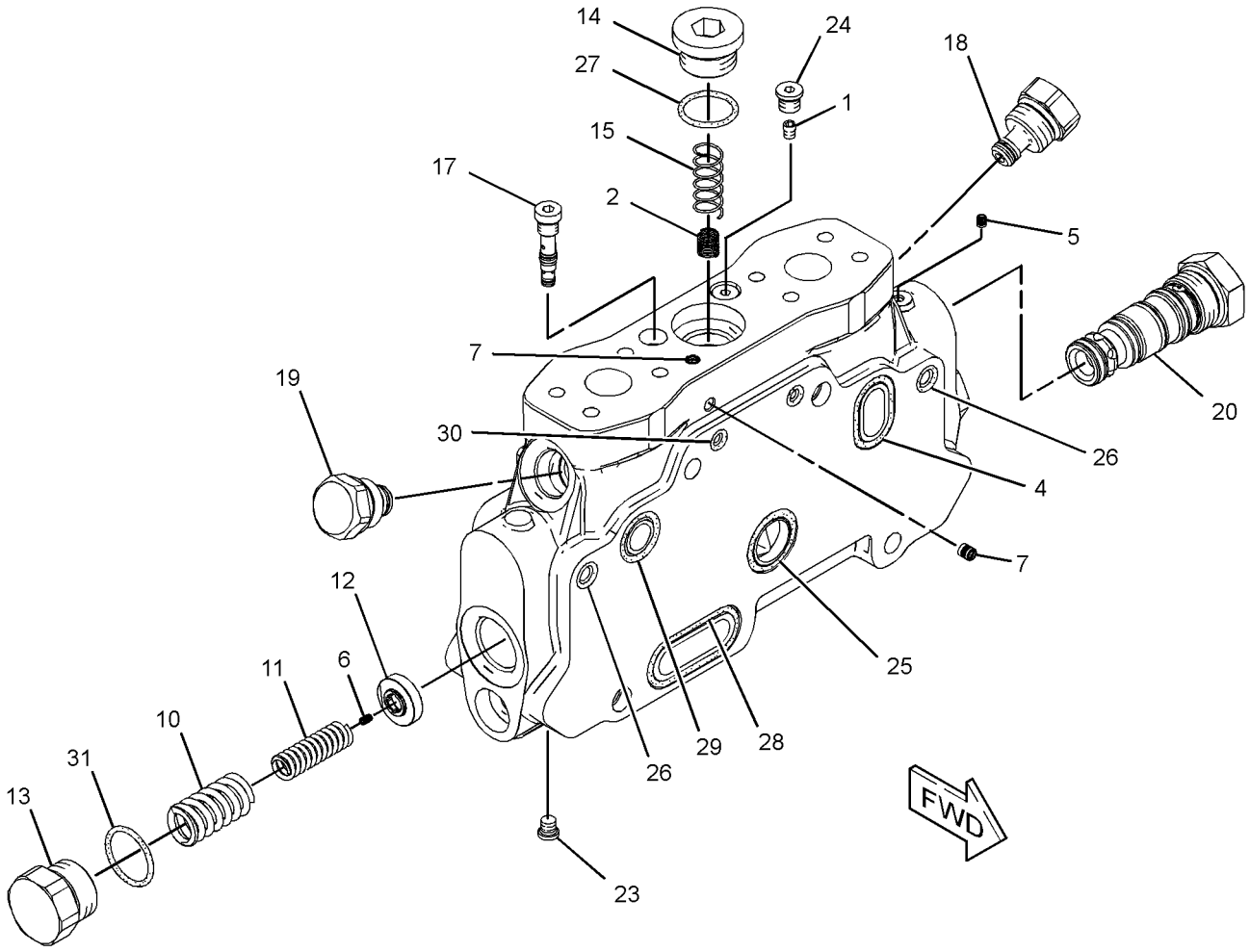

GRAPHIC #1 **<END>** g01391840

281-0042 VALVE GP-CONTROL–TILT

S/N: JKM1-UP

PART OF 251-1675, 251-1676, 254-8100, 254-8101, 266-5977 VALVE GP-MAIN CONTROL

ALSO AN ATTACHMENT

SMCS-5051 **i02905067**

NOTE	REF NO	GRAPHIC REF	PART NUMBER	QTY	PART NAME 1 2 3 4 5 6 (PRODUCT LEVEL)	SEE PAGE
	1	1	**1T-0936**	1	PLUG-PIPE	
	2	2	**2W-1776**	1	SPRING	
	4	2	**9W-7783**	1	PLUG	
	5	2	**148-2557**	1	PLUG	
	6	1	**148-9359**	2	PLUG	
	9	2	**240-1863**	2	SPRING (INNER)	
	10	2	**240-1865**	2	SPRING (OUTER)	
	11	2	**240-1866**	2	RETAINER-SPRING	
	12	1	**240-1867**	2	PLUG-RETAINER	
	13	1	**240-6016**	1	PLUG-RETAINER	
	14	2	**240-6017**	1	SPRING	
Y	16	1	**260-8590**	1	VALVE GP-SHUTTLE (BALL RESOLVER)	889
Y	17	1	**264-5999**	1	VALVE GP-RELIEF (LINE, TILT)	880
Y	18	1	**270-0291**	1	VALVE GP-RELIEF (LINE, TILT)	882
J	19	1	**315-4711**	1	VALVE GP-CHECK (LOAD)	
	22	2	*173-3993*	2	PLUG AS	
					(EACH INCLUDES)	
		2	**4J-7533**	1	SEAL-O-RING	
		2	**9S-8001**	1	PLUG-O-RING	
	23	1	*183-7263*	1	PLUG AS	
		1	**3J-7354**	1	SEAL-O-RING	
		1	**9S-8002**	1	PLUG-O-RING	
	24	1	**1P-3703**	1	SEAL-RECTANGULAR	
	25	1	**4J-9535**	2	SEAL-O-RING	
	26	2	**4K-1388**	1	SEAL-O-RING	
	27	1	**5F-8000**	1	SEAL-O-RING	
	28	1	**6J-3134**	2	SEAL-O-RING	
	29	2	**7M-8485**	2	SEAL-O-RING	
					AVAILABLE REPAIR KIT(S):	
			276-5435	1	KIT-SEAL (CHECK VALVE)	
					(INCLUDES O-RINGS & BACK-UP RINGS)	

J-KIT MARKED J SERVICES PART MARKED J
Y-SEPARATE ILLUSTRATION

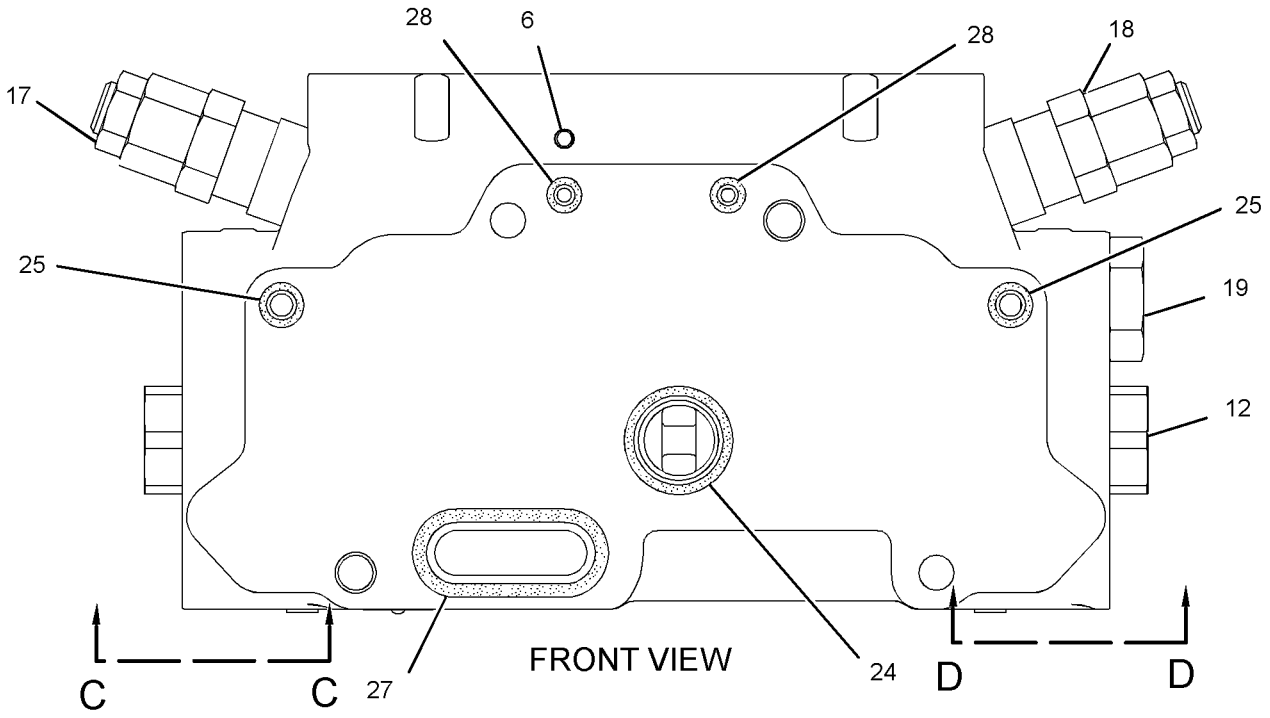

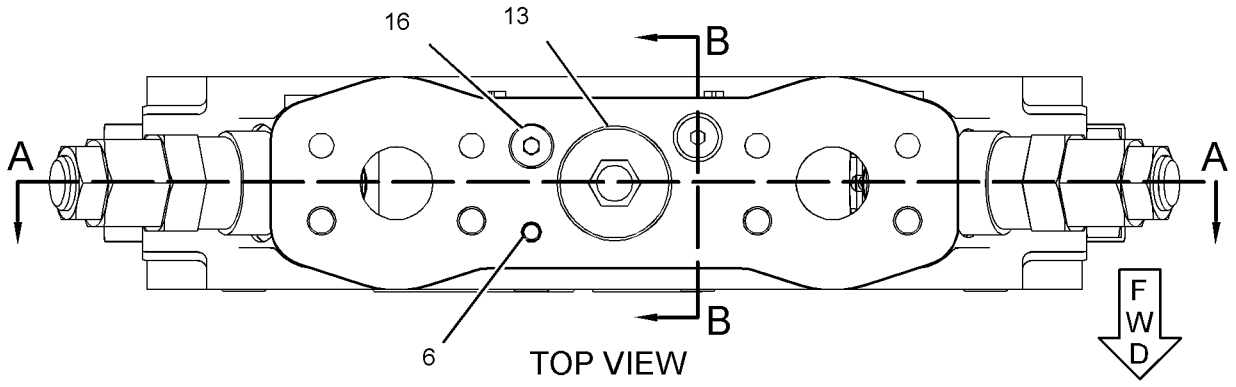

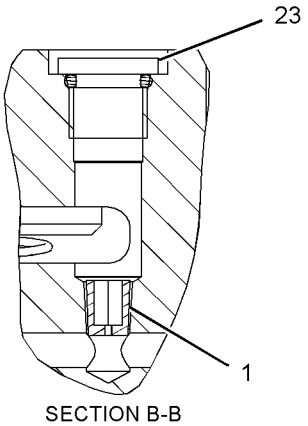

SECTION B-B

REFER TO ALL ILLUSTRATIONS OF THIS GROUP FOR AUXILIARY VIEWS.

GRAPHIC #1

g01395322

281-0042 VALVE GP-CONTROL *(contd.)* **i02905067**

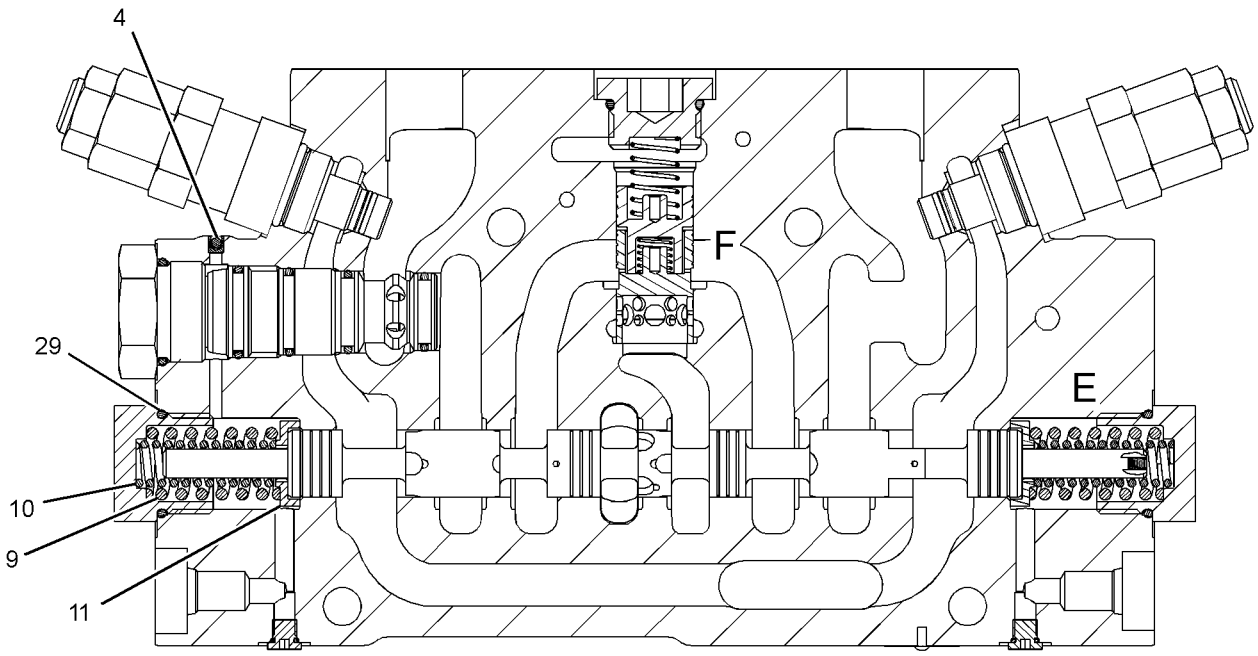

SECTION A-A

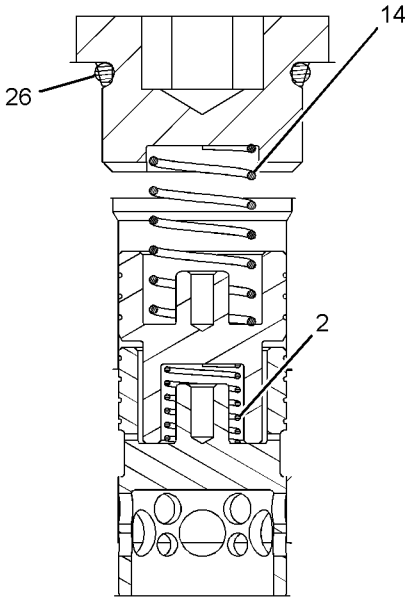

VIEW OF AREA F

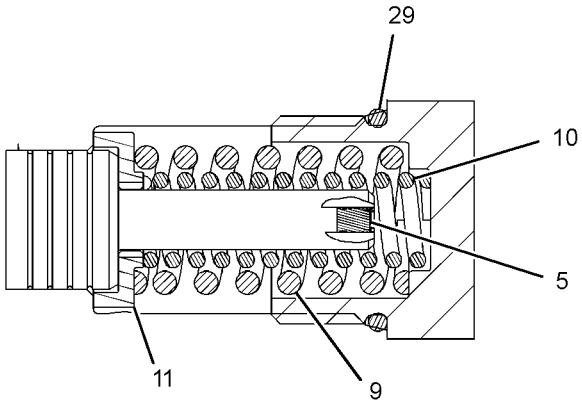

VIEW OF AREA E

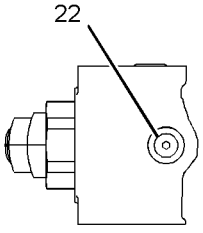

VIEW C-C

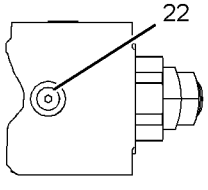

VIEW D-D

GRAPHIC #2 **<END>** g01398851

HYDRAULIC SYSTEM

180-8585 VALVE GP-DIVERTER—QUICK COUPLER

S/N: JKM1-UP
PART OF 260-8830, 260-8831 LINES GP-COUPLER
AN ATTACHMENT

SMCS-5066 **i02900389**

NOTE	REF NO	GRAPHIC REF	PART NUMBER	QTY	PART NAME 1 2 3 4 5 6 (PRODUCT LEVEL)	SEE PAGE
	1	1	**180-9068**	1	VALVE GP-SOLENOID (QUICK COUPLER)	
	2	1	**180-9069**	1	VALVE GP-DIVERTER (QUICK COUPLER)	
	3	1	**102-8802**	1	KIT-RECEPTACLE (2-PIN)	
					(INCLUDES RECEPTACLE AS AND WEDGE)	
	4	1	**186-3735**	2	PIN-CONNECTOR (16-GA TO 18-GA)	

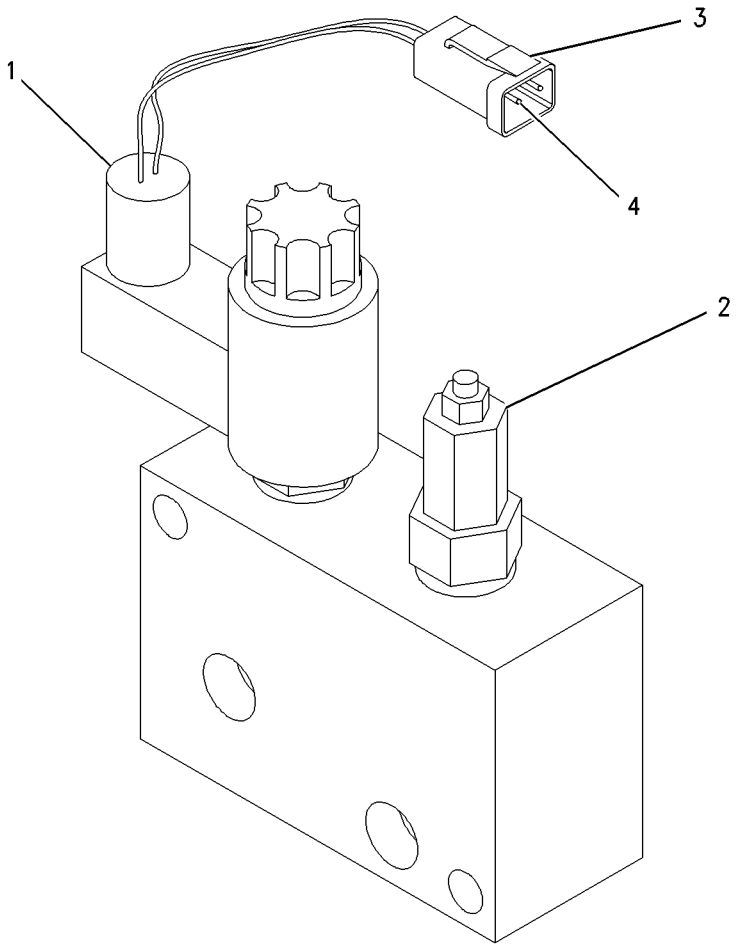

GRAPHIC #1 **<END>** g00748594

252-9256 VALVE GP-DIVERTER–HYDRAULIC FAN

S/N: JKM1-UP

PART OF 309-4907 MANIFOLD GP-CONTROL

SMCS-5066 **i02250581**

NOTE	REF NO	GRAPHIC REF	PART NUMBER	QTY	PART NAME 1 2 3 4 5 6 (PRODUCT LEVEL)	SEE PAGE
J	1	1	**2M-9780**	1	SEAL-O-RING	
J	2	1	**6V-5142**	1	SEAL-O-RING	
J	3	1	**169-1617**	2	RING-BACKUP	
J	4	1	**095-1751**	1	SEAL-O-RING	
J	5	1	**169-1616**	2	RING-BACKUP	
					AVAILABLE REPAIR KIT(S):	
J			**200-6282**	1	KIT-SEAL (DIVERTER VALVE) (HYDRAULIC FAN FLUID FLOW)	
					(INCLUDES SEALS & RINGS)	

J-KIT MARKED J SERVICES PARTS MARKED J

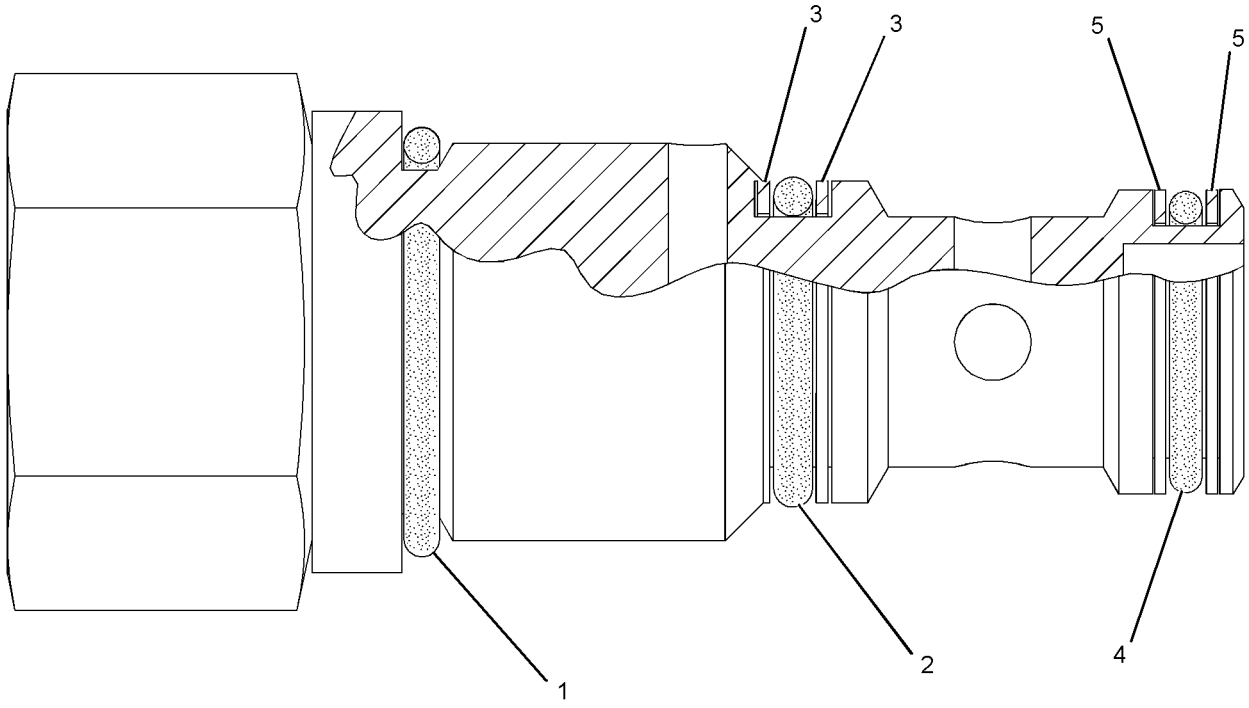

GRAPHIC #1 **<END>** g01109584

HYDRAULIC SYSTEM

245-5943 VALVE GP-DRAIN–ECOLOGY, HYDRAULIC

S/N: JKM1-UP

PART OF 239-3357 LINES GP-HYDRAULIC

SMCS-5076 **i02908524**

NOTE	REF NO	GRAPHIC REF	PART NUMBER	QTY	PART NAME 1 2 3 4 5 6 (PRODUCT LEVEL)	SEE PAGE
	1	1	**1U-2827**	1	GUIDE-VALVE	
	2	1	**8J-8782**	1	BODY-DRAIN VALVE	
	3	1	**8J-8783**	1	VALVE	
	4	1	**9J-7031**	1	PLUG-DRAIN (HYDRAULIC TANK OIL)	
	5	1	**283-5192**	1	BLOCK	
	6	1	**5M-2057**	1	SEAL-O-RING	
	7	1	**7B-3039**	1	SPRING	
M	8	1	**8T-0722**	2	BOLT-LOCKING (M10X1.5X30-MM)	
	9	1	**8T-3298**	1	SEAL-RECTANGULAR	
	10	1	**8T-4896**	2	WASHER-HARD (10.2X18.5X2.5-MM THK)	

M-METRIC PART

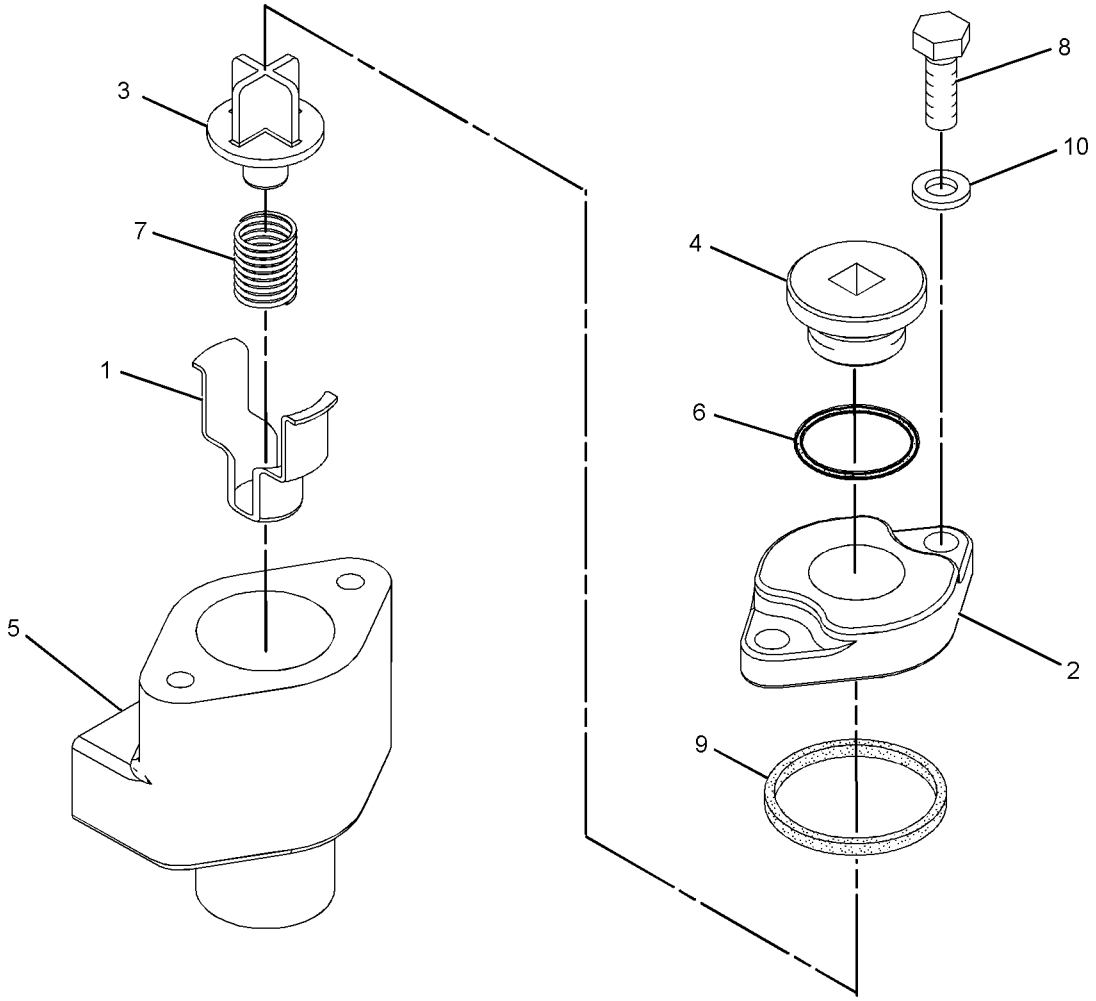

GRAPHIC #1 **<END>** g01387050

251-1675 VALVE GP-MAIN CONTROL–3-FUNCTION

S/N: JKM1-UP

PART OF 257-6971 VALVE & MTG GP-MAIN CONTROL

AN ATTACHMENT

SMCS-5051 **i03875840**

NOTE	REF NO	GRAPHIC REF	PART NUMBER	QTY	PART NAME 1 2 3 4 5 6 (PRODUCT LEVEL)	SEE PAGE
	1	1	*183-7263*	1	PLUG AS	
		1	**3J-7354**	1	SEAL-O-RING	
		1	**9S-8002**	1	PLUG-O-RING	
M	2	1	**240-8661**	4	BOLT (M12X1.75X255-MM)	
	3	1	**282-8827**	2	PLUG	
Y	4	1	**254-8095**	1	VALVE GP-CONTROL (AUXILIARY)	823
Y	5	1	**281-0041**	1	VALVE GP-CONTROL (LIFT)	825
Y	6	1	**281-0042**	1	VALVE GP-CONTROL (TILT)	827
Y	7	1	**282-4971**	1	MANIFOLD GP-HYDRAULIC (INLET)	791
	8	1	**314-8759**	1	COVER	

M-METRIC PART
Y-SEPARATE ILLUSTRATION

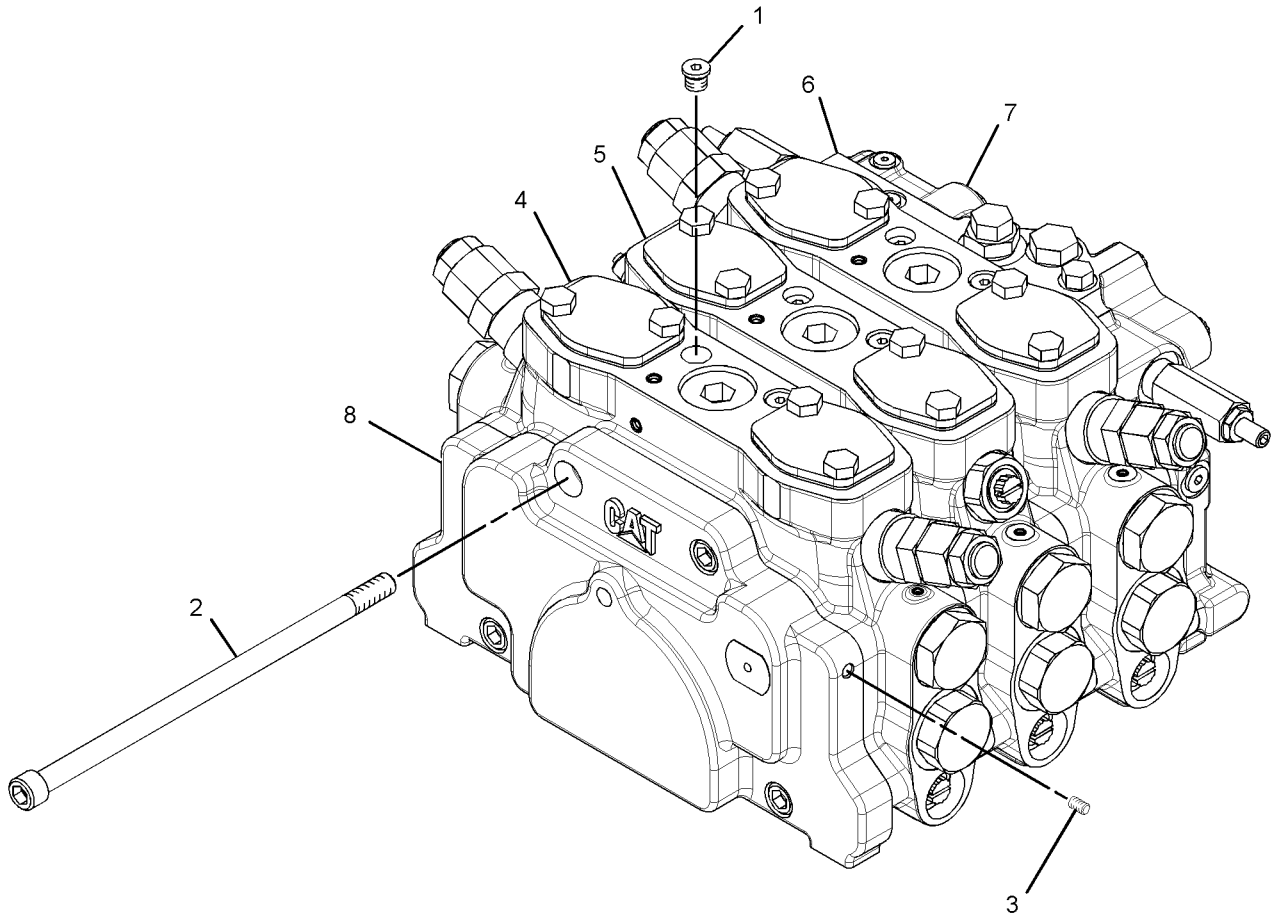

GRAPHIC #1 **<END>** g02139896

251-1676 VALVE GP-MAIN CONTROL–
3-FUNCTION, WITH RIDE CONTROL
S/N: JKM1-1077
PART OF 261-0327 VALVE & MTG GP-MAIN CONTROL
AN ATTACHMENT

SMCS-5051 **i02933338**

NOTE	REF NO	GRAPHIC REF	PART NUMBER	QTY	PART NAME 1 2 3 4 5 6 (PRODUCT LEVEL)	SEE PAGE
	1	1	*183-7263*	1	PLUG AS	
		1	**3J-7354**	1	SEAL-O-RING	
		1	**9S-8002**	1	PLUG-O-RING	
	2	1	**240-8662**	4	BOLT-SOCKET HEAD (M12X1.75X330-MM)	
Y	3	1	**254-8094**	1	VALVE GP-RIDE CONTROL	883
Y	4	1	**254-8095**	1	VALVE GP-CONTROL (AUXILIARY)	823
Y	5	1	**281-0041**	1	VALVE GP-CONTROL (LIFT)	825
Y	6	1	**281-0042**	1	VALVE GP-CONTROL (TILT)	827
Y	7	1	**282-4971**	1	MANIFOLD GP-HYDRAULIC (INLET)	791
	8	1	**314-8759**	1	COVER	

Y-SEPARATE ILLUSTRATION

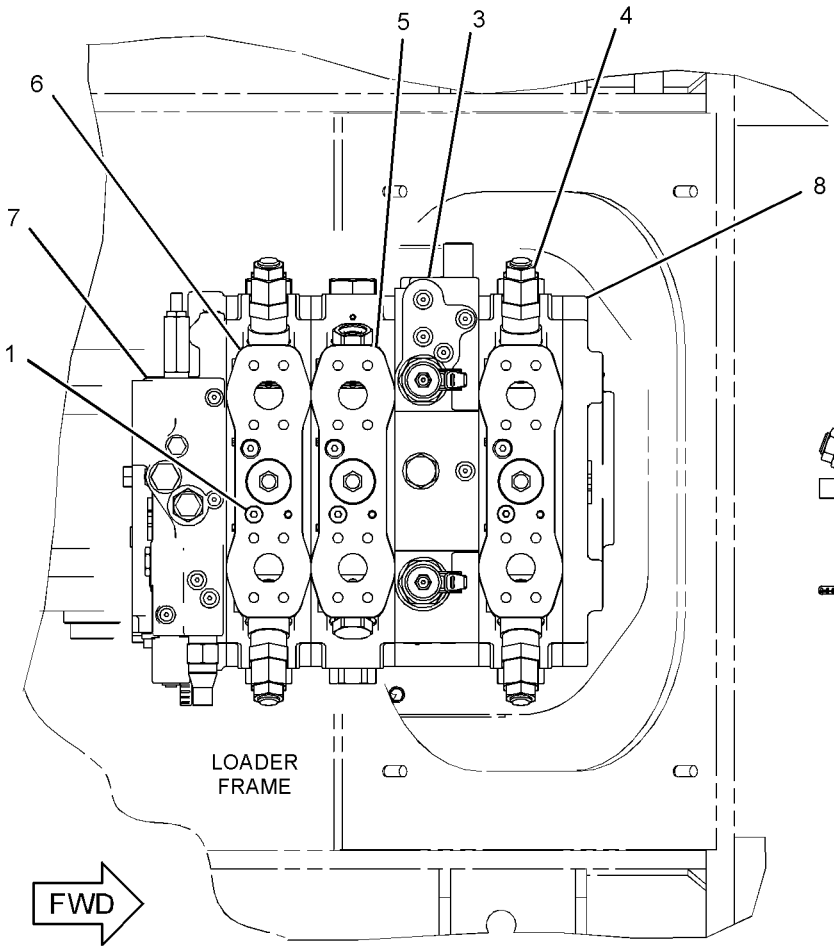

TOP VIEW

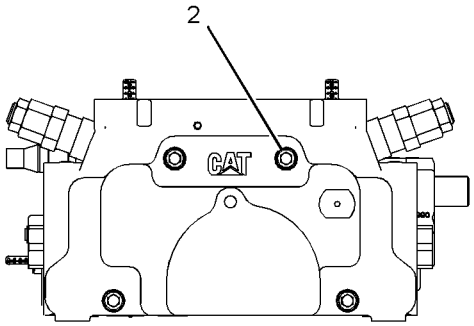

FRONT VIEW

GRAPHIC #1 **<END>** g01431699

251-1676 VALVE GP-MAIN CONTROL–
3-FUNCTION, WITH RIDE CONTROL
S/N: JKM1078-UP
PART OF 261-0327 VALVE & MTG GP-MAIN CONTROL
AN ATTACHMENT

SMCS-5051 **i03983492**

NOTE	REF NO	GRAPHIC REF	PART NUMBER	QTY	PART NAME 1 2 3 4 5 6 (PRODUCT LEVEL)	SEE PAGE
	1	1	*183-7263*	1	PLUG AS	
		1	**3J-7354**	1	SEAL-O-RING	
		1	**9S-8002**	1	PLUG-O-RING	
	2	1	**240-8662**	4	BOLT-SOCKET HEAD (M12X1.75X330-MM)	
CY	3	1	**340-2084**	1	VALVE GP-RIDE CONTROL	885
Y	4	1	**254-8095**	1	VALVE GP-CONTROL (AUXILIARY)	823
Y	5	1	**281-0041**	1	VALVE GP-CONTROL (LIFT)	825
Y	6	1	**281-0042**	1	VALVE GP-CONTROL (TILT)	827
Y	7	1	**282-4971**	1	MANIFOLD GP-HYDRAULIC (INLET)	791
	8	1	**314-8759**	1	COVER	
C	9	1	**282-8827**	2	PLUG	

C-CHANGE FROM PREVIOUS TYPE
Y-SEPARATE ILLUSTRATION

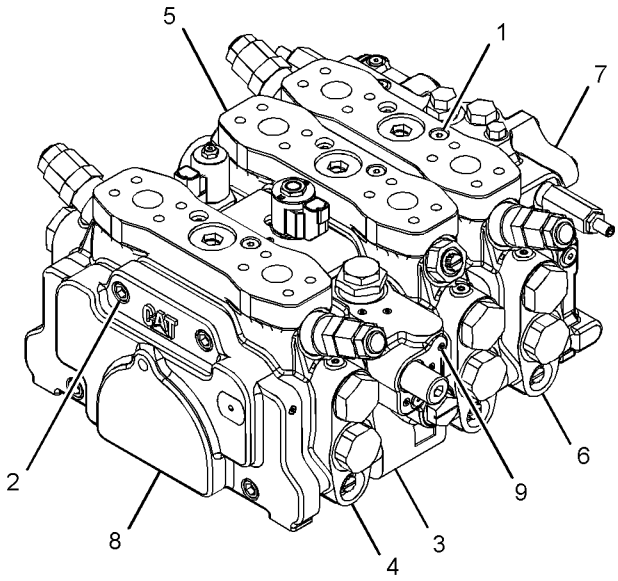

VIEW OF AREA A

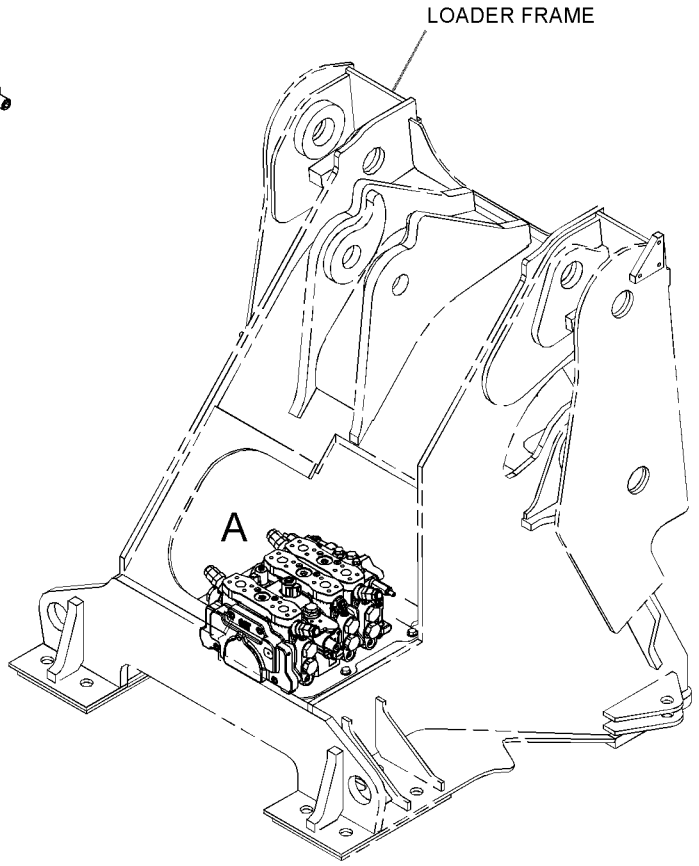

GRAPHIC #1 **<END>** g02163738

254-8100 VALVE GP-MAIN CONTROL–
2-FUNCTION, WITH RIDE CONTROL
S/N: JKM1-1077
PART OF 260-8832 VALVE & MTG GP-MAIN CONTROL
AN ATTACHMENT

SMCS-5051 **i02934492**

NOTE	REF NO	GRAPHIC REF	PART NUMBER	QTY	PART NAME 1 2 3 4 5 6 (PRODUCT LEVEL)	SEE PAGE
	1	1	*183-7263*	1	PLUG AS	
		1	**3J-7354**	1	SEAL-O-RING	
		1	**9S-8002**	1	PLUG-O-RING	
M	2	1	**240-8661**	4	BOLT (M12X1.75X255-MM)	
Y	4	1	**254-8094**	1	VALVE GP-RIDE CONTROL	883
Y	5	1	**281-0041**	1	VALVE GP-CONTROL (LIFT)	825
Y	6	1	**281-0042**	1	VALVE GP-CONTROL (TILT)	827
Y	7	1	**282-4971**	1	MANIFOLD GP-HYDRAULIC (INLET)	791
	8	1	**314-8759**	1	COVER	

M-METRIC PART
Y-SEPARATE ILLUSTRATION

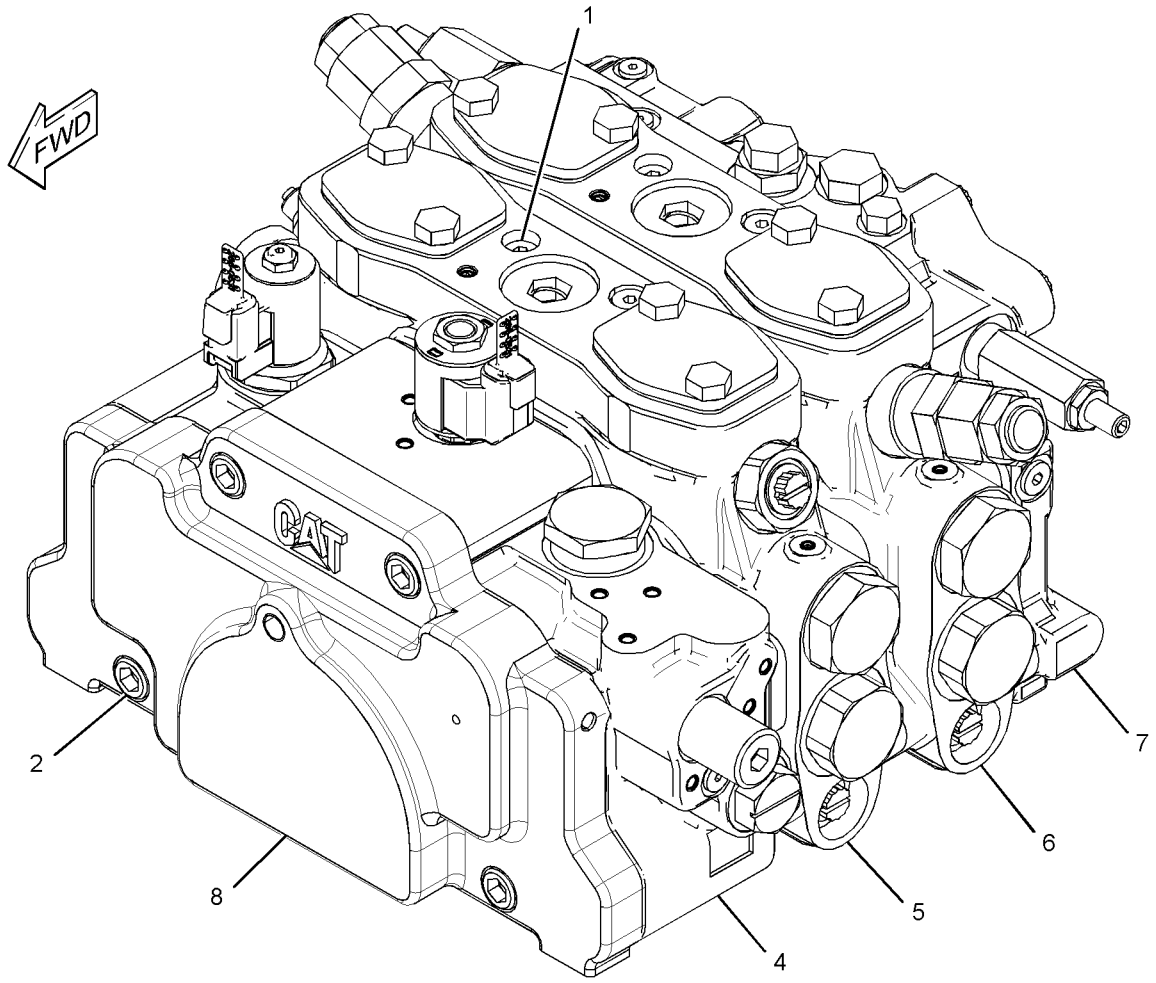

GRAPHIC #1 **<END>** g01455760

254-8100 VALVE GP-MAIN CONTROL–
2-FUNCTION, WITH RIDE CONTROL
S/N: JKM1078-UP
PART OF 260-8832 VALVE & MTG GP-MAIN CONTROL
AN ATTACHMENT

SMCS-5051 **i03983491**

NOTE	REF NO	GRAPHIC REF	PART NUMBER	QTY	PART NAME 1 2 3 4 5 6 (PRODUCT LEVEL)	SEE PAGE
	1	1	*183-7263*	1	PLUG AS	
		1	**3J-7354**	1	SEAL-O-RING	
		1	**9S-8002**	1	PLUG-O-RING	
M	2	1	**240-8661**	4	BOLT (M12X1.75X255-MM)	
CY	4	1	**340-2084**	1	VALVE GP-RIDE CONTROL	885
Y	5	1	**281-0041**	1	VALVE GP-CONTROL (LIFT)	825
Y	6	1	**281-0042**	1	VALVE GP-CONTROL (TILT)	827
Y	7	1	**282-4971**	1	MANIFOLD GP-HYDRAULIC (INLET)	791
	8	1	**314-8759**	1	COVER	
C	9	1	**282-8827**	2	PLUG	

C-CHANGE FROM PREVIOUS TYPE
M-METRIC PART
Y-SEPARATE ILLUSTRATION

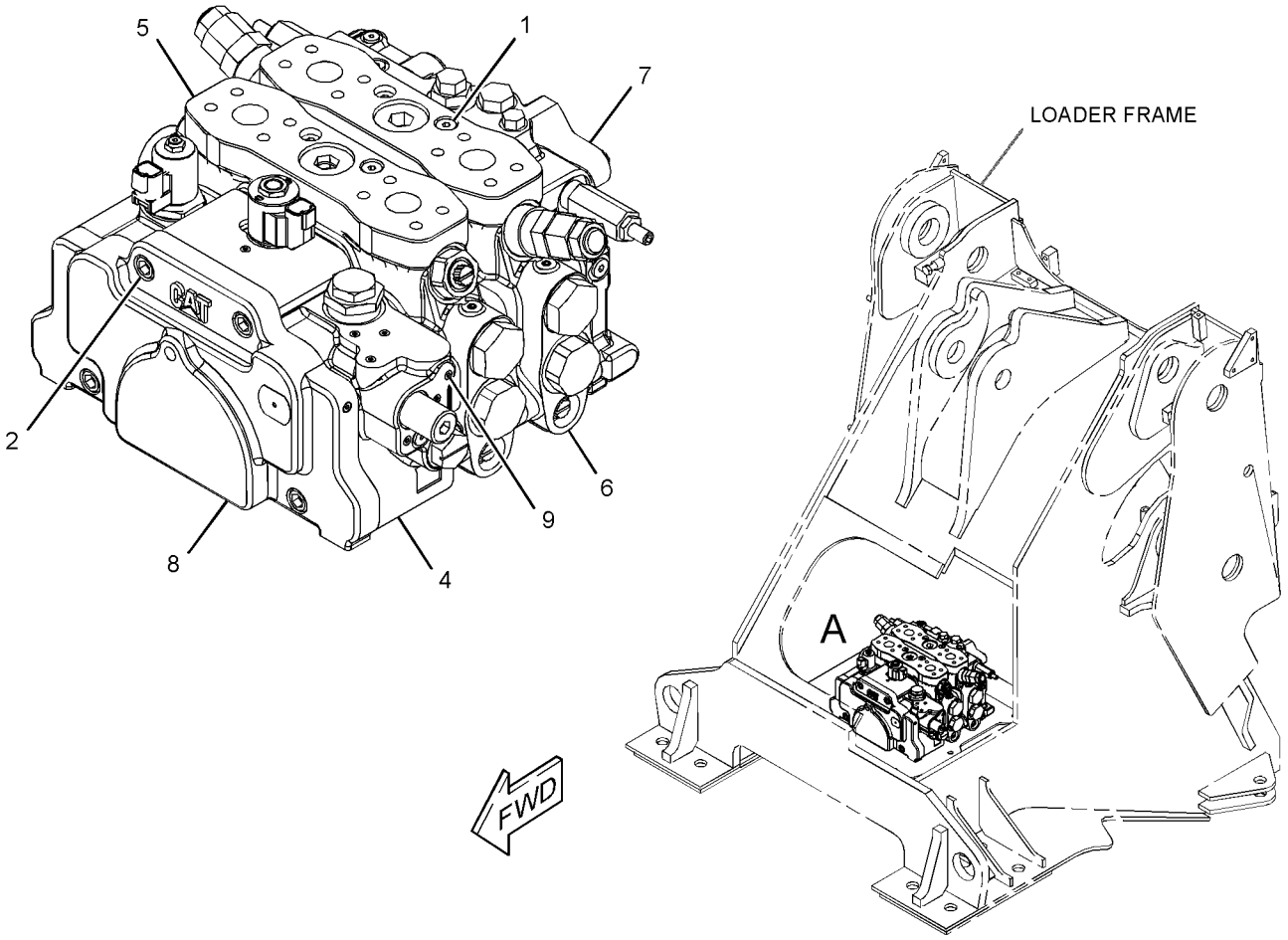

GRAPHIC #1 **<END>** g02163784

HYDRAULIC SYSTEM

254-8101 VALVE GP-MAIN CONTROL–2-FUNCTION

S/N: JKM1-UP

PART OF 257-6969 VALVE & MTG GP-MAIN CONTROL

SMCS-5051 **i03875841**

NOTE	REF NO	GRAPHIC REF	PART NUMBER	QTY	PART NAME 1 2 3 4 5 6 (PRODUCT LEVEL)	SEE PAGE
	1	1	**282-8827**	2	PLUG	
	2	1	**240-8660**	4	BOLT (M12X1.75X180-MM)	
	4	1	**314-8759**	1	COVER	
Y	5	1	**281-0041**	1	VALVE GP-CONTROL (LIFT)	825
Y	6	1	**281-0042**	1	VALVE GP-CONTROL (TILT)	827
Y	7	1	**282-4971**	1	MANIFOLD GP-HYDRAULIC (INLET)	791
	8	1	*183-7263*	1	PLUG AS	
		1	**3J-7354**	1	SEAL-O-RING	
		1	**9S-8002**	1	PLUG-O-RING	

Y-SEPARATE ILLUSTRATION

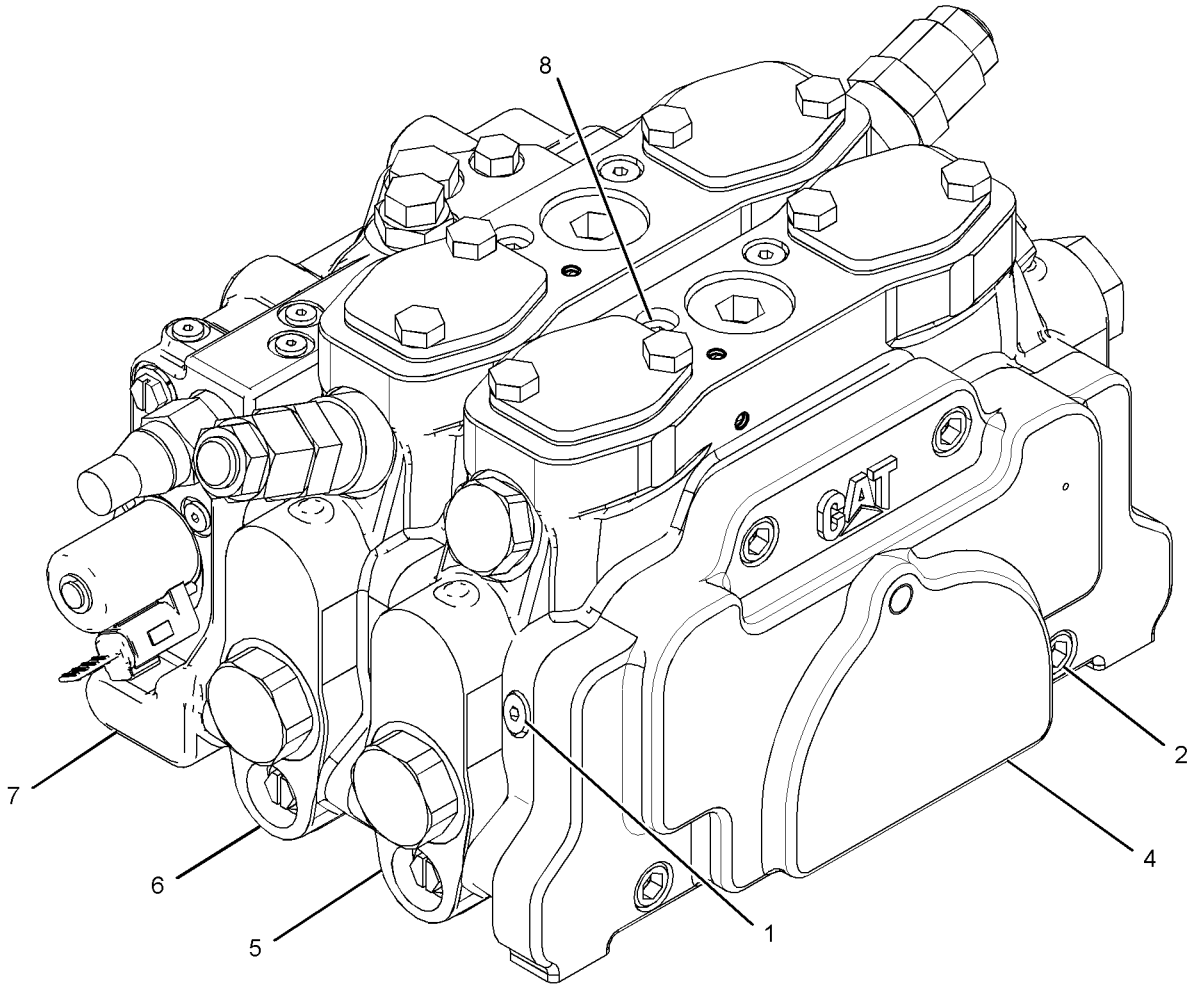

GRAPHIC #1 **<END>** g02142713

HYDRAULIC SYSTEM

266-5977 VALVE GP-MAIN CONTROL–4-FUNCTION

S/N: JKM1-UP

PART OF 266-7266 VALVE & MTG GP-MAIN CONTROL

AN ATTACHMENT

SMCS-5051 **i03875842**

NOTE	REF NO	GRAPHIC REF	PART NUMBER	QTY	PART NAME 1 2 3 4 5 6 (PRODUCT LEVEL)	SEE PAGE
	1	1	**240-8662**	4	BOLT-SOCKET HEAD (M12X1.75X330-MM)	
	2	1	**282-8827**	2	PLUG	
Y	3	1	**254-8095**	2	VALVE GP-CONTROL (AUXILIARY)	823
Y	5	1	**281-0041**	1	VALVE GP-CONTROL (LIFT)	825
Y	6	1	**281-0042**	1	VALVE GP-CONTROL (TILT)	827
Y	7	1	**282-4971**	1	MANIFOLD GP-HYDRAULIC (INLET)	791
	8	1	**314-8759**	1	COVER	
	9	1	*183-7263*	1	PLUG AS	
		1	**3J-7354**	1	SEAL-O-RING	
		1	**9S-8002**	1	PLUG-O-RING	

Y-SEPARATE ILLUSTRATION

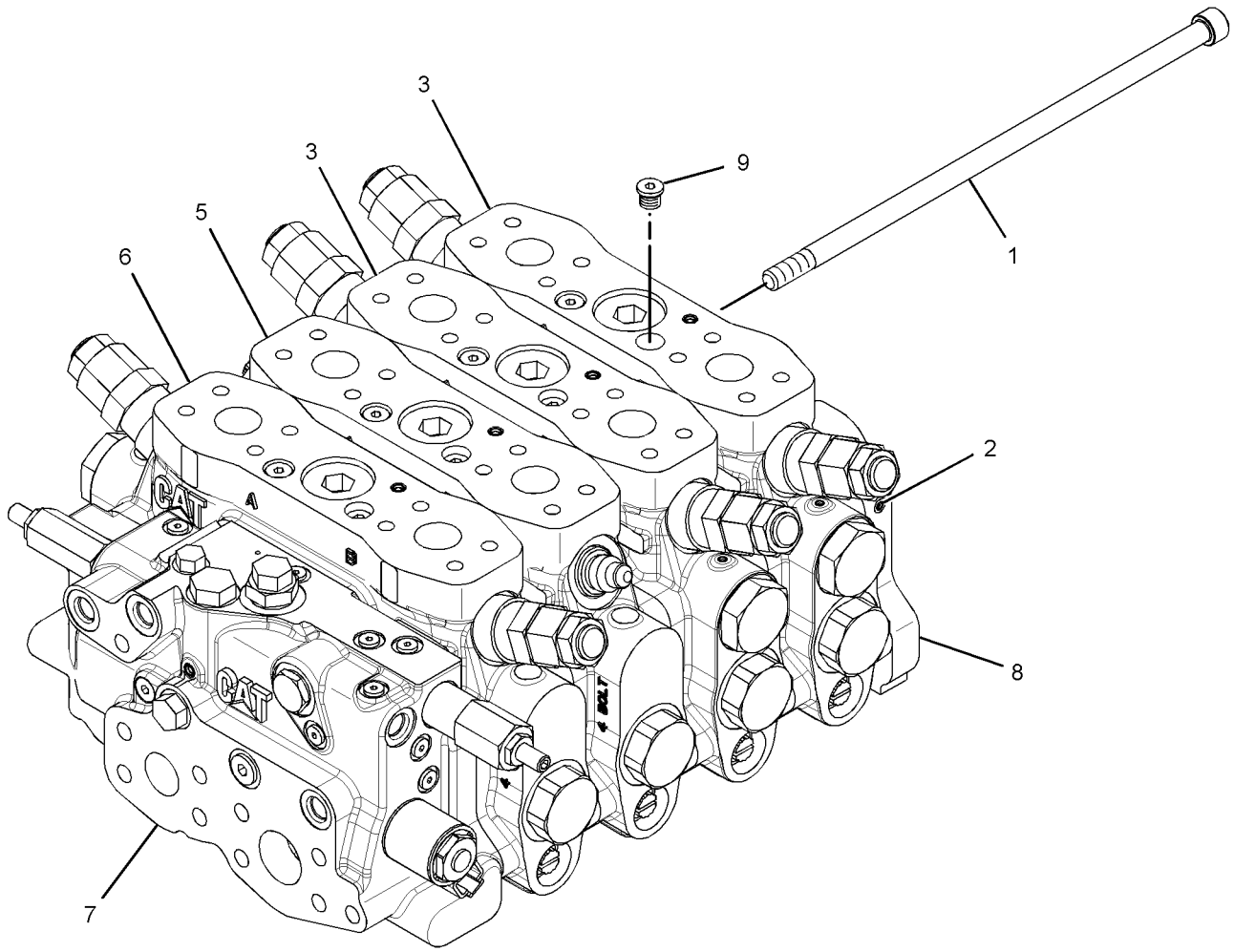

GRAPHIC #1 **<END>** g02139949

HYDRAULIC SYSTEM

112-1817 VALVE GP-MANUAL

S/N: JKM1-UP

PART OF 260-8830, 260-8831, 266-0799, 268-1061 LINES GP-COUPLER, 260-8818 VALVE GP-MANUAL

ALSO AN ATTACHMENT

SMCS-5001, 5130, 5147 **i01859603**

NOTE	PART NUMBER	QTY	PART NAME 1 2 3 4 5 6 (PRODUCT LEVEL)	SEE PAGE
J	*202-0671*	1	VALVE GP-MANUAL	
			—OR—	
J	*202-0673*	1	VALVE GP-MANUAL	
			—OR—	
J	*202-0674*	1	VALVE GP-MANUAL	
			AVAILABLE REPAIR KIT(S):	
J	**112-9861**	1	KIT-SEAL	
			(INCLUDES SEALS, CONNECTORS & THRUST RING)	

J-KIT MARKED J SERVICES PARTS MARKED J

<END>

260-8818 VALVE GP-MANUAL—LIFT ARM LOWERING CONTROL

S/N: JKM1-1004

PART OF 237-7535 HYDRAULIC AR-2 VALVE

SMCS-5001, 5130, 5147 **i03539010**

NOTE	REF NO	GRAPHIC REF	PART NUMBER	QTY	PART NAME 1 2 3 4 5 6 (PRODUCT LEVEL)	SEE PAGE
	1	1	**264-8962**	1	PLATE	
I	3	1	**265-4127**	1	HOSE AS	
I	4	1	**285-3771**	1	HOSE AS	
	5	1	**096-6166**	4	WASHER-HARD (4.5X9X1-MM THK)	
Y	6	1	**112-1817**	1	VALVE GP-MANUAL (LOWERING CONTROL)	840
	7	1	*148-8367*	2	ELBOW AS	
					(EACH INCLUDES)	
		1	**6V-8397**	1	SEAL-O-RING	
		1	**6V-9850**	1	ELBOW	
	8	1	*148-8374*	1	ELBOW AS	
		1	**3K-0360**	1	SEAL-O-RING	
		1	**6V-8397**	1	SEAL-O-RING	
		1	**6V-8723**	1	ELBOW	
	9	1	*148-8378*	2	ELBOW AS	
					(EACH INCLUDES)	
		1	**3J-1907**	1	SEAL-O-RING	
		1	**6V-8397**	1	SEAL-O-RING	
		1	**6V-8724**	1	ELBOW	
	10	1	*148-8435*	1	TEE AS	
		1	**3J-1907**	1	SEAL-O-RING	
		1	**6V-8397**	2	SEAL-O-RING	
		1	**6V-8781**	1	TEE-FACE SEAL	
	11	1	**6D-4246**	1	CLIP	
	12	1	**6V-9829**	1	CAP AS	
M	13	1	**8T-0285**	4	SCREW-MACHINE (M4X0.7X12-MM)	
	14	1	**8T-4121**	3	WASHER-HARD (11X21X2.5-MM THK)	
M	15	1	**8T-4136**	2	BOLT (M10X1.5X25-MM)	
M	16	1	**8T-4137**	1	BOLT (M10X1.5X20-MM)	

I-REFER TO HYDRAULIC INFORMATION SYSTEM
M-METRIC PART
Y-SEPARATE ILLUSTRATION

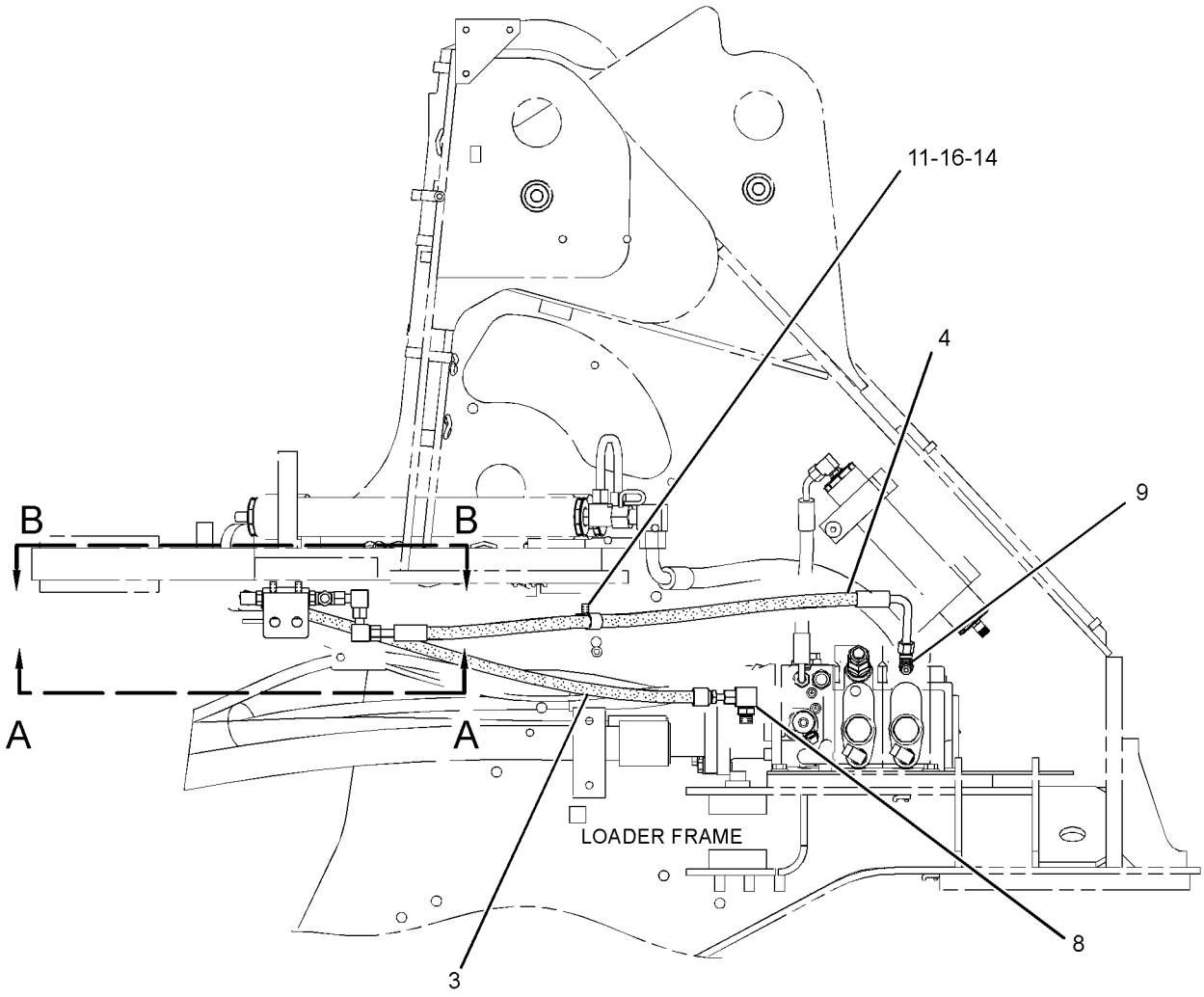

RIGHT SIDE VIEW

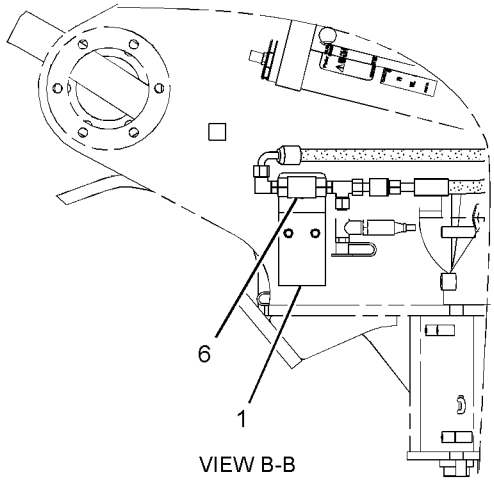

VIEW B-B

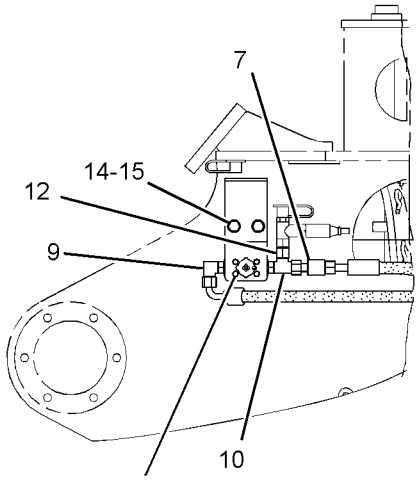

VIEW A-A

GRAPHIC #1 **<END>** g01868593

260-8818 VALVE GP-MANUAL—LIFT ARM LOWERING CONTROL

S/N: JKM1005-UP

PART OF 237-7535 HYDRAULIC AR-2 VALVE

SMCS-5001, 5130, 5147 **i03986992**

NOTE	REF NO	GRAPHIC REF	PART NUMBER	QTY	PART NAME 1 2 3 4 5 6 (PRODUCT LEVEL)	SEE PAGE
	1	1	**264-8962**	1	PLATE	
CI	3	1	**128-0281**	1	HOSE AS	
I	4	1	**285-3771**	1	HOSE AS	
	5	1	**096-6166**	4	WASHER-HARD (4.5X9X1-MM THK)	
Y	6	1	**112-1817**	1	VALVE GP-MANUAL (LOWERING CONTROL)	840
	7	1	*148-8367*	2	ELBOW AS	
					(EACH INCLUDES)	
		1	**6V-8397**	1	SEAL-O-RING	
		1	**6V-9850**	1	ELBOW	
C	8	1	*150-4044*	1	CONNECTOR AS	
			3J-1907	1	SEAL-O-RING	
			6V-8397	1	SEAL-O-RING	
			8T-1779	1	CONNECTOR	
	9	1	*148-8378*	2	ELBOW AS	
					(EACH INCLUDES)	
		1	**3J-1907**	1	SEAL-O-RING	
		1	**6V-8397**	1	SEAL-O-RING	
		1	**6V-8724**	1	ELBOW	
	10	1	*148-8435*	1	TEE AS	
		1	**3J-1907**	1	SEAL-O-RING	
		1	**6V-8397**	2	SEAL-O-RING	
		1	**6V-8781**	1	TEE-FACE SEAL	
	11	1	**6D-4246**	1	CLIP	
	12	1	**6V-9829**	1	CAP AS	
M	13	1	**8T-0285**	4	SCREW-MACHINE (M4X0.7X12-MM)	
	14	1	**8T-4121**	3	WASHER-HARD (11X21X2.5-MM THK)	
M	15	1	**8T-4136**	2	BOLT (M10X1.5X25-MM)	
M	16	1	**8T-4137**	1	BOLT (M10X1.5X20-MM)	

C-CHANGE FROM PREVIOUS TYPE
I-REFER TO HYDRAULIC INFORMATION SYSTEM
M-METRIC PART
Y-SEPARATE ILLUSTRATION

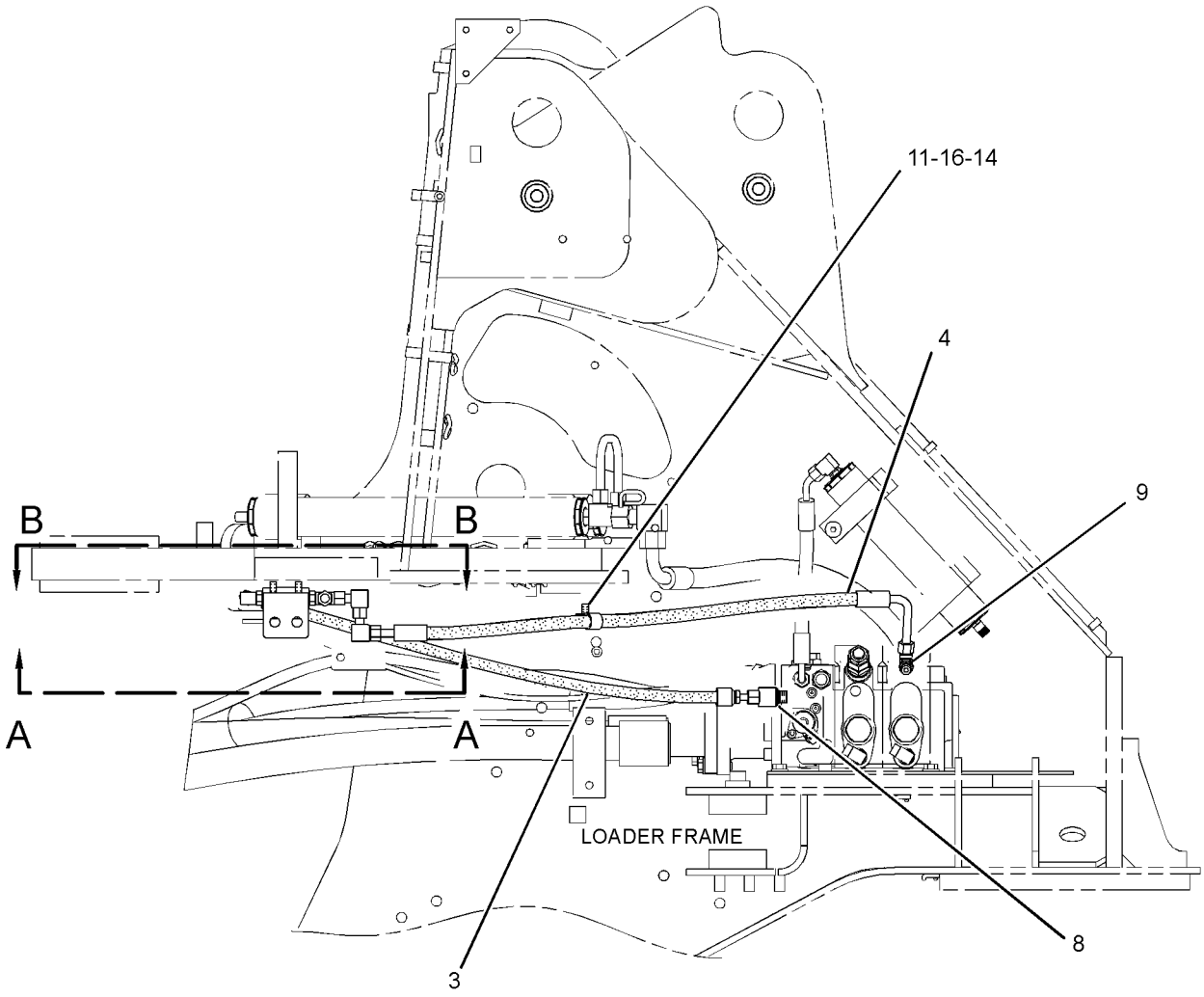

RIGHT SIDE VIEW

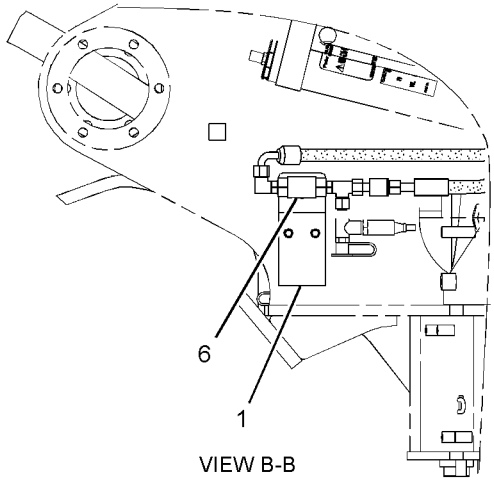

VIEW B-B

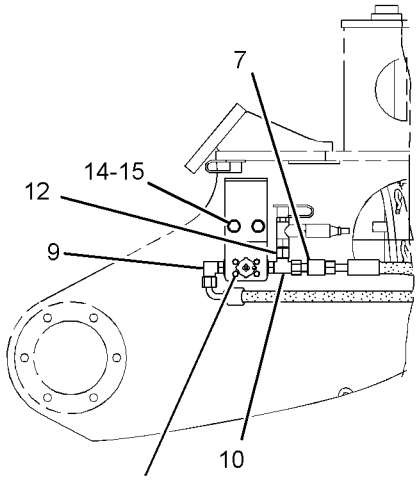

VIEW A-A

GRAPHIC #1 **<END>** g02168254

261-8653 VALVE GP-PILOT—JOYSTICK, 2-FUNCTION

S/N: JKM1-UP
PART OF 257-5664 CONTROL GP-PILOT OPERATED HYD
AN ATTACHMENT

SMCS-5059 **i03635409**

NOTE	REF NO	GRAPHIC REF	PART NUMBER	QTY	PART NAME 1 2 3 4 5 6 (PRODUCT LEVEL)	SEE PAGE
	1	1	**102-8806**	1	KIT-RECEPTACLE (8-PIN)	
					(INCLUDES RECEPTACLE AS & WEDGE)	
	4	2	**108-7507**	4	CONNECTOR	
	5	2	**136-9297**	1	PLATE	
	6	2	**136-9298**	1	RETAINER	
	7	1	**141-4852**	1	BOOT	
	8	2	**141-7481**	1	SPACER	
	9	1	**141-9236**	1	SCREEN AS	
	10	2	**146-8478**	1	CUP	
	11	2	**149-5470**	1	PLATE	
	12	1	**153-8952**	1	ADAPTER	
	13	1	**163-5512**	5	GROMMET	
	14	2	**168-1877**	1	BODY AS	
		2	**3J-7354**	8	SEAL-O-RING	
		2	**9S-8002**	8	PLUG-O-RING	
Y	15	2	**212-4962**	2	VALVE GP-PILOT CARTRIDGE (LIFT, LOWER)	873
Y	16	1	**212-4963**	2	VALVE GP-PILOT CARTRIDGE (DUMP, TILT BACK)	874
	17	1	**261-0560**	1	PLATE	
	19	2	**269-4949**	6	ADAPTER	
	20	1	**145-8428**	3	COIL AS-DETENT	
					(EACH INCLUDES)	
D		1	**6V-2689**		TUBE-HEAT SHRINK (6.35-MM DIA) (0.8-M)	
		1	**8T-8729**	2	PIN-CONNECTOR (16-GA TO 18-GA)	
Y	21	2	**147-3322**	1	PLATE GP-PILOT VALVE (JOYSTICK)	801
	22	2	**153-8947**	1	SWIVEL AS	
M	23	1	**191-8920**	4	BOLT-SOCKET HEAD (M6X1X12-MM)	
	24	1,2	**3J-1907**	6	SEAL-O-RING	
	25	2	**8L-2786**	1	SEAL-O-RING	
	26	1,2	**7W-7381**	2	FITTING-OUTLET	
	27	1	**8T-8737**	2	PLUG-SEAL	

D-ORDER BY THE METER
M-METRIC PART
Y-SEPARATE ILLUSTRATION

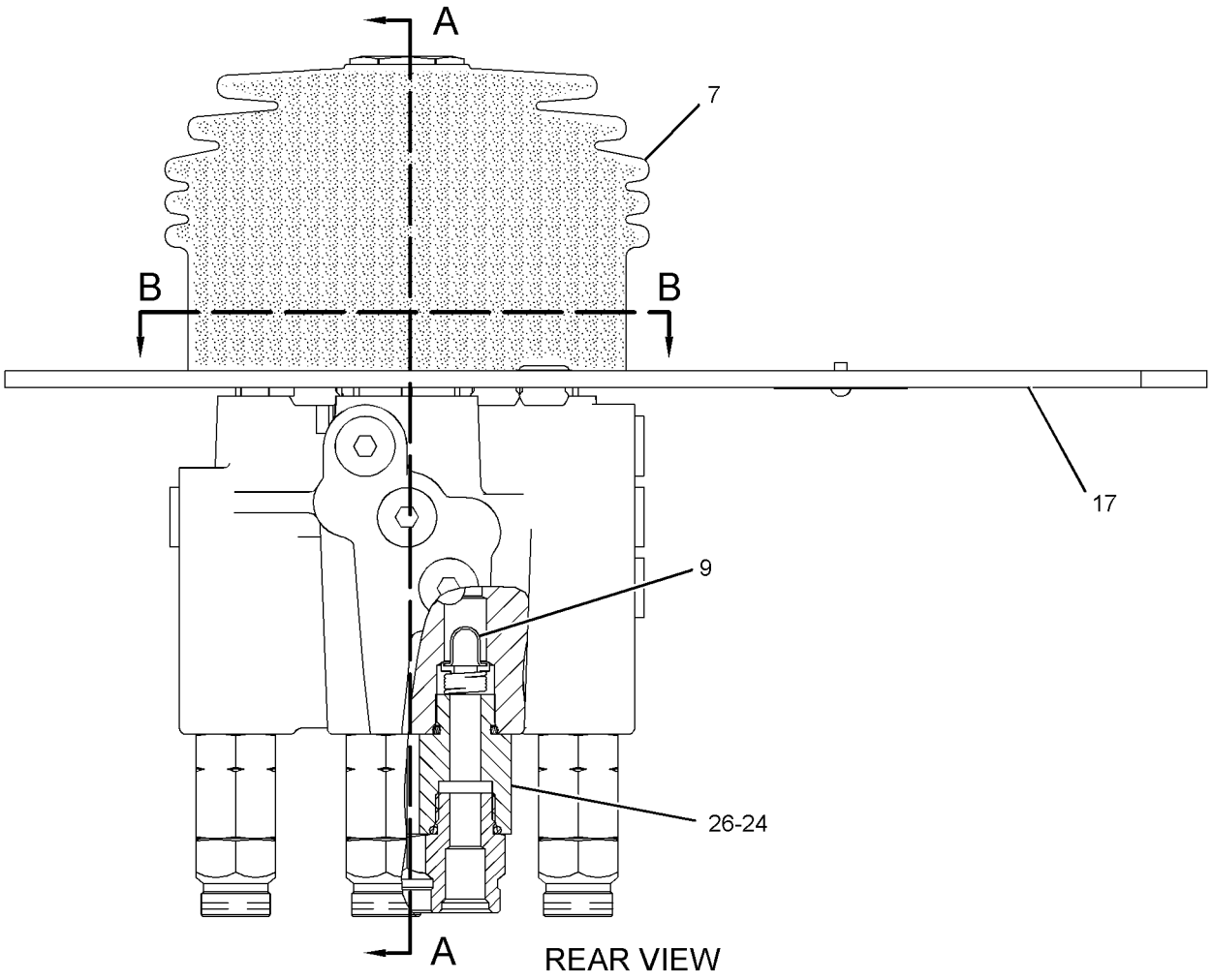

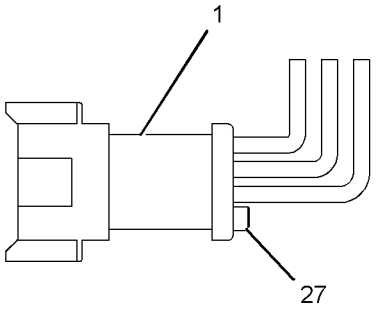

VIEW OF PLUG DETAIL

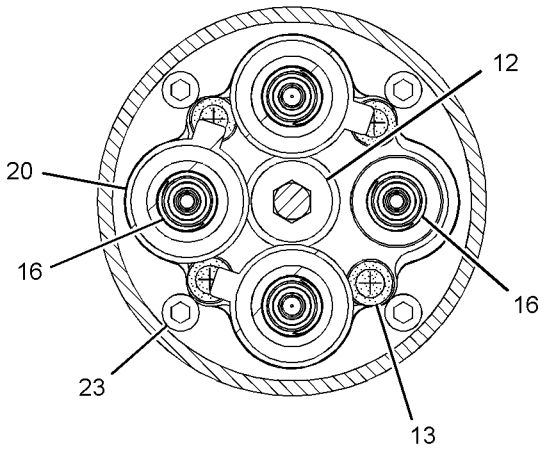

SECTION B-B

GRAPHIC #1

g01433288

261-8653 VALVE GP-PILOT *(contd.)* **i03635409**

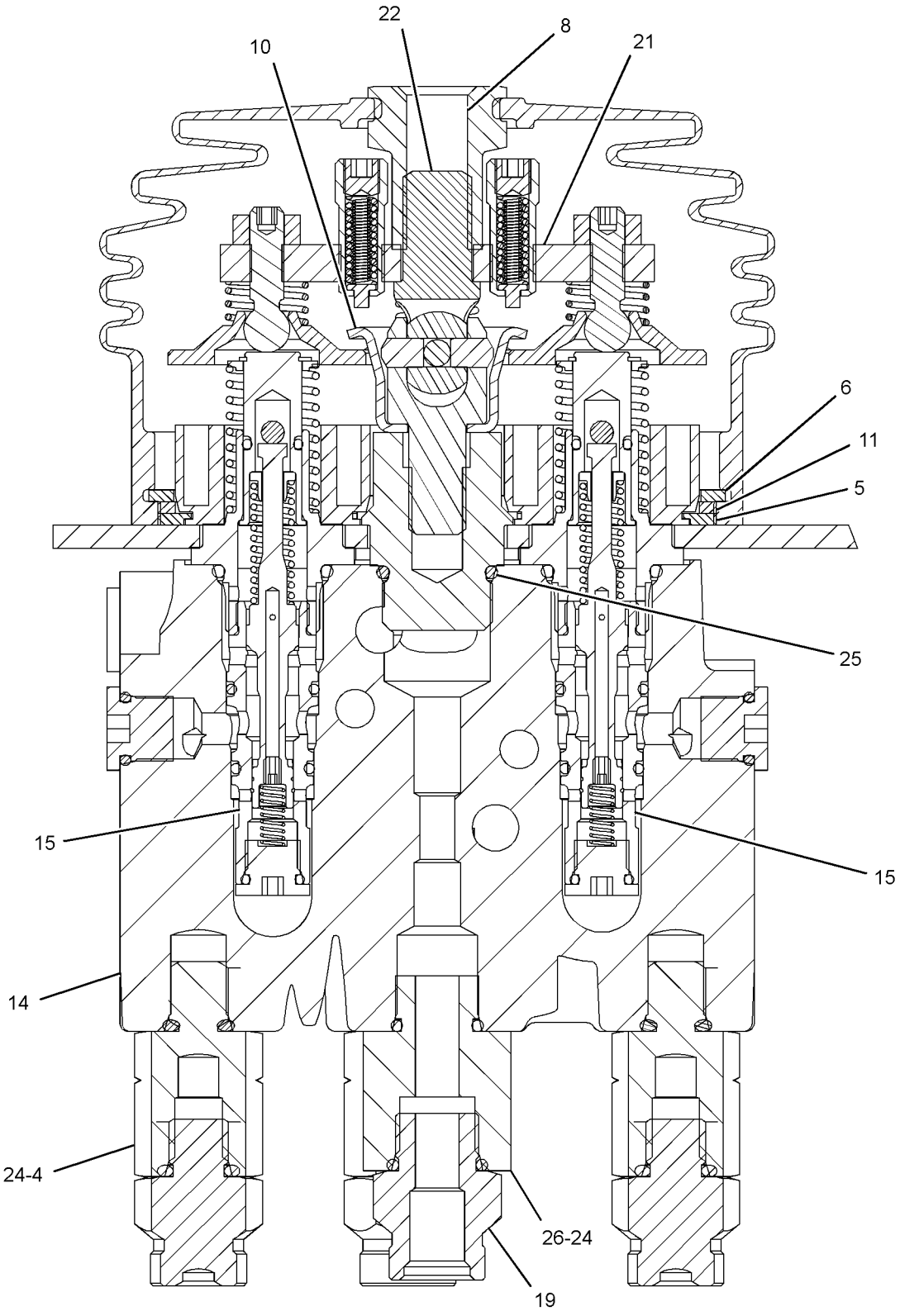

SECTION A-A

GRAPHIC #2 **<END>** g01427396

261-8654 VALVE GP-PILOT–2-FUNCTION

S/N: JKM1-UP
PART OF 257-5661 CONTROL GP-PILOT OPERATED HYD
ALSO AN ATTACHMENT
TYPE 1

SMCS-5059 **i02917000**

NOTE	REF NO	GRAPHIC REF	PART NUMBER	QTY	PART NAME 1 2 3 4 5 6 (PRODUCT LEVEL)	SEE PAGE
	1	1	**102-8806**	1	KIT-RECEPTACLE (8-PIN)	
					(INCLUDES RECEPTACLE AS & WEDGE)	
	2	1	**3E-3389**	1	WEDGE-RECEPTACLE LOCK (8-PIN)	
	4	2	**108-7507**	4	CONNECTOR	
	5	2	**141-1556**	2	RETAINER	
	6	2	**141-2032**	2	PLATE	
	7	1	**141-9236**	1	SCREEN AS	
Y	8	2	**145-2322**	1	PIVOT GP-PILOT VALVE (LIFT)	794
	9	2	**145-2334**	2	ADAPTER	
	10	2	**146-8477**	2	BRACKET	
	11	1	**146-8981**	2	PIN	
Y	12	2	**147-2038**	1	PIVOT GP-PILOT VALVE (TILT)	795
	13	2	**148-7922**	2	PLATE	
	14	2	**163-5512**	5	GROMMET	
Y	15	1	**168-1879**	1	BODY GP-PILOT VALVE	669
Y	17	2	**262-7181**	3	VALVE GP-PILOT CARTRIDGE (LIFT, DUMP, TILT BACK)	875
Y	18	2	**262-7182**	1	VALVE GP-PILOT CARTRIDGE (LOWER)	876
	20	2	**269-4949**	6	ADAPTER	
	21	1	**033-9139**	4	RING-RETAINING	
	22	1	**136-9292**	2	BOOT	
	23	2	**145-8428**	3	COIL AS-DETENT	
					(EACH INCLUDES)	
D		2	**6V-2689**		TUBE-HEAT SHRINK (6.35-MM DIA) (0.375-M EACH)	
		2	**186-3735**	2	PIN-CONNECTOR (16-GA TO 18-GA)	
	24	1	*148-8407*	2	PLUG AS	
					(EACH INCLUDES)	
		1	**3J-1907**	1	SEAL-O-RING	
		1	**9S-4191**	1	PLUG-O-RING	
M	25	2	**191-8920**	8	BOLT-SOCKET HEAD (M6X1X12-MM)	
	26	1	**3J-1907**	6	SEAL-O-RING	
M	27	2	**5A-3604**	2	BOLT-SOCKET HEAD (M8X1.25X25-MM)	
	28	1,2	**7W-7381**	2	FITTING-OUTLET	
	29	2	**8L-2786**	2	SEAL-O-RING	
	30	1	**8T-8737**	2	PLUG-SEAL	

D-ORDER BY THE METER
M-METRIC PART
Y-SEPARATE ILLUSTRATION

REFER TO ALL ILLUSTRATIONS OF
THIS GROUP FOR AUXILIARY VIEWS

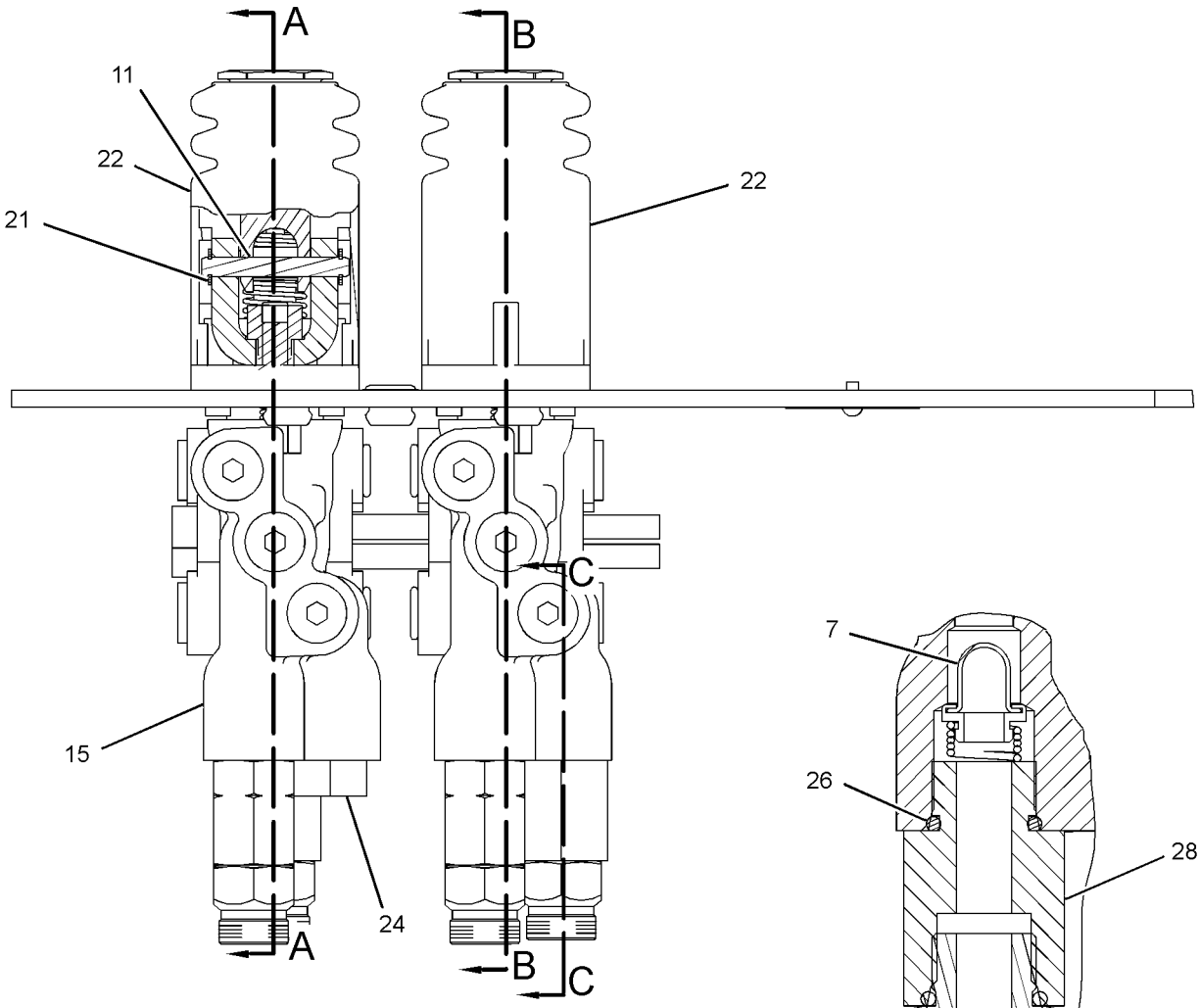

REAR VIEW

SECTION C-C

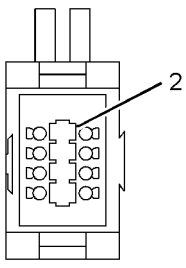

VIEW D-D

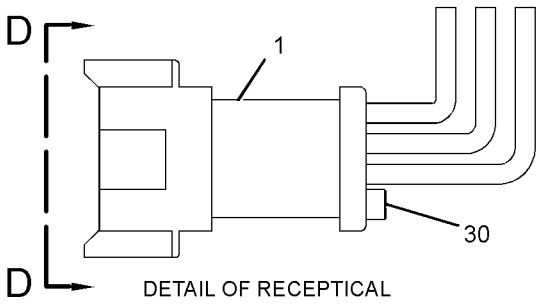

DETAIL OF RECEPTICAL

GRAPHIC #1 g01424382

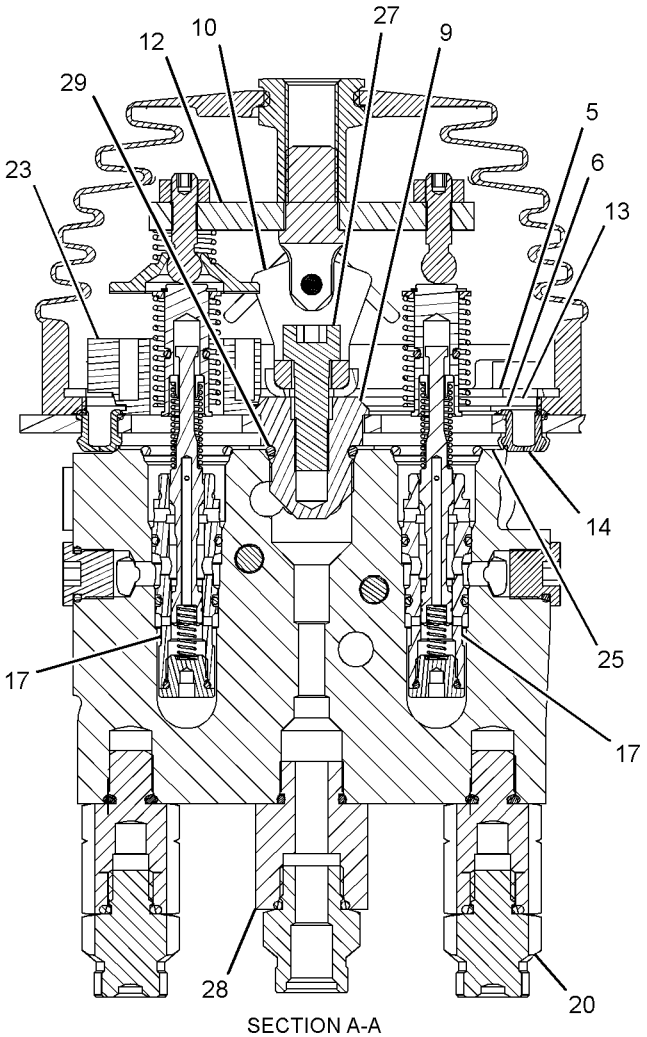

SECTION A-A

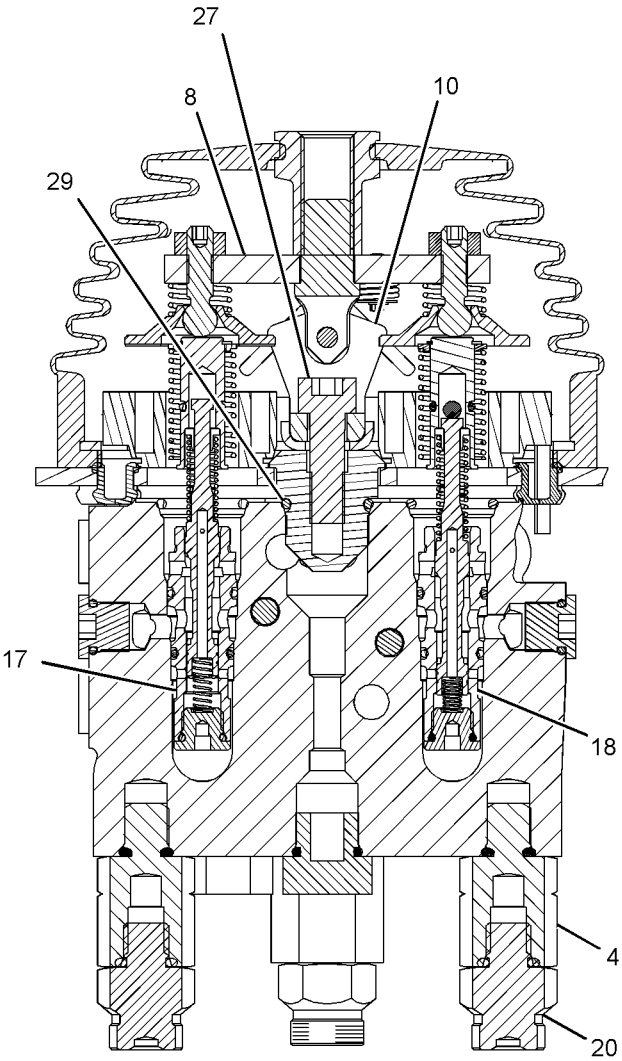

SECTION B-B

GRAPHIC #2 **<END>** g01424579

261-8654 VALVE GP-PILOT–2-FUNCTION

S/N: JKM1-UP
PART OF 257-5661 CONTROL GP-PILOT OPERATED HYD
ALSO AN ATTACHMENT
TYPE 2

SMCS-5059 **i03896593**

NOTE	REF NO	GRAPHIC REF	PART NUMBER	QTY	PART NAME 1 2 3 4 5 6 (PRODUCT LEVEL)	SEE PAGE
	1	1	**102-8806**	1	KIT-RECEPTACLE (8-PIN)	
					(INCLUDES RECEPTACLE AS & WEDGE)	
	2	2	**108-7507**	4	CONNECTOR	
	3	3	**141-1556**	2	RETAINER	
	4	3	**141-2032**	2	PLATE	
	5	1	**141-9236**	1	SCREEN AS (PILOT OIL)	
CY	6	2	*160-6300*	1	PIVOT GP-PILOT VALVE (LIFT)	798
C	7	3	**145-2334**	2	ADAPTER	
C	8	2,3	**146-8477**	2	BRACKET	
C	9	1	**146-8981**	2	PIN	
CY	10	3	**147-2038**	1	PIVOT GP-PILOT VALVE (TILT)	795
	11	3	**148-7922**	2	PLATE	
	12	3	**163-5512**	5	GROMMET	
Y	13	1	**168-1879**	1	BODY GP-PILOT VALVE	669
Y	14	2,3	**262-7181**	3	VALVE GP-PILOT CARTRIDGE (AUXILIARY)	875
Y	15	2	**262-7182**	1	VALVE GP-PILOT CARTRIDGE (DUMP)	876
	16	2,3	**269-4949**	6	ADAPTER	
	17	1	**033-9139**	4	RING-RETAINING	
	18	1	**136-9292**	2	BOOT	
	19	1	**145-8428**	3	COIL AS-DETENT	
					(EACH INCLUDES)	
D		1	**6V-2689**		TUBE-HEAT SHRINK (6.35-MM DIA) (0.4-M EACH)	
		1	**8T-8729**	2	PIN-CONNECTOR (16-GA TO 18-GA)	
	20	1	*148-8407*	2	PLUG AS	
					(EACH INCLUDES)	
		1	**3J-1907**	1	SEAL-O-RING	
		1	**9S-4191**	1	PLUG-O-RING	
M	21	1	**191-8920**	8	BOLT-SOCKET HEAD (M6X1X12-MM)	
	22	1	**3J-1907**	6	SEAL-O-RING	
M	23	2,3	**5A-3604**	2	BOLT-SOCKET HEAD (M8X1.25X25-MM)	
	24	1,3	**7W-7381**	2	FITTING-OUTLET	
	25	2,3	**8L-2786**	2	SEAL-O-RING	
	26	1	**8T-8737**	2	PLUG-SEAL	
C	27	2	**173-9964**	1	PLATE-BUMPER	

C-CHANGE FROM PREVIOUS TYPE
D-ORDER BY THE METER
M-METRIC PART
Y-SEPARATE ILLUSTRATION

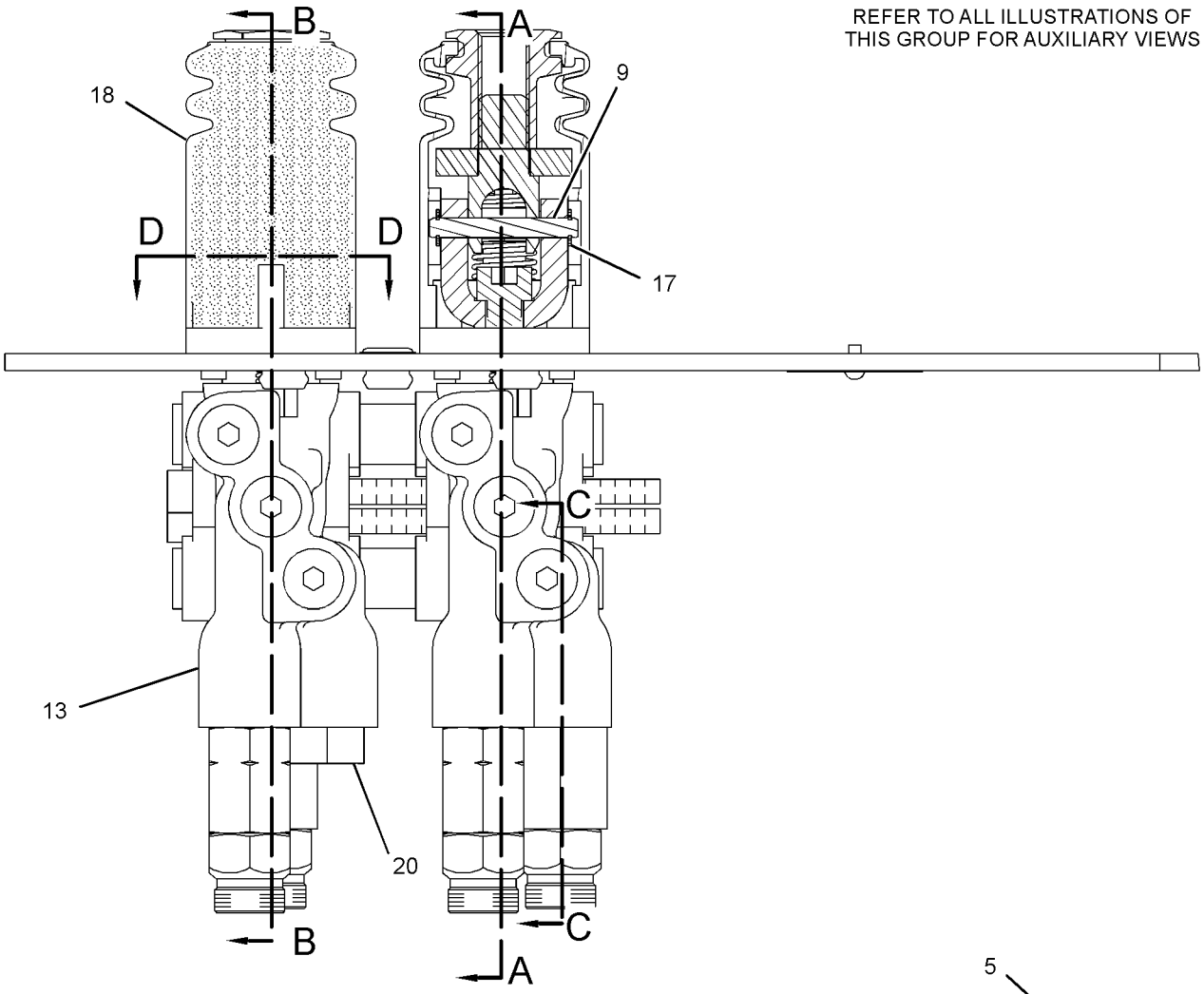

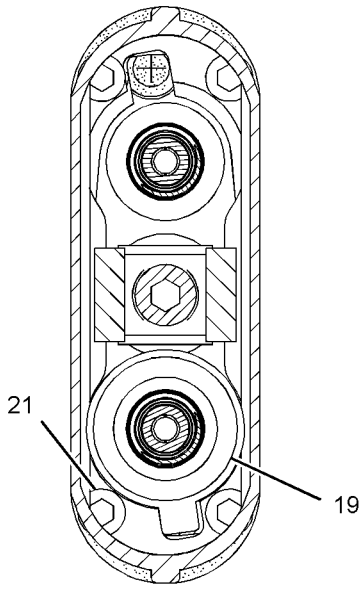

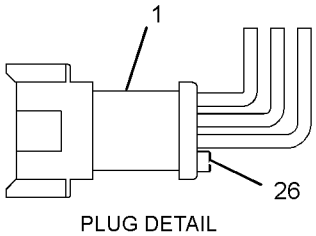

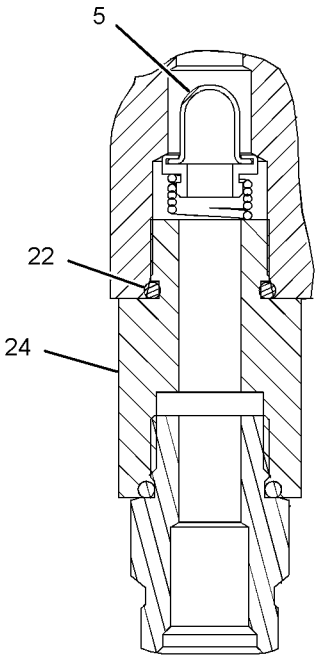

GRAPHIC #1

g01462008

261-8654 VALVE GP-PILOT *(contd.)* **i03896593**

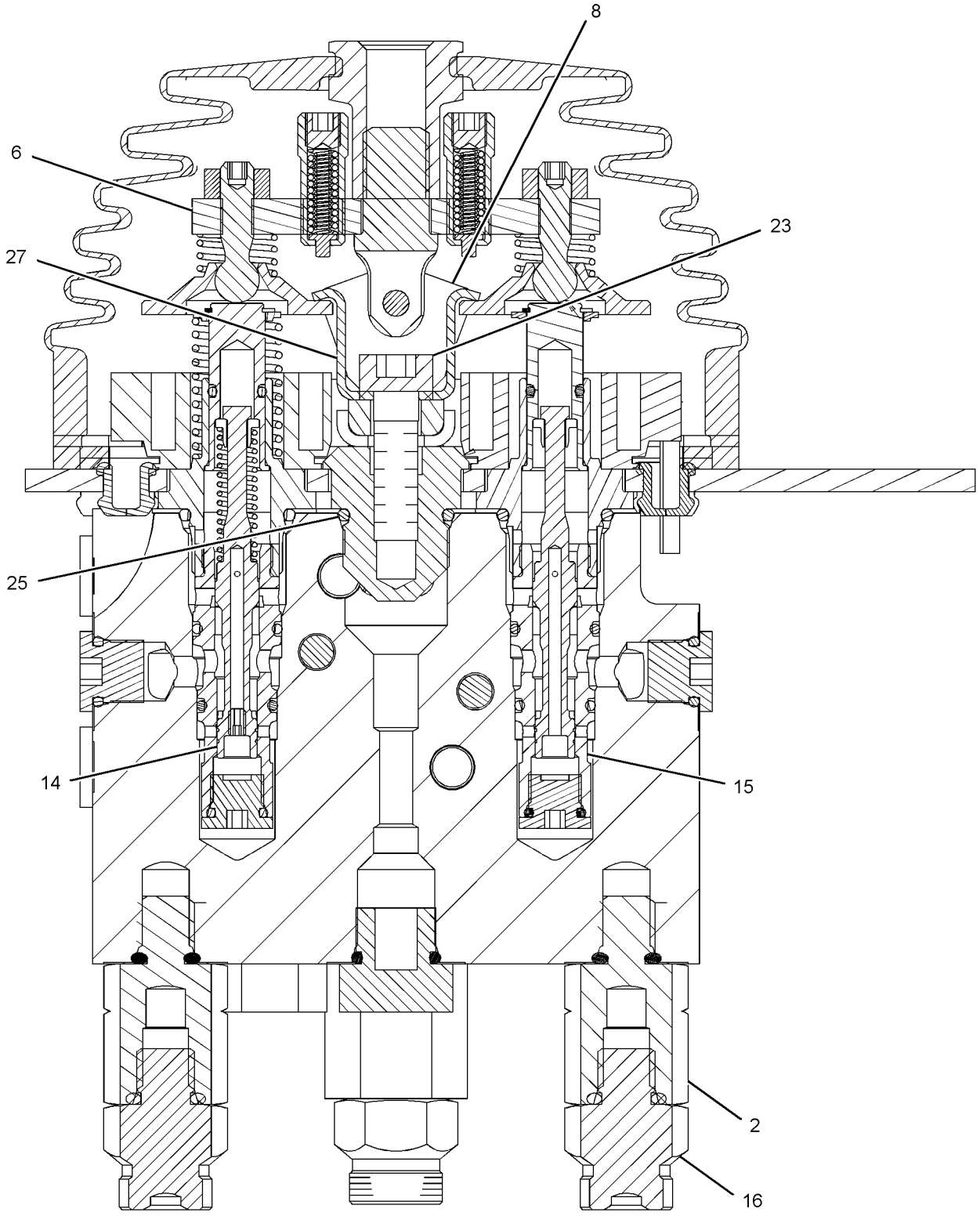

SECTION A-A

GRAPHIC #2 g02140369

261-8654 VALVE GP-PILOT *(contd.)* i03896593

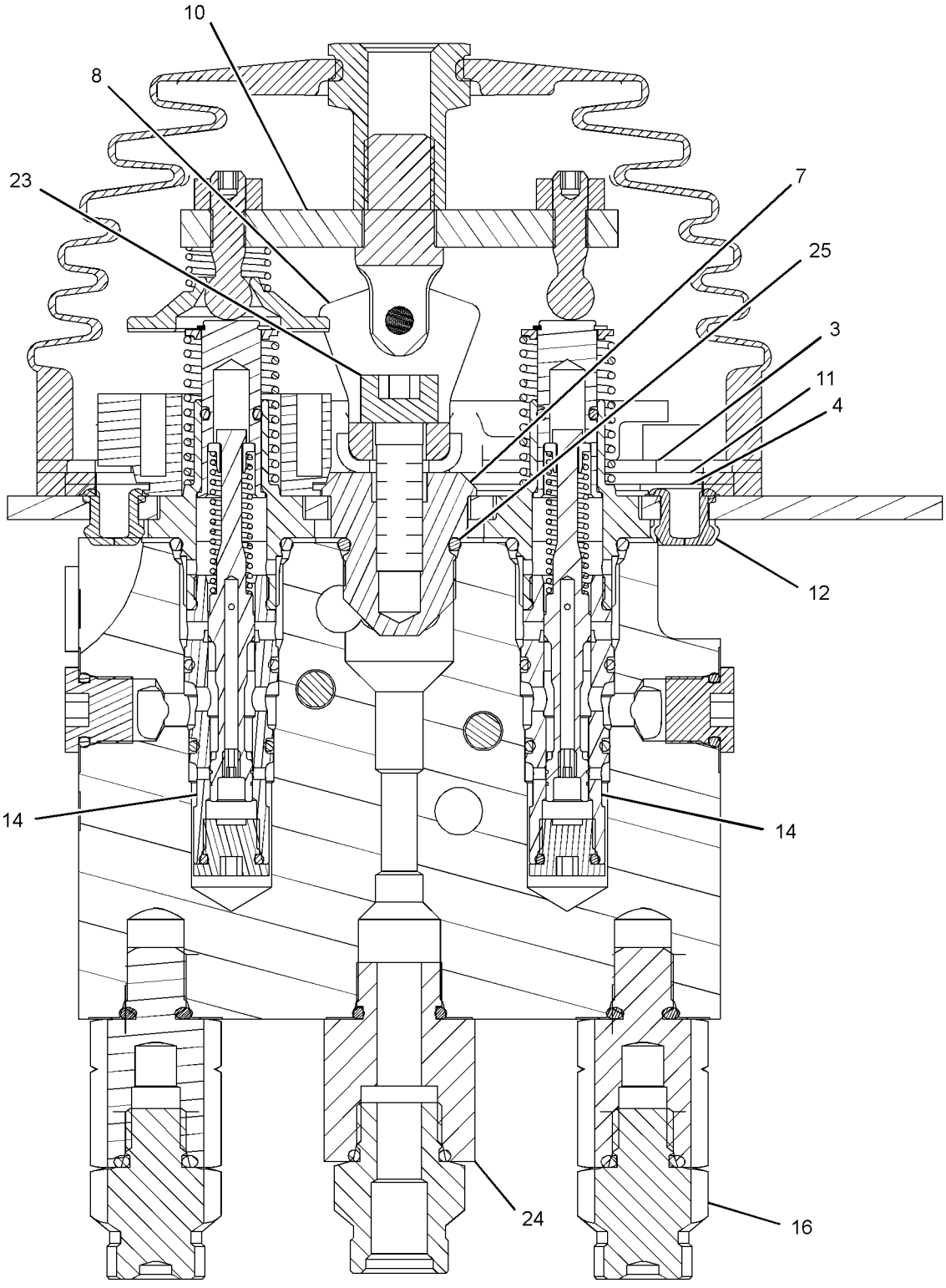

SECTION B-B

GRAPHIC #3 **<END>** g01873116

261-8655 VALVE GP-PILOT—JOYSTICK, 3-FUNCTION

S/N: JKM1-UP
PART OF 257-5665 CONTROL GP-PILOT OPERATED HYD
AN ATTACHMENT

SMCS-5059 **i02927096**

NOTE	REF NO	GRAPHIC REF	PART NUMBER	QTY	PART NAME 1 2 3 4 5 6 (PRODUCT LEVEL)	SEE PAGE
	1	1	**102-8806**	1	KIT-RECEPTACLE (8-PIN)	
					(INCLUDES RECEPTACLE AS AND WEDGE)	
	4	1,2,3	**108-7507**	6	CONNECTOR	
	5	3	**136-9297**	1	PLATE	
	6	3	**136-9298**	1	RETAINER	
	7	3	**141-1556**	1	RETAINER	
	8	3	**141-2032**	1	PLATE	
	9	1	**141-4852**	1	BOOT	
	10	3	**141-7481**	1	SPACER	
	11	1	**141-9236**	1	SCREEN AS	
	12	1	**145-2334**	1	ADAPTER	
	13	2	**146-8477**	1	BRACKET	
	14	3	**146-8478**	1	CUP	
	15	3	**146-8981**	1	PIN	
	16	3	**148-7922**	1	PLATE	
	17	3	**149-5470**	1	PLATE	
	18	1	**153-8952**	1	ADAPTER	
	19	1	**163-5512**	7	GROMMET	
	20	1	**168-1878**	1	BODY AS	
		1	**3J-7354**	16	SEAL-O-RING	
M		1	**5C-2890**	2	NUT (M6X1-THD)	
		1	**9S-8002**	12	PLUG-O-RING	
M		1	**140-9926**	2	BOLT-SOCKET HEAD (M6X1X150-MM)	
		1	**141-1095**	2	ADAPTER	
Y	21	2	**175-9443**	1	PIVOT GP-PILOT VALVE	799
Y	22	1	**212-4962**	2	VALVE GP-PILOT CARTRIDGE (LIFT, LOWER)	873
Y	23	3	**212-4963**	2	VALVE GP-PILOT CARTRIDGE (DUMP, TILT BACK)	874
	24	1	**261-0560**	1	PLATE	
Y	25	2	**262-7181**	2	VALVE GP-PILOT CARTRIDGE (AUXILIARY)	875
	27	1,2,3	**269-4949**	8	ADAPTER	
	28	3	**033-9139**	2	RING-RETAINING	
	29	1	**136-9292**	1	BOOT	
	30	1	**145-8428**	4	COIL AS-DETENT	
					(EACH INCLUDES)	
D		1	**6V-2689**		TUBE-HEAT SHRINK (6.35-MM DIA) (0.8-M)	
		1	**186-3735**	1	PIN-CONNECTOR (16-GA TO 18-GA)	
Y	31	3	**147-3322**	1	PLATE GP-PILOT VALVE (JOYSTICK)	801
	32	1	*148-8407*	2	PLUG AS	
					(EACH INCLUDES)	
		1	**3J-1907**	1	SEAL-O-RING	
		1	**9S-4191**	1	PLUG-O-RING	
	33	3	**153-8947**	1	SWIVEL AS	
M	34	1	**191-8920**	8	BOLT-SOCKET HEAD (M6X1X12-MM)	
	35	1,2,3	**3J-1907**	8	SEAL-O-RING	
	36	3	**3K-0360**	2	SEAL-O-RING	
M	37	3	**5A-3604**	1	BOLT-SOCKET HEAD (M8X1.25X25-MM)	
	38	1,3	**7W-7381**	2	FITTING-OUTLET	

D-ORDER BY THE METER
M-METRIC PART
Y-SEPARATE ILLUSTRATION

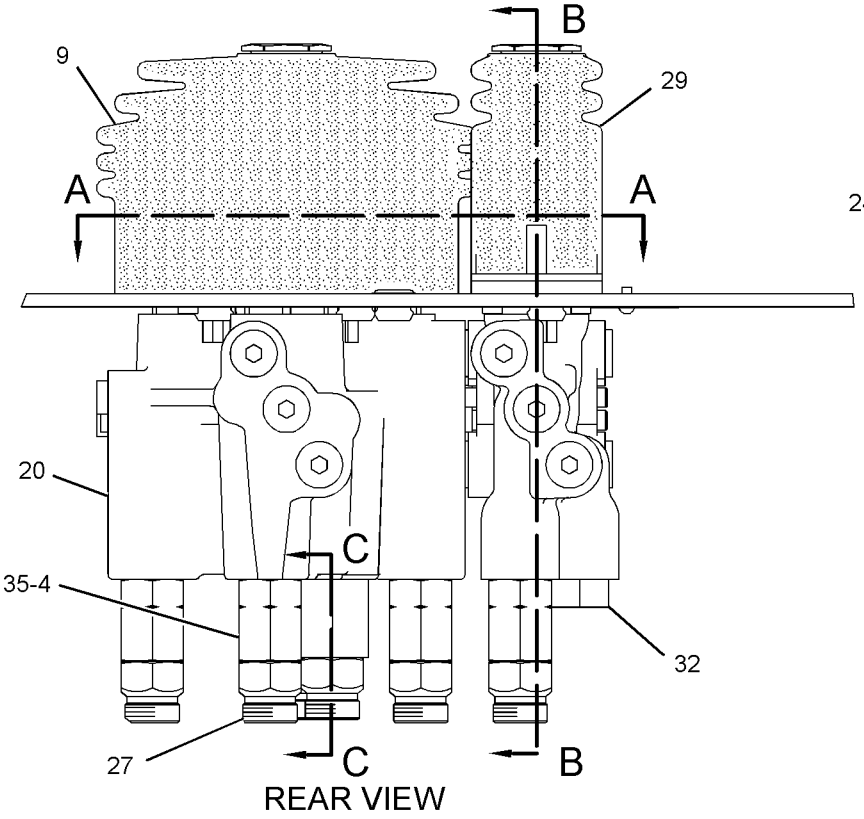

REAR VIEW

REFER TO ALL ILLUSTRATIONS OF THIS GROUP FOR AUXILIARY VIEWS

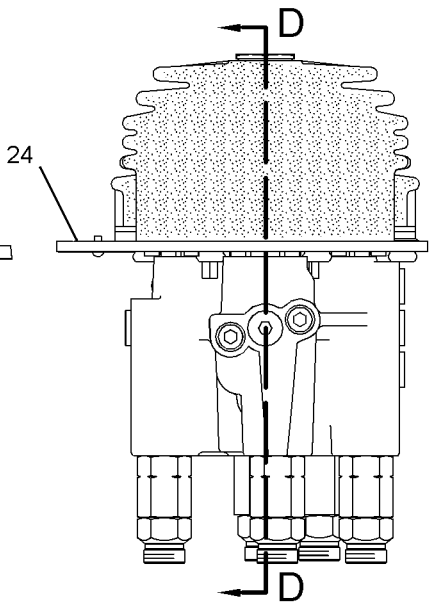

LEFT SIDE VIEW

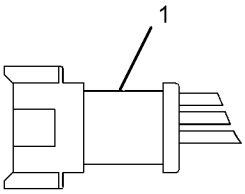

VIEW OF PLUG DETAIL

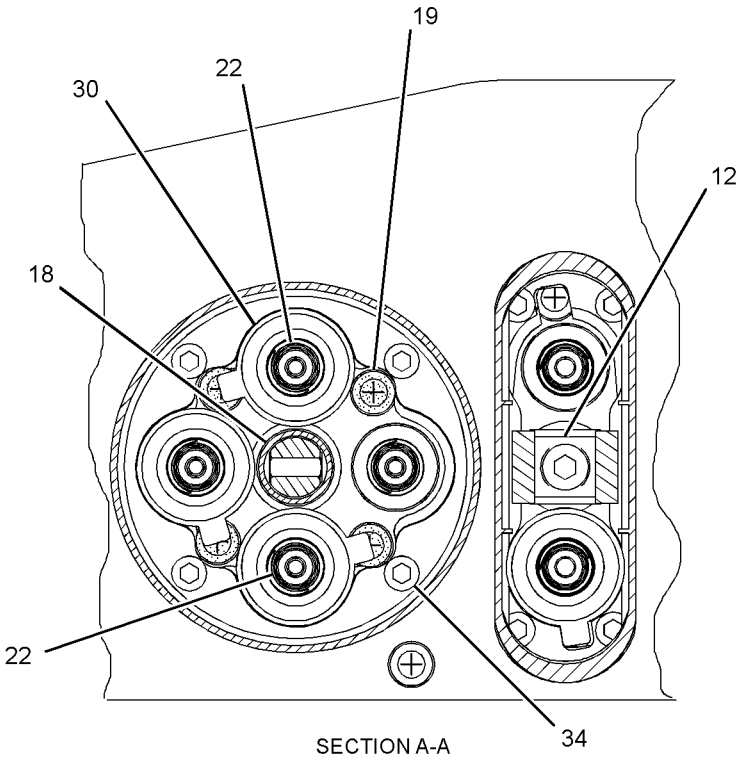

SECTION A-A

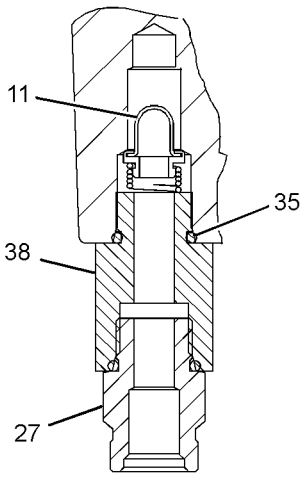

SECTION C-C

GRAPHIC #1

g01430746

261-8655 **VALVE GP-PILOT** *(contd.)* **i02927096**

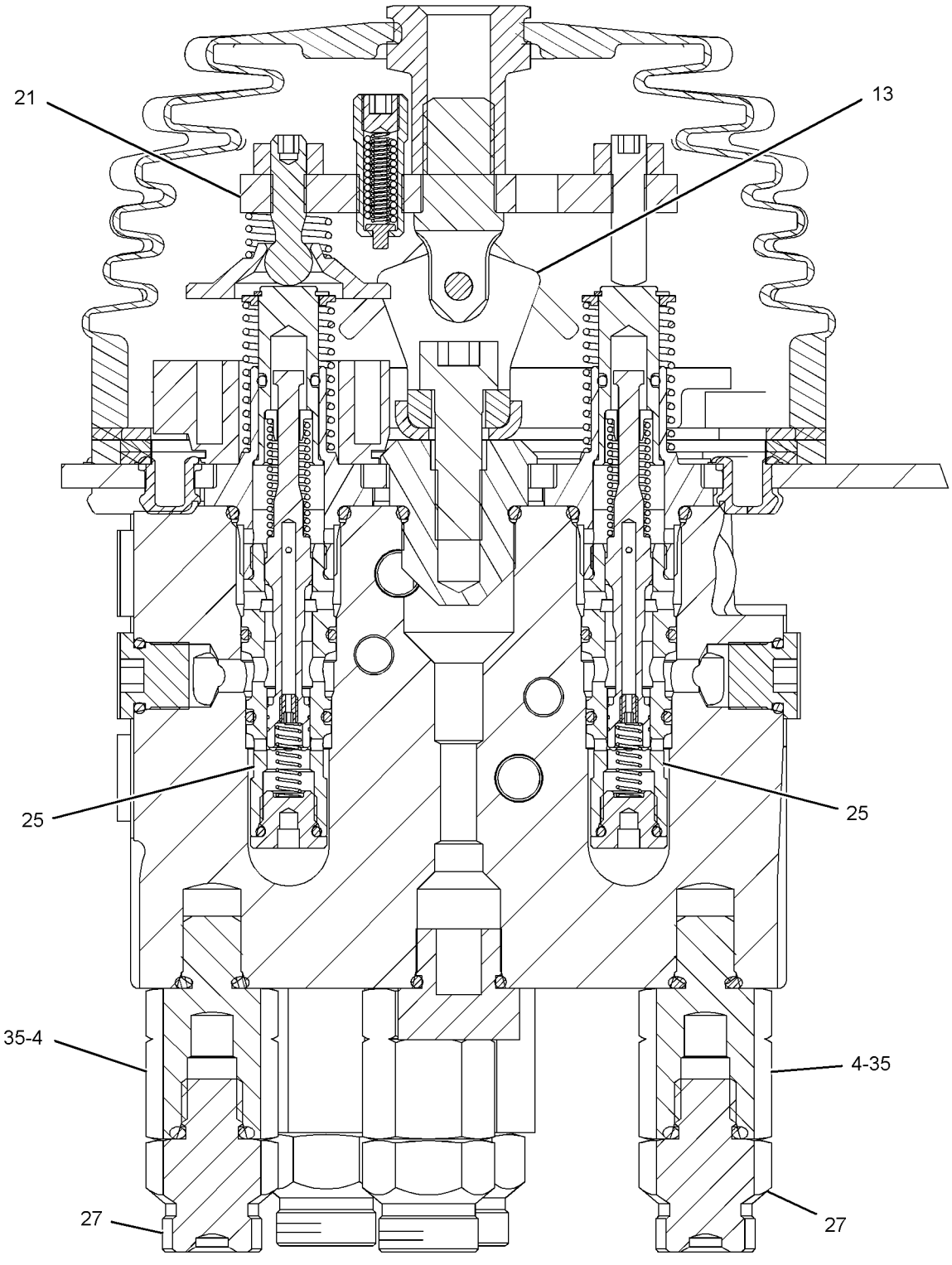

SECTION B-B

GRAPHIC #2 g01430665

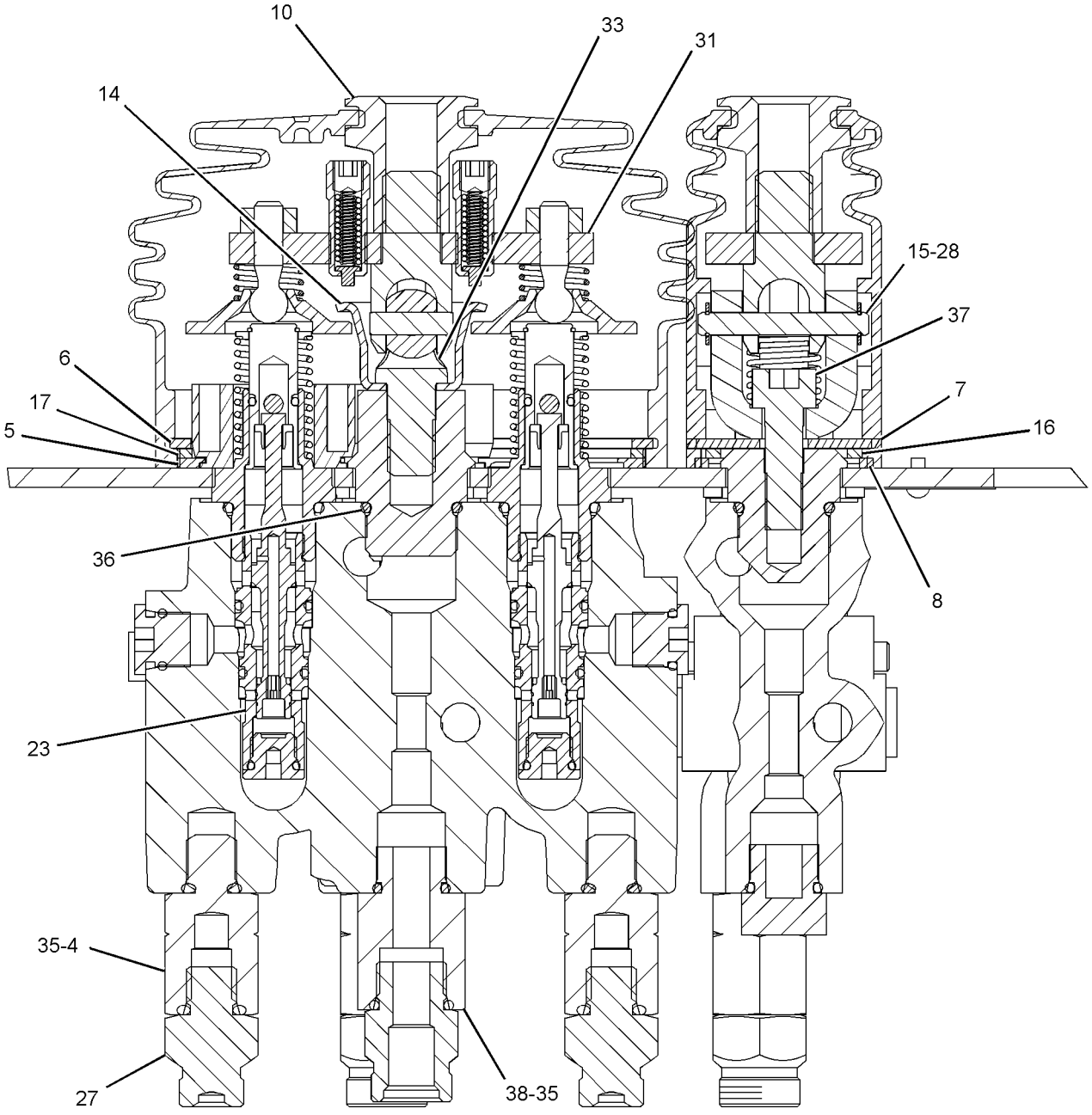

SECTION D-D

GRAPHIC #3 **<END>** g01430745

HYDRAULIC SYSTEM

261-8656 VALVE GP-PILOT–3-FUNCTION

S/N: JKM1-UP
PART OF 257-5662 CONTROL GP-PILOT OPERATED HYD
AN ATTACHMENT
TYPE 1

SMCS-5059 **i02927705**

NOTE	REF NO	GRAPHIC REF	PART NUMBER	QTY	PART NAME 1 2 3 4 5 6 (PRODUCT LEVEL)	SEE PAGE
	1	2	**8L-2786**	3	SEAL-O-RING	
	2	1,2	**108-7507**	6	CONNECTOR	
	3	2	**141-1556**	3	RETAINER	
	4	2	**141-2032**	3	PLATE	
	5	2	**141-9236**	1	SCREEN AS	
	6	2	**145-2334**	3	ADAPTER	
	7	1	**145-8428**	4	COIL AS-DETENT	
					(EACH INCLUDES)	
D		1	**6V-2689**		TUBE-HEAT SHRINK (6.35-MM DIA) (0.8-M)	
		1	**186-3735**	2	PIN-CONNECTOR (16-GA TO 18-GA)	
	8	2	**146-8477**	3	BRACKET	
	9	1	**146-8981**	3	PIN	
Y	10	2	**147-2038**	1	PIVOT GP-PILOT VALVE (TILT)	795
	11	2	**148-7922**	3	PLATE	
	12	1	**163-5512**	7	GROMMET	
Y	13	1	**168-1880**	1	BODY GP-PILOT VALVE	670
	14	2	**173-9964**	2	PLATE-BUMPER	
Y	15	2	**175-9443**	1	PIVOT GP-PILOT VALVE	799
Y	17	2	**262-7181**	5	VALVE GP-PILOT CARTRIDGE (LIFT, LOWER, TILT BACK, AUX)	875
Y	18	2	**262-7182**	1	VALVE GP-PILOT CARTRIDGE (DUMP)	876
	20	1,2	**269-4949**	8	ADAPTER	
	21	1	**033-9139**	6	RING-RETAINING	
	22	1	**136-9292**	3	BOOT	
	23	1	*148-8407*	4	PLUG AS	
					(EACH INCLUDES)	
		1	**3J-1907**	1	SEAL-O-RING	
		1	**9S-4191**	1	PLUG-O-RING	
Y	24	2	**160-6300**	1	PIVOT GP-PILOT VALVE (LIFT) (LIFT)	798
M	25	1	**191-8920**	12	BOLT-SOCKET HEAD (M6X1X12-MM)	
	26	1	**102-8806**	1	KIT-RECEPTACLE (8-PIN)	
					(INCLUDES RECEPTACLE AS AND WEDGE)	
	28	1,2	**3J-1907**	8	SEAL-O-RING	
M	29	2	**5A-3604**	3	BOLT-SOCKET HEAD (M8X1.25X25-MM)	
	30	2	**7W-7381**	2	FITTING-OUTLET	

D-ORDER BY THE METER
M-METRIC PART
Y-SEPARATE ILLUSTRATION

261-8656 VALVE GP-PILOT *(contd.)* i02927705

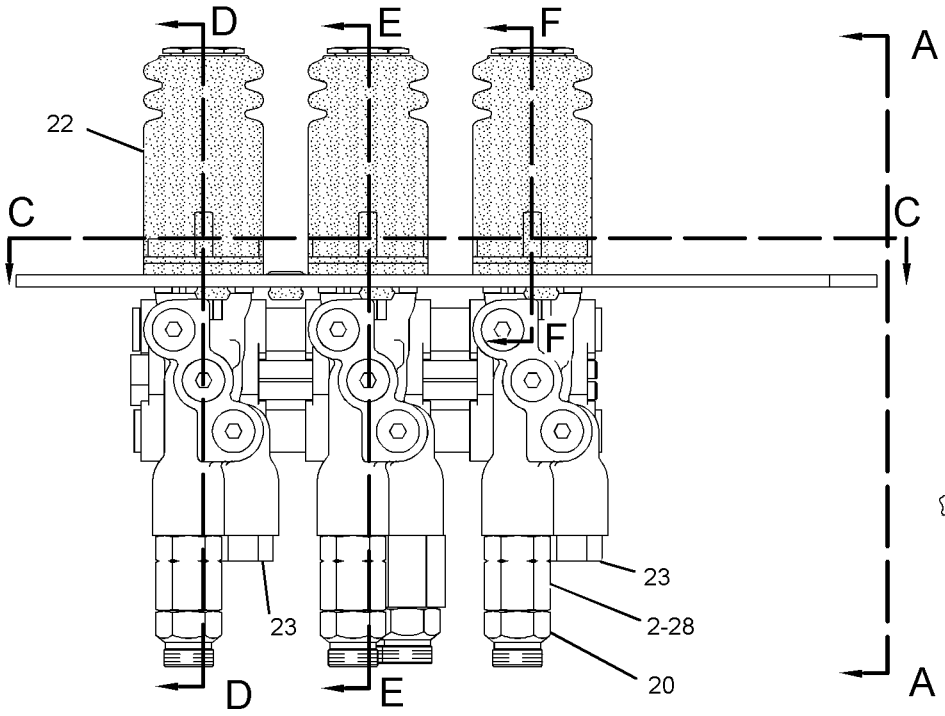

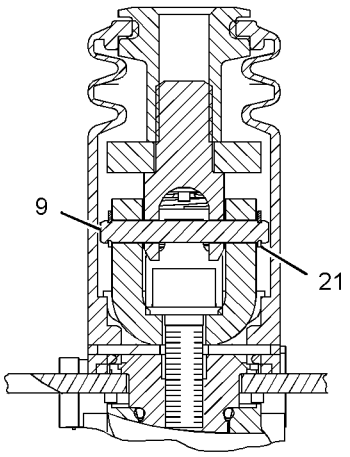

SECTION B-B

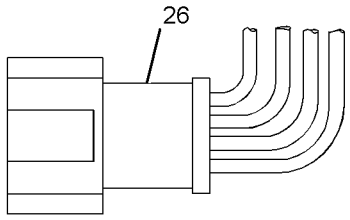

(PLUG DETAIL)

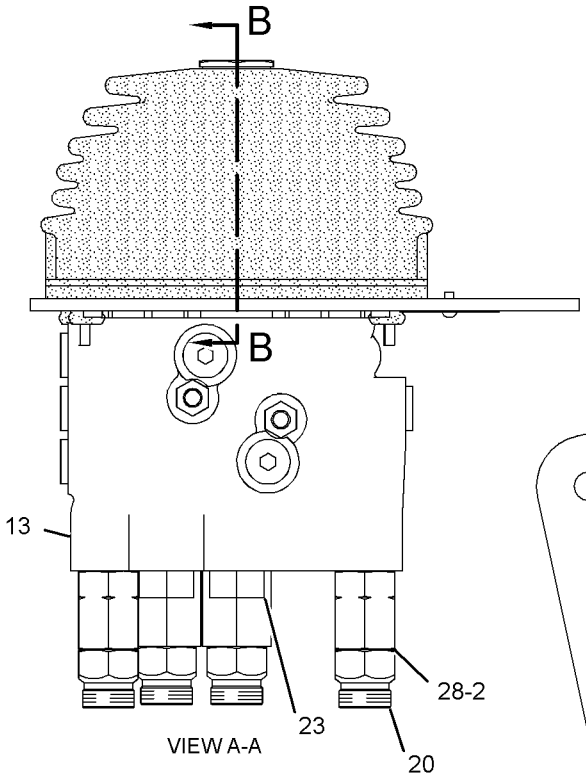

VIEW A-A

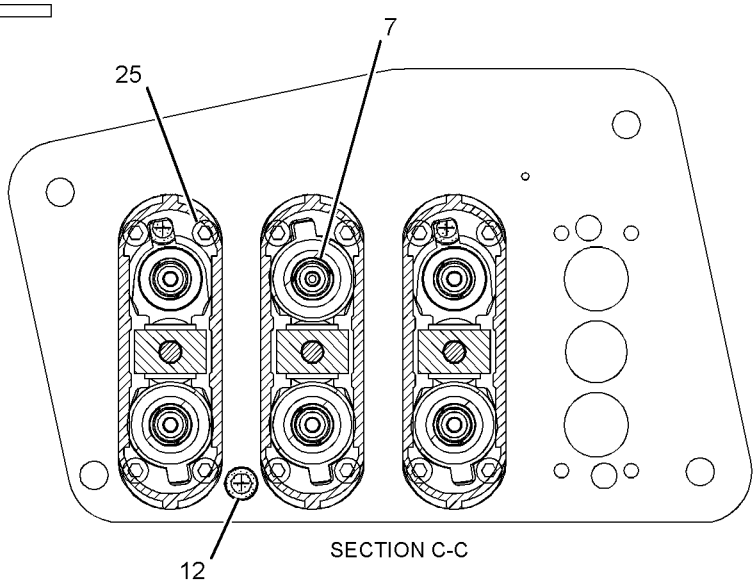

SECTION C-C

REFER TO ALL ILLUSTRATIONS OF THIS GROUP FOR AUXILIARY VIEWS

GRAPHIC #1

g01436532

261-8656 VALVE GP-PILOT *(contd.)* **i02927705**

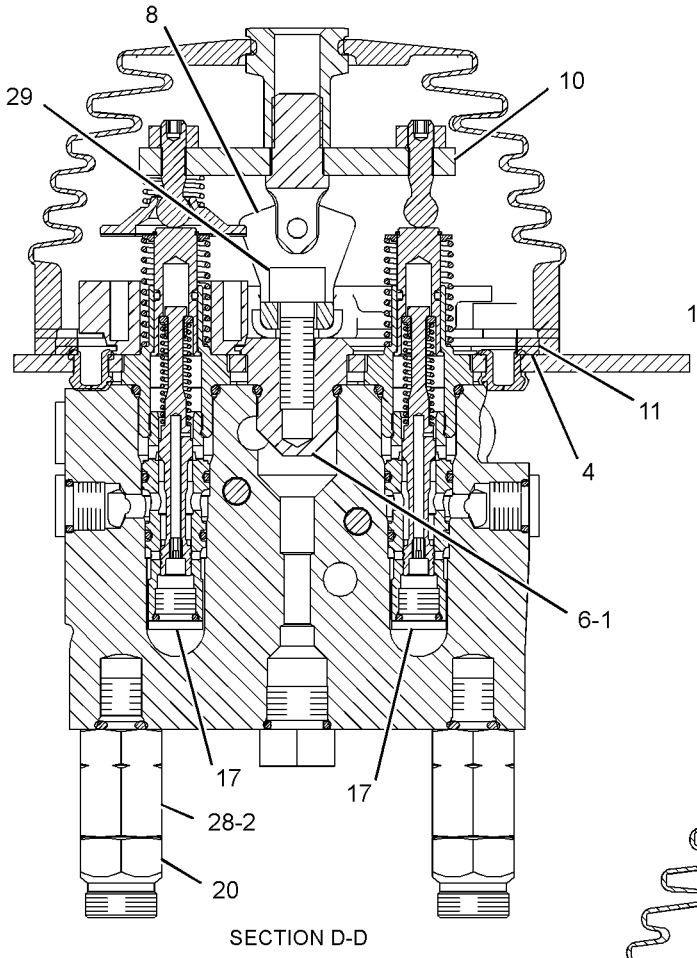

SECTION D-D

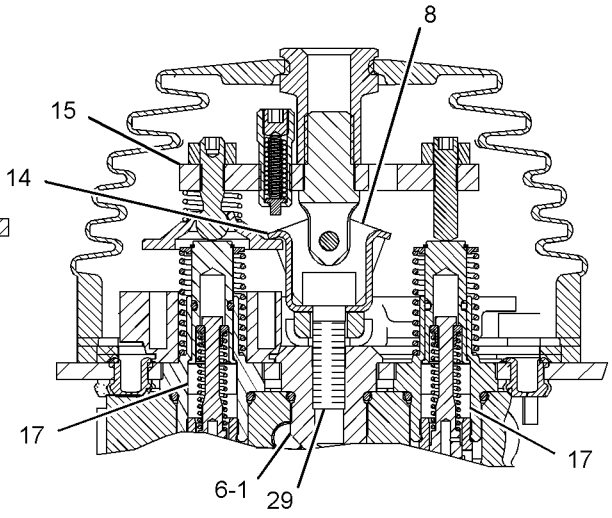

SECTION F-F

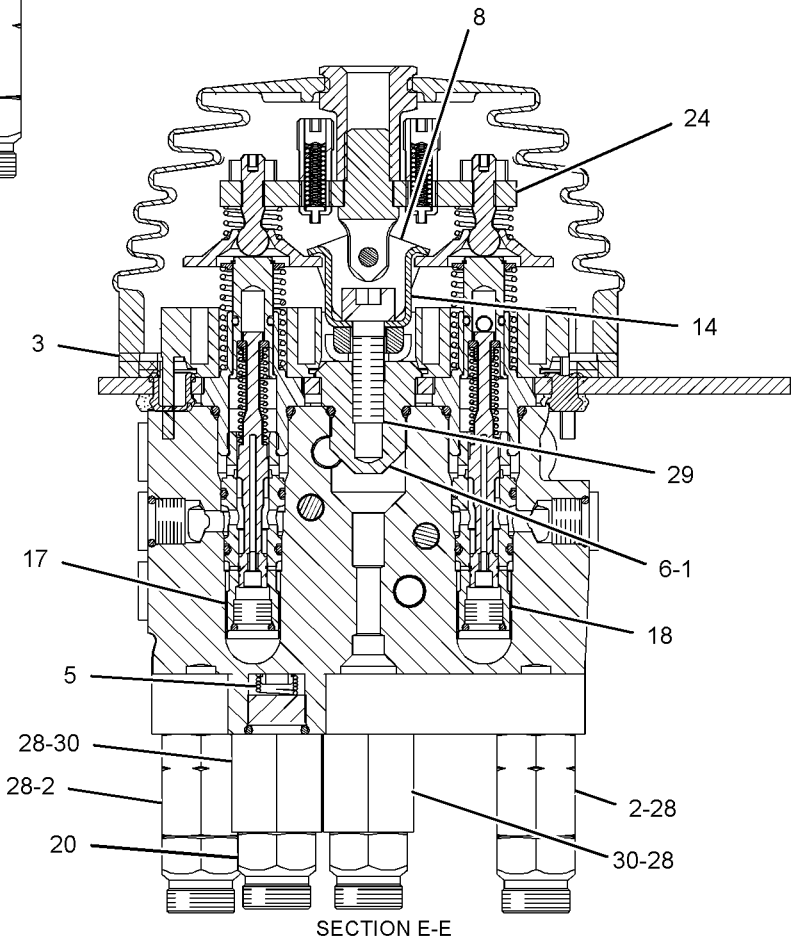

SECTION E-E

GRAPHIC #2 **<END>** g01436533

HYDRAULIC SYSTEM

261-8656 VALVE GP-PILOT–3-FUNCTION

S/N: JKM1-UP
PART OF 257-5662 CONTROL GP-PILOT OPERATED HYD
AN ATTACHMENT
TYPE 2

SMCS-5059 **i03657037**

NOTE	REF NO	GRAPHIC REF	PART NUMBER	QTY	PART NAME 1 2 3 4 5 6 (PRODUCT LEVEL)	SEE PAGE
	1	2	**8L-2786**	3	SEAL-O-RING	
	2	1,2	**108-7507**	6	CONNECTOR	
	3	2	**141-1556**	3	RETAINER	
	4	2	**141-2032**	3	PLATE	
	5	2	**141-9236**	1	SCREEN AS (PILOT OIL)	
	6	2	**145-2334**	3	ADAPTER	
	7	1	**145-8428**	4	COIL AS-DETENT	
					(EACH INCLUDES)	
D		1	**6V-2689**		TUBE-HEAT SHRINK (6.35-MM DIA) (0.8-M)	
		1	**186-3735**	2	PIN-CONNECTOR (16-GA TO 18-GA)	
	8	2	**146-8477**	3	BRACKET	
	9	1	**146-8981**	3	PIN	
Y	10	2	**147-2038**	1	PIVOT GP-PILOT VALVE (TILT)	795
	11	2	**148-7922**	3	PLATE	
	12	1	**163-5512**	7	GROMMET	
Y	13	1	**168-1880**	1	BODY GP-PILOT VALVE	670
C	14	2	**173-9964**	3	PLATE-BUMPER	
CY	15	2	**160-6299**	1	PIVOT GP-PILOT VALVE (TILT)	797
Y	17	2	**262-7181**	5	VALVE GP-PILOT CARTRIDGE (LIFT, LOWER, TILT BACK, AUX)	875
Y	18	2	**262-7182**	1	VALVE GP-PILOT CARTRIDGE (DUMP)	876
	20	1,2	**269-4949**	8	ADAPTER	
	21	1	**033-9139**	6	RING-RETAINING	
	22	1	**136-9292**	3	BOOT	
	23	1	*148-8407*	4	PLUG AS	
					(EACH INCLUDES)	
		1	**3J-1907**	1	SEAL-O-RING	
		1	**9S-4191**	1	PLUG-O-RING	
CY	24	2	*325-5760*	1	PIVOT GP-PILOT VALVE (LIFT)	800
M	25	1	**191-8920**	12	BOLT-SOCKET HEAD (M6X1X12-MM)	
	26	1	**102-8806**	1	KIT-RECEPTACLE (8-PIN)	
					(INCLUDES RECEPTACLE AS & WEDGE)	
	28	1,2	**3J-1907**	8	SEAL-O-RING	
M	29	2	**5A-3604**	3	BOLT-SOCKET HEAD (M8X1.25X25-MM)	
	30	2	**7W-7381**	2	FITTING-OUTLET	

C-CHANGE FROM PREVIOUS TYPE
D-ORDER BY THE METER
M-METRIC PART
Y-SEPARATE ILLUSTRATION

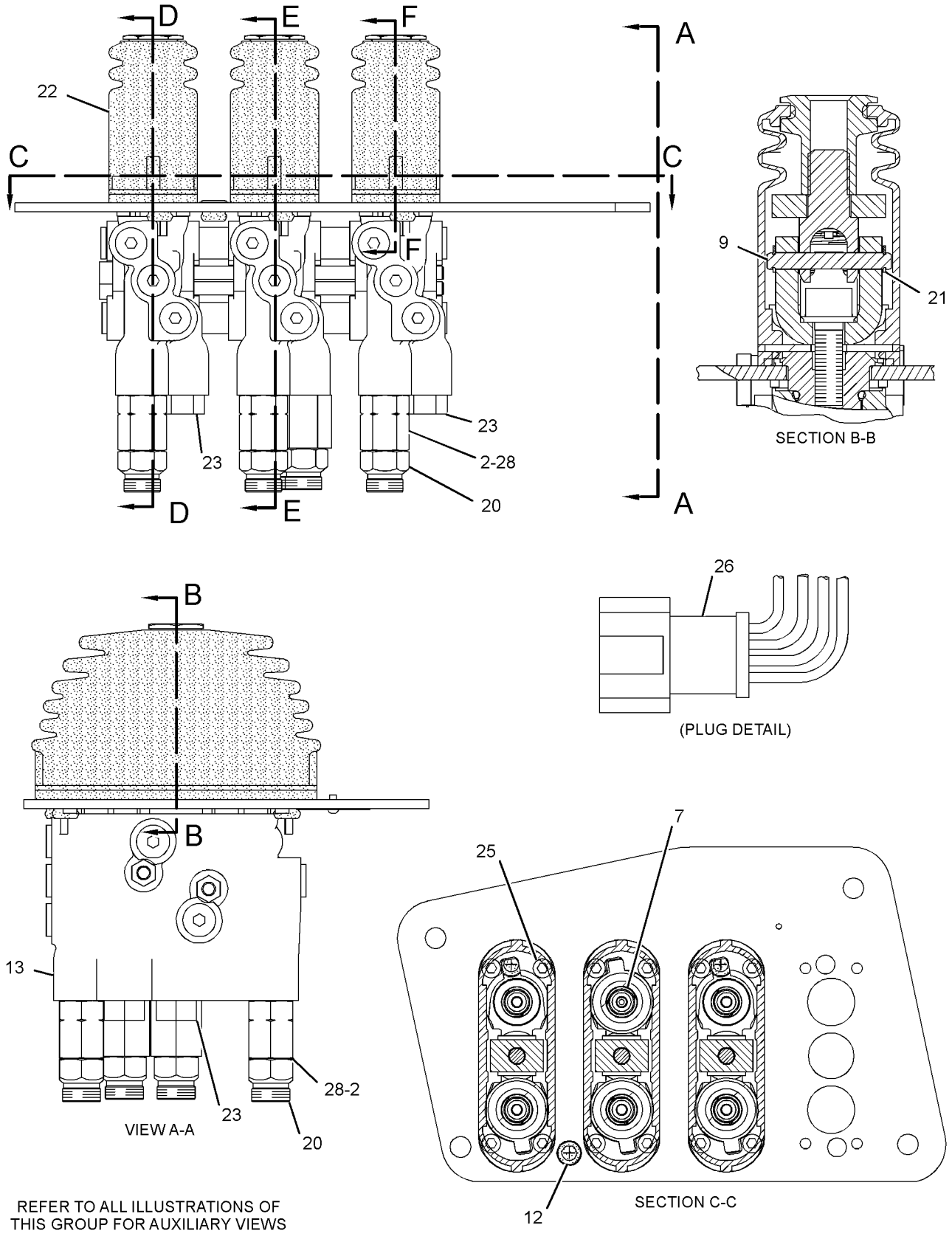

REFER TO ALL ILLUSTRATIONS OF
THIS GROUP FOR AUXILIARY VIEWS

GRAPHIC #1

g01436532

261-8656 VALVE GP-PILOT *(contd.)* i03657037

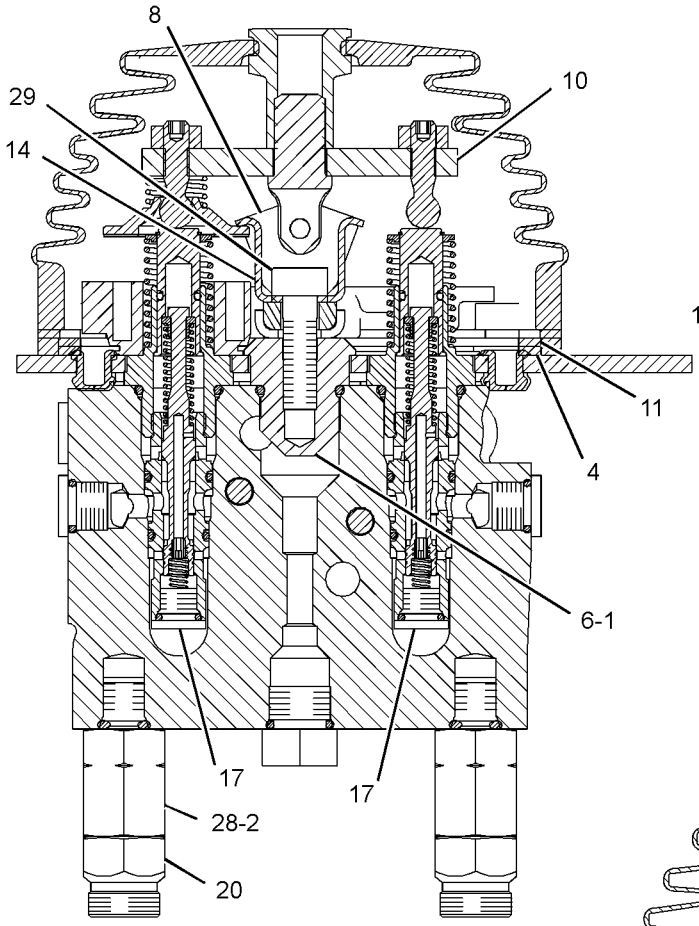

SECTION D-D

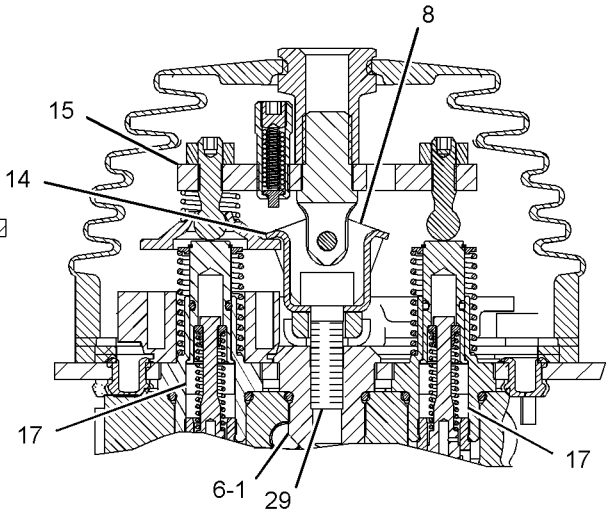

SECTION F-F

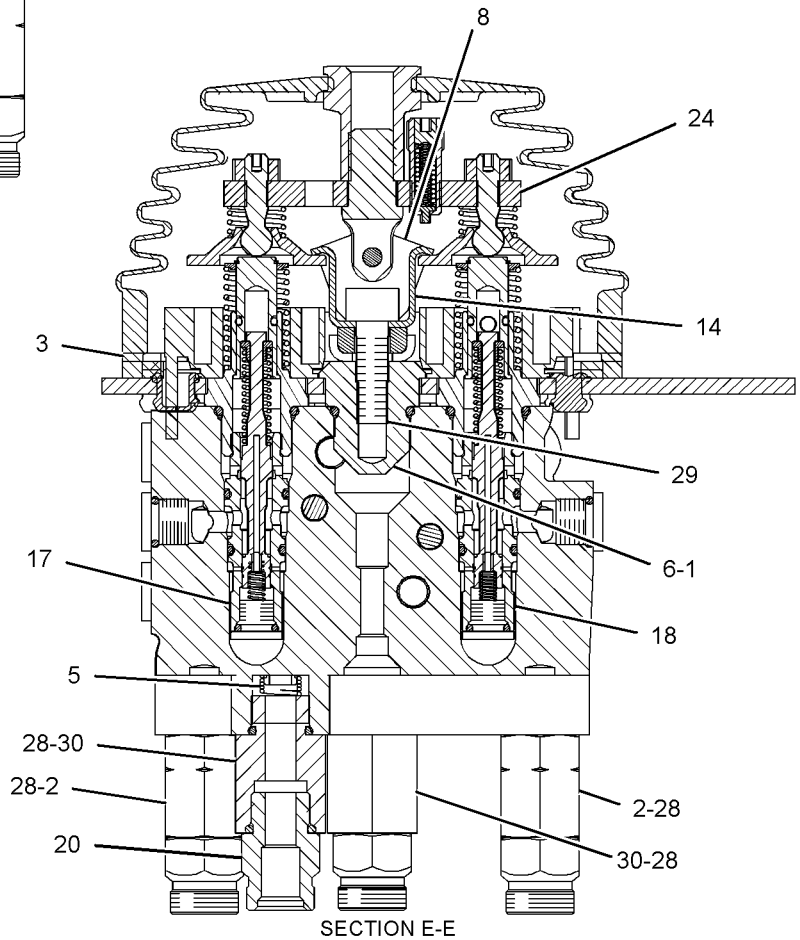

SECTION E-E

GRAPHIC #2 **<END>** g01876138

261-8658 VALVE GP-PILOT–4-FUNCTION

S/N: JKM1-UP
PART OF 257-5663 CONTROL GP-PILOT OPERATED HYD
AN ATTACHMENT
TYPE 1

SMCS-5059 **i02927655**

NOTE	REF NO	GRAPHIC REF	PART NUMBER	QTY	PART NAME 1 2 3 4 5 6 (PRODUCT LEVEL)	SEE PAGE
	1	2,3	**8L-2786**	4	SEAL-O-RING	
	2	1,2,3	**108-7507**	8	CONNECTOR	
	3	2	**141-1556**	4	RETAINER	
	4	2	**141-2032**	4	PLATE	
	5	2	**141-9236**	1	SCREEN AS	
	6	2,3	**145-2334**	4	ADAPTER	
	7	1	**145-8428**	4	COIL AS-DETENT	
					(EACH INCLUDES)	
D		1	**6V-2689**		TUBE-HEAT SHRINK (6.35-MM DIA) (0.8-M)	
		1	**186-3735**	2	PIN-CONNECTOR (16-GA TO 18-GA)	
	8	2,3	**146-8477**	4	BRACKET	
	9	1	**146-8981**	4	PIN	
Y	10	2	**147-2038**	1	PIVOT GP-PILOT VALVE (TILT)	795
Y	11	3	**147-3114**	1	PIVOT GP-PILOT VALVE	796
	12	2	**148-7922**	4	PLATE	
	13	1	**163-5512**	9	GROMMET	
	14	2,3	**173-9964**	2	PLATE-BUMPER	
Y	15	3	**175-9443**	1	PIVOT GP-PILOT VALVE	799
Y	17	2,3	**262-7181**	7	VALVE GP-PILOT CARTRIDGE (LIFT, DUMP, TILT BACK, AUX)	875
Y	18	2	**262-7182**	1	VALVE GP-PILOT CARTRIDGE (LOWER)	876
Y	20	1	*263-5436*	1	BODY GP-PILOT VALVE	671
	21	1,2,3	**269-4949**	10	ADAPTER	
	22	1	**033-9139**	8	RING-RETAINING	
	23	1	**136-9292**	4	BOOT	
	24	1	*148-8407*	6	PLUG AS	
					(EACH INCLUDES)	
		1	**3J-1907**	1	SEAL-O-RING	
		1	**9S-4191**	1	PLUG-O-RING	
Y	25	2	*160-6300*	1	PIVOT GP-PILOT VALVE (LIFT) (LIFT)	798
M	26	1	**191-8920**	16	BOLT-SOCKET HEAD (M6X1X12-MM)	
	29	1,2,3	**3J-1907**	10	SEAL-O-RING	
M	30	2,3	**5A-3604**	4	BOLT-SOCKET HEAD (M8X1.25X25-MM)	
	31	2	**7W-7381**	2	FITTING-OUTLET	
F			**102-8806**	1	KIT-RECEPTACLE (8-PIN)	

D-ORDER BY THE METER
F-NOT SHOWN
M-METRIC PART
Y-SEPARATE ILLUSTRATION

261-8658 VALVE GP-PILOT *(contd.)* i02927655

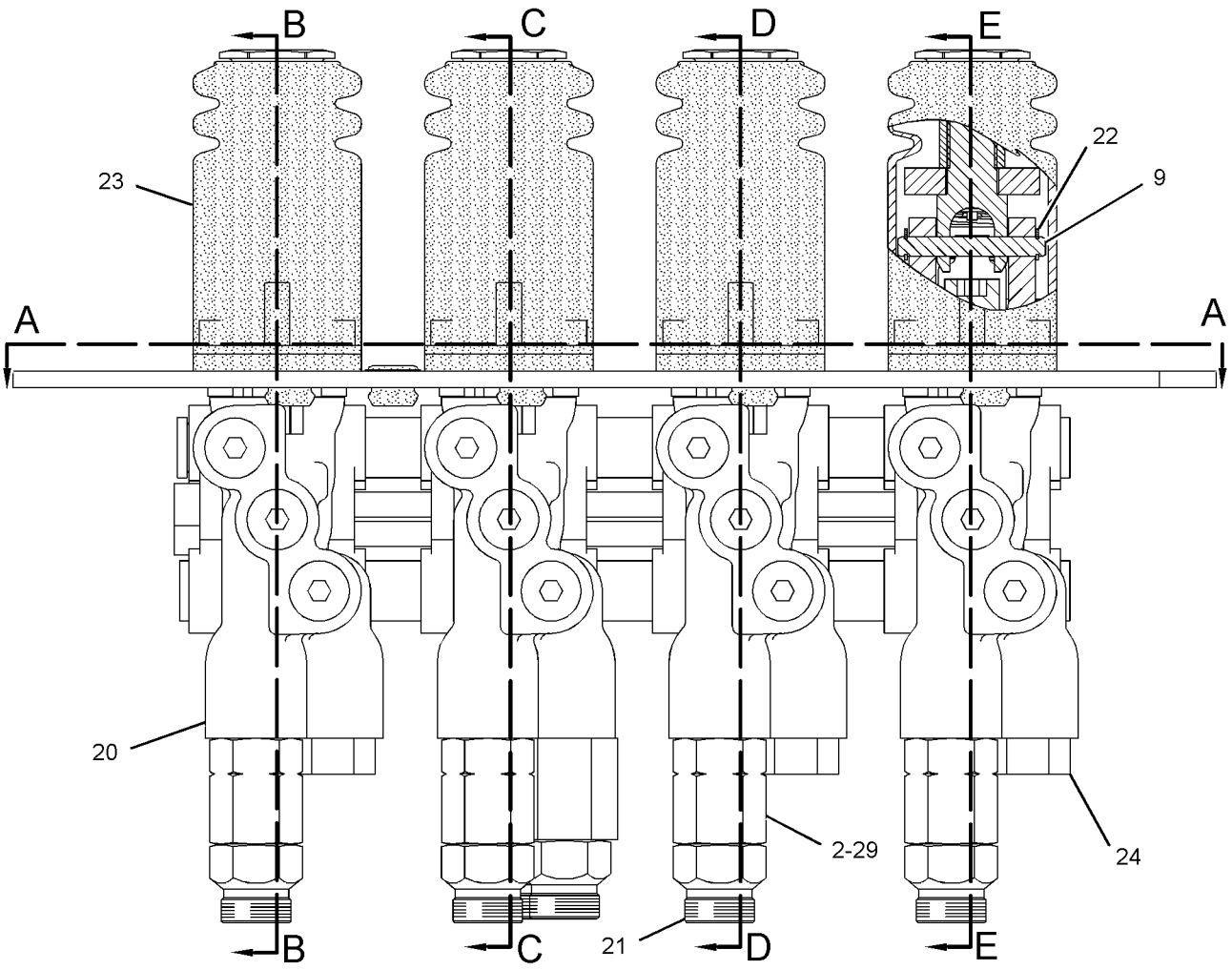

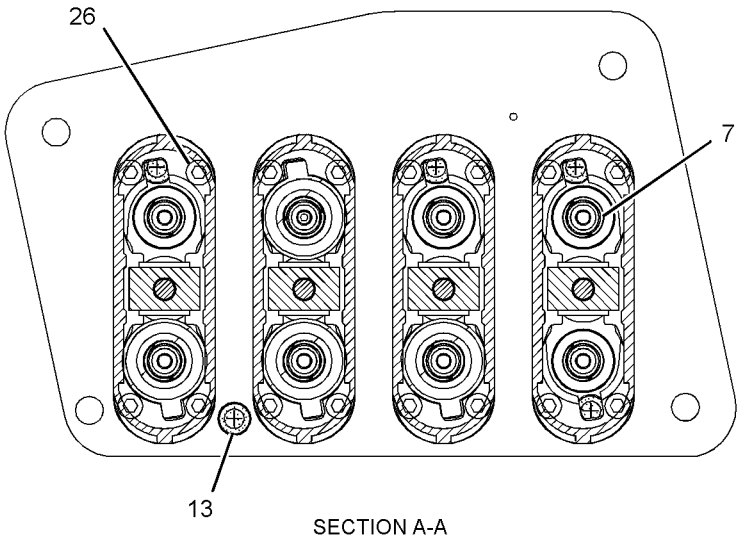

SECTION A-A

REFER TO ALL ILLUSTRATIONS OF THIS GROUP FOR AUXILIARY VIEWS

GRAPHIC #1

g01436899

261-8658 VALVE GP-PILOT *(contd.)* **i02927655**

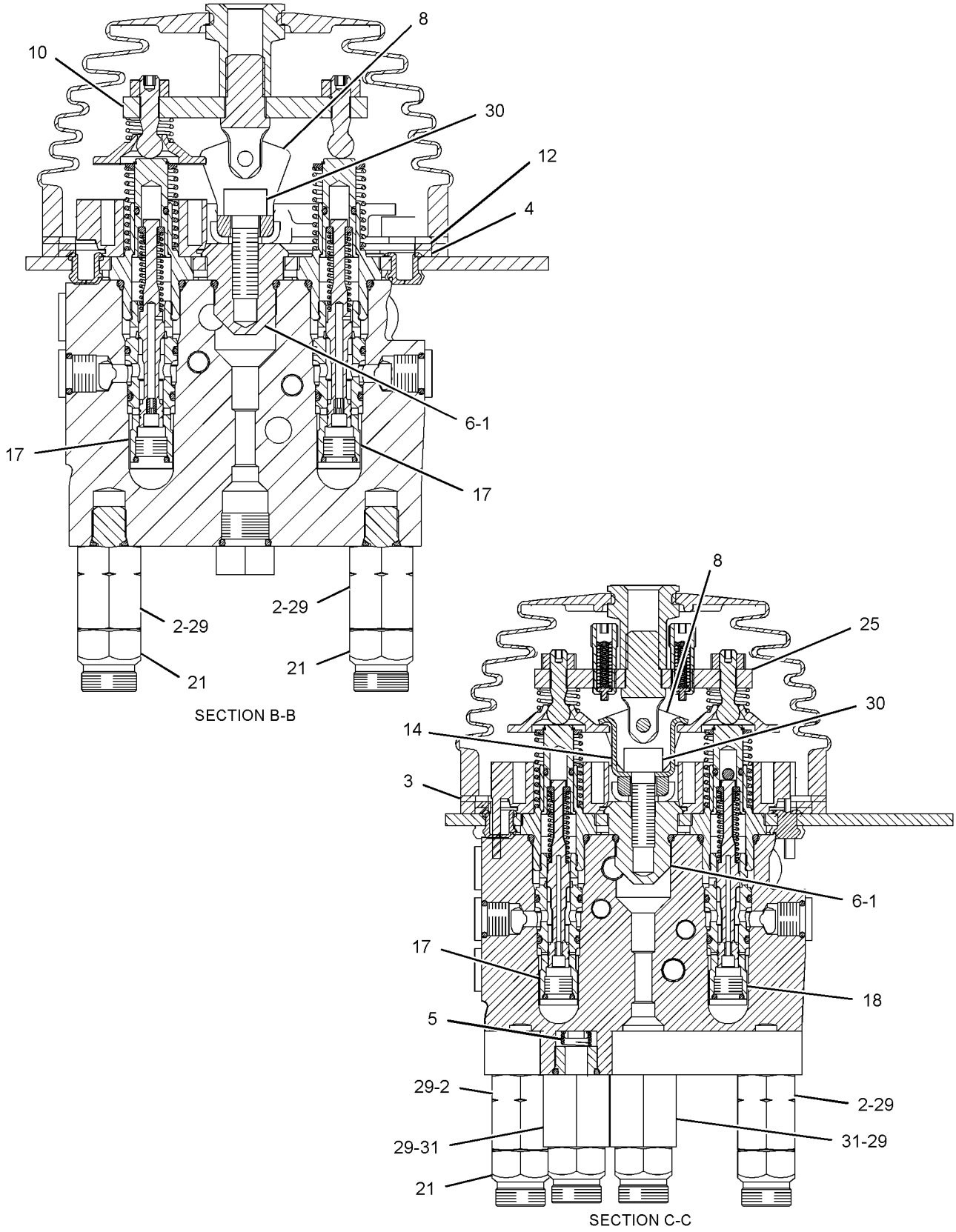

GRAPHIC #2 g01436900

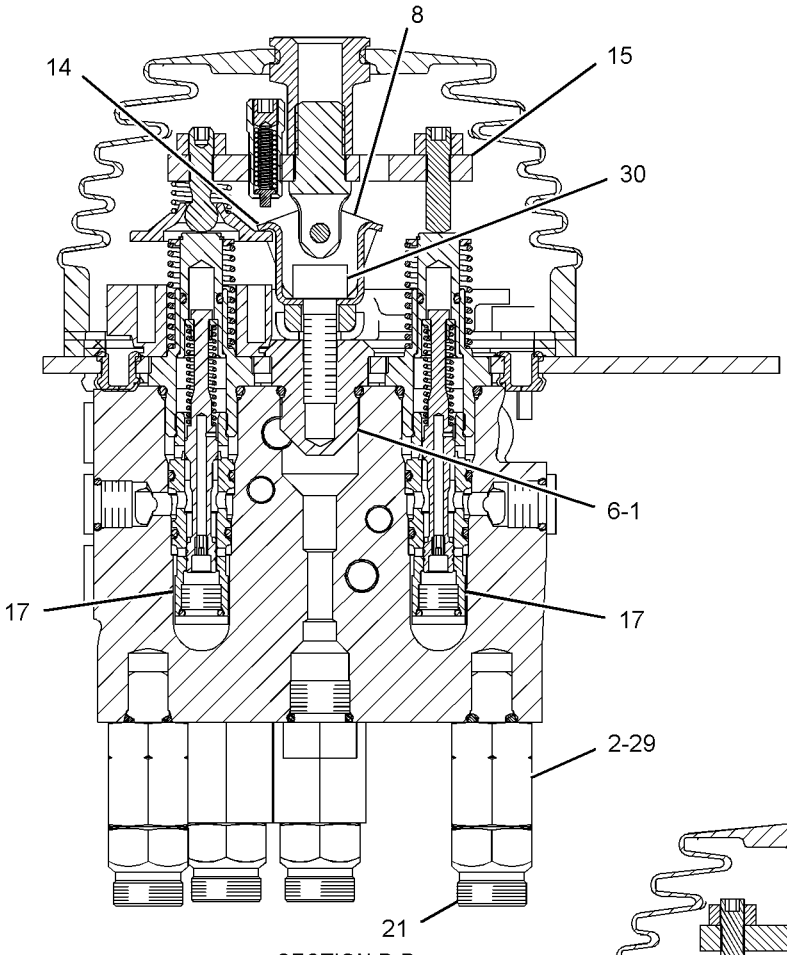

SECTION D-D

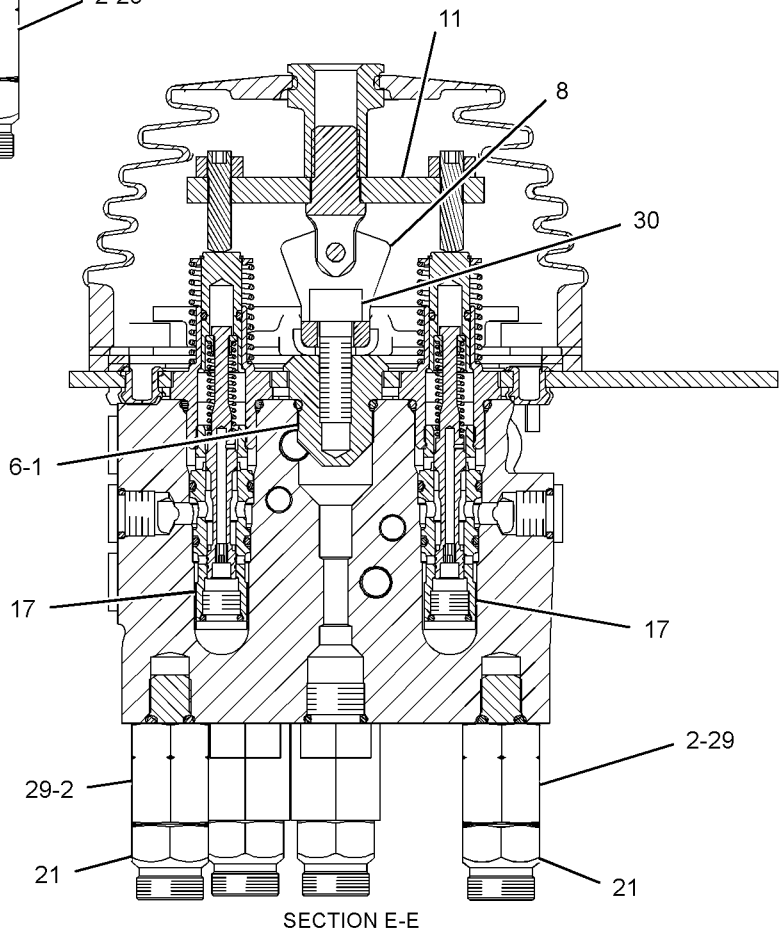

SECTION E-E

GRAPHIC #3 **<END>** g01436901

261-8658 VALVE GP-PILOT–4-FUNCTION

S/N: JKM1-UP
PART OF 257-5663 CONTROL GP-PILOT OPERATED HYD
AN ATTACHMENT
TYPE 2

SMCS-5059 **i03657621**

NOTE	REF NO	GRAPHIC REF	PART NUMBER	QTY	PART NAME 1 2 3 4 5 6 (PRODUCT LEVEL)	SEE PAGE
	1	2,3	**8L-2786**	4	SEAL-O-RING	
	2	1,2,3	**108-7507**	8	CONNECTOR	
	3	2	**141-1556**	4	RETAINER	
	4	2	**141-2032**	4	PLATE	
	5	2	**141-9236**	1	SCREEN AS (PILOT OIL)	
	6	2,3	**145-2334**	4	ADAPTER	
	7	1	**145-8428**	4	COIL AS-DETENT	
	8	2,3	**146-8477**	4	BRACKET	
	9	1	**146-8981**	4	PIN	
Y	10	2	**147-2038**	1	PIVOT GP-PILOT VALVE (TILT)	795
Y	11	3	**147-3114**	1	PIVOT GP-PILOT VALVE (AUXILIARY)	796
	12	2	**148-7922**	4	PLATE	
	13	1	**163-5512**	9	GROMMET	
	14	2,3	**173-9964**	2	PLATE-BUMPER	
CY	15	3	*160-6299*	1	PIVOT GP-PILOT VALVE (TILT, AUXILIARY)	797
Y	17	2,3	**262-7181**	7	VALVE GP-PILOT CARTRIDGE (LIFT, DUMP, TILT BACK, AUX)	875
Y	18	2	**262-7182**	1	VALVE GP-PILOT CARTRIDGE (LOWER)	876
Y	20	1	*263-5436*	1	BODY GP-PILOT VALVE	671
	21	1,2,3	**269-4949**	10	ADAPTER	
	22	1	**033-9139**	8	RING-RETAINING	
	23	1	**136-9292**	4	BOOT	
	24	1	*148-8407*	6	PLUG AS	
					(EACH INCLUDES)	
		1	**3J-1907**	1	SEAL-O-RING	
		1	**9S-4191**	1	PLUG-O-RING	
CY	25	2	*325-5760*	1	PIVOT GP-PILOT VALVE (LIFT)	800
M	26	1	**191-8920**	16	BOLT-SOCKET HEAD (M6X1X12-MM)	
	29	1,2,3	**3J-1907**	10	SEAL-O-RING	
M	30	2,3	**5A-3604**	4	BOLT-SOCKET HEAD (M8X1.25X25-MM)	
	31	2	**7W-7381**	2	FITTING-OUTLET	
F			**102-8806**	1	KIT-RECEPTACLE (8-PIN)	
					(INCLUDES RECEPTACLE AS & WEDGE)	

C-CHANGE FROM PREVIOUS TYPE
F-NOT SHOWN
M-METRIC PART
Y-SEPARATE ILLUSTRATION

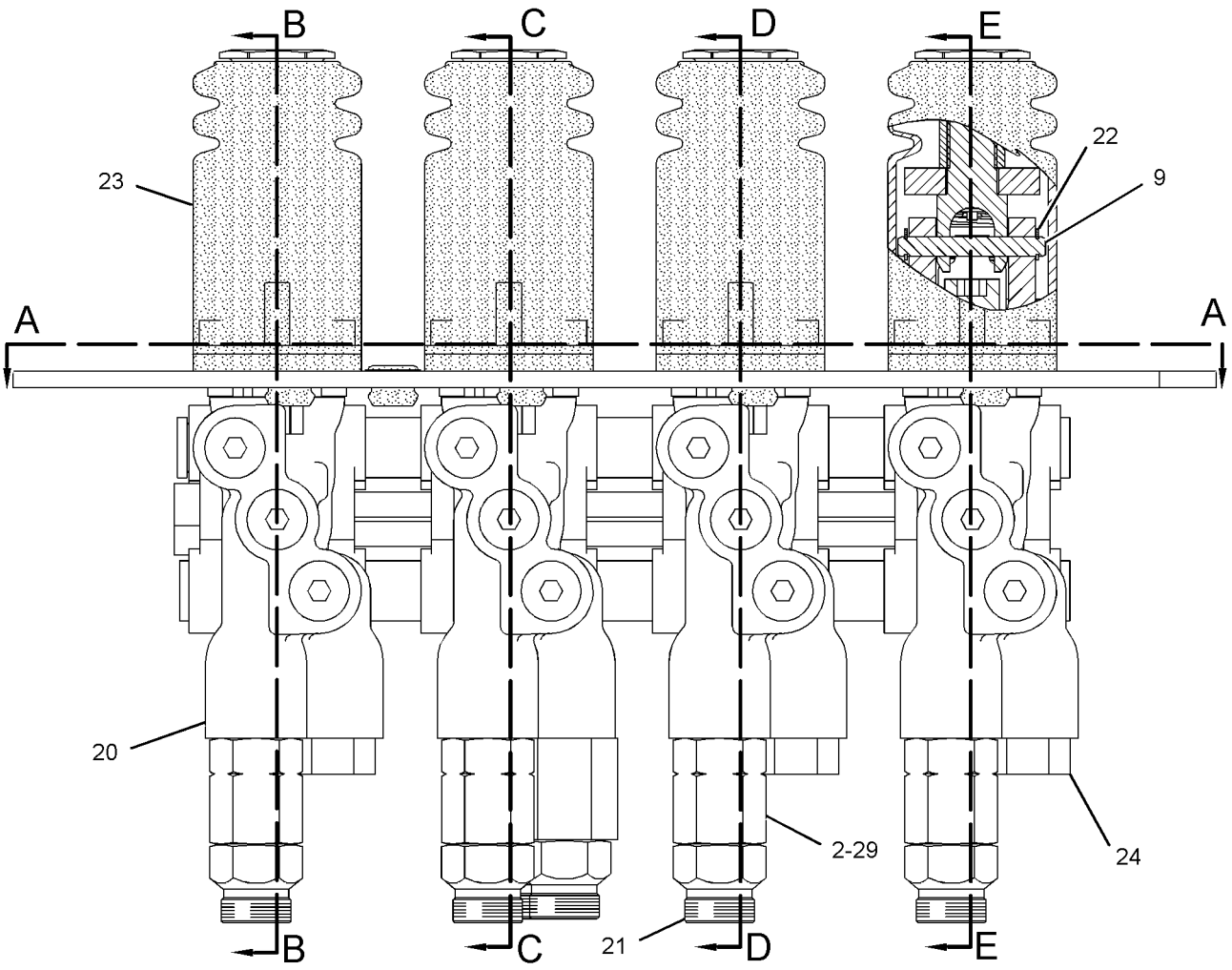

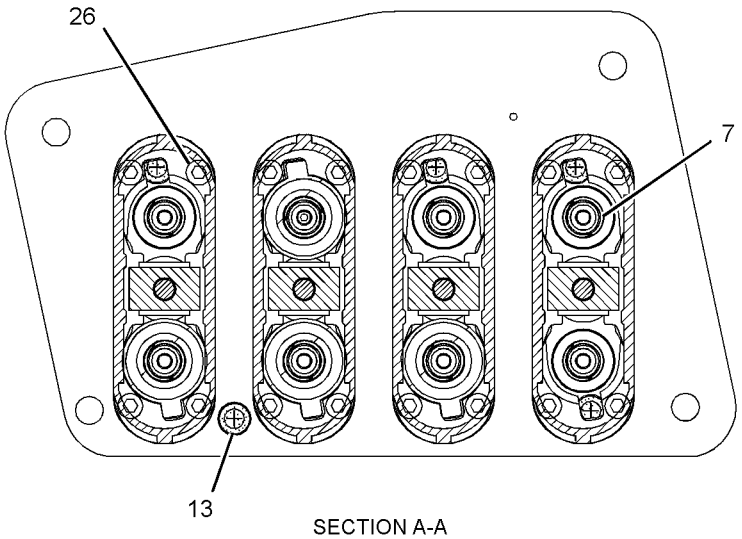

SECTION A-A

REFER TO ALL ILLUSTRATIONS OF THIS GROUP FOR AUXILIARY VIEWS

GRAPHIC #1

g01436899

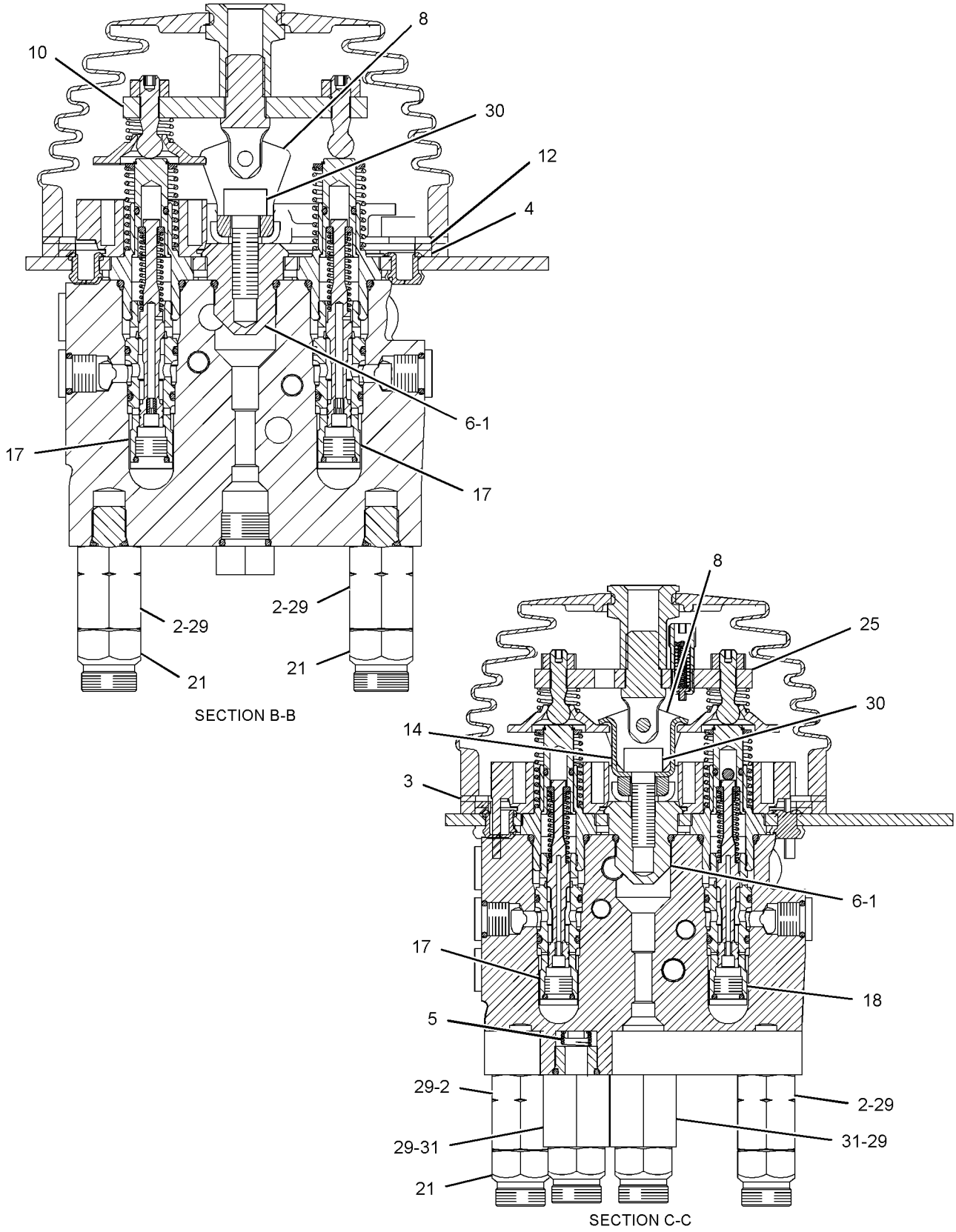

GRAPHIC #2

g01888113

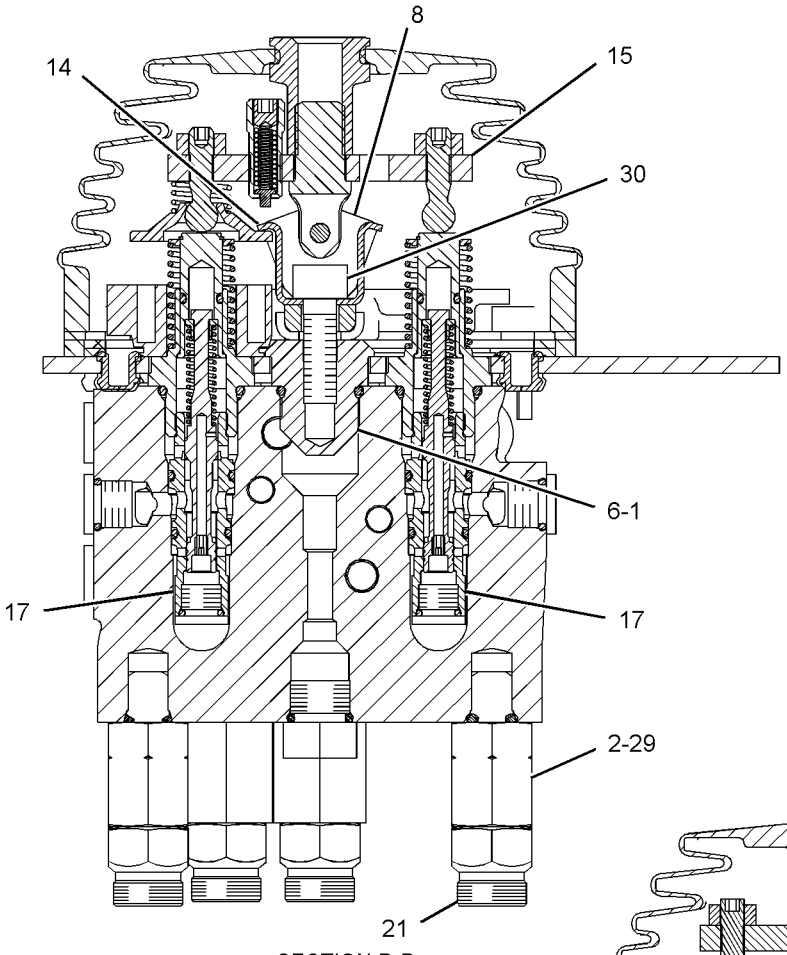

SECTION D-D

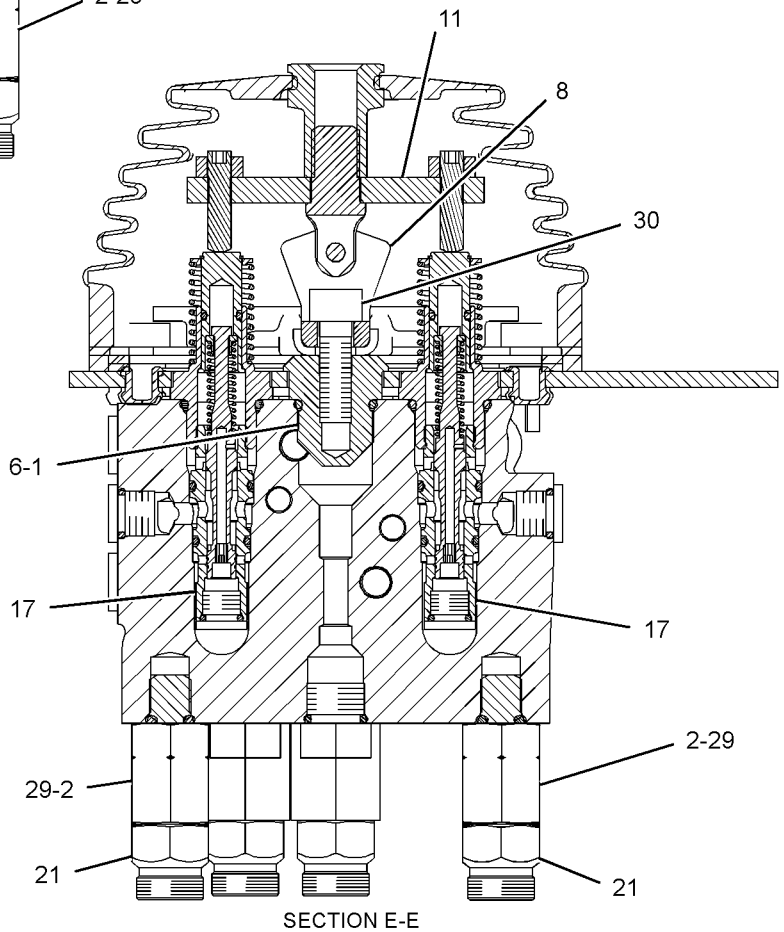

SECTION E-E

GRAPHIC #3 **<END>** g01888114

212-4962 VALVE GP-PILOT CARTRIDGE

S/N: JKM1-UP
PART OF 261-8653, 261-8655 VALVE GP-PILOT
AN ATTACHMENT

SMCS-5059 **i01822324**

NOTE	REF NO	GRAPHIC REF	PART NUMBER	QTY	PART NAME 1 2 3 4 5 6 (PRODUCT LEVEL)	SEE PAGE
	1	1	**116-4527**	1	ORIFICE	
	2	1	**6M-5062**	1	SEAL-O-RING	
	3	1	**146-6316**	2	RETAINER	
	4	1	**7I-6601**	1	SEAL-O-RING	
	5	1	**146-6319**	1	RETAINER	
	6	1	**153-8924**	1	SPOOL	
	7	1	**153-8925**	1	STOP	
	8	1	**153-8926**	1	SPRING	
	9	1	**153-8929**	1	CAGE	
	10	1	**7J-0204**	1	SEAL-O-RING	
	11	1	**157-2152**	1	SPRING	
	12	1	**2H-3429**	1	RING-RETAINING	
	13	1	**3E-4354**	1	BALL	
	14	1	**3K-0360**	1	SEAL-O-RING	
	15	1	**4K-2039**	1	SEAL-O-RING	

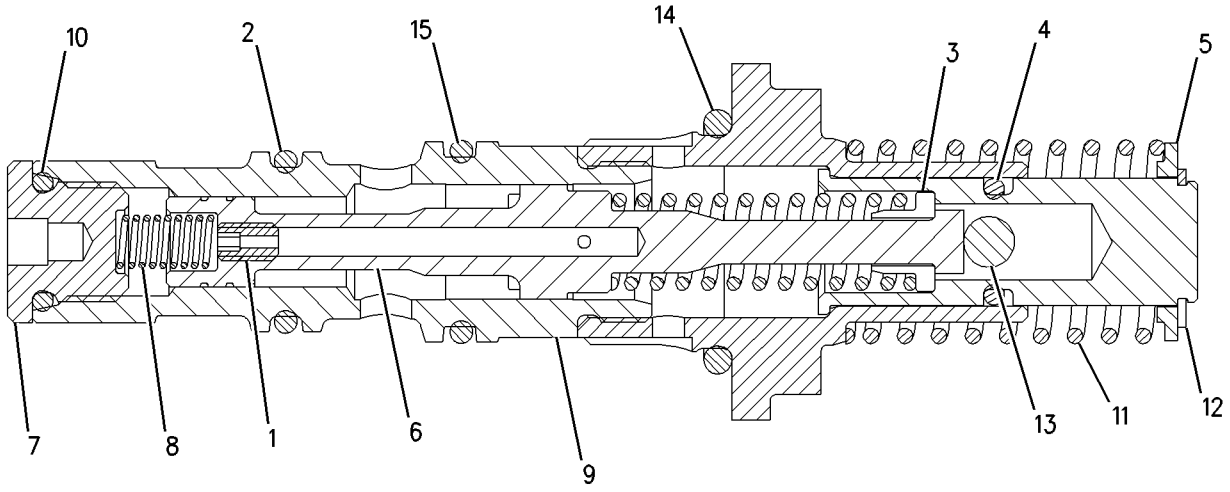

GRAPHIC #1 **<END>** g00930437

HYDRAULIC SYSTEM

212-4963 VALVE GP-PILOT CARTRIDGE

S/N: JKM1-UP
PART OF 261-8653, 261-8655 VALVE GP-PILOT
AN ATTACHMENT

SMCS-5059 **i01822407**

NOTE	REF NO	GRAPHIC REF	PART NUMBER	QTY	PART NAME 1 2 3 4 5 6 (PRODUCT LEVEL)	SEE PAGE
	1	1	**116-4527**	1	ORIFICE	
	2	1	**6M-5062**	1	SEAL-O-RING	
	3	1	**146-6316**	2	RETAINER	
	4	1	**7I-6601**	1	SEAL-O-RING	
	5	1	**146-6319**	1	RETAINER	
	6	1	**153-8924**	1	SPOOL	
	7	1	**153-8925**	1	STOP	
	8	1	**153-8926**	1	SPRING	
	9	1	**153-8929**	1	CAGE	
	10	1	**157-2153**	1	SPRING	
	11	1	**7J-0204**	1	SEAL-O-RING	
	12	1	**2H-3429**	1	RING-RETAINING	
	13	1	**3E-4354**	1	BALL	
	14	1	**3K-0360**	1	SEAL-O-RING	
	15	1	**4K-2039**	1	SEAL-O-RING	

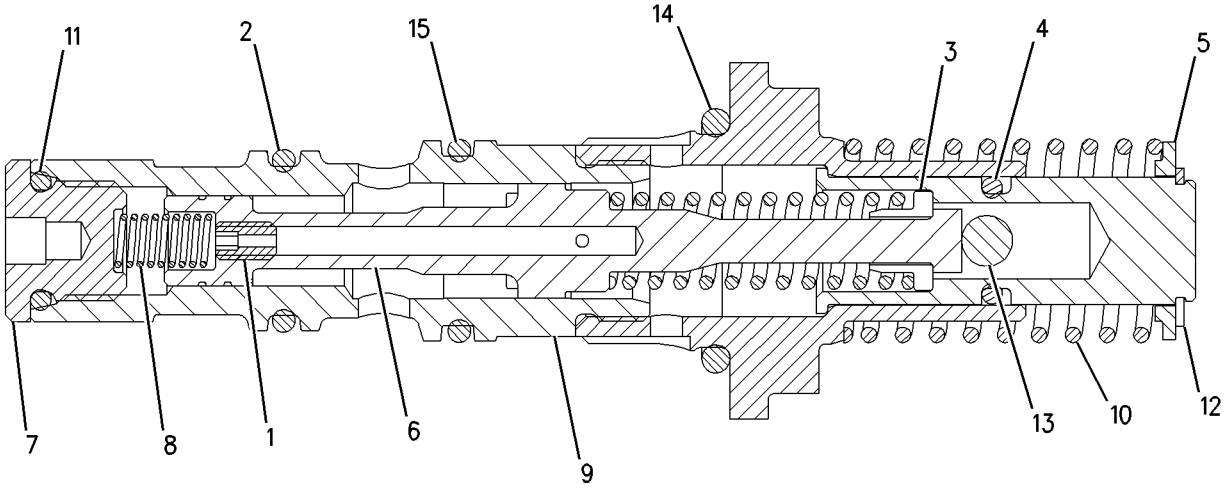

GRAPHIC #1 **<END>** g00930441

262-7181 VALVE GP-PILOT CARTRIDGE

S/N: JKM1-UP

PART OF 261-8654, 261-8655, 261-8656, 261-8658 VALVE GP-PILOT

ALSO AN ATTACHMENT

SMCS-5059 **i02918430**

NOTE	REF NO	GRAPHIC REF	PART NUMBER	QTY	PART NAME 1 2 3 4 5 6 (PRODUCT LEVEL)	SEE PAGE
	1	1	**136-9301**	1	SPRING	
	2	1	**146-6319**	1	RETAINER	
	3	1	**153-8926**	1	SPRING	
	4	1	**308-5681**	1	SPRING	
	5	1	**153-8925**	1	STOP	
	6	1	**2H-3429**	1	RING-RETAINING	
	7	1	**3K-0360**	1	SEAL-O-RING	
	8	1	**4K-2039**	1	SEAL-O-RING	
	9	1	**6M-5062**	1	SEAL-O-RING	
	10	1	**7J-0204**	1	SEAL-O-RING	

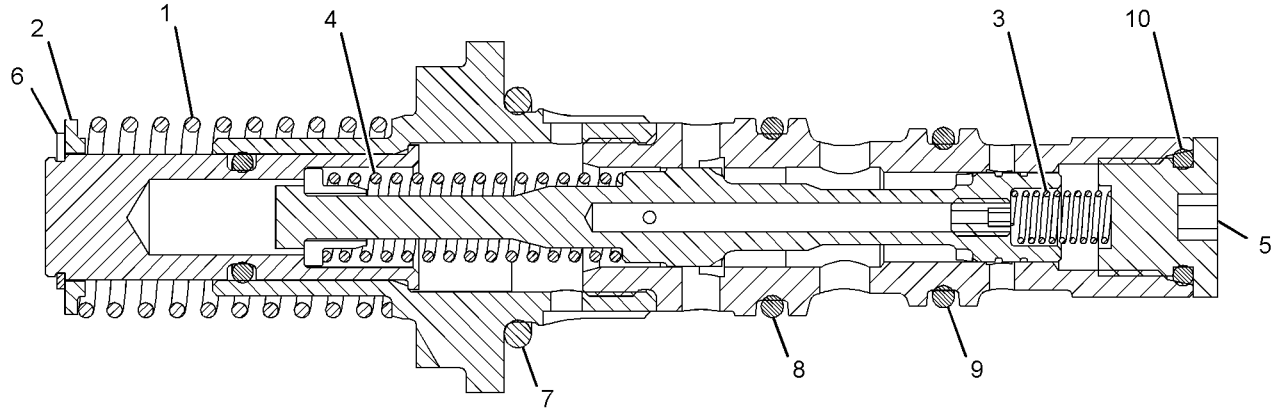

GRAPHIC #1 **<END>** g01423521

HYDRAULIC SYSTEM

262-7182 VALVE GP-PILOT CARTRIDGE

S/N: JKM1-UP

PART OF 261-8654, 261-8656, 261-8658 VALVE GP-PILOT

ALSO AN ATTACHMENT

SMCS-5059 **i02918431**

NOTE	REF NO	GRAPHIC REF	PART NUMBER	QTY	PART NAME 1 2 3 4 5 6 (PRODUCT LEVEL)	SEE PAGE
	1	1	**136-9301**	1	SPRING	
	2	1	**146-6319**	1	RETAINER	
	3	1	**153-8926**	1	SPRING	
	4	1	**153-8925**	1	STOP	
	5	1	**2H-3429**	1	RING-RETAINING	
	6	1	**3K-0360**	1	SEAL-O-RING	
	7	1	**4K-2039**	1	SEAL-O-RING	
	8	1	**6M-5062**	1	SEAL-O-RING	
	9	1	**7J-0204**	1	SEAL-O-RING	

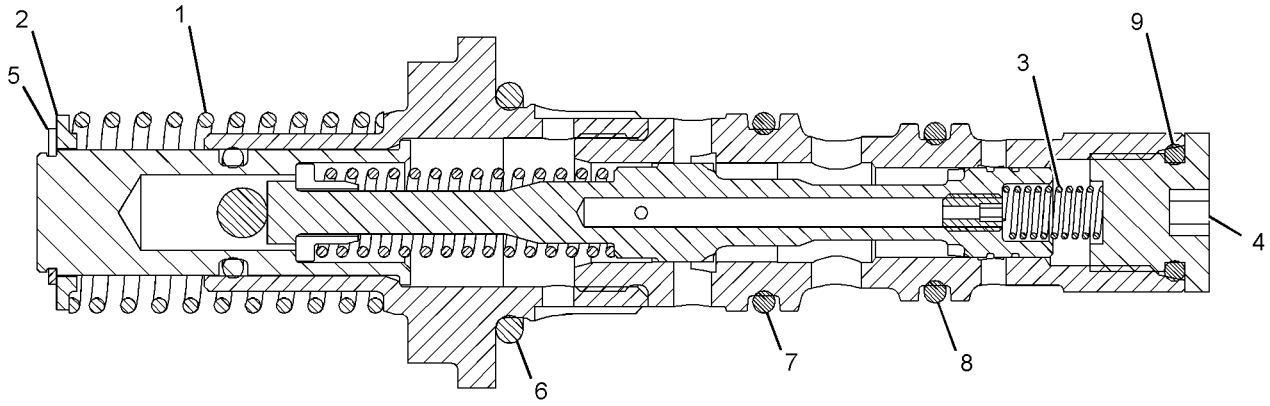

GRAPHIC #1 **<END>** g01423570

193-1665 VALVE GP-PRESSURE REDUCING–

SIGNAL DUPLICATION

S/N: JKM1-UP

PART OF 282-4971 MANIFOLD GP-HYDRAULIC

ALSO AN ATTACHMENT

SMCS-5117 **i03624885**

NOTE	REF NO	GRAPHIC REF	PART NUMBER	QTY	PART NAME 1 2 3 4 5 6 (PRODUCT LEVEL)	SEE PAGE
	1	1	**193-1664**	1	VALVE GP-CONTROL	
	2	1	**3J-1907**	2	SEAL-O-RING	
	3	1	**4J-5268**	1	SEAL-O-RING	
	4	1	**4J-5351**	1	SEAL-O-RING	
	5	1	**301-5243**	1	RING-BACKUP	
	6	1	**5J-2974**	1	SEAL-O-RING	
	7	1	**5P-6719**	1	PLUG	
	8	1	**301-5241**	1	RING-BACKUP	
	9	1	**301-5242**	1	RING-BACKUP	

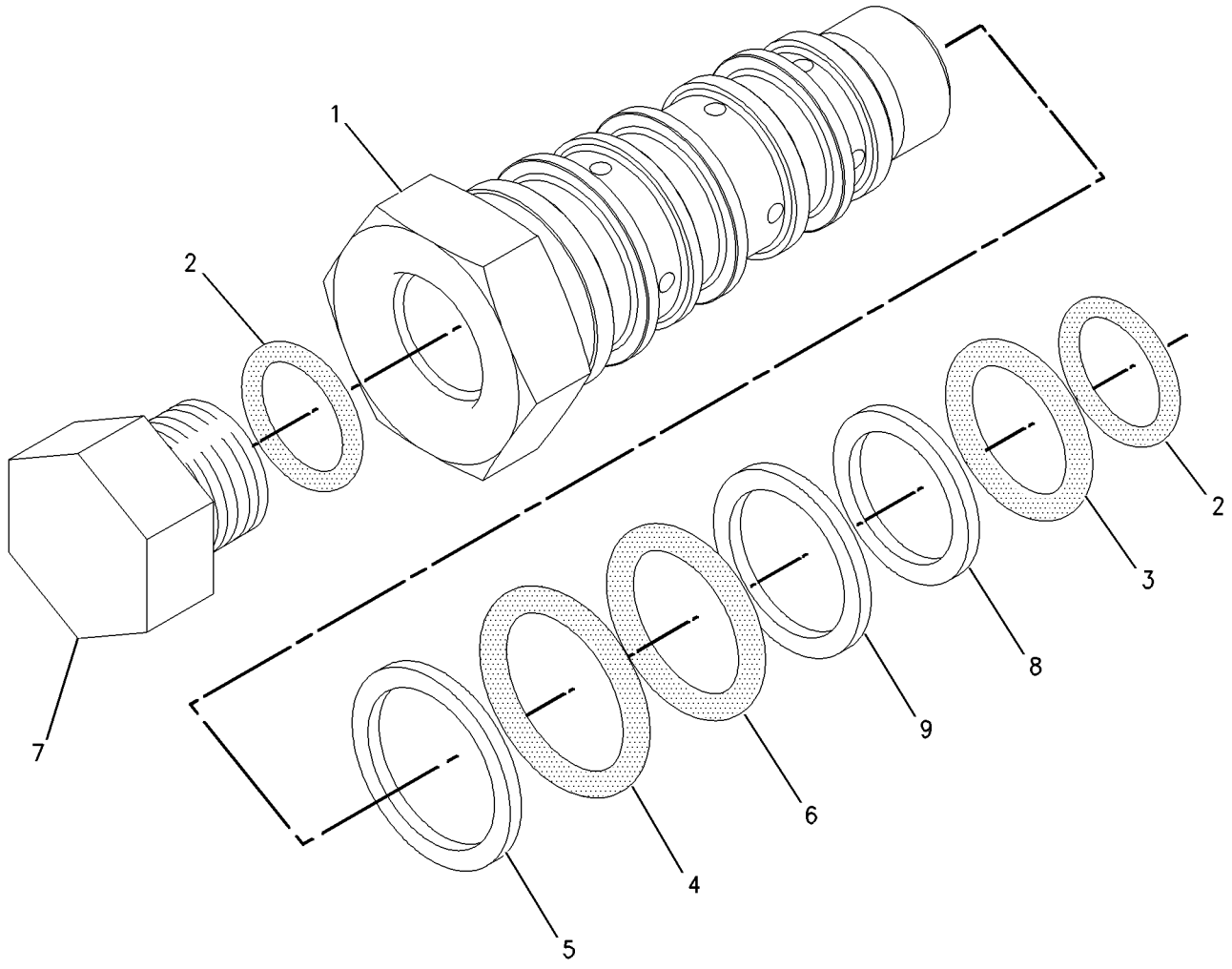

GRAPHIC #1 **<END>** g00763618

HYDRAULIC SYSTEM

207-0697 VALVE GP-PUMP CONTROL–
PRESSURE, FLOW COMPENSATOR–BRAKE, HYDRAULIC FAN
S/N: JKM1-UP

PART OF 254-5145 PUMP GP-PISTON

SMCS-5455 **i01787268**

NOTE	REF NO	GRAPHIC REF	PART NUMBER	QTY	PART NAME 1 2 3 4 5 6 (PRODUCT LEVEL)	SEE PAGE
	1	1	**6E-6528**	6	SEAL	
	2	1	**6E-6527**	2	PLUG	
	3	1	**6E-3268**	1	RETAINER-SPRING	
	4	1	**6E-3275**	1	SPRING	
	5	1	**6E-3274**	1	SPRING	
	6	1	**033-6043**	1	SEAL-O-RING	
	7	1	**6E-3272**	1	SEAT	
	8	1	**6E-6540**	1	PLUG	
M	9	1	**6E-6538**	2	NUT-ADJUSTMENT (M8X1-THD)	
M	10	1	**6E-6537**	2	SCREW-ADJUSTMENT (M8X1X28-MM)	
M	11	1	**6E-6539**	2	NUT-CAP (M8X1-THD)	
	12	1	**6E-3273**	1	SEAT	
	13	1	**6E-6536**	1	PLUG	
	14	1	**6V-8352**	1	SEAL-O-RING	
	15	1	**193-1036**	1	SPRING	
	16	1	**6E-3276**	1	SPRING	
	17	1	**6E-3269**	1	RETAINER-SPRING	
	18	1	**105-2145**	1	VALVE-ORIFICE	
	19	1	**5P-9262**	1	SEAL-O-RING	
	20	1	**3J-7354**	1	SEAL-O-RING	
	21	1	**9S-8002**	1	PLUG-O-RING	
M	22	1	**8T-8442**	4	BOLT-SOCKET HEAD (M6X1X30-MM)	
	23	1	**9X-7680**	3	SEAL-O-RING	
	24	1	**119-0959**	1	PLUG-ORIFICE	

M-METRIC PART

207-0697 **VALVE GP-PUMP CONTROL** *(contd.)* **i01787268**

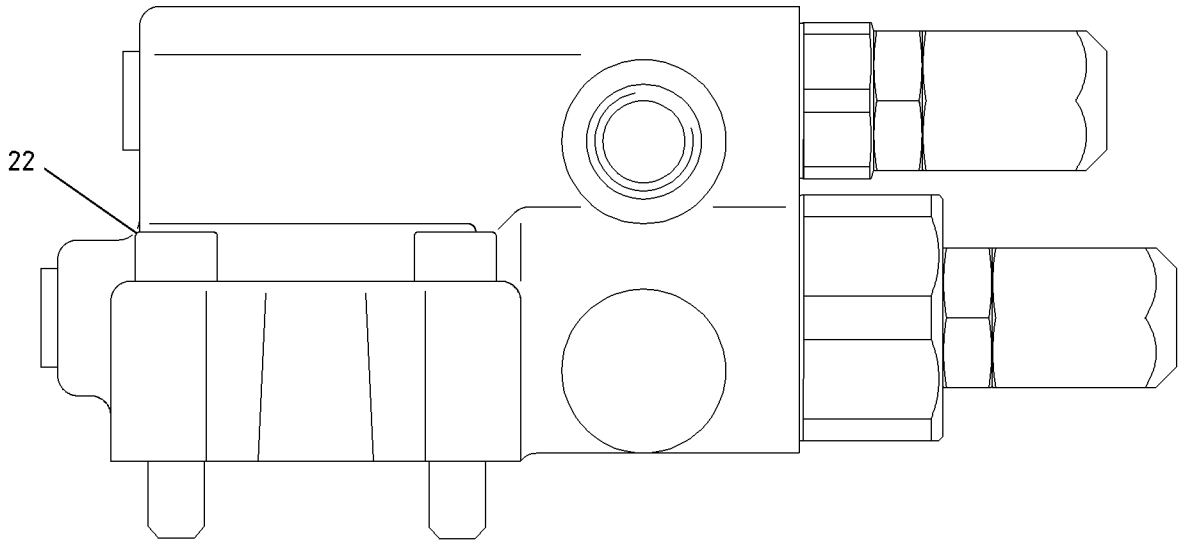

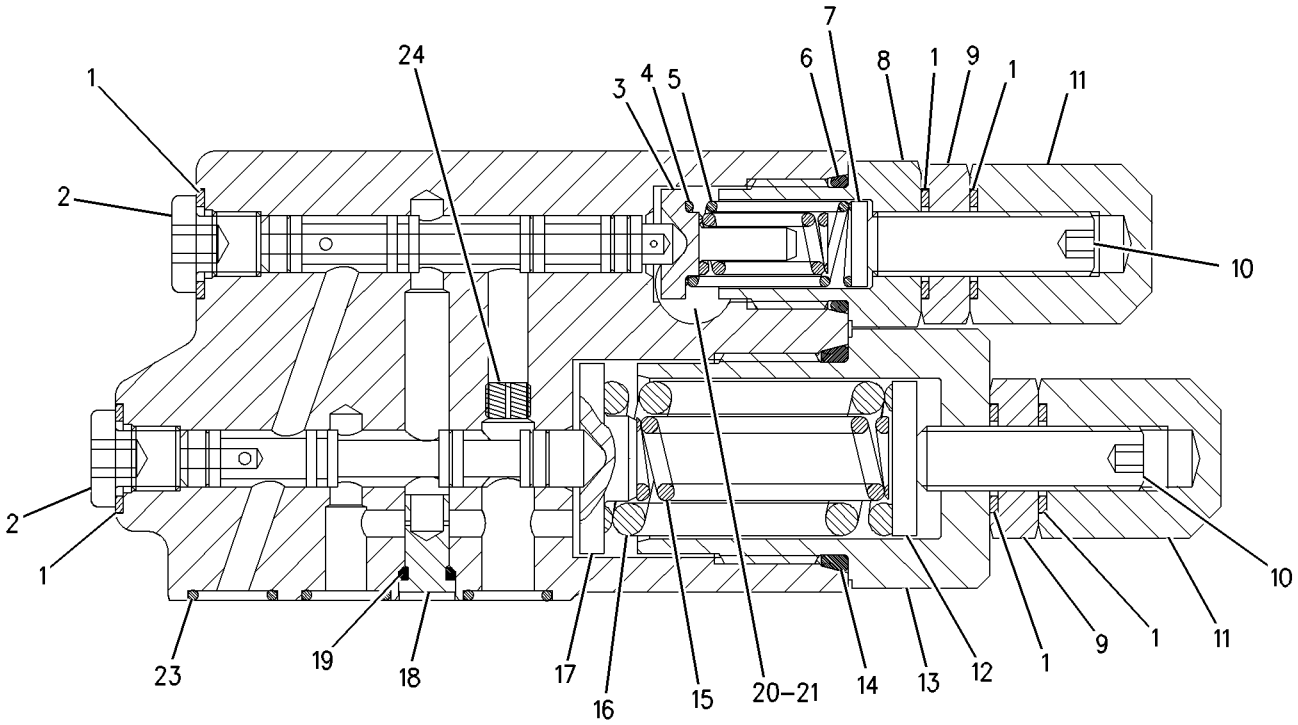

GRAPHIC #1 **<END>** g00826611

HYDRAULIC SYSTEM

264-5999 VALVE GP-RELIEF–LINE

S/N: JKM1-UP
PART OF 281-0042 VALVE GP-CONTROL
ALSO AN ATTACHMENT

SMCS-5069, 5117 **i02905686**

NOTE	REF NO	GRAPHIC REF	PART NUMBER	QTY	PART NAME 1 2 3 4 5 6 (PRODUCT LEVEL)	SEE PAGE
	1	1	**030-0167**	1	RING-BACKUP	
	2	1	**8L-2779**	1	SEAL-O-RING	
	3	1	**033-6036**	2	SEAL-O-RING	
	4	1	**3P-0647**	1	SEAL-O-RING	
	5	1	**9J-0707**	2	RING-BACKUP	
	6	1	**2P-2975**	1	SEAL-O-RING	

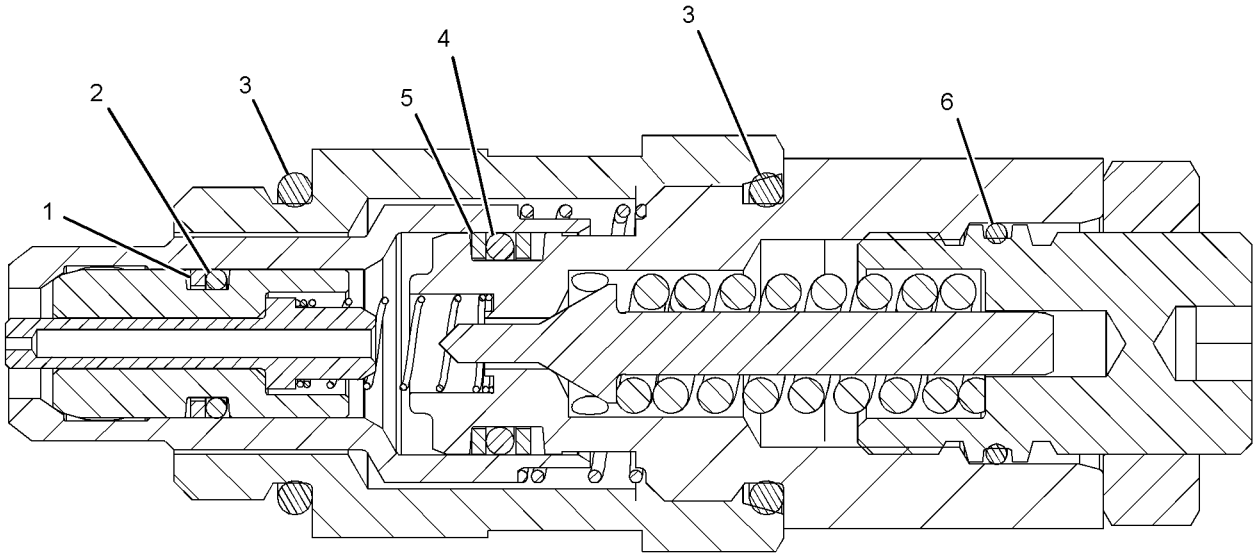

GRAPHIC #1 **<END>** g01389886

264-6000 VALVE GP-RELIEF–LINE

S/N: JKM1-UP

PART OF 254-8095 VALVE GP-CONTROL

AN ATTACHMENT

SMCS-5069, 5117 **i02927660**

NOTE	REF NO	GRAPHIC REF	PART NUMBER	QTY	PART NAME 1 2 3 4 5 6 (PRODUCT LEVEL)	SEE PAGE
	1	1	**030-0167**	1	RING-BACKUP	
	2	1	**8L-2779**	1	SEAL-O-RING	
	3	1	**033-6036**	2	SEAL-O-RING	
	4	1	**3P-0647**	1	SEAL-O-RING	
	5	1	**9J-0707**	2	RING-BACKUP	
	6	1	**2P-2975**	1	SEAL-O-RING	

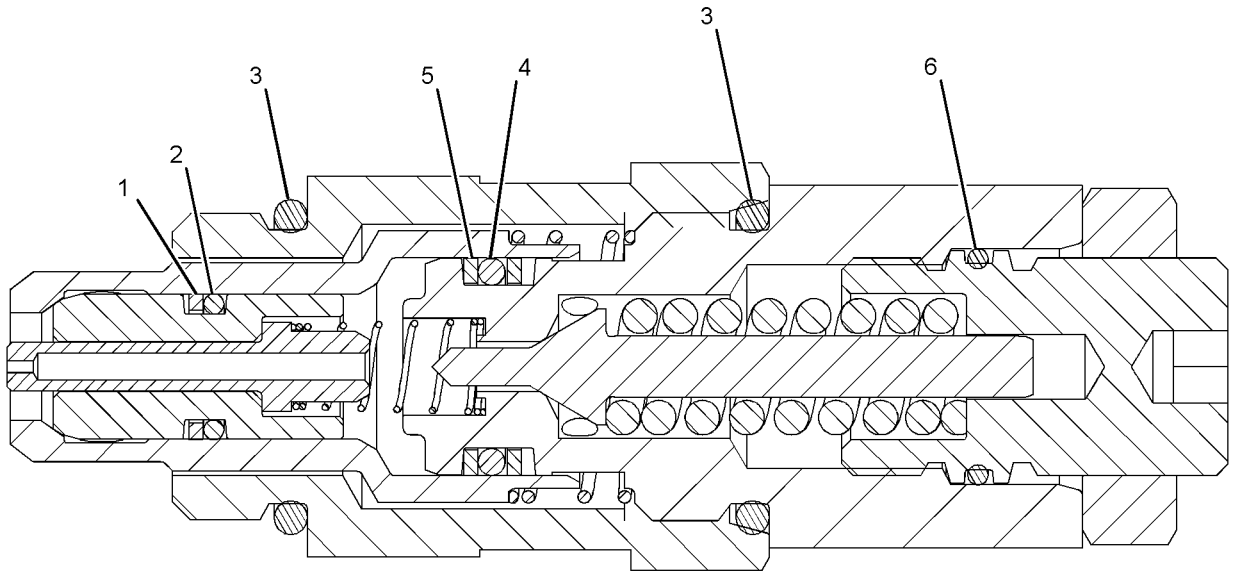

GRAPHIC #1 **<END>** g01407226

HYDRAULIC SYSTEM

270-0291 VALVE GP-RELIEF–LINE

S/N: JKM1-UP
PART OF 281-0042 VALVE GP-CONTROL
ALSO AN ATTACHMENT

SMCS-5069, 5117 **i02905795**

NOTE	REF NO	GRAPHIC REF	PART NUMBER	QTY	PART NAME 1 2 3 4 5 6 (PRODUCT LEVEL)	SEE PAGE
	1	1	**030-0167**	1	RING-BACKUP	
	2	1	**8L-2779**	1	SEAL-O-RING	
	3	1	**033-6036**	2	SEAL-O-RING	
	4	1	**3P-0647**	1	SEAL-O-RING	
	5	1	**9J-0707**	2	RING-BACKUP	
	6	1	**2P-2975**	1	SEAL-O-RING	
	7	1	**033-5879**	1	SEAL-O-RING	
	8	1	**9J-0705**	1	RING-BACKUP	

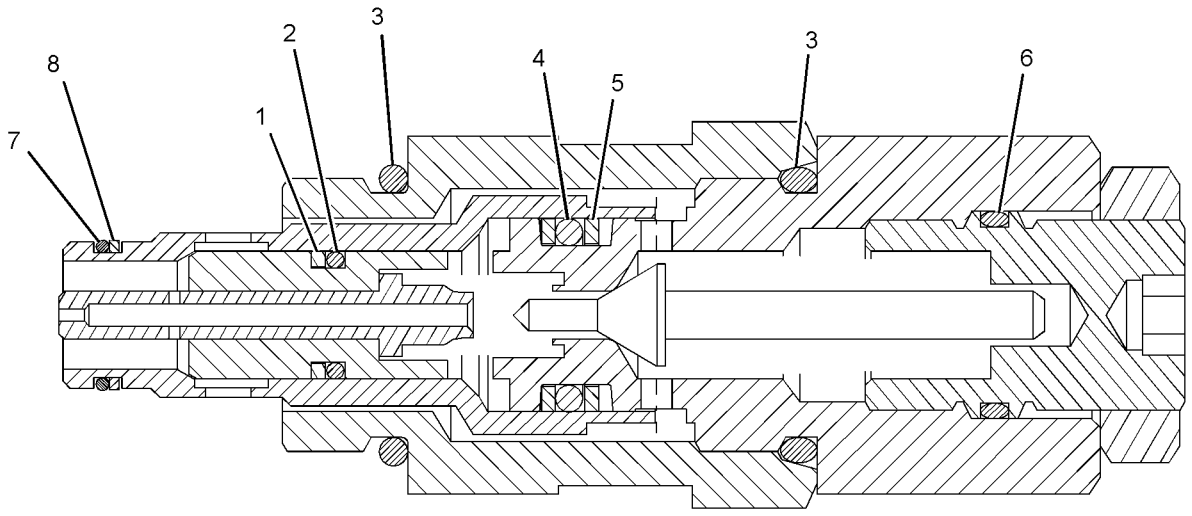

GRAPHIC #1 **<END>** g01389881

254-8094 VALVE GP-RIDE CONTROL–
2-FUNCTION, 3-FUNCTION CONTROL VALVE
S/N: JKM1-1077
PART OF 251-1676, 254-8100 VALVE GP-MAIN CONTROL
AN ATTACHMENT

SMCS-5004, 5054, 5066 **i02927794**

NOTE	REF NO	GRAPHIC REF	PART NUMBER	QTY	PART NAME 1 2 3 4 5 6 (PRODUCT LEVEL)	SEE PAGE
	1	1	**252-0737**	1	VALVE GP-SOLENOID (RIDE CONT, LIFT CYL HEAD END)	
	3	1	**5F-8000**	1	SEAL-O-RING	
	4	1	**7J-9933**	1	SEAL-O-RING	
J	5	1	**235-6156**	1	VALVE GP-CHECK (RIDE CONT, LIFT CYL HEAD END)	
L	6	1	**235-6157**	1	VALVE GP-SHUTTLE	
	7	1	**244-8686**	1	VALVE GP-SOLENOID (24-VOLT) (RIDE CONTROL, LIFT CYL ROD END)	
		1	**249-0981**	1	COIL AS	
	10	1	**288-8932**	1	VALVE GP-CHECK	
	11	1	**292-8061**	13	PLUG-EXPANSION	
	12	1	*164-5619*	1	PLUG AS	
		1	**2M-9780**	1	SEAL-O-RING	
		1	**9S-8006**	1	PLUG-O-RING	
	13	1	**1P-3703**	1	SEAL-RECTANGULAR	
	14	1	*207-8218*	1	PLUG AS	
		1	**7J-0204**	1	SEAL-O-RING	
		1	**9S-8007**	1	PLUG	
	15	1	**5H-6005**	6	SEAL-O-RING	
	16	1	**6J-3134**	2	SEAL-O-RING	
					AVAILABLE REPAIR KIT(S):	
J			**238-9843**	1	KIT-SEAL (CHECK VALVE)	
					(INCLUDES BACKUP RINGS & SEAL-O-RINGS)	
L			**238-9844**	1	KIT-SEAL (SHUTTLE VALVE)	
					(INCLUDES O-RINGS)	

J-KIT MARKED J SERVICES PART MARKED J
L-KIT MARKED L SERVICES PART MARKED L

254-8094 VALVE GP-RIDE CONTROL *(contd.)* i02927794

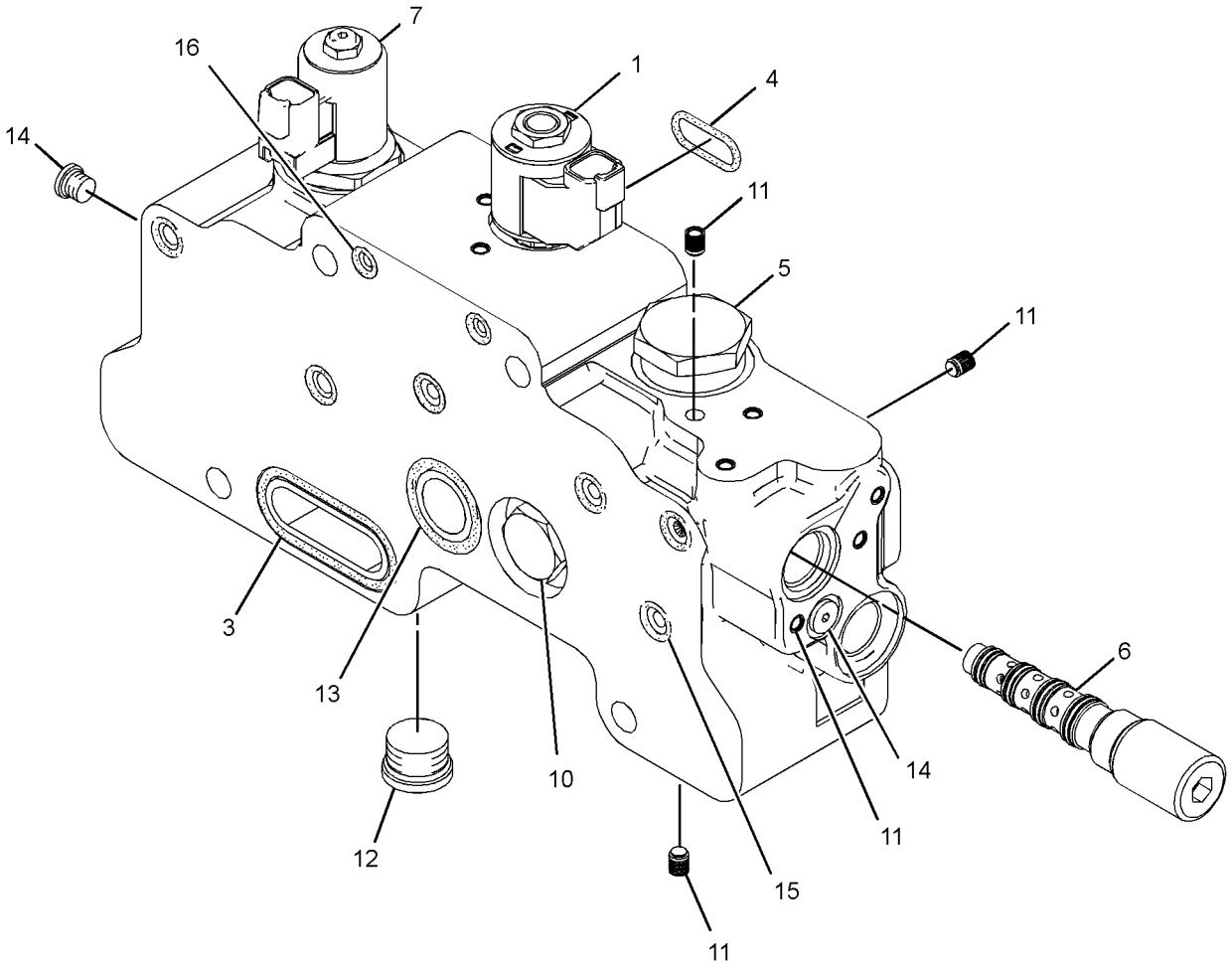

GRAPHIC #1 **<END>** g01455942

340-2084 VALVE GP-RIDE CONTROL

S/N: JKM1078-UP

PART OF 251-1676, 254-8100 VALVE GP-MAIN CONTROL

AN ATTACHMENT

SMCS-5004, 5054, 5066 **i03983495**

NOTE	REF NO	GRAPHIC REF	PART NUMBER	QTY	PART NAME 1 2 3 4 5 6 (PRODUCT LEVEL)	SEE PAGE
Y	1	1	**251-3268**	1	VALVE GP-SOLENOID (24-VOLT)	893
	3	1	**6V-5326**	1	SEAL-O-RING	
J	4	1	**235-6157**	1	VALVE GP-SHUTTLE	
	5	1	**244-8686**	1	VALVE GP-SOLENOID (24-VOLT)	
	7	1	**282-8827**	10	PLUG	
	8	1	**292-8061**	3	PLUG-EXPANSION	
L	9	1	**318-8833**	1	VALVE GP-CHECK (HIGH PRESSURE, RIDE CONTROL)	
N	10	1	**332-4089**	1	VALVE GP-CHECK	
		1	**2M-9780**	1	SEAL-O-RING	
	12	1	*164-5619*	1	PLUG AS	
		1	**2M-9780**	1	SEAL-O-RING	
		1	**9S-8006**	1	PLUG-O-RING	
	13	1	**1P-3703**	1	SEAL-RECTANGULAR	
	14	1	*207-8218*	2	PLUG AS	
					(EACH INCLUDES)	
		1	**7J-0204**	1	SEAL-O-RING	
		1	**9S-8007**	1	PLUG	
	15	1	**5F-8000**	1	SEAL-O-RING	
	16	1	**5H-6005**	6	SEAL-O-RING	
	17	1	**6J-3134**	2	SEAL-O-RING	
					AVAILABLE REPAIR KIT(S):	
J			**238-9844**	1	KIT-SEAL (SHUTTLE VALVE)	
L			**333-9152**	1	KIT-SEAL	
N			**238-9843**	1	KIT-SEAL (CHECK VALVE)	
					(EACH REPAIR KIT INCLUDES RINGS)	

J-(KIT MARKED J SERVICES PART MARKED J)
L-(KIT MARKED L SERVICES PART MARKED L)
N-(KIT MARKED N SERVICES PART MARKED N)
Y-SEPARATE ILLUSTRATION

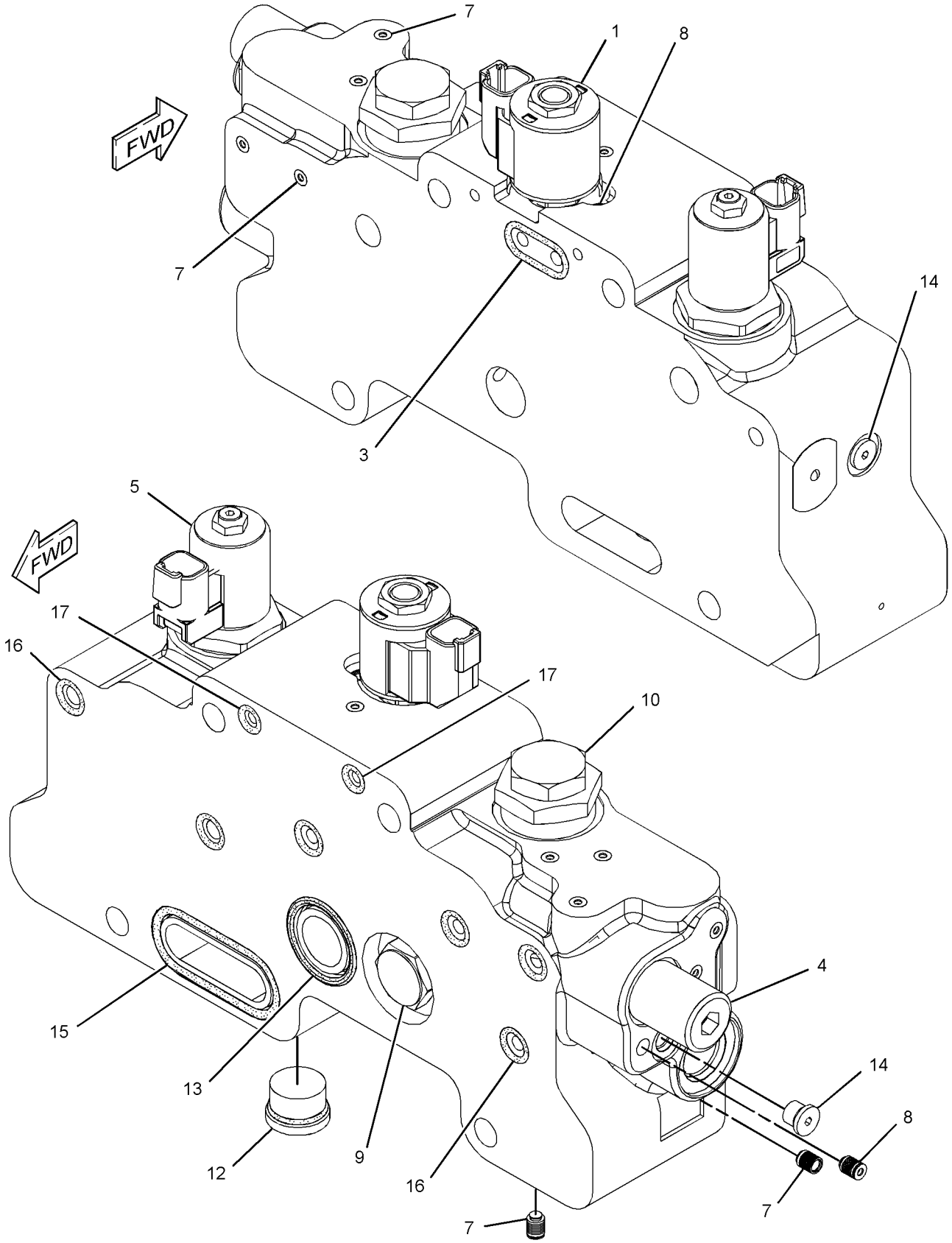

GRAPHIC #1 **<END>** g02161130

HYDRAULIC SYSTEM

8J-6875 VALVE GP-SHUTTLE

S/N: JKM1-UP

PART OF 239-3357 LINES GP-HYDRAULIC

SMCS-5079 **i02773481**

NOTE	REF NO	GRAPHIC REF	PART NUMBER	QTY	PART NAME 1 2 3 4 5 6 (PRODUCT LEVEL)	SEE PAGE
	1	1	**4T-9905**	2	ADAPTER	
	2	1	**2M-9780**	2	SEAL-O-RING	
	3	1	**4B-9784**	1	BALL	

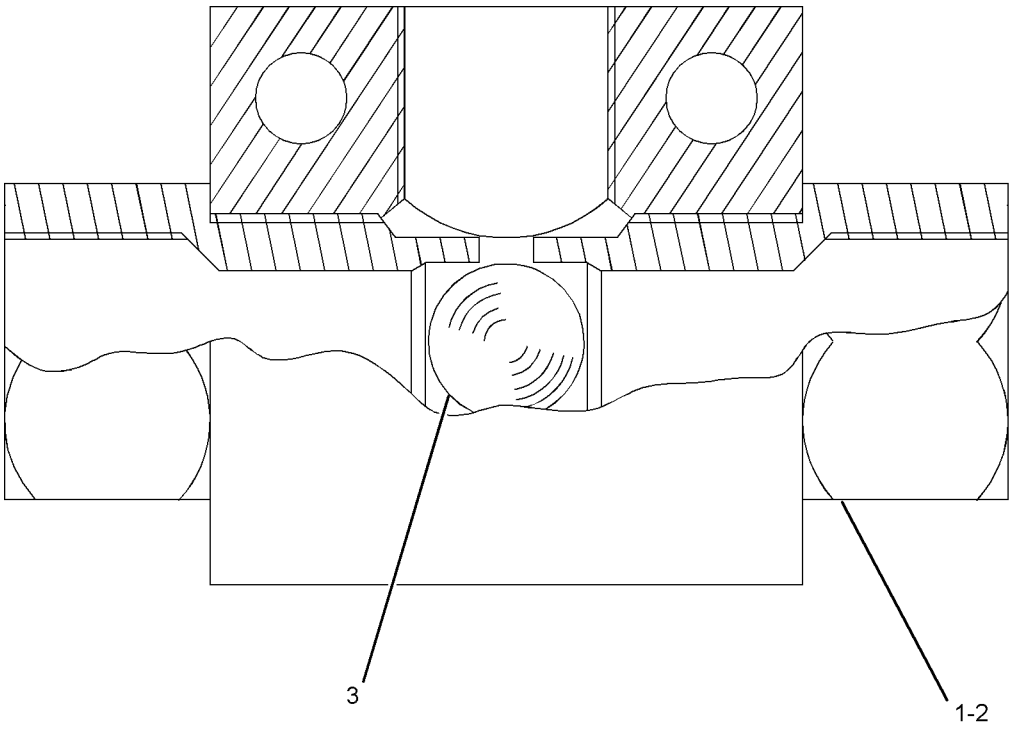

GRAPHIC #1 **<END>** g01047576

HYDRAULIC SYSTEM

257-8414 VALVE GP-SHUTTLE

S/N: JKM1-UP

PART OF 309-4907 MANIFOLD GP-CONTROL

SMCS-5079 **i02708474**

NOTE	REF NO	GRAPHIC REF	PART NUMBER	QTY	PART NAME 1 2 3 4 5 6 (PRODUCT LEVEL)	SEE PAGE
	1	1	**3K-0360**	1	SEAL-O-RING	
	2	1	**161-6149**	1	SEAL-O-RING	
	3	1	**095-1750**	1	SEAL-O-RING	
	4	1	**161-6161**	1	RING-BACKUP	
	5	1	**187-0541**	1	RING-BACKUP	

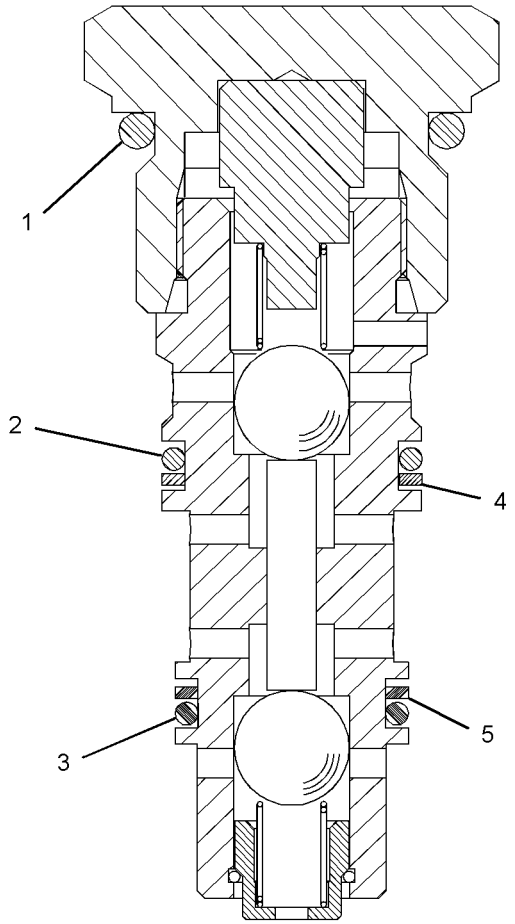

GRAPHIC #1 **<END>** g01104191

HYDRAULIC SYSTEM

260-8590 VALVE GP-SHUTTLE

S/N: JKM1-UP

PART OF 254-8095, 281-0041, 281-0042 VALVE GP-CONTROL

ALSO AN ATTACHMENT

SMCS-5079 **i02233009**

NOTE	REF NO	GRAPHIC REF	PART NUMBER	QTY	PART NAME 1 2 3 4 5 6 (PRODUCT LEVEL)	SEE PAGE
J	1	1	**3J-7354**	1	SEAL-O-RING	
J	2	1	**9N-1756**	1	SEAL-O-RING	
J	3	1	**3H-0442**	1	SEAL-O-RING	
					AVAILABLE REPAIR KIT(S):	
J			**240-7356**	1	KIT-SEAL (SHUTTLE VALVE) (IMPLEMENT CONTROL)	

J-(KIT MARKED J INCLUDES PARTS MARKED J)

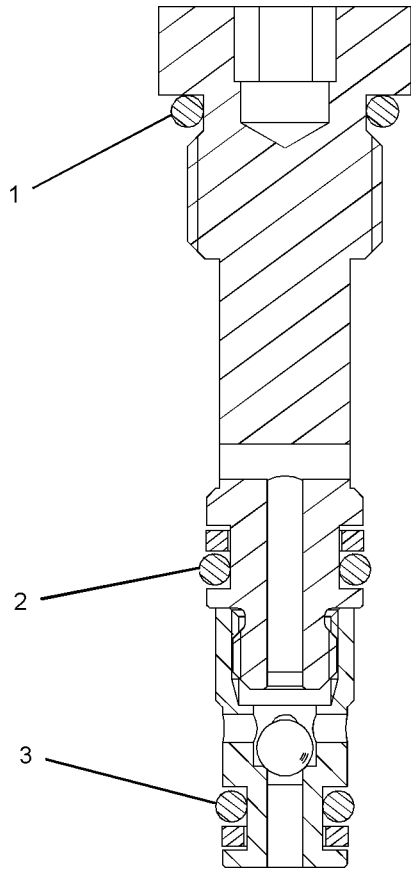

GRAPHIC #1 **<END>** g01018080

HYDRAULIC SYSTEM

148-3551 VALVE GP-SOLENOID

S/N: JKM1-UP
PART OF 318-1760 LINES GP-HYDRAULIC FAN
AN ATTACHMENT

SMCS-5132, 5479 **i03816581**

NOTE	REF NO	GRAPHIC REF	PART NUMBER	QTY	PART NAME 1 2 3 4 5 6 (PRODUCT LEVEL)	SEE PAGE
	1	1	**127-4404**	1	NUT (1/2-20-THD)	
J	2	1	**138-1974**	1	VALVE AS	
	3	1	**218-9894**	1	COIL AS (24-VOLT)	
		1	**1S-9593**	2	STRAP-CABLE	
		1	**8T-8729**	2	PIN-CONNECTOR (16-GA TO 18-GA)	
		1	**102-8802**	1	KIT-RECEPTACLE (2-PIN)	
					(INCLUDES RECEPTACLE & WEDGE)	
					AVAILABLE REPAIR KIT(S):	
J			**3G-8175**	1	KIT-SEAL	
					(INCLUDES RING & SEALS)	

J-KIT MARKED J SERVICES PART MARKED J

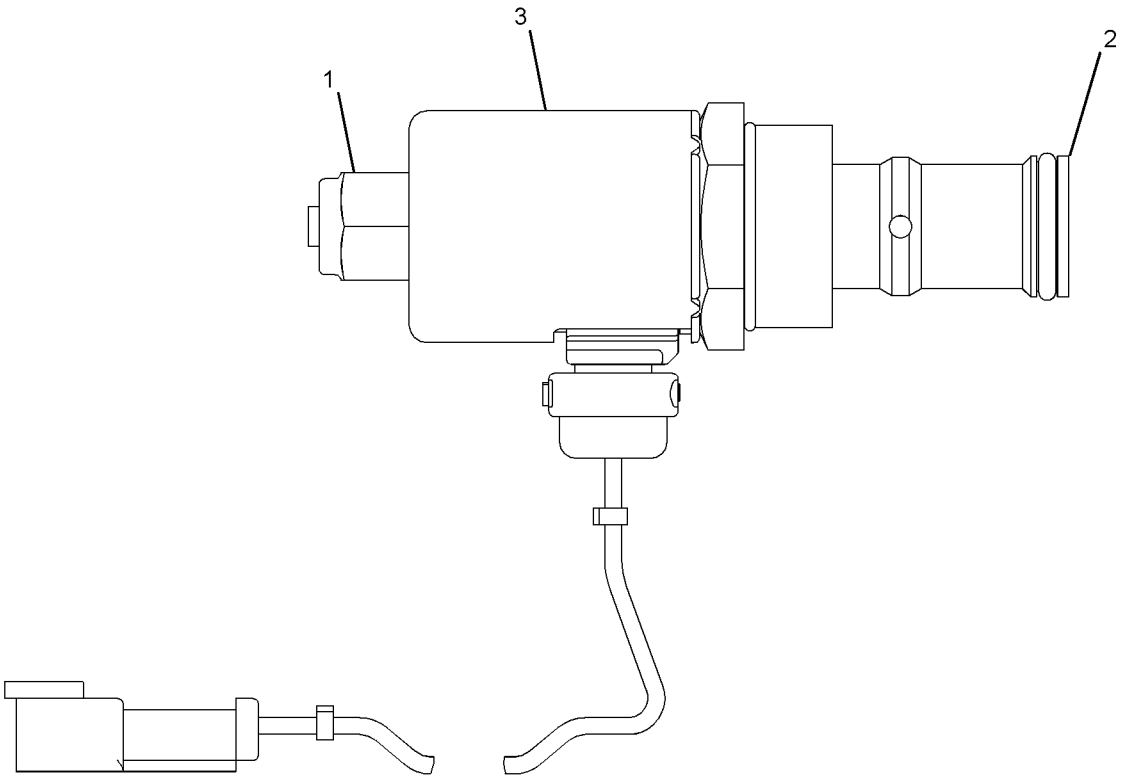

GRAPHIC #1 **<END>** g02023132

HYDRAULIC SYSTEM

152-8340 VALVE GP-SOLENOID

S/N: JKM1-UP
PART OF 314-4008 MANIFOLD GP-CONTROL
AN ATTACHMENT

SMCS-5132, 5479 **i02236758**

NOTE	REF NO	GRAPHIC REF	PART NUMBER	QTY	PART NAME 1 2 3 4 5 6 (PRODUCT LEVEL)	SEE PAGE
	1	1	**8C-9987**	1	WASHER (8.3X28X2.5-MM THK)	
	2	1	**111-0343**	1	LOCKNUT (5/16-18-THD)	
	3	1	**152-8338**	1	CARTRIDGE AS	
		1	**8C-9987**	1	WASHER (8.3X28X2.5-MM THK)	
		1	**111-0343**	1	LOCKNUT (5/16-18-THD)	
	4	1	**189-0189**	1	COIL AS (24-VOLT)	
					—OR—	
	5	1	**227-4398**	1	COIL AS	
					(EACH COIL ASSEMBLY INCLUDES)	
	5A	1	**186-3735**	2	PIN-CONNECTOR (16-GA TO 18-GA)	
	5B	1	**3E-3365**	1	WEDGE-RECEPTACLE LOCK (2-PIN)	
	5C	1	**102-8802**	1	KIT-RECEPTACLE (2-PIN)	
					(INCLUDES RECEPTACLE AS & WEDGE)	
	5D	1	**1S-9593**	2	STRAP-CABLE	
					AVAILABLE REPAIR KIT(S):	
			197-7701	1	KIT-SEAL (SOLENOID VALVE)	
					(INCLUDES SEALS AND RINGS)	

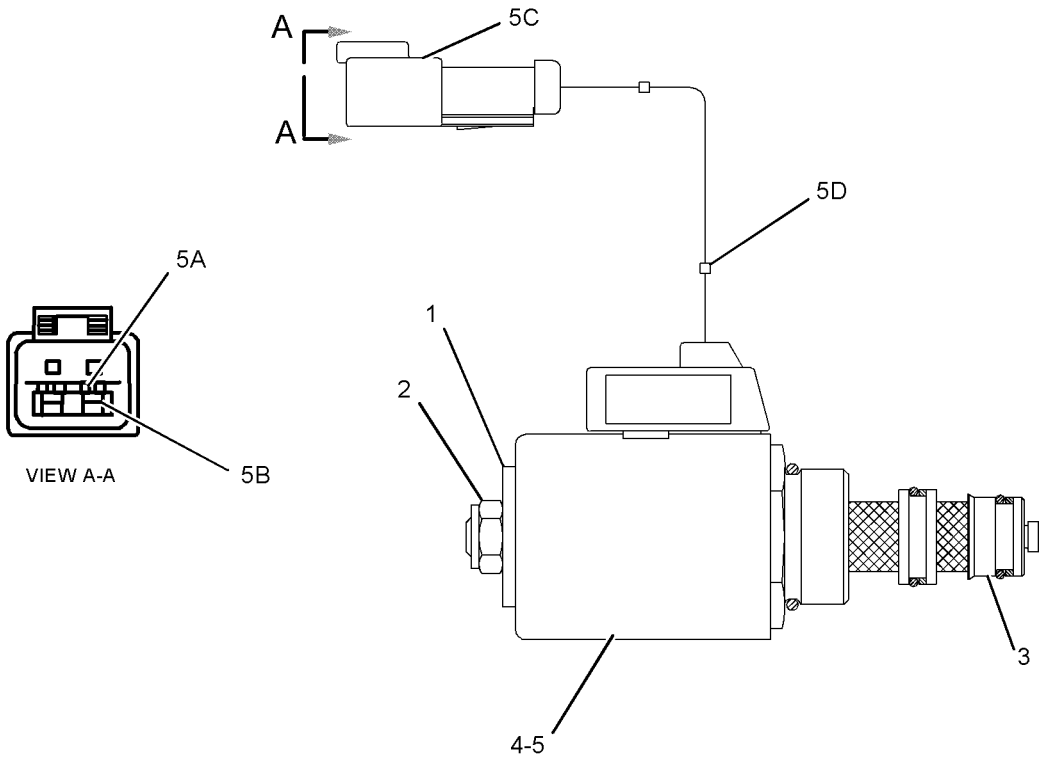

GRAPHIC #1 **<END>** g01127692

HYDRAULIC SYSTEM

183-7595 VALVE GP-SOLENOID

S/N: JKM1-UP

PART OF 309-4907 MANIFOLD GP-CONTROL

SMCS-5132, 5479 **i02357432**

NOTE	REF NO	GRAPHIC REF	PART NUMBER	QTY	PART NAME 1 2 3 4 5 6 (PRODUCT LEVEL)	SEE PAGE
	1	1	**146-3728**	1	WASHER-SPRING	
	2	1	**187-8191**	1	COIL AS	
Z	3	1		1	CARTRIDGE AS	
Z	4	1		1	ADAPTER AS	

Z-NOT SERVICED SEPARATELY

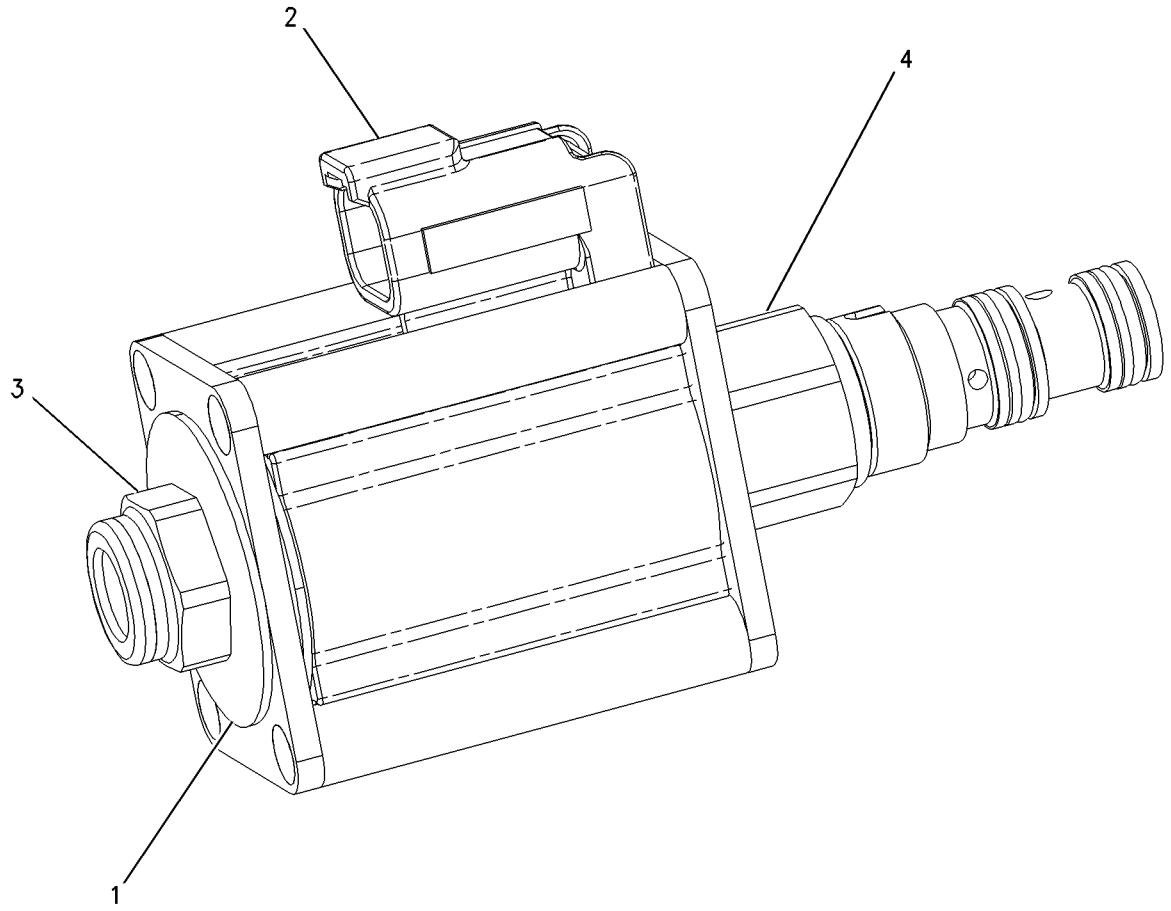

GRAPHIC #1 **<END>** g00891511

HYDRAULIC SYSTEM

251-3268 VALVE GP-SOLENOID

S/N: JKM1078-UP
PART OF 340-2084 VALVE GP-RIDE CONTROL
AN ATTACHMENT

SMCS-5132, 5479 **i03984760**

NOTE	REF NO	GRAPHIC REF	PART NUMBER	QTY	PART NAME 1 2 3 4 5 6 (PRODUCT LEVEL)	SEE PAGE
	1	1	**250-6148**	1	COIL AS (24-VOLT)	

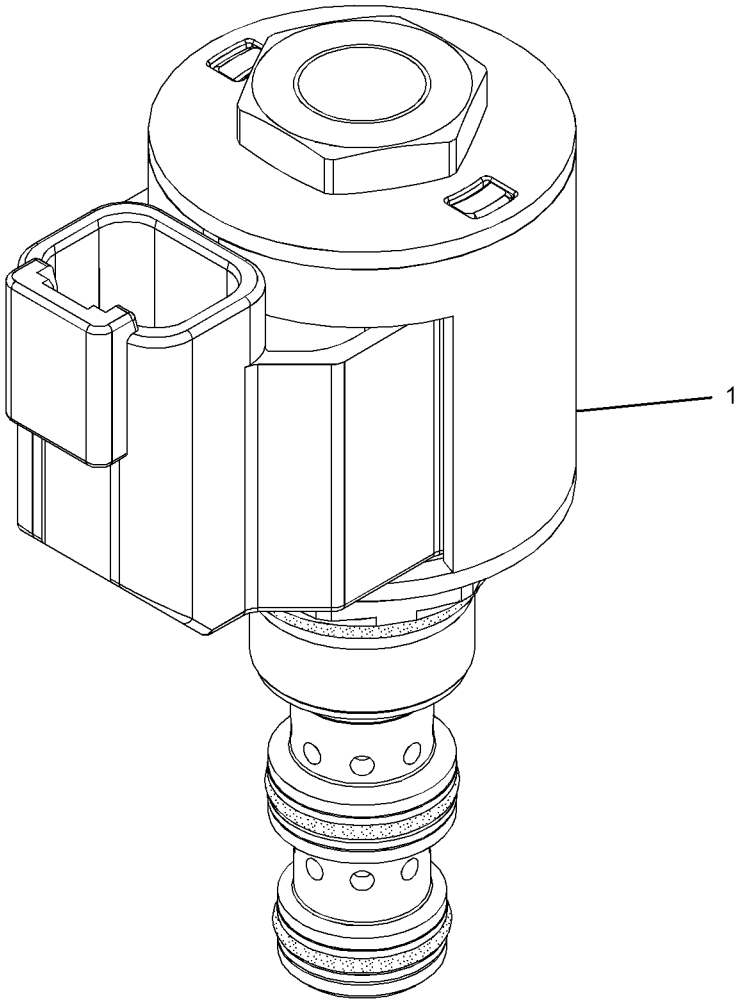

GRAPHIC #1 **<END>** g02173984

HYDRAULIC SYSTEM

285-5730 VALVE GP-SOLENOID

S/N: JKM1-685
24-VDC
PART OF 286-8970 MANIFOLD GP-CONTROL
FIELD REPLACEMENT ORDER 313-7668—PAGE 896

SMCS-5132, 5479 **i03206500**

NOTE	REF NO	GRAPHIC REF	PART NUMBER	QTY	PART NAME 1 2 3 4 5 6 (PRODUCT LEVEL)	SEE PAGE
	1	1	**312-8629**	1	COIL AS	
	2	1	**6M-5062**	1	SEAL-O-RING	
	3	1	**3K-0360**	1	SEAL-O-RING	
	4	1	**4K-2039**	1	SEAL-O-RING	
					PARTS SHOWN IN GRAPHIC(S) WITHOUT A REFERENCE NUMBER ARE NOT SERVICED SEPARATELY	

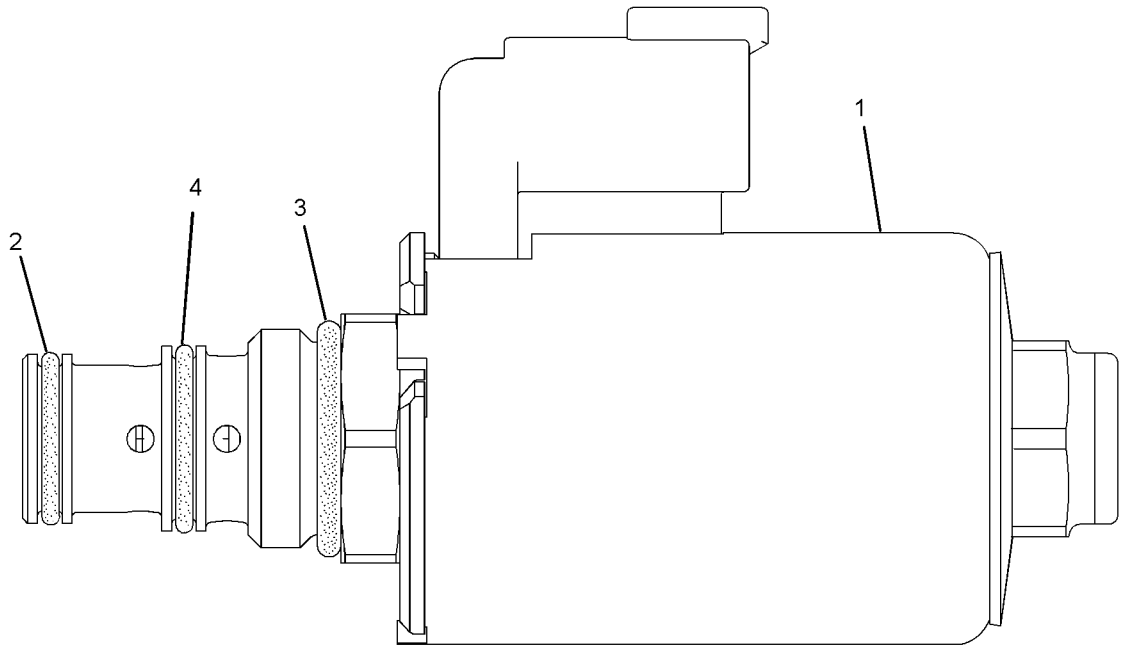

GRAPHIC #1 **<END>** g01336691

HYDRAULIC SYSTEM

300-6057 VALVE GP-SOLENOID–24-VOLT

S/N: JKM686-1004

PART OF 286-8970 MANIFOLD GP-CONTROL

FIELD REPLACEMENT ORDER 313-7668–PAGE 896

SMCS-5132, 5479 **i03624868**

NOTE	REF NO	GRAPHIC REF	PART NUMBER	QTY	PART NAME 1 2 3 4 5 6 (PRODUCT LEVEL)	SEE PAGE
	1	1	**191-9247**	1	WASHER (19.15X31.65X2.36-MM THK)	
	2	1	**198-2914**	1	NUT (3/4-32-THD)	
	3	1	**312-8629**	1	COIL AS	

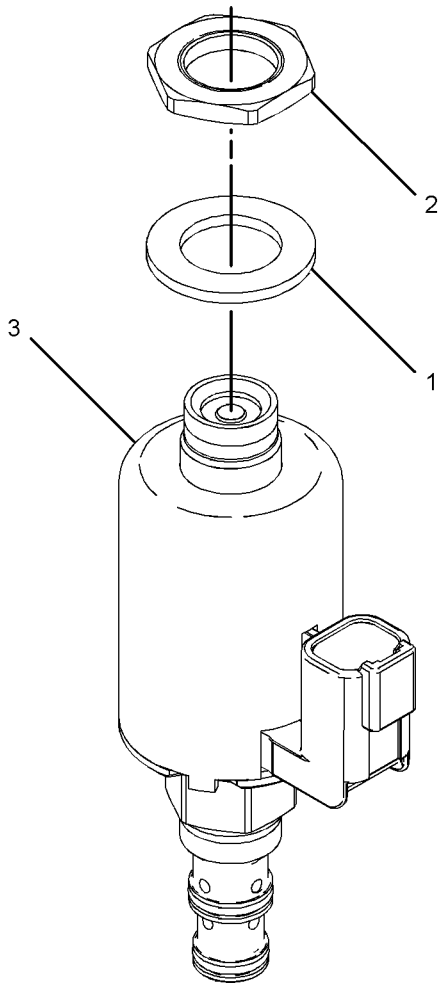

GRAPHIC #1 **<END>** g01723233

HYDRAULIC SYSTEM

313-7668 VALVE GP-SOLENOID

S/N: JKM1-UP
24-VDC
PART OF 286-8970 MANIFOLD GP-CONTROL
FIELD REPLACEMENT FOR 285-5730—PAGE 894, 300-6057—PAGE 895

SMCS-5132, 5479 **i03302458**

NOTE	REF NO	GRAPHIC REF	PART NUMBER	QTY	PART NAME 1 2 3 4 5 6 (PRODUCT LEVEL)	SEE PAGE
	1	1	**191-9247**	1	WASHER (19.15X31.65X2.36-MM THK)	
	2	1	**198-2914**	1	NUT (3/4-32-THD)	
	3	1	**312-8629**	1	COIL AS	
F			**3K-0360**	1	SEAL-O-RING	
F			**4K-2039**	1	SEAL-O-RING	
F			**6M-5062**	1	SEAL-O-RING	
F-NOT SHOWN						

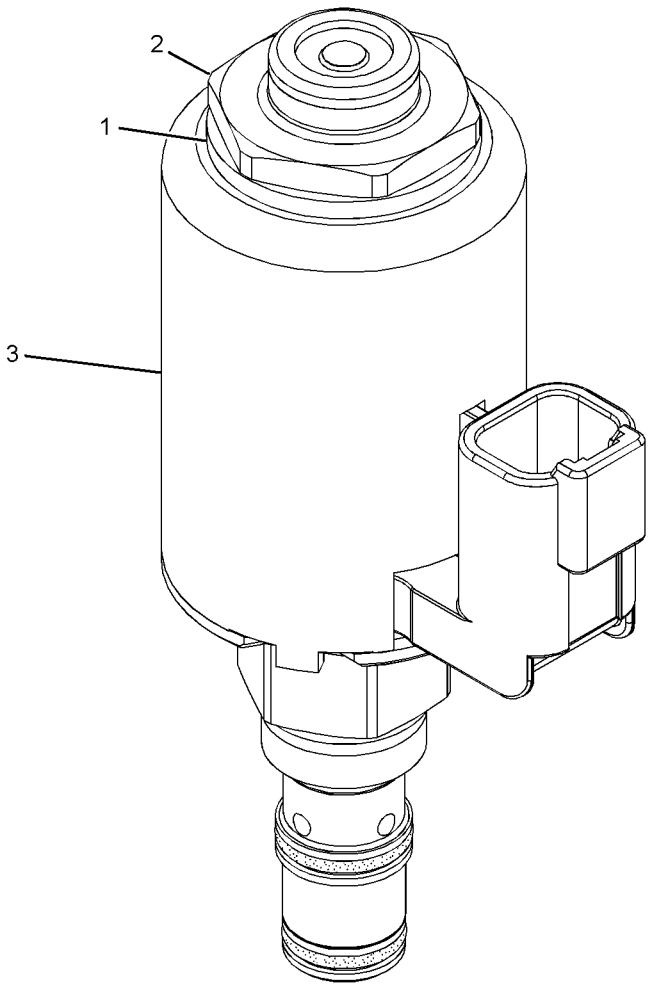

GRAPHIC #1 **<END>** g01637233

267-2938 ARM AS-LIFT

S/N: JKM1-UP
PART OF 265-9739 CONTROL AR-QUICK COUPLER, 265-9750 HYDRAULIC AR-3 VALVE, 265-9760 HYDRAULIC AR-4 VALVE
AN ATTACHMENT

SMCS-6119 **i02929207**

NOTE	REF NO	GRAPHIC REF	PART NUMBER	QTY	PART NAME 1 2 3 4 5 6 (PRODUCT LEVEL)	SEE PAGE
	1	1	**286-3115**	1	ARM & BEARING AS-LIFT	
	1A	1	**4V-2872**	2	BEARING-SLEEVE	
	1B	1	**4V-2873**	2	BEARING-SLEEVE	
	1C	1	**7P-3454**	2	BEARING-SLEEVE	
	1D	1	**9C-4935**	1	PLATE	
	1E	1	**106-1137**	1	CROSSMEMBER AS	
	4	1	**7Y-2522**	2	PLATE	
M	5	1	**7Y-8763**	1	BOSS (M10X1.5X25-MM)	
M	7	1	**9R-2613**	2	BOSS-WELD (M10X1.5X25-MM)	

M-METRIC PART

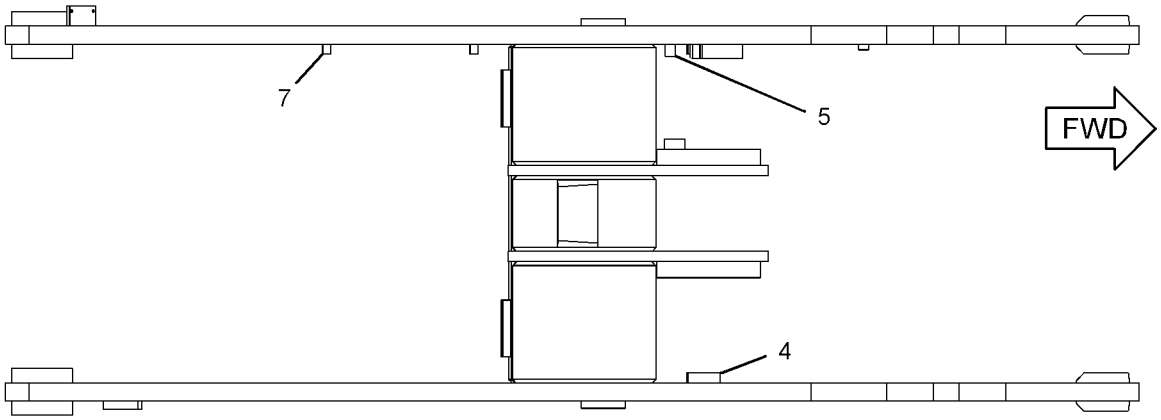

TOP VIEW

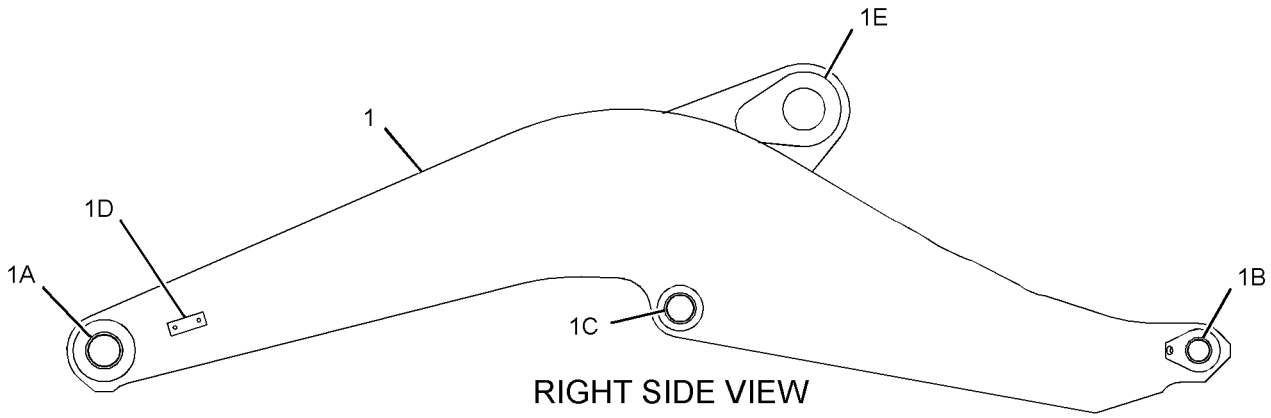

RIGHT SIDE VIEW

GRAPHIC #1 **<END>** g01430945

267-8689 ARM AS-LIFT

S/N: JKM1-UP

PART OF 265-9755 CONTROL AR-HIGH LIFT, 267-8688 CONTROL GP-WORK TOOL AN ATTACHMENT

SMCS-6119 **i02929893**

NOTE	REF NO	GRAPHIC REF	PART NUMBER	QTY	PART NAME 1 2 3 4 5 6 (PRODUCT LEVEL)	SEE PAGE
	1	1	*267-8690*	1	ARM AS-LIFT	
	1A	1	**7Y-2522**	2	PLATE	
M	1B	1	**8T-3851**	3	BOSS-WELD (M10X1.5X17.5-MM)	
	1C	1	**9C-4935**	3	PLATE	
	1D	1	**106-1137**	1	CROSSMEMBER AS	
	2	1	**4V-2872**	2	BEARING-SLEEVE	
	3	1	**4V-2873**	2	BEARING-SLEEVE	
	4	1	**7P-3454**	2	BEARING-SLEEVE	

M-METRIC PART

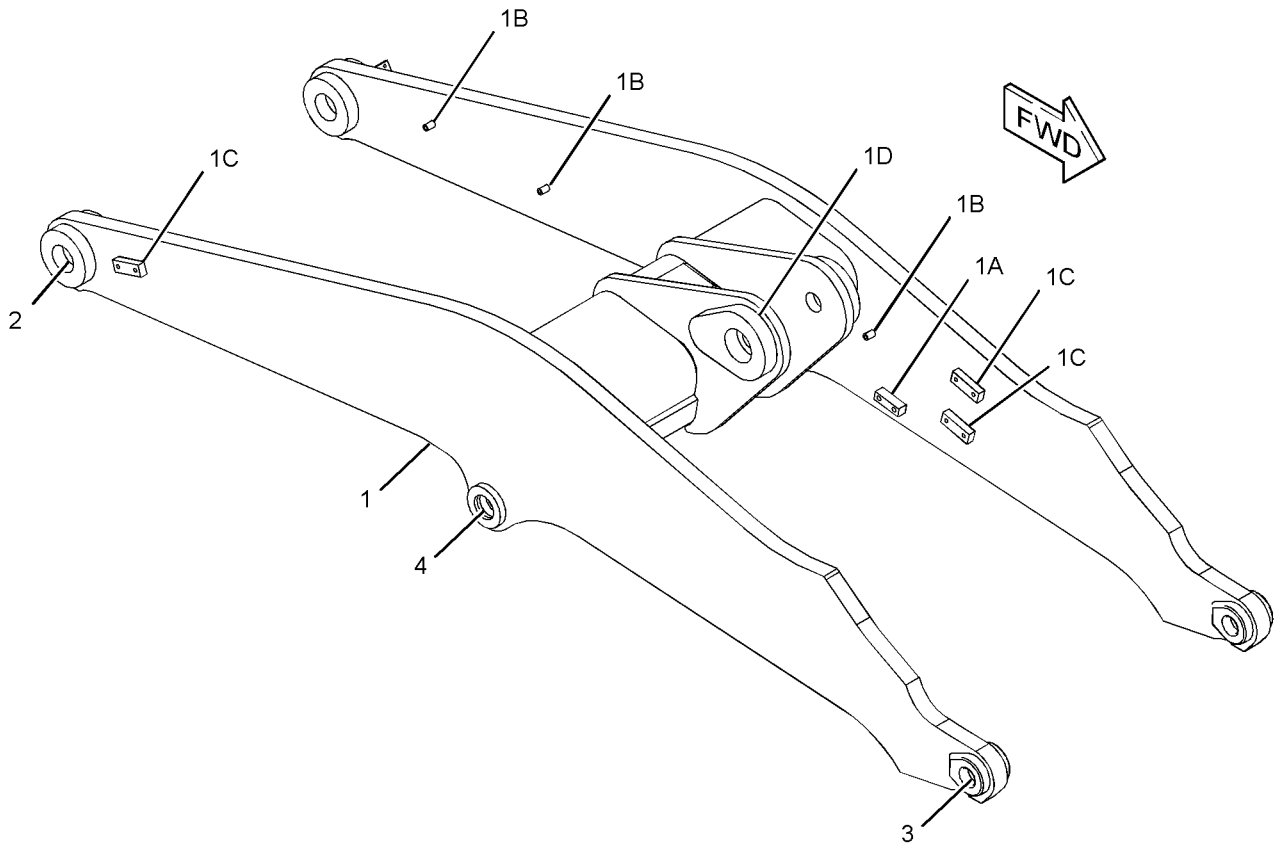

GRAPHIC #1 **<END>** g01432819

285-5028 BOSS GP-LIFT ARM

S/N: JKM1-UP
PART OF 284-5011 LUBRICATION AR-AUTOMATIC
AN ATTACHMENT

SMCS-6118, 6119 **i03268378**

NOTE	REF NO	GRAPHIC REF	PART NUMBER	QTY	PART NAME 1 2 3 4 5 6 (PRODUCT LEVEL)	SEE PAGE
	1	1	**5G-6973**	2	LUG	
	2	1	**251-3104**	8	BLOCK	
	3	1	**285-5036**	2	BLOCK-THREADED (M10X1.5X42-MM)	
M	4	1	**8T-3851**	3	BOSS-WELD (M10X1.5X17.5-MM)	

M-METRIC PART

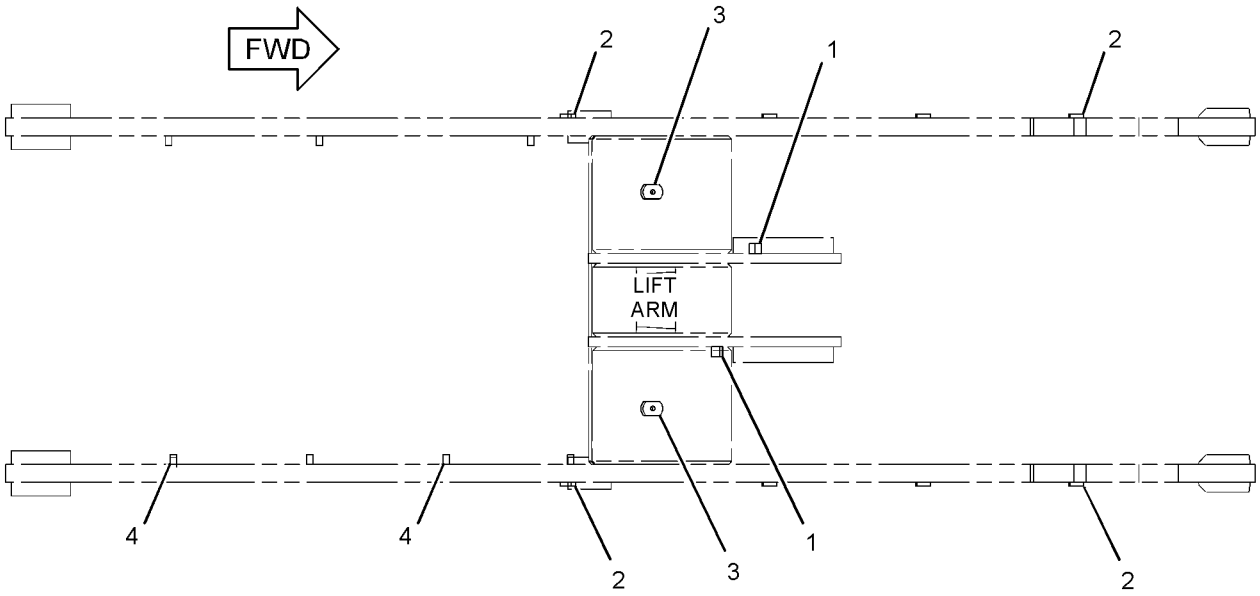

TOP VIEW

GRAPHIC #1 **<END>** g01428318

IMPLEMENTS

255-4807 CONTROL GP-WORK TOOL

S/N: JKM1-UP

PART OF 237-7540 CHASSIS AR

SMCS-6116, 6117, 6119, 6700 **i03412624**

NOTE	REF NO	GRAPHIC REF	PART NUMBER	QTY	PART NAME 1 2 3 4 5 6 (PRODUCT LEVEL)	SEE PAGE
	1	2	**2D-4867**	2	FITTING-GREASE	
	2	1,2	**3B-8489**	4	FITTING-GREASE	
	3	1	**3B-8491**	4	FITTING-GREASE	
B	4	1,2	**4E-6364**	8	WASHER (71X147X1.6-MM THK)	
	5	1	**4V-2588**	2	PIN AS	
	6	1	**4V-3619**	3	PIN AS	
	7	1	**4V-3625**	1	PIN AS	
	8	2	**5B-0651**	2	FITTING-STRAIGHT	
	9	1	**275-0120**	2	PIN AS	
B	10	1	**8R-2912**	4	WASHER	
B	11	1	**8R-2913**	4	WASHER	
	12	1,2	**9C-7907**	5	SPACER (21.5X28X14-MM THK)	
	13	1	**096-6467**	6	WASHER (22X60X8-MM THK)	
	14	1	**193-0953**	1	LINK AS	
		1	**4V-2883**	2	BUSHING	
	15	1	**265-7608**	1	LEVER AS	
		1	**4V-2879**	2	BUSHING	
	16	1	**286-3115**	1	ARM & BEARING AS-LIFT	
		1	**4V-2872**	2	BUSHING	
		1	**4V-2873**	2	BUSHING	
		1	**7P-3454**	2	BUSHING	
	17	1	**287-8291**	5	PIN AS	
B	18	2	**5V-6454**	4	WASHER (52X120X1.6-MM THK)	
B	19	2	**5V-6455**	6	WASHER (52X120X3-MM THK)	
	20	2	**7K-9203**	4	SEAL-LIP TYPE	
	21	2	**7K-9205**	4	SEAL-LIP TYPE	
	22	2	**7K-9208**	4	SEAL-LIP TYPE	
	23	1	**7K-9209**	4	SEAL-LIP TYPE	
	24	1	**7K-9216**	2	SEAL-LIP TYPE	
	25	1	**7X-0618**	2	WASHER-HARD (13.5X40X5-MM THK)	
	26	1	**8T-4167**	2	WASHER-HARD (26X44X4-MM THK)	
M	27	1	**8T-4192**	2	BOLT (M12X1.75X25-MM)	
M	28	1	**8T-4780**	6	BOLT (M20X2.5X30-MM)	
	29	1,2	**8T-5439**	5	WASHER-HARD (21.5X45X6-MM THK)	
M	30	2	**8T-5460**	2	BOLT (M20X2.5X40-MM)	
M	31	1,2	**8T-6430**	3	BOLT (M20X2.5X50-MM)	

B-USE AS REQUIRED
M-METRIC PART

255-4807 **CONTROL GP-WORK TOOL** *(contd.)* **i03412624**

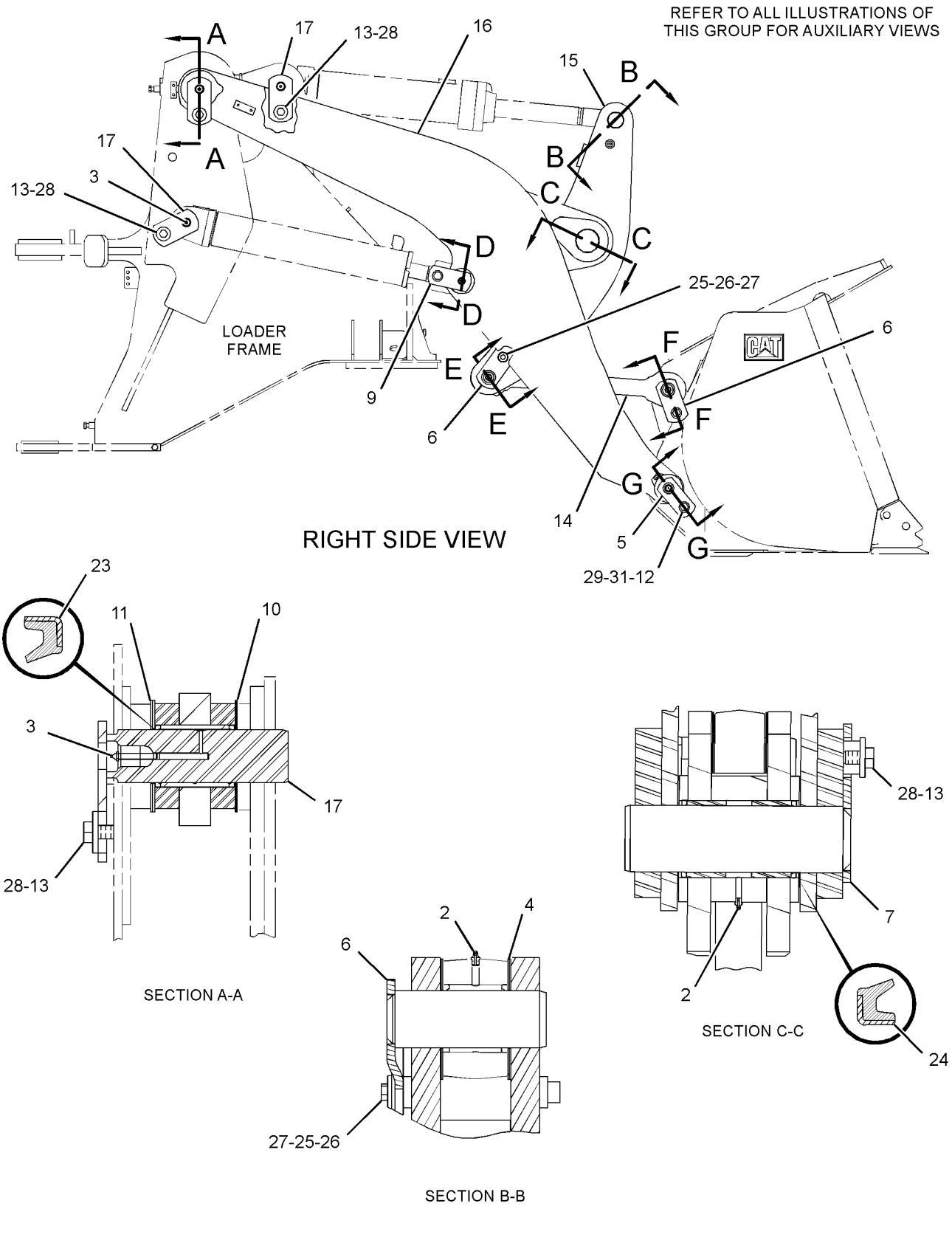

GRAPHIC #1 g01422105

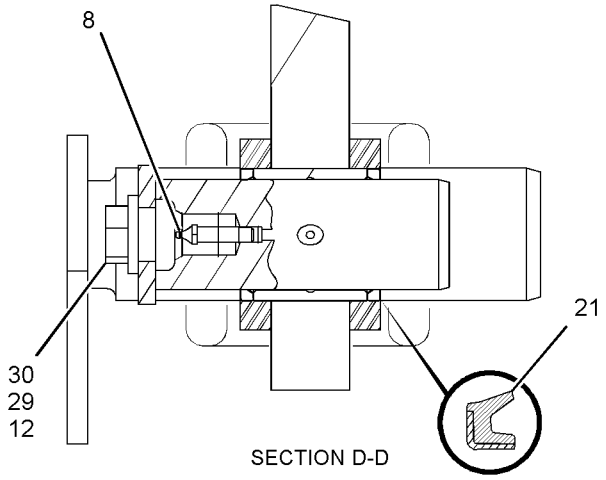

SECTION D-D

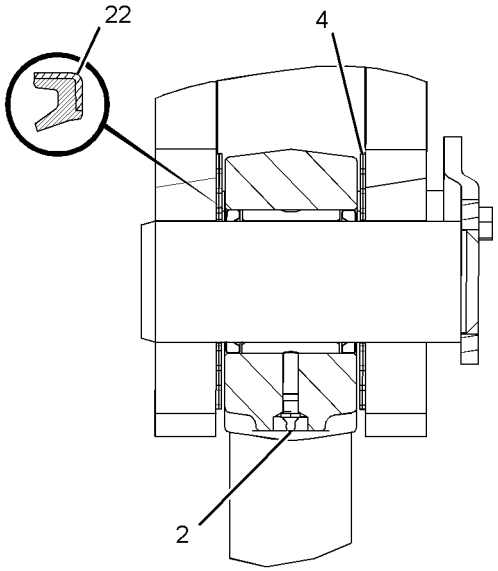

SECTION E-E

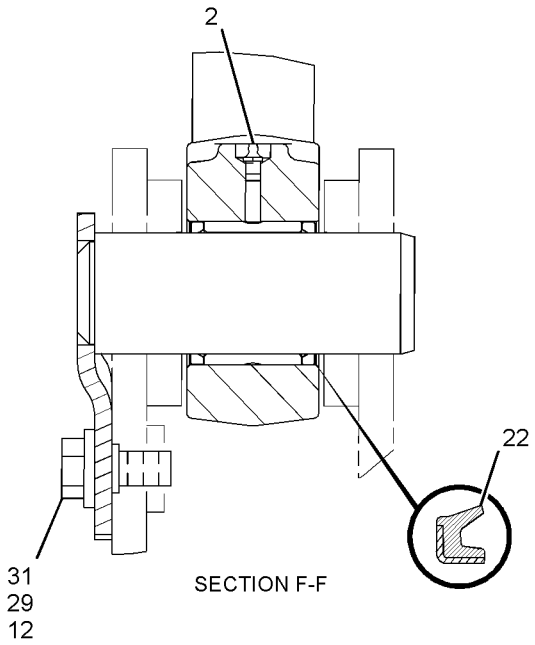

SECTION F-F

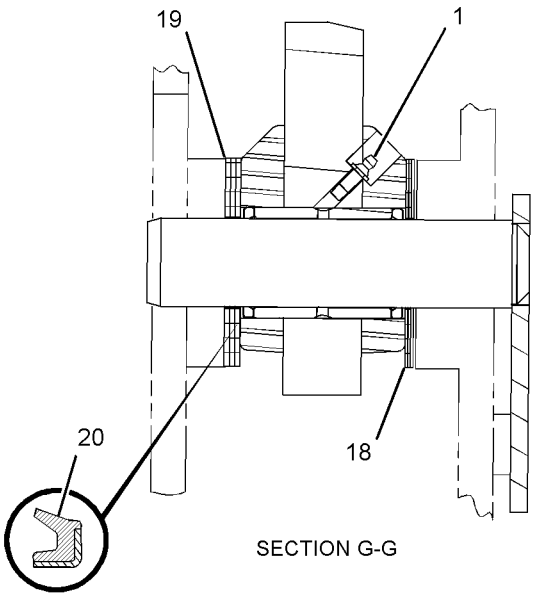

SECTION G-G

GRAPHIC #2 **<END>** g01422106

267-8688 CONTROL GP-WORK TOOL—HIGH LIFT MACHINES

S/N: JKM1-UP

PART OF 265-9755 CONTROL AR-HIGH LIFT, 265-9754 LIFT AR

AN ATTACHMENT

SMCS-6116, 6117, 6119, 6700 **i03412620**

NOTE	REF NO	GRAPHIC REF	PART NUMBER	QTY	PART NAME 1 2 3 4 5 6 (PRODUCT LEVEL)	SEE PAGE
	1	1	**2D-4867**	2	FITTING-GREASE	
	2	1	**3B-8489**	4	FITTING-GREASE	
	3	1	**3B-8491**	4	FITTING-GREASE	
B	4	1	**4E-6364**	4	WASHER (71X147X1.6-MM THK)	
	5	1	**4Q-1346**	1	LINK & BEARING AS	
		1	**4V-2883**	2	BUSHING	
	6	1	**4V-2588**	2	PIN AS	
	7	1	**4V-3619**	3	PIN AS	
	8	1	**4V-3625**	1	PIN AS	
	9	1	**5B-0651**	2	FITTING-STRAIGHT	
	10	1	**7K-9205**	4	SEAL-LIP TYPE	
	11	1	**7K-9209**	4	SEAL-LIP TYPE	
	12	1	**275-0120**	2	PIN AS	
B	13	1	**8R-2912**	2	WASHER	
B	14	1	**8R-2913**	2	WASHER	
	15	1	**9C-7907**	5	SPACER (21.5X28X14-MM THK)	
	16	1	**096-6467**	6	WASHER (22X60X8-MM THK)	
	17	1	**265-7608**	1	LEVER AS	
		1	**4V-2879**	2	BUSHING	
Y	18	1	**267-8689**	1	ARM AS-LIFT	898
	19	1	**287-8291**	5	PIN AS	
B	20	1	**5V-6454**	4	WASHER (52X120X1.6-MM THK)	
B	21	1	**5V-6455**	6	WASHER (52X120X3-MM THK)	
	22	1	**7K-9203**	4	SEAL-LIP TYPE	
	23	1	**7K-9208**	4	SEAL-LIP TYPE	
	24	1	**7K-9216**	2	SEAL-LIP TYPE	
	25	1	**7X-0618**	2	WASHER-HARD (13.5X40X5-MM THK)	
	26	1	**8T-4167**	2	WASHER-HARD (26X44X4-MM THK)	
M	27	1	**8T-4192**	2	BOLT (M12X1.75X25-MM)	
M	28	1	**8T-4780**	6	BOLT (M20X2.5X30-MM)	
	29	1	**8T-5439**	5	WASHER-HARD (21.5X45X6-MM THK)	
M	30	1	**8T-5460**	2	BOLT (M20X2.5X40-MM)	
M	31	1	**8T-6430**	3	BOLT (M20X2.5X50-MM)	

B-USE AS REQUIRED
M-METRIC PART
Y-SEPARATE ILLUSTRATION

267-8688 **CONTROL GP-WORK TOOL** *(contd.)* **i03412620**

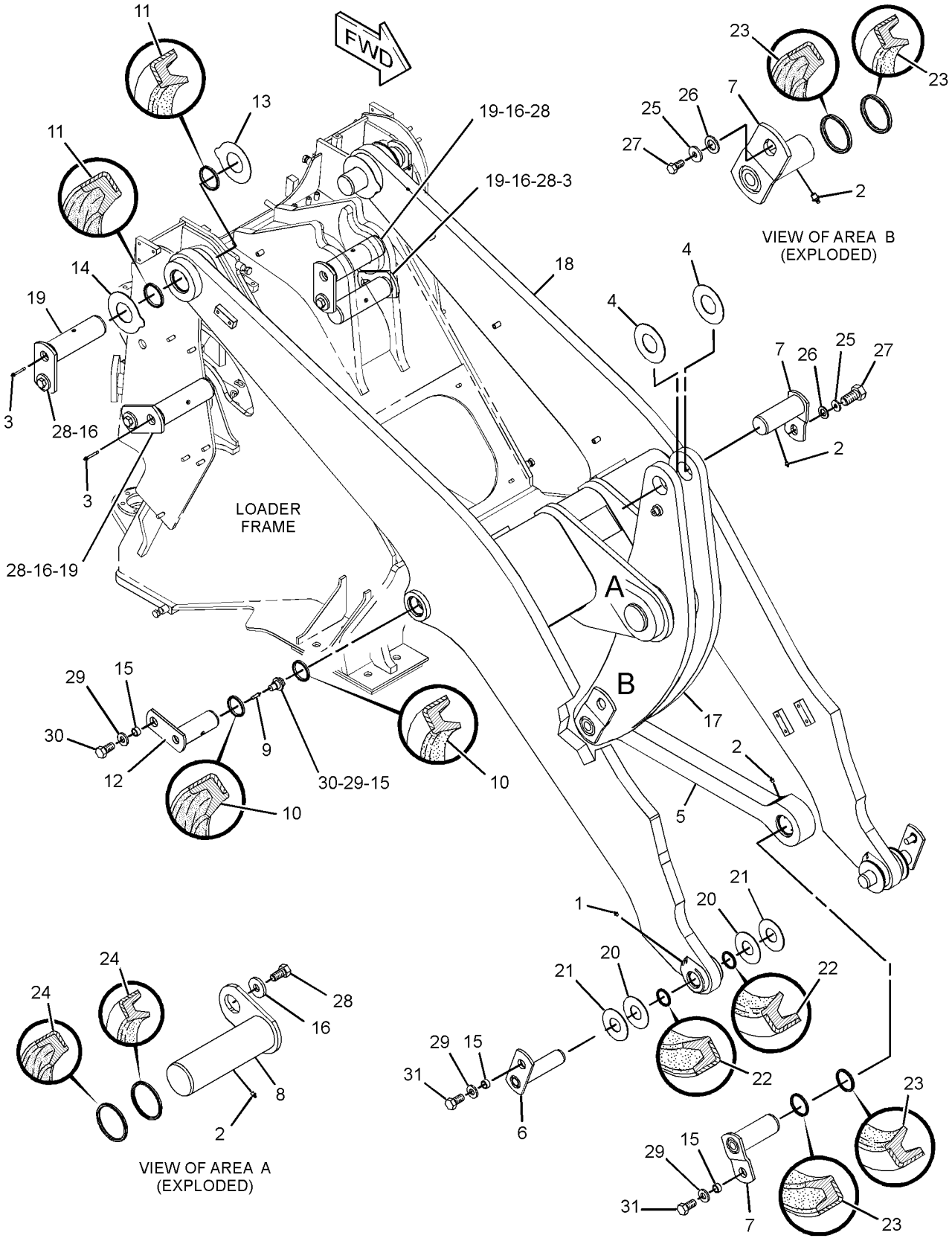

GRAPHIC #1 **<END>** g01433834

285-5044 LEVER & BEARING AS

S/N: JKM1-UP
PART OF 284-5011 LUBRICATION AR-AUTOMATIC
AN ATTACHMENT

SMCS-6116 **i03268380**

NOTE	REF NO	GRAPHIC REF	PART NUMBER	QTY	PART NAME 1 2 3 4 5 6 (PRODUCT LEVEL)	SEE PAGE
	1	1	**285-5045**	2	PIN AS	
	2	1	**285-5047**	1	LEVER & BEARING AS	
		1	**4V-2879**	2	BEARING-SLEEVE	
		1	*285-5048*	1	LEVER AS	
M		1	**8T-3851**	3	BOSS-WELD (M10X1.5X17.5-MM)	
		1	**8Y-7023**	3	BOSS (M12X1.75-THD)	
M		1	**9R-2613**	3	BOSS-WELD (M10X1.5X25-MM)	

M-METRIC PART

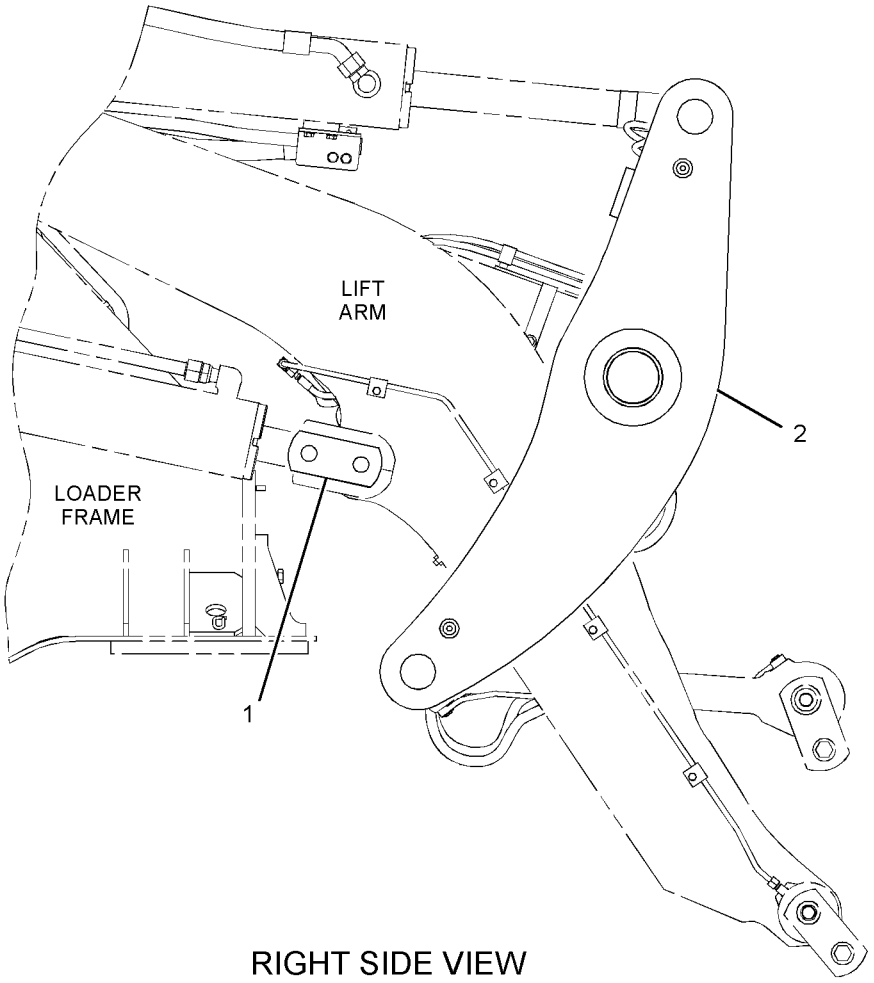

RIGHT SIDE VIEW

GRAPHIC #1 **<END>** g01429327

265-9754 LIFT AR—HIGH LIFT MACHINES

S/N: JKM1-UP

FOR USE WITH 317-8356—PAGE 369, 317-8359—PAGE 2, 318-0647—PAGE 8.
CANNOT BE USED WITH 317-8368—PAGE 5, 317-8364—PAGE 4, 317-8366—PAGE 4, 265-9755—PAGE 673, 317-8360—PAGE 3, 317-8361—PAGE 3, 317-8362—PAGE 3, 317-8363—PAGE 4
AN ATTACHMENT

SMCS-6000 **i03637889**

NOTE	PART NUMBER	QTY	PART NAME 1 2 3 4 5 6 (PRODUCT LEVEL)	SEE PAGE
Y	*267-8688*	1	CONTROL GP-WORK TOOL (HIGH LIFT MACHINES)	903
Y	*266-9862*	1	COUNTERWEIGHT GP	501
Y	*265-7722*	1	CYLINDER & SEAL GP-TILT (HIGH LIFT MACHINES)	678

Y-SEPARATE ILLUSTRATION

<END>

OPERATOR STATION

176-3900 ACCUMULATOR GP-REFRIGERANT—WITH DESICCANT

S/N: JKM1-UP
PART OF 186-6190 ACCUMULATOR GP-REFRIGERANT
FIELD REPLACEMENT FOR 186-6190—PAGE 908
AN ATTACHMENT

SMCS-1808, 7320 **i02108337**

NOTE	REF NO	GRAPHIC REF	PART NUMBER	QTY	PART NAME 1 2 3 4 5 6 (PRODUCT LEVEL)	SEE PAGE
					(NO SERVICED PARTS)	

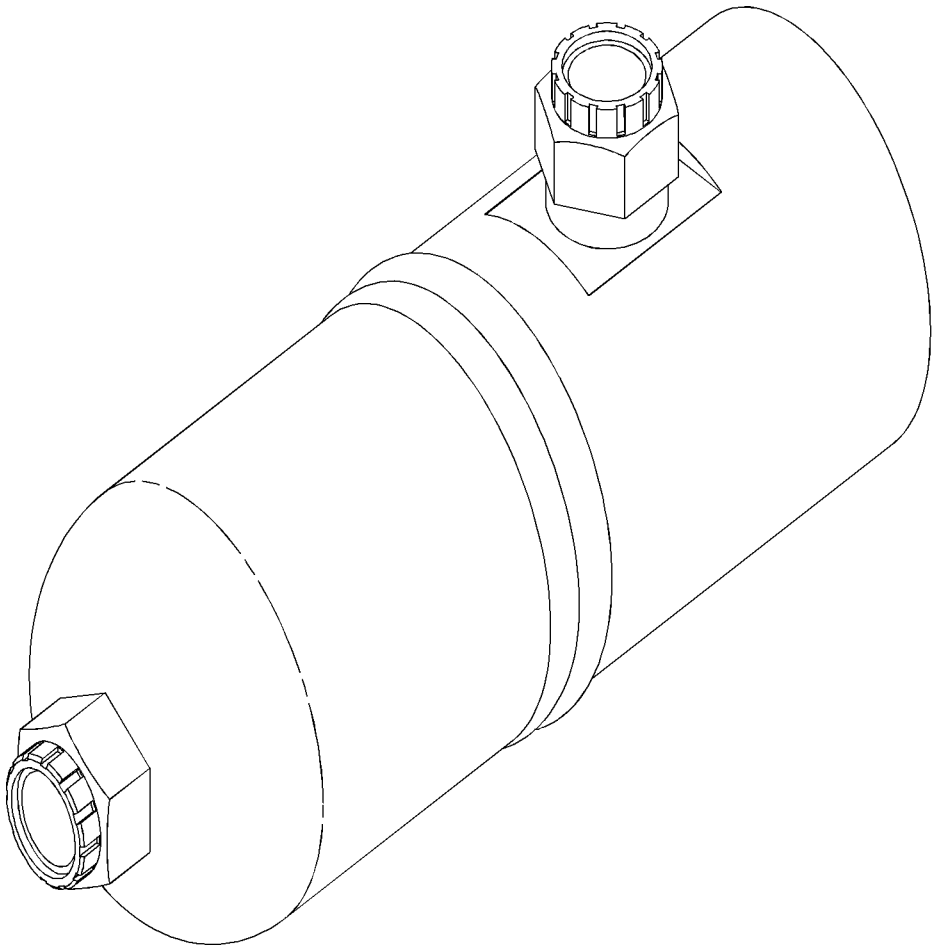

GRAPHIC #1 **<END>** g01035076

OPERATOR STATION

186-6190 ACCUMULATOR GP-REFRIGERANT—WITH DESICCANT

S/N: JKM1-UP
PART OF 263-3352 LINES GP-AIR CONDITIONER
FIELD REPLACEMENT ORDER 176-3900—PAGE 907
AN ATTACHMENT

SMCS-1808, 7320 **i02108702**

NOTE	REF NO	GRAPHIC REF	PART NUMBER	QTY	PART NAME 1 2 3 4 5 6 (PRODUCT LEVEL)	SEE PAGE
Y	1	1	**176-3900**	1	ACCUMULATOR GP-REFRIGERANT (WITH DESICCANT)	907

Y-SEPARATE ILLUSTRATION

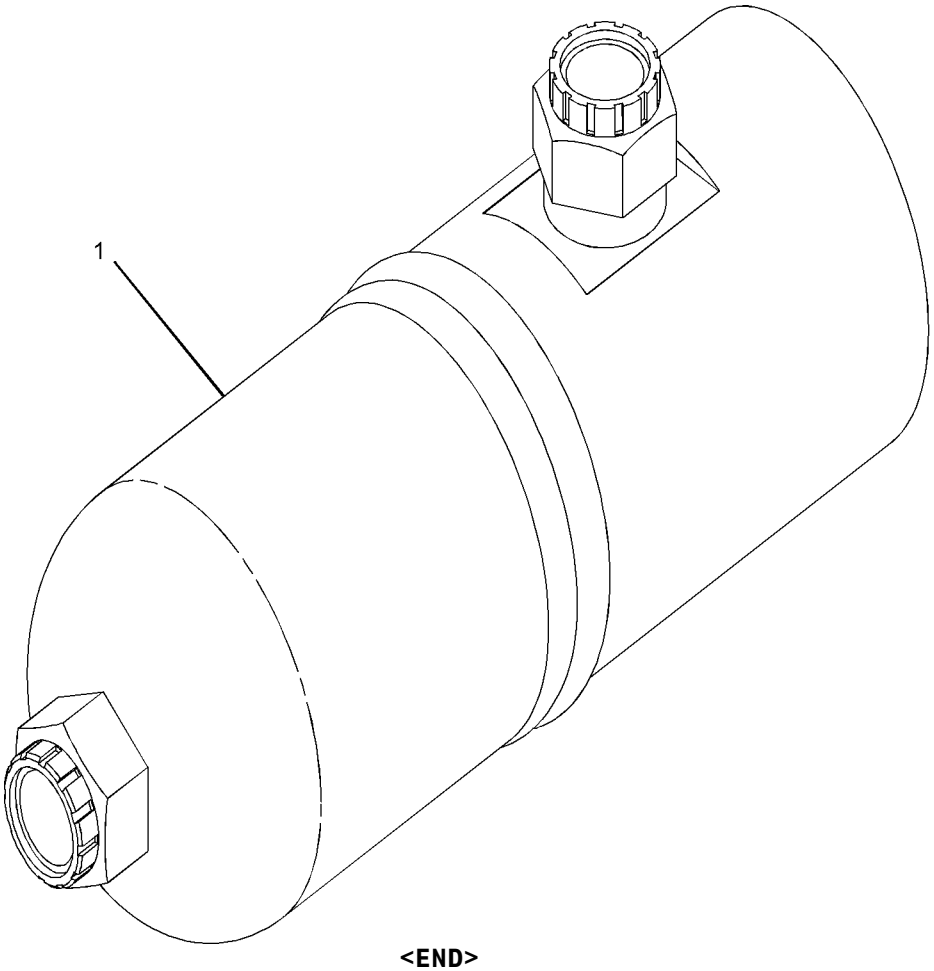

GRAPHIC #1 **<END>** g01034976

OPERATOR STATION

173-1028 ADJUSTER GP-SEAT

S/N: JKM1-UP
PART OF 178-0603 SEAT GP
AN ATTACHMENT

SMCS-7321 **i01582195**

NOTE	REF NO	GRAPHIC REF	PART NUMBER	QTY	PART NAME 1 2 3 4 5 6 (PRODUCT LEVEL)	SEE PAGE
	1	1	**4V-8256**	4	SPRING	
	2	1	**117-4492**	1	ROD	
	3	1	**136-1544**	1	LATCH AS (LH)	
	4	1	**156-5545**	1	LATCH AS (RH)	
	5	1	**164-4531**	1	ROD	
	6	1	**170-1112**	1	PLATE AS	
	7	1	**170-1114**	1	HANDLE (SLIDE ADJUSTMENT)	
	8	1	**170-1115**	1	HANDLE (TILT ADJUSTMENT)	
	9	1	**132-0338**	2	WASHER-PLASTIC (13X31.7X0.8-MM THK)	
	10	1	**2K-4973**	2	LOCKNUT (3/8-16-THD)	
	11	1	**7X-0608**	2	WASHER-HARD (10.2X16X2-MM THK)	

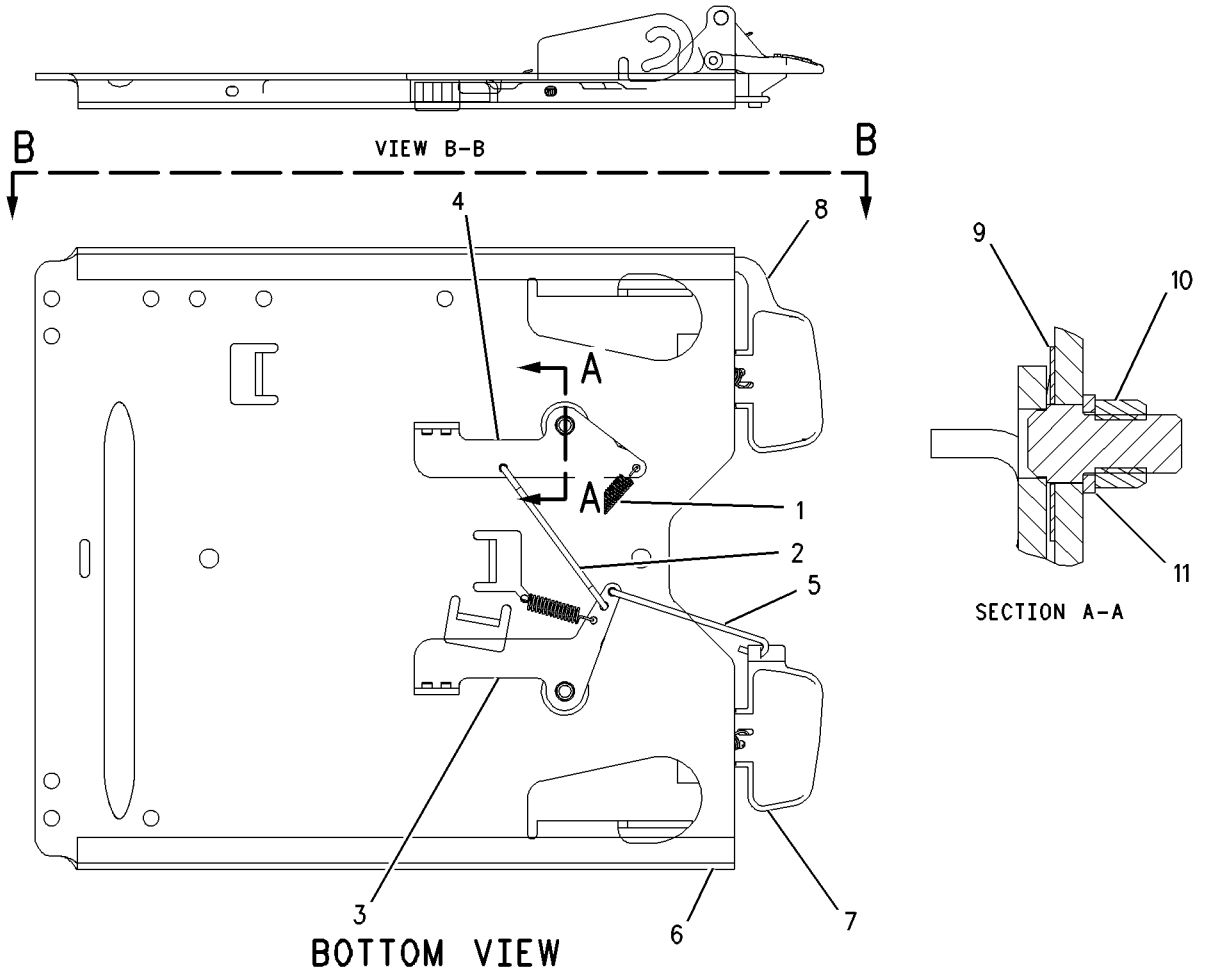

GRAPHIC #1 **<END>** g00816460

OPERATOR STATION

237-3970 AIR COMPRESSOR GP-SEAT

S/N: JKM1-UP
FOR OPTIONAL FIELD REPLACEMENT ORDER 214-0783 COMPRESSOR, 211-5358 CONDUIT(100-CM) & 5P-6010 TUBE(1-M), PROVIDES HEAVY DUTY SEAT COMPRESSOR
PART OF 191-2933, 199-5725 SUSPENSION GP-SEAT
AN ATTACHMENT

SMCS-731S, 7324 **i02784170**

NOTE	REF NO	GRAPHIC REF	PART NUMBER	QTY	PART NAME 1 2 3 4 5 6 (PRODUCT LEVEL)	SEE PAGE
					(NO SERVICED PARTS)	

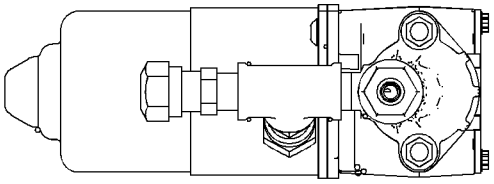

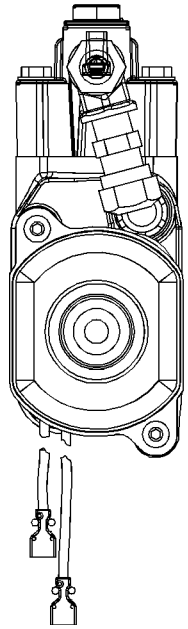

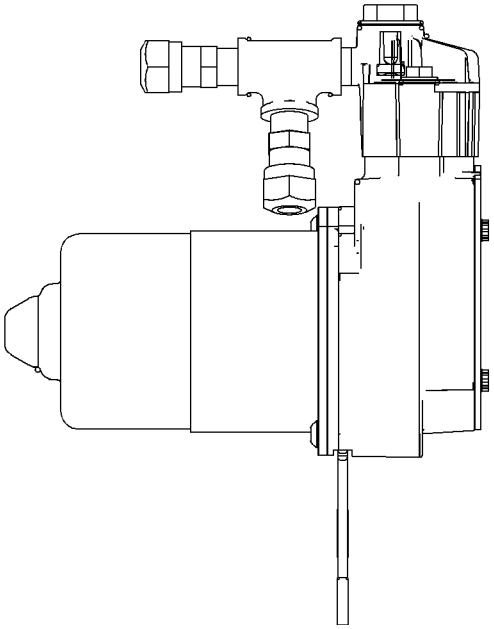

GRAPHIC #1 **<END>** g01040576

OPERATOR STATION

264-6828 AIR CONDITIONER & MOUNTING GP

S/N: JKM1-UP
PART OF 255-4820 AIR CONDITIONER AR
AN ATTACHMENT

SMCS-7320 **i02928686**

NOTE	REF NO	GRAPHIC REF	PART NUMBER	QTY	PART NAME 1 2 3 4 5 6 (PRODUCT LEVEL)	SEE PAGE
	1	1	**118-7259**	1	GASKET	
	2	1	**236-2295**	2	TUBE AS	
Y	3	1	**266-7600**	1	AIR CONDITIONER GP	913
	4	1	**7X-0579**	11	WASHER-HARD (8.8X25.5X2-MM THK)	
M	5	1	**8T-4908**	11	BOLT (M8X1.25X25-MM)	
D	6	1	**5P-5643**		SEAL (0.8-M EACH)	

D-ORDER BY THE METER
M-METRIC PART
Y-SEPARATE ILLUSTRATION

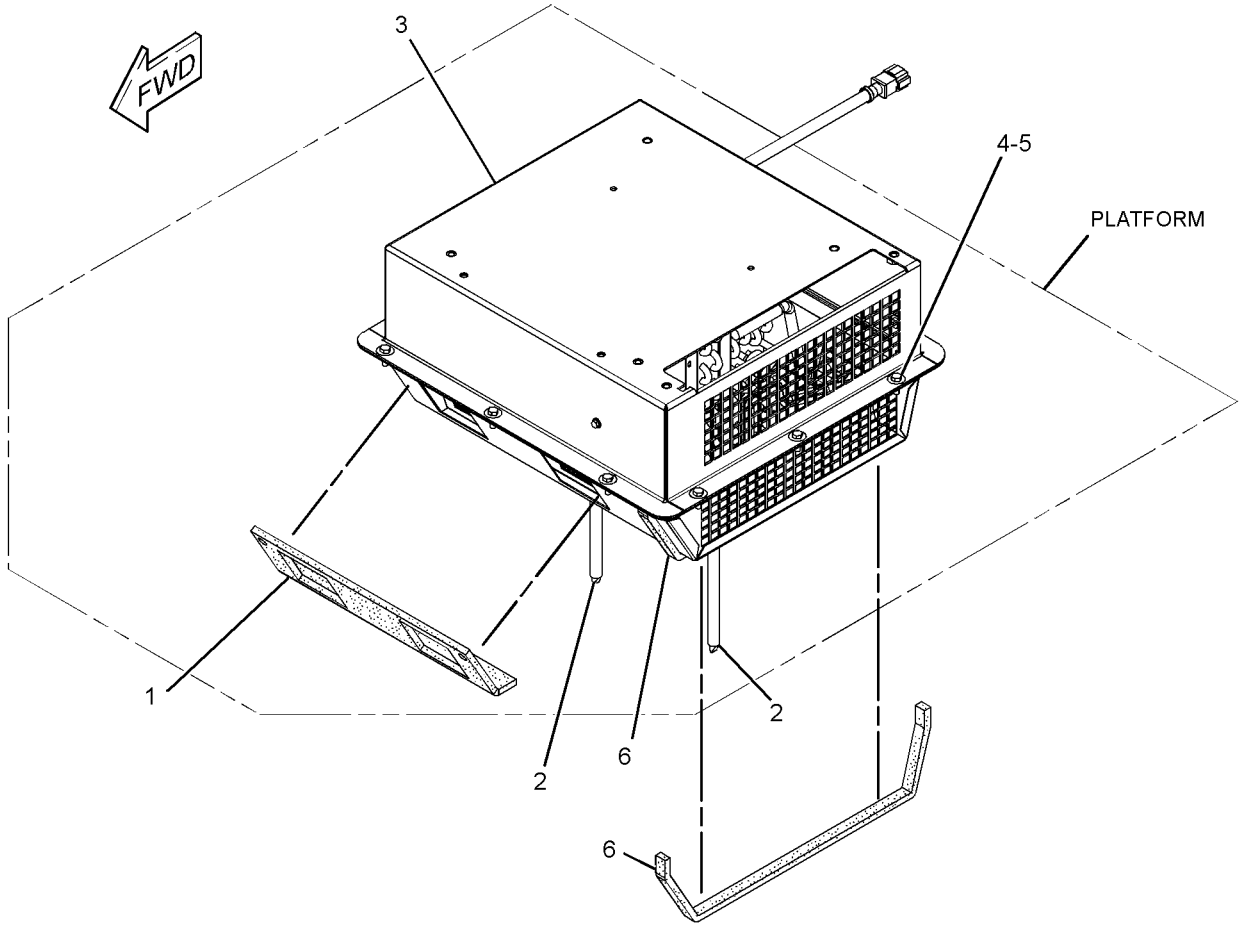

GRAPHIC #1 **<END>** g01434608

OPERATOR STATION

255-4820 AIR CONDITIONER AR

S/N: JKM1-UP

PART OF 322-7948, 329-5761 CONVERSION AR-MACHINE, 344-5644 MODULE AR-CLEAN EMISSIONS

AN ATTACHMENT

SMCS-7320 **i02928387**

NOTE	PART NUMBER	QTY	PART NAME 1 2 3 4 5 6 (PRODUCT LEVEL)	SEE PAGE
Y	*264-6828*	1	AIR CONDITIONER & MOUNTING GP	911
Y	*258-8756*	1	COMPRESSOR GP-REFRIGERANT	923
Y	*255-4816*	1	CONDENSER & MTG GP-REFRIGERANT	924
Y	*263-3352*	1	LINES GP-AIR CONDITIONER	979
	110-6393	1	PLATE-INSTRUCTION (AIR CONDITIONER)	
			(INSIDE LH CAB DOOR)	

Y-SEPARATE ILLUSTRATION

<END>

OPERATOR STATION

266-7600 AIR CONDITIONER GP

S/N: JKM1-UP

PART OF 264-6828 AIR CONDITIONER & MOUNTING GP

AN ATTACHMENT

SMCS-7320 **i02928687**

NOTE	REF NO	GRAPHIC REF	PART NUMBER	QTY	PART NAME 1 2 3 4 5 6 (PRODUCT LEVEL)	SEE PAGE
	1	1	**3E-5464**	1	THERMOSTAT (HVAC) (AIR CONDITIONER, HEATER)	
	2	1	**8C-3756**	1	FILM-IDENTIFICATION (GROUP NO., SEQUENCE NO.)	
	3	1	**114-3140**	1	GROMMET	
	4	1	**180-3528**	1	COIL AS-EVAPORATOR	
		1	**189-1707**	1	ORIFICE AS-AIR CONDITIONER	
	5	1	**183-7528**	1	COIL AS-HEATER	
	6	1	**189-1707**	1	ORIFICE AS-AIR CONDITIONER	
	7	1	**204-9921**	1	RESISTOR AS	
	8	1	**253-9510**	1	GUARD	
	9	1	**275-6706**	1	MOTOR-BLOWER (24-VOLT)	
	10	1	**276-4300**	1	HARNESS AS-HEATER & AIR COND	
Y	11	1	**277-7116**	1	VALVE GP-WATER (HEATER CONTROL)	1033
	12	1	**277-7766**	1	PLATE AS	
	13	1	**277-7767**	1	PLATE AS	
	14	1	**277-7787**	1	PLATE AS	
	15	1	**277-7788**	1	CASE AS	
	16	1	**277-7790**	1	PLATE	
	17	1	**277-7792**	1	PLATE	
	18	1	**277-7793**	1	COVER AS	
	28	1	**280-7785**	1	GROMMET	
M	29	1	**5C-2890**	2	NUT (M6X1-THD)	
M	30	1	**5C-9553**	13	BOLT (M6X1X16-MM)	
M	31	1	**6V-9673**	2	SCREW-MACHINE (M5X0.8X12-MM)	
M	32	1	**8T-4171**	2	BOLT (M6X1X12-MM)	
	33	1	**8T-4205**	17	WASHER-HARD (7.2X14.5X2-MM THK)	
	34	1	**8T-6631**	2	SCREW-MACHINE (8-32X0.5-IN)	
	35	1	**9X-2488**	4	CLAMP-HOSE	
E	36	1	**136-1953**		HOSE (21-CM)	
E	36A	1	**136-1953**		HOSE (22-CM)	
					AVAILABLE REPAIR KIT(S):	
			317-3348	1	KIT-SEAL	
					(INCLUDES GASKETS & SEAL)	

E-ORDER BY THE CENTIMETER
M-METRIC PART
Y-SEPARATE ILLUSTRATION

266-7600 AIR CONDITIONER GP *(contd.)* i02928687

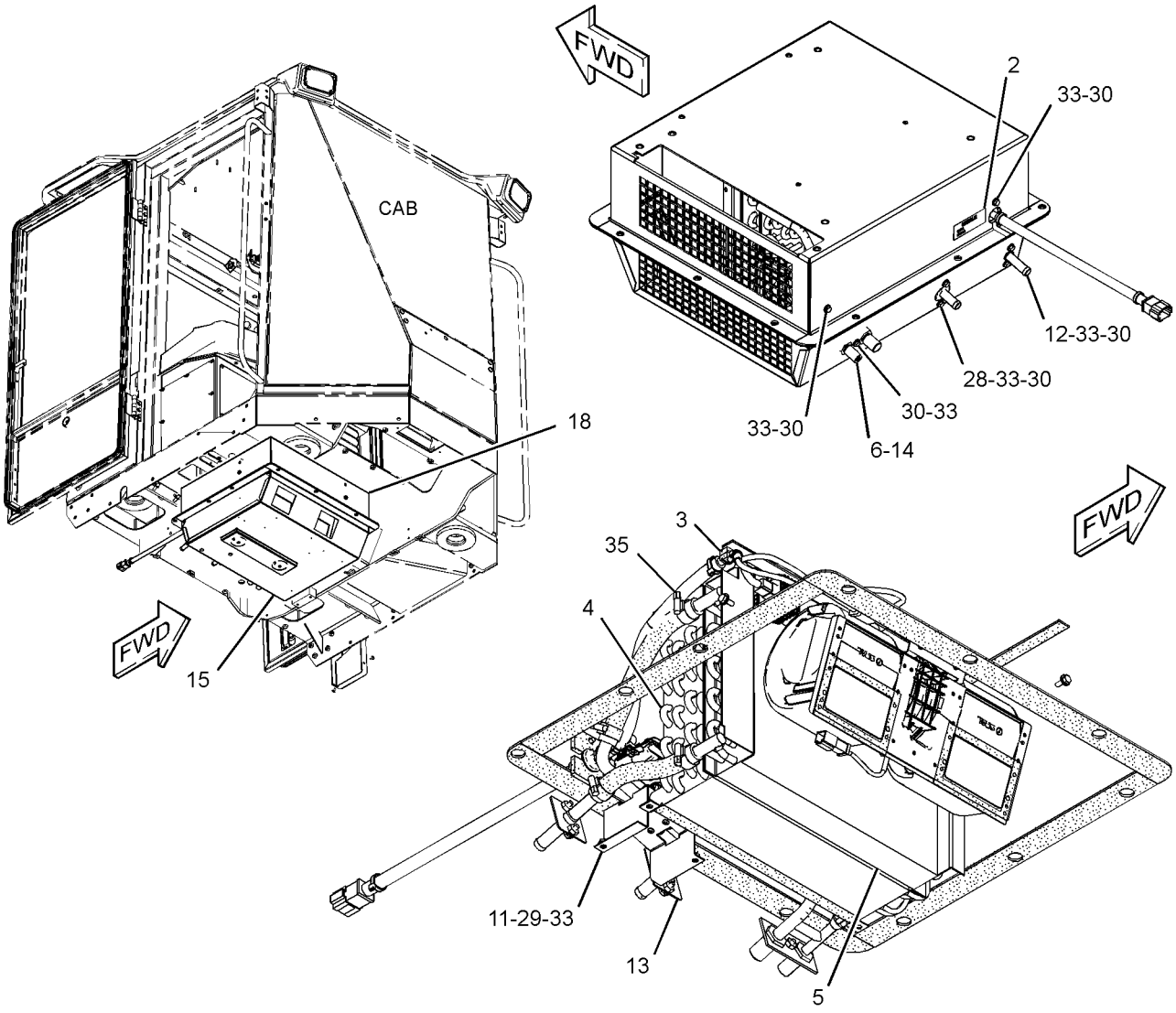

(PARTS REMOVED FOR CLARITY)

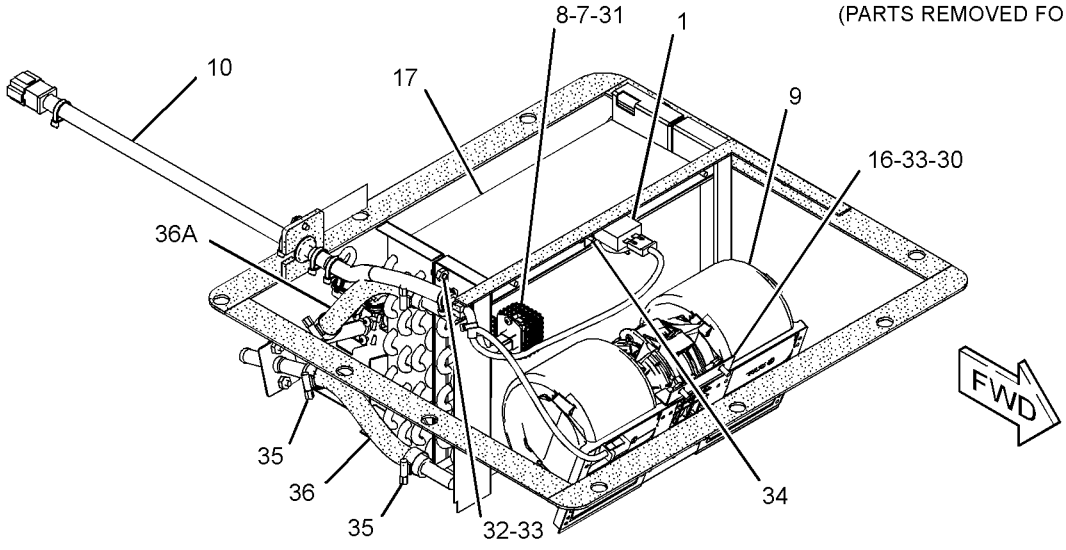

GRAPHIC #1 **<END>** g01435048

OPERATOR STATION

214-7636 ARM GP-WINDOW WIPER

S/N: JKM1-UP

FRONT

PART OF 149-7702 WIPER GP-WINDOW

SMCS-7305 **i01877471**

NOTE	REF NO	GRAPHIC REF	PART NUMBER	QTY	PART NAME 1 2 3 4 5 6 (PRODUCT LEVEL)	SEE PAGE
M	1	1	**191-8921**	4	BOLT-SOCKET HEAD (M6X1X25-MM)	
	2	1	**227-7392**	4	WASHER (6.3X10.3X0.4-MM THK)	
M	3	1	**6V-8225**	4	NUT (M6X1-THD)	
	4	1	**136-3190**	1	NOZZLE AS-WASHER	
	5	1	**136-3188**	3	CLIP	

M-METRIC PART

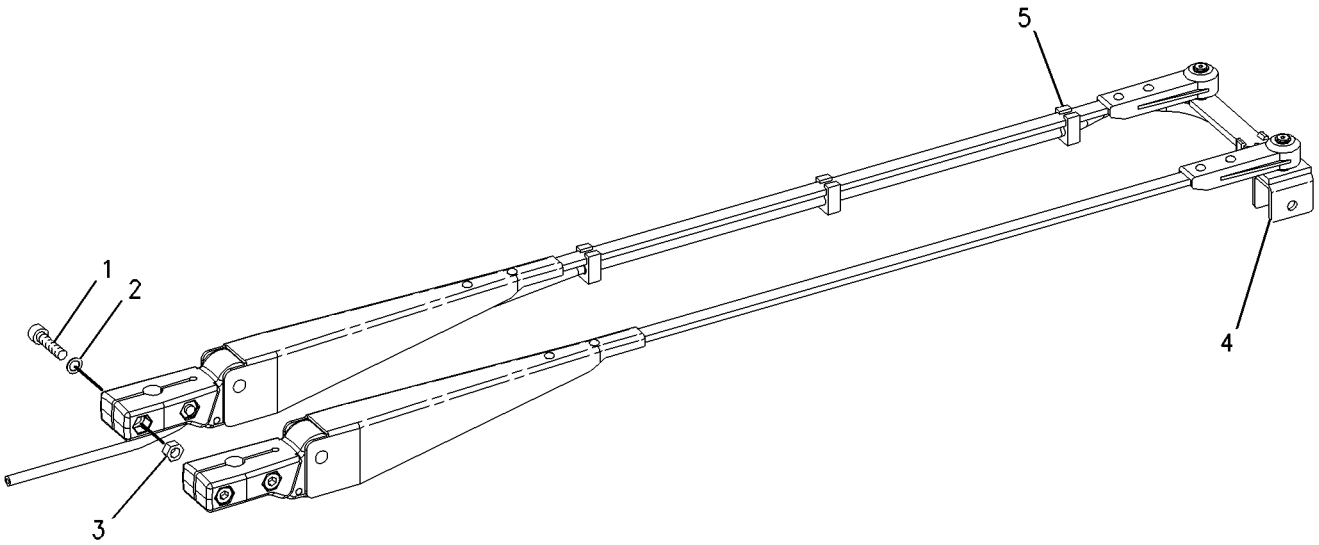

GRAPHIC #1 **<END>** g00958013

OPERATOR STATION

292-1301 ARMREST GP–LH

S/N: JKM1-UP
PART OF 257-9501 SEAT GP
AN ATTACHMENT

SMCS-7307, 7312 **i02991588**

NOTE	REF NO	GRAPHIC REF	PART NUMBER	QTY	PART NAME 1 2 3 4 5 6 (PRODUCT LEVEL)	SEE PAGE
	1	1	**143-1288**	1	LOCKNUT-FLANGE (3/8-16-THD)	
	2	1	**163-1149**	1	BRACKET AS	
	3	1	**278-5457**	1	ARMREST AS	
M		1	**6A-9083**	1	SCREW-MACHINE (M6X1X15-MM)	
		1	**278-2564**	1	PAD AS	
	4	1	**0S-1595**	1	BOLT (1/2-13X1.25-IN)	
	5	1	**1K-6872**	1	LOCKNUT (1/2-13-THD)	
	6	1	**4L-6454**	1	BOLT (3/8-16X1-IN)	
	7	1	**5P-8245**	1	WASHER-HARD (13.5X25.5X3-MM THK)	
M	8	1	**6A-9083**	1	SCREW-MACHINE (M6X1X15-MM)	

M-METRIC PART

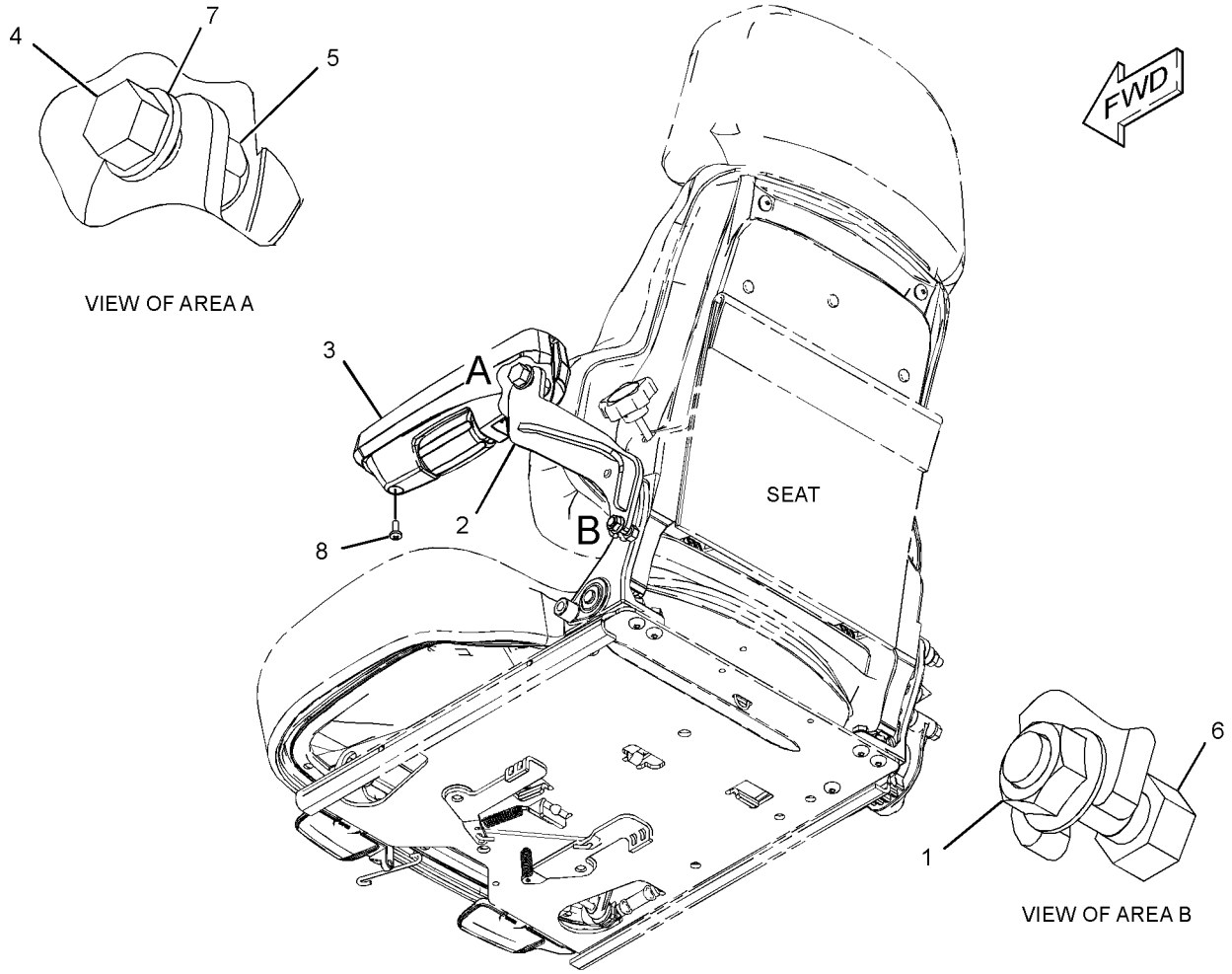

GRAPHIC #1 **<END>** g01520352

OPERATOR STATION

252-4553 CAB AR-ENCLOSED ROPS

S/N: JKM1-UP

PART OF 258-4543 OPERATOR AR-ENCLOSED ROPS

SMCS-7301 **i03996072**

NOTE	PART NUMBER	QTY	PART NAME 1 2 3 4 5 6 (PRODUCT LEVEL)	SEE PAGE
Y	*271-7808*	1	CONTROL GP-FOOT BRAKE	616
Y	*230-1240*	1	CONTROL GP-PARKING BRAKE	617
Y	*257-5661*	1	CONTROL GP-PILOT OPERATED HYD (2-FUNCTION)	928
Y	*257-5688*	1	CONTROL GP-STEERING	942
Y	*199-3460*	1	CONTROL GP-TRANSMISSION	946
Y	*107-4630*	1	DUCT GP-CAB AIR	960
Y	*248-2863*	1	FILTER GP-CAB AIR	962
Y	*264-6827*	1	HEATER & MTG GP-CAB	968
Y	*199-3461*	1	INSTALLATION GP-RADIO	972
Y	*266-9953*	1	LIGHTING GP-FLOOD (CAB FRONT, REAR)	219
Y	*281-0798*	1	LINER GP-OPEN ROPS	978
Y	*318-2597*	1	MIRROR GP-REAR VIEW (INTERIOR)	988
Y	*273-9603*	1	MIRROR GP-REAR VIEW (EXTERIOR)	984
			S/N: JKM1038-UP	
Y	*263-9730*	1	MOUNTING GP-DISPLAY (MESSENGER)	993
Y	*257-5694*	1	PANEL GP-INSTRUMENT (FRONT)	998
Y	*257-5698*	1	PEDAL GP-GOVERNOR	1003
Y	*257-5667*	1	ROPS GP-ENCLOSED	1008
Y	*257-9846*	1	SEAT & MOUNTING GP	1012
Y	*257-5690*	1	SWITCH GP-DIFFERENTIAL LOCK	261
Y	*107-4641*	1	VISOR GP-CAB	1034
Y	*149-7702*	1	WIPER GP-WINDOW	1042
Y	*265-3259*	1	WIRING GP-CAB	275

Y-SEPARATE ILLUSTRATION

<END>

OPERATOR STATION

257-5670 CAB GP-ENCLOSED ROPS

S/N: JKM1-UP

PART OF 257-5667 ROPS GP-ENCLOSED

SMCS-7301 **i03922009**

NOTE	REF NO	GRAPHIC REF	PART NUMBER	QTY	PART NAME 1 2 3 4 5 6 (PRODUCT LEVEL)	SEE PAGE
M	1	2	**8U-7051**	1	SCREW (M6X1X12-MM)	
	2	1	**8Y-6377**	1	STRIKER	
	3	2	**9R-8537**	1	SOCKET-LATCH	
	4	2	**107-6144**	1	GLASS-FRONT (LH)	
	5	2	**107-6145**	1	GLASS-FRONT (CENTER)	
	6	2	**107-6146**	1	GLASS-REAR (LH)	
	7	1	**107-6147**	1	GLASS-REAR	
	8	1	**108-4311**	1	SCREW-MACHINE (3/8-16X0.75-IN)	
	9	2	**111-0177**	1	GLASS-FRONT (RH)	
	10	2	**111-0178**	1	GLASS-REAR (RH)	
	11	1	**111-0204**	1	PLATE AS	
	12	1	**161-9645**	1	STRIKER AS	
	13	2	**198-3393**	4	INSERT	
	14	2	**257-5672**	1	CAB AS	
	15	2	**263-2062**	1	BRACKET AS	
	16	1	**5P-4116**	2	WASHER-HARD (8.8X20.5X2-MM THK)	
	17	1,2	**8T-4121**	4	WASHER-HARD (11X21X2.5-MM THK)	
M	18	1	**8T-4137**	4	BOLT (M10X1.5X20-MM)	
M	19	1	**8T-4189**	14	BOLT (M8X1.25X20-MM)	
	20	1	**8T-4224**	12	WASHER-HARD (8.8X16X2-MM THK)	
M	21	1,2	**9X-2041**	4	SCREW-TRUSS HEAD (M10X1.5X20-MM)	
B	26	1	**119-0781**	1	ADHESIVE	
B	27	1,2	**110-7524**	1	BUTTON	

B-USE AS REQUIRED
M-METRIC PART

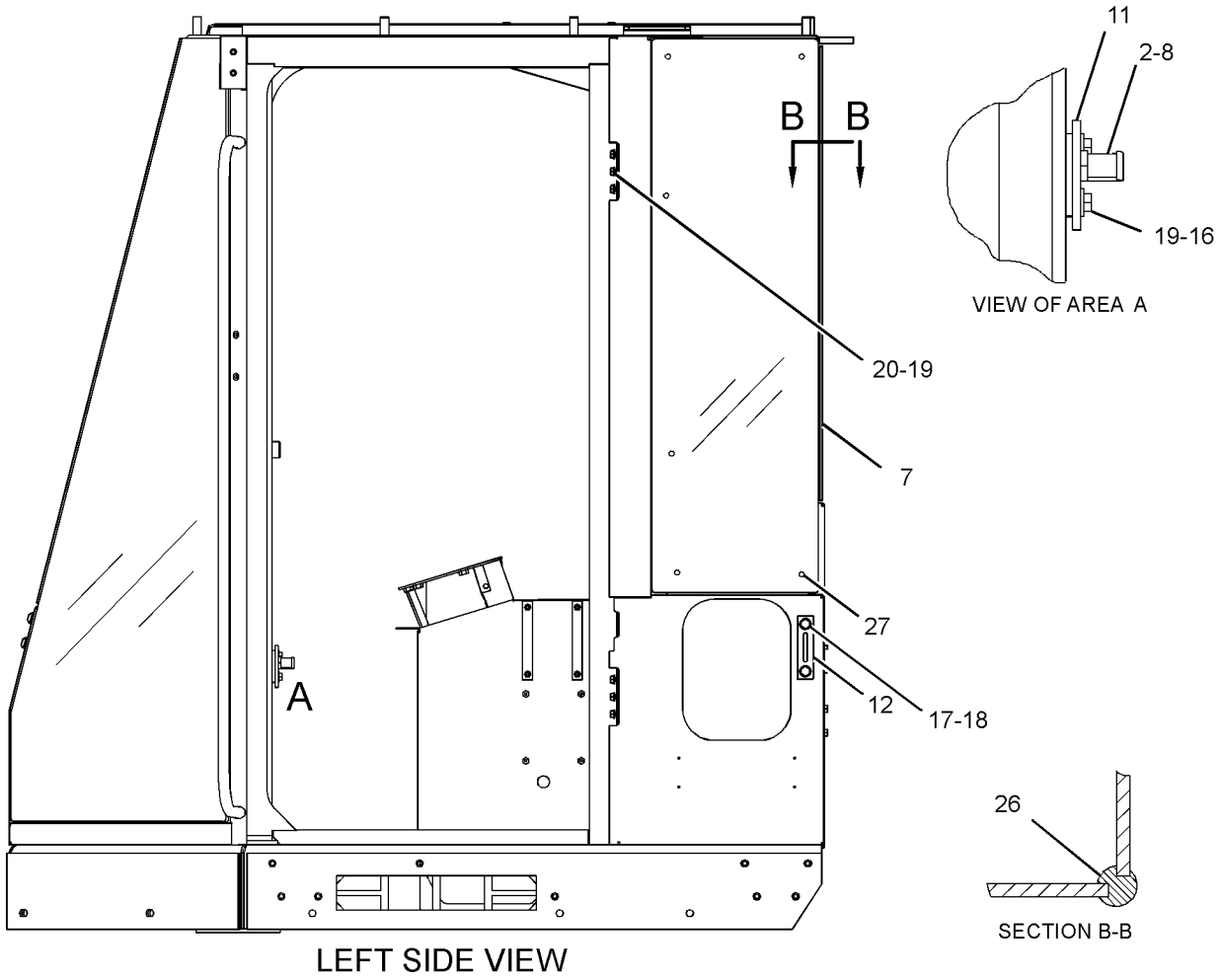

LEFT SIDE VIEW

GRAPHIC #1 g02091134

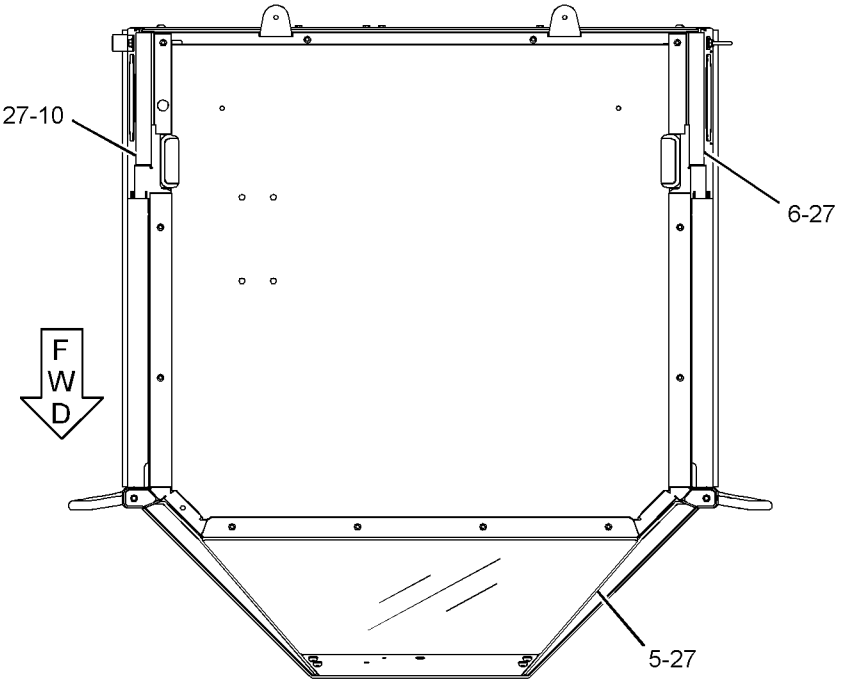

TOP VIEW

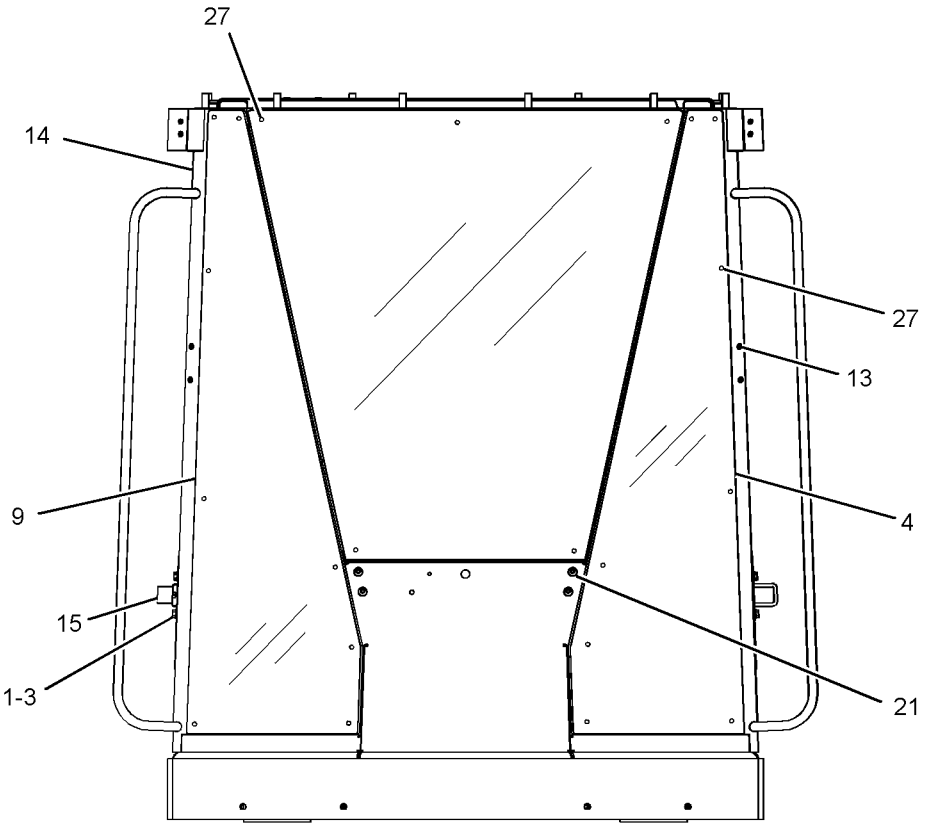

FRONT VIEW

GRAPHIC #2

<END>

g02091136

OPERATOR STATION

269-4873 CANOPY AR-OPEN ROPS

S/N: JKM1-UP

PART OF 269-4871 OPERATOR AR-OPEN ROPS

AN ATTACHMENT

SMCS-7302, 7323 **i02922394**

NOTE	PART NUMBER	QTY	PART NAME 1 2 3 4 5 6 (PRODUCT LEVEL)	SEE PAGE
Y	*271-7808*	1	CONTROL GP-FOOT BRAKE	616
Y	*230-1240*	1	CONTROL GP-PARKING BRAKE	617
Y	*257-5661*	1	CONTROL GP-PILOT OPERATED HYD (2-FUNCTION)	928
Y	*257-5688*	1	CONTROL GP-STEERING	942
Y	*199-3460*	1	CONTROL GP-TRANSMISSION	946
Y	*118-0809*	1	DASH GP	950
Y	*269-4876*	1	LIGHTING GP-FLOOD (CANOPY FRONT, REAR)	222
Y	*273-9603*	1	MIRROR GP-REAR VIEW (EXTERIOR)	984
Y	*318-2597*	1	MIRROR GP-REAR VIEW (INTERIOR)	988
Y	*263-9730*	1	MOUNTING GP-DISPLAY (MESSENGER)	993
Y	*257-5694*	1	PANEL GP-INSTRUMENT (FRONT)	998
Y	*257-5698*	1	PEDAL GP-GOVERNOR	1003
Y	*269-4875*	1	ROPS GP-OPEN	1009
Y	*257-9848*	1	SEAT & MOUNTING GP	1014
Y	*118-0808*	1	SUPPORT GP-SEAT	1028
Y	*257-5690*	1	SWITCH GP-DIFFERENTIAL LOCK	261
Y	*266-3717*	1	WIRING GP-CAB	293

Y-SEPARATE ILLUSTRATION

<END>

OPERATOR STATION

183-5106 COMPRESSOR GP-REFRIGERANT

S/N: JKM1-UP
PART OF 258-8756 COMPRESSOR GP-REFRIGERANT
AN ATTACHMENT

SMCS-1802 **i03437060**

NOTE	REF NO	GRAPHIC REF	PART NUMBER	QTY	PART NAME 1 2 3 4 5 6 (PRODUCT LEVEL)	SEE PAGE
	1	1	**180-9339**	2	PIN-CONNECTOR (14-GA TO 18-GA)	
	2	1	**102-8802**	1	KIT-RECEPTACLE (2-PIN)	
					(INCLUDES RECEPTACLE AS & WEDGE)	
	3	1	**314-4018**	1	VALVE AS-PRESSURE RELIEF (REFRIGERANT COMPRESSOR)	
		1	**9X-7378**	1	SEAL-O-RING	
	4	1	**7T-4532**	1	PLUG AS	
	5	1	**9X-7385**	2	SEAL-O-RING	

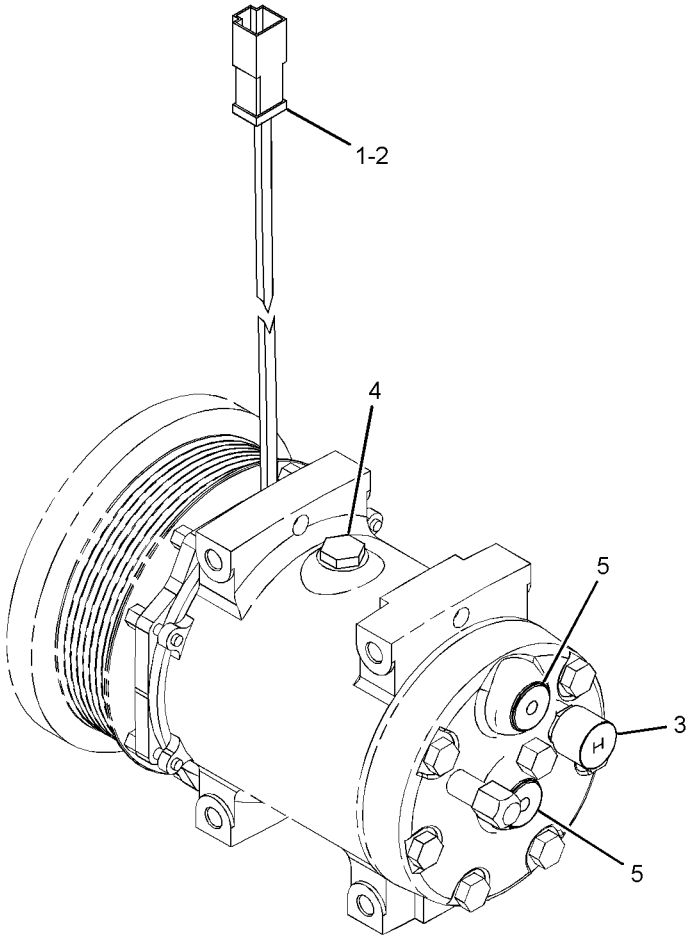

GRAPHIC #1 **<END>** g01419732

OPERATOR STATION

258-8756 COMPRESSOR GP-REFRIGERANT

S/N: JKM1-UP
PART OF 255-4820 AIR CONDITIONER AR
AN ATTACHMENT

SMCS-1802 **i03185483**

NOTE	REF NO	GRAPHIC REF	PART NUMBER	QTY	PART NAME 1 2 3 4 5 6 (PRODUCT LEVEL)	SEE PAGE
	1	1	**114-5333**	1	SWITCH AS-PRESSURE (COMPRESSOR)	
		1	**102-8802**	1	KIT-RECEPTACLE (2-PIN)	
					(INCLUDES RECEPTACLE AS & WEDGE)	
		1	**186-3735**	2	PIN-CONNECTOR (16-GA TO 18-GA)	
E		1	**9X-1386**		SLEEVE (25-CM)	
Y	2	1	**183-5106**	1	COMPRESSOR GP-REFRIGERANT	922
M	3	1	**7X-2538**	4	BOLT (M8X1.25X100-MM)	
	4	1	**8T-4224**	4	WASHER-HARD (8.8X16X2-MM THK)	
	5	1	**9X-7378**	1	SEAL-O-RING	
	6	1	**7K-1181**	1	STRAP-CABLE	

E-ORDER BY THE CENTIMETER
M-METRIC PART
Y-SEPARATE ILLUSTRATION

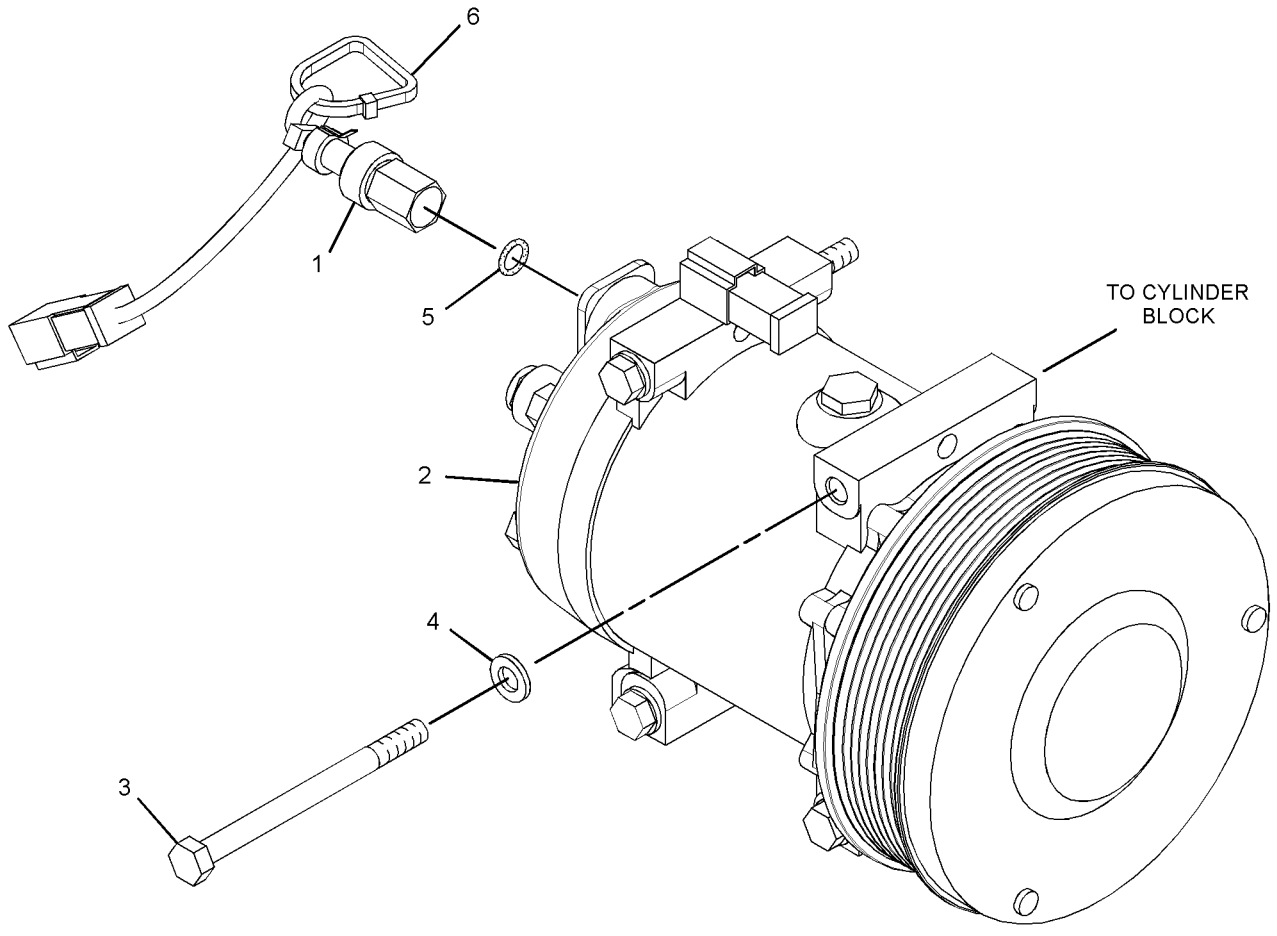

GRAPHIC #1 **<END>** g01661882

OPERATOR STATION

255-4816 CONDENSER & MTG GP-REFRIGERANT

S/N: JKM1-UP
PART OF 255-4820 AIR CONDITIONER AR
AN ATTACHMENT

SMCS-1805 **i02928426**

NOTE	REF NO	GRAPHIC REF	PART NUMBER	QTY	PART NAME 1 2 3 4 5 6 (PRODUCT LEVEL)	SEE PAGE
	1	1	**4E-1384**	1	BUMPER-CONICAL	
	2	1	**260-7452**	1	HINGE AS	
	3	1	**265-7497**	1	CORE AS-CONDENSER (REFRIGERANT)	
	4	1	**266-1662**	1	BRACKET	
	5	1	**266-1664**	1	BRACKET AS	
M	6	1	**5C-7261**	5	NUT (M8X1.25-THD)	
	7	1	**5P-4116**	4	WASHER-HARD (8.8X20.5X2-MM THK)	
	8	1	**7X-7729**	4	WASHER (11X25X3-MM THK)	
M	9	1	**8T-4195**	4	BOLT (M10X1.5X30-MM)	

M-METRIC PART

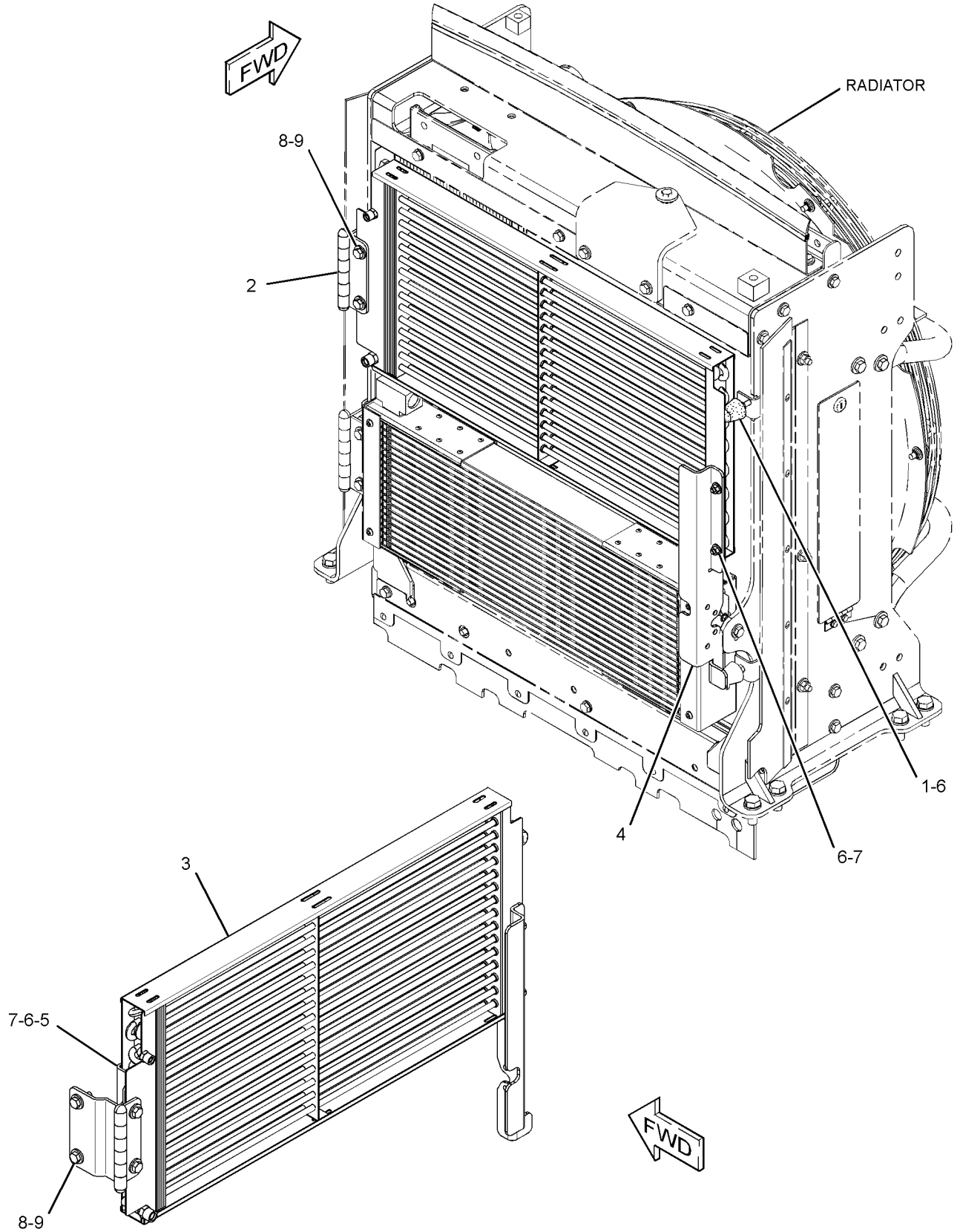

GRAPHIC #1 **<END>** g01425091

OPERATOR STATION

282-3820 CONTROL GP-HANDLE—DIRECTION, DOWNSHIFT, HORN

S/N: JKM1-UP

PART OF 257-5664, 257-5665 CONTROL GP-PILOT OPERATED HYD

AN ATTACHMENT

SMCS-5063, 5705 **i03545845**

NOTE	REF NO	GRAPHIC REF	PART NUMBER	QTY	PART NAME 1 2 3 4 5 6 (PRODUCT LEVEL)	SEE PAGE
Y	1	1	**285-1134**	1	CONTROL GP-HANDLE (DIRECTION, DOWNSHIFT, HORN)	927
	2	1	**322-6230**	1	SHROUD	
	3	1	**231-4262**	1	ADAPTER (RH)	
	4	1	**317-8731**	1	ELBOW	
	5	1	**1S-9593**	3	STRAP-CABLE	

Y-SEPARATE ILLUSTRATION

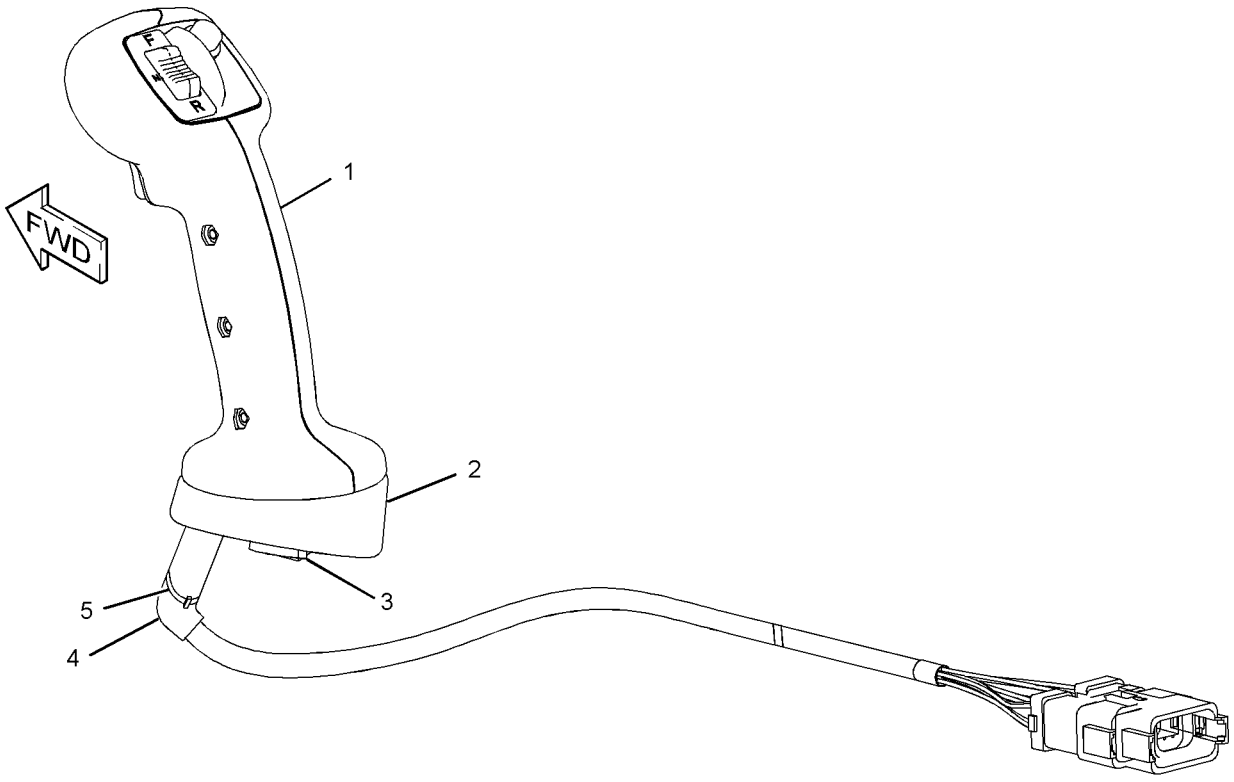

GRAPHIC #1 **<END>** g01662334

OPERATOR STATION

285-1134 CONTROL GP-HANDLE—DIRECTION, DOWNSHIFT, HORN

S/N: JKM1-UP

PART OF 282-3820 CONTROL GP-HANDLE

AN ATTACHMENT

SMCS-5063, 5705 **i02927108**

NOTE	REF NO	GRAPHIC REF	PART NUMBER	QTY	PART NAME 1 2 3 4 5 6 (PRODUCT LEVEL)	SEE PAGE
	1	1	**1S-9593**	2	STRAP-CABLE	
	2	1	**174-3091**	1	KIT-RECEPTACLE (12-PIN)	
					(INCLUDES RECEPTACLE AS & WEDGE)	
	3	1	**186-3735**	8	PIN-CONNECTOR (16-GA TO 18-GA)	
	4	1	**8T-8737**	4	PLUG-SEAL	
	5	1	**317-8731**	1	ELBOW	

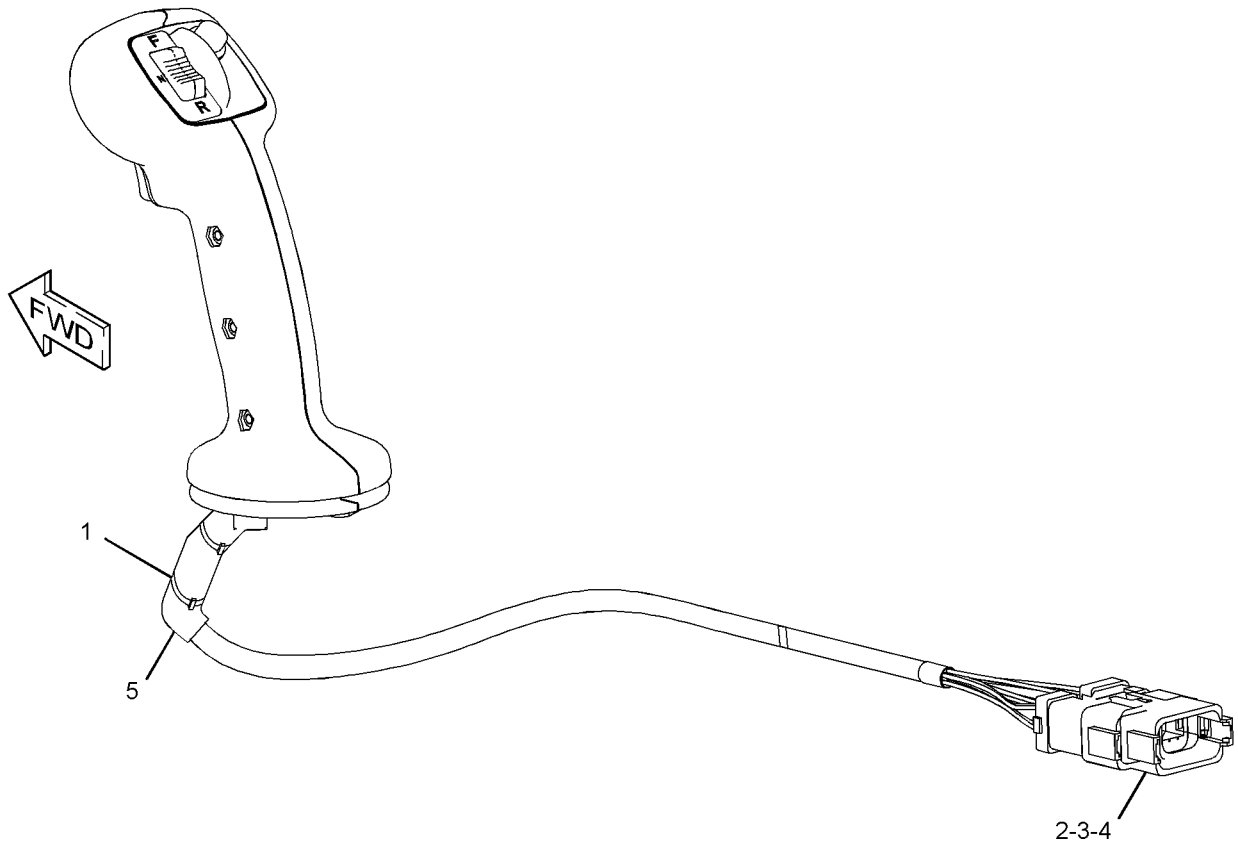

GRAPHIC #1 **<END>** g01432715

OPERATOR STATION

257-5661 CONTROL GP-PILOT OPERATED HYD–2-FUNCTION

S/N: JKM1-914

PART OF 252-4553 CAB AR-ENCLOSED ROPS, 269-4873 CANOPY AR-OPEN ROPS

ALSO AN ATTACHMENT

SMCS-5063 **i03636740**

NOTE	REF NO	GRAPHIC REF	PART NUMBER	QTY	PART NAME 1 2 3 4 5 6 (PRODUCT LEVEL)	SEE PAGE
	1	1	**124-4401**	2	KNOB	
	2	1	**140-5945**	1	FILM-IDENTIFICATION (HORN)	
	3	1	**247-4184**	1	FILM-IDENTIFICATION (DOWNSHIFT SWITCH)	
	4	1	**257-5630**	1	CUSHION AS	
	5	1	**257-5632**	1	COVER AS	
	6	1	**257-5633**	1	PLATE	
	7	1	**257-5634**	1	PLATE AS	
	8	1	**257-5638**	1	GROMMET	
	9	1	**257-5641**	1	SUPPORT	
Y	10	1	**261-8654**	1	VALVE GP-PILOT (2-FUNCTION)	848
	11	1	**263-1493**	1	SWITCH AS-PUSH BUTTON (DOWNSHIFT)	
	12	1	**265-8171**	1	SWITCH AS-PUSH BUTTON (HORN)	
	13	1	**281-2921**	8	RECEPTACLE	
	14	1	**281-2923**	1	RATCHET	
B	15	1	**282-0594**		TAPE	
	16	1	**315-5134**	2	ROD	
	17	1	**317-0755**	1	BRACKET	
	18	1	**117-8929**	4	WASHER (6.6X22X2-MM THK)	
M	19	1	**137-3626**	5	BOLT-SPECIAL	
	20	1	**267-9408**	1	FILM-INSTRUCTION (BUCKET POSITION)	
M	21	1	**3E-8020**	6	SCREW-TRUSS HEAD (M6X1X25-MM)	
	22	1	**8R-3695**	1	GROMMET	
M	23	1	**8T-4138**	4	BOLT (M6X1X20-MM)	
M	24	1	**8T-4189**	4	BOLT (M8X1.25X20-MM)	
	25	1	**8T-4205**	4	WASHER-HARD (7.2X14.5X2-MM THK)	
	26	1	**8T-4224**	4	WASHER-HARD (8.8X16X2-MM THK)	
M	27	1	**9X-1046**	8	SCREW (M4X0.7X18-MM)	
M	28	1	**9X-2043**	4	SCREW-TRUSS HEAD (M6X1X14-MM)	
M	29	1	**9X-2044**	4	SCREW-TRUSS HEAD (M6X1X16-MM)	
E	30	1	**8T-9005**		SEAL (85.8-CM)	
E	30A	1	**8T-9005**		SEAL (111.7-CM)	
D	31	1	**5P-5927**		SEAL (1.4-M)	

B-USE AS REQUIRED
D-ORDER BY THE METER
E-ORDER BY THE CENTIMETER
M-METRIC PART
Y-SEPARATE ILLUSTRATION

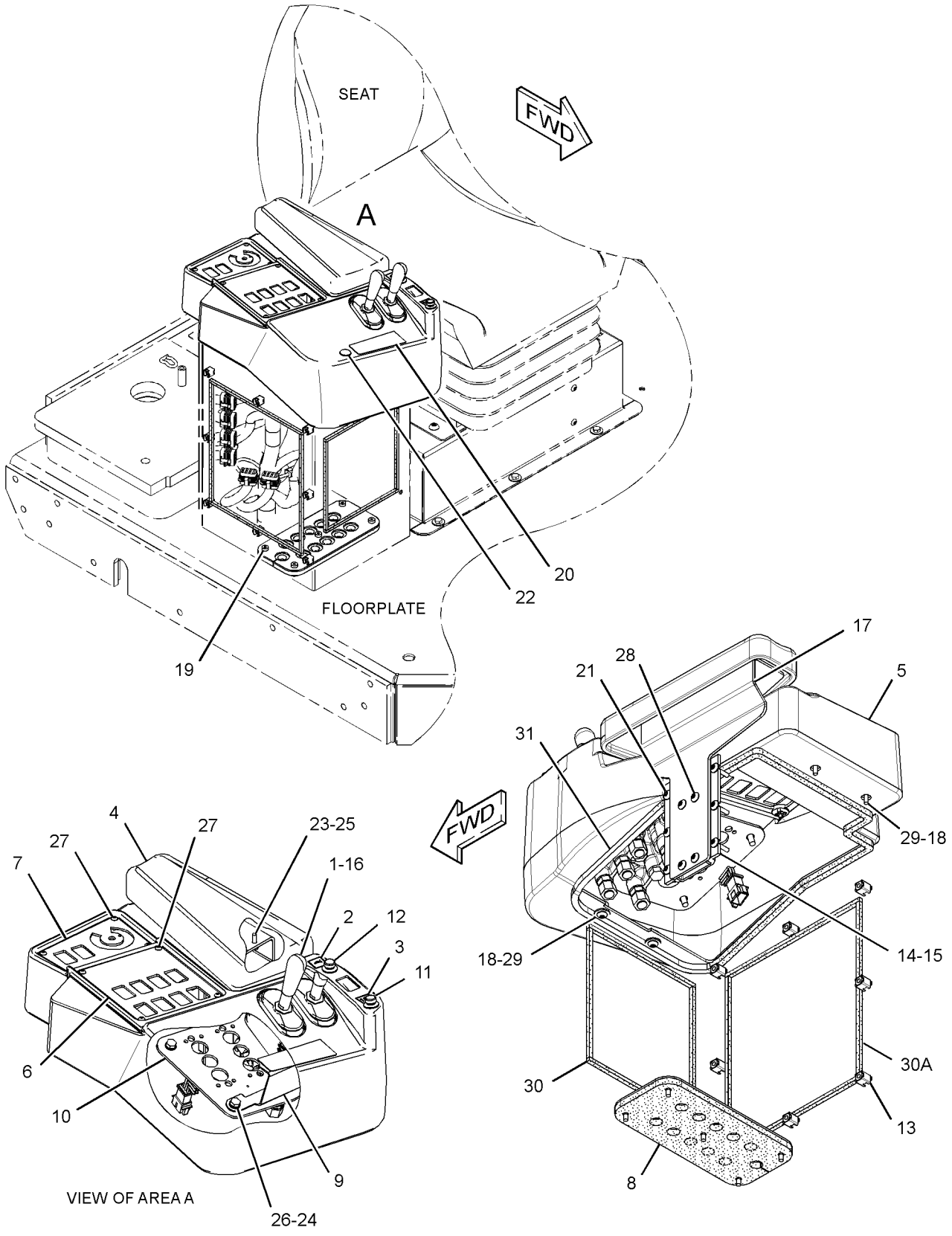

GRAPHIC #1 **<END>** g01871720

OPERATOR STATION

257-5661 CONTROL GP-PILOT OPERATED HYD–2-FUNCTION

S/N: JKM915-UP

PART OF 252-4553 CAB AR-ENCLOSED ROPS, 269-4873 CANOPY AR-OPEN ROPS

ALSO AN ATTACHMENT

SMCS-5063 **i03851809**

NOTE	REF NO	GRAPHIC REF	PART NUMBER	QTY	PART NAME 1 2 3 4 5 6 (PRODUCT LEVEL)	SEE PAGE
	1	1	**124-4401**	2	KNOB	
	2	1	**140-5945**	1	FILM-IDENTIFICATION (HORN)	
	3	1	**247-4184**	1	FILM-IDENTIFICATION (DOWNSHIFT SWITCH)	
	4	1	**257-5630**	1	CUSHION AS	
M		1	**6V-9632**	4	NUT-WELD (M6X1-THD)	
	5	1	**257-5632**	1	COVER AS	
	6	1	**257-5633**	1	PLATE	
	7	1	**257-5634**	1	PLATE AS	
C	8	1	**341-8739**	1	GROMMET	
C	9	1	**324-6970**	1	PLATE	
Y	10	1	**261-8654**	1	VALVE GP-PILOT (2-FUNCTION)	848
	11	1	**263-1493**	1	SWITCH AS-PUSH BUTTON (DOWNSHIFT)	
		1	**6F-0253**	1	LOCKWASHER	
		1	**9X-3402**	3	SOCKET-CONNECTOR (16-GA TO 18-GA)	
		1	**155-2260**	1	KIT-CONNECTING PLUG (3-PIN)	
					(INCLUDES PLUG AS & WEDGE)	
		1	**172-3511**	1	NUT (5/8-24-THD)	
	12	1	**265-8171**	1	SWITCH AS-PUSH BUTTON (HORN)	
		1	**6F-0253**	1	LOCKWASHER	
		1	**8T-8729**	3	PIN-CONNECTOR (16-GA TO 18-GA)	
		1	**102-8803**	1	KIT-RECEPTACLE (3-PIN)	
					(INCLUDES PLUG AS & WEDGE)	
		1	**172-3511**	1	NUT (5/8-24-THD)	
	13	1	**281-2921**	8	RECEPTACLE	
	14	1	**281-2923**	1	RATCHET	
B	15	1	**282-0594**		TAPE	
	16	1	**315-5134**	2	ROD	
	17	1	**317-0755**	1	BRACKET	
	18	1	**117-8929**	4	WASHER (6.6X22X2-MM THK)	
M	19	1	**137-3626**	5	BOLT-SPECIAL	
	20	1	**267-9408**	1	FILM-INSTRUCTION (BUCKET POSITION)	
CM	21	1	**3E-8020**	4	SCREW-TRUSS HEAD (M6X1X25-MM)	
	22	1	**8R-3695**	1	GROMMET	
M	23	1	**8T-4138**	4	BOLT (M6X1X20-MM)	
CM	24	1	**127-2170**	4	SCREW-TRUSS HEAD (M8X1.25X20-MM)	
	25	1	**8T-4205**	4	WASHER-HARD (7.2X14.5X2-MM THK)	
	26	1	**8T-4224**	4	WASHER-HARD (8.8X16X2-MM THK)	
M	27	1	**9X-1046**	8	SCREW (M4X0.7X18-MM)	
M	28	1	**9X-2043**	4	SCREW-TRUSS HEAD (M6X1X14-MM)	
M	29	1	**9X-2044**	4	SCREW-TRUSS HEAD (M6X1X16-MM)	
E	30	1	**8T-9005**		SEAL (85.8-CM)	
E	30A	1	**8T-9005**		SEAL (111.7-CM)	
D	31	1	**5P-5927**		SEAL (1.4-M)	

B-USE AS REQUIRED
C-CHANGE FROM PREVIOUS TYPE
D-ORDER BY THE METER
E-ORDER BY THE CENTIMETER
M-METRIC PART
Y-SEPARATE ILLUSTRATION

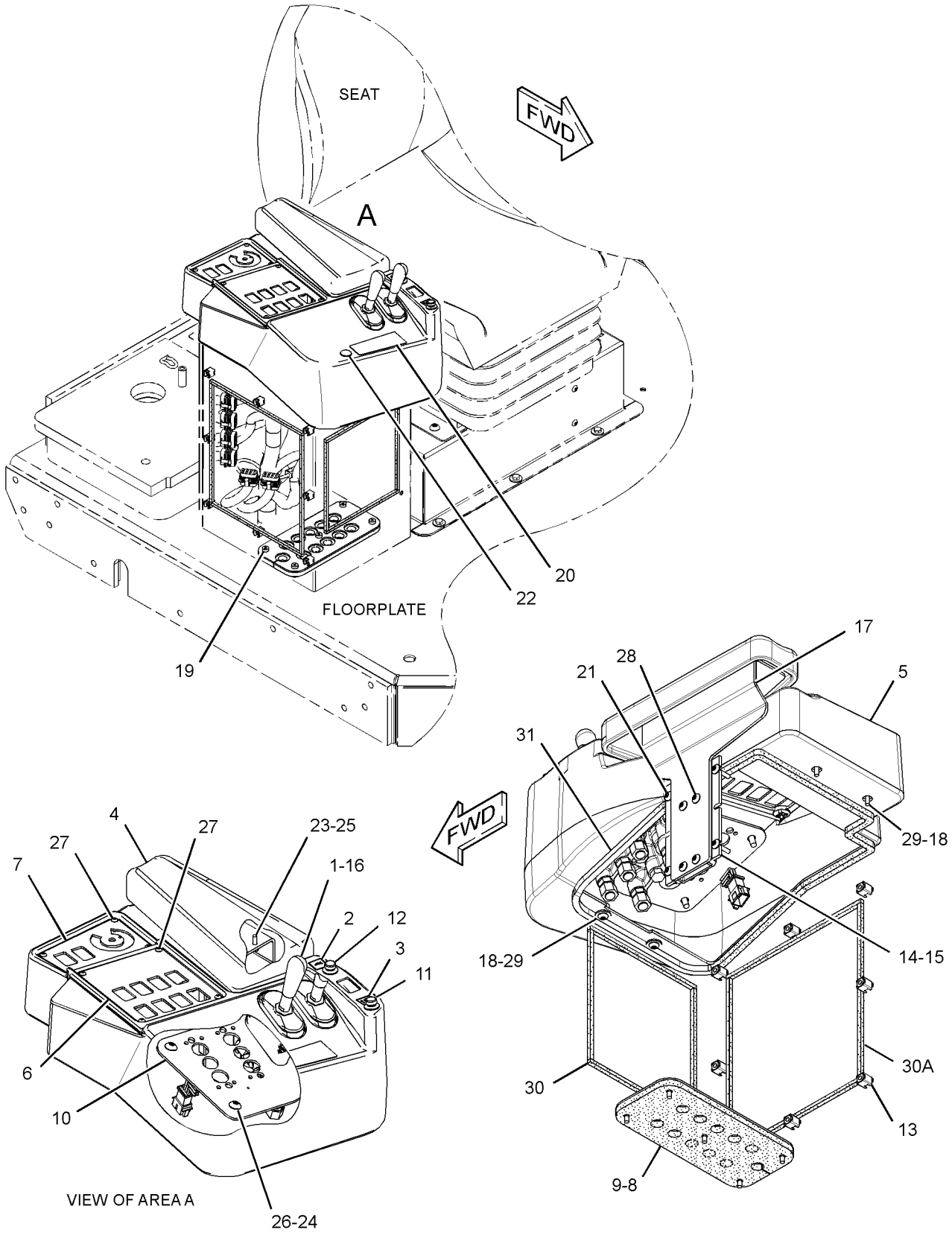

GRAPHIC #1 **<END>** g02146173

OPERATOR STATION

257-5662 CONTROL GP-PILOT OPERATED HYD—3-FUNCTION

S/N: JKM1-914
PART OF 265-9750 HYDRAULIC AR-3 VALVE
AN ATTACHMENT

SMCS-5063 **i03667960**

NOTE	REF NO	GRAPHIC REF	PART NUMBER	QTY	PART NAME 1 2 3 4 5 6 (PRODUCT LEVEL)	SEE PAGE
	1	1	**124-4401**	3	KNOB	
	2	1	**140-5945**	1	FILM-IDENTIFICATION (HORN)	
	3	1	**247-4184**	1	FILM-IDENTIFICATION (DOWNSHIFT SWITCH)	
	4	1	**257-5630**	1	CUSHION AS	
M		1	**6V-9632**	4	NUT-WELD (M6X1-THD)	
	5	1	**257-5633**	1	PLATE	
	6	1	**257-5634**	1	PLATE AS	
	7	1	**257-5638**	1	GROMMET	
	8	1	**257-5641**	1	SUPPORT	
Y	9	1	**261-8656**	1	VALVE GP-PILOT (3-FUNCTION)	859
	10	1	**262-4879**	1	CONSOLE AS	
	11	1	**263-1493**	1	SWITCH AS-PUSH BUTTON (DOWNSHIFT)	
		1	**6F-0253**	1	LOCKWASHER	
		1	**9X-3402**	3	SOCKET-CONNECTOR (16-GA TO 18-GA)	
		1	**155-2260**	1	KIT-CONNECTING PLUG (3-PIN)	
					(INCLUDES PLUG AS AND WEDGE)	
		1	**172-3511**	1	NUT (5/8-24-THD)	
	12	1	**265-8171**	1	SWITCH AS-PUSH BUTTON (HORN)	
		1	**102-8803**	1	KIT-RECEPTACLE (3-PIN)	
					(INCLUDES RECEPTACLE AS AND WEDGE)	
		1	**6F-0253**	1	LOCKWASHER	
		1	**186-3735**	3	PIN-CONNECTOR (16-GA TO 18-GA)	
		1	**172-3511**	1	NUT (5/8-24-THD)	
	14	1	**281-2921**	8	RECEPTACLE	
	15	1	**281-2923**	1	RATCHET	
B	16	1	**282-0594**		TAPE	
	17	1	**315-5134**	3	ROD	
	18	1	**317-0755**	1	BRACKET	
	19	1	**117-8929**	4	WASHER (6.6X22X2-MM THK)	
M	20	1	**137-3626**	5	BOLT-SPECIAL	
M	21	1	**3E-8020**	6	SCREW-TRUSS HEAD (M6X1X25-MM)	
	22	1	**8R-3695**	1	GROMMET	
M	23	1	**8T-4138**	4	BOLT (M6X1X20-MM)	
M	24	1	**8T-4189**	4	BOLT (M8X1.25X20-MM)	
	25	1	**8T-4205**	4	WASHER-HARD (7.2X14.5X2-MM THK)	
	26	1	**8T-4224**	4	WASHER-HARD (8.8X16X2-MM THK)	
M	27	1	**9X-1046**	8	SCREW (M4X0.7X18-MM)	
M	28	1	**9X-2043**	4	SCREW-TRUSS HEAD (M6X1X14-MM)	
M	29	1	**9X-2044**	4	SCREW-TRUSS HEAD (M6X1X16-MM)	
E	30	1	**8T-9005**		SEAL (86-CM)	
E	30A	1	**8T-9005**		SEAL (112-CM)	
D	31	1	**5P-5927**		SEAL (1.4-M)	

B-USE AS REQUIRED
D-ORDER BY THE METER
E-ORDER BY THE CENTIMETER
M-METRIC PART
Y-SEPARATE ILLUSTRATION

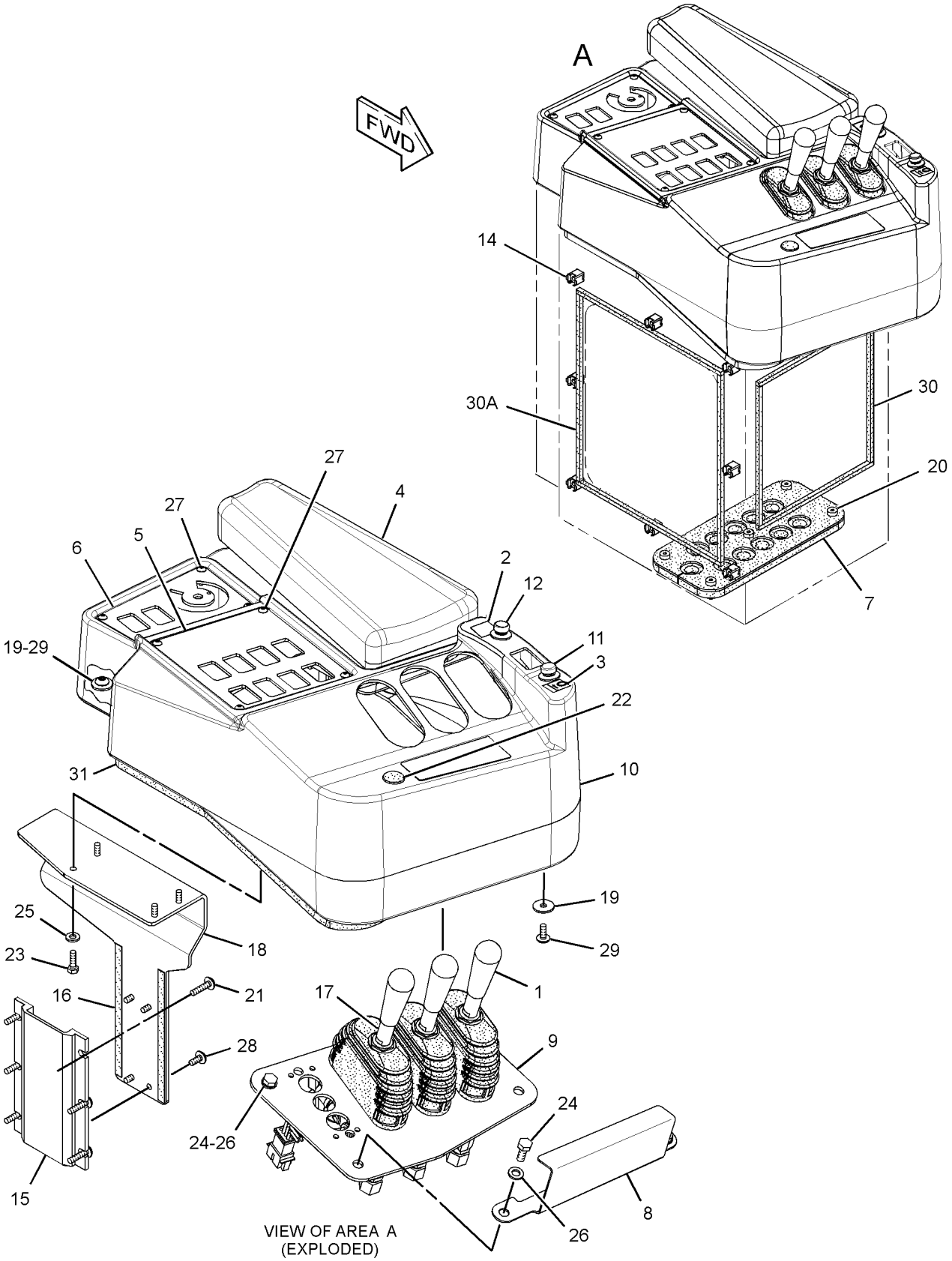

GRAPHIC #1 **<END>** g01871985

OPERATOR STATION

257-5662 CONTROL GP-PILOT OPERATED HYD—3-FUNCTION

S/N: JKM915-UP
PART OF 265-9750 HYDRAULIC AR-3 VALVE
AN ATTACHMENT

SMCS-5063 **i03851790**

NOTE	REF NO	GRAPHIC REF	PART NUMBER	QTY	PART NAME 1 2 3 4 5 6 (PRODUCT LEVEL)	SEE PAGE
	1	1	**124-4401**	3	KNOB	
	2	1	**140-5945**	1	FILM-IDENTIFICATION (HORN)	
	3	1	**247-4184**	1	FILM-IDENTIFICATION (DOWNSHIFT SWITCH)	
	4	1	**257-5630**	1	CUSHION AS	
M		1	**6V-9632**	4	NUT-WELD (M6X1-THD)	
	5	1	**257-5633**	1	PLATE	
	6	1	**257-5634**	1	PLATE AS	
C	7	1	**341-8739**	1	GROMMET	
C	8	1	**324-6970**	1	PLATE	
Y	9	1	**261-8656**	1	VALVE GP-PILOT (3-FUNCTION)	859
	10	1	**262-4879**	1	CONSOLE AS	
	11	1	**263-1493**	1	SWITCH AS-PUSH BUTTON (DOWNSHIFT)	
		1	**6F-0253**	1	LOCKWASHER	
		1	**9X-3402**	3	SOCKET-CONNECTOR (16-GA TO 18-GA)	
		1	**155-2260**	1	KIT-CONNECTING PLUG (3-PIN)	
					(INCLUDES PLUG AS AND WEDGE)	
		1	**172-3511**	1	NUT (5/8-24-THD)	
	12	1	**265-8171**	1	SWITCH AS-PUSH BUTTON (HORN)	
		1	**102-8803**	1	KIT-RECEPTACLE (3-PIN)	
					(INCLUDES RECEPTACLE AS AND WEDGE)	
		1	**6F-0253**	1	LOCKWASHER	
		1	**186-3735**	3	PIN-CONNECTOR (16-GA TO 18-GA)	
		1	**172-3511**	1	NUT (5/8-24-THD)	
	14	1	**281-2921**	8	RECEPTACLE	
	15	1	**281-2923**	1	RATCHET	
B	16	1	**282-0594**		TAPE	
	17	1	**315-5134**	3	ROD	
	18	1	**317-0755**	1	BRACKET	
	19	1	**117-8929**	4	WASHER (6.6X22X2-MM THK)	
M	20	1	**137-3626**	5	BOLT-SPECIAL	
CM	21	1	**3E-8020**	4	SCREW-TRUSS HEAD (M6X1X25-MM)	
	22	1	**8R-3695**	1	GROMMET	
M	23	1	**8T-4138**	4	BOLT (M6X1X20-MM)	
CM	24	1	**127-2170**	4	SCREW-TRUSS HEAD (M8X1.25X20-MM)	
	25	1	**8T-4205**	4	WASHER-HARD (7.2X14.5X2-MM THK)	
	26	1	**8T-4224**	4	WASHER-HARD (8.8X16X2-MM THK)	
M	27	1	**9X-1046**	8	SCREW (M4X0.7X18-MM)	
M	28	1	**9X-2043**	4	SCREW-TRUSS HEAD (M6X1X14-MM)	
M	29	1	**9X-2044**	4	SCREW-TRUSS HEAD (M6X1X16-MM)	
E	30	1	**8T-9005**		SEAL (86-CM)	
E	30A	1	**8T-9005**		SEAL (112-CM)	
D	31	1	**5P-5927**		SEAL (1.4-M)	

B-USE AS REQUIRED
C-CHANGE FROM PREVIOUS TYPE
D-ORDER BY THE METER
E-ORDER BY THE CENTIMETER
M-METRIC PART
Y-SEPARATE ILLUSTRATION

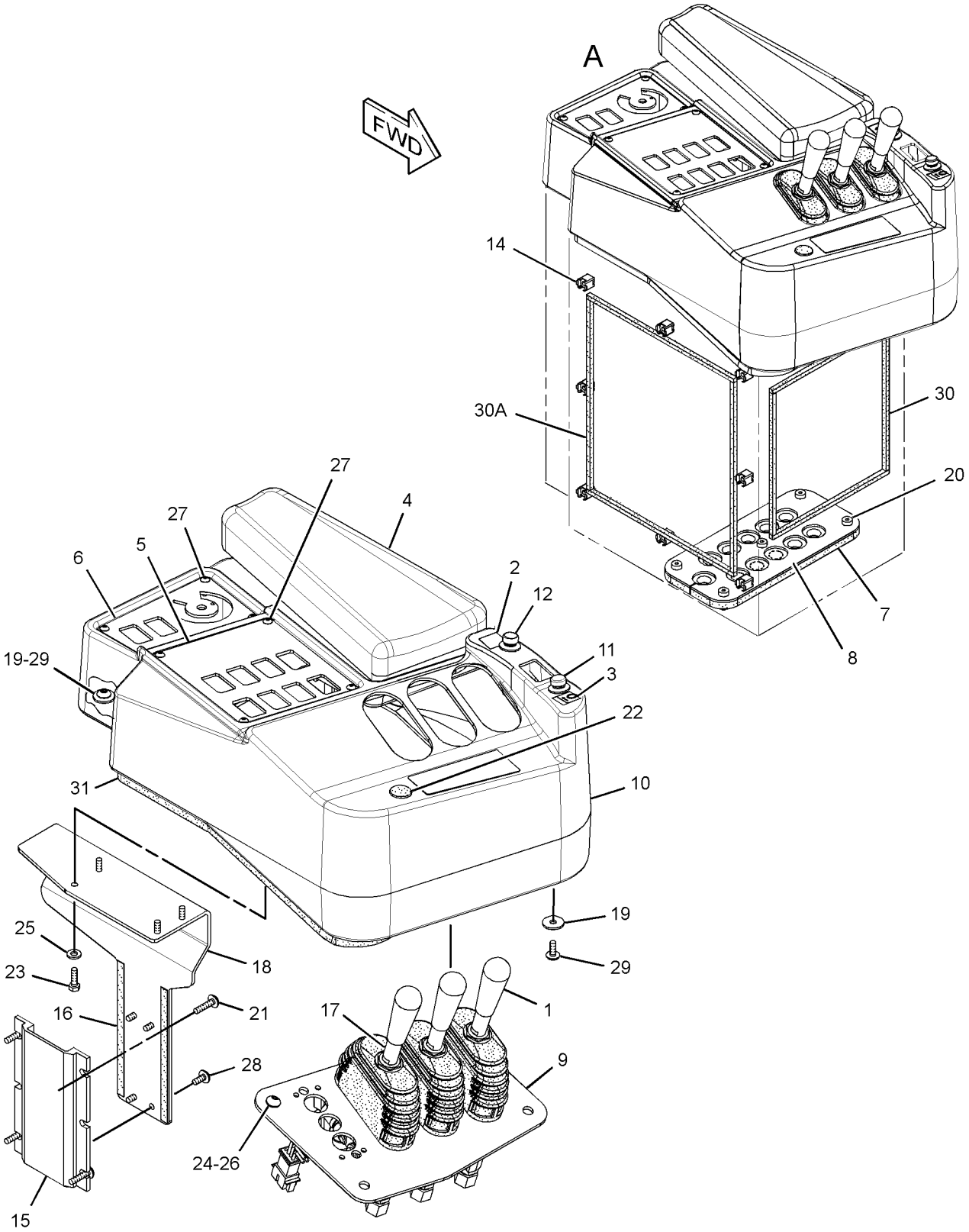

VIEW OF AREA A
(EXPLODED)

GRAPHIC #1 **<END>** g02146213

OPERATOR STATION

257-5663 CONTROL GP-PILOT OPERATED HYD—4-FUNCTION

S/N: JKM1-914
PART OF 265-9760 HYDRAULIC AR-4 VALVE
AN ATTACHMENT

SMCS-5063 **i03840592**

NOTE	REF NO	GRAPHIC REF	PART NUMBER	QTY	PART NAME 1 2 3 4 5 6 (PRODUCT LEVEL)	SEE PAGE
	1	1	**124-4401**	4	KNOB	
	2	1	**140-5945**	1	FILM-IDENTIFICATION (HORN)	
	3	1	**247-4184**	1	FILM-IDENTIFICATION (DOWNSHIFT SWITCH)	
	4	1	**257-5630**	1	CUSHION AS	
M		1	**6V-9632**	4	NUT-WELD (M6X1-THD)	
	5	1	**257-5633**	1	PLATE	
	6	1	**257-5634**	1	PLATE AS	
	7	1	**257-5638**	1	GROMMET	
	8	1	**257-5641**	1	SUPPORT	
Y	9	1	**261-8658**	1	VALVE GP-PILOT (4-FUNCTION)	865
	10	1	**262-4881**	1	COVER AS	
	11	1	**263-1493**	1	SWITCH AS-PUSH BUTTON (DOWNSHIFT)	
	12	1	**265-8171**	1	SWITCH AS-PUSH BUTTON (HORN)	
	13	1	**267-9410**	1	FILM-INSTRUCTION (LIFT, TILT, AUXILIARY)	
	14	1	**281-2921**	8	RECEPTACLE	
	15	1	**281-2923**	1	RATCHET	
B	16	1	**282-0594**		TAPE (4-DM)	
	17	1	**315-5134**	4	ROD	
	18	1	**317-0755**	1	BRACKET	
	19	1	**117-8929**	4	WASHER (6.6X22X2-MM THK)	
M	20	1	**137-3626**	5	BOLT-SPECIAL	
M	21	1	**3E-8020**	6	SCREW-TRUSS HEAD (M6X1X25-MM)	
	22	1	**8R-3695**	1	GROMMET	
M	23	1	**8T-4138**	4	BOLT (M6X1X20-MM)	
M	24	1	**8T-4189**	4	BOLT (M8X1.25X20-MM)	
	25	1	**8T-4205**	4	WASHER-HARD (7.2X14.5X2-MM THK)	
	26	1	**8T-4224**	4	WASHER-HARD (8.8X16X2-MM THK)	
M	27	1	**9X-1046**	8	SCREW (M4X0.7X18-MM)	
M	28	1	**9X-2043**	4	SCREW-TRUSS HEAD (M6X1X14-MM)	
M	29	1	**9X-2044**	4	SCREW-TRUSS HEAD (M6X1X16-MM)	
E	30	1	**8T-9005**		SEAL (86-CM)	
E	30A	1	**8T-9005**		SEAL (112-CM)	
D	31	1	**5P-5927**		SEAL (1.4-M)	

B-USE AS REQUIRED
D-ORDER BY THE METER
E-ORDER BY THE CENTIMETER
M-METRIC PART
Y-SEPARATE ILLUSTRATION

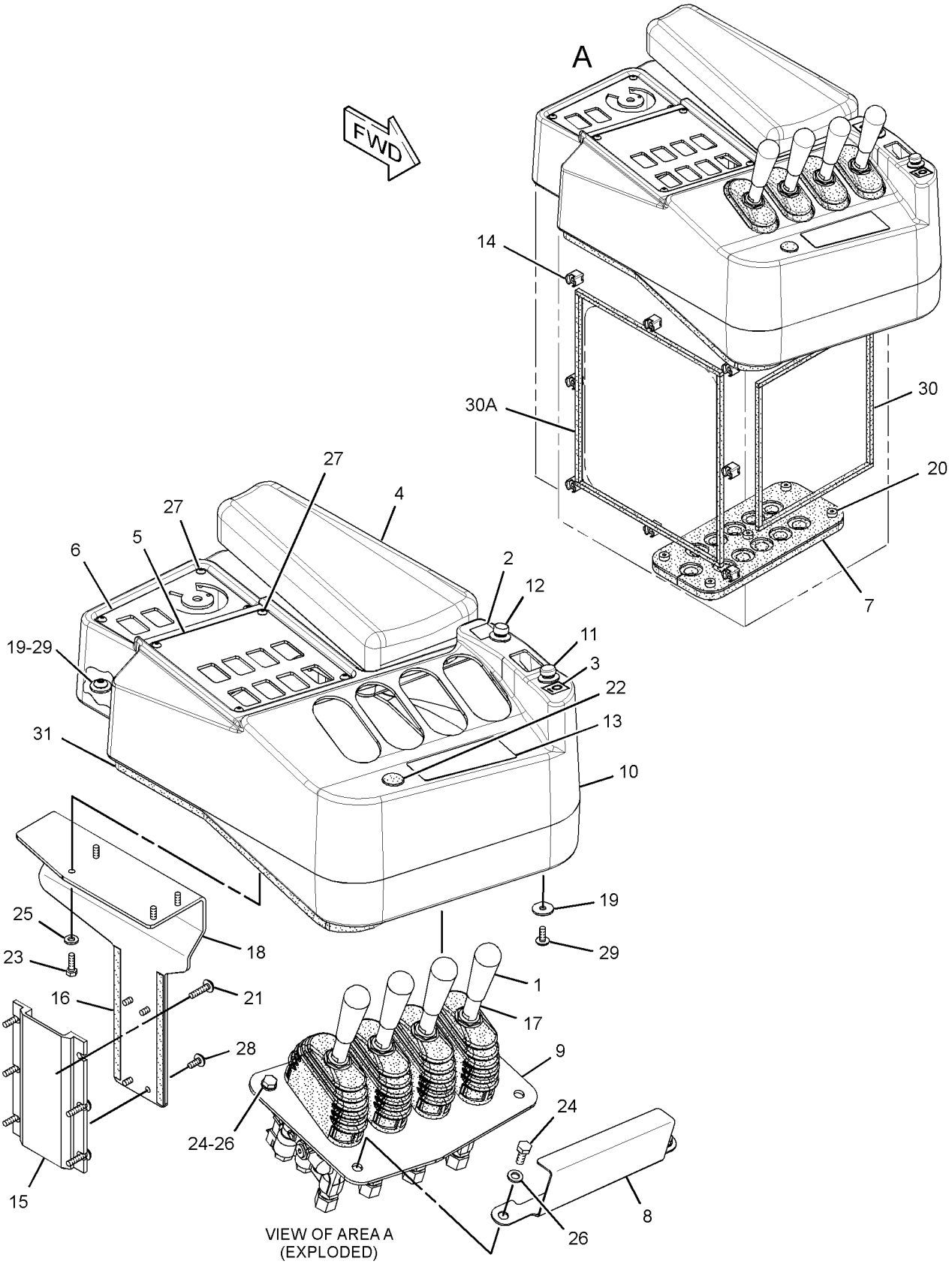

GRAPHIC #1 **<END>** g01872873

OPERATOR STATION

257-5663 CONTROL GP-PILOT OPERATED HYD—4-FUNCTION

S/N: JKM915-UP
PART OF 265-9760 HYDRAULIC AR-4 VALVE
AN ATTACHMENT

SMCS-5063 **i03874941**

NOTE	REF NO	GRAPHIC REF	PART NUMBER	QTY	PART NAME 1 2 3 4 5 6 (PRODUCT LEVEL)	SEE PAGE
	1	1	**124-4401**	4	KNOB	
	2	1	**140-5945**	1	FILM-IDENTIFICATION (HORN)	
	3	1	**247-4184**	1	FILM-IDENTIFICATION (DOWNSHIFT SWITCH)	
	4	1	**257-5630**	1	CUSHION AS	
M		1	**6V-9632**	4	NUT-WELD (M6X1-THD)	
	5	1	**257-5633**	1	PLATE	
	6	1	**257-5634**	1	PLATE AS	
C	7	1	**341-8739**	1	GROMMET	
C	8	1	**324-6970**	1	PLATE	
Y	9	1	**261-8658**	1	VALVE GP-PILOT (4-FUNCTION)	865
	10	1	**262-4881**	1	COVER AS	
	11	1	**263-1493**	1	SWITCH AS-PUSH BUTTON (DOWNSHIFT)	
		1	**6F-0253**	1	LOCKWASHER	
		1	**9X-3402**	3	SOCKET-CONNECTOR (16-GA TO 18-GA)	
		1	**155-2260**	1	KIT-CONNECTING PLUG (3-PIN)	
					(INCLUDES PLUG AS & WEDGE)	
		1	**172-3511**	1	NUT (5/8-24-THD)	
	12	1	**265-8171**	1	SWITCH AS-PUSH BUTTON (HORN)	
		1	**102-8803**	1	KIT-RECEPTACLE (3-PIN)	
					(INCLUDES PLUG AS & WEDGE)	
		1	**6F-0253**	1	LOCKWASHER	
		1	**8T-8729**	3	PIN-CONNECTOR (16-GA TO 18-GA)	
		1	**172-3511**	3	NUT (5/8-24-THD)	
	13	1	**267-9410**	1	FILM-INSTRUCTION (LIFT, TILT, AUXILIARY)	
	14	1	**281-2921**	8	RECEPTACLE	
	15	1	**281-2923**	1	RATCHET	
B	16	1	**282-0594**		TAPE	
	17	1	**315-5134**	4	ROD	
	18	1	**317-0755**	1	BRACKET	
	19	1	**117-8929**	4	WASHER (6.6X22X2-MM THK)	
M	20	1	**137-3626**	5	BOLT-SPECIAL	
CM	21	1	**3E-8020**	4	SCREW-TRUSS HEAD (M6X1X25-MM)	
	22	1	**8R-3695**	1	GROMMET	
M	23	1	**8T-4138**	4	BOLT (M6X1X20-MM)	
CM	24	1	**127-2170**	4	SCREW-TRUSS HEAD (M8X1.25X20-MM)	
	25	1	**8T-4205**	4	WASHER-HARD (7.2X14.5X2-MM THK)	
	26	1	**8T-4224**	4	WASHER-HARD (8.8X16X2-MM THK)	
M	27	1	**9X-1046**	8	SCREW (M4X0.7X18-MM)	
M	28	1	**9X-2043**	4	SCREW-TRUSS HEAD (M6X1X14-MM)	
M	29	1	**9X-2044**	4	SCREW-TRUSS HEAD (M6X1X16-MM)	
E	30	1	**8T-9005**		SEAL (86-CM)	
E	30A	1	**8T-9005**		SEAL (112-CM)	
D	31	1	**5P-5927**		SEAL (1.4-M)	

B-USE AS REQUIRED
C-CHANGE FROM PREVIOUS TYPE
D-ORDER BY THE METER
E-ORDER BY THE CENTIMETER
M-METRIC PART
Y-SEPARATE ILLUSTRATION

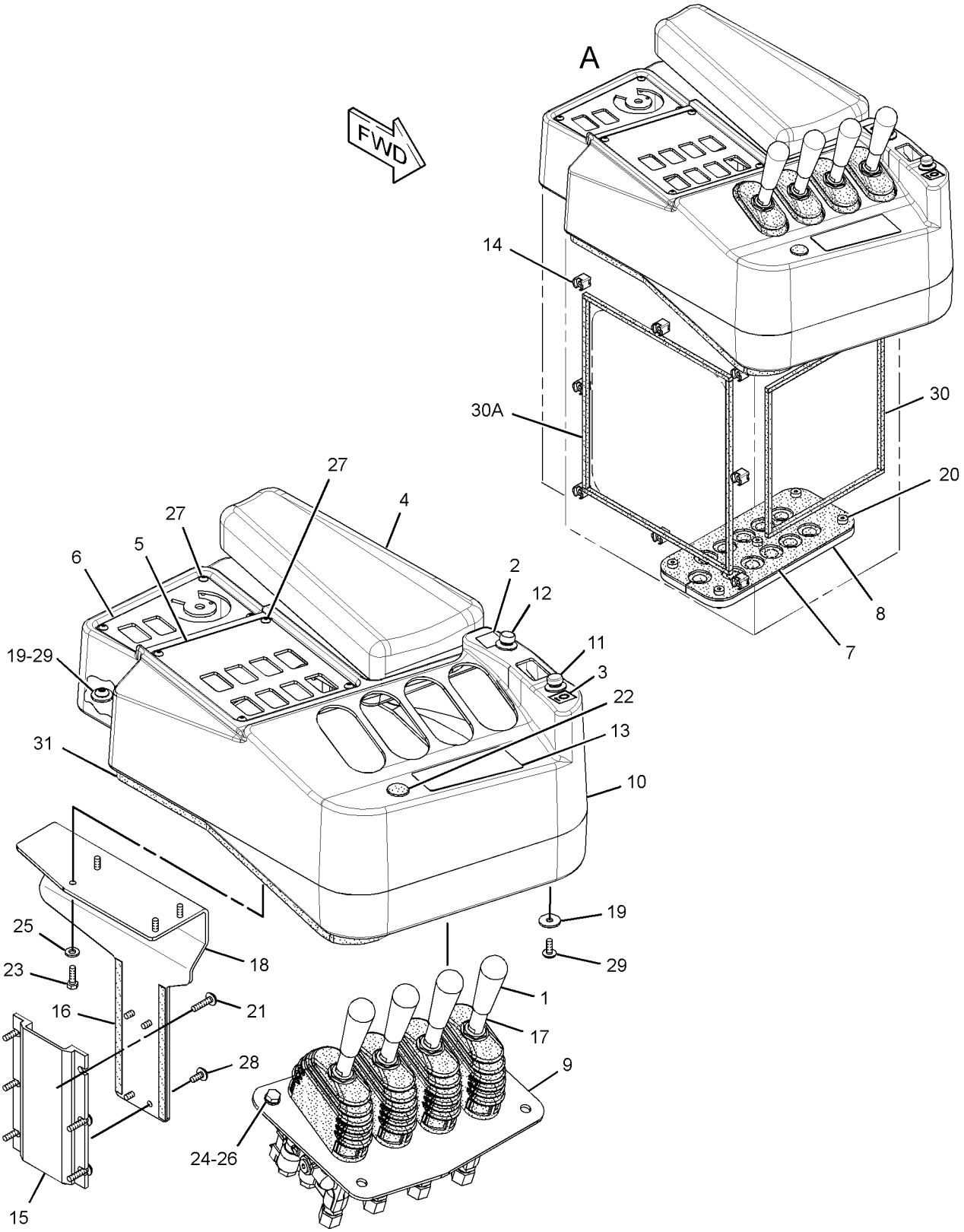

VIEW OF AREA A
(EXPLODED)

GRAPHIC #1 **<END>** g02144844

OPERATOR STATION

257-5664 CONTROL GP-PILOT OPERATED HYD–
JOYSTICK, 2-FUNCTION
S/N: JKM1-UP
AN ATTACHMENT

SMCS-5063 **i03654888**

NOTE	REF NO	GRAPHIC REF	PART NUMBER	QTY	PART NAME 1 2 3 4 5 6 (PRODUCT LEVEL)	SEE PAGE
Y	1	1	**261-8653**	1	VALVE GP-PILOT (JOYSTICK, 2-FUNCTION)	845
	2	1	**262-4877**	1	COVER AS	
	3	1	**267-9414**	1	FILM-INSTRUCTION	
Y	4	1	**282-3820**	1	CONTROL GP-HANDLE (DIRECTION, DOWNSHIFT, HORN)	926
M	5	1	**096-6331**	1	NUT (M12X1.75-THD)	
	6	1	**4N-9170**	2	CLIP	
E	7	1	**8T-9005**		SEAL (137-CM)	

E-ORDER BY THE CENTIMETER
M-METRIC PART
Y-SEPARATE ILLUSTRATION

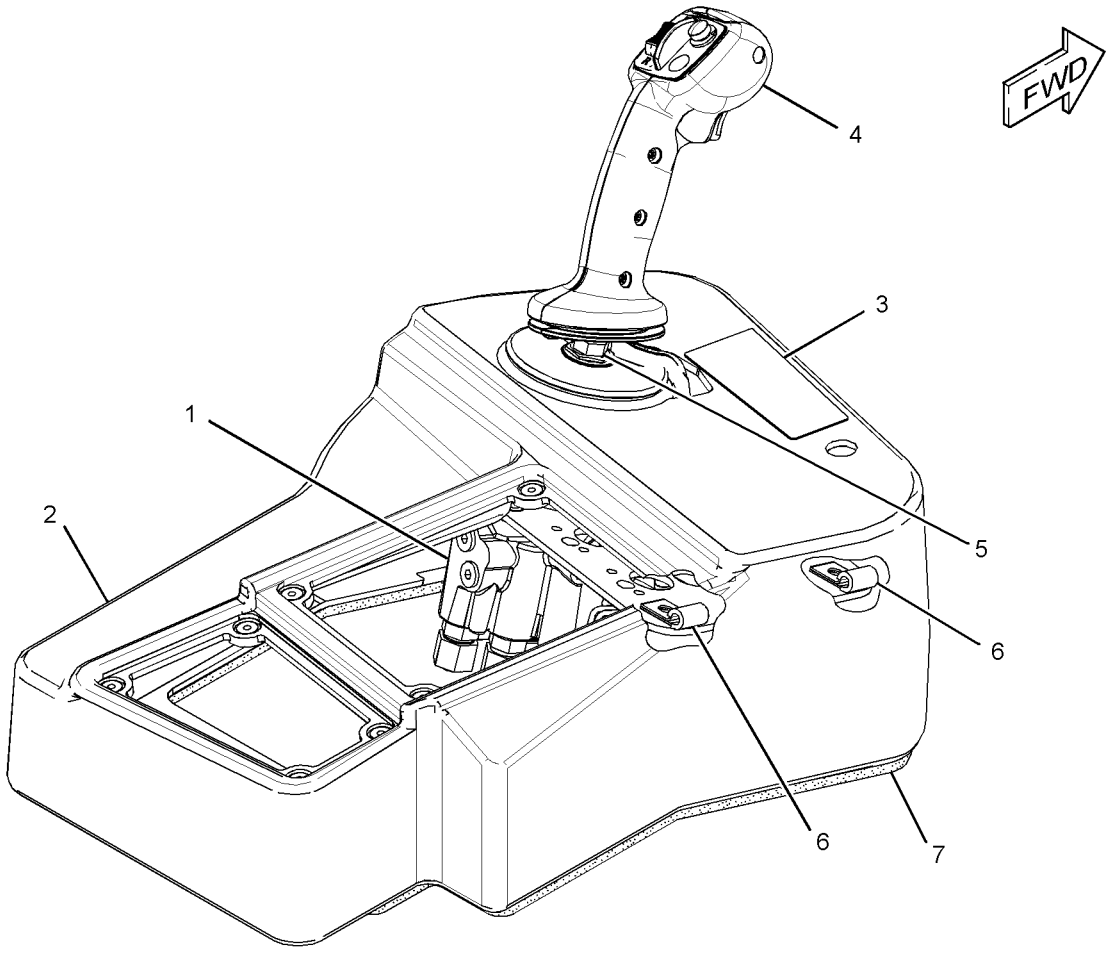

GRAPHIC #1 **<END>** g01978273

OPERATOR STATION

257-5665 CONTROL GP-PILOT OPERATED HYD–
JOYSTICK, 3-FUNCTION
S/N: JKM1-UP
AN ATTACHMENT

SMCS-5063 **i03654887**

NOTE	REF NO	GRAPHIC REF	PART NUMBER	QTY	PART NAME 1 2 3 4 5 6 (PRODUCT LEVEL)	SEE PAGE
Y	1	1	**261-8655**	1	VALVE GP-PILOT (JOYSTICK, 3-FUNCTION)	855
	2	1	**262-4878**	1	COVER AS	
	3	1	**267-9415**	1	FILM-INSTRUCTION	
Y	4	1	**282-3820**	1	CONTROL GP-HANDLE (DIRECTION, DOWNSHIFT, HORN)	926
	5	1	**315-8297**	1	ROD	
M	6	1	**096-6331**	2	NUT (M12X1.75-THD)	
	7	1	**4N-9170**	2	CLIP	
E	8	1	**8T-9005**		SEAL (137-CM)	

E-ORDER BY THE CENTIMETER
M-METRIC PART
Y-SEPARATE ILLUSTRATION

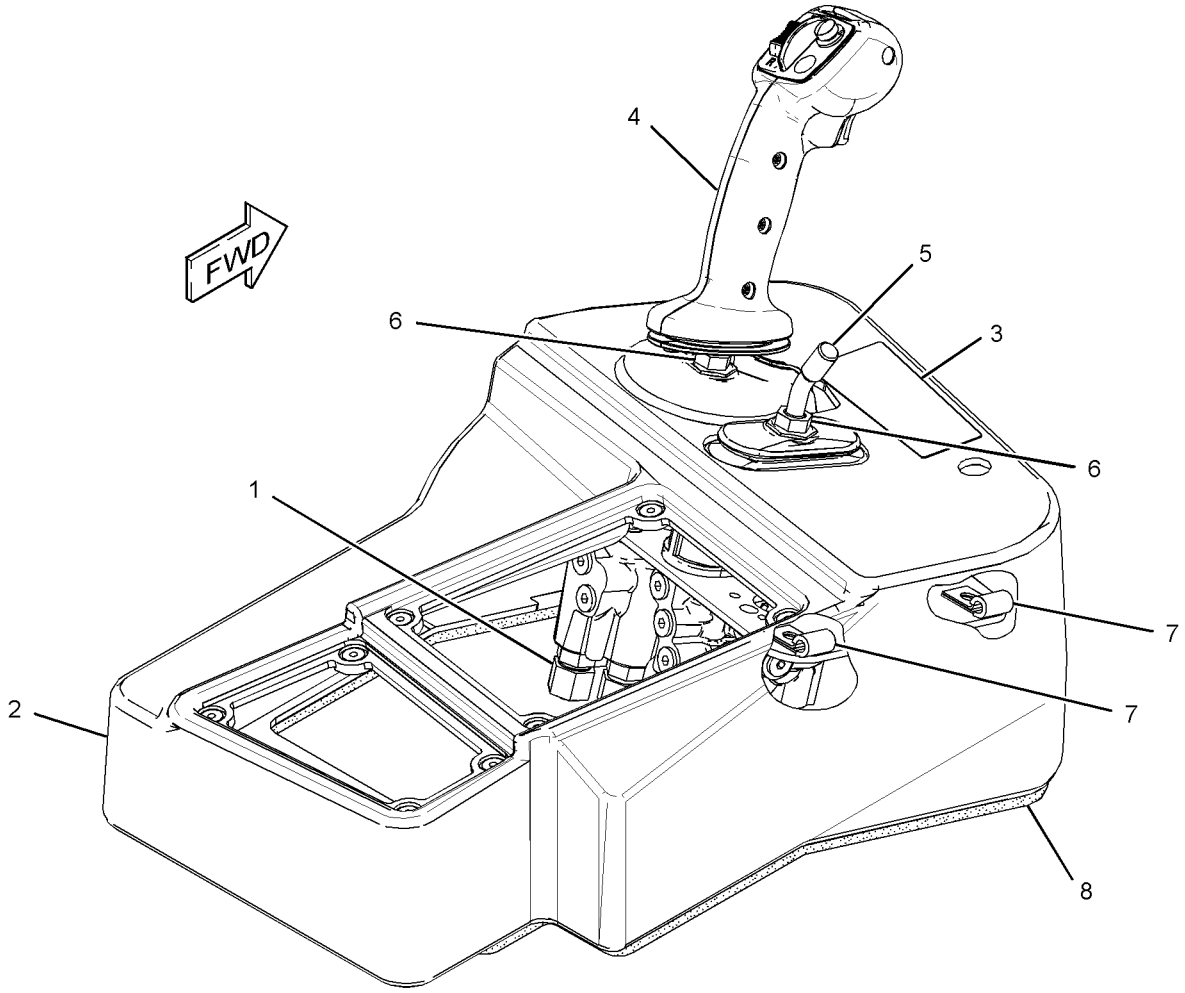

GRAPHIC #1 **<END>** g01979373

OPERATOR STATION

257-5688 CONTROL GP-STEERING

S/N: JKM1-432

PART OF 252-4553 CAB AR-ENCLOSED ROPS, 269-4873 CANOPY AR-OPEN ROPS

ALSO AN ATTACHMENT

SMCS-4310, 4338, 4343 **i02917117**

NOTE	REF NO	GRAPHIC REF	PART NUMBER	QTY	PART NAME 1 2 3 4 5 6 (PRODUCT LEVEL)	SEE PAGE
	1	1	**2T-3360**	1	BUTTON AS-HORN	
	2	1	**8R-2918**	1	KNOB AS	
	3	1	**9D-7924**	4	MOUNTING	
	4	1	**107-6141**	1	COVER	
	5	1	**111-7874**	1	SEAL	
Y	6	1	**280-6837**	1	STEERING COLUMN GP-ADJUSTABLE	662
	7	1	**217-7937**	1	PLATE AS	
	8	1	**111-7878**	1	COVER	
	9	1	**129-3270**	1	STEERING WHEEL AS	
	10	1	**257-5687**	1	SUPPORT AS	
	11	1	**7X-0603**	4	WASHER-HARD (9.9X35X2.5-MM THK)	
	12	1	**8T-4121**	7	WASHER-HARD (11X21X2.5-MM THK)	
M	13	1	**8T-4136**	7	BOLT (M10X1.5X25-MM)	
M	14	1	**8T-4191**	4	BOLT (M10X1.5X16-MM)	
M	15	1	**8T-6869**	4	BOLT (M8X1.25X60-MM)	
M	16	1	**8T-8894**	4	BOLT-SOCKET HEAD (M10X1.5X20-MM)	
M	17	1	**9X-2045**	6	SCREW-TRUSS HEAD (M6X1X20-MM)	
E	19	1	**8T-9005**		SEAL (157-CM)	

E-ORDER BY THE CENTIMETER
M-METRIC PART
Y-SEPARATE ILLUSTRATION

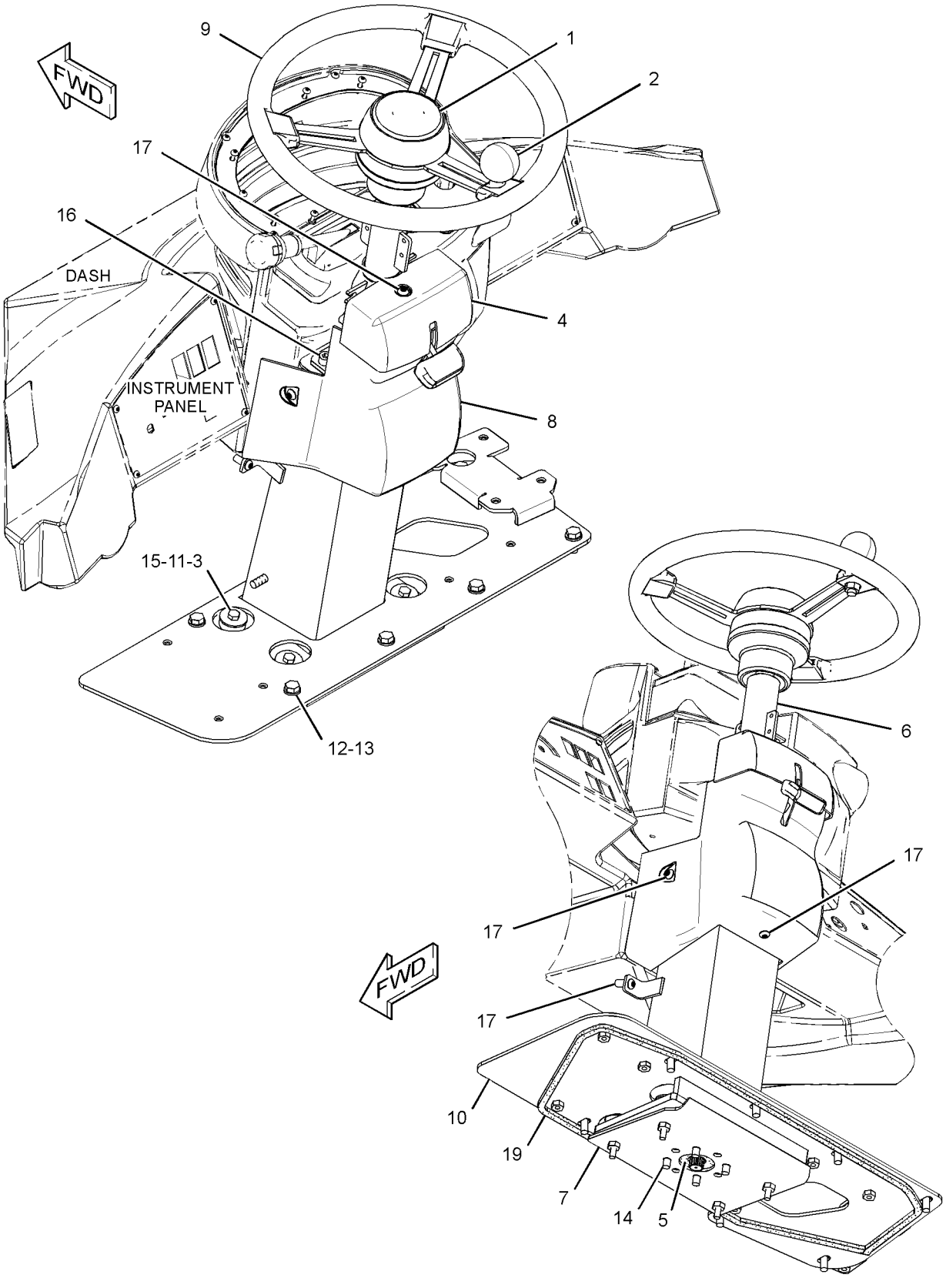

GRAPHIC #1 **<END>** g01423207

OPERATOR STATION

257-5688 CONTROL GP-STEERING

S/N: JKM433-UP

PART OF 252-4553 CAB AR-ENCLOSED ROPS, 269-4873 CANOPY AR-OPEN ROPS

ALSO AN ATTACHMENT

SMCS-4310, 4338, 4343 **i03813129**

NOTE	REF NO	GRAPHIC REF	PART NUMBER	QTY	PART NAME 1 2 3 4 5 6 (PRODUCT LEVEL)	SEE PAGE
	1	1	**322-8568**	1	BUTTON AS-HORN	
	2	1	**8R-2918**	1	KNOB AS	
	3	1	**107-6141**	1	COVER	
	4	1	**111-7878**	1	COVER	
	5	1	**129-3270**	1	STEERING WHEEL AS	
CY	6	1	**319-1625**	1	STEERING COLUMN GP-ADJUSTABLE	663
	7	1	**8T-4121**	7	WASHER-HARD (11X21X2.5-MM THK)	
M	8	1	**8T-4136**	7	BOLT (M10X1.5X25-MM)	
M	9	1	**8T-8894**	4	BOLT-SOCKET HEAD (M10X1.5X20-MM)	
	10	1	**257-5687**	1	SUPPORT AS	
M	11	1	**9X-2045**	6	SCREW-TRUSS HEAD (M6X1X20-MM)	
E	13	1	**8T-9005**		SEAL (157-CM)	

C-CHANGE FROM PREVIOUS TYPE
E-ORDER BY THE CENTIMETER
M-METRIC PART
Y-SEPARATE ILLUSTRATION

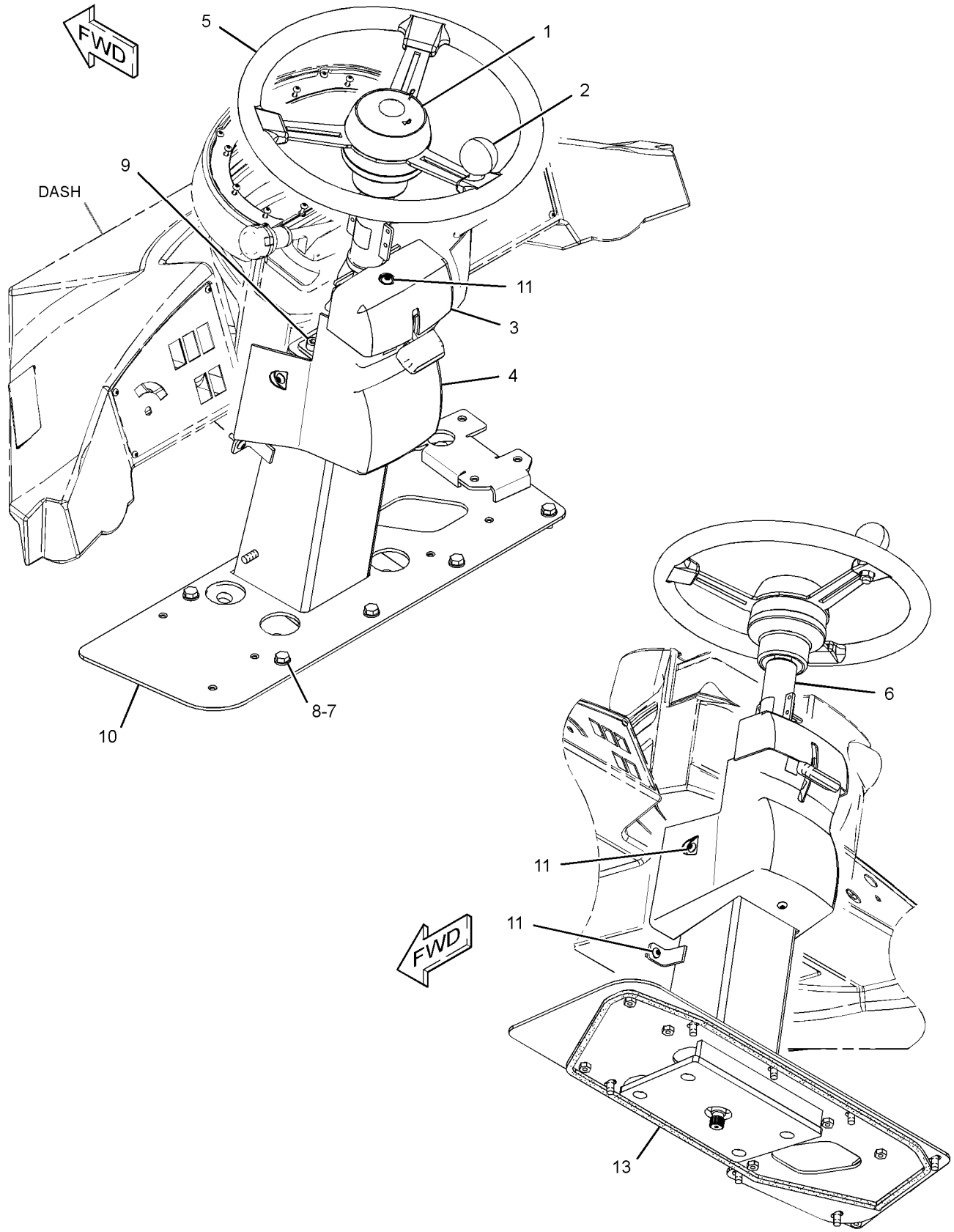

GRAPHIC #1 **<END>** g01878937

OPERATOR STATION

199-3460 CONTROL GP-TRANSMISSION

S/N: JKM1-UP

PART OF 252-4553 CAB AR-ENCLOSED ROPS, 269-4873 CANOPY AR-OPEN ROPS

ALSO AN ATTACHMENT

SMCS-3065, 3168 **i02818633**

NOTE	REF NO	GRAPHIC REF	PART NUMBER	QTY	PART NAME 1 2 3 4 5 6 (PRODUCT LEVEL)	SEE PAGE
CY	1	1	**299-5839**	1	CONTROL GP-TRANSMISSION	947
M	2	1	**134-1374**	4	BOLT-SOCKET HEAD (M5X0.8X20-MM)	

C-CHANGE FROM PREVIOUS TYPE
M-METRIC PART
Y-SEPARATE ILLUSTRATION

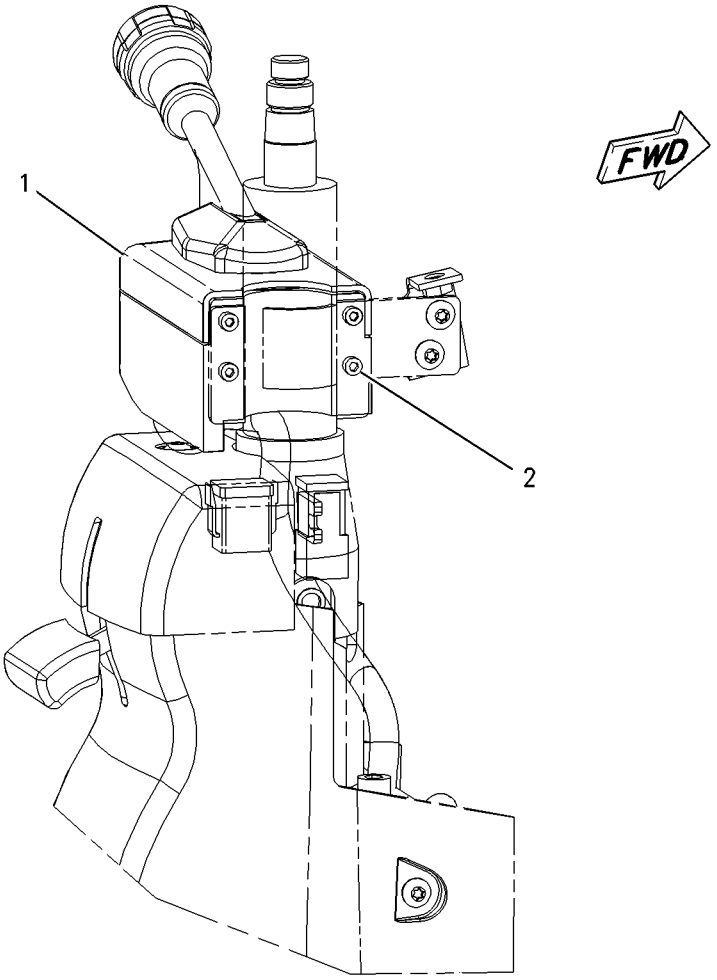

GRAPHIC #1 **<END>** g00868149

OPERATOR STATION

299-5839 CONTROL GP-TRANSMISSION

S/N: JKM1-UP

PART OF 199-3460 CONTROL GP-TRANSMISSION

ALSO AN ATTACHMENT

SMCS-3065, 3168 **i03455640**

NOTE	REF NO	GRAPHIC REF	PART NUMBER	QTY	PART NAME 1 2 3 4 5 6 (PRODUCT LEVEL)	SEE PAGE
	1	1	**102-8805**	1	KIT-RECEPTACLE (6-PIN)	
					(INCLUDES RECEPTACLE AS & WEDGE)	
	2	1	**155-2265**	1	KIT-CONNECTING PLUG (8-PIN)	
					(INCLUDES PLUG AS, WEDGE & INTERFACE SEAL)	
	3	1	**9G-3695**	2	PLUG-SEAL	
	4	1	**186-3736**	12	SOCKET-CONNECTOR (16-GA TO 18-GA)	
	5	1	**101-9161**	1	WIRE AS	
	6	1	**155-2271**	1	KIT-CONNECTING PLUG (4-PIN)	
					(INCLUDES PLUG AS, WEDGE & INTERFACE SEAL)	
	7	1	**186-3735**	4	PIN-CONNECTOR (16-GA TO 18-GA)	

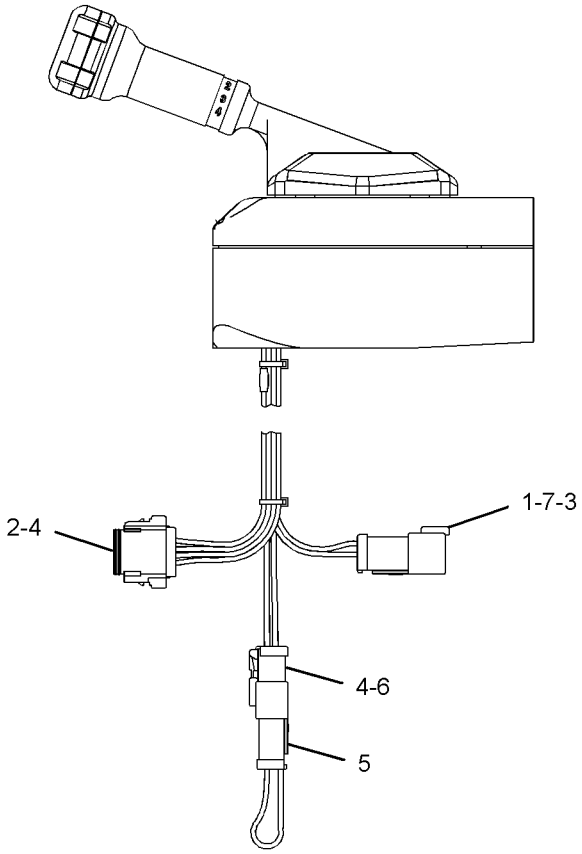

REAR VIEW

GRAPHIC #1 **<END>** g01814730

OPERATOR STATION

239-5025 CONTROL GP-UNPRGMED MONITOR—MESSENGER

S/N: JKM1-852

PART OF 265-3259, 266-3717 WIRING GP-CAB

ALSO AN ATTACHMENT

SMCS-7610 **i02779168**

NOTE	REF NO	GRAPHIC REF	PART NUMBER	QTY	PART NAME 1 2 3 4 5 6 (PRODUCT LEVEL)	SEE PAGE
	1	1	*239-5024*	1	CONTROL GP-MONITOR (MESSENGER)	
	1A	1	**124-0312**	1	SCREW-PAN HEAD (8-16X0.32-IN)	
	2	1	**242-2461**	1	BEZEL	
					PARTS SHOWN IN GRAPHIC(S) WITHOUT A REFERENCE NUMBER ARE NOT SERVICED SEPARATELY	

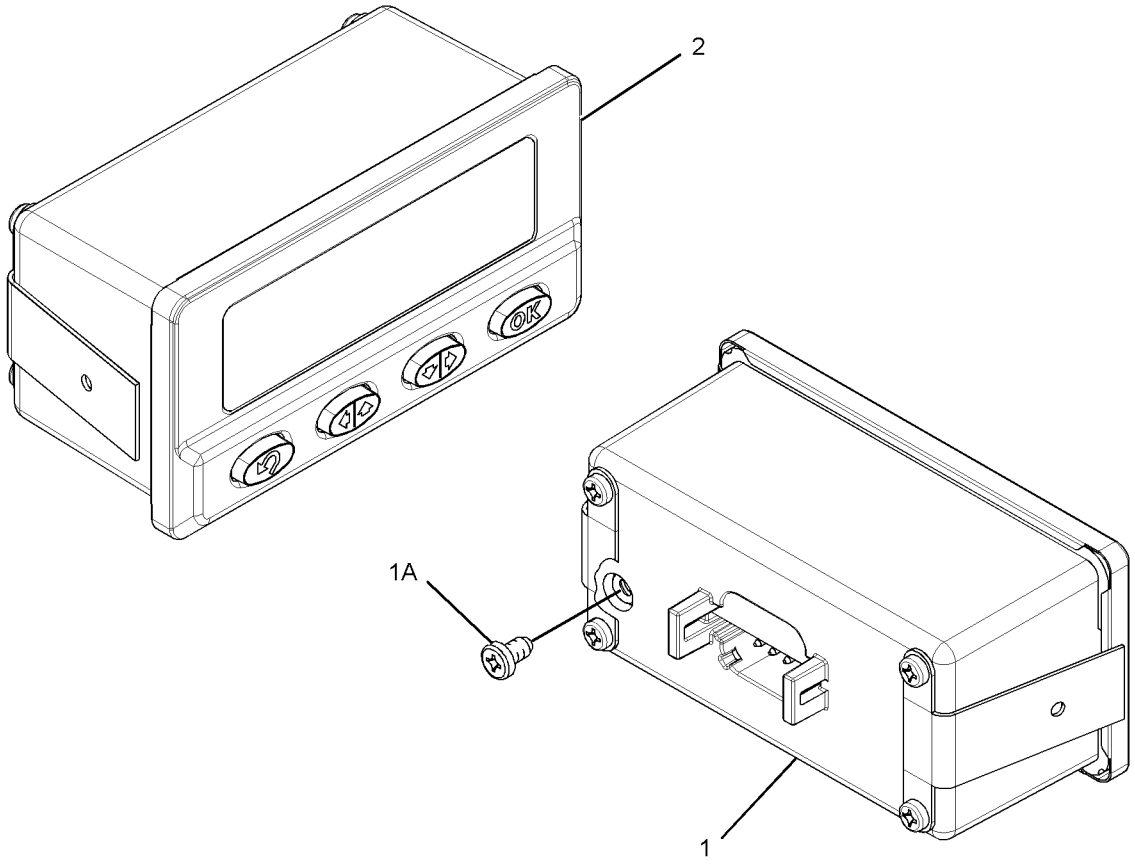

GRAPHIC #1 **<END>** g01393265

OPERATOR STATION

308-3869 CONTROL GP-UNPRGMED MONITOR

S/N: JKM853-UP
PART OF 265-3259, 266-3717 WIRING GP-CAB
ALSO AN ATTACHMENT

SMCS-7610 **i03825849**

NOTE	REF NO	GRAPHIC REF	PART NUMBER	QTY	PART NAME 1 2 3 4 5 6 (PRODUCT LEVEL)	SEE PAGE
	1	1	*308-3868*	1	CONTROL AS-ELECTRONIC (MESSENGER)	
	1A	1	**124-0312**	1	SCREW-PAN HEAD (8-16X0.32-IN)	

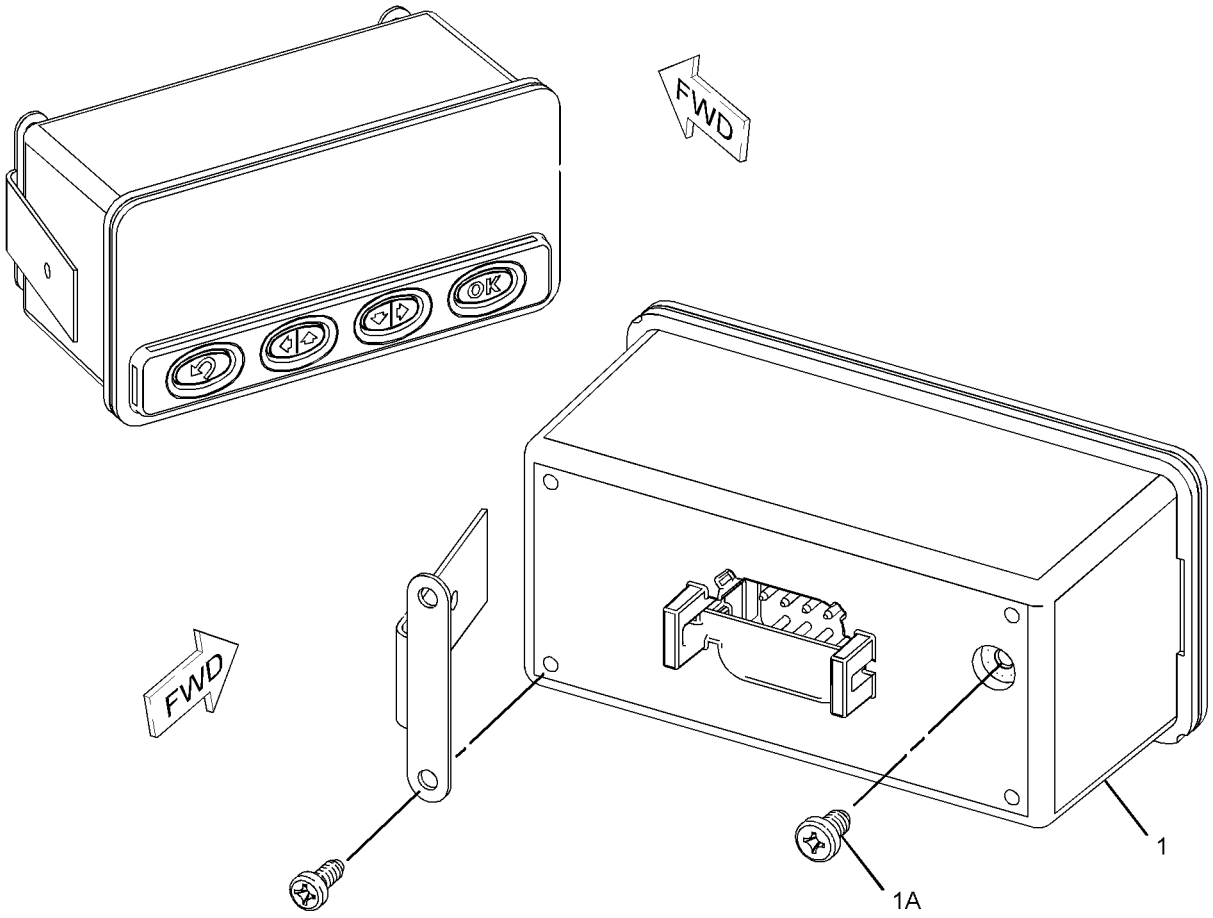

GRAPHIC #1 **<END>** g01866019

OPERATOR STATION

118-0809 DASH GP

S/N: JKM1-UP
PART OF 269-4873 CANOPY AR-OPEN ROPS
AN ATTACHMENT

SMCS-7314 **i01374382**

NOTE	REF NO	GRAPHIC REF	PART NUMBER	QTY	PART NAME 1 2 3 4 5 6 (PRODUCT LEVEL)	SEE PAGE
C	1	1	**166-9287**	1	DASH AS	
	2	1	**5P-4116**	4	WASHER-HARD (8.8X20.5X2MM THK)	
M	3	1	**8T-4908**	4	BOLT (M8X1.25X25MM)	

C-CHANGE FROM PREVIOUS TYPE
M-METRIC PART

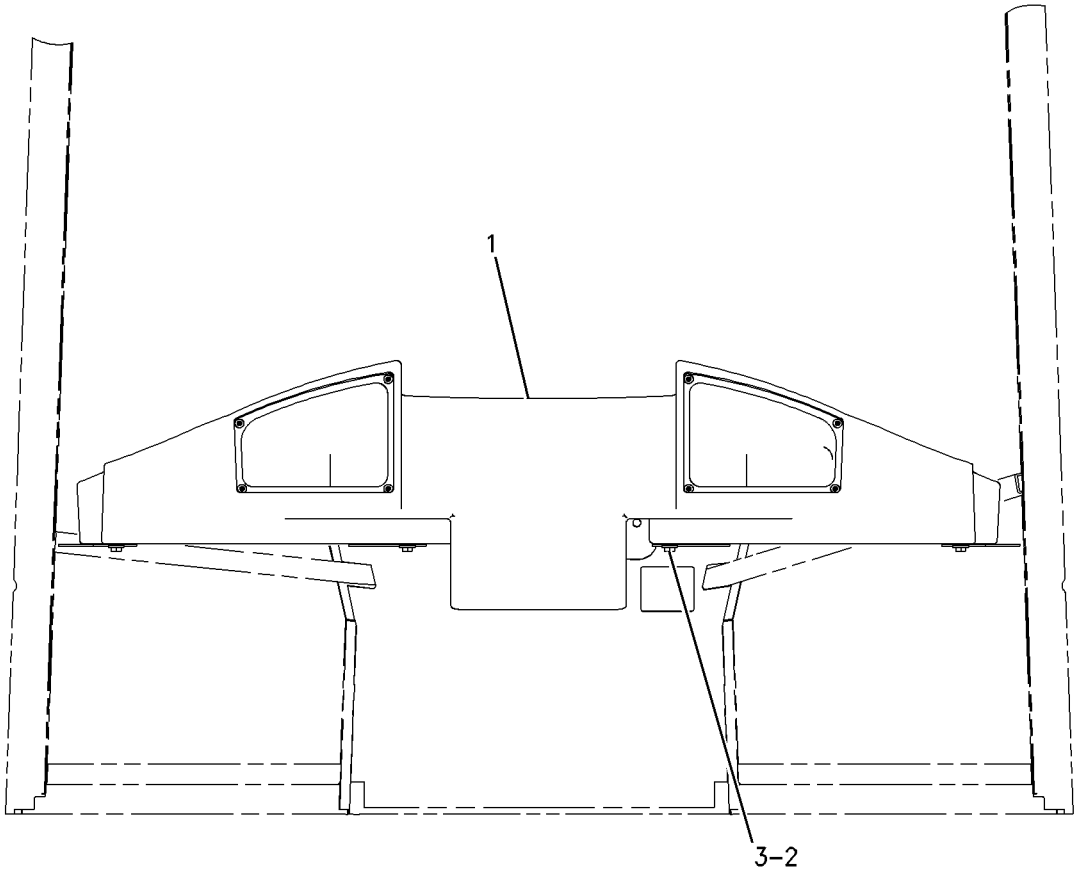

GRAPHIC #1 **<END>** g00729083

OPERATOR STATION

261-3226 DISPLAY GP-CAMERA—WORK AREA VISUAL SYSTEM

S/N: JKM1-UP

PART OF 284-2272 DISPLAY GP-CAMERA

AN ATTACHMENT

SMCS-7347 **i02798860**

NOTE	REF NO	GRAPHIC REF	PART NUMBER	QTY	PART NAME 1 2 3 4 5 6 (PRODUCT LEVEL)	SEE PAGE
	1	1	**261-3222**	1	MOUNTING GP-DISPLAY (WORK AREA VISUAL SYSTEM)	
		1	**259-4397**	1	CLAMP GP	
		1	**259-4399**	2	BASE	
	2	1	**261-3224**	1	MODULE GP-DISPLAY (WORK AREA VISUAL SYSTEM)	
	2A	1	**280-2691**	1	CABLE AS	
		1	**102-8805**	1	KIT-RECEPTACLE (6-PIN)	
					(INCLUDES RECEPTACLE AS & WEDGE)	
		1	**8T-8737**	1	PLUG-SEAL	
		1	**186-3735**	5	PIN-CONNECTOR (16-GA TO 18-GA)	
	3	1	**4B-4274**	4	WASHER (5.5X13X1.2-MM THK)	
M	4	1	**8T-0288**	4	BOLT (M5X0.8X12-MM)	

M-METRIC PART

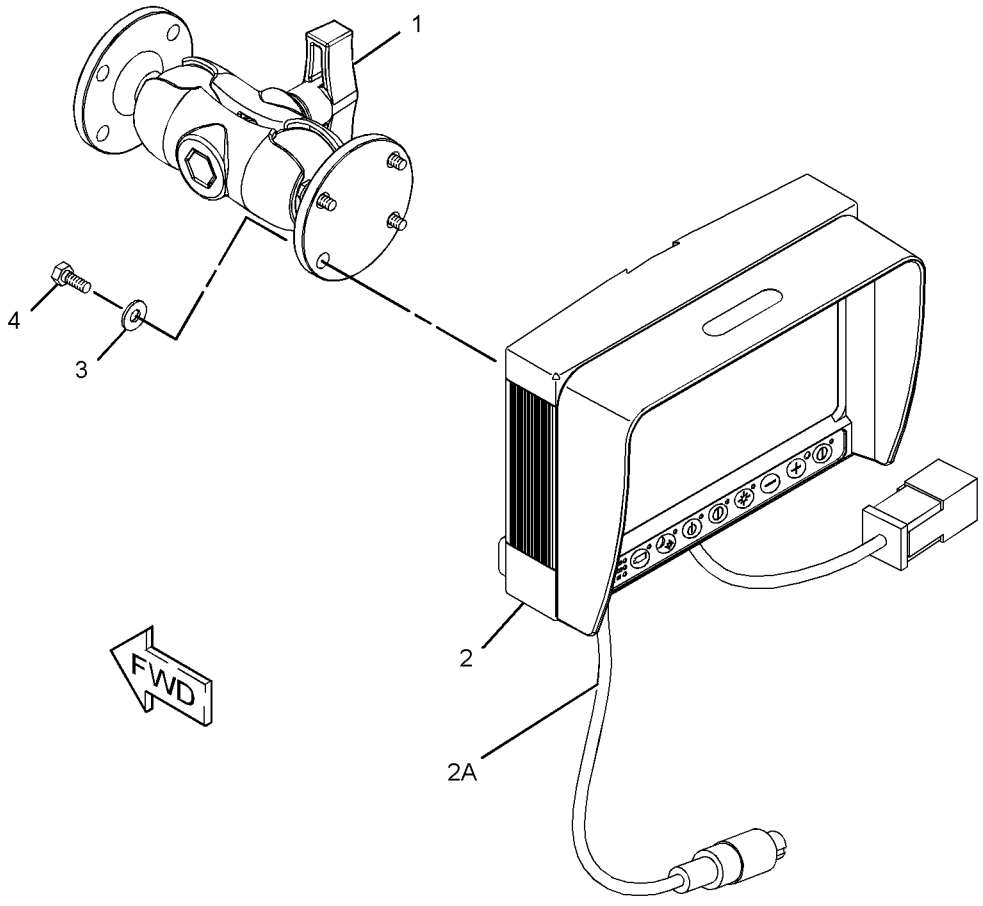

GRAPHIC #1 **<END>** g01383320

OPERATOR STATION

284-2272 DISPLAY GP-CAMERA—WORK AREA VISUAL SYSTEM

S/N: JKM1-UP
PART OF 284-1300 CAMERA AR
AN ATTACHMENT

SMCS-7347 **i03789837**

NOTE	REF NO	GRAPHIC REF	PART NUMBER	QTY	PART NAME 1 2 3 4 5 6 (PRODUCT LEVEL)	SEE PAGE
	1	1	**333-8153**	1	CONNECTOR GP-ELECTRONIC	
	2	1	**251-8248**	1	CABLE AS-COMMUNICATION (CAMERA)	
Y	3	1	**261-3226**	1	DISPLAY GP-CAMERA (WORK AREA VISUAL SYSTEM)	951
	4	1	**277-0306**	1	BRACKET	
	5	1	**284-3283**	1	HARNESS AS-WIRING	
		1	**196-2412**	1	TERMINAL AS	
		1	**7R-2750**	1	SEAL-CONNECTOR	
		1	**8T-8737**	3	PLUG-SEAL	
		1	**9X-3402**	3	SOCKET-CONNECTOR (16-GA TO 18-GA)	
					(OR)	
		1	**126-1768**	3	SOCKET-CONNECTOR (14-GA)	
E		1	**125-7874**		TUBE-HEAT SHRINK (5.72-MM DIA) (5-CM)	
		1	**2L-8079**	1	TERMINAL-RING (14-GA TO 16-GA, 3/8-IN SCREW)	
		1	**155-2274**	1	KIT-CONNECTING PLUG (6-PIN)	
					(INCLUDES PLUG AS & WEDGE)	
M	6	1	**5C-9553**	4	BOLT (M6X1X16-MM)	
	7	1	**8M-2771**	2	CLIP	
M	8	1	**8T-4138**	2	BOLT (M6X1X20-MM)	
	9	1	**8T-4205**	6	WASHER-HARD (7.2X14.5X2-MM THK)	
B	10	1	**3S-2093**	26	STRAP-CABLE	

B-USE AS REQUIRED
E-ORDER BY THE CENTIMETER
M-METRIC PART
Y-SEPARATE ILLUSTRATION

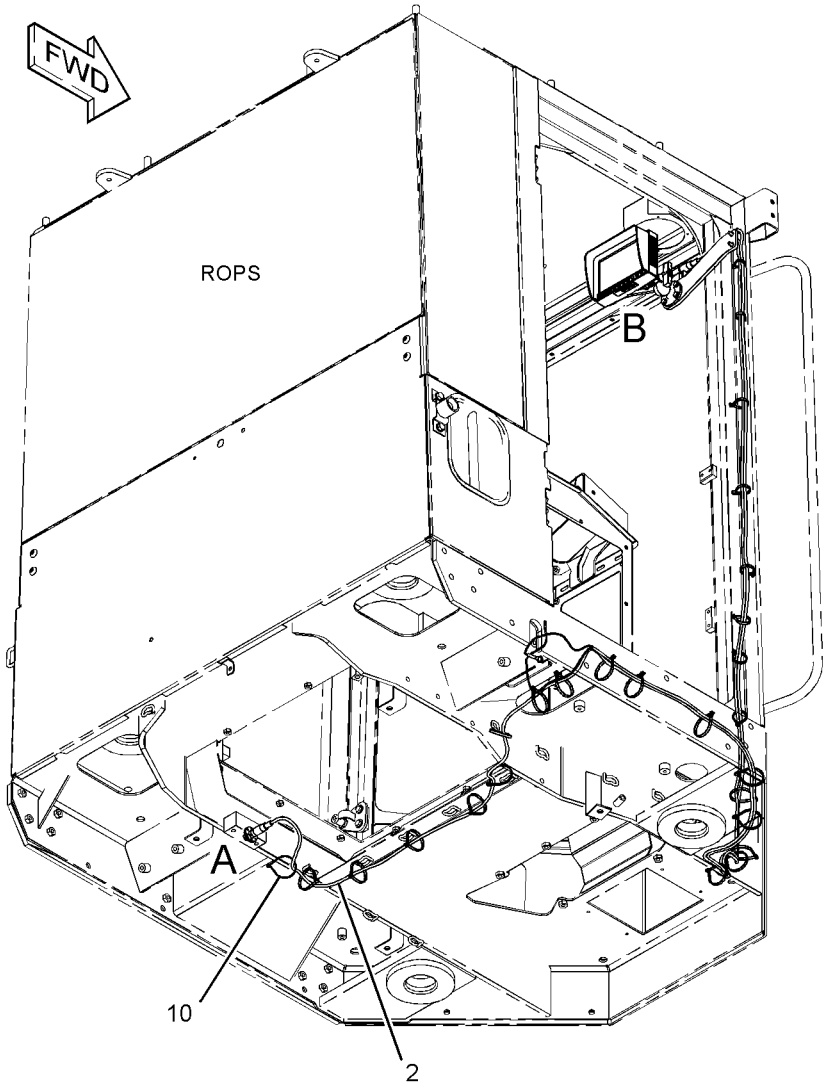

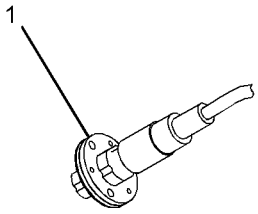

VIEW OF AREA A

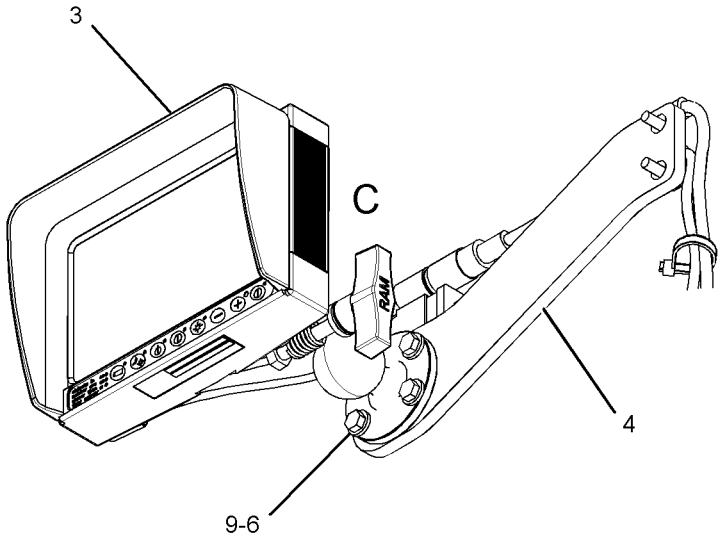

VIEW OF AREA B

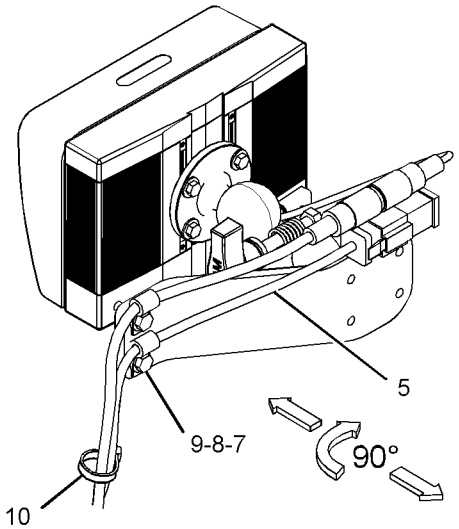

VIEW OF AREA C

GRAPHIC #1 **<END>** g01427887

OPERATOR STATION

263-2046 DOOR GP-CAB—SLIDING WINDOW, LH

S/N: JKM1-UP

PART OF 257-5667 ROPS GP-ENCLOSED

SMCS-7308 **i02917150**

NOTE	REF NO	GRAPHIC REF	PART NUMBER	QTY	PART NAME 1 2 3 4 5 6 (PRODUCT LEVEL)	SEE PAGE
	1	2	**3T-5201**	1	BEARING	
	2	1	**4E-1384**	1	BUMPER-CONICAL	
	3	1	**7W-2108**	1	SPRING-BYPASS VALVE	
M	4	2	**8T-4180**	4	SCREW-MACHINE (M5X0.8X20-MM)	
	5	2	**8T-4742**	1	END-YOKE ROD	
	6	2	**8T-4747**	2	BRACKET	
J	7	1	**8Y-4617**	1	HANDLE AS	
		1	**8Y-4501**	1	SPRING-HANDLE	
	8	1	**8Y-6386**	1	SEAL-HANDLE	
	9	2	**108-5471**	1	CLEVIS	
	10	2	**126-3489**	1	LINKAGE AS	
M		2	**6V-9492**	1	SCREW-MACHINE (M4X0.7X25-MM)	
M		2	**8T-2659**	1	LOCKNUT (M4X0.7-THD)	
		2	**8Y-6974**	2	KNOB	
		2	**8Y-8315**	1	SPRING-HANDLE	
		2	**096-6166**	2	WASHER-HARD (4.5X9X1-MM THK)	
	11	1	**141-8580**	1	RING-RETAINING	
	12	2	**149-5160**	1	LATCH AS-ROTARY	
	13	1	**161-9640**	1	COVER	
	14	1	**161-9641**	1	PLATE	
	15	1	**161-9642**	1	ROD AS	
	16	2	**161-9647**	1	PLATE	
	17	2	**168-2457**	1	LATCH AS-DOOR (HOLD OPEN)	
	18	2	**169-3995**	1	SEAL	
	19	1	**178-2593**	1	BUMPER	
Y	20	1	**180-3871**	1	WINDOW GP-DOOR (SLIDING)	1039
	21	1	**263-2049**	1	DOOR AS-CAB (LH)	
		1	**111-0200**	1	HANDRAIL	
		1	**115-1552**	1	HANDLE-PULL	
		1	**286-9593**	2	HINGE AS	
					(EACH INCLUDES)	
		1	**096-2323**	1	RING-RETAINING (EXTERNAL)	
		1	**318-0827**	1	PIN	
	22	2	**263-2055**	1	COVER (LH)	
	23	2	**263-6330**	1	LINK (LH)	
	24	2	**242-5206**	2	SPACER (6.4X12.5X0.76-MM THK)	
M	25	2	**5C-2890**	1	NUT (M6X1-THD)	
M	26	1	**5C-7261**	2	NUT (M8X1.25-THD)	
	27	2	**6V-7636**	2	PIN AS-SPRING	
M	28	2	**7X-2533**	4	BOLT (M6X1X35-MM)	
	29	1,2	**8T-4205**	6	WASHER-HARD (7.2X14.5X2-MM THK)	
M	30	2	**8T-4971**	4	BOLT (M6X1X30-MM)	
M	31	1,2	**9X-2042**	11	SCREW-TRUSS HEAD (M6X1X12-MM)	
E	32	1	**3E-3805**		SEAL (420-CM)	

E-ORDER BY THE CENTIMETER
J-REQUIRES CORPORATE KEY
M-METRIC PART
Y-SEPARATE ILLUSTRATION

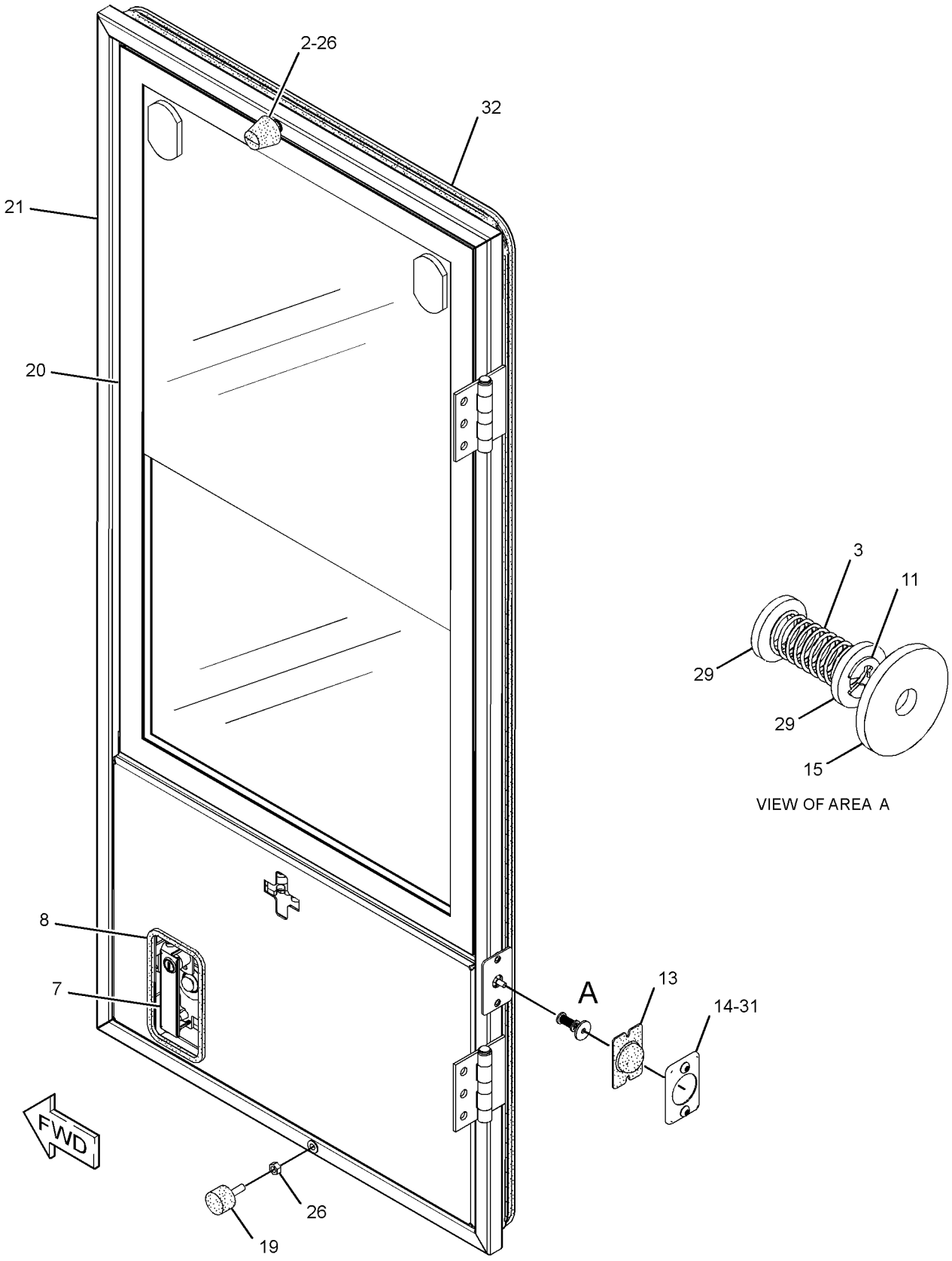

GRAPHIC #1

g01423475

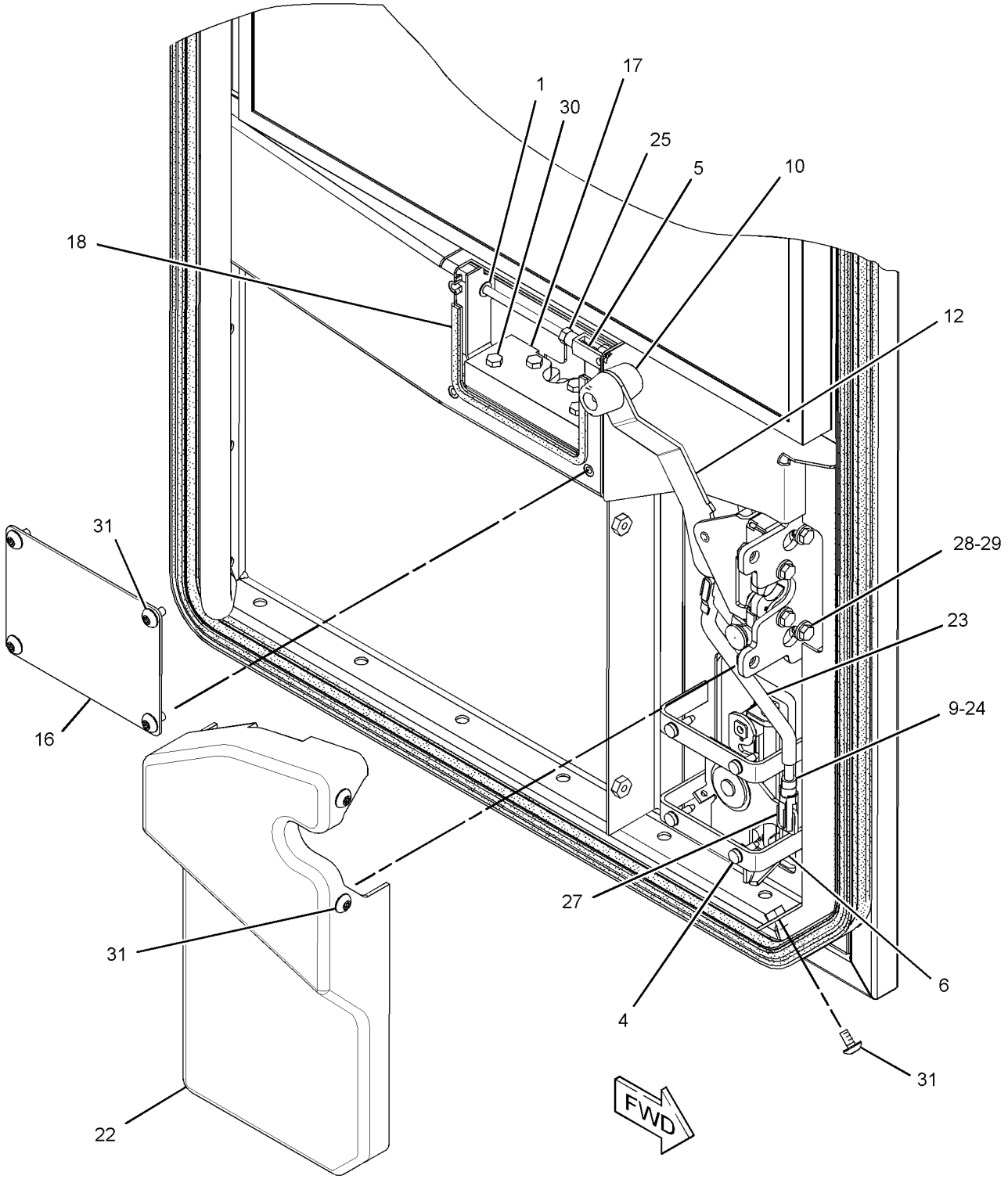

GRAPHIC #2 **<END>** g01423587

263-2058 DOOR GP-CAB—SLIDING WINDOW, RH

S/N: JKM1-UP

PART OF 263-2063 DOOR GP-CAB

SMCS-7308 **i02917870**

NOTE	REF NO	GRAPHIC REF	PART NUMBER	QTY	PART NAME 1 2 3 4 5 6 (PRODUCT LEVEL)	SEE PAGE
	1	1	**4E-1384**	1	BUMPER-CONICAL	
	2	1	**9R-8538**	1	PLUNGER (LATCH)	
	3	1	**178-2593**	1	BUMPER	
Y	4	1	**180-3871**	1	WINDOW GP-DOOR (SLIDING)	1039
	5	1	**263-2059**	1	DOOR AS-CAB (RH)	
		1	**286-9592**	2	HINGE AS	
					(EACH INCLUDES)	
		1	**096-2323**	1	RING-RETAINING (EXTERNAL)	
M	6	1	**5C-7261**	2	NUT (M8X1.25-THD)	
M	7	1	**6V-7743**	1	LOCKNUT (M6X1-THD)	
M	8	1	**8T-4971**	1	BOLT (M6X1X30-MM)	
	9	1	**9X-8256**	1	WASHER (6.6X12X2-MM THK)	
E	14	1	**3E-3805**		SEAL (420-CM)	

E-ORDER BY THE CENTIMETER
M-METRIC PART
Y-SEPARATE ILLUSTRATION

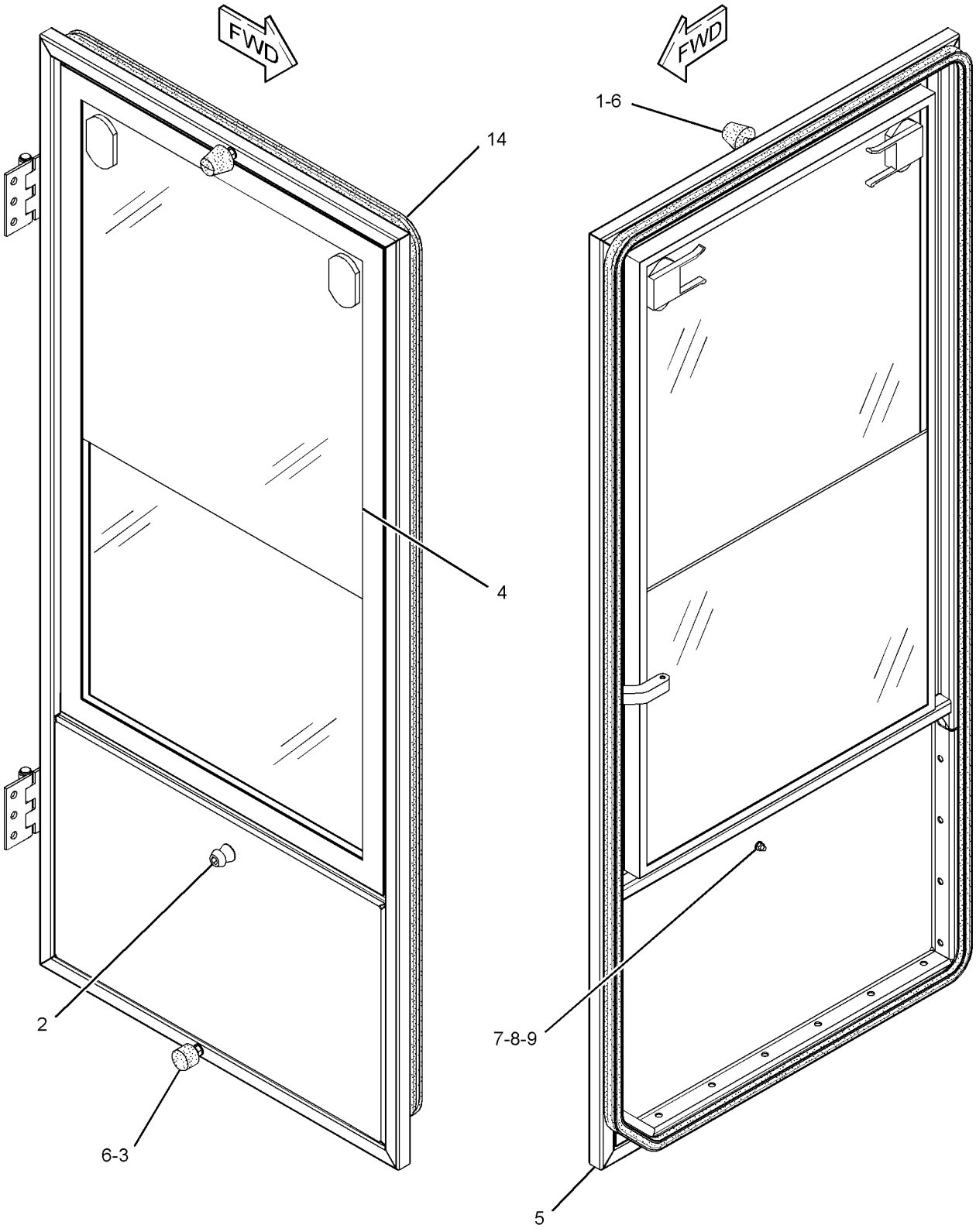

GRAPHIC #1 **<END>** g01423633

OPERATOR STATION

263-2063 DOOR GP-CAB—SLIDING WINDOW, RH

S/N: JKM1-UP

PART OF 257-5667 ROPS GP-ENCLOSED

SMCS-7308 **i02917155**

NOTE	REF NO	GRAPHIC REF	PART NUMBER	QTY	PART NAME 1 2 3 4 5 6 (PRODUCT LEVEL)	SEE PAGE
	1	1	**5P-7958**	1	SLEEVE-CABLE SPLICE	
	2	1	**8T-6842**	1	FILM-INSTRUCTION (PULL RING, ALTERNATE EXIT)	
	3	1	**126-1052**	1	PIN	
	4	1	**160-9925**	1	LANYARD	
	5	1	**209-5018**	1	LATCH AS	
Y	6	1	*263-2058*	1	DOOR GP-CAB (SLIDING WINDOW, RH)	957
M	7	1	**9X-2044**	2	SCREW-TRUSS HEAD (M6X1X16-MM)	

M-METRIC PART
Y-SEPARATE ILLUSTRATION

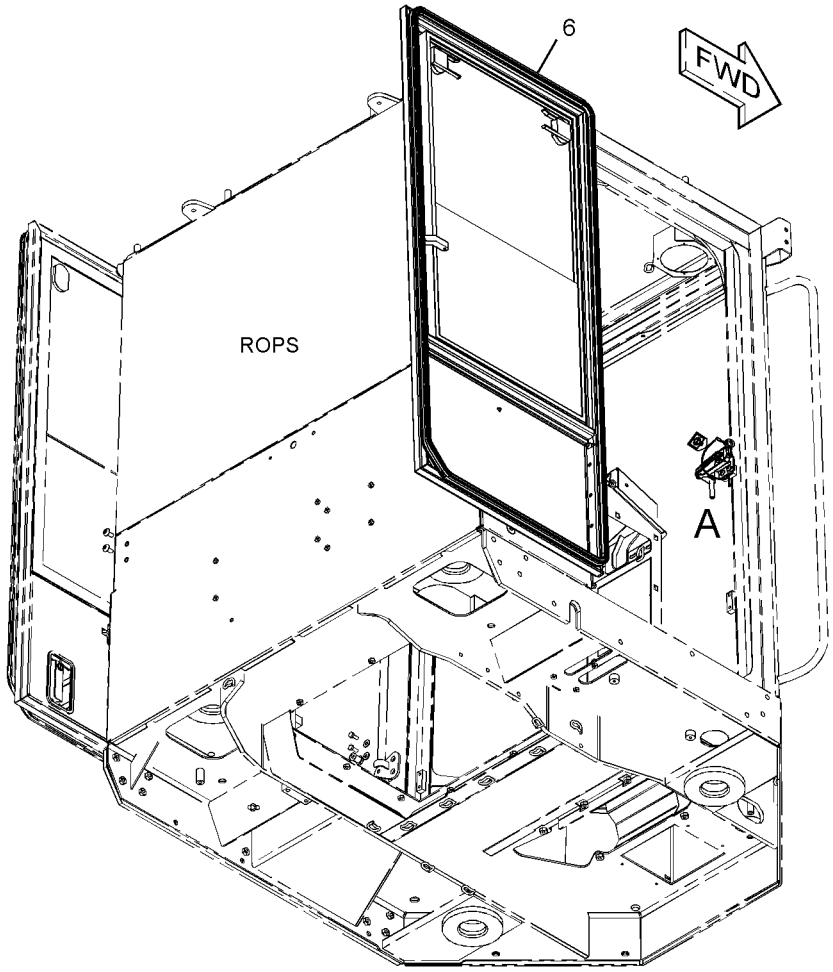

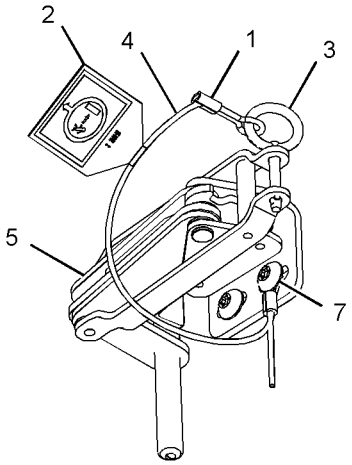

VIEW OF AREA A

GRAPHIC #1 **<END>** g01425004

OPERATOR STATION

107-4630 DUCT GP-CAB AIR

S/N: JKM1-UP

PART OF 252-4553 CAB AR-ENCLOSED ROPS

SMCS-734D **i03900589**

NOTE	REF NO	GRAPHIC REF	PART NUMBER	QTY	PART NAME 1 2 3 4 5 6 (PRODUCT LEVEL)	SEE PAGE
D	1	1	**5P-5927**		SEAL (0.8-M)	
D	1A	1	**5P-5927**		SEAL (1-M)	
D	1B	1	**5P-5927**		SEAL (1.2-M)	
C	2	1	**8Y-6388**	2	LOUVER AS-VENT (RH)	
C	3	1	**171-4046**	2	LOUVER AS (LH)	
	4	1	**104-2091**	12	SCREW-FLAT HEAD (6-20X0.5-IN)	
	5	1	**107-6079**	1	DUCT	
	6	1	**148-3626**	8	SCREW-FLAT HEAD (6-20X0.75-IN)	
C	7	1	**151-5715**	4	LOUVER AS-VENT	
	8	1	**161-7620**	12	SCREW-PAN HEAD	
C	9	1	**166-9286**	1	DUCT AS	
	10	1	**5P-4116**	4	WASHER-HARD (8.8X20.5X2-MM THK)	
M	11	1	**8T-4908**	4	BOLT (M8X1.25X25-MM)	

C-CHANGE FROM PREVIOUS TYPE
D-ORDER BY THE METER
M-METRIC PART

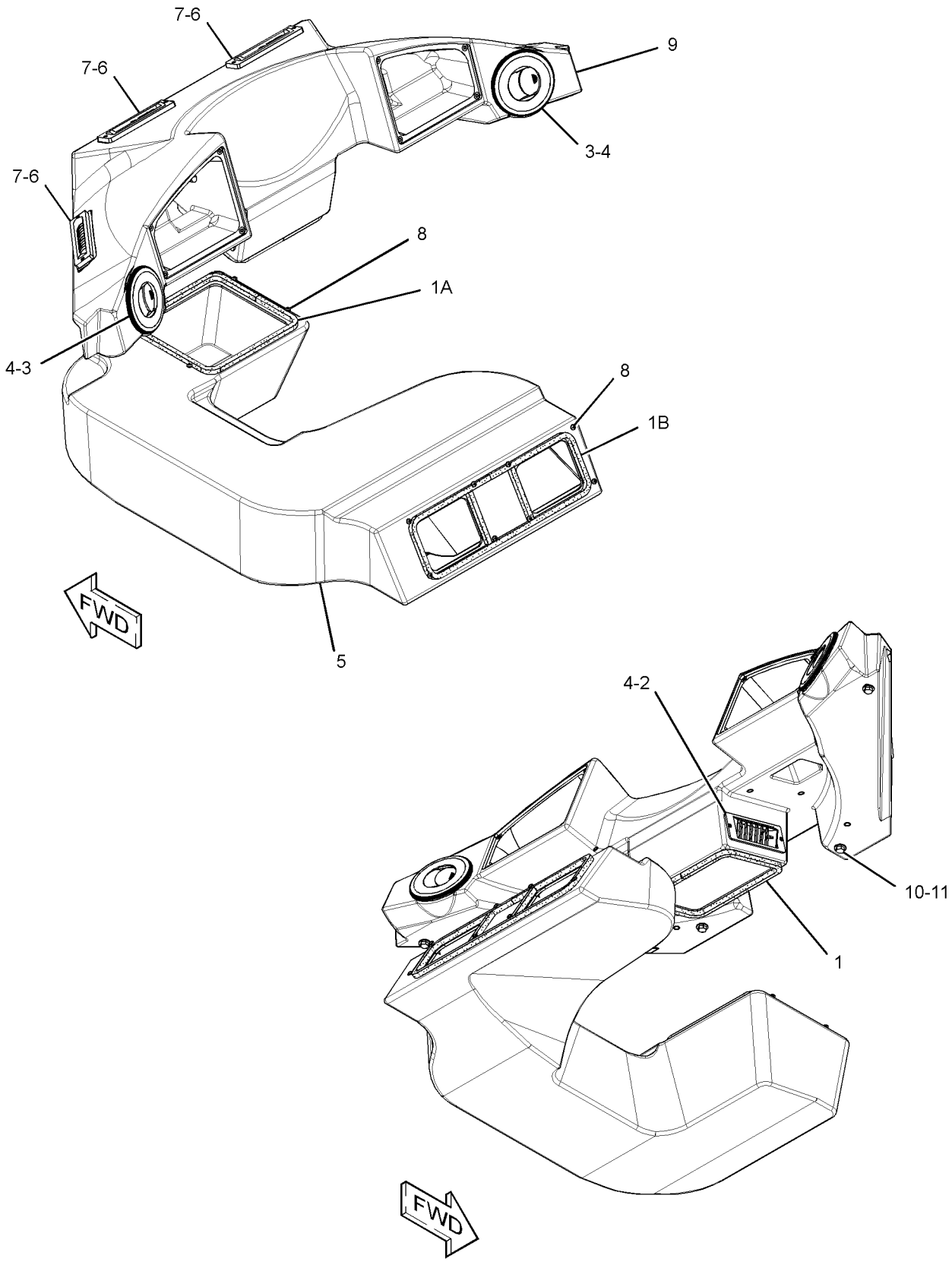

GRAPHIC #1 **<END>** g02149688

OPERATOR STATION

248-2863 FILTER GP-CAB AIR

S/N: JKM1-UP

PART OF 252-4553 CAB AR-ENCLOSED ROPS

SMCS-7342 **i02941623**

NOTE	REF NO	GRAPHIC REF	PART NUMBER	QTY	PART NAME 1 2 3 4 5 6 (PRODUCT LEVEL)	SEE PAGE
	1	1	**111-8738**	1	FILTER ELEMENT-CAB AIR (PRIMARY)	
	2	1	**114-3944**	1	COVER	
	3	1	**116-7856**	2	KNOB	
	4	1	**127-8613**	1	GASKET	
	5	1	**180-7486**	1	COVER AS	
	6	1	**180-7487**	1	FILTER ELEMENT-CAB AIR (SECONDARY)	
	7	1	**248-2284**	2	KNOB-CONTROL	

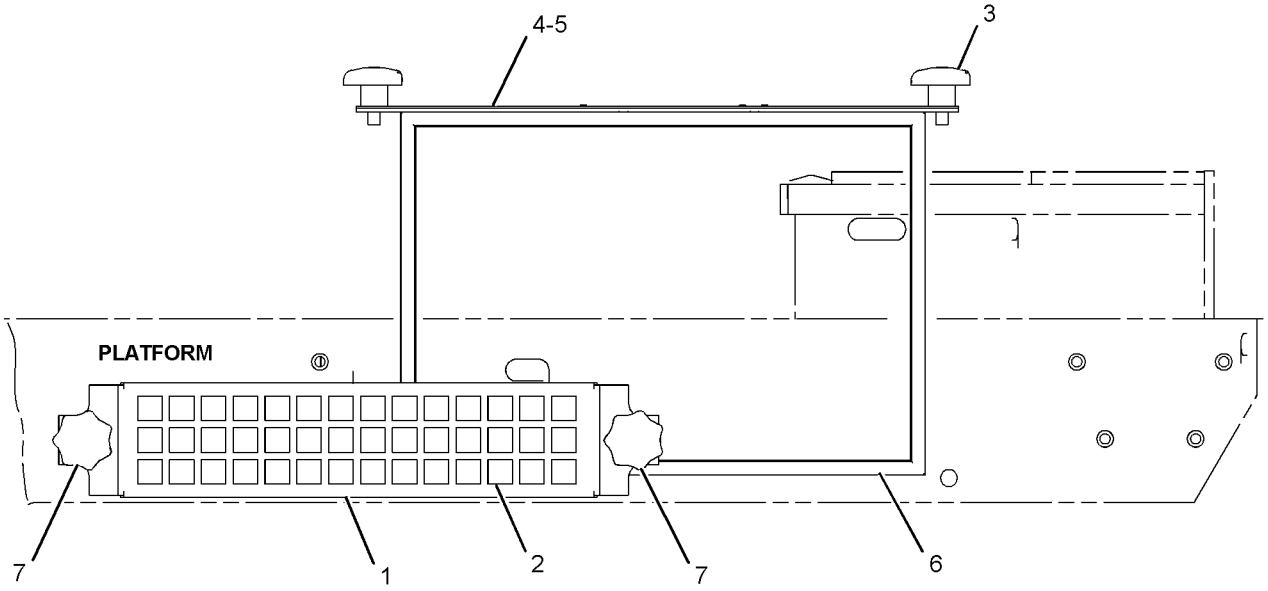

LEFT SIDE VIEW

GRAPHIC #1

<END>

g01088295

OPERATOR STATION

269-4872 GUARD GP-VANDALISM—
INSTRUMENT PANEL, MONITOR, RH CONSOLE
S/N: JKM1-UP
PART OF 269-4871 OPERATOR AR-OPEN ROPS
AN ATTACHMENT

SMCS-7315 **i02922392**

NOTE	REF NO	GRAPHIC REF	PART NUMBER	QTY	PART NAME 1 2 3 4 5 6 (PRODUCT LEVEL)	SEE PAGE
	1	1	**246-2641**	5	PADLOCK GP	
					(EACH INCLUDES)	
		1	**5P-8500**	1	KEY	
	2	1	**136-6982**	1	PLATE	
	3	1	**145-1135**	2	PLATE	
	4	1	**145-1140**	1	PLATE	
	5	1	**145-5607**	1	PLATE AS	
	6	1	**218-5003**	1	PLATE	
	7	1	**218-5004**	1	PLATE AS	
	8	1	**218-5005**	1	PLATE AS	
	9	1	**269-4883**	1	BRACKET AS	
	10	1	**269-4885**	1	BRACKET	
	11	1	**269-4886**	1	PLATE	
	12	1	**269-4887**	1	PLATE	
	13	1	**318-2156**	1	BRACKET	
	14	1	**318-2157**	1	PLATE	
	15	1	**318-2158**	1	BRACKET	
M	16	1	**123-0707**	4	SCREW-HEX SOCKET (M4X0.7X20-MM)	
M	17	1	**8T-4138**	2	BOLT (M6X1X20-MM)	
	18	1	**9X-8256**	2	WASHER (6.6X12X2-MM THK)	
D	19	1	**5P-7657**		SEAL (0.1-M)	

D-ORDER BY THE METER
M-METRIC PART

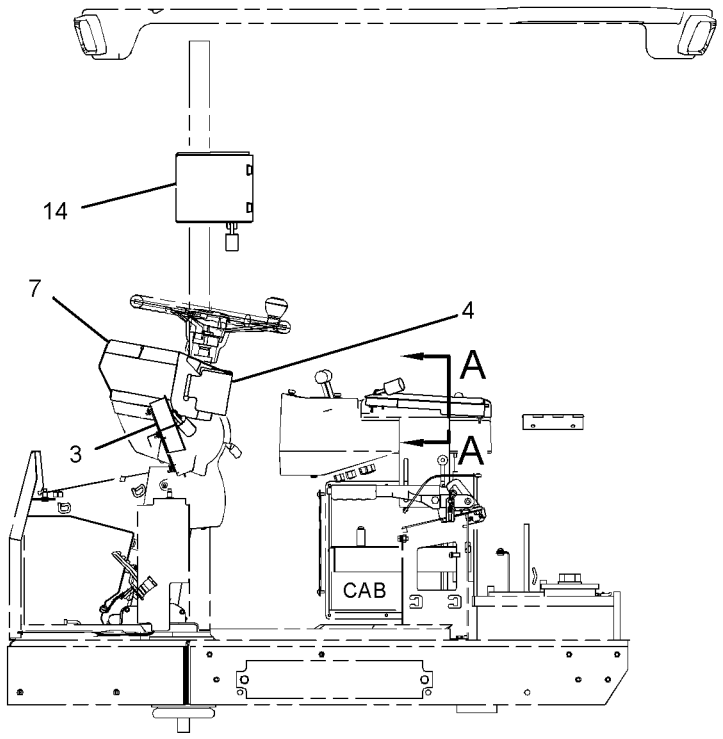

LEFT SIDE VIEW

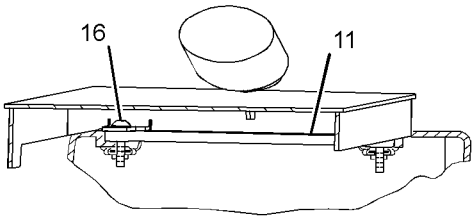

SECTION A-A

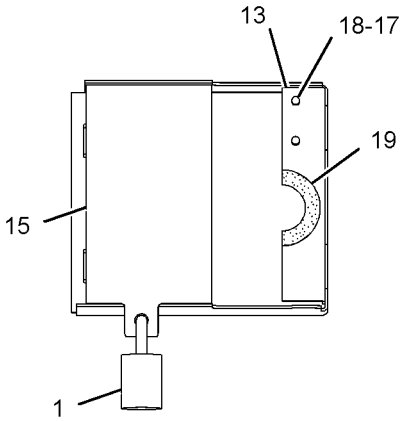

VIEW B-B

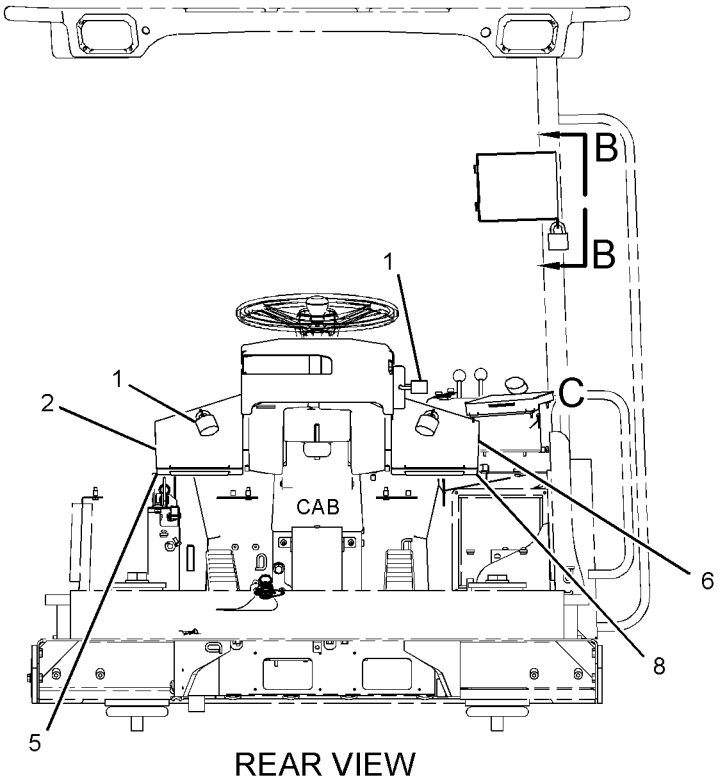

REAR VIEW

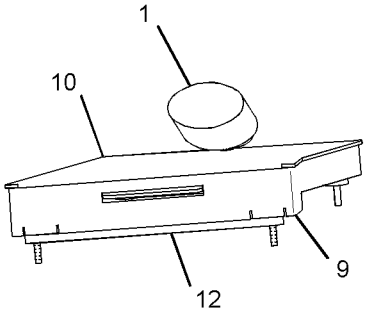

VIEW OF AREA C

GRAPHIC #1 **<END>** g01454515

282-3357 GUARD GP-VANDALISM—ELECTRONIC CONTROLS

S/N: JKM1-UP

PART OF 269-4871 OPERATOR AR-OPEN ROPS

AN ATTACHMENT

SMCS-7315 **i02927105**

NOTE	REF NO	GRAPHIC REF	PART NUMBER	QTY	PART NAME 1 2 3 4 5 6 (PRODUCT LEVEL)	SEE PAGE
	1	1	**233-4466**	2	LATCH AS	
	3	1	**282-3358**	1	PLATE AS	
BM	5	1	**5C-9553**	2	BOLT (M6X1X16-MM)	
B	6	1	**9X-8256**	2	WASHER (6.6X12X2-MM THK)	
B	7	1	**9X-8267**	2	WASHER (6.6X12X2-MM THK)	
D	8	1	**5P-7657**		SEAL (0.1-M)	

B-USE AS REQUIRED
D-ORDER BY THE METER
M-METRIC PART

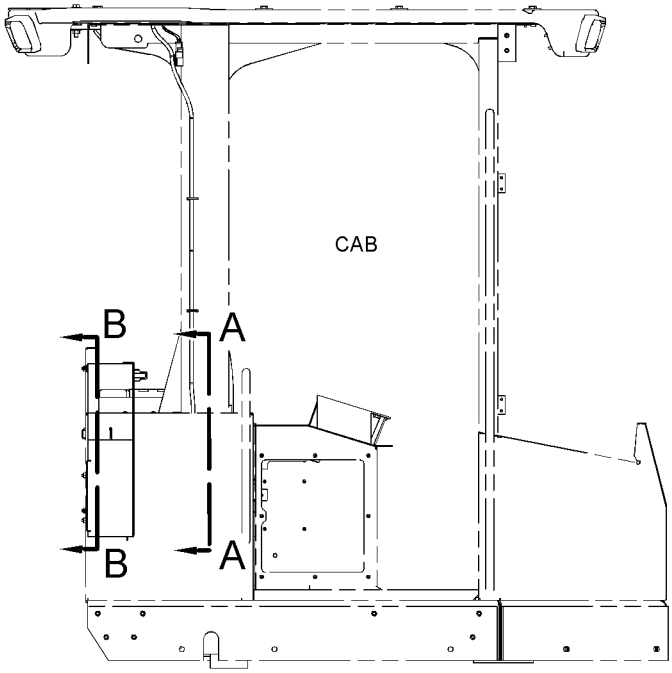

RIGHT SIDE VIEW

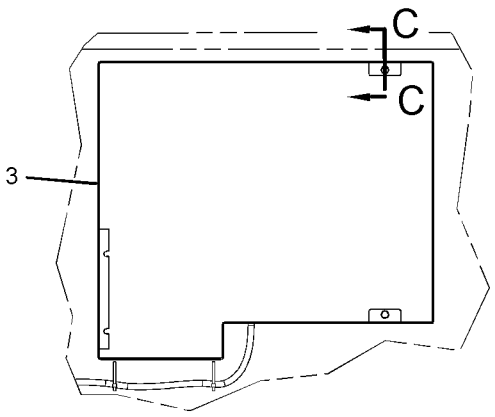

SECTION B-B

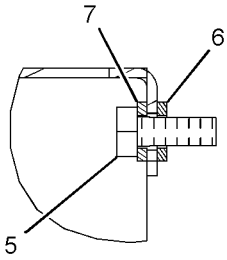

SECTION C-C

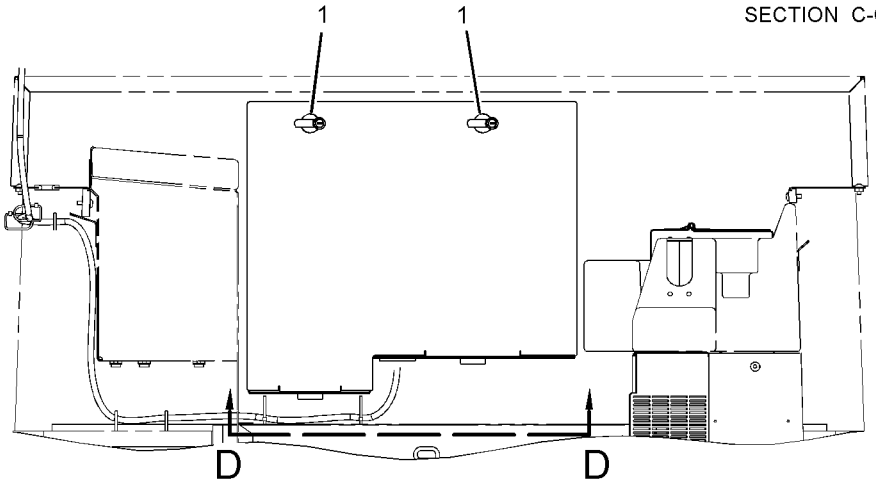

VIEW A-A

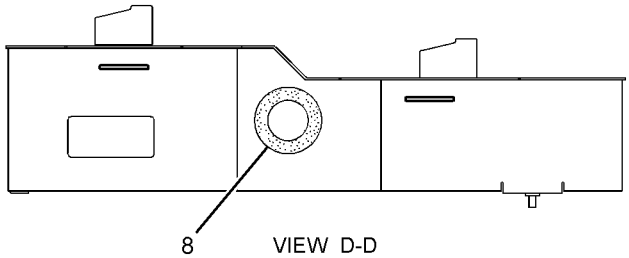

VIEW D-D

GRAPHIC #1 **<END>** g01454560

OPERATOR STATION

239-3375 GUARD GP-WINDOW—FRONT

S/N: JKM1-UP
PART OF 317-9490 CONFIGURATION AR
AN ATTACHMENT

SMCS-7165, 7182, 7310 **i02930726**

NOTE	REF NO	GRAPHIC REF	PART NUMBER	QTY	PART NAME 1 2 3 4 5 6 (PRODUCT LEVEL)	SEE PAGE
	1	1	**2G-9524**	2	LATCH	
	2	1	**4E-1384**	4	BUMPER-CONICAL	
	3	1	**6C-3679**	8	RIVET-POP	
	4	1	**6S-6646**	4	PIN-COTTER	
	5	1	**175-6749**	2	PLATE	
	6	1	**239-3373**	1	GUARD AS-WINDOW (FRONT)	
	7	1	**239-3377**	1	GUARD AS-WINDOW (RH)	
	8	1	**239-3379**	1	GUARD AS-WINDOW (LH)	
	9	1	**0S-0175**	4	PIN-CLEVIS	
M	10	1	**5C-7261**	4	NUT (M8X1.25-THD)	
M	11	1	**5C-9553**	4	BOLT (M6X1X16-MM)	
	12	1	**5P-4116**	4	WASHER-HARD (8.8X20.5X2-MM THK)	
	13	1	**8T-4121**	4	WASHER-HARD (11X21X2.5-MM THK)	
M	14	1	**8T-4136**	4	BOLT (M10X1.5X25-MM)	
M	15	1	**8T-7547**	4	BOLT (M8X1.25X30-MM)	
	16	1	**9X-8256**	4	WASHER (6.6X12X2-MM THK)	

M-METRIC PART

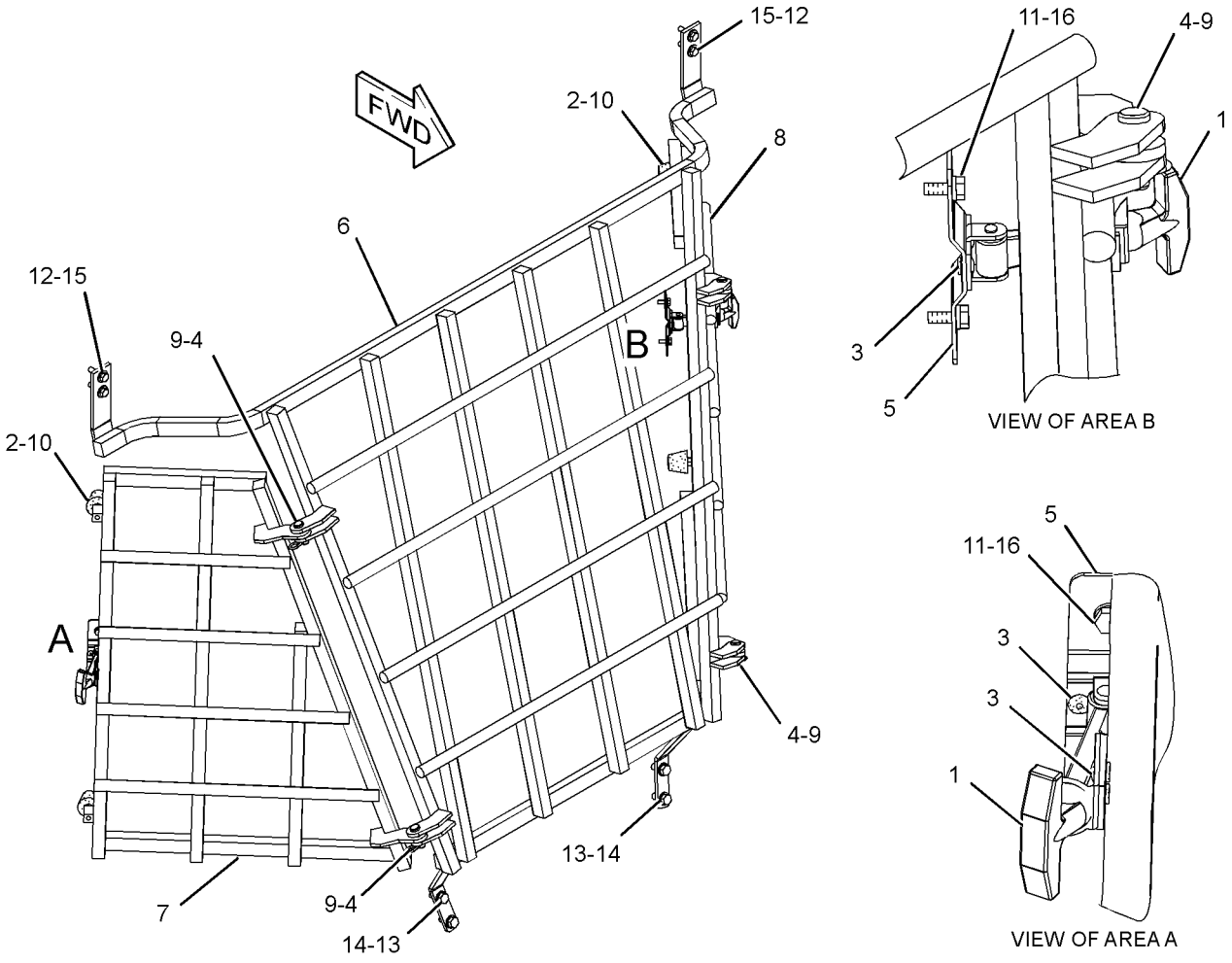

GRAPHIC #1 **<END>** g01254256

OPERATOR STATION

264-6827 HEATER & MTG GP-CAB

S/N: JKM1-UP

PART OF 252-4553 CAB AR-ENCLOSED ROPS

SMCS-7304 **i02917661**

NOTE	REF NO	GRAPHIC REF	PART NUMBER	QTY	PART NAME 1 2 3 4 5 6 (PRODUCT LEVEL)	SEE PAGE
	1	1	**118-7259**	1	GASKET	
Y	2	1	**266-7601**	1	HEATER GP-CAB	969
	3	1	**7X-0579**	11	WASHER-HARD (8.8X25.5X2-MM THK)	
M	4	1	**8T-4908**	11	BOLT (M8X1.25X25-MM)	
D	5	1	**5P-5643**		SEAL (0.8-M EACH)	

D-ORDER BY THE METER
M-METRIC PART
Y-SEPARATE ILLUSTRATION

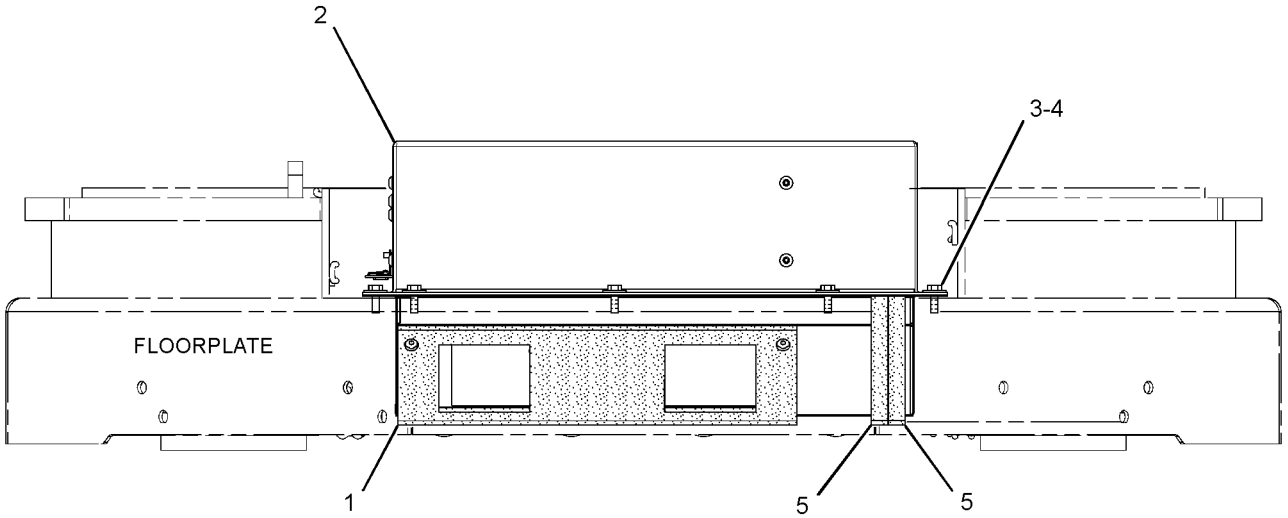

FRONT VIEW

GRAPHIC #1 **<END>** g01422538

OPERATOR STATION

266-7601 HEATER GP-CAB

S/N: JKM1-UP

PART OF 264-6827 HEATER & MTG GP-CAB

SMCS-7304 **i02917689**

NOTE	REF NO	GRAPHIC REF	PART NUMBER	QTY	PART NAME 1 2 3 4 5 6 (PRODUCT LEVEL)	SEE PAGE
	1	1	**8C-3756**	1	FILM-IDENTIFICATION (GROUP NO., SEQUENCE NO.)	
	2	1	**114-3140**	1	GROMMET	
	3	1	**183-7528**	1	COIL AS-HEATER	
	4	1	**204-9921**	1	RESISTOR AS	
	5	1	**253-9510**	1	GUARD	
	6	1	**275-6706**	1	MOTOR-BLOWER (24-VOLT)	
	7	1	**276-4300**	1	HARNESS AS-HEATER & AIR COND	
Y	8	1	**277-7116**	1	VALVE GP-WATER (HEATER CONTROL)	1033
	9	1	**277-7766**	1	PLATE AS	
	10	1	**277-7767**	1	PLATE AS	
	11	1	**277-7772**	1	PLATE AS	
	12	1	**277-7773**	1	PLATE	
	14	1	**277-7790**	1	PLATE	
	15	1	**277-7793**	1	COVER AS	
	23	1	**280-7785**	1	GROMMET	
M	24	1	**5C-2890**	2	NUT (M6X1-THD)	
M	25	1	**5C-9553**	12	BOLT (M6X1X16-MM)	
M	26	1	**6V-9673**	2	SCREW-MACHINE (M5X0.8X12-MM)	
	27	1	**8T-4205**	14	WASHER-HARD (7.2X14.5X2-MM THK)	
	28	1	**9X-2488**	4	CLAMP-HOSE	
E	29	1	**136-1953**		HOSE (22-CM)	
E	29A	1	**136-1953**		HOSE (21-CM)	
					AVAILABLE REPAIR KIT(S):	
			317-3349	1	KIT-SEAL	
					(KIT INCLUDES GASKETS & SEAL)	

E-ORDER BY THE CENTIMETER
M-METRIC PART
Y-SEPARATE ILLUSTRATION

266-7601 HEATER GP-CAB *(contd.)* i02917689

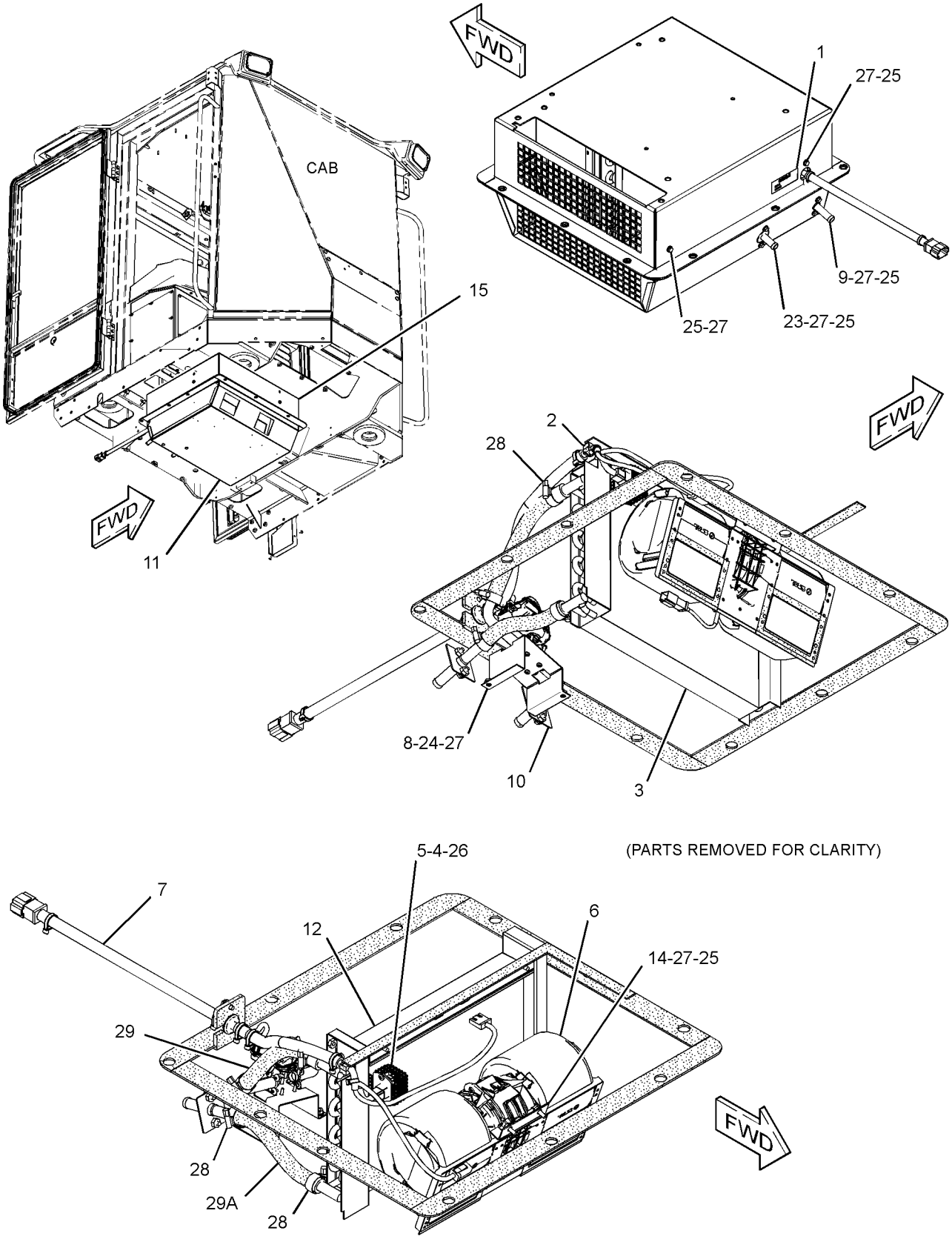

GRAPHIC #1 **<END>** g01435055

OPERATOR STATION

248-0420 HORN GP-ELECTRIC

S/N: JKM1-UP

PART OF 237-7539 ELECTRICAL AR

SMCS-7402 **i02305331**

NOTE	REF NO	GRAPHIC REF	PART NUMBER	QTY	PART NAME 1 2 3 4 5 6 (PRODUCT LEVEL)	SEE PAGE
	1	1	**174-7875**	1	HORN AS (24-VOLT, HIGH TONE)	
	2	1	**8T-4121**	1	WASHER-HARD (11X21X2.5-MM THK)	
M	3	1	**8T-4137**	1	BOLT (M10X1.5X20-MM)	

M-METRIC PART

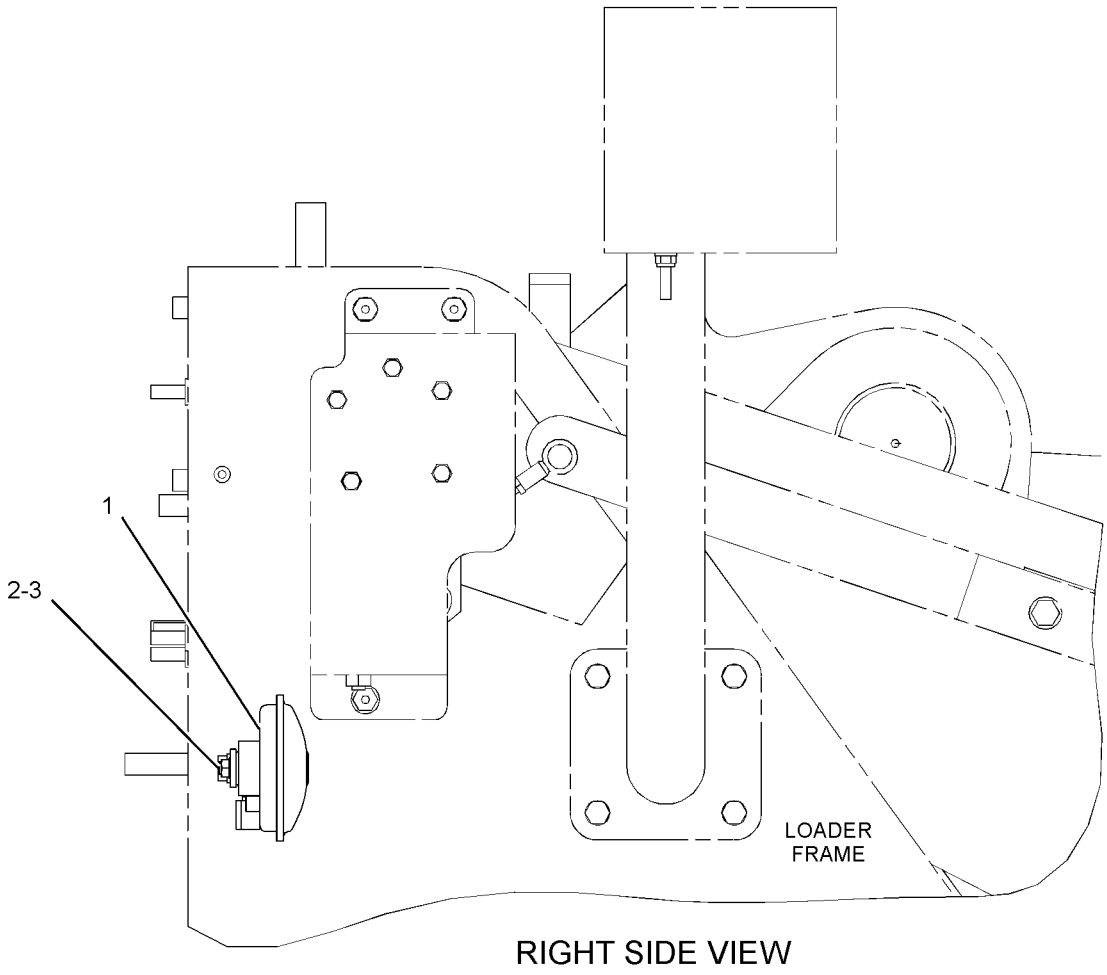

RIGHT SIDE VIEW

GRAPHIC #1 **<END>** g01154861

OPERATOR STATION

199-3461 INSTALLATION GP-RADIO

S/N: JKM1-UP

PART OF 252-4553 CAB AR-ENCLOSED ROPS

SMCS-7338 **i02916094**

NOTE	REF NO	GRAPHIC REF	PART NUMBER	QTY	PART NAME 1 2 3 4 5 6 (PRODUCT LEVEL)	SEE PAGE
M	1	1	**9X-2042**	4	SCREW-TRUSS HEAD (M6X1X12-MM)	
	2	1	**9U-8263**	1	COVER	
	3	1	**114-3953**	1	BRACKET AS	
	4	1	**114-3954**	1	COVER	
	5	1	**168-8772**	2	SPEAKER AS-RADIO	
	6	1	**5P-4115**	4	WASHER-HARD (7.2X19X2-MM THK)	
	7	1	**5P-8524**	4	GROMMET	
	8	1	**8C-6440**	8	SCREW-PAN HEAD (10-16X0.5-IN)	
M	9	1	**8T-4134**	4	NUT (M6X1-THD)	

M-METRIC PART

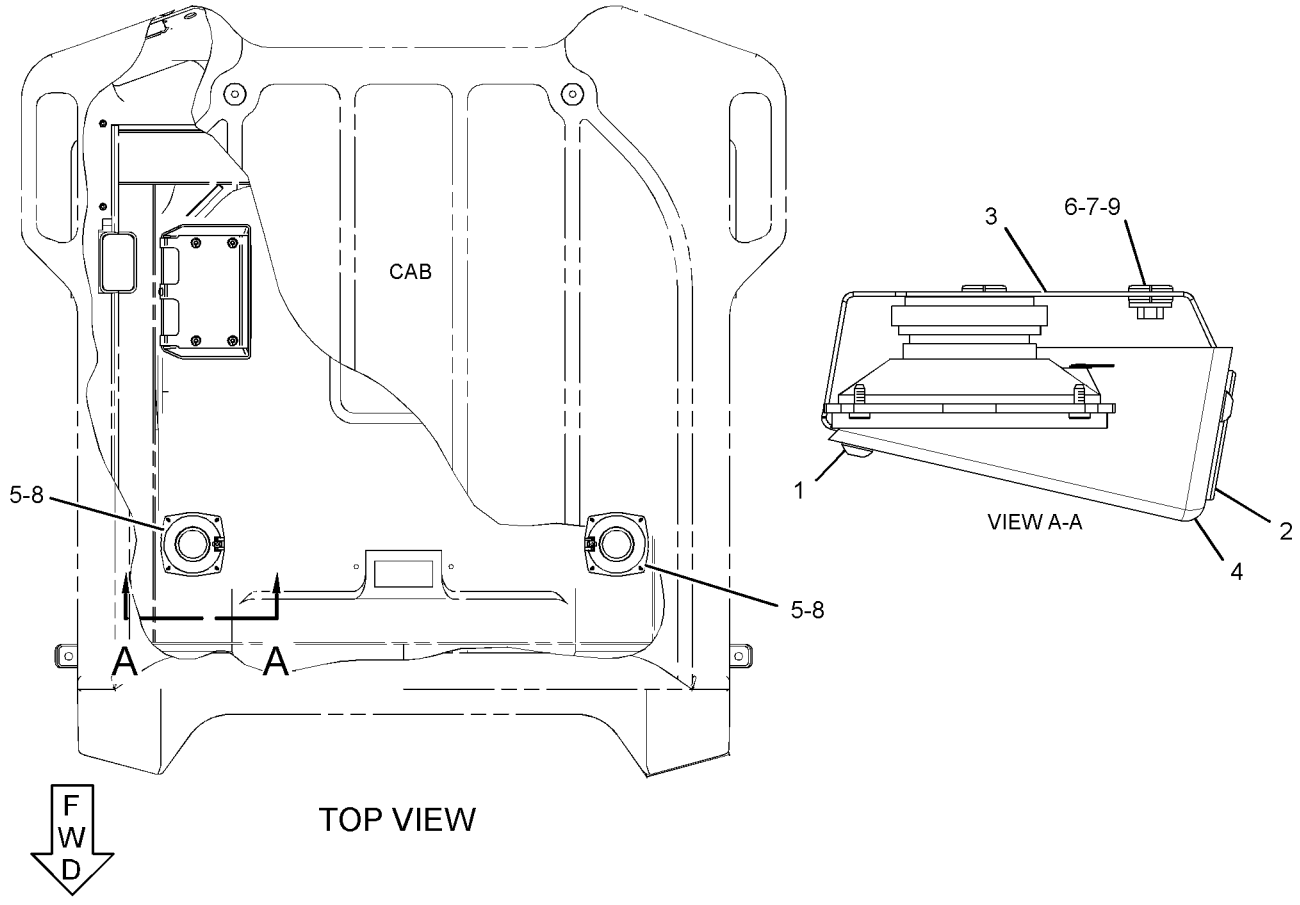

GRAPHIC #1 **<END>** g01423431

OPERATOR STATION

257-5699 LINER GP-CAB

S/N: JKM1-UP

PART OF 258-4543 OPERATOR AR-ENCLOSED ROPS

SMCS-7329 **i03868776**

NOTE	REF NO	GRAPHIC REF	PART NUMBER	QTY	PART NAME 1 2 3 4 5 6 (PRODUCT LEVEL)	SEE PAGE
	1	1	**4E-2161**	1	STRAP	
	2	1	**8N-9033**	2	PLUG	
	3	1	**8T-3995**	5	NUT (M6X1-THD)	
	4	1	**125-7045**	1	COVER AS	
	5	1	**125-7046**	1	PLATE AS	
	6	1	**210-8842**	4	PLUG	
	7	1	**226-0294**	1	LOCK AS	
	8	1	**226-0341**	1	CAM	
	9	1	**230-1246**	1	COVER AS	
	10	1	**235-0607**	1	COVER AS	
		1	**4S-8264**	3	RIVET-POP	
		1	**120-0596**	1	BRACKET	
		1	**124-9015**	1	KIT-BRUSH SEAL	
	11	1	**257-5635**	1	PLATE	
	12	1	**257-5636**	1	PLATE	
	13	1	**257-5643**	1	BOX AS	
	14	1	**266-8984**	1	FLOOR MAT	
	15	1	**266-8985**	1	INSULATION	
	16	1	**281-2920**	8	STUD	
	17	1	**281-2922**	8	RETAINER	
	18	1	**316-7029**	1	FILM-FUSE PANEL	
M	19	1	**5C-2890**	2	NUT (M6X1-THD)	
M	20	1	**8T-4189**	3	BOLT (M8X1.25X20-MM)	
M	21	1	**8T-4200**	2	BOLT (M8X1.25X16-MM)	
	22	1	**8T-4205**	2	WASHER-HARD (7.2X14.5X2-MM THK)	
	23	1	**8T-4224**	4	WASHER-HARD (8.8X16X2-MM THK)	
M	24	1	**9X-2042**	13	SCREW-TRUSS HEAD (M6X1X12-MM)	
D	25	1	**5P-5637**		SEAL (0.8-M)	
	26	1	**5P-4116**	1	WASHER-HARD (8.8X20.5X2-MM THK)	
	27	1	**9X-2038**	1	WASHER (7X19X2-MM THK)	
	28	1	**117-2311**	1	SOCKET-AUXILIARY POWER (12-VOLT)	
	29	1	**124-5638**	1	FILM-INFORMATION (12-VOLT)	

D-ORDER BY THE METER
M-METRIC PART

257-5699 **LINER GP-CAB** ***(contd.)*** **i03868776**

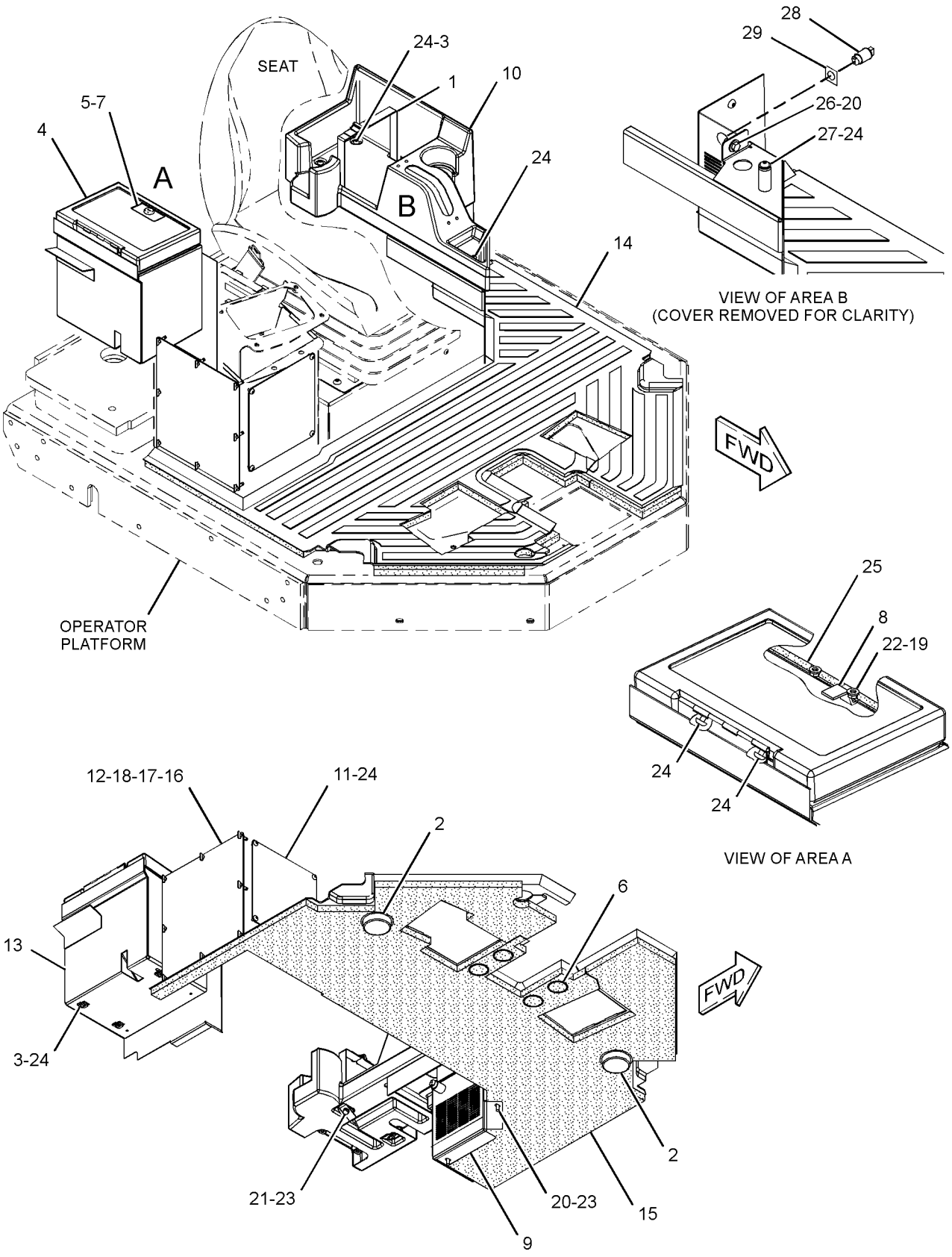

GRAPHIC #1 **<END>** g02144079

OPERATOR STATION

269-4879 LINER GP-CAB

S/N: JKM1-UP
PART OF 269-4871 OPERATOR AR-OPEN ROPS
AN ATTACHMENT

SMCS-7329 **i02927031**

NOTE	REF NO	GRAPHIC REF	PART NUMBER	QTY	PART NAME 1 2 3 4 5 6 (PRODUCT LEVEL)	SEE PAGE
	1	2	**4E-2161**	1	STRAP	
	2	1	**8T-3995**	5	NUT (M6X1-THD)	
	3	1	**125-7045**	1	COVER AS	
	4	1	**125-7046**	1	PLATE AS	
	5	1	**226-0294**	1	LOCK AS	
	6	1	**226-0341**	1	CAM	
	7	2	**230-1246**	1	COVER AS	
	8	2	**235-0607**	1	COVER AS	
		2	**4S-8264**	3	RIVET-POP	
		2	**120-0596**	1	BRACKET	
		2	**124-9015**	1	KIT-BRUSH SEAL	
		2	**128-0899**	4	RIVET	
	9	1	**250-9720**	1	LINER AS-CAB	
	10	2	**257-5635**	1	PLATE	
	11	2	**257-5636**	1	PLATE	
	12	1	**257-5643**	1	BOX AS	
	13	1	**266-8984**	1	FLOOR MAT	
	14	1	**266-8985**	1	INSULATION	
	15	2	**281-2920**	8	STUD	
	16	2	**281-2922**	8	RETAINER	
	17	1	**282-9894**	1	INSULATION	
	18	1	**311-0117**	1	PLATE	
	19	2	**311-0118**	1	PLATE	
	20	2	**316-7029**	1	FILM-FUSE PANEL	
M	21	1	**5C-2890**	2	NUT (M6X1-THD)	
M	22	1	**8T-4189**	3	BOLT (M8X1.25X20-MM)	
M	23	2	**8T-4200**	2	BOLT (M8X1.25X16-MM)	
	24	1	**8T-4205**	2	WASHER-HARD (7.2X14.5X2-MM THK)	
	25	1,2	**8T-4224**	5	WASHER-HARD (8.8X16X2-MM THK)	
M	26	1,2	**9X-2042**	17	SCREW-TRUSS HEAD (M6X1X12-MM)	
E	27	2	**129-1855**		FASTENER-HOOK (10-CM)	
E	27A	1	**129-1855**		FASTENER-HOOK (13-CM)	
E	28	2	**129-1854**		FASTENER-LOOP (10-CM)	
E	28A	1	**129-1854**		FASTENER-LOOP (13-CM)	
D	29	1	**5P-7657**		SEAL (0.1-M)	
D	30	1	**5P-5637**		SEAL (0.8-M)	

D-ORDER BY THE METER
E-ORDER BY THE CENTIMETER
M-METRIC PART

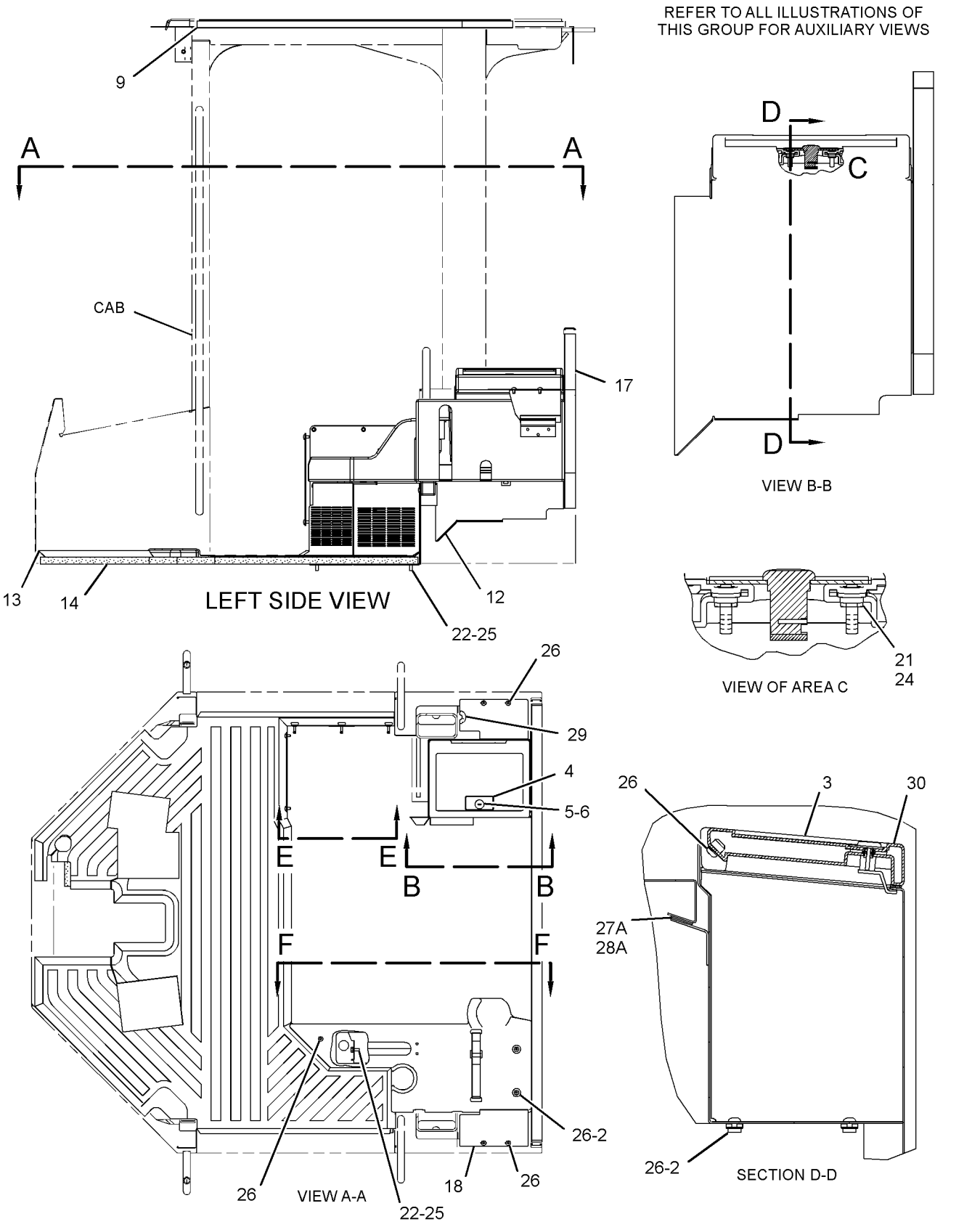

GRAPHIC #1

g01454434

269-4879 **LINER GP-CAB** *(contd.)* **i02927031**

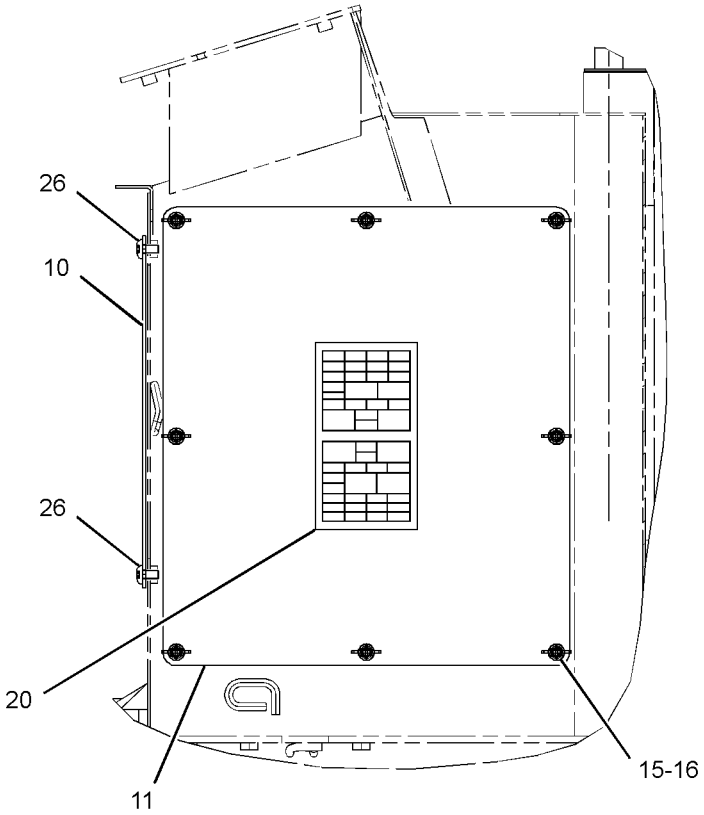

VIEW E-E

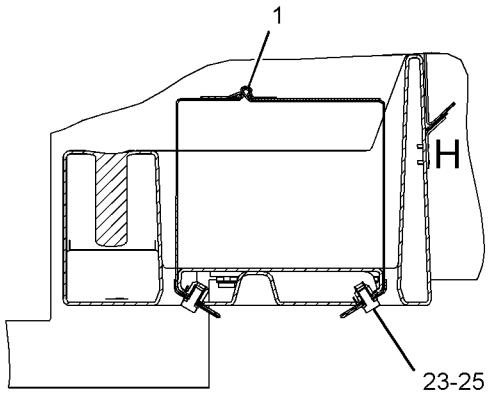

SECTION G-G

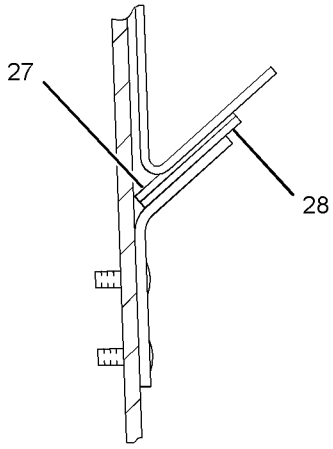

VIEW OF AREA H

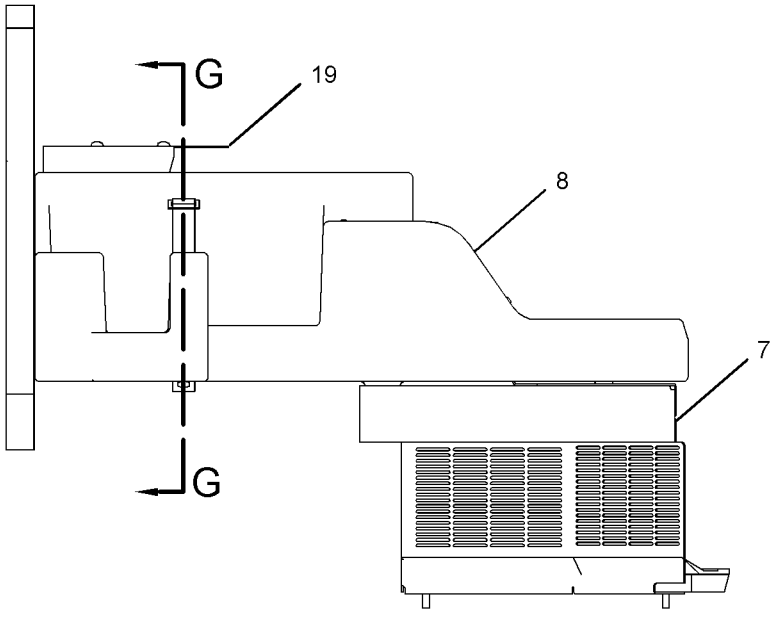

VIEW F-F

GRAPHIC #2 **<END>** g01454435

OPERATOR STATION

281-0798 LINER GP-OPEN ROPS

S/N: JKM1-UP

PART OF 252-4553 CAB AR-ENCLOSED ROPS

SMCS-7330 **i02918772**

NOTE	REF NO	GRAPHIC REF	PART NUMBER	QTY	PART NAME 1 2 3 4 5 6 (PRODUCT LEVEL)	SEE PAGE
	1	1	**6V-8928**	1	HOOK-COAT	
	2	1	**107-6032**	1	LAMP GP-DOME (24-VOLT)	
	3	1	**145-5307**	1	PLATE	
	4	1	**250-7514**	1	COVER AS (LH)	
	5	1	**250-7515**	1	COVER AS (RH)	
	6	1	**250-7516**	1	HEADLINER	
	7	1	**250-7523**	1	COVER	
	8	1	**281-0667**	1	INSULATION	
	9	1	**308-0708**	1	INSULATION	
M	10	1	**6V-8490**	4	BOLT (M6X1X25-MM)	
M	11	1	**9X-2045**	1	SCREW-TRUSS HEAD (M6X1X20-MM)	

M-METRIC PART

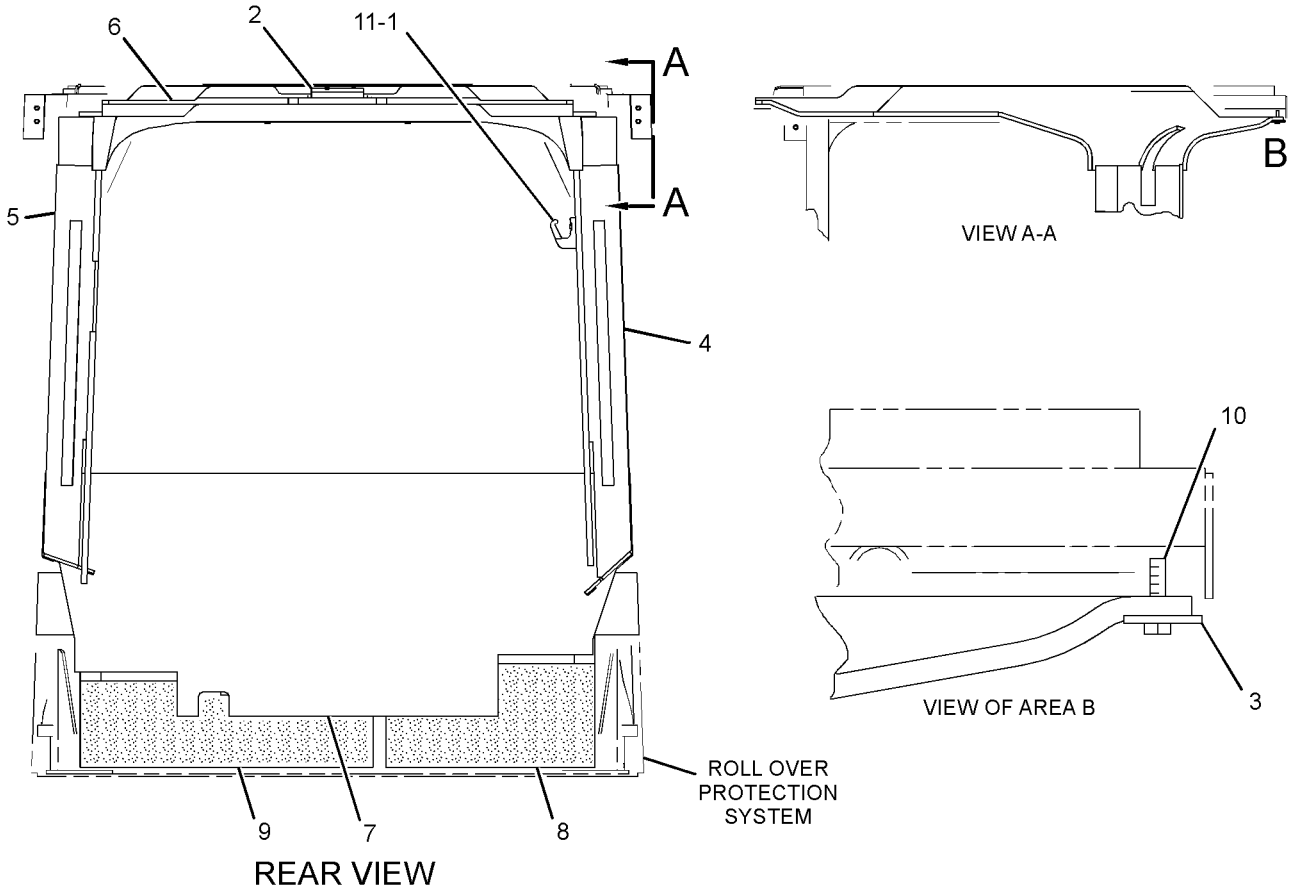

GRAPHIC #1 **<END>** g01425663

OPERATOR STATION

263-3352 LINES GP-AIR CONDITIONER

S/N: JKM1-UP

PART OF 255-4820 AIR CONDITIONER AR

AN ATTACHMENT

SMCS-1808 **i03875844**

NOTE	REF NO	GRAPHIC REF	PART NUMBER	QTY	PART NAME 1 2 3 4 5 6 (PRODUCT LEVEL)	SEE PAGE
	1	1	**7K-1181**	3	STRAP-CABLE	
I	2	1	**263-3353**	1	HOSE AS	
I	3	1	**263-3355**	1	HOSE AS	
	4	1	**335-7981**	1	HOSE AS	
I	5	1	**263-3357**	1	HOSE AS	
	6	1	**263-3358**	1	BRACKET AS	
M		1	**8T-3597**	1	NUT-WELD (M12X1.75-THD)	
	7	1	**315-7790**	1	PLATE	
Y	8	1	*186-6190*	1	ACCUMULATOR GP-REFRIGERANT (CHARGED)	908
	9	1	**3S-8664**	3	CLIP	
	10	1	**4S-1962**	1	CLIP	
	11	1	**6K-8178**	5	CLIP	
	12	1	**6V-4356**	1	CLIP (SLOT)	
	13	1	**6V-4357**	1	CLIP (TAB)	
	14	1	**8T-4121**	8	WASHER-HARD (11X21X2.5-MM THK)	
M	15	1	**8T-4137**	7	BOLT (M10X1.5X20-MM)	
M	16	1	**8T-4139**	3	BOLT (M12X1.75X30-MM)	
M	17	1	**8T-4195**	1	BOLT (M10X1.5X30-MM)	
	18	1	**8T-4223**	3	WASHER-HARD (13.5X25.5X3-MM THK)	
	19	1	**9M-8406**	3	CLIP	
	20	1	**9X-7380**	1	SEAL-O-RING	
	21	1	**9X-7381**	2	SEAL-O-RING	
	22	1	**9X-7382**	1	SEAL-O-RING	
	23	1	**9X-7383**	2	SEAL-O-RING	
E	24	1	**8C-5064**		CONDUIT-FLEXIBLE (92.5-CM)	
E	24A	1	**8C-5064**		CONDUIT-FLEXIBLE (61.2-CM)	
D	25	1	**6V-2495**		SEAL (0.3-M)	

D-ORDER BY THE METER
E-ORDER BY THE CENTIMETER
I-REFER TO HYDRAULIC INFORMATION SYSTEM
M-METRIC PART
Y-SEPARATE ILLUSTRATION

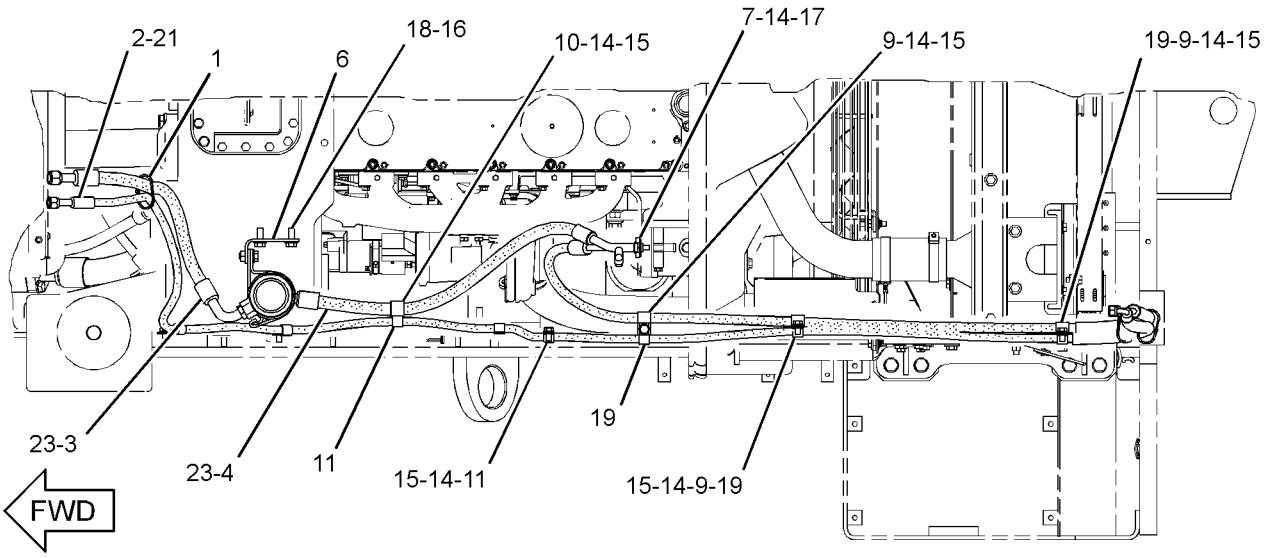

TOP VIEW

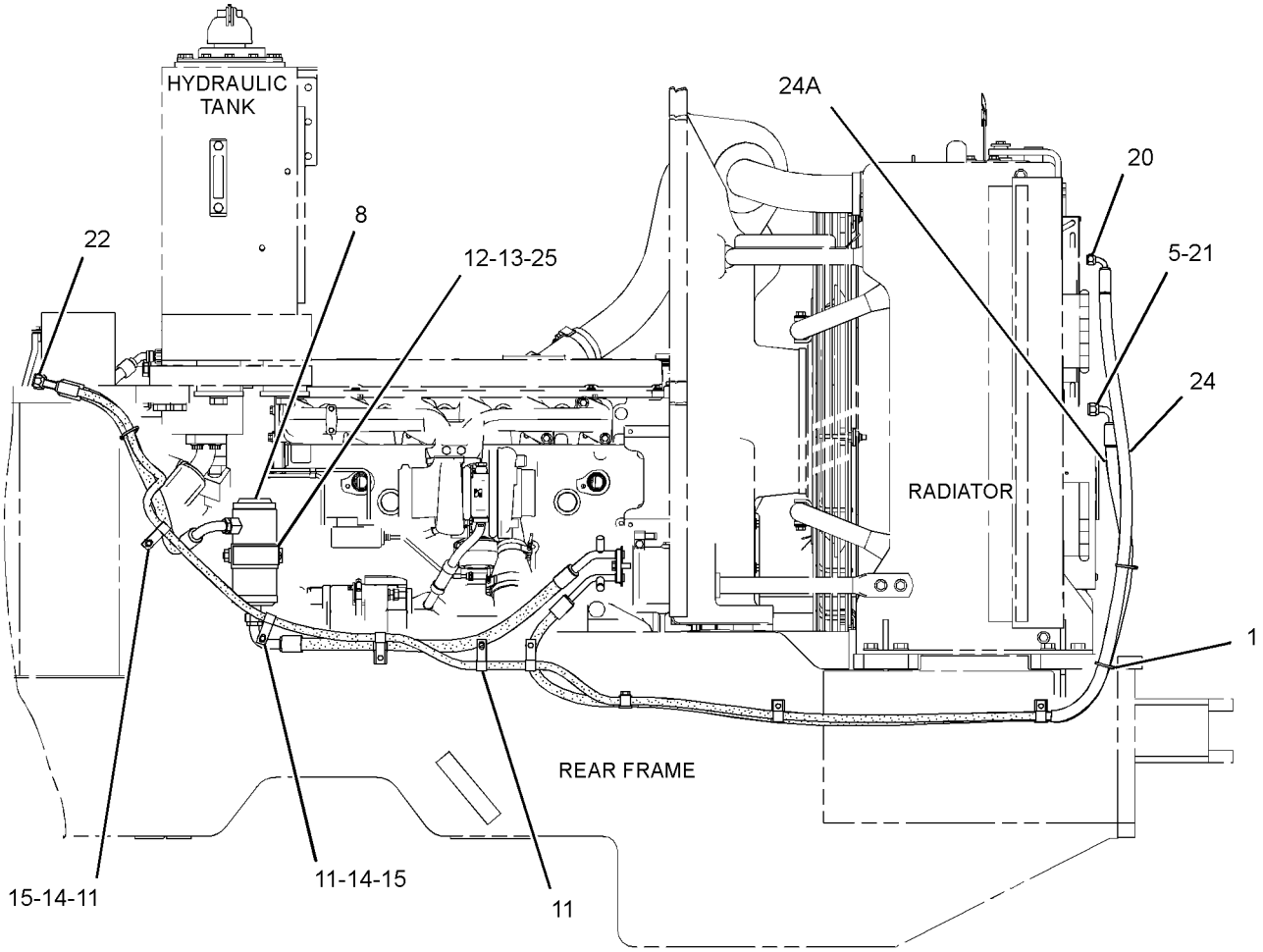

LEFT SIDE VIEW

GRAPHIC #1

<END>

g01427492

OPERATOR STATION

255-4822 LINES GP-CAB HEATER

S/N: JKM1-UP

PART OF 237-7540 CHASSIS AR

SMCS-7304 **i02910518**

NOTE	REF NO	GRAPHIC REF	PART NUMBER	QTY	PART NAME 1 2 3 4 5 6 (PRODUCT LEVEL)	SEE PAGE
	1	1	**5D-1026**	6	CLAMP-BAND	
	2	1	**5I-3883**	2	BRACKET AS	
					(EACH INCLUDES)	
M		1	**8T-3490**	1	NUT-WELD (M10X1.5-THD)	
	3	1	**7K-1181**	1	STRAP-CABLE	
	4	1	**127-9323**	1	BRACKET AS	
M		1	**8T-3490**	1	NUT-WELD (M10X1.5-THD)	
	5	1	**160-4989**	2	BRACKET AS	
	6	1	**308-5333**	1	VALVE AS-WATER	
	7	1	**4D-7388**	1	CLIP	
	8	1	**6D-1641**	3	CLIP	
	9	1	**8T-4121**	14	WASHER-HARD (11X21X2.5-MM THK)	
M	10	1	**8T-4133**	1	NUT (M10X1.5-THD)	
M	11	1	**8T-4136**	9	BOLT (M10X1.5X25-MM)	
M	12	1	**8T-4137**	3	BOLT (M10X1.5X20-MM)	
	13	1	**9X-8250**	6	CLIP	
E	14	1	**5P-0767**		HOSE (141-CM)	
E	14A	1	**5P-0767**		HOSE (215.8-CM)	
E	14B	1	**5P-0767**		HOSE (84.2-CM)	

E-ORDER BY THE CENTIMETER
M-METRIC PART

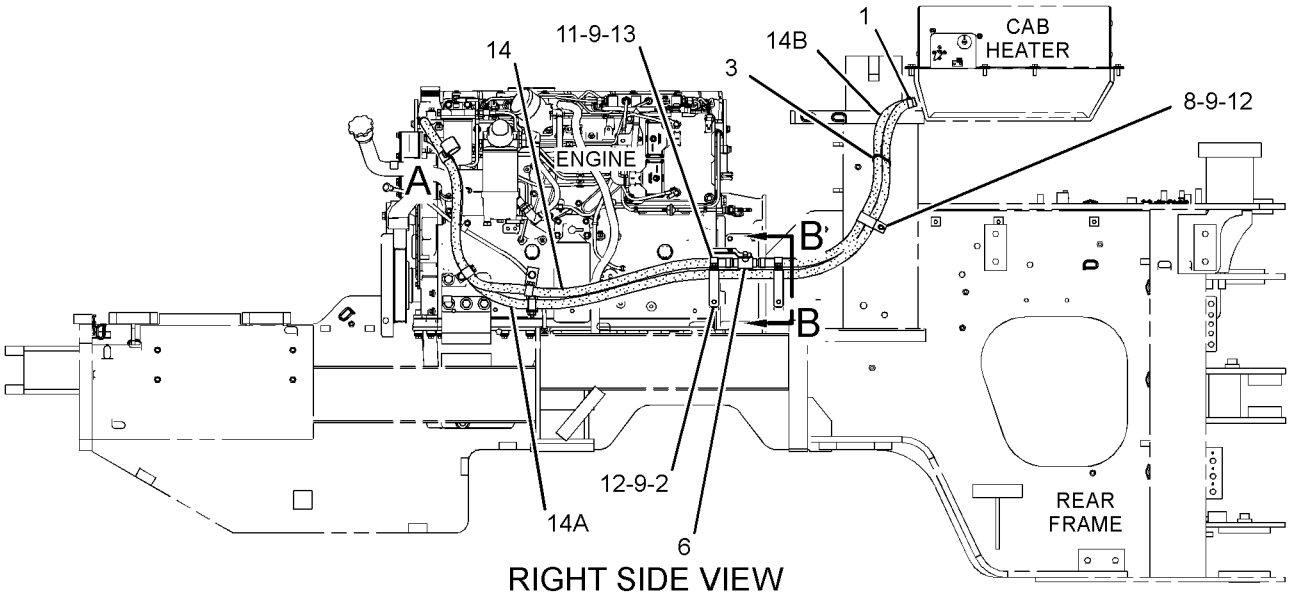

RIGHT SIDE VIEW

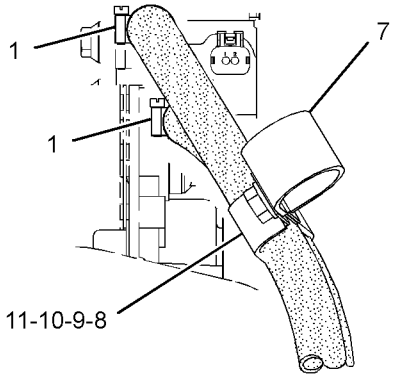

VIEW OF AREA A

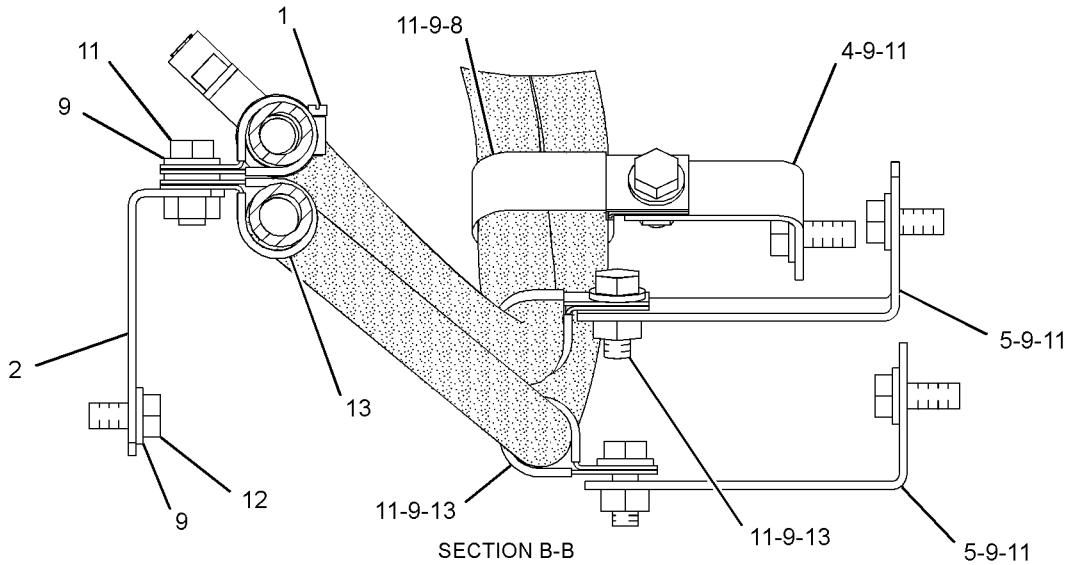

SECTION B-B

GRAPHIC #1 **<END>** g01421639

107-4642 MIRROR GP-REAR VIEW—EXTERIOR

S/N: JKM1-UP
AN ATTACHMENT

SMCS-7319 **i00710783**

NOTE	REF NO	GRAPHIC REF	PART NUMBER	QTY	PART NAME 1 2 3 4 5 6 (PRODUCT LEVEL)	SEE PAGE
	1	1	**150-6582**	2	MIRROR AS	
	2	1	**123-6621**	1	BRACKET AS (LH)	
	3	1	**123-6622**	1	BRACKET AS (RH)	
M	4	1	**8T-4189**	4	BOLT (M8X1.25X20-MM)	
	5	1	**8T-4224**	4	WASHER-HARD (8.8X16X2-MM THK)	

M-METRIC PART

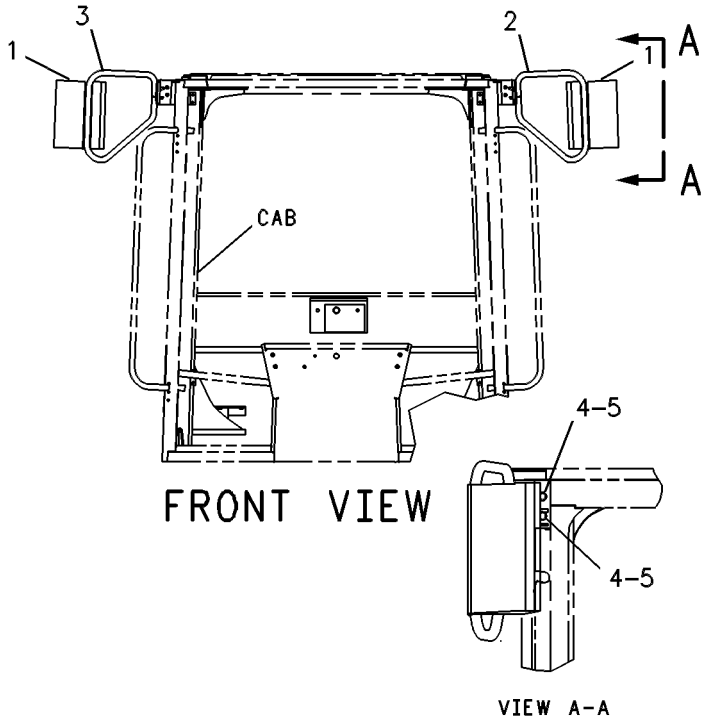

FRONT VIEW

VIEW A-A

GRAPHIC #1 **<END>** g00307313

OPERATOR STATION

273-9603 MIRROR GP-REAR VIEW—EXTERIOR

S/N: JKM1-900

PART OF 269-4873 CANOPY AR-OPEN ROPS, 258-4543 OPERATOR AR-ENCLOSED ROPS

ALSO AN ATTACHMENT

SMCS-7319 **i02917819**

NOTE	REF NO	GRAPHIC REF	PART NUMBER	QTY	PART NAME 1 2 3 4 5 6 (PRODUCT LEVEL)	SEE PAGE
	1	1	**273-9604**	2	TUBE AS	
	2	1	**273-9607**	2	PLATE	
	3	1	**4I-8135**	2	MIRROR	
	4	1	**287-0298**	2	PLUG	
M	5	1	**3T-0852**	4	LOCKNUT (M8X1.25-THD)	
M	6	1	**8T-4189**	4	BOLT (M8X1.25X20-MM)	
	7	1	**8T-4224**	12	WASHER-HARD (8.8X16X2-MM THK)	
M	8	1	**8T-4908**	4	BOLT (M8X1.25X25-MM)	

M-METRIC PART

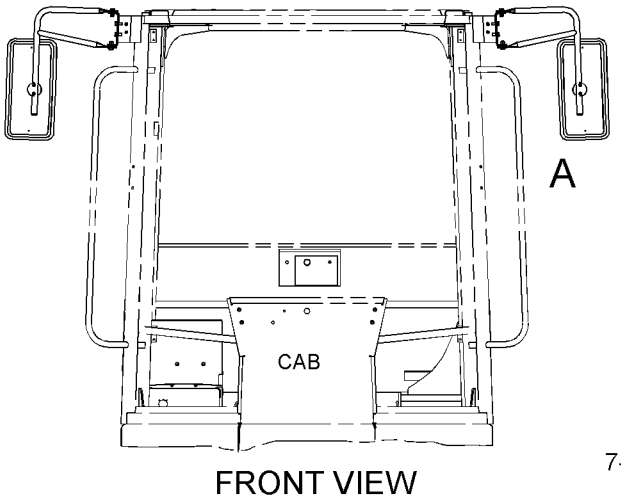

FRONT VIEW

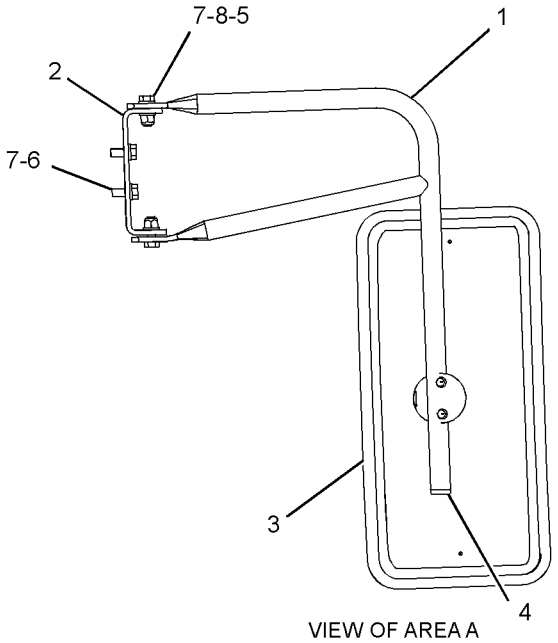

VIEW OF AREA A

GRAPHIC #1 **<END>** g01398611

OPERATOR STATION

273-9603 MIRROR GP-REAR VIEW—EXTERIOR

S/N: JKM901-UP

PART OF 252-4553 CAB AR-ENCLOSED ROPS, 269-4873 CANOPY AR-OPEN ROPS, 258-4543 OPERATOR AR-ENCLOSED ROPS

ALSO AN ATTACHMENT

SMCS-7319 **i03845369**

NOTE	REF NO	GRAPHIC REF	PART NUMBER	QTY	PART NAME 1 2 3 4 5 6 (PRODUCT LEVEL)	SEE PAGE
C	1	1	**273-9605**	2	TUBE	
	2	1	**273-9607**	2	PLATE	
	3	1	**4I-8135**	2	MIRROR	
	4	1	**287-0298**	2	PLUG	
C	5	1	**329-4101**	2	TUBE	
M	6	1	**3T-0852**	4	LOCKNUT (M8X1.25-THD)	
C	7	1	**5P-7458**	2	CLIP (SLOT)	
C	8	1	**5P-7459**	2	CLIP (TAB)	
CM	9	1	**6V-8149**	2	NUT (M12X1.75-THD)	
M	10	1	**8T-4189**	4	BOLT (M8X1.25X20-MM)	
C	11	1	**8T-4223**	4	WASHER-HARD (13.5X25.5X3-MM THK)	
	12	1	**8T-4224**	12	WASHER-HARD (8.8X16X2-MM THK)	
M	13	1	**8T-4908**	4	BOLT (M8X1.25X25-MM)	
CM	14	1	**8T-4956**	2	BOLT (M12X1.75X35-MM)	

C-CHANGE FROM PREVIOUS TYPE
M-METRIC PART

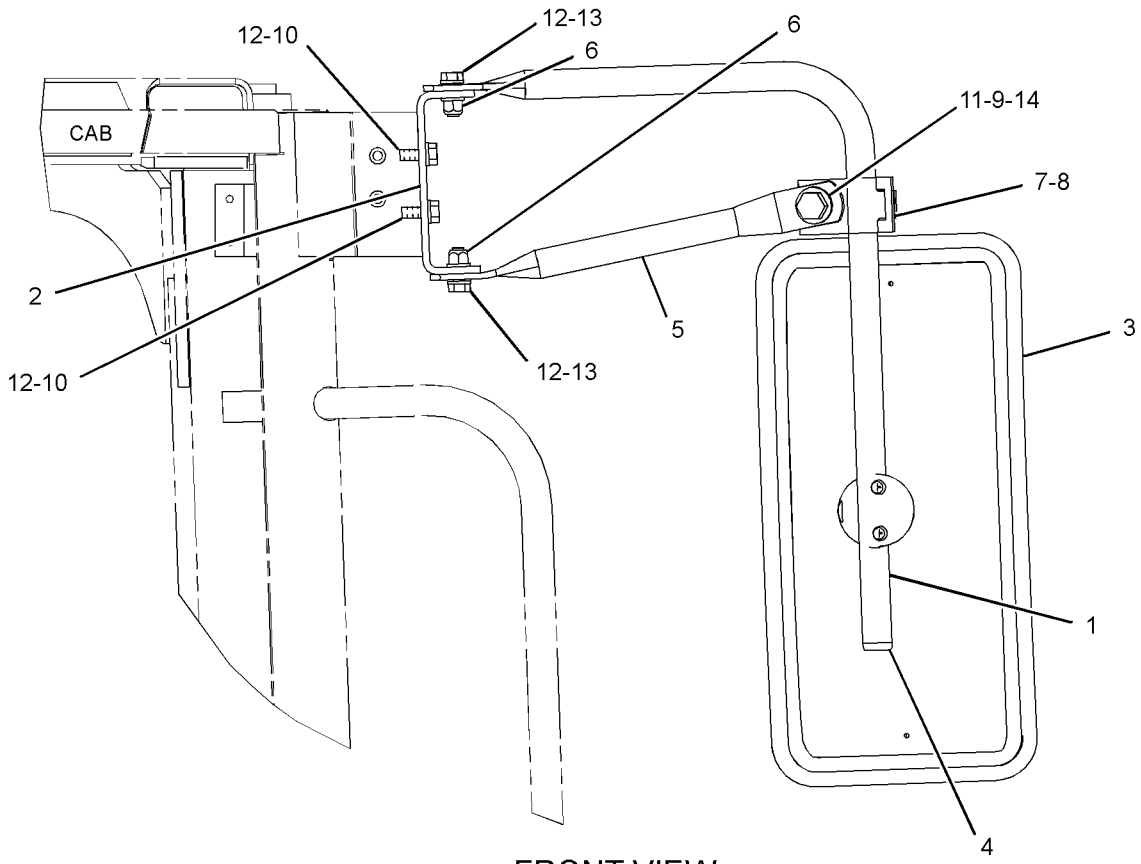

FRONT VIEW

GRAPHIC #1 **<END>** g01866482

OPERATOR STATION

290-6181 MIRROR GP-REAR VIEW—EXTERIOR, HEATED

S/N: JKM1-UP
PART OF 317-9483 CONFIGURATION AR
AN ATTACHMENT

SMCS-7319 **i03212463**

NOTE	REF NO	GRAPHIC REF	PART NUMBER	QTY	PART NAME 1 2 3 4 5 6 (PRODUCT LEVEL)	SEE PAGE
	1	1	**200-1173**	2	MIRROR AS	
		1	**102-8802**	1	KIT-RECEPTACLE (2-PIN)	
					(INCLUDES RECEPTACLE AS AND WEDGE)	
		1	**186-3735**	2	PIN-CONNECTOR (16-GA TO 18-GA)	
	2	1	**273-9605**	2	TUBE	
	3	1	**273-9607**	2	PLATE	
	4	1	**287-0298**	2	PLUG	
	5	1	*291-5201*	1	SWITCH GP-ROCKER (HEATED MIRRORS)	
		1	**236-4630**	1	SWITCH AS-ROCKER (HEATED MIRRORS) (HEATED MIRRORS)	
		1	**248-2841**	1	RELAY AS (24-VOLT)	
	6	1	**2D-2751**	2	GROMMET	
M	7	1	**3T-0852**	4	LOCKNUT (M8X1.25-THD)	
	8	1	**7K-1181**	8	STRAP-CABLE	
M	9	1	**8T-4189**	4	BOLT (M8X1.25X20-MM)	
	10	1	**8T-4224**	12	WASHER-HARD (8.8X16X2-MM THK)	
M	11	1	**8T-4908**	4	BOLT (M8X1.25X25-MM)	
	12	1	**5P-7458**	2	CLIP (SLOT)	
	13	1	**5P-7459**	2	CLIP (TAB)	
M	14	1	**6V-8149**	2	NUT (M12X1.75-THD)	
	15	1	**8T-4223**	4	WASHER-HARD (13.5X25.5X3-MM THK)	
M	16	1	**8T-4956**	2	BOLT (M12X1.75X35-MM)	
	17	1	**329-4101**	2	TUBE	

M-METRIC PART

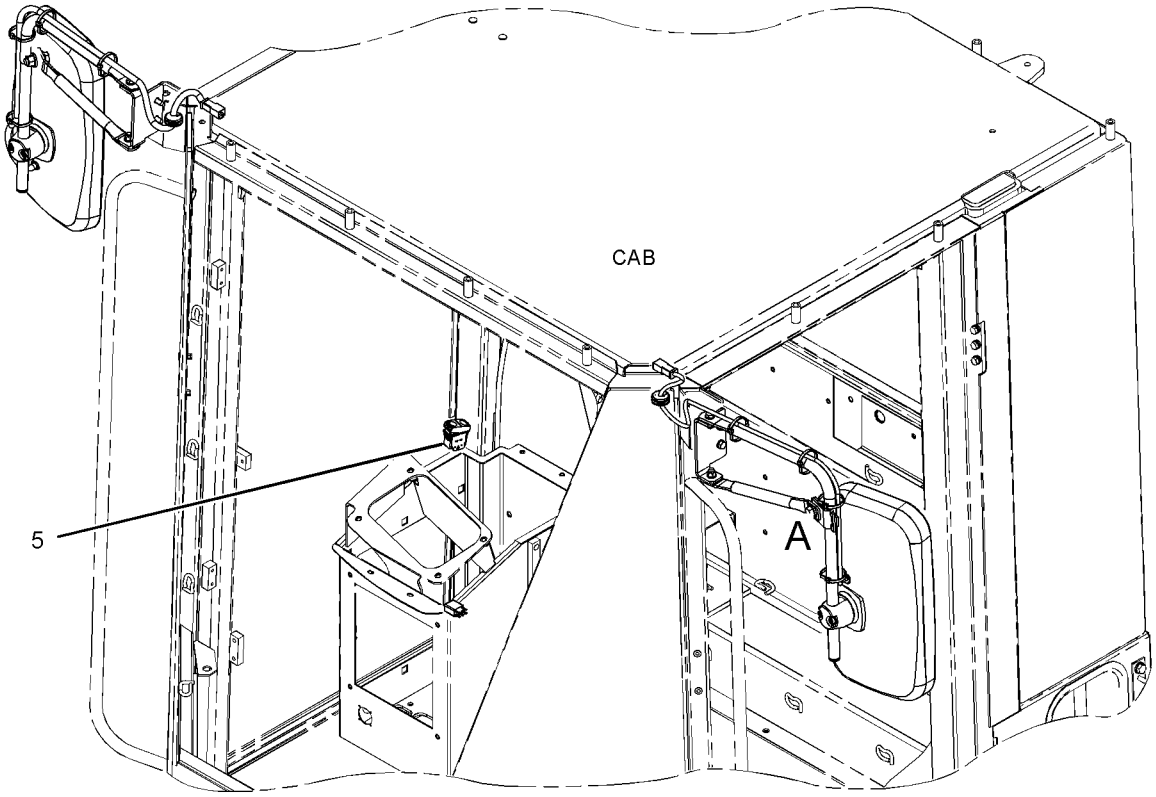

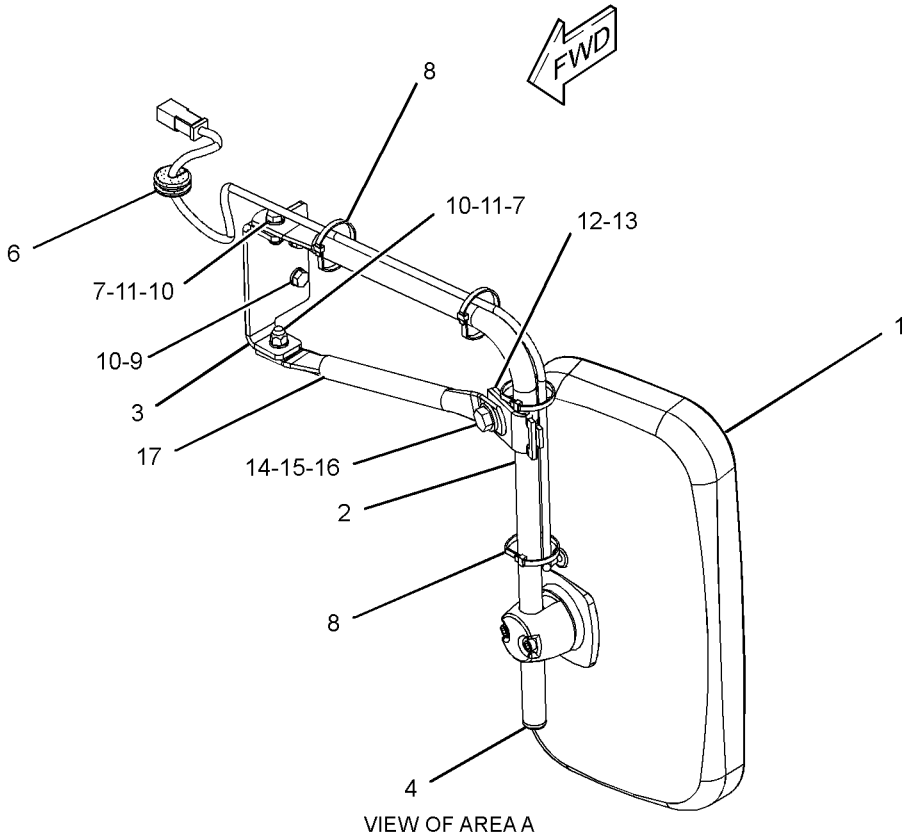

VIEW OF AREA A

GRAPHIC #1 **<END>** g01642274

OPERATOR STATION

318-2597 MIRROR GP-REAR VIEW—INTERIOR

S/N: JKM1-UP

PART OF 252-4553 CAB AR-ENCLOSED ROPS, 269-4873 CANOPY AR-OPEN ROPS

ALSO AN ATTACHMENT

SMCS-7319 **i02917821**

NOTE	REF NO	GRAPHIC REF	PART NUMBER	QTY	PART NAME 1 2 3 4 5 6 (PRODUCT LEVEL)	SEE PAGE
	1	1	**114-3956**	2	PLATE	
	2	1	**235-4546**	2	NUT-JAM (3/8-16-THD)	
	3	1	**275-5588**	2	MIRROR AS	
					(EACH INCLUDES)	
		1	**3K-6060**	1	LOCKNUT (3/8-16-THD)	
M	4	1	**8T-4138**	4	BOLT (M6X1X20-MM)	
	5	1	**8T-4205**	4	WASHER-HARD (7.2X14.5X2-MM THK)	

M-METRIC PART

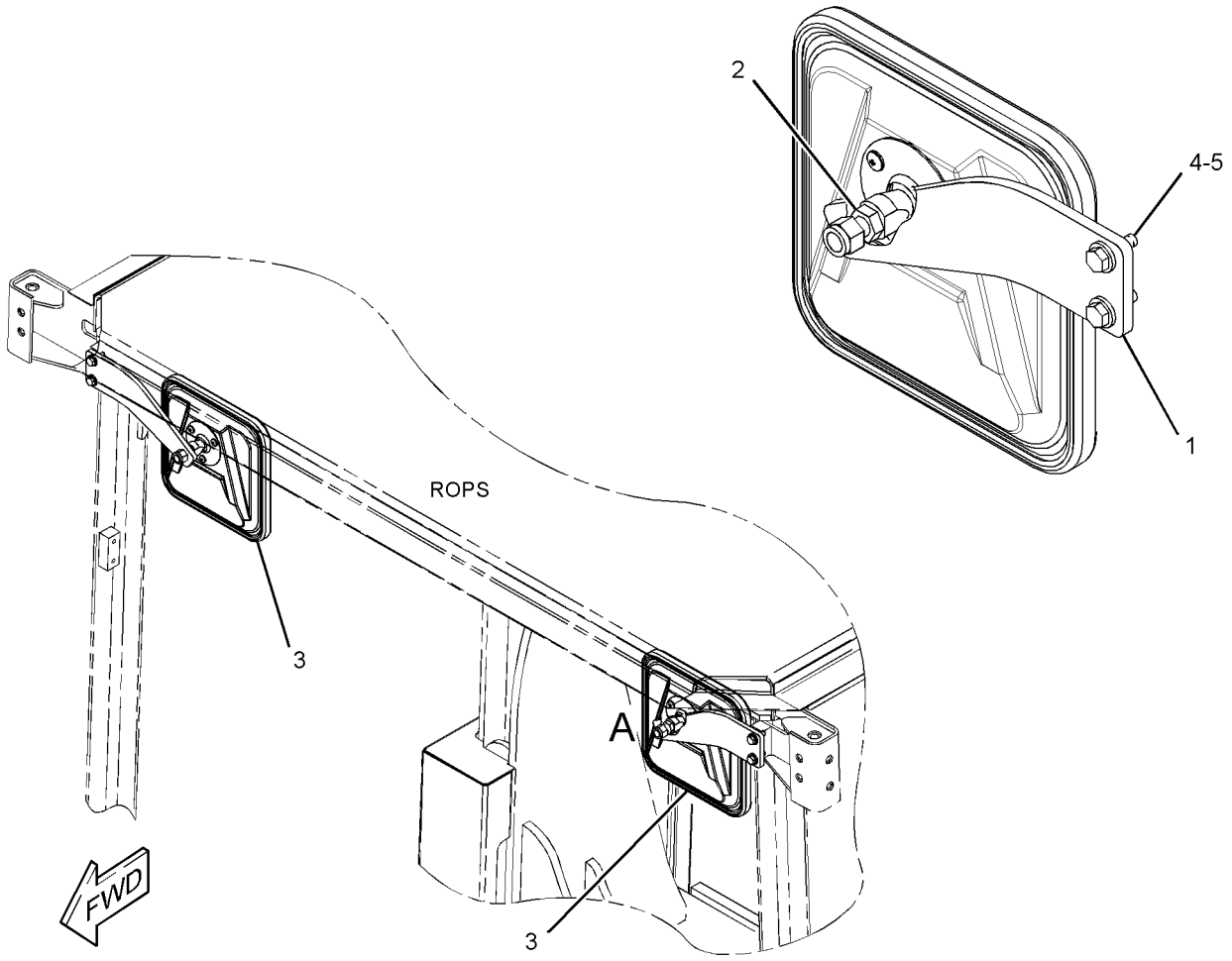

GRAPHIC #1 **<END>** g01427828

OPERATOR STATION

155-5783 MOTOR GP-WINDOW WIPER–FRONT

S/N: JKM1-UP
24 VOLT
PART OF 149-7702 WIPER GP-WINDOW

SMCS-7305 **i03590501**

NOTE	REF NO	GRAPHIC REF	PART NUMBER	QTY	PART NAME 1 2 3 4 5 6 (PRODUCT LEVEL)	SEE PAGE
	1	1	**135-0611**	1	MOTOR GP-WINDOW WIPER (24-VOLT, 2-SPEED)	
		1	**8T-8737**	1	PLUG-SEAL	
		1	**102-8805**	1	KIT-RECEPTACLE (6-PIN)	
					(KIT INCLUDES RECEPTACLE AS & WEDGE)	
		1	**186-3735**	5	PIN-CONNECTOR (16-GA TO 18-GA)	
	2	1	**206-5823**	1	CAP (MOTOR)	

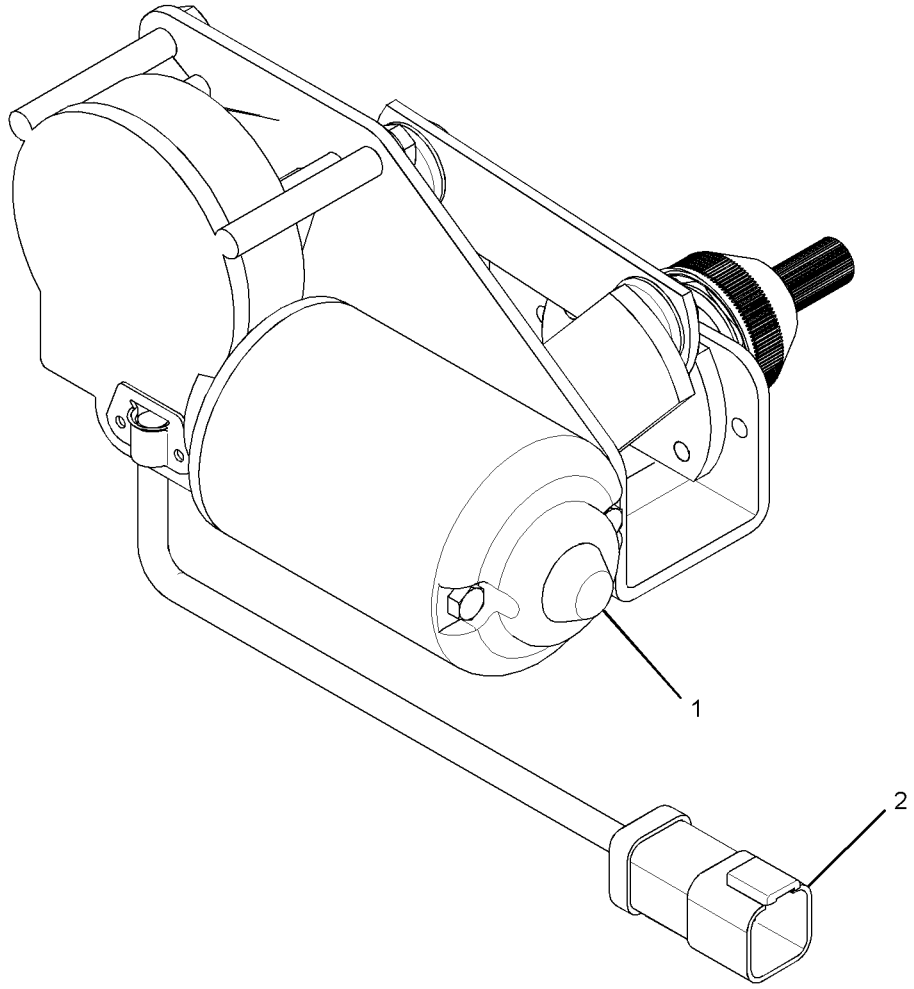

GRAPHIC #1 **<END>** g01908073

OPERATOR STATION

155-5784 MOTOR GP-WINDOW WIPER–REAR

S/N: JKM1-UP
24 VOLT
PART OF 149-7702 WIPER GP-WINDOW
TYPE 1

SMCS-7305 **i02092247**

NOTE	REF NO	GRAPHIC REF	PART NUMBER	QTY	PART NAME 1 2 3 4 5 6 (PRODUCT LEVEL)	SEE PAGE
	1	1	**102-8805**	1	KIT-RECEPTACLE (6-PIN)	
					(INCLUDES RECEPTACLE AS & WEDGE)	
	2	1	**8T-8737**	1	PLUG-SEAL	
	3	1	**186-3735**	5	PIN-CONNECTOR (16-GA TO 18-GA)	

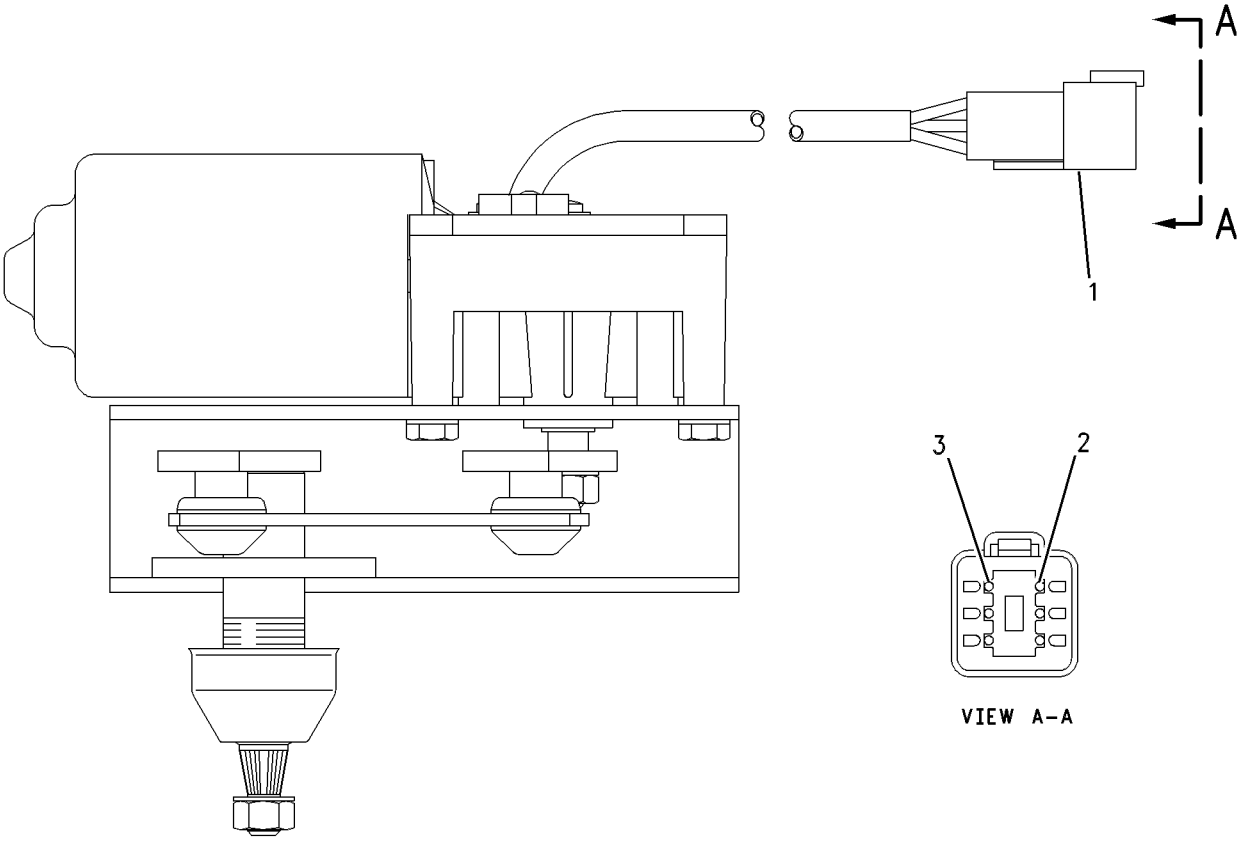

GRAPHIC #1 **<END>** g00615271

155-5784 MOTOR GP-WINDOW WIPER–REAR

S/N: JKM1-UP
24 VOLT
PART OF 149-7702 WIPER GP-WINDOW
TYPE 2

SMCS-7305 **i03009970**

NOTE	REF NO	GRAPHIC REF	PART NUMBER	QTY	PART NAME 1 2 3 4 5 6 (PRODUCT LEVEL)	SEE PAGE
C	1	1	**135-0611**	1	MOTOR GP-WINDOW WIPER (24-VOLT, 2-SPEED)	
		1	**102-8805**	1	KIT-RECEPTACLE (6-PIN)	
					(INCLUDES RECEPTACLE AS & WEDGE)	
		1	**8T-8737**	1	PLUG-SEAL	
		1	**186-3735**	5	PIN-CONNECTOR (16-GA TO 18-GA)	
C	2	1	**206-5823**	1	CAP	

C-CHANGE FROM PREVIOUS TYPE

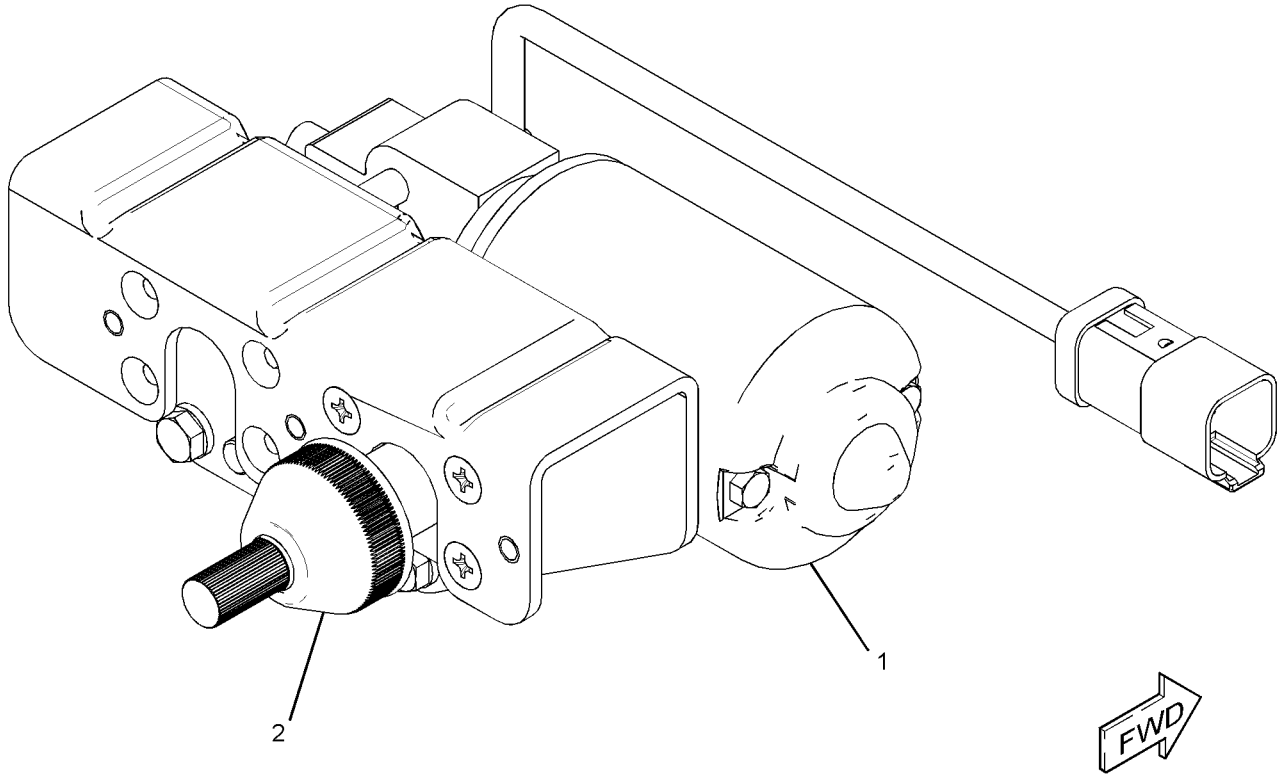

GRAPHIC #1 **<END>** g01423589

OPERATOR STATION

258-8761 MOUNTING GP-CAB

S/N: JKM1-UP

PART OF 258-4543 OPERATOR AR-ENCLOSED ROPS, 269-4871 OPERATOR AR-OPEN ROPS

ALSO AN ATTACHMENT

SMCS-7301 **i02899283**

NOTE	REF NO	GRAPHIC REF	PART NUMBER	QTY	PART NAME 1 2 3 4 5 6 (PRODUCT LEVEL)	SEE PAGE
	1	1	**8E-0849**	4	SLEEVE-CAB	
	2	1	**9U-0512**	4	WASHER (32X144X12-MM THK)	
	3	1	**9W-9940**	4	MOUNT AS	
	4	1	**7X-0593**	4	WASHER-HARD (34X57X6-MM THK)	
M	5	1	**8C-3236**	4	BOLT (M30X3.5X160-MM)	

M-METRIC PART

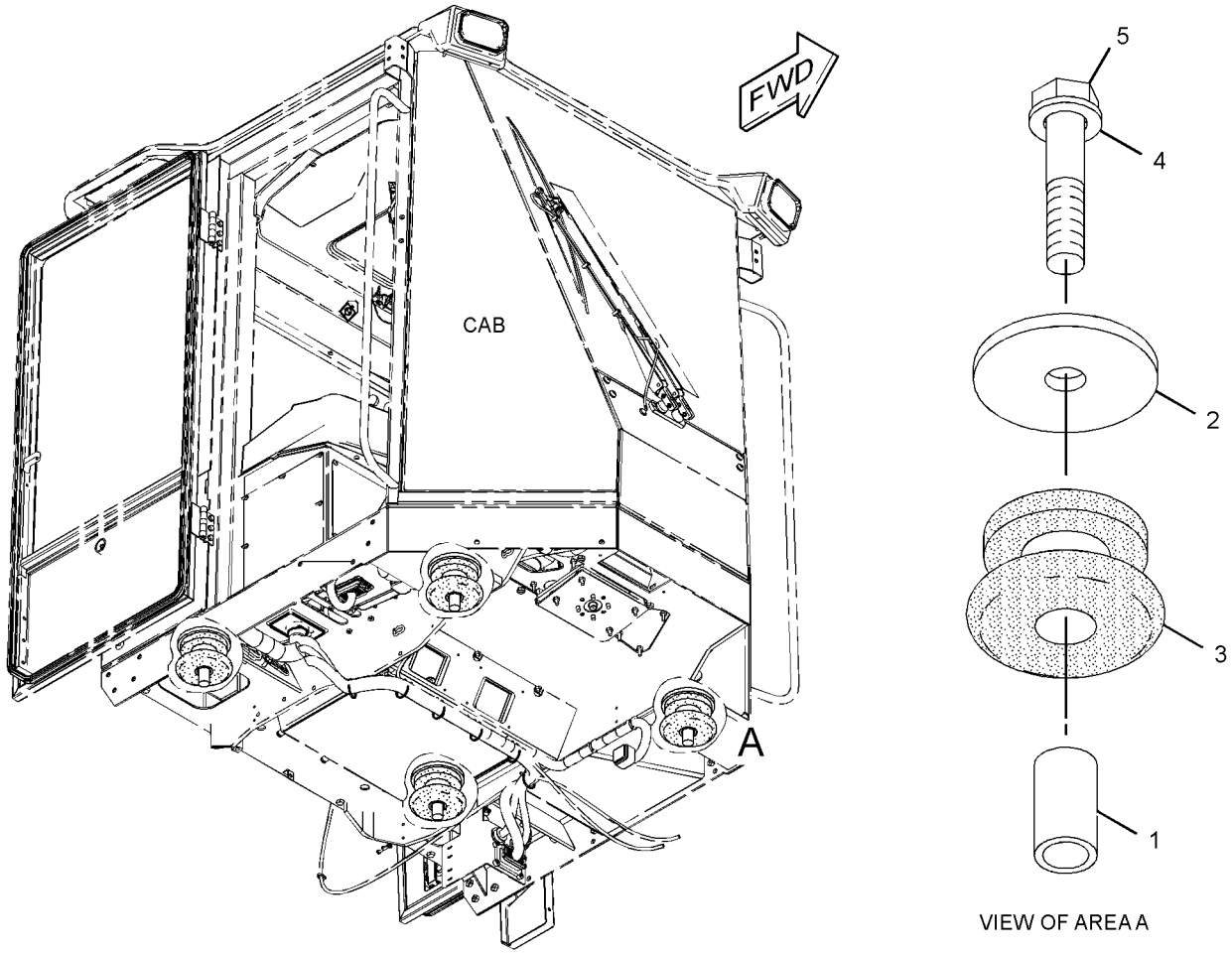

VIEW OF AREA A

GRAPHIC #1 **<END>** g01441683

263-9730 MOUNTING GP-DISPLAY—MESSENGER

S/N: JKM1-UP

PART OF 252-4553 CAB AR-ENCLOSED ROPS, 269-4873 CANOPY AR-OPEN ROPS

ALSO AN ATTACHMENT

SMCS-7347, 7490 **i03646503**

NOTE	REF NO	GRAPHIC REF	PART NUMBER	QTY	PART NAME 1 2 3 4 5 6 (PRODUCT LEVEL)	SEE PAGE
	1	1	**221-9409**	1	KNOB	
	2	1	**263-9731**	1	PLATE	
	3	1	**263-9732**	1	BOX AS	
M	4	1	**8T-4138**	2	BOLT (M6X1X20-MM)	
	5	1	**9X-8256**	2	WASHER (6.6X12X2-MM THK)	
	6	1	**8C-6438**	4	SCREW-PAN HEAD (6-20X12.7-MM)	
	7	1	**326-3092**	1	VISOR (MESSENGER)	

M-METRIC PART

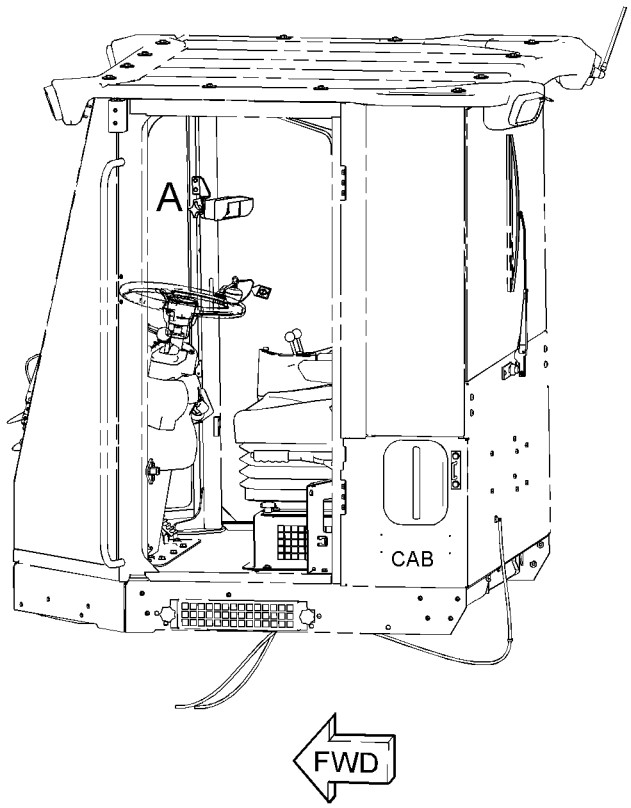

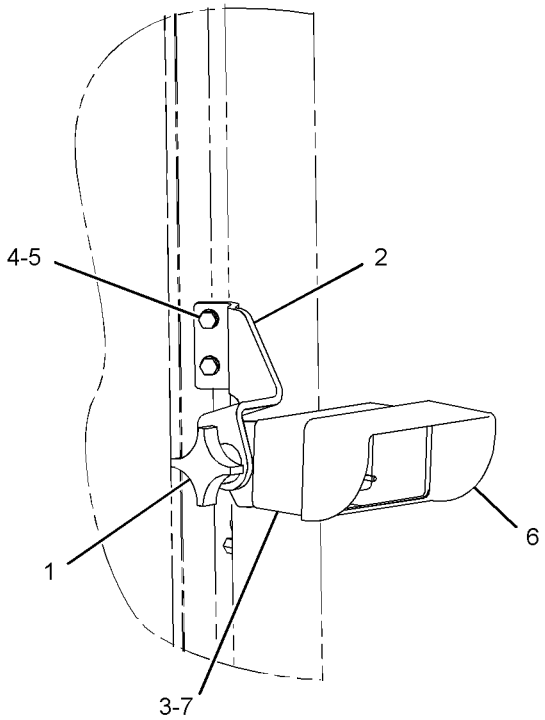

VIEW OF AREA A

GRAPHIC #1 **<END>** g02144383

OPERATOR STATION

287-2921 MOUNTING GP-DISPLAY–

AUTOMATIC LUBRICATION SYSTEM

S/N: JKM1-UP

PART OF 284-5011 LUBRICATION AR-AUTOMATIC

AN ATTACHMENT

SMCS-7347, 7490 **i03270062**

NOTE	REF NO	GRAPHIC REF	PART NUMBER	QTY	PART NAME 1 2 3 4 5 6 (PRODUCT LEVEL)	SEE PAGE
	1	1	**221-6803**	1	MODULE GP-DISPLAY (AUTOMATIC LUBRICATION SYSTEM)	
	2	1	**287-2920**	1	PLATE AS	
	3	1	**287-6819**	1	FILM-IDENTIFICATION (WINDOW WIPER CONTROLS, RH)	
	4	1	**032-9828**	1	GROMMET	
	5	1	**1H-4393**	2	LOCKWASHER	
M	6	1	**5C-8312**	2	NUT (M4X0.7-THD)	
M	7	1	**6V-9672**	2	SCREW-MACHINE (M4X0.7X16-MM)	

M-METRIC PART

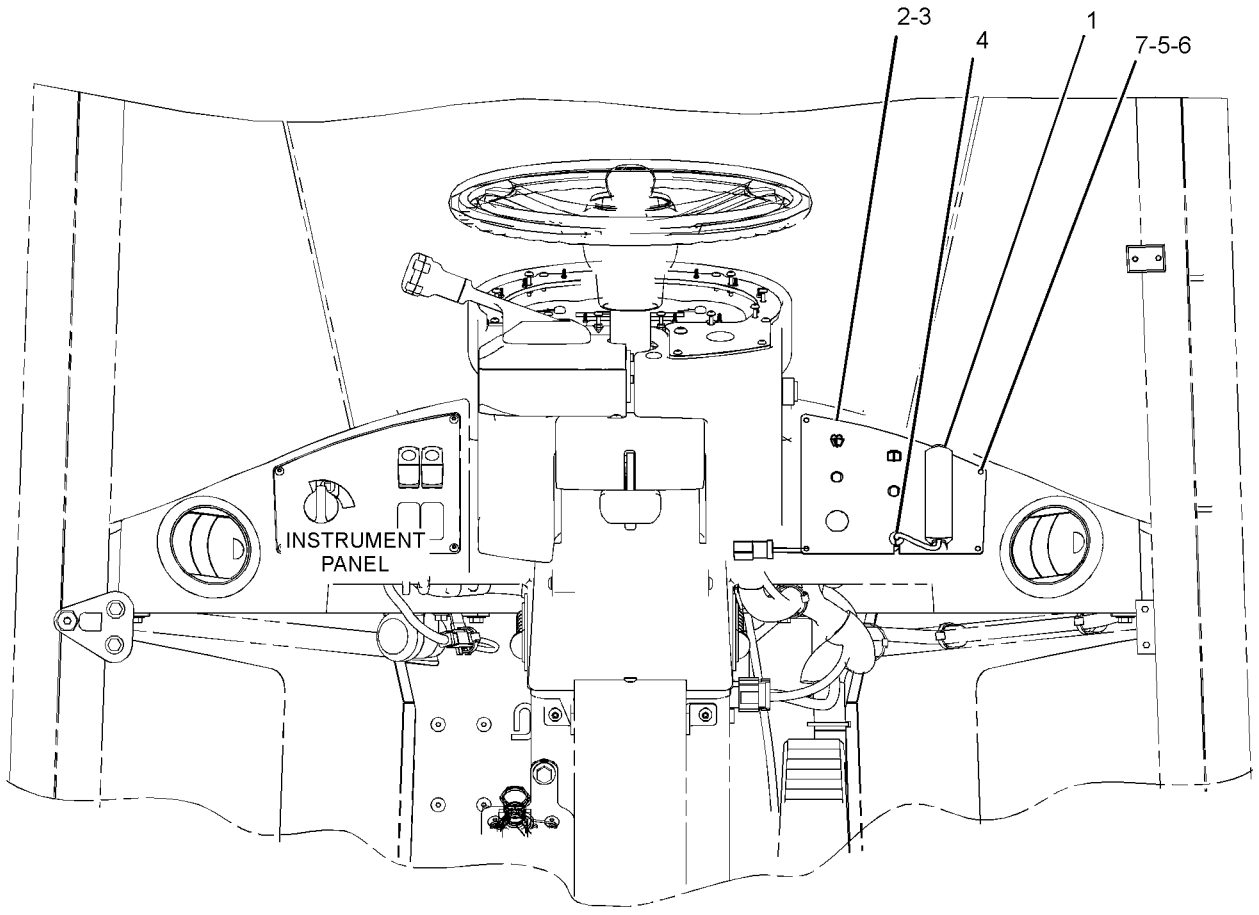

REAR VIEW

GRAPHIC #1 **<END>** g01431166

OPERATOR STATION

258-4543 OPERATOR AR-ENCLOSED ROPS

S/N: JKM1-UP

PART OF 237-7545 GENERAL AR

SMCS-7301 **i03735904**

NOTE	PART NUMBER	QTY	PART NAME 1 2 3 4 5 6 (PRODUCT LEVEL)	SEE PAGE
Y	*252-4553*	1	CAB AR-ENCLOSED ROPS	917
Y	*257-5699*	1	LINER GP-CAB	973
Y	*273-9603*	1	MIRROR GP-REAR VIEW (EXTERIOR)	984
Y	*258-8761*	1	MOUNTING GP-CAB	992
Y	*258-8764*	1	WASHER GP-WINDOW	1036

Y-SEPARATE ILLUSTRATION

<END>

269-4871 OPERATOR AR-OPEN ROPS

S/N: JKM1-UP

AN ATTACHMENT

SMCS-7323 **i02922390**

NOTE	PART NUMBER	QTY	PART NAME 1 2 3 4 5 6 (PRODUCT LEVEL)	SEE PAGE
Y	*269-4873*	1	CANOPY AR-OPEN ROPS	921
Y	*269-4872*	1	GUARD GP-VANDALISM (INSTR PANEL, MON, RH CONSOLE)	963
Y	*282-3357*	1	GUARD GP-VANDALISM (ELECTRONIC CONTROLS)	965
Y	*269-4879*	1	LINER GP-CAB	975
Y	*258-8761*	1	MOUNTING GP-CAB	992
Y	*285-3241*	1	SKIRT GP-CAB	1027
	3J-5389	2	PLUG	

Y-SEPARATE ILLUSTRATION

<END>

OPERATOR STATION

292-6402 PAN GP-BACKREST–LUMBAR

S/N: JKM1-UP
PART OF 292-9237 PAN GP-BACKREST
AN ATTACHMENT

SMCS-7312 **i03095782**

NOTE	REF NO	GRAPHIC REF	PART NUMBER	QTY	PART NAME 1 2 3 4 5 6 (PRODUCT LEVEL)	SEE PAGE
	1	1	**5P-7957**	1	LANYARD	
	2	1	**136-1543**	1	PLATE AS-LUMBAR	
	3	1	**173-2052**	1	RETAINER	
	4	1	**178-7907**	1	HOLDER	
	5	1	**261-5694**	1	PAN AS-BACKREST	
	6	1	**322-3161**	1	SPRING	
	7	1	**4K-9429**	8	RIVET-POP	

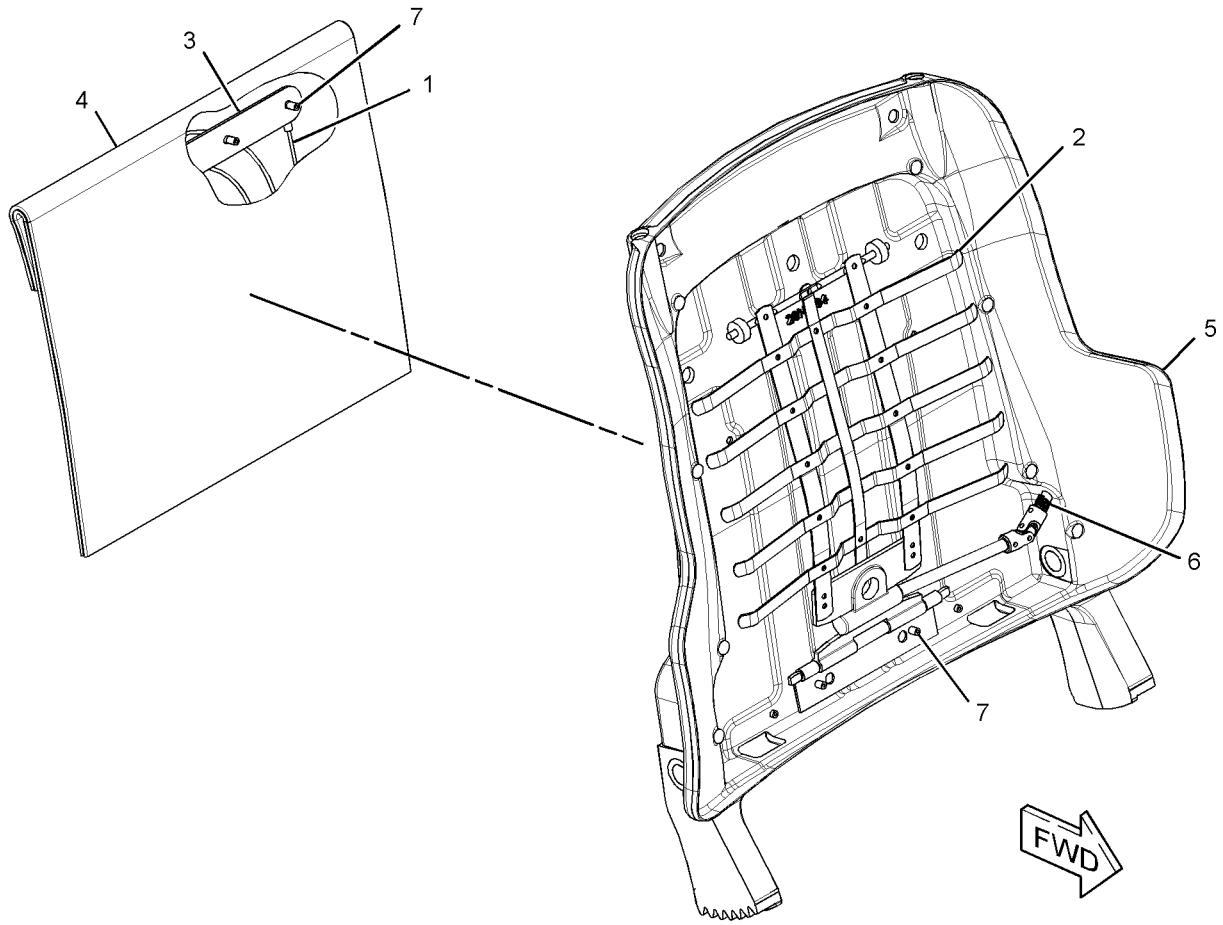

GRAPHIC #1 **<END>** g01577333

OPERATOR STATION

292-9237 PAN GP-BACKREST–CLOTH, LUMBAR

S/N: JKM1-UP
PART OF 178-0603 SEAT GP
AN ATTACHMENT

SMCS-7312 **i03093580**

NOTE	REF NO	GRAPHIC REF	PART NUMBER	QTY	PART NAME 1 2 3 4 5 6 (PRODUCT LEVEL)	SEE PAGE
	1	1	**164-4883**	1	KNOB-LUMBAR	
	2	1	**250-4628**	3	PLUG	
	3	1	**292-6097**	1	CUSHION AS-BACK	
Y	4	1	**292-6402**	1	PAN GP-BACKREST (LUMBAR)	996
	5	1	**5P-0537**	2	WASHER-HARD (7.2X14.5X2-MM THK)	
	6	1	**6V-8969**	2	SCREW-BUTTON HEAD (1/4-20X0.5-IN)	
	7	1	**8T-7566**	1	PIN-SPRING	

Y-SEPARATE ILLUSTRATION

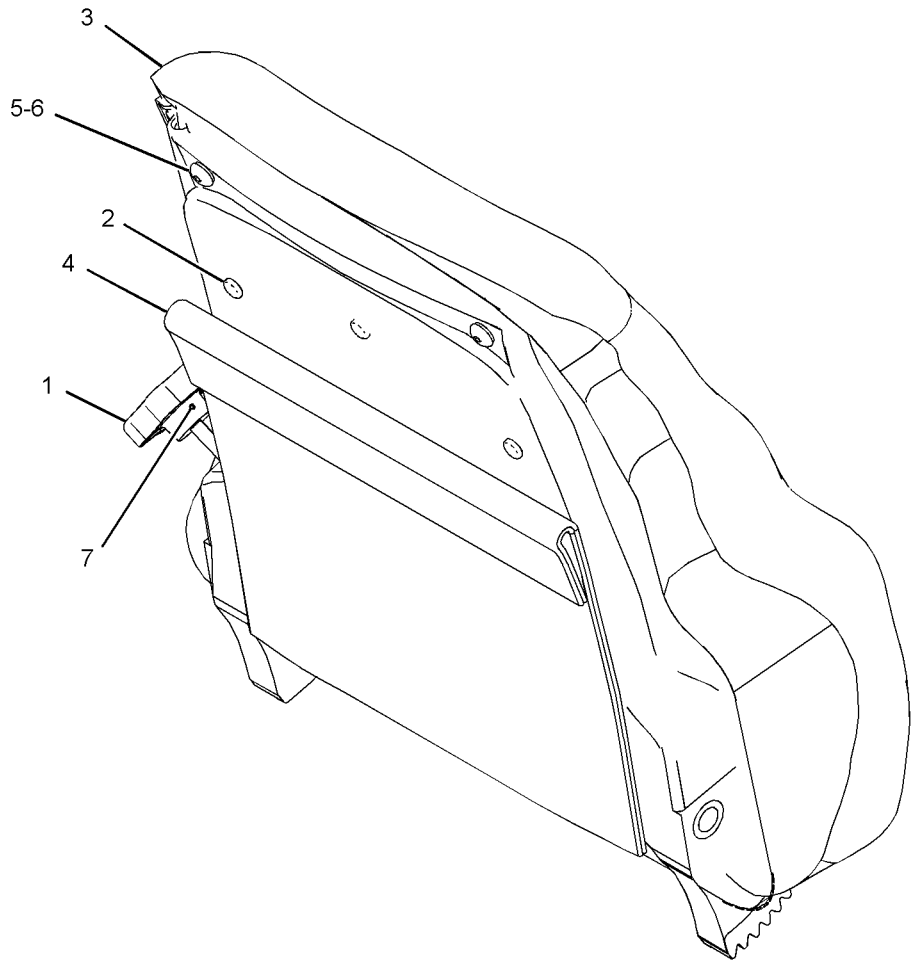

GRAPHIC #1 **<END>** g01336870

OPERATOR STATION

257-5694 PANEL GP-INSTRUMENT–FRONT

S/N: JKM1-UP

PART OF 252-4553 CAB AR-ENCLOSED ROPS, 269-4873 CANOPY AR-OPEN ROPS

ALSO AN ATTACHMENT

SMCS-7451 **i02917157**

NOTE	REF NO	GRAPHIC REF	PART NUMBER	QTY	PART NAME 1 2 3 4 5 6 (PRODUCT LEVEL)	SEE PAGE
	1	1	**129-7184**	1	FILM-INSTRUCTION (ENGINE START)	
	2	1	**185-5629**	1	PLATE AS	
	3	1	**190-4563**	1	PLATE AS	
	4	1	**205-4125**	1	HOUSING AS	
	5	1	**221-4579**	1	PLATE AS	
	6	1	**222-0574**	1	FILM-INFORMATION (INSTRUMENT PANEL COVER)	
	7	1	**257-5695**	1	PLATE AS	
	8	1	**263-9729**	1	PLATE AS	
M	9	1	**129-3178**	2	LOCKNUT (M6X1-THD)	
	10	1	**1H-4393**	9	LOCKWASHER	
M	11	1	**213-7315**	9	SCREW-TRUSS HEAD (M4X0.7X25-MM)	
M	12	1	**5C-2890**	2	NUT (M6X1-THD)	
M	13	1	**5C-8312**	12	NUT (M4X0.7-THD)	
M	14	1	**6V-8490**	2	BOLT (M6X1X25-MM)	
	15	1	**8C-9987**	2	WASHER (8.3X28X2.5-MM THK)	
	16	1	**8T-4205**	4	WASHER-HARD (7.2X14.5X2-MM THK)	
M	17	1	**9X-1046**	17	SCREW (M4X0.7X18-MM)	
M	18	1	**9X-2045**	3	SCREW-TRUSS HEAD (M6X1X20-MM)	

M-METRIC PART

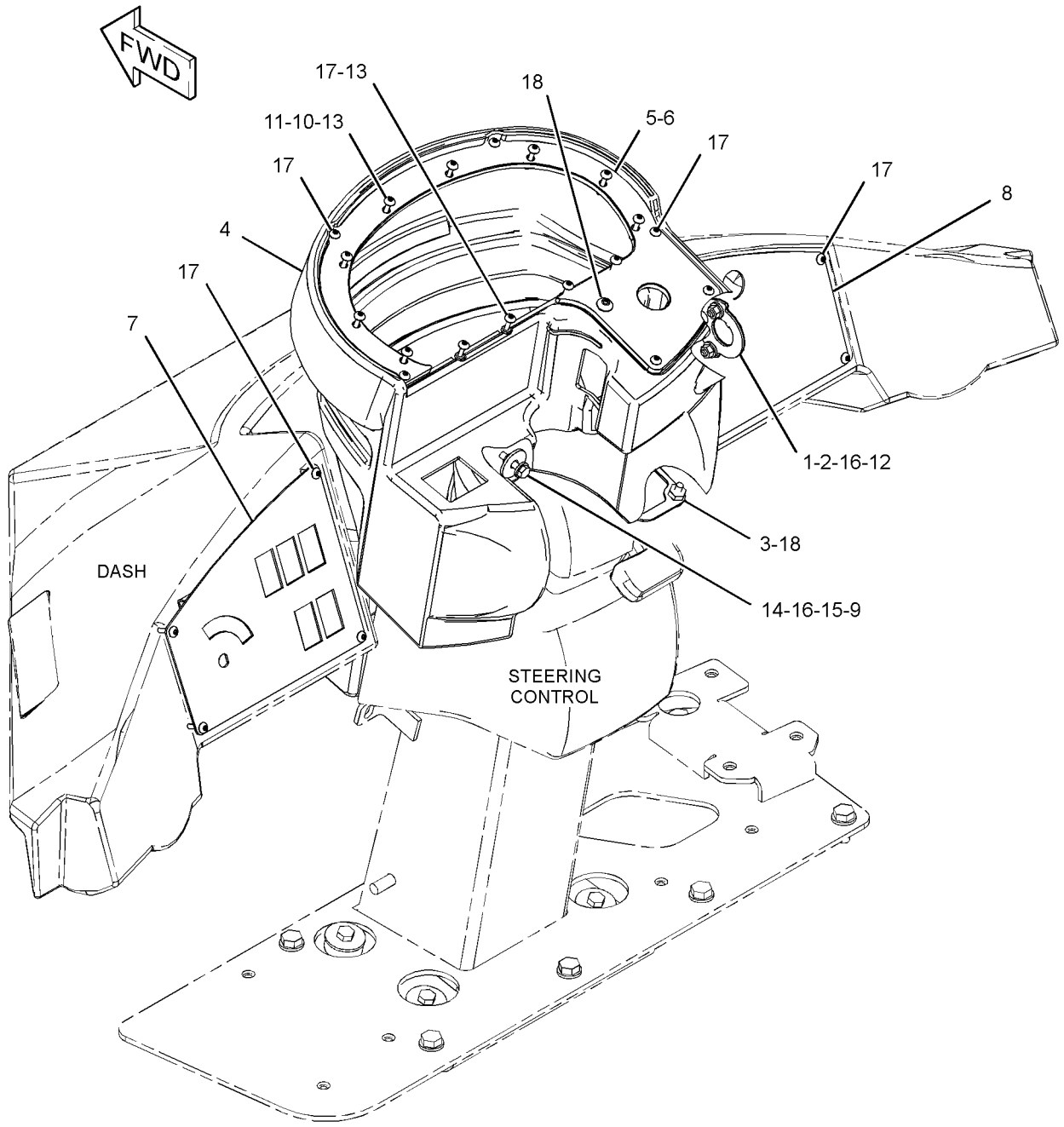

GRAPHIC #1 **<END>** g01423114

OPERATOR STATION

205-9237 BASE GP-FOOT BRAKE–PEDAL, RH

S/N: JKM1-UP
PART OF 271-0260 CONTROL GP-FOOT BRAKE
ALSO AN ATTACHMENT

SMCS-4269, 4290 **i01805770**

NOTE	REF NO	GRAPHIC REF	PART NUMBER	QTY	PART NAME 1 2 3 4 5 6 (PRODUCT LEVEL)	SEE PAGE
	1	1	**4E-8958**	1	PIN	
	2	1	**4E-9664**	1	PIN	
	3	1	**8S-2225**	1	SEAL-LIP TYPE	
	4	1	**009-3101**	4	RING-RETAINING	
	5	1	**113-7752**	1	PEDAL-BRAKE	
	6	1	**115-2247**	1	SPRING	
	7	1	**163-3926**	1	ROLLER	

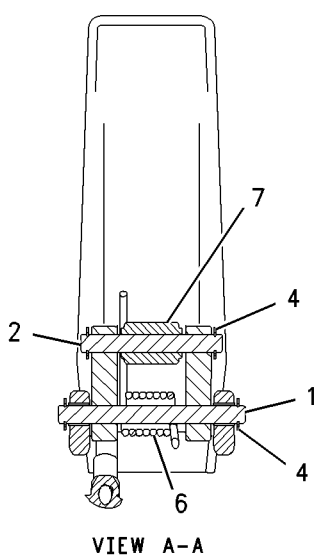

VIEW A-A

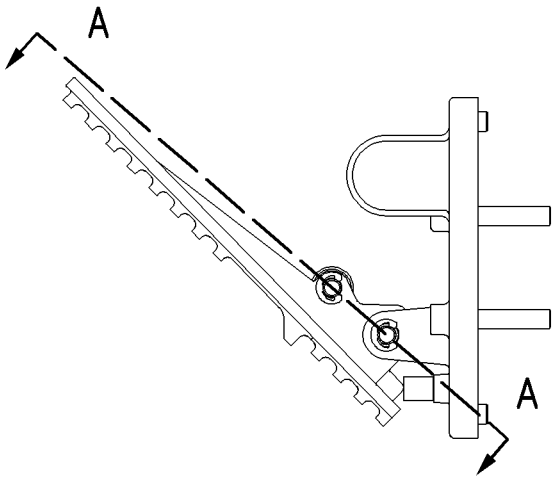

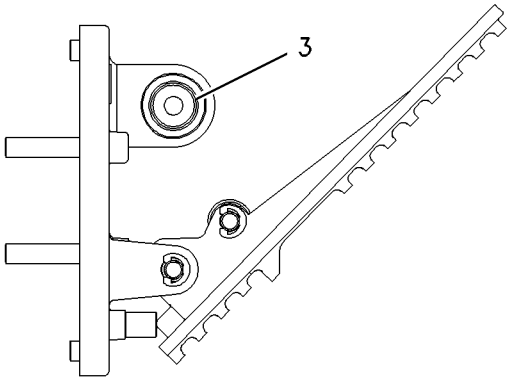

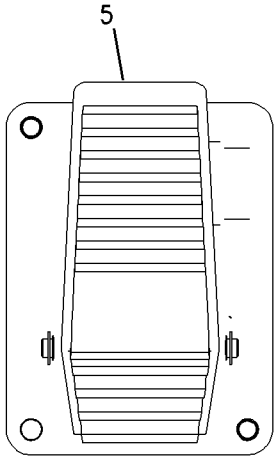

GRAPHIC #1 **<END>** g00869036

OPERATOR STATION

271-0261 BASE GP-FOOT BRAKE–PEDAL, LH

S/N: JKM1-UP

PART OF 271-0260 CONTROL GP-FOOT BRAKE

ALSO AN ATTACHMENT

SMCS-4269, 4290 **i02905687**

NOTE	REF NO	GRAPHIC REF	PART NUMBER	QTY	PART NAME 1 2 3 4 5 6 (PRODUCT LEVEL)	SEE PAGE
	1	1	**4E-9664**	1	PIN	
	2	1	**009-3101**	3	RING-RETAINING	
	3	1	**105-6117**	1	SWITCH AS-LIMIT (STOP LIGHT)	
	4	1	**113-7752**	1	PEDAL-BRAKE	
	5	1	**115-2247**	1	SPRING	
	6	1	**146-1892**	1	HARNESS AS-BRAKE (STOP LIGHT)	
M	7	1	**153-6273**	1	SETSCREW	
	8	1	**200-2217**	1	COVER	
	9	1	**200-2218**	1	BRACKET AS-ADJUSTABLE SWITCH (STOP LIGHT LIMIT)	
	10	1	**200-2219**	6	BOLT (M5X0.8X25-MM)	
	11	1	**200-2220**	1	SEAL	
	12	1	**205-3582**	1	ROLLER	
	13	1	**206-7316**	1	PIN	
M	14	1	**125-3295**	2	SCREW-PAN HEAD (M2.5X0.45X12-MM)	
	15	1	**267-5222**	1	SENSOR GP-POSITION (ROTARY) (LEFT BRAKE PEDAL)	
		1	**186-3735**	3	PIN-CONNECTOR (16-GA TO 18-GA)	
E		1	**9X-1813**		SLEEVE (13-CM)	
		1	**230-4014**	1	RECEPTACLE AS-CONNECTOR (3-PIN)	
M	16	1	**8T-2899**	2	SCREW-MACHINE (M2.5X0.45X6-MM)	

E-ORDER BY THE CENTIMETER
M-METRIC PART

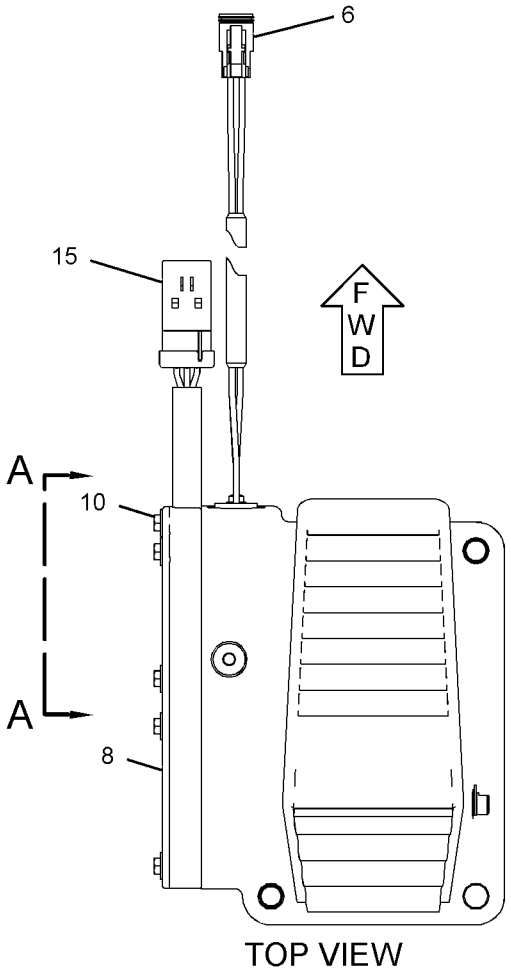

TOP VIEW

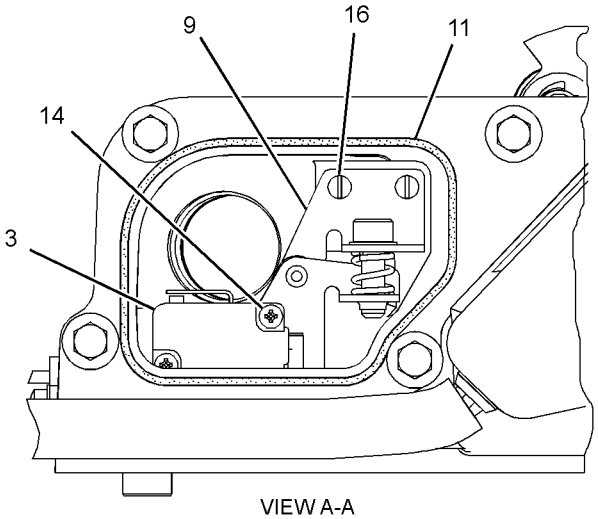

VIEW A-A

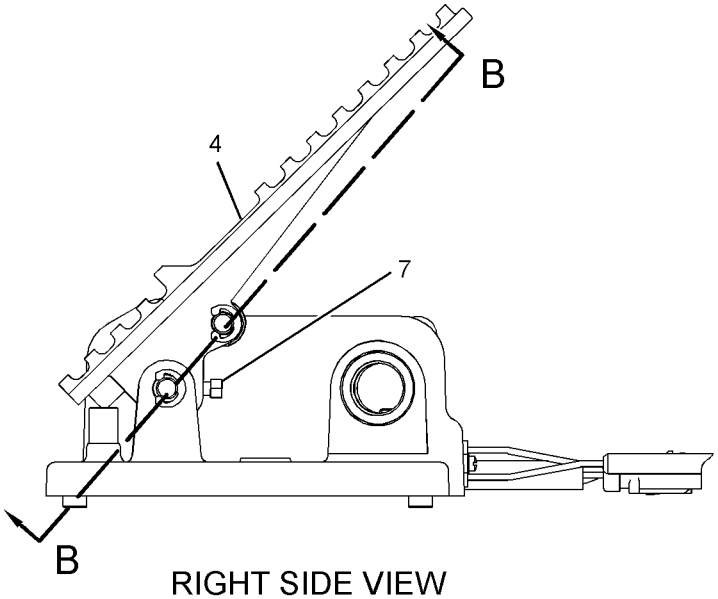

RIGHT SIDE VIEW

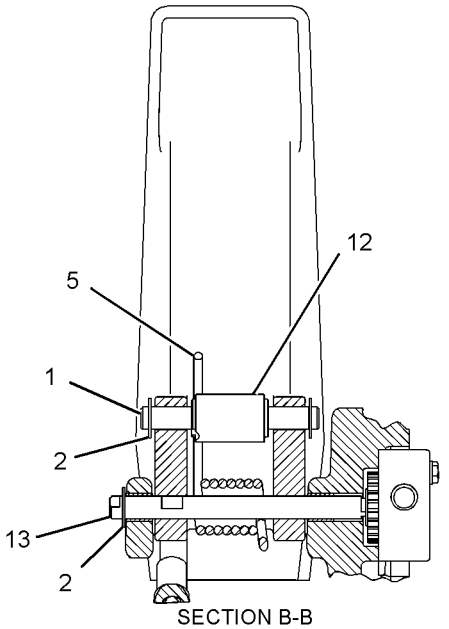

SECTION B-B

GRAPHIC #1 **<END>** g01425798

OPERATOR STATION

257-5698 PEDAL GP-GOVERNOR

S/N: JKM1-UP

PART OF 252-4553 CAB AR-ENCLOSED ROPS, 269-4873 CANOPY AR-OPEN ROPS

ALSO AN ATTACHMENT

SMCS-1276 **i03531623**

NOTE	REF NO	GRAPHIC REF	PART NUMBER	QTY	PART NAME 1 2 3 4 5 6 (PRODUCT LEVEL)	SEE PAGE
	1	1	**8T-4224**	4	WASHER-HARD (8.8X16X2-MM THK)	
M	2	1	**8T-7547**	4	BOLT (M8X1.25X30-MM)	
	3	1	**262-5778**	1	PEDAL GP-GOVERNOR	
		1	**269-1983**	1	SENSOR GP-POSITION (THROTTLE)	
		1	**292-9802**	1	COVER	
	4	1	**327-9256**	1	PLATE	

M-METRIC PART

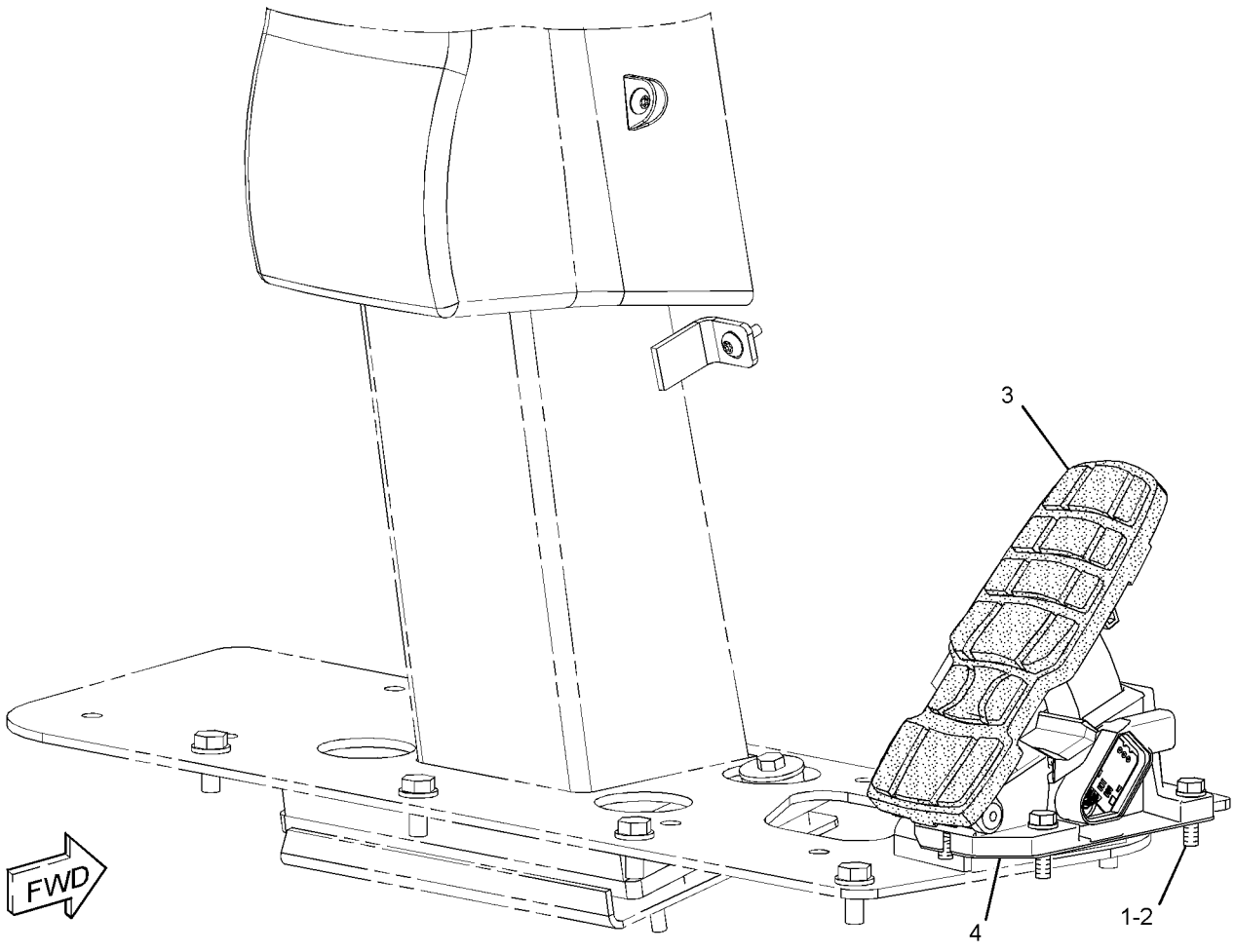

GRAPHIC #1 **<END>** g01811118

OPERATOR STATION

248-4152 RADIO GP—AM/FM/WB CD PLAYER

S/N: JKM1-UP
PART OF 284-4739 RADIO GP
AN ATTACHMENT

SMCS-7338 **i03837531**

NOTE	PART NUMBER	QTY	PART NAME 1 2 3 4 5 6 (PRODUCT LEVEL)	SEE PAGE
Y	**331-5291**	1	RADIO GP (AM/FM/WB/CD PLAYER)	1005
	200-5728	1	HARNESS AS-RADIO	
	172-8039	11	TERMINAL (RADIO)	
	160-3518	1	KIT-RECEPTACLE (8-PIN)	
			(INCLUDES RECEPTACLE AS & WEDGE)	
	8T-8737	1	PLUG-SEAL	
	186-3735	7	PIN-CONNECTOR (16-GA TO 18-GA)	
	172-8037	1	CONNECTOR (RADIO)	
	241-4939	1	BUSHING	

Y-SEPARATE ILLUSTRATION

<END>

284-4739 RADIO GP—AM/FM CD PLAYER

S/N: JKM1-UP
AN ATTACHMENT

SMCS-7338 **i02579148**

NOTE	PART NUMBER	QTY	PART NAME 1 2 3 4 5 6 (PRODUCT LEVEL)	SEE PAGE
Y	*248-4152*	1	RADIO GP (AM/FM/WB/CD PLAYER)	1004

Y-SEPARATE ILLUSTRATION

<END>

331-5291 RADIO GP–AM/FM/WB/CD PLAYER

S/N: JKM1-UP

PART OF 248-4152 RADIO GP

AN ATTACHMENT

SMCS-7338 **i03624418**

NOTE	REF NO	GRAPHIC REF	PART NUMBER	QTY	PART NAME 1 2 3 4 5 6 (PRODUCT LEVEL)	SEE PAGE
	1	1	**192-7054**	1	SLEEVE	

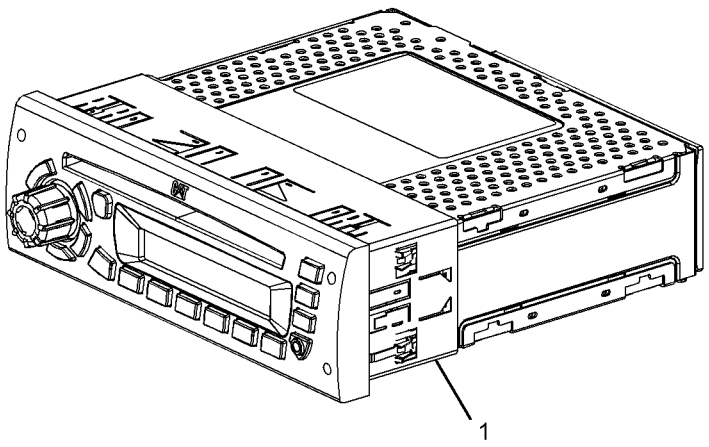

GRAPHIC #1 **<END>** g01813033

OPERATOR STATION

263-9088 RADIO GP-COMMUNICATION—PRODUCT LINK 121SR

S/N: JKM1-UP

PART OF 281-9476 WIRING GP-COMMUNICATION

AN ATTACHMENT

SMCS-733T **i03954672**

NOTE	PART NUMBER	QTY	PART NAME 1 2 3 4 5 6 (PRODUCT LEVEL)	SEE PAGE
	336-3566	1	SOFTWARE GP-COMMUNICATION (PRODUCT LINK 121SR)	

<END>

OPERATOR STATION

210-2270 RECLINER GP-SEAT

S/N: JKM1-UP
PART OF 178-0603 SEAT GP
AN ATTACHMENT

SMCS-7312 **i03643750**

NOTE	REF NO	GRAPHIC REF	PART NUMBER	QTY	PART NAME 1 2 3 4 5 6 (PRODUCT LEVEL)	SEE PAGE
	1	1	**177-1862**	1	BRACKET (SEAT BELT)	
	2	1	**210-2262**	1	BRACKET AS (LH)	
	3	1	**210-2263**	1	BRACKET AS (RH)	
	4	1	**210-2266**	1	GEAR-LOCK (14-TEETH)	
	5	1	**293-2911**	1	SHAFT AS	
		1	**2L-5893**	2	PIN-SPRING	
		1	**170-8590**	1	SPRING	
	6	1	**217-7933**	1	LATCH	
	7	1	**236-5197**	1	SPRING	
	8	1	**031-0214**	1	BOLT-LOCKING (1/4-20X0.5-IN)	
	9	1	**101-2867**	1	WASHER-HARD (7.2X25X2-MM THK)	
	10	1	**4M-6425**	1	BOLT (5/16-18X1-IN)	
	11	1	**5M-2894**	1	WASHER-HARD (10.2X18.5X2.5-MM THK)	
	12	1	**5S-7383**	1	BOLT (3/8-16X1.75-IN)	
	13	1	**8T-4224**	1	WASHER-HARD (8.8X16X2-MM THK)	

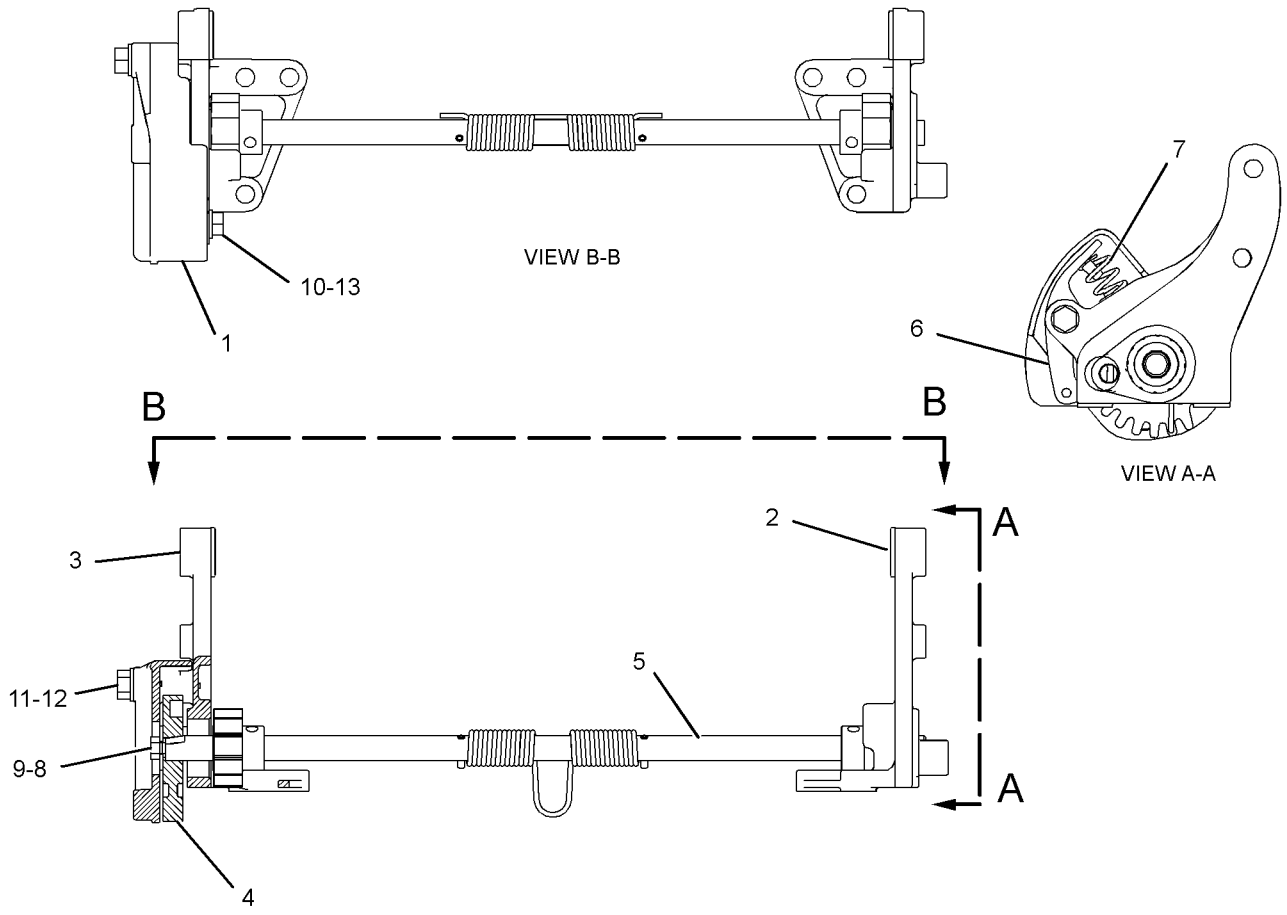

GRAPHIC #1 **<END>** g01296294

OPERATOR STATION

257-5667 ROPS GP-ENCLOSED

S/N: JKM1-UP

PART OF 252-4553 CAB AR-ENCLOSED ROPS

SMCS-7301 **i03508831**

NOTE	REF NO	GRAPHIC REF	PART NUMBER	QTY	PART NAME 1 2 3 4 5 6 (PRODUCT LEVEL)	SEE PAGE
Y	1	1	**257-5670**	1	CAB GP-ENCLOSED ROPS	918
Y	2	1	**263-2046**	1	DOOR GP-CAB (SLIDING WINDOW, LH)	954
Y	3	1	**263-2063**	1	DOOR GP-CAB (SLIDING WINDOW, RH)	959
	4	1	**091-0079**	1	PLUG	

Y-SEPARATE ILLUSTRATION

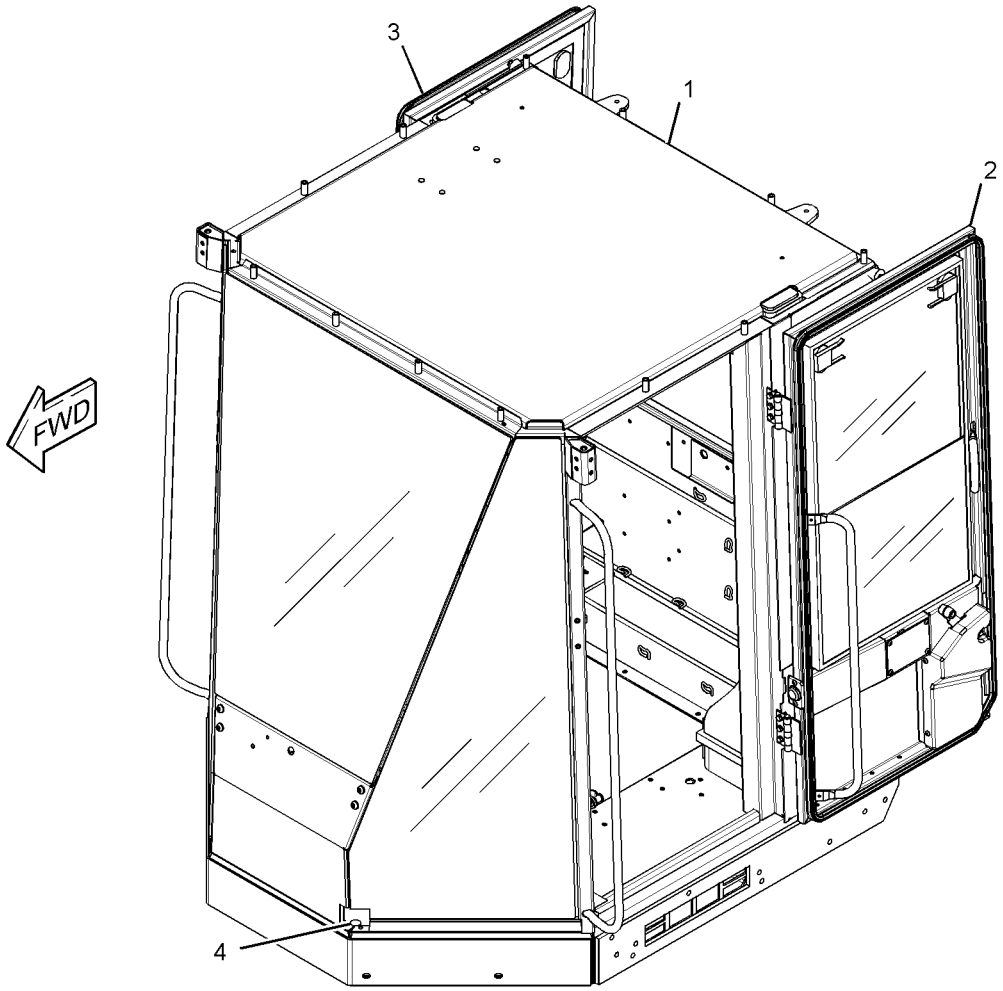

GRAPHIC #1 **<END>** g01846313

OPERATOR STATION

269-4875 ROPS GP-OPEN

S/N: JKM1-UP
PART OF 269-4873 CANOPY AR-OPEN ROPS
AN ATTACHMENT

SMCS-7323 **i02926913**

NOTE	REF NO	GRAPHIC REF	PART NUMBER	QTY	PART NAME 1 2 3 4 5 6 (PRODUCT LEVEL)	SEE PAGE
	1	1	**118-7255**	1	COVER	
	2	1	**269-4877**	1	CANOPY AS	
	3	1	**8T-4121**	2	WASHER-HARD (11X21X2.5-MM THK)	
M	4	1	**8T-4196**	2	BOLT (M10X1.5X35-MM)	

M-METRIC PART

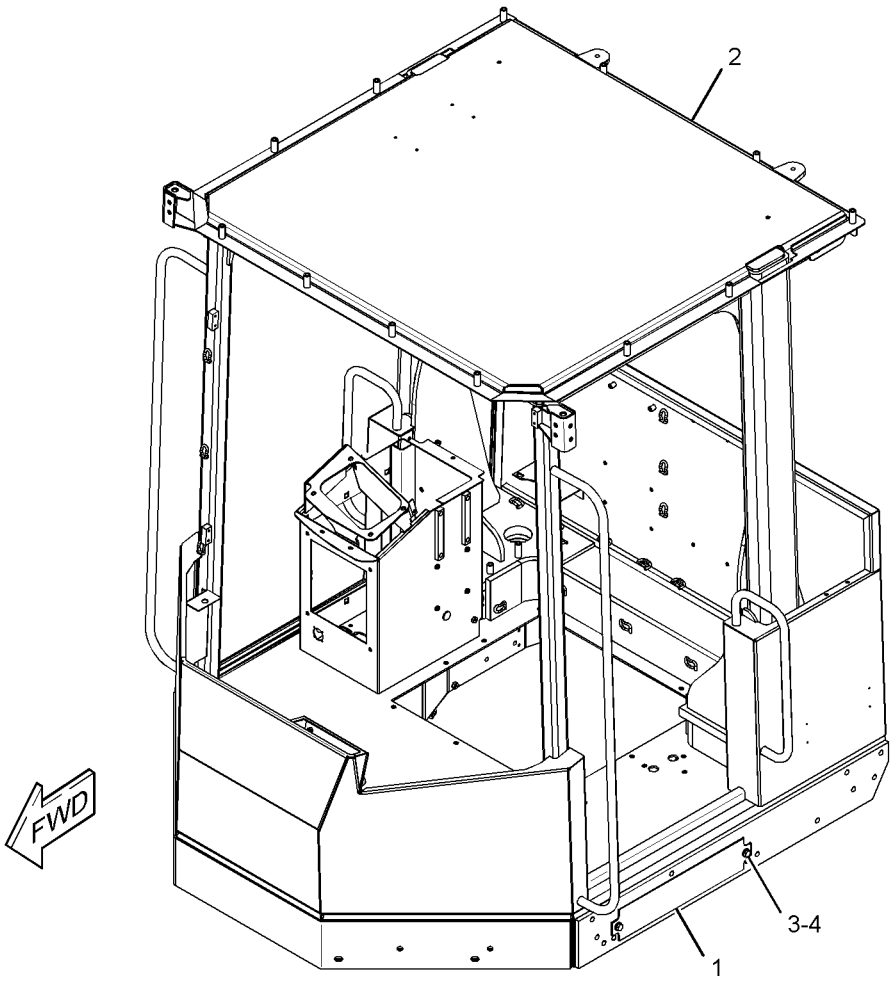

GRAPHIC #1 **<END>** g01397233

OPERATOR STATION

118-7250 SCREEN GP-SUN

S/N: JKM1-UP
PART OF 317-9483 CONFIGURATION AR, 317-9482 OPTION AR-CAB
AN ATTACHMENT

SMCS-7165 **i01850342**

NOTE	REF NO	GRAPHIC REF	PART NUMBER	QTY	PART NAME 1 2 3 4 5 6 (PRODUCT LEVEL)	SEE PAGE
	1	1	**119-2073**	2	HOOK-RETAINER	

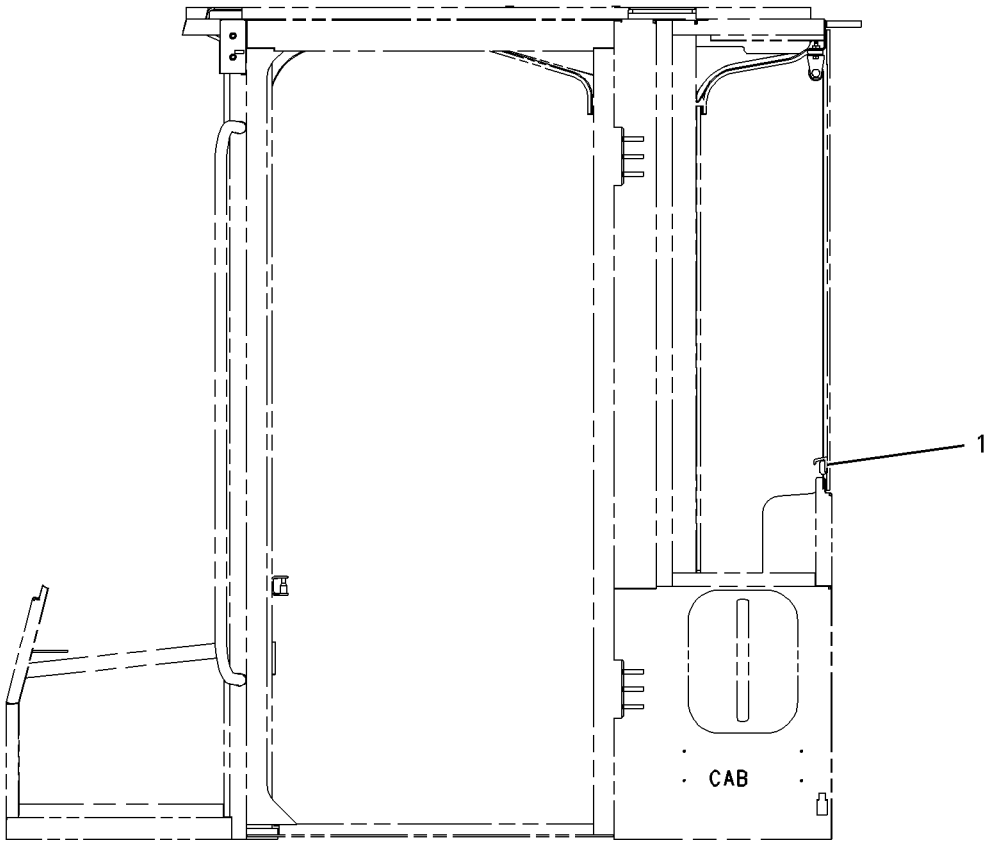

LEFT SIDE VIEW

GRAPHIC #1 **<END>** g00942564

OPERATOR STATION

257-9837 SEAT & MOUNTING GP

S/N: JKM1-UP
PART OF 317-9483 CONFIGURATION AR
CANNOT BE USED WITH 269-4871—PAGE 995
AN ATTACHMENT

SMCS-7312 **i02950619**

NOTE	REF NO	GRAPHIC REF	PART NUMBER	QTY	PART NAME 1 2 3 4 5 6 (PRODUCT LEVEL)	SEE PAGE
M	1	1	**113-9232**	2	BOLT (8X1.25X30-MM)	
	2	1	**177-4937**	1	SPACER (11.7X19.8X20.3-MM THK)	
Y	3	1	**236-7019**	1	SEAT BELT GP (RETRACTABLE, 51-MM)	1016
Y	4	1	**257-9838**	1	SEAT GP-SUSPENSION (HEATED)	1023
	5	1	**0T-0244**	1	BOLT (7/16-20X1.25-IN)	
	6	1	**205-6388**	1	BOLT (7/16-20X1.75-IN)	
	7	1	**8T-4121**	4	WASHER-HARD (11X21X2.5-MM THK)	
M	8	1	**9X-2125**	4	BOLT-LOCKING (M10X1.5X25-MM)	

M-METRIC PART
Y-SEPARATE ILLUSTRATION

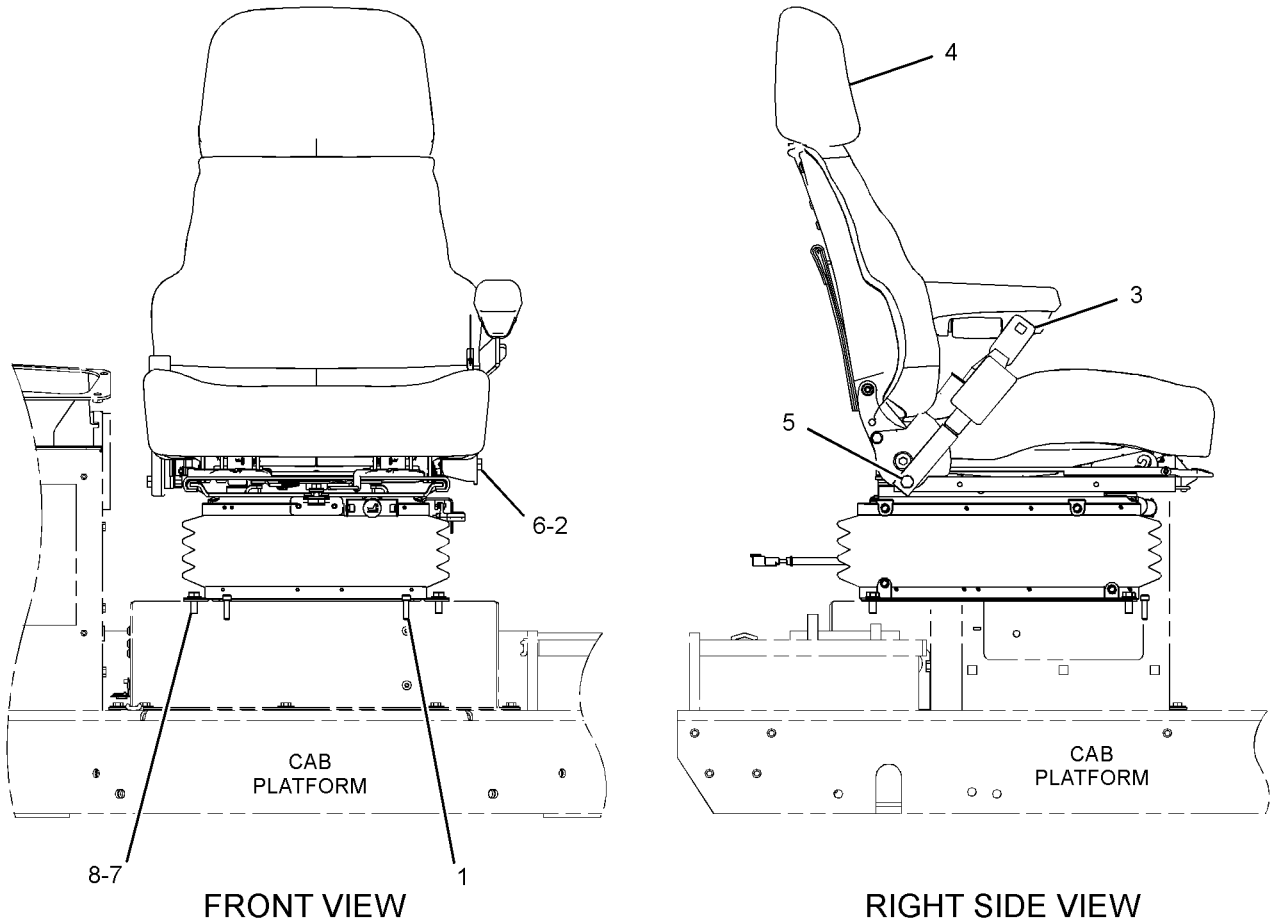

GRAPHIC #1 **<END>** g01430541

OPERATOR STATION

257-9846 SEAT & MOUNTING GP

S/N: JKM1-UP

PART OF 252-4553 CAB AR-ENCLOSED ROPS

SMCS-7312 **i02917199**

NOTE	REF NO	GRAPHIC REF	PART NUMBER	QTY	PART NAME 1 2 3 4 5 6 (PRODUCT LEVEL)	SEE PAGE
M	1	1	**113-9232**	4	BOLT (8X1.25X30-MM)	
	2	1	**118-7236**	1	PLATE	
Y	3	1	**246-0667**	1	SEAT BELT GP (RETRACTABLE)	1017
Y	4	1	**257-9860**	1	SEAT GP-SUSPENSION	1023
M	5	1	**9X-2041**	4	SCREW-TRUSS HEAD (M10X1.5X20-MM)	

M-METRIC PART
Y-SEPARATE ILLUSTRATION

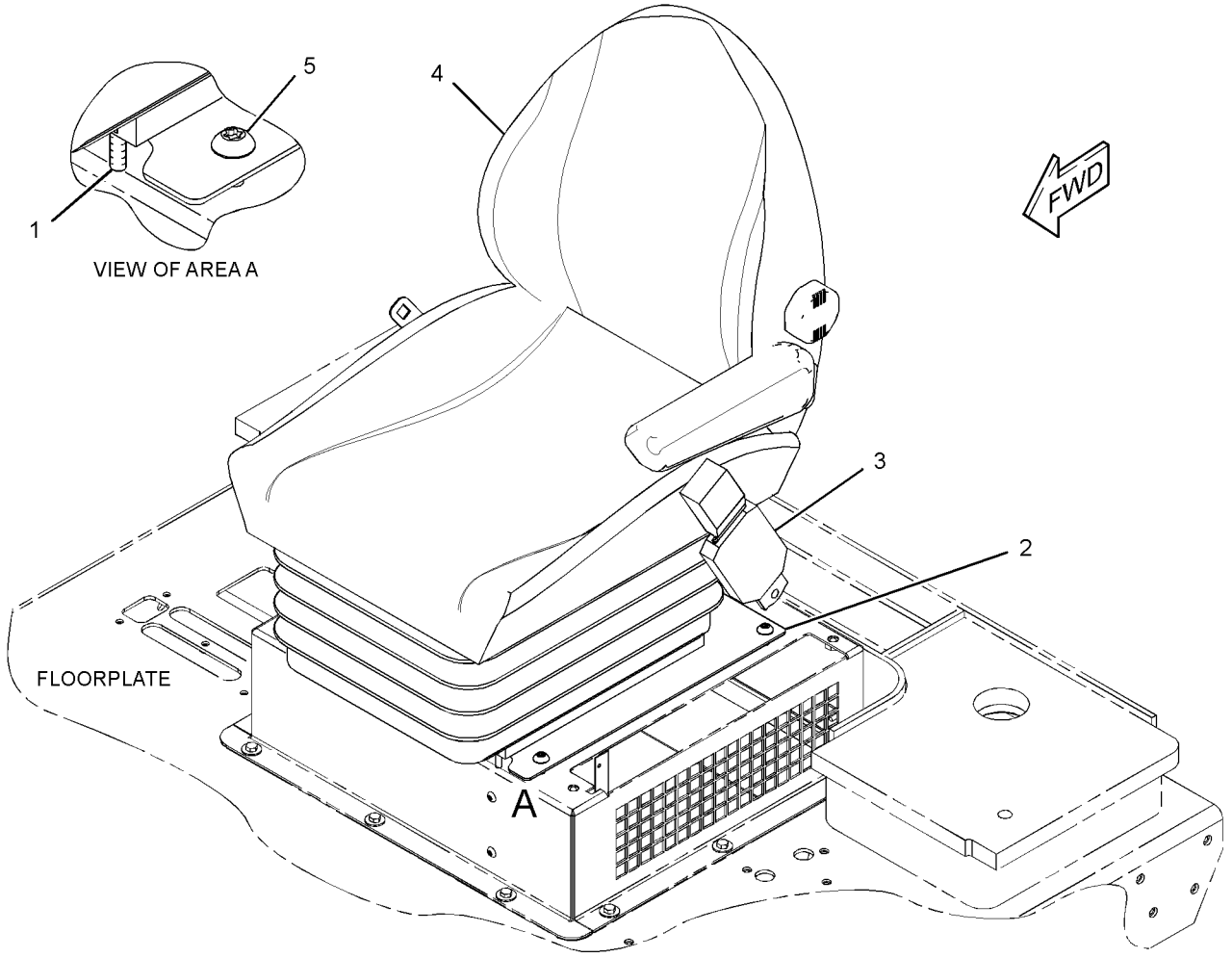

GRAPHIC #1 **<END>** g01422557

OPERATOR STATION

257-9847 SEAT & MOUNTING GP

S/N: JKM1-UP
PART OF 317-9482 OPTION AR-CAB
AN ATTACHMENT

SMCS-7312 **i02926980**

NOTE	REF NO	GRAPHIC REF	PART NUMBER	QTY	PART NAME 1 2 3 4 5 6 (PRODUCT LEVEL)	SEE PAGE
M	1	1	**113-9232**	2	BOLT (8X1.25X30-MM)	
	2	1	**177-4937**	1	SPACER (11.7X19.8X20.3-MM THK)	
Y	3	1	**236-7019**	1	SEAT BELT GP (RETRACTABLE, 51-MM)	1016
Y	4	1	**257-9500**	1	SEAT GP-SUSPENSION	1022
	5	1	**0T-0244**	1	BOLT (7/16-20X1.25-IN)	
	6	1	**205-6388**	1	BOLT (7/16-20X1.75-IN)	
	7	1	**8T-4121**	4	WASHER-HARD (11X21X2.5-MM THK)	
M	8	1	**9X-2125**	4	BOLT-LOCKING (M10X1.5X25-MM)	

M-METRIC PART
Y-SEPARATE ILLUSTRATION

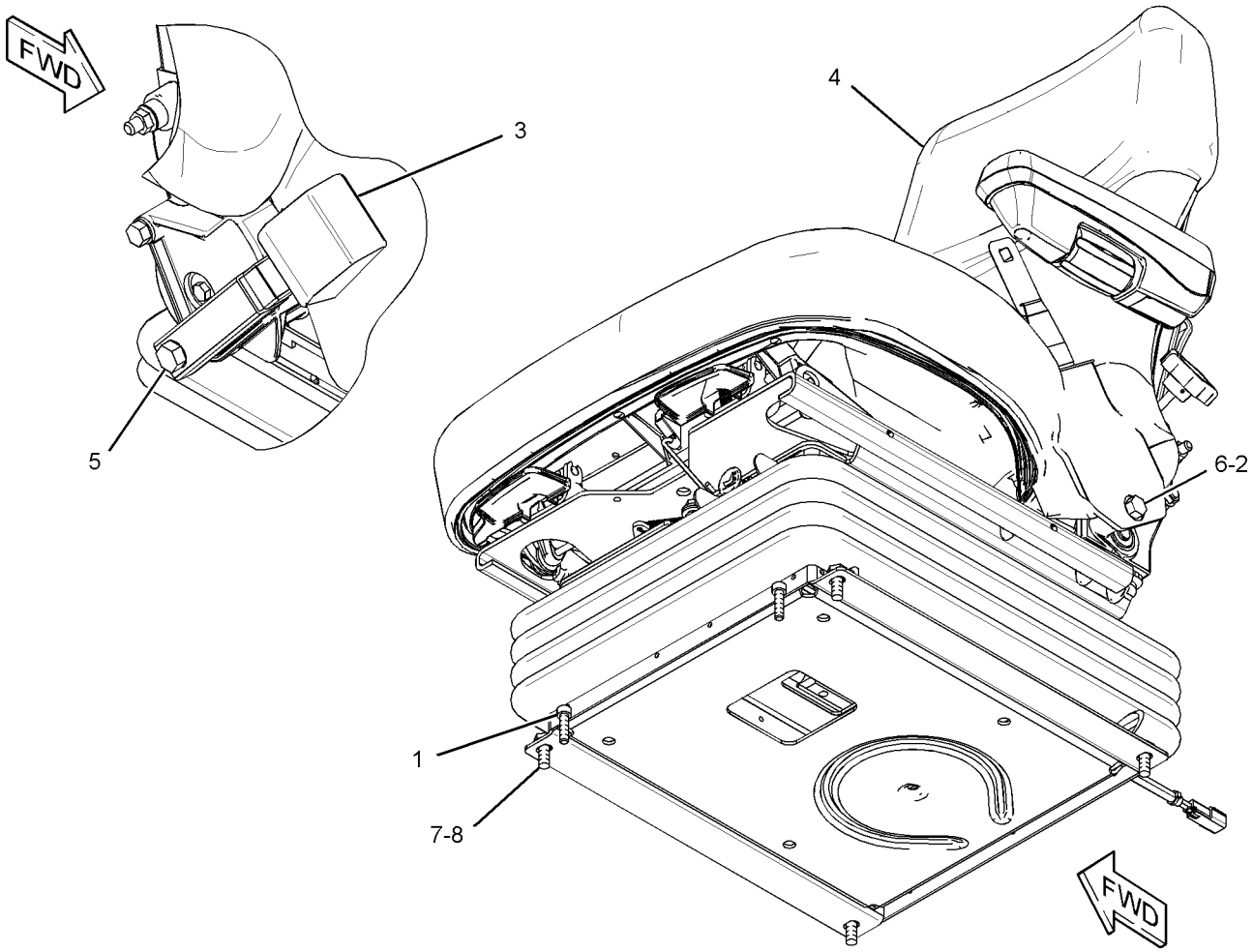

GRAPHIC #1 **<END>** g01427171

OPERATOR STATION

257-9848 SEAT & MOUNTING GP

S/N: JKM1-UP
PART OF 269-4873 CANOPY AR-OPEN ROPS
AN ATTACHMENT

SMCS-7312 **i02926864**

NOTE	REF NO	GRAPHIC REF	PART NUMBER	QTY	PART NAME 1 2 3 4 5 6 (PRODUCT LEVEL)	SEE PAGE
M	1	1	**113-9232**	4	BOLT (8X1.25X30-MM)	
	2	1	**118-7236**	1	PLATE	
Y	3	1	**246-0667**	1	SEAT BELT GP (RETRACTABLE)	1017
Y	4	1	**257-9861**	1	SEAT GP-SUSPENSION	1024
M	5	1	**9X-2041**	4	SCREW-TRUSS HEAD (M10X1.5X20-MM)	

M-METRIC PART
Y-SEPARATE ILLUSTRATION

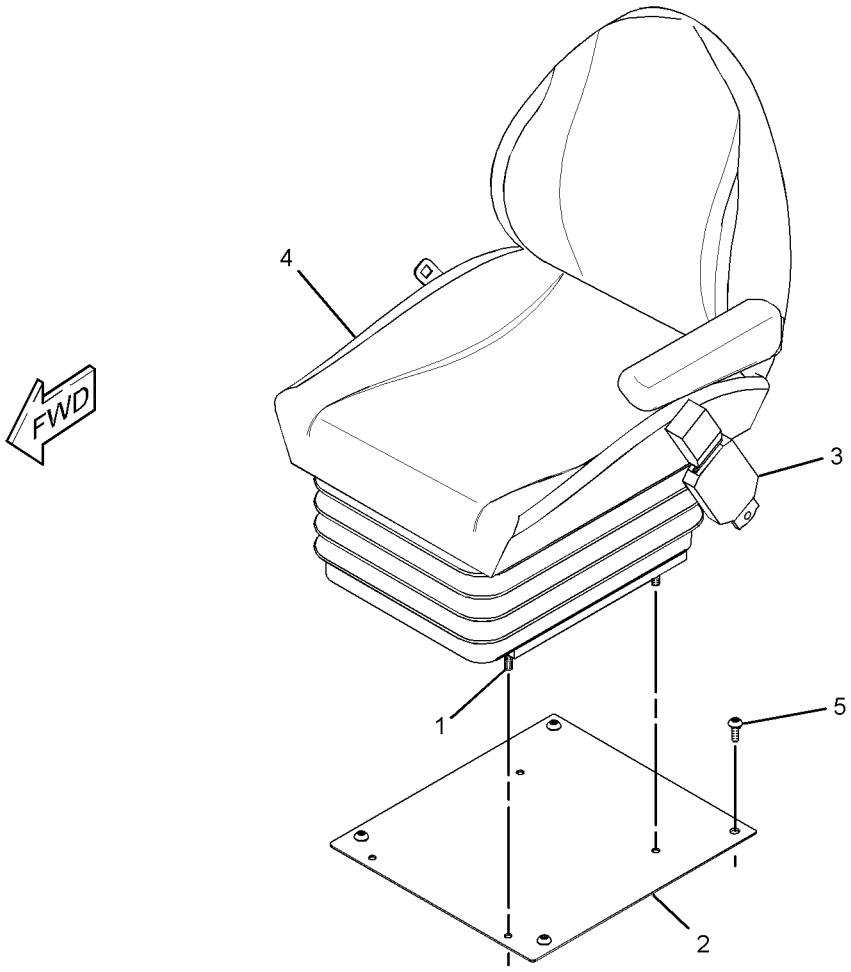

GRAPHIC #1 **<END>** g01454457

OPERATOR STATION

129-7253 SEAT BELT GP

S/N: JKM1-UP
PART OF 247-0682 SEAT BELT GP
AN ATTACHMENT

SMCS-7327 **i02594429**

NOTE	REF NO	GRAPHIC REF	PART NUMBER	QTY	PART NAME 1 2 3 4 5 6 (PRODUCT LEVEL)	SEE PAGE
	1	1	**8S-0934**	1	LOCKNUT-FLANGE (7/16-20-THD)	
	2	1	**1J-6298**	1	BOLT (7/16-20X3.5-IN)	
	3	1	**8S-4723**	1	BOLT (7/16-20X1.5-IN)	

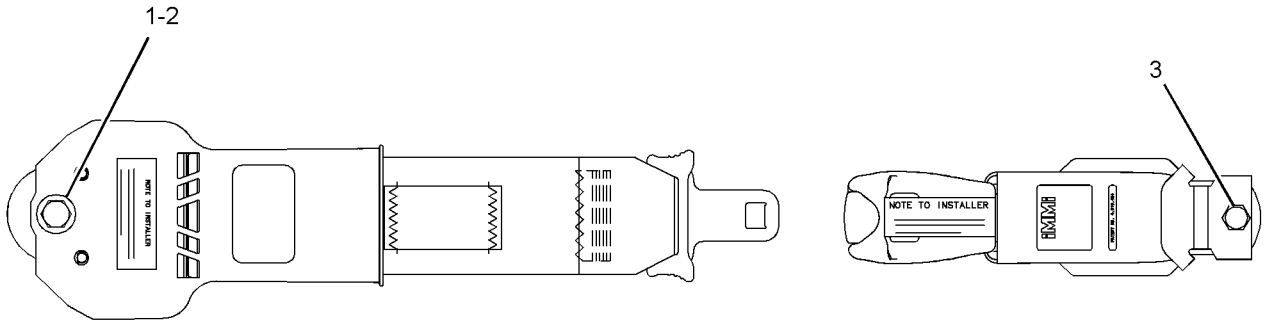

GRAPHIC #1 **<END>** g01247451

OPERATOR STATION

236-7019 SEAT BELT GP

S/N: JKM1-UP
PART OF 257-9837, 257-9847 SEAT & MOUNTING GP
AN ATTACHMENT

SMCS-7327 **i02220017**

NOTE	REF NO	GRAPHIC REF	PART NUMBER	QTY	PART NAME 1 2 3 4 5 6 (PRODUCT LEVEL)	SEE PAGE
	1	1	**0T-0244**	1	BOLT (7/16-20X1.25-IN)	
	2	1	**205-6388**	1	BOLT (7/16-20X1.75-IN)	

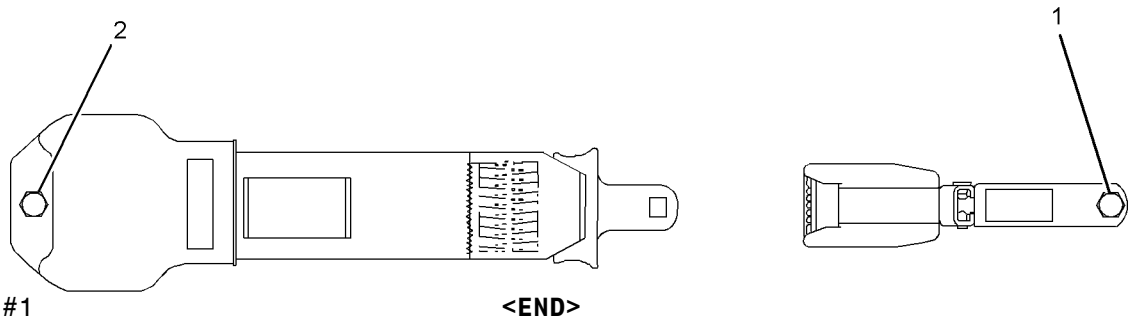

GRAPHIC #1 **<END>** g01072526

246-0667 SEAT BELT GP

S/N: JKM1-UP

PART OF 257-9846, 257-9848 SEAT & MOUNTING GP

ALSO AN ATTACHMENT

SMCS-7327 **i02221197**

NOTE	REF NO	GRAPHIC REF	PART NUMBER	QTY	PART NAME 1 2 3 4 5 6 (PRODUCT LEVEL)	SEE PAGE
	1	1	**8S-0934**	1	LOCKNUT-FLANGE (7/16-20-THD)	
	2	1	**1J-6298**	1	BOLT (7/16-20X3.5-IN)	
	3	1	**8S-4723**	1	BOLT (7/16-20X1.5-IN)	

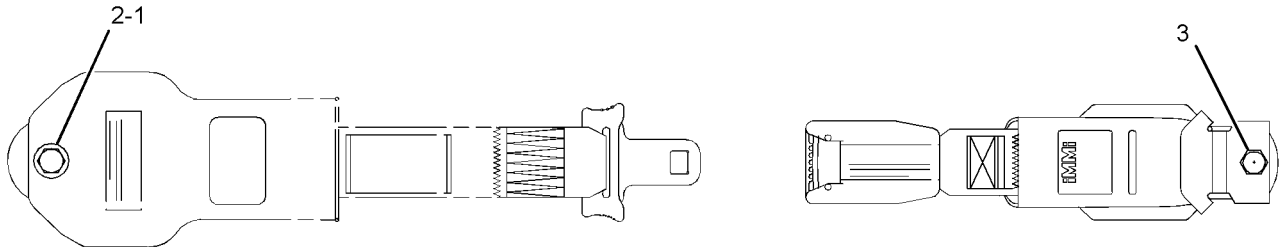

FRONT VIEW

GRAPHIC #1 **<END>** g01149069

OPERATOR STATION

246-1058 SEAT BELT GP

S/N: JKM1-UP

AN ATTACHMENT

SMCS-7327 **i02180837**

NOTE	PART NUMBER	QTY	PART NAME 1 2 3 4 5 6 (PRODUCT LEVEL)	SEE PAGE
	222-0345	1	SEAT BELT GP (RETRACTABLE)	
	0T-0244	1	BOLT (7/16-20X1.25-IN)	
	205-6388	1	BOLT (7/16-20X1.75-IN)	

<END>

247-0682 SEAT BELT GP—RETRACTABLE, 3-IN

S/N: JKM1-UP

FOR USE WITH MACHINES DESTINED FOR CALIFORNIA. CANNOT BE USED WITH 246-1058—PAGE 1018

AN ATTACHMENT

SMCS-7327 **i02373585**

NOTE	PART NUMBER	QTY	PART NAME 1 2 3 4 5 6 (PRODUCT LEVEL)	SEE PAGE
Y	**129-7253**	1	SEAT BELT GP (RETRACTABLE)	1015
Y-SEPARATE ILLUSTRATION				

<END>

OPERATOR STATION

178-0603 SEAT GP–CLOTH

S/N: JKM1-UP
PART OF 257-9501 SEAT GP
AN ATTACHMENT

SMCS-7312 **i02679176**

NOTE	REF NO	GRAPHIC REF	PART NUMBER	QTY	PART NAME 1 2 3 4 5 6 (PRODUCT LEVEL)	SEE PAGE
	1	1	**218-0861**	1	PAN AS	
		1	**8T-9082**	5	RIVET-POP	
		1	**217-9049**	1	CUSHION AS	
	2	1	**143-1288**	8	LOCKNUT-FLANGE (3/8-16-THD)	
	3	1	**171-1230**	6	SCREW-BUTTON HEAD (3/8-16X1-IN)	
	4	1	**171-6682**	1	BAR	
	5	1	**172-2416**	2	PIN	
Y	6	1	*173-1028*	1	ADJUSTER GP-SEAT	909
	7	1	**177-1863**	2	BOLT-PIVOT (3/8-16X2.89-IN)	
Y	8	1	*210-2270*	1	RECLINER GP-SEAT	1007
CY	9	1	*292-9237*	1	PAN GP-BACKREST	997
	10	1	**184-2298**	1	ROD	
	11	1	**184-2299**	4	WASHER (7X25.4X2.54-MM THK)	
	12	1	**095-0843**	2	PIN-COTTER	
	13	1	**5V-1496**	2	RETAINER	
	14	1	**6V-7646**	2	WASHER-HARD (7.2X25X2-MM THK)	
	15	1	**8T-0328**	1	WASHER-HARD (5.5X10X1-MM THK)	
	16	1	**8T-4205**	1	WASHER-HARD (7.2X14.5X2-MM THK)	
C	17	1	**294-5042**	2	SPACER (11.1X19.5X9.67-MM THK)	

C-CHANGE FROM PREVIOUS TYPE
Y-SEPARATE ILLUSTRATION

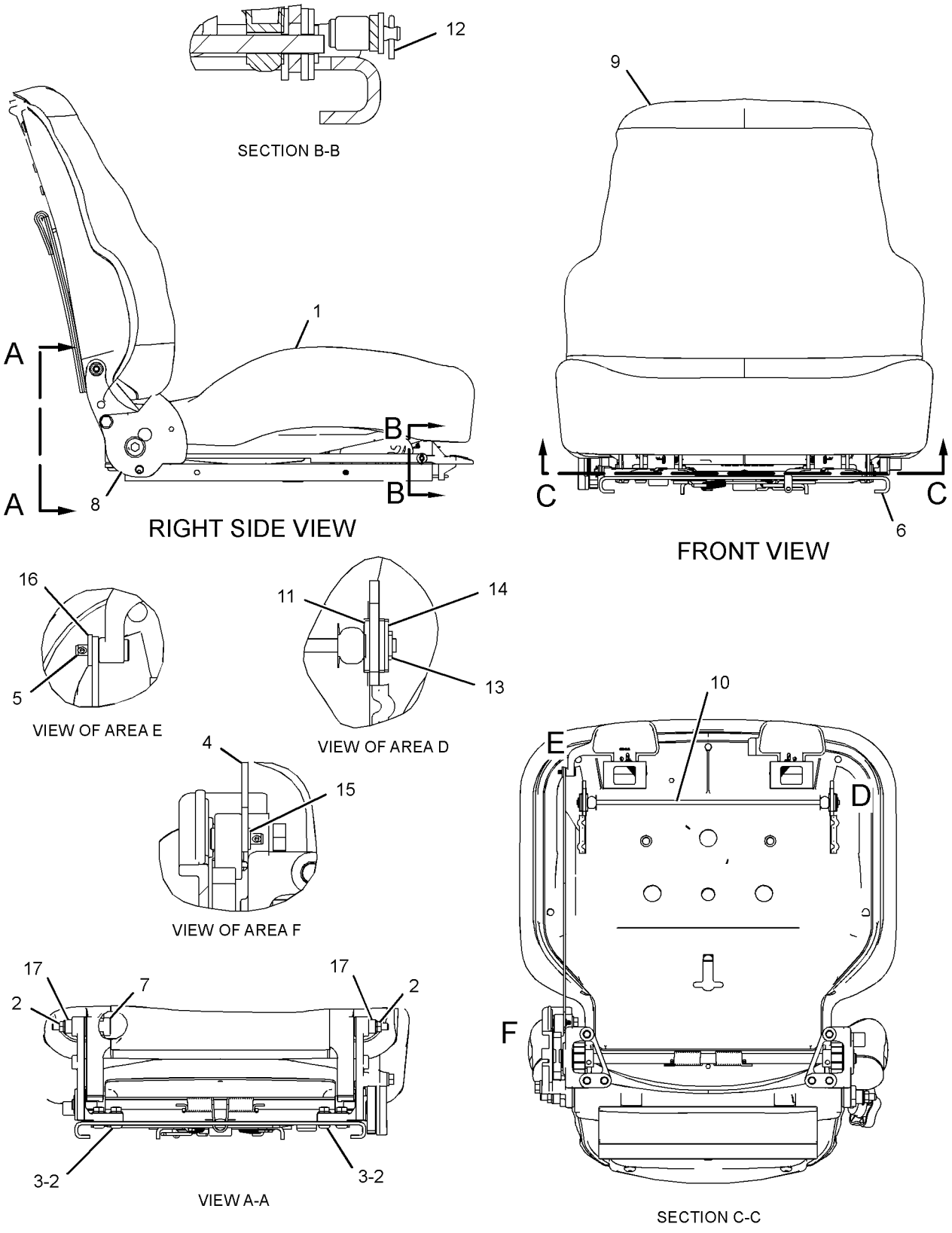

GRAPHIC #1 **<END>** g01336990

OPERATOR STATION

257-9501 SEAT GP–CLOTH

S/N: JKM1-UP

PART OF 257-9500 SEAT GP-SUSPENSION

AN ATTACHMENT

SMCS-7312 **i03631243**

NOTE	REF NO	GRAPHIC REF	PART NUMBER	QTY	PART NAME 1 2 3 4 5 6 (PRODUCT LEVEL)	SEE PAGE
Y	1	1	**292-1301**	1	ARMREST GP (LH)	916
Y	2	1	**178-0603**	1	SEAT GP (CLOTH)	1019
	3	1	**229-1494**	1	EXTENSION GP-BACKREST (CLOTH)	

Y-SEPARATE ILLUSTRATION

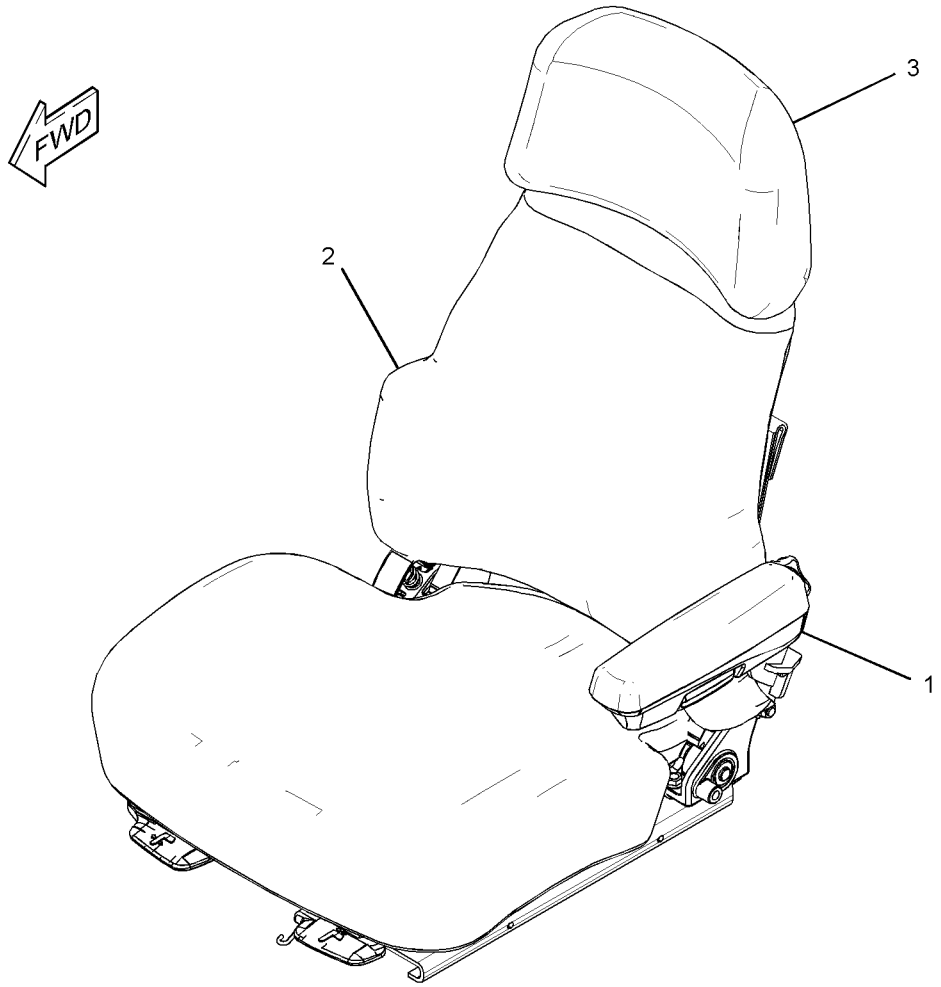

GRAPHIC #1 **<END>** g01520313

OPERATOR STATION

257-9500 SEAT GP-SUSPENSION

S/N: JKM1-UP
PART OF 257-9847 SEAT & MOUNTING GP
AN ATTACHMENT

SMCS-7324, 7336 **i02934254**

NOTE	REF NO	GRAPHIC REF	PART NUMBER	QTY	PART NAME 1 2 3 4 5 6 (PRODUCT LEVEL)	SEE PAGE
J	1	1	**4F-4879**	1	BOLT (3/8-16X0.5-IN)	
J	2	1	**173-5787**	4	SETSCREW (1/4-20-THD)	
Y	3	1	**191-2933**	1	SUSPENSION GP-SEAT (AIR)	1029
J	4	1	**203-7703**	2	WASHER-HARD (10.2X22.22X2.38-MM THK)	
Y	5	1	**257-9501**	1	SEAT GP (CLOTH)	1021
					AVAILABLE REPAIR KIT(S):	
J			**173-7035**	1	KIT-SLIDER BLOCK (SUSPENSION SEAT)	
					(INCLUDES BLOCK-SLIDER)	

J-KIT MARKED J INCLUDES PARTS MARKED J
Y-SEPARATE ILLUSTRATION

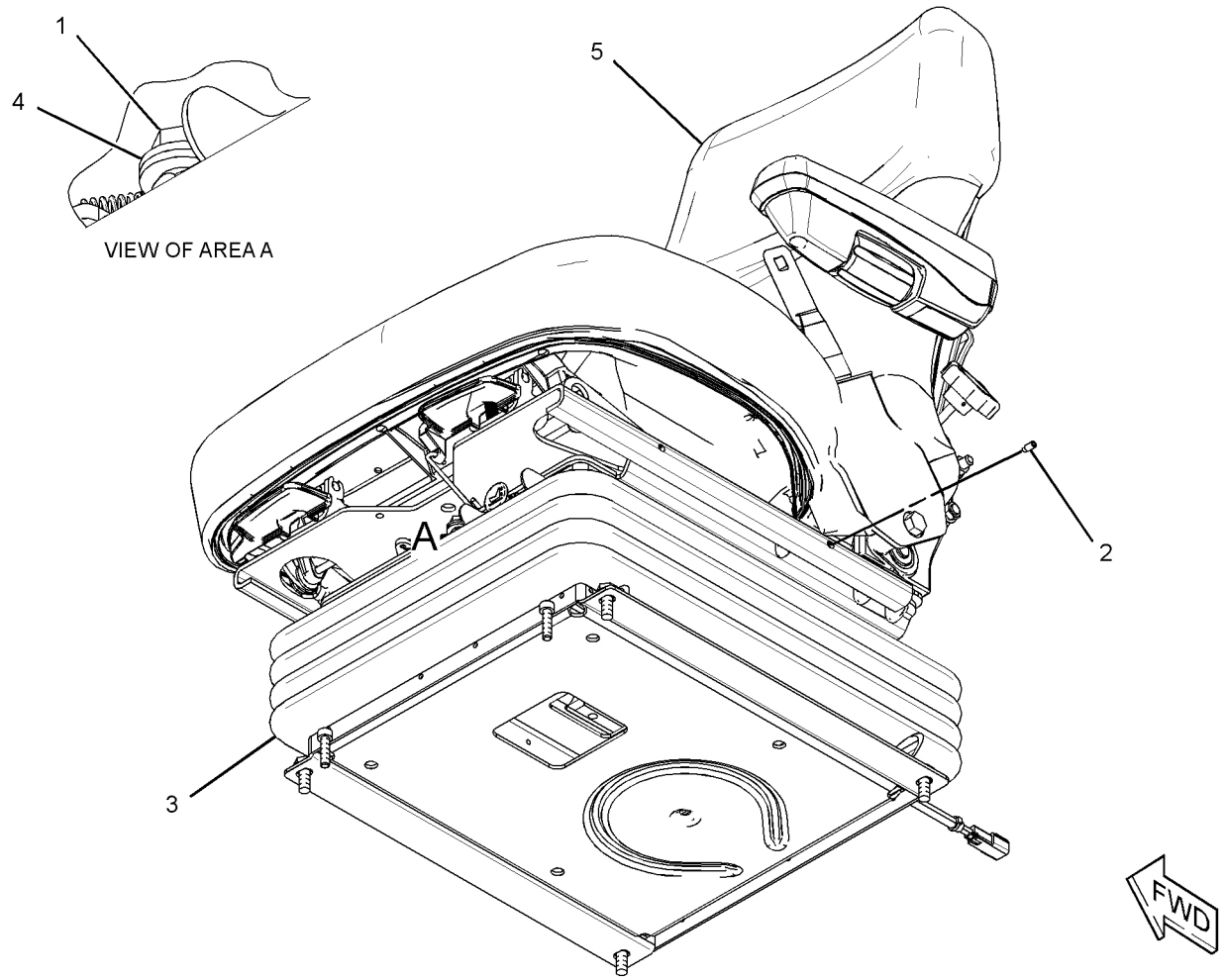

GRAPHIC #1 **<END>** g01427177

OPERATOR STATION

257-9838 SEAT GP-SUSPENSION—HEATED

S/N: JKM1-UP
24-VOLT
PART OF 257-9837 SEAT & MOUNTING GP
AN ATTACHMENT

SMCS-7324, 7336 **i02937139**

NOTE	PART NUMBER	QTY	PART NAME 1 2 3 4 5 6 (PRODUCT LEVEL)	SEE PAGE
Y	**199-5725**	1	SUSPENSION GP-SEAT (AIR)	1031
Y-SEPARATE ILLUSTRATION				

<END>

257-9860 SEAT GP-SUSPENSION

S/N: JKM1-UP
PART OF 257-9846 SEAT & MOUNTING GP

SMCS-7324, 7336 **i02917204**

NOTE	PART NUMBER	QTY	PART NAME 1 2 3 4 5 6 (PRODUCT LEVEL)	SEE PAGE
	110-5068	1	KIT-ADJUSTER (SUSPENSION)	
	110-5060	1	KIT-ARMREST-LH	
	7I-6756	1	KIT-CABLE ADJUSTER	
			(INCLUDES CABLE AS & STRAP)	
	120-7733	1	KIT-COVER (BACK)	
	120-7734	1	KIT-COVER (BOTTOM)	
	110-5065	1	KIT-DAMPER	
	110-5052	1	KIT-FRAME AS (SEAT)	
	120-7732	1	KIT-HANDLE	
	110-5063	1	KIT-HEIGHT RISER	
	110-5064	1	KIT-LEVER AS (HEIGHT RISER)	
	110-5056	1	KIT-SEAT (BACK)	
	110-5059	1	KIT-SEAT (BOTTOM)	
	110-5072	1	KIT-SLIDE RAIL	
	110-5062	1	KIT-SPRING (HEIGHT RISER)	
	110-5066	1	KIT-STOP	
	8Y-5711	1	KIT-SUPPORT	
			(INCLUDES RETAINING RING, GEAR, LUMBAR KNOB, HANDLE, PLATE, & ROLL PINS)	
	110-5074	1	KIT-SUSPENSION BEARING	
	110-5071	1	KIT-SUSPENSION COVER	
	128-2678	1	KIT-TETHER	
	110-5073	1	SUSPENSION AS	

<END>

OPERATOR STATION

257-9861 SEAT GP-SUSPENSION

S/N: JKM1-UP
PART OF 257-9848 SEAT & MOUNTING GP
AN ATTACHMENT

SMCS-7324, 7336 **i02926871**

NOTE	PART NUMBER	QTY	PART NAME 1 2 3 4 5 6 (PRODUCT LEVEL)	SEE PAGE
	110-5068	1	KIT-ADJUSTER (SUSPENSION)	
	110-5060	1	KIT-ARMREST-LH	
	7I-6756	1	KIT-CABLE ADJUSTER	
			(INCLUDES CABLE AS & STRAP)	
	110-5054	1	KIT-COVER (BACK)	
	110-5058	1	KIT-COVER (BOTTOM)	
	110-5065	1	KIT-DAMPER	
	110-5052	1	KIT-FRAME AS (SEAT)	
	110-5067	1	KIT-HANDLE	
	110-5063	1	KIT-HEIGHT RISER	
	110-5064	1	KIT-LEVER AS (HEIGHT RISER)	
	110-5059	1	KIT-SEAT (BOTTOM)	
	110-5056	1	KIT-SEAT (BACK)	
	110-5072	1	KIT-SLIDE RAIL	
	110-5062	1	KIT-SPRING (HEIGHT RISER)	
	110-5066	1	KIT-STOP	
	110-5074	1	KIT-SUSPENSION BEARING	
	110-5071	1	KIT-SUSPENSION COVER	
	128-2678	1	KIT-TETHER	
	110-5051	1	KIT-UPPER AS	
	110-5073	1	SUSPENSION AS	

<END>

OPERATOR STATION

255-4827 SKIRT GP-CAB

S/N: JKM1-UP

PART OF 237-7540 CHASSIS AR

SMCS-7301 **i03085340**

NOTE	REF NO	GRAPHIC REF	PART NUMBER	QTY	PART NAME 1 2 3 4 5 6 (PRODUCT LEVEL)	SEE PAGE
	1	1	**264-9670**	1	SHEET AS	
M		1	**8T-3490**	3	NUT-WELD (M10X1.5-THD)	
	2	1	**264-9671**	1	SHEET AS	
M		1	**8T-3490**	3	NUT-WELD (M10X1.5-THD)	
	3	1	**264-9672**	1	SHEET AS	
M		1	**8T-3490**	2	NUT-WELD (M10X1.5-THD)	
	4	1	**264-9673**	1	SHEET AS	
M		1	**8T-3490**	4	NUT-WELD (M10X1.5-THD)	
	5	1	**283-8305**	1	BRACKET AS	
M		1	**8T-3490**	1	NUT-WELD (M10X1.5-THD)	
	6	1	**7X-7729**	14	WASHER (11X25X3-MM THK)	
M	7	1	**8T-4136**	8	BOLT (M10X1.5X25-MM)	
M	8	1	**8T-4195**	6	BOLT (M10X1.5X30-MM)	

M-METRIC PART

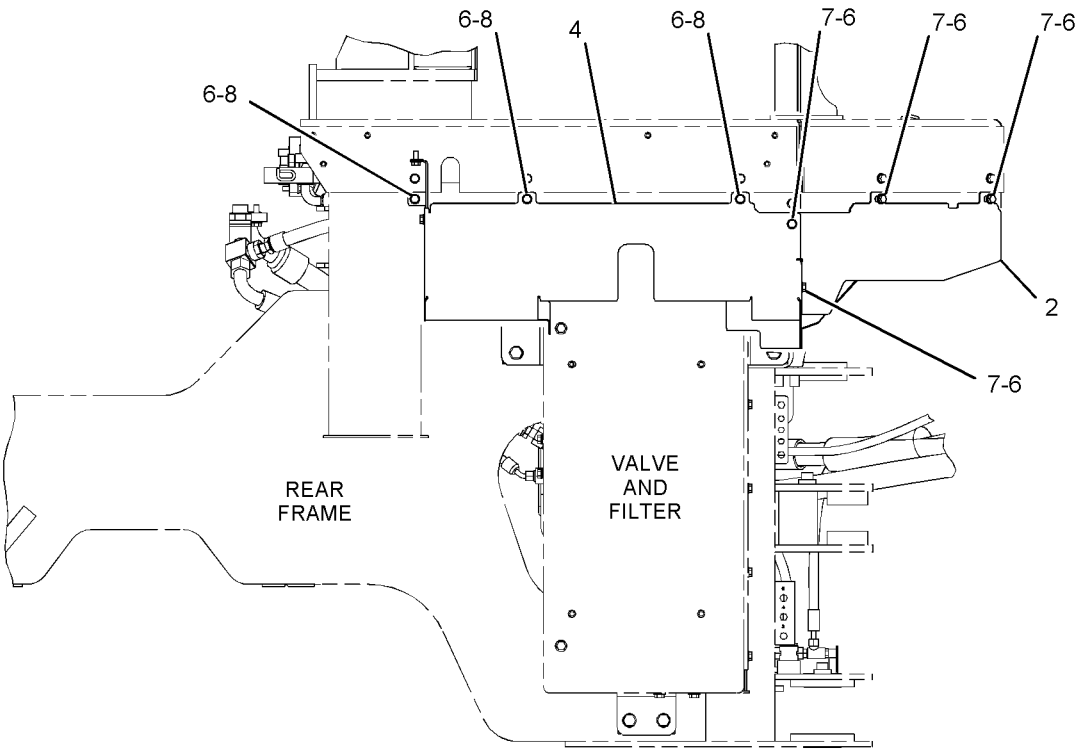

RIGHT SIDE VIEW

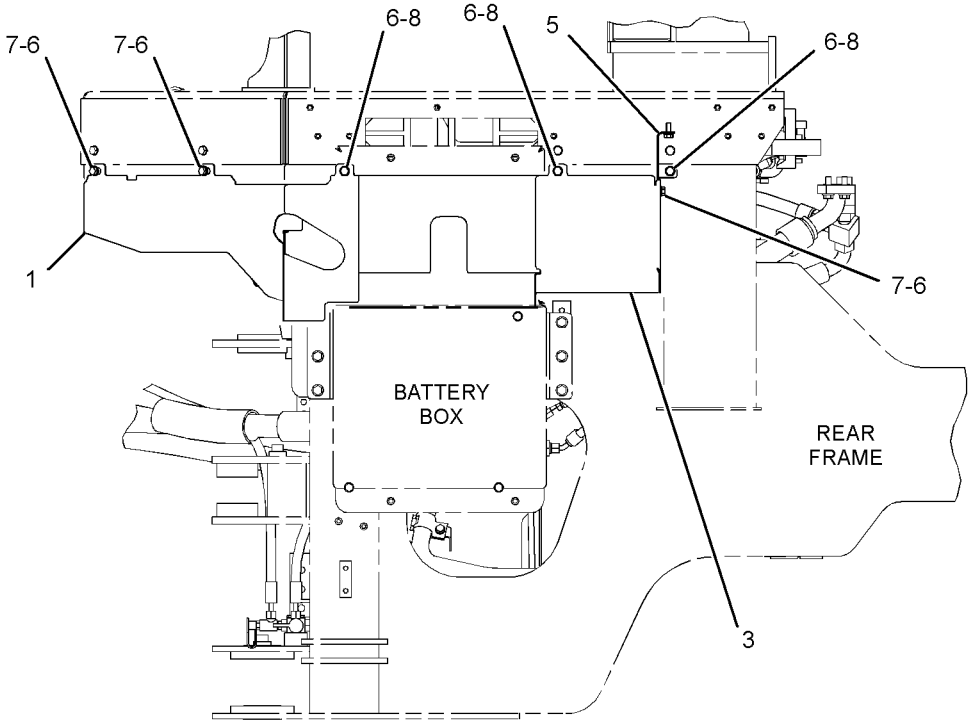

LEFT SIDE VIEW

GRAPHIC #1 **<END>** g01422265

OPERATOR STATION

285-3241 SKIRT GP-CAB

S/N: JKM1-UP
PART OF 269-4871 OPERATOR AR-OPEN ROPS
AN ATTACHMENT

SMCS-7301 **i03263231**

NOTE	REF NO	GRAPHIC REF	PART NUMBER	QTY	PART NAME 1 2 3 4 5 6 (PRODUCT LEVEL)	SEE PAGE
	1	1	**264-9671**	1	SHEET AS	
	2	1	**264-9672**	1	SHEET AS	
	3	1	**264-9673**	1	SHEET AS	
	4	1	**281-2390**	1	SHEET AS	
	5	1	**283-8305**	1	BRACKET AS	
	6	1	**7X-7729**	14	WASHER (11X25X3-MM THK)	
M	7	1	**8T-4136**	8	BOLT (M10X1.5X25-MM)	
M	8	1	**8T-4195**	6	BOLT (M10X1.5X30-MM)	

M-METRIC PART

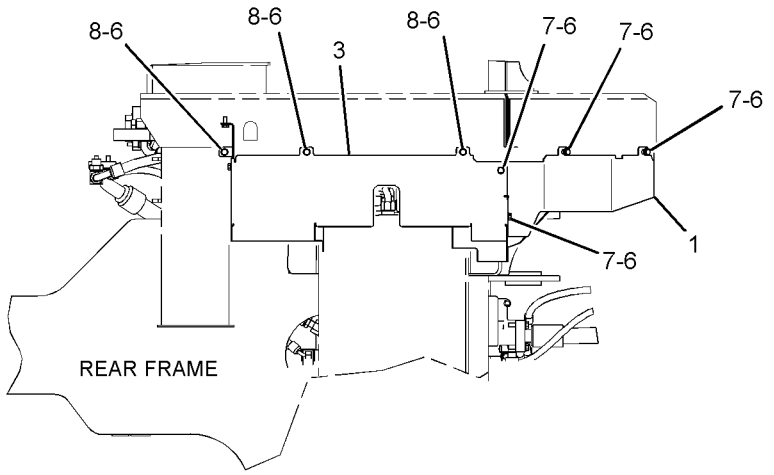

RIGHT SIDE VIEW

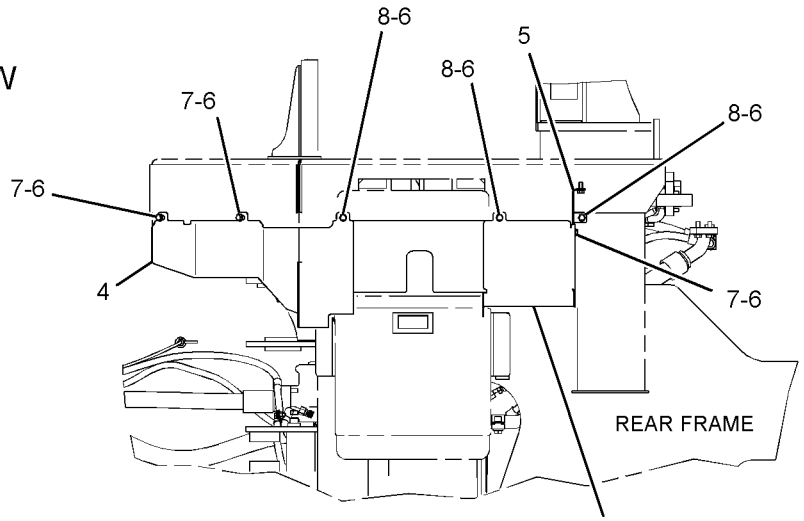

LEFT SIDE VIEW

GRAPHIC #1 **<END>** g01454529

OPERATOR STATION

118-0808 SUPPORT GP-SEAT

S/N: JKM1-UP
PART OF 269-4873 CANOPY AR-OPEN ROPS
AN ATTACHMENT

SMCS-7321 **i00717796**

NOTE	REF NO	GRAPHIC REF	PART NUMBER	QTY	PART NAME 1 2 3 4 5 6 (PRODUCT LEVEL)	SEE PAGE
	1	1	**119-8310**	1	COVER AS	
M		1	**8T-3490**	2	NUT-WELD (M10X1.5-THD)	
M		1	**8T-3612**	2	NUT-WELD (M8X1.25-THD)	
	2	1	**7X-0579**	11	WASHER-HARD (8.8X25.5X2-MM THK)	
M	3	1	**8T-4908**	11	BOLT (M8X1.25X25-MM)	

M-METRIC PART

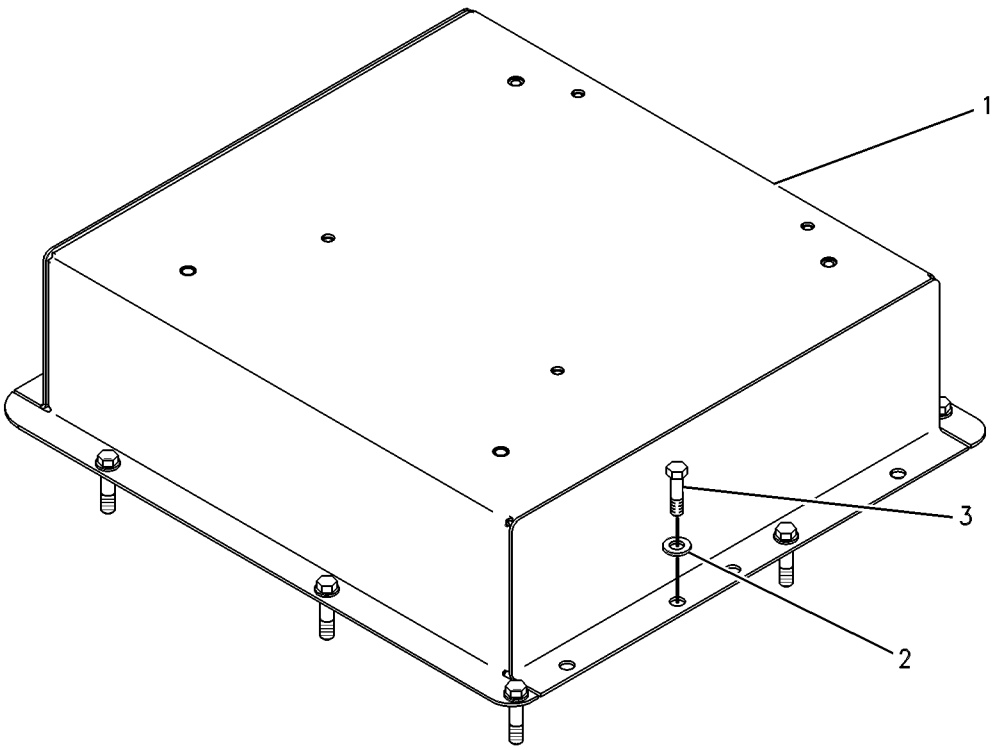

GRAPHIC #1 **<END>** g00131738

OPERATOR STATION

191-2933 SUSPENSION GP-SEAT—AIR

S/N: JKM1-UP
PART OF 257-9500 SEAT GP-SUSPENSION
AN ATTACHMENT

SMCS-7324 **i03176251**

NOTE	REF NO	GRAPHIC REF	PART NUMBER	QTY	PART NAME 1 2 3 4 5 6 (PRODUCT LEVEL)	SEE PAGE
	1	1	**3P-9900**	5	WASHER (10.5X30X3-MM THK)	
	2	1	**4B-4278**	2	WASHER (10.2X20.5X1.6-MM THK)	
	3	1	**4V-8577**	12	BEARING	
	4	1	**8L-8413**	1	STRAP-CABLE	
	5	1	**145-0326**	1	FILM-INSTRUCTION (SEAT ADJUSTMENT)	
	6	1	**164-1234**	1	PLATE	
	7	1	**101-0003**	33	FASTENER	
	8	1	**169-7380**	1	BOLT-SOCKET HEAD (3/8-16X0.375-IN)	
	9	1	**186-5107**	2	SCREW-DRIVE (8-16X1.25-IN)	
	10	1	**192-7752**	4	SHAFT AS	
	11	1	**192-7755**	1	HOUSING AS (LOWER)	
	12	1	**192-7760**	1	SHAFT	
	13	1	**192-7767**	1	SCISSORS AS	
	14	1	**192-7783**	1	TOGGLE AS (WIDE)	
	15	1	**192-7787**	1	TOGGLE AS (NARROW)	
	16	1	**192-7790**	1	HOUSING AS (UPPER)	
	17	1	**192-7795**	1	BOOT	
	18	1	**192-7805**	1	HARNESS AS-VALVE (SEAT AIR COMPRESSOR)	
	19	1	**192-7810**	1	SPRING AS-AIR	
		1	**5P-4423**	1	ELBOW	
		1	**163-1135**	1	SPRING	
J	20	1	**192-7812**	1	BOLT-SHOULDER (3/8-16X2-IN)	
	21	1	**192-7820**	3	BUMPER	
	22	1	**192-7822**	1	SHAFT	
	23	1	**237-3943**	1	BRACKET	
Y	24	1	**237-3970**	1	AIR COMPRESSOR GP-SEAT	910
	25	1	**108-4311**	1	SCREW-MACHINE (3/8-16X0.75-IN)	
J	26	1	**2K-4973**	8	LOCKNUT (3/8-16-THD)	
J	27	1	**3J-4818**	1	LOCKWASHER	
M	28	1	**5C-2890**	3	NUT (M6X1-THD)	
	29	1	**8T-9371**	1	BOLT (3/8-16X0.5-IN)	
E	30	1	**211-5358**		CONDUIT-FLEXIBLE (36-CM)	
E	30A	1	**211-5358**		CONDUIT-FLEXIBLE (27-CM)	
D	31	1	**5P-6010**		TUBE (0.4-M)	
D	31A	1	**5P-6010**		TUBE (0.3-M)	
					AVAILABLE REPAIR KIT(S):	
			192-7799	1	KIT-AIR VALVE (SUSPENSION SEAT)	
					(INCLUDES KNOB AS, NUT, VALVE, LOCKWASHER & FITTING)	
J			**192-7848**	1	KIT-SHOCK ABSORBER (SUSPENSION SEAT) (SUSPENSION SEAT)	
					(ALSO INCLUDES SHOCK ABSORBER, BEARINGS, WASHERS & BOLT)	
			211-9294	1	KIT-TETHER (SUSPENSION SEAT)	
					(INCLUDES TETHERS)	

D-ORDER BY THE METER
E-ORDER BY THE CENTIMETER
J-KIT MARKED J SERVICES PARTS MARKED J
M-METRIC PART
Y-SEPARATE ILLUSTRATION

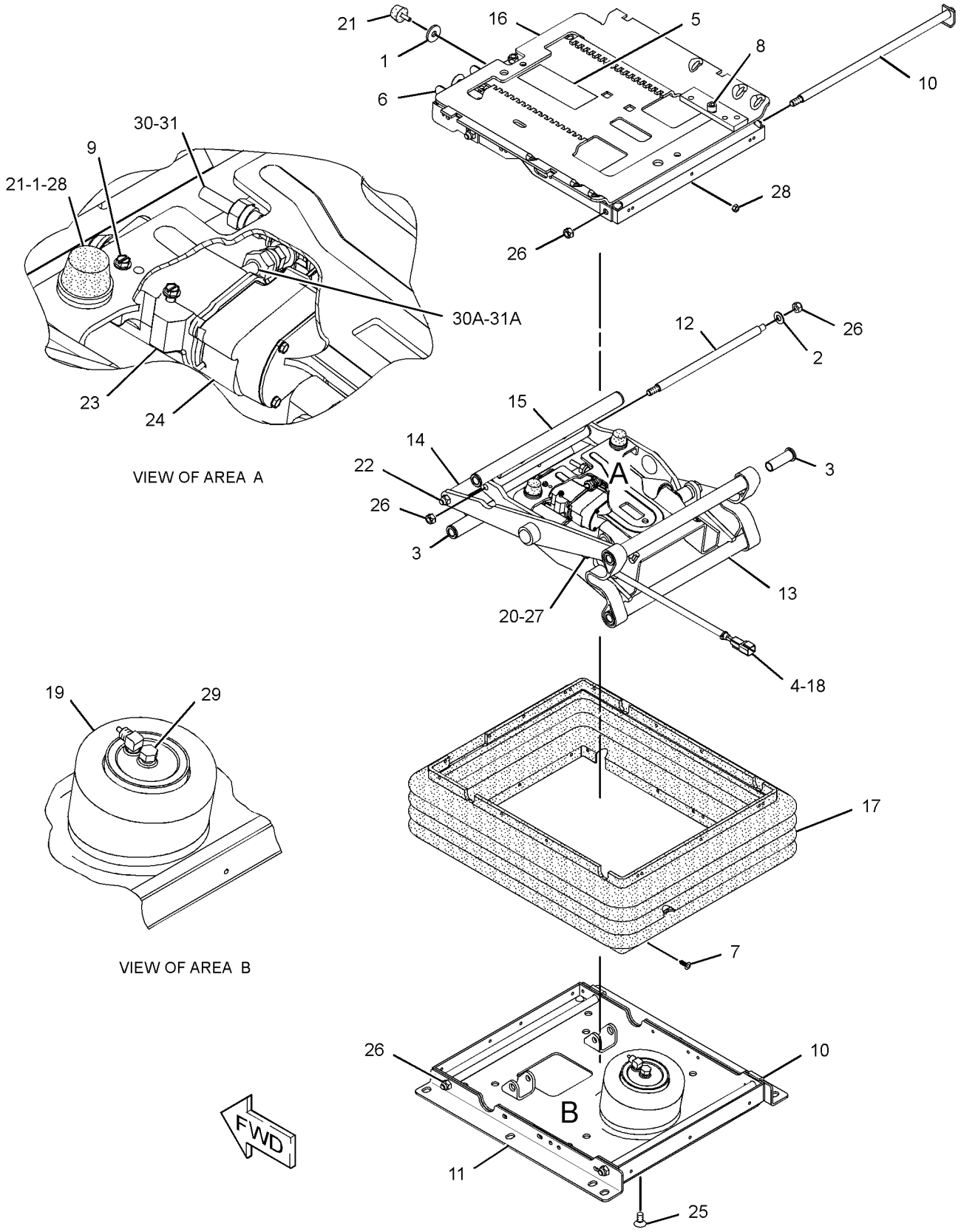

GRAPHIC #1 **<END>** g01598864

OPERATOR STATION

199-5725 SUSPENSION GP-SEAT—AIR

S/N: JKM1-UP

PART OF 257-9838 SEAT GP-SUSPENSION

AN ATTACHMENT

SMCS-7324 **i02937379**

NOTE	REF NO	GRAPHIC REF	PART NUMBER	QTY	PART NAME 1 2 3 4 5 6 (PRODUCT LEVEL)	SEE PAGE
	1	1	**3P-9900**	5	WASHER (10.5X30X3-MM THK)	
	2	1	**4B-4278**	2	WASHER (10.2X20.5X1.6-MM THK)	
	3	1	**4V-8577**	12	BEARING	
	4	1	**8L-8413**	1	STRAP-CABLE	
	5	1	**145-0326**	1	FILM-INSTRUCTION (SEAT ADJUSTMENT)	
	6	1	**237-3943**	1	BRACKET	
	7	1	**164-1234**	1	PLATE	
	8	1	**101-0003**	26	FASTENER	
	9	1	**169-7380**	1	BOLT-SOCKET HEAD (3/8-16X0.375-IN)	
	10	1	**186-5107**	2	SCREW-DRIVE (8-16X1.25-IN)	
	11	1	**192-7752**	4	SHAFT AS	
	12	1	**192-7755**	1	HOUSING AS (LOWER)	
	13	1	**192-7760**	1	SHAFT	
	14	1	**192-7767**	1	SCISSORS AS	
	15	1	**192-7783**	1	TOGGLE AS (WIDE) (WIDE)	
	16	1	**192-7787**	1	TOGGLE AS (NARROW) (NARROW)	
	17	1	**192-7790**	1	HOUSING AS (UPPER)	
	18	1	**192-7795**	1	BOOT	
	19	1	**192-7805**	1	HARNESS AS-VALVE (SEAT AIR COMPRESSOR)	
		1	**102-8802**	1	KIT-RECEPTACLE (2-PIN)	
					(INCLUDES RECEPTACLE AS & WEDGE)	
	20	1	**192-7810**	1	SPRING AS-AIR	
		1	**5P-4423**	1	ELBOW	
	21	1	**192-7812**	1	BOLT-SHOULDER (3/8-16X2-IN)	
	22	1	**192-7820**	3	BUMPER	
	23	1	**192-7822**	1	SHAFT	
Y	24	1	**237-3970**	1	AIR COMPRESSOR GP-SEAT	910
	25	1	**1H-8296**	1	SCREW-MACHINE (3/8-16X0.52-IN)	
	26	1	**2K-4973**	8	LOCKNUT (3/8-16-THD)	
	27	1	**3J-4818**	1	LOCKWASHER	
M	28	1	**5C-2890**	3	NUT (M6X1-THD)	
	29	1	**8T-9371**	1	BOLT (3/8-16X0.5-IN)	
E	30	1	**211-5358**		CONDUIT-FLEXIBLE (35.6-CM)	
E	31	1	**211-5358**		CONDUIT-FLEXIBLE (26.7-CM)	
D	32	1	**5P-6010**		TUBE (0.4-M)	
D	33	1	**5P-6010**		TUBE (0.3-M)	
					AVAILABLE REPAIR KIT(S):	
			192-7799	1	KIT-AIR VALVE (SEAT)	
					(INCLUDES KNOB ASSEMBLY, FITTING, LOCKWASHER, NUT & VALVE)	
			212-7779	1	KIT-SHOCK ABSORBER (SUSPENSION SEAT) (SEAT)	
					(INCLUDES LOCKNUTS, BALL, LOCKWASHER, STRAP, SPRING, CLAMP, ADJUSTERS, BOLTS, BEARINGS, WASHERS, SHOCK ABSORBER,	
					BRACKETS, PULLEY KIT, CABLE ASSEMBLY, & KNOB)	
			213-5170	1	KIT-INDICATOR (SEAT ADJUSTMENT) (SEAT)	
					(INCLUDES BOLTS, ROD, ARM, LOCKNUTS & HOUSING)	
			211-9294	1	KIT-TETHER (SEAT)	
					(INCLUDES TETHER)	

D-ORDER BY THE METER
E-ORDER BY THE CENTIMETER
M-METRIC PART
Y-SEPARATE ILLUSTRATION

199-5725 **SUSPENSION GP-SEAT** *(contd.)* **i02937379**

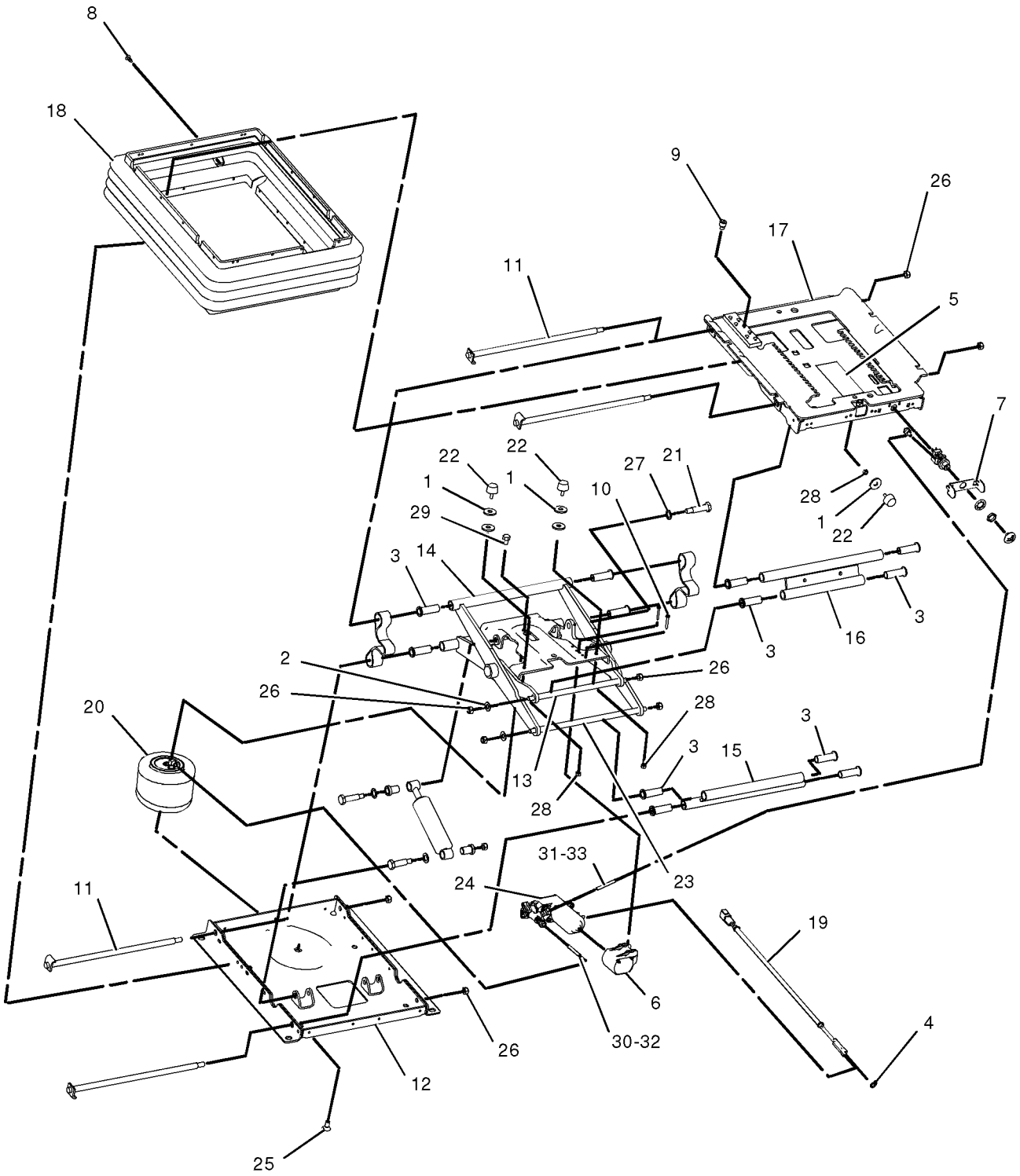

GRAPHIC #1 **<END>** g01054555

277-7116 VALVE GP-WATER—HEATER CONTROL

S/N: JKM1-UP

PART OF 266-7600 AIR CONDITIONER GP, 266-7601 HEATER GP-CAB

ALSO AN ATTACHMENT

SMCS-1800, 7320 **i02917825**

NOTE	REF NO	GRAPHIC REF	PART NUMBER	QTY	PART NAME 1 2 3 4 5 6 (PRODUCT LEVEL)	SEE PAGE
	1	1	**9X-2185**	7	SCREW (8-15X0.44-IN)	
	2	1	**131-3093**	1	BUSHING	
	3	1	**248-6772**	8	SCREW-MACHINE (8-16X7.75-IN)	
	4	1	**268-8769**	1	VALVE AS-WATER	
	5	1	**277-7769**	1	TUBE	
	6	1	**277-7770**	1	TUBE	
	7	1	**277-7789**	1	PLATE	
	8	1	**279-0850**	1	ACTUATOR (ELECTRONIC)	
	9	1	**4M-6582**	2	SEAL-O-RING	

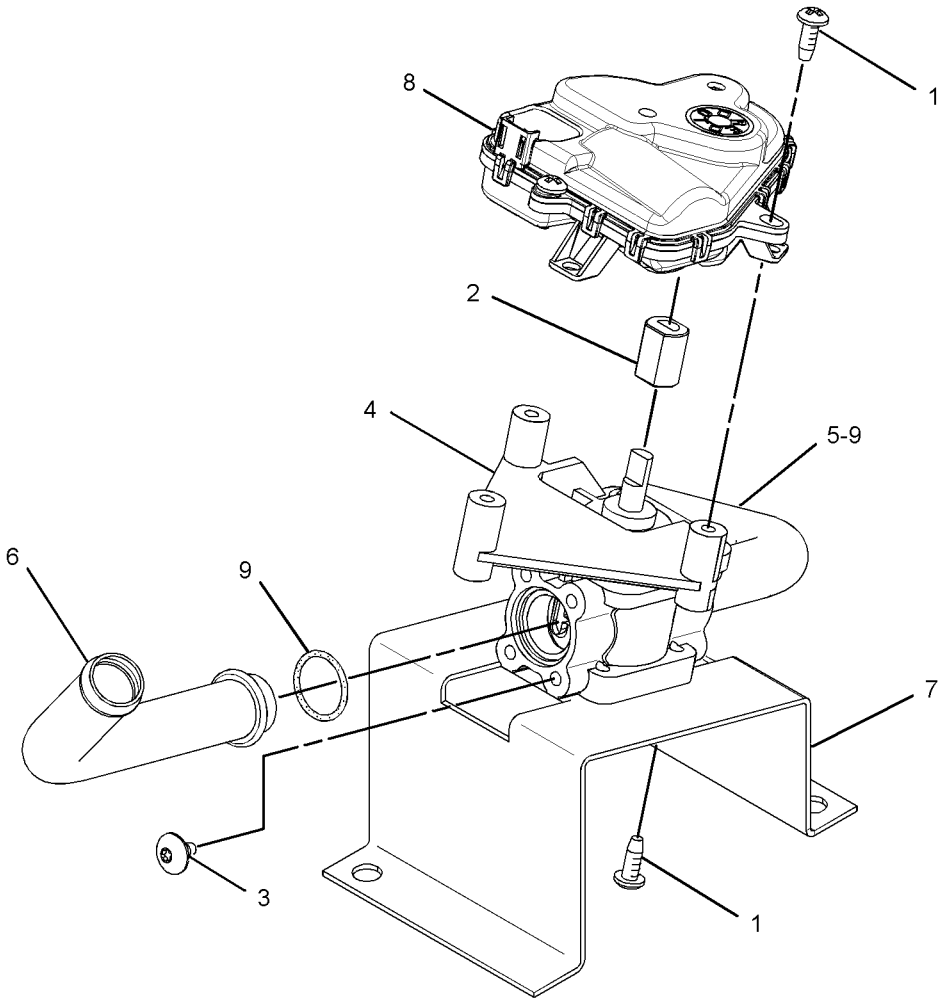

GRAPHIC #1 **<END>** g01404281

OPERATOR STATION

107-4641 VISOR GP-CAB

S/N: JKM1-UP

PART OF 252-4553 CAB AR-ENCLOSED ROPS

SMCS-7301 **i01130547**

NOTE	REF NO	GRAPHIC REF	PART NUMBER	QTY	PART NAME 1 2 3 4 5 6 (PRODUCT LEVEL)	SEE PAGE
	1	1	**9R-3203**	2	PLATE	
	2	1	**9R-3204**	1	PLATE AS	
	3	1	**9R-3205**	1	VISOR AS	
M	4	1	**9X-2042**	2	SCREW-TRUSS HEAD (M6X1X12-MM)	
M	5	1	**9X-2045**	2	SCREW-TRUSS HEAD (M6X1X20-MM)	

M-METRIC PART

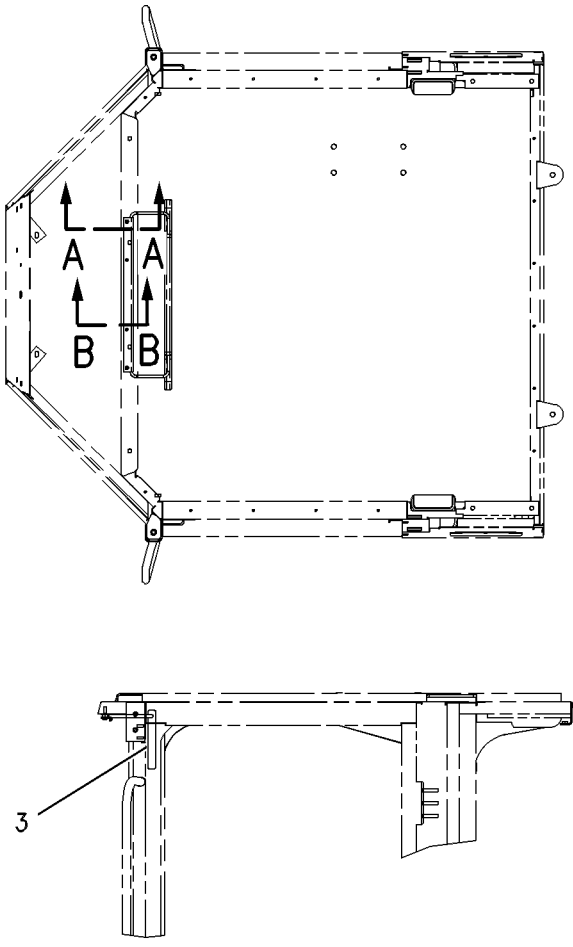

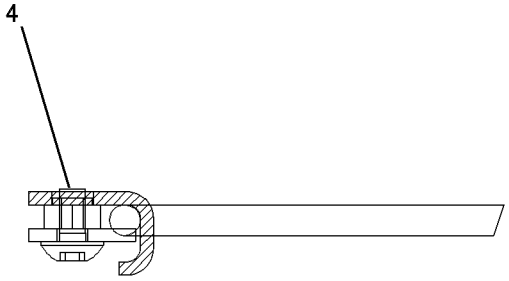

SECTION A-A

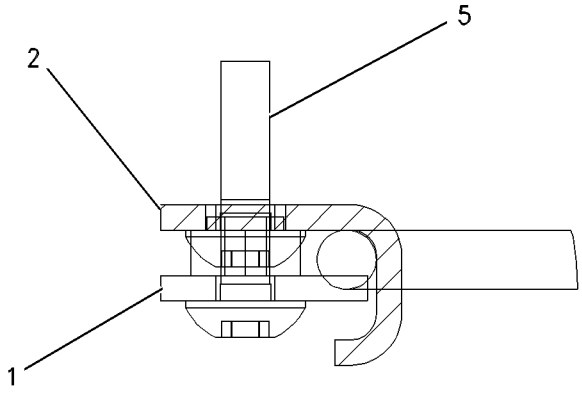

SECTION B-B

GRAPHIC #1 **<END>** g00599031

OPERATOR STATION

152-2764 WASHER GP-WINDOW

S/N: JKM1-UP

PART OF 258-8764 WASHER GP-WINDOW

SMCS-7306 **i01062076**

NOTE	REF NO	GRAPHIC REF	PART NUMBER	QTY	PART NAME 1 2 3 4 5 6 (PRODUCT LEVEL)	SEE PAGE
	1	1	**152-2763**	1	RESERVOIR	
	2	1	**8E-8292**	1	CAP-VENTED	
	3	1	**7T-8890**	2	PUMP AS-WASHER	
	4	1	**8T-5914**	2	GROMMET	
	5	1	**8T-5913**	2	SCREEN-FILTER	

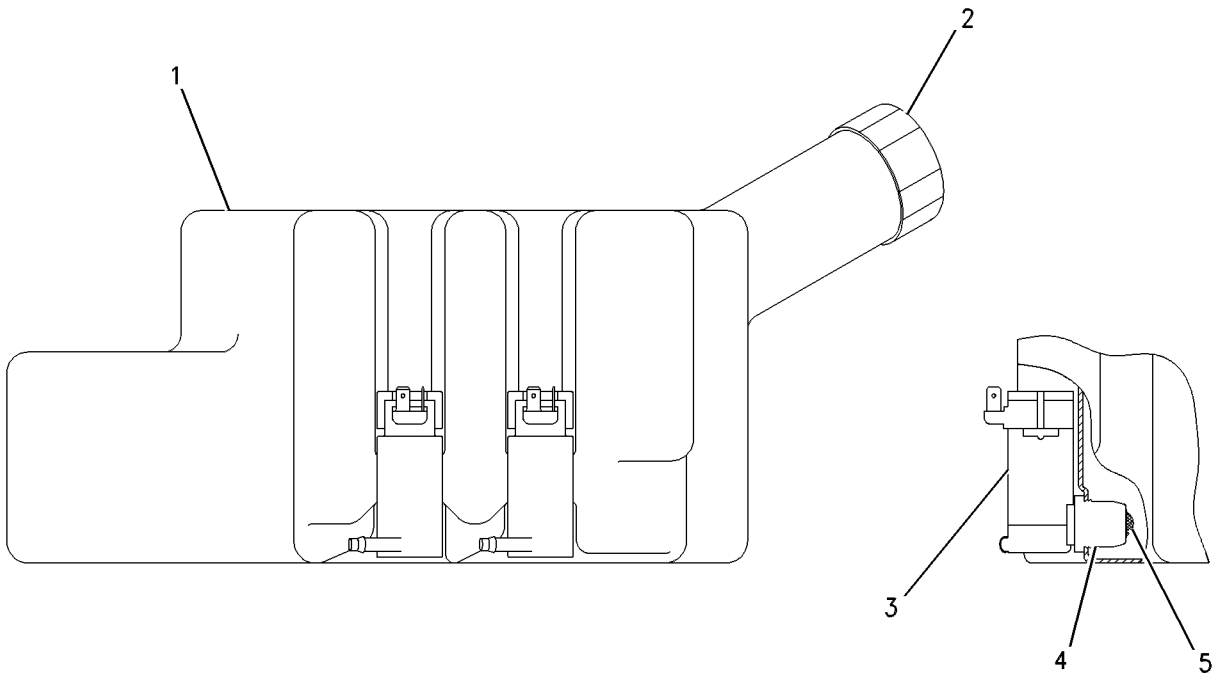

GRAPHIC #1 **<END>** g00325164

OPERATOR STATION

258-8764 WASHER GP-WINDOW

S/N: JKM1-UP

PART OF 258-4543 OPERATOR AR-ENCLOSED ROPS

SMCS-7306 **i02899272**

NOTE	REF NO	GRAPHIC REF	PART NUMBER	QTY	PART NAME 1 2 3 4 5 6 (PRODUCT LEVEL)	SEE PAGE
Y	1	1	**152-2764**	1	WASHER GP-WINDOW	1035
	2	1	**234-5103**	1	BRACKET	
M	3	1	**5C-9553**	2	BOLT (M6X1X16-MM)	
	4	1	**9X-8256**	2	WASHER (6.6X12X2-MM THK)	
E	5	1	**9X-2126**		SEAL (47-CM)	

E-ORDER BY THE CENTIMETER
M-METRIC PART
Y-SEPARATE ILLUSTRATION

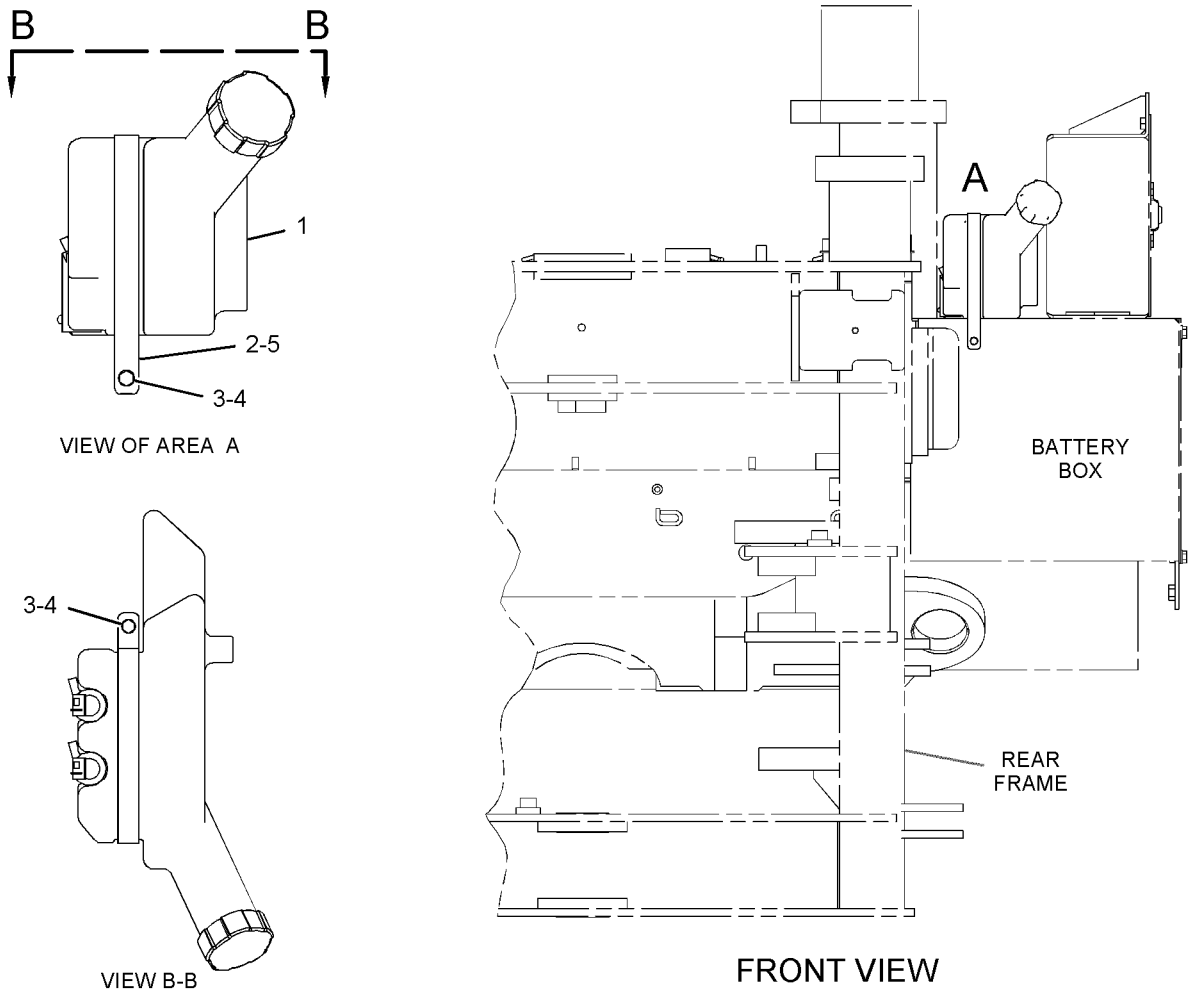

GRAPHIC #1

<END>

g01435875

OPERATOR STATION

352-4153 WINDOW GP-CAB

S/N: JKM1-UP

FIELD REPLACEMENT FOR 180-3871—PAGE 1039

SMCS-7310 **i03979895**

NOTE	PART NUMBER	QTY	PART NAME 1 2 3 4 5 6 (PRODUCT LEVEL)	SEE PAGE
Y	**180-2535**	1	WINDOW GP-DOOR (CAB)	1038
			—OR—	
Y	**180-3871**	1	WINDOW GP-DOOR (SLIDING)	1039
			—OR—	
Y	*351-6993*	1	WINDOW GP-DOOR (SLIDING)	1041

Y-SEPARATE ILLUSTRATION

<END>

OPERATOR STATION

180-2535 WINDOW GP-DOOR

S/N: JKM1-UP

PART OF 352-4153 WINDOW GP-CAB

SMCS-7308, 7310 **i03783949**

NOTE	REF NO	GRAPHIC REF	PART NUMBER	QTY	PART NAME 1 2 3 4 5 6 (PRODUCT LEVEL)	SEE PAGE
	1	1	**144-1569**	1	STOP	
	2	1	**187-5122**	1	FRAME	
	3	1	**187-5123**	1	RAIL	
	4	1	**187-5124**	1	GLASS-SLIDING	
	5	1	**187-5125**	1	GLASS-FIXED	
	6	1	**187-5126**	1	RAIL AS	
	7	1	**334-8328**	1	CATCH AS (LH) (UPPER, LH)	
	8	1	**334-8329**	1	CATCH AS (RH) (UPPER, RH)	
					(EACH CATCH AS INCLUDES)	
		1	**150-8015**	1	GASKET	
M	9	1	**8T-0306**	6	SCREW-MACHINE (M5X0.8X10-MM)	
D	10	1	**9X-2532**		SEAL (1-M)	
E	11	1	**137-2170**		SEAL (250-CM)	

D-ORDER BY THE METER
E-ORDER BY THE CENTIMETER
M-METRIC PART

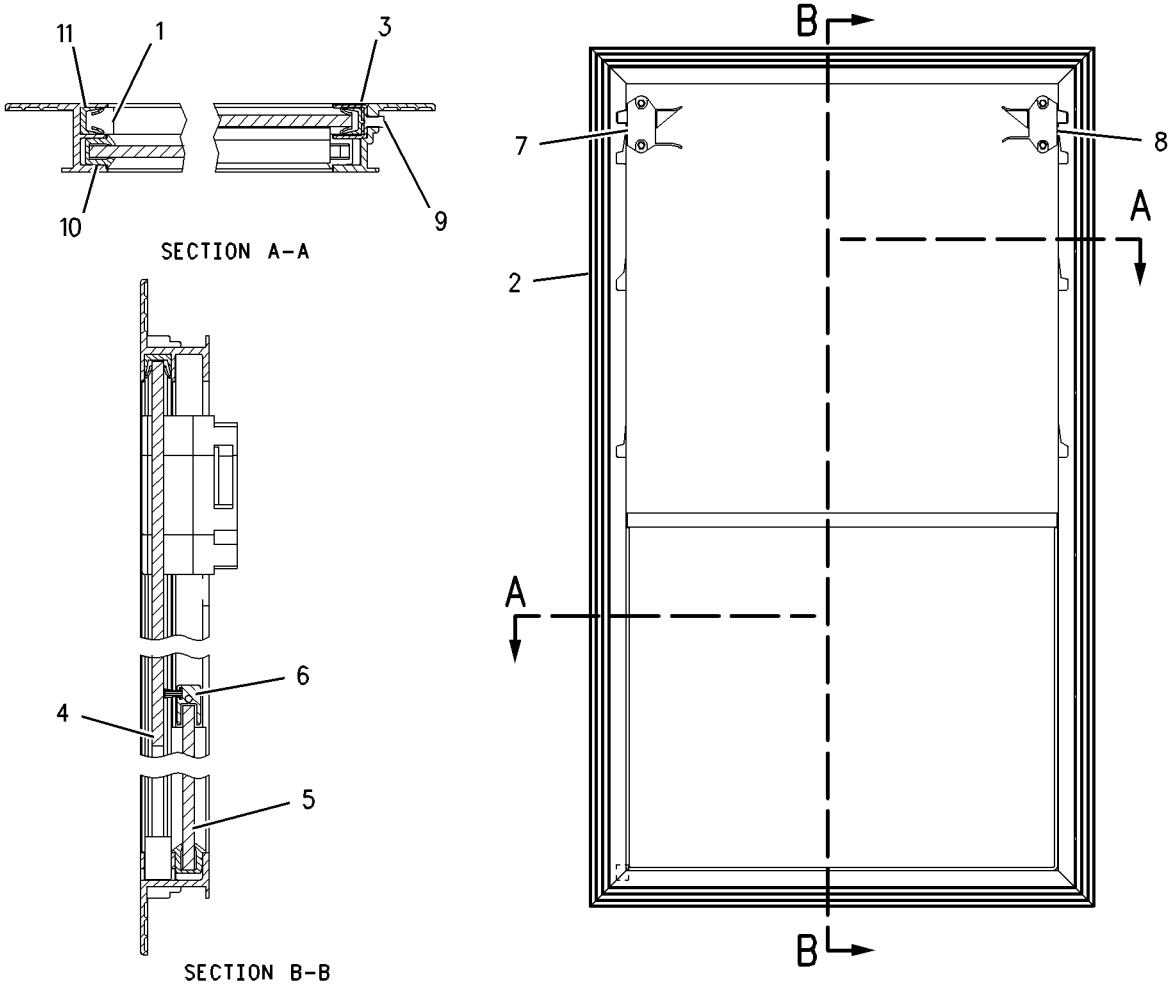

GRAPHIC #1 **<END>** g00762052

OPERATOR STATION

180-3871 WINDOW GP-DOOR—SLIDING

S/N: JKM1-UP

PART OF 263-2046, 263-2058 DOOR GP-CAB, 352-4153 WINDOW GP-CAB

FIELD REPLACEMENT ORDER 352-4153—PAGE 1037

SMCS-7308, 7310 **i03567833**

NOTE	REF NO	GRAPHIC REF	PART NUMBER	QTY	PART NAME 1 2 3 4 5 6 (PRODUCT LEVEL)	SEE PAGE
	1	1	**144-1569**	1	STOP	
	2	1	**187-5122**	1	FRAME	
	3	1	**187-5123**	1	RAIL	
	4	1	**187-5124**	1	GLASS-SLIDING	
	5	1	**187-5125**	1	GLASS-FIXED	
	6	1	**187-5126**	1	RAIL AS (DOOR WINDOW, LH)	
	7	1	**334-8328**	1	CATCH AS (UPPER, LH)	
	8	1	**334-8329**	1	CATCH AS (UPPER, RH)	
					(EACH CATCH AS INCLUDES)	
		1	**150-8015**	1	GASKET	
M	9	1	**8T-0306**	6	SCREW-MACHINE (M5X0.8X10-MM)	
D	10	1	**9X-2532**		SEAL (1-M)	
E	11	1	**137-2170**		SEAL (250-CM)	

D-ORDER BY THE METER
E-ORDER BY THE CENTIMETER
M-METRIC PART

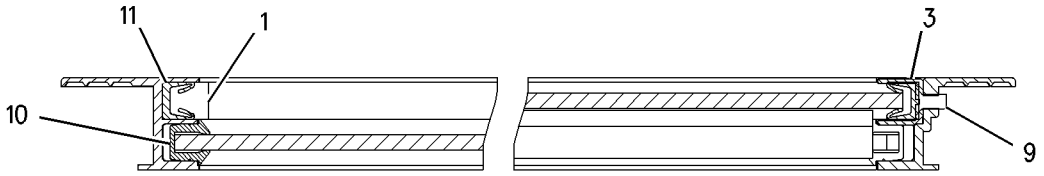

SECTION A-A

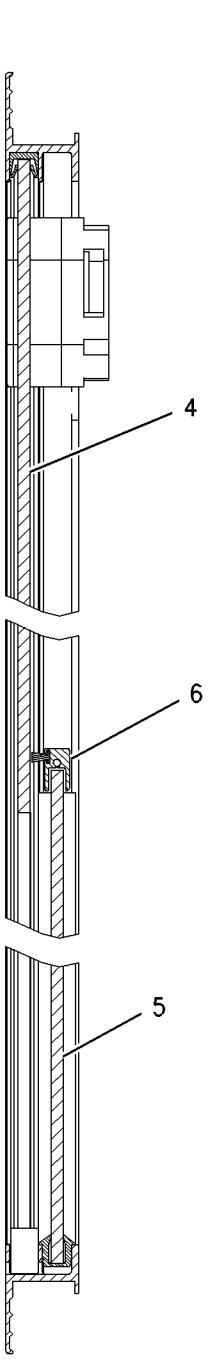

SECTION B-B

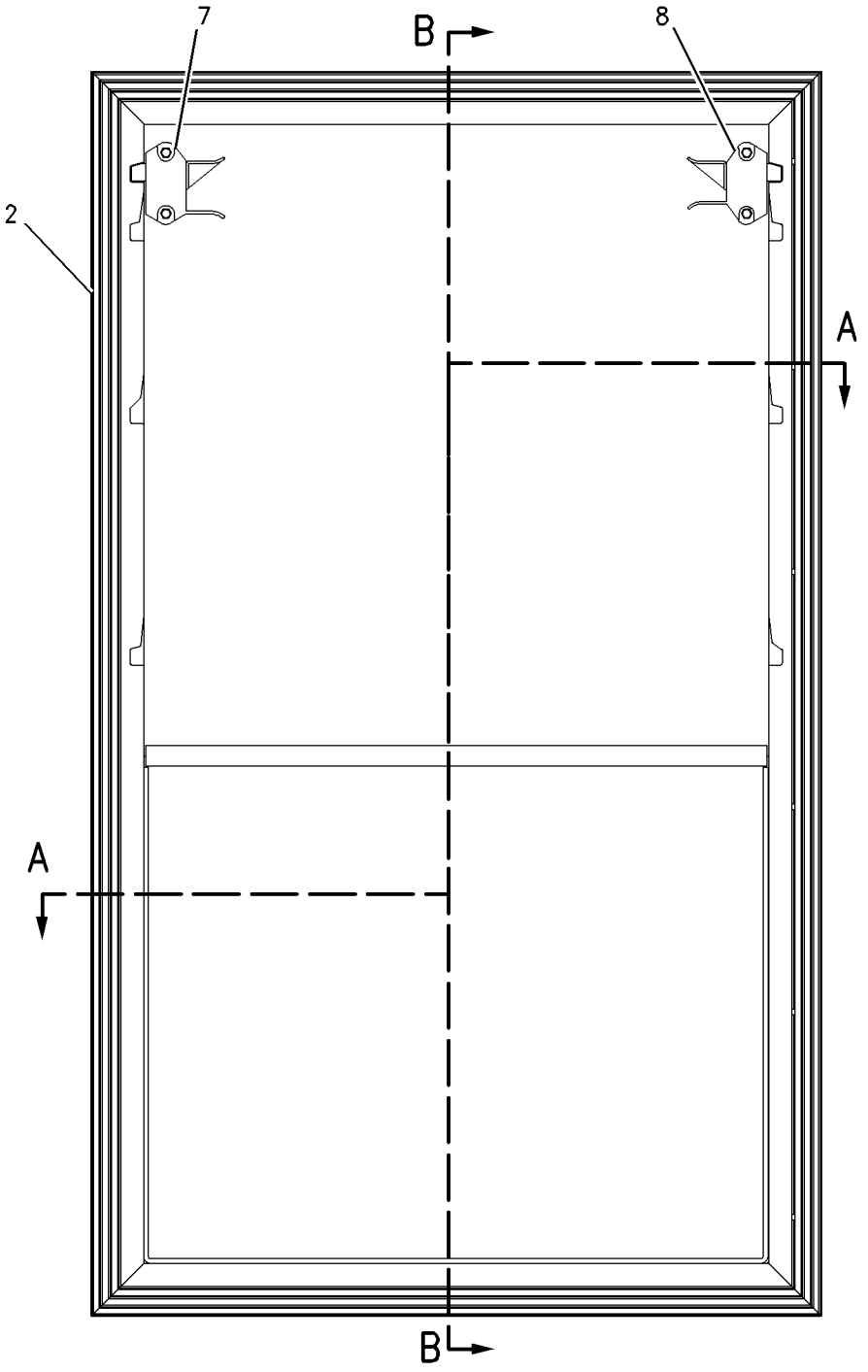

GRAPHIC #1 **<END>** g00758887

OPERATOR STATION

351-6993 WINDOW GP-DOOR—SLIDING

S/N: JKM1-UP

PART OF 352-4153 WINDOW GP-CAB

FIELD REPLACEMENT ORDER 352-4153—PAGE 1037

SMCS-7308, 7310 **i03982029**

NOTE	REF NO	GRAPHIC REF	PART NUMBER	QTY	PART NAME 1 2 3 4 5 6 (PRODUCT LEVEL)	SEE PAGE
	1	1	**187-5125**	1	GLASS-FIXED	
	2	1	**318-8503**	1	HANDLE AS (LH)	
	3	1	**318-8504**	1	HANDLE AS (RH)	
	4	1	**352-4157**	1	RAIL	
	5	1	**352-4900**	1	GLASS-SLIDING	
	6	1	**353-5395**	1	KIT-SEAL	
					(INCLUDES BRUSH, BUMPERS, FLOCKED RUBBER, & GLAZING)	

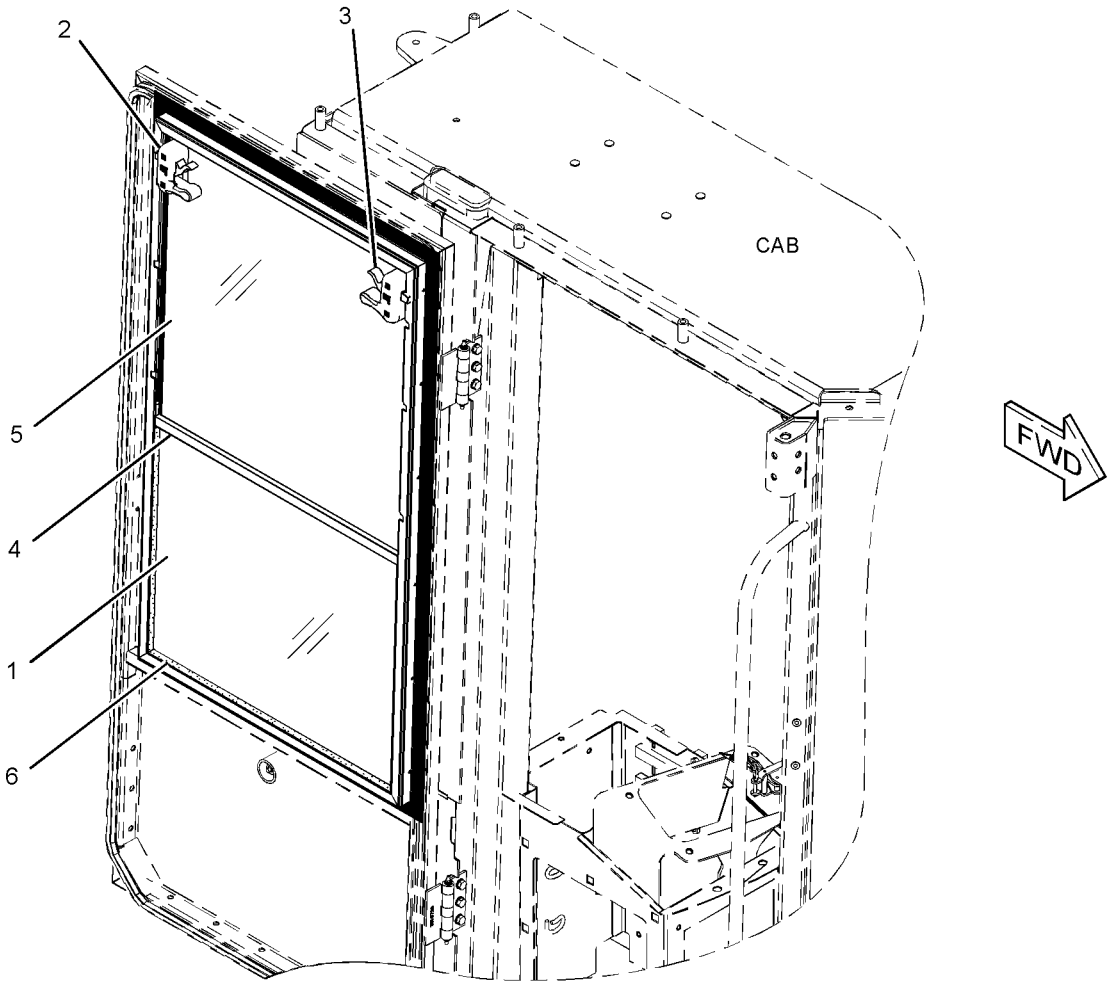

GRAPHIC #1

<END>

g02174452

OPERATOR STATION

149-7702 WIPER GP-WINDOW

S/N: JKM1-UP

PART OF 252-4553 CAB AR-ENCLOSED ROPS

SMCS-7305 **i03508551**

NOTE	REF NO	GRAPHIC REF	PART NUMBER	QTY	PART NAME 1 2 3 4 5 6 (PRODUCT LEVEL)	SEE PAGE
	1	1	**6V-6210**	1	GASKET-SHAFT	
	2	1	**6V-7419**	1	BLADE AS-WIPER (700-MM)	
	3	1	**8T-5400**	3	CONNECTOR AS	
	4	1	**9R-2596**	1	PLATE	
C	5	1	**155-5779**	1	WIPER PIVOT AS	
C	6	1	**155-5781**	1	ARM-WINDOW WIPER (REAR)	
	7	1	**5C-8811**	1	BLADE AS-WIPER (500-MM)	
CY	8	1	**214-7636**	1	ARM GP-WINDOW WIPER (FRONT)	915
CY	9	1	**155-5783**	1	MOTOR GP-WINDOW WIPER (24-VOLT) (FRONT)	989
CY	10	1	**155-5784**	1	MOTOR GP-WINDOW WIPER (24-VOLT) (REAR)	990
	11	1	**3S-2093**	9	STRAP-CABLE	
	12	1	**4M-7470**	1	GROMMET	
M	13	1	**9X-2045**	2	SCREW-TRUSS HEAD (M6X1X20-MM)	
E	14	1	**144-0195**		HOSE (70-CM)	
E	14A	1	**144-0195**		HOSE (148-CM)	
E	14B	1	**144-0195**		HOSE (242-CM)	

C-CHANGE FROM PREVIOUS TYPE
E-ORDER BY THE CENTIMETER
M-METRIC PART
Y-SEPARATE ILLUSTRATION

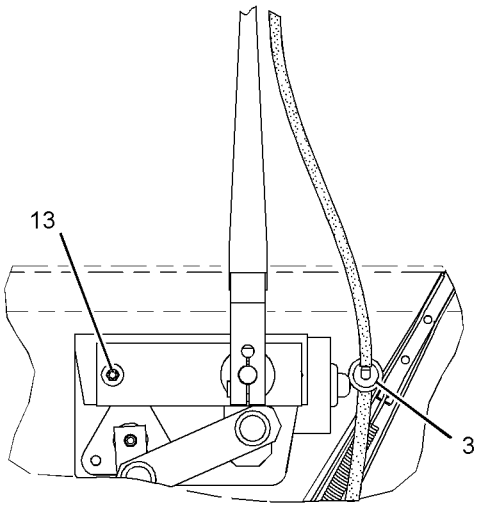

VIEW A-A

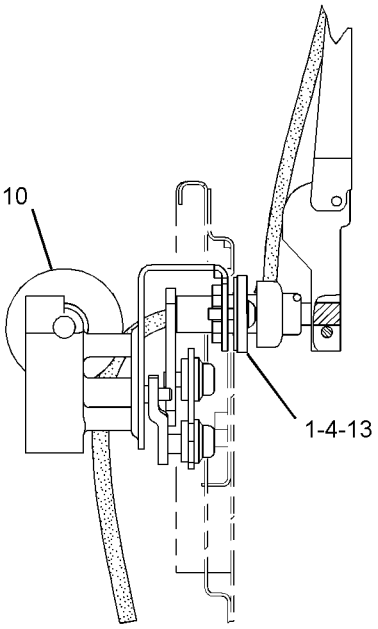

VIEW OF AREA B

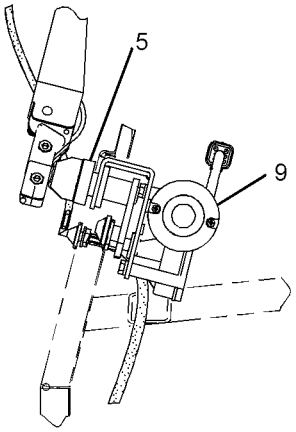

VIEW OF AREA C

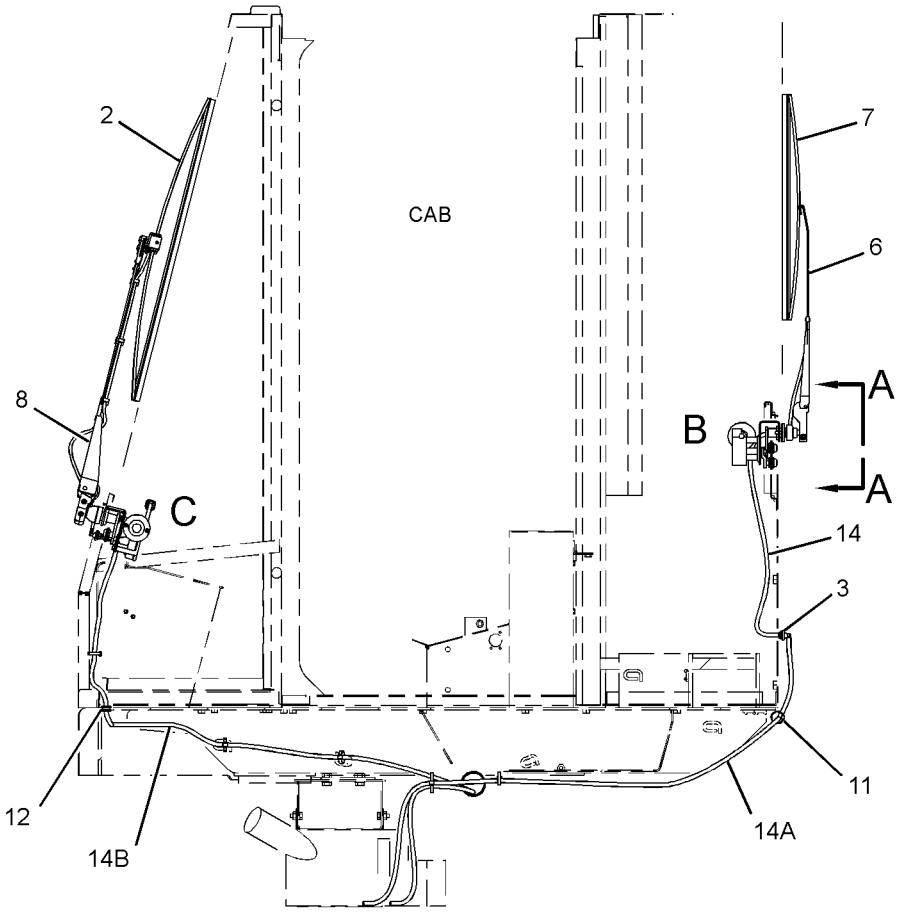

LEFT SIDE VIEW

GRAPHIC #1

<END>

g01847702

WORK TOOLS

116-9713 ADAPTER GP-TIP

S/N: JKM1-UP

AN ATTACHMENT

SMCS-6803 **i01862804**

NOTE	PART NUMBER	QTY	PART NAME 1 2 3 4 5 6 (PRODUCT LEVEL)	SEE PAGE
	6I-9250	1	ADAPTER-TIP	
	6I-9251	1	ADAPTER-TIP	
	1U-0257	6	ADAPTER-STRAP	
	8J-2928	12	BOLT-PLOW (1-8X3.75-IN)	
	4F-4042	2	BOLT-PLOW (1-8X3-IN)	
	4J-9058	2	BOLT-PLOW (1-8X3.25-IN)	
	8J-2933	12	NUT (1-8-THD)	
	2J-3507	4	NUT-FULL (1-8-THD)	

<END>

WORK TOOLS

106-2481 ARM GP-MATERIAL HANDLING

S/N: JKM1-UP

AN ATTACHMENT

SMCS-6542 **i02580732**

NOTE	REF NO	GRAPHIC REF	PART NUMBER	QTY	PART NAME 1 2 3 4 5 6 (PRODUCT LEVEL)	SEE PAGE
	1	1	**3W-6116**	1	PIN	
	2	1	**103-5796**	1	PIN-KEEPER	
	3	1	**159-8036**	1	FILM-WARNING (READ OMM)	
	4	1	**203-7643**	1	CLEVIS	
	5	1	**203-7644**	1	HOOK AS	
	5A	1	**203-7730**	1	KIT-LATCH	
	6	1	**272-5862**	1	FILM-RATING	

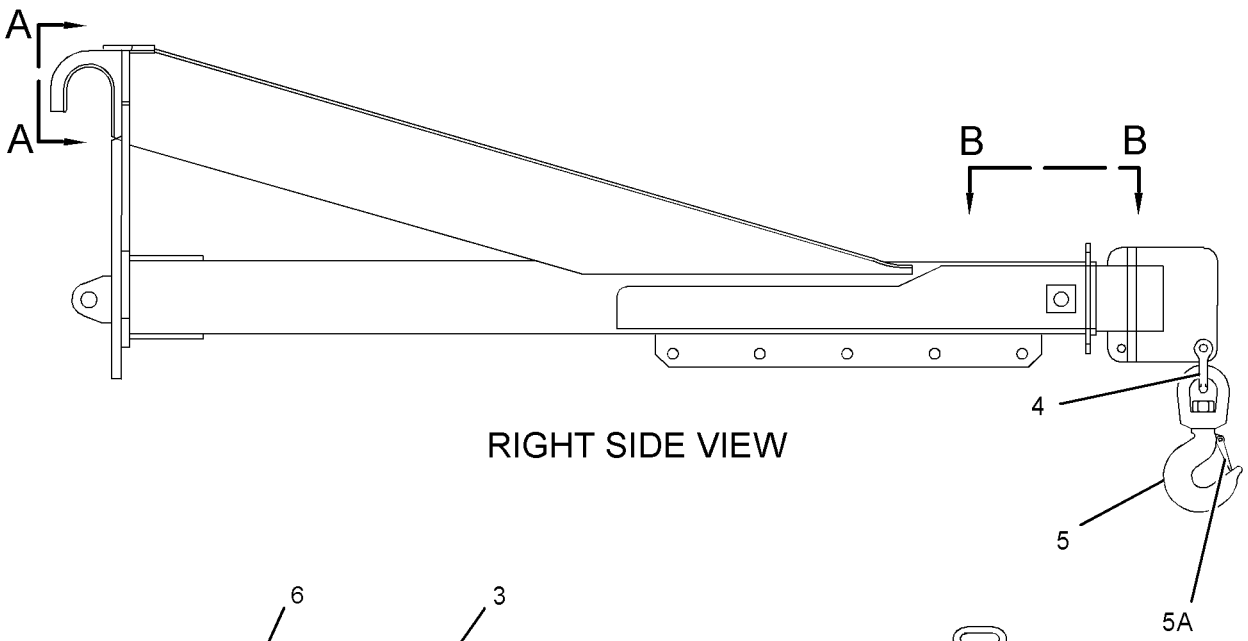

RIGHT SIDE VIEW

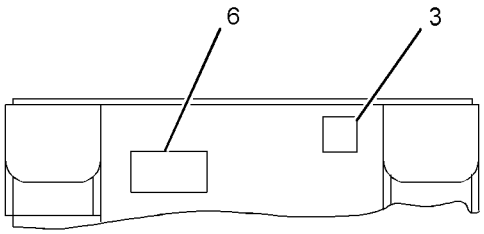

VIEW A-A

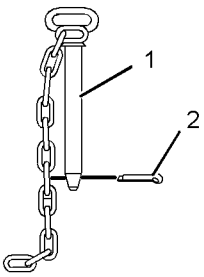

VIEW B-B

GRAPHIC #1 **<END>** g01253391

WORK TOOLS

289-9888 ARM GP-MATERIAL HANDLING—QUICK COUPLER

S/N: JKM1-UP

AN ATTACHMENT

SMCS-6542 **i03878755**

NOTE	REF NO	GRAPHIC REF	PART NUMBER	QTY	PART NAME 1 2 3 4 5 6 (PRODUCT LEVEL)	SEE PAGE
	1	1	**127-1678**	1	EXTENSION AS	
	2	1	**156-3815**	1	PLATE-IDENTIFICATION	
	3	1	**159-8035**	2	FILM-WARNING (CRUSH HAZARD, STAY BACK)	
	4	1	**159-8036**	1	FILM-WARNING (READ OMM)	
	5	1	**203-7643**	1	CLEVIS	
	6	1	**203-7644**	1	HOOK AS	
		1	**203-7730**	1	KIT-LATCH	
	7	1	**293-4494**	1	ARM AS	
		1	**2C-9259**	2	PLATE-IDENTIFICATION (CAT)	
		1	**3W-6116**	1	PIN	
		1	**103-5796**	1	PIN-KEEPER	
	8	1	**312-5694**	1	SETSCREW (1/4-20X0.25-IN)	
	9	1	**180-3516**	1	PLATE-IDENTIFICATION	

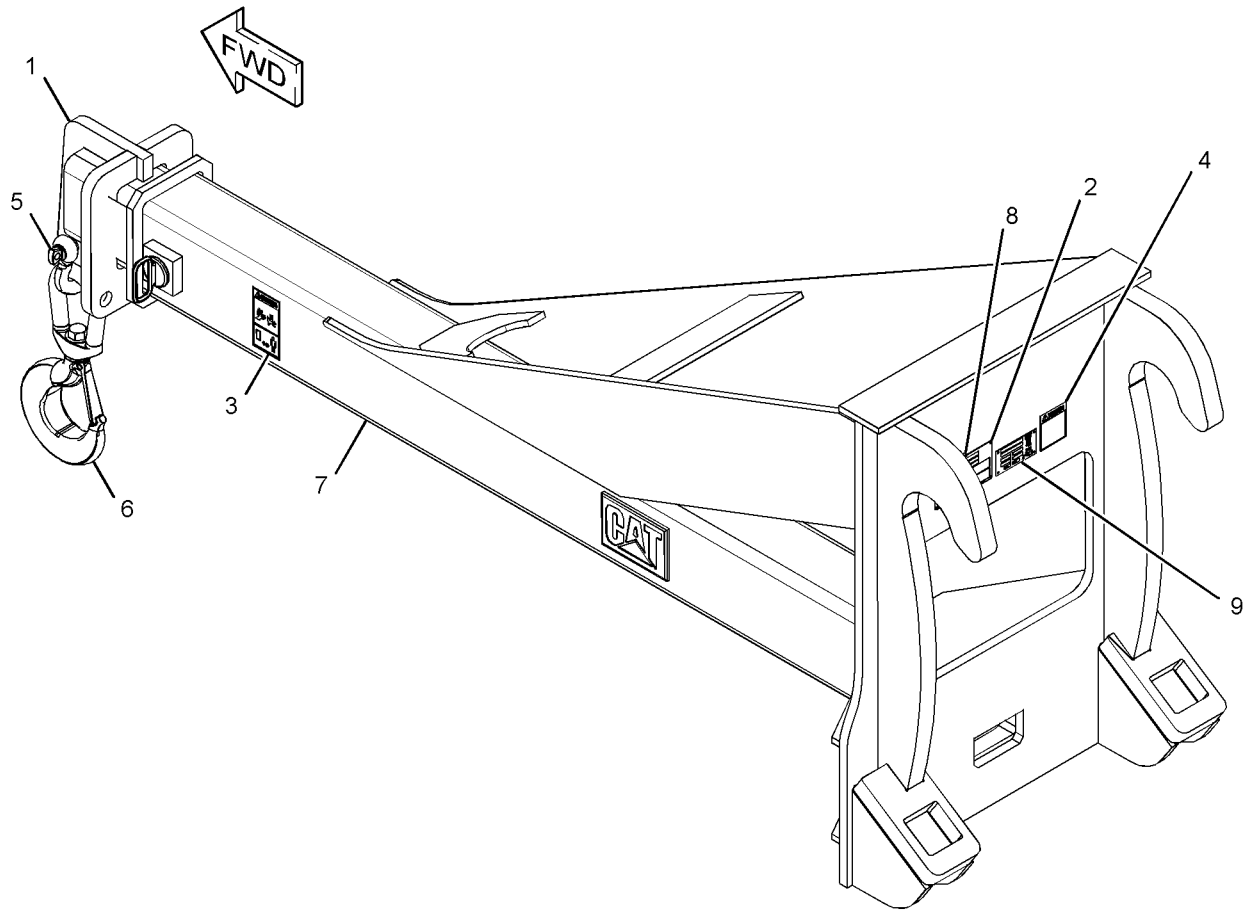

GRAPHIC #1 **<END>** g02153932

149-7446 BUCKET AS-GENERAL PURPOSE

S/N: JKM1-UP
2.1 CU M (2.75 CU YD)
CANNOT BE USED WITH BOLT-ON CORNER EDGE, ADAPTERS AND SEGMENTS
AN ATTACHMENT

SMCS-6101 **i01080746**

NOTE	REF NO	GRAPHIC REF	PART NUMBER	QTY	PART NAME 1 2 3 4 5 6 (PRODUCT LEVEL)	SEE PAGE
	1	1	**149-7507**	1	HINGE AS (LIFT-LH-OUTER)	
	2	1	**149-7508**	1	HINGE AS (LIFT-LH-INNER)	
	3	1	**149-7684**	1	HINGE AS (TILT-LH)	
	4	1	**149-7683**	1	HINGE AS (TILT-RH)	
	5	1	**149-7510**	1	HINGE AS (LIFT-RH-INNER)	
	6	1	**149-7509**	1	HINGE AS (LIFT-RH-OUTER)	
	7	1	**106-3192**	1	EDGE AS-CUTTING	
	8	1	**149-7513**	2	PLATE	
	9	1	**149-7514**	2	PLATE	
	10	1	**149-7469**	2	BAR	
	11	1	**4V-8286**	1	CORNER (LH)	
	12	1	**4V-8285**	1	CORNER (RH)	
	13	1	**149-7686**	1	PLATE-WEAR	

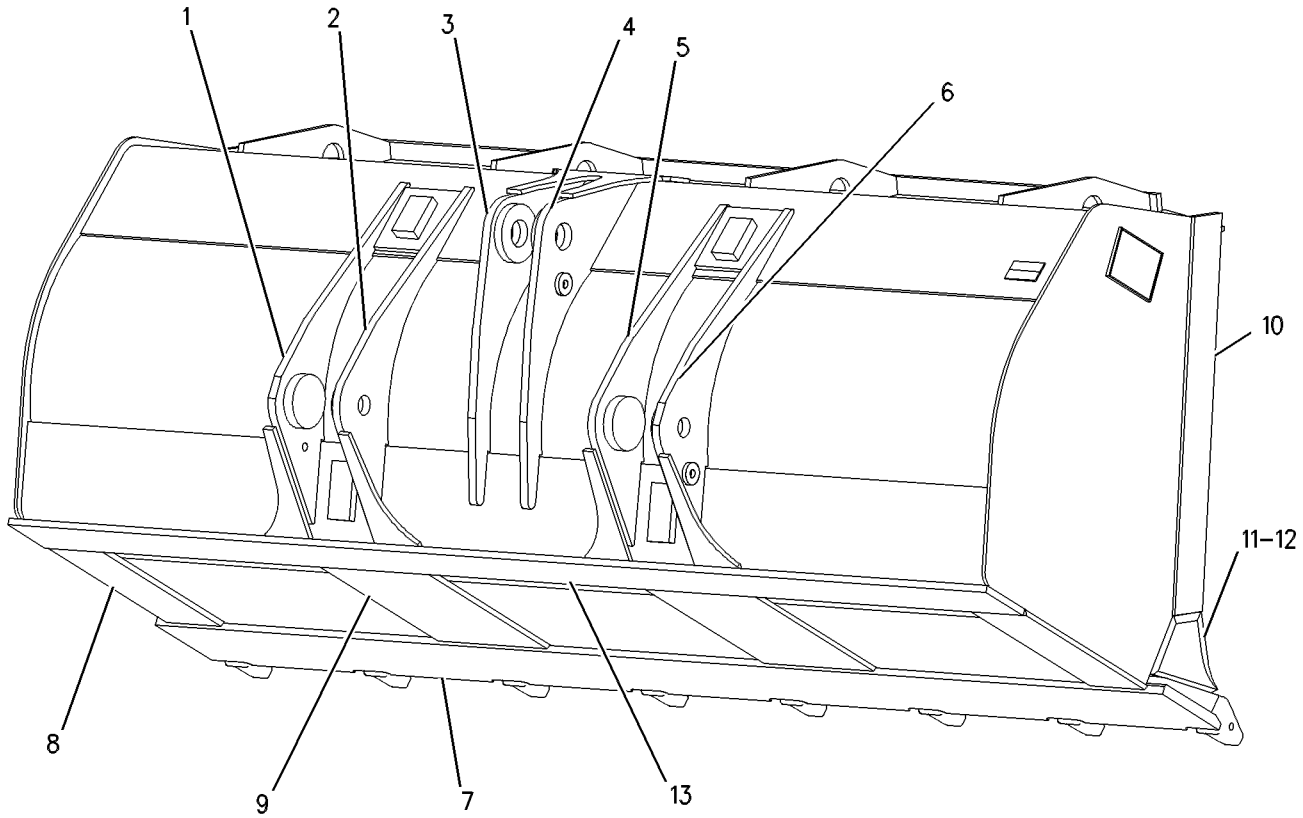

GRAPHIC #1 **<END>** g00497447

WORK TOOLS

215-1276 BUCKET AS-GENERAL PURPOSE

S/N: JKM1-UP
2.86 CU M (3.74 CU YDS)
AN ATTACHMENT

SMCS-6101 **i02144785**

NOTE	REF NO	GRAPHIC REF	PART NUMBER	QTY	PART NAME 1 2 3 4 5 6 (PRODUCT LEVEL)	SEE PAGE
	1	1	**6I-8310**	1	CORNER (LH)	
	2	1	**6I-8311**	1	CORNER (RH)	
	3	1	**105-2345**	1	EDGE-CUTTING	
	4	1	**216-4320**	2	PAD-WEAR	
	5	1	**217-2928**	2	PLATE-WEAR	
	6	1	**147-7633**	3	BOSS-TAPPED	

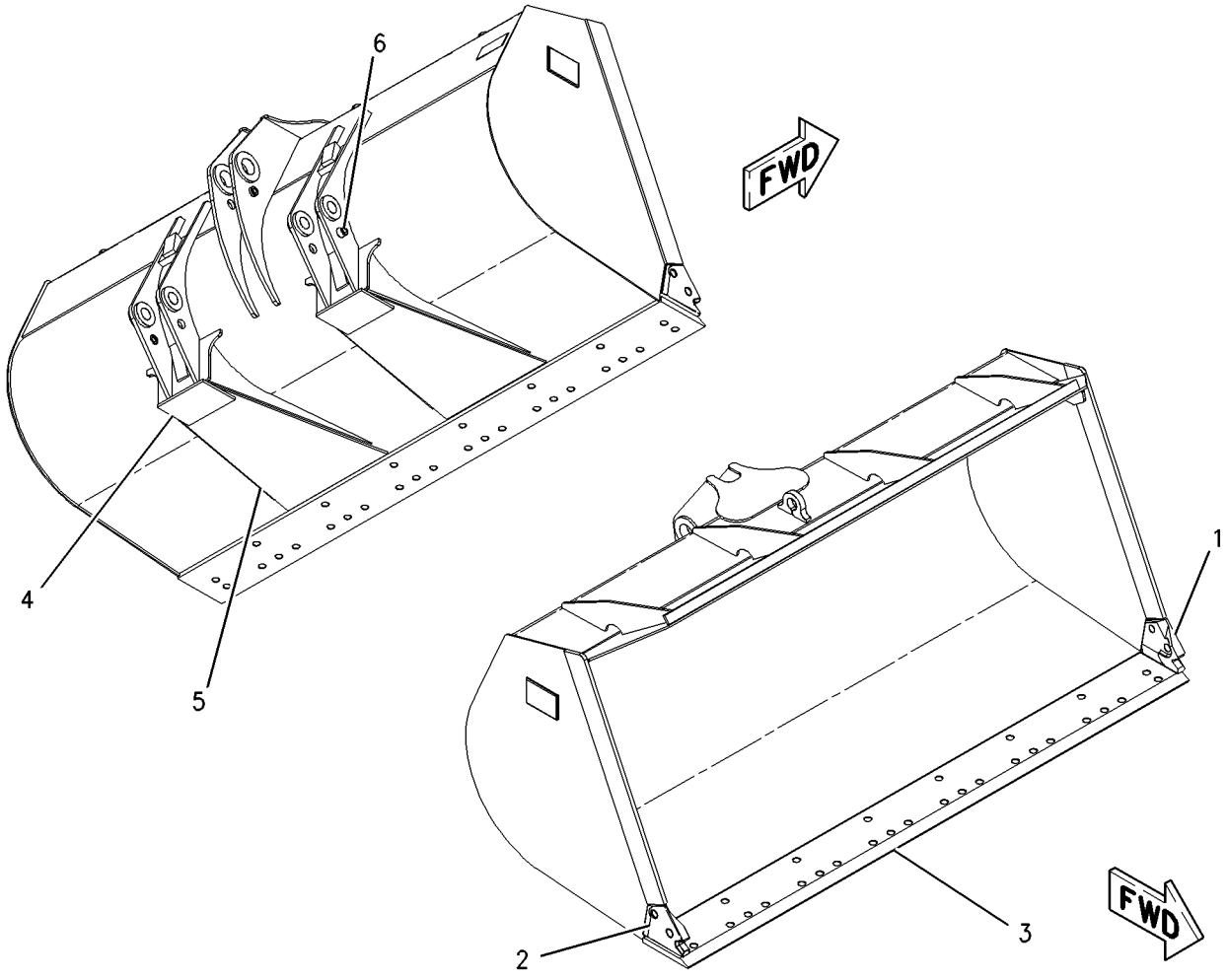

GRAPHIC #1 **<END>** g00956627

215-1278 BUCKET AS-GENERAL PURPOSE–QUICK COUPLER

S/N: JKM1-UP
2.6 CU M (3.5 CU YDS)
FOR USE WITH 2Q-8504 COUPLER AR-H LIFT, 185-5785 CONTROL AR-QUICK COUPLER
AN ATTACHMENT

SMCS-6101 **i02144997**

NOTE	REF NO	GRAPHIC REF	PART NUMBER	QTY	PART NAME 1 2 3 4 5 6 (PRODUCT LEVEL)	SEE PAGE
	1	1	**6I-8310**	1	CORNER (LH)	
	2	1	**6I-8311**	1	CORNER (RH)	
	3	1	**105-2345**	1	EDGE-CUTTING	
	4	1	**216-4320**	2	PAD-WEAR	
	5	1	**216-5032**	2	PLATE-WEAR	

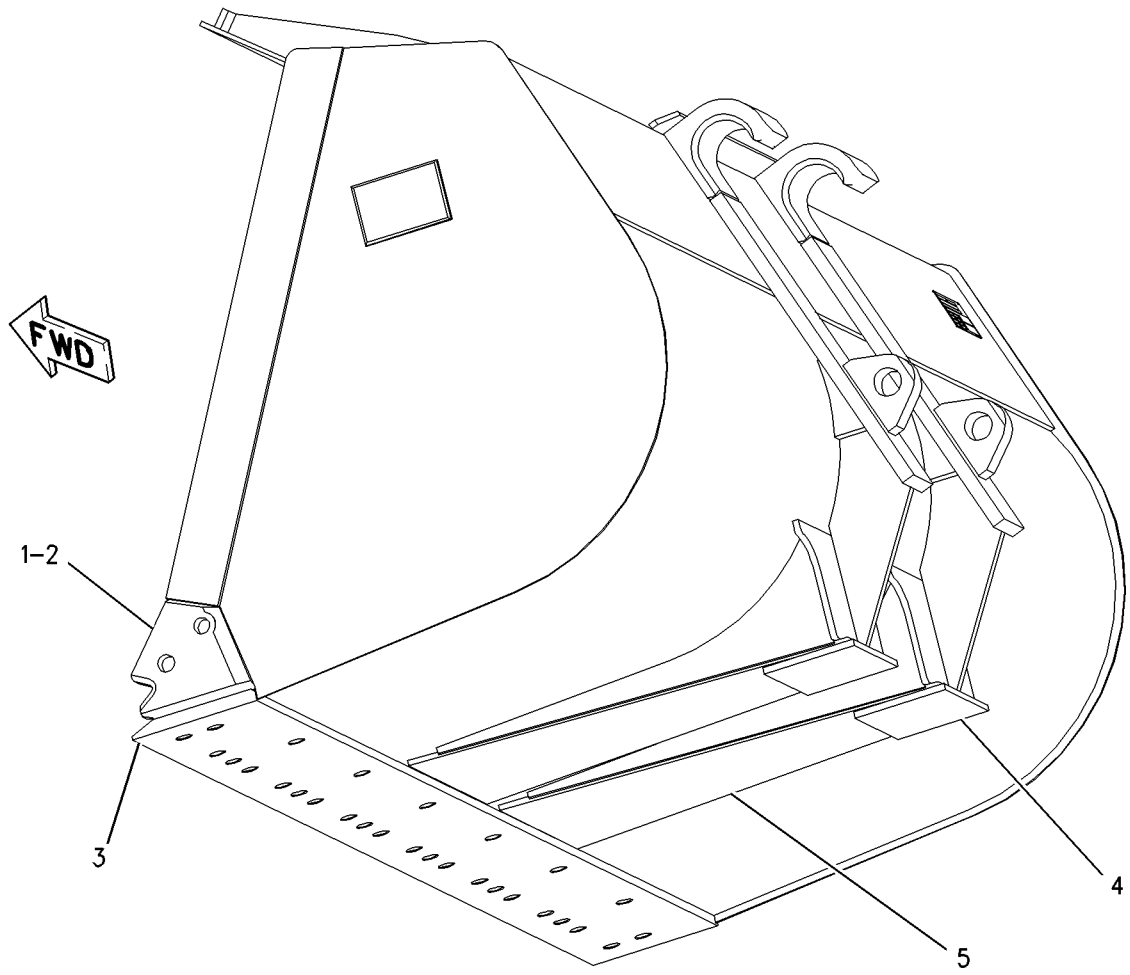

GRAPHIC #1 **<END>** g00928476

WORK TOOLS

311-6942 BUCKET AS-GENERAL PURPOSE—QUICK COUPLER

S/N: JKM1-UP
2.9-CU M (3.75-CU YD)
AN ATTACHMENT

SMCS-6101 **i03405125**

NOTE	REF NO	GRAPHIC REF	PART NUMBER	QTY	PART NAME 1 2 3 4 5 6 (PRODUCT LEVEL)	SEE PAGE
	1	1	**6I-8310**	1	CORNER (LH)	
	2	1	**6I-8311**	1	CORNER (RH)	
	4	1	**105-2345**	1	EDGE-CUTTING	
	5	1	**137-4234**	1	PLATE-IDENTIFICATION (WORK TOOL)	
	8	1	**201-0684**	2	PAD-WEAR	
	20	1	**323-9539**	1	PLATE-WEAR	
	21	1	**323-9540**	2	PLATE-HOOK	
	27	1	**2C-9259**	2	PLATE-IDENTIFICATION (CAT)	
	28	1	**312-5694**	1	SETSCREW (1/4-20X0.25-IN)	

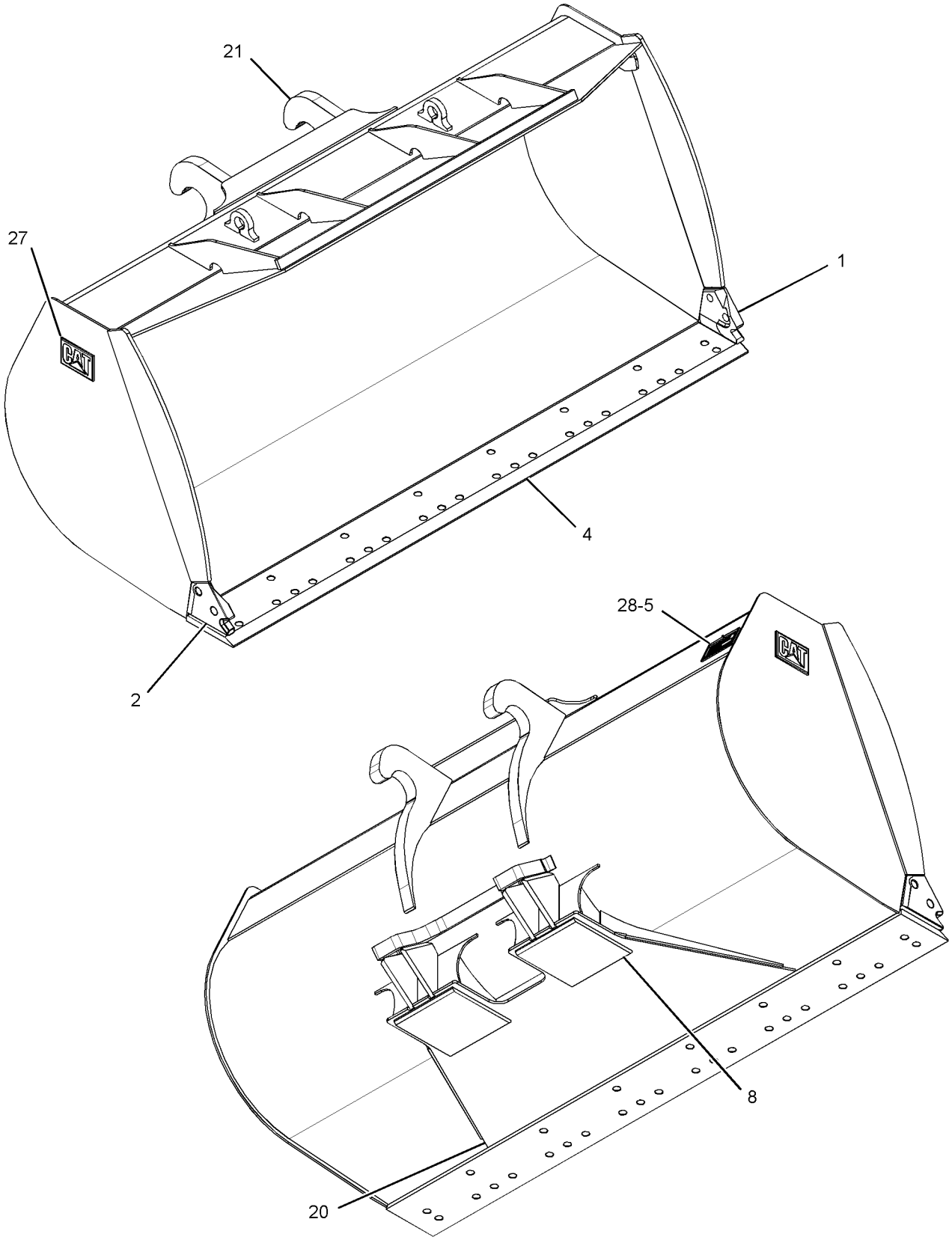

GRAPHIC #1 **<END>** g01842933

WORK TOOLS

314-3209 BUCKET AS-GENERAL PURPOSE

S/N: JKM1-UP
2.5-CU M (3.25-CU YD)
AN ATTACHMENT

SMCS-6101 **i03405122**

NOTE	REF NO	GRAPHIC REF	PART NUMBER	QTY	PART NAME 1 2 3 4 5 6 (PRODUCT LEVEL)	SEE PAGE
	1	1	**6I-8310**	1	CORNER (LH)	
	2	1	**6I-8311**	1	CORNER (RH)	
	3	1	**105-2345**	1	EDGE-CUTTING	
	4	1	**137-4234**	1	PLATE-IDENTIFICATION (WORK TOOL)	
	5	1	**201-0684**	2	PAD-WEAR	
	6	1	**316-2336**	2	PLATE-SIDE BAR	
	7	1	**323-9540**	2	PLATE-HOOK	
	8	1	**324-0136**	1	PLATE-WEAR	
	9	1	**2C-9259**	2	PLATE-IDENTIFICATION (CAT)	
	10	1	**312-5694**	1	SETSCREW (1/4-20X0.25-IN)	

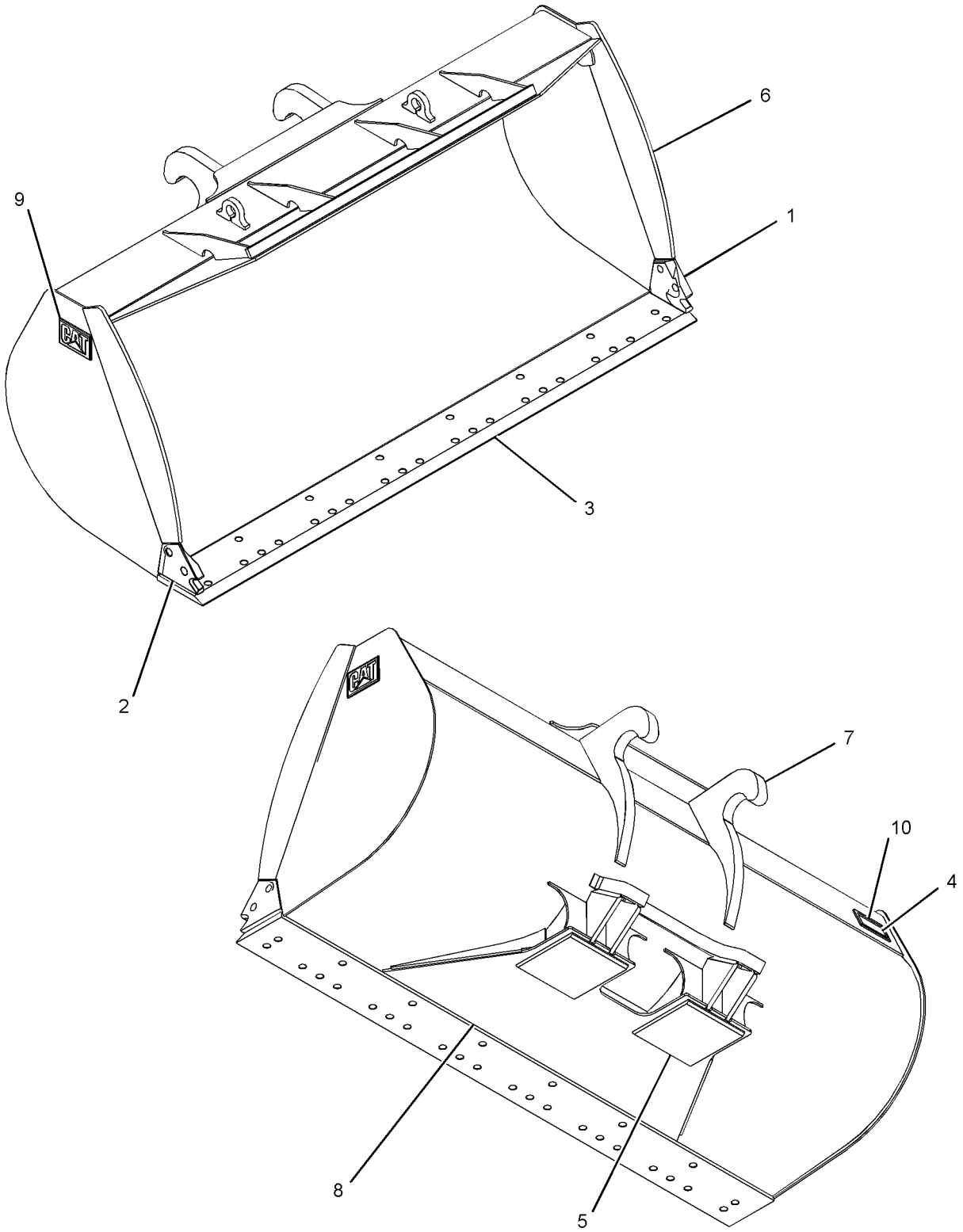

GRAPHIC #1 **<END>** g01882877

WORK TOOLS

314-3210 BUCKET AS-GENERAL PURPOSE

S/N: JKM1-UP
3.1-CU M (4-CU YD)
AN ATTACHMENT

SMCS-6101 **i03405123**

NOTE	REF NO	GRAPHIC REF	PART NUMBER	QTY	PART NAME 1 2 3 4 5 6 (PRODUCT LEVEL)	SEE PAGE
	1	1	**6I-8310**	1	CORNER (LH)	
	2	1	**6I-8311**	1	CORNER (RH)	
	3	1	**105-2345**	1	EDGE-CUTTING	
	4	1	**137-4234**	1	PLATE-IDENTIFICATION (WORK TOOL)	
	5	1	**201-0684**	2	PAD-WEAR	
	6	1	**316-2560**	2	PLATE-SIDE BAR	
	7	1	**323-9540**	2	PLATE-HOOK	
	8	1	**324-0152**	1	PLATE-WEAR	
	9	1	**2C-9259**	2	PLATE-IDENTIFICATION (CAT)	
	10	1	**312-5694**	1	SETSCREW (1/4-20X0.25-IN)	

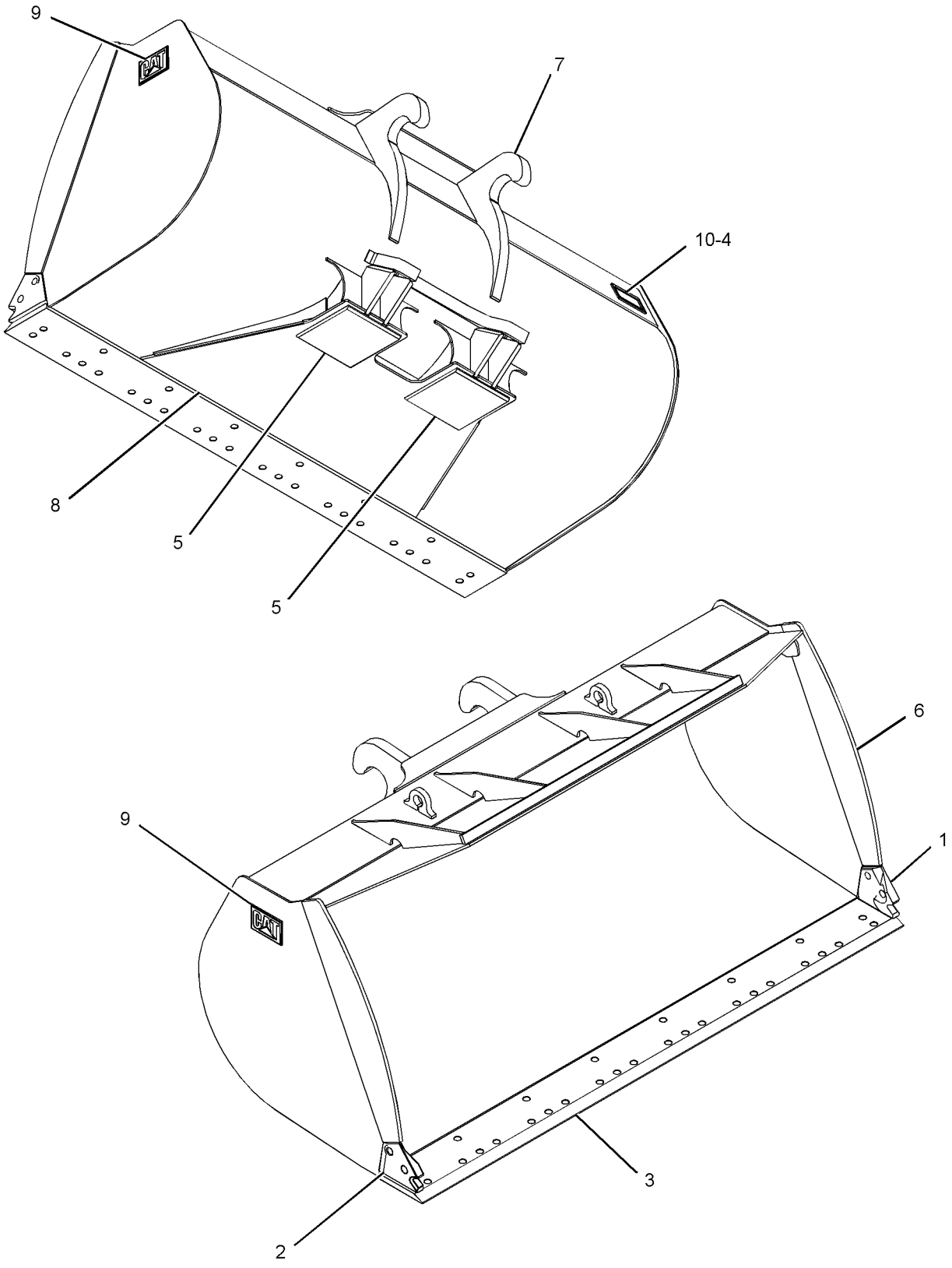

GRAPHIC #1 **<END>** g01890314

149-7443 BUCKET AS-MATERIAL HANDLING

S/N: JKM1-UP
2.3 CU M (3.0 CU YD)
FOR USE WITH GROUND ENGAGING TOOLS (G.E.T.), 107-3747—PAGE 1079, 116-9713—PAGE 1044
AN ATTACHMENT

SMCS-6101 **i01075991**

NOTE	REF NO	GRAPHIC REF	PART NUMBER	QTY	PART NAME 1 2 3 4 5 6 (PRODUCT LEVEL)	SEE PAGE
	1	1	**149-7489**	1	HINGE AS (LIFT-LH-OUTER)	
	2	1	**149-7490**	1	HINGE AS (LIFT-LH-INNER)	
	3	1	**149-7486**	1	HINGE AS (TILT-LH)	
	4	1	**149-7485**	1	HINGE AS (TILT-RH)	
	5	1	**149-7492**	1	HINGE AS (LIFT-RH-INNER)	
	6	1	**149-7491**	1	HINGE AS (LIFT-RH-OUTER)	
	7	1	**105-2345**	1	EDGE-CUTTING	
	8	1	**9V-4484**	4	PLATE	
	9	1	**150-0359**	2	PLATE-WEAR	
	10	1	**6I-8311**	1	CORNER (RH)	
	11	1	**6I-8310**	1	CORNER (LH)	
	12	1	**149-7469**	2	BAR	

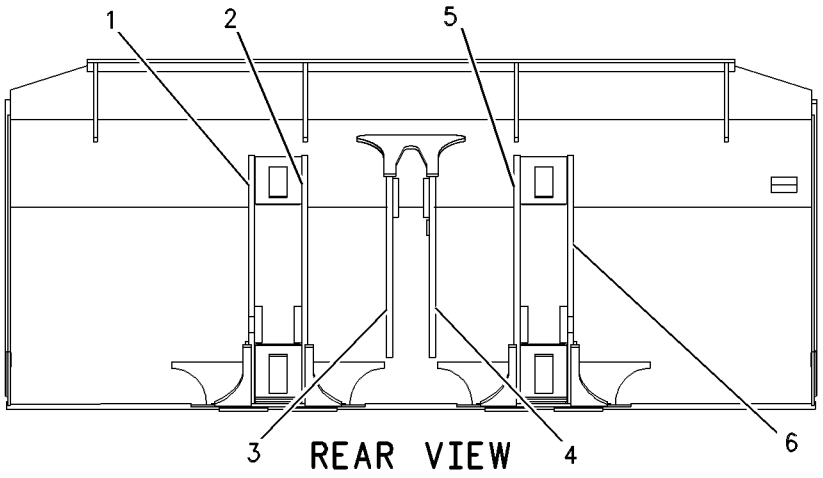

REAR VIEW

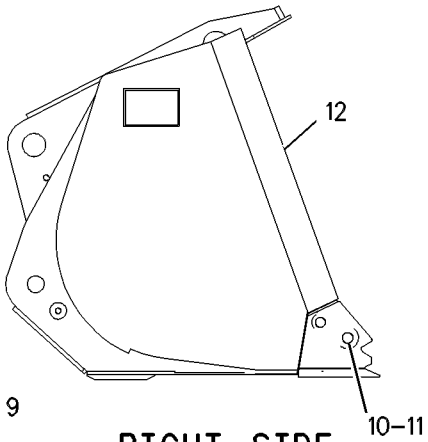

RIGHT SIDE VIEW

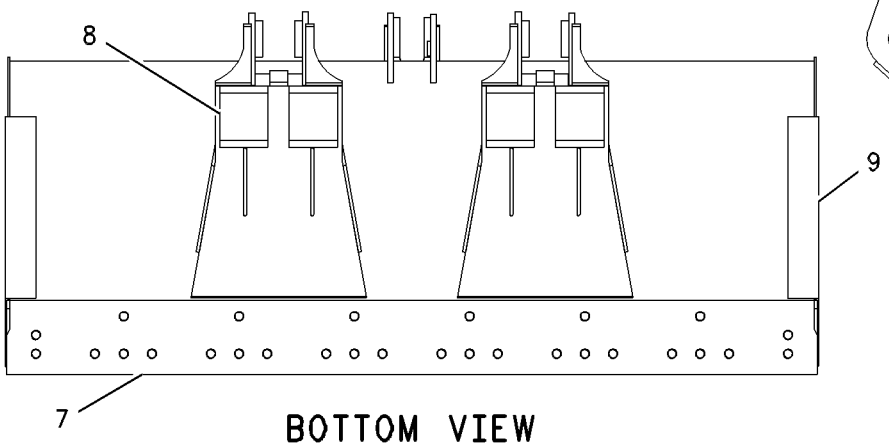

BOTTOM VIEW

GRAPHIC #1 **<END>** g00557282

WORK TOOLS

149-7444 BUCKET AS-MATERIAL HANDLING

S/N: JKM1-UP
2.5 CU M (3.25 CU YD)
FOR USE WITH GROUND ENGAGING TOOLS (G.E.T.), 116-9713—PAGE 1044, 107-3747—PAGE 1079
AN ATTACHMENT

SMCS-6101 **i01929605**

NOTE	REF NO	GRAPHIC REF	PART NUMBER	QTY	PART NAME 1 2 3 4 5 6 (PRODUCT LEVEL)	SEE PAGE
	2	1	**9V-4484**	4	PLATE	
	3	1	**105-2345**	1	EDGE-CUTTING	
	4	1	**149-7485**	1	HINGE AS (TILT-RH)	
	5	1	**149-7486**	1	HINGE AS (TILT-LH)	
	6	1	**149-7489**	1	HINGE AS (LIFT-LH-OUTER)	
	7	1	**149-7490**	1	HINGE AS (LIFT-LH-INNER)	
	8	1	**149-7491**	1	HINGE AS (LIFT-RH-OUTER)	
	9	1	**149-7492**	1	HINGE AS (LIFT-RH-INNER)	
	10	1	**150-0365**	2	PLATE-WEAR	
	11	1	**6I-8311**	1	CORNER (RH)	
	12	1	**6I-8310**	1	CORNER (LH)	

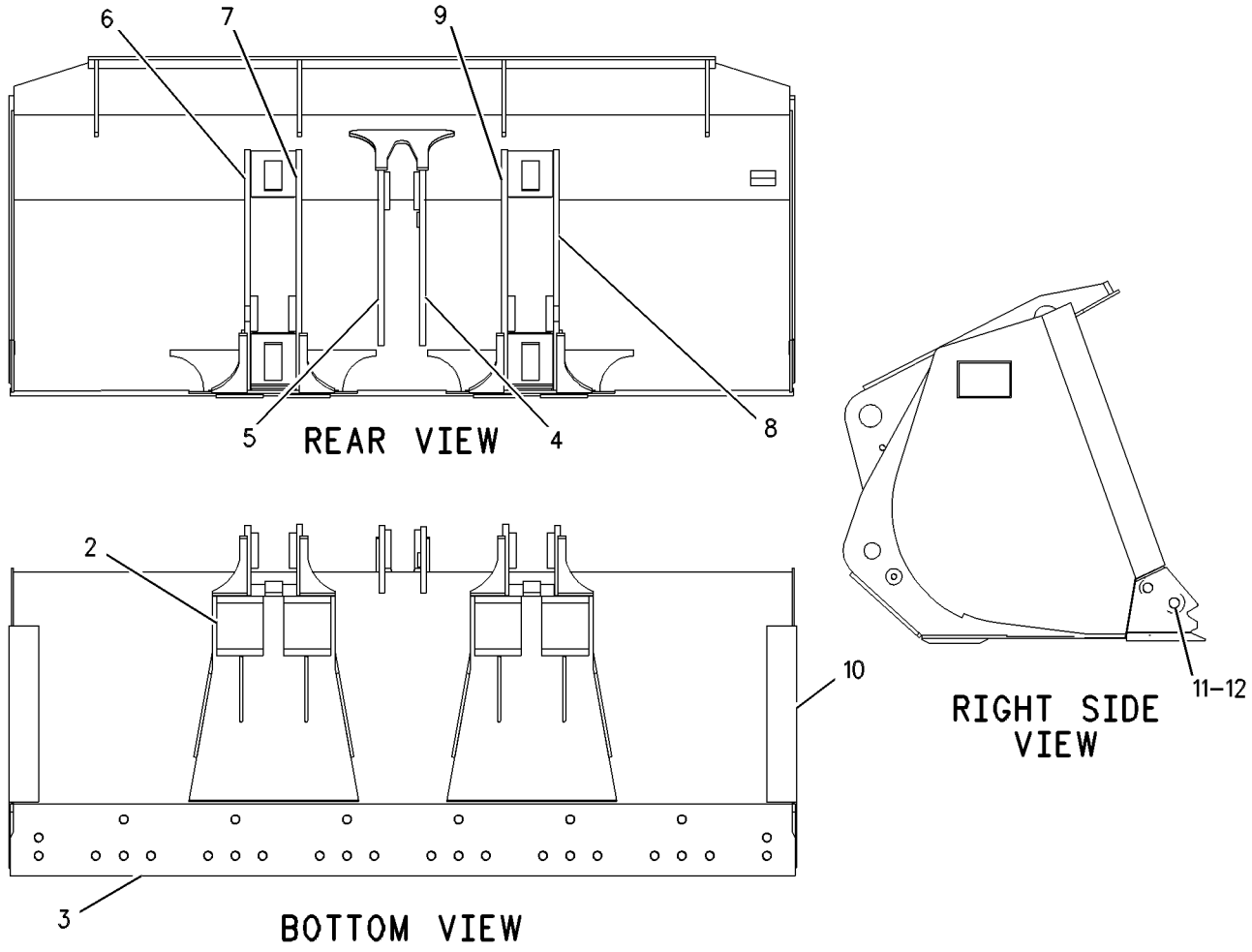

GRAPHIC #1 **<END>** g00565940

WORK TOOLS

149-7445 BUCKET AS-MATERIAL HANDLING

S/N: JKM1-UP
2.8 CU M (3.65 CU YD)
AN ATTACHMENT

SMCS-6101 **i01929619**

NOTE	REF NO	GRAPHIC REF	PART NUMBER	QTY	PART NAME 1 2 3 4 5 6 (PRODUCT LEVEL)	SEE PAGE
	1	1	**149-7489**	1	HINGE AS (LIFT-LH-OUTER)	
	2	1	**149-7490**	1	HINGE AS (LIFT-LH-INNER)	
	3	1	**149-7486**	1	HINGE AS (TILT-LH)	
	4	1	**149-7485**	1	HINGE AS (TILT-RH)	
	5	1	**149-7492**	1	HINGE AS (LIFT-RH-INNER)	
	6	1	**149-7491**	1	HINGE AS (LIFT-RH-OUTER)	
	7	1	**105-2345**	1	EDGE-CUTTING	
	8	1	**9V-4484**	4	PLATE	
	9	1	**149-7471**	1	BAR	
	10	1	**6I-8311**	1	CORNER (RH)	
	11	1	**6I-8310**	1	CORNER (LH)	

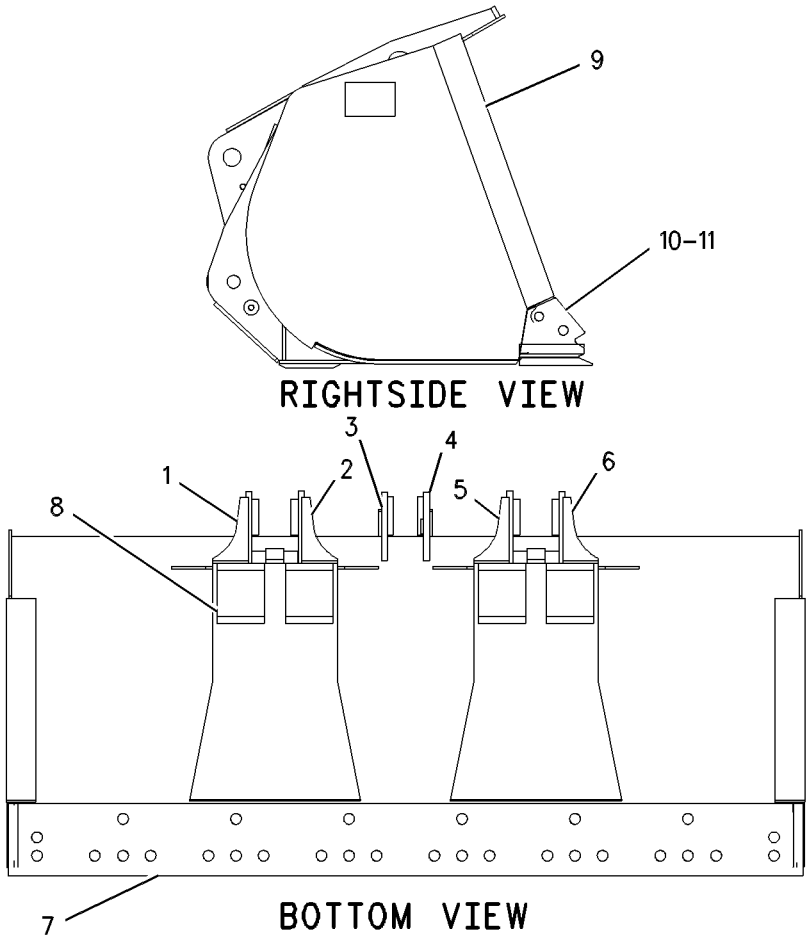

GRAPHIC #1 **<END>** g00333474

158-3137 BUCKET AS-MATERIAL HANDLING

S/N: JKM1-UP
2.8-CU M (3.66-CU YD)
PART OF 154-6956 BUCKET GP-MATERIAL HANDLING
FOR USE WITH 107-3747—PAGE 1079, 116-9713—PAGE 1044
AN ATTACHMENT

SMCS-6101 **i02676069**

NOTE	REF NO	GRAPHIC REF	PART NUMBER	QTY	PART NAME 1 2 3 4 5 6 (PRODUCT LEVEL)	SEE PAGE
	1	1	**155-7313**	1	HINGE AS (LIFT, OUTER, LH)	
	2	1	**155-7315**	1	HINGE AS (LIFT, INNER, LH)	
	3	1	**155-5059**	1	HINGE AS (TILT, LH)	
	4	1	**155-5058**	1	HINGE AS (TILT, RH)	
	5	1	**155-7318**	1	HINGE AS (LIFT, INNER, RH)	
	6	1	**155-7317**	1	HINGE AS (LIFT, OUTER, RH)	
	7	1	**105-2345**	1	EDGE-CUTTING	
	8	1	**9V-4484**	4	PLATE	
	9	1	**155-7325**	2	PLATE-WEAR	
	10	1	**155-7326**	4	PLATE-WEAR	
	11	1	*155-7281*	1	PLATE AS (RH)	
	11A	1	**155-7283**	1	PLATE-WEAR	
	11B	1	**6I-8311**	1	CORNER (RH)	
	11C	1	**2C-9259**	1	PLATE-IDENTIFICATION (CAT)	
	12	1	*155-7282*	1	PLATE AS (LH)	
	12A	1	**155-7283**	1	PLATE-WEAR	
	12B	1	**6I-8310**	1	CORNER (LH)	
	12C	1	**2C-9259**	1	PLATE-IDENTIFICATION (CAT)	

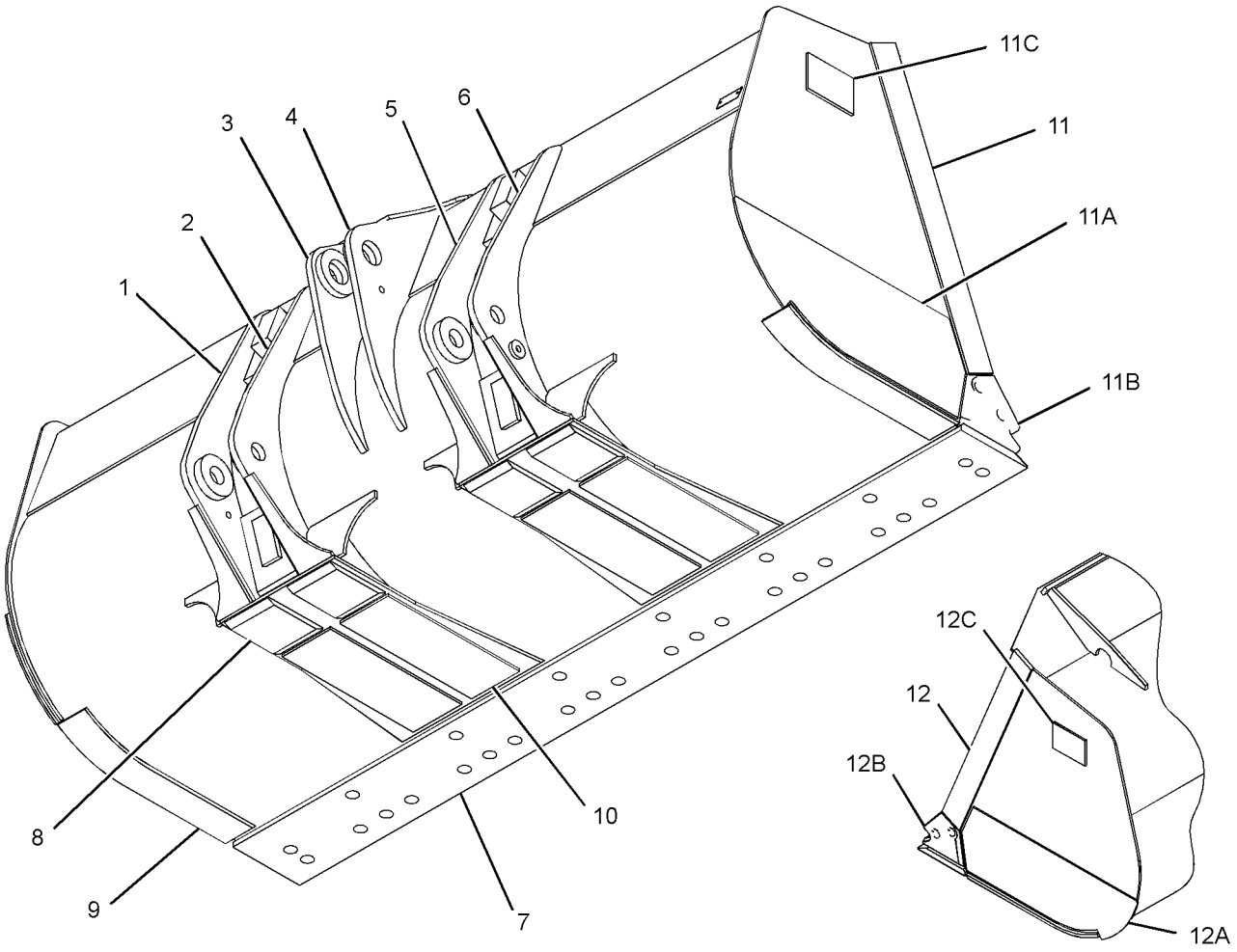

GRAPHIC #1 **<END>** g01379144

WORK TOOLS

158-3138 BUCKET AS-MATERIAL HANDLING

S/N: JKM1-UP
3.0 CU M (4.02 CU YD)
PART OF 154-6957 BUCKET GP-MATERIAL HANDLING
AN ATTACHMENT

SMCS-6101 **i03198161**

NOTE	REF NO	GRAPHIC REF	PART NUMBER	QTY	PART NAME 1 2 3 4 5 6 (PRODUCT LEVEL)	SEE PAGE
	1	1	**155-7313**	1	HINGE AS (LIFT, OUTER, LH) (LIFT-LH-OUTER)	
	2	1	**155-7315**	1	HINGE AS (LIFT, INNER, LH) (LIFT-LH-INNER)	
	3	1	**155-5059**	1	HINGE AS (TILT, LH) (TILT-LH)	
	4	1	**155-5058**	1	HINGE AS (TILT, RH) (TILT-RH)	
	5	1	**155-7318**	1	HINGE AS (LIFT, INNER, RH) (LIFT-RH-INNER)	
	6	1	**155-7317**	1	HINGE AS (LIFT, OUTER, RH) (LIFT-RH-OUTER)	
	7	1	**105-2345**	1	EDGE-CUTTING	
	8	1	**9V-4484**	4	PLATE	
	9	1	**158-0379**	2	PLATE-WEAR	
	10	1	**158-0380**	4	PLATE-WEAR	
	11	1	*158-0372*	1	PLATE AS (RH)	
	11A	1	**2C-9259**	1	PLATE-IDENTIFICATION (CAT)	
	11B	1	**6I-8311**	1	CORNER (RH)	
	11C	1	**158-0377**	1	PLATE-WEAR	
	12	1	*158-0374*	1	PLATE AS (LH)	
	12A	1	**2C-9259**	1	PLATE-IDENTIFICATION (CAT)	
	12B	1	**6I-8310**	1	CORNER (LH)	
	12C	1	**158-0377**	1	PLATE-WEAR	

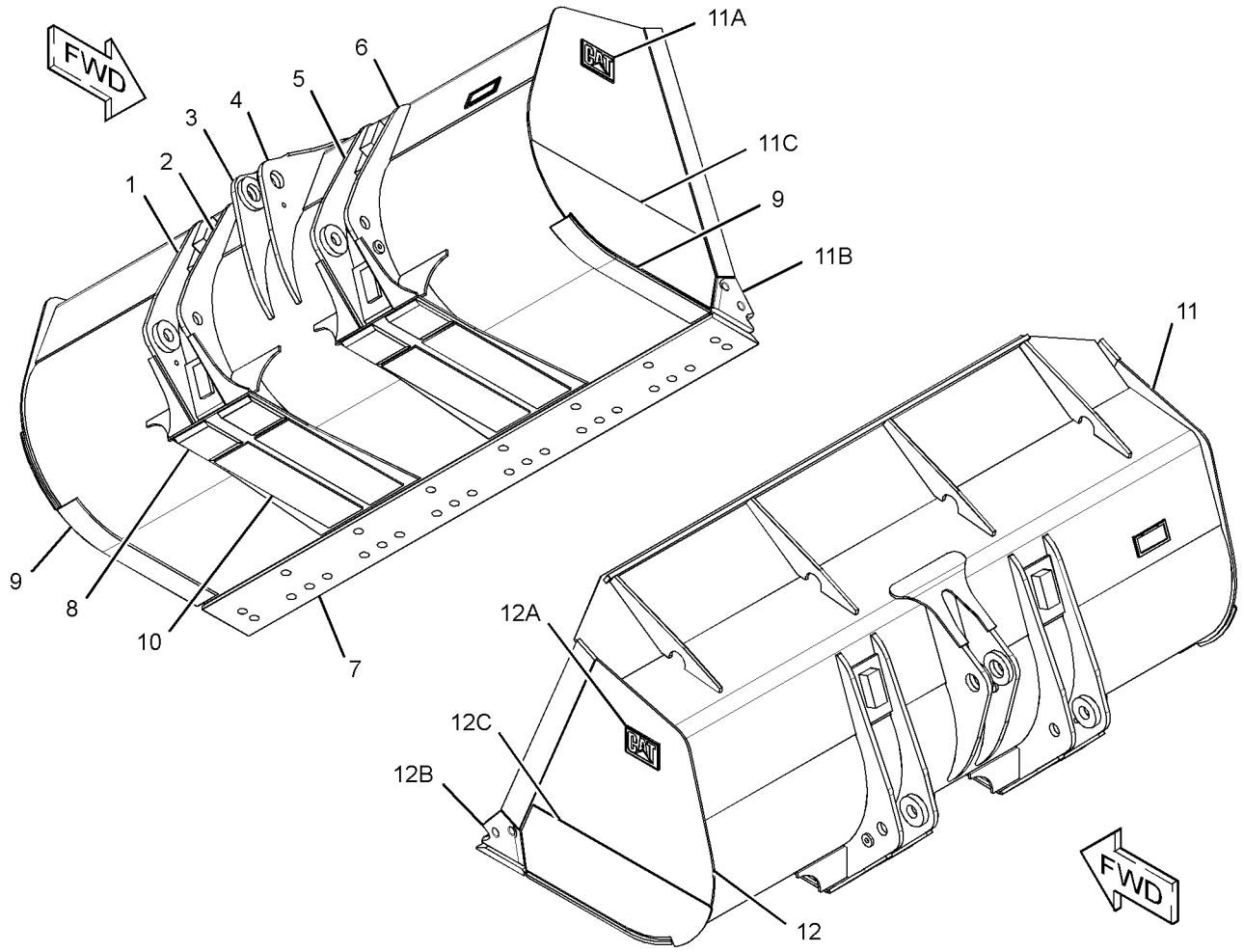

GRAPHIC #1 **<END>** g01714954

WORK TOOLS

314-3208 BUCKET AS-MATERIAL HANDLING

S/N: JKM1-UP
2.1-CU M (2.75 -CU YD), 2.3 -CU M (3.0 -CU YD) W/ BOLT ON CUTTING EDGES
FOR USE WITH 116-9713—PAGE 1044, 107-3747—PAGE 1079
AN ATTACHMENT

SMCS-6101 **i03733780**

NOTE	REF NO	GRAPHIC REF	PART NUMBER	QTY	PART NAME 1 2 3 4 5 6 (PRODUCT LEVEL)	SEE PAGE
	1	1	**2C-9259**	2	PLATE-IDENTIFICATION (CAT)	
	2	1	**6I-8310**	1	CORNER (LH)	
	3	1	**6I-8311**	1	CORNER (RH)	
	4	1	**105-2345**	1	EDGE-CUTTING	
	5	1	**137-4234**	1	PLATE-IDENTIFICATION (WORK TOOL)	
	6	1	**201-0684**	2	PAD-WEAR	
	7	1	**285-3254**	1	PLATE	
	8	1	**323-9316**	1	PLATE	
	9	1	**323-9322**	1	BAR	
	10	1	**323-9540**	2	PLATE-HOOK	
	11	1	**325-1511**	1	PLATE-WEAR	
	12	1	**312-5694**	1	SETSCREW (1/4-20X0.25-IN)	

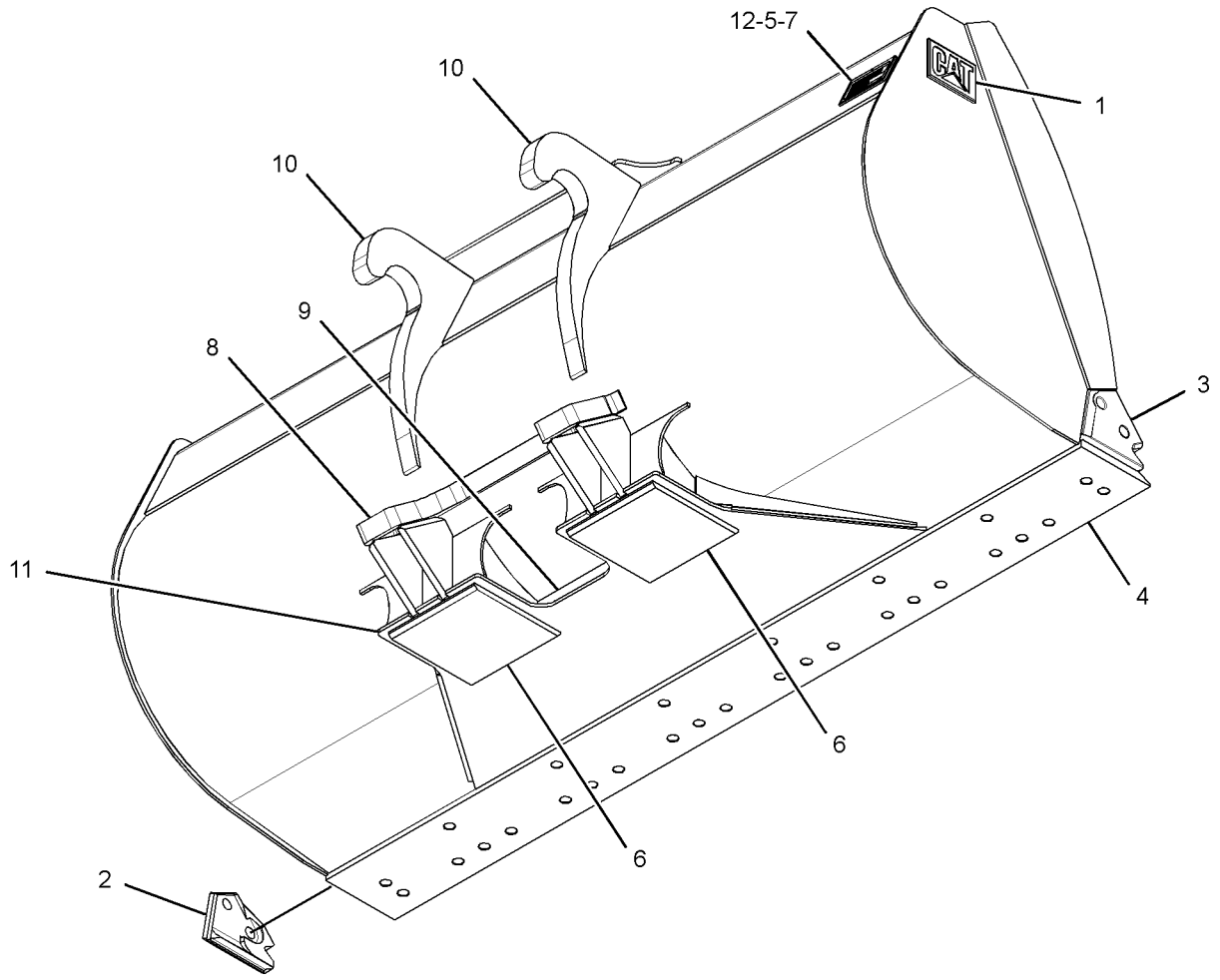

GRAPHIC #1 **<END>** g02121213

158-7479 BUCKET GP-GENERAL PURPOSE

S/N: JKM1-UP
2.3 CU M (3.0 CU YD)
FOR USE WITH GROUND ENGAGING TOOLS (G.E.T.), 116-9713—PAGE 1044, 107-3747—PAGE 1079
AN ATTACHMENT

SMCS-6101 **i01615213**

NOTE	REF NO	GRAPHIC REF	PART NUMBER	QTY	PART NAME 1 2 3 4 5 6 (PRODUCT LEVEL)	SEE PAGE
	1	1	**159-0862**	1	HINGE AS (LIFT-LH-OUTER)	
	2	1	**159-0864**	1	HINGE AS (LIFT-LH-INNER)	
	3	1	**159-0866**	1	HINGE AS (TILT-LH)	
	4	1	**159-0865**	1	HINGE AS (TILT-RH)	
	5	1	**159-0863**	1	HINGE AS (LIFT-RH-INNER)	
	6	1	**159-0861**	1	HINGE AS (LIFT-RH-OUTER)	
	7	1	**105-2345**	1	EDGE-CUTTING	
	8	1	**9V-4484**	4	PLATE	
	9	1	**6I-8310**	1	CORNER (LH)	
	10	1	**6I-8311**	1	CORNER (RH)	

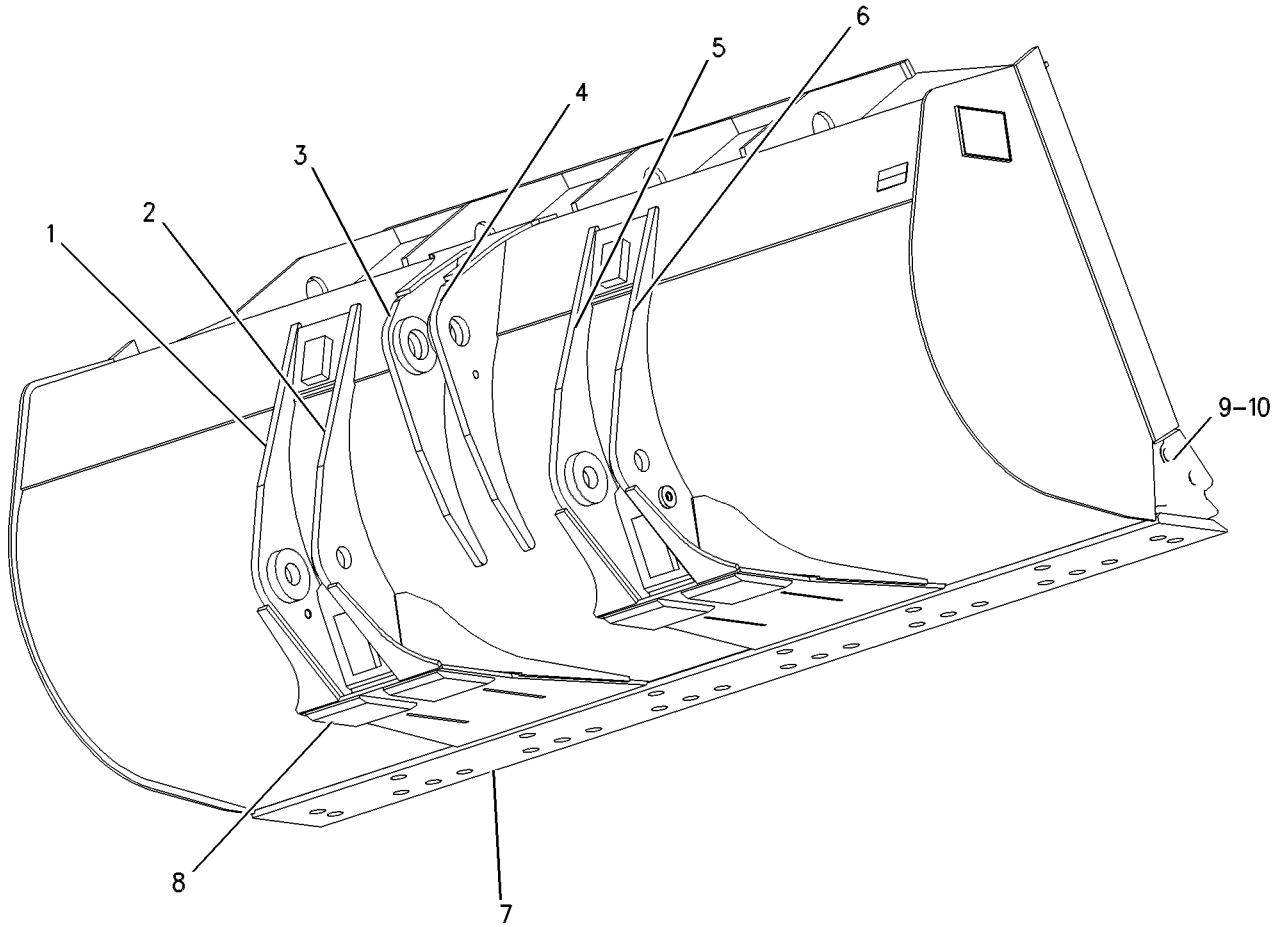

GRAPHIC #1 **<END>** g00532586

158-7480 BUCKET GP-GENERAL PURPOSE

S/N: JKM1-UP
2.5 CU M (3.25 CU YD)
FOR USE WITH GROUND ENGAGING TOOLS (G.E.T.), 116-9713—PAGE 1044, 107-3747—PAGE 1079
AN ATTACHMENT

SMCS-6101 **i01930576**

NOTE	REF NO	GRAPHIC REF	PART NUMBER	QTY	PART NAME 1 2 3 4 5 6 (PRODUCT LEVEL)	SEE PAGE
	1	1	**159-0862**	1	HINGE AS (LIFT-LH-OUTER)	
	2	1	**159-0864**	1	HINGE AS (LIFT-LH-INNER)	
	3	1	**159-0866**	1	HINGE AS (LIFT-LH)	
	4	1	**159-0865**	1	HINGE AS (LIFT-RH)	
	5	1	**159-0863**	1	HINGE AS (LIFT-RH-INNER)	
	6	1	**159-0861**	1	HINGE AS (LIFT-RH-OUTER)	
	7	1	**105-2345**	1	EDGE-CUTTING	
	8	1	**9V-4484**	4	PLATE	
	9	1	**6I-8311**	1	CORNER (RH)	
	10	1	**6I-8310**	1	CORNER (LH)	

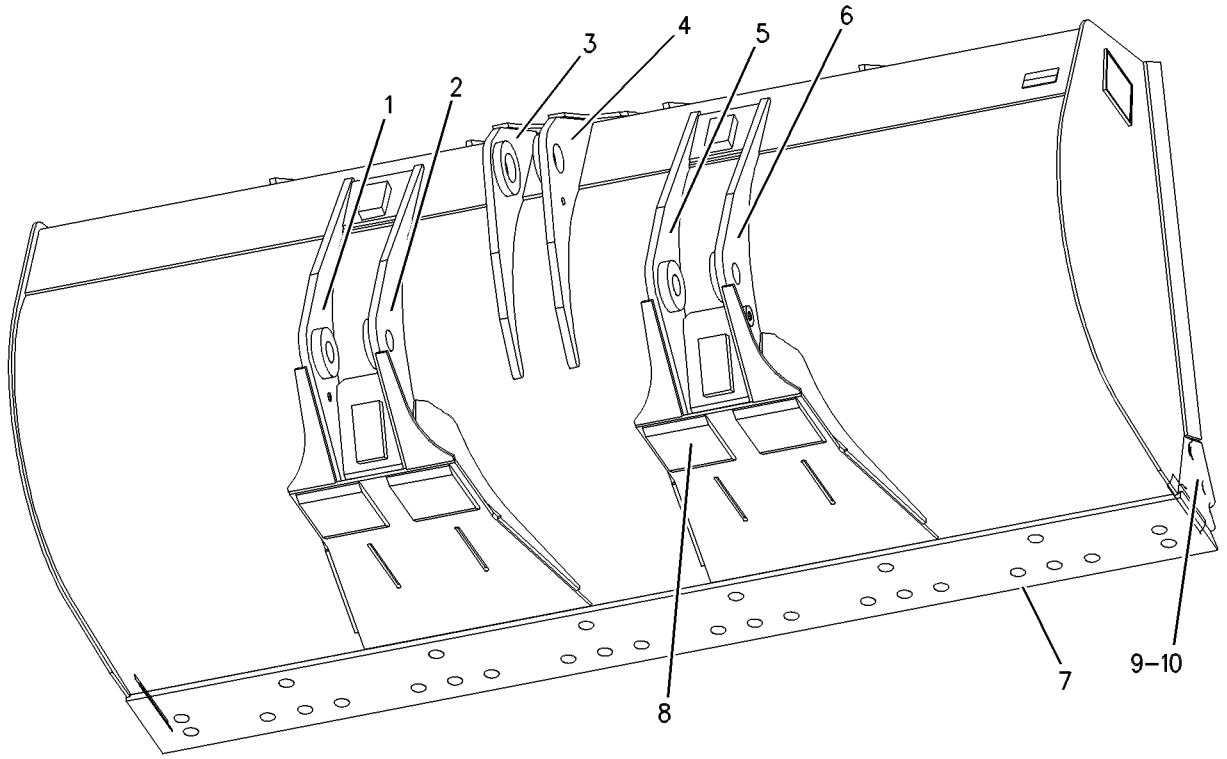

GRAPHIC #1 **<END>** g00534537

WORK TOOLS

158-7481 BUCKET GP-GENERAL PURPOSE

S/N: JKM1-UP
2.8 CU M (3.65 CU YD)
AN ATTACHMENT

SMCS-6101 **i01930583**

NOTE	REF NO	GRAPHIC REF	PART NUMBER	QTY	PART NAME 1 2 3 4 5 6 (PRODUCT LEVEL)	SEE PAGE
	1	1	**159-0862**	1	HINGE AS (LIFT-LH-OUTER)	
	2	1	**159-0864**	1	HINGE AS (LIFT-LH-INNER)	
	3	1	**159-0866**	1	HINGE AS (TILT-LH)	
	4	1	**159-0865**	1	HINGE AS (TILT-RH)	
	5	1	**159-0863**	1	HINGE AS (LIFT-RH-INNER)	
	6	1	**159-0861**	1	HINGE AS (LIFT-RH-OUTER)	
	7	1	**105-2345**	1	EDGE-CUTTING	
	8	1	**9V-4484**	4	PLATE	
	9	1	**6I-8311**	1	CORNER (RH)	
	10	1	**6I-8310**	1	CORNER (LH)	

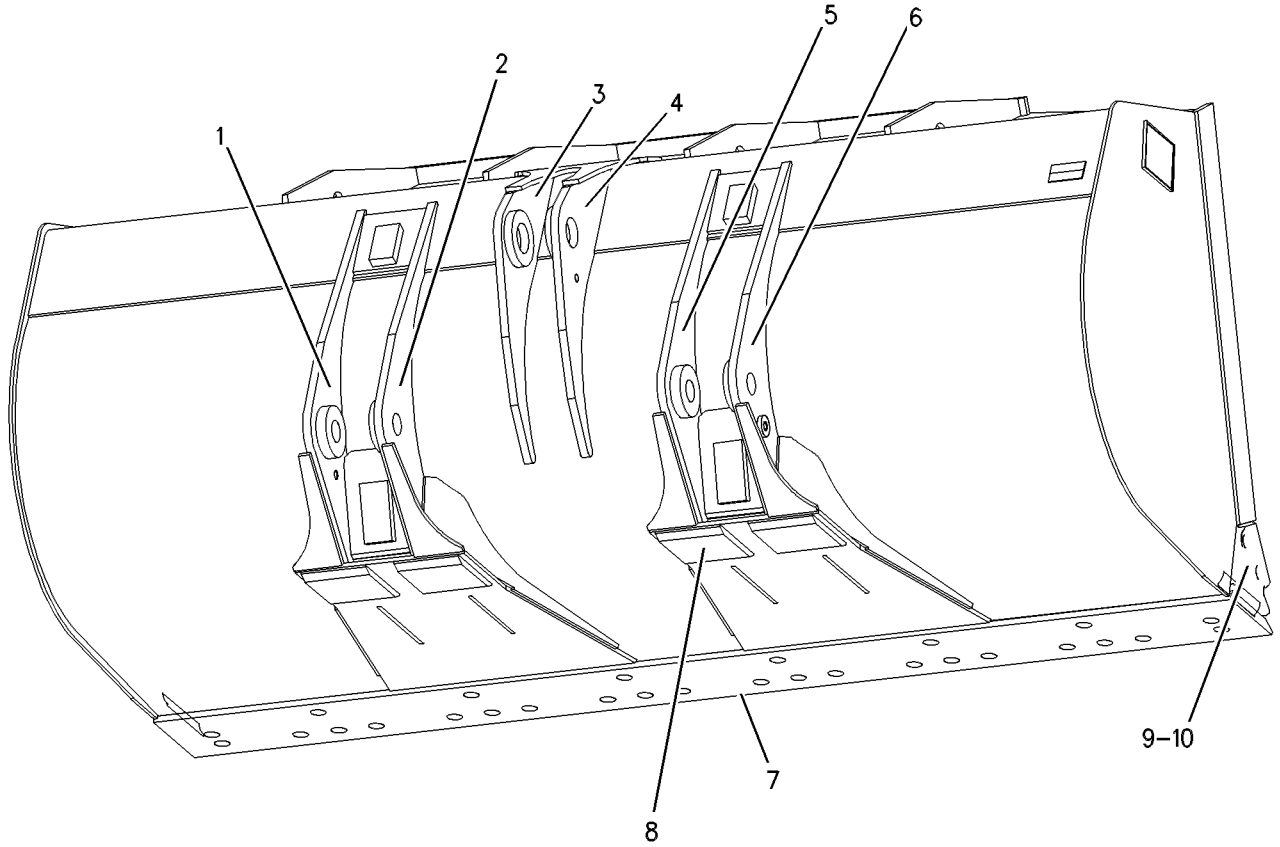

GRAPHIC #1 **<END>** g00534519

215-1277 BUCKET GP-GENERAL PURPOSE—QUICK COUPLER

S/N: JKM1-UP
2.48 CU M (3.25 CU YDS)
FOR USE WITH 2Q-8504 COUPLER AR-H LIFT, 185-5785 CONTROL AR-QUICK COUPLER
AN ATTACHMENT

SMCS-6101 **i02144974**

NOTE	REF NO	GRAPHIC REF	PART NUMBER	QTY	PART NAME 1 2 3 4 5 6 (PRODUCT LEVEL)	SEE PAGE
	1	1	**6I-8310**	1	CORNER (LH)	
	2	1	**6I-8311**	1	CORNER (RH)	
	3	1	**105-2345**	1	EDGE-CUTTING	
	4	1	**216-4320**	2	PAD-WEAR	
	5	1	**216-5023**	2	PLATE-WEAR	

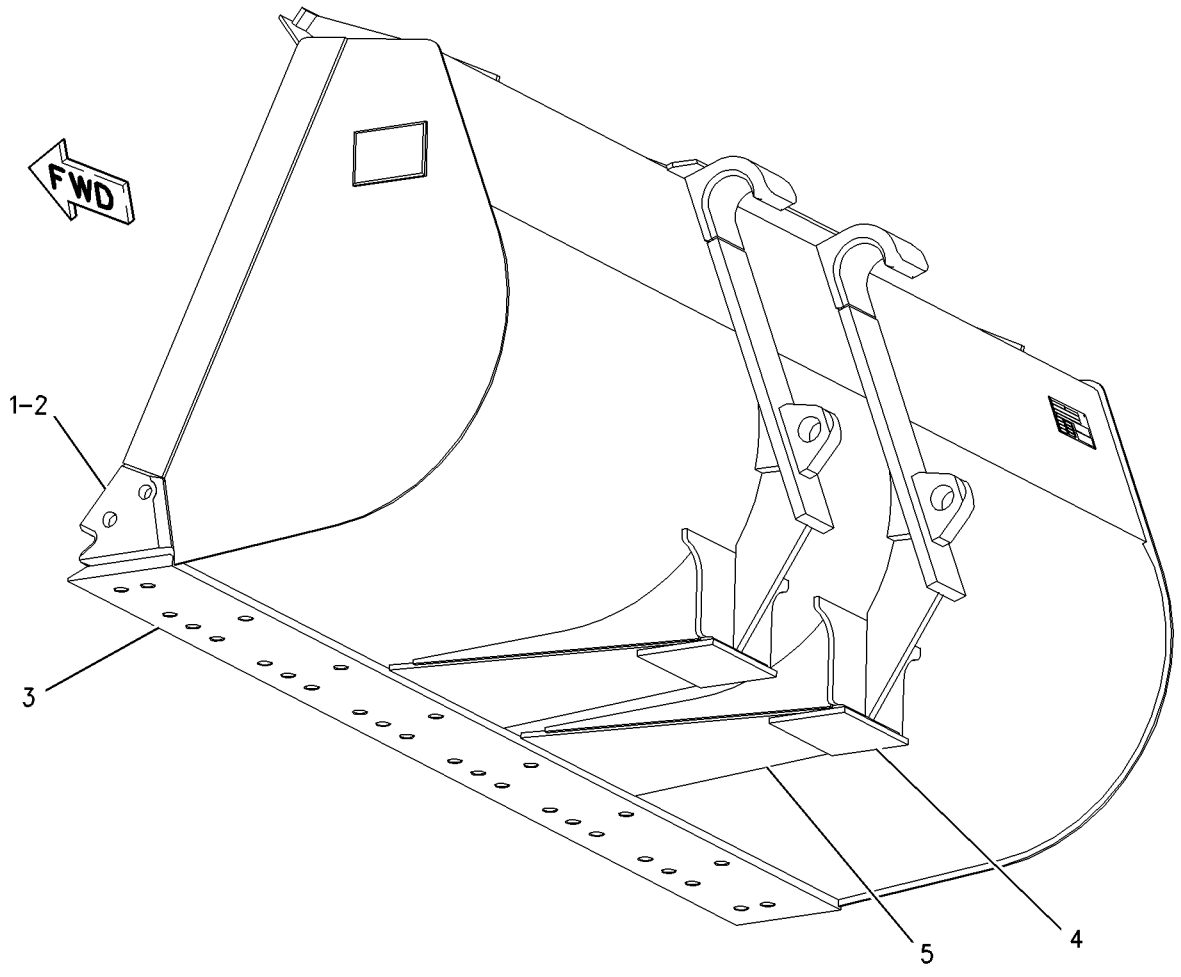

GRAPHIC #1 **<END>** g00928741

WORK TOOLS

154-6956 BUCKET GP-MATERIAL HANDLING

S/N: JKM1-UP
2.8-CU M (3.66-CU YD)
FOR USE WITH 107-3747–PAGE 1079, 116-9713–PAGE 1044
AN ATTACHMENT

SMCS-6101 **i02675974**

NOTE	PART NUMBER	QTY	PART NAME 1 2 3 4 5 6 (PRODUCT LEVEL)	SEE PAGE
Y	**158-3137**	1	BUCKET AS-MATERIAL HANDLING	1059
Y-SEPARATE ILLUSTRATION				

<END>

WORK TOOLS

154-6957 BUCKET GP-MATERIAL HANDLING

S/N: JKM1-UP

FOR USE WITH 107-3747—PAGE 1079, 116-9713—PAGE 1044

AN ATTACHMENT

SMCS-6101 **i03198140**

NOTE	REF NO	GRAPHIC REF	PART NUMBER	QTY	PART NAME 1 2 3 4 5 6 (PRODUCT LEVEL)	SEE PAGE
Y	1	1	**158-3138**	1	BUCKET AS-MATERIAL HANDLING	1061

Y-SEPARATE ILLUSTRATION

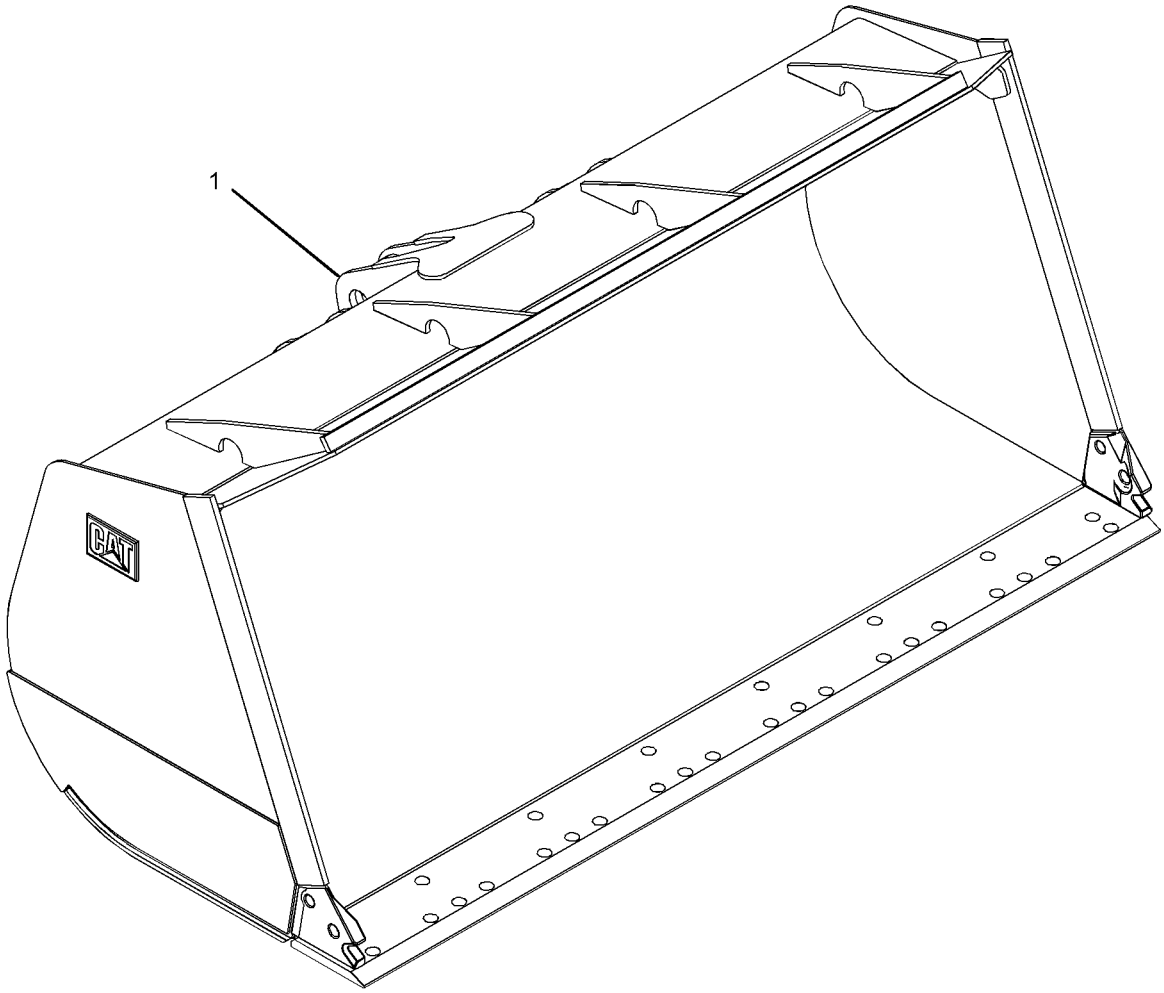

GRAPHIC #1 **<END>** g01458837

314-7442 CARRIAGE GP-FORK—84-IN

S/N: JKM1-UP
PART OF 329-4982 CARRIAGE GP-FORK
FOR USE WITH 318-2467—PAGE 1081
AN ATTACHMENT

SMCS-6402 **i03405340**

NOTE	REF NO	GRAPHIC REF	PART NUMBER	QTY	PART NAME 1 2 3 4 5 6 (PRODUCT LEVEL)	SEE PAGE
	1	1	**9C-7907**	2	SPACER (21.5X28X14-MM THK)	
	2	1	**292-9055**	1	PLATE	
	3	1	**314-7432**	2	PLATE-LOCK	
	4	1	**314-7443**	1	CARRIAGE AS	
		1	**2C-9259**	2	PLATE-IDENTIFICATION (CAT)	
		1	**147-7633**	6	BOSS-TAPPED	
		1	**314-7441**	2	PLATE	
	5	1	**316-2657**	2	PIN AS	
	6	1	**321-8344**	1	PLATE-FORK	
	7	1	**312-5694**	1	SETSCREW (1/4-20X0.25-IN)	
	8	1	**8T-4123**	2	WASHER (22X35X3.5-MM THK)	
M	9	1	**8T-6430**	2	BOLT (M20X2.5X50-MM)	

M-METRIC PART

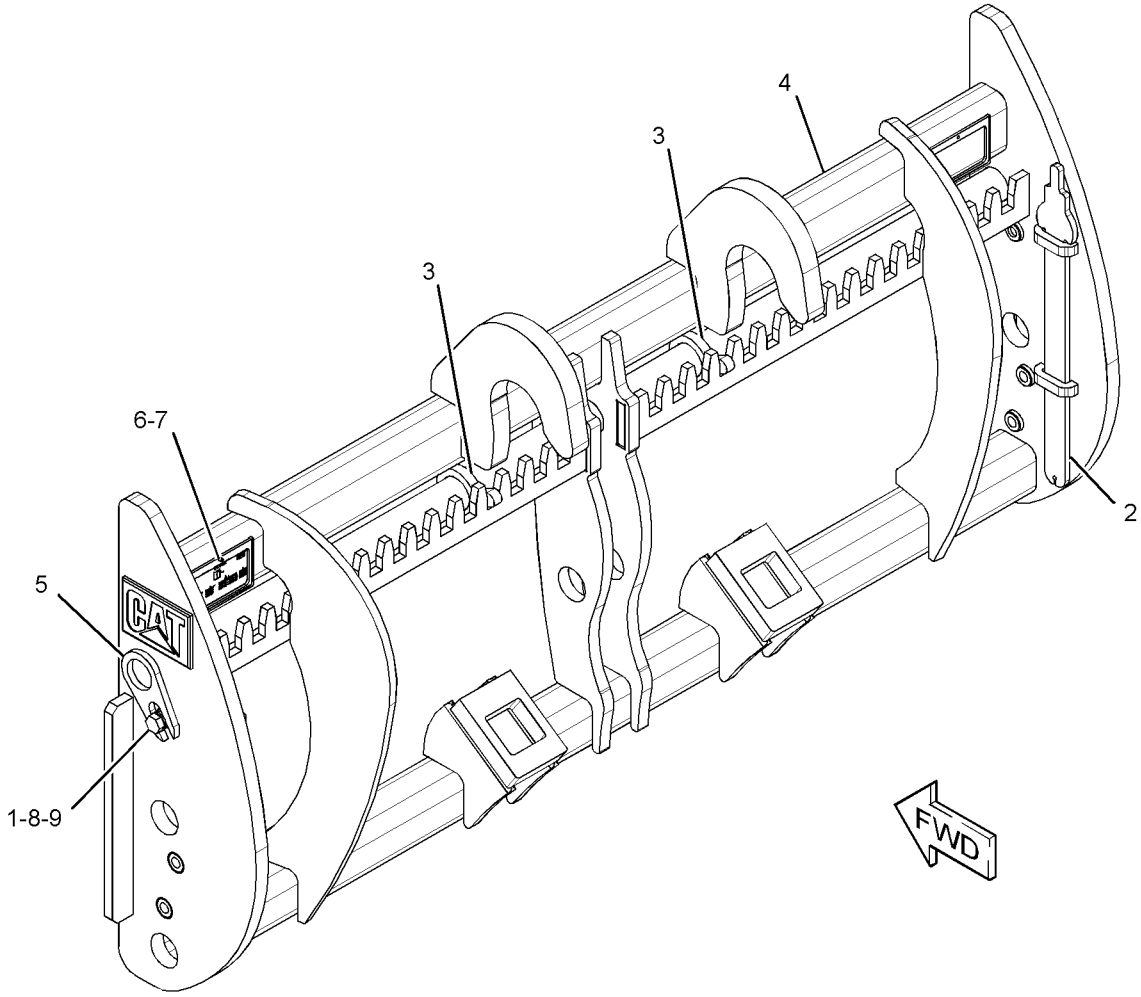

GRAPHIC #1 **<END>** g01826413

WORK TOOLS

329-4982 CARRIAGE GP-FORK–84-IN

S/N: JKM1-UP

AN ATTACHMENT

SMCS-6402 **i03405360**

NOTE	REF NO	GRAPHIC REF	PART NUMBER	QTY	PART NAME 1 2 3 4 5 6 (PRODUCT LEVEL)	SEE PAGE
	1	1	**137-4234**	1	PLATE-IDENTIFICATION (WORK TOOL)	
Y	2	1	*314-7442*	1	CARRIAGE GP-FORK (84-IN)	1069
Y	3	1	*318-2467*	1	PIN GP-FORK (ANTI-SWING)	1081
	4	1	**312-5694**	1	SETSCREW (1/4-20X0.25-IN)	

Y-SEPARATE ILLUSTRATION

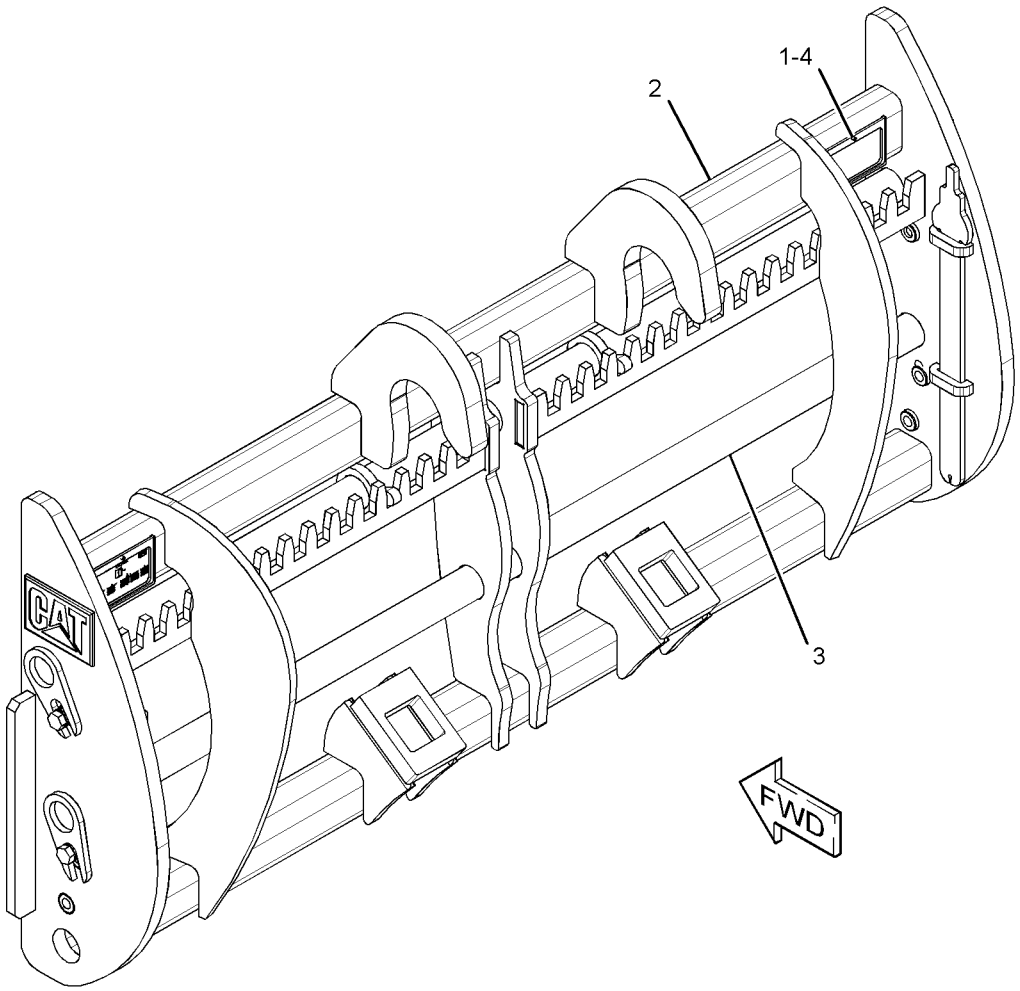

GRAPHIC #1 **<END>** g01826414

265-9738 CONTROL AR-QUICK COUPLER

S/N: JKM1-UP
PART OF 317-8360, 317-8361, 317-8362, 317-8363, 317-8368, 340-6088
CONFIGURATION AR
CANNOT BE USED WITH 265-9754–PAGE 906, 265-9755–PAGE 673
AN ATTACHMENT

SMCS-6129 **i02942064**

NOTE	PART NUMBER	QTY	PART NAME 1 2 3 4 5 6 (PRODUCT LEVEL)	SEE PAGE
Y	*265-9739*	1	CONTROL AR-QUICK COUPLER (HORIZONTAL PIN LOCK)	1071
Y	*266-9862*	1	COUNTERWEIGHT GP	501
Y	*310-9392*	1	COUPLER GP-QUICK (HORIZONTAL PIN LOCK)	1073
Y-SEPARATE ILLUSTRATION				

<END>

265-9739 CONTROL AR-QUICK COUPLER–HORIZONTAL PIN LOCK

S/N: JKM1-UP
PART OF 265-9738, 318-9717 CONTROL AR-QUICK COUPLER
AN ATTACHMENT

SMCS-6129 **i02929044**

NOTE	PART NUMBER	QTY	PART NAME 1 2 3 4 5 6 (PRODUCT LEVEL)	SEE PAGE
Y	**267-2938**	1	ARM AS-LIFT	897
Y	*260-8830*	1	LINES GP-COUPLER	703
Y	*267-7546*	1	WIRING GP-COUPLER	353
Y-SEPARATE ILLUSTRATION				

<END>

286-8244 CONTROL AR-QUICK COUPLER–HIGH LIFT MACHINES

S/N: JKM1-UP
PART OF 265-9757 COUPLER AR-QUICK
AN ATTACHMENT

SMCS-6129 **i02919518**

NOTE	PART NUMBER	QTY	PART NAME 1 2 3 4 5 6 (PRODUCT LEVEL)	SEE PAGE
Y	*260-8831*	1	LINES GP-COUPLER	706
Y	*267-7546*	1	WIRING GP-COUPLER	353
Y-SEPARATE ILLUSTRATION				

<END>

WORK TOOLS

318-9717 CONTROL AR-QUICK COUPLER–HORIZONTAL PIN LOCK

S/N: JKM1-UP

AN ATTACHMENT

SMCS-6129 **i02930629**

NOTE	PART NUMBER	QTY	PART NAME 1 2 3 4 5 6 (PRODUCT LEVEL)	SEE PAGE
Y	*265-9739*	1	CONTROL AR-QUICK COUPLER (HORIZONTAL PIN LOCK)	1071
Y	*266-9862*	1	COUNTERWEIGHT GP	501
Y	*315-6334*	1	COUPLER GP-QUICK (HORIZONTAL PIN LOCK)	1077
Y-SEPARATE ILLUSTRATION				

<END>

265-9757 COUPLER AR-QUICK–HIGH LIFT MACHINES

S/N: JKM1-UP

PART OF 321-0127, 329-3943 CONTROL AR-HIGH LIFT

AN ATTACHMENT

SMCS-6129 **i02919505**

NOTE	PART NUMBER	QTY	PART NAME 1 2 3 4 5 6 (PRODUCT LEVEL)	SEE PAGE
Y	*286-8244*	1	CONTROL AR-QUICK COUPLER (HIGH LIFT MACHINES)	1071
	230-8123	1	LINK AS	
	4V-2883	2	BEARING-SLEEVE	
Y-SEPARATE ILLUSTRATION				

<END>

310-9392 COUPLER GP-QUICK–HORIZONTAL PIN LOCK

S/N: JKM1-862

PART OF 317-8363 CONFIGURATION AR, 329-3943 CONTROL AR-HIGH LIFT, 265-9738 CONTROL AR-QUICK COUPLER

AN ATTACHMENT

SMCS-6129 **i03021810**

NOTE	REF NO	GRAPHIC REF	PART NUMBER	QTY	PART NAME 1 2 3 4 5 6 (PRODUCT LEVEL)	SEE PAGE
	1	1	**3B-8489**	2	FITTING-GREASE	
M	2	1	**8T-4244**	1	NUT (M12X1.75-THD)	
	3	1	**159-8036**	1	FILM-WARNING (READ OMM)	
I	4	1	**164-5847**	4	HOSE AS	
L	5	1	**311-1463**	2	CYLINDER GP-COUPLER	
					(EACH INCLUDES)	
		1	**9S-8002**	8	PLUG-O-RING	
J		1	**237-0947**	1	VALVE GP-CHECK	
	6	1	**312-0220**	2	HOSE AS	
	7	1	**313-1418**	2	WEDGE AS	
	8	1	**323-9427**	1	FRAME AS	
I	9	1	**323-9430**	2	HOSE AS	
	10	1	**312-5694**	1	SETSCREW (1/4-20X0.25-IN)	
	11	1	**3B-4629**	4	PIN-COTTER	
	12	1	**3J-7354**	6	SEAL-O-RING	
	13	1	**4J-5477**	10	SEAL-O-RING	
	14	1	**6V-8647**	6	CONNECTOR	
	15	1	**6W-6211**	4	PIN	
	16	1	**7G-2950**	3	CLIP (SLOT)	
	17	1	**7G-2951**	3	CLIP (TAB)	
M	18	1	**8T-4139**	2	BOLT (M12X1.75X30-MM)	
M	19	1	**8T-4179**	1	BOLT (M12X1.75X20-MM)	
	20	1	**8T-4223**	3	WASHER-HARD (13.5X25.5X3-MM THK)	
					AVAILABLE REPAIR KIT(S):	
J			**213-8433**	1	KIT-SEAL (QUICK COUPLER)	
L			**315-6338**	1	KIT-PACKING (QUICK COUPLER)	

I-REFER TO HYDRAULIC INFORMATION SYSTEM
J-KIT MARKED J SERVICES PART MARKED J
L-KIT MARKED L SERVICES PART MARKED L
M-METRIC PART

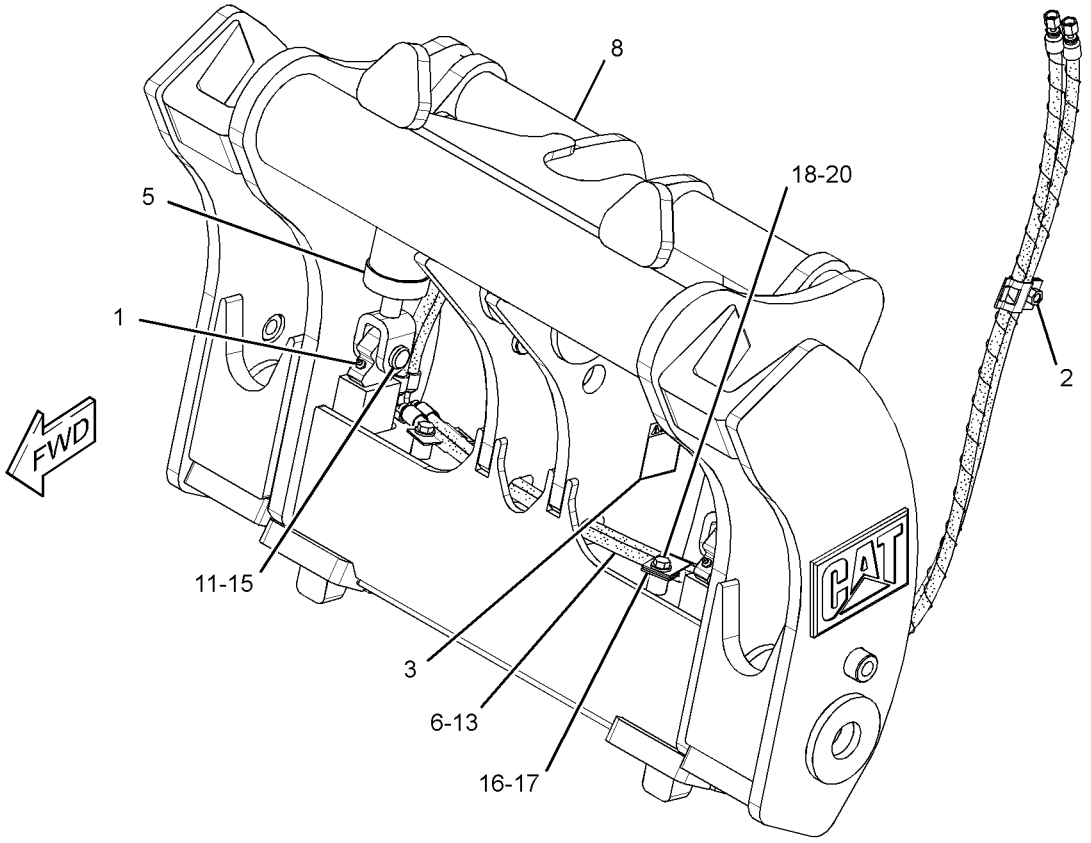

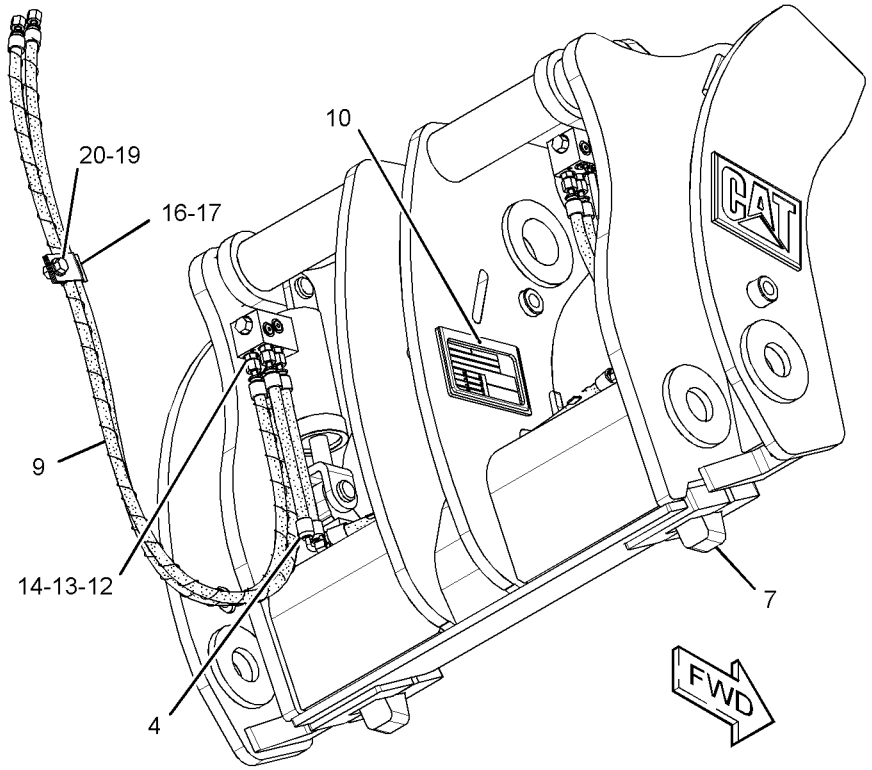

GRAPHIC #1 **<END>** g01526504

310-9392 COUPLER GP-QUICK–HORIZONTAL PIN LOCK

S/N: JKM863-UP

PART OF 317-8363 CONFIGURATION AR, 329-3943 CONTROL AR-HIGH LIFT, 265-9738 CONTROL AR-QUICK COUPLER

AN ATTACHMENT

SMCS-6129 **i03906749**

NOTE	REF NO	GRAPHIC REF	PART NUMBER	QTY	PART NAME 1 2 3 4 5 6 (PRODUCT LEVEL)	SEE PAGE
	1	1	**3B-8489**	2	FITTING-GREASE	
I	2	1	**164-5847**	4	HOSE AS	
C	3	1	**192-5881**	4	PIN	
C	4	1	**295-5619**	1	FILM-WARNING (HAND CRUSH HAZARD, READ OMM)	
L	5	1	**311-1463**	2	CYLINDER GP-COUPLER	
					(EACH INCLUDES)	
		1	**9S-8002**	8	PLUG-O-RING	
J		1	**237-0947**	1	VALVE GP-CHECK	
	6	1	**312-0220**	2	HOSE AS	
	7	1	**313-1418**	2	WEDGE AS	
	8	1	**323-9427**	1	FRAME AS	
I	9	1	**323-9430**	2	HOSE AS	
C	10	1	*148-8316*	6	CONNECTOR AS	
					(EACH INCLUDES)	
		1	**3J-7354**	1	SEAL-O-RING	
		1	**4J-5477**	1	SEAL-O-RING	
		1	**6V-8647**	1	CONNECTOR	
C	11	1	**3B-4631**	4	PIN-COTTER	
C	12	1	**4J-5477**	4	SEAL-O-RING	
	13	1	**7G-2950**	3	CLIP (SLOT)	
	14	1	**7G-2951**	3	CLIP (TAB)	
CM	15	1	**8T-4179**	3	BOLT (M12X1.75X20-MM)	
	16	1	**8T-4223**	3	WASHER-HARD (13.5X25.5X3-MM THK)	
M	17	1	**8T-4244**	1	NUT (M12X1.75-THD)	
					AVAILABLE REPAIR KIT(S):	
J			**213-8433**	1	KIT-SEAL (QUICK COUPLER)	
L			**315-6338**	1	KIT-PACKING (QUICK COUPLER)	

C-CHANGE FROM PREVIOUS TYPE
I-REFER TO HYDRAULIC INFORMATION SYSTEM
J-KIT MARKED J SERVICES PART MARKED J
L-KIT MARKED L SERVICES PART MARKED L
M-METRIC PART

310-9392 **COUPLER GP-QUICK** *(contd.)* **i03906749**

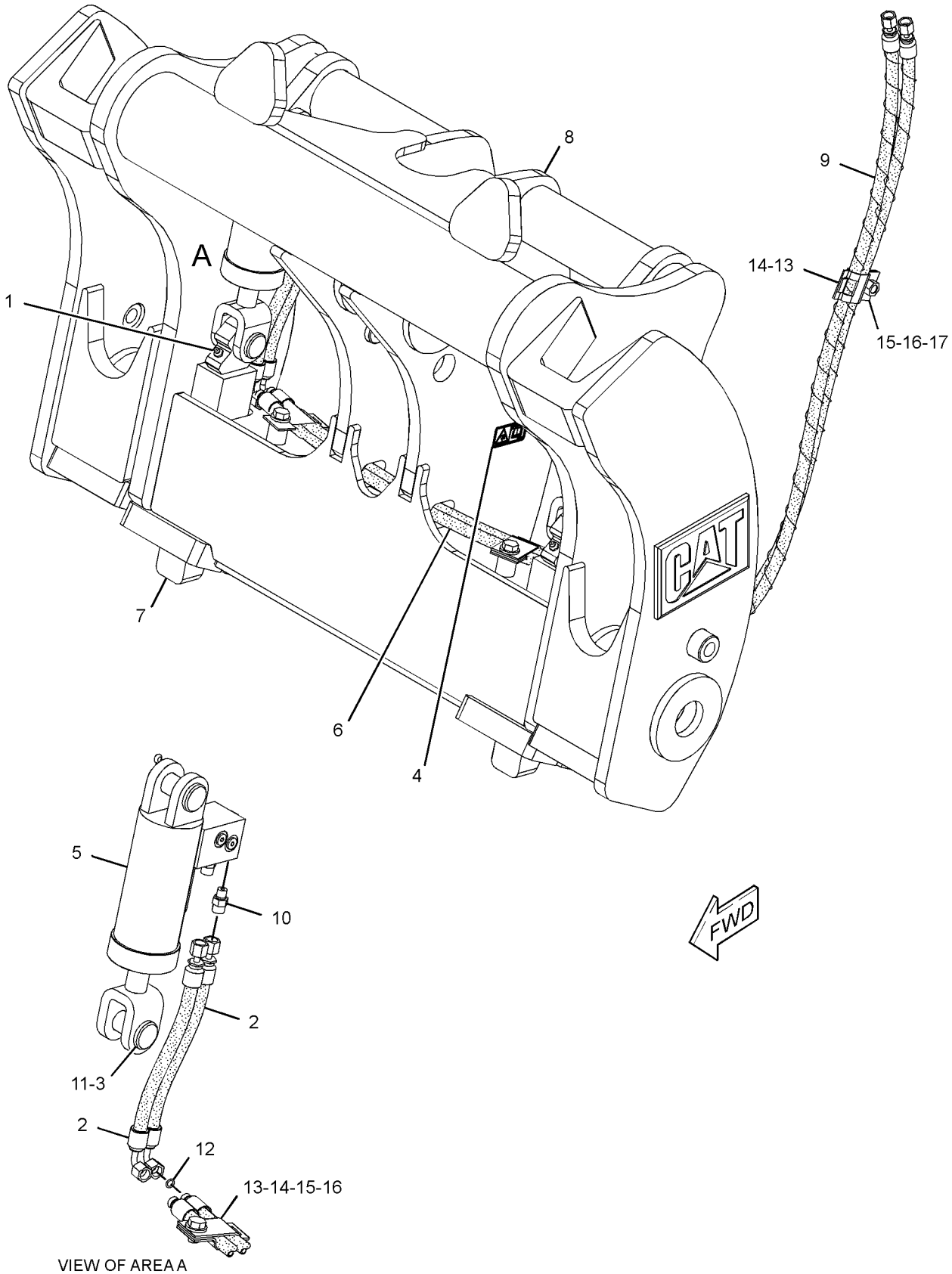

VIEW OF AREA A

GRAPHIC #1 **<END>** g02148317

315-6334 COUPLER GP-QUICK–HORIZONTAL PIN LOCK

S/N: JKM1-UP

PART OF 321-0127 CONTROL AR-HIGH LIFT, 318-9717 CONTROL AR-QUICK COUPLER AN ATTACHMENT

SMCS-6129 **i03029581**

NOTE	REF NO	GRAPHIC REF	PART NUMBER	QTY	PART NAME 1 2 3 4 5 6 (PRODUCT LEVEL)	SEE PAGE
	1	1	**8T-4223**	3	WASHER-HARD (13.5X25.5X3-MM THK)	
	2	1	**177-6845**	2	PIN	
	3	1	**185-1948**	1	PLATE-STOP	
	4	1	**200-1734**	2	PLATE	
	5	1	**222-4981**	1	FRAME AS	
	5A	1	**147-7633**	3	BOSS-TAPPED	
	5B	1	**161-4160**	2	PLATE	
Y	6	1	**237-0946**	1	CYLINDER GP-COUPLER	680
I	7	1	**315-6335**	2	HOSE AS	
	8	1	**3B-4629**	4	PIN-COTTER	
	9	1	**3J-7354**	2	SEAL-O-RING	
	10	1	**4J-5477**	2	SEAL-O-RING	
	11	1	**5S-7598**	4	PIN	
M	12	1	**6V-7687**	2	LOCKNUT (M12X1.75-THD)	
M	13	1	**6V-8197**	2	BOLT (M12X1.75X40-MM)	
	14	1	**6V-8647**	2	CONNECTOR	
	15	1	**7G-2950**	1	CLIP (SLOT)	
	16	1	**7G-2951**	1	CLIP (TAB)	
M	17	1	**8T-4179**	1	BOLT (M12X1.75X20-MM)	
M	18	1	**8T-4244**	1	NUT (M12X1.75-THD)	

I-REFER TO HYDRAULIC INFORMATION SYSTEM
M-METRIC PART
Y-SEPARATE ILLUSTRATION

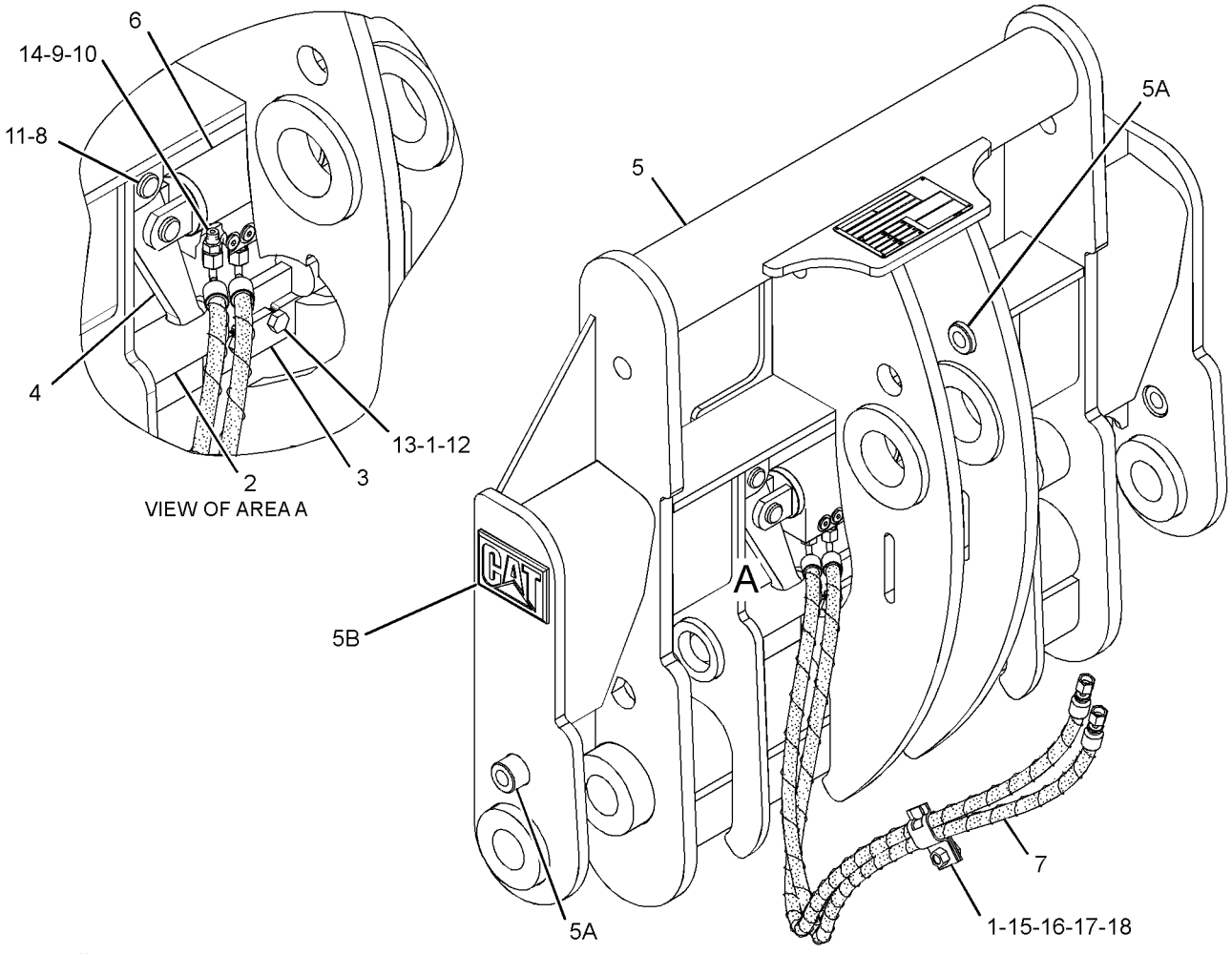

GRAPHIC #1 **<END>** g01662133

WORK TOOLS

107-3747 EDGE GP-CUTTING

S/N: JKM1-UP
FOR USE WITH BUCKET AS
AN ATTACHMENT

SMCS-6801 **i00449369**

NOTE	PART NUMBER	QTY	PART NAME 1 2 3 4 5 6 (PRODUCT LEVEL)	SEE PAGE
	1J-5607	10	BOLT-PLOW	
	107-3746	2	EDGE-CUTTING	
	4T-8091	2	EDGE-END	
	2J-3507	10	NUT-FULL (1-8 THD)	

<END>

WORK TOOLS

2Q-1578 FORK GP-PALLET

S/N: JKM1-UP

AN ATTACHMENT

SMCS-6136 **i02491755**

NOTE	REF NO	GRAPHIC REF	PART NUMBER	QTY	PART NAME 1 2 3 4 5 6 (PRODUCT LEVEL)	SEE PAGE
	1	1	**179-3552**	1	CARRIAGE AS	
	2	1	**136-3620**	1	SHAFT	
	3	1	**180-2835**	2	FORK GP-PALLET (60-IN)	
	4	1	**127-3577**	2	STOP	
	5	1	**139-8439**	4	CLAMP AS	
M	6	1	**6V-8197**	4	BOLT (M12X1.75X40-MM)	
	8	1	**5P-8245**	4	WASHER-HARD (13.5X25.5X3-MM THK)	

M-METRIC PART

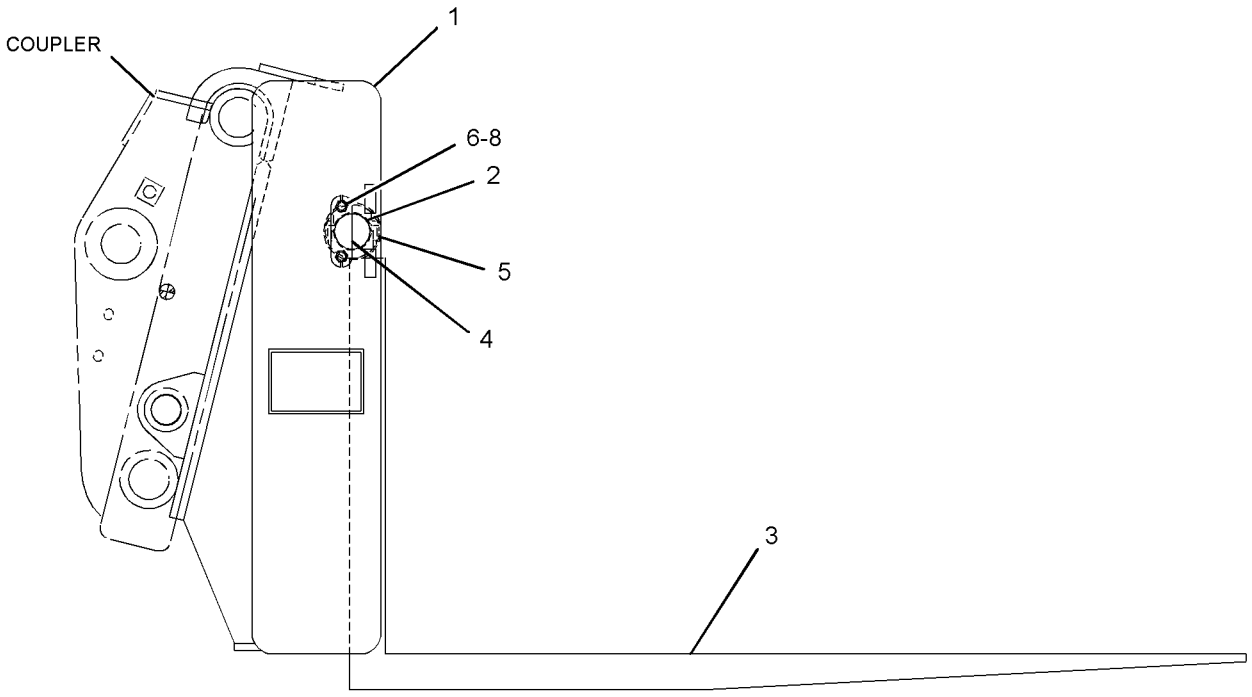

GRAPHIC #1 **<END>** g01246219

WORK TOOLS

318-2467 PIN GP-FORK—ANTI-SWING

S/N: JKM1-UP

PART OF 329-4982 CARRIAGE GP-FORK

AN ATTACHMENT

SMCS-6458 **i02861563**

NOTE	REF NO	GRAPHIC REF	PART NUMBER	QTY	PART NAME 1 2 3 4 5 6 (PRODUCT LEVEL)	SEE PAGE
	1	1	**9C-7907**	2	SPACER (21.5X28X14-MM THK)	
	2	1	**316-2657**	2	PIN AS	
	3	1	**8T-4123**	2	WASHER (22X35X3.5-MM THK)	
M	4	1	**8T-6430**	2	BOLT (M20X2.5X50-MM)	

M-METRIC PART

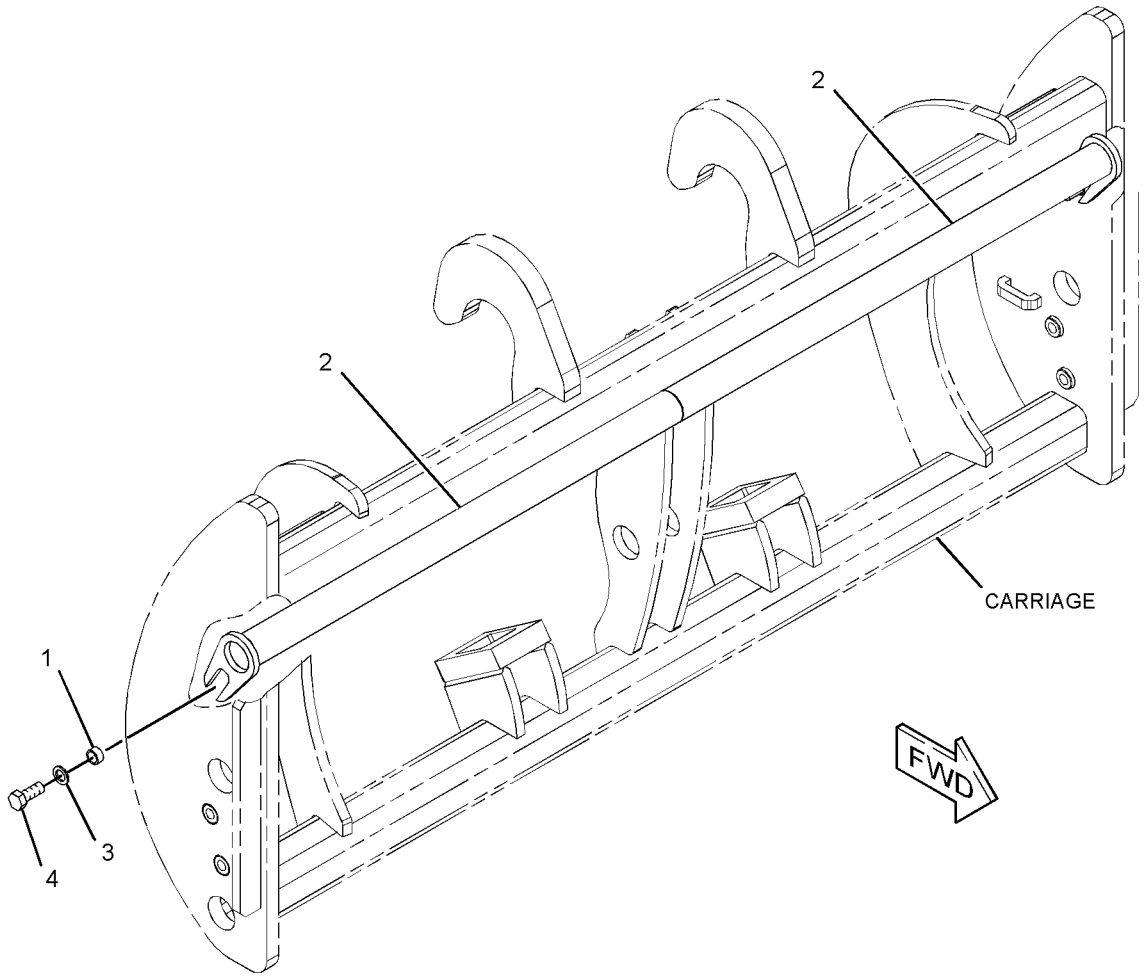

GRAPHIC #1 **<END>** g01433373

WORK TOOLS

315-1414 TINE GP

S/N: JKM1-UP

FOR USE WITH CARRIAGE WITH 2.5-IN DIA SHAFT HOLE. CANNOT BE USED WITH 3-IN DIA SHAFT ON 96-IN WIDE CARRIAGE

AN ATTACHMENT

SMCS-6458 **i02927689**

NOTE	REF NO	GRAPHIC REF	PART NUMBER	QTY	PART NAME 1 2 3 4 5 6 (PRODUCT LEVEL)	SEE PAGE
	1	1	**317-5423**	1	FORK GP-PALLET (48-IN)	
	2	1	**317-5434**	1	FORK GP-PALLET (48-IN)	

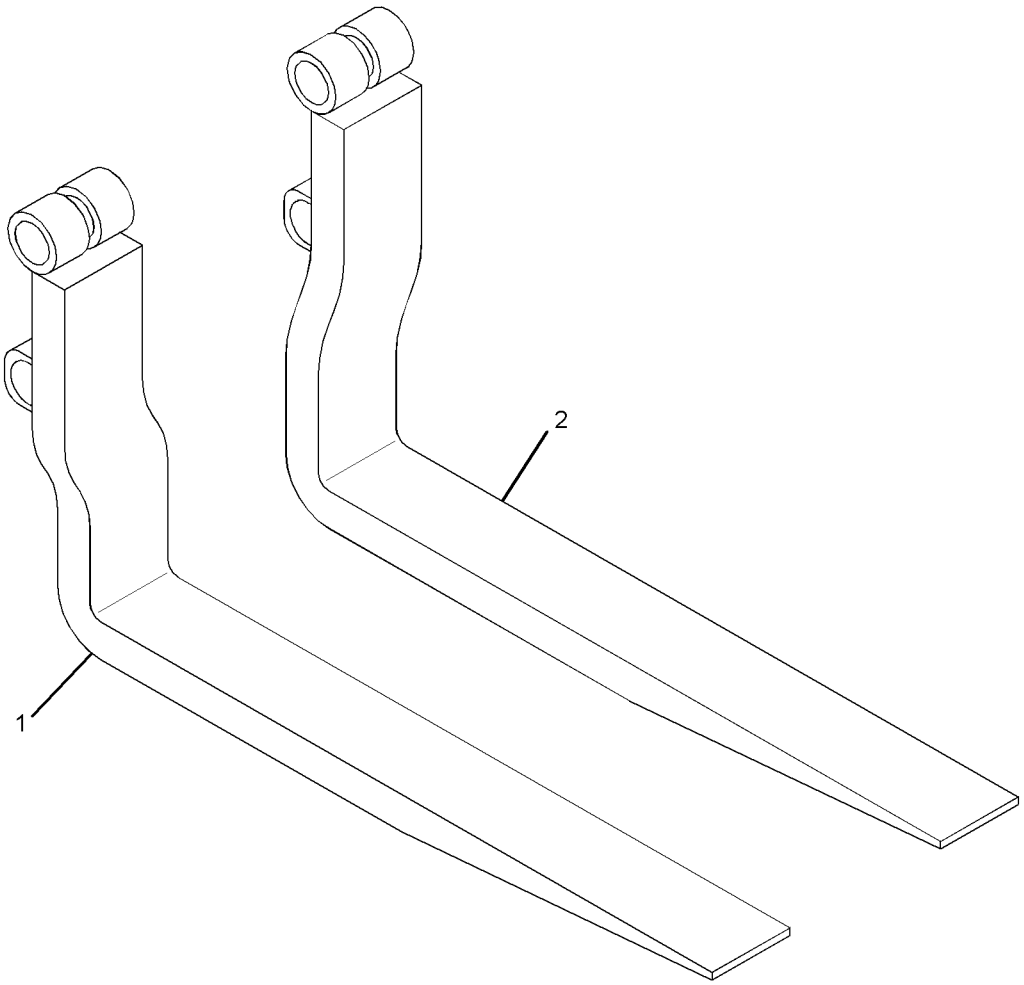

GRAPHIC #1 **<END>** g01453669

WORK TOOLS

100-6462 TIP GP-PENETRATION

S/N: JKM1-UP
FOR USE WITH J250 ADAPTERS
AN ATTACHMENT

SMCS-6805 **i01812021**

NOTE	PART NUMBER	QTY	PART NAME 1 2 3 4 5 6 (PRODUCT LEVEL)	SEE PAGE
	132-4763	1	PIN	
	149-5733	1	RETAINER AS (G.E.T.)	
	8E-6259	1	RETAINER AS	
	9J-4259	1	TIP-PENETRATION	

<END>

SERVICE EQUIPMENT AND SUPPLIES

239-3367 ENCLOSURE GP-SERVICE CENTER

S/N: JKM1-UP

PART OF 237-7540 CHASSIS AR

SMCS-7554 **i02911198**

NOTE	REF NO	GRAPHIC REF	PART NUMBER	QTY	PART NAME 1 2 3 4 5 6 (PRODUCT LEVEL)	SEE PAGE
	1	1	**3B-4611**	1	PIN-COTTER	
	2	1	**245-6175**	1	ROD AS	
	3	1	**264-4873**	1	ENCLOSURE AS-SERVICE CENTER	
	4	1	**264-4874**	1	DOOR AS-ACCESS (HYD FILTER, BRAKE ACCUMULATOR)	
	5	1	**307-1747**	1	PLATE	
	6	1	**096-6166**	4	WASHER-HARD (4.5X9X1-MM THK)	
M	7	1	**170-5632**	2	BOLT (M4X0.7X16-MM)	
M	8	1	**5C-8312**	2	NUT (M4X0.7-THD)	
M	9	1	**7X-2553**	6	BOLT (M16X2X40-MM)	
	10	1	**8T-4121**	6	WASHER-HARD (11X21X2.5-MM THK)	
M	11	1	**8T-4137**	5	BOLT (M10X1.5X20-MM)	
M	12	1	**8T-4139**	6	BOLT (M12X1.75X30-MM)	
	13	1	**8T-4223**	6	WASHER-HARD (13.5X25.5X3-MM THK)	
	14	1	**9X-8257**	6	WASHER (17.5X30X3.5-MM THK)	

M-METRIC PART

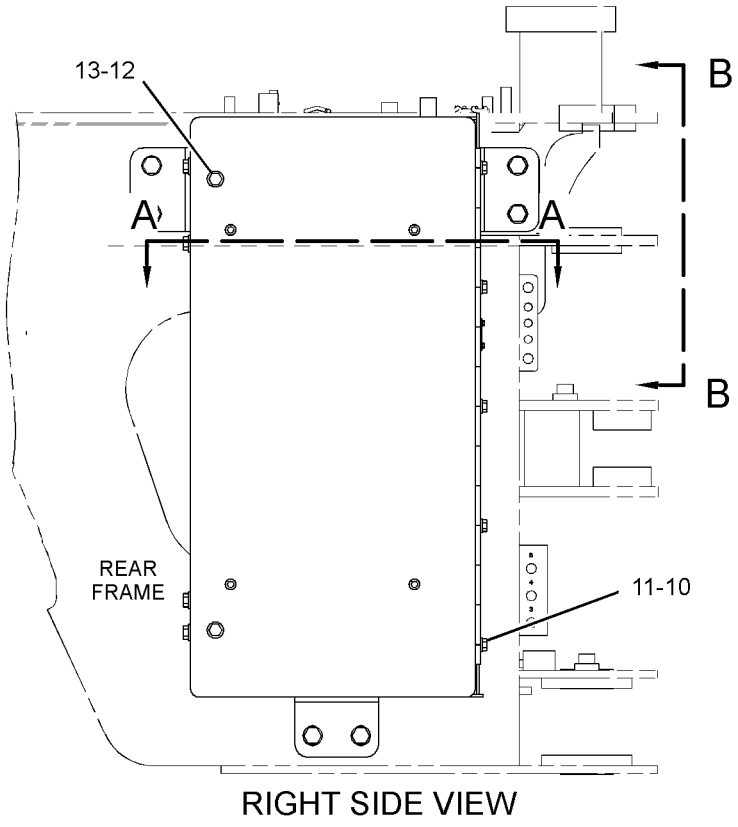

RIGHT SIDE VIEW

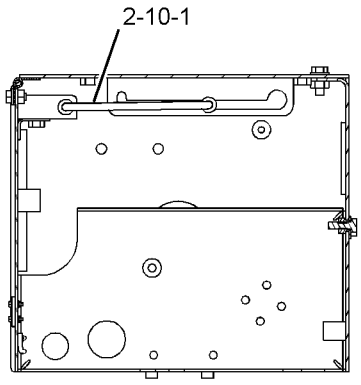

SECTION A-A

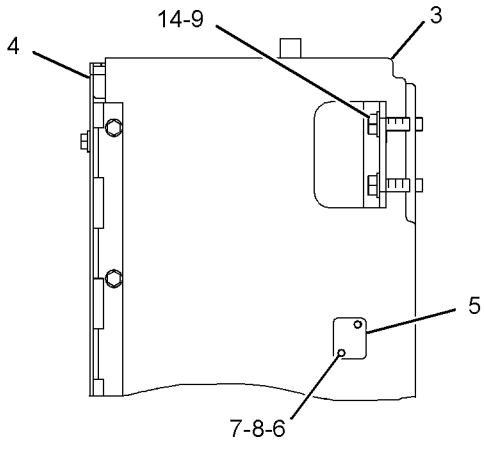

VIEW B-B

GRAPHIC #1 **<END>** g01392107

SERVICE EQUIPMENT AND SUPPLIES

283-5434 FILM GP–REFLECTIVE, RED, YELLOW

S/N: JKM1-UP

PART OF 237-7540 CHASSIS AR

SMCS-7405, 7557 **i02908843**

NOTE	REF NO	GRAPHIC REF	PART NUMBER	QTY	PART NAME 1 2 3 4 5 6 (PRODUCT LEVEL)	SEE PAGE
	1	1	**195-2274**	2	FILM-STRIPE (YELLOW, REFLECTIVE)	
					(ON SIDE OF COUNTERWEIGHT, 40-MM - 50-MM REAR OF THE FRONT EDGE OF COUNTERWEIGHT & 30-MM - 40-MM ABOVE THE BOTTOM EDGE	
					OF COUNTERWEIGHT)	
	1A	1	**195-2274**	2	FILM-STRIPE (YELLOW, REFLECTIVE)	
					(FOR 938H ONLY, ON SIDE PLATE OF LIFT ARM, 20-MM - 30-MM FROM THE FRONT EDGE. BOTTOM EDGE OF THE REFLECTOR SHOULD BE	
					80-MM - 90-MM FROM PROJECTION OF THE BOTTOM EDGE OF THE TILT EAR.)	
	1B	1	**195-2274**	2	FILM-STRIPE (YELLOW, REFLECTIVE)	
					(FOR IT38H ONLY, ON LINK ASSEMBLY CENTERED BETWEEN PINS & SIDES OF PLATE)	
	1C	1	**195-2274**	1	FILM-STRIPE (YELLOW, REFLECTIVE)	
					(ON SIDE OF SERVICE CENTER BOX, CENTERED VERTICALLY BETWEEN THE LADDER RAILS. BOTTOM EDGE OF REFLECTOR SHOULD BE	
					50-MM - 60-MM FROM TOP EDGE OF BOTTOM LADDER STEP)	
	1D	1	**195-2274**	1	FILM-STRIPE (YELLOW, REFLECTIVE)	
					(ON SIDE OF FRAME, BETWEEN BOTTOM TWO STEPS OF THE LADDER. KEEP REFLECTOR CLEAR OF WELD & EDGE OF CUTOUT.)	
E	2	1	**206-6305**		FILM-STRIPE (RED REFLECTIVE) (13.5-CM EACH)	
					(ON LEFT & RIGHT REAR COUNTERWEIGHT, CENTERED VERTICALLY & FORWARD IN RECESSED SURFACE.)	

E-ORDER BY THE CENTIMETER

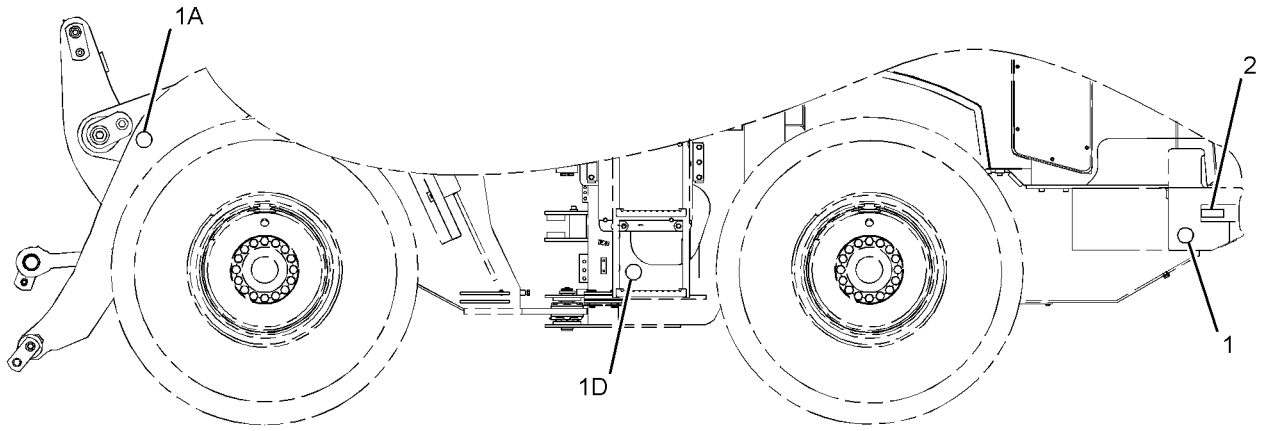

LEFT SIDE VIEW

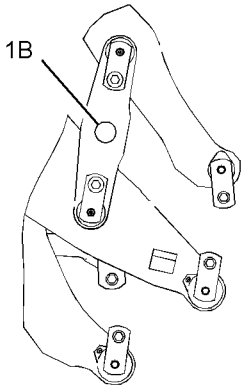

VIEW OF AREA A
(ALTERNATE VIEW IT38 LINKAGE)

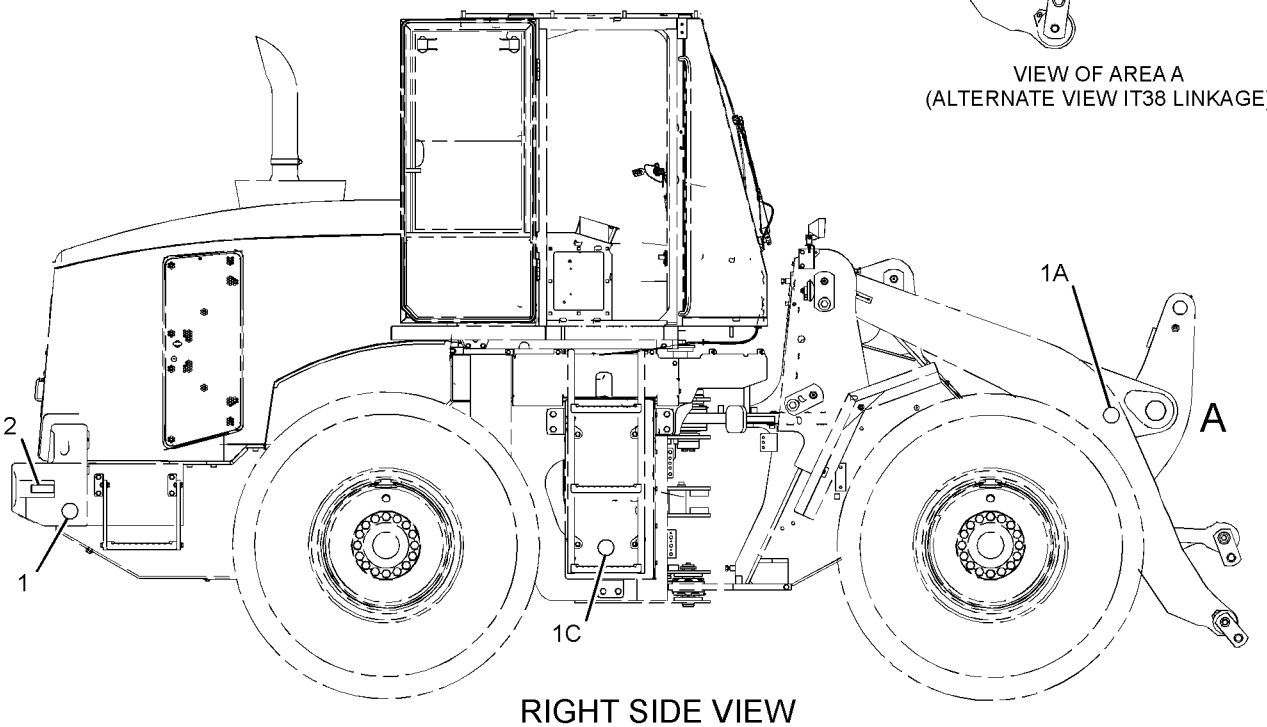

RIGHT SIDE VIEW

GRAPHIC #1 **<END>** g01423124

SERVICE EQUIPMENT AND SUPPLIES

287-2371 FILM GP

S/N: JKM1-UP
PART OF 329-5761 CONVERSION AR-MACHINE
AN ATTACHMENT

SMCS-7405, 7557 **i03875547**

NOTE	PART NUMBER	QTY	PART NAME 1 2 3 4 5 6 (PRODUCT LEVEL)	SEE PAGE
	334-4603	1	FILM-INFORMATION (HYDO ADVANCED 10)	
			(ON TOP OF HYDRAULIC TANK BETWEEN THE FILLER CAP & THE VACUUM BREAKER PORT, WITH THE LETTERS ON THE FILM READABLE FROM	
			REAR)	

<END>

SERVICE EQUIPMENT AND SUPPLIES

291-4352 FILM GP

S/N: JKM1-UP

PART OF 239-3371 PLATE & FILM GP

SMCS-7405, 7557 **i03209449**

NOTE	REF NO	GRAPHIC REF	PART NUMBER	QTY	PART NAME 1 2 3 4 5 6 (PRODUCT LEVEL)	SEE PAGE
	1	1	**290-5819**	1	FILM-IDENTIFICATION (CAT 938H, LH)	
	2	1	**290-5820**	1	FILM-IDENTIFICATION (CAT 938H, RH)	
	3	1	**118-0626**	1	FILM-WINDOW (FRONT)	
	4	1	**140-2394**	1	FILM-WINDOW (REAR)	
	6	1	**253-0861**	2	FILM-INFORMATION (CAT POWER, ACERT TECHNOLOGY)	

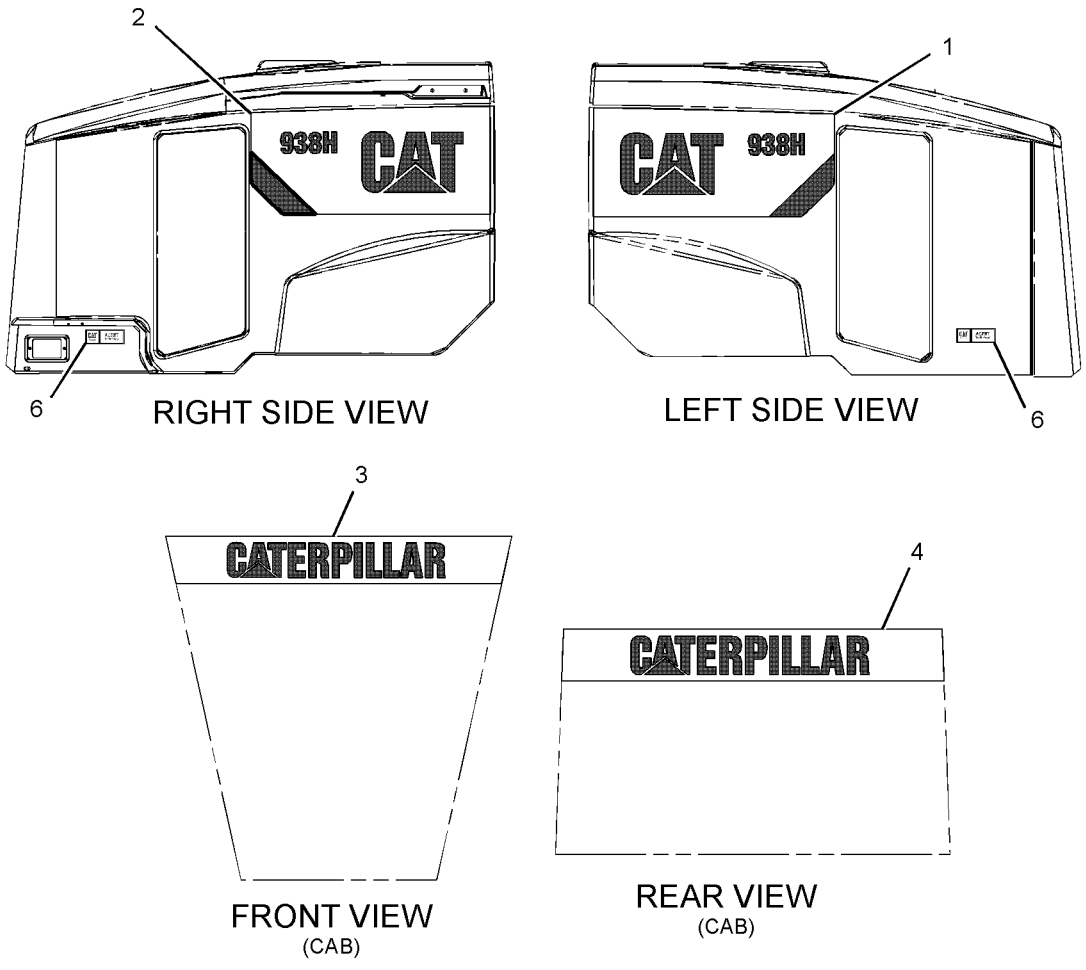

GRAPHIC #1 **<END>** g01638553

SERVICE EQUIPMENT AND SUPPLIES

343-6179 FILM GP

S/N: JKM1-UP

AN ATTACHMENT

SMCS-7405, 7557 **i03744213**

NOTE	PART NUMBER	QTY	PART NAME 1 2 3 4 5 6 (PRODUCT LEVEL)	SEE PAGE
	225-4130	2	FILM-WARNING (FLYING DEBRIS, STAY BACK, U.S.)	

<END>

282-9600 FILM GP-U.S.

S/N: JKM1-UP

AN ATTACHMENT

SMCS-7405, 7557 **i03550500**

NOTE	PART NUMBER	QTY	PART NAME 1 2 3 4 5 6 (PRODUCT LEVEL)	SEE PAGE
	224-7830	1	FILM-WARNING (HIGH PRESSURE, READ OMM, U.S.)	
	225-0313	2	FILM-WARNING (JUMP START, READ OMM, U.S.)	
	225-4256	2	FILM-WARNING (HOT FLUID UNDER PRESSURE, U.S.)	
	226-1242	2	FILM-WARNING (CRUSH HAZARD, STAY BACK, U.S.)	
	226-1275	1	FILM-WARNING (CRUSH HAZARD, READ OMM, U.S.)	
	224-9021	1	FILM-WARNING (SEAT BELT)	
	240-7956	1	FILM-WARNING (DO NOT OPERATE, READ OMM)	
	274-4283	1	FILM-WARNING (PRODUCT LINK)	
	237-6257	2	FILM-WARNING (FAN)	

<END>

SERVICE EQUIPMENT AND SUPPLIES

260-8828 LINES GP-DIAGNOSTIC–
REMOTE PRESSURE TAPS, TMSN, TORQUE CONVERTER
S/N: JKM1-UP
PART OF 237-7540 CHASSIS AR

SMCS-7554 **i02910523**

NOTE	REF NO	GRAPHIC REF	PART NUMBER	QTY	PART NAME 1 2 3 4 5 6 (PRODUCT LEVEL)	SEE PAGE
	1	1	**7K-1181**	8	STRAP-CABLE	
	2	1	**9R-6247**	1	STRAP-CABLE	
	3	1	**185-6250**	3	FITTING AS	
	4	1	**234-3539**	3	WASHER-WAVE	
	5	1	**265-5866**	1	HOSE AS	
	6	1	**265-5867**	1	HOSE AS	
	7	1	**265-5868**	1	HOSE AS	
	8	1	*148-8325*	1	CONNECTOR AS	
		1	**3J-1907**	1	SEAL-O-RING	
		1	**4J-5477**	1	SEAL-O-RING	
		1	**6V-8641**	1	CONNECTOR	
	9	1	*148-8351*	4	ELBOW AS	
					(EACH INCLUDES)	
		1	**4J-5477**	1	SEAL-O-RING	
		1	**6V-9849**	1	ELBOW	
	10	1	*148-8368*	2	ELBOW AS	
					(EACH INCLUDES)	
		1	**3J-1907**	1	SEAL-O-RING	
		1	**4J-5477**	1	SEAL-O-RING	
		1	**6V-8627**	1	ELBOW	
	11	1	**170-4735**	3	RING-RETAINING	
	12	1	**204-8000**	8	MOUNTING-CABLE TIE	
	13	1	**4J-5477**	3	SEAL-O-RING	
	14	1	**6V-0852**	3	CAP-DUST	
	15	1	**8T-4121**	8	WASHER-HARD (11X21X2.5-MM THK)	
M	16	1	**8T-4136**	8	BOLT (M10X1.5X25-MM)	

M-METRIC PART

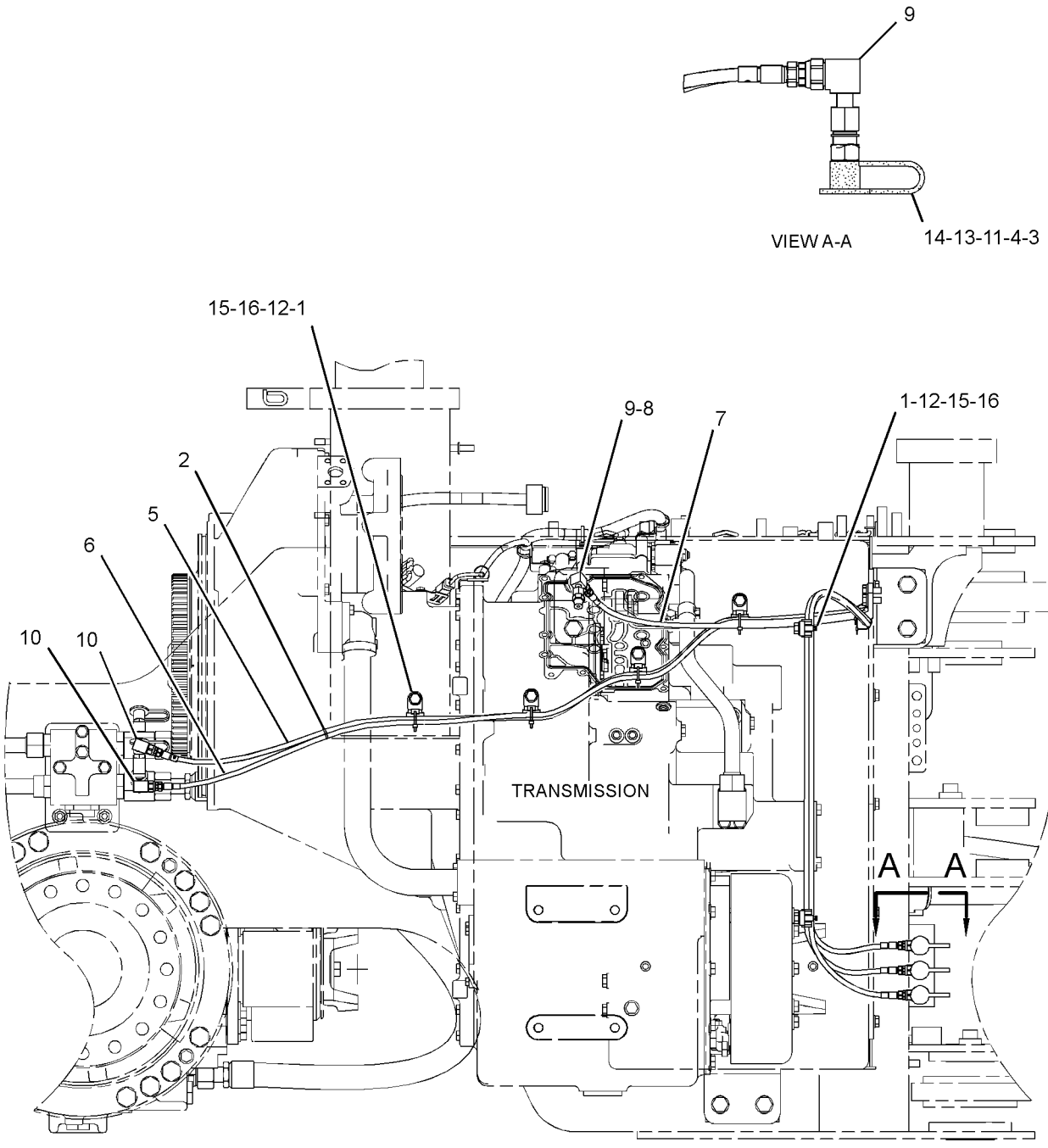

RIGHT SIDE VIEW

GRAPHIC #1 **<END>** g01425373

SERVICE EQUIPMENT AND SUPPLIES

258-8765 LOCK GP-VANDALISM

S/N: JKM1-UP

PART OF 237-7540 CHASSIS AR

SMCS-7430 **i02910763**

NOTE	REF NO	GRAPHIC REF	PART NUMBER	QTY	PART NAME 1 2 3 4 5 6 (PRODUCT LEVEL)	SEE PAGE
	1	1	**246-2641**	3	PADLOCK GP	
					(EACH INCLUDES)	
		1	**5P-8500**	1	KEY	
Y	2	1	*7K-5636*	1	COVER GP-XMSN OIL FILLER CAP	409

Y-SEPARATE ILLUSTRATION

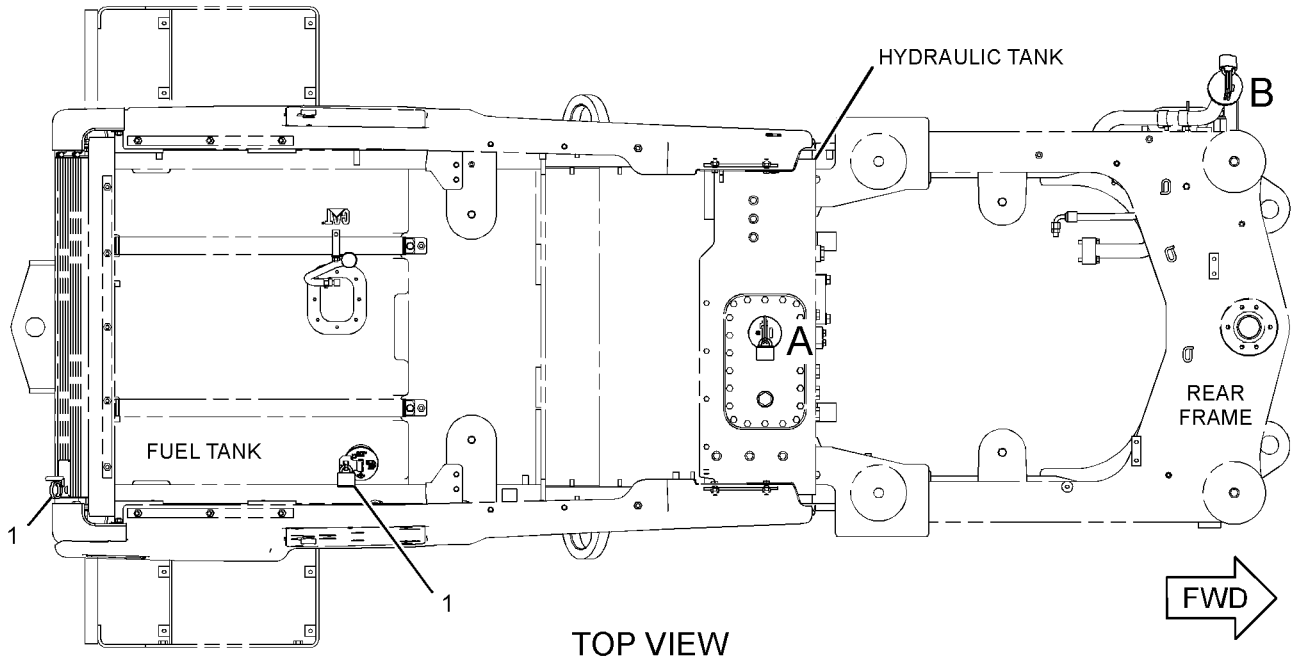

TOP VIEW

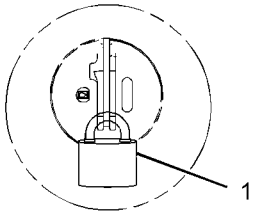

VIEW OF AREA A

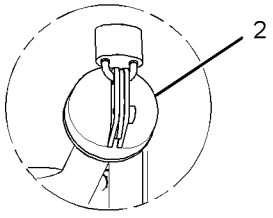

VIEW OF AREA B

GRAPHIC #1 **<END>** g01421978

SERVICE EQUIPMENT AND SUPPLIES

239-3371 PLATE & FILM GP

S/N: JKM1-UP

PART OF 237-7540 CHASSIS AR

SMCS-7405, 7557 **i03361883**

NOTE	PART NUMBER	QTY	PART NAME 1 2 3 4 5 6 (PRODUCT LEVEL)	SEE PAGE
Y	*291-4352*	1	FILM GP	1088
	330-0620	1	FILM GP	
	146-6747	1	FILM-INFORMATION (24-VOLT)	
			(ON OUTSIDE, BOTTOM LEFT CORNER OF BREAKER PANEL BOX DOOR, READABLE FROM TOP TO BOTTOM)	
	146-6747	1	FILM-INFORMATION (24-VOLT)	
			(ADJACENT TO FILM-WARNING (JUMP START) ON UPPER RH CORNER OF COVER ON BATTERY BOX)	
	148-3587	1	FILM-INFORMATION (TRANSMISSION OIL LEVEL)	
			(ON LEFT SIDE OF TRANSMISSION SIGHT GAUGE)	
	187-0661	1	FILM-INSTRUCTION (ALTERNATE EXIT)	
			(ON RH CAB WINDOW DIRECTLY ABOVE LATCH)	
	7X-3229	4	FILM-INSTRUCTION (LIFT EYE, TIE-DOWN LOCATION)	
			(ONE EACH AT REAR LIFT & TIE DOWN EYES & ONE EACH AT FRONT LIFT & TIE DOWN EYES)	
	124-2456	1	FILM-INSTRUCTION (NO STEP)	
			(ON TOP SURFACE OF HOOD IN CENTER)	
	283-8262		FILM-INSTRUCTION (LUBRICATION, MAINTENANCE)	
			(ON INSIDE SURFACE OF HYDRAULIC SERVICE CENTER DOOR)	
	297-4129	1	FILM-SERVICE	
			(ON OUTSIDE SURFACE OF HYDRAULIC SERVICE CENTER DOOR)	
	226-1274	1	FILM-WARNING (CRUSH HAZARD, READ OMM, INTL)	
			(ON SIDEFACE OF LOADER FRAME APPROX 25-MM FORWARD OF REAR EDGE & 225-MM UP FROM BOTTOM LEFT SIDE)	
	226-1240	2	FILM-WARNING (CRUSH HAZARD, STAY BACK, INTL)	
			(ON SIDEFACE OF LOADER FRAME APPROX 25-MM FORWARD OF REAR EDGE & 225-MM UP FROM BOTTOM, EACH SIDE)	
	237-6256	2	FILM-WARNING (FAN)	
			(ABOVE CLEAN-OUT ACCESS ON RH SIDE RADIATOR SUPPORT PLATE)	
	224-0672	1	FILM-WARNING (HIGH PRESSURE, READ OMM, INTL)	
			(IN HYDRAULIC SERVICE CENTER APPROX 130-MM ABOVE BRAKE ACCUMULATORS TOP SURFACE CENTERED ABOUT BOTH ACCUMULATORS	
			CLEARLY VISIBLE WHILE SERVICE CENTER DOOR IS OPEN)	
	225-4257	2	FILM-WARNING (HOT FLUID UNDER PRESS, INTL)	
			(ONE ON FLAT SURFACE IN CLOSE PROXIMITY TO THE HYDRAULIC TANK FILLER NECK & ONE IN LINE WITH RADIATOR FILL CAP ON SIDE	
			OF COOLANT TANK)	
	225-0312	1	FILM-WARNING (JUMP START, READ OMM, INTL)	
			(INSIDE BATTERY BOX)	
	225-0312	1	FILM-WARNING (JUMP START, READ OMM, INTL)	
			(ON UPPER RH CORNER OF COVER ON BATTERY BOX)	
	224-9022	1	FILM-WARNING (SEAT BELT)	
			(ON RH CAB POST)	
	240-7957	1	FILM-WARNING (DO NOT OPERATE, READ OMM, INTL)	
			(ON BRACKET ON RH "B" POST INSIDE OF CAB)	
	239-6986	1	PLATE-IDENTIFICATION (MACHINE)	

239-3371 **PLATE & FILM GP** *(contd.)* **i03361883**

NOTE	PART NUMBER	QTY	PART NAME 1 2 3 4 5 6 (PRODUCT LEVEL)	SEE PAGE
			(ON SIDEFACE OF LOADER FRAME APPROX 100-MM FORWARD OF REAR EDGE & 10-MM UP FROM BOTTOM LEFT SIDE)	
	4B-4158	4	SCREW-DRIVE (4X0.25-IN)	
Y-SEPARATE ILLUSTRATION				

<END>

PART NUMBER INDEX

Part	Page
0	
0A-2926	803
0S-0175	967
0S-1595	916
0S-1603	33
0T-0244	1011
	1013
	1016
	1018
1	
1B-0676	508
1B-8736	14
	24
	25
1D-5117	168
	177
1F-6762	681
1G-7947	703
1G-7949	706
1G-8878	421
1H-3244	162
	164
	214
1H-4393	275
	281
	287
	293
	300
	307
	315
	994
	998
1H-8171	427
	430
	444
1H-8296	1031
1H-9696	680
1J-2303	686
1J-5607	1079
1J-6298	1015
	1017
1J-9671	372
	378
	609
	610
	666
1K-6872	916
1L-5072	409
	811
	813
1M-6119	174
1M-6120	174
1N-5999	455
1P-0810	171
	174
	325
	329
	339
	348
	360
1P-3703	449
1P-3704	727
	736
	758
1P-3707	372
	377
	419
1P-4278	68
	742
1P-4577	649
	653
	748
	754
	811
	813
1P-4578	748
	754
1P-4579	727
	736
	811
	813
1P-4585	811
	813
1P-5767	727
	736
1P-7009	623
1S-0496	727
	736
1S-0670	680
1S-0685	494
1S-0994	339
	345
	348
	649
	653
	727
	736
1S-0996	727
	736
1S-1014	587
	589
	591
1S-6595	372
	378
1S-7251	168
	171
	174
	360
1S-7252	360
1S-9593	890
	891
	926
	927
1T-0936	791
	823
	825
	827
1T-1621	473
1T-1639	372
	377
1U-0257	1044
1U-2827	832
1U-8846	372
	377
	427
	430
1V-1122	767
	770
1V-2647	515
	518
1V-6256	70
1W-8793	435
	440
2	
2B-0858	25
	27
	29
	51
2B-9373	463
2C-9259	1046
	1050
	1052
	1054
	1059
	1061
	1062
	1069
2D-0094	408
2D-2508	483
2D-2509	483
2D-2751	337
	986
2D-4202	811
	813
2D-4867	900
	903
2D-5658	462
2G-9524	967
2H-3088	423
2H-3429	362
	873
	874
	875
	876
2H-3920	266
	275
	281
	287
	293
	300
	307
	315
2H-3922	262
2H-6184	372
2H-6338	727
	736
2H-9247	682
	684
	685
	686
2J-3507	1044
	1079
2J-7761	409
	811
	813
2K-2939	410
	412
	414
2K-2961	682
	684
	685
	686
2K-4096	681
2K-4821	162
	164
2K-4973	909
	1029
	1031
2L-5893	1007
2L-6726	362
2L-8079	952
2M-3432	335
2M-8191	802
2M-9780	113
	434
	435
	439
	440
	746
	747
	752
	776
	821
	831
	883
	885
	887
2N-3477	617
	619
2N-7006	372
	377
2N-7007	372
	377
2P-1279	736
	742
	766
	769
2P-1293	702
	727
	736
	748
	754
	781
2P-1373	486
	488
2P-1692	484
2P-2975	880
	881

► **PRIMARY REFERENCE**

PART NUMBER INDEX

Part	Page
	882
2P-7806	360
2P-8421	779
2P-8986	372
	377
	423
2P-8987	423
2Q-1578	▶1080
2Q-7327	528
2S-3440	15
	18
	20
	22
2S-4078	372
	377
	434
	439
2S-4663	480
2S-5835	480
2T-2209	744
2T-3360	942
2U-6826	113
2V-0482	87
2V-1771	168
	171
	174
	360
2V-3216	87
	88
	90
2V-9121	70
	72
2W-1776	823
	825
	827
2Y-3812	727
	736
2Y-5829	261
	423

3

Part	Page
3A-3692	445
	447
3B-2062	508
	525
3B-4512	611
3B-4605	549
	550
3B-4610	621
	623
3B-4611	1084
3B-4615	508
3B-4629	549
	550
	1073
	1077
3B-4631	1075
3B-6487	87
	88
	90
3B-6552	87
	88
	90
	569
	572
3B-8489	467
	468
	469
	549
	550
	551
	575
	640
	900
	903
	1073
	1075
3B-8491	900
	903
3B-8686	575
3D-2824	155
	392
	399
	445
	447
	455
	477
	649
	653
	694
	717
	719
	722
	725
	726
	727
	734
	735
	746
	747
	748
	752
	753
	758
	760
	763
	766
	769
	776
	777
	779
	806
	822
	825
3D-2891	694
3D-8317	480
3D-8752	362
3E-3365	249
	250
	253
	421
	891
3E-3371	245
	246
	254
	333
3E-3377	251
3E-3383	206
	208
	293
	300
	307
	315
3E-3389	275
	848
3E-3805	954
	957
3E-4250	680
3E-4315	467
	468
3E-4352	339
3E-4353	261
3E-4354	873
	874
3E-4367	277
	282
	288
	308
	316
3E-4883	43
3E-5169	234
3E-5464	913
3E-6328	▶158
	275
	281
	287
	293
	300
	307
	315
3E-6799	473
3E-7401	388
	391
	394
	398
3E-7844	▶181
	700
3E-8020	508
	928
	930
	932
	934
	936
	938
3E-8048	245
3E-8320	234
3E-8558	277
	282
	288
	308
	316
3F-9556	162
	164
	263
3G-4704	644
	646
3G-5285	684
	685
	686
3G-7875	88
	90
3G-8175	890
3H-0442	785
	889
3H-7180	797
	798
	800
	801
3H-8538	617
3J-1907	108
	244
	325
	329
	372
	377
	388
	391
	394
	398
	421
	422
	427
	430
	434
	439
	445
	447
	449
	476
	480
	484
	625
	626
	629
	633
	638
	649
	653
	669
	670
	671
	689
	690
	691
	694
	703
	706
	710
	712
	724
	725
	726
	727
	733
	734
	735
	736
	742
	746
	747
	748
	752
	753
	763
	766
	769
	777
	785

▶ **PRIMARY REFERENCE**

PART NUMBER INDEX

Part	Page	Part	Page	Part	Page	Part	Page
	791	3K-0158	430	3P-9554	494		1031
	793	3K-0159	430	3P-9847	68	4B-5324	617
	806	3K-0360	32		113		619
	815		155	3P-9900	1029	4B-8774	99
	816		157		1031		102
	817		360	3R-9322	494	4B-9373	486
	818		377	3S-2093	32		488
	819		388		168	4B-9374	486
	841		391		171		488
	843		394		174	4B-9782	419
	845		398		180	4B-9784	887
	848		402		238	4B-9880	480
	851		404		275	4D-7388	68
	855		407		277		445
	859		427		281		447
	862		430		283		981
	865		435		287	4D-7733	113
	869		441		289	4D-7735	419
	877		479		293		626
	1090		480		300		629
3J-4818	1029		625		307		633
	1031		626		308	4D-7794	325
3J-5389	995		633		315		329
3J-7354	421		638		316		345
	427		647		323		348
	430		649		335		703
	445		653		337		706
	447		660		339	4D-8123	256
	609		725		360		358
	610		726		402		359
	637		734		404	4D-9517	567
	666		735		449	4D-9986	197
	669		763		567		198
	670		766		952		372
	671		769		1042		377
	689		777	3S-2713	240	4E-0019	546
	691		785		242	4E-0835	545
	725		787	3S-6049	174	4E-1373	43
	727		789	3S-6050	174	4E-1384	78
	734		791	3S-6162	681		924
	736		804	3S-7023	454		954
	747		806	3S-8664	979		957
	753		811	3S-9233	688		967
	785		813	3T-0852	984	4E-2161	973
	787		820		985		975
	789		841		986	4E-3273	466
	791		855	3T-3008	380	4E-3760	551
	804		873	3T-4688	339	4E-5127	693
	823		874	3T-5201	954	4E-5984	466
	825		875	3V-2793	521	4E-5985	466
	827		876	3V-6909	700	4E-6364	900
	833		888	3W-6116	1045		903
	834		894		1046	4E-7088	362
	835		896	3W-9117	515	4E-8958	1000
	836	3K-6060	988		518	4E-9324	467
	837	3K-6113	694		521		468
	838	3K-8460	372			4E-9664	1000
	839		378				1001
	845	3L-8187	617			4E-9667	615
	855		619			4E-9668	615
	878	3P-0647	880	4B-4158	806	4F-2294	264
	889		881		1094	4F-4042	1044
	1073		882	4B-4274	234	4F-4879	1022
	1075	3P-2404	435		951	4F-9652	430
	1077		440	4B-4278	1029	4H-1225	348

4

► **PRIMARY REFERENCE**

PART NUMBER INDEX

Part	Page
4I-1022	806
4I-3038	275
	281
	287
	293
	300
	307
	315
4I-3398	515
	518
4I-3884	518
4I-6289	521
4I-6602	521
4I-8135	984
	985
4J-0520	445
	447
	449
	649
	653
	702
	717
	719
	722
	748
	754
	760
	777
	779
	781
4J-0521	825
4J-0522	727
	736
	748
	754
4J-0524	727
	736
4J-3014	565
4J-4606	682
	684
	685
	686
4J-5267	649
	653
	748
	754
4J-5268	877
4J-5351	877
4J-5477	710
	712
	724
	725
	733
	734
	737
	742
	746
	752
	763
	766
	767
	769
	770
	1073
	1075
	1077
	1090
4J-7533	785
	787
	789
	791
	823
	825
	827
4J-9058	1044
4J-9535	791
	823
	825
	827
4K-1388	477
	806
	823
	825
	827
4K-2039	873
	874
	875
	876
	894
	896
4K-4284	462
4K-4879	464
4K-4881	465
4K-7464	551
4K-8864	270
	339
	345
	348
4K-9429	996
4L-6454	916
4M-2381	480
4M-5905	480
4M-6425	1007
4M-6582	1033
4M-7470	549
	550
	1042
4M-8973	567
4N-1650	693
4N-9170	940
	941
4P-7429	339
4P-7581	256
	335
	345
	348
	449
4P-7582	273
4P-8134	155
	270
	277
	283
	289
	294
	301
	309
	317
4Q-1346	673
	903
4S-1936	348
	623
4S-1962	70
	72
	435
	440
	979
4S-4455	325
	329
	748
	754
4S-5824	423
4S-5875	486
	488
4S-5971	408
4S-8264	973
	975
4S-8541	473
4S-8598	372
	377
4S-8603	372
4T-6116	476
4T-6117	449
	▶476
4T-6907	644
	646
4T-8091	1079
4T-9905	887
4V-1878	724
	733
4V-1939	345
4V-2588	900
	903
4V-2872	897
	898
	900
4V-2873	897
	898
	900
4V-2879	900
	903
	905
4V-2883	567
	673
	900
	903
	1072
4V-3619	900
	903
4V-3625	900
	903
4V-6999	700
4V-8256	909
4V-8285	1047
4V-8286	1047
4V-8577	1029
	1031
4V-8674	681
4V-9798	773
	774
4V-9799	773
	774

5

Part	Page
5A-3604	131
	132
	154
	848
	851
	855
	859
	862
	865
	869
5B-0651	900
	903
5B-0935	569
	572
5B-2183	724
	746
	752
5C-2890	78
	87
	88
	90
	196
	214
	218
	219
	222
	362
	669
	670
	671
	794
	795
	796
	797
	798
	799
	800
	801
	855
	913
	954
	969
	973
	975
	998
	1029
	1031
5C-7261	78
	168
	171
	174
	236
	238
	240
	242
	258
	277
	283
	289
	294
	301
	309
	317

PART NUMBER INDEX

Part	Page	Part	Page	Part	Page	Part	Page
	508	5G-6505	168	5K-9243	569	5P-1505	68
	621		177		572	5P-1506	348
	623	5G-6973	899	5L-2030	410	5P-3119	486
	924	5G-6978	521		412		488
	954	5G-7820	700		414	5P-3422	575
	957	5G-8480	515	5L-2031	410	5P-3779	609
	967		518		412		665
5C-8312	277		521		414		668
	283	5H-2767	825	5L-3233	88	5P-4115	323
	289	5H-3252	463		90		972
	294	5H-3701	427	5L-4507	234	5P-4116	68
	301		430	5L-4759	688		168
	309	5H-4019	717	5L-7200	275		171
	317		719		281		174
	994		722		287		223
	998	5H-4744	567		293		224
	1084	5H-6005	883		300		258
5C-8811	1042		885		307		339
5C-9553	155	5H-8853	710		315		587
	277		712	5M-2057	832		589
	283	5H-8936	419	5M-2894	1007		591
	289	5I-3883	70	5M-3154	372		700
	294		72		378		813
	301		981	5M-4987	463		918
	309	5I-4376	244	5M-6214	682		924
	317	5J-0253	717		684		950
	323		719		685		960
	337		722		686		967
	567		779	5P-0372	525		973
	913	5J-2974	419	5P-0537	997	5P-4295	748
	952		877	5P-0597	233		754
	965	5J-3488	682	5P-0721	155	5P-4325	233
	967		684	5P-0767	32	5P-4423	1029
	969		685		70		1031
	1036		686		72	5P-4484	427
5D-0718	435	5J-5158	811		407		430
	440	5K-0806	717		981	5P-4571	276
	727		719	5P-1076	78		277
	736		722		269		282
5D-1026	32	5K-1568	419		337		283
	68	5K-3294	360		498		288
	70	5K-5338	395		506		289
	72		399		508		308
	155		626		525		309
	407		629		528		316
	981		633		529	5P-4961	113
5D-1242	611	5K-9065	473		530	5P-5461	569
5D-1911	811	5K-9090	434		534		572
	813		435		536	5P-5463	569
5D-7927	811		439		537		572
	813		440		539	5P-5623	268
5F-3488	811		445		597	5P-5630	256
5F-8000	791		447		719		258
	823		449		727	5P-5637	503
	825		725		736		973
	827		726		748		975
	883		734		754	5P-5639	219
	885		735		758		222
5F-9144	108		747		760	5P-5643	498
	417		753		763		911
	421		758		766		968
	422		760		769	5P-5677	200
	689		779		779	5P-5774	219
	690	5K-9242	569	5P-1251	68		222
	691		572	5P-1442	348	5P-5901	509

► **PRIMARY REFERENCE**

PART NUMBER INDEX

Part	Page	Part	Page	Part	Page	Part	Page
5P-5923	594	5P-8309	79	6D-3479	325	6H-5139	419
5P-5927	928	5P-8334	467		329	6H-9361	811
	930		468		742		813
	932	5P-8347	484	6D-4244	325	6H-9691	427
	934	5P-8440	742		329		430
	936	5P-8444	419	6D-4246	168	6I-0138	▶85
	938		435		171		594
	960		440		174	6I-0139	85
5P-6010	1029	5P-8500	1		178	6I-0217	15
	1031		409		339		18
5P-6414	473		963		360		20
5P-6718	32		1092		402		36
5P-6719	877	5P-8502	409		435		38
5P-6944	625	5P-8524	972		440		57
	638	5P-8837	528		748		64
	725		577		754		74
	734	5P-9085	273		767		76
5P-7458	985		325		770		99
	986		329		841		102
5P-7459	985		339		843		133
	986		358	6D-4636	388		138
5P-7466	649		359		391		143
	653	5P-9262	878		395		148
5P-7467	649	5P-9297	335		399	6I-0233	260
	653		352	6D-7889	131	6I-0254	57
5P-7468	435		364		132		74
	440		621		484		76
5P-7469	435		710	6D-8305	626		133
	440		712		629		138
5P-7657	963	5P-9299	567		634		143
	965	5P-9436	717	6E-0381	785		148
	975		719		820	6I-0260	44
5P-7701	435		722	6E-1497	681		46
	440	5P-9683	362	6E-3268	878		62
5P-7814	419	5P-9806	372	6E-3269	878		116
5P-7854	748		377	6E-3272	878		119
	754	5P-9935	589	6E-3273	878		122
5P-7957	996	5S-7349	162	6E-3274	878		125
5P-7958	1		164	6E-3275	878		128
	275	5S-7383	1007	6E-3276	878		133
	281	5S-7598	1077	6E-5066	783		138
	287	5T-3907	168		784		143
	293		171		785		148
	300	5V-1007	521		791	6I-0289	44
	307	5V-1496	1019	6E-5101	811	6I-0455	64
	315	5V-4999	577		813	6I-0456	133
	959	5V-6454	900	6E-6527	878		138
5P-8112	649		903	6E-6528	878		143
	653	5V-6455	900	6E-6536	878		148
5P-8119	427		903	6E-6537	878	6I-0563	99
	430	5V-8780	78	6E-6538	878		102
5P-8167	95			6E-6539	878	6I-0593	12
5P-8245	33			6E-6540	878		115
	372			6F-0253	323		116
	377				930		119
	416	6A-5591	372		932		122
	417		377		934		125
	423	6A-9083	916		938		128
	486	6B-6682	611	6F-3930	483	6I-0594	116
	488	6C-2356	454	6F-4855	822		119
	916	6C-3247	470	6F-5188	419		122
	1080	6C-3679	967	6F-7045	262		125
5P-8247	162	6C-7367	470	6G-4195	617		128
	164	6D-1641	981		619	6I-0645	36
	466	6D-3025	362	6H-3568	551		38

6

▶ **PRIMARY REFERENCE**

PART NUMBER INDEX

Part	Page	Part	Page	Part	Page	Part	Page
	92		1062		638		404
	93		1063		649	6V-3823	473
6I-0650	36		1064		653	6V-3884	261
	38		1065		727	6V-3907	806
6I-0654	12		1066		736	6V-3940	372
	41	6I-8531	467		748		377
	116	6I-8849	551		754		480
	119	6I-9250	1044		763	6V-3960	460
	122	6I-9251	1044		766	6V-3965	244
	125	6J-1889	680		769		388
	128	6J-1890	680		779		391
6I-0817	99	6J-1972	644		1090		394
	102		646	6V-0894	362		398
6I-1090	18	6J-2245	251	6V-1616	717		421
	20	6J-3134	791		719		422
	22		823		722		478
	60		825		779		480
6I-1418	275		827	6V-1720	372		626
	281		883		377		638
	287		885	6V-1722	155		649
	293	6J-5731	644		763		653
	300		646		766		726
	307	6J-5733	644		769		733
	315		646	6V-1819	463		735
	323	6J-9996	797	6V-1820	372		747
6I-1497	44		798		377		753
6I-4079	44		800		473		766
6I-4374	57		801	6V-1889	325		769
	133	6K-4185	551		329		779
	138	6K-4186	551		435	6V-4248	261
	143	6K-4191	551		440		462
	148	6K-6967	567		649	6V-4249	373
6I-4681	44	6K-8178	113		653		378
	46		979		744	6V-4356	979
6I-4793	62	6M-5062	825		748	6V-4357	979
	64		873		754	6V-5049	87
	133		874	6V-1970	1		367
	138		875	6V-2313	362		388
	143		876	6V-2317	402		391
	148		894		404		626
6I-8310	1048		896	6V-2394	380		633
	1049	6M-9155	637		382	6V-5142	831
	1050	6N-1604	197		384	6V-5210	277
	1052		198	6V-2495	979		283
	1054	6N-6984	255	6V-2689	308		289
	1056	6P-3206	476		316		294
	1057	6S-6646	599		845		301
	1058		601		848		309
	1059		617		851		317
	1061		619		855	6V-5215	402
	1062		967		859		404
	1063	6T-6080	810		862	6V-5217	372
	1064	6V-0301	455		865		377
	1065	6V-0359	551	6V-3265	460	6V-5218	480
	1066	6V-0675	51		626	6V-5221	484
6I-8311	1048	6V-0852	244		629	6V-5223	402
	1049		388		634		404
	1050		391		727	6V-5258	445
	1052		395		736		447
	1054		399	6V-3303	466	6V-5326	885
	1056		421	6V-3319	694	6V-5684	486
	1057		422	6V-3668	372		488
	1058		480		377	6V-5686	410
	1059		484		423		412
	1061		625	6V-3821	402		414

► **PRIMARY REFERENCE**

PART NUMBER INDEX

Part	Page	Part	Page	Part	Page	Part	Page
6V-5696	423		646		629		391
6V-5839	373	6V-8352	878		633		394
	378	6V-8369	266		647		398
	423		275		703		625
	473		281		726		629
	781		287		735		633
6V-5842	372		293		747		703
	377		300		753		706
6V-5843	423		307		763		726
6V-6210	1042		315		766		727
6V-6317	377	6V-8373	617		769		735
	408		619		777		736
	462	6V-8378	263	6V-8467	802		747
6V-6604	525	6V-8389	777	6V-8490	978		753
6V-6635	231	6V-8397	113		998		841
	232		244	6V-8625	633		843
6V-7238	32		388	6V-8627	726	6V-8758	621
	157		391		735		623
	407		392		742	6V-8774	726
6V-7357	219		394		1090		735
	222		398	6V-8629	435	6V-8778	726
6V-7383	567		399		440		735
6V-7419	1042		419		776	6V-8781	625
6V-7636	954		434	6V-8633	777		629
6V-7646	1019		439	6V-8635	434		633
6V-7687	1077		625		439		703
6V-7732	533		629		449		706
6V-7742	811		633		779		841
6V-7743	957		703	6V-8636	434		843
6V-7744	205		704		439	6V-8782	726
	567		706		625		735
	811		724		629		763
	813		725		633		766
6V-7981	372		726		703		769
	377		727		706		777
	408		733		710	6V-8784	726
6V-7991	423		734		712		735
6V-8076	445		735	6V-8637	748	6V-8801	85
	447		736		754	6V-8928	978
	649		744		758	6V-8934	763
	653		747		760		766
	726		753		776		769
	735		763	6V-8639	388	6V-8941	747
6V-8077	626		766		391		753
	638		769		394	6V-8946	747
6V-8128	473		815		398		753
6V-8149	985		816	6V-8640	434	6V-8969	997
	986		817		439	6V-8980	703
6V-8186	263		818		747		706
	362		819		752		744
6V-8187	234		841	6V-8641	1090	6V-8981	763
6V-8188	168		843	6V-8642	434		766
6V-8189	162	6V-8398	388		439		769
	164		391	6V-8647	1073	6V-8987	392
6V-8197	1077		394		1075		399
	1080		398		1077		747
6V-8201	423		419	6V-8714	445		753
6V-8212	372		427		447	6V-8990	747
	408		430		758		753
6V-8224	803		434		760	6V-8993	742
6V-8225	915		435	6V-8715	113	6V-9001	388
6V-8227	662		439	6V-8723	726		391
	663		440		735		629
6V-8237	457		444		841		633
	644		625	6V-8724	388		725

PART NUMBER INDEX

Part	Page
	734
6V-9002	777
6V-9004	726
	735
	758
	760
6V-9005	435
	440
	725
	734
6V-9007	649
	653
	725
	734
	747
	753
6V-9008	435
	440
	725
	734
	747
	753
6V-9027	40
6V-9028	113
6V-9158	434
	439
6V-9160	726
	735
6V-9168	389
	391
	395
	399
	419
	703
	706
	748
	754
6V-9169	419
	427
	430
	444
	763
	766
	770
6V-9182	744
6V-9189	180
	205
6V-9492	954
6V-9632	234
	276
	282
	288
	294
	301
	308
	316
	337
	497
	508
	930
	932
	934
	936
	938
6V-9667	427
	430
	486
	488
6V-9671	245
6V-9672	994
6V-9673	277
	283
	289
	294
	301
	309
	317
	913
	969
6V-9746	434
	435
	439
	440
	445
	447
	455
	477
	647
	649
	653
	702
	724
	725
	726
	727
	733
	734
	735
	736
	744
	746
	747
	748
	752
	753
	754
	758
	760
	776
	781
6V-9828	710
	712
6V-9829	841
	843
6V-9836	625
	629
	633
	726
	735
	747
	753
	769
6V-9837	626
	629
	633
	703
	706
	763
	766
	769
6V-9839	747
	753
6V-9840	726
	735
6V-9846	747
	753
6V-9849	1090
6V-9850	388
	391
	394
	398
	703
	706
	725
	734
	841
	843
6V-9851	435
	440
	625
	629
	633
	763
	766
	769
	777
6V-9852	435
	440
6V-9853	435
	440
	455
	726
	735
6V-9854	449
6V-9872	747
	753
6V-9875	434
	439
6W-2888	702
	781
6W-2890	702
	781
6W-4126	467
	468
6W-5817	508
	525
6W-5818	525
6W-6211	1073
6W-7636	435
	440
6W-8246	551
6Y-0373	384
6Y-0809	372
	377
6Y-0869	372
	377
6Y-1085	473
6Y-1087	473
6Y-1093	473
6Y-1758	384
6Y-2538	486
	488
6Y-3149	473
6Y-3151	473
6Y-4859	473
6Y-4873	423
6Y-5010	463
6Y-5632	384
6Y-7922	380
	382
	384
6Y-7932	384
6Y-8262	433
6Y-8265	380
	382
	384
6Y-8266	380
	382
6Y-8275	380
	384
6Y-8278	380
6Y-8286	384
6Y-8288	384
6Y-8289	384
6Y-8293	423
6Y-8506	372
	377
6Y-8512	380
	382
	384
6Y-8514	380
	382
	384
7B-3039	832
7C-0351	44
	46
7C-0754	70
	72
7C-1224	46
7C-1281	18
	20
	22
7C-4354	325
	329
7C-4355	435
	440
	748
7C-4616	36
	38
7D-1649	593
7D-3512	435
	440
7D-5252	483
7D-6922	617
	619
7D-7233	277
	283
	289
	294
	301
	309
	317
	435
	440
	621
	748

7

► **PRIMARY REFERENCE**

PART NUMBER INDEX

Part	Page
	754
	763
	766
	770
7D-9014	802
7E-9898	394
	398
	726
	735
7F-0560	177
7F-8268	408
7F-8607	680
7F-9571	611
7F-9572	611
7F-9578	611
7F-9579	611
7G-2950	1073
	1075
	1077
7G-2951	1073
	1075
	1077
7G-3832	649
	653
7G-3833	649
	653
7G-3834	649
	653
7G-7053	700
7G-7917	276
	282
	288
	308
	316
7G-7919	276
	282
	288
	308
	316
	339
7G-7920	339
7G-8839	551
	640
7H-1447	811
	813
7H-4566	551
7I-3236	362
7I-6601	873
	874
7I-6756	1023
	1024
7I-7439	395
	399
	621
	623
7J-0204	455
	484
	873
	874
	875
	876
	883
	885
7J-3554	408
7J-5225	811
7J-5544	407
	811
7J-8209	372
	377
7J-8210	433
7J-9108	434
	435
	439
	440
7J-9933	883
7K-1181	240
	242
	255
	256
	268
	270
	273
	275
	281
	287
	293
	300
	307
	315
	325
	329
	333
	339
	345
	348
	353
	354
	356
	357
	358
	359
	360
	364
	367
	404
	460
	565
	575
	742
	746
	923
	979
	981
	986
	1090
7K-3971	763
	766
	769
7K-3972	763
	766
	769
7K-3974	763
	766
	769
7K-3975	763
	766
	769
7K-5634	409
7K-5636	▶409
	1092
7K-9203	642
	643
	900
	903
7K-9205	900
	903
7K-9208	676
	677
	678
	679
	900
	903
7K-9209	675
	676
	677
	678
	679
	900
	903
7K-9216	900
	903
7M-3361	325
	329
7M-8485	372
	377
	427
	430
	434
	435
	439
	440
	444
	449
	455
	688
	724
	725
	726
	733
	734
	735
	744
	747
	753
	779
	823
	825
	827
7N-0718	234
	▶262
7N-2059	256
7N-3718	435
	440
	626
	629
	634
7N-5685	85
7N-9017	339
7N-9801	267
7P-3454	897
	898
	900
7R-2750	277
	283
	289
	308
	309
	316
	317
	952
7R-2751	276
	282
	288
	308
	316
7S-4001	410
	412
	414
7S-8920	727
	736
7S-8921	727
	736
7T-0094	339
7T-1099	234
	273
	460
	491
	515
	518
	521
	811
7T-4532	922
7T-4924	174
7T-4925	174
7T-6799	275
	281
	287
	293
	300
	307
	315
7T-7624	258
7T-8682	380
7T-8698	384
7T-8890	1035
7V-9791	599
	601
7W-2108	954
7W-2632	133
	138
	143
	148
7W-4669	51
7W-7381	388
	391
	394
	398
	845
	848
	851
	855
	859
	862
	865
	869
7W-8106	563
	564
7W-9094	72
	325
	329

▶ **PRIMARY REFERENCE**

PART NUMBER INDEX

Part	Page
7X-0492	742
7X-0515	78
	500
	508
	529
	599
	601
7X-0563	553
	555
	557
	560
7X-0578	508
7X-0579	83
	113
	911
	968
	1028
7X-0591	12
	811
	813
7X-0593	992
7X-0603	582
	660
	942
7X-0608	236
	277
	283
	289
	294
	301
	309
	317
	909
7X-0618	529
	900
	903
7X-0750	491
	515
	518
	521
7X-0751	515
	518
7X-0752	515
	518
	521
7X-0772	268
7X-0818	323
	727
	736
7X-2454	499
	500
	501
7X-2459	388
	391
	394
	398
	724
	733
	763
	766
7X-2533	200
	202
	337
	954
7X-2534	540
	542
	727
	736
7X-2536	567
7X-2537	83
	240
	242
7X-2538	923
7X-2546	78
7X-2548	325
	329
7X-2549	727
	736
7X-2552	340
7X-2553	78
	529
	534
	1084
7X-2563	802
7X-2622	43
7X-3183	240
	242
7X-3229	1093
7X-3308	275
	281
	287
	293
	300
	307
	315
7X-3392	694
7X-4776	821
7X-4805	427
	430
	613
7X-5331	742
7X-6222	277
	282
	288
	308
	316
7X-6315	183
	184
7X-7729	68
	78
	95
	113
	325
	329
	340
	389
	392
	395
	399
	435
	440
	449
	494
	503
	506
	508
	525
	529
	531
	534
	544
	553
	555
	557
	560
	567
	587
	589
	591
	594
	597
	599
	601
	623
	626
	629
	700
	717
	719
	722
	724
	733
	736
	924
	1025
	1027
7X-7945	724
	733
	737
	746
	752
	767
	770
7Y-2522	515
	518
	521
	897
	898
7Y-3731	449
7Y-4215	806
7Y-4594	515
	518
7Y-7394	693
7Y-8763	515
	518
	546
	811
	897
8B-4884	88
	90
8C-0538	225
	227
	229
8C-3093	435
	440
8C-3098	427
	430
8C-3205	748
	754
8C-3206	445
	447
	449
8C-3236	992
8C-3445	61
8C-3446	421
	422
	689
	691
8C-3447	421
	422
8C-3451	689
	691
8C-3681	68
8C-3756	913
	969
8C-3979	384
	410
	412
	414
8C-5064	979
8C-5607	200
	202
	337
	362
8C-5608	200
	202
	337
	362
8C-6160	621
	623
8C-6354	275
	281
	287
	293
	300
	307
	315
8C-6358	168
	177
8C-6438	993
8C-6440	972
8C-6523	157
8C-6712	689
	691
8C-6868	419
8C-6959	32
8C-7315	240
	242
8C-7563	435
	440
8C-7575	87
	88
	90
8C-8451	565
	604
8C-8550	384
8C-9200	681
	682
	684
	685

8

► **PRIMARY REFERENCE**

PART NUMBER INDEX

Part	Page	Part	Page	Part	Page	Part	Page
	686		629		288		816
8C-9987	891		633		308		817
	998		880		316		818
8E-0849	992		881	8N-1540	276		819
8E-1118	219		882		282	8T-0088	427
8E-1143	480	8L-2786	845		288		430
8E-1279	384		848		308	8T-0106	416
8E-3416	380		851		316	8T-0119	647
	382		859	8N-1544	276	8T-0162	417
	384		862		282	8T-0164	710
8E-3433	384		865		288		712
8E-3435	382		869		308	8T-0251	380
8E-5247	473	8L-4496	362		316		382
8E-5261	372	8L-8413	1029	8N-1548	276		384
	377		1031		282	8T-0267	364
8E-5380	372	8M-2770	270		288	8T-0271	460
	377		575		308	8T-0273	425
8E-5735	384	8M-2771	952		316		426
8E-5737	384	8M-2772	180	8N-1725	168		694
8E-5742	384		569		171	8T-0276	402
8E-6259	1083		572		174		404
8E-6539	473		575	8N-2622	275	8T-0282	410
8E-6647	473	8M-2773	325		281		412
8E-6648	473		329		287		414
8E-8292	1035		348		293	8T-0285	703
8E-8317	380		395		300		706
	382		399		307		710
	384		404		315		712
8E-8321	384		435	8N-2694	87		841
8E-8652	384		440		88		843
8E-8653	380		575		90	8T-0288	951
8E-8654	380		626	8N-9033	973	8T-0306	1038
	382		630	8R-0721	626		1039
	384		634		630	8T-0328	362
8E-9550	423		748		634		1019
8F-1434	263		754		764	8T-0336	427
8F-7219	108		763		767		430
8F-9516	682		774		770	8T-0342	463
	684	8M-5251	402	8R-0768	168	8T-0372	467
	685		404		171	8T-0380	457
	686	8M-5253	480		174	8T-0389	203
8G-0871	525	8M-7160	372	8R-2912	900		206
8H-5303	262		377		903		208
8H-5306	262	8N-0869	168	8R-2913	900		210
8H-7521	372		171		903		211
	377		174	8R-2918	942		212
8J-0101	806		238		944		213
8J-2928	1044		360	8R-3695	928	8T-0643	372
8J-2933	1044	8N-1532	277		930		377
8J-6875	724		283		932	8T-0655	430
	733		288		934	8T-0722	832
	▶887		308		936	8T-1138	794
8J-8782	832		316		938		799
8J-8783	832	8N-1535	276	8R-7092	551	8T-1160	66
8K-1253	362		282	8S-0934	1015	8T-1482	499
8K-1433	617		288		1017		500
	619		308	8S-0948	325		501
8K-2665	345		316		329	8T-1674	449
	348	8N-1536	277	8S-2225	1000	8T-1685	455
8L-2779	132		283	8S-2634	238	8T-1686	777
	154		289	8S-4723	1015	8T-1687	777
	388		308		1017	8T-1779	843
	391		316	8S-8820	727	8T-1889	449
	419	8N-1537	276		736		623
	626		282	8T-0075	815		717

▶ **PRIMARY REFERENCE**

PART NUMBER INDEX

Part	Page	Part	Page	Part	Page	Part	Page
	719		555		160		534
	722		557		166		537
	727		563		167		549
	736		564		168		550
	758		575		171		551
	760		594		174		563
8T-1890	449		623		178		564
	623		625		180		565
	717		629		203		567
	719		633		204		569
	722		703		205		572
	727		706		225		575
	736		717		227		594
	758		722		229		597
	760		746		233		621
8T-1905	703		752		234		623
	706		763		240		626
8T-2275	811		766		242		630
	813		769		256		634
8T-2321	583		981		268		638
	584		1025		273		647
8T-2561	362		1028		277		649
	532	8T-3518	177		283		653
	533	8T-3519	168		289		658
8T-2659	954		177		294		693
8T-2893	78	8T-3597	494		301		702
8T-2899	1001		497		309		703
8T-2925	371		498		317		706
8T-3282	427		521		325		710
	430		530		329		712
	486		537		335		717
	488		539		340		719
8T-3298	832		563		345		722
8T-3312	724		979		348		727
	733	8T-3612	542		354		736
8T-3490	68		617		358		744
	72		619		359		748
	113		693		360		754
	168		1028		362		758
	171	8T-3635	521		364		760
	273	8T-3734	515		367		764
	276		518		389		767
	282		521		392		770
	288	8T-3851	491		395		777
	339		493		399		779
	373		515		408		802
	378		518		419		803
	388		521		435		811
	391		546		440		813
	394		567		445		841
	398		898		447		843
	407		899		449		918
	434		905		455		942
	439	8T-3985	508		460		944
	449	8T-3995	973		490		967
	455		975		494		971
	494	8T-4121	43		498		979
	497		68		504		981
	498		70		509		1009
	508		72		525		1011
	521		78		527		1013
	529		83		528		1084
	530		95		530		1090
	537		113		532	8T-4122	340
	553		155		533		727

► **PRIMARY REFERENCE**

PART NUMBER INDEX

Part	Page
	736
	776
8T-4123	43
	419
	810
	1069
	1081
8T-4131	694
8T-4132	78
8T-4133	68
	78
	113
	160
	168
	171
	268
	277
	283
	289
	294
	301
	309
	317
	325
	329
	354
	360
	364
	408
	435
	440
	445
	447
	449
	490
	494
	504
	509
	525
	531
	532
	533
	534
	553
	555
	557
	560
	587
	589
	591
	594
	597
	599
	601
	621
	623
	626
	638
	649
	653
	694
	727
	736
	748
	754
	764
	767
	770
	981
8T-4134	972
8T-4136	70
	72
	78
	83
	113
	168
	174
	178
	225
	227
	229
	273
	325
	329
	340
	348
	360
	364
	419
	435
	440
	445
	447
	455
	509
	525
	532
	534
	553
	555
	557
	560
	567
	594
	597
	601
	621
	626
	630
	634
	647
	649
	653
	693
	695
	703
	706
	717
	719
	722
	727
	736
	748
	754
	758
	760
	764
	767
	770
	779
	806
	811
	813
	841
	843
	942
	944
	967
	981
	1025
	1027
	1090
8T-4137	70
	72
	113
	155
	168
	171
	178
	180
	219
	222
	225
	227
	229
	233
	234
	240
	242
	256
	268
	273
	277
	283
	289
	294
	301
	309
	317
	325
	329
	335
	340
	345
	348
	364
	367
	389
	392
	395
	399
	419
	435
	440
	445
	447
	490
	494
	498
	503
	509
	534
	544
	565
	569
	572
	575
	599
	601
	621
	623
	626
	630
	634
	649
	653
	693
	703
	706
	710
	712
	727
	736
	748
	754
	764
	767
	770
	779
	802
	803
	841
	843
	918
	971
	979
	981
	1084
8T-4138	87
	88
	90
	155
	234
	277
	283
	289
	294
	301
	309
	317
	337
	928
	930
	932
	934
	936
	938
	952
	963
	988
	993
8T-4139	269
	345
	348
	435
	440
	449
	494
	498
	509

► **PRIMARY REFERENCE**

PART NUMBER INDEX

Part	Page	Part	Page	Part	Page	Part	Page
	528		565		584		727
	529		748		617		736
	534		754		619		781
	536		758		918	8T-4195	43
	537		760		928		68
	539	8T-4183	168		932		72
	563		435		936		78
	564		440		973		95
	597		509		975		155
	626		650		983		268
	630		653		984		325
	634		727		985		329
	650		736		986		348
	653		748	8T-4190	273		362
	658		754	8T-4191	233		364
	693		802		345		435
	700		815		348		440
	703		816		460		445
	706		817		509		447
	717		818		527		460
	719		819		569		509
	722	8T-4184	727		572		527
	727		736		575		528
	736	8T-4185	113		599		529
	758		647		660		537
	764		748		942		553
	767		754	8T-4192	113		555
	770		758		168		557
	802		760		171		560
	979		776		223		567
	1073		777		224		594
	1084	8T-4186	70		273		596
8T-4140	727		78		340		597
	736		95		345		623
	806		362		348		650
8T-4149	747		506		364		654
	753		563		509		658
8T-4167	900		564		551		700
	903		587		567		717
8T-4171	277		589		640		719
	283		591		727		722
	289		623		736		727
	294		702		760		736
	301		717		779		742
	309		719		815		754
	317		722		816		758
	913		748		817		760
8T-4172	551		754		818		924
	748		781		819		979
	754	8T-4187	810		900		1025
8T-4176	593	8T-4189	205		903		1027
8T-4178	395		218	8T-4193	505	8T-4196	79
	399		256		599		255
	449		258		601		325
8T-4179	340		277		727		329
	1073		283		736		435
	1075		289		811		440
	1077		294		813		445
8T-4180	954		301	8T-4194	435		447
8T-4181	509		309		440		449
8T-4182	95		317		551		529
	445		340		647		650
	447		540		650		654
	449		542		653		700
	460		583		702		719

► **PRIMARY REFERENCE**

PART NUMBER INDEX

Part	Page
	727
	736
	748
	754
	760
	779
	811
	813
	1009
8T-4197	240
	242
	742
8T-4198	166
	167
	767
	770
8T-4200	68
	131
	132
	154
	197
	198
	255
	567
	700
	973
	975
8T-4201	509
8T-4205	90
	155
	162
	164
	219
	222
	234
	294
	301
	309
	317
	460
	913
	928
	930
	932
	934
	936
	938
	952
	954
	969
	973
	975
	988
	998
	1019
8T-4219	492
	521
	548
8T-4223	113
	168
	171
	223
	224
	273
	325
	329
	340
	345
	348
	360
	362
	364
	436
	441
	449
	494
	498
	509
	528
	534
	551
	563
	564
	567
	597
	626
	630
	634
	650
	653
	658
	693
	700
	702
	704
	706
	717
	719
	722
	727
	736
	764
	767
	770
	781
	802
	811
	813
	815
	816
	817
	818
	819
	979
	985
	986
	1073
	1075
	1077
	1084
8T-4224	66
	162
	164
	180
	197
	198
	218
	238
	240
	242
	255
	256
	258
	277
	283
	289
	294
	301
	309
	317
	340
	362
	540
	542
	567
	583
	584
	616
	617
	619
	727
	736
	918
	923
	928
	930
	932
	934
	936
	938
	973
	975
	983
	984
	985
	986
	1003
	1007
8T-4226	68
	79
	219
	222
	587
	589
	591
	596
	597
	748
	754
8T-4244	168
	171
	325
	329
	337
	360
	362
	506
	509
	593
	650
	653
	693
	700
	702
	727
	736
	764
	767
	770
	781
	1073
	1075
	1077
8T-4648	436
	441
	727
	736
8T-4742	954
8T-4747	954
8T-4779	43
	500
8T-4780	900
	903
8T-4896	85
	95
	240
	242
	832
8T-4908	66
	256
	587
	591
	911
	950
	960
	968
	984
	985
	986
	1028
8T-4910	650
	653
8T-4935	225
	227
	229
	491
	515
	518
	521
8T-4956	79
	530
	764
	767
	770
	811
	813
	985
	986
8T-4967	515
	518
	521
	553
	555
	557
	811
8T-4968	508
8T-4970	234
8T-4971	79
	240
	242

► **PRIMARY REFERENCE**

PART NUMBER INDEX

Part	Page
	954
	957
8T-4983	68
8T-4985	727
	736
8T-5005	206
	208
	325
	329
	449
	704
	706
	758
	760
	777
8T-5035	441
8T-5041	551
8T-5043	419
8T-5353	372
	377
	463
8T-5400	1042
8T-5439	427
	430
	444
	900
	903
8T-5460	900
	903
8T-5913	1035
8T-5914	1035
8T-6381	43
	810
8T-6430	900
	903
	1069
	1081
8T-6462	491
8T-6466	79
	436
	441
	449
	530
	626
	630
	634
	717
	719
	722
	764
	767
	770
	779
8T-6631	913
8T-6685	389
	392
	395
	399
	748
	754
	764
	767
	770
	777
8T-6842	959
8T-6868	337
8T-6869	113
	660
	700
	942
8T-6870	240
	242
8T-6876	747
	753
	777
8T-6912	583
	584
	700
8T-7329	340
8T-7352	113
8T-7529	436
	441
8T-7547	223
	224
	238
	616
	967
	1003
8T-7566	997
8T-7811	425
	426
	806
8T-8442	604
	804
	878
8T-8729	206
	234
	252
	253
	263
	267
	268
	270
	275
	276
	281
	282
	287
	288
	307
	315
	325
	339
	422
	803
	845
	851
	890
	930
	938
8T-8730	276
	282
	288
	307
	315
8T-8731	404
8T-8732	252
8T-8737	206
	208
	210
	211
	212
	213
	266
	270
	275
	276
	281
	282
8T-8827	339
8T-8894	942
	944
8T-8898	449
8T-8899	435
	440
	747
	753
8T-8900	455
8T-8902	724
	733
8T-8915	85
8T-9005	928
	930
	932
	934
	936
	938
	940
	941
	942
	944
8T-9082	1019
8T-9358	388
	391
	394
	398
8T-9371	1029
	1031
8T-9597	804
8T-9655	113
	275
	281
	287
	293
	300
	307
	315
	323
8T-9658	803
8U-7051	918
8V-1412	468
8V-7659	640
8W-0301	168
	171
8X-0674	810
8X-1147	763
	766
	769
8X-5147	521
8X-6780	546
8X-9618	275
	281
	287
	293
	300
	307
	315
8Y-4501	954
8Y-4617	954
8Y-5711	1023
8Y-6364	409
8Y-6377	918
8Y-6386	954
8Y-6388	960
8Y-6974	954
8Y-7023	515
	518
	521
	905
8Y-7833	325
	329
8Y-8315	954
8Y-8387	763
	766
	769
8Y-8388	764
	767
	770
8Y-8826	621
	623
9B-7233	275
	281
	287
	293
	300
	307
	315
9C-0119	528
9C-4935	521
	897

9

► **PRIMARY REFERENCE**

PART NUMBER INDEX

Part	Page
	898
9C-5974	700
9C-6809	515
	518
9C-7907	900
	903
	1069
	1081
9C-7929	491
9C-8419	486
	488
9D-7924	660
	942
9F-2247	92
9F-5644	236
	262
	277
	283
	289
	294
	301
	309
	317
9F-6188	774
9F-6189	774
9G-0004	168
	171
9G-0005	168
	171
9G-3695	662
	663
	947
9G-4343	339
9G-4344	339
9G-5127	419
9G-5315	486
	488
9G-8909	238
9H-6454	811
	813
9J-0705	882
9J-0707	822
	880
	881
	882
9J-3866	449
	777
9J-4259	1083
9J-5685	659
9J-7031	832
9K-7951	483
9L-6770	162
	164
9L-9068	402
	404
	484
9M-0164	419
9M-1974	402
	404
	480
	484
9M-2008	433
9M-2110	480
9M-4335	427
	430
	613
9M-4995	565
9M-5137	611
9M-5138	611
9M-5139	611
9M-5140	611
9M-5884	553
	555
	557
	560
9M-7394	409
	811
	813
9M-7958	157
9M-8406	436
	441
	979
9N-0869	277
	283
	289
	294
	301
	309
	317
	323
	742
9N-1756	889
9R-1733	518
9R-2060	491
	508
	515
	518
	546
9R-2160	515
	518
9R-2596	1042
9R-2613	434
	439
	515
	518
	521
	714
	897
	905
9R-2640	515
	518
	521
9R-2672	234
	521
9R-2821	497
	515
	518
	521
9R-3203	1034
9R-3204	1034
9R-3205	1034
9R-3845	515
	518
9R-4286	168
	171
	174
	360
9R-4595	521
9R-4764	436
	441
9R-5008	434
	439
9R-5383	746
9R-6247	1090
9R-7941	219
	222
9R-7942	215
	216
9R-7958	215
9R-7980	219
	222
9R-8537	918
9R-8538	957
9R-9110	617
	619
9R-9111	617
	619
9R-9866	497
	521
9S-4181	372
	377
	427
	430
9S-4182	427
	430
	791
9S-4183	806
9S-4185	427
	430
	436
	441
	649
	653
	726
	735
	791
	806
	811
	813
9S-4191	372
	377
	476
	669
	670
	671
	791
	793
	848
	851
	855
	859
	862
	865
	869
9S-5754	174
9S-5755	174
9S-7712	569
	572
9S-8001	785
	787
	789
	791
	823
	825
	827
	833
	834
	835
	836
	837
	838
	839
	845
	855
	878
	1073
	1075
9S-8002	637
	669
	670
	671
	680
	785
	787
	789
	791
	804
	823
	825
	827
	833
	834
	835
	836
	837
	838
	839
	845
	855
	878
	1073
	1075
9S-8004	108
	785
	791
	806
9S-8005	377
	787
	789
	804
	806
9S-8006	113
	883
	885
9S-8007	883
	885
9S-8009	806
9S-8010	372
	377
9T-1013	647
9T-4788	644
	646
9T-7692	825
9T-7823	682
	684
	685
	686
9T-9227	811
	813
9U-0512	992
9U-0710	621
	623
9U-8263	972
9U-8669	480
9U-9018	473
9U-9322	384
9V-0334	525
9V-0450	525
9V-0453	525
9V-2412	467
9V-4484	1056
	1057

PART NUMBER INDEX

Part	Page	Part	Page	Part	Page	Part	Page
	1058		325	9X-2488	913	9X-4493	206
	1059		329		969		208
	1061		360	9X-2532	1038		214
	1063		402		1039	9X-4609	372
	1064		421	9X-2538	445		377
	1065		422		447	9X-5617	181
9V-6471	551		689		746		182
9W-0719	380		690		752	9X-6032	695
	382		691	9X-3401	245		804
	384		1001		247	9X-6165	200
9W-0852	234	9X-2038	973		270		202
	275	9X-2040	509		272		337
	281		525		276		362
	287		555		282		509
	293		560		288	9X-6580	748
	300	9X-2041	509		294		754
	307		918		301	9X-6772	197
	315		1012		308		198
	803		1014		316		277
9W-1951	277	9X-2042	277		333		283
	283		283		339		289
	288		289		348		309
	308		294		359		316
	316		301		367		323
9W-6661	384		309		404	9X-7344	268
9W-6662	423		317	9X-3402	270	9X-7378	922
9W-7226	372		954		272		923
	377		972		323	9X-7380	979
9W-7783	823		973		325	9X-7381	979
	825		975		329	9X-7382	979
	827		1034		333	9X-7383	979
9W-9271	380	9X-2043	928		335	9X-7385	922
9W-9272	384		930		348	9X-7680	804
9W-9278	380		932		354		878
	382		934		367	9X-7849	215
	384		936		404	9X-8139	215
9W-9399	380		938		930	9X-8250	70
	382	9X-2044	225		932		72
	384		227		934		273
9W-9436	380		229		938		364
	382		553		952		445
	384		555	9X-3463	203		447
9W-9920	43		557		219		981
9W-9940	992		560		222	9X-8256	79
9X-0196	277		928	9X-3465	206		87
	283		930		208		88
	289		932		210		240
	309		934		211		242
	317		936		212		277
9X-1046	928		938		213		283
	930		959	9X-3595	681		289
	932	9X-2045	942	9X-3596	684		294
	934		944		685		301
	936		978	9X-3597	684		309
	938		998		685		317
	998		1034	9X-3598	682		337
9X-1386	923		1042		684		345
9X-1813	245	9X-2085	777		685		540
	246	9X-2125	1011		686		542
	247		1013	9X-4244	203		567
	249	9X-2126	1036		204		727
	250	9X-2185	1033		205		736
	251	9X-2297	769		206		957
	254	9X-2480	345		208		963
	268		362	9X-4492	214		965

► **PRIMARY REFERENCE**

PART NUMBER INDEX

Part	Page
	967
	993
	1036
9X-8257	43
	79
	534
	551
	1084
9X-8267	965
9X-8268	273
	410
	412
	414
	423
	427
	430
9X-8487	515
	518
	521
9X-8582	575
	764
	767
	770
9X-8979	804
9X-9825	168
9X-9865	206
	208
9Y-2700	240
	242
	754
9Y-8315	95
9Y-9381	99
	102

0

Part	Page
004-3212	640
005-4834	551
009-3101	615
	1000
	1001
010-2573	700
030-0167	880
	881
	882
031-0214	1007
032-8047	99
	102
032-9020	18
	20
	22
032-9828	994
033-5879	882
033-6028	273
	325
	329
033-6036	880
	881
	882
033-6043	878
033-8248	68
	234
	402
	404
	567
033-9139	848
	851
	855
	859
	862
	865
	869
035-8014	99
	102
053-0558	445
054-7915	79
064-0230	551
064-3843	473
067-2551	113
	345
	348
	629
067-3161	806
067-6043	25
	27
067-6179	36
	38
085-8091	95
	419
	460
087-5421	700
090-8247	521
091-0079	1008
091-0081	348
092-7385	746
	752
092-9741	508
094-1875	694
	806
094-1881	694
094-1882	694
	806
094-1883	806
095-0827	604
095-0843	1019
095-0910	234
095-0946	806
095-1750	479
	888
095-1751	831
095-1785	694
095-1787	694
095-1788	694
096-0194	793
096-2323	954
	957
096-3781	525
096-4389	806
096-6166	703
	706
	710
	712
	841
	843
	954
	1084
096-6331	940
	941
096-6467	900
	903
097-0832	449
099-3649	277
	283
	289
	294
	301
	309
	317
099-3671	694

1

Part	Page
100-3245	206
	208
100-3248	206
	208
100-3250	206
	208
100-3251	206
	208
100-3253	206
	208
	210
	211
	212
	213
100-3254	206
	208
	210
	211
	212
	213
100-3255	206
	208
	210
	211
	212
	213
100-3751	36
	38
100-3852	551
100-3853	551
100-3856	551
100-4336	647
100-4830	99
	102
100-4838	196
100-4841	15
	18
	20
	22
	25
	27
100-6462	►1083
100-7000	479
101-0003	1029
	1031
101-2867	1007
101-3895	36
	38
	133
	138
	143
	148
101-7402	725
	734
101-9161	947
101-9759	339
102-5846	508
102-5848	508
102-5849	508
102-8801	276
	282
	287
	288
	307
	308
	315
	316
	348
102-8802	155
	158
	159
	200
	202
	214
	249
	250
	253
	261
	263
	267
	268
	270
	272
	273
	276
	282
	288
	308
	316
	339
	348
	359
	367
	402
	421
	422
	662
	663
	689
	690
	691
	803
	830
	890
	891
	922
	923
	986
	1031
102-8803	181
	214
	234
	245
	246
	247
	254

► PRIMARY REFERENCE

PART NUMBER INDEX

Part	Page	Part	Page	Part	Page	Part	Page
	276		859	107-4749	345		281
	282		862	107-6032	978		287
	288		865	107-6079	960		293
	308		869	107-6141	942		300
	316	102-9690	46		944		307
	325	102-9941	34	107-6144	918		315
	329	103-0010	623	107-6145	918	110-6393	912
	333	103-1066	15	107-6146	918	110-6844	348
	339	103-1712	423	107-6147	918	110-6848	348
	348	103-5406	776	108-1029	▶215	110-7524	918
	360		777		231	110-7887	275
	404	103-5796	1045	108-2148	482		281
	930		1046	108-4311	918		287
	932	104-2091	960		1029		293
	934	104-7336	384	108-5471	954		300
	938	105-2145	878	108-7507	845		307
102-8804	251	105-2345	1048		848		315
	270		1049		851	111-0177	918
	275		1050		855	111-0178	918
	276		1052		859	111-0200	954
	281		1054		862	111-0204	918
	282		1056		865	111-0343	891
	287		1057		869	111-0859	116
	288		1058	109-4846	777		125
	293		1059	109-5821	744	111-1460	445
	300		1061	109-7041	219		447
	307		1062		222	111-4013	225
	308		1063	109-8981	219		227
	315		1064	110-2023	521	111-7092	68
	316		1065	110-2974	240	111-7874	660
	348		1066		242		942
102-8805	206	105-4849	▶206	110-4821	508	111-7878	942
	208		225	110-5051	1024		944
	210	105-4850	▶208	110-5052	1023	111-8738	962
	211		225		1024	112-0885	649
	212	105-6117	1001	110-5054	1024		653
	213	106-1137	897	110-5056	1023	112-1817	703
	234		898		1024		706
	275	106-2481	▶1045	110-5058	1024		710
	281	106-3192	1047	110-5059	1023		712
	287	106-4155	277		1024		▶840
	293		283	110-5060	1023		841
	300		288		1024		843
	307		308	110-5062	1023	112-4550	252
	315		316		1024		339
	348	106-4837	470	110-5063	1023	112-5344	78
	947	106-7771	515		1024	112-6174	275
	951		518	110-5064	1023		281
	989	106-8916	116		1024		287
	990		119	110-5065	1023	112-9073	515
	991		122		1024		518
102-8806	266		125	110-5066	1023	112-9861	840
	270		128		1024	113-0583	277
	275	106-9013	537	110-5067	1024		283
	276		539	110-5068	1023		288
	281	107-2344	515		1024		308
	282	107-2348	99	110-5071	1023		316
	287		102		1024	113-1504	57
	288	107-3746	1079	110-5072	1023	113-5183	277
	308	107-3747	▶1079		1024		283
	316	107-4630	917	110-5073	1023		289
	845		▶960		1024		308
	848	107-4641	917	110-5074	1023		316
	851		▶1034		1024	113-5184	277
	855	107-4642	▶983	110-6109	275		283

▶ **PRIMARY REFERENCE**

PART NUMBER INDEX

Part	Page	Part	Page	Part	Page	Part	Page
	289		557	119-3662	245		555
	309	115-5411	625		348		557
	316		638	119-5708	727		560
113-7752	1000	115-6948	86		736	124-4401	928
	1001	116-0118	364	119-6723	87		930
113-8129	74	116-2434	454		88		932
	76	116-2659	96		90		934
113-8490	236	116-4491	113	119-8310	1028		936
113-8491	236	116-4527	873	120-0596	973		938
113-9232	1011		874		975	124-5638	275
	1012	116-7856	962	120-4394	804		281
	1013	116-8540	469	120-7732	1023		293
	1014	116-9713	▶1044	120-7733	1023		300
114-1071	380	117-1385	131	120-7734	1023		307
	382		132	121-1340	168		973
	384		154	121-3307	78	124-6569	580
114-3140	913	117-1559	490	121-3812	724		581
	969	117-2311	275		733	124-6570	580
114-3944	962		281	121-4824	700		581
114-3953	972		293	121-9231	476	124-9015	973
114-3954	972		300	121-9874	813		975
114-3956	988		307	122-0630	549	124-9633	345
114-4231	419		973		550		348
114-5333	923	117-4492	909	122-4233	490	125-0965	427
114-6604	219	117-5268	657	122-5855	746		430
	222	117-7838	▶457		752	125-0966	427
114-8843	270		464	123-0707	963		430
	272	117-8929	928	123-2899	82		444
	276		930		119	125-2871	407
	282		932		122	125-3295	1001
	288		934	123-4980	599	125-7037	553
	333		936		601		555
	335		938	123-6621	983		557
	348	117-9409	229	123-6622	983		560
	354	118-0626	1088	124-0174	388	125-7045	973
	359	118-0808	921		391		975
	367		▶1028		394	125-7046	973
	404	118-0809	921		398		975
114-8844	270		▶950		746	125-7484	746
	276	118-4019	681		752	125-7874	323
	282	118-6878	373	124-0312	948		333
	288		378		949		339
	325	118-7236	1012	124-0506	15		348
	329		1014	124-0689	419		354
114-8845	348	118-7250	5	124-2456	509		404
	404		9		1093		952
114-9325	565		▶1010	124-3019	68	125-7875	270
	604	118-7255	1009		113		323
114-9491	615	118-7259	911		339		325
115-1552	954		968		746		329
115-1558	217	118-7313	551	124-3536	25		339
	▶218	118-7362	275		48		348
115-1559	218		281		49		404
115-1748	275		287	124-3815	36	125-7876	348
	281		293		38	125-9738	515
	287		300		44		518
	293		307		46	126-1052	959
	300		315		57	126-1766	339
	307	118-9587	502		128		359
	315	118-9901	589		133	126-1767	247
115-2247	1000	119-0013	472		138		272
	1001	119-0281	502		143		333
115-4550	480	119-0781	918		148		348
115-4968	553	119-0959	878	124-4227	555		359
	555	119-2073	1010	124-4228	553		367

▶ **PRIMARY REFERENCE**

PART NUMBER INDEX

Part	Page	Part	Page	Part	Page	Part	Page
	404	130-3280	96		283	136-3190	915
126-1768	329	130-3515	210		289	136-3620	1080
	333		211		294	136-3845	206
	335		212		301	136-3846	208
	348		213		309	136-3848	206
	367	130-5202	455		317		208
	404		▶477		325	136-4992	746
	952	130-5300	225		329	136-6982	963
126-1774	323		227		335	136-7966	567
126-3489	954		229		337	136-9030	793
126-6872	724		234		339	136-9292	848
	733		240		345		851
126-7574	183		242		348		855
	184		258		367		859
126-8472	553		277		402		862
	555		294		404		865
	557		325	132-6964	546		869
	560		329	132-7370	68	136-9297	845
126-9535	1		335	132-7551	434		855
	▶506		339		439	136-9298	845
127-1678	1046		345		594		855
127-2170	930		348	132-8502	587	136-9301	875
	934		353		589		876
	938		354		591	137-2170	1038
127-3577	1080		358	133-1011	36		1039
127-4404	890		359		38	137-3626	928
127-4405	744		360	133-3260	445		930
127-7443	256		402		447		932
127-8281	18		404	133-9469	99		934
	20		803		102		936
	22	130-5301	360	134-0795	470		938
127-8613	962	130-6789	308	134-0797	471	137-4234	1050
127-9323	981		315	134-1374	946		1052
128-0281	843	130-9888	57	134-2540	277		1054
128-0899	975	131-0427	▶252		283		1062
128-2478	693		449		289		1070
128-2678	1023	131-2639	794		294	138-1511	416
	1024		799		301		417
128-6847	649	131-2752	506		309	138-1645	371
	653	131-2753	506		317	138-1974	890
128-8678	95	131-3093	1033		323	138-3334	649
	460	131-4798	540		339		653
	724		542	134-3196	255	138-3335	649
	733	131-5879	594	134-4126	183		653
	746		601		184	138-3642	416
	752	131-6593	492	134-5330	587		417
129-0336	231		521		589	138-4411	649
	232	131-8201	725		591		653
129-1854	975		734	134-9454	506	138-5853	649
129-1855	975	131-8202	725	134-9458	506		653
129-2380	473		734	134-9569	275	139-3312	642
129-3178	508	132-0338	909		281		▶644
	998	132-1829	▶159		287	139-3313	644
129-3270	942		160		293		646
	944		353		300	139-3314	644
129-6791	362	132-1924	508		307		646
129-6792	362	132-1927	549		315	139-4189	794
129-7184	998		550	135-0611	989		795
129-7253	▶1015	132-1928	549		991		799
	1018		550	135-2543	339	139-7421	581
129-7853	806	132-1929	508	136-1543	996	139-7422	581
129-7921	806	132-4763	1083	136-1544	909	139-7423	580
129-7927	806	132-5789	180	136-1953	913	139-8439	1080
129-7978	694		268		969	140-2394	1088
129-7979	806		277	136-3188	915	140-3668	▶216

▶ **PRIMARY REFERENCE**

PART NUMBER INDEX

Part	Page	Part	Page	Part	Page	Part	Page
	232		377		801	148-1928	372
140-5945	928	142-5789	219	146-6316	873		377
	930		222		874	148-2557	823
	932	142-7061	659	146-6317	794		825
	934	143-1288	916		797		827
	936		1019		798	148-3551	744
	938	144-0195	1042		799		▶890
140-9926	670	144-0832	690		800	148-3587	1093
	855		692		801	148-3626	960
141-0008	521	144-1569	1038	146-6319	873	148-5689	275
141-1095	855		1039		874		281
141-1556	848	144-5611	40		875		287
	851	144-7090	725		876		293
	855		734	146-6747	238		300
	859	144-7091	725		1093		307
	862		734	146-8477	848		315
	865	145-0326	1029		851	148-7786	746
	869		1031		855		752
141-2032	848	145-1135	963		859	148-7841	417
	851	145-1140	963		862	148-7922	848
	855	145-2322	▶794		865		851
	859		848		869		855
	862	145-2334	848	146-8478	845		859
	865		851		855		862
	869		855	146-8479	794		865
141-2820	553		859		795		869
	555		862		796	148-8240	582
	557		865		797	148-8309	779
	560		869		798	148-8313	625
141-4852	845	145-2901	40		799		638
	855	145-5307	978		800		725
141-7481	794	145-5607	963	146-8981	848		734
	795	145-6669	96		851	148-8315	434
	796	145-6929	▶214		855		439
	797		225		859	148-8316	1075
	798		227		862	148-8317	445
	799		229		865		447
	800	145-7028	▶253		869		758
	845		484	147-1380	261		760
	855	145-7977	669	147-1445	323	148-8319	113
141-8546	669		670	147-1446	323	148-8322	434
141-8580	954		671	147-2038	▶795		439
141-8589	99	145-8428	845		848		747
	102		848		851		752
141-9236	845		851		859	148-8323	434
	848		855		862		439
	851		859		865	148-8325	1090
	855		862		869	148-8326	747
	859		865	147-3114	▶796		753
	862		869		865	148-8327	758
	865	145-8983	746		869		760
	869		752	147-3150	763		776
142-0038	434	146-1892	1001		766	148-8328	777
	439	146-3337	794		769	148-8335	434
142-1657	746		799	147-3322	▶801		439
	752	146-3728	892		845		449
142-2928	277	146-4055	270		855		779
	283	146-4073	270	147-5553	99	148-8336	434
	289	146-6315	794		102		439
	294		795	147-7142	763		625
	301		796		767		629
	309		797		770		633
	317		798	147-7633	1048		703
142-4247	423		799		1069		706
142-4431	372		800		1077	148-8338	815

▶ **PRIMARY REFERENCE**

PART NUMBER INDEX

Part	Page	Part	Page	Part	Page	Part	Page
	816		769		766		1057
	817	148-8377	703		769		1058
	818		706		777	149-7489	1056
	819		744	148-8429	726		1057
148-8340	388	148-8378	388		735		1058
	391		391	148-8433	625	149-7490	1056
	394		394		629		1057
	398		398		633		1058
148-8346	777		625		726	149-7491	1056
148-8347	649		629		735		1057
	653		633		747		1058
	725		703		753	149-7492	1056
	734		706		769		1057
	747		726	148-8435	625		1058
	753		735		629	149-7507	1047
148-8351	1090		747		633	149-7508	1047
148-8352	449		753		703	149-7509	1047
148-8353	725		841		706	149-7510	1047
	734		843		841	149-7513	1047
148-8354	777	148-8388	435		843	149-7514	1047
148-8355	435		440	148-8439	726	149-7683	1047
	440		776		735	149-7684	1047
	725	148-8389	742	148-8442	455	149-7686	1047
	734	148-8392	435	148-8443	388	149-7702	917
148-8357	725		440		391		▶1042
	734		726		394	149-7738	747
	747		735		398		753
	753	148-8393	435		724	149-8142	155
148-8360	744		440		733	149-8177	504
148-8364	633	148-8395	377		763	149-9129	270
148-8365	747		789		766	150-0359	1056
	753	148-8405	372	148-8444	625	150-0365	1057
	777		377		629	150-1743	1
148-8366	392	148-8407	372		633		▶504
	399		377		703	150-3033	710
	747		476		763		712
	753		671		766	150-3036	703
148-8367	388		791		769		706
	391		848	148-8449	747	150-3059	449
	394		851		753	150-3378	793
	398		855	148-9359	791	150-4033	747
	703		859		823		753
	706		862		825	150-4044	843
	725		865		827	150-4049	747
	734		869	149-0777	662		753
	841	148-8411	427		663	150-5430	702
	843		430	149-2612	234		781
148-8368	725		441	149-4456	419	150-5782	806
	734		649	149-5160	954	150-5797	694
	742		653	149-5470	845	150-6582	983
	1090		726		855	150-8015	1038
148-8370	435		735	149-5733	1083		1039
	440		791	149-7393	1	150-8381	68
	625		811		▶640	151-2184	702
	629		813	149-7443	▶1056	151-2402	3
	633	148-8413	763	149-7444	▶1057		4
	763		766	149-7445	▶1058		▶702
	766		769	149-7446	▶1047	151-2583	702
	769	148-8417	747	149-7469	1047		781
	777		753		1056	151-2898	40
148-8374	726	148-8424	724	149-7471	1058	151-2900	40
	735		733	149-7485	1056		166
	841	148-8428	726		1057	151-5145	445
148-8375	763		735		1058		447
	766		763	149-7486	1056	151-5711	455

▶ **PRIMARY REFERENCE**

PART NUMBER INDEX

Part	Page
151-5715	960
151-6730	746
	752
151-9274	276
	282
	288
	294
	301
	308
	316
152-2763	1035
152-2764	▶1035
	1036
152-3503	640
	▶642
	▶643
152-5542	339
152-8338	891
152-8340	787
	789
	▶891
153-1277	96
153-5043	253
153-6236	747
	753
153-6237	726
	735
	758
	760
153-6256	435
	440
153-6273	1001
153-8462	419
153-8463	419
153-8623	694
153-8924	873
	874
153-8925	873
	874
	875
	876
153-8926	873
	874
	875
	876
153-8929	873
	874
153-8941	794
	795
153-8945	797
	798
	800
	801
153-8946	794
	799
153-8947	845
	855
153-8952	845
	855
154-1580	613
154-5650	419
154-6626	155
154-6956	▶1067
154-6957	▶1068
154-9024	68
155-0576	133
	138
	143
	148
	803
155-2027	449
155-2105	275
	281
	287
	293
	300
	307
	315
155-2255	325
	329
155-2257	323
155-2258	323
	329
155-2260	182
	248
	323
	325
	329
	335
	339
	348
	354
	404
	930
	932
	934
	938
155-2265	270
	947
155-2270	264
	270
	272
	275
	281
	287
	307
	315
	325
	329
	333
	339
	348
	354
	359
	367
	404
155-2271	275
	281
	287
	307
	315
	348
	947
155-2274	276
	281
	287
	307
	315
	323
	325
	329
	335
	339
	348
	354
	359
	367
	404
	952
155-2276	248
155-3624	427
	430
	791
155-5058	1059
	1061
155-5059	1059
	1061
155-5779	1042
155-5781	1042
155-5783	▶989
	1042
155-5784	▶990
	▶991
	1042
155-7281	1059
155-7282	1059
155-7283	1059
155-7313	1059
	1061
155-7315	1059
	1061
155-7317	1059
	1061
155-7318	1059
	1061
155-7321	155
	763
	766
	769
155-7325	1059
155-7326	1059
155-7327	710
	712
155-7328	435
	440
155-8999	273
155-9112	809
155-9115	809
155-9116	809
155-9117	809
155-9125	804
155-9127	804
155-9136	809
156-3815	1046
156-5545	909
156-6129	419
156-6175	277
	283
	289
	294
	301
	309
	317
157-0670	68
157-0687	486
	488
157-2152	873
157-2153	874
157-6155	671
158-0372	1061
158-0374	1061
158-0377	1061
158-0379	1061
158-0380	1061
158-2336	667
	668
158-3137	▶1059
	1067
158-3138	▶1061
	1068
158-7479	▶1063
158-7480	▶1064
158-7481	▶1065
158-9956	785
	791
	▶820
159-0861	1063
	1064
	1065
159-0862	1063
	1064
	1065
159-0863	1063
	1064
	1065
159-0864	1063
	1064
	1065
159-0865	1063
	1064
	1065
159-0866	1063
	1064
	1065
159-1666	693
159-1683	693
159-3046	410
	412
	414
159-3781	794
	795
	797
	798
	799
	800
	801
159-5255	32
159-8035	1046
159-8036	1045
	1046
	1073
159-8049	168
	171
	174
	238
	360
159-8050	168
	171
	174
	238
	360
159-9322	323
159-9540	323
160-0162	143
	148
160-0526	15
160-3518	1004
160-4989	981

▶ **PRIMARY REFERENCE**

PART NUMBER INDEX

Part	Page
160-6299	▶797
	862
	869
160-6300	▶798
	851
	859
	865
160-8708	626
	629
	633
	647
	726
	735
160-9925	959
161-4160	1077
161-4194	693
161-6149	479
	821
	888
161-6154	785
	820
161-6161	888
161-7620	960
161-9030	603
161-9640	954
161-9641	954
161-9642	954
161-9645	918
161-9647	954
162-0177	791
162-1565	18
	20
	22
162-2896	724
	733
162-6802	445
	447
162-7120	499
	500
	501
162-8352	435
	440
163-1135	1029
163-1149	916
163-3343	702
	781
163-3926	1000
163-5512	845
	848
	851
	855
	859
	862
	865
	869
163-6412	617
163-8682	454
164-1234	1029
	1031
164-2108	478
	482
164-3651	484
164-4180	372
	377
	427
	430
164-4225	113
164-4531	909
164-4883	997
164-5509	219
164-5567	244
	388
	391
	394
	398
	626
	638
	649
	653
	726
	735
	747
	753
	766
	769
	779
164-5574	726
	735
164-5597	419
164-5608	777
164-5611	724
	733
164-5619	113
	883
	885
164-5624	777
164-5798	233
164-5847	1073
	1075
164-6858	726
	735
164-6862	726
	735
164-6871	244
164-7556	203
164-9869	769
165-2273	32
	407
165-4929	427
	430
165-4931	626
	638
165-4933	747
	753
165-6365	388
	391
	394
	398
166-2232	362
166-6358	166
166-6760	467
166-6761	466
	▶468
166-6762	423
166-9286	960
166-9287	950
167-2190	644
167-2235	681
	682
	684
	685
	686
167-2299	681
	682
	684
	685
	686
167-2300	644
167-7760	455
167-7764	455
167-7775	455
167-7776	455
168-0402	362
168-1877	845
168-1878	855
168-1879	▶669
	848
	851
168-1880	▶670
	859
	862
168-1968	724
	733
168-2166	490
168-2457	954
168-3332	625
	638
	647
168-3504	804
168-7861	804
168-8772	972
168-8774	362
169-0417	240
	▶245
169-0418	245
169-1616	831
169-1617	831
169-2554	491
	515
	518
169-3995	954
169-5863	724
	733
	746
	752
	767
	770
169-7380	1029
	1031
169-7395	419
170-0493	667
	668
170-1061	419
170-1112	909
170-1114	909
170-1115	909
170-1807	372
	377
170-3014	494
	498
170-4735	726
	763
	1090
170-5632	1084
170-8590	1007
171-1230	1019
171-2205	234
171-2210	234
171-4046	960
171-5349	249
	250
	251
	402
171-6682	1019
171-6723	435
	440
	747
	753
171-8689	465
172-1482	245
172-2416	1019
172-3511	323
	930
	932
	934
	938
172-4871	345
	348
172-7966	480
172-7968	480
172-8037	1004
172-8039	1004
172-9200	276
	282
	288
172-9287	394
	398
	726
	735
173-1028	▶909
	1019
173-1498	166
	167
173-2052	996
173-3427	806
173-3428	806
173-3993	789
	791
	823
	825
	827
173-5787	1022
173-7035	1022
173-7439	384
173-9779	644
	646
173-9964	851
	859
	862
	865
	869
174-0503	323
174-0828	747
174-1366	796
	797
	798
	800
174-3085	525
174-3091	927
174-4916	451

▶ **PRIMARY REFERENCE**

PART NUMBER INDEX

Part	Page
	452
	▶482
174-5386	408
174-5415	96
	97
174-7449	480
174-7875	971
174-9570	▶108
	153
175-0447	748
	753
175-6749	967
175-7896	644
	646
175-7903	681
175-7904	681
175-9443	▶799
	855
	859
	865
176-0118	465
176-3141	31
176-3900	▶907
	908
176-4703	748
	753
176-5459	▶182
	700
176-5868	155
177-0071	▶254
	367
177-0581	86
177-1061	434
	439
177-1862	1007
177-1863	1019
177-3463	567
	575
177-3464	575
177-3465	575
177-3466	575
177-3468	575
177-3475	567
	575
177-3484	567
177-3490	567
177-3516	607
177-3517	606
	607
177-3518	606
	607
177-3519	607
177-3520	607
177-4937	1011
	1013
177-6845	1077
178-0603	▶1019
	1021
178-0711	521
178-2593	954
	957
178-2594	508
178-2722	604
178-2723	567
178-2737	606
	607
178-2740	606
	607
178-2746	606
178-3620	70
	72
178-7877	799
	801
178-7907	996
179-1660	606
179-1661	606
179-3552	1080
179-4324	490
179-9392	275
	281
	287
	293
	300
	307
	315
180-2535	1037
	▶1038
180-2835	1080
180-3516	1046
180-3528	913
180-3730	157
180-3871	954
	957
	1037
	▶1039
180-7486	962
180-7487	962
180-8585	703
	706
	▶830
180-9068	830
180-9069	830
180-9339	246
	251
	922
180-9340	248
183-1343	260
183-3401	388
	391
	626
	629
	633
183-5106	▶922
	923
183-6121	79
183-6967	657
183-6970	657
183-6971	657
183-7262	372
	377
183-7263	637
	671
	789
	791
	823
	825
	827
	833
	834
	835
	836
	837
	838
	839
183-7528	913
	969
183-7595	785
	▶892
183-8019	724
	733
183-8597	▶249
	402
184-0704	583
	▶585
184-2298	1019
184-2299	1019
184-2420	388
	391
	394
	398
184-9843	644
185-0169	694
185-0201	694
185-0884	25
	27
185-1948	1077
185-2638	162
	164
185-2639	162
	164
185-2642	162
185-2643	164
185-2644	162
	164
185-2647	162
	164
185-2648	162
	164
185-2650	162
	164
185-2654	162
	164
185-2655	162
	164
185-2658	162
	164
185-3159	15
185-5629	998
185-5634	275
	281
	287
	293
	300
	307
	315
185-6250	724
	763
	1090
185-6335	275
	281
	287
	293
	300
	307
	315
186-3735	155
	158
	159
	200
	208
	210
	211
	212
	213
	214
	234
	249
	250
	254
	261
	266
	273
	281
	293
	300
	307
	315
	329
	360
	402
	421
	662
	663
	689
	690
	691
	830
	848
	855
	859
	862
	865
	891
	923
	927
	932
	934
	947
	951
	986
	989
	990
	991
	1001
	1004
186-3736	264
	947
186-4415	617
	619
186-5107	1029
	1031
186-6190	▶908
	979
187-0541	479
	888
187-0555	44
187-0661	1093
187-5122	1038
	1039
187-5123	1038

▶ **PRIMARY REFERENCE**

PART NUMBER INDEX

Part	Page
	1039
187-5124	1038
	1039
187-5125	1038
	1039
	1041
187-5126	1038
	1039
187-8191	892
188-2467	416
	417
188-8844	155
189-0189	891
189-1707	913
189-3158	276
	282
	288
	307
	315
189-5594	78
190-1125	587
	589
	591
190-4563	998
190-7673	694
190-7674	694
190-8985	471
191-1782	113
191-2933	1022
	▶1029
191-5707	694
191-7581	804
191-7582	804
191-7583	804
191-8920	845
	848
	851
	855
	859
	862
	865
	869
191-8921	915
191-9247	895
	896
192-0087	569
	572
192-0573	806
192-1563	▶40
	460
192-5881	1075
192-5987	606
192-6036	606
192-7054	1005
192-7752	1029
	1031
192-7755	1029
	1031
192-7760	1029
	1031
192-7767	1029
	1031
192-7783	1029
	1031
192-7787	1029
192-7790	1029
	1031
192-7795	1029
	1031
192-7799	1029
	1031
192-7805	1029
	1031
192-7810	1029
	1031
192-7812	1029
	1031
192-7820	1029
	1031
192-7822	1029
	1031
192-7848	1029
193-0953	900
193-1036	878
193-1664	877
193-1665	791
	▶877
193-1736	806
193-2200	372
	377
	423
194-1497	455
194-1723	787
	▶821
194-2903	647
194-4046	360
194-5278	78
194-9453	804
	▶809
194-9461	804
194-9471	804
194-9472	804
194-9473	804
194-9474	804
194-9478	809
194-9479	809
194-9480	809
194-9481	809
194-9632	793
195-2274	1085
196-1046	585
	586
196-1047	585
	586
196-1048	585
	586
196-1049	585
	586
196-1050	585
	586
196-1051	585
	586
196-1052	585
196-1053	585
	586
196-1054	585
	586
196-1055	585
	586
196-1056	585
	586
196-1060	585
	586
196-1061	585
	586
196-1062	585
	586
196-1063	585
	586
196-1064	585
	586
196-1065	585
	586
196-1066	585
	586
196-1067	585
	586
196-1068	585
	586
196-1069	585
	586
196-1070	585
	586
196-1071	585
	586
196-1072	585
	586
196-1073	585
	586
196-1074	585
	586
196-1075	585
	586
196-1076	585
196-1077	585
	586
196-1078	585
	586
196-1079	585
	586
196-1185	▶250
	402
	404
196-2412	277
	283
	289
	309
	317
	952
196-8488	468
197-7701	891
197-7995	467
197-9641	460
198-2914	895
	896
198-3393	918
198-4777	529
198-4778	508
198-5351	804
198-5389	200
	202
198-6570	275
	281
	287
198-6571	275
	293
	300
	307
	315
198-8645	18
	20
	22
199-0518	694
	806
199-3460	917
	921
	▶946
199-3461	917
	▶972
199-5725	1023
	▶1031
199-7854	440
199-7891	162
	164
199-8436	162
	164
199-9252	133
	138
	143
	148
199-9267	61
	133
	138
	143
	148
199-9751	29
	2
200-1173	986
200-1316	611
200-1734	1077
200-2050	484
200-2217	1001
200-2218	1001
200-2219	1001
200-2220	1001
200-3255	694
200-4305	657
200-5728	1004
200-6282	785
	831
200-6345	70
	72
201-0624	68
201-0684	1050
	1052
	1054
	1062
201-1029	18
	20
	22
201-1742	477
201-2733	275

▶ **PRIMARY REFERENCE**

PART NUMBER INDEX

Part	Page	Part	Page	Part	Page	Part	Page
	281	205-8257	200	213-5170	1031		148
	287		202	213-7315	998	217-2928	1048
	293	205-9237	615	213-7928	613	217-4155	662
	300		▶1000	213-8433	680		663
	307	206-2722	565		1073	217-7933	1007
	315	206-2728	703		1075	217-7937	660
201-3321	402	206-2729	769	214-5372	275		942
	404	206-2737	436		281	217-8166	276
201-3322	▶480		441		287		282
	484	206-4441	157		293		288
201-6761	▶507	206-5162	200		300		293
201-6775	507		201		307		300
201-6776	507	206-5823	989		315		308
201-6777	507		991	214-7457	86		316
	508	206-6305	1085	214-7566	422	217-8339	153
201-6778	507	206-7316	1001	214-7568	88	217-9039	133
	508	206-8809	477		90		138
201-8481	410	207-0697	804		391		143
	412		▶878		398		148
	414	207-2985	694		422		343
202-0671	840	207-6031	471		478	217-9049	1019
202-0673	840	207-8218	883		626	218-0268	613
202-0674	840		885		629	218-0404	200
202-6614	203	208-2479	256		638		202
203-6473	490	208-6055	86		653	218-0861	1019
203-7613	433	208-7448	87		727	218-2373	478
203-7643	1045		88		735		482
	1046	209-0381	275		736	218-4935	339
203-7644	1045		281		747		354
	1046		287		753		360
203-7703	1022		293		766	218-5003	963
203-7730	1045		300		769	218-5004	963
	1046		307		779	218-5005	963
204-1370	155		315	214-7636	▶915	218-9894	890
204-2281	70	209-4035	530		1042	219-0311	700
	72	209-4579	86	215-1246	604	219-2907	724
	767	209-5018	959	215-1276	▶1048		733
	770	209-5528	78	215-1277	▶1066	219-6314	200
204-6195	339	209-5582	234	215-1278	▶1049		201
204-7186	615		▶263	215-9509	116	220-0229	268
204-8000	339	209-7530	337		119	220-0814	724
	1090	209-9219	25		122	220-2612	508
204-8758	664		26		125	220-4335	637
	665	210-2262	1007		128	220-4336	637
204-9602	▶433	210-2263	1007	215-9962	694	220-8365	525
	475	210-2266	1007	216-2211	88	220-8678	108
204-9603	433	210-2270	▶1007		97	221-3416	244
204-9605	382		1019		98		▶248
204-9921	913	210-8842	973	216-4320	1048	221-3494	727
	969	210-8958	339		1049	221-4579	998
205-0353	325	211-5358	1029		1066	221-6803	994
	329		1031	216-4983	68	221-8040	417
	742	211-9294	1029	216-5023	1066	221-9409	993
205-0826	200		1031	216-5032	1049	222-0345	1018
	202	212-3657	113	216-7790	168	222-0574	998
205-3582	1001		▶153		238	222-3785	665
205-4125	998	212-4962	845	216-8634	36	222-4981	1077
205-5409	471		855		38	222-5765	665
205-6029	490		▶873	216-9633	61	224-0672	776
205-6388	1011	212-4963	845	216-9752	116		777
	1013		855		128		1093
	1016		▶874		133	224-0807	87
	1018	212-6934	68	217-0099	133		88
205-7299	238	212-7779	1031		138	224-1185	672
	345	213-5007	613		143	224-1709	597

▶ **PRIMARY REFERENCE**

PART NUMBER INDEX

Part	Page	Part	Page	Part	Page	Part	Page
224-2263	84	227-7392	915		148	235-5235	466
224-5132	609	228-0172	132	231-0858	233		▶467
	610		154	231-2236	380	235-5762	218
	666	228-6051	210		382	235-6156	787
224-5152	609		211	231-3539	644		789
	610	228-6052	210	231-3571	459		883
	666		211		▶466	235-6157	787
224-7135	791		212	231-3574	466		789
224-7830	1089		213		▶469		883
224-9021	1089	228-6054	210	231-3576	467		885
224-9022	1093		211	231-4262	926	235-7132	▶162
225-0311	625		212	231-4707	804		166
	638		213	232-1115	116	235-7133	▶164
	647	228-6056	210		119		167
225-0312	1093		211		122	235-9822	78
225-0313	238		212		125	236-2295	911
	1089		213		128	236-2541	380
225-3854	404	228-6089	277	232-1322	25		382
225-4118	689		283		27		384
	691		289		29	236-4545	256
225-4130	1089		294	232-1374	113		258
225-4256	1089		301	232-1376	113	236-4610	276
225-4257	1093		309	232-3149	133		282
225-4607	694		317		138		288
225-5439	25	228-7089	154		143	236-4611	276
	48		736		148		282
225-5927	200	228-7092	748	232-3657	36		288
	201		754		38	236-4612	265
225-6524	57	228-7100	131	232-3666	36		356
225-7738	74		132		38		358
	76		154	232-3751	64	236-4630	986
225-7944	64	228-7102	148	232-3861	61	236-5197	1007
225-8019	74	228-7106	804	232-7596	25	236-6919	806
	76	228-9655	162		27	236-7019	1011
225-8287	36		164	232-7597	25		1013
	38	228-9656	162		27		▶1016
225-8524	133		164	232-7599	25	236-8013	258
	138	228-9657	162		27	236-8722	276
	143		164	233-4466	965		282
	148	229-1494	1021	233-6729	1		288
225-8839	24	229-5039	472		▶621	236-9939	525
	25	229-7534	525		▶623	237-0946	▶680
225-8858	25	229-9974	204	234-1530	563		1077
	27		205		564	237-0947	680
225-9611	791	230-1239	617	234-1531	563		1073
226-0291	78	230-1240	▶617		593		1075
226-0294	973		▶619	234-3030	92	237-3943	1029
	975		917	234-3063	116		1031
226-0321	78		921		119	237-3970	▶910
226-0341	973	230-1246	973		122		1029
	975		975		125		1031
226-1240	1093	230-1340	337		128	237-6256	1093
226-1242	1089	230-3661	380	234-3539	1090	237-6257	1089
226-1274	1093	230-3662	433	234-3545	563	237-7535	9
226-1275	1089	230-3663	380		564		▶698
226-3799	785		382	234-4325	▶203	237-7538	9
226-4192	802	230-3671	83		218		▶459
226-4909	233		87	234-5103	1036	237-7539	9
226-9622	482	230-4014	1001	234-5106	564		▶183
227-4398	891	230-7058	710	234-5107	563	237-7540	▶1
227-5350	644		712	234-7730	203		9
227-5716	525	230-8123	1072	234-7731	203	237-7541	1
227-6744	421	230-8989	133	235-0607	973		▶521
	422		138		975	237-7542	1
	691		143	235-4546	988		▶515

▶ **PRIMARY REFERENCE**

PART NUMBER INDEX

Part	Page
	▶518
237-7543	1
	▶563
237-7544	1
	▶499
	▶500
237-7545	▶9
237-7546	183
	▶195
237-7548	▶676
	▶677
	698
237-7549	▶675
	698
237-9575	633
237-9736	231
	232
237-9878	657
238-0120	131
	132
	144
	149
	154
238-0364	166
	167
238-5082	748
	754
238-8288	93
238-8292	99
	102
238-9843	787
	789
	883
	885
238-9844	787
	789
	883
	885
239-0618	785
239-1134	256
	258
	▶267
239-3357	698
	▶724
	▶733
239-3358	698
	▶779
239-3359	698
	▶758
	▶760
239-3360	698
	▶763
	▶766
	▶769
239-3361	183
	▶700
239-3362	698
	▶802
239-3364	698
	▶810
239-3365	1
	▶625
	▶629
	▶633
239-3367	1
239-3369	1
	▶569
	▶572
239-3370	1
	▶649
	▶653
239-3371	1
	▶1093
239-3372	9
	▶11
239-3373	967
239-3375	7
	▶967
239-3377	967
239-3379	967
239-4202	613
239-4203	486
	488
239-4850	199
	▶244
239-5024	948
239-5025	277
	283
	293
	300
	▶948
239-5195	785
239-5231	410
	412
	414
239-6336	728
	737
239-6986	1093
240-1863	823
	825
	827
240-1865	823
	825
	827
240-1866	823
	825
	827
240-1867	823
	825
	827
240-2020	410
	412
	414
240-2021	427
	430
240-3657	410
	412
	414
240-3658	410
	412
	414
240-3659	410
	412
	414
240-3665	417
240-3668	417
240-3669	417
240-3670	458
240-3671	417
240-3672	417
240-5972	▶609
240-6016	823
	825
	827
240-6017	823
	825
	827
240-7356	889
240-7956	1089
240-7957	1093
240-8259	377
240-8642	595
	▶596
240-8643	595
	▶597
240-8660	838
240-8661	833
	836
	837
240-8662	834
	835
	839
241-0037	609
	610
	666
	667
	668
241-3974	445
	447
241-4194	256
	258
241-4291	133
	138
	143
	148
241-4939	1004
241-5895	452
	791
241-6205	480
241-6215	445
	447
	649
	653
	726
	735
241-6347	430
241-8368	234
	▶264
242-0588	210
	211
	212
	213
242-1382	9
	▶10
242-2461	948
242-5206	954
242-6251	430
242-6252	430
242-6801	806
242-6803	806
242-6804	806
243-1353	752
243-2143	166
	167
243-2289	78
243-3416	78
244-1031	▶689
	746
244-1040	557
244-1043	553
	555
	▶580
244-3114	▶478
	484
244-7139	388
	391
	▶451
244-7140	394
	398
	▶452
244-8686	787
	789
	883
	885
245-2975	388
	391
	394
	398
	▶664
245-3358	458
245-3359	458
245-5943	724
	733
	▶832
245-6175	1084
245-6566	▶665
245-8355	785
246-0435	525
246-0511	78
246-0667	1012
	1014
	▶1017
246-1058	▶1018
246-2641	963
	1092
246-3295	225
	227
	229
246-6727	563
247-0682	▶1018
247-1115	534
247-4184	928
	930
	932
	934
	936
	938
247-6019	131
	132
	154
248-0420	183
	▶971
248-0833	688
248-1066	131
	132
	154
248-2284	962
248-2841	236
	239

▶ **PRIMARY REFERENCE**

PART NUMBER INDEX

Part	Page
	333
	360
	986
248-2863	917
	▶962
248-4152	▶1004
248-6772	1033
248-7538	606
248-9953	694
248-9954	694
248-9955	694
249-0204	427
	430
249-0981	787
	789
	883
249-1750	▶421
	445
249-5479	276
	282
	288
	293
	300
	308
	316
249-9042	174
249-9066	174
250-0241	575
250-0492	793
250-1424	727
	736
250-4241	▶462
	475
250-4242	462
	▶463
250-4628	997
250-6148	452
	791
	893
250-7514	978
250-7515	978
250-7516	978
250-7523	978
250-9720	975
251-1195	276
	282
	288
	293
	300
	308
	316
251-1675	816
	▶833
251-1676	818
	▶834
	▶835
251-2031	276
	282
	288
	293
	300
	308
	316
251-2138	567
251-2139	567
251-3104	899
251-3227	68
251-3268	885
	▶893
251-3564	585
	586
251-4160	180
251-4162	180
251-4336	36
251-4339	223
	224
251-4686	791
251-5781	473
251-6351	434
	439
251-7294	567
251-8248	180
	952
251-9335	380
	382
	384
252-0040	353
	354
252-0737	883
252-2165	▶464
	470
	471
	472
252-4553	▶917
	995
252-5129	372
	377
252-5132	▶423
	475
252-5133	372
	377
252-5134	▶372
	▶377
	475
252-5135	459
	▶475
252-8211	604
252-9256	785
	▶831
252-9720	▶402
	▶404
	475
253-0861	1088
253-1383	68
253-2111	234
253-2673	689
	690
253-4008	430
253-5210	11
	▶43
253-9510	913
	969
253-9795	606
253-9943	815
	816
	817
	818
	819
254-2501	724
	733
254-5145	802
	▶804
254-6876	791
254-8094	834
	836
	▶883
254-8095	▶823
	833
	834
	835
	839
254-8100	817
	▶836
	▶837
254-8101	815
	▶838
254-8501	585
	586
254-8502	585
	586
254-8503	585
	586
254-9037	675
	▶681
255-0761	463
255-0764	463
255-0766	463
255-0767	463
255-0768	462
255-0769	462
255-0903	815
	816
	817
	818
	819
255-2421	698
	▶811
	▶813
255-2422	811
	813
255-4804	11
	▶83
255-4805	11
	▶87
	▶88
	▶90
255-4806	11
	▶95
255-4807	1
	▶900
255-4808	11
	▶166
255-4809	11
	▶32
255-4810	1
	▶155
255-4811	▶445
	▶447
	459
255-4812	1
	▶68
255-4813	1
	▶86
255-4814	1
	▶407
255-4815	1
	▶78
255-4816	912
	▶924
255-4817	1
	▶746
	▶752
255-4818	▶419
	459
255-4819	1
	▶494
255-4820	8
	9
	94
	▶912
255-4821	1
	▶113
255-4822	1
	▶981
255-4823	1
	▶449
255-4824	1
	▶587
	▶589
255-4827	1
	▶1025
256-0083	806
256-3254	78
256-3255	78
256-3258	78
256-3261	78
256-3262	78
256-3263	78
256-3265	78
256-3267	78
256-3269	78
256-3270	78
256-3276	78
256-3278	78
256-4884	567
256-6453	273
	325
	329
256-7365	▶473
	475
256-7485	806
256-7823	276
	282
	288
	293
	300
	308
	316
256-7900	83
	▶84
256-7901	84
256-7902	84
256-7903	84
256-7904	84
256-7926	83
257-1701	637
257-1702	637
257-5630	928
	930
	932

▶ **PRIMARY REFERENCE**

PART NUMBER INDEX

Part	Page
	934
	936
	938
257-5632	928
	930
257-5633	928
	930
	932
	934
	936
	938
257-5634	928
	930
	932
	934
	936
	938
257-5635	973
	975
257-5636	973
	975
257-5638	928
	932
	936
257-5641	928
	932
	936
257-5643	973
	975
257-5661	917
	921
	▶928
	▶930
257-5662	698
	▶932
	▶934
257-5663	699
	▶936
	▶938
257-5664	▶940
257-5665	▶941
257-5667	917
	▶1008
257-5670	▶918
	1008
257-5672	918
257-5687	942
	944
257-5688	917
	921
	▶942
	▶944
257-5689	261
257-5690	▶261
	917
	921
257-5694	917
	921
	▶998
257-5695	998
257-5698	917
	921
	▶1003
257-5699	▶973
	995
257-5929	▶380
	475
257-5930	▶382
	475
257-6282	563
257-6283	563
257-6969	698
	▶815
257-6971	698
	▶816
257-6979	717
	722
257-8413	515
	518
257-8414	785
	▶888
257-9500	1013
	▶1022
257-9501	▶1021
257-9837	5
257-9838	1011
	▶1023
257-9846	917
	▶1012
257-9847	9
	▶1013
257-9848	921
	▶1014
257-9860	1012
	▶1023
257-9861	1014
	▶1024
258-2829	733
258-4543	9
	▶995
258-5443	407
258-5447	86
258-5448	86
258-6671	587
	589
	591
258-7484	180
258-8315	810
258-8412	659
258-8756	912
	▶923
258-8757	674
	▶776
258-8759	▶454
	459
258-8761	▶992
	995
258-8764	995
	▶1036
258-8765	1
	▶1092
258-8766	1
	▶577
259-0577	78
259-2510	515
	518
259-4397	951
259-4399	951
259-4685	▶667
	776
	777
259-4691	▶668
259-5632	521
259-5638	521
259-7138	688
259-7889	694
260-0638	776
	777
260-1555	197
260-1556	198
260-1566	197
260-1569	198
260-1803	472
260-2024	339
260-3568	503
260-3939	133
	138
	143
	148
260-4698	587
	589
	591
260-4749	6
	▶593
260-4750	6
	▶528
260-5541	343
260-5764	607
260-5864	339
260-7452	78
	924
260-7454	68
260-7469	68
260-7470	78
260-7472	78
260-8590	823
	825
	827
	▶889
260-8636	811
	813
260-8818	698
	▶841
	▶843
260-8823	406
	▶434
	▶439
260-8825	698
	▶717
260-8827	698
	▶773
260-8828	1
	▶1090
260-8829	▶647
	661
260-8830	4
	▶703
	714
260-8831	▶706
	716
	1071
260-8832	674
	▶817
260-8834	1
	▶388
260-8836	387
	▶394
	▶398
260-8837	8
	406
	▶537
	595
260-9155	113
260-9176	649
	653
260-9177	649
	653
260-9187	388
	391
	394
	398
261-0327	674
	▶818
261-0376	12
261-0560	845
	855
261-3222	951
261-3224	951
261-3226	▶951
	952
261-3868	717
	719
261-3869	717
	719
261-4546	551
261-5642	1
	▶551
261-5694	996
261-8653	▶845
	940
261-8654	▶848
	▶851
261-8655	▶855
	941
261-8656	▶859
	▶862
	932
	934
261-8658	▶865
	▶869
	936
	938
262-0337	1
	▶268
262-0377	1
	▶531
262-1408	276
	293
262-1421	▶183
	337
262-1458	434
	439
262-1459	434
	439

▶ **PRIMARY REFERENCE**

PART NUMBER INDEX

Part	Page
262-1460	434
	439
262-1462	434
	439
262-1467	434
	439
262-1472	434
	439
262-1474	434
	439
262-1491	746
	752
262-1492	746
	752
262-1499	746
	752
262-1510	388
	391
	394
	398
262-1512	388
	391
	394
	398
262-1542	724
	733
262-1546	724
	733
262-1548	724
	733
262-1549	724
	733
262-1616	499
262-1617	499
262-2043	▶184
	199
262-2950	387
	▶544
262-4071	811
	813
262-4480	553
	555
	557
	560
262-4597	68
262-4598	68
262-4599	68
262-4748	503
262-4877	940
262-4878	941
262-4879	932
	934
262-4881	936
	938
262-5098	1
	▶529
262-5099	529
262-5565	87
	88
	90
262-5566	87
	88
	90
262-5568	87
262-5578	724
	733
262-5579	724
	733
262-5778	1003
262-6762	746
	752
262-7087	183
	▶599
	▶601
262-7088	599
	601
262-7089	599
	601
262-7095	599
	601
262-7097	599
	601
262-7181	848
	851
	855
	859
	862
	865
	869
	▶875
262-7182	848
	851
	859
	862
	865
	869
	▶876
262-7603	746
	752
262-9920	811
	813
263-1026	802
263-1028	758
	760
263-1202	694
263-1203	694
263-1204	694
263-1372	802
263-1493	323
	928
	930
	932
	934
	936
	938
263-1860	406
	▶460
263-1861	460
263-1862	460
263-2046	▶954
	1008
263-2049	954
263-2055	954
263-2058	▶957
	959
263-2059	957
263-2062	918
263-2063	▶959
	1008
263-2191	810
263-3171	183
	▶225
	▶227
	▶229
263-3352	912
	▶979
263-3353	979
263-3355	979
263-3357	979
263-3358	979
263-3386	681
263-3389	681
263-3391	681
263-3401	681
263-3840	802
263-5018	95
263-5072	183
	▶345
	▶348
263-5073	183
	▶339
263-5074	▶168
	▶171
	183
263-5075	183
	▶325
	▶329
263-5436	▶671
	865
	869
263-5640	325
	329
263-6065	▶525
	553
	555
	557
	560
263-6088	6
	▶530
263-6330	954
263-7148	▶109
	115
263-7474	806
263-7501	694
263-7753	530
263-7756	530
263-7759	530
263-7898	694
263-9006	445
	447
263-9007	445
	447
263-9088	337
	▶1006
263-9574	168
	171
	174
263-9729	998
263-9730	917
	921
	▶993
263-9731	993
263-9732	993
264-0148	▶251
	364
264-0469	529
264-0470	529
264-0471	529
264-0597	449
264-0608	686
264-0614	682
	684
264-0615	682
	684
	685
	686
264-1271	508
	▶564
264-1273	564
264-1276	508
264-1281	508
	▶549
264-1283	549
264-1290	508
264-1294	547
264-1300	505
	▶508
264-1337	▶470
264-1338	▶470
264-1339	▶470
264-1354	▶470
264-1356	▶471
264-1358	▶471
264-1363	▶471
264-1364	▶471
264-1366	▶472
264-1370	▶472
264-1371	▶472
264-1395	472
264-3637	155
	360
264-4517	155
264-4873	1084
264-4874	1084
264-5741	763
	766
264-5742	763
	766
	769
264-5999	827
	▶880
264-6000	823
	▶881
264-6823	449
264-6824	373
	378
264-6827	917
	▶968
264-6828	▶911
	912
264-7762	▶658
	661
264-8214	464
	▶483
264-8233	483
264-8234	449
264-8961	449
264-8962	841
	843
264-9670	1025

▶ **PRIMARY REFERENCE**

PART NUMBER INDEX

Part	Page
264-9671	1025
	1027
264-9672	1025
	1027
264-9673	1025
	1027
265-0857	658
265-1048	225
	540
265-2150	674
	▶777
265-2157	649
	653
265-2158	649
	653
265-2160	724
	733
265-2162	724
265-2163	724
	733
265-3145	225
	540
265-3259	▶275
	▶281
	▶287
	917
265-4127	841
265-4925	78
	▶793
265-5242	763
	766
265-5276	825
265-5277	825
265-5287	380
	382
	384
265-5828	199
	▶362
265-5858	587
	589
	591
265-5859	587
	589
	591
265-5861	587
	589
	591
265-5864	553
	555
	▶581
265-5865	557
265-5866	1090
265-5867	1090
265-5868	1090
265-6986	773
265-6987	774
265-7497	924
265-7608	900
	903
265-7722	673
	▶678
	▶679
	906
265-7723	5
	8
	▶97
265-7724	2
	▶197
265-8148	▶360
	661
265-8171	928
	930
	932
	934
	936
	938
265-8182	236
265-9081	699
	▶719
265-9082	719
265-9083	719
265-9084	719
265-9455	703
	706
265-9496	722
265-9497	722
265-9646	2
	▶255
	▶256
265-9647	255
265-9736	2
	5
	9
	▶161
265-9738	3
	4
	5
	8
	▶1071
265-9739	1071
	1072
265-9740	2
	3
	8
	▶674
265-9741	3
	4
	▶674
265-9742	▶65
265-9745	▶406
265-9746	8
	9
	▶661
265-9748	8
	▶65
265-9750	3
	4
	▶698
265-9751	8
	▶200
	▶201
265-9753	3
	4
	5
	8
	▶387
265-9754	▶906
265-9755	▶673
265-9756	5
	▶674
265-9757	673
	▶1072
265-9758	▶505
265-9760	5
	▶699
265-9762	9
	▶217
266-0059	▶384
	475
266-0144	717
	719
	722
266-0145	717
	719
	722
266-0248	445
	447
266-0258	531
266-0298	155
266-0378	626
	630
	638
266-0750	▶408
	475
266-0799	703
	▶710
266-1484	▶246
	362
266-1495	65
266-1588	674
	▶722
266-1604	717
	719
	722
266-1662	924
266-1664	924
266-1688	387
	406
	▶546
266-1690	505
	▶547
266-1979	597
266-1983	577
266-2293	597
266-2337	242
	▶247
266-2470	402
	404
	▶484
266-3275	65
266-3717	▶293
	▶300
	▶307
	▶315
	921
266-3775	434
	439
266-4514	161
	▶167
266-4523	▶240
	▶242
	387
266-4597	525
266-4603	525
266-5977	819
	▶839
266-5982	719
266-6628	763
	766
	769
	774
266-6629	763
	766
	769
266-6630	763
	766
	769
266-6705	763
	766
	769
266-7174	717
	719
	722
266-7265	673
266-7266	699
	▶819
266-7600	911
	▶913
266-7601	968
	▶969
266-7627	95
266-8583	9
	94
	▶199
266-8584	9
	▶595
266-8620	219
	222
266-8984	973
	975
266-8985	973
	975
266-9438	▶356
	▶357
	674
266-9461	183
	▶352
266-9746	699
	▶774
266-9766	773
	774
266-9861	499
	500
	501
266-9862	4
	▶501
	673
	906
	1071
	1072
266-9953	▶219
	917
266-9958	337
267-0337	255
	▶258
267-0339	2
	▶198
267-2265	234
267-2276	183
	▶238

▶ **PRIMARY REFERENCE**

PART NUMBER INDEX

Part	Page	Part	Page	Part	Page	Part	Page
267-2809	214		439		660		616
267-2938	698	268-6497	323		748	271-0261	615
	699	268-6653	276		754		▶1001
	▶897		282		758	271-2335	444
	1071		288		760	271-2336	427
267-2941	596		293	269-4961	388		430
	597		300		394	271-2337	427
267-2942	596		308		398		430
	597		316		724	271-2338	444
267-2998	352	268-6654	277		733	271-2342	371
267-2999	352		283		748	271-2344	2
267-3057	703		289		754		3
	706	268-6677	133	269-4962	388		4
	763		138		391		8
	766		143		394		369
	769		148		398		▶370
267-3081	503	268-6678	133		647	271-2354	371
267-3135	5		138	269-4964	388	271-3086	78
	7		143		391	271-7808	▶616
	▶503		148		394		917
267-3500	539	268-8769	1033		398		921
267-3501	9	269-1983	1003	269-4965	625	271-7841	637
	▶539	269-1995	508		638	271-7842	637
267-3506	454	269-2731	276		649	271-8517	410
267-4794	▶272		282		660		414
	406		288		763	271-8521	410
267-4795	269		293		766		414
	▶273		300	269-4966	625	271-8522	412
267-4799	▶364		308		629	271-8528	410
	387		316		638		412
267-4800	199	269-2732	276	269-4967	388		414
	▶335		282		391	271-8529	410
267-5222	1001		288		395		412
267-6214	113	269-4871	▶995		399		414
267-7546	4	269-4872	▶963		647	271-8710	370
	▶353		995	269-6825	724		▶410
	▶354	269-4873	▶921		733	271-8711	369
	714		995	269-8325	59		▶412
	716	269-4875	921	269-9530	694	271-8713	370
	1071		▶1009	270-0291	827		▶414
267-8688	673	269-4876	▶222		▶882	271-8720	410
	▶903		921	270-0350	▶822		412
	906	269-4877	1009		825		414
267-8689	673	269-4879	▶975	270-3318	▶70	271-9095	410
	▶898		995		▶72		412
	903	269-4883	963		406		414
267-8690	898	269-4885	963	270-7241	410	272-2448	369
267-9400	5	269-4886	963		412		370
	7	269-4887	963		414		▶613
	▶688	269-4949	388	270-7672	371	272-2449	613
267-9408	928		391	270-7673	486		▶637
	930		394		488	272-4989	430
267-9410	936		398	270-7731	486	272-4990	2
	938		845		488		3
267-9414	940		848	270-7827	464		4
267-9415	941		851	270-7828	464		8
267-9828	113		855		▶465		▶369
268-1061	706		859	270-7829	465	272-4992	▶369
	▶712		862	270-8937	694		387
268-1517	155		865	270-9306	▶371	272-4993	430
268-1572	434		869		486	272-4996	▶370
	439	269-4951	625		488		387
268-1708	323		638	270-9307	371	272-4998	488
268-2935	97	269-4952	647	270-9308	371	272-5609	412
268-4500	434	269-4958	649	271-0260	▶615	272-5672	806

▶ **PRIMARY REFERENCE**

PART NUMBER INDEX

Part	Page
272-5862	1045
272-8384	233
272-9800	215
273-1751	724
	733
273-1807	460
273-2536	657
273-5464	694
273-5785	6
	▶527
273-5800	527
273-8316	694
273-8317	694
273-8318	694
273-9603	917
	921
	▶984
	▶985
	995
273-9604	984
273-9605	985
	986
273-9607	984
	985
	986
273-9730	6
	▶545
273-9731	6
	▶492
	595
273-9760	6
	▶534
273-9940	534
	597
273-9943	534
	597
273-9947	534
	597
273-9949	534
	597
273-9950	534
	597
273-9951	534
	597
273-9952	534
274-1639	110
	111
	112
	134
	139
	144
	149
274-1929	10
	▶52
274-1930	52
274-1931	52
274-1933	52
274-1934	52
274-1935	52
274-3774	325
	329
	348
274-3775	293
	300
	308
	316
274-3777	294
	301
	308
	316
	323
274-3778	294
	301
	308
	316
274-3948	604
274-4283	1089
274-4284	199
274-6580	593
275-0120	900
	903
275-0571	494
275-0572	494
	502
275-2428	196
275-3634	255
	256
275-5588	988
275-6706	913
	969
275-7741	▶266
	275
	281
	287
275-7803	449
275-7875	▶666
	724
	733
275-8880	724
	733
275-9883	44
	46
275-9884	44
	46
275-9888	44
	46
275-9889	44
	46
275-9891	44
	46
276-0036	537
276-0142	44
	46
276-2817	724
276-4188	593
276-4220	593
276-4221	593
276-4222	593
276-4300	913
	969
276-5435	823
	825
	827
276-5600	25
	27
276-5601	25
	27
276-5602	25
	27
276-5603	25
	27
276-5604	25
	27
276-5605	25
	27
276-5648	25
276-6596	258
276-7387	24
276-7388	24
	25
276-7389	24
	25
276-7390	24
	25
276-7391	24
	25
276-7393	24
	25
276-7394	24
	25
276-7475	25
	48
	49
276-7476	48
	49
276-7478	25
	48
276-7479	48
276-7481	48
276-7483	48
276-8116	29
276-8117	29
276-8123	29
276-8132	29
276-8133	29
276-8134	31
276-8173	575
276-8398	▶131
	133
	138
276-9200	53
276-9201	53
276-9206	53
276-9207	53
276-9230	53
276-9729	508
276-9730	508
276-9733	508
276-9734	508
276-9735	508
276-9736	508
276-9737	508
276-9738	508
276-9749	508
277-0116	34
277-0118	34
277-0121	34
277-0122	34
277-0306	952
277-0587	33
277-0588	33
277-0590	10
	▶33
277-1974	57
277-1975	57
277-2500	62
277-2537	64
277-2538	64
277-2545	694
277-2548	694
277-2550	694
277-2912	10
	▶59
277-2923	74
	76
277-2925	74
	76
277-2939	10
	▶74
	▶76
277-2974	82
277-2976	10
	▶82
277-3012	36
	38
277-3013	36
	38
277-3072	575
	603
	607
277-3073	575
	603
	607
277-3318	83
277-3319	83
277-4219	540
277-4220	540
277-4223	50
277-4262	10
	▶60
277-4302	92
	93
277-4408	196
277-4409	196
277-4410	10
	▶196
277-4490	42
277-4541	10
	▶42
277-4694	10
	▶61
277-4990	115
277-4991	115
277-4993	115
277-5030	15
277-5031	15
	18
	20
	22
277-5064	15
	18
	20
	22
277-5065	15
	18
	20
	22
277-5067	15
	18

▶ **PRIMARY REFERENCE**

PART NUMBER INDEX

Part	Page
	20
	22
277-5094	15
	18
277-5096	15
	18
277-5307	53
277-6075	12
277-6078	12
277-6165	116
	119
	122
	125
	128
277-6826	10
	▶105
277-6990	10
	▶25
277-7116	913
	969
	▶1033
277-7766	913
	969
277-7767	913
	969
277-7769	1033
277-7770	1033
277-7772	969
277-7773	969
277-7787	913
277-7788	913
277-7789	1033
277-7790	913
	969
277-7792	913
277-7793	913
	969
277-8271	270
277-8272	270
277-8628	78
277-8985	78
277-9463	102
277-9501	99
277-9598	99
277-9602	99
	102
277-9603	99
	102
277-9605	99
277-9660	724
	733
277-9938	99
	102
277-9939	99
	102
277-9940	99
	102
277-9941	99
	102
278-0015	99
	102
278-0016	99
	102
278-0017	99
	102
278-0310	99
	102
278-0311	99
	102
278-0314	116
	119
	122
	125
	128
278-0315	99
278-0316	99
278-0361	99
278-0372	240
	242
278-0644	490
278-1667	▶236
	276
	282
	288
	294
	301
	308
	316
278-2073	604
278-2078	567
278-2324	681
	682
	684
	685
	686
278-2563	68
278-2564	916
278-2656	78
278-3242	74
278-4138	106
	107
	115
	116
	119
	122
	125
	128
	134
	139
	144
	149
278-4693	15
278-4694	15
278-4695	15
278-4788	78
278-5111	53
278-5112	53
278-5113	53
278-5125	14
278-5126	14
278-5128	92
	93
278-5168	133
	138
	143
	148
278-5170	133
	138
	143
	148
278-5180	133
	138
	143
	148
278-5201	133
	138
	143
	148
278-5202	133
	138
	143
	148
278-5203	133
	138
	143
	148
278-5209	343
278-5210	343
278-5225	133
	138
	143
	148
278-5226	133
	138
	143
	148
278-5272	133
	138
	143
	148
278-5273	133
	138
	143
	148
278-5307	133
	138
	143
	148
278-5457	916
278-5681	625
	629
	633
278-5698	113
278-5850	540
	542
278-5927	15
278-6202	779
278-6203	779
278-6234	587
	589
	591
278-6391	625
	629
	633
278-9079	388
	391
	394
	398
279-0093	▶610
	625
	629
	633
279-0850	1033
279-1176	394
	398
279-2567	486
	488
279-4345	410
	412
279-5719	625
	638
279-6040	527
279-9361	99
	102
279-9651	41
279-9652	41
279-9653	10
	▶41
279-9937	569
	572
280-1291	92
280-1383	44
280-1430	57
280-1636	763
	766
	769
280-1889	133
	138
	143
280-1890	133
	138
	143
280-1891	133
	138
280-1911	▶53
	55
280-1912	53
280-1913	53
280-1914	53
280-2424	99
280-2691	951
280-2709	236
280-2710	236
280-2794	▶358
	▶359
	674
280-3350	388
	391
	394
	398
280-3353	388
	391
	394
	398
280-3355	394
	398
280-4127	758
	760
280-4128	758
	760
280-4129	758
	760
280-4130	758
	760
280-4151	758
	760
280-4152	758
	760
280-4244	160
	353

▶ **PRIMARY REFERENCE**

PART NUMBER INDEX

Part	Page
280-6741	758
	760
280-6743	758
	760
280-6746	758
	760
280-6749	758
	760
280-6837	▶662
	942
280-7076	599
	601
280-7078	599
	601
280-7285	323
280-7287	337
280-7484	763
	766
	769
280-7785	913
	969
280-8042	779
280-8912	449
	744
280-8934	779
280-8966	779
280-9461	469
281-0041	▶825
	833
	834
	835
	836
	837
	838
	839
281-0042	▶827
	833
	834
	835
	836
	837
	838
	839
281-0667	978
281-0798	917
	▶978
281-2378	587
	589
	591
281-2390	1027
281-2844	78
281-2880	236
	277
	283
	289
	294
	301
	309
	317
281-2920	973
	975
281-2921	928
	930
	932
	934
	936
	938
281-2922	973
	975
281-2923	928
	930
	932
	934
	936
	938
281-3170	719
281-3171	719
281-3335	811
	813
281-5871	649
	660
281-5872	649
	660
281-5972	748
	754
281-7039	62
281-7040	62
281-8744	82
281-9476	199
	▶337
281-9480	337
281-9481	323
282-0594	928
	930
	932
	934
	936
	938
282-2024	78
282-2593	625
	629
	633
282-2640	460
282-3357	▶965
	995
282-3358	965
282-3820	▶926
	940
	941
282-4971	▶791
	833
	834
	835
	836
	837
	838
282-5394	785
282-5397	785
282-6720	724
	733
282-6721	724
	733
282-6724	724
	733
282-6726	724
	733
282-6727	724
	733
282-6728	724
	733
282-6729	725
	734
282-6730	725
	734
282-6731	725
	734
282-6732	725
	734
282-6734	647
282-6735	647
282-6737	649
	653
282-6738	649
	653
282-8827	833
	835
	837
	838
	839
	885
282-9047	272
282-9588	763
	766
	769
282-9600	▶1089
282-9894	975
283-0266	422
283-1135	553
	555
	557
	560
283-1958	78
283-1977	68
283-4353	▶548
	595
283-4558	10
	▶64
283-4559	64
283-4662	34
283-4960	276
	282
	288
	294
	301
	308
	316
283-4985	419
283-5192	832
283-5233	183
	▶269
283-5262	774
283-5434	1
	▶1085
283-6945	5
	9
	▶231
	▶232
283-8262	1093
283-8301	42
283-8302	42
283-8305	1025
	1027
283-9941	703
	706
283-9977	423
	▶611
283-9978	611
283-9979	611
284-0071	34
284-1300	8
	▶179
284-2272	179
	▶952
284-2273	179
	▶180
284-2291	746
	752
284-2292	748
	754
284-2364	180
284-3283	952
284-3569	▶595
284-3623	276
	282
	288
	294
	301
	308
	316
284-4739	▶1004
284-5011	▶578
284-6016	78
284-6573	717
	719
	722
284-6574	717
	719
	722
284-6625	113
284-7682	7
	▶98
284-8252	597
284-8253	597
284-8255	597
284-8256	597
284-8257	597
284-8893	96
284-9039	157
284-9623	97
284-9624	▶96
	98
285-0421	7
	▶540
	▶542
285-0422	540
285-0423	540
285-0545	▶567
	578
285-0554	604
	▶606
285-0557	604
285-0562	604
285-0570	567
285-0579	567
285-0580	567
285-1134	926
	▶927
285-1975	15
	18

▶ **PRIMARY REFERENCE**

PART NUMBER INDEX

Part	Page	Part	Page	Part	Page	Part	Page
	20		46	287-8597	34	289-8604	410
	22	286-8880	▶565	287-8833	425		412
285-2235	▶690		578	287-8834	430		▶417
	725	286-8970	725	287-8835	426	289-9430	44
285-3197	99		734	287-8836	427		46
	102		▶783	288-1025	416	289-9519	171
285-3241	995		▶784		417	289-9520	171
	▶1027	286-8971	783	288-1328	694	289-9888	▶1046
285-3254	1062		784	288-1331	694	290-1219	174
285-3771	841	286-9127	372	288-1332	694	290-2077	174
	843		377	288-6974	34	290-2768	▶426
285-5028	578	286-9592	957	288-6975	34		427
	▶899	286-9593	954	288-6976	260	290-3910	133
285-5036	899	287-0298	984	288-6983	99		138
285-5044	578		985	288-6984	99		143
	▶905		986	288-6985	99	290-3911	133
285-5045	905	287-2098	725	288-7979	10		138
285-5047	905		734		▶34		143
285-5048	905	287-2099	763	288-7980	10	290-3912	133
285-5050	578		766		▶260		138
	▶583		769	288-7981	10		143
	▶584	287-2371	9		▶44	290-3913	133
285-5079	583		▶1087		▶46		138
	584	287-2435	294	288-7983	10		143
285-5730	783		301		▶12	290-3914	133
	▶894		308	288-7984	10		138
285-5816	725		316		▶99		143
	734	287-2436	294	288-7985	10	290-3915	133
285-5817	725		301		▶92		138
	734		308		▶93		143
285-5818	725		316	288-8932	451	290-3916	133
	734	287-2920	994		452		138
285-5819	725	287-2921	578		883		143
	734		▶994	288-9478	369	290-3943	553
285-5820	725	287-5279	575		▶427		555
	734	287-5593	491	288-9479	370		557
285-8337	▶575	287-5594	▶491		▶430		560
	578		578	288-9482	369	290-5728	34
285-9233	434	287-5635	▶493		370		260
	439		578		▶458	290-5735	99
285-9234	434	287-5766	▶270	288-9483	369	290-5819	1088
	439		578		370	290-5820	1088
286-0035	10	287-6819	994		▶486	290-6181	5
	▶36	287-6838	133	288-9484	369		▶986
	▶38		138		370	290-7296	410
286-0039	10		143		▶488		412
	▶50		148	288-9485	425		414
286-2890	122	287-6839	133		426	290-7406	486
	125		138	288-9486	425	290-8159	204
286-3115	897		143		426	290-8160	204
	900		148	288-9487	▶425		205
286-3274	195	287-6853	116		430	291-2165	276
286-3683	133		119	288-9488	369		282
	138		122		370		288
	143		125		▶444	291-2939	204
286-7060	10		128	289-2217	195		205
	▶115	287-7430	74	289-2451	494	291-2942	204
286-7847	44	287-7637	110	289-2452	234		205
	46		111	289-2453	494	291-4352	▶1088
286-7850	99		112	289-3828	▶204		1093
286-7851	99	287-8291	900		223	291-5201	986
	102		903	289-8600	417	291-5919	▶132
286-8244	▶1071	287-8399	87	289-8601	416		143
	1072		88	289-8602	414	291-6129	633
286-8817	44		90		▶416	292-0848	133

▶ **PRIMARY REFERENCE**

PART NUMBER INDEX

Part	Page
292-0886	26
292-1301	▶916
	1021
292-3264	806
292-3462	93
292-3790	▶110
	133
292-4458	508
292-4459	508
292-4460	508
292-4461	508
292-5856	10
	▶26
292-5857	10
	▶48
	▶49
292-5859	10
	▶24
292-5860	10
	▶31
292-5865	10
	▶55
292-5867	10
	▶14
292-6097	997
292-6402	▶996
	997
292-8061	883
	885
292-8508	10
	▶343
292-8771	806
292-9055	1069
292-9237	▶997
	1019
292-9802	1003
292-9881	196
293-0249	131
	132
	154
293-1880	343
293-2911	1007
293-4494	1046
293-8068	116
	119
	122
	125
	128
293-8279	423
293-9901	133
	138
	143
	148
294-0286	36
	38
294-0701	694
294-0702	694
294-3031	132
294-3032	132
294-3301	10
	▶128
294-5042	1019
294-5393	10
	▶15
	▶18
	▶20
	▶22
294-5408	15
294-8550	44
294-8551	44
294-9505	791
295-0189	132
295-0912	92
	93
295-1042	15
295-1711	36
295-2598	700
295-2635	700
295-4670	116
	119
	122
	125
	128
295-4801	132
	154
295-5619	1075
295-6661	29
295-6889	78
295-7620	694
295-8323	269
295-8324	528
295-8327	528
295-8332	406
	▶536
295-8333	536
295-8334	536
295-9234	486
	488
296-3542	132
	154
296-3667	▶184
296-3668	▶184
296-3669	▶185
296-3670	▶185
296-3671	▶185
296-5749	742
296-5750	744
296-6980	647
296-8069	406
	▶455
296-8592	79
297-1860	460
297-4129	1093
297-7972	725
	734
297-7973	725
	734
297-8102	703
	706
297-8103	703
	706
297-9538	10
	▶57
298-4550	15
	18
	20
	22
298-4576	116
	119
	122
	125
	128
298-5032	806
298-8921	▶694
	806
299-3502	382
299-5420	95
299-5511	29
299-5839	946
	▶947
299-7996	813
299-7997	813
299-8229	105
	106
	107
299-9078	508
	▶550
299-9087	550
	3
300-0392	185
300-0394	185
300-1927	505
300-2940	133
	138
	143
	148
300-3907	15
300-5466	758
	760
300-5467	758
	760
300-6057	784
	▶895
300-6440	345
	348
300-6442	234
300-6443	339
300-6444	364
300-6446	364
300-6448	168
	171
300-6449	234
300-6451	325
	329
300-6520	102
300-6550	434
	439
300-6551	625
	629
	633
300-6552	625
	629
	633
300-6554	434
	439
300-7318	525
	553
	555
	557
	560
	587
	589
	591
300-9596	▶505
301-0589	337
301-2979	234
301-2980	234
301-5241	877
301-5242	877
301-5243	877
301-6874	694
301-8294	694
301-9692	649
	653
301-9801	758
301-9802	758
301-9817	553
	555
	557
	560
301-9818	553
	555
	557
	560
302-0076	649
	653
302-0409	▶210
	227
302-0411	▶211
	227
302-1373	758
302-1374	758
302-2343	78
302-2344	78
302-2360	525
302-2366	525
302-3800	▶502
	553
	555
	557
	560
302-3801	502
302-5410	223
	224
302-5411	223
	224
302-5414	5
	▶223
	▶224
302-5695	116
	119
	122
	125
	128
302-6112	34
302-7818	15
303-0366	116
	119
	122
	125
	128
303-1225	402
303-1226	364
303-1227	364
303-1228	364
303-1229	364
303-1230	273

▶ **PRIMARY REFERENCE**

PART NUMBER INDEX

Part	Page	Part	Page	Part	Page	Part	Page
	364	305-4370	345		597		769
303-2116	102		348	307-0410	534	308-1188	492
303-3499	694	305-4372	174		597	308-1189	66
303-5189	488	305-4373	174	307-0543	223	308-1401	725
303-5974	649	305-4374	273		224		734
	653	305-4375	273	307-1747	1084	308-1402	725
303-6371	434	305-4376	▶174	307-2634	219		734
	439		176		222	308-1403	388
303-6373	434	305-4377	335	307-3087	360		391
	439	305-4378	339	307-3089	168		394
303-6374	434	305-4381	358		171		398
	439		359		174	308-1880	646
303-6375	434	305-4382	270	307-3093	360	308-1883	646
	439	305-4383	238	307-3095	360	308-1884	646
303-6376	434	305-4384	168	307-3097	174	308-2071	490
	439		171	307-3100	339	308-3023	594
303-7863	725	305-5291	148	307-3101	339	308-3868	949
303-7865	725	305-6308	498	307-3122	2	308-3869	289
	734	305-6471	116		▶367		308
303-7866	725		119	307-3123	367		316
303-9566	276		128	307-3124	▶178		▶949
	282	305-7505	240		276	308-3892	544
	288		242		282	308-4267	534
	294	305-7939	325		294	308-4278	2
	301		329		301		▶176
	308	305-8607	157		308		199
	316	305-8608	155		329	308-4340	1
304-0329	276		▶157	307-3159	▶234		▶594
	282	305-8958	▶490		325	308-4778	596
	288		599		329		597
	294		601	307-3894	234	308-5065	87
	301	305-8966	490	307-4806	223		88
	308	305-8969	490		224		90
	316	306-2337	57	307-4807	223	308-5333	981
304-2713	777	306-4025	725		224	308-5681	875
304-5687	282		734	307-6155	276	308-6412	603
	288	306-4181	419		282		▶607
	300	306-4182	419		288	308-6413	575
	308	306-4201	703		294		▶603
	316		706		301	308-6414	565
304-5691	323	306-4202	703		308	308-6415	565
304-6771	746		706		316	308-6606	529
	752	306-5398	168	307-6156	276	308-6736	575
304-6911	223		171		282	308-7121	155
	224	306-5399	168		288	308-7122	157
304-7047	113		171		294	308-7298	109
304-8016	647	306-5400	168		301	308-7480	105
304-8017	647		171		308	308-7489	234
304-9308	802	306-5401	168		316	308-7576	109
	▶806		171	307-8435	▶553	308-8426	133
304-9710	115	306-5432	116		▶555	308-9116	593
305-2530	563		119		595	308-9131	594
305-2533	494		122	307-8436	553	309-0857	116
305-2543	494		125		555		119
	▶497		128		▶582		122
305-2557	176	306-6845	26	307-8437	557		125
	▶498		▶27		560		128
305-2559	498	306-8066	168		582	309-1604	604
305-3337	416		171	307-8440	1	309-1606	567
	417		174		▶557	309-1609	567
305-3339	416	306-9390	▶111		▶560	309-1776	567
	417		138	307-9843	74	309-3910	594
305-3684	339		143	308-0708	978	309-3944	575
305-3755	703	307-0047	199	308-0932	763	309-4907	746
	706	307-0408	534		766		752

▶ **PRIMARY REFERENCE**

PART NUMBER INDEX

Part	Page
	▶785
309-6597	582
309-6663	▶29
	31
309-6664	15
	18
	20
	22
309-6678	29
309-8006	134
	139
	144
	149
309-9217	567
	▶604
310-1915	725
	734
310-5909	746
	752
310-5910	746
	752
310-5912	109
310-5919	388
	391
	394
	398
310-7066	525
	553
	555
	557
	560
310-7918	133
	138
	143
	149
310-8658	640
310-9392	4
	673
	1071
	▶1073
	▶1075
311-0013	▶672
311-0014	▶66
	672
311-0015	672
	▶742
311-0017	▶333
	672
311-0038	277
	283
	289
	294
	301
	309
	317
311-0117	975
311-0118	975
311-1331	116
	119
	122
	125
	128
311-1463	1073
	1075
311-1677	116
	128
311-1721	128
311-1722	116
311-1737	116
	119
	122
	125
	128
311-1919	128
311-1927	116
	119
	122
	125
	128
311-1952	116
	119
	122
	125
	128
311-2232	116
	119
	122
	125
	128
311-2579	569
	572
311-2580	569
	572
311-2581	569
	572
311-2582	569
	572
311-2583	569
	572
311-2584	569
	572
311-2585	569
	572
311-2586	569
	572
311-2587	569
	572
311-3163	66
311-3166	66
311-3170	742
	▶803
311-3206	66
	▶591
311-3207	591
311-3858	133
	138
	143
	149
311-3898	219
311-4759	410
	412
	414
311-6342	134
	139
	144
	149
311-6632	138
	143
311-6942	▶1050
311-8557	662
	663
312-0220	1073
	1075
312-1139	665
312-1596	66
312-1598	742
312-1599	742
312-3084	15
312-4545	60
312-4586	▶472
312-5694	1046
	1050
	1052
	1054
	1062
	1069
	1070
	1073
312-6458	79
312-8601	649
312-8629	894
	895
	896
313-1418	1073
	1075
313-1663	109
313-3471	746
	752
313-3472	746
	752
313-3473	746
	752
313-3484	391
	399
	703
	706
	815
	816
	817
	818
	819
313-3497	725
	734
313-3498	725
	734
313-4006	11
	▶233
313-5104	360
313-5855	▶657
	658
313-7110	106
313-7668	▶896
314-2405	325
	329
314-2566	508
314-2567	508
314-2760	785
314-3208	▶1062
314-3209	▶1052
314-3210	▶1054
314-3332	508
314-3333	508
314-4008	777
	▶787
	▶789
314-4018	922
314-6458	233
314-7432	1069
314-7441	1069
314-7442	▶1069
	1070
314-7443	1069
314-8759	833
	834
	835
	836
	837
	838
	839
314-9340	643
	▶646
314-9341	646
315-0180	171
315-1414	▶1082
315-4711	823
	825
	827
315-5134	928
	930
	932
	934
	936
	938
315-6334	673
	1072
	▶1077
315-6335	1077
315-6338	1073
	1075
315-7790	979
315-8049	594
315-8050	594
315-8297	941
315-9798	449
315-9799	449
316-0413	102
316-2336	1052
316-2560	1054
316-2657	1069
	1081
316-4891	746
	752
316-4892	746
	752
316-4893	746
	752
316-7029	973
	975
316-9073	196
316-9189	503
317-0755	928
	930
	932
	934
	936
	938
317-0953	725
	734
317-1090	678
	▶682

▶ **PRIMARY REFERENCE**

PART NUMBER INDEX

Part	Page
317-1449	682
	684
	685
	686
317-1453	682
	686
317-1631	710
317-1632	710
317-2684	93
317-2717	18
	20
	22
317-2885	712
317-2886	712
317-3064	18
	20
	22
317-3348	913
317-3349	969
317-3775	57
317-4330	647
317-4532	▶186
317-4533	▶186
317-4534	▶186
317-4535	▶187
317-4536	▶187
317-4537	▶187
317-4538	▶188
317-4539	▶188
317-4540	▶188
317-4541	▶189
317-4543	▶189
317-4544	▶189
317-4545	▶190
317-4546	▶190
317-4547	▶190
317-4548	▶191
317-4549	▶191
317-4550	▶191
317-4551	▶192
317-4552	▶192
317-4553	▶192
317-4554	▶193
317-4555	▶193
317-4556	▶193
317-4557	▶194
317-4558	▶194
317-4559	▶194
317-4560	▶195
317-5423	1082
317-5434	1082
317-5574	725
	734
317-5873	703
	706
317-5874	703
	706
317-5899	706
317-7147	116
	119
	122
	125
317-7595	746
	752
317-7619	700
317-7966	10
	▶133
	▶138
	▶143
	▶148
317-7974	625
	629
	633
317-7975	625
	629
	633
317-7976	625
	629
317-7977	625
	629
317-7978	625
	629
317-8345	703
	706
317-8356	▶369
317-8359	▶2
317-8360	▶3
317-8361	▶3
317-8362	▶3
317-8363	▶4
317-8364	▶4
317-8366	▶4
317-8368	▶5
317-8476	119
317-8731	926
	927
317-9031	763
	766
317-9088	508
317-9299	57
317-9301	625
	629
317-9302	625
	629
317-9482	▶9
317-9483	▶5
317-9484	▶5
317-9485	▶2
317-9486	▶2
317-9487	▶9
317-9488	▶5
317-9489	▶6
317-9490	▶7
317-9491	▶8
317-9565	763
	766
	769
317-9643	649
	653
317-9992	233
317-9994	647
318-0647	▶8
318-0827	954
318-1509	746
	752
318-1510	746
	752
318-1511	746
	752
318-1512	746
	752
318-1513	746
318-1514	746
	752
318-1518	746
	752
318-1726	18
318-1757	746
	752
318-1758	746
	752
318-1759	746
	752
318-1760	2
	▶744
318-1761	746
	752
318-1762	744
318-1763	625
	629
	633
318-1764	625
	629
	633
318-1765	625
	629
	633
318-1766	625
	629
	633
318-1767	625
	629
	633
318-2156	963
318-2157	963
318-2158	963
318-2396	148
318-2467	1070
	▶1081
318-2487	68
318-2597	917
	921
	▶988
318-2889	▶532
	698
	699
318-2891	532
318-2892	532
318-2893	532
318-2894	532
318-3762	7
	▶693
318-4747	451
	452
	▶479
318-5001	693
318-5004	693
318-5007	693
318-5008	693
318-5009	693
318-6251	777
318-6510	394
	398
318-6511	388
	391
	394
	398
318-6512	746
	752
318-7395	388
	391
318-7396	434
	439
318-7397	434
	439
318-7434	777
318-7435	777
318-8038	18
	20
	22
318-8503	1041
318-8504	1041
318-8833	789
	885
318-9181	240
	242
318-9717	▶1072
319-1625	▶663
	944
319-3554	240
	242
319-4210	178
319-6096	560
	581
319-6099	560
	580
319-6294	95
	460
319-6804	337
319-7220	542
319-7221	542
319-7347	119
	122
	125
319-7382	▶205
	224
319-7384	205
319-7862	10
	▶102
319-7863	10
	▶116
	▶119
	▶122
	▶125
319-7864	10
	▶106
	▶107
319-7873	116
	125
319-7874	116
319-7875	116
	128
319-9349	333
319-9510	662
	663
320-0690	▶112
	148
320-1213	742
320-1515	210

▶ **PRIMARY REFERENCE**

PART NUMBER INDEX

Part	Page
	211
	212
	213
320-2391	138
320-2868	12
320-4733	10
	▶51
320-6551	18
	20
	22
320-9867	227
	229
320-9868	227
	229
321-0127	▶673
321-1270	138
	143
	148
321-6951	662
	663
321-8167	803
321-8168	803
321-8191	803
321-8344	1069
322-1217	▶199
322-2932	419
322-3161	996
322-3305	171
	▶177
322-4617	449
322-4638	▶659
	660
322-6143	528
322-6230	926
322-6402	10
322-7948	▶8
322-8274	86
322-8568	944
322-9530	119
	122
322-9531	119
	122
	125
322-9532	107
322-9662	76
322-9980	776
323-0231	777
323-1604	528
323-2006	742
323-4732	533
323-4733	533
323-4735	533
323-4736	533
323-4737	▶533
	698
	699
323-6976	672
323-9312	49
323-9316	1062
323-9322	1062
323-9427	1073
	1075
323-9430	1073
	1075
323-9531	478
323-9539	1050
323-9540	1050
	1052
	1054
	1062
324-0136	1052
324-0152	1054
324-0444	36
	38
324-0533	148
	▶154
324-2651	▶714
324-2652	▶716
324-2959	46
324-2960	46
324-2961	46
324-2967	57
324-2968	57
324-2969	57
324-3722	621
324-5849	419
324-6970	930
	934
	938
324-6983	727
	736
324-7051	727
	736
324-7619	779
324-7870	66
325-1511	1062
325-5760	▶800
	862
	869
326-0504	646
326-1644	108
326-3092	993
326-6550	339
326-7288	18
326-7289	18
326-7401	▶62
	64
327-3397	119
	122
327-3398	119
	122
327-6256	95
327-9091	500
327-9092	500
327-9093	501
327-9094	501
327-9256	1003
328-0919	234
328-1054	88
	90
328-1718	700
328-5311	734
329-2310	734
329-3943	▶673
329-4101	985
	986
329-4982	▶1070
329-5475	752
329-5761	▶9
330-0620	1093
330-3685	148
330-3687	148
330-5363	▶195
	199
330-5467	143
	148
330-5954	▶199
330-9358	▶691
	752
331-0290	49
331-0291	49
331-0292	49
331-2890	653
	▶660
331-3257	803
331-3776	122
	125
331-4029	629
	633
	▶638
331-4400	46
331-5291	1004
	▶1005
331-7539	148
331-8052	20
331-8053	20
331-8917	102
332-4089	885
332-6884	662
	663
333-3207	186
333-3208	186
333-3209	186
333-3210	186
333-3211	186
333-3212	186
333-3213	187
333-3214	187
333-3215	187
333-3216	187
333-3217	187
333-3218	187
333-3219	184
333-3220	184
333-3221	188
333-3222	188
333-3223	188
333-3224	188
333-3225	188
333-3226	188
333-3227	189
333-3228	189
333-3229	189
333-3230	189
333-3231	189
333-3232	189
333-3233	190
333-3234	190
333-3235	190
333-3236	190
333-3237	190
333-3238	190
333-3239	191
333-3240	191
333-3241	191
333-3242	191
333-3243	191
333-3244	191
333-3245	192
333-3246	192
333-3247	192
333-3248	192
333-3249	192
333-3250	192
333-3251	193
333-3252	193
333-3253	185
333-3255	185
333-3257	185
333-3258	185
333-3259	193
333-3260	193
333-3261	193
333-3262	193
333-3263	194
333-3264	194
333-3267	184
333-3268	184
333-3269	194
333-3270	194
333-3271	195
333-3272	195
333-8153	952
333-9152	885
334-0584	201
	▶202
334-2932	154
334-4603	1087
334-6035	199
334-8328	1038
	1039
334-8329	1038
	1039
335-2609	▶239
	272
335-5532	752
335-7981	979
336-1845	▶265
	357
	359
336-3566	1006
336-6799	▶160
	354
336-8174	148
336-8175	148
336-8176	148
336-8177	148
336-8178	148
336-8179	148
336-8180	148
336-8614	155
336-9099	733
337-0182	66
337-0831	▶422
	447
337-4102	▶692
	734
338-0912	157
338-1398	125
338-3525	575

▶ **PRIMARY REFERENCE**

PART NUMBER INDEX

Part	Page	Part	Page	Part	Page	Part	Page
338-7395	684	352-4900	1041				
	685	353-5395	1041				
338-8416	676	355-5105	183				
	▶684		184				
339-3397	55	355-8947	157				
339-5116	760	355-9764	183				
339-5117	760		184				
339-6501	733	358-4889	267				
339-8209	619	359-6766	195				
339-8583	619	359-6767	195				
339-9637	29						
340-2084	835						
	837						
	▶885						
340-6088	▶8						
341-1975	623						
341-2862	806						
341-6643	422						
341-8583	584						
	▶586						
341-8739	930						
	934						
	938						
342-1263	586						
342-1264	586						
342-5837	633						
342-5838	633						
342-5839	633						
342-5841	633						
342-8428	▶323						
	335						
343-5527	108						
343-6179	▶1089						
344-2367	5						
	▶781						
344-2368	781						
344-3455	▶212						
	229						
344-3456	▶213						
	229						
344-5644	▶94						
344-7928	404						
346-0407	38						
346-0408	38						
346-1091	685						
	686						
346-1093	677						
	▶685						
346-1094	679						
	▶686						
346-4788	90						
346-4791	90						
346-5146	194						
346-5147	194						
347-1133	14						
348-7240	212						
	213						
349-9851	769						
349-9852	769						
351-2246	589						
351-6993	1037						
	▶1041						
351-9778	52						
352-4153	▶1037						
352-4157	1041						

▶ **PRIMARY REFERENCE**

MEMORANDA



© 2010 CATERPILLAR
ALL RIGHTS
RESERVED

CAT, CATERPILLAR, THEIR RESPECTIVE LOGOS, “CATERPILLAR YELLOW” AND THE POWER EDGE TRADE DRESS, AS WELL AS CORPORATE AND PRODUCT IDENTITY USED HEREIN, ARE TRADEMARKS OF CATERPILLAR AND MAY NOT BE USED WITHOUT PERMISSION.

PRINTED IN
U.S.A.