DEZEMBRO 1974

Parts Catalog

945 WHEEL LOADER

S/N 79L01001-UP

FIAT ALLIS

RUTHZIL TRATOR COMERCIAL DE PEÇAS LTDA 11 97083-6812 ROLANDO

FIAT-ALLIS

FORM 73064201
(REPLACES 3060166-0)

AVOID ACCIDENTS

Most accidents, whether they occur in industry, on the farm, at home or on the highway, are caused by the failure of some individual to follow simple and fundamental safety rules or precautions. For this reason **MOST ACCIDENTS CAN BE PREVENTED** by recognizing the real cause and doing something about it before the accident occurs.

Regardless of the care used in the design and construction of any type of equipment there are many conditions that cannot be completely safeguarded against without interfering with reasonable accessibility and efficient operation.

A careful operator is the best insurance against an accident. The complete observance of one simple rule would prevent many thousand serious injuries each year.
That rule is:

Never attempt to clean, oil or adjust a machine while it is in motion.

NATIONAL SAFETY COUNCIL

WARNING

On machines having hydraulically, mechanically, and/or cable controlled equipment (such as shovels, loaders, dozers, scrapers, etc.) be certain the equipment is lowered to the ground before servicing, adjusting and/or repairing. If it is necessary to have the hydraulically, mechanically, and/or cable controlled equipment partially or fully raised to gain access to certain items, be sure the equipment is suitably supported by means other than the hydraulic lift cylinders, cable and/or mechanical devices used for controlling the equipment.

Parts Catalog

945 WHEEL LOADER

S/N 79L01001-UP

FIAT-ALLIS

FORM 73064201
(REPLACES 3060166-0)

AVOID ACCIDENTS

Most accidents, whether they occur in industry, on the farm, at home or on the highway, are caused by the failure of some individual to follow simple and fundamental safety rules or precautions. For this reason MOST ACCIDENTS CAN BE PREVENTED by recognizing the real cause and doing something about it before the accident occurs.

Regardless of the care used in the design and construction of any type of equipment there are many conditions that cannot be completely safeguarded against without interfering with reasonable accessibility and efficient operation.

A careful operator is the best insurance against an accident. The complete observance of one simple rule would prevent many thousand serious injuries each year.
That rule is:

Never attempt to clean, oil or adjust a machine while it is in motion.

NATIONAL SAFETY COUNCIL

WARNING

On machines having hydraulically, mechanically, and/or cable controlled equipment (such as shovels, loaders, dozers, scrapers, etc.) be certain the equipment is lowered to the ground before servicing, adjusting and/or repairing. If it is necessary to have the hydraulically, mechanically, and/or cable controlled equipment partially or fully raised to gain access to certain items, be sure the equipment is suitably supported by means other than the hydraulic lift cylinders, cable and/or mechanical devices used for controlling the equipment.

ADDITIONAL PUBLICATIONS AVAILABLE

FOR

MODEL 945 WHEEL LOADER (S/N 79L01001)

NOTICE

Consult Fiat-Allis Construction Machinery Dealer for Publications.

See Construction Machinery Technical Publications List (Form 70658800) for all available Publications.

Publications Lists (Form 70658800) are available FREE from your dealer.

(Manuals Translated In Other Languages Are Available As Indicated)

DESCRIPTION	SERIAL NO.		FORM NO.			
			ENGLISH	ESPAÑOL (Spanish)	PORTUGUÊS (Portuguese)	FRANÇAIS (French)
Parts Catalogs						
Cab Glass	All		70626019			
Injection Pump	All		70690916			
Operators Manuals						
945 Wheel Loader	All		73063164	73062527	73062535	
Service Manuals						
Axle	All	(a)	73060180			
Brakes	All	(a)	73060182			
Bucket and Chassis	All	(a)	73060184		73062541	
Electrical System	All	(a)	73060185			
Engine	All	(a)	70663850			
Injection Pump (Robert Bosch)	All		70681649			
Loader Hydraulic System	All	(a)	73060183			
Power Steering System	All	(a)	73060181			
Transmission and Torque Converter	All	(a)	73060179			
Turbocharger	All	(a)	70637740			
Service Manual Set	All		73062940			

(a) Manuals so marked are included in the Service Manual Set.

IMPORTANT

All parts listed herein, which have no specific usage indicated, are applicable to all models. Those parts which are used only on specific models are so indicated.

Attaching parts such as bolts, nuts, rivets, screws, washers, etc., are indented immediately following the parts which they attach.

Parts indicated with a square (□) are also available in packaged sets. Refer to section titled "PACKAGED PARTS".

The terms "right" and "left" used throughout this parts catalog are determined by facing the direction of forward travel.

The engine is mounted unconventionally with the flywheel toward the front of the machine, but all engine parts are designated in respect to the engine as it would be installed in a conventional machine with the flywheel to the rear.

INSTRUCTIONS FOR ORDERING PARTS

Order parts from the dealer covering the local territory.

ALWAYS GIVE THE MODEL AND SERIAL NUMBER OF MACHINE. IF PARTS ARE FOR AN ASSEMBLY WHICH HAS A MODEL AND/OR SERIAL NUMBER (SUCH AS ENGINE ASSEMBLY, PUMP ASSEMBLY), ALSO INCLUDE THIS INFORMATION.

To obtain parts promptly, give part name and part number.

Give post office address, town, county and state where parts are to be shipped. Also specify whether material is to be shipped by freight, express or parcel post.

Confirm all telephone or telegraph orders in writing.

Parts for standard motor accessories such as generators and starting motors should be ordered from authorized Service Stations maintained by manufacturers of these units throughout the country.

No credit will be allowed on parts unless they are returned to the dealer from whom they were purchased; from there they will be returned, at the customer's expense, to the factory for inspection.

Unless claims for shortages or errors are made immediately upon receipt of goods, they will not be considered.

When broken goods are received, a full description of the damage should be made by the carrier agent on the freight bill. If this description is insisted upon, full damage can always be collected from the transportation company.

No responsibility is assumed for delay or damage to merchandise while in transit. Our responsibility ceases upon delivery of shipment to the transportation company from whom a receipt is received showing that shipment was in good condition when delivered to them; therefore, claims (if any) should be filed with the transportation company and not with Fiat-Allis.

The right is reserved to change the construction or material of any parts where it seems desirable to do so without incurring the obligation of installing such changes on units already delivered.

The information contained herein is general in nature and is not intended for specific application purposes. Fiat-Allis reserves the right to make changes in specifications shown herein, or add improvements, at any time without notice or obligation.

MODEL IDENTIFICATION

The symbol listed below is stamped in front of the model serial number on each unit.

MODEL SYMBOL	ENGINE MODEL	DESCRIPTION
945	25000 MK II	Turbocharged Diesel powered engine, four wheel drive loader equipped with: power shift transmission, torque converter, planetary axles, power steering and air brakes.

RECORD YOUR SERIAL NUMBERS BELOW

LOADER SERIAL NO. _____ _____ _____

ENGINE SERIAL NO. _____ _____ _____

TRANSMISSION SERIAL NO. _____ _____ _____

SERIAL NUMBER LOCATION

LOADER SERIAL NO: On plate attached to the left front of platform.

ENGINE SERIAL NO: On plate attached to the right hand side of the engine block.

TRANSMISSION SERIAL NO: On plate attached to the left side of the transmission housing.

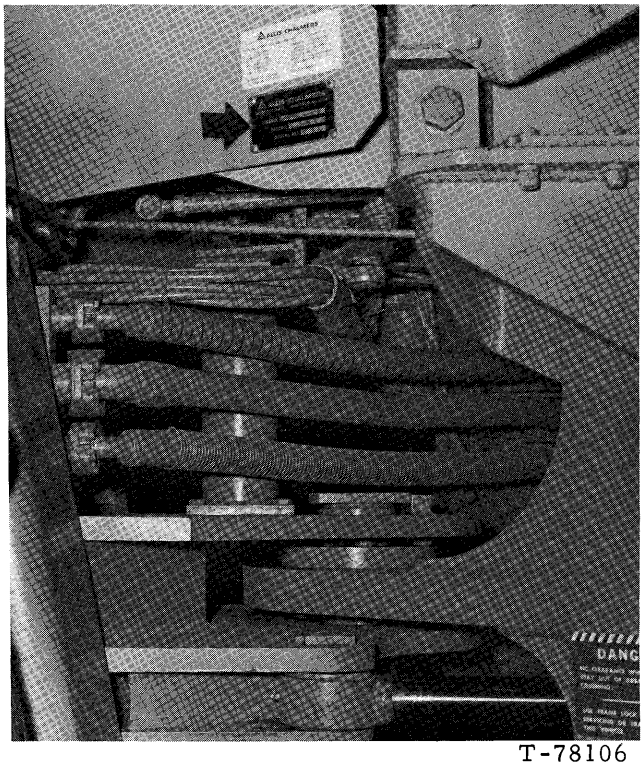

T-78106

LOADER SERIAL NUMBER



T-78107

ENGINE SERIAL NUMBER

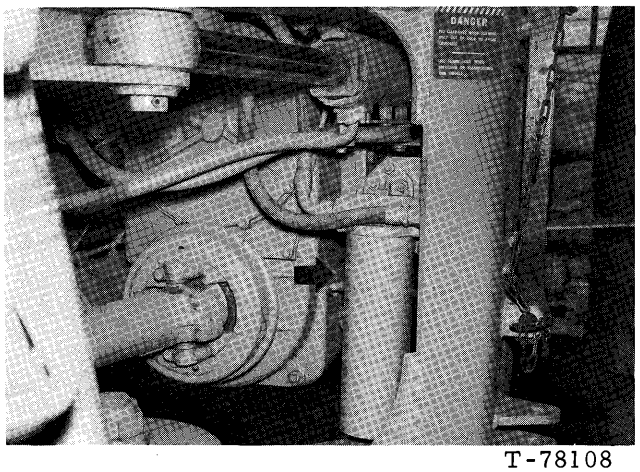

T-78108

TRANSMISSION SERIAL NUMBER

MODEL SERIAL NUMBER

*SERIAL NUMBER consisting of all 8 character must always be submitted for positive identification of your machine.

LOADER MODEL	*SERIAL NO.	
	PRODUCT CODE	UNIT NO.
945	7 9 L	0 1 0 0 1

ALPHABETICAL INDEX

A

Accessory Drive (Engine) 26
Accessory Drive (Transmission) 102
Additional Publications 1
Air Application Valve Assy. 143
Air Cleaner Assy. 64
Air Cleaner Connections 62
Air Compressor 148
Air Horn and Lines 141
Air Relay Valve 136
Air Tank Drain Valve 137
Alcohol Injector 132
Alcohol Injector Assy. 229. 131
Alternator 223, 234
Automatic Boom Kick-Out 208
Automatic Bucket Leveler 206
Air Tank and Lines 135, 138
Axle Housing and Pins (Front). 217
Axle Housing and Mounting (Rear). . . . 119
Axle Shaft and Hub (Front & Rear) . . . 224

B

Batteries and Cables. 226
Battery Covers 226
Boom Kick-Out 210
Brake Air Lines . . . . . 124 - 135 - 138
Brake Assy. (Front & Rear). 124
Bucket . . . . . 218 - 220
Bucket Leveler. 204

C

Cab and Wiper Assy. 246
Canopy 251
Charging Oil Pump. 103
Clutch Cut-Off Valve. 140
Compressor, Air 148
Compressor Crankcase. 149
Compressor Cylinder Block 150
Compressor Cylinder Head 148
Controls:
  Bucket & Boom 195
  Engine. 50
  Parking Brake 128
  Transmission 106
Control Valve Assy. (Hydraulic) 182
Control Valve Assy. (Transmission) . . 104
Coolant Filter and Lines 65
Coolant Pump. 69
Cowl 214
Crankshaft 16
Crankshaft Pulley 16
Cylinders:
  Dump 190
  Lift 188
  Parking Brake 130
  Steering 158
  Wheel (Brakes) 124
Cylinder Block 12
Cylinder Head 18

D

Dash Light Assy. 233
Defroster Fan 245
Demand Valve Assy. 157
Differential Assy. (Front & Rear) . . . 117
Differential Assy. No-Spin (Rear) . . . 119
Door Assy. (Cab) 248
Drive Shaft . . . . . 112 - 114
Dump Cylinder Assy. 190
Dump Cylinder Piping 192

E

Electrical System 228
Elements:
  Air Cleaner 64
  Fuel Filter . . . . . 47 - 48
  Hydraulic Tank 200
  Oil Filter 34, 36
  Transmission Oil Filter . . . . 110 - 111
Engine Breather 21
Engine Controls 50
Engine Front Housing 28
Engine and Front Mounting 11
Exhaust Manifold 55

F

Fan 74
Fan Hub. 75
Fenders. . . . . 213 - 214
Filters:
  Coolant 65
  Engine Oil 33, 34, 36
  Fuel Filter 45, 46
  Hydraulic Tank 200
  Transmission Oil 110
Flex Disk and Converter Drive 82
Flood Light Group 245
Flywheel 23
Flywheel Housing 22
Forward Clutch and Planetary 94
Frame. 219
Front Air Brake Lines 135
Fuel Filter 45, 46
Fuel Injection Pump 40
Fuel Injection Lines 42
Fuel Tank and Lines 48

G

Gauges 236
Governor (Air Compressor) 151

H

Hand Rails 213
Heat Exchangers 66
Heater (Cab) 254
Heavy Duty Filter Lines 33
Hood. 214
Hose Parts 6
Hour Meter 229
Hydraulic Controls 195
Hydraulic Tank 200
Hydraulic Oil Cooler 198
Hydraulic Pump Assy. 178
Hydraulic Pump and Valve Piping . . . 172
Hydraulic Filter and Piping Group. . 175
High Range Clutch & Transfer Drive . 97

I

Injection Nozzle Lines 42
Injection Pump 40
Instrument Panel & Gauges 236
Instrument Panel Cover & Light 238
Instruments & Wires 241

ALPHABETICAL INDEX

Instrument Panel & Wiring (ROPS Cab) 244
Intake Manifold 56

L

Ladder, Handrails & Fenders 213
Lift Cylinder Assy. 188
Lift Cylinder Piping 186
Light Assy. . . . . 228 - 229 - 231 - 245
Linkage Group 220
Low Range Clutch & Transfer Drive. . . 98
Lube Oil Filter 34, 36

M

Manifolds:
- Air. 138
- Exhaust 55
- Intake 56

Muffler 52

N

No-Spin Differential (Rear Axle). 119
Nozzle Holder Assy. 44

O

Oil Cooler 198
Oil Pan 38
Oil Pump 32
Oil Pump Lines 30
Output Shaft 101

P

Packaged Parts. 8
Painting and Marking 255
Parking Brake Assy. 126
Parking Brake Control. 128
Pilot Control Valve. 180
Pilot Control Valve Piping. 170
Pilot Regulating Valve 177
Piston and Connecting Rod. 15
Platform 214
Power Steering Pump 164
Publications 1
Pumps:
- Coolant 69
- Engine Oil. 27
- Hydraulic Main 174
- Injection. 41
- Steering 164
- Transmission Charging Oil. 103

Q

Quick Relay Valve Assy. 136

R

Radiator Assy. 79
Radiator Support. . . . . 76 - 214
Rear Air Brake Lines 138
Rear Window (Cab). 250
Reverse Clutch and Planetary 92

S

Seat Belt 219
Seat and Mounting 218
Shaft and Hub. 120
Side Panels. 211
Starter 233
Starting Aid (Cold Weather). 53
Steering Cylinder 158
Steering Demand Valve. 157
Steering Gear Assy. 168
Steering Gear Linkage 166
Steering Hydraulics (Pump & Valve). . . 160
Steering Hydraulics (Cylinder Section) . 152
Steering Pump 164
Steering Valve Assy. 154

T

Tail Light Assy. 232
Tandem Steering Pump. 164
Timing Gear Housing. 28
Tires 221
Transmission Assy. 80
Transmission Charging Oil Pump 103
Transmission Control 106
Transmission Control Valve. 104
Transmission Filter . . . . . 110 - 111
Transmission Hoses 108
Transmission Housing & Cover 90
Tools 259
Torque Converter 84
Torque Converter Housing. 86
Turbine Drive Gear & Freewheel Unit . 88
Turbocharger Assy. 60
Turbocharger Connections. 59

V

Valves:
- Air Application 143
- Air Tank Drain 137
- Clutch Cut-Off 140
- Control Hydraulic. 182
- Demand 157
- Control Steering 154
- Pilot Control 180
- Pilot Regulating. 177
- Quick Relay. 136
- Transmission. 104

Valve Operating Mechanism. 24
Vandalism Protection Parts. 257

W

Water Inlet Manifold. 66
Water Outlet Manifold 72
Wheel. 225
Wiper Group 252

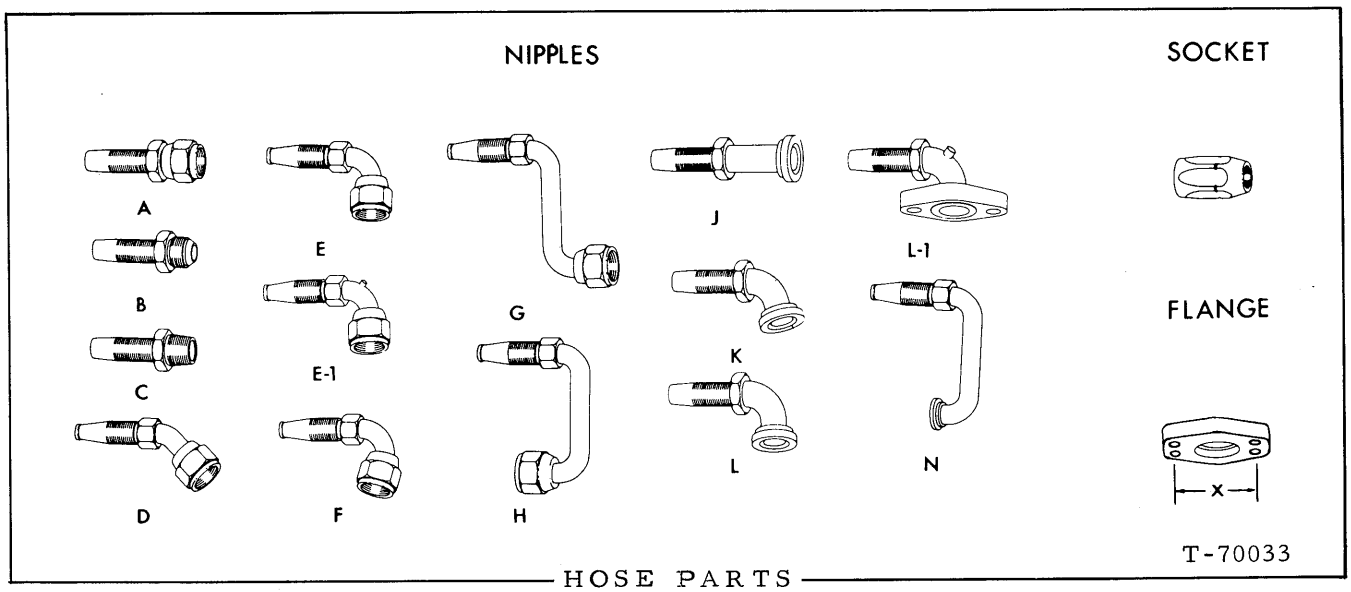

HOSE PARTS

NOTE: Refer to left hand column for identity of original hose. Hose is crimped-type (fitting not re-usable) unless otherwise noted. Equivalent hose assembly may be constructed from data indicated.

ORIGINAL HOSE ASSY. NUMBER	BULK HOSE (25' Roll)	HOSE LENGTH (inches)	NIPPLE (#1 end) ASSY. NO. (w/socket)		NIPPLE (#1 end) NIPPLE only		NIPPLE (#2 end) ASSY. NO. (w/socket)		NIPPLE (#2 end) NIPPLE only		SOCKET both ends
70675105	70922345	54-7/8			70919081	E			70920303	A	70919076
70676063	70921335	75-1/2	70925735	A			70925735	A			
70673676	70920731	42-1/2			70924630	J			70924172	K	70922391
70682027	70920720	12-5/8	70920805	A			70920805	A			
70684886	70928126	59-1/2			70928109	E			70928099	A	70928087
70684887	70928126	61-1/4			70928109	E			70928099	A	70928087
70684888	70928126	57-1/4			70928109	E			70928099	A	70928087
70688910	70919474	39-1/2			70919473	E			70921046	A	70919469
70689183	70920221	47-1/2			70920344	A			70921042	E	70919281
70689185	70926724	66-5/8		A			70925805	A			
70689314	70919474	60-1/2			70919473	E			70921046	A	70919469
*70689817	70920733	34			70930256	J			70930256	J	70923275
70689818	70920733	50			70930256	J			70930257	K	70923275
74393684	70928126	39-1/2			70928099	A			70928331	L	70928087
74393686	70928126	30-1/4			70929123	K			70928331	L	70928087
74393688	70928126	25			70928099	A			70928099	A	70928087
74393694	70928123	17-1/2			70928107	E			70928097	A	70928085
74394398	70928120	14-3/4			70930348	E			70928094	A	70928082
73062469	70920221	26-7/16			70920344	A			70920344	A	70919281
73062470	70920221	40-1/4			70919277	E			70919277	E	70919281
74393692	70928123	16-3/4			70928107	E			70928097	A	70928085

*Includes 27" of hose guard 70927480

MEMO

PACKAGED PARTS

PACKAGED NO.	DESCRIPTION
--------	REPAIR KIT, alcohol injector (See ALCOHOL INJECTOR ASSY.)
--------	REPAIR KIT, cylinder (See DUMP CYLINDER)
--------	REPAIR KIT, cylinder (See LIFT CYLINDER)
--------	REPAIR KIT, cylinder (See POWER STEERING CYLINDER)
--------	REPAIR KIT, brake (See BRAKE AND AIR CHAMBER)
--------	REPAIR KIT, valve (See AIR APPLICATION VALVE)
--------	LINING KIT (See BRAKE AND AIR CHAMBER)
--------	DECAL KIT (See PAINTING AND MARKING)
--------	RING SET, piston (See PISTON AND CONNECTING ROD)
--------	REPAIR KIT, pump (See WATER PUMP)
73062193	SEAL AND GASKET KIT, model TRT Transmission (2-speed forward, 2-reverse)(Also order 1 PLASTIC SEALANT - 70927939)

1	70194585	RING
2	70194679	SEAL, oil
2	70924944	NUT
24	73021041	NUT
1	73021056	GASKET
1	73021058	RING, seal
1	73026156	SEAL, oil
1	73035714	RING
1	73035745	RING, seal
1	73063376	SEAL, oil
1	73042146	KIT, seal and expander
8	73044460	TAB, locking
3	73044474	GASKET
1	73044485	GASKET
2	73044489	GASKET
2	73047668	RING, seal
1	73047698	GASKET
1	73047701	KIT, seal and expander
1	73047720	KIT, seal and expander
2	73047724	RING, seal
1	73047741	GASKET
1	73048782	GASKET
1	73058793	RING, seal
1	73062025	RING, seal
1	73062026	RING, seal
2	73062027	RING, seal
1	73062031	GASKET
1	73062032	GASKET
2	73062043	O-RING
1	73062051	RING, seal
1	73062067	RING, seal
1	73062134	SEAL

PACKAGE NO.		DESCRIPTION
74387007		GASKET SET, turbocharger mounting (See TURBOCHARGER)
74394432		GASKET SET, engine cylinder head
	8	74254873 WASHER, rocker cover capscrew
	8	74255956 SLEEVE, fuel line (rubber)
	1	74361551 GASKET, air intake elbow
	6	74376483 GASKET, water manifold
	1	74376520 GASKET, thermostat housing cover
	6	74378031 GASKET, nozzle
	1	74386137 GASKET, thermostat by-pass tube
	12	74387697 GASKET, intake and exhaust manifold
	2	74389961 GASKET, cylinder head cover (upper)
	2	74394426 GASKET ASSY., cylinder head (Includes Instruction Sheet)
	1	74391707 GASKET, air inlet
	1	74392279 GASKET, manifold connecting
	2	74393989 GASKET, cylinder head cover (lower)
74394034		GASKET KIT, intermediate, engine cylinder block (Does not include cylinder head or oil pan gaskets)
	2	70667252 GASKET, drain plug
	8	70923379 O-RING, water tube
	1	70923575 O-RING, idler pin
	8	70923645 O-RING, injection pump line
	2	70923651 O-RING, bonnet tube
	2	70923810 O-RING, dowel
	1	70923813 O-RING, idler gear pin
	5	70923934 O-RING
	1	70923935 O-RING, water pump flange
	1	70923936 O-RING, cam
	12	70925612 O-RING, water inlet manifold
	2	74113897 GASKET, cap nut
	4	74119937 GASKET, plugging capscrews
	5	74255511 O-RING, heat exchanger/oil filter
	2	74255513 O-RING, oil filter
	12	74255631 O-RING, oil cooler
	4	74255665 O-RING, fuel pump bracket
	2	74255781 O-RING, heat exchanger elbow
	1	74255898 O-RING
	1	74255904 O-RING
	1	74255912 O-RING, flywheel
	1	74310257 GASKET, oil filler pipe
	1	74336897 O-RING, flywheel housing
	1	74361740 GASKET, idler support
	1	74367090 GASKET, tachometer hole nut
	1	74371027 GASKET, gear housing hole cover
	2	74371160 GASKET, heat exchanger
	1	74371289 GASKET, oil pan cover
	3	74371345 GASKET, oil tube
	1	74371742 GASKET, cover
	1	74376398 GASKET, water pump
	1	74376603 GASKET, accessory drive
	1	74376609 GASKET, gear housing cover
	7	74376749 WASHER, push rod cover capscrew
	2	74377120 GASKET, push rod cover
	2	74378112 GASKET, lower by-pass flange
	1	74379070 SEAL, oil pan
	1	74385317 GASKET, water manifold
	1	74385320 GASKET, bonnet
	1	74386223 GASKET, bonnet

(Continued)

PACKAGED PARTS (Continued)

PACKAGE NO.		DESCRIPTION	
74394034 (Cont'd)	1	74386495	GASKET, water and oil manifold, lower
	1	74386856	GASKET, heat exchanger
	1	74387525	GASKET, cover
	1	74389291	GASKET, water and oil manifold, upper
	1	74389635	GASKET
	1	74389676	GASKET, heat exchanger
	1	74389678	GASKET, heat exchanger
	3	74389782	GASKET, oil tube
	1	74390432	GASKET, housing cover
	4	74393359	GASKET, oil lines
	1	74660423	GASKET, oil line
	1	74660492	GASKET, gear housing
---		RING SET, engine, piston (See PISTON AND CONNECTING ROD)	
74394054		SLEEVE KIT, engine (with piston)	
	2	74253749	RETAINER, piston pin
	1	74385485	RING, packing (red)
	1	74390175	PIN, piston
	1	74391473	SLEEVE, cylinder
	1	74393303	PISTON
	2	74393426	RING, packing (black)
	1	74394053	RING SET, piston (See above)

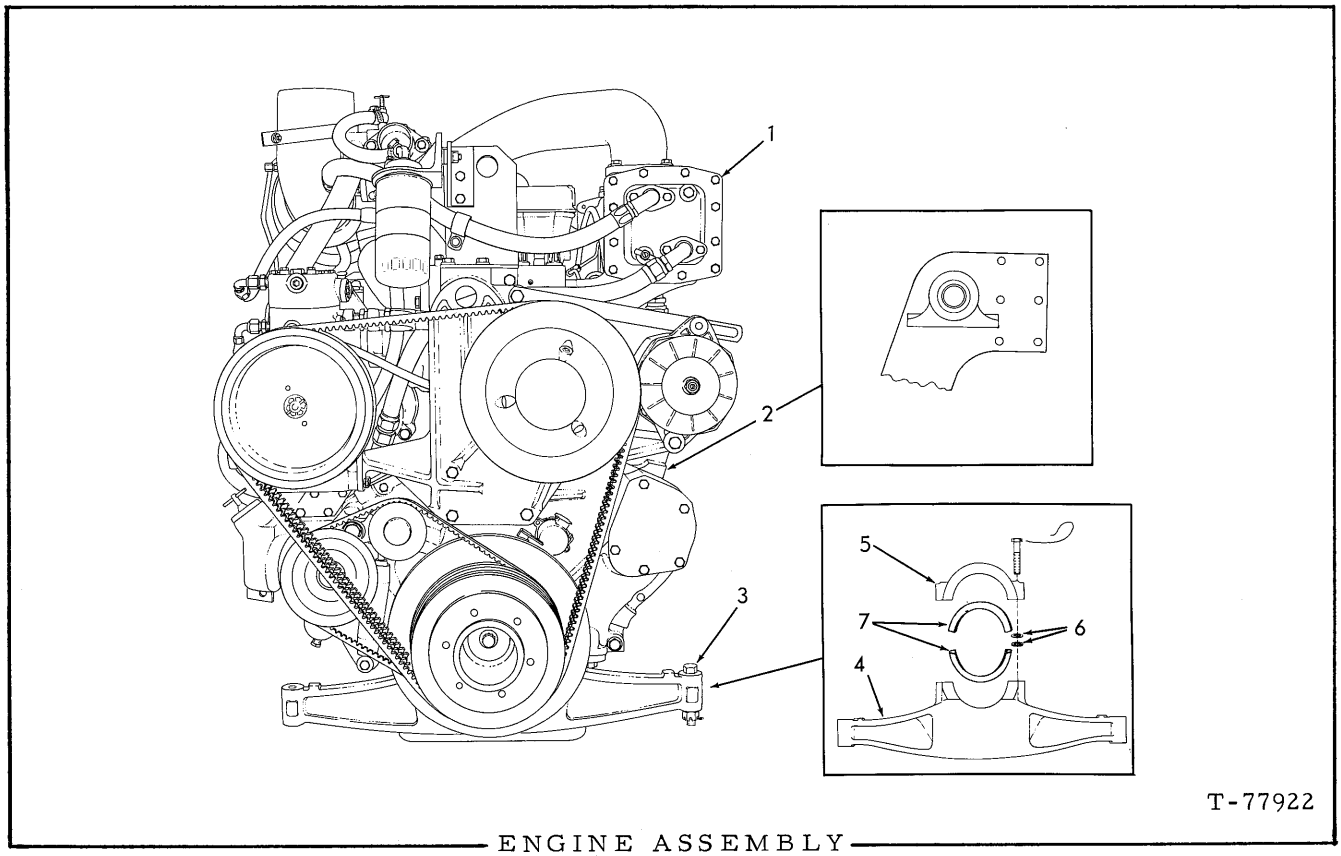

ENGINE ASSEMBLY

ITEM	PART NO.	QTY.	DESCRIPTION
1	74393795	1	ENGINE ASSY., Model 25000 Mark II
			NOTE: Engine includes Coolant Filter, Turbocharger, Fuel Pump, Fuel Filters, Lub. Oil Filters, Air Compressor and Alternator; but does not include Fan, Air Cleaner or Starter.
2	---------	2	BRACKET, rear (See TRANSMISSION ASSY.)
3	70925740	2	CAPSCREW, 5/8" NF x 4"
	70916589	2	NUT, locking, 5/8" NF
4	70655452	1	HANGER ASSY. front (Includes item 5)
5	--------	1	CAP (Not serviced separately)
	74394312	2	CAPSCREW, nylok, 1/2" NC x 3"
	74374018	1	LOCKWIRE
6	70916009	14	WASHER, shimming (1/32" thick) (Use as required)
7	74336491	2	LINER

"ALWAYS GIVE MODEL AND SERIAL NUMBER WHEN ORDERING PARTS"

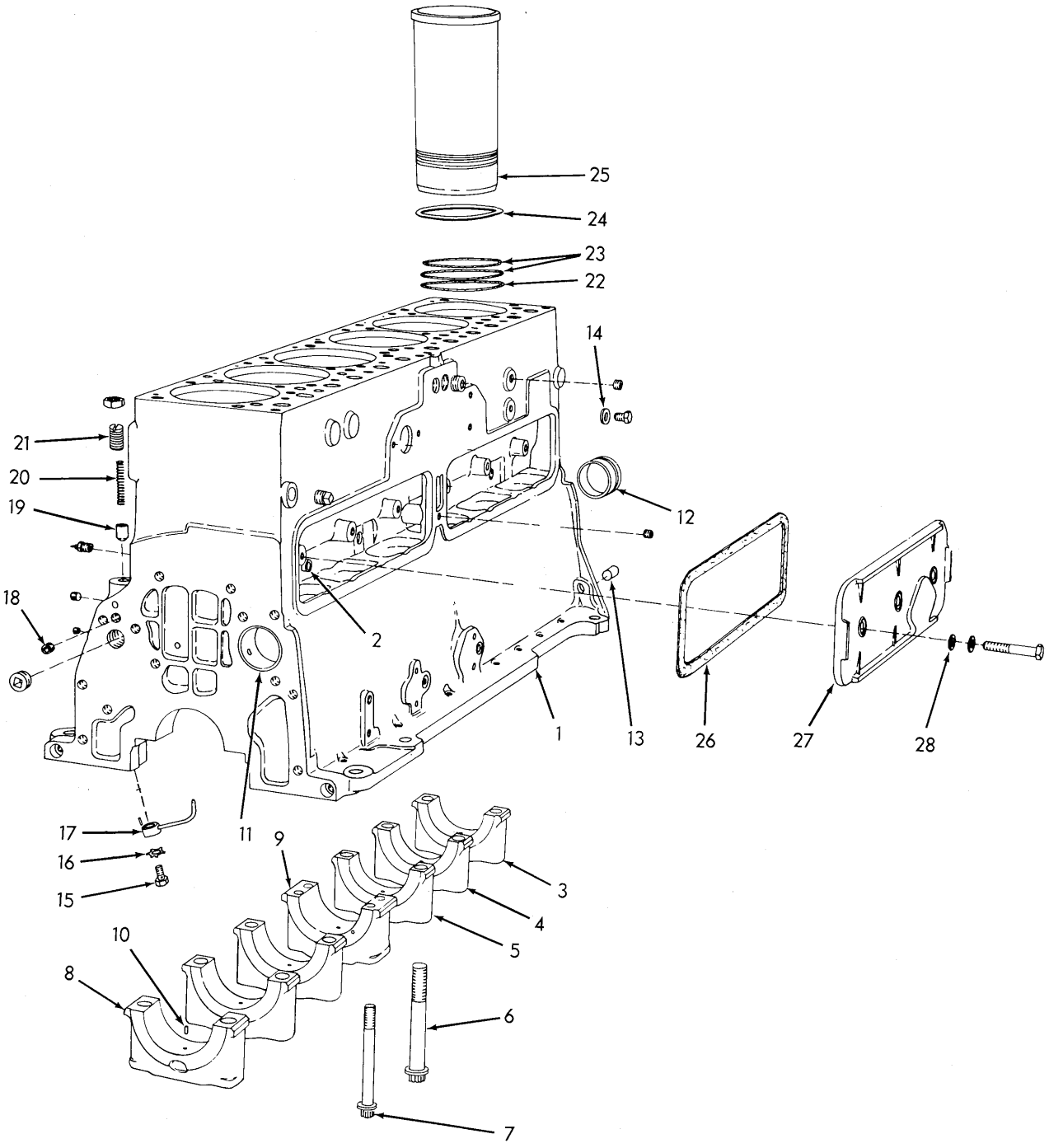

CYLINDER BLOCK T-72179-A

CYLINDER BLOCK

ITEM	PART NO.	QTY.	DESCRIPTION
1	74394346	1	BLOCK ASSY. (Includes items 2 thru 14, 18 and hardware indented below)
	70919840	3	PLUG, hex-hd., 1/4" NPT
	70920333	1	PLUG, hex-hd., 3/8" NPT
	70918887	1	PLUG, hex-skt. 3/8" NPT
	70917673	3	PLUG, hex-skt. 1/8" NPT
	70918850	3	PLUG, hex-skt. 1/4" NPT
	70918851	4	PLUG, hex-skt. 3/4" NPT
	74255363	1	COCK, drain, 1/4" NPT
2	--------	4	DOWEL (See VALVE OPERATING MECHANISM)
3	74389235	1	* CAP
4	74389232	1	* CAP
5	74389234	1	* CAP
6	74393397	12	CAPSCREW, 7/8" diam.
7	74391307	4	CAPSCREW, 5/8" diam.
8	74389231	1	* CAP
9	74393636	1	* CAP
	--------	4	PIN (See CRANKSHAFT)
10	74389292	7	PIN
11	74665306	1	BEARING, camshaft, front
	74393373	2	BEARING, camshaft, intermediate
12	74665306	1	BEARING, camshaft, rear
13	--------	2	PIN (See FLYWHEEL AND HOUSING)
14	74119937	3	□ WASHER (Copper)
	70919229	3	CAPSCREW, 1/2" NC x 1/2"
15	70922205	6	CAPSCREW, 5/8" NF x 1/2" (Included in BLOCK ASSY. for shipping purposes; remove and replace with jet retaining screw)
	74386262	6	SCREW, jet retaining (Not included in service BLOCK ASSY.)
16	74373619	6	LOCKWASHER, 5-tang (Included in BLOCK ASSY. for shipping purposes; remove and replace with jet retaining screw lockwasher)
	74255186	6	LOCKWASHER, jet retaining screw (Not included in service BLOCK ASSY.)
17	74390766	3	JET ASSY., right hand (Includes DOWEL PIN indented below)
	74390767	3	JET ASSY., left hand (Includes DOWEL PIN indented below)
	70917558	6	PIN, dowel, 1/8" x 1/2"
18	74389943	1	RESTRICTOR, oil pressure by-pass

(Continued)

CYLINDER BLOCK (Continued)

ITEM	PART NO.	QTY.	DESCRIPTION	
19	74500230	1	PISTON	
20	74660358	1	SPRING	
21	74389058	1	SCREW (Nylok)	
	70910847	1	NUT, jam, 3/4" NF	
22	74385485	6	□ O-RING, lower (red)	
23	74393426	12	□ O-RING, upper (black)	
24	74368204	-	SHIM (.005" thick)	Use as required when remachining block
	74368205	-	SHIM (.010" thick)	
	74368206	-	SHIM (.015" thick)	
	74369002	-	SHIM (.020" thick)	
25	74391473	6	□ SLEEVE	
26	74377120	2	□ GASKET	
27	74393853	2	COVER	
	70916316	6	CAPSCREW, 1/2" NC x 2-1/2"	
28	74376749	7	□ WASHER	
-	74061528	6	SLEEVE KIT (Consists of 1 O-RING 74385485, 2 O-RING 74393426 and 1 SLEEVE 74391473)	

* Replacement bearing caps are semi-finished and must be line-bored after installing.

□ (Also see PACKAGED PARTS)

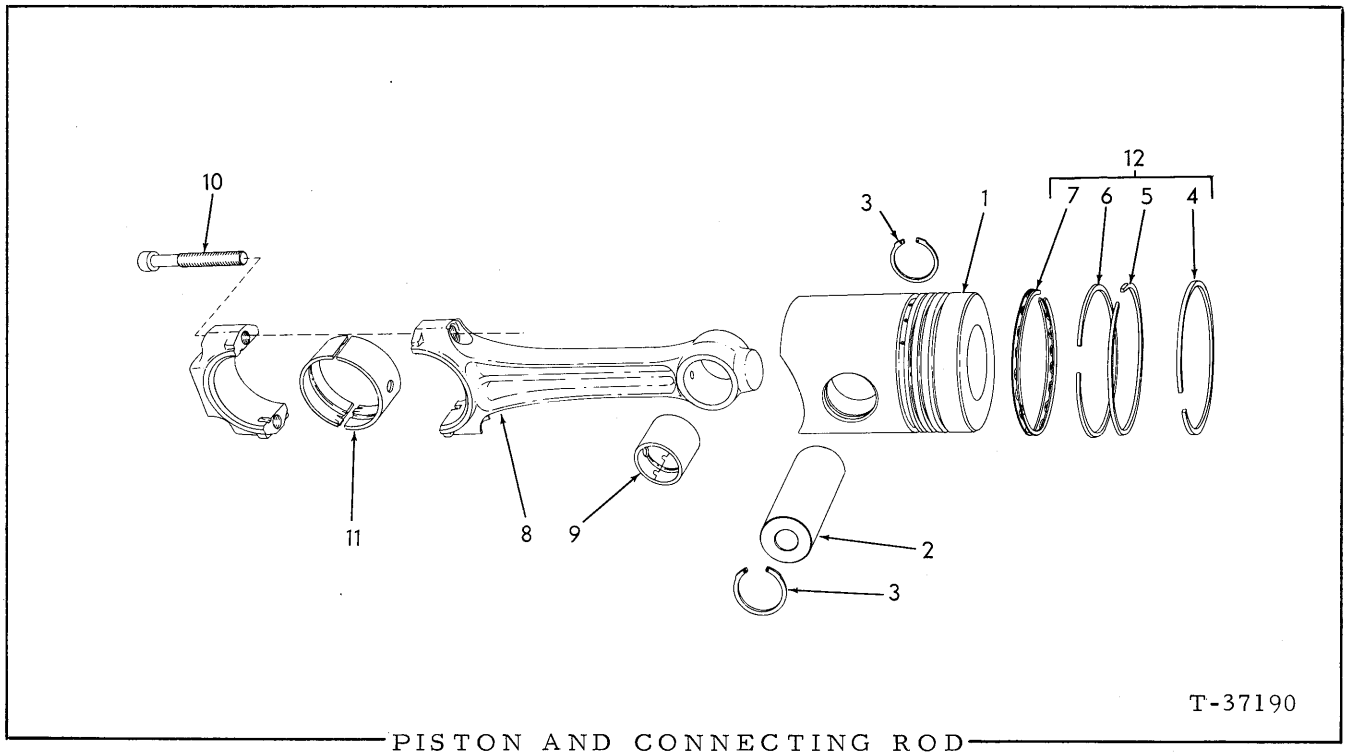

PISTON AND CONNECTING ROD

ITEM	PART NO.	QTY.	DESCRIPTION
1	74393303	6	□ PISTON
2	74390175	6	□ PIN
3	74253749	12	□ RETAINER
4	---------	6	RING (Top groove) } Order item 12
5	---------	6	RING (2nd groove)
6	---------	6	RING (3rd groove)
7	---------	6	RING (4th groove)
8	74394058	6	ROD ASSY. (Includes items 9 and 10)
9	74376986	6	BUSHING,
10	74392024	12	CAPSCREW
11	74390698	12	BEARING (Standard size)
	74391156	12	BEARING (.010" undersize)
	74391157	12	BEARING (.020" undersize)
	74391158	12	BEARING (.030" undersize)
	74391159	12	BEARING (.040" undersize)
12	74394053	6	□ RING SET (For 1 piston only)(Includes 1 each items 4 thru 7)
-	74061548	6	PISTON KIT (Consists of one each items 1, 2, 12 and 2 RETAINER 74253749)
			□(Also see PACKAGED PARTS)

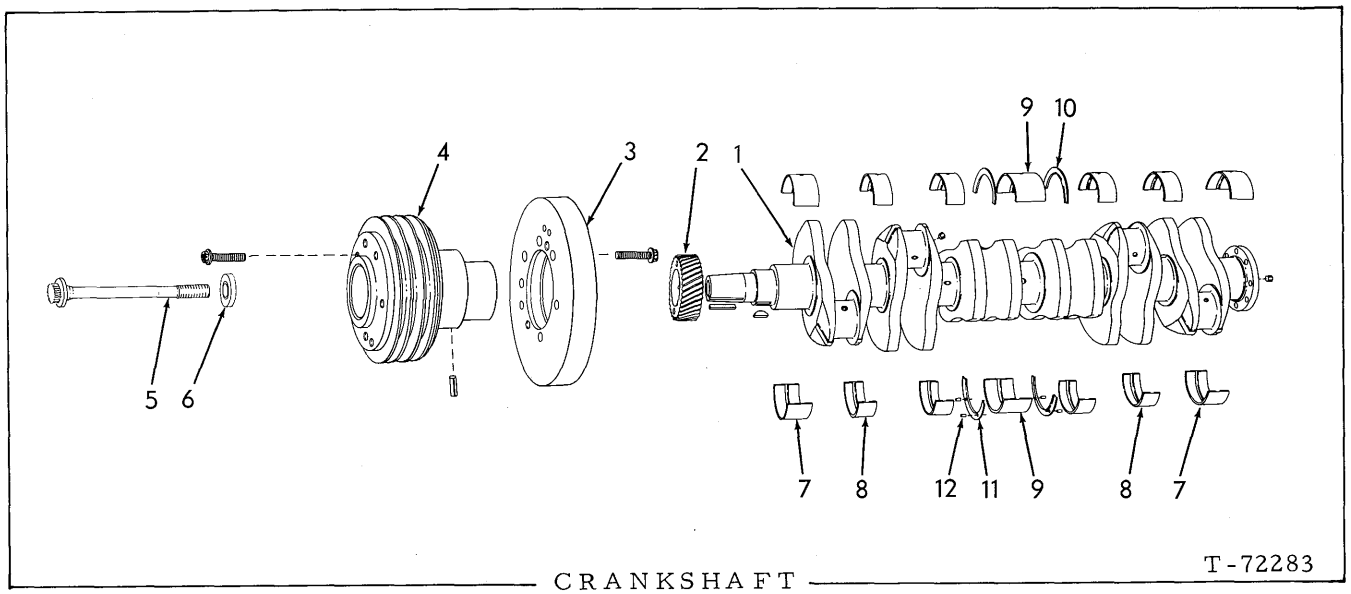

CRANKSHAFT

ITEM	PART NO.	QTY.	DESCRIPTION
1	74393322	1	CRANKSHAFT KIT (Replaces production no.74391953)
2	74389052	1	GEAR
	70905129	1	KEY, "D" woodruff, 5/16" x 1-1/4"
3	74390413	1	DAMPER
	74391022	6	BOLT, place (1/2" NC x 1-3/8")
4	74393664	1	PULLEY ASSY. (Includes PIN indented below)
	70921839	1	PIN, roll, 5/16" x 1-3/8"
5	74393443	1	CAPSCREW, 3/4" NC x 7-1/4"
6	74393436	1	WASHER
7	74387031	4	BEARING, front and rear main (Std. size)
	74386480	4	BEARING, front and rear main (.010" undersize)
	74386481	4	BEARING, front and rear main (.020" undersize)
	74386482	4	BEARING, front and rear main (.030" undersize)
	74386483	4	BEARING, front and rear main (.040" undersize)
8	74387032	8	BEARING, intermediate main (Std. size)
	74386473	8	BEARING, intermediate main (.010" undersize)
	74386474	8	BEARING, intermediate main (.020" undersize)
	74386475	8	BEARING, intermediate main (.030" undersize)
	74386476	8	BEARING, intermediate main (.040" undersize)
9	74387033	2	BEARING, center main (Std. size)
	74386469	2	BEARING, center main (.010" undersize)
	74386466	2	BEARING, center main (.020" undersize)
	74386467	2	BEARING, center main (.030" undersize)
	74386468	2	BEARING, center main (.040" undersize)
10	74386360	2	FLANGE, thrust, center main, upper (Std. size)
	74386456	2	FLANGE, thrust, center main, upper (.005" oversize)
	74386457	2	FLANGE, thrust, center main, upper (.010" oversize)
	74386458	2	FLANGE, thrust, center main, upper (.015" oversize)

(Continued)

ITEM	PART NO.	QTY.	DESCRIPTION
11	74386359	2	FLANGE, thrust, center main, lower (Std. size)
	74386453	2	FLANGE, thrust, center main, lower (.005" oversize)
	74386454	2	FLANGE, thrust, center main, lower (.010" oversize)
	74386455	2	FLANGE, thrust, center main, lower (.015" oversize)
12	74250898	4	PIN, dowel, thrust flange
13	74061484	1	KIT, bearing, main, crankshaft (Std. size)
	74061485	1	KIT, bearing, main, crankshaft (.010" undersize)
	74061486	1	KIT, bearing, main, crankshaft (.020" undersize)
	74061487	1	KIT, bearing, main, crankshaft (.030" undersize)
	74061488	1	KIT, bearing, main, crankshaft (.040" undersize)

NOTE: Each BEARING KIT listed above consists of BEARINGs for complete crankshaft overhaul.

14	74061489	1	KIT, flange, thrust (Std. size)
	74061490	1	KIT, flange, thrust (.005" undersize)
	74061491	1	KIT, flange, thrust (.010" undersize)
	74061492	1	KIT, flange, thrust (.015" undersize)

NOTE: Each THRUST FLANGE KIT listed above consists of upper and lower flange bearings and 4 PIN 74250898.

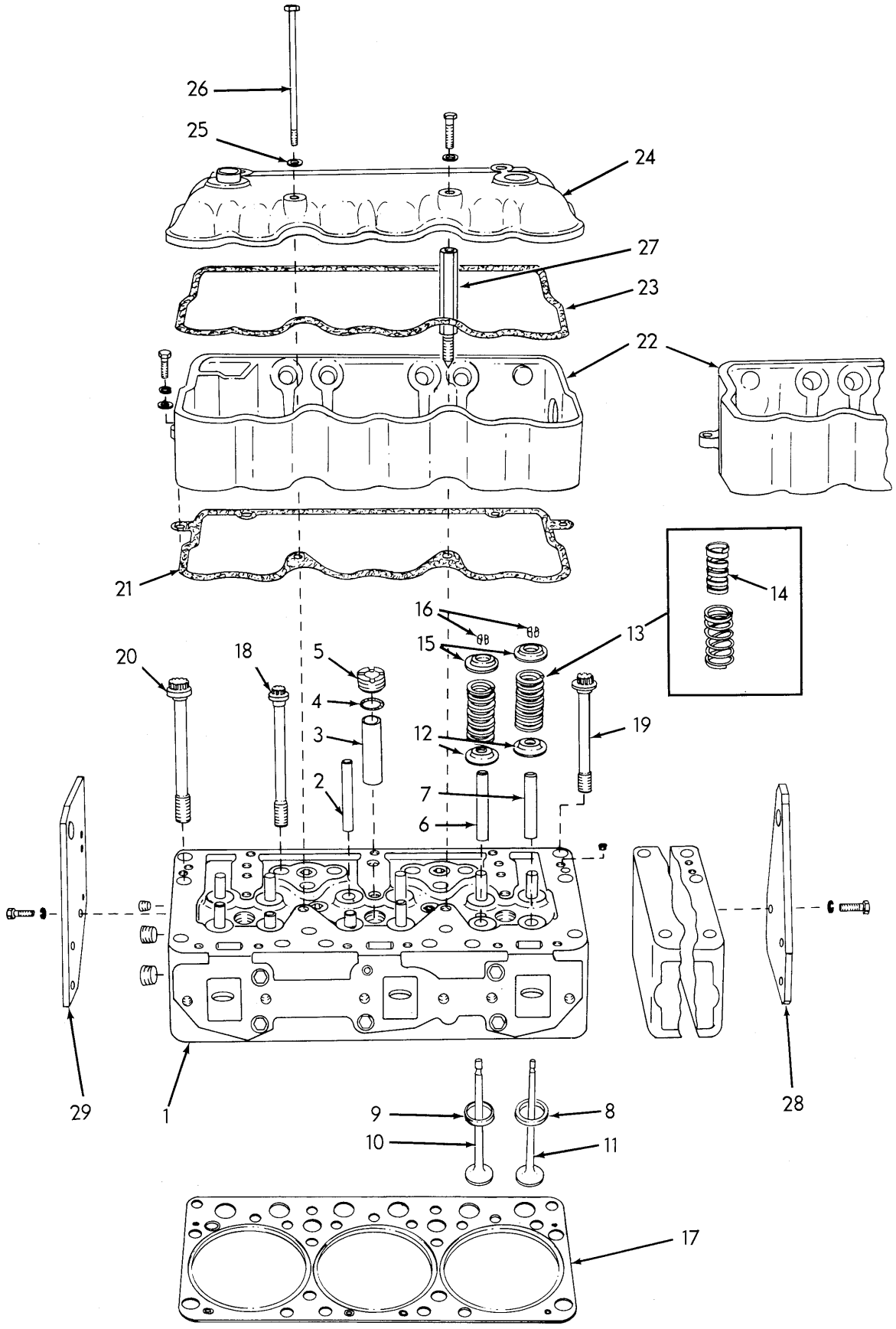

T-77915

CYLINDER HEAD

CYLINDER HEAD

ITEM	PART NO.	QTY.	DESCRIPTION
1	74394445	2	CYLINDER HEAD KIT (Includes items 2 thru 9 and PLUGS below)
	74255490	8	PLUG, pipe, hex-socket, 1/8" NPT
	74255491	2	PLUG, pipe, hex-socket, 1/4" NPT
	74255577	26	PLUG, pipe, hex-socket, 3/4" NPT
2	74386413	12	PIN, guide, valve bridge
3	74392051	6	SLEEVE, injection nozzle
4	70926672	6	O-RING, sleeve sealing
5	74392052	6	NUT, nozzle sleeve
6	74390547	12	GUIDE, intake valve
7	74390548	12	GUIDE, exhaust valve
8	74392053	12	INSERT, exhaust valve seat (Std. size)
	74392068	12	INSERT, exhaust valve seat (.005" oversize)
9	74386628	12	INSERT, intake valve seat (Std. size)
	74386653	12	INSERT, intake valve seat (.005" oversize)
10	74386790	12	VALVE, intake
11	74392054	12	VALVE, exhaust
12	74389685	24	SEAT
13	74389294	24	SPRING ASSY. (Includes item 14)
14	74389293	24	DAMPER
15	74389397	24	ROTOCOIL ASSY., intake valve (Serviced only as a unit)
16	74376497	48	LOCK
17	74394426	2	□ GASKET (Includes instruction sheet)
18	74391306	26	CAPSCREW (12 pt. flanged, 5/8" diam.)
19	74391307	2	CAPSCREW (12 pt. flanged, 5/8" NC x 6")
20	74393443	8	CAPSCREW (12 pt. flanged, 3/4" NC x 7-1/4")
21	74393989	2	□ GASKET
22	74393625	1	COVER, front
	74393628	1	COVER, rear
	70916272	4	CAPSCREW, 3/8" NC x 1-1/4"
	70904206	4	LOCKWASHER, 3/8"
	70913544	4	WASHER, plain, 3/8"

(Continued)

CYLINDER HEAD (Continued)

ITEM	PART NO.	QTY.	DESCRIPTION
23	74389961	2	□ GASKET
24	74386901	1	COVER
	74387726	1	COVER
25	74254873	8	□ WASHER
26	74386421	6	CAPSCREW
27	74389965	2	BOLT
	70914847	2	CAPSCREW, 3/8" NC x 1-1/2"
28	74387976	1	EYE, lifting (rear)
	70916311	3	CAPSCREW, 1/2" NC x 1-1/4"
	70904208	3	LOCKWASHER, 1/2"
29	74393597	1	EYE, lifting (front)
	70916311	1	CAPSCREW, 1/2" NC x 1-1/4"
	70915987	2	CAPSCREW, 1/2" NC x 1-1/2"
	70904208	3	LOCKWASHER, 1/2"

□(Also see PACKAGED PARTS)

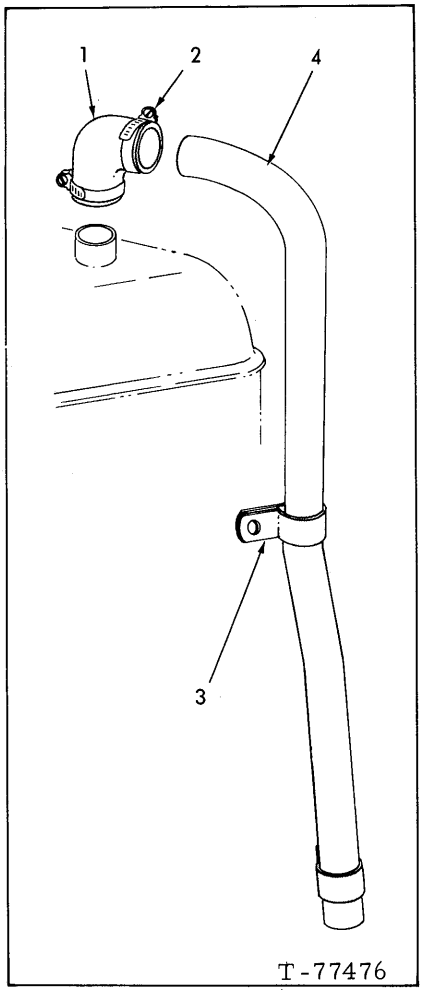

ENGINE BREATHER

ITEM	PART NO.	QTY.	DESCRIPTION
1	74255351	1	ELBOW
2	70922198	2	CLAMP
3	74255361	2	CLAMP
	70921865	1	CAPSCREW, nylok, 1/2" NC x 1"
4	74390722	1	TUBE

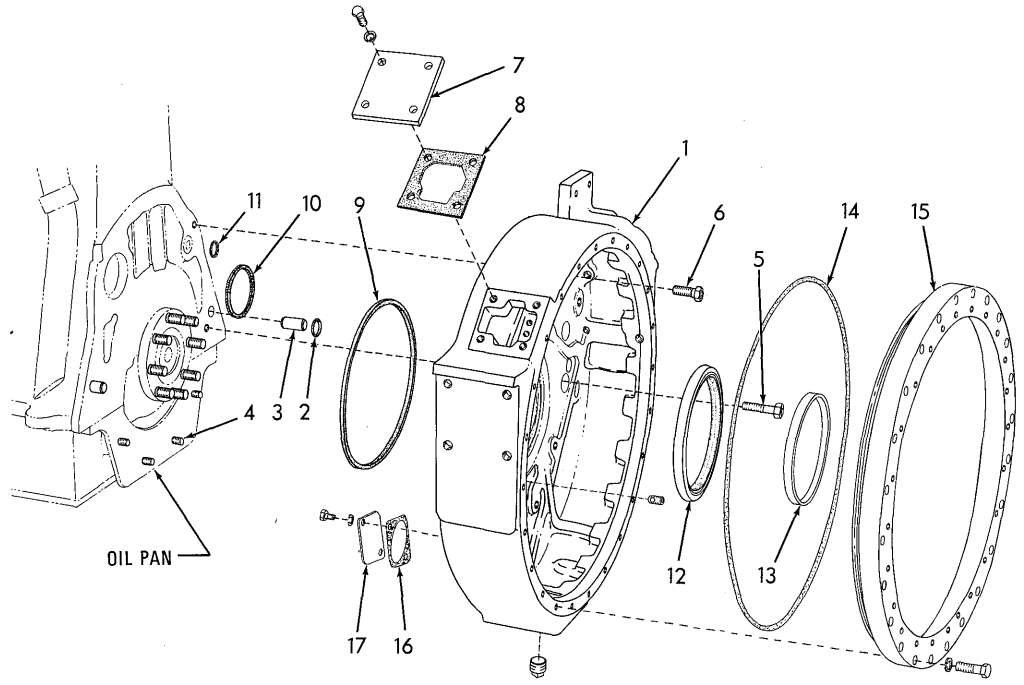

FLYWHEEL HOUSING

ITEM	PART NO.	QTY.	DESCRIPTION
1	74393658	1	HOUSING
	70920132	1	PLUG, 1/2" NPT
2	70923810	2	☐O-RING, housing dowel
3	74373716	2	DOWEL, housing to crankcase
4	--------	4	CAPSCREW (See OIL PAN)
5	74255335	2	CAPSCREW, 1/2" NC x 2-1/8"
6	70920574	8	CAPSCREW, 1/2" NC x 1-3/8"
7	74386650	1	COVER
	70915813	4	CAPSCREW, 5-1/16"NC x 7/8"
	70904205	4	LOCKWASHER, 5/16"
8	74390432	1	☐GASKET, timing hole cover
9	74336897	1	☐RING, sealing
10	74255904	1	☐RING, sealing, (camshaft hole)
11	74255898	1	☐RING, sealing, (oil gallery hole)
12	74394038	1	SEAL, oil
13	74394036	1	SLEEVE
14	70924828	1	O-RING

(Continued)

FLYWHEEL HOUSING (Continued)

ITEM	PART NO.	QTY.	DESCRIPTION
15	74393659	1	ADAPTER
	70920648	24	CAPSCREW, 7/16"NC x 2"
	70904207	24	LOCKWASHER, 7/16"
16	74387525	1	□GASKET, cover
17	74387524	1	COVER
	70921508	2	CAPSCREW, nylok, 5/16"NC x 3/4"
	70904205	2	LOCKWASHER, 5/16"

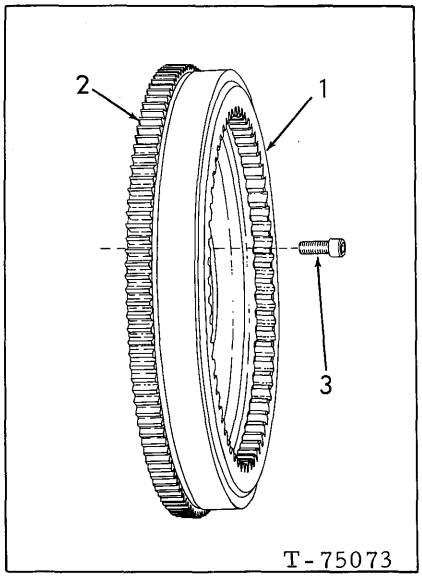

FLYWHEEL

ITEM	PART NO.	QTY.	DESCRIPTION
1	74393742	1	FLYWHEEL ASSY. (Includes item 2)
2	74303694	1	GEAR
3	74391666	8	CAPSCREW

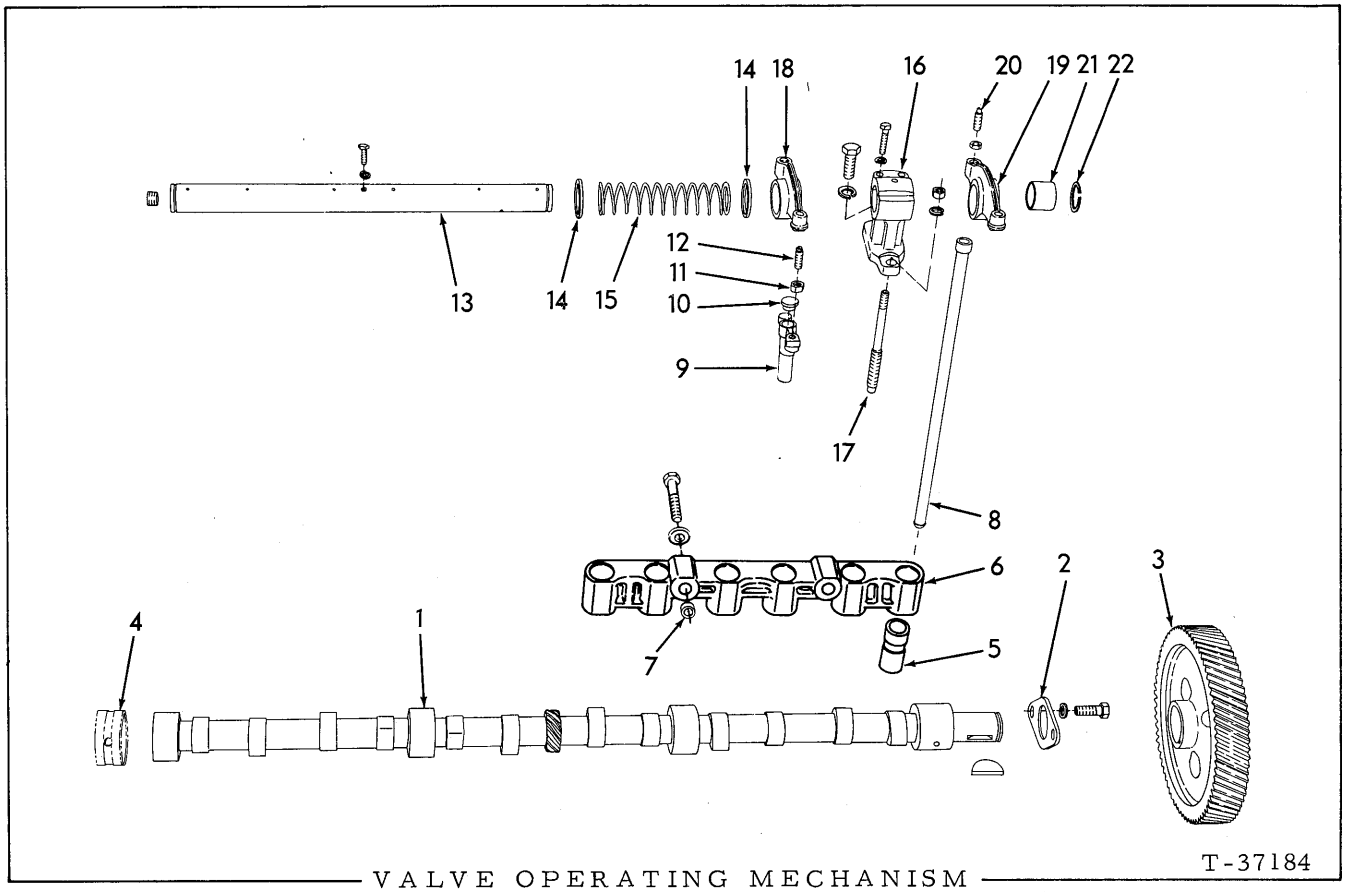

VALVE OPERATING MECHANISM

ITEM	PART NO.	QTY.	DESCRIPTION
1	74393399	1	CAMSHAFT
2	74386776	1	PLATE
	70916311	2	CAPSCREW, 1/2" NC x 1-1/4"
	70904208	2	LOCKWASHER, 1/2"
3	74392183	1	GEAR
	70923738	1	KEY, hi-pro, 5/16" x 2-1/8"
4	--------	-	BEARING (See CYLINDER BLOCK)
5	74391845	12	LIFTER
6	74391869	1	BRACKET, front
	74391870	1	BRACKET, rear
	70915969	4	CAPSCREW, 1/2" NC x 3"
	74376277	4	WASHER
7	74303038	4	DOWEL
8	74391849	12	ROD
9	74390270	12	BRIDGE ASSY. (Includes items 10 thru 12)
10	74376538	12	INSERT
11	74516821	12	NUT
12	74390254	12	SCREW
13	74390117	2	SHAFT ASSY. (Includes PLUGS indented below)
	70918887	4	PLUG, pipe, hex-skt., 3/8" NPT
	70915406	2	CAPSCREW, 1/4" NC x 3/4"
	70904204	2	LOCKWASHER, 1/4"

(Continued)

VALVE OPERATING MECHANISM (Continued)

ITEM	PART NO.	QTY.	DESCRIPTION
14	74386406	8	RETAINER
15	74386405	4	SPRING
16	74389317	6	BRACKET
	70916311	6	CAPSCREW, 1/2" NC x 1-1/4" (attaching)
	70904208	6	LOCKWASHER, 1/2"
	70915807	12	CAPSCREW, 5/16" x 1-1/4"
	70904205	12	LOCKWASHER, 5/16"
17	74377541	6	STUD (Also retains injection nozzle holder)
	70910325	6	NUT, 1/2" NC
	70904208	6	LOCKWASHER, 1/2"
18	74390296	4	ARM ASSY., intake valve no.'s 1, 2, 4, 5 (Includes items 20 & 21)
	74390297	2	ARM ASSY., exhaust valve no.'s 3, 6 (Includes items 20 & 21)
19	74390294	4	ARM ASSY., exhaust valve no.'s 1, 2, 4, 5 (Includes items 20 & 21)
	74390295	2	ARM ASSY., intake valve no.'s 3, 6 (Includes items 20 & 21)
20	74336646	12	SCREW
	74516821	12	NUT
21	74388428	12	BUSHING
22	74253190	4	RING

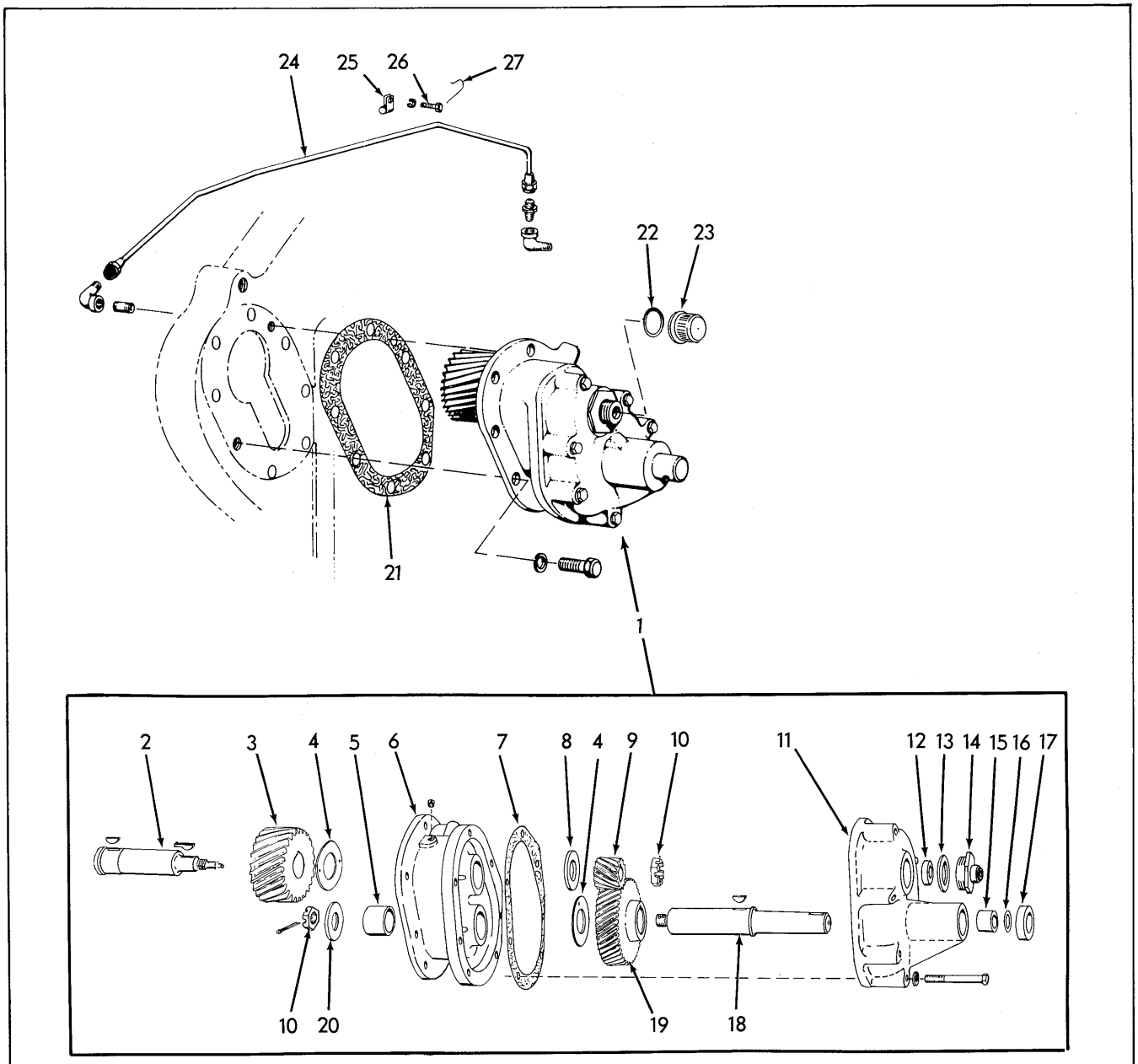

T-18959

ACCESSORY DRIVE

ITEM	PART NO.	QTY.	DESCRIPTION
1	74391402	1	DRIVE ASSY., accessory (Includes items 2 thru 20)
	70921520	8	CAPSCREW, nylok, 3/8" NC x 1"
2	74391404	1	SHAFT, upper
	70917409	1	KEY, woodruff, #9, 3/16" x 3/4" (drive gear)
	70922939	1	KEY, 3/16" square x 1/2" (drive shaft gear)
3	74391403	1	GEAR, accessory drive

(Continued)

ACCESSORY DRIVE (Continued)

ITEM	PART NO.	QTY.	DESCRIPTION
4	74391412	2	WASHER, thrust
5	74369746	4	BUSHING, accessory drive housing
6	74391457	1	HOUSING ASSY., accessory drive (Includes item 5)
	70919134	2	PLUG, pipe, hex, 1/8"NPT (dryseal)
7	74387124	1	GASKET
8	74391407	1	WASHER, thrust, drive shaft
9	74364404	1	GEAR, drive shaft (14T.)
10	70930805	2	NUT, flexloc, thin, 3/4"NF
11	74377314	1	COVER ASSY., accessory drive (Includes item 15)
	70912069	7	CAPSCREW, 3/8"NC x 1-7/8"
	70904206	7	LOCKWASHER, 3/8"
12	74391019	1	SEAL, oil
13	74251601	1	GASKET
14	74365627	1	ADAPTER, tachometer drive
15	74377278	1	BUSHING
16	74254742	1	RING, snap
17	74386879	1	SEAL, oil
18	74391475	1	SHAFT, driven
	70917409	1	KEY, woodruff #9, 3/16" x 3/4"
19	74391557	1	GEAR
20	74364166	1	WASHER, thrust
21	74376603	1	☐GASKET
22	74367090	1	☐GASKET, tachometer hole cover
23	74371118	1	NUT, cover, tachometer hole
24	74376627	1	TUBE ASSY. (Includes flared NUTS)
	74391885	1	ELBOW, female, 1/4" tube, 1/8" taper thd.
	70917841	1	NIPPLE, pipe, 1/8" x 7/8"
	70910141	1	CONNECTOR, male, 1/4" tube, 1/8" taper thd.
	70917013	1	ELBOW, street, 90°, 1/8"
25	74361829	1	CLIP
26	74335669	1	CAPSCREW, drilled hd.
	70904204	1	LOCKWASHER, 1/4"
27	74348691	1	WIRE, locking

☐Also see PACKAGED PARTS

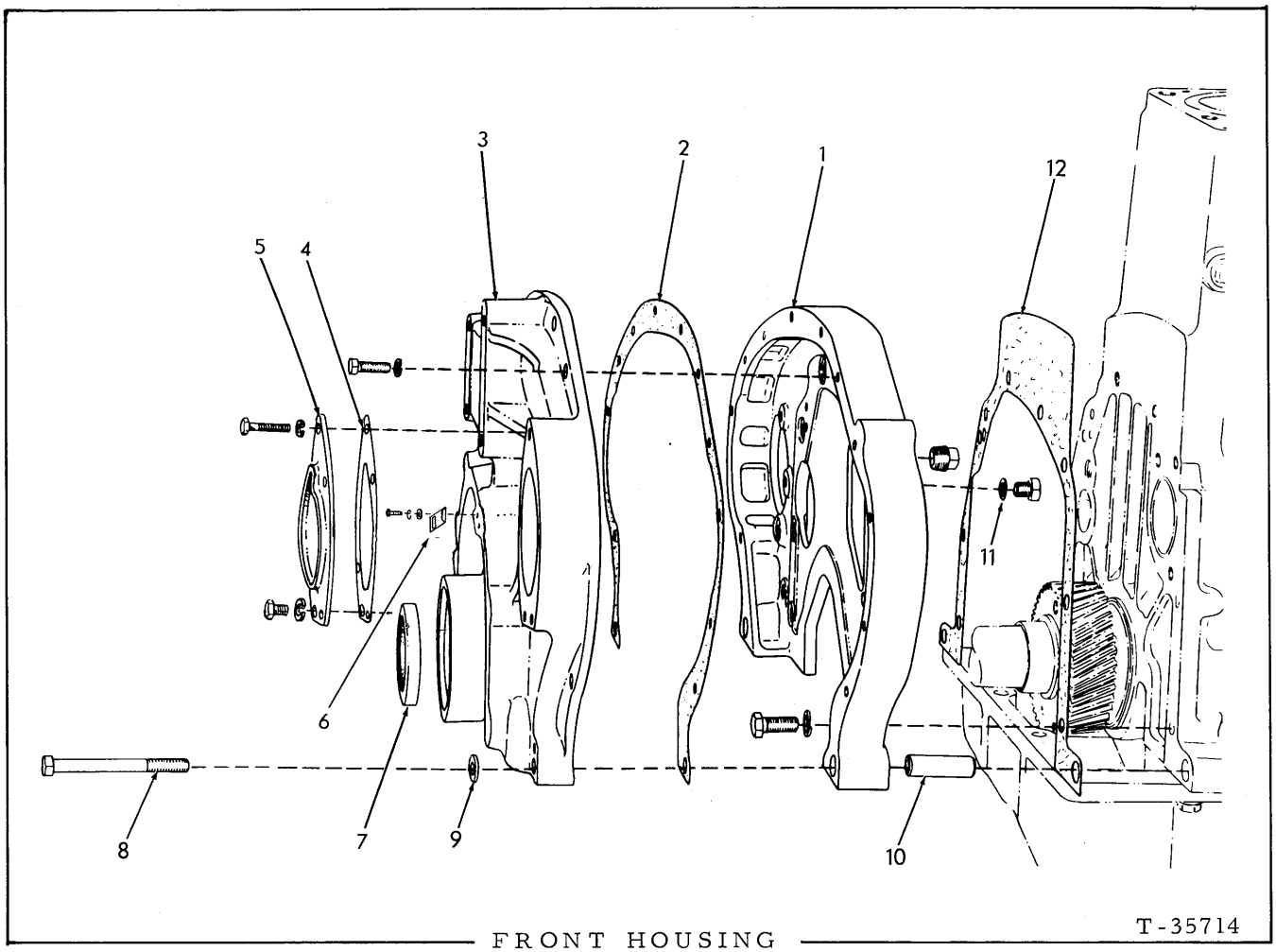

FRONT HOUSING

ITEM	PART NO.	QTY.	DESCRIPTION
1	74377408	1	HOUSING
	70908944	1	PLUG, pipe, ctsk., 1/2"
	70916311	8	CAPSCREW, 1/2" NC x 1-1/4"
	70904208	8	LOCKWASHER, 1/2"
2	74376609	1	□ GASKET
3	74393552	1	COVER
	70919224	7	CAPSCREW, 3/8" NC x 1-1/8"
	70904206	7	LOCKWASHER, 3/8"
4	74371742	1	□ GASKET
5	74373585	1	COVER
	70916253	2	CAPSCREW, 7/16" NC x 3/4"
	70904207	2	LOCKWASHER, 7/16"
	70915990	3	CAPSCREW, 3/8" NC x 2-3/4"
	70904206	3	LOCKWASHER, 3/8"
6	74390418	1	POINTER, timing
	70916284	2	CAPSCREW, 1/4" NC x 1/2"
	70904204	2	LOCKWASHER, 1/4"
	70911114	2	WASHER, plain, SAE std., 1/4"
7	74028922	1	SEAL KIT, oil, crankshaft
8	70916321	2	CAPSCREW, 1/2" NC x 4-1/2"
9	74371445	2	WASHER, plain, 1/2"

(Continued)

FRONT HOUSING (Continued)

ITEM	PART NO.	QTY.	DESCRIPTION
10	74371444	2	DOWEL, hollow, gear housing
11	74119937	1	□GASKET, plugging capscrew (copper annular)
	70919229	1	CAPSCREW, 1/2" NC x 1/2"
12	74660492	1	□GASKET

□(Also see PACKAGED PARTS)

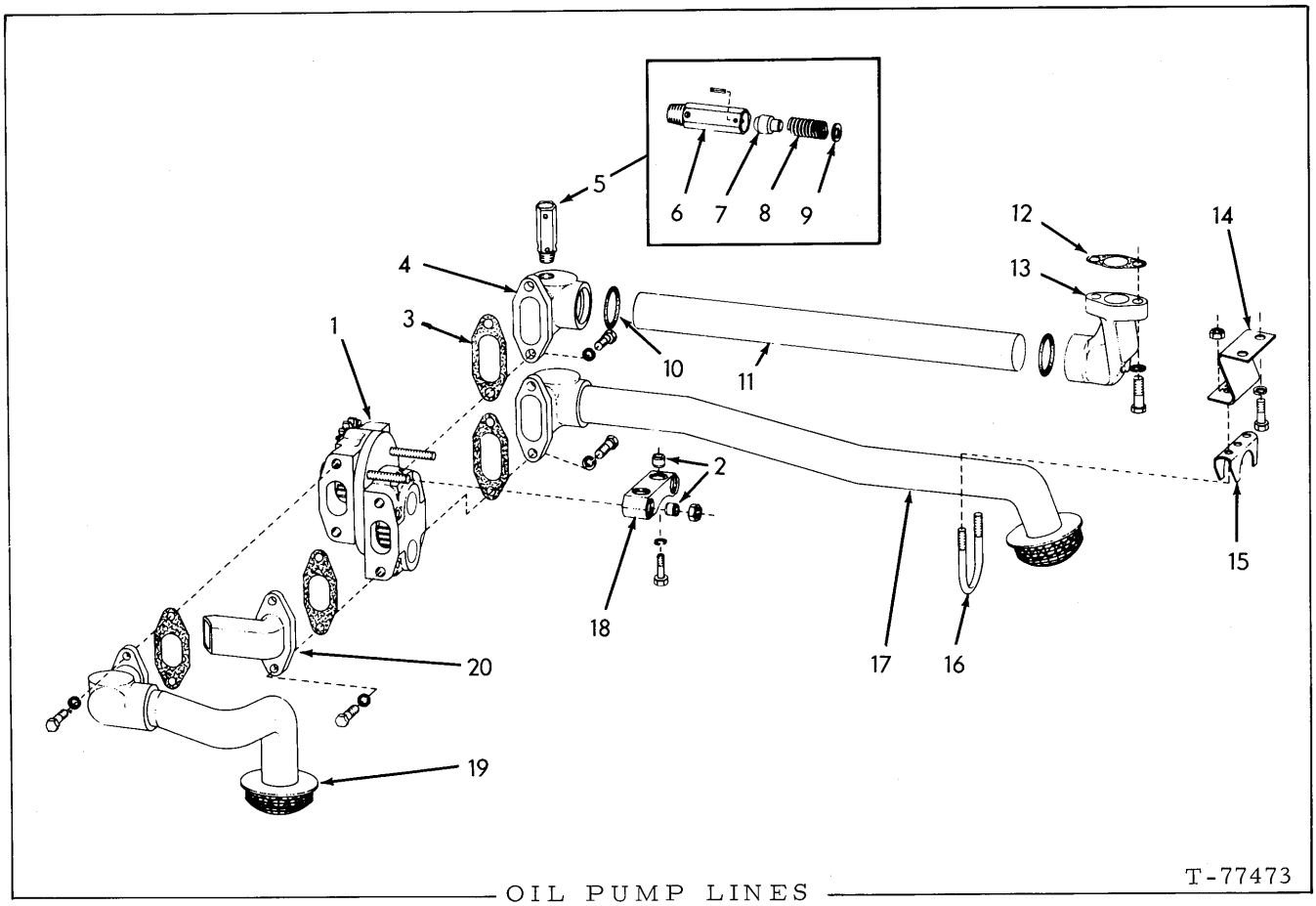

OIL PUMP LINES

ITEM	PART NO.	QTY.	DESCRIPTION
1	--------	1	PUMP ASSY. (See page 32)
	70928212	2	NUT, 7/16"NC
2	74371253	4	DOWEL
3	74393359	4	□GASKET
4	74393362	1	ELBOW
	70923193	2	CAPSCREW, 3/8"NF x 1-1/4"
	70916543	2	LOCKWASHER, internal teeth, 3/8"
5	74320597	1	VALVE ASSY. (Includes items 6 thru 9)
6	--------	1	BODY (Not serviced separately)
	70916001	1	PIN, spring, 3/16" x 1"
7	--------	1	PISTON (Not serviced separately)
8	74354568	1	SPRING
9	74359310	1	WASHER
10	70927044	2	O-RING
11	74393364	1	TUBE

(Continued)

OIL PUMP LINES (Continued)

ITEM	PART NO.	QTY.	DESCRIPTION
12	74660423	1	□GASKET
13	74393363	1	ELBOW
	70916313	2	CAPSCREW, 1/2"NC x 1-3/4"
	70904208	2	LOCKWASHER, 1/2"
14	74393599	1	BRACKET
	70927485	2	CAPSCREW, 7/16"NC x 1"
	70904207	2	LOCKWASHER, 7/16"
	70911992	2	WASHER, plain, 7/16"
15	74393601	1	SADDLE
16	74393600	1	U-BOLT
	70916871	2	NUT, elastic stop, 5/16"NC
17	74393356	1	TUBE
	70923193	2	CAPSCREW, 3/8"NF x 1-1/4"
	70916543	2	LOCKWASHER, internal teeth, 3/8"
18	74393341	1	BRACKET
	70927583	2	CAPSCREW, 7/16"NC x 1-3/4"
	70904207	2	LOCKWASHER, 7/16"
19	74393360	1	TUBE
	70923193	2	CAPSCREW, 3/8"NF x 1-1/4"
	70916543	2	LOCKWASHER, internal teeth, 3/8"
20	74393391	1	ELBOW
	70923193	2	CAPSCREW, 3/8"NF x 1-1/4"
	70916543	2	LOCKWASHER, internal teeth, 3/8"

□ Also see PACKAGED PARTS

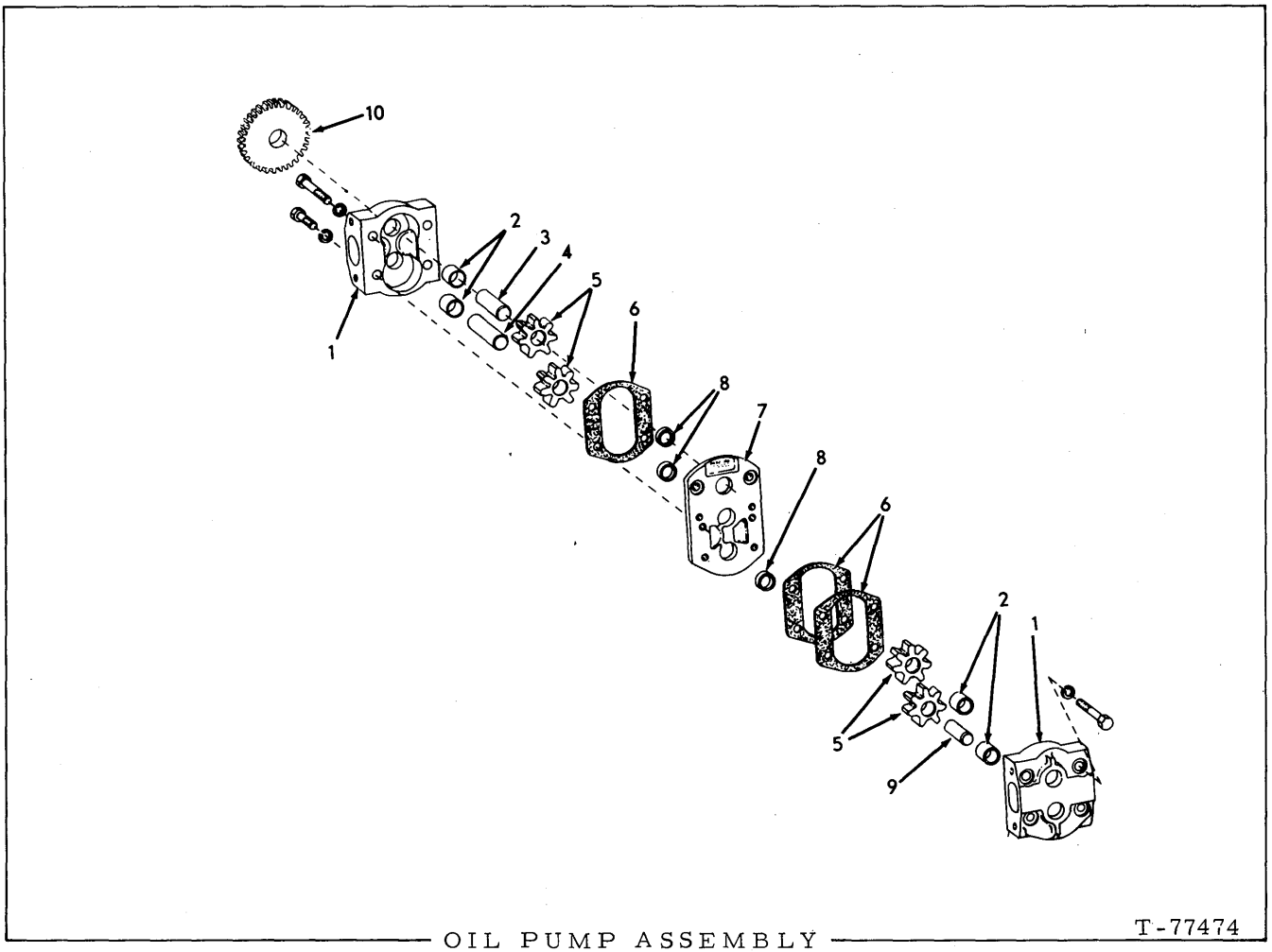

OIL PUMP ASSEMBLY

USAGE: See page 30

ITEM	PART NO.	QTY.	DESCRIPTION
-	74393342	1	PUMP ASSY. (Includes items 1 thru 10)
1	74393344	2	BODY ASSY. (Includes item 2)
	70920594	6	CAPSCREW, 7/16" NF x 2"
	70928211	2	CAPSCREW, 7/16" NF x 3-3/4"
	70907863	8	LOCKWASHER, 7/16"
2	74393346	4	BUSHING
3	74393351	1	SHAFT
4	74026614	1	SHAFT
5	74028077	4	GEAR
6	74393349	3	GASKET
7	74393347	1	PLATE ASSY. (Includes item 8)
8	74393346	3	BUSHING
9	74393354	1	SHAFT
10	74393355	1	GEAR

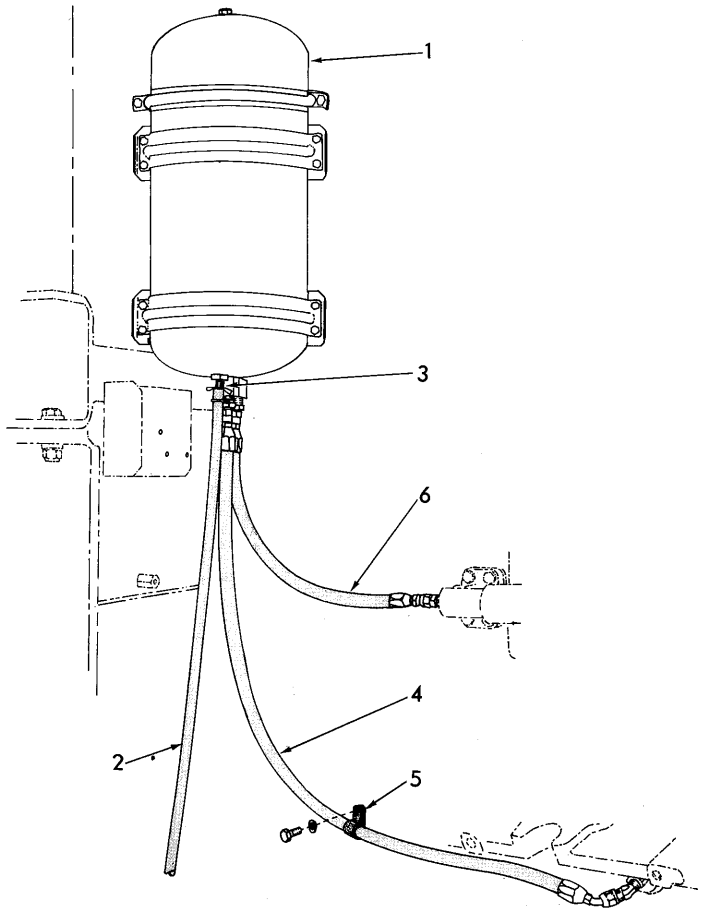

T-78024

HEAVY DUTY FILTER
(By-Pass Type)

ITEM	PART NO.	QTY.	DESCRIPTION
1	---------	1	FILTER ASSY., (See page 34).
	70922763	8	CAPSCREW, 3/8" NC x 1"
	70911026	8	NUT, 3/8" NC
2	70667676	1	HOSE, drain
	70929146	1	CLAMP
3	70229210	1	COCK, drain
4	70681428	1	HOSE ASSY. (long)
	70925838	2	ELBOW, 3/8" tube, 1/2" NPT
5	70927217	1	CLAMP
	70921175	1	CAPSCREW, 1/2" NC x 1"
	70677008	1	WASHER, plain, 1/2"
6	70197372	1	HOSE ASSY. (short)
	70919127	1	CONNECTOR, (Filter end) 3/8" tube, 1/2" NPT
	70919172	1	CONNECTOR, (Engine end) 3/8" tube, 3/8" NPT

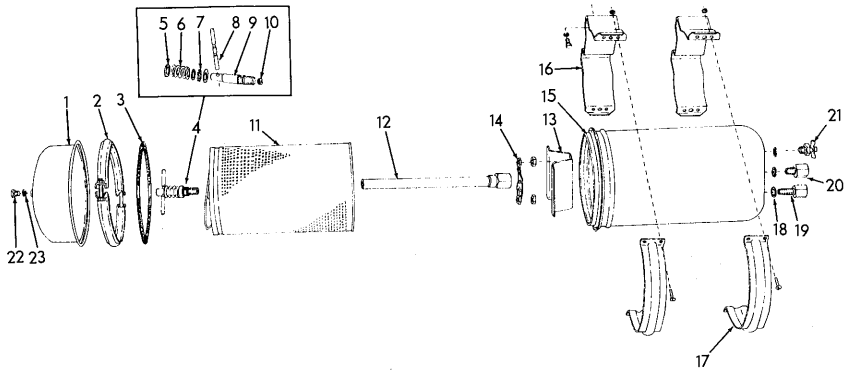

LUBER-FINER DESIGN T-74660

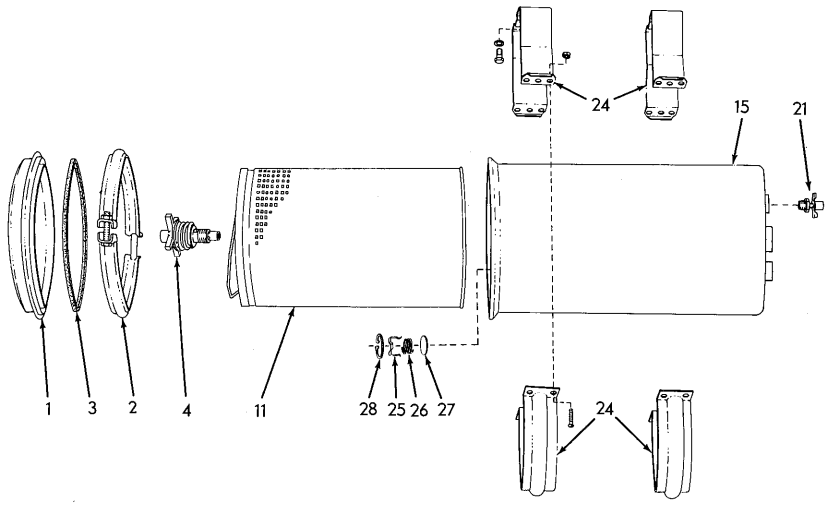

FLEETGUARD DESIGN T-76480

OIL FILTER (By-pass type)

USAGE: See page 33

NOTE: This Filter Assy. is available in two designs, "Fleetguard" and "Luber-Finer". Check which is applicable to your unit and order service parts accordingly.

* Luber-Finer Design

** Fleetguard Design

ITEM	PART NO.	QTY. *	QTY. **	DESCRIPTION
-	74390593	2	-	FILTER ASSY. (Includes items 1 thru 23)
-	74390593	-	2	FILTER ASSY. (Includes items 1 thru 4, 11, 15, 21, 24 thru 28)
				NOTE: Quantities are for one (1) filter only.
1	74059262	1	-	COVER
	74059813	-	1	COVER
2	70630540	1	-	RING ASSY. (Includes nut and bolt)
	74059814	-	1	COUPLING ASSY. (Includes hardware. Serviced only as a unit)
3	70082449	1	-	GASKET
	70926772	-	1	GASKET

(Continued)

OIL FILTER (By-pass type)(Continued)

ITEM	PART NO.	QTY. *	QTY. **	DESCRIPTION
4	74059266	1	-	HOLD-DOWN ASSY. (Includes items 5 thru 10)
	74060691	-	1	SUPPORT ASSY. (Includes O-RING, Serviced only as a unit)
5	70082489	3	-	WASHER
6	70082490	1	-	SPRING
7	70082487	1	-	SEAL
8	70082488	1	-	HANDLE
9	--------	1	-	STUD (Not Serviced Separtely)
10	74059265	1	-	PLUG
11	74059343	1	1	ELEMENT
12	74059264	1	-	TUBE ASSY. (Includes NUT)
13	70096816	1	-	SUPPORT
	70911049	2	-	NUT, jam, 5/8" NF
14	70096815	1	-	RETAINER
15	--------	1	-	HOUSING (Not Serviced Separately)
	74059809	-	1	SHELL
16	70082444	2	-	BRACKET
17	70082443	2	-	BAND
	70915406	8	-	CAPSCREW, 1/4" NC x 3/4"
	70911024	8	-	NUT, 1/4" NC
18	70063891	3	-	GASKET
19	70063890	1	-	VALVE ASSY. (Includes 1 SPRING, 1 RING, 1 CUP, Serviced only as a unit)
20	70080758	1	-	VALVE ASSY. (Includes 1 SPRING, 1 RING, 1 CUP, Serviced only as a unit)
21	74060755	1	-	COCK
	70229210	-	1	COCK
22	70084897	1	-	PLUG
23	70084899	1	-	WASHER
24	74059817	-	2	BRACKET ASSY. (2 piece, includes hardware. Serviced only as a unit)
25	74059810	-	1	CAGE
26	74059811	-	1	SPRING
27	70459812	-	1	DISC
28	74253555	-	1	RING

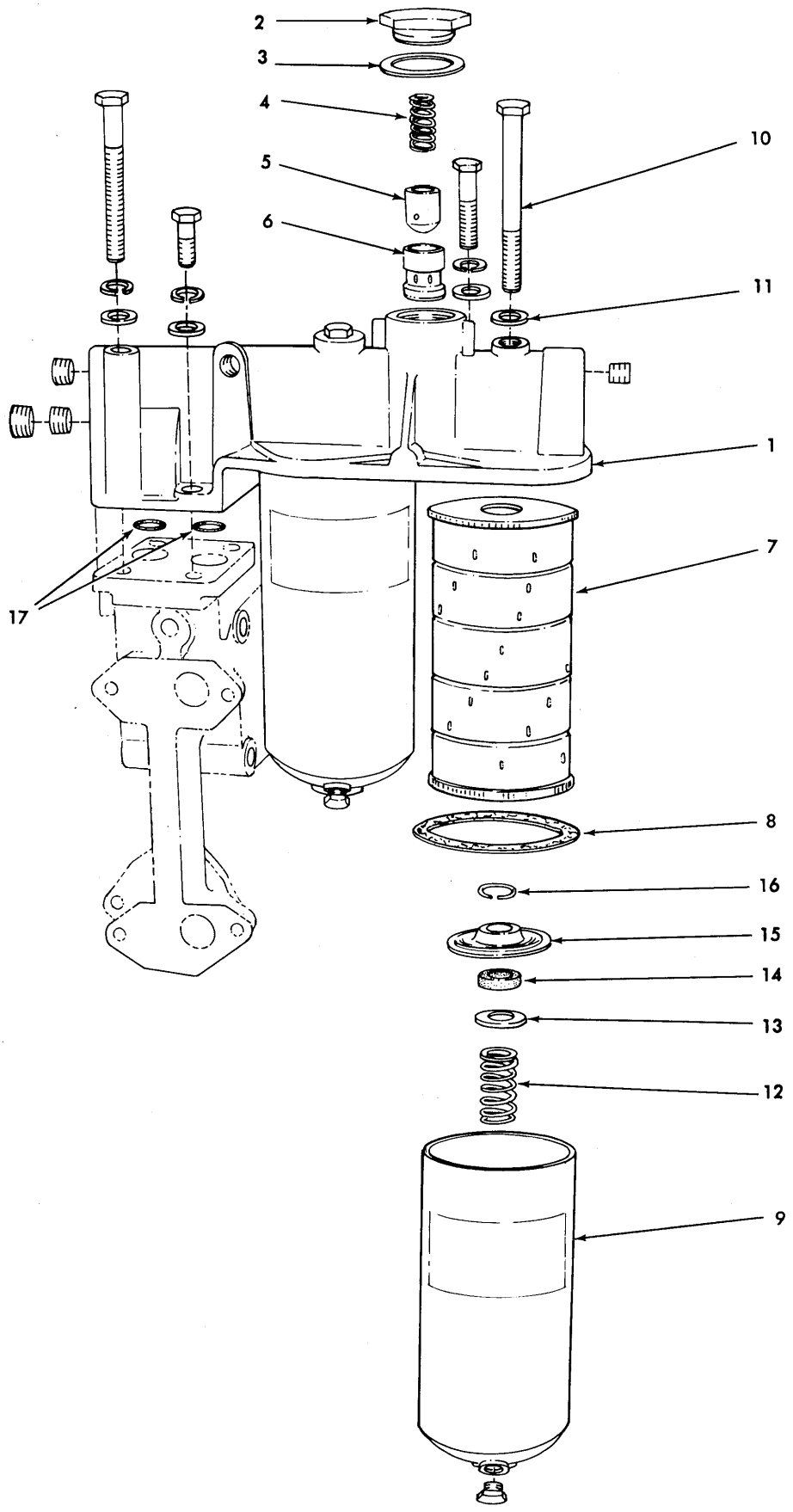

OIL FILTER (Full-Flow Type)

T-70444

OIL FILTER

(Full-Flow Type)

ITEM	PART NO.	QTY.	DESCRIPTION
1	74391146	1	HEAD ASSY. (Includes items 2 thru 6, also PLUGS indented below)
	70918888	3	PLUG, pipe, hex-skt., 1"
	70918697	1	PLUG, pipe, hex-skt., 1-1/4"
	70916317	2	CAPSCREW, 1/2" NC x 2-3/4"
	70916323	2	CAPSCREW, 1/2" NC x 5-1/2"
	70915987	2	CAPSCREW, 1/2" NC x 1-1/2"
	70912333	6	WASHER, plain
	70904208	6	LOCKWASHER, 1/2"
2	74388810	1	CAP
3	74388848	1	GASKET
4	74359656	1	SPRING
5	74373613	1	PISTON
6	74388809	1	SLEEVE
7	74371021	2	ELEMENT KIT (Includes item 8)
8	74372325	2	GASKET
9	74339021	2	BODY
	70918951	2	PLUG, pipe, hex-hd., 3/8" NPT
10	74388836	2	CAPSCREW
11	74376749	2	WASHER
12	74379268	2	SPRING
13	74053410	2	WASHER
14	74053409	2	SEAL
15	74055971	2	ADAPTER
16	74379269	2	RING
17	74255631	2	□ O-RING

□(Also see PACKAGED PARTS)

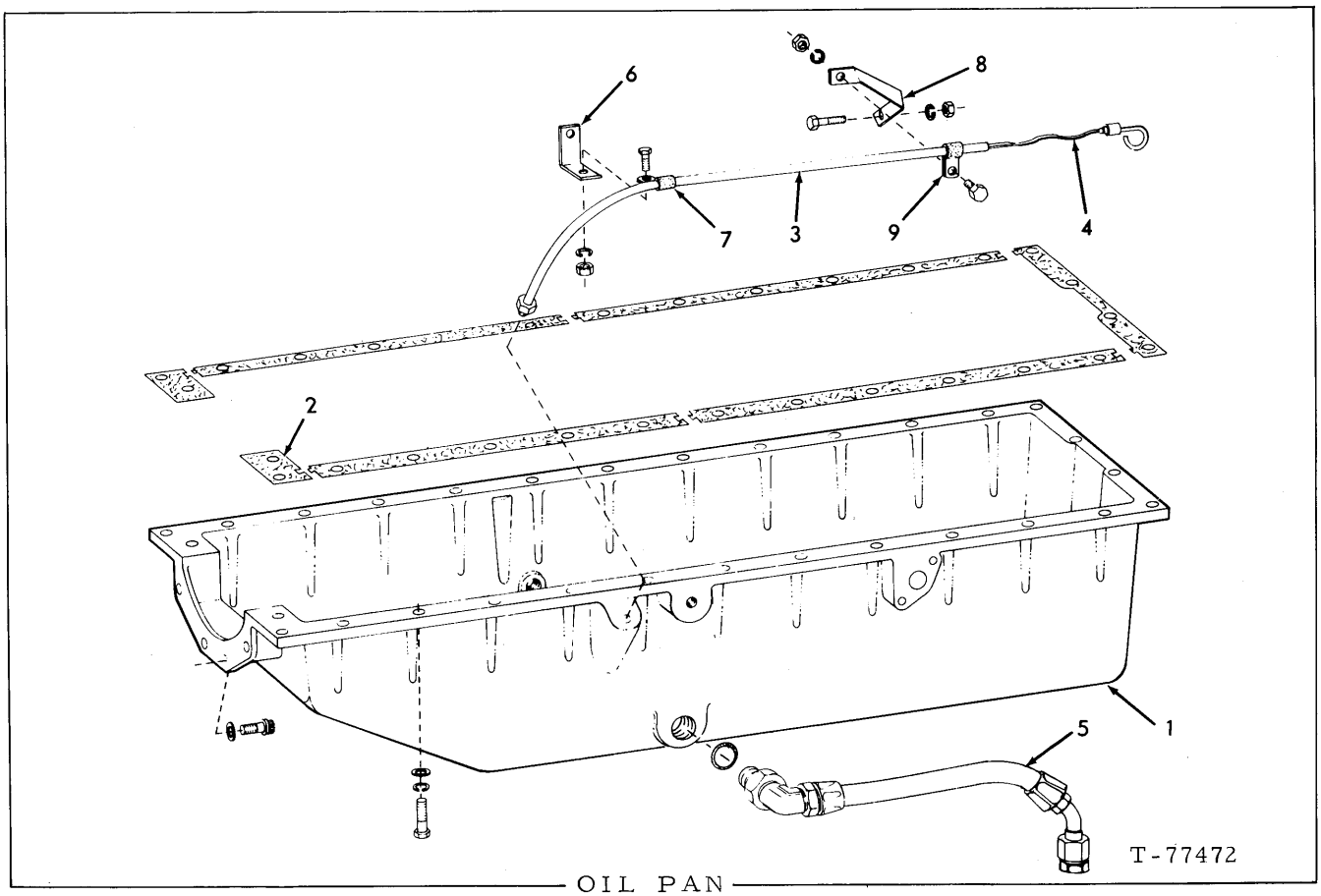

OIL PAN

ITEM	PART NO.	QTY.	DESCRIPTION
1	74394763	1	PAN (Second Type)(Order 1 each of the following PLUGS, 70035250, 70918851 and 70922420)
	70928246	4	CAPSCREW, flanged, 1/2" NC x 1"
	70928247	30	CAPSCREW, 1/2" NC x 1-1/2"
	70904208	30	LOCKWASHER, 1/2"
	70912007	34	WASHER, plain
	70920416	1	PLUG, pipe, 1/2" NPT
	70921216	1	PLUG (Includes O-RING) (Used with First Type PAN)
	70921214	1	O-RING, plug
	70035250	1	PLUG
	70918851	1	PLUG (Used with Second Type PAN)
	70922420	1	PLUG
2	74365129	1	GASKET SET
3	74393639	1	ADAPTER KIT
4	74393646	1	GAUGE
5	74393745	1	HOSE, oil drain
	70924692	1	PLUG, flare type, 1-5/16" str. thd.
	70921227	1	ELBOW, adjustable, flare type, 1-5/16" str. thd. (Includes O-RING)
	70921214	1	O-RING, elbow
6	74393641	1	BRACKET
7	70927097	1	CLAMP, adapter, 1/2" dia.
	70916268	1	CAPSCREW, 3/8" NC x 5/8"
	70904206	1	LOCKWASHER, 3/8"
	70910324	1	NUT, 3/8" NC

(Continued)

ITEM	PART NO.	QTY.	DESCRIPTION
8	74394310	1	BRACKET
	70916272	1	CAPSCREW, 3/8"NC x 1-1/4"
	70910287	1	LOCKWASHER, 3/8"
	70910324	1	NUT, 3/8"NC
9	70926917	1	CLAMP, adapter (3/8" diam.)
	70916268	1	CAPSCREW, 3/8"NC x 5/8"
	70904206	1	LOCKWASHER, 3/8"
	70910324	1	NUT, 3/8"NC

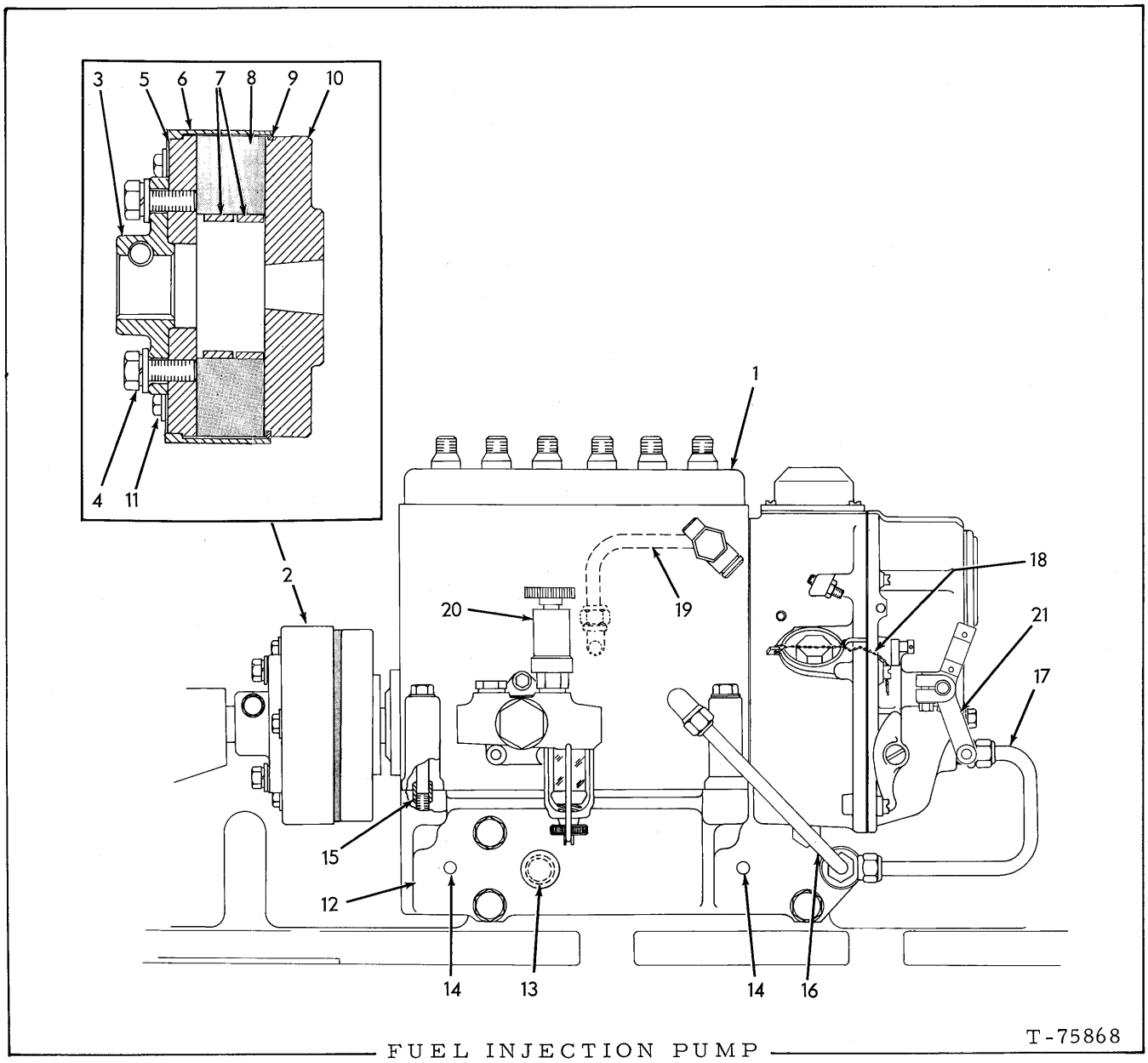

FUEL INJECTION PUMP

ITEM	PART NO.	QTY.	DESCRIPTION
1	74061077	1	PUMP ASSY. (Includes item 2)(Service replacement for original factory adjusted PUMP ASSY. 74394176, requires calibration)
	70919015	4	CAPSCREW, 3/8" NC x 3-1/2"
	70904206	4	LOCKWASHER, 3/8"
	70913544	4	WASHER, plain, 3/8"
	70905845	1	KEY, woodruff, 1/4" x 7/8"
2	74384009	1	COUPLING (Includes items 3 thru 11)
3	74394318	1	CLAMP
	70927322	1	CAPSCREW, 3/8" NF x 2" } Clamping
	70910287	1	LOCKWASHER, 3/8" }

(Continued)

FUEL INJECTION PUMP (Continued)

ITEM	PART NO.	QTY.	DESCRIPTION
4	70921076	2	CAPSCREW, 3/8" NC x 1-1/4"
	70677006	2	WASHER, plain
5	74060643	1	FLANGE
6	74061040	1	COVER
7	74060645	2	INSERT
8	74060646	6	INSERT (rubber)
9	74061042	1	SHIELD, dust
10	74061041	1	HUB
11	70915343	3	CAPSCREW, 1/4" NC x 1/2"
	70904204	3	LOCKWASHER, 1/4"
	70911114	3	WASHER, plain
12	74392500	1	BRACKET (Used prior to engine serial No. 25-04002)
	74394301	1	BRACKET (Effective with engine serial No. 25-04002)
	70916311	4	CAPSCREW, 1/2" NC x 1-1/4"
	70904208	4	LOCKWASHER, 1/2"
13	74255665	2	□ O-RING
14	74253286	2	PIN
15	74392630	2	DOWEL (Used prior to engine serial No. 25-04002)
	74394302	2	DOWEL (Effective with engine serial No. 25-04002)
16	74392494	1	TUBE ASSY. (Includes SLEEVES and NUTS)
	70917810	2	NUT, Imperial, 3/8" tube
	70917807	2	SLEEVE, Imperial, 3/8" tube (rubber)
	70920280	1	ELBOW, Imperial, 3/8" tube, 1/4" NPT (at pump)
	70921841	1	TEE, service, Imperial, 3/8" tube, 1/4" NPT (at bracket)
17	74392492	1	TUBE ASSY. (Includes SLEEVES and NUTS)
	70917810	2	NUT, Imperial, 3/8" tube
	70917807	2	SLEEVE, Imperial, 3/8" tube (rubber)
	70920279	1	CONNECTOR, Imperial, 3/8" tube NPT (at governor)
18	74355843	1	SEAL
19	74392518	1	TUBE ASSY. (Includes SLEEVES and NUTS)(Used prior to engine serial No. 25-04002)
	74394306	1	TUBE ASSY. (Includes SLEEVES and NUTS)(Effective with engine serial No. 25-04002)
	70917810	2	NUT, Imperial, 3/8" tube
	70917807	2	SLEEVE, Imperial, 3/8" tube (rubber)
	70920790	1	ELBOW, Imperial, 3/8" tube, 1/8" NPT (at pump)
	70927139	1	ELBOW, Imperial, 3/8" tube, 1/4" NPT female } at block
	70913112	1	NIPPLE, pipe, hex, 1/4" x 1/4" } at block
20	74392903	1	PUMP, hand primer
21	74393286	1	LEVER ASSY.

□ (Also see PACKAGED PARTS)

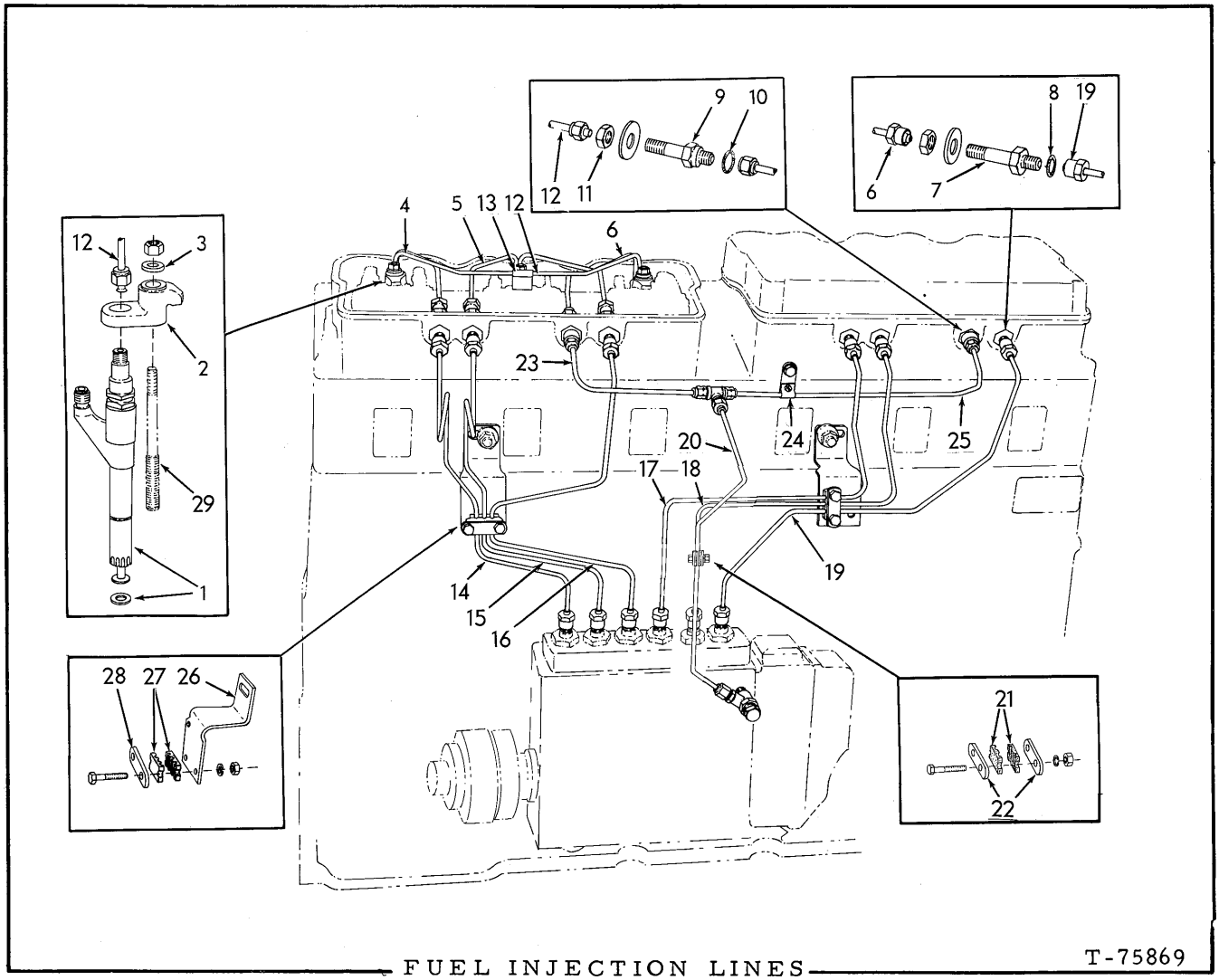

T-75869

FUEL INJECTION LINES

ITEM	PART NO.	QTY.	DESCRIPTION
1	--------	6	HOLDER ASSY. (See page 44)
2	74387385	6	CLAMP
	74115287	6	NUT, 3/8" NF
3	74020145	6	WASHER
4	74390093	2	TUBE ASSY. (#1 and #4 cyl.)
5	74390094	2	TUBE ASSY. (#2 and #5 cyl.) — Each includes nuts
6	74390095	2	TUBE ASSY. (#3 and #6 cyl.)
7	74386601	6	CONNECTOR
	70919303	6	NUT, jam, 9/16" NF
	70914659	6	WASHER, plain, SAE std., 9/16"
8	70923645	6	□ O-RING

(Continued)

FUEL INJECTION LINES (Continued)

ITEM	PART NO.	QTY.	DESCRIPTION
9	74386602	2	CONNECTOR
10	70923645	2	□ O-RING
11	74377267	2	NUT (1/2" - 24)
	70914659	2	WASHER, plain, SAE std., 9/16"
12	74393813	2	MANIFOLD ASSY.
	70917809	8	NUT, Imperial, 1/4" tube
	74255956	8	□ SLEEVE, Imperial, 1/4" tube (rubber)
13	74255179	2	CLIP
14	74392384	1	TUBE ASSY. (#1 cyl.)
15	74392385	1	TUBE ASSY. (#2 cyl.)
16	74392386	1	TUBE ASSY. (#3 cyl.)
17	74392387	1	TUBE ASSY. (#4 cyl.)
18	74392388	1	TUBE ASSY. (#5 cyl.)
19	74392389	1	TUBE ASSY. (#6 cyl.)

Each includes nuts

20	74393772	1	TUBE
	70917809	2	NUT, Imperial, 1/4" tube
	74255956	2	SLEEVE, Imperial, 1/4" tube (rubber)
	70919797	1	TEE, Imperial, 1/4" tube
	70919800	1	CONNECTOR, Imperial
21	74507358	2	SPACER
22	74507414	2	PLATE
	70918794	2	SCREW, fil-hd., 1/4"NC x 5/8"
	70904204	2	LOCKWASHER, 1/4"
	70910880	2	NUT, 1/4"NC
23	74392789	1	TUBE
	70917809	2	NUT, Imperial, 1/4" tube
	74255956	2	SLEEVE, Imperial, 1/4" tube (rubber)
24	74386617	1	CLIP
	70901171	1	SCREW, machine, #10-24 NC x 3/8"
	70904203	1	LOCKWASHER, #10
	70901310	1	NUT, #10-24NC
	70915408	1	CAPSCREW, 3/8"NC x 3/4"
	70904206	1	LOCKWASHER, 3/8"
	70911115	1	WASHER, plain, SAE std., 3/8"
25	74392788	1	TUBE
	70917809	2	NUT, Imperial, 1/4" tube
	74255956	2	SLEEVE, Imperial, 1/4" tube (rubber)
26	74388148	2	BRACKET
27	74507359	4	SPACER
28	74507415	2	PLATE
	70918794	4	CAPSCREW, 1/4"NC x 1-3/8"
	70904204	4	LOCKWASHER, 1/4"
	70910880	4	NUT, 1/4"NC
29	- -------	6	STUD (See VALVE OPERATING MECHANISM)

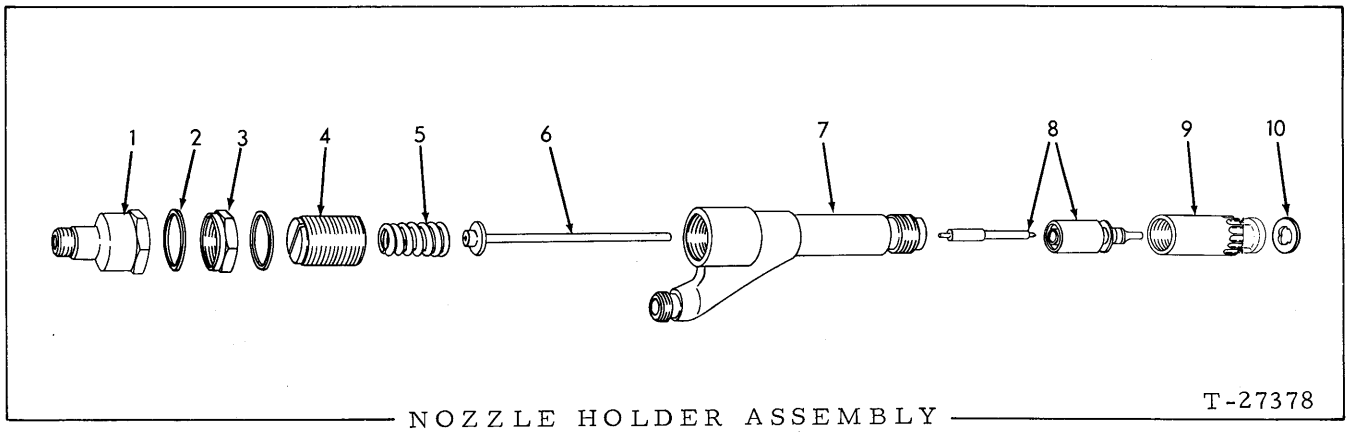

NOZZLE HOLDER ASSEMBLY

USAGE: See page 42
NOTE: Quantities indicated are for one (1) HOLDER ASSY. only

ITEM	PART NO.	QTY.	DESCRIPTION
-	74392121	1	HOLDER ASSY. (Not Serviced, order HOLDER ASSY. 74060861 and item 8)
-	74060861	1	HOLDER ASSY. (Includes items 1 thru 7 and 9)
1	74021227	1	NUT
2	74511243	2	GASKET
3	74511213	1	NUT
4	74378033	1	SCREW
5	74380652	1	SPRING
6	74391240	1	SPINDLE ASSY. (1 SPINDLE and 1 SEAT)
7	--------	1	BODY (Not Serviced Separately)
8	74390006	1	NOZZLE ASSY. (Includes item 10)(Not a component of HOLDER ASSY.)
9	74392057	1	NUT
10	74378031	1	□ GASKET

□ (Also see PACKAGED PARTS)

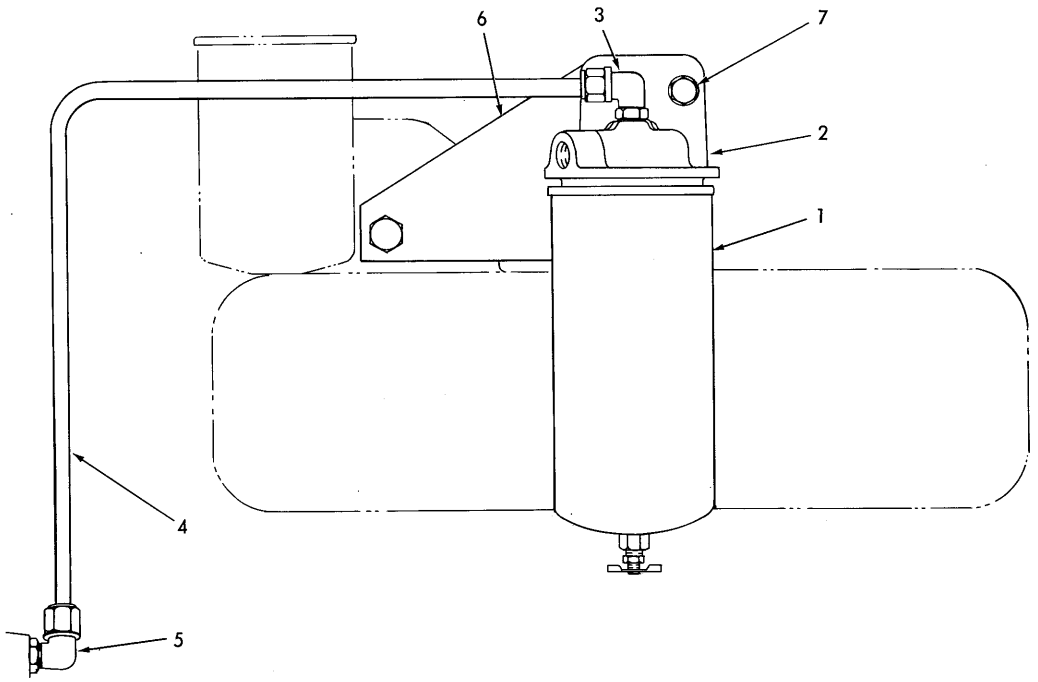

FUEL FILTER
(1st stage)

ITEM	PART NO.	QTY.	DESCRIPTION
1	74394407	1	FILTER ELEMENT
2	74394408	1	BASE ASSY. (Includes insert and hardware indented below)
	74251367	1	WASHER
	70920612	1	CAPSCREW, 3/8" NF x 1/2"
3	74023721	1	ELBOW ASSY. (Includes 1 O-RING 70921885)
	70921885	1	O-RING
4	74394406	1	TUBE
	70917807	2	SLEEVE, imperial, 3/8" tube
	70917810	2	NUT, imperial, 3/8" tube
5	70920280	1	ELBOW, 3/8" tube, 1/4" NPT
	70930349	1	NUT, locking, 1/4"
6	74394405	1	BRACKET
	74255895	2	CAPSCREW
	70912441	2	LOCKWASHER, 1/2"
7	70916191	2	CAPSCREW, 7/16" NC x 1-1/2"
	70914498	2	WASHER, plain, 7/16"
	70914678	2	LOCKWASHER, 7/16"
	70912201	2	NUT, 7/16" NC

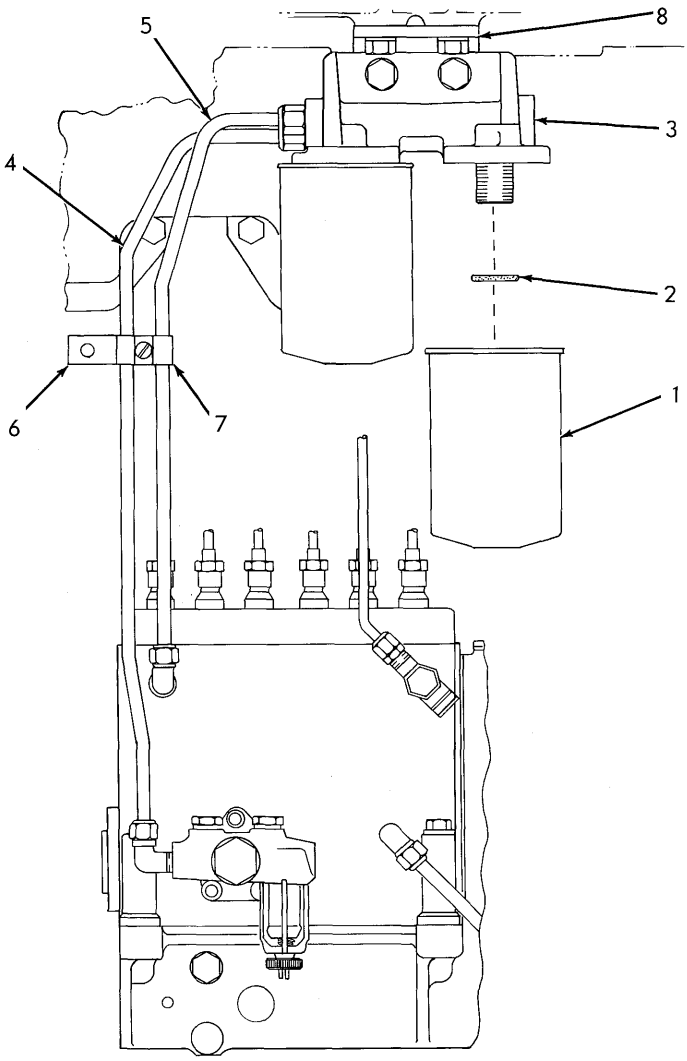

T-78098

FUEL FILTER

ITEM	PART NO.	QTY.	DESCRIPTION
1	74028945	2	ELEMENT, filter (Includes item 2)
2	70923934	2	O-RING
3	74393077	1	BASE ASSY., filter (Includes Inserts not serviced separately)
	70922577	2	PLUG, hex.- hd., 3/8" tube, 9/16" str. thd. (Includes O-RING)
	70921885	2	O-RING, plug
	70919230	2	CAPSCREW, 1/2"NC x 1-3/8"
	70904208	2	LOCKWASHER, 1/2"
	70910510	2	NUT, 1/2"NC

(Continued)

FUEL FILTER (Continued)

ITEM	PART NO.	QTY.	DESCRIPTION
4	74393085	1	TUBE
	70917810	2	NUT, Imperial, 3/8" tube
	70917807	2	SLEEVE, Imperial, 3/8" tube (rubber)
	70920280	1	ELBOW, Imperial, 3/8" tube, 1/4"PT (at transfer pump)
	74359776	1	CONNECTOR, (Includes O-RING)
	70921885	1	O-RING, connector
5	74293086	1	TUBE
	70917810	2	NUT, Imperial, 3/8" tube
	70917807	2	SLEEVE, Imperial, 3/8" tube (rubber)
	70920280	1	ELBOW, Imperial, 3/8" tube, 1/4"PT (at fuel pump)
	74359776	1	CONNECTOR (Includes O-RING)
	70921885	1	O-RING, connector
6	74393890	1	SUPPORT, clip
7	74251644	1	CLIP
	70912226	1	SCREW, fil. hd., 1/4"NC x 5/8"
	70904204	1	LOCKWASHER, 1/4"
	70910880	1	NUT, 1/4"NC
8	74392397	1	BRACKET, filter mounting
	70915987	4	CAPSCREW, 1/2"NC x 1-1/2"
	70904208	4	LOCKWASHER, 1/2"
	70910510	2	NUT, 1/2"NC

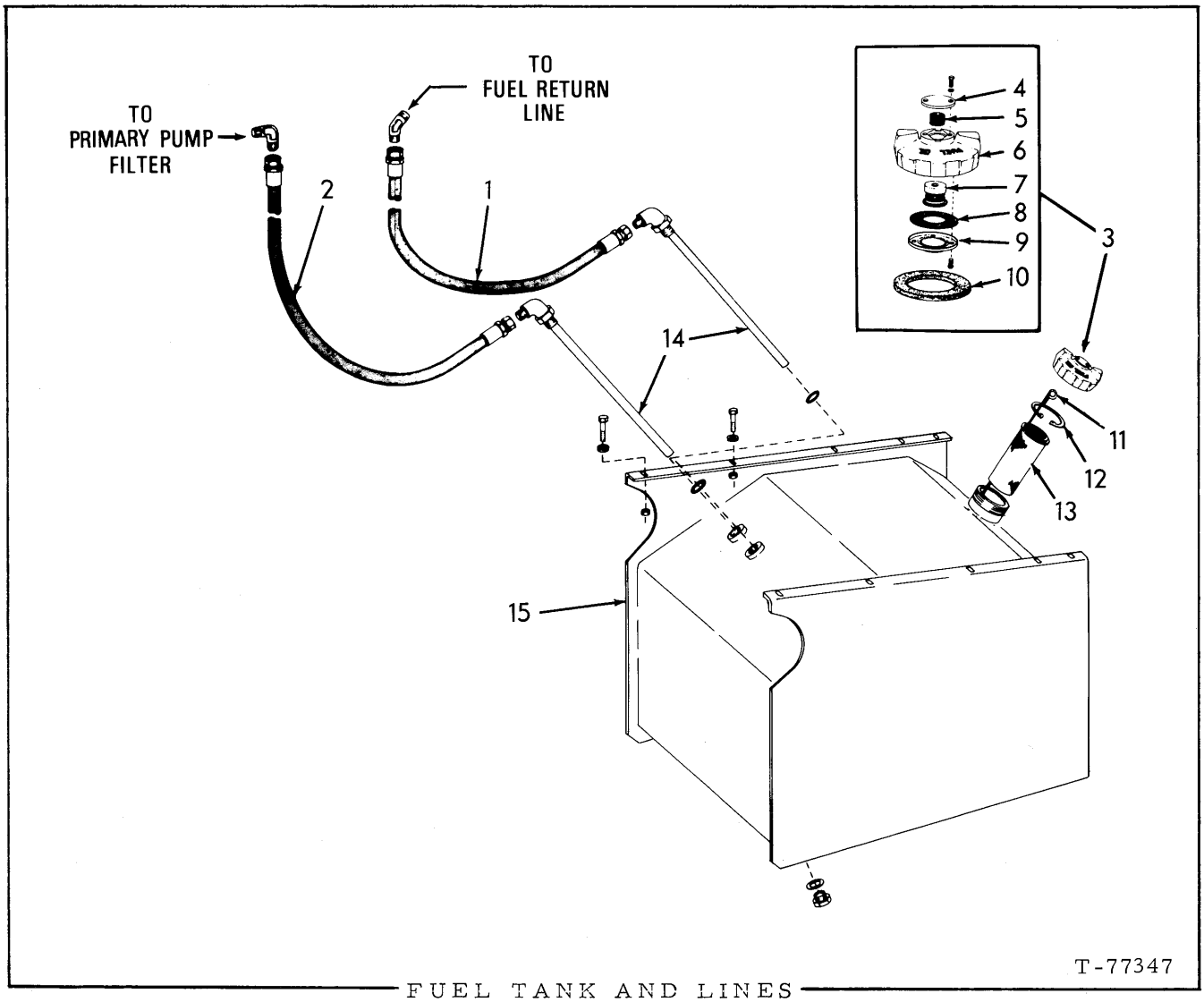

FUEL TANK AND LINES

ITEM	PART NO.	QTY.	DESCRIPTION
1	70680629	1	HOSE ASSY., fuel return
	70925839	1	ELBOW, 1/2 O. D. x 3/4" st. thd.
2	70690486	1	HOSE ASSY., to primer pump filter
	70930804	1	ELBOW, 1/2" O. D. x 3/4" st. thd.
3	70668252	1	CAP ASSY. (Includes items 4 thru 10)
4	70668262	1	COVER
	70921181	2	SCREW ASSEMBLY, #10 NC x 1/2" (Includes lockwasher)
5	70664867	1	ELEMENT
6	70668251	1	CAP
7	70668805	1	VALVE ASSY. (Serviced only as a unit)
8	70668804	1	GASKET

(Continued)

FUEL TANK AND LINES (Continued)

ITEM	PART NO.	QTY.	DESCRIPTION
9	70668806	1	SEAT
	70926699	4	SCREW, #10 NF x 3/8"
10	70668263	1	GASKET
11	70053100	1	GAUGE, fuel
12	70654840	1	RING
13	70650509	1	STRAINER ASSY.
14	73049845	2	TUBE ASSY.
	70921206	2	O-RING
15	70672913	1	TANK
	73010159	1	PLUG ASSY.
	70921174	4	CAPSCREW, 5/8" NC x 2-1/2"
	70921597	6	CAPSCREW, 5/8" NC x 3"
	70677010	10	WASHER
	70911029	10	NUT, 5/8" NC
16	70925620	2	CLAMP, 15/16" x 3/4" (Not illustrated)
	70922300	1	CAPSCREW, 3/8" NC x 3/4"
	70677006	1	WASHER

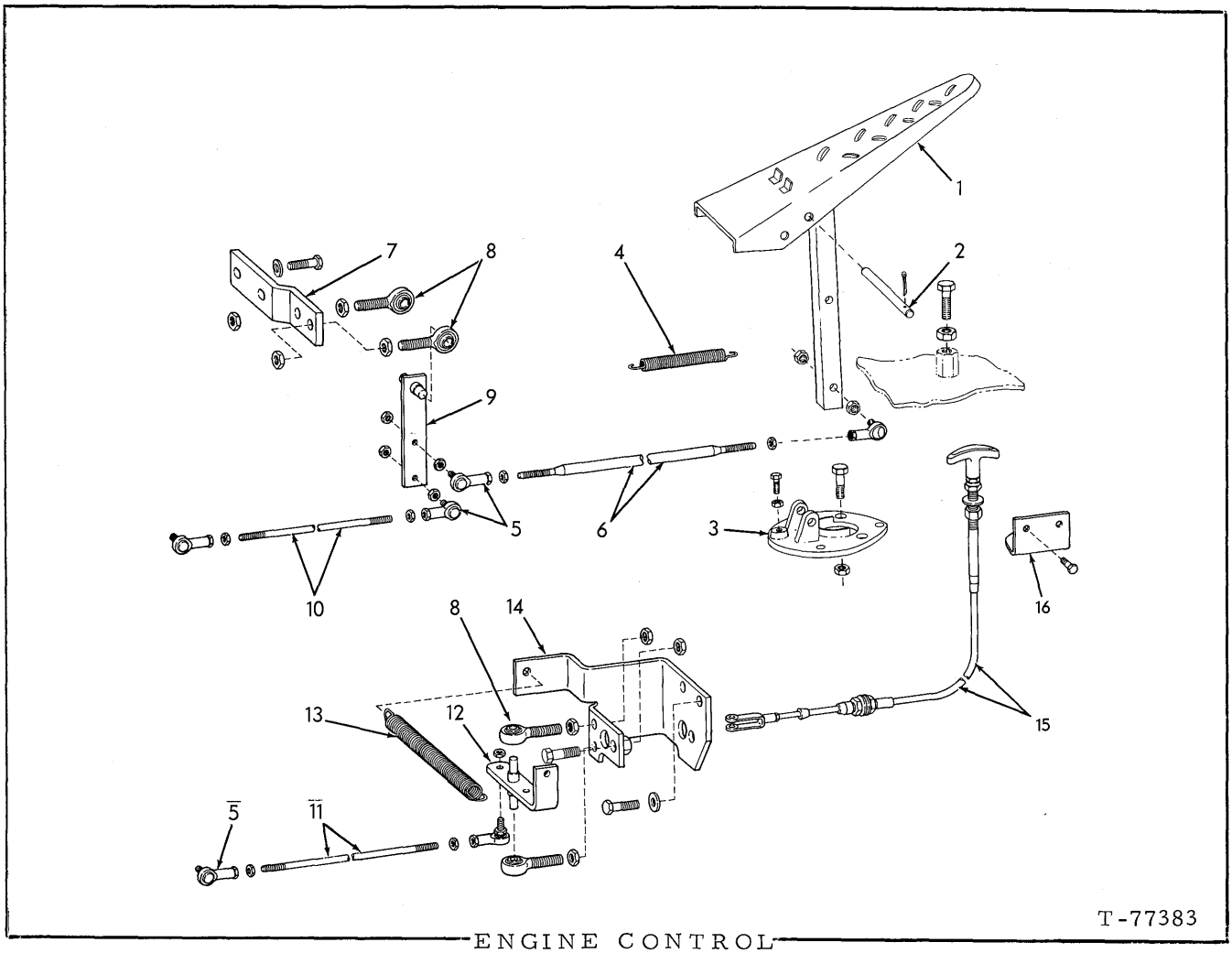

ENGINE CONTROL

ITEM	PART NO.	QTY.	DESCRIPTION
1	70676069	1	PEDAL
	70927401	1	CAPSCREW, 1/4" NC x 1"
	70916662	1	NUT, 1/4" NC
	70920996	1	CAPSCREW, 3/8" NC x 2-1/4"
	70903584	1	NUT, 3/8" NC
2	73048322	1	PIN
	70907801	1	PIN, cotter, 3/32" x 1-1/2"
3	73050228	1	BRACKET
	70921566	3	CAPSCREW, 5/16" NC x 1"
	70911025	3	NUT, 5/16" NC
4	73014226	1	SPRING
5	70686384	6	JOINT, ball
	70910267	6	NUT, 1/4" NF
6	70676085	1	ROD
	70910267	2	NUT, 1/4" NF

(Continued)

ENGINE CONTROL (Continued)

ITEM	PART NO.	QTY.	DESCRIPTION
7	70672972	1	BRACKET
	70921076	2	CAPSCREW, 3/8" NC x 1-1/4"
	70677006	2	WASHER, plain, 3/8"
8	73014549	4	BEARING
	70910876	8	NUT, 7/16" NF
9	70688917	1	SHAFT
10	70676086	1	ROD
	70910267	2	NUT, 1/4" NF
11	70689018	1	ROD
12	70688852	1	SHAFT ASSY.
13	70043881	1	SPRING
14	70688836	1	BRACKET
	70921076	2	CAPSCREW, 3/8" NC x 1-1/4"
	70677006	2	WASHER
	70929057	1	CAPSCREW, 3/8" NC x 1-1/2"
	70911026	1	NUT, 3/8" NC
15	70691251	1	CABLE ASSY.
16	70689612	1	BRACKET
	70928138	2	CAPSCREW, 1/4" NC x 5/8"

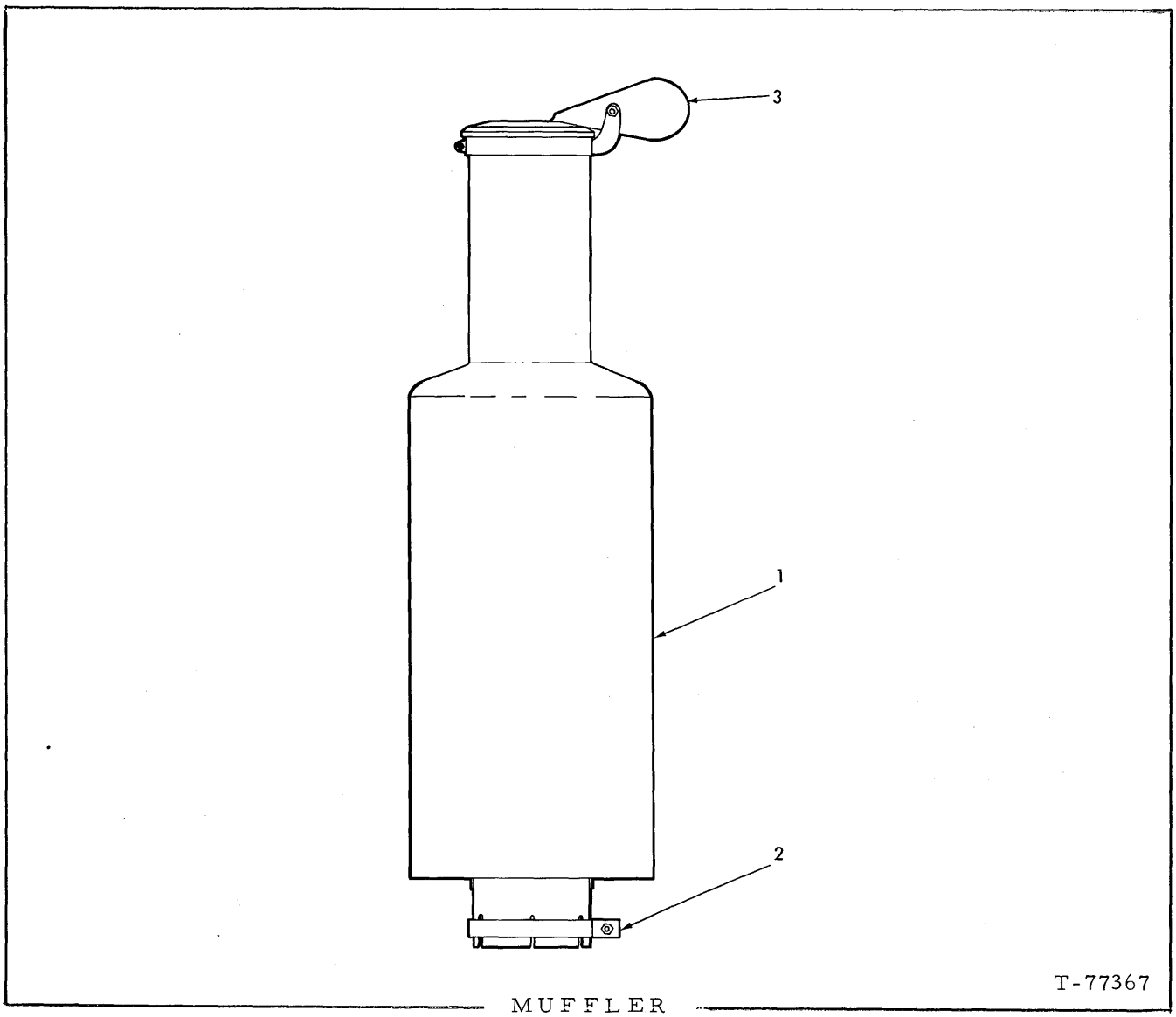

MUFFLER

ITEM	PART NO.	QTY.	DESCRIPTION
1	70690361	1	MUFFLER
2	70629755	1	CLAMP
3	70097354	1	CAP, rain

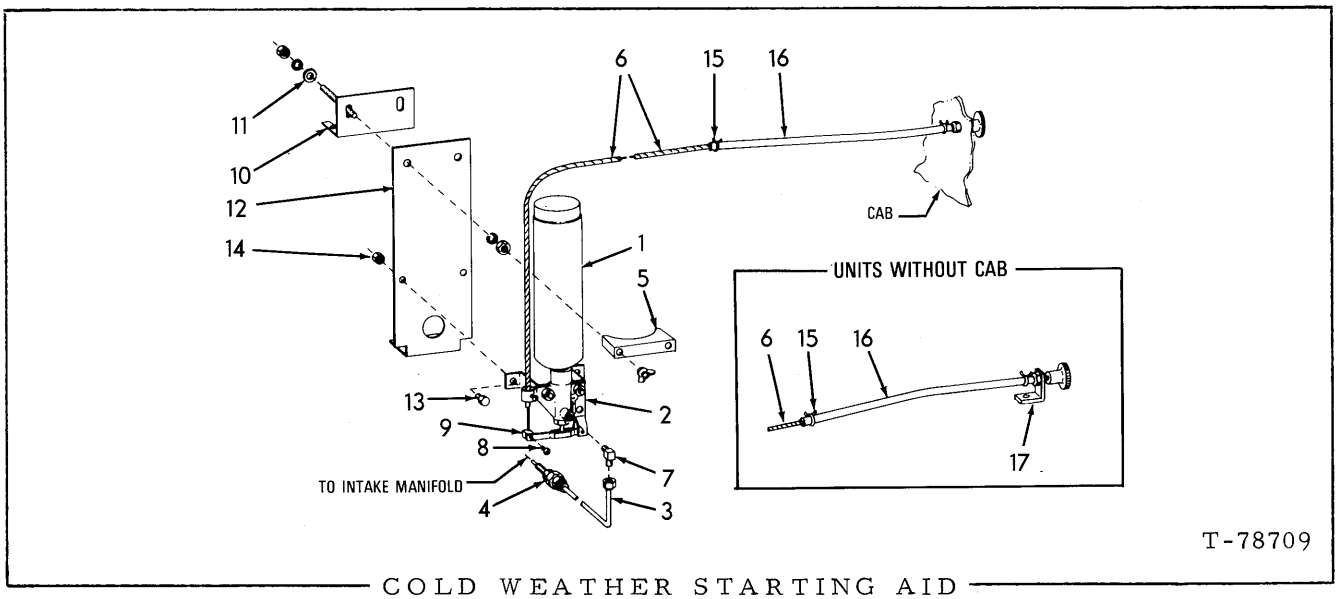

COLD WEATHER STARTING AID

USAGE: Special Equipment

ITEM	PART NO.	QTY.	DESCRIPTION
1	74024792	1	CYLINDER
2	70669526	1	VALVE AND BRACKET ASSY.
3	74444723	1	TUBE
4	74024482	1	ATOMIZER
5	73041822	1	CLAMP ASSY.
6	73052083	1	CABLE
7	73052086	1	FITTING
8	73100824	1	SCREW
9	73100825	1	STOP
10	70692967	1	BRACKET
11	70677005	2	WASHER
12	70692966	1	BRACKET
13	70927541	2	CAPSCREW, 1/4" NC x 3/4"
14	70911024	2	NUT, 1/4" NC
15	70921910	2	CLAMP, No. 6, 25/32" to 7/16"
16	73062776	1	HOSE, 1/4" I. D. x 30"

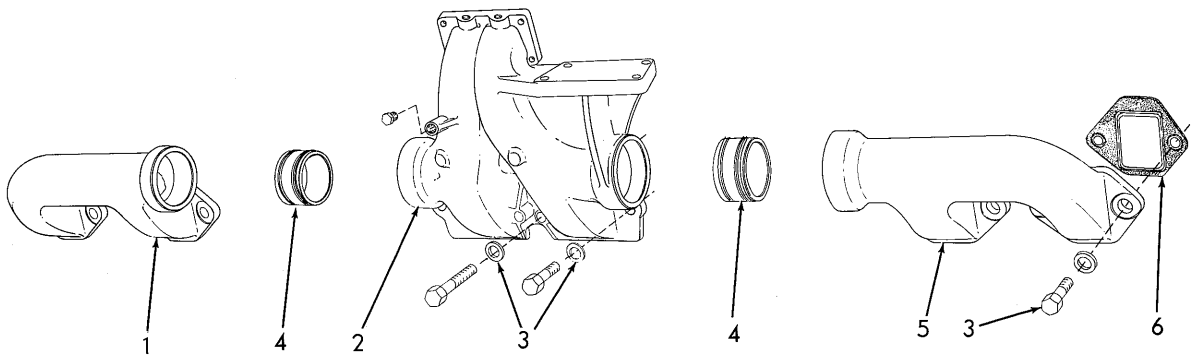

T-19672

EXHAUST MANIFOLD

ITEM	PART NO.	QTY.	DESCRIPTION
1	74359968	1	MANIFOLD
2	74393548	1	MANIFOLD
	70917425	2	PLUG, 1/4" NPT
3	74371107	12	WASHER
	70916317	2	CAPSCREW, 1/2"NC x 2-3/4" (center)
	70915987	10	CAPSCREW, 1/2"NC x 1-1/2"
4	74391425	2	SLEEVE
5	74374695	1	MANIFOLD
6	74387697	6	☐GASKET

☐ Also see PACKAGE PARTS

"ALWAYS GIVE MODEL AND SERIAL NUMBER WHEN ORDERING PARTS"

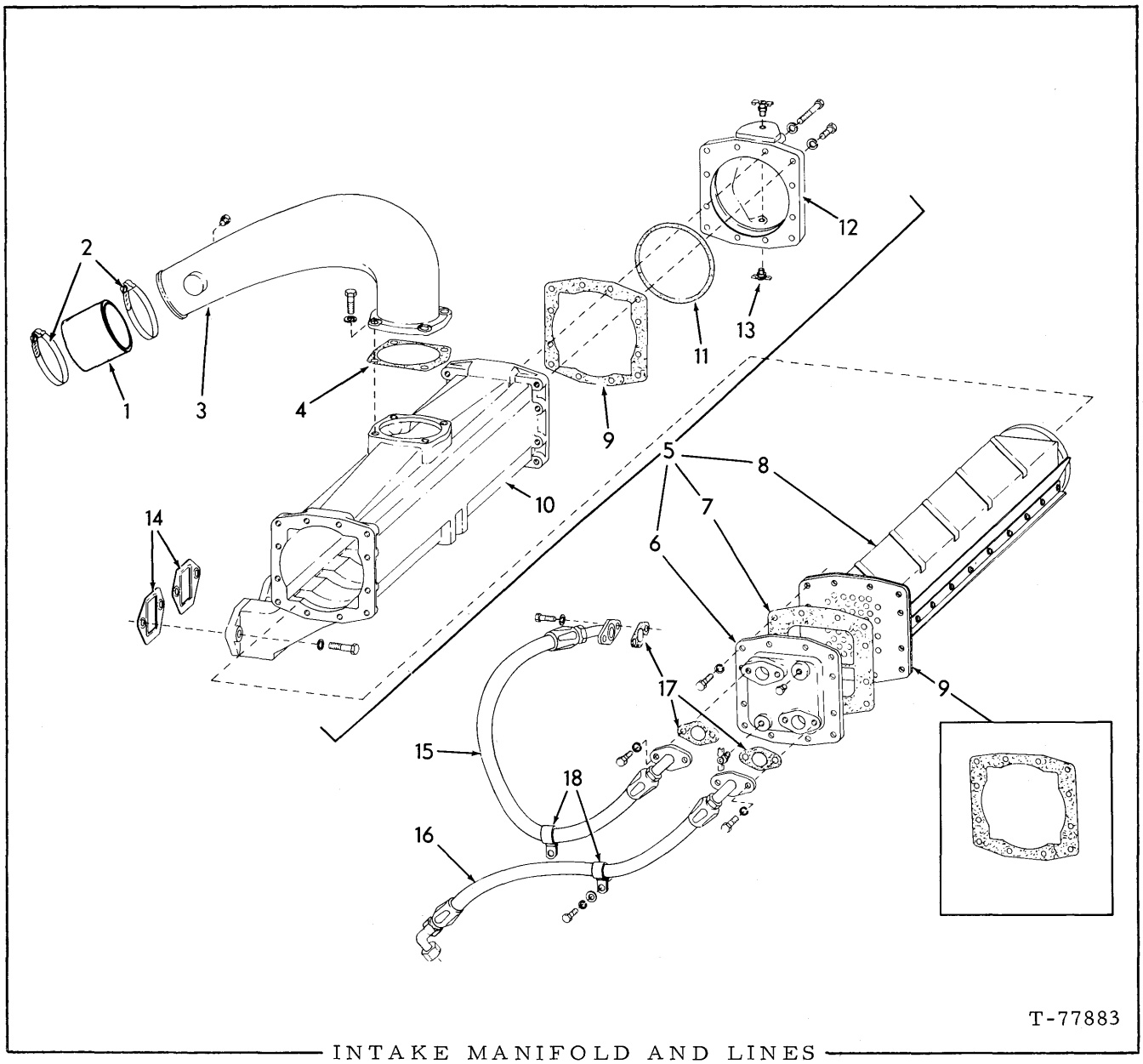

INTAKE MANIFOLD AND LINES

ITEM	PART NO.	QTY.	DESCRIPTION
1	74391131	1	HOSE
2	70929417	2	CLAMP, hose
3	74391875	1	ELBOW
	70919840	1	PLUG, pipe, hex-hd., 1/4" NPT
	70916316	4	CAPSCREW, 1/2" NC x 2-1/2"
	70904208	4	LOCKWASHER, 1/2"
4	74361551	1	□ GASKET
5	--------	1	MANIFOLD ASSY. (Includes items 6 thru 13)
	74255995	12	CAPSCREW, 1/2" NC x 1-3/4"
	74371107	12	WASHER, plain

(Continued)

INTAKE MANIFOLD AND LINES (Continued)

ITEM	PART NO.	QTY.	DESCRIPTION
6	74387689	1	BONNET, front
	70920333	1	PLUG, 3/8" NPT
	70919287	12	CAPSCREW, 3/8" NC x 1-7/8"
	70904206	12	LOCKWASHER, 3/8"
7	74387693	1	GASKET
8	74391607	1	CORE
9	74387692	2	GASKET
10	74393857	1	MANIFOLD
	70919134	1	PLUG, 1/8" NPT
11	70925480	2	O-RING
12	74392604	1	BONNET, rear
	70916273	8	CAPSCREW, 3/8" NC x 1-3/4"
	70919015	4	CAPSCREW, 3/8" NC x 3-1/2"
	70904206	12	LOCKWASHER, 3/8"
13	70916873	3	COCK, drain
14	74387697	6	□ GASKET
15	74393686	1	HOSE (Includes FLANGE listed below)(See HOSE PARTS)
	70919224	4	CAPSCREW, 3/8" NC x 1-1/8"
	70904206	4	LOCKWASHER, 3/8"
	70928329	2	FLANGE, 1" tube O. D.
16	74394525	1	HOSE (Serviced only as a unit)(Includes FLANGE listed below)
	70919224	2	CAPSCREW, 3/8" NC x 1-1/8"
	70904206	2	LOCKWASHER, 3/8"
	70928329	1	FLANGE, 1" tube O. D.
17	74335578	3	GASKET
18	74388583	2	CLAMP
	70916277	2	CAPSCREW, 5/16" NC x 5/8"
	70904205	2	LOCKWASHER, 5/16"
	70910335	2	WASHER

□(Also see PACKAGED PARTS)

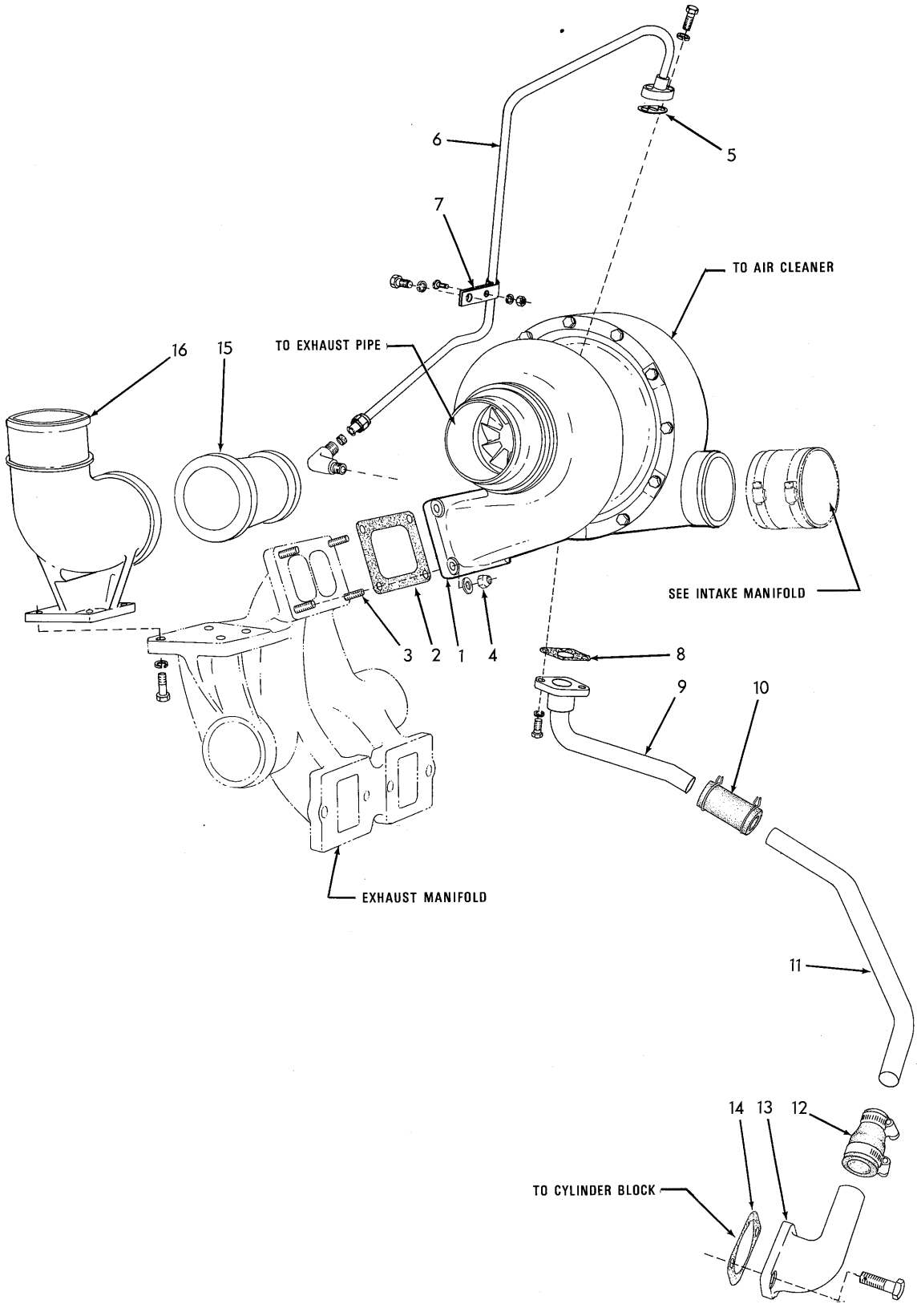
6
5
7
TO AIR CLEANER
16
15
TO EXHAUST PIPE
SEE INTAKE MANIFOLD
3
2
1
4
8
9
10
EXHAUST MANIFOLD
11
14
13
12
TO CYLINDER BLOCK

T-37201

TURBOCHARGER

ITEM	PART NO.	QTY.	DESCRIPTION
1	--------	1	TURBOCHARGER ASSY. (See page 60)
2	74336558	1	☐GASKET
3	74339535	4	STUD
4	74255977	4	NUT
	70913544	4	WASHER, plain
5	74335647	1	☐GASKET
6	74391996	1	TUBE ASSY., oil supply line (Includes NUT and SLEEVE indented below)
	70917810	1	NUT, Imperial, 3/8" tube
	70917807	1	SLEEVE, Imperial, 3/8" tube
	70919005	1	ELBOW, Imperial, 90°, 3/8"tube, 3/8"NF male
	70916269	2	CAPSCREW, 3/8"NC x 7/8"
	70904206	2	LOCKWASHER, 3/8"
7	74254961	1	CLAMP, tube supporting
	70900552	1	SCREW, machine, #8-32
	70906964	1	LOCKWASHER, #8
	70907154	1	NUT, #8-32
	70916270	1	CAPSCREW, 3/8"NC x 1/2"
	70904206	1	LOCKWASHER, 3/8"
8	74335649	1	☐GASKET
9	74385614	1	TUBE, oil drain line, upper
	70916269	2	CAPSCREW, 3/8"NC x 7/8"
	70904206	2	LOCKWASHER, 3/8"
10	74387906	1	HOSE, oil drain line
	70921911	2	CLAMP, hose (11/16" to 1-1/4" diam.)
11	74379913	1	TUBE, oil drain line, lower
12	74379723	1	ADAPTER
	70921911	1	CLAMP, hose (11/16" to 1-1/4" diam.)
	70921912	1	CLAMP, hose (1-1/4" to 1-15/16" diam)
13	74359972	1	ELBOW
	70921865	2	CAPSCREW, Nylok, 1/2"NC x 1"
14	74310257	1	☐GASKET
15	74391715	1	DIFFUSER
16	74393563	1	ELBOW, exhaust
	70919230	4	CAPSCREW, 1/2"NC x 1-3/8"
	70904208	4	LOCKWASHER, 1/2"
17	74387007	1	☐ GASKET KIT (Consists of items 2, 5, 8 and 14)(Not illustrated)

☐Indicates components of item 17

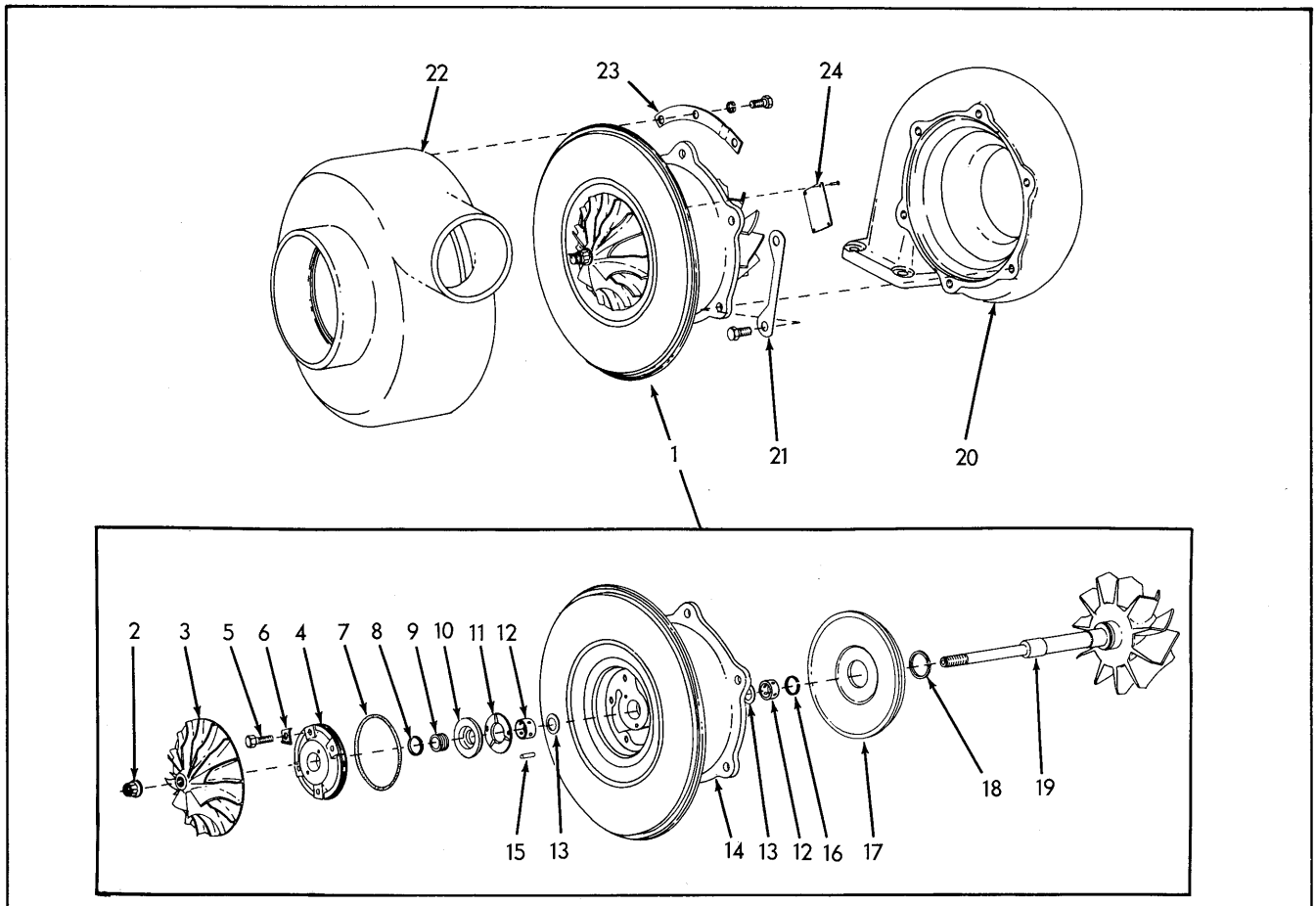

TURBOCHARGER ASSEMBLY T-75467

USAGE: See page 59

ITEM	PART NO.	QTY.	DESCRIPTION
-	74394366	1	TURBOCHARGER ASSY. (Includes items 1 thru 24)
1	74061217	1	HOUSING AND ROTATING ASSY. (Consists of items 2 thru 19)
2	74055201	1	NUT
3	74061218	1	IMPELLER
4	74055193	1	PLATE ASSY., thrust, center housing (Includes riveted washer)
5	74055196	4	CAPSCREW, #10-24 NC x 7/8"
6	74055194	4	PLATE, locking
7	74053336	1	O-RING, thrust plate
8	74055195	1	RING, sealing
9	74060984	1	SPACER, thrust
10	74056494	1	RING, thrust
11	74055192	1	BEARING, thrust
12	74061213	2	BEARING, impeller shaft
13	74061214	2	WASHER, wear
14	74061210	1	HOUSING ASSY., center (Includes item 15)
15	74055187	2	PIN, dowel, center housing
16	74056296	3	RING, snap

(Continued)

TURBOCHARGER ASSEMBLY (Continued)

ITEM	PART NO.	QTY.	DESCRIPTION
17	74059748	1	SHROUD, wheel
18	74061212	1	RING, sealing
19	74059744	1	SHAFT AND WHEEL
20	74059747	1	HOUSING, turbine
	74056026	6	CAPSCREW, 3/8" NC x 3/4"
21	74055981	3	PLATE, capscrew locking
22	74059018	1	HOUSING ASSY., compressor (Includes venturi)
23	74055203	6	CLAMP, compressor housing
	70903626	12	CAPSCREW, 5/16" NC x 3/4"
	70917356	12	LOCKWASHER, plated, 5/16"
24	74055206	1	PLATE, name
	74049009	4	SCREW, drive

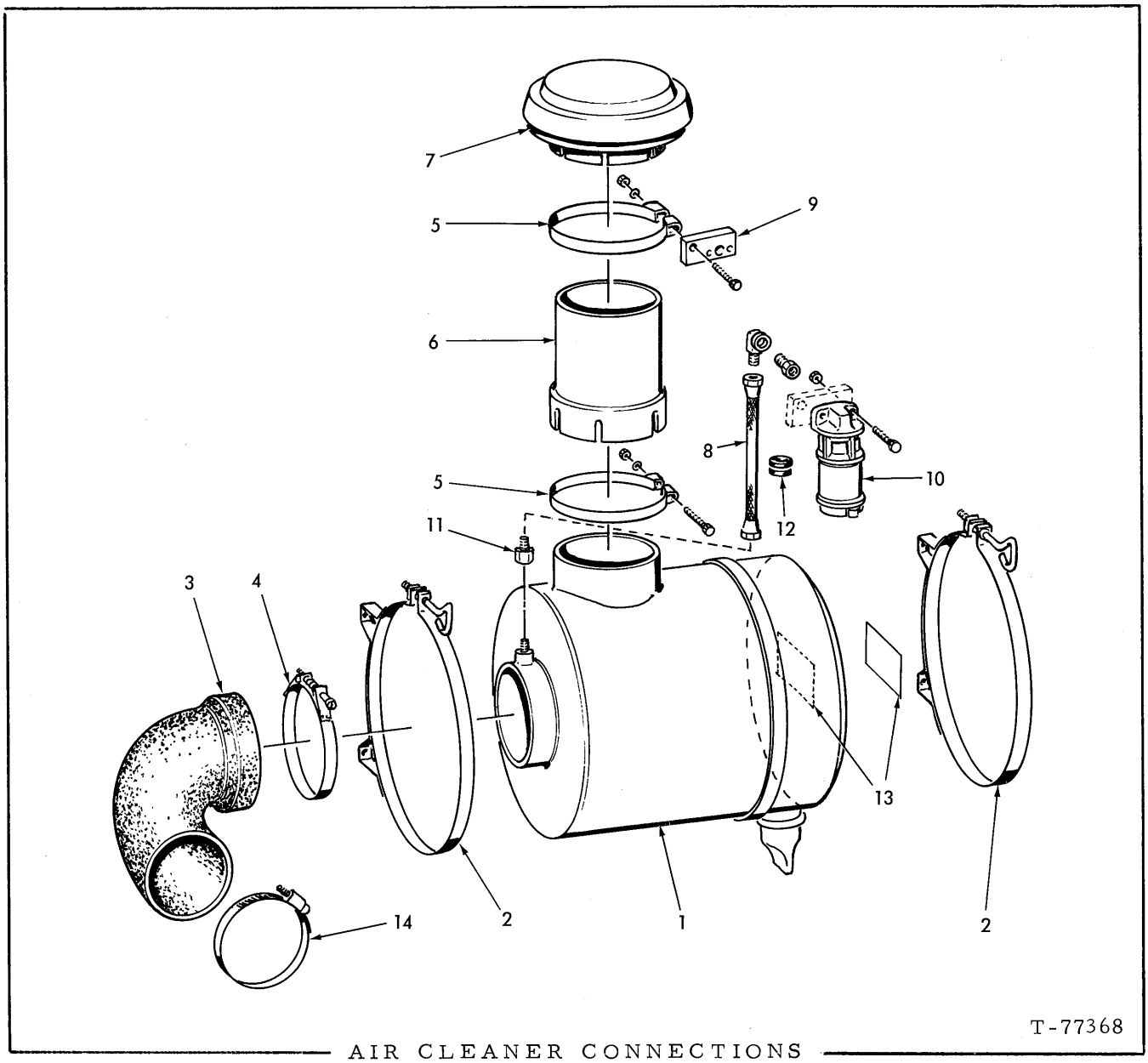

AIR CLEANER CONNECTIONS

ITEM	PART NO.	QTY.	DESCRIPTION
1	--------	1	CLEANER ASSY. (See AIR CLEANER)
2	70197570	2	BAND
3	70688222	1	ELBOW
4	70929805	1	CLAMP
5	70658633	2	CLAMP
	70927218	2	CAPSCREW, 3/8" NC x 2-3/4"
	70677006	2	WASHER
	70911026	2	NUT, 3/8" NC
6	70658509	1	TUBE

(Continued)

AIR CLEANER CONNECTIONS (Continued)

ITEM	PART NO.	QTY.	DESCRIPTION
7	70197576	1	CAP
8	70682027	1	HOSE ASSY. (See page 6)
	70919174	1	CONNECTOR, 1/4" tube, 7/16" straight thread, female
	70919249	1	ELBOW, 1/4" tube, 7/16" straight thread, female
9	70689261	1	PLATE
10	70680946	1	INDICATOR, filter
	70927401	2	CAPSCREW, 1/4" NC x 1"
	70911024	2	NUT, 1/4" NC
11	70919174	1	CONNECTOR
12	70929168	1	GROMMET
13	---------	1	DECAL (Applied to AIR CLEANER) (See Painting and Marking)
14	70930707	1	CLAMP

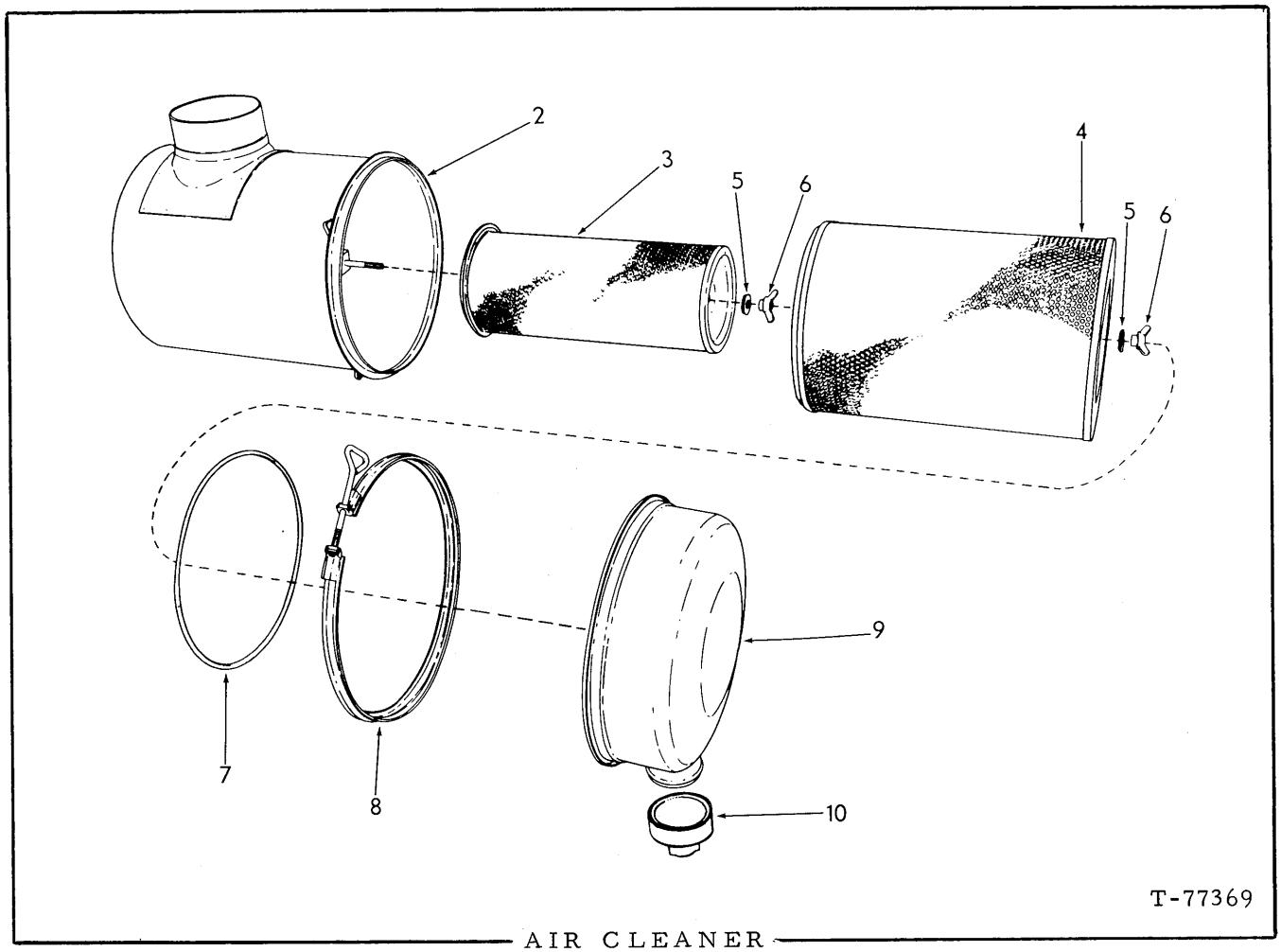

AIR CLEANER

ITEM	PART NO.	QTY.	DESCRIPTION
1	70198780	1	CLEANER ASSY., (Includes items 2 thru 10)
2	--------	1	BODY (Order complete assy.)
3	70197588	1	ELEMENT ASSY., safety (inner)(Includes item 5)
4	70659387	1	ELEMENT ASSY., filter (outer)(Includes item 5)
5	--------	2	GASKET
6	70664343	2	NUT ASSY. (Includes item 5)
7	70197805	1	O-RING
8	70197806	1	CLAMP ASSY. (Includes clamping screw - serviced only as a unit)
9	70197824	1	CUP ASSY.
10	70197810	1	VALVE, vacuator

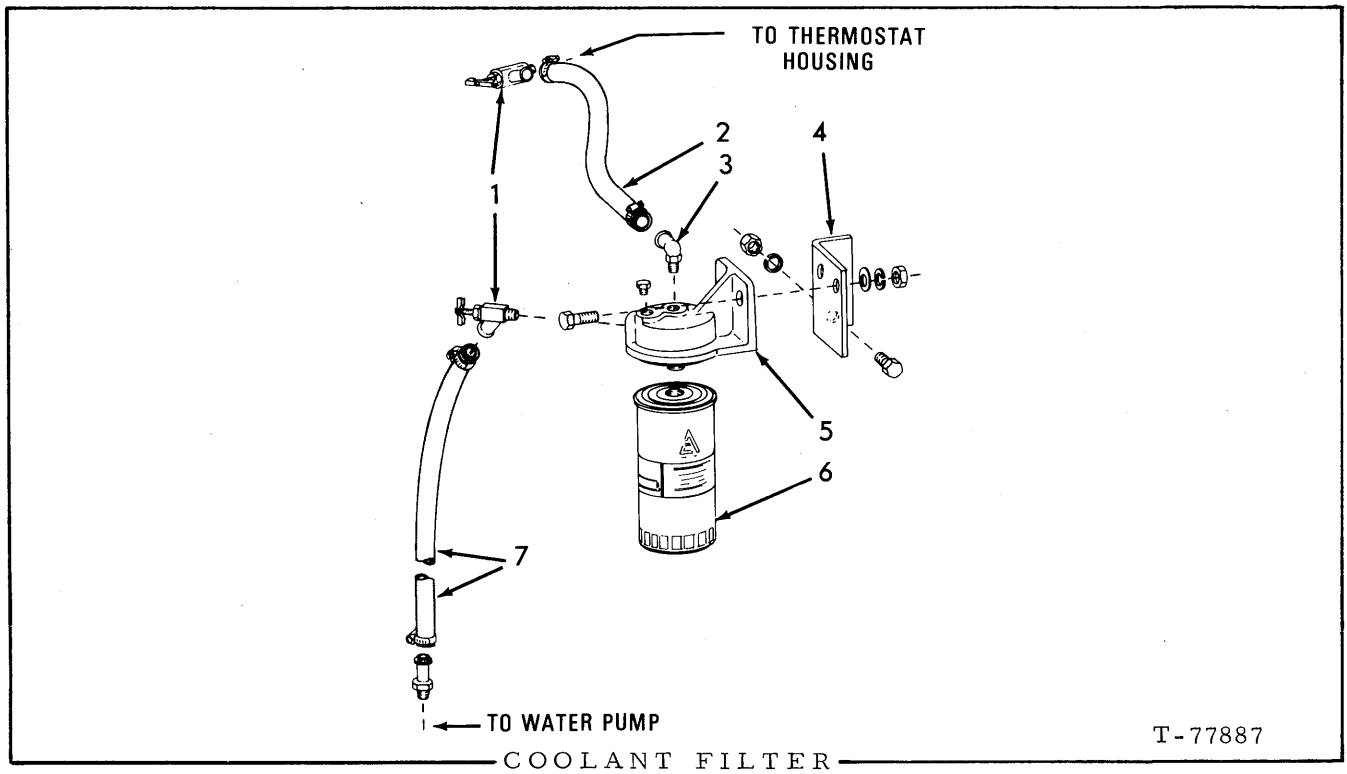

COOLANT FILTER

ITEM	PART NO.	QTY.	DESCRIPTION
1	74255287	2	VALVE, shut-off
2	--------	1	HOSE, 5/8"I. D. (Order 16" of 70920722)(See Note)
	70921911	2	CLAMP,
3	74255286	1	ELBOW, 3/8" NPT
4	74394443	1	BRACKET,
	70916197	2	CAPSCREW, 7/16"NC x 1-1/4"
	70904207	2	LOCKWASHER, 7/16"
	70912201	2	NUT, 7/16"NC
5	74393427	1	HEAD ASSY. (Includes plug indented below)
	70919134	1	PLUG, 1/8" NPT
	70916197	2	CAPSCREW, 7/16"NC x 1-1/4"
	70910919	2	WASHER, plain
	70904207	2	LOCKWASHER, 7/16"
	70912201	2	NUT, 7/16"NC
6	74393504	1	FILTER (Original equipment, all purpose, recommended for use with most types of permanent and non-permanent anti-freeze as well as with plain water (except "Dowtherm" 209)
	74393505	1	FILTER (Chromate type, for use with "Dowtherm" 209 antifreeze)
7	--------	1	HOSE, 5/8"I. D. (Order 23" of 70920722)(See Note)
	70921911	2	CLAMP,
	70925238	1	NIPPLE, 5/8" hose, 3/8"NPT

NOTE: Factory provides 25 foot rolls only.
Dealer will provide cut length or full roll.

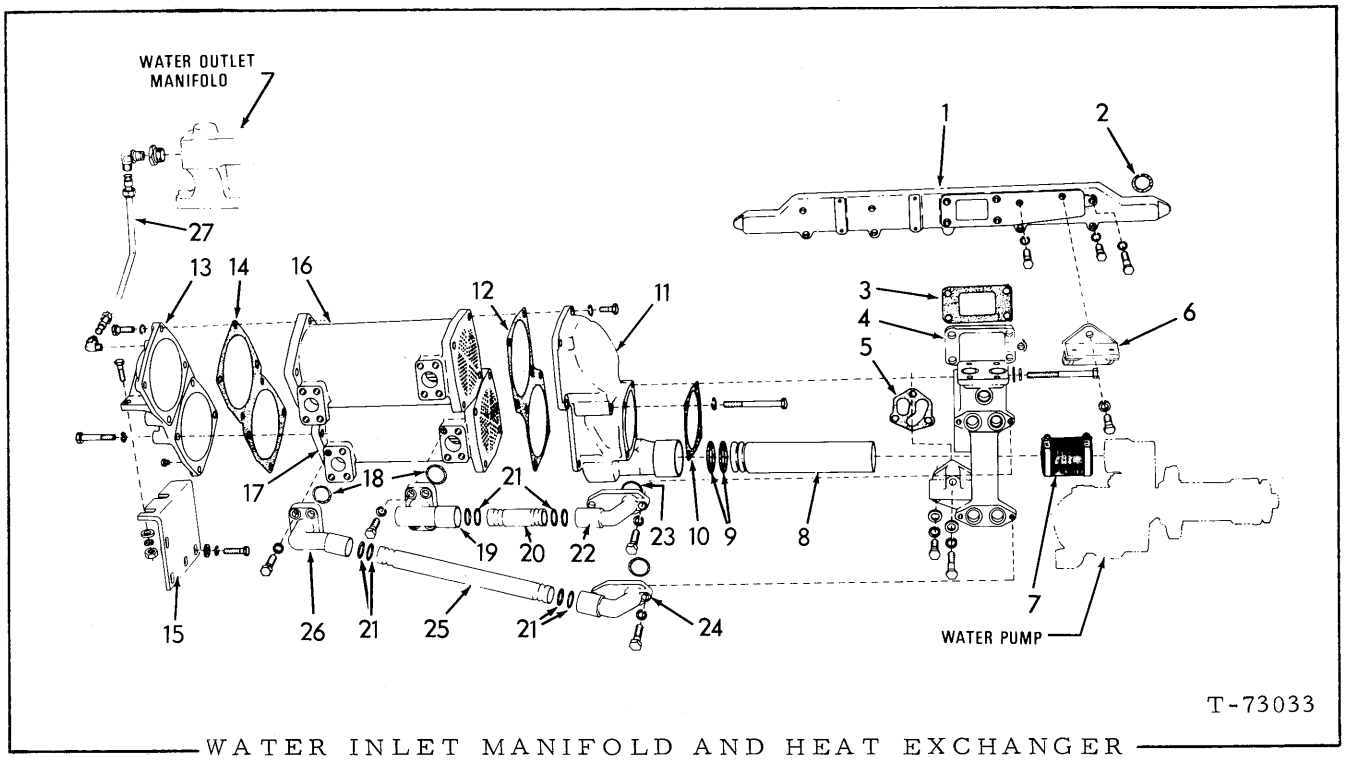

WATER INLET MANIFOLD AND HEAT EXCHANGER

ITEM	PART NO.	QTY.	DESCRIPTION
1	74393557	1	MANIFOLD
	70919231	4	CAPSCREW, 1/2" NC x 1-7/8"
	70916317	3	CAPSCREW, 1/2" NC x 2-3/4"
	70915969	1	CAPSCREW, 1/2" NC x 3"
	70904208	8	LOCKWASHER, 1/2"
2	70925612	12	□ O-RING
3	74389635	1	□ GASKET
4	74393702	1	MANIFOLD, water and oil
	70916311	4	CAPSCREW, 1/2" NC x 1-1/4"
	70915987	4	CAPSCREW, 1/2" NC x 1-1/2"
	70916320	1	CAPSCREW, 1/2" NC x 4"
	70904208	8	LOCKWASHER, 1/2"
	70912333	8	WASHER, plain
5	74386495	1	□ GASKET, manifold to block
6	74393708	1	BRACKET
	70915987	1	CAPSCREW, 1/2" NC x 1-1/2"
	70904208	1	LOCKWASHER, 1/2"
7	74662263	1	HOSE, heat exchanger to water pump
	70922199	2	CLAMP, hose
8	74388185	1	TUBE
9	70923651	2	□ O-RING
10	74371160	1	□ GASKET
11	74387418	1	ADAPTER, heat exchanger
	70919294	2	CAPSCREW, 1/2" NC x 4-1/4" } To Exchanger
	70915987	6	CAPSCREW, 1/2" NC x 1-1/2" } To Exchanger
	70916320	2	CAPSCREW, 1/2" NC x 4" } To Manifold
	70916322	2	CAPSCREW, 1/2" NC x 5" } To Manifold
	70904208	12	LOCKWASHER, 1/2"
	70916009	4	WASHER, plain

(Continued)

WATER INLET MANIFOLD AND HEAT EXCHANGER (Continued)

ITEM	PART NO.	QTY.	DESCRIPTION	
12	74389678	1	□ GASKET	
13	74388465	1	BONNET	
	70919840	1	PLUG, 1/4" NPT	
	70915987	4	CAPSCREW, 1/2" NC x 1-1/2"	To Heat Exchanger
	70915969	4	CAPSCREW, 1/2" NC x 3"	
	70904208	8	LOCKWASHER, 1/2"	
	70916272	2	CAPSCREW, 3/8" NC x 1-1/4"	To Supporting Bracket
	70911115	2	WASHER, plain, 3/8"	
	70904206	2	LOCKWASHER, 3/8"	
	70910324	2	NUT, 3/8" NC	
14	74389676	1	□ GASKET	
15	74390868	1	BRACKET, supporting, heat exchanger	
	70916311	2	CAPSCREW, 1/2" NC x 1-1/4"	
	70910244	2	WASHER, plain, 1/2"	
	70904208	2	LOCKWASHER, 1/2"	
16	74394014	1	EXCHANGER, torque converter oil	
17	74394188	1	EXCHANGER, engine oil	
18	74255781	2	□ O-RING	
19	74390591	1	ELBOW	
	70916191	4	CAPSCREW, 7/16" NC x 1-1/2"	
	70904207	4	LOCKWASHER, 7/16"	
20	74390595	1	TUBE	
21	74255631	8	□ O-RING	
22	74390592	1	ELBOW	
	70919225	1	CAPSCREW, 3/8" NC x 1-3/8"	
	70912069	1	CAPSCREW, 3/8" NC x 2-1/2"	
	70904206	2	LOCKWASHER, 3/8"	
23	74255631	2	□ O-RING	
24	74390589	1	ELBOW	
	70919225	1	CAPSCREW, 3/8" NC x 1-3/8"	
	70912069	1	CAPSCREW, 3/8" NC x 2-1/2"	
	70904206	2	LOCKWASHER, 3/8"	
25	74390594	1	TUBE	
26	74390590	1	ELBOW	
	70916191	4	CAPSCREW, 7/16" NC x 1-1/2"	
	70904207	4	LOCKWASHER, 7/16"	
27	74390583	1	TUBE, air bleed	
	70917809	2	NUT, imperial, 1/4" tube	
	74255956	2	SLEEVE, imperial, 1/4" tube	
	70919481	2	ELBOW, imperial, 1/4" tube, 1/4" NPT male	
	70901839	1	BUSHING, pipe reducing, 1/2" NPT to 1/4" NPT	

□ (Also see PACKAGED PARTS)

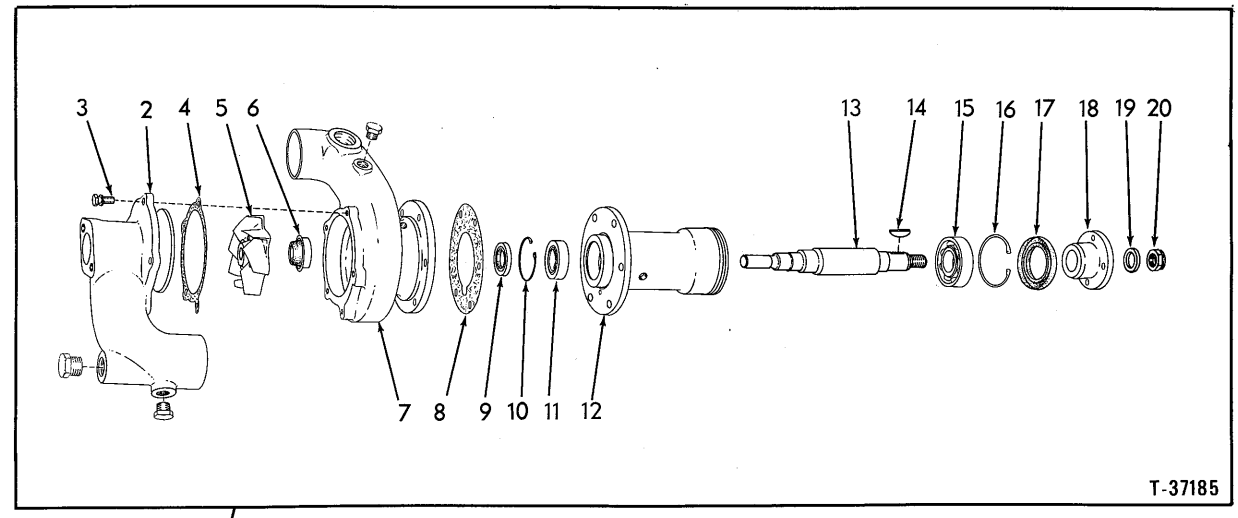
3
2
4
5
6
13
14
15
16
17
18
19
20
7
8
9
10
11
12
T-37185

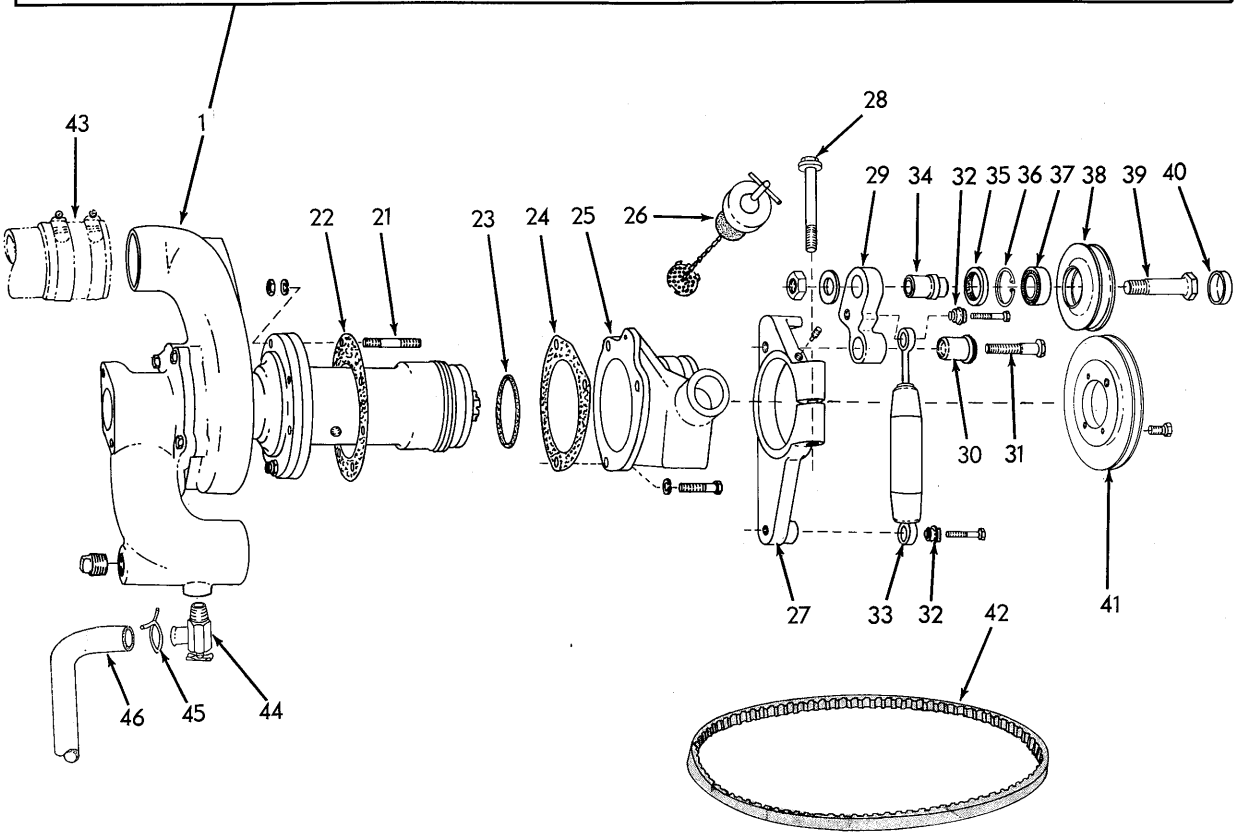
43
1
28
29
34
32
35
36
37
38
39
40
22
21
23
24
25
26
30
31
27
33
32
41
42
46
45
44
T-75577

WATER PUMP

ITEM	PART NO.	QTY.	DESCRIPTION
1	74394451	1	KIT, water pump (Includes items 2 thru 23, and 1 GASKET 74378112)
	70920333	1	PLUG, pipe, 3/8"
2	74375682	1	COVER
	--------	1	PLUG, pipe, 3/8" NPT } For shipping only
	--------	1	PLUG, pipe, 1/2" NPT } For shipping only
3	74041092	4	CAPSCREW ASSY. (Includes LOCKWASHER)
4	74372421	1	GASKET
5	74393324	1	IMPELLER ASSY. (Includes ceramic INSERT)
6	74386862	1	SEAL ASSY. (Serviced only as a unit)
7	74387609	1	BODY
8	74387051	1	GASKET
9	74387605	1	SEAL
10	74254100	1	RING
11	74255338	1	BEARING, roller (rear)
12	74387050	1	SLEEVE
13	74393325	1	SHAFT
14	74660677	1	KEY
15	73007474	1	BEARING, ball (front)
16	74253318	1	RING
17	74254948	1	SEAL
18	74386924	1	HUB
19	74375691	1	WASHER
20	70918182	1	NUT, self-locking, 3/4" NF
21	74513810	5	STUD
	70904206	5	LOCKWASHER, 3/8"
	70910123	5	NUT, 3/8" NF
22	74376398	1	□ GASKET
23	70923935	1	□ O-RING
24	74361740	1	□ GASKET
25	74394269	1	PIPE (Incorporates idler support)
	70919224	1	CAPSCREW, 3/8" NC x 1-1/8"
	70912069	2	CAPSCREW, 3/8" NC x 2-1/2"
	70904206	3	LOCKWASHER, 3/8"
26	74354449	1	CLOSURE ASSY. (Includes CHAIN and STRAINER)
27	74391950	1	BRACKET
	70913683	1	SETSCREW, hex-skt., 3/8" NC x 1"
28	70924863	1	SCREW
29	74391949	1	ARM ASSY. (Includes item 30)
30	74391933	1	BUSHING (flex-type)
31	74391955	1	CAPSCREW
32	74391934	2	BUSHING (flex-type)
33	74391938	1	DAMPER ASSY. (Includes item 32)
	70919225	2	CAPSCREW, 3/8" NC x 1-3/8"
34	74390992	1	SHAFT
35	74255839	1	SEAL

(Continued)

WATER PUMP (Continued)

ITEM	PART NO.	QTY.	DESCRIPTION
36	74254100	1	RING
37	74391154	1	BEARING
38	74390995	1	PULLEY
39	74390655	1	BOLT
	70910847	1	NUT, jam, 3/4" NF
	70923421	1	WASHER, plain
40	74255110	1	CAP
41	74391593	1	PULLEY
	74752002	4	BOLT, self-locking, 3/8" NF x 1/2"
42	74391351	1	BELT
43	--------	1	HOSE (See WATER INLET MANIFOLD AND HEAT EXCHANGER)
44	70089894	1	COCK, drain
45	70089107	1	CLAMP
46	70092652	1	HOSE

□ (Also see PACKAGED PARTS)

MEMO

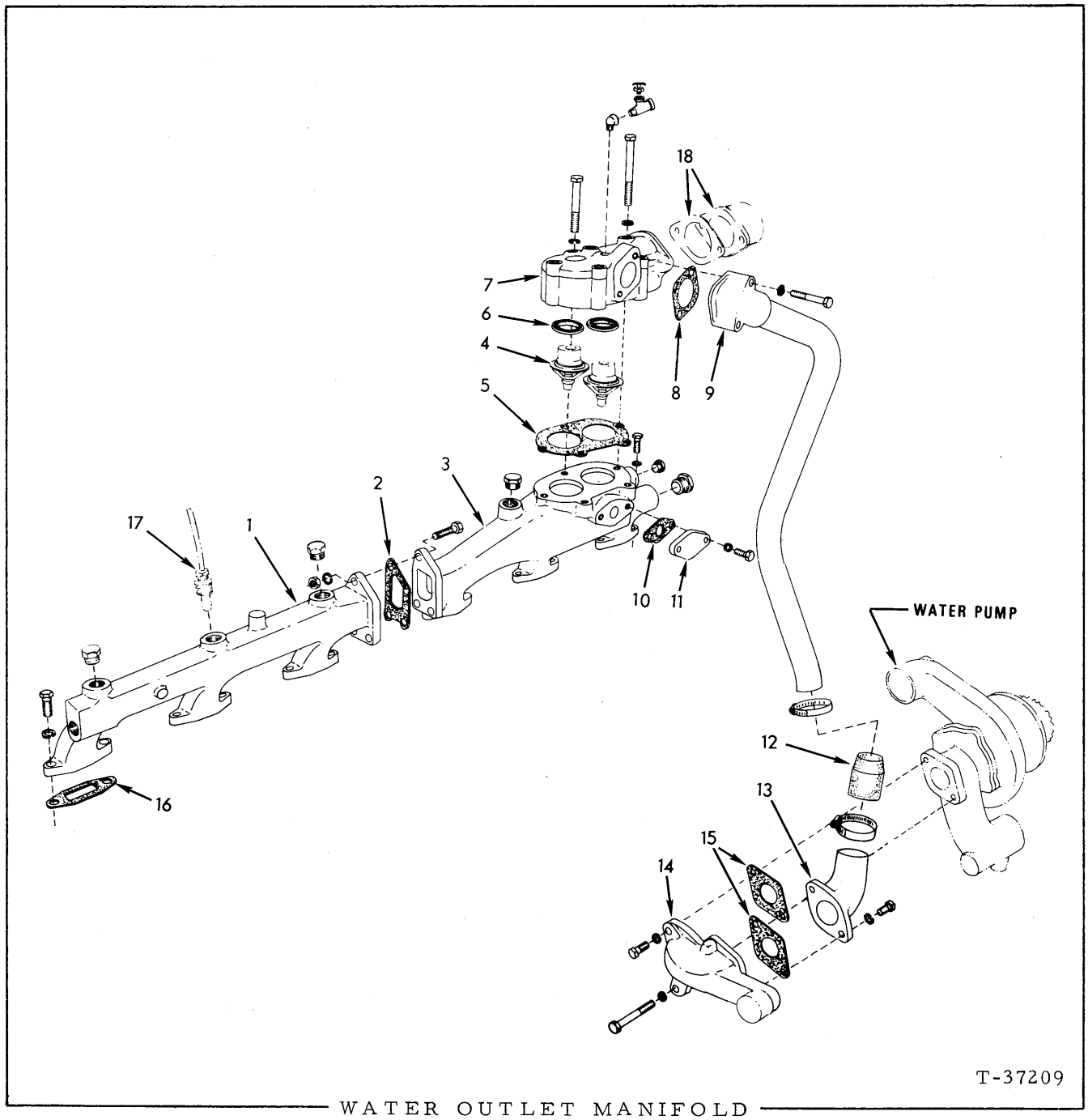

WATER OUTLET MANIFOLD

ITEM	PART NO.	QTY.	DESCRIPTION
1	74393615	1	MANIFOLD, rear
	70919224	6	CAPSCREW, 3/8" NC x 1-1/8"
	70919226	3	CAPSCREW, 3/8" NC x 1-5/8"
	70904206	9	LOCKWASHER, 3/8"
	70910324	3	NUT, 3/8" NC
	70924636	3	PLUG, pipe, brass, 1/2" NPT
2	74392279	1	□ GASKET

WATER OUTLET MANIFOLD (Continued)

ITEM	PART NO.	QTY.	DESCRIPTION
3	74388563	1	MANIFOLD, front (When making first replacement also order items 10 and 11)
	70920416	3	PLUG, pipe, hex-hd., 1/2" NPT
	70919224	6	CAPSCREW, 3/8" NC x 1-1/8"
	70904206	6	LOCKWASHER, 3/8"
4	74354537	2	THERMOSTAT
5	74376520	1	□ GASKET, thermostat cover
6	74317554	2	SEAL, thermostat
7	74389036	1	COVER ASSY., thermostat (Includes item 6)
	70918374	1	ELBOW, street, brass, 90°, 1/4" NPT
	70918395	4	CAPSCREW, 7/16" NC x 3-1/4"
	70918740	1	CAPSCREW, 7/16" NC x 4"
	70904207	5	LOCKWASHER, 7/16"
	70924440	1	TEE, pipe, 3/8" NPT
	70916873	1	COCK, drain, 3/8"
8	74386137	1	□ GASKET, water by-pass tube
9	74386835	1	TUBE, water by-pass
	70916274	2	CAPSCREW, 3/8" NC x 2-1/4"
	70904206	2	LOCKWASHER, 3/8"
10	74362458	1	GASKET, manifold cover — Not original equipment. See item 3.
11	74313015	1	COVER, front manifold — Not original equipment. See item 3.
	70915408	2	CAPSCREW, 3/8" NC x 3/4" — Not original equipment. See item 3.
	70904206	2	LOCKWASHER, 3/8" — Not original equipment. See item 3.
12	74387227	1	HOSE, water by-pass tube (rubber)
	70922198	2	CLAMP, hose, 1-9/16" to 2-9/16" dia.
13	74386881	1	ELBOW, water by-pass line
	70916271	2	CAPSCREW, 3/8" NC x 1"
	70904206	2	LOCKWASHER, 3/8"
14	74391237	1	FLANGE, water pump
	70916272	1	CAPSCREW, 3/8" NC x 1-1/4"
	70920275	1	CAPSCREW, 3/8" NC x 3"
	70904206	2	LOCKWASHER, 3/8"
15	74378112	2	□ GASKET, water pump flange
16	74376483	6	□ GASKET, manifold to head
17	---------	-	GAUGE, temperature (See INSTRUMENT PANEL)
18	---------	-	OUTLET AND GASKET (See RADIATOR CONNECTIONS)

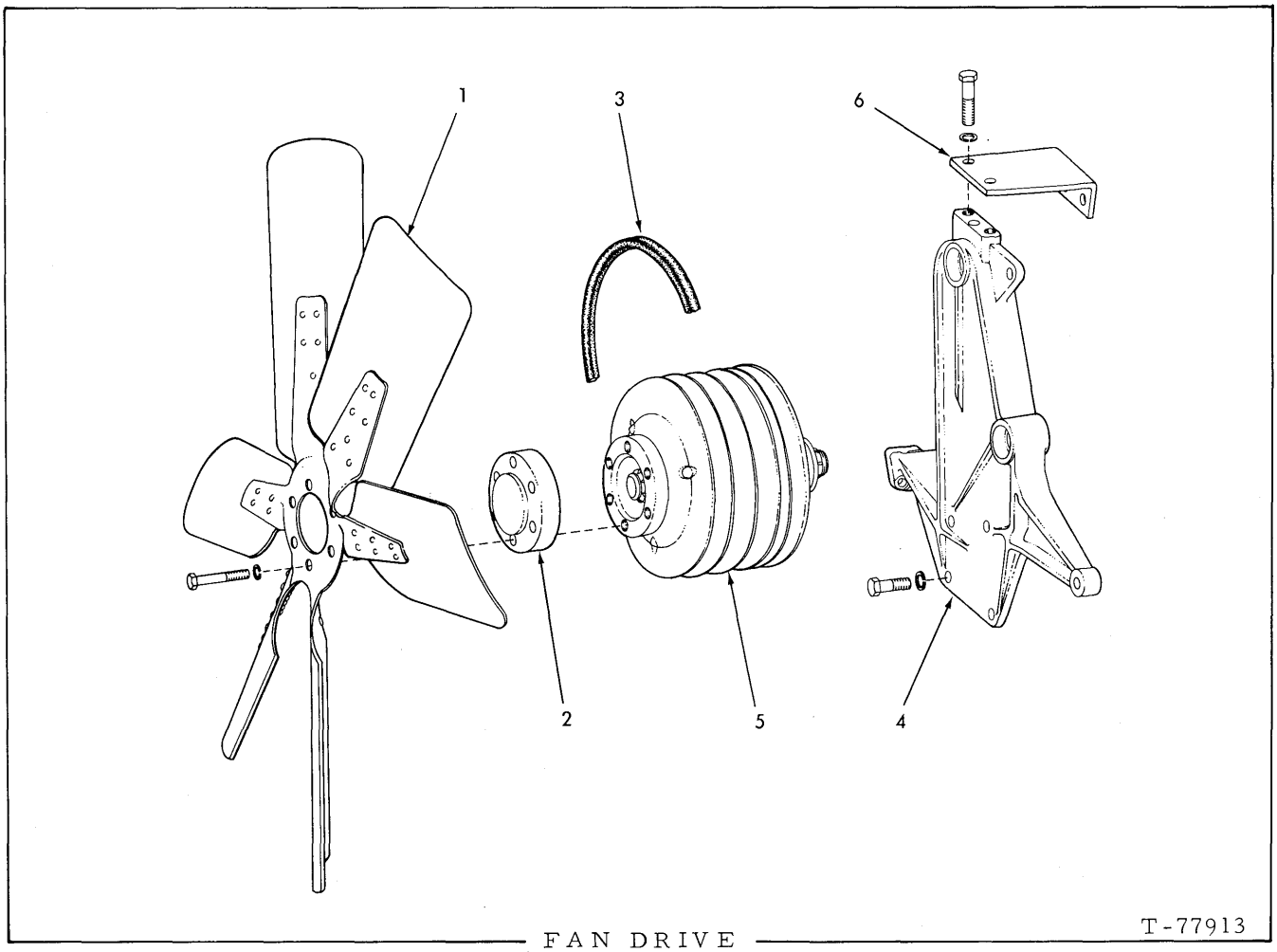

FAN DRIVE

ITEM	PART NO.	QTY.	DESCRIPTION
1	70688584	1	FAN
	70924843	6	CAPSCREW, 3/8" NC x 3-1/2"
	70929156	6	WASHER, plain
2	74394279	1	SPACER
3	74394325	1	BELT SET (Consists of 3 matched belts)
4	74394268	1	BRACKET
	70915987	4	CAPSCREW, 1/2" NC x 1-1/2"
	70904208	4	LOCKWASHER, 1/2"
5	--------	1	HUB ASSY. (See page 75)
6	74393675	1	BRACKET
	70916313	2	CAPSCREW, 1/2" NC x 1-3/4"
	70912441	2	LOCKWASHER, 1/2"

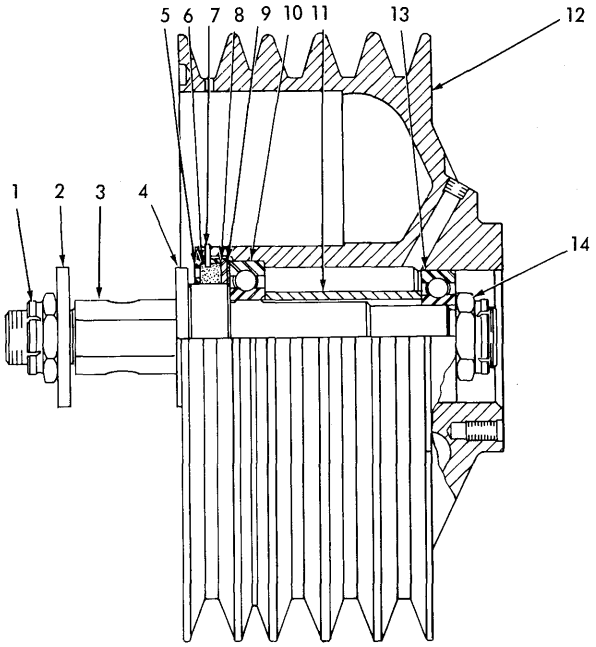

T-77892

FAN HUB ASSEMBLY

ITEM	PART NO.	QTY.	DESCRIPTION
-	74394402	1	HUB ASSY., fan (Includes items 1 thru 14)
1	74393300	1	NUT, fan hub spindle
2	74371703	1	WASHER, spindle nut
3	74394403	1	SPINDLE, fan hub
4	74394404	1	WASHER, spindle
5	74372337	1	RETAINER, sealing washer
6	74372338	1	WASHER, bearing sealing
7	74371707	1	WIRE, locking, sealing washer
8	74372339	1	WASHER, sealing
9	74372340	1	GASKET, retainer
10	70210024	1	BEARING, ball
11	74378646	1	SPACER, bearing
12	--------	1	HUB, fan (Not Serviced Separately)
	70910230	1	PLUG, pipe, slotted, 1/8" NPT
13	74253863	1	BEARING, ball
14	74378647	1	NUT, flex-lok, spindle

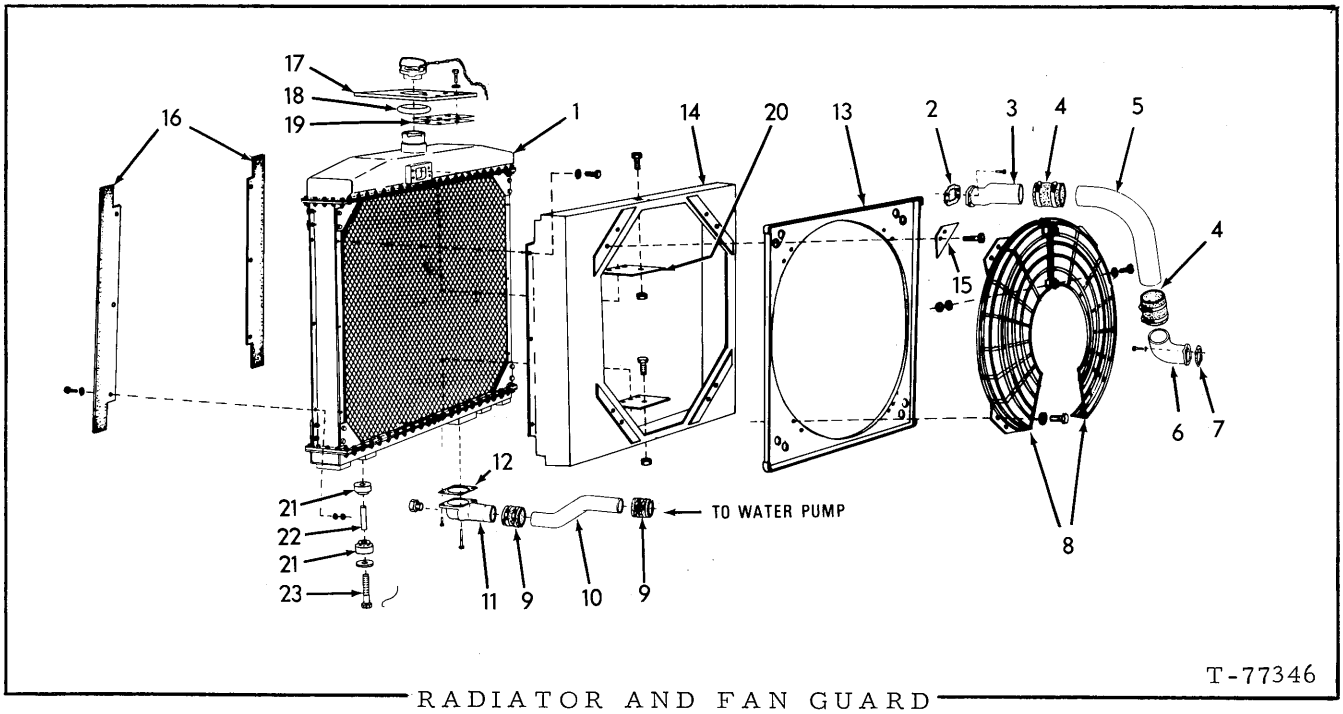

RADIATOR AND FAN GUARD

ITEM	PART NO.	QTY.	DESCRIPTION
1	---------	-	RADIATOR ASSY. (See page 79)
	70921076	6	CAPSCREW, 3/8" NC x 1-1/4"
	70677006	6	WASHER, plain, 3/8"
		1	COCK, drain
2	70081614	1	GASKET
3	70082608	1	INLET
	70922763	4	CAPSCREW, 3/8" NC x 1"
4	70067884	2	HOSE
	70922199	4	CLAMP, adjustable, 3-1/2" to 2-9/16"
5	70688771	1	TUBE
6	70660557	1	EIBOW
	70916197	2	CAPSCREW, 7/16" NC x 1-1/4"
	70904207	2	LOCKWASHER, 7/16"
	70920525	1	PLUG, pipe, 3/4"
7	74310257	1	GASKET
8	70682833	1	GUARD, left
	70682834	1	GUARD, right
	70921076	10	CAPSCREW, 3/8" NC x 1-1/4"
	70677006	12	WASHER plain, 3/8"
	70911026	2	NUT, 3/8" NC
9	70654565	2	HOSE
	70922199	4	CLAMP, adjustable, 3-1/2" to 2-9/16"
10	70688772	1	TUBE

(Continued)

RADIATOR AND FAN GUARD (Continued)

ITEM	PART NO.	QTY.	DESCRIPTION
11	70661354	1	ELBOW
	70920275	2	CAPSCREW, 3/8" NC x 3"
	70921076	2	CAPSCREW, 3/8" NC x 1-1/4"
	70918951	1	PLUG, 3/8"
12	70081627	1	GASKET
13	70688104	1	COVER
	70922763	8	CAPSCREW, 3/8" NC x 1"
14	70688103	1	SHROUD
	70921076	6	CAPSCREW, 3/8" NC x 1-1/4"
	70677006	6	WASHER, plain, 3/8"
15	73062719	4	BAR
16	70688112	2	BAFFLE
	70926180	6	WASHER, plain 7/16"
	70911025	12	NUT, 5/16" NC
17	70660387	1	COLLAR, radiator supporting
	70922526	4	CAPSCREW, 1/2" NC x 2-1/2"
	70677008	4	WASHER, 1/2"
	70918309	4	NUT, 1/2" NC
18	70095575	1	RING
19	70660606	2	SHIM, adjusting (1/32" thick) } Use as required
	70660480	1	SHIM, adjusting (1/16" thick)
20	73062368	2	PLATE
	70922300	2	CAPSCREW, 3/8" NC x 3/4"
	70922694	2	NUT, 3/8" NC
	70921566	6	CAPSCREW, 5/16" NC x 1"
21	70061671	16	SNUBBER
22	70061655	8	TUBE
23	70929071	8	CAPSCREW
	70061656	8	WASHER
	--------	2	LOCKWIRE, 1/16" x 26" (Obtain Locally)

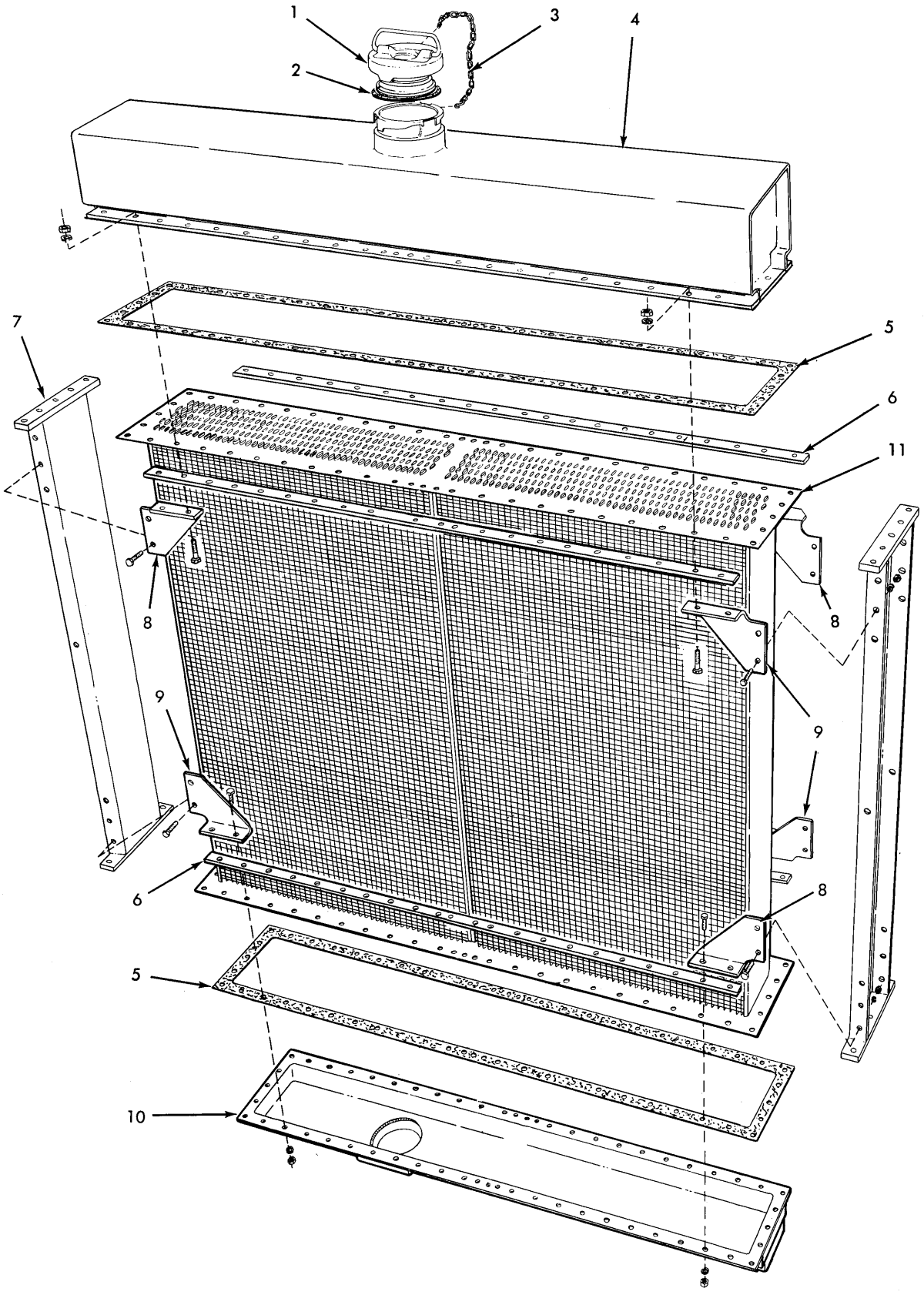

RADIATOR ASSEMBLY

RADIATOR ASSEMBLY

ITEM	PART NO.	QTY.	DESCRIPTION
-	70687250	1	RADIATOR ASSY. (Includes items 1 thru 11)
1	70654096	1	CAP ASSY. (Includes item 2)
2	70682843	1	GASKET
3	70654098	1	CHAIN
4	70686370	1	TANK
	70922843	52	CAPSCREW, 5/16" NC x 1-1/4"
	70919311	52	LOCKWASHER, 5/16"
	70911025	52	NUT, 5/16" NC
5	70083599	2	GASKET
6	70668276	4	CLAMP
7	70083073	2	SIDE
8	70083069	4	GUSSET
	70921566	8	CAPSCREW, 5/16" NC x 1"
	70919311	8	LOCKWASHER, 5/16"
	70911025	8	NUT, 5/16" NC
9	70083070	4	GUSSET
	70921566	8	CAPSCREW, 5/16" NC x 1"
	70910268	8	ELBOW, 3/16" O.D. x 3/8"
	70911025	8	NUT, 5/16" NC
10	73060053	1	TANK
	70922843	54	CAPSCREW, 5/16" NC x 1-1/4"
	70919311	54	LOCKWASHER, 5/16"
	70911025	48	NUT, 5/16" NC
11	73060052	1	CORE

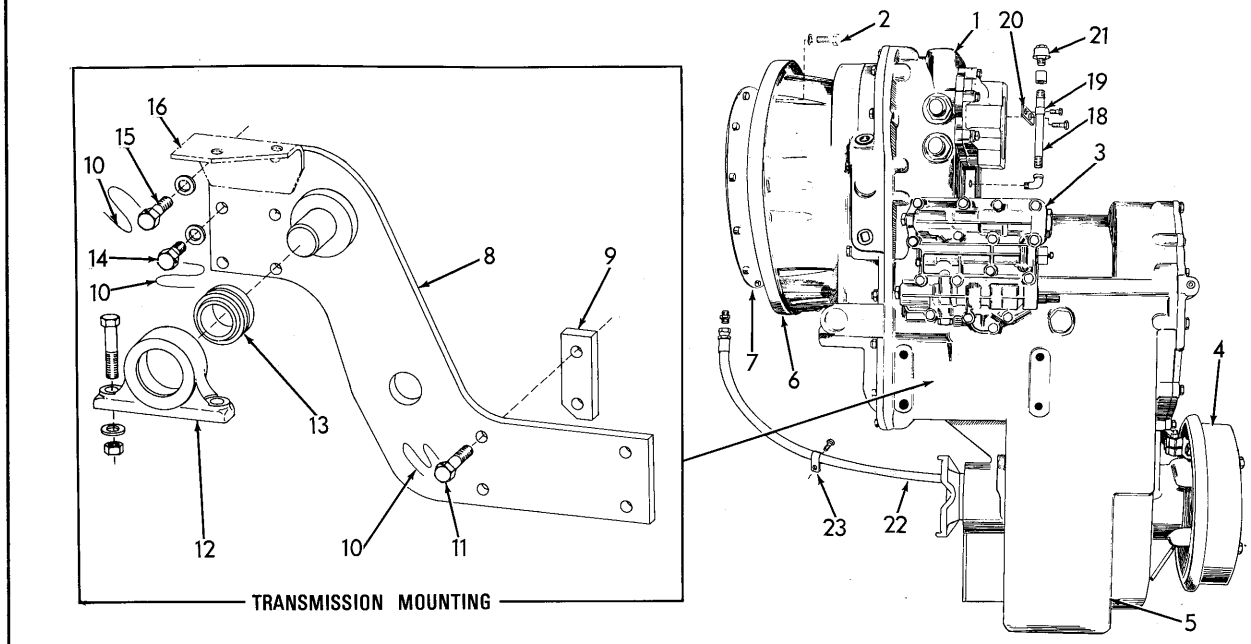

TRANSMISSION ASSEMBLY

ITEM	PART NO.	QTY.	DESCRIPTION
1	70674337	1	TRANSMISSION ASSY., complete, std. Model TRT 4820-1 (2 speeds forward, 2 speeds reverse)
2	70922287	12	CAPSCREW, 3/8" NC x 1-3/4"
3	--------	1	VALVE ASSY., control (See page 104)
4	--------	1	BRAKE ASSY., parking (See page 126)
5	--------	1	HOUSING ASSY., transmission (See page 90)
6	--------	1	HOUSING ASSY., converter (See page 86)
7	--------	1	DISC ASSY., flex (See page 82)
8	70674943	1	BRACKET, left
	70674944	1	BRACKET, right
9	70682398	3	BLOCK
10	70023633	10	LOCKWIRE

(Continued)

TRANSMISSION ASSEMBLY (Continued)

ITEM	PART NO.	QTY.	DESCRIPTION
11	70928882	8	CAPSCREW, dr.hd., 5/8" NC x 3-1/2"
	70926196	8	WASHER, plain, 5/8"
12	70679453	2	PAD, mounting
	70922458	4	CAPSCREW, 3/4" NC x 3-1/2"
	70927382	4	WASHER, plain, 3/4"
	70916170	4	NUT, 3/4" NC
13	70181605	2	BEARING
14	70928881	10	CAPSCREW, dr.hd., 5/8" NC x 1-3/4"
15	70929322	2	CAPSCREW, dr. hd., 5/8" NC x 2-5/8"
	70677010	2	WASHER, plain, 5/8"
16	--------	-	See HYDRAULIC PUMP AND VALVE PIPING
17	70927939	-	PLASTIC SEALANT (50cc)(Not Illustrated)
18	70919557	1	NIPPLE, pipe
	70901722	1	ELBOW, pipe, 90°, 1/4" street
	70922863	1	COUPLING, 1/4" NPTF x 1-1/8"
19	70928137	1	CLIP
	70927484	1	CAPSCREW, 3/8" NC x 1/2"
20	70686283	1	BAR
	70924277	1	CAPSCREW, 5/8" NC x 1"
21	--------	1	BREATHER (See TRANSMISSION HOUSING AND COVERS)

NOTE: The following items are Oil Return from Flywheel Housing to Transmission

22	70675105	1	HOSE ASSY.
	70919128	1	CONNECTOR, hose to flywheel housing 1/2" tube x 1/2" tapered thd.
	70925839	1	ELBOW, hose to transmission housing 1/2" tube 3/4" straight thd.
23	70926049	1	CLIP, hose support, 3/4" x 3/4" insulated
	70677006	1	WASHER
	70922300	1	CAPSCREW, 3/8" NC x 3/4"

"ALWAYS GIVE MODEL AND SERIAL NUMBER WHEN ORDERING PARTS"

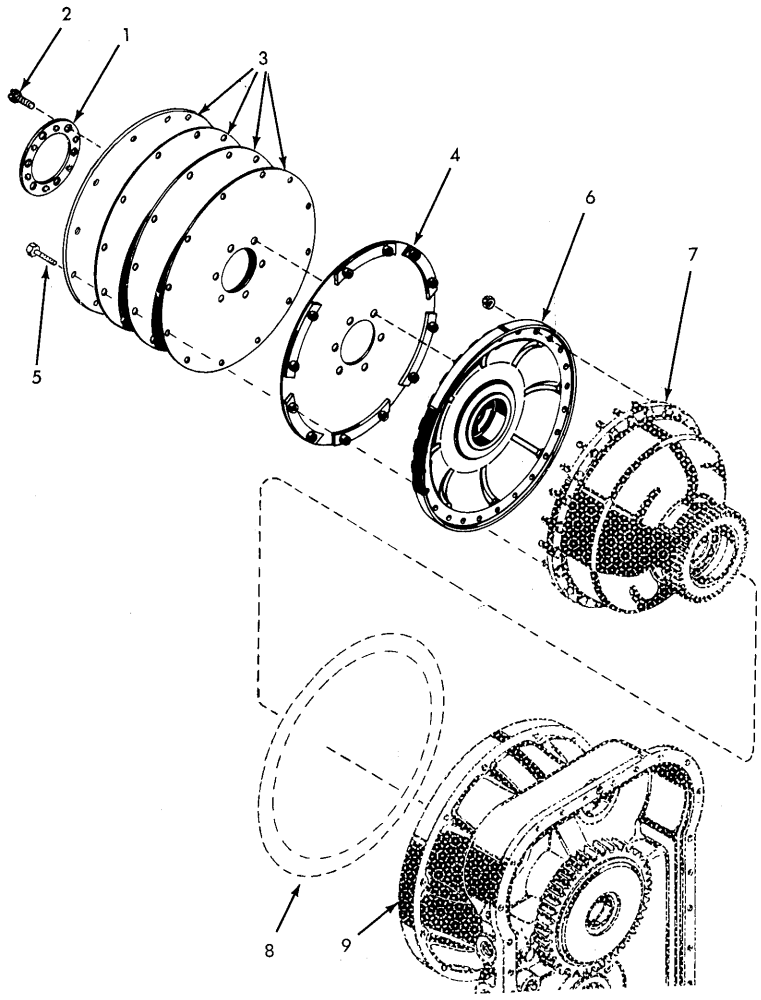

T-78015

FLEX DISC AND CONVERTER DRIVE

ITEM	PART NO.	QTY.	DESCRIPTION
1	73062669	1	PLATE, flex disc
2	73062670	12	CAPSCREW, 1/2" NC x 1-1/4"
3	73062109	4	DISC, flex
4	73062110	1	DISC ASSY. (Includes washer)
5	70930269	12	BOLT, place (flex disc to flywheel)
6	73062111	1	COVER, torque converter
	---------	24	NUT (See TORQUE CONVERTER group)(See page 82)
7	---------	1	CONVERTER ASSY., torque (See page 82)
8	70927939	1	PLASTIC SEALANT, converter housing to adapter ring (50 cc bottle)
9	---------	1	HOUSING, torque converter (See page 84)

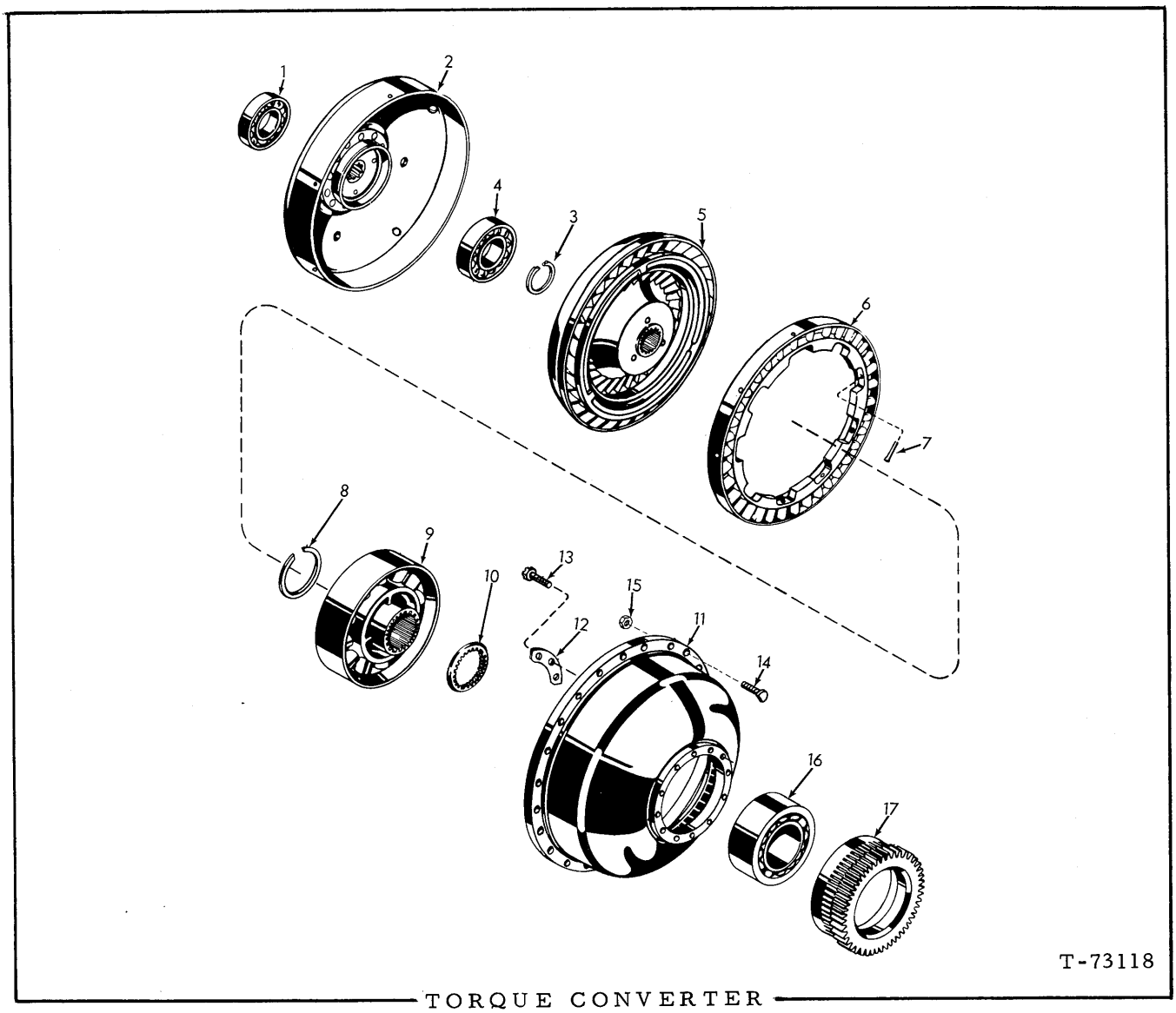

TORQUE CONVERTER

ITEM	PART NO.	QTY.	DESCRIPTION
1	73062082	1	BEARING, turbine assy. (Single row ball)
2	73062113	1	TURBINE ASSY., first (Includes HOUSING and items 6 and 7)
3	73047036	1	RING, snap
4	73047035	1	BEARING, turbine (Single row ball)
5	73062112	1	TURBINE, torque converter, second (Used prior to transmission serial no. 5451)
	73063887	1	TURBINE, torque converter, second (Effective with transmission serial no. 5451)
	--------	1	TURBINE, torque converter, first (Order item 2)
7	73062103	9	PIN, turbine assy.
8	70194541	1	RING, snap
9	73062106	1	STATOR, torque converter

(Continued)

TORQUE CONVERTER (Continued)

ITEM	PART NO.	QTY.		DESCRIPTION
10	73100710	1		SPACER, stator
11	73062107	1		PUMP ASSY., torque converter (Includes item 14)
12	73047041	4		STRIP, locking
13	73047040	12		BOLT, 5/16" NF x 1-1/8" (self-locking)
14	73033044	24		BOLT, 5/16" NF x 1-5/16"
15	73021041	24	□	NUT, 5/16" NF (locking)
16	73047043	1		BEARING, converter pump (double row ball)
17	73062080	1		GEAR, input, accessory drive
			□	(Also see PACKAGED PARTS)

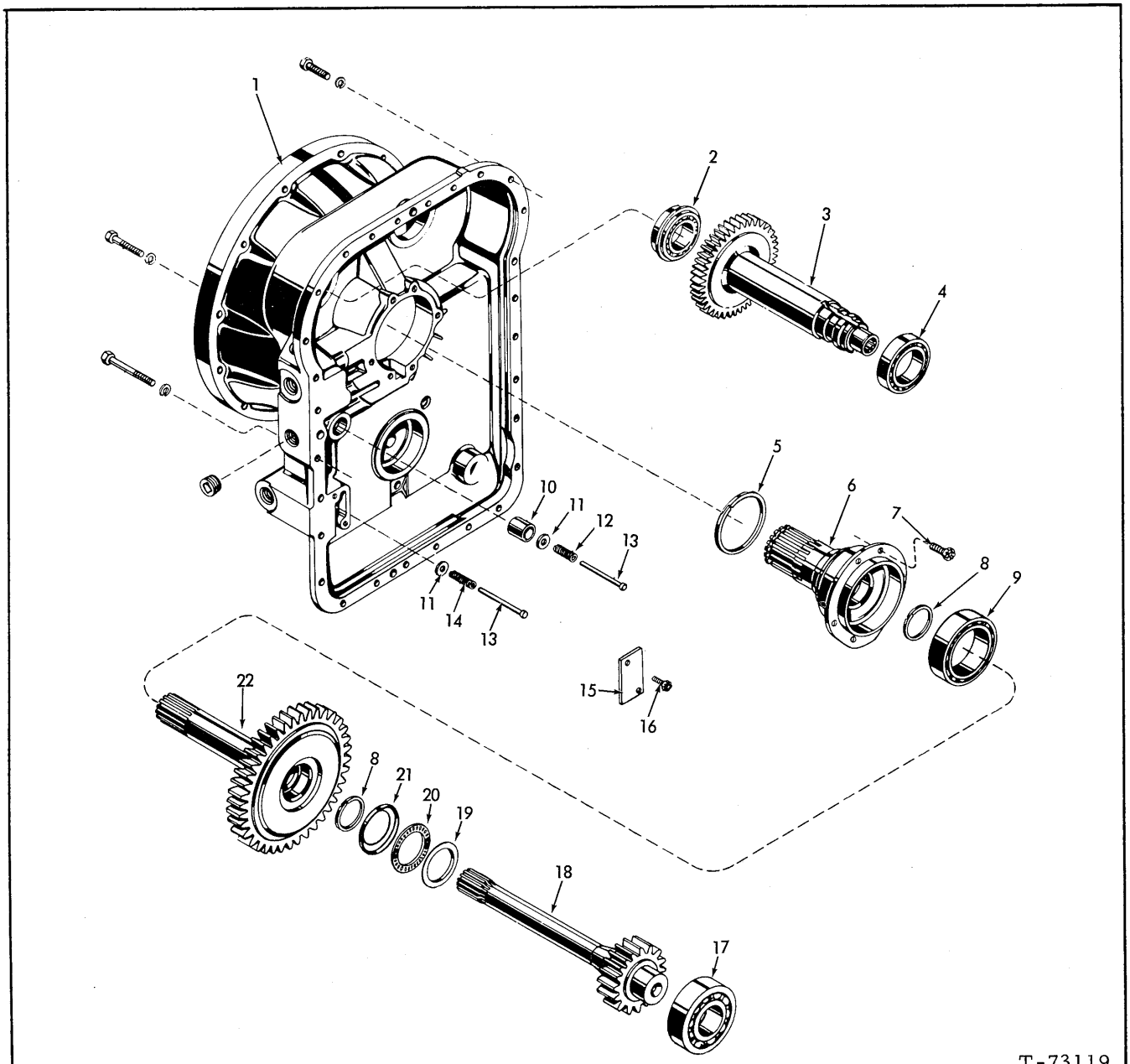

TORQUE CONVERTER HOUSING

ITEM	PART NO.	QTY.	DESCRIPTION
1	73047047	1	HOUSING ASSY., converter (Includes PLUG indented below and items 10 thru 14)
	70916867	3	CAPSCREW, 7/16" NC x 3"
	70912188	4	CAPSCREW, 7/16" NC x 1-3/4"
	70916197	21	CAPSCREW, 7/16" NC x 1-1/4"
	70904207	28	LOCKWASHER, 7/16"
	73047050	1	PLUG, ctsk-hd.
2	73047666	1	BEARING
3	73062081	1	GEAR, driven, accessory

(Continued)

TORQUE CONVERTER HOUSING (Continued)

ITEM	PART NO.	QTY.		DESCRIPTION	
4	73055228	1		BEARING	
5	70194585	1	□	RING, seal	
6	73100708	1		SLEEVE, converter, ground	
7	73100709	6		BOLT, 3/8" NC x 7/8"	
8	73047668	2	□	RING, seal	
9	73045284	1		BEARING (Single row ball)	
10	-------	1		TUBE, regulator valve (not serviced)	
11	73044430	2		VALVE, converter regulator and lube overage	
12	73044431	1		SPRING, converter regulator	
13	73044449	2		PIN, valve guide	
14	73047049	1		SPRING, lube overage	
15	73047664	1		COVER, lube overage valve	
16	73047665	2		CAPSCREW, 3/8" NC x 3/4"	
17	73051799	1		BEARING	
18	73051800	1		GEAR, turbine drive, first	
19	73047673	1		RACE, thrust	
20	73047672	1		BEARING, thrust, roller	
21	73047671	1		RACE, thrust	
22	73047669	1		GEAR (Used prior to transmission serial no. 5451)	Turbine Drive, second
	73063386	1		GEAR (Effective with transmission serial no. 5451)	

□ (Also see PACKAGED PARTS)

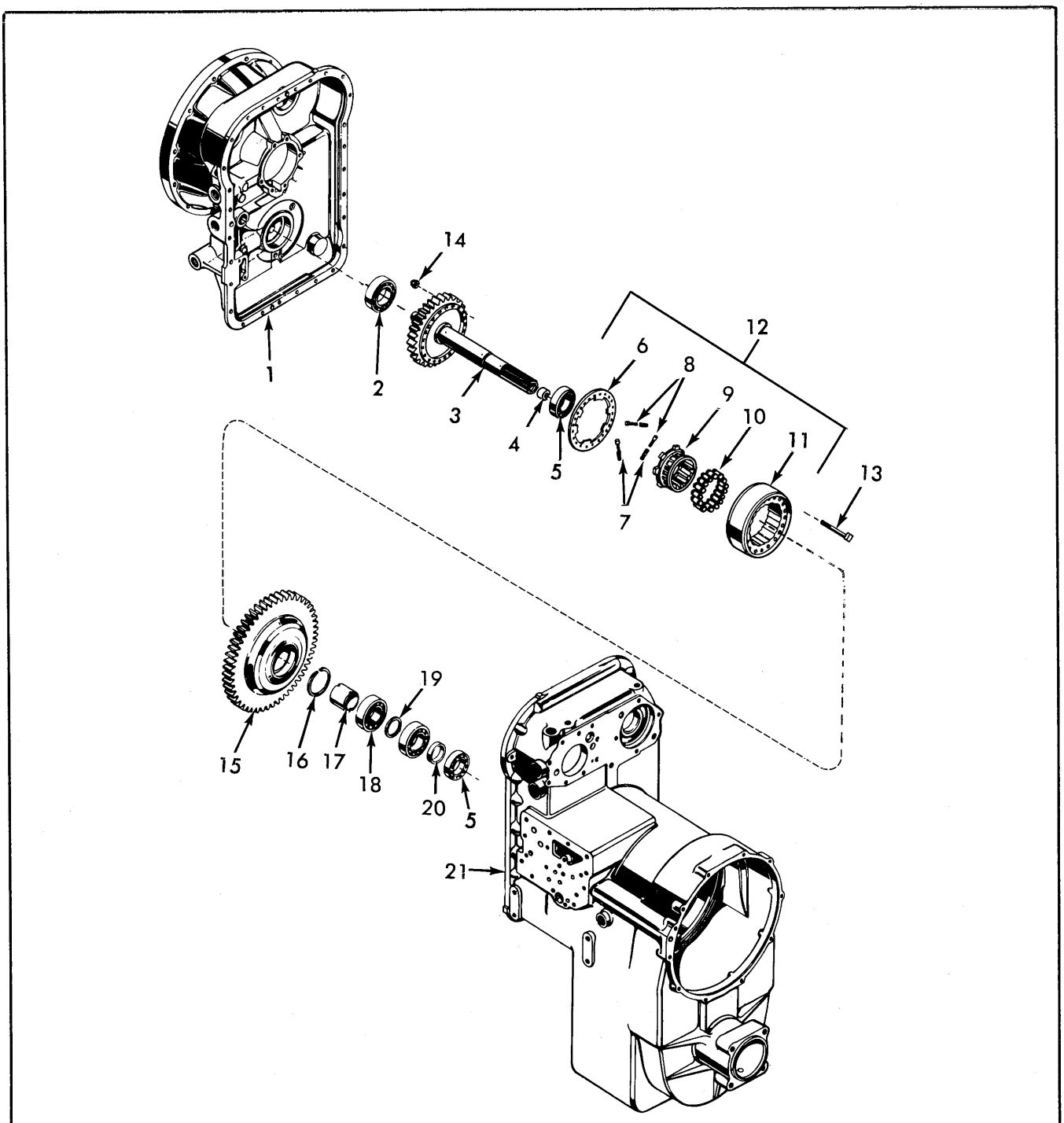

TURBINE DRIVE GEARS AND FREEWHEEL UNIT

ITEM	PART NO.	QTY.	DESCRIPTION
1	--------	1	HOUSING, torque converter (See page 86)
2	73062082	1	BEARING (single row ball)
3	73062131	1	GEAR ASSY., driven, second turbine (Includes item 4)

(Continued)

TURBINE DRIVE GEARS AND FREEWHEEL UNIT (Continued)

ITEM	PART NO.	QTY.	DESCRIPTION
4	73047802	1	BUSHING
5	73047678	2	BEARING (single row ball)
6	--------	1	PLATE, spring
7	--------	3	SPRING
8	--------	3	SPIRAL
9	--------	1	CAGE, freewheel roller
10	--------	21	ROLLER
11	--------	1	CAM, freewheel
12	73061968	-	KIT, overrunning clutch (Includes items 6 thru 11)
13	73047684	21	CAPSCREW, sq. hd., 3/8" NF x 3-1/2"
14	73044438	21	NUT, self-locking, 3/8" NF
15	73047685	1	GEAR, first turbine, driven
16	73047686	1	RING, snap
17	73047687	1	SPACER, bearing
18	73047688	2	BEARING (single row ball)
19	73047689	1	SPACER, bearing
20	73047690	1	SPACER, bearing
21	--------	1	HOUSING, transmission (See page 90)

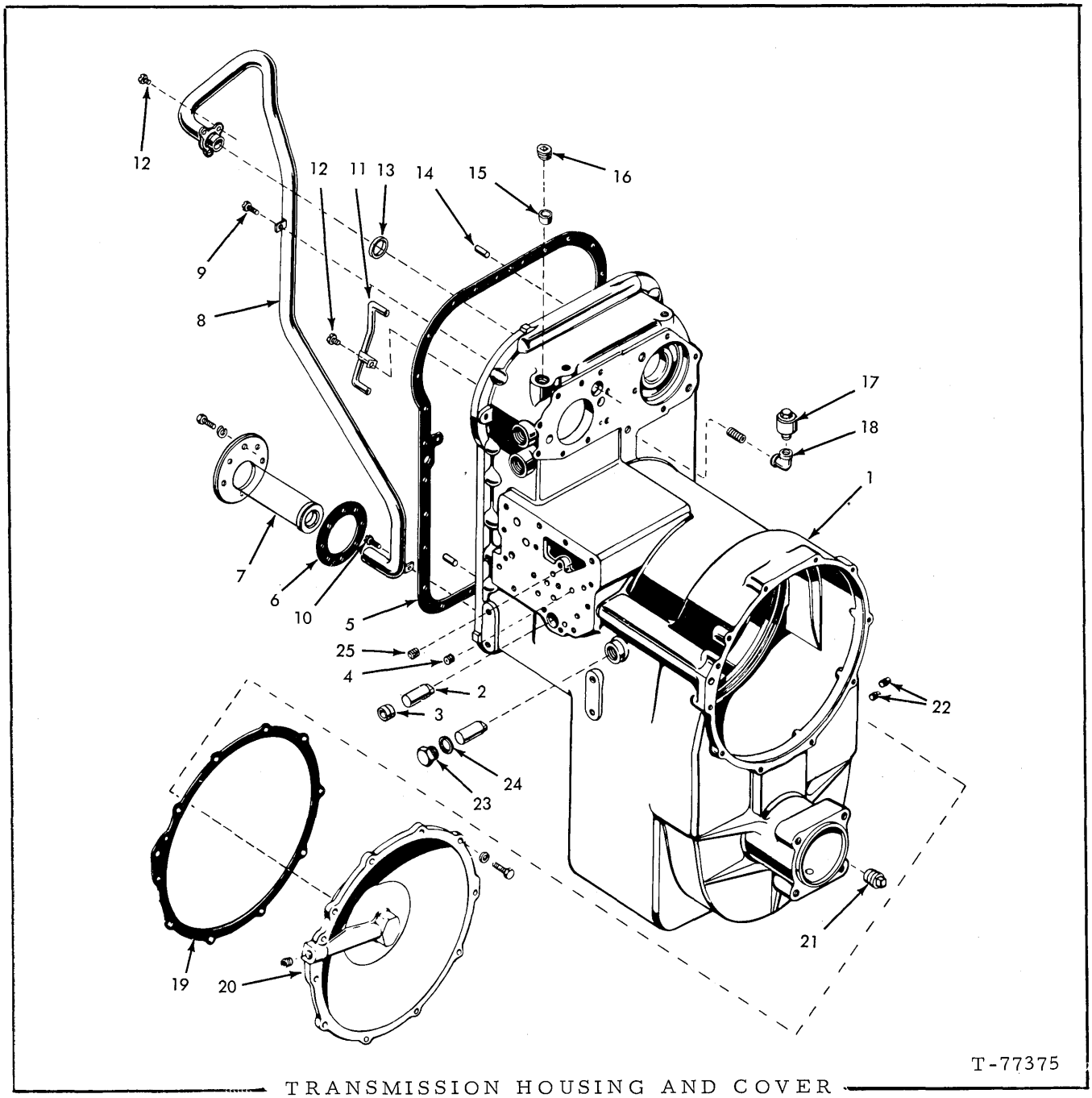

TRANSMISSION HOUSING AND COVER

ITEM	PART NO.	QTY.	DESCRIPTION
1	73062116	1	HOUSING ASSY., transmission (Includes item 4) (Also order item 15)
2	73047697	2	PIN, anchor
3	73047696	1	SPACER
4	73062137	1	PLUG, orifice
5	73047698	1	☐ GASKET, transmission housing

(Continued)

TRANSMISSION HOUSING AND COVER (Continued)

ITEM	PART NO.	QTY.	DESCRIPTION
6	73021056	1	☐ GASKET, strainer
7	73062052	1	STRAINER ASSY.
	70916269	6	CAPSCREW, 3/8" NC x 7/8"
	70904206	6	LOCKWASHER, 3/8"
8	73062048	1	TUBE, suction
9	73044388	2	CAPSCREW, 3/8" NC x 5/8"
10	73021223	1	CAPSCREW, 3/8" NC x 7/8"
11	73062049	1	TUBE ASSY.
12	73047665	3	BOLT
13	73062051	1	☐ RING, seal, nut
14	73044436	2	PIN, dowel
15	73044391	1	PLUG, remote filter
16	73055076	1	PLUG
17	70194551	1	BREATHER, transmission
18	---------	1	ELBOW, breather } (See TRANSMISSION ASSY.)
	---------	1	NIPPLE }
19	73047741	1	☐ GASKET, rear cover
20	73047743	1	COVER, rear
	70916197	11	CAPSCREW, 7/16" NC x 1-1/4"
	70904207	11	LOCKWASHER, 7/16"
	73054984	1	PLUG, 1/4" NPT
21	73021038	1	PLUG, pipe, 3/4" NPT (oil drain)
22	70919840	2	PLUG, pipe, 1/4" NPT
23	73044473	1	PLUG
24	73044474	1	☐ GASKET
25	73062050	1	PLUG

☐ (Also see PACKAGED PARTS)

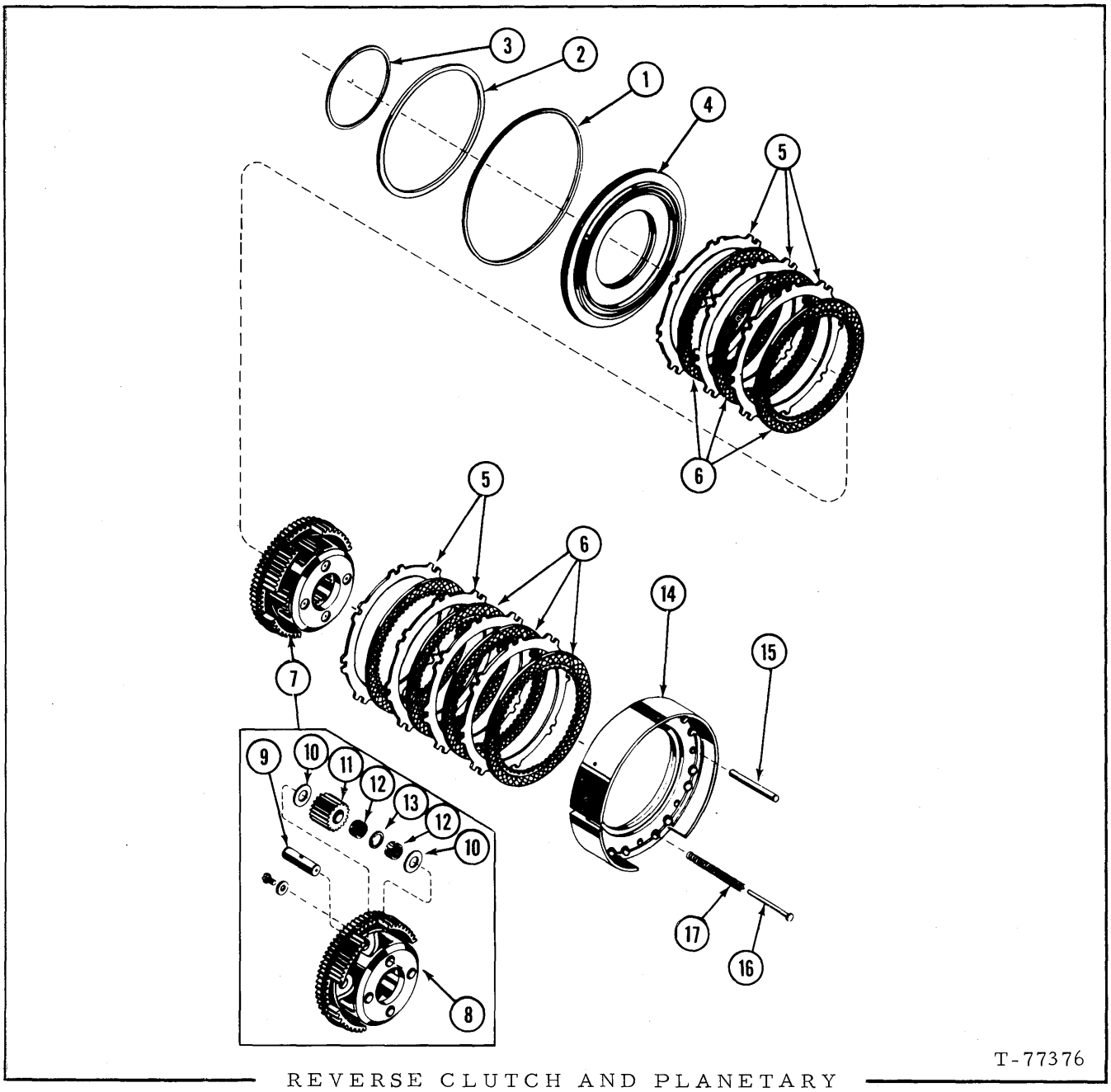

REVERSE CLUTCH AND PLANETARY

ITEM	PART NO.	QTY.	DESCRIPTION
1	73062027	1	□ RING, seal
2	73062026	1	□ RING, seal
3	73058793	1	□ RING, seal
4	73062114	1	PISTON
5	73062078	7	PLATE, external splined
6	73047703	7	PLATE, internal tanged

(Continued)

REVERSE CLUTCH AND PLANETARY (Continued)

ITEM	PART NO.	QTY.	DESCRIPTION
7	73062034	1	CARRIER ASSY., reverse clutch (Includes items 8 thru 13)
8	--------	1	CARRIER, reverse clutch (ORDER item 7)
9	73047708	4	SPINDLE
	73047707	4	CAPSCREW, 3/8" NF x 1/2"
	73047706	4	WASHER, 3/8"
10	73047709	8	WASHER, thrust
11	73047710	1	PINION SET (Consists of 4 pinions)
12	73047711	8	BEARING
13	73047712	4	SPACER
14	73062036	1	ANCHOR ASSY., clutch, reverse and forward (Includes item 15)
15	73062038	8	PIN
16	73062039	15	PIN
17	73062040	15	SPRING

☐ (Also see PACKAGED PARTS)

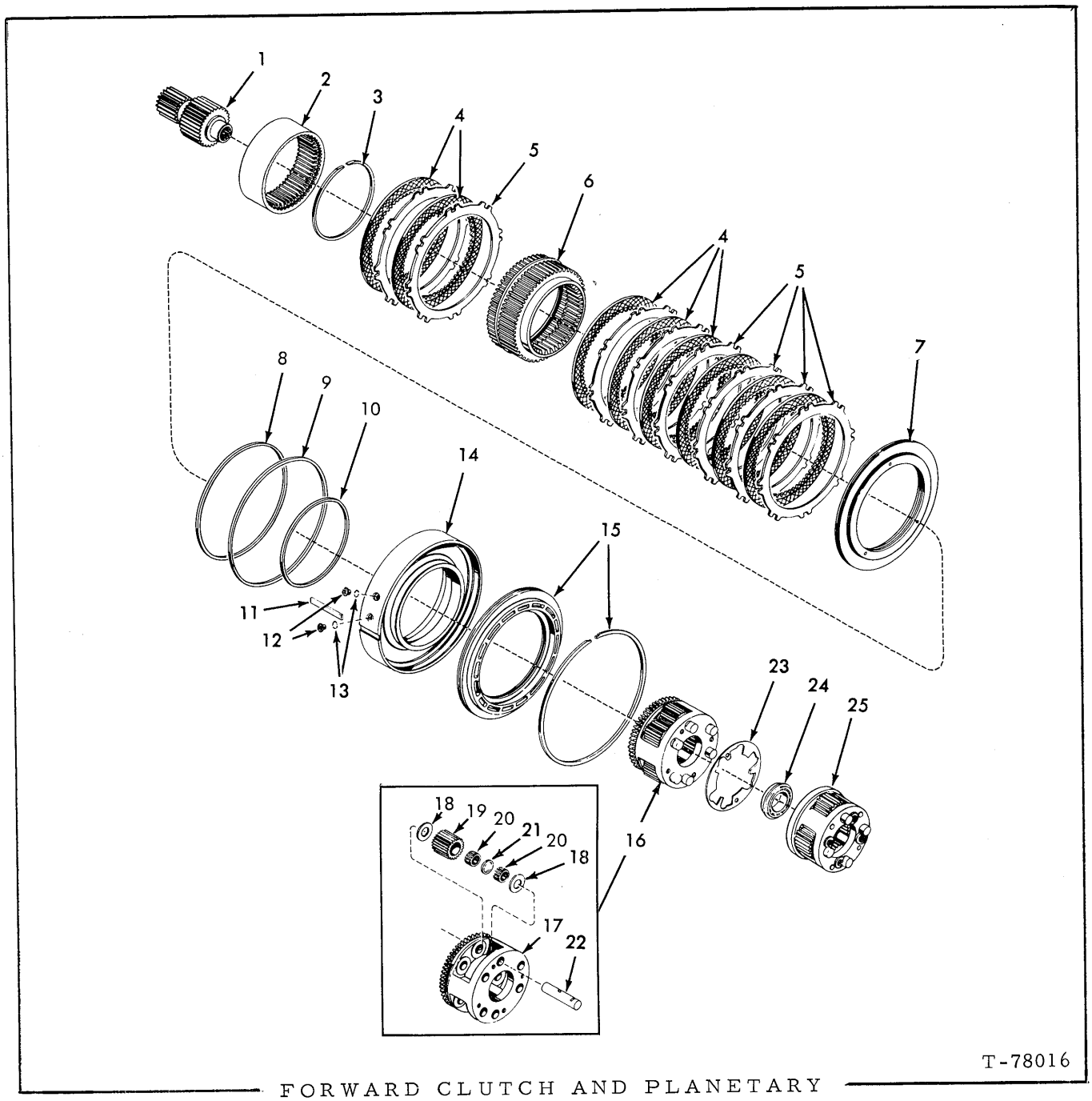

FORWARD CLUTCH AND PLANETARY

ITEM	PART NO.	QTY.	DESCRIPTION
1	73062130	1	GEAR, sun, forward and reverse clutch
2	73062041	1	GEAR, reverse ring
3	73048414	1	RING, snap
4	73047703	8	PLATE, internal splined
5	73062078	8	PLATE, external tanged

(Continued)

FORWARD CLUTCH AND PLANETARY (Continued)

ITEM	PART NO.	QTY.	DESCRIPTION
6	73062118	1	GEAR, forward clutch ring
7	73062127	1	PISTON, forward clutch
8	73062067	1	□ RING, seal, center
9	73062027	1	□ RING, seal, large
10	73062025	1	□ RING, seal, small
11	73062053	1	KEY, anchor
12	73047723	2	INSERT, forward clutch housing
13	73047724	2	□ RING, seal, forward clutch housing insert
14	73062120	1	HOUSING, forward clutch piston
15	--------	-	See HIGH RANGE CLUTCH
16	73062128	1	CARRIER ASSY. (Includes items 17 thru 22)
17	--------	1	CARRIER (ORDER item 16)
18	73047709	12	WASHER, thrust
19	73047817	1	PINION SET, carrier (Consists of 6 pinions)
20	73047711	12	BEARING, roller
21	73047712	6	SPACER, bearing
22	73047729	6	SPINDLE
23	73047818	1	LOCK, spindle
24	73047731	1	BEARING(single row ball)
25	--------	1	See HIGH RANGE CLUTCH AND TRANSMISSION DRIVE GROUP.
			□ (Also see PACKAGED PARTS)

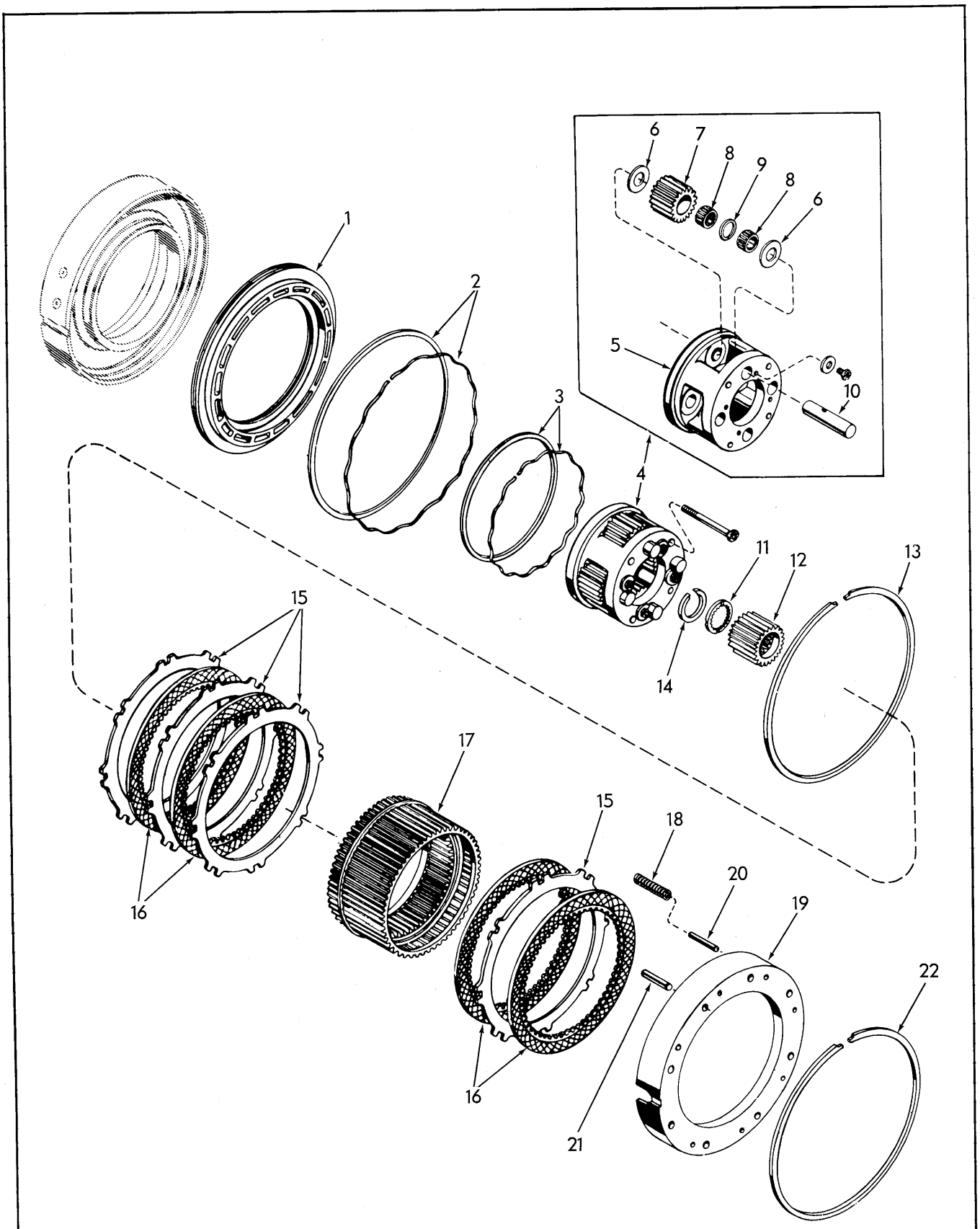

HIGH RANGE CLUTCH AND TRANSFER DRIVE GEAR

HIGH RANGE CLUTCH AND TRANSFER DRIVE GEAR

ITEM	PART NO.	QTY.	DESCRIPTION	
1	73062104	1	PISTON	
2	73047701	1	□ KIT	
3	73047720	1	□ KIT	
4	73047822	1	CARRIER ASSY. (Includes items 5 thru 10)	
	73047824	4	CAPSCREW, 7/16" NF x 3-11/16"	
5	--------	1	CARRIER (Order Carrier Assy.)	
6	73047709	8	WASHER	
7	73047710	1	PINION SET (Consists of 4 pinions)	
8	73047711	8	BEARING	
9	73047712	4	SPACER	
10	73047708	4	SPINDLE	
	73047707	4	CAPSCREW, 3/8" NF x 1/2"	
	73047706	4	WASHER, 3/8"	
11	73047825	1	WASHER	
12	73047826	1	GEAR	
13	73100707	1	RING, snap (.187" thick)	
	73047828	1	RING, snap (.174" thick - Color code Red)	Use as required
	73047829	1	RING, snap (.180" thick - Color code White)	
	73047830	1	RING, snap (.193" thick - Color code Blue)	
	73047831	1	RING, snap (.200" thick - Color code Green)	
14	73051199	1	RING	
15	73062078	5	PLATE, external	
16	73047703	5	PLATE, internal	
17	73062121	1	GEAR	
18	73047834	7	SPRING	
19	73062145	1	ANCHOR ASSY. (Includes items 20 and 21)	
20	73047836	7	PIN	
21	73062142	8	PIN	
22	73100707	1	RING, snap (.187" thick)	

□ (Also see PACKAGED PARTS)

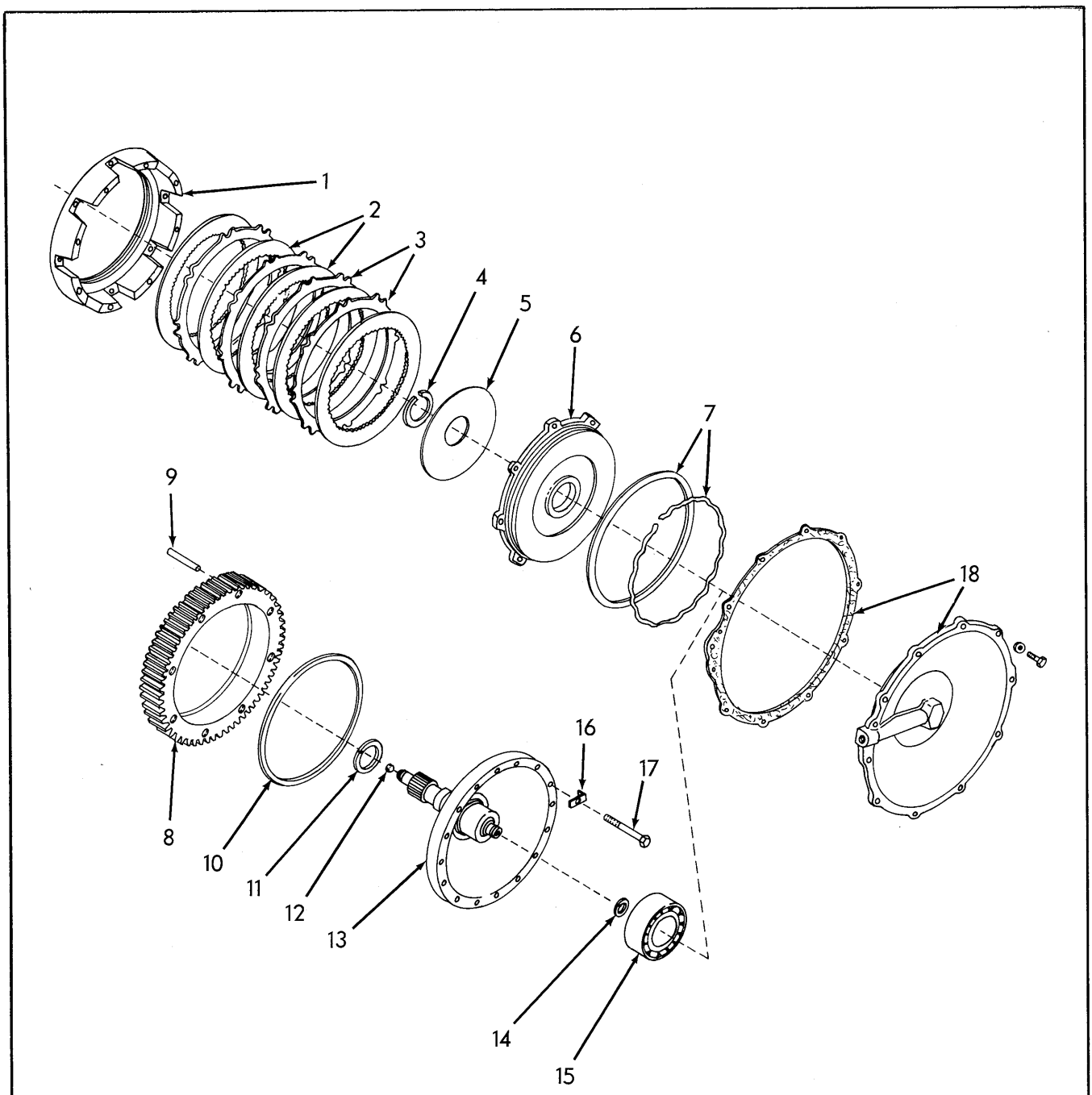

LOW RANGE CLUTCH AND TRANSFER DRIVE GEAR

ITEM	PART NO.	QTY.	DESCRIPTION
1	73062143	1	PLATE
2	73047703	5	PLATE, internal
3	73062078	4	PLATE, external

(Continued)

LOW RANGE CLUTCH AND TRANSFER DRIVE GEAR (Continued)

ITEM	PART NO.	QTY.		DESCRIPTION
4	73035719	1		RING
5	73055856	1		SPRING
6	73062122	1		PISTON
7	73042146	1	□	KIT
8	73062115	1		GEAR ASSY. (Includes item 9)
9	73062141	8		PIN
10	73062134	1	□	SEAL
11	73035714	1	□	RING
12	73062133	1		PLUG
13	73062123	1		HUB ASSY. (Includes item 12)
14	73035745	1	□	RING
15	73062147	1		BEARING (double row)
16	73044460	8	□	LOCK
17	73062099	8		CAPSCREW, 1/2" NF x 3"
18	- - - - - - -	-		See TRANSMISSION HOUSING AND COVER

□ (Also see PACKAGED PARTS)

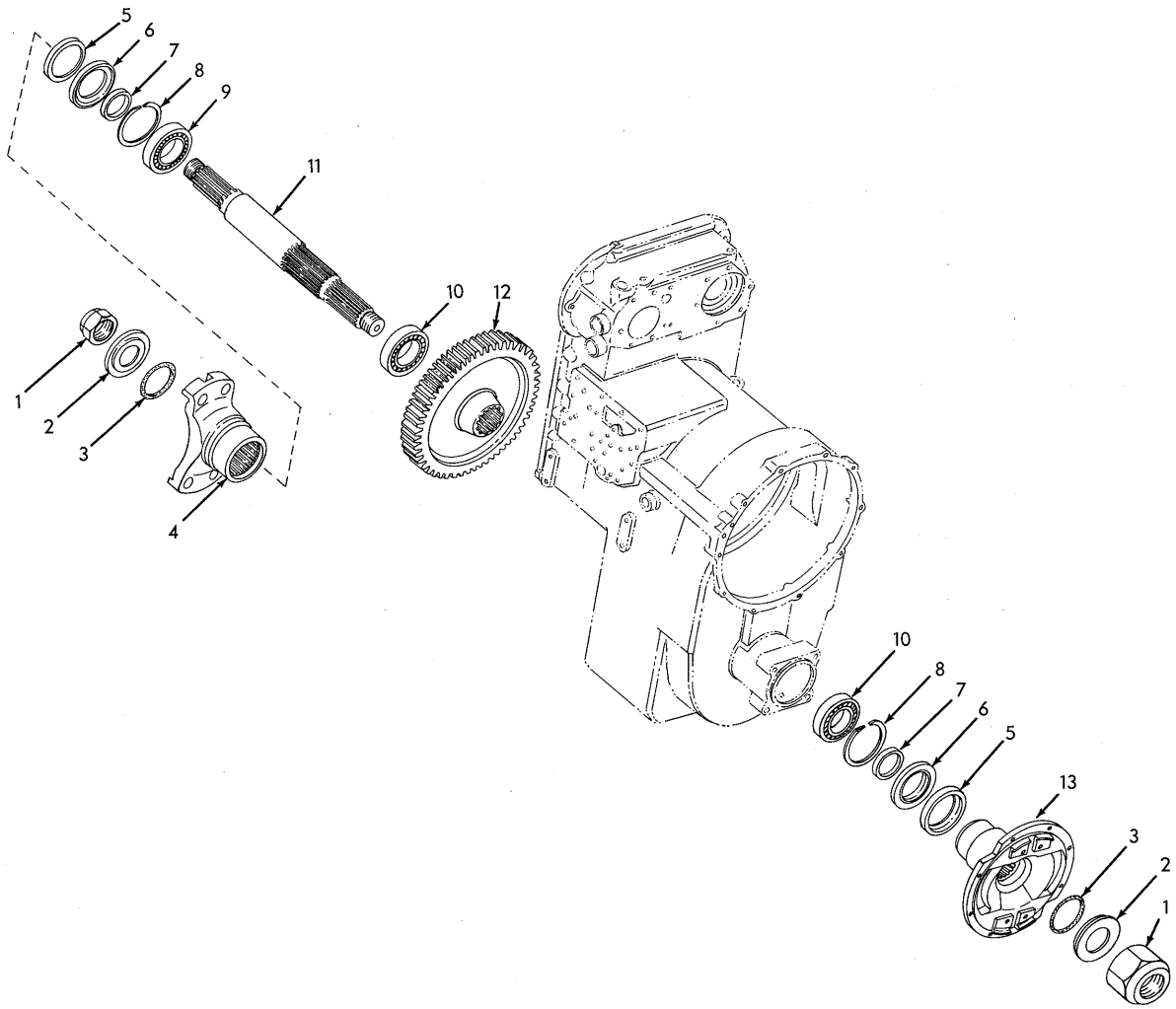

T-78022

OUTPUT SHAFT

OUTPUT SHAFT

ITEM	PART NO.	QTY.	DESCRIPTION
1	70924944	2	□ NUT, safety
2	73062042	2	WASHER
3	73062043	2	□ O-RING
4	73062146	1	YOKE, flange type
5	70194680	2	SLINGER
6	70194679	2	□ SEAL
7	73047746	2	SPACER
8	73021060	1	RING
9	70194533	1	BEARING
10	73047749	1	BEARING (single row ball)
11	73062044	1	SHAFT
12	73062136	1	GEAR
13	73062135	1	YOKE, flange type

□ (Also see PACKAGED PARTS)

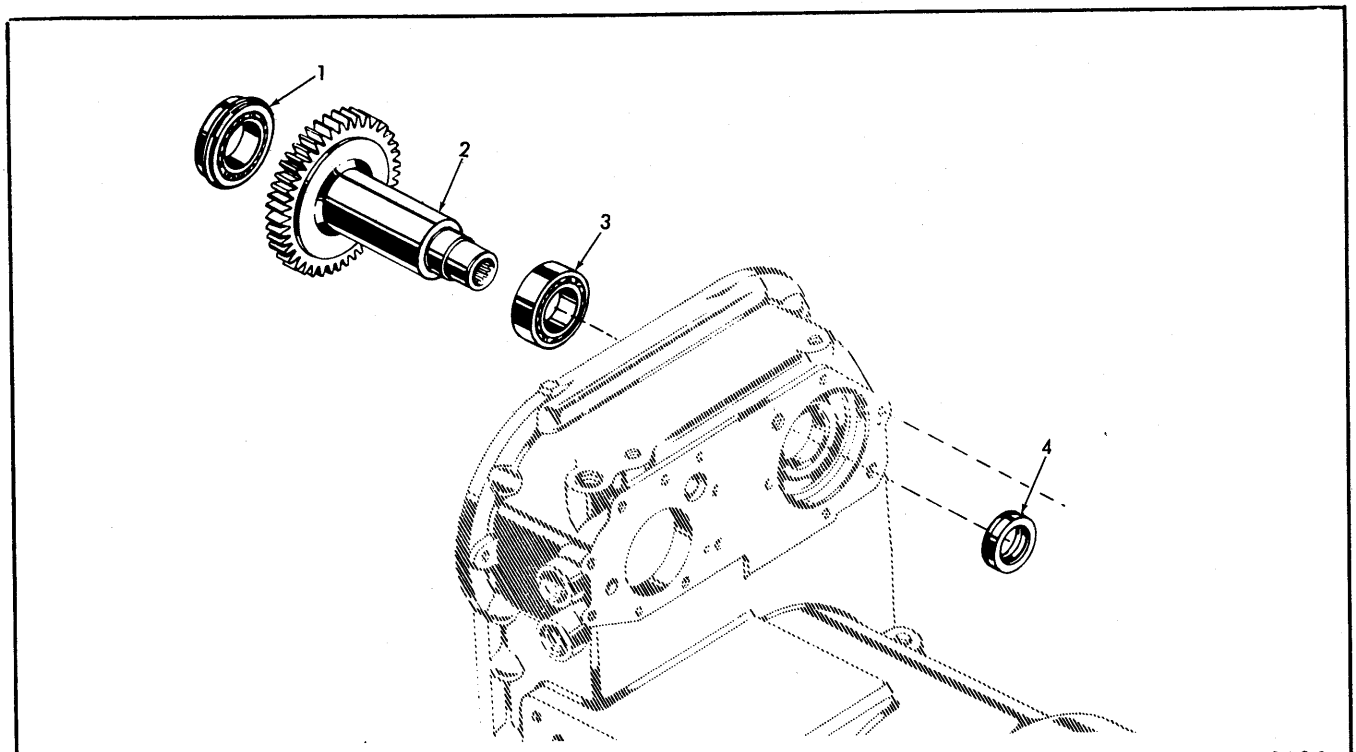

ACCESSORY DRIVE

ITEM	PART NO.	QTY.	DESCRIPTION
1	73047666	1	BEARING
2	73062079	1	GEAR, accessory drive
3	73046008	1	BEARING
4	73026156	1	□ SEAL, oil
			□ (Also see PACKAGED PARTS)

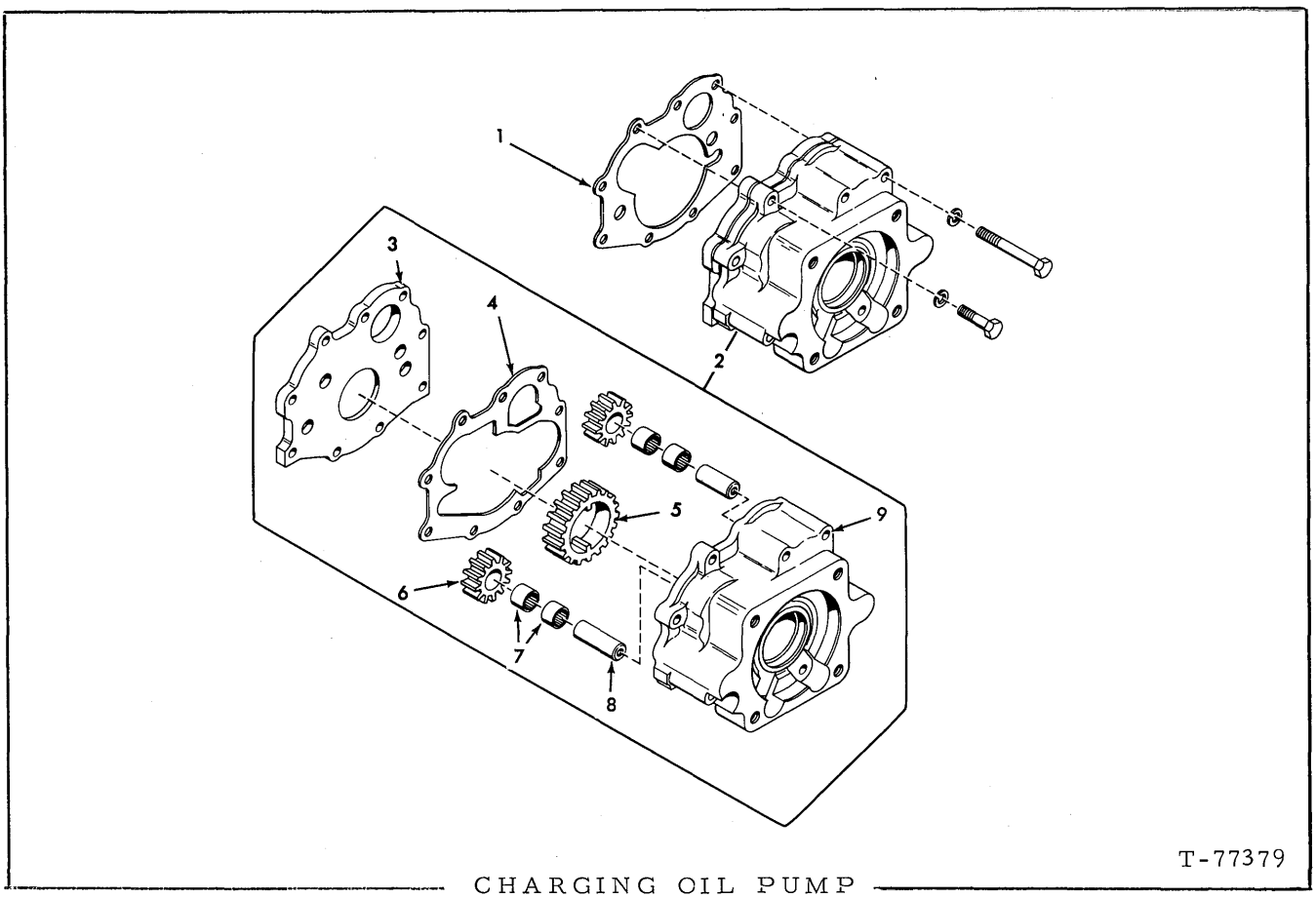

CHARGING OIL PUMP

ITEM	PART NO.	QTY.		DESCRIPTION
1	73062032	1	□	GASKET
2	73062029	1		PUMP ASSY. (Includes items 3 thru 9)
	70919801	6		CAPSCREW, 3/8" NC x 4"
	70910948	3		CAPSCREW, 3/8" NC x 3"
	70904206	9		LOCKWASHER, 3/8"
3	73062033	1		COVER
4	73062031	1	□	GASKET
5	--------	1		GEAR, drive (Order item 2)
6	--------	2		GEAR, driven (Order item 2)
7	73044403	4		BEARING
8	--------	2		SHAFT (Order item 2)
9	--------	1		BODY (Order item 2)

□ (Also see PACKAGED PARTS)

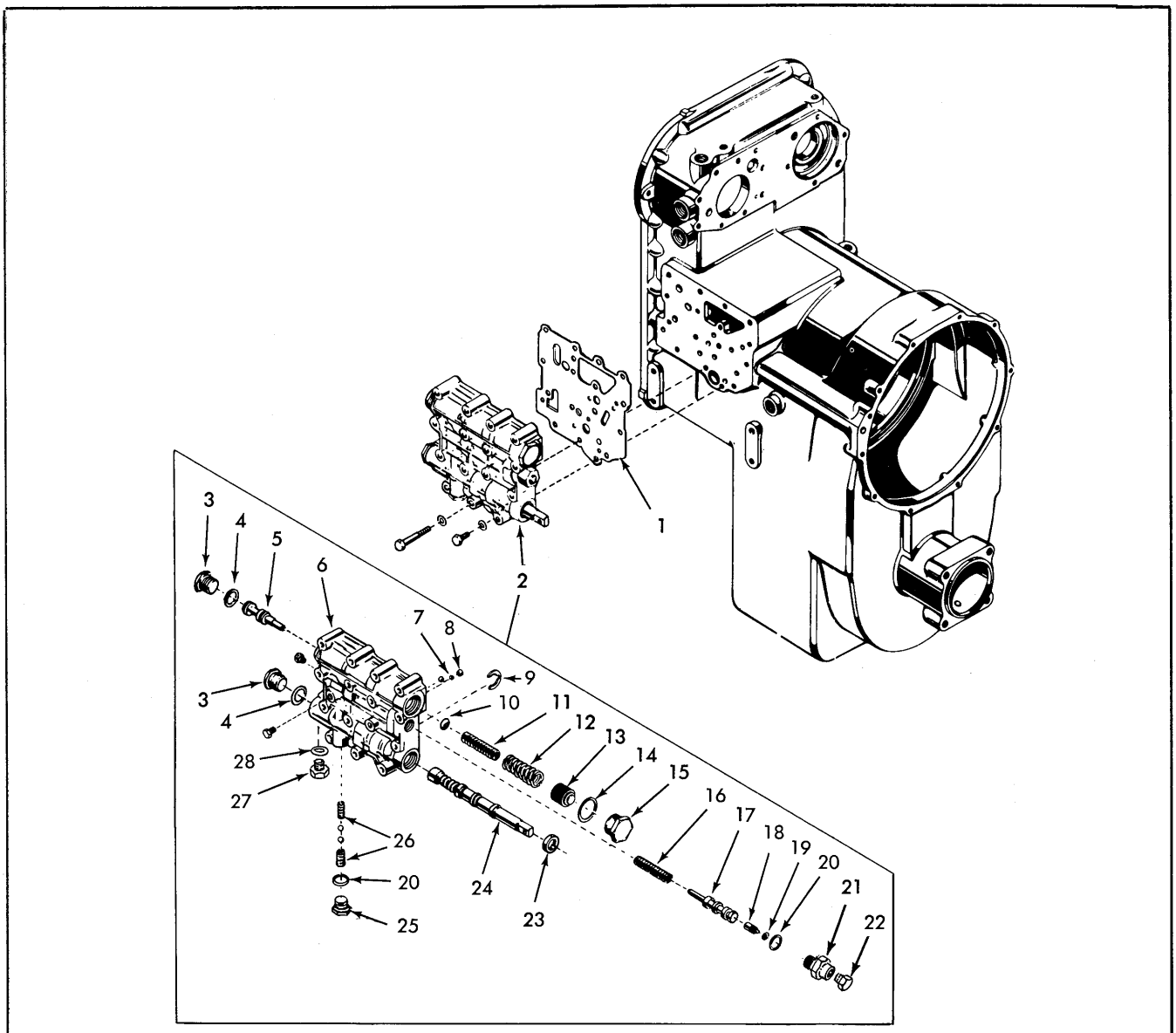

TRANSMISSION CONTROL VALVE

ITEM	PART NO.	QTY.	DESCRIPTION
1	73048842	1	□ GASKET, control valve
2	73062138	1	VALVE ASSY., control (Includes items 3 thru 28)
	70916271	1	CAPSCREW, 3/8" NC x 1"
	70912069	15	CAPSCREW, 3/8" NC x 2-1/2"
	70904206	16	LOCKWASHER, 3/8"
3	73044473	2	PLUG, regulator valve
4	73044474	2	□ GASKET, plug
5	73048836	1	VALVE, regulator
6	73062139	1	BODY, control valve
	70919134	2	PLUG, pipe, 1/8" NPT

(Continued)

TRANSMISSION CONTROL VALVE (Continued)

ITEM	PART NO.	QTY.	DESCRIPTION
7	73044478	1	BALL
8	73044479	1	PLUG, ball retainer
9	73044480	1	STOP, valve
10	73054808	1	RETAINER, spring
11	73047832	1	SPRING, regulator valve
12	73048839	1	SPRING, trimmer valve
13	73104559	1	PLUG, trimmer valve
14	73044485	1	□ GASKET, plug
15	73044486	1	PLUG
16	73044487	1	SPRING
17	73062720	-	VALVE, clutch cut-off
18	73021169	1	PLUG
19	73021058	1	□ RING, seal
20	73044489	2	□ GASKET, plug
21	73033692	1	PLUG, cut-off valve
22	73062100	1	PLUG
23	73063376	1	□ SEAL, oil, range valve
24	73062140	1	VALVE, range selector
25	73044493	1	PLUG, detent spring
26	73062021	2	SPRING, detent
	70917580	2	BALL, detent, 1/2" dia.
27	73063379	1	PLUG
28	73063378	1	WASHER, seal

□ (Also see PACKAGED PARTS)

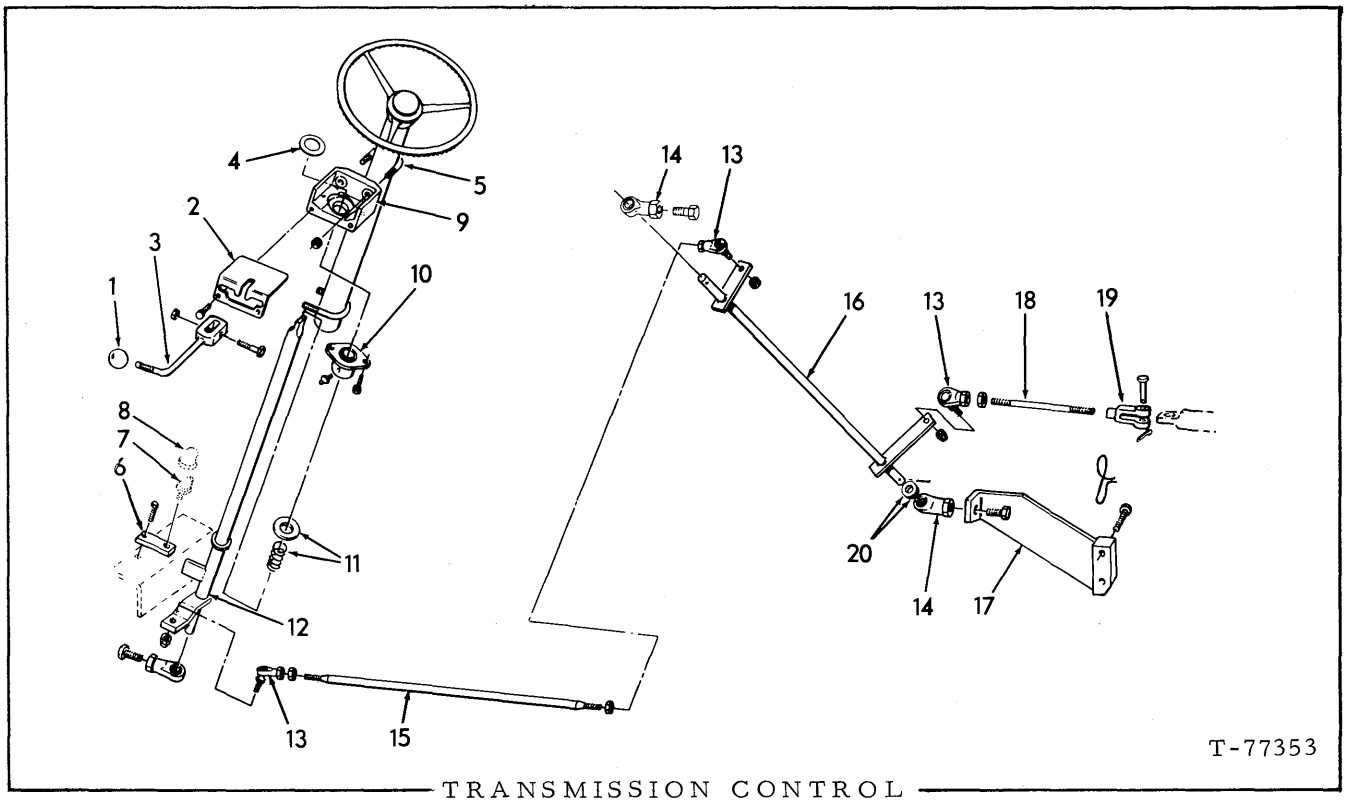

TRANSMISSION CONTROL

ITEM	PART NO.	QTY.	DESCRIPTION
1	73001171	1	KNOB
2	70689177	1	COVER
	70922300	2	CAPSCREW, 3/8" NC x 3/4"
3	70689178	1	LEVER
	70920995	1	CAPSCREW, 3/8" NC x 2"
	70915891	1	NUT, 3/8" NC
4	70928448	1	WASHER, 1-5/16" I. D.
5	--------	1	U-BOLT (See STEERING GEAR AND LINKAGE)
6	70686620	1	PLATE
	70922763	1	CAPSCREW, 3/8" NC x 1"
7	--------	1	SWITCH } (See ELECTRICAL SYSTEM)
8	--------	1	BOOT }
9	70689176	1	BRACKET
	70922304	2	NUT, locking, 1/2" NC
10	73053308	1	BLOCK ASSY. (Includes 1 fitting indented below)
	70914465	1	FITTING, lubricating, 1/8" NPT
	70922300	1	CAPSCREW, 3/8" NC x 3/4"
11	73016399	1	SPRING
	70911159	1	WASHER, plain, 1"
12	70689181	1	LEVER

(Continued)

TRANSMISSION CONTROL (Continued)

ITEM	PART NO.	QTY.	DESCRIPTION
13	70653570	3	STUD ASSY., adjustable
	70913528	3	NUT, 3/8" NF
14	70683291	3	BEARING
	70929138	1	CAPSCREW, 5/8" NF x 1-1/4"
	70923884	2	CAPSCREW, 5/8" NF x 1-1/2"
15	70688142	1	ROD
	70910329	2	NUT, 3/8" NF
16	70675034	1	LEVER ASSY.
17	70684812	1	BRACKET
	70928882	2	CAPSCREW, 5/8" NC x 3-1/2"
	70926196	2	WASHER, plain
	70023633	1	LOCKWIRE
18	70626982	1	ROD
	70910329	2	NUT, 3/8" NF
19	70628736	1	YOKE
	70078810	1	PIN, pivot
	70918448	1	PIN, cotter, 3/32" x 1"
20	70911100	2	WASHER, plain, 5/8"
	70900806	1	PIN, cotter, 1/8" x 1"

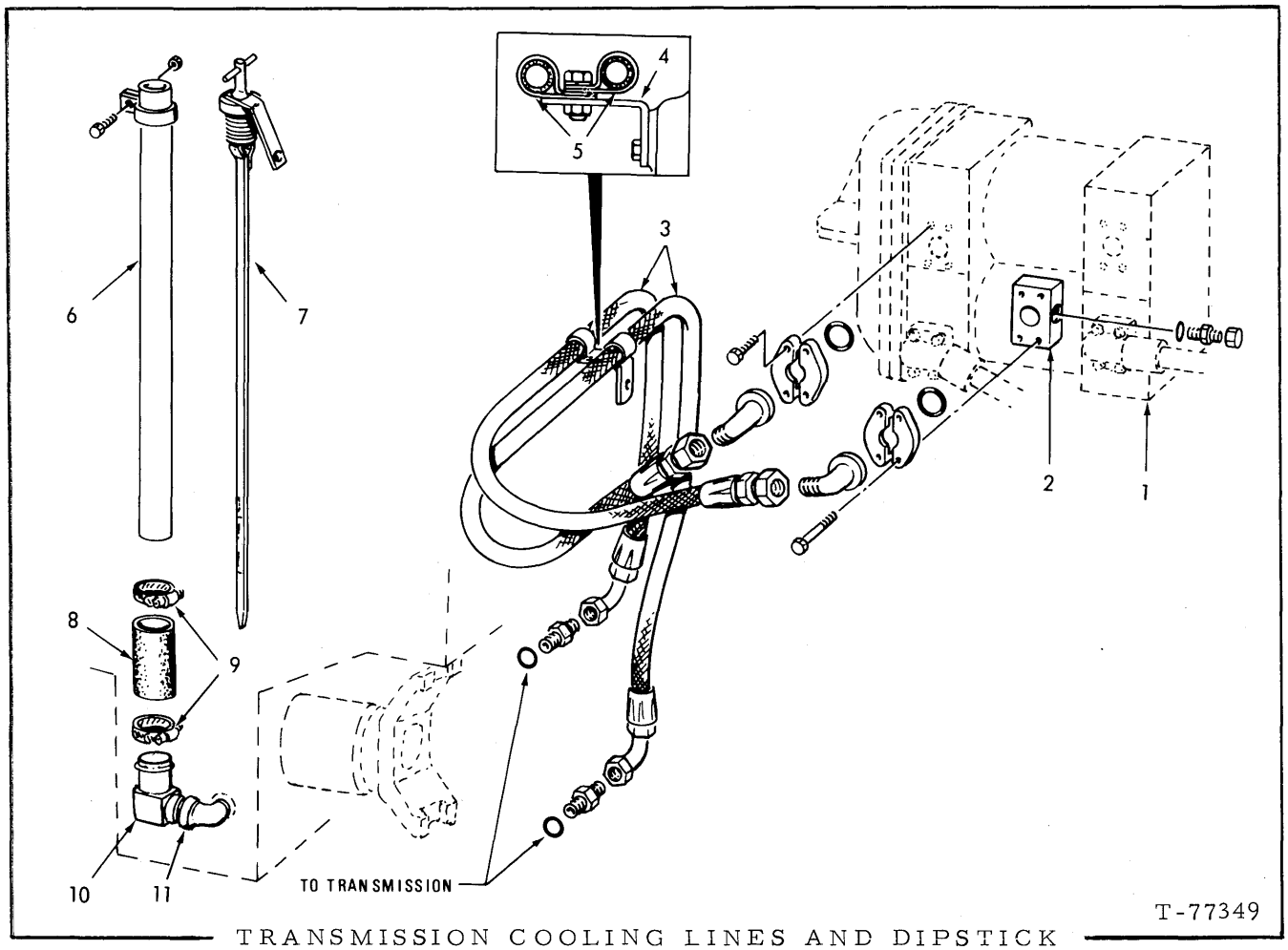

TRANSMISSION COOLING LINES AND DIPSTICK

ITEM	PART NO.	QTY.	DESCRIPTION
1	-------	-	HEAT EXCHANGER
2	70683312	1	BLOCK
	-------	1	CONNECTOR, 1/4" O. D. (See INSTRUMENT PANEL AND GAUGES)
	70921467	1	CAP, 1/4"
	-------	1	O-RING (See INSTRUMENT PANEL AND GAUGES)
	70929904	1	O-RING
3	70684886	2	HOSE ASSY. (See HOSE PARTS)
	70921117	4	FLANGE, half, 1-1/4"
	70929904	2	O-RING
	70929143	4	CAPSCREW, 7/16" NC x 2-3/8"
	70928892	4	CAPSCREW, 7/16" NC x 1-1/4"
	70929886	2	ELBOW, 1" tube
	70921228	1	CONNECTOR, outlet, 1" tube, 1-5/16" st. thd. (Includes 1 O-RING 0921214-3)
	70924688	2	CONNECTOR, inlet, 1" tube, 1-5/16" st. thd. (Includes 1 O-RING 0921214-3)
4	70686282	1	ANGLE

(Continued)

TRANSMISSION COOLING LINES AND DIPSTICK (Continued)

ITEM	PART NO.	QTY.	DESCRIPTION
5	70929186	2	CLAMP
	70920583	1	CAPSCREW, 1/2" NC x 1-1/2"
	70910325	1	NUT, 1/2" NC
6	70675038	1	TUBE ASSY. (Includes clamp)
	70921175	1	CAPSCREW, 1/2" NC x 1"
	70911028	1	NUT, 1/2" NC
7	70674957	1	DIPSTICK
8	70631788	1	HOSE
9	70921913	2	CLAMP, 1-13/16" to 2-3/4"
10	70925092	1	NIPPLE, hose, 90°
11	70901727	1	ELBOW, 1-1/4" NPT

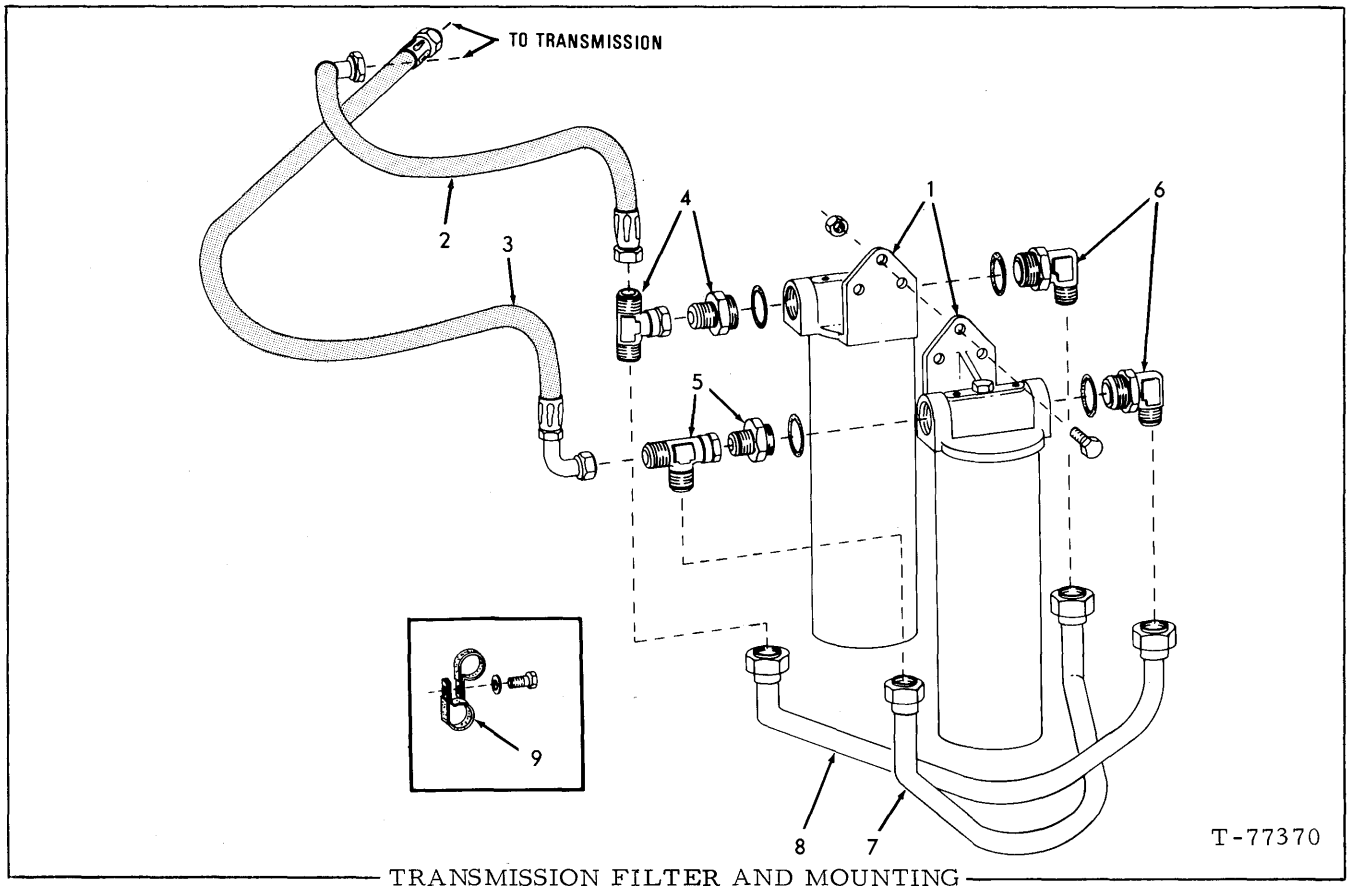

TRANSMISSION FILTER AND MOUNTING

ITEM	PART NO.	QTY.	DESCRIPTION
1	70669503	2	FILTER ASSY. (See page 111)
	70921556	3	CAPSCREW, 1/2" NC x 2"
	70911028	3	NUT, 1/2" NC
2	70684887	1	HOSE ASSY. (See page 6)
3	70684888	1	HOSE ASSY. (See page 6)
4	70925835	1	TEE, 1" tube, 1-5/16" st. thd.
	70922411	1	CONNECTOR, reducing, 1-5/8" to 1-5/16" (Includes one O-RING 70921235)
5	70925836	1	TEE, 1" tube, 1-5/16" st. thd.
	70922411	1	CONNECTOR, reducing, 1-5/8" to 1-5/16" (Includes one O-RING 70921235)
6	70928139	2	ELBOW, 1" tube, 1-5/8" st. thd. (Includes one O-RING 70921235)
7	70685630	1	TUBE ASSY.
8	70685629	1	TUBE ASSY.
9	70928927	6	CLAMP
	70922763	3	CAPSCREW, 3/8" NC x 1"
	70677006	3	WASHER, plain, 3/8"

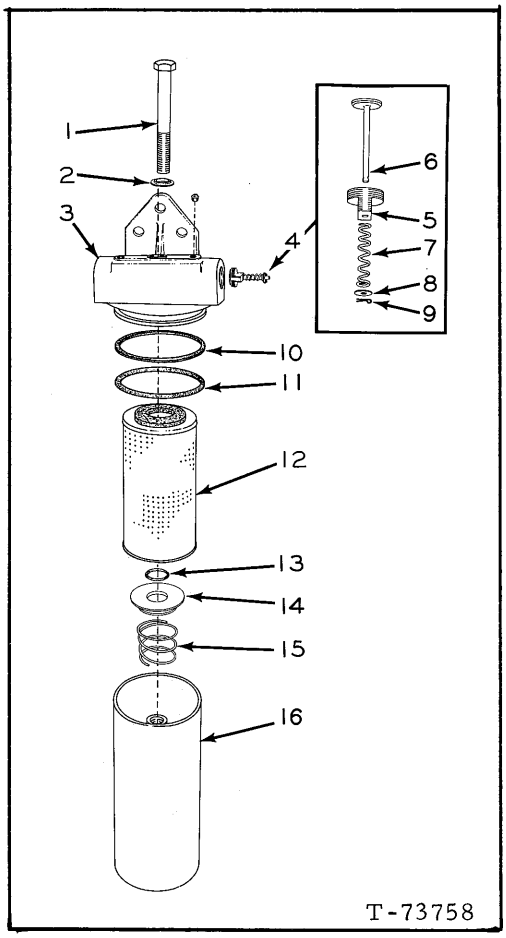

TRANSMISSION OIL FILTER ASSEMBLY

NOTE: See page 108 Quantities listed for one assy. only

ITEM	PART NO.	QTY.	DESCRIPTION
-	70669503	1	FILTER ASSY. (Includes items 1 thru 16)
1	70923438	1	CAPSCREW, 3/4" NF x 5-1/2"
2	74254971	1	WASHER
3	--------	1	HEAD
	70901652	2	PLUG, pipe, 1/4" NPT
4	70671498	1	VALVE ASSY. (Includes items 5 thru 9)
5	--------	1	HOUSING
6	--------	1	VALVE
7	70671613	1	SPRING
8	70671499	1	WASHER
9	70900970	1	PIN, cotter, 1/16" x 1/2"
10	70646532	1	RING
11	70671617	1	O-RING
12	70669434	1	ELEMENT KIT (Includes items 2, 10 and 11)
13	70671616	1	O-RING
14	70641031	1	PLATE
15	70674798	1	SPRING
16	70671497	1	TANK ASSY.

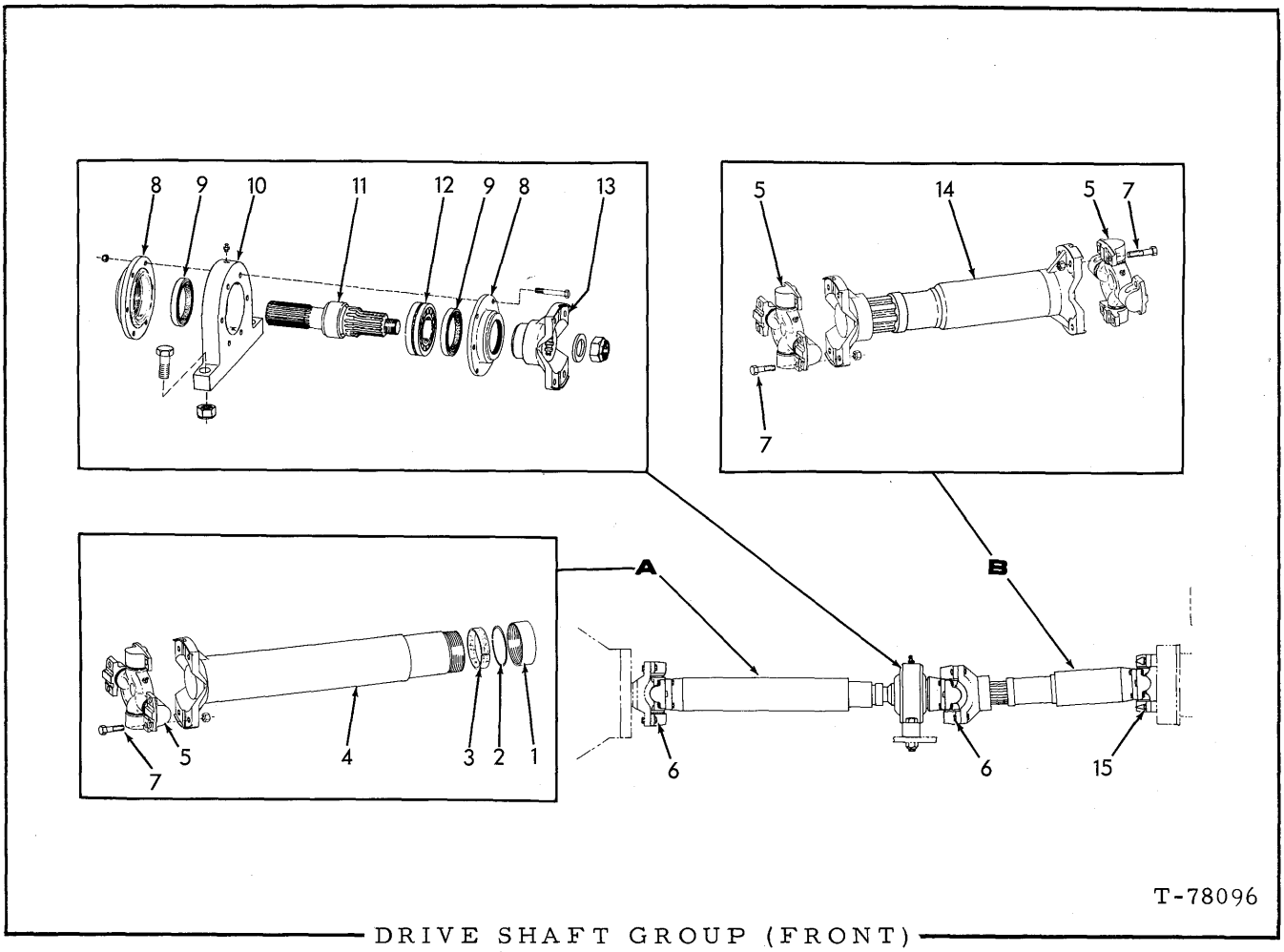

DRIVE SHAFT GROUP (FRONT)

ITEM	PART NO.	QTY.	DESCRIPTION
A	70673066	1	SLEEVE ASSY., drive (Includes item 1 thru 7)
1	73060029	1	CAP
2	73060027	1	WASHER, metal
3	73060028	1	WASHER, felt
4	73060030	1	YOKE, shaft assembly
5	73060000	3	CROSS ASSY. (Includes Bearings and Fitting)
	70914465	3	FITTING, lube, 1/8" NPT
6	70927233	8	CAPSCREW, 1/2" NF x 2-3/4"
	70915746	8	NUT, lock 1/2" NF
7	70921570	12	CAPSCREW, 1/2" NF x 2-1/2"
	70915746	12	NUT, lock, 1/2" NF
8	73049614	2	COVER
	70922849	6	CAPSCREW, 3/8" NC x 4"
	70924728	6	NUT, safety 3/8" NC
9	70929822	2	SEAL

(Continued)

DRIVE SHAFT GROUP (FRONT) (Continued)

ITEM	PART NO.	QTY.	DESCRIPTION
10	70672289	1	BRACKET
	70922859	2	CAPSCREW, 1" NC x 4"
	70917793	2	NUT, lock, 1" NC
	70914465	1	FITTING, lube
11	70673427	1	SHAFT
12	70929821	1	BEARING
13	70672231	1	YOKE
	70926212	1	WASHER, 1-9/16" I. D.
	70924727	1	NUT, safety, 1-1/2" NF
B	70673068	1	SHAFT ASSY., (Includes items 5, 7, 14 and 15)
14	73060003	1	SHAFT ASSY.
	70914687	1	FITTING, lube
15	70930468	4	CAPSCREW, drilled hd. 1/2" NC x 2-1/2"
	--------	2	LOCKWIRE (Obtain locally)

"ALWAYS GIVE MODEL AND SERIAL NUMBER WHEN ORDERING PARTS"

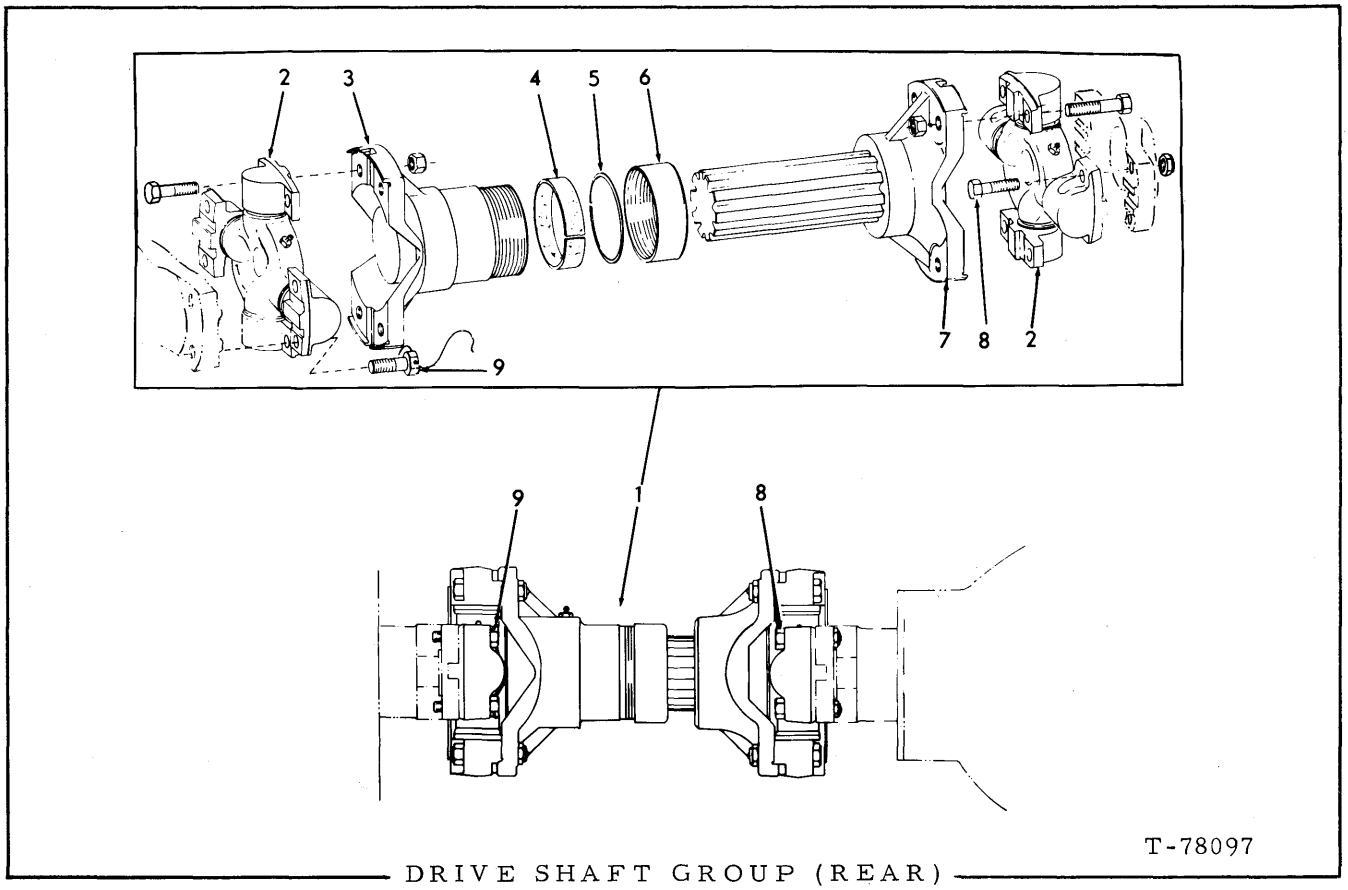

DRIVE SHAFT GROUP (REAR)

ITEM	PART NO.	QTY.	DESCRIPTION
1	70673067	1	SHAFT ASSY. (Includes items 2 thru 7)
2	73060000	2	CROSS ASSY. (Includes Bearings and Fitting)
	70921570	8	CAPSCREW, 1/2" NF x 2-1/2"
	70915746	8	NUT, lock, 1/2" NF
	70914465	2	FITTING, lube, 1/8" NPT
3	73060001	1	YOKE, slip
	70914465	1	FITTING, lube, 1/8" NPT
4	73060014	1	WASHER, (Felt)
5	73060015	1	WASHER, (Nylon)
6	73060013	1	CAP
7	73060002	1	YOKE, spline
8	70927233	4	CAPSCREW, 1/2" NF x 2-3/4"
	70915746	4	NUT, lock, 1/2" NF
9	70930468	4	CAPSCREW, drilled hd., 1/2" NF x 2-1/2"
	70023633	2	LOCKWIRE

"ALWAYS GIVE MODEL AND SERIAL NUMBER WHEN ORDERING PARTS"

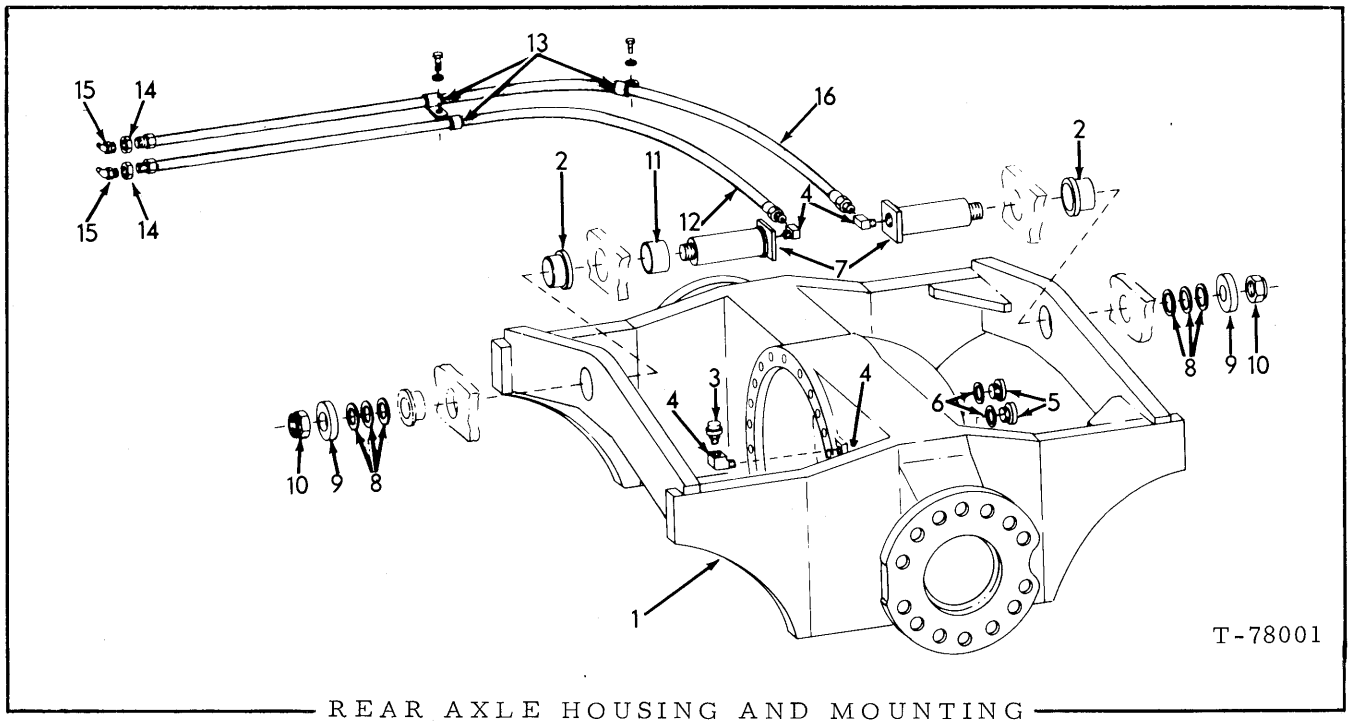

REAR AXLE HOUSING AND MOUNTING

ITEM	PART NO.	QTY.	DESCRIPTION
1	70672134	1	HOUSING ASSY. (Includes item 2)
2	70672118	2	BUSHING
3	73007145	1	BREATHER
4	70923690	4	ELBOW, 90°, 1/8", automotive type (quantity 1 inside housing)
5	70035250	2	PLUG
6	70667252	2	GASKET
7	70672120	2	PIN
8	70682298	4	SHIM (.014" thick - Use as required)
	73046315	4	SHIM (.035" thick - Use as required)
	73046317	4	SHIM (.059" thick - Use as required)
9	70682299	2	WASHER
10	70924130	2	LOCKNUT, 1-3/4" NC
11	70672115	1	BUSHING
12	70689514	1	HOSE ASSY. (front pin)
13	70925616	3	CLAMP
	70922300	2	CAPSCREW, 3/8" NC x 3/4"
	70677006	2	WASHER, plain, 3/8"
14	70910345	2	NUT, 5/8" NF
15	70915274	2	FITTING, lubricating, 45°, 1/8"
16	70689513	1	HOSE ASSY. (rear pin)

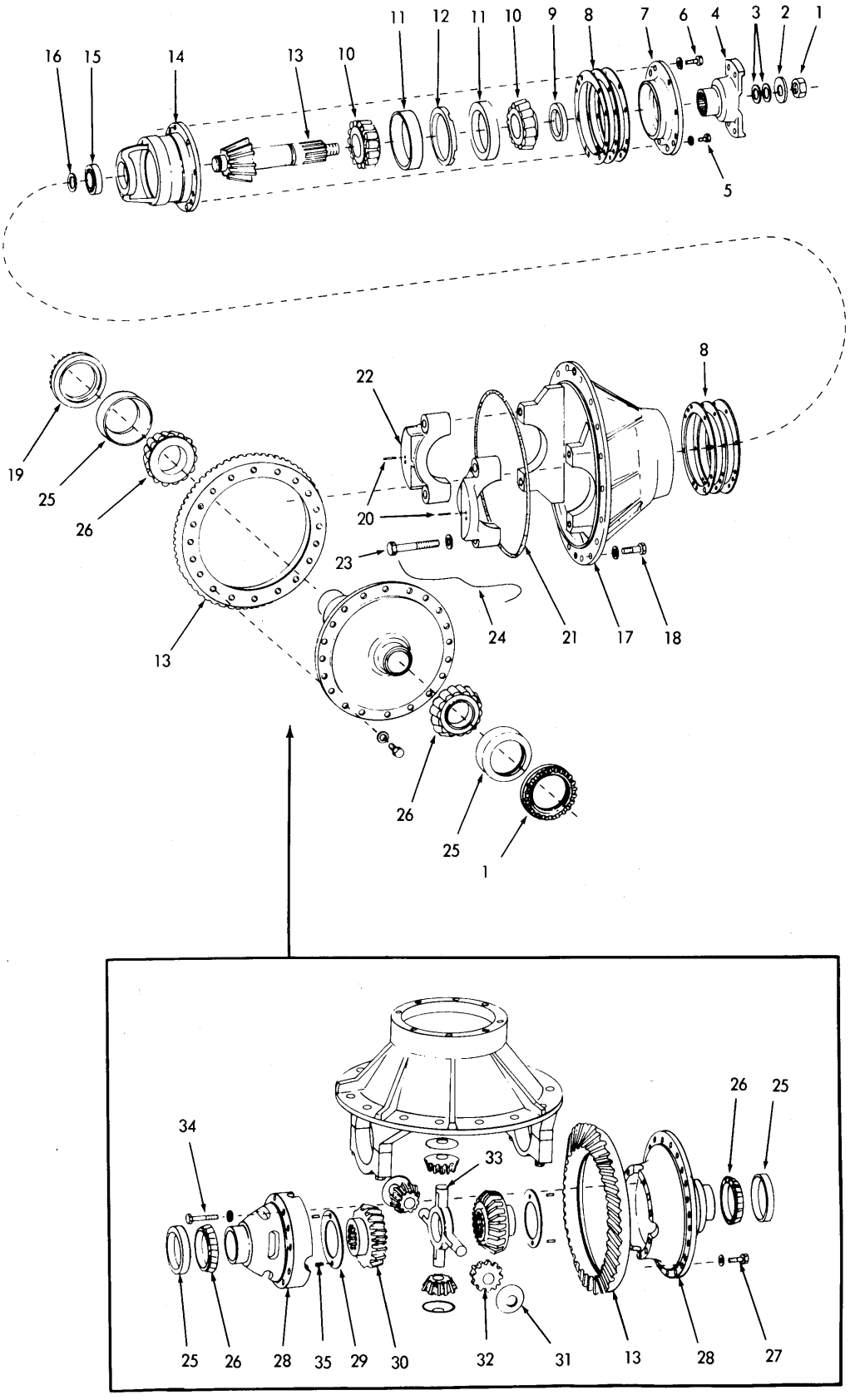

T-77400

DIFFERENTIAL AND CARRIER ASSEMBLY
(Front and Rear Axle)

DIFFERENTIAL AND CARRIER ASSEMBLY

(Front and Rear Axle)

* 70675948 FRONT DIFFERENTIAL, complete
** 70680096 REAR DIFFERENTIAL, complete

ITEM	PART NO.	QTY. *	QTY. **	DESCRIPTION
1	73103339	1	1	NUT
2	73051248	1	1	WASHER
3	73103267	3	3	SHIM (.005" thick) Use as required
	73103268	3	3	SHIM (.007" thick) Use as required
	73103266	3	3	SHIM (.020" thick) Use as required
4	70673065	1	1	YOKE
5	70928166	2	2	CAPSCREW, 5/8" NC x 1-1/4"
	70926196	2	2	WASHER, plain, 5/8"
6	70921172	8	8	CAPSCREW, 5/8" NC x 2-1/4"
	70926196	8	8	WASHER, plain, 5/8"
7	70671515	1	1	COVER
8	73051223	1	1	SHIM (.005" thick) Use as required
	73051224	1	1	SHIM (.007" thick) Use as required
	73051225	1	1	SHIM (.020" thick) Use as required
9	73051237	1	1	SEAL
10	70929775	2	2	CONE ASSY.
11	70929776	2	2	CUP
12	70671522	1	1	SPACER
13	70691576	1	-	GEAR SET (Includes matched pinion and gear)
	70691577	-	1	GEAR SET (Includes matched pinion and gear)
14	70678546	1	1	HOUSING
15	70675066	1	1	BEARING
16	74253029	1	1	SNAP RING
17	73051242	1	1	CARRIER ASSY. (Includes items 22 and 23)
18	70927199	18	18	CAPSCREW, 3/4" NC x 2-1/4"
	70928063	18	18	WASHER, plain, 3/4"
19	70674571	2	2	NUT, spanner
20	70915523	2	2	PIN, spring, 5/16" x 1-1/2"
21	70925651	1	1	O-RING
22	--------	2	2	CAP (Order item 17)
23	73051238	4	4	BOLT
	70928189	4	4	WASHER, plain, 1"
24	--------	2	2	LOCKWIRE, 1/16" x 22" (Obtain locally)

(Continued)

DIFFERENTIAL AND CARRIER ASSEMBLY (Continued)

(Front and Rear Axle)

ITEM	PART NO.	QTY. *	QTY. **	DESCRIPTION
25	70125786	2	2	CUP, bearing
26	70928134	2	2	BEARING CONE
27	70922743	20	20	CAPSCREW, 3/4" NC x 2"
	70926200	20	20	WASHER, plain, 3/4"
28	70692732	1	1	CASE ASSY. (Includes both halves-serviced only as an assembly)
29	70675952	2	2	WASHER, thrust
30	70682725	2	2	GEAR
31	70689372	4	4	WASHER, thrust
32	70692241	1	1	PINION SET (Consists of 4 pinions)
33	70689445	1	1	CROSS
34	70921567	16	16	CAPSCREW, 1/2" NC x 4"
	70928188	16	16	WASHER, plain, 1/2"
35	70921292	4	4	PIN, dowel
-	--------	-	-	DRAIN PLUGS AND BREATHER (See AXLE HOUSING AND MOUNTING)

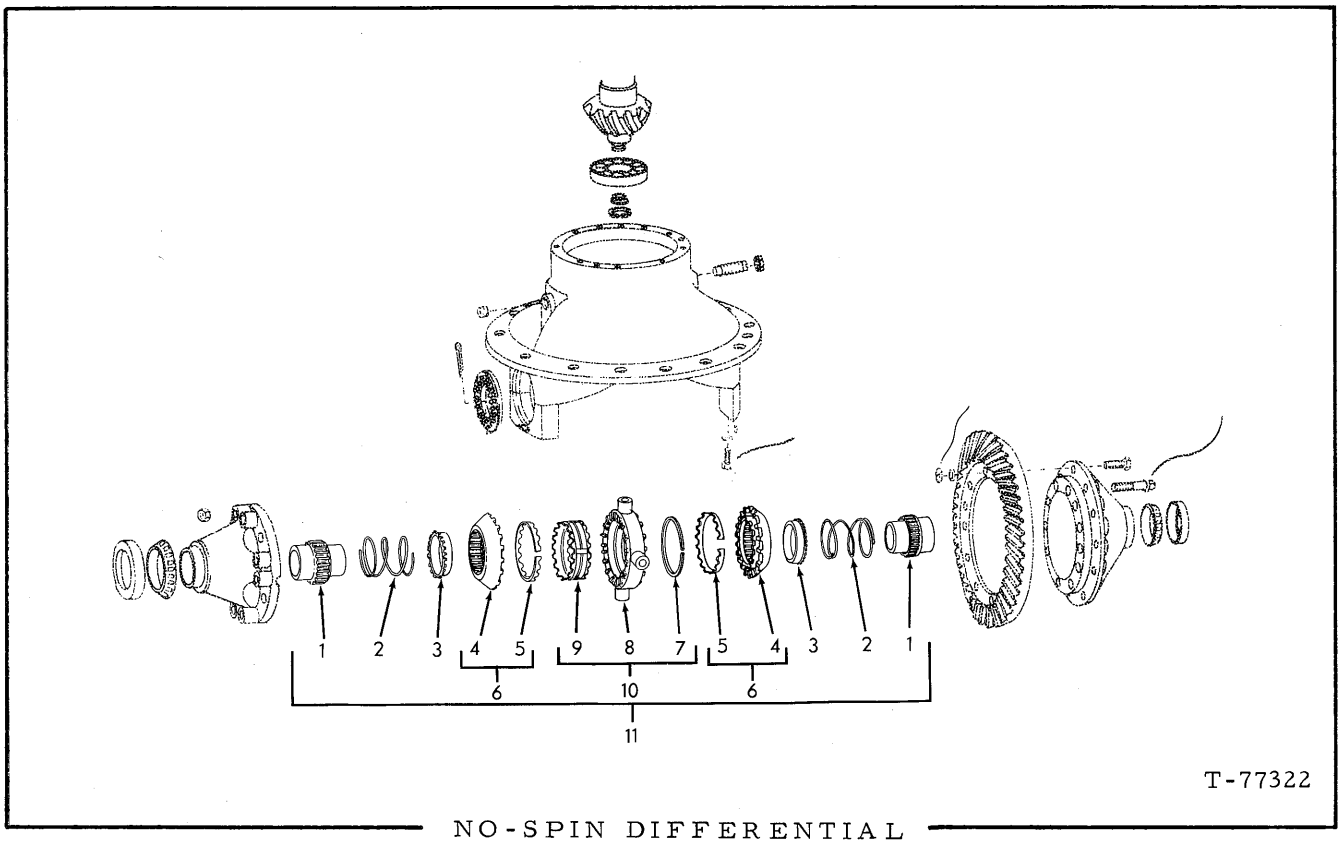

NO-SPIN DIFFERENTIAL

(Rear Axle Only)

USAGE: Special Equipment
*First Type (Internal Spring)(Illustrated)
**Second Type

ITEM	PART NO.	QTY. *	QTY. **	DESCRIPTION
				NOTE: The following parts replace items 29 thru 33 on page 118 all other Differential Carrier parts are identical to those listed on pages 117 and 118.
1	73060011	2	-	GEAR
	73064175	-	2	GEAR
2	73060010	2	-	SPRING
	73064173	-	2	SPRING
3	73060009	2	-	RETAINER
	73064174	-	2	RETAINER
4	--------	2	2	MEMBER ASSY. (Order item 6)
5	--------	2	2	RING (Order item 6)
6	73063594	2	2	CLUTCH ASSY. (Includes items 4 and 5)
7	--------	1	1	SNAP RING (Order item 10)
8	--------	1	1	SPIDER (Order item 10)
9	--------	1	1	CAM (Order item 10)
10	73060186	1	1	SPIDER ASSY. (Includes items 7 thru 9)
11	--------	1	-	NO-SPIN ASSY. (Includes item 1 thru 10)(Order 1 73064172)
	73064172	-	1	NO-SPIN ASSY. (Includes items 1 thru 10)

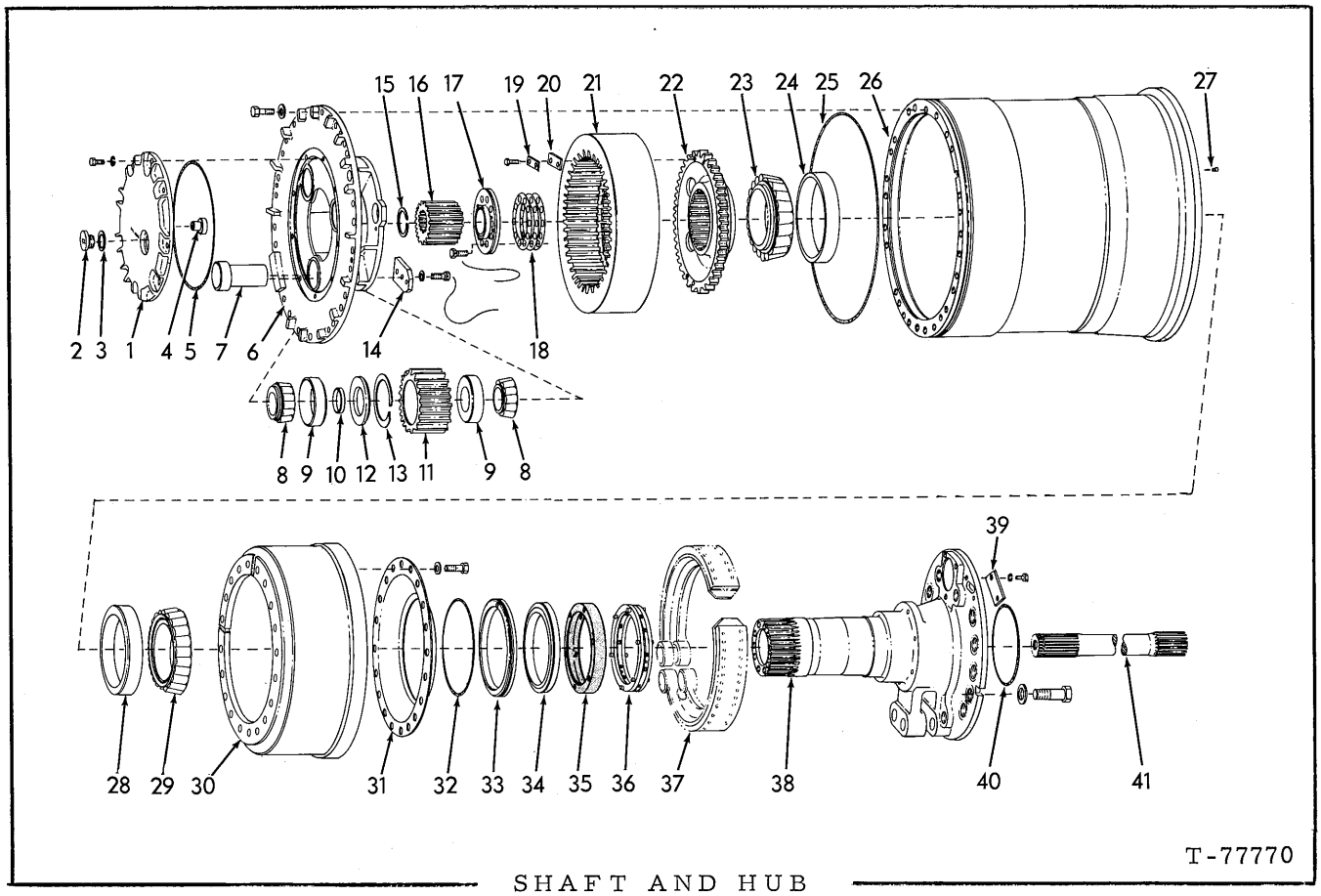

SHAFT AND HUB
(Front and Rear)

ITEM	PART NO.	QTY.	DESCRIPTION
1	73051502	2	COVER ASSY. (Includes items 2 thru 4)
	70927491	18	CAPSCREW, nylok, 1/2" NC x 1-1/4"
	70912441	18	LOCKWASHER, 1/2"
2	70035250	2	PLUG
3	70667252	2	GASKET
4	73051470	2	BUTTON, thrust
5	70926561	2	O-RING
6	73051480	2	CARRIER, planet gear
	70925415	54	CAPSCREW, 3/4" NC x 1-3/4"
	70928063	54	WASHER, plain
7	73051458	6	SHAFT, planet gear
8	70928064	12	CONE ASSY., bearing
9	70928069	12	CUP, bearing
10	70678697	6	SPACER, cone
11	73051453	6	GEAR, planet
12	70678696	6	SPACER, cup

(Continued)

SHAFT AND HUB (Continued)

ITEM	PART NO.	QTY.	DESCRIPTION
13	70928127	6	RING, snap
14	70677813	6	PLATE, shaft retaining
	70929087	18	CAPSCREW, drilled-hd., 5/8" NC x 1-1/2"
	70926196	18	WASHER, plain
	--------	6	WIRE, locking, 16 GA. x 12" (Obtain Locally)
15	70088735	2	RING, snap
16	73051457	2	GEAR, sun
17	73051478	2	RETAINER
	70929087	20	CAPSCREW, drilled-hd., 5/8" NC x 1-1/2"
	--------	10	WIRE, locking, 16 GA. x 12" (Obtain Locally)
18	73051474	4	SHIM (.005" thick) } Use as Required
	73051475	4	SHIM (.007" thick) } Use as Required
	73051476	4	SHIM (.020" thick) } Use as Required
19	73051463	8	LOCK
	70927485	16	CAPSCREW, 7/16" NC x 1"
20	73051462	8	BLOCK
21	73051451	2	GEAR, ring
22	73051461	2	HUB
23	70928068	2	CONE ASSY.
24	70928065	2	CUP
25	70928062	2	O-RING
26	--------	2	WHEEL (See TIRE AND WHEEL GROUP)
	70907070	2	PLUG, pipe, square-socket, 1/4" NPT
	70907856	2	PLUG, pipe, hex-socket, 3/8" NPT
27	70084432	2	PIN
28	70928132	2	CUP
29	70928128	2	CONE ASSY.
30	73051203	2	DRUM
31	70679835	2	SHIELD
	70922743	40	CAPSCREW, 3/4" NC x 2"
	70928063	40	WASHER, plain, 3/4"
32	70925482	2	O-RING
33	73051465	2	RING
34	70082322	2	RING
35	70082323	2	BOOT
36	70669770	2	FOLLOWER ASSY. (Serviced only as a unit)
37	---------	-	BRAKE ASSY. (See page 124)

(Continued)

SHAFT AND HUB (Continued)

ITEM	PART NO.	QTY.	DESCRIPTION	
38	70687776	2	SPINDLE	
	70926856	28	CAPSCREW, 1-1/4" NF x 4"	
	73051504	28	WASHER, plain, 1-1/4"	
39	70679190	4	PLATE, brake adjusting hole	
	70922300	8	CAPSCREW, 3/8" NC x 3/4"	
	70910287	8	LOCKWASHER, 3/8"	
40	70923853	2	O-RING	
41	70682803	2	SHAFT, axle, left and right	
42	70033288	-	CEMENT, neoprene, 1/2 pt. can	For cementing Boots and Gaskets (Not Illustrated)
43	70054890	-	SOLVENT, neoprene cement, 1/2 pt. can	

"ALWAYS GIVE MODEL AND SERIAL NUMBER WHEN ORDERING PARTS"

MEMO

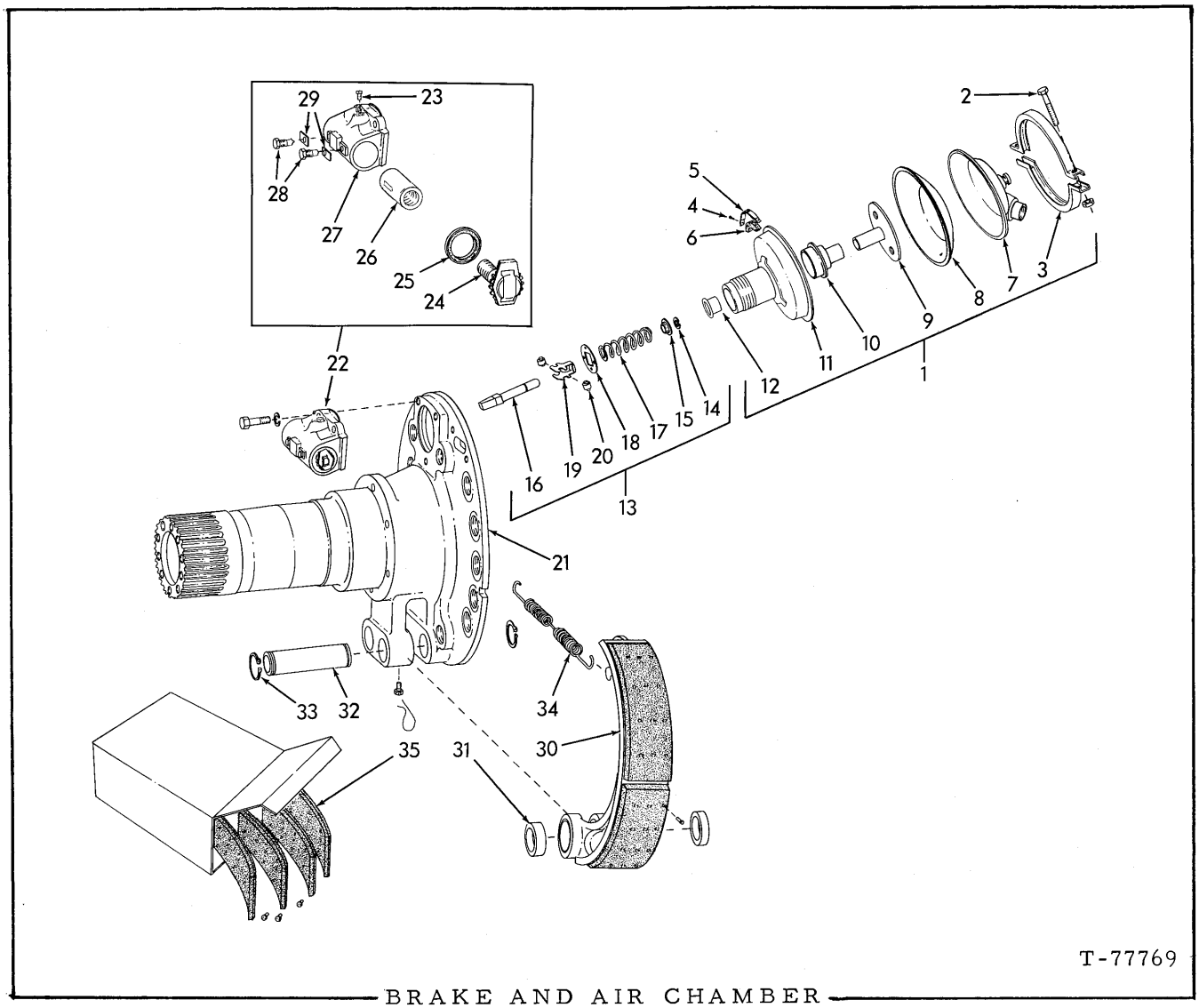

BRAKE AND AIR CHAMBER
(Front and Rear Axle)

ITEM	PART NO.	QTY.	DESCRIPTION Quantities indicated are for one (1) wheel end only.
1	73060161	1	CHAMBER ASSY., air (Includes item 2 thru 12)
2	70688886	2	BOLT, clamp
	70688885	2	NUT
3	70688887	2	CLAMP
4	70914198	2	SCREW, thd., cutting, #10 NC x 3/8"
5	70689857	1	RETAINER
6	70689856	1	FILTER
7	73060162	1	HOUSING, pressure
	70919840	1	PLUG, pipe, 1/4", automotive type
8	70688890	1	DIAPHRAGM

(Continued)

BRAKE AND AIR CHAMBER (Continued)

(Front and Rear Axle)

ITEM	PART NO.	QTY.	DESCRIPTION
9	70688889	1	PLATE ASSY.
10	70688892	1	BOOT
11	73060163	1	HOUSING ASSY. (Includes item 10)
12	70688884	1	GUIDE
13	73060164	1	WEDGE ASSY. (Includes items 14 thru 20)
14	73048023	1	WASHER
15	70688700	1	WASHER
16	73060165	1	WEDGE
17	70688699	1	SPRING
18	70688698	1	WASHER
19	70688697	1	CAGE
20	73048020	2	ROLLER
21	--------	1	SPINDLE (See Shaft and Hub)
	70929069	2	CAPSCREW, dr. hd., 3/8" NC x 1"
	70023633	1	LOCKWIRE, #16 x 12"
22	73060151	1	HOUSING ASSY., actuator (Includes items 24 thru 29)
	70920585	3	CAPSCREW, 1/2" NC x 1-3/4"
	70912441	3	LOCKWASHER, 1/2"
23	70185244	1	SETSCREW
24	73057697	2	BOLT ASSY., adjustable
25	73047898	2	SEAL ASSY.
26	73060146	2	PLUNGER
27	70688708	1	HOUSING
28	70185243	2	GUIDE
29	70189311	2	WASHER, lock
30	70688690	2	SHOE ASSY. (Includes items 31 and 35)
31	70166697	4	BUSHING
32	73051205	1	PIN
33	70928179	4	RING, snap
34	70691758	1	SPRING
35	70688689	1	LINING KIT (Includes 4 linings and rivets indented below)(Lining Kit for one wheel only).
	70918627	120	RIVET, 1/4" x 5/8"

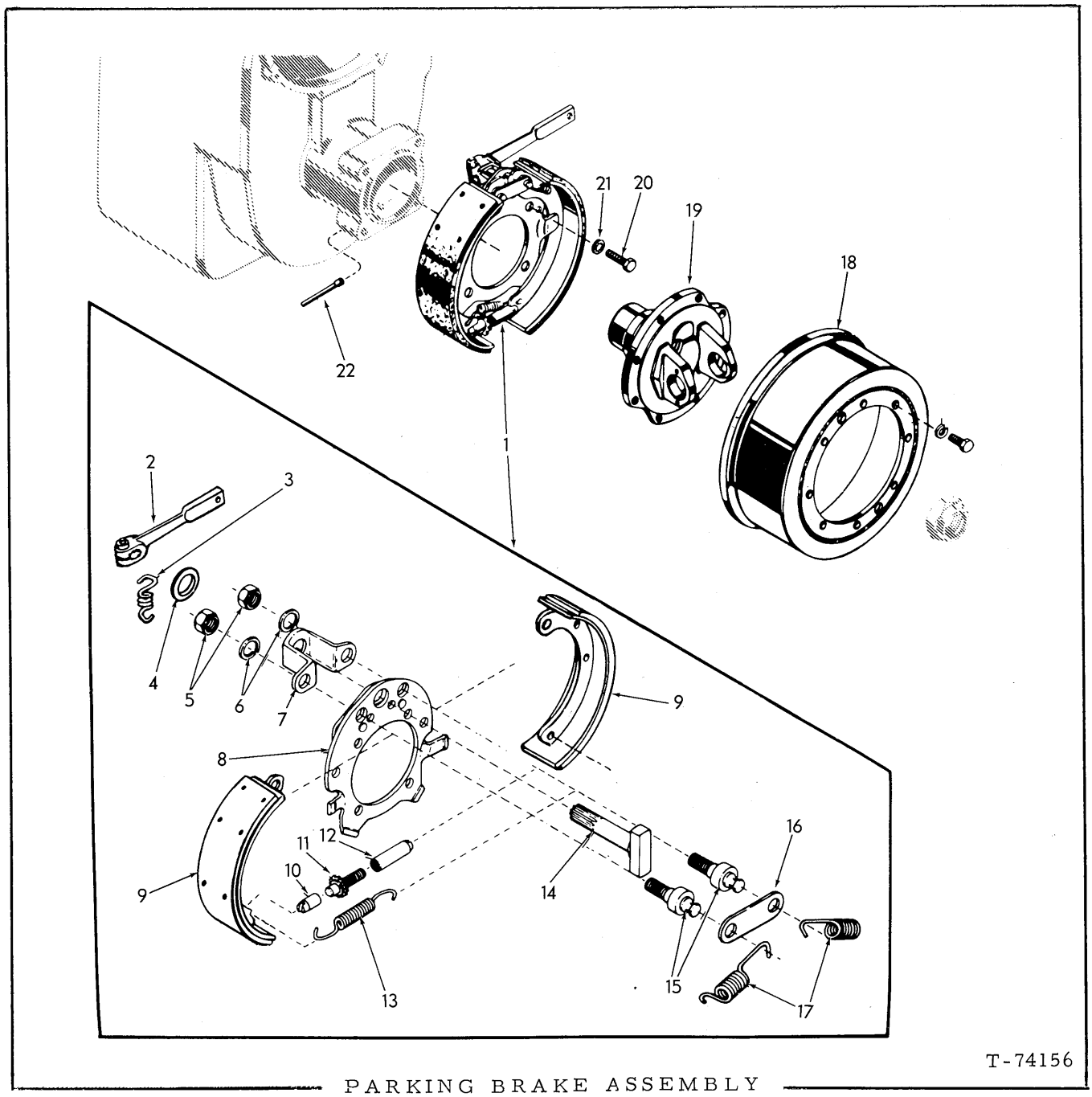

PARKING BRAKE ASSEMBLY

ITEM	PART NO.	QTY.	DESCRIPTION
1	73104652	1	BRAKE AND LEVER ASSY. (Includes items 2 thru 17)
2	73104653	1	LEVER
3	73104655	1	SPRING
4	73104656	1	WASHER
5	73104657	2	NUT

(Continued)

PARKING BRAKE ASSEMBLY (Continued)

ITEM	PART NO.	QTY.	DESCRIPTION
6	70919332	2	LOCKWASHER, 3/4"
7	73104658	1	BRACKET
8	73104659	1	PLATE
9	73104664	2	SHOE AND LINING
10	73104660	1	SOCKET
11	73104661	1	SCREW, adjusting
12	73104662	1	NUT, adjusting screw
13	73104663	1	SPRING
14	73104665	1	CAMSHAFT
15	73104666	2	PIN
16	73104667	1	BRACE
17	73104668	2	SPRING
18	73047763	1	DRUM, brake
	70914875	8	CAPSCREW, 1/2" NF x 1"
	70904208	8	LOCKWASHER, 1/2"
19	--------	1	YOKE (See OUTPUT SHAFT AND AXLE DISCONNECT)
20	73047762	4	CAPSCREW, 5/8" NCx 1-3/8"
21	73047761	4	LOCKWASHER, internal tooth, 5/8"
22	73047765	1	TUBE, drain
-	73055085	1	LINING KIT, brake (Includes 2 Linings and 24 Rivets)

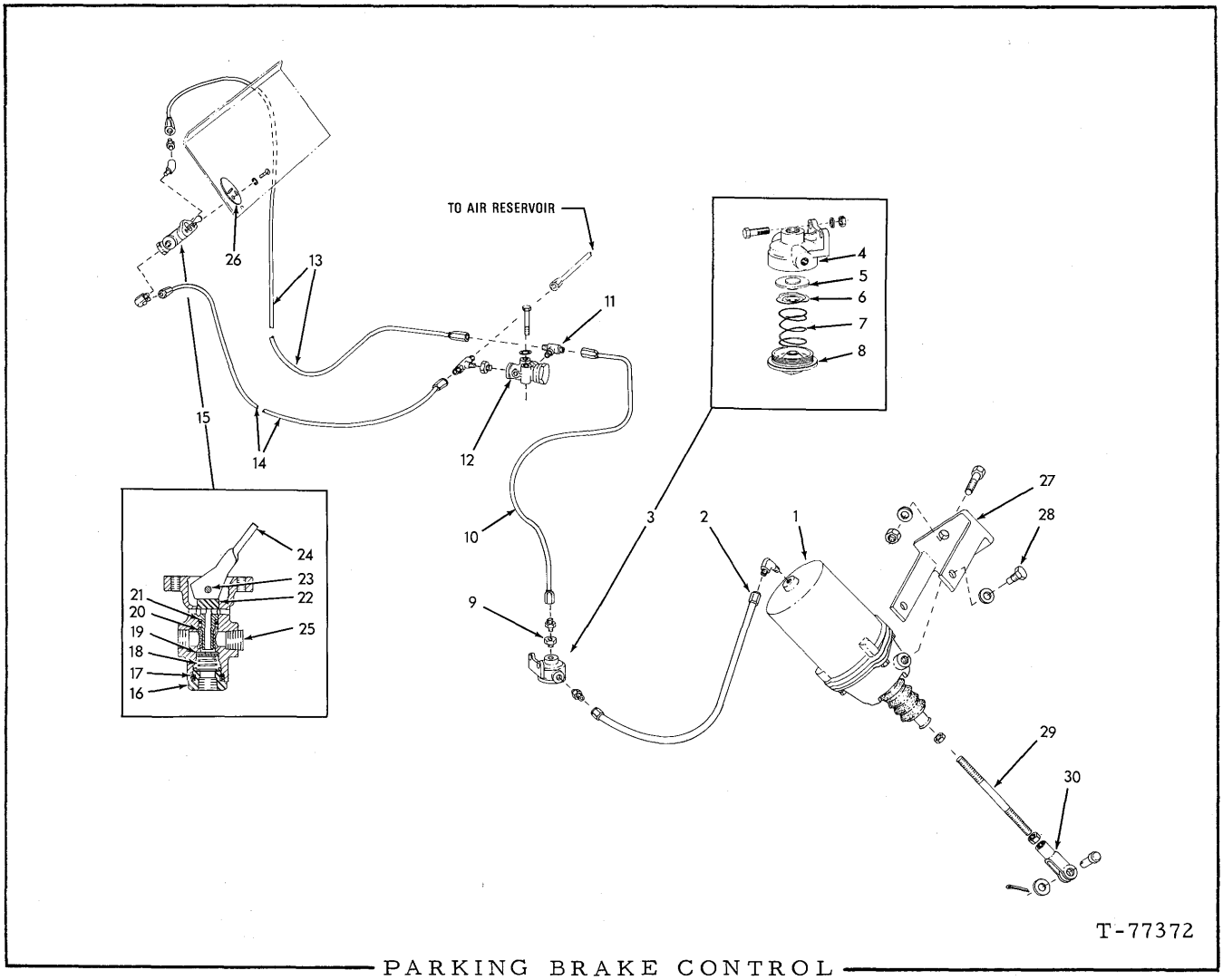

PARKING BRAKE CONTROL

ITEM	PART NO.	QTY.	DESCRIPTION
1	--------	1	CYLINDER ASSY. (See PARKING BRAKE CYLINDER ASSY.)
2	70682114	1	TUBE ASSY.
	70919581	1	ELBOW, 1/2" tube, 1/4" NPT
	70917354	1	CONNECTOR, 1/2" tube, 3/8" NPT
3	70177179	1	VALVE ASSY. (Includes items 4 thru 8)
	70918951	1	PLUG, pipe, 3/8"
	70927541	2	CAPSCREW, 1/4" NC x 3/4"
	70677004	2	WASHER 1/4"
4	70177323	1	BODY
5	70177324	1	DIAPHRAGM
6	70177322	1	SEAT, spring
7	70177321	1	SPRING
8	70676106	1	COVER ASSY.

(Continued)

PARKING BRAKE CONTROL (Continued)

ITEM	PART NO.	QTY.	DESCRIPTION
9	70917352	1	BUSHING, 3/8" x 1/8" NPT
10	73058639	1	TUBE ASSY.
	70914626	1	CONNECTOR, 1/4" tube, 1/8" NPT
11	70910275	2	TEE, 1/4" tube, 1/8" NPT, male
	70901834	1	BUSHING, 1/4" x 1/8" NPT
12	70689174	1	VALVE ASSY. (Serviced only as a unit)
	70930238	2	CAPSCREW, 1/4" NC x 2"
	70911114	1	WASHER, plain, 1/4"
13	73057998	1	TUBE ASSY.
	70914626	1	CONNECTOR, 1/4" tube, 1/8" NPT, male
	70920655	1	ELBOW, street, 1/8" NPT
14	70682118	1	TUBE ASSY.
	70911017	1	ELBOW, 1/4" tube, 1/8" NPT
15	73031610	1	VALVE ASSY. (Includes items 16 thru 25)
	70917388	2	SCREW, machine, #10, 3/4" NC
	70910284	2	LOCKWASHER, #10
16	73033334	1	CAP
17	73033335	1	RING, sealing
18	73033336	1	SPRING, valve
19	73033337	1	VALVE
20	73033342	1	SPRING, plunger
21	70923559	1	O-RING
22	73033340	1	PLUNGER
23	73033338	1	PIN
24	73033339	1	LEVER
25	70910231	1	PLUG, pipe, 1/8" NPT
26	70689094	1	DIAL
27	70676289	1	BRACKET
	70924864	2	CAPSCREW, 1/2" NC x 2-1/4"
	70677008	2	WASHER,1/2"
	70911028	2	NUT, 1/2" NC
28	70676288	2	BOLT, trunnion
	70910543	2	LOCKWASHER, external tooth, 5/8"
29	70611919	1	ROD
30	70917666	1	YOKE, rod end, 1/2"
	70917648	1	PIN, yoke, 1/2"
	70913830	2	NUT, 1/2" NF
	70900806	1	PIN, cotter, 1/8" x 1"

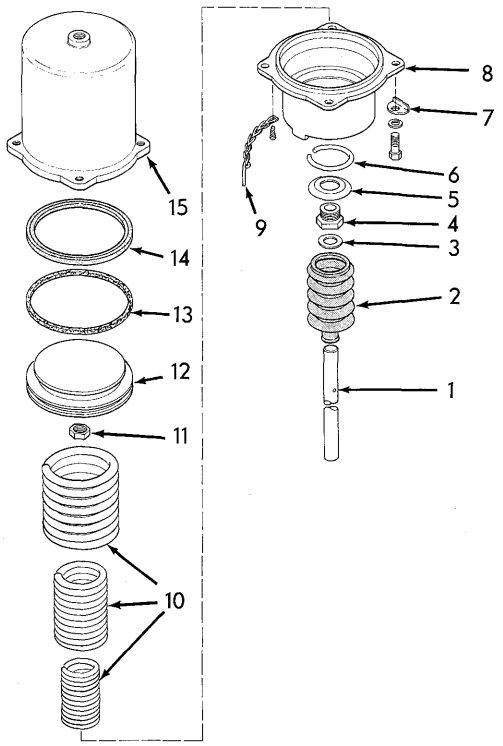

T-78101

PARKING BRAKE CYLINDER ASSEMBLY

NOTE: See page 128

ITEM	PART NO.	QTY.	DESCRIPTION
-	70675045	1	CYLINDER ASSY. (Includes items 1 thru 15)
1	--------	1	ROD (Order complete assy.)
2	--------	1	BOOT (Order complete assy.)
3	--------	1	WASHER (Order complete assy.)
4	--------	1	BUSHING (Order complete assy.)
5	--------	1	RETAINER (Order complete assy.)
6	--------	1	CLAMP (Order complete assy.)
7	--------	1	TAG (Order complete assy.)
8	--------	1	HEAD (Order complete assy.)
	--------	4	WASHER
	--------	4	CAPSCREW
9	--------	1	CHAIN ASSY. (Includes lock pin)(Order complete assy.)
10	70690663	1	SPRING SET (Consists of three springs)
11	--------	1	NUT, jam (Order complete assy.)
12	--------	1	PISTON (Order complete assy.)
13	70680394	1	WIPER, felt
14	70680395	1	SEAL, piston
15	--------	1	CASE (Order complete assy.)

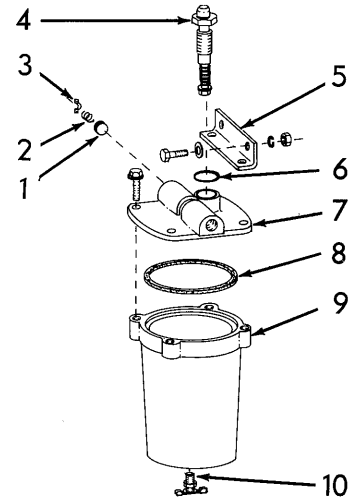

T-77178

ALCOHOL INJECTOR ASSEMBLY

ITEM	PART	QTY.	DESCRIPTION
-	73059030	1	INJECTOR ASSY. (Includes items 1 thru 10) (See page 132)
1	--------	1	VALVE (Order repair kit)
2	--------	1	SPRING (Order repair kit)
3	--------	1	RETAINER (Order repair kit)
4	73059055	1	VALVE
5	73048748	1	BRACKET
6	--------	1	SEAL (small)(Order repair kit)
7	73059054	1	COVER ASSY.
	70927477	4	SCREW, tapping, 5/16" NC x 1"
8	--------	1	SEAL (Large) (Order repair kit)
9	73048741	1	RESERVOIR
10	70915514	1	DRAIN COCK, 1/8"
-	73048750	-	KIT, repair (Includes items 1, 2, 3, 6 and 8)

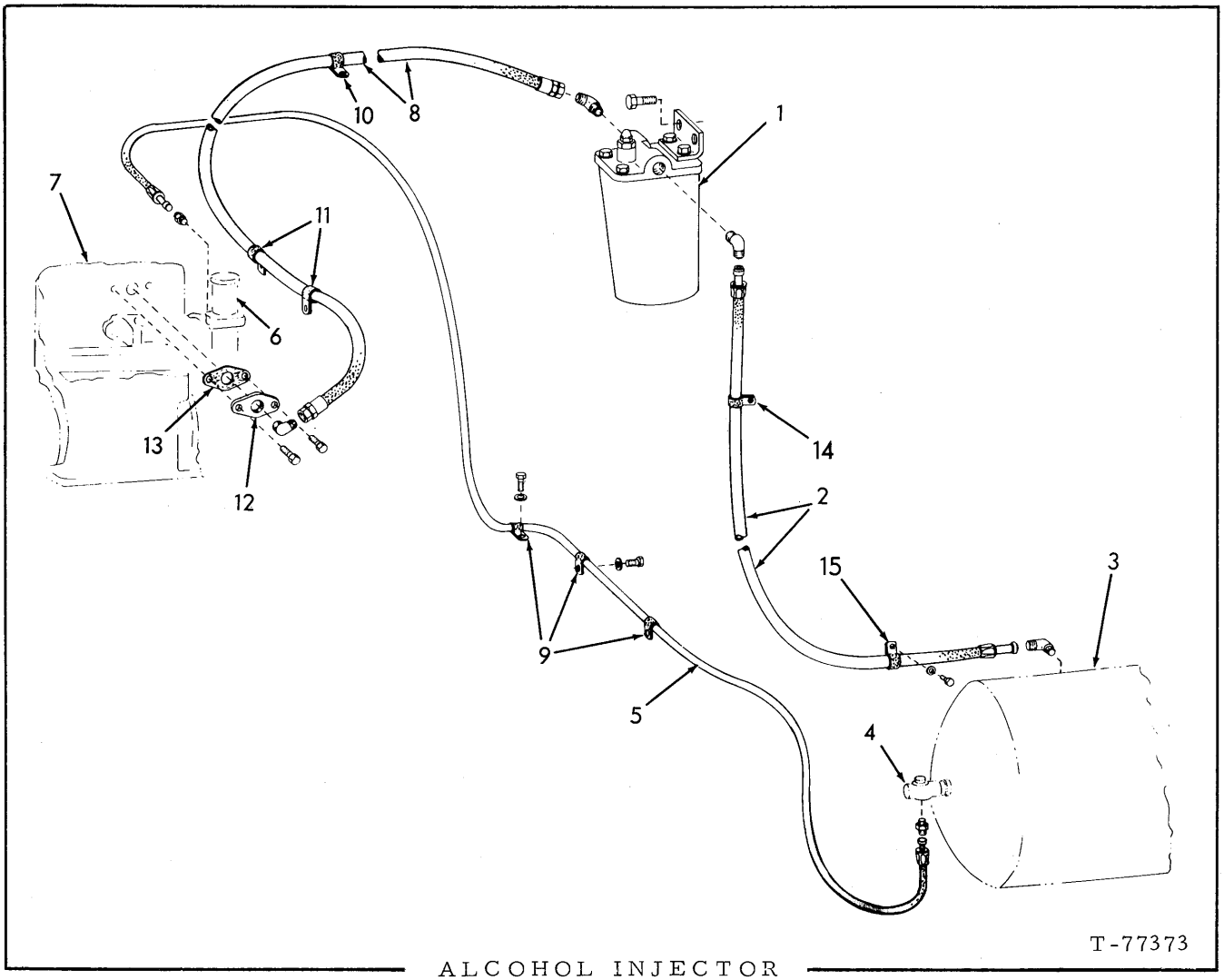

ALCOHOL INJECTOR

ITEM	PART NO.	QTY.	DESCRIPTION
1	--------	1	INJECTOR ASSY. (See ALCOHOL INJECTOR ASSY.)(Page 131)
	70922300	2	CAPSCREW, 3/8" NC x 3/4"
2	70689019	1	TUBE ASSY.
	70921186	1	ELBOW, 1/2" tube, 1/2" NPT, male
	70928624	1	ELBOW, 1/2" tube, 3/8" NPT, male
3	--------	1	TANK (See AIR BRAKE LINES)
4	--------	1	MANIFOLD (See AIR BRAKE LINES)
5	73057930	1	TUBE ASSY.
	70919497	1	CONNECTOR, 1/4" tube, 1/4" NPT
	70914626	1	CONNECTOR, 1/4" tube, 1/8" NPT, male
6	--------	1	GOVERNOR (See GOVERNOR ASSY.)
7	--------	1	COMPRESSOR (See AIR COMPRESSOR)

(Continued)

ALCOHOL INJECTOR (Continued)

ITEM	PART NO.	QTY.	DESCRIPTION
8	70676063	1	HOSE ASSY.
	70919206	1	ELBOW, 1/2" tube, 3/4" straight thread
	70919195	1	ELBOW, 1/2" tube, 3/4" straight thread
9	70928654	3	CLAMP
	70922300	3	CAPSCREW, 3/8" NC x 3/4"
	70677006	3	WASHER
10	70925618	1	CLAMP, 9/16" I.D. x 1"
11	70925097	2	CLAMP, 3/4"
12	74041004	1	FITTING
	70927373	2	CAPSCREW, 5/16" NC x 7/8"
13	74040302	1	GASKET
14	70927177	1	CLAMP, 1/2" I.D. x 1"
15	70925617	1	CLAMP, 1/2" I.D. x 3/4"
	70922300	1	CAPSCREW, 3/8" NC x 3/4"
	70677006	1	WASHER, plain, 3/8"

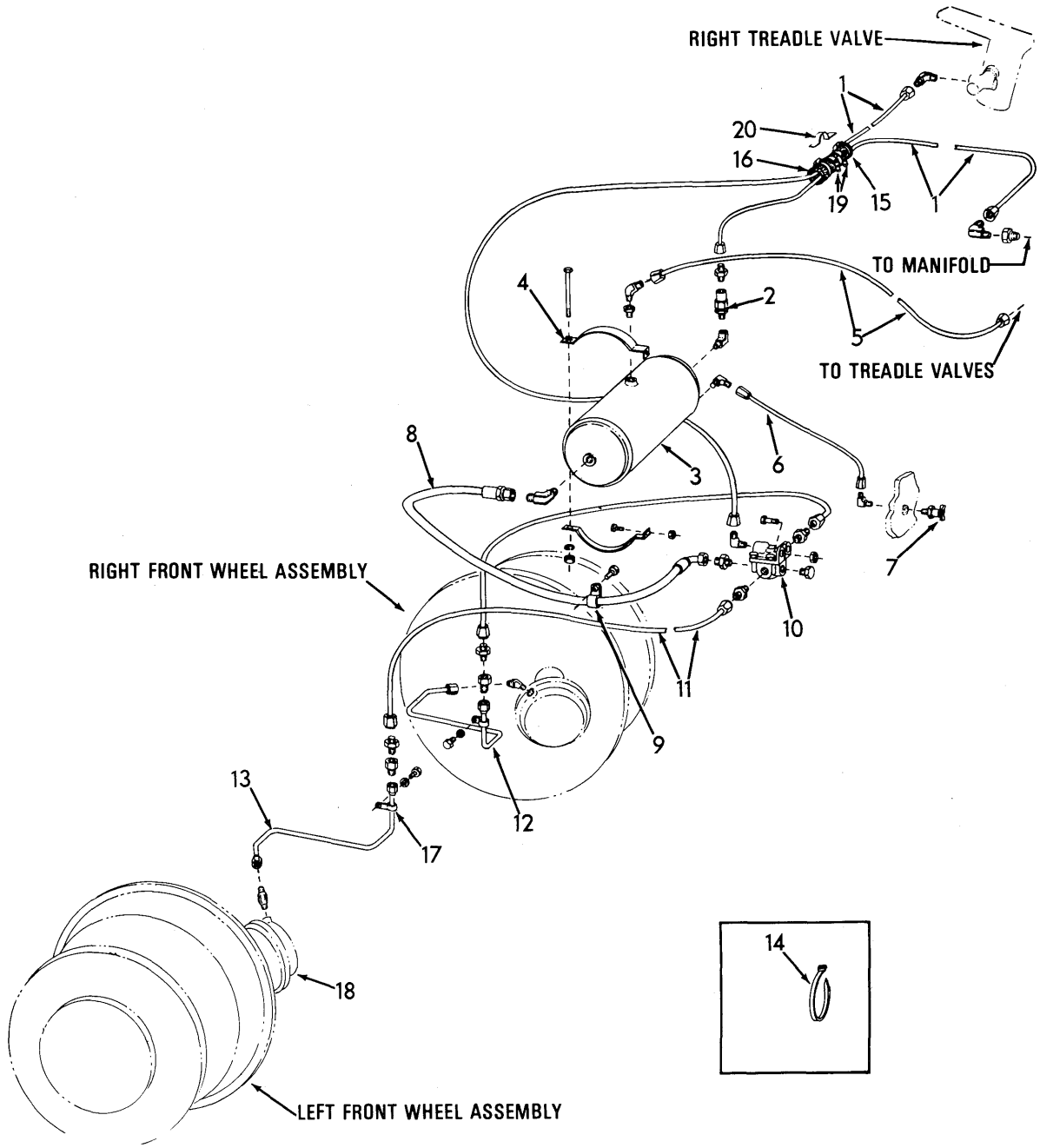

T-77396

FRONT AIR BRAKE LINES

FRONT AIR BRAKE LINES

ITEM	PART NO.	QTY.	DESCRIPTION
-	--------	1	MANIFOLD (See REAR AIR BRAKE LINES)(See page 139)
1	70682117	2	TUBE ASSY.
	70919581	1	ELBOW, 1/2" tube, 1/4" NPT
	70917370	1	ELBOW, 1/2" tube, 3/8" NPT
	70921186	1	ELBOW, 1/2" tube, 1/2" NPT
	70917354	1	CONNECTOR, 1/2" tube, 3/8" NPT
	70901835	1	BUSHING, 1/2" tube, 3/8" NPT
2	70685878	1	VALVE, check
	70925864	1	ELBOW, 3/8" NPT
3	70196736	1	RESERVOIR, air
	70925599	1	TEE, 3/8"
	70925846	1	ELBOW, 3/8" NPT
	70912319	1	COCK, drain, 1/2"
	70928567	1	ADAPTER, 3/8" NPT
4	70180586	2	BRACKET ASSY.
	70929708	2	CAPSCREW, 3/8" NC x 6"
	70910287	2	LOCKWASHER, 3/8"
	70911026	6	NUT, 3/8" NC
	70917733	8	CAPSCREW, 3/8" NC x 1-1/4"
5	70691141	1	TUBE ASSY.
	70928624	1	ELBOW, 1/2" tube, 3/8" NPT
	70901835	1	BUSHING, 1/2"x3/8" NPT
6	73059068	1	TUBE ASSY.
	70921185	1	ELBOW, 1/4" tube, 1/4" NPT
7	70912319	1	COCK, drain, 1/4"
8	70688910	1	HOSE ASSY. (See page 6)
	70919472	1	CONNECTOR, 5/8" tube, 7/8" straight thread
	70921511	1	ELBOW, 5/8" tube, 7/8" straight thread
9	70925620	1	CLAMP
	70922300	1	CAPSCREW, 3/8" NC x 3/4"
10	--------	1	VALVE ASSY., quick relay (See page 136)
	70921566	2	CAPSCREW, 5/16" NC x 1"
	70911025	2	NUT, 5/16" NC
	70918951	2	PLUG, 3/8" NPT
11	70682124	2	TUBE ASSY.
	70917354	4	CONNECTOR, 1/2" tube, 3/8" NPT
12	70688394	1	TUBE ASSY.
	70919788	1	CONNECTOR, 1/2" tube, 3/4" straight thread
	70925839	1	ELBOW, 1/2" tube, 3/4" straight thread
13	70688393	1	TUBE ASSY.
	70919788	1	CONNECTOR, 1/2" tube, 3/4" straight thread
	70925839	1	ELBOW, 1/2" tube, 3/4" straight thread
14	70925442	6	TIE
15	70689332	1	WRAP
16	70921913	2	CLAMP
17	70925617	2	CLAMP
	70922300	2	CAPSCREW, 3/8" NC x 3/4"
	70677006	2	WASHER, plain, 3/8"
18	--------	2	CHAMBER ASSY., air (See page 124)
19	70927308	2	CLAMP
20	70692785	1	CLAMP

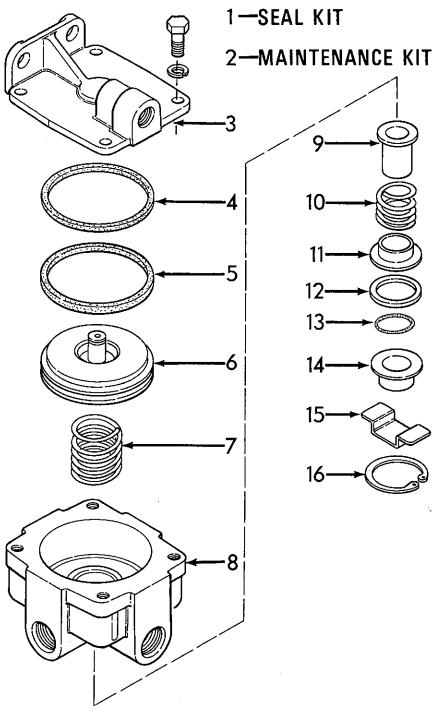

T-78008

QUICK RELAY VALVE ASSEMBLY

USAGE: See pages 135 and 139

ITEM	PART NO.	QTY.	DESCRIPTION
			NOTE: QUANTITIES indicated are for one assembly only.
-	70685879	1	VALVE ASSY. (Includes items 1 thru 16)
1	70691726	1	KIT, seal (Includes items 4, 5, 9, 12, 13 and 16)
2	70691727	1	KIT, maintenance (Includes items 6, 7, 10, 11, 14 and 15)
3	--------	1	COVER (Order complete Assy.)
		4	CAPSCREW
		4	LOCKWASHER
4	--------	1	RING, seal (Order item 1)
5	--------	1	RING, quad (Order item 1)
6	--------	1	PISTON (Order item 2)
7	--------	1	SPRING (Order item 2)
8	--------	1	BODY (Order complete Assy.)
9	--------	1	VALVE ASSY. (Order item 1)
10	--------	1	SPRING (Order item 2)
11	--------	1	GUIDE (Order item 2)
12	--------	1	O-RING (Order item 1)
13	--------	1	RING, seal (Order item 1)
14	--------	1	RETAINER (Order item 2)
15	--------	1	SHIELD, exhaust (Order item 2)
16	--------	1	RING, retaining (Order item 1)

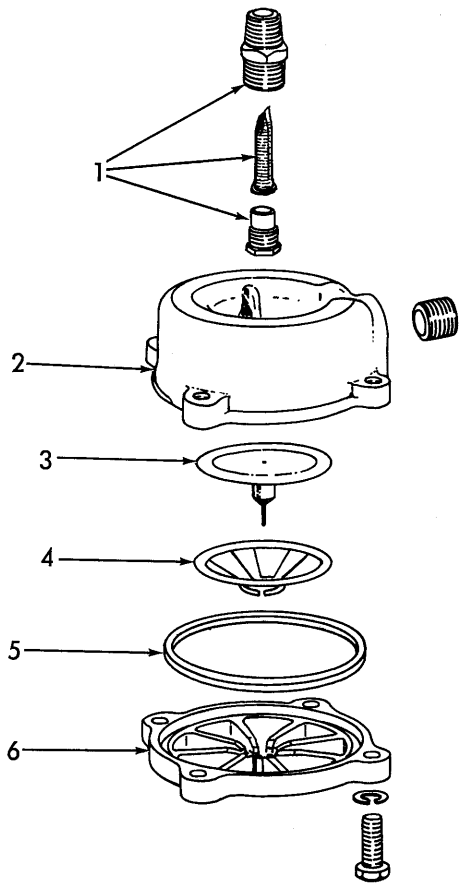

T-74160

AIR TANK DRAIN VALVE

ITEM	PART NO.	QTY.	DESCRIPTION
-	73103486	1	VALVE ASSY. (Includes items 1 thru 6)
1	73104682	1	FILTER ASSY. (Includes filter, adapter and retainer)
2	--------	1	BODY (Order complete Valve Assy.)
3	73104683	1	VALVE ASSY.
4	73104684	1	GUIDE
5	73104685	1	RING
6	--------	1	COVER (Order complete Valve Assy.)
	70923325	4	CAPSCREW, 5/16" NC x 7/8"
	70917356	4	LOCKWASHER, 5/16"

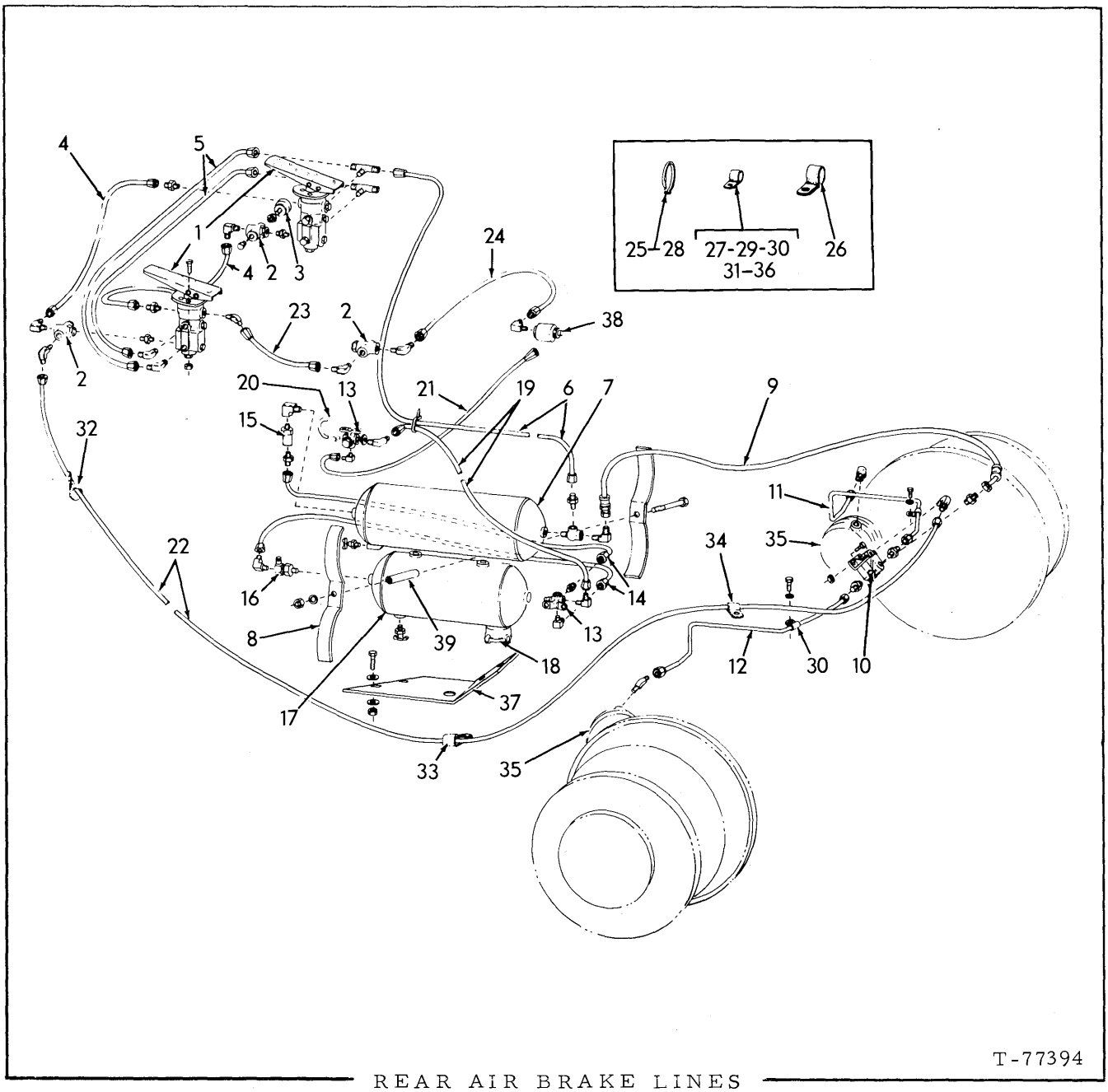

REAR AIR BRAKE LINES

ITEM	PART NO.	QTY.	DESCRIPTION
1	--------	2	VALVE ASSY. (See page 143)
	70921566	6	CAPSCREW, 5/16" NC x 1"
	70911025	6	NUT, 5/16" NC
	70918951	6	PLUG, 3/8" NPT
	70922777	2	NIPPLE, 3/8"
	70928624	1	ELBOW, 45°, 3/8" NPT, 1/2" tube
	70924636	1	PLUG, 1/2" NPT
2	73100197	3	VALVE ASSY.
	70918951	2	PLUG, pipe, 3/8" NPT
3	73031667	1	SWITCH, stop light
	70917351	1	BUSHING, 3/8" x 1/4"

(Continued)

REAR AIR BRAKE LINES (Continued)

ITEM	PART NO.	QTY.	DESCRIPTION
4	70682124	2	TUBE ASSY.
	70917370	2	ELBOW, 1/2" tube, 3/8" NPT
	70917354	2	CONNECTOR, 1/2" tube, 3/8" NPT
5	70682242	2	TUBE ASSY.
	70919526	2	TEE, 1/2" tube, 3/8" NPT
	70917370	1	ELBOW, 1/2" tube, 3/8" NPT (upper)
	70921186	1	ELBOW, 1/2" tube, 1/2" NPT (lower)
6	73059067	1	TUBE ASSY.
	70917354	1	CONNECTOR, 1/2" tube, 3/8" NPT
7	70196736	1	RESERVOIR, air
	70925599	1	TEE, 3/8"
	70925864	1	ELBOW, 3/8" NPT
	70912319	1	COCK, drain, 1/4"
	70917498	1	PLUG, 1/2"
8	70196898	4	CLAMP
	70686084	2	ROD
	70677008	2	WASHER, plain, 5/8"
	70911028	2	NUT, 1/2" NC
9	70689314	1	TUBE ASSY.
	70921511	1	ELBOW, 5/8" tube, 7/8" straight thread
	70919472	1	CONNECTOR, 1/2" tube, 3/4" straight thread
10	--------	1	VALVE ASSY. (See page 136)
	70922763	2	CAPSCREW, 3/8" NC x 1"
	70911026	2	NUT, 3/8" NC
	70918951	2	PLUG, 3/8"
11	70688548	1	TUBE ASSY.
	70919063	1	ADAPTER
	70925839	1	ELBOW, 1/2" tube, 3/4" straight thread
12	70688547	1	TUBE ASSY.
	70919063	1	ADAPTER, 1/2" tube, 3/4" straight thread
	70925839	1	ELBOW, 1/2" tube, 3/4" straight thread
13	70689040	2	MANIFOLD
	70917717	1	PLUG, 1/4"
14	70682121	2	TUBE ASSY.
	70919581	1	ELBOW, 1/2" tube, 1/4" NPT
	70921186	1	ELBOW, 1/2" tube, 1/2" NPT
	70924816	1	CONNECTOR, 1/2" tube, 1/4" NPT
	70917354	1	CONNECTOR, 1/2" tube, 3/8" NPT
15	70685878	1	VALVE, check
	70925864	1	ELBOW, 3/8" NPT
16	70196735	1	VALVE ASSY., check (Serviced only as a unit)
17	73046822	1	RESERVOIR
	70912319	1	COCK, drain, 1/4"
	70922778	1	CONNECTOR, 1/2" NPT
18	--------	1	VALVE ASSY. (See page 137)
19	70689079	1	TUBE ASSY.
	70917370	2	ELBOW, 90°, 1/2" tube, 3/8" NPT
	70901835	1	BUSHING, 1/2" x 3/8"

(Continued)

REAR AIR BRAKE LINES (Continued)

ITEM	PART NO.	QTY.	DESCRIPTION
20	--------	1	TUBE ASSY. (See page 141)
21	73059073	1	TUBE ASSY. (To INSTRUMENT PANEL)
22	70682115	1	TUBE ASSY.
	70919581	1	ELBOW, 1/2" tube, 1/4" NPT
	70917370	1	ELBOW, 1/2" tube, 3/8" NPT
23	73059064	1	TUBE ASSY.
	70917370	1	ELBOW, 1/2" tube, 3/8" NPT
	70928624	1	ELBOW, 1/2" tube, 3/8" NPT
24	73059066	1	TUBE ASSY.
	70917370	1	ELBOW, 1/2" tube, 3/8" NPT
	70919581	1	ELBOW, 1/2" tube, 1/4" NPT
25	70925442	1	TIE
26	70927388	2	CLAMP
	70926163	2	CAPSCREW, 5/8" NC x 2-1/2"
	70677008	2	WASHER, plain, 5/8"
27	70927177	4	CLAMP
	70926163	2	CAPSCREW, 5/8" NC x 2-1/2"
	70677008	2	WASHER, plain, 5/8"
28	70925094	4	TIE
29	70925617	1	CLAMP
30	70925620	1	CLAMP
	70922300	1	CAPSCREW, 3/8" NC x 3/4"
	70677006	1	WASHER, plain, 3/8"
31	70926049	1	CLAMP
	70922300	1	CAPSCREW, 3/8" NC x 3/4"
	70677006	1	WASHER, plain, 3/8"
32	--------	4	CLIP (See ELECTRICAL SYSTEM)
33	--------	1	CLIP (See ELECTRICAL SYSTEM)
34	--------	1	CLIP (See ELECTRICAL SYSTEM)
35	--------	2	CHAMBER ASSY., air (See page 124)
36	70925617	2	CLAMP
	70922300	2	CAPSCREW, 3/8" NC x 3/4"
	70677006	2	WASHER, plain, 3/8"
37	70691422	1	PLATE
	70921172	4	CAPSCREW, 1/2" NC x 1-1/8"
	70677010	4	WASHER, 1/2"
	70911029	4	NUT, 1/2" NC
38	73041850	1	CYLINDER, air, clutch cut-off. (Adapts to Trans. Control Valve)
39	73062415	2	PIPE

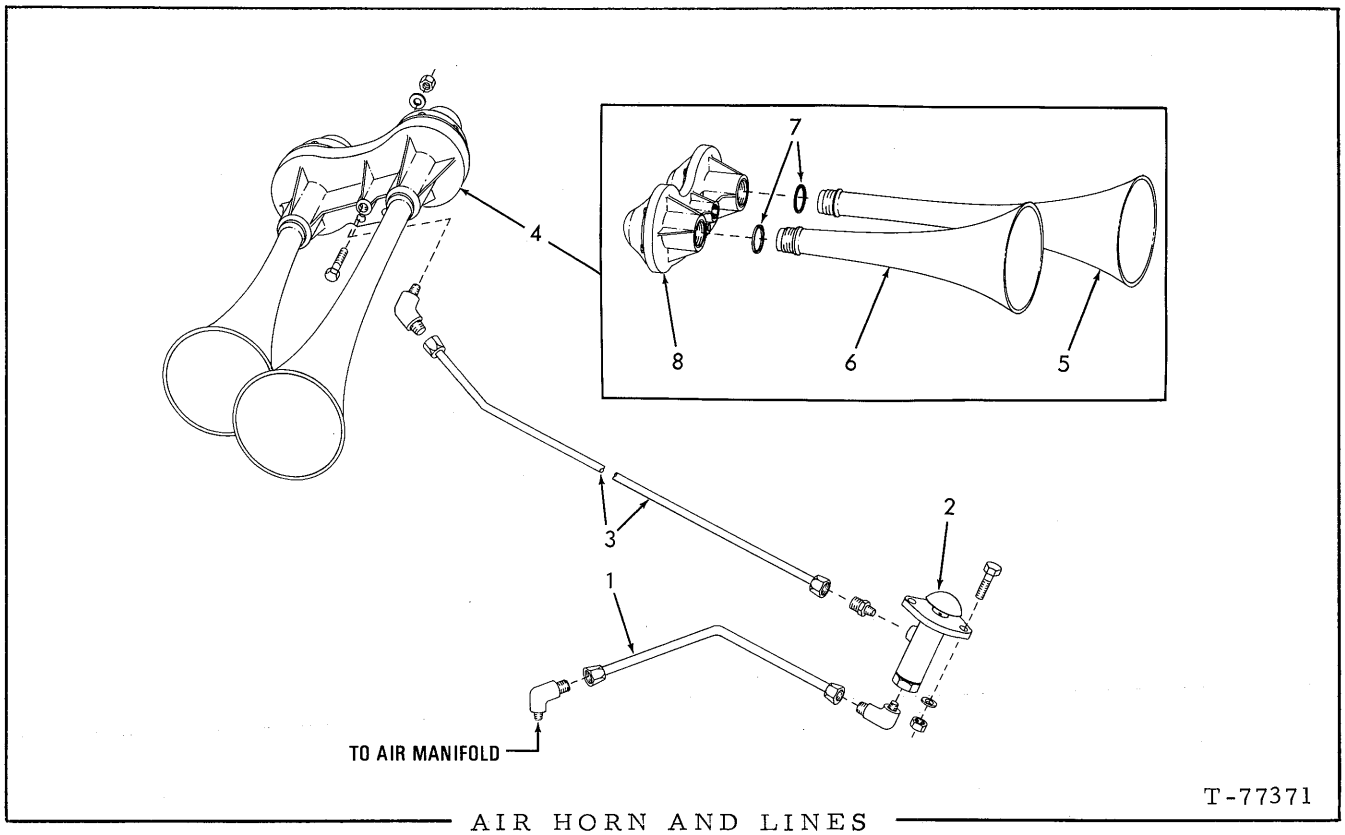

AIR HORN AND LINES

ITEM	PART NO.	QTY.	DESCRIPTION
-	--------	1	MANIFOLD (See page 139)
1	73058576	1	TUBE ASSY.
	70921185	2	ELBOW, 1/4" tube, 1/4" tapered thread
2	70181478	1	VALVE
	70927401	2	CAPSCREW, 1/4" NC x 1"
	70677004	2	WASHER, plain
	70916622	2	NUT, 1/4" NC
3	70691140	1	TUBE ASSY.
	70914626	1	CONNECTOR, 1/4" tube, 1/8" tapered thread
	70921185	1	ELBOW, 1/4" tube, 1/4" tapered thread
4	73053921	1	HORN ASSY. (Includes items 5 thru 8)
	70927401	2	CAPSCREW, 1/4" NC x 1"
	70677004	2	WASHER, plain
	70911024	2	NUT, 1/4" NC
5	73056154	1	PROJECTOR
6	73056153	1	PROJECTOR
7	73061126	2	GASKET
8	73061127	2	DIAPHRAGM

"ALWAYS GIVE MODEL AND SERIAL NUMBER WHEN ORDERING PARTS"

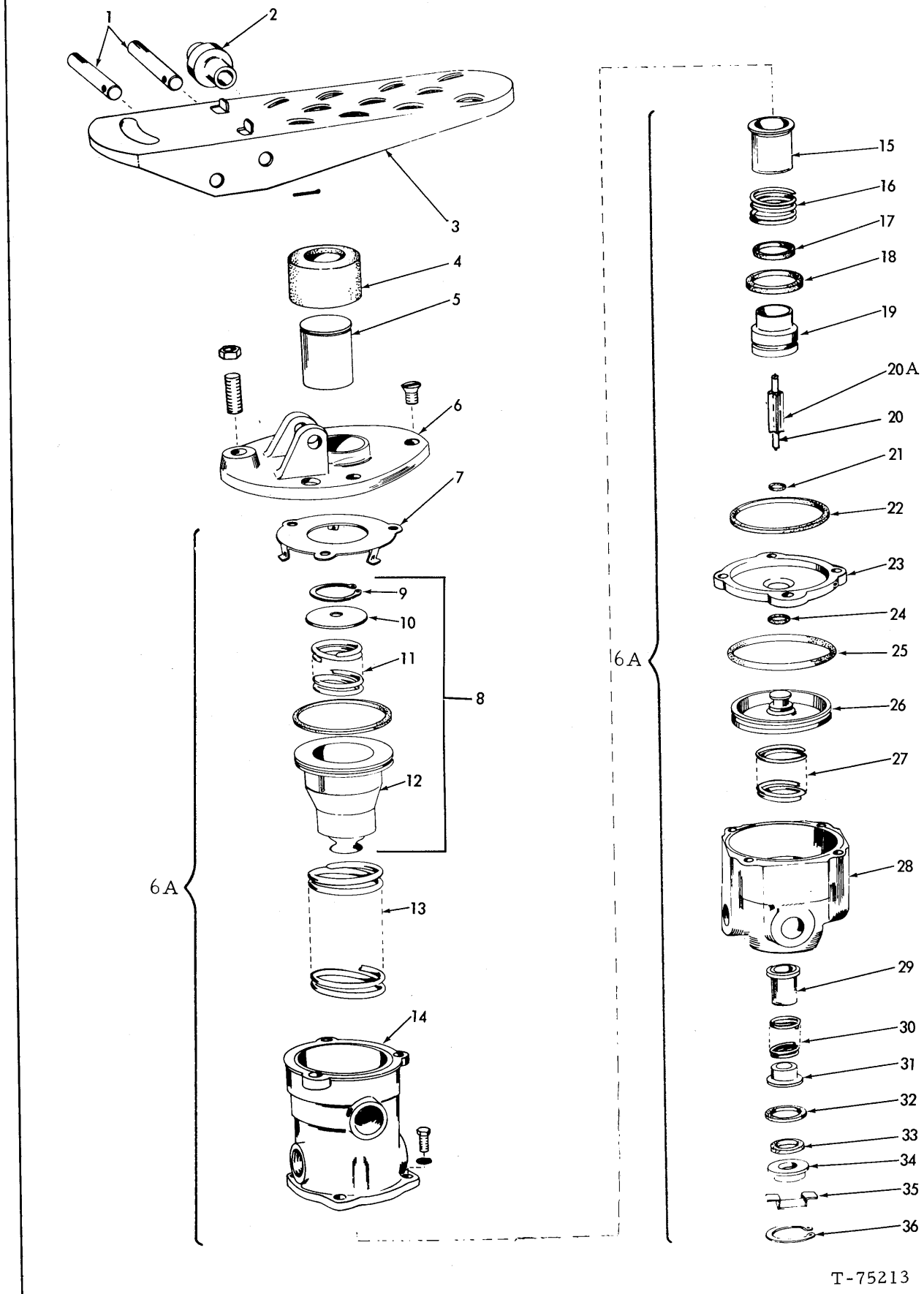

AIR APPLICATION VALVE ASSEMBLY

AIR APPLICATION VALVE ASSEMBLY

NOTE: See pages 135 and 138

ITEM	PART NO.	QTY.		DESCRIPTION
				Quantity: For one application valve only.
-	70684143	1		VALVE ASSY., air application (Includes items 1 thru 36)
	70920622	3		CAPSCREW, 5/16" NF x 1"
	70904205	3		LOCKWASHER, 5/16"
	70929251	3		NUT, 5/16" NF
1	73048322	2		PIN, pivot, treadle
2	73048319	1		ROLLER, treadle
3	73060147	1		TREADLE, brake
	70907801	2		PIN, cotter, 3/32" x 1-1/8"
4	73048318	1	□	BOOT, plunger
5	73048321	1		PLUNGER, treadle
6	73048320	1		FLANGE, treadle mounting
	70914805	1		CAPSCREW, flat hd., 5/16" NC x 7/8"
	70911327	1		NUT, 1/4" NC
	70904569	3		SCREW, machine flat hd.
6A	73048316	1		VALVE ASSY., brake (Includes items 7 thru 36)
7	73048338	1		RETAINER, spring
8	73048340	1		PISTON ASSY. (Includes items 9 thru 12)
9	73048386	1		RING, snap
10	73048387	1		RETAINER, spring, metering
11	73048388	1		SPRING, metering
12	73048389	1		PISTON, primary metering
	70923580	1	□	O-RING, primary piston
13	73048342	1		SPRING, return, primary piston
14	--------	1		BODY, upper valve (Not Serviced, order 1 73048316 VALVE ASSY.)
	70919351	4		CAPSCREW, 1/4" NC x 7/8"
	70904204	4		LOCKWASHER, 1/4"
15	73048344	1	□	VALVE, primary inlet
16	73048345	1		SPRING, primary inlet
17	73048347	1	□	PACKING, primary valve guide
18	70926804	1	□	SEAL, primary valve
19	73048346	1		GUIDE, primary valve
20	73053758	1		ROD, push
20A	73053759	1		GUIDE, push rod

(Continued)

AIR APPLICATION VALVE ASSEMBLY (Continued)

ITEM	PART NO.	QTY.		DESCRIPTION
21	70923944	1	□	O-RING, sealing, air passage
22	70926805	1	□	SEAL, cover top
23	73048349	1		COVER, body
24	70923558	1	□	O-RING, secondary piston (small)
25	70923852	1	□	O-RING, secondary piston (large)
26	73048373	1		PISTON, secondary metering
27	73048376	1		SPRING, return, secondary piston
28	73048384	1		BODY, lower valve
29	73048383	1	□	VALVE, secondary inlet
30	73048382	1		SPRING, secondary inlet
31	73048381	1		GUIDE, spring
32	70926803	1	□	SEAL, guide
33	73048379	1	□	RETAINER, secondary seal
34	73048378	1		RETAINER, seal
35	73048377	1		SHIELD, exhaust
36	73048375	1		RING, snap
-	73048402	-		REPAIR KIT, valve (Includes items 4, 15, 17, 18, 21, 22, 24, 25, 29, 32, 33 and 1 O-RING 70923580)

□ (Also included in REPAIR KIT)

MEMO

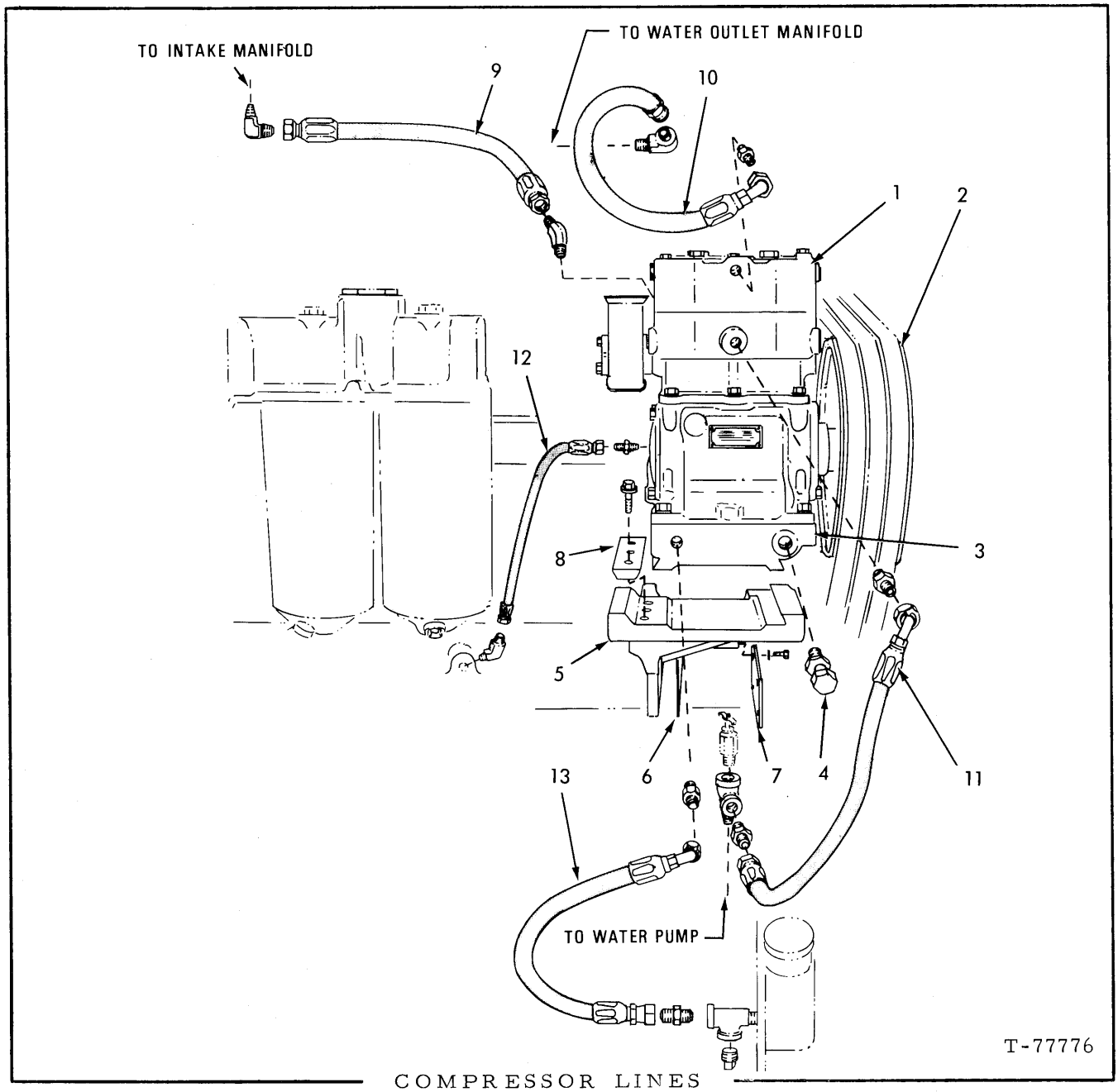

COMPRESSOR LINES

ITEM	PART NO.	QTY.	DESCRIPTION
1	--------	1	COMPRESSOR ASSY., air (See page 148)
	70920649	4	CAPSCREW, 7/16" NC x 1-3/8"
	70914678	4	LOCKWASHER, 7/16"
2	74393672	1	PULLEY
3	74394266	1	BASE, compressor
4	74040598	1	SCREW, adjusting, 5/8" NC x 8-3/16"
	70910511	1	NUT, jam, 5/8" NC

(Continued)

COMPRESSOR LINES (Continued)

ITEM	PART NO.	QTY.	DESCRIPTION
5	74394265	1	BRACKET
	70916272	5	CAPSCREW, 3/8" NC x 1-1/4"
	70922211	1	CAPSCREW, Nylok, 3/8" NC x 1-1/4"
	70910287	6	LOCKWASHER, 3/8"
6	74394275	1	GASKET
7	74394276	1	PLATE
	70916269	2	CAPSCREW, 3/8" NC x 7/8"
	70916271	2	CAPSCREW, 3/8" NC x 1"
	70910287	4	LOCKWASHER, 3/8"
8	74394267	1	CLAMP
	70922065	3	CAPSCREW, 12 pt., 1/2" NC x 1-1/4"
9	74393688	1	HOSE (See HOSE PARTS)
	70920697	1	ELBOW, flare type, 45°, 1" tube, 3/4" NPT
	70621579	1	ELBOW, 90°, 1" tube, 3/4" NPT
10	74393694	1	HOSE (See HOSE PARTS)
	70919128	1	CONNECTOR, flare type, 1/2" tube, 1/2" NPT
	70919272	1	ELBOW, flare type, 90°, 1/2" tube, 3/4" NPT
11	74393694	1	HOSE (See HOSE PARTS)
	70924440	1	TEE, pipe, service, 3/8" NPT
	70920131	1	PLUG, 3/8" NPT
12	74394398	1	HOSE (See HOSE PARTS)
	70919171	1	CONNECTOR, flare type, 1/4" tube, 1/8" NPT
	70922990	1	ELBOW, flare type, 45°, 1/4" tube, 1/4" NPT
13	74393692	1	HOSE (See HOSE PARTS)
	70919063	2	CONNECTOR, flare type, 1/2" tube, 3/8" NPT
	70924440	1	TEE, pipe, service, 3/8" NPT
	70920131	1	PLUG, 3/8" NPT

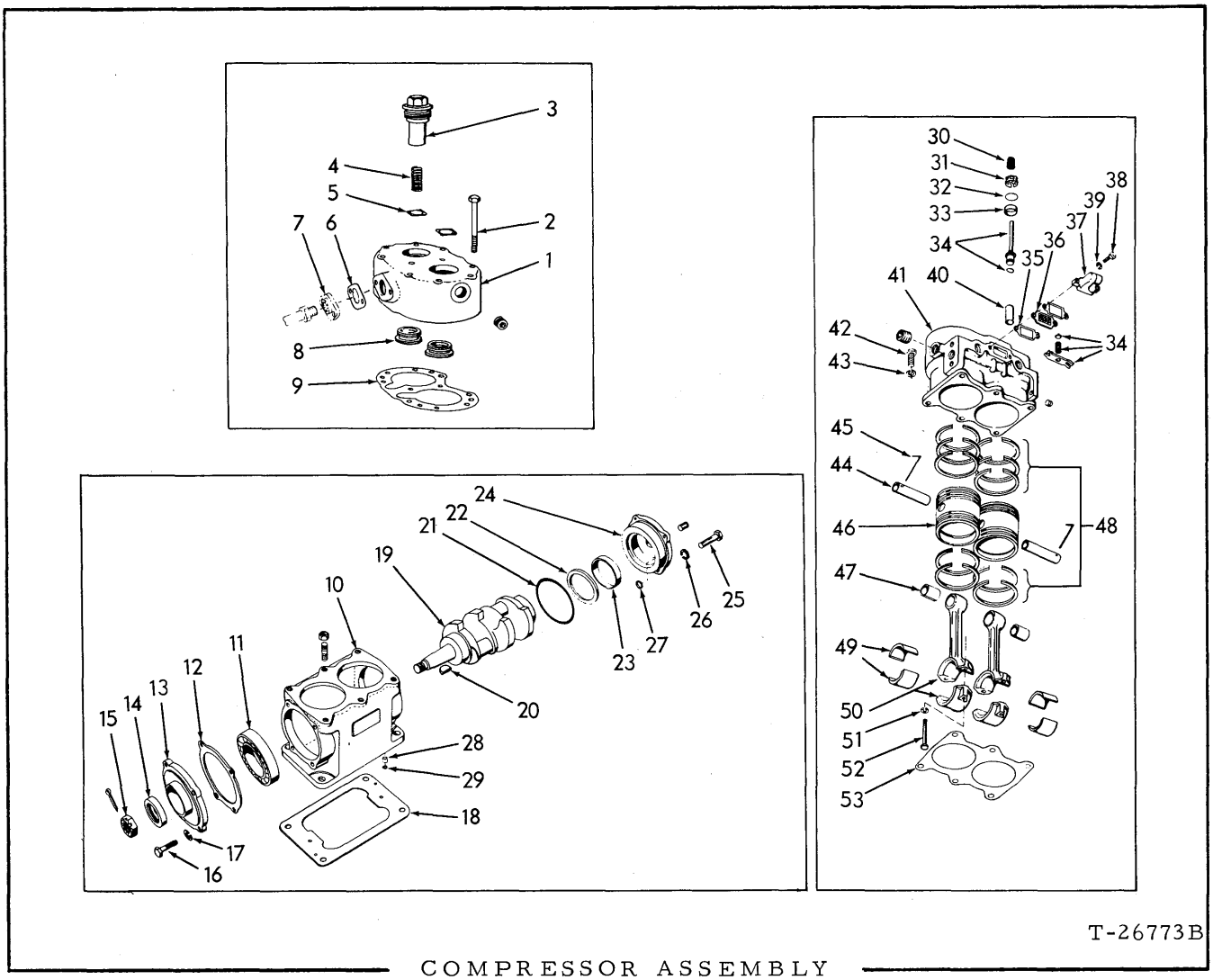

COMPRESSOR ASSEMBLY

ITEM	PART NO.	QTY.	DESCRIPTION
-	74393666	1	COMPRESSOR ASSY. (Not Serviced, order 74358580)
-	74358580	1	COMPRESSOR ASSY. (Includes items 1 thru 5, 8 thru 34 and 40 thru 53. Does not include GOVERNOR)(Service replacement for original compressor 74393666)
	74053235	1	COCK (Not Illustrated)
1	74040342	1	HEAD ASSY., cylinder (Includes inlet valve spring SEAT, INSERT and item 8)
	74054434	2	SEAT, inlet valve spring (Not Illustrated)
	74054435	2	INSERT, inlet valve spring (Not Illustrated)
2	74050468	10	CAPSCREW
3	74040343	2	CAPNUT, discharge valve
4	74040303	2	SPRING, discharge valve
5	74040315	2	VALVE, discharge
6	74040302	1	GASKET, fitting
7	--------	1	FITTING (See pages 135 and 138)
8	74050467	2	SEAT, discharge valve
9	74050466	1	GASKET, cylinder head

(Continued)

COMPRESSOR ASSEMBLY (Continued)

ITEM	PART NO.	QTY.	DESCRIPTION
10	74051038	1	CRANKCASE ASSY. (Includes item 28)
11	70510313	1	BEARING, ball
12	74040323	1	GASKET, front cover
13	74040300	1	COVER, front end
14	74058886	1	SEAL
15	70920403	1	NUT
16	70915813	4	CAPSCREW, 5/16"
17	74112723	4	LOCKWASHER, 5/16"
18	74040305	1	GASKET
19	74058845	1	CRANKSHAFT
20	70910545	1	KEY
21	74055527	1	GROMMET
22	74055528	1	WASHER, thrust
23	74055558	1	BUSHING, rear cover
24	74055529	1	COVER ASSY. (Includes item 23)
	74040550	1	PLUG, pipe
	70917673	1	PLUG, pipe
25	70915809	4	CAPSCREW, 5/16"
26	74112723	4	LOCKWASHER, 5/16"
27	74055556	1	O-RING
28	74047564	1	TUBE
29	74040539	1	GASKET
30	74040336	2	SPRING, inlet valve
31	74052124	2	GUIDE, inlet valve
32	74040335	2	VALVE, inlet
33	74040330	2	SEAT, inlet valve
34	74058899	1	VALVE KIT, unloader (Serviced only as a unit)(Includes GASKET)
35	74040341	2	GASKET, elbow
36	74056066	1	PLATE, strainer
37	74393667	1	FITTING
38	74055557	2	CAPSCREW, 5/16"
39	74112723	2	LOCKWASHER, 5/16"
40	74054439	2	BUSHING, unloader bore
41	74050453	1	BLOCK ASSY., cylinder (Includes items 33 and 40)
	70918850	1	PLUG, pipe, sq. hd., 1/4"
42	70916271	6	CAPSCREW, 3/8"
43	74110730	6	LOCKWASHER, 3/8"
44	74040339	2	PIN, wrist
	74054437	-	PIN, wrist (.005" oversize)(Use as required)
45	74040340	2	WIRE, locking, wrist pin
46	74052939	2	PISTON ASSY. (Includes item 44)
47	74056353	2	BUSHING, wrist pin
48	74052940	1	RING SET (Includes ten compression rings)
49	74053595	2	BEARING, connecting rod
50	74056425	2	ROD ASSY., connecting (Includes CAP and items 47, 51 and 52)
51	74053298	4	LOCKWASHER, connecting rod bolt
52	74053356	4	BOLT, connecting rod
53	74040321	1	GASKET, cylinder block

MEMO

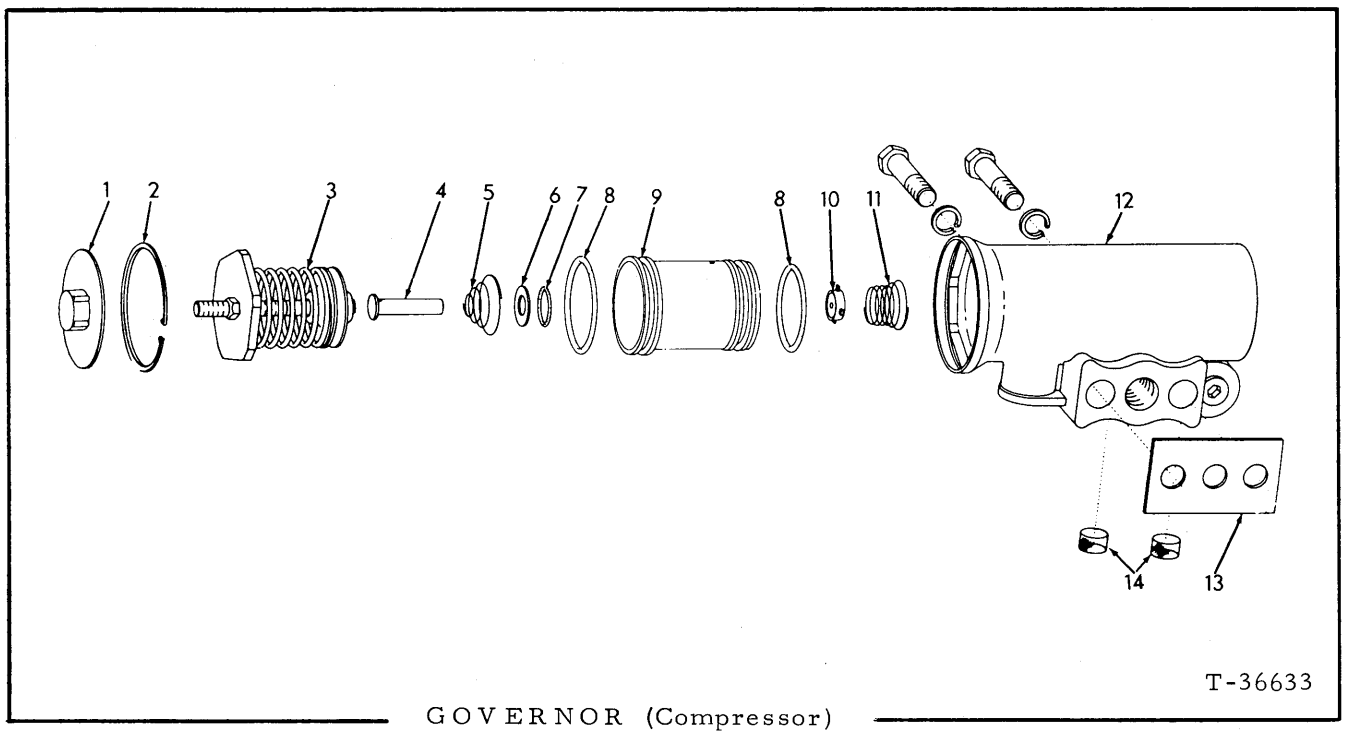

GOVERNOR (Compressor)

ITEM	PART NO.	QTY.	DESCRIPTION
-	74389823	1	GOVERNOR ASSY. (Includes items 1 thru 12 and 14)
	74055341	2	CAPSCREW (Special)
	74112723	2	LOCKWASHER, 5/16"
1	74055277	1	COVER
2	74056265	1	RING
3	74055276	1	SCREW AND SPRING ASSY. (Includes SCREWS, NUT, SPRING GUIDE & SEATS)(Serviced only as a unit)
4	74055278	1	STEM
5	74055279	1	SPRING
6	74055275	1	WASHER
7	74054151	1	GROMMET (Inner)
8	74055283	2	GROMMET (Outer)
9	74055274	1	PISTON ASSY. (Includes items 6 and 7)
10	74055273	1	VALVE
11	74055272	1	SPRING
12	74055281	1	BODY ASSY. (Includes item 14)
	70917673	3	PLUG, ctsk. -hd., 1/8" NPT
13	74040345	1	GASKET
14	74055282	2	FILTER

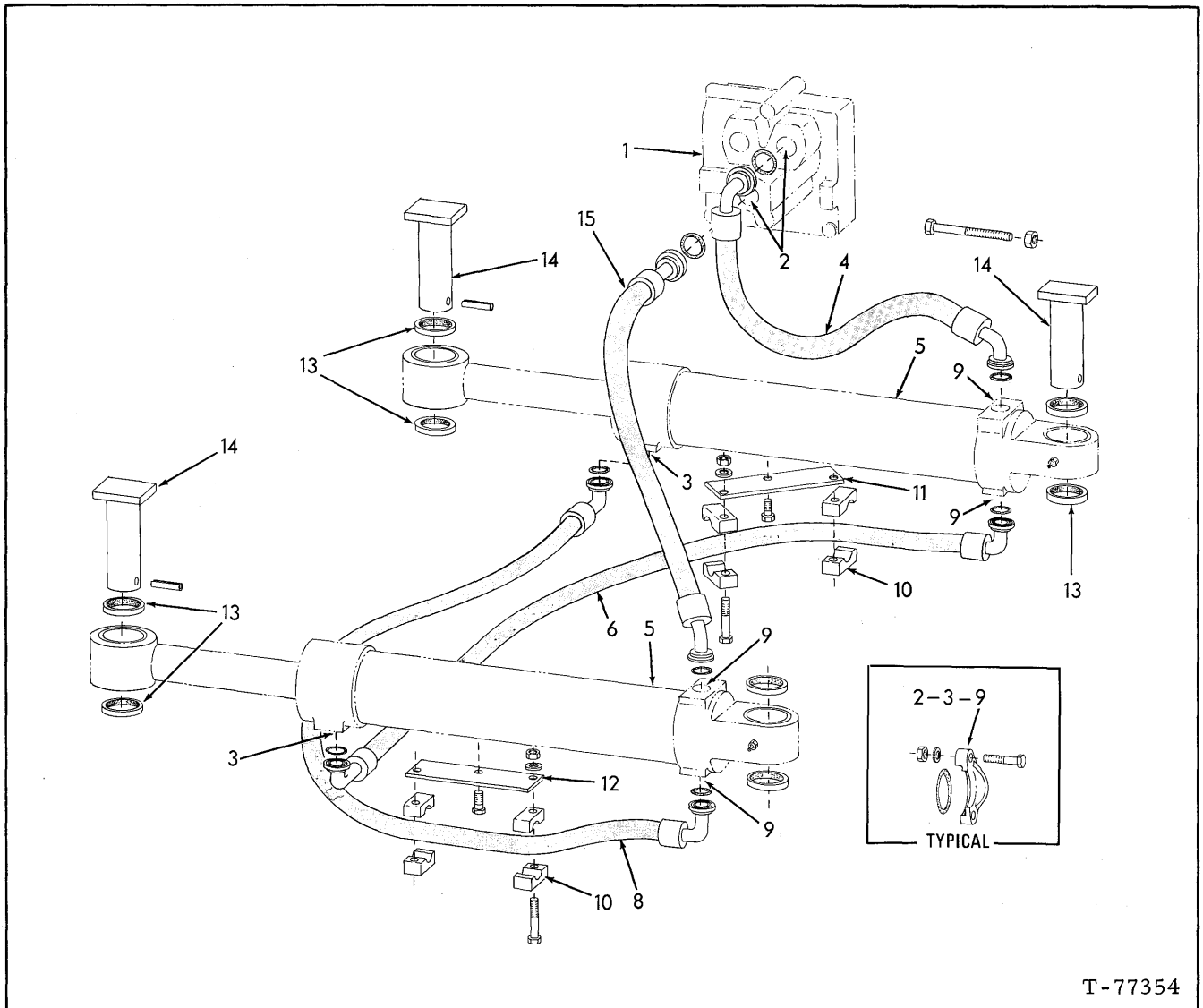

STEERING CYLINDER HYDRAULICS

(Cylinder Section)

ITEM	PART NO.	QTY.	DESCRIPTION
1	--------	1	VALVE ASSY., stg. (See page 154)
2	70921117	4	FLANGE, half
	70924192	2	O-RING
	70921569	8	CAPSCREW, 7/16" NC x 1-1/4"
3	70921115	4	FLANGE, half
	70924110	2	O-RING
	70921076	8	CAPSCREW, 3/8" NC x 1-1/4"
	70910287	8	LOCKWASHER, 3/8"
4	70684884	1	HOSE ASSY.
5	--------	2	CYLINDER ASSY. (See STEERING CYLINDER ASSEMBLY)
	70914465	2	FITTING, lubricating, st., 1/8" NPTF
	70915276	2	FITTING, lubricating, 90°, 1/8" NPTF
	70910231	2	PLUG, 1/8"

(Continued)

STEERING CYLINDER HYDRAULICS (Continued)

(Cylinder Section)

ITEM	PART NO.	QTY.	DESCRIPTION
6	70686478	1	HOSE ASSY.
7	--------	-	NOT REQUIRED
8	70686475	1	HOSE ASSY.
9	70921116	8	FLANGE, half
	70924200	4	O-RING
	70921076	16	CAPSCREW, 3/8" NC x 1-1/4"
	70910287	16	LOCKWASHER, 3/8"
10	70690105	8	CLAMP, half
	70921598	4	CAPSCREW, 1/2" NC x 3"
	70677008	4	WASHER, plain, 1/2"
	70911028	4	NUT, 1/2" NC
11	70686473	1	PLATE
	70920582	1	CAPSCREW, 1/2" NC x 1-1/4"
12	70686474	1	PLATE
	70920582	1	CAPSCREW, 1/2" NC x 1-1/4"
13	70685792	8	SEAL
14	70685791	4	PIN
	70927180	2	CAPSCREW, 1/2" NC x 5-1/4"
	70915972	2	NUT, lock, 1/2" NC
	70918245	2	PIN, roll, 1/2" x 2-1/2"
15	70684883	1	HOSE ASSY.

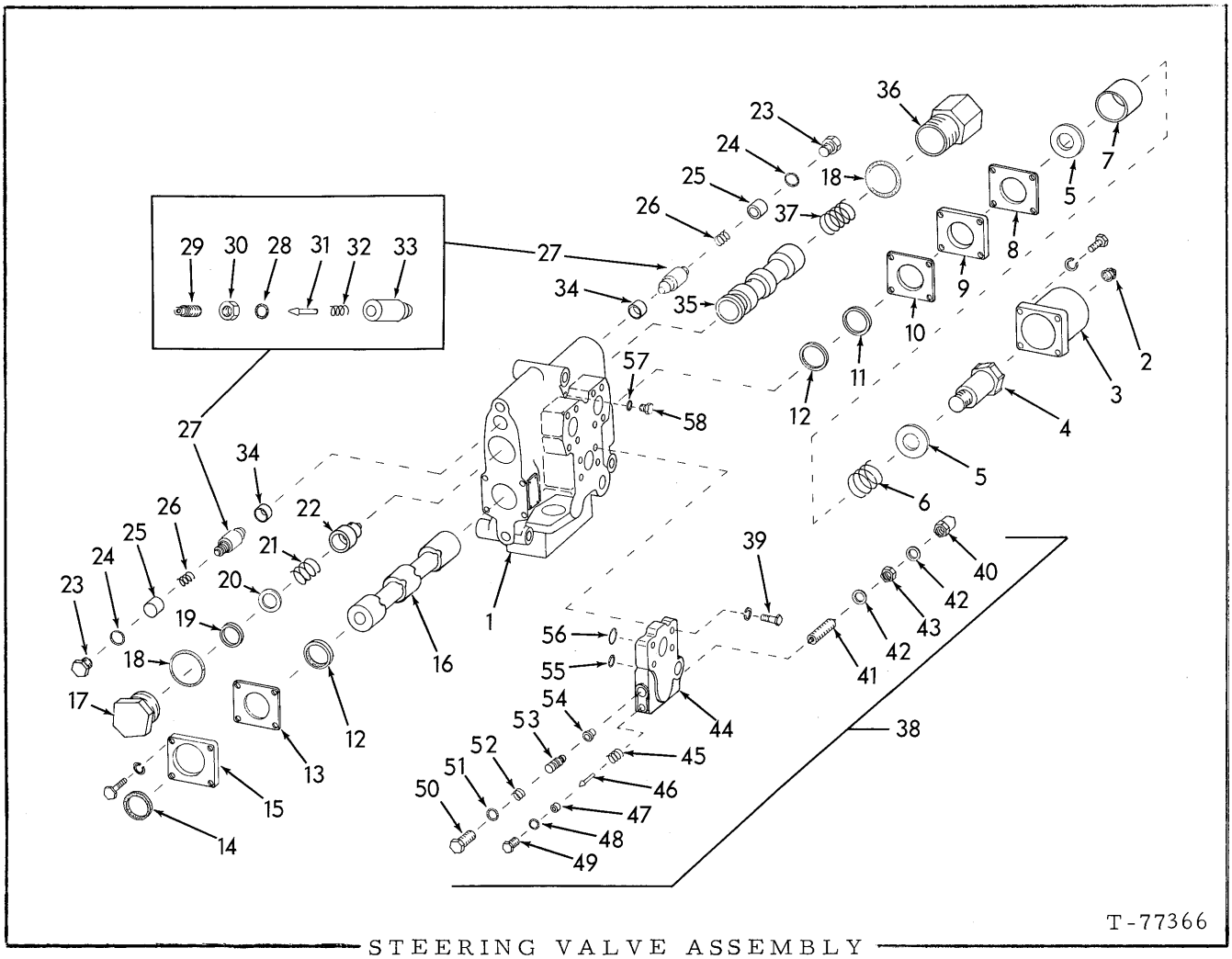

STEERING VALVE ASSEMBLY

USAGE: See STEERING CYLINDER HYDRAULICS

ITEM	PART NO.	QTY.	DESCRIPTION
-	70678148	1	VALVE ASSY., steering (Includes items 1 thru 56)
1	-------	-	HOUSING (Order VALVE ASSY.)
2	70184550	1	PLUG
3	73060081	1	COVER
	70920660	4	CAPSCREW, 5/16" NC x 1-1/2"
	70919311	4	LOCKWASHER, 5/16"
4	73060085	1	CAPSCREW (Special)
5	73060079	2	SPACER
6	73060128	1	SPRING
7	73060076	1	SPACER
8	73060150	-	SHIM (.002 thick. Use as required)
	73060077	-	SHIM (.010 thick. Use as required)

(Continued)

STEERING VALVE ASSEMBLY (Continued)

ITEM	PART NO.	QTY.	DESCRIPTION
9	73060072	1	SPACER
10	73060084	-	SHIM (. 002 thick. Use as required)
	73060106	-	SHIM (. 004 thick. Use as required)
	73060148	-	SHIM (. 008 thick. Use as required)
	73060149	-	SHIM (. 031 thick. Use as required)
	73060078	-	SHIM (. 047 thick. Use as required)
11	70184595	1	WASHER
12	70683338	2	SEAL
13	73060073	1	RETAINER
14	70683339	1	WIPER
15	73060074	1	RETAINER
	70922925	4	CAPSCREW, 5/16" NC x 3/4"
	70919311	4	LOCKWASHER, 5/16"
16	--------	1	SPOOL (Order VALVE ASSEMBLY)
17	73060071	1	CAP
18	70926810	2	RING
19	70930236	2	RING
20	73060080	1	WASHER
21	73060082	1	SPRING
22	73060068	1	CHECK
23	73060070	2	CAP
24	70930225	2	RING
25	73060075	2	PLUG
26	73044263	2	SPRING
27	73060065	2	VALVE ASSY. (Includes items 28 thru 33)
28	70923559	2	O-RING
29	73060066	2	SEAT
30	73048324	2	NUT
31	73060067	2	POPPET
32	70687891	2	SPRING
33	--------	2	HOUSING (Order item 27)
34	73048328	2	SEAT

(Continued)

STEERING VALVE ASSEMBLY (Continued)

ITEM	PART NO.	QTY.	DESCRIPTION
35	--------	1	PLUNGER (Order VALVE ASSEMBLY)
36	73060069	1	CAP
37	73060083	1	SPRING
38	73060063	1	OVERLOAD ASSY. (Includes items 40 thru 54)
39	--------	4	CAPSCREW (See HYDRAULIC STEERING PIPING)
	--------	4	WASHER
40	73033939	1	NUT, acorn, 1/2" NF
41	73027399	1	SCREW, adjusting, 1/2" NF
42	70191995	2	WASHER, 1/2" (rubber coated)
43	70913830	1	NUT, jam, 1/2" NF
44	--------	1	HOUSING (Order item 38)
45	73027401	1	SPRING
46	73027397	1	POPPET
47	73060064	1	SEAT
48	73100089	1	O-RING
49	73100734	1	CAP
50	73100091	1	CAP
51	70926806	1	O-RING
52	73100099	1	SPRING
53	73100098	1	CHECK
54	73100097	1	SEAT
55	70923575	1	O-RING
56	--------	1	O-RING
57	70921885	1	O-RING
58	70922577	1	PLUG

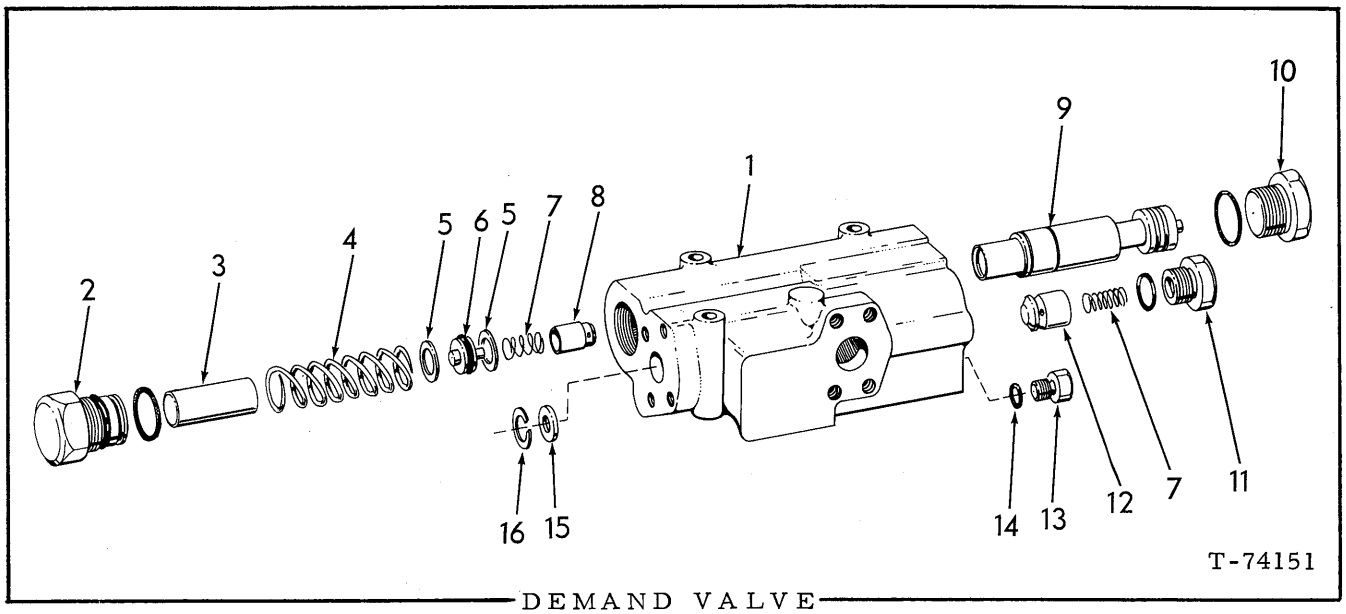

DEMAND VALVE

USAGE: See page 160 or 174

ITEM	PART NO.	QTY.	DESCRIPTION
-	70678319	1	VALVE ASSY. (Includes items 1 thru 16)
1	--------	1	HOUSING (Order Valve Assy.)
2	73050567	1	CAP
	70925453	1	O-RING, 1-1/2" I.D.
	70926809	1	RING, seal, flat washer type
3	73050682	1	SPACER
4	73050683	1	SPRING
5	70927278	2	RING
6	73050571	1	PLUG
	70923645	1	O-RING
7	70636102	2	SPRING
8	73018397	1	PLUNGER
9	--------	1	PLUNGER (Order Valve Assy.)
10	73050570	1	CAP
	70926809	1	RING, seal, 1-1/2" I.D.
11	73050568	1	CAP
	70926807	1	RING, seal, 1" I.D.
12	73001717	1	PLUNGER
13	73050569	1	CAP
14	70926801	1	RING, seal, 1/2" I.D.
15	73060127	1	PLUG, orfice
16	70927279	1	RING

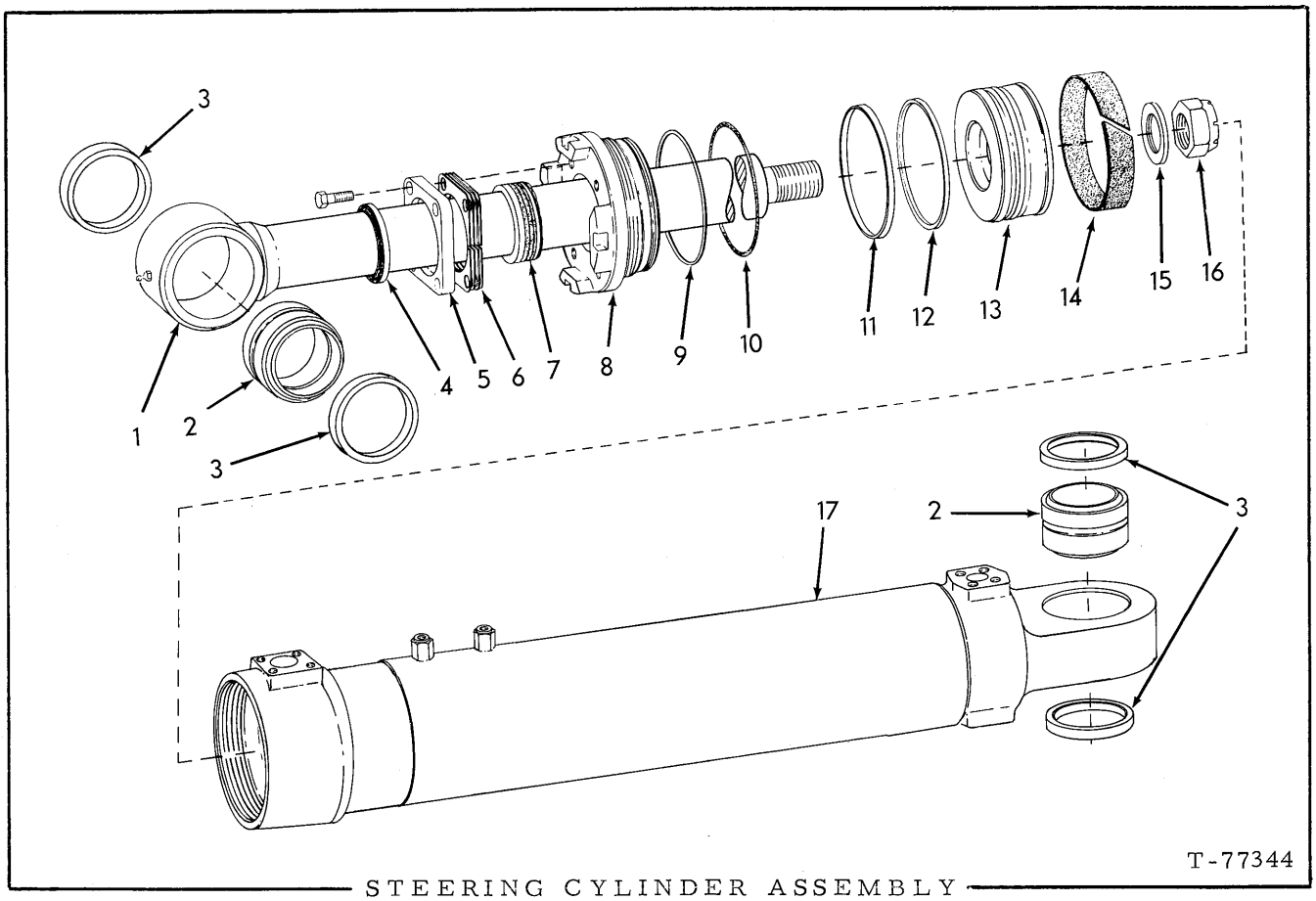

STEERING CYLINDER ASSEMBLY

USAGE: See STEERING CYLINDER HYDRAULICS

ITEM	PART NO.	QTY.	DESCRIPTION NOTE: Quantities indicated are for one (1) cylinder only.
-	73059304	1	CYLINDER ASSY. (left & right)(Includes items 1 thru 17)
1	73059293	1	ROD ASSY. (Includes 1 BEARING 70181605 and 2 RING 73059299)
2	70181605	2	BEARING
3	73059299	4	RING
4	73052879	1	SEAL
5	73059336 70914847	1 4	PLATE CAPSCREW, 3/8" NC x 1-1/2"
6	73054547	4	SHIM (.0299 thick - Use as req'd)
7	73053886	1	PACKING ASSY.
8	73059295	1	HEAD
9	70926631	1	RING, back-up
10	70924923	1	O-RING
11	73053825	1	RING, outer (Teflon)
12	70926817	1	RING, inner

(Continued)

STEERING CYLINDER ASSEMBLY (Continued)

ITEM	PART NO.	QTY.	DESCRIPTION
13	73059297	1	PISTON
14	73053826	1	RING, wear
15	73053977	1	SPACER
16	70926391	1	LOCKNUT, safety, 1-3/4" NF
17	73059303	1	TUBE ASSY. (Includes 1 BEARING 70181605 and 2 RING 73059299)
-	73056489	1	REPAIR KIT (Consist of items 4, 6, 7, 9 thru 12, and 14)

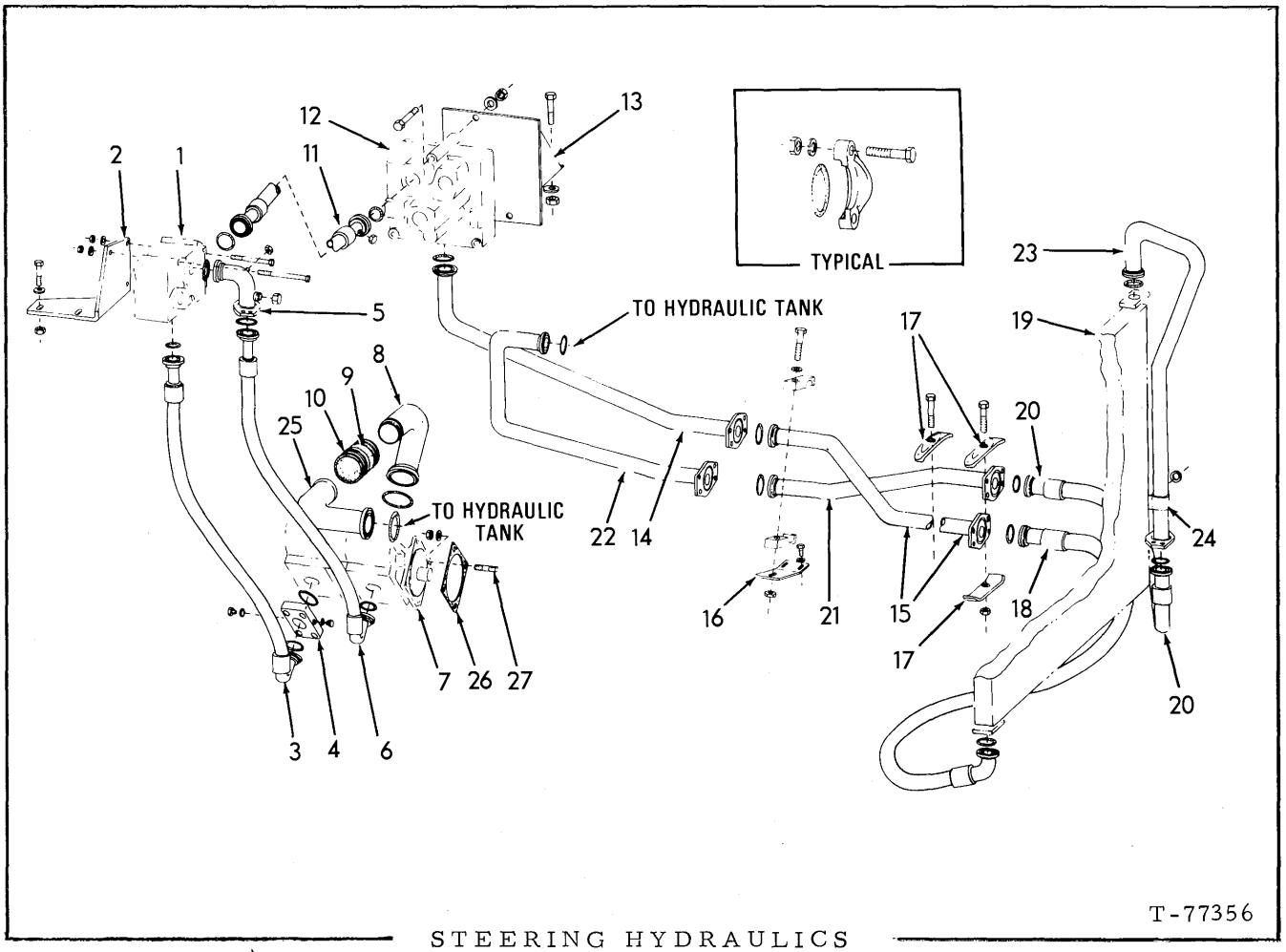

T-77356

STEERING HYDRAULICS
(Pump and Valve Section)

ITEM	PART NO.	QTY.	DESCRIPTION	
1	--------	1	VALVE ASSY., demand (See page 157)	
	70922849	1	CAPSCREW, 3/8" NC x 4"	
	70929011	2	CAPSCREW, 3/8" NC x 5"	
	70677006	3	WASHER, plain, 3/8"	
	70911026	3	NUT, 3/8" NC	
2	70690500	1	ANGLE	
	70924864	2	CAPSCREW, 1/2" NC x 2-1/4"	
	70677008	2	WASHER, plain, 1/2"	
	70911028	2	NUT, 1/2" NC	
3	70684879	1	HOSE ASSY.	
	70921116	2	FLANGE, 1"	AT VALVE
	70924200	1	O-RING, 1-5/16" I. D.	AT VALVE
	70927173	4	CAPSCREW, 3/8" NC x 1-1/8"	AT VALVE
	70921117	2	FLANGE, 1-1/4"	AT PUMP
	70924192	1	O-RING, 1-1/2" I. D.	AT PUMP
	70924618	4	CAPSCREW, 7/16" NC x 3"	AT PUMP

(Continued)

STEERING HYDRAULICS (Continued)
(Pump and Valve Section)

ITEM	PART NO.	QTY.	DESCRIPTION
4	70686280	1	BLOCK
	70924192	1	O-RING
	70921204	1	PLUG, 3/4" tube, 1-1/6" st. thd. (Includes 1 o-ring 0921206-9)
	70923166	1	PLUG, 1/4" tube, 7/16" st. thd. (Includes 1 o-ring 0921883-5)
5	70682346	1	TUBE
	70922195	1	CAP, 1"
	70924192	1	O-RING
	70921117	2	FLANGE, half, 1-1/4"
	70921569	4	CAPSCREW, 7/16" NC x 1-1/4"
	70921467	1	CAP, 1/4"
6	70690488	1	HOSE ASSY. (Serviced only as a unit)
	70924192	2	O-RING
	70921117	4	FLANGE, half, 1-1/4"
	70921569	8	CAPSCREW, 7/16" NC x 1-1/4"
	70914678	4	LOCKWASHER, 7/16"
7	70683972	1	PUMP ASSY., tandem (See page 162)
8	70684079	1	TUBE ASSY.
	70921599	2	FLANGE, half, 2-1/2"
	70923582	1	O-RING
	70920583	4	CAPSCREW, 1/2" NC x 1-1/2"
9	70675174	1	HOSE
10	70921915	4	CLAMP, adjustable
11	70684880	1	HOSE ASSY. (Serviced only as a unit)
	70921117	2	FLANGE, half, 1-1/4"
	70924192	1	O-RING
	70929014	4	CAPSCREW, 7/16" NC x 3-1/2"
	70921116	2	FLANGE, half, 1"
	70924200	1	O-RING
	70927173	4	CAPSCREW, 3/8" NC x 1-1/8"
	70921467	1	CAP, spud, 1/4" tube
12	--------	1	VALVE ASSY. (See Steering Valve Assy.)
	70921122	3	CAPSCREW, 1/2" NC x 5"
	70677008	3	WASHER, plain,
	70911028	3	NUT, 1/2" NC
13	70682760	1	BRACKET
	70921068	3	CAPSCREW, 3/4" NC x 2-1/4"
	70677012	3	WASHER, plain
	70911030	3	NUT, 3/4" NC
14	70689808	1	TUBE ASSY.
	70921118	2	FLANGE, half, 1-1/2"
	70924193	1	O-RING
	70920583	4	CAPSCREW, 1/2" NC x 1-1/2"
15	70688100	1	TUBE ASSY.
	70921117	2	FLANGE, half, 1-1/4"
	70924192	1	O-RING
	70921569	4	CAPSCREW, 7/16" NC x 1-1/4"
16	73062557	1	BRACKET
	70922763	2	CAPSCREW, 3/8" NC x 1"
	70677006	2	WASHER, plain
	70682483	1	CLAMP
	70926156	1	CAPSCREW, 1/2" NC x 3-1/4"
	70677008	1	WASHER, plain
	70911028	1	NUT, 1/2" NC

(Continued)

STEERING HYDRAULICS (Continued)
(Pump and Valve Section)

ITEM	PART NO.	QTY.	DESCRIPTION
17	70649779	3	CLAMP
	70921598	1	CAPSCREW, 1/2" NC x 3"
	70926156	1	CAPSCREW, 1/2" NC x 3-1/4"
	70911028	1	NUT, 1/2" NC
18	70689818	1	HOSE ASSY. (See HOSE PARTS)
	70924192	2	O-RING
	70921117	4	FLANGE, half, 1-1/4"
	70921569	8	CAPSCREW, 7/16" NC x 1-1/4"
19	--------	1	COOLER, oil (See page 198)
20	70689817	1	HOSE ASSY. (See HOSE PARTS)
	70921117	4	FLANGE, half, 1-1/4"
	70924192	2	O-RING
	70921569	8	CAPSCREW, 7/16" NC x 1-1/4"
21	70689799	1	TUBE ASSY.
	70921117	2	FLANGE, half, 1-1/4"
	70924192	1	O-RING
	70921569	4	CAPSCREW, 7/16" NC x 1-1/4"
22	70689800	1	TUBE ASSY.
	70921118	2	FLANGE, half, 1-1/2"
	70924193	1	O-RING
	70920583	4	CAPSCREW, 1/2" NC x 1-1/2"
23	70689798	1	TUBE ASSY.
	70923664	1	O-RING
	70921117	2	FLANGE, half, 1-1/4"
	70923192	4	CAPSCREW, 7/16" NC x 1-1/2"
24	70618024	1	CLIP
	70677008	1	WASHER, plain, 1/2"
25	70684078	1	TUBE ASSY.
	70923582	1	O-RING
	70921599	2	FLANGE, half, 2-1/2"
	70920583	4	CAPSCREW, 1/2" NC x 1-1/2"
26	70188771	1	GASKET
27	70054882	4	STUD
	70928460	4	WASHER, plain, 1/2"
	70910325	4	NUT, 1/2" NC

MEMO

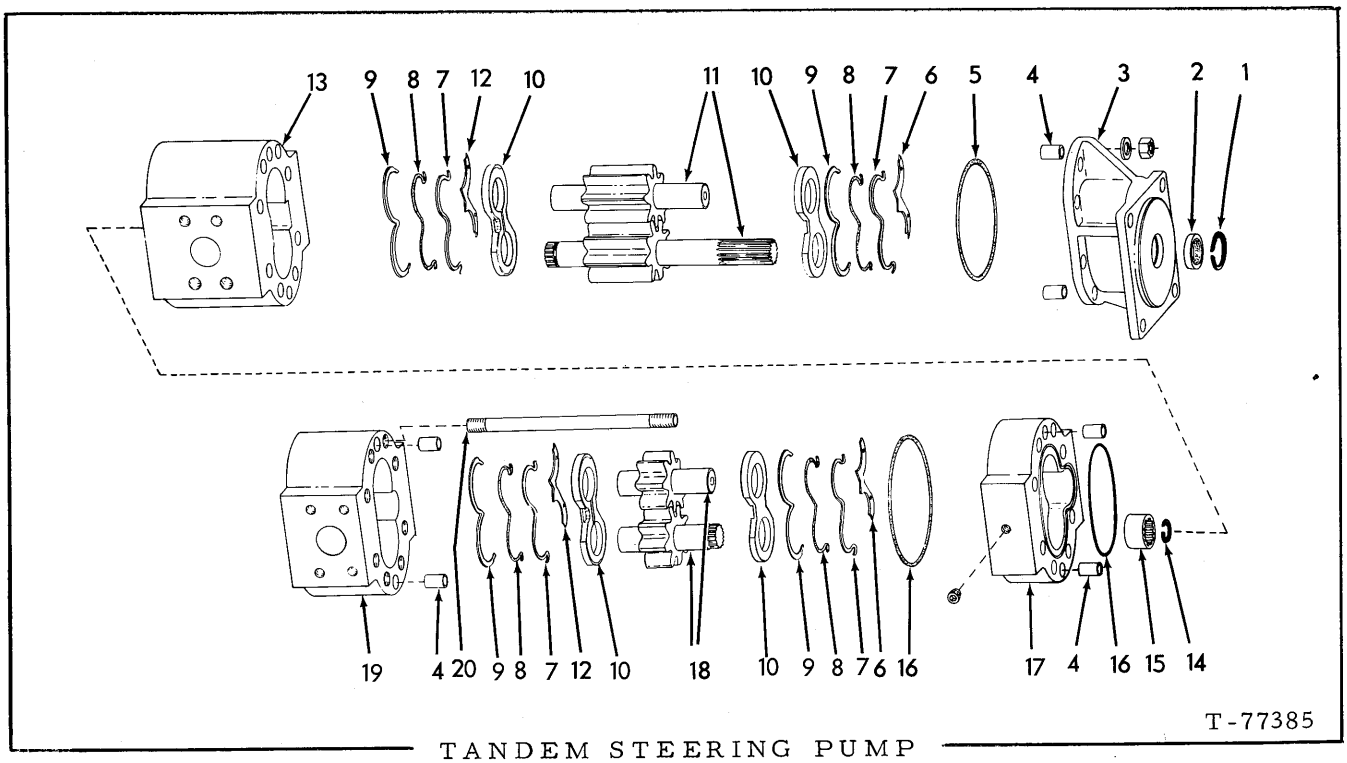

TANDEM STEERING PUMP

USAGE: See page 161.

ITEM	PART NO.	QTY.	DESCRIPTION
-	70683972	1	PUMP ASSY. (Includes items 1 thru 20)
1	70194166	1	RING, snap
2	70194165	1	SEAL, oil
3	73060058	1	FLANGE ASSY. (Includes bushings and ball plug)
4	70194132	6	DOWEL
5	70925655	1	O-RING
6	70665098	2	PLATE, isolation (sharp edges)
7	70665096	4	RING, back-up
8	70665097	4	O-RING, sealing
9	70665099	4	RETAINER
10	70658241	4	PLATE, wear
11	73060044	1	GEAR SET (Consists of 2 matched gears) (Includes shafts)
12	70665095	2	PLATE, isolation (rounded edges)
13	73060056	1	BODY ASSY. (Includes bushings)
14	70927691	1	RING, snap, gear coupling
15	70667594	1	COUPLING, gear

(Continued)

TANDEM STEERING PUMP (Continued)

ITEM	PART NO.	QTY.	DESCRIPTION
16	70684487	2	O-RING
17	73060055	1	BODY ASSY. (Includes bushings)
	70910231		PLUG, pipe, hex socket, 1/8" NPT
18	73060045	1	GEAR SET (Consists of 2 matched gears) (Includes shafts)
19	73060057	1	BODY ASSY. (Includes bushings and ball plug)
20	73060054	8	STUD, 1/2" NC x 1/2" NF x 8-1/2"
	70665930		NUT, 1/2" NF
	70651109		WASHER, plain

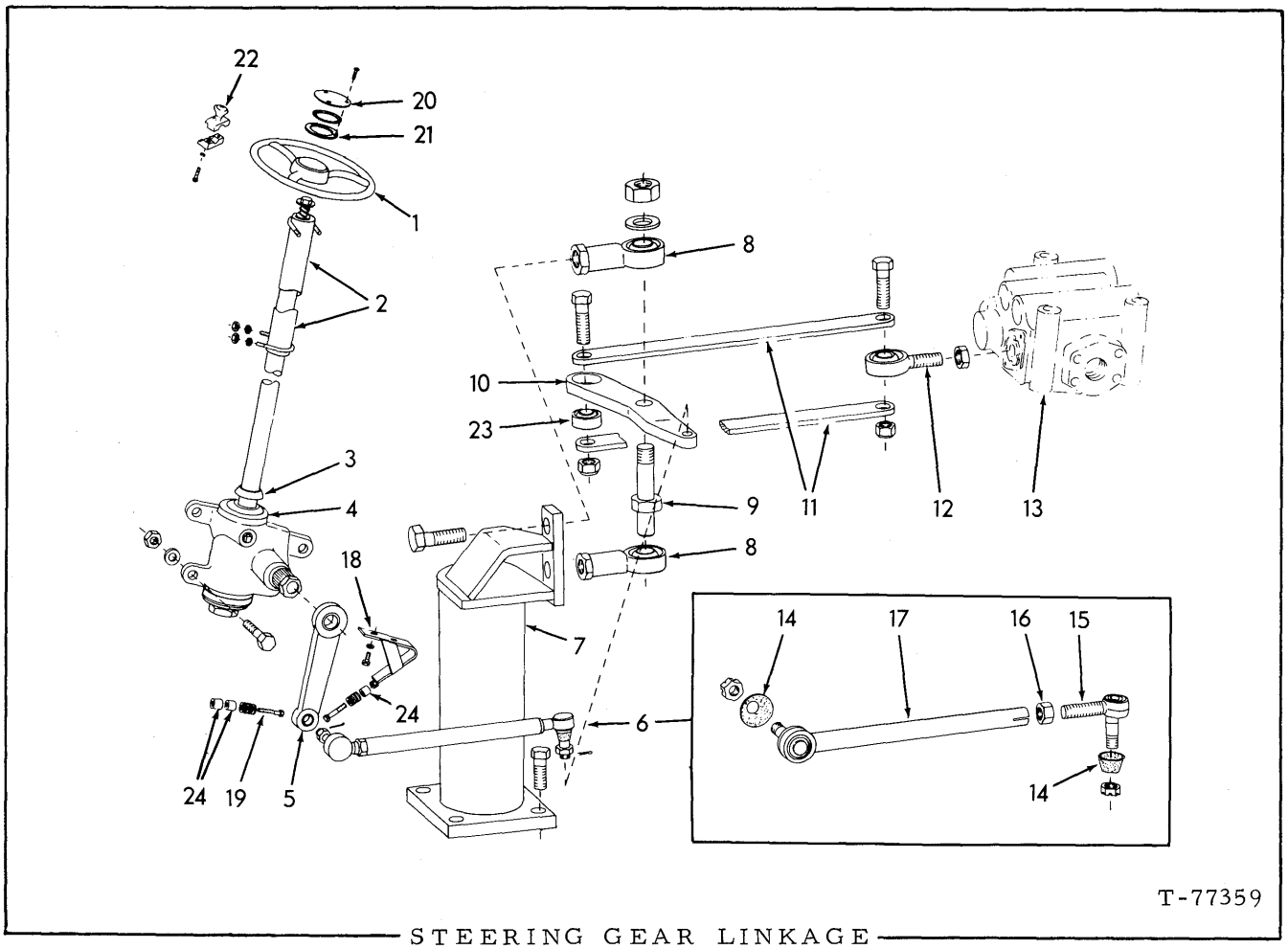

STEERING GEAR LINKAGE

ITEM	PART NO.	QTY.	DESCRIPTION
1	73043399	1	WHEEL, steering
2	70689182	1	SUPPORT ASSY. (Includes 2 U-BOLT)
	70928188	2	WASHER, plain, 1/2"
	70922304	2	NUT, 1/2" NC
3	70604289	1	SHIELD
4	--------	1	GEAR ASSY., steering (See STEERING GEAR ASSY.)
	70920585	3	CAPSCREW, 1/2" NC x 1-3/4"
	70928188	3	WASHER, plain, 1/2"
	70911028	3	NUT, 1/2" NC
5	70689173	1	ARM, pitman, steering gear
6	70685284	1	ROD ASSY., tie (Includes items 14 thru 17)
	70900806	1	PIN, cotter 1/8" x 1"
7	70689275	1	SUPPORT
	70921403	4	CAPSCREW, 5/8" NC x 2"
8	70689020	2	BEARING, rod end
	70928422	2	CAPSCREW, 1" NF x 2-1/2"

(Continued)

STEERING GEAR LINKAGE (Continued)

ITEM	PART NO.	QTY.	DESCRIPTION
9	70686093	1	SHAFT
	70678072	1	WASHER
	70919109	1	NUT, lock, 1" NF
10	70689316	1	ARM ASSY. (Includes item 23)
11	70689021	2	BAR
	70922744	2	CAPSCREW, 3/4" NC x 2-1/2"
	70916170	2	NUT, 3/4" NC
12	73048990	1	BEARING, rod end (Includes nut listed below)
	70910847	1	NUT, jam, 3/4" NF
13	--------	1	VALVE ASSY., steering (See STEERING VALVE ASSY.)
14	73048337	2	COVER, seal
15	73060168	1	SOCKET ASSY. (Includes 1 NUT 70910867 and item 14)
	70910867	1	NUT, slotted, 1/2" NF
16	73048335	1	NUT
17	73060155	1	LINK ASSY. (Includes 1 NUT 70910867 and item 14)
	70910867	1	NUT, slotted, 1/2" NF
18	70687860	1	ANGLE
	70921175	2	CAPSCREW, 1/2" NC x 1"
	70677008	2	WASHER, plain, 1/2"
	70920995	1	CAPSCREW, 3/8" NC x 2" (Pitman arm stop)
	70911115	9	WASHER, plain, 3/8" (Use as required)
19	70927446	1	CAPSCREW, 3/8" NC x 3" (Pitman arm stop)
	70911115	6	WASHER, plain, 3/8" (Use as required)
20	73048964	1	MEDALLION
	73048971	3	SCREW, self tapping, #8 x 1-1/4"
21	73048968	1	SPACER
	70923582	1	O-RING
22	73055371	1	KNOB (See Machinery Manual)(Special Equipment)
23	70672830	1	BEARING
24	73029626	3	TUBE (Not illustrated)

"ALWAYS GIVE MODEL AND SERIAL NUMBER WHEN ORDERING PARTS"

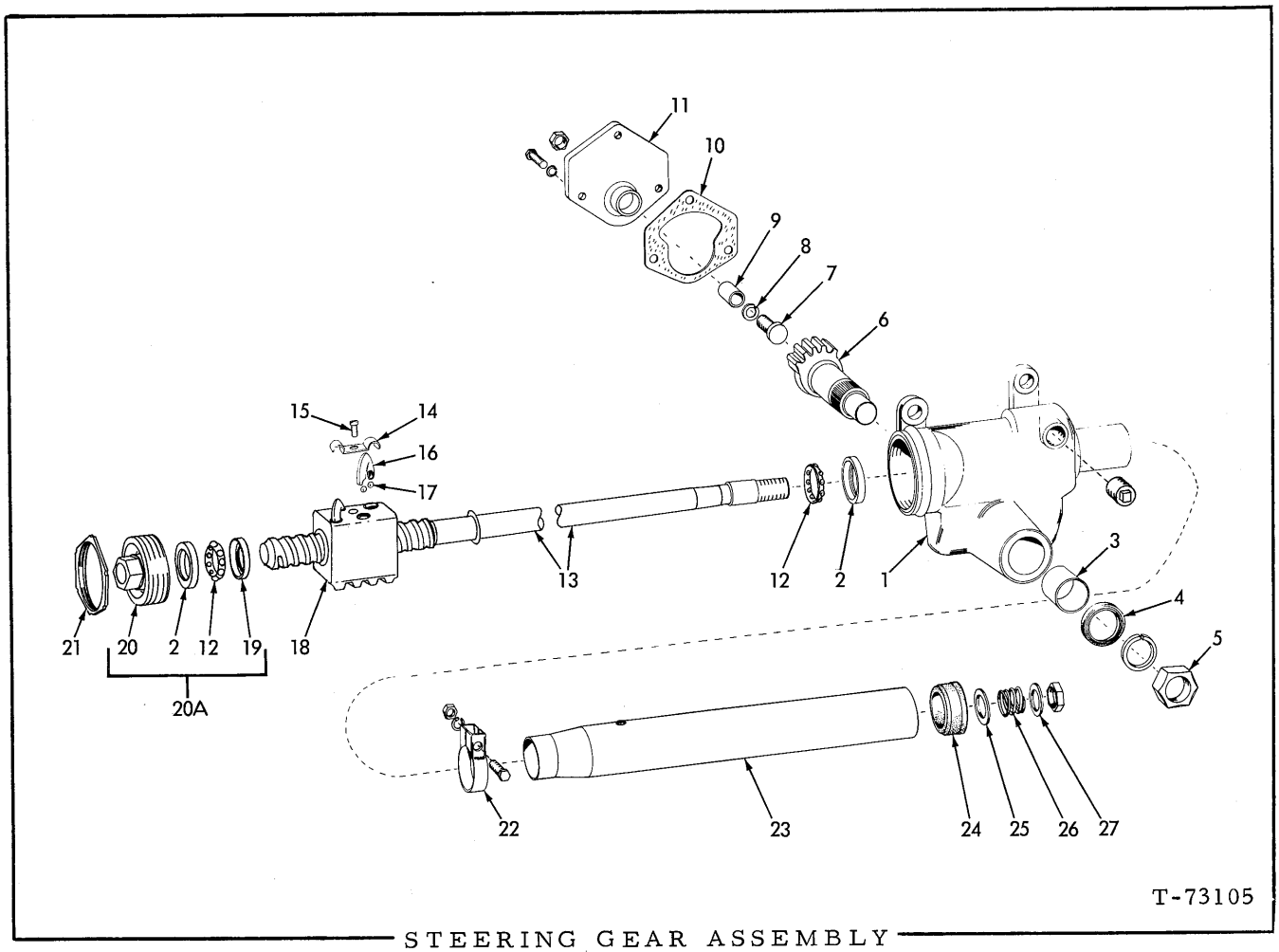

STEERING GEAR ASSEMBLY

USAGE: See page 166.

ITEM	PART NO.	QTY.	DESCRIPTION
-	73059193	1	GEAR ASSY., stg. (Includes items 1 thru 27)
1	73048099	1	HOUSING ASSY. (Includes 1 Cup 703048096 and item 3)
	70905261	1	PLUG, pipe, 1/2" NPT
2	73048096	2	CUP
3	73003893	1	BUSHING
4	73048276	1	SEAL
5	73044546	1	NUT
	70914727	1	LOCKWASHER, 7/8"
6	73057623	1	GEAR
7	73059196	1	ADJUSTER
	70910876	1	NUT, jam, 7/16" NF

(Continued)

STEERING GEAR ASSEMBLY (Continued)

ITEM	PART NO.	QTY.	DESCRIPTION
8	73044365	1	SHIM KIT (Consists of the following four shims)
	73003883	1	SHIM (.063" thick. Use as required)
	73003884	1	SHIM (.065" thick. Use as required)
	73003885	1	SHIM (.067" thick. Use as required)
	73003886	1	SHIM (.069" thick. Use as required)
9	73059198	1	BUSHING
10	73048271	1	GASKET
11	73059197	1	COVER ASSY. (Includes item 9)
	73059200	3	BOLT
12	73048095	2	BEARING ASSY.
13	73057624	1	SHAFT ASSY. (Includes items 14 thru 18)
14	73048278	1	CLAMP
15	73003933	1	BOLT ASSY. (Includes washer)
16	73048279	4	GUIDE
17	73006597	54	BALL
18	--------	1	NUT (Order item 13)
19	73048097	1	RETAINER
20	73048094	1	ADJUSTER
20a	73059204	1	ADJUSTER ASSY. (Includes 1 Cup 73058096, 1 Bearing 73058095 and items 19 and 20)
21	73059202	1	NUT
22	73048270	1	CLAMP
	73048269	1	BOLT
	70910233	1	NUT, 5/16" NF
	70904205	1	LOCKWASHER, 5/16"
23	73048754	1	JACKET ASSY.
24	73048753	1	BEARING ASSY. (Serviced only as a unit)
25	73003888	1	SEAT
26	73003894	1	SPRING
27	73003891	1	WASHER
	70913177	1	NUT, jam, 1/2" NF

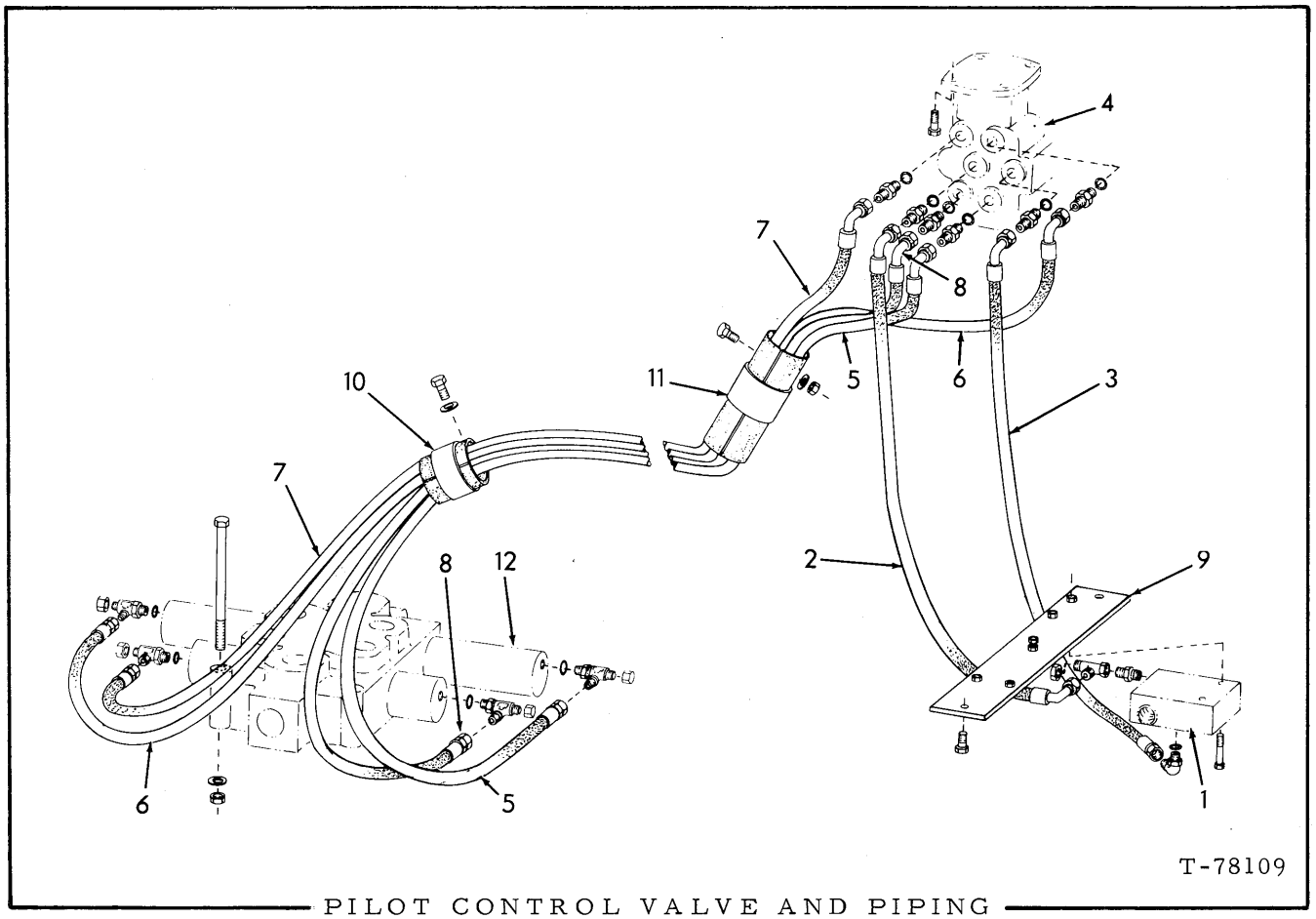

PILOT CONTROL VALVE AND PIPING

ITEM	PART NO.	QTY.	DESCRIPTION
1	---------	1	VALVE ASSY., pilot regulating (See page 177)
	70927446	2	CAPSCREW, 3/8" NC x 3"
2	70689325	1	HOSE ASSY.
	70921297	1	TEE, 3/8" tube, 9/16" st. thd.
	70922522	2	CONNECTOR, 3/8" tube (Includes 1 O-RING 70921882)
	70919552	1	CAP, 3/8"
3	73062471	1	HOSE ASSY. (Serviced only as a unit)
	70922522	1	CONNECTOR, 3/8" tube (Includes 1 O-RING 70921882)
	70921203	1	ELBOW, 3/4" tube, 1-1/16" st. thd. (Includes 1 O-RING 70921206)
	70925852	1	REDUCER, 3/4" to 3/8" tube
	70919197	1	NUT, 3/4" tube
4	--------	1	VALVE ASSY., pilot control (See page 180)
	70921076	4	CAPSCREW, 3/8" NC x 1-1/4"
5	70689334	1	HOSE ASSY. (Serviced only as a unit)
	70930806	1	TEE, 3/8" tube, 3/4" st. thd. (Includes 1 O-RING 70921349)
	70922522	1	CONNECTOR, 3/8" tube (Includes 1 O-RING 70921882)
	70919552	1	CAP, 3/8"

(Continued)

PILOT CONTROL VALVE AND PIPING (Continued)

ITEM	PART NO.	QTY.	DESCRIPTION
6	70689336	1	HOSE ASSY. (Serviced only as a unit)
	70930806	1	TEE, 3/8" tube, 3/4" st. thd. (Includes 1 O-RING 70921349)
	70919552	1	CAP, 3/8"
	70922522	1	CONNECTOR, 3/8" tube (Includes 1 O-RING 70921349)
7	70689335	1	HOSE ASSY. (Serviced only as a unit)
	70930806	1	TEE, 3/8" tube, 3/4" st. thd. (Includes 1 O-RING 70921349)
	70919552	1	CAP, 3/8"
	70922522	1	CONNECTOR, 3/8" tube (Includes 1 O-RING 70921349)
8	70689333	1	HOSE ASSY. (Serviced only as a unit)
	70930806	1	TEE, 3/8" tube, 3/4" st. thd. (Includes 1 O-RING 70921349)
	70919552	1	CAP, 3/8"
	70922522	1	CONNECTOR, 3/8" tube (Includes 1 O-RING 70921349)
9	70689184	1	PLATE
	70921175	2	CAPSCREW, 1/2" NC x 1"
10	70925622	1	CLAMP
	70689346	1	WRAP
	70921175	1	CAPSCREW, 1/2" NC x 1"
	70677008	1	WASHER, plain, 1/2"
11	70928439	1	CLAMP
	70689331	1	WRAP
	70920582	1	CAPSCREW, 1/2" NC x 1-1/4"
	70677008	1	WASHER, plain, 1/2"
	70911028	1	NUT, 1/2" NC
12	-------	1	VALVE ASSY., control (See page 182)
	70923807	4	CAPSCREW, 1/2" NC x 8"
	70926192	4	WASHER, plain, 1/2"
	70911028	4	NUT, 1/2" NC

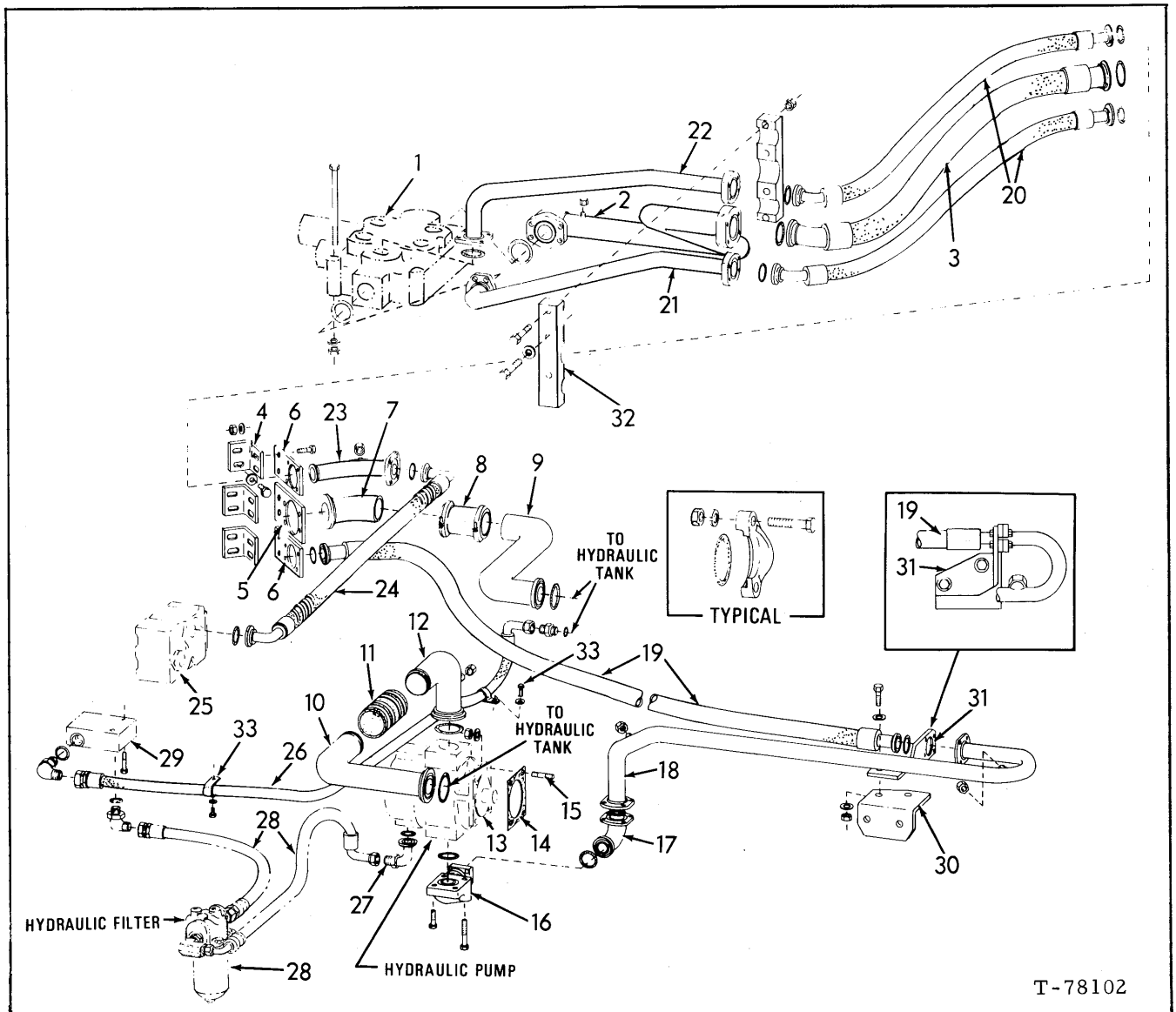

HYDRAULIC PUMP AND VALVE PIPING

ITEM	PART NO.	QTY.	DESCRIPTION
1	--------	1	VALVE ASSY., control (See page 182)
	70923807	4	CAPSCREW, 1/2" NC x 8"
	70926192	4	WASHER, plain, 1/2"
	70911028	4	NUT, 1/2" NC
2	70679686	1	TUBE ASSY.
	70924158	1	O-RING
	70920583	4	CAPSCREW, 1/2" NC x 1-1/2"
	70921467	1	CAP, 1/4" tube
	70919552	1	CAP, 3/8" tube
3	70673676	1	HOSE ASSY. (See page 6)
	70924158	2	O-RING
	70921558	4	FLANGE, half, 2" (Front end)
	70920583	4	CAPSCREW, 1/2" NC x 1-1/2" (Front end)
	70191827	2	FLANGE, half, 2" (Rear end)
	70922526	4	CAPSCREW, 1/2" NC x 2-1/2"
	70911028	4	NUT, 1/2" NC

(Continued)

ITEM	PART NO.	QTY.	DESCRIPTION
4	70684539	3	BRACKET
	70920583	6	CAPSCREW, 1/2" NC x 1-1/2"
	70677008	6	WASHER, plain, 1/2"
5	70682227	1	PLATE
	70920585	2	CAPSCREW, 1/2" NC x 1-3/4"
	70677008	2	WASHER, plain, 1/2"
	70911028	2	NUT, 1/2" NC
6	70682226	2	PLATE
	70920585	4	CAPSCREW, 1/2" NC x 1-3/4"
	70677008	4	WASHER, plain, 1/2"
	70911028	4	NUT, 1/2" NC
7	70684538	1	TUBE
	70921117	2	FLANGE, half, 1-1/4"
	70924192	1	O-RING
	70928525	4	CAPSCREW, 7/16" NC x 1-1/8"
8	70682190	1	JOINT ASSY. (Serviced only as a unit)
9	70684234	1	TUBE ASSY.
	70921599	2	FLANGE, half, 2-1/2"
	70923582	1	O-RING
	70920583	4	CAPSCREW, 1/2" NC x 1-1/2"
10	70684077	1	TUBE ASSY.
	70921599	2	FLANGE, half, 2-1/2"
	70923582	1	O-RING
	70920583	4	CAPSCREW, 1/2" NC x 1-1/2"
11	70675174	1	HOSE
	70921915	4	CLAMP, adjustable
12	70684076	1	TUBE ASSY.
	70921599	2	FLANGE, half, 2-1/2"
	70923582	1	O-RING
	70920583	4	CAPSCREW, 1/2" NC x 1-1/2"
	70921467	1	CAP, 1/4" tube
13	--------	1	PUMP ASSY., hydraulic (See page 178)
14	70188771	1	GASKET
15	70054882	4	STUD
	70928460	4	WASHER, plain, 1/2"
	70910325	4	NUT, 1/2" NC
16	70684519	1	ELBOW ASSY.
	70924193	1	O-RING
	70920583	2	CAPSCREW, 1/2" NC x 1-1/2" } (To Pump)
	70922510	2	CAPSCREW, 1/2" NC x 2-3/4" } (To Pump)
17	70930701	1	ELBOW
	70921117	2	FLANGE, half, 1-1/4"
	70921569	8	CAPSCREW, 7/16" NC x 1-1/4"
	70924192	2	O-RING
18	70685144	1	TUBE ASSY.
	70922195	1	CAP, spud, 1"
	70921467	1	CAP, spud, 1/4" tube
18a	70689185	1	HOSE ASSY. (from tube 70679688 to Pilot Regulating Valve) (Not Illustrated)
	70923643	1	ELBOW, 1/4" tube x 7/16" st. thd.

(Continued)

HYDRAULIC PUMP AND VALVE PIPING (Continued)

ITEM	PART NO.	QTY.	DESCRIPTION
19	70684882	1	HOSE ASSY. (Serviced only as a unit)
	70186848	2	FLANGE, half, 1-1/4" (Use to connect item 18)
	70921117	2	FLANGE, half, 1-1/4"
	70924192	2	O-RING
	70928391	4	CAPSCREW, 7/16" NC x 2-1/4"
	70911027	4	NUT, 7/16" NC
20	70684878	2	HOSE ASSY. (Serviced only as a unit)
	70921117	8	FLANGE, half, 1-1/4" (Front end)
	70186848	4	FLANGE, half, 1-1/4" (Rear end)
	70924192	4	O-RING
	70928391	8	CAPSCREW, 7/16" NC x 2-1/4"
	70923192	4	CAPSCREW, 7/16" NC x 1-1/2"
	70911027	8	NUT, 7/16" NC
	70187300	1	PLATE
21	70682264	1	TUBE ASSY.
	70920583	4	CAPSCREW, 1/2" NC x 1-1/2"
	70924193	1	O-RING
22	70679684	1	TUBE ASSY.
	70924193	1	O-RING
	70920583	4	CAPSCREW, 1/2" NC x 1-1/2"
23	70685143	1	TUBE ASSY.
	70921467	1	CAP, spud, 1/4" tube
24	70684881	1	HOSE ASSY. (Serviced only as a unit)
	70924192	2	O-RING
	70921117	4	FLANGE, half, 1-1/4"
	70921569	8	CAPSCREW, 7/16" NC x 1-1/4"
	70914678	8	LOCKWASHER, 7/16"
25	--------	1	VALVE ASSY., demand (See page 157)
26	70689183	1	HOSE ASSY. (See page 6)
	70921203	1	ELBOW, 90°, 3/4" tube (Includes 1 O-RING 70921349)
	70921217	1	CONNECTOR, 3/4" tube (Includes 1 O-RING 70921349)
27	--------	1	ADAPTER (See HYDRAULIC FILTER & PIPING GROUP)
28	--------	-	HOSE ASSY. (See HYDRAULIC FILTER & PIPING GROUP)
	--------	-	FILTER ASSY. (See HYDRAULIC FILTER & PIPING GROUP)
29	--------	1	VALVE ASSY., pilot regulating (See page 177)
	70927446	2	CAPSCREW, 3/8" NC x 3"
30	70690164	1	ANGLE (See TRANSMISSION ASSY. for fasteners)
31	70690792	1	ANGLE
	70921403	2	CAPSCREW, 5/8" NC x 2"
	70677010	4	WASHER, plain, 5/8"
	70911029	2	NUT, 5/8" NC
32	70682256	2	CLAMP
	70921567	4	CAPSCREW, 1/2" NC x 4"
	70677008	2	WASHER, plain, 1/2"
	70911028	2	NUT, 1/2" NC
33	70927201	2	CLIP
	70677006	2	WASHER, plain, 3/8"
	70922763	2	CAPSCREW, 3/8"

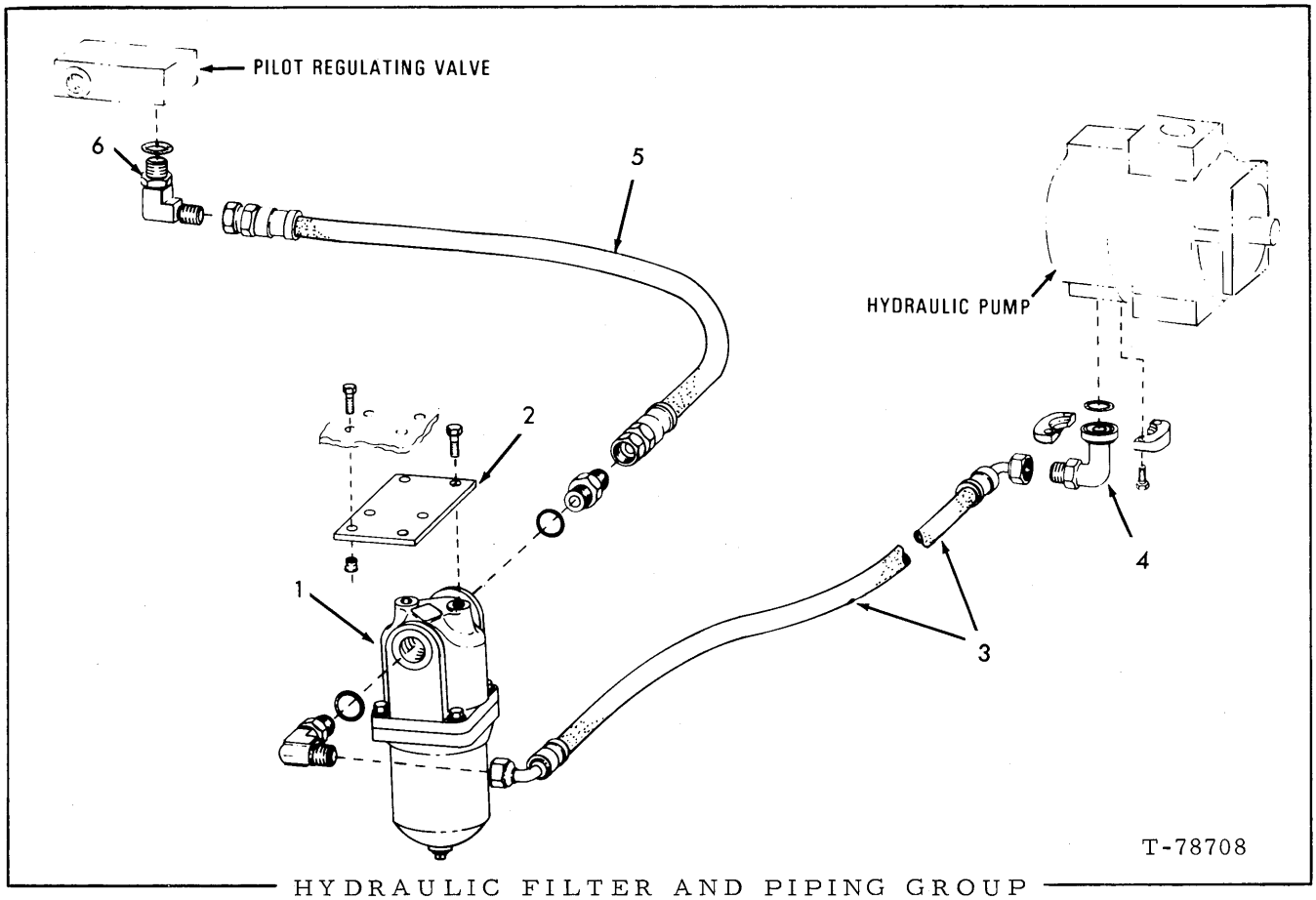

HYDRAULIC FILTER AND PIPING GROUP

ITEM	PART NO.	QTY.	DESCRIPTION
1	70679514	1	FILTER ASSY., hydraulic oil (See page 176)
	70920582	2	CAPSCREW, 1/2" NC x 1-1/4"
2	73063025	1	BRACKET
	70922763	4	CAPSCREW, 3/8" NC x 1"
	73057569	4	NUTSERT, 3/8" NC
3	73062470	1	HOSE ASSY. (See HOSE PARTS)
	70926598	1	ELBOW ASSY., 3/4" tube, 1-5/8" straight thread (Includes 1 O-RING 70921235)
4	70690950	1	ADAPTER ASSY. (Includes 1 O-RING 70924110)
	70921115	2	FLANGE, half, 3/4"
	70921076	4	CAPSCREW, 3/8" NC x 1-1/4"
5	73062469	1	HOSE ASSY. (See HOSE PARTS)
	70924182	1	CONNECTOR, reducing, 3/4" tube, 1-5/8" to 1-1/16" (Includes 1 O-RING 70921235)
6	70921203	1	ELBOW ASSY., 3/4" tube (Includes 1 O-RING 70921349)

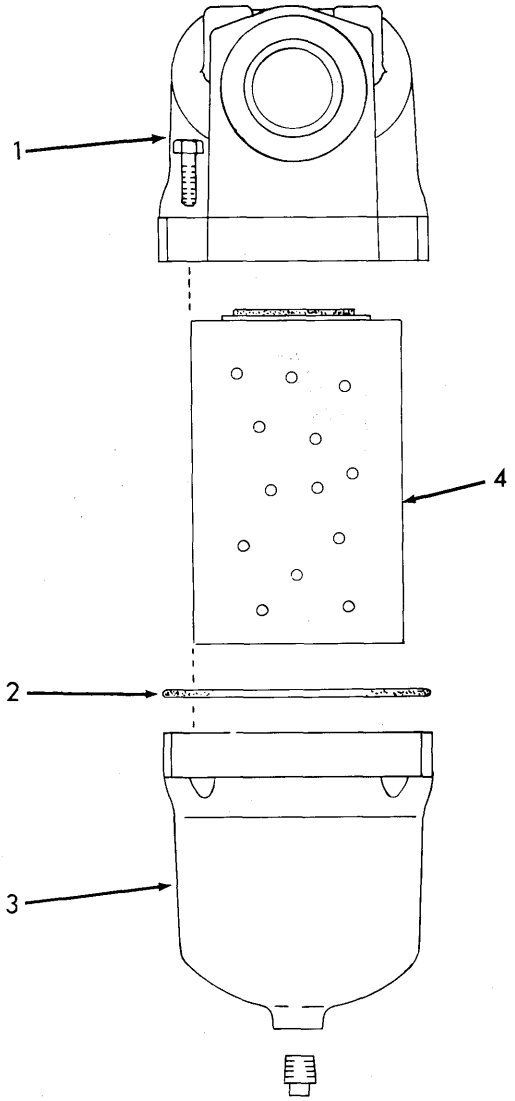

T-75221

HYDRAULIC OIL FILTER

ITEM	PART NO.	QTY.	DESCRIPTION
			NOTE: See page 175
-	70679514	1	FILTER ASSY., hydraulic (Includes items 1 thru 4)
1	70666243	1	HEAD ASSY., filter
	70920648	4	CAPSCREW, 7/16" NC x 2"
2	70666244	1	SEAL, housing
3	70666245	1	HOUSING, filter
	70901653	1	PLUG, pipe, sq.hd., 3/8"
4	70679513	1	ELEMENT KIT (Includes ELEMENT and item 2)

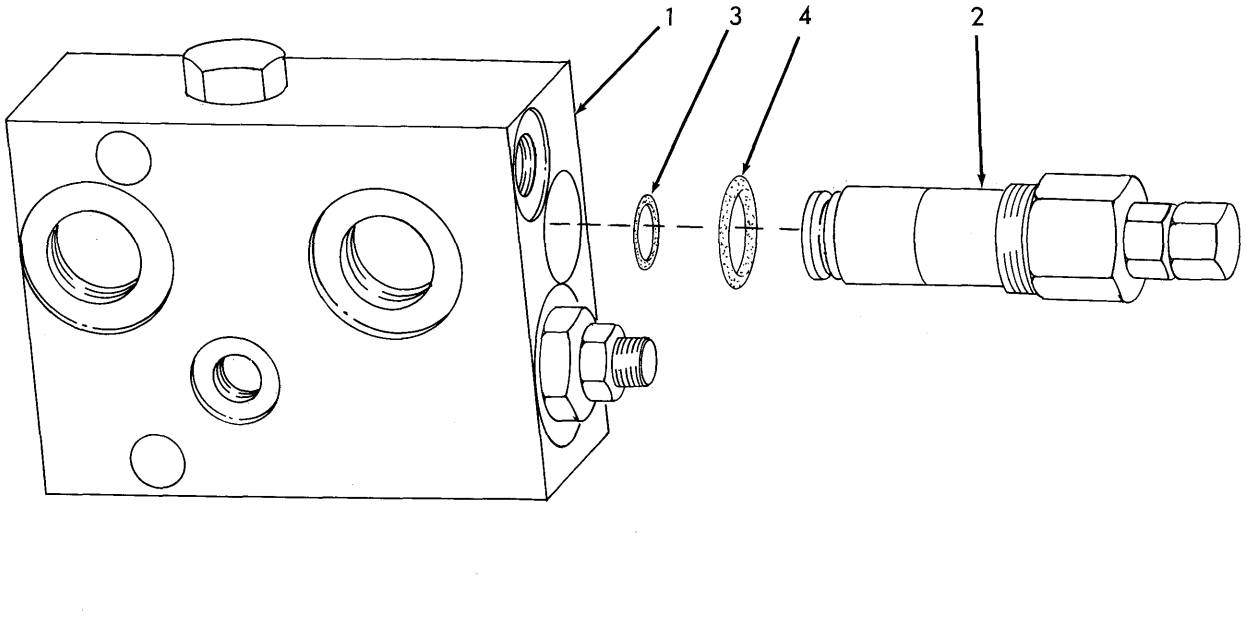

T-78005

PILOT REGULATING VALVE

USAGE: See page 174

ITEM	PART NO.	QTY.	DESCRIPTION
-	70680517	1	VALVE ASSY., pilot regulating (Includes items 1 thru 4)
1	--------	1	BODY (Order Valve Assy.)
2	73060170	1	CARTRIDGE ASSY. (Serviced only as a unit)
3	70930357	1	O-RING
4	70923851	1	O-RING

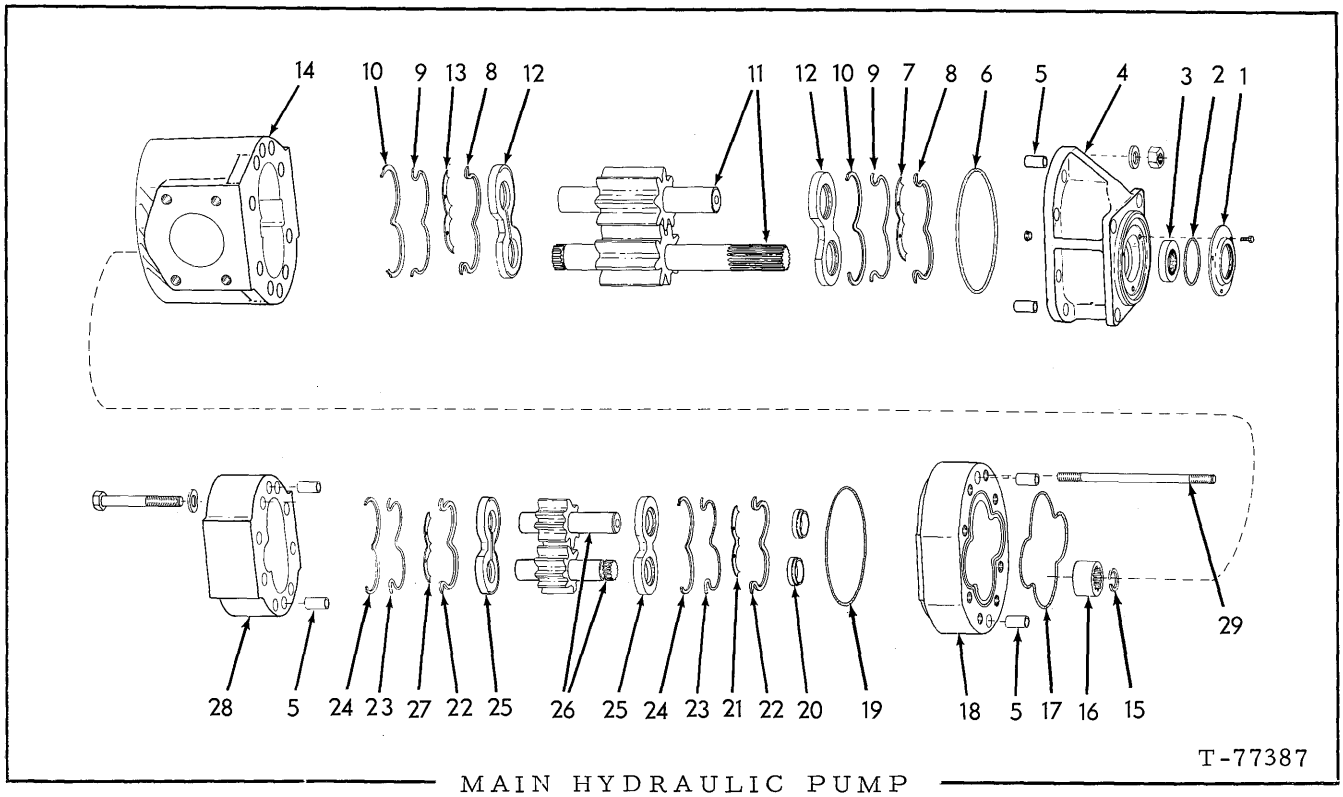

MAIN HYDRAULIC PUMP

USAGE: See page 173.

ITEM	PART NO.	QTY.	DESCRIPTION
-	70683973	1	PUMP ASSY. (Includes items 1 thru 34 as indicated)
1	73046983	1	RETAINER
	70928138	3	CAPSCREW, 1/4" NC x 5/8"
2	70194136	1	O-RING
3	70671754	1	SEAL, oil
4	70686621	1	FLANGE ASSY. (Includes bushings)
	70910231	1	PLUG, pipe, hex-socket, 1/8" NPT
5	70194132	6	DOWEL
6	70923824	1	O-RING
7	70194130	1	PLATE, isolation (sharp edges)
8	70671753	2	RING, back-up (teflon)
9	70668452	2	O-RING (rubber)
10	73046973	2	RETAINER (nylon)
11	73060050	1	REPAIR SET (Consists of 2 matched gears) (Includes shafts)
12	70195846	2	PLATE
13	70194129	1	PLATE, isolation (rounded edges)
14	73060060	1	BODY ASSY. (Includes bushings)

(Continued)

MAIN HYDRAULIC PUMP (Continued)

ITEM	PART NO.	QTY.	DESCRIPTION
15	70927691	1	RING
16	70671751	1	COUPLING
17	70929724	1	O-RING
18	70664298	1	PLATE ASSY., center (Includes bushings)
19	70684487	1	O-RING
20	70664694	2	RING
21	70665098	1	PLATE, isolation (sharp edges)
22	70665096	2	RING
23	70665097	2	O-RING
24	70665099	2	RETAINER
25	73060061	2	PLATE
26	73060051	1	REPAIR SET (Consists of 2 matched gears) (Includes shafts)
27	70665095	1	PLATE, isolation (rounded edges)
28	73060062	1	BODY ASSY. (Includes bushings and ball plug)
	70921539	8	CAPSCREW, 1/2" NC x 3-1/2"
	70651109	8	WASHER
29	73060059	8	STUD (7-1/4" long)
	70686625	8	NUT, 5/8" NF
	73046979	8	WASHER, plain

"ALWAYS GIVE MODEL AND SERIAL NUMBER WHEN ORDERING PARTS"

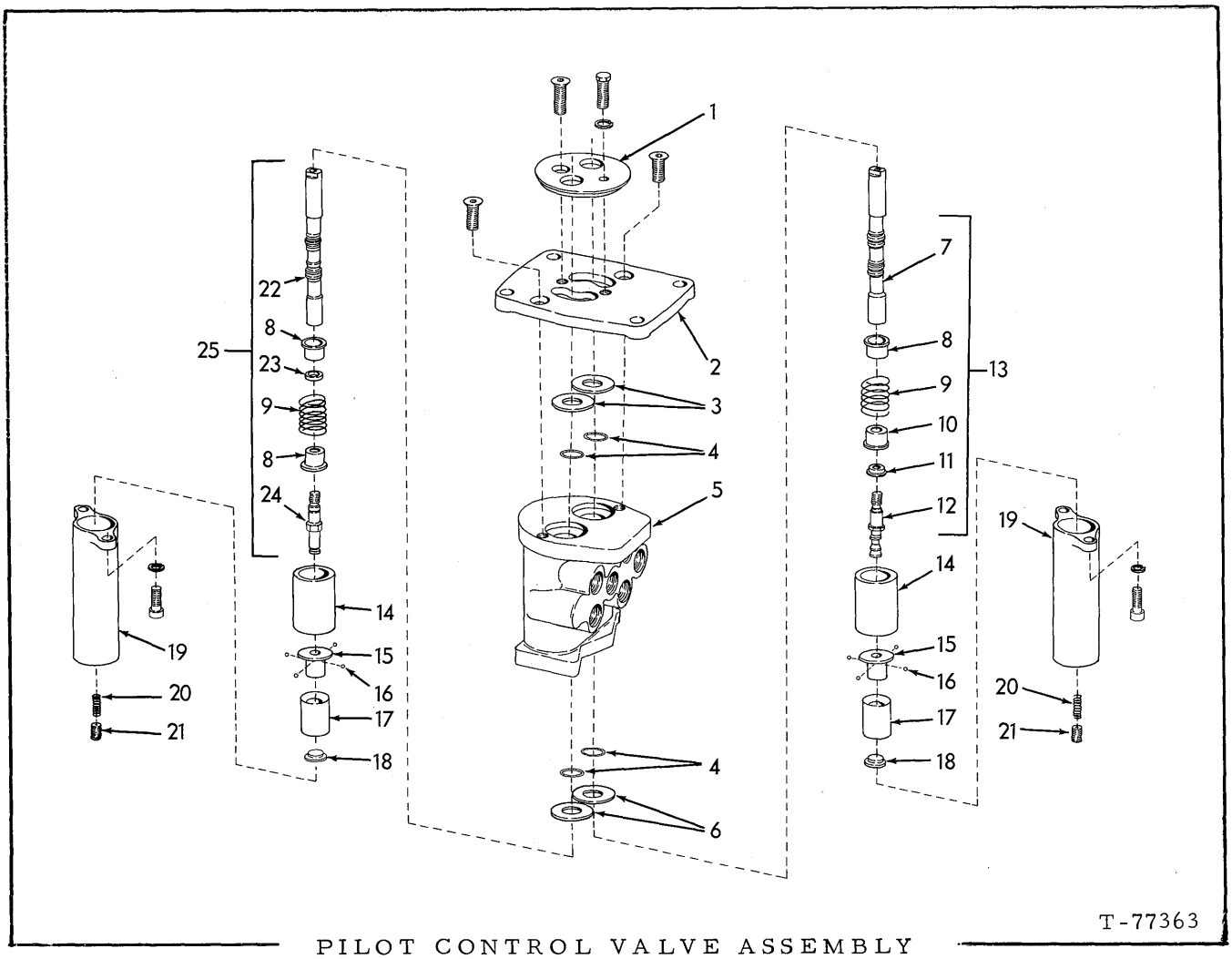

PILOT CONTROL VALVE ASSEMBLY

USAGE: See page 170.

ITEM	PART NO.	QTY.	DESCRIPTION
-	70674930	1	VALVE ASSY., pilot control (Includes items 1 thru 25)
1	73060102	1	PLATE, retainer
	70930227	1	SCREW, machine, 3/8" NC x 1" (Flat head hex-socket)
	70921566	1	CAPSCREW, 5/16" NC x 1", hex-hd.
	70919311	1	LOCKWASHER, 5/16"
2	73060103	1	FLANGE, mounting
3	73060099	2	RETAINER, seal
4	70923645	4	O-RING
5	--------	1	HOUSING (Order VALVE ASSEMBLY)
	70930228	2	SCREW, machine, 3/8" NC x 3/4" (Flat head hex-socket)
6	73060101	2	RETAINER, seal
7	--------	1	PLUNGER (Order item 13)
8	73060087	3	RETAINER, spring

(Continued)

PILOT CONTROL VALVE ASSEMBLY (Continued)

ITEM	PART NO.	QTY.	DESCRIPTION
9	73060090	2	SPRING
10	73060092	1	RETAINER, spring
11	73060094	1	RESTRICTOR, travel
12	73060093	1	CAP, detent
13	73060091	1	PLUNGER ASSY. (Includes items 7 thru 12)
14	73060105	2	SPACER
15	73060096	2	RETAINER, ball
16	73105944	8	BALL
17	73060097	2	RETAINER, ball
18	73060095	2	PLUG
19	73060098	2	COVER, detent
	70925640	4	CAPSCREW, 5/16" NC x 3/4" (Hex-socket head)
	70919311	4	LOCKWASHER, 5/16"
20	73060107	2	SPRING
21	73060108	2	SCREW, adjusting, hex-socket
22	--------	1	PLUNGER (Order item 25)
23	73060089	1	SPACER
24	73060088	1	CAP, detent
25	73060086	1	PLUNGER ASSY. (Includes item 8, 9, and 22 thru 24)

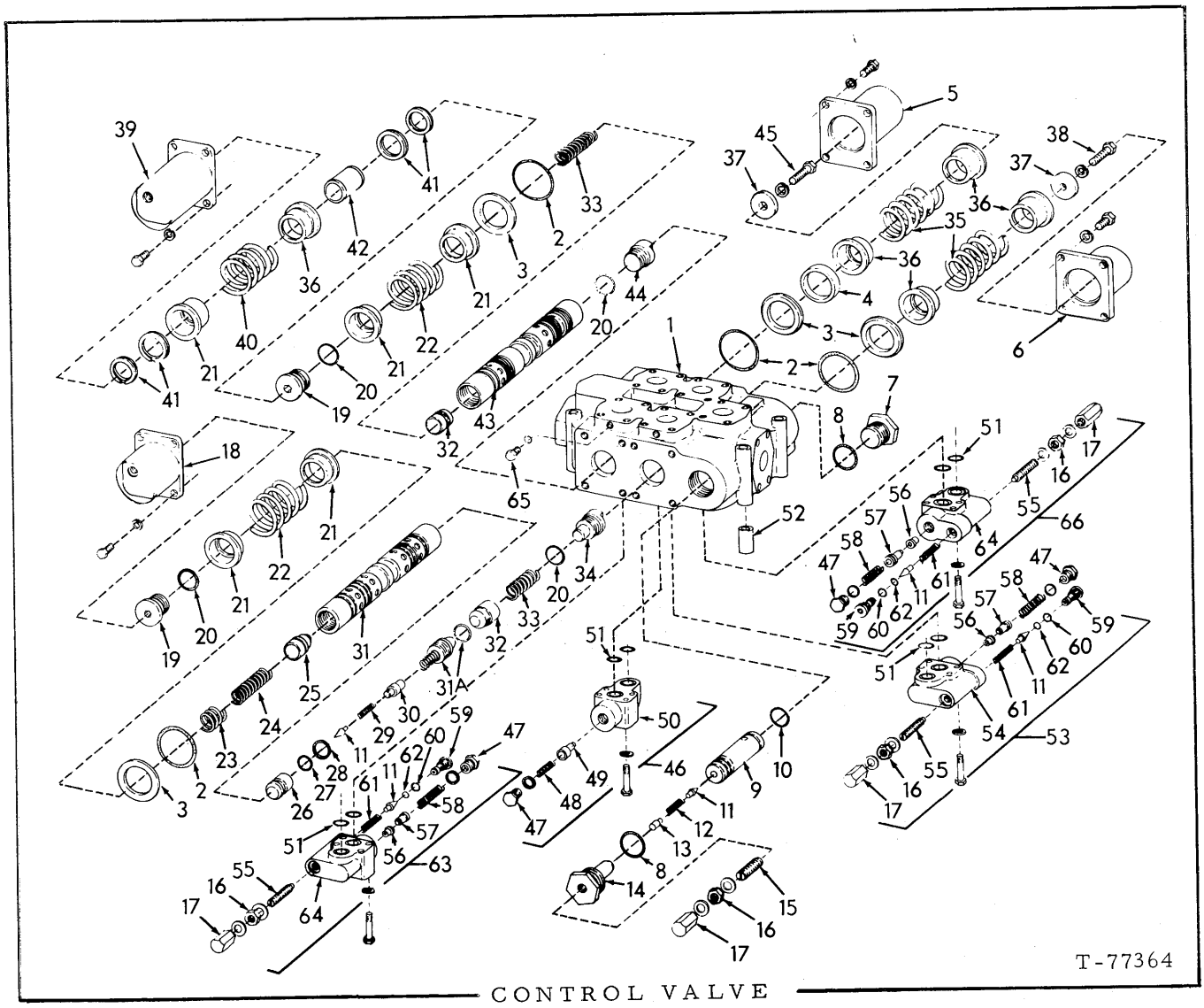

CONTROL VALVE

USAGE: See page 172.

ITEM	PART NO.	QTY.	DESCRIPTION
-	70674929	1	VALVE ASSEMBLY (Includes items 1 thru 65)
1	--------	1	HOUSING (Order complete VALVE ASSEMBLY)
2	70923583	4	O-RING
3	73060139	4	PLATE, retainer
4	73060140	1	SPACER
5	73060138	1	COVER, spring
	70921422	4	CAPSCREW, 5/16" NC x 1-1/8"
	70919311	4	LOCKWASHER, 5/16"
6	73060136	1	COVER, spring
	70921422	4	CAPSCREW, 5/16" NC x 1-1/8"
	70919311	4	LOCKWASHER, 5/16"
7	70671667	1	CAP

(Continued)

ITEM	PART NO.	QTY.	DESCRIPTION	
8	70923577	2	O-RING	
9	70671663	1	VALVE ASSY., relief (Serviced as assembly only) (Includes item 10)	
10	70924192	1	O-RING	
11	73027397	5	POPPET	
12	73027401	1	SPRING	
13	70671662	1	GUIDE	
14	70671661	1	CAP	
15	70615630	1	SCREW, adjusting, 1/2" NF	
16	70913177	4	NUT, jam, 1/2" NF	
17	73033939	4	NUT, acorn, 1/2" NF	
	70191995	8	WASHER, 1/2"	
18	73060135	1	COVER, spring	
	70921422	4	CAPSCREW, 5/16" NC x 1-1/8"	
	70919311	4	LOCKWASHER, 5/16"	
19	73060110	2	CAP	
20	70923813	4	O-RING	
21	73060112	5	RETAINER, spring	
22	73060111	2	SPRING	
23	73010857	1	SPRING	
24	73060120	1	SPRING	
25	73060121	1	CHECK	
26	--------	1	CHECK	(Order complete VALVE ASSY.)
27	--------	1	O-RING	
28	--------	1	RING, seal	
29	--------	1	SPRING	
30	--------	1	CAP	
31	--------	1	PLUNGER ASSY.	
31a	--------	1	CAP ASSY.	
32	73060114	2	CHECK	
33	73060113	2	SPRING	
34	73060129	1	CAP	
35	73060116	2	SPRING	
36	73060115	5	RETAINER, spring	

(Continued)

ITEM	PART NO.	QTY.	DESCRIPTION
37	73060118	2	PLATE, retainer
38	73060130	1	CAPSCREW (Special) 1/2" NC x 2-1/2"
	70912441	1	LOCKWASHER, 1/2"
39	73060137	1	COVER, spring
	70921422	4	CAPSCREW, 5/16" NC x 1-1/8"
	70919311	4	LOCKWASHER, 5/16"
40	73060134	1	SPRING
41	73060133	4	RING, retaining
42	73060132	1	SPACER
43	--------	1	PLUNGER (Order complete VALVE ASSEMBLY)
44	73060117	1	CAP
45	70920585	1	CAPSCREW, 1/2" NC x 1-3/4"
	70912441	1	LOCKWASHER, 1/2"
46	73103496	1	CHECK ASSY. (Includes items 47 thru 51)
	73103503	4	CAPSCREW, 3/8" NC x 2-1/4"
	70910287	4	LOCKWASHER, 3/8"
47	73103498	4	CAP
	70926806	4	RING, square
48	73103497	1	SPRING
49	73100093	1	CHECK
50	-------	1	HOUSING (Order item 46)
51	70923575	8	O-RING
52	73060145	4	SPACER
53	73060144	1	OVERLOAD ASSY. (Includes items 11, 16, 17, 47, 51, and 54 thru 62)
	73103503	4	CAPSCREW, 3/8" NC x 2-1/4"
	70910287	4	LOCKWASHER, 3/8"
54	-------	1	HOUSING (Order item 53)
55	73060142	3	SCREW, adjusting, 1/2" NF
56	73100097	3	SEAT
57	73105243	3	POPPET
58	73100099	3	SPRING
59	73100095	3	SEAT
60	73103230	3	SEAL
61	73060143	3	SPRING
62	73103229	3	SEAL

CONTROL VALVE (Continued)

ITEM	PART NO.	QTY.	DESCRIPTION
63	73060141	1	OVERLOAD ASSY. (Includes items 11, 16, 17, 47, 51, 55 thru 62, and 64)
	73103503	4	CAPSCREW, 3/8" NC x 2-1/4"
	70910287	4	LOCKWASHER, 3/8"
64	--------	1	HOUSING (Order item 63)
65	70925940	5	PLUG
	70921883	5	O-RING
66	73062578	1	OVERLOAD ASSY. (Includes items 11, 16, 17, 47, 51, 55 thru 62, and 64)
	73103503	4	CAPSCREW, 3/8" NC x 2-1/4"
	70910287	4	LOCKWASHER, 3/8"

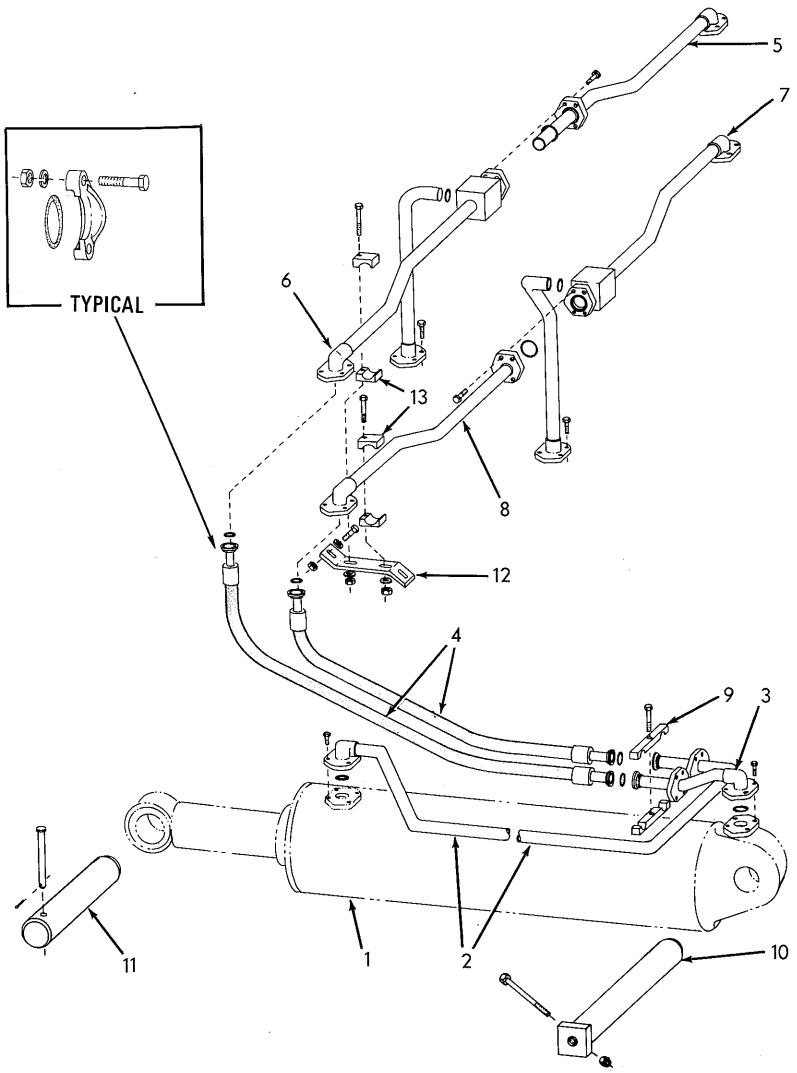

LIFT CYLINDER PIPING

ITEM	PART NO.	QTY.	DESCRIPTION
1	--------	2	CYLINDER ASSY. (See page 188)
2	70672929	2	TUBE ASSY.
	70921076	8	CAPSCREW, 3/8" NC x 1-1/4"
	70924200	2	O-RING
	70910287	8	LOCKWASHER, 3/8"
3	70672926	1	TUBE ASSY.
	70929231	8	CAPSCREW, 7/16"NC x 1-1/4"
	70924192	1	O-RING
4	70684876	4	HOSE ASSY.
	70921117	16	FLANGE, half, 1-1/4"
	70924192	8	O-RING
	70921569	24	CAPSCREW, 7/16" NC x 1-1/4"
	70924180	8	CAPSCREW, 3/16" NC x 2"

(Continued)

LIFT CYLINDER PIPING (Continued)

ITEM	PART NO.	QTY.	DESCRIPTION
5	70679690	1	TUBE ASSY.
	70924180	4	CAPSCREW, 7/16" NC x 2"
	70924192	1	O-RING
6	70679689	1	TUBE ASSY.
	70920583	4	CAPSCREW, 1/2" NC x 1-1/2"
	70924193	1	O-RING
7	70679687	1	TUBE ASSY.
	70920583	4	CAPSCREW, 1/2" NC x 1-1/2"
	70924193	1	O-RING
8	70679688	1	TUBE ASSY.
	70924180	4	CAPSCREW, 7/16" NC x 2"
	70924192	1	O-RING
9	70672923	4	CLAMP
	70922510	2	CAPSCREW, 1/2" NC x 2-3/4"
10	70672262	2	PIN
	70927181	2	CAPSCREW, 5/8" NC x 7"
	70914501	2	NUT, lock, 5/8" NC
11	70671575	2	PIN
	73052863	2	PIN, locking
	70900811	2	PIN, cotter, 3/16" x 1-1/2"
12	70682484	2	BRACKET
	70921556	4	CAPSCREW, 1/2" NC x 2"
	70677008	4	WASHER, plain, 1/2"
	70911028	4	NUT, 1/2" NC
13	70682483	8	CLAMP
	70926157	4	CAPSCREW, 1/2" NC x 3-3/4"
	70677008	4	WASHER, plain, 1/2"
	70911028	4	NUT, 1/2" NC

"ALWAYS GIVE MODEL AND SERIAL NUMBER WHEN ORDERING PARTS"

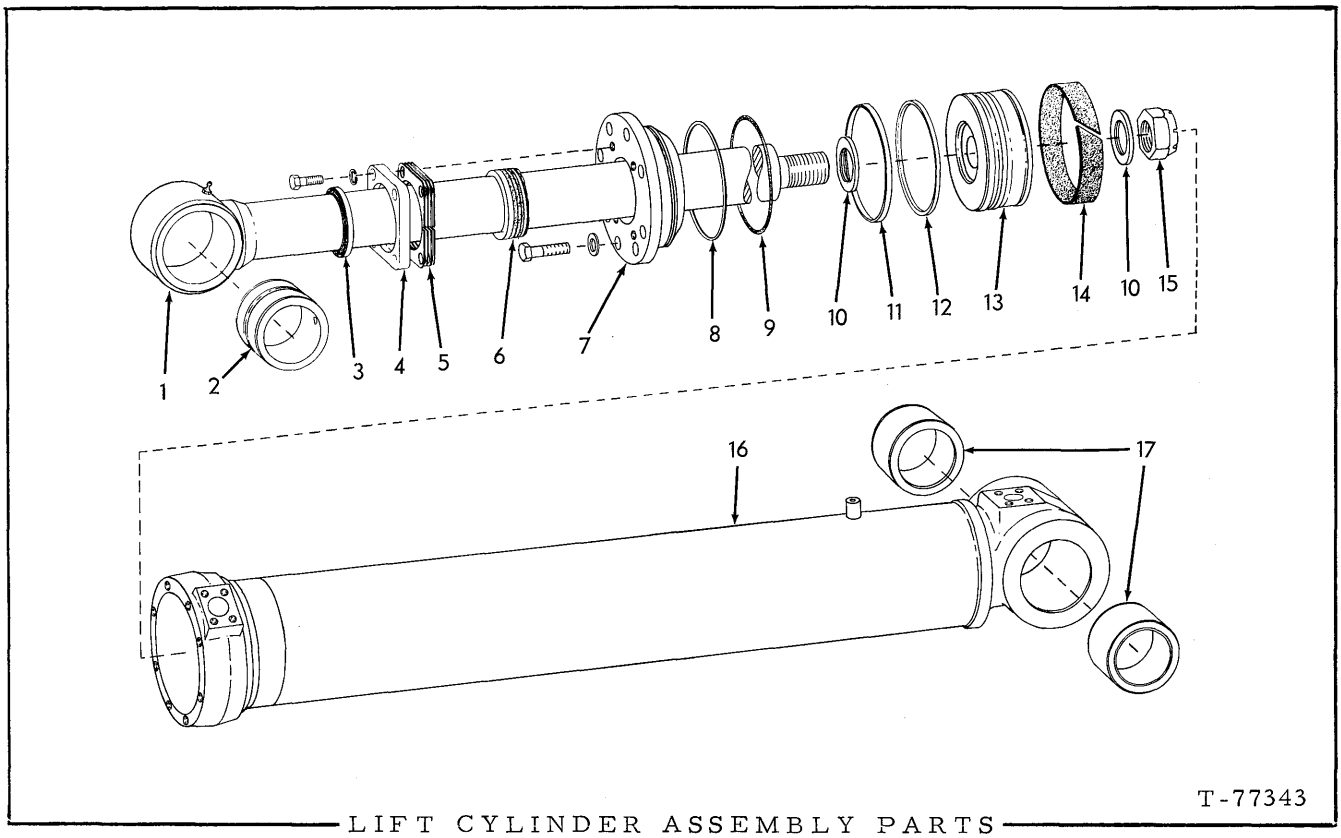

LIFT CYLINDER ASSEMBLY PARTS

ITEM	PART NO.	QTY.	DESCRIPTION
			NOTE: Quantities indicated are for one (1) cylinder only.
-	73059360	1	CYLINDER ASSY., left & right (Includes items 1 thru 17)
1	73061054	1	ROD ASSY., piston (Includes item 2)
2	73061232	1	BUSHING, rod
3	73052243	1	WIPER, rod
4	73058377	1	PLATE, end, piston wiper
	70915987	4	CAPSCREW, 1/2" NC x 1-3/4"
	70904208	4	LOCKWASHER, 1/2"
5	73054566	4	SHIM, adjusting (.0299" thick)
6	73053988	1	PACKING ASSY., rod
7	73059386	1	HEAD
	70923901	8	CAPSCREW, 3/4" NC 2-3/4"
	70928358	8	WASHER, plain (Hardened)
8	73063372	1	RING, back-up
9	70927171	1	O-RING, sealing
10	73053583	2	SPACER
11	73053715	1	RING, outer

(Continued)

LIFT CYLINDER ASSEMBLY PARTS (Continued)

ITEM	PART NO.	QTY.	DESCRIPTION
12	70926822	1	RING, inner, piston
13	73053713	1	PISTON
14	73053716	1	RING, wear
15	70926829	1	NUT, safety 2-1/2" NF
16	73059305	1	TUBE ASSY. (Includes item 17)
17	73055525	2	BUSHING
-	73056494	1	REPAIR KIT, cylinder (Consists of items 3, 5, 6 8, 9, 11, 12 & 14)

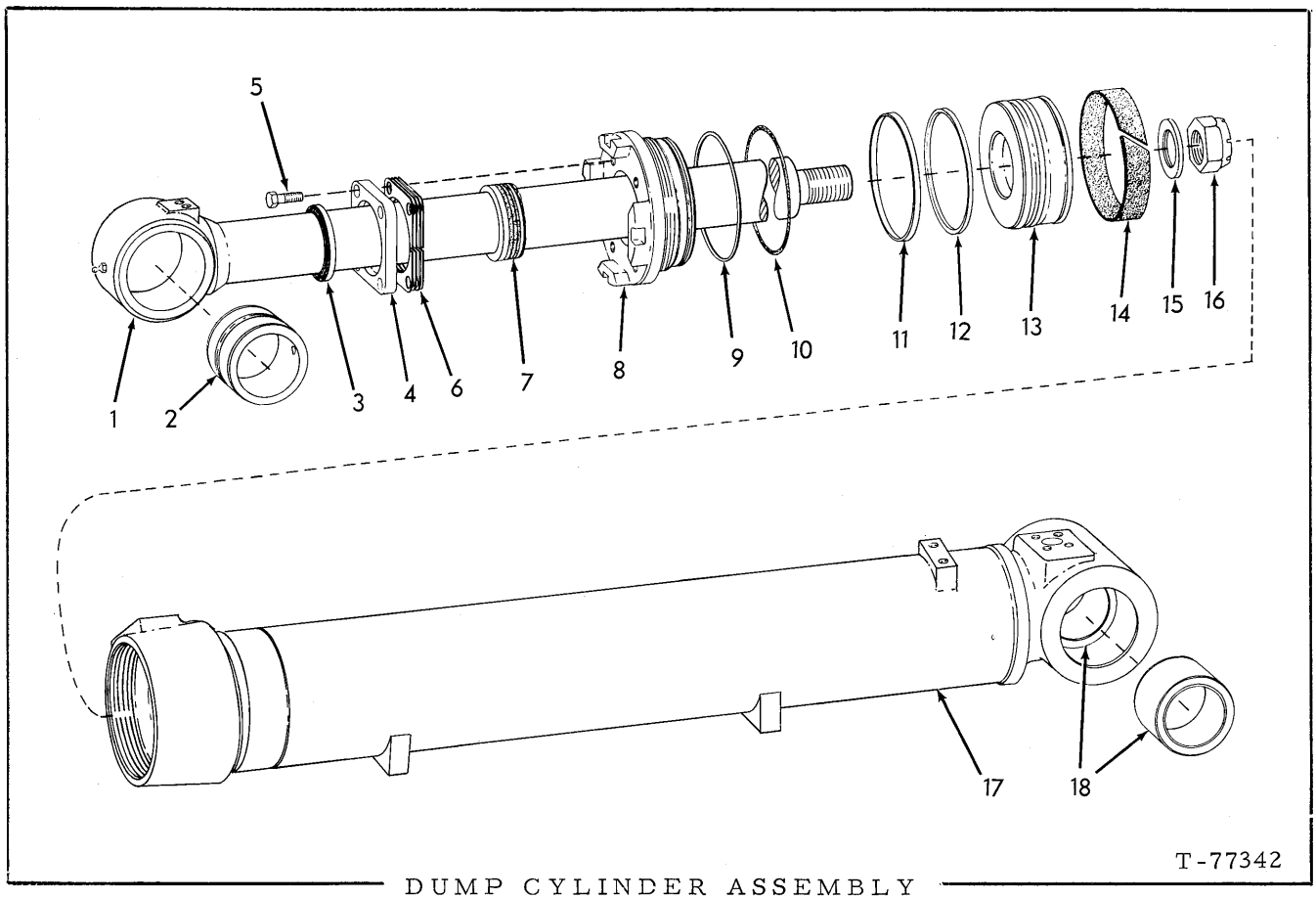

DUMP CYLINDER ASSEMBLY

ITEM	PART NO.	QTY.		DESCRIPTION
				NOTE: Quantities indicated are for one (1) cylinder assy.
-	73055522	1		CYLINDER ASSY., left and right (Includes items 1 thru 18)
1	73055519	1		ROD ASSY., piston (Includes item 2)
2	70675470	1		BUSHING, rod assy.
3	73052942	1	☐	SCRAPER, piston rod
4	73059354	1		PLATE, end, piston rod
5	70914847	4		CAPSCREW, 3/8" NC x 1-1/2"
6	73054488	4	☐	SHIM, adjusting (.0299" thick)
7	73054073	1	☐	PACKING ASSY., rod
8	73055508	1		HEAD
9	73063369	1	☐	RING, back-up
10	70924138	1	☐	O-RING, sealing
11	73053357	1	☐	RING, outer

(Continued)

DUMP CYLINDER ASSEMBLY (Continued)

ITEM	PART NO.	QTY.	DESCRIPTION
12	70926865	1	☐ RING, inner
13	73055511	1	PISTON
14	73053359	1	☐ RING, wear
15	73054108	1	SPACER, rod
16	70926392	1	LOCKNUT, safety, 2" NF
17	73055521	1	TUBE ASSY., left and right (Includes item 18)
18	73055525	2	BUSHING, tube assy.
-	73055523	1	☐ REPAIR KIT, cylinder (Consists of items 3, 6, 7, 9 thru 12 & 14)

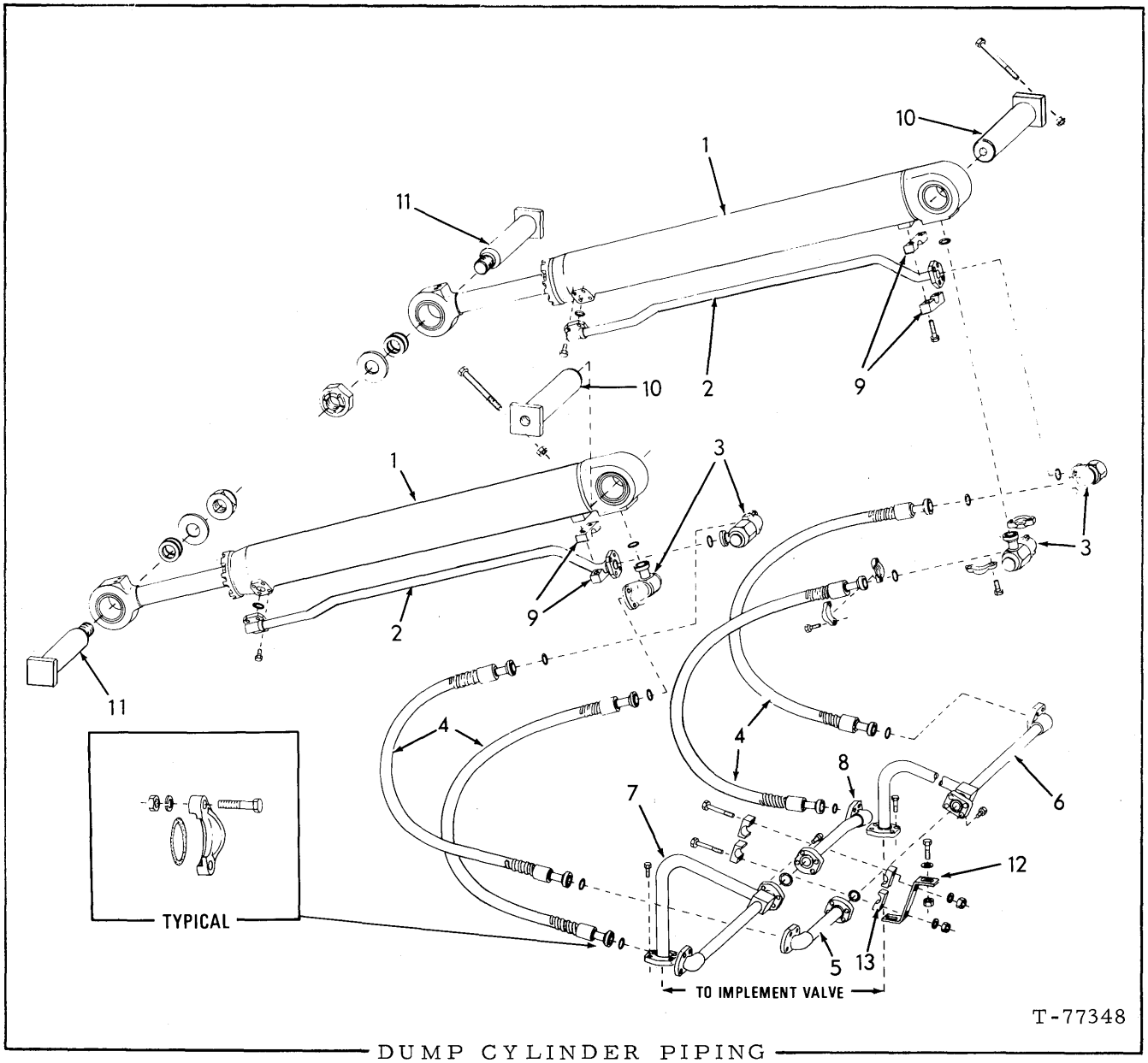

DUMP CYLINDER PIPING

ITEM	PART NO.	QTY.	DESCRIPTION
1	--------	2	CYLINDER ASSY. (See DUMP CYLINDER)
2	70674924	2	TUBE ASSY.
	70922763	4	CAPSCREW, 3/8" NC x 1"
	70924200	2	O-RING
3	70685954	4	SWIVEL ASSY.
	70921116	8	FLANGE, half, 1"
	70924200	4	O-RING
	70921076	16	CAPSCREW, 3/8" NC x 1-1/4"
4	70684877	4	HOSE ASSY.
	70921116	16	FLANGE, half, 1"
	70924200	8	O-RING
	70921076	32	CAPSCREW, 3/8" NC x 1-1/4"

(Continued)

DUMP CYLINDER PIPING (Continued)

ITEM	PART NO.	QTY.	DESCRIPTION
5	70679694	1	TUBE ASSY.
	70921569	4	CAPSCREW, 7/16" NC x 1-1/4"
	70924192	1	O-RING
6	70679693	1	TUBE ASSY.
	70920583	4	CAPSCREW, 1/2" NC x 1-1/2"
	70924193	1	O-RING
7	70679691	1	TUBE ASSY.
	70920583	4	CAPSCREW, 1/2" NC x 1-1/2"
	70924193	1	O-RING
8	70679692	1	TUBE ASSY.
	70921569	4	CAPSCREW, 7/16" NC x 1-1/4"
	70924192	1	O-RING
9	70686331	4	CLAMP
	70927174	4	CAPSCREW, 3/8" NC x 2-1/2"
10	70672262	2	PIN
	70927181	2	CAPSCREW, 5/8" NC x 7"
	70914501	2	NUT, lock, 5/8" NC
11	70671558	2	PIN
	73031361	2	WASHER, 1/16" thick
	73031362	2	WASHER, 1/32" thick
	70626543	2	WASHER, 3/8" thick
	73031182	2	NUT, 2"
12	70682484	2	BRACKET
	70921556	4	CAPSCREW, 1/2" NC x 2"
	70677008	4	WASHER, plain, 1/2"
	70911028	4	NUT, 1/2" NC
13	70682483	8	CLAMP
	70926157	4	CAPSCREW, 1/2" NC x 3-3/4"
	70677008	4	WASHER, plain, 1/2"
	70911028	4	NUT, 1/2" NC

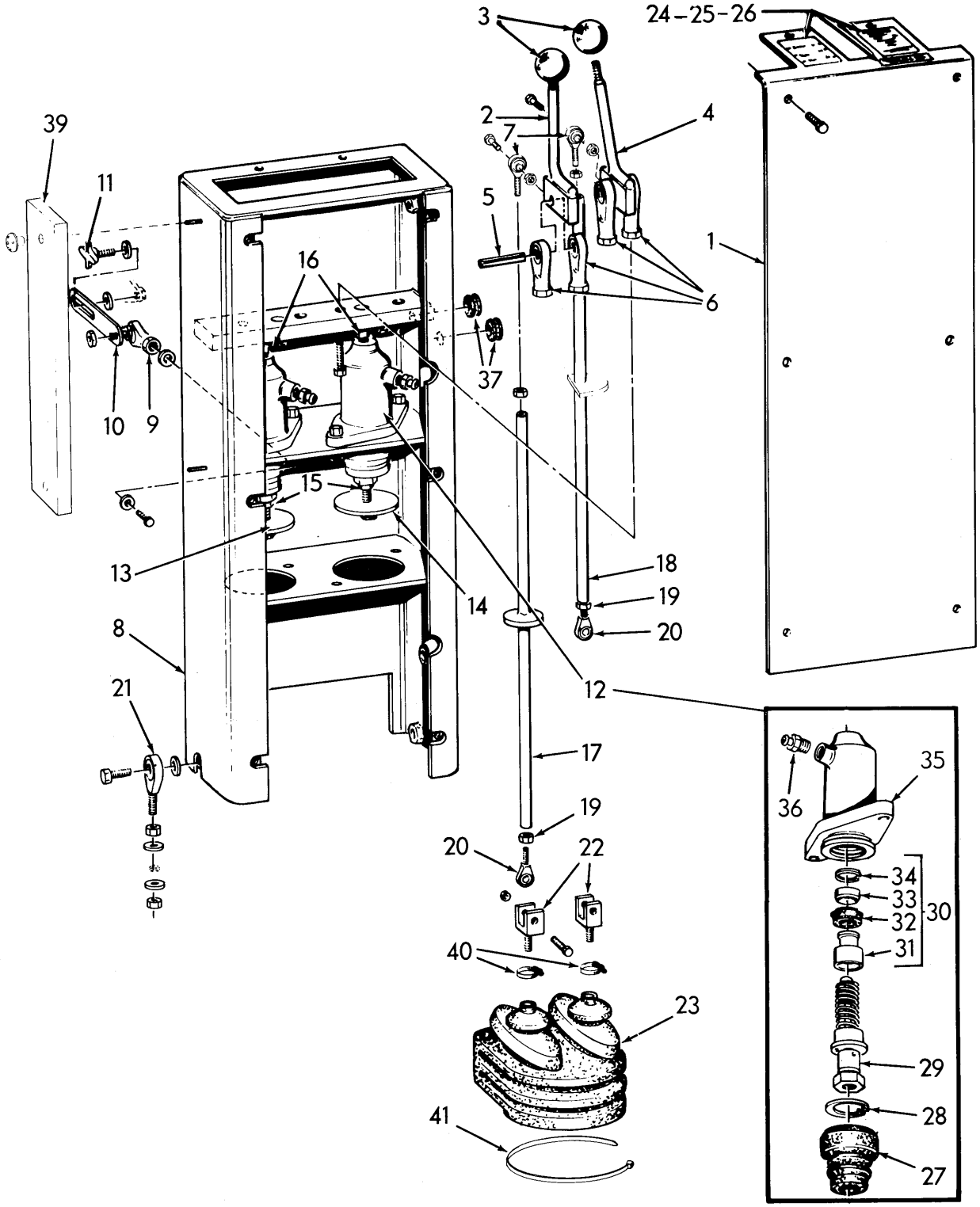
3
24-25-26
2
7
4
39
11
5
1
16
6
37
10
9
15
13
18
19
20
14
8
12
21
17
19
20
22
40
23
41
35
36
34
33
32
30
31
29
28
27
T-78003

HYDRAULIC CONTROLS

ITEM	PART NO.	QTY.	DESCRIPTION
1	70689956	1	COVER
	70916081	8	CAPSCREW, 1/4" NC x 1/2"
2	70687649	1	LEVER
3	70091855	2	KNOB
4	70687648	1	LEVER
5	70915500	2	PIN, 3/8" x 1-3/4"
6	70688127	4	END, rod
	70923193	4	CAPSCREW, 3/8" NF x 1-1/4"
7	70687496	2	END, rod
	70927401	2	CAPSCREW, 1/4" NF x 1"
	70917730	2	NUT, 1/4" NF
8	70687604	1	CONTROL TOWER
9	70653570	1	STUD ASSY.
	70923193	1	CAPSCREW, 3/8" NF x 1-1/4"
	70926180	2	WASHER, plain, 7/16"
	70910123	1	NUT, 3/8" NF
10	70689175	1	LINK
11	70624487	1	KNOB
	70918227	1	LOCKWASHER, 1/2"
	70900806	1	PIN, cotter, 1/8" x 1"
12	73057432	3	CYLINDER ASSY., slave (Includes items 27 thru 36)
	70921076	6	CAPSCREW, 3/8" NC x 1-1/4"
	70911026	6	NUT, 3/8" NC
13	70687645	1	WASHER ASSY. (welded)
14	70687643	2	WASHER ASSY. (welded)
15	70910195	3	NUT, 1/2" NF
16	70928625	3	ELBOW, 90°, 1/4" tube x 7/16" st. thd.
17	70687639	1	ROD ASSY.
18	70687637	1	ROD ASSY.
19	70911040	1	NUT, 1/4" NF
20	70687496	2	END, rod
21	70687498	2	END, rod
	70921076	2	CAPSCREW, 3/8" NC x 1-1/4"
	70926189	2	WASHER, plain, 3/8"
	70926180	4	WASHER, plain, 7/16"
	70910329	2	NUT, jam, 3/8" NF
	70910123	2	NUT, 3/8" NF
22	70687632	2	YOKE
	70927401	2	CAPSCREW, 1/4" NC x 1"
	70917730	2	NUT, 1/4" NC

(Continued)

HYDRAULIC CONTROLS (Continued)

ITEM	PART NO.	QTY.	DESCRIPTION
23	70687670	1	BOOT
24	--------	1	DECAL }
25	--------	1	DECAL } (See PAINTING AND MARKING)
26	--------	1	DECAL }
27	70067487	3	□ BOOT
28	70927694	3	□ RING
29	73058960	3	ROD ASSY. (Serviced only as a unit)
30	73058959	3	PISTON ASSY. (Includes items 31 thru 34)
31	--------	3	PISTON (Order item 30)
32	73058962	3	□ CUP, primary
33	73058963	3	□ RETAINER
34	70927783	3	□ RING
35	--------	3	HOUSING (Order item 12)
36	70638413	3	SCREW, bleeder
37	70916769	4	GROMMET
38	73058961	3	REPAIR KIT, slave cylinder (Consists of one each items 27, 28 32, 33 and 34)
39	70689752	1	CUSHION } (Not Illustrated)
	70687557	2	FASTENER }
			□ (Also included in REPAIR KIT)
40	70921910	2	CLAMP, adjustable, 25/32" to 7/16"
41	70925442	1	TIE

□(Also included in REPAIR KIT)

MEMO

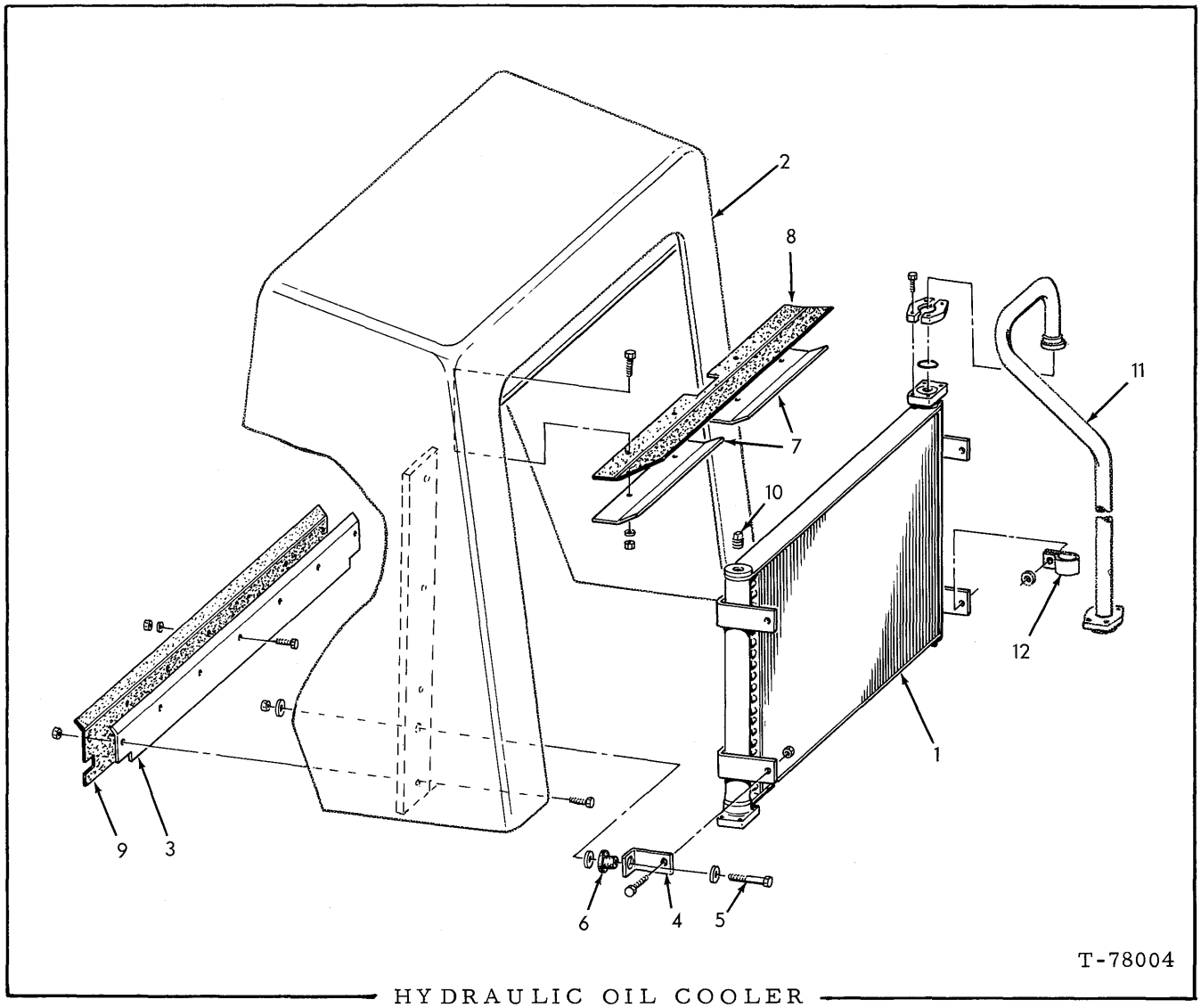

HYDRAULIC OIL COOLER

ITEM	PART NO.	QTY.	DESCRIPTION
1	70682831	1	COOLER ASSY.
	70920583	4	CAPSCREW, 1/2" NC x 1-1/2"
	70918309	4	NUT, 1/2" NC
2	--------	1	SUPPORT (See page 215)
3	70688108	1	ANGLE
	70922287	2	CAPSCREW, 3/8" NC x 1-3/4"
	70921076	5	CAPSCREW, 3/8" NC x 1-1/4"
	70677006	7	WASHER, plain, 3/8"
	70922694	7	LOCKNUT, 3/8" NC
4	70686973	4	ANGLE
	70920583	4	CAPSCREW, 1/2" NC x 1-1/2"
	70918309	4	NUT, 1/2" NC
5	70921266	4	CAPSCREW, 5/8" NC x 3-1/4"
	70926194	12	WASHER, plain, 5/8"
	70910308	4	NUT, 5/8" NC

(Continued)

HYDRAULIC OIL COOLER (Continued)

ITEM	PART NO.	QTY.	DESCRIPTION
6	70665237	4	MOUNT
7	70688110	2	ANGLE
	70923470	4	CAPSCREW, 3/8" NC x 1-1/2"
	70911026	4	NUT, 3/8" NC
8	70688107	1	BAFFLE
9	70688109	1	BAFFLE
10	70920131	2	PLUG, 3/8"
11	--------	1	TUBE ASSY. (See STEERING HYDRAULIC Pump & Valve Section)
12	--------	1	CLIP (See STEERING HYDRAULIC Pump & Valve Section)

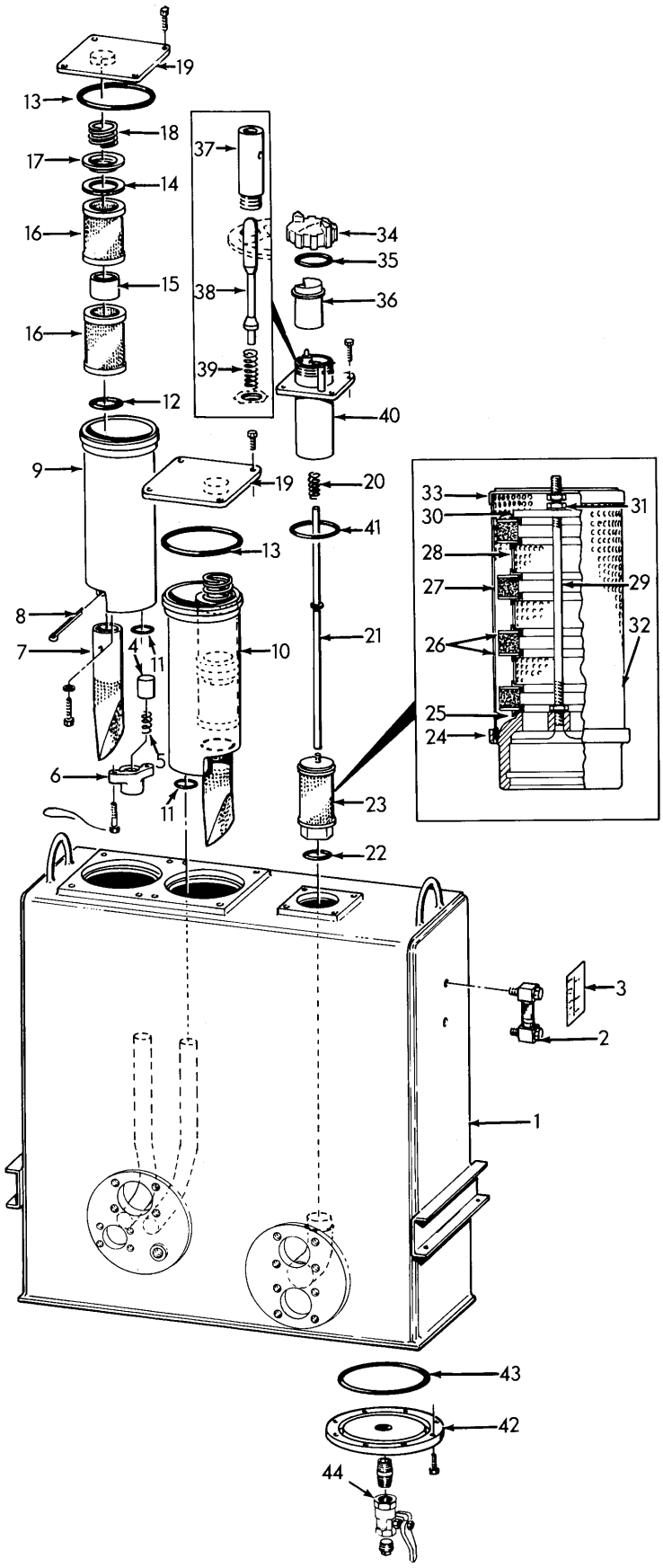

T-78006

HYDRAULIC TANK

HYDRAULIC TANK

ITEM	PART NO.	QTY.	DESCRIPTION
1	70674769	1	TANK
	70922526	8	CAPSCREW, 1/2" NC x 2-1/2"
	70677008	16	WASHER, plain, 1/2"
	70918309	8	NUT, 1/2" NC
2	70678984	1	GAUGE ASSY.
3	--------	1	TRANSFER (See Painting and Marking)
4	70647151	2	VALVE
5	70647108	2	SPRING
6	70647122	2	CAP
	70927597	4	CAPSCREW, drilled hd., 3/8" NC x 1-1/2"
	70023633	2	WIRE, locking, 1/16" x 12"
7	70663940	2	TUBE
8	70919271	2	PIN, cotter
9	70662468	2	HOUSING
	70928798	2	CAPSCREW, 3/8" NC x 3/4" (Nylok)
	70910287	2	LOCKWASHER, 3/8"
10	70664000	2	ELEMENT KIT (Consists of 2 elements and items 11 thru 15)
11	70923579	2	O-RING
12	70924146	2	O-RING
13	70923951	2	O-RING
14	70663977	2	GASKET
15	70666423	2	CONNECTOR
16	70666421	4	ELEMENT
17	70666422	2	CAP
18	70641027	2	SPRING
19	70675664	2	COVER
	70921076	8	CAPSCREW, 3/8" NC x 1-1/4"
20	70098292	1	SPRING
21	70674761	1	ROD
22	70923816	1	O-RING
23	70664960	1	SEPARATOR ASSY. (Consists of items 24 thru 33)
24	70666573	1	HEAD
25	70666572	2	SPACER
26	70666571	8	PLATE

(Continued)

HYDRAULIC TANK (Continued)

ITEM	PART NO.	QTY.	DESCRIPTION
27	70666569	4	MAGNET
28	70666567	3	SPACER
29	70666570	1	TIE-ROD
30	70666566	1	BRIDGE
31	70666565	3	NUT
32	70666568	1	SLEEVE
33	70666564	1	PLATE
34	70665726	1	CAP
35	70923950	1	O-RING
36	70671325	1	STRAINER ASSY.
37	70666634	1	GUIDE
38	70665767	1	PLUNGER
39	70666654	1	SPRING
40	70674765	1	TUBE
	70922763	4	CAPSCREW, 3/8" NC x 1"
41	70923594	1	O-RING
42	70679144	1	COVER
	70921076	8	CAPSCREW,3/8" NC x 1"
43	70925242	1	O-RING
44	70671974	1	VALVE, drain
	70901521	1	NIPPLE
	70912768	1	Plug

MEMO

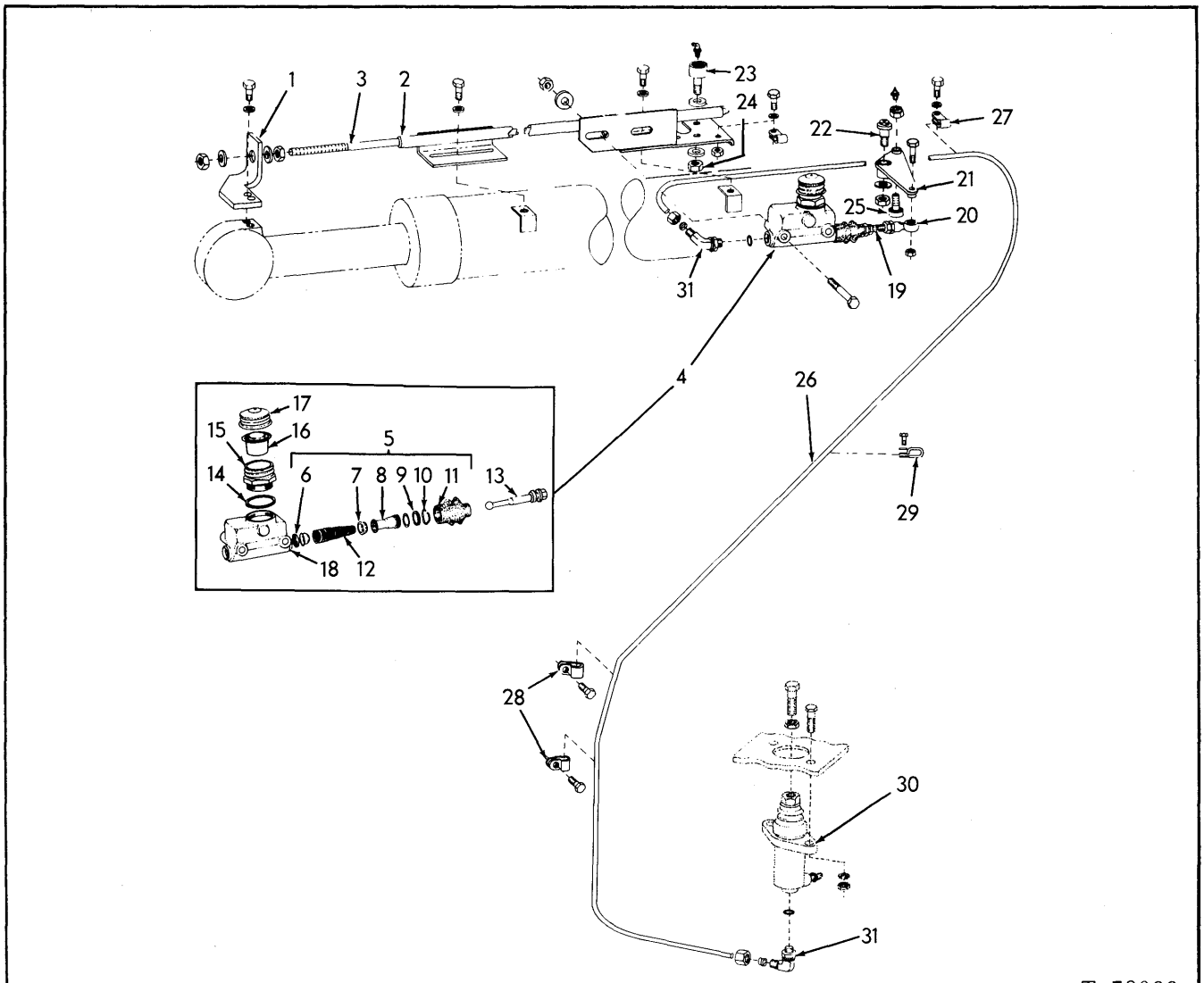

AUTOMATIC BUCKET LEVELER

ITEM	PART NO.	QTY.	DESCRIPTION
1	70688139	1	PLATE
	70922262	2	CAPSCREW, 3/8" NC x 7/8"
	70677006	2	WASHER, plain, 3/8"
2	70688120	1	TUBE ASSY.
	70911028	2	CAPSCREW, 3/8" NC x 7/8"
	70677006	2	WASHER, plain, 3/8"
3	70688138	1	ROD
	70911028	1	NUT, 1/2" NC
	70913807	1	WASHER, 17/32"
	70913092	1	WASHER, 25/32"
	70688140	1	NUT, special, 1/2"
4	73058934	1	CYLINDER ASSY., master (Includes items 6 thru 18)
	70927446	2	CAPSCREW, 3/8" NC x 3"
	70926180	2	WASHER, plain, 7/16"
	70911026	2	NUT, 3/8" NC

(Continued)

AUTOMATIC BUCKET LEVELER (Continued)

ITEM	PART NO.	QTY.		DESCRIPTION
5	73058985	-		KIT, repair (Includes items 6 thru 11)
6	--------	1	□	VALVE ASSY. (Order item 5)
7	73058975	1	□	CUP, primary piston
8	--------	1	□	PISTON ASSY. (Includes O-RING 70929194) (Order item 5)
	70929194	1		O-RING
9	--------	1	□	PLATE (Order item 5)
10	73058978	1	□	LOCKWIRE
11	73058979	1	□	BOOT
12	73058974	1		SPRING ASSY.
13	73059079	1		ROD ASSY., push
14	73058981	1		GASKET
15	73058982	1		ADAPTER, cap
16	73058983	1		DIAPHRAGM, cap
17	73058984	1		CAP
18	--------	1		HOUSING, master cylinder (Order item 4)
19	70688129	-		ROD
	70910329	1		NUT, 3/8" NF
	70912772	1		NUT, 3/8" NC
20	70688127	1		ROD, end
	70921076	1		CAPSCREW, 3/8" NC x 1-1/4"
	70910324	1		NUT, 3/8" NC
21	70688137	1		BELLCRANK ASSY.
22	70929173	1		BOLT, shoulder, 5/8" dia., hex-socket, 1/2" NC x 1-1/2"
	70912900	1		WASHER, 21/32"
	70915972	1		NUT, 1/2" NC
23	70684009	1		FOLLOWER, cam
24	70910195	1		NUT, 1/2" NF
	70677008	2		WASHER, plain, 1/2"
	70917889	1		FITTING, lube, 3/16" drive type.
25	70684010	1		FOLLOWER, cam
	70918946	1		NUT, 7/16" NF
	70917889	1		FITTING, lube, 3/16" drive type.
26	--------	-		TUBE, hydraulic line (Order required length of part no. 3059021-9) (See Note)
27	70928654	2		CLAMP
	70677006	2		WASHER, plain, 3/8"
	70922300	2		CAPSCREW, 3/8" NC x 3/4"
	70911026	1		NUT, 3/8" NC

(Continued)

AUTOMATIC BUCKET LEVELER (Continued)

ITEM	PART NO.	QTY.	DESCRIPTION
28	70928656	2	CLAMP
	70922300	2	CAPSCREW, 3/8" NC x 3/4"
29	70927098	1	CLAMP
	70928138	1	CAPSCREW, 1/4" NC x 5/8"
	70911114	1	WASHER, 9/32"
30	--------	1	CYLINDER ASSY., slave (See HYDRAULIC CONTROLS)
31	70928625	2	ELBOW ASSY. (Includes nut, sleeve and o-ring indented below)
	70930351	2	NUT
	70930350	2	SLEEVE
	70921883	2	O-RING

NOTE: Factory provides 100' roll.
Dealer will provide cut length or complete roll.

□ (Also included in REPAIR KIT)

MEMO

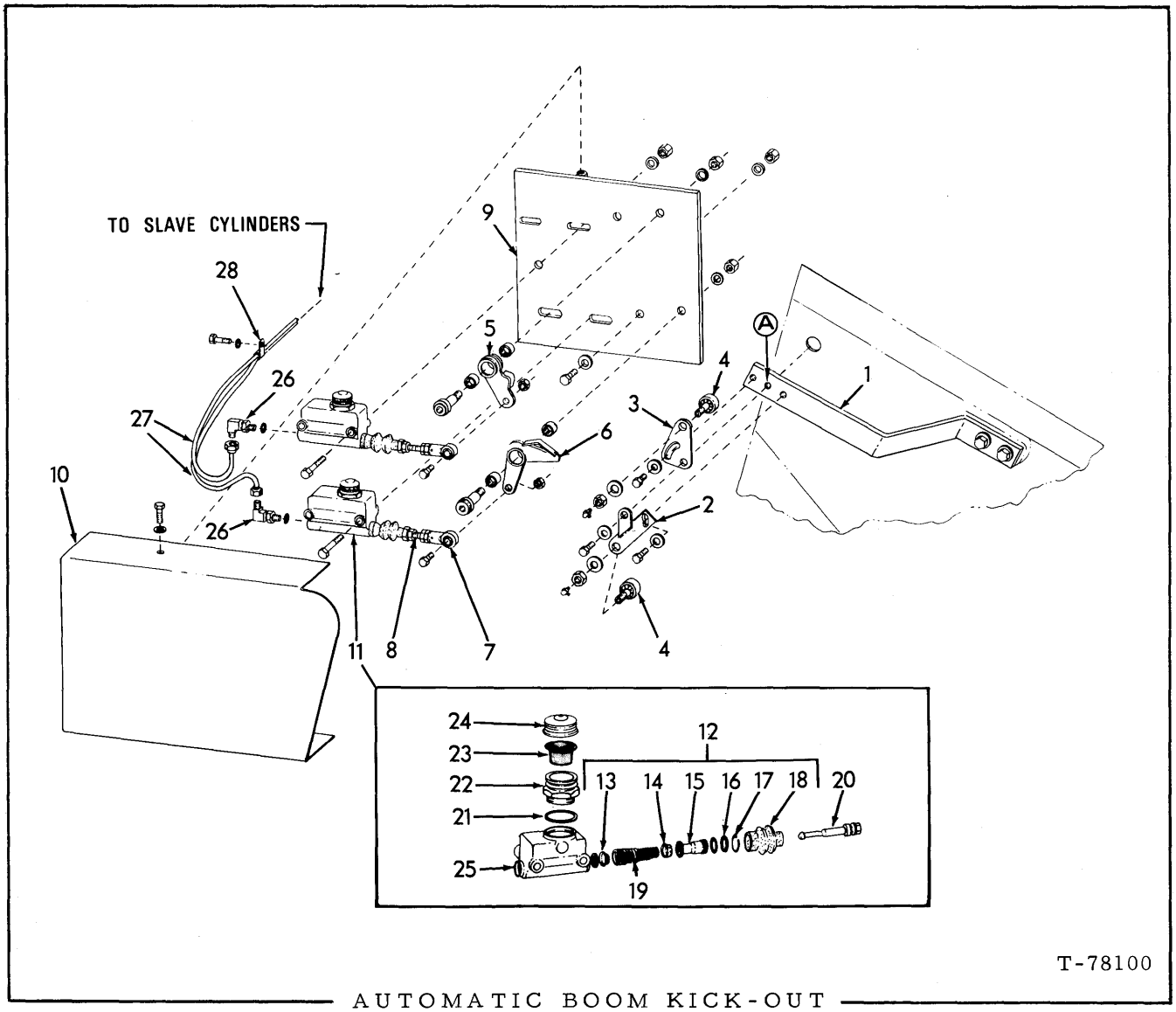

T-78100

AUTOMATIC BOOM KICK-OUT

ITEM	PART NO.	QTY.	DESCRIPTION
1	70688130	1	BAR
	70677008	2	WASHER, plain, 1/2"
	70920583	2	CAPSCREW, 1/2" NC x 1-1/2"
2	70688125	1	LEVER ASSY.
	70677006	1	WASHER, plain, 3/8"
	70922262	1	CAPSCREW, 3/8" NC x 7/8"
3	70688124	1	LEVER
	70677006	2	WASHER, plain, 3/8"
	70922262	1	CAPSCREW, 3/8" NC x 7/8"
	70921076	1	CAPSCREW, 3/8" NC x 1-1/4"
4	70684009	2	FOLLOWER, cam
	70677008	2	WASHER, plain, 1/2"
	70915746	2	NUT, 1/2" NF
	70917889	2	FITTING, lube, 3/16" drive type

(Continued)

ITEM	PART NO.	QTY.		DESCRIPTION
5	70688123	1		BELLCRANK ASSY. (Includes bearing)
	70929173	1		CAPSCREW, 5/8" shoulder, hex-socket, 1/2" NC x 1-1/2"
	70912900	1		WASHER, 21/32"
	70915972	1		NUT, locking, 1/2" NC
6	70688126	1		BELLCRANK ASSY.
	70929173	1		CAPSCREW, 5/8" shoulder, hex-socket hd., 1/2" NC x 1-1/2"
	70912900	1		WASHER, 21/32"
	70915972	1		NUT, locking, 1/2" NC
7	70688127	2		ROD END
	70921076	2		CAPSCREW, 3/8" NC x 1-1/4"
	70910324	2		NUT, 3/8" NC
8	70688129	2		ROD
	70910329	2		NUT, 3/8" NF
	70912772	2		NUT, 3/8" NC
9	70688134	1		PLATE, mounting
	70920582	3		CAPSCREW, 1/2" NC x 1-1/4"
	70677008	3		WASHER, plain, 1/2"
10	70688131	1		COVER
	70922763	3		CAPSCREW, 3/8" NC x 1"
	70677006	3		WASHER, plain, 3/8"
11	73058934	2		MASTER CYLINDER (Includes one each of items 13 thru 25)
	70927446	4		CAPSCREW, 3/8" NC x 3"
	70677006	4		WASHER, plain, 3/8"
	70911026	4		NUT, 3/8" NC
12	73058985	-		KIT, repair (Includes one each of items 13 thru 18)
13	--------	2	□	VALVE ASSY. (Order item 12)
14	73058975	2	□	CUP, primary piston
15	--------	2	□	PISTON ASSY. (Includes 1 O-RING 70929194) (Order item 12)
	70929194	2		O-RING
16	--------	2	□	PLATE (Order item 12)
17	73058978	2	□	LOCKWIRE
18	73058979	2	□	BOOT
19	73058974	2		SPRING ASSY.
20	73059079	2		ROD
21	73058981	2		GASKET
22	73058982	2		ADAPTER, cap
23	73058983	2		DIAPHRAGM, cap
24	73058984	2		CAP
25	--------	2		HOUSING (Order item 11)
26	70928625	2		ELBOW, 1/4" tube, 7/16" thd. (Includes sleeves, nut and o-ring
	70921883	2		O-RING, 11/32" I. D. indented below)
	70930350	2		SLEEVE
	70930351	2		NUT

(Continued)

AUTOMATIC BOOM KICK-OUT (Continued)

ITEM	PART NO.	QTY.	DESCRIPTION
27	--------	2	TUBE, hydraulic line (Order required length of part no. 73059021) (See Note)
28	70925617	1	CLAMP
	70677006	1	WASHER, plain, 3/8"
	70922763	1	CAPSCREW, 3/8" NC x 1"
29	--------	1	CLAMP (See AUTOMATIC BUCKET LEVELER)
30	--------	1	CLAMP (See AUTOMATIC BUCKET LEVELER)
31	--------	2	CYLINDER ASSY., slave (See HYDRAULIC CONTROLS)

NOTE: Factory provides 100' roll.
Dealer will provide cut length or complete roll.

□ (Also included in REPAIR KIT)

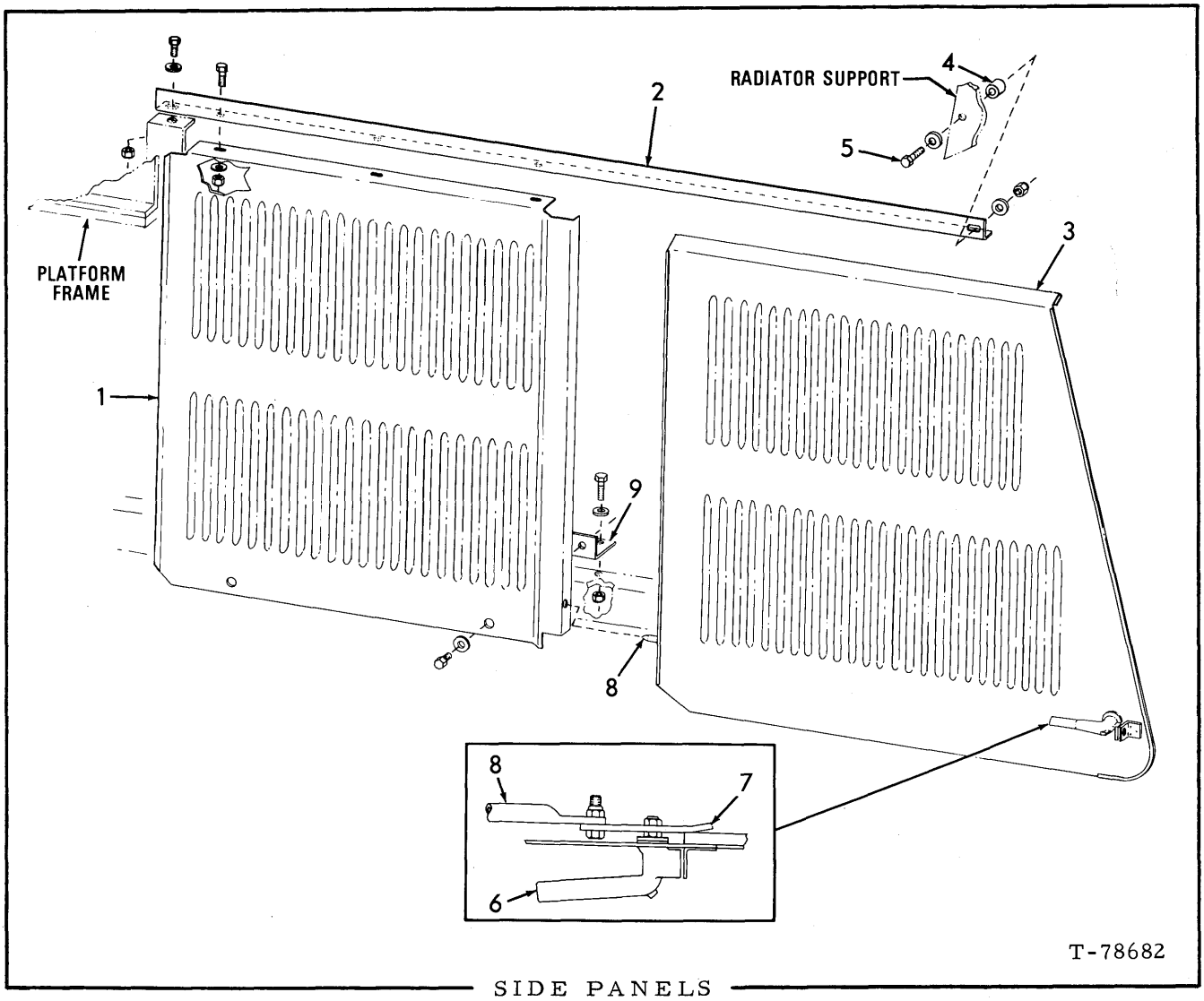

SIDE PANELS

USAGE: Special Equipment

ITEM	PART NO.	QTY.	DESCRIPTION
1	70692771	1	PANEL, left front
	70692772	1	PANEL, right front
	70923683	4	CAPSCREW, self-tapping, 3/8" NC x 3/4"
	70900817	10	WASHER, plain, 3/8"
	70922763	6	CAPSCREW, 3/8" NC x 1"
	70922694	6	NUT, lock, 3/8" NC
2	70692795	1	ANGLE, left
	70692796	1	ANGLE, right
	70922763	2	CAPSCREW, 3/8" NC x 1"
	70900817	4	WASHER, plain, 3/8"
	70922694	2	NUT, lock, 3/8" NC
3	70692773	1	PANEL, left rear
	70692774	1	PANEL, right rear

(Continued)

SIDE PANELS (Continued)

ITEM	PART NO.	QTY.	DESCRIPTION
4	73044067	2	SPACER
5	70920995	2	CAPSCREW, 3/8" NC x 2"
	70900817	4	WASHER, plain, 3/8"
	70922694	2	NUT, lock, 3/8" NC
6	70650901	1	LOCK, left
	70692825	1	LOCK, right
	70900817	4	WASHER, plain, 3/8"
	70912772	4	NUT, jam, 3/8" NC
7	70692821	2	LATCH
	70922763	2	CAPSCREW, 3/8" NC x 1"
	70922694	2	NUT, lock, 3/8" NC
8	73062756	2	ROD
9	73062710	2	PLATE, formed
	70919225	4	CAPSCREW, 3/8" NC x 1-3/8"
	70900817	4	WASHER, plain, 3/8"
	70922694	4	NUT, lock, 3/8" NC

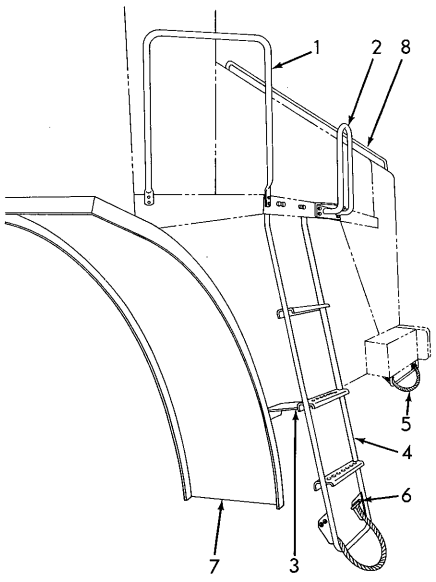

T-77360

LADDER, HANDRAILS AND FENDERS

ITEM	PART NO.	QTY.	DESCRIPTION
1	70680453	2	RAIL, hand
	70922763	8	CAPSCREW, 3/8" NC x 1"
	70911026	8	NUT, 3/8" NC
2	70691705	2	RAIL, hand
	70922763	8	CAPSCREW, 3/8" NC x 1"
	70911026	8	NUT, 3/8" NC
3	70673211	2	BRACKET
	70922673	4	CAPSCREW, 3/8" NC x 1"
	70677006	4	WASHER, plain, 3/8"
4	70673226	2	LADDER
	70922673	8	CAPSCREW, 3/8" NC x 1"
	70677006	4	WASHER, plain, 3/8"
	70911026	8	NUT, 3/8" NC
5	70185606	4	CABLE
6	70188662	8	CLIP
7	70683319	1	FENDER, left
	70683320	1	FENDER, right
	70920585	8	CAPSCREW, 1/2" NC x 1-3/4"
	70677008	8	WASHER, plain, 1/2"
	70911028	8	NUT, 1/2" NC
8	70691703	2	RAIL, hand
	70922763	4	CAPSCREW, 3/8" NC x 1"
	70677006	4	WASHER
	70911026	4	NUT, 3/8" NC

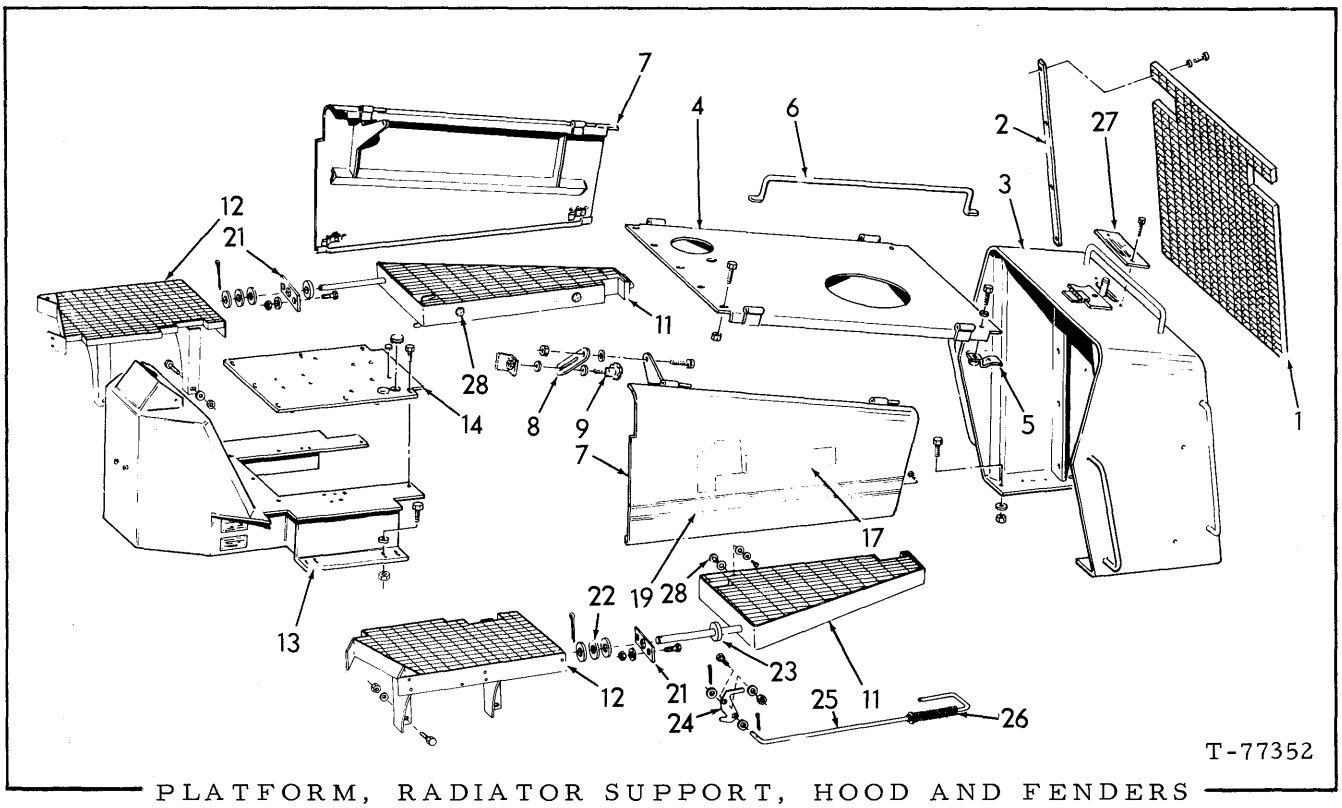

PLATFORM, RADIATOR SUPPORT, HOOD AND FENDERS

ITEM	PART NO.	QTY.	DESCRIPTION
1	70686871	1	GRILLE
2	70686865	2	BAR
	70920996	8	CAPSCREW, 3/8" NC x 2-1/4"
	70677006	8	WASHER, plain, 3/8"
3	70686872	1	SUPPORT
	- - - - - - -	6	CAPSCREW (See FUEL TANK AND LINES)
4	70686670	1	HOOD
	70920582	5	CAPSCREW, 1/2" NC x 1-1/4"
	70677008	5	WASHER, plain, 1/2"
5	70686873	3	CLIP ASSY.
	70920582	3	CAPSCREW, 1/2" NC x 1-1/4"
	70677008	3	WASHER, plain, 1/2"
6	- - - - - - -	2	BAR (See LADDER, HAND RAIL AND FENDERS)
7	70686957	1	PANEL, left
	70686958	1	PANEL, right
	70920582	2	CAPSCREW, 1/2" NC x 1-1/4"
	70926192	2	WASHER, plain, 9/16"
	70923352	2	NUT, 1/2" NC
8	70686975	2	LINK

(Continued)

PLATFORM, RADIATOR SUPPORT, HOOD AND FENDERS (Continued)

ITEM	PART NO.	QTY.	DESCRIPTION
9	70624487	2	KNOB
	70926192	4	WASHER, plain, 1/2"
	70900806	2	PIN, cotter, 1/8" x 1"
11	70686465	1	FENDER, left
	70686466	1	FENDER, right
	70920585	4	CAPSCREW, 1/2" NC x 1-3/4"
	70677008	4	WASHER, plain, 1/2"
12	70673223	1	FENDER, left
	70673224	1	FENDER, right
	70920585	8	CAPSCREW, 1/2" NC x 1-3/4"
	70677008	8	WASHER, plain, 1/2"
	70911028	8	NUT, 1/2" NC
13	70686220	1	PLATFORM ASSY.
	70922526	8	CAPSCREW, 1/2" NC x 2-1/2"
	70677008	8	WASHER, plain, 1/2"
	70918309	8	NUT, 1/2" NC
	70691164	1	GROMMET
14	70686208	1	PLATE
	70922763	7	CAPSCREW, 3/8" NC x 1"
	70917632	2	PLUG, button
17	--------	2	DECAL (See PAINTING AND MARKING)
18	--------	1	PLATE (Not Illustrated) (See PAINTING AND MARKING)
19	--------	-	DECAL (See PAINTING AND MARKING)
21	73063013	4	BAR
	70920583	8	CAPSCREW, 1/2" NC x 1-1/2" (Not Illustrated)
	70677008	8	WASHER, plain, 1/2"
	70911028	8	NUT, 1/2" NC
22	70912299	6	WASHER, plain, 1-1/4"
	70901345	2	PIN, cotter, 1/4" x 2-1/2"
23	70928453	2	WASHER, plain, 1-5/16"
24	70691704	2	LATCH
	70920583	2	CAPSCREW, 1/2" NC x 1-1/2"
	70912007	2	WASHER, plain, 1/2"
	70913744	2	NUT, 1/2" NC
25	70691888	2	ROD
	70913274	4	WASHER, plain, 1/2"
	70918448	4	PIN, cotter, 3/32" x 1"
26	70088491	2	SPRING
	70913274	2	WASHER, plain, 1/2"
	70918448	2	PIN, cotter, 3/32" x 1"
27	70688105	1	PLATE
	70921076	2	CAPSCREW, 3/8" NC x 1-1/4"
28	70687557	4	BUMPER
	70927541	4	CAPSCREW, 1/4" NF x 3/4"
	70919084	4	WASHER, plain, 17/64"
	70913807	24	WASHER, plain, 17/32" (Use as required)

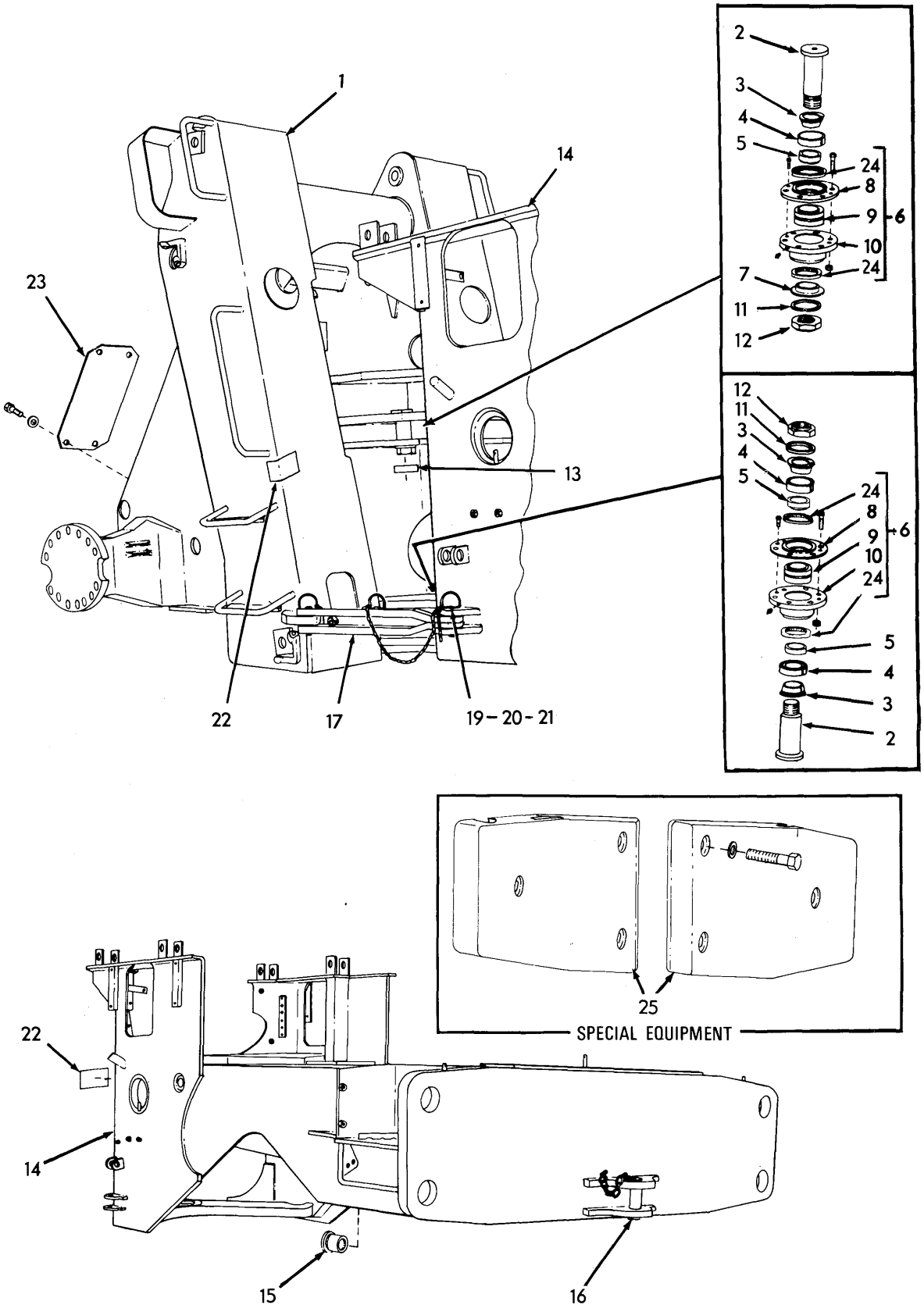
1
2
3
4
5
6
7
8
9
10
11
12
13
14
15
16
17
19-20-21
22
23
24
25
SPECIAL EQUIPMENT
T-77358

FRAME

FRAME

ITEM	PART NO.	QTY.	DESCRIPTION
1	70672689	1	FRAME
2	73049126	2	PIN
3	73049122	3	COLLET, inner
4	73049121	3	COLLET, outer
5	73049123	3	BOSS
6	73049120	2	RETAINER ASSY. (Includes items 8 thru 10, 24 and 1 Fitting 70916273)
	70922673	12	CAPSCREW, 3/4" NC x 4-1/2"
	70911030	12	NUT, 3/4" NC
	70915273	2	FITTING, lubrication, 1/8" NPT
7	70688308	1	BOSS
8	73049068	2	RETAINER
	70921076	4	CAPSCREW, 3/8" NC x 1-1/4"
9	73049067	2	BUSHING
10	73049069	2	RETAINER
11	73049125	2	WASHER
12	70925752	2	NUT
13	73049036	1	BUSHING
14	70672137	1	FRAME ASSY. (Includes items 15 and 16)
15	70686009	1	BUSHING
16	70677162	1	PIN, drawbar
17	70689427	1	LOCK ASSY., left side (Includes CHAIN and PIN)
	70920585	1	CAPSCREW, 1/2" NC x 1-3/4"
18	70689429	1	LOCK ASSY., right side (Includes CHAIN and PIN) (NOT ILLUSTRATED)
19	70920570	3	PIN, quick
20	70926907	4	CLAMP, 3/16" I. D. x 1/2"
	70928182	4	CAPSCREW, 1/4" NC x 1/2"
	70677004	4	WASHER, plain, 1/4"
21	70689387	2	HOOK
22	--------	2	DECAL, warning (Applied to front frame) (See PAINTING AND MARKING)
23	70673560	1	COVER ASSY.
	70920583	4	CAPSCREW, 1/2" NC x 1-1/2"
	70677008	4	WASHER
24	73062582	4	SEAL, rod scraper
25	73062705	2	COUNTERWEIGHT, Special Equipment (Note: Do not use with rear tire liquid ballast)
	70929741	6	CAPSCREW, 1-1/4" NC x 6"
	70928448	6	WASHER, 1-5/16", hardened

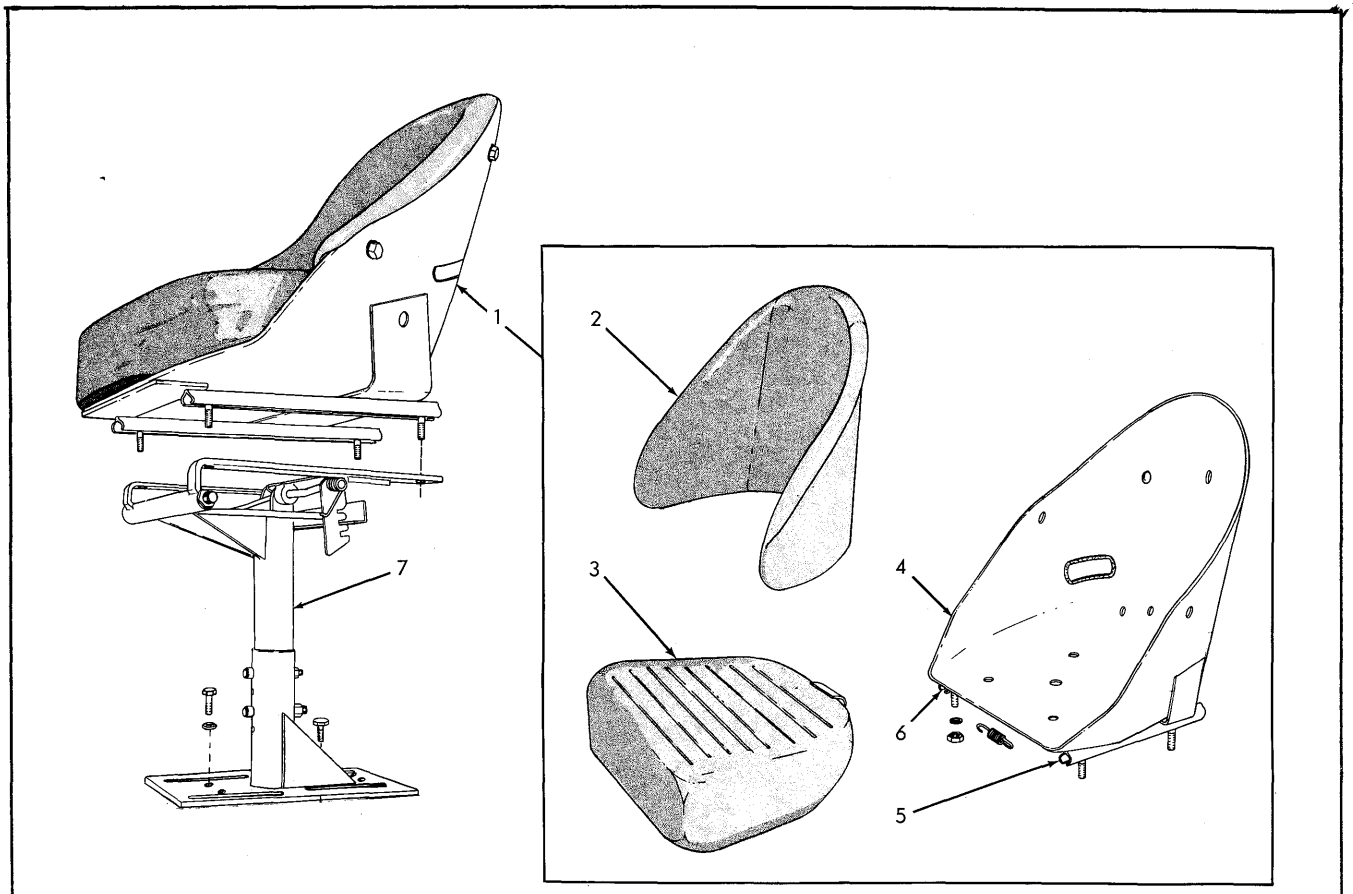

T-73132

SEAT AND MOUNTING

ITEM	PART NO.	QTY.	DESCRIPTION
1	70689348	1	SEAT ASSY. (26-1/2" wide) (Includes items 2 and 6)
	70927612	6	CAPSCREW, 5/16" NC x 5/8"
	70919311	2	LOCKWASHER, 5/16"
	70910323	2	NUT, 5/16" NC
2	73060173	1	BACKREST
3	73060172	1	SEAT CUSHION
4	73060171	1	SHELL ASSY.
5	73060174	1	ADJUSTER, left
	70927612	2	CAPSCREW, 5/16" NC x 5/8"
	70919311	2	LOCKWASHER, 5/16"
	70910323	2	NUT, 5/16" NC
6	73060175	1	ADJUSTER ASSY. right
	70927612	2	CAPSCREW, 5/16" NC x 5/8"
	70919311	2	LOCKWASHER, 5/16"
	70910323	2	NUT, 5/16" NC
7	73058049	1	PEDESTAL ASSY. (Serviced only as a unit)
	70921175	4	CAPSCREW, 1/2" NC x 1"

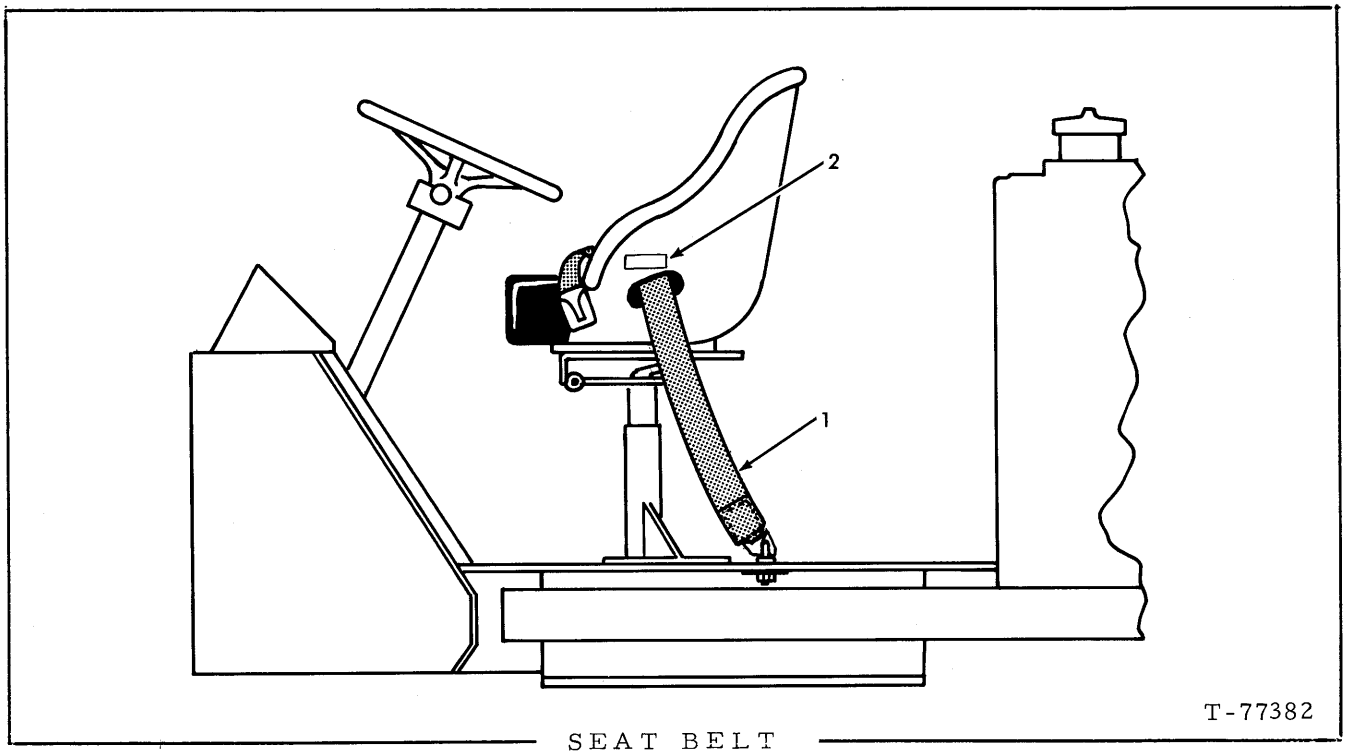

SEAT BELT

USAGE: Special equipment

ITEM	PART NO.	QTY.	DESCRIPTION
1	70687663	1	BELT ASSY., seat (Includes bolts and nuts)
2	70682968	1	DECAL, seat belt

NOTE: Use of Seat Belts, on roll over protection structure (ROPS) equipped vehicles, is recommended. FASTEN SEAT BELTS SECURELY.

"ALWAYS GIVE MODEL AND SERIAL NUMBER WHEN ORDERING PARTS"

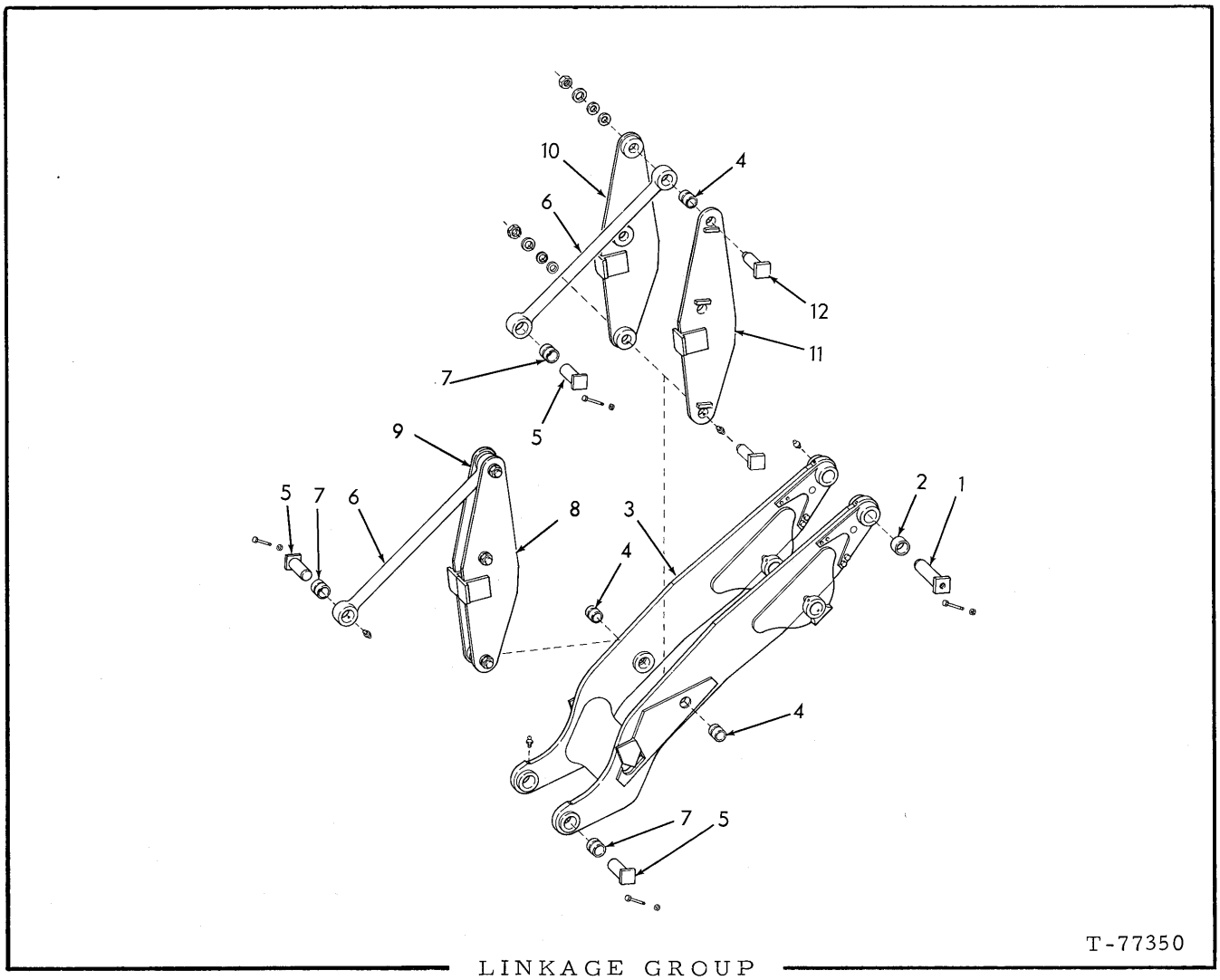

LINKAGE GROUP

ITEM	PART NO.	QTY.	DESCRIPTION
1	70672262	2	PIN
	70927181	2	CAPSCREW, 5/8" NC x 7"
	70914501	2	NUT, 5/8" NC
2	73055525	4	BUSHING
3	70671576	1	BOOM ASSY. (Includes items 2, 4 and 7)
	70914465	6	FITTING, lubricating, 1/8" NPT
	70915276	2	FITTING, lubricating, 90°, 1/8" NPT
4	70675470	4	BUSHING
5	70671532	4	PIN
	70927181	4	CAPSCREW, 5/8" NC x 7"
	70914501	2	NUT, Special, 5/8" NC
6	70686335	2	LINK ASSY. (Includes items 4 and 7)
	70914465	4	FITTING, lubricating, 1/8" NPT
7	70682489	4	BUSHING
8	70671555	1	LINK

(Continued)

LINKAGE GROUP (Continued)

ITEM	PART NO.	QTY.	DESCRIPTION
9	70671556	1	LINK
10	70672397	1	LINK
11	70672398	1	LINK
12	70671558	4	PIN
	73031361	4	WASHER, 1/16" thick, 2-15/16" O. D.
	73031362	4	WASHER, 1/32" thick, 2-15/16" O. D.
	70626543	4	WASHER, 3/8" thick, 4" O. D.
	73031182	4	NUT, 2" (SPECIAL)

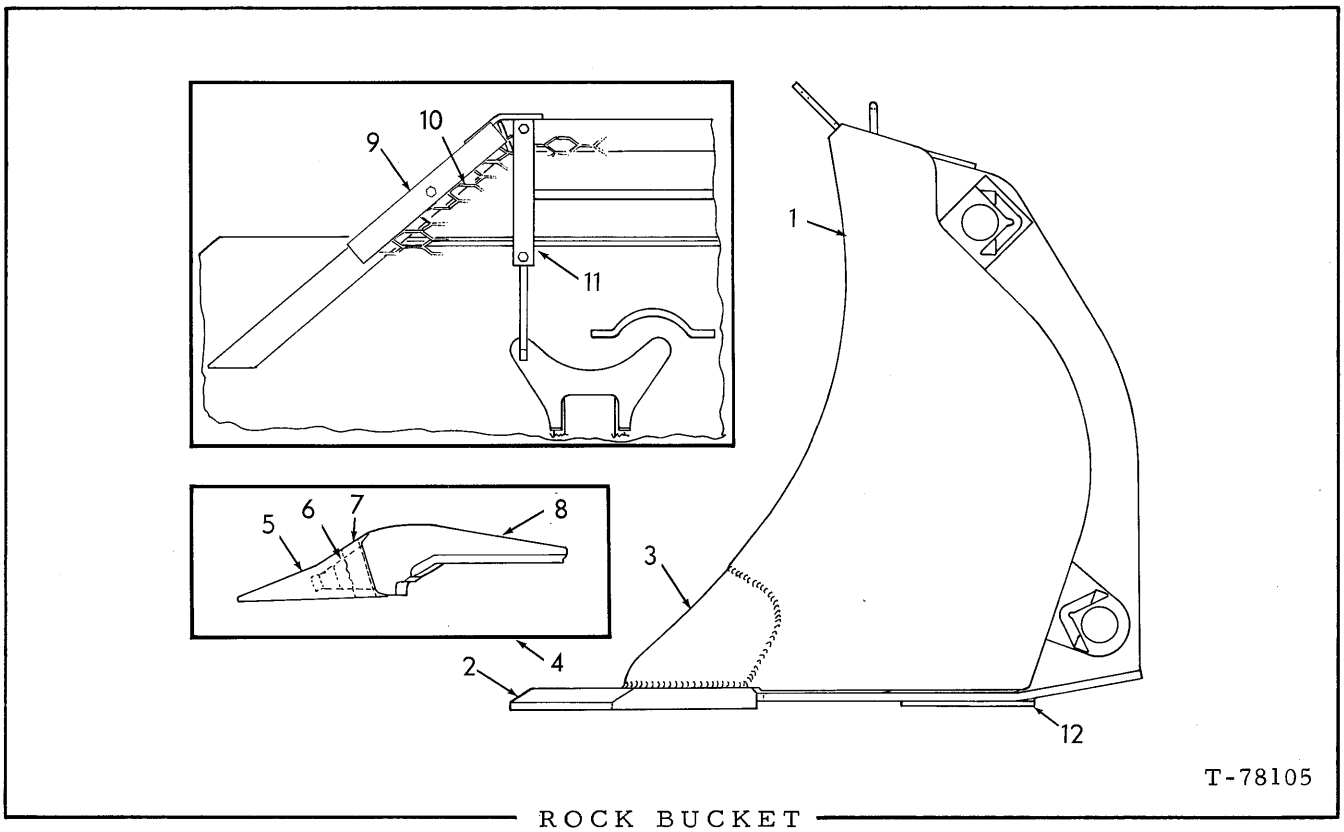

ROCK BUCKET

ITEM	PART NO.	QTY.	DESCRIPTION
1	70676896	1	BUCKET ASSY., 6 cu. yd. without teeth (Includes items 2 and 3) Machinery Item.
	70689735	1	BUCKET ASSY., 6 cu. yd. with welded teeth (Includes items 2 thru 8) Machinery Item.
	70690261	1	BUCKET ASSY., 6 cu. yd. with guard and no teeth (Includes items 2, 3 and 9 thru 11) Machinery Item.
	70690432	1	BUCKET ASSY., 6 cu. yd. with guard and teeth (Includes items 2 thru 11) Machinery Item.
2	70676887	1	EDGE, left (Requires welding to install)
	70676888	1	EDGE, right (Requires welding to install)
3	70688157	1	BIT, left (Requires welding to install)
	70688158	1	BIT, right (Requires welding to install)
4	70691645	1	TOOTH ASSY. left (4 required per bucket)(Includes items 5 thru 8)(Requires welding to install)
	70691646	1	TOOTH ASSY. right (4 required per bucket)(Includes items 5 thru 8)(Requires welding to install)
5	73060153	1	POINT
6	73060154	1	LOCK

(Continued)

ROCK BUCKET (Continued)

ITEM	PART NO.	QTY.	DESCRIPTION
7	73060152	1	PIN
8	70687181	1	SHANK, left (Requires welding to install)
	70687182	1	SHANK, right (Requires welding to install)
9	73062758	2	STRIP
	70921175	2	CAPSCREW, 1/2" NC x 1"
	70677008	2	WASHER, plain, 1/2"
10	70691144	1	PLATE
11	70691084	3	BAR
	70920582	6	CAPSCREW, 1/2" NC x 1-1/4"
	70677008	6	WASHER, plain, 1/2"
	70910244	8	WASHER, plain, 1/2"
12	70687080	4	SKID (Requires welding to install)

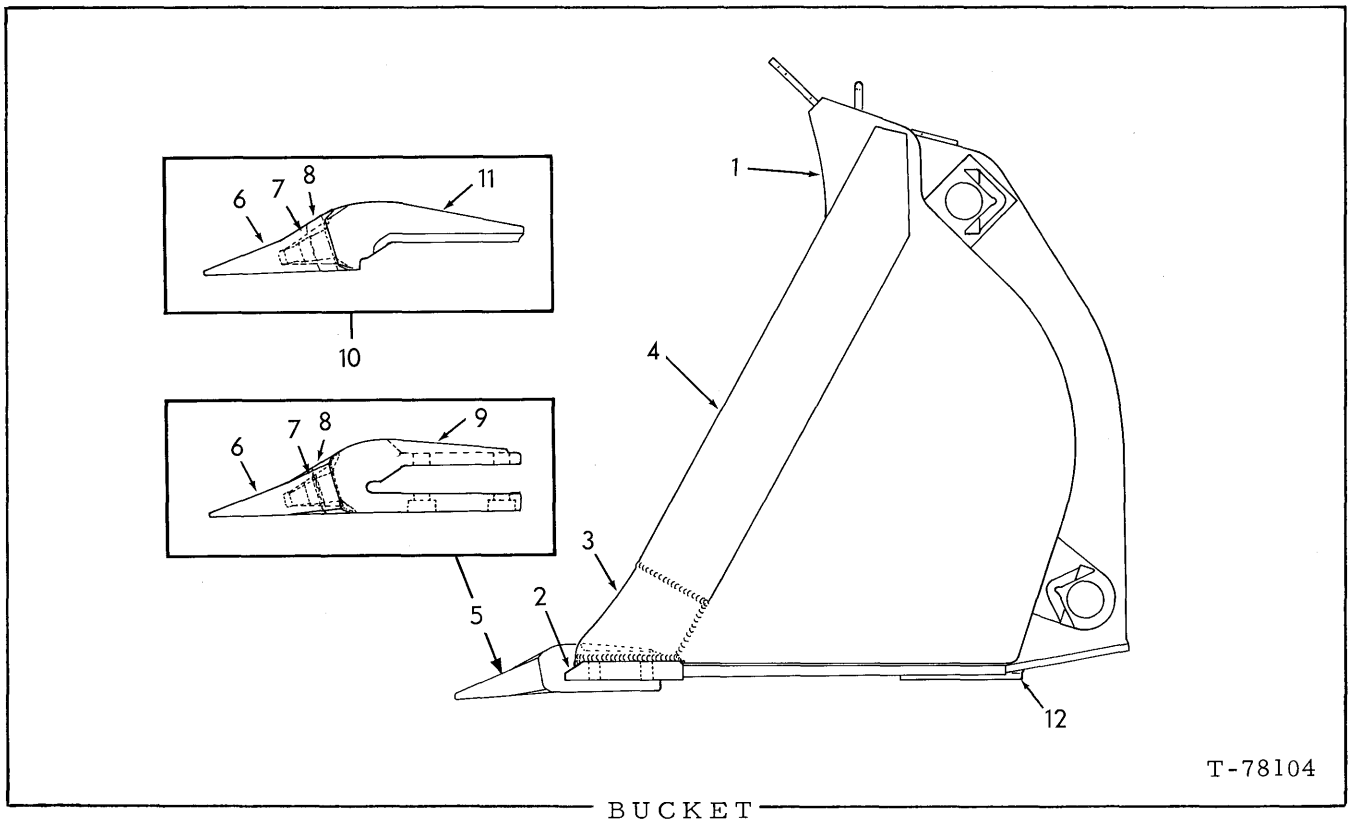

BUCKET
(General Purpose)

ITEM	PART NO.	QTY.	DESCRIPTION
1	70675397	1	BUCKET ASSY., 6 cu.yd. without teeth (Includes items 2 thru 4) Machinery item.
	70689733	1	BUCKET ASSY., 6 cu.yd. with welded teeth (Includes items 2 thru 4 and 10)
	70692036	1	BUCKET ASSY., 6-1/2 cu.yd. without teeth (Includes items 2 thru 4)
	73062393	1	BUCKET ASSY., 6-1/2 cu.yd. with teeth (Includes items 2 thru 4 and 10)
2	70671533	1	EDGE, cutting
3	70688155	1	BIT, left
	70688156	1	BIT, right
4	70683676	2	EDGE, side
5	70691644	-	TOOTH ASSY., bolted type (8 required per bucket)(Includes items 6 thru 9)
	70922859	2	CAPSCREW, 1" NC x 4"
	70929611	2	NUT, 1" NC
6	73060153	1	POINT
7	73060154	1	LOCK
8	73060152	1	PIN
9	70689713	1	SHANK (bolted type)
10	70691647	1	TOOTH ASSY., (8 required per bucket)(Includes items 6 thru 8 and 11)(Requires welding to install)
11	70682542	1	SHANK (welded type)
12	70687080	2	SKID (Requires welding to install)

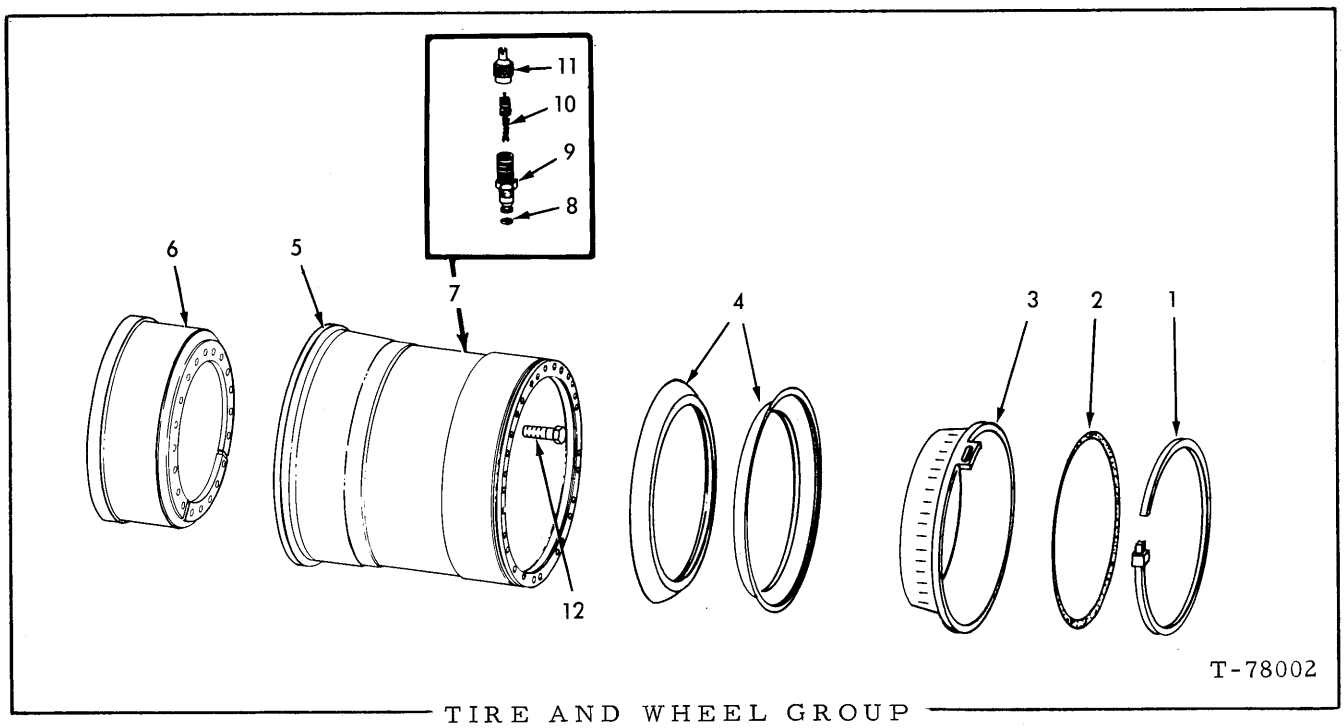

TIRE AND WHEEL GROUP

ITEM	PART NO.	QTY.	DESCRIPTION
			NOTE: Quantities shown are for one (1) wheel only.
1	73104785	1	RING, lock
2	70184225	1	O-RING
3	73104784	1	BAND
4	70162379	2	FLANGE
5	73051473	1	WHEEL WELD ASSEMBLY (Consists of 1 HUB and 1 RIM)
	70907856	1	PLUG, pipe, ctsk, 3/8" NPT
6	--------	1	DRUM, brake (See SHAFT AND HUB)
7	70678715	1	STEM ASSY. (Includes items 8 thru 11)
8	70179658	1	O-RING
9	70179657	1	STEM
10	70169832	1	CORE
11	70180016	1	CAP
12	--------	-	(See SHAFT AND HUB)
-	--------	1	TIRE, 29.5 x 29 - 22 PR-L-4 (Obtain locally)

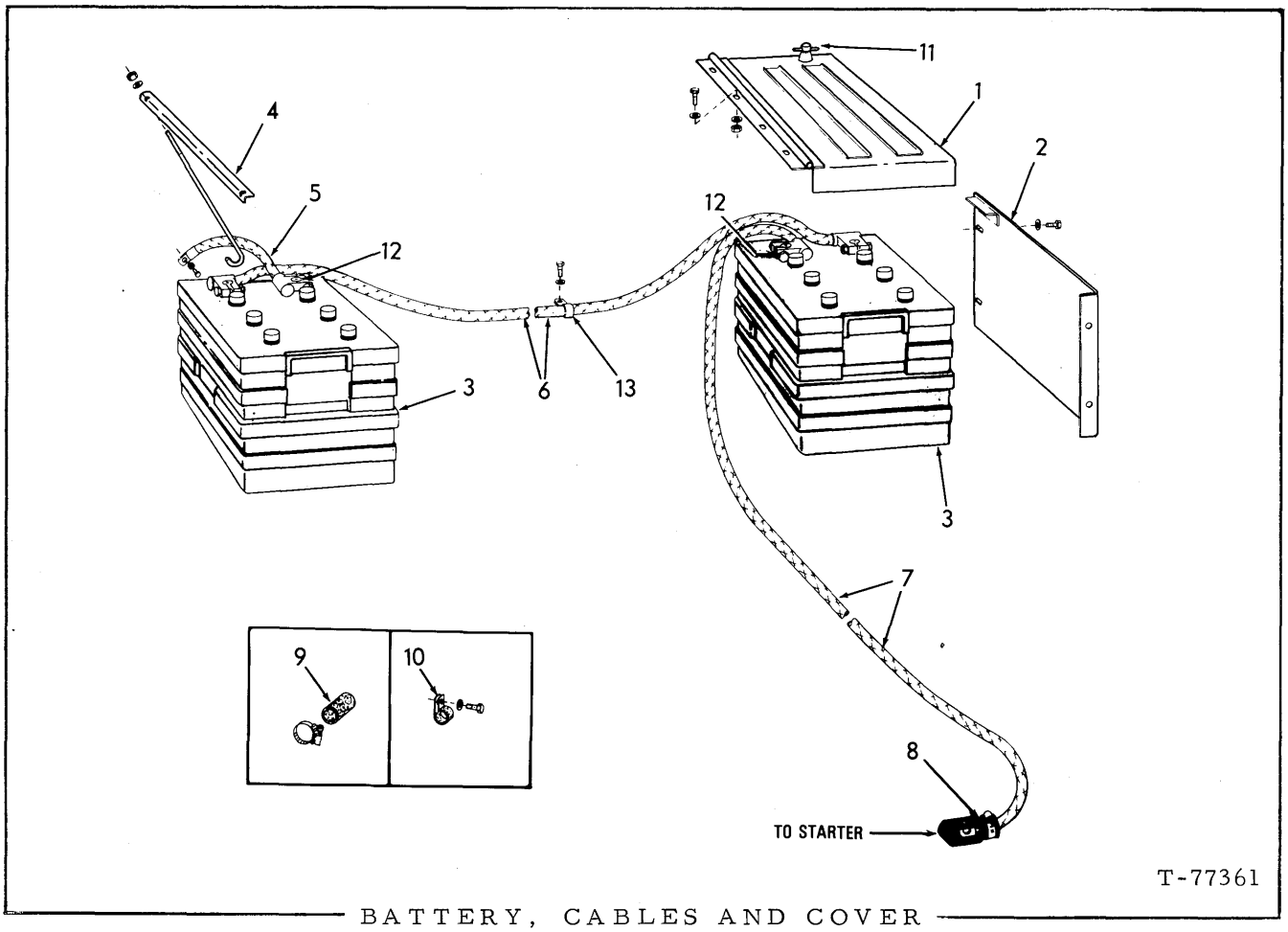

BATTERY, CABLES AND COVER

ITEM	PART NO.	QTY.	DESCRIPTION
1	70686487	1	COVER, left
	70686488	1	COVER, right
	70921076	8	CAPSCREW, 3/8" NC x 1-1/4"
	70677006	16	WASHER, plain, 3/8"
	70911026	8	NUT, 3/8" NC
2	73062409	1	ANGLE ASSY., left
	73062410	1	ANGLE ASSY., right
	70921076	8	CAPSCREW, 3/8" NC x 1-1/4"
	70677006	8	WASHER, plain, 3/8"
3	*70250545	2	BATTERY, storage, 12 volt, dry charged 220 amp hour cap (Requires 15-1/2 quarts electrolyte)
3A	*70243526	1	ELECTROLYTE ("Z" Pack) 6.1 qts.
	*70243527	1	ELECTROLYTE ("F" Pack) 5.0 gal.
3B	*70243528	1	HOSE, dispenser (For use with 5 gallon pack).

(Continued)

BATTERY, CABLES AND COVER (Continued)

ITEM	PART NO.	QTY.	DESCRIPTION
4	73048106	2	PLATE
	70676689	4	HOOK, 3/8" NC
	70677006	4	WASHER, plain, 3/8"
	70918308	4	NUT, locking, 3/8" NC
5	70671632	1	CABLE ASSY.
	70922300	1	CAPSCREW, 3/8" NC x 3/4"
	70906960	1	LOCKWASHER, 3/8"
6	70632971	1	CABLE ASSY.
7	70657743	1	CABLE ASSY.
8	70076572	1	BOOT
	70922660	1	CLAMP, hose
9	70076469	3	BOOT
	70922660	3	CLAMP, hose
10	70926049	1	CLAMP, hose
	70922300	1	CAPSCREW, 3/8" NC x 3/4"
	70677006	1	WASHER, plain, 3/8"
11	74359167	2	HANDLE KIT
12	73008046	4	WASHER, felt
13	70926049	1	CLIP
	70922300	1	CAPSCREW, 3/8" NC x 5/8"
	70677006	1	WASHER, plain, 3/8"

*Order from Construction Machinery Depot

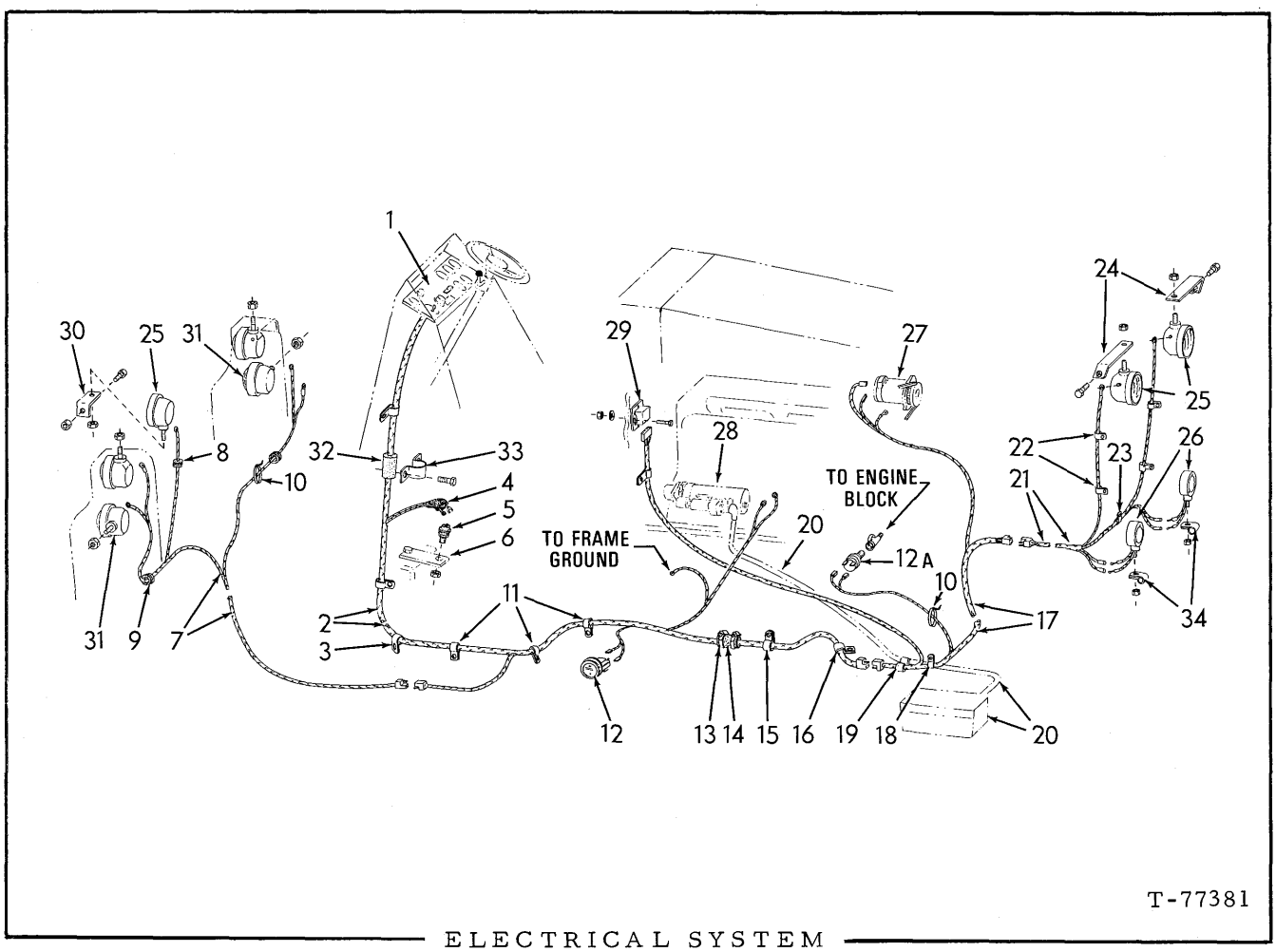

ELECTRICAL SYSTEM

ITEM	PART NO.	QTY.	DESCRIPTION
1	--------	-	See (INSTRUMENT PANEL AND GAUGES)
2	70689216	1	HARNESS, wiring
3	70927311	1	CLAMP
	70926163	1	CAPSCREW, 5/8" NC x 2-1/2"
	70677010	1	WASHER, plain, 5/8"
4	73061193	1	BOOT
5	73057506	1	SWITCH, starting, safety (Includes mounting nuts)
6	--------	1	PLATE } (See TRANSMISSION CONTROL)
	--------	1	CAPSCREW }
7	70679548	1	HARNESS
8	70926068	2	GROMMET, rubber
9	70930863	2	GROMMET, rubber
10	70925094	7	TIE, self locking

(Continued)

ITEM	PART NO.	QTY.	DESCRIPTION
11	70927388	6	CLAMP
	70921175	6	CAPSCREW, 1/2" NC x 1"
	70677008	6	WASHER, plain, 1/2"
12	70688997	1	METER, hour
12A	70640727	1	SWITCH, pressure
	70913938	1	TEE, pipe, 1/4" NPT
13	70922660	2	CLAMP
14	70689346	1	WRAP
15	70927176	1	CLIP
	70921175	1	CAPSCREW, 1/2" NC x 1"
	70677008	1	WASHER, plain, 1/2"
16	70925617	2	CLAMP
	70922300	1	CAPSCREW, 3/8" NC x 3/4"
	70677006	1	WASHER, plain, 3/8"
17	70689215	1	HARNESS, wiring(for use with Std. 30 amp. alternator)
	70689955	1	HARNESS, wiring(for use with Special Equip. 50 amp. alternator)
18	70926049	2	CLAMP
	70922300	2	CAPSCREW, 3/8" NC x 3/4"
	70677006	2	WASHER, plain, 3/8"
19	70926049	1	CLAMP
	70925617	1	CLAMP
	70922300	1	CAPSCREW, 3/8" NC x 3/4"
	70677006	1	WASHER, plain, 3/8"
20	--------	-	See (See BATTERY CABLES AND COVERS)
21	70679552	1	HARNESS
22	70639388	4	CLIP
	70927400	4	CAPSCREW, 3/8" NC x 5/8"
	70677006	4	WASHER, plain, 3/8"
23	70640676	1	CLIP
	70927400	1	CAPSCREW, 3/8" NC x 5/8"
	70677006	1	WASHER, plain, 3/8"
24	70687061	1	ANGLE, left
	70687062	1	ANGLE, right
	70920583	2	CAPSCREW, 1/2" NC x 1-1/2"
25	70621429	5	LIGHT ASSY. (See page 231)
	70914487	5	NUT, 1/2" NF
	70677008	3	WASHER, plain, 1/2"
26	73044008	2	LIGHT (See page 232)
27	--------	-	See (ALTERNATOR)
28	--------	-	See (STARTER)

(Continued)

ELECTRICAL SYSTEM (Continued)

ITEM	PART NO.	QTY.	DESCRIPTION
29	70650944	1	REGULATOR, voltage (for use with standard alternator only)
	70928138	2	CAPSCREW, 1/4" NC x 5/8"
	70911114	2	WASHER, plain, 1/4"
	70911024	2	NUT, 1/4" NC
30	73103620	1	BRACKET
	70920582	1	CAPSCREW, 1/2" NC x 1-1/4"
	70911028	1	NUT, 1/2" NC
31	73044810	2	LIGHT ASSY. (See page 231)
	70914487	2	NUT, plain, 1/2" NF
	70677008	2	WASHER, plain, 1/2"
32	70689331	1	WRAP
33	70689179	1	CLAMP
	70922763	2	CAPSCREW, 3/8" NC x 1"
34	70925616	2	CLIP (Attached to light mounting)

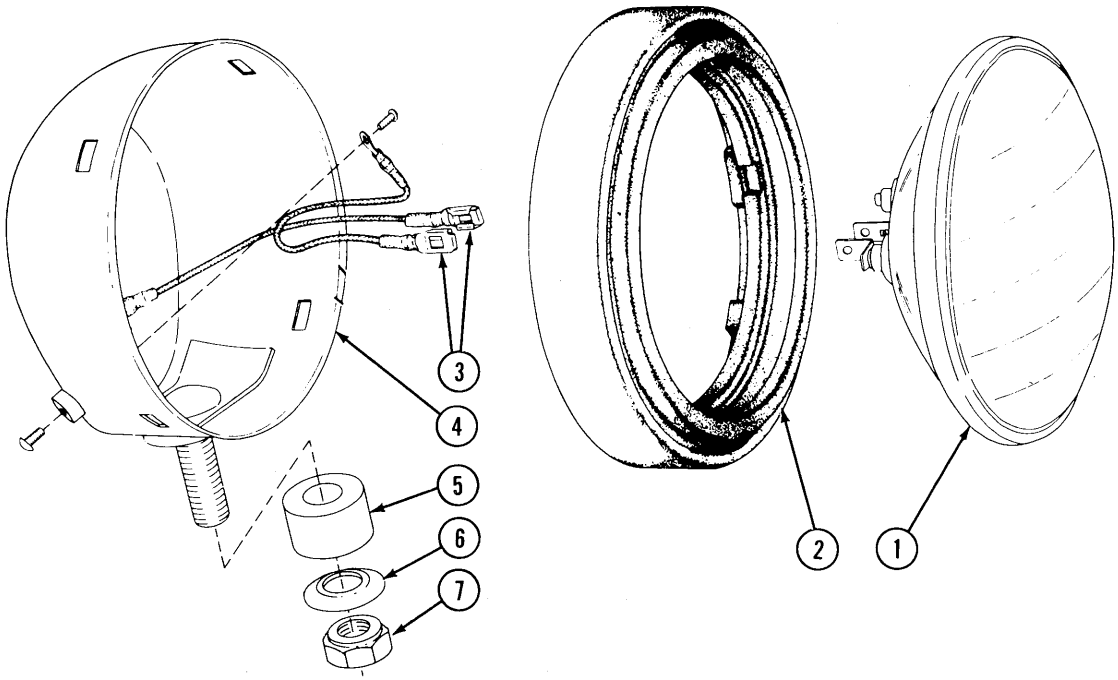

T-70750

LIGHT ASSEMBLY PARTS

USAGE: * FLOOD LIGHT ASSEMBLY 70621429
** HEAD LIGHT ASSEMBLY 73044810
*** FLOOD LIGHT ASSEMBLY 73059873 (ROPS CAB AND CANOPY) Special Equip.

NOTE: Quantity shown are for one light only.

ITEM	PART NO.	QTY. *	**	***	DESCRIPTION
1	70182763	1	-	-	SEALED BEAM (24 volt)
	73046497	-	1	-	SEALED BEAM (24 volt)
	73061207	-	-	1	SEALED BEAM (24 volt)
2	70621428	1	1	-	RETAINER (rubber)
	70621821	-	-	1	RETAINER (rubber)
3	70621724	2	2	-	CABLE, sealed beam (Includes terminals)
	70912731	1	1	-	SCREW, machine, #8 NC x 5/16"
4	73061208	-	-	1	SHELL ASSY.
	--------	1	1	-	BODY ASSY. (Not serviced separately)
	70912731	1	1	-	SCREW, machine, #8 NC x 5/16"
5	71006992	-	-	1	BUSHING
6	73061210	-	-	1	WASHER
7	70919440	-	-	1	NUT, safety, 1/2" NF

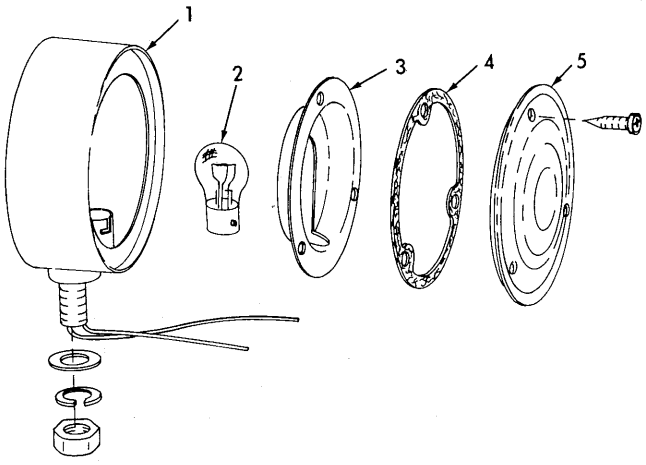

T-70713

TAIL LIGHT ASSEMBLY

ITEM	PART NO.	QTY.	DESCRIPTION
-	73044008	1	TAIL LIGHT ASSY. (Includes items 1 thru 5)
1	--------	1	BODY ASSY. (Not serviced separately) (Order 1-73044008 LIGHT ASSY.)
2	73039643	1	BULB
3	73036242	1	REFLECTOR
4	73036241	1	GASKET
5	73036240	1	LENS (red glass)

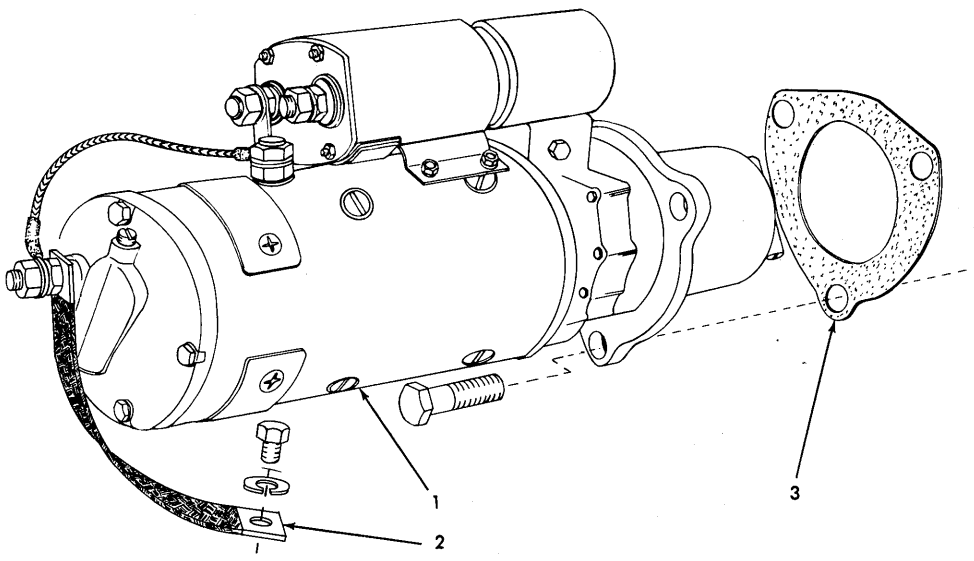

STARTER

ITEM	PART NO.	QTY.	DESCRIPTION
1	70690396	1	STARTER, (DELCO REMY #1114727) (Order parts from Local United Motors Service Agency)
	70921411	3	CAPSCREW, 5/8" NC x 1-1/2"
	70912942	3	LOCKWASHER, 5/8"
2	70630199	1	STRAP, ground
	70927219	1	CAPSCREW, 1/2" NC x 3/4"
	70906961	1	LOCKWASHER, 1/2" (Internal Tooth)
3	70631573	1	GASKET, starter mounting

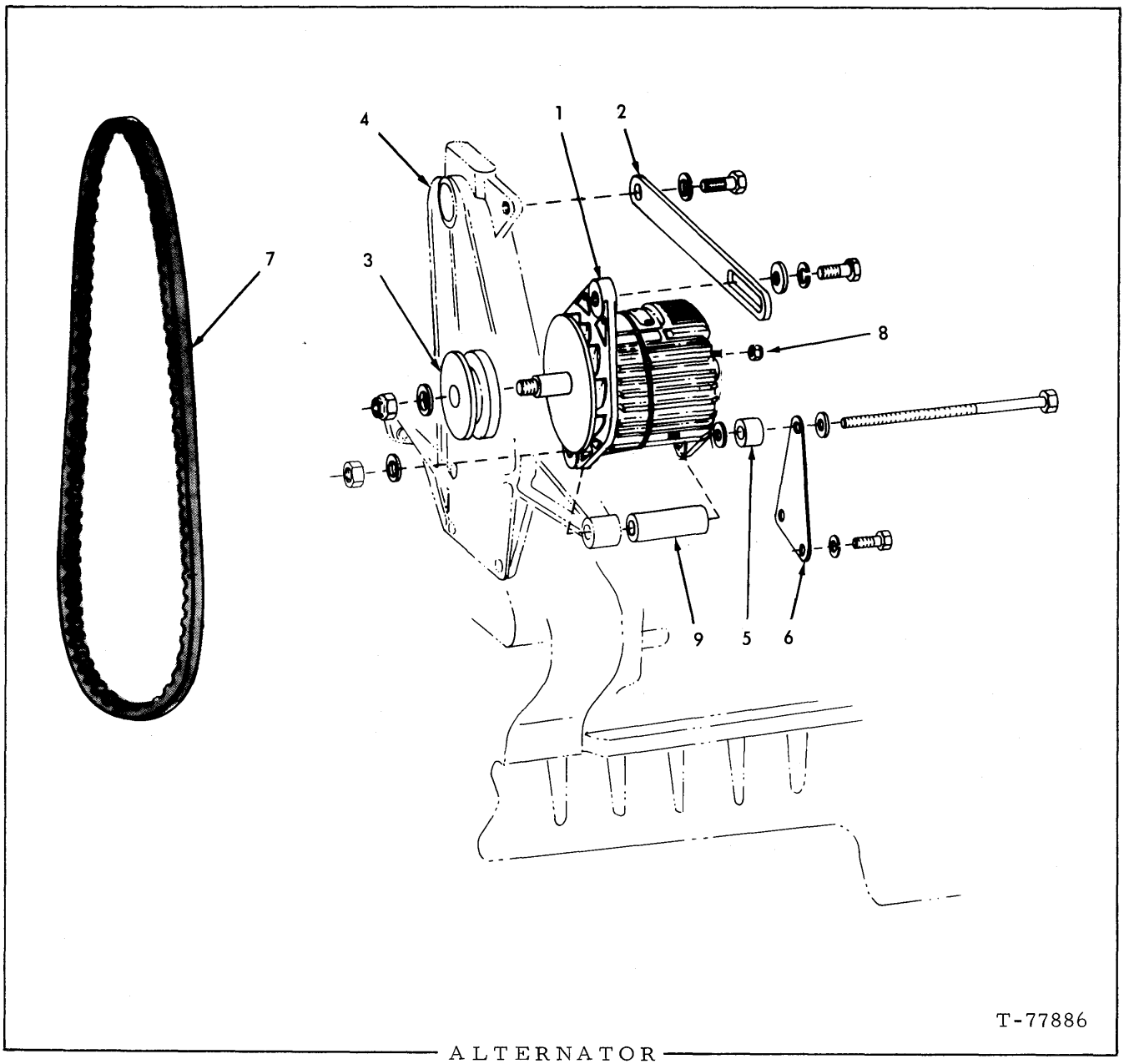

ALTERNATOR

ITEM	PART NO.	QTY.	DESCRIPTION	
1	74393317	1	ALTERNATOR, (Delco-Remy No. 1100061) (Standard. 30 amp capacity)	Order parts from local "United Motors" Service Dealer
	70662020	1	ALTERNATOR, (Delco-Remy No. 1117226) (Special. 50 amp capacity)	
	70917376	1	NUT, 12-24	
2	74393678	1	BRACE	
	70916311	2	CAPSCREW, 1/2" NC x 1-1/4"	
	70912441	2	LOCKWASHER, 1/2"	
	70677008	1	WASHER, plain	
3	74393668	1	PULLEY	

(Continued)

ITEM	PART NO.	QTY.	DESCRIPTION
3	74393668	1	PULLEY
4	--------	1	BRACKET (See FAN DRIVE)
5	74372722	1	SPACER
6	74394410	1	BRACKET
	70916310	2	CAPSCREW, 1/2" NC x 1"
	70912441	2	LOCKWASHER, 1/2"
7	74393680	1	BELT
8	70917376	1	NUT, 12-24
9	74393679	1	SPACER
	70916326	1	CAPSCREW, 1/2" NC x 7-1/2"
	74371107	3	WASHER, hardened (Use as required)
	70910325	1	NUT, 1/2" NC

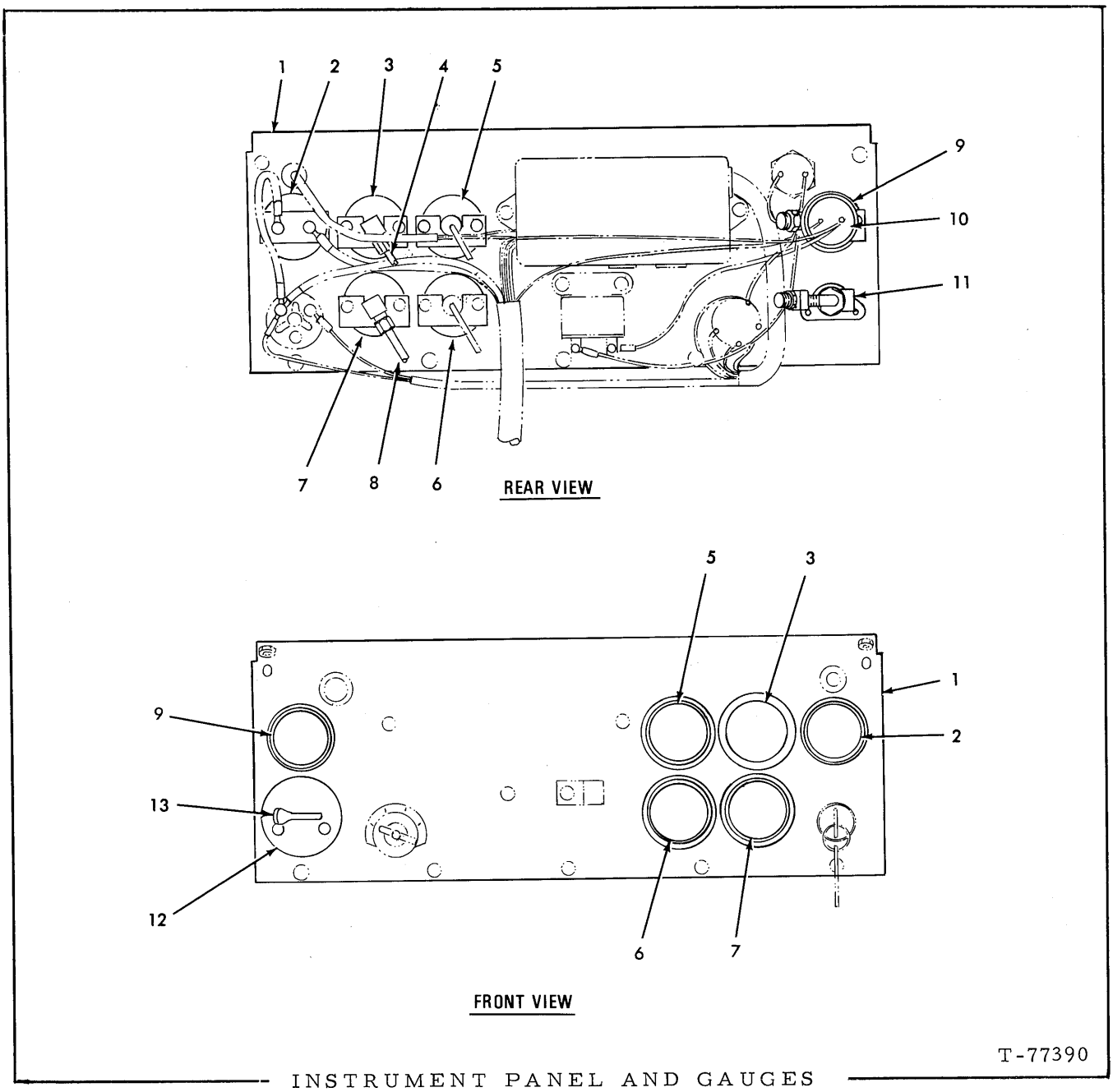

INSTRUMENT PANEL AND GAUGES

ITEM	PART NO.	QTY.	DESCRIPTION
1	70686230	1	PANEL
	70916081	7	SCREW, 1/4" x 1/2"
	70916622	7	NUT, 1/4" NC
2	--------	1	AMMETER (See page 241)
3	73055671	1	GAUGE ASSY., pressure, transmission
4	--------	1	TUBE (Order 150 inches of 3059021-0) (See NOTE below)
	70928800	1	ELBOW, female, 1/4" x 7/16"
	70928799	1	CONNECTOR, male, 1/4" x 7/16" straight thread

(Continued)

ITEM	PART NO.	QTY.	DESCRIPTION
5	70675482	1	GAUGE ASSY., temperature, converter
	70923163	1	CONNECTOR, 1/4" O. D. (Includes O-RING)
	70921883	1	O-RING
6	70675481	1	GAUGE ASSY., temperature, engine coolant
	70928799	1	CONNECTOR, male, 1/4" x 7/16" straight thread
	70901825	1	BUSHING, 1/4" x 1/8"
	70913938	1	TEE, 1/4"
	70926866	1	CLIP
7	70658293	1	GAUGE ASSY., pressure, engine oil
8	--------	1	TUBE (Order 185 inches of 73059021) (See NOTE below)
	70928800	1	ELBOW, female, 1/4" x 7/16"
	70928799	1	CONNECTOR, male, 1/4" x 7/16" straight thread
	70901825	1	BUSHING, 1/4" x 1/8"
9	73048635	1	GAUGE ASSY., pressure, air
	70920992	1	TEE, male, 1/8"
	70919663	1	ELBOW
	70914626	1	CONNECTOR, 1/4" O. D. x 1/8" tapered thread
10	--------	1	SWITCH, pressure, air (See page 138)
11	73031610	1	VALVE ASSY., control
	70920655	1	ELBOW, male, 1/8"
	70911017	1	ELBOW, 1/4" O. D. x 1/8" tapered thread
	70914626	1	CONNECTOR, 1/4" O. D. x 1/8" tapered thread
12	--------	1	DIAL, brake, parking (See PARKING BRAKE CONTROL)

NOTE: The factory will furnish 100 foot rolls of tubing. Dealer will furnish cut length or 100 foot rolls.

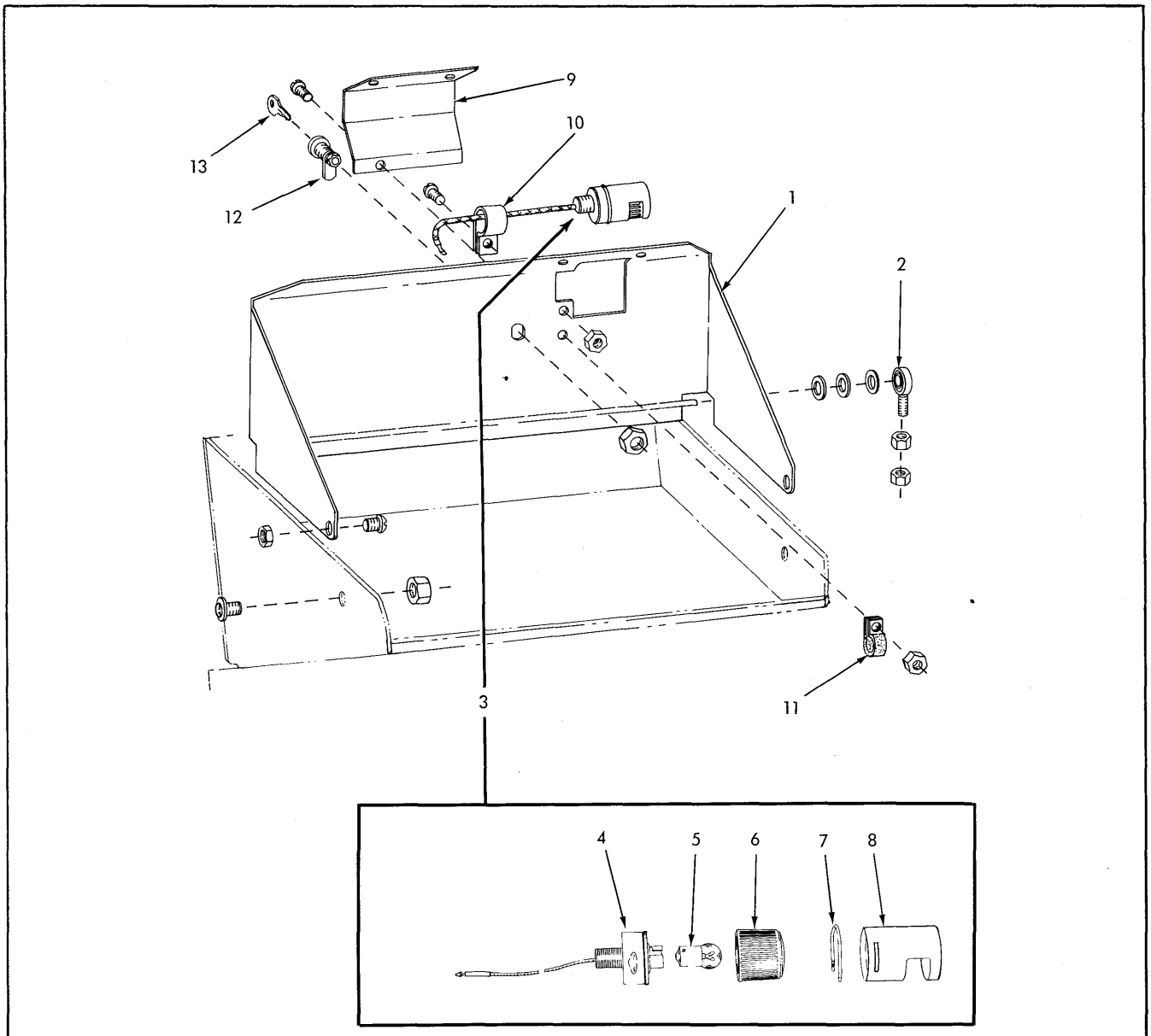

T-77392

INSTRUMENT PANEL COVER AND LIGHT

ITEM	PART NO.	QTY.	DESCRIPTION
1	70686212	1	COVER
	70916081	2	SCREW, 1/4" NC x 1/2"
	70916622	2	NUT, 1/4" NC
	70686213	2	DETENT
	70910510	2	NUT, 1/2" NC
2	70687496	2	END, rod
	70911114	6	WASHER, plain, 9/32" I. D., 5/8" O. D.
	70914192	4	NUT, 1/4" NF
3	70658641	1	LIGHT ASSY. (Includes items 4 thru 8)
4	--------	1	BASE ASSY. (Order item 3)

(Continued)

INSTRUMENT PANEL COVER AND LIGHT (Continued)

ITEM	PART NO.	QTY.	DESCRIPTION
5	70074452	1	BULB (24 VOLT)
6	70095267	1	LENS
7	70095265	1	SPRING, retaining
8	70659002	1	COVER
9	70689093	1	SHIELD
	70916081	3	SCREW, 1/4" NC x 1/2"
	70916622	3	NUT, 1/4" NC
10	70925606	1	CLAMP
	70916081	1	SCREW, 1/4" NC x 1/2"
	70916622	1	NUT, 1/4" NC
11	70929722	1	CLAMP
	70916081	1	SCREW, 1/4" NC x 1/2"
	70916622	1	NUT, 1/4" NC
12	73058015	1	LOCK ASSY. (Includes item 13)
13	73058910	1	KEY

"ALWAYS GIVE MODEL AND SERIAL NUMBER WHEN ORDERING PARTS"

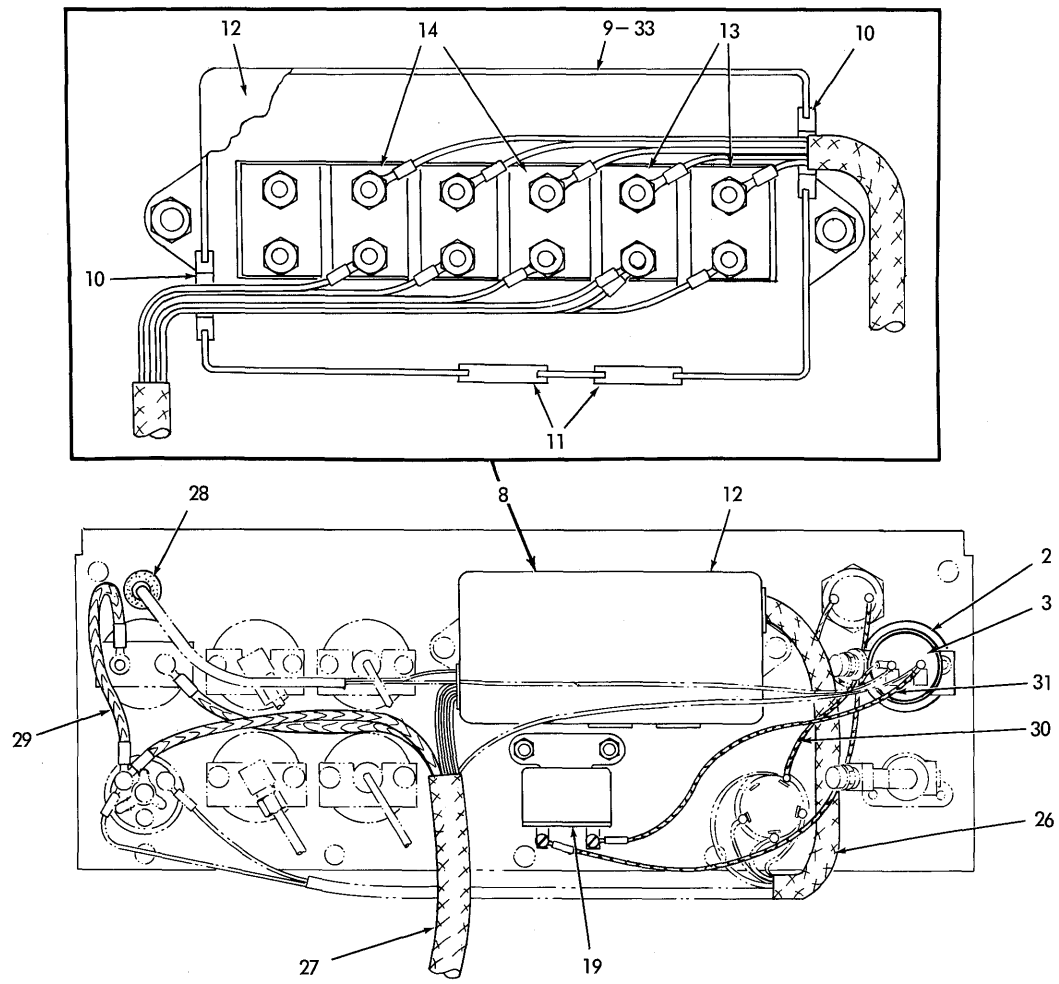

REAR VIEW

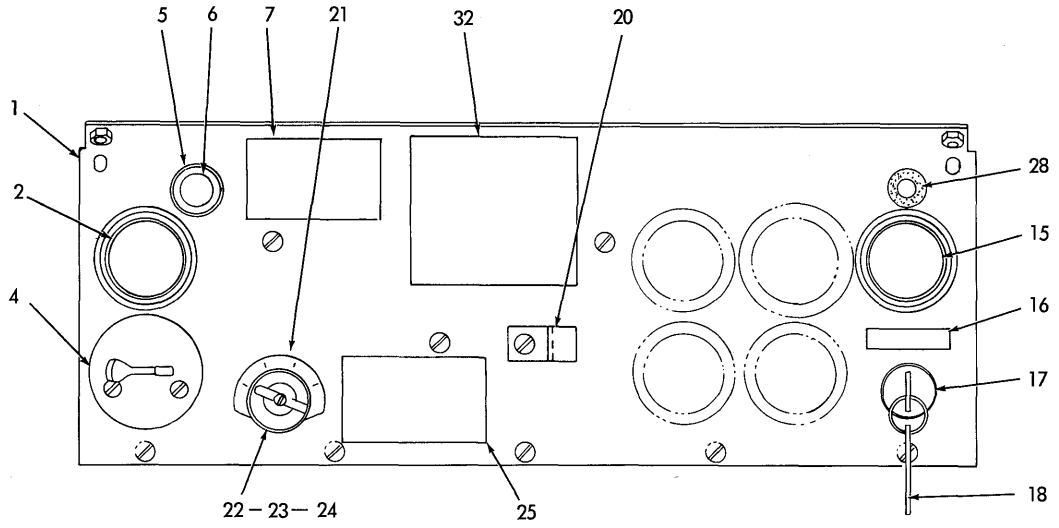

FRONT VIEW

T-77391

INSTRUMENT PANEL ELECTRICAL COMPONENTS

ITEM	PART NO.	QTY.	DESCRIPTION
1	--------	1	See INSTRUMENT PANEL AND GAUGES
2	--------	1	GAUGE, pressure, air (See page 237)
3	73062007	1	SWITCH, pressure, low air
4	--------	1	VALVE, control (See page 237)
5	73034558	1	LIGHT, warning, pressure, air
6	73034566	1	BULB
7	--------	1	STICKER
8	73057977	1	BOX, junction (Includes items 9 thru 14) (24 volt)
	70916081	2	SCREW, 1/4" NC x 1/2"
	70916622	2	NUT, 1/4" NC
9	--------	1	BODY, junction box (Order item 8)
10	73058528	2	GROMMET
11	73058527	2	GROMMET (Closed)
12	73058561	1	COVER
	70929117	2	SCREW, 1/4" x 1-3/4"
	70917365	2	LOCKWASHER, #10
13	73058351	4	BREAKER, circuit, 8 Amp.
	70916880	8	NUT, #10 NF
	70922711	8	LOCKWASHER, #10
	70924237	8	WASHER, plain, #10
14	73058529	2	BREAKER, circuit, 15 Amp.
	70916880	4	NUT, #10
	70922711	4	LOCKWASHER, #10
	70924237	4	WASHER, plain, #10
15	73048619	1	AMMETER ASSY.
16	--------	1	DECAL (See PAINTING AND MARKINGS)
17	70689096	1	SWITCH, ignition
18	73062381	1	KEY
19	73057952	1	BUZZER
	70916081	1	SCREW, 1/4" NC x 1/2"
	70916622	1	NUT, 1/4" NC
20	70686214	1	ANGLE
21	73057505	1	INSTRUCTION PLATE
22	73057960	1	SWITCH ASSY., light (Includes items 23, 24 and items indented below)
	70917393	5	SCREW, #8 NC x 3/8"
	70917395	5	LOCKWASHER, #8

(Continued)

INSTRUMENT PANEL ELECTRICAL COMPONENTS (Continued)

ITEM	PART NO.	QTY.	DESCRIPTION
23	73058917-0	1	KNOB
	70928595-8	1	SCREW, #8 NC x 5/8"
24	73058919-6	1	NUT, 11/16" NC
25	----------	1	DECAL (See PAINTING AND MARKING)
26	70689954-6	1	HARNESS
27	----------	1	HARNESS
28	70913233-3	1	GROMMET
29	70689951-2	1	WIRE ASSY.
30	70689953-8	1	WIRE ASSY.
31	70689952-0	1	WIRE ASSY.
32	----------	1	DECAL (See PAINTING AND MARKING)
33	----------	1	DECAL (See PAINTING AND MARKING)

MEMO

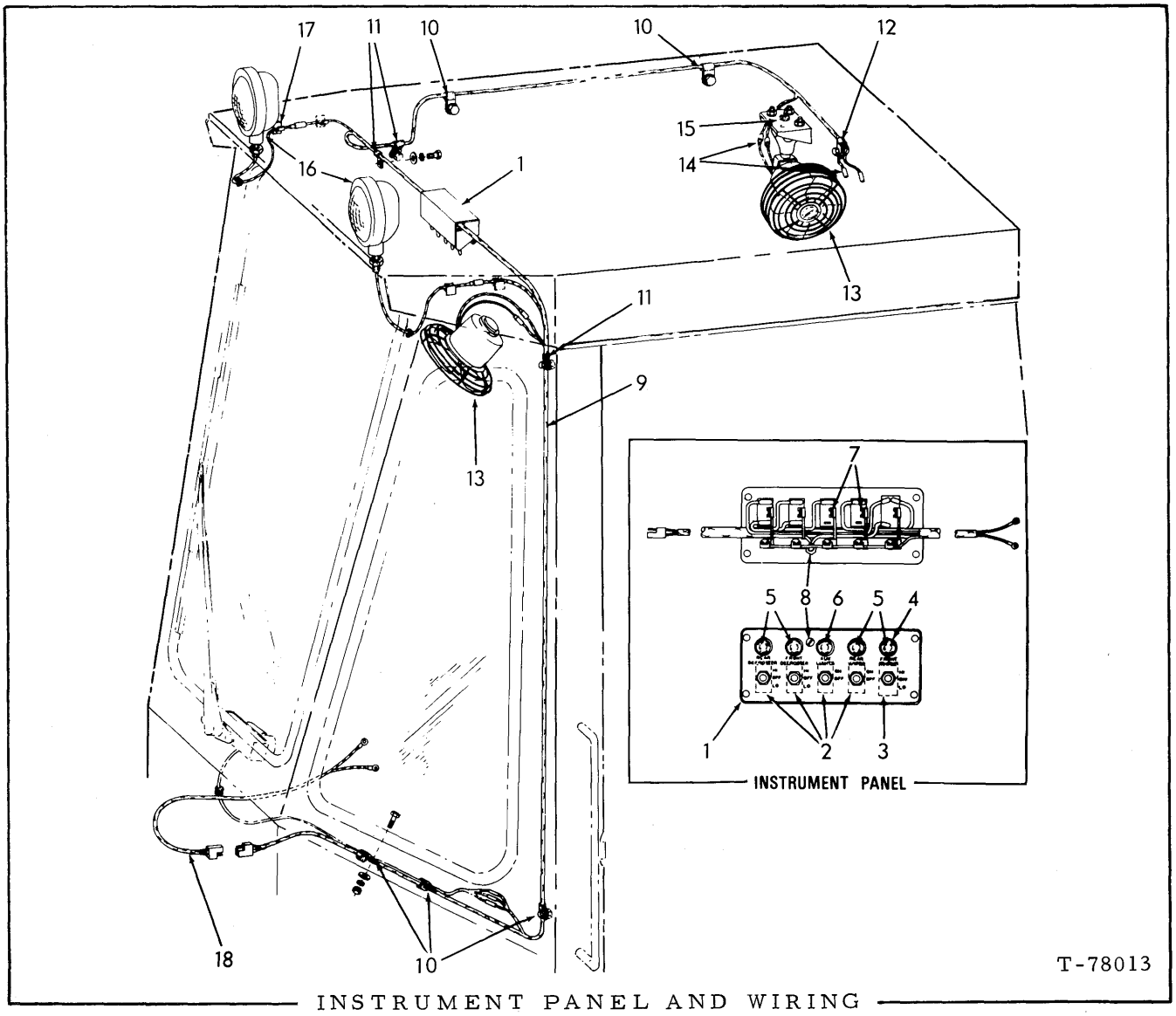

INSTRUMENT PANEL AND WIRING
(ROPS CAB)

USAGE: Special Equipment

ITEM	PART NO.	QTY.	DESCRIPTION
1	73059890	1	PANEL, instrument
	70925369	4	SCREW, #10 NF x 5/8"
	70909055	4	LOCKWASHER, #10 (Internal tooth)
2	73059891	4	SWITCH (Includes hex nut and round nut)
3	73059893	1	SWITCH (Includes hex nut and round nut) (Front Wiper)
4	74791157	5	HOLDER, fuse
5	73040013	4	FUSE, 3 amp.
6	73059920	1	FUSE, 10 amp.
7	73059894	5	WIRE

(Continued)

INSTRUMENT PANEL AND WIRING (Continued)

(ROPS CAB)

ITEM	PART NO.	QTY.	DESCRIPTION
8	70925369	1	SCREW, #10 NF x 5/8"
	70917365	1	LOCKWASHER, #10
	70917415	1	NUT, #10 NF
9	70691303	1	HARNESS
10	70928931	7	CLIP (Harness)
	70916284	5	CAPSCREW, 1/4" NC x 1/2"
	70916282	2	CAPSCREW, 1/4" NC x 7/8"
	70900816	7	WASHER, plain, 1/4"
	70904204	7	LOCKWASHER, 1/4"
	70911024	2	NUT, 1/4" NC
11	70925617	1	CLIP
	70916284	1	CAPSCREW, 1/4" NC x 1/2"
	70900816	1	WASHER, plain, 1/4"
	70904204	1	LOCKWASHER, 1/4"
12	70928654	1	CLIP (Harness, right side)
	70916284	1	CAPSCREW, 1/4" NC x 1/2"
	70900816	1	WASHER, plain, 1/4"
	70904204	1	LOCKWASHER, 1/4"
-	73059888	-	DEFROSTER FAN GROUP (Includes items 13 and 15)(Special Equipment)
13	73059875	2	FAN ASSY. (12 volt)(Serviced only as a unit)
	70926308	4	CAPSCREW, #10 NF x 3/4" (Front Fan)
	70925369	4	CAPSCREW, #10 NF x 5/8"
	70923212	8	WASHER, plain, #10
	70917365	8	LOCKWASHER, #10
	70917415	4	NUT, #10 NF (Rear Fan)
14	73052008	4	TERMINAL, male bullet.
15	73045633	1	GROMMET
-	73059879	-	FLOOD LIGHT GROUP (Includes items 16 and 17)(Special Equipment)
16	73059873	2	LIGHT, flood (12 volt) (See page 225)
17	73059884	2	CLIP
18	70691304	1	WIRE ASSY. (Connects from ignition switch to switch panel harness)

"ALWAYS GIVE MODEL AND SERIAL NUMBER WHEN ORDERING PARTS"

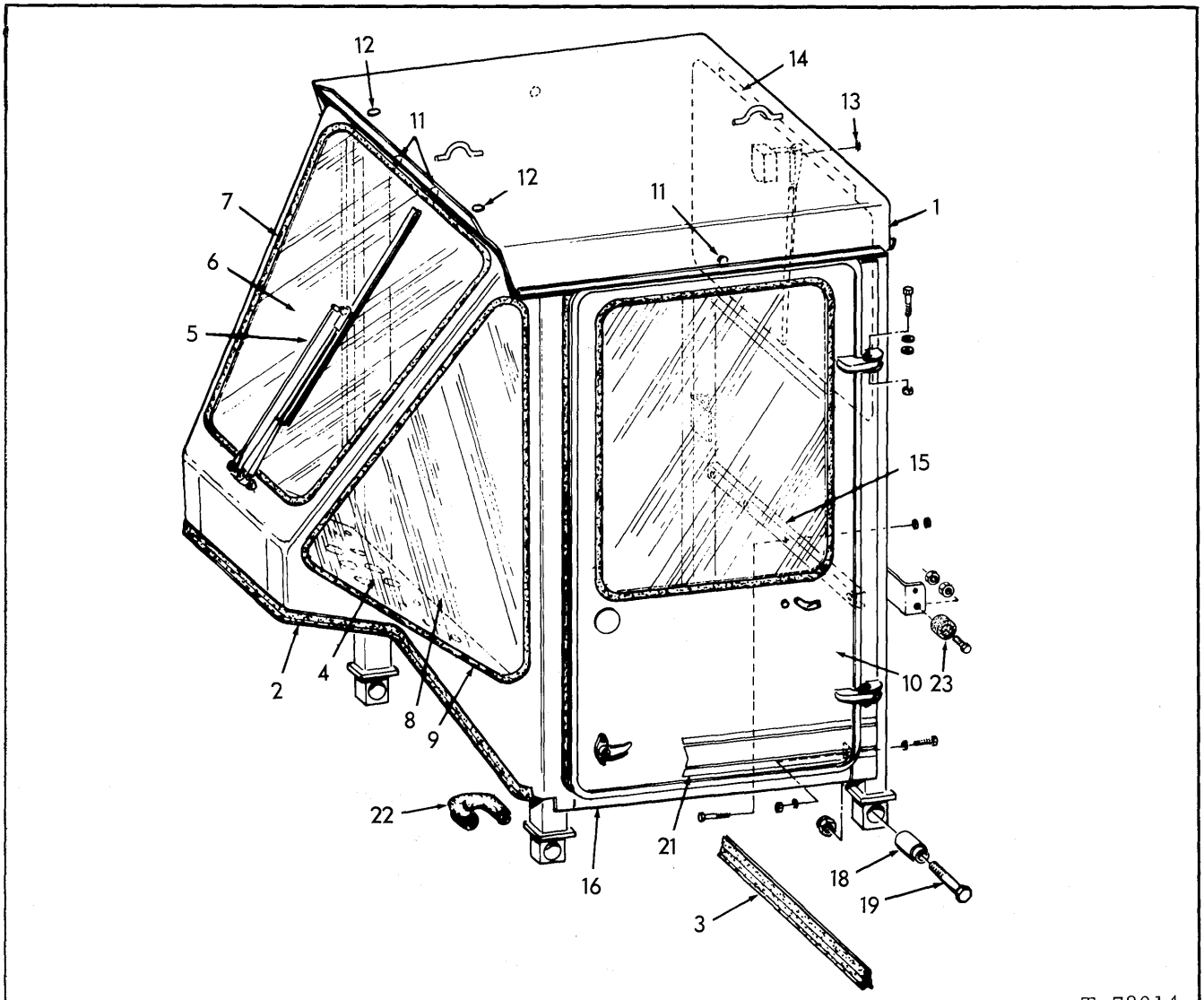

CAB AND WIPER ASSEMBLY

USAGE: Special equipment

ITEM	PART NO.	QTY.	DESCRIPTION
1	--------	-	CAB & WIPER ASSY. (MACHINERY ITEM) (See MACHINERY MANUAL)
2	--------	-	CHANNEL (Order 80" of 73059943) (See NOTE)
3	--------	-	CHANNEL (Order 42" of 73059943) (See NOTE)
4	--------	1	PANEL ASSY., instrument (See page 242)
5	--------	1	WIPER GROUP (See page 252)
6	70691128	1	GLASS (REFER TO GLASS MANUAL 70626019)
7	--------	-	CHANNEL (Order 134" of 73059952) (See NOTE)
8	70691127	2	GLASS (REFER TO GLASS MANUAL 70626019)
9	--------	2	CHANNEL (Order 108" of 73059952) (See NOTE)

(Continued)

ITEM	PART NO.	QTY.	DESCRIPTION
10	-------	2	DOOR ASSY. (See page 248)
	70920995	4	CAPSCREW, 3/8" NC x 2"
	70911115	16	WASHER, plain, 3/8"
	70918308	4	NUT, locking, 3/8" NC
11	73059832	4	PLUG
12	73059831	2	PLUG
13	70921113	1	PLUG, 11/16", button type
14	-------	1	WINDOW ASSY., rear (See page 250)
	70915406	5	CAPSCREW, 1/4" NC x 3/4"
	70904204	5	LOCKWASHER, 1/4"
	70900816	5	WASHER, plain, 5/16"
15	70690633	1	PLATE
	70922287	5	CAPSCREW, 3/8" NC x 1-3/4"
	70904206	5	LOCKWASHER, 3/8"
	70910324	5	NUT, 3/8" NC
16	70691289	2	PLATE
	70922300	4	CAPSCREW, 3/8" NC x 3/4"
	70911115	4	WASHER, plain, 3/8"
	70904206	4	LOCKWASHER, 3/8"
	70910324	4	NUT, 3/8" NC
17	73059954	1	ADHESIVE, 5 ounce tube (Use as required)
18	70684837	4	BUSHING
19	70929311	4	CAPSCREW, 1-1/4" NC x 6-1/2"
	70917792	4	NUT, locking, 1-1/4" NC
21	-------	-	STRIP, decal (Order 48" of 70691022) (See NOTE)
22	-------	-	SEAL (Order 25 feet of 70691562) (See NOTE A)
23	74788327	2	BUMPER
	70918237	2	CAPSCREW, 1/4" NC x 1-1/4"
	70910880	4	NUT, 1/4" NC

NOTE: Factory provides 100 foot rolls only.
Dealer will provide cut length or full roll.

NOTE A: Factory provides 25 foot rolls only.
Dealer will provide cut length or full roll.

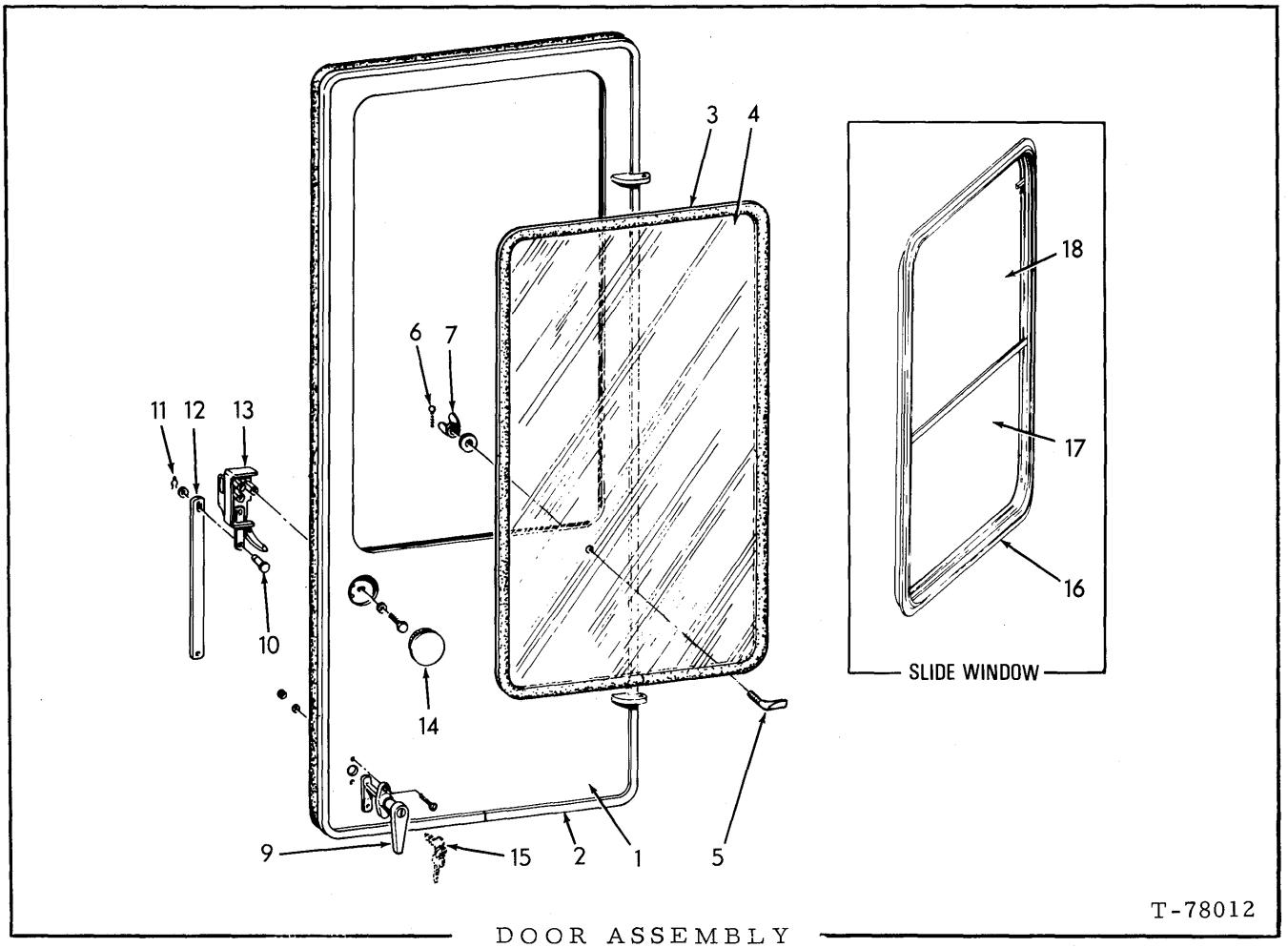

DOOR ASSEMBLY
(ROPS CAB)

USAGE: Special equipment

ITEM	PART NO.	QTY.	DESCRIPTION
-	70691003	1	DOOR ASSY., left (Includes items 1 thru 14)
-	70691004	1	DOOR ASSY., right (Includes items 1 thru 14)
1	--------	1	DOOR, left and right (Order complete DOOR ASSY.)
2	--------	-	STRIP (Order 177" of 70690108) (See NOTE)
3	--------	-	CHANNEL (Order 102" of 73069952) (See NOTE)
4	73061150	1	GLASS (Refer to GLASS MANUAL 70626019)
5	70681455	1	HOOK, handle
6	70906759	1	SCREW, drive, #4 x 1/4"
7	70085559	1	NUT, wing
	70067924	1	WASHER

(Continued)

DOOR ASSEMBLY (Continued)
(ROPS CAB)

ITEM	PART NO.	QTY.	DESCRIPTION
9	73059675	1	HANDLE ASSY. (Includes 1 KEY 73061191)
	70922704	2	SCREW, #10 NF x 3/4" flat hd.
	70904203	2	LOCKWASHER, #10
	70926024	2	NUT, #10 NF
	73061191	1	KEY
10	70920523	2	PIN, clevis, 1/4"
	70911114	2	WASHER, plain, 1/4"
11	70923086	2	PIN, retainer, 1"
12	73059621	1	BAR
13	70691101	1	LOCK ASSY., left (Serviced only as a unit)
	70691102	1	LOCK ASSY., right (Serviced only as a unit)
	70922763	3	CAPSCREW, 3/8" NC x 1"
	70911115	9	WASHER, plain, 3/8"
14	70921447	1	PLUG, button type
16	73059604	1	WINDOW ASSY., slide (Includes items 19 and 20) (Also order item 3) (Optional equipment) (Order service parts from Young Window, Inc., Brook and Colwell Rds., Conshohocken, PA 19428) (Be sure to state model no. 250001 when ordering parts).
17	73061377	1	GLASS (Not serviced) (Refer to GLASS MANUAL 70626019)
18	73061376	1	GLASS (Not serviced) (Refer to GLASS MANUAL 70626019)

NOTE: The factory provides 100 foot rolls only.
Dealer will provide cut length or full roll.

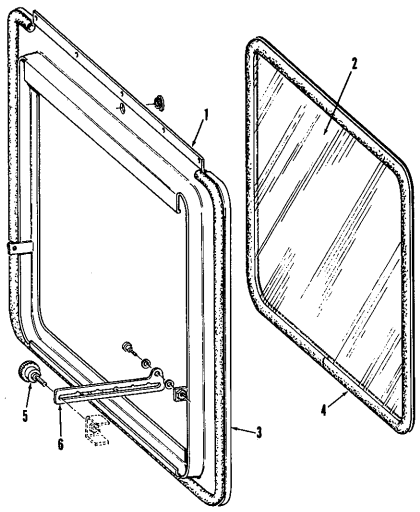

T-78010

REAR WINDOW ASSEMBLY

USAGE: Special equipment

ITEM	PART NO.	QTY.	DESCRIPTION
1	70690888	1	FRAME
	70921113	1	PLUG, 11/16", button type
2	70691096	1	GLASS (Refer to GLASS MANUAL 70626019)
3	--------	-	STRIP (Order 107" of 70690108)(See NOTE)
4	--------	-	CHANNEL (Order 118" of 70690108) (See NOTE)
5	73061276	2	KNOB
6	73061275	2	ARM, adjuster
	70911115	6	WASHER, plain, 3/8" (Use as required)
	70929613	2	SCREW, 3/8" NC x 3/8" (Shoulder bolt, hex-socket)

NOTE: The factory supplies 100 foot rolls only.
Dealer will supply cut length or full roll.

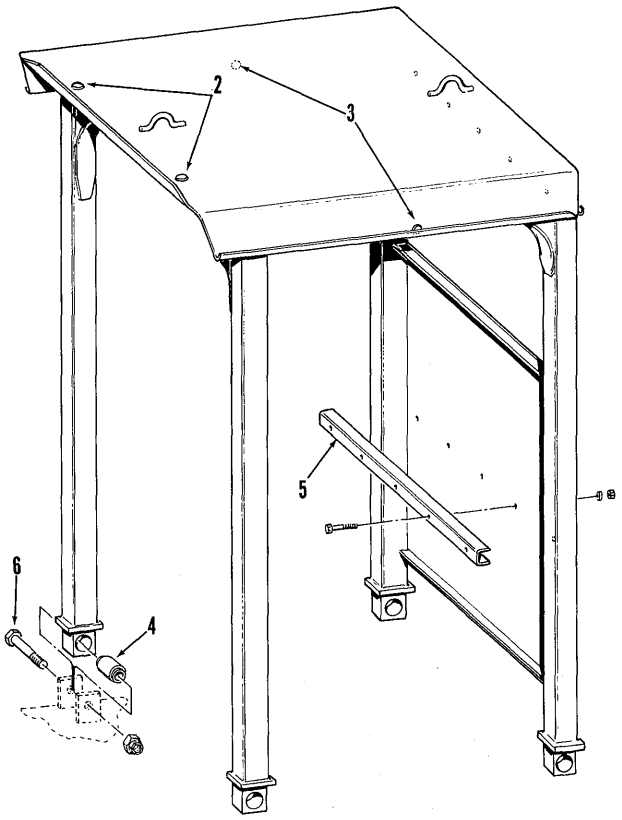

T-78011

CANOPY ASSEMBLY (ROPS)

USAGE: Special Equipment

ITEM	PART NO.	QTY.	DESCRIPTION
1	70688399	1	CANOPY ASSY. (Includes items 2 thru 7)
2	73059831	2	PLUG
3	73059832	2	PLUG
4	70684837	4	BUSHING
5	- -------	1	STIFFENER CHANNEL (Not serviced)
	70923470	5	CAPSCREW, 3/8" NC x 1-1/2"
	70904206	5	LOCKWASHER, 3/8"
	70910324	5	NUT, 3/8" NC
6	70929311	4	CAPSCREW, 1-1/4" NC x 6-1/2"
	70917792	4	NUT, 1-1/4" NC

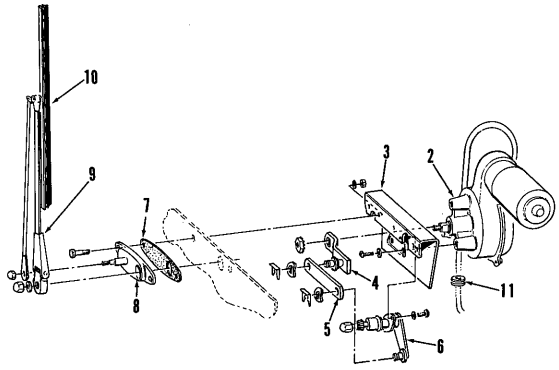

FRONT WIPER

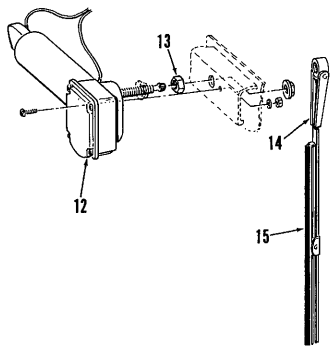

REAR WIPER
SPECIAL EQUIPMENT

T-78009

WIPER GROUPS

NOTE: See page 246)

USAGE: Special Equipment

ITEM	PART NO.	QTY.	DESCRIPTION
1	70691474	1	BRACKET AND MOTOR ASSY. (Includes items 2 thru 6)
2	73059838	1	MOTOR, wiper (24 volt)
	70914120	3	SCREW, 1/4" NF x 3/4"
	70914105	3	LOCKWASHER, 1/4"
3	73060178	1	BRACKET
4	73061046	1	ARM, crank
5	73060177	1	LINK
	70639073	2	WASHER, spring 1/4"
	70639074	2	CLIP, spring 1/4"
6	73059928	1	SHAFT ASSY.
	70922121	2	SCREW, #10 NF x 3/8"
	70922711	2	LOCKWASHER, #10, External Tooth
7	70691477	1	GASKET
8	70691476	1	PIVOT ASSY.
	70916400	2	CAPSCREW, 1/4" NF x 3/4"
	70904204	2	LOCKWASHER, 1/4"
	70691479	1	NUT, 1/4" NF
9	70691475	1	ARM, wiper
10	73057227	1	BLADE
11	70923510	1	GROMMET

(Continued)

WIPER GROUPS (Continued)

ITEM	PART NO.	QTY.	DESCRIPTION
-	70690274	1	WIPER GROUP, rear (Includes items 12 thru 15)(Special Equip)
12	73059938	1	MOTOR, wiper (24 volt)
	70900558	1	SCREW, #10 NF x 1/2"
	70904203	1	LOCKWASHER, #10
	70917415	1	NUT, #10 NF
13	73051895	1	NUT, 5/8" NF
14	70691361	1	ARM, wiper
15	70687460	1	BLADE, wiper

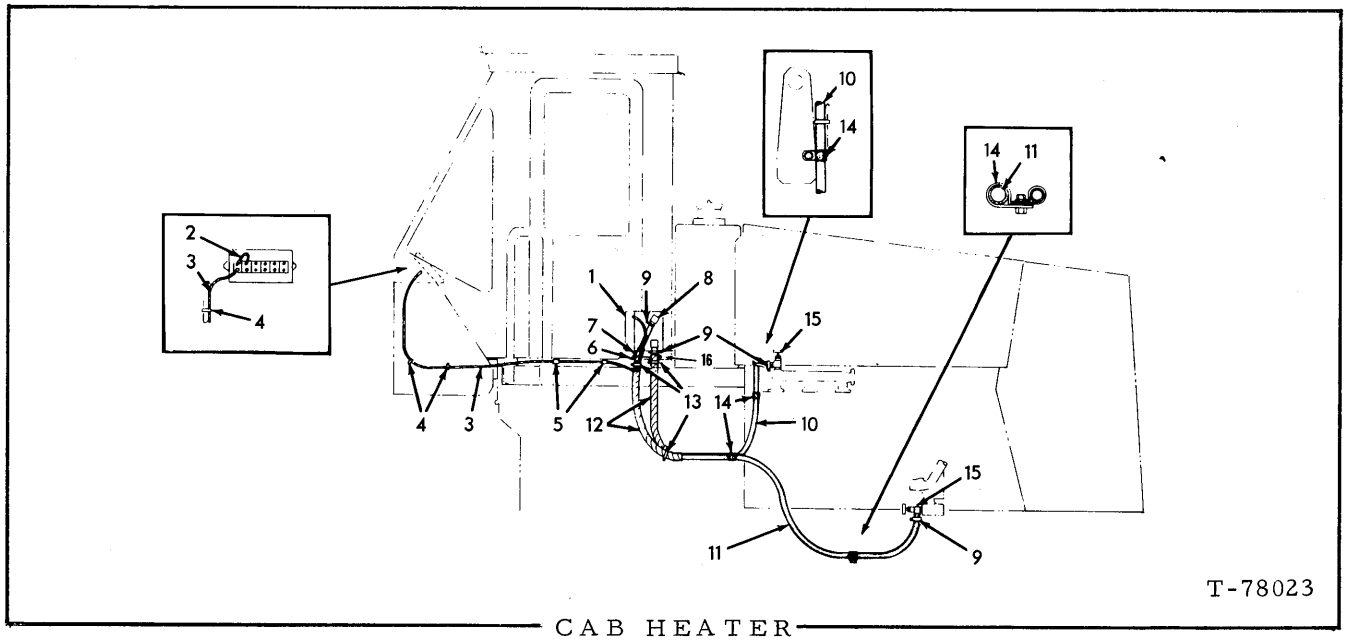

CAB HEATER

USAGE: Special Equipment

ITEM	PART NO.	QTY.	DESCRIPTION
1	70691414	1	HEATER ASSY. (Model No. B 6113-SS-73 24V) (Order parts from Bergstrom Mfg. Co., 2390 Blackhawk Rd., Rockford, IL 61109) Order parts by Model number only.
2	73058126	1	WIRE ASSY.
3	70691472	1	WIRE ASSY.
4	73044015	9	TIE, plastic
5	73059884	2	CLIP
6	70922763	4	CAPSCREW, 5/16" NC x 1"
	70904206	4	LOCKWASHER, 3/8"
	70911115	4	WASHER
	70911026	4	NUT, 3/8" NC
7	70915809	4	CAPSCREW, 5/16" NC x 3/4"
	70904205	4	LOCKWASHER, 5/16"
	70910335	4	WASHER, plain, 5/16"
8	70925063	2	ELBOW, 90°, 3/4"
9	70921911	4	CLAMP, No. 12, 11/16" to 1-1/4"
10	70690412	1	HOSE, 3/4" I. D. x 65-1/2"
11	70691143	1	HOSE, 3/4" I. D. x 100"
12	73059192	2	HOSE, protective, spiral cut
13	70921912	4	CLAMP, No. 24, 1-1/16" to 2"
14	70927388	4	CLAMP
15	73058884	2	VALVE
16	73057773	2	BRACKET

PAINTING AND MARKING

(Not Illustrated)

ITEM	PART NO.	QTY.	DESCRIPTION
1	70925109	-	ENAMEL, yellow, quart can (50-60 semi-gloss)
	70925433	-	ENAMEL, black, quart can (50-60 semi-gloss)
2	70925110	-	ENAMEL, yellow, gallon can (50-60 semi-gloss)
3	70925108	-	ENAMEL, yellow, 12 oz. pressurized spray-type can (50-60 semi-gloss)
4	70924535	2	TRANSFER (Allis-Chalmers trademark)(Applied to hood)
5	70694433	2	DECAL, "F-A Fiat-Allis" (Applied to engine hood)
	70924553	2	DECAL, "Allis-Chalmers" (Applied to engine hood)
6	70694425	1	STICKER, "Fiat-Allis" trademark (Applied to front of unit)
	70924457	1	STICKER, "Allis-Chalmers" trademark (Applied to front of unit)
7	70689123	1	STICKER, hydraulic filter serivce (Applied to top of hood)
8	70687655	1	STICKER, bucket control (Applied to remote control tower)
9	73048897	1	STICKER, downshift warning (Applied to instrument panel)
10	73046066	1	STICKER, air restriction indicator (Applied to air intake stack)
11	73050281	1	STICKER, warning, low air pressure (Applied to instrument panel)
12	73048898	1	STICKER, transmission control (Applied to top of transmission control)
13	70689122	1	STICKER, lube and service guide (Applied to left front fender)
14	73105127	1	STICKER, caution (Applied to alternator)
15	73054785	1	STICKER, fuel shut-off (Applied to remote control tower)
16	73054975	1	DECAL, oil level (Applied to hydraulic tank for sight gauge)
17	70682968	1	TRANSFER, caution, fasten seat belts (Applied to seat shell)
18	73057767	1	DECAL, circuit breaker box (Applied to circuit box)
19	73058026	1	DECAL, key switch instructions (Applied to instrument panel)
20	70688188	1	DECAL, starting and stopping instructions (Applied to instrument panel)
21	73061463	1	ACTIVATOR (pint can)(Use as required to improve adhesive of stickers)
22	73058881	2	DECAL, warning (Applied to frame)
23	73104936	2	TRANSFER, battery instruction (Applied to underside of battery covers and under right hand side of hood)
24	70691966	1	TRANSFER, export loading instructions (Applied to left hand side of frame)
25	70694438	1	DECAL, "Fiat-Allis" (Applied to counterweight)
	70924555	1	DECAL, "Allis-Chalmers" (Applied to counterweight)
26	70659160	1	STICKER, air cleaner (Applied to air cleaner)
27	70621343	2	TRANSFER, lube oil filter
28	70659539	1	TRANSFER, heavy duty lube oil filter
29	70689959	2	EMBLEM, model designation 945 (Applied to radiator support) (Allis-Chalmers application)
30	73062868	1	DECAL, strip (Fiat-Allis)(Applied to bonnet, hood, radiator support and front frame)
	73062868	1	DECAL, strip (Allis-Chalmers)(Applied to bonnet, hood and radiator support)

(Continued)

PAINTING AND MARKING (Continued)

ITEM	PART NO.	QTY.	DESCRIPTION
31	70691020	2	EMBLEM, 945 (Applied to front and rear of unit)
	70694464	3	EMBLEM, 945 (Appied to front frame)
32	70687656	1	STICKER, boom control (Applied to remote control tower)
33	73062934	1	DECAL KIT, Fiat-Allis (Includes items 5 thru 28 & 30 thru 32)
	70692116	1	DECAL KIT, Allis-Chalmers (Includes items 4 thru 32)

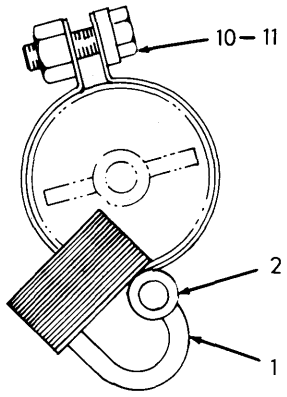

ENGINE OIL FILLER

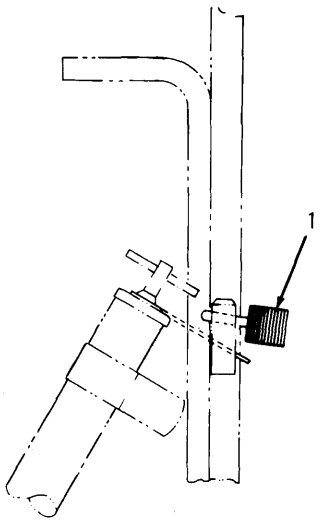

TRANSMISSION FILLER

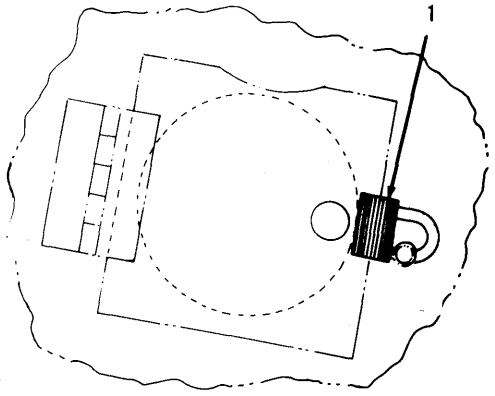

RADIATOR TANK FILLER

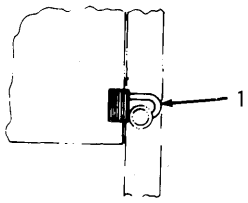

BATTERY BOX COVER

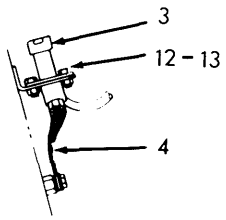

ELECTRICAL SHUT-OFF

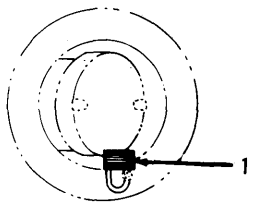

FUEL TANK FILLER

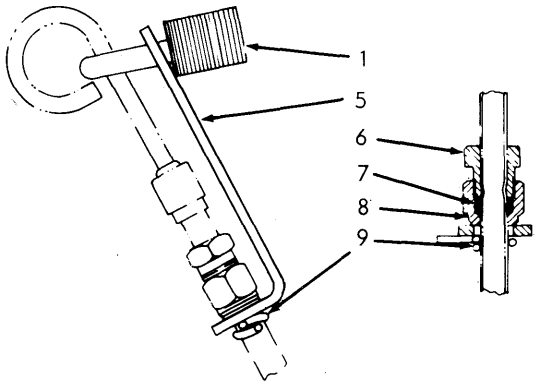

ENGINE OIL DIPSTICK

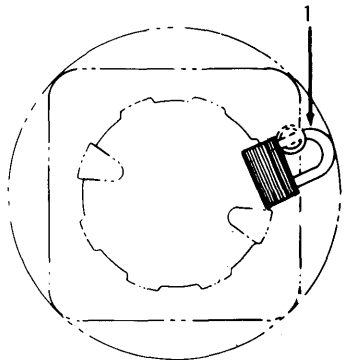

HYDRAULIC TANK FILLER

T-78717

VANDALISM PROTECTION PARTS

USAGE: Special Equipment

ITEM	PART NO.	QTY.	DESCRIPTION
1	70928052	8	PADLOCK
2	70683437	1	COLLAR WELD ASSY.
3	70096908	1	SWITCH
4	70062168	1	STRAP
5	70659175	1	ANGLE
6	70650178	1	NUT
7	70925164	1	FERRULE
8	70925162	1	NUT, tube, 3/8"
9	74254980	1	CLAMP
10	70677006	1	WASHER
11	70921076	1	CAPSCREW, 3/8" NC x 1-1/4"
12	70927541	2	CAPSCREW, 1/4" NC x 3/4"
13	70911024	2	NUT, hex, 1/4" NC

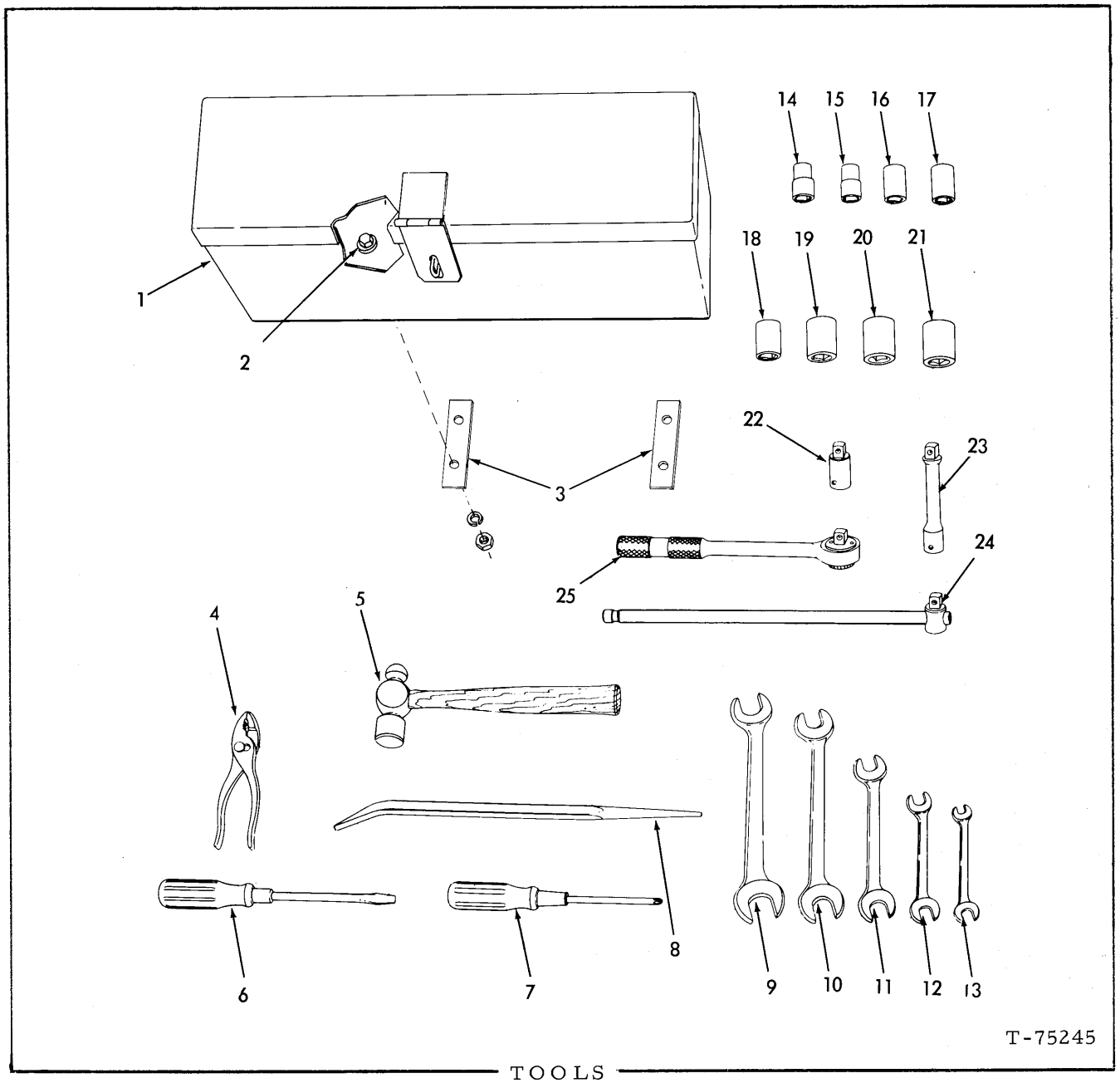

TOOLS

USAGE: Special Equipment

NOTE: For other recommended service tools, see Special Tool, Instrument & Equip. Catalog.

ITEM	PART NO.	QTY.	DESCRIPTION
1	70604943	1	BOX, tool
2	70920995	4	CAPSCREW, 3/8" NC x 2"
	70677006	4	WASHER, plain, 3/8"
	70915891	4	NUT, 3/8" NC
3	70691445	2	BAR, tool box mounting
4	70012389	1	PLIERS, slip joint, 6"
5	70012387	1	HAMMER, ball peen, 1-lb.

(Continued)

TOOLS (Continued)

ITEM	PART NO.	QTY.	DESCRIPTION
6	7 0036268	1	SCREWDRIVER, 9-3/4" long
7	7 0914732	1	SCREWDRIVER, Phillips #2
8	7 0052371	1	BAR, pinch, 16" long
9	7 0050611	1	WRENCH, open end, double head, 15°, 15/16" and 1-1/16"
10	7 0050610	1	WRENCH, open end, double head, 15°, 3/4" and 7/8"
11	7 0050609	1	WRENCH, open end, double head, 15°, 5/8" and 3/4"
12	7 0050608	1	WRENCH, open end, double head, 15°, 1/2" and 9/16"
13	7 0050607	1	WRENCH, open end, double head, 15°, 5/16" and 3/8"
14	7 0914709	1	SOCKET, 1/2" square drive, 1/2" hex
15	7 0914710	1	SOCKET, 1/2" square drive, 9/16" hex
16	7 0914711	1	SOCKET, 1/2" square drive, 5/8" hex
17	7 0914712	1	SOCKET, 1/2" square drive, 11/16" hex
18	7 0914713	1	SOCKET, 1/2" square drive, 3/4" hex
19	7 0914714	1	SOCKET, 1/2" square drive, 7/8" hex
20	7 0914715	1	SOCKET, 1/2" square drive, 15/16" hex
21	7 0914716	1	SOCKET, 1/2" square drive, 1" hex
22	7 0914717	1	BAR, extension, socket, 1/2" drive, 2" long
23	7 0914718	1	BAR, extension, socket, 1/2" drive, 5" long
24	7 0050612	1	HANDLE, socket, sliding T, 1/2" square drive, 15" long
25	7 0914719	1	HANDLE, socket, ratchet, 1/2" square drive
26	7 0688577	1	BRAKE TOOL (Not Illustrated)

Part No.	Page
70012389	259
70023633	201
70023633	107
70023633	114
70023633	125
70023633	80
70023756	77
70033288	122
70035250	115
70035250	120
70036268	260
70043881	51
70050607	260
70050608	260
70050609	260
70050610	260
70050611	260
70050612	260
70052371	260
70053100	49
70054882	162
70054882	173
70054890	122
70061655	77
70061656	77
70061671	77
70062168	258
70063890	35
70063891	35
70067487	196
70067884	76
70067924	248
70074452	239
70076469	227
70076572	227
70078810	107
70080758	35
70081614	76
70081627	77
70082322	121
70082323	121
70082443	35
70082444	35
70082449	34
70082487	35
70082488	35
70082489	35
70082490	35
70082608	76
70084432	121
70084897	35
70084899	35
70085559	248
70088491	215
70088735	121
70089107	70
70089894	70
70091855	195
70092652	70
70095265	239
70095267	239
70095575	77
70096815	35
70096816	35
70096908	258
70097354	52
70098292	201
70125786	118
70162379	225
70166697	125
70169832	225
70177179	128
70177321	128
70177322	128
70177323	128
70177324	128
70179657	225
70179658	225
70180016	225
70180586	135
70181478	141
70181605	158
70181605	81
70182763	231
70184225	225
70184550	154
70184595	155
70185243	125
70185244	125
70185606	213
70186848	174
70187300	174
70188662	213
70188771	162
70188771	173
70189311	125
70191827	172
70191995	183
70191995	156
70194129	178
70194130	178
70194132	178
70194132	164
70194136	178
70194165	164
70194166	164
70194533	101
70194541	84
70194585	87
70194585	8
70194679	101
70194679	8
70194680	101
70195846	178
70196735	139
70196736	135
70196736	139
70196898	139
70197372	33
70197570	62
70197576	63
70197588	64
70197805	64
70197806	64
70197810	64
70197824	64
70198780	64
70210024	75
70229210	33
70229210	35
70243526	226
70243527	226
70243528	226
70250545	226
70459812	35
70510313	149
70604289	166
70604943	259
70611919	129
70615630	183
70618024	162
70621343	255
70621428	231
70621429	229
70621579	147
70621724	231
70621821	231
70624487	195
70624487	215
70626019	1
70626543	193
70626543	221
70626982	107
70628736	107
70629755	52
70630199	233
70630540	34
70631573	233
70631788	109
70632971	227
70636102	157
70637740	1
70638413	196
70639073	252
70639074	252
70639388	229
70640676	229
70640727	229
70641027	201
70641031	111
70646532	111
70647108	201
70647122	201
70647151	201
70649779	162
70650178	258
70650509	49
70650901	212
70650944	230
70651109	179
70651109	165
70653570	195
70653570	107
70654565	76
70654840	49
70655452	11
70657743	227
70658241	164
70658293	237
70658509	62
70658633	62
70658641	238
70659002	239
70659160	255
70659175	258
70659387	64
70659539	255
70660387	77
70660480	77
70660557	76
70660606	77
70661354	77
70662020	234
70662468	201
70663850	1
70663940	201
70663977	201
70664000	201
70664298	179
70664343	64
70664694	179
70664867	48
70664960	201
70665095	179
70665095	164
70665096	179
70665096	164
70665097	179
70665097	164
70665098	179
70665098	164
70665099	179
70665099	164
70665237	199
70665726	202
70665767	202
70665930	165
70666243	176
70666244	176
70666245	176
70666421	201
70666422	201
70666423	201
70666564	202
70666565	202
70666566	202
70666567	202
70666568	202
70666569	202
70666570	202
70666571	201
70666572	201
70666573	201
70666634	202
70666654	202
70667252	115
70667252	120
70667252	9
70667594	164
70667676	33
70668251	48
70668252	48
70668262	48
70668263	49
70668452	178
70668804	48
70668805	48
70668806	49
70669434	111
70669503	110
70669503	111
70669526	53
70669770	121
70671325	202
70671497	111
70671498	111
70671499	111
70671515	117
70671522	117
70671532	220
70671533	224
70671555	220
70671556	221
70671558	193
70671558	221
70671575	187
70671576	220
70671613	111
70671616	111
70671617	111
70671632	227
70671661	183
70671662	183
70671663	183
70671667	182
70671751	179
70671753	178
70671754	178
70671974	202
70672115	115
70672118	115
70672120	115
70672134	115
70672137	217
70672231	113
70672262	187
70672262	193
70672262	220
70672289	113
70672397	221
70672398	221
70672689	217
70672830	167
70672913	49
70672923	187
70672926	186
70672929	186
70672972	51
70673065	117
70673066	112
70673067	114
70673068	113
70673211	213
70673223	215
70673224	215
70673226	213
70673427	113
70673560	217
70673676	172
70673676	6
70674337	80
70674571	117
70674761	201
70674765	202
70674769	201
70674798	111
70674924	192
70674929	182
70674930	180
70674943	80
70674944	80
70674957	109
70675034	107
70675038	109
70675045	130
70675066	117
70675105	81
70675105	6
70675174	161
70675174	173
70675397	224
70675470	190
70675470	220
70675481	237
70675482	237
70675664	201
70675952	118
70676063	133
70676063	6
70676069	50

Part No.	Page
70676085	50
70676086	51
70676106	128
70676288	129
70676289	129
70676689	227
70676887	222
70676888	222
70676896	222
70677004	217
70677004	128
70677004	141
70677005	53
70677006	198
70677006	204
70677006	205
70677006	208
70677006	209
70677006	209
70677006	210
70677006	213
70677006	214
70677006	110
70677006	115
70677006	133
70677006	135
70677006	140
70677006	140
70677006	258
70677006	259
70677006	160
70677006	161
70677006	174
70677006	226
70677006	227
70677006	229
70677006	41
70677006	49
70677006	51
70677006	62
70677006	76
70677006	77
70677006	81
70677008	187
70677008	193
70677008	201
70677008	205
70677008	208
70677008	209
70677008	213
70677008	214
70677008	215
70677008	217
70677008	223
70677008	129
70677008	139
70677008	140
70677008	234
70677008	153
70677008	160
70677008	161
70677008	162
70677008	167
70677008	171
70677008	173
70677008	174
70677008	229
70677008	230
70677008	77
70677008	33
70677010	140
70677010	174
70677010	228
70677010	81
70677010	49
70677012	161
70677162	217
70677813	121
70678072	167
70678148	154
70678319	157
70678546	117
70678696	120
70678697	120
70678715	225
70678984	201
70679144	202
70679190	122
70679453	81
70679513	176
70679514	176
70679514	175
70679548	228
70679552	229
70679684	174
70679686	172
70679687	187
70679688	187
70679689	187
70679690	187
70679691	193
70679692	193
70679693	193
70679694	193
70679835	121
70680394	130
70680395	130
70680453	213
70680517	177
70680629	48
70680946	63
70681428	33
70681455	248
70681649	1
70682027	6
70682027	63
70682114	128
70682115	140
70682117	135
70682118	129
70682121	139
70682124	135
70682124	139
70682190	173
70682226	173
70682227	173
70682242	139
70682256	174
70682264	174
70682298	115
70682299	115
70682346	161
70682398	80
70682483	187
70682483	193
70682483	161
70682484	187
70682484	193
70682489	220
70682542	224
70682725	118
70682760	161
70682803	122
70682831	198
70682833	76
70682834	76
70682968	219
70682968	255
70683291	107
70683312	108
70683319	213
70683320	213
70683338	155
70683339	155
70683437	258
70683676	224
70683972	161
70683972	164
70683973	178
70684009	205
70684009	208
70684010	205
70684076	173
70684077	173
70684078	162
70684079	161
70684143	143
70684234	173
70684487	179
70684487	165
70684519	173
70684538	173
70684539	173
70684812	107
70684837	247
70684837	251
70684876	186
70684876	6
70684877	192
70684877	6
70684878	174
70684878	6
70684879	160
70684879	6
70684880	161
70684880	6
70684881	174
70684881	6
70684882	174
70684882	6
70684883	153
70684883	6
70684884	152
70684884	6
70684886	108
70684886	6
70684887	110
70684887	6
70684888	110
70684888	6
70685143	174
70685144	173
70685284	166
70685629	110
70685630	110
70685791	153
70685792	153
70685878	135
70685878	139
70685879	136
70685954	192
70686009	217
70686084	139
70686093	167
70686208	215
70686212	238
70686213	238
70686214	241
70686220	215
70686230	236
70686280	161
70686282	108
70686283	81
70686331	193
70686335	220
70686384	50
70686465	215
70686466	215
70686473	153
70686474	153
70686475	153
70686475	6
70686478	153
70686487	226
70686478	6
70686488	226
70686620	106
70686621	178
70686625	179
70686670	214
70686865	214
70686871	214
70686872	214
70686873	214
70686957	214
70686958	214
70686973	198
70686975	214
70687061	229
70687062	229
70687080	223
70687080	224
70687181	223
70687182	223
70687460	253
70687496	195
70687496	238
70687498	195
70687557	196
70687557	215
70687604	195
70687632	195
70687637	195
70687639	195
70687643	195
70687645	195
70687648	195
70687649	195
70687655	255
70687656	256
70687663	219
70687670	196
70687776	122
70687860	167
70687891	155
70688100	161
70688103	77
70688104	77
70688105	215
70688107	199
70688108	198
70688109	199
70688110	199
70688112	77
70688120	204
70688123	209
70688124	208
70688125	208
70688126	209
70688127	195
70688127	205
70688127	209
70688129	205
70688129	209
70688130	208
70688131	209
70688134	209
70688137	205
70688138	204
70688139	204
70688140	204
70688142	107
70688155	224
70688156	224
70688157	222
70688158	222
70688188	255
70688222	62
70688308	217
70688393	135
70688394	135
70688399	251
70688547	139
70688548	139
70688577	260
70688584	74
70688689	125
70688690	125
70688697	125
70688698	125
70688699	125
70688700	125
70688708	125
70688771	76
70688772	76
70688836	51
70688852	51
70688884	125
70688885	124
70688886	124
70688887	124
70688889	125
70688890	124
70688892	125
70688910	135
70688910	6
70688917	51
70688997	229
70689018	51
70689019	132
70689019	6
70689020	166
70689021	167
70689040	139
70689079	139
70689093	239
70689094	129
70689096	241
70689122	255
70689123	255

Part No.	Page
70689173	166
70689174	129
70689175	195
70689176	106
70689177	106
70689178	106
70689179	230
70689181	106
70689182	166
70689183	174
70689183	6
70689184	171
70689185	173
70689185	6
70689215	229
70689216	228
70689261	63
70689275	166
70689314	139
70689314	6
70689316	167
70689325	170
70689325	7
70689331	171
70689331	230
70689332	135
70689333	171
70689333	7
70689334	170
70689334	7
70689335	171
70689335	7
70689336	171
70689336	7
70689346	171
70689346	229
70689348	218
70689372	118
70689387	217
70689427	217
70689429	217
70689445	118
70689513	115
70689514	115
70689612	51
70689713	224
70689733	224
70689735	222
70689752	196
70689798	162
70689799	162
70689800	162
70689808	161
70689817	162
70689817	7
70689818	162
70689818	7
70689856	124
70689857	124
70689951	242
70689952	242
70689953	242
70689954	242
70689955	229
70689956	195
70689959	255
70690105	153
70690164	174
70690261	222
70690274	253
70690361	52
70690396	233
70690412	254
70690432	222
70690486	48
70690488	161
70690488	7
70690500	160
70690633	247
70690663	130
70690792	174
70690888	250
70690916	1
70690950	175
70691003	248
70691004	248
70691020	256
70691084	223
70691096	250
70691101	249
70691102	249
70691127	246
70691128	246
70691140	141
70691141	135
70691143	254
70691144	223
70691164	215
70691251	51
70691289	247
70691303	245
70691304	245
70691361	253
70691414	254
70691422	140
70691445	259
70691472	254
70691474	252
70691475	252
70691476	252
70691477	252
70691479	252
70691576	117
70691577	117
70691644	224
70691645	222
70691646	222
70691647	224
70691703	213
70691704	215
70691705	213
70691726	136
70691727	136
70691758	125
70691888	215
70691966	255
70692036	224
70692116	256
70692241	118
70692732	118
70692771	211
70692772	211
70692773	211
70692774	211
70692785	135
70692795	211
70692796	211
70692821	212
70692825	212
70692966	53
70692967	53
70694425	255
70694433	255
70694438	255
70694464	256
70900552	59
70900558	253
70900806	195
70900806	215
70900806	107
70900806	129
70900806	166
70900811	187
70900816	245
70900816	247
70900817	211
70900817	212
70900970	111
70901171	43
70901310	43
70901345	215
70901521	202
70901652	111
70901653	176
70901722	81
70901727	109
70901825	237
70901834	129
70901835	135
70901835	139
70901839	67
70903584	50
70903626	61
70904203	249
70904203	253
70904203	43
70904204	143
70904204	245
70904204	247
70904204	252
70904204	24
70904204	27
70904204	28
70904204	41
70904204	43
70904204	47
70904205	143
70904205	254
70904205	169
70904205	22
70904205	23
70904205	25
70904205	57
70904206	103
70904206	104
70904206	247
70904206	251
70904206	254
70904206	19
70904206	27
70904206	28
70904206	38
70904206	39
70904206	40
70904206	43
70904206	57
70904206	59
70904206	67
70904206	69
70904206	69
70904206	72
70904206	73
70904206	91
70904207	23
70904207	28
70904207	31
70904207	65
70904207	67
70904207	73
70904207	76
70904207	86
70904207	91
70904208	188
70904208	127
70904208	20
70904208	24
70904208	25
70904208	28
70904208	31
70904208	37
70904208	38
70904208	41
70904208	46
70904208	47
70904208	56
70904208	59
70904208	66
70904208	67
70904208	74
70904569	143
70905129	16
70905261	168
70905845	40
70906759	248
70906960	227
70906961	233
70906964	59
70907070	121
70907154	59
70907801	143
70907801	50
70907856	225
70907856	121
70907863	32
70908944	28
70909055	244
70910123	195
70910123	69
70910141	27
70910195	195
70910195	205
70910230	75
70910231	178
70910231	129
70910231	152
70910231	165
70910233	169
70910244	223
70910244	67
70910267	50
70910267	51
70910275	129
70910284	129
70910287	184
70910287	185
70910287	186
70910287	201
70910287	122
70910287	135
70910287	147
70910287	152
70910287	153
70910287	39
70910287	40
70910308	198
70910323	218
70910324	205
70910324	209
70910324	247
70910324	251
70910324	38
70910324	39
70910324	67
70910324	72
70910325	109
70910325	235
70910325	162
70910325	173
70910325	25
70910329	195
70910329	205
70910329	209
70910329	107
70910335	254
70910335	57
70910345	115
70910510	238
70910510	46
70910510	47
70910511	146
70910543	129
70910545	149
70910847	167
70910847	14
70910847	70
70910867	167
70910876	168
70910876	51
70910880	247
70910880	43
70910880	47
70910919	65
70910948	103
70911017	129
70911017	237
70911024	141
70911024	245
70911024	258
70911024	230
70911024	35
70911024	53
70911024	63
70911025	135
70911025	138
70911025	77
70911025	50
70911026	195
70911026	199
70911026	204
70911026	205
70911026	209
70911026	213
70911026	135
70911026	139
70911026	254
70911026	160
70911026	226
70911026	33
70911026	51
70911026	62

Part No.	Page	Part No.	Page	Part No.	Page	Part No.	Page	Part No.	Page
70911026	76	70912772	205	70915274	115	70916277	57	70917673	149
70911027	174	70912772	209	70915276	220	70916282	245	70917673	151
70911028	187	70912772	212	70915276	152	70916284	245	70917673	13
70911028	193	70912900	205	70915343	41	70916284	28	70917717	139
70911028	204	70912900	209	70915406	247	70916310	235	70917730	195
70911028	213	70912942	233	70915406	24	70916311	234	70917733	135
70911028	215	70913092	204	70915406	35	70916311	20	70917792	247
70911028	109	70913112	41	70915408	43	70916311	24	70917792	251
70911028	110	70913177	183	70915408	73	70916311	25	70917793	113
70911028	129	70913177	169	70915500	195	70916311	28	70917807	41
70911028	139	70913233	242	70915514	131	70916311	41	70917807	45
70911028	153	70913274	215	70915523	117	70916311	66	70917807	47
70911028	160	70913528	107	70915746	208	70916311	67	70917807	59
70911028	161	70913544	19	70915746	112	70916313	188	70917809	43
70911028	162	70913544	40	70915746	114	70916313	31	70917809	67
70911028	166	70913544	59	70915807	25	70916313	74	70917810	41
70911028	171	70913683	69	70915809	254	70916316	14	70917810	45
70911028	172	70913744	215	70915809	149	70916316	56	70917810	47
70911028	173	70913807	204	70915813	149	70916317	37	70917810	59
70911028	174	70913807	215	70915813	22	70916317	55	70917841	27
70911028	230	70913830	129	70915891	106	70916317	66	70917889	205
70911029	140	70913830	156	70915891	259	70916320	66	70917889	208
70911029	174	70913938	237	70915969	24	70916321	28	70918182	69
70911029	49	70913938	229	70915969	66	70916322	66	70918227	195
70911030	217	70914105	252	70915969	67	70916323	37	70918237	247
70911030	161	70914120	252	70915972	205	70916326	235	70918245	153
70911040	195	70914192	238	70915972	209	70916400	252	70918308	247
70911049	35	70914198	124	70915972	153	70916543	30	70918308	227
70911100	107	70914465	220	70915987	20	70916543	31	70918309	198
70911114	206	70914465	106	70915987	37	70916589	11	70918309	201
70911114	129	70914465	112	70915987	47	70916622	141	70918309	215
70911114	238	70914465	113	70915987	55	70916622	236	70918309	77
70911114	249	70914465	114	70915987	66	70916622	238	70918374	73
70911114	230	70914465	152	70915987	67	70916622	239	70918395	73
70911114	28	70914487	229	70915987	74	70916622	241	70918448	215
70911114	41	70914487	230	70915990	28	70916662	50	70918448	107
70911115	247	70914498	45	70916001	30	70916769	196	70918627	125
70911115	249	70914501	187	70916009	11	70916867	86	70918697	37
70911115	250	70914501	193	70916009	66	70916871	31	70918740	73
70911115	254	70914501	220	70916081	195	70916873	57	70918794	43
70911115	167	70914626	129	70916081	236	70916873	73	70918850	149
70911115	43	70914626	132	70916081	238	70916880	241	70918850	13
70911115	67	70914626	141	70916081	239	70917013	27	70918851	13
70911159	106	70914626	237	70916081	241	70917351	138	70918887	13
70911327	143	70914659	42	70916170	167	70917352	129	70918887	24
70911992	31	70914659	43	70916170	81	70917354	128	70918888	37
70912007	215	70914678	146	70916191	45	70917354	135	70918946	205
70912007	38	70914678	161	70916191	67	70917354	139	70918951	128
70912069	104	70914678	174	70916197	76	70917356	137	70918951	135
70912069	27	70914678	45	70916197	86	70917356	61	70918951	138
70912069	67	70914687	113	70916197	91	70917365	241	70918951	139
70912069	69	70914709	260	70916197	65	70917365	245	70918951	77
70912188	86	70914710	260	70916253	28	70917370	135	70918951	37
70912201	45	70914711	260	70916268	38	70917370	139	70919005	59
70912201	65	70914712	260	70916268	39	70917370	140	70919015	40
70912226	47	70914713	260	70916269	147	70917376	234	70919015	57
70912299	215	70914714	260	70916269	91	70917376	235	70919063	139
70912319	135	70914715	260	70916269	59	70917388	129	70919063	147
70912319	139	70914716	260	70916270	59	70917393	241	70919076	6
70912333	37	70914717	260	70916271	104	70917395	241	70919081	6
70912333	66	70914718	260	70916271	147	70917409	26	70919084	215
70912441	184	70914719	260	70916271	149	70917409	27	70919109	167
70912441	120	70914727	168	70916271	73	70917415	245	70919127	33
70912441	125	70914732	260	70916272	147	70917415	253	70919128	147
70912441	234	70914805	143	70916272	19	70917425	55	70919128	81
70912441	235	70914847	190	70916272	39	70917558	13	70919134	104
70912441	45	70914847	158	70916272	67	70917580	105	70919134	27
70912441	74	70914847	20	70916272	73	70917632	215	70919134	57
70912731	231	70914875	127	70916273	57	70917648	129	70919134	65
70912768	202	70915273	217	70916274	73	70917666	129	70919171	147

Part No.	Page
70919172	33
70919174	63
70919195	133
70919197	170
70919206	133
70919224	28
70919224	57
70919224	69
70919224	72
70919224	73
70919225	212
70919225	67
70919225	69
70919226	72
70919229	13
70919229	29
70919230	46
70919230	59
70919231	66
70919249	63
70919271	201
70919272	147
70919277	7
70919281	6
70919281	7
70919287	57
70919294	66
70919303	42
70919311	180
70919311	181
70919311	182
70919311	183
70919311	184
70919311	218
70919311	154
70919311	155
70919332	127
70919351	143
70919440	231
70919469	6
70919472	135
70919472	139
70919473	6
70919474	6
70919481	67
70919497	132
70919526	139
70919552	170
70919552	171
70919552	172
70919557	81
70919581	128
70919581	135
70919581	139
70919581	140
70919663	237
70919788	135
70919797	43
70919800	43
70919801	103
70919840	124
70919840	13
70919840	56
70919840	67
70919840	91
70920131	199
70920131	147
70920132	22
70920221	6
70920221	7
70920275	77
70920275	73
70920279	41
70920280	41
70920280	45
70920280	47
70920303	6
70920333	13
70920333	57
70920333	69
70920344	6
70920344	7
70920403	149
70920416	38
70920416	73
70920523	249
70920525	76
70920570	217
70920574	22
70920582	209
70920582	214
70920582	223
70920582	153
70920582	171
70920582	175
70920582	230
70920583	187
70920583	193
70920583	198
70920583	208
70920583	215
70920583	217
70920583	109
70920583	162
70920583	172
70920583	173
70920583	173
70920583	174
70920583	229
70920585	184
70920585	213
70920585	215
70920585	217
70920585	125
70920585	166
70920585	173
70920594	32
70920612	45
70920622	143
70920648	176
70920648	23
70920649	146
70920655	129
70920655	237
70920660	154
70920697	147
70920720	6
70920731	6
70920733	7
70920790	41
70920805	6
70920992	237
70920995	212
70920995	106
70920995	247
70920995	259
70920995	167
70920996	214
70920996	50
70921042	6
70921046	6
70921046	6
70921068	161
70921076	186
70921076	192
70921076	195
70921076	198
70921076	201
70921076	202
70921076	205
70921076	208
70921076	209
70921076	215
70921076	217
70921076	258
70921076	152
70921076	153
70921076	170
70921076	175
70921076	226
70921076	41
70921076	51
70921076	76
70921076	77
70921113	247
70921113	250
70921115	152
70921115	175
70921116	192
70921116	153
70921116	160
70921116	161
70921117	186
70921117	108
70921117	152
70921117	160
70921117	161
70921117	162
70921117	173
70921117	174
70921118	161
70921118	162
70921122	161
70921172	117
70921172	140
70921174	49
70921175	218
70921175	223
70921175	109
70921175	167
70921175	171
70921175	229
70921175	33
70921181	48
70921185	135
70921185	141
70921186	132
70921186	135
70921186	139
70921203	170
70921203	174
70921203	175
70921204	161
70921206	49
70921214	38
70921214	38
70921216	38
70921217	174
70921227	38
70921228	108
70921266	198
70921292	118
70921297	170
70921335	6
70921403	166
70921403	174
70921411	233
70921422	182
70921422	183
70921422	184
70921447	249
70921467	108
70921467	161
70921467	172
70921467	173
70921467	174
70921508	23
70921511	135
70921511	139
70921520	26
70921539	179
70921556	187
70921556	193
70921556	110
70921558	172
70921566	180
70921566	135
70921566	138
70921566	77
70921566	50
70921567	118
70921567	174
70921569	186
70921569	193
70921569	152
70921569	161
70921569	162
70921569	162
70921569	173
70921569	174
70921570	112
70921570	114
70921597	49
70921598	153
70921598	162
70921599	161
70921599	162
70921599	173
70921839	16
70921841	41
70921865	21
70921865	59
70921883	185
70921883	206
70921883	209
70921883	237
70921885	156
70921885	45
70921885	46
70921885	47
70921910	196
70921910	53
70921911	254
70921911	59
70921911	65
70921912	254
70921912	59
70921913	109
70921913	135
70921915	161
70921915	173
70922065	147
70922121	252
70922195	161
70922195	173
70922198	21
70922198	73
70922199	76
70922199	66
70922205	13
70922211	147
70922262	204
70922262	208
70922287	198
70922287	247
70922287	80
70922300	205
70922300	206
70922300	106
70922300	115
70922300	122
70922300	132
70922300	133
70922300	135
70922300	140
70922300	247
70922300	227
70922300	229
70922300	77
70922300	81
70922300	49
70922304	106
70922304	166
70922345	6
70922391	6
70922411	110
70922458	81
70922510	187
70922510	173
70922522	170
70922522	171
70922526	201
70922526	215
70922526	172
70922526	77
70922577	156
70922577	46
70922660	227
70922660	229
70922673	213
70922673	217
70922694	198
70922694	211
70922694	212
70922694	77
70922704	249
70922711	241
70922711	252
70922743	118
70922743	121
70922744	167
70922763	192
70922763	202
70922763	209
70922763	210
70922763	211
70922763	212
70922763	213
70922763	215
70922763	106

Part No.	Page
70922763	110
70922763	139
70922763	249
70922763	254
70922763	161
70922763	174
70922763	175
70922763	230
70922763	76
70922763	77
70922763	33
70922777	138
70922778	139
70922849	112
70922849	160
70922859	224
70922859	113
70922863	81
70922925	155
70922939	26
70922990	147
70923086	249
70923163	237
70923166	161
70923192	162
70923192	174
70923193	195
70923193	30
70923193	31
70923212	245
70923275	7
70923325	137
70923352	214
70923379	9
70923421	70
70923438	111
70923470	199
70923470	251
70923510	252
70923558	144
70923559	129
70923559	155
70923575	184
70923575	156
70923575	9
70923577	183
70923579	201
70923580	143
70923582	161
70923582	162
70923582	167
70923582	173
70923583	182
70923594	202
70923643	173
70923645	180
70923645	157
70923645	9
70923645	42
70923645	43
70923651	9
70923651	66
70923664	162
70923683	211
70923690	115
70923738	24
70923807	171
70923807	172
70923810	9
70923810	22
70923813	183
70923813	9
70923816	201
70923824	178
70923851	177
70923852	144
70923853	122
70923884	107
70923901	188
70923934	9
70923934	46
70923935	9
70923935	69
70923936	9
70923944	144
70923950	202
70923951	201
70924110	152
70924130	115
70924138	190
70924146	201
70924158	172
70924172	6
70924180	186
70924180	187
70924182	175
70924192	183
70924192	186
70924192	187
70924192	193
70924192	152
70924192	160
70924192	161
70924192	162
70924192	173
70924192	174
70924193	187
70924193	193
70924193	161
70924193	162
70924193	173
70924193	174
70924200	186
70924200	192
70924200	153
70924200	160
70924200	161
70924237	241
70924277	81
70924440	147
70924440	73
70924457	255
70924535	255
70924553	255
70924555	255
70924618	160
70924630	6
70924636	72
70924688	108
70924692	38
70924727	113
70924728	112
70924816	139
70924828	22
70924843	74
70924863	69
70924864	129
70924864	160
70924923	158
70924944	101
70924944	8
70925063	254
70925092	109
70925094	140
70925094	228
70925097	133
70925108	255
70925109	255
70925110	255
70925162	258
70925164	258
70925238	65
70925242	202
70925369	244
70925369	245
70925415	120
70925433	255
70925442	196
70925442	135
70925442	140
70925453	157
70925480	57
70925482	121
70925599	135
70925599	139
70925606	239
70925612	9
70925612	66
70925616	115
70925616	230
70925617	210
70925617	133
70925617	135
70925617	140
70925617	245
70925617	229
70925618	133
70925620	135
70925620	140
70925620	49
70925622	171
70925640	181
70925651	117
70925655	164
70925735	6
70925740	11
70925752	217
70925805	6
70925835	110
70925836	110
70925838	33
70925839	135
70925839	139
70925839	81
70925839	48
70925846	135
70925852	170
70925864	135
70925864	139
70925940	185
70926024	249
70926049	140
70926049	227
70926049	229
70926049	81
70926068	228
70926156	161
70926156	162
70926157	187
70926157	193
70926163	140
70926163	228
70926180	195
70926180	204
70926180	77
70926192	214
70926192	215
70926192	171
70926192	172
70926194	198
70926196	107
70926196	117
70926196	121
70926196	81
70926200	118
70926212	113
70926308	245
70926391	159
70926392	191
70926561	120
70926598	175
70926631	158
70926672	19
70926699	49
70926724	6
70926772	34
70926801	157
70926803	144
70926804	143
70926805	144
70926806	184
70926806	156
70926807	157
70926809	157
70926810	155
70926817	158
70926822	189
70926829	189
70926856	122
70926865	191
70926866	237
70926907	217
70926917	39
70927044	30
70927097	38
70927098	206
70927139	41
70927171	188
70927173	160
70927173	161
70927174	193
70927176	229
70927177	133
70927177	140
70927180	153
70927181	187
70927181	193
70927181	220
70927199	117
70927201	174
70927217	33
70927218	62
70927219	233
70927233	112
70927233	114
70927278	157
70927279	157
70927308	135
70927311	228
70927322	40
70927373	133
70927382	81
70927388	140
70927388	254
70927388	229
70927400	229
70927401	195
70927401	141
70927401	50
70927401	63
70927446	204
70927446	209
70927446	167
70927446	170
70927446	174
70927477	131
70927484	81
70927485	121
70927485	31
70927491	120
70927541	215
70927541	128
70927541	258
70927541	53
70927583	31
70927597	201
70927612	218
70927691	179
70927691	164
70927694	196
70927783	196
70927939	82
70927939	81
70928052	258
70928062	121
70928063	117
70928063	120
70928063	121
70928064	120
70928065	121
70928068	121
70928069	120
70928082	7
70928085	7
70928087	6
70928087	7
70928094	7
70928097	7
70928099	6
70928099	7
70928107	7
70928109	6
70928120	7
70928123	7
70928126	6
70928126	7
70928128	121
70928132	121
70928134	118
70928137	81
70928138	178
70928138	206
70928138	230
70928138	51
70928139	110
70928166	117
70928179	125
70928182	217
70928188	118
70928188	166

Part No.	Page
70928189	117
70928211	32
70928212	30
70928246	38
70928247	38
70928329	57
70928331	7
70928358	188
70928391	174
70928422	166
70928439	171
70928448	217
70928448	106
70928453	215
70928460	162
70928460	173
70928525	173
70928567	135
70928567	139
70928595	242
70928624	132
70928624	135
70928624	138
70928624	140
70928625	195
70928625	206
70928625	209
70928654	205
70928654	133
70928654	245
70928656	206
70928798	201
70928799	236
70928799	237
70928800	236
70928800	237
70928881	81
70928882	107
70928882	81
70928892	108
70928927	110
70928931	245
70929011	160
70929014	161
70929057	51
70929069	125
70929071	77
70929087	121
70929117	241
70929123	7
70929138	107
70929143	108
70929146	33
70929156	74
70929168	63
70929173	205
70929173	209
70929186	109
70929194	205
70929194	209
70929231	186
70929251	143
70929311	247
70929311	251
70929322	81
70929417	56
70929611	224
70929613	250
70929708	135
70929722	239
70929724	179
70929741	217
70929775	117
70929776	117
70929805	62
70929821	113
70929822	112
70929886	108
70929904	108
70930225	155
70930227	180
70930228	180
70930236	155
70930238	129
70930256	7
70930257	7
70930269	82
70930348	7
70930349	45
70930350	206
70930350	209
70930351	206
70930351	209
70930357	177
70930468	113
70930468	114
70930701	173
70930707	63
70930804	48
70930805	27
70930806	170
70930806	171
70930863	228
71006992	231
73001171	106
73001717	157
73003883	169
73003884	169
73003885	169
73003886	169
73003888	169
73003891	169
73003893	168
73003894	169
73003933	169
73006597	169
73007145	115
73007474	69
73008046	227
73010159	49
73010857	183
73014226	50
73014549	51
73016399	106
73018397	157
73021038	91
73021041	85
73021041	8
73021056	91
73021056	8
73021058	105
73021058	8
73021060	101
73021169	105
73021223	91
73026156	102
73026156	8
73027397	183
73027397	156
73027399	156
73027401	183
73027401	156
73029626	167
73031182	193
73031182	221
73031361	193
73031361	221
73031362	193
73031362	221
73031610	129
73031610	237
73031667	138
73033044	85
73033334	129
73033335	129
73033336	129
73033337	129
73033338	129
73033339	129
73033340	129
73033342	129
73033692	105
73033939	183
73033939	156
73034558	241
73034566	241
73035714	99
73035714	8
73035719	99
73035745	99
73035745	8
73036240	232
73036241	232
73036242	232
73039643	232
73040013	244
73041822	53
73041850	140
73042146	99
73042146	8
73043399	166
73044008	232
73044008	229
73044015	254
73044067	212
73044263	155
73044365	169
73044388	91
73044391	91
73044403	103
73044430	87
73044431	87
73044436	91
73044438	89
73044449	87
73044460	99
73044460	8
73044473	104
73044473	91
73044474	104
73044474	91
73044474	8
73044478	105
73044479	105
73044480	105
73044485	105
73044485	8
73044486	105
73044487	105
73044489	105
73044489	8
73044493	105
73044546	168
73044810	230
73045284	87
73045633	245
73046008	102
73046066	255
73046315	115
73046317	115
73046497	231
73046822	139
73046973	178
73046979	179
73046983	178
73047035	84
73047036	84
73047040	85
73047041	85
73047043	85
73047047	86
73047049	87
73047050	86
73047664	87
73047665	87
73047665	91
73047666	102
73047666	86
73047668	87
73047668	8
73047669	87
73047671	87
73047672	87
73047673	87
73047678	89
73047684	89
73047685	89
73047686	89
73047687	89
73047688	89
73047689	89
73047690	89
73047698	8
73047701	97
73047701	8
73047703	92
73047703	94
73047703	97
73047703	98
73047706	93
73047706	97
73047707	93
73047707	97
73047708	93
73047708	97
73047709	93
73047709	95
73047709	97
73047710	93
73047710	97
73047711	93
73047711	95
73047711	97
73047712	93
73047712	95
73047712	97
73047720	97
73047720	8
73047723	95
73047724	95
73047724	8
73047731	95
73047741	8
73047743	91
73047746	101
73047749	101
73047761	127
73047762	127
73047763	127
73047765	127
73047802	89
73047817	95
73047818	95
73047822	97
73047824	97
73047825	97
73047826	97
73047828	97
73047829	97
73047830	97
73047831	97
73047832	105
73047834	97
73047836	97
73047898	125
73048020	125
73048023	125
73048094	169
73048095	169
73048096	168
73048097	169
73048099	168
73048106	227
73048269	169
73048270	169
73048271	169
73048276	168
73048278	169
73048279	169
73048316	143
73048318	143
73048319	143
73048320	143
73048321	143
73048322	143
73048322	50
73048324	155
73048328	155
73048335	167
73048337	167
73048338	143
73048340	143
73048342	143
73048344	143
73048345	143
73048346	143
73048347	143
73048349	144
73048373	144
73048375	144
73048376	144
73048377	144
73048378	144
73048379	144
73048381	144
73048382	144
73048383	144
73048384	144
73048386	143
73048387	143

Part No.	Page
73048388	143
73048389	143
73048402	144
73048414	94
73048619	241
73048635	237
73048741	131
73048748	131
73048750	131
73048753	169
73048754	169
73048782	8
73048836	104
73048839	105
73048842	104
73048897	255
73048898	255
73048964	167
73048968	167
73048971	167
73048990	167
73049036	217
73049067	217
73049068	217
73049069	217
73049120	217
73049121	217
73049122	217
73049123	217
73049125	217
73049126	217
73049614	112
73049845	49
73050228	50
73050281	255
73050567	157
73050568	157
73050569	157
73050570	157
73050571	157
73050682	157
73050683	157
73051199	97
73051203	121
73051205	125
73051223	117
73051224	117
73051225	117
73051237	117
73051238	117
73051242	117
73051248	117
73051451	121
73051453	120
73051457	121
73051458	120
73051461	121
73051462	121
73051463	121
73051465	121
73051470	120
73051473	225
73051474	121
73051475	121
73051476	121
73051478	121
73051480	120
73051502	120
73051504	122
73051799	87
73051800	87
73051895	253
73052008	245
73052083	53
73052086	53
73052243	188
73052863	187
73052879	158
73052942	190
73053308	106
73053357	190
73053359	191
73053583	188
73053713	189
73053715	188
73053716	189
73053758	143
73053759	143
73053825	158
73053826	159
73053886	158
73053921	141
73053977	159
73053988	188
73054073	190
73054108	191
73054488	190
73054547	158
73054566	188
73054785	255
73054808	105
73054975	255
73054984	91
73055085	127
73055228	87
73055371	167
73055508	190
73055511	191
73055519	190
73055521	191
73055522	190
73055523	191
73055525	189
73055525	191
73055525	220
73055671	236
73055856	99
73056153	141
73056154	141
73056489	159
73056494	189
73057227	252
73057432	195
73057505	241
73057506	228
73057569	175
73057623	168
73057624	169
73057697	125
73057767	255
73057773	254
73057930	132
73057952	241
73057960	241
73057977	241
73057998	129
73058015	239
73058026	255
73058049	218
73058126	254
73058351	241
73058527	241
73058528	241
73058529	241
73058561	241
73058576	141
73058639	129
73058793	92
73058793	8
73058881	255
73058884	254
73058910	239
73058917	242
73058919	242
73058934	204
73058934	209
73058959	196
73058960	196
73058961	196
73058962	196
73058963	196
73058974	205
73058974	209
73058975	205
73058975	209
73058978	205
73058978	209
73058979	205
73058979	209
73058981	205
73058981	209
73058982	205
73058982	209
73058983	205
73058983	209
73058984	205
73058984	209
73058985	205
73058985	209
73059030	131
73059054	131
73059055	131
73059064	140
73059066	140
73059067	139
73059068	135
73059073	140
73059079	205
73059079	209
73059192	254
73059193	168
73059196	168
73059197	169
73059198	169
73059200	169
73059202	169
73059204	169
73059293	158
73059295	158
73059297	159
73059299	158
73059303	159
73059304	158
73059305	189
73059336	158
73059354	190
73059360	188
73059386	188
73059604	249
73059621	249
73059675	249
73059831	247
73059831	251
73059832	247
73059832	251
73059838	252
73059873	245
73059875	245
73059879	245
73059884	245
73059884	254
73059888	245
73059890	244
73059891	244
73059893	244
73059894	244
73059920	244
73059928	252
73059938	253
73059954	247
73060000	112
73060000	114
73060001	114
73060002	114
73060003	113
73060009	119
73060010	119
73060011	119
73060013	114
73060014	114
73060015	114
73060027	112
73060028	112
73060029	112
73060030	112
73060044	164
73060045	165
73060050	178
73060051	179
73060054	165
73060055	165
73060056	164
73060057	165
73060058	164
73060059	179
73060060	178
73060061	179
73060062	179
73060063	156
73060064	156
73060065	155
73060066	155
73060067	155
73060068	155
73060069	156
73060070	155
73060071	155
73060072	155
73060073	155
73060074	155
73060075	155
73060076	154
73060077	154
73060078	155
73060079	154
73060080	155
73060081	154
73060082	155
73060083	156
73060084	155
73060085	154
73060086	181
73060087	180
73060088	181
73060089	181
73060090	181
73060091	181
73060092	181
73060093	181
73060094	181
73060095	181
73060096	181
73060097	181
73060098	181
73060099	180
73060101	180
73060102	180
73060103	180
73060105	181
73060106	155
73060107	181
73060108	181
73060110	183
73060111	183
73060112	183
73060113	183
73060114	183
73060115	183
73060116	183
73060117	184
73060118	184
73060120	183
73060121	183
73060127	157
73060128	154
73060129	183
73060130	184
73060132	184
73060133	184
73060134	184
73060135	183
73060136	182
73060137	184
73060138	182
73060139	182
73060140	182
73060141	185
73060142	184
73060143	184
73060144	184
73060145	184
73060146	125
73060147	143
73060148	155
73060149	155
73060150	154
73060151	125
73060152	223
73060152	224
73060153	222
73060153	224
73060154	222
73060154	224
73060155	167
73060161	124
73060162	124
73060163	125
73060164	125
73060165	125
73060168	167

Part No.	Page
73060170	177
73060171	218
73060172	218
73060173	218
73060174	218
73060175	218
73060177	252
73060178	252
73060179	1
73060180	1
73060181	1
73060182	1
73060183	1
73060184	1
73060185	1
73060186	119
73061046	252
73061054	188
73061126	141
73061127	141
73061150	248
73061191	249
73061193	228
73061207	231
73061208	231
73061210	231
73061232	188
73061275	250
73061276	250
73061376	249
73061377	249
73061463	255
73061599	188
73061968	89
73062007	241
73062021	105
73062025	95
73062025	8
73062026	92
73062026	8
73062027	92
73062027	95
73062027	8
73062029	103
73062031	103
73062031	8
73062032	103
73062032	8
73062033	103
73062034	93
73062036	93
73062038	93
73062039	93
73062040	93
73062041	94
73062042	101
73062043	101
73062043	8
73062044	101
73062048	91
73062049	91
73062050	91
73062051	91
73062051	8
73062052	91
73062053	95
73062067	95
73062067	8
73062078	92
73062078	94
73062078	97
73062078	98
73062079	102
73062080	85
73062081	86
73062082	84
73062082	88
73062099	99
73062100	105
73062103	84
73062104	97
73062106	84
73062107	85
73062109	82
73062110	82
73062111	82
73062112	84
73062113	84
73062114	92
73062115	99
73062118	95
73062120	95
73062121	97
73062122	99
73062123	99
73062127	95
73062128	95
73062130	94
73062131	88
73062133	99
73062134	99
73062134	8
73062135	101
73062136	101
73062138	104
73062139	104
73062140	105
73062141	99
73062142	97
73062143	98
73062145	97
73062146	101
73062147	99
73062193	8
73062368	77
73062381	241
73062393	224
73062409	226
73062410	226
73062415	140
73062469	175
73062469	7
73062470	175
73062470	7
73062471	170
73062527	1
73062535	1
73062541	1
73062557	161
73062578	185
73062582	217
73062669	82
73062670	82
73062705	217
73062710	212
73062719	77
73062720	105
73062756	212
73062758	223
73062776	53
73062868	255
73062868	255
73062934	256
73062940	1
73063013	215
73063025	175
73063164	1
73063369	190
73063372	188
73063376	105
73063376	8
73063378	105
73063379	105
73063386	87
73063594	119
73063887	84
73064172	119
73064173	119
73064174	119
73064175	119
73100089	156
73100091	156
73100093	184
73100095	184
73100097	184
73100097	156
73100098	156
73100099	184
73100099	156
73100197	138
73100707	97
73100707	97
73100708	87
73100709	87
73100710	85
73100734	156
73100824	53
73100825	53
73103229	184
73103230	184
73103266	117
73103267	117
73103268	117
73103339	117
73103486	137
73103496	184
73103497	184
73103498	184
73103503	184
73103503	184
73103503	185
73103620	230
73104559	105
73104652	126
73104653	126
73104655	126
73104656	126
73104657	126
73104658	127
73104659	127
73104660	127
73104661	127
73104662	127
73104663	127
73104664	127
73104665	127
73104666	127
73104667	127
73104668	127
73104682	137
73104683	137
73104684	137
73104685	137
73104784	225
73104785	225
73104936	255
73105127	255
73105243	184
73105944	181
74020145	42
74021227	44
74023721	45
74024482	53
74024792	53
74026614	32
74028077	32
74028922	28
74028945	46
74040300	149
74040302	133
74040302	148
74040303	148
74040305	149
74040315	148
74040321	149
74040323	149
74040330	149
74040335	149
74040336	149
74040339	149
74040340	149
74040341	149
74040342	148
74040343	148
74040345	151
74040539	149
74040550	149
74040598	146
74041004	133
74041092	69
74047564	149
74049009	61
74050453	149
74050466	148
74050467	148
74050468	148
74051038	149
74052124	149
74052939	149
74052940	149
74053235	148
74053298	149
74053336	60
74053356	149
74053409	37
74053410	37
74053595	149
74054151	151
74054434	148
74054435	148
74054437	149
74054439	149
74055187	60
74055192	60
74055193	60
74055194	60
74055195	60
74055196	60
74055201	60
74055203	61
74055206	61
74055272	151
74055273	151
74055274	151
74055275	151
74055276	151
74055277	151
74055278	151
74055279	151
74055281	151
74055282	151
74055283	151
74055341	151
74055527	149
74055528	149
74055529	149
74055556	149
74055557	149
74055558	149
74055971	37
74055981	61
74056026	61
74056066	149
74056265	151
74056296	60
74056353	149
74056425	149
74056494	60
74058845	149
74058886	149
74058899	149
74059018	61
74059262	34
74059264	35
74059265	35
74059266	35
74059343	35
74059744	61
74059747	61
74059748	61
74059809	35
74059810	35
74059811	35
74059813	34
74059814	34
74059817	35
74060643	41
74060645	41
74060646	41
74060691	35
74060755	35
74060861	44
74060984	60
74061040	41
74061041	41
74061042	41
74061077	40
74061210	60
74061212	61
74061213	60
74061214	60
74061217	60
74061218	60
74061484	17
74061485	17
74061486	17
74061487	17
74061488	17
74061489	17
74061490	17

Part No.	Page
74061491	17
74061492	17
74061528	14
74061548	15
74110730	149
74112723	149
74112723	151
74113897	9
74115287	42
74119937	9
74119937	13
74119937	29
74250898	17
74251367	45
74251601	27
74251644	47
74253029	117
74253190	25
74253286	41
74253318	69
74253555	35
74253749	10
74253749	15
74253863	75
74254100	69
74254100	70
74254742	27
74254873	9
74254873	20
74254948	69
74254961	59
74254971	111
74254980	258
74255110	70
74255179	43
74255186	13
74255286	65
74255287	65
74255335	22
74255338	69
74255351	21
74255361	21
74255363	13
74255490	19
74255491	19
74255511	9
74255513	9
74255577	19
74255631	9
74255631	37
74255631	67
74255665	9
74255665	41
74255781	9
74255781	67
74255839	69
74255895	45
74255898	9
74255898	22
74255904	9
74255904	22
74255912	9
74255956	9
74255956	43
74255956	67
74255977	59
74255995	56
74293086	47
74303038	24
74303694	23
74310257	9
74310257	59
74310257	76
74313015	73
74317554	73
74320597	30
74335578	57
74335647	59
74335649	59
74335669	27
74336491	11
74336558	59
74336646	25
74336897	9
74336897	22
74339021	37
74339535	59
74348691	27
74354449	69
74354537	73
74354568	30
74355843	41
74358580	148
74359167	227
74359310	30
74359656	37
74359776	47
74359968	55
74359972	59
74361551	9
74361551	56
74361740	9
74361740	69
74361829	27
74362458	73
74364166	27
74364404	27
74365129	38
74365627	27
74367090	9
74367090	27
74368204	14
74368205	14
74368206	14
74369002	14
74369746	27
74371021	37
74371027	9
74371107	235
74371107	55
74371107	56
74371118	27
74371160	9
74371160	66
74371253	30
74371289	9
74371345	9
74371444	29
74371445	28
74371703	75
74371707	75
74371742	9
74371742	28
74372325	37
74372337	75
74372338	75
74372339	75
74372340	75
74372421	69
74372722	235
74373585	28
74373613	37
74373619	13
74373716	22
74374018	11
74374695	55
74375682	69
74375691	69
74376277	24
74376398	9
74376398	69
74376483	9
74376483	73
74376497	19
74376520	9
74376520	73
74376538	24
74376603	9
74376603	27
74376609	9
74376609	28
74376627	27
74376749	9
74376749	14
74376749	37
74376986	15
74377120	9
74377120	14
74377267	43
74377278	27
74377314	27
74377408	28
74377541	25
74378031	9
74378031	44
74378033	44
74378112	9
74378112	73
74378646	75
74378647	75
74379070	9
74379268	37
74379269	37
74379723	59
74379913	59
74380652	44
74384009	40
74385317	9
74385320	9
74385485	10
74385485	14
74385614	59
74386137	9
74386137	73
74386223	9
74386262	13
74386359	17
74386360	16
74386405	25
74386406	25
74386413	19
74386421	20
74386453	17
74386454	17
74386455	17
74386456	16
74386457	16
74386458	16
74386466	16
74386467	16
74386468	16
74386469	16
74386473	16
74386474	16
74386475	16
74386476	16
74386480	16
74386481	16
74386482	16
74386483	16
74386495	10
74386495	66
74386601	42
74386602	43
74386617	43
74386628	19
74386650	22
74386653	19
74386776	24
74386790	19
74386835	73
74386856	10
74386862	69
74386879	27
74386881	73
74386901	20
74386924	69
74387007	9
74387007	59
74387031	16
74387032	16
74387033	16
74387050	69
74387051	69
74387124	27
74387227	73
74387385	42
74387418	66
74387524	23
74387525	10
74387525	23
74387605	69
74387609	69
74387689	57
74387692	57
74387693	57
74387697	9
74387697	55
74387697	57
74387726	20
74387906	59
74387976	20
74388148	43
74388185	66
74388428	25
74388465	67
74388563	73
74388583	57
74388809	37
74388810	37
74388836	37
74388848	37
74389036	73
74389052	16
74389058	14
74389231	13
74389232	13
74389234	13
74389235	13
74389291	10
74389292	13
74389293	19
74389294	19
74389317	25
74389397	19
74389635	10
74389635	66
74389676	10
74389676	67
74389678	10
74389678	67
74389685	19
74389782	10
74389823	151
74389943	13
74389961	9
74389961	20
74389965	20
74390006	44
74390093	42
74390094	42
74390095	42
74390117	24
74390175	10
74390175	15
74390254	24
74390270	24
74390294	25
74390295	25
74390296	25
74390297	25
74390413	16
74390418	28
74390432	10
74390432	22
74390547	19
74390548	19
74390583	67
74390589	67
74390590	67
74390591	67
74390592	67
74390593	34
74390594	67
74390595	67
74390655	70
74390698	15
74390722	21
74390766	13
74390767	13
74390868	67
74390992	69
74390995	70
74391019	27
74391022	16
74391131	56
74391146	37
74391154	70
74391156	15
74391157	15
74391158	15
74391159	15
74391237	73
74391240	44
74391306	19
74391307	13
74391307	19
74391351	70
74391402	26
74391403	26

Part No.	Page	Part No.	Page	Part No.	Page	Part No.	Page	Part No.	Page
74391404	26	74393351	32	74394014	67				
74391407	27	74393354	32	74394034	9				
74391412	27	74393355	32	74394034	10				
74391425	55	74393356	31	74394036	22				
74391457	27	74393359	10	74394038	22				
74391473	10	74393359	30	74394053	10				
74391473	14	74393360	31	74394053	15				
74391475	27	74393362	30	74394054	10				
74391557	27	74393363	31	74394058	15				
74391593	70	74393364	30	74394188	67				
74391607	57	74393373	13	74394265	147				
74391666	23	74393391	31	74394266	146				
74391707	9	74393397	13	74394267	147				
74391715	59	74393399	24	74394268	74				
74391845	24	74393426	10	74394269	69				
74391849	24	74393426	14	74394275	147				
74391869	24	74393427	65	74394276	147				
74391870	24	74393436	16	74394279	74				
74391875	56	74393443	16	74394301	41				
74391885	27	74393443	19	74394302	41				
74391933	69	74393504	65	74394306	41				
74391934	69	74393505	65	74394310	39				
74391938	69	74393548	55	74394312	11				
74391949	69	74393552	28	74394318	40				
74391950	69	74393557	66	74394325	74				
74391955	69	74393563	59	74394346	13				
74391996	59	74393597	20	74394366	60				
74392024	15	74393599	31	74394398	147				
74392051	19	74393600	31	74394398	7				
74392052	19	74393601	31	74394402	75				
74392053	19	74393615	72	74394403	75				
74392054	19	74393625	19	74394404	75				
74392057	44	74393628	19	74394405	45				
74392068	19	74393636	13	74394406	45				
74392121	44	74393639	38	74394407	45				
74392183	24	74393641	38	74394408	45				
74392279	9	74393646	38	74394410	235				
74392279	72	74393658	22	74394426	9				
74392384	43	74393659	23	74394426	19				
74392385	43	74393664	16	74394432	9				
74392386	43	74393666	148	74394443	65				
74392387	43	74393667	149	74394445	19				
74392388	43	74393668	234	74394451	69				
74392389	43	74393668	235	74394525	57				
74392397	47	74393672	146	74394763	38				
74392492	41	74393675	74	74444723	53				
74392494	41	74393678	234	74500230	14				
74392500	41	74393679	235	74507358	43				
74392518	41	74393680	235	74507359	43				
74392604	57	74393684	7	74507414	43				
74392630	41	74393686	7	74507415	43				
74392788	43	74393686	57	74511213	44				
74392789	43	74393688	147	74511243	44				
74392903	41	74393688	7	74513810	69				
74393077	46	74393692	147	74516821	24				
74393085	47	74393692	7	74516821	25				
74393286	41	74393694	147	74660358	14				
74393300	75	74393694	7	74660423	10				
74393303	10	74393702	66	74660423	31				
74393303	15	74393708	66	74660492	10				
74393317	234	74393742	23	74660492	29				
74393322	16	74393745	38	74660677	69				
74393324	69	74393772	43	74662263	66				
74393325	69	74393795	11	74665306	13				
74393341	31	74393813	43	74665306	13				
74393342	32	74393853	14	74752002	70				
74393344	32	74393857	57	74788327	247				
74393346	32	74393890	47	74791157	244				
74393347	32	74393989	9						
74393349	32	74393989	19						