SEBP6716-02
March 2015

RUTHZIL TRATOR COMERCIAL DE PEÇAS LTDA 11 97083-6812 ROLANDO

Parts Manual

950 GC Wheel Loader

M5K1-Up (Machine)
E7A1-Up (Engine)
S4X1-Up (Transmission)
S4Y1-Up (Torque Converter)

Powered By C7.1 Engine
This Parts Manual is also available as a PDF on CD

Product and Dealer Information

Note: For product identification plate locations, see the section “Product Identification Information” in the Operation and Maintenance Manual.

Delivery Date: _____

Product Information

Model: _____

Product Identification Number: _____

Engine Serial Number: _____

Transmission Serial Number: _____

Generator Serial Number: _____

Attachment Serial Numbers: _____

Attachment Information: _____

Customer Equipment Number: _____

Dealer Equipment Number: _____

Dealer Information

Name: _____ Branch: _____

Address: _____

_____

_____

	Dealer Contact	Phone Number	Hours
Sales:	_____	_____	_____
Parts:	_____	_____	_____
Service:	_____	_____	_____

MEMORANDA

TABLE OF CONTENTS

NAME	PAGE
GENERAL INFORMATION	**A5**
REPAIR ALTERNATIVES	**A8**
SUPPLEMENTAL COOLANT ADDITIVES	A9
MAINTENANCE PARTS	**A10**
INDEX	**A13**
MACHINE ARRANGEMENT	**1**
CHASSIS AR	1
COMMON AR	1
CONFIGURATION AR	2
OPTION AR-COLD WEATHER	2
ENGINE ARRANGEMENT	**3**
ENGINE AR-PRIMARY	3
INSTALLATION GP-ENGINE	5
BASIC ENGINE	**8**
BELT TENSIONER GP	8
BRACKET GP-MOUNTING	9
CAMSHAFT GP	10
CONNECTING ROD GP	12
COVER GP-VALVE MECHANISM	13
CRANKSHAFT GP	14
CYLINDER BLOCK AS	15
CYLINDER BLOCK GP	16
CYLINDER HEAD AS	17
CYLINDER HEAD GP	18
DRAIN GP-OIL	19
DRIVE GP-FAN	20
FLYWHEEL GP	21
HOUSING GP-FLYWHEEL	22
HOUSING GP-FRONT	23
JET GP-PISTON COOLING	25
LIFTING GP-ENGINE	26
PAN GP-OIL	27
PISTON & ROD GP	28
PISTON GP	29
PLUG GP-OIL PAN	30
POWER TAKE-OFF GP	31
PULLEY GP-AUXILIARY DRIVE	33
PULLEY GP-CRANKSHAFT	34
ROCKER ARM GP	35
LUBRICATION SYSTEM	**38**
BREATHER GP	38
FILLER GP-ENGINE OIL	39
FILTER GP-ENGINE OIL	40
PUMP GP-ENGINE OIL	41
VALVE GP-FLUID SAMPLING	43
COOLING SYSTEM	**44**
CONNECTION GP-HEATER	44
CONNECTION GP-WATER	45
CONVERSION GP-COOLING SYSTEM	46
COOLER GP-ENGINE OIL	47
LINES GP-COOLANT	49
LINES GP-OIL COOLER	51
MODULE GP-COOLING	54
PUMP GP-WATER	59
RADIATOR & HYD OIL COOLER GP	60
AIR INLET AND EXHAUST SYSTEM	**64**
AIR CLEANER GP	64
CAP GP-AIR CLEANER	66
LINES GP-AIR	67
LINES GP-TURBOCHARGER AIR	68
MANIFOLD GP-EXHAUST	69
MANIFOLD GP-INLET	70
MUFFLER GP	71
PRECLEANER AR	72
PRECLEANER GP	73
TURBOCHARGER GP	74
FUEL SYSTEM	**75**
FILTER GP-FUEL	75
INJECTOR GP-FUEL	80
LINES GP-FUEL	82
LINES GP-FUEL FILTER	87
LINES GP-FUEL INJECTION	91
PUMP GP-FUEL INJECTION	93
RAIL GP-FUEL	94
TANK & MTG GP-FUEL	95
TANK GP-FUEL	96
ELECTRICAL AND STARTING SYSTEM	97
ALARM GP	97
ALTERNATOR GP-CHARGING	99
BATTERY & BOX GP-HEAVY-DUTY	100
BATTERY & WIRING GP	103
BLOCK GP-JUNCTION	106
BRACKET GP-SUPPORT	107
CAMERA & WIRING GP	108
CAMERA AR	109
CONTROL GP-ENGINE ELECTRONIC	110
CONTROL GP-UNPROGRAMMED	111
CONVERTER GP-POWER	113
ELECTRICAL AR	114
ELECTRONICS GP-COMMUNICATION	114
ELECTRONICS GP-MONITOR	115
ELECTRONICS GP-POWER TRAIN	115
HARNESS AS-CAB	116
HARNESS AS-CHASSIS	119
HARNESS AS-CONTROL	120
HARNESS AS-ENGINE	121

TABLE OF CONTENTS

NAME	PAGE
HARNESS AS-FRONT	123
HARNESS AS-HEATER & AIR COND	123
HARNESS AS-LIGHTING	124
HARNESS AS-STEERING	126
HARNESS AS-TRANSMISSION	127
HARNESS AS-WIRING	127
HEATER GP-JACKET WATER	128
INSTALLATION GP-COMMUNICATION	129
LAMP GP-FLOOD	137
LAMP GP-HEAD & SIGNAL	140
LAMP GP-REGISTRATION PLATE	146
LAMP GP-STOP & TAIL	147
LAMP GP-WARNING BEACON	148
LIGHTING GP-FLOOD	151
LIGHTING GP-FLOOD & SIGNAL	153
LIGHTING GP-SIGNAL	155
LIGHTING GP-WARNING BEACON	156
MOUNTING GP-ELECTRONIC CONTROL	158
RADIO GP-COMMUNICATION	159
SENSOR GP-ENGINE	160
STARTING AID GP	161
STARTING AID GP-ETHER	162
STARTING MOTOR GP-ELECTRIC	164
SWITCH GP-DISCONNECT	166
SWITCH GP-MAGNETIC	167
SWITCH GP-QUICK COUPLER	168
SWITCH GP-REVERSING FAN	169
SWITCH GP-RIDE CONTROL	170
SWITCH GP-ROTARY	171
SWITCH GP-SECONDARY STEERING	172
SWITCH GP-SIGNAL	173
VALVE GP-ETHER STARTING	175
WIRING GP-CAB	176
WIRING GP-CAMERA	181
WIRING GP-CHASSIS	182
WIRING GP-COMMUNICATION	186
WIRING GP-ENGINE	187
WIRING GP-FRONT	191
WIRING GP-SECONDARY STEERING	193
POWER TRAIN	**195**
AXLE AR-FIXED	195
AXLE AR-FIXED & OSCILLATING	195
AXLE AR-OSCILLATING	196
AXLE GP-FIXED	197
AXLE GP-OSCILLATING	198
CASE & PARTS GP-PLANETARY	199
CASE GP-TRANSMISSION	203
CLUTCH GP	204
CONTROL GP-TRANSMISSION HYD	210
COOLER GP-TRANSMISSION OIL	211
COVER GP-REAR	213
COVER GP-SHIPPING	214
DIFFERENTIAL & BEVEL GEAR GP	215
DRIVE GP-FLEXIBLE COUPLING	224
DRIVE GP-POWER TAKE-OFF	225
DRIVE GP-PUMP	227
DRIVE GP-TRANSFER	228
FASTENER GP-FIXED AXLE	229
FILLER GP-POWER TRAIN OIL	230
FILTER GP-OIL	233
GEAR & BEARING GP	234
LINES GP-POWER TRAIN COOLER	235
MOUNTING GP-AXLE	237
PLANETARY GP-FINAL DRIVE	238
POWER TRAIN AR	239
PUMP GP-TRANSMISSION	240
SHAFT GP-DRIVE	241
SLIP JOINT GP	243
TIRE & RIM AR	245
TIRE & RIM GP	247
TRANSMISSION AR	251
TRUNNION GP-AXLE	254
UNIVERSAL JOINT GP	256
VALVE GP-DIFFERENTIAL	257
VALVE GP-DUMP	258
VALVE GP-FLOW CONTROL	259
VALVE GP-SELECTOR & PRESS CONT	260
VALVE GP-SOLENOID	262
VALVE GP-TRANSMISSION CONTROL	265
FRAME AND BODY	**267**
BOX GP-BATTERY	267
BRACKET GP-MOUNTING	273
CONVERSION AR-ROADING	277
CONVERSION GP-ROADING	278
COUNTERWEIGHT & MOUNTING GP	279
DOOR GP-ACCESS	284
ENCLOSURE GP-ENGINE	287
FENDER & MOUNTING GP	295
FENDER GP	296
FENDER GP-FRONT	297
FENDER GP-ROADING	299
FRAME AR	302
FRAME AS	303
FRAME AS-FRONT	305
FRAME AS-LOADER	306
FRAME AS-REAR	307
GRILL GP	310
GUARD GP-FRONT	311
HITCH GP-ARTICULATING	313
LADDER GP	326
LINES GP-GREASE	330
LUBRICATION GP-AUTOMATIC	333

TABLE OF CONTENTS

NAME	PAGE
MOUNTING GP-BRACKET	335
PANEL AS-SIDE	336
SHIELD GP-ENGINE COMPARTMENT	338
SUPPORT GP-VALVE & FILTER	339
BRAKING SYSTEM	**341**
ACCUMULATOR GP-HYDRAULIC	341
ACTUATOR GP-PARKING BRAKE	343
BRAKE GP-PARKING	345
BRAKE GP-SERVICE	347
CONTROL GP-PARKING BRAKE	348
CONTROL GP-SERVICE BRAKE	349
CONVERSION AR-BRAKE CONTROL	356
STEERING SYSTEM	**358**
CYLINDER GP-STEERING	358
LINES GP-SECONDARY STEERING	360
LINES GP-STEERING	363
PUMP & MOTOR GP-SEC STEERING	368
PUMP & MTG GP-SECONDARY STEER	369
PUMP & MTG GP-STEERING	370
PUMP GP-PISTON	372
ROTATING GP-PUMP	377
STEERING AR-SECONDARY	378
STEERING COLUMN GP-ADJUSTABLE	379
VALVE GP-PUMP CONTROL	380
VALVE GP-SECONDARY STEERING	382
HYDRAULIC SYSTEM	**384**
ACCUMULATOR GP-HYDRAULIC	384
ACCUMULATOR GP-PILOT OIL	385
ACCUMULATOR GP-RIDE CONTROL	388
BODY GP-PILOT VALVE	392
CYLINDER GP-COUPLER	395
CYLINDER GP-LIFT	396
CYLINDER GP-LIFT & TILT	400
CYLINDER GP-TILT	403
FILTER GP-OIL	404
HYDRAULIC AR	405
HYDRAULIC AR-3 VALVE	405
KICKOUT & POSITIONER GP	406
LINES GP-COUPLER	407
LINES GP-FRONT	409
LINES GP-HYD FAN DR & OIL CLR	413
LINES GP-IMPLEMENT	418
LINES GP-PILOT	428
MANIFOLD GP-CONTROL	433
MANIFOLD GP-VALVE	434
MOTOR & LINES GP-HYDRAULIC FAN	435
MOTOR GP-GEAR	439
MOUNTING GP-BANK VALVE	441
PIVOT GP-PILOT VALVE	442
PLATE GP-PILOT VALVE	446
TANK GP-HYDRAULIC	452
VALVE & MTG GP-HYDRAULIC	455
VALVE & MTG GP-SOLENOID	461
VALVE GP-CHECK	462
VALVE GP-CHECK & RELIEF	465
VALVE GP-CONTROL	466
VALVE GP-FAN REVERSING	477
VALVE GP-MAIN CONTROL	478
VALVE GP-PILOT	490
VALVE GP-PILOT CARTRIDGE	503
VALVE GP-RELIEF	508
IMPLEMENTS	**511**
ARM AS-LIFT	511
CONTROL GP-BUCKET	512
LINK & BEARING AS	519
OPERATOR STATION	**520**
AIR CONDITIONER GP	520
ARMREST GP	529
CAB AR	535
CAB GP-ENCLOSED ROPS	542
COMPRESSOR & MTG GP-REFRIG	544
COMPRESSOR GP-REFRIGERANT	545
CONTROL & MTG GP-ELHYD	546
CONTROL & MTG GP-JOYSTICK	550
CONTROL & MTG GP-PEDAL	552
CONTROL GP-JOYSTICK	553
CONTROL GP-STEERING	555
COVER GP-ACCESS	559
COVER GP-CAB	561
DOOR GP-CAB	562
DUCT GP-CAB AIR	565
INSTALLATION GP-CAB	567
INSTALLATION GP-RADIO	568
LINES GP-AIR CONDITIONER	569
LINES GP-HEATER	571
MIRROR GP-REAR VIEW	572
MOUNTING GP-CAB	573
OPERATOR AR	574
PANEL GP-CAB	575
PEDAL GP-BRAKE	576
PEDAL GP-GOVERNOR	577
PLATFORM GP-CAB	578
RADIO GP	580
ROOF GP-CAB	581
ROPS GP-ENCLOSED	582
SEAT BELT GP	583
SEAT GP-SUSPENSION	586
SUPPORT GP-SEAT	590

TABLE OF CONTENTS

NAME	PAGE
SUSPENSION GP-SEAT	591
VALVE GP-WATER	595
VISOR GP-CAB	597
WASHER GP-WINDOW	598
WINDOW GP-CAB	599
WINDOW GP-DOOR	601
WIPER GP-WINDOW	603
WORK TOOLS	**605**
ADAPTER GP-TIP	605
BUCKET AS-GENERAL PURPOSE	607
BUCKET AS-MATERIAL HANDLING	625
BUCKET GP-GENERAL PURPOSE	626
BUCKET GP-MATERIAL HANDLING	638
COUPLER GP-QUICK	640
EDGE GP-CUTTING	642
EDGE GP-SEGMENT	643
EDGE-COVER	644
EDGE-END	645
PLATE-WEAR	647
PROTECTOR GP-LINKAGE	650
TIP GP-GENERAL PURPOSE	651
TIP GP-LONG	652
SERVICE EQUIPMENT AND SUPPLIES	653
BOX GP-TOOL	653
FILM GP	655
PLATE & FILM GP	666
SERVICE CENTER AR	667
PART NUMBER INDEX	**B1**

1. MACHINE IDENTIFICATION

Cat machines are identified by Product Identification Numbers (PIN). Some components included in a machine may be identified by Serial Numbers (S/N). Typical components that will be serialized include engines, transmissions, bulldozers, and rippers. The machine and engine are further identified by arrangement numbers and in some cases modification numbers. These numbers are shown on the product identification plate(s) and on the master plate in the operator's compartment.

Cat dealers need all of these numbers to determine accurate parts identification.

Effective First Quarter 2001 the Cat Product Identification Number (PIN) changed from 8 to 17 characters. In an effort to provide uniform equipment identification, Caterpillar and other construction equipment manufacturers are moving to comply with the latest version of the product identification numbering standard. Non-road machine PINs are defined by ISO 10261. The new PIN format will apply to all Cat machines and generator sets. The PIN plates and frame marking will display the 17 character PIN. The new format will look like the following:

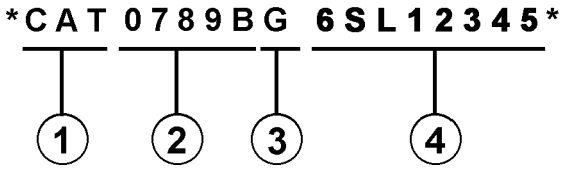

Where:

1. Caterpillar's World Manufacturing Code (characters 1-3)

2. Machine Descriptor (characters 4-8)

3. Check Character (character 9)

4. Machine Indicator Section (MIS) or Product Sequence Number (characters 10-17). These were previously referred to as the Serial Number.

Machines and generator sets produced before First Quarter 2001 will maintain their 8 character PIN format.

Components such as engines, transmissions, axles, etc. and work tools will continue to use an 8 character Serial Number (S/N).

2. ORDERING PARTS

⚠ WARNING

When replacement parts are required for this product Caterpillar recommends using Caterpillar replacement parts or parts with equivalent specifications including, but not limited to, physical dimensions, type, strength and material.

Failure to heed this warning can lead to premature failures, product damage, personal injury or death.

Quality Cat replacement parts are available from Cat dealers throughout the world. Their parts inventories are up to date and include all parts normally required to protect your investment in Cat machines. Dealers may offer repair kits or remanufactured parts to allow selection of the most effective repair alternative for a particular situation. When ordering parts, your order should specify the quantity, part number, part name, and the serial number/product identification number of the machine for which the parts are needed.

3. PARTS MANUAL ORGANIZATION

Product information in this manual is presented as "information elements" that represent all of the components for the specific model. Engine Arrangement and Seat Group are examples of information elements. The information elements are organized alphabetically by part name and secondarily by part number within each major section of the manual.

4. TABLE OF CONTENTS

A table of contents (TOC) is found at the beginning of the manual. The TOC lists each section of the manual with a complete list of all information elements organized as they appear in the manual. Page numbers are provided for quick reference to detailed parts identification illustrations and serviceable consist lists.

5. MAINTENANCE PARTS INDEX

The Maintenance Parts Index, located near the beginning of the manual, references most frequently used maintenance part numbers, providing description, quantity, usage and page number. This information is organized alphabetically by part description.

6. INDEX

The index located near the front of the manual is an alphabetical listing of all information elements included in the manual. Page numbers are provided for quick reference to detailed parts identification illustrations and serviceable consist lists.

7. PART NUMBER INDEX

A numerical index listing all part numbers and the corresponding page number(s) appears at the back of the manual.

8. CAPTIONS

Captions located at the beginning of each information element identify the part number and part name along with additional descriptive information. PIN and S/N information found in each caption should be used to select correct information for a specific machine. Field replacement options, identification of optional attachment components, and where used ("part of") information is also provided.

The first line of a caption is shown in larger type font to indicate the beginning of an information element. Captions for additional pages that may be required to illustrate an information element will be shown in standard type font and will include the term *(contd.)* .

9. NON-SERVICED PARTS

In some instances it is necessary to display non-serviced parts that are a link to a lower level serviceable consist lists. These non-serviced part numbers are shown in *italic* type indicating that they are not available.

10. PARTS LIST REFERENCE NUMBERS

Numbers shown in the Ref No column correspond to numbers used in the associated graphic(s). An alphabetic suffix may be added to a reference number to identify lower level consist items. Numbers shown in the Graphic Ref column refer to the graphic number identifier displayed in the lower left corner of each illustration. The Graphic Ref number may be used in combination with the item Ref No to determine the correct part number. There may be intentional omission of a Ref No in a consist list as information is updated to reflect the latest serviceable part numbers.

11. INDENTED PART NAMES

When a part name is indented in a parts list, it is part of (included in) the group or assembly under which it is indented.

12. ILLUSTRATION REFERENCE LETTERS

When necessary, illustrations contain reference letters (A, B, C etc.) that are intended to track lines and harnesses from one point to another. They are also used to show where to reconnect illustrations that have been separated.

13. ABBREVIATIONS AND SYMBOLS

O.D. – Outside Diameter
I.D. – Inside Diameter
A – Not Part Of This Group
B – Use As Required
C – Change From Previous Type
D – Order By The Meter
E – Order By The Centimeter
F – Not Shown
G – Order By The Inch
I – Refer To Hydraulic Information System
M – Metric Part
R – Remfg Part May Be Available
Y – Separate Illustration
Z – Not Serviced Separately

14. DESCRIPTION OF TYPE CHANGES

Type - A type is defined as any configuration change that requires an additional Information Element for an Arrangement, Group, or Assembly. If serial number breaks for types are not available, a type # (Type 1, Type 2, etc.) will be displayed in the caption. These "type" changes are identified with a "C" note (change from previous type) in the Parts List. Only the "types" that apply to this Parts Manual will be included. Additional types may exist causing "C" notes to appear on an Information Element when no other types are shown.

15.<END>

This symbol indicates the end of an information element.

NOTE:

Continuing improvement and advancement of product design may cause changes to your machine which may not be included in this publication. Whenever a question arises regarding your Cat product or this publication, please consult your Cat dealer for the latest available information.

FRAME AND BODY

8E-3299 PLATFORM GP-CAB

PIN 3SK1-99999

SMCS-7283 100090751

NOTE	REF NO	GRAPHIC REF	PART NUMBER	QTY	PART NAME (1 2 3 4 5 6 PRODUCT LEVEL)	SEE PAGE
	1	1	3T-3963	1	PLATE AS	
	2	1	5H-3962	25	BOLT (3/8-16X.750IN)	
	3	1	6P-1078	41	WASHER-HARD (9MM THK)	
	4	1	9P-1444	2	SUPPORT AS-FOOT	
	5	1	5P-2229	19	BOLT (1/2-13X1IN)	
		1	9x-[illegible]	19	WASHER-HARD (4MM THK)	
	6	1	9E-8134	1	COVER AS-LH	
		1	9P-2979	6	NUT-WELD (3/8-16 THD)	
		1	1P-0188	1	CLIP	
	7	1	7S-2411	4	COVER	
	8	1	5J-0468	19	SCREW-HEAD (3/8-16X.87SIN)	
	9	1	[illegible]074	1	COVER	
		1	9E-8[illegible]	1	GASKET	
	10	1	9E-3248	1	[illegible]	
		1	9E-3250	1	GASKET	
	11	1	3T-3830	1	HANDHOLD	
	12	1	9E-8678	1	COVER AS	
		1	9P-2979	6	NUT-WELD (3/8-16 THD)	
		1	9E-8078	1	GASKET	
	13	1	7T-0131	1	FLOORPLATE AS	
		1	1P-0748	4	NUT-WELD (1/2-13 THD)	
	14	1	7V-8067	1	PLUG-BUTTON	
	15	1	7T-0136	1	PLATE AS	
		1	9P-2978	5	NUT-WELD (3/8-16 THD)	
	16	1	7T-5066	1	COVER	
		1	7T-0779	1	GASKET	
	17	1	3T-3951	1	PLATE AS	
	18	1	9T-9364	4	BOLT (1/4-20X.62SIN)	
M		1	9T-4236	4	WASHER-HARD (2MM THK)	
	19	1	6I-8464	1	FLOOR MAT	
	20	1	8E-8846	1	MODULE AS-OPERATOR	
	21	1	3T-3834	1	HANDHOLD	
	22	1	9P-8571	2	PLUG	
	23	2	9T-9364	4	BOLT (1/4-20X.62SIN)	
M		2	9T-4236	4	WASHER-HARD (2MM THK)	
	24	2	5H-3962	17	BOLT (3/8-16X.750IN)	
	25	2	6P-1078	21	WASHER-HARD (9MM THK)	
	26	2	7T-0136	1	SEAL	
	27	2	7X-0378	2	BOLT (3/4-10X5IN)	
		2	7X-0682	2	WASHER-HARD (6MM THK)	
	28	2	3T-3482	2	PLATE	
	29	2	3T-8290	1	PLATE AS	
		2	7S-4828	6	SPACER	
	30	2	3T-8281	1	SEAL	
	31	2	7S-8017	1	GASKET	
	32	2	7S-8016	1	COVER AS	
		2	2R-2376	2	WASHER	
		2	6P-0626	2	SCREW-KNURLED	
	33	2	9W-3429	1	COVER	
	34	2	8E-9697	1	COVER	
	35	2	9D-3091	8	SCREW-SOCKET HEAD	
	36	2	9W-3142	8	MOUNTING	
	37	2	9W-9527	2	PLATE	
	38	2	7X-0390	2	BOLT (7/8-9X6IN)	
		2	7X-0672	2	WASHER-HARD	
	39	2	4L-6454	4	BOLT (3/8-16X1.0IN)	
	40	2	3T-4788	1	COVER	

12 FRAME AND BODY 1 of 4 SELP4570-01

FRAME AND BODY

8E-3299 PLATFORM GP-CAB (contd.)

100090751

NOTE	REF NO	GRAPHIC REF	PART NUMBER	QTY	PART NAME (1 2 3 4 5 6 PRODUCT LEVEL)	SEE PAGE
	41	2	8E-2515	1	COVER	
	42	2	7T-0134	1	PLATE	
	43	2	7T-0128	1	GASKET	
	44	2	7S-8724	1	GASKET	
	45	2	7S-8723	1	COVER	
	46	2	6V-1960	2	PLUG-BUTTON	

M-METRIC PART

SELP4570-01 2 of 4 FRAME AND BODY 13

FRAME AND BODY

8E-3299 PLATFORM GP-CAB (contd.)

100090751

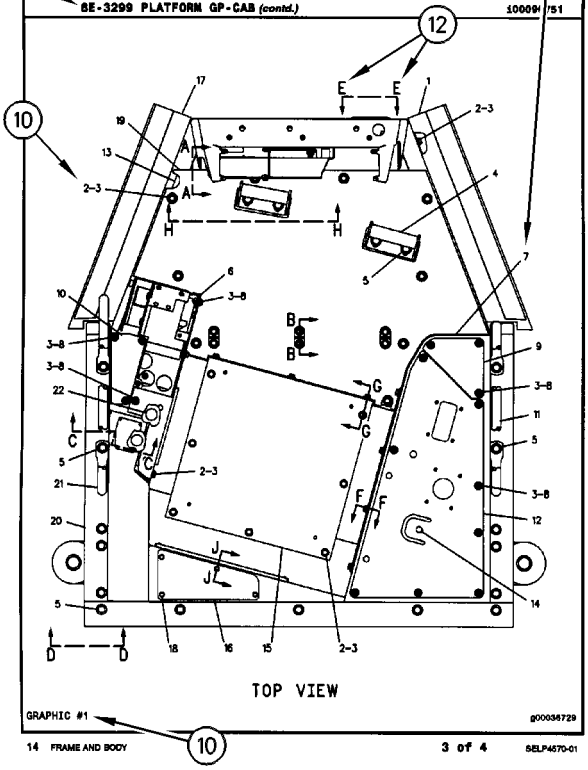

14 FRAME AND BODY 3 of 4 SELP4570-01

FRAME AND BODY

8E-3299 PLATFORM GP-CAB (contd.)

100090751

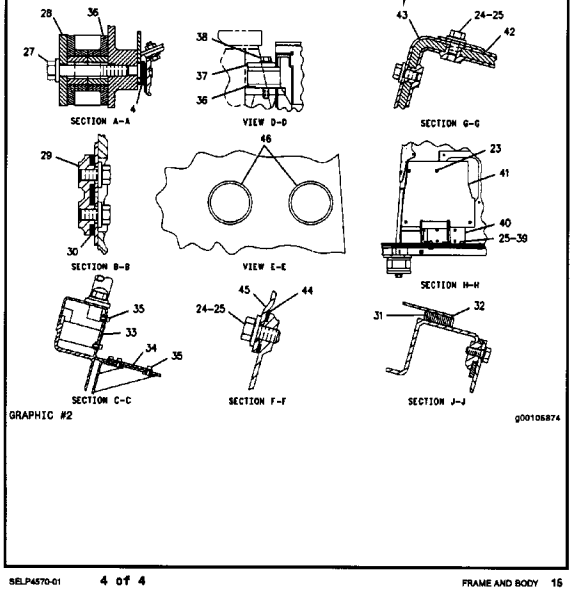

SELP4570-01 4 of 4 FRAME AND BODY 15

REMANUFACTURED COMPONENTS

As an option when making repairs consider Cat Remanufactured Components. Components that are available through the Cat Remanufactured Program are identified three ways in the parts book:

- with the letter R in the note field of the parts list
- with an R* at the beginning of the first line of the caption
- with an *R at the end of the first line of the caption

Typical components included in the Remanufacturing Program include:

ALTERNATORS
CONNECTING RODS
CRANKSHAFTS - UNDERSIZE
CRANKSHAFTS - UPGRADE TO NEW
CYLINDER HEADS
ELECTRONIC CONTROL MODULES (ECM)
ELECTRONIC SENSORS
FUEL INJECTORS
FUEL NOZZLES
FUEL PUMPS
GOVERNORS
OIL PUMPS
PISTONS
SHORT BLOCKS
STARTERS
TURBOCHARGERS - COMPLETE
TURBOCHARGER CARTRIDGES
WATER PUMPS

Cat Remanufactured engines for many engine arrangements are also available.

SUPPLEMENTAL COOLANT ADDITIVES

CUSTOMER BENEFITS:

Protects against cavitation, foam, erosion, corrosion, and scale buildup in cooling systems.

- Provides measured coolant conditioner.

DESCRIPTION:

Additives deplete from the coolant with normal operation. For this reason, Supplemental Coolant Additives (SCA) must be added to all heavy duty coolants at regular intervals. In addition, when not using a fully formulated, pre-charged antifreeze, like Cat DEAC, an initial charge of SCA must be added to the cooling system. The amount of SCA added to the system is dependent on the capacity of the system.

The SCA for initial fill is provided as a liquid. SCA's for maintenance intervals are available in liquid form and as a spin-on element. (No Spin-on available for 3600 Family of Engines)

NOTE:

The amount of SCA added at initial fill is not the same as the amount added at maintenance intervals.

The coolant additive elements can be used with any ethylene or propylene glycol type antifreeze which meets ASTM D4985 or ASTM D5345 Specifications.

NOTE:

For use with standard heavy duty coolant only, not for use with Extended Life Coolant.

PARTS NEEDED:

Cooling System Capacity		Liquid SCA at Initial Fill	Liquid SCA at Maintenance*	Spin-on SCA Maintenance Element*
Liters	Gallons			
22-30	(6-8)	3P-2044 (1)	6V-3542 (1)	111-2370 (1)
30-38	(8-10)	3P-2044 (1) 6V-3542 (1)	111-2372 (1)	111-2369 (1)
38-49	(10-13)	3P-2044 (1) 8T-1589 (1)	111-2372 (1)	111-2369 (1)
49-64	(13-17)	3P-2044 (2)	8T-1589 (1)	9N-3368 (1)
64-83	(17-22)	3P-2044 (2) 8T-1589 (1)	111-2372 (1) 6V-3542 (1)	111-2371 (1)
83-114	(22-30)	3P-2044 (3) 8T-1589 (1)	3P-2044 (1)	9N-3718 (1)
114-163	(30-43)	3P-2044 (5)	3P-2044 (1) 6V-3542 (1)	111-2371 (2)
163-242	(43-64)	3P-2044 (8)	3P-2044 (2)	9N-3718 (2)

** Normal maintenance period is 250 hrs. See your Operation and Maintenance Manual for complete coolant maintenance instructions.*

( ) Indicates quantity required.

MAINTENANCE PARTS

DESCRIPTION	PART NUMBER	QTY	WHERE USED	PAGE
AIR INLET AND EXHAUST SYSTEM				
FILTER ELEMENT AS-AIR (SECONDARY)	245-6376	1	AIR CLEANER GP	64
FILTER ELEMENT-AIR (PRIMARY)	245-6375	1	AIR CLEANER GP	64
BASIC ENGINE				
CAP-BREATHER (VALVE MECHANISM)	380-9615	1	COVER GP-VALVE MECHANISM	13
BRAKING SYSTEM				
CAP (GAS VALVE)	224-5132	1	ACCUMULATOR GP-HYDRAULIC	341
		1	ACCUMULATOR GP-HYDRAULIC	342
CAP AS	6V-9829	1	CONTROL GP-SERVICE BRAKE	352
COOLING SYSTEM				
CAP AS-RADIATOR	332-4175	1	MODULE GP-COOLING	54
		1	MODULE GP-COOLING	56
GASKET	281-7040	1	COOLER GP-ENGINE OIL	47
GASKET (ENGINE OIL FILTER BASE)	225-7944	2	COOLER GP-ENGINE OIL	47
GASKET (HOUSING)	277-2500	1	COOLER GP-ENGINE OIL	47
GASKET-WATER REGULATOR (TEMPERATURE)	281-8744	1	CONNECTION GP-WATER	45
HOSE-RADIATOR	387-6081	1	LINES GP-COOLANT	49
		1	LINES GP-COOLANT	50
	387-6082	1	LINES GP-COOLANT	49
		1	LINES GP-COOLANT	50
	387-6093	1	LINES GP-COOLANT	49
REGULATOR AS	417-7782	1	CONNECTION GP-WATER	45
ELECTRICAL AND STARTING SYSTEM				
BATTERY (12-VOLT, MAINTENANCE FREE, WET)	9X-3404	2	BATTERY & BOX GP-HEAVY-DUTY	100
		2	BATTERY & WIRING GP	103
BELT-DRIVE (WARNING BEACON)	9X-8139	1	LAMP GP-WARNING BEACON	148
CIRCUIT BREAKER AS (25-AMPERE)	280-2711	1	WIRING GP-CAB	177
CIRCUIT BREAKER AS (40-AMPERE)	171-2205	2	WIRING GP-CHASSIS	182
CIRCUIT BREAKER AS (80-AMPERE)	171-2210	1	WIRING GP-CHASSIS	182
FILTER (ETHER START)	358-4889	1	VALVE GP-ETHER STARTING	175
FLASHER AS (24-VOLT)	217-8166	1	WIRING GP-CAB	176
FUSE (10-AMPERE)	113-8490	21	WIRING GP-CAB	176
FUSE (15-AMPERE)	113-8491	9	WIRING GP-CAB	176
FUSE (20-AMPERE)	113-8492	2	WIRING GP-CAB	176
GASKET	304-7168	1	LIGHTING GP-FLOOD & SIGNAL	153
GLOW PLUG (24-VOLT)	361-9875	6	STARTING AID GP	161
KEY (BATTERY DISCONNECT)	8H-5306	1	SWITCH GP-DISCONNECT	166
LAMP (24-VOLT, 10-WATT)	259-1286	1	WIRING GP-CAB	176

MAINTENANCE PARTS

DESCRIPTION	PART NUMBER	QTY	WHERE USED	PAGE
LAMP (24-VOLT, 21-WATT)	9X-4493	1	LIGHTING GP-FLOOD & SIGNAL	153
LAMP (24-VOLT, 21-WATT) (DIRECTION)	9X-4493	2	LAMP GP-STOP & TAIL	147
LAMP (24-VOLT, 5-WATT) (FLOODLIGHT)	130-3515	1	LAMP GP-HEAD & SIGNAL	140
		1	LAMP GP-HEAD & SIGNAL	141
LAMP (24-VOLT, 5-WATT) (REGISTRATION PLATE)	5C-9583	1	LAMP GP-REGISTRATION PLATE	146
LAMP (24-VOLT, 5-WATT) (STOP, TAIL)	9X-4492	1	LAMP GP-STOP & TAIL	147
LAMP (24-VOLT, 70-WATT)	9X-7849	1	LAMP GP-WARNING BEACON	148
LAMP (24-VOLT, 75/70-WATT) (HIGH, LOW BEAM)	9X-3465	1	LAMP GP-HEAD & SIGNAL	140
		1	LAMP GP-HEAD & SIGNAL	141
LAMP GP-FLOOD (24-VOLT, 70-WATT) (SUSPENDED)	219-6487	4	LIGHTING GP-FLOOD	151
LAMP GP-FLOOD (HID)	388-6274	4	LAMP GP-FLOOD	139
LAMP-FLOOD (24-VOLT, 5-WATT)	9X-4492	1	LIGHTING GP-FLOOD & SIGNAL	153
LAMP-HALOGEN (24-VOLT, 70-WATT)	351-9918	1	LAMP GP-FLOOD	137
LAMP-TURN SIGNAL (24-VOLT, 21-WATT) (TURN SIGNAL)	242-0588	1	LAMP GP-HEAD & SIGNAL	140
		1	LAMP GP-HEAD & SIGNAL	141
ENGINE ARRANGEMENT				
BELT-SERPENTINE	338-0499	1	INSTALLATION GP-ENGINE	5
FUEL SYSTEM				
CAP AS-FUEL (LOCKABLE, VENTED)	349-7059	1	TANK GP-FUEL	96
FILTER AS-WATER SEP & FUEL	439-5037	1	FILTER GP-FUEL	76
FILTER ELEMENT-FUEL	360-8960	1	FILTER GP-FUEL	75
STRAINER-FUEL	9P-7121	1	TANK GP-FUEL	96
HYDRAULIC SYSTEM				
BREATHER (HYDRAULIC TANK)	258-2829	1	TANK GP-HYDRAULIC	454
CAP AS	6V-9829	1	VALVE & MTG GP-HYDRAULIC	456
		1	VALVE GP-MAIN CONTROL	482
		1	VALVE GP-MAIN CONTROL	484
CAP AS-FILLER (LOCKABLE) (HYDRAULIC TANK)	142-8937	1	TANK GP-HYDRAULIC	454
FILTER (HYDRAULIC)	387-6169	1	TANK GP-HYDRAULIC	454
FILTER-OIL (ULTRA HIGH EFFICIENCY)	126-1818	1	FILTER GP-OIL	404
SCREEN AS (HYDRAULIC TANK)	9T-9227	2	TANK GP-HYDRAULIC	454
SCREEN AS (PILOT OIL)	141-9236	1	VALVE GP-PILOT	490
		1	VALVE GP-PILOT	492
		1	VALVE GP-PILOT	495
		1	VALVE GP-PILOT	497
		1	VALVE GP-PILOT	499
		1	VALVE GP-PILOT	501

MAINTENANCE PARTS

DESCRIPTION	PART NUMBER	QTY	WHERE USED	PAGE
IMPLEMENTS				
CAP-DUST	6V-0852	10	CONTROL GP-BUCKET	514
LUBRICATION SYSTEM				
CAP-OIL FILLER (ENGINE)	130-9888	1	FILLER GP-ENGINE OIL	39
FILTER-ENGINE OIL	462-1171	1	FILTER GP-ENGINE OIL	40
OPERATOR STATION				
ARM GP-WINDOW WIPER (FRONT)	425-0077	1	WIPER GP-WINDOW	603
BLADE AS-WIPER (450-MM)	425-0081	1	WIPER GP-WINDOW	603
DRYER-REFRIGERANT (RECEIVER)	450-6492	1	AIR CONDITIONER GP	520
FILTER ELEMENT AS-AIR (ACTIVATED CHARCOAL)	348-3432	1	AIR CONDITIONER GP	520
FILTER ELEMENT-CAB AIR (STANDARD)	290-2287	1	AIR CONDITIONER GP	520
FILTER-AIR	290-2288	1	AIR CONDITIONER GP	520
SEAT BELT (2-IN)	206-1749	1	SEAT BELT GP	584
	388-3220	1	SEAT BELT GP	583
SEAT BELT (3-IN)	206-1750	1	SEAT BELT GP	585
POWER TRAIN				
BREATHER AS (TRANSMISSION)	9G-5127	1	CASE & PARTS GP-PLANETARY	199
CAP-FILLER (POWER TRAIN)	5K-1568	1	FILLER GP-POWER TRAIN OIL	231
FILTER ELEMENT-OIL (ADVANCED EFFICIENCY)	341-6643	1	FILTER GP-OIL	233
GASKET	2N-7007	1	CASE & PARTS GP-PLANETARY	199
PLUG-MAGNETIC (DIFFERENTIAL)	5P-4484	1	DIFFERENTIAL & BEVEL GEAR GP	216
		1	DIFFERENTIAL & BEVEL GEAR GP	218
		1	DIFFERENTIAL & BEVEL GEAR GP	220
		1	DIFFERENTIAL & BEVEL GEAR GP	222
SCREEN-SUCTION (TRANSMISSION)	4S-8598	1	CASE & PARTS GP-PLANETARY	199
STEERING SYSTEM				
SCREEN AS (HYDRAULIC)	382-1511	1	LINES GP-STEERING	363
		1	LINES GP-STEERING	365

INDEX

NAME PAGE

A

ACCUMULATOR GP-HYDRAULIC 342
ACCUMULATOR GP-HYDRAULIC–BRAKE 341
ACCUMULATOR GP-HYDRAULIC–CHARGED . . . 384
ACCUMULATOR GP-PILOT OIL–CHARGED 386
ACCUMULATOR GP-PILOT OIL–UNCHARGED 385, 387
ACCUMULATOR GP-RIDE CONTROL–CHARGED 388, 390
ACCUMULATOR GP-RIDE CONTROL–UNCHARGED 389, 391
ACTUATOR GP-PARKING BRAKE 343, 344
ADAPTER GP-TIP 605, 606
AIR CLEANER GP 5, 64, 65
AIR CONDITIONER GP 520, 522, 526
ALARM GP 97, 98
ALTERNATOR GP-CHARGING 99
ARM AS-LIFT 511
ARM GP-WINDOW WIPER (FRONT) 603
ARMREST GP 529, 532
ARMREST GP (SUSPENSION SEAT) 589
ATOMIZER GP-ETHER 162
AXLE AR-FIXED 195
AXLE AR-FIXED & OSCILLATING 195, 196
AXLE AR-FIXED–LIMITED SLIP DIFFERENTIAL 195
AXLE AR-OSCILLATING 196
AXLE AR-OSCILLATING–LIMITED SLIP DIFFERENTIAL 196
AXLE GP-FIXED 197
AXLE GP-OSCILLATING 198

B

BATTERY (12-VOLT, MAINTENANCE FREE, WET) 100, 103
BATTERY & BOX GP-HEAVY-DUTY 100
BATTERY & WIRING GP 103
BELT TENSIONER GP 8
BELT-DRIVE (WARNING BEACON) 148
BELT-SERPENTINE 5
BLADE AS-WIPER (450-MM) 603
BLOCK GP-JUNCTION–BATTERY 106

NAME PAGE

BODY GP-PILOT VALVE 392, 393, 394
BOX GP-BATTERY 267, 269, 272
BOX GP-BATTERY–COLD WEATHER 270
BOX GP-TOOL 653
BRACKET GP-MOUNTING 9, 273, 274, 275, 276
BRACKET GP-SUPPORT 107
BRAKE GP-PARKING 345, 346
BRAKE GP-SERVICE 347
BREATHER (HYDRAULIC TANK) 454
BREATHER AS (TRANSMISSION) 199
BREATHER GP 38
BUCKET AS-GENERAL PURPOSE 607, 608, 610, 612, 613, 614, 616, 618, 619, 620, 621, 623
BUCKET AS-MATERIAL HANDLING 625
BUCKET GP-GENERAL PURPOSE 626, 627, 628, 629, 630, 631, 632, 633, 634, 635, 636, 637
BUCKET GP-MATERIAL HANDLING 638

C

CAB AR 535, 536, 539
CAB GP-ENCLOSED ROPS 542
CAMERA & WIRING GP 108
CAMERA AR 109
CAMERA GP (115-DEG, COLOR) 108
CAMSHAFT GP 10, 11
CAP (GAS VALVE) 341, 342

INDEX

NAME	PAGE
CAP AS	352, 456, 482, 484
CAP AS-FILLER (LOCKABLE) (HYDRAULIC TANK)	454
CAP AS-FUEL (LOCKABLE, VENTED)	96
CAP AS-RADIATOR	54, 56
CAP GP-AIR CLEANER	66
CAP GP-FUEL FILLER	96
CAP-BREATHER (VALVE MECHANISM)	13
CAP-DUST	514
CAP-FILLER (POWER TRAIN)	231
CAP-OIL FILLER (ENGINE)	39
CAP-PUSH BUTTON (YELLOW)	553
CASE & PARTS GP-PLANETARY	199
CASE GP-TRANSMISSION	203
CHASSIS AR	1
CIRCUIT BREAKER AS (25-AMPERE)	177
CIRCUIT BREAKER AS (40-AMPERE)	182
CIRCUIT BREAKER AS (80-AMPERE)	182
CLUTCH GP–FIRST, THIRD	208
CLUTCH GP–FORWARD HIGH, FORWARD LOW	206
CLUTCH GP–REVERSE, 2ND	204
COMMON AR	1
COMPRESSOR & MTG GP-REFRIG	544
COMPRESSOR GP-REFRIGERANT	545
CONFIGURATION AR	2
CONNECTING ROD GP	12, 28
CONNECTION GP-HEATER	44
CONNECTION GP-WATER	45
CONNECTOR GP-ELECTRONIC (OBJECT DETECTION, VISION)	181
CONTROL & MTG GP-ELHYD	548
CONTROL & MTG GP-ELHYD–2-LEVER	546
CONTROL & MTG GP-JOYSTICK	550, 551
CONTROL & MTG GP-PEDAL	552
CONTROL GP-BUCKET	512, 514, 516
CONTROL GP-COMMUNICATION (PL421)	133
CONTROL GP-ENGINE ELECTRONIC	110
CONTROL GP-JOYSTICK	553
CONTROL GP-JOYSTICK–IMPLEMENT CONTROLS	554
CONTROL GP-PARKING BRAKE	348
CONTROL GP-SERVICE BRAKE	349, 350
CONTROL GP-STEERING	555, 556, 557
CONTROL GP-TRANSMISSION HYD	210
CONTROL GP-UNPROGRAMMED	176
CONTROL GP-UNPROGRAMMED (PRODUCT LINK 300)	114
CONTROL GP-UNPROGRAMMED–PRODUCT LINK 522	111
CONTROL GP-UNPROGRAMMED–PRODUCT LINK 522, CHINA	112
CONVERSION AR-BRAKE CONTROL	356, 357
CONVERSION AR-ROADING	277
CONVERSION GP-COOLING SYSTEM	46
CONVERSION GP-ROADING	278
CONVERTER GP-POWER–24-VOLT TO 12-VOLT	113
COOLER AS-OIL (ENGINE)	47
COOLER GP-ENGINE OIL	47
COOLER GP-TRANSMISSION OIL	211, 212
CORE AS-AFTERCOOLER	54, 56
CORE AS-OIL COOLER (HYDRAULIC)	54, 56
CORE AS-RADIATOR	54, 56
COUNTERWEIGHT & MOUNTING GP	279, 280, 282
COUPLER GP-QUICK	640
COVER GP-ACCESS–HVAC	559
COVER GP-CAB	561
COVER GP-REAR	213
COVER GP-SHIPPING–TRANSMISSION	214
COVER GP-VALVE MECHANISM	13
CRANKSHAFT GP	14
CYLINDER BLOCK AS	15
CYLINDER BLOCK GP	16
CYLINDER GP-COUPLER	395
CYLINDER GP-LIFT & TILT	400, 401
CYLINDER GP-LIFT–LH	397, 398
CYLINDER GP-LIFT–RH	396, 399
CYLINDER GP-STEERING	358, 359
CYLINDER GP-TILT	403
CYLINDER HEAD AS	17
CYLINDER HEAD GP	18

D

NAME	PAGE
DIFFERENTIAL & BEVEL GEAR GP	215
DIFFERENTIAL & BEVEL GEAR GP–WITH HOUSING	216, 218, 220, 222
DIFFERENTIAL GP-LIMITED SLIP	220, 222
DOOR GP-ACCESS–LH	284
DOOR GP-ACCESS–RH	286
DOOR GP-CAB	562
DRAIN GP-OIL	19
DRIVE GP-FAN	20
DRIVE GP-FLEXIBLE COUPLING	224

INDEX

NAME PAGE

DRIVE GP-POWER TAKE-OFF 225
DRIVE GP-PUMP–TRANSMISSION. 227
DRIVE GP-TRANSFER. 228
DRYER-REFRIGERANT (RECEIVER). 520
DUCT GP-CAB AIR. 565

E

EDGE GP-CUTTING 642
EDGE GP-SEGMENT 643
EDGE-COVER–CENTER 644
EDGE-END–LH 645
EDGE-END–RH. 646
ELECTRICAL AR 114
ELECTRONICS GP-COMMUNICATION 114
ELECTRONICS GP-COMMUNICATION–PRODUCT LINK 300 114
ELECTRONICS GP-MONITOR–CONTROL 115
ELECTRONICS GP-POWER TRAIN–TRANSMISSION CONTROL 115
ENCLOSURE GP-ENGINE 287
291
ENGINE AR-PRIMARY 3
4

F

FASTENER GP-FIXED AXLE 229
FENDER & MOUNTING GP–REAR 295
FENDER GP-FRONT. 297
298
FENDER GP-ROADING 299
FENDER GP–LH 296
FILLER GP-ENGINE OIL 39
FILLER GP-POWER TRAIN OIL 230
231
FILLER GP-POWER TRAIN OIL (AXLE OIL). . . . 196
FILM GP. 655
658
659
660
663
FILM-IDENTIFICATION (12-VOLT). 529
532
FILM-IDENTIFICATION (CAT). 112
FILM-IDENTIFICATION (HORN, TRANSMISSION DIRECTION). 546
548
FILM-IDENTIFICATION (HVAC FILTER) 522
526
FILM-IDENTIFICATION (HYDRAULIC ACCUMULATOR) 384
385
386
387
FILM-IDENTIFICATION (LUBRICATION POINTS) 330
FILM-INFORMATION (24-VOLT HEATER). 522
526

NAME PAGE

FILM-INFORMATION (HYD ACCUMULATOR, READ OMM). 388
389
390
391
FILM-INFORMATION (PRODUCT LINK, READ OMM). 129
131
133
135
FILM-INSTRUCTION (BUCKET POSITION) 546
FILM-INSTRUCTION (ENGINE START) 176
FILM-INSTRUCTION (EXIT). 658
FILM-INSTRUCTION (FUEL, READ OMM) 660
663
FILM-INSTRUCTION (IMPLEMENT CONTROL). 548
FILM-INSTRUCTION (IMPLEMENT) 550
551
FILM-INSTRUCTION (READ OMM). 330
FILM-WARNING (DO NOT LIFT, READ OMM). 626
627
628
629
630
631
632
633
634
635
636
637
638
FILM-WARNING (EXPLOSION, RADIO PRODUCT LINK) 129
131
133
135
FILM-WARNING (HAND CRUSH HAZARD, READ OMM). 640
FILM-WARNING (HIGH PRESSURE, READ OMM). 341
342
FILTER (ETHER START). 175
FILTER (HYDRAULIC) 454
FILTER AS-WATER SEP & FUEL 76
FILTER ELEMENT AS-AIR (ACTIVATED CHARCOAL) 520
FILTER ELEMENT AS-AIR (SECONDARY) 64
FILTER ELEMENT-AIR (PRIMARY) 64
FILTER ELEMENT-CAB AIR (STANDARD) 520
FILTER ELEMENT-FUEL 75
FILTER ELEMENT-OIL (ADVANCED EFFICIENCY). 233
FILTER GP-ENGINE OIL 40
FILTER GP-FUEL. 75
76
77
78
79

INDEX

NAME PAGE

FILTER GP-OIL. 233
FILTER GP-OIL (HYDRAULIC). 413
FILTER GP-OIL–HYDRAULIC 404
FILTER-AIR 520
FILTER-ENGINE OIL. 40
FILTER-OIL (ULTRA HIGH EFFICIENCY). 404
FINAL DRIVE GP 238
FLASHER AS (24-VOLT). 176
FLOOR MAT 552
FLOOR MAT (CAB). 536
FLYWHEEL GP 21
FRAME AR 302
FRAME AS 303
FRAME AS-FRONT. 305
FRAME AS-LOADER. 306
FRAME AS-REAR 307
308
309
FRAME AS–GRILL. 304
FUSE (10-AMPERE) 176
FUSE (15-AMPERE) 176
FUSE (20-AMPERE) 176

G

GASKET 47
153
199
GASKET (ENGINE OIL FILTER BASE). 47
GASKET (HOUSING) 47
GASKET-WATER REGULATOR (TEMPERATURE). 45
GAUGE AS-OIL LEVEL (DIPSTICK) (AXLE) 196
230
GAUGE GP-OIL LEVEL (DIPSTICK) 5
GAUGE-SIGHT (OIL). 252
GEAR & BEARING GP 234
GLOW PLUG (24-VOLT) 161
GRILL GP 310
GUARD GP-FRONT. 311
312

H

HAMMER GP (CAB WINDOW) 542
HARNESS AS-BRAKE (STOP LIGHT). 576
HARNESS AS-CAB 118
176
HARNESS AS-CAB–MAIN 116
HARNESS AS-CAB–REAR VIEW, CAMERA 118
HARNESS AS-CHASSIS 119
HARNESS AS-CONTROL 120
HARNESS AS-CONTROL (PRODUCT LINK). . . . 186
HARNESS AS-ENGINE 121
122
HARNESS AS-FRONT 123
HARNESS AS-HEATER & AIR COND 123
124
522

NAME PAGE

HARNESS AS-LIGHTING. 124
125
126
HARNESS AS-LIGHTING (BACKUP ALARM, SIGNAL LAMPS) 153
HARNESS AS-LIGHTING (LICENSE PLATE). . . . 278
HARNESS AS-LIGHTING (TURN SIGNAL). 173
HARNESS AS-PLATFORM 188
HARNESS AS-RADIO. 580
HARNESS AS-STARTING AID. 161
HARNESS AS-STEERING. 126
HARNESS AS-TRANSMISSION. 127
HARNESS AS-WIRING. 127
187
HARNESS AS-WIRING (AUTOLUBE). 333
HEATER GP-JACKET WATER. 128
HITCH GP-ARTICULATING. 313
316
319
320
322
324
HOSE-RADIATOR 49
50
HOUSING GP-FLYWHEEL. 5
22
HOUSING GP-FRONT 23
HYDRAULIC AR. 405
HYDRAULIC AR-3 VALVE. 405
HYDRAULIC AR-3 VALVE–WITH RIDE CONTROL 405

I

INDICATOR AS (SEAT ADJUSTMENT). 591
INJECTOR GP-FUEL. 80
81
INSTALLATION GP-CAB 567
INSTALLATION GP-COMMUNICATION 135
INSTALLATION GP-COMMUNICATION–PRODUCT LINK. 133
INSTALLATION GP-COMMUNICATION–PRODUCT LINK, 522. 129
131
INSTALLATION GP-ENGINE. 5
INSTALLATION GP-RADIO 568

J

JET GP-PISTON COOLING 25

K

KEY (BATTERY DISCONNECT) 166
KICKOUT & POSITIONER GP. 406

INDEX

NAME PAGE

L

LADDER GP–LEFT 326
LADDER GP–REAR. 328
329
LADDER GP–RIGHT 327
LAMP (24-VOLT, 10-WATT) 176
LAMP (24-VOLT, 21-WATT) 153
LAMP (24-VOLT, 21-WATT) (DIRECTION) 147
LAMP (24-VOLT, 5-WATT) (FLOODLIGHT) 140
141
LAMP (24-VOLT, 5-WATT) (REGISTRATION PLATE) 146
LAMP (24-VOLT, 5-WATT) (STOP, TAIL) 147
LAMP (24-VOLT, 70-WATT) 148
LAMP (24-VOLT, 75/70-WATT) (HIGH, LOW BEAM) 140
141
LAMP GP-BACKUP (REAR) 153
LAMP GP-DOME (24-VOLT) 176
LAMP GP-FLOOD 137
138
LAMP GP-FLOOD (24-VOLT, 70-WATT) (SUSPENDED) 151
LAMP GP-FLOOD (HID). 139
LAMP GP-FLOOD–HID 139
LAMP GP-HEAD & SIGNAL 142
143
144
145
LAMP GP-HEAD & SIGNAL–LH 141
LAMP GP-HEAD & SIGNAL–RH 140
LAMP GP-LICENSE PLATE 146
LAMP GP-REAR (COMBINATION) 153
LAMP GP-REGISTRATION PLATE–LICENSE . . . 146
LAMP GP-SIGNAL (TURN) 153
LAMP GP-STOP & TAIL 147
LAMP GP-WARNING BEACON–AMBER, STROBE 149
150
LAMP GP-WARNING BEACON–ROTATING 148
LAMP-FLOOD (24-VOLT, 5-WATT) 153
LAMP-HALOGEN (24-VOLT, 70-WATT) 137
LAMP-TURN SIGNAL (24-VOLT, 21-WATT) (TURN SIGNAL) 140
141
LIFTING GP-ENGINE 26
LIGHTING GP-FLOOD 152
LIGHTING GP-FLOOD & SIGNAL. 153
LIGHTING GP-FLOOD–CAB, HALOGEN 151
LIGHTING GP-SIGNAL 155
LIGHTING GP-WARNING BEACON 156
157
LINES GP-AIR 67
LINES GP-AIR CONDITIONER. 569
LINES GP-COOLANT–RADIATOR 49
50
LINES GP-COUPLER 407
LINES GP-FRONT 409

NAME PAGE

LINES GP-FUEL 82
83
84
85
86
LINES GP-FUEL FILTER 87
89
LINES GP-FUEL INJECTION 91
92
LINES GP-GREASE 330
LINES GP-HEATER. 571
LINES GP-HYD FAN DR & OIL CLR 413
LINES GP-IMPLEMENT 418
423
LINES GP-OIL COOLER 53
LINES GP-OIL COOLER–COLD START 51
LINES GP-PILOT–2-LEVER. 430
LINES GP-PILOT–3-LEVER. 428
LINES GP-PILOT–JOYSTICK 431
LINES GP-PILOT–JOYSTICK, 3-LEVER 429
LINES GP-POWER TRAIN COOLER 235
LINES GP-SECONDARY STEERING 360
362
LINES GP-STEERING. 363
365
LINES GP-TURBOCHARGER AIR. 68
LINK & BEARING AS–HIGH LIFT MACHINES. 519
LINK GP 516
LUBRICATION GP-AUTOMATIC 333

M

MANIFOLD GP-CONTROL. 407
433
MANIFOLD GP-EXHAUST 69
MANIFOLD GP-INLET. 70
MANIFOLD GP-VALVE 434
MIRROR GP-REAR VIEW 572
MODULE GP-COOLING 54
56
MODULE GP-DISPLAY (WORK AREA VISUAL SYSTEM) 181
MOTOR & LINES GP-HYDRAULIC FAN. 437
MOTOR & LINES GP-HYDRAULIC FAN–REVERSING FAN 435
MOTOR GP-ELEC HYD PUMP (SECONDARY STEERING) 368
MOTOR GP-GEAR–HYDRAULIC FAN 439
MOTOR GP-GEAR–REVERSING FAN–HYDRAULIC FAN 440
MOUNTING GP-AXLE. 237
MOUNTING GP-BANK VALVE 441
MOUNTING GP-BRACKET 335
MOUNTING GP-CAB. 573
MOUNTING GP-ELECTRONIC CONTROL 158
MUFFLER GP 5
71

INDEX

NAME PAGE

O

OPERATOR AR 574
OPTION AR-COLD WEATHER. 2

P

PADLOCK GP. 231
452
PAN GP-OIL 27
PANEL AS-SIDE. 336
337
PANEL GP-CAB 575
PEDAL GP-BRAKE 576
PEDAL GP-GOVERNOR 577
PISTON & ROD GP 28
PISTON GP. 29
PIVOT GP-PILOT VALVE 443
PIVOT GP-PILOT VALVE–LIFT 444
445
PIVOT GP-PILOT VALVE–TILT 442
PLANETARY GP-FINAL DRIVE 238
PLATE & FILM GP 666
PLATE GP-PILOT VALVE 447
449
450
PLATE GP-PILOT VALVE–JOYSTICK 446
PLATE-WEAR–CENTER 647
PLATE-WEAR–LH. 648
PLATE-WEAR–RH 649
PLATFORM GP-CAB–CAB 578
PLUG GP-OIL PAN. 30
PLUG-MAGNETIC (DIFFERENTIAL) 216
218
220
222
POWER TAKE-OFF GP 31
POWER TRAIN AR. 239
PRECLEANER AR. 72
PRECLEANER GP. 73
PROTECTOR GP-LINKAGE 650
PULLEY GP-AUXILIARY DRIVE 33
PULLEY GP-CRANKSHAFT 34
PUMP & MOTOR GP-SEC STEERING–
SECONDARY 368
PUMP & MTG GP-SECONDARY STEER. 369
PUMP & MTG GP-STEERING 370
PUMP GP-ENGINE OIL 41
42
PUMP GP-FUEL INJECTION 93
PUMP GP-GEAR (BRAKE, FAN). 413
PUMP GP-GEAR (SECONDARY STEERING) . . . 368
PUMP GP-METERING (HMU) 363
365
PUMP GP-PISTON 375
PUMP GP-PISTON (IMPLEMENT) 372
PUMP GP-PISTON (STEERING). 372
PUMP GP-PISTON–IMPLEMENT. 373
PUMP GP-PISTON–IMPLEMENT, STEERING . . . 372
PUMP GP-TRANSMISSION. 240

NAME PAGE

PUMP GP-WATER. 59

R

RADIATOR & HYD OIL COOLER GP. 60
61
62
RADIO GP (AM/FM/WB) 580
RADIO GP-COMMUNICATION–PRODUCT LINK
121SR 159
RADIO GP–AM/FM/WB. 580
RAIL GP-FUEL 94
REFLECTOR GP 356
357
REGULATOR AS 45
RELAY (SECONDARY STEERING MOTOR) 368
RELAY AS (24-VOLT). 176
RELAY AS (24-VOLT) (RESISTOR) 599
ROCKER ARM GP 35
37
ROOF GP-CAB. 581
ROPS GP-ENCLOSED 582
ROTATING GP-PUMP. 377

S

SCREEN AS (HYDRAULIC TANK) 454
SCREEN AS (HYDRAULIC) 363
365
SCREEN AS (PILOT OIL). 490
492
495
497
499
501
SCREEN-SUCTION (TRANSMISSION). 199
SEAL GP-DUO-CONE. 197
198
SEAT BELT (2-IN). 583
584
SEAT BELT (3-IN). 585
SEAT BELT GP–RETRACTABLE 583
SEAT BELT GP–RETRACTABLE, 2-IN 584
SEAT BELT GP–RETRACTABLE, 3-IN 585
SEAT GP-SUSPENSION 586
587
588
589
SEAT GP-SUSPENSION (CLOTH) 588
SEGMENT-EDGE 643
644
SENDER AS-FUEL LEVEL 182
SENSOR AS-TEMPERATURE (PASSIVE DATA
BOOSTER). 182
SENSOR AS-TEMPERATURE (TORQUE
CONVERTER OIL). 252
SENSOR AS-TEMPERATURE (TRANSMISSION
OIL) 252

INDEX

NAME PAGE

SENSOR GP-ENGINE 3
4
160
SENSOR GP-LIQUID LEVEL 76
SENSOR GP-POSITION (LIFT) 191
SENSOR GP-POSITION (THROTTLE) 577
SENSOR GP-POSITION (TILT) 191
SENSOR GP-PRESSURE (BRAKE OIL) 182
SENSOR GP-PRESSURE (BRAKE PRESSURE WARNING) 183
SENSOR GP-PRESSURE (INLET MANIFOLD AIR) 160
SENSOR GP-PRESSURE (PARKING BRAKE) 183
SENSOR GP-SPEED (ENGINE) 160
SENSOR GP-SPEED (TRANSMISSION) 252
SENSOR-PRESSURE (ENGINE OIL) 160
SENSOR-TEMPERATURE (AIR INLET MANIFOLD) 160
SENSOR-TEMPERATURE (COOLANT) 160
SERVICE CENTER AR 667
SHAFT GP-DRIVE 241
SHAFT GP-TRANSMISSION 204
206
208
SHIELD GP-ENGINE COMPARTMENT 338
SLIP JOINT GP 243
244
SOFTWARE GP-COMMUNICATION 114
SOFTWARE GP-COMMUNICATION (PL300) 114
SOFTWARE GP-COMMUNICATION (PRODUCT LINK 522, CHINA) 129
SOFTWARE GP-COMMUNICATION (PRODUCT LINK 522) 114
SOFTWARE GP-ELECTRONIC 111
112
SOFTWARE GP-MACHINE (PRODUCT LINK 121SR) 159
SOFTWARE GP-MONITOR 115
SOFTWARE GP-POWER TRAIN 115
SOLENOID 70
SPRING-GAS (DOOR) 562
STARTING AID GP 161
STARTING AID GP-ETHER 162
STARTING MOTOR GP-ELECTRIC 164
165
STEERING AR-SECONDARY 378
STEERING COLUMN GP-ADJUSTABLE 379
STRAINER-FUEL 96
SUN VISOR 597
SUPPORT GP-LINES 87
89
SUPPORT GP-SEAT 590
SUPPORT GP-VALVE & FILTER 339
340
SUSPENSION GP-SEAT 591
593
SWITCH AS-LIMIT (NORMALLY CLOSED) (BRAKE PEDAL) 576

NAME PAGE

SWITCH AS-PRESSURE (PRIMARY STEERING) 193
SWITCH AS-PRESSURE (REFRIGERANT) 189
SWITCH AS-PRESSURE (SECONDARY STEERING) 193
SWITCH AS-PUSH BUTTON (DOWNSHIFT) 546
548
SWITCH AS-PUSH BUTTON (HORN) 546
548
SWITCH AS-ROCKER (24-VOLT) (FLOODLIGHTS, REAR) 138
SWITCH AS-ROCKER (24-VOLT) (HAZARD WARNING LIGHTS) 176
SWITCH AS-ROCKER (24-VOLT) (HEADLIGHT DIMMER) 176
SWITCH AS-ROCKER (24-VOLT) (IMPLEMENT LOCKOUT) 176
SWITCH AS-ROCKER (24-VOLT) (QUICK COUPLER) 168
SWITCH AS-ROCKER (24-VOLT) (REVERSING FAN) 169
SWITCH AS-ROCKER (24-VOLT) (RIDE CONTROL) 170
SWITCH AS-ROCKER (24-VOLT) (RUNNING LIGHTS) 176
SWITCH AS-ROCKER (24-VOLT) (SECONDARY STEERING) 172
SWITCH AS-ROCKER (24-VOLT) (WORK LIGHT) 176
SWITCH AS-ROCKER (AIR CONDITIONER, HEATER) 176
SWITCH AS-ROCKER (AUTOSHIFT) 176
SWITCH AS-ROCKER (DEFROSTER) 599
SWITCH AS-ROCKER (TRANSMISSION NEUT OVERRIDE) 176
SWITCH AS-ROCKER (WARNING BEACON) . . . 156
157
SWITCH AS-START (KEY) 176
SWITCH AS-THERMOSTAT (HVAC) 522
526
SWITCH AS-TOGGLE (ENGINE SHUTDOWN) 182
SWITCH AS-TURN SIGNAL 173
SWITCH GP-DISCONNECT (BATTERY) 100
SWITCH GP-DISCONNECT–BATTERY 166
SWITCH GP-MAGNETIC 167
SWITCH GP-PRESSURE (FILTER OIL) 233
SWITCH GP-PRESSURE (STEERING CHARGE) 404
SWITCH GP-QUICK COUPLER 168
SWITCH GP-REVERSING FAN 169
435
SWITCH GP-RIDE CONTROL 170
SWITCH GP-ROTARY 171
SWITCH GP-ROTARY (WIPER, WASHER) (FRONT) 176
SWITCH GP-ROTARY (WIPER, WASHER) (REAR) 176
SWITCH GP-SECONDARY STEERING 172
SWITCH GP-SIGNAL 173

INDEX

NAME	PAGE
SWITCH-PRESSURE (AIR CLEANER)	189

T

NAME	PAGE
TANK & MTG GP-FUEL	95
TANK GP-FUEL	96
TANK GP-HYDRAULIC	452, 454
TANK GP-WINDOW WASHER	598
TIP GP-GENERAL PURPOSE–K-80	651
TIP GP-LONG	652
TIRE & RIM AR	245, 246
TIRE & RIM GP	247, 248, 249, 250
TRANSMISSION AR	252
TRANSMISSION AR–HYDROSTATIC	251
TRUNNION GP-AXLE	254
TRUNNION GP-AXLE–REAR	255
TURBOCHARGER GP	74

U

NAME	PAGE
UNIVERSAL JOINT GP	256

V

NAME	PAGE
VALVE & MTG GP (HYDRAULIC)	51
VALVE & MTG GP-HYDRAULIC–RIDE CONTROL	455, 458
VALVE & MTG GP-SOLENOID	461
VALVE AS-PRESSURE RELIEF (REFRIGERANT COMPRESSOR)	545
VALVE GP	465
VALVE GP-ACCUMULATOR CHARGING (BRAKE)	413
VALVE GP-BRAKE CONTROL (PARKING)	350
VALVE GP-BRAKE CONTROL (SERVICE)	350
VALVE GP-CHECK	462, 477
VALVE GP-CHECK (HYDRAULIC OIL COOLER BYPASS)	413
VALVE GP-CHECK (HYDRAULIC)	413
VALVE GP-CHECK (LOAD SIGNAL)	466, 473, 478, 486
VALVE GP-CHECK (QUICK COUPLER)	395
VALVE GP-CHECK & RELIEF	465
VALVE GP-CHECK–PILOT OPERATED	463, 464
VALVE GP-CONTROL	466, 472, 473
VALVE GP-CONTROL–AUXILIARY	470
VALVE GP-DIFFERENTIAL–TRANSMISSION	257
VALVE GP-DUMP–TRANSMISSION	258
VALVE GP-ETHER STARTING	175
VALVE GP-FAN REVERSING–FAN	477
VALVE GP-FLOW CONTROL	259
VALVE GP-FLUID SAMPLING	43
VALVE GP-MAIN CONTROL	478, 482, 484, 486
VALVE GP-MAKEUP	473, 478
VALVE GP-MAKEUP (BUCKET LIFT)	466
VALVE GP-MAKEUP (LIFT, ROD END)	486
VALVE GP-PILOT CARTRIDGE	503, 504, 505, 506, 507
VALVE GP-PILOT–2-FUNCTION–LIFT, TILT	490
VALVE GP-PILOT–AUXILIARY, LIFT, TILT	492, 499, 501
VALVE GP-PILOT–LIFT, TILT	495, 497
VALVE GP-PRESSURE REDUCING (IMPLEMENT)	418, 423
VALVE GP-PUMP CONTROL	381
VALVE GP-PUMP CONTROL–FLOW COMPENSATOR	380
VALVE GP-RELIEF	478, 508, 509, 510
VALVE GP-RELIEF (AUXILIARY)	470
VALVE GP-RELIEF (DIRECT OPERATED)	473
VALVE GP-RELIEF (LIFT)	466
VALVE GP-RELIEF (LOAD SIGNAL)	486
VALVE GP-RELIEF (MARGIN)	466, 473, 486
VALVE GP-RELIEF (PILOT OPERATED)	473
VALVE GP-RELIEF (TILT CONTROL)	466, 478, 486
VALVE GP-RELIEF (TILT)	473, 487
VALVE GP-SECONDARY STEERING	382, 383
VALVE GP-SELECTOR & PRESS CONT	260
VALVE GP-SHUTTLE (PILOT OIL)	434
VALVE GP-SOLENOID	262, 263
VALVE GP-SOLENOID (24-VOLT) (PILOT ON, OFF)	486
VALVE GP-SOLENOID (24-VOLT) (PILOT SUPPLY)	466, 473, 478

NAME PAGE NAME PAGE

VALVE GP-SOLENOID (24-VOLT) (RIDE CONTROL). 461
VALVE GP-SOLENOID (24-VOLT) (RIPPER). . . . 260
VALVE GP-SOLENOID (COUPLER MANIFOLD) 407
VALVE GP-SOLENOID (FAN BYPASS). 51
VALVE GP-SOLENOID (HYDRAULIC FAN MOTOR) 413
VALVE GP-SOLENOID (HYDRAULIC FAN) 413
VALVE GP-SOLENOID (REVERSING FAN). 477
VALVE GP-SOLENOID–12-VDC. 264
VALVE GP-TIRE. 249
250
VALVE GP-TIRE (TIRE INFLATION) 248
VALVE GP-TRANSMISSION CONTROL 265
VALVE GP-WATER. 595
596
VALVE-RELIEF (PRESSURE). 333
VISOR GP-CAB 597

W

WASHER GP-WINDOW 598
WINDOW GP-CAB. 599
600
WINDOW GP-DOOR–LH 601
WINDOW GP-DOOR–RH 602
WIPER GP-WINDOW 603
WIRING GP-CAB 176
180
WIRING GP-CAMERA. 181
WIRING GP-CHASSIS 182
WIRING GP-COMMUNICATION 186
WIRING GP-ENGINE. 187
188
189
WIRING GP-FRONT 191
WIRING GP-SECONDARY STEERING 193

MEMORANDA

MACHINE ARRANGEMENT

387-6001 CHASSIS AR

S/N: M5K1-UP

PART OF 387-6000 COMMON AR

SMCS-7000 **i06110908**

NOTE	PART NUMBER	QTY	PART NAME 1 2 3 4 5 6 (PRODUCT LEVEL)	SEE PAGE
Y	*392-3702*	1	BRACKET GP-MOUNTING	273
Y	*434-6672*	1	COOLER GP-TRANSMISSION OIL	211
Y	*387-6220*	1	ENCLOSURE GP-ENGINE	287
			—OR—	
Y	*457-8580*	1	ENCLOSURE GP-ENGINE	291
Y	*392-3800*	1	FENDER GP-FRONT	297
			—OR—	
Y	*450-4870*	1	FENDER GP-FRONT	298
Y	**387-5783**	1	FRAME AS-LOADER	306
Y	**387-5835**	1	FRAME AS-REAR	307
Y	*387-5794*	1	HITCH GP-ARTICULATING	313
Y	*417-2107*	1	KICKOUT & POSITIONER GP	406
Y	*387-6085*	1	LINES GP-AIR	67
Y	*424-2855*	1	LINES GP-AIR CONDITIONER	569
Y	*387-6080*	1	LINES GP-COOLANT	49
Y	*424-2857*	1	LINES GP-HEATER	571
Y	*417-2102*	1	MOUNTING GP-BRACKET (KICKOUT, POSITIONER)	335
Y	*392-3720*	1	PLATFORM GP-CAB	578
Y	*387-6095*	1	RADIATOR & HYD OIL COOLER GP	60
Y	*387-6091*	1	SHIELD GP-ENGINE COMPARTMENT	338
Y	*392-3715*	1	SUPPORT GP-VALVE & FILTER	339
Y	*387-6100*	1	TANK & MTG GP-FUEL	95
Y	*387-6150*	1	TANK GP-HYDRAULIC	452

Y - SEPARATE ILLUSTRATION

<END>

387-6000 COMMON AR

S/N: M5K1-UP

SMCS-7000 **i05425958**

NOTE	PART NUMBER	QTY	PART NAME 1 2 3 4 5 6 (PRODUCT LEVEL)	SEE PAGE
Y	*387-6001*	1	CHASSIS AR	1
Y	*392-8352*	1	ELECTRICAL AR	114
Y	*393-4097*	1	ENGINE AR-PRIMARY	3
Y	*390-5959*	1	HYDRAULIC AR	405
Y	*392-2252*	1	INSTALLATION GP-ENGINE	5
Y	*391-5300*	1	OPERATOR AR	574
Y	*387-6025*	1	POWER TRAIN AR	239

Y - SEPARATE ILLUSTRATION

<END>

MACHINE ARRANGEMENT

387-6044 CONFIGURATION AR

S/N: M5K1-UP
AN ATTACHMENT

SMCS-7000 **i05411731**

NOTE	PART NUMBER	QTY	PART NAME 1 2 3 4 5 6 (PRODUCT LEVEL)	SEE PAGE
Y	*327-2256*	1	AXLE AR-FIXED	195
Y	*418-4767*	1	AXLE AR-OSCILLATING	196
Y	*394-1677*	1	TRUNNION GP-AXLE (FRONT)	254
Y	*394-1679*	1	TRUNNION GP-AXLE (REAR)	255

Y - SEPARATE ILLUSTRATION

<END>

387-6028 OPTION AR-COLD WEATHER

S/N: M5K1-UP
COLD WEATHER
AN ATTACHMENT

SMCS-7000 **i05819487**

NOTE	PART NUMBER	QTY	PART NAME 1 2 3 4 5 6 (PRODUCT LEVEL)	SEE PAGE
Y	*267-0339*	1	HEATER GP-JACKET WATER	128
Y	*399-0931*	1	STARTING AID GP-ETHER	162

Y - SEPARATE ILLUSTRATION

<END>

ENGINE ARRANGEMENT

393-4097 ENGINE AR-PRIMARY

S/N: E7A1-UP

168 BRAKE KW (225 BHP) AT 2200 RPM

PART OF 387-6000 COMMON AR, 387-6027, 432-7392, 432-7393 CONVERSION AR-BRAKE CONTROL ALSO AN ATTACHMENT

SMCS-1000 **i06057240**

NOTE	PART NUMBER	QTY	PART NAME 1 2 3 4 5 6 (PRODUCT LEVEL)	SEE PAGE
Y	*385-8001*	1	ALTERNATOR GP-CHARGING	99
Y	*375-4479*	1	BELT TENSIONER GP	8
Y	*379-6637*	1	BRACKET GP-MOUNTING	9
Y	*392-0632*	1	BREATHER GP	38
Y	*396-2617*	1	CAMSHAFT GP	11
Y	*346-2911*	1	CONNECTION GP-HEATER	44
Y	*373-3607*	1	CONNECTION GP-WATER	45
Y	*371-2537*	1	CONTROL GP-ENGINE ELECTRONIC	110
Y	*378-8276*	1	COOLER GP-ENGINE OIL	47
Y	*389-3346*	1	COVER GP-VALVE MECHANISM	13
Y	*374-6300*	1	CRANKSHAFT GP	14
Y	*390-0854*	1	CYLINDER BLOCK GP	16
Y	*385-2572*	1	CYLINDER HEAD GP	18
Y	*378-8166*	1	DRAIN GP-OIL	19
Y	*375-3937*	1	DRIVE GP-FAN	20
Y	*390-3737*	1	FILLER GP-ENGINE OIL	39
Y	*415-5625*	1	FILM GP	659
Y	*346-0220*	1	FILTER GP-ENGINE OIL	40
Y	*453-7163*	1	FILTER GP-FUEL	79
Y	*441-1215*	1	FILTER GP-FUEL	77
Y	*345-9029*	1	FLYWHEEL GP	21
Y	*393-3369*	1	HOUSING GP-FLYWHEEL	22
Y	*371-2725*	1	HOUSING GP-FRONT	23
Y	*416-8908*	1	INJECTOR GP-FUEL	81
Y	*371-2478*	1	JET GP-PISTON COOLING	25
Y	*371-2740*	1	LIFTING GP-ENGINE	26
Y	*426-3312*	1	LINES GP-FUEL FILTER	87
Y	*416-7808*	1	MANIFOLD GP-EXHAUST	69
Y	*391-5523*	1	MANIFOLD GP-INLET	70
Y	*395-0112*	1	MOUNTING GP-ELECTRONIC CONTROL	158
Y	*378-0593*	1	PAN GP-OIL	27
Y	*369-7304*	1	PISTON & ROD GP	28
Y	*378-8167*	1	PLATE & FILM GP	666
Y	*458-9768*	1	PLUG GP-OIL PAN	30
Y	*378-0628*	1	POWER TAKE-OFF GP	31
Y	*375-0098*	1	PULLEY GP-AUXILIARY DRIVE	33
Y	*371-2554*	1	PULLEY GP-CRANKSHAFT	34
Y	*346-0737*	1	PUMP GP-ENGINE OIL	41
			—OR—	
Y	*462-6685*	1	PUMP GP-ENGINE OIL	42
Y	*391-4811*	1	PUMP GP-FUEL INJECTION	93
Y	*372-2297*	1	PUMP GP-WATER	59
Y	*394-9639*	1	RAIL GP-FUEL	94
Y	*371-2480*	1	ROCKER ARM GP	37
Y	*395-0110*	1	SENSOR GP-ENGINE	160
Y	*395-0114*	1	STARTING AID GP	161
Y	*445-4703*	1	STARTING MOTOR GP-ELECTRIC	165
Y	*416-6971*	1	TURBOCHARGER GP	74
Y	*371-2745*	1	VALVE GP-FLUID SAMPLING	43
Y	*395-0113*	1	WIRING GP-ENGINE	187
	451-8385	1	CYLINDER BLOCK GP-SHORT	
	448-4763	1	ELECTRONICS GP-ENGINE RATINGS	

Y - SEPARATE ILLUSTRATION

<END>

ENGINE ARRANGEMENT

446-7556 ENGINE AR-PRIMARY

S/N: E7A1-UP

PART OF 387-6026 CONVERSION AR-ROADING

AN ATTACHMENT

SMCS-1000 **i06057237**

NOTE	PART NUMBER	QTY	PART NAME 1 2 3 4 5 6 (PRODUCT LEVEL)	SEE PAGE
Y	*385-8001*	1	ALTERNATOR GP-CHARGING	99
Y	*375-4479*	1	BELT TENSIONER GP	8
Y	*379-6637*	1	BRACKET GP-MOUNTING	9
Y	*392-0632*	1	BREATHER GP	38
Y	*396-2617*	1	CAMSHAFT GP	11
Y	*346-2911*	1	CONNECTION GP-HEATER	44
Y	*373-3607*	1	CONNECTION GP-WATER	45
Y	*371-2537*	1	CONTROL GP-ENGINE ELECTRONIC	110
Y	*378-8276*	1	COOLER GP-ENGINE OIL	47
Y	*389-3346*	1	COVER GP-VALVE MECHANISM	13
Y	*374-6300*	1	CRANKSHAFT GP	14
Y	*390-0854*	1	CYLINDER BLOCK GP	16
Y	*385-2572*	1	CYLINDER HEAD GP	18
Y	*378-8166*	1	DRAIN GP-OIL	19
Y	*375-3937*	1	DRIVE GP-FAN	20
Y	*390-3737*	1	FILLER GP-ENGINE OIL	39
Y	*415-5625*	1	FILM GP	659
Y	*346-0220*	1	FILTER GP-ENGINE OIL	40
Y	*453-7163*	1	FILTER GP-FUEL	79
Y	*441-1215*	1	FILTER GP-FUEL	77
Y	*345-9029*	1	FLYWHEEL GP	21
Y	*393-3369*	1	HOUSING GP-FLYWHEEL	22
Y	*371-2725*	1	HOUSING GP-FRONT	23
Y	*416-8908*	1	INJECTOR GP-FUEL	81
Y	*371-2478*	1	JET GP-PISTON COOLING	25
Y	*371-2740*	1	LIFTING GP-ENGINE	26
Y	*426-3312*	1	LINES GP-FUEL FILTER	87
Y	*416-7808*	1	MANIFOLD GP-EXHAUST	69
Y	*391-5523*	1	MANIFOLD GP-INLET	70
Y	*395-0112*	1	MOUNTING GP-ELECTRONIC CONTROL	158
Y	*378-0593*	1	PAN GP-OIL	27
Y	*369-7304*	1	PISTON & ROD GP	28
Y	*378-8167*	1	PLATE & FILM GP	666
Y	*458-9768*	1	PLUG GP-OIL PAN	30
Y	*378-0628*	1	POWER TAKE-OFF GP	31
Y	*375-0098*	1	PULLEY GP-AUXILIARY DRIVE	33
Y	*371-2554*	1	PULLEY GP-CRANKSHAFT	34
Y	*346-0737*	1	PUMP GP-ENGINE OIL	41
			—OR—	
Y	*462-6685*	1	PUMP GP-ENGINE OIL	42
Y	*391-4811*	1	PUMP GP-FUEL INJECTION	93
Y	*372-2297*	1	PUMP GP-WATER	59
Y	*394-9639*	1	RAIL GP-FUEL	94
Y	*371-2480*	1	ROCKER ARM GP	37
Y	*395-0110*	1	SENSOR GP-ENGINE	160
Y	*395-0114*	1	STARTING AID GP	161
Y	*385-8000*	1	STARTING MOTOR GP-ELECTRIC	164
Y	*416-6971*	1	TURBOCHARGER GP	74
Y	*371-2745*	1	VALVE GP-FLUID SAMPLING	43
Y	*395-0113*	1	WIRING GP-ENGINE	187
	447-7816	1	ELECTRONICS GP-ENGINE	

Y - SEPARATE ILLUSTRATION

<END>

392-2252 INSTALLATION GP-ENGINE

S/N: M5K1-UP

PART OF 387-6000 COMMON AR

SMCS-1000 **i06067617**

NOTE	REF NO	GRAPHIC REF	PART NUMBER	QTY	PART NAME 1 2 3 4 5 6 (PRODUCT LEVEL)	SEE PAGE
	1	2	**7K-1181**	5	STRAP-CABLE	
	2	1	**338-0499**	1	BELT-SERPENTINE	
Y	3	2	*392-2253*	1	AIR CLEANER GP	65
Y	4	1	*392-2254*	1	MUFFLER GP	71
	5	2	**392-2273**	2	SUPPORT AS	
	6	2	**392-2281**	1	BRACKET AS	
	7	2	**392-2287**	1	HOSE AS	
	9	2	**399-0928**	1	HOSE AS	
	11	2	**399-0933**	1	CLAMP	
	12	1,2	**399-0936**	4	MOUNT AS	
	13	1,2	**399-0937**	4	WASHER (26X112X10-MM THK)	
	14	1	**461-2951**	1	FLYWHEEL	
	15	1	**399-0939**	1	HOSE	
	16	1	*399-0940*	1	HOUSING GP-FLYWHEEL	
M		1	**8T-4171**	2	BOLT (M6X1X12-MM)	
		1	**399-0929**	1	HOUSING-FLYWHEEL	
		1	**399-0930**	1	COVER	
	17	1,2	**434-6671**	4	NUT (M24X3-THD)	
	18	2	**434-6673**	4	CLAMP	
	20	2	**446-6965**	2	WASHER	
	21	2	**446-6976**	1	BRACKET	
	22	2	**446-6977**	1	BRACKET	
	23	2	**448-2946**	1	GAUGE GP-OIL LEVEL (DIPSTICK)	
M	24	1,2	**8C-3290**	4	BOLT (M24X3X150-MM)	
	25	2	**198-4780**	1	WASHER-HARD (17.5X32X8-MM THK)	
	26	2	**1S-0994**	2	CLIP	
	27	2	**218-6645**	3	ELBOW	
	28	2	**228-7102**	3	SEAL-O-RING	
	29	2	*274-3868*	1	ELBOW AS	
		2	**321-8628**	1	ELBOW	
		2	**228-7102**	1	SEAL-O-RING	
	30	2	**5P-9297**	1	CLIP	
M	31	2	**7X-2554**	2	BOLT (M16X2X70-MM)	
	32	2	**8M-2773**	1	CLIP (LOOP)	
	33	1,2	**8T-4121**	55	WASHER-HARD (11X21X2.5-MM THK)	
M	34	1,2	**8T-4133**	4	NUT (M10X1.5-THD)	
M	35	1	**8T-4136**	12	BOLT (M10X1.5X25-MM)	
M	36	2	**8T-4137**	5	BOLT (M10X1.5X20-MM)	
M	37	1	**8T-4186**	2	BOLT (M10X1.5X40-MM)	
M	38	1	**8T-4195**	32	BOLT (M10X1.5X30-MM)	
	39	1	**8T-4224**	2	WASHER-HARD (8.8X16X2-MM THK)	
M	40	1	**8T-4908**	2	BOLT (M8X1.25X25-MM)	
M	41	2	**8T-7338**	6	BOLT (M16X2X45-MM)	
	42	2	**9X-8257**	7	WASHER (17.5X30X3.5-MM THK)	
E	43	2	**347-8647**		HOSE (160-CM)	
	44	1	**457-3284**	1	BRACKET	
Y	45	2	*457-3274*	1	BRACKET GP-MOUNTING	276

E - ORDER BY THE CENTIMETER
M - METRIC PART
Y - SEPARATE ILLUSTRATION

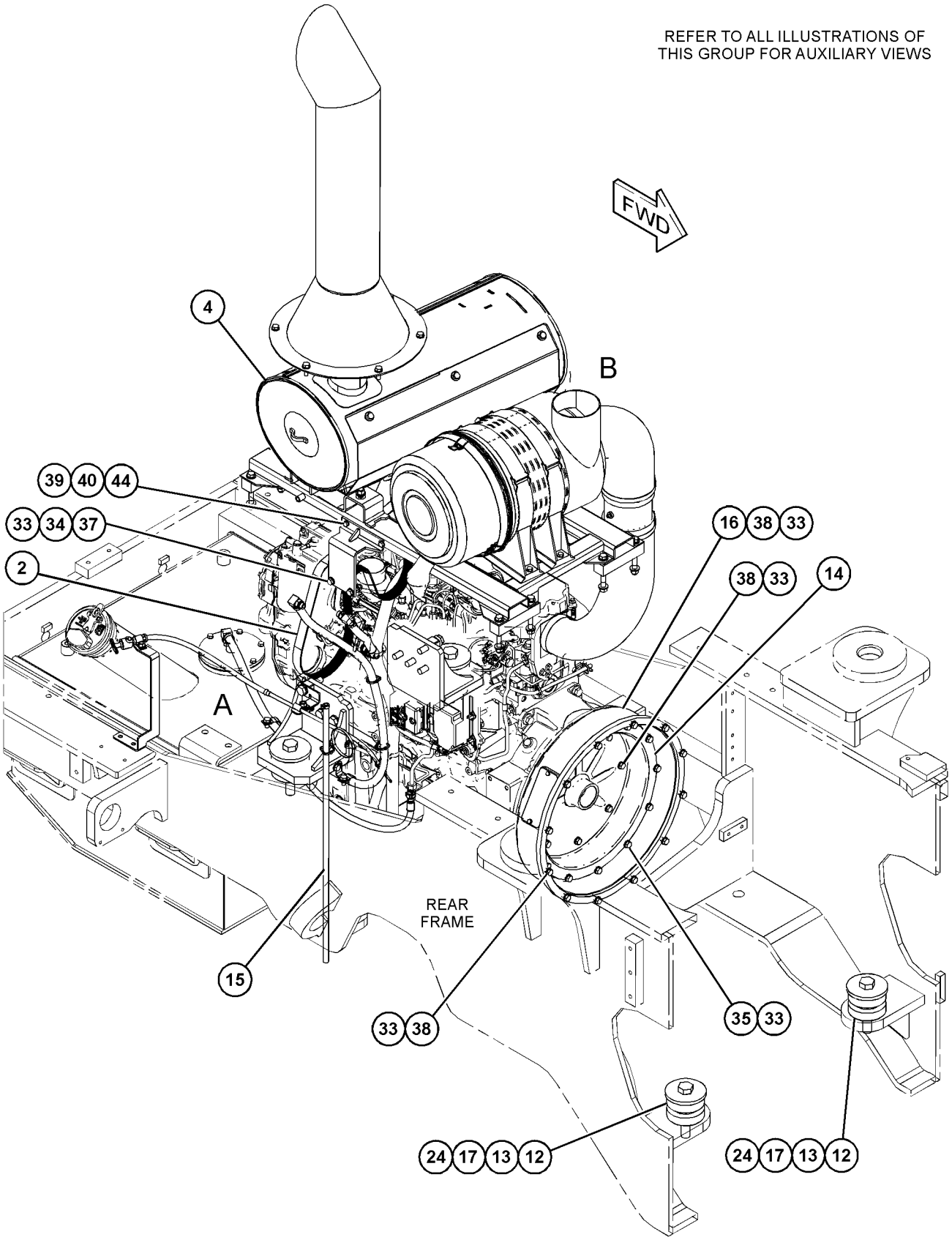

GRAPHIC #1

g03798223

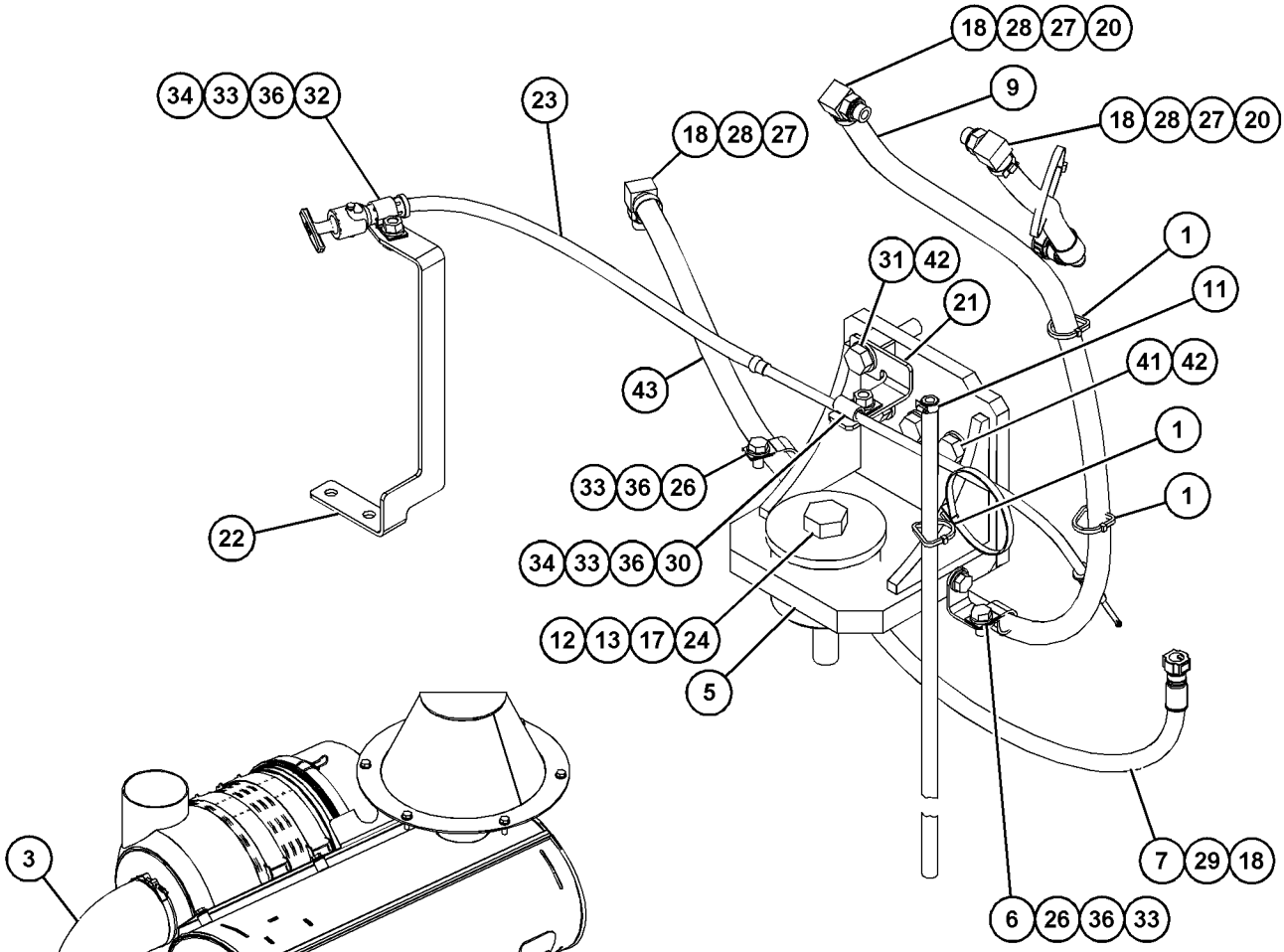

VIEW OF AREA A
(PARTS REMOVED FOR CLARITY)

VIEW OF AREA B
(PARTS REMOVED FOR CLARITY)

GRAPHIC #2 **<END>** g03798224

375-4479 BELT TENSIONER GP

S/N: E7A1-UP
PART OF 393-4097, 446-7556 ENGINE AR-PRIMARY
ALSO AN ATTACHMENT

SMCS-1357, 1358, 1397

i05469212

NOTE	REF NO	GRAPHIC REF	PART NUMBER	QTY	PART NAME 1 2 3 4 5 6 (PRODUCT LEVEL)	SEE PAGE
	1	1	**369-1255**	1	TENSIONER	
	2	1	**337-6324**	1	PULLEY	

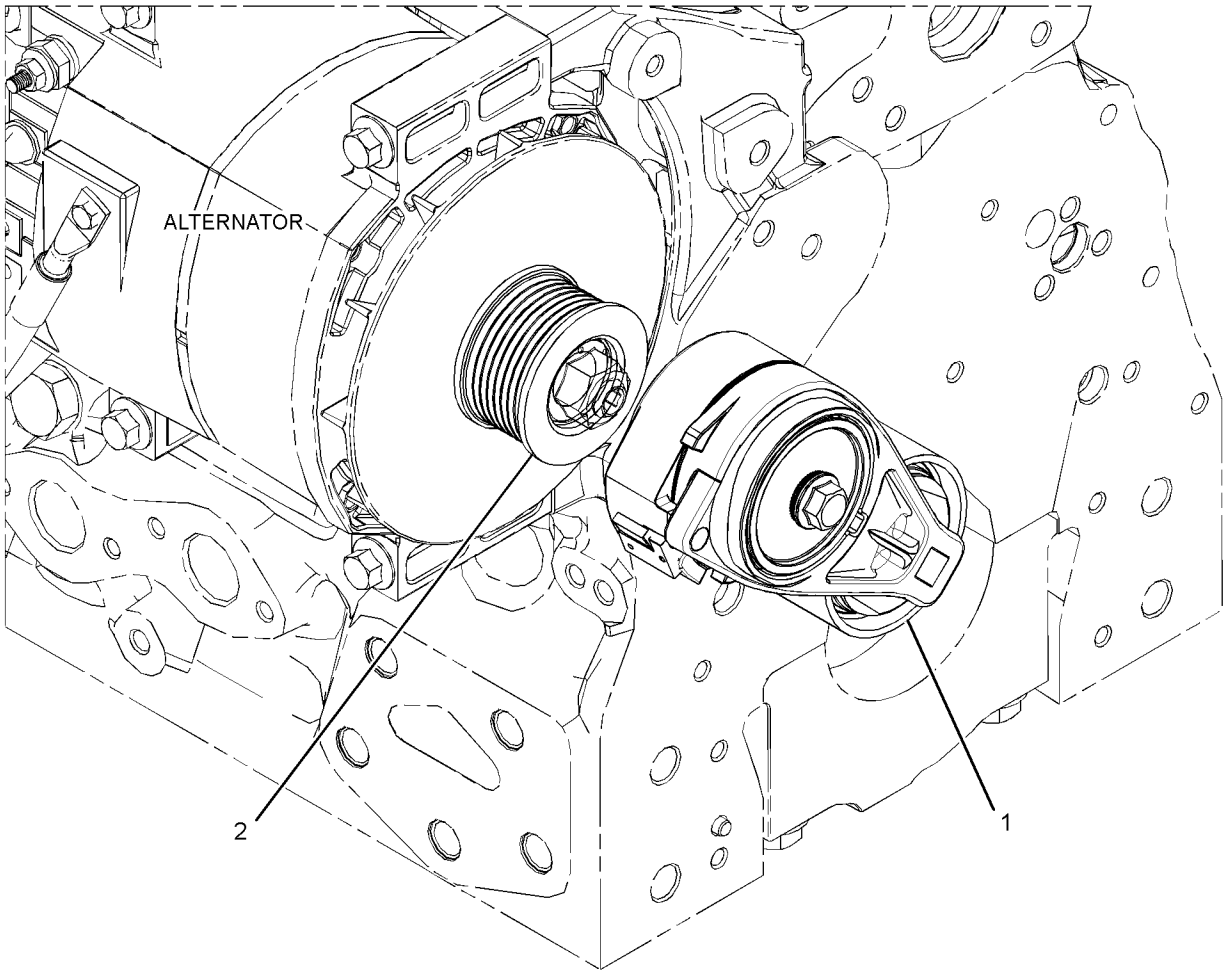

GRAPHIC #1

<END>

g02406802

379-6637 BRACKET GP-MOUNTING

S/N: E7A1-UP
PART OF 393-4097, 446-7556 ENGINE AR-PRIMARY
ALSO AN ATTACHMENT

SMCS-1375 **i05469049**

NOTE	REF NO	GRAPHIC REF	PART NUMBER	QTY	PART NAME 1 2 3 4 5 6 (PRODUCT LEVEL)	SEE PAGE
	1	1	**101-7178**	3	BOLT (M10X1.5X55-MM)	
	2	1	**330-1725**	1	BRACKET AS	
	2A	1	**161-9820**	2	PIN	

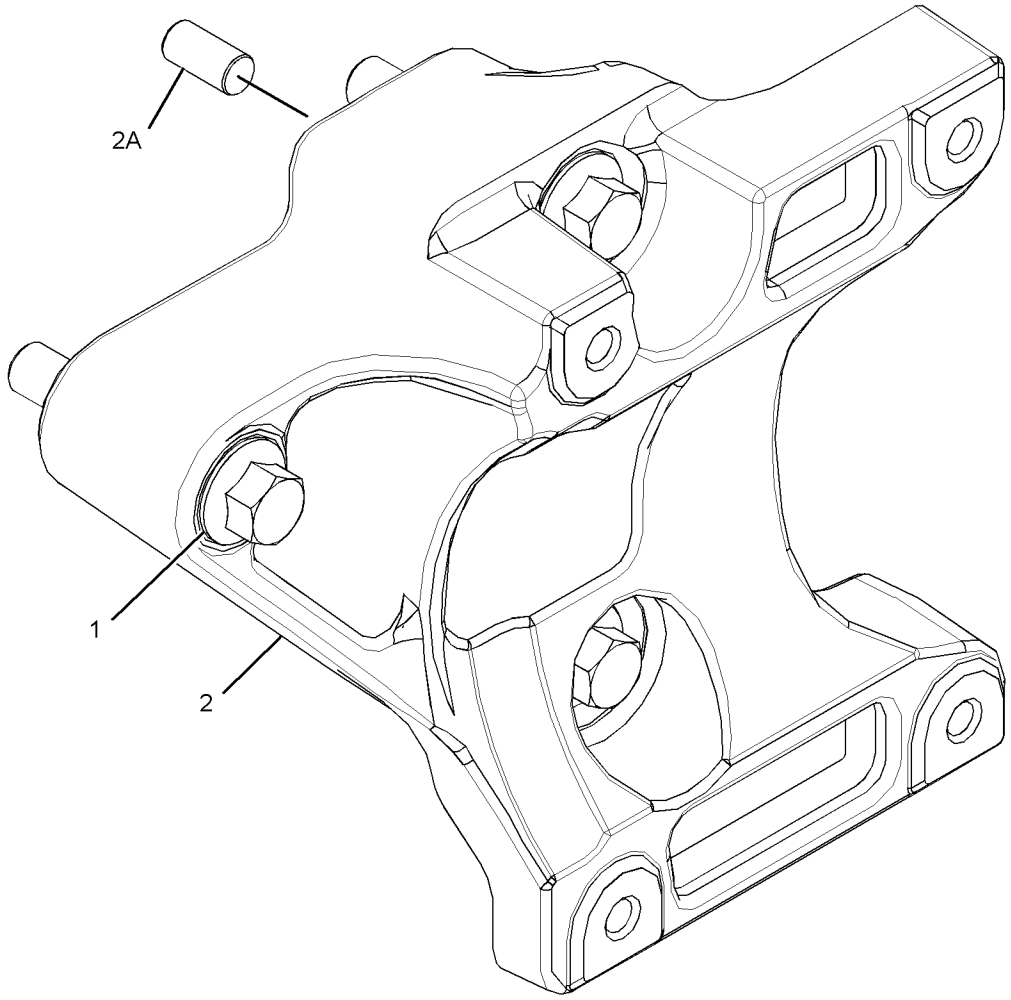

GRAPHIC #1

<END>

g02392976

395-1802 CAMSHAFT GP

S/N: E7A1-UP
PART OF 396-2617 CAMSHAFT GP
ALSO AN ATTACHMENT

SMCS-1210, 1211, 1212

i05574331

NOTE	REF NO	GRAPHIC REF	PART NUMBER	QTY	PART NAME 1 2 3 4 5 6 (PRODUCT LEVEL)	SEE PAGE
	1	1	**067-6135**	1	KEY-WOODRUFF	

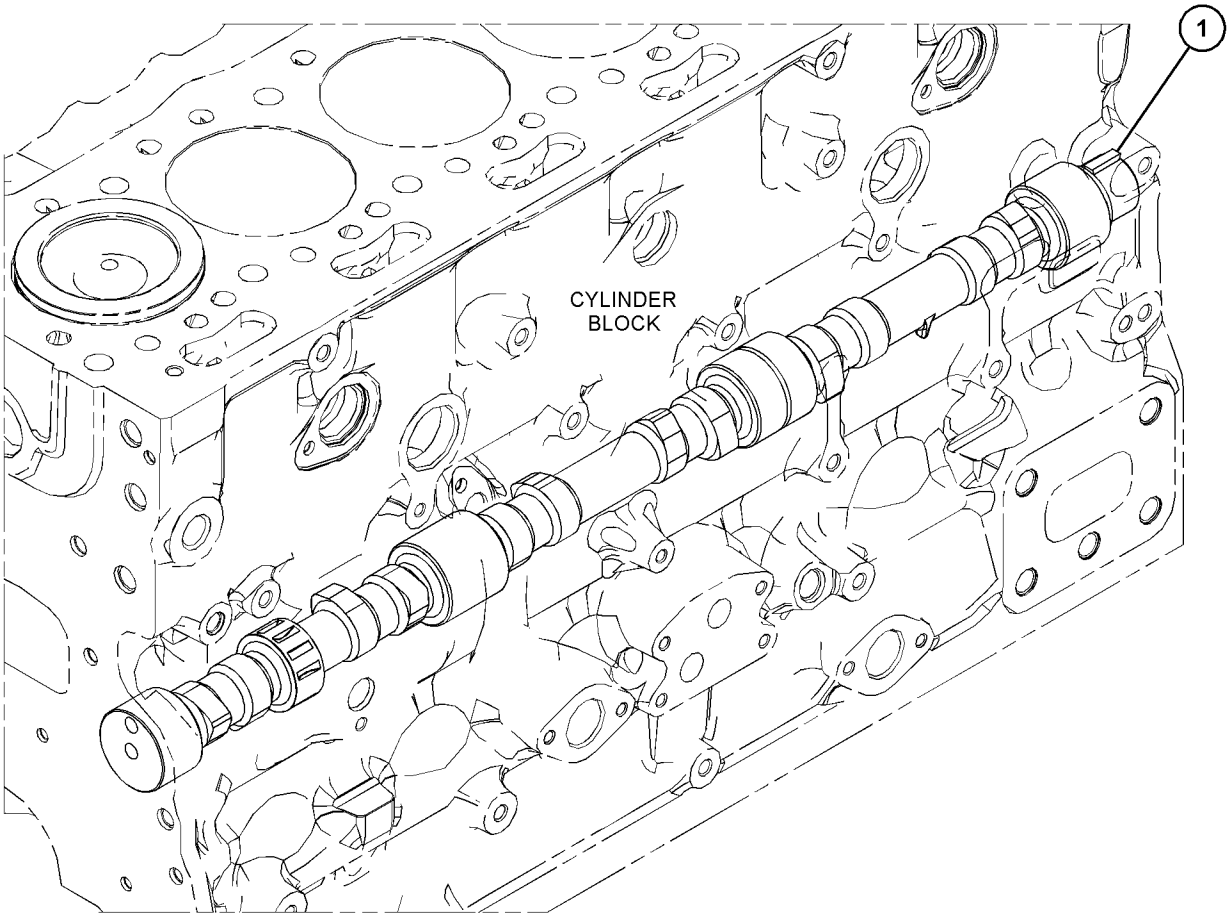

GRAPHIC #1

<END>

g03552103

396-2617 CAMSHAFT GP

S/N: E7A1-UP
PART OF 393-4097, 446-7556 ENGINE AR-PRIMARY
ALSO AN ATTACHMENT

SMCS-1210, 1211, 1212

i05472749

NOTE	REF NO	GRAPHIC REF	PART NUMBER	QTY	PART NAME 1 2 3 4 5 6 (PRODUCT LEVEL)	SEE PAGE
	1	1	**278-5125**	12	TAPPET	
Y	2	1	**395-1802**	1	CAMSHAFT GP	10
	3	1	**319-8426**	12	PUSHROD	

Y - SEPARATE ILLUSTRATION

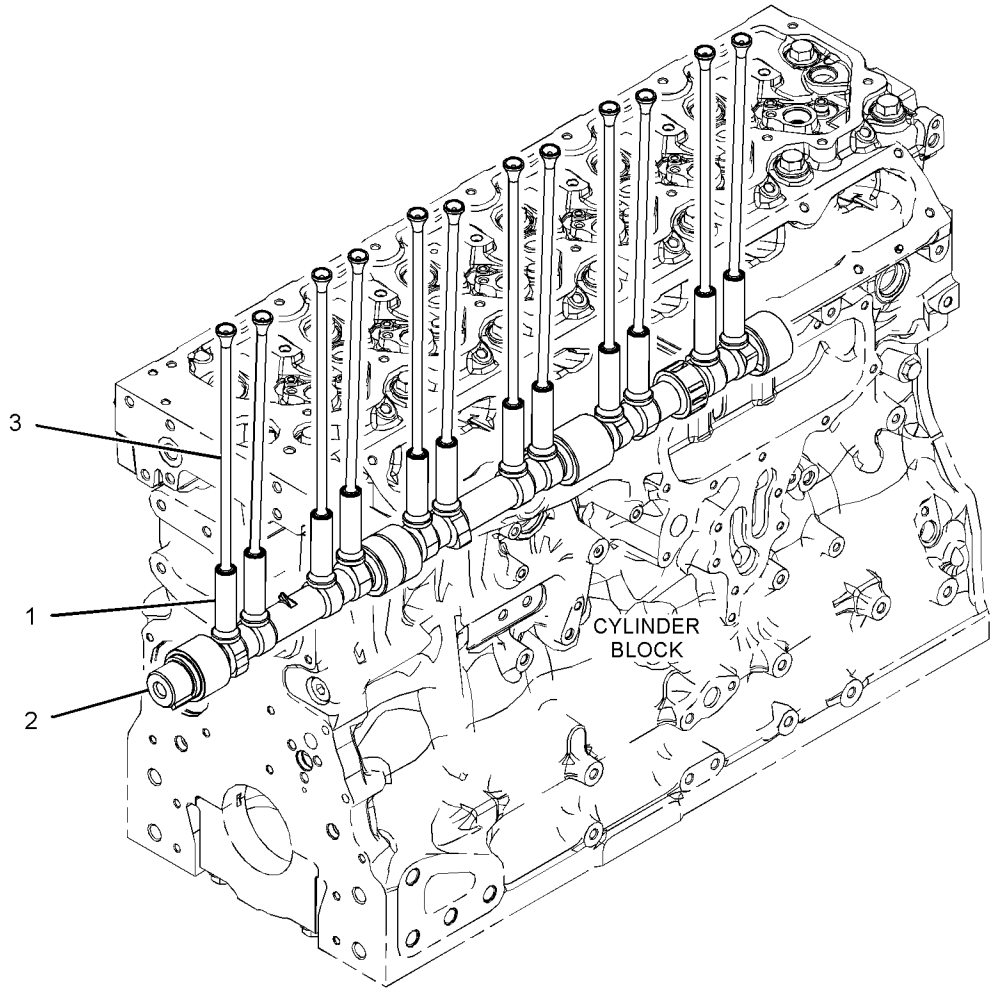

GRAPHIC #1

<END>

g03536203

331-0290 CONNECTING ROD GP

S/N: E7A1-UP
PART OF 369-7304 PISTON & ROD GP
ALSO AN ATTACHMENT

SMCS-1218 **i05574329**

NOTE	REF NO	GRAPHIC REF	PART NUMBER	QTY	PART NAME 1 2 3 4 5 6 (PRODUCT LEVEL)	SEE PAGE
	1	1	**276-7478**	1	BUSHING	
	2	1	**323-9312**	2	BOLT (M10X1X50-MM)	

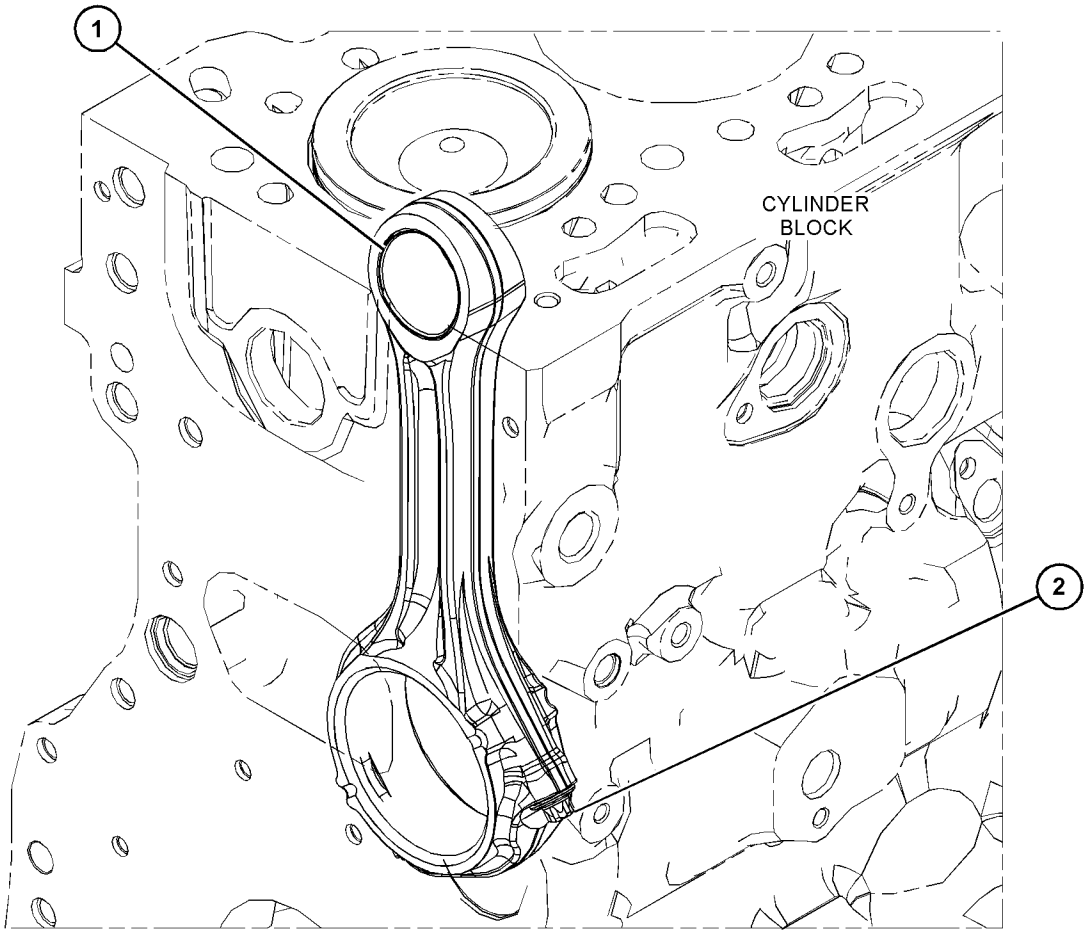

GRAPHIC #1 **<END>** g03551985

389-3346 COVER GP-VALVE MECHANISM

S/N: E7A1-UP
PART OF 393-4097, 446-7556 ENGINE AR-PRIMARY
ALSO AN ATTACHMENT

SMCS-1107 **i05954917**

NOTE	REF NO	GRAPHIC REF	PART NUMBER	QTY	PART NAME 1 2 3 4 5 6 (PRODUCT LEVEL)	SEE PAGE
M	1	1	**101-3895**	9	BOLT (M8X1.25X35-MM)	
	2	1	**103-5705**	6	BOLT (M8X1.25X110-MM)	
	3	1	**383-1382**	1	COVER GP-VALVE MECHANISM	
	3A	1	**195-9245**	3	SCREW (M4X0.7X10-MM)	
	3B	1	**376-4761**	1	SEAL	
	3C	1	**380-9615**	1	CAP-BREATHER (VALVE MECHANISM)	
	3D	1	**383-1383**	1	COVER-VALVE MECHANISM	
	4	1	**388-0536**	1	GASKET	
	5	1	**461-3440**	1	COVER-BASE	
M	6	1	**6I-0217**	14	BOLT (M8X1.25X20-MM)	

M - METRIC PART

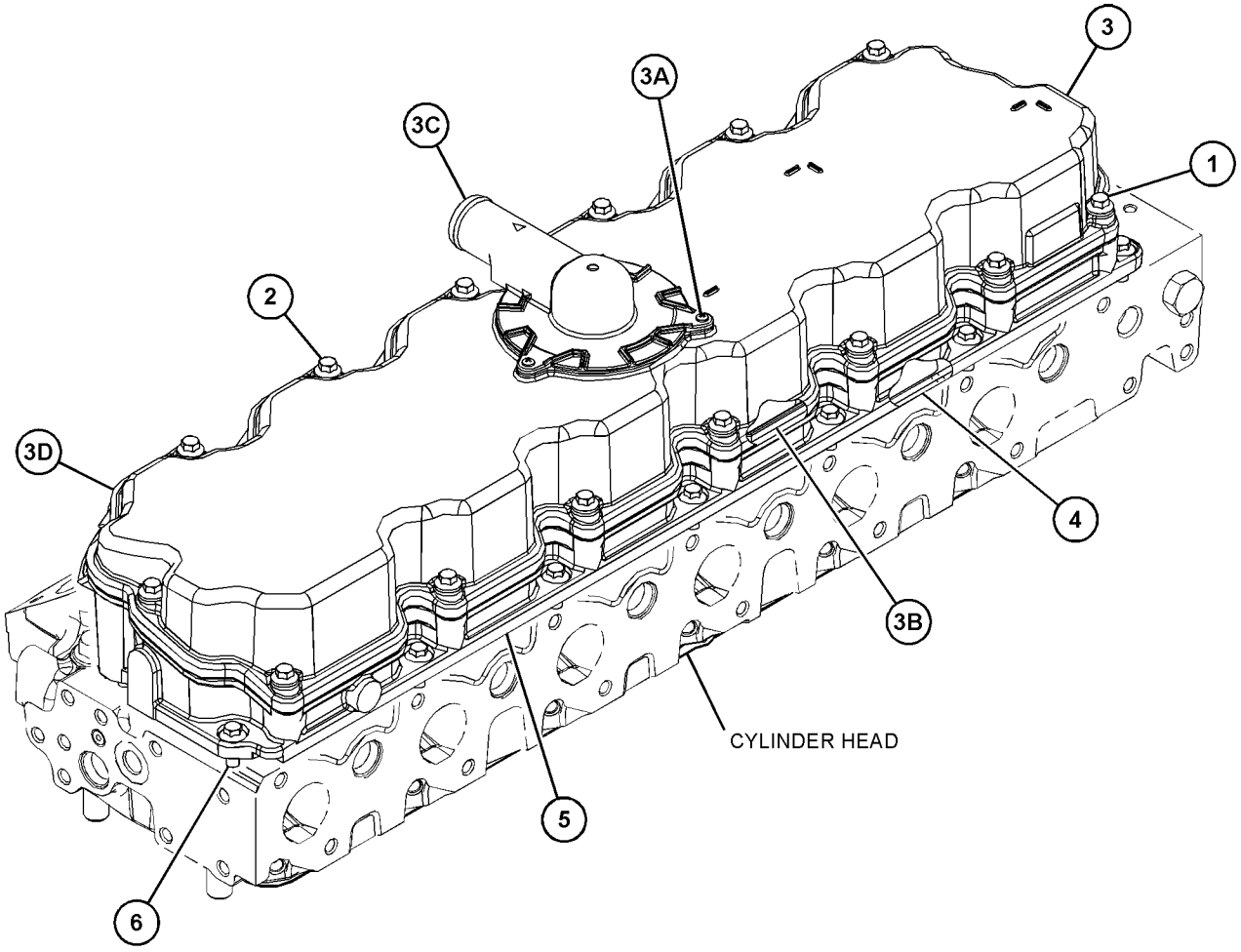

GRAPHIC #1 **<END>** g03741084

374-6300 CRANKSHAFT GP

S/N: E7A1-UP

PART OF 393-4097, 446-7556 ENGINE AR-PRIMARY

ALSO AN ATTACHMENT

SMCS-1202 **i05469138**

NOTE	REF NO	GRAPHIC REF	PART NUMBER	QTY	PART NAME 1 2 3 4 5 6 (PRODUCT LEVEL)	SEE PAGE
P	1	1	*317-5485*	7	BEARING	
P	2	1	*317-5486*	7	BEARING	
	3	1	**339-8780**	1	DOWEL	
J	4	1	**363-0559**	2	WASHER-THRUST	
	5	1	**376-4074**	1	CRANKSHAFT	
	6	1	**376-4078**	1	DISC-TIMING	
	7	1	**067-6135**	1	KEY-WOODRUFF	
	8	1	**276-7391**	1	GEAR (34-TEETH)	
	9	1	**276-7394**	3	BOLT	
					AVAILABLE REPAIR KIT(S):	
P			**360-1978**	1	KIT-BEARING	
					(INCLUDES BEARINGS)	
J			**364-5145**	1	KIT-WASHER	
					(INCLUDES WASHERS)	

J - KIT MARKED J SERVICES PART MARKED J
P - KIT MARKED P SERVICES PARTS MARKED P

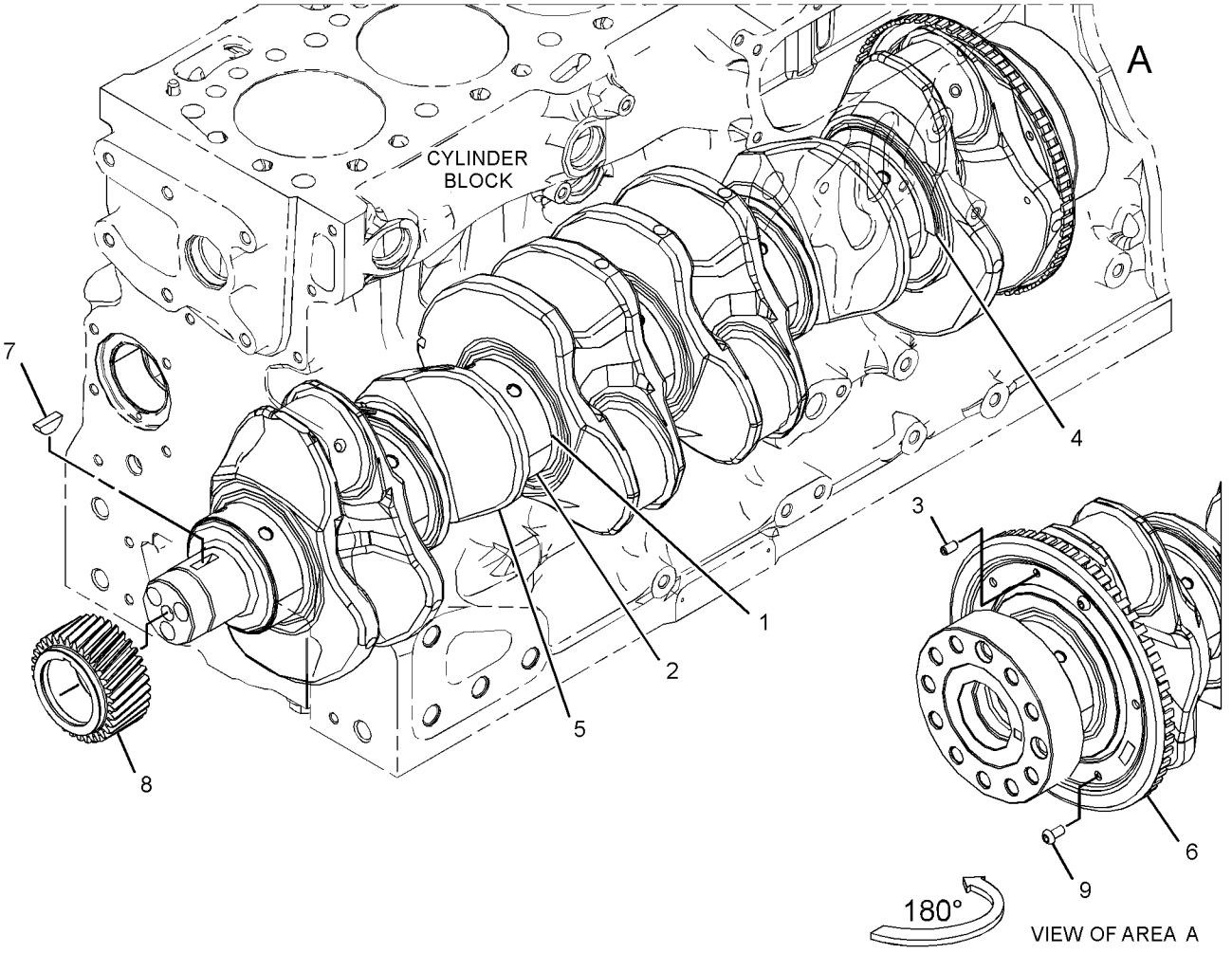

GRAPHIC #1 **<END>** g03115317

383-3581 CYLINDER BLOCK AS

S/N: E7A1-UP
PART OF 390-0854 CYLINDER BLOCK GP
ALSO AN ATTACHMENT

SMCS-1201 **i05571817**

NOTE	REF NO	GRAPHIC REF	PART NUMBER	QTY	PART NAME 1 2 3 4 5 6 (PRODUCT LEVEL)	SEE PAGE
	1	1	**232-7597**	4	PLUG	
	2	1	**276-5602**	2	PLUG-CORE	
	3	1	**232-7596**	1	PLUG	
	4	1	**067-6043**	7	PLUG-SIDE	
	5	1	**067-6823**	1	PLUG	
	6	1	**185-0884**	2	DOWEL	
	7	1	**225-8858**	2	PLUG	
	8	1	**232-7599**	2	PLUG	
	9	1	**276-5600**	14	BOLT-SPECIAL (BEARING CAP)	
	10	1	**331-6835**	2	PLUG-SEALING	

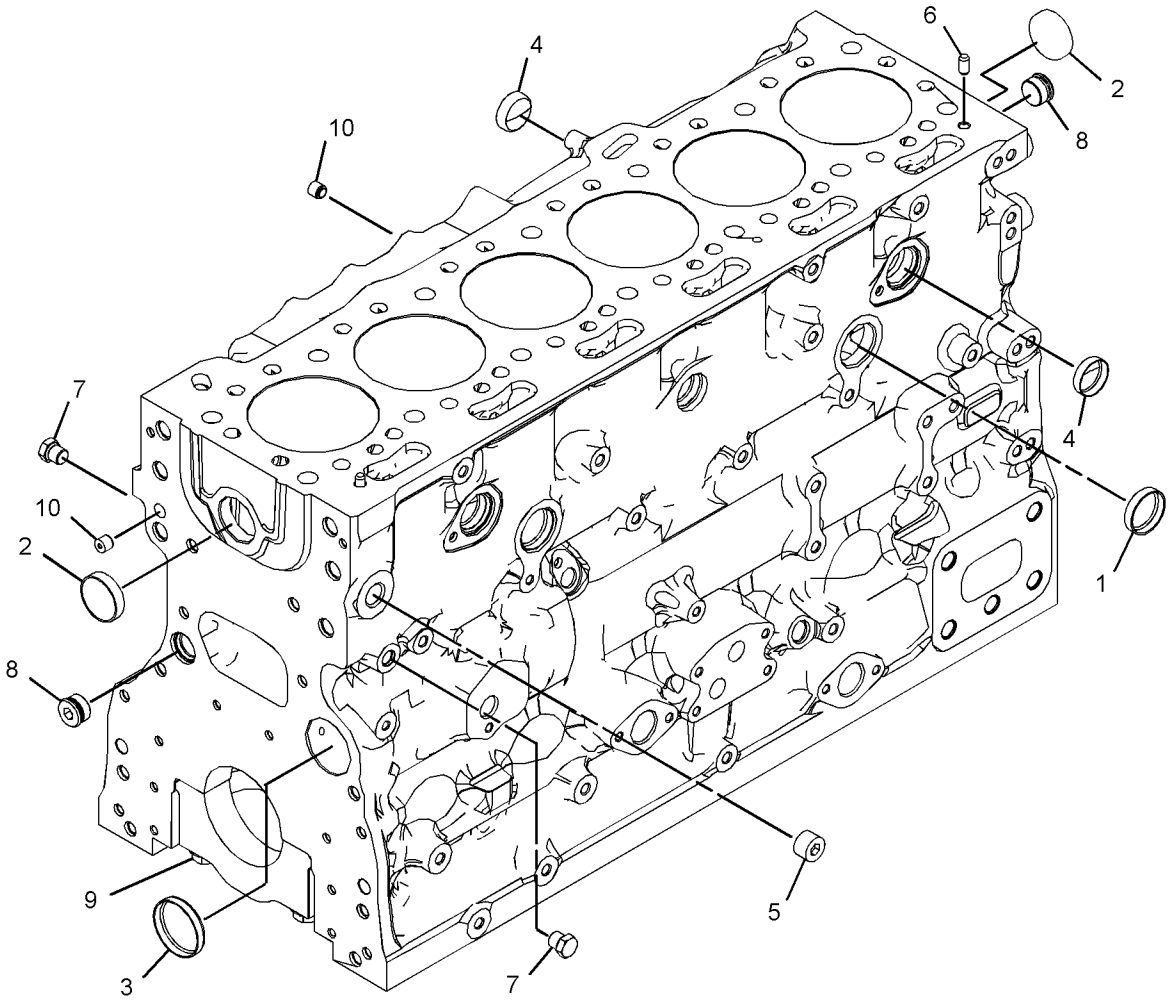

GRAPHIC #1 **<END>** g03351937

390-0854 CYLINDER BLOCK GP

S/N: E7A1-UP

PART OF 393-4097, 446-7556 ENGINE AR-PRIMARY

ALSO AN ATTACHMENT

SMCS-1201 **i05469150**

NOTE	REF NO	GRAPHIC REF	PART NUMBER	QTY	PART NAME 1 2 3 4 5 6 (PRODUCT LEVEL)	SEE PAGE
	1	1	**276-5603**	1	SEAL-O-RING	
Y	2	1	*383-3581*	1	CYLINDER BLOCK AS	15
M	3	1	**209-9219**	10	BOLT (M8X1.25X16-MM)	
	4	1	**232-7449**	1	HOUSING AS	
	5	1	**232-1322**	1	PLUG	

M - METRIC PART
Y - SEPARATE ILLUSTRATION

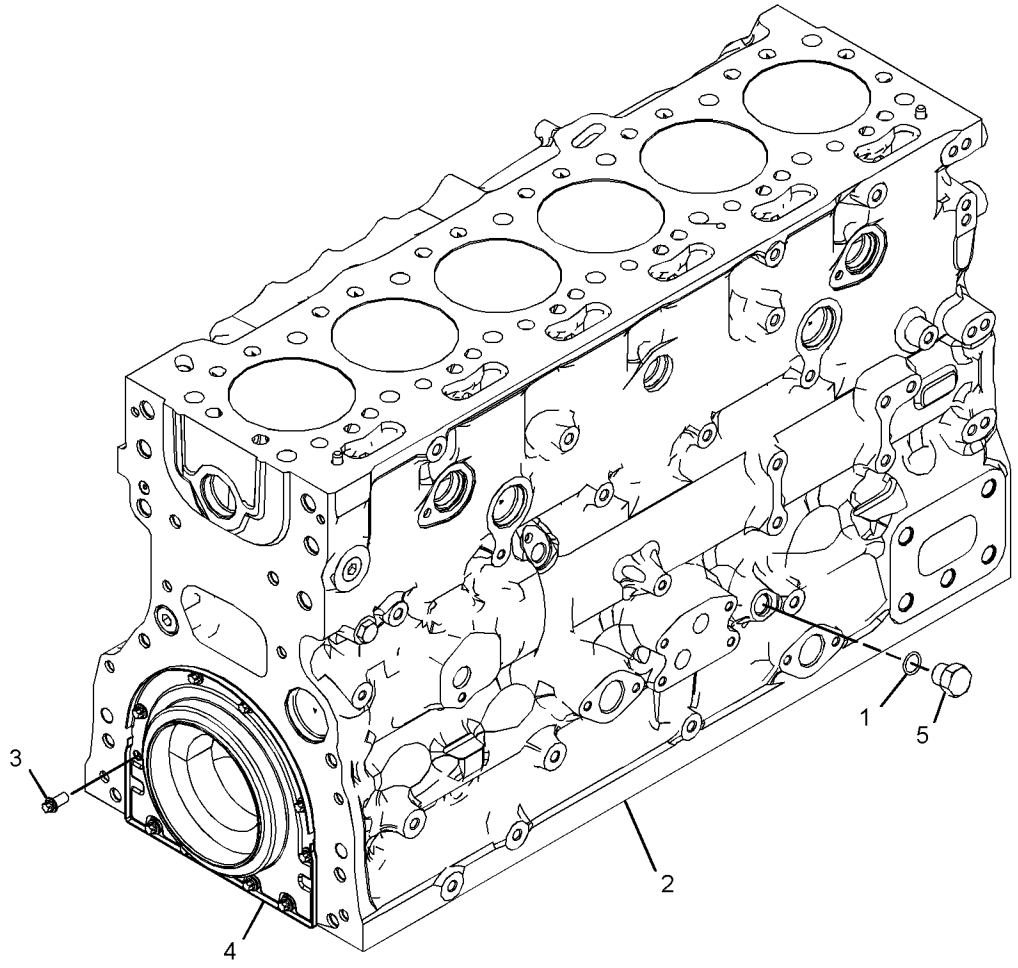

GRAPHIC #1 **<END>** g03384924

384-5313 CYLINDER HEAD AS

S/N: E7A1-UP
PART OF 385-2572 CYLINDER HEAD GP
ALSO AN ATTACHMENT

SMCS-1100, 1101

i05571837

NOTE	REF NO	GRAPHIC REF	PART NUMBER	QTY	PART NAME 1 2 3 4 5 6 (PRODUCT LEVEL)	SEE PAGE
	1	1	**276-8116**	6	PLUG-CORE	
	2	1	**377-0400**	12	INSERT-VALVE SEAT (EXHAUST)	
	3	1	**377-0399**	12	INSERT-VALVE SEAT (INTAKE)	
	4	1	**276-8117**	13	PLUG-CORE	

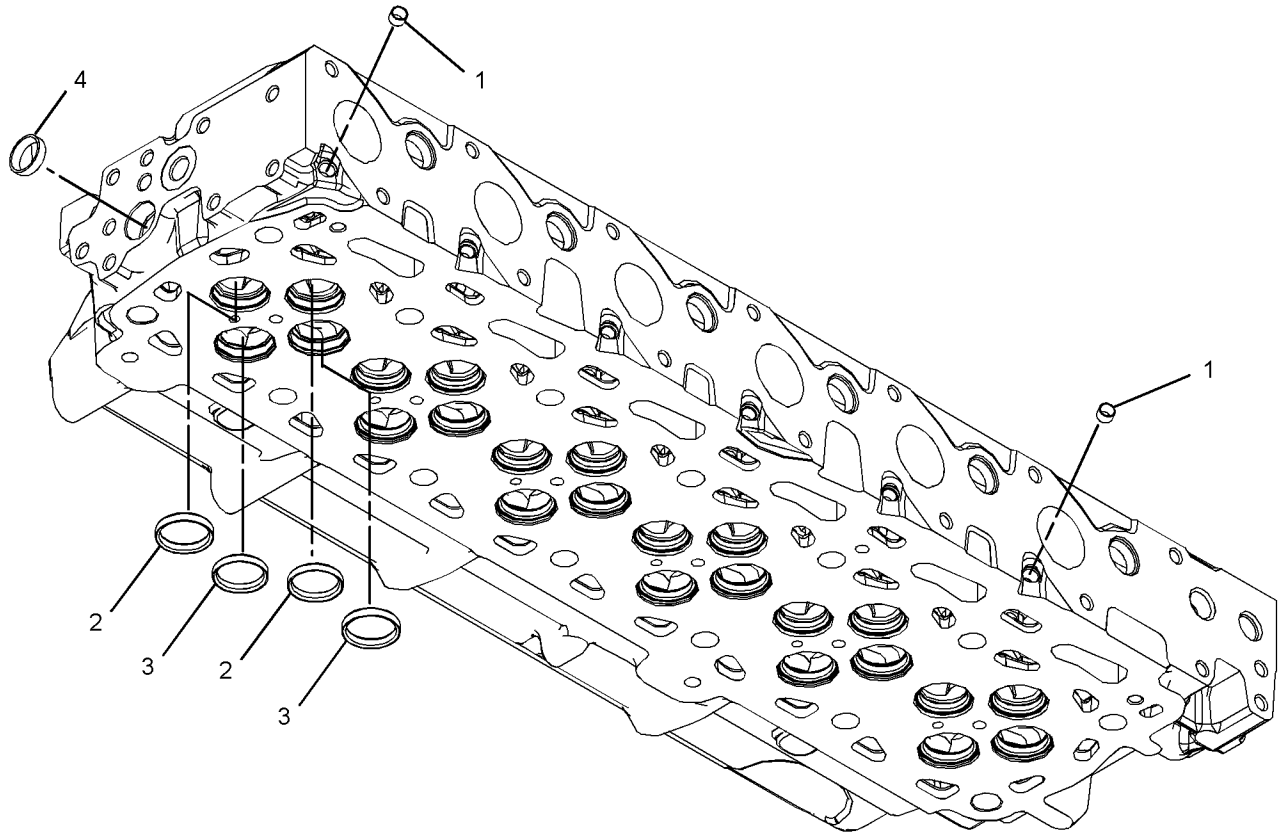

GRAPHIC #1

<END>

g03379426

385-2572 CYLINDER HEAD GP

S/N: E7A1-UP

PART OF 393-4097, 446-7556 ENGINE AR-PRIMARY

ALSO AN ATTACHMENT

SMCS-1100 **i05469171**

NOTE	REF NO	GRAPHIC REF	PART NUMBER	QTY	PART NAME 1 2 3 4 5 6 (PRODUCT LEVEL)	SEE PAGE
	1	1	**199-9751**	1	SEAL-O-RING	
Y	2	1	**384-5313**	1	CYLINDER HEAD AS	17
	3	1	**388-4707**	1	GASKET-CYLINDER HEAD	
	4	1	**232-1322**	1	PLUG	
	5	1	**276-8134**	14	BOLT-SPECIAL (CYLINDER HEAD)	
	6	1	**277-4302**	2	DOWEL	
	7	1	**295-6661**	1	PLUG	

Y - SEPARATE ILLUSTRATION

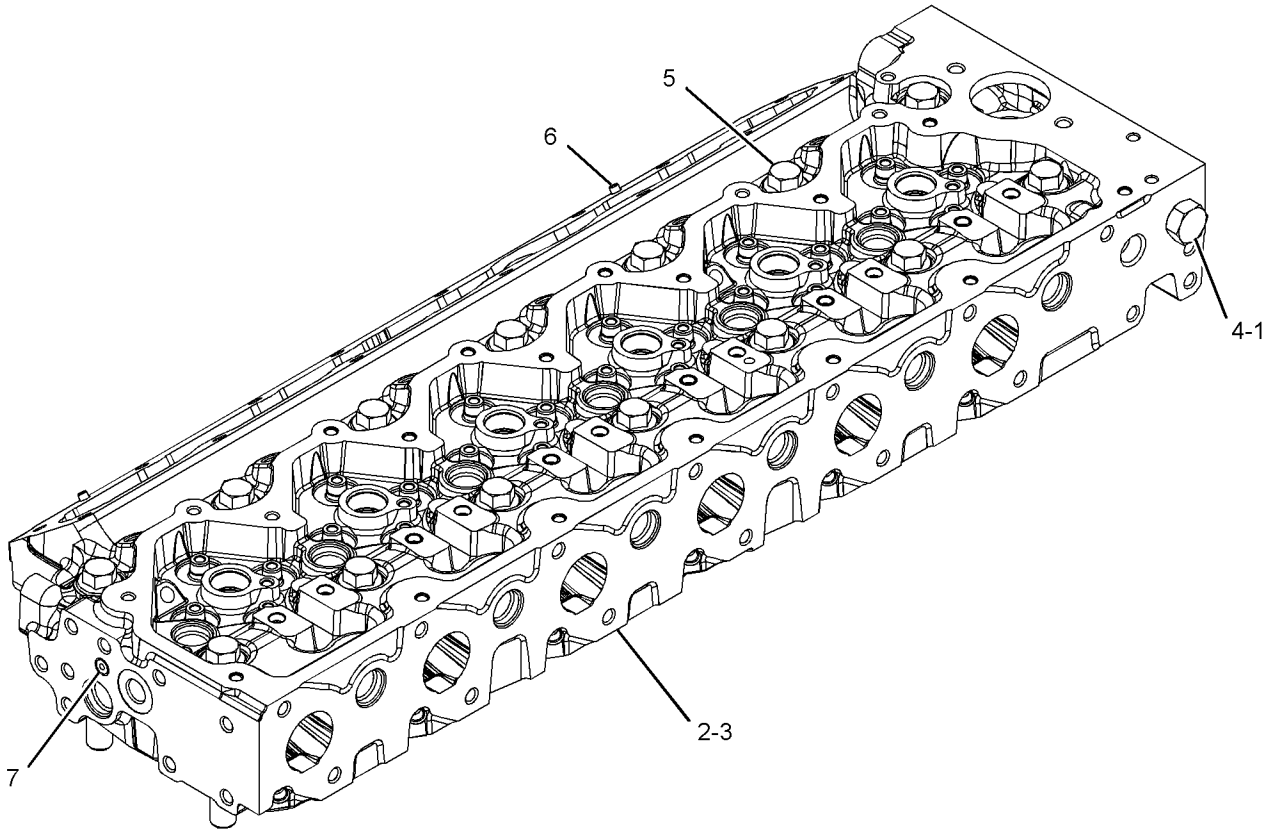

GRAPHIC #1 **<END>** g03379427

378-8166 DRAIN GP-OIL

S/N: E7A1-UP
PART OF 393-4097, 446-7556 ENGINE AR-PRIMARY
ALSO AN ATTACHMENT

SMCS-1302 **i05472390**

NOTE	REF NO	GRAPHIC REF	PART NUMBER	QTY	PART NAME 1 2 3 4 5 6 (PRODUCT LEVEL)	SEE PAGE
	1	1	**6V-7238**	1	VALVE-SHUTOFF	
	2	1	**3K-0360**	1	SEAL-O-RING	

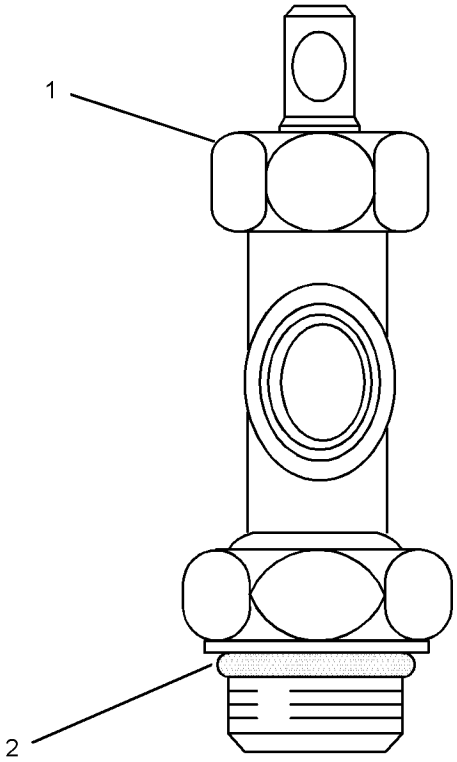

GRAPHIC #1 **<END>** g03457400

375-3937 DRIVE GP-FAN

S/N: E7A1-UP
PART OF 393-4097, 446-7556 ENGINE AR-PRIMARY
ALSO AN ATTACHMENT

SMCS-1359 **i05469198**

NOTE	REF NO	GRAPHIC REF	PART NUMBER	QTY	PART NAME 1 2 3 4 5 6 (PRODUCT LEVEL)	SEE PAGE
	1	1	**371-8298**	1	BRACKET	
	2	1	**377-9255**	1	PULLEY (8-GROOVE)	
	3	1	**111-0859**	2	BOLT (M10X1.5X35-MM)	

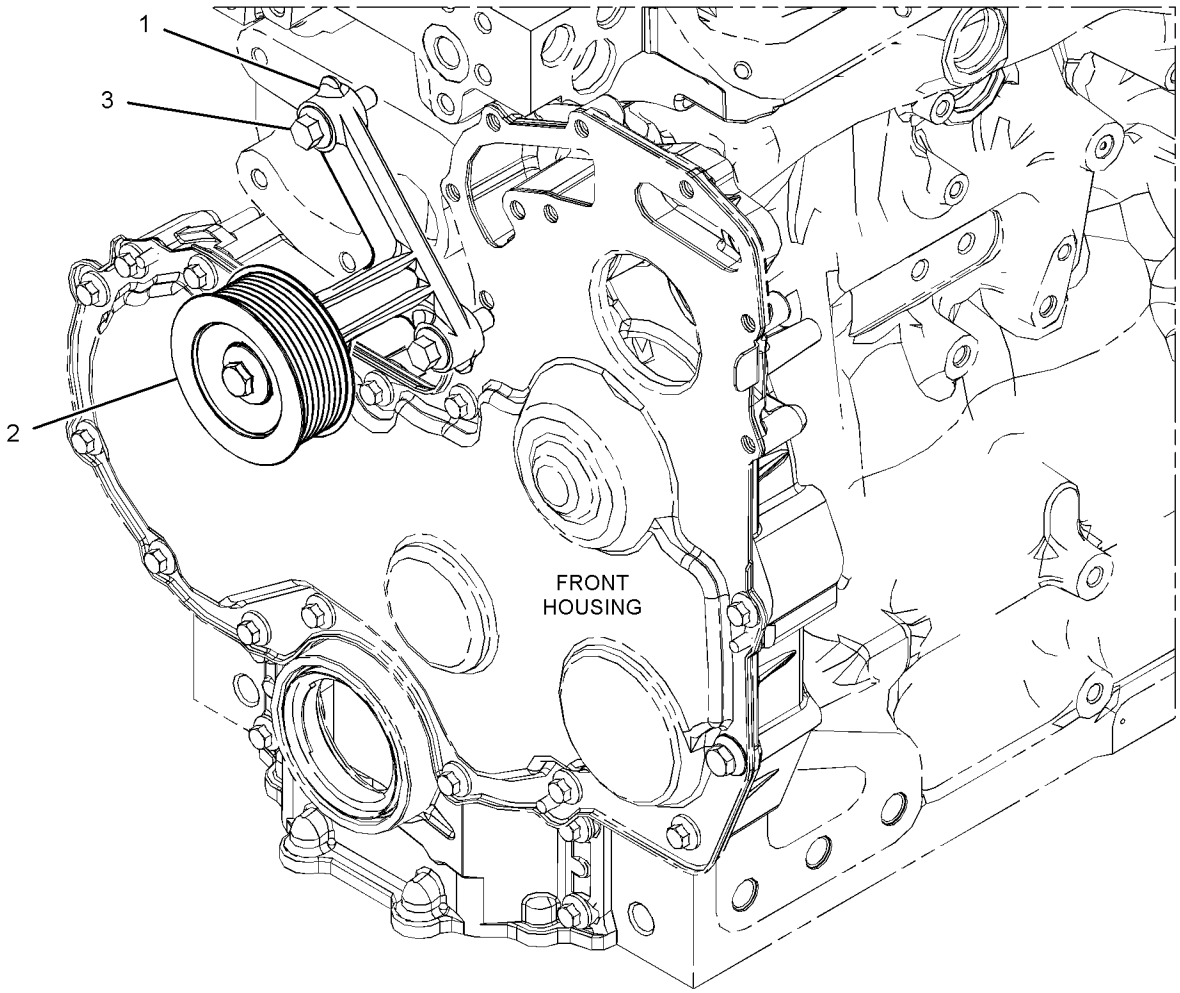

GRAPHIC #1 **<END>** g03108922

345-9029 FLYWHEEL GP

S/N: E7A1-UP
PART OF 393-4097, 446-7556 ENGINE AR-PRIMARY
ALSO AN ATTACHMENT

SMCS-1156 **i05472870**

NOTE	REF NO	GRAPHIC REF	PART NUMBER	QTY	PART NAME 1 2 3 4 5 6 (PRODUCT LEVEL)	SEE PAGE
	1	1	**289-1157**	1	FLYWHEEL AS	
	1A	1	**277-0588**	1	GEAR-STARTING MOTOR RING (134-TEETH)	
	2	1	**295-7712**	12	BOLT	
	3	1	**5P-8245**	12	WASHER-HARD (13.5X25.5X3-MM THK)	

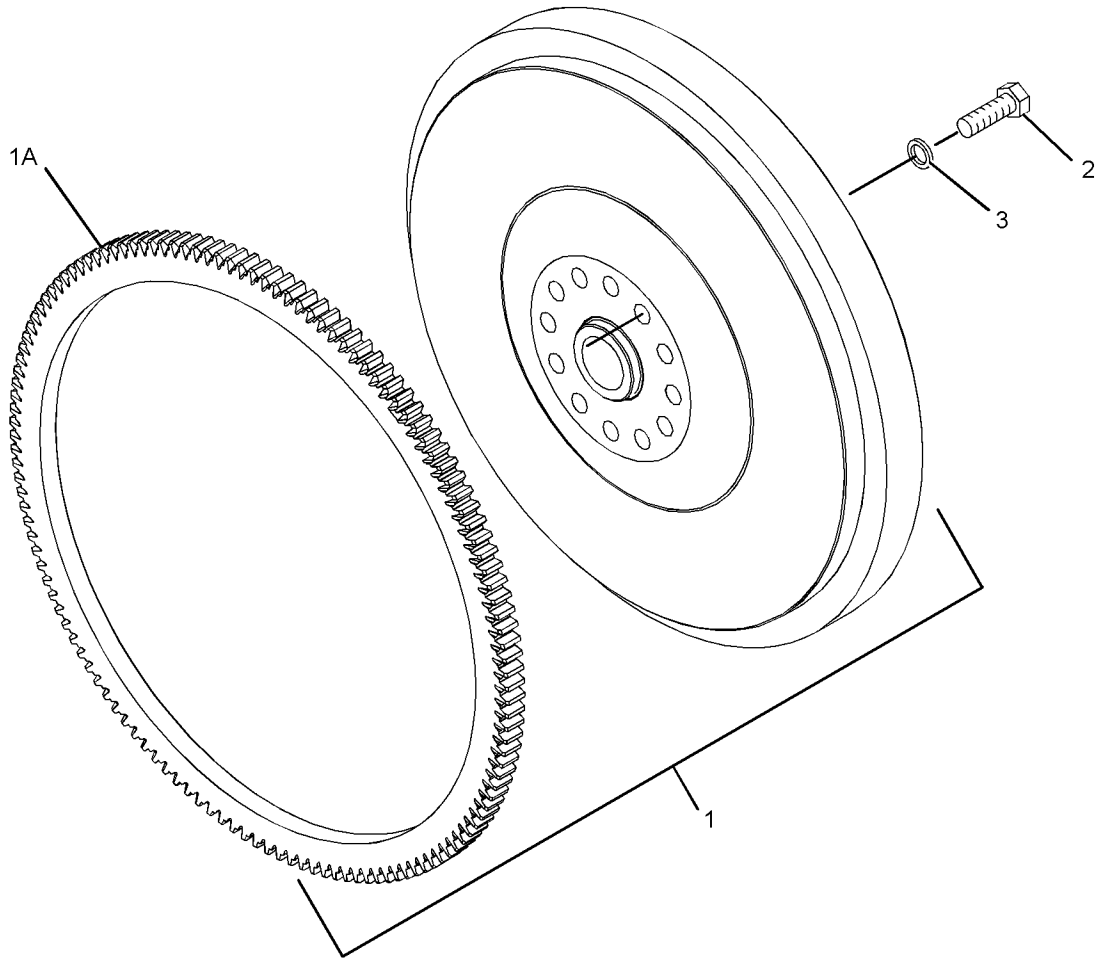

GRAPHIC #1 **<END>** g01279529

393-3369 HOUSING GP-FLYWHEEL

S/N: E7A1-UP

PART OF 393-4097, 446-7556 ENGINE AR-PRIMARY

ALSO AN ATTACHMENT

SMCS-1157 **i06057535**

NOTE	REF NO	GRAPHIC REF	PART NUMBER	QTY	PART NAME 1 2 3 4 5 6 (PRODUCT LEVEL)	SEE PAGE
	1	1	**354-8322**	3	PLUG	
	2	1	**283-4662**	2	BOLT-FLANGE HEAD	
	3	1	**287-8597**	2	DOWEL	
	4	1	**288-6974**	4	BOLT	
	5	1	**288-6975**	2	BOLT (M16X2X40-MM)	
	6	1	**393-4006**	1	GASKET	
	7	1	**393-4007**	1	HOUSING-FLYWHEEL	

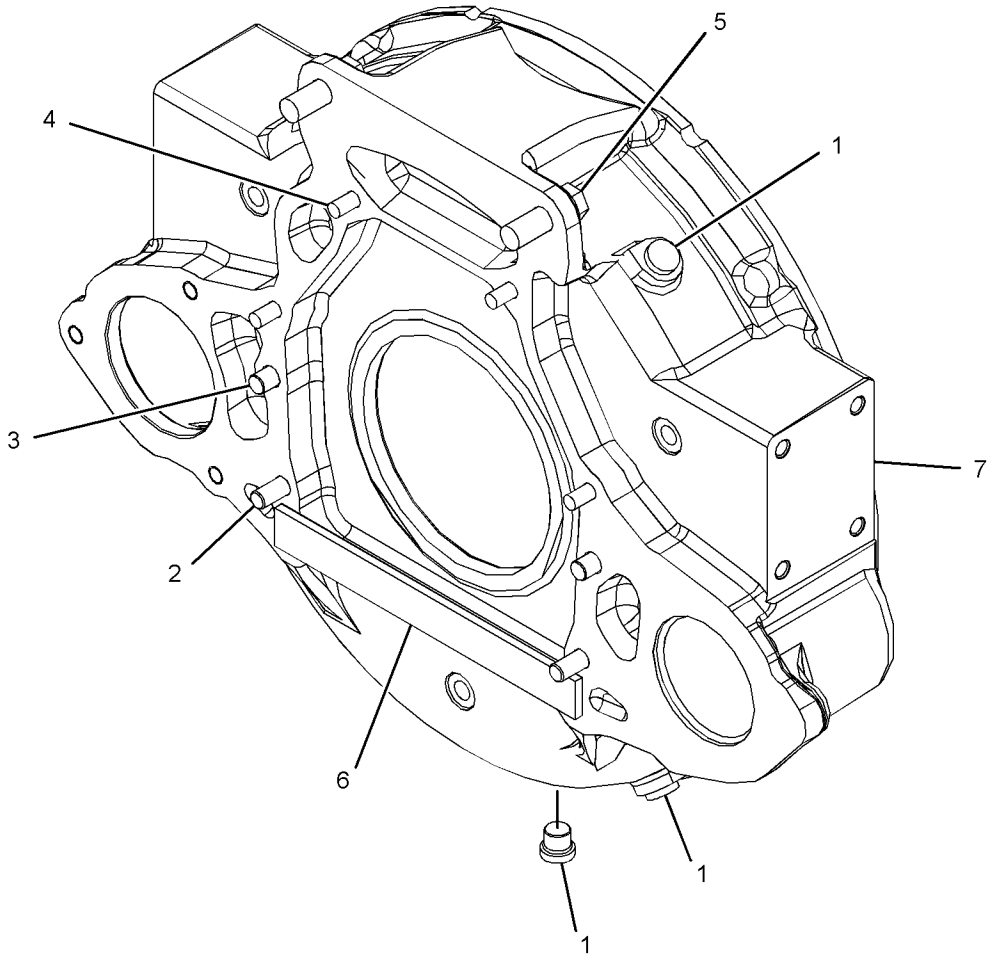

GRAPHIC #1 **<END>** g03379656

371-2725 HOUSING GP-FRONT

S/N: E7A1-UP
PART OF 393-4097, 446-7556 ENGINE AR-PRIMARY
ALSO AN ATTACHMENT

SMCS-1151, 1162, 1206

i05709609

NOTE	REF NO	GRAPHIC REF	PART NUMBER	QTY	PART NAME 1 2 3 4 5 6 (PRODUCT LEVEL)	SEE PAGE
M	1	1	**6I-0650**	3	BOLT (M10X1.5X65-MM)	
	2	1	**7C-4616**	1	BOLT (M12X1.75X45-MM)	
	3	1	**067-6179**	1	DOWEL	
M	4	1	**100-3751**	5	BOLT (M8X1.25X65-MM)	
M	5	1	**100-4830**	1	BOLT (M10X1.5X20-MM)	
M	6	1	**101-3895**	2	BOLT (M8X1.25X35-MM)	
M	7	1	**124-3815**	9	BOLT (M8X1.25X16-MM)	
	8	1	**133-1011**	1	WASHER	
	9	1	**232-3666**	1	WASHER-THRUST	
	10	1	**277-3013**	1	SEAL	
	11	1	**346-0408**	1	PLATE	
	12	1	**443-9076**	1	CASE-GEAR	
M	13	1	**6I-0217**	6	BOLT (M8X1.25X20-MM)	
M	14	1	**6I-0645**	4	BOLT (M8X1.25X25-MM)	
	15	1	**324-0444**	1	HUB-IDLER GEAR	
	16	1	**216-8634**	1	GEAR-CAMSHAFT (68-TEETH)	
	17	1	**226-8767**	1	COVER AS-FRONT	
		1	**226-8766**	1	GASKET-COVER	
	18	1	**251-4336**	1	GEAR AS-IDLER (73-TEETH)	
	19	1	**277-3012**	1	GASKET-COVER	

M - METRIC PART

371-2725 **HOUSING GP-FRONT (*contd.*)** **i05709609**

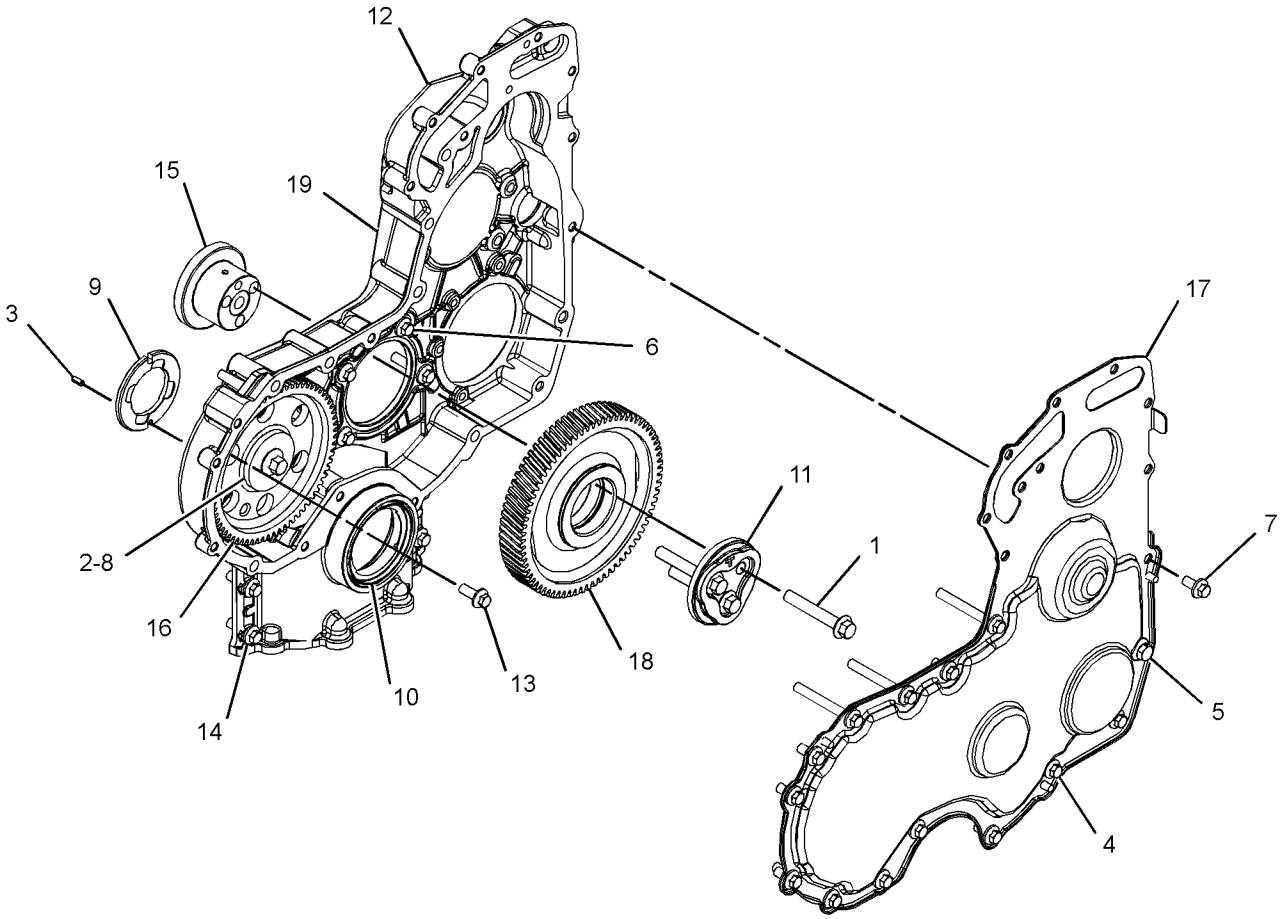

GRAPHIC #1 **<END>** g03378599

371-2478 JET GP-PISTON COOLING

S/N: E7A1-UP
PART OF 393-4097, 446-7556 ENGINE AR-PRIMARY
ALSO AN ATTACHMENT

SMCS-1331 **i05472511**

NOTE	REF NO	GRAPHIC REF	PART NUMBER	QTY	PART NAME 1 2 3 4 5 6 (PRODUCT LEVEL)	SEE PAGE
M	1	1	**100-4841**	6	BOLT (M6X1X10-MM)	
	2	1	**329-3796**	6	TUBE AS-OIL JET	

M - METRIC PART

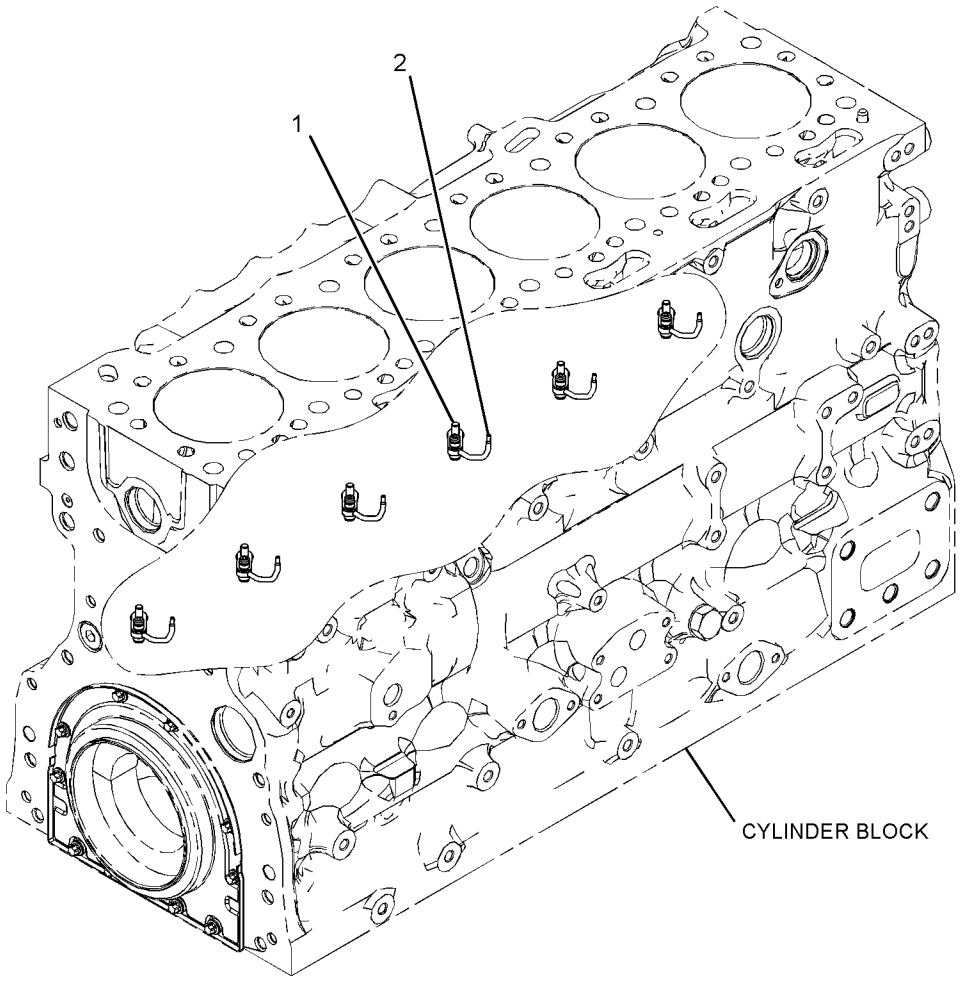

GRAPHIC #1 **<END>** g03378569

371-2740 LIFTING GP-ENGINE

S/N: E7A1-UP

PART OF 393-4097, 446-7556 ENGINE AR-PRIMARY

ALSO AN ATTACHMENT

SMCS-1122 **i05493911**

NOTE	REF NO	GRAPHIC REF	PART NUMBER	QTY	PART NAME 1 2 3 4 5 6 (PRODUCT LEVEL)	SEE PAGE
	1	1	**279-9651**	1	PLATE-LIFTING	
	2	1	**304-5062**	1	BRACKET	
M	3	1	**6I-0654**	2	BOLT (M10X1.5X25-MM)	
	4	1	**123-2899**	4	BOLT (M10X1.5X40-MM)	
	5	1	**415-1604**	1	BRACKET-LIFTING	

M - METRIC PART

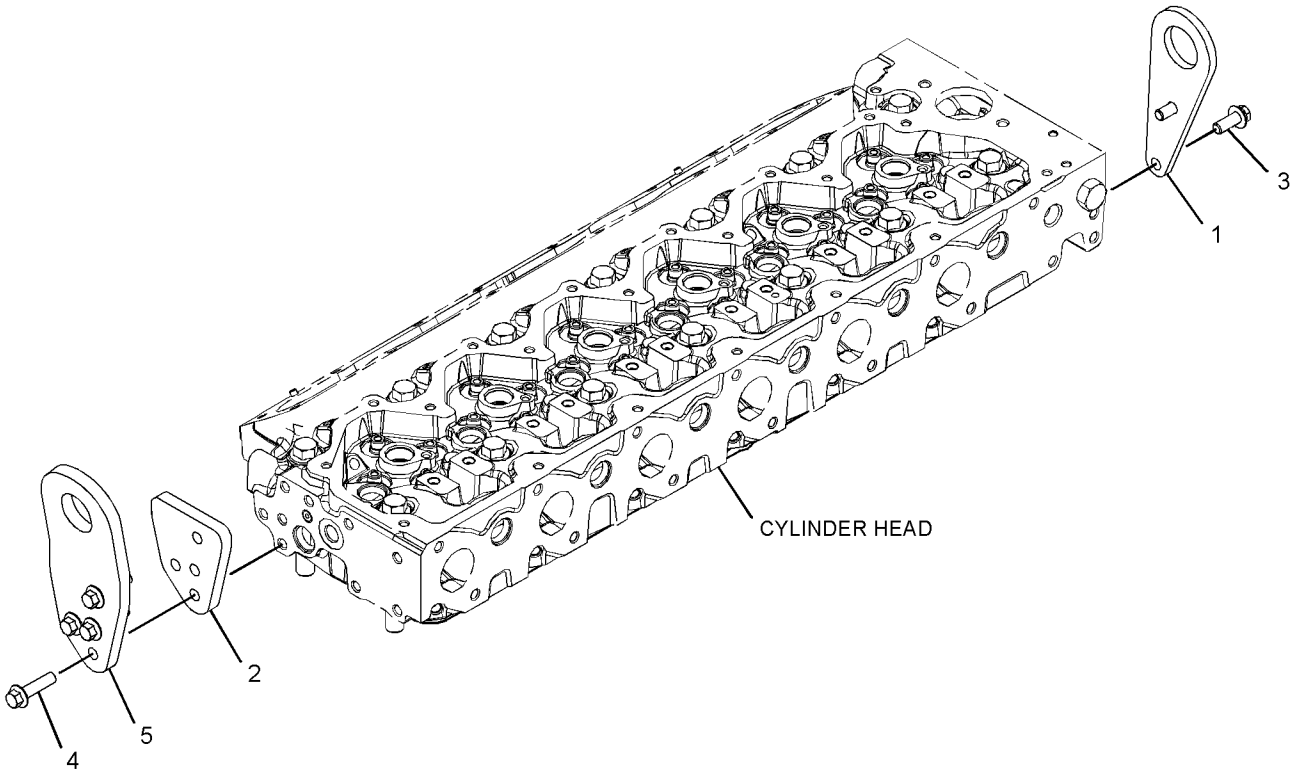

GRAPHIC #1 **<END>** g03456846

378-0593 PAN GP-OIL

S/N: E7A1-UP
PART OF 393-4097, 446-7556 ENGINE AR-PRIMARY
ALSO AN ATTACHMENT

SMCS-1302 **i05472951**

NOTE	REF NO	GRAPHIC REF	PART NUMBER	QTY	PART NAME 1 2 3 4 5 6 (PRODUCT LEVEL)	SEE PAGE
M	1	1	**6I-0363**	2	BOLT (M6X1X20-MM)	
	2	1	**230-8094**	1	BRIDGE	
	3	1	**351-4749**	1	GASKET-OIL PAN	
	4	1	**366-7721**	1	PAN AS-OIL	
	4A	1	**8L-2786**	2	SEAL-O-RING	
	4B	1	**9S-4185**	2	PLUG	
M	5	1	**6I-0217**	28	BOLT (M8X1.25X20-MM)	
M	6	1	**6I-0260**	2	BOLT (M8X1.25X25-MM)	
M	7	1	**6I-0572**	2	BOLT (M8X1.25X20-MM)	
	8	1	**286-8817**	1	TUBE-OIL SUCTION	
	9	1	**6I-4681**	1	GASKET	

M - METRIC PART

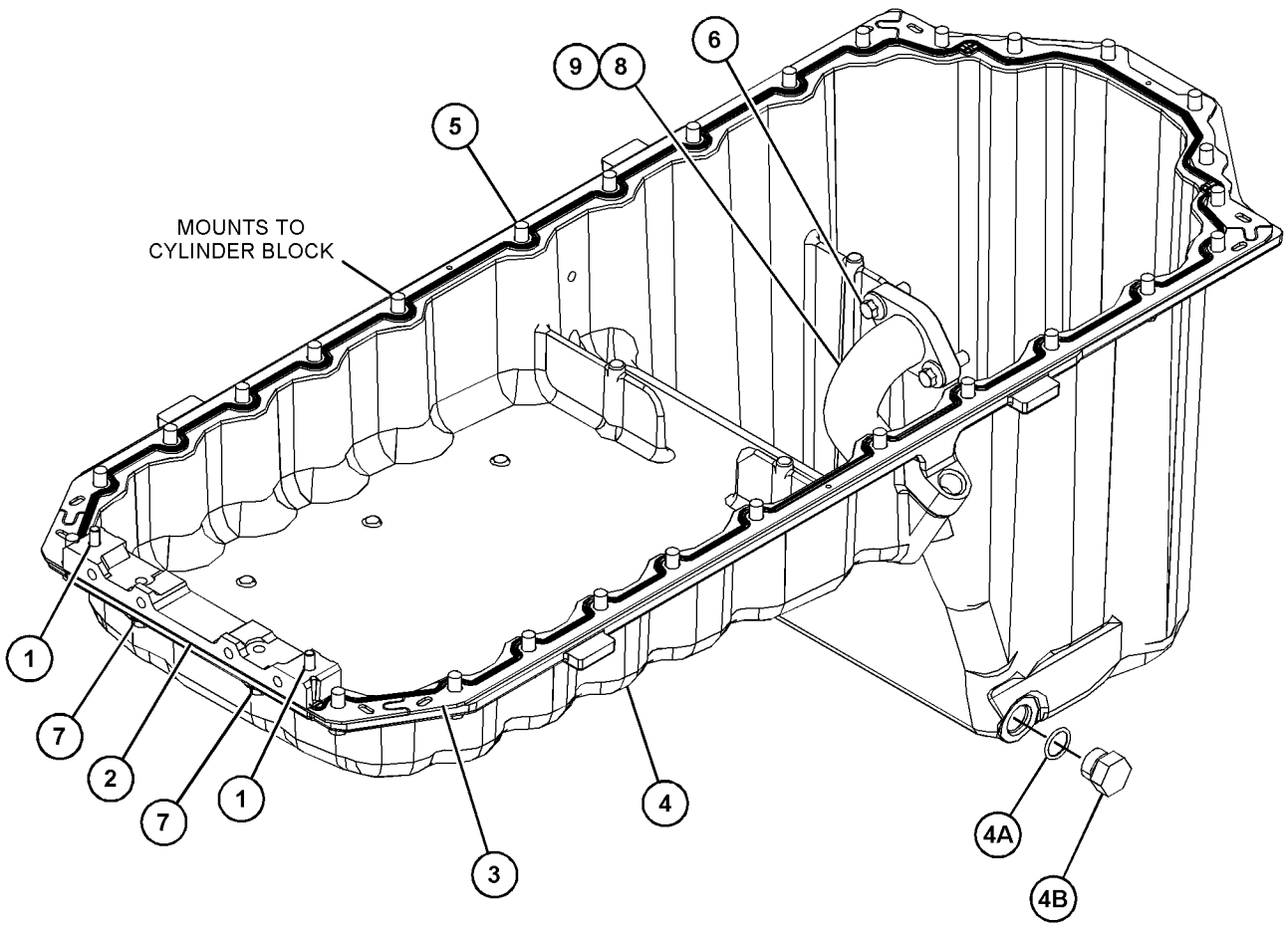

GRAPHIC #1 **<END>** g03539340

369-7304 PISTON & ROD GP

S/N: E7A1-UP
PART OF 393-4097, 446-7556 ENGINE AR-PRIMARY
ALSO AN ATTACHMENT

SMCS-1225 **i05472944**

NOTE	REF NO	GRAPHIC REF	PART NUMBER	QTY	PART NAME 1 2 3 4 5 6 (PRODUCT LEVEL)	SEE PAGE
Y	1	1	**331-0290**	6	CONNECTING ROD GP	12
Y	2	1	**369-3186**	6	PISTON GP	29
J	3	1	*317-5482*	6	BEARING	
J	4	1	*317-5483*	6	BEARING	
	5	1	**124-3536**	12	RING-RETAINING	
					AVAILABLE REPAIR KIT(S):	
J			**360-1564**	1	KIT-BEARING (PISTON)	
			443-9543	1	KIT-RING	
					(KIT INCLUDES RINGS)	
			443-9475	1	KIT-PISTON (STANDARD)	
			443-9898	1	KIT-PISTON (0.5-MM OS)	
			443-9919	1	KIT-PISTON (1.0-MM OS)	
					(EACH KIT INCLUDES RINGS)	

J - KIT MARKED J SERVICES PART MARKED J
Y - SEPARATE ILLUSTRATION

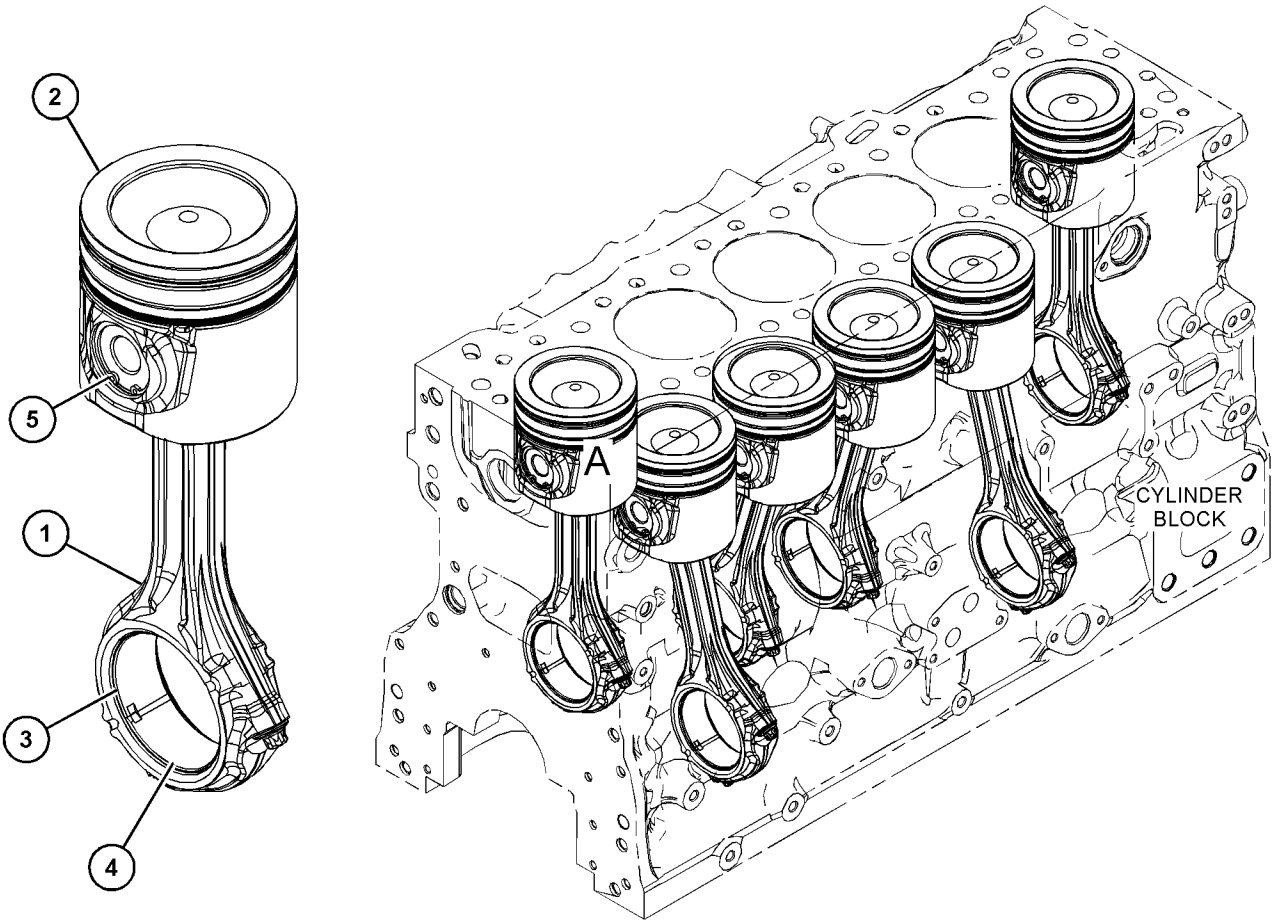

VIEW OF AREA A

GRAPHIC #1 **<END>** g03539380

369-3186 PISTON GP

S/N: E7A1-UP
PART OF 369-7304 PISTON & ROD GP
ALSO AN ATTACHMENT

SMCS-1214 **i05574330**

NOTE	REF NO	GRAPHIC REF	PART NUMBER	QTY	PART NAME 1 2 3 4 5 6 (PRODUCT LEVEL)	SEE PAGE
					(NO SERVICED PARTS)	

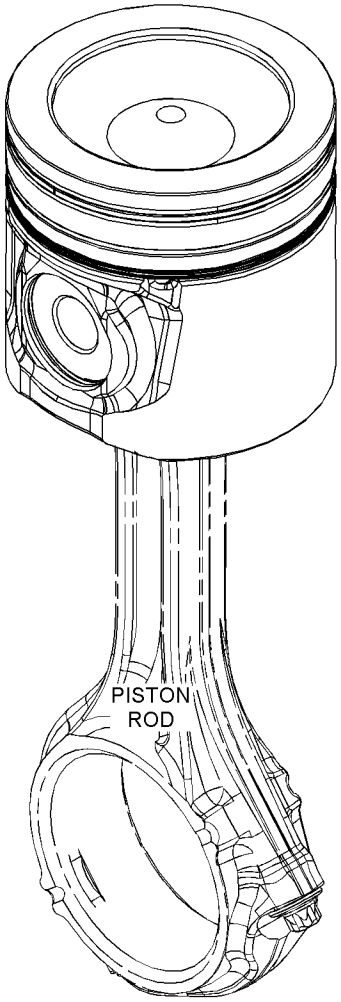

GRAPHIC #1 **<END>** g03551997

458-9768 PLUG GP-OIL PAN

S/N: E7A1-UP
PART OF 393-4097, 446-7556 ENGINE AR-PRIMARY
ALSO AN ATTACHMENT

SMCS-1302 **i05817124**

NOTE	REF NO	GRAPHIC REF	PART NUMBER	QTY	PART NAME 1 2 3 4 5 6 (PRODUCT LEVEL)	SEE PAGE
	1	1	**354-8322**	2	PLUG	

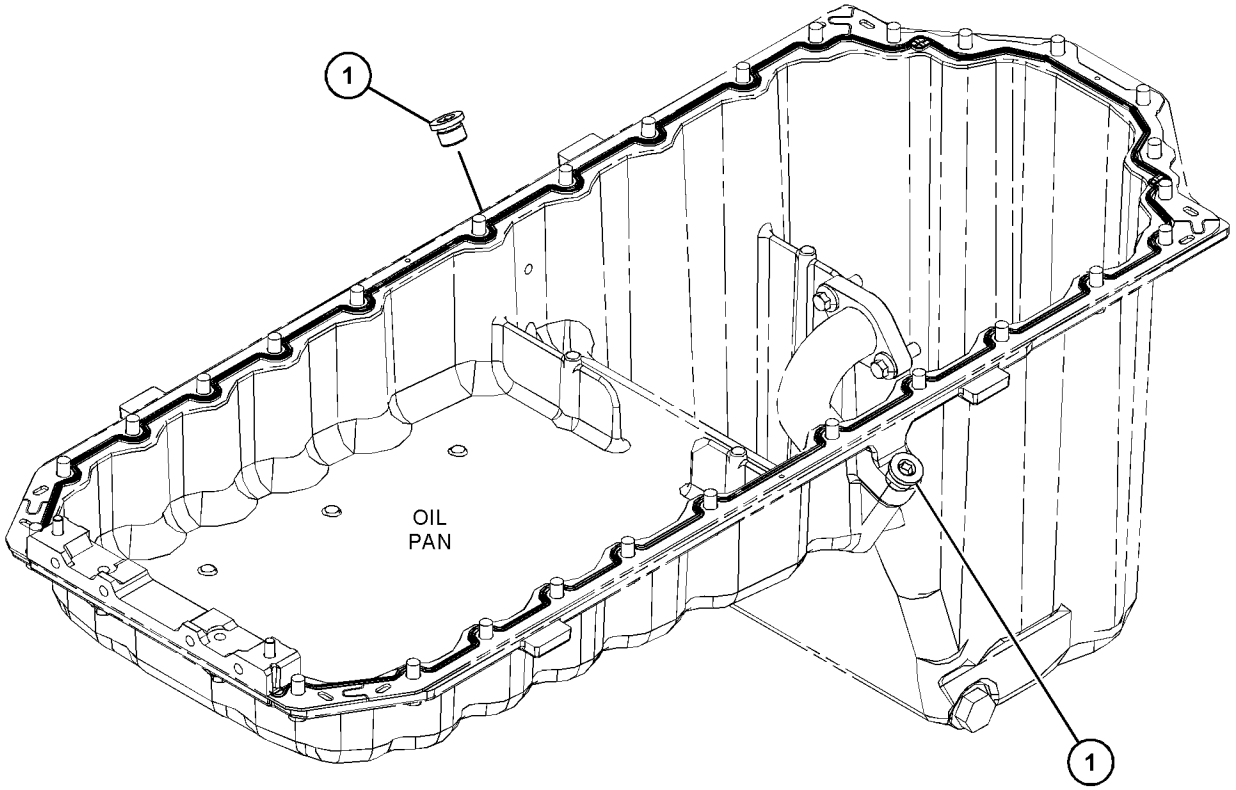

GRAPHIC #1 **<END>** g03696638

378-0628 POWER TAKE-OFF GP

S/N: E7A1-UP

PART OF 393-4097, 446-7556 ENGINE AR-PRIMARY

ALSO AN ATTACHMENT

SMCS-1165, 3055, 3107

i05472609

NOTE	REF NO	GRAPHIC REF	PART NUMBER	QTY	PART NAME 1 2 3 4 5 6 (PRODUCT LEVEL)	SEE PAGE
M	1	1	**100-4830**	2	BOLT (M10X1.5X20-MM)	
	2	1	**102-2073**	1	SEAL-O-RING	
M	3	1	**102-2078**	1	BOLT (M10X1.5X25-MM)	
	5	1	**126-3212**	5	BOLT (M8X1.25X25-MM)	
	6	1	**198-8262**	1	COVER AS	
	6A	1	**198-8263**	1	SEAL-O-RING	
	7	1	**235-1063**	1	ADAPTER AS	
	7A	1	**6H-3957**	1	BALL BEARING	
	7B	1	**102-2075**	1	BEARING	
	7C	1	**102-2076**	1	CLIP	
	7D	1	**235-1061**	1	GEAR (33-TEETH)	
	8	1	**277-4223**	1	PLUG	

M - METRIC PART

378-0628 **POWER TAKE-OFF GP (*contd.*)** **i05472609**

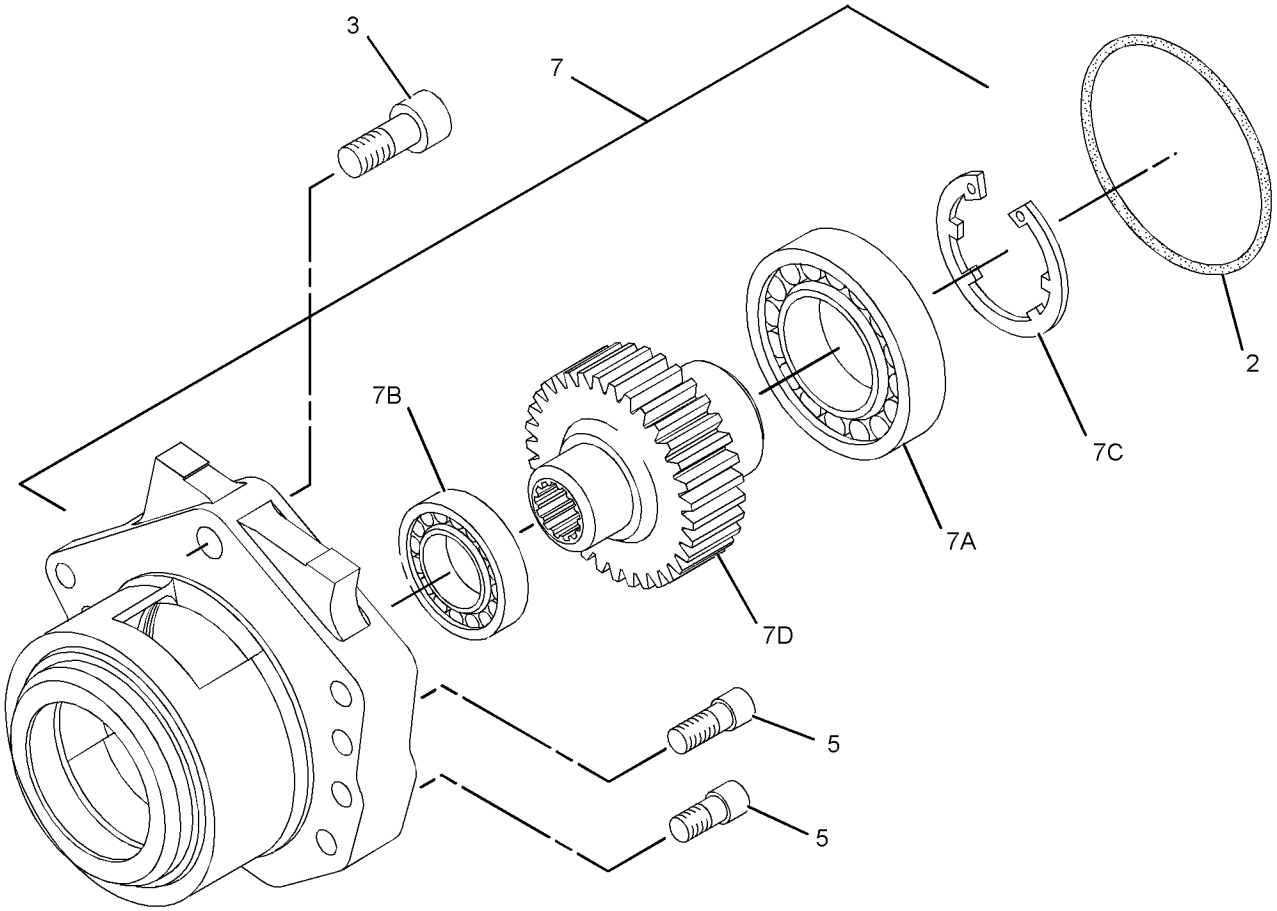

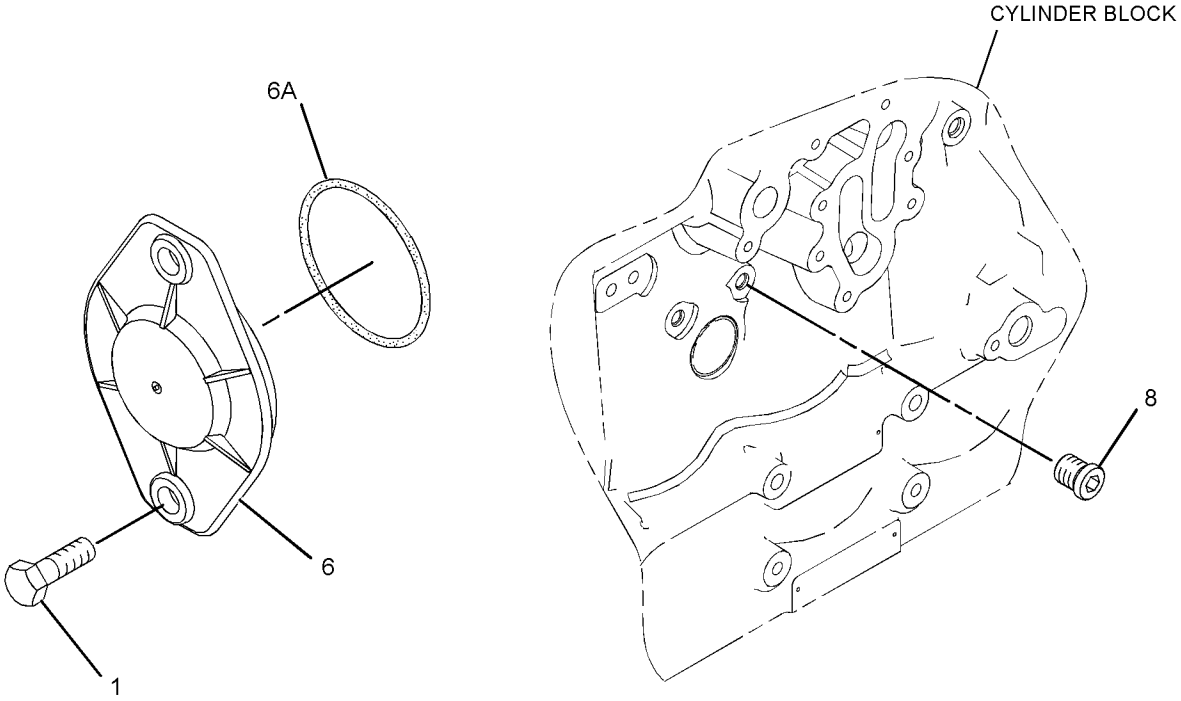

GRAPHIC #1 **<END>** g01418849

375-0098 PULLEY GP-AUXILIARY DRIVE

S/N: E7A1-UP
PART OF 393-4097, 446-7556 ENGINE AR-PRIMARY
ALSO AN ATTACHMENT

SMCS-1207 **i05472855**

NOTE	REF NO	GRAPHIC REF	PART NUMBER	QTY	PART NAME 1 2 3 4 5 6 (PRODUCT LEVEL)	SEE PAGE
	1	1	**274-1935**	6	BOLT	

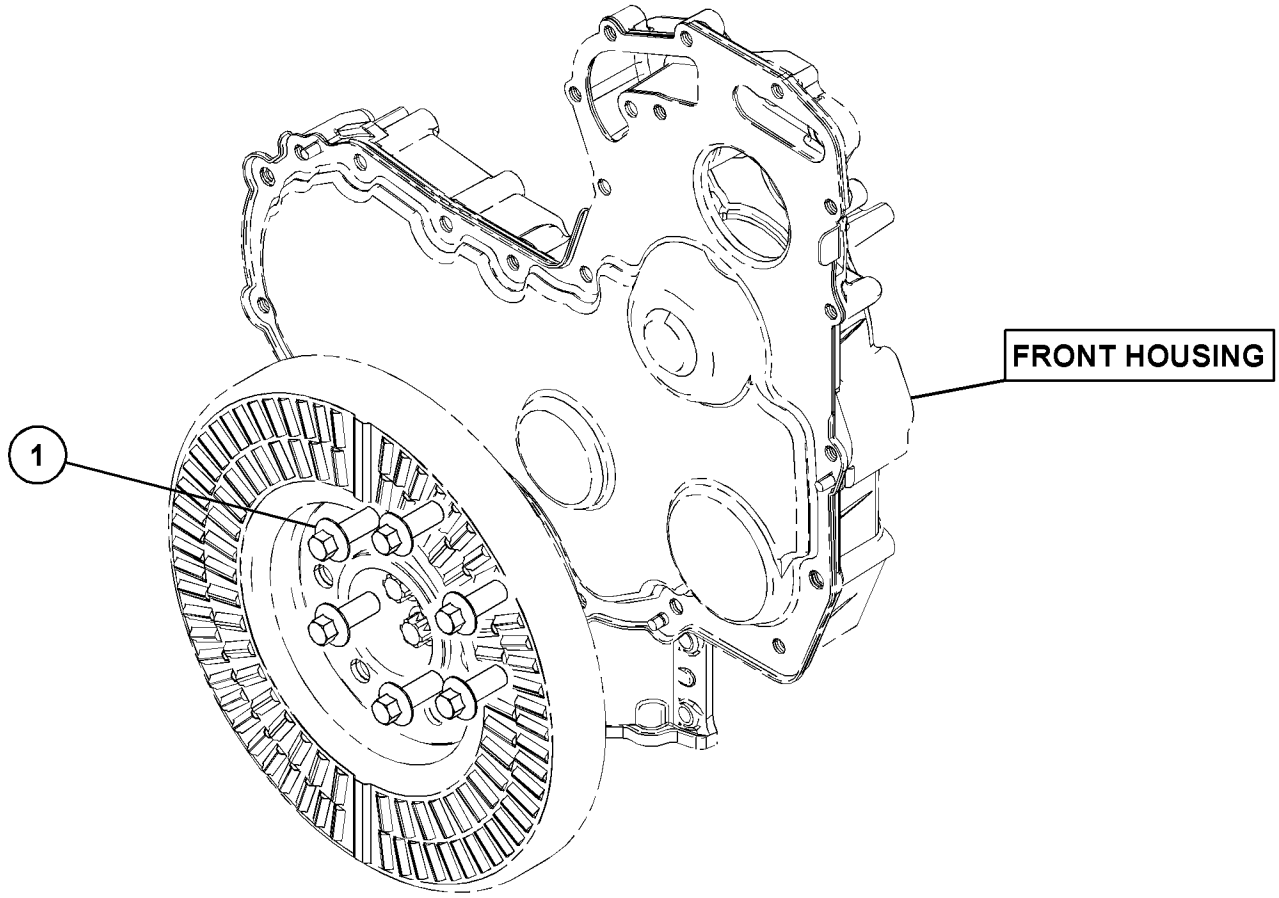

GRAPHIC #1 **<END>** g03172177

371-2554 PULLEY GP-CRANKSHAFT

S/N: E7A1-UP
PART OF 393-4097, 446-7556 ENGINE AR-PRIMARY
ALSO AN ATTACHMENT

SMCS-1205 **i05472858**

NOTE	REF NO	GRAPHIC REF	PART NUMBER	QTY	PART NAME 1 2 3 4 5 6 (PRODUCT LEVEL)	SEE PAGE
	1	1	**274-1931**	1	PULLEY (8-GROOVE)	
	2	1	**342-6502**	1	ADAPTER	
	3	1	**342-6510**	3	BOLT-TORX (M14X1.5X70-MM)	
	4	1	**351-1724**	1	DAMPER	

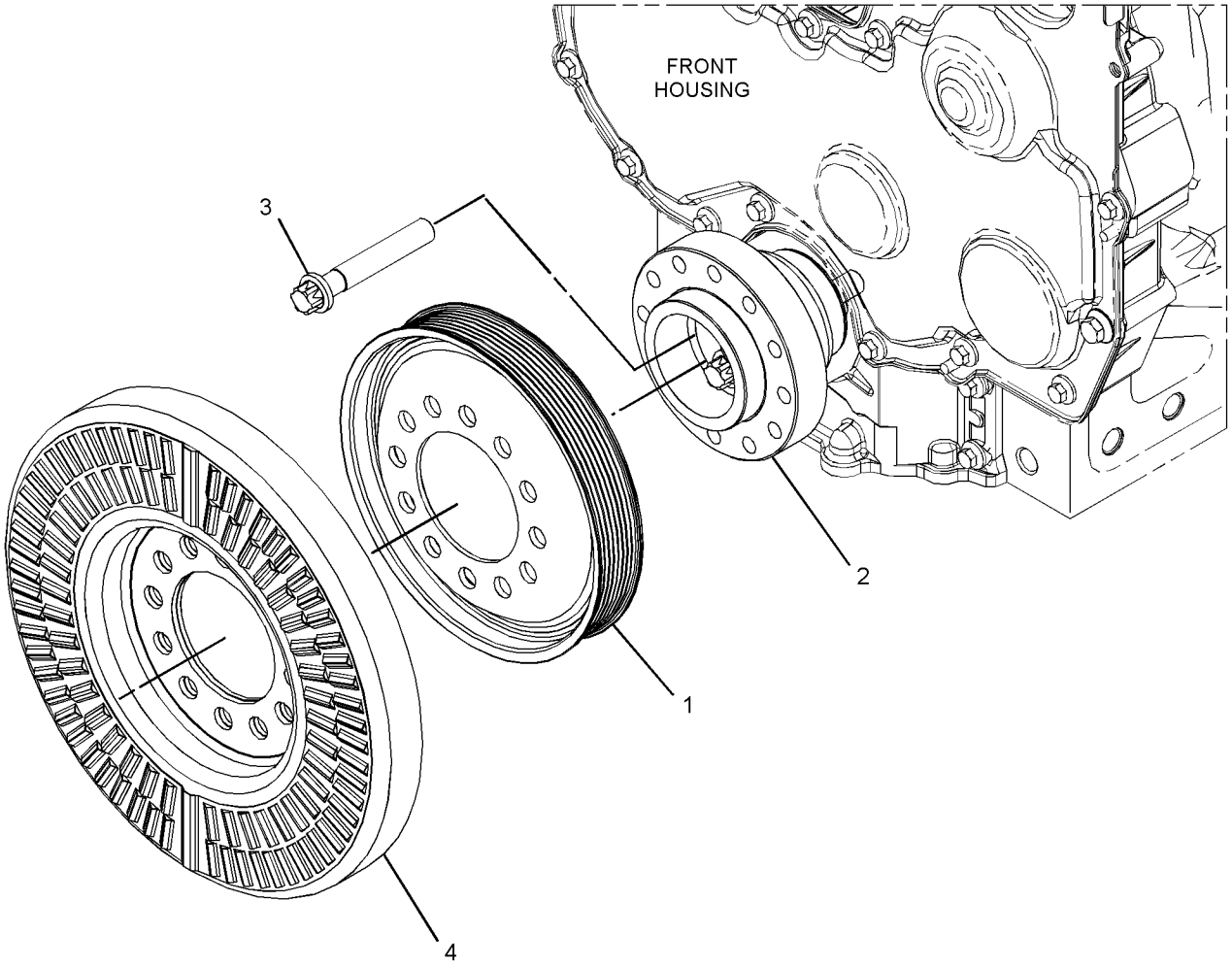

GRAPHIC #1 **<END>** g03110077

280-1911 ROCKER ARM GP

S/N: E7A1-UP
PART OF 371-2480 ROCKER ARM GP
ALSO AN ATTACHMENT

SMCS-1123 **i05571942**

NOTE	REF NO	GRAPHIC REF	PART NUMBER	QTY	PART NAME 1 2 3 4 5 6 (PRODUCT LEVEL)	SEE PAGE
	1	1	**276-9201**	1	CLIP	
	2	1	**276-9206**	5	SPRING-SHAFT	
	3	1	**276-9207**	1	SPRING-SHAFT	
	4	1	**277-5307**	1	SHAFT AS-ROCKER ARM	
	4A	1	**276-9200**	1	PLUG-SHAFT END	
	5	1	**278-5111**	6	ROCKER ARM AS	
					(EACH INCLUDES)	
	5A	1	**276-9230**	1	NUT	
	5B	1	**278-5113**	1	ADJUSTING SCREW (TORX)	
	6	1	**278-5112**	6	ROCKER ARM AS	
					(EACH INCLUDES)	
	6A	1	**276-9230**	1	NUT	
	6B	1	**278-5113**	1	ADJUSTING SCREW (TORX)	
	7	1	**280-1912**	6	BRACKET	
	8	1	**280-1913**	6	RETAINER	
	9	1	**280-1914**	12	BOLT (M8X1.25X55-MM)	

280-1911 **ROCKER ARM GP (*contd.*)** **i05571942**

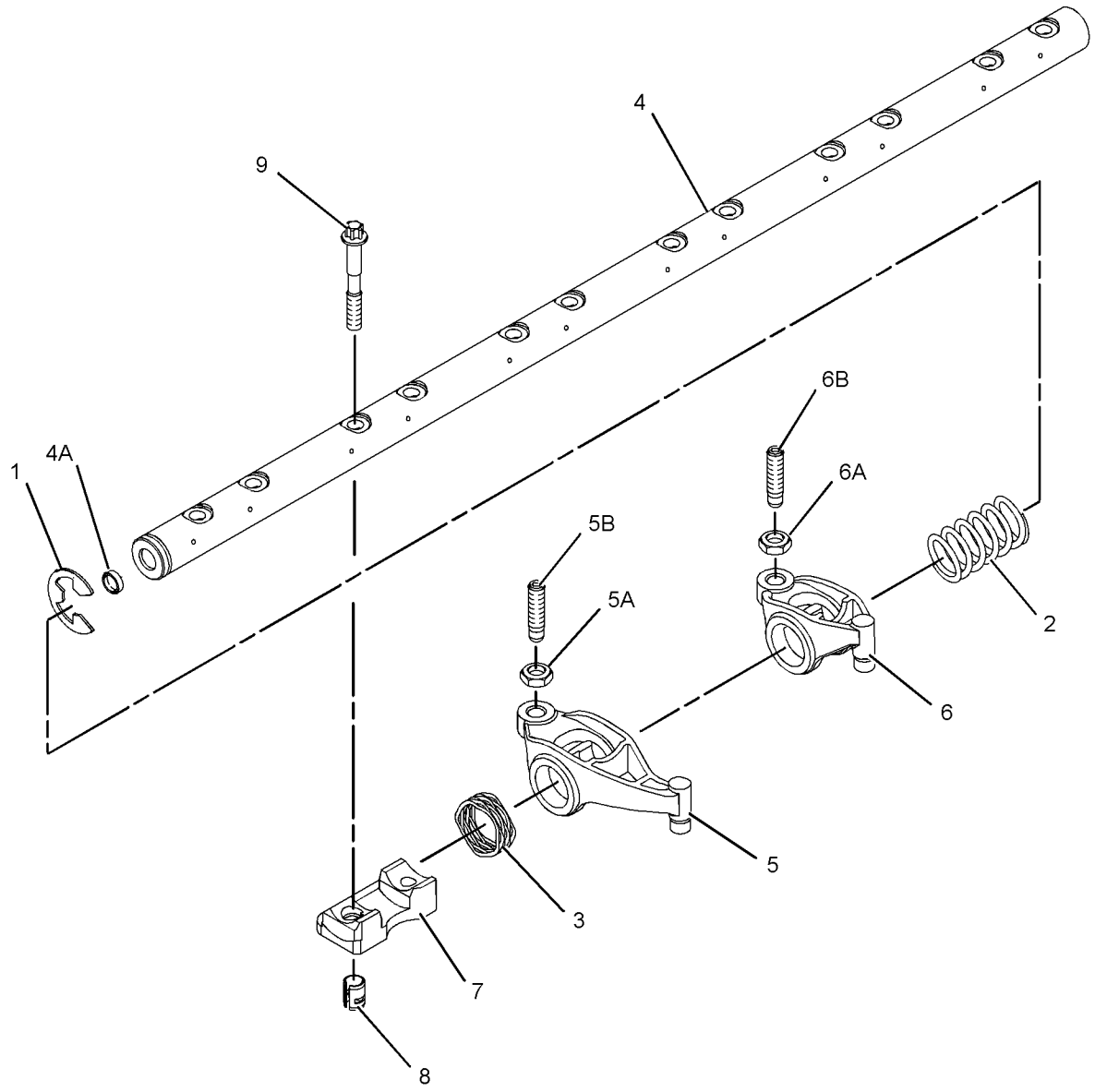

GRAPHIC #1 **<END>** g01235750

371-2480 ROCKER ARM GP

S/N: E7A1-UP
PART OF 393-4097, 446-7556 ENGINE AR-PRIMARY
ALSO AN ATTACHMENT

SMCS-1123 **i05773125**

NOTE	REF NO	GRAPHIC REF	PART NUMBER	QTY	PART NAME 1 2 3 4 5 6 (PRODUCT LEVEL)	SEE PAGE
	1	1	**436-0521**	24	SPRING-VALVE	
	2	1	**346-4709**	12	BRIDGE GP-VALVE	
	3	1	**276-8123**	48	RETAINER	
	4	1	**276-8133**	24	CAP-VALVE	
Y	5	1	**280-1911**	1	ROCKER ARM GP	35
	6	1	**299-5511**	24	SEAL-VALVE STEM	
	7	1	**309-6678**	12	VALVE-INLET	
	8	1	**339-9637**	12	VALVE-EXHAUST	

Y - SEPARATE ILLUSTRATION

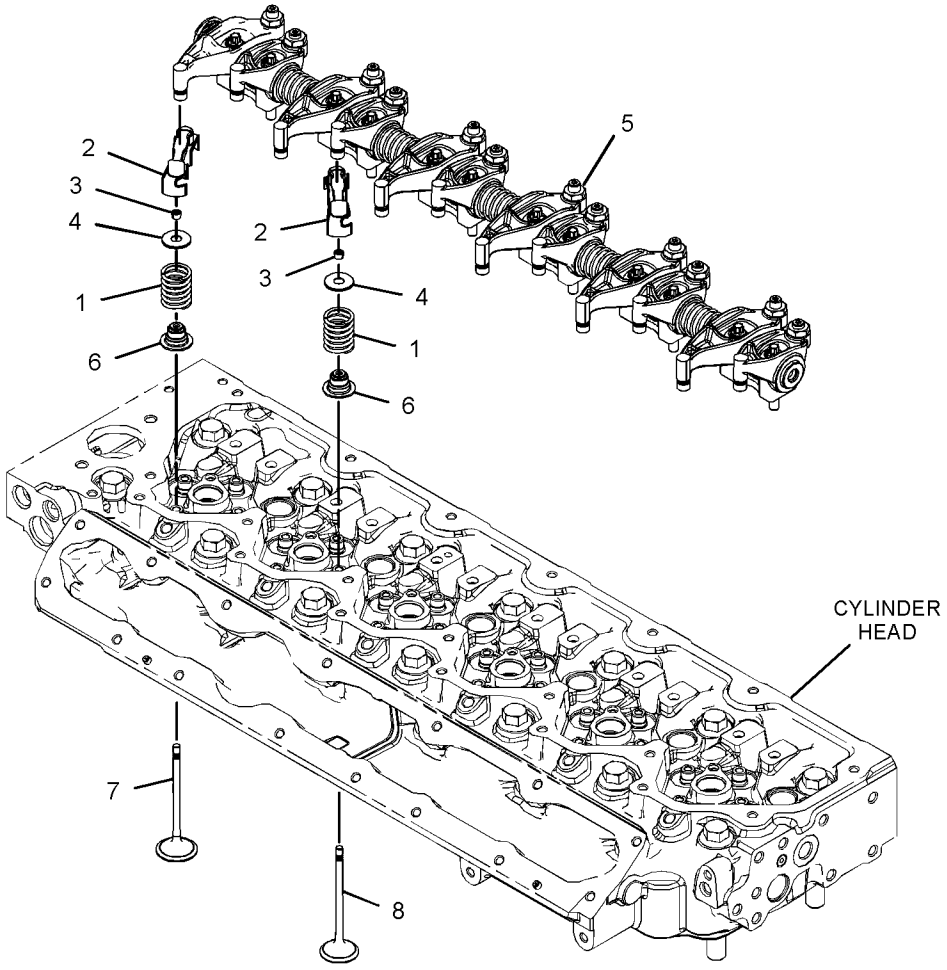

GRAPHIC #1 **<END>** g03103178

392-0632 BREATHER GP

S/N: E7A1-UP

PART OF 393-4097, 446-7556 ENGINE AR-PRIMARY

ALSO AN ATTACHMENT

SMCS-1317 **i05472730**

NOTE	REF NO	GRAPHIC REF	PART NUMBER	QTY	PART NAME 1 2 3 4 5 6 (PRODUCT LEVEL)	SEE PAGE
	1	1	**105-2740**	3	BOLT	
M	2	1	**124-3815**	3	BOLT (M8X1.25X16-MM)	
	3	1	**363-5813**	1	CLAMP-HOSE	
	4	1	**378-5311**	2	CLIP-PIPE	
	5	1	**389-1995**	1	BRACKET AS	
	6	1	**392-4097**	1	HOSE	

M - METRIC PART

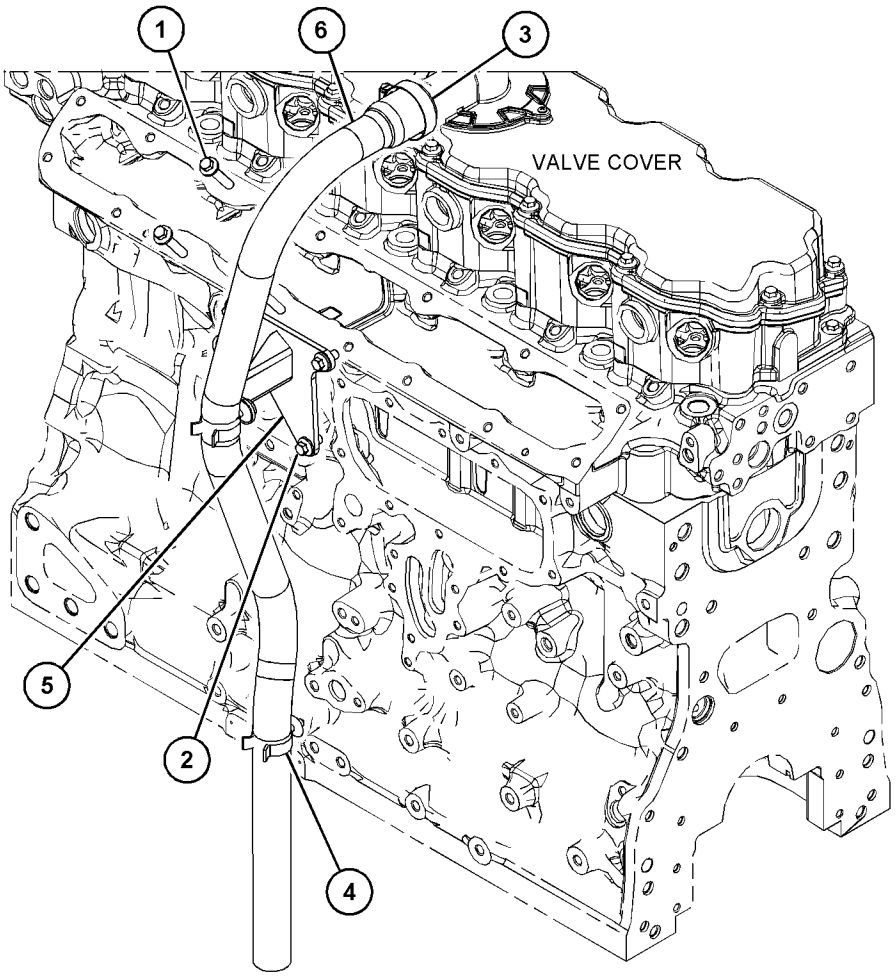

GRAPHIC #1 **<END>** g03482913

390-3737 FILLER GP-ENGINE OIL

S/N: E7A1-UP
PART OF 393-4097, 446-7556 ENGINE AR-PRIMARY
ALSO AN ATTACHMENT

SMCS-1316 **i05469233**

NOTE	PART NUMBER	QTY	PART NAME 1 2 3 4 5 6 (PRODUCT LEVEL)	SEE PAGE
M	**6I-0217**	2	BOLT (M8X1.25X20-MM)	
M	**6I-0254**	1	BOLT (M8X1.25X30-MM)	
	6I-4374	1	BOLT (M8X1.25X60-MM)	
	321-2383	1	FILLER GP-ENGINE OIL	
	306-2337	1	SEAL-O-RING	
	130-9888	1	CAP-OIL FILLER (ENGINE)	
	113-1504	1	SEAL-O-RING	
	277-1974	1	PLATE AS	
	277-1975	1	SEAL-O-RING	

M - METRIC PART

<END>

346-0220 FILTER GP-ENGINE OIL

S/N: E7A1-UP
PART OF 393-4097, 446-7556 ENGINE AR-PRIMARY
ALSO AN ATTACHMENT

SMCS-1306, 1308

i05882513

NOTE	REF NO	GRAPHIC REF	PART NUMBER	QTY	PART NAME 1 2 3 4 5 6 (PRODUCT LEVEL)	SEE PAGE
	1	1	**462-1171**	1	FILTER-ENGINE OIL	

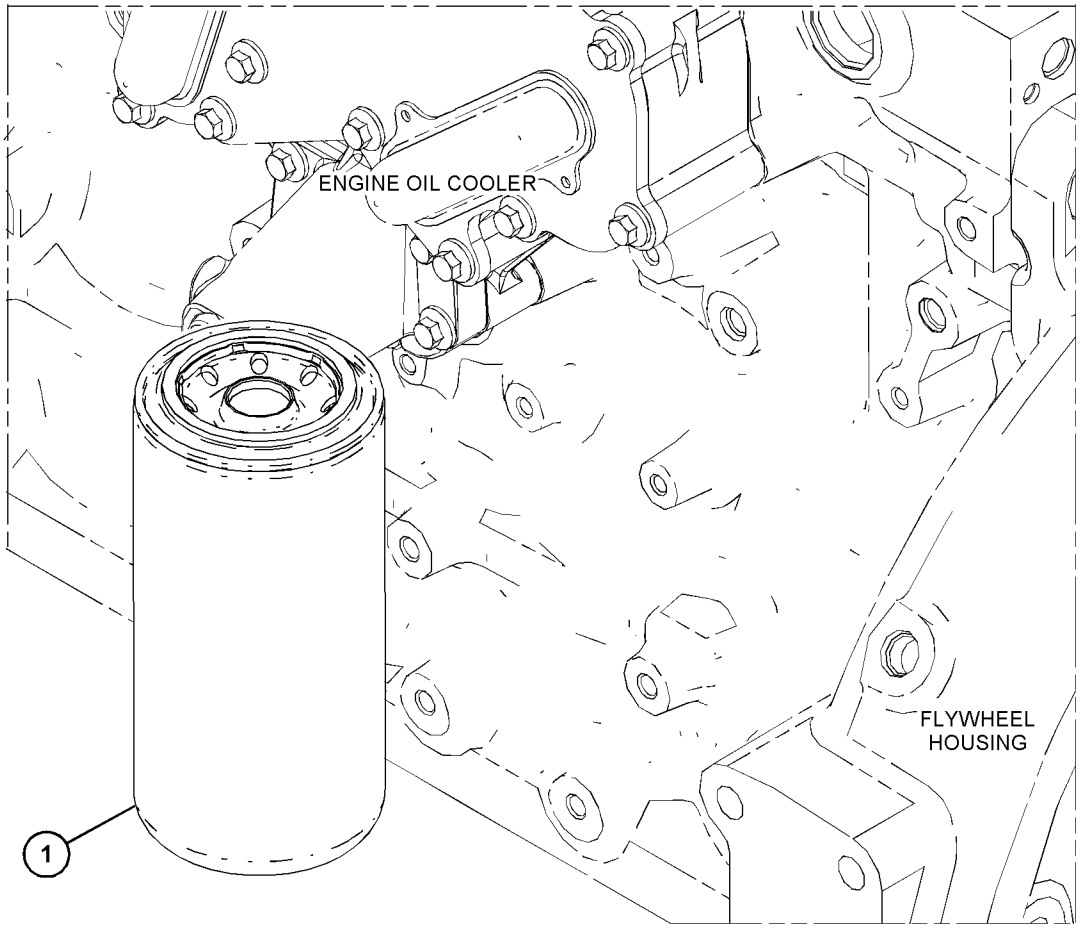

GRAPHIC #1

<END>

g03710180

346-0737 PUMP GP-ENGINE OIL

S/N: E7A1-UP
PART OF 393-4097, 446-7556 ENGINE AR-PRIMARY
ALSO AN ATTACHMENT

SMCS-1304, 1315

i05472869

NOTE	REF NO	GRAPHIC REF	PART NUMBER	QTY	PART NAME 1 2 3 4 5 6 (PRODUCT LEVEL)	SEE PAGE
	1	1	**373-8014**	1	PUMP-OIL	
	2	1	**6I-1090**	4	BOLT (M8X1.25X40-MM)	

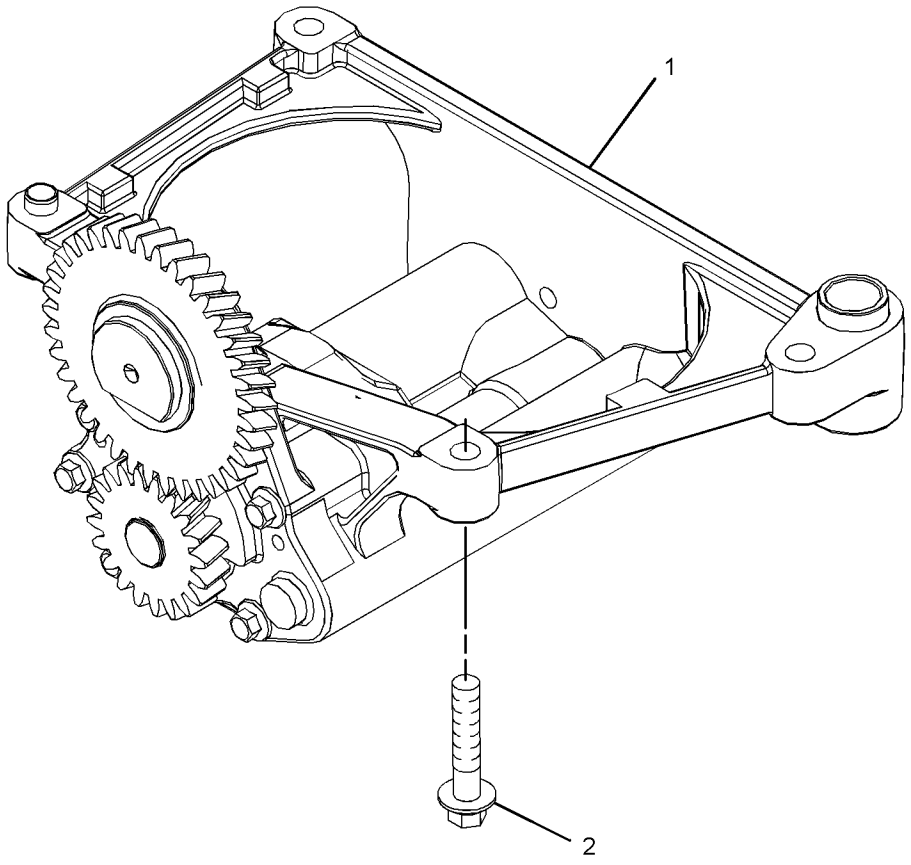

GRAPHIC #1

<END>

g02815299

462-6685 PUMP GP-ENGINE OIL

S/N: E7A1-UP

PART OF 393-4097, 446-7556 ENGINE AR-PRIMARY

ALSO AN ATTACHMENT

SMCS-1304, 1315

i06057267

NOTE	REF NO	GRAPHIC REF	PART NUMBER	QTY	PART NAME 1 2 3 4 5 6 (PRODUCT LEVEL)	SEE PAGE
	1	1	**469-5033**	1	PUMP AS-ENGINE OIL	
M	2	1	**6I-1090**	4	BOLT (M8X1.25X40-MM)	

M - METRIC PART

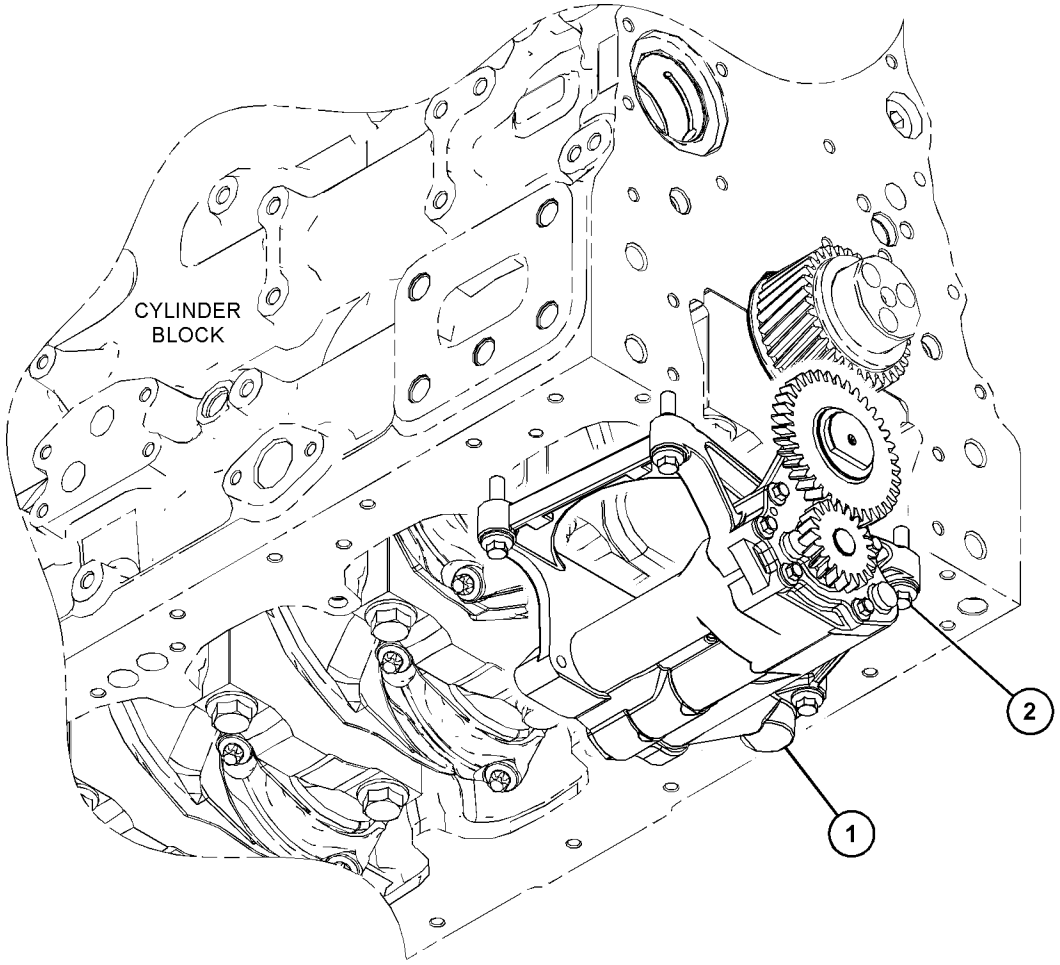

GRAPHIC #1

<END>

g03797853

371-2745 VALVE GP-FLUID SAMPLING

S/N: E7A1-UP
PART OF 393-4097, 446-7556 ENGINE AR-PRIMARY
ALSO AN ATTACHMENT

SMCS-7542 **i05472971**

NOTE	REF NO	GRAPHIC REF	PART NUMBER	QTY	PART NAME 1 2 3 4 5 6 (PRODUCT LEVEL)	SEE PAGE
	1	1	**216-9633**	1	VALVE AS-FLUID SAMPLING	
	2	1	**8C-3445**	1	CAP-DUST	

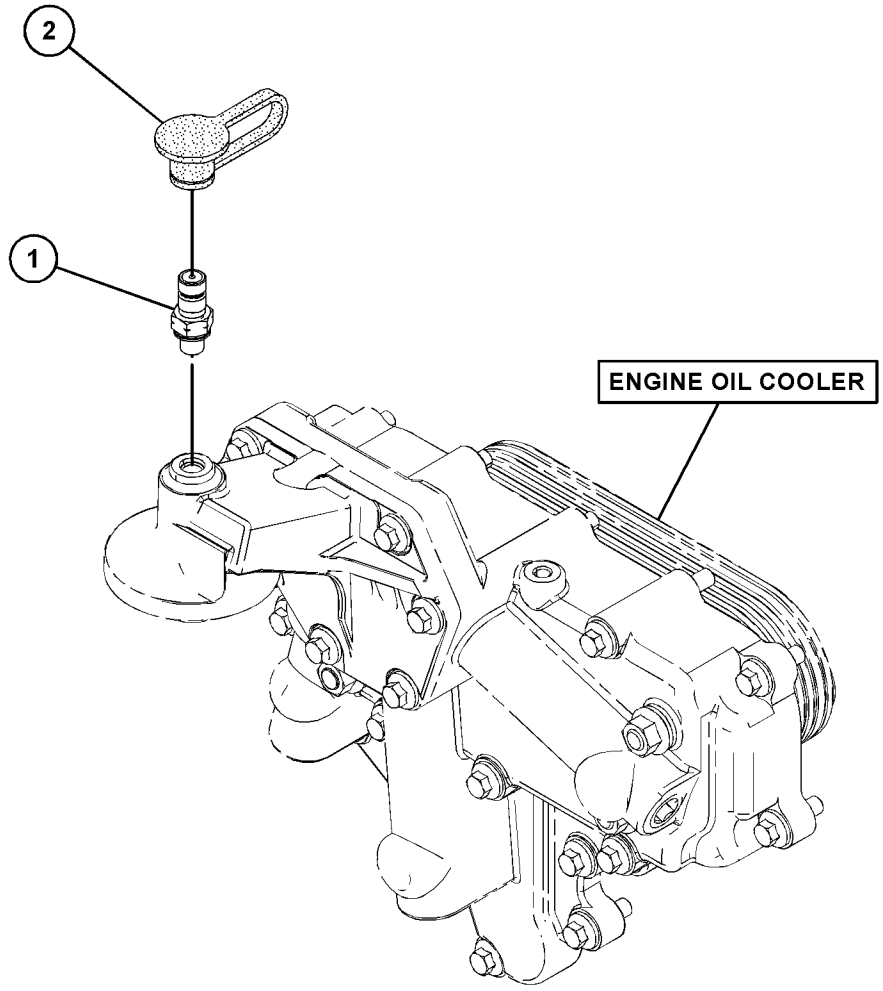

GRAPHIC #1 **<END>** g03178016

346-2911 CONNECTION GP-HEATER

S/N: E7A1-UP
FOR USE WITH OPTIONAL CUSTOMER CONNECTION FOR CAB HEATER
PART OF 393-4097, 446-7556 ENGINE AR-PRIMARY
ALSO AN ATTACHMENT

SMCS-1380, 1383 **i05469073**

NOTE	REF NO	GRAPHIC REF	PART NUMBER	QTY	PART NAME 1 2 3 4 5 6 (PRODUCT LEVEL)	SEE PAGE
	1	1	**067-6823**	1	PLUG	
	2	1	**9X-3959**	1	ELBOW	
	3	1	**7W-4669**	1	ADAPTER	

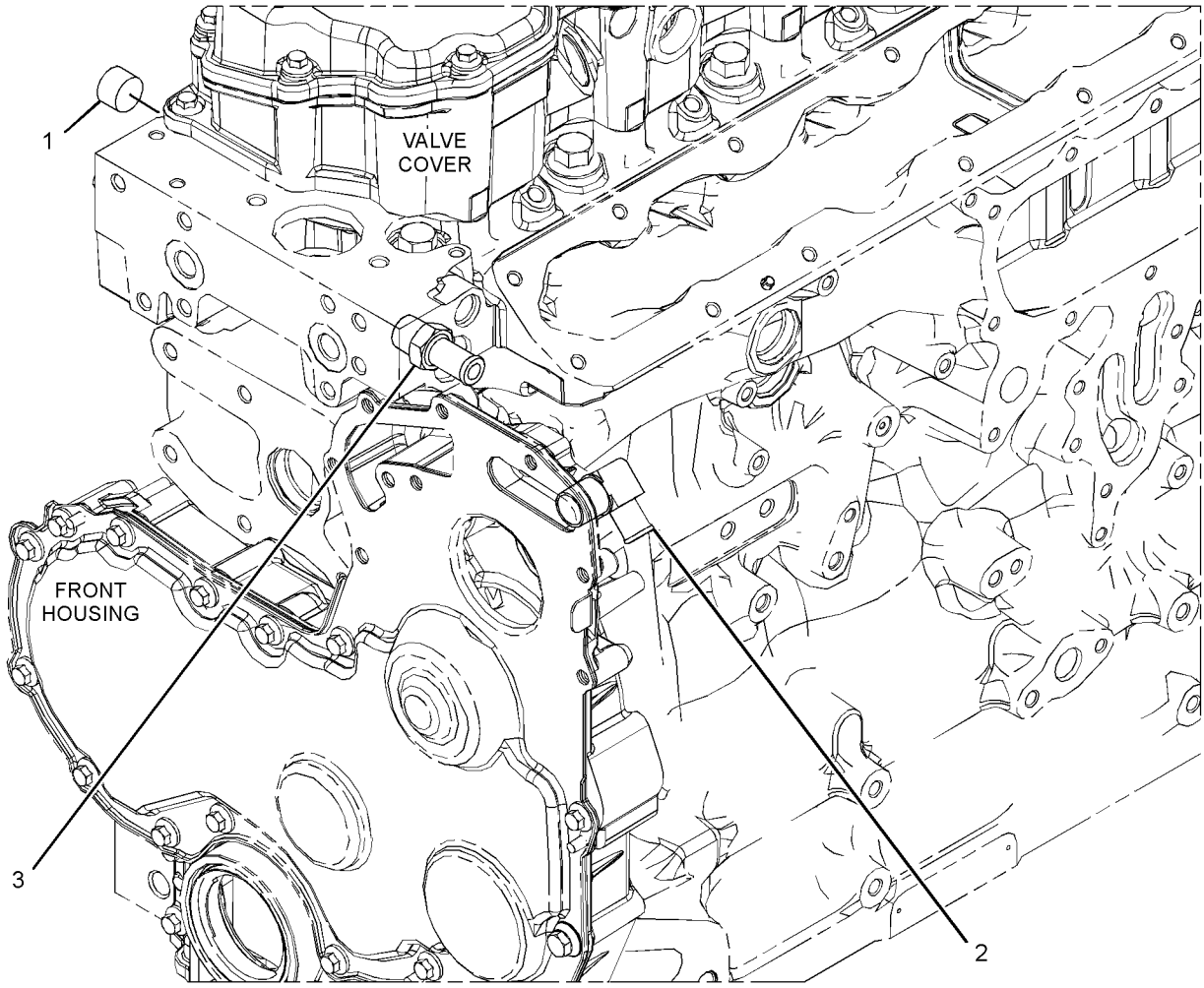

GRAPHIC #1 **<END>** g03105759

373-3607 CONNECTION GP-WATER

S/N: E7A1-UP
PART OF 393-4097, 446-7556 ENGINE AR-PRIMARY
ALSO AN ATTACHMENT

SMCS-1380 **i05469082**

NOTE	REF NO	GRAPHIC REF	PART NUMBER	QTY	PART NAME 1 2 3 4 5 6 (PRODUCT LEVEL)	SEE PAGE
	1	1	**123-2899**	2	BOLT (M10X1.5X40-MM)	
	2	1	**417-7782**	1	REGULATOR AS	
	3	1	**281-8744**	1	GASKET-WATER REGULATOR (TEMPERATURE)	

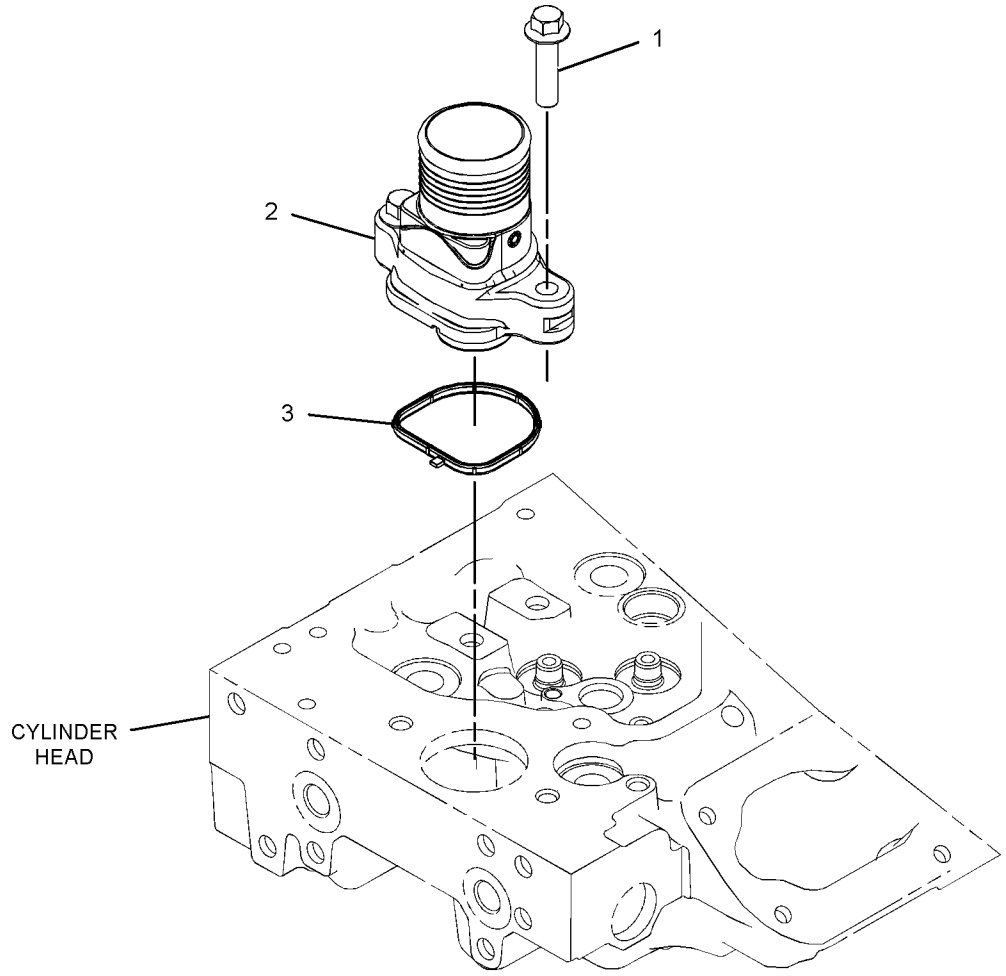

GRAPHIC #1 **<END>** g03341487

432-7394 CONVERSION GP-COOLING SYSTEM

S/N: M5K1-UP

AN ATTACHMENT

SMCS-1350 **i05817817**

NOTE	PART NUMBER	QTY	PART NAME 1 2 3 4 5 6 (PRODUCT LEVEL)	SEE PAGE
			(NO SERVICED PARTS)	

<END>

378-8276 COOLER GP-ENGINE OIL

S/N: E7A1-UP
PART OF 393-4097, 446-7556 ENGINE AR-PRIMARY
ALSO AN ATTACHMENT

SMCS-1378 **i05901371**

NOTE	REF NO	GRAPHIC REF	PART NUMBER	QTY	PART NAME 1 2 3 4 5 6 (PRODUCT LEVEL)	SEE PAGE
M	1	1	**6I-0217**	6	BOLT (M8X1.25X20-MM)	
M	2	1	**6I-0455**	4	BOLT (M8X1.25X55-MM)	
M	3	1	**6I-0839**	7	BOLT (M8X1.25X70-MM)	
	4	1	**225-7944**	2	GASKET (ENGINE OIL FILTER BASE)	
	5	1	**232-3751**	1	PLATE (BLANKING)	
	6	1	**277-2537**	1	PLATE	
	7	1	**326-7402**	1	COOLER GP-ENGINE OIL (ENGINE)	
M	7A	1	**6I-0260**	3	BOLT (M8X1.25X25-MM)	
	7B	1	**277-2500**	1	GASKET (HOUSING)	
	7C	1	**281-7040**	1	GASKET	
	7D	1	**287-7424**	1	COOLER AS-OIL (ENGINE)	
M	7E	1	**6I-0839**	4	BOLT (M8X1.25X70-MM)	
	8	1	**283-4559**	1	HEAD AS-OIL FILTER (ENGINE)	

M - METRIC PART

378-8276 **COOLER GP-ENGINE OIL (*contd.*)** **i05901371**

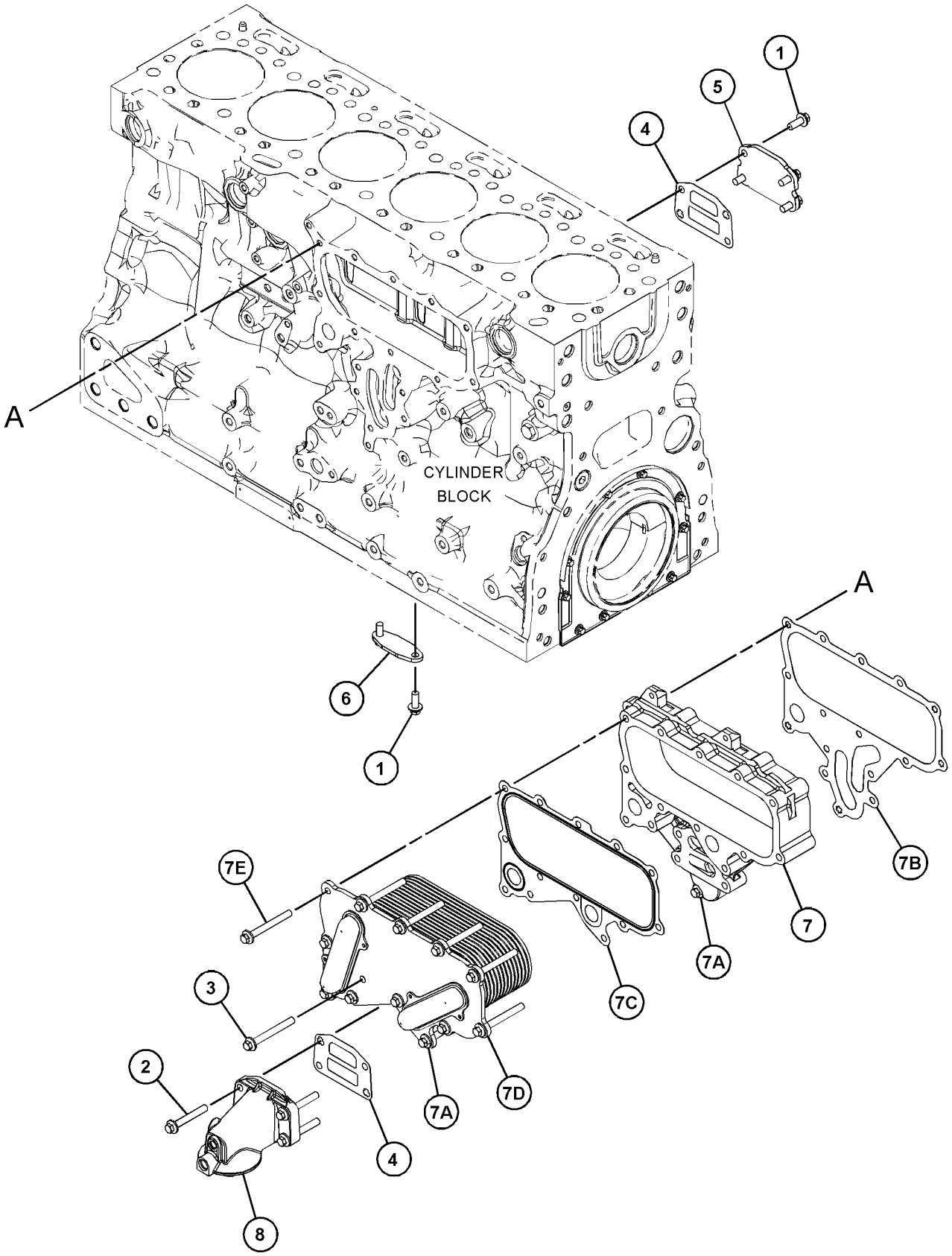

GRAPHIC #1 **<END>** g03724883

387-6080 LINES GP-COOLANT–RADIATOR

S/N: M5K1-UP
PART OF 387-6001 CHASSIS AR
TYPE 1

SMCS-1380 **i05665572**

NOTE	REF NO	GRAPHIC REF	PART NUMBER	QTY	PART NAME 1 2 3 4 5 6 (PRODUCT LEVEL)	SEE PAGE
	1	1	**387-6082**	1	HOSE-RADIATOR	
	2	1	**387-6081**	1	HOSE-RADIATOR	
	3	1	**387-6083**	1	HOSE	
	4	1	**387-6093**	1	HOSE-RADIATOR	
	5	1	**399-0942**	1	HOSE	
	6	1	**432-7368**	1	TUBE AS	
	7	1	**216-4983**	8	CLAMP	
	8	1	**2S-3440**	2	CLAMP-HOSE	
	9	1	**7D-7233**	2	CLIP (LOOP)	
	10	1	**8T-4121**	4	WASHER-HARD (11X21X2.5-MM THK)	
M	11	1	**8T-4133**	2	NUT (M10X1.5-THD)	
M	12	1	**8T-4136**	2	BOLT (M10X1.5X25-MM)	

M - METRIC PART

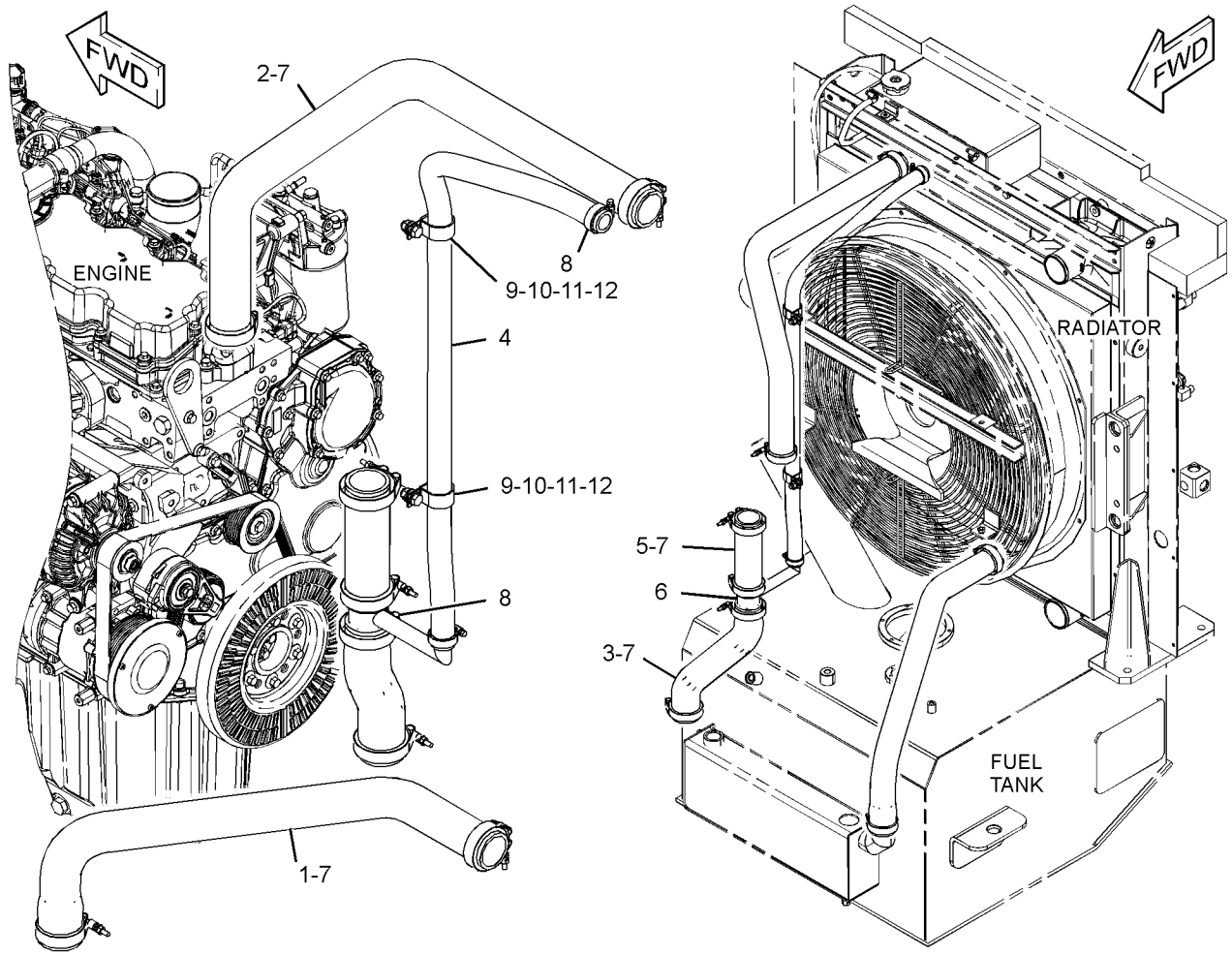

GRAPHIC #1 **<END>** g03698946

387-6080 LINES GP-COOLANT–RADIATOR

S/N: M5K1-UP
PART OF 387-6001 CHASSIS AR
TYPE 2

SMCS-1380 **i06063852**

NOTE	REF NO	GRAPHIC REF	PART NUMBER	QTY	PART NAME 1 2 3 4 5 6 (PRODUCT LEVEL)	SEE PAGE
	1	1	**387-6082**	1	HOSE-RADIATOR	
	2	1	**387-6081**	1	HOSE-RADIATOR	
	3	1	**387-6083**	1	HOSE	
C	4	1	**457-3282**	1	HOSE	
	5	1	**399-0942**	1	HOSE	
C	6	1	**457-5441**	1	TUBE AS	
C	7	1	**212-6933**	3	CLAMP	
	8	1	**2S-3440**	2	CLAMP-HOSE	
	9	1	**7D-7233**	2	CLIP (LOOP)	
	10	1	**8T-4121**	4	WASHER-HARD (11X21X2.5-MM THK)	
M	11	1	**8T-4133**	2	NUT (M10X1.5-THD)	
M	12	1	**8T-4136**	2	BOLT (M10X1.5X25-MM)	
C	13	1	**216-6944**	5	CLAMP	

C - CHANGE FROM PREVIOUS TYPE
M - METRIC PART

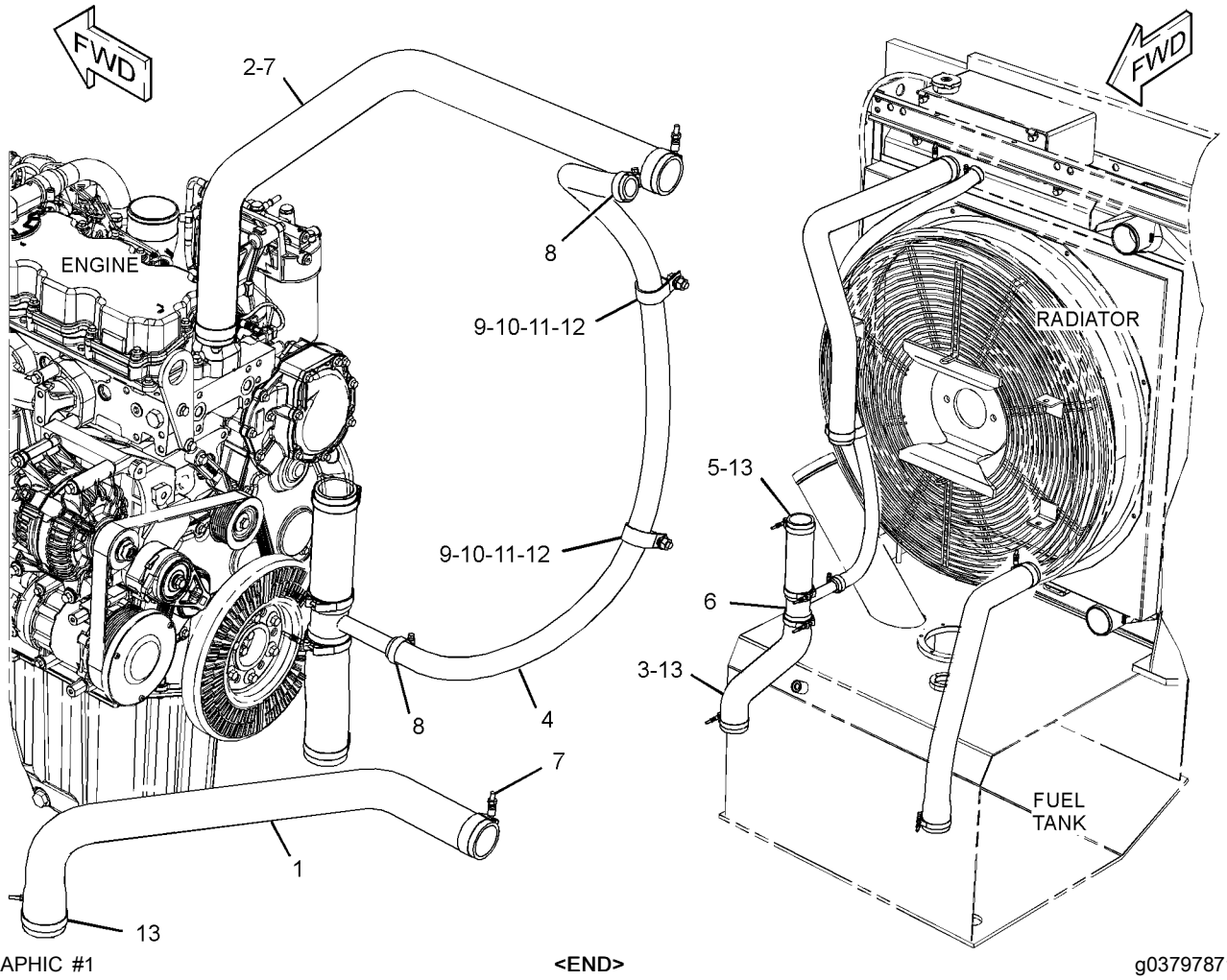

GRAPHIC #1 **<END>** g03797871

397-9803 LINES GP-OIL COOLER—COLD START

S/N: M5K1-UP

CANNOT BE USED WITH 397-9804 LINES GP-OIL COOLER

AN ATTACHMENT

SMCS-1374, 5057

i05675205

NOTE	REF NO	GRAPHIC REF	PART NUMBER	QTY	PART NAME 1 2 3 4 5 6 (PRODUCT LEVEL)	SEE PAGE
	1	1	*388-9447*	1	VALVE & MTG GP (HYDRAULIC)	
		1	**377-0034**	1	VALVE GP-SOLENOID (FAN BYPASS)	
		1	**254-0072**	1	COIL AS (24-VOLT)	
		1	**388-9448**	1	MANIFOLD	
I	2	1	**397-9836**	1	HOSE AS	
I	3	1	**397-9838**	1	HOSE AS	
I	4	1	**397-9840**	1	HOSE AS	
	5	1	**397-9842**	1	BRACKET	
	6	1	*148-8322*	2	CONNECTOR AS	
					(EACH INCLUDES)	
		1	**2M-9780**	1	SEAL-O-RING	
		1	**6V-8640**	1	CONNECTOR	
		1	**6V-9746**	1	SEAL-O-RING	
	7	1	*148-8327*	1	CONNECTOR AS	
		1	**3D-2824**	1	SEAL-O-RING	
		1	**6V-8637**	1	CONNECTOR	
		1	**6V-9746**	1	SEAL-O-RING	
	8	1	*148-8392*	1	ELBOW AS	
		1	**6V-9746**	1	SEAL-O-RING	
		1	**6V-9853**	1	ELBOW	
	9	1	*148-8449*	1	TEE AS-SWIVEL	
		1	**6V-9746**	2	SEAL-O-RING	
		1	**6V-9839**	1	TEE-SWIVEL	
	10	1	*150-4033*	1	TEE AS	
		1	**6V-9746**	2	SEAL-O-RING	
		1	**6V-9846**	1	TEE-SWIVEL	
	11	1	**6V-1889**	2	CLIP	
	12	1	**8T-4121**	2	WASHER-HARD (11X21X2.5-MM THK)	
M	13	1	**8T-4137**	2	BOLT (M10X1.5X20-MM)	
	14	1	**8T-4224**	2	WASHER-HARD (8.8X16X2-MM THK)	
M	15	1	**8T-6870**	2	BOLT (M8X1.25X70-MM)	

I - REFER TO HYDRAULIC INFORMATION SYSTEM
M - METRIC PART

397-9803 **LINES GP-OIL COOLER (*contd.*)** **i05675205**

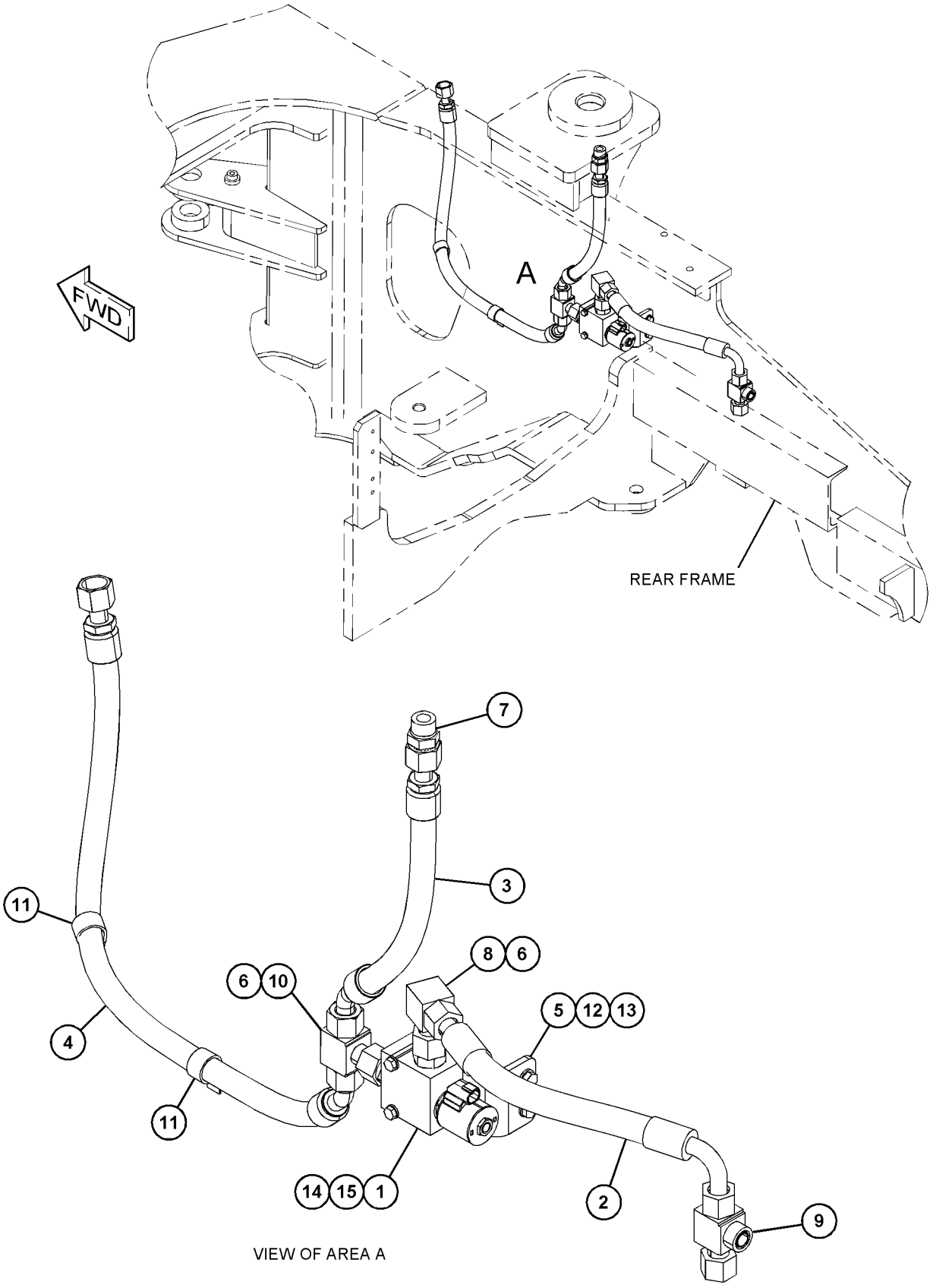

VIEW OF AREA A

GRAPHIC #1 **<END>** g03699144

397-9804 LINES GP-OIL COOLER

S/N: M5K1-UP
WITHOUT COLD WEATHER STARTING
CANNOT BE USED WITH 397-9803 LINES GP-OIL COOLER
AN ATTACHMENT

SMCS-1374, 5057

i05675310

NOTE	REF NO	GRAPHIC REF	PART NUMBER	QTY	PART NAME 1 2 3 4 5 6 (PRODUCT LEVEL)	SEE PAGE
I	1	1	**397-9843**	1	HOSE AS	
	2	1	*148-8327*	1	CONNECTOR AS	
		1	**3D-2824**	1	SEAL-O-RING	
		1	**6V-8637**	1	CONNECTOR	
		1	**6V-9746**	1	SEAL-O-RING	
	3	1	*148-8392*	1	ELBOW AS	
		1	**6V-9746**	1	SEAL-O-RING	
		1	**6V-9853**	1	ELBOW	
	4	1	**6V-1889**	2	CLIP (LOOP)	

I - REFER TO HYDRAULIC INFORMATION SYSTEM

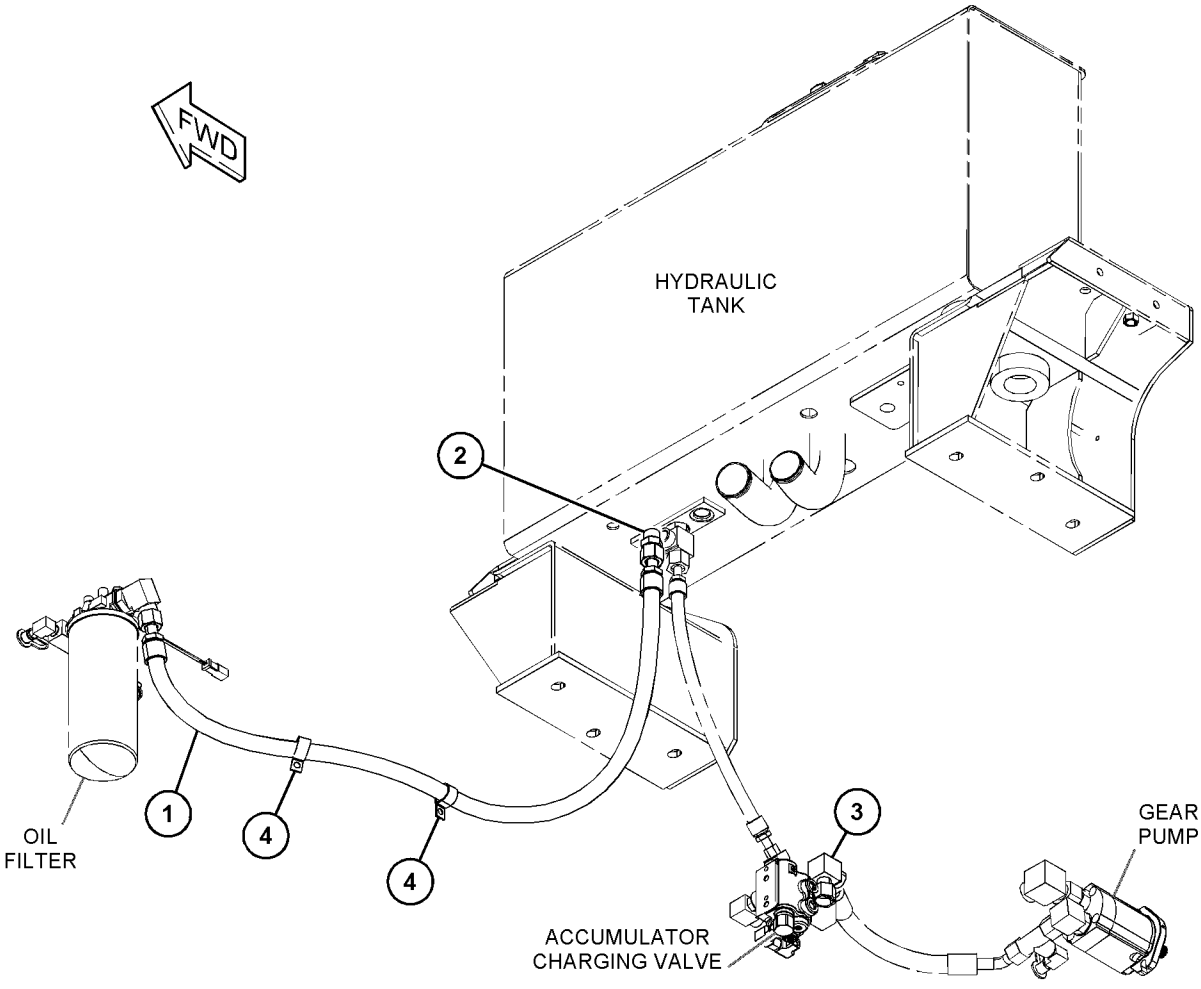

GRAPHIC #1

<END>

g03697917

387-6050 MODULE GP-COOLING

S/N: M5K1-143

PART OF 387-6095 RADIATOR & HYD OIL COOLER GP

SMCS-1064, 1350, 1374, 1375, 1378, 137T, 1712, 1811, 4346 **i05830087**

NOTE	REF NO	GRAPHIC REF	PART NUMBER	QTY	PART NAME 1 2 3 4 5 6 (PRODUCT LEVEL)	SEE PAGE
	1	1	**7K-1181**	2	STRAP-CABLE	
	2	1	**332-4175**	1	CAP AS-RADIATOR	
	3	1	**387-6051**	1	CORE AS-RADIATOR	
	4	1	**387-6052**	1	CORE AS-AFTERCOOLER	
	5	1	**387-6053**	1	CORE AS-OIL COOLER (HYDRAULIC)	
	6	1	**387-6054**	1	BRACKET AS	
	7	1	**387-6055**	1	BRACKET AS	
	8	1	**387-6057**	4	MOUNT AS	
	9	1	**387-6061**	2	STRIP	
	10	1	**387-6062**	1	GUARD AS-FAN	
	11	1	**387-6063**	1	SHROUD	
	12	1	**387-6064**	2	PLATE	
	13	1	**387-6065**	4	NUT-FLANGE	
	14	1	**387-6066**	2	BRACKET AS	
	15	1	**387-6067**	2	SEAL-AIR	
	16	1	**387-6068**	2	SEAL-AIR	
	17	1	**387-6069**	2	SEAL-AIR	
	18	1	**387-6070**	2	SEAL-AIR	
	19	1	**387-6071**	1	SEAL-AIR	
	20	1	**387-6072**	1	SEAL-AIR	
	21	1	**387-6073**	6	SEAL-AIR	
	22	1	**387-6074**	1	CORE AS-CONDENSER	
	23	1	**387-6075**	1	SUPPORT AS	
	24	1	**387-6076**	1	SUPPORT AS	
	25	1	**387-6077**	1	BRACKET AS	
	26	1	**387-6078**	1	SUPPORT AS	
	27	1	**387-6079**	2	BAFFLE	
	28	1	**387-6099**	1	SEAL-AIR	
	29	1	**399-0941**	1	TANK AS-EXPANSION	
	30	1	**399-0947**	1	SEAL-AIR	
	31	1	**399-0949**	2	SEAL-AIR	
	32	1	**450-3465**	1	SHROUD AS	
	33	1	**450-3467**	1	CLIP	
	34	1	**450-3471**	2	PLATE	
	35	1	**450-3478**	4	WASHER-PLATED	
	36	1	**450-3479**	4	SLEEVE	
	37	1	**5P-4116**	26	WASHER-HARD (8.8X20.5X2-MM THK)	
	38	1	**5P-4961**	4	CLAMP-HOSE	
	39	1	**7X-0578**	4	WASHER-HARD (10.2X32X2.5-MM THK)	
M	40	1	**7X-2537**	4	BOLT (M8X1.25X35-MM)	
	41	1	**7X-7729**	32	WASHER (11X25X3-MM THK)	
M	42	1	**8T-4136**	22	BOLT (M10X1.5X25-MM)	
M	43	1	**8T-4137**	8	BOLT (M10X1.5X20-MM)	
M	44	1	**8T-4138**	10	BOLT (M6X1X20-MM)	
M	45	1	**8T-4182**	2	BOLT (M10X1.5X45-MM)	
M	46	1	**8T-4185**	4	BOLT (M10X1.5X50-MM)	
M	47	1	**8T-4189**	20	BOLT (M8X1.25X20-MM)	
M	48	1	**8T-4192**	4	BOLT (M12X1.75X25-MM)	
M	49	1	**8T-4196**	2	BOLT (M10X1.5X35-MM)	
	50	1	**8T-4205**	10	WASHER-HARD (7.2X14.5X2-MM THK)	
	51	1	**8T-4223**	8	WASHER-HARD (13.5X25.5X3-MM THK)	
M	52	1	**8T-4908**	6	BOLT (M8X1.25X25-MM)	
M	53	1	**8T-4956**	4	BOLT (M12X1.75X35-MM)	
G	54	1	**423-1981**		HOSE (12-IN EACH)	
E	55	1	**450-3473**		HOSE (200-CM)	

E - ORDER BY THE CENTIMETER
G - ORDER BY THE INCH
M - METRIC PART

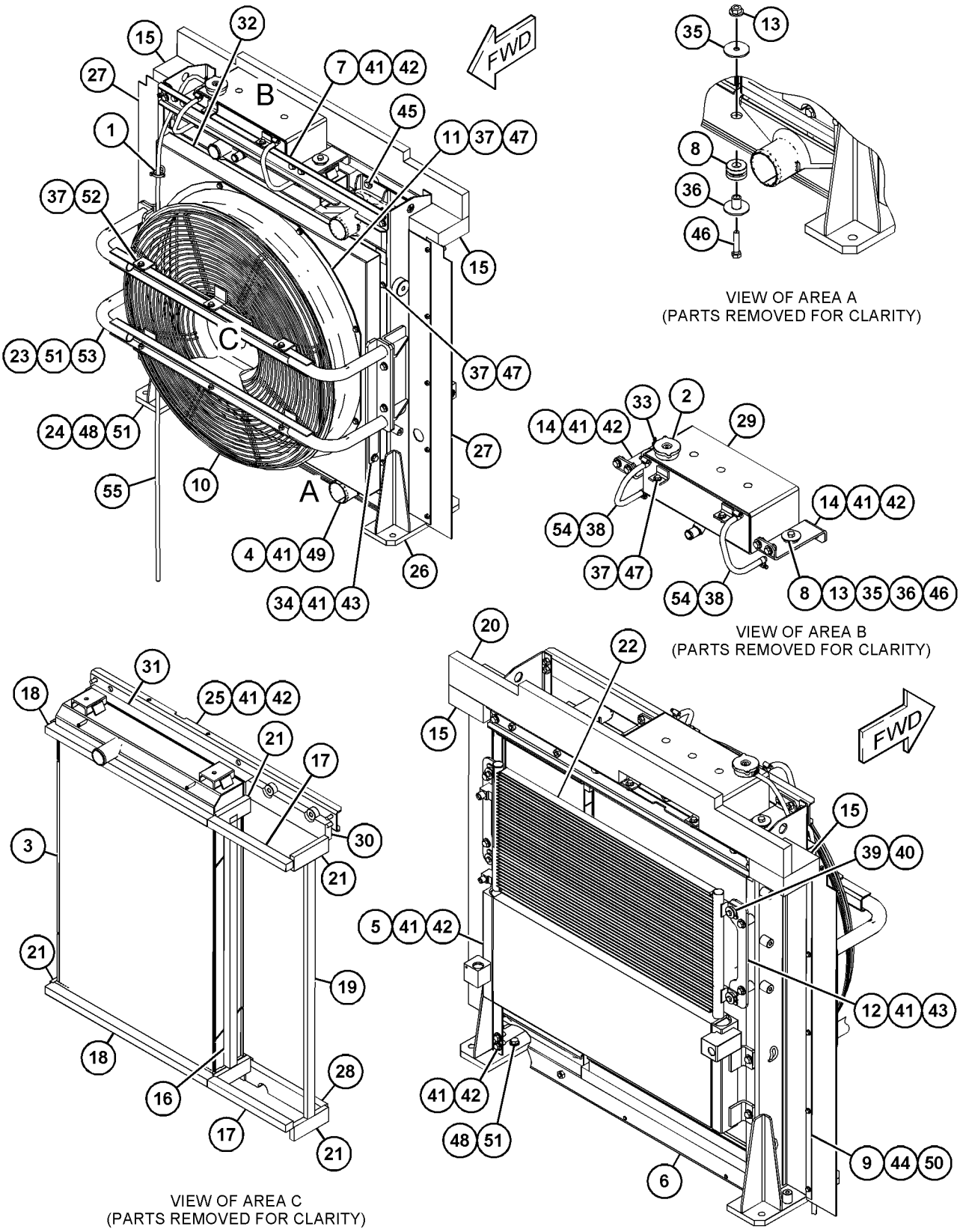

GRAPHIC #1 **<END>** g03693033

450-3481 MODULE GP-COOLING

S/N: M5K144-UP

PART OF 387-6095 RADIATOR & HYD OIL COOLER GP

SMCS-1064, 1350, 1374, 1375, 1378, 137T, 1712, 1811, 4346 **i06063932**

NOTE	REF NO	GRAPHIC REF	PART NUMBER	QTY	PART NAME 1 2 3 4 5 6 (PRODUCT LEVEL)	SEE PAGE
	1	1	**7K-1181**	2	STRAP-CABLE	
M	2	1	**8T-4136**	18	BOLT (M10X1.5X25-MM)	
	3	1	**278-4834**	4	LOCKPIN	
	4	1	**332-4175**	1	CAP AS-RADIATOR	
	5	1	**387-6051**	1	CORE AS-RADIATOR	
	6	1	**387-6052**	1	CORE AS-AFTERCOOLER	
	7	1	**387-6053**	1	CORE AS-OIL COOLER (HYDRAULIC)	
	8	1	**387-6055**	1	BRACKET AS	
	9	1	**387-6057**	4	MOUNT AS	
	10	1	**387-6061**	2	STRIP	
	11	1	**387-6062**	1	GUARD AS-FAN	
	12	1	**387-6063**	1	SHROUD	
	13	1	**387-6064**	2	PLATE	
	14	1	**387-6065**	4	NUT-FLANGE	
	15	1	**387-6066**	2	BRACKET AS	
	16	1	**387-6068**	2	SEAL-AIR	
	17	1	**387-6069**	2	SEAL-AIR	
	18	1	**387-6070**	2	SEAL-AIR	
	19	1	**387-6071**	1	SEAL-AIR	
	20	1	**387-6072**	1	SEAL-AIR	
	21	1	**387-6073**	6	SEAL-AIR	
	22	1	**387-6074**	1	CORE AS-CONDENSER	
	23	1	**387-6077**	1	BRACKET AS	
	24	1	**387-6079**	2	BAFFLE	
	25	1	**399-0947**	1	SEAL-AIR	
	26	1	**399-0949**	1	SEAL-AIR	
	27	1	**450-3463**	1	TANK AS-EXPANSION	
	28	1	**450-3464**	1	SUPPORT AS	
	29	1	**450-3465**	1	SHROUD AS	
	30	1	**450-3466**	1	SEAL-AIR	
	31	1	**450-3467**	1	CLIP	
	32	1	**450-3468**	1	SEAL-AIR	
	33	1	**450-3469**	1	BRACKET AS	
	34	1	**450-3471**	2	PLATE	
	35	1	**450-3475**	1	SEAL-AIR	
	36	1	**450-3476**	1	SEAL-AIR	
	37	1	**450-3478**	4	WASHER-PLATED (11X50X3-MM THK)	
	38	1	**450-3479**	4	SLEEVE	
	39	1	**461-2749**	1	SUPPORT AS	
	40	1	**461-2750**	1	SUPPORT AS	
	41	1	**461-2751**	1	PLATE AS	
	42	1	**461-2752**	1	PLATE AS	
	43	1	**220-3976**	4	BOLT (M10X1.5X55-MM)	
	44	1	**5P-4116**	30	WASHER-HARD (8.8X20.5X2-MM THK)	
	45	1	**5P-4961**	4	CLAMP-HOSE	
	46	1	**7X-0578**	4	WASHER-HARD (10.2X32X2.5-MM THK)	
M	47	1	**7X-2537**	4	BOLT (M8X1.25X35-MM)	
	48	1	**7X-7729**	28	WASHER (11X25X3-MM THK)	
M	49	1	**8T-4137**	4	BOLT (M10X1.5X20-MM)	
M	50	1	**8T-4138**	10	BOLT (M6X1X20-MM)	
M	51	1	**8T-4182**	2	BOLT (M10X1.5X45-MM)	
M	52	1	**8T-4185**	4	BOLT (M10X1.5X50-MM)	
M	53	1	**8T-4189**	20	BOLT (M8X1.25X20-MM)	
M	54	1	**8T-4192**	4	BOLT (M12X1.75X25-MM)	
M	55	1	**8T-4196**	2	BOLT (M10X1.5X35-MM)	
M	56	1	**8T-4200**	10	BOLT (M8X1.25X16-MM)	
	57	1	**8T-4205**	10	WASHER-HARD (7.2X14.5X2-MM THK)	
	58	1	**8T-4223**	8	WASHER-HARD (13.5X25.5X3-MM THK)	

450-3481 **MODULE GP-COOLING (*contd.*)** **i06063932**

NOTE	REF NO	GRAPHIC REF	PART NUMBER	QTY	PART NAME 1 2 3 4 5 6 (PRODUCT LEVEL)	SEE PAGE
	59	1	**8T-4224**	10	WASHER-HARD (8.8X16X2-MM THK)	
M	60	1	**8T-4908**	10	BOLT (M8X1.25X25-MM)	
M	61	1	**8T-4956**	4	BOLT (M12X1.75X35-MM)	
G	62	1	**423-1981**		HOSE (12.1-IN)	
E	63	1	**450-3473**		HOSE (200-CM)	

E - ORDER BY THE CENTIMETER
G - ORDER BY THE INCH
M - METRIC PART

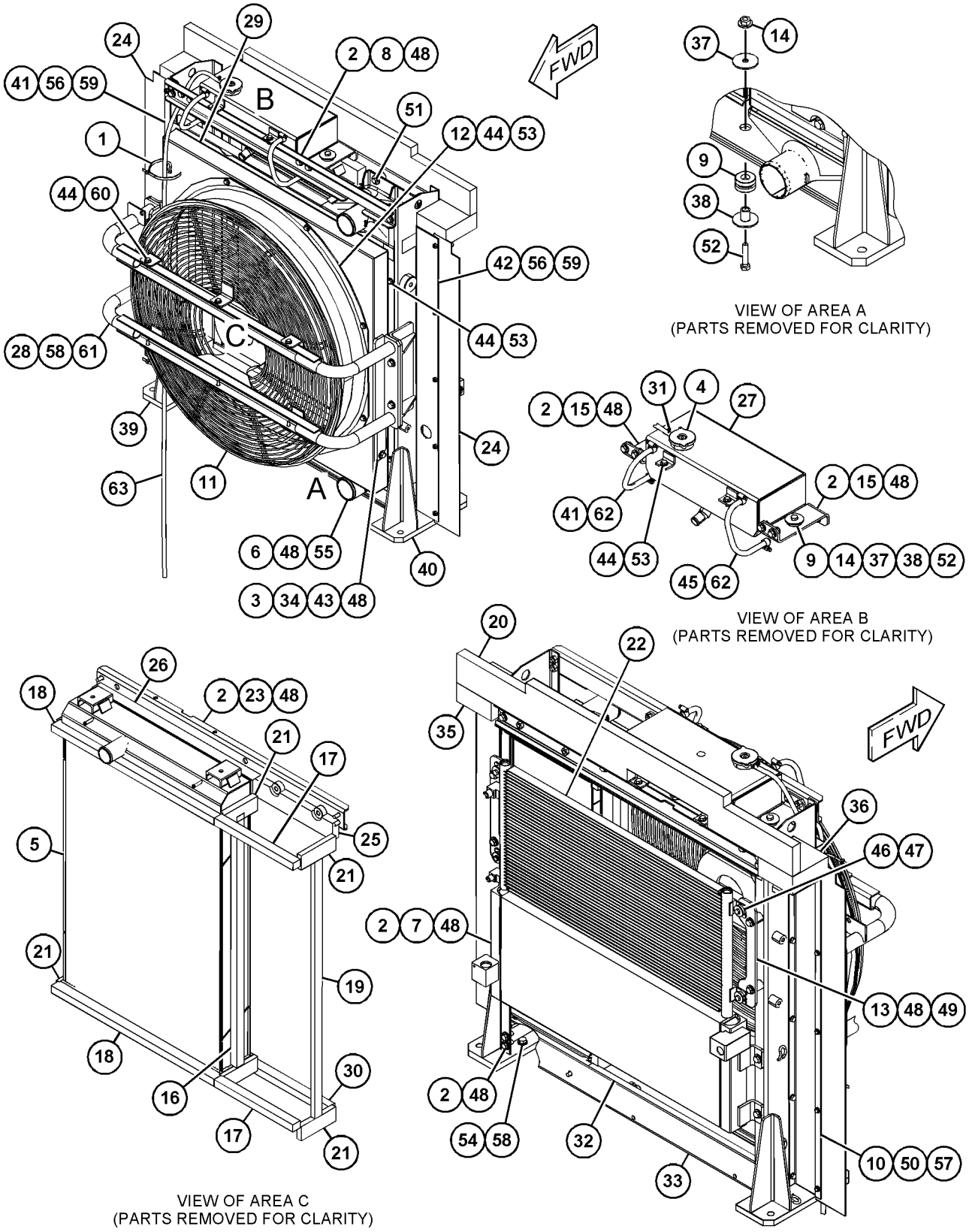

GRAPHIC #1 **<END>** g03798016

372-2297 PUMP GP-WATER

S/N: E7A1-UP
PART OF 393-4097, 446-7556 ENGINE AR-PRIMARY
ALSO AN ATTACHMENT

SMCS-1361 **i05472907**

NOTE	REF NO	GRAPHIC REF	PART NUMBER	QTY	PART NAME 1 2 3 4 5 6 (PRODUCT LEVEL)	SEE PAGE
M	1	1	**6I-0217**	2	BOLT (M8X1.25X20-MM)	
	2	1	**355-8710**	1	PUMP GP-WATER	
	3	1	**113-8129**	2	BOLT (M8X1.25X75-MM)	
	4	1	**225-8019**	1	GASKET	
	5	1	**277-2925**	1	CONNECTION AS	
	5A	1	**225-7738**	1	SEAL-O-RING	
	5B	1	**277-2923**	1	GASKET	
M	6	1	**6I-0254**	2	BOLT (M8X1.25X30-MM)	
	7	1	**6I-0839**	5	BOLT (M8X1.25X70-MM)	

M - METRIC PART

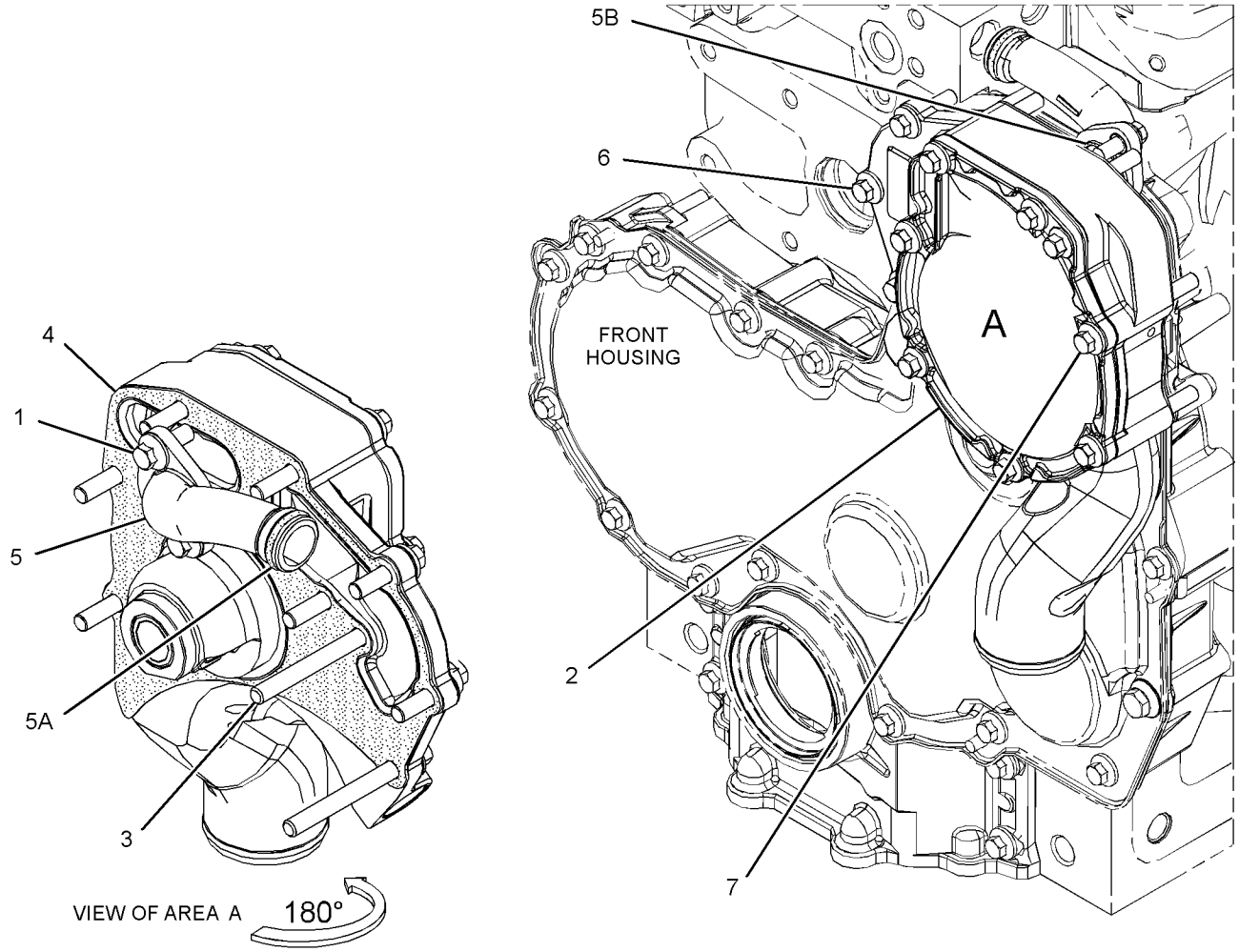

GRAPHIC #1 **<END>** g03387516

387-6095 RADIATOR & HYD OIL COOLER GP

S/N: M5K1-143

PART OF 387-6001 CHASSIS AR

SMCS-1353, 1374 **i05834452**

NOTE	REF NO	GRAPHIC REF	PART NUMBER	QTY	PART NAME 1 2 3 4 5 6 (PRODUCT LEVEL)	SEE PAGE
	1	1	**246-0616**	1	SPIDER AS-FAN (8-BLADE)	
Y	2	1	**387-6050**	1	MODULE GP-COOLING	54
	3	1	**387-6059**	1	BAFFLE	
	4	1	**387-6060**	1	STRIP	
	5	1	**387-6094**	1	ADAPTER	
	6	1	**387-6096**	2	TUBE	
	7	1	**399-0946**	1	GROMMET	
	8	1	**5P-1076**	2	WASHER-HARD (13.5X30X4-MM THK)	
	9	1	**7X-0583**	5	WASHER-HARD (17X45X6-MM THK)	
M	10	1	**7X-2553**	4	BOLT (M16X2X40-MM)	
M	11	1	**8T-3980**	1	NUT (M16X1.5-THD)	
	12	1	**8T-4121**	6	WASHER-HARD (11X21X2.5-MM THK)	
M	13	1	**8T-4136**	6	BOLT (M10X1.5X25-MM)	
M	14	1	**8T-4183**	2	BOLT (M12X1.75X40-MM)	
	15	1	**199-2235**	3	BOLT (M8X1.25X22-MM)	
M	16	1	**8T-4192**	4	BOLT (M12X1.75X25-MM)	
	17	1	**8T-4223**	4	WASHER-HARD (13.5X25.5X3-MM THK)	
	18	1	**8T-4224**	3	WASHER-HARD (8.8X16X2-MM THK)	

M - METRIC PART
Y - SEPARATE ILLUSTRATION

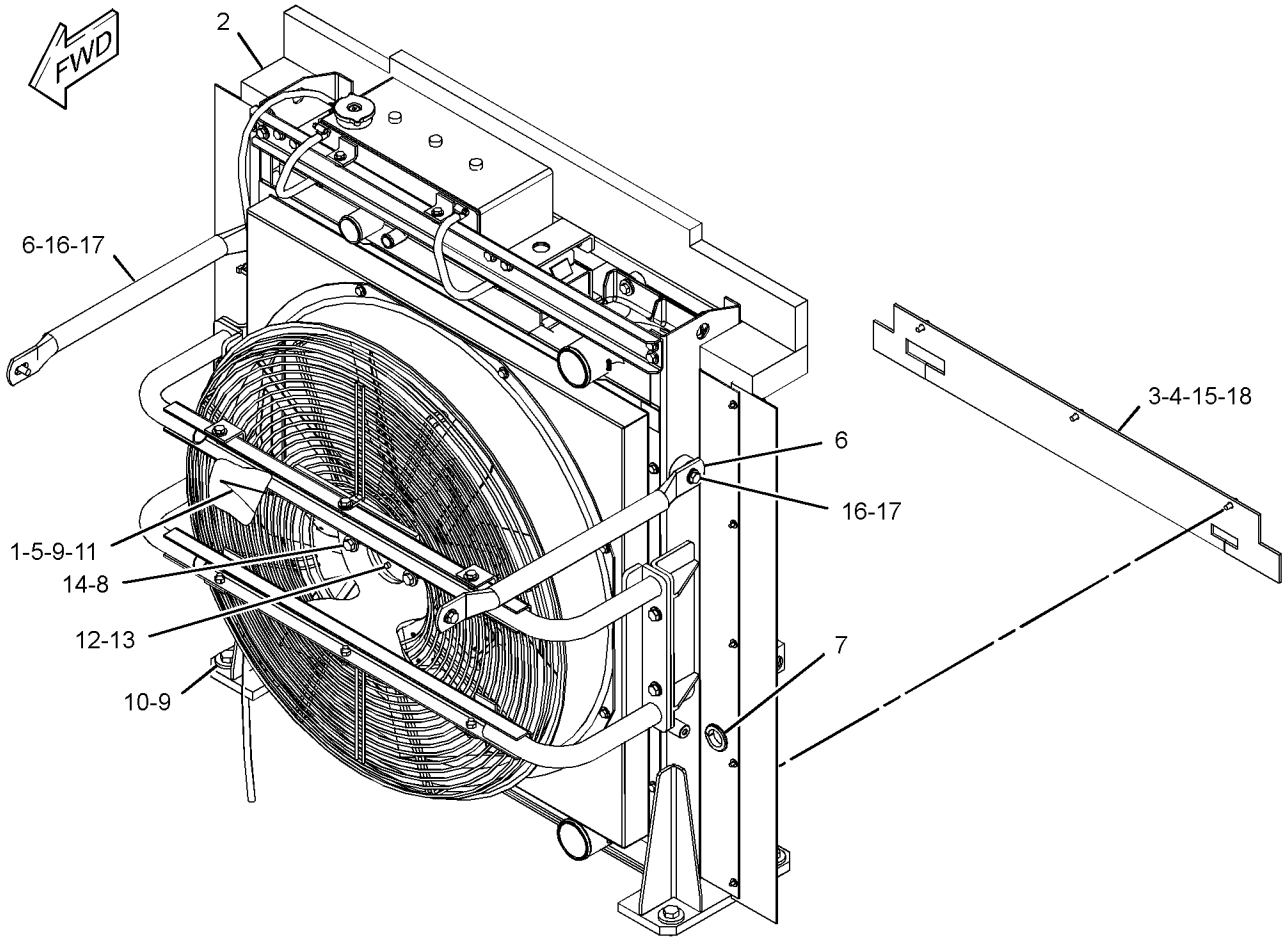

GRAPHIC #1 **<END>** g03430065

387-6095 RADIATOR & HYD OIL COOLER GP

S/N: M5K144-351

PART OF 387-6001 CHASSIS AR

SMCS-1353, 1374 **i06063881**

NOTE	REF NO	GRAPHIC REF	PART NUMBER	QTY	PART NAME 1 2 3 4 5 6 (PRODUCT LEVEL)	SEE PAGE
	1	1	**246-0616**	1	SPIDER AS-FAN (8-BLADE)	
CY	2	1	*450-3481*	1	MODULE GP-COOLING	56
	3	1	**387-6059**	1	BAFFLE	
	4	1	**387-6060**	1	STRIP	
	5	1	**387-6094**	1	ADAPTER	
	6	1	**387-6096**	2	TUBE	
	7	1	**399-0946**	1	GROMMET	
	8	1	**5P-1076**	2	WASHER-HARD (13.5X30X4-MM THK)	
	9	1	**7X-0583**	5	WASHER-HARD (17X45X6-MM THK)	
M	10	1	**7X-2553**	4	BOLT (M16X2X40-MM)	
M	11	1	**8T-3980**	1	NUT (M16X1.5-THD)	
	12	1	**8T-4121**	6	WASHER-HARD (11X21X2.5-MM THK)	
M	13	1	**8T-4136**	6	BOLT (M10X1.5X25-MM)	
M	14	1	**8T-4183**	2	BOLT (M12X1.75X40-MM)	
	15	1	**199-2235**	3	BOLT (M8X1.25X22-MM)	
M	16	1	**8T-4192**	4	BOLT (M12X1.75X25-MM)	
	17	1	**8T-4223**	4	WASHER-HARD (13.5X25.5X3-MM THK)	
	18	1	**8T-4224**	3	WASHER-HARD (8.8X16X2-MM THK)	

C - CHANGE FROM PREVIOUS TYPE
M - METRIC PART
Y - SEPARATE ILLUSTRATION

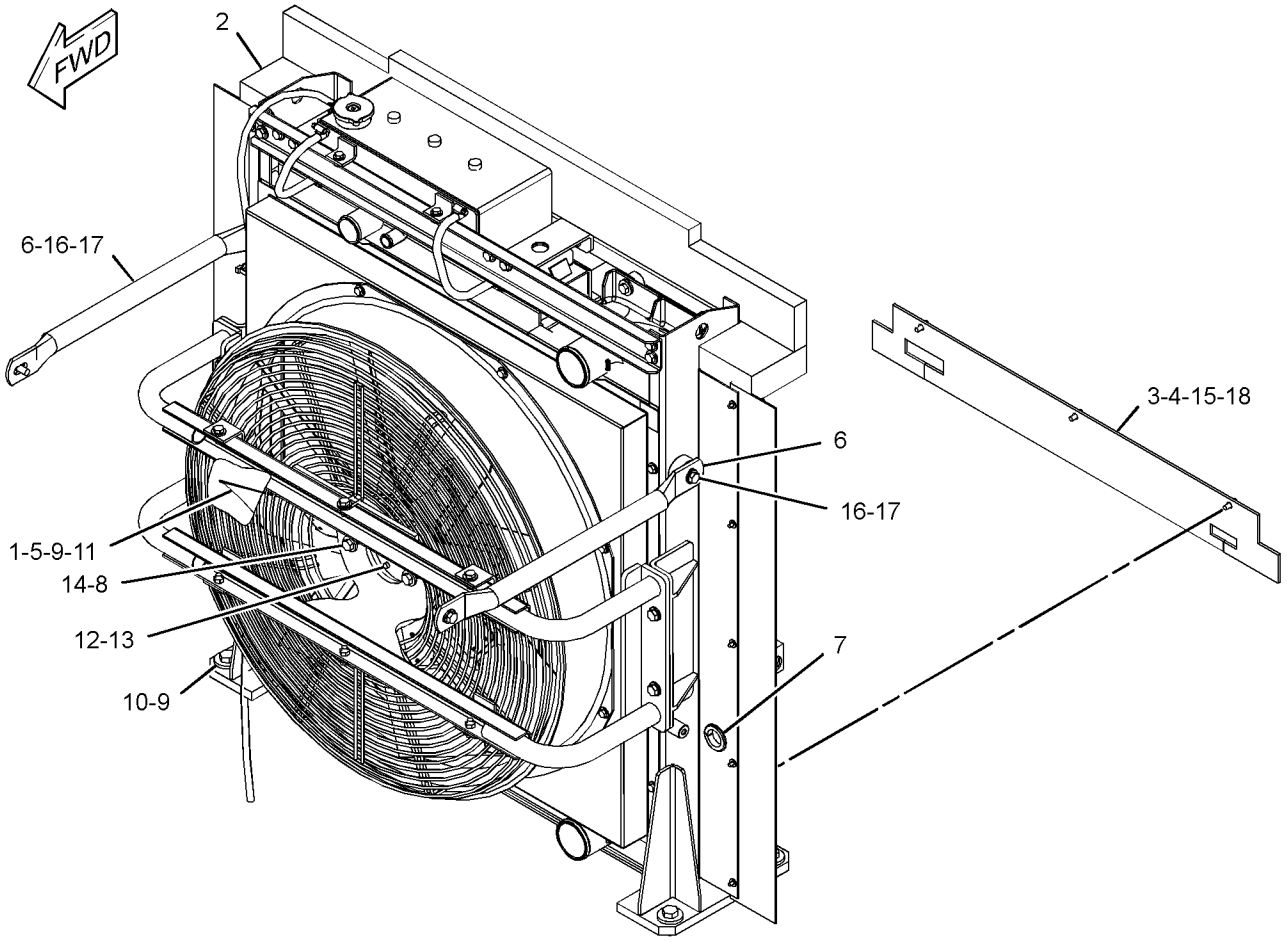

GRAPHIC #1 **<END>** g03430065

387-6095 RADIATOR & HYD OIL COOLER GP

S/N: M5K352-UP

PART OF 387-6001 CHASSIS AR

SMCS-1353, 1374 **i06063935**

NOTE	REF NO	GRAPHIC REF	PART NUMBER	QTY	PART NAME 1 2 3 4 5 6 (PRODUCT LEVEL)	SEE PAGE
	1	1	**246-0616**	1	SPIDER AS-FAN (8-BLADE)	
Y	2	1	*450-3481*	1	MODULE GP-COOLING	56
	3	1	**387-6059**	1	BAFFLE	
	4	1	**387-6060**	1	STRIP	
	5	1	**387-6094**	1	ADAPTER	
	6	1	**387-6096**	2	TUBE	
	7	1	**399-0946**	1	GROMMET	
	8	1	**5P-1076**	2	WASHER-HARD (13.5X30X4-MM THK)	
C	9	1	**7X-0583**	1	WASHER-HARD (17X45X6-MM THK)	
CM	10	1	**8T-4140**	4	BOLT (M16X2X60-MM)	
M	11	1	**8T-3980**	1	NUT (M16X1.5-THD)	
	12	1	**8T-4121**	6	WASHER-HARD (11X21X2.5-MM THK)	
M	13	1	**8T-4136**	6	BOLT (M10X1.5X25-MM)	
M	14	1	**8T-4183**	2	BOLT (M12X1.75X40-MM)	
	15	1	**199-2235**	3	BOLT (M8X1.25X22-MM)	
M	16	1	**8T-4192**	4	BOLT (M12X1.75X25-MM)	
	17	1	**8T-4223**	4	WASHER-HARD (13.5X25.5X3-MM THK)	
	18	1	**8T-4224**	3	WASHER-HARD (8.8X16X2-MM THK)	
C	19	1	**415-7713**	4	BUSHING	

C - CHANGE FROM PREVIOUS TYPE
M - METRIC PART
Y - SEPARATE ILLUSTRATION

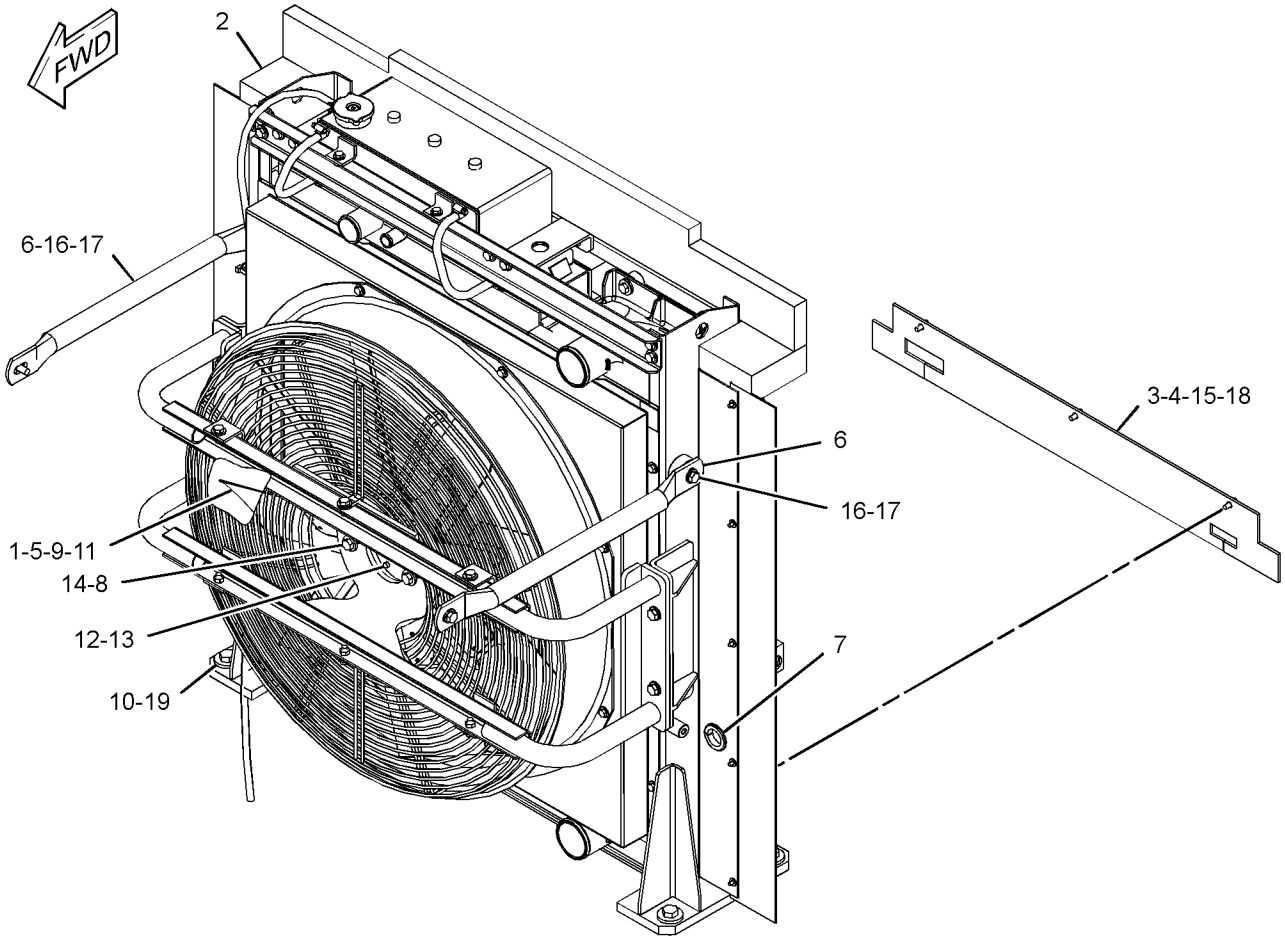

GRAPHIC #1 **<END>** g03797552

AIR INLET AND EXHAUST SYSTEM

244-0357 AIR CLEANER GP

S/N: M5K1-UP

PART OF 392-2253 AIR CLEANER GP

SMCS-1051, 1054 **i05592010**

NOTE	REF NO	GRAPHIC REF	PART NUMBER	QTY	PART NAME 1 2 3 4 5 6 (PRODUCT LEVEL)	SEE PAGE
	1	1	**245-6375**	1	FILTER ELEMENT-AIR (PRIMARY)	
	2	1	**245-6376**	1	FILTER ELEMENT AS-AIR (SECONDARY)	
	3	1	**246-4612**	1	VALVE-AIR CLEANER DUST	
	4	1	**246-4614**	1	COVER AS	
	5	1	**246-4615**	2	BRACKET AS	

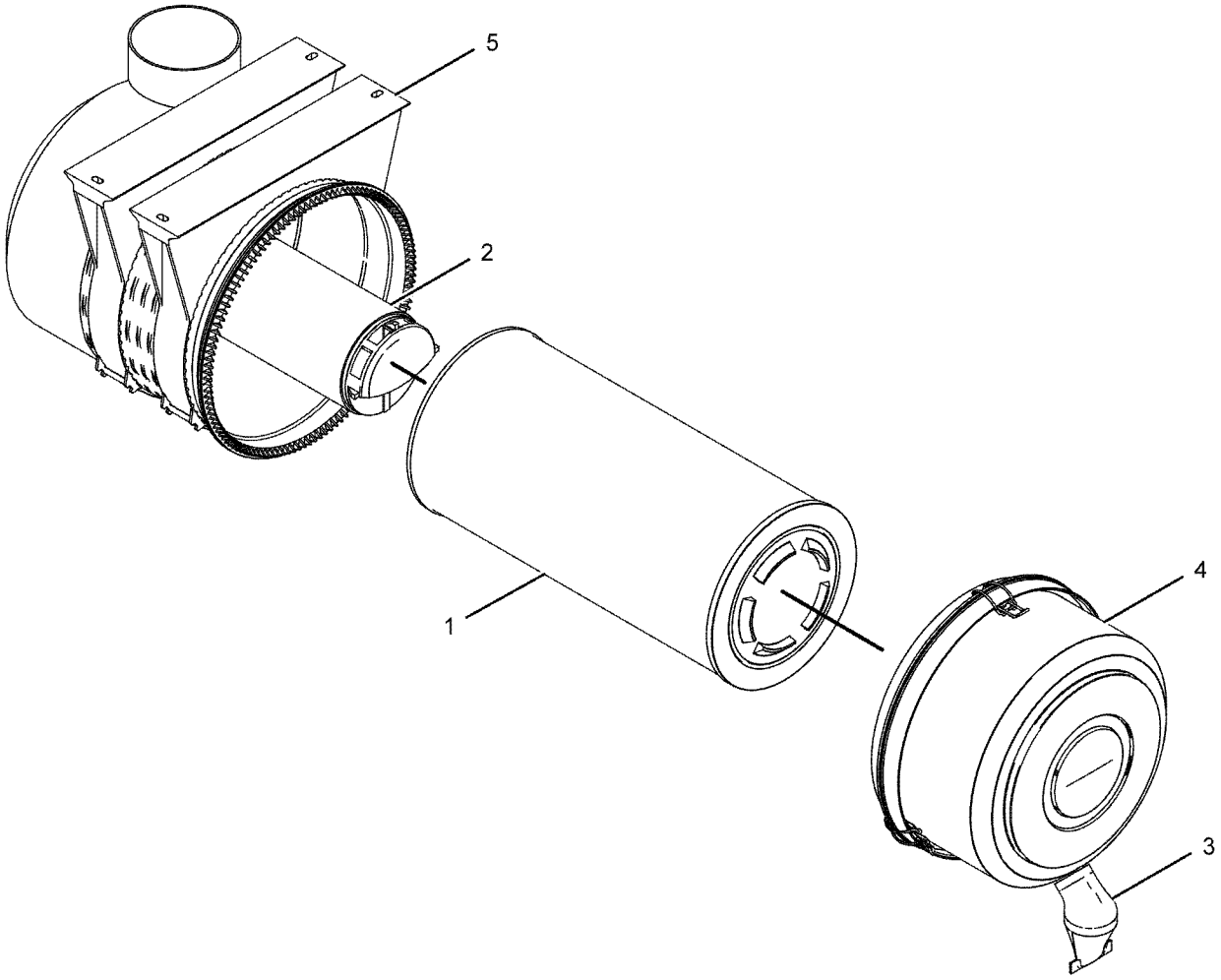

GRAPHIC #1 **<END>** g01102727

392-2253 AIR CLEANER GP

S/N: M5K1-UP

PART OF 392-2252 INSTALLATION GP-ENGINE

SMCS-1051, 1054 **i05591954**

NOTE	REF NO	GRAPHIC REF	PART NUMBER	QTY	PART NAME 1 2 3 4 5 6 (PRODUCT LEVEL)	SEE PAGE
Y	1	1	**244-0357**	1	AIR CLEANER GP	64
	2	1	**392-2266**	1	HOSE-AIR INLET	
	3	1	**392-2267**	1	TUBE-AIR	
	4	1	**392-2268**	1	HOSE-AIR INLET	
	5	1	**174-5414**	1	CLAMP	
	6	1	**246-8026**	3	CLAMP	
M	7	1	**5P-7970**	4	NUT (M8X1.25-THD)	
M	8	1	**6V-5219**	4	BOLT (M8X1.25X40-MM)	
	9	1	**8T-4224**	8	WASHER-HARD (8.8X16X2-MM THK)	

M - METRIC PART
Y - SEPARATE ILLUSTRATION

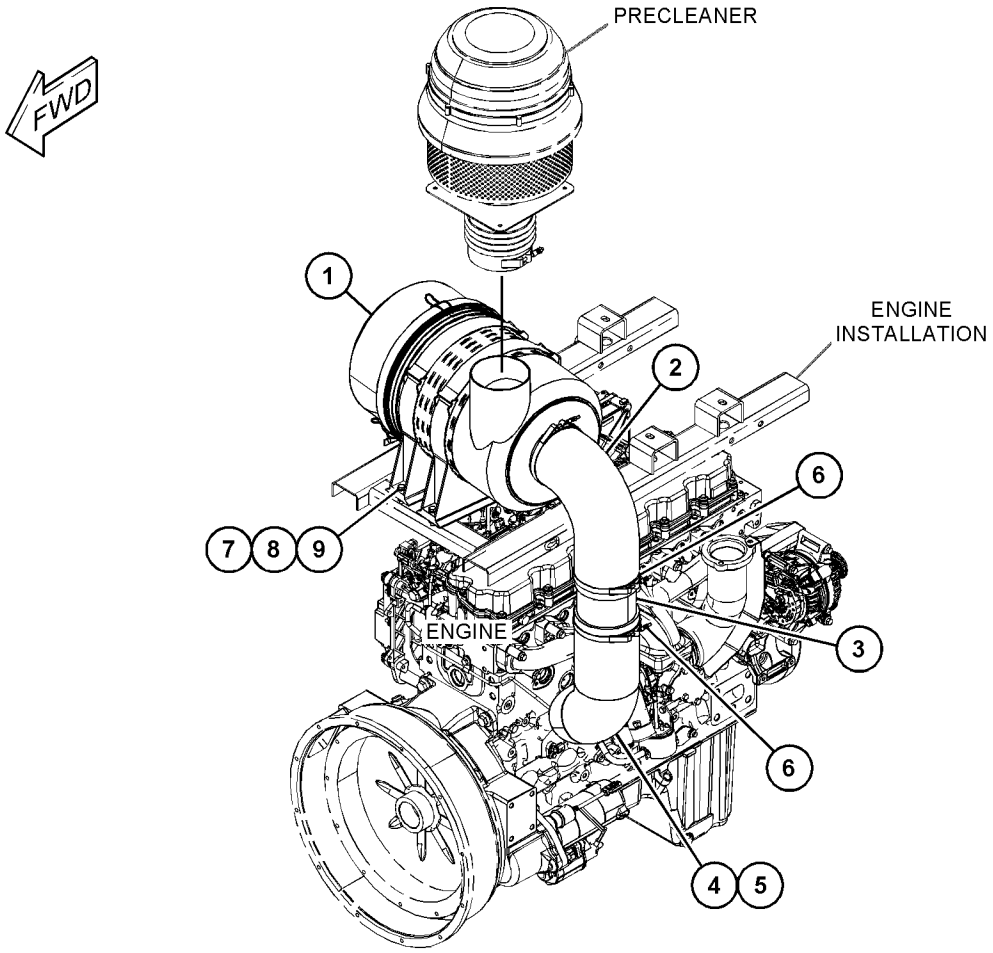

GRAPHIC #1 **<END>** g03556101

392-2261 CAP GP-AIR CLEANER

S/N: M5K1-UP

AN ATTACHMENT

SMCS-1051 **i05425192**

NOTE	REF NO	GRAPHIC REF	PART NUMBER	QTY	PART NAME 1 2 3 4 5 6 (PRODUCT LEVEL)	SEE PAGE
	1	1	**246-4611**	1	CAP AS-AIR CLEANER	
	2	1	**392-2263**	1	PIPE-EXTENSION	
	3	1	**222-2277**	1	CLAMP	

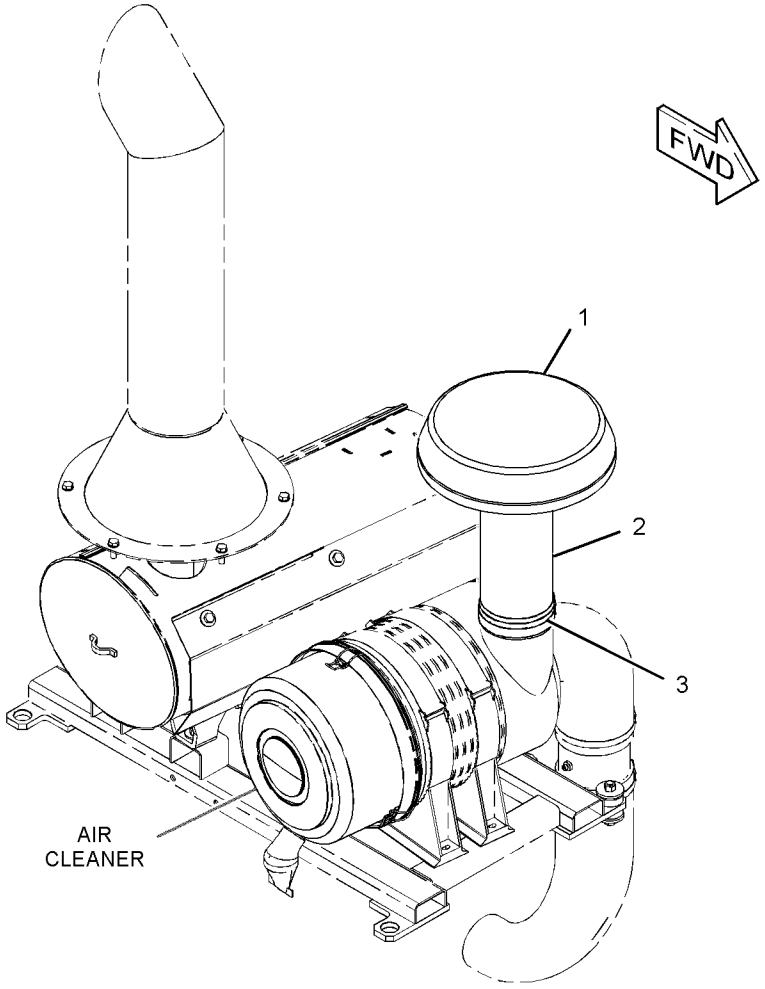

GRAPHIC #1 **<END>** g03426970

387-6085 LINES GP-AIR

S/N: M5K1-UP

PART OF 387-6001 CHASSIS AR

SMCS-1071 **i05834451**

NOTE	REF NO	GRAPHIC REF	PART NUMBER	QTY	PART NAME 1 2 3 4 5 6 (PRODUCT LEVEL)	SEE PAGE
	1	1	**387-6084**	1	BRACKET	
	2	1	**387-6086**	3	HOSE	
	3	1	**387-6087**	1	TUBE	
	4	1	**387-6088**	1	HOSE	
	5	1	**387-6089**	1	TUBE	
	6	1	**387-6090**	1	HOSE	
	7	1	**387-6097**	2	CLAMP-TUBE	
	8	1	**387-6098**	1	BRACKET	
	9	1	**212-6933**	2	CLAMP	
	10	1	**216-4983**	8	CLAMP	
	11	1	**7X-7729**	3	WASHER (11X25X3-MM THK)	
M	12	1	**8T-4137**	3	BOLT (M10X1.5X20-MM)	
	13	1	**446-6981**	1	TUBE	

M - METRIC PART

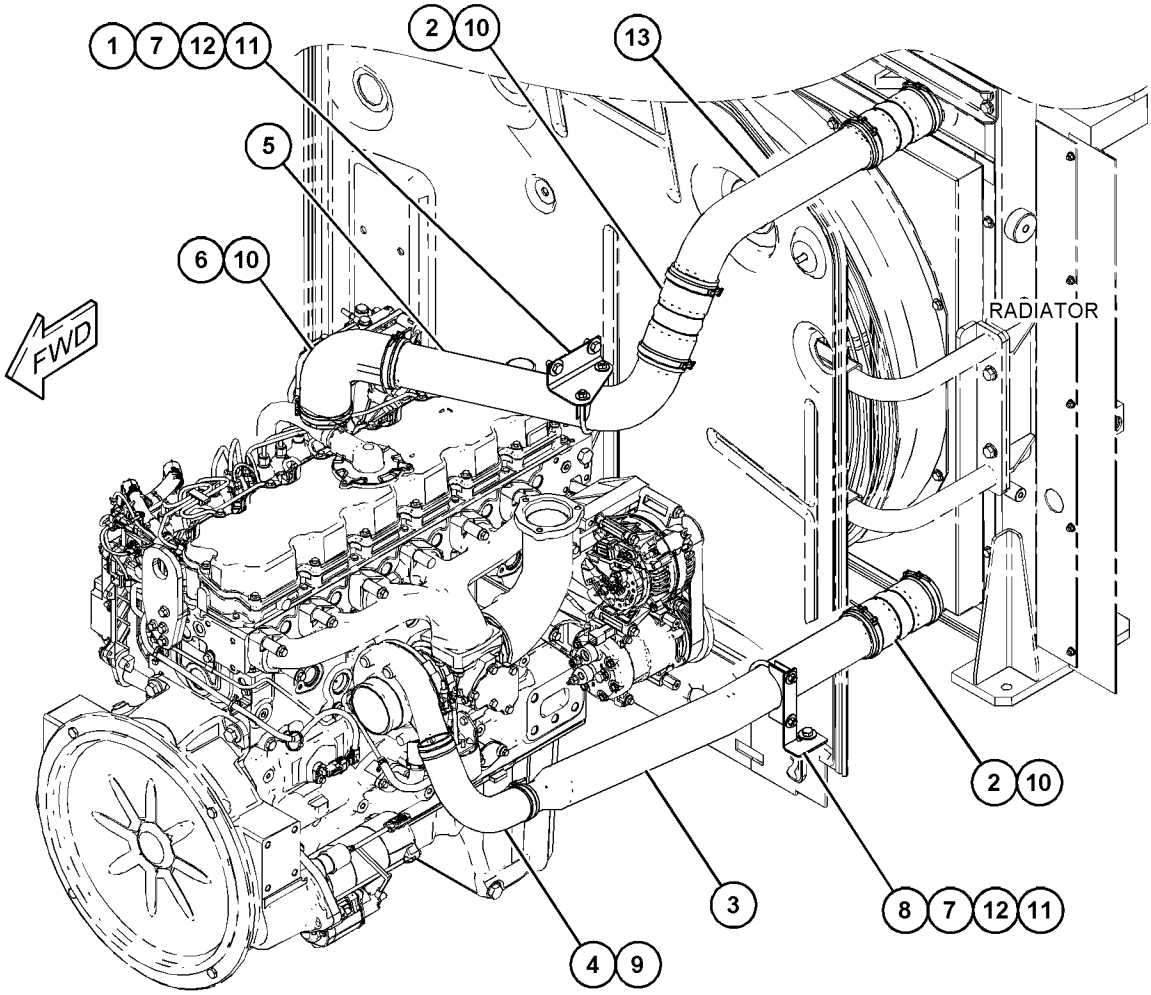

GRAPHIC #1 **<END>** g03693431

396-9532 LINES GP-TURBOCHARGER AIR

S/N: E7A1-UP
PART OF 416-6971 TURBOCHARGER GP
ALSO AN ATTACHMENT

SMCS-1052, 1071

i05574332

NOTE	REF NO	GRAPHIC REF	PART NUMBER	QTY	PART NAME 1 2 3 4 5 6 (PRODUCT LEVEL)	SEE PAGE
	1	1	**225-8526**	2	WASHER (10.4X13.75X1.37-MM THK)	
	2	1	**133-9469**	1	CLIP	
	3	1	**225-8524**	1	BOLT-SPECIAL (BANJO)	
	4	1	**335-8611**	1	CLIP	
	5	1	**396-9529**	1	TUBE AS-TURBOCHARGER	
	6	1	**107-2348**	2	CLIP	

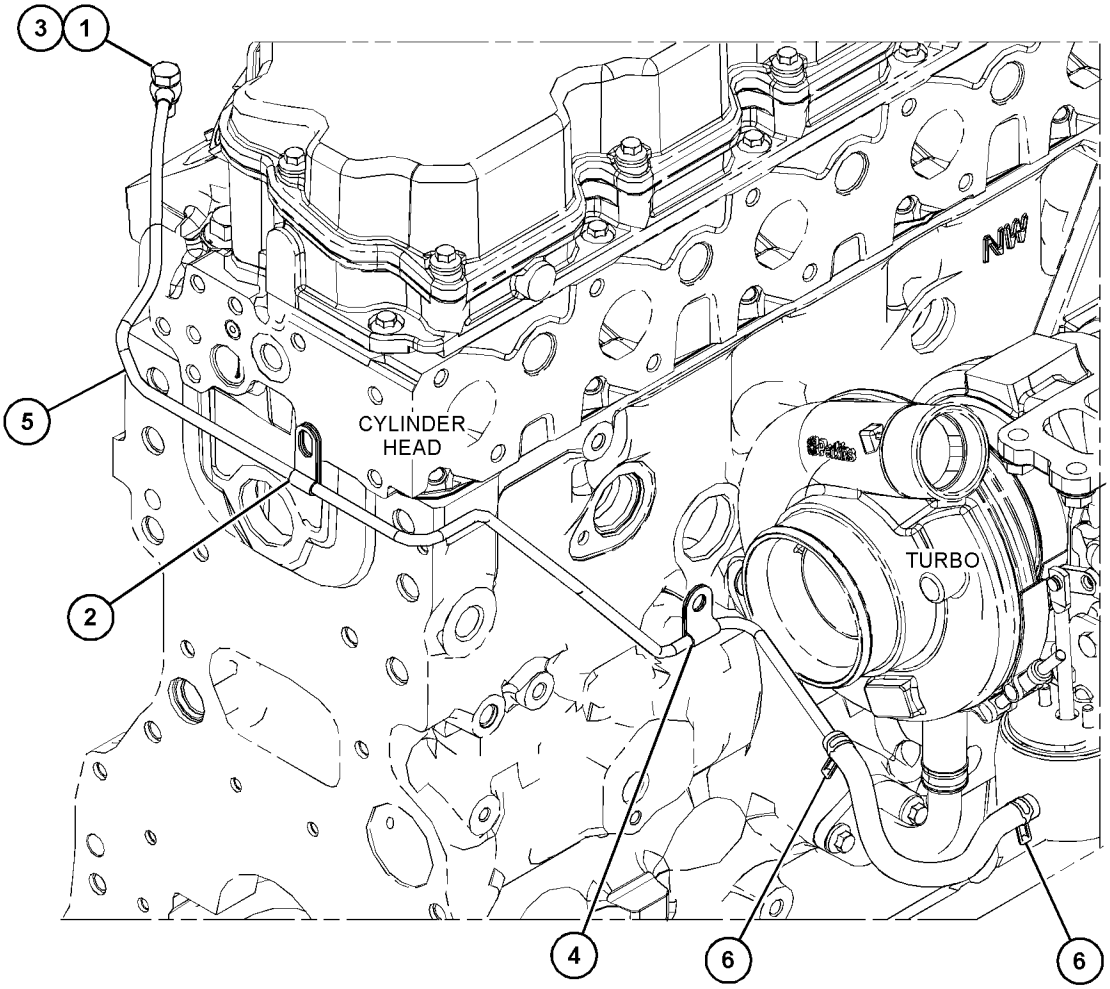

GRAPHIC #1

<END>

g03557599

416-7808 MANIFOLD GP-EXHAUST

S/N: E7A1-UP
PART OF 393-4097, 446-7556 ENGINE AR-PRIMARY
ALSO AN ATTACHMENT

SMCS-1059 **i06060823**

NOTE	REF NO	GRAPHIC REF	PART NUMBER	QTY	PART NAME 1 2 3 4 5 6 (PRODUCT LEVEL)	SEE PAGE
	1	1	**238-8292**	12	BOLT-FLANGE HEAD	
	2	1	**286-7851**	12	SPACER	
	3	1	**396-8052**	1	MANIFOLD-EXHAUST	
	4	1	**367-3340**	4	STUD	
	5	1	**416-7727**	2	GASKET	

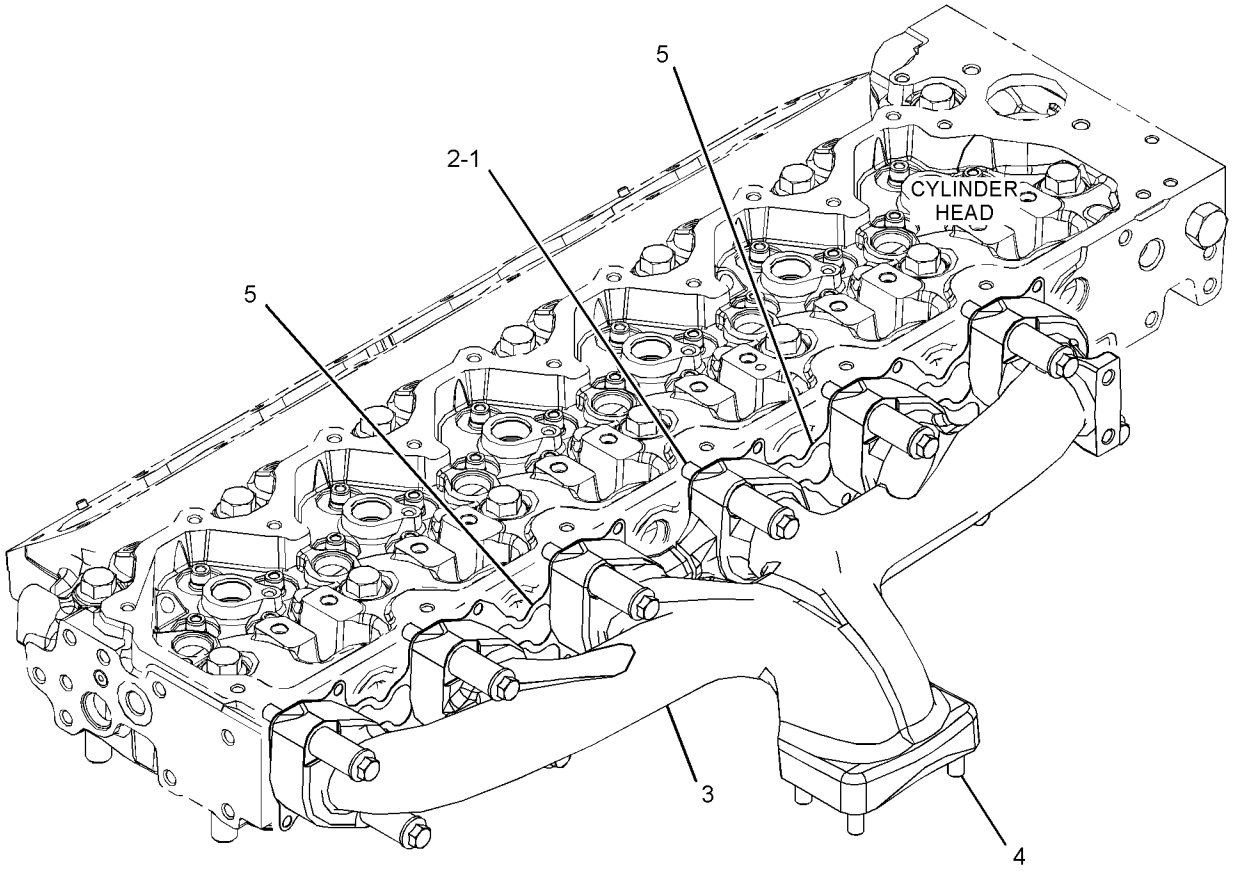

GRAPHIC #1 **<END>** g03535858

391-5523 MANIFOLD GP-INLET

S/N: E7A1-UP

PART OF 393-4097, 446-7556 ENGINE AR-PRIMARY

ALSO AN ATTACHMENT

SMCS-1058 **i05832946**

NOTE	REF NO	GRAPHIC REF	PART NUMBER	QTY	PART NAME 1 2 3 4 5 6 (PRODUCT LEVEL)	SEE PAGE
	1	1	**6I-0917**	2	BOLT (M6X1X25-MM)	
	2	1	**105-2740**	12	BOLT	
	3	1	**369-1658**	1	SOLENOID	
	4	1	**452-9704**	1	COVER (CYLINDER HEAD)	
M	5	1	**6I-0260**	4	BOLT (M8X1.25X25-MM)	
	6	1	**390-7626**	1	CONNECTION GP-AIR	
		1	**238-8288**	1	GASKET-INLET	
		1	**292-3462**	1	PLUG-PIPE	

M - METRIC PART

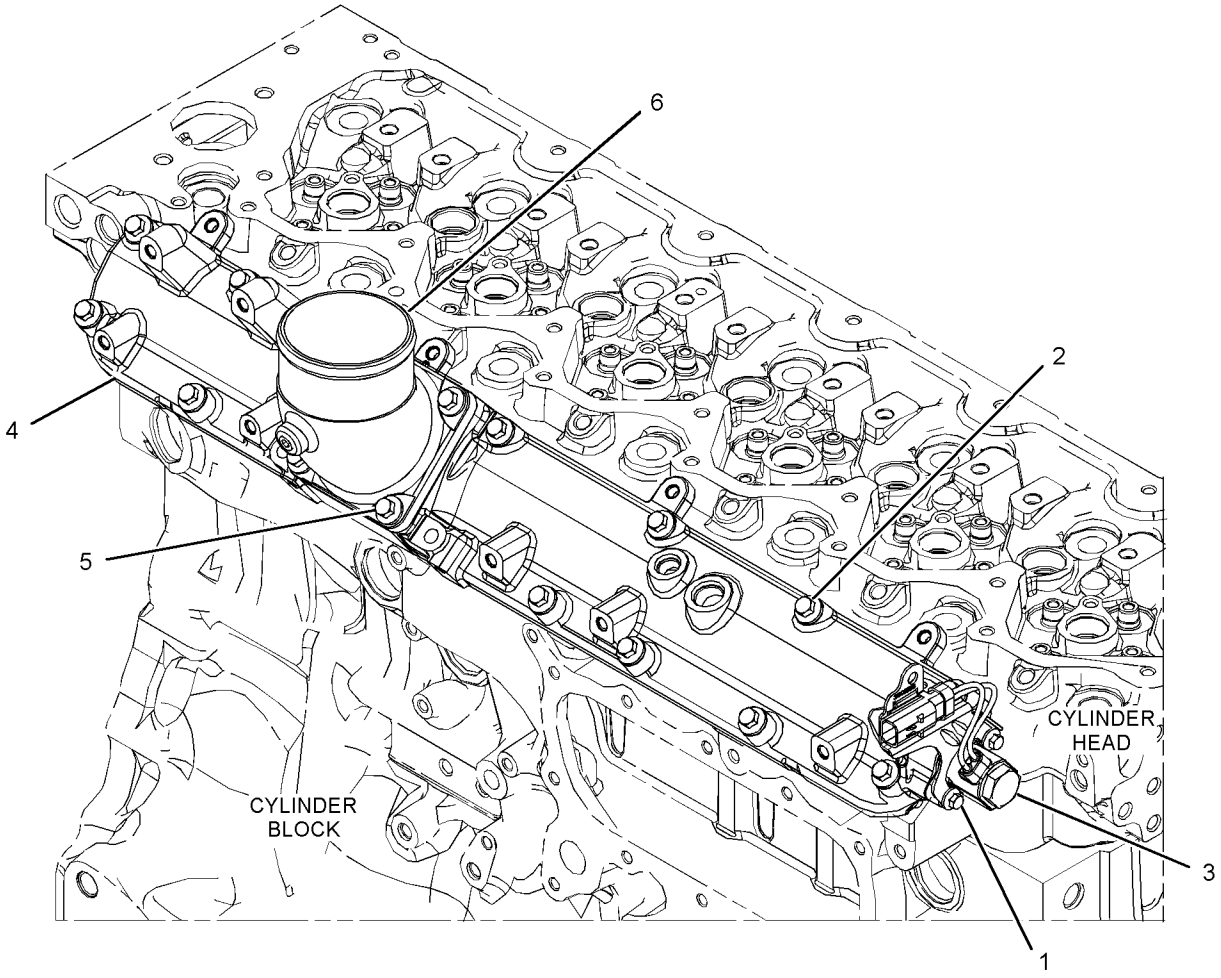

GRAPHIC #1 **<END>** g03476304

AIR INLET AND EXHAUST SYSTEM

392-2254 MUFFLER GP

S/N: M5K1-UP

PART OF 392-2252 INSTALLATION GP-ENGINE

SMCS-1062 **i05839223**

NOTE	REF NO	GRAPHIC REF	PART NUMBER	QTY	PART NAME 1 2 3 4 5 6 (PRODUCT LEVEL)	SEE PAGE
	1	1	**337-7325**	1	CLAMP-BAND	
	2	1	**361-4435**	1	PIPE AS	
	3	1	**392-2255**	1	TUBE-EXHAUST (BOTTOM)	
	4	1	**392-2303**	1	TUBE-EXHAUST (TOP)	
	5	1	**399-0913**	1	SHIELD-HEAT	
	6	1	**399-0920**	1	CLAMP	
	7	1	**360-2691**	1	MUFFLER AS	
	8	1	**5P-8245**	4	WASHER-HARD (13.5X25.5X3-MM THK)	
	9	1	**7X-7729**	6	WASHER (11X25X3-MM THK)	
	10	1	**8T-4121**	11	WASHER-HARD (11X21X2.5-MM THK)	
M	11	1	**8T-4133**	1	NUT (M10X1.5-THD)	
M	12	1	**8T-4137**	6	BOLT (M10X1.5X20-MM)	
M	13	1	**8T-4185**	1	BOLT (M10X1.5X50-MM)	
M	14	1	**8T-4195**	9	BOLT (M10X1.5X30-MM)	
	15	1	**8T-4223**	4	WASHER-HARD (13.5X25.5X3-MM THK)	
M	16	1	**8T-4244**	4	NUT (M12X1.75-THD)	
M	17	1	**8T-4956**	4	BOLT (M12X1.75X35-MM)	
	18	1	**446-6982**	1	TUBE	

M - METRIC PART

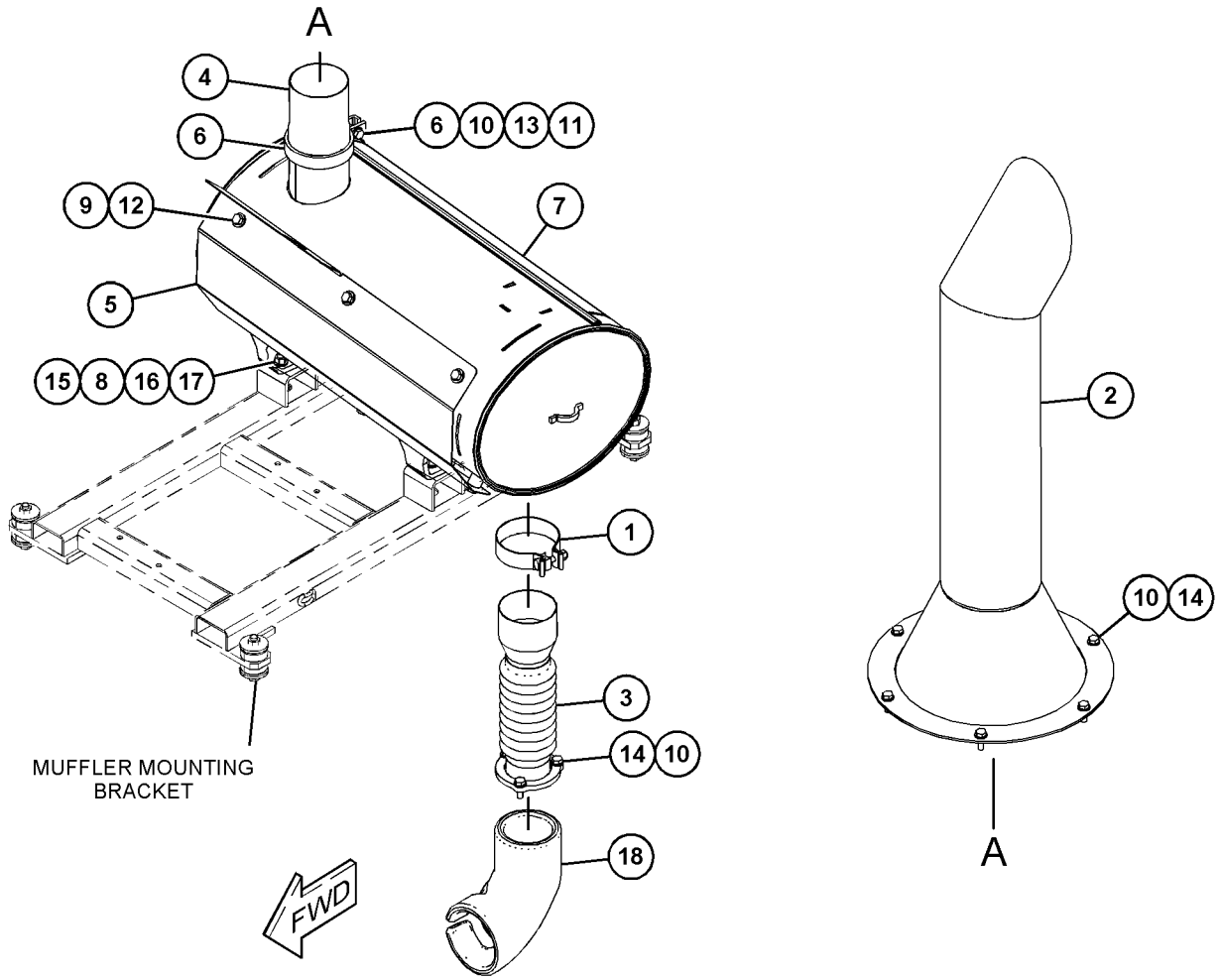

GRAPHIC #1 **<END>** g03693429

AIR INLET AND EXHAUST SYSTEM

392-2302 PRECLEANER AR

S/N: M5K1-UP

CANNOT BE USED WITH 392-2261 CAP GP-RAIN

AN ATTACHMENT

SMCS-1055 **i05406503**

NOTE	REF NO	GRAPHIC REF	PART NUMBER	QTY	PART NAME 1 2 3 4 5 6 (PRODUCT LEVEL)	SEE PAGE
Y	1	1	*217-5288*	1	PRECLEANER GP	73
	2	1	**392-2294**	1	PIPE-EXTENSION	
	3	1	**392-2295**	1	HOSE	
	4	1	**222-2277**	1	CLAMP	
	5	1	**246-8026**	2	CLAMP	
M	6	1	**5P-7970**	4	NUT (M8X1.25-THD)	
M	7	1	**8T-4189**	4	BOLT (M8X1.25X20-MM)	
	8	1	**8T-4224**	8	WASHER-HARD (8.8X16X2-MM THK)	

M - METRIC PART
Y - SEPARATE ILLUSTRATION

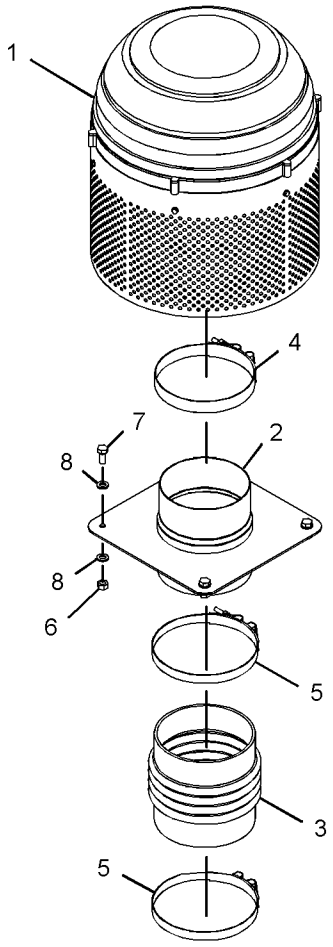

GRAPHIC #1 **<END>** g03465401

217-5288 PRECLEANER GP

S/N: M5K1-UP
PART OF 392-2302 PRECLEANER AR
AN ATTACHMENT

SMCS-1055 **i05472835**

NOTE	REF NO	GRAPHIC REF	PART NUMBER	QTY	PART NAME 1 2 3 4 5 6 (PRODUCT LEVEL)	SEE PAGE
	1	1	**116-2659**	2	DAMPER	
	2	1	**130-3280**	1	PRECLEANER AS	
		1	**174-5415**	1	CLAMP	
	3	1	**153-1277**	1	KIT-SCREEN (PRECLEANER)	
					(INCLUDES CLAMP, SCREWS, TUBE, DAMPER & PRESCREEN)	
	4	1	**145-6669**	6	SCREW-SELF-TAPPING (10X0.75-IN)	
	5	1	**3L-2221**	1	PIPE-EXTENSION	

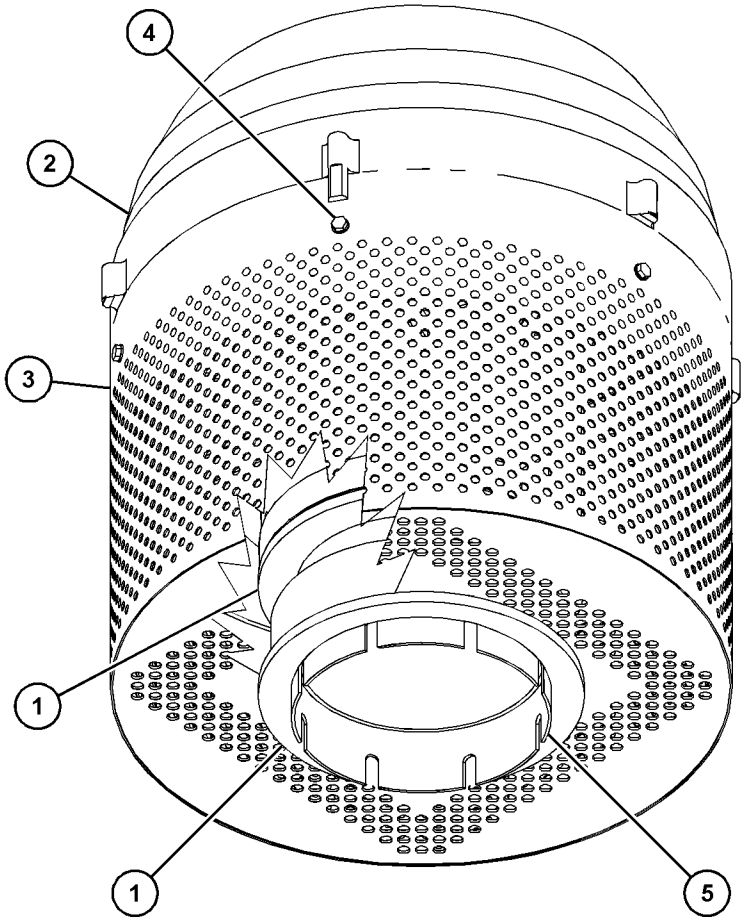

GRAPHIC #1 **<END>** g03523664

416-6971 TURBOCHARGER GP

S/N: E7A1-UP
PART OF 393-4097, 446-7556 ENGINE AR-PRIMARY
ALSO AN ATTACHMENT

SMCS-1052, 1053

i05758453

NOTE	REF NO	GRAPHIC REF	PART NUMBER	QTY	PART NAME 1 2 3 4 5 6 (PRODUCT LEVEL)	SEE PAGE
M	1	1	**6I-0217**	5	BOLT (M8X1.25X20-MM)	
M	2	1	**6I-0563**	4	NUT (M10X1.5-THD)	
M	3	1	**6I-0593**	3	BOLT (M10X1.5X30-MM)	
M	4	1	**100-4830**	1	BOLT (M10X1.5X20-MM)	
M	5	1	**124-3815**	1	BOLT (M8X1.25X16-MM)	
	6	1	**437-4170**	1	GASKET	
	7	1	**278-0017**	1	GASKET	
	8	1	**420-2372**	1	LINE AS	
	9	1	**280-2424**	1	ADAPTER	
	10	1	**282-2830**	1	ELBOW	
	11	1	**368-8557**	1	TUBE AS-TURBOCHARGER	
Y	12	1	*396-9532*	1	LINES GP-TURBOCHARGER AIR	68
	13	1	**435-4501**	1	TURBOCHARGER	

M - METRIC PART
Y - SEPARATE ILLUSTRATION

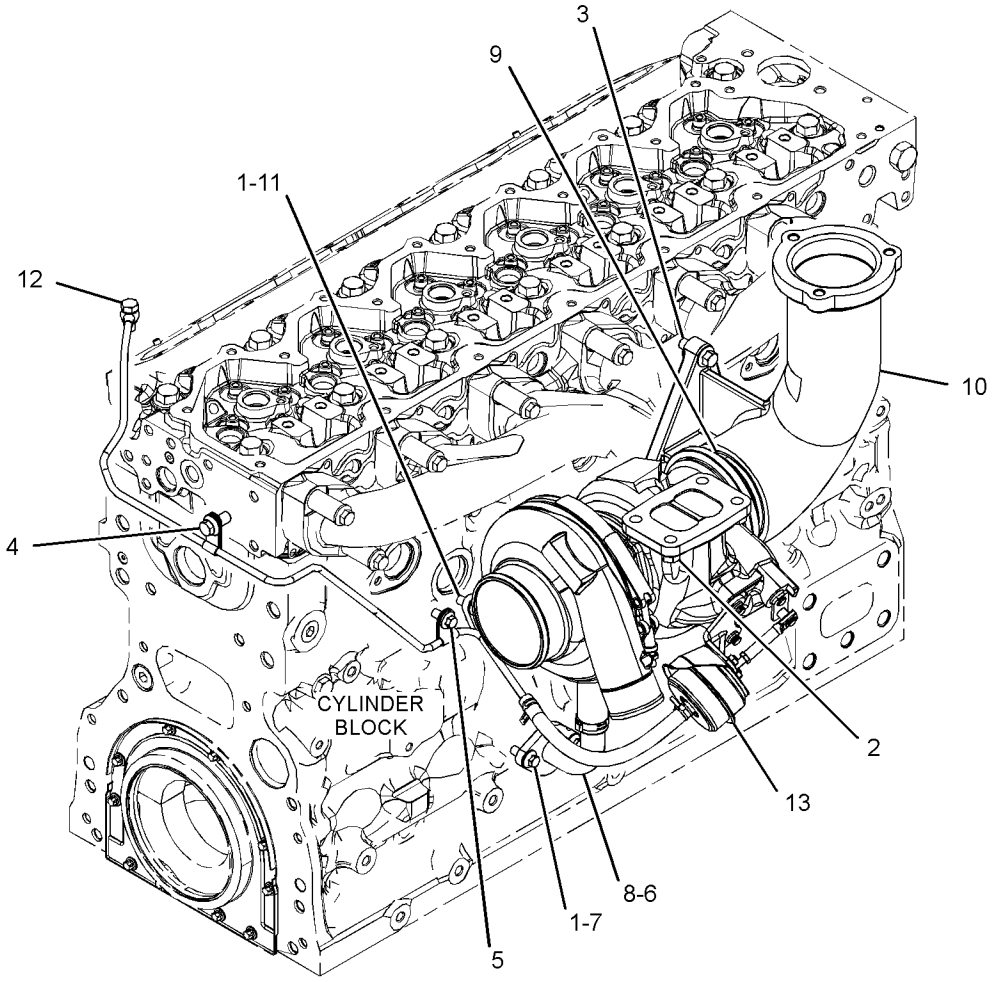

GRAPHIC #1

<END>

g03660046

360-8958 FILTER GP-FUEL

S/N: E7A1-UP
PART OF 452-8547 FILTER GP-FUEL
ALSO AN ATTACHMENT

SMCS-1261 **i05571889**

NOTE	REF NO	GRAPHIC REF	PART NUMBER	QTY	PART NAME 1 2 3 4 5 6 (PRODUCT LEVEL)	SEE PAGE
	1	1	**360-8960**	1	FILTER ELEMENT-FUEL	
					AVAILABLE REPAIR KIT(S):	
			362-5412	1	KIT-DRAIN (FUEL FILTER)	
					(INCLUDES DRAIN, KNOB, & SEALS)	

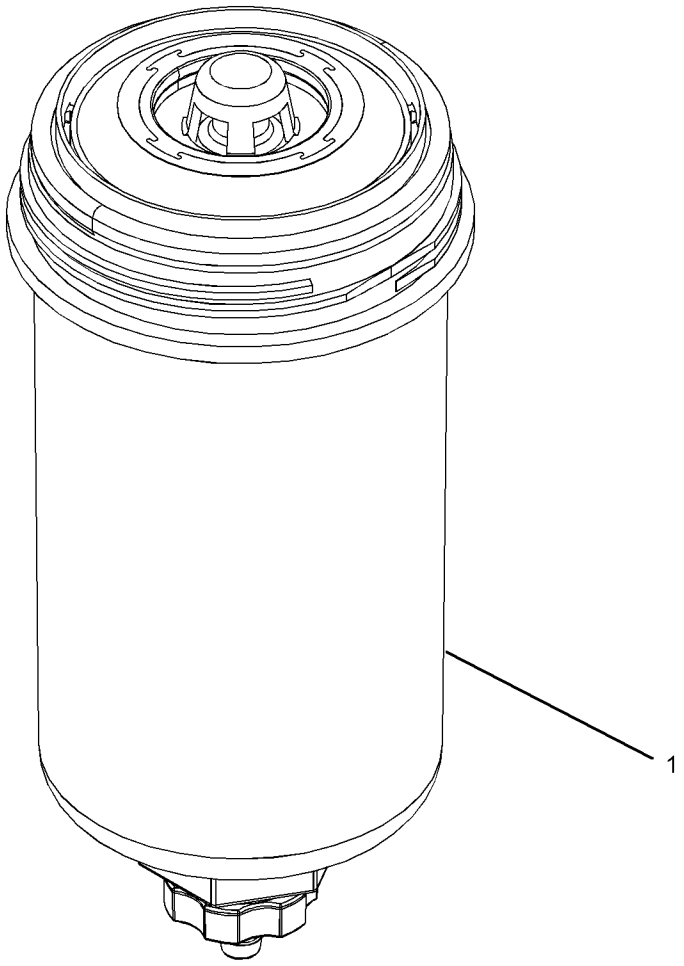

GRAPHIC #1 **<END>** g03173178

438-7763 FILTER GP-FUEL

S/N: E7A1-UP

PART OF 441-1215 FILTER GP-FUEL

ALSO AN ATTACHMENT

SMCS-1261 **i05573610**

NOTE	REF NO	GRAPHIC REF	PART NUMBER	QTY	PART NAME 1 2 3 4 5 6 (PRODUCT LEVEL)	SEE PAGE
	1	1	**192-9207**	1	PLUG	
	1A	1	**126-9093**	1	SEAL	
	2	1	**439-5037**	1	FILTER AS-WATER SEP & FUEL	
	3	1	**439-5039**	1	SENSOR GP-LIQUID LEVEL	
	4	1	**439-5040**	1	BOWL AS	

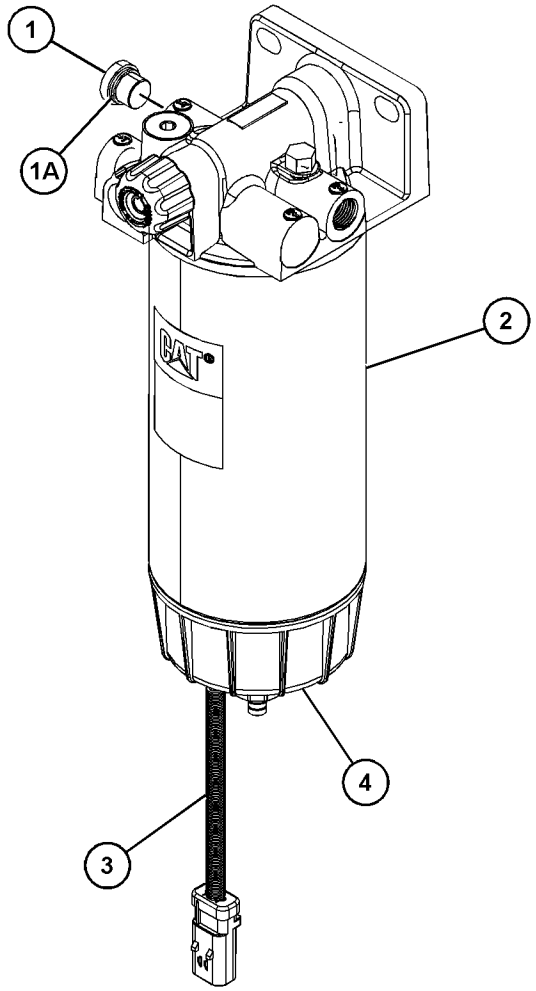

GRAPHIC #1 **<END>** g03540796

441-1215 FILTER GP-FUEL

S/N: E7A1-UP
PART OF 393-4097, 446-7556 ENGINE AR-PRIMARY
ALSO AN ATTACHMENT

SMCS-1261 **i05472856**

NOTE	REF NO	GRAPHIC REF	PART NUMBER	QTY	PART NAME 1 2 3 4 5 6 (PRODUCT LEVEL)	SEE PAGE
Y	1	1	**438-7763**	1	FILTER GP-FUEL	76

Y - SEPARATE ILLUSTRATION

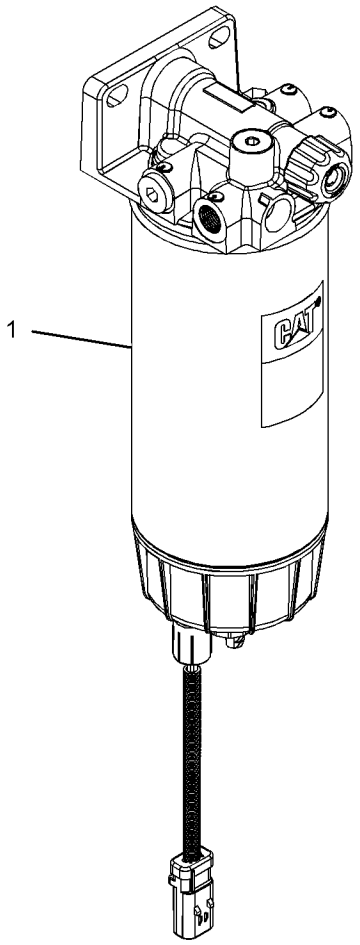

GRAPHIC #1 **<END>** g03535423

452-8547 FILTER GP-FUEL

S/N: E7A1-UP
PART OF 453-7163 FILTER GP-FUEL
ALSO AN ATTACHMENT

SMCS-1261 **i05905637**

NOTE	REF NO	GRAPHIC REF	PART NUMBER	QTY	PART NAME 1 2 3 4 5 6 (PRODUCT LEVEL)	SEE PAGE
Y	1	1	**360-8958**	2	FILTER GP-FUEL	75
	2	1	**362-9689**	2	SCREW-SPECIAL	
					AVAILABLE REPAIR KIT(S):	
			362-5412	2	KIT-DRAIN	
					(EACH KIT INCLUDES DRAIN, KNOB & SEAL)	

Y - SEPARATE ILLUSTRATION

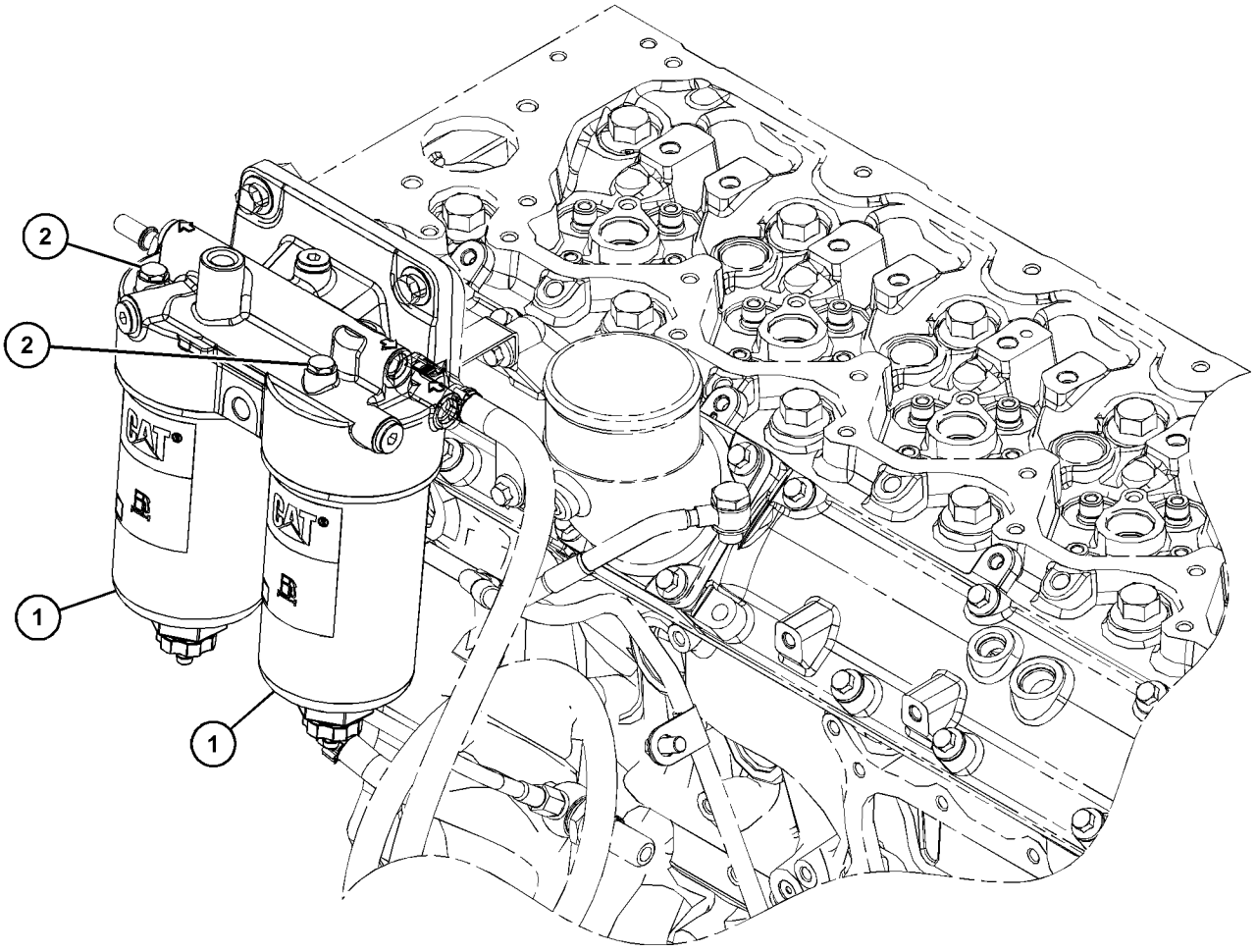

GRAPHIC #1 **<END>** g03701881

453-7163 FILTER GP-FUEL

S/N: E7A1-UP
PART OF 393-4097, 446-7556 ENGINE AR-PRIMARY
ALSO AN ATTACHMENT

SMCS-1261 **i05905582**

NOTE	REF NO	GRAPHIC REF	PART NUMBER	QTY	PART NAME 1 2 3 4 5 6 (PRODUCT LEVEL)	SEE PAGE
Y	1	1	**452-8547**	1	FILTER GP-FUEL	78

Y - SEPARATE ILLUSTRATION

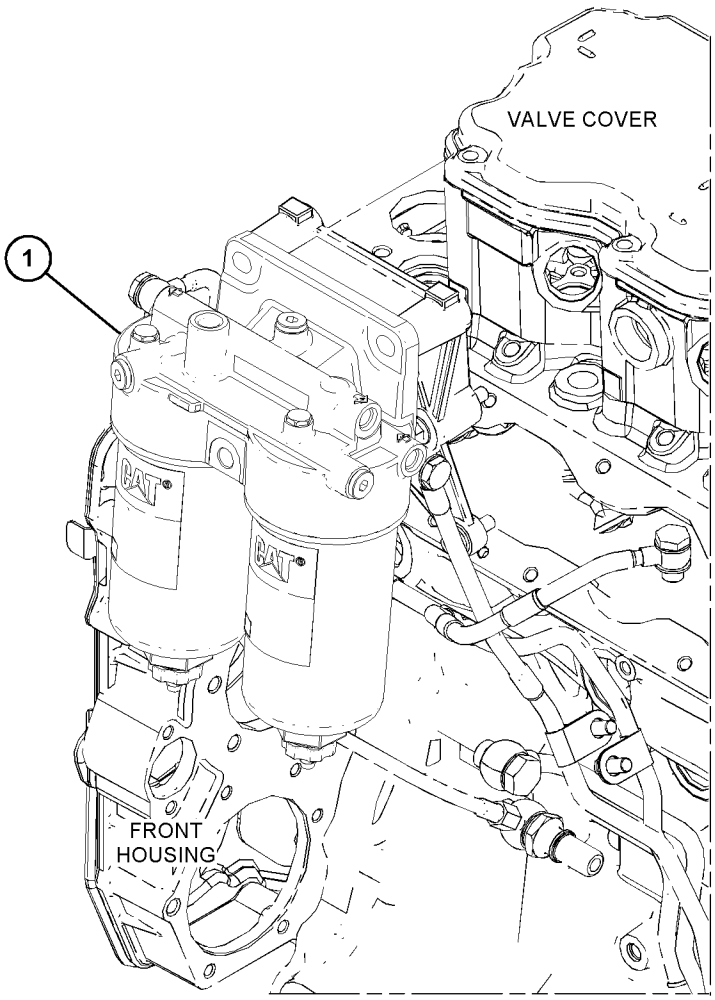

GRAPHIC #1 **<END>** g03695817

396-9626 INJECTOR GP-FUEL

S/N: E7A1-UP

PART OF 416-8908 INJECTOR GP-FUEL

ALSO AN ATTACHMENT

SMCS-1251, 1254, 1290, 1713 **i05573777**

NOTE	REF NO	GRAPHIC REF	PART NUMBER	QTY	PART NAME 1 2 3 4 5 6 (PRODUCT LEVEL)	SEE PAGE
	1	1	**376-6403**	1	WASHER-SEAL	
	2	1	**376-6405**	1	SEAL-O-RING	

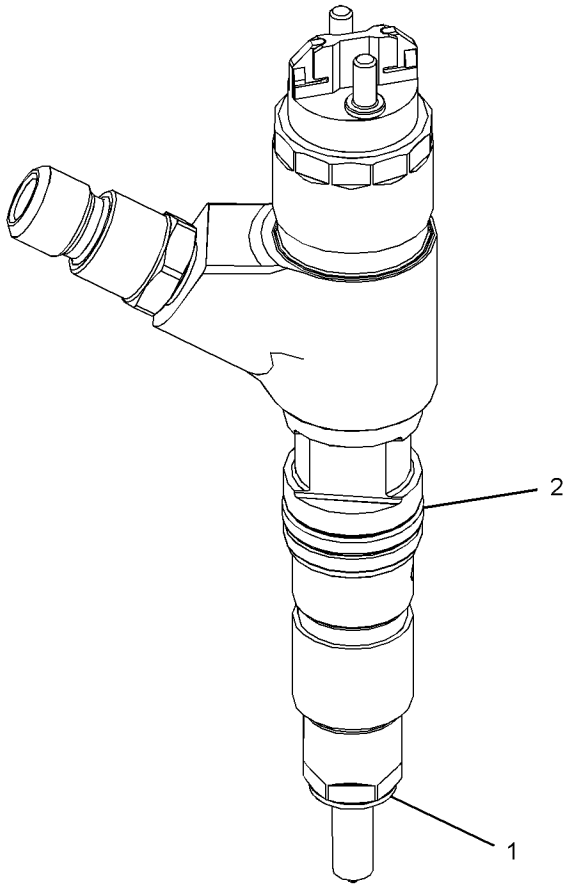

GRAPHIC #1 **<END>** g03566176

416-8908 INJECTOR GP-FUEL

S/N: E7A1-UP
PART OF 393-4097, 446-7556 ENGINE AR-PRIMARY
ALSO AN ATTACHMENT

SMCS-1251, 1254, 1290, 1713

i05472953

NOTE	REF NO	GRAPHIC REF	PART NUMBER	QTY	PART NAME 1 2 3 4 5 6 (PRODUCT LEVEL)	SEE PAGE
	1	1	**278-5170**	6	BOLT	
	2	1	**369-7799**	6	CLAMP-INJECTOR	
Y	3	1	**396-9626**	6	INJECTOR GP-FUEL	80
	4	1	**277-5067**	6	SLEEVE	

Y - SEPARATE ILLUSTRATION

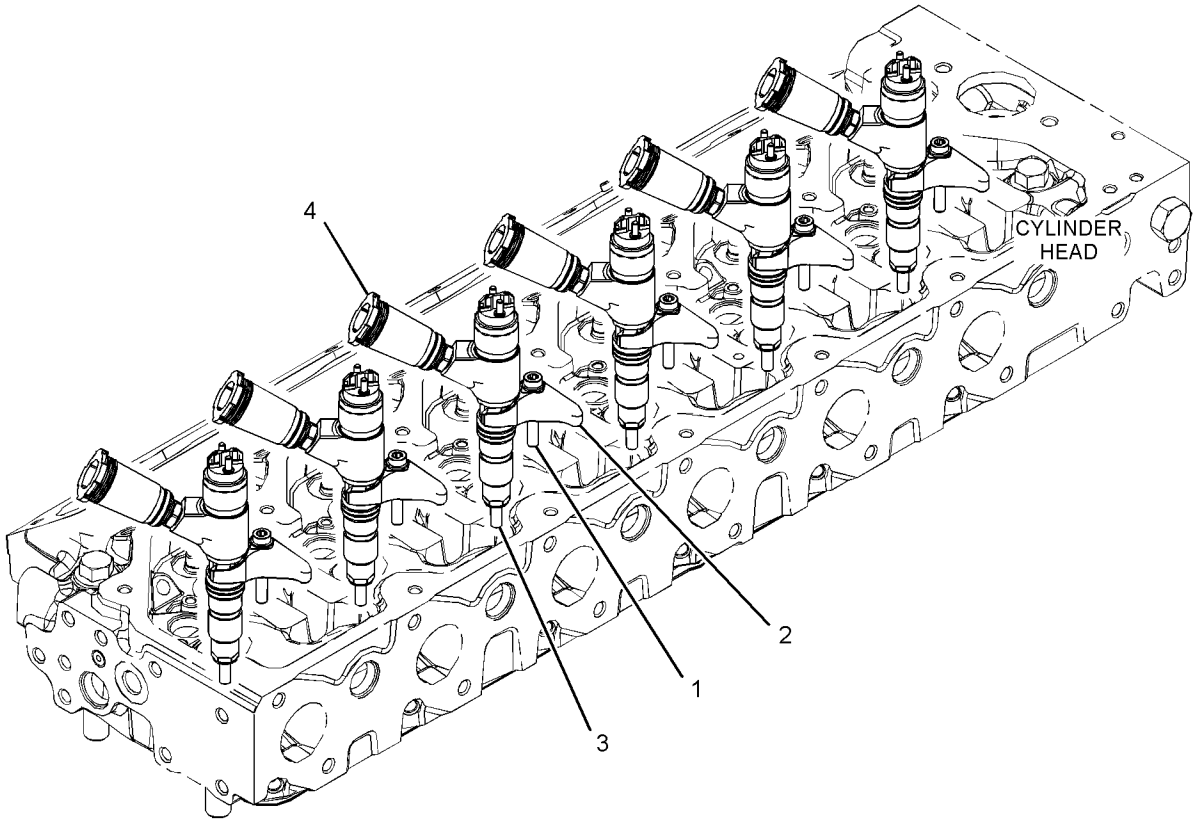

GRAPHIC #1 **<END>** g03535641

425-2178 LINES GP-FUEL

S/N: E7A1-UP

PART OF 426-3312 LINES GP-FUEL FILTER

ALSO AN ATTACHMENT

SMCS-1274 **i05526170**

NOTE	REF NO	GRAPHIC REF	PART NUMBER	QTY	PART NAME 1 2 3 4 5 6 (PRODUCT LEVEL)	SEE PAGE
	1	1	**349-6847**	2	CLIP	
	2	1	**377-5988**	1	BOLT	
	3	1	**286-2890**	2	WASHER	
M	4	1	**161-7614**	1	NUT (M16X1.5-THD)	
	5	1	**277-4993**	1	SEAL-O-RING	

M - METRIC PART

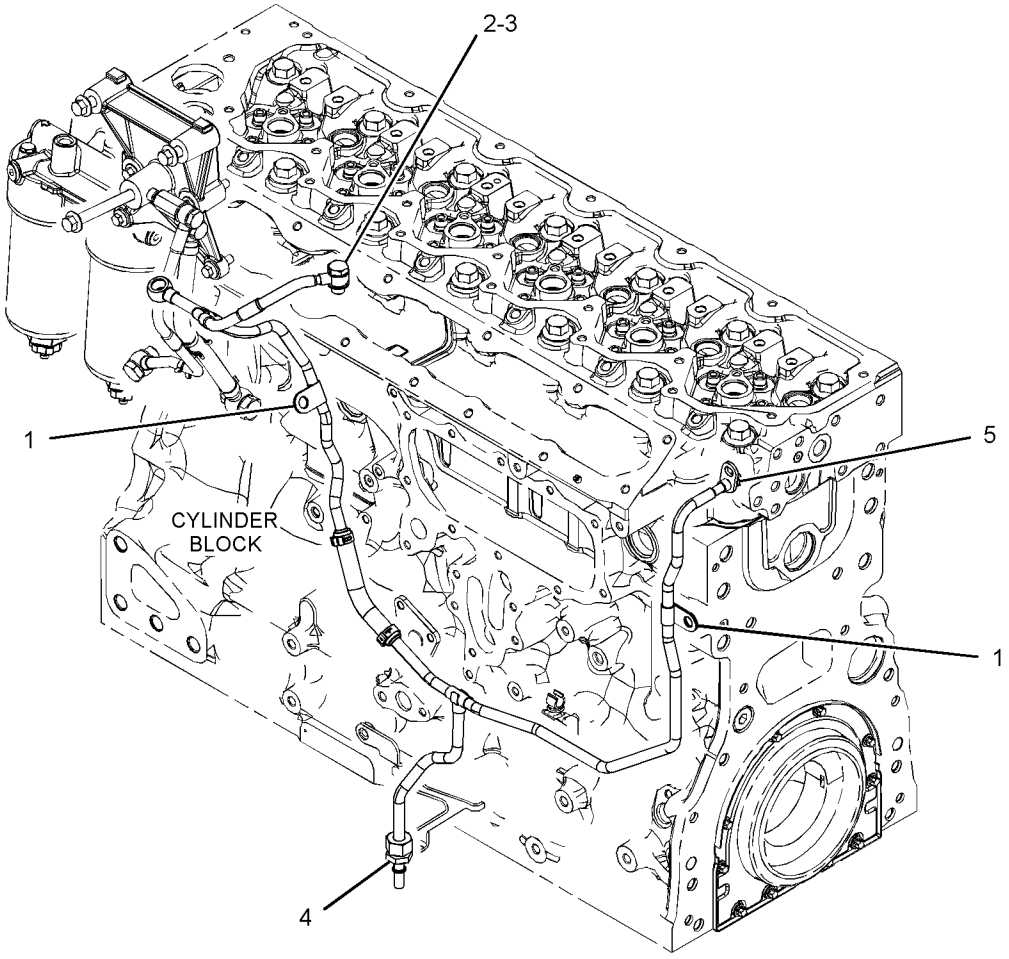

GRAPHIC #1 **<END>** g03384683

433-1316 LINES GP-FUEL

S/N: E7A1-UP
PART OF 426-3312 LINES GP-FUEL FILTER
ALSO AN ATTACHMENT

SMCS-1274 **i05526172**

NOTE	REF NO	GRAPHIC REF	PART NUMBER	QTY	PART NAME 1 2 3 4 5 6 (PRODUCT LEVEL)	SEE PAGE
	1	1	**246-4361**	2	WASHER (10.5X14X1.5-MM THK)	
	2	1	**385-1398**	1	CONNECTION-FUEL	
	3	1	**386-1864**	1	BOLT-BANJO	
	4	1	**247-4928**	2	WASHER (16.5X20.5X1.6-MM THK)	

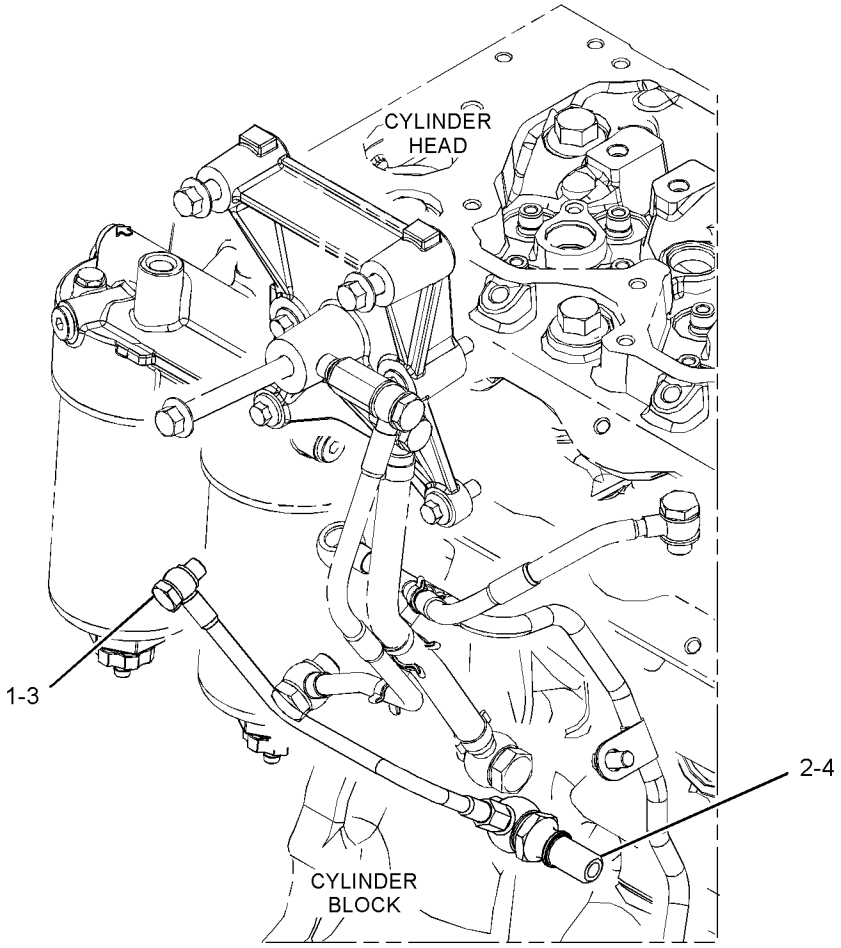

GRAPHIC #1 **<END>** g03384847

442-8465 LINES GP-FUEL

S/N: E7A1-UP

PART OF 426-3312 LINES GP-FUEL FILTER

ALSO AN ATTACHMENT

SMCS-1274 **i05843926**

NOTE	REF NO	GRAPHIC REF	PART NUMBER	QTY	PART NAME 1 2 3 4 5 6 (PRODUCT LEVEL)	SEE PAGE
M	1	1	**277-9938**	1	BOLT-SPECIAL (BANJO)	
	2	1	**286-2890**	2	WASHER	
	3	1	**295-4670**	1	BOLT-SPECIAL (BANJO)	

M - METRIC PART

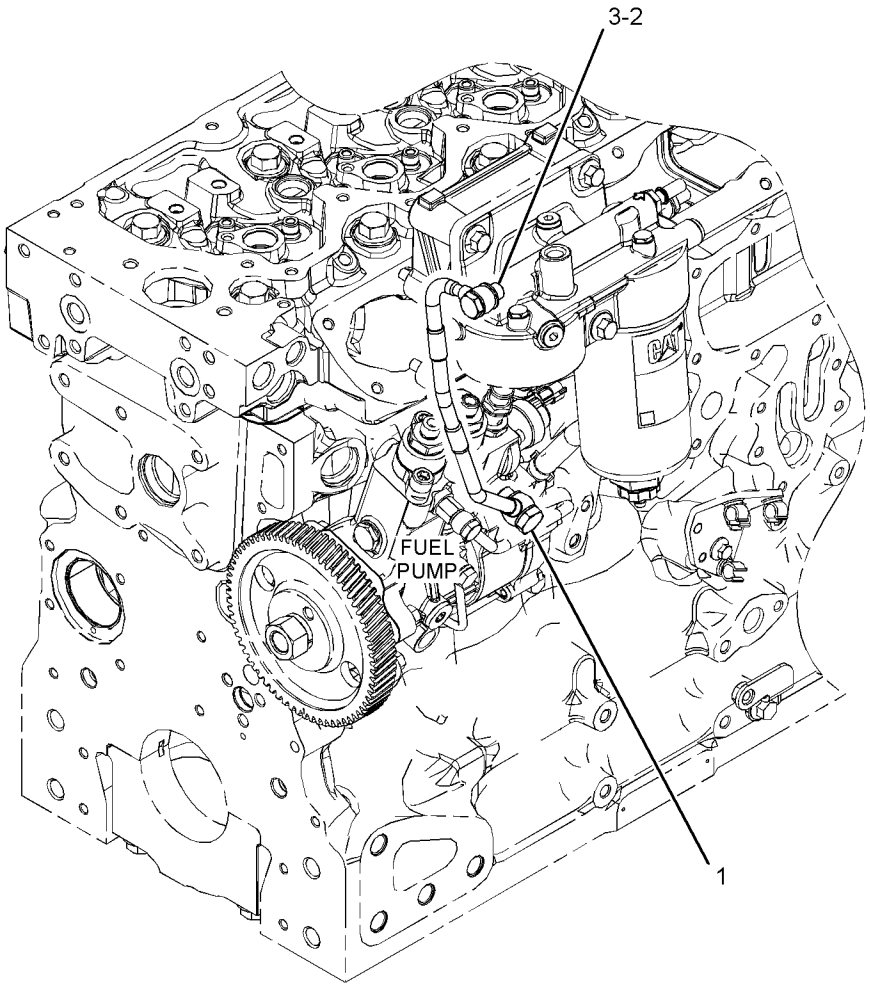

GRAPHIC #1 **<END>** g03564656

442-8531 LINES GP-FUEL

S/N: E7A1-UP
PART OF 426-3312 LINES GP-FUEL FILTER
ALSO AN ATTACHMENT

SMCS-1274 **i05843962**

NOTE	REF NO	GRAPHIC REF	PART NUMBER	QTY	PART NAME 1 2 3 4 5 6 (PRODUCT LEVEL)	SEE PAGE
	1	1	**286-2890**	2	WASHER	
	2	1	**386-2737**	1	BOLT-BANJO	
	3	1	*442-8530*	1	LINE AS-FUEL	
E	3A	1	**347-8645**		HOSE (29-CM)	
	4	1	**247-4928**	2	WASHER (16.5X20.5X1.6-MM THK)	
	5	1	**295-4670**	1	BOLT-SPECIAL (BANJO)	

E - ORDER BY THE CENTIMETER

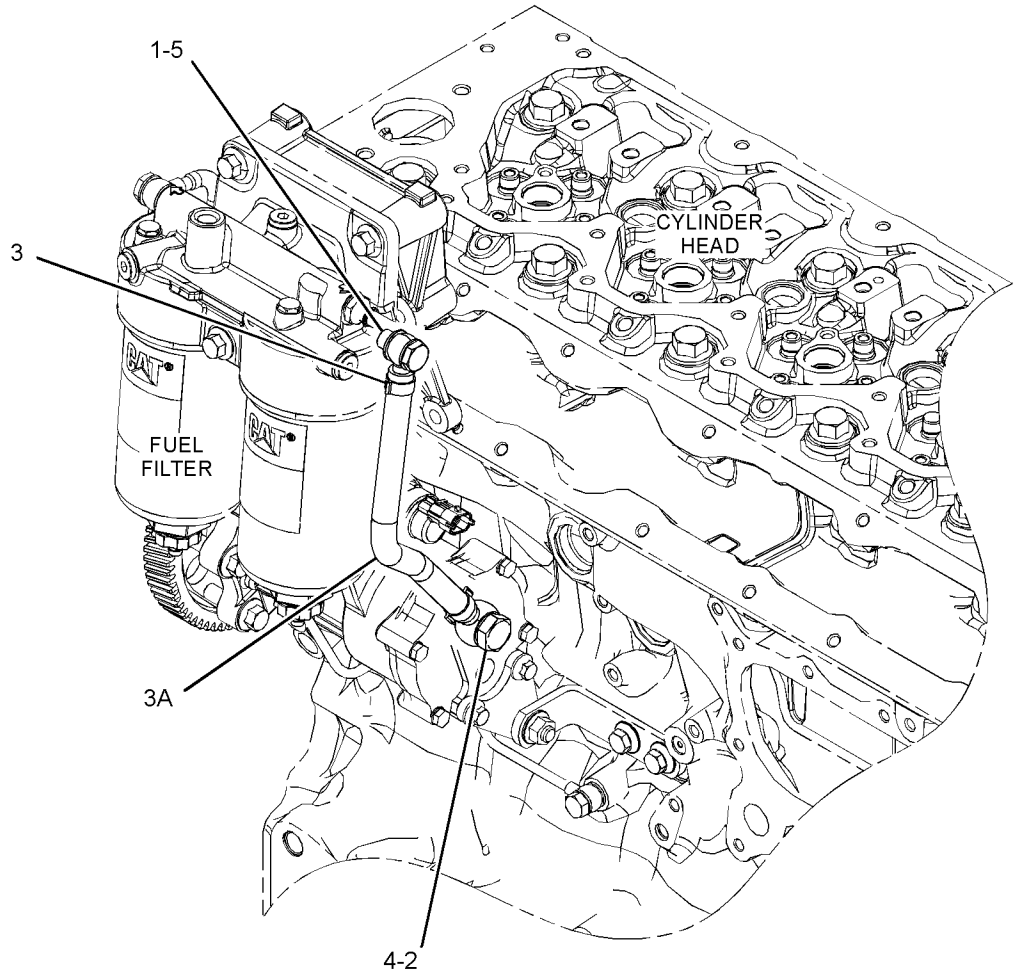

GRAPHIC #1 **<END>** g03564798

464-7899 LINES GP-FUEL

S/N: E7A1-UP
PART OF 426-3312 LINES GP-FUEL FILTER
ALSO AN ATTACHMENT

SMCS-1274 **i06022313**

NOTE	REF NO	GRAPHIC REF	PART NUMBER	QTY	PART NAME 1 2 3 4 5 6 (PRODUCT LEVEL)	SEE PAGE
	1	1	**349-6847**	2	CLIP	
	2	1	**377-5988**	1	BOLT	
	3	1	**286-2890**	2	WASHER	
M	4	1	**161-7614**	1	NUT (M16X1.5-THD)	
	5	1	**277-4993**	1	SEAL-O-RING	

M - METRIC PART

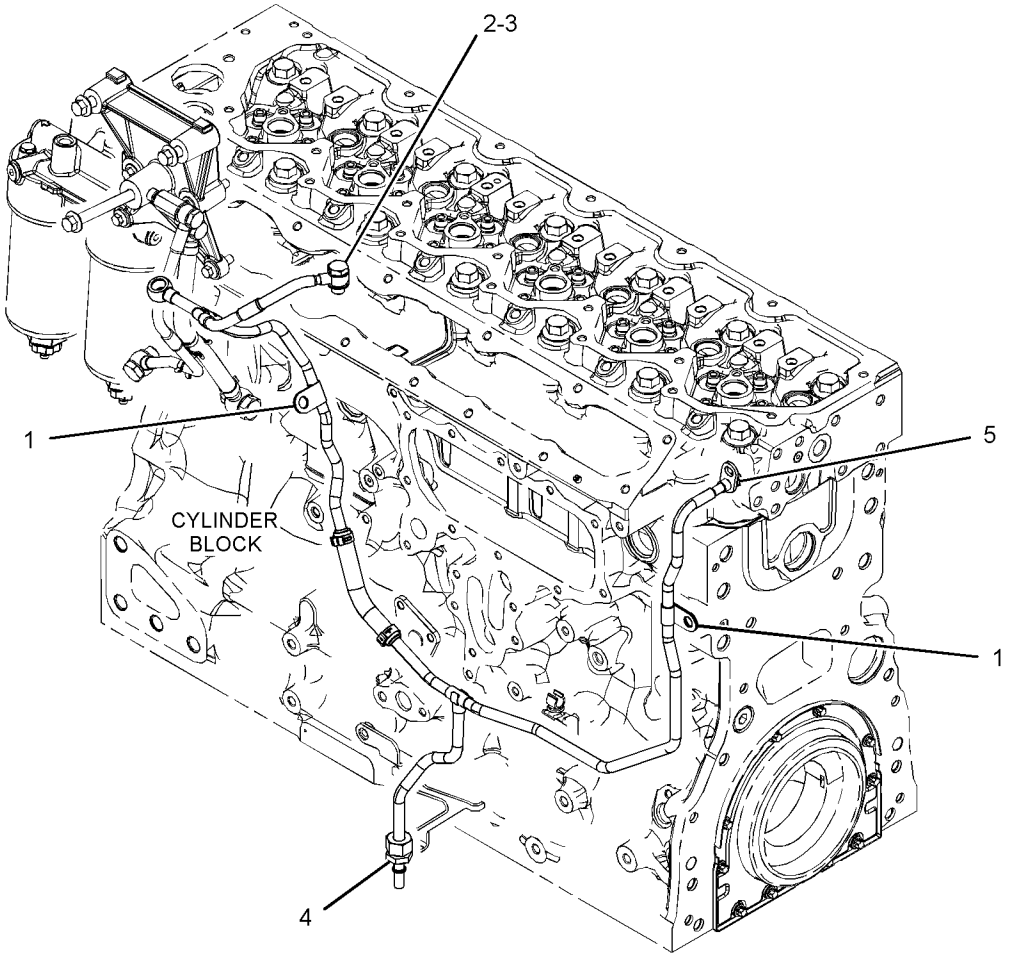

GRAPHIC #1 **<END>** g03384683

426-3312 LINES GP-FUEL FILTER

S/N: E7A1-UP
PART OF 393-4097, 446-7556 ENGINE AR-PRIMARY
ALSO AN ATTACHMENT
TYPE 1

SMCS-1261, 1274 **i05838446**

NOTE	REF NO	GRAPHIC REF	PART NUMBER	QTY	PART NAME 1 2 3 4 5 6 (PRODUCT LEVEL)	SEE PAGE
M	1	1	**6I-0593**	2	BOLT (M10X1.5X30-MM)	
M	2	1	**6I-4200**	2	BOLT (M10X1.5X16-MM)	
	3	1	**100-4458**	2	BOLT (M8X1.25X14-MM)	
	4	1	**164-7468**	1	BOLT (M10X1.5X95-MM)	
	5	1	**442-8569**	1	CLIP-PIPE	
	6	1	**208-9287**	2	BOLT-FLANGE HEAD (M8X1.25X50-MM)	
Y	7	1	**442-8465**	1	LINES GP-FUEL	84
	8	1	**389-5775**	1	BRACKET	
	9	1	**389-5784**	1	BRACKET-FILTER	
	10	1	**390-0755**	1	BRACKET AS	
	11	1	**390-8738**	1	SUPPORT GP-LINES	
		1	**366-9373**	1	CLIP	
	12	1	**391-1817**	1	SUPPORT GP-LINES	
		1	**366-9373**	2	CLIP	
Y	13	1	**442-8531**	1	LINES GP-FUEL	85
Y	14	1	**425-2178**	1	LINES GP-FUEL	82
Y	15	1	**433-1316**	1	LINES GP-FUEL	83
M	16	1	**6I-0217**	1	BOLT (M8X1.25X20-MM)	
M	17	1	**6I-0260**	3	BOLT (M8X1.25X25-MM)	
	18	1	*330-9723*	2	PLUG AS	
					(EACH INCLUDES)	
		1	**228-7100**	1	SEAL-O-RING	
		1	**241-6157**	1	PLUG	

M - METRIC PART
Y - SEPARATE ILLUSTRATION

426-3312 **LINES GP-FUEL FILTER (*contd.*)** **i05838446**

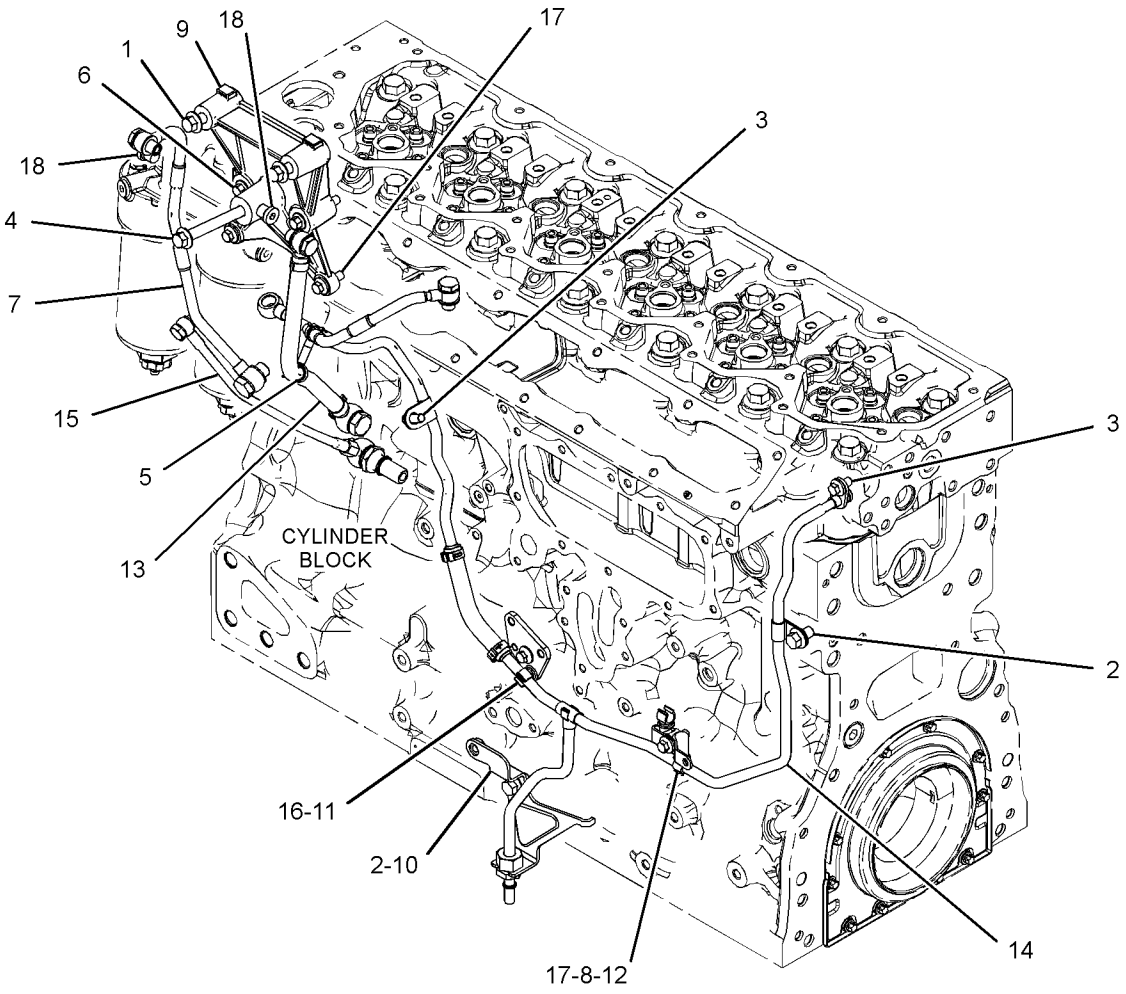

GRAPHIC #1 **<END>** g03699263

426-3312 LINES GP-FUEL FILTER

S/N: E7A1-UP
PART OF 393-4097, 446-7556 ENGINE AR-PRIMARY
ALSO AN ATTACHMENT
TYPE 2

SMCS-1261, 1274 **i06022418**

NOTE	REF NO	GRAPHIC REF	PART NUMBER	QTY	PART NAME 1 2 3 4 5 6 (PRODUCT LEVEL)	SEE PAGE
M	1	1	**6I-0593**	2	BOLT (M10X1.5X30-MM)	
M	2	1	**6I-4200**	2	BOLT (M10X1.5X16-MM)	
	3	1	**100-4458**	2	BOLT (M8X1.25X14-MM)	
	4	1	**164-7468**	1	BOLT (M10X1.5X95-MM)	
	5	1	**442-8569**	1	CLIP-PIPE	
	6	1	**208-9287**	2	BOLT-FLANGE HEAD (M8X1.25X50-MM)	
Y	7	1	**442-8465**	1	LINES GP-FUEL	84
	8	1	**389-5775**	1	BRACKET	
	9	1	**389-5784**	1	BRACKET-FILTER	
	10	1	**390-0755**	1	BRACKET AS	
	11	1	**390-8738**	1	SUPPORT GP-LINES	
		1	**366-9373**	1	CLIP	
	12	1	**391-1817**	1	SUPPORT GP-LINES	
		1	**366-9373**	2	CLIP	
Y	13	1	**442-8531**	1	LINES GP-FUEL	85
CY	14	1	**464-7899**	1	LINES GP-FUEL	86
Y	15	1	**433-1316**	1	LINES GP-FUEL	83
M	16	1	**6I-0217**	1	BOLT (M8X1.25X20-MM)	
M	17	1	**6I-0260**	3	BOLT (M8X1.25X25-MM)	
	18	1	*330-9723*	2	PLUG AS	
					(EACH INCLUDES)	
		1	**228-7100**	1	SEAL-O-RING	
		1	**241-6157**	1	PLUG	

C - CHANGE FROM PREVIOUS TYPE
M - METRIC PART
Y - SEPARATE ILLUSTRATION

426-3312 **LINES GP-FUEL FILTER (*contd.*)** **i06022418**

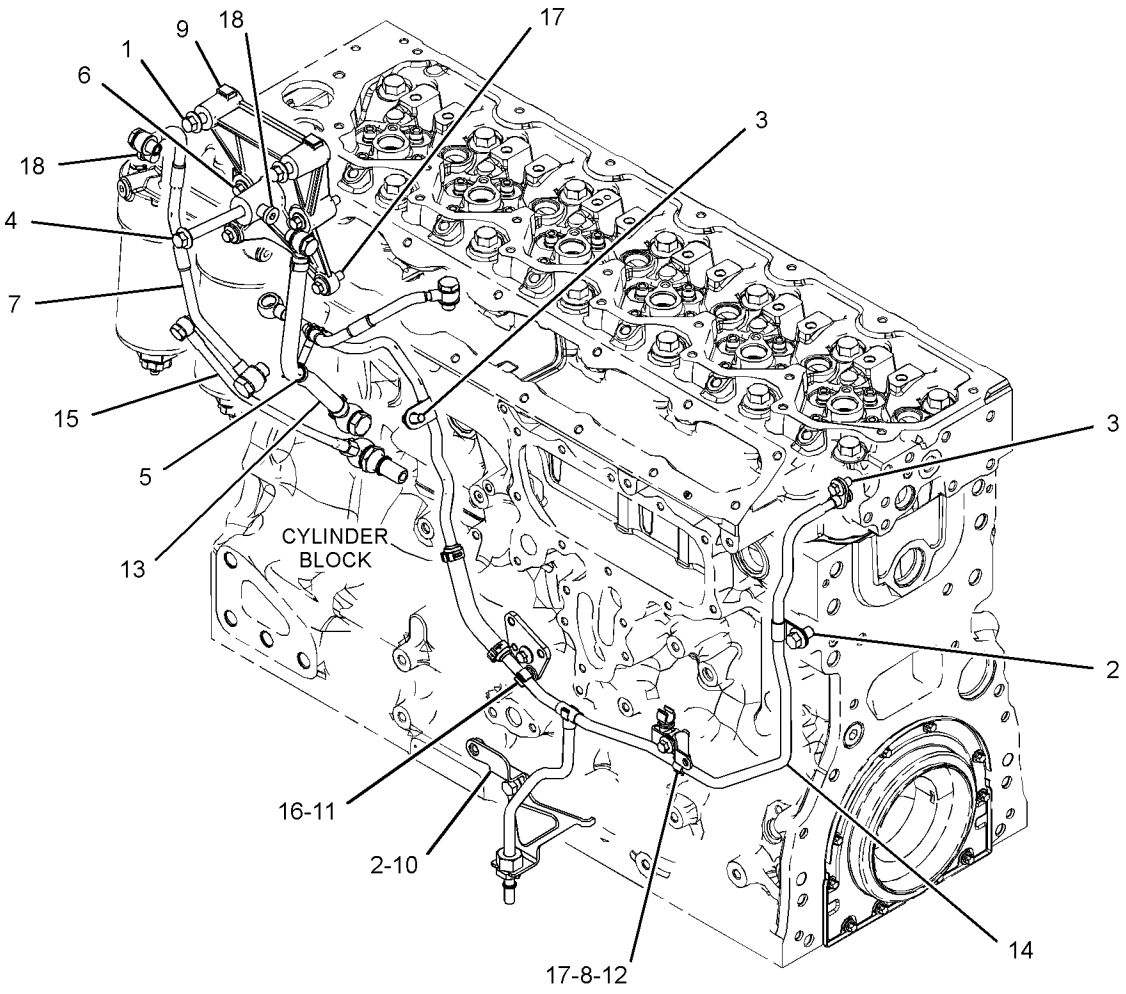

GRAPHIC #1 **<END>** g03699263

370-5520 LINES GP-FUEL INJECTION

S/N: E7A1-UP
PART OF 394-9639 RAIL GP-FUEL
ALSO AN ATTACHMENT

SMCS-1252, 1254

i05571932

NOTE	REF NO	GRAPHIC REF	PART NUMBER	QTY	PART NAME 1 2 3 4 5 6 (PRODUCT LEVEL)	SEE PAGE
	1	1	**395-1633**	1	BRACKET AS	
		1	**6I-0631**	1	BOLT (M6X1X12-MM)	
	2	1	**370-5516**	1	LINE AS-FUEL INJECTION	
	3	1	**370-5517**	1	LINE AS-FUEL INJECTION	
	4	1	**370-5518**	1	LINE AS-FUEL INJECTION	

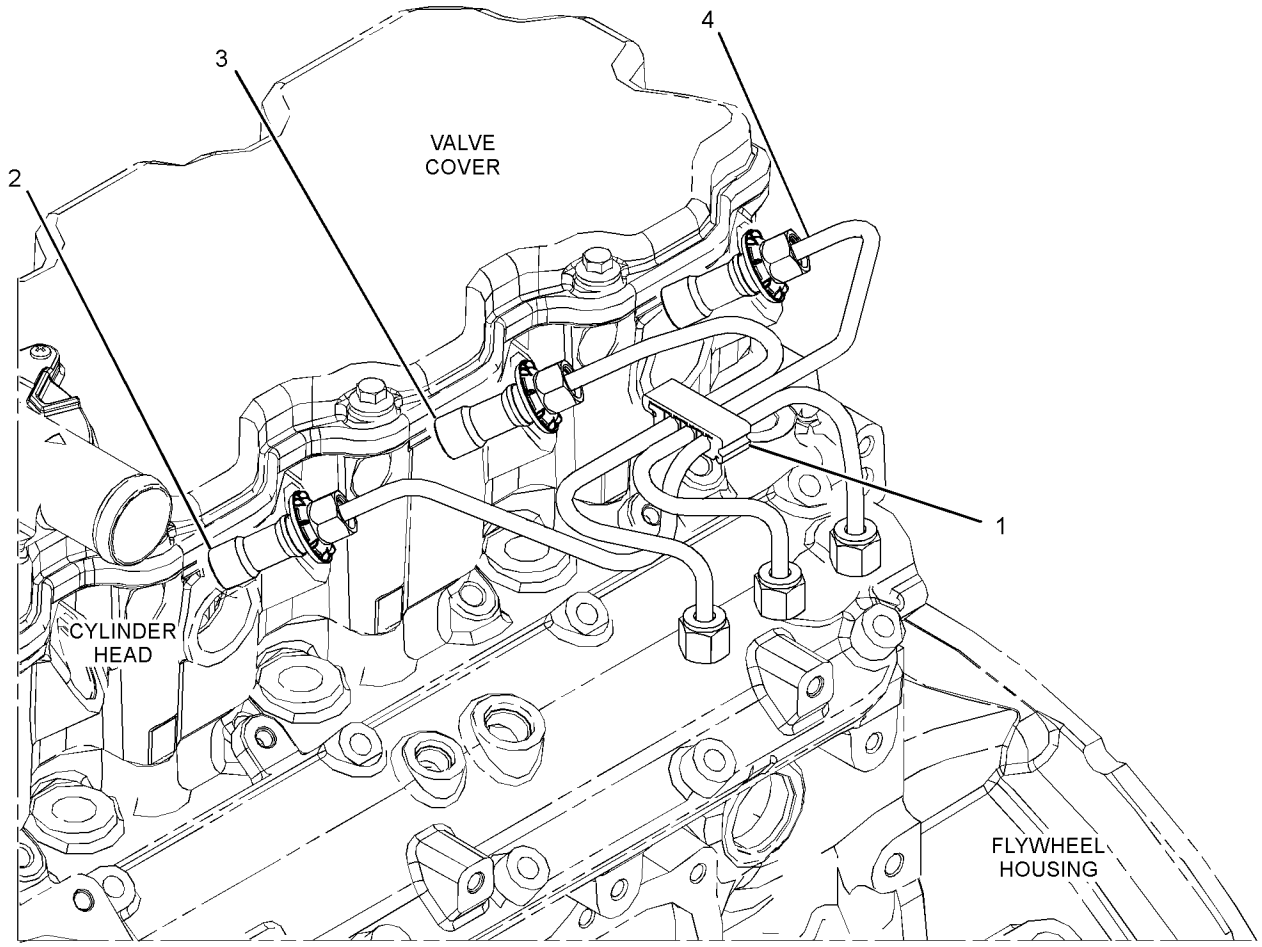

GRAPHIC #1

<END>

g03380791

394-0525 LINES GP-FUEL INJECTION

S/N: E7A1-UP
PART OF 394-9639 RAIL GP-FUEL
ALSO AN ATTACHMENT

SMCS-1252, 1254

i05571937

NOTE	REF NO	GRAPHIC REF	PART NUMBER	QTY	PART NAME 1 2 3 4 5 6 (PRODUCT LEVEL)	SEE PAGE
	1	1	**395-1633**	1	BRACKET AS	
	1A	1	**6I-0631**	1	BOLT (M6X1X12-MM)	
	2	1	**370-5513**	1	LINE AS-FUEL	
	3	1	**393-5467**	1	LINE AS-FUEL	
	4	1	**393-5468**	1	LINE AS-FUEL	

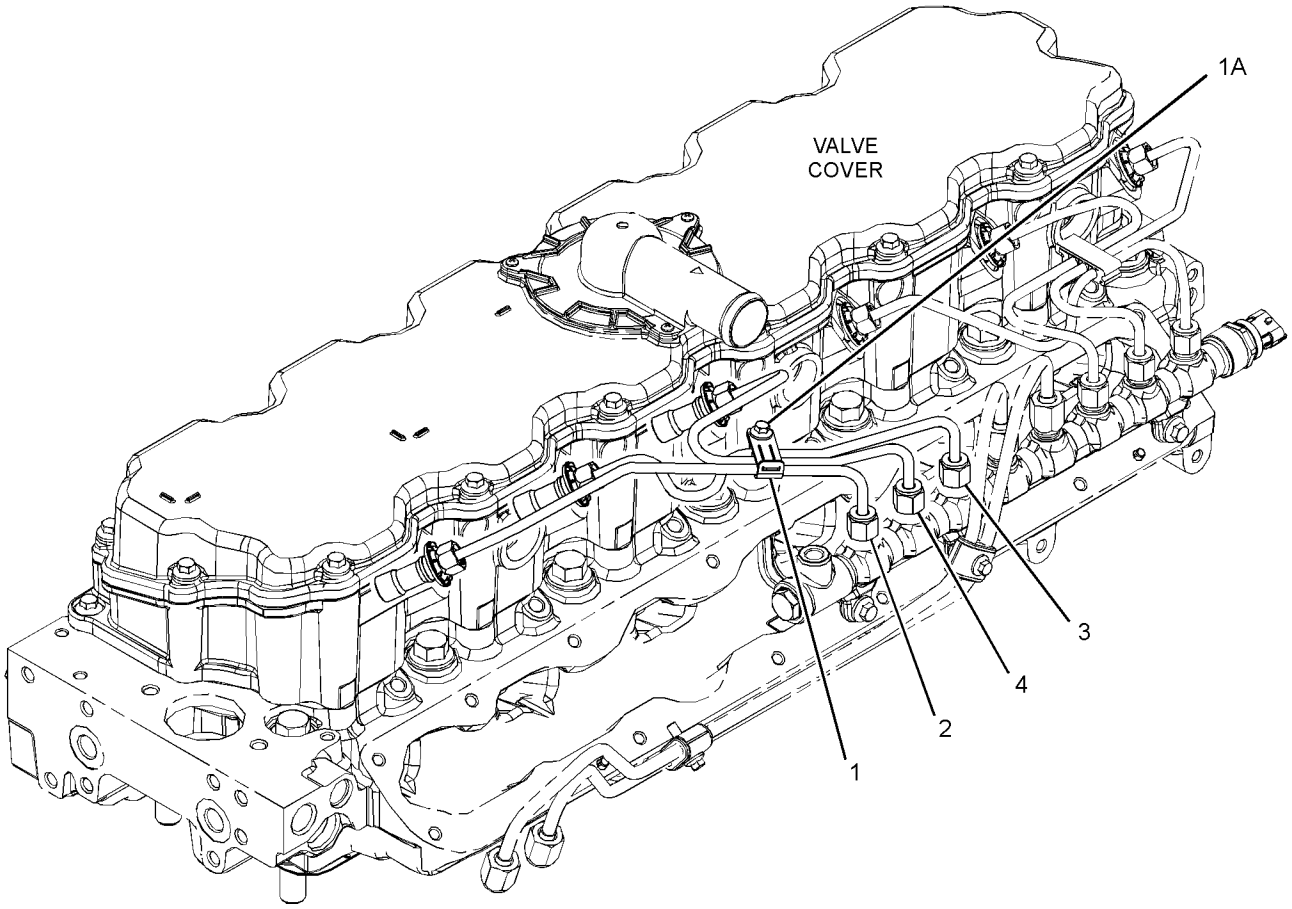

GRAPHIC #1

<END>

g03479680

391-4811 PUMP GP-FUEL INJECTION

S/N: E7A1-UP
PART OF 393-4097, 446-7556 ENGINE AR-PRIMARY
ALSO AN ATTACHMENT

SMCS-1251, 1290

i05472893

NOTE	REF NO	GRAPHIC REF	PART NUMBER	QTY	PART NAME 1 2 3 4 5 6 (PRODUCT LEVEL)	SEE PAGE
	1	1	**286-0123**	4	BOLT	
M	2	1	**6I-0654**	3	BOLT (M10X1.5X25-MM)	
	3	1	**371-2684**	1	BRACKET	
	4	1	**371-2691**	1	BRACKET	
	5	1	**371-7263**	1	LINE AS-FUEL	
	6	1	**375-2647**	1	PUMP GP-FUEL INJECTION	
		1	**375-8254**	1	VALVE	
		1	**376-6409**	1	SEAL	
		1	**376-6410**	1	RETAINER-WASHER	
		1	**376-6411**	1	NUT-SHAFT	
		1	**386-2971**	2	WASHER	
		1	**386-2976**	2	WASHER	
		1	**386-3819**	1	KEY-SHAFT	
	7	1	**387-8412**	1	GEAR-FUEL PUMP	
M	8	1	**6I-0217**	2	BOLT (M8X1.25X20-MM)	
	9	1	**346-0006**	1	BOLT-SPECIAL	
	10	1	**346-0007**	2	WASHER	
	11	1	**6I-0594**	1	NUT (M10X1.5-THD)	

M - METRIC PART

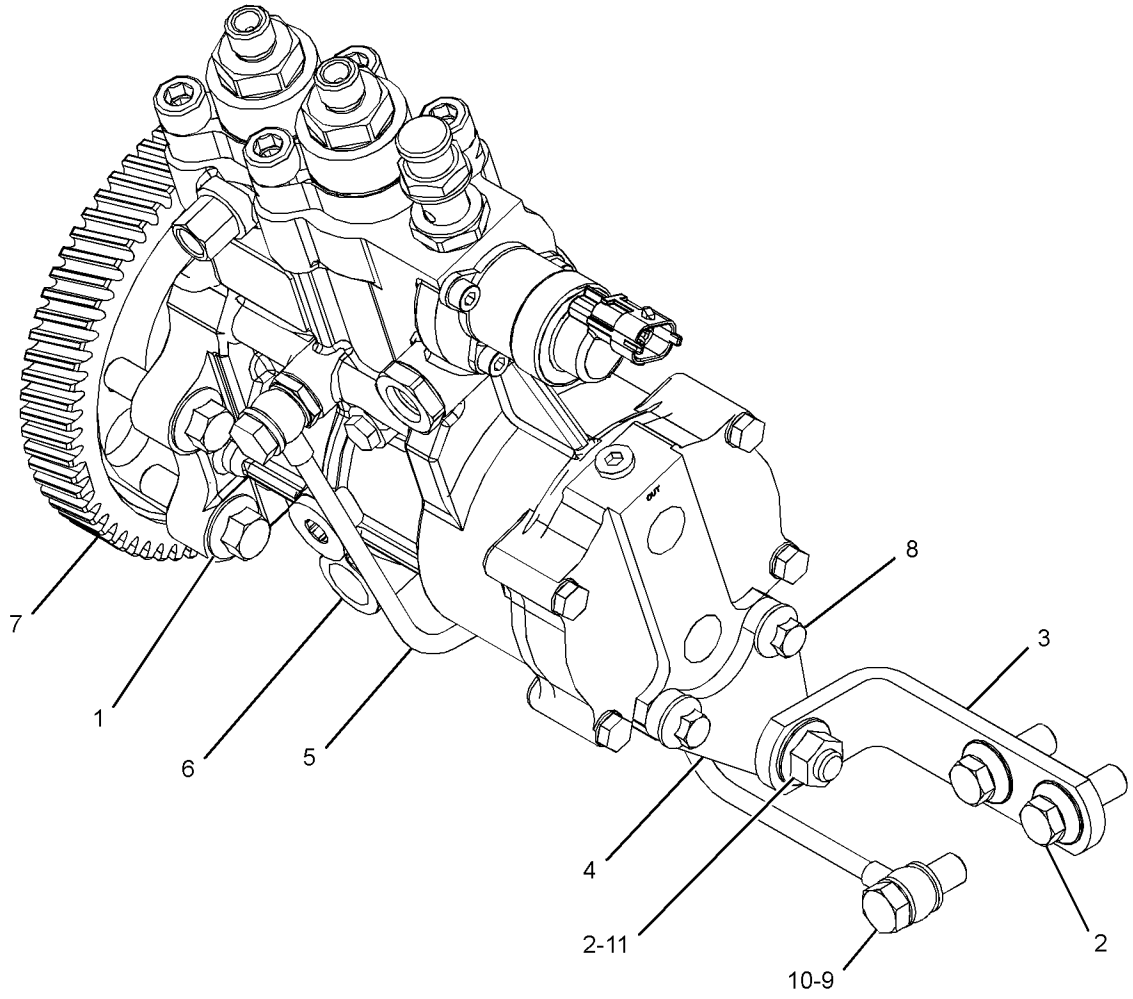

GRAPHIC #1

<END>

g03378913

394-9639 RAIL GP-FUEL

S/N: E7A1-UP
PART OF 393-4097, 446-7556 ENGINE AR-PRIMARY
ALSO AN ATTACHMENT

SMCS-1288 **i05489960**

NOTE	REF NO	GRAPHIC REF	PART NUMBER	QTY	PART NAME 1 2 3 4 5 6 (PRODUCT LEVEL)	SEE PAGE
M	1	1	**6I-0260**	3	BOLT (M8X1.25X25-MM)	
M	2	1	**099-6418**	1	NUT (M6X1-THD)	
	3	1	**206-1826**	2	BOLT	
Y	4	1	*370-5520*	1	LINES GP-FUEL INJECTION	91
	5	1	**375-0482**	4	CLAMP-PIPE	
	6	1	**375-0483**	2	INSERT-CLAMP	
	7	1	**375-2649**	1	RAIL GP-FUEL	
		1	**375-6988**	1	SENSOR (FUEL RAIL PRESSURE)	
		1	**398-6226**	1	VALVE (FUEL RAIL PRESSURE)	
	8	1	**393-2034**	1	LINE AS-FUEL	
	9	1	**393-2035**	1	LINE AS-FUEL	
Y	10	1	**394-0525**	1	LINES GP-FUEL INJECTION	92

M - METRIC PART
Y - SEPARATE ILLUSTRATION

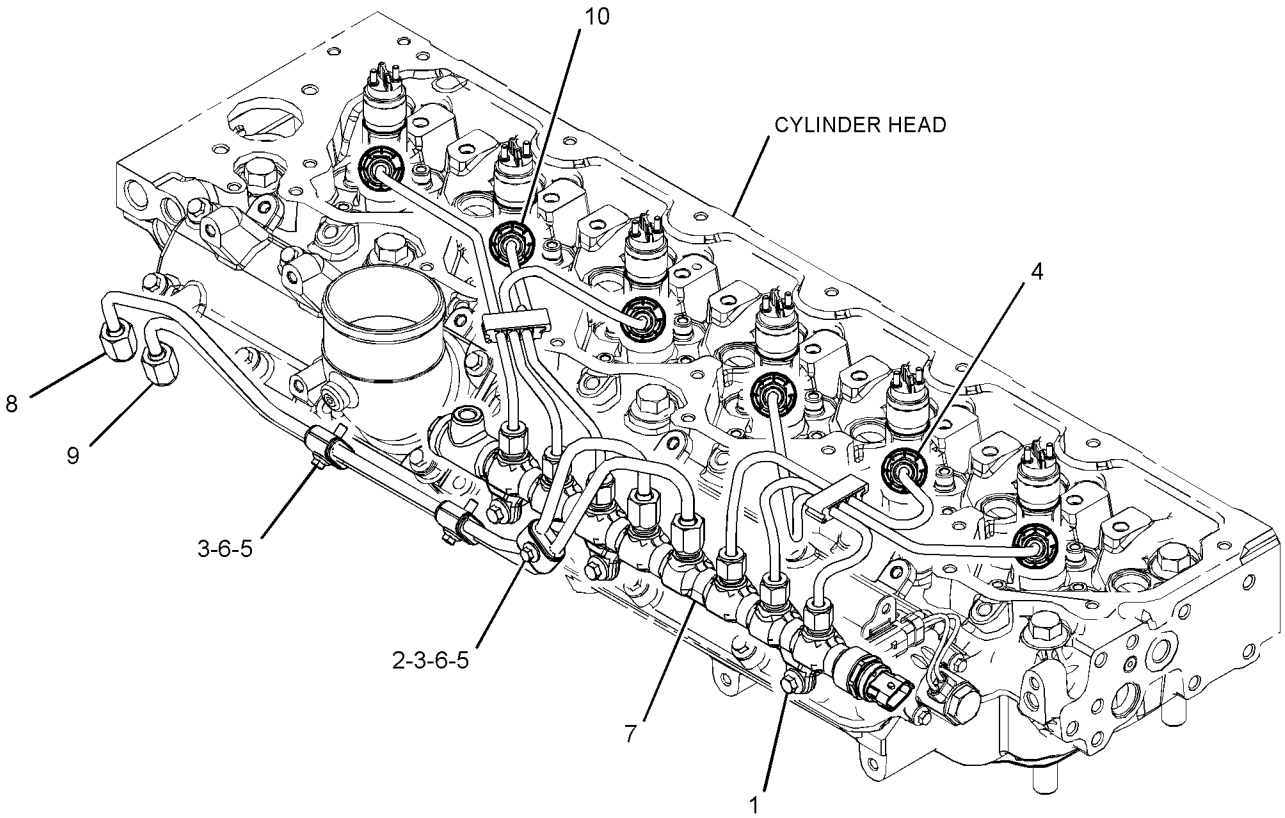

GRAPHIC #1 **<END>** g03380177

387-6100 TANK & MTG GP-FUEL

S/N: M5K1-UP

PART OF 387-6001 CHASSIS AR

SMCS-1273 **i06071400**

NOTE	REF NO	GRAPHIC REF	PART NUMBER	QTY	PART NAME 1 2 3 4 5 6 (PRODUCT LEVEL)	SEE PAGE
Y	1	1	**387-6101**	1	TANK GP-FUEL	96
	2	1	**187-7331**	8	MOUNT-RUBBER	
	3	1	**387-6121**	4	WASHER (20X55X8-MM THK)	
M	4	1	**7X-2554**	4	BOLT (M16X2X70-MM)	
					AVAILABLE REPAIR KIT(S):	
J			**350-7735**	1	KIT-CAP FILTER (FUEL TANK)	
					(INCLUDES BODY, GASKET, SCREWS & WASHERS)	

J - KIT MARKED J SERVICES PART(S) MARKED J
M - METRIC PART
Y - SEPARATE ILLUSTRATION

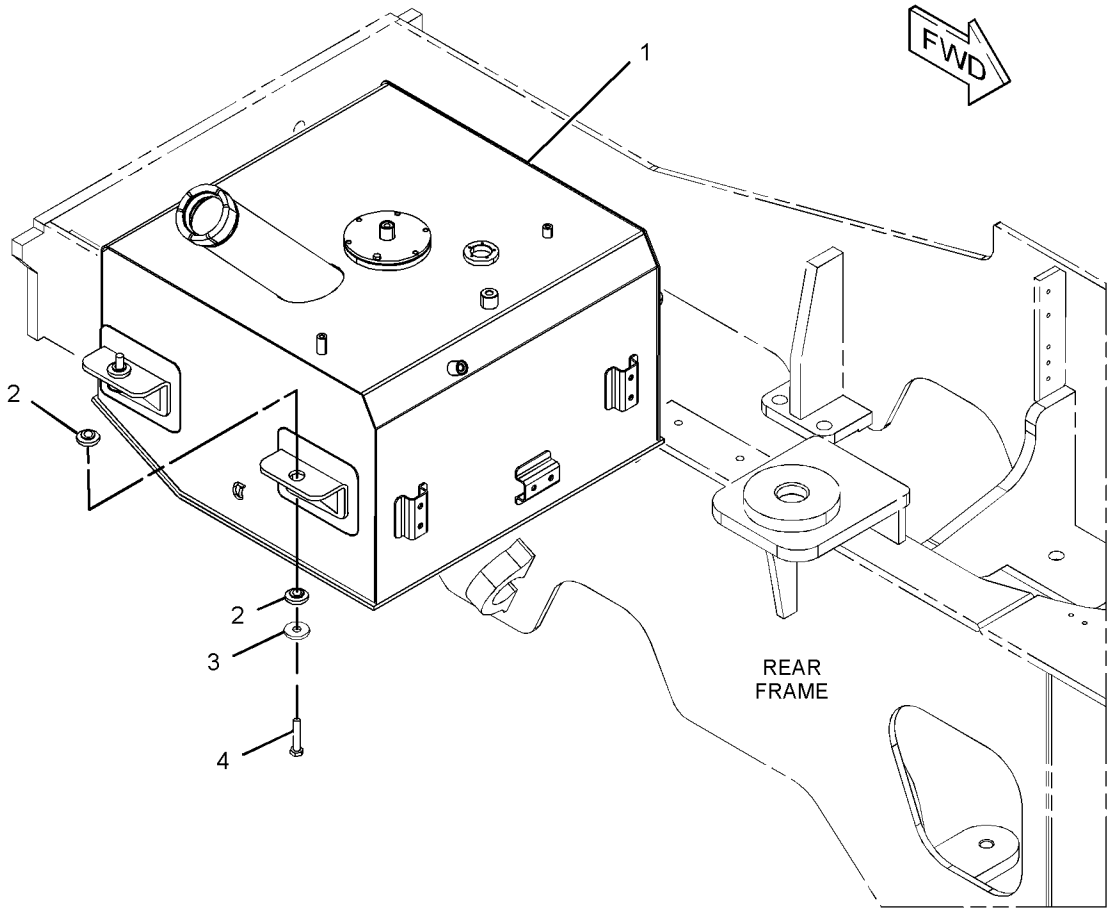

GRAPHIC #1 **<END>** g03668061

387-6101 TANK GP-FUEL

S/N: M5K1-UP
320-L (84.5-US GAL)
PART OF 387-6100 TANK & MTG GP-FUEL

SMCS-1273 **i05721491**

NOTE	REF NO	GRAPHIC REF	PART NUMBER	QTY	PART NAME 1 2 3 4 5 6 (PRODUCT LEVEL)	SEE PAGE
	1	1	**387-6102**	1	TANK AS-FUEL	
	2	1	**387-6129**	1	GASKET	
	3	1	**387-6130**	1	TUBE	
	4	1	**387-6140**	1	PLUG AS	
M	5	1	**8T-4189**	6	BOLT (M8X1.25X20-MM)	
	6	1	**8T-4224**	6	WASHER-HARD (8.8X16X2-MM THK)	
	7	1	**9P-7121**	1	STRAINER-FUEL	
	8	1	**357-7399**	1	CAP GP-FUEL FILLER	
		1	**349-7059**	1	CAP AS-FUEL (LOCKABLE, VENTED)	
		1	**350-7735**	1	KIT-CAP FILTER (FUEL TANK)	
					(INCLUDES BREATHER, GASKET, SCREWS & WASHERS)	
		1	**9X-8600**	1	SEAL-O-RING	
		1	**364-1995**	1	BOOT-FUEL CAP	

M - METRIC PART

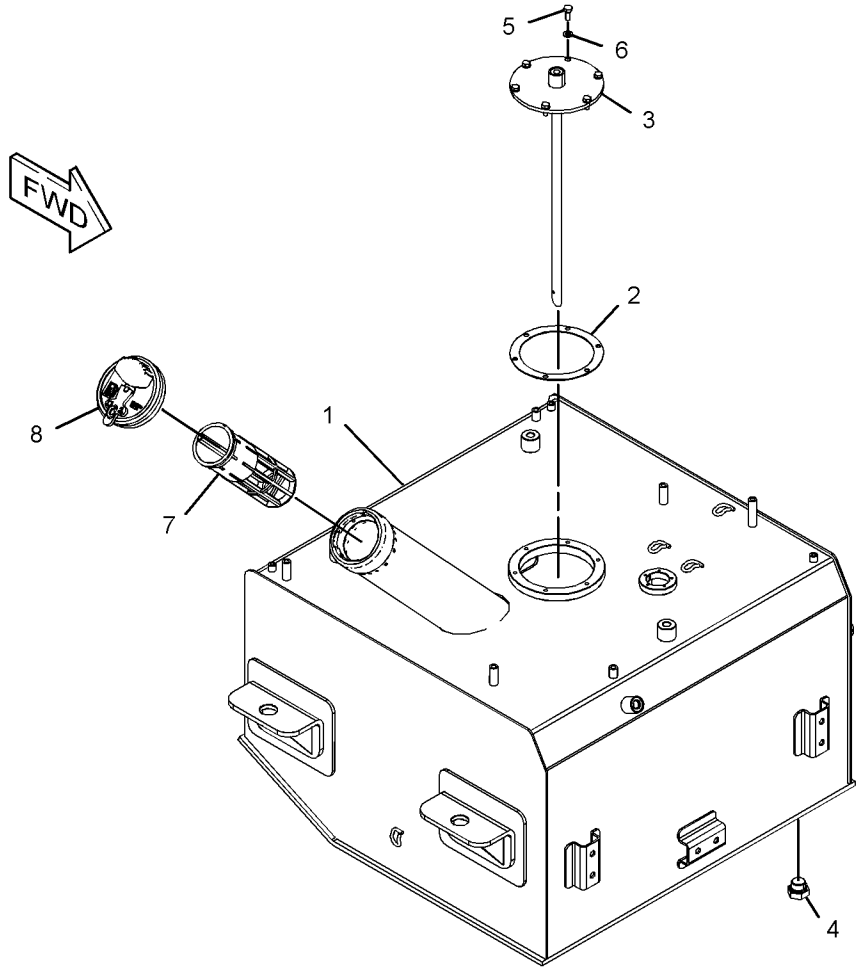

GRAPHIC #1 **<END>** g03699120

3E-6328 ALARM GP

S/N: M5K1-UP
24-VOLT
PART OF 392-8351 WIRING GP-CAB

SMCS-7400, 7402, 7407 **i06056673**

NOTE	REF NO	GRAPHIC REF	PART NUMBER	QTY	PART NAME 1 2 3 4 5 6 (PRODUCT LEVEL)	SEE PAGE
	1	1	**102-8802**	1	KIT-RECEPTACLE (2-PIN)	
					(INCLUDES RECEPTACLE AS & WEDGE)	
	2	1	**8T-8729**	2	PIN-CONNECTOR (16-GA TO 18-GA)	

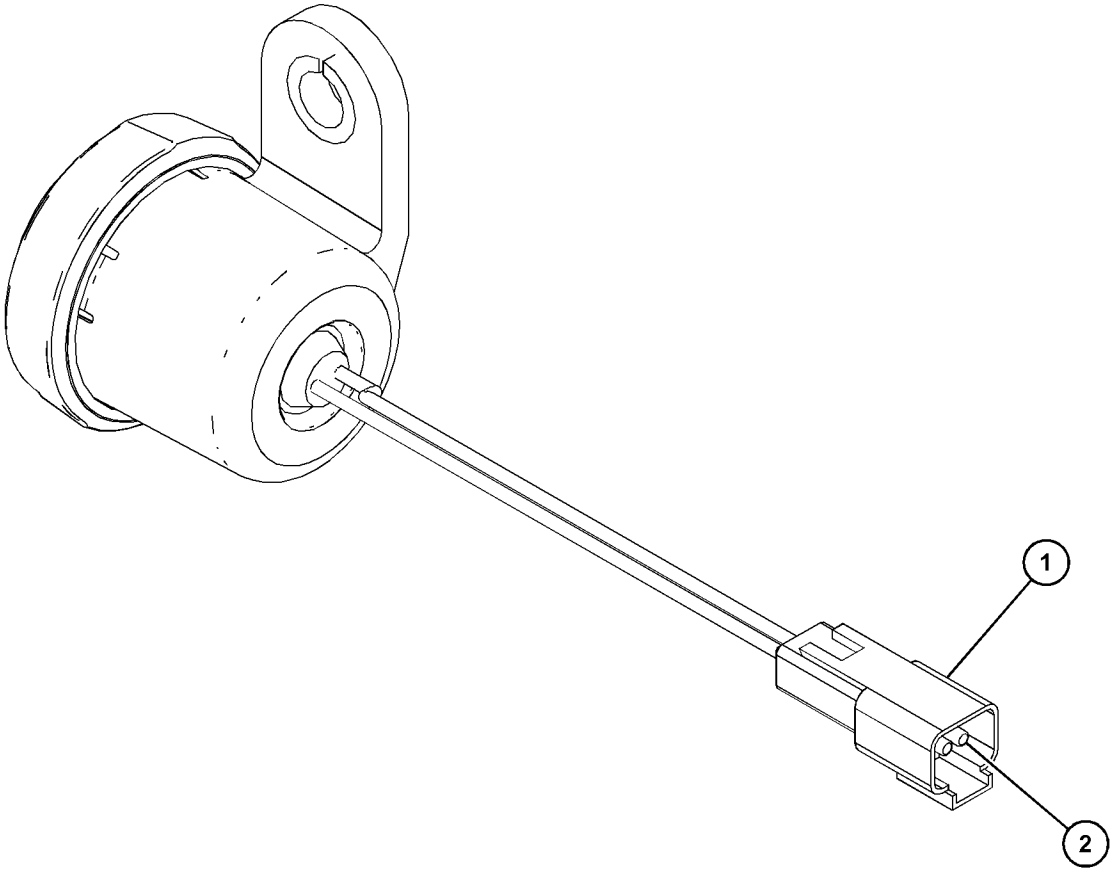

GRAPHIC #1 **<END>** g03798741

132-1829 ALARM GP

S/N: M5K1-UP
24-VOLT
PART OF 415-4230 SWITCH GP-QUICK COUPLER
AN ATTACHMENT

SMCS-7400, 7402, 7407 **i05412940**

NOTE	REF NO	GRAPHIC REF	PART NUMBER	QTY	PART NAME 1 2 3 4 5 6 (PRODUCT LEVEL)	SEE PAGE
	1	1	**102-8802**	2	KIT-RECEPTACLE (2-PIN)	
					(EACH INCLUDES RECEPTACLE AS & WEDGE)	
	2	1	**186-3735**	2	PIN-CONNECTOR (16-GA TO 18-GA)	

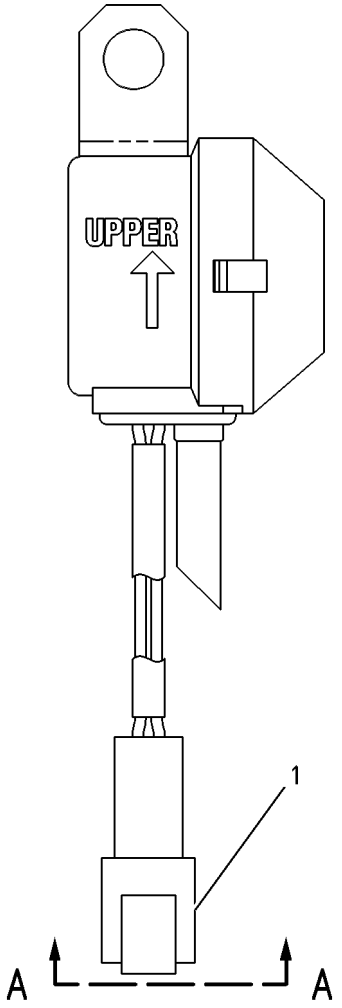

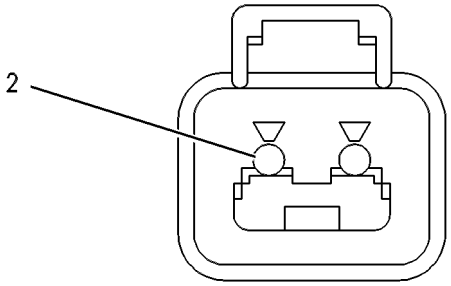

VIEW A-A

GRAPHIC #1 **<END>** g00272185

385-8001 ALTERNATOR GP-CHARGING

S/N: E7A1-UP
24-VOLTS, 115-AMPERES
PART OF 393-4097, 446-7556 ENGINE AR-PRIMARY
ALSO AN ATTACHMENT

SMCS-1405 **i05468997**

NOTE	REF NO	GRAPHIC REF	PART NUMBER	QTY	PART NAME 1 2 3 4 5 6 (PRODUCT LEVEL)	SEE PAGE
	1	1	**111-0859**	4	BOLT (M10X1.5X35-MM)	
	2	1	**164-7468**	4	BOLT (M10X1.5X95-MM)	
R	3	1	**344-5081**	1	ALTERNATOR GP-CHARGING	
	4	1	**394-4451**	1	BRACKET AS	
		1	**161-9820**	2	PIN	

R - REMFG PART MAY BE AVAILABLE

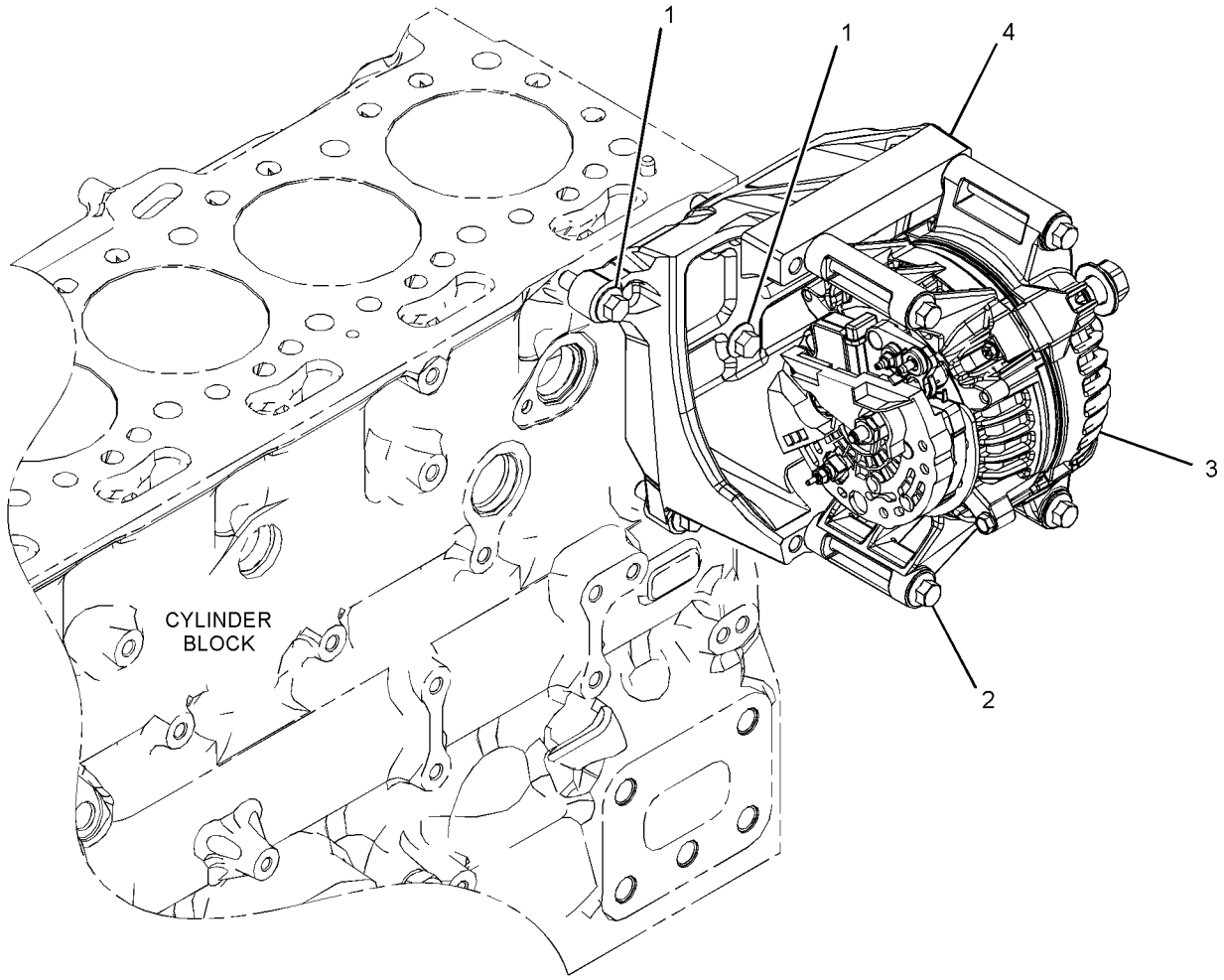

GRAPHIC #1 **<END>** g03380061

415-4246 BATTERY & BOX GP-HEAVY-DUTY

S/N: M5K1-UP
PART OF 432-7330 BOX GP-BATTERY
AN ATTACHMENT

SMCS-1401, 1402, 7257 **i05677891**

NOTE	REF NO	GRAPHIC REF	PART NUMBER	QTY	PART NAME 1 2 3 4 5 6 (PRODUCT LEVEL)	SEE PAGE
	1	1	**3E-8320**	1	PLATE-INSTRUCTION (BATTERY)	
	2	1	**8V-0622**	1	CABLE AS-BATTERY	
		1	**1M-6119**	2	BOLT (5/16-18X1.375-IN)	
		1	**1M-6120**	2	NUT (5/16-18-THD)	
		1	**8C-5917**	1	TERMINAL AS-BATTERY (POSITIVE)	
		1	**8T-9757**	1	TERMINAL AS-BATTERY (NEGATIVE)	
					(EACH TERMINAL AS INCLUDES)	
		1	**1M-6119**	1	BOLT (5/16-18X1.375-IN)	
		1	**1M-6120**	1	NUT (5/16-18-THD)	
E		1	**159-8049**		CABLE (00-GA, RED) (16-CM)	
		1	**9G-0003**	1	COVER AS-TERMINAL (BLACK)	
		1	**8L-8413**	1	STRAP-CABLE (WHITE)	
		1	**9G-0004**	1	COVER AS-TERMINAL (RED)	
		1	**8L-8413**	1	STRAP-CABLE (WHITE)	
	3	1	**9X-3404**	2	BATTERY (12-VOLT, MAINTENANCE FREE, WET)	
	4	1	**392-8391**	1	CABLE AS (BATTERY POSITIVE)	
		1	**1S-7251**	1	TERMINAL-CABLE (00-GA, 1/2-IN SCREW)	
E		1	**159-8049**		CABLE (00-GA, RED) (66-CM)	
		1	**8N-0869**	1	COVER-TERMINAL (RED)	
		1	**9G-0004**	1	COVER AS-TERMINAL (RED)	
		1	**8L-8413**	1	STRAP-CABLE (WHITE)	
		1	**8C-5917**	1	TERMINAL AS-BATTERY (POSITIVE)	
		1	**1M-6119**	1	BOLT (5/16-18X1.375-IN)	
		1	**1M-6120**	1	NUT (5/16-18-THD)	
	5	1	**392-8392**	1	CABLE AS (BATTERY NEGATIVE)	
E		1	**159-8050**		CABLE (00-GA, BLACK) (49-CM)	
		1	**9G-0005**	1	COVER AS-TERMINAL (BLACK)	
		1	**8L-8413**	1	STRAP-CABLE (WHITE)	
		1	**8C-5918**	1	TERMINAL AS (NEGATIVE)	
		1	**1M-6119**	1	BOLT (5/16-18X1.375-IN)	
		1	**1M-6120**	1	NUT (5/16-18-THD)	
		1	**315-0180**	1	TERMINAL-RING	
	6	1	**392-8393**	1	CABLE AS (DISCONNECT SWITCH)	
		1	**1S-7251**		TERMINAL-CABLE (00-GA, 1/2-IN SCREW)	
E		1	**159-8050**		CABLE (00-GA, BLACK) (32-CM)	
		1	**315-0180**	1	TERMINAL-RING	
		1	**351-9309**	1	TUBE-HEAT SHRINK (32-MM DIA)	
	7	1	**415-4191**	2	GROMMET	
	8	1	**1S-0994**	3	CLIP (LOOP)	
	9	1	**2V-1771**	3	GROMMET	
	10	1	**3S-2093**	7	STRAP-CABLE	
Y	11	1	**7N-0718**	1	SWITCH GP-DISCONNECT (BATTERY)	166
	12	1	**8T-4121**	5	WASHER-HARD (11X21X2.5-MM THK)	
M	13	1	**8T-4137**	4	BOLT (M10X1.5X20-MM)	
	14	1	**342-9671**	1	RECEPTACLE AS-AUXILIARY START	
	15	1	**392-8346**	1	STRAP	
	16	1	**415-4193**	1	CABLE AS (JUMP START)	
		1	**311-3475**	1	TERMINAL-RING	
		1	**351-9309**		TUBE-HEAT SHRINK (32-MM DIA) (3-CM)	
		1	**1S-7251**	1	TERMINAL-CABLE (00-GA, 1/2-IN SCREW)	
		1	**8N-0869**	1	COVER-TERMINAL (RED)	
		1	**159-8049**		CABLE (00-GA, RED) (61-CM)	
		1	**276-1786**	1	COVER-TERMINAL (RED)	
M	17	1	**5C-7261**	4	NUT (M8X1.25-THD)	
M	18	1	**8T-4189**	1	BOLT (M8X1.25X20-MM)	

415-4246 **BATTERY & BOX GP-HEAVY-DUTY (*contd.*)** **i05677891**

NOTE	REF NO	GRAPHIC REF	PART NUMBER	QTY	PART NAME 1 2 3 4 5 6 (PRODUCT LEVEL)	SEE PAGE
	19	1	**8T-4224**	5	WASHER-HARD (8.8X16X2-MM THK)	
M	20	1	**8T-4908**	4	BOLT (M8X1.25X25-MM)	
	21	1	**415-4214**	1	PLATE AS	
M		1	**8T-3490**	1	NUT-WELD (M10X1.5-THD)	
	22	1	**8S-2634**	1	COVER AS	
M	23	1	**8T-4136**	1	BOLT (M10X1.5X25-MM)	

E - ORDER BY THE CENTIMETER
M - METRIC PART
Y - SEPARATE ILLUSTRATION

415-4246 **BATTERY & BOX GP-HEAVY-DUTY (*contd.*)** **i05677891**

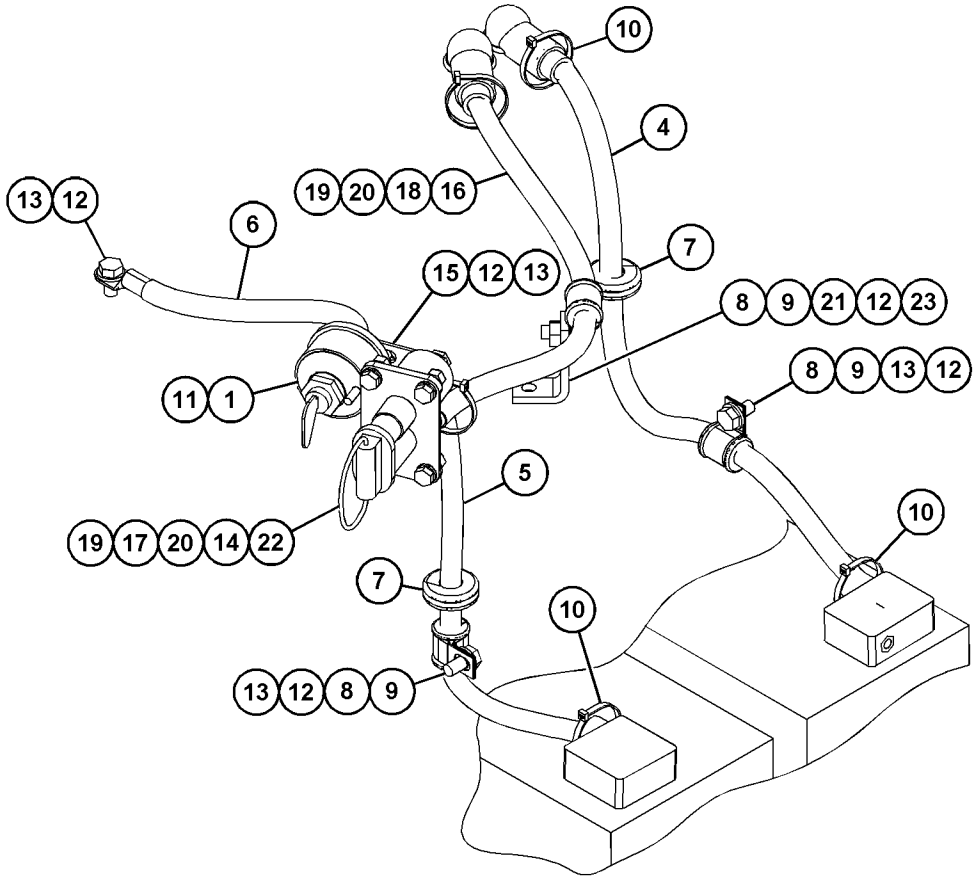

VIEW OF AREA A

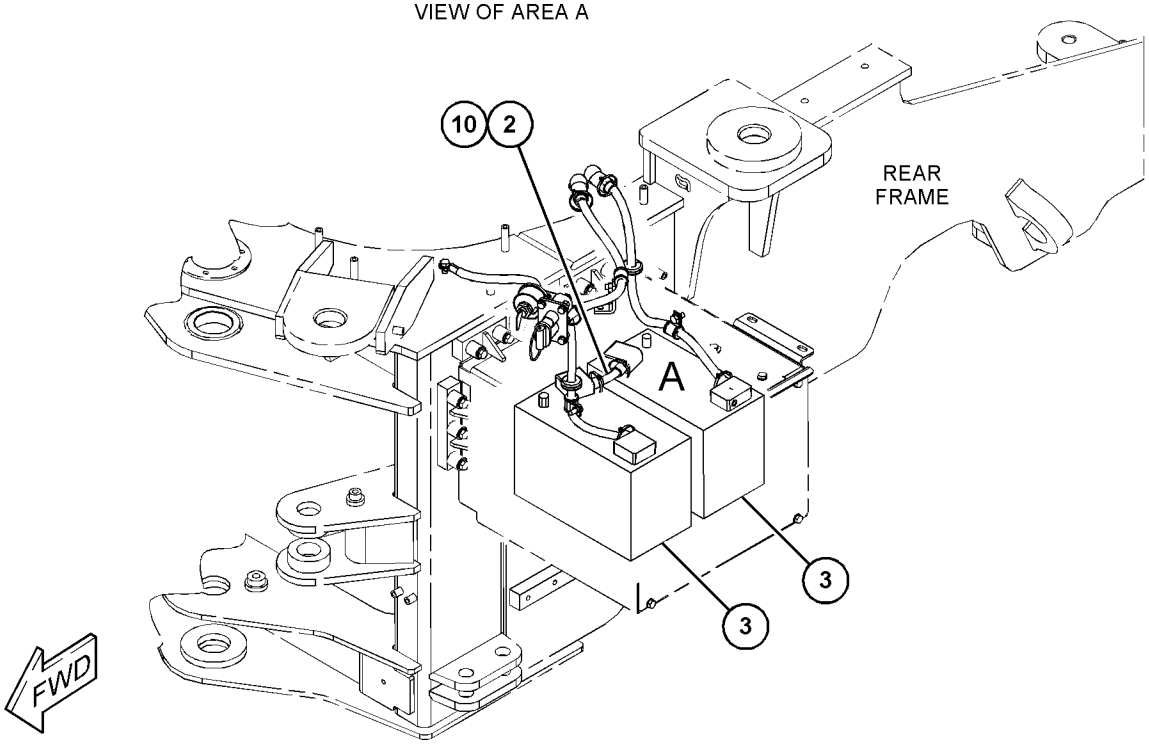

GRAPHIC #1 **<END>** g03708011

392-8394 BATTERY & WIRING GP

S/N: M5K1-UP
PART OF 392-3780 BOX GP-BATTERY
AN ATTACHMENT

SMCS-1401, 1402, 1408 **i05715528**

NOTE	REF NO	GRAPHIC REF	PART NUMBER	QTY	PART NAME 1 2 3 4 5 6 (PRODUCT LEVEL)	SEE PAGE
	1	1	**3E-8320**	1	PLATE-INSTRUCTION (BATTERY)	
	2	1	**392-8390**	1	CABLE AS	
E		1	**5P-0761**		CABLE (00-GA, RED) (31-CM)	
		1	**7T-9987**	1	COVER AS-TERMINAL (RED)	
		1	**8L-8413**	1	STRAP-CABLE (WHITE)	
		1	**7T-9988**	1	COVER AS-TERMINAL (BLACK)	
		1	**8L-8413**	1	STRAP-CABLE (WHITE)	
		1	**3S-6050**	1	TERMINAL AS-BATTERY (NEGATIVE)	
		1	**1M-6119**	1	BOLT (5/16-18X1.375-IN)	
		1	**1M-6120**	1	NUT (5/16-18-THD)	
		1	**3S-6049**	1	TERMINAL AS-BATTERY (POSITIVE)	
		1	**1M-6119**	1	BOLT (5/16-18X1.375-IN)	
		1	**1M-6120**	1	NUT (5/16-18-THD)	
	3	1	**392-8391**	1	CABLE AS	
		1	**1S-7251**	1	TERMINAL-CABLE (00-GA, 1/2-IN SCREW)	
E		1	**5P-0761**		CABLE (00-GA, RED) (66-CM)	
		1	**8N-0869**	1	COVER-TERMINAL (RED)	
		1	**9G-0004**	1	COVER AS-TERMINAL (RED)	
		1	**8L-8413**	1	STRAP-CABLE (WHITE)	
		1	**8C-5917**	1	TERMINAL AS-BATTERY (POSITIVE)	
		1	**1M-6119**	1	BOLT (5/16-18X1.375-IN)	
		1	**1M-6120**	1	NUT (5/16-18-THD)	
	4	1	**392-8392**	1	CABLE AS	
		1	**9G-0005**	1	COVER AS-TERMINAL (BLACK)	
		1	**8L-8413**	1	STRAP-CABLE (WHITE)	
		1	**8C-5918**	1	TERMINAL AS (NEGATIVE)	
		1	**1M-6119**	1	BOLT (5/16-18X1.375-IN)	
		1	**1M-6120**	1	NUT (5/16-18-THD)	
E		1	**159-8050**		CABLE (00-GA, BLACK) (49-CM)	
		1	**315-0180**	1	TERMINAL-RING	
	5	1	**392-8393**	1	CABLE AS	
		1	**1S-7251**	1	TERMINAL-CABLE (00-GA, 1/2-IN SCREW)	
E		1	**159-8050**		CABLE (00-GA, BLACK) (32-CM)	
		1	**315-0180**	1	TERMINAL-RING	
	6	1	**415-4191**	2	GROMMET	
	7	1	**1S-0994**	3	CLIP	
	8	1	**2V-1771**	3	GROMMET	
	9	1	**342-9671**	1	RECEPTACLE AS-AUXILIARY START	
Y	10	1	**7N-0718**	1	SWITCH GP-DISCONNECT (BATTERY)	166
	11	1	**8T-4121**	5	WASHER-HARD (11X21X2.5-MM THK)	
M	12	1	**8T-4137**	4	BOLT (M10X1.5X20-MM)	
	13	1	**9X-3404**	2	BATTERY (12-VOLT, MAINTENANCE FREE, WET)	
	14	1	**392-8346**	1	STRAP	
	15	1	**415-4214**	1	PLATE AS	
M		1	**8T-3490**	1	NUT-WELD (M10X1.5-THD)	
	16	1	**3S-2093**	7	STRAP-CABLE	
	17	1	**415-4193**	1	CABLE AS	
		1	**1S-7251**	1	TERMINAL-CABLE (00-GA, 1/2-IN SCREW)	
		1	**8N-0869**	1	COVER-TERMINAL (RED)	
E		1	**159-8049**		CABLE (00-GA, RED) (61-CM)	
		1	**276-1786**	1	COVER-TERMINAL (RED)	
		1	**311-3475**	1	TERMINAL-RING	
E		1	**351-9309**		TUBE-HEAT SHRINK (32-MM DIA) (3-CM)	
M	18	1	**6V-3940**	4	BOLT (M8X1.25X25-MM)	
M	19	1	**5C-7261**	4	NUT (M8X1.25-THD)	

392-8394 **BATTERY & WIRING GP (*contd.*)** **i05715528**

NOTE	REF NO	GRAPHIC REF	PART NUMBER	QTY	PART NAME 1 2 3 4 5 6 (PRODUCT LEVEL)	SEE PAGE
	20	1	**8S-2634**	1	COVER AS	
M	21	1	**8T-4136**	1	BOLT (M10X1.5X25-MM)	
M	22	1	**8T-4189**	1	BOLT (M8X1.25X20-MM)	
	23	1	**8T-4224**	5	WASHER-HARD (8.8X16X2-MM THK)	

E - ORDER BY THE CENTIMETER
M - METRIC PART
Y - SEPARATE ILLUSTRATION

392-8394 **BATTERY & WIRING GP (*contd.*)** **i05715528**

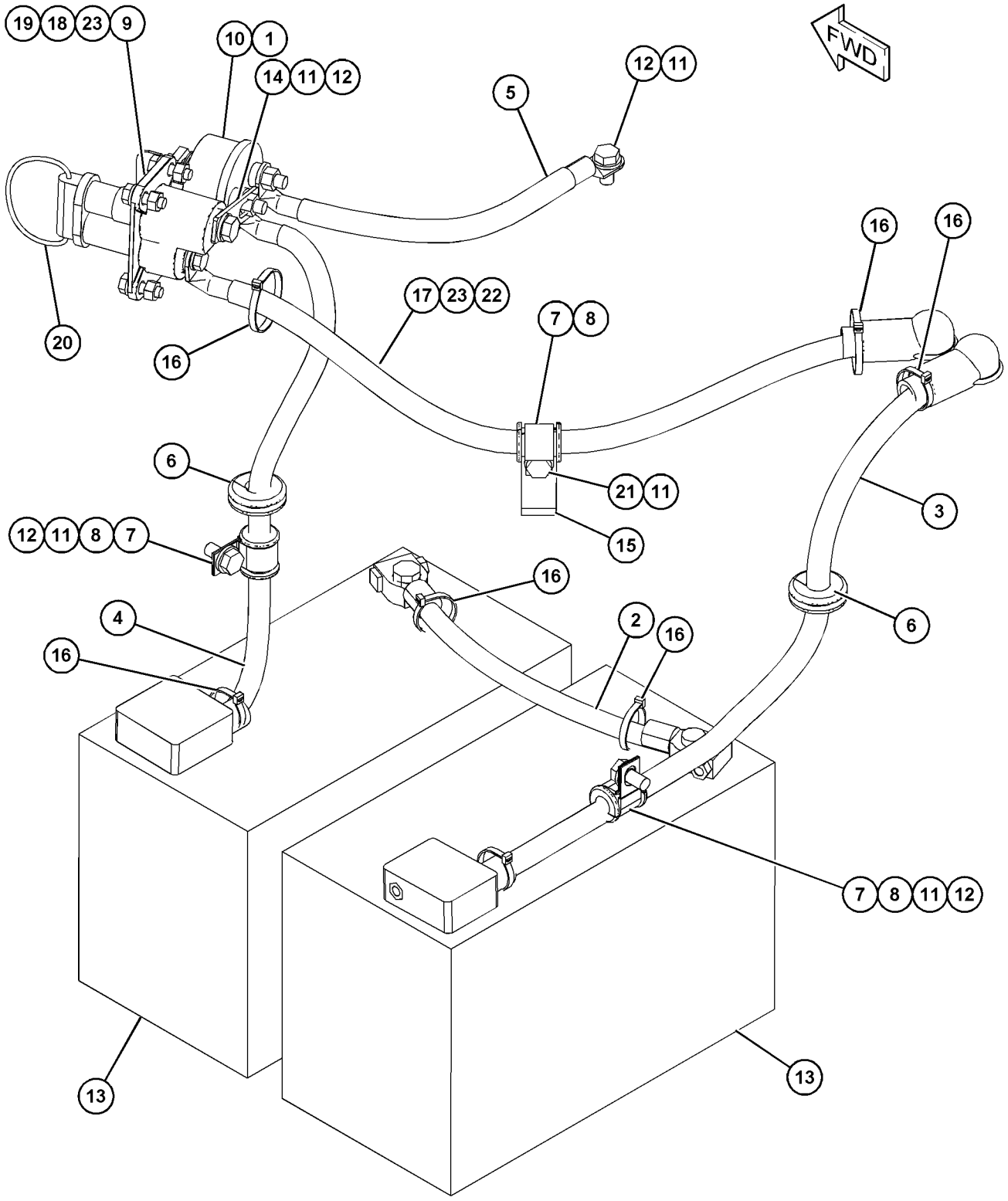

GRAPHIC #1 **<END>** g03699180

322-3305 BLOCK GP-JUNCTION–BATTERY

S/N: M5K1-UP

PART OF 392-8362 WIRING GP-CHASSIS

SMCS-1408, 7426 **i05737033**

NOTE	REF NO	GRAPHIC REF	PART NUMBER	QTY	PART NAME 1 2 3 4 5 6 (PRODUCT LEVEL)	SEE PAGE
	1	1	**5G-6505**	3	WASHER (25X38X14-MM THK)	
	2	1	**8C-6358**	1	BLOCK AS-JUNCTION (BATTERY)	
	2A	1	**7F-0560**	6	WASHER (0.516X0.938X0.101-IN THK)	
	2B	1	**8T-3518**	6	NUT-FULL (1/2-13-THD)	

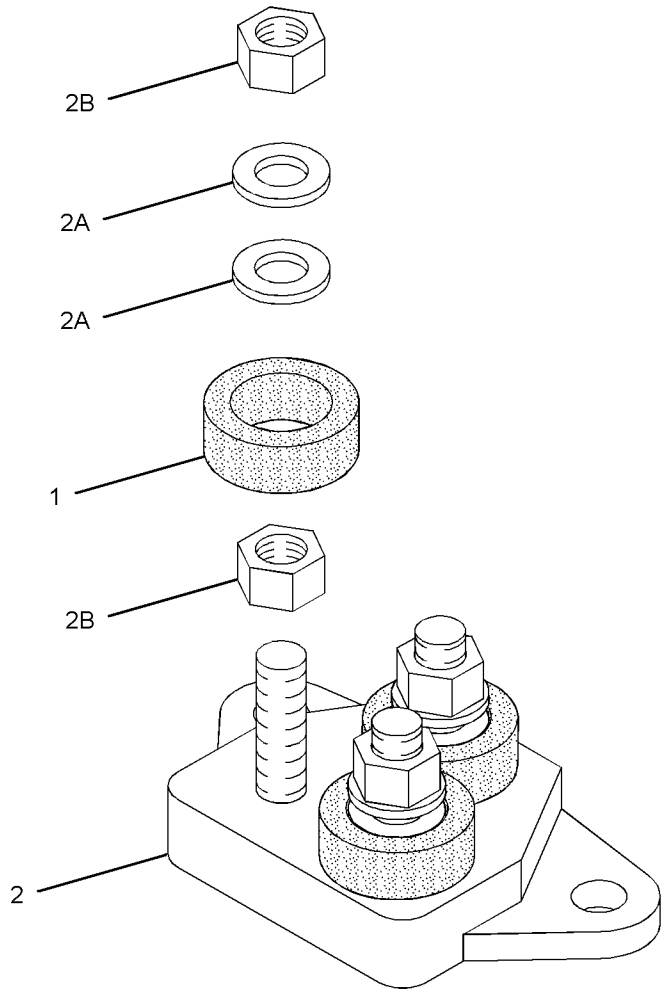

GRAPHIC #1 **<END>** g03664766

450-4860 BRACKET GP-SUPPORT

S/N: M5K1-UP
PART OF 387-6026 CONVERSION AR-ROADING
AN ATTACHMENT

SMCS-0635, 1408 **i06062385**

NOTE	REF NO	GRAPHIC REF	PART NUMBER	QTY	PART NAME 1 2 3 4 5 6 (PRODUCT LEVEL)	SEE PAGE
	1	1	**450-4861**	1	BRACKET AS (LH)	
	2	1	**450-4867**	1	BRACKET AS (RH)	
	3	1	**8T-4121**	6	WASHER-HARD (11X21X2.5-MM THK)	
M	4	1	**8T-4136**	6	BOLT (M10X1.5X25-MM)	

M - METRIC PART

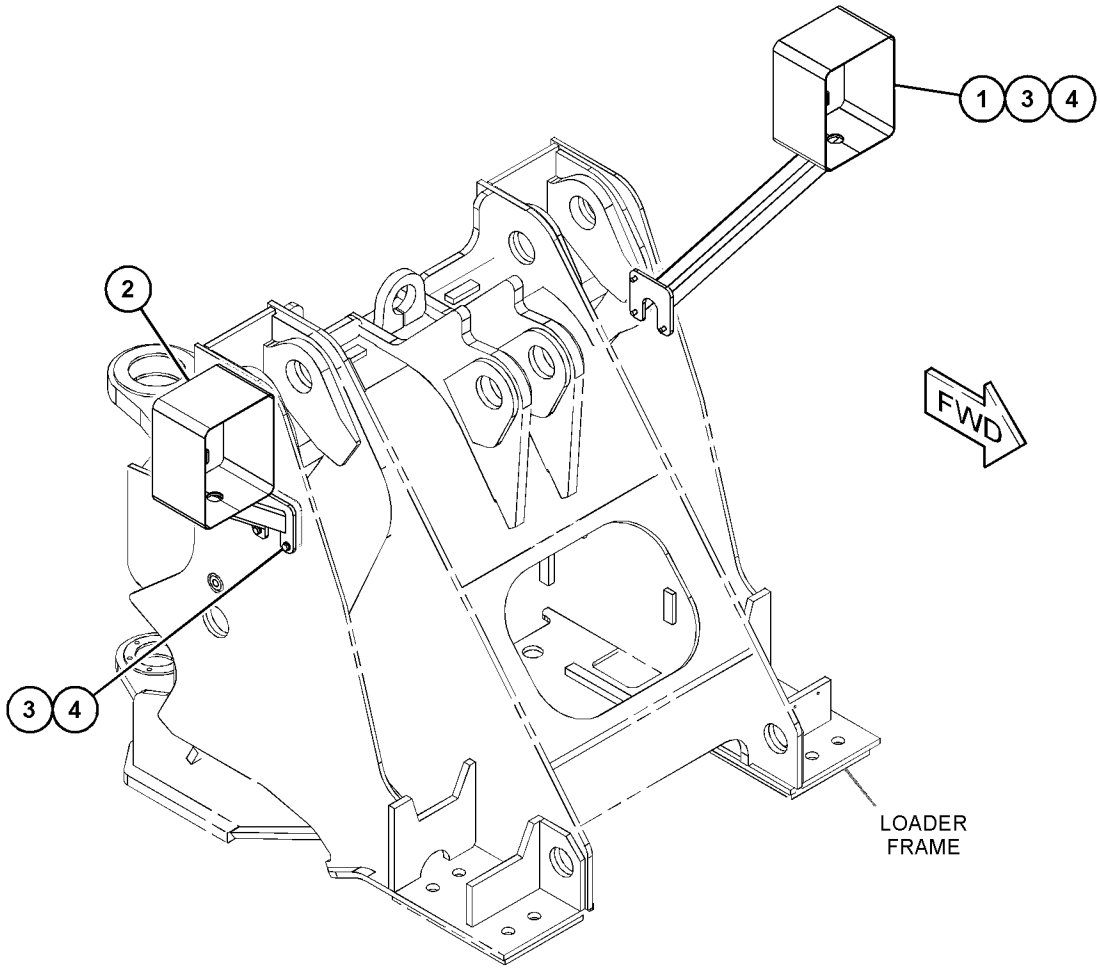

GRAPHIC #1 **<END>** g03798776

415-4209 CAMERA & WIRING GP

S/N: M5K1-UP
PART OF 415-4205 CAMERA AR
AN ATTACHMENT

SMCS-7348 **i05401076**

NOTE	REF NO	GRAPHIC REF	PART NUMBER	QTY	PART NAME 1 2 3 4 5 6 (PRODUCT LEVEL)	SEE PAGE
	1	1	**8T-4224**	4	WASHER-HARD (8.8X16X2-MM THK)	
	2	1	**268-8643**	1	CABLE AS	
J	3	1	**347-1668**	1	CAMERA GP (115-DEG, COLOR)	
	4	1	**7K-1181**	20	STRAP-CABLE	
M	5	1	**8T-4189**	4	BOLT (M8X1.25X20-MM)	
	6	1	**258-7485**	1	BRACKET	
					AVAILABLE REPAIR KIT(S):	
J			**251-4162**	1	KIT-BRACKET (CAMERA)	
					(INCLUDES BRACKET, BOLTS, NUTS, GASKET & WRENCH)	

J - KIT MARKED J SERVICES PART(S) MARKED J
M - METRIC PART

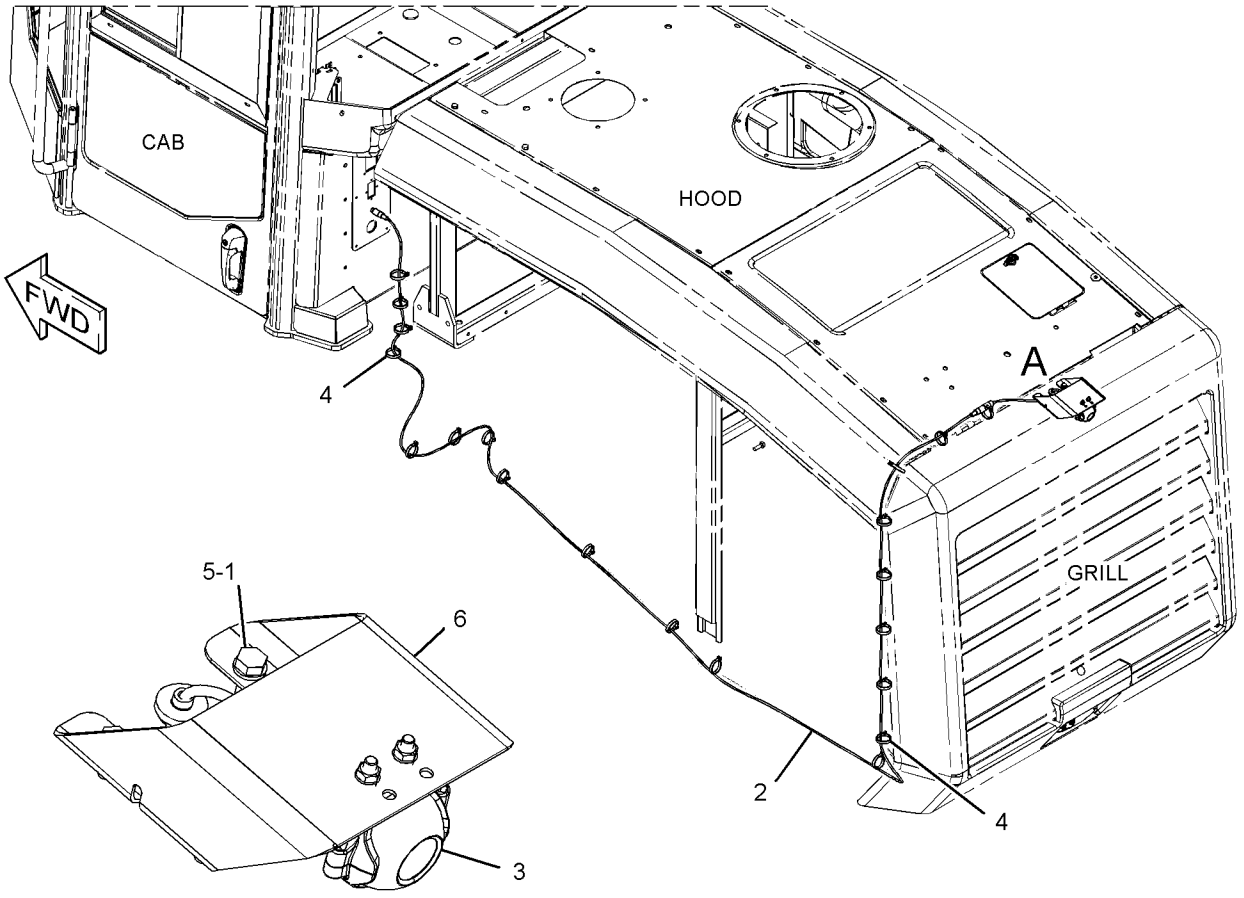

VIEW OF AREA A

GRAPHIC #1 **<END>** g03426937

415-4205 CAMERA AR

S/N: M5K1-UP
CANNOT BE USED WITH 387-6027 CONVERSION AR-BRAKE CONTROL
PART OF 387-6027 CONVERSION AR-BRAKE CONTROL
AN ATTACHMENT

SMCS-7348 **i05401071**

NOTE	PART NUMBER	QTY	PART NAME 1 2 3 4 5 6 (PRODUCT LEVEL)	SEE PAGE
Y	*415-4209*	1	CAMERA & WIRING GP	108
Y	*415-4208*	1	WIRING GP-CAMERA	181

Y - SEPARATE ILLUSTRATION

<END>

371-2537 CONTROL GP-ENGINE ELECTRONIC

S/N: E7A1-UP

PART OF 393-4097, 446-7556 ENGINE AR-PRIMARY

ALSO AN ATTACHMENT

SMCS-1901 **i05469093**

NOTE	REF NO	GRAPHIC REF	PART NUMBER	QTY	PART NAME 1 2 3 4 5 6 (PRODUCT LEVEL)	SEE PAGE
	1	1	**7W-2632**	1	WASHER (8.5X16.8X1.6-MM THK)	
	2	1	**217-0099**	4	SPACER (8.2X25X2-MM THK)	
	3	1	**278-5203**	4	SPACER	
	4	1	**155-0576**	8	MOUNT-ISOLATION	
	5	1	**6I-0456**	4	BOLT (M8X1.25X45-MM)	

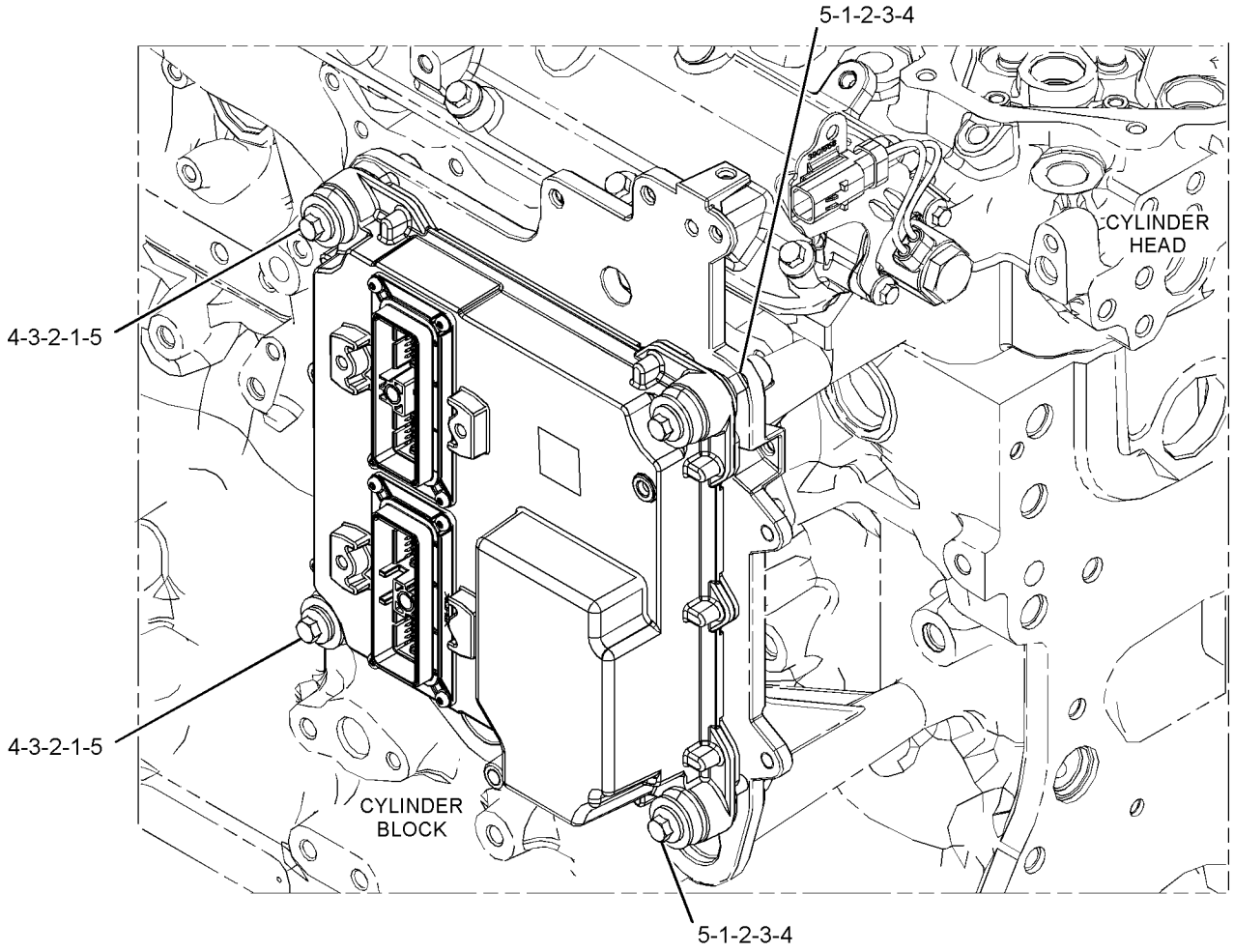

GRAPHIC #1 **<END>** g03379047

351-8490 CONTROL GP-UNPROGRAMMED–PRODUCT LINK 522

S/N: M5K1-UP
WITH SIM
PART OF 392-8363 INSTALLATION GP-COMMUNICATION
AN ATTACHMENT

SMCS-7610 **i05794898**

NOTE	REF NO	GRAPHIC REF	PART NUMBER	QTY	PART NAME 1 2 3 4 5 6 (PRODUCT LEVEL)	SEE PAGE
	1	1	**346-7763**	1	COVER AS	
	2	1	**351-8488**	1	CARD-MEMORY (SUBSCRIBER IDENTITY MODULE)	
	3	1	**7X-6315**	1	STRAP AS-GROUND	
D		1	**5P-6006**		TUBE-HEAT SHRINK (9.52-MM DIA) (0.1-M)	
		1	**2L-8078**	1	TERMINAL-RING (14-GA TO 16-GA, 5/16-IN SCREW)	
		1	**139-6911**	1	RING-TERMINAL	
M	4	1	**342-9022**	4	SCREW-PAN HEAD (M2.5X0.45X8-MM)	
	5	1	**342-9290**	1	SCREW-PAN HEAD (M4X0.7-THD)	
	6	1	**134-4126**	1	WASHER (4.52X8.28X0.76-MM THK)	
F			**449-6277**	1	SOFTWARE GP-ELECTRONIC	

D - ORDER BY THE METER
F - NOT SHOWN
M - METRIC PART

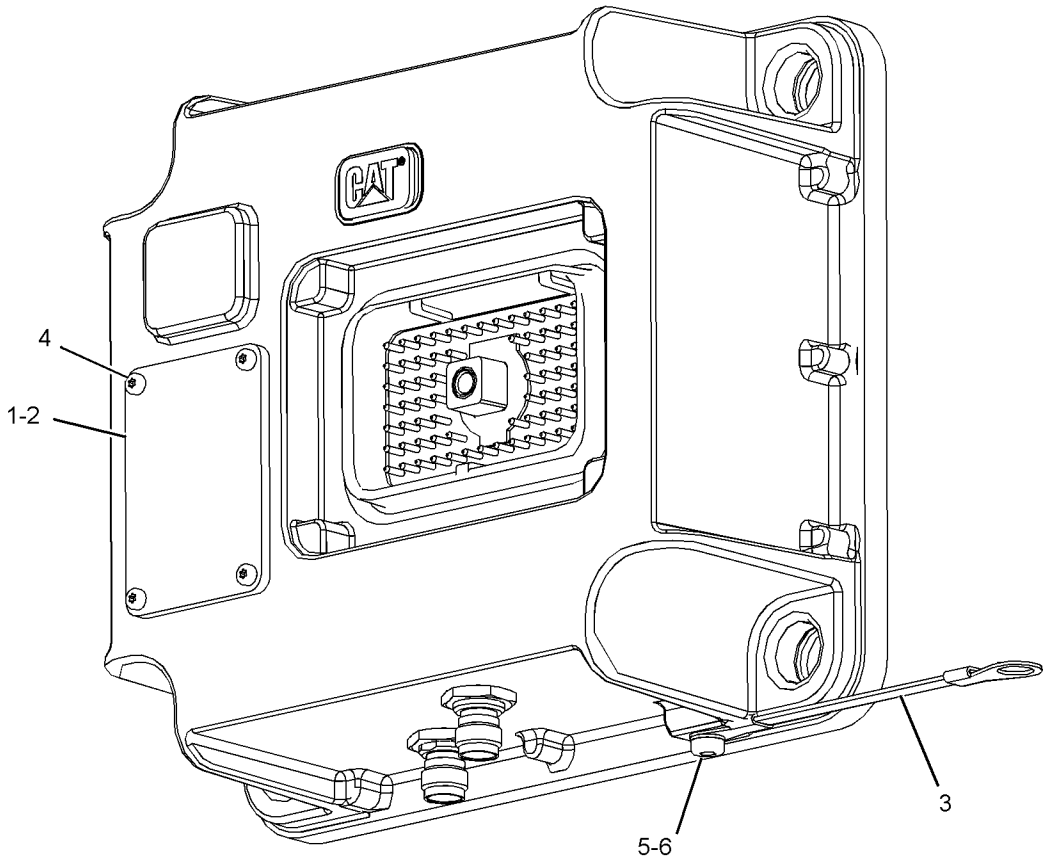

GRAPHIC #1 **<END>** g02330133

372-4531 CONTROL GP-UNPROGRAMMED–PRODUCT LINK 522, CHINA

S/N: M5K1-UP
WITH SIM
PART OF 392-8355 INSTALLATION GP-COMMUNICATION
AN ATTACHMENT

SMCS-7610 **i06060246**

NOTE	REF NO	GRAPHIC REF	PART NUMBER	QTY	PART NAME 1 2 3 4 5 6 (PRODUCT LEVEL)	SEE PAGE
	1	1	**346-7763**	1	COVER AS	
	2	1	**372-4532**	1	CARD-MEMORY (SUBSCRIBER IDENTITY MODULE)	
	3	1	**7X-6315**	1	STRAP AS-GROUND	
M	4	1	**342-9022**	4	SCREW-PAN HEAD (M2.5X0.45X8-MM)	
	5	1	**342-9290**	1	SCREW-PAN HEAD (M4X0.7-THD)	
	6	1	**134-4126**	1	WASHER (4.52X8.28X0.76-MM THK)	
	7	1	**276-4053**	1	FILM-IDENTIFICATION (CAT)	
F			**449-6277**	1	SOFTWARE GP-ELECTRONIC	

F - NOT SHOWN
M - METRIC PART

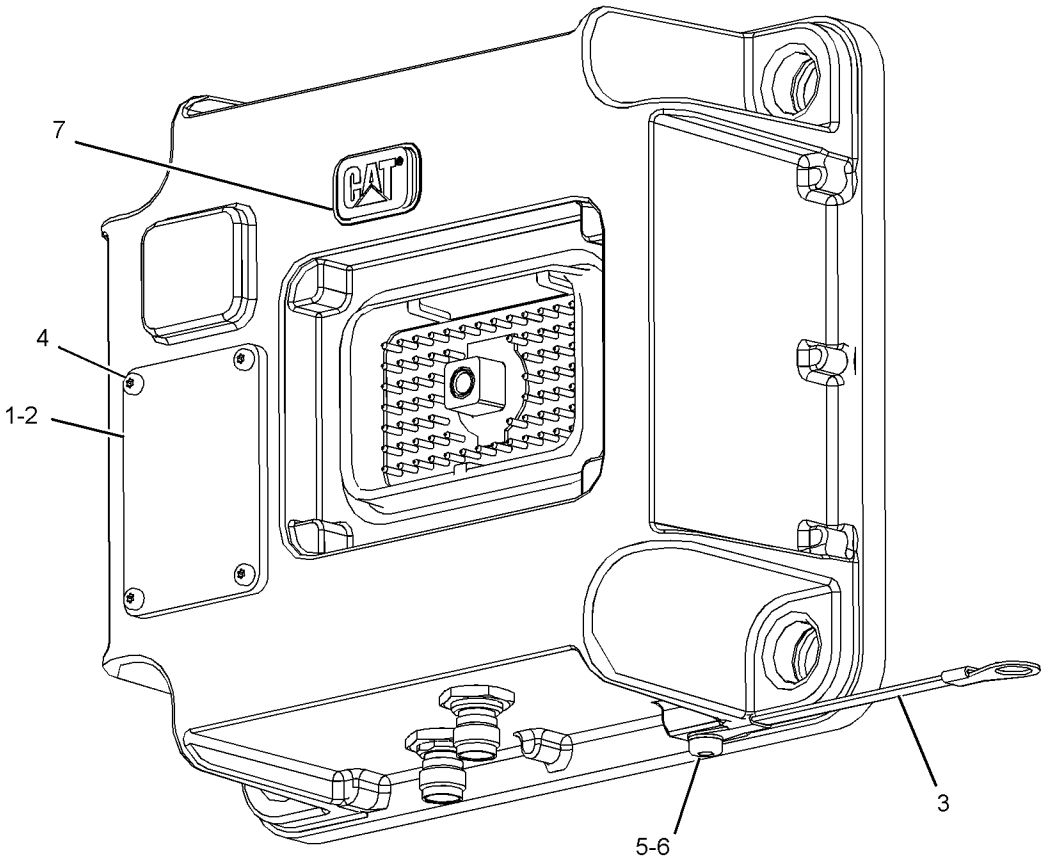

GRAPHIC #1 **<END>** g03009457

415-4228 CONVERTER GP-POWER–24-VOLT TO 12-VOLT

S/N: M5K1-UP

AN ATTACHMENT

SMCS-1421 **i05412908**

NOTE	REF NO	GRAPHIC REF	PART NUMBER	QTY	PART NAME 1 2 3 4 5 6 (PRODUCT LEVEL)	SEE PAGE
	1	1	**117-2311**	1	SOCKET-AUXILIARY POWER (12-VOLT)	
	2	1	**340-7161**	1	CONVERTER-POWER (24-VOLT TO 12-VOLT)	
M	3	1	**8T-0289**	2	BOLT (M5X0.8X20-MM)	
	4	1	**8T-4205**	2	WASHER-HARD (7.2X14.5X2-MM THK)	

M - METRIC PART

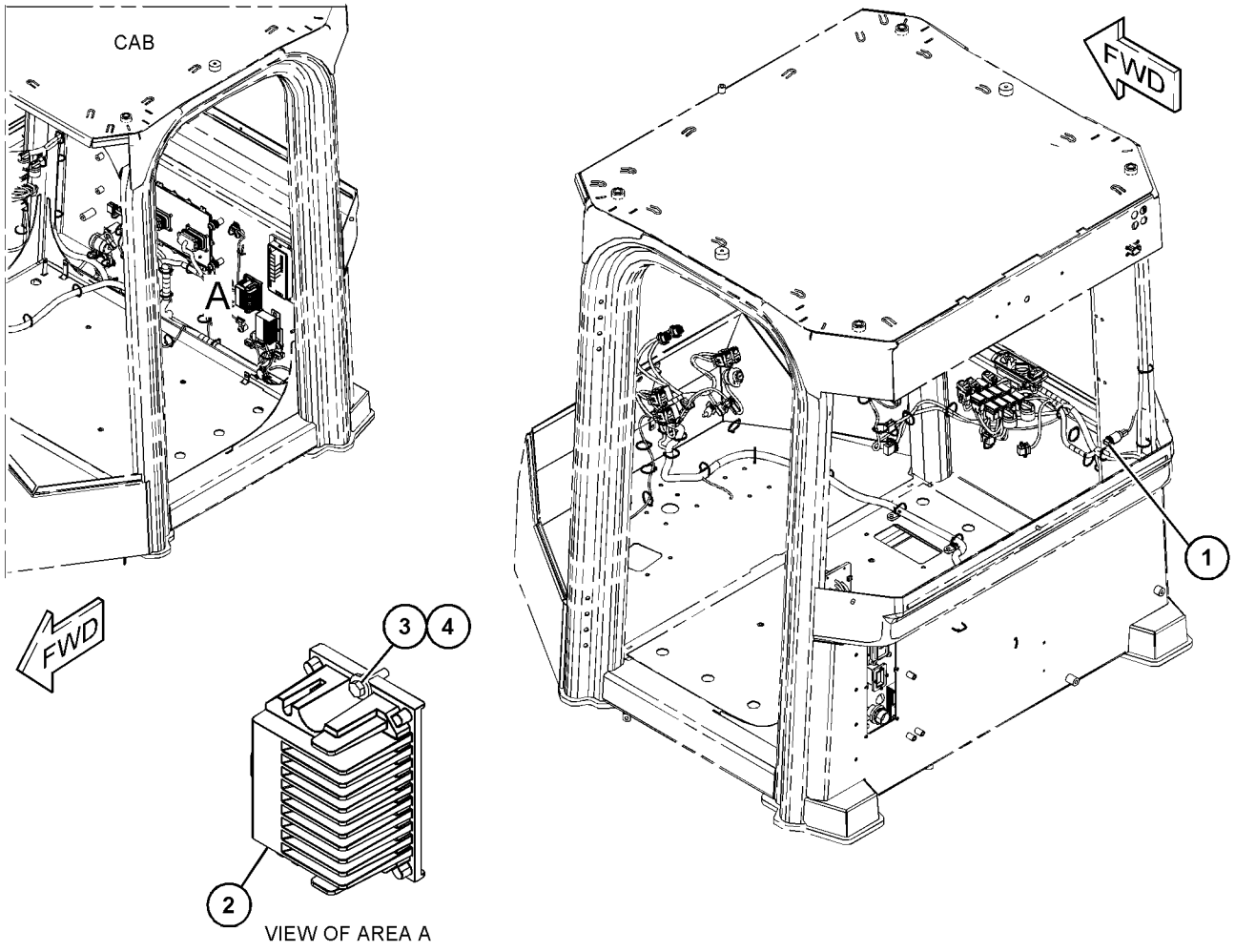

GRAPHIC #1 **<END>** g03551859

392-8352 ELECTRICAL AR

S/N: M5K1-UP

PART OF 387-6000 COMMON AR

SMCS-1408, 1429, 7402, 7406 **i05432100**

NOTE	PART NUMBER	QTY	PART NAME 1 2 3 4 5 6 (PRODUCT LEVEL)	SEE PAGE
Y	*415-4217*	1	CONTROL GP-TRANSMISSION HYD	210
Y	*392-8354*	1	ELECTRONICS GP-MONITOR	115
Y	*392-8353*	1	ELECTRONICS GP-POWER TRAIN	115
Y	*392-8362*	1	WIRING GP-CHASSIS	182
Y	*415-4218*	1	WIRING GP-ENGINE	189
Y	*415-4219*	1	WIRING GP-FRONT	191

Y - SEPARATE ILLUSTRATION

<END>

262-1421 ELECTRONICS GP-COMMUNICATION—PRODUCT LINK 300

S/N: M5K1-UP

PART OF 449-4917 INSTALLATION GP-COMMUNICATION

AN ATTACHMENT

SMCS-7606, 7610, 7620 **i05816874**

NOTE	PART NUMBER	QTY	PART NAME 1 2 3 4 5 6 (PRODUCT LEVEL)	SEE PAGE
	285-1133		CONTROL GP-UNPROGRAMMED (PRODUCT LINK 300)	
	7X-6315	1	STRAP AS-GROUND	
	101-0852	1	SCREW-PAN HEAD (8-32X0.375-IN)	
	134-4126	1	WASHER (4.52X8.28X0.76-MM THK)	
	445-2631	1	SOFTWARE GP-COMMUNICATION	

<END>

262-2043 ELECTRONICS GP-COMMUNICATION—PRODUCT LINK 300

S/N: M5K1-UP

PART OF 449-4917 INSTALLATION GP-COMMUNICATION

AN ATTACHMENT

SMCS-7606, 7610, 7620 **i06061855**

NOTE	PART NUMBER	QTY	PART NAME 1 2 3 4 5 6 (PRODUCT LEVEL)	SEE PAGE
	445-2631	1	SOFTWARE GP-COMMUNICATION (PL300)	

<END>

373-8292 ELECTRONICS GP-COMMUNICATION

S/N: M5K1-UP

PART OF 392-8363 INSTALLATION GP-COMMUNICATION

AN ATTACHMENT

SMCS-7606, 7610, 7620 **i05665394**

NOTE	PART NUMBER	QTY	PART NAME 1 2 3 4 5 6 (PRODUCT LEVEL)	SEE PAGE
	442-6441	1	SOFTWARE GP-COMMUNICATION (PRODUCT LINK 522)	

<END>

392-8354 ELECTRONICS GP-MONITOR—CONTROL

S/N: M5K1-UP

PART OF 392-8352 ELECTRICAL AR

SMCS-7490, 7494, 7601, 7603, 7610, 7620

i06067687

NOTE	PART NUMBER	QTY	PART NAME 1 2 3 4 5 6 (PRODUCT LEVEL)	SEE PAGE
	466-7316	1	SOFTWARE GP-MONITOR	

<END>

392-8353 ELECTRONICS GP-POWER TRAIN—TRANSMISSION CONTROL

S/N: M5K1-UP

PART OF 392-8352 ELECTRICAL AR

SMCS-4800, 4808, 7610, 7620

i06066840

NOTE	PART NUMBER	QTY	PART NAME 1 2 3 4 5 6 (PRODUCT LEVEL)	SEE PAGE
	461-1370	1	SOFTWARE GP-POWER TRAIN	

<END>

392-8370 HARNESS AS-CAB—MAIN

S/N: M5K1-UP

PART OF 392-8351 WIRING GP-CAB

SMCS-1408 **i05834456**

NOTE	PART NUMBER	QTY	PART NAME 1 2 3 4 5 6 (PRODUCT LEVEL)	SEE PAGE
	102-8802	1	KIT-RECEPTACLE (2-PIN)	
	102-8803	1	KIT-RECEPTACLE (3-PIN)	
			(EACH RECEPTACLE KIT INCLUDES RECEPTACLE AS & WEDGE)	
	155-2255	4	KIT-CONNECTING PLUG (12-PIN)	
	155-2265	6	KIT-CONNECTING PLUG (8-PIN)	
	155-2270	8	KIT-CONNECTING PLUG (2-PIN)	
	155-2271	3	KIT-CONNECTING PLUG (4-PIN)	
	155-2274	5	KIT-CONNECTING PLUG (6-PIN)	
	245-7434	15	KIT-CONNECTING PLUG (10-PIN)	
			(EACH PLUG KIT INCLUDES PLUG AS, WEDGE, & INTERFACE SEAL)	
	155-2260	1	KIT-CONNECTING PLUG (3-PIN)	
			(INCLUDES PLUG AS, WEDGES & INTERFACE SEAL)	
	3S-2093	4	STRAP-CABLE	
	6V-0491	2	TERMINAL-BLADE (14-GA TO 18-GA)	
	7G-7917	1	PLUG-SEAL	
	7G-7919	1	PLUG-SEAL	
	7R-2750	25	SEAL-CONNECTOR	
	7R-2751	25	PLUG-CONNECTOR	
	8N-1532	1	RECEPTACLE AS-CONNECTOR (6-PIN)	
	8N-1536	1	NUT (1-5/8-18-THD)	
	8N-1535	1	BELL AS-END	
	8N-1537	1	LOCKWASHER	
	8N-1540	3	PIN-CONNECTOR (12-GA TO 14-GA)	
	8N-1544	1	PIN-CONNECTOR (8-GA)	
	8N-1548	1	PIN-CONNECTOR (4-GA)	
	8T-8737	127	PLUG-SEAL	
	9X-0145	1	RECEPTACLE AS-CONNECTOR (24-PIN)	
	7K-1181	1	STRAP-CABLE	
	196-2412	53	TERMINAL AS	
			(EACH INCLUDES)	
	7R-2750	1	SEAL-CONNECTOR	
	8T-8729	5	PIN-CONNECTOR (16-GA TO 18-GA)	
E	**119-3662**		TUBE-HEAT SHRINK (10.85-MM DIA) (7-CM)	
	123-7615	1	CONNECTOR	
	124-8821	2	TERMINAL-BLADE (18-GA TO 22-GA)	
E	**125-7874**		TUBE-HEAT SHRINK (5.72-MM DIA) (290-CM)	
E	**125-7875**		TUBE-HEAT SHRINK (7.44-MM DIA) (60-CM)	
	9X-3402	193	SOCKET-CONNECTOR (16-GA TO 18-GA)	
			—OR—	
	126-1768	193	SOCKET-CONNECTOR (14-GA TO 16-GA)	
	126-1774	122	COVER-CONNECTOR	
	128-4123		SEAL	
	2L-8078	1	TERMINAL-RING (14-GA TO 16-GA, 5/16-IN SCREW)	
	128-5016	53	SEAL-CABLE	
	5P-4571	2	TERMINAL-BLADE (14-GA TO 16-GA)	
	097-7234	2	TERMINAL-BLADE (18-GA TO 22-GA)	
	2L-8069	4	TERMINAL-RING (2-GA TO 10-GA, 3/8-IN SCREW)	
	2L-8079	2	TERMINAL-RING (14-GA TO 16-GA, 3/8-IN SCREW)	
	134-2540	1	RECEPTACLE AS-CONNECTOR (3-PIN)	
	9X-3401	83	PIN-CONNECTOR (16-GA TO 18-GA)	
			—OR—	
	126-1767	83	PIN-CONNECTOR (14-GA TO 16-GA)	
	147-1445	1	PLUG AS-CONNECTOR (70-PIN)	
	159-9322	1	SEAL-O-RING	
	147-1446	1	PLUG AS-CONNECTOR (70-PIN)	

392-8370 **HARNESS AS-CAB (*contd.*)** **i05834456**

NOTE	PART NUMBER	QTY	PART NAME 1 2 3 4 5 6 (PRODUCT LEVEL)	SEE PAGE
	159-9322	1	SEAL-O-RING	
	172-9200	2	SUPPRESSOR-ARC	
	196-2413	12	TERMINAL AS	
			(EACH INCLUDES)	
	128-4123	1	SEAL	
	185-1861	91	SEAL-WIRE	
	189-3158	2	SUPPRESSOR-ARC	
	202-5397	60	PLUG	
	204-1297	61	TERMINAL AS-BLADE (18-GA TO 20-GA)	
			(EACH INCLUDES)	
	235-4123	1	TERMINAL (18-GA TO 20-GA)	
	214-4208	151	RECEPTACLE AS-CONNECTOR (70-PIN)	
	230-4013	1	PLUG AS-CONNECTOR (3-PIN)	
	264-7030	1	SEAL-CONNECTOR	
	265-4123	1	RECEPTACLE-CONNECTOR	
	284-8481	1	TERMINAL AS-RING	
E	**119-3662**		TUBE-HEAT SHRINK (10.85-MM DIA) (4-CM)	
	309-9886	1	BLOCK AS-FUSE	
M	**5C-7261**	2	NUT (M8X1.25-THD)	
	7X-0608	2	WASHER-HARD (10.2X16X2-MM THK)	
	9F-5644	2	LOCKWASHER	
E	**329-3734**		TAPE-ELECTRICAL (3246-CM)	
	340-2567	20	WIRE AS	
	340-2566	32	PLUG-SEAL	
	374-7463	4	CAP-SEAL	
	374-7467	1	CAP-SEAL	
	374-7468	2	CAP-SEAL	

E - ORDER BY THE CENTIMETER
M - METRIC PART

<END>

392-8381 HARNESS AS-CAB

S/N: M5K1-UP
PART OF 392-8369 WIRING GP-CAB
AN ATTACHMENT

SMCS-1408 **i05468112**

NOTE	PART NUMBER	QTY	PART NAME 1 2 3 4 5 6 (PRODUCT LEVEL)	SEE PAGE
	155-2270	2	KIT-CONNECTING PLUG (2-PIN)	
			(EACH PLUG KIT INCLUDES PLUG AS, WEDGE, & INTERFACE SEAL)	
	102-8802	1	KIT-RECEPTACLE (2-PIN)	
			(RECEPTACLE KIT INCLUDES RECEPTACLE AS & WEDGE)	
	8T-8729	2	PIN-CONNECTOR (16-GA TO 18-GA)	
	8T-8730	4	SOCKET-CONNECTOR (16-GA TO 18-GA)	
	218-4935	1	SUPPRESSOR-ARC	
E	**125-7874**		TUBE-HEAT SHRINK (5.72-MM DIA) (10-CM)	

E - ORDER BY THE CENTIMETER

<END>

392-8383 HARNESS AS-CAB—REAR VIEW, CAMERA

S/N: M5K1-UP
PART OF 415-4208 WIRING GP-CAMERA
AN ATTACHMENT

SMCS-1408 **i05522767**

NOTE	PART NUMBER	QTY	PART NAME 1 2 3 4 5 6 (PRODUCT LEVEL)	SEE PAGE
	102-8802	1	KIT-RECEPTACLE (2-PIN)	
			(KIT INCLUDES PLUG AS & WEDGE)	
	8T-8737	6	PLUG-SEAL	
E	**125-7874**		TUBE-HEAT SHRINK (5.72-MM DIA) (5-CM)	
	9X-3402	6	SOCKET-CONNECTOR (16-GA TO 18-GA)	
			—OR—	
	126-1768	6	SOCKET-CONNECTOR (14-GA TO 16-GA)	
	9X-3401	4	PIN-CONNECTOR (16-GA TO 18-GA)	
			—OR—	
	126-1767	4	PIN-CONNECTOR (14-GA TO 16-GA)	
	155-2274	1	KIT-CONNECTING PLUG (6-PIN)	
			(KIT INCLUDES RECEPTACLE AS, WEDGE & INTERFACE SEAL)	

E - ORDER BY THE CENTIMETER

<END>

392-8382 HARNESS AS-CHASSIS

S/N: M5K1-UP

PART OF 392-8362 WIRING GP-CHASSIS

SMCS-1408 **i05677929**

NOTE	PART NUMBER	QTY	PART NAME 1 2 3 4 5 6 (PRODUCT LEVEL)	SEE PAGE
	102-8802	1	KIT-RECEPTACLE (2-PIN)	
	102-8805	1	KIT-RECEPTACLE (6-PIN)	
	102-8801	1	KIT-RECEPTACLE (12-PIN)	
			(EACH RECEPTACLE KIT INCLUDES RECEPTACLE AS & WEDGE)	
	155-2260	1	KIT-CONNECTING PLUG (3-PIN)	
	155-2270	14	KIT-CONNECTING PLUG (2-PIN)	
	155-2274	1	KIT-CONNECTING PLUG (6-PIN)	
	155-2265	1	KIT-CONNECTING PLUG (8-PIN)	
			(EACH PLUG KIT INCLUDES PLUG AS, WEDGE & INTERFACE SEAL)	
	7G-7917	1	PLUG-SEAL	
	7G-7919	1	PLUG-SEAL	
	8N-1533	1	PLUG AS-CONNECTOR (7-PIN)	
	8N-1535	1	BELL AS-END	
	8N-1541	3	SOCKET-CONNECTOR (12-GA TO 14-GA)	
	8N-1545	1	SOCKET-CONNECTOR (8-GA)	
	8N-1549	1	SOCKET-CONNECTOR (4-GA)	
	8T-8737	24	PLUG-SEAL	
	7K-1181	3	STRAP-CABLE	
	8T-8729	11	PIN-CONNECTOR (16-GA TO 18-GA)	
E	**119-3662**		TUBE-HEAT SHRINK (10.85-MM DIA) (7-CM)	
E	**125-7874**		TUBE-HEAT SHRINK (5.72-MM DIA) (55-CM)	
E	**125-7875**		TUBE-HEAT SHRINK (7.44-MM DIA) (10-CM)	
	9X-3402	120	SOCKET-CONNECTOR (16-GA TO 18-GA)	
			—OR—	
	126-1768	120	SOCKET-CONNECTOR (14-GA TO 16-GA)	
	126-1774	1	COVER-CONNECTOR	
	5P-3454	1	TERMINAL-RING (4-GA, 5/16-IN SCREW)	
	2L-8050	1	TERMINAL-RING (6-GA, 1/4-IN SCREW)	
			—OR—	
	2L-8058	1	TERMINAL-RING (8-GA, 1/4-IN SCREW)	
	2L-8071	3	TERMINAL-RING (10-GA TO 12-GA, 1/2-IN SCREW)	
	9X-3401	18	PIN-CONNECTOR (16-GA TO 18-GA)	
			—OR—	
	126-1766	18	SOCKET-CONNECTOR (14-GA TO 18-GA)	
	160-7689	1	PLUG AS-CONNECTOR (70-PIN)	
	159-9322	1	SEAL-O-RING	
	211-0052	2	NUT (1-11/16-18-THD)	
	230-4013	2	PLUG AS-CONNECTOR (3-PIN)	
			(EACH INCLUDES)	
	455-0705	1	SEAL-CONNECTOR	
	237-0227	1	PLUG AS-CONNECTOR (3-PIN)	
	455-0705	1	SEAL-CONNECTOR	
	276-1151	1	PIN-CONNECTOR (8-GA TO 10-GA)	
	284-8481	1	TERMINAL AS-RING	
E	**119-3662**		TUBE-HEAT SHRINK (10.85-MM DIA) (4-CM)	
	295-8961	1	RECEPTACLE AS (18-PIN)	
	310-0674	2	LOCKWASHER	
	319-8101	1	RECEPTACLE-CONNECTOR	
E	**325-3767**		SLEEVE (50-CM)	
	374-7463	5	CAP-SEAL	
	374-7467	1	CAP-SEAL	

E - ORDER BY THE CENTIMETER

<END>

392-8356 HARNESS AS-CONTROL

S/N: M5K1-UP
MONITOR ECM
PART OF 392-8355, 392-8363 INSTALLATION GP-COMMUNICATION
AN ATTACHMENT

SMCS-1408 **i05435881**

NOTE	PART NUMBER	QTY	PART NAME 1 2 3 4 5 6 (PRODUCT LEVEL)	SEE PAGE
	102-8801	1	KIT-RECEPTACLE (12-PIN)	
			(INCLUDES RECEPTACLE AS & WEDGE)	
	8T-8737	66	PLUG-SEAL	
	7K-1181	2	STRAP-CABLE	
E	**125-7874**		TUBE-HEAT SHRINK (5.72-MM DIA) (5-CM)	
	9X-3402	8	SOCKET-CONNECTOR (16-GA TO 18-GA)	
			—OR—	
	126-1768	8	SOCKET-CONNECTOR (14-GA TO 16-GA)	
	126-1774	1	COVER-CONNECTOR	
	2L-8077	1	TERMINAL-RING (14-GA TO 16-GA, 1/4-IN SCREW)	
	9X-3401	8	PIN-CONNECTOR (16-GA TO 18-GA)	
			—OR—	
	126-1767	8	PIN-CONNECTOR (14-GA TO 16-GA)	
	160-7690	1	PLUG AS-CONNECTOR (70-PIN)	
	159-9322	1	SEAL-O-RING	
B	**1P-0810**	1	TAPE-ELECTRICAL	

B - USE AS REQUIRED
E - ORDER BY THE CENTIMETER

<END>

449-4919 HARNESS AS-CONTROL

S/N: M5K1-UP
PART OF 449-4917 INSTALLATION GP-COMMUNICATION
AN ATTACHMENT

SMCS-1408 **i05819583**

NOTE	PART NUMBER	QTY	PART NAME 1 2 3 4 5 6 (PRODUCT LEVEL)	SEE PAGE
	102-8801	1	KIT-RECEPTACLE (12-PIN)	
			(INCLUDES RECEPTACLE AS & WEDGE)	
	8T-8737	58	PLUG-SEAL	
	7K-1181	2	STRAP-CABLE	
E	**125-7874**		TUBE-HEAT SHRINK (5.72-MM DIA) (20-CM)	
	9X-3402	25	SOCKET-CONNECTOR (16-GA TO 18-GA)	
			—OR—	
	126-1768	25	SOCKET-CONNECTOR (14-GA TO 16-GA)	
	126-1774	1	COVER-CONNECTOR	
	2L-8077	1	TERMINAL-RING (14-GA TO 16-GA, 1/4-IN SCREW)	
	9X-3401	11	PIN-CONNECTOR (16-GA TO 18-GA)	
			—OR—	
	126-1767	11	PIN-CONNECTOR (14-GA TO 16-GA)	
	155-2255	1	KIT-CONNECTING PLUG (12-PIN)	
			(INCLUDES PLUG AS, WEDGE & INTERFACE SEAL)	
	160-7690	1	PLUG AS-CONNECTOR (70-PIN)	
	159-9322	1	SEAL-O-RING	
B	**1P-0810**	1	TAPE-ELECTRICAL	

B - USE AS REQUIRED
E - ORDER BY THE CENTIMETER

<END>

385-5997 HARNESS AS-ENGINE

S/N: E7A1-UP
PART OF 395-0113 WIRING GP-ENGINE
ALSO AN ATTACHMENT

SMCS-1408 **i05898406**

NOTE	PART NUMBER	QTY	PART NAME 1 2 3 4 5 6 (PRODUCT LEVEL)	SEE PAGE
	377-6932	1	COVER	
E	**292-2896**		CONDUIT (45-CM)	
	155-2271	3	KIT-CONNECTING PLUG (4-PIN)	
			(INCLUDES PLUG AS, WEDGE & INTERFACE SEAL)	
	245-1044	2	LOCK-CONNECTOR	
	316-9351	7	MOUNTING-CABLE TIE	
	230-4011	2	PLUG AS-CONNECTOR (2-PIN)	
			(EACH INCLUDES)	
	264-7029	1	SEAL-CONNECTOR	
	238-8245	1	PLUG AS-CONNECTOR (2-PIN)	
	264-7029	1	SEAL-CONNECTOR	
	238-8247	2	PLUG AS-CONNECTOR (2-PIN)	
			(EACH INCLUDES)	
	264-7029	1	SEAL-CONNECTOR	
	245-1043	1	PLUG AS-CONNECTOR (64-PIN)	
M	**267-7207**	1	BOLT-SPECIAL	
	281-8804	2	PLUG AS-CONNECTOR (3-PIN)	
			(EACH INCLUDES)	
	264-7030	1	SEAL-CONNECTOR	
	245-1048	33	PLUG-CONNECTOR	
	185-1860	5	SEAL-WIRE	
	267-9572	31	SOCKET-CONNECTION (18-GA)	
	9X-3402	16	SOCKET-CONNECTOR (16-GA TO 18-GA)	
			—OR—	
	126-1768	16	SOCKET-CONNECTOR (14-GA TO 16-GA)	
	217-9039	6	STRAP-CABLE	
	356-1219	1	STRAP-CABLE	
	206-1345	14	STRAP-CABLE	
E	**125-7874**		TUBE-HEAT SHRINK (5.72-MM DIA) (10-CM)	
	194-5226	12	WIRE AS (16-GA)	
			—OR—	
	194-5227	12	WIRE AS (14-GA)	

E - ORDER BY THE CENTIMETER
M - METRIC PART

<END>

392-8378 HARNESS AS-ENGINE

S/N: M5K1-UP

PART OF 415-4218 WIRING GP-ENGINE

SMCS-1408 **i05432132**

NOTE	PART NUMBER	QTY	PART NAME 1 2 3 4 5 6 (PRODUCT LEVEL)	SEE PAGE
	8T-8737	12	PLUG-SEAL	
E	**119-3662**		TUBE-HEAT SHRINK (10.85-MM DIA) (7-CM)	
E	**125-7874**		TUBE-HEAT SHRINK (5.72-MM DIA) (15-CM)	
E	**125-7875**		TUBE-HEAT SHRINK (7.44-MM DIA) (15-CM)	
	9X-3402	23	SOCKET-CONNECTOR (16-GA TO 18-GA)	
			—OR—	
	126-1768	23	SOCKET-CONNECTOR (14-GA TO 16-GA)	
	131-3201	1	BOOT	
	134-2540	1	RECEPTACLE AS-CONNECTOR (3-PIN)	
	9X-3401	19	PIN-CONNECTOR (16-GA TO 18-GA)	
			—OR—	
	126-1767	19	PIN-CONNECTOR (14-GA TO 16-GA)	
	2L-8050	1	TERMINAL-RING (6-GA, 1/4-IN SCREW)	
			—OR—	
	2L-8058	1	TERMINAL-RING (8-GA, 1/4-IN SCREW)	
	155-2260	1	KIT-CONNECTING PLUG (3-PIN)	
	155-2270	3	KIT-CONNECTING PLUG (2-PIN)	
			(EACH PLUG KIT INCLUDES PLUG AS, WEDGE, & INTERFACE SEAL)	
	176-1477	1	PLUG AS (2-PIN)	
	176-1521	2	TERMINAL	
	185-1861	2	SEAL-WIRE	
	204-6195	1	SOCKET-CONNECTOR (10-GA)	
	218-4935	1	SUPPRESSOR-ARC	
	230-4011	1	PLUG AS-CONNECTOR (2-PIN)	
	264-7029	1	SEAL-CONNECTOR	
	230-4013	1	PLUG AS-CONNECTOR (3-PIN)	
	264-7030	1	SEAL-CONNECTOR	
	245-1042	1	PLUG AS-CONNECTOR (64-PIN)	
M	**267-7207**	1	BOLT-SPECIAL	
	267-7208	1	RING-RETAINING	
	274-4990	1	SEAL	
	245-1044	2	LOCK-CONNECTOR	
	245-1045	2	COVER	
	267-9572	30	SOCKET-CONNECTION (18-GA)	
	245-1048	34	PLUG-CONNECTOR	
	319-8100	1	PLUG-CONNECTOR	

E - ORDER BY THE CENTIMETER
M - METRIC PART

<END>

392-8380 HARNESS AS-FRONT

S/N: M5K1-UP

PART OF 415-4219 WIRING GP-FRONT

SMCS-1408 **i05737280**

NOTE	PART NUMBER	QTY	PART NAME 1 2 3 4 5 6 (PRODUCT LEVEL)	SEE PAGE
G	**423-1982**		HOSE (1-IN)	
E	**5P-1506**		HOSE (63-CM)	
	8T-8737	3	PLUG-SEAL	
E	**9X-8243**		TUBE-HEAT SHRINK (39.9-MM DIA) (4-CM)	
	8T-8730	27	SOCKET-CONNECTOR (16-GA TO 18-GA)	
E	**119-3662**		TUBE-HEAT SHRINK (10.85-MM DIA) (7-CM)	
E	**125-7874**		TUBE-HEAT SHRINK (5.72-MM DIA) (20-CM)	
E	**125-7875**		TUBE-HEAT SHRINK (7.44-MM DIA) (5-CM)	
E	**125-7876**		TUBE-HEAT SHRINK (17.78-MM DIA) (7-CM)	
	9X-3402	14	SOCKET-CONNECTOR (16-GA TO 18-GA)	
			—OR—	
	126-1768	14	SOCKET-CONNECTOR (14-GA TO 16-GA)	
	155-2255	1	KIT-CONNECTING PLUG (12-PIN)	
	155-2260	2	KIT-CONNECTING PLUG (3-PIN)	
	155-2270	4	KIT-CONNECTING PLUG (2-PIN)	
	155-2274	3	KIT-CONNECTING PLUG (6-PIN)	
			(EACH KIT INCLUDES PLUG AS, WEDGE & INTERFACE SEAL)	
	374-7463	2	CAP-SEAL	

E - ORDER BY THE CENTIMETER
G - ORDER BY THE INCH

<END>

392-8384 HARNESS AS-HEATER & AIR COND

S/N: M5K1-UP

AN ATTACHMENT

SMCS-1408 **i05406783**

NOTE	PART NUMBER	QTY	PART NAME 1 2 3 4 5 6 (PRODUCT LEVEL)	SEE PAGE
	6A-5277	1	CONNECTOR	
	6T-6505	2	HOUSING-RECEPTACLE (BLADE, POSITIVE LOCK)	
	6T-6506	2	TERMINAL-BLADE (14-GA TO 18-GA)	
	6V-0491	4	TERMINAL-BLADE (14-GA TO 18-GA)	
	8T-8737	1	PLUG-SEAL	
E	**119-3662**		TUBE-HEAT SHRINK (10.85-MM DIA) (7-CM)	
	9X-3402	5	SOCKET-CONNECTOR (16-GA TO 18-GA)	
			—OR—	
	126-1768	5	SOCKET-CONNECTOR (14-GA TO 16-GA)	
	9X-3401	8	PIN-CONNECTOR (16-GA TO 18-GA)	
			—OR—	
	126-1767	8	PIN-CONNECTOR (14-GA TO 16-GA)	
	155-2270	1	KIT-CONNECTING PLUG (2-PIN)	
	155-2271	1	KIT-CONNECTING PLUG (4-PIN)	
			(EACH PLUG KIT INCLUDES PLUG AS, WEDGE & INTERFACE SEAL)	
B	**1P-0810**	1	TAPE-ELECTRICAL	
	194-4254	1	KIT-RECEPTACLE (8-PIN)	
			(INCLUDES RECEPTACLE AS & WEDGE)	

B - USE AS REQUIRED
E - ORDER BY THE CENTIMETER

<END>

465-7767 HARNESS AS-HEATER & AIR COND

S/N: M5K1-UP

PART OF 424-2864 AIR CONDITIONER GP

SMCS-1408 **i06068884**

NOTE	PART NUMBER	QTY	PART NAME 1 2 3 4 5 6 (PRODUCT LEVEL)	SEE PAGE
	6T-6505	6	HOUSING-RECEPTACLE (BLADE, POSITIVE LOCK)	
	6T-6506	6	TERMINAL-BLADE (14-GA TO 18-GA)	
	8T-8737	1	PLUG-SEAL	
E	**125-7875**		TUBE-HEAT SHRINK (7.44-MM DIA) (5-CM)	
	9X-3402	5	SOCKET-CONNECTOR (16-GA TO 18-GA)	
			—OR—	
	126-1768	5	SOCKET-CONNECTOR (14-GA TO 16-GA)	
	9X-3401	8	PIN-CONNECTOR (16-GA TO 18-GA)	
			—OR—	
	126-1767	8	PIN-CONNECTOR (14-GA TO 16-GA)	
	155-2270	1	KIT-CONNECTING PLUG (2-PIN)	
	155-2271	1	KIT-CONNECTING PLUG (4-PIN)	
			(EACH PLUG KIT INCLUDES PLUG AS, WEDGE, & INTERFACE SEAL)	
B	**1P-0810**	1	TAPE-ELECTRICAL	
	194-4254	1	KIT-RECEPTACLE (8-PIN)	
			(RECEPTACLE KIT INCLUDES RECEPTACLE AS & WEDGE)	

B - USE AS REQUIRED
E - ORDER BY THE CENTIMETER

<END>

392-8359 HARNESS AS-LIGHTING

S/N: M5K1-UP

STOP, TAIL, TURN, BACKUP

PART OF 415-4244 LIGHTING GP-SIGNAL

AN ATTACHMENT

SMCS-1408 **i05425391**

NOTE	PART NUMBER	QTY	PART NAME 1 2 3 4 5 6 (PRODUCT LEVEL)	SEE PAGE
	102-8805	1	KIT-RECEPTACLE (6-PIN)	
			(INCLUDES RECEPTACLE AS & WEDGE)	
	8T-8737	2	PLUG-SEAL	
	8T-8730	10	SOCKET-CONNECTOR (16-GA TO 18-GA)	
E	**125-7874**		TUBE-HEAT SHRINK (5.72-MM DIA) (15-CM)	
E	**125-7875**		TUBE-HEAT SHRINK (7.44-MM DIA) (5-CM)	
	9X-3401	6	PIN-CONNECTOR (16-GA TO 18-GA)	
			—OR—	
	126-1767	6	PIN-CONNECTOR (14-GA TO 16-GA)	
	155-2274	2	KIT-CONNECTING PLUG (6-PIN)	
			(EACK INCLUDES PLUG AS, WEDGE & INTERFACE SEAL)	

E - ORDER BY THE CENTIMETER

<END>

392-8360 HARNESS AS-LIGHTING

S/N: M5K1-UP
STOP, SIGNAL
PART OF 415-4245 LIGHTING GP-FLOOD & SIGNAL
AN ATTACHMENT

SMCS-1408 **i05413475**

NOTE	PART NUMBER	QTY	PART NAME 1 2 3 4 5 6 (PRODUCT LEVEL)	SEE PAGE
	102-8805	1	KIT-RECEPTACLE (6-PIN)	
			(INCLUDES RECEPTACLE AS & WEDGE)	
	5A-3646	4	TERMINAL-BULLET	
	5A-3647	4	TERMINAL-BULLET	
	7Y-3951	6	TERMINAL-BLADE (14-GA)	
	7Y-3954	2	CONNECTOR-PLUG (3-PIN)	
E	**125-7874**		TUBE-HEAT SHRINK (5.72-MM DIA) (10-CM)	
E	**125-7875**		TUBE-HEAT SHRINK (7.44-MM DIA) (15-CM)	
	9X-3401	6	PIN-CONNECTOR (16-GA TO 18-GA)	
			—OR—	
	126-1767	6	PIN-CONNECTOR (14-GA TO 16-GA)	

E - ORDER BY THE CENTIMETER

<END>

392-8371 HARNESS AS-LIGHTING

S/N: M5K1-UP
FLOODLIGHTS, CAB, FRONT
PART OF 415-4215 LIGHTING GP-FLOOD
AN ATTACHMENT

SMCS-1408 **i05412785**

NOTE	PART NUMBER	QTY	PART NAME 1 2 3 4 5 6 (PRODUCT LEVEL)	SEE PAGE
	374-7463	1	CAP-SEAL	
	155-2265	1	KIT-CONNECTING PLUG (8-PIN)	
	155-2270	5	KIT-CONNECTING PLUG (2-PIN)	
			(EACH PLUG KIT INCLUDES PLUG AS, WEDGE & INTERFACE SEAL)	
	8T-8737	5	PLUG-SEAL	
	8T-8730	13	SOCKET-CONNECTOR (16-GA TO 18-GA)	
	2L-8079	1	TERMINAL-RING (14-GA TO 16-GA, 3/8-IN SCREW)	
E	**125-7874**		TUBE-HEAT SHRINK (5.72-MM DIA) (10-CM)	
E	**125-7875**		TUBE-HEAT SHRINK (7.44-MM DIA) (5-CM)	

E - ORDER BY THE CENTIMETER

<END>

392-8372 HARNESS AS-LIGHTING

S/N: M5K1-UP
FLOODLIGHTS, HID LIGHTS, WARNING BEACON
PART OF 392-8373 LAMP GP-FLOOD
AN ATTACHMENT

SMCS-1408 **i05406504**

NOTE	PART NUMBER	QTY	PART NAME 1 2 3 4 5 6 (PRODUCT LEVEL)	SEE PAGE
	374-7463	1	CAP-SEAL	
	155-2265	1	KIT-CONNECTING PLUG (8-PIN)	
	155-2270	9	KIT-CONNECTING PLUG (2-PIN)	
			(EACH PLUG KIT INCLUDES PLUG AS, WEDGE & INTERFACE SEAL)	
	8T-8737	3	PLUG-SEAL	
	8T-8730	23	SOCKET-CONNECTOR (16-GA TO 18-GA)	
	2L-8069	1	TERMINAL-RING (2-GA TO 10-GA, 3/8-IN SCREW)	
E	**125-7874**		TUBE-HEAT SHRINK (5.72-MM DIA) (20-CM)	
E	**125-7875**		TUBE-HEAT SHRINK (7.44-MM DIA) (10-CM)	

E - ORDER BY THE CENTIMETER

<END>

392-8395 HARNESS AS-STEERING

S/N: M5K1-UP
PART OF 415-4198 WIRING GP-SECONDARY STEERING
AN ATTACHMENT

SMCS-1408 **i05714633**

NOTE	PART NUMBER	QTY	PART NAME 1 2 3 4 5 6 (PRODUCT LEVEL)	SEE PAGE
	102-8806	1	KIT-RECEPTACLE (8-PIN)	
			(INCLUDES RECEPTACLE AS & WEDGE)	
	8T-8737	1	PLUG-SEAL	
E	**125-7874**		TUBE-HEAT SHRINK (5.72-MM DIA) (15-CM)	
	9X-3402	8	SOCKET-CONNECTOR (16-GA TO 18-GA)	
			—OR—	
	126-1768	8	SOCKET-CONNECTOR (14-GA TO 16-GA)	
	5P-4571	2	TERMINAL-BLADE (14-GA TO 16-GA)	
	9X-3401	7	PIN-CONNECTOR (16-GA TO 18-GA)	
			—OR—	
	126-1767	7	PIN-CONNECTOR (14-GA TO 16-GA)	
	155-2260	2	KIT-CONNECTING PLUG (3-PIN)	
			(EACH KIT INCLUDES RECEPTACLE AS, WEDGES & INTERFACE SEAL)	
	155-2270	1	KIT-CONNECTING PLUG (2-PIN)	
			(KIT INCLUDES RECEPTACLE AS, WEDGE & INTERFACE SEAL)	
	218-4935	1	SUPPRESSOR-ARC	

E - ORDER BY THE CENTIMETER

<END>

392-8377 HARNESS AS-TRANSMISSION

S/N: M5K1-UP

PART OF 415-4217 CONTROL GP-TRANSMISSION HYD

SMCS-1408 **i05432128**

NOTE	PART NUMBER	QTY	PART NAME 1 2 3 4 5 6 (PRODUCT LEVEL)	SEE PAGE
	7X-6222	1	PLUG AS-CONNECTOR (24-PIN)	
	3E-4367	1	RING-RETAINING	
M	**3E-8558**	1	BOLT (M5X0.8X39.37-MM)	
	9X-3265	2	SEAL-CONNECTOR (24-PIN)	
	8T-8737	10	PLUG-SEAL	
E	**125-7874**		TUBE-HEAT SHRINK (5.72-MM DIA) (5-CM)	
E	**125-7875**		TUBE-HEAT SHRINK (7.44-MM DIA) (5-CM)	
	9X-3402	32	SOCKET-CONNECTOR (16-GA TO 18-GA)	
			—OR—	
	126-1768	32	SOCKET-CONNECTOR (14-GA TO 16-GA)	
	155-2270	9	KIT-CONNECTING PLUG (2-PIN)	
			(EACH INCLUDES PLUG AS, WEDGE & INTERFACE SEAL)	

E - ORDER BY THE CENTIMETER
M - METRIC PART

<END>

375-8407 HARNESS AS-WIRING

S/N: E7A1-UP

PART OF 395-0113 WIRING GP-ENGINE

ALSO AN ATTACHMENT

SMCS-1408 **i05571950**

NOTE	PART NUMBER	QTY	PART NAME 1 2 3 4 5 6 (PRODUCT LEVEL)	SEE PAGE
	102-8804	1	KIT-RECEPTACLE (4-PIN)	
			(INCLUDES RECEPTACLE AS & WEDGE)	
	113-4630	1	RECEPTACLE AS-CONNECTOR (4-PIN)	
	9X-3401	4	PIN-CONNECTOR (16-GA TO 18-GA)	
			—OR—	
	126-1767	4	PIN-CONNECTOR (14-GA TO 16-GA)	
	332-7865	1	TIE-CABLE	

<END>

267-0339 HEATER GP-JACKET WATER

S/N: M5K1-UP

PART OF 387-6028 OPTION AR-COLD WEATHER

AN ATTACHMENT

SMCS-1383 **i05767962**

NOTE	REF NO	GRAPHIC REF	PART NUMBER	QTY	PART NAME 1 2 3 4 5 6 (PRODUCT LEVEL)	SEE PAGE
	1	1	**6N-1604**	1	CAP AS-DUST	
	2	1	**7K-1181**	1	STRAP-CABLE	
	3	1	**260-1556**	1	ELEMENT AS-JACKET WATER HEATER (240-VOLT, 1000-WATT)	
		1	**4D-9986**	1	SEAL-O-RING	
	4	1	**260-1569**	1	CORD AS-HEATER	
M	5	1	**8T-4200**	1	BOLT (M8X1.25X16-MM)	
	6	1	**8T-4224**	1	WASHER-HARD (8.8X16X2-MM THK)	

M - METRIC PART

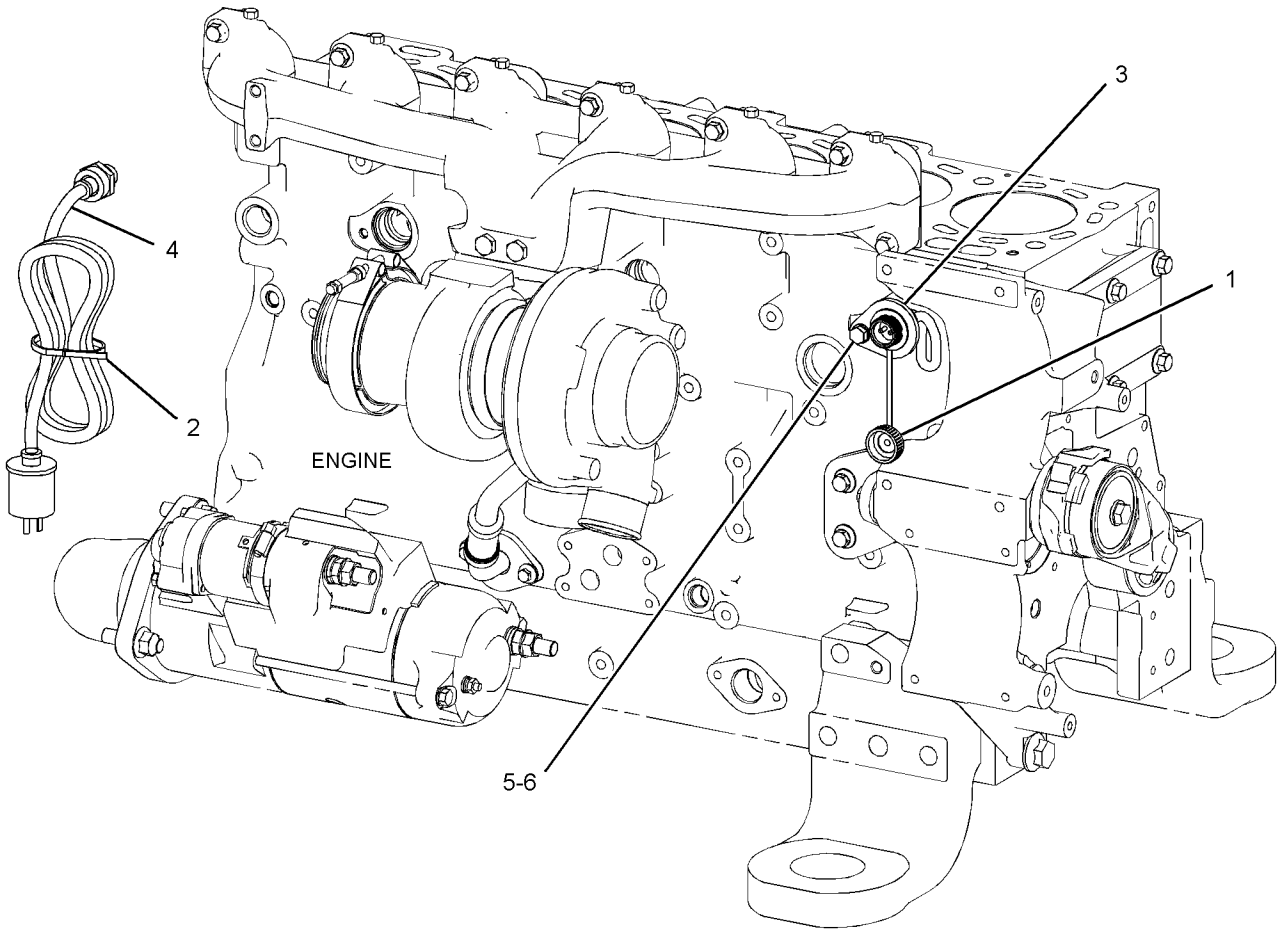

GRAPHIC #1 **<END>** g01426588

392-8355 INSTALLATION GP-COMMUNICATION—PRODUCT LINK, 522

S/N: M5K1-UP

CANNOT BE USED WITH 415-4239—PAGE: 133, 392-8363—PAGE: 131

AN ATTACHMENT

SMCS-7606 **i05714790**

NOTE	REF NO	GRAPHIC REF	PART NUMBER	QTY	PART NAME 1 2 3 4 5 6 (PRODUCT LEVEL)	SEE PAGE
	1	1	**7K-1181**	7	STRAP-CABLE	
	2	1	**8C-5607**	8	MOUNT-ISOLATION	
	3	1	**274-4284**	1	FILM-WARNING (EXPLOSION, RADIO PRODUCT LINK)	
	4	1	**307-0047**	1	FILM-INFORMATION (PRODUCT LINK, READ OMM)	
	5	1	**346-9376**	1	ANTENNA AS	
		1	**355-1213**	1	PLUG	
		1	**361-1045**	1	NUT-SPECIAL (5/8-18-THD)	
Y	6	1	**372-4531**	1	CONTROL GP-UNPROGRAMMED (PRODUCT LINK 522, CHINA)	112
Y	7	1	**392-8356**	1	HARNESS AS-CONTROL (MONITOR ECM)	120
	8	1	**2D-2751**	1	GROMMET	
	9	1	**351-3454**	1	CABLE AS	
		1	**125-7876**	5	TUBE-HEAT SHRINK (17.78-MM DIA)	
E		1	**232-0893**		CONDUIT-FLEXIBLE (6.2-MM ID) (325-CM)	
	10	1	**351-3455**	1	CABLE AS (REVERSE POLARITY)	
		1	**125-7876**	5	TUBE-HEAT SHRINK (17.78-MM DIA)	
E		1	**232-0893**		CONDUIT-FLEXIBLE (6.2-MM ID) (325-CM)	
	11	1	**8C-5608**	4	SPACER (6.5X9.5X25.4-MM THK)	
M	12	1	**9X-2480**	4	BOLT (M6X1X45-MM)	
	13	1	**9X-6165**	8	WASHER (6.5X22X2.5-MM THK)	
F			**375-7128**	1	SOFTWARE GP-COMMUNICATION (PRODUCT LINK 522, CHINA)	

E - ORDER BY THE CENTIMETER
F - NOT SHOWN
M - METRIC PART
Y - SEPARATE ILLUSTRATION

392-8355 **INSTALLATION GP-COMMUNICATION (*contd.*)** **i05714790**

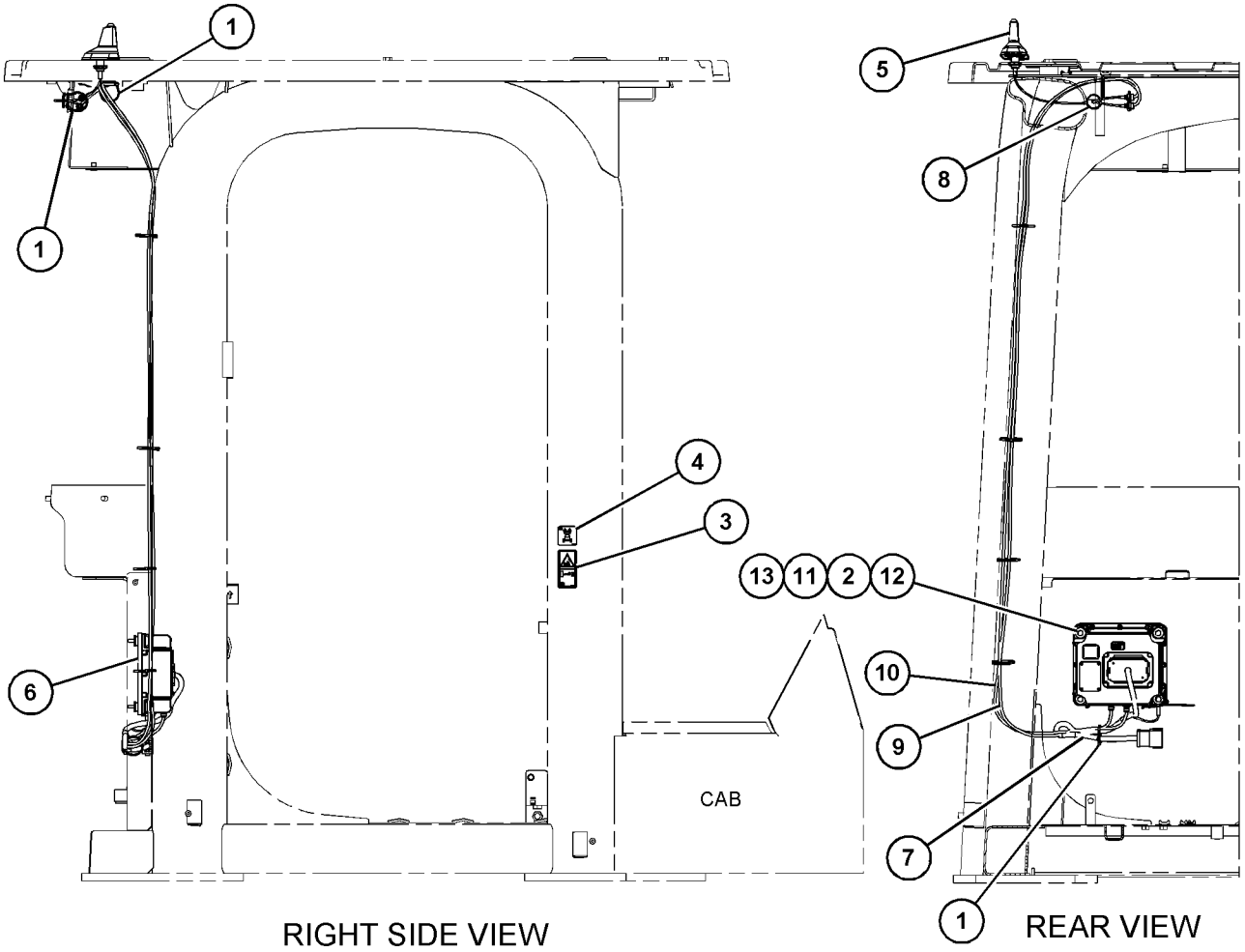

GRAPHIC #1 **<END>** g03530077

392-8363 INSTALLATION GP-COMMUNICATION—PRODUCT LINK, 522

S/N: M5K1-UP

CANNOT BE USED WITH 415-4239—PAGE: 133, 392-8355—PAGE: 129

AN ATTACHMENT

SMCS-7606 **i05714789**

NOTE	REF NO	GRAPHIC REF	PART NUMBER	QTY	PART NAME 1 2 3 4 5 6 (PRODUCT LEVEL)	SEE PAGE
	1	1	**7K-1181**	7	STRAP-CABLE	
	2	1	**8C-5607**	8	MOUNT-ISOLATION	
	3	1	**274-4284**	1	FILM-WARNING (EXPLOSION, RADIO PRODUCT LINK)	
	4	1	**307-0047**	1	FILM-INFORMATION (PRODUCT LINK, READ OMM)	
	5	1	**346-9376**	1	ANTENNA AS	
		1	**355-1213**	1	PLUG	
		1	**361-1045**	1	NUT-SPECIAL (5/8-18-THD)	
Y	6	1	**351-8490**	1	CONTROL GP-UNPROGRAMMED (PRODUCT LINK 522)	111
Y	7	1	**392-8356**	1	HARNESS AS-CONTROL (MONITOR ECM)	120
	8	1	**2D-2751**	1	GROMMET	
	9	1	**351-3454**	1	CABLE AS	
		1	**125-7876**	5	TUBE-HEAT SHRINK (17.78-MM DIA)	
E		1	**232-0893**		CONDUIT-FLEXIBLE (6.2-MM ID) (325-CM)	
	10	1	**351-3455**	1	CABLE AS (REVERSE POLARITY)	
		1	**125-7876**	5	TUBE-HEAT SHRINK (17.78-MM DIA)	
E		1	**232-0893**		CONDUIT-FLEXIBLE (6.2-MM ID) (325-CM)	
	11	1	**8C-5608**	4	SPACER (6.5X9.5X25.4-MM THK)	
M	12	1	**9X-2480**	4	BOLT (M6X1X45-MM)	
	13	1	**9X-6165**	8	WASHER (6.5X22X2.5-MM THK)	
FY			*373-8292*	1	ELECTRONICS GP-COMMUNICATION	114

E - ORDER BY THE CENTIMETER
F - NOT SHOWN
M - METRIC PART
Y - SEPARATE ILLUSTRATION

392-8363 **INSTALLATION GP-COMMUNICATION (*contd.*)** **i05714789**

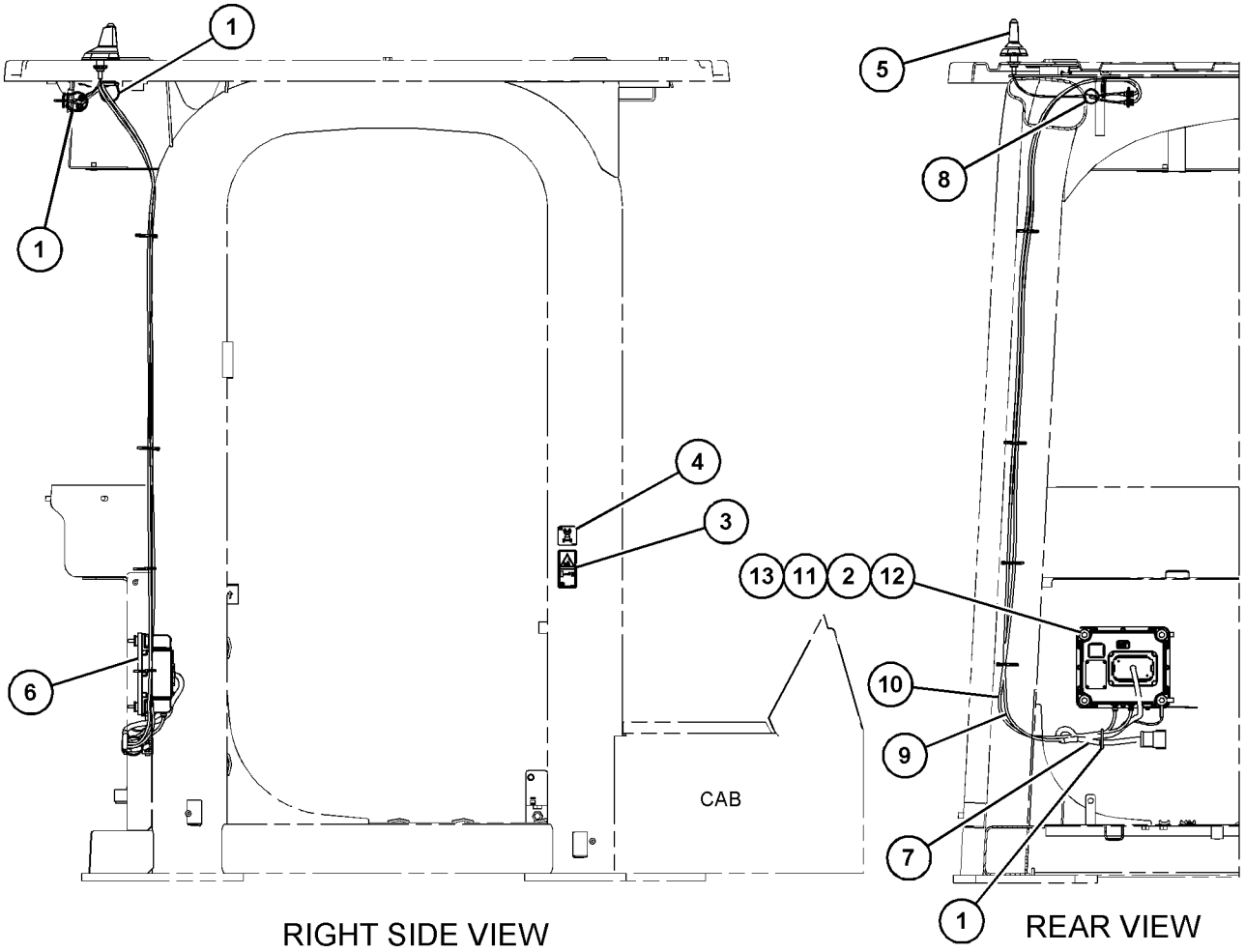

GRAPHIC #1 **<END>** g03531119

415-4239 INSTALLATION GP-COMMUNICATION–PRODUCT LINK

S/N: M5K1-UP

CANNOT BE USED WITH 392-8363–PAGE: 131, 392-8355–PAGE: 129

AN ATTACHMENT

SMCS-7606 **i05465895**

NOTE	REF NO	GRAPHIC REF	PART NUMBER	QTY	PART NAME 1 2 3 4 5 6 (PRODUCT LEVEL)	SEE PAGE
	1	1	**7K-1181**	8	STRAP-CABLE	
	2	1	**274-4284**	1	FILM-WARNING (EXPLOSION, RADIO PRODUCT LINK)	
	3	1	**307-0047**	1	FILM-INFORMATION (PRODUCT LINK, READ OMM)	
	4	1	**386-3004**	1	CONTROL GP-COMMUNICATION (PL421)	
		1	**390-2764**	1	BRACKET	
	5	1	**389-0463**	1	ANTENNA AS	
	6	1	**415-4240**	1	BRACKET	
Y	7	1	**415-4241**	1	WIRING GP-COMMUNICATION	186
M	8	1	**127-2170**	4	SCREW-TRUSS HEAD (M8X1.25X20-MM)	
	9	1	**1H-3244**	2	LOCKWASHER	
	10	1	**2D-2751**	1	GROMMET	
	11	1	**4P-7581**	1	CLIP	
M	12	1	**5C-2890**	2	NUT (M6X1-THD)	
M	13	1	**7X-2533**	2	BOLT (M6X1X35-MM)	
	14	1	**9N-0869**	4	WASHER-HARD (8.8X25.5X2-MM THK)	

M - METRIC PART
Y - SEPARATE ILLUSTRATION

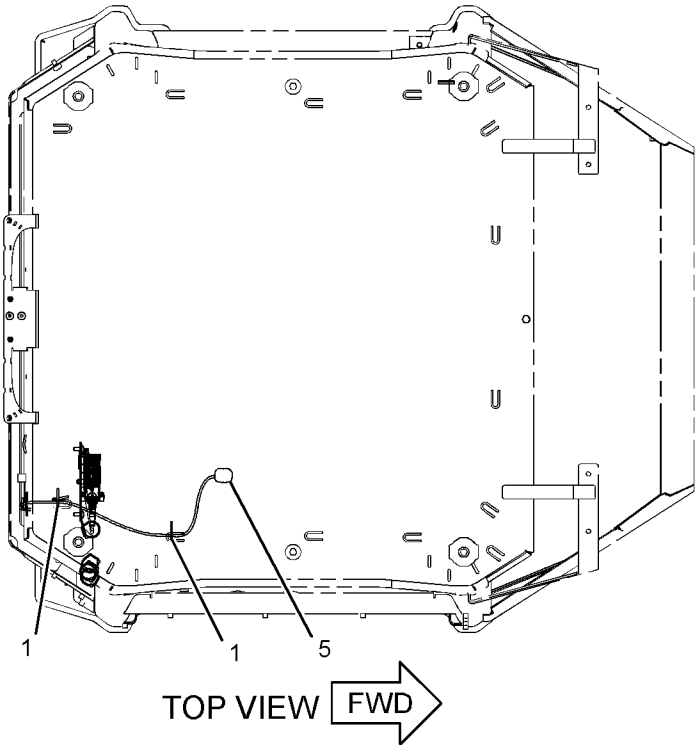

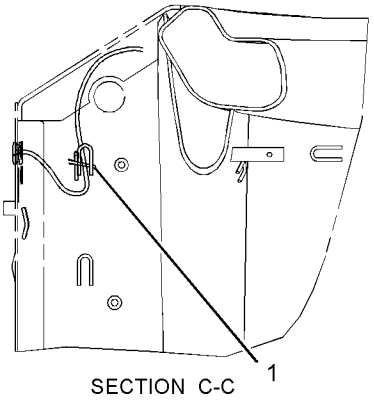

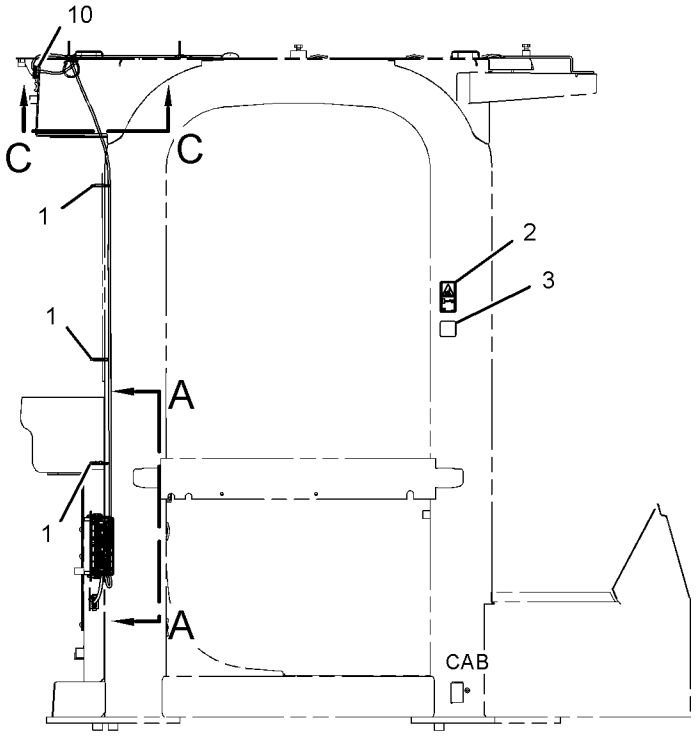

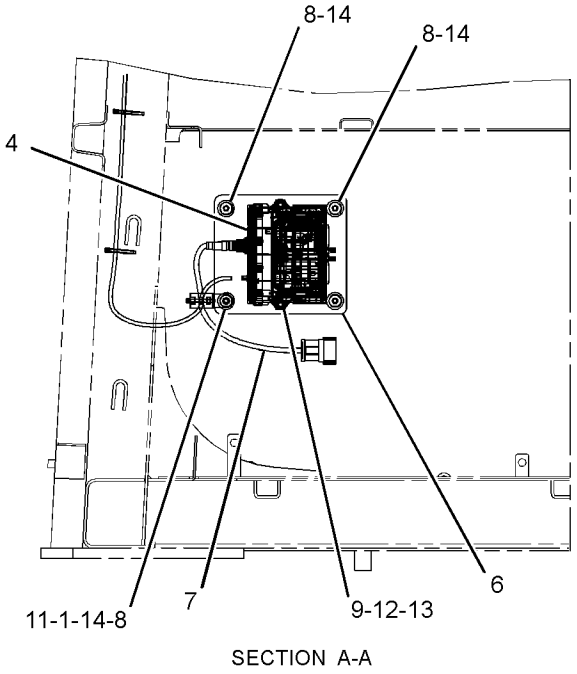

GRAPHIC #1 **<END>** g03521324

449-4917 INSTALLATION GP-COMMUNICATION

S/N: M5K1-UP

AN ATTACHMENT

SMCS-7606 **i05815844**

NOTE	REF NO	GRAPHIC REF	PART NUMBER	QTY	PART NAME 1 2 3 4 5 6 (PRODUCT LEVEL)	SEE PAGE
	1	1	**7K-1181**	13	STRAP-CABLE	
	2	1	**8C-5607**	8	MOUNT-ISOLATION	
	3	1	**8C-5608**	4	SPACER (6.5X9.5X25.4-MM THK)	
Y	4	1	*262-1421*	1	ELECTRONICS GP-COMMUNICATION (PRODUCT LINK 300)	114
Y	5	1	*262-2043*	1	ELECTRONICS GP-COMMUNICATION (PRODUCT LINK 300)	114
	6	1	**274-4284**	1	FILM-WARNING (EXPLOSION, RADIO PRODUCT LINK)	
	7	1	**307-0047**	1	FILM-INFORMATION (PRODUCT LINK, READ OMM)	
	8	1	**310-2393**	1	ANTENNA AS (450-CM)	
		1	**301-0589**	1	ANTENNA (FLEXIBLE)	
		1	**355-0598**	1	NUT-SPECIAL	
Y	9	1	**336-3545**	1	RADIO GP-COMMUNICATION (PRODUCT LINK 121SR)	159
	10	1	**437-7034**	1	PLATE	
Y	11	1	**449-4919**	1	HARNESS AS-CONTROL	120
	12	1	**2D-2751**	1	GROMMET	
M	13	1	**8T-4971**	4	BOLT (M6X1X30-MM)	
M	14	1	**9X-2480**	4	BOLT (M6X1X45-MM)	
	15	1	**9X-6165**	8	WASHER (6.5X22X2.5-MM THK)	
	16	1	**9X-8256**	4	WASHER (6.6X12X2-MM THK)	

M - METRIC PART
Y - SEPARATE ILLUSTRATION

449-4917 **INSTALLATION GP-COMMUNICATION (*contd.*)** **i05815844**

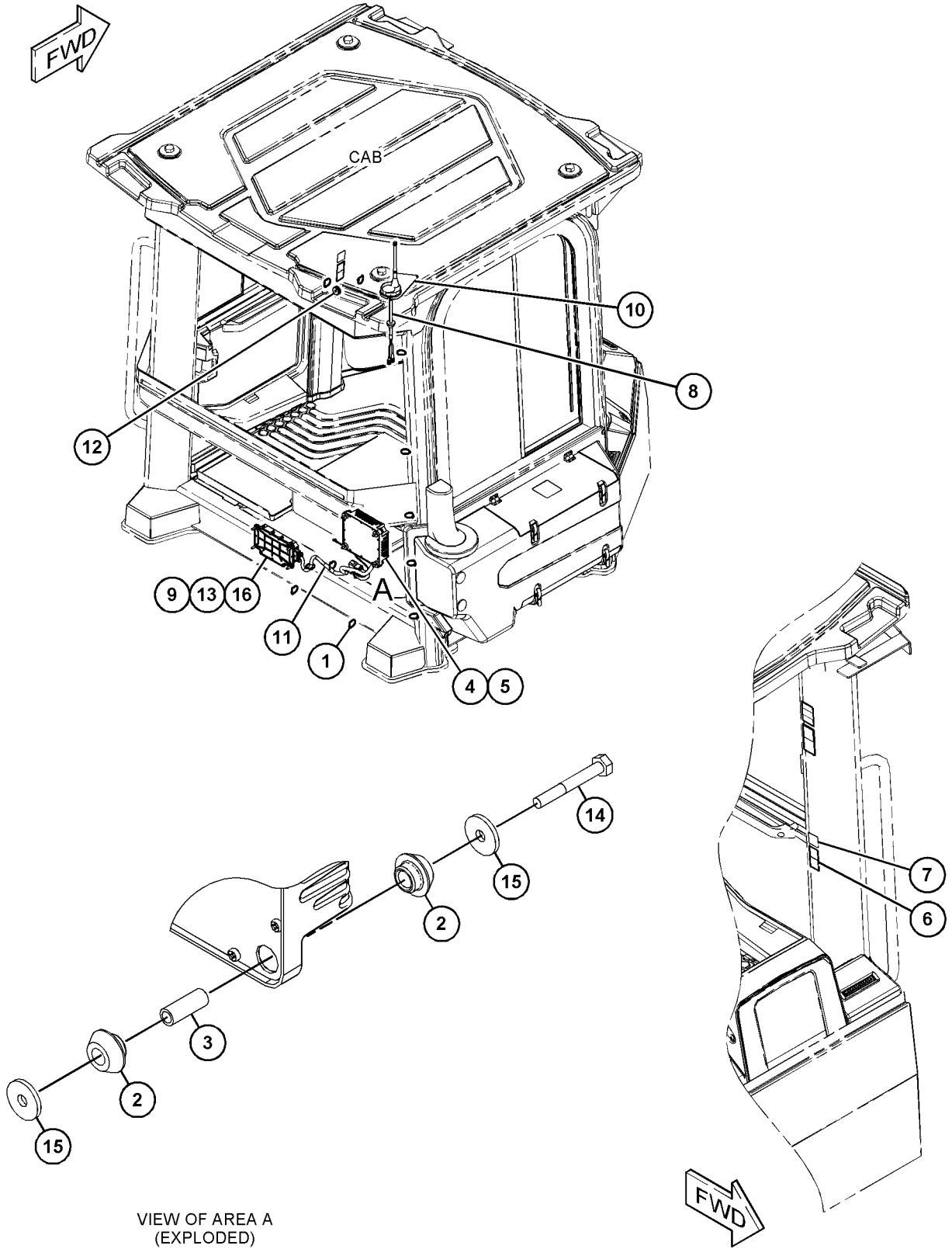

VIEW OF AREA A
(EXPLODED)

GRAPHIC #1 **<END>** g03692409

219-6487 LAMP GP-FLOOD

S/N: M5K1-UP
24-VOLT, 70-WATT
PART OF 392-8373 LAMP GP-FLOOD, 415-4203, 415-4215 LIGHTING GP-FLOOD
AN ATTACHMENT

SMCS-1434 **i05406522**

NOTE	REF NO	GRAPHIC REF	PART NUMBER	QTY	PART NAME 1 2 3 4 5 6 (PRODUCT LEVEL)	SEE PAGE
	1	1	**351-9918**	1	LAMP-HALOGEN (24-VOLT, 70-WATT)	
M	2	1	**8T-6912**	1	BOLT (M8X1.25X50-MM)	
M	3	1	**6V-9189**	1	LOCKNUT (M8X1.25-THD)	
	4	1	**8T-4224**	2	WASHER-HARD (8.8X16X2-MM THK)	
	5	1	**9X-4244**	2	SCREW-SPECIAL (M4X1.79X25-MM)	
	6	1	**175-4291**	1	BRACKET AS	
	7	1	**202-6614**	1	LENS AS (FLOODLIGHT)	
	8	1	**175-4292**	1	BODY AS	
	9	1	**164-7556**	1	BRACKET (LAMP RETAINING)	

M - METRIC PART

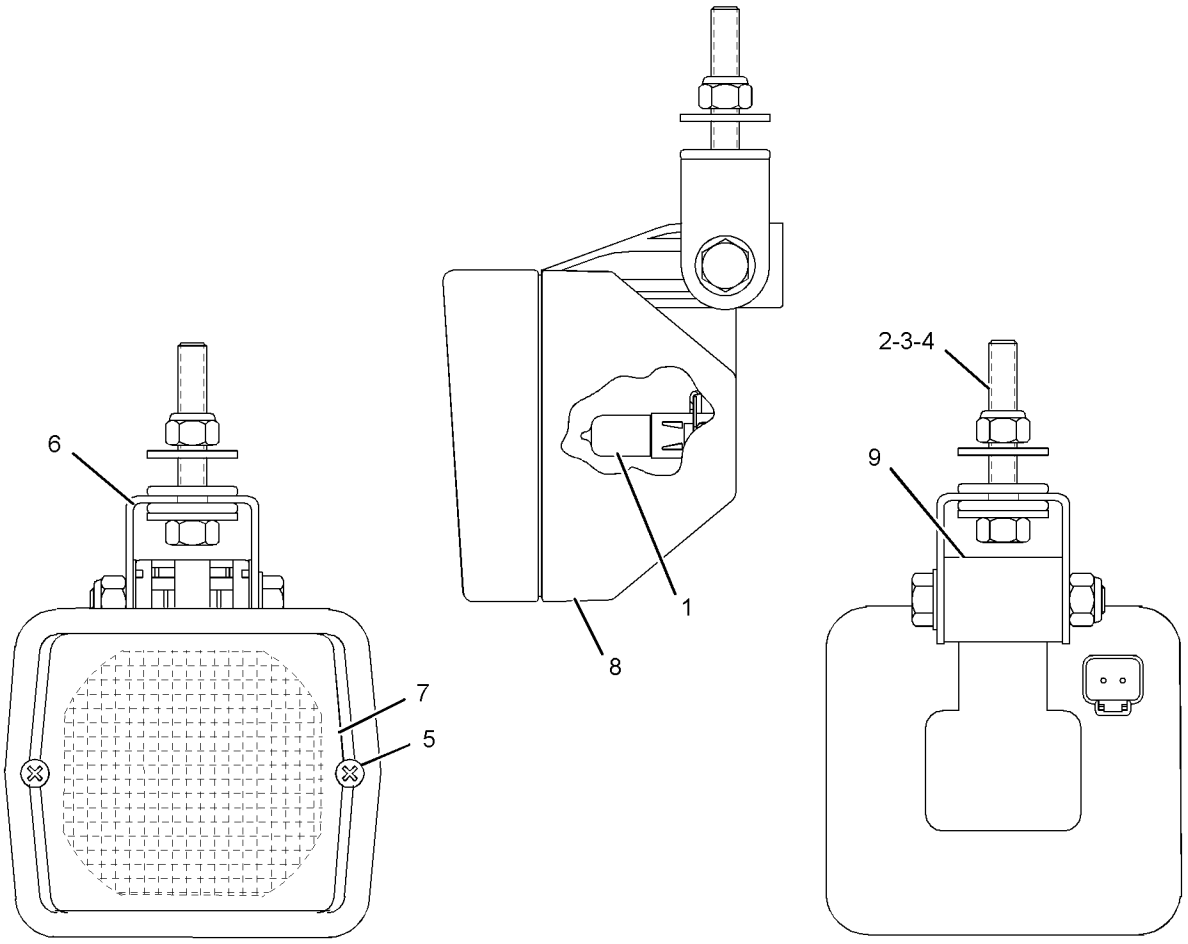

GRAPHIC #1 **<END>** g02167882

392-8373 LAMP GP-FLOOD

S/N: M5K1-UP

AN ATTACHMENT

SMCS-1434 **i05406492**

NOTE	REF NO	GRAPHIC REF	PART NUMBER	QTY	PART NAME 1 2 3 4 5 6 (PRODUCT LEVEL)	SEE PAGE
	1	1	**7K-1181**	16	STRAP-CABLE	
Y	2	1	**219-6487**	4	LAMP GP-FLOOD (24-VOLT, 70-WATT)	137
	3	1	**251-4339**	1	SWITCH AS-ROCKER (24-VOLT) (FLOODLIGHTS, REAR)	
Y	4	1	**392-8372**	1	HARNESS AS-LIGHTING	126
	5	1	**8T-4121**	1	WASHER-HARD (11X21X2.5-MM THK)	
M	6	1	**9X-2041**	1	SCREW-TRUSS HEAD (M10X1.5X20-MM)	

M - METRIC PART
Y - SEPARATE ILLUSTRATION

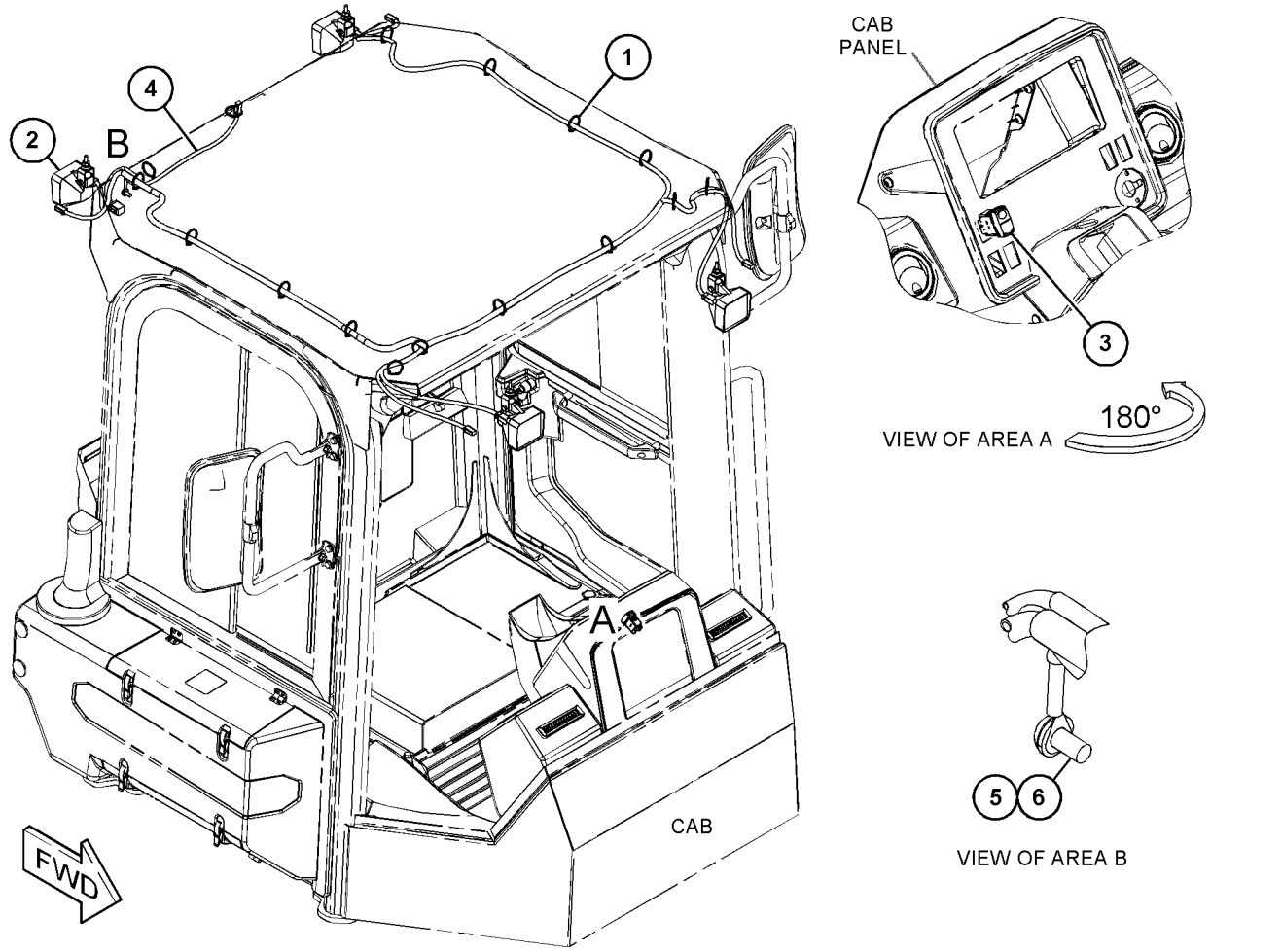

GRAPHIC #1 **<END>** g03552496

415-4202 LAMP GP-FLOOD–HID

S/N: M5K1-UP

AN ATTACHMENT

SMCS-1434 **i05412546**

NOTE	REF NO	GRAPHIC REF	PART NUMBER	QTY	PART NAME 1 2 3 4 5 6 (PRODUCT LEVEL)	SEE PAGE
	1	1	**388-6274**	4	LAMP GP-FLOOD (HID)	

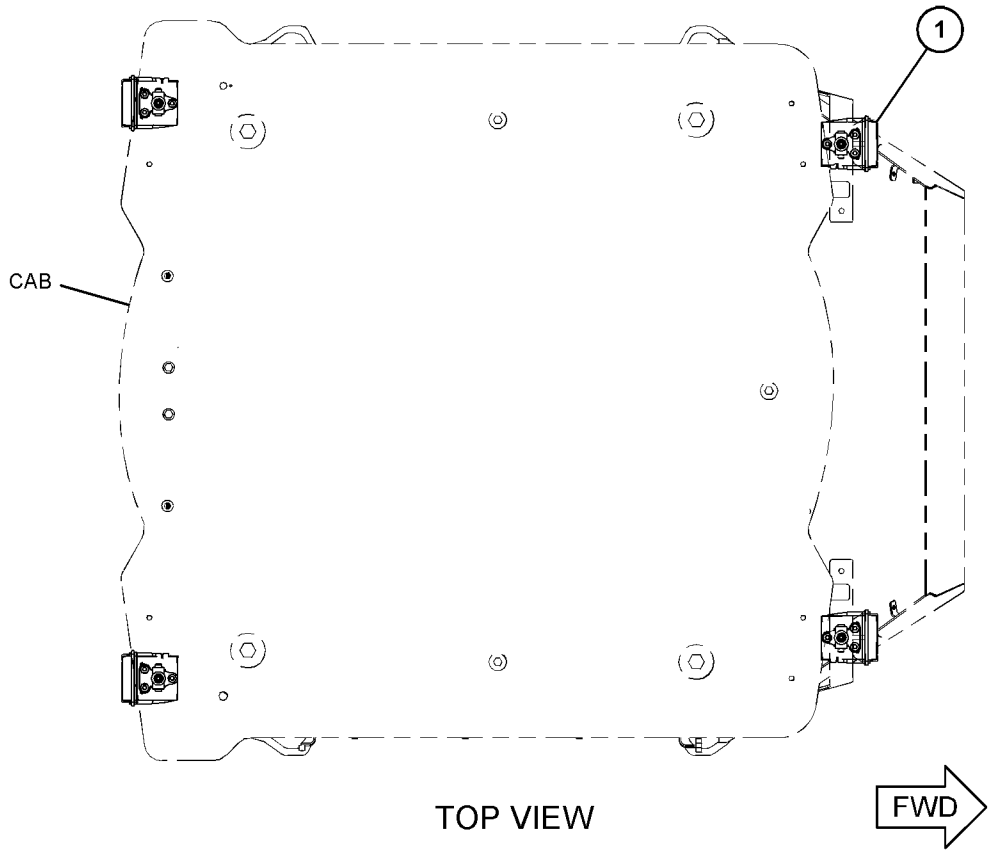

GRAPHIC #1 **<END>** g03424065

344-3455 LAMP GP-HEAD & SIGNAL–RH

S/N: M5K1-UP
24- VOLT
PART OF 415-4247 LAMP GP-HEAD & SIGNAL
AN ATTACHMENT

SMCS-1429, 1430 **i06052832**

NOTE	REF NO	GRAPHIC REF	PART NUMBER	QTY	PART NAME 1 2 3 4 5 6 (PRODUCT LEVEL)	SEE PAGE
	1	1	**8T-8737**	1	PLUG-SEAL	
	2	1	**228-6054**	1	BEZEL	
	3	1	**444-6523**	1	LENS AS (HEADLIGHT)	
	4	1	**228-6052**	1	LENS AS (TURN SIGNAL)	
	5	1	**228-6056**	6	SCREW (4-32X1.26-IN)	
	6	1	**9X-3465**	1	LAMP (24-VOLT, 75/70-WATT) (HIGH, LOW BEAM)	
	7	1	**130-3515**	1	LAMP (24-VOLT, 5-WATT) (FLOODLIGHT)	
	8	1	**242-0588**	1	LAMP-TURN SIGNAL (24-VOLT, 21-WATT) (TURN SIGNAL)	
M	9	1	**8T-0389**	1	LOCKNUT (M10X1.5-THD)	
	10	1	**100-3253**	1	SPACER (SPHERICAL)	
	11	1	**100-3254**	1	SPACER (SPHERICAL)	
	12	1	**100-3255**	2	WASHER (SPHERICAL)	
	13	1	**102-8805**	1	KIT-RECEPTACLE (6-PIN)	
					(INCLUDES RECEPTACLE AS & WEDGE)	
	14	1	**8T-8729**	5	PIN-CONNECTOR (16-GA TO 18-GA)	

M - METRIC PART

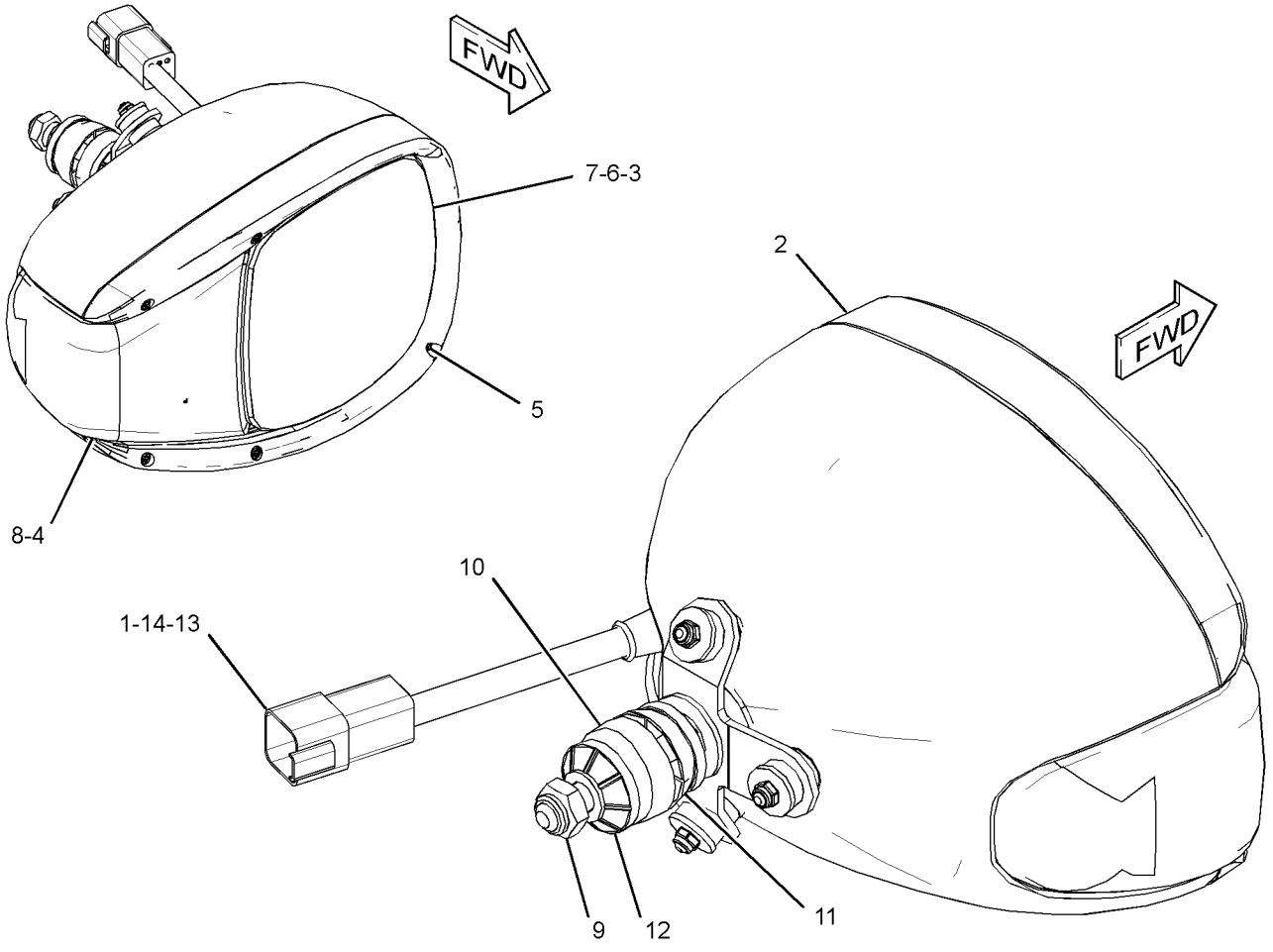

GRAPHIC #1 **<END>** g03439879

344-3456 LAMP GP-HEAD & SIGNAL–LH

S/N: M5K1-UP
24-VOLT
PART OF 415-4247 LAMP GP-HEAD & SIGNAL
AN ATTACHMENT

SMCS-1429, 1430 **i06052830**

NOTE	REF NO	GRAPHIC REF	PART NUMBER	QTY	PART NAME 1 2 3 4 5 6 (PRODUCT LEVEL)	SEE PAGE
	1	1	**8T-8737**	1	PLUG-SEAL	
	2	1	**228-6054**	1	BEZEL	
	3	1	**444-6523**	1	LENS AS (HEADLIGHT)	
	4	1	**228-6052**	1	LENS AS (TURN SIGNAL)	
	5	1	**228-6056**	6	SCREW (4-32X1.26-IN)	
	6	1	**9X-3465**	1	LAMP (24-VOLT, 75/70-WATT) (HIGH, LOW BEAM)	
	7	1	**130-3515**	1	LAMP (24-VOLT, 5-WATT) (FLOODLIGHT)	
	8	1	**242-0588**	1	LAMP-TURN SIGNAL (24-VOLT, 21-WATT) (TURN SIGNAL)	
M	9	1	**8T-0389**	1	LOCKNUT (M10X1.5-THD)	
	10	1	**100-3253**	1	SPACER (SPHERICAL)	
	11	1	**100-3254**	1	SPACER (SPHERICAL)	
	12	1	**100-3255**	2	WASHER (SPHERICAL)	
	13	1	**102-8805**	1	KIT-RECEPTACLE (6-PIN)	
					(INCLUDES RECEPTACLE AS & WEDGE)	
	14	1	**8T-8729**	5	PIN-CONNECTOR (16-GA TO 18-GA)	

M - METRIC PART

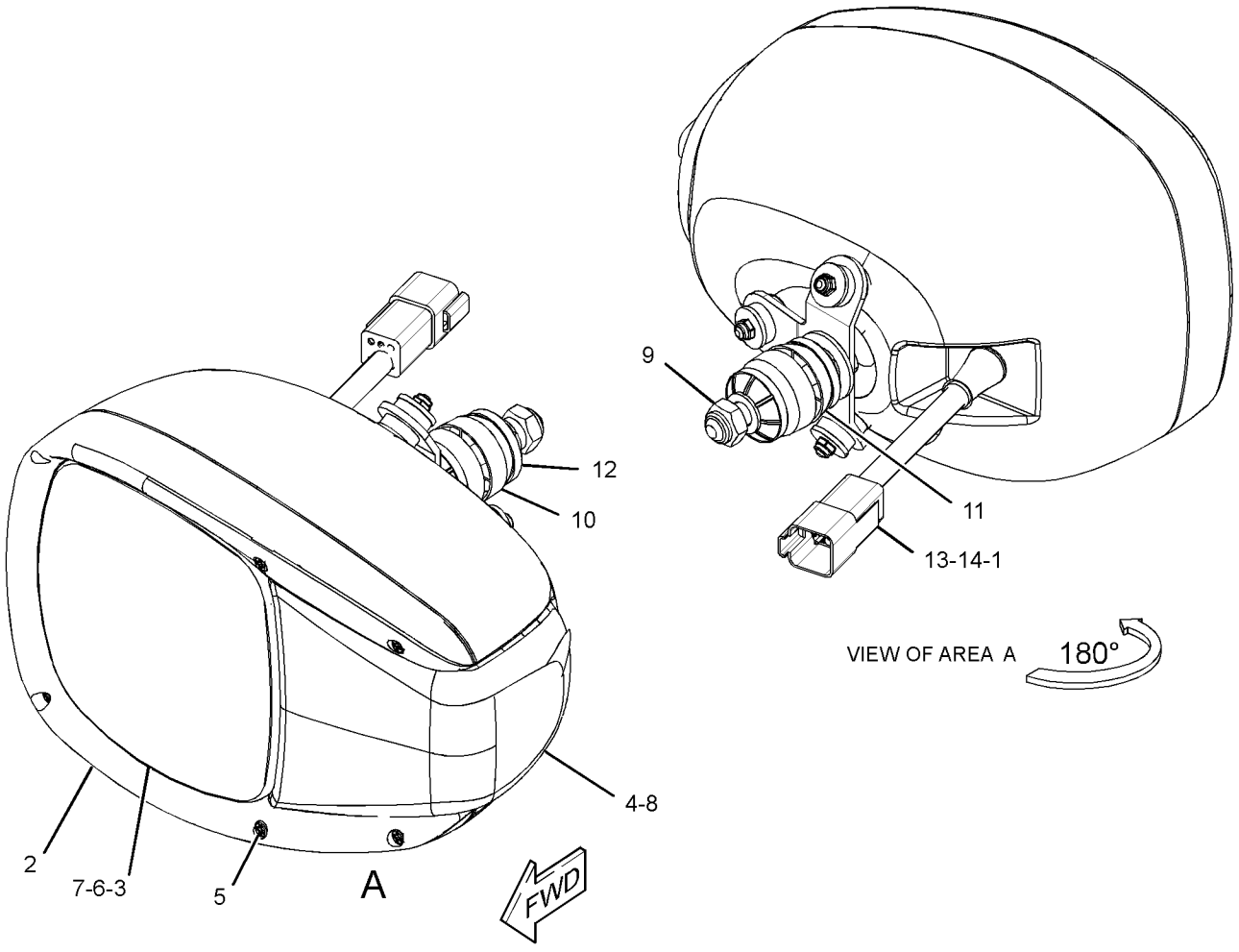

GRAPHIC #1 **<END>** g03439877

345-0188 LAMP GP-HEAD & SIGNAL

S/N: M5K1-UP

PART OF 415-4249, 449-4936 LAMP GP-HEAD & SIGNAL

AN ATTACHMENT

SMCS-1429, 1430

i06060555

NOTE	REF NO	GRAPHIC REF	PART NUMBER	QTY	PART NAME 1 2 3 4 5 6 (PRODUCT LEVEL)	SEE PAGE
					(NO SERVICED PARTS)	

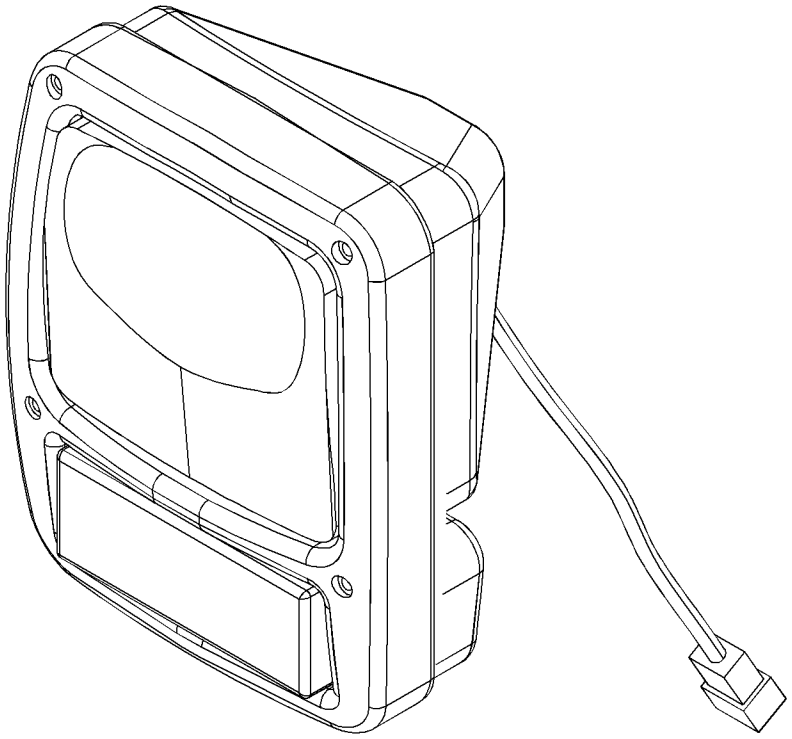

GRAPHIC #1

<END>

g03797764

415-4247 LAMP GP-HEAD & SIGNAL

S/N: M5K1-UP

CANNOT BE USED WITH 415-4249 LAMP GP-HEAD & SIGNAL

AN ATTACHMENT

SMCS-1429, 1430

i05425410

NOTE	REF NO	GRAPHIC REF	PART NUMBER	QTY	PART NAME 1 2 3 4 5 6 (PRODUCT LEVEL)	SEE PAGE
Y	1	1	**344-3456**	1	LAMP GP-HEAD & SIGNAL (LH)	141
Y	2	1	**344-3455**	1	LAMP GP-HEAD & SIGNAL (RH)	140

Y - SEPARATE ILLUSTRATION

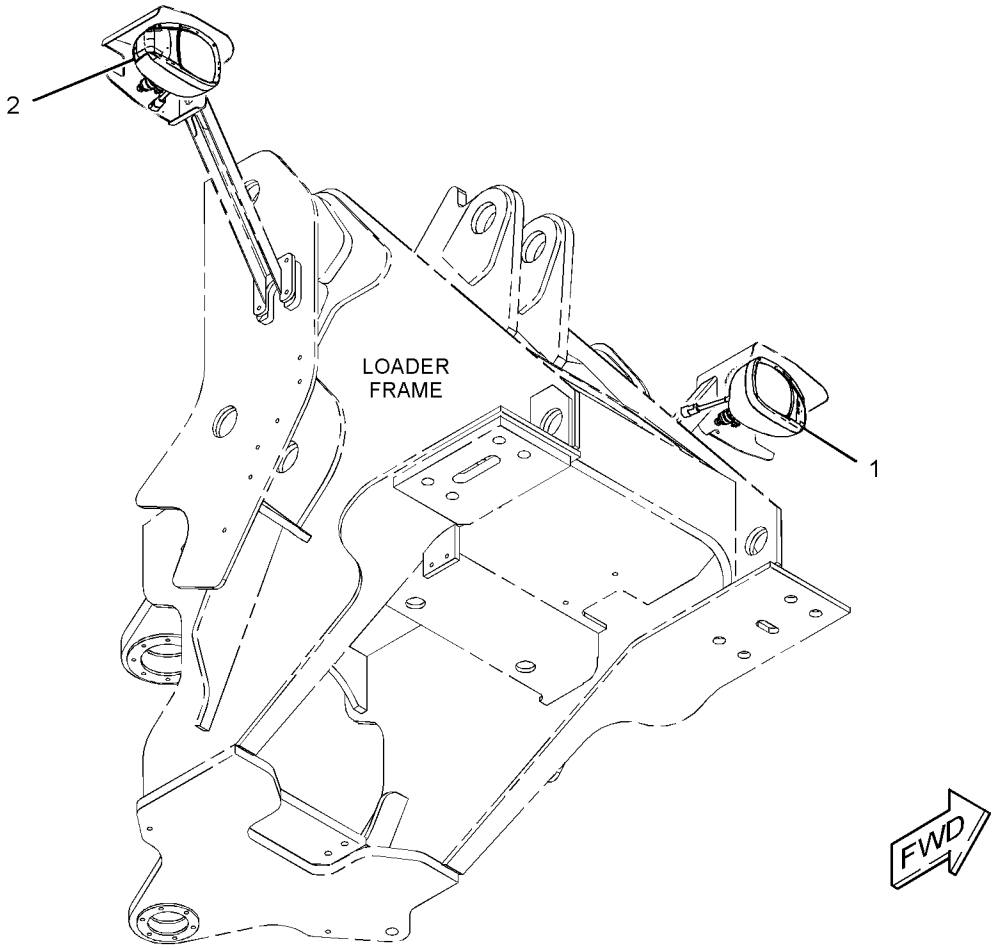

GRAPHIC #1

<END>

g03428555

415-4249 LAMP GP-HEAD & SIGNAL

S/N: M5K1-UP

CANNOT BE USED WITH 415-4247—PAGE: 143

AN ATTACHMENT

SMCS-1429, 1430

i06060554

NOTE	REF NO	GRAPHIC REF	PART NUMBER	QTY	PART NAME 1 2 3 4 5 6 (PRODUCT LEVEL)	SEE PAGE
Y	1	1	**345-0188**	1	LAMP GP-HEAD & SIGNAL (24-VOLT) (LH)	142
Y	1A	1	**345-0188**	1	LAMP GP-HEAD & SIGNAL (24-VOLT) (RH)	142

Y - SEPARATE ILLUSTRATION

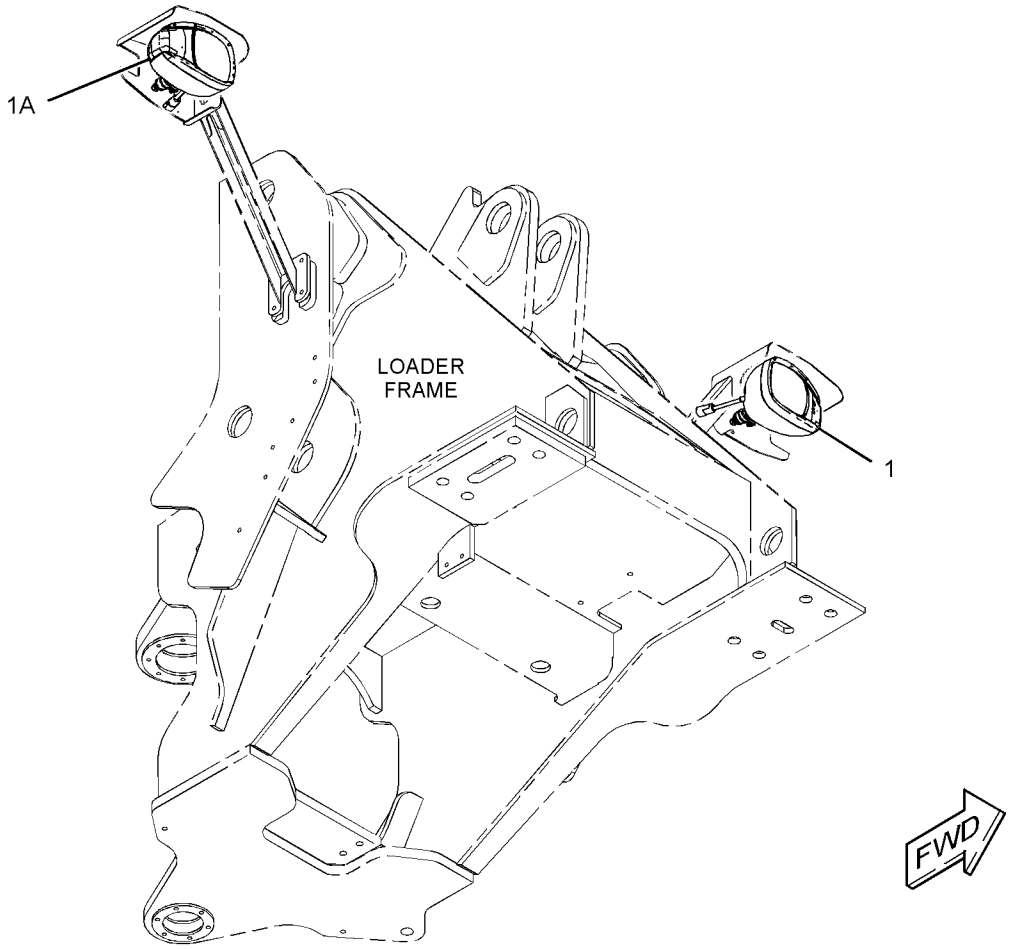

GRAPHIC #1 **<END>** g03796762

449-4936 LAMP GP-HEAD & SIGNAL

S/N: M5K1-UP

AN ATTACHMENT

SMCS-1429, 1430 **i06061863**

NOTE	REF NO	GRAPHIC REF	PART NUMBER	QTY	PART NAME 1 2 3 4 5 6 (PRODUCT LEVEL)	SEE PAGE
	1	1	**449-4935**	2	GROMMET	
Y	2	1	**345-0188**	2	LAMP GP-HEAD & SIGNAL (24-VOLT)	142

Y - SEPARATE ILLUSTRATION

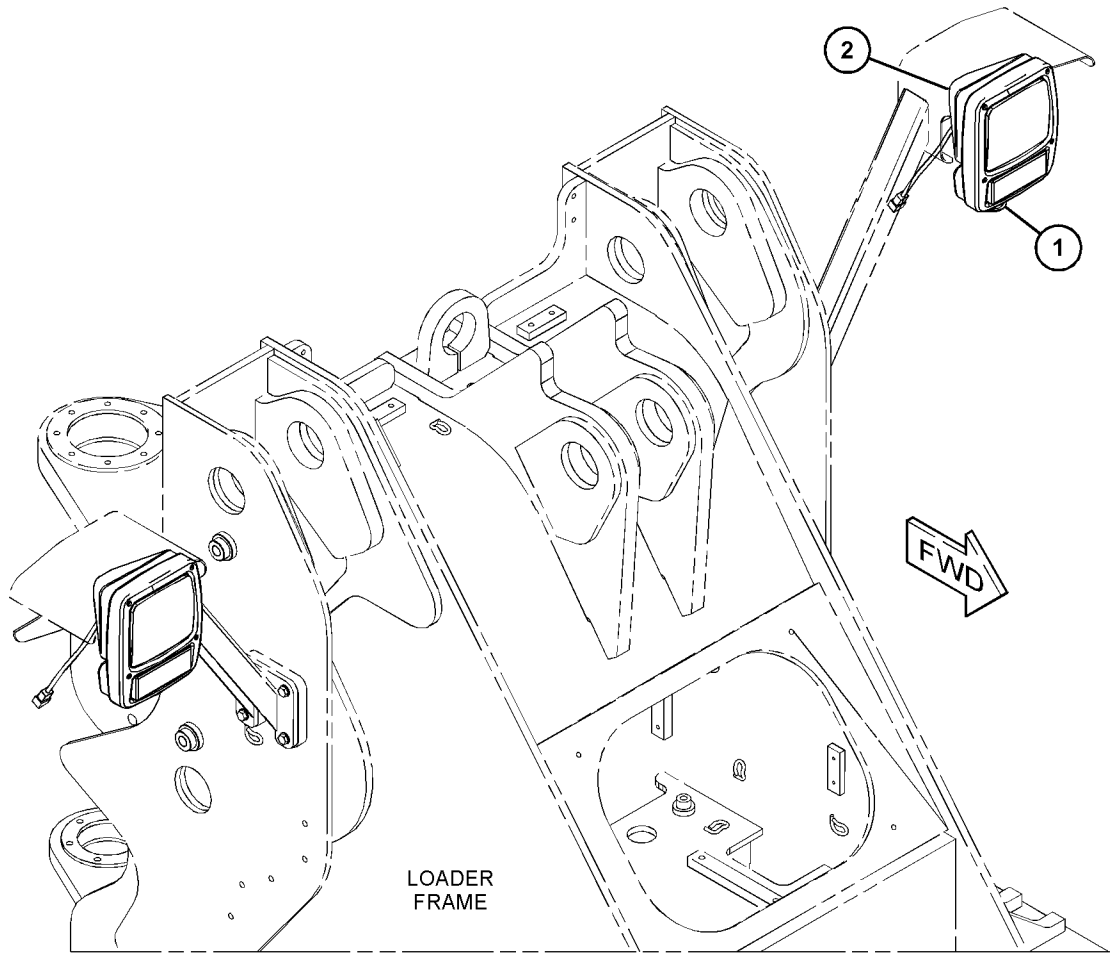

GRAPHIC #1 **<END>** g03796736

259-0134 LAMP GP-REGISTRATION PLATE–LICENSE

S/N: M5K1-UP
24-VOLT
PART OF 415-4232 CONVERSION GP-ROADING
AN ATTACHMENT

SMCS-1429 **i05514717**

NOTE	REF NO	GRAPHIC REF	PART NUMBER	QTY	PART NAME 1 2 3 4 5 6 (PRODUCT LEVEL)	SEE PAGE
	1	1	**5C-9583**	1	LAMP (24-VOLT, 5-WATT) (REGISTRATION PLATE)	
	2	1	**102-8802**	1	KIT-RECEPTACLE (2-PIN)	
					(INCLUDES RECEPTACLE AS & WEDGE)	
	3	1	**8T-8729**	2	PIN-CONNECTOR (16-GA TO 18-GA)	

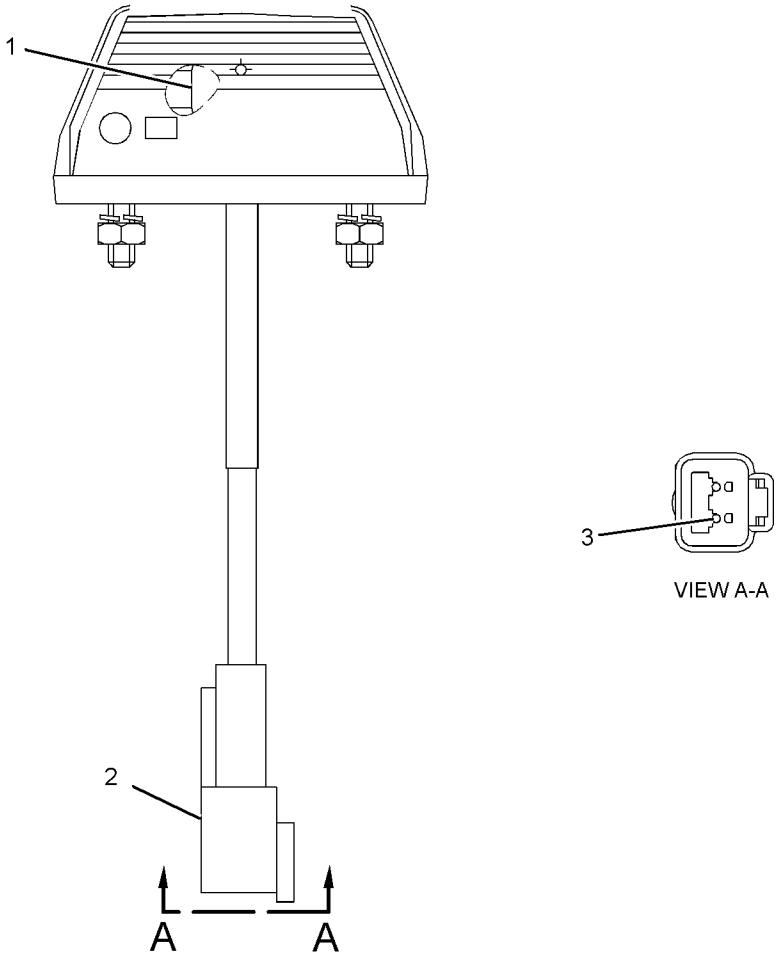

GRAPHIC #1 **<END>** g01201568

327-7104 LAMP GP-STOP & TAIL

S/N: M5K1-UP
PART OF 415-4244 LIGHTING GP-SIGNAL
AN ATTACHMENT

SMCS-1432 **i05425304**

NOTE	REF NO	GRAPHIC REF	PART NUMBER	QTY	PART NAME 1 2 3 4 5 6 (PRODUCT LEVEL)	SEE PAGE
	1	1	**8T-8729**	5	PIN-CONNECTOR (16-GA TO 18-GA)	
	2	1	**8T-8737**	1	PLUG-SEAL	
	3	1	**9X-4493**	2	LAMP (24-VOLT, 21-WATT) (DIRECTION)	
	4	1	**9X-4492**	1	LAMP (24-VOLT, 5-WATT) (STOP, TAIL)	
	5	1	**209-3090**	1	LENS (AMBER) (DIRECTION)	
	6	1	**209-3091**	1	LENS (WHITE) (REVERSE)	
	7	1	**209-3093**	1	LENS (RED) (STOP, TAIL)	
M	8	1	**5C-2890**	3	NUT (M6X1-THD)	
	9	1	**8T-0087**	3	LOCKWASHER	
	10	1	**102-8805**	1	KIT-RECEPTACLE (6-PIN)	
					(INCLUDES RECEPTACLE AS & WEDGE)	

M - METRIC PART

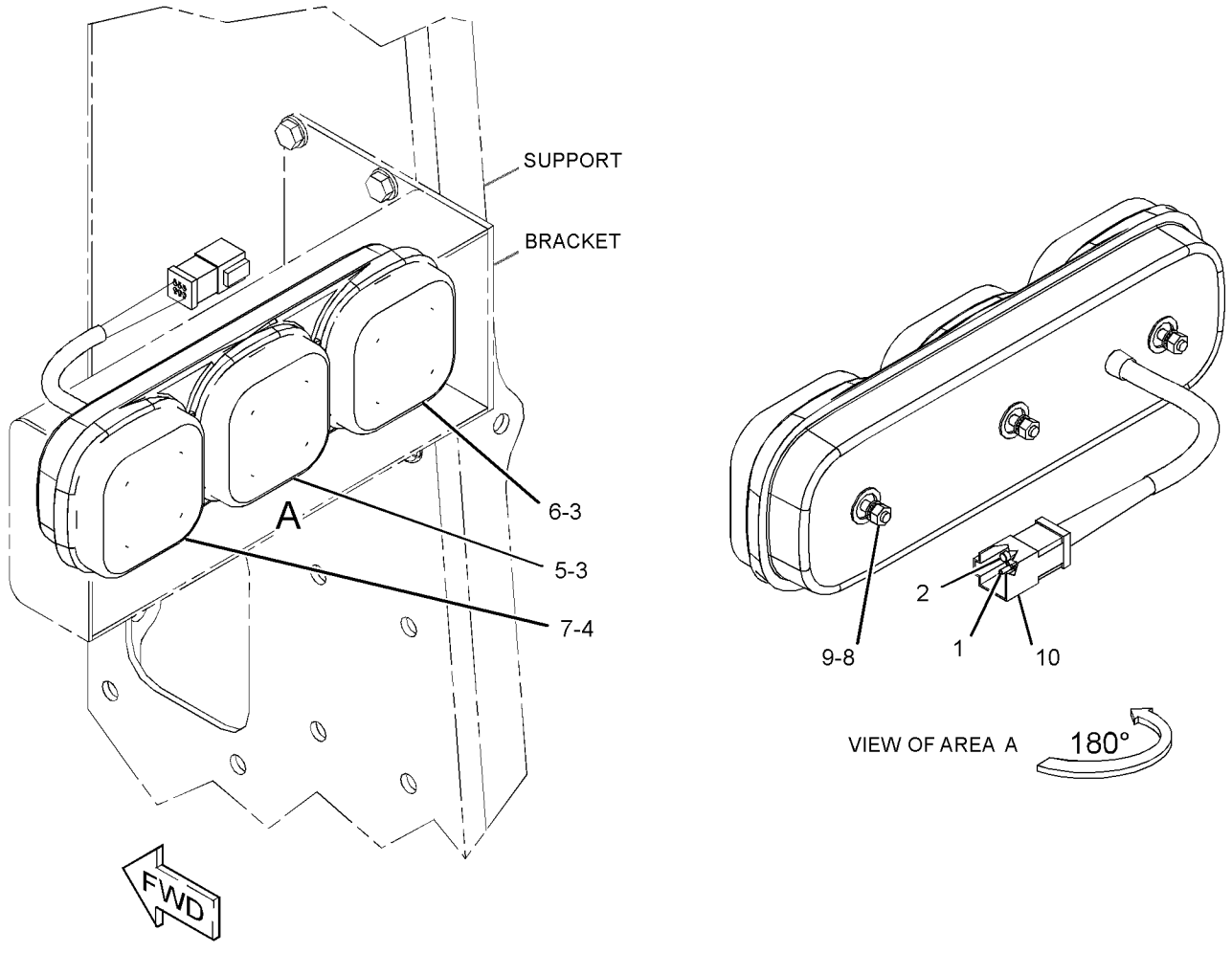

GRAPHIC #1 **<END>** g02916000

235-3937 LAMP GP-WARNING BEACON—ROTATING

S/N: M5K1-UP
24-VOLT, 70-WATT, AMBER
FIELD REPLACEMENT ORDER 284-3757—PAGE: 149
PART OF 415-4227 LIGHTING GP-WARNING BEACON
AN ATTACHMENT

SMCS-1431 **i05412860**

NOTE	REF NO	GRAPHIC REF	PART NUMBER	QTY	PART NAME 1 2 3 4 5 6 (PRODUCT LEVEL)	SEE PAGE
	1	1	**272-9800**	1	LENS (AMBER)	
	2	1	**9X-7849**	1	LAMP (24-VOLT, 70-WATT)	
	3	1	**9X-8139**	1	BELT-DRIVE (WARNING BEACON)	
	4	1	**186-3735**	2	PIN-CONNECTOR (16-GA TO 18-GA)	
M	5	1	**6V-8225**	3	NUT (M6X1-THD)	
	6	1	**5P-0537**	3	WASHER-HARD (7.2X14.5X2-MM THK)	
	7	1	**102-8802**	1	KIT-RECEPTACLE (2-PIN)	
					(INCLUDES RECEPTACLE AS & WEDGE)	

M - METRIC PART

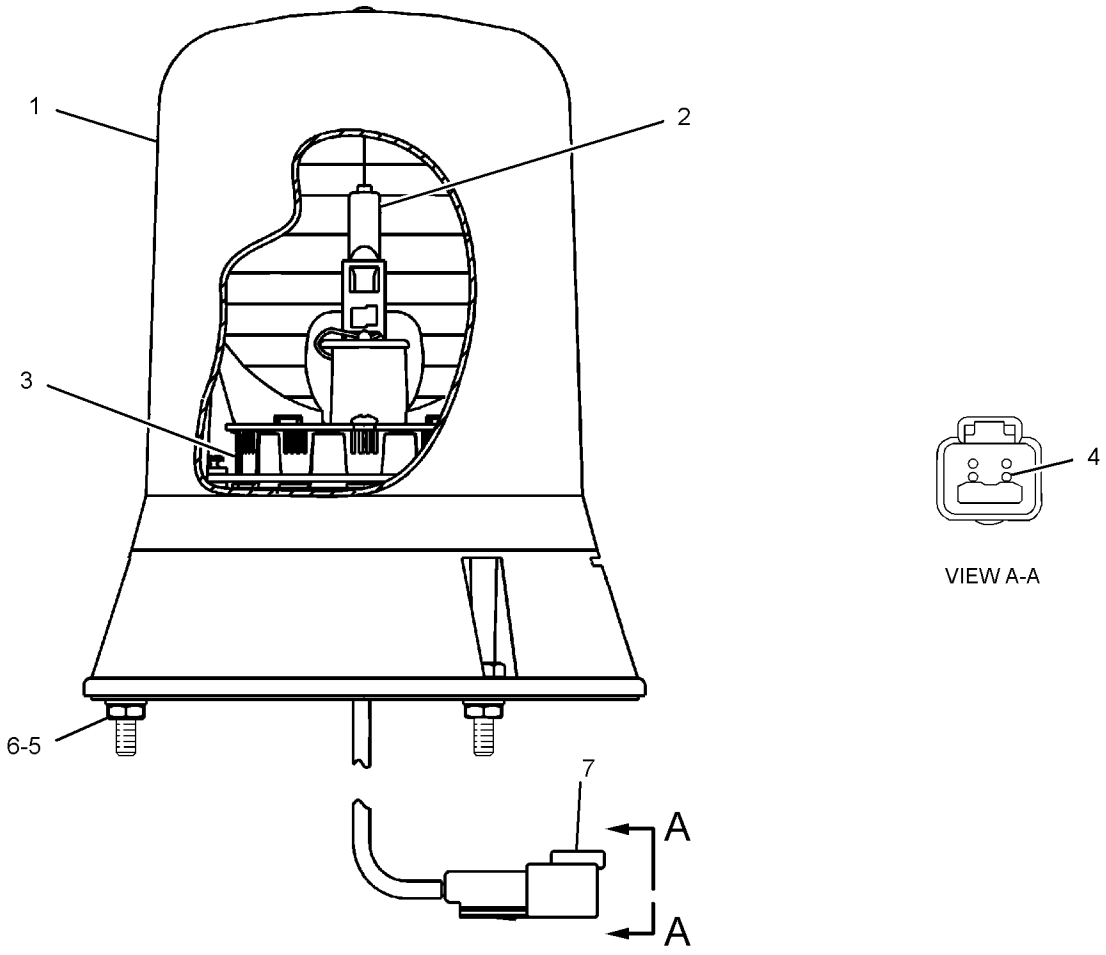

GRAPHIC #1 **<END>** g02374556

284-3757 LAMP GP-WARNING BEACON–AMBER, STROBE

S/N: M5K1-UP
12-VOLT, 24-VOLT. 2 FLASH STROBE
FIELD REPLACEMENT FOR 235-3937–PAGE: 148

SMCS-1431 **i05412861**

NOTE	REF NO	GRAPHIC REF	PART NUMBER	QTY	PART NAME 1 2 3 4 5 6 (PRODUCT LEVEL)	SEE PAGE
	1	1	**102-8802**	1	KIT-RECEPTACLE (2-PIN)	
					(INCLUDES RECEPTACLE AS & WEDGE)	
	2	1	**186-3735**	2	PIN-CONNECTOR (16-GA TO 18-GA)	

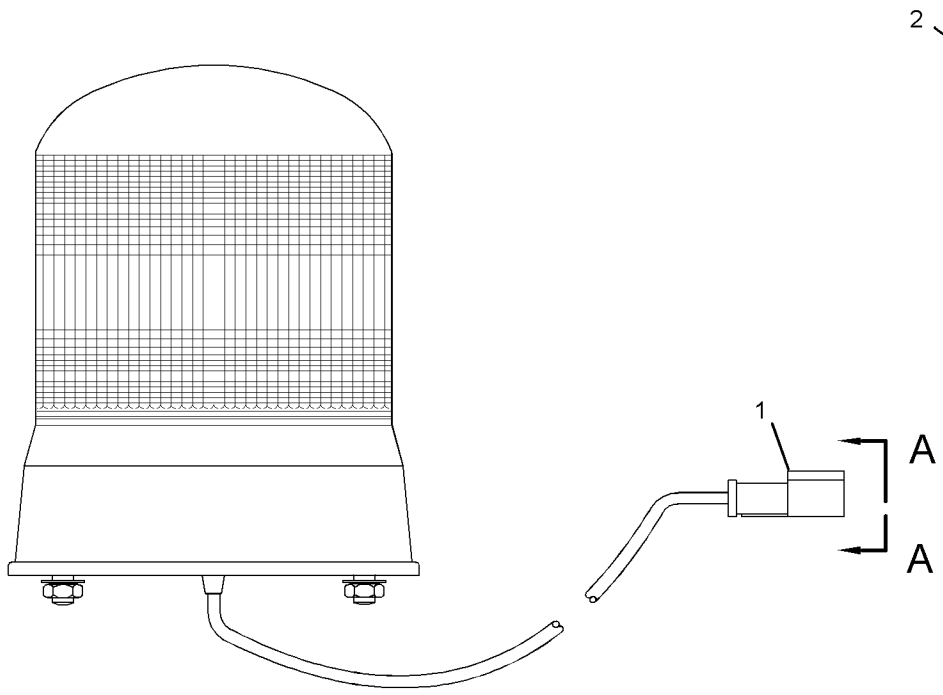

GRAPHIC #1 **<END>** g01373385

371-2241 LAMP GP-WARNING BEACON–AMBER, STROBE

S/N: M5K1-UP

PART OF 449-4931 LIGHTING GP-WARNING BEACON

AN ATTACHMENT

SMCS-1431 **i05815784**

NOTE	REF NO	GRAPHIC REF	PART NUMBER	QTY	PART NAME 1 2 3 4 5 6 (PRODUCT LEVEL)	SEE PAGE
	1	1	**102-8802**	1	KIT-RECEPTACLE (2-PIN)	
					(INCLUDES RECEPTACLE AS & WEDGE)	
	2	1	**8T-8729**	2	PIN-CONNECTOR (16-GA TO 18-GA)	
	3	1	**389-5708**	1	LENS (AMBER, WARNING BEACON)	
E	4	1	**9X-1386**		SLEEVE (44-CM)	

E - ORDER BY THE CENTIMETER

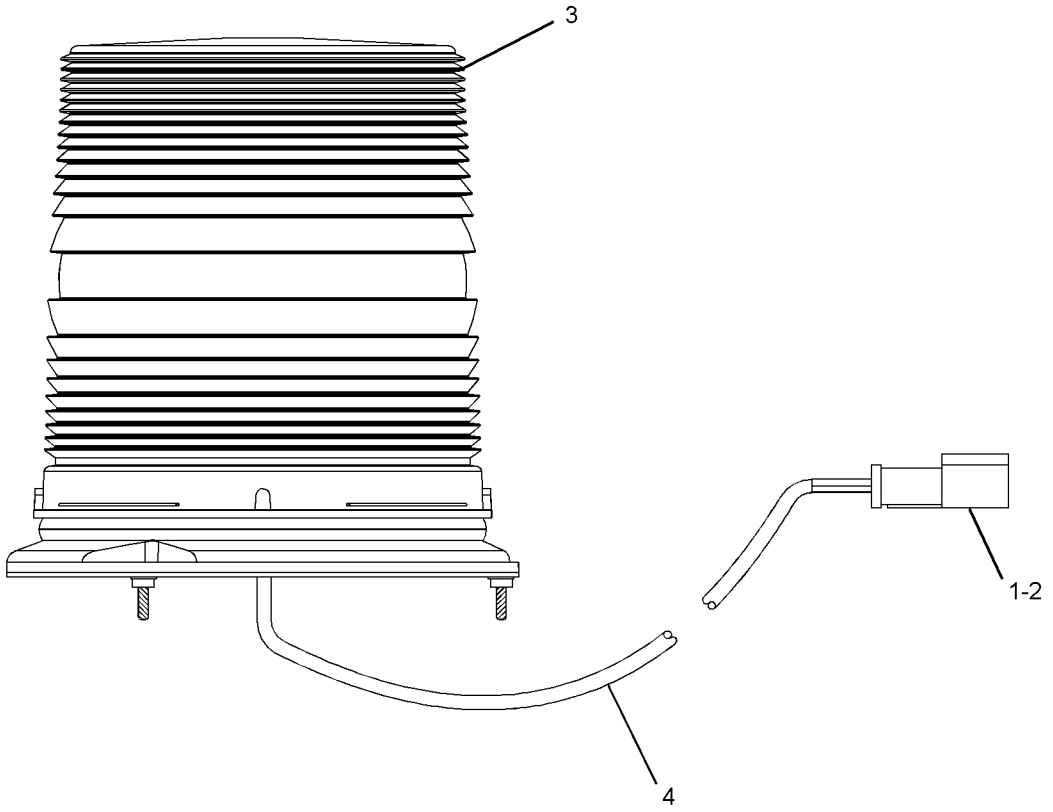

GRAPHIC #1 **<END>** g02934916

415-4203 LIGHTING GP-FLOOD–CAB, HALOGEN

S/N: M5K1-UP

AN ATTACHMENT

SMCS-1434 **i05412562**

NOTE	REF NO	GRAPHIC REF	PART NUMBER	QTY	PART NAME 1 2 3 4 5 6 (PRODUCT LEVEL)	SEE PAGE
Y	1	1	**219-6487**	4	LAMP GP-FLOOD (24-VOLT, 70-WATT) (SUSPENDED)	137

Y - SEPARATE ILLUSTRATION

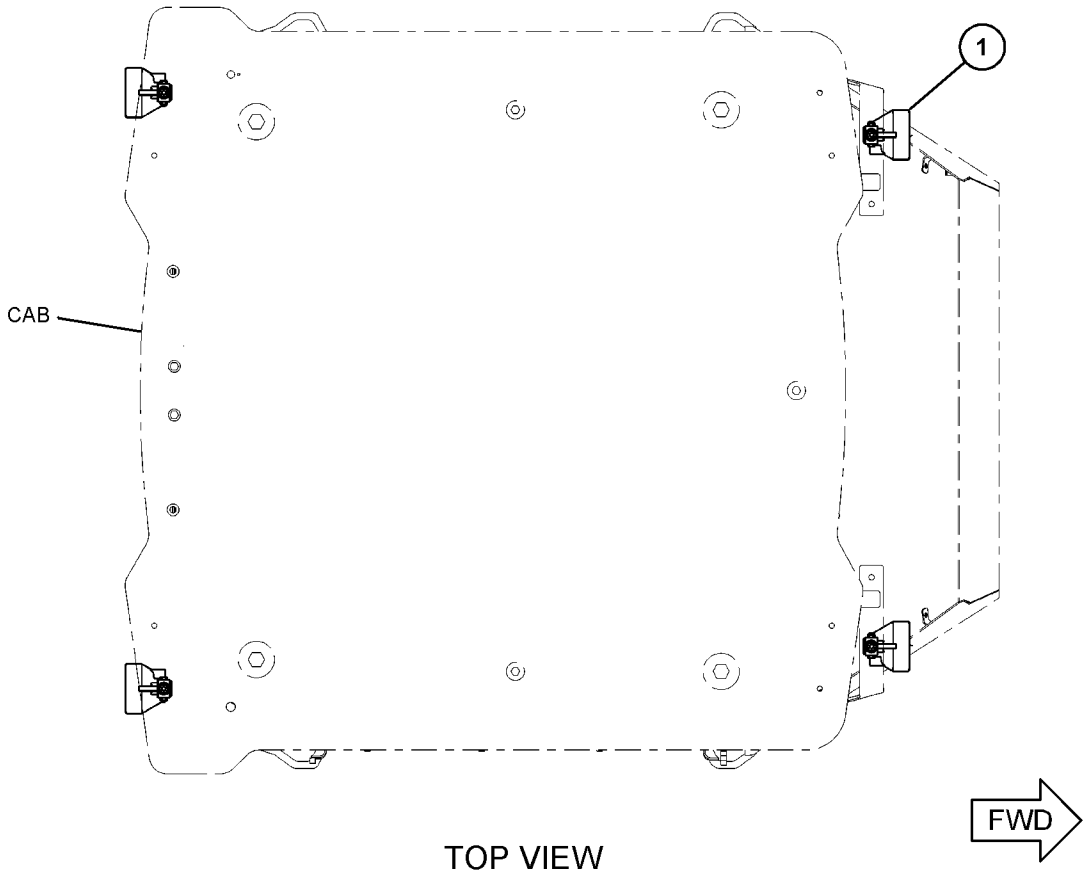

TOP VIEW

GRAPHIC #1 **<END>** g03424092

415-4215 LIGHTING GP-FLOOD

S/N: M5K1-UP
CANNOT BE USED WITH 392-8373 LAMP GP-FLOOD
AN ATTACHMENT

SMCS-1434 **i05412782**

NOTE	REF NO	GRAPHIC REF	PART NUMBER	QTY	PART NAME 1 2 3 4 5 6 (PRODUCT LEVEL)	SEE PAGE
Y	1	1	**219-6487**	4	LAMP GP-FLOOD (24-VOLT, 70-WATT)	137
Y	2	1	**392-8371**	1	HARNESS AS-LIGHTING	125
	3	1	**3S-2093**	16	STRAP-CABLE	
	4	1	**8T-4121**	1	WASHER-HARD (11X21X2.5-MM THK)	
M	5	1	**9X-2041**	1	SCREW-TRUSS HEAD (M10X1.5X20-MM)	

M - METRIC PART
Y - SEPARATE ILLUSTRATION

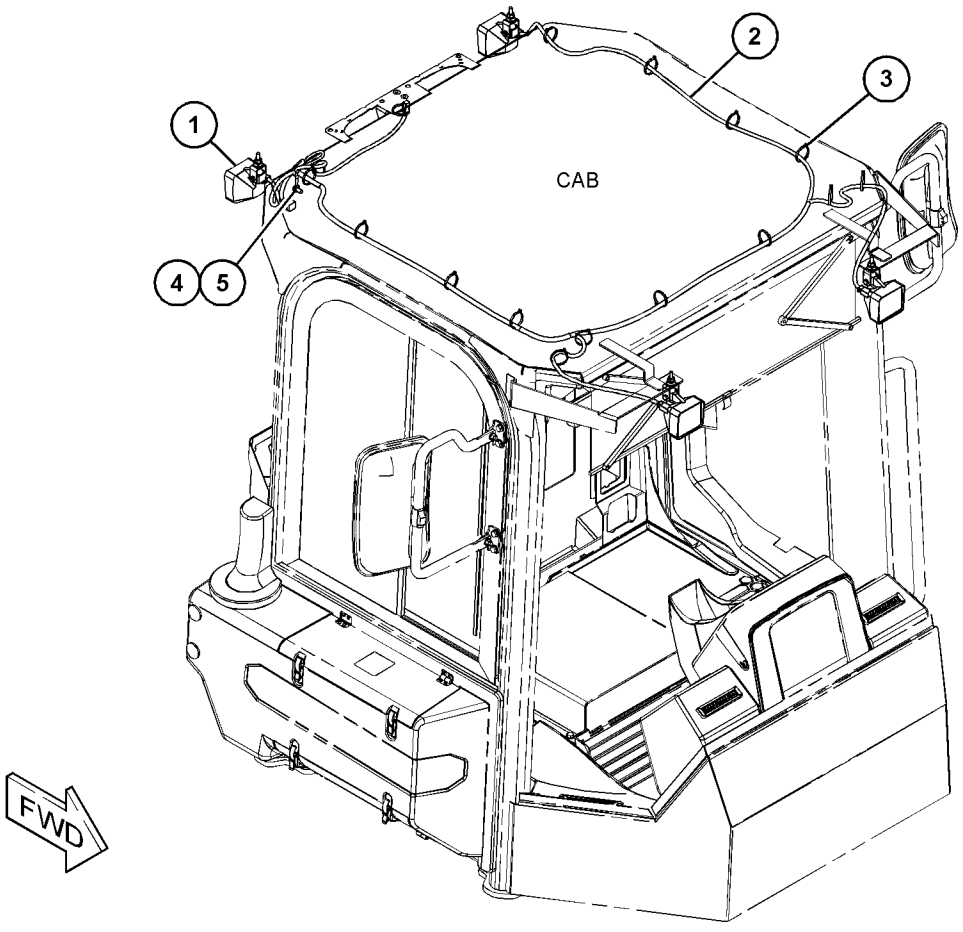

GRAPHIC #1 **<END>** g03550138

415-4245 LIGHTING GP-FLOOD & SIGNAL

S/N: M5K1-UP

PART OF 431-4650 COUNTERWEIGHT & MOUNTING GP

AN ATTACHMENT

SMCS-1430, 1434

i05743626

NOTE	REF NO	GRAPHIC REF	PART NUMBER	QTY	PART NAME 1 2 3 4 5 6 (PRODUCT LEVEL)	SEE PAGE
	1	1	**338-5716**	2	LAMP GP-BACKUP (REAR)	
					(EACH INCLUDES)	
		1	**9X-4493**	1	LAMP (24-VOLT, 21-WATT)	
		1	**257-3736**	2	SCREW (M5X0.8X25-MM)	
		1	**304-7167**	1	LENS	
		1	**304-7168**	1	GASKET	
	2	1	**338-5719**	2	LAMP GP-REAR (COMBINATION)	
					(EACH INCLUDES)	
		1	**9X-4492**	1	LAMP-FLOOD (24-VOLT, 5-WATT)	
		1	**257-3736**	2	SCREW (M5X0.8X25-MM)	
	3	1	*338-5720*	2	LAMP GP-SIGNAL (TURN)	
					(EACH INCLUDES)	
		1	**9X-4493**	1	LAMP (24-VOLT, 21-WATT)	
		1	**257-3736**	2	SCREW (M5X0.8X25-MM)	
Y	4	1	**392-8360**	1	HARNESS AS-LIGHTING (BACKUP ALARM, SIGNAL LAMPS)	125
	5	1	**415-4191**	4	GROMMET	
	6	1	**7K-1181**	11	STRAP-CABLE	
	7	1	**415-4211**	2	GROMMET	
	8	1	**415-4229**	2	GROMMET	

Y - SEPARATE ILLUSTRATION

415-4245 **LIGHTING GP-FLOOD & SIGNAL (*contd.*)** **i05743626**

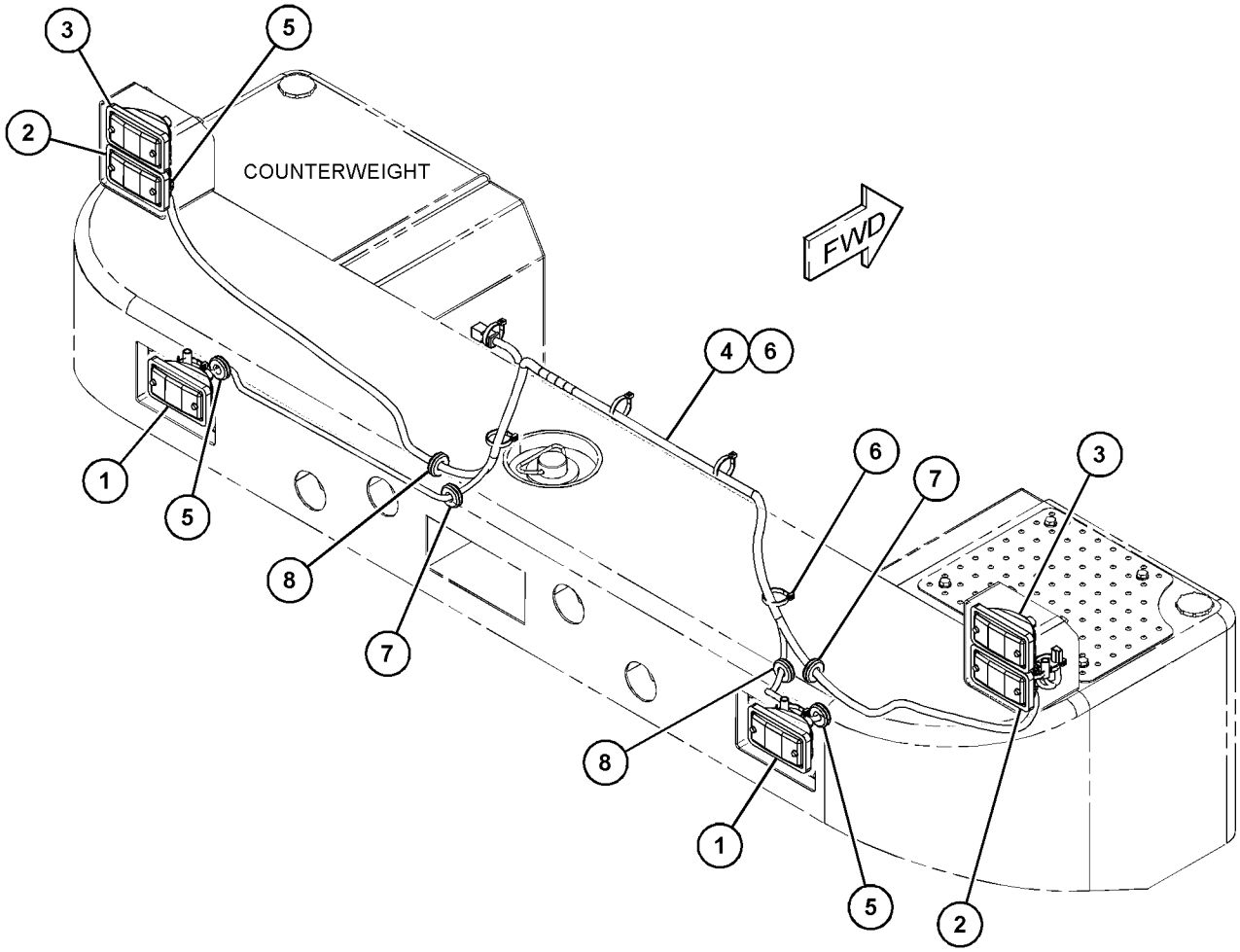

GRAPHIC #1 **<END>** g03672300

415-4244 LIGHTING GP-SIGNAL

S/N: M5K1-UP
PART OF 392-3830 COUNTERWEIGHT & MOUNTING GP
AN ATTACHMENT

SMCS-1430 **i05675649**

NOTE	REF NO	GRAPHIC REF	PART NUMBER	QTY	PART NAME 1 2 3 4 5 6 (PRODUCT LEVEL)	SEE PAGE
Y	1	1	*327-7104*	2	LAMP GP-STOP & TAIL (24-VOLT)	147
Y	2	1	**392-8359**	1	HARNESS AS-LIGHTING	124
	3	1	**130-5300**	2	CLIP	
	4	1	**7K-1181**	4	STRAP-CABLE	
	5	1	**8T-4121**	2	WASHER-HARD (11X21X2.5-MM THK)	
M	6	1	**8T-4137**	2	BOLT (M10X1.5X20-MM)	
	7	1	**415-4211**	4	GROMMET	

M - METRIC PART
Y - SEPARATE ILLUSTRATION

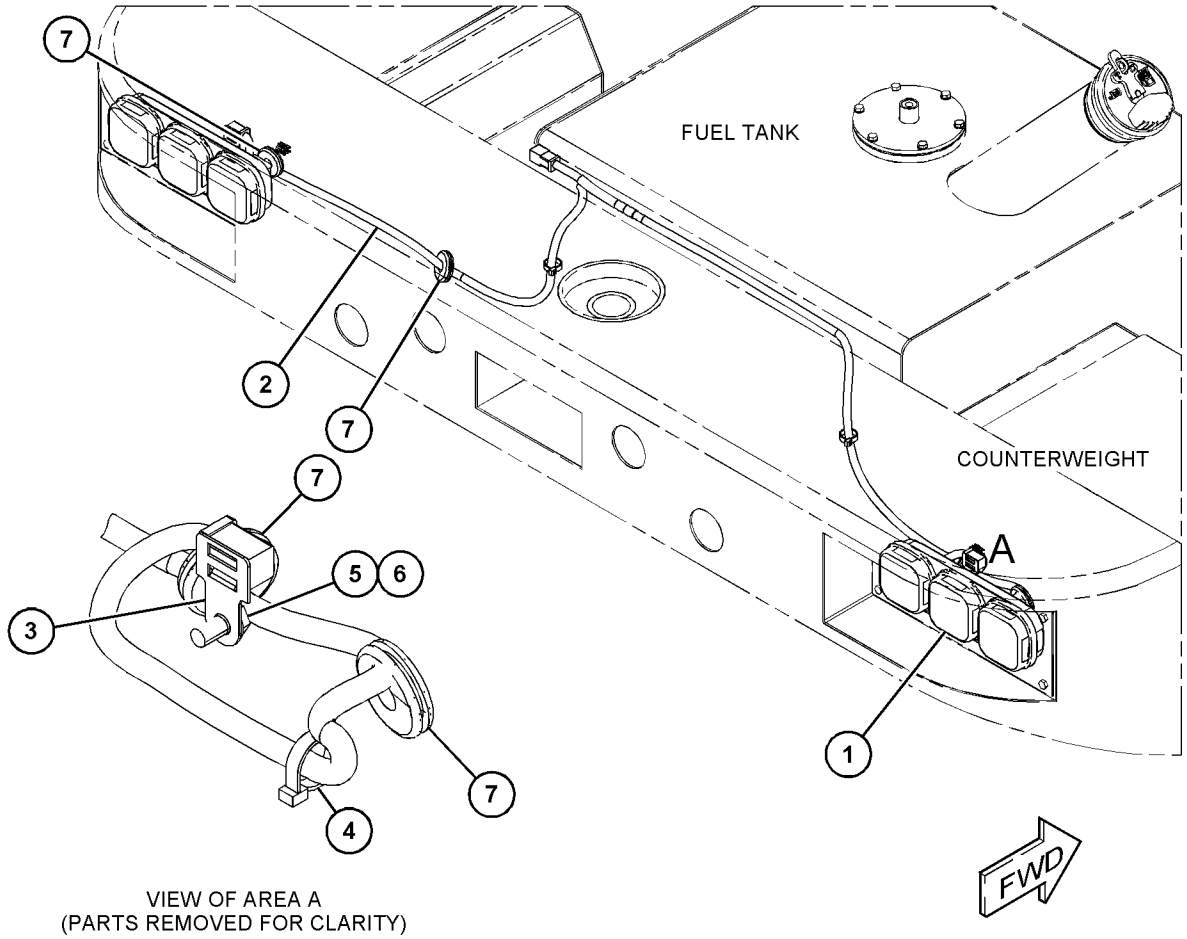

VIEW OF AREA A
(PARTS REMOVED FOR CLARITY)

GRAPHIC #1 **<END>** g03699522

415-4227 LIGHTING GP-WARNING BEACON

S/N: M5K1-UP

PART OF 387-6027 CONVERSION AR-BRAKE CONTROL

AN ATTACHMENT

SMCS-1431 **i05412862**

NOTE	REF NO	GRAPHIC REF	PART NUMBER	QTY	PART NAME 1 2 3 4 5 6 (PRODUCT LEVEL)	SEE PAGE
Y	1	1	*235-3937*	1	LAMP GP-WARNING BEACON (24-VOLT, AMBER, ROTATING)	148
	2	1	**237-9736**	1	SWITCH AS-ROCKER (WARNING BEACON)	
	3	1	**391-5324**	1	BRACKET	

Y - SEPARATE ILLUSTRATION

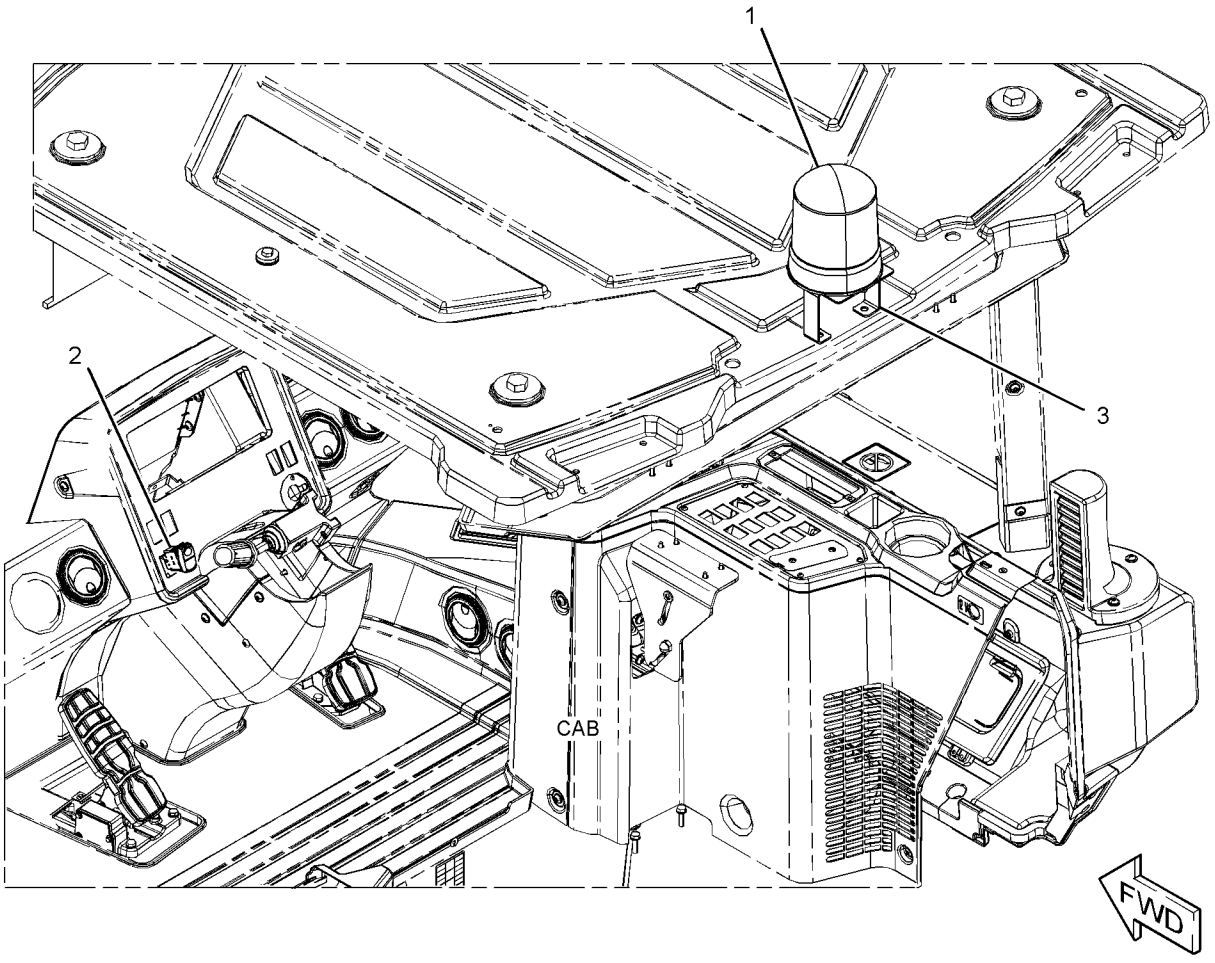

GRAPHIC #1 **<END>** g03551682

449-4931 LIGHTING GP-WARNING BEACON

S/N: M5K1-UP

AN ATTACHMENT

SMCS-1431 **i05815814**

NOTE	REF NO	GRAPHIC REF	PART NUMBER	QTY	PART NAME 1 2 3 4 5 6 (PRODUCT LEVEL)	SEE PAGE
	1	1	**237-9736**	1	SWITCH AS-ROCKER (WARNING BEACON)	
Y	2	1	**371-2241**	1	LAMP GP-WARNING BEACON (AMBER, STROBE) (LED)	150
	3	1	**449-4932**	1	BRACKET	

Y - SEPARATE ILLUSTRATION

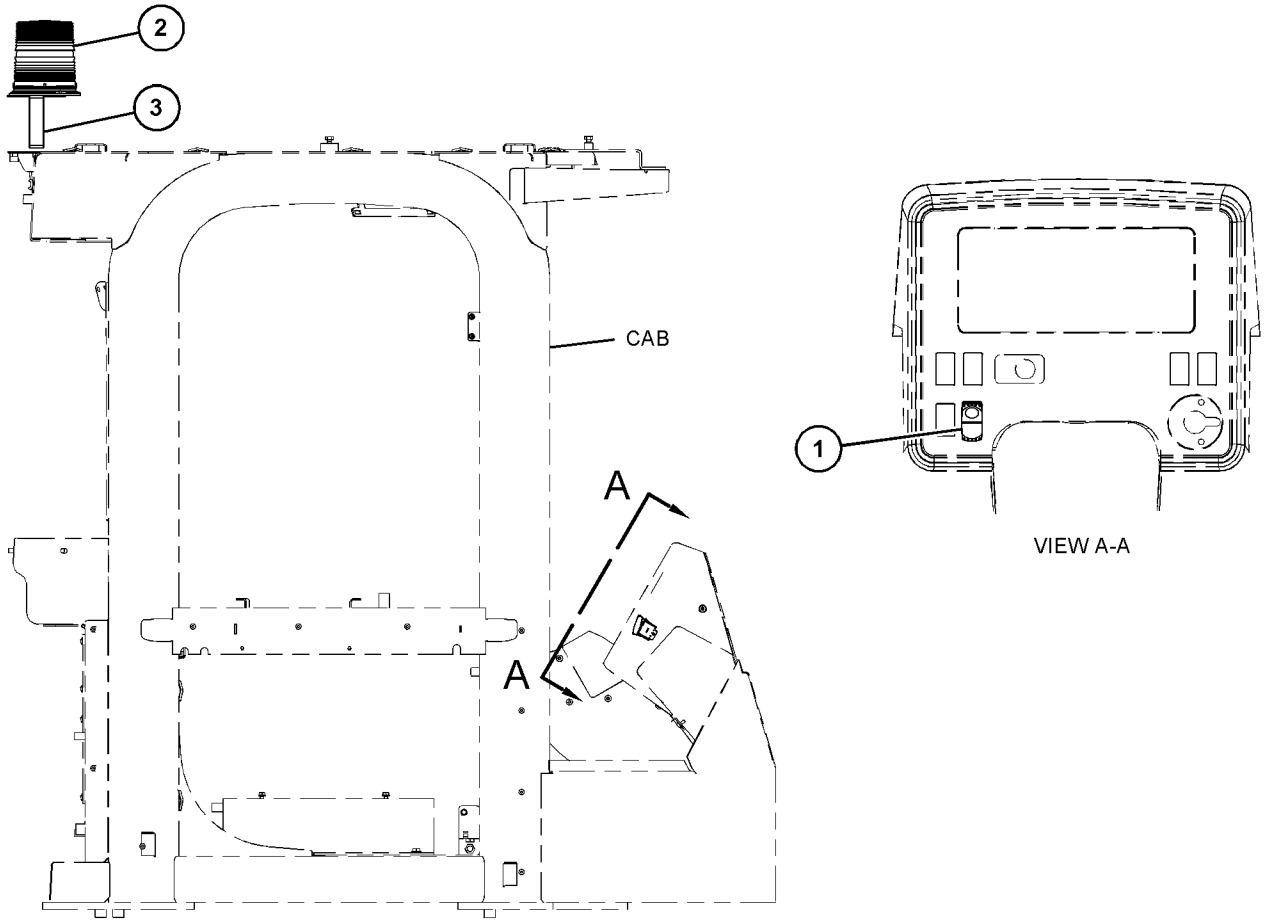

RIGHT SIDE VIEW

GRAPHIC #1 **<END>** g03692275

395-0112 MOUNTING GP-ELECTRONIC CONTROL

S/N: E7A1-UP
PART OF 393-4097, 446-7556 ENGINE AR-PRIMARY
ALSO AN ATTACHMENT

SMCS-1901, 7610

i05535450

NOTE	REF NO	GRAPHIC REF	PART NUMBER	QTY	PART NAME 1 2 3 4 5 6 (PRODUCT LEVEL)	SEE PAGE
	1	1	**446-1268**	1	BRACKET AS	
M	2	1	**6I-0292**	2	BOLT (M8X1.25X140-MM)	
	3	1	**6I-0293**	2	BOLT (M8X1.25X80-MM)	

M - METRIC PART

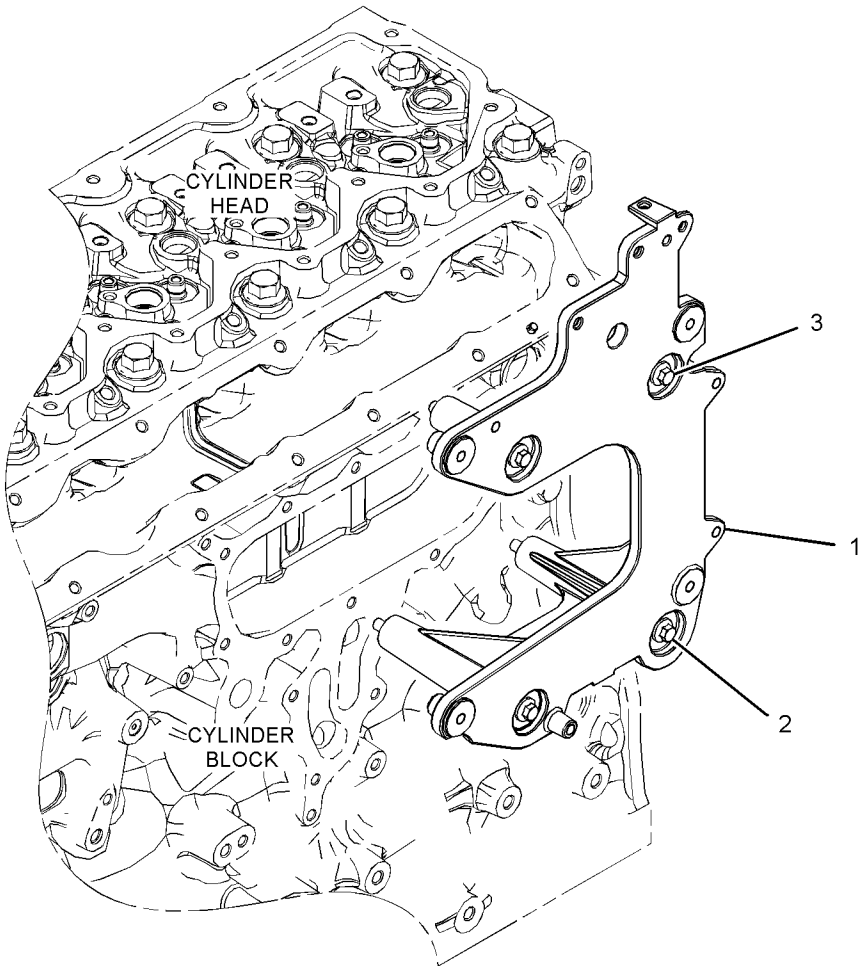

GRAPHIC #1

<END>

g03378971

336-3545 RADIO GP-COMMUNICATION—PRODUCT LINK 121SR

S/N: M5K1-UP

PART OF 449-4917 INSTALLATION GP-COMMUNICATION

AN ATTACHMENT

SMCS-733T **i05819552**

NOTE	PART NUMBER	QTY	PART NAME 1 2 3 4 5 6 (PRODUCT LEVEL)	SEE PAGE
	434-1356	1	SOFTWARE GP-MACHINE (PRODUCT LINK 121SR)	

<END>

395-0110 SENSOR GP-ENGINE

S/N: E7A1-UP

PART OF 393-4097, 446-7556 ENGINE AR-PRIMARY

ALSO AN ATTACHMENT

SMCS-1718, 1906, 1907, 1912, 1917, 1923, 1924, 1928, 1929, 7400

i05472952

NOTE	REF NO	GRAPHIC REF	PART NUMBER	QTY	PART NAME 1 2 3 4 5 6 (PRODUCT LEVEL)	SEE PAGE
M	1	1	**124-3815**	2	BOLT (M8X1.25X16-MM)	
	2	1	**199-9252**	1	SEAL-O-RING	
	3	1	**199-9267**	1	SEAL-O-RING	
	4	1	**199-9751**	1	SEAL-O-RING	
	5	1	**238-0120**	2	SENSOR GP-SPEED (ENGINE)	
	6	1	**256-6454**	1	SENSOR-TEMPERATURE (AIR INLET MANIFOLD)	
	6A	1	**256-6454**	1	SENSOR-TEMPERATURE (COOLANT)	
	7	1	**276-5603**	1	SEAL-O-RING	
	8	1	**320-3060**	1	SENSOR-PRESSURE (ENGINE OIL)	
	9	1	**320-3062**	1	SENSOR GP-PRESSURE (INLET MANIFOLD AIR)	
	10	1	**228-4947**	2	SEAL-O-RING	

M - METRIC PART

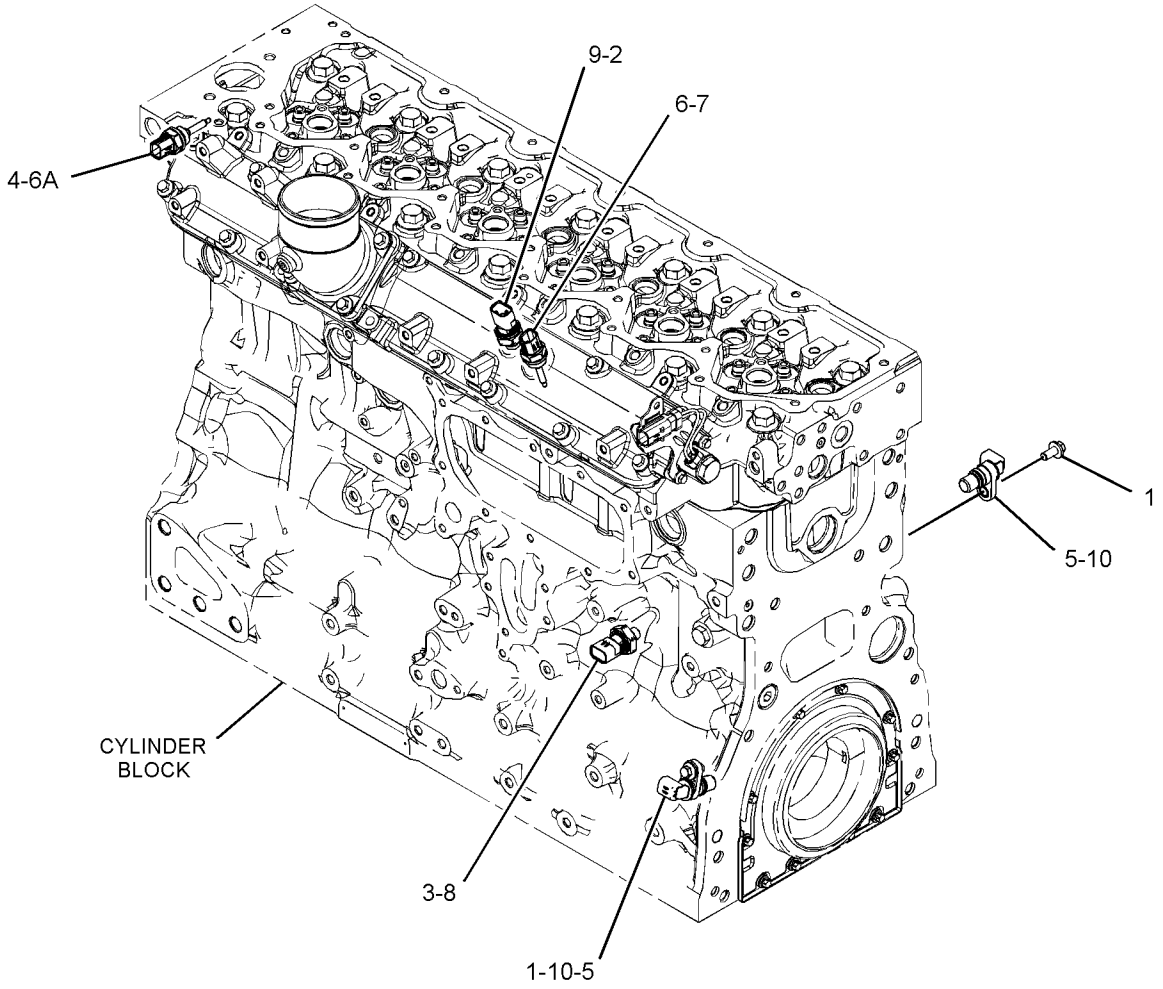

GRAPHIC #1

<END>

g03380662

395-0114 STARTING AID GP

S/N: E7A1-UP
PART OF 393-4097, 446-7556 ENGINE AR-PRIMARY
ALSO AN ATTACHMENT

SMCS-1090 **i05472955**

NOTE	REF NO	GRAPHIC REF	PART NUMBER	QTY	PART NAME 1 2 3 4 5 6 (PRODUCT LEVEL)	SEE PAGE
	1	1	**112-7704**	1	BOLT	
M	2	1	**5C-2890**	2	NUT (M6X1-THD)	
	3	1	**217-9039**	1	STRAP-CABLE	
	4	1	**361-9875**	6	GLOW PLUG (24-VOLT)	
	5	1	**368-3145**	1	BUS BAR AS	
	6	1	**384-7567**	1	HARNESS AS-STARTING AID	
		1	**2L-8050**	2	TERMINAL-RING (6-GA, 1/4-IN SCREW)	
					—OR—	
		1	**2L-8058**	2	TERMINAL-RING (8-GA, 1/4-IN SCREW)	
		1	**316-9351**	1	MOUNTING-CABLE TIE	
	7	1	**208-8469**	1	LOCKNUT (M6X1-THD)	
	8	1	**275-2428**	1	INSULATOR	
	9	1	**277-4409**	1	CAP	

M - METRIC PART

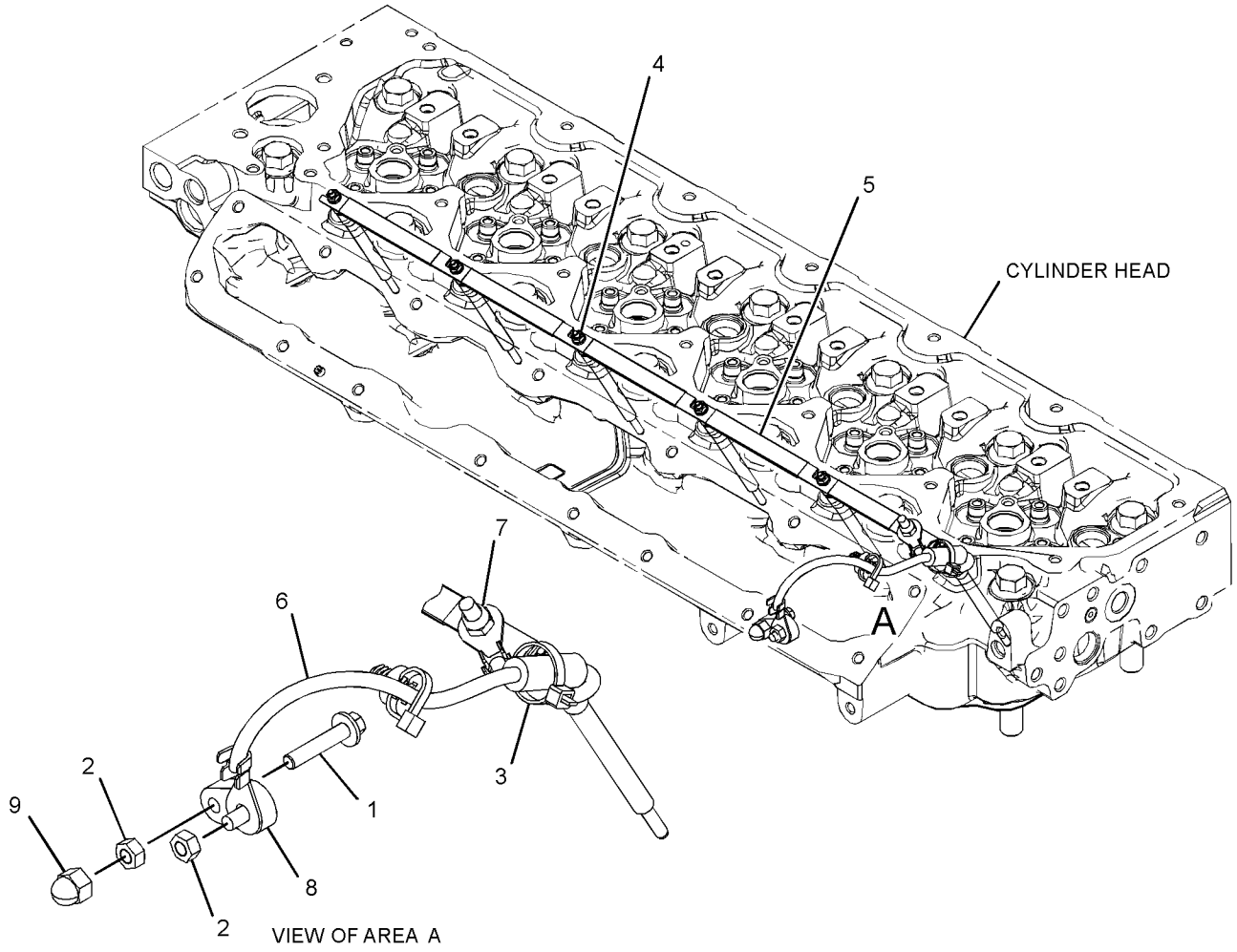

GRAPHIC #1 **<END>** g03379036

399-0931 STARTING AID GP-ETHER

S/N: M5K1-UP

PART OF 387-6028 OPTION AR-COLD WEATHER

AN ATTACHMENT

SMCS-1456 **i05402739**

NOTE	REF NO	GRAPHIC REF	PART NUMBER	QTY	PART NAME 1 2 3 4 5 6 (PRODUCT LEVEL)	SEE PAGE
	1	1	**7N-2059**	1	CLAMP AS	
Y	2	1	**239-1134**	1	VALVE GP-ETHER STARTING (24-VOLT)	175
	3	1	**256-6881**	1	ATOMIZER GP-ETHER	
		1	**236-4545**	1	NUT-SLEEVE (5/16-24-THD)	
	4	1	**276-5436**	1	FITTING AS	
		1	**236-4545**	1	NUT-SLEEVE (5/16-24-THD)	
M	5	1	**5C-7261**	2	NUT (M8X1.25-THD)	
	6	1	**6V-2686**	5	CLIP	
M	7	1	**6V-5218**	4	BOLT (M8X1.25X35-MM)	
	8	1	**8T-4121**	2	WASHER-HARD (11X21X2.5-MM THK)	
M	9	1	**8T-4137**	2	BOLT (M10X1.5X20-MM)	
	10	1	**8T-4224**	6	WASHER-HARD (8.8X16X2-MM THK)	
D	11	1	**5P-5630**		TUBE (1.5-M)	

D - ORDER BY THE METER
M - METRIC PART
Y - SEPARATE ILLUSTRATION

399-0931 **STARTING AID GP-ETHER (*contd.*)** **i05402739**

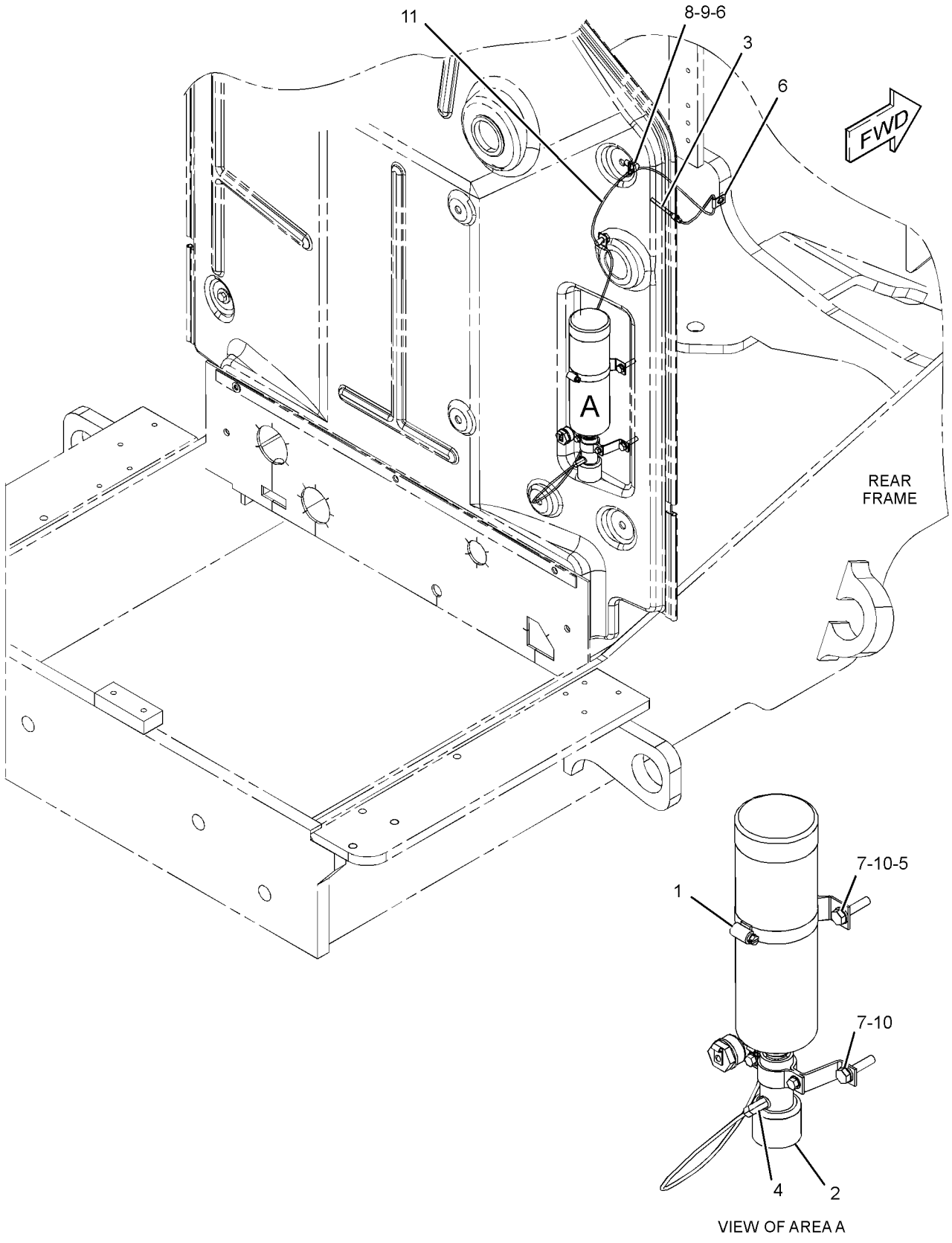

GRAPHIC #1 **<END>** g03424036

385-8000 STARTING MOTOR GP-ELECTRIC

S/N: E7A1-UP
PART OF 446-7556 ENGINE AR-PRIMARY
AN ATTACHMENT

SMCS-1453 **i05472959**

NOTE	REF NO	GRAPHIC REF	PART NUMBER	QTY	PART NAME 1 2 3 4 5 6 (PRODUCT LEVEL)	SEE PAGE
	1	1	**354-5671**	1	STARTING MOTOR GP-ELECTRIC	
	1A	1	**230-4012**	1	RECEPTACLE AS-CONNECTOR (2-PIN)	
	2	1	**183-1343**	3	STUD	
M	3	1	**6I-0233**	3	NUT (M12X1.75-THD)	

M - METRIC PART

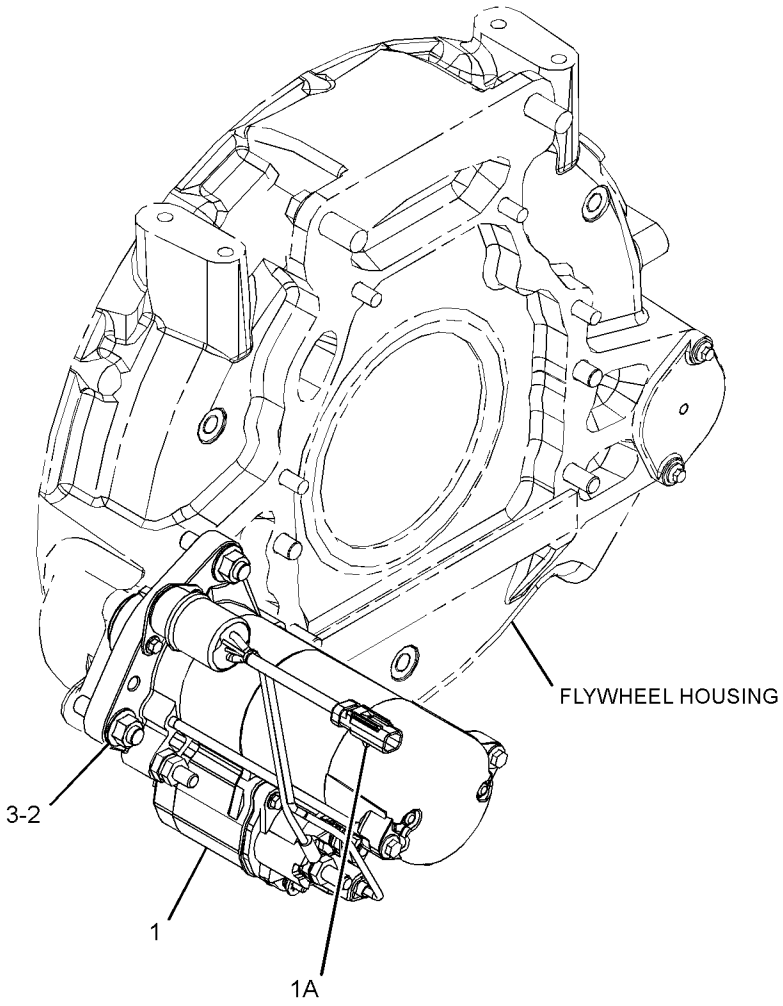

GRAPHIC #1 **<END>** g03317666

445-4703 STARTING MOTOR GP-ELECTRIC

S/N: E7A1-UP
PART OF 393-4097 ENGINE AR-PRIMARY
ALSO AN ATTACHMENT

SMCS-1453 **i05493936**

NOTE	REF NO	GRAPHIC REF	PART NUMBER	QTY	PART NAME 1 2 3 4 5 6 (PRODUCT LEVEL)	SEE PAGE
	1	1	**183-1343**	3	STUD	
	2	1	**424-6652**	1	STARTING MOTOR GP-ELECTRIC	
		1	**230-4012**	2	RECEPTACLE AS-CONNECTOR (2-PIN)	
		1	**423-9049**	2	SEAL-O-RING	
M	3	1	**6I-0233**	3	NUT (M12X1.75-THD)	

M - METRIC PART

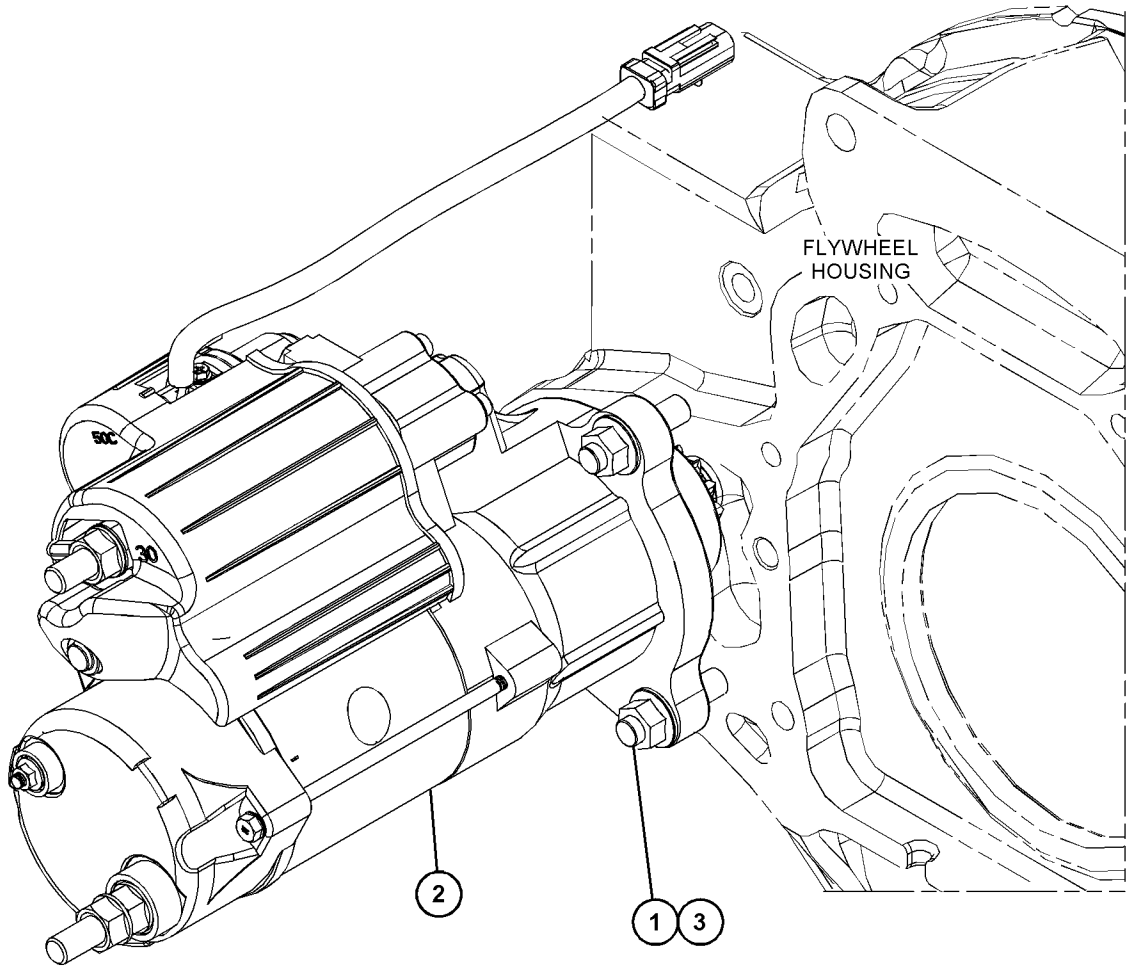

GRAPHIC #1 **<END>** g03482937

7N-0718 SWITCH GP-DISCONNECT–BATTERY

S/N: M5K1-UP

PART OF 415-4246 BATTERY & BOX GP-HEAVY-DUTY, 392-8394 BATTERY & WIRING GP

AN ATTACHMENT

SMCS-1411 **i05425265**

NOTE	REF NO	GRAPHIC REF	PART NUMBER	QTY	PART NAME 1 2 3 4 5 6 (PRODUCT LEVEL)	SEE PAGE
	1	1	**8H-5306**	1	KEY (BATTERY DISCONNECT)	
	2	1	**8H-5303**	1	NUT (3/4-16-THD)	
	3	1	**2H-3922**	2	LOCKWASHER	
	4	1	**9F-5644**	2	LOCKWASHER	
	5	1	**6F-7045**	2	NUT-FULL (3/8-24-THD)	

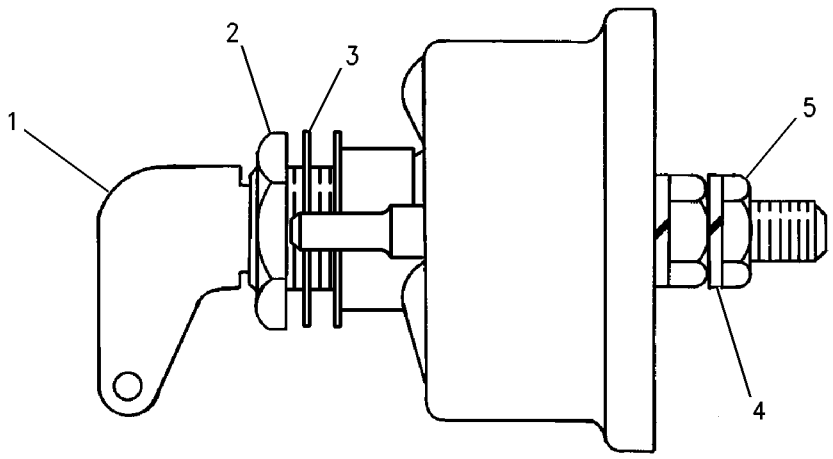

GRAPHIC #1 **<END>** g00715584

398-0940 SWITCH GP-MAGNETIC

S/N: M5K1-UP

PART OF 392-8362 WIRING GP-CHASSIS

SMCS-7499 **i05431936**

NOTE	REF NO	GRAPHIC REF	PART NUMBER	QTY	PART NAME 1 2 3 4 5 6 (PRODUCT LEVEL)	SEE PAGE
	1	1	**102-8802**	1	KIT-RECEPTACLE (2-PIN)	
					(INCLUDES RECEPTACLE AS & WEDGE)	
	2	1	**8T-8729**	2	PIN-CONNECTOR (16-GA TO 18-GA)	
	3	1	**3F-9556**	2	LOCKWASHER	
	4	1	**6V-8186**	2	NUT-FULL (5/16-24-THD)	
	5	1	**6V-8378**	2	NUT (10-32-THD)	
	6	1	**8F-1434**	2	LOCKWASHER	

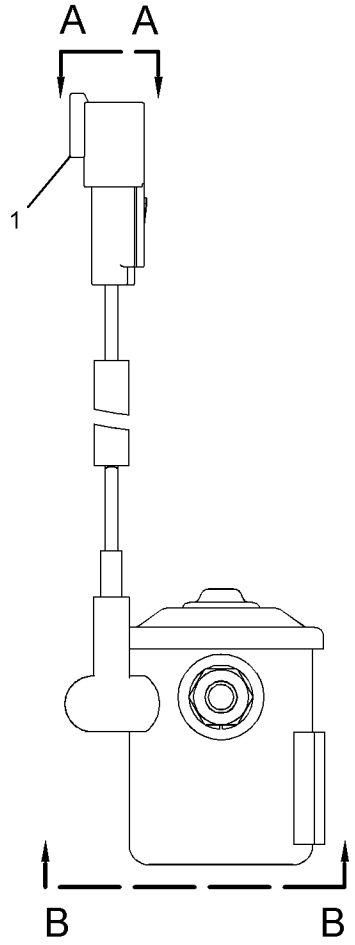

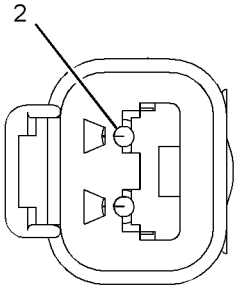

VIEW A-A

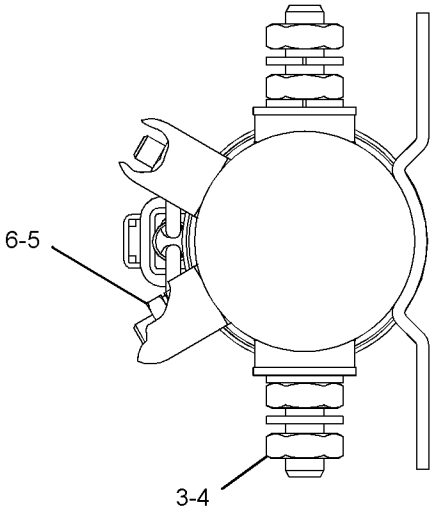

VIEW B-B

GRAPHIC #1 **<END>** g03351877

415-4230 SWITCH GP-QUICK COUPLER

S/N: M5K1-UP
PART OF 397-9860 LINES GP-COUPLER
AN ATTACHMENT

SMCS-6129, 7332 **i05412941**

NOTE	REF NO	GRAPHIC REF	PART NUMBER	QTY	PART NAME 1 2 3 4 5 6 (PRODUCT LEVEL)	SEE PAGE
Y	1	1	**132-1829**	1	ALARM GP (24-VOLT)	98
	2	1	**280-4244**	1	SWITCH AS-ROCKER (24-VOLT) (QUICK COUPLER)	
	3	1	**8T-4121**	1	WASHER-HARD (11X21X2.5-MM THK)	
M	4	1	**9X-2041**	1	SCREW-TRUSS HEAD (M10X1.5X20-MM)	

M - METRIC PART
Y - SEPARATE ILLUSTRATION

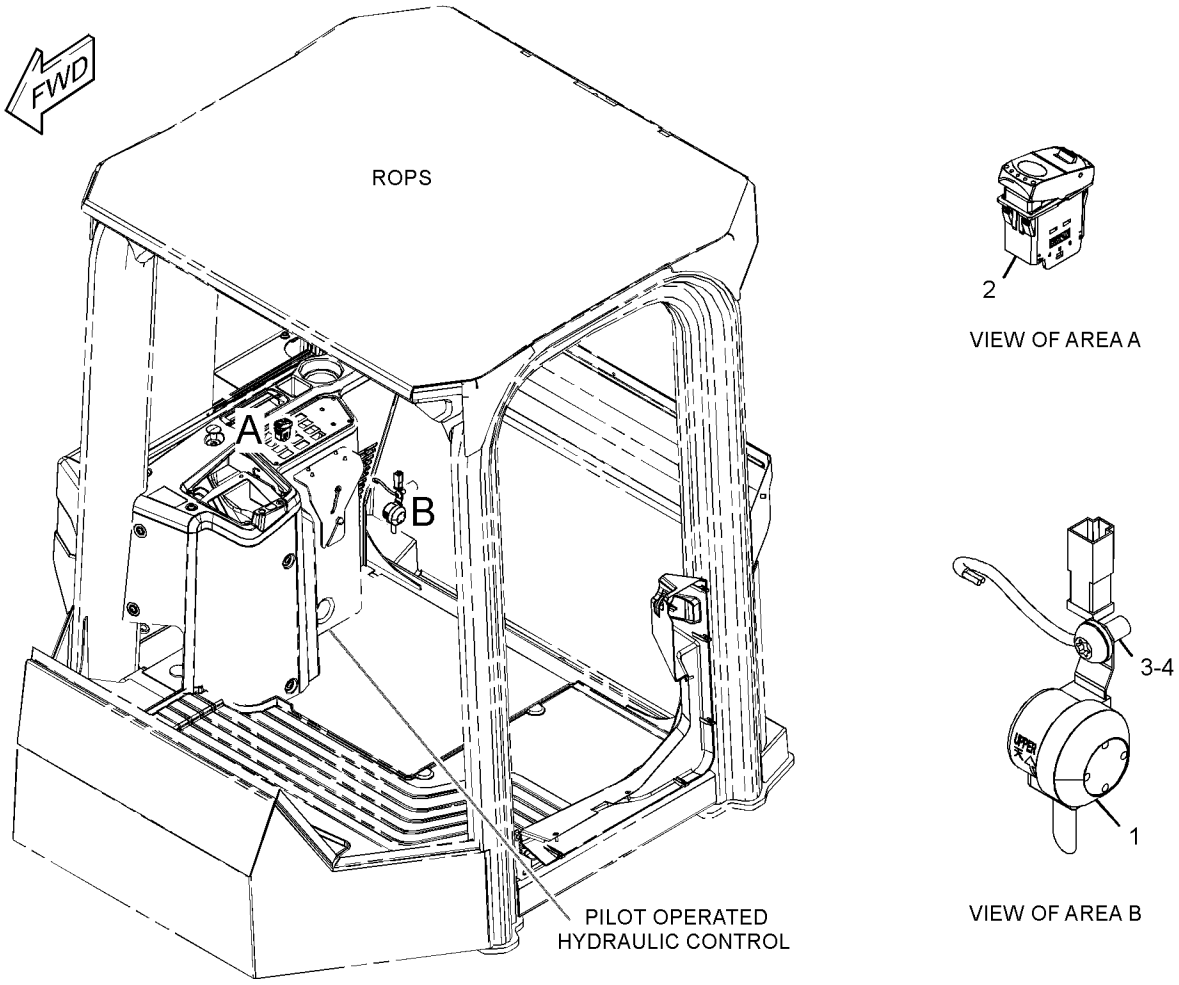

GRAPHIC #1 **<END>** g03422681

415-4235 SWITCH GP-REVERSING FAN

S/N: M5K1-UP

PART OF 397-9801 MOTOR & LINES GP-HYDRAULIC FAN

AN ATTACHMENT

SMCS-7332 **i05413349**

NOTE	REF NO	GRAPHIC REF	PART NUMBER	QTY	PART NAME 1 2 3 4 5 6 (PRODUCT LEVEL)	SEE PAGE
	1	1	**236-4623**	1	SWITCH AS-ROCKER (24-VOLT) (REVERSING FAN)	

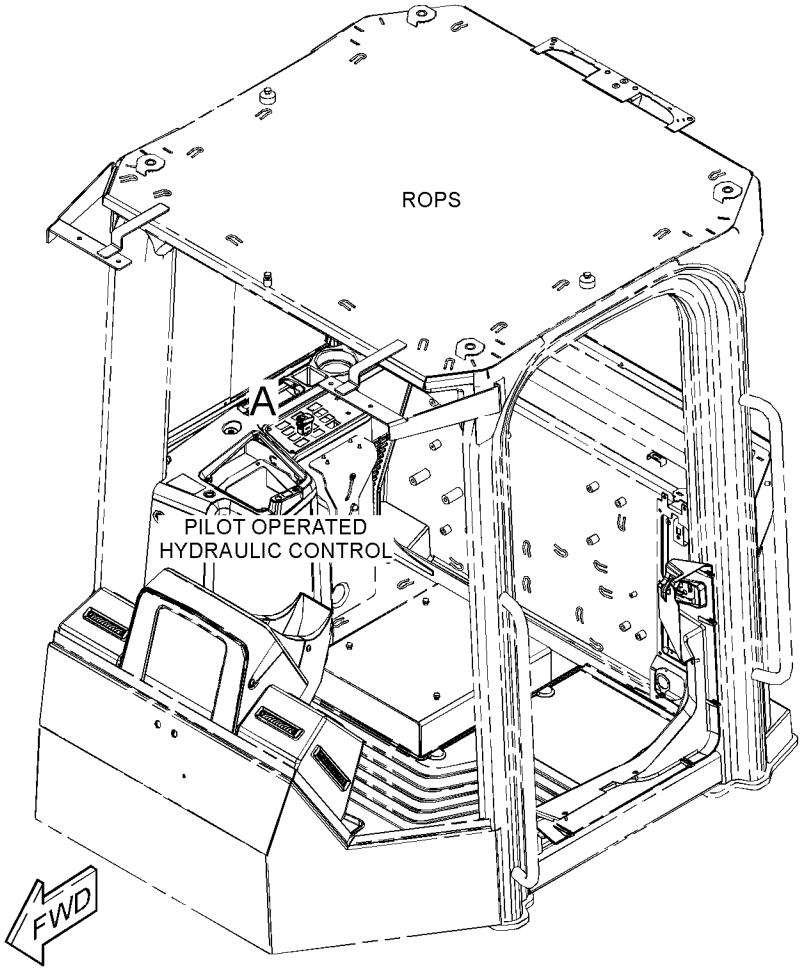

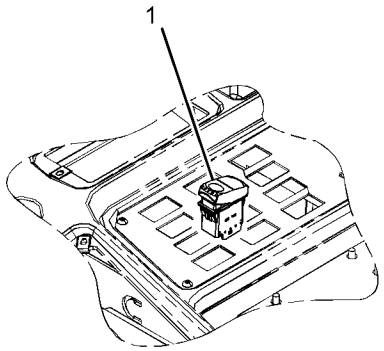

VIEW OF AREA A

GRAPHIC #1 **<END>** g03422340

415-4234 SWITCH GP-RIDE CONTROL

S/N: M5K1-UP

PART OF 390-5903 VALVE & MTG GP-HYDRAULIC

AN ATTACHMENT

SMCS-7332 **i05413346**

NOTE	REF NO	GRAPHIC REF	PART NUMBER	QTY	PART NAME 1 2 3 4 5 6 (PRODUCT LEVEL)	SEE PAGE
	1	1	**236-4612**	1	SWITCH AS-ROCKER (24-VOLT) (RIDE CONTROL)	

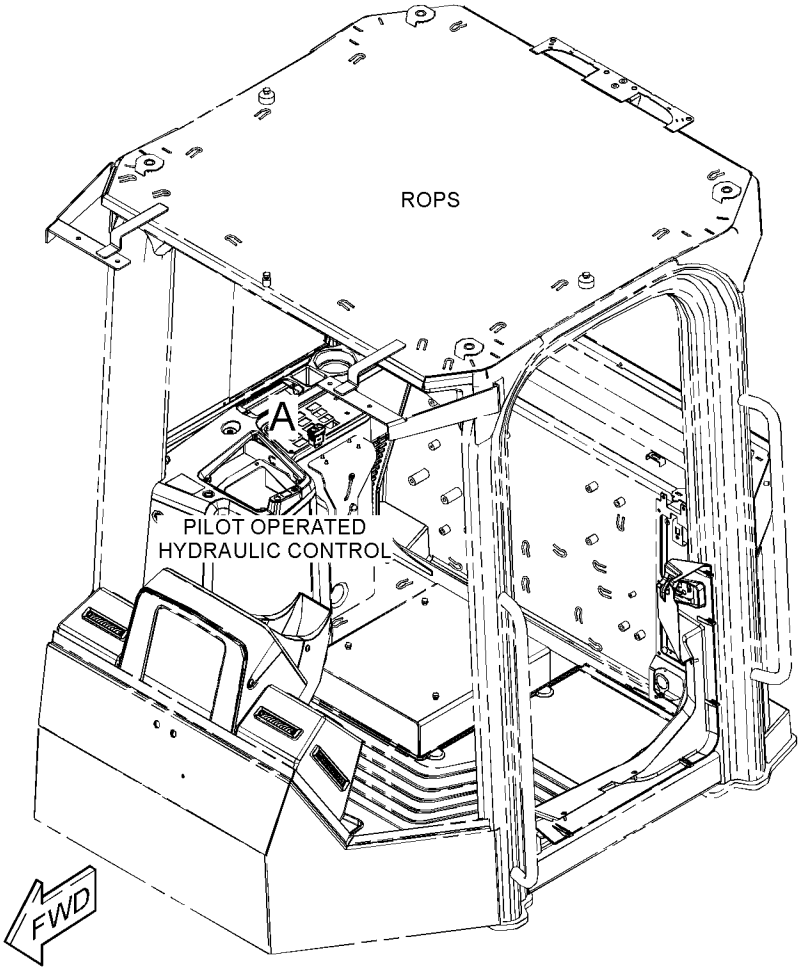

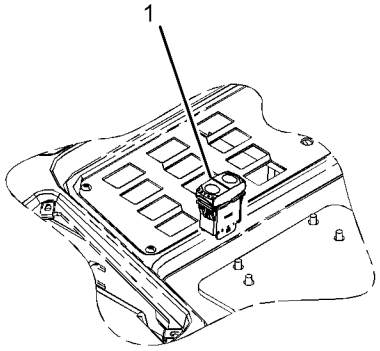

VIEW OF AREA A

GRAPHIC #1 **<END>** g03422339

112-6174 SWITCH GP-ROTARY

S/N: M5K1-UP

PART OF 392-8351 WIRING GP-CAB

SMCS-7332 **i06066852**

NOTE	REF NO	GRAPHIC REF	PART NUMBER	QTY	PART NAME 1 2 3 4 5 6 (PRODUCT LEVEL)	SEE PAGE
	1	1	**6V-8369**	1	NUT (7/16-28-THD)	
	2	1	**2H-3920**	1	LOCKWASHER	
	3	1	**102-8806**	1	KIT-RECEPTACLE (8-PIN)	
					(INCLUDES RECEPTACLE AS & WEDGE)	
	4	1	**8T-8737**	2	PLUG-SEAL	
	5	1	**8T-8729**	6	PIN-CONNECTOR (16-GA TO 18-GA)	

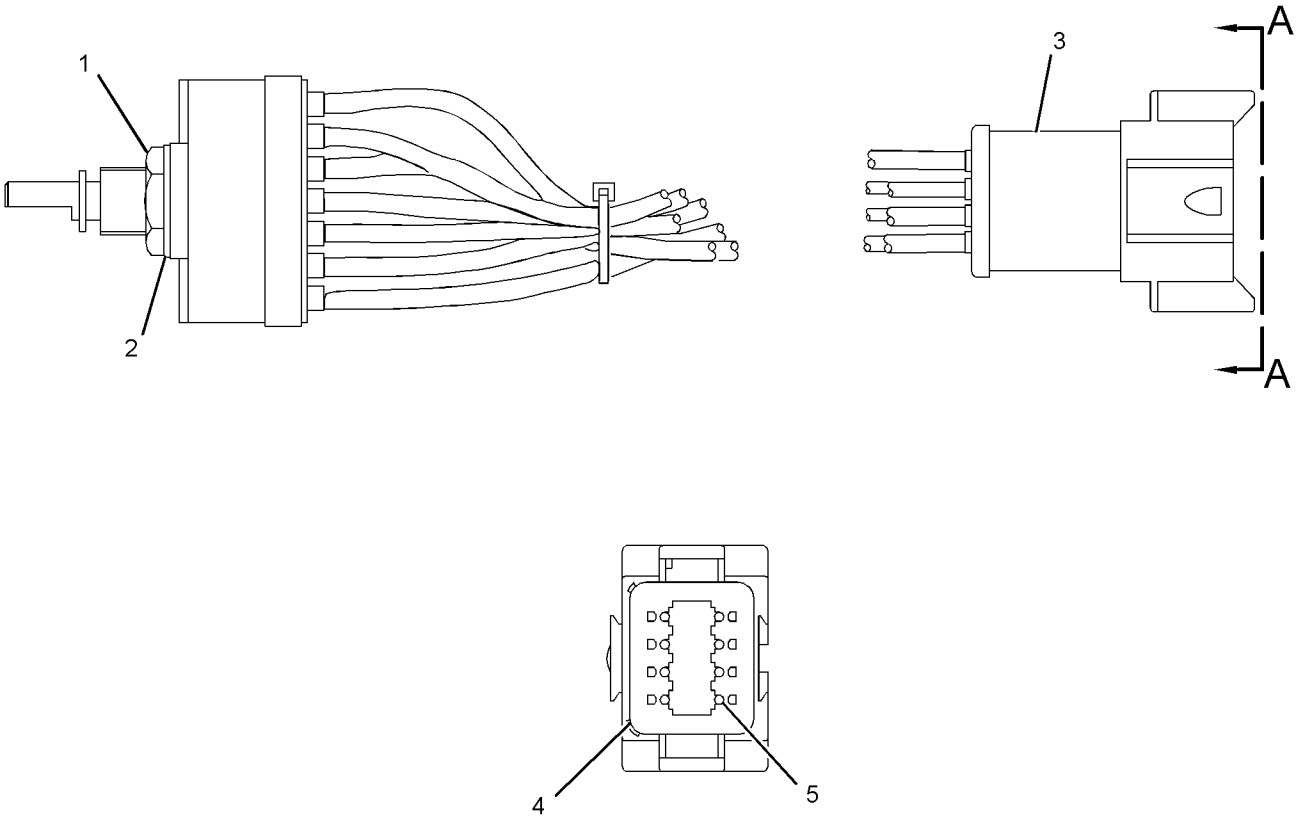

VIEW A-A

GRAPHIC #1 **<END>** g03197518

415-4236 SWITCH GP-SECONDARY STEERING

S/N: M5K1-UP

PART OF 390-5985 STEERING AR-SECONDARY

AN ATTACHMENT

SMCS-7332 **i05413351**

NOTE	REF NO	GRAPHIC REF	PART NUMBER	QTY	PART NAME 1 2 3 4 5 6 (PRODUCT LEVEL)	SEE PAGE
	1	1	**382-4478**	1	SWITCH AS-ROCKER (24-VOLT) (SECONDARY STEERING)	

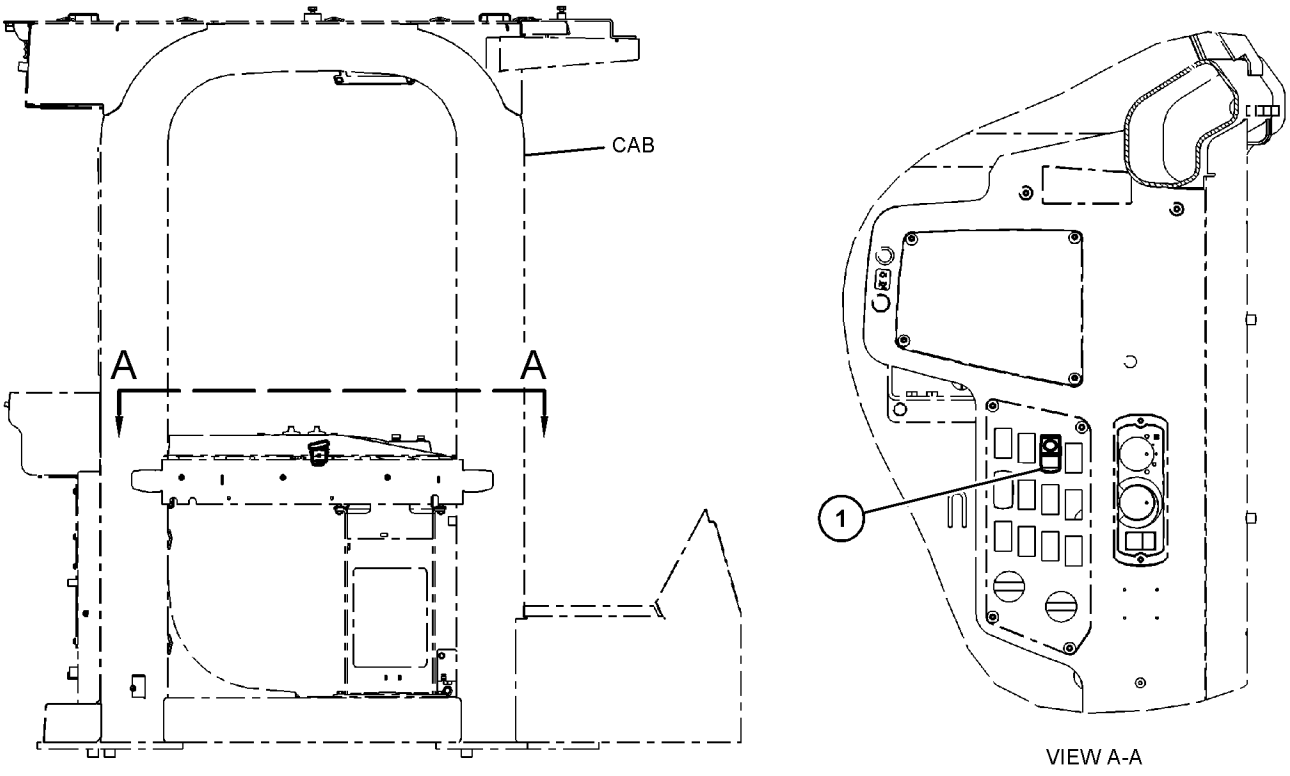

GRAPHIC #1 **<END>** g03421519

415-4210 SWITCH GP-SIGNAL

S/N: M5K1-UP

PART OF 392-8351 WIRING GP-CAB

SMCS-7332 **i05434669**

NOTE	REF NO	GRAPHIC REF	PART NUMBER	QTY	PART NAME 1 2 3 4 5 6 (PRODUCT LEVEL)	SEE PAGE
	1	1	**8N-2622**	1	LEVER (TURN SIGNAL SWITCH)	
	2	1	**134-9569**	1	SWITCH AS-TURN SIGNAL	
		1	**5L-7200**	1	SCREW (8-32X0.375-IN)	
		1	**9B-7233**	1	LOCKWASHER	
	3	1	**149-0668**	1	COVER	
	4	1	**154-4563**	1	HARNESS AS-LIGHTING (TURN SIGNAL)	
		1	**102-8805**	1	KIT-RECEPTACLE (6-PIN)	
					(KIT INCLUDES RECEPTACLE AS & WEDGE)	
		1	**9W-0852**	3	PIN-CONNECTOR (14-GA TO 16-GA)	
		1	**9X-3401**	3	PIN-CONNECTOR (16-GA TO 18-GA)	
					—OR—	
		1	**126-1767**	3	PIN-CONNECTOR (14-GA TO 16-GA)	
		1	**5P-4571**	6	TERMINAL-BLADE (14-GA TO 16-GA)	
					—OR—	
		1	**7N-7221**	6	TERMINAL-BLADE (18-GA TO 22-GA)	
	5	1	**154-8262**	1	BRACKET AS	
	6	1	**201-5555**	1	PLATE-INSTRUCTION (TURN SIGNAL)	
	7	1	**214-9453**	1	BOOT	
M	8	1	**7Y-3173**	3	SCREW-BUTTON HEAD (M4X0.7X12-MM)	
M	9	1	**8T-4200**	2	BOLT (M8X1.25X16-MM)	
	10	1	**8T-4224**	2	WASHER-HARD (8.8X16X2-MM THK)	
	11	1	**9X-2038**	4	WASHER (7X19X2-MM THK)	
M	12	1	**9X-2042**	4	SCREW-TRUSS HEAD (M6X1X12-MM)	

M - METRIC PART

415-4210 **SWITCH GP-SIGNAL (*contd.*)** **i05434669**

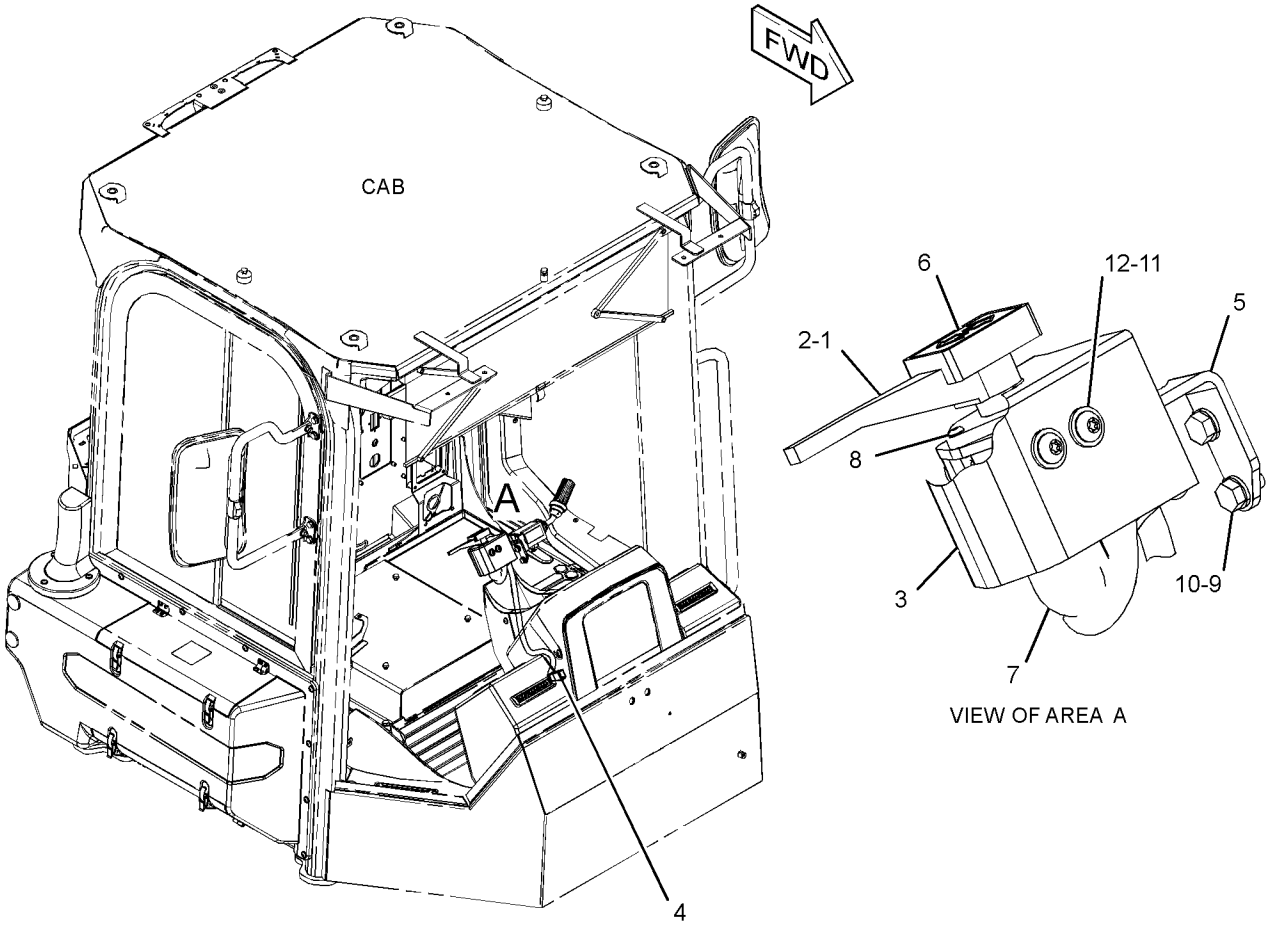

GRAPHIC #1 **<END>** g03523921

239-1134 VALVE GP-ETHER STARTING

S/N: M5K1-UP
24-VOLT
PART OF 399-0931 STARTING AID GP-ETHER
AN ATTACHMENT

SMCS-1456 **i05426330**

NOTE	REF NO	GRAPHIC REF	PART NUMBER	QTY	PART NAME 1 2 3 4 5 6 (PRODUCT LEVEL)	SEE PAGE
	1	1	**7N-9801**	1	GASKET	
	2	1	**102-8802**	1	KIT-RECEPTACLE (2-PIN)	
					(INCLUDES RECEPTACLE AS & WEDGE)	
	3	1	**8T-8729**	2	PIN-CONNECTOR (16-GA TO 18-GA)	
	4	1	**358-4889**	1	FILTER (ETHER START)	

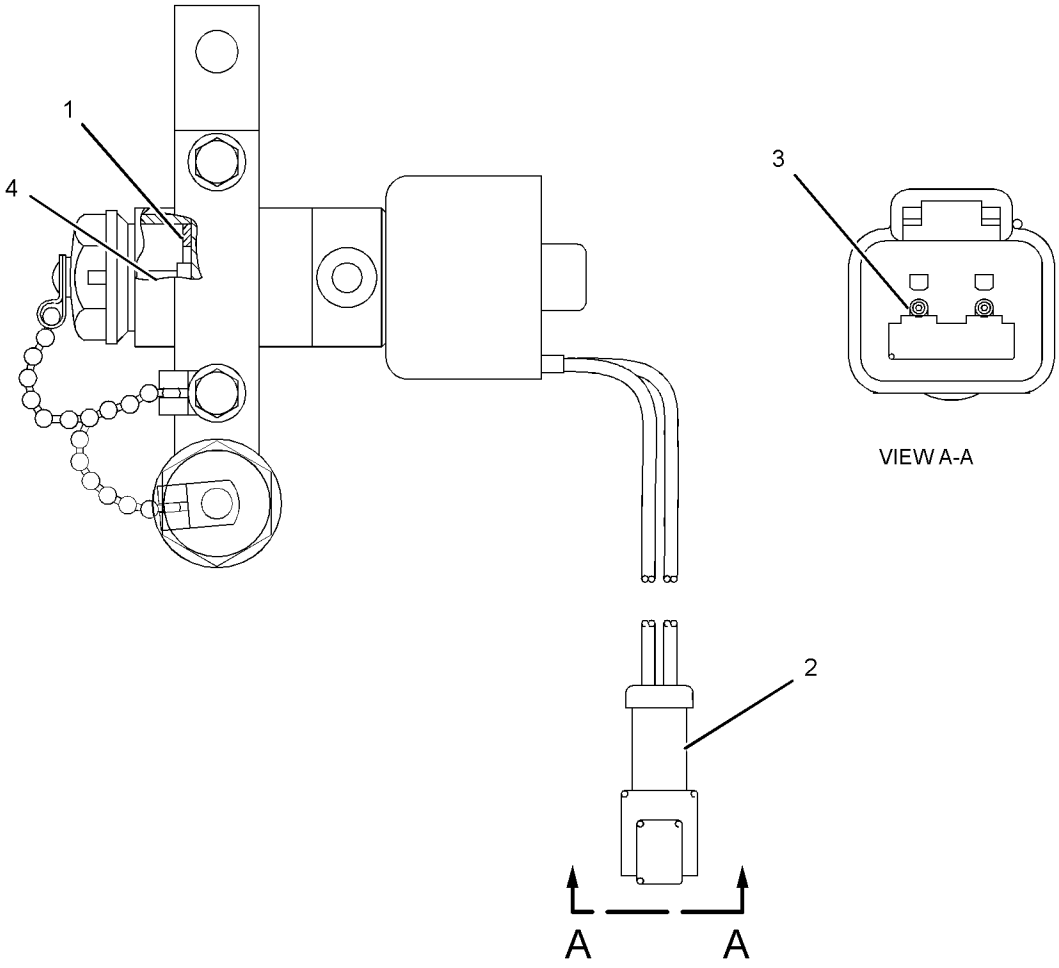

GRAPHIC #1 **<END>** g02138138

392-8351 WIRING GP-CAB

S/N: M5K1-UP

PART OF 391-5301 CAB AR

SMCS-1408, 7301 **i05677270**

NOTE	REF NO	GRAPHIC REF	PART NUMBER	QTY	PART NAME 1 2 3 4 5 6 (PRODUCT LEVEL)	SEE PAGE
Y	1	2	**3E-6328**	1	ALARM GP (24-VOLT)	97
	2	2	**6I-1418**	4	SPACER (8.2X12.7X28.7-MM THK)	
	3	1,2	**7K-1181**	78	STRAP-CABLE	
	4	2	**8T-9655**	8	MOUNT-ISOLATION	
	5	1	**8X-9618**	1	STRAP AS-GROUND	
	6	1	**107-6032**	1	LAMP GP-DOME (24-VOLT)	
		1	**259-1286**	1	LAMP (24-VOLT, 10-WATT)	
	7	1	**110-7887**	1	SWITCH AS-START (KEY)	
		1	**7T-6799**	1	NUT-MOUNTING (1-32-THD)	
		1	**8T-8729**	4	PIN-CONNECTOR (16-GA TO 18-GA)	
		1	**102-8804**	1	KIT-RECEPTACLE (4-PIN)	
					(INCLUDES RECEPTACLE AS & WEDGE)	
Y	8	2	**112-6174**	1	SWITCH GP-ROTARY (WIPER, WASHER) (REAR)	171
Y	8A	2	**112-6174**	1	SWITCH GP-ROTARY (WIPER, WASHER) (FRONT)	171
	9	2	**113-8490**	21	FUSE (10-AMPERE)	
	10	2	**113-8491**	9	FUSE (15-AMPERE)	
	11	2	**113-8492**	2	FUSE (20-AMPERE)	
	12	2	**117-2311**	1	SOCKET-AUXILIARY POWER (12-VOLT)	
	13	1	**128-8617**	1	PLATE AS	
	14	1	**129-7184**	1	FILM-INSTRUCTION (ENGINE START)	
	15	2	**180-9900**	1	CAP AS	
		2	**5P-7958**	1	SLEEVE-CABLE SPLICE	
		2	**8C-6354**	1	CAP-RECEPTACLE (ET CONNECTOR)	
		2	**179-9392**	1	LANYARD	
	16	2	**201-2733**	1	FILM-INFORMATION (INPUT/OUTPUT)	
	17	2	**203-9007**	1	NUT (1-1/2-18-THD)	
	18	2	**217-8166**	1	FLASHER AS (24-VOLT)	
	19	1,2	**228-6089**	11	PLUG (ROCKER SWITCH)	
	20	2	**236-4609**	1	SWITCH AS-ROCKER (TRANSMISSION NEUT OVERRIDE)	
	21	2	**236-4610**	1	SWITCH AS-ROCKER (AIR CONDITIONER, HEATER)	
	22	2	**248-2841**	7	RELAY AS (24-VOLT)	
	23	2	**249-5478**	1	SWITCH AS-ROCKER (AUTOSHIFT)	
	24	1	**249-5479**	1	SWITCH AS-ROCKER (24-VOLT) (HEADLIGHT DIMMER)	
	25	1	**251-1195**	1	SWITCH AS-ROCKER (24-VOLT) (WORK LIGHT)	
	26	1	**251-2031**	1	SWITCH AS-ROCKER (24-VOLT) (RUNNING LIGHTS)	
	27	1	**256-7823**	1	SWITCH AS-ROCKER (24-VOLT) (HAZARD WARNING LIGHTS)	
	28	2	**284-3623**	1	SWITCH AS-ROCKER (24-VOLT) (IMPLEMENT LOCKOUT)	
	29	1	**286-0323**	1	GASKET	
	30	2	**307-0649**	2	KNOB	
	31	2	**308-0467**	1	PLUG-RUBBER	
	32	2	**340-7161**	1	CONVERTER-POWER (24-VOLT TO 12-VOLT)	
	33	2	**365-6765**	1	CONTROL GP-UNPROGRAMMED	
Y	34	1	**392-8370**	1	HARNESS AS-CAB	116
	35	1	**392-8461**	1	MODULE GP-DISPLAY (GAUGE CLUSTER)	
Y	36	1	*415-4210*	1	SWITCH GP-SIGNAL	173
	37	2	**415-4231**	1	PLATE AS	
M		2	**8T-3490**	1	NUT-WELD (M10X1.5-THD)	
M		2	**8T-8874**	2	NUT-WELD (M5X0.8-THD)	
	38	2	**424-4578**	1	PANEL-CONTROL (HVAC)	
	39	2	**114-6658**	2	WASHER (6.5X17X1-MM THK)	
	40	1	**096-6166**	4	WASHER-HARD (4.5X9X1-MM THK)	
	41	1,2	**130-5300**	7	CLIP	
M	42	2	**138-8454**	1	SCREW-TRUSS HEAD (M4X0.7X10-MM)	
	43	1	**204-8000**	2	MOUNTING-CABLE TIE	
M	44	2	**271-9408**	4	SCREW-TRUSS HEAD (M5X0.8X10-MM)	
M	45	2	**274-7409**	4	SCREW-TRUSS HEAD (M8X1.25X45-MM)	

392-8351 **WIRING GP-CAB (*contd.*)** **i05677270**

NOTE	REF NO	GRAPHIC REF	PART NUMBER	QTY	PART NAME 1 2 3 4 5 6 (PRODUCT LEVEL)	SEE PAGE
	46	1,2	**4P-7581**	5	CLIP	
M	47	1	**5C-2890**	2	NUT (M6X1-THD)	
	48	2	**6V-2687**	4	SCREW-PAN HEAD (10-24X1-IN)	
M	49	1	**6V-9672**	4	SCREW-MACHINE (M4X0.7X16-MM)	
	50	2	**8R-3695**	2	GROMMET	
M	51	2	**7I-2272**	2	BOLT (M5X0.8X12-MM)	
M	52	2	**8T-0289**	2	BOLT (M5X0.8X20-MM)	
	53	2	**8T-0328**	2	WASHER-HARD (5.5X10X1-MM THK)	
M	54	1	**8T-2659**	4	LOCKNUT (M4X0.7-THD)	
	55	1,2	**8T-4121**	14	WASHER-HARD (11X21X2.5-MM THK)	
	56	1,2	**8T-4205**	4	WASHER-HARD (7.2X14.5X2-MM THK)	
	57	2	**9N-0869**	4	WASHER-HARD (8.8X25.5X2-MM THK)	
M	58	2	**9X-1046**	2	SCREW (M4X0.7X18-MM)	
M	59	1,2	**9X-2041**	14	SCREW-TRUSS HEAD (M10X1.5X20-MM)	
M	60	2	**9X-2044**	6	SCREW-TRUSS HEAD (M6X1X16-MM)	
	61	2	**280-2711**	1	CIRCUIT BREAKER AS (25-AMPERE)	

M - METRIC PART
Y - SEPARATE ILLUSTRATION

392-8351 **WIRING GP-CAB (*contd.*)** **i05677270**

REFER TO ALL ILLUSTRATIONS OF
THIS GROUP FOR AUXILIARY VIEWS

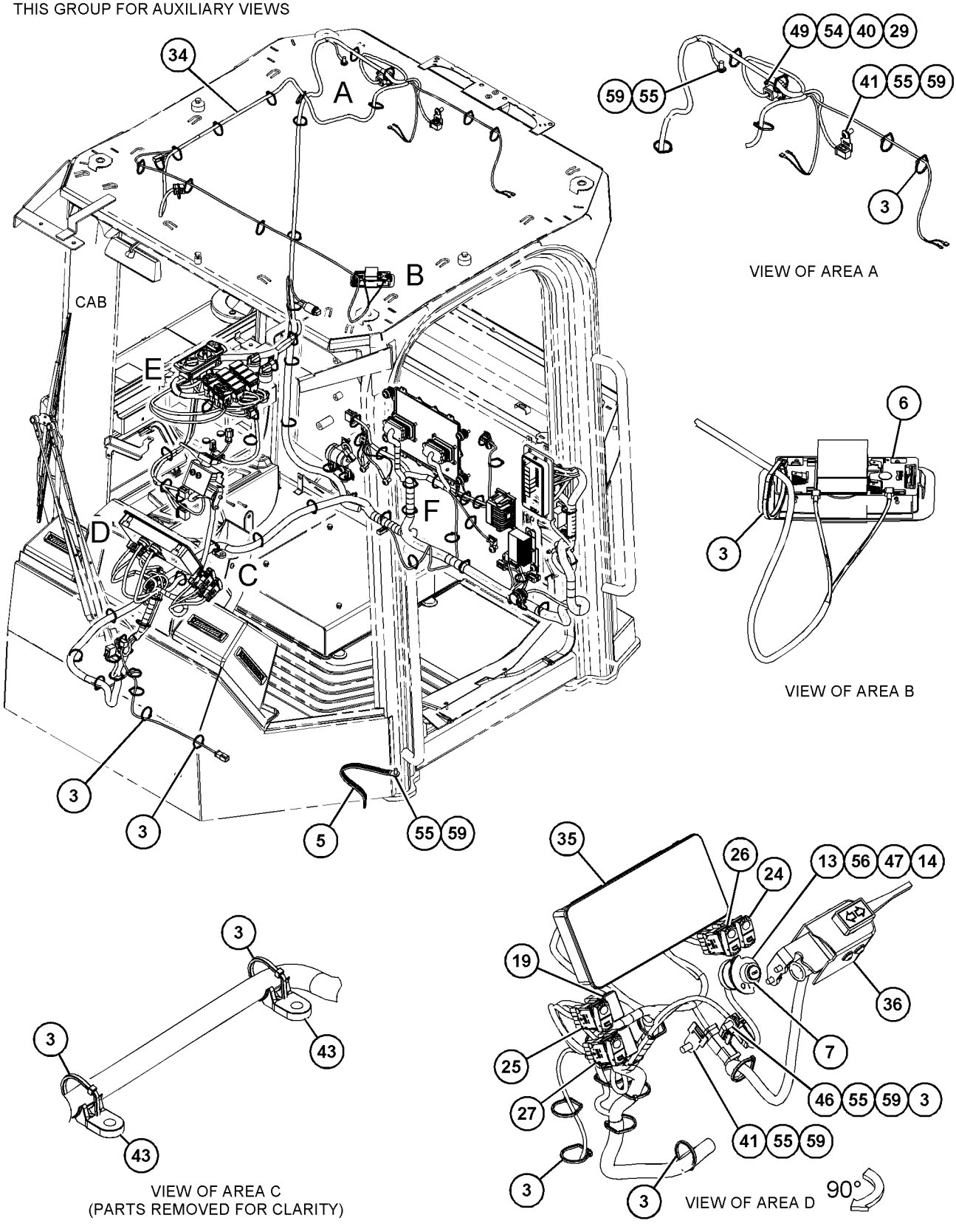

GRAPHIC #1

g03529788

392-8351 **WIRING GP-CAB (*contd.*)** **i05677270**

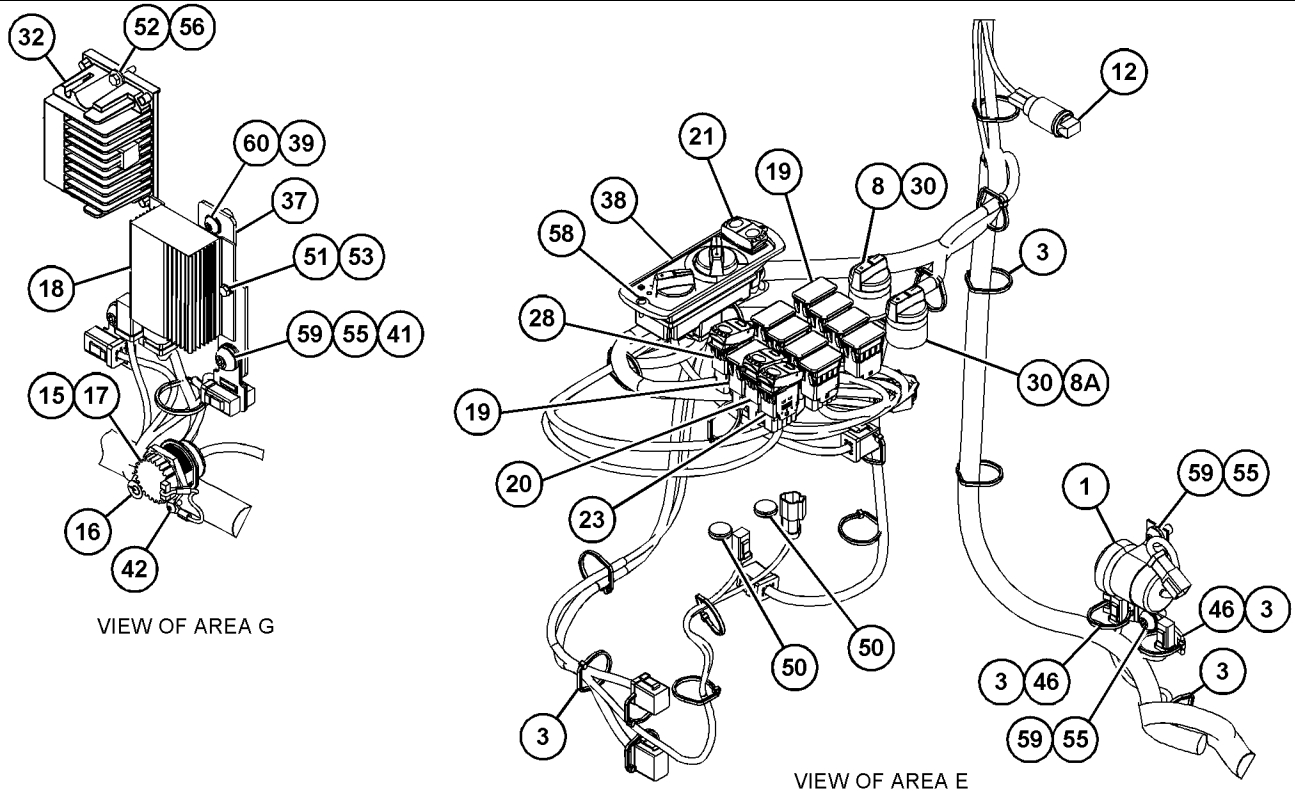

GRAPHIC #2 **<END>** g03699153

392-8369 WIRING GP-CAB

S/N: M5K1-UP
PART OF 397-9860 LINES GP-COUPLER
AN ATTACHMENT

SMCS-1408, 7301

i05677431

NOTE	REF NO	GRAPHIC REF	PART NUMBER	QTY	PART NAME 1 2 3 4 5 6 (PRODUCT LEVEL)	SEE PAGE
Y	1	1	**392-8381**	1	HARNESS AS-CAB	118
	2	1	**130-5300**	1	CLIP	
	3	1	**4P-7581**	1	CLIP	
	4	1	**7K-1181**	2	STRAP-CABLE	

Y - SEPARATE ILLUSTRATION

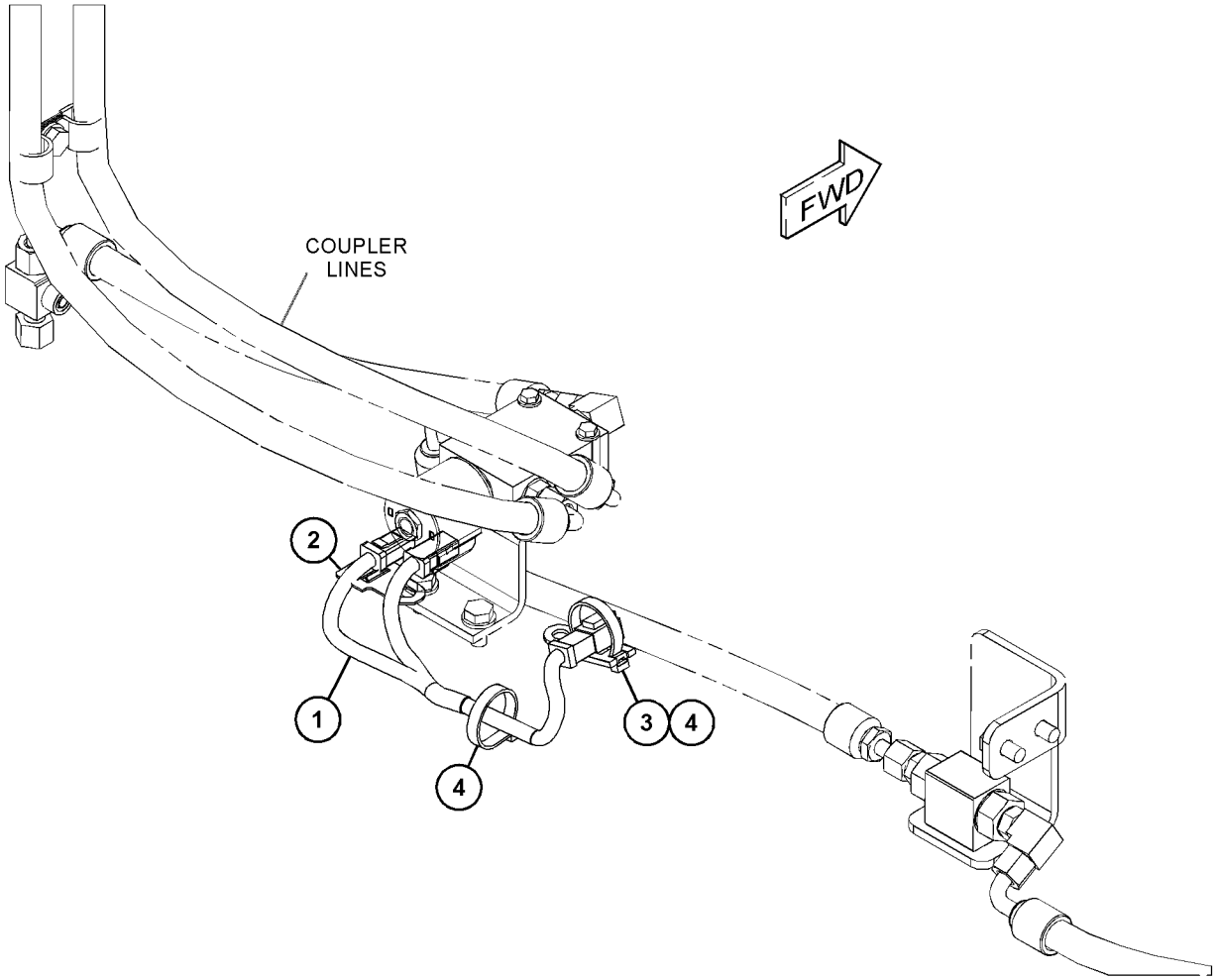

GRAPHIC #1 **<END>** g03687391

415-4208 WIRING GP-CAMERA

S/N: M5K1-UP
PART OF 415-4205 CAMERA AR
AN ATTACHMENT

SMCS-1408, 7348 **i05401074**

NOTE	REF NO	GRAPHIC REF	PART NUMBER	QTY	PART NAME 1 2 3 4 5 6 (PRODUCT LEVEL)	SEE PAGE
	1	1	**7K-1181**	17	STRAP-CABLE	
	2	1	**251-8248**	1	CABLE AS-COMMUNICATION (5-M)	
	3	1	**333-8153**	1	CONNECTOR GP-ELECTRONIC (OBJECT DETECTION, VISION)	
	4	1	**344-2733**	1	MODULE GP-DISPLAY (WORK AREA VISUAL SYSTEM)	
		1	**8T-8729**	5	PIN-CONNECTOR (16-GA TO 18-GA)	
		1	**8T-8737**	1	PLUG-SEAL	
		1	**102-8805**	1	KIT-RECEPTACLE (6-PIN)	
		1	**344-3847**	1	CABLE AS	
	5	1	**392-1926**	1	BRACKET	
Y	6	1	**392-8383**	1	HARNESS AS-CAB (REAR VIEW, CAMERA)	118
	7	1	**4B-4274**	4	WASHER (5.5X13X1.2-MM THK)	
M	8	1	**7I-2272**	4	BOLT (M5X0.8X12-MM)	
M	9	1	**9X-2044**	2	SCREW-TRUSS HEAD (M6X1X16-MM)	

M - METRIC PART
Y - SEPARATE ILLUSTRATION

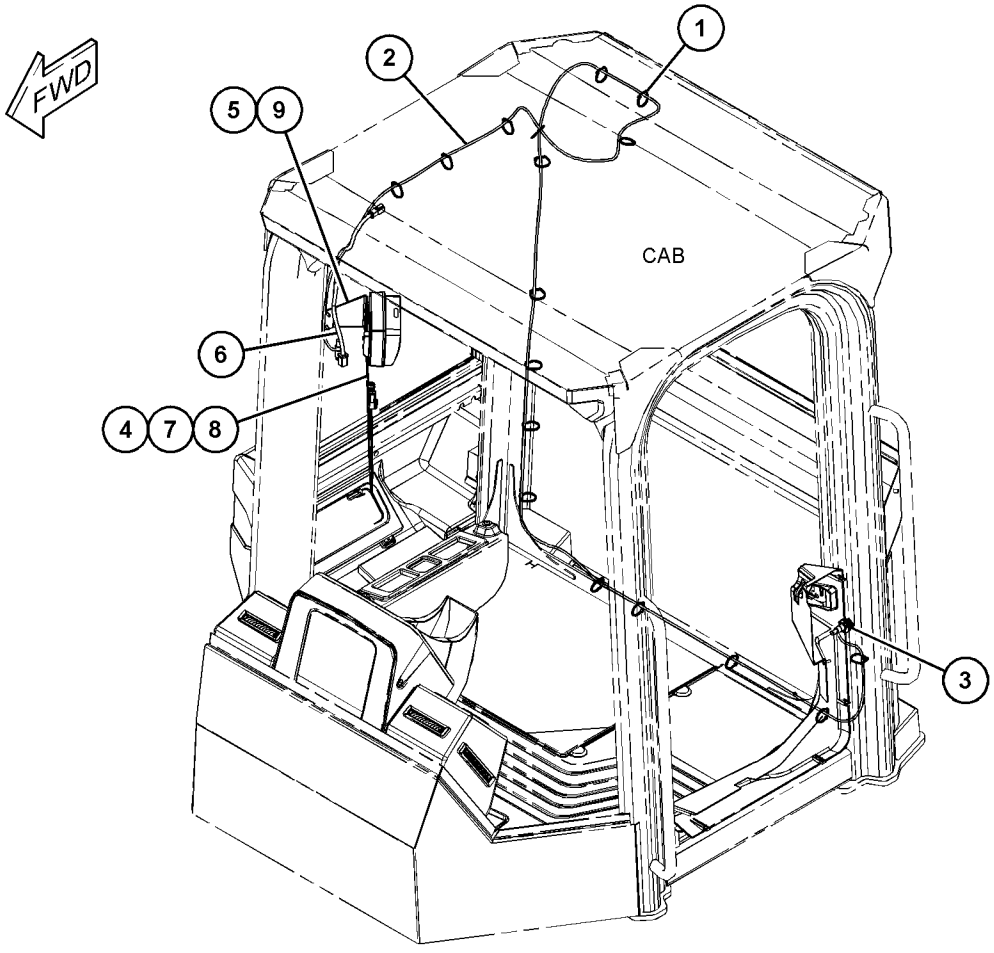

GRAPHIC #1 **<END>** g03548681

392-8362 WIRING GP-CHASSIS

S/N: M5K1-UP

PART OF 392-8352 ELECTRICAL AR

SMCS-1408 **i06127290**

NOTE	REF NO	GRAPHIC REF	PART NUMBER	QTY	PART NAME 1 2 3 4 5 6 (PRODUCT LEVEL)	SEE PAGE
	1	1,2	**3S-2093**	7	STRAP-CABLE	
	2	1	**9R-7240**	1	GASKET	
	3	2	**171-2205**	2	CIRCUIT BREAKER AS (40-AMPERE)	
					(EACH INCLUDES)	
		2	**4E-5724**	2	WASHER (7X12X1-MM THK)	
		2	**8T-0122**	2	NUT-FULL (1/4-28-THD)	
		2	**253-2111**	2	LOCKWASHER	
	4	1	**213-9100**	1	ALARM AS (REAR BACKUP)	
		1	**102-8802**	1	KIT-RECEPTACLE (2-PIN)	
					(INCLUDES RECEPTACLE AS & WEDGE)	
		1	**8T-8729**	2	PIN-CONNECTOR (16-GA TO 18-GA)	
E		1	**9X-1813**		SLEEVE (29-CM)	
	5	2	**264-4297**	1	SENSOR AS-TEMPERATURE (PASSIVE DATA BOOSTER)	
		2	**137-6645**	1	PAD-CONNECTOR	
	6	2	**267-2265**	1	BAR-BUS	
Y	7	2	*322-3305*	1	BLOCK GP-JUNCTION (BATTERY)	106
	8	2	**344-7389**	1	SENSOR GP-PRESSURE (BRAKE OIL)	
	9	2	**353-4515**	1	SWITCH AS-TOGGLE (ENGINE SHUTDOWN)	
		2	**102-8803**	1	KIT-RECEPTACLE (3-PIN)	
					(INCLUDES RECEPTACLE AS & WEDGE)	
		2	**3E-3371**	1	WEDGE-RECEPTACLE LOCK (3-PIN)	
		2	**8T-8729**	3	PIN-CONNECTOR (16-GA TO 18-GA)	
	10	1	**391-9320**	1	SENDER AS-FUEL LEVEL	
		1	**8T-8729**	2	PIN-CONNECTOR (16-GA TO 18-GA)	
		1	**102-8802**	1	KIT-RECEPTACLE (2-PIN)	
					(INCLUDES RECEPTACLE AS & WEDGE)	
	11	2	**392-8338**	1	CABLE AS	
		2	**9G-4343**	1	TERMINAL-RING (4-GA, 1/4-IN SCREW)	
		2	**9G-4344**	1	TERMINAL-RING (4-GA, 1/2-IN SCREW)	
	12	2	**392-8357**	2	BRACKET	
	13	2	**392-8364**	1	BRACKET	
	14	2	**392-8367**	2	BRACKET AS	
Y	15	2	**392-8382**	1	HARNESS AS-CHASSIS	119
	16	2	**392-8385**	1	CABLE AS	
		2	**2L-8050**	1	TERMINAL-RING (6-GA, 1/4-IN SCREW)	
					—OR—	
		2	**2L-8058**	1	TERMINAL-RING (8-GA, 1/4-IN SCREW)	
		2	**2L-8051**	1	TERMINAL-RING (6-GA, 5/16-IN SCREW)	
					—OR—	
		2	**5P-3455**	1	TERMINAL-RING (8-GA, 5/16-IN SCREW)	
	17	2	**392-8389**	1	CABLE AS	
		2	**1S-7251**	2	TERMINAL-CABLE (00-GA, 1/2-IN SCREW)	
E		2	**5P-0761**		CABLE (00-GA, RED) (149-CM)	
		2	**8N-0869**	2	COVER-TERMINAL (RED)	
	18	2	**392-8398**	1	CABLE AS	
		2	**2L-8050**	1	TERMINAL-RING (6-GA, 1/4-IN SCREW)	
					—OR—	
		2	**2L-8058**	1	TERMINAL-RING (8-GA, 1/4-IN SCREW)	
		2	**284-8481**	1	TERMINAL AS-RING	
	19	2	**415-4191**	3	GROMMET	
	20	2	**415-4192**	1	BRACKET AS	
	21	2	**171-2210**	1	CIRCUIT BREAKER AS (80-AMPERE)	
		2	**1H-3244**	2	LOCKWASHER	
		2	**4E-5724**	2	WASHER (7X12X1-MM THK)	
		2	**8T-0122**	2	NUT-FULL (1/4-28-THD)	
	22	2	**184-6636**	1	PLATE-INFORMATION (ENGINE SHUTOFF)	
	23	2	**415-4224**	1	PLATE	

392-8362 **WIRING GP-CHASSIS (*contd.*)** **i06127290**

NOTE	REF NO	GRAPHIC REF	PART NUMBER	QTY	PART NAME 1 2 3 4 5 6 (PRODUCT LEVEL)	SEE PAGE
Y	24	2	**398-0940**	1	SWITCH GP-MAGNETIC (24-VOLT)	167
	25	2	**415-4201**	1	BRACKET	
	26	1,2	**130-5300**	6	CLIP	
	27	1,2	**132-5789**	5	CLIP	
	28	2	**241-8368**	1	SWITCH GP-MAGNETIC (24-VOLT) (MAIN RELAY)	
		2	**4F-2294**	2	NUT-JAM (5/16-24-THD)	
		2	**8T-8730**	2	SOCKET-CONNECTOR (16-GA TO 18-GA)	
		2	**155-2270**	1	KIT-CONNECTING PLUG (2-PIN)	
					(INCLUDES PLUG AS, WEDGE & INTERFACE SEAL)	
	29	2	**2V-1771**	6	GROMMET	
	30	2	**344-7391**	1	SENSOR GP-PRESSURE (BRAKE PRESSURE WARNING)	
	30A	2	**344-7391**	1	SENSOR GP-PRESSURE (PARKING BRAKE)	
	31	2	**3J-1907**	3	SEAL-O-RING	
	32	2	**3K-0360**	1	SEAL-O-RING	
	33	2	**1S-0994**	6	CLIP	
	34	1,2	**4B-4274**	11	WASHER (5.5X13X1.2-MM THK)	
	35	1,2	**4P-7581**	13	CLIP	
	36	2	**4S-4455**	1	CLIP	
	37	2	**5P-9297**	2	CLIP	
M	38	2	**5C-7261**	1	NUT (M8X1.25-THD)	
	39	1,2	**7K-1181**	85	STRAP-CABLE	
	40	2	**7U-4891**	6	SCREW (10-32X1-IN)	
	41	1,2	**8T-4121**	41	WASHER-HARD (11X21X2.5-MM THK)	
M	42	2	**8T-4133**	2	NUT (M10X1.5-THD)	
M	43	1,2	**8T-4137**	39	BOLT (M10X1.5X20-MM)	
M	44	2	**8T-4138**	4	BOLT (M6X1X20-MM)	
M	45	2	**8T-4192**	4	BOLT (M12X1.75X25-MM)	
	46	2	**8T-4205**	4	WASHER-HARD (7.2X14.5X2-MM THK)	
	47	2	**8T-4223**	4	WASHER-HARD (13.5X25.5X3-MM THK)	
M	48	1	**8T-4970**	5	BOLT (M6X1X14-MM)	
	49	2	**9M-8406**	2	CLIP	
	50	2	**352-3964**	2	CLIP	
	51	2	**102-8801**	1	KIT-RECEPTACLE (12-PIN)	
M	52	2	**8T-4195**	2	BOLT (M10X1.5X30-MM)	
	53	2	**4D-7388**	3	CLIP	
	54	2	**8T-4224**	2	WASHER-HARD (8.8X16X2-MM THK)	
M	55	2	**8T-4908**	1	BOLT (M8X1.25X25-MM)	

E - ORDER BY THE CENTIMETER
M - METRIC PART
Y - SEPARATE ILLUSTRATION

392-8362 **WIRING GP-CHASSIS (*contd.*)** **i06127290**

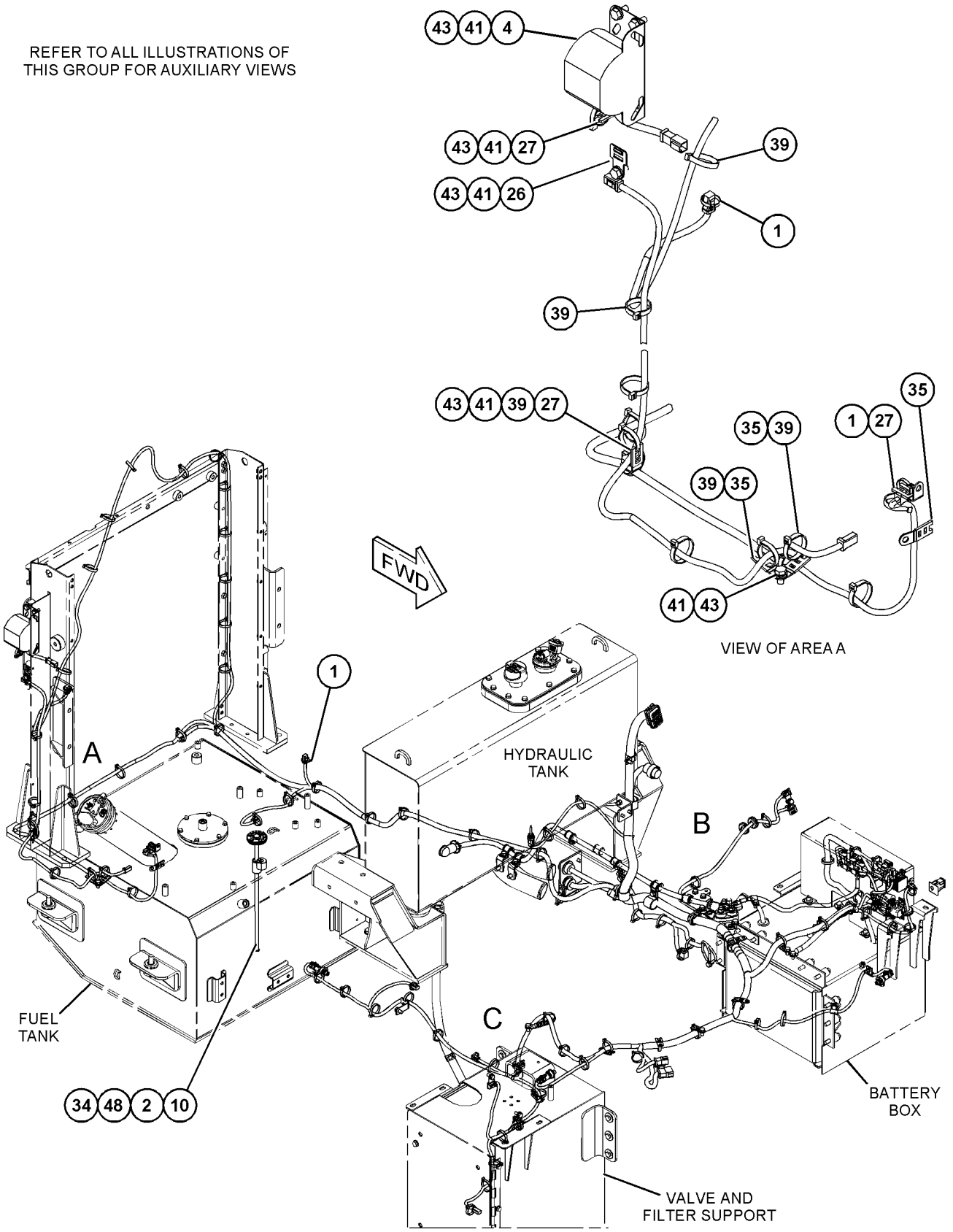

GRAPHIC #1 g03699758

392-8362 **WIRING GP-CHASSIS (*contd.*)** **i06127290**

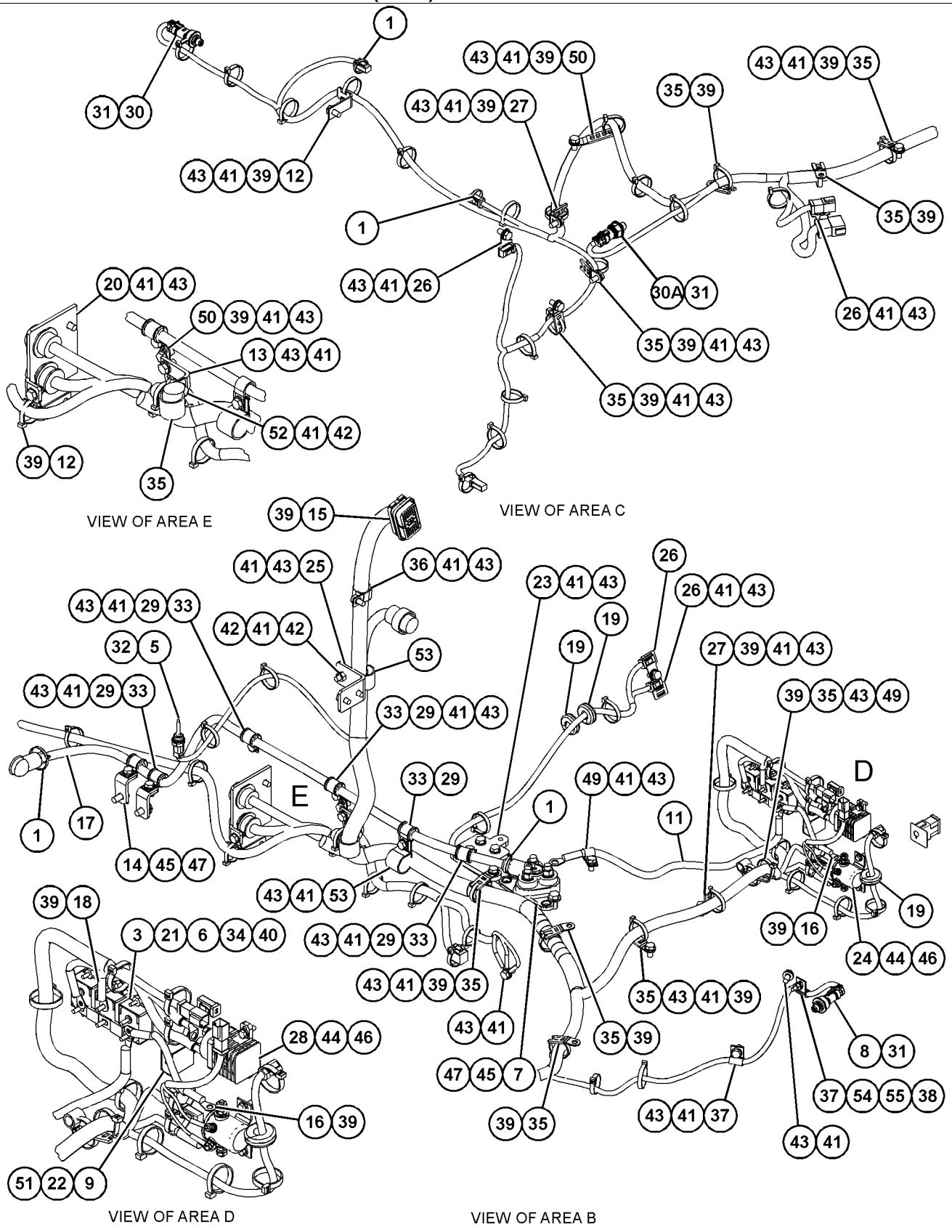

GRAPHIC #2 **<END>** g03699759

415-4241 WIRING GP-COMMUNICATION

S/N: M5K1-UP

PART OF 415-4239 INSTALLATION GP-COMMUNICATION

AN ATTACHMENT

SMCS-1408, 7606

i05465897

NOTE	PART NUMBER	QTY	PART NAME 1 2 3 4 5 6 (PRODUCT LEVEL)	SEE PAGE
	102-8801	1	KIT-RECEPTACLE (12-PIN)	
			(KIT INCLUDES RECEPTACLE AS & WEDGE)	
	8T-8737	6	PLUG-SEAL	
	9X-3401	6	PIN-CONNECTOR (16-GA TO 18-GA)	
			—OR—	
	126-1767	6	PIN-CONNECTOR (14-GA TO 16-GA)	
	392-4904	1	HARNESS AS-CONTROL (PRODUCT LINK)	
E	**317-1204**		SLEEVE (300-CM)	

E - ORDER BY THE CENTIMETER

<END>

395-0113 WIRING GP-ENGINE

S/N: E7A1-UP
PART OF 393-4097, 446-7556 ENGINE AR-PRIMARY
ALSO AN ATTACHMENT
TYPE 1

SMCS-1403, 1408 **i05933204**

NOTE	REF NO	GRAPHIC REF	PART NUMBER	QTY	PART NAME 1 2 3 4 5 6 (PRODUCT LEVEL)	SEE PAGE
	1	1	**277-5064**	3	SEAL-O-RING	
	2	1	**277-5065**	3	CLIP	
M	3	1	**124-3815**	4	BOLT (M8X1.25X16-MM)	
	4	1	**217-9039**	1	STRAP-CABLE	
	5	1	**348-4637**	1	BOLT	
Y	6	1	**375-8407**	3	HARNESS AS-WIRING	127
	7	1	**377-1293**	1	BRACKET	
Y	8	1	**385-5997**	1	HARNESS AS-ENGINE	121
	9	1	**389-3863**	1	BRACKET	
	10	1	**392-2780**	1	BRACKET	
	11	1	**132-5789**	1	CLIP	
M	12	1	**232-1693**	1	BOLT-FLANGE HEAD (M6X1X35-MM)	

M - METRIC PART
Y - SEPARATE ILLUSTRATION

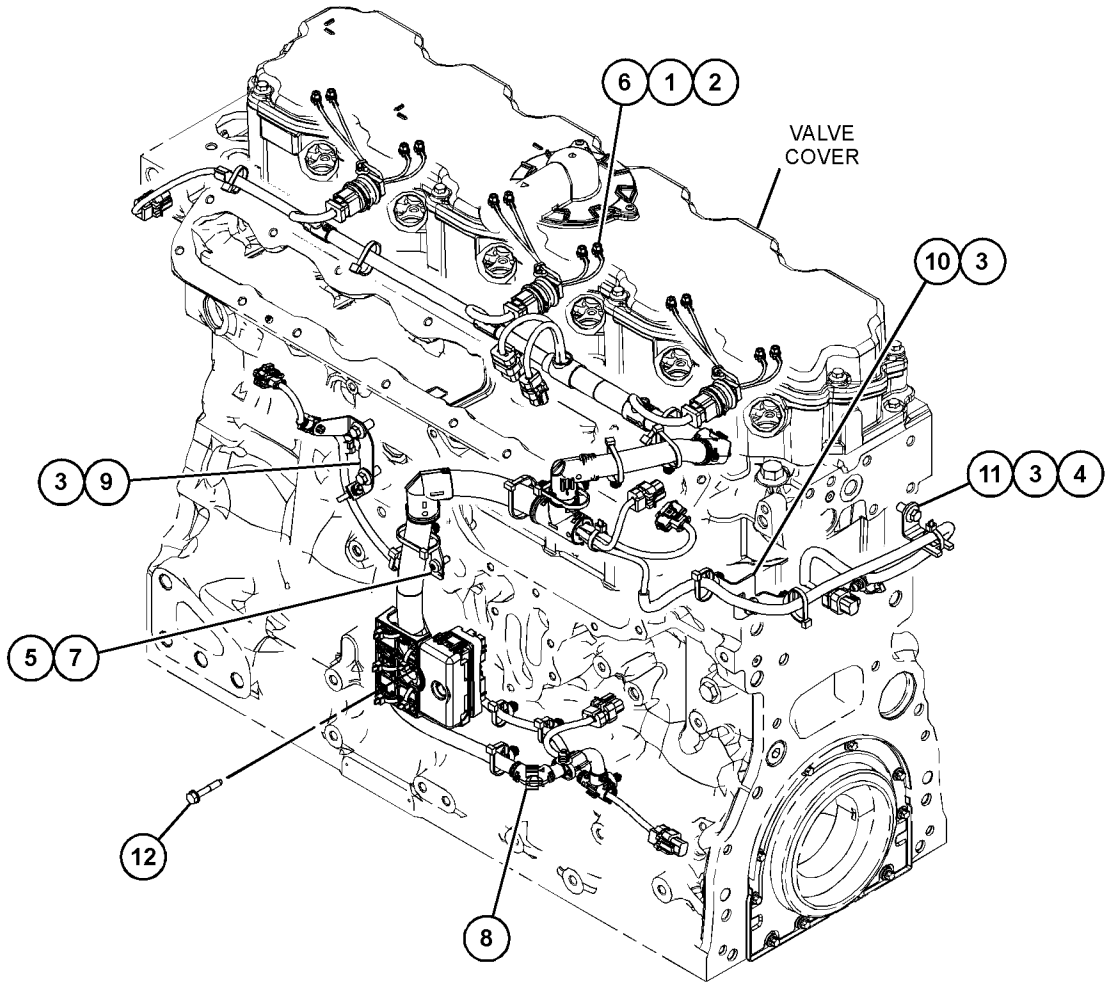

GRAPHIC #1 **<END>** g03731718

395-0113 WIRING GP-ENGINE

S/N: E7A1-UP
PART OF 393-4097, 446-7556 ENGINE AR-PRIMARY
ALSO AN ATTACHMENT
TYPE 2

SMCS-1403, 1408 **i06127291**

NOTE	REF NO	GRAPHIC REF	PART NUMBER	QTY	PART NAME 1 2 3 4 5 6 (PRODUCT LEVEL)	SEE PAGE
C	1	1	**323-7347**	3	SEAL-O-RING	
C	2	1	**254-3633**	3	BOLT-FLANGE HEAD (M6X1X16-MM, SELF LOCKING)	
M	3	1	**124-3815**	4	BOLT (M8X1.25X16-MM)	
	4	1	**217-9039**	1	STRAP-CABLE	
	5	1	**348-4637**	1	BOLT	
C	6	1	**458-3745**	3	HARNESS AS-PLATFORM	
					(EACH INCLUDES)	
		1	**332-7865**	1	TIE-CABLE	
	7	1	**377-1293**	1	BRACKET	
Y	8	1	**385-5997**	1	HARNESS AS-ENGINE	121
	9	1	**389-3863**	1	BRACKET	
	10	1	**392-2780**	1	BRACKET	
	11	1	**132-5789**	1	CLIP	
M	12	1	**232-1693**	1	BOLT-FLANGE HEAD (M6X1X35-MM)	

C - CHANGE FROM PREVIOUS TYPE
M - METRIC PART
Y - SEPARATE ILLUSTRATION

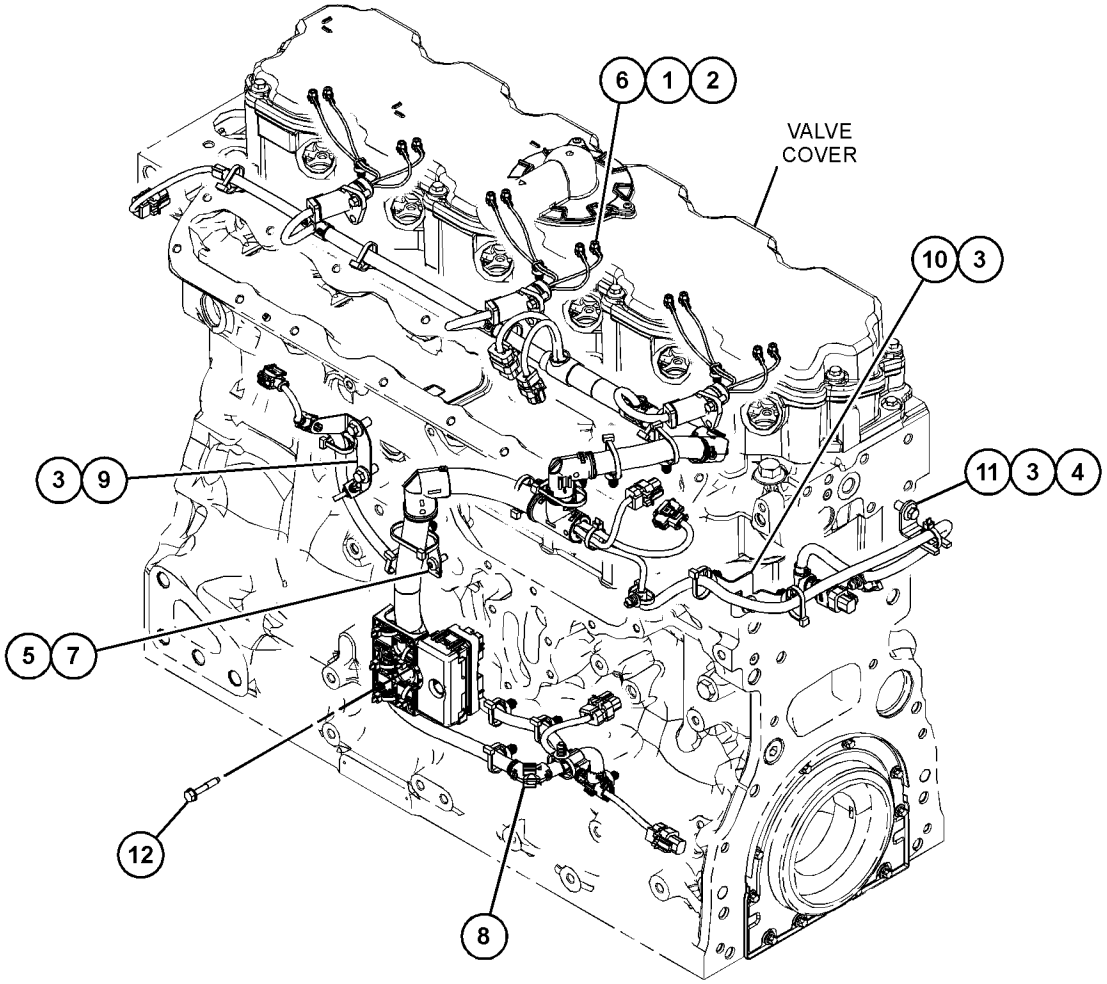

GRAPHIC #1 **<END>** g03739892

415-4218 WIRING GP-ENGINE

S/N: M5K1-UP

PART OF 392-8352 ELECTRICAL AR

SMCS-1403, 1408 **i05675510**

NOTE	REF NO	GRAPHIC REF	PART NUMBER	QTY	PART NAME 1 2 3 4 5 6 (PRODUCT LEVEL)	SEE PAGE
	1	1	**276-4836**	1	SWITCH-PRESSURE (AIR CLEANER)	
	2	1	**355-3148**	1	SWITCH AS-PRESSURE (REFRIGERANT)	
		1	**102-8802**	1	KIT-RECEPTACLE (2-PIN)	
					(RECEPTACLE KIT INCLUDES RECEPTACLE AS & WEDGE)	
		1	**8T-8729**	2	PIN-CONNECTOR (16-GA TO 18-GA)	
	3	1	**392-8339**	1	BRACKET AS	
M		1	**8T-3490**	6	NUT-WELD (M10X1.5-THD)	
	4	1	**392-8344**	1	BRACKET	
	5	1	**392-8361**	1	BRACKET AS	
M		1	**8T-3490**	1	NUT-WELD (M10X1.5-THD)	
	6	1	**392-8366**	1	STRAP AS	
Y	7	1	**392-8378**	1	HARNESS AS-ENGINE	122
	8	1	**392-8399**	1	STRAP AS	
	9	1	**392-8400**	1	CABLE AS	
		1	**3S-2093**	2	STRAP-CABLE	
E		1	**8C-3056**		CABLE (2-GA, RED) (64-CM)	
E		1	**125-7876**		TUBE-HEAT SHRINK (17.78-MM DIA) (5-CM)	
	10	1	**415-4190**	1	BRACKET	
	11	1	**415-4194**	1	CABLE AS	
E		1	**8C-0596**		CABLE (2-GA) (56-CM)	
	12	1	**449-4915**	2	BRACKET AS	
					(EACH INCLUDES)	
M		1	**8T-3490**	1	NUT-WELD (M10X1.5-THD)	
	13	1	**124-1479**	2	CLIP	
	14	1	**132-5789**	7	CLIP	
	15	1	**352-3964**	1	CLIP	
	16	1	**3S-2093**	1	STRAP-CABLE	
	17	1	**4D-9517**	2	CLIP	
	18	1	**4P-7428**	1	CLIP	
	19	1	**4P-7581**	2	CLIP	
	20	1	**5K-5338**	1	CLIP	
	21	1	**7K-1181**	31	STRAP-CABLE	
	22	1	**8T-4121**	19	WASHER-HARD (11X21X2.5-MM THK)	
M	23	1	**8T-4136**	2	BOLT (M10X1.5X25-MM)	
M	24	1	**8T-4137**	15	BOLT (M10X1.5X20-MM)	
M	25	1	**8T-4195**	1	BOLT (M10X1.5X30-MM)	
	26	1	**9X-8250**	2	CLIP	

E - ORDER BY THE CENTIMETER
M - METRIC PART
Y - SEPARATE ILLUSTRATION

415-4218 **WIRING GP-ENGINE (*contd.*)** **i05675510**

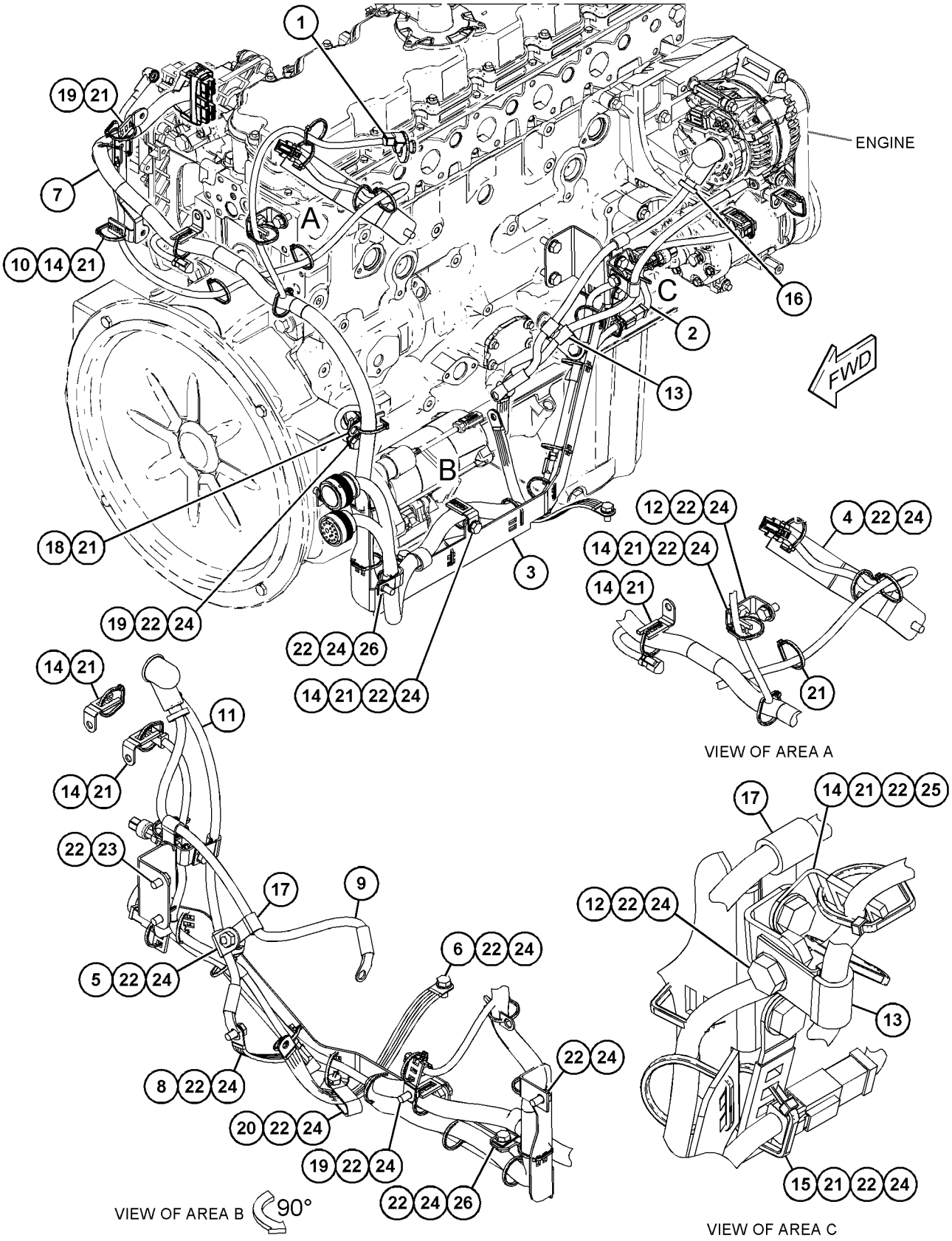

GRAPHIC #1 **<END>** g03700717

415-4219 WIRING GP-FRONT

S/N: M5K1-UP

PART OF 392-8352 ELECTRICAL AR

SMCS-1408, 5734 **i06064173**

NOTE	REF NO	GRAPHIC REF	PART NUMBER	QTY	PART NAME 1 2 3 4 5 6 (PRODUCT LEVEL)	SEE PAGE
	1	1	**174-7875**	1	HORN AS (24-VOLT, HIGH TONE)	
	2	1	**281-8737**	2	CLAMP	
	3	1	**281-8738**	2	CLAMP AS	
Y	4	1	**392-8380**	1	HARNESS AS-FRONT	123
	5	1	**415-4191**	2	GROMMET	
	8	1	**415-4223**	1	BRACKET	
	9	1	**425-7391**	1	SENSOR GP-POSITION (TILT)	
	9A	1	**425-7391**	1	SENSOR GP-POSITION (LIFT)	
	10	1	**130-5300**	1	CLIP	
	11	1	**132-5789**	13	CLIP (LADDER)	
	12	1	**277-1873**	3	CLIP (LADDER)	
	13	1	**352-3964**	1	CLIP (LADDER)	
	14	1	**3S-2093**	2	STRAP-CABLE	
	15	1	**4P-7581**	4	CLIP (LADDER)	
	16	1	**5P-1076**	9	WASHER-HARD (13.5X30X4-MM THK)	
	17	1	**5V-6152**	2	CLAMP	
	18	1	**5V-6153**	1	PLATE-COVER	
	19	1	**7K-1181**	48	STRAP-CABLE	
	20	1	**7S-8920**	1	CLIP (SLOT)	
	21	1	**7S-8921**	1	CLIP (TAB)	
	22	1	**8T-4121**	26	WASHER-HARD (11X21X2.5-MM THK)	
M	23	1	**8T-4133**	2	NUT (M10X1.5-THD)	
M	24	1	**8T-4137**	22	BOLT (M10X1.5X20-MM)	
M	25	1	**8T-4183**	4	BOLT (M12X1.75X40-MM)	
M	26	1	**8T-4192**	1	BOLT (M12X1.75X25-MM)	
M	27	1	**8T-4195**	3	BOLT (M10X1.5X30-MM)	
	28	1	**8T-4205**	2	WASHER-HARD (7.2X14.5X2-MM THK)	
	29	1	**8T-4223**	4	WASHER-HARD (13.5X25.5X3-MM THK)	
M	30	1	**8T-4244**	5	NUT (M12X1.75-THD)	
M	31	1	**8T-6974**	2	BOLT (M6X1X80-MM)	
	32	1	**9M-8406**	2	CLIP (LOOP)	
	33	1	**449-4918**	1	BRACKET	
M	34	1	**8T-4136**	1	BOLT (M10X1.5X25-MM)	

M - METRIC PART
Y - SEPARATE ILLUSTRATION

415-4219 **WIRING GP-FRONT (*contd.*)** **i06064173**

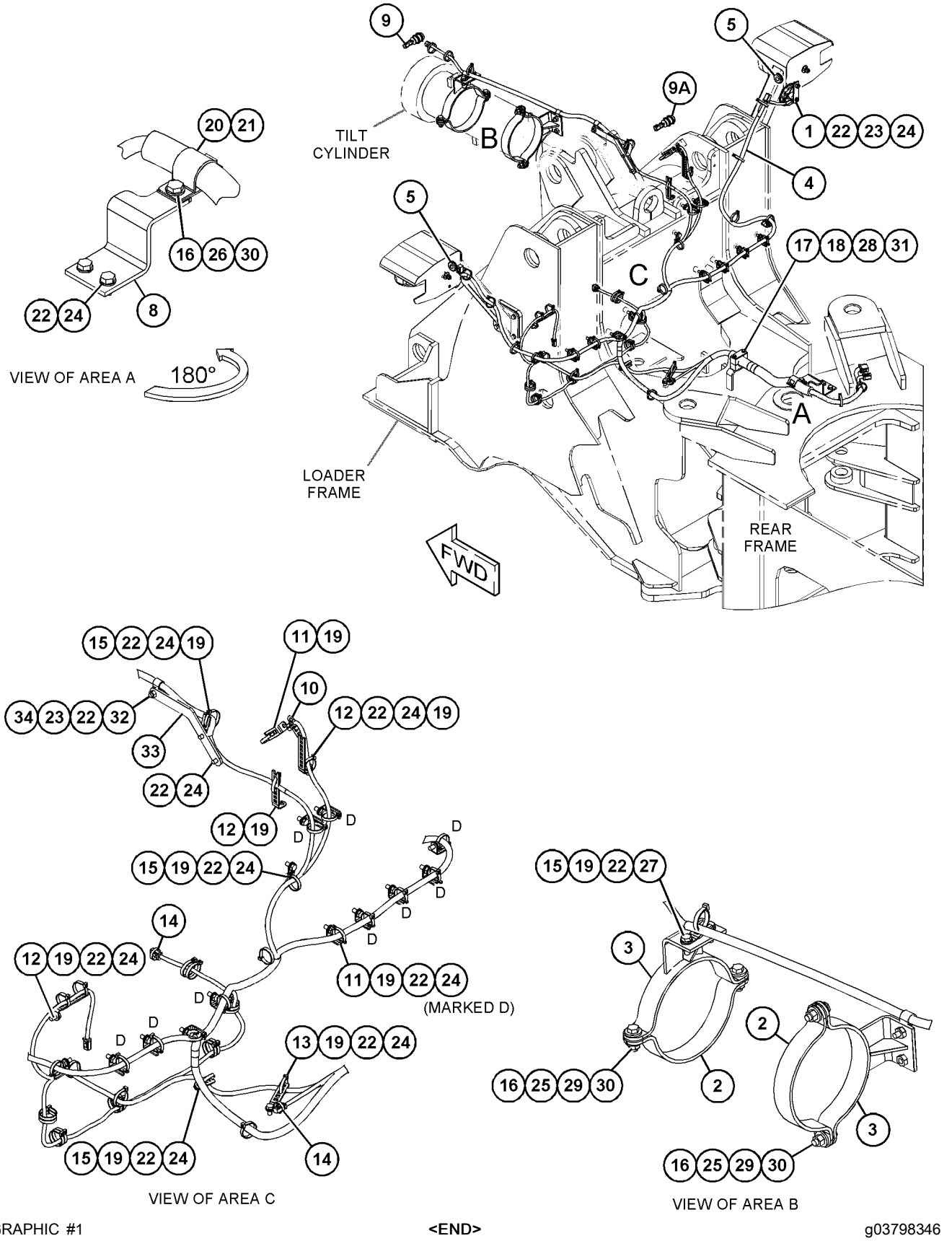

GRAPHIC #1 **<END>** g03798346

415-4198 WIRING GP-SECONDARY STEERING

S/N: M5K1-UP
PART OF 390-5985 STEERING AR-SECONDARY
AN ATTACHMENT

SMCS-1408, 4334

i05834454

NOTE	REF NO	GRAPHIC REF	PART NUMBER	QTY	PART NAME 1 2 3 4 5 6 (PRODUCT LEVEL)	SEE PAGE
	1	1	**367-9074**	1	SWITCH AS-PRESSURE (SECONDARY STEERING)	
	1A	1	**367-9074**	1	SWITCH AS-PRESSURE (PRIMARY STEERING)	
					(EACH INCLUDES)	
		1	**102-8803**	1	KIT-RECEPTACLE (3-PIN)	
					(INCLUDES RECEPTACLE AS & WEDGE)	
		1	**8T-8729**	3	PIN-CONNECTOR (16-GA TO 18-GA)	
E		1	**9X-1813**		SLEEVE (28-CM)	
Y	2	1	**392-8395**	1	HARNESS AS-STEERING (SECONDARY)	126
	3	1	**392-8396**	1	CABLE AS	
		1	**1S-7251**	2	TERMINAL-CABLE (00-GA, 1/2-IN SCREW)	
E		1	**5P-0761**		CABLE (00-GA, RED) (71-CM)	
		1	**8N-0869**	1	COVER-TERMINAL (RED)	
	4	1	**392-8397**	1	CABLE AS	
		1	**1S-7252**	2	TERMINAL-CABLE (00-GA, 3/8-IN SCREW)	
E		1	**5P-0747**		CABLE (00-GA, BLACK) (29-CM)	
	5	1	**130-5300**	1	CLIP	
	6	1	**1S-0994**	3	CLIP (LOOP)	
	7	1	**2V-1771**	3	GROMMET	
	8	1	**3J-1907**	2	SEAL-O-RING	
	9	1	**7K-1181**	9	STRAP-CABLE	
	10	1	**8T-4121**	7	WASHER-HARD (11X21X2.5-MM THK)	
M	11	1	**8T-4137**	7	BOLT (M10X1.5X20-MM)	
	12	1	**415-4214**	1	PLATE AS	
M		1	**8T-3490**	1	NUT-WELD (M10X1.5-THD)	
	13	1	**4P-7428**	2	CLIP	
	14	1	**3S-2093**	1	STRAP-CABLE	
	15	1	**352-3964**	1	CLIP	
	16	1	**277-1873**	1	CLIP	
	17	1	**4P-7429**	1	CLIP	

E - ORDER BY THE CENTIMETER
M - METRIC PART
Y - SEPARATE ILLUSTRATION

415-4198 **WIRING GP-SECONDARY STEERING (*contd.*)** **i05834454**

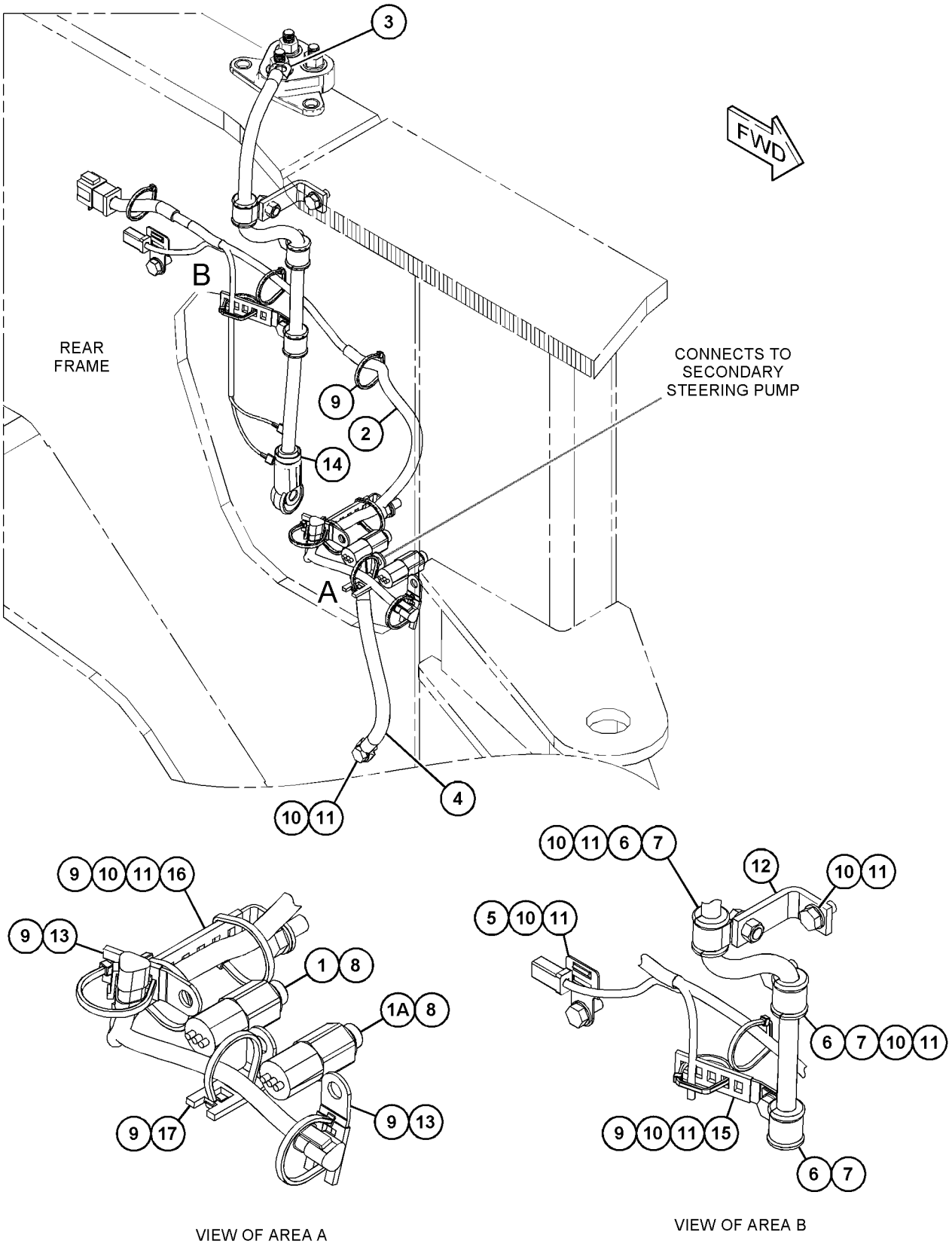

GRAPHIC #1 **<END>** g03681423

327-2256 AXLE AR-FIXED

S/N: M5K1-UP
PART OF 387-6044 CONFIGURATION AR
AN ATTACHMENT

SMCS-3013, 3278 **i05411733**

NOTE	PART NUMBER	QTY	PART NAME 1 2 3 4 5 6 (PRODUCT LEVEL)	SEE PAGE
Y	*327-2229*	2	AXLE GP-FIXED	197
Y	*327-2254*	2	BRAKE GP-SERVICE	347
Y	*326-2071*	1	DIFFERENTIAL & BEVEL GEAR GP (WITH HOUSING)	216
Y	*327-2235*	1	FASTENER GP-FIXED AXLE	229
Y	*327-2234*	2	PLANETARY GP-FINAL DRIVE	238

Y - SEPARATE ILLUSTRATION

<END>

394-1675 AXLE AR-FIXED—LIMITED SLIP DIFFERENTIAL

S/N: M5K1-UP
PART OF 387-6045, 387-6046 AXLE AR-FIXED & OSCILLATING
AN ATTACHMENT

SMCS-3013, 3278 **i05402900**

NOTE	PART NUMBER	QTY	PART NAME 1 2 3 4 5 6 (PRODUCT LEVEL)	SEE PAGE
Y	*327-2229*	2	AXLE GP-FIXED	197
Y	*327-2235*	1	FASTENER GP-FIXED AXLE (AXLE HOUSING)	229
Y	*327-2254*	2	BRAKE GP-SERVICE	347
Y	*418-4769*	1	DIFFERENTIAL & BEVEL GEAR GP (WITH HOUSING)	220
Y	*327-2234*	2	PLANETARY GP-FINAL DRIVE	238

Y - SEPARATE ILLUSTRATION

<END>

387-6045 AXLE AR-FIXED & OSCILLATING

S/N: M5K1-UP
AN ATTACHMENT

SMCS-3013, 3278 **i05402865**

NOTE	PART NUMBER	QTY	PART NAME 1 2 3 4 5 6 (PRODUCT LEVEL)	SEE PAGE
Y	*394-1675*	1	AXLE AR-FIXED	195
Y	*394-1676*	1	AXLE AR-OSCILLATING (LIMITED SLIP DIFFERENTIAL)	196
Y	*394-1677*	1	TRUNNION GP-AXLE (FRONT)	254
Y	*394-1679*	1	TRUNNION GP-AXLE (REAR)	255

Y - SEPARATE ILLUSTRATION

<END>

387-6046 AXLE AR-FIXED & OSCILLATING

S/N: M5K1-UP
LIMITED SLIP DIFFERENTIAL
AN ATTACHMENT

SMCS-3013, 3278 **i05405364**

NOTE	PART NUMBER	QTY	PART NAME 1 2 3 4 5 6 (PRODUCT LEVEL)	SEE PAGE
Y	*394-1675*	1	AXLE AR-FIXED	195
Y	*418-4767*	1	AXLE AR-OSCILLATING	196
Y	*394-1677*	1	TRUNNION GP-AXLE (FRONT)	254
Y	*394-1679*	1	TRUNNION GP-AXLE (REAR)	255

Y - SEPARATE ILLUSTRATION

<END>

394-1676 AXLE AR-OSCILLATING—LIMITED SLIP DIFFERENTIAL

S/N: M5K1-UP
PART OF 387-6045 AXLE AR-FIXED & OSCILLATING
AN ATTACHMENT

SMCS-3013, 3278 **i05402981**

NOTE	PART NUMBER	QTY	PART NAME 1 2 3 4 5 6 (PRODUCT LEVEL)	SEE PAGE
Y	*327-2248*	2	AXLE GP-OSCILLATING	198
Y	*327-2235*	1	FASTENER GP-FIXED AXLE (AXLE HOUSING)	229
Y	*327-2254*	2	BRAKE GP-SERVICE	347
Y	*418-4770*	1	DIFFERENTIAL & BEVEL GEAR GP (WITH HOUSING)	222
Y	*327-2234*	2	PLANETARY GP-FINAL DRIVE	238
	330-5681	1	FILLER GP-POWER TRAIN OIL (AXLE OIL)	
	3B-0551	1	PLUG-PIPE	
	9C-6327	1	GAUGE AS-OIL LEVEL (DIPSTICK) (AXLE)	

Y - SEPARATE ILLUSTRATION

<END>

418-4767 AXLE AR-OSCILLATING

S/N: M5K1-UP
PART OF 387-6046 AXLE AR-FIXED & OSCILLATING, 387-6044 CONFIGURATION AR
AN ATTACHMENT

SMCS-3013, 3278 **i05405408**

NOTE	PART NUMBER	QTY	PART NAME 1 2 3 4 5 6 (PRODUCT LEVEL)	SEE PAGE
Y	*327-2248*	2	AXLE GP-OSCILLATING	198
Y	*327-2254*	2	BRAKE GP-SERVICE	347
Y	*418-4768*	1	DIFFERENTIAL & BEVEL GEAR GP (WITH HOUSING)	218
Y	*327-2235*	1	FASTENER GP-FIXED AXLE	229
Y	*330-5681*	1	FILLER GP-POWER TRAIN OIL (AXLE OIL)	230
Y	*327-2234*	2	PLANETARY GP-FINAL DRIVE	238

Y - SEPARATE ILLUSTRATION

<END>

327-2229 AXLE GP-FIXED

S/N: M5K1-UP
PART OF 327-2256, 394-1675 AXLE AR-FIXED
AN ATTACHMENT

SMCS-3278 **i06075195**

NOTE	REF NO	GRAPHIC REF	PART NUMBER	QTY	PART NAME 1 2 3 4 5 6 (PRODUCT LEVEL)	SEE PAGE
	1	1	**9C-8421**	1	SHAFT-AXLE	
	2	1	**9G-5315**	1	SEAL GP-DUO-CONE	
		1	**2M-0344**	2	RING-SEALING	
	3	1	**440-0510**	1	GEAR-RING (75-TEETH)	
	4	1	**440-0511**	1	HOUSING-AXLE	
	5	1	**2P-1373**	1	CUP-BEARING	
	6	1	**3F-3442**	3	DOWEL	
	7	1	**6Y-2538**	1	CONE-BEARING	
	8	1	**8B-6342**	1	CONE-BEARING	
	9	1	**8B-6343**	1	CUP-BEARING	
	10	1	**9C-8419**	1	NUT-BEARING	

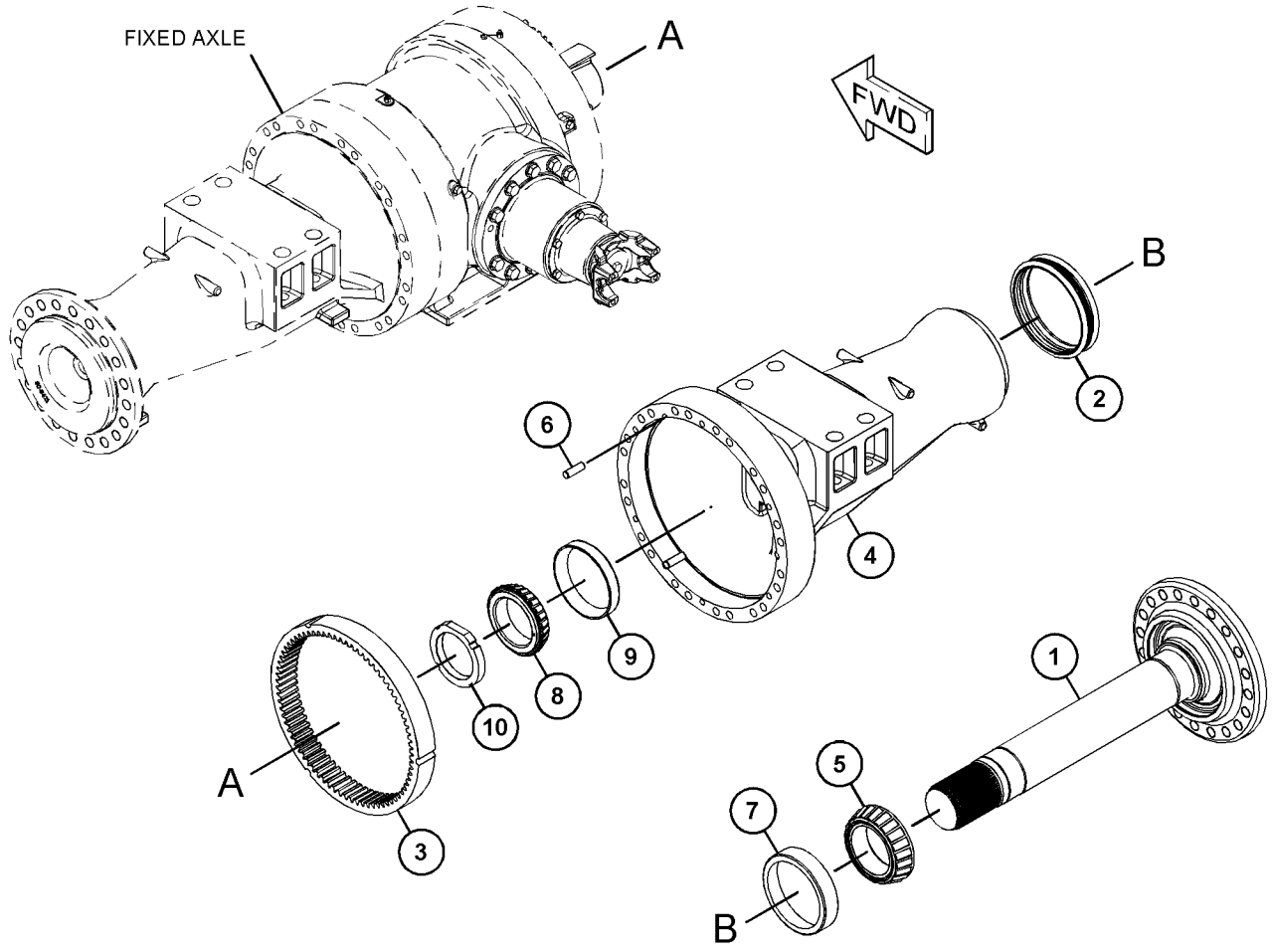

GRAPHIC #1 **<END>** g03428118

327-2248 AXLE GP-OSCILLATING

S/N: M5K1-UP

PART OF 394-1676, 418-4767 AXLE AR-OSCILLATING

AN ATTACHMENT

SMCS-3278 **i06088910**

NOTE	REF NO	GRAPHIC REF	PART NUMBER	QTY	PART NAME 1 2 3 4 5 6 (PRODUCT LEVEL)	SEE PAGE
	1	1	**9C-8421**	1	SHAFT-AXLE	
	2	1	**9G-5315**	1	SEAL GP-DUO-CONE	
		1	**2M-0344**	2	RING-SEALING	
	3	1	**440-0510**	1	GEAR-RING (75-TEETH)	
	4	1	**9C-8419**	1	NUT-BEARING	
	5	1	**2P-1373**	1	CUP-BEARING	
	6	1	**3F-3442**	3	DOWEL	
	7	1	**6Y-2538**	1	CONE-BEARING	
	8	1	**8B-6342**	1	CONE-BEARING	
	9	1	**8B-6343**	1	CUP-BEARING	
	10	1	**440-0512**	1	HOUSING-AXLE	

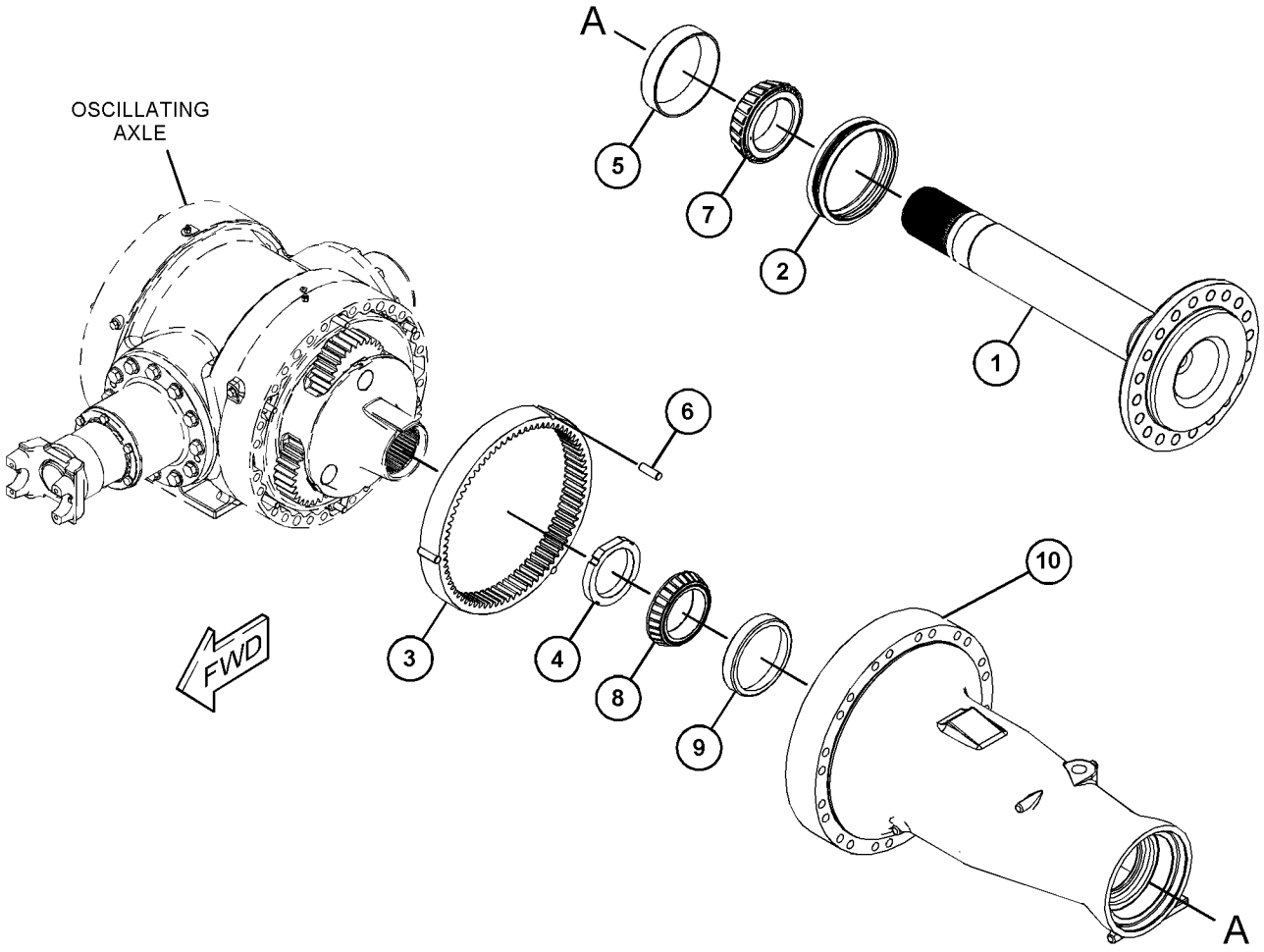

GRAPHIC #1 **<END>** g03803885

396-5183 CASE & PARTS GP-PLANETARY

S/N: S4X1-UP

PART OF 396-5175 TRANSMISSION AR

SMCS-3064 **i05677553**

NOTE	REF NO	GRAPHIC REF	PART NUMBER	QTY	PART NAME 1 2 3 4 5 6 (PRODUCT LEVEL)	SEE PAGE
	1	2	**4S-8598**	1	SCREEN-SUCTION (TRANSMISSION)	
	2	2	**326-3049**	1	PLATE-IDENTIFICATION (TRANSMISSION, TORQUE CONVERTER)	
	3	2	**6Y-8506**	1	CAGE-BEARING	
	4	2	**8C-5176**	1	SEAL-O-RING	
B	5	2	**8E-5261**	1	SHIM PACK (INCLUDES 24-SHIMS)	
	6	1	**9G-5127**	1	BREATHER AS (TRANSMISSION)	
	7	2	**9P-9150**	40	WASHER (8.25X18X0.84-MM THK)	
B	8	2	**142-4431**	1	SHIM PACK (INCLUDES 19-SHIMS)	
	9	2	**148-1928**	1	VALVE-RELIEF	
	10	2	**193-2200**	1	SEAL-LIP TYPE	
	11	2	**326-0668**	1	COVER	
M	12	2	**8T-6912**	3	BOLT (M8X1.25X50-MM)	
Y	13	2	**326-3718**	1	VALVE GP-FLOW CONTROL	259
	14	2	*326-3735*	3	PLUG AS	
					(EACH INCLUDES)	
		2	**9S-4191**	1	PLUG (9/16-18-THD)	
		2	**3J-1907**	1	SEAL-O-RING	
	15	2	*326-3736*	1	PLUG AS	
		2	**326-3745**	1	PLUG	
		2	**4F-7952**	1	SEAL-O-RING	
	16	2	*326-3737*	1	PLUG AS	
		2	**326-3744**	1	PLUG	
		2	**8M-5248**	1	SEAL-O-RING	
	17	1	**329-5556**	1	COVER	
	18	2	**396-5149**	1	ADAPTER	
	19	1	**396-5150**	1	ADAPTER	
Y	20	2	**396-5182**	1	CASE GP-TRANSMISSION	203
	21	2	**397-9748**	1	BRACKET	
	22	1	**417-4077**	1	COVER	
	23	1	**432-7369**	1	ADAPTER	
	24	1	**432-8538**	1	TUBE AS	
	25	2	**126-9993**	2	SCREW-DRIVE	
	26	2	**170-1807**	1	BEARING-SPECIAL RACE	
	27	1	**1P-3707**	2	SEAL-RECTANGULAR	
	28	1	**1S-1164**	1	SEAL-LIP TYPE	
	29	2	**1S-6595**	1	GASKET-OIL SUPPLY	
	30	2	**2H-6184**	1	SEAL-O-RING	
	31	2	**2N-7006**	1	COVER	
	32	2	**2N-7007**	1	GASKET	
	33	2	**2P-8986**	1	CUP-BEARING	
	34	2	**2S-4078**	1	SEAL-O-RING	
	35	2	**3E-4352**	20	WASHER-HARD (8.8X20.5X2.5-MM THK)	
	36	2	**3P-0647**	2	SEAL-O-RING	
	37	2	**4D-9986**	1	SEAL-O-RING	
	38	1	**4J-0520**	1	SEAL-O-RING	
	39	2	**5M-3154**	1	COVER	
	40	2	**5P-8245**	10	WASHER-HARD (13.5X25.5X3-MM THK)	
	41	1	**5P-9147**	1	SEAL-O-RING	
M	42	2	**6A-5591**	2	BOLT (M12X1.75X25-MM)	
M	43	1	**6V-1820**	5	BOLT (M10X1.5X30-MM)	
M	44	2	**6V-3668**	12	BOLT (M12X1.75X30-MM)	
M	45	2	**6V-3821**	4	BOLT (M8X1.25X110-MM)	
M	46	2	**6V-3940**	5	BOLT (M8X1.25X25-MM)	
M	47	2	**6V-5217**	3	BOLT (M8X1.25X20-MM)	
M	48	2	**6V-5223**	9	BOLT (M8X1.25X100-MM)	
	49	1	**6V-5839**	4	WASHER (11X21X2.5-MM THK)	
M	50	1	**6V-5842**	27	BOLT (M10X1.5X40-MM)	

396-5183 **CASE & PARTS GP-PLANETARY (*contd.*)** **i05677553**

NOTE	REF NO	GRAPHIC REF	PART NUMBER	QTY	PART NAME 1 2 3 4 5 6 (PRODUCT LEVEL)	SEE PAGE
	51	2	**6V-6228**	2	SEAL-O-RING	
M	52	1	**6V-7981**	1	BOLT (M10X1.5X70-MM)	
	53	1,2	**7J-8209**	2	CUP-BEARING	
	54	1,2	**8E-5380**	5	BEARING-ROLLER	
	55	2	**8H-7521**	1	SEAL-O-RING	
M	56	1	**8T-0643**	6	BOLT (M10X1.5X80-MM)	
M	57	1	**8T-4136**	12	BOLT (M10X1.5X25-MM)	
M	58	2	**8T-4137**	2	BOLT (M10X1.5X20-MM)	
	59	2	**9X-4609**	1	SEAL-O-RING	
M	60	2	**9X-6000**	4	BOLT (M8X1.25X180-MM)	
BF			**8C-8422**		SEALANT	

B - USE AS REQUIRED
F - NOT SHOWN
M - METRIC PART
Y - SEPARATE ILLUSTRATION

396-5183 **CASE & PARTS GP-PLANETARY (*contd.*)** **i05677553**

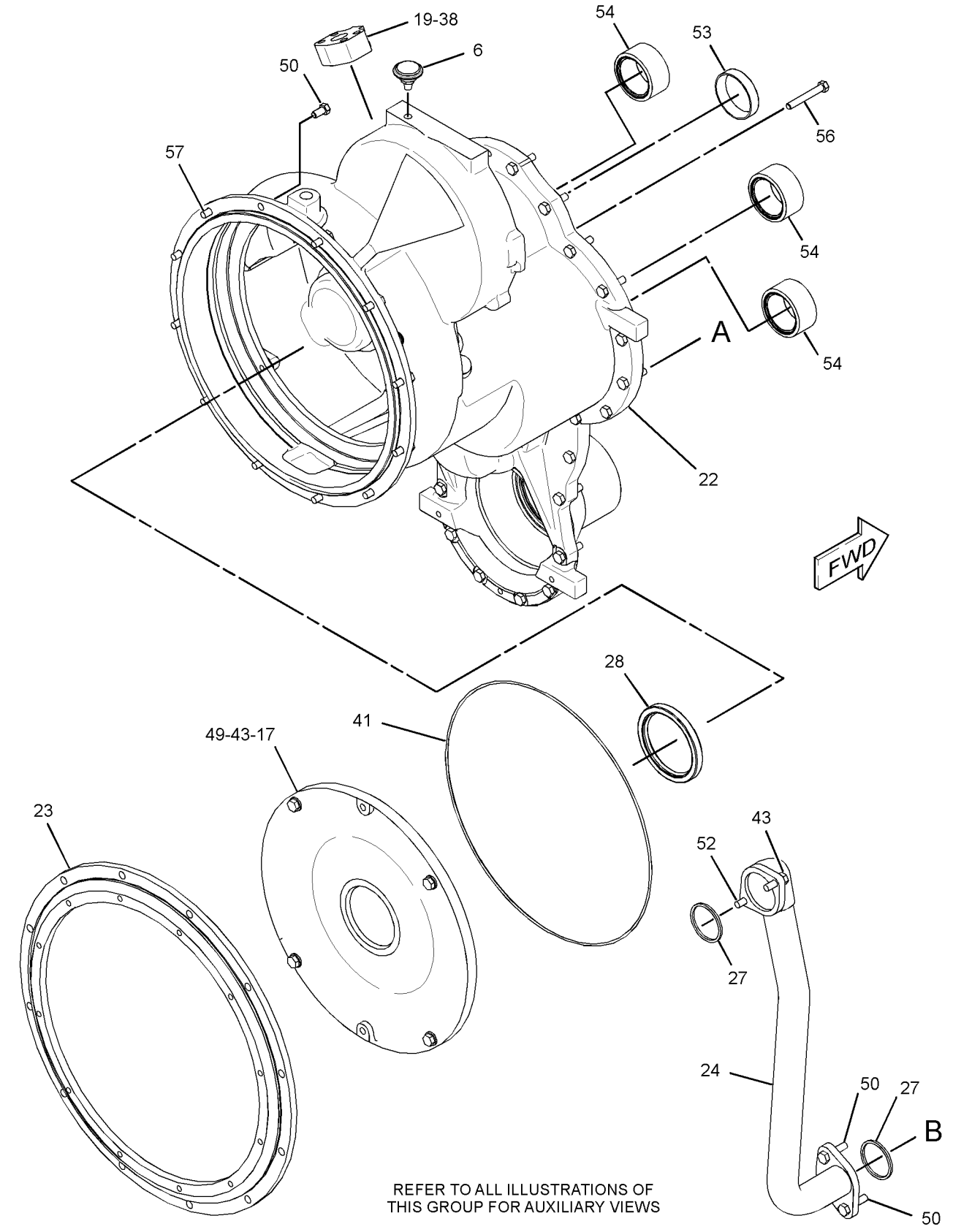

GRAPHIC #1

g03549617

396-5183 **CASE & PARTS GP-PLANETARY (*contd.*)** **i05677553**

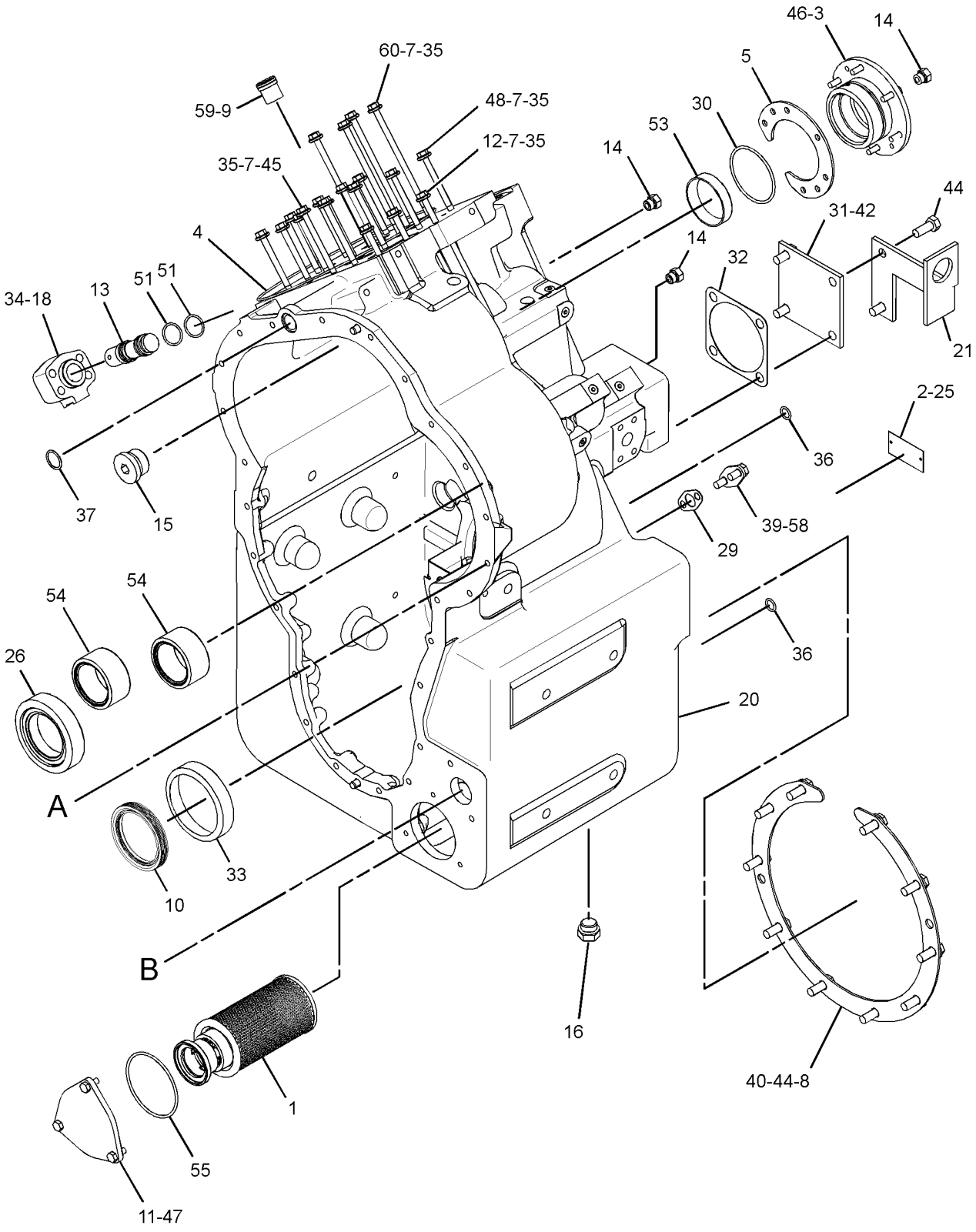

GRAPHIC #2 **<END>** g03549619

396-5182 CASE GP-TRANSMISSION

S/N: S4X1-UP

PART OF 396-5183 CASE & PARTS GP-PLANETARY

SMCS-3064 **i05581810**

NOTE	REF NO	GRAPHIC REF	PART NUMBER	QTY	PART NAME 1 2 3 4 5 6 (PRODUCT LEVEL)	SEE PAGE
	1	1	**326-3738**	2	DOWEL	
	2	1	**396-5154**	15	PLUG	
	3	1	**417-4072**	1	CASE	
	4	1	**433-7185**	1	BAFFLE AS	
M	5	1	**8T-4200**	2	BOLT (M8X1.25X16-MM)	

M - METRIC PART

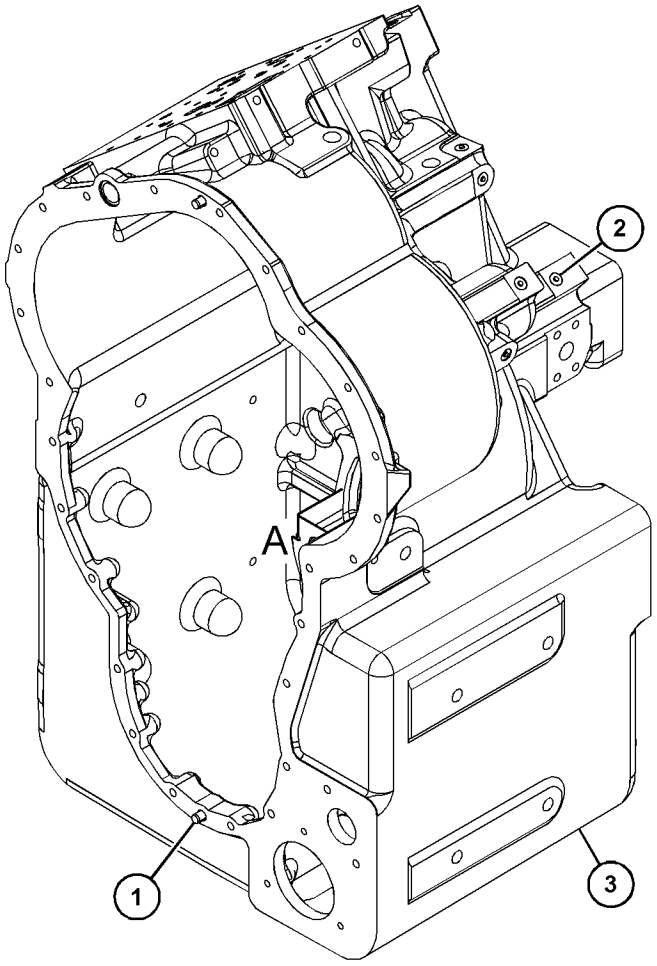

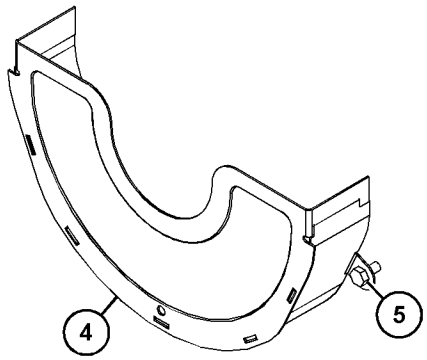

VIEW OF AREA A
(PARTS REMOVED FOR CLARITY)



GRAPHIC #1 **<END>** g03543743

326-0622 CLUTCH GP–REVERSE, 2ND

S/N: S4X1-UP

PART OF 396-5175 TRANSMISSION AR

SMCS-3155 **i05430835**

NOTE	REF NO	GRAPHIC REF	PART NUMBER	QTY	PART NAME 1 2 3 4 5 6 (PRODUCT LEVEL)	SEE PAGE
	1	1	**6Y-8265**	2	SEAL AS-BALANCE	
	2	1	**9W-9399**	2	RING-SEAL	
	3	1	**9W-9436**	2	RING-SEAL	
	4	1	**114-1071**	2	PISTON	
	5	1	**265-5287**	3	RING-SEAL	
	6	1	**326-0681**	1	GEAR (49-TEETH)	
	7	1	**326-0756**	1	GEAR (32-TEETH)	
	8	1	**326-0782**	1	HUB AS	
	9	1	**326-0838**	16	PLATE	
	10	1	*326-3018*	1	SHAFT GP-TRANSMISSION	
		1	**9W-0719**	2	PLUG	
	11	1	**326-3709**	1	WASHER	
	12	1	**326-3758**	2	PLATE	
	13	1	**8T-0251**	6	RING-RETAINING	
	14	1	**326-3784**	2	PLATE-END	
	15	1	**326-3786**	1	GEAR (48-TEETH)	
	16	1	**326-3799**	2	RETAINER	
	17	1	**326-3801**	18	DISC AS-FRICTION	
	18	1	**328-6197**	1	HUB AS	
	19	1	**236-2541**	2	RING-RETAINING	
	20	1	**251-9335**	2	SPRING-WAVE	
	21	1	**6V-2394**	2	RING-RETAINING	
	22	1	**8E-8317**	2	DISC-THRUST	
	23	1	**8E-8653**	1	DISC-THRUST	
	24	1	**8E-8654**	2	DISC-THRUST	

PARTS SHOWN IN GRAPHIC(S) WITHOUT A REFERENCE NUMBER ARE NOT SERVICED SEPARATELY

326-0622 **CLUTCH GP (*contd.*)** **i05430835**

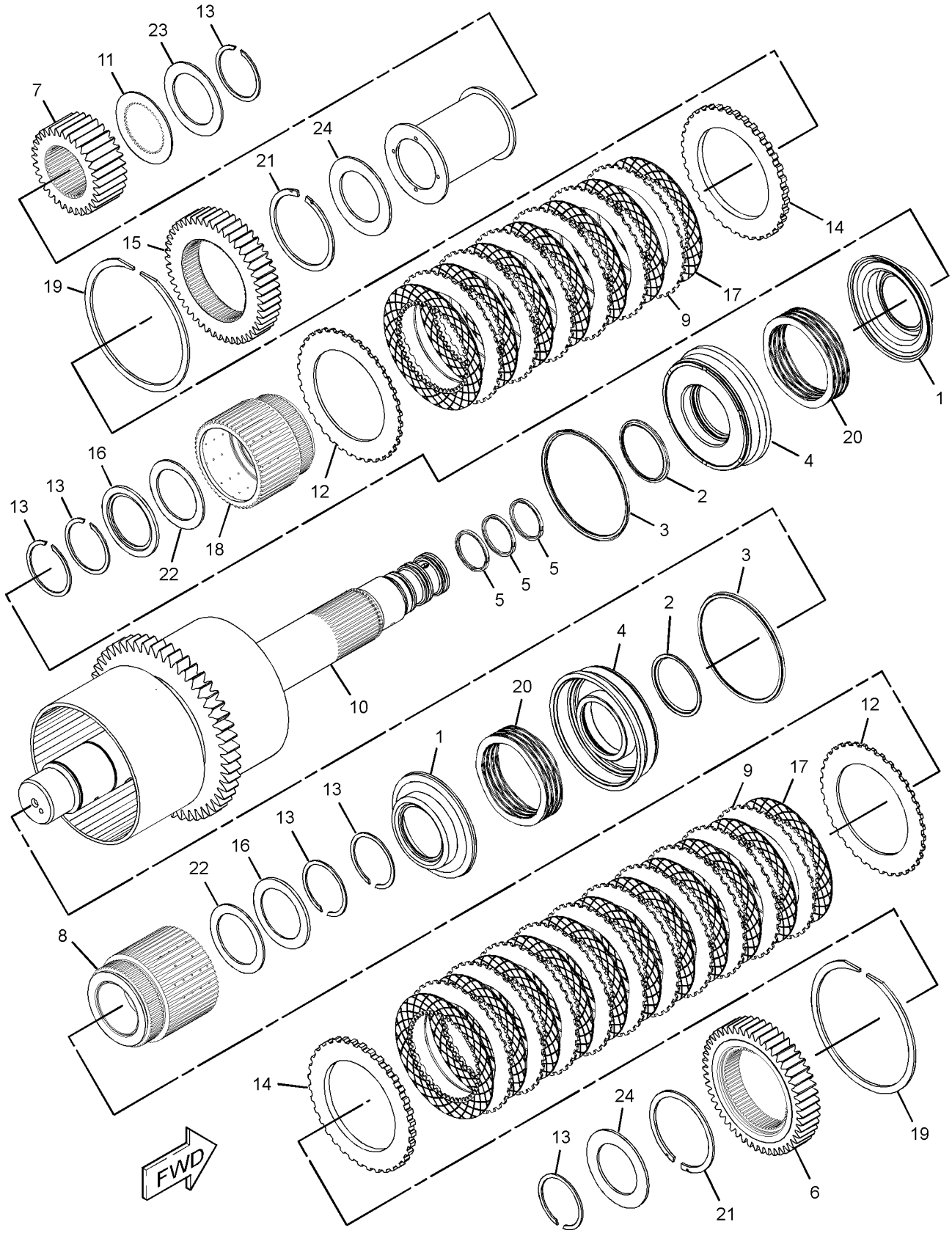

GRAPHIC #1 **<END>** g03551716

326-0624 CLUTCH GP—FORWARD HIGH, FORWARD LOW

S/N: S4X1-UP

PART OF 396-5175 TRANSMISSION AR

SMCS-3155 **i05715372**

NOTE	REF NO	GRAPHIC REF	PART NUMBER	QTY	PART NAME 1 2 3 4 5 6 (PRODUCT LEVEL)	SEE PAGE
	1	1	**6Y-8265**	2	SEAL AS-BALANCE	
	2	1	**9W-9399**	2	RING-SEAL	
	3	1	**9W-9436**	2	RING-SEAL	
	4	1	**114-1071**	2	PISTON	
	5	1	**326-0684**	1	GEAR AS (38-TEETH)	
	6	1	**265-5287**	3	RING-SEAL	
	7	1	**326-0681**	1	GEAR (49-TEETH)	
	8	1	**326-0782**	1	HUB AS	
	9	1	**326-0838**	16	PLATE	
	10	1	*326-3017*	1	SHAFT GP-TRANSMISSION	
		1	**9W-0719**	2	PLUG	
	11	1	**326-3758**	2	PLATE	
	12	1	**326-3784**	2	PLATE-END	
	13	1	**326-3799**	2	RETAINER	
	14	1	**326-3801**	18	DISC AS-FRICTION	
	15	1	**236-2541**	2	RING-RETAINING	
	16	1	**251-9335**	2	SPRING-WAVE	
	17	1	**6V-2394**	1	RING-RETAINING	
	18	1	**8E-8317**	2	DISC-THRUST	
	19	1	**8E-8654**	2	DISC-THRUST	
	20	1	**8T-0251**	6	RING-RETAINING	

326-0624 **CLUTCH GP (*contd.*)** **i05715372**

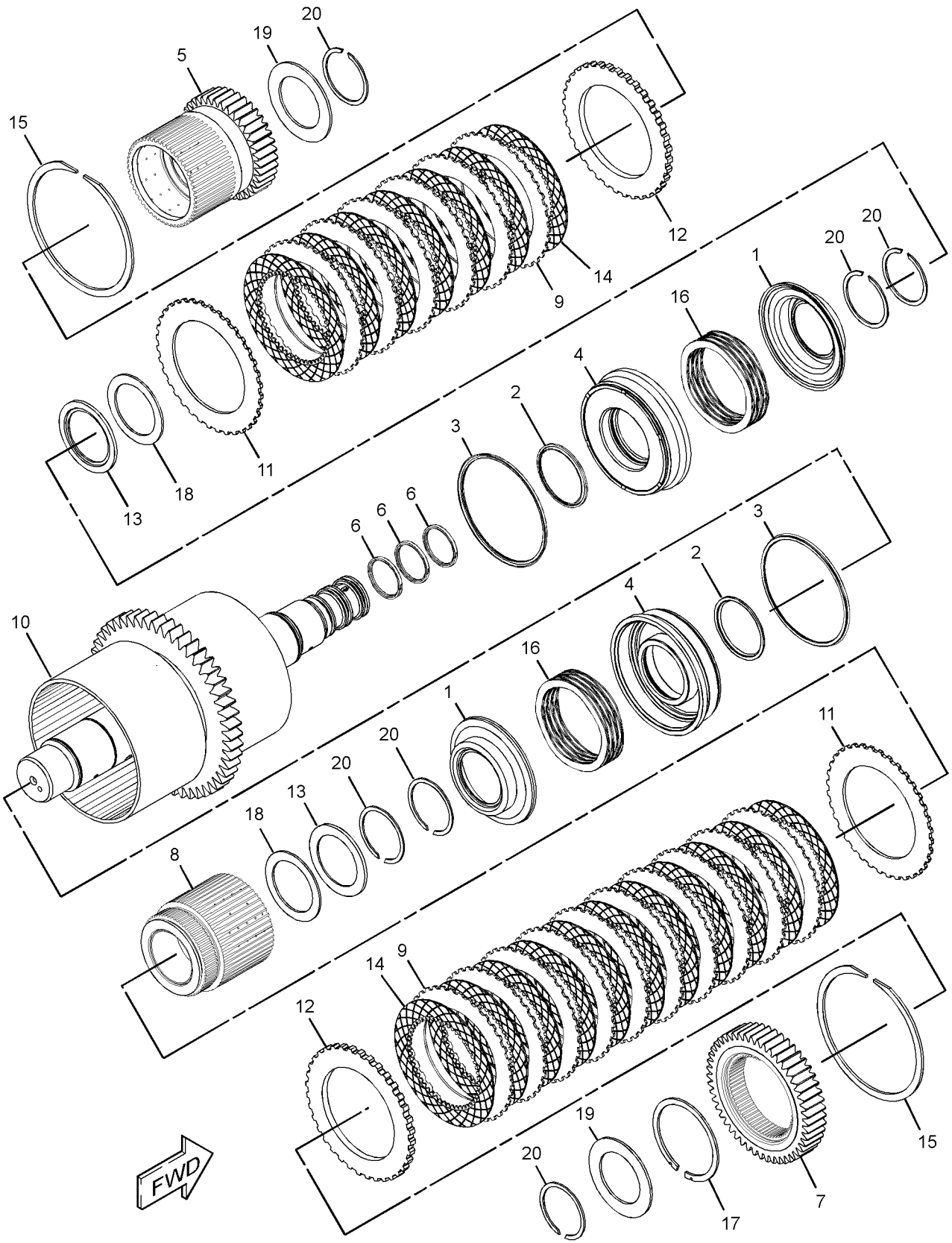

GRAPHIC #1 **<END>** g03552199

326-0626 CLUTCH GP–FIRST, THIRD

S/N: S4X1-UP

PART OF 396-5175 TRANSMISSION AR

SMCS-3155 **i05430860**

NOTE	REF NO	GRAPHIC REF	PART NUMBER	QTY	PART NAME 1 2 3 4 5 6 (PRODUCT LEVEL)	SEE PAGE
	1	1	**6Y-0373**	1	RETAINER-RING	
	2	1	**6Y-8265**	1	SEAL AS-BALANCE	
	3	1	**6Y-8286**	1	PISTON	
	4	1	**6Y-8288**	1	PISTON-BALANCE	
	5	1	**8E-5735**	1	RING-SEAL	
	6	1	**8E-5737**	1	RING-SEAL	
	7	1	**8E-5742**	1	RING-SEAL	
	8	1	**9W-9399**	1	RING-SEAL	
	9	1	**9W-9436**	1	RING-SEAL	
	10	1	**114-1071**	1	PISTON	
	11	1	**265-5287**	4	RING-SEAL	
	12	1	**326-0791**	11	DISC AS-FRICTION	
	13	1	**326-0838**	6	PLATE	
	14	1	**326-0839**	10	PLATE-CONVERTER	
	15	1	*326-3019*	1	SHAFT GP-TRANSMISSION	
		1	**9W-0719**	3	PLUG	
	16	1	**326-3757**	1	PLATE-CONVERTER	
	17	1	**326-3758**	1	PLATE	
	18	1	**326-3784**	1	PLATE-END	
	19	1	**326-3785**	1	PLATE-END	
	20	1	**326-3799**	1	RETAINER	
	21	1	**326-3801**	7	DISC AS-FRICTION	
	22	1	**326-3811**	1	GEAR (46-TEETH)	
	23	1	**326-3814**	1	GEAR (97-TEETH)	
	24	1	**326-3817**	1	GEAR (37-TEETH)	
	25	1	**328-6197**	1	HUB AS	
	26	1	**328-6198**	1	HUB AS	
		1	**8E-3433**	1	BUSHING	
	27	1	**104-7336**	2	RING-RETAINING	
	28	1	**236-2541**	1	RING-RETAINING	
	29	1	**251-9335**	1	SPRING-WAVE	
	30	1	**6V-2394**	1	RING-RETAINING	
	31	1	**8C-3979**	1	RING-RETAINING	
	32	1	**8C-8550**	1	RING-RETAINING	
	33	1	**8E-1279**	1	SPRING-WAVE	
	34	1	**8E-8317**	1	DISC-THRUST	
	35	1	**8E-8321**	2	DISC-THRUST	
	36	1	**8E-8652**	1	DISC-THRUST	
	37	1	**8E-8654**	1	DISC-THRUST	
	38	1	**8T-0251**	3	RING-RETAINING	
	39	1	**9U-9322**	1	RING-RETAINING	

326-0626 **CLUTCH GP (*contd.*)** **i05430860**

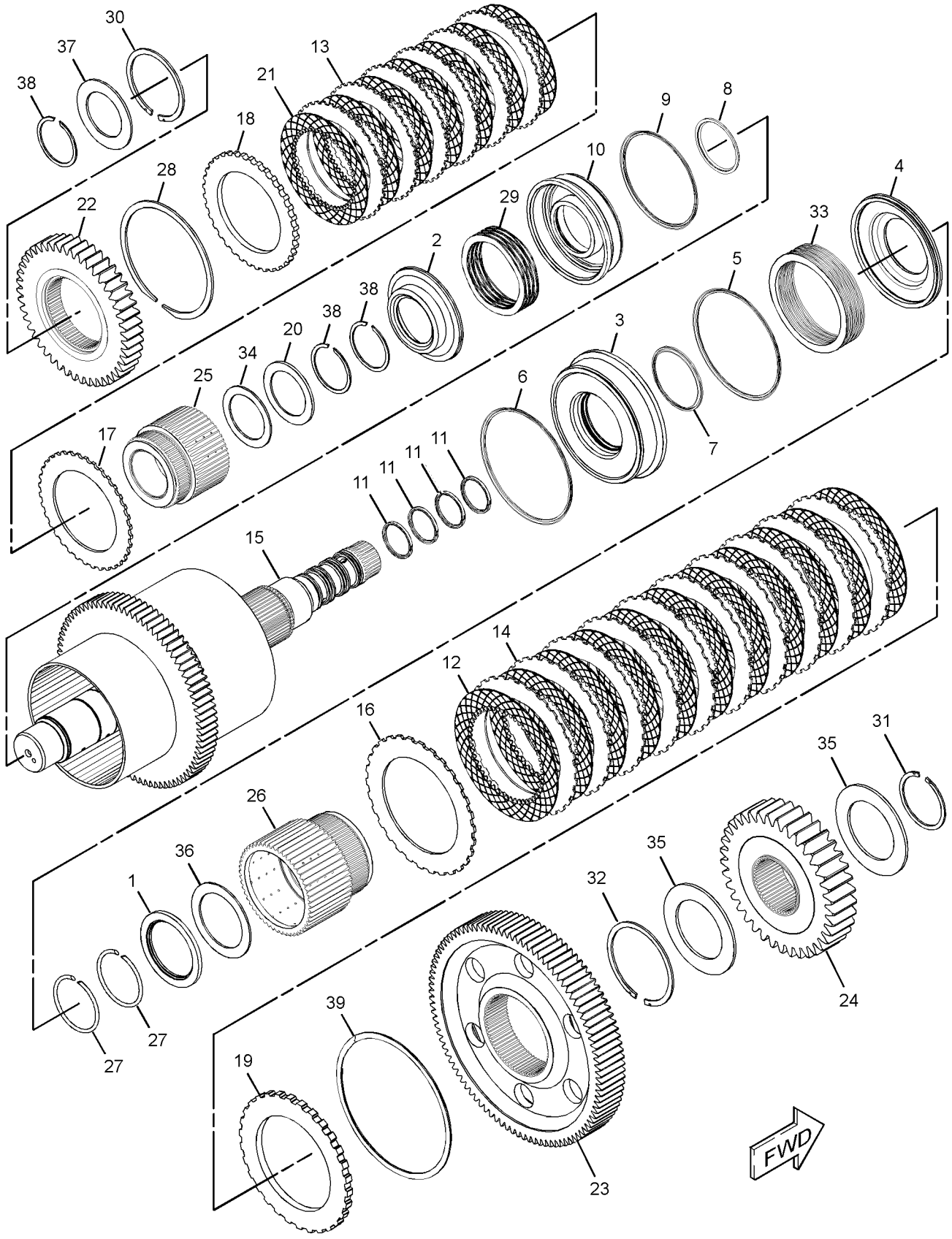

GRAPHIC #1 **<END>** g03552677

415-4217 CONTROL GP-TRANSMISSION HYD

S/N: M5K1-UP

PART OF 392-8352 ELECTRICAL AR

SMCS-3073, 3167

i05675484

NOTE	REF NO	GRAPHIC REF	PART NUMBER	QTY	PART NAME 1 2 3 4 5 6 (PRODUCT LEVEL)	SEE PAGE
Y	1	1	**392-8377**	1	HARNESS AS-TRANSMISSION	127
	2	1	**415-4189**	1	BRACKET	
	3	1	**415-4214**	1	PLATE AS	
M		1	**8T-3490**	1	NUT-WELD (M10X1.5-THD)	
	4	1	**7K-1181**	9	STRAP-CABLE	
	5	1	**8T-4121**	1	WASHER-HARD (11X21X2.5-MM THK)	
M	6	1	**8T-4137**	1	BOLT (M10X1.5X20-MM)	
	7	1	**9M-8406**	3	CLIP	

M - METRIC PART
Y - SEPARATE ILLUSTRATION

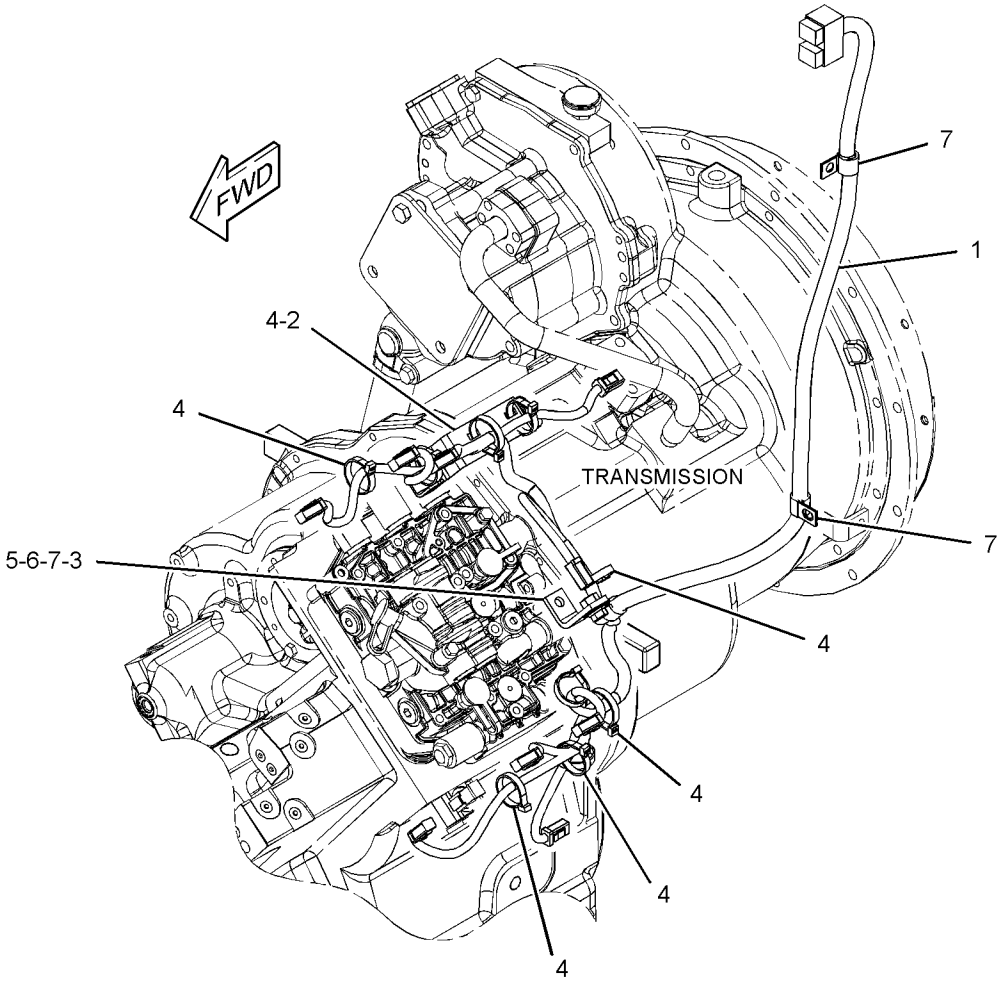

GRAPHIC #1

<END>

g03524396

434-6672 COOLER GP-TRANSMISSION OIL

S/N: M5K1-UP
PART OF 387-6001 CHASSIS AR
TYPE 1

SMCS-1375 **i05714992**

NOTE	REF NO	GRAPHIC REF	PART NUMBER	QTY	PART NAME 1 2 3 4 5 6 (PRODUCT LEVEL)	SEE PAGE
	1	1	**392-2308**	1	COOLER GP-TRANSMISSION OIL	
		1	**392-2314**	1	COOLER AS-TRANSMISSION OIL	
		1	**392-2315**	1	VALVE-SHUTOFF	
	2	1	**8T-4121**	6	WASHER-HARD (11X21X2.5-MM THK)	
M	3	1	**8T-4137**	6	BOLT (M10X1.5X20-MM)	

M - METRIC PART

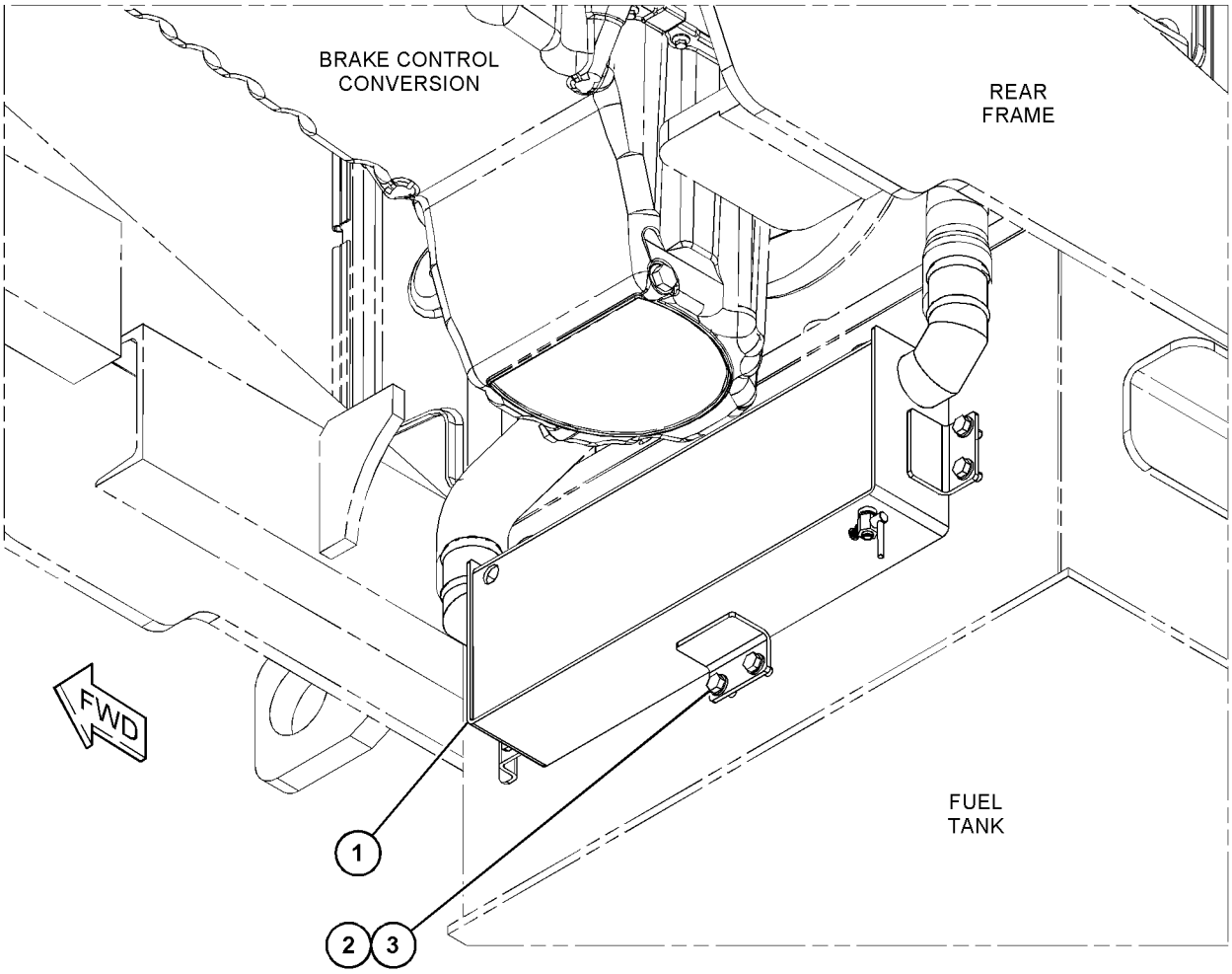

GRAPHIC #1 **<END>** g03693013

434-6672 COOLER GP-TRANSMISSION OIL

S/N: M5K1-UP
PART OF 387-6001 CHASSIS AR
TYPE 2

SMCS-1375 **i06063998**

NOTE	REF NO	GRAPHIC REF	PART NUMBER	QTY	PART NAME 1 2 3 4 5 6 (PRODUCT LEVEL)	SEE PAGE
C	1	1	**450-3474**	1	COOLER GP-TRANSMISSION OIL	
		1	**450-3472**	1	COOLER AS-TRANSMISSION OIL	
		1	**392-2315**	1	VALVE-SHUTOFF	
	2	1	**8T-4121**	6	WASHER-HARD (11X21X2.5-MM THK)	
M	3	1	**8T-4137**	6	BOLT (M10X1.5X20-MM)	
C	4	1	**157-0670**	1	CAP-DUST	
C	5	1	**154-9023**	1	VALVE-SAMPLING (TRANSMISSION OIL)	
C	6	1	**3J-7354**	1	SEAL-O-RING	

C - CHANGE FROM PREVIOUS TYPE
M - METRIC PART

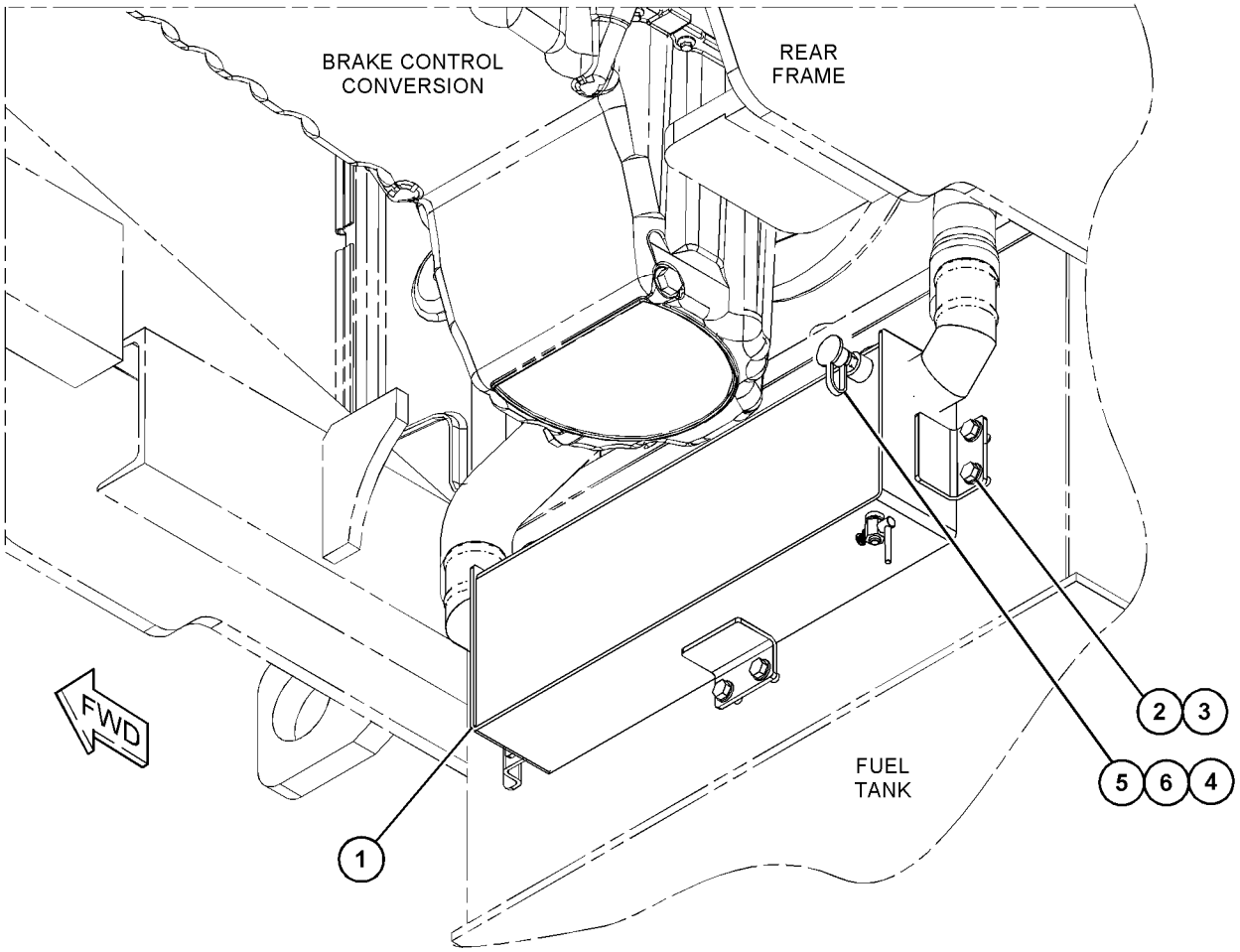

GRAPHIC #1 **<END>** g03798816

457-8561 COVER GP-REAR

S/N: M5K1-UP

PART OF 457-8580 ENCLOSURE GP-ENGINE

SMCS-3064 **i06068769**

NOTE	REF NO	GRAPHIC REF	PART NUMBER	QTY	PART NAME 1 2 3 4 5 6 (PRODUCT LEVEL)	SEE PAGE
	1	1	**387-6210**	1	SCREEN	
	2	1	**457-8582**	1	ROOF AS	
		1	**8T-4121**	6	WASHER-HARD (11X21X2.5-MM THK)	
M		1	**8T-4133**	6	NUT (M10X1.5-THD)	
M		1	**8T-4137**	6	BOLT (M10X1.5X20-MM)	
		1	**450-4830**	1	PANEL AS	
M	3	1	**8T-4199**	8	BOLT (M8X1.25X12-MM)	
	4	1	**8T-4224**	8	WASHER-HARD (8.8X16X2-MM THK)	

M - METRIC PART

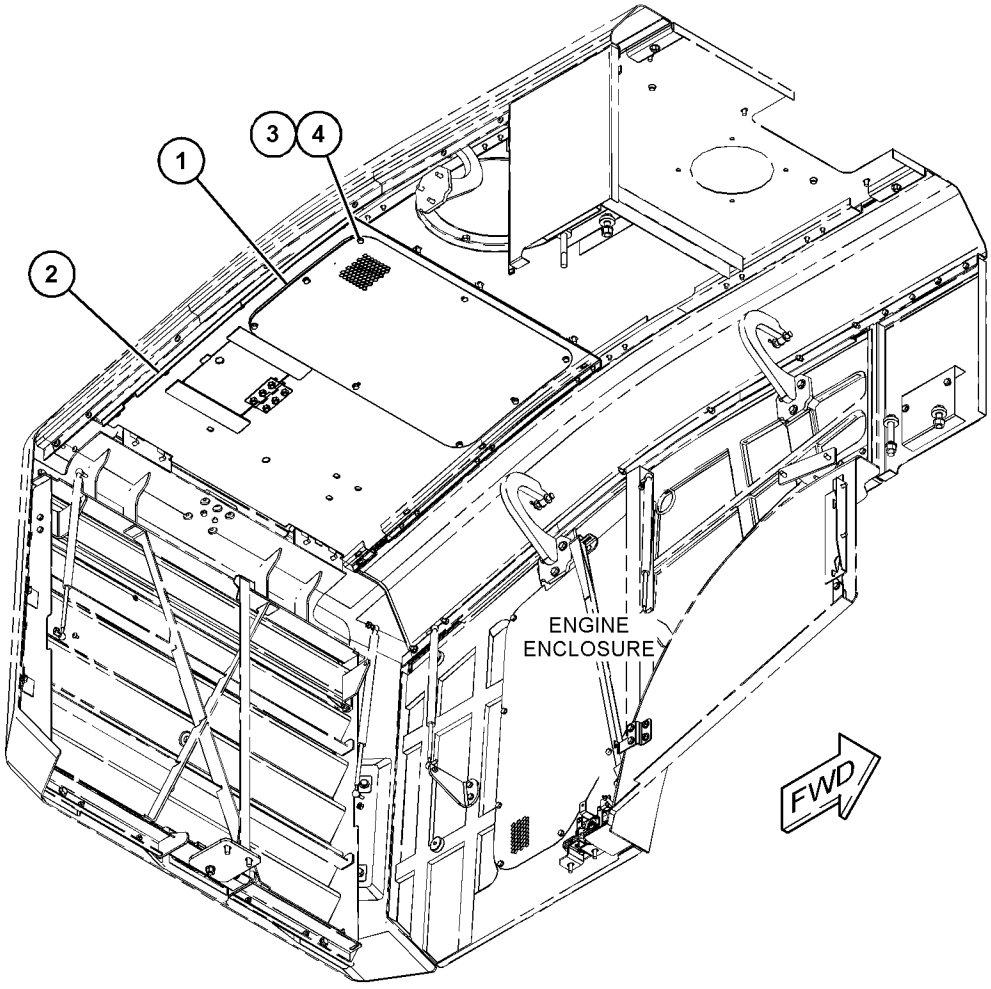

GRAPHIC #1 **<END>** g03799097

396-5185 COVER GP-SHIPPING–TRANSMISSION

S/N: S4X1-UP

PART OF 396-5175 TRANSMISSION AR

SMCS-3064 **i05430973**

NOTE	REF NO	GRAPHIC REF	PART NUMBER	QTY	PART NAME 1 2 3 4 5 6 (PRODUCT LEVEL)	SEE PAGE
	1	1	**7J-3554**	3	COVER	
	2	1	**217-7024**	1	GASKET	
M	3	1	**8T-4137**	8	BOLT (M10X1.5X20-MM)	
M	4	1	**8T-0293**	4	BOLT (M12X1.75X20-MM)	
	5	1	**396-5153**	1	GASKET	
	6	1	**2D-0094**	3	GASKET	
	7	1	**4S-5971**	1	COVER	
M	8	1	**6V-4249**	4	BOLT (M10X1.5X50-MM)	
	9	1	**7F-8268**	1	SEAL-O-RING	
	10	1	**396-5151**	1	COVER	

M - METRIC PART

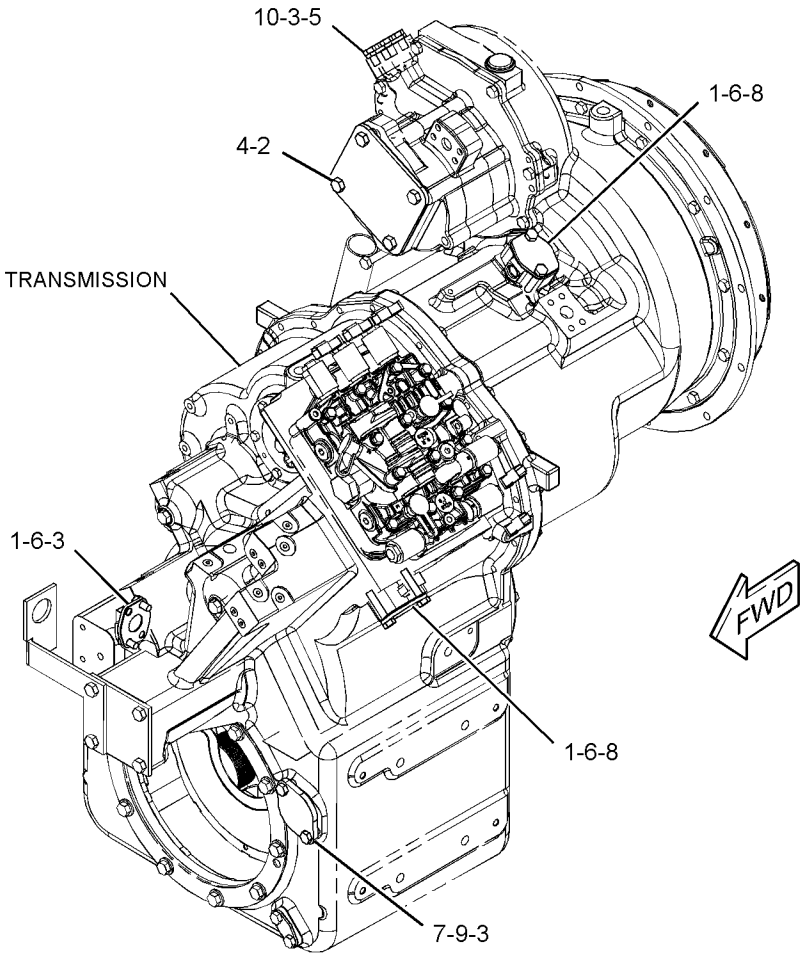

GRAPHIC #1 **<END>** g03435016

326-0532 DIFFERENTIAL & BEVEL GEAR GP

S/N: M5K1-UP

PART OF 326-2071, 418-4768 DIFFERENTIAL & BEVEL GEAR GP

AN ATTACHMENT

SMCS-3254, 3256, 3258 **i05833178**

NOTE	REF NO	GRAPHIC REF	PART NUMBER	QTY	PART NAME 1 2 3 4 5 6 (PRODUCT LEVEL)	SEE PAGE
	1	1	**217-3680**	4	WASHER-THRUST	
	2	1	**8R-1703**	4	PINION-DIFFERENTIAL BEVEL (10-TEETH)	
	3	1	**8R-1704**	2	GEAR-DIFFERENTIAL BEVEL (16-TEETH)	
	4	1	**162-8772**	2	WASHER-THRUST	
	5	1	**326-0535**	1	CASE AS-DIFFERENTIAL	
M		1	**8T-0207**	8	BOLT (M16X2X100-MM)	
		1	**9X-8268**	8	WASHER (17.5X30X3.5-MM THK)	
	6	1	**327-6903**	1	SPIDER	
	7	1	**135-2946**	4	BUSHING	

M - METRIC PART

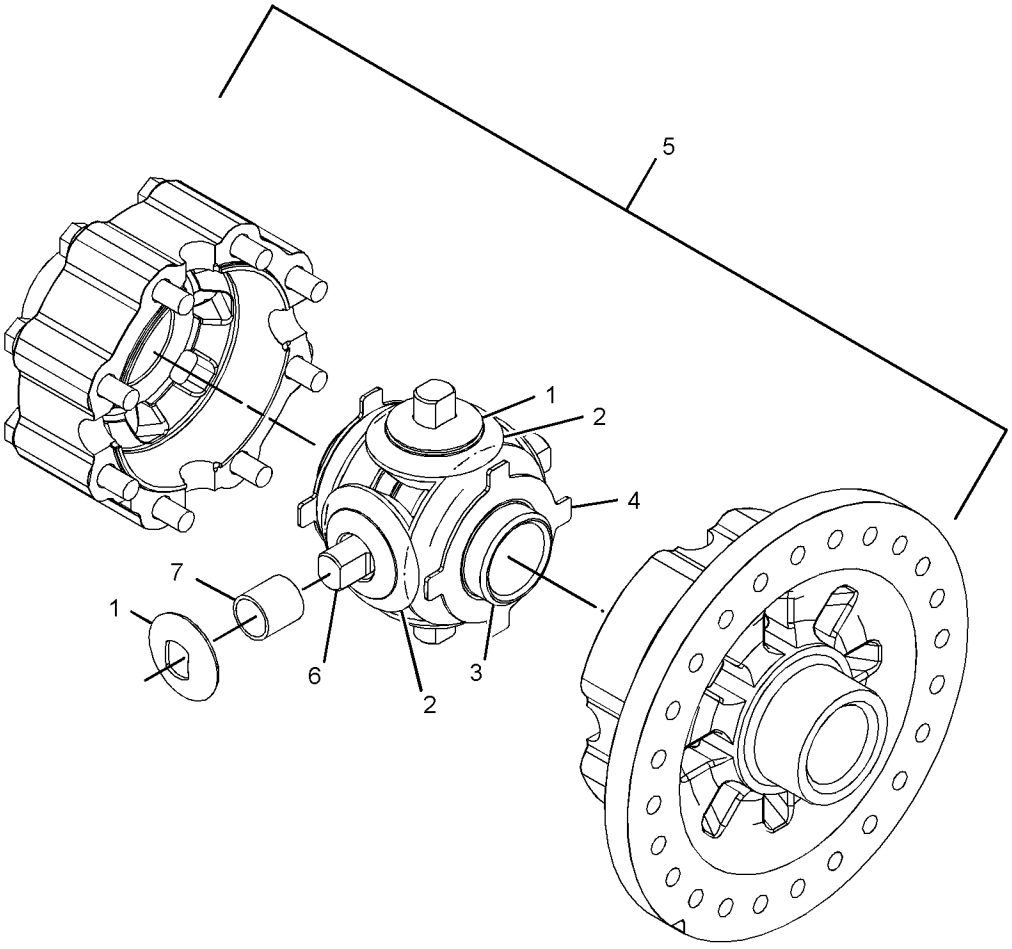

GRAPHIC #1 **<END>** g03420846

326-2071 DIFFERENTIAL & BEVEL GEAR GP—WITH HOUSING

S/N: M5K1-UP
PART OF 327-2256 AXLE AR-FIXED
AN ATTACHMENT

SMCS-3254, 3256, 3258 **i05714617**

NOTE	REF NO	GRAPHIC REF	PART NUMBER	QTY	PART NAME 1 2 3 4 5 6 (PRODUCT LEVEL)	SEE PAGE
	1	1	**1J-2860**	1	CUP-BEARING	
	2	1	**2D-9454**	1	CUP-BEARING (TAPERED ROLLER)	
	3	1	**2D-9455**	1	CONE-BEARING	
	4	1	**4H-6520**	1	SEAL-O-RING	
	5	1	**5H-3701**	2	SCREW-PURGE	
	6	1	**5P-4484**	1	PLUG-MAGNETIC (DIFFERENTIAL)	
	7	1	**6G-4703**	1	NUT (5 1/4-12-THD)	
	8	1	**6W-1638**	1	WASHER (71X95X5-MM THK)	
	9	1	**6Y-2540**	1	CUP-BEARING	
	10	1	**8T-0336**	1	FITTING-PRESSURE RELIEF	
	11	1	**226-2684**	1	SHIM PACK (INCLUDES 11-SHIMS)	
	12	1	**9V-2429**	1	RETAINER	
	13	1	**030-0061**	1	CONE-BEARING	
	14	1	**112-0782**	1	YOKE	
	15	1	**297-3211**	1	LOCK-BEARING	
Y	16	1	**326-0532**	1	DIFFERENTIAL & BEVEL GEAR GP	215
	17	1	**326-4354**	1	SHIM (INCLUDES 10-SHIMS)	
	18	1	**327-2226**	1	HOUSING AS	
M		1	**095-0673**	4	BOLT-SOCKET HEAD (M12X1.75X60-MM)	
	19	1	**327-2244**	1	HOUSING-PINION	
	20	1	**327-8556**	1	RETAINER-SEAL	
	21	1	**327-8692**	1	SET-BEVEL GEAR (40-TEETH)	
	22	1	**030-0060**	1	CUP-BEARING	
	23	1	**123-4003**	1	SEAL-LIP TYPE	
	24	1	**259-2627**	24	BOLT (M12X1.75X40-MM)	
	25	1	**1J-4757**	1	CONE-BEARING	
	26	1	**2H-3088**	1	SEAL-O-RING	
	27	1	**5P-8245**	24	WASHER-HARD (13.5X25.5X3-MM THK)	
	28	1	**5P-8247**	10	WASHER-HARD (17X32X3.5-MM THK)	
M	29	1	**6V-5686**	10	BOLT (M16X2X50-MM)	
M	30	1	**6V-7732**	6	BOLT (M10X1.5X25-MM)	
	31	1	**6Y-2539**	1	CONE-BEARING	
	32	1	**7M-8485**	1	SEAL-O-RING	
M	33	1	**8T-0372**	1	BOLT (M12X1.75X90-MM)	
	34	1	**9C-6041**	3	DOWEL	
	35	1	*326-3737*	1	PLUG AS	
		1	**326-3744**	1	PLUG	
		1	**8M-5248**	2	SEAL-O-RING	
	36	1	**9V-6563**	1	LOCKNUT (2.75X18-THD)	
	37	1	**9X-2027**	6	WASHER (11X18X2-MM THK)	
M	38	1	**9X-2616**	1	SCREW-SOCKET (M8X1.25X16-MM)	
BF			**8C-8422**		SEALANT	

B - USE AS REQUIRED
F - NOT SHOWN
M - METRIC PART
Y - SEPARATE ILLUSTRATION

326-2071 **DIFFERENTIAL & BEVEL GEAR GP (*contd.*)** **i05714617**

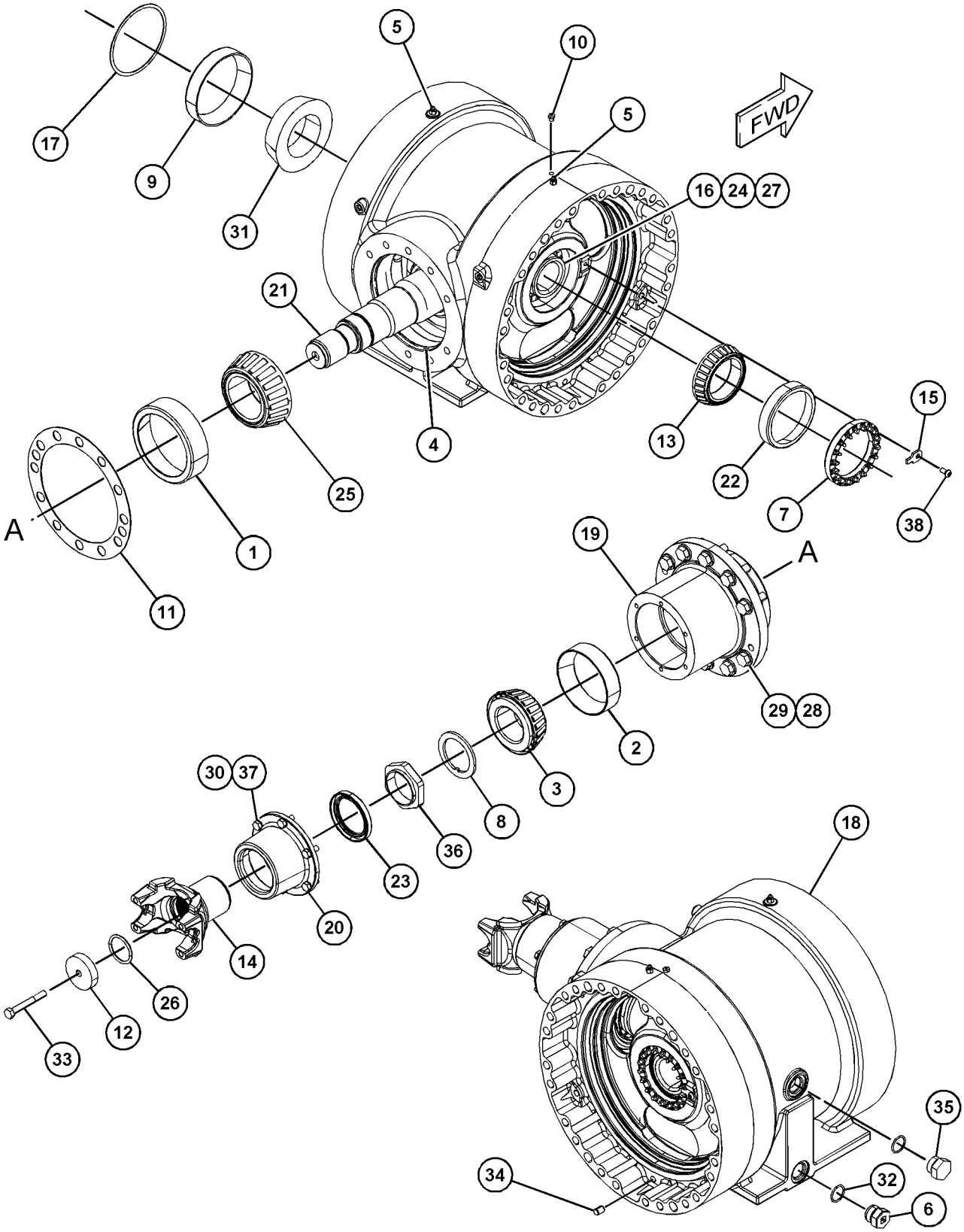

GRAPHIC #1 **<END>** g03666872

418-4768 DIFFERENTIAL & BEVEL GEAR GP—WITH HOUSING

S/N: M5K1-UP
PART OF 418-4767 AXLE AR-OSCILLATING
AN ATTACHMENT

SMCS-3254, 3256, 3258

i05405457

NOTE	REF NO	GRAPHIC REF	PART NUMBER	QTY	PART NAME 1 2 3 4 5 6 (PRODUCT LEVEL)	SEE PAGE
	1	1	**1J-2860**	1	CUP-BEARING	
	2	1	**2D-9454**	1	CUP-BEARING (TAPERED ROLLER)	
	3	1	**2D-9455**	1	CONE-BEARING	
	4	1	**4H-6520**	1	SEAL-O-RING	
	5	1	**5H-3701**	2	SCREW-PURGE	
	6	1	**5P-4484**	1	PLUG-MAGNETIC (DIFFERENTIAL)	
	7	1	**6G-4703**	1	NUT (5 1/4-12-THD)	
	8	1	**6W-1638**	1	WASHER (71X95X5-MM THK)	
	9	1	**6Y-2540**	1	CUP-BEARING	
	10	1	**8T-0336**	1	FITTING-PRESSURE RELIEF	
	11	1	**226-2684**	1	SHIM PACK (INCLUDES 11-SHIMS)	
	12	1	**030-0061**	1	CONE-BEARING	
	13	1	**156-1151**	1	YOKE AS	
		1	**7V-3791**	1	GUARD	
		1	**156-1153**	1	KIT-SERVICE	
					(INCLUDES CUP, SEAL, & RING)	
	14	1	**297-3211**	1	LOCK-BEARING	
Y	15	1	**326-0532**	1	DIFFERENTIAL & BEVEL GEAR GP	215
	16	1	**326-4354**	1	SHIM	
	17	1	**327-2246**	1	HOUSING AS	
M		1	**095-0673**	4	BOLT-SOCKET HEAD (M12X1.75X60-MM)	
	18	1	**327-2251**	1	HOUSING-PINION	
	19	1	**327-8556**	1	RETAINER-SEAL	
	20	1	**376-6533**	1	SET-BEVEL GEAR (40 TEETH)	
	21	1	**394-1681**	1	TRUNNION	
	22	1	**030-0060**	1	CUP-BEARING	
	23	1	**123-4003**	1	SEAL-LIP TYPE	
	24	1	**259-2627**	24	BOLT (M12X1.75X40-MM)	
	25	1	**1J-4757**	1	CONE-BEARING	
	26	1	**5P-8245**	24	WASHER-HARD (13.5X25.5X3-MM THK)	
	27	1	**5P-8247**	24	WASHER-HARD (17X32X3.5-MM THK)	
M	28	1	**6V-5686**	24	BOLT (M16X2X50-MM)	
M	29	1	**6V-7732**	6	BOLT (M10X1.5X25-MM)	
	30	1	**6Y-2539**	1	CONE-BEARING	
	31	1	**7M-8485**	1	SEAL-O-RING	
	32	1	**9C-6041**	3	DOWEL	
	33	1	**9V-6563**	1	LOCKNUT (2.75X18-THD)	
	34	1	**9X-2027**	6	WASHER (11X18X2-MM THK)	
M	35	1	**9X-2616**	1	SCREW-SOCKET (M8X1.25X16-MM)	
BF			**8C-8422**		SEALANT	

B - USE AS REQUIRED
F - NOT SHOWN
M - METRIC PART
Y - SEPARATE ILLUSTRATION

418-4768 **DIFFERENTIAL & BEVEL GEAR GP (*contd.*)** **i05405457**

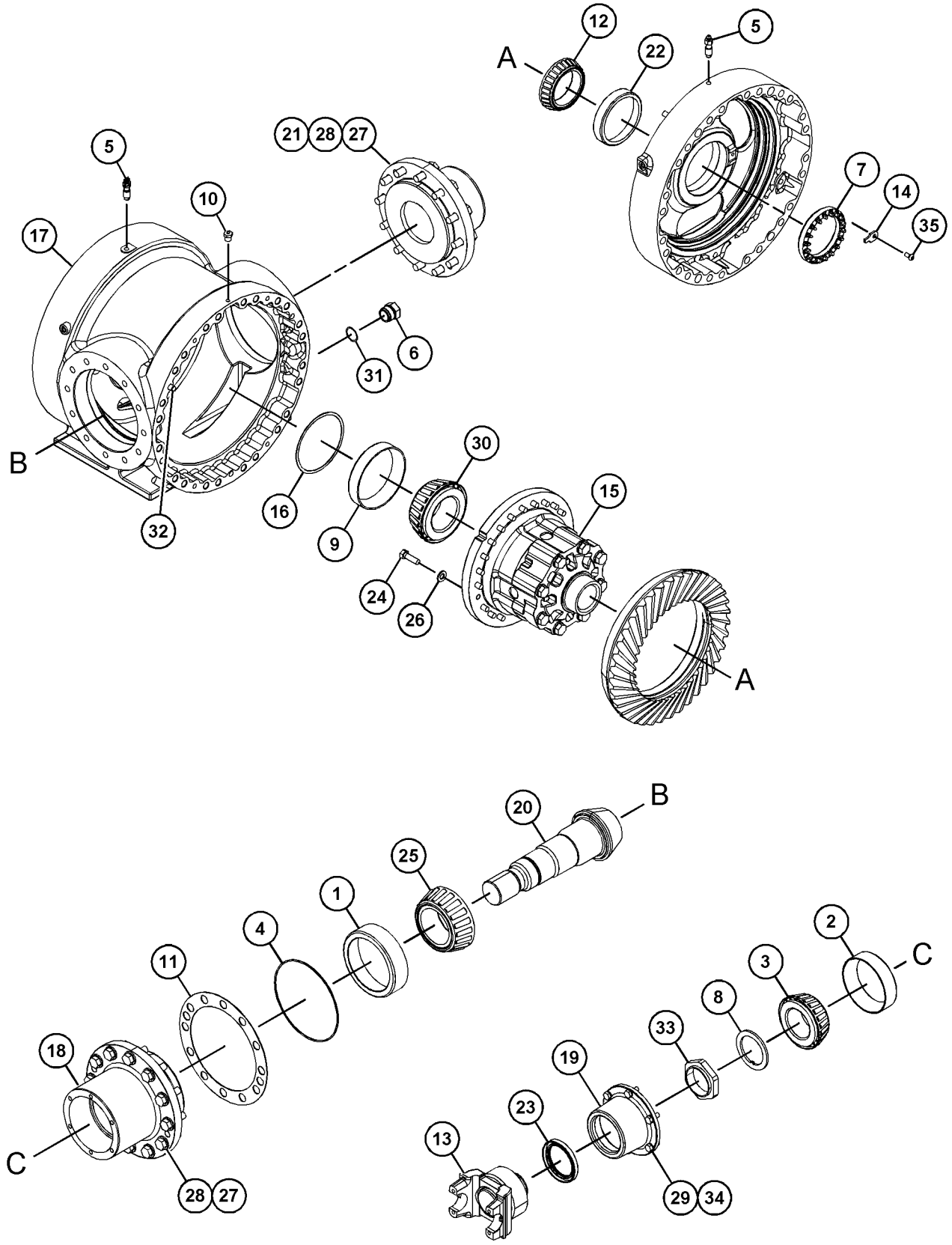

GRAPHIC #1 **<END>** g03525496

418-4769 DIFFERENTIAL & BEVEL GEAR GP—WITH HOUSING

S/N: M5K1-UP
PART OF 394-1675 AXLE AR-FIXED
AN ATTACHMENT

SMCS-3254, 3256, 3258

i05403150

NOTE	REF NO	GRAPHIC REF	PART NUMBER	QTY	PART NAME 1 2 3 4 5 6 (PRODUCT LEVEL)	SEE PAGE
	1	1	**1J-2860**	1	CUP-BEARING	
	2	1	**2D-9454**	1	CUP-BEARING (TAPERED ROLLER)	
	3	1	**2D-9455**	1	CONE-BEARING	
	4	1	**4H-6520**	1	SEAL-O-RING	
	5	1	**5H-3701**	2	SCREW-PURGE	
	6	1	**5P-4484**	1	PLUG-MAGNETIC (DIFFERENTIAL)	
	7	1	**6G-4703**	1	NUT (5 1/4-12-THD)	
	8	1	**6W-1638**	1	WASHER (71X95X5-MM THK)	
	9	1	**6Y-2540**	1	CUP-BEARING	
	10	1	**8T-0336**	1	FITTING-PRESSURE RELIEF	
	11	1	**226-2684**	1	SHIM PACK (INCLUDES 11-SHIMS)	
	12	1	**9V-2429**	1	RETAINER	
	13	1	**030-0061**	1	CONE-BEARING	
	14	1	**112-0782**	1	YOKE	
	15	1	**297-3211**	1	LOCK-BEARING	
	16	1	*326-3737*	1	PLUG AS	
		1	**8M-5248**	1	SEAL-O-RING	
		1	**326-3744**	1	PLUG	
	17	1	**326-4354**	1	SHIM	
	18	1	**327-2226**	1	HOUSING AS	
M		1	**095-0673**	4	BOLT-SOCKET HEAD (M12X1.75X60-MM)	
	19	1	**327-2244**	1	HOUSING-PINION	
	20	1	**327-8556**	1	RETAINER-SEAL	
	21	1	**327-8692**	1	SET-BEVEL GEAR	
	22	1	**328-2266**	1	DIFFERENTIAL GP-LIMITED SLIP	
	23	1	**030-0060**	1	CUP-BEARING	
	24	1	**123-4003**	1	SEAL-LIP TYPE	
	25	1	**259-2627**	24	BOLT (M12X1.75X40-MM)	
	26	1	**1J-4757**	1	CONE-BEARING	
	27	1	**2H-3088**	1	SEAL-O-RING	
	28	1	**5P-8245**	24	WASHER-HARD (13.5X25.5X3-MM THK)	
	29	1	**5P-8247**	10	WASHER-HARD (17X32X3.5-MM THK)	
M	30	1	**6V-5686**	10	BOLT (M16X2X50-MM)	
M	31	1	**6V-7732**	6	BOLT (M10X1.5X25-MM)	
	32	1	**6Y-2539**	1	CONE-BEARING	
	33	1	**7M-8485**	1	SEAL-O-RING	
M	34	1	**8T-0372**	1	BOLT (M12X1.75X90-MM)	
	35	1	**9C-6041**	3	DOWEL	
	36	1	**9V-6563**	1	LOCKNUT (2.75X18-THD)	
	37	1	**9X-2027**	6	WASHER (11X18X2-MM THK)	
M	38	1	**9X-2616**	1	SCREW-SOCKET (M8X1.25X16-MM)	
BF		1	**8C-8422**		SEALANT	

B - USE AS REQUIRED
F - NOT SHOWN
M - METRIC PART

418-4769 **DIFFERENTIAL & BEVEL GEAR GP (*contd.*)** **i05403150**

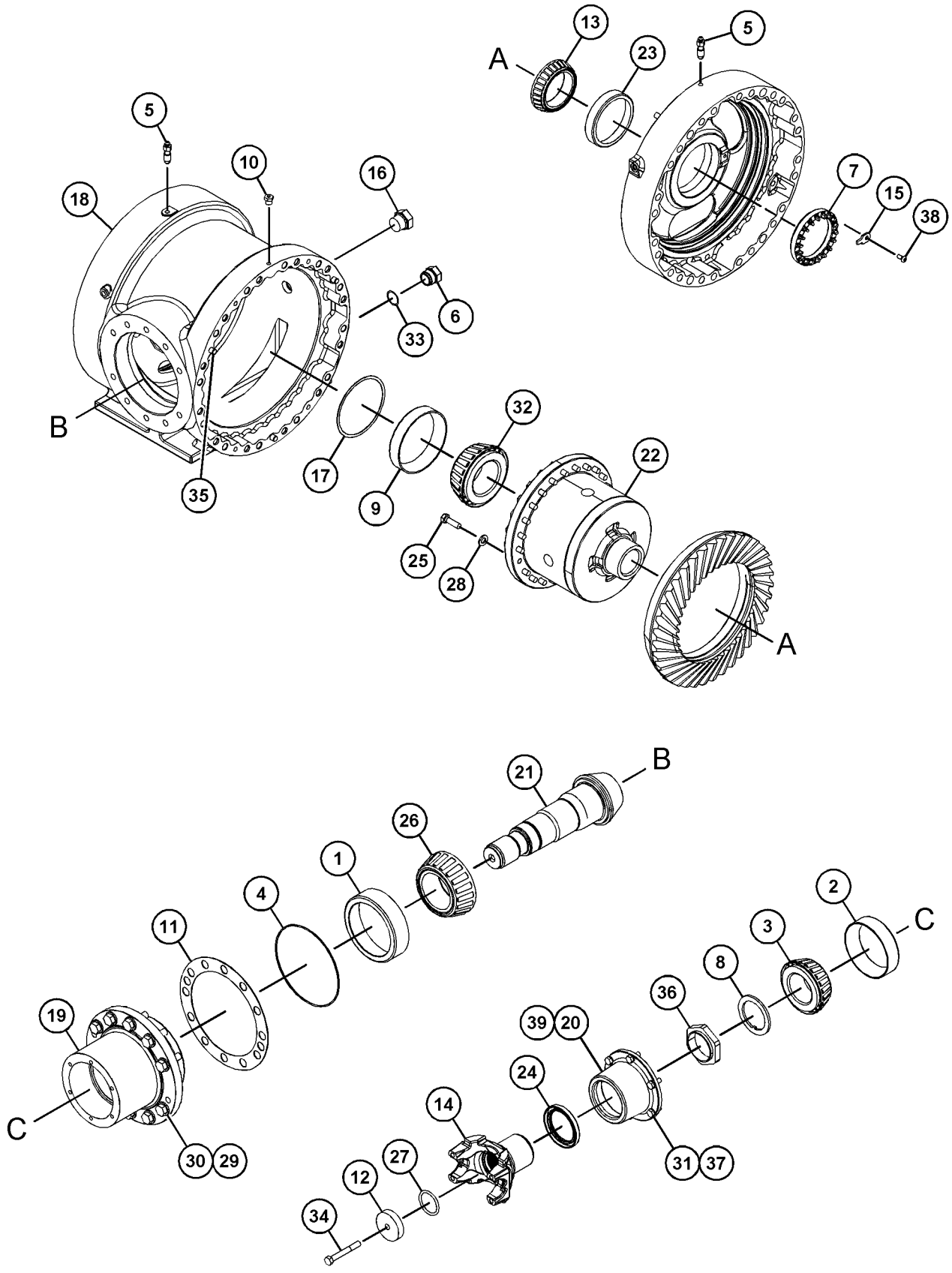

GRAPHIC #1 **<END>** g03429894

418-4770 DIFFERENTIAL & BEVEL GEAR GP—WITH HOUSING

S/N: M5K1-UP
PART OF 394-1676 AXLE AR-OSCILLATING
AN ATTACHMENT

SMCS-3254, 3256, 3258 **i05404458**

NOTE	REF NO	GRAPHIC REF	PART NUMBER	QTY	PART NAME 1 2 3 4 5 6 (PRODUCT LEVEL)	SEE PAGE
	1	1	**1J-2860**	1	CUP-BEARING	
	2	1	**2D-9454**	1	CUP-BEARING (TAPERED ROLLER)	
	3	1	**2D-9455**	1	CONE-BEARING	
	4	1	**4H-6520**	1	SEAL-O-RING	
	5	1	**5H-3701**	2	SCREW-PURGE	
	6	1	**5P-4484**	1	PLUG-MAGNETIC (DIFFERENTIAL)	
	7	1	**6G-4703**	1	NUT (5 1/4-12-THD)	
	8	1	**6W-1638**	1	WASHER (71X95X5-MM THK)	
	9	1	**6Y-2540**	1	CUP-BEARING	
	10	1	**8T-0336**	1	FITTING-PRESSURE RELIEF	
	11	1	**226-2684**	1	SHIM PACK (INCLUDES 11-SHIMS)	
	12	1	**030-0061**	1	CONE-BEARING	
	13	1	**156-1151**	1	YOKE AS	
		1	**7V-3791**	1	GUARD	
		1	**156-1153**	1	KIT-SERVICE (YOKE)	
					(KIT INCLUDES CAP, SEAL & RING)	
	14	1	**297-3211**	1	LOCK-BEARING	
	15	1	**326-4354**	1	SHIM (INCLUDES 10-SHIMS)	
	16	1	**327-2246**	1	HOUSING AS	
M		1	**095-0673**	4	BOLT-SOCKET HEAD (M12X1.75X60-MM)	
	17	1	**327-2251**	1	HOUSING-PINION	
	18	1	**327-8556**	1	RETAINER-SEAL	
	19	1	**328-2266**	1	DIFFERENTIAL GP-LIMITED SLIP	
	20	1	**376-6533**	1	SET-BEVEL GEAR (40 TEETH)	
	21	1	**394-1681**	1	TRUNNION	
	22	1	**030-0060**	1	CUP-BEARING	
	23	1	**123-4003**	1	SEAL-LIP TYPE	
	24	1	**259-2627**	24	BOLT (M12X1.75X40-MM)	
	25	1	**1J-4757**	1	CONE-BEARING	
	26	1	**5P-8245**	24	WASHER-HARD (13.5X25.5X3-MM THK)	
	27	1	**5P-8247**	24	WASHER-HARD (17X32X3.5-MM THK)	
M	28	1	**6V-5686**	24	BOLT (M16X2X50-MM)	
M	29	1	**6V-7732**	6	BOLT (M10X1.5X25-MM)	
	30	1	**6Y-2539**	1	CONE-BEARING	
	31	1	**7M-8485**	1	SEAL-O-RING	
	32	1	**9C-6041**	3	DOWEL	
	33	1	**9V-6563**	1	LOCKNUT (2.75X18-THD)	
	34	1	**9X-2027**	6	WASHER (11X18X2-MM THK)	
M	35	1	**9X-2616**	1	SCREW-SOCKET (M8X1.25X16-MM)	
BF			**8C-8422**		SEALANT	

B - USE AS REQUIRED
F - NOT SHOWN
M - METRIC PART

418-4770 **DIFFERENTIAL & BEVEL GEAR GP (*contd.*)** **i05404458**

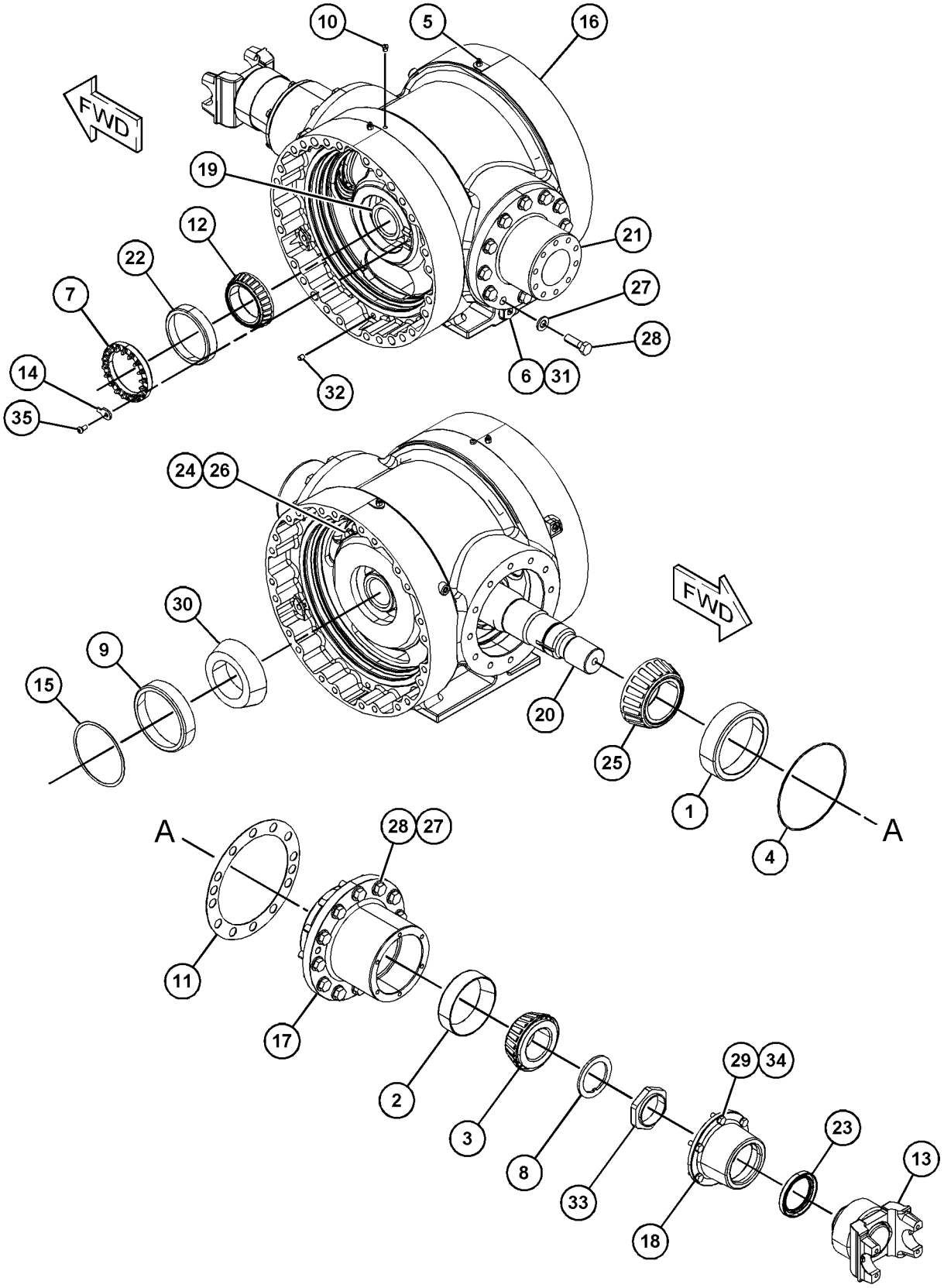

GRAPHIC #1 **<END>** g03560201

340-8734 DRIVE GP-FLEXIBLE COUPLING

S/N: S4X1-UP

PART OF 396-5175 TRANSMISSION AR

SMCS-3252 **i05457670**

NOTE	REF NO	GRAPHIC REF	PART NUMBER	QTY	PART NAME 1 2 3 4 5 6 (PRODUCT LEVEL)	SEE PAGE
	1	1	**333-5931**	2	PLATE	
	2	1	**340-0864**	1	PLATE AS	
	3	1	**340-8736**	1	SPACER (63X86X33.4-MM THK)	
M	4	1	**8T-4139**	8	BOLT (M12X1.75X30-MM)	

M - METRIC PART

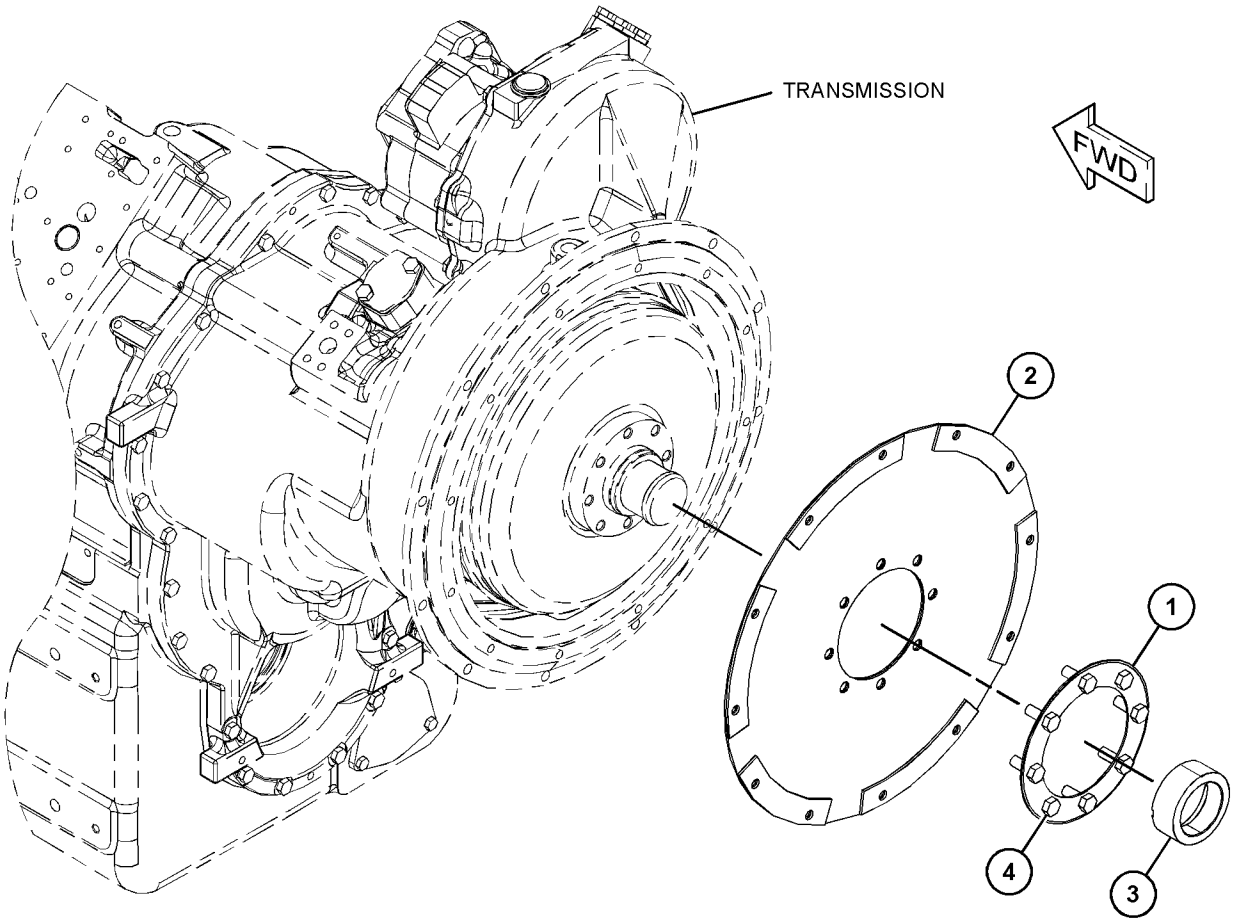

GRAPHIC #1 **<END>** g03523761

434-2641 DRIVE GP-POWER TAKE-OFF

S/N: S4X1-UP

PART OF 396-5175 TRANSMISSION AR

SMCS-3107 **i05430976**

NOTE	REF NO	GRAPHIC REF	PART NUMBER	QTY	PART NAME 1 2 3 4 5 6 (PRODUCT LEVEL)	SEE PAGE
	1	1	**193-2200**	1	SEAL-LIP TYPE	
	2	1	**326-0645**	1	SHAFT-OUTPUT	
	3	1	**326-0648**	1	GEAR-OUTPUT	
	4	1	**326-0651**	1	CAGE-BEARING	
	5	1	**326-0652**	1	COUPLING	
	6	1	**326-3710**	1	COUPLING	
Y	7	1	**387-6037**	1	BRAKE GP-PARKING	345
	8	1	**2H-3088**	2	SEAL-O-RING	
	9	1	**2P-8986**	1	CUP-BEARING	
	10	1	**2P-8987**	2	CONE-BEARING	
	11	1	**4S-5824**	2	RETAINER	
	12	1	**5P-8245**	8	WASHER-HARD (13.5X25.5X3-MM THK)	
M	13	1	**6V-3668**	8	BOLT (M12X1.75X30-MM)	
M	14	1	**6V-5696**	2	BOLT (M12X1.75X80-MM)	
	15	1	**6V-7991**	1	SEAL-O-RING	
M	16	1	**6V-8201**	4	BOLT-SOCKET HEAD (M16X2X45-MM)	
	17	1	**8E-9550**	1	SPACER (61X75X9.85-MM THK)	
	18	1	**9X-8268**	4	WASHER (17.5X30X3.5-MM THK)	

M - METRIC PART
Y - SEPARATE ILLUSTRATION

434-2641 **DRIVE GP-POWER TAKE-OFF (*contd.*)** **i05430976**

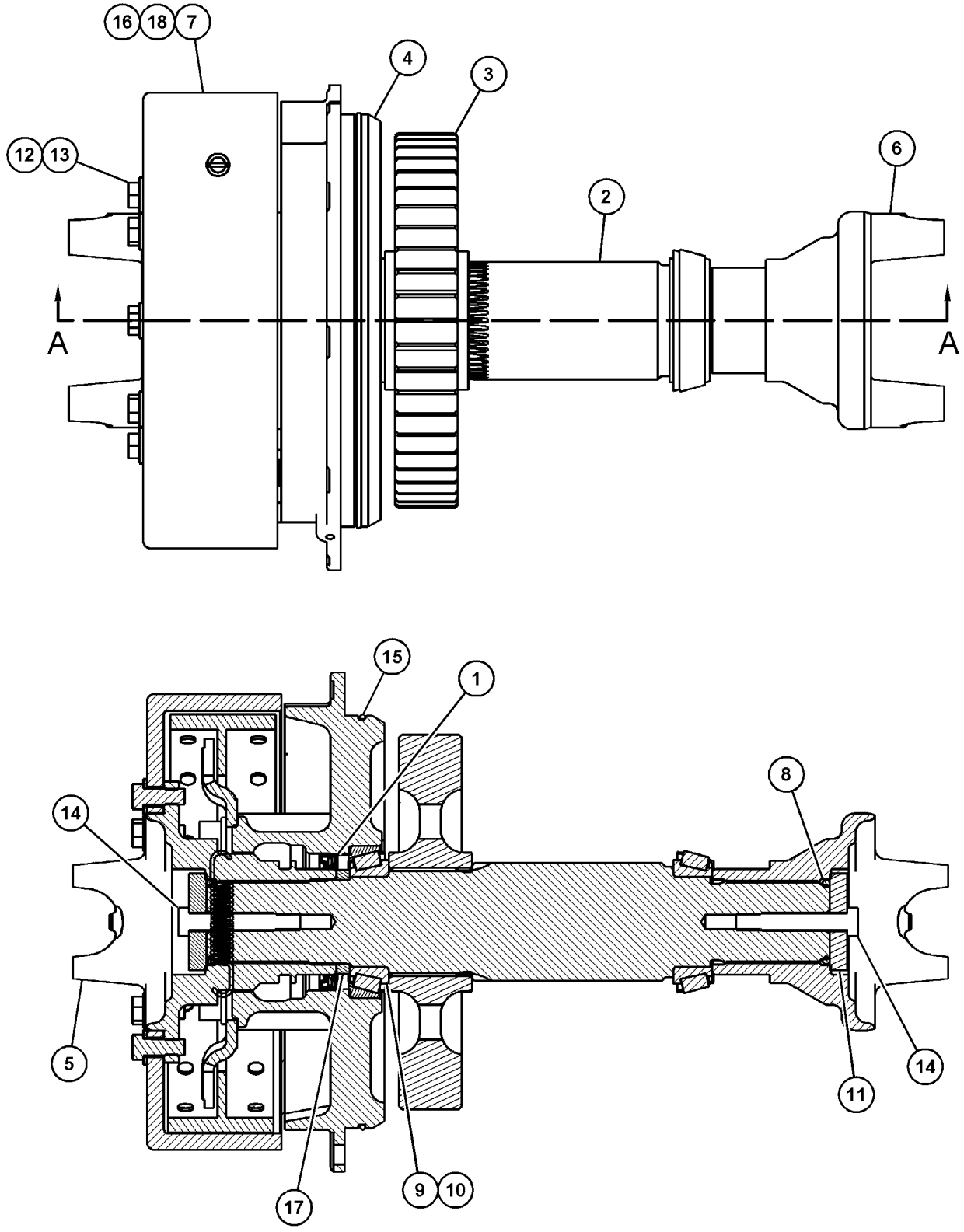

SECTION A-A

GRAPHIC #1 **<END>** g03526184

331-3418 DRIVE GP-PUMP–TRANSMISSION

S/N: S4X1-UP

PART OF 396-5175 TRANSMISSION AR

SMCS-3108 **i05430870**

NOTE	REF NO	GRAPHIC REF	PART NUMBER	QTY	PART NAME 1 2 3 4 5 6 (PRODUCT LEVEL)	SEE PAGE
	1	1	**326-0757**	1	SUPPORT AS	
	2	1	**329-5555**	1	SUPPORT-STATOR	
	3	1	**331-3321**	1	GEAR-DRIVE	
	4	1	**091-5942**	1	RING-SNAP	
	5	1	**124-3307**	1	BALL BEARING	
	6	1	**133-2905**	1	RING-RETAINING	
M	7	1	**209-8296**	4	BOLT-SOCKET HEAD (M8X1.25X25-MM)	

M - METRIC PART

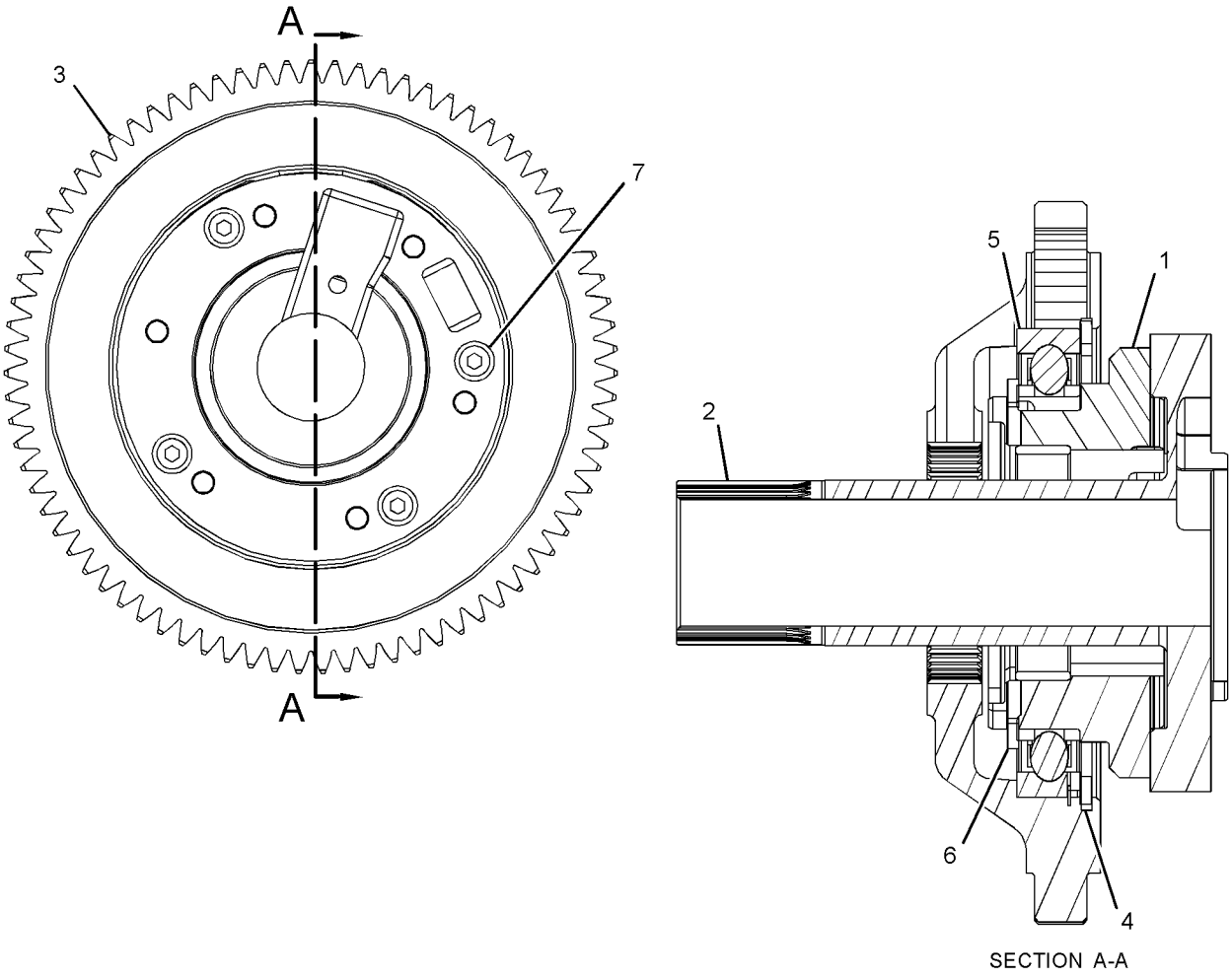

SECTION A-A

GRAPHIC #1 **<END>** g03523038

387-6040 DRIVE GP-TRANSFER

S/N: M5K1-UP

PART OF 392-3894 SHAFT GP-DRIVE

SMCS-3159, 4350, 4355 **i05819914**

NOTE	REF NO	GRAPHIC REF	PART NUMBER	QTY	PART NAME 1 2 3 4 5 6 (PRODUCT LEVEL)	SEE PAGE
	1	1	**5W-2817**	1	FITTING-GREASE	
	2	1	**450-4809**	2	BUSHING	
	3	1	**450-4810**	2	SEAL	
	4	1	**099-5217**	2	PIN-COTTER	
M	5	1	**6V-1820**	12	BOLT (M10X1.5X30-MM)	
	6	1	**8T-4121**	12	WASHER-HARD (11X21X2.5-MM THK)	
					PARTS SHOWN IN GRAPHIC(S) WITHOUT A REFERENCE NUMBER ARE NOT SERVICED SEPARATELY	

M - METRIC PART

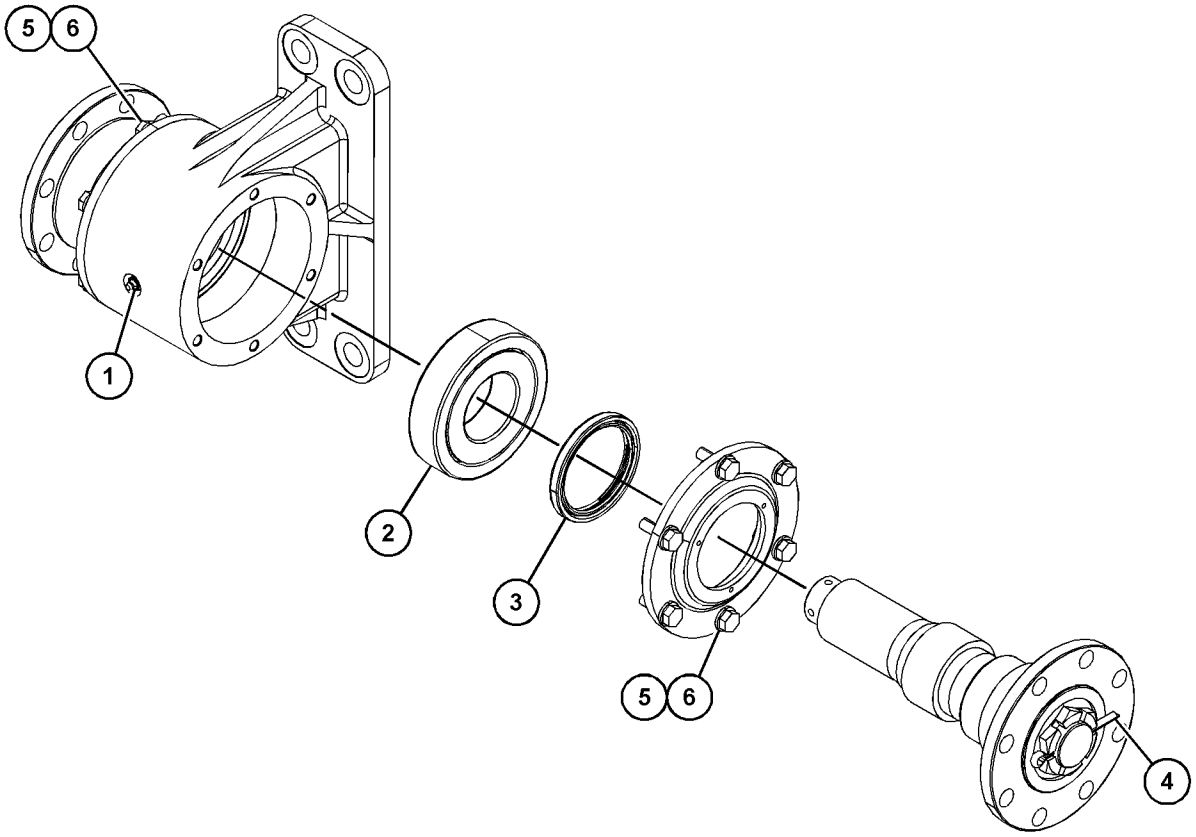

GRAPHIC #1 **<END>** g03689872

327-2235 FASTENER GP-FIXED AXLE

S/N: M5K1-UP

PART OF 327-2256, 394-1675 AXLE AR-FIXED, 394-1676, 418-4767 AXLE AR-OSCILLATING AN ATTACHMENT

SMCS-3013 **i05404139**

NOTE	REF NO	GRAPHIC REF	PART NUMBER	QTY	PART NAME 1 2 3 4 5 6 (PRODUCT LEVEL)	SEE PAGE
	1	1	**5P-8247**	48	WASHER-HARD (17X32X3.5-MM THK)	
M	2	1	**6C-5303**	24	BOLT (M16X2X200-MM)	
M	3	1	**8T-0649**	24	BOLT (M16X2X110-MM)	
BF			**8C-8422**		SEALANT	

B - USE AS REQUIRED
F - NOT SHOWN
M - METRIC PART

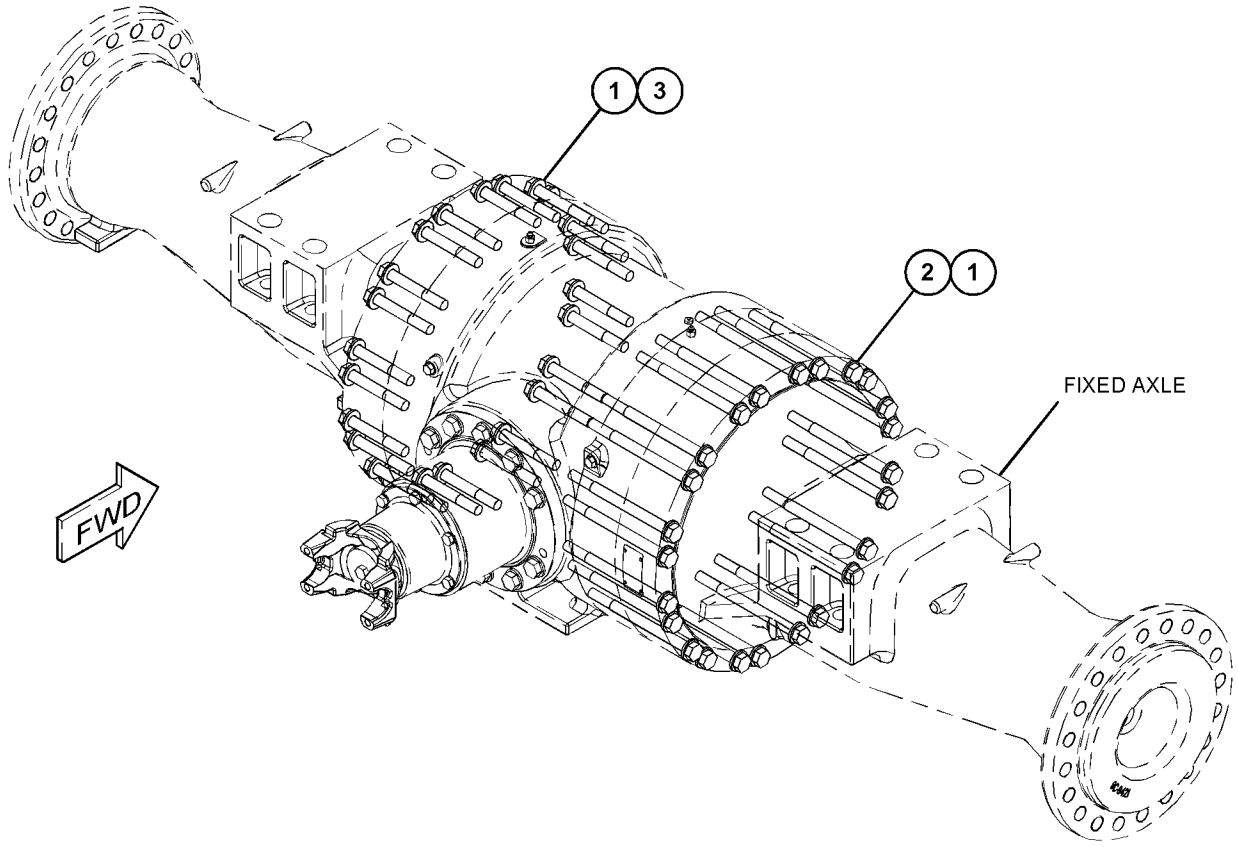

GRAPHIC #1 **<END>** g03428207

330-5681 FILLER GP-POWER TRAIN OIL

S/N: M5K1-UP
PART OF 418-4767 AXLE AR-OSCILLATING
AN ATTACHMENT

SMCS-3005, 3081

i05593690

NOTE	REF NO	GRAPHIC REF	PART NUMBER	QTY	PART NAME 1 2 3 4 5 6 (PRODUCT LEVEL)	SEE PAGE
	1	1	**3B-0551**	1	PLUG-PIPE	
	2	1	**9C-6327**	1	GAUGE AS-OIL LEVEL (DIPSTICK) (AXLE)	

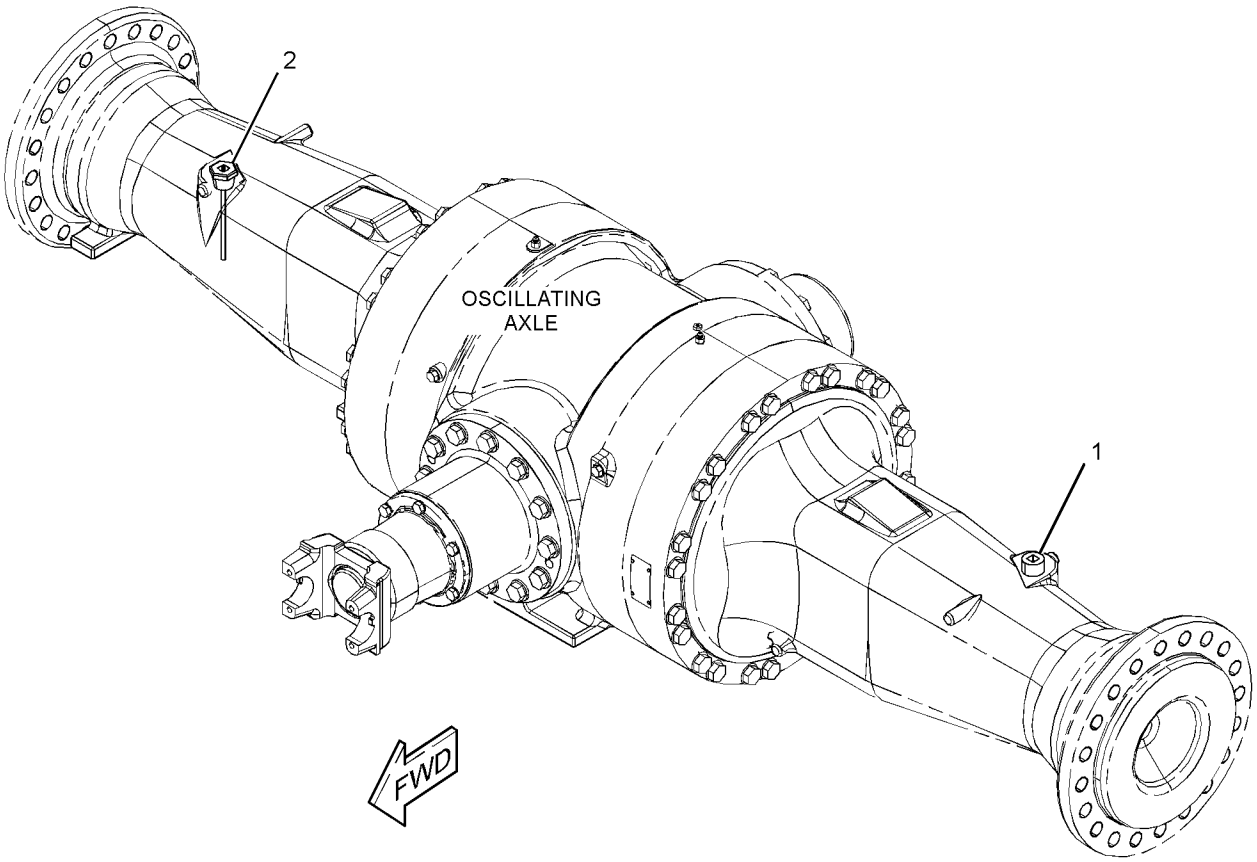

GRAPHIC #1

<END>

g03553476

417-7151 FILLER GP-POWER TRAIN OIL

S/N: M5K1-UP

PART OF 421-4449 TRANSMISSION AR

SMCS-3005, 3081

i05430817

NOTE	REF NO	GRAPHIC REF	PART NUMBER	QTY	PART NAME 1 2 3 4 5 6 (PRODUCT LEVEL)	SEE PAGE
	1	1	**246-2641**	1	PADLOCK GP	
		1	**5P-8500**	1	KEY	
	2	1	**6F-5188**	1	SEAL-RING	
	3	1	**6H-5139**	1	PLATE-PRESSURE	
	4	1	**7K-5634**	1	COVER	
	5	1	**9M-7394**	1	LEVER	
	6	1	**417-8029**	1	HOSE	
	7	1	**418-0758**	1	TUBE AS	
	8	1	**420-5114**	1	TUBE AS	
	9	1	**1L-5072**	1	DOWEL	
	10	1	**2J-7761**	1	RING-RETAINING	
	11	1	**4B-9782**	1	BALL	
	12	1	**5K-1568**	1	CAP-FILLER (POWER TRAIN)	
	13	1	**7F-8268**	1	SEAL-O-RING	
	14	1	**7S-8920**	2	CLIP (SLOT)	
	15	1	**7S-8921**	2	CLIP (TAB)	
	16	1	**8T-4121**	2	WASHER-HARD (11X21X2.5-MM THK)	
M	17	1	**8T-4137**	2	BOLT (M10X1.5X20-MM)	
	18	1	**9M-0164**	2	CLAMP-HOSE	

M - METRIC PART

417-7151 **FILLER GP-POWER TRAIN OIL (*contd.*)** **i05430817**

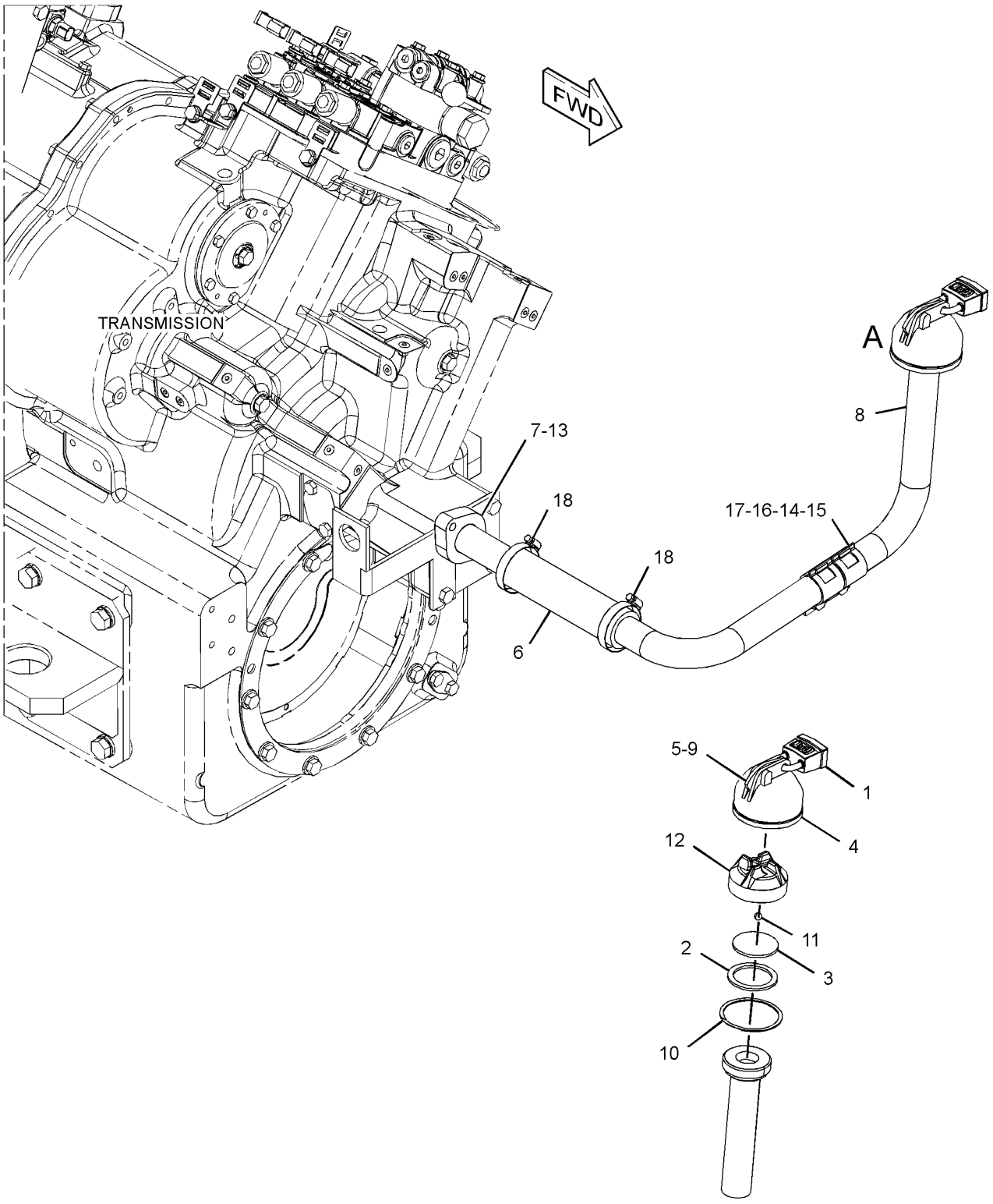

VIEW OF AREA A

GRAPHIC #1 **<END>** g03521997

337-0831 FILTER GP-OIL

S/N: M5K1-UP

PART OF 397-9706 LINES GP-POWER TRAIN COOLER

SMCS-3004, 3067 **i05792190**

NOTE	REF NO	GRAPHIC REF	PART NUMBER	QTY	PART NAME 1 2 3 4 5 6 (PRODUCT LEVEL)	SEE PAGE
	1	1	**6V-0852**	1	CAP-DUST	
	2	1	**6V-3965**	1	FITTING (QUICK DISCONNECT)	
	3	1	**8C-3446**	1	VALVE-FLUID SAMPLING	
	4	1	**8C-3447**	1	CAP-DUST	
	5	1	**214-7566**	1	SEAL-O-RING	
	6	1	**214-7568**	2	SEAL-O-RING	
	7	1	**227-6744**	1	SWITCH GP-PRESSURE (FILTER OIL)	
		1	**102-8802**	1	KIT-RECEPTACLE (2-PIN)	
					(INCLUDES RECEPTICAL AS & WEDGE)	
		1	**3J-1907**	1	SEAL-O-RING	
		1	**5F-9144**	1	SEAL-O-RING	
		1	**8T-8729**	2	PIN-CONNECTOR (16-GA TO 18-GA)	
E		1	**9X-1813**		SLEEVE (14-CM)	
	8	1	**283-0266**	1	SEAL-O-RING	
	9	1	**341-6643**	1	FILTER ELEMENT-OIL (ADVANCED EFFICIENCY)	

E - ORDER BY THE CENTIMETER

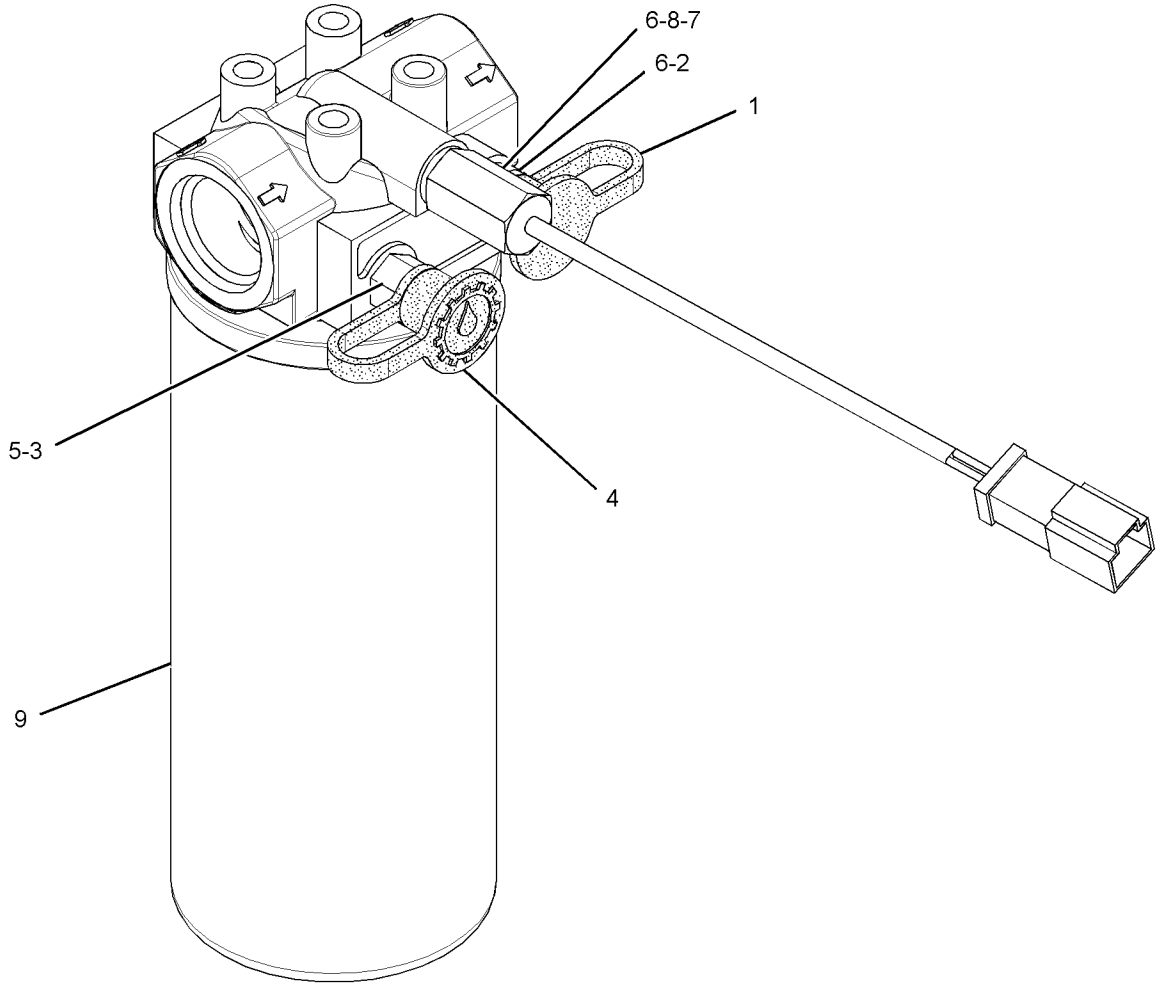

GRAPHIC #1 **<END>** g02132453

326-0616 GEAR & BEARING GP

S/N: S4X1-UP

PART OF 396-5175 TRANSMISSION AR

SMCS-7551, 7552

i05430828

NOTE	REF NO	GRAPHIC REF	PART NUMBER	QTY	PART NAME 1 2 3 4 5 6 (PRODUCT LEVEL)	SEE PAGE
	1	1	**6Y-8262**	1	CARRIER-RING	
	2	1	**9M-2008**	1	RING-METAL SEAL	
	3	1	**326-0639**	1	GEAR (58-TEETH)	
	4	1	**326-0641**	1	GEAR (45-TEETH)	
	5	1	**326-0643**	1	SHAFT	
	6	1	**7J-8210**	2	CONE-BEARING	

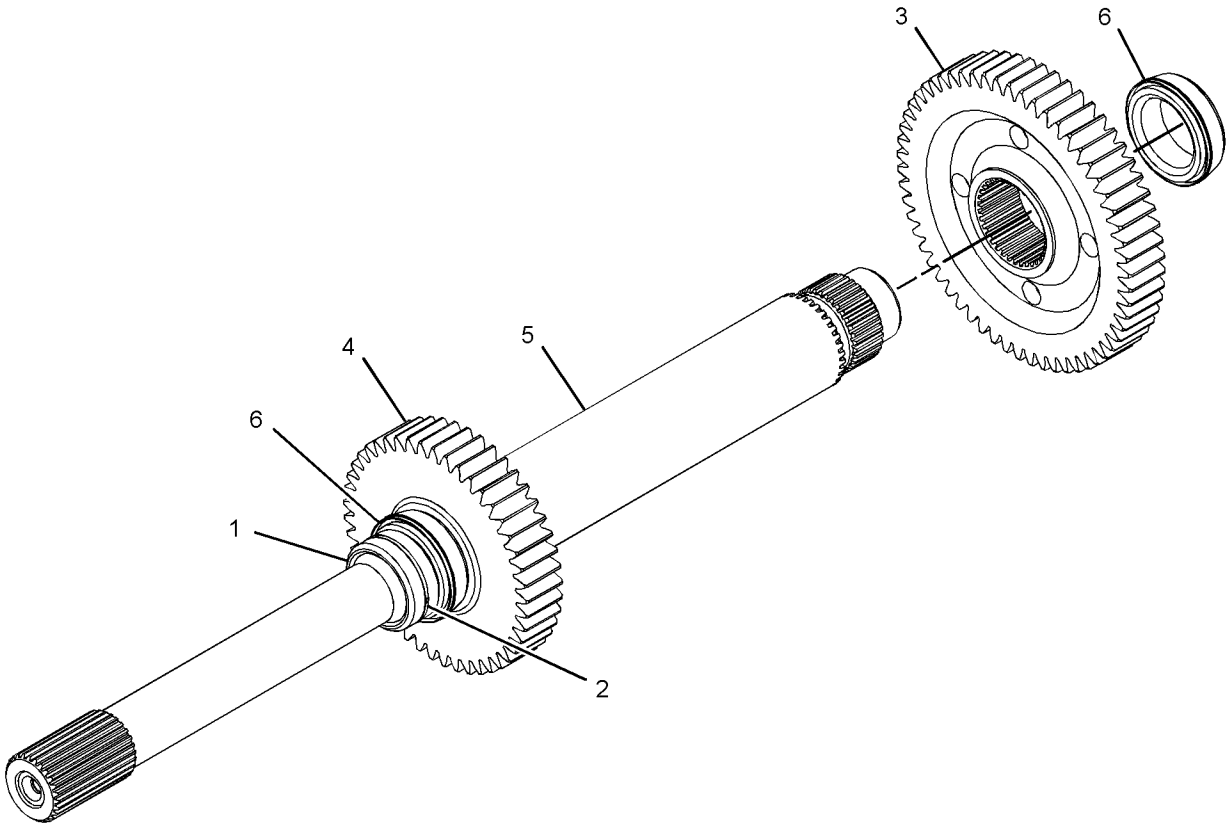

GRAPHIC #1

<END>

g03521396

397-9706 LINES GP-POWER TRAIN COOLER

S/N: M5K1-UP

PART OF 390-5959 HYDRAULIC AR

SMCS-1365, 1375, 3016 **i05715611**

NOTE	REF NO	GRAPHIC REF	PART NUMBER	QTY	PART NAME 1 2 3 4 5 6 (PRODUCT LEVEL)	SEE PAGE
Y	1	1	**337-0831**	1	FILTER GP-OIL (POWER TRAIN)	233
I	2	1	**397-9707**	1	HOSE AS	
I	3	1	**397-9709**	1	HOSE AS	
I	4	1	**397-9711**	1	HOSE AS	
I	5	1	**397-9713**	1	HOSE AS	
	6	1	**397-9716**	1	BRACKET AS	
M		1	**8T-4133**	1	NUT (M10X1.5-THD)	
	7	1	**397-9718**	1	BRACKET AS	
M		1	**8T-4133**	1	NUT (M10X1.5-THD)	
	8	1	**397-9724**	1	BRACKET AS	
M		1	**8T-4133**	1	NUT (M10X1.5-THD)	
	9	1	**397-9744**	1	ADAPTER AS	
I	10	1	**397-9749**	1	HOSE AS	
	11	1	*148-8347*	1	ELBOW AS	
		1	**6V-9007**	1	ADAPTER	
		1	**3D-2824**	1	SEAL-O-RING	
		1	**6V-9746**	1	SEAL-O-RING	
	12	1	*148-8357*	2	ELBOW AS	
					(EACH INCLUDES)	
		1	**6V-9008**	1	ELBOW	
		1	**5K-9090**	1	SEAL-O-RING	
		1	**7M-8485**	1	SEAL-O-RING	
	13	1	*148-8362*	1	ELBOW AS	
		1	**8T-6684**	1	ELBOW	
		1	**3D-2824**	1	SEAL-O-RING	
		1	**5K-9090**	1	SEAL-O-RING	
	14	1	*148-8392*	1	ELBOW AS	
		1	**6V-9853**	1	ELBOW	
		1	**6V-9746**	1	SEAL-O-RING	
	15	1	*155-2026*	1	UNION AS	
		1	**6V-8998**	1	UNION	
		1	**5K-9090**	2	SEAL-O-RING	
	16	1	*177-1061*	1	ELBOW AS	
		1	**142-0038**	1	ELBOW	
		1	**5K-9090**	1	SEAL-O-RING	
	17	1	**1P-4577**	6	FLANGE-HALF	
	18	1	**4D-7388**	6	CLIP	
	19	1	**4J-0520**	3	SEAL-O-RING	
	20	1	**5M-2894**	31	WASHER-HARD (10.2X18.5X2.5-MM THK)	
	21	1	**5P-8245**	1	WASHER-HARD (13.5X25.5X3-MM THK)	
	22	1	**6V-1889**	2	CLIP	
	23	1	**6V-9172**	1	NUT (1-7/16-12-THD)	
	24	1	**8C-3205**	2	FLANGE-HALF	
M	25	1	**8T-4136**	5	BOLT (M10X1.5X25-MM)	
M	26	1	**8T-4137**	10	BOLT (M10X1.5X20-MM)	
M	27	1	**8T-4192**	1	BOLT (M12X1.75X25-MM)	
M	28	1	**8T-4195**	8	BOLT (M10X1.5X30-MM)	
M	29	1	**8T-6466**	8	BOLT (M10X1.5X60-MM)	

I - REFER TO HYDRAULIC INFORMATION SYSTEM
M - METRIC PART
Y - SEPARATE ILLUSTRATION

397-9706 **LINES GP-POWER TRAIN COOLER (*contd.*)** **i05715611**

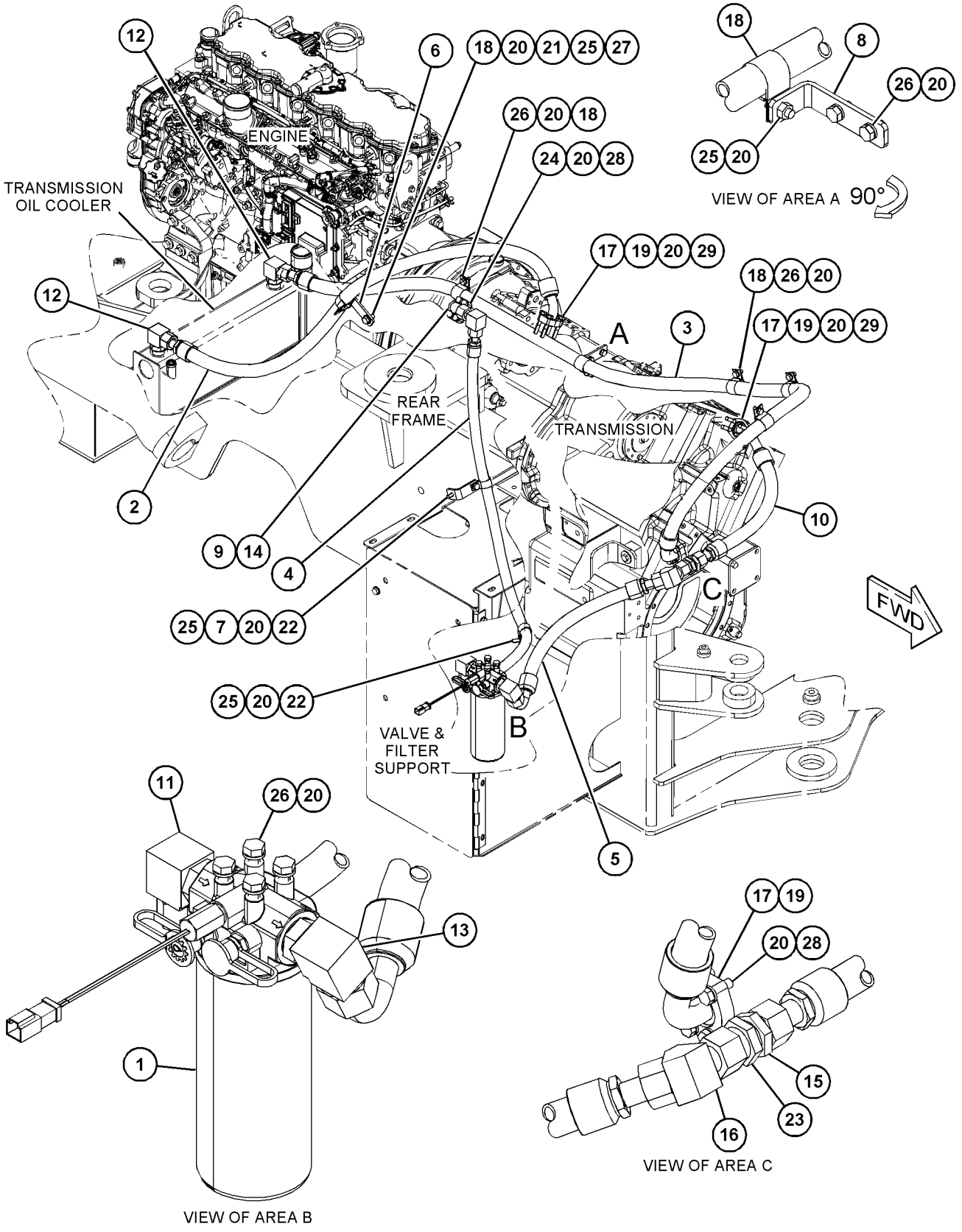

GRAPHIC #1 **<END>** g03689278

392-3895 MOUNTING GP-AXLE

S/N: M5K1-UP

PART OF 387-6025 POWER TRAIN AR

SMCS-3268, 3278 **i05677182**

NOTE	REF NO	GRAPHIC REF	PART NUMBER	QTY	PART NAME 1 2 3 4 5 6 (PRODUCT LEVEL)	SEE PAGE
M	1	1	**3E-9850**	8	BOLT (M30X3.5X220-MM)	
M	2	1	**7X-2585**	4	BOLT (M30X3.5X160-MM)	
M	3	1	**7X-2586**	4	BOLT (M30X3.5X180-MM)	
	4	1	**8T-0327**	16	WASHER-HARD (31X56X4-MM THK)	
M	5	1	**8T-5065**	8	LOCKNUT (M30X3.5-THD)	
	6	1	**446-6974**	8	PLATE	

M - METRIC PART

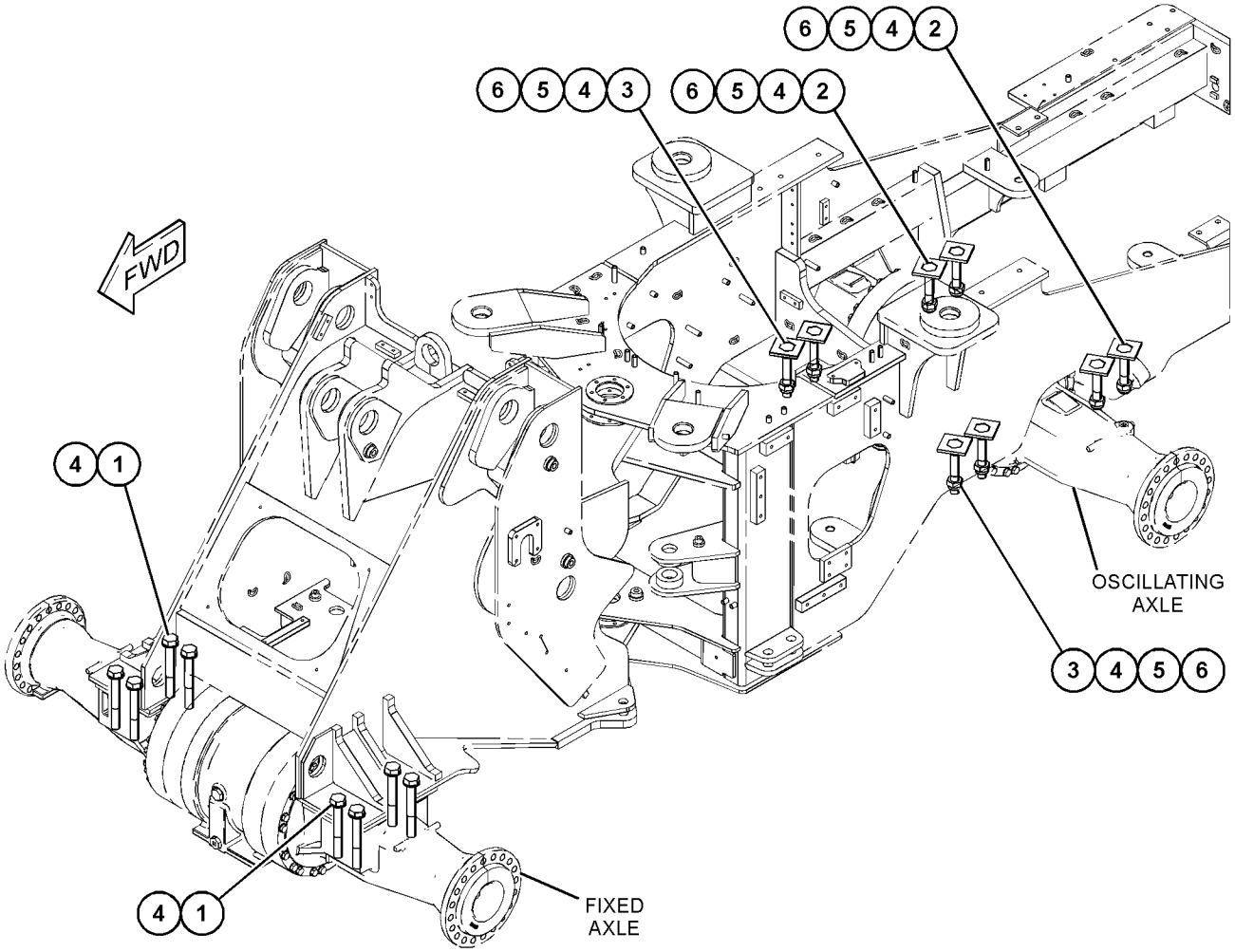

GRAPHIC #1 **<END>** g03699419

327-2234 PLANETARY GP-FINAL DRIVE

S/N: M5K1-UP

PART OF 327-2256, 394-1675 AXLE AR-FIXED, 394-1676, 418-4767 AXLE AR-OSCILLATING AN ATTACHMENT

SMCS-4050, 4084

i05403147

NOTE	REF NO	GRAPHIC REF	PART NUMBER	QTY	PART NAME 1 2 3 4 5 6 (PRODUCT LEVEL)	SEE PAGE
	1	1	**325-5440**	3	GEAR-PLANETARY (28-TEETH)	
	2	1	**327-2232**	1	CARRIER-PLANETARY	
	3	1	**327-2240**	6	WASHER-THRUST	
	4	1	**327-2241**	3	BUSHING	
	5	1	**327-2243**	3	SHAFT	
	6	1	**327-7185**	1	GEAR-SUN (15-TEETH)	
	7	1	**138-1645**	3	PIN-SPRING	
	8	1	**5P-3119**	1	RING-RETAINING	
	9	1	**8T-2925**	3	PIN-SPRING	

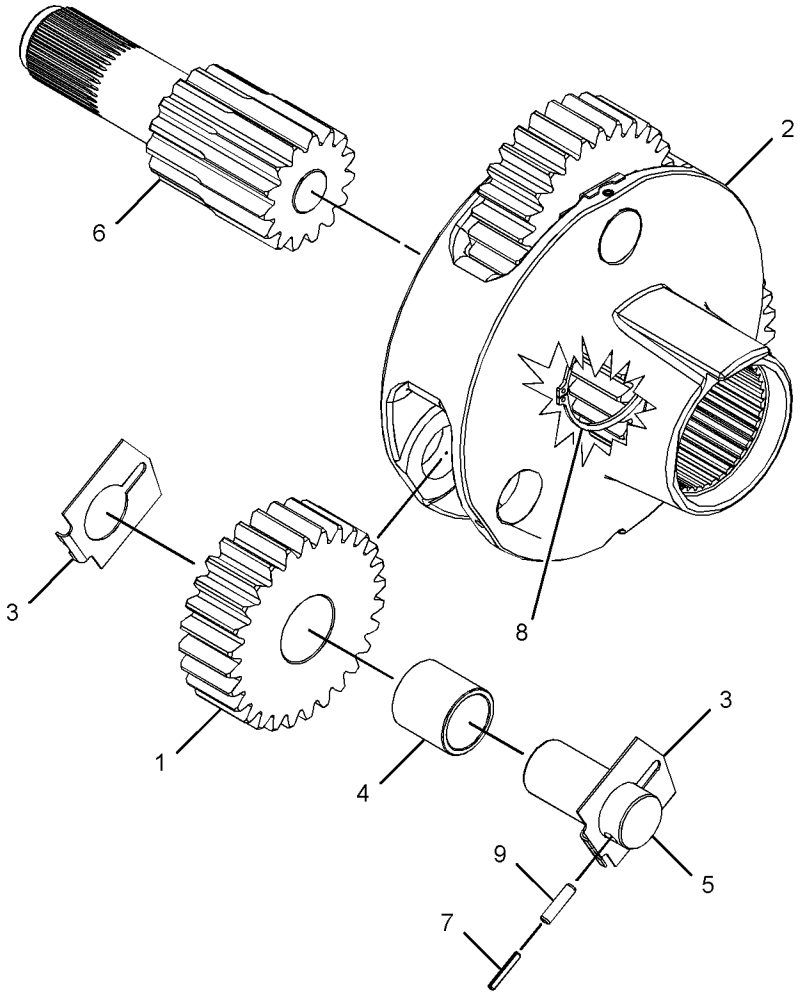

GRAPHIC #1 **<END>** g03429636

387-6025 POWER TRAIN AR

S/N: M5K1-UP

PART OF 387-6000 COMMON AR

SMCS-3000, 4000

i05430749

NOTE	PART NUMBER	QTY	PART NAME 1 2 3 4 5 6 (PRODUCT LEVEL)	SEE PAGE
Y	*392-3891*	1	ACTUATOR GP-PARKING BRAKE	343
Y	*392-3890*	1	CONTROL GP-SERVICE BRAKE	350
Y	*392-3895*	1	MOUNTING GP-AXLE	237
Y	*392-3894*	1	SHAFT GP-DRIVE	241
Y	*421-4449*	1	TRANSMISSION AR	252

Y - SEPARATE ILLUSTRATION

<END>

424-8654 PUMP GP-TRANSMISSION

S/N: S4X1-UP

PART OF 396-5175 TRANSMISSION AR

SMCS-3066 **i05830097**

NOTE	REF NO	GRAPHIC REF	PART NUMBER	QTY	PART NAME 1 2 3 4 5 6 (PRODUCT LEVEL)	SEE PAGE
	1	1	**326-2381**	1	GEAR	
	2	1	**326-2382**	1	SHAFT	
	3	1	**326-3738**	2	DOWEL	
	4	1	**423-9984**	1	PUMP GP-TRANSMISSION	
	5	1	**2D-5658**	1	BALL BEARING	
	6	1	**4K-4284**	1	RING-RETAINING	
M	7	1	**6V-4248**	7	BOLT (M10X1.5X25-MM)	
M	8	1	**8T-4137**	6	BOLT (M10X1.5X20-MM)	

M - METRIC PART

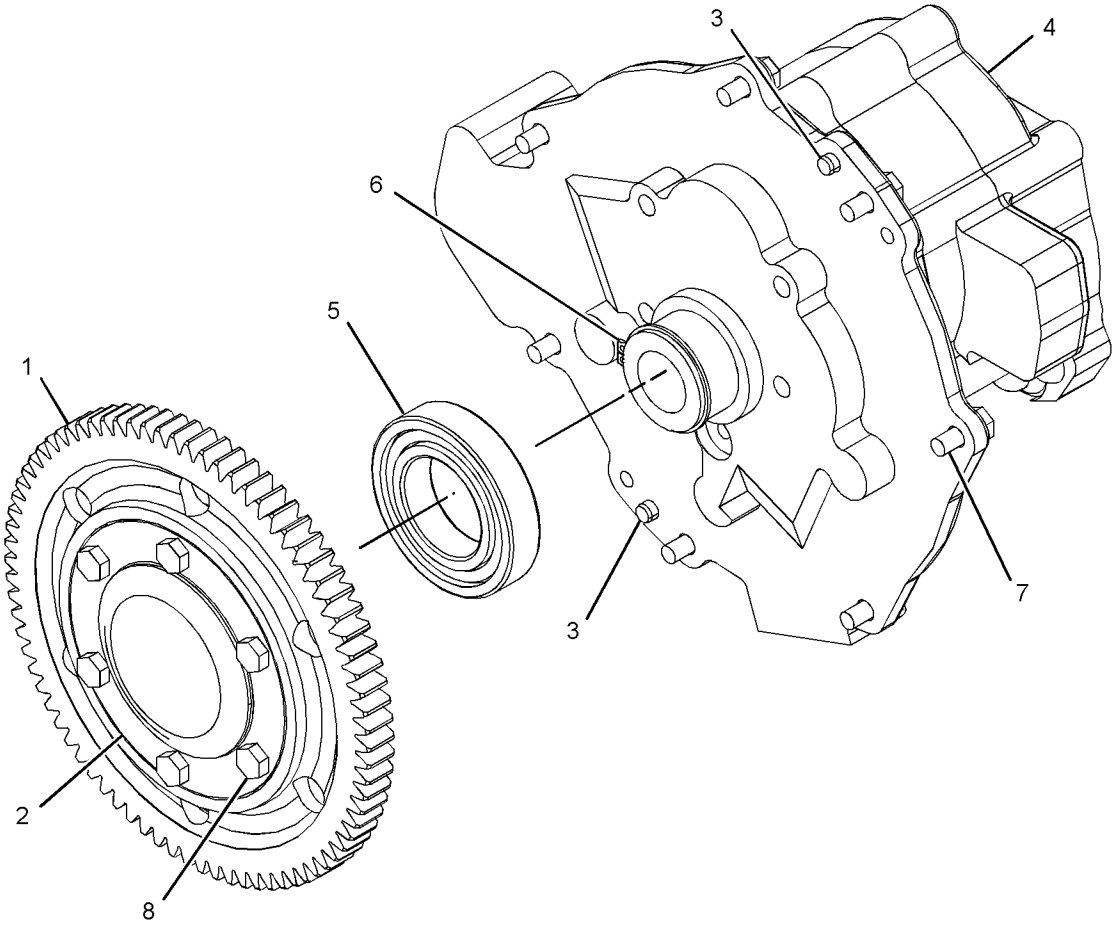

GRAPHIC #1 **<END>** g03527777

392-3894 SHAFT GP-DRIVE

S/N: M5K1-UP

PART OF 387-6025 POWER TRAIN AR

SMCS-3253 **i06064001**

NOTE	REF NO	GRAPHIC REF	PART NUMBER	QTY	PART NAME 1 2 3 4 5 6 (PRODUCT LEVEL)	SEE PAGE
	1	1	**4E-3273**	8	STRAP	
Y	2	1	**387-6040**	1	DRIVE GP-TRANSFER	228
Y	3	1	**387-6041**	1	SLIP JOINT GP (FRONT)	243
Y	4	1	**387-6042**	1	SLIP JOINT GP (REAR)	244
Y	5	1	**387-6043**	1	UNIVERSAL JOINT GP	256
	6	1	**432-7335**	8	BOLT (M16X1.5X48-MM)	
	7	1	**432-7336**	8	STUD (M16X1.5X70-MM)	
	8	1	**195-8313**	4	LOCKWASHER	
	9	1	**3B-4510**	24	LOCKWASHER	
M	10	1	**4E-5985**	16	BOLT-12 POINT HEAD (M10X1.25X20-MM)	
M	11	1	**8T-3980**	24	NUT (M16X1.5-THD)	
M	12	1	**8T-6430**	4	BOLT (M20X2.5X50-MM)	

M - METRIC PART
Y - SEPARATE ILLUSTRATION

392-3894 **SHAFT GP-DRIVE (*contd.*)** **i06064001**

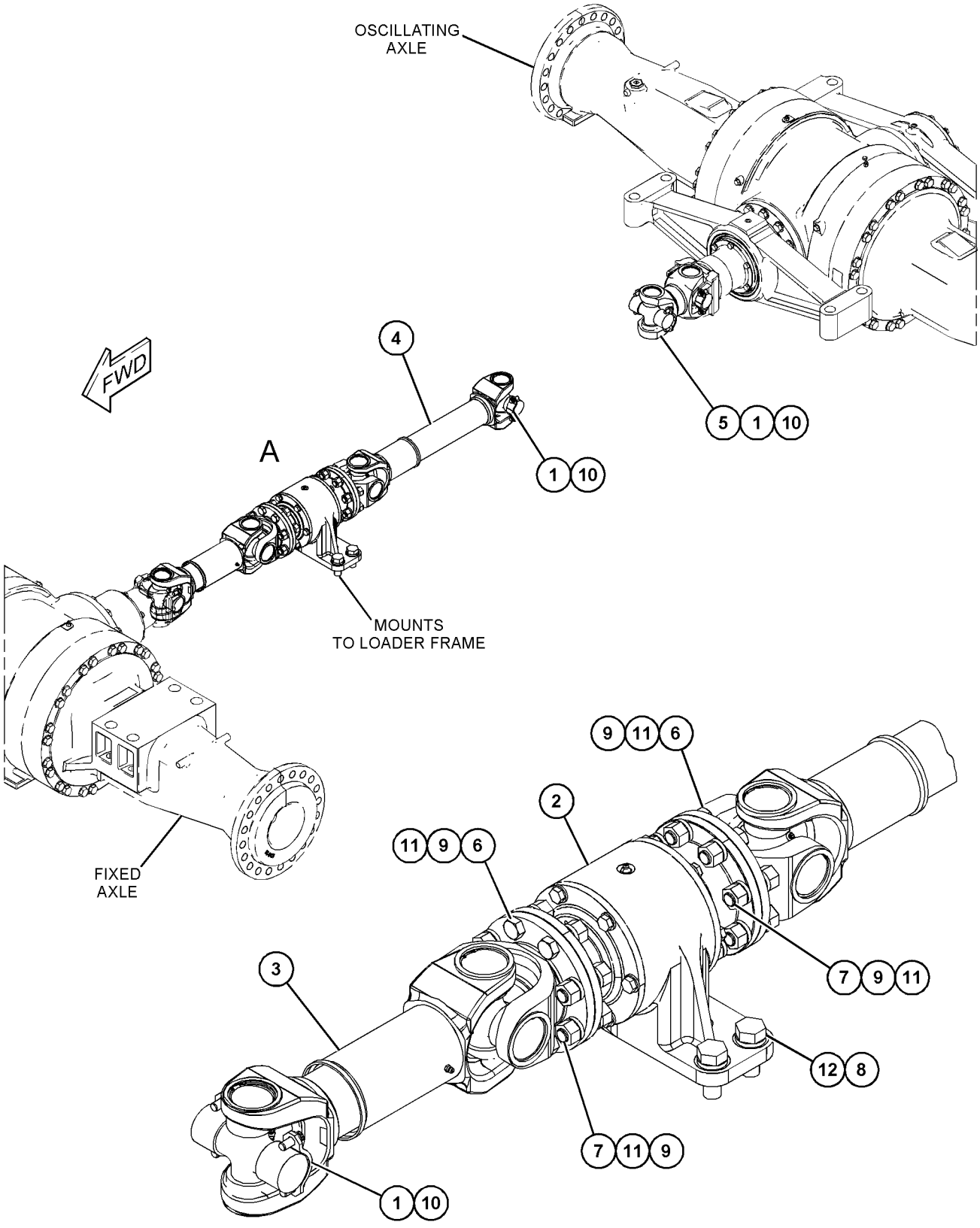

VIEW OF AREA A

GRAPHIC #1 **<END>** g03528636

387-6041 SLIP JOINT GP

S/N: M5K1-UP

PART OF 392-3894 SHAFT GP-DRIVE

SMCS-3251 **i05667210**

NOTE	REF NO	GRAPHIC REF	PART NUMBER	QTY	PART NAME 1 2 3 4 5 6 (PRODUCT LEVEL)	SEE PAGE
	1	1	**6V-1506**	1	FITTING-GREASE	
	2	1	**450-4807**	1	SPIDER & BEARING GP	
		1	**3B-8488**	1	FITTING-GREASE	
	3	1	**450-4808**	1	SPIDER & BEARING GP	
		1	**3B-8488**	1	FITTING-GREASE	
	4	1	**9X-2858**	6	RING-RETAINING	

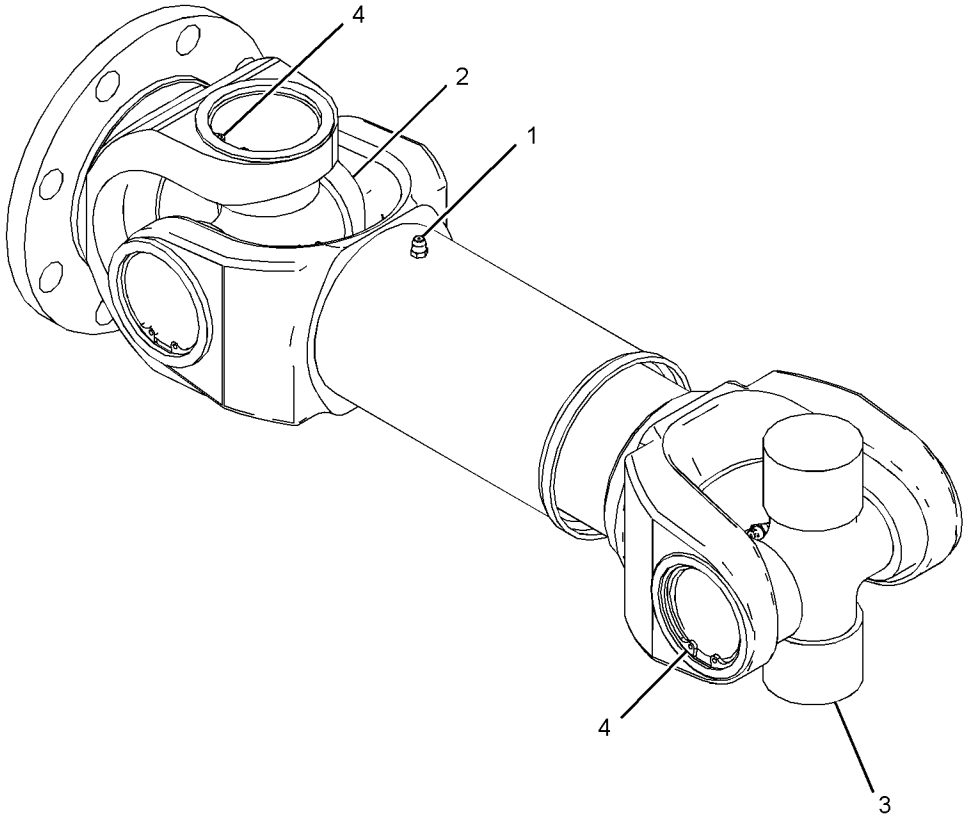

GRAPHIC #1 **<END>** g03668449

387-6042 SLIP JOINT GP

S/N: M5K1-UP

PART OF 392-3894 SHAFT GP-DRIVE

SMCS-3251 **i05819915**

NOTE	REF NO	GRAPHIC REF	PART NUMBER	QTY	PART NAME 1 2 3 4 5 6 (PRODUCT LEVEL)	SEE PAGE
	1	1	**6V-1506**	1	FITTING-GREASE	
	2	1	**450-4807**	1	SPIDER & BEARING GP	
		1	**3B-8488**	1	FITTING-GREASE (1/8-27 PTF)	
	3	1	**450-4808**	1	SPIDER & BEARING GP	
		1	**3B-8488**	1	FITTING-GREASE (1/8-27 PTF)	
	4	1	**9X-2858**	6	RING-RETAINING	

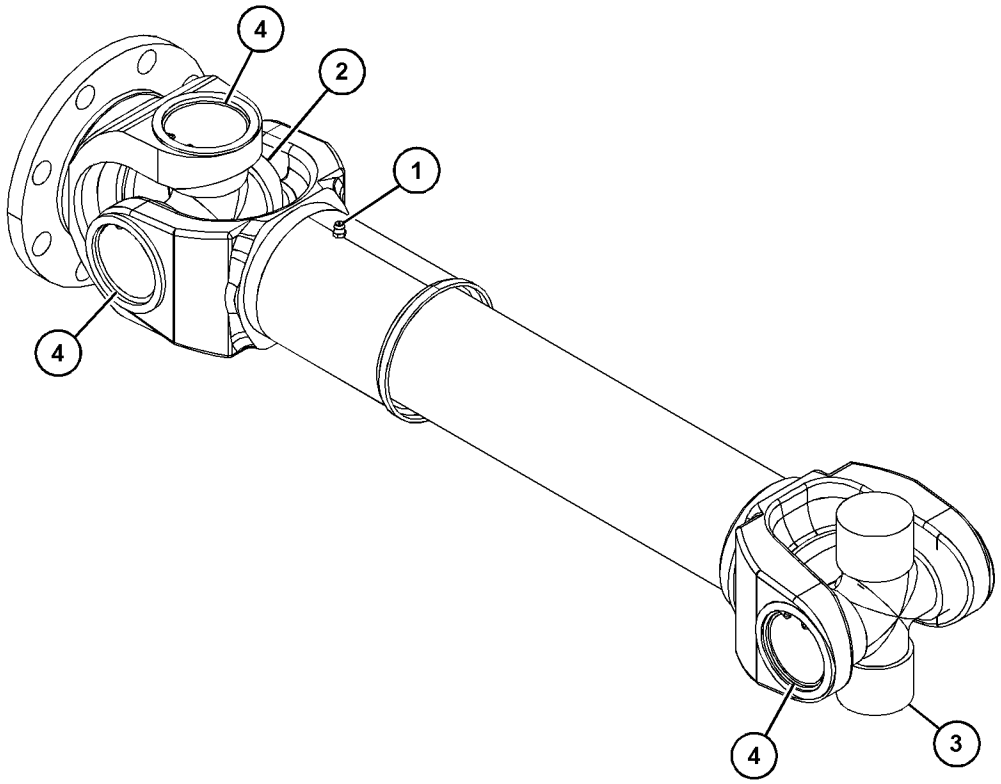

GRAPHIC #1 **<END>** g03692986

415-4348 TIRE & RIM AR

S/N: M5K1-UP

AN ATTACHMENT

SMCS-4202 **i06064180**

NOTE	PART NUMBER	QTY	PART NAME 1 2 3 4 5 6 (PRODUCT LEVEL)	SEE PAGE
Y	*392-3893*	4	TIRE & RIM GP	248
M	**448-9996**	80	BOLT (M24X3X50-MM)	
	8T-4167	80	WASHER-HARD (26X44X4-MM THK)	

M - METRIC PART
Y - SEPARATE ILLUSTRATION

<END>

415-4349 TIRE & RIM AR

S/N: M5K1-UP

AN ATTACHMENT

SMCS-4202 **i06064181**

NOTE	PART NUMBER	QTY	PART NAME 1 2 3 4 5 6 (PRODUCT LEVEL)	SEE PAGE
Y	*387-6047*	4	TIRE & RIM GP	247
M	**448-9996**	80	BOLT (M24X3X50-MM)	
	8T-4167	80	WASHER-HARD (26X44X4-MM THK)	

M - METRIC PART
Y - SEPARATE ILLUSTRATION

<END>

446-6230 TIRE & RIM AR

S/N: M5K1-UP

CANNOT BE USED WITH 415-4348 TIRE & RIM AR, 415-4349 TIRE & RIM AR, 446-6232 TIRE & RIM AR

AN ATTACHMENT

SMCS-4202 **i06064178**

NOTE	PART NUMBER	QTY	PART NAME 1 2 3 4 5 6 (PRODUCT LEVEL)	SEE PAGE
Y	*446-6229*	4	TIRE & RIM GP	249
M	**448-9996**	80	BOLT (M24X3X50-MM)	
	8T-4167	80	WASHER-HARD (26X44X4-MM THK)	

M - METRIC PART
Y - SEPARATE ILLUSTRATION

<END>

446-6232 TIRE & RIM AR

S/N: M5K1-UP

CANNOT BE USED WITH 415-4349 TIRE & RIM AR, 415-4348 TIRE & RIM AR, 446-6230 TIRE & RIM AR

AN ATTACHMENT

SMCS-4202 **i06064179**

NOTE	PART NUMBER	QTY	PART NAME 1 2 3 4 5 6 (PRODUCT LEVEL)	SEE PAGE
Y	*446-6231*	4	TIRE & RIM GP	250
M	**448-9996**	80	BOLT (M24X3X50-MM)	
	8T-4167	80	WASHER-HARD (26X44X4-MM THK)	

M - METRIC PART
Y - SEPARATE ILLUSTRATION

<END>

387-6047 TIRE & RIM GP

S/N: M5K1-UP
23.5-25
PART OF 415-4349 TIRE & RIM AR
AN ATTACHMENT

SMCS-4202 **i05425479**

NOTE	REF NO	GRAPHIC REF	PART NUMBER	QTY	PART NAME 1 2 3 4 5 6 (PRODUCT LEVEL)	SEE PAGE
	1	1	**387-6038**	1	RIM AS	
	2	1	*387-6049*	1	TIRE (23.5-25)	

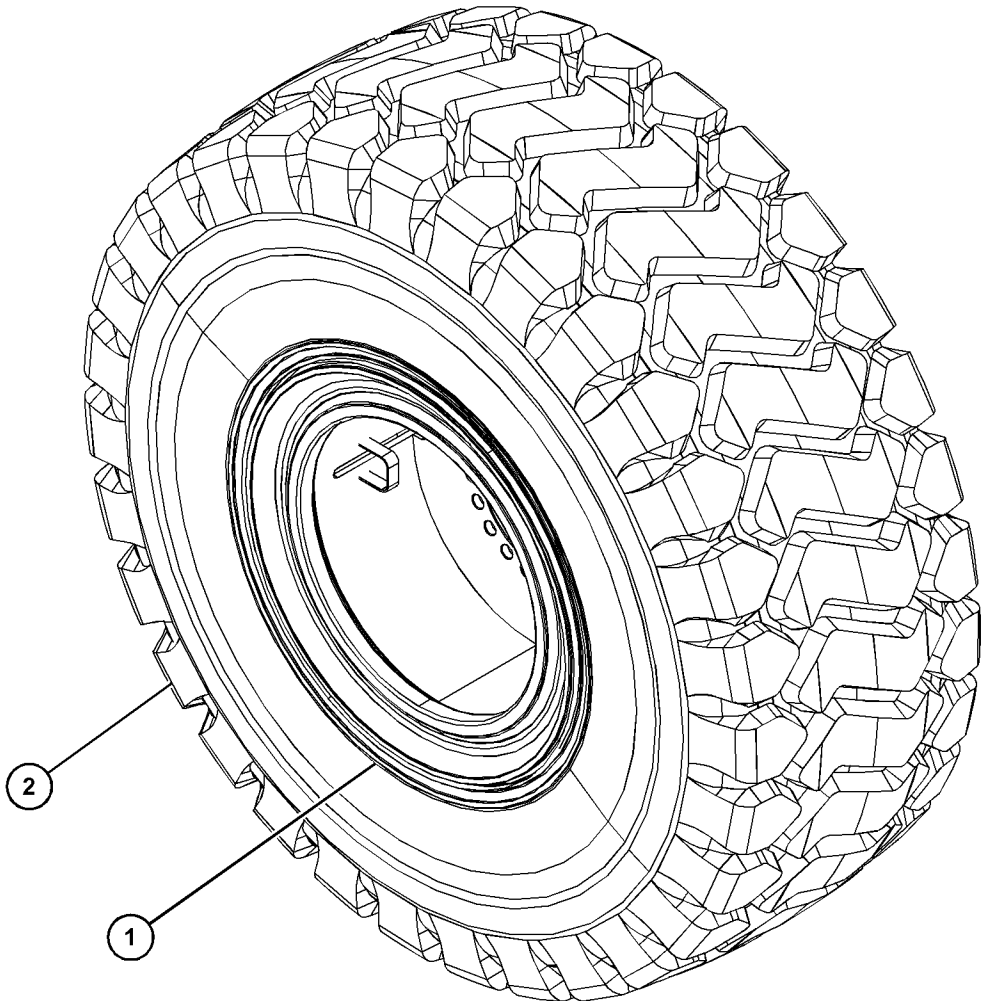

GRAPHIC #1 **<END>** g03525977

392-3893 TIRE & RIM GP

S/N: M5K1-UP
23.5-R25
PART OF 415-4348 TIRE & RIM AR
AN ATTACHMENT

SMCS-4202 **i05591510**

NOTE	REF NO	GRAPHIC REF	PART NUMBER	QTY	PART NAME 1 2 3 4 5 6 (PRODUCT LEVEL)	SEE PAGE
	1	1	**1K-8374**	1	VALVE GP-TIRE (TIRE INFLATION)	
		1	**2D-2507**	1	SPUD	
		1	**2D-2508**	1	GROMMET	
		1	**2D-2509**	1	LOCKNUT (11/16-16-THD)	
		1	**3K-2316**	1	VALVE (TIRE INFLATION)	
		1	**6F-3930**	1	CORE-VALVE	
		1	**6F-3931**	1	CAP-VALVE STEM	
	2	1	*315-7907*	1	TIRE (23.5-R25)	
	3	1	**392-3892**	1	RIM AS	
	4	1	**2D-2443**	1	SEAL-O-RING	

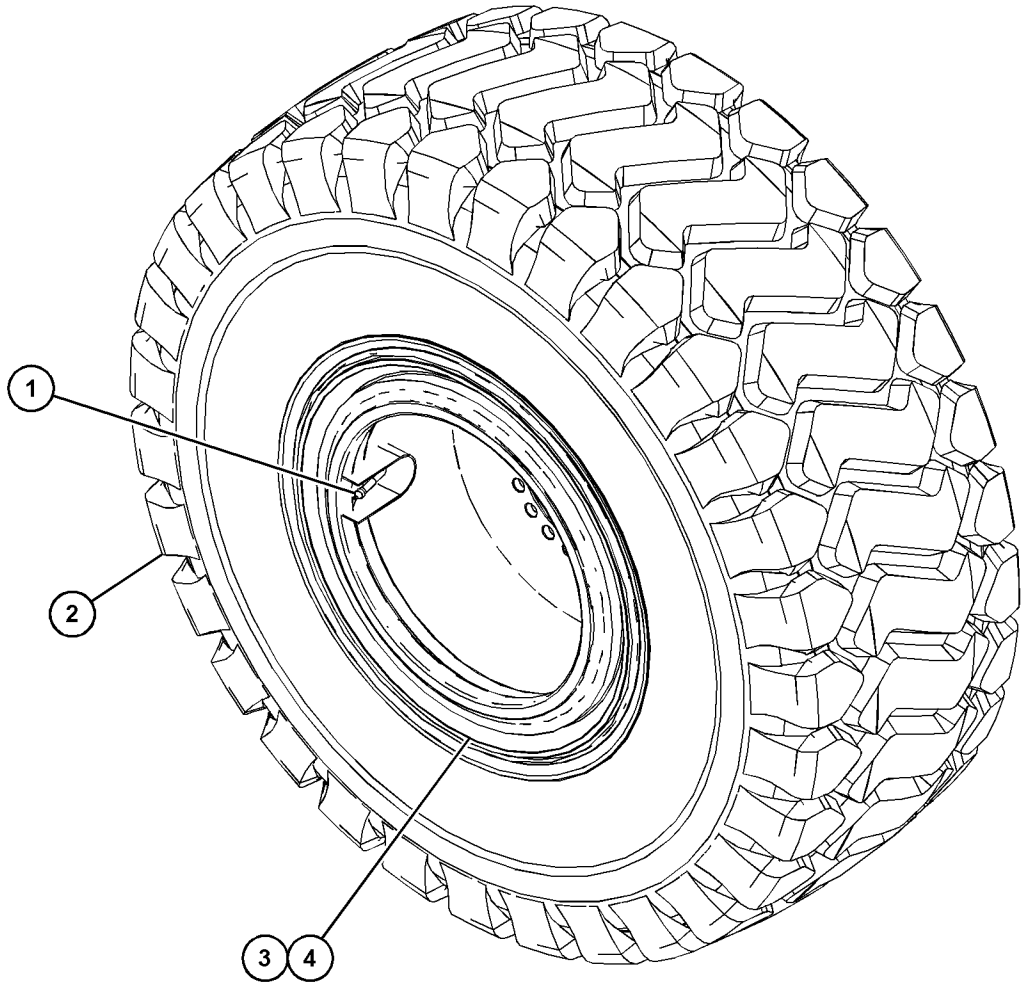

GRAPHIC #1 **<END>** g03563456

446-6229 TIRE & RIM GP

S/N: M5K1-UP
23.5-R25
PART OF 446-6230 TIRE & RIM AR
AN ATTACHMENT

SMCS-4202 **i05413815**

NOTE	REF NO	GRAPHIC REF	PART NUMBER	QTY	PART NAME 1 2 3 4 5 6 (PRODUCT LEVEL)	SEE PAGE
	1	1	**2D-2443**	1	SEAL-O-RING	
	2	1	**1K-8374**	1	VALVE GP-TIRE	
		1	**2D-2507**	1	SPUD	
		1	**2D-2508**	1	GROMMET	
		1	**2D-2509**	1	LOCKNUT (11/16-16-THD)	
		1	**3K-2316**	1	VALVE	
		1	**6F-3930**	1	CORE-VALVE	
		1	**6F-3931**	1	CAP-VALVE STEM	
	3	1	**392-3892**	1	RIM AS	
	4	1	*319-7428*	1	TIRE (23.5-R25)	

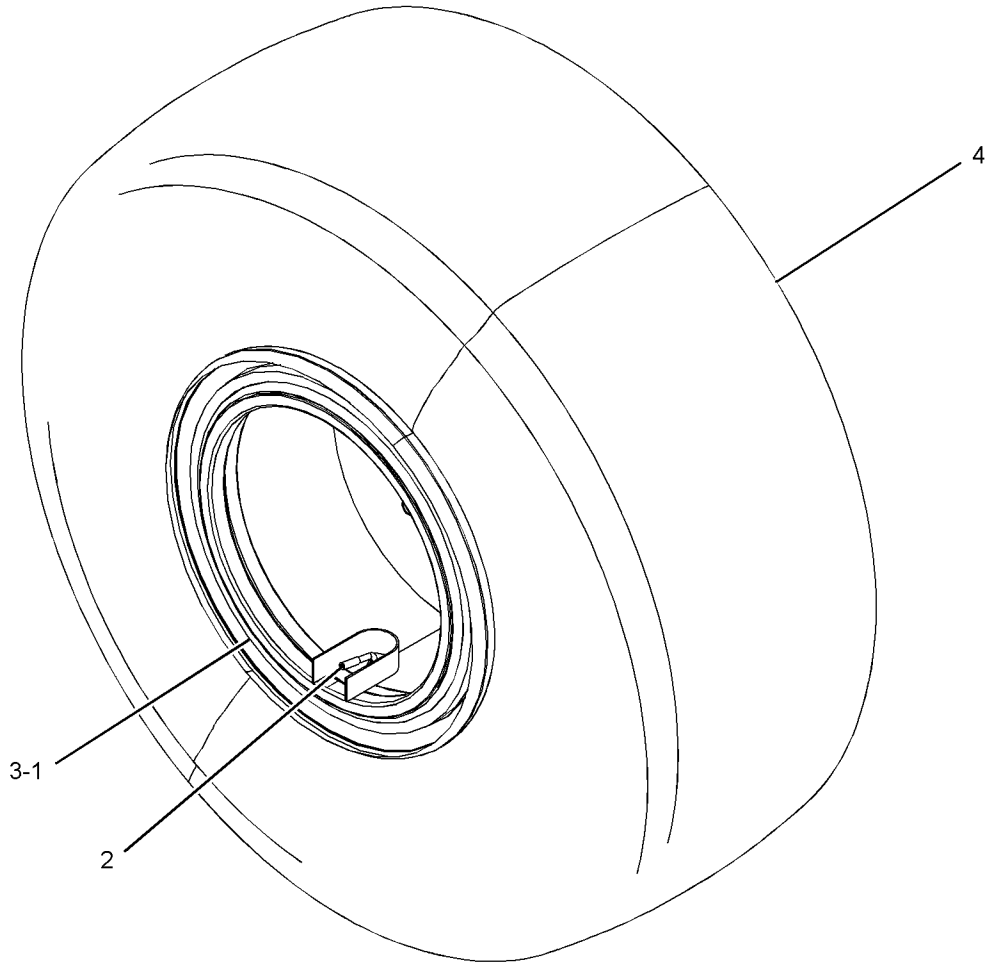

GRAPHIC #1 **<END>** g03433062

446-6231 TIRE & RIM GP

S/N: M5K1-UP
23.5-R25
PART OF 446-6232 TIRE & RIM AR
AN ATTACHMENT

SMCS-4202 **i05425150**

NOTE	REF NO	GRAPHIC REF	PART NUMBER	QTY	PART NAME 1 2 3 4 5 6 (PRODUCT LEVEL)	SEE PAGE
	1	1	**1K-8374**	1	VALVE GP-TIRE	
		1	**2D-2507**	1	SPUD	
		1	**2D-2508**	1	GROMMET	
		1	**2D-2509**	1	LOCKNUT (11/16-16-THD)	
		1	**3K-2316**	1	VALVE	
		1	**6F-3930**	1	CORE-VALVE	
		1	**6F-3931**	1	CAP-VALVE STEM	
	2	1	**392-3892**	1	RIM AS	
	3	1	**2D-2443**	1	SEAL-O-RING	
	4	1	*433-4342*	1	TIRE (23.5-R25)	

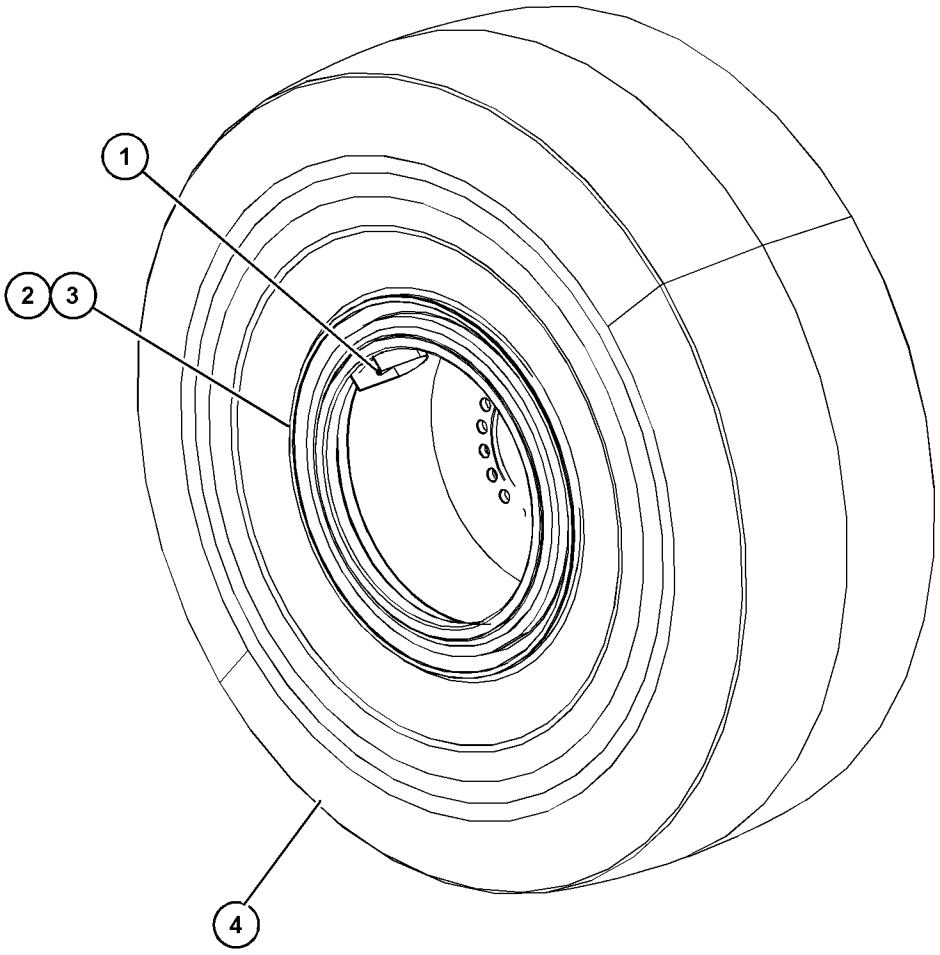

GRAPHIC #1 **<END>** g03535905

396-5175 TRANSMISSION AR–HYDROSTATIC

S/N: S4X1-UP

PART OF 421-4449 TRANSMISSION AR

SMCS-3030 **i05430812**

NOTE	PART NUMBER	QTY	PART NAME 1 2 3 4 5 6 (PRODUCT LEVEL)	SEE PAGE
Y	*396-5183*	1	CASE & PARTS GP-PLANETARY	199
Y	*326-0622*	1	CLUTCH GP (REVERSE, 2ND)	204
Y	*326-0624*	1	CLUTCH GP (FORWARD HIGH, FORWARD LOW)	206
Y	*326-0626*	1	CLUTCH GP (FIRST, THIRD)	208
Y	*396-5185*	1	COVER GP-SHIPPING	214
Y	**340-8734**	1	DRIVE GP-FLEXIBLE COUPLING	224
Y	*434-2641*	1	DRIVE GP-POWER TAKE-OFF	225
Y	*331-3418*	1	DRIVE GP-PUMP	227
Y	*326-0616*	1	GEAR & BEARING GP	234
Y	*424-8654*	1	PUMP GP-TRANSMISSION	240
Y	*365-6745*	1	VALVE GP-TRANSMISSION CONTROL	265
	333-0270	1	TORQUE CONVERTER AS	

Y - SEPARATE ILLUSTRATION

<END>

421-4449 TRANSMISSION AR

S/N: M5K1-UP

PART OF 387-6025 POWER TRAIN AR

SMCS-3030 **i06064006**

NOTE	REF NO	GRAPHIC REF	PART NUMBER	QTY	PART NAME 1 2 3 4 5 6 (PRODUCT LEVEL)	SEE PAGE
	1	1	**1V-6341**	1	SEAL	
	2	1	**248-2432**	1	WASHER (17X30X3-MM THK)	
	3	1	**264-4297**	1	SENSOR AS-TEMPERATURE (TRANSMISSION OIL)	
	3A	1	**264-4297**	1	SENSOR AS-TEMPERATURE (TORQUE CONVERTER OIL)	
	4	1	**318-1182**	1	SENSOR GP-SPEED (TRANSMISSION)	
		1	**9X-3401**	2	PIN-CONNECTOR (16-GA TO 18-GA)	
					—OR—	
		1	**126-1767**	2	PIN-CONNECTOR (14-GA TO 16-GA)	
		1	**102-8802**	1	KIT-RECEPTACLE (2-PIN)	
					(KIT INCLUDES RECEPTACLE AS & WEDGE)	
E		1	**9X-1813**		SLEEVE (14-CM)	
		1	**171-5349**	1	STRAP-MARKER	
	5	1	**392-2277**	2	BRACKET AS	
Y	6	1	**396-5175**	1	TRANSMISSION AR	251
Y	7	1	*417-7151*	1	FILLER GP-POWER TRAIN OIL	231
	8	1	**432-8537**	1	TUBE AS	
	9	1	**436-0820**	1	GAUGE-SIGHT (OIL)	
	10	1	**130-5300**	7	CLIP	
	11	1	**132-5789**	3	CLIP (LADDER)	
	12	1	**3K-0360**	2	SEAL-O-RING	
	13	1	**4P-7581**	3	CLIP (LADDER)	
	14	1	**6V-0357**	2	SEAL-O-RING	
M	15	1	**6V-8212**	8	BOLT (M10X1.5X16-MM)	
M	16	1	**7X-2553**	8	BOLT (M16X2X40-MM)	
M	17	1	**9X-6032**	8	BOLT-SOCKET HEAD (M10X1.5X30-MM)	
	18	1	**8T-4121**	8	WASHER-HARD (11X21X2.5-MM THK)	
M	19	1	**8T-4200**	1	BOLT (M8X1.25X16-MM)	
	20	1	**8T-4224**	1	WASHER-HARD (8.8X16X2-MM THK)	
M	21	1	**6V-3822**	2	BOLT (M10X1.5X35-MM)	
	22	1	**9X-8268**	8	WASHER (17.5X30X3.5-MM THK)	

E - ORDER BY THE CENTIMETER
M - METRIC PART
Y - SEPARATE ILLUSTRATION

421-4449 **TRANSMISSION AR (*contd.*)** **i06064006**

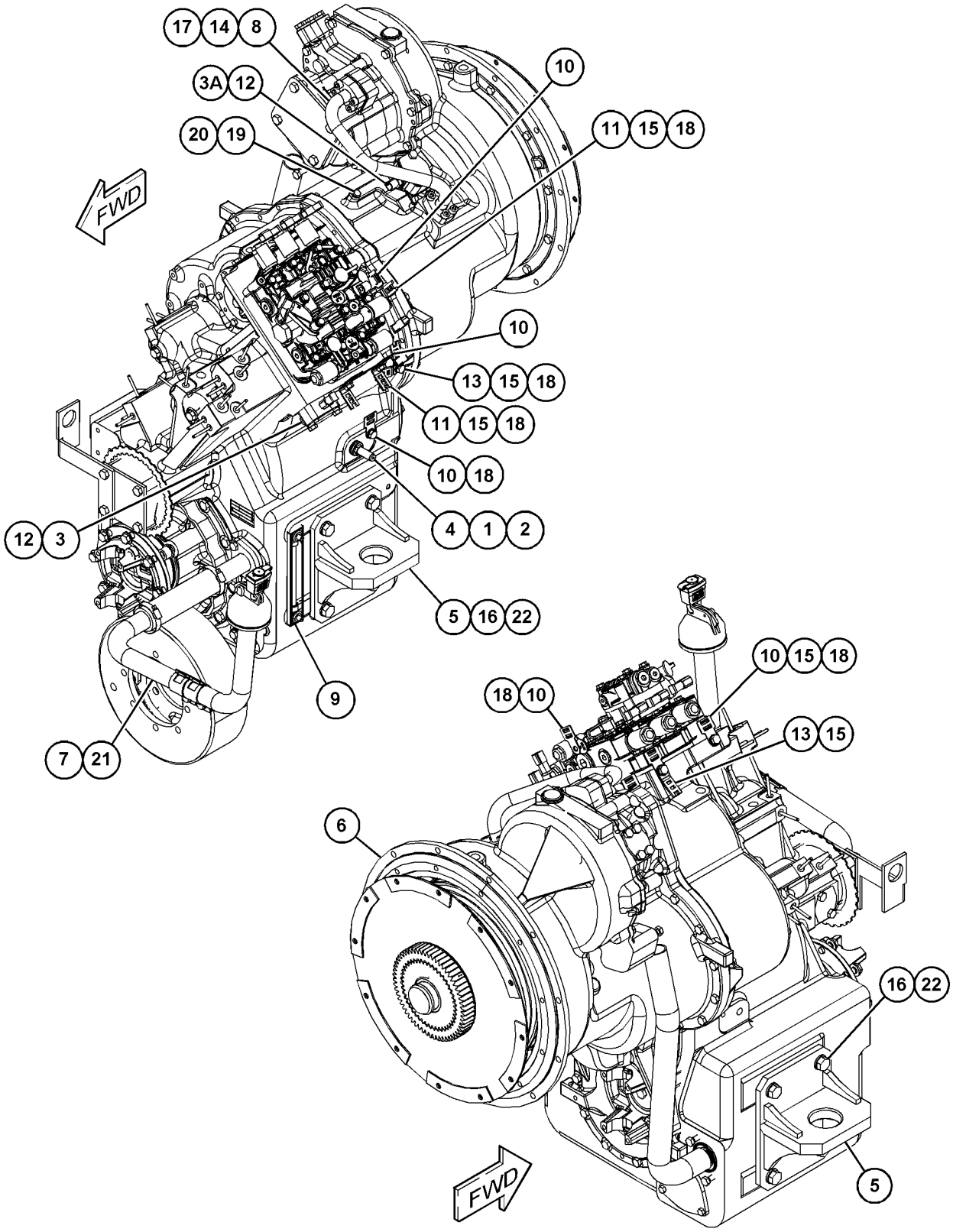

GRAPHIC #1 **<END>** g03797569

394-1677 TRUNNION GP-AXLE

S/N: M5K1-UP

FRONT

PART OF 387-6045, 387-6046 AXLE AR-FIXED & OSCILLATING, 387-6044 CONFIGURATION AR

AN ATTACHMENT

SMCS-3268 **i05402982**

NOTE	REF NO	GRAPHIC REF	PART NUMBER	QTY	PART NAME 1 2 3 4 5 6 (PRODUCT LEVEL)	SEE PAGE
	1	1	**394-1678**	1	SUPPORT-TRUNNION	
	2	1	**213-1365**	1	BUSHING	
	3	1	**3K-0158**	2	SEAL-LIP TYPE	
	4	1	**3K-0159**	1	RING-RETAINING	

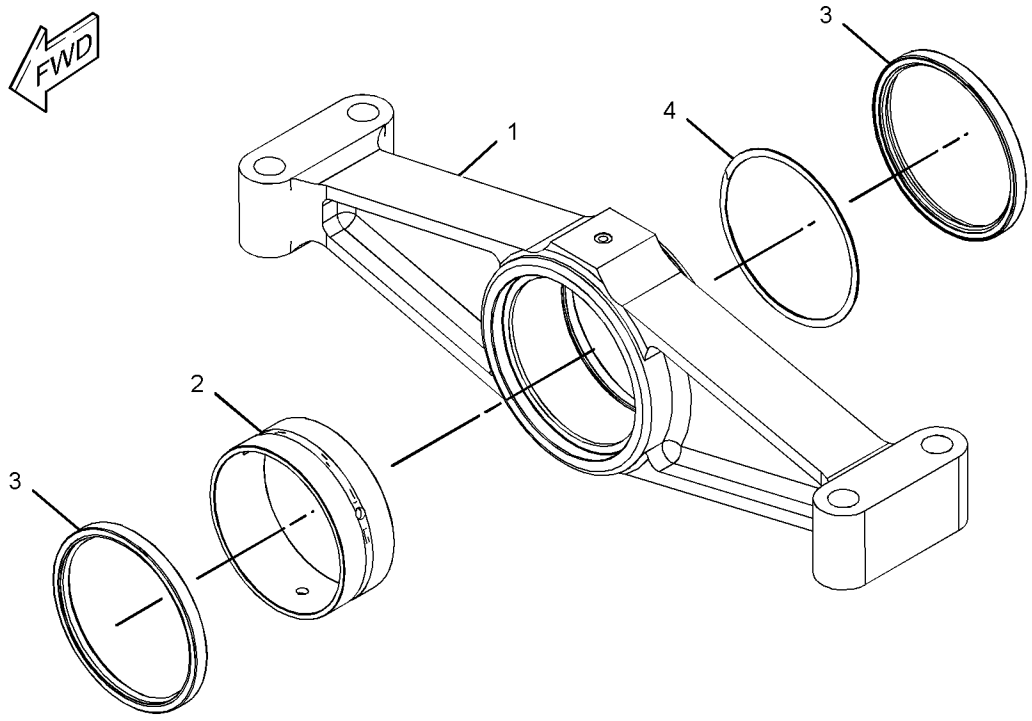

GRAPHIC #1 **<END>** g03422596

394-1679 TRUNNION GP-AXLE–REAR

S/N: M5K1-UP

PART OF 387-6045, 387-6046 AXLE AR-FIXED & OSCILLATING, 387-6044 CONFIGURATION AR AN ATTACHMENT

SMCS-3268 **i06067833**

NOTE	REF NO	GRAPHIC REF	PART NUMBER	QTY	PART NAME 1 2 3 4 5 6 (PRODUCT LEVEL)	SEE PAGE
	1	1	**096-5867**	10	WASHER-HARD (15X28X2.5-MM THK)	
	2	1	**387-6039**	2	WASHER-THRUST	
	3	1	**387-6048**	1	PLATE	
	4	1	**394-1680**	1	SUPPORT-TRUNNION	
	5	1	**394-1682**	1	COVER	
	6	1	**446-6967**	1	BUSHING	
	7	1	**443-9425**	1	SEAL-LIP TYPE	
M	8	1	**157-0950**	10	BOLT (M14X1.5X40-MM)	
	9	1	**5P-8245**	12	WASHER-HARD (13.5X25.5X3-MM THK)	
M	10	1	**6V-8197**	12	BOLT (M12X1.75X40-MM)	

M - METRIC PART

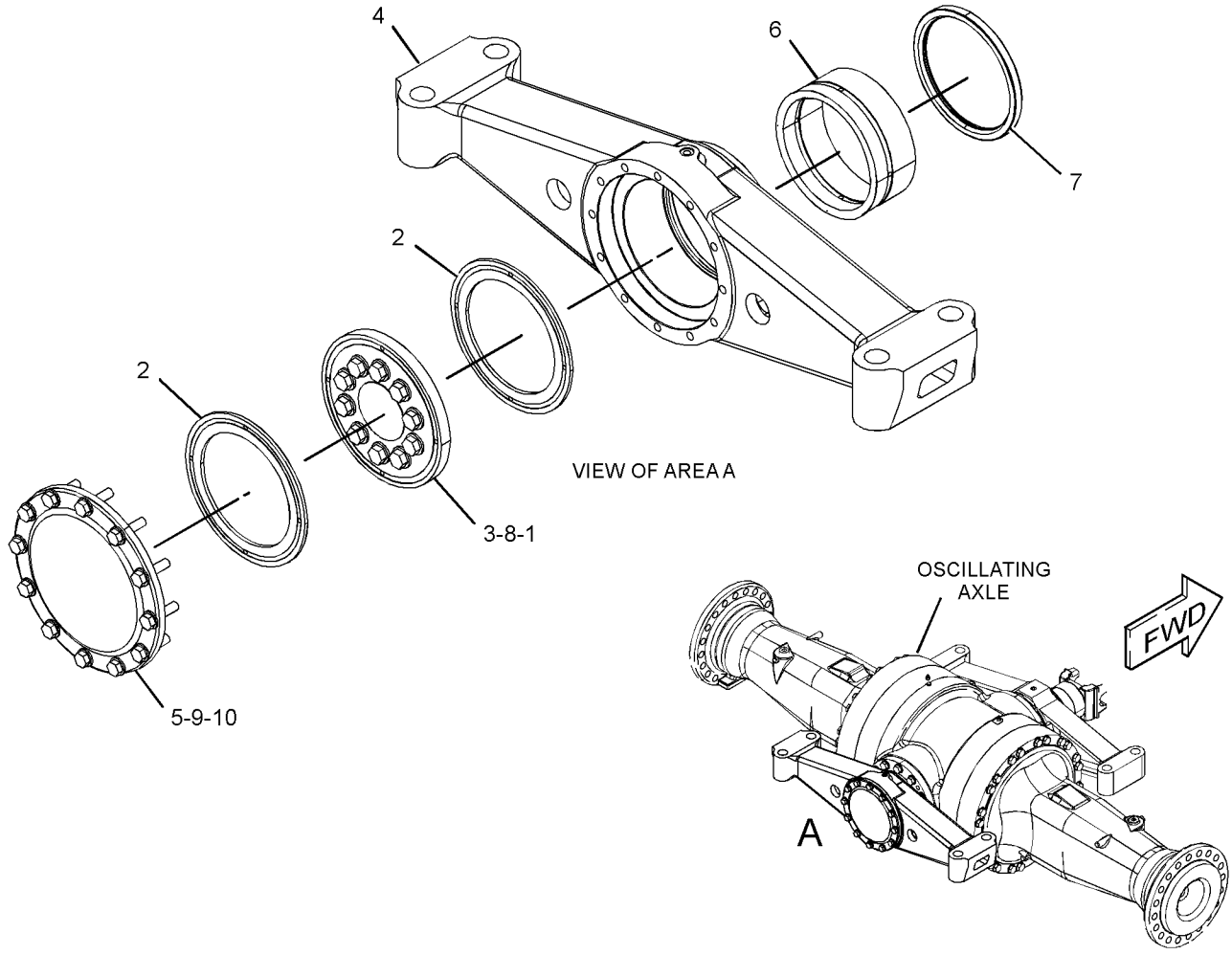

GRAPHIC #1 **<END>** g03424128

387-6043 UNIVERSAL JOINT GP

S/N: M5K1-UP

PART OF 392-3894 SHAFT GP-DRIVE

SMCS-3251, 3253 **i05667209**

NOTE	REF NO	GRAPHIC REF	PART NUMBER	QTY	PART NAME 1 2 3 4 5 6 (PRODUCT LEVEL)	SEE PAGE
	1	1	**450-4808**	2	SPIDER & BEARING GP	
					(EACH INCLUDES)	
		1	**3B-8488**	1	FITTING-GREASE	
	2	1	**9X-2858**	4	RING-RETAINING	

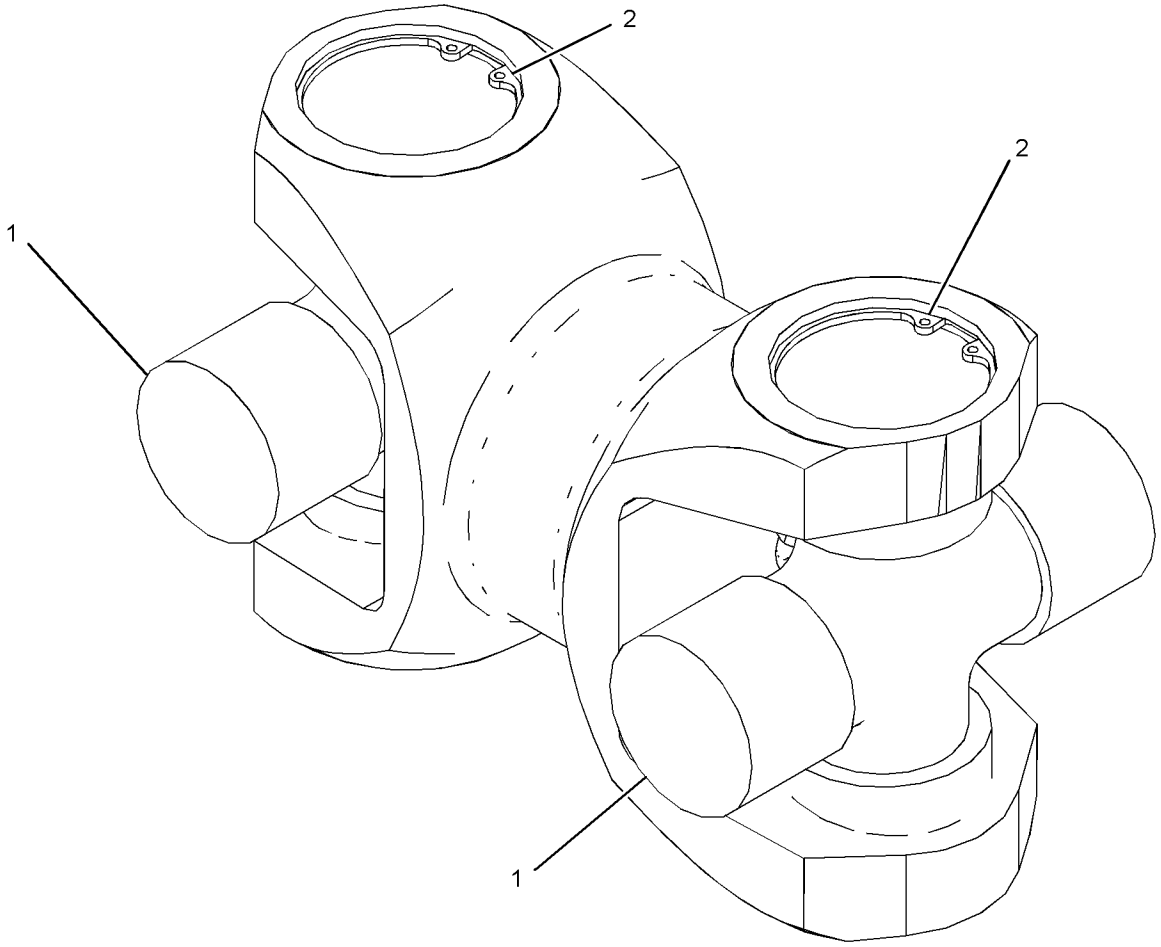

GRAPHIC #1 **<END>** g03668437

8E-6703 VALVE GP-DIFFERENTIAL–TRANSMISSION

S/N: S4X1-UP

PART OF 365-6745 VALVE GP-TRANSMISSION CONTROL

SMCS-3073 **i05430918**

NOTE	REF NO	GRAPHIC REF	PART NUMBER	QTY	PART NAME 1 2 3 4 5 6 (PRODUCT LEVEL)	SEE PAGE
	1	1	**156-5899**	1	BODY-VALVE	
	2	1	**2P-5755**	1	SPRING	
	3	1	**8E-0987**	1	SPOOL	
	4	1	**8E-2035**	1	PLUG	
	5	1	**7M-8485**	1	SEAL-O-RING	

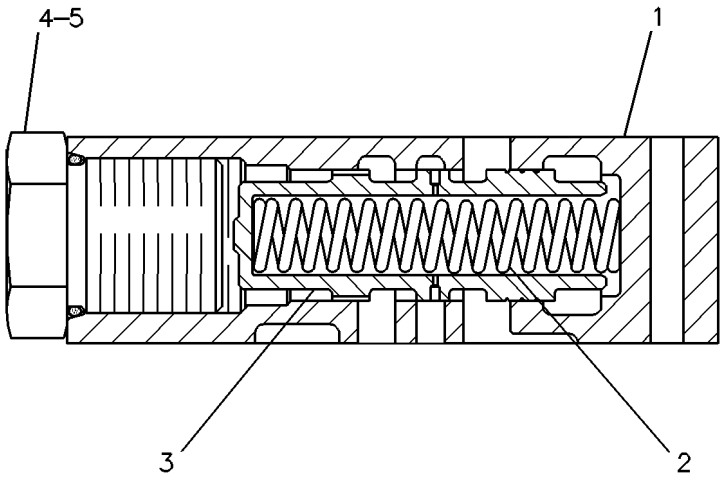

GRAPHIC #1 **<END>** g00119446

8E-5523 VALVE GP-DUMP–TRANSMISSION

S/N: S4X1-UP

LOAD PISTON

PART OF 365-6745 VALVE GP-TRANSMISSION CONTROL

SMCS-3073 **i05430908**

NOTE	REF NO	GRAPHIC REF	PART NUMBER	QTY	PART NAME 1 2 3 4 5 6 (PRODUCT LEVEL)	SEE PAGE
	1	1	**8E-4884**	1	BODY	
	2	1	**9S-8006**	2	PLUG-O-RING	
	3	1	**2M-9780**	2	SEAL-O-RING	
	4	1	**9S-8005**	2	PLUG-O-RING	
	5	1	**3K-0360**	2	SEAL-O-RING	
	6	1	**8E-4959**	1	SLUG	
	7	1	**8E-4958**	1	SPOOL	
	8	1	**9S-8004**	1	PLUG-O-RING	
	9	1	**3J-1907**	1	SEAL-O-RING	
	10	1	**6Y-7582**	1	PISTON	
	11	1	**9L-9188**	1	SPRING-VALVE	
	12	1	**8P-0346**	1	SPRING	
	13	1	**8E-6051**	1	PLUG-ORIFICE	
	14	1	**4J-7533**	1	SEAL-O-RING	
	15	1	**6Y-7621**	1	SPOOL	

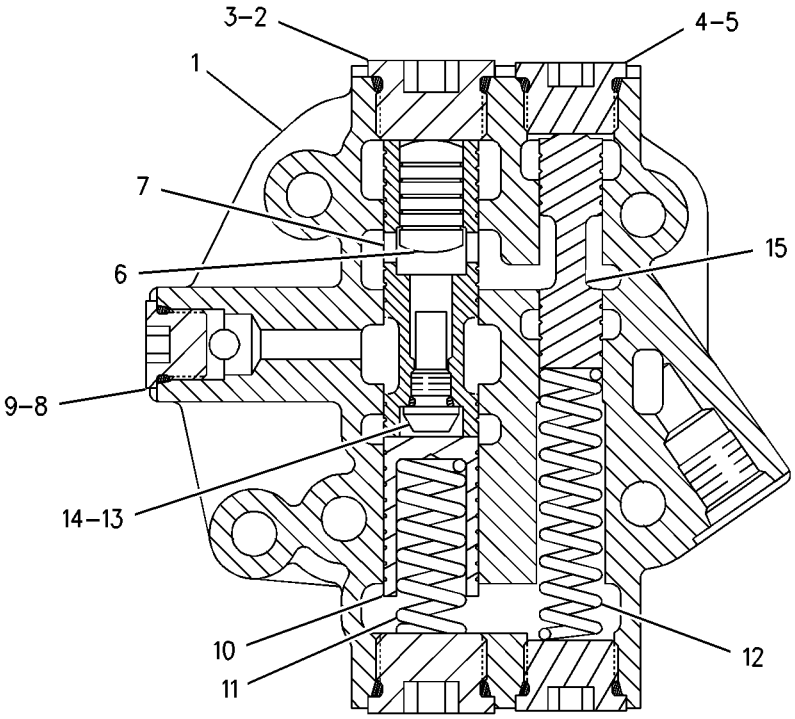

GRAPHIC #1 **<END>** g00664878

326-3718 VALVE GP-FLOW CONTROL

S/N: S4X1-UP

PART OF 396-5183 CASE & PARTS GP-PLANETARY

SMCS-5137 **i05430971**

NOTE	REF NO	GRAPHIC REF	PART NUMBER	QTY	PART NAME 1 2 3 4 5 6 (PRODUCT LEVEL)	SEE PAGE
	1	1	**6I-9395**	1	SCREEN (TRANSMISSION CONTROL VALVE)	
	2	1	**9W-0884**	1	PISTON	
	3	1	**4M-7945**	1	SPRING	
	4	1	**2L-6726**	1	RING-RETAINING	
					PARTS SHOWN IN GRAPHIC(S) WITHOUT A REFERENCE NUMBER ARE NOT SERVICED SEPARATELY	

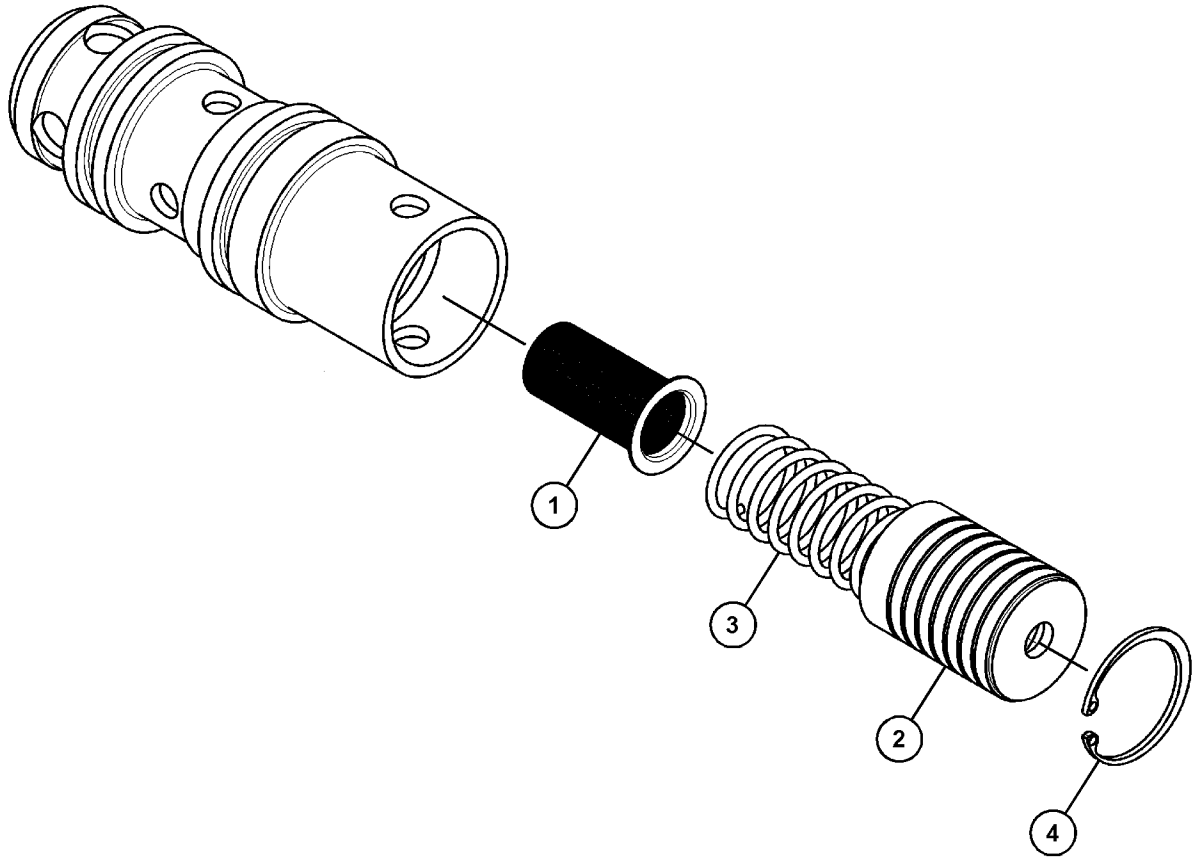

GRAPHIC #1 **<END>** g03524458

365-6746 VALVE GP-SELECTOR & PRESS CONT

S/N: S4X1-UP

PART OF 365-6745 VALVE GP-TRANSMISSION CONTROL

SMCS-3083 **i05430947**

NOTE	REF NO	GRAPHIC REF	PART NUMBER	QTY	PART NAME 1 2 3 4 5 6 (PRODUCT LEVEL)	SEE PAGE
	1	1	**6Y-0871**	2	SPRING	
	2	1	**6Y-1763**	1	BODY	
	4	1	**7T-7679**	4	PLUG	
	5	1	**7T-8797**	1	SPACER (13X18.85X2-MM THK)	
	6	1	**8E-1139**	1	SPRING	
	7	1	**8E-1142**	1	SLUG	
	8	1	**8E-1143**	1	SLUG	
	9	1	**8E-3674**	1	SPOOL	
	10	1	**8E-3675**	1	SPOOL	
	11	1	**8J-2283**	1	RING-SNAP	
	12	1	**9U-9328**	1	SPRING	
	13	1	**9W-6096**	6	SLUG	
	14	1	**9W-6097**	6	SPOOL-SELECTOR	
	15	1	**9W-8279**	1	PISTON	
	16	1	**9W-8839**	1	PLUG-SCREEN	
	18	1	**2M-9780**	4	SEAL-O-RING	
	19	1	**4J-7533**	1	SEAL-O-RING	
	20	1	**6Y-4638**	2	PLUG-HEX SOCKET (1-5/16-12-THD)	
	21	1	**7M-8485**	2	SEAL-O-RING	
Y	22	1	**186-1526**	6	VALVE GP-SOLENOID (24-VOLT) (RIPPER)	262

Y - SEPARATE ILLUSTRATION

365-6746 **VALVE GP-SELECTOR & PRESS CONT (*contd.*)** **i05430947**

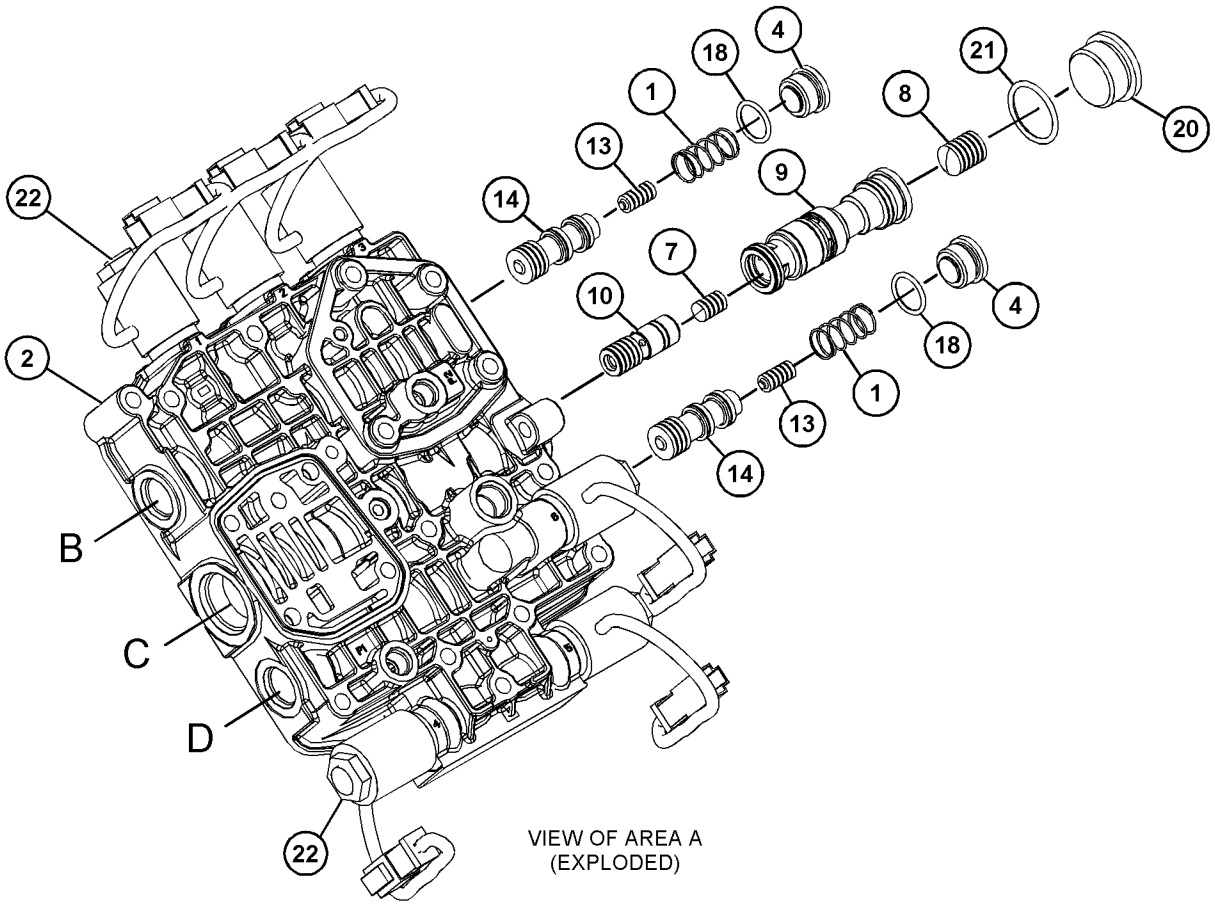

VIEW OF AREA A
(EXPLODED)

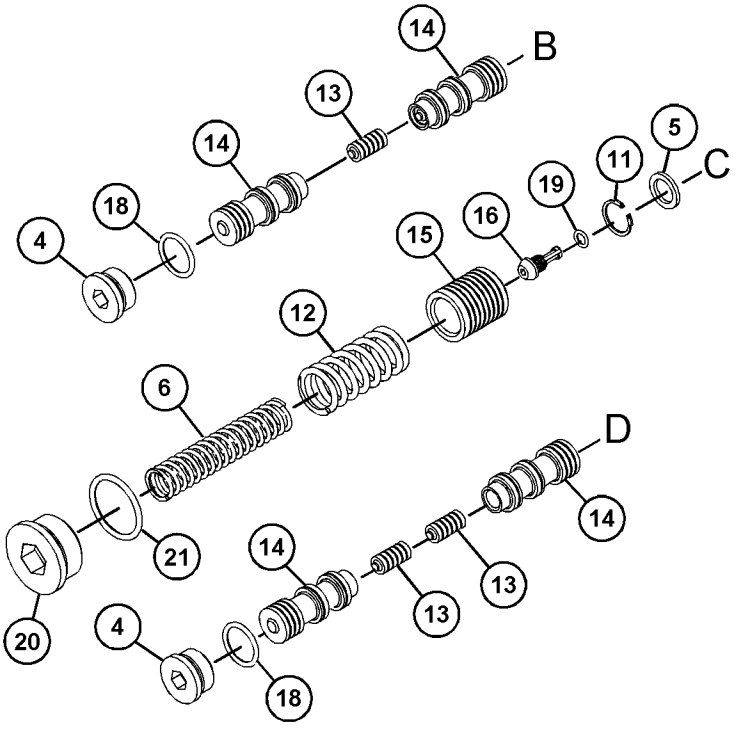

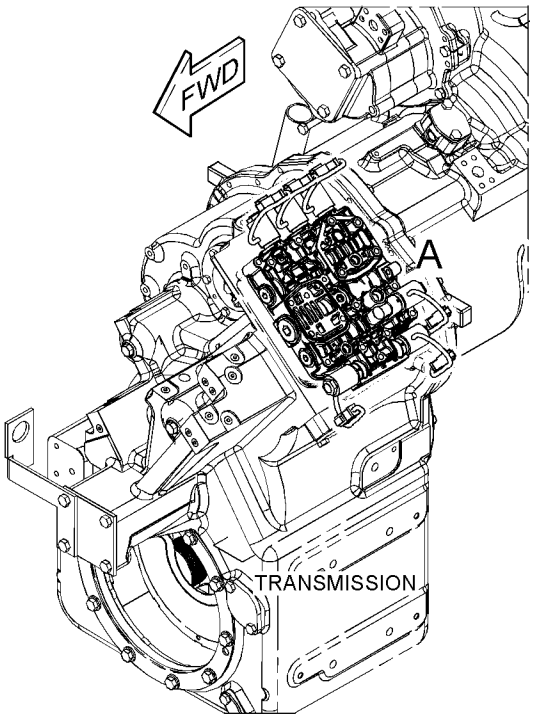

GRAPHIC #1 **<END>** g03523058

186-1526 VALVE GP-SOLENOID

S/N: S4X1-UP
24-VOLT
FIELD REPLACEMENT FOR 396-7070—PAGE: 264
PART OF 365-6746 VALVE GP-SELECTOR & PRESS CONT
TYPE 1

SMCS-3174, 4804, 4805, 5479 **i05430939**

NOTE	REF NO	GRAPHIC REF	PART NUMBER	QTY	PART NAME 1 2 3 4 5 6 (PRODUCT LEVEL)	SEE PAGE
	1	1	**104-3947**	1	LOCKNUT (5/8-11-THD)	
J	2	1	**234-6666**	1	CARTRIDGE AS-VALVE	
	3	1	**301-3118**	1	COIL AS	
	3A	1	**1S-9593**	2	STRAP-CABLE	
	3B	1	**102-8802**	1	KIT-RECEPTACLE (2-PIN)	
					(INCLUDES RECEPTACLE AS & WEDGE)	
	3C	1	**186-3735**	2	PIN-CONNECTOR (16-GA TO 18-GA)	
					AVAILABLE REPAIR KIT(S):	
J			**7T-4515**	1	KIT-SEAL	
					(INCLUDES SEAL-O-RINGS)	

J - KIT MARKED J SERVICES PART MARKED J

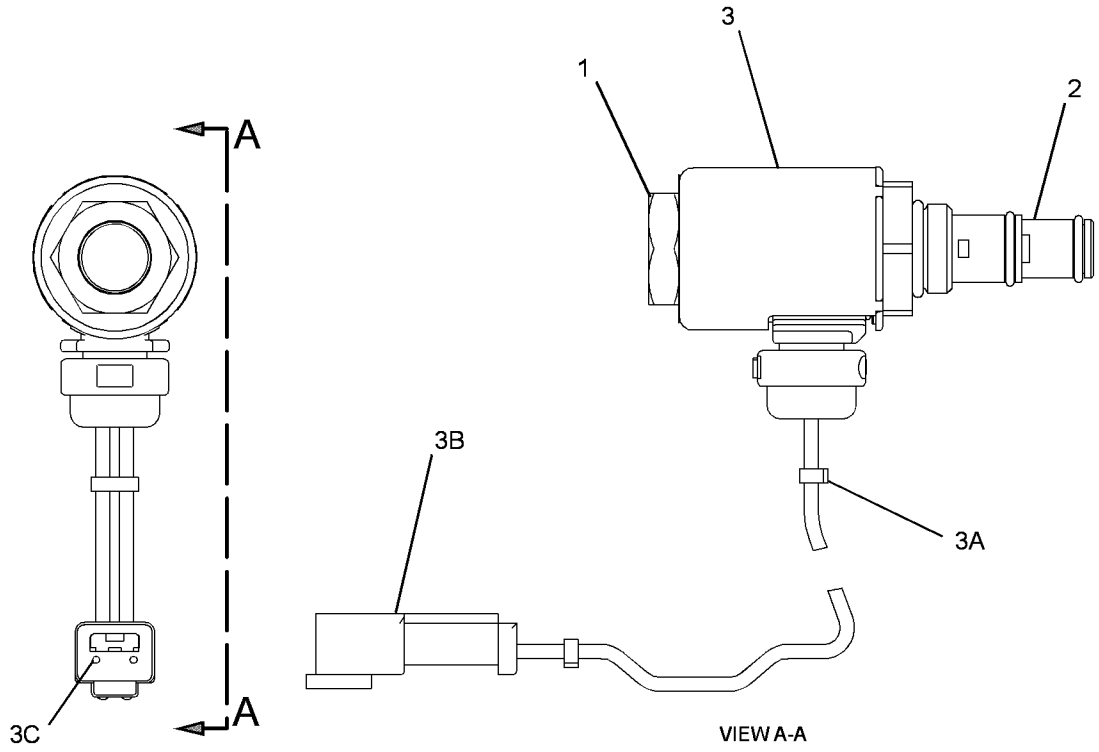

GRAPHIC #1 **<END>** g01628276

186-1526 VALVE GP-SOLENOID

S/N: S4X1-UP
24-VOLT
FIELD REPLACEMENT FOR 396-7070—PAGE: 264
PART OF 365-6746 VALVE GP-SELECTOR & PRESS CONT
TYPE 2

SMCS-3174, 4804, 4805, 5479 **i06071447**

NOTE	PART NUMBER	QTY	PART NAME 1 2 3 4 5 6 (PRODUCT LEVEL)	SEE PAGE
Y	**396-7070**	1	VALVE GP-SOLENOID (12-VDC)	264

Y - SEPARATE ILLUSTRATION

<END>

396-7070 VALVE GP-SOLENOID–12-VDC

S/N: S4X1-UP

FIELD REPLACEMENT ORDER 186-1526–PAGE: 262

PART OF 186-1526 VALVE GP-SOLENOID

SMCS-3174, 4804, 4805, 5479 **i06071474**

NOTE	REF NO	GRAPHIC REF	PART NUMBER	QTY	PART NAME 1 2 3 4 5 6 (PRODUCT LEVEL)	SEE PAGE
	1	1	**301-3118**	1	COIL AS	
	2	1	**443-1076**	1	NUT (9/16-18-THD)	
					AVAILABLE REPAIR KIT(S):	
			7T-4515	1	KIT-SEAL (SOLENOID VALVE)	
					(INCLUDES SEALS)	

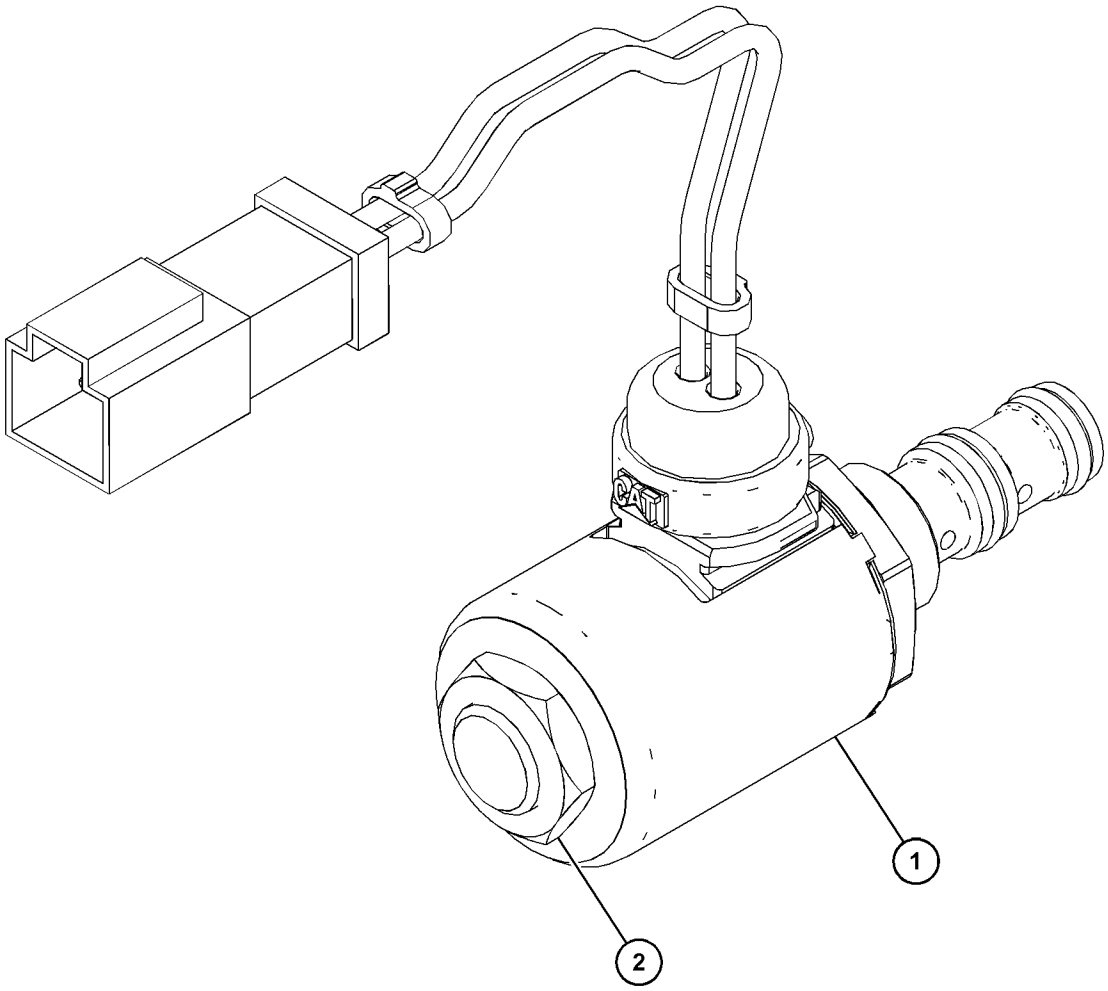

GRAPHIC #1 **<END>** g03799064

365-6745 VALVE GP-TRANSMISSION CONTROL

S/N: S4X1-UP

PART OF 396-5175 TRANSMISSION AR

SMCS-3073, 3167 **i05430941**

NOTE	REF NO	GRAPHIC REF	PART NUMBER	QTY	PART NAME 1 2 3 4 5 6 (PRODUCT LEVEL)	SEE PAGE
	1	1	**3J-1907**	3	SEAL-O-RING	
	2	1	**3J-6956**	1	SPRING	
	3	1	**4F-4097**	2	SEAL-O-RING	
	4	1	**6V-0852**	3	CAP-DUST	
	5	1	**6Y-2522**	1	SPRING	
	6	1	**6Y-2584**	1	RETAINER	
	7	1	**6Y-9692**	1	PLATE	
	8	1	**7T-8810**	1	PLUNGER	
	9	1	**8C-5176**	2	SEAL-O-RING	
Y	10	1	**8E-5523**	1	VALVE GP-DUMP (TRANSMISSION)	258
Y	11	1	**8E-6703**	1	VALVE GP-DIFFERENTIAL (TRANSMISSION)	257
	12	1	**9L-9068**	6	DOWEL	
	13	1	**9P-9150**	4	WASHER (8.25X18X0.84-MM THK)	
	14	1	**142-1767**	1	POPPET	
	15	1	**179-6377**	1	MANIFOLD	
Y	16	1	**365-6746**	1	VALVE GP-SELECTOR & PRESS CONT	260
	17	1	**365-6747**	1	PLATE	
	18	1	**1T-0738**	2	WASHER (8.4X19X1.83-MM THK)	
	19	1	**3K-0360**	1	SEAL-O-RING	
	20	1	**4D-1322**	1	RING-RETAINING	
	21	1	**4J-2506**	2	SEAL-O-RING	
	22	1	**6V-3965**	3	FITTING (QUICK DISCONNECT)	
M	23	1	**6V-8212**	1	BOLT (M10X1.5X16-MM)	
	24	1	**8E-9571**	1	WASHER-HARD (8.8X16X7-MM THK)	
M	25	1	**8T-4776**	1	BOLT-SOCKET HEAD (M8X1.25X100-MM)	
M	26	1	**8T-9535**	2	BOLT-SOCKET HEAD (M8X1.25X60-MM)	
	27	1	**9S-8005**	1	PLUG-O-RING	

M - METRIC PART
Y - SEPARATE ILLUSTRATION

365-6745 **VALVE GP-TRANSMISSION CONTROL** (*contd.*) **i05430941**

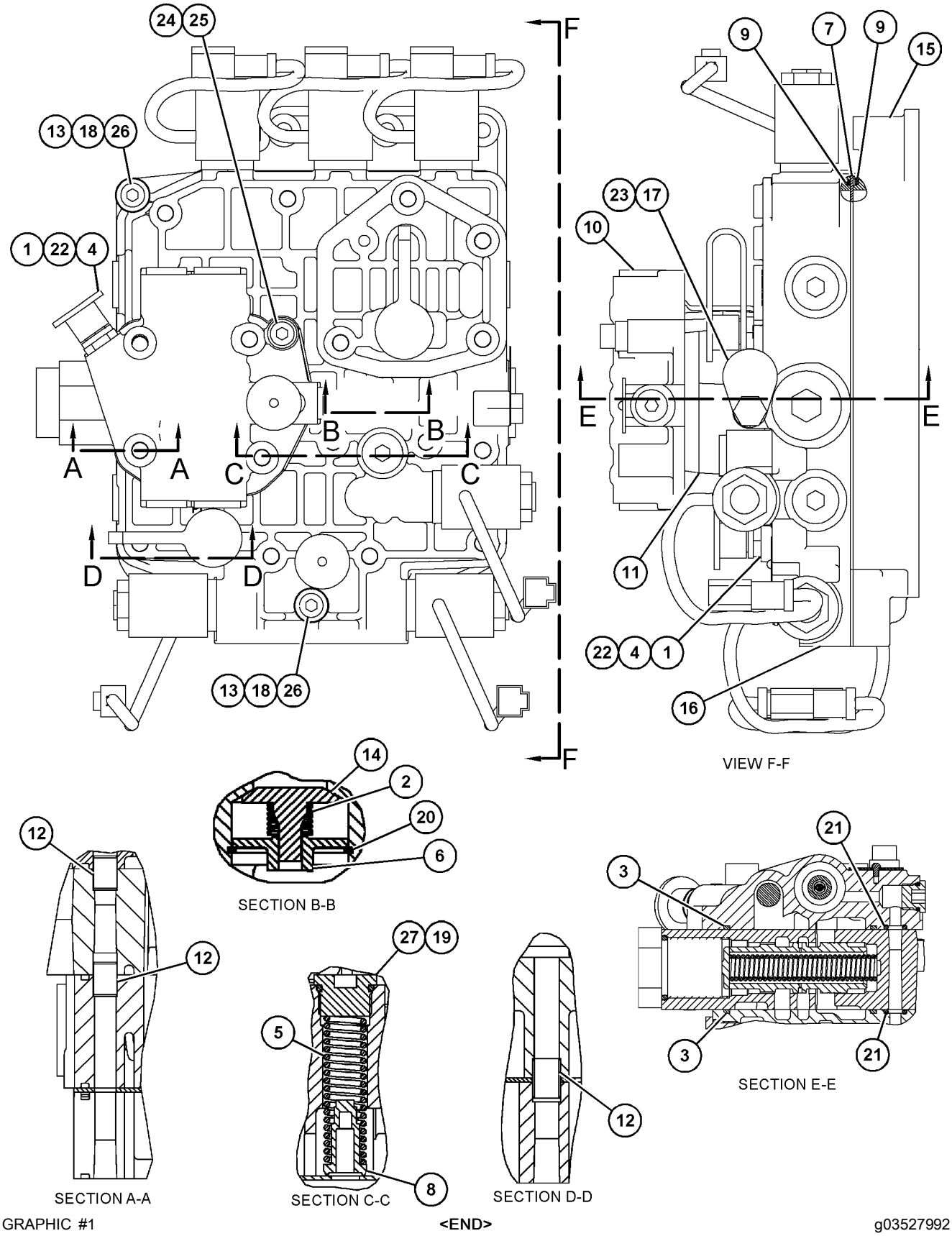

GRAPHIC #1

<END>

g03527992

392-3780 BOX GP-BATTERY

S/N: M5K1-UP
CANNOT BE USED WITH 432-7330 BOX GP-BATTERY
AN ATTACHMENT

SMCS-7257 **i05584050**

NOTE	REF NO	GRAPHIC REF	PART NUMBER	QTY	PART NAME 1 2 3 4 5 6 (PRODUCT LEVEL)	SEE PAGE
	1	1	**392-3778**	2	ROD	
	2	1	**392-3779**	2	SPACER (9X22X4-MM THK)	
	3	1	**392-3781**	1	BOX AS-BATTERY	
		1	**7T-1099**	1	LINK	
M		1	**8T-3490**	8	NUT-WELD (M10X1.5-THD)	
M		1	**8T-6462**	1	BOSS-WELD (M10X1.5X25-MM)	
M		1	**416-8393**	2	BOSS-WELD (M10X1.5X56-MM)	
Y	4	1	*392-3782*	1	BOX GP-BATTERY	269
	5	1	**392-3796**	1	COVER	
	6	1	**392-3797**	9	BOSS	
	7	1	**392-3798**	1	BRACKET AS	
Y	8	1	*392-8394*	1	BATTERY & WIRING GP (MOUNTING)	103
M	9	1	**5P-7970**	2	NUT (M8X1.25-THD)	
M	10	1	**6V-3823**	9	BOLT (M12X1.75X60-MM)	
	11	1	**7X-7729**	2	WASHER (11X25X3-MM THK)	
	12	1	**8T-4121**	6	WASHER-HARD (11X21X2.5-MM THK)	
M	13	1	**8T-4136**	4	BOLT (M10X1.5X25-MM)	
M	14	1	**8T-4137**	4	BOLT (M10X1.5X20-MM)	
	15	1	**8T-4223**	9	WASHER-HARD (13.5X25.5X3-MM THK)	

M - METRIC PART
Y - SEPARATE ILLUSTRATION

392-3780 **BOX GP-BATTERY (*contd.*)** **i05584050**

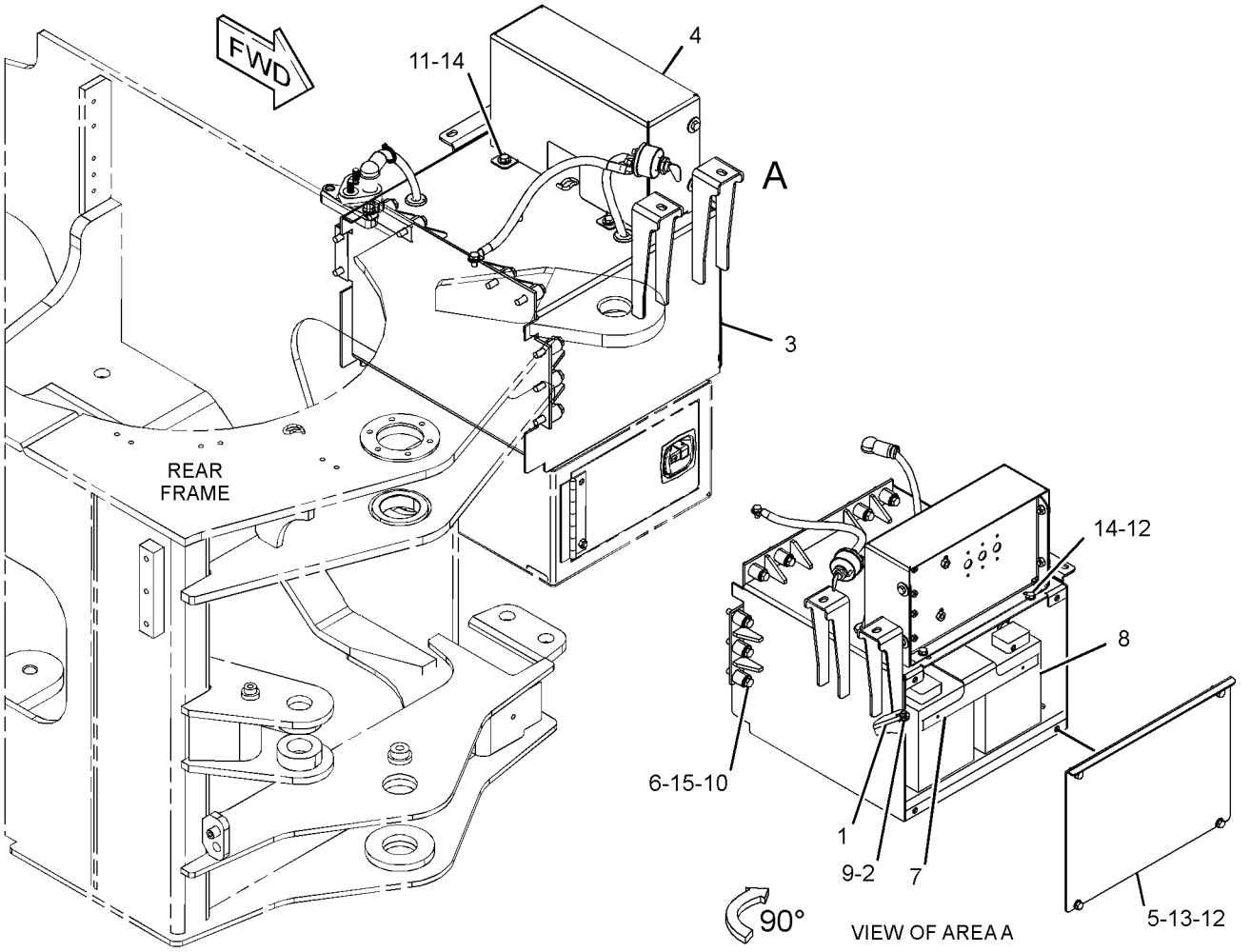

GRAPHIC #1 **<END>** g03429799

392-3782 BOX GP-BATTERY

S/N: M5K1-UP
PART OF 392-3780, 432-7330 BOX GP-BATTERY
AN ATTACHMENT

SMCS-7257 **i05583991**

NOTE	REF NO	GRAPHIC REF	PART NUMBER	QTY	PART NAME 1 2 3 4 5 6 (PRODUCT LEVEL)	SEE PAGE
	1	1	**392-3793**	1	BOX	
	2	1	**392-3794**	1	COVER AS	
M	3	1	**8T-4137**	4	BOLT (M10X1.5X20-MM)	
	4	1	**7X-7729**	4	WASHER (11X25X3-MM THK)	

M - METRIC PART

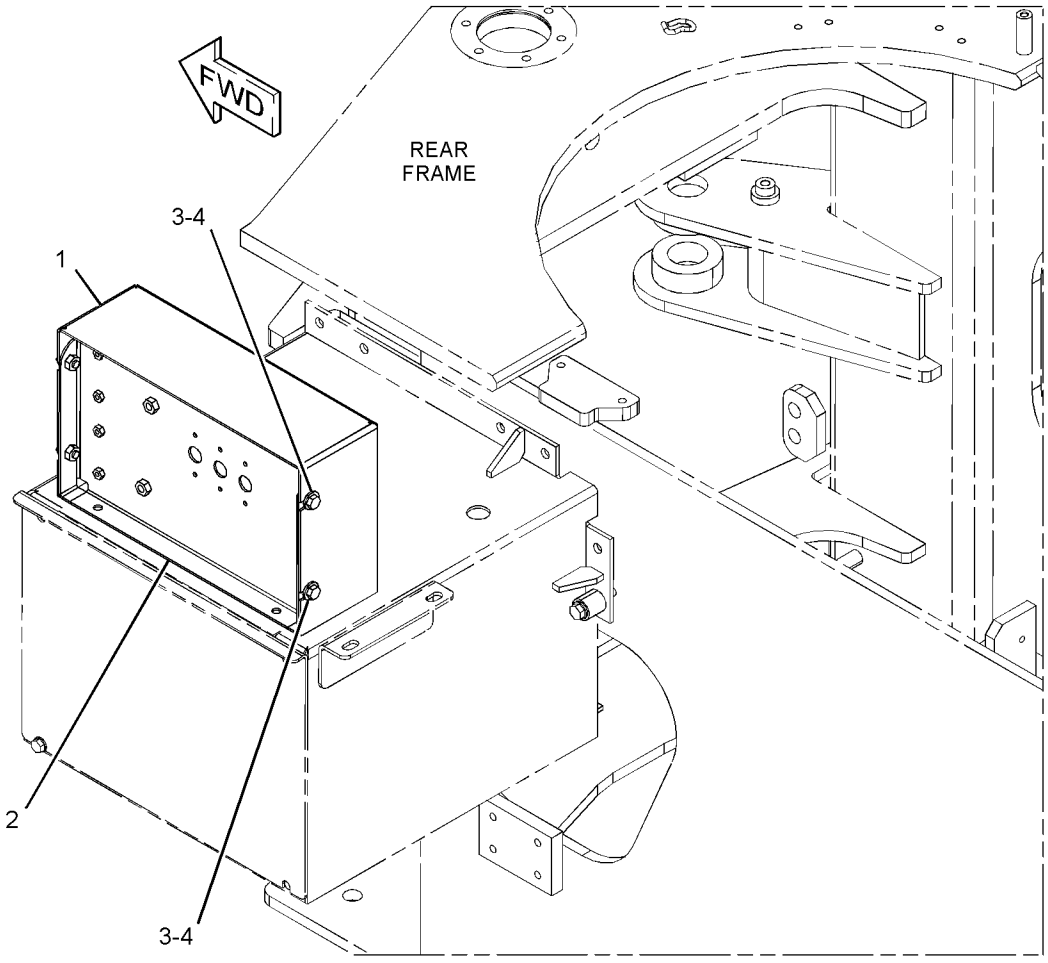

GRAPHIC #1 **<END>** g03547439

432-7330 BOX GP-BATTERY—COLD WEATHER

S/N: M5K1-UP

CANNOT BE USED WITH 392-3780 BOX GP-BATTERY AN ATTACHMENT

SMCS-7257 **i05425514**

NOTE	REF NO	GRAPHIC REF	PART NUMBER	QTY	PART NAME 1 2 3 4 5 6 (PRODUCT LEVEL)	SEE PAGE
Y	1	1	*392-3782*	1	BOX GP-BATTERY	269
	2	1	**392-3796**	1	COVER	
	3	1	**392-3797**	9	BOSS	
Y	4	1	*415-4246*	1	BATTERY & BOX GP-HEAVY-DUTY	100
	5	1	**432-7328**	2	LINK	
	6	1	**432-7329**	1	PLATE	
Y	7	1	**432-7331**	1	BOX GP-BATTERY	272
M	8	1	**6V-3823**	9	BOLT (M12X1.75X60-MM)	
	9	1	**7X-7729**	4	WASHER (11X25X3-MM THK)	
	10	1	**8T-4121**	6	WASHER-HARD (11X21X2.5-MM THK)	
M	11	1	**8T-4133**	2	NUT (M10X1.5-THD)	
M	12	1	**8T-4136**	4	BOLT (M10X1.5X25-MM)	
M	13	1	**8T-4137**	4	BOLT (M10X1.5X20-MM)	
	14	1	**8T-4223**	9	WASHER-HARD (13.5X25.5X3-MM THK)	

M - METRIC PART
Y - SEPARATE ILLUSTRATION

432-7330 **BOX GP-BATTERY (*contd.*)** **i05425514**

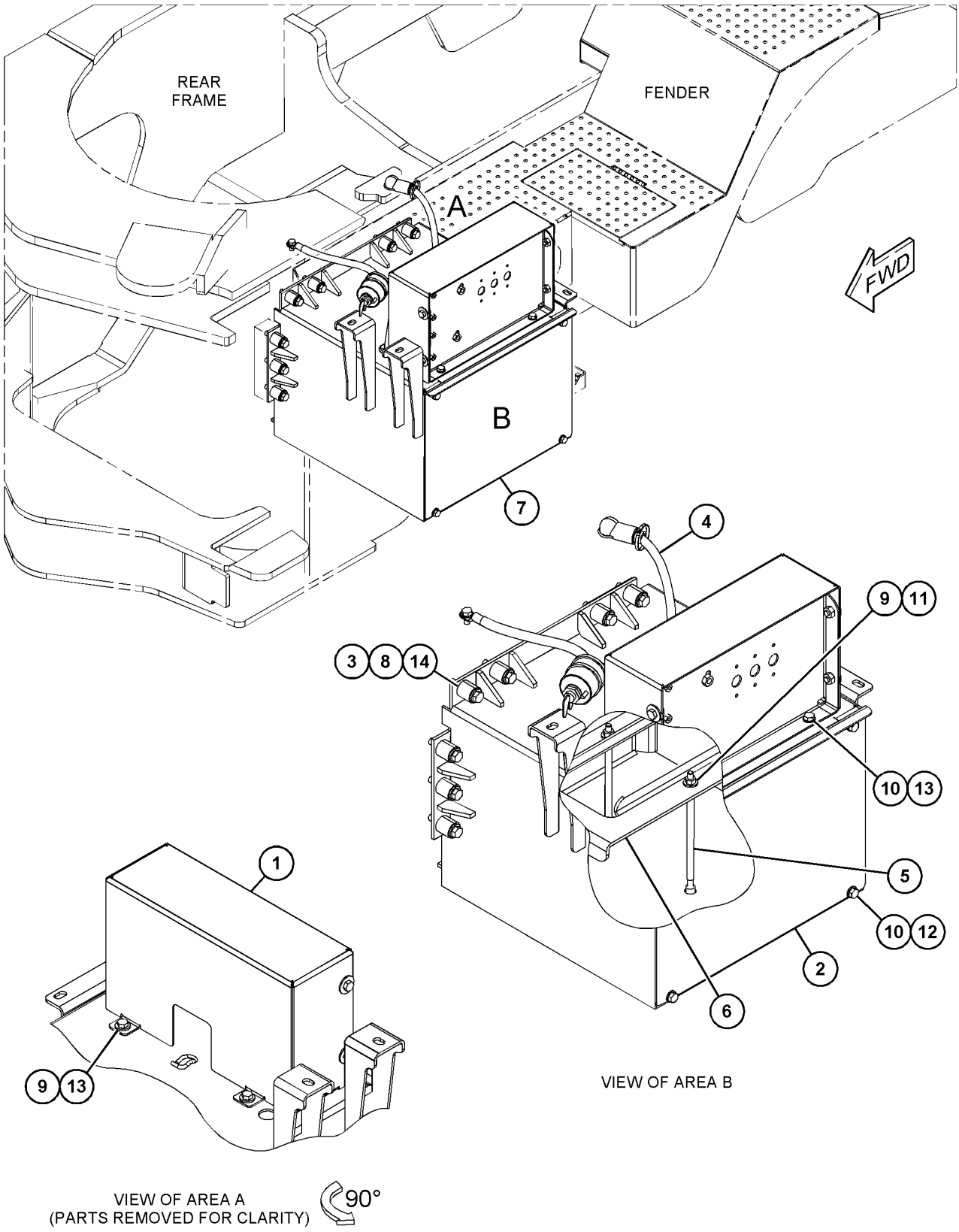

GRAPHIC #1 **<END>** g03526724

432-7331 BOX GP-BATTERY

S/N: M5K1-UP
PART OF 432-7330 BOX GP-BATTERY
AN ATTACHMENT

SMCS-7257 **i05582608**

NOTE	REF NO	GRAPHIC REF	PART NUMBER	QTY	PART NAME 1 2 3 4 5 6 (PRODUCT LEVEL)	SEE PAGE
M	1	1	**416-8393**	2	BOSS-WELD (M10X1.5X56-MM)	
	2	1	**7T-1099**	3	LINK	
M	3	1	**8T-3490**	8	NUT-WELD (M10X1.5-THD)	
M	4	1	**8T-4935**	2	BOSS-WELD (M10X1.5X45-MM)	
M	5	1	**8T-6462**	3	BOSS-WELD (M10X1.5X25-MM)	

M - METRIC PART

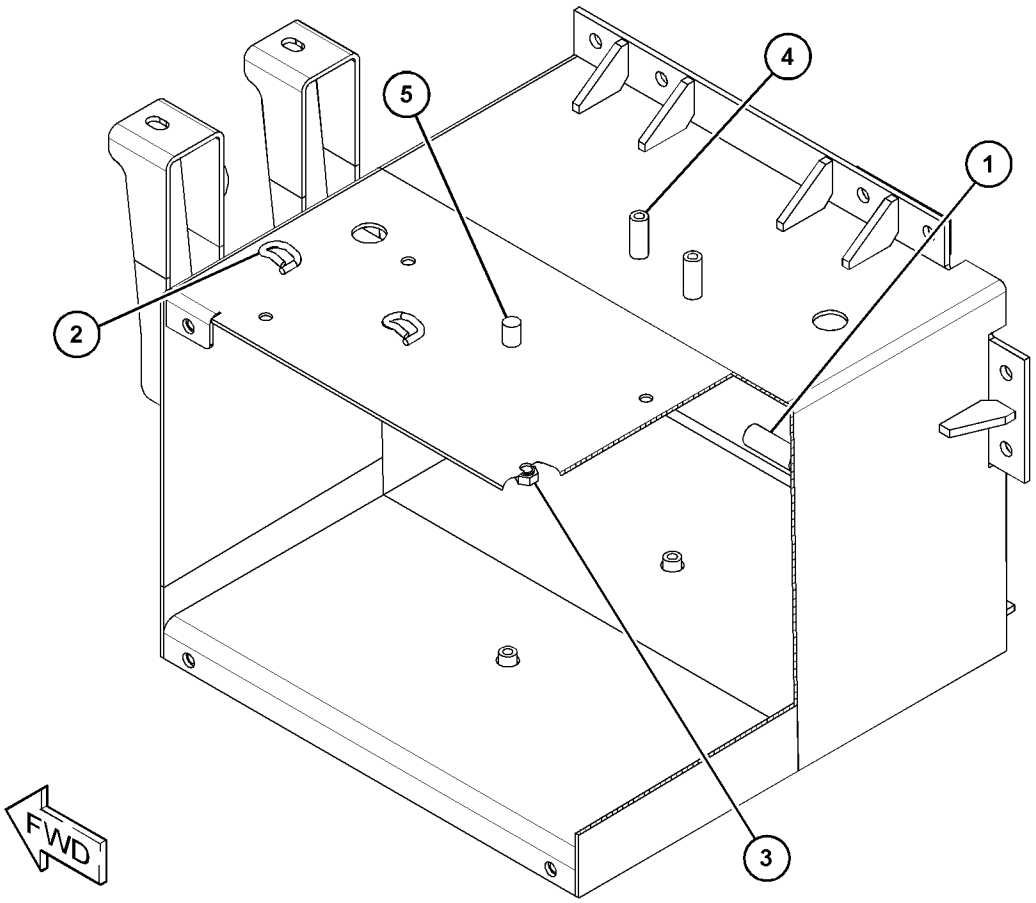

GRAPHIC #1 **<END>** g03552104

392-3702 BRACKET GP-MOUNTING

S/N: M5K1-UP

PART OF 387-6001 CHASSIS AR, 387-6027, 432-7392, 432-7393 CONVERSION AR-BRAKE CONTROL ALSO AN ATTACHMENT

TYPE 1

SMCS-0635, 5057 **i05436473**

NOTE	REF NO	GRAPHIC REF	PART NUMBER	QTY	PART NAME 1 2 3 4 5 6 (PRODUCT LEVEL)	SEE PAGE
	1	1	**392-3704**	1	BRACKET AS (LH)	
	2	1	**392-3711**	1	BRACKET AS (RH)	
	3	1	**7X-0623**	8	WASHER (10.5X21X2-MM THK)	
M	4	1	**8T-4136**	8	BOLT (M10X1.5X25-MM)	

M - METRIC PART

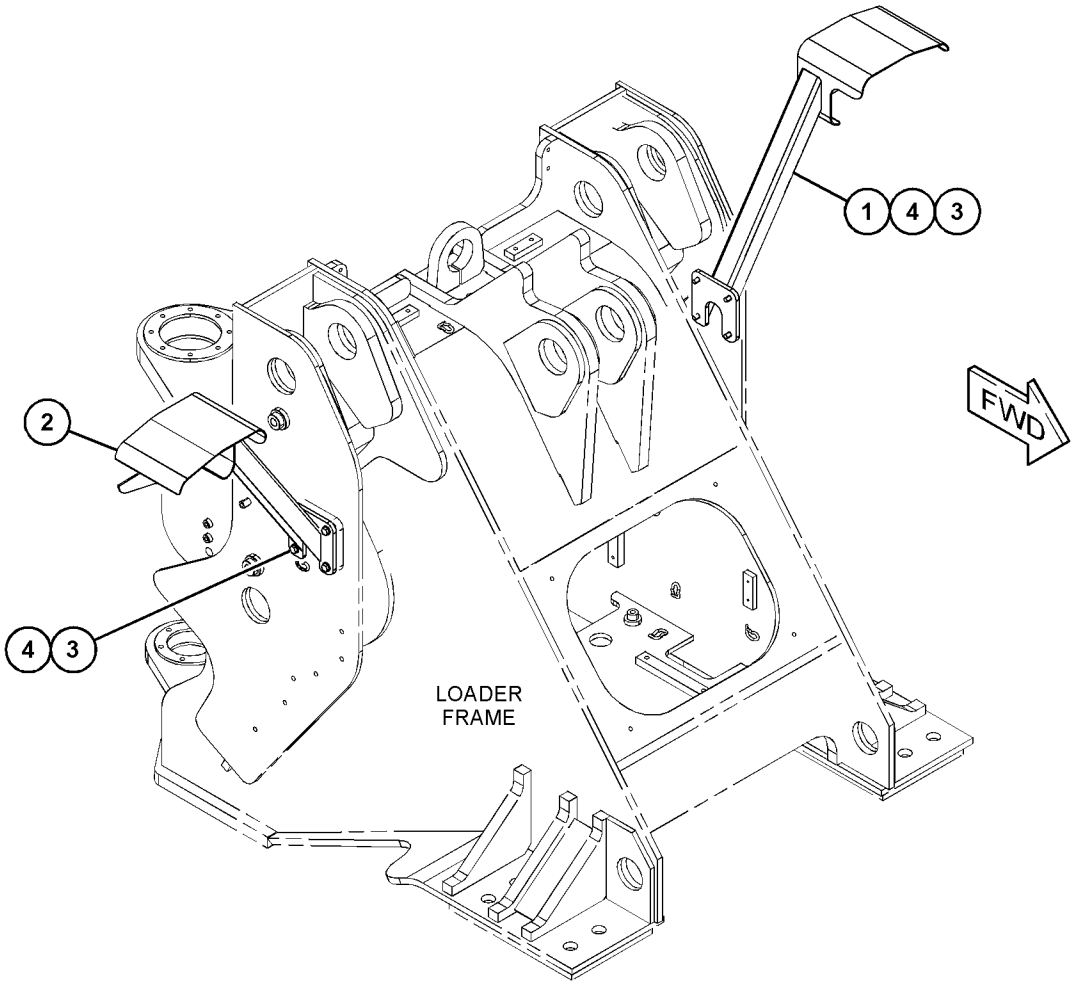

GRAPHIC #1 **<END>** g03531676

392-3702 BRACKET GP-MOUNTING

S/N: M5K1-UP
PART OF 387-6027, 432-7392, 432-7393 CONVERSION AR-BRAKE CONTROL
AN ATTACHMENT
TYPE 2

SMCS-0635, 5057

i06056744

NOTE	REF NO	GRAPHIC REF	PART NUMBER	QTY	PART NAME 1 2 3 4 5 6 (PRODUCT LEVEL)	SEE PAGE
	1	1	**392-3704**	1	BRACKET AS (LH)	
	2	1	**392-3711**	1	BRACKET AS (RH)	
C	3	1	**7X-0623**	6	WASHER (10.5X21X2-MM THK)	
CM	4	1	**8T-4136**	6	BOLT (M10X1.5X25-MM)	

C - CHANGE FROM PREVIOUS TYPE
M - METRIC PART

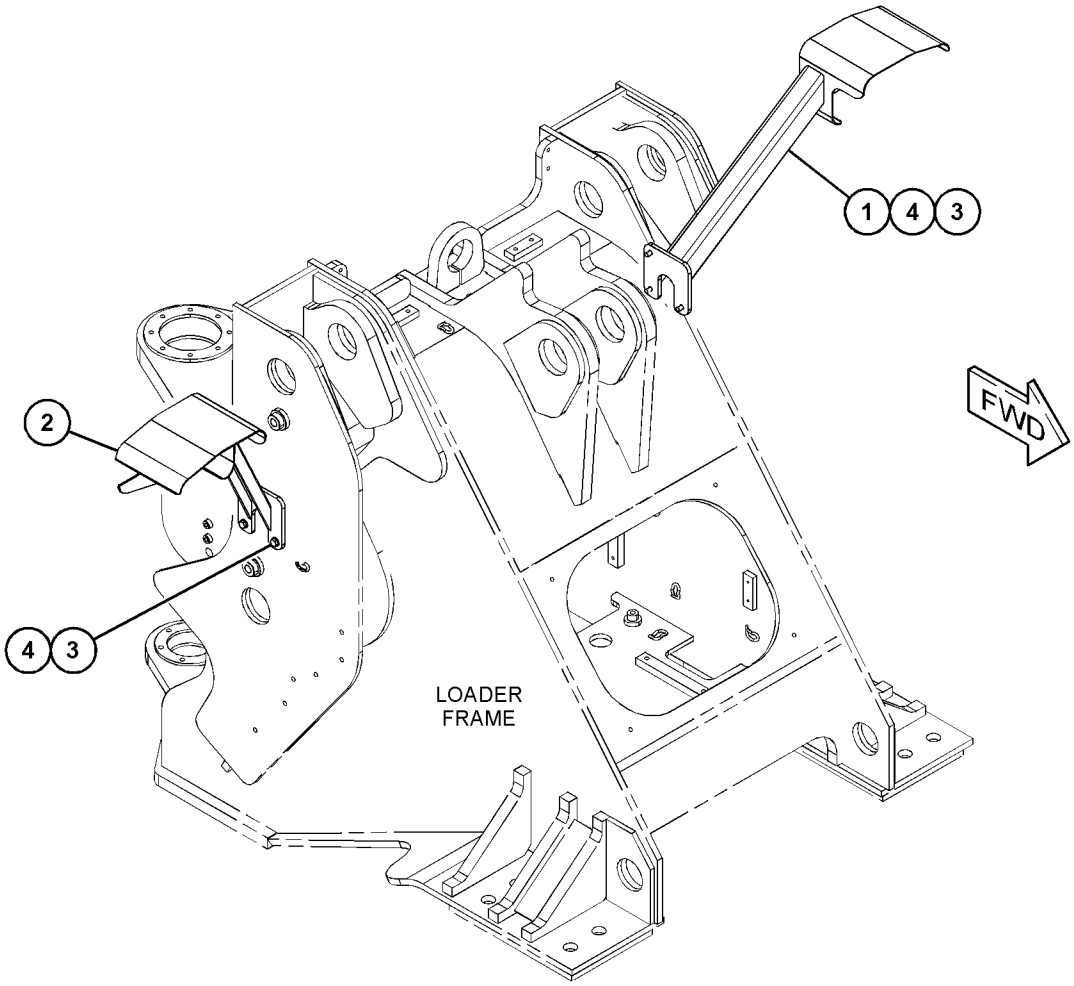

GRAPHIC #1

<END>

g03796792

392-3725 BRACKET GP-MOUNTING

S/N: M5K1-UP

AN ATTACHMENT

SMCS-0635, 5057 **i05425204**

NOTE	REF NO	GRAPHIC REF	PART NUMBER	QTY	PART NAME 1 2 3 4 5 6 (PRODUCT LEVEL)	SEE PAGE
	1	1	**416-8390**	1	BRACKET AS	
M	2	1	**8T-4139**	5	BOLT (M12X1.75X30-MM)	
	3	1	**8T-4821**	5	WASHER (13.5X40X3-MM THK)	

M - METRIC PART

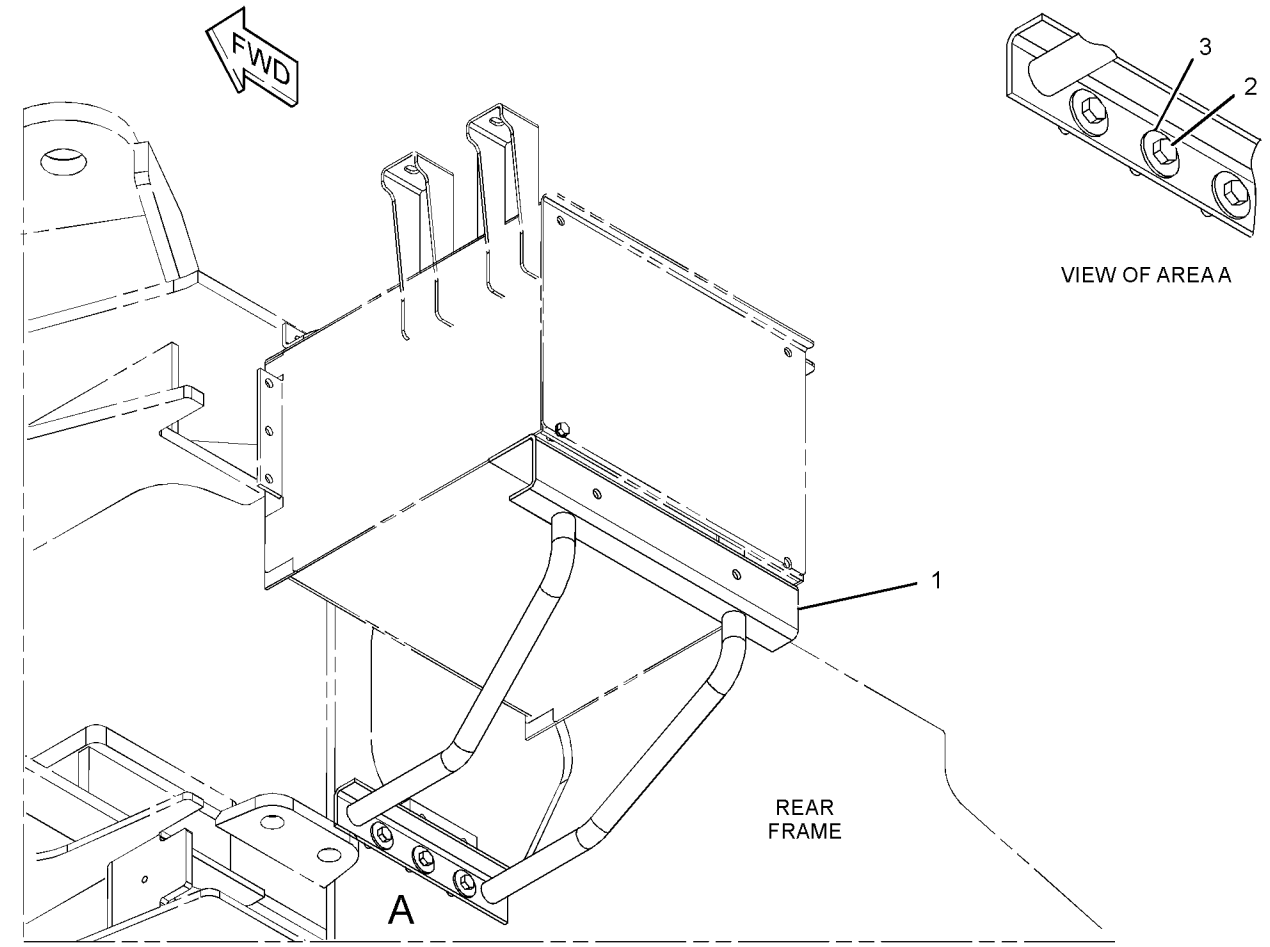

GRAPHIC #1 **<END>** g03431148

457-3274 BRACKET GP-MOUNTING

S/N: M5K1-UP
FOR USE WITH MUFFLER
PART OF 392-2252 INSTALLATION GP-ENGINE

SMCS-0635, 5057 **i06067619**

NOTE	REF NO	GRAPHIC REF	PART NUMBER	QTY	PART NAME 1 2 3 4 5 6 (PRODUCT LEVEL)	SEE PAGE
	1	1	**457-3275**	1	BRACKET AS	
	2	1	**457-3280**	2	SPACER	
	3	1	**457-3281**	2	SPACER	
	4	1	**5P-8245**	16	WASHER-HARD (13.5X25.5X3-MM THK)	
M	5	1	**8T-0646**	8	BOLT (M12X1.75X110-MM)	
M	6	1	**8T-4244**	8	NUT (M12X1.75-THD)	

M - METRIC PART

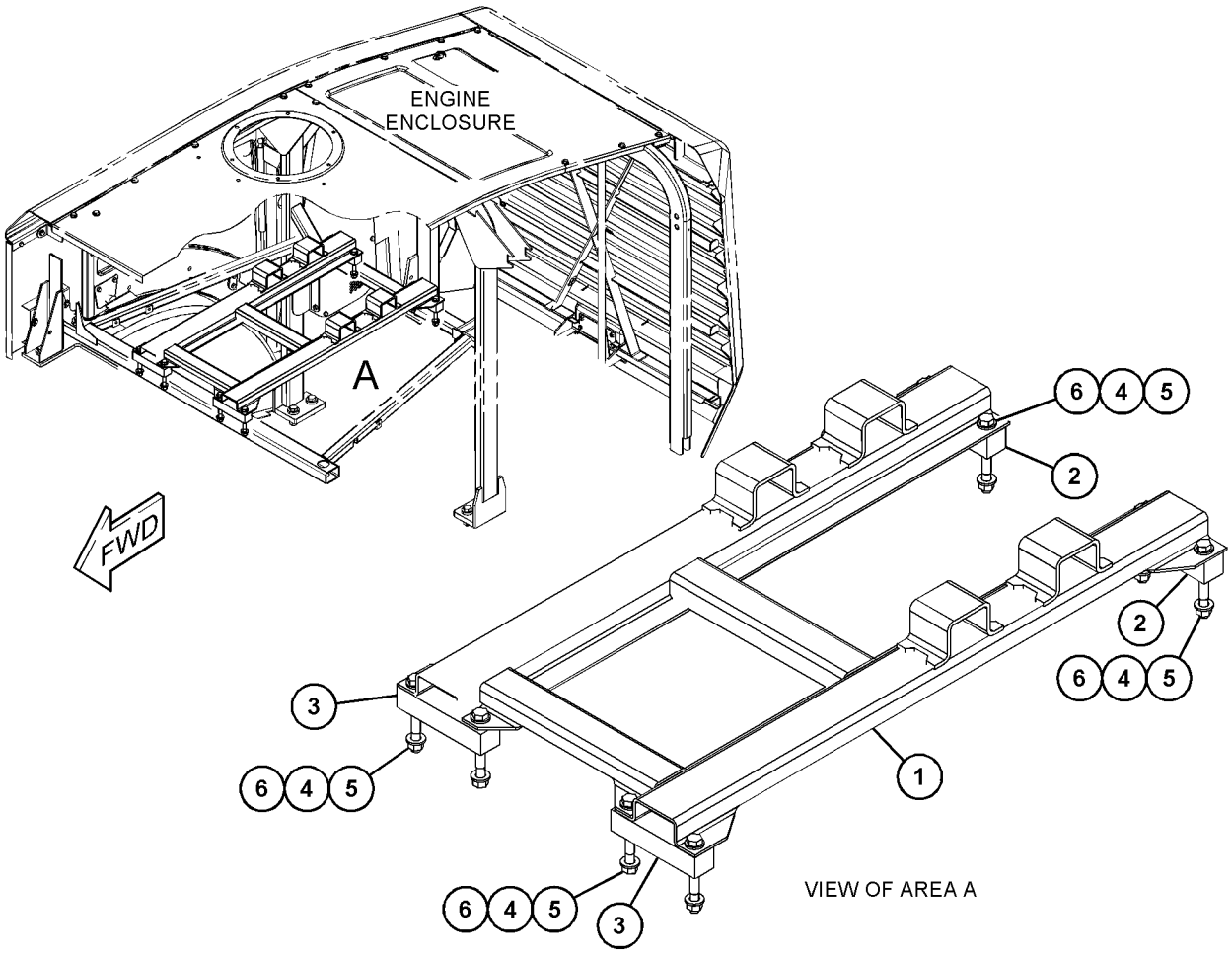

GRAPHIC #1 **<END>** g03798265

387-6026 CONVERSION AR-ROADING

S/N: M5K1-UP

FOR USE WITH 415-4249—PAGE: 144

CANNOT BE USED WITH 387-6027—PAGE: 356, 432-7392—PAGE: 356, 432-7393—PAGE: 357

AN ATTACHMENT

SMCS-7000, 7153

i06056806

NOTE	PART NUMBER	QTY	PART NAME 1 2 3 4 5 6 (PRODUCT LEVEL)	SEE PAGE
Y	*450-4860*	1	BRACKET GP-SUPPORT	107
Y	*371-5010*	1	CONTROL GP-SERVICE BRAKE	349
Y	*415-4232*	1	CONVERSION GP-ROADING (LICENSE PLATE)	278
Y	*446-7556*	1	ENGINE AR-PRIMARY	4
Y	*434-6694*	1	FILM GP	663
	417-2116	1	REFLECTOR GP	
	238-4523	2	REFLECTOR-RED	
	238-4524	6	REFLECTOR-AMBER	
	238-4525	2	REFLECTOR-WHITE	

Y - SEPARATE ILLUSTRATION

<END>

415-4232 CONVERSION GP-ROADING

S/N: M5K1-UP

PART OF 387-6026 CONVERSION AR-ROADING

AN ATTACHMENT

SMCS-7000 **i05819494**

NOTE	REF NO	GRAPHIC REF	PART NUMBER	QTY	PART NAME 1 2 3 4 5 6 (PRODUCT LEVEL)	SEE PAGE
Y	1	1	**259-0134**	1	LAMP GP-REGISTRATION PLATE (24-VOLT)	146
	2	1	**415-4191**	1	GROMMET	
	3	1	**449-4921**	1	BRACKET	
	4	1	**096-6166**	4	WASHER-HARD (4.5X9X1-MM THK)	
M	5	1	**5C-8312**	4	NUT (M4X0.7-THD)	
M	6	1	**121-4405**	4	BOLT (M4X0.7X12-MM)	
	7	1	**449-4920**	1	HARNESS AS-LIGHTING (LICENSE PLATE)	
		1	**102-8802**	1	KIT-RECEPTACLE (2-PIN)	
					(INCLUDES RECEPTACLE AS & WEDGE)	
		1	**8T-8729**	2	PIN-CONNECTOR (16-GA TO 18-GA)	
		1	**8T-8730**	2	SOCKET-CONNECTOR (16-GA TO 18-GA)	
		1	**155-2270**	1	KIT-CONNECTING PLUG (2-PIN)	
					(INCLUDES PLUG AS, WEDGE & INTERFACE SEAL)	
	8	1	**7K-1181**	17	STRAP-CABLE	

M - METRIC PART
Y - SEPARATE ILLUSTRATION

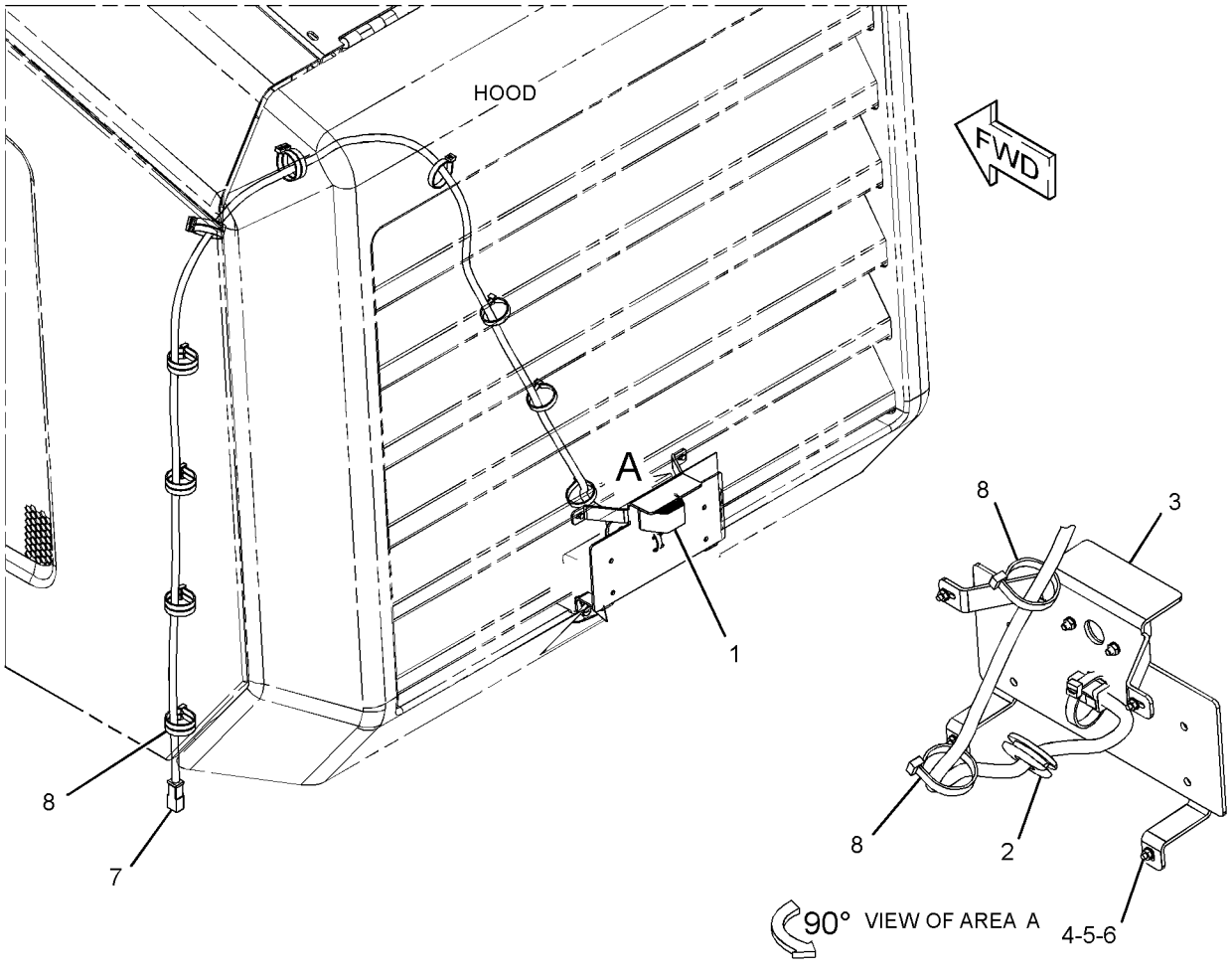

GRAPHIC #1 **<END>** g03684412

392-3830 COUNTERWEIGHT & MOUNTING GP

S/N: M5K1-UP

AN ATTACHMENT

SMCS-7056 **i05819495**

NOTE	REF NO	GRAPHIC REF	PART NUMBER	QTY	PART NAME 1 2 3 4 5 6 (PRODUCT LEVEL)	SEE PAGE
	1	1	**392-3831**	1	COUNTERWEIGHT GP	
M		1	**8T-4200**	8	BOLT (M8X1.25X16-MM)	
		1	**8T-4224**	8	WASHER-HARD (8.8X16X2-MM THK)	
		1	**392-3861**	2	BRACKET AS	
					(EACH INCLUDES)	
		1	**7T-1099**	2	LINK	
M		1	**8T-6462**	1	BOSS-WELD (M10X1.5X25-MM)	
	2	1	**392-3871**	1	PIN AS	
	3	1	**392-3876**	1	PLATE	
	4	1	**392-3875**	1	LOCKPIN	
	5	1	**392-3886**	2	PLUG	
Y	6	1	*415-4244*	1	LIGHTING GP-SIGNAL (COUNTERWEIGHT)	155
M	7	1	**264-4451**	4	BOLT (M30X3.5X350-MM)	
M	8	1	**8C-8722**	4	NUT (M30X3.5-THD)	
	9	1	**8T-4121**	6	WASHER-HARD (11X21X2.5-MM THK)	
M	10	1	**8T-4136**	6	BOLT (M10X1.5X25-MM)	
	11	1	**392-3878**	4	PLATE	

M - METRIC PART
Y - SEPARATE ILLUSTRATION

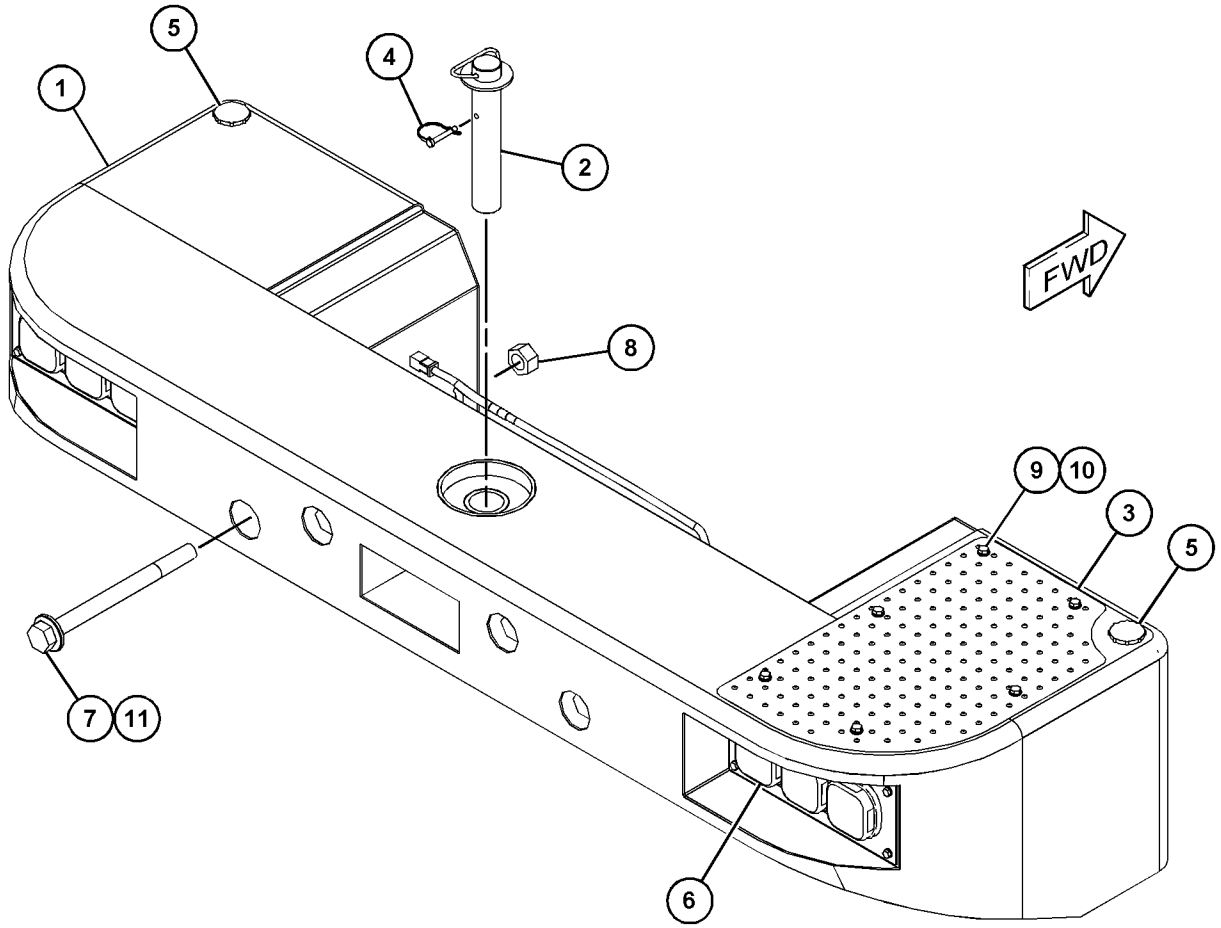

GRAPHIC #1 **<END>** g03687997

431-4650 COUNTERWEIGHT & MOUNTING GP

S/N: M5K1-UP
CANNOT BE USED WITH 392-3830—PAGE: 279
AN ATTACHMENT
TYPE 1

SMCS-7056 **i06061638**

NOTE	REF NO	GRAPHIC REF	PART NUMBER	QTY	PART NAME 1 2 3 4 5 6 (PRODUCT LEVEL)	SEE PAGE
	1	1	**392-3871**	1	PIN AS	
		1	**392-3833**	1	PIN	
	2	1	**392-3874**	1	PLATE	
	3	1	**392-3886**	2	PLUG	
Y	4	1	*415-4245*	1	LIGHTING GP-FLOOD & SIGNAL	153
	5	1	**431-4651**	1	COUNTERWEIGHT GP	
	7	1	**431-4669**	2	PLATE	
	8	1	**431-4671**	2	BRACKET AS	
					(EACH INCLUDES)	
		1	**7T-1099**	1	LINK	
M	9	1	**264-4451**	4	BOLT (M30X3.5X350-MM)	
M	10	1	**8C-8722**	4	NUT (M30X3.5-THD)	
	11	1	**8T-4121**	8	WASHER-HARD (11X21X2.5-MM THK)	
M	12	1	**8T-4136**	8	BOLT (M10X1.5X25-MM)	
M	13	1	**8T-4189**	16	BOLT (M8X1.25X20-MM)	
	14	1	**8T-4224**	16	WASHER-HARD (8.8X16X2-MM THK)	
	15	1	**392-3875**	1	LOCKPIN	
	16	1	**431-4676**	1	COVER AS (LIGHT)	
	17	1	**431-4677**	1	COVER AS (LIGHT)	
	18	1	**392-3878**	4	PLATE	

M - METRIC PART
Y - SEPARATE ILLUSTRATION

431-4650 **COUNTERWEIGHT & MOUNTING GP (*contd.*)** **i06061638**

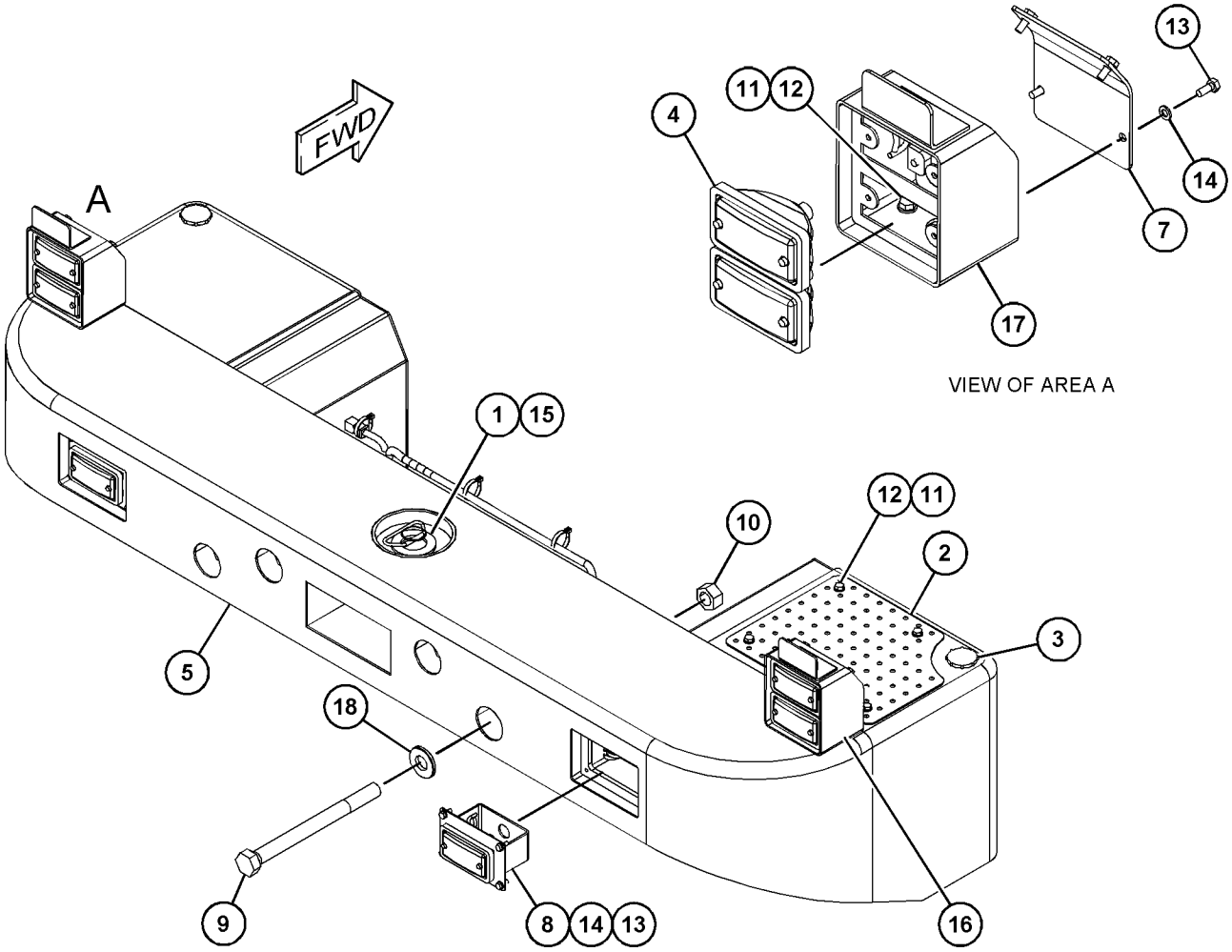

GRAPHIC #1 **<END>** g03795825

431-4650 COUNTERWEIGHT & MOUNTING GP

S/N: M5K1-UP
CANNOT BE USED WITH 392-3830—PAGE: 279
AN ATTACHMENT
TYPE 2

SMCS-7056 **i06063941**

NOTE	REF NO	GRAPHIC REF	PART NUMBER	QTY	PART NAME 1 2 3 4 5 6 (PRODUCT LEVEL)	SEE PAGE
	1	1	**392-3871**	1	PIN AS	
		1	**392-3833**	1	PIN	
	2	1	**392-3874**	1	PLATE	
	3	1	**392-3875**	1	LOCKPIN	
	4	1	**392-3878**	4	PLATE	
	5	1	**392-3886**	2	PLUG	
Y	6	1	*415-4245*	1	LIGHTING GP-FLOOD & SIGNAL	153
	7	1	**431-4669**	2	PLATE	
C	8	1	**431-4682**	2	BRACKET AS	
					(EACH INCLUDES)	
		1	**7T-1099**	2	LINK	
M		1	**8T-6462**	1	BOSS-WELD (M10X1.5X25-MM)	
C	9	1	**431-4683**	1	COUNTERWEIGHT AS	
M	10	1	**264-4451**	4	BOLT (M30X3.5X350-MM)	
M	11	1	**8C-8722**	4	NUT (M30X3.5-THD)	
	12	1	**8T-4121**	8	WASHER-HARD (11X21X2.5-MM THK)	
M	13	1	**8T-4136**	8	BOLT (M10X1.5X25-MM)	
CM	14	1	**8T-4200**	8	BOLT (M8X1.25X16-MM)	
C	15	1	**8T-4224**	8	WASHER-HARD (8.8X16X2-MM THK)	

C - CHANGE FROM PREVIOUS TYPE
M - METRIC PART
Y - SEPARATE ILLUSTRATION

431-4650 **COUNTERWEIGHT & MOUNTING GP (*contd.*)** **i06063941**

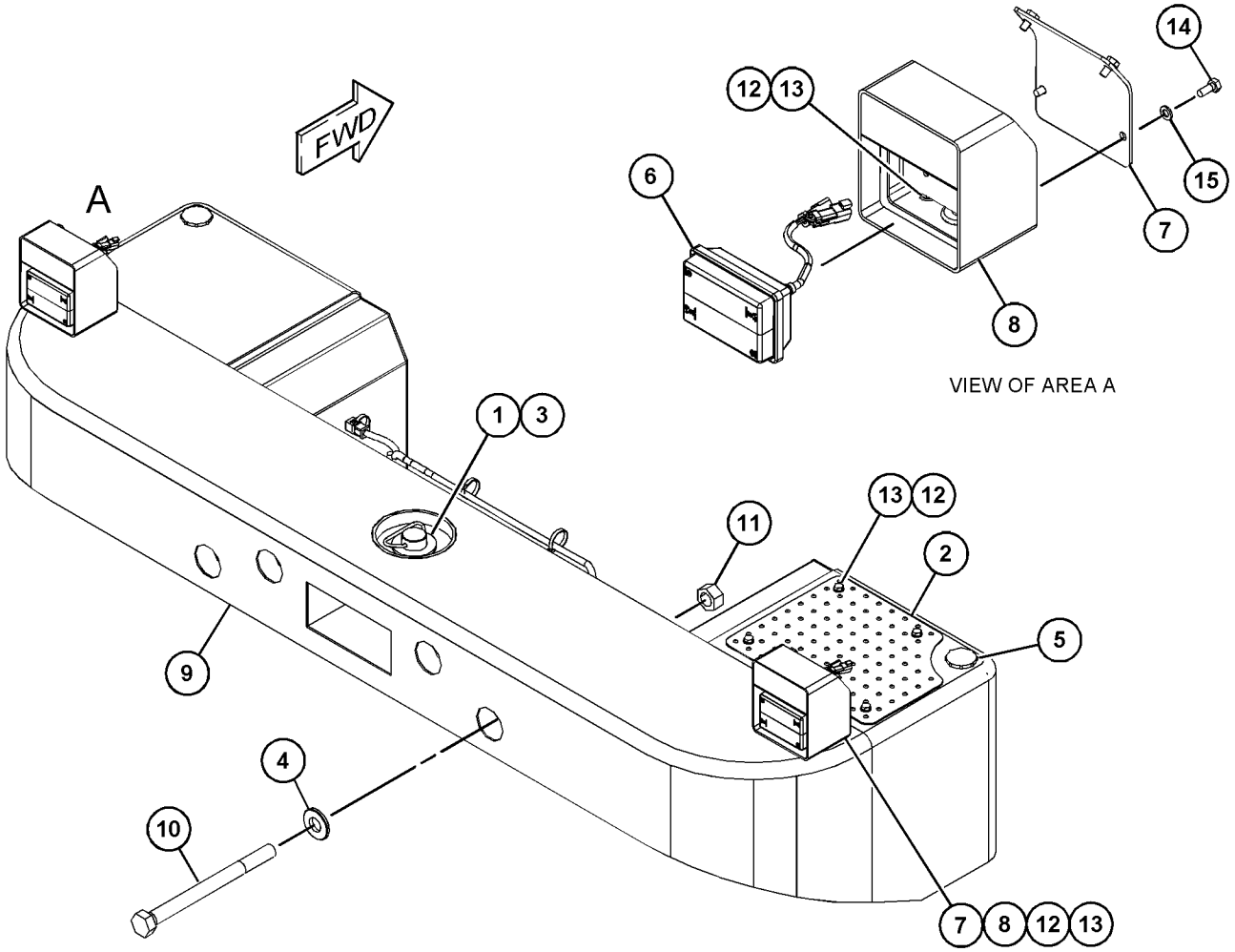

GRAPHIC #1 **<END>** g03798521

387-6209 DOOR GP-ACCESS–LH

S/N: M5K1-UP

PART OF 387-6220, 457-8580 ENCLOSURE GP-ENGINE

SMCS-7273 **i05426390**

NOTE	REF NO	GRAPHIC REF	PART NUMBER	QTY	PART NAME 1 2 3 4 5 6 (PRODUCT LEVEL)	SEE PAGE
	1	1	**387-6297**	1	SCREEN	
	2	1	**415-7677**	1	PLATE	
	3	1	**415-7689**	1	PANEL	
	4	1	**415-7696**	1	PLATE	
	5	1	**415-7701**	2	PLATE	
	6	1	**432-7293**	1	PLATE	
	7	1	**432-7315**	1	SEAL	
M	8	1	**5P-7970**	19	NUT (M8X1.25-THD)	
M	9	1	**8T-4189**	19	BOLT (M8X1.25X20-MM)	
	10	1	**8T-4224**	19	WASHER-HARD (8.8X16X2-MM THK)	
J	11	1	**432-7310**		BELT (9-DM)	
J	12	1	**432-7299**		SEAL (15-DM)	

J - ORDER BY THE DECIMETER
M - METRIC PART

387-6209 **DOOR GP-ACCESS (*contd.*)** **i05426390**

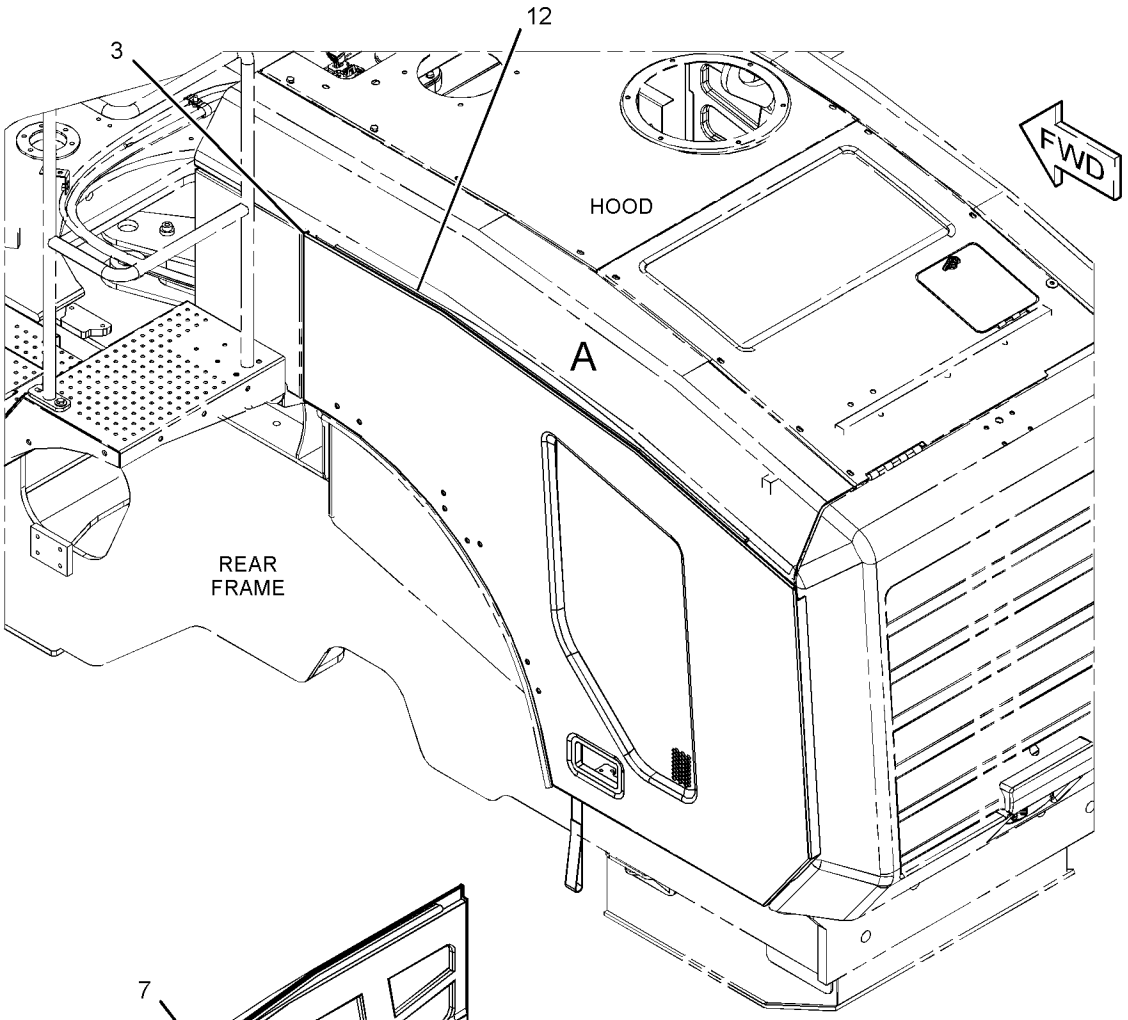

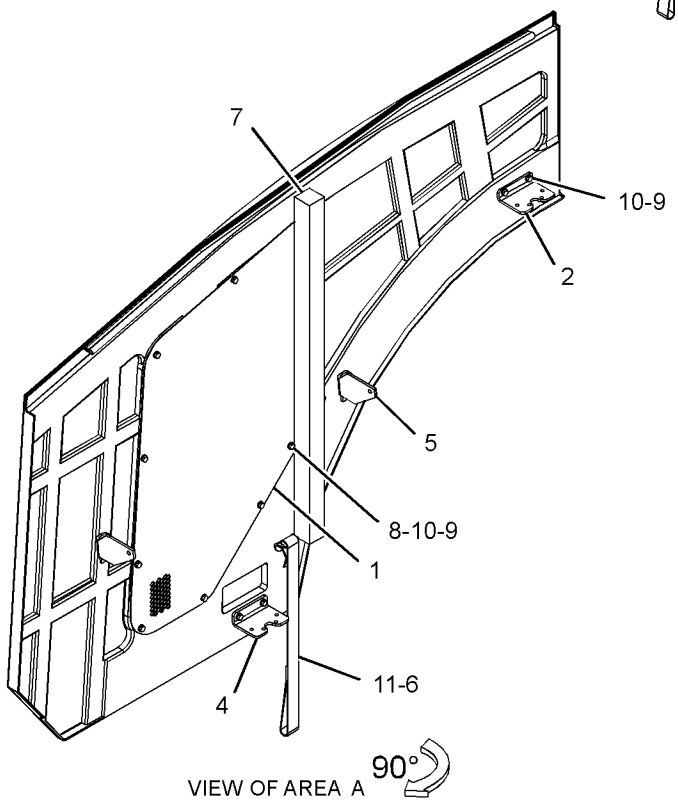

GRAPHIC #1 **<END>** g03526357

387-6225 DOOR GP-ACCESS–RH

S/N: M5K1-UP

PART OF 387-6220, 457-8580 ENCLOSURE GP-ENGINE

SMCS-7273 **i05426392**

NOTE	REF NO	GRAPHIC REF	PART NUMBER	QTY	PART NAME 1 2 3 4 5 6 (PRODUCT LEVEL)	SEE PAGE
	1	1	**387-6224**	1	PANEL	
	2	1	**387-6272**	1	PLATE	
	3	1	**387-6273**	1	PLATE	
	4	1	**387-6286**	2	PLATE	
	5	1	**387-6297**	1	SCREEN	
	6	1	**432-7293**	1	PLATE	
	7	1	**432-7315**	1	SEAL	
M	8	1	**5P-7970**	19	NUT (M8X1.25-THD)	
M	9	1	**8T-4189**	19	BOLT (M8X1.25X20-MM)	
	10	1	**8T-4224**	19	WASHER-HARD (8.8X16X2-MM THK)	
J	11	1	**432-7310**		BELT (9-DM)	
J	12	1	**432-7297**		SEAL (15-DM)	

J - ORDER BY THE DECIMETER
M - METRIC PART

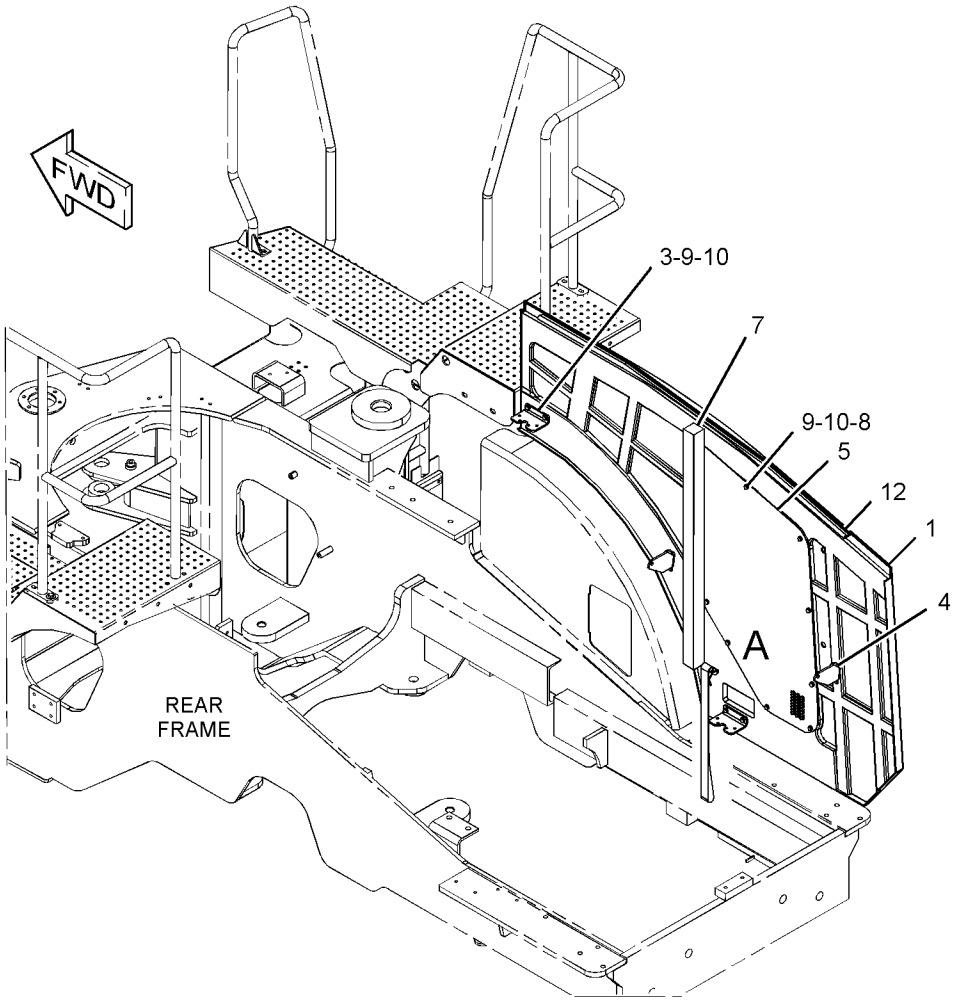

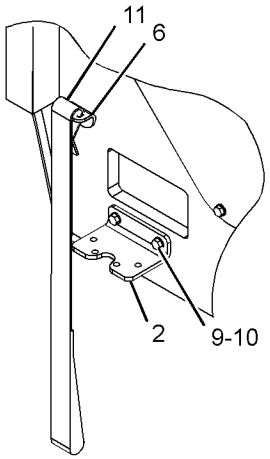

VIEW OF AREA A

GRAPHIC #1 **<END>** g03426928

387-6220 ENCLOSURE GP-ENGINE

S/N: M5K1-UP

PART OF 387-6001 CHASSIS AR

SMCS-7263, 7273

i05921778

NOTE	REF NO	GRAPHIC REF	PART NUMBER	QTY	PART NAME 1 2 3 4 5 6 (PRODUCT LEVEL)	SEE PAGE
	1	2	**272-0002**	5	STRIKER AS	
	2	1	**275-0571**	1	CAM-LATCH	
J	3	1	**275-0572**	1	LATCH AS (RH)	
	4	1	**352-9944**	1	LATCH	
	5	2	**356-7550**	4	LATCH AS (LH)	
J	6	2	**363-5907**	2	HANDLE AS	
					(EACH INCLUDES)	
		2	**8Y-4501**	1	SPRING-HANDLE	
Y	7	2	**387-6200**	1	FRAME AS (FRONT)	303
	8	2	**387-6203**	1	BRACKET	
	9	1	**387-6208**	1	PANEL	
Y	10	2	**387-6209**	1	DOOR GP-ACCESS (LH)	284
	11	2	**387-6211**	1	PANEL AS-ENCLOSURE	
Y	12	2	**387-6225**	1	DOOR GP-ACCESS (RH)	286
Y	13	1	**387-6230**	1	GRILL GP (RH)	310
Y	14	2	**387-6245**	1	PANEL AS-SIDE (TOP)	336
Y	15	2	**387-6246**	1	PANEL AS-SIDE (BOTTOM)	337
	16	2	**387-6249**	1	LINK-CONNECTING	
	17	2	**387-6253**	1	PLATE	
	18	1	**387-6277**	1	COVER AS	
	19	2	**387-6292**	1	LINK AS	
M		2	**5C-2890**	1	NUT (M6X1-THD)	
		2	**387-6291**	1	LINK-CONNECTING	
		2	**415-7704**	1	CLEVIS	
	20	1	**387-6299**	1	PANEL	
	21	2	**387-6300**	1	PANEL AS-ENCLOSURE	
	22	2	**415-7670**	1	PLATE	
	23	2	**415-7671**	1	PLATE	
	24	2	**415-7673**	4	HINGE AS (BOTTOM)	
	25	2	**415-7678**	1	CABLE AS	
	26	2	**415-7680**	2	PLATE	
	27	1	**415-7682**	1	COVER AS-ACCESS	
M		1	**5P-7970**	8	NUT (M8X1.25-THD)	
M		1	**8T-4199**	8	BOLT (M8X1.25X12-MM)	
		1	**8T-4224**	8	WASHER-HARD (8.8X16X2-MM THK)	
		1	**387-6210**	1	SCREEN	
	28	2	**415-7687**	1	PLATE	
	29	2	**415-7697**	1	LINK-CONNECTING	
	30	2	**415-7698**	4	BRACKET	
	31	2	**415-7703**	1	PLATE	
	32	2	**415-7713**	12	BUSHING	
	33	2	**415-7714**	3	CYLINDER AS (LH)	
	34	1	**432-7289**	1	HANDRAIL AS	
	35	2	**432-7295**	1	BRACKET AS (BOTTOM)	
	36	2	**432-7302**	6	BRACKET AS (TOP)	
	37	2	**432-7308**	3	CYLINDER AS (LH)	
	38	1	**432-7381**	4	PIN	
	39	1	**432-7382**	6	BRACKET AS	
					(EACH INCLUDES)	
M		1	**8T-3490**	1	NUT-WELD (M10X1.5-THD)	
	40	1	**432-7384**	1	TUBE-HANDRAIL	
	41	1	**432-7385**	1	PLATE AS	
	42	1	**432-7386**	1	HANDRAIL AS	
	43	1	**432-7389**	1	PLATE	
	44	1	**432-7396**	4	PAD	
	45	1	**450-0059**	3	SEAL	
	46	1	**450-0066**	1	BRACKET AS	
	47	2	**095-0865**	7	PIN-COTTER	

387-6220 **ENCLOSURE GP-ENGINE (*contd.*)** **i05921778**

NOTE	REF NO	GRAPHIC REF	PART NUMBER	QTY	PART NAME 1 2 3 4 5 6 (PRODUCT LEVEL)	SEE PAGE
M	48	2	**096-5486**	1	SCREW-MACHINE (M6X1X25-MM)	
	49	2	**264-3659**	1	NUT (M6X1-THD)	
M	50	2	**329-3356**	2	NUT (M12X1.75-THD)	
	51	2	**4B-4274**	8	WASHER (5.5X13X1.2-MM THK)	
	52	2	**5P-4116**	12	WASHER-HARD (8.8X20.5X2-MM THK)	
M	53	2	**5P-7970**	24	NUT (M8X1.25-THD)	
M	54	1,2	**6V-3823**	2	BOLT (M12X1.75X60-MM)	
M	55	1	**6V-5686**	10	BOLT (M16X2X50-MM)	
M	56	1	**6V-7357**	20	BOLT (M6X1X25-MM)	
	57	1	**6V-8178**	16	WASHER (13X24X2.5-MM THK)	
	58	2	**7J-5925**	4	PIN-COTTER	
	59	1,2	**7X-7729**	51	WASHER (11X25X3-MM THK)	
M	60	2	**8T-0287**	8	BOLT (M5X0.8X10-MM)	
M	61	1	**8T-0649**	2	BOLT (M16X2X110-MM)	
	62	1,2	**8T-4121**	8	WASHER-HARD (11X21X2.5-MM THK)	
M	63	1	**8T-4132**	12	NUT (M16X2-THD)	
M	64	1	**8T-4133**	4	NUT (M10X1.5-THD)	
M	65	1,2	**8T-4137**	35	BOLT (M10X1.5X20-MM)	
M	66	2	**8T-4139**	2	BOLT (M12X1.75X30-MM)	
M	67	1	**8T-4182**	4	BOLT (M10X1.5X45-MM)	
M	68	2	**8T-4189**	44	BOLT (M8X1.25X20-MM)	
M	69	2	**8T-4195**	16	BOLT (M10X1.5X30-MM)	
	70	1,2	**8T-4205**	20	WASHER-HARD (7.2X14.5X2-MM THK)	
	71	2	**8T-4223**	5	WASHER-HARD (13.5X25.5X3-MM THK)	
	72	2	**8T-4224**	44	WASHER-HARD (8.8X16X2-MM THK)	
M	73	2	**8T-4244**	5	NUT (M12X1.75-THD)	
M	74	2	**8T-7547**	14	BOLT (M8X1.25X30-MM)	
M	75	2	**9X-2042**	4	SCREW-TRUSS HEAD (M6X1X12-MM)	
	76	1	**9X-8257**	4	WASHER (17.5X30X3.5-MM THK)	
	77	1	**9X-8268**	8	WASHER (17.5X30X3.5-MM THK)	
X	78	2	**432-7296**		SEAL (12-DM)	
X	79	2	**432-7298**		SEAL (12-DM)	

J - REQUIRES CORPORATE KEY
M - METRIC PART
X - ORDER BY THE DECIMETER
Y - SEPARATE ILLUSTRATION

387-6220 **ENCLOSURE GP-ENGINE (*contd.*)** **i05921778**

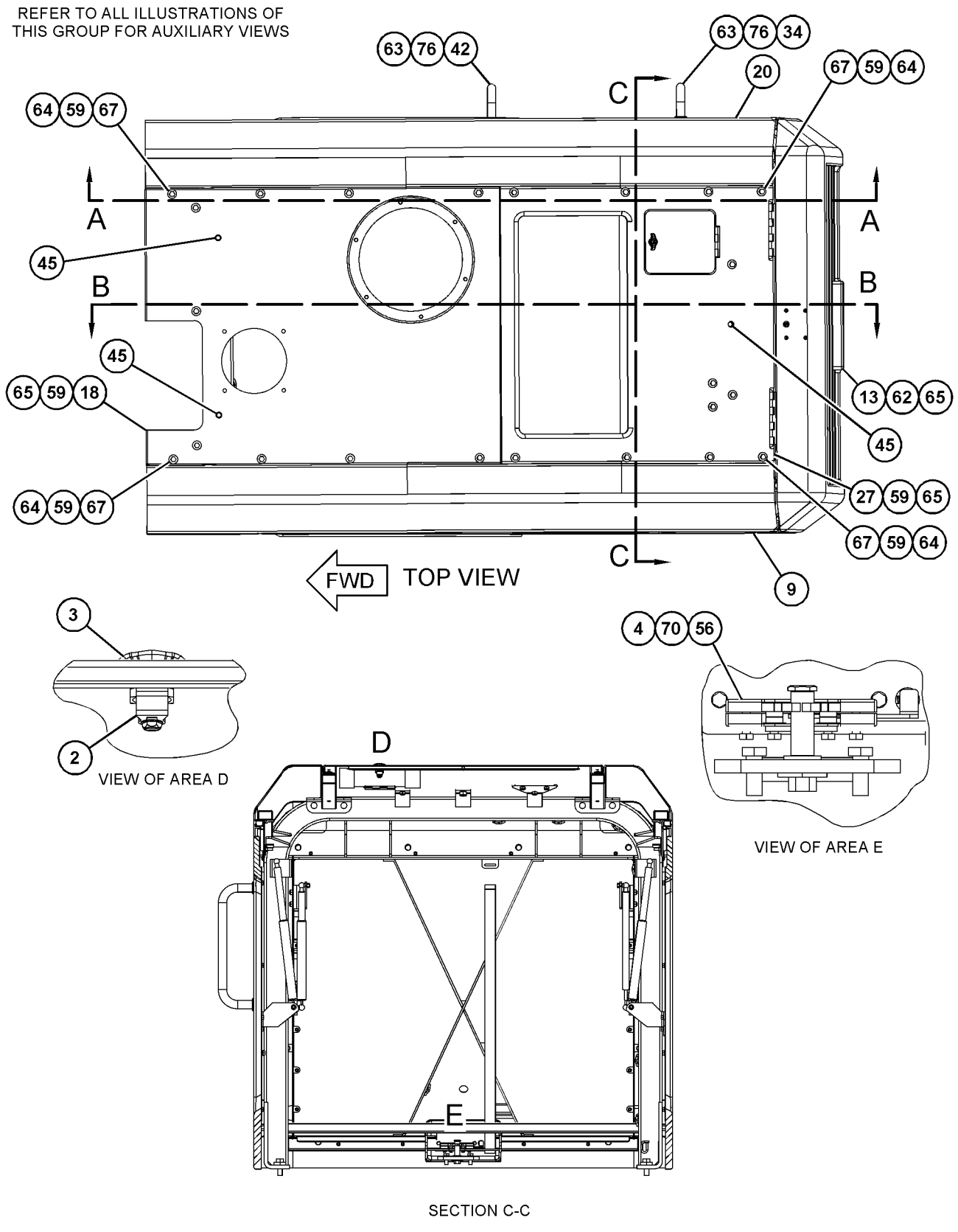

SECTION C-C

GRAPHIC #1 g03790744

387-6220 **ENCLOSURE GP-ENGINE (*contd.*)** **i05921778**

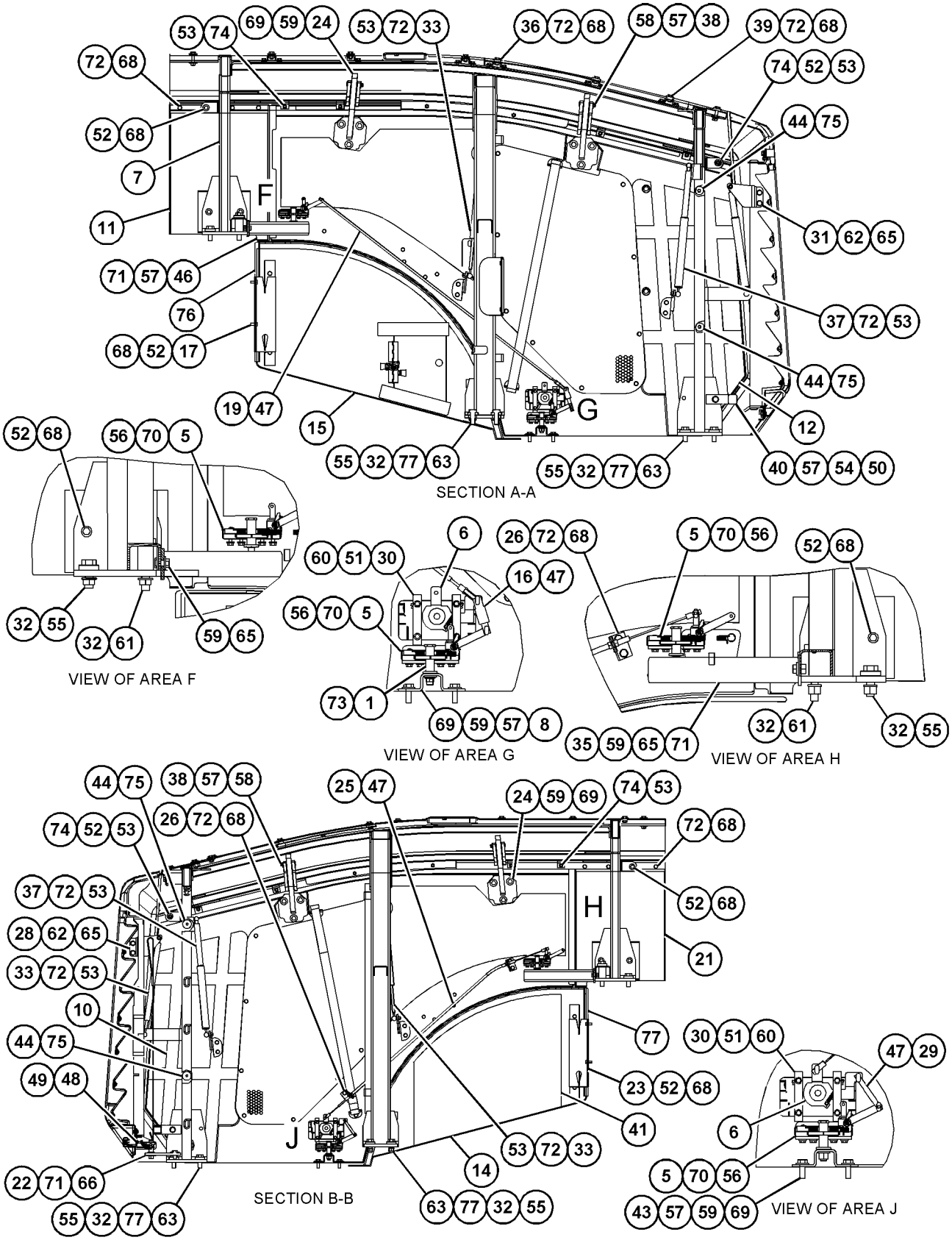

GRAPHIC #2 **<END>** g03790741

457-8580 ENCLOSURE GP-ENGINE

S/N: M5K1-UP

PART OF 387-6001 CHASSIS AR

SMCS-7263, 7273 **i06110913**

NOTE	REF NO	GRAPHIC REF	PART NUMBER	QTY	PART NAME 1 2 3 4 5 6 (PRODUCT LEVEL)	SEE PAGE
	1	2	**189-8789**	2	BUMPER AS	
	2	1,2	**272-0002**	3	STRIKER AS	
	3	1	**275-0571**	1	CAM-LATCH	
J	4	1	**275-0572**	1	LATCH AS	
	5	2	**352-9944**	1	LATCH	
	6	1	**356-7550**	2	LATCH AS	
J	7	1	**363-5907**	2	HANDLE AS	
					(EACH INCLUDES)	
		1	**8Y-4501**	1	SPRING-HANDLE	
	8	1	**387-6203**	1	BRACKET	
Y	9	1	**387-6209**	1	DOOR GP-ACCESS (LH)	284
Y	10	1	**387-6225**	1	DOOR GP-ACCESS (RH)	286
Y	11	1	**387-6230**	1	GRILL GP	310
Y	12	1	**387-6245**	1	PANEL AS-SIDE (TOP)	336
Y	13	1	**387-6246**	1	PANEL AS-SIDE (BOTTOM)	337
	14	1	**387-6253**	1	PLATE	
	15	1	**415-7671**	1	PLATE	
	16	2	**415-7687**	1	PLATE	
	17	2	**415-7703**	1	PLATE	
	18	1	**415-7713**	12	BUSHING	
	19	2	**415-7714**	3	CYLINDER AS	
	20	1	**432-7289**	1	HANDRAIL AS	
	21	1	**432-7302**	6	BRACKET AS	
					(EACH INCLUDES)	
M		1	**8T-3490**	1	NUT-WELD (M10X1.5-THD)	
	22	2	**432-7308**	3	CYLINDER AS	
	23	2	**432-7382**	6	BRACKET AS	
					(EACH INCLUDES)	
M		2	**8T-3490**	1	NUT-WELD (M10X1.5-THD)	
	24	1	**432-7386**	1	HANDRAIL AS	
	25	2	**432-7389**	1	PLATE	
	26	2	**432-7396**	4	PAD	
	27	1	**450-0059**	2	SEAL	
	28	2	**450-0065**	1	BAR AS	
M		2	**8T-3612**	4	NUT-WELD (M8X1.25-THD)	
	29	1	**450-0084**	1	PANEL AS	
	30	1	**450-0085**	4	TUBE	
	31	1	**450-0087**	1	PANEL AS	
	32	2	**450-4827**	1	PLATE AS	
M		2	**8T-3490**	7	NUT-WELD (M10X1.5-THD)	
	33	1	**457-8546**	1	PANEL AS	
M		1	**8T-3612**	2	NUT-WELD (M8X1.25-THD)	
	34	1	**457-8551**	1	LINK	
	35	1	**457-8556**	1	PANEL AS	
M		1	**8T-3612**	2	NUT-WELD (M8X1.25-THD)	
	36	2	**457-8558**	1	PLATE	
	37	2	**457-8559**	4	HINGE AS	
Y	38	1	*457-8561*	1	COVER GP-REAR	213
	39	2	**457-8563**	1	LINK	
	40	1,2	**457-8564**	4	BRACKET	
	41	2	**457-8566**	4	PIN	
	42	2	**457-8586**	1	PLATE AS	
M		2	**8T-3612**	1	NUT-WELD (M8X1.25-THD)	
	43	2	**457-8588**	1	PLATE AS	
M		2	**8T-3612**	1	NUT-WELD (M8X1.25-THD)	
	44	1	**457-8591**	1	SEAL	
	45	1	**457-8595**	1	PIN	
	46	1	**457-8596**	1	SCREW-PLUG	

457-8580 **ENCLOSURE GP-ENGINE (*contd.*)** **i06110913**

NOTE	REF NO	GRAPHIC REF	PART NUMBER	QTY	PART NAME 1 2 3 4 5 6 (PRODUCT LEVEL)	SEE PAGE
	47	1	**465-1810**	1	FRAME AS	
	48	2	**465-1812**	1	FRAME AS	
		2	**7T-1099**	11	LINK	
M		2	**8T-3490**	17	NUT-WELD (M10X1.5-THD)	
M		2	**8T-3612**	8	NUT-WELD (M8X1.25-THD)	
M		2	**8T-4132**	1	NUT (M16X2-THD)	
M		2	**8T-6462**	1	BOSS-WELD (M10X1.5X25-MM)	
M	49	2	**095-7932**	14	SCREW-MACHINE (M8X1.25-THD)	
M	50	1	**096-5486**	1	SCREW-MACHINE (M6X1X25-MM)	
	51	2	**1P-3321**	6	PIN	
M	52	1	**5C-2890**	1	NUT (M6X1-THD)	
	53	1,2	**3B-4605**	4	PIN-COTTER	
	54	1,2	**4B-4274**	20	WASHER (5.5X13X1.2-MM THK)	
	55	1,2	**5P-4116**	14	WASHER-HARD (8.8X20.5X2-MM THK)	
M	56	2	**5P-7970**	24	NUT (M8X1.25-THD)	
	57	1,2	**5P-8245**	14	WASHER-HARD (13.5X25.5X3-MM THK)	
M	58	2	**6V-3940**	4	BOLT (M8X1.25X25-MM)	
M	59	1	**6V-5686**	6	BOLT (M16X2X50-MM)	
M	60	1	**6V-7357**	12	BOLT (M6X1X25-MM)	
	61	2	**7J-5925**	4	PIN-COTTER	
	62	1,2	**7X-7729**	47	WASHER (11X25X3-MM THK)	
	63	1	**8D-5054**	4	WASHER-HARD (17X30X3-MM THK)	
M	64	1	**8T-0088**	4	BOLT (M16X2X65-MM)	
M	65	2	**8T-0287**	8	BOLT (M5X0.8X10-MM)	
M	66	1	**8T-0649**	2	BOLT (M16X2X110-MM)	
	67	1	**8T-4121**	15	WASHER-HARD (11X21X2.5-MM THK)	
M	68	1	**8T-4132**	12	NUT (M16X2-THD)	
M	69	1	**8T-4133**	4	NUT (M10X1.5-THD)	
M	70	2	**8T-4136**	4	BOLT (M10X1.5X25-MM)	
M	71	1,2	**8T-4137**	34	BOLT (M10X1.5X20-MM)	
M	72	2	**8T-4139**	2	BOLT (M12X1.75X30-MM)	
M	73	1	**8T-4182**	2	BOLT (M10X1.5X45-MM)	
M	74	1	**8T-4185**	2	BOLT (M10X1.5X50-MM)	
M	75	1,2	**8T-4189**	40	BOLT (M8X1.25X20-MM)	
M	76	1,2	**8T-4195**	16	BOLT (M10X1.5X30-MM)	
M	77	1	**8T-4200**	4	BOLT (M8X1.25X16-MM)	
	78	1	**8T-4205**	12	WASHER-HARD (7.2X14.5X2-MM THK)	
	79	1	**8T-4223**	3	WASHER-HARD (13.5X25.5X3-MM THK)	
	80	1,2	**8T-4224**	51	WASHER-HARD (8.8X16X2-MM THK)	
M	81	1,2	**8T-4244**	3	NUT (M12X1.75-THD)	
M	82	2	**9X-2042**	5	SCREW-TRUSS HEAD (M6X1X12-MM)	
	83	1	**9X-8268**	8	WASHER (17.5X30X3.5-MM THK)	
H	84	1	**432-7298**		SEAL (48-DM)	

H - SOLD BY THE DECIMETER
J - REQUIRES CORPORATE KEY
M - METRIC PART
Y - SEPARATE ILLUSTRATION

457-8580 **ENCLOSURE GP-ENGINE (*contd.*)** **i06110913**

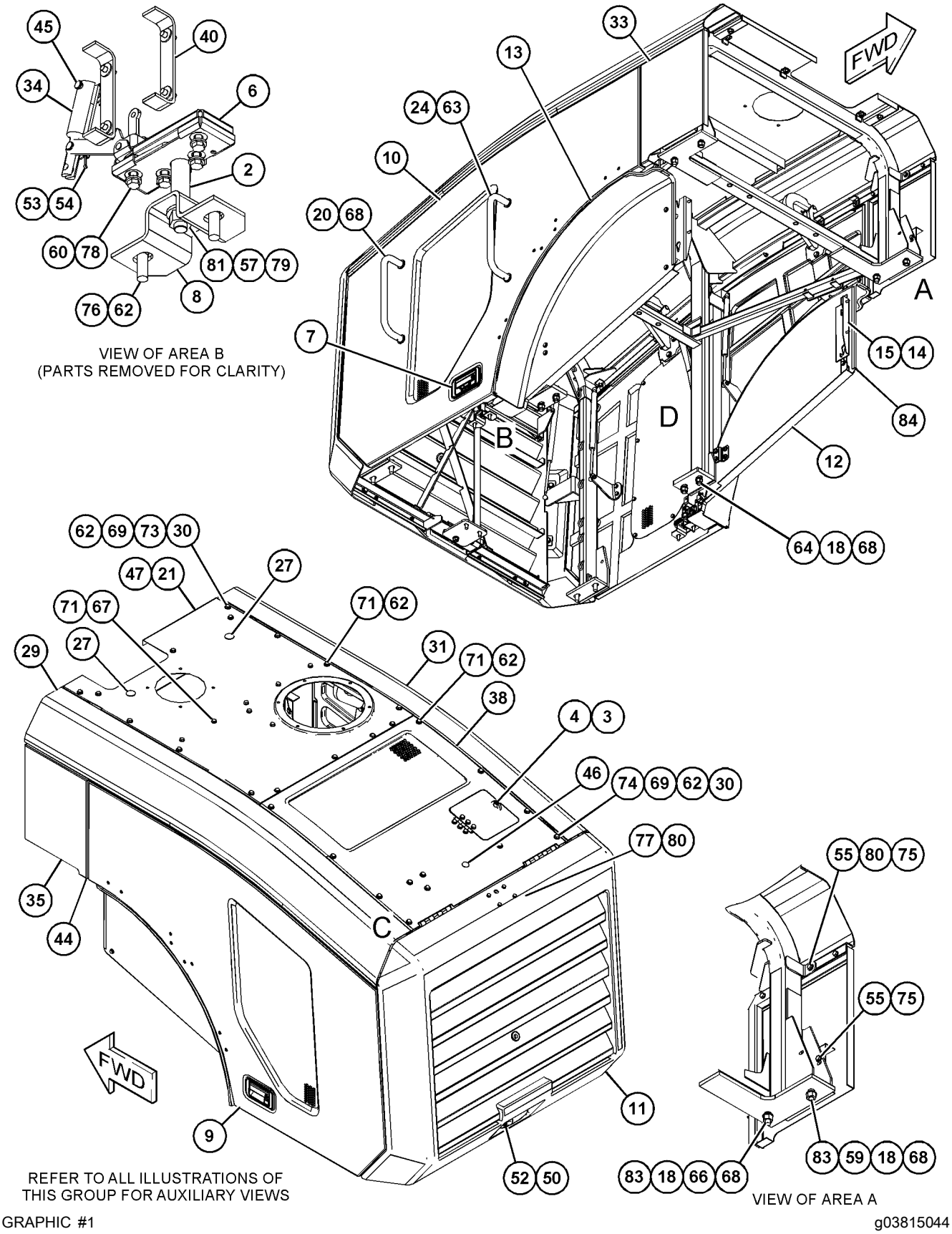

GRAPHIC #1

g03815044

457-8580 **ENCLOSURE GP-ENGINE (*contd.*)** **i06110913**

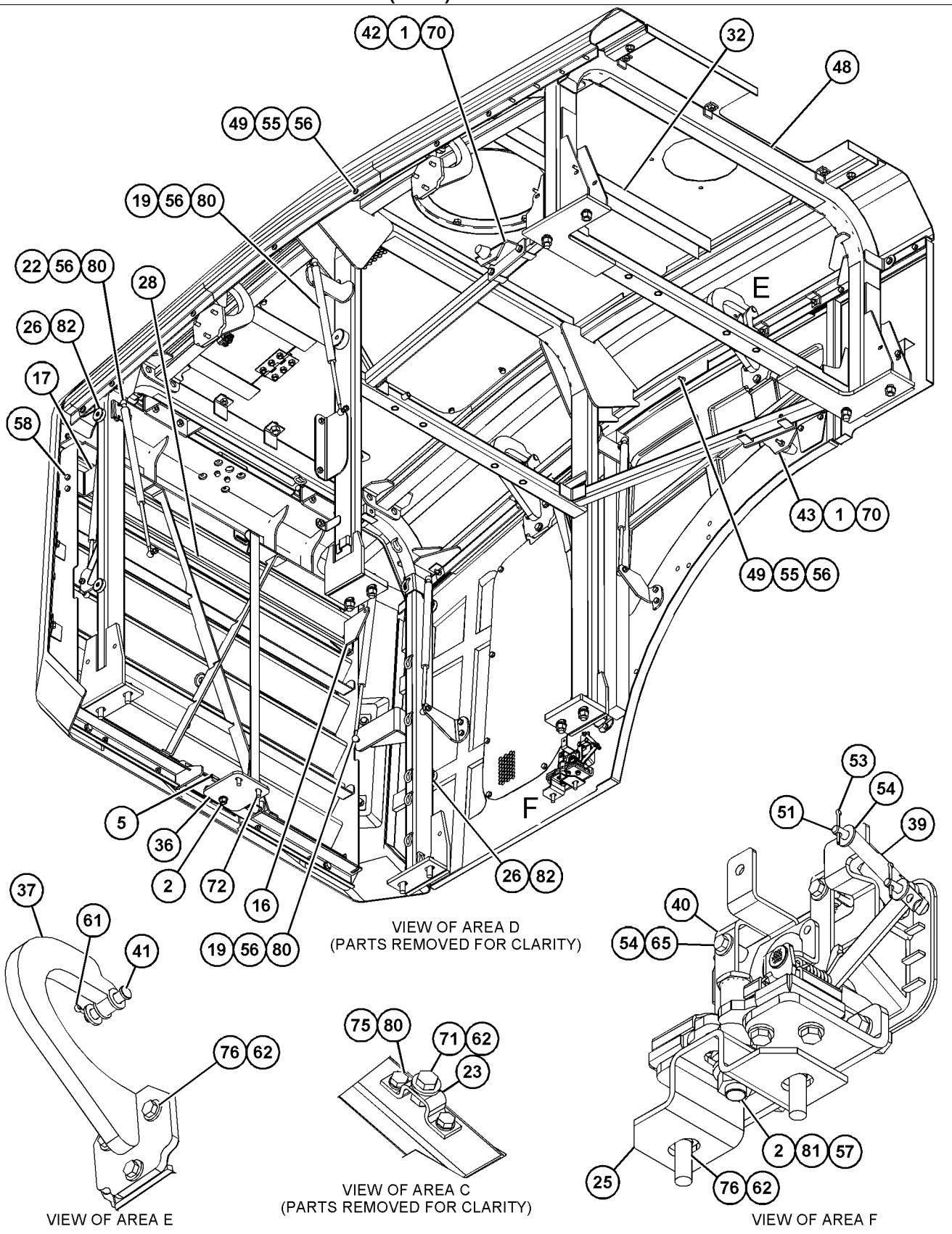

GRAPHIC #2

<END>

g03815045

415-7735 FENDER & MOUNTING GP–REAR

S/N: M5K1-UP

AN ATTACHMENT

SMCS-7252 **i05413404**

NOTE	REF NO	GRAPHIC REF	PART NUMBER	QTY	PART NAME 1 2 3 4 5 6 (PRODUCT LEVEL)	SEE PAGE
	1	1	**415-7736**	1	FENDER AS (LH)	
	2	1	**415-7737**	1	FENDER AS (RH)	
M	3	1	**8T-4139**	6	BOLT (M12X1.75X30-MM)	
	4	1	**8T-4223**	6	WASHER-HARD (13.5X25.5X3-MM THK)	

M - METRIC PART

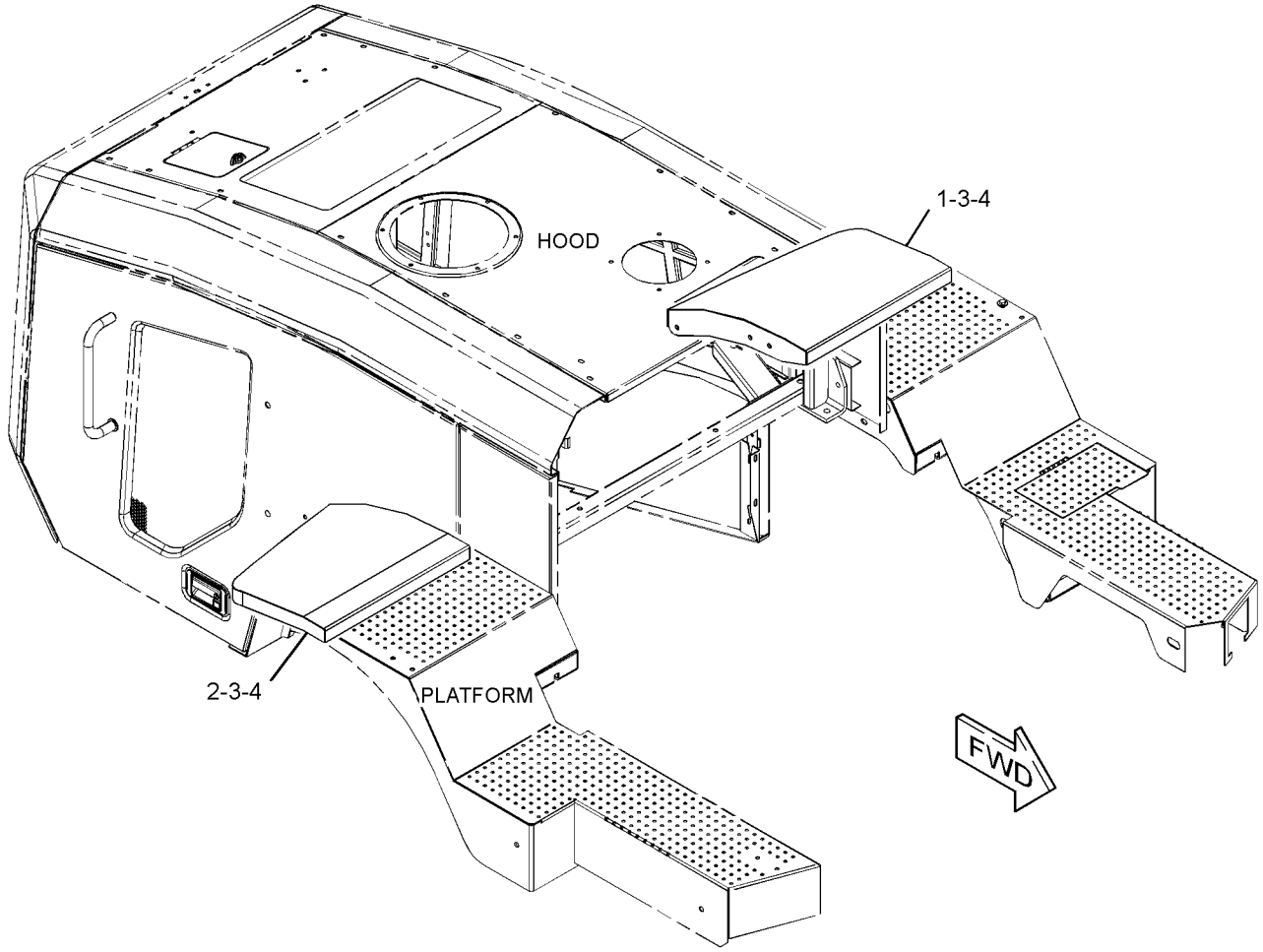

GRAPHIC #1 **<END>** g03428798

392-3721 FENDER GP–LH

S/N: M5K1-UP

PART OF 392-3720 PLATFORM GP-CAB

SMCS-7252 **i05667251**

NOTE	REF NO	GRAPHIC REF	PART NUMBER	QTY	PART NAME 1 2 3 4 5 6 (PRODUCT LEVEL)	SEE PAGE
	1	1	**1K-8850**	2	SPRING	
	2	1	**275-0571**	1	CAM-LATCH	
J	3	1	**275-0572**	1	LATCH AS	
	4	1	**392-3723**	1	FENDER AS (LH)	
M		1	**6V-9632**	2	NUT-WELD (M6X1-THD)	
		1	**7T-1099**	2	LINK	
M		1	**8T-3490**	11	NUT-WELD (M10X1.5-THD)	
M		1	**8T-3597**	7	NUT-WELD (M12X1.75-THD)	
M		1	**8T-6462**	2	BOSS-WELD (M10X1.5X25-MM)	
	5	1	**392-3740**	2	PLATE	
	6	1	**5W-1417**	2	WASHER (6.4X18X1.6-MM THK)	
M	7	1	**5C-9553**	2	BOLT (M6X1X16-MM)	

J - REQUIRES CORPORATE KEY
M - METRIC PART

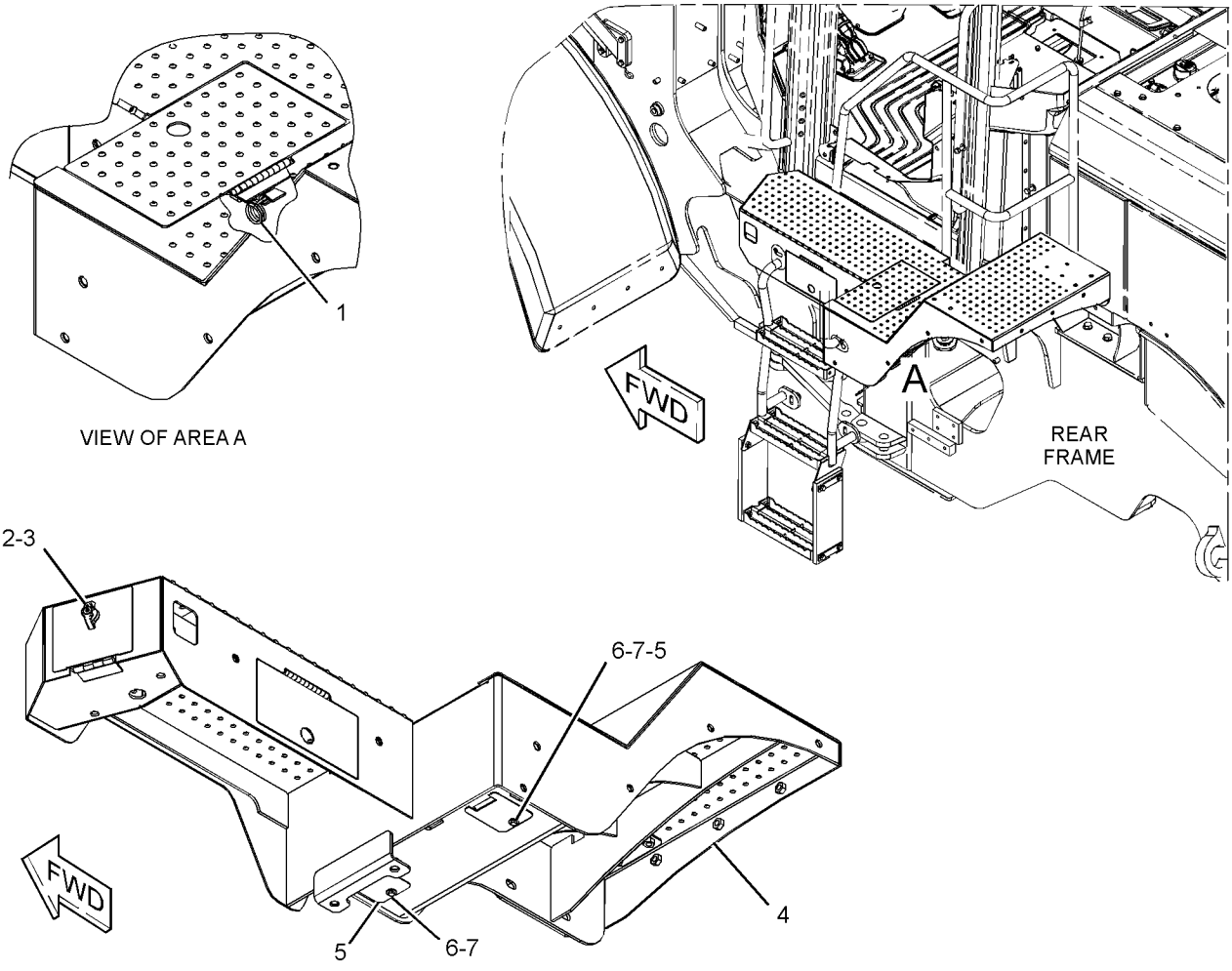

GRAPHIC #1 **<END>** g03698908

392-3800 FENDER GP-FRONT

S/N: M5K1-UP

PART OF 387-6001 CHASSIS AR

SMCS-7252 **i05436476**

NOTE	REF NO	GRAPHIC REF	PART NUMBER	QTY	PART NAME 1 2 3 4 5 6 (PRODUCT LEVEL)	SEE PAGE
	1	1	**392-3801**	1	FENDER AS-FRONT (RH)	
	2	1	**392-3802**	1	FENDER AS-FRONT (LH)	
M	3	1	**8T-4192**	12	BOLT (M12X1.75X25-MM)	
	4	1	**8T-4223**	12	WASHER-HARD (13.5X25.5X3-MM THK)	

M - METRIC PART

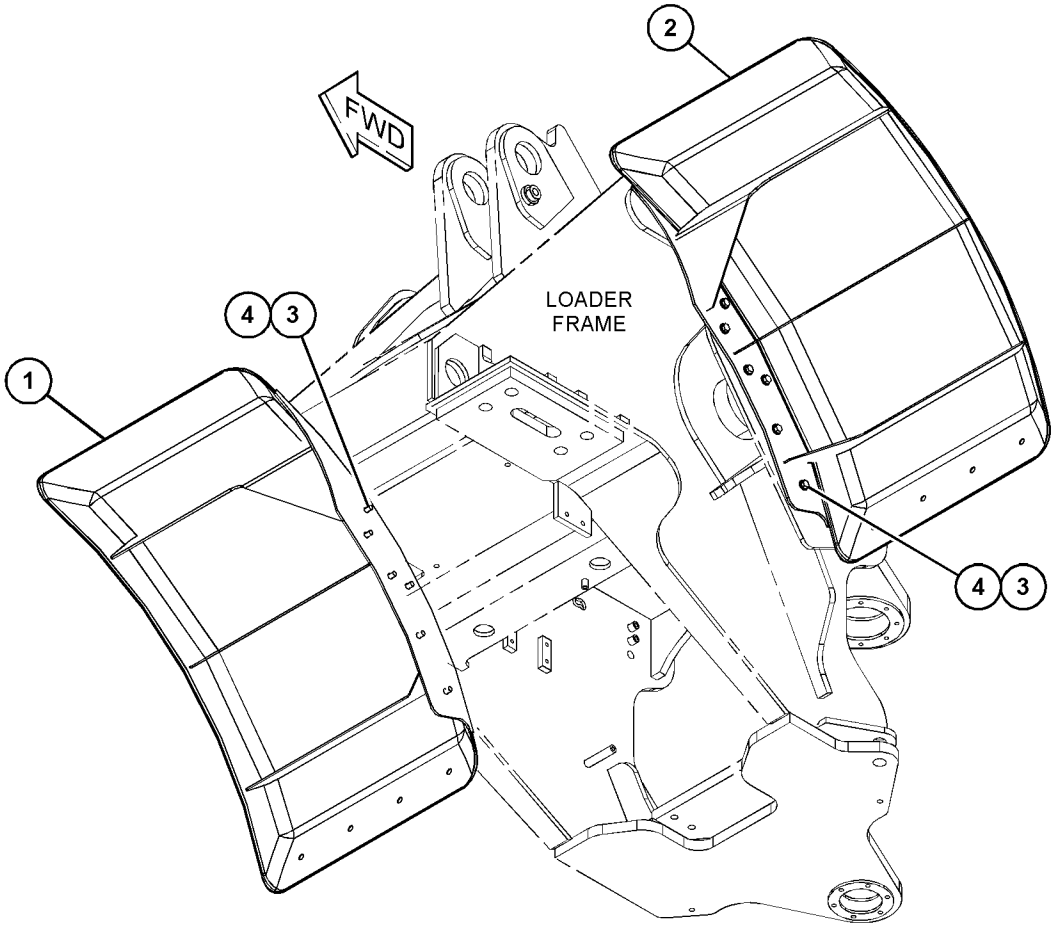

GRAPHIC #1 **<END>** g03530242

450-4870 FENDER GP-FRONT

S/N: M5K1-UP

PART OF 387-6001 CHASSIS AR

SMCS-7252 **i06069005**

NOTE	REF NO	GRAPHIC REF	PART NUMBER	QTY	PART NAME 1 2 3 4 5 6 (PRODUCT LEVEL)	SEE PAGE
	1	1	**450-4871**	1	FENDER AS (FRONT, RH)	
	2	1	**450-4872**	1	FENDER AS (FRONT, LH)	
	3	1	**450-4874**	16	WASHER (13X30X10-MM THK)	
M	4	1	**8T-4139**	16	BOLT (M12X1.75X30-MM)	

M - METRIC PART

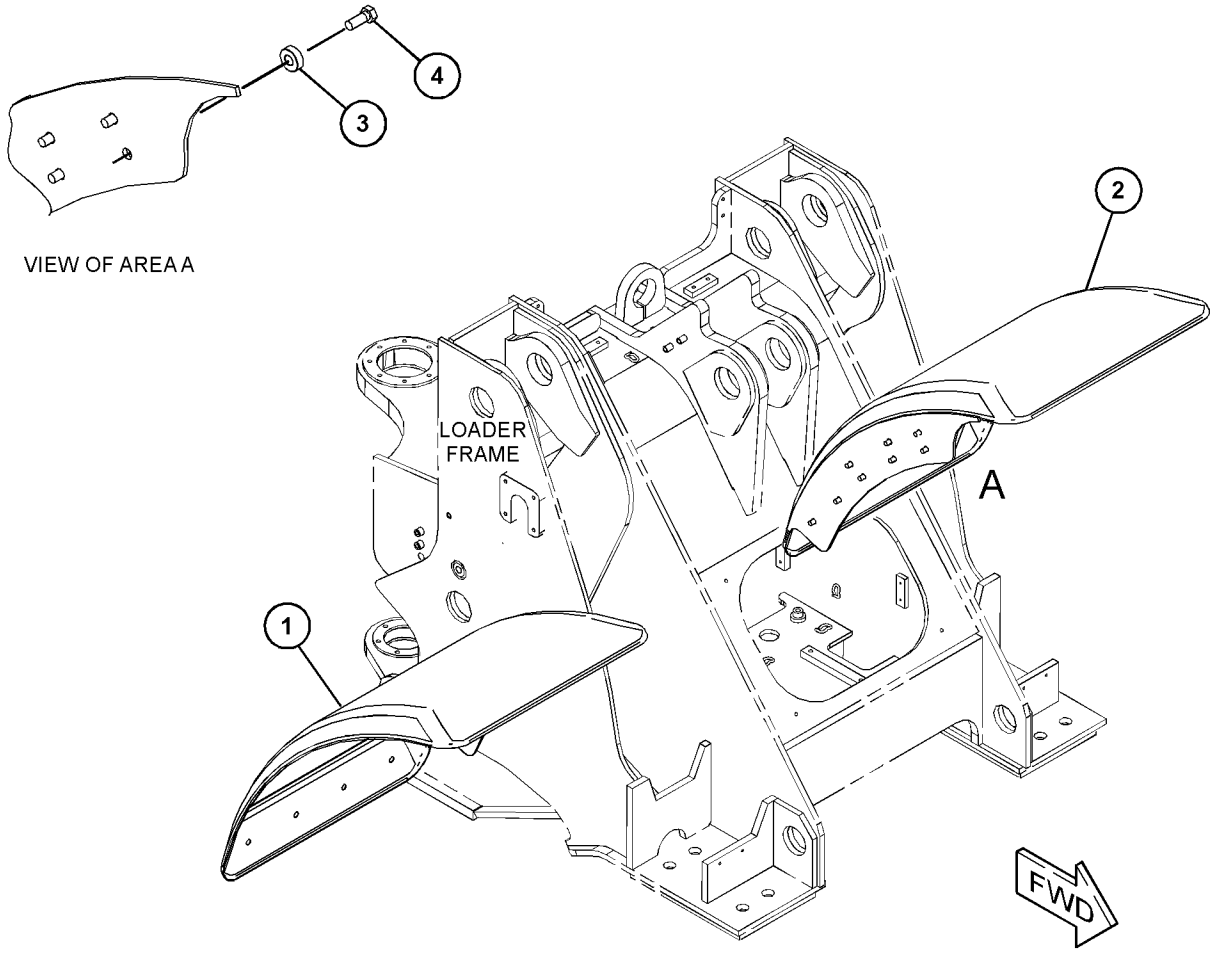

GRAPHIC #1 **<END>** g03798914

432-7334 FENDER GP-ROADING

S/N: M5K1-UP

CANNOT BE USED WITH 415-7735—PAGE: 295

AN ATTACHMENT

SMCS-7252 **i05676983**

NOTE	REF NO	GRAPHIC REF	PART NUMBER	QTY	PART NAME 1 2 3 4 5 6 (PRODUCT LEVEL)	SEE PAGE
	1	1	**141-3889**	2	EXTENSION	
	2	2	**141-3890**	2	PLATE AS	
	3	2	**376-6509**	2	STRIP	
	4	1	**383-3207**	2	FLAP	
	5	1	**415-7716**	1	FENDER AS (LH)	
	6	1	**415-7717**	1	FENDER AS (RH)	
M	7	2	**8T-4971**	8	BOLT (M6X1X30-MM)	
M	8	2	**8T-4244**	8	NUT (M12X1.75-THD)	
	9	1,2	**7X-7729**	24	WASHER (11X25X3-MM THK)	
	10	2	**8T-4205**	16	WASHER-HARD (7.2X14.5X2-MM THK)	
M	11	1,2	**8T-4139**	16	BOLT (M12X1.75X30-MM)	
M	12	2	**8T-4195**	32	BOLT (M10X1.5X30-MM)	
M	13	2	**5C-2890**	8	NUT (M6X1-THD)	
	14	1,2	**5P-8245**	16	WASHER-HARD (13.5X25.5X3-MM THK)	
	15	2	**8T-4121**	32	WASHER-HARD (11X21X2.5-MM THK)	
M	16	2	**8T-4133**	24	NUT (M10X1.5-THD)	
	17	1	**432-7717**	1	PLATE	
	18	1	**432-7718**	1	PLATE	
	19	1	**432-7719**	1	PLATE	
	20	1	**432-7720**	1	PLATE	
	21	2	**432-7723**	2	BRACKET	
	22	2	**432-7724**	4	BRACKET	

M - METRIC PART

432-7334 **FENDER GP-ROADING (*contd.*)** **i05676983**

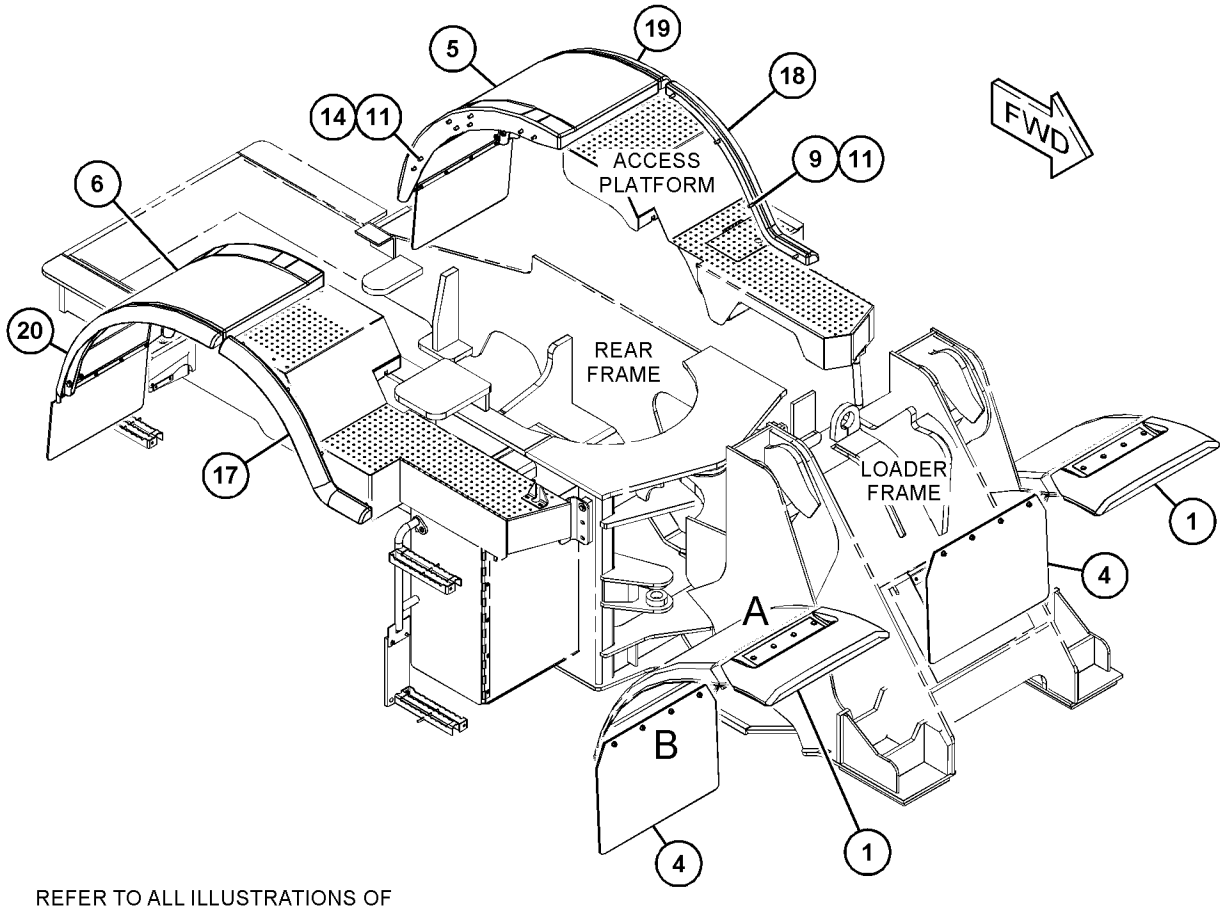

REFER TO ALL ILLUSTRATIONS OF
THIS GROUP FOR AUXILIARY VIEWS

GRAPHIC #1 g03566131

432-7334 **FENDER GP-ROADING (*contd.*)** **i05676983**

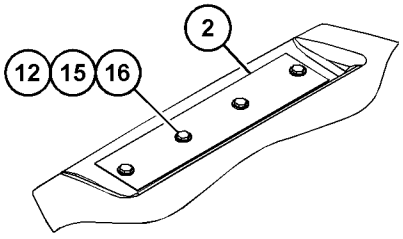

VIEW OF AREA A

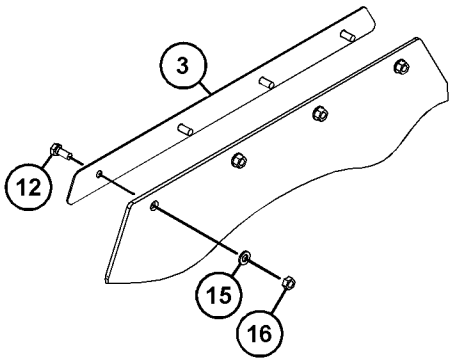

VIEW OF AREA B
(EXPLODED)

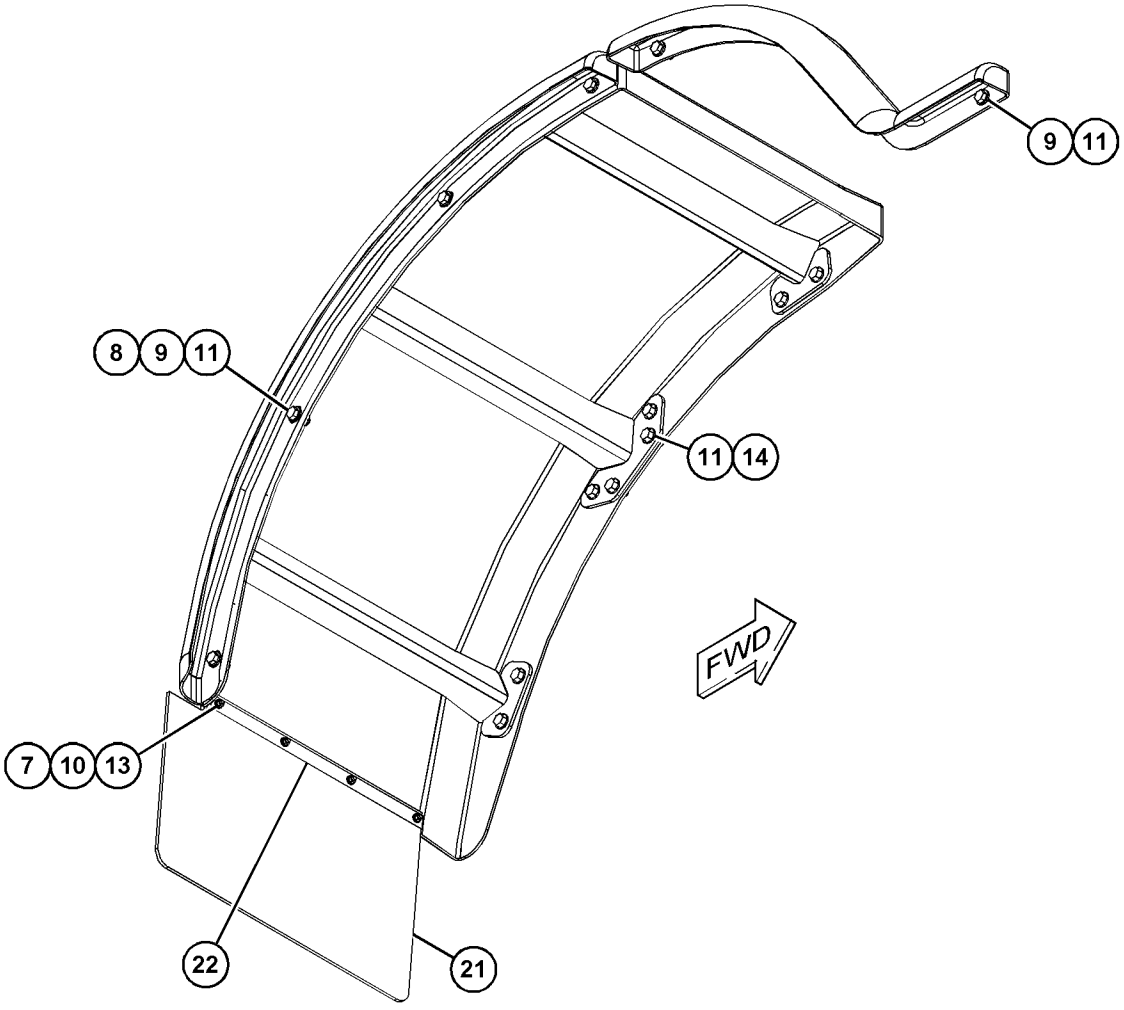

GRAPHIC #2 **<END>** g03566132

387-5837 FRAME AR

S/N: M5K1-UP
CANNOT BE USED WITH 432-7340 FRAME AR, 432-7338 LUBRICATION GP-AUTOMATIC
PART OF 446-6955 SERVICE CENTER AR
AN ATTACHMENT

SMCS-7051 **i05402673**

NOTE	PART NUMBER	QTY	PART NAME 1 2 3 4 5 6 (PRODUCT LEVEL)	SEE PAGE
Y	**387-5783**	1	FRAME AS-LOADER	306
Y	**387-5835**	1	FRAME AS-REAR	307
Y	*387-5794*	1	HITCH GP-ARTICULATING	313

Y - SEPARATE ILLUSTRATION

<END>

432-7340 FRAME AR

S/N: M5K1-UP
PART OF 446-6956 SERVICE CENTER AR
AN ATTACHMENT

SMCS-7051 **i05826928**

NOTE	PART NUMBER	QTY	PART NAME 1 2 3 4 5 6 (PRODUCT LEVEL)	SEE PAGE
Y	*432-7341*	1	FRAME AS-FRONT	305
Y	*432-7342*	1	FRAME AS-REAR	309
Y	*432-7343*	1	HITCH GP-ARTICULATING	322

Y - SEPARATE ILLUSTRATION

<END>

387-6200 FRAME AS

S/N: M5K1-UP

PART OF 387-6220 ENCLOSURE GP-ENGINE

SMCS-7050, 7051 **i05665592**

NOTE	REF NO	GRAPHIC REF	PART NUMBER	QTY	PART NAME 1 2 3 4 5 6 (PRODUCT LEVEL)	SEE PAGE
	1	1	**7T-1099**	10	LINK	
M	2	1	**8T-3490**	17	NUT-WELD (M10X1.5-THD)	
M	3	1	**8T-3612**	8	NUT-WELD (M8X1.25-THD)	
M	4	1	**8T-4132**	1	NUT (M16X2-THD)	
M	5	1	**8T-6462**	1	BOSS-WELD (M10X1.5X25-MM)	

M - METRIC PART

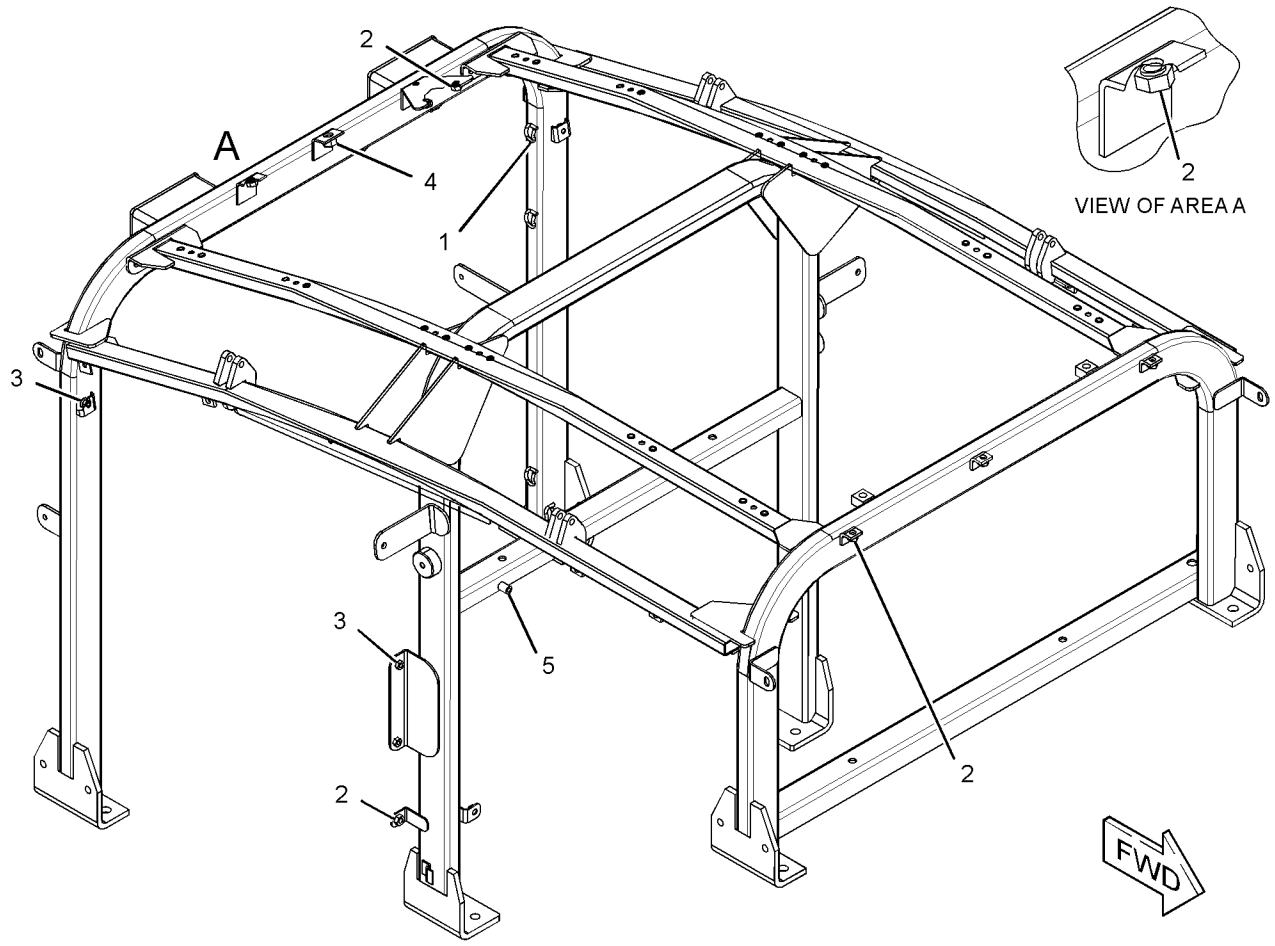

GRAPHIC #1 **<END>** g03428263

FRAME AND BODY

387-6233 FRAME AS—GRILL

S/N: M5K1-UP

PART OF 387-6230 GRILL GP

SMCS-7050, 7051 **i05426397**

NOTE	REF NO	GRAPHIC REF	PART NUMBER	QTY	PART NAME 1 2 3 4 5 6 (PRODUCT LEVEL)	SEE PAGE
	1	1	**387-6234**	2	HINGE AS	
M	2	1	**6V-9632**	20	NUT-WELD (M6X1-THD)	
	3	1	**7T-1099**	1	LINK	
M	4	1	**8T-3490**	4	NUT-WELD (M10X1.5-THD)	
M	5	1	**8T-3612**	2	NUT-WELD (M8X1.25-THD)	

M - METRIC PART

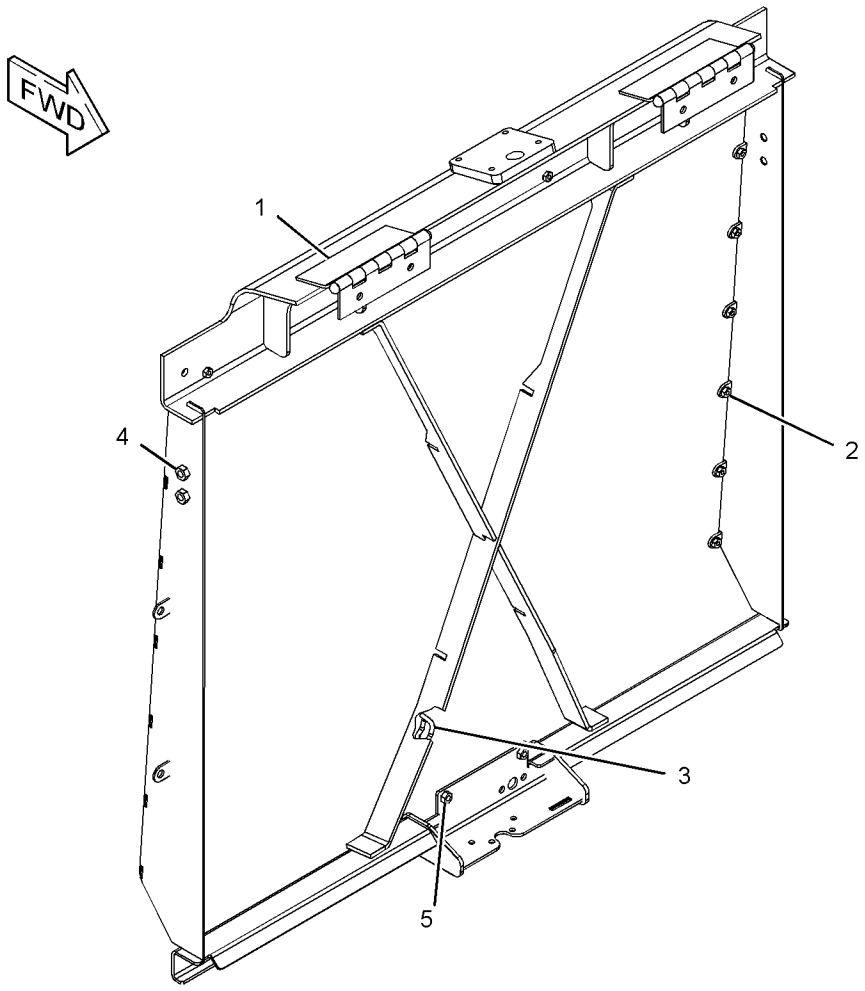

GRAPHIC #1 **<END>** g03427011

432-7341 FRAME AS-FRONT

S/N: M5K1-UP
PART OF 432-7340 FRAME AR
AN ATTACHMENT

SMCS-7051 **i05826923**

NOTE	REF NO	GRAPHIC REF	PART NUMBER	QTY	PART NAME 1 2 3 4 5 6 (PRODUCT LEVEL)	SEE PAGE
Y	1	1	**387-5783**	1	FRAME AS-LOADER	306
	2	1	**431-4615**	1	BOSS (M10X1X45-MM)	
	3	1	**432-7346**	1	BRACKET	
	4	1	**7T-1099**	8	LINK	
M	5	1	**8T-6462**	4	BOSS-WELD (M10X1.5X25-MM)	

M - METRIC PART
Y - SEPARATE ILLUSTRATION

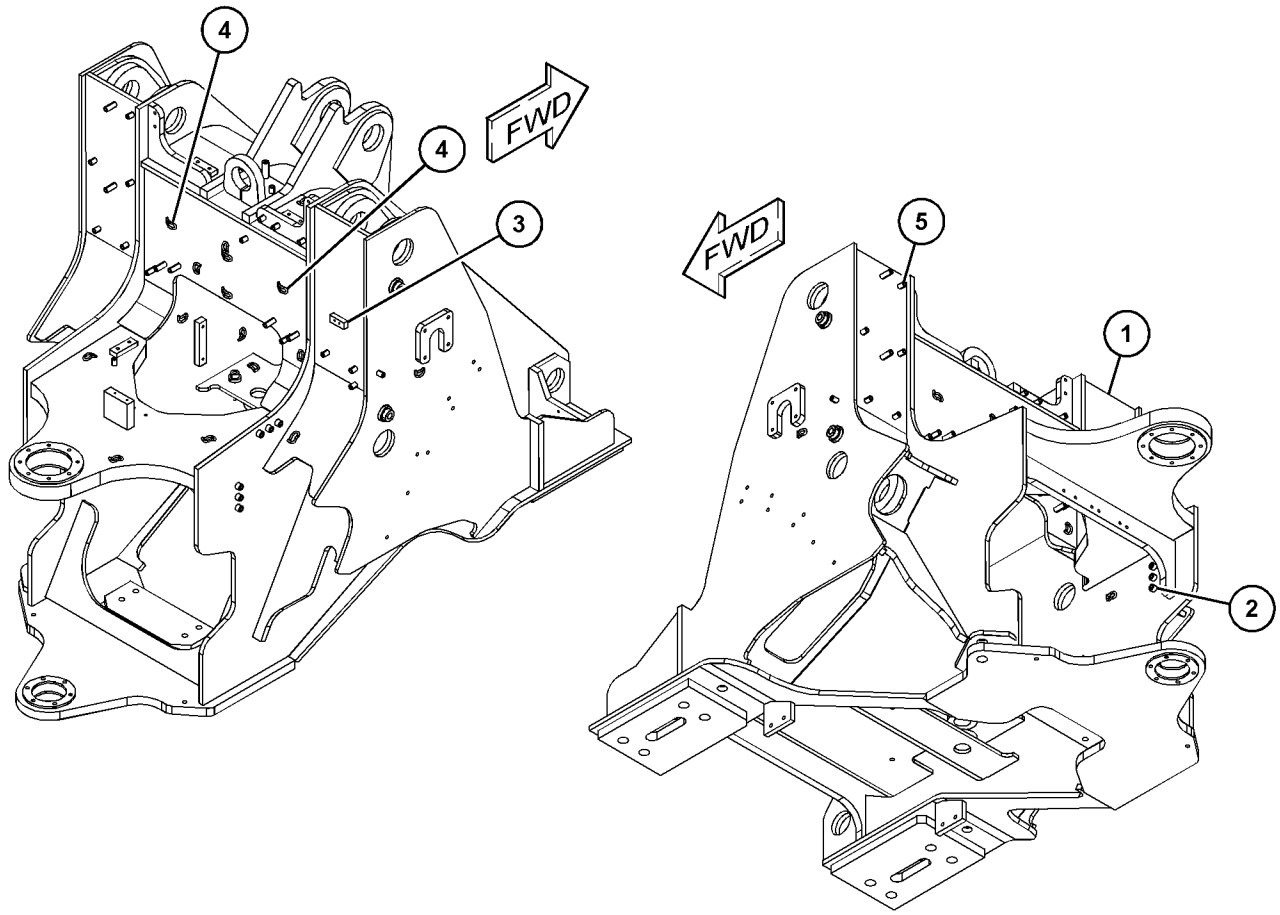

GRAPHIC #1 **<END>** g03689889

387-5783 FRAME AS-LOADER

S/N: M5K1-UP

PART OF 387-6001 CHASSIS AR, 387-5837 FRAME AR, 432-7341 FRAME AS-FRONT

ALSO AN ATTACHMENT

SMCS-7054 **i05899158**

NOTE	REF NO	GRAPHIC REF	PART NUMBER	QTY	PART NAME 1 2 3 4 5 6 (PRODUCT LEVEL)	SEE PAGE
M	1	1	**8T-6462**	17	BOSS-WELD (M10X1.5X25-MM)	
	2	1	**431-4615**	5	BOSS (M10X1X45-MM)	
	3	1	**7T-1099**	21	LINK	
M	4	1	**8T-4935**	8	BOSS-WELD (M10X1.5X45-MM)	
M	5	1	**416-8393**	1	BOSS-WELD (M10X1.5X56-MM)	

M - METRIC PART

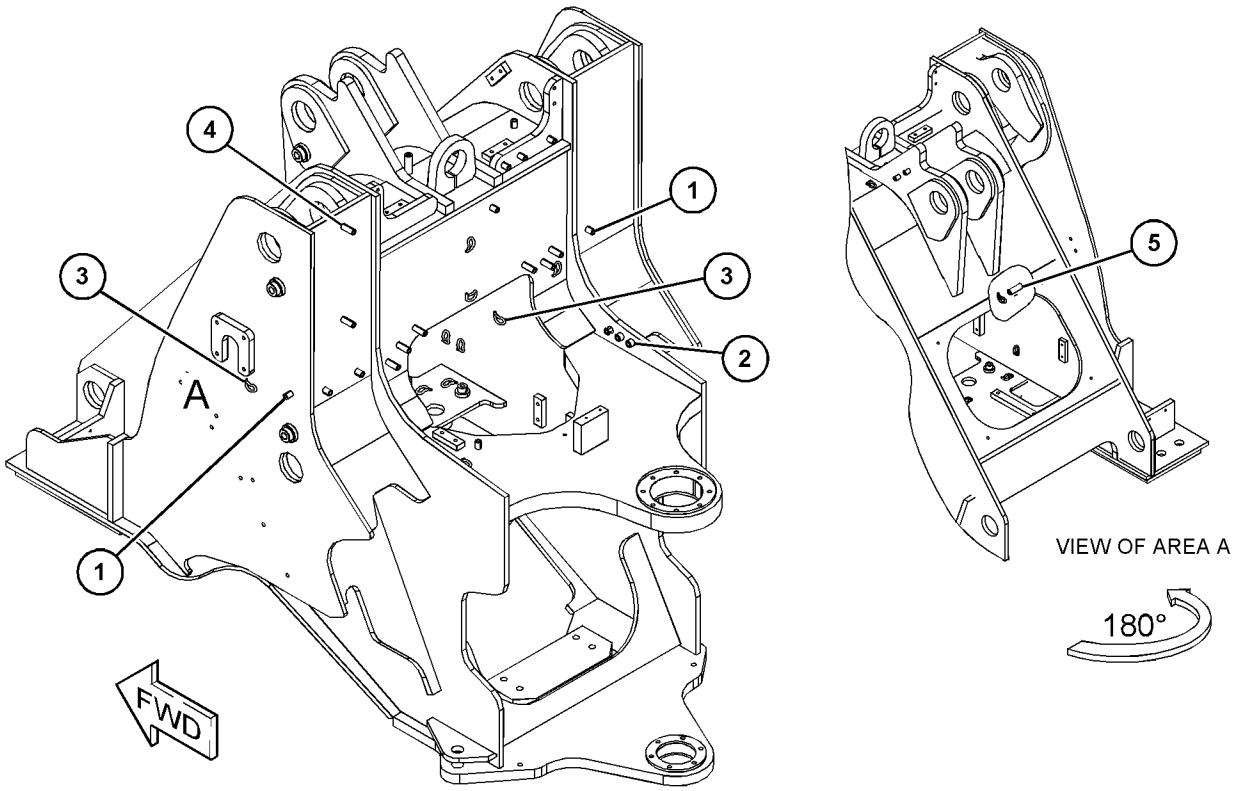

GRAPHIC #1 **<END>** g03750121

387-5835 FRAME AS-REAR

S/N: M5K1-UP
PART OF 387-6001 CHASSIS AR, 387-5837 FRAME AR, 432-7342 FRAME AS-REAR
ALSO AN ATTACHMENT
TYPE 1

SMCS-7051 **i05715510**

NOTE	REF NO	GRAPHIC REF	PART NUMBER	QTY	PART NAME 1 2 3 4 5 6 (PRODUCT LEVEL)	SEE PAGE
	1	1	**7T-1099**	40	LINK	
	2	1	**190-0544**	5	BOSS-THREADED (M10X1.5-MM THD)	
	3	1	**308-9236**	1	BOSS	
	4	1	**387-5840**	1	BOSS (M12X1X41-MM)	
M	5	1	**416-8393**	20	BOSS-WELD (M10X1.5X56-MM)	
	6	1	**431-4610**	2	BOSS (M10X1.5X90-MM)	
	7	1	**446-6985**	1	BOSS	
	8	1	**446-6986**	1	BOSS	
M	9	1	**8T-4935**	14	BOSS-WELD (M10X1.5X45-MM)	
M	10	1	**8T-6462**	22	BOSS-WELD (M10X1.5X25-MM)	

M - METRIC PART

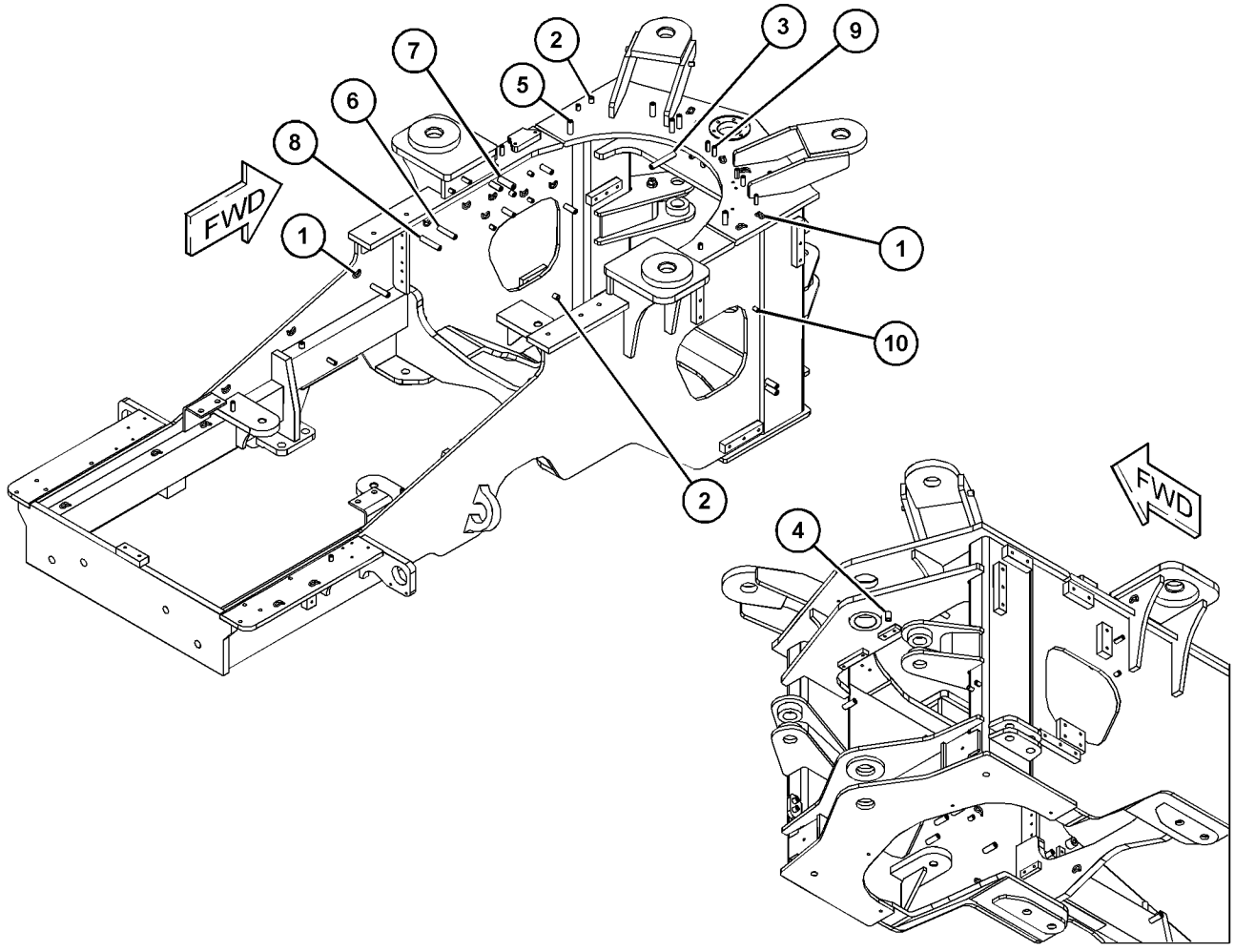

GRAPHIC #1 **<END>** g03668485

387-5835 FRAME AS-REAR

S/N: M5K1-UP
PART OF 387-6001 CHASSIS AR, 387-5837 FRAME AR, 432-7342 FRAME AS-REAR
ALSO AN ATTACHMENT
TYPE 2

SMCS-7051 **i05838308**

NOTE	REF NO	GRAPHIC REF	PART NUMBER	QTY	PART NAME 1 2 3 4 5 6 (PRODUCT LEVEL)	SEE PAGE
	1	1	**7T-1099**	40	LINK	
	2	1	**190-0544**	5	BOSS-THREADED (M10X1.5-MM THD)	
C	3	1	**450-4897**	1	BOSS	
	4	1	**387-5840**	1	BOSS (M12X1X41-MM)	
M	5	1	**416-8393**	20	BOSS-WELD (M10X1.5X56-MM)	
CM	6	1	**8T-6462**	21	BOSS-WELD (M10X1.5X25-MM)	
	7	1	**446-6985**	1	BOSS	
	8	1	**446-6986**	1	BOSS	
CM	9	1	**8T-4935**	13	BOSS-WELD (M10X1.5X45-MM)	

C - CHANGE FROM PREVIOUS TYPE
M - METRIC PART

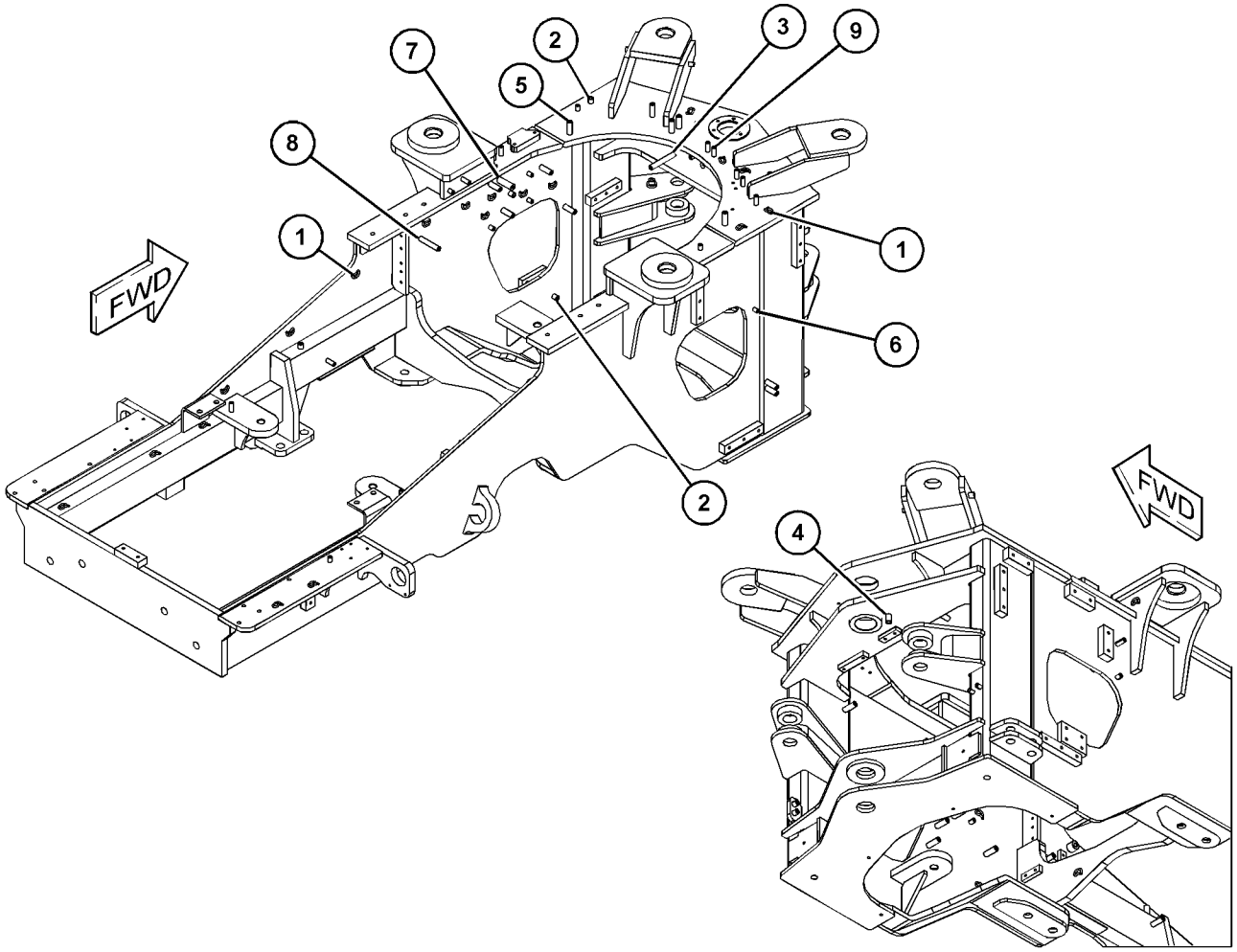

GRAPHIC #1 **<END>** g03695129

432-7342 FRAME AS-REAR

S/N: M5K1-UP
PART OF 432-7340 FRAME AR
AN ATTACHMENT

SMCS-7051 **i05826921**

NOTE	REF NO	GRAPHIC REF	PART NUMBER	QTY	PART NAME 1 2 3 4 5 6 (PRODUCT LEVEL)	SEE PAGE
Y	1	1	**387-5835**	1	FRAME AS-REAR	307
	2	1	**432-7346**	2	BRACKET	
	3	1	**7T-1099**	12	LINK	
M	4	1	**8T-6462**	3	BOSS-WELD (M10X1.5X25-MM)	

M - METRIC PART
Y - SEPARATE ILLUSTRATION

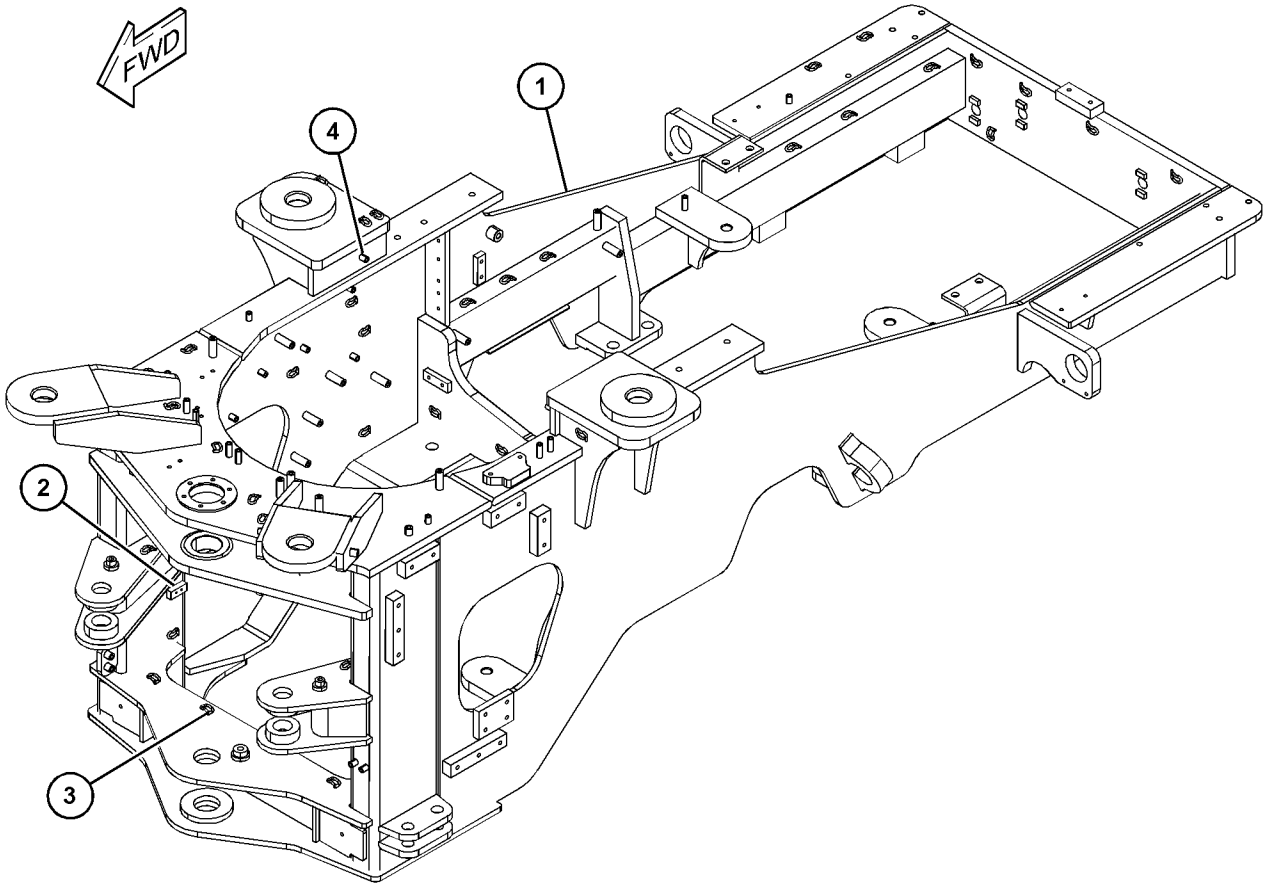

GRAPHIC #1 **<END>** g03689881

387-6230 GRILL GP

S/N: M5K1-UP

PART OF 387-6220, 457-8580 ENCLOSURE GP-ENGINE

SMCS-7251 **i05435979**

NOTE	REF NO	GRAPHIC REF	PART NUMBER	QTY	PART NAME 1 2 3 4 5 6 (PRODUCT LEVEL)	SEE PAGE
	1	1	**387-6231**	1	GRILL	
	2	1	**387-6232**	1	PANEL	
Y	3	1	**387-6233**	1	FRAME AS (GRILL)	304
M	4	1	**5C-9553**	20	BOLT (M6X1X16-MM)	
	5	1	**8T-4121**	10	WASHER-HARD (11X21X2.5-MM THK)	
M	6	1	**8T-4133**	10	NUT (M10X1.5-THD)	
M	7	1	**8T-4137**	10	BOLT (M10X1.5X20-MM)	
M	8	1	**8T-4138**	3	BOLT (M6X1X20-MM)	
	9	1	**8T-4205**	23	WASHER-HARD (7.2X14.5X2-MM THK)	
J	10	1	**432-7310**		BELT (9-DM)	

J - ORDER BY THE DECIMETER
M - METRIC PART
Y - SEPARATE ILLUSTRATION

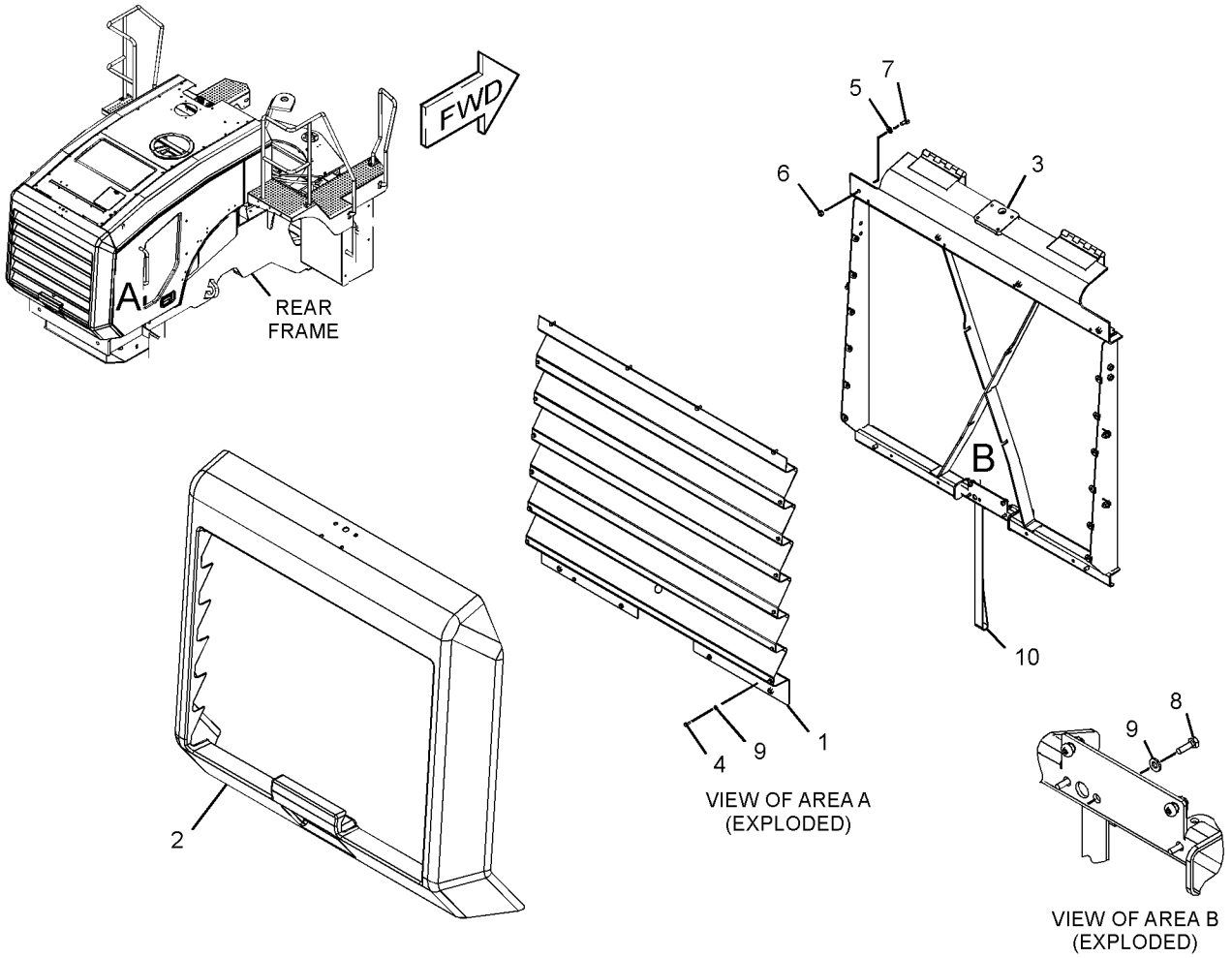

GRAPHIC #1 **<END>** g03426834

387-5994 GUARD GP-FRONT

S/N: M5K1-UP
PART OF 387-5794, 432-7343 HITCH GP-ARTICULATING
ALSO AN ATTACHMENT

SMCS-7167 **i05402680**

NOTE	REF NO	GRAPHIC REF	PART NUMBER	QTY	PART NAME 1 2 3 4 5 6 (PRODUCT LEVEL)	SEE PAGE
	1	1	**387-5995**	1	GUARD AS	
M		1	**8T-3490**	4	NUT-WELD (M10X1.5-THD)	
	2	1	**7X-7729**	4	WASHER (11X25X3-MM THK)	
	3	1	**8T-4121**	4	WASHER-HARD (11X21X2.5-MM THK)	
M	4	1	**8T-4136**	8	BOLT (M10X1.5X25-MM)	

M - METRIC PART

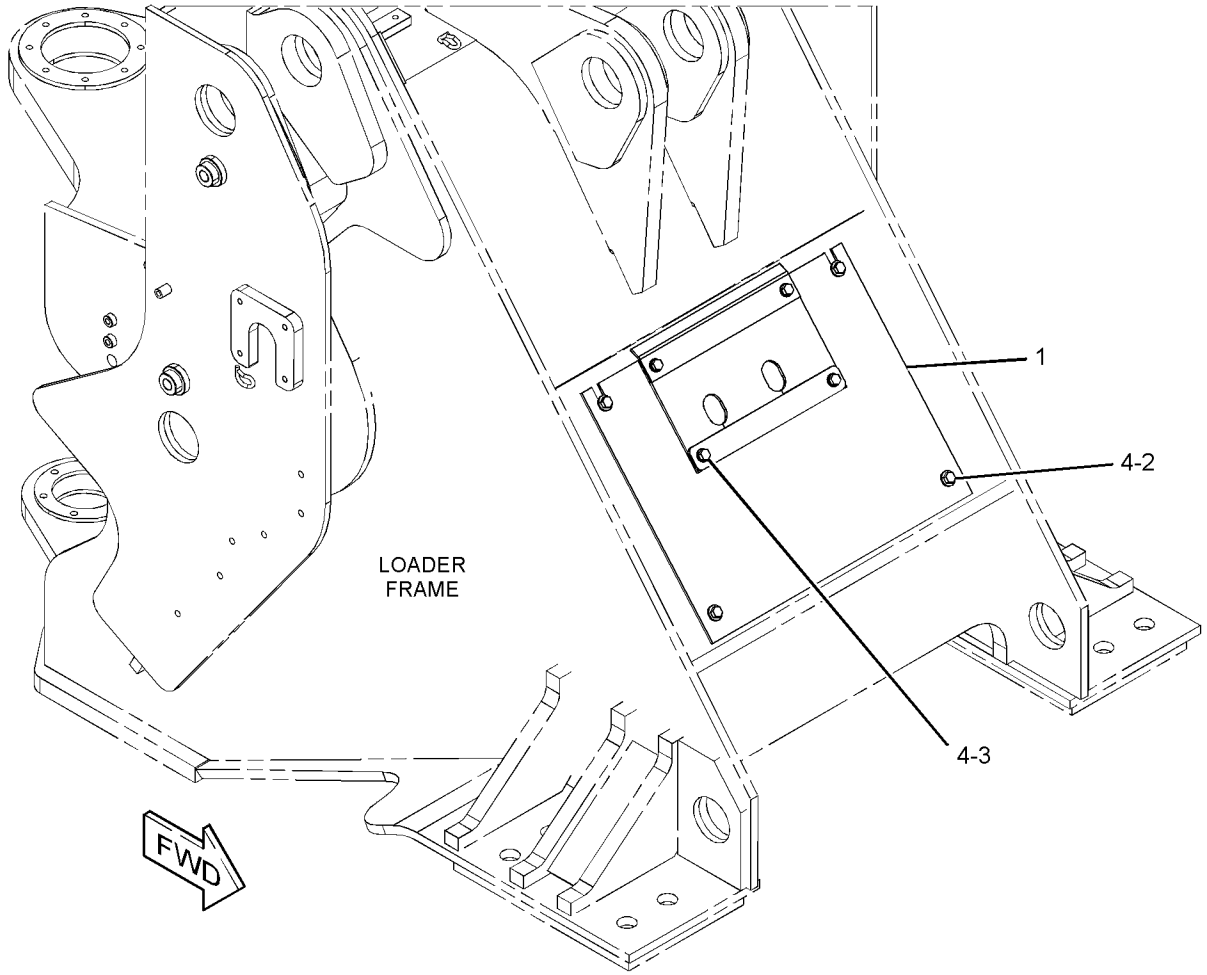

GRAPHIC #1 **<END>** g03537216

469-3122 GUARD GP-FRONT

S/N: M5K1-UP
PART OF 387-5794, 432-7343 HITCH GP-ARTICULATING
ALSO AN ATTACHMENT

SMCS-7167 **i06077298**

NOTE	REF NO	GRAPHIC REF	PART NUMBER	QTY	PART NAME 1 2 3 4 5 6 (PRODUCT LEVEL)	SEE PAGE
	1	1	**387-5995**	1	GUARD AS	
M		1	**8T-3490**	4	NUT-WELD (M10X1.5-THD)	
	2	1	**387-5997**	1	PLATE	
	3	1	**387-5998**	1	PLATE	
	4	1	**469-3107**	4	SPACER (10.5X15.5X4.2-MM THK)	
	5	1	**469-3133**	1	PLATE	
	6	1	**7X-7729**	4	WASHER (11X25X3-MM THK)	
	7	1	**8T-4121**	4	WASHER-HARD (11X21X2.5-MM THK)	
M	8	1	**8T-4136**	8	BOLT (M10X1.5X25-MM)	

M - METRIC PART

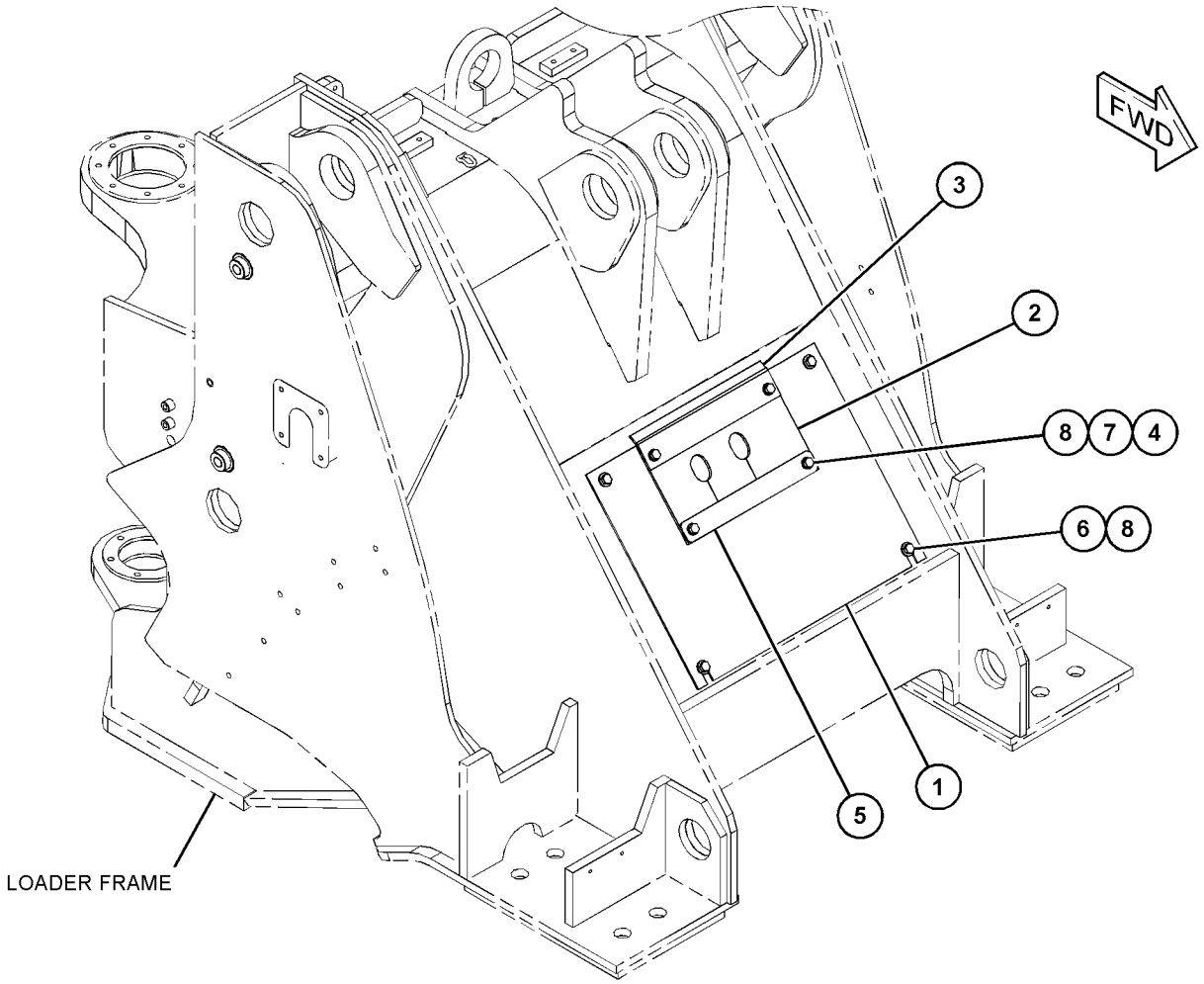

GRAPHIC #1 **<END>** g03799412

387-5794 HITCH GP-ARTICULATING

S/N: M5K1-UP
PART OF 387-6001 CHASSIS AR, 387-5837 FRAME AR
ALSO AN ATTACHMENT
TYPE 1

SMCS-7057, 7100 **i06056588**

NOTE	REF NO	GRAPHIC REF	PART NUMBER	QTY	PART NAME 1 2 3 4 5 6 (PRODUCT LEVEL)	SEE PAGE
	1	2	**6V-9313**	2	PLUG	
	3	2	**365-2574**	4	PIN AS	
	4	2	**387-5750**	1	LINK GP-STEERING FRAME LOCK	
		2	**7D-7496**	2	PIN AS	
		2	**387-5751**	1	LINK	
		2	**431-4595**	2	PIN	
Y	5	2	*387-5795*	1	HITCH GP-ARTICULATING (REAR FRAME)	319
Y	6	2	*387-5796*	1	HITCH GP-ARTICULATING (LOADER FRAME)	320
Y	7	1	*387-5994*	1	GUARD GP-FRONT	311
	8	2	**387-6034**	1	BRACKET	
	9	2	**431-4613**	10	ADAPTER	
	10	1	**431-4619**	2	STOP AS-STEERING	
	11	2	**333-2230**	4	WASHER	
	12	2	**3B-8489**	2	FITTING-GREASE (1/8-27 PTF)	
	13	2	**6V-0852**	8	CAP-DUST	
M	15	2	**8T-4137**	10	BOLT (M10X1.5X20-MM)	
M	16	1	**8T-4176**	2	BOLT (M12X1.75X90-MM)	
M	17	2	**8T-4192**	4	BOLT (M12X1.75X25-MM)	
	18	1	**8T-4223**	4	WASHER-HARD (13.5X25.5X3-MM THK)	
M	19	1	**8T-4244**	2	NUT (M12X1.75-THD)	
M	20	1	**6V-3940**	4	BOLT (M8X1.25X25-MM)	
	21	1	**8T-4224**	4	WASHER-HARD (8.8X16X2-MM THK)	
	22	1	**446-6988**	1	PLATE-COVER (RH)	
	23	1	**446-6989**	1	PLATE-COVER (LH)	
	24	2	**8T-4121**	10	WASHER-HARD (11X21X2.5-MM THK)	
	25	2	**450-4814**	2	STOPPER	

M - METRIC PART
Y - SEPARATE ILLUSTRATION

387-5794 **HITCH GP-ARTICULATING (*contd.*)** **i06056588**

REFER TO ALL ILLUSTRATIONS OF
THIS GROUP FOR AUXILIARY VIEWS

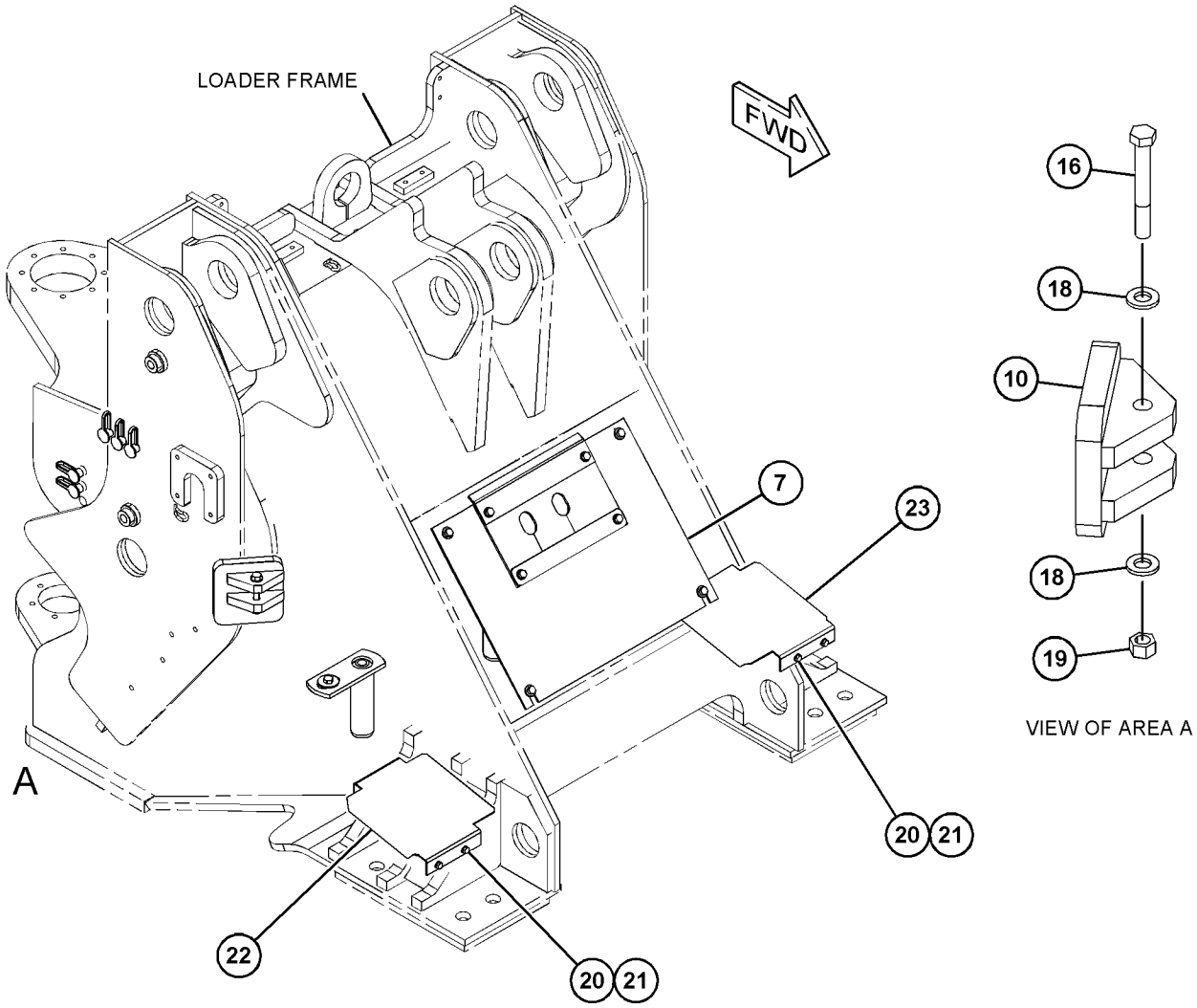

GRAPHIC #1 g03747543

387-5794 **HITCH GP-ARTICULATING (*contd.*)** **i06056588**

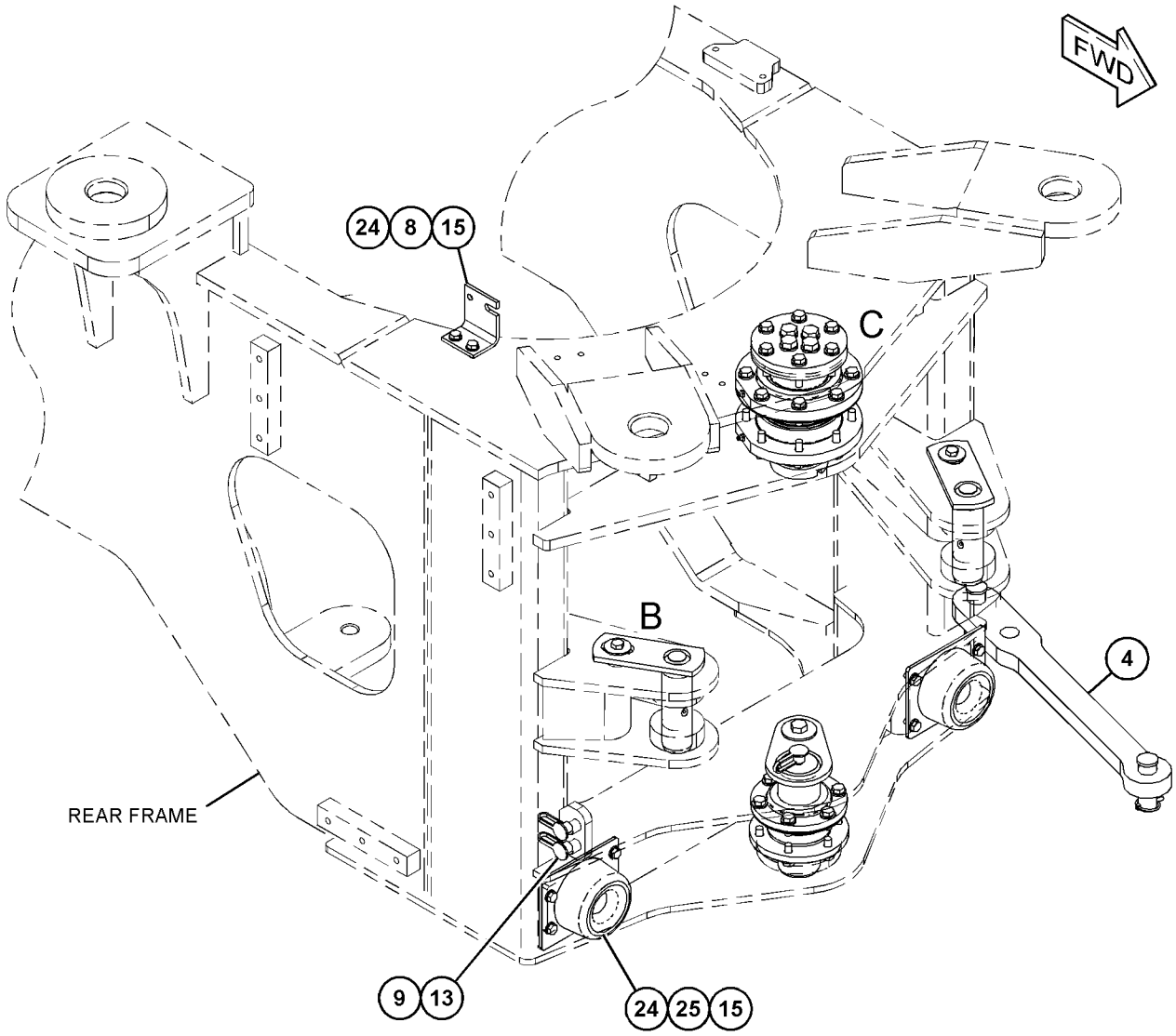

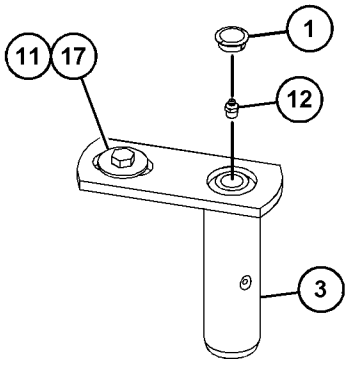

VIEW OF AREA B

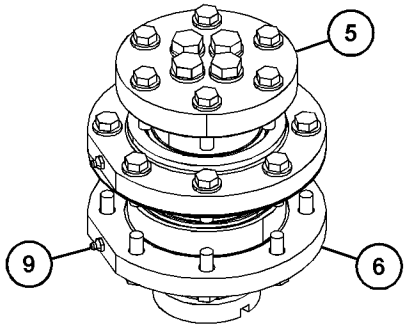

VIEW OF AREA C

GRAPHIC #2 **<END>** g03692809

387-5794 HITCH GP-ARTICULATING

S/N: M5K1-UP
PART OF 387-6001 CHASSIS AR, 387-5837 FRAME AR
ALSO AN ATTACHMENT
TYPE 2

SMCS-7057, 7100 **i06077286**

NOTE	REF NO	GRAPHIC REF	PART NUMBER	QTY	PART NAME 1 2 3 4 5 6 (PRODUCT LEVEL)	SEE PAGE
	1	2	**6V-9313**	2	PLUG	
	3	2	**365-2574**	4	PIN AS	
	4	2	**387-5750**	1	LINK GP-STEERING FRAME LOCK	
		2	**7D-7496**	2	PIN AS	
		2	**387-5751**	1	LINK	
		2	**431-4595**	2	PIN	
Y	5	2	*387-5795*	1	HITCH GP-ARTICULATING (REAR FRAME)	319
Y	6	2	*387-5796*	1	HITCH GP-ARTICULATING (LOADER FRAME)	320
CY	7	1	*469-3122*	1	GUARD GP-FRONT	312
	8	2	**387-6034**	1	BRACKET	
	9	2	**431-4613**	10	ADAPTER	
	10	1	**431-4619**	2	STOP AS-STEERING	
	11	2	**333-2230**	4	WASHER	
	12	2	**3B-8489**	2	FITTING-GREASE (1/8-27 PTF)	
	13	2	**6V-0852**	8	CAP-DUST	
M	15	2	**8T-4137**	10	BOLT (M10X1.5X20-MM)	
M	16	1	**8T-4176**	2	BOLT (M12X1.75X90-MM)	
M	17	2	**8T-4192**	4	BOLT (M12X1.75X25-MM)	
	18	1	**8T-4223**	4	WASHER-HARD (13.5X25.5X3-MM THK)	
M	19	1	**8T-4244**	2	NUT (M12X1.75-THD)	
M	20	1	**6V-3940**	4	BOLT (M8X1.25X25-MM)	
C	21	1	**5P-4116**	4	WASHER-HARD (8.8X20.5X2-MM THK)	
	22	1	**446-6988**	1	PLATE-COVER (RH)	
	23	1	**446-6989**	1	PLATE-COVER (LH)	
	24	2	**8T-4121**	10	WASHER-HARD (11X21X2.5-MM THK)	
	25	2	**450-4814**	2	STOPPER	
C	26	2	**469-3138**	1	ADAPTER	

C - CHANGE FROM PREVIOUS TYPE
M - METRIC PART
Y - SEPARATE ILLUSTRATION

387-5794 **HITCH GP-ARTICULATING (*contd.*)** **i06077286**

REFER TO ALL ILLUSTRATIONS OF
THIS GROUP FOR AUXILIARY VIEWS

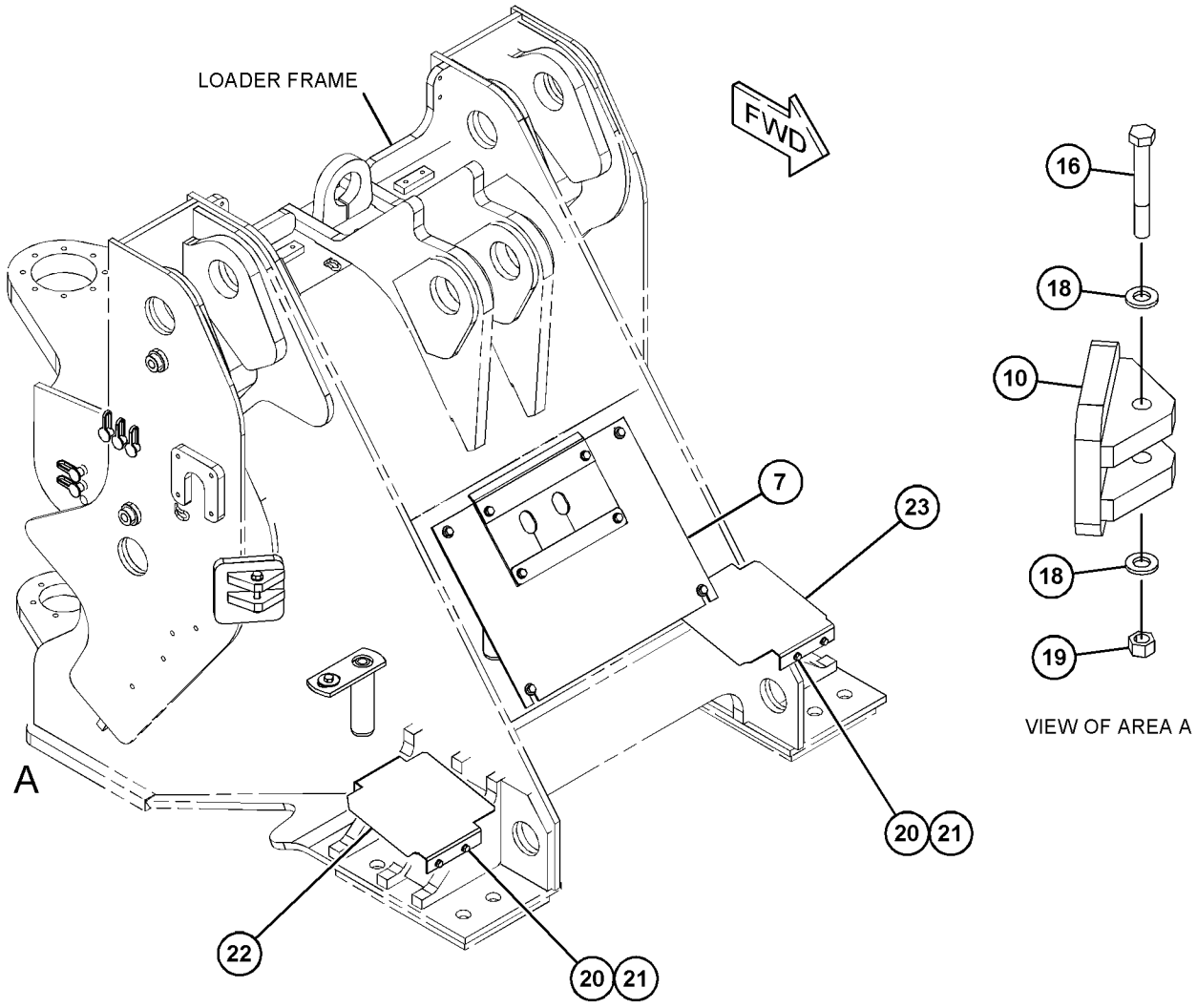

GRAPHIC #1 g03747543

387-5794 **HITCH GP-ARTICULATING (*contd.*)** **i06077286**

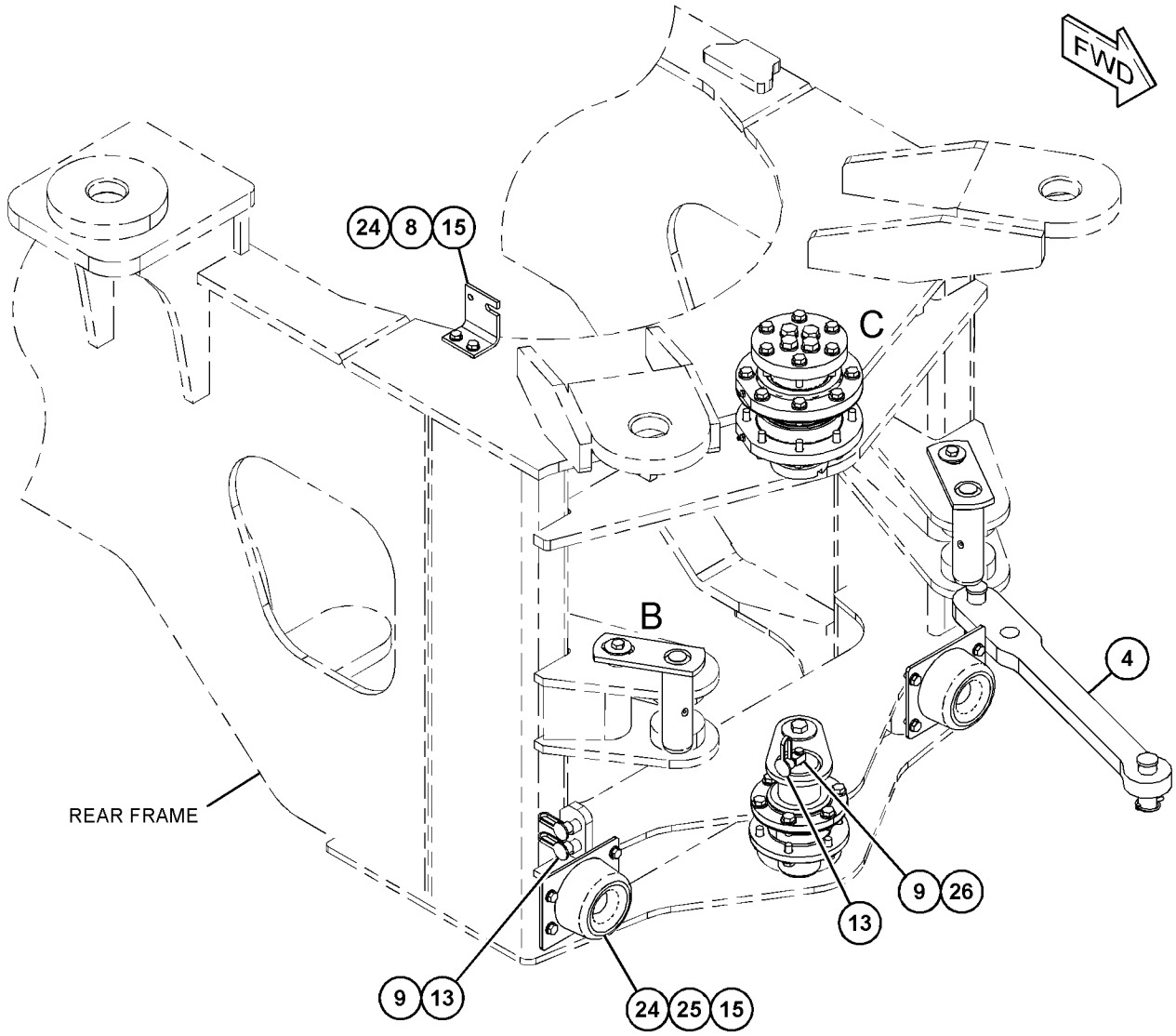

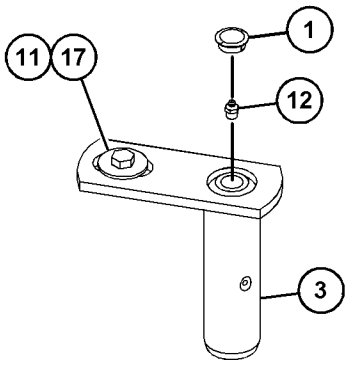

VIEW OF AREA B

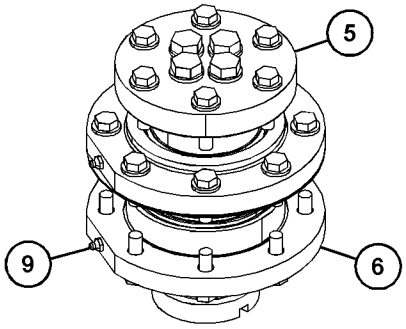

VIEW OF AREA C

GRAPHIC #2 **<END>** g03799397

387-5795 HITCH GP-ARTICULATING

S/N: M5K1-UP
REAR FRAME
PART OF 387-5794, 432-7343 HITCH GP-ARTICULATING
ALSO AN ATTACHMENT

SMCS-7057, 7100 **i05666189**

NOTE	REF NO	GRAPHIC REF	PART NUMBER	QTY	PART NAME 1 2 3 4 5 6 (PRODUCT LEVEL)	SEE PAGE
	1	1	**241-4934**	1	WASHER-HARD	
	2	1	**387-5915**	1	SPACER (80X95X69-MM THK)	
	3	1	**387-5916**	1	SPACER (80X95X39-MM THK)	
	4	1	**387-6032**	1	PIN AS	
	5	1	**387-6033**	1	PLATE	
	6	1	**431-4596**	10	SHIM (0.2-MM THK)	
	7	1	**431-4597**	8	SHIM (1-MM THK)	
	8	1	**431-4598**	4	SHIM (0.5-MM THK)	
	9	1	**448-2945**	1	PIN	
	10	1	**431-4609**	1	COVER	
	11	1	**5P-8245**	6	WASHER-HARD (13.5X25.5X3-MM THK)	
M	12	1	**6V-7673**	6	BOLT (M12X1.75X50-MM)	
M	13	1	**7X-2555**	4	BOLT (M16X2X80-MM)	
M	14	1	**8T-4190**	1	BOLT (M16X2X25-MM)	
M	15	1	**8T-4192**	1	BOLT (M12X1.75X25-MM)	
	16	1	**9X-8268**	4	WASHER (17.5X30X3.5-MM THK)	

M - METRIC PART

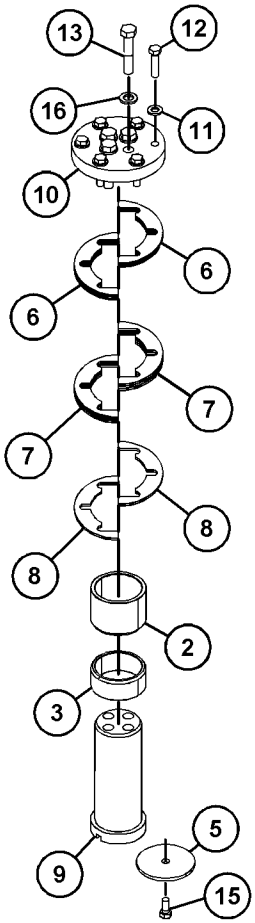

VIEW OF AREA A
(EXPLODED)

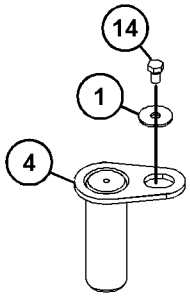

VIEW OF AREA B
(EXPLODED)

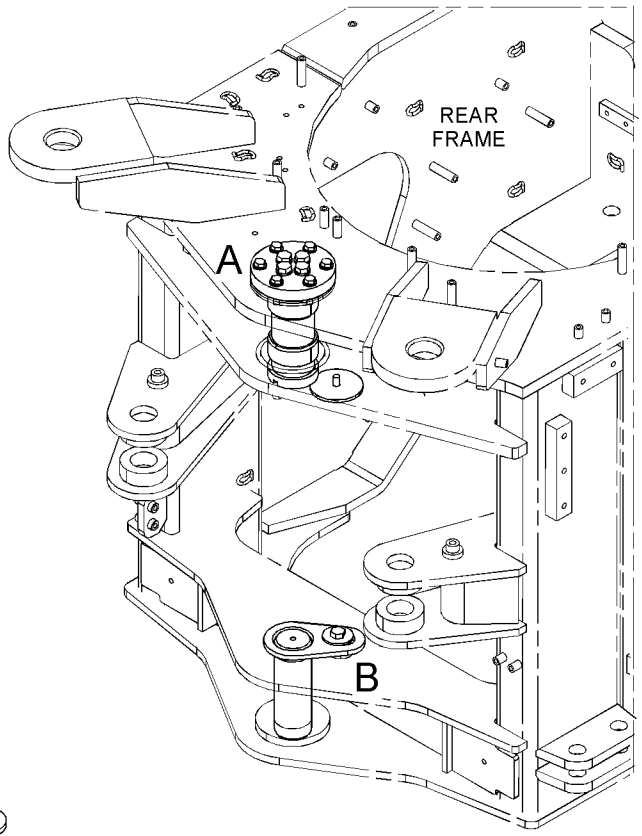

GRAPHIC #1

<END>

g03539718

387-5796 HITCH GP-ARTICULATING

S/N: M5K1-UP
LOADER FRAME
PART OF 387-5794, 432-7343 HITCH GP-ARTICULATING
ALSO AN ATTACHMENT

SMCS-7057, 7100 **i05402678**

NOTE	REF NO	GRAPHIC REF	PART NUMBER	QTY	PART NAME 1 2 3 4 5 6 (PRODUCT LEVEL)	SEE PAGE
	1	1	**431-4599**	10	SHIM (0.2-MM THK)	
	2	1	**431-4600**	6	SHIM (0.5-MM THK)	
	3	1	**431-4601**	2	CAP-BEARING	
	4	1	**431-4602**	1	CAP-BEARING	
	5	1	**431-4603**	2	SEAL	
	6	1	**431-4604**	1	CAP-BEARING	
	7	1	**431-4605**	2	SHIM (0.3-MM THK)	
	8	1	**431-4606**	2	SHIM (0.5-MM THK)	
	9	1	**431-4607**	2	SHIM (0.7-MM THK)	
	10	1	**431-4611**	2	SEAL	
	11	1	**431-4614**	2	BEARING	
	12	1	**207-1738**	1	BEARING	
	13	1	**5P-8245**	28	WASHER-HARD (13.5X25.5X3-MM THK)	
M	14	1	**6V-3668**	12	BOLT (M12X1.75X30-MM)	
M	15	1	**6V-8197**	16	BOLT (M12X1.75X40-MM)	

M - METRIC PART

387-5796 **HITCH GP-ARTICULATING (*contd.*)** **i05402678**

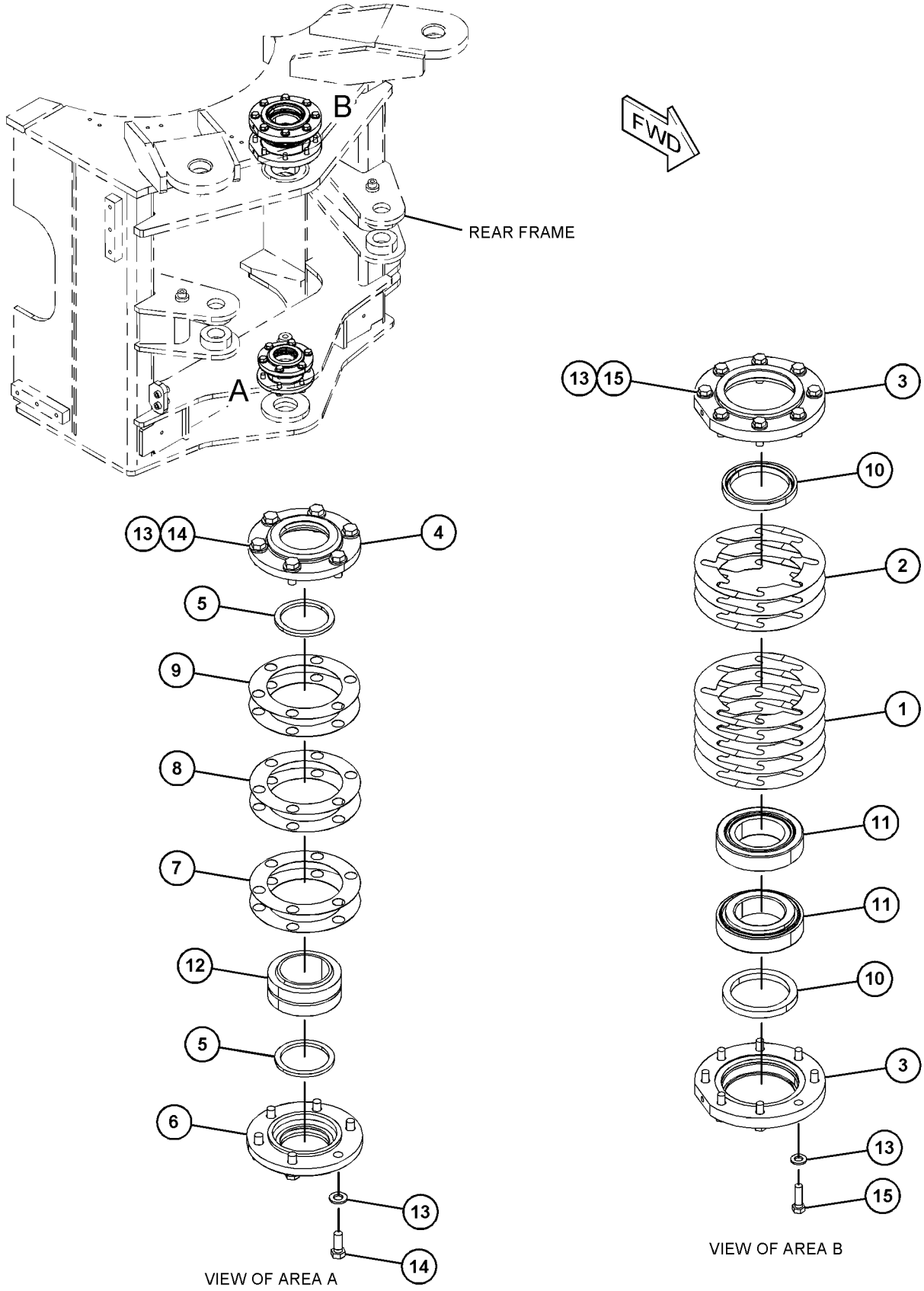

GRAPHIC #1 **<END>** g03537658

432-7343 HITCH GP-ARTICULATING

S/N: M5K1-UP
PART OF 432-7340 FRAME AR
AN ATTACHMENT
TYPE 1

SMCS-7057, 7100

i06061712

NOTE	REF NO	GRAPHIC REF	PART NUMBER	QTY	PART NAME 1 2 3 4 5 6 (PRODUCT LEVEL)	SEE PAGE
	1	1	**365-2574**	4	PIN AS	
	2	1	**387-5750**	1	LINK GP-STEERING FRAME LOCK	
		1	**7D-7496**	2	PIN AS	
		1	**387-5751**	1	LINK	
		1	**431-4595**	2	PIN	
Y	3	1	*387-5795*	1	HITCH GP-ARTICULATING (REAR FRAME)	319
Y	4	1	*387-5796*	1	HITCH GP-ARTICULATING (LOADER FRAME)	320
Y	5	1	*387-5994*	1	GUARD GP-FRONT (HITCH)	311
	6	1	**387-6034**	1	BRACKET	
	7	1	**431-4613**	1	ADAPTER	
	8	1	**431-4619**	2	STOP AS-STEERING	
	9	1	**446-6988**	1	PLATE-COVER (RH)	
	10	1	**446-6989**	1	PLATE-COVER (LH)	
	11	1	**450-4814**	2	STOPPER	
	12	1	**333-2230**	4	WASHER	
	13	1	**5P-8245**	4	WASHER-HARD (13.5X25.5X3-MM THK)	
	14	1	**6V-0852**	1	CAP-DUST	
M	15	1	**6V-3940**	4	BOLT (M8X1.25X25-MM)	
	16	1	**8T-4121**	10	WASHER-HARD (11X21X2.5-MM THK)	
M	17	1	**8T-4137**	10	BOLT (M10X1.5X20-MM)	
M	18	1	**8T-4176**	2	BOLT (M12X1.75X90-MM)	
M	19	1	**8T-4192**	4	BOLT (M12X1.75X25-MM)	
	20	1	**8T-4224**	4	WASHER-HARD (8.8X16X2-MM THK)	
M	21	1	**8T-4244**	2	NUT (M12X1.75-THD)	

M - METRIC PART
Y - SEPARATE ILLUSTRATION

432-7343 **HITCH GP-ARTICULATING (*contd.*)** **i06061712**

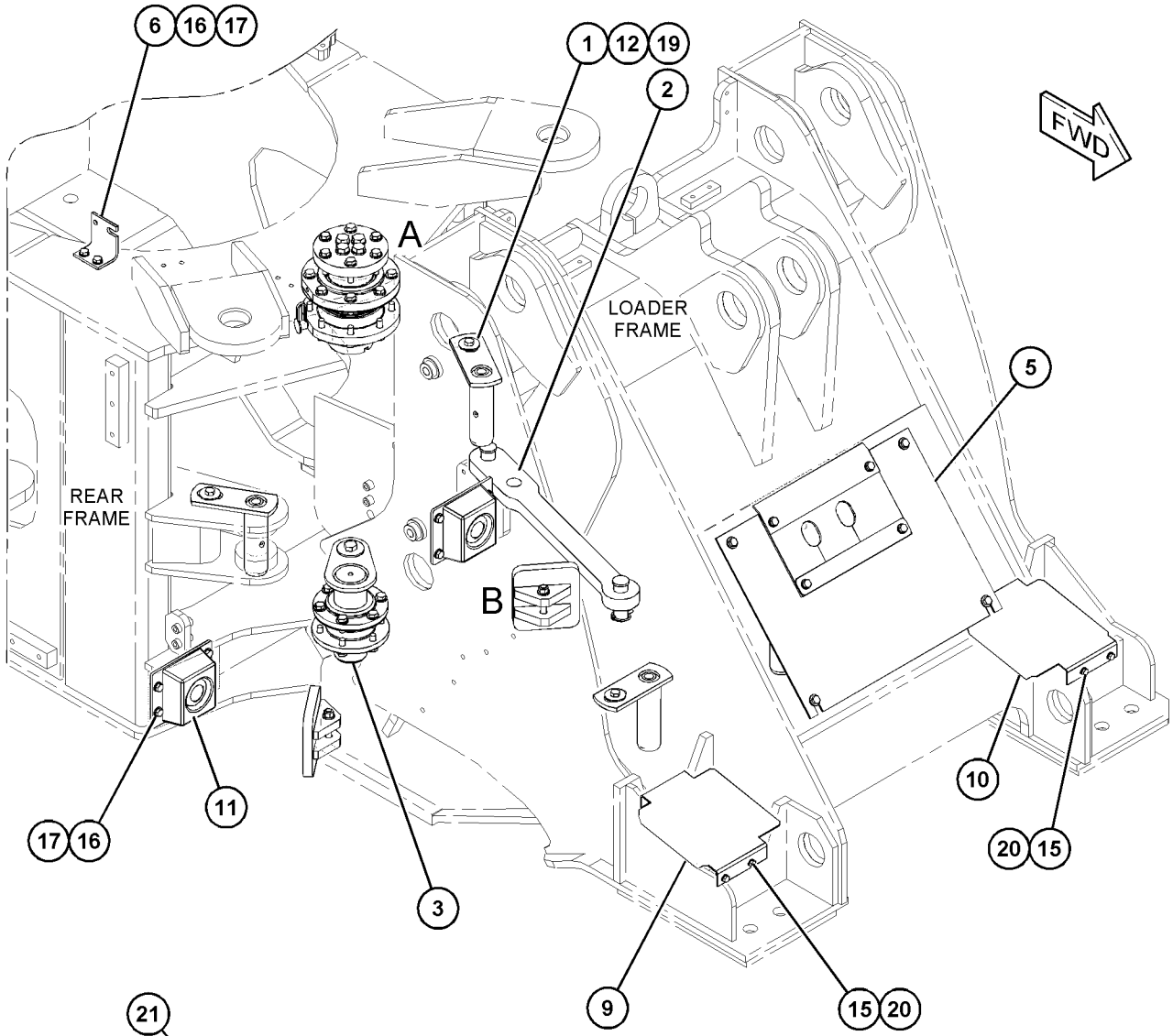

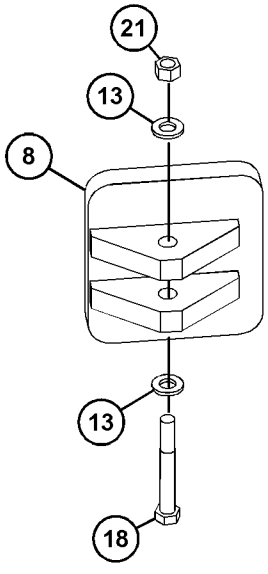

VIEW OF AREA B

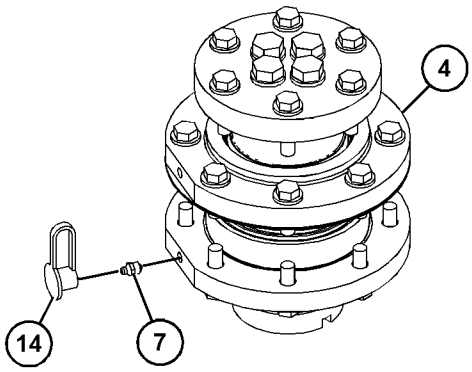

VIEW OF AREA A

GRAPHIC #1 **<END>** g03747545

432-7343 HITCH GP-ARTICULATING

S/N: M5K1-UP
PART OF 432-7340 FRAME AR
AN ATTACHMENT
TYPE 2

SMCS-7057, 7100

i06077284

NOTE	REF NO	GRAPHIC REF	PART NUMBER	QTY	PART NAME 1 2 3 4 5 6 (PRODUCT LEVEL)	SEE PAGE
	1	1	**365-2574**	4	PIN AS	
	2	1	**387-5750**	1	LINK GP-STEERING FRAME LOCK	
		1	**7D-7496**	2	PIN AS	
		1	**387-5751**	1	LINK	
		1	**431-4595**	2	PIN	
Y	3	1	*387-5795*	1	HITCH GP-ARTICULATING (REAR FRAME)	319
Y	4	1	*387-5796*	1	HITCH GP-ARTICULATING (LOADER FRAME)	320
CY	5	1	*469-3122*	1	GUARD GP-FRONT (HITCH)	312
	6	1	**387-6034**	1	BRACKET	
	7	1	**431-4613**	1	ADAPTER	
	8	1	**431-4619**	2	STOP AS-STEERING	
	9	1	**446-6988**	1	PLATE-COVER (RH)	
	10	1	**446-6989**	1	PLATE-COVER (LH)	
	11	1	**450-4814**	2	STOPPER	
	12	1	**333-2230**	4	WASHER	
	13	1	**5P-8245**	4	WASHER-HARD (13.5X25.5X3-MM THK)	
	14	1	**6V-0852**	1	CAP-DUST	
M	15	1	**6V-3940**	4	BOLT (M8X1.25X25-MM)	
	16	1	**8T-4121**	10	WASHER-HARD (11X21X2.5-MM THK)	
M	17	1	**8T-4137**	10	BOLT (M10X1.5X20-MM)	
M	18	1	**8T-4176**	2	BOLT (M12X1.75X90-MM)	
M	19	1	**8T-4192**	4	BOLT (M12X1.75X25-MM)	
C	20	1	**5P-4116**	4	WASHER-HARD (8.8X20.5X2-MM THK)	
M	21	1	**8T-4244**	2	NUT (M12X1.75-THD)	

C - CHANGE FROM PREVIOUS TYPE
M - METRIC PART
Y - SEPARATE ILLUSTRATION

432-7343 **HITCH GP-ARTICULATING (*contd.*)** **i06077284**

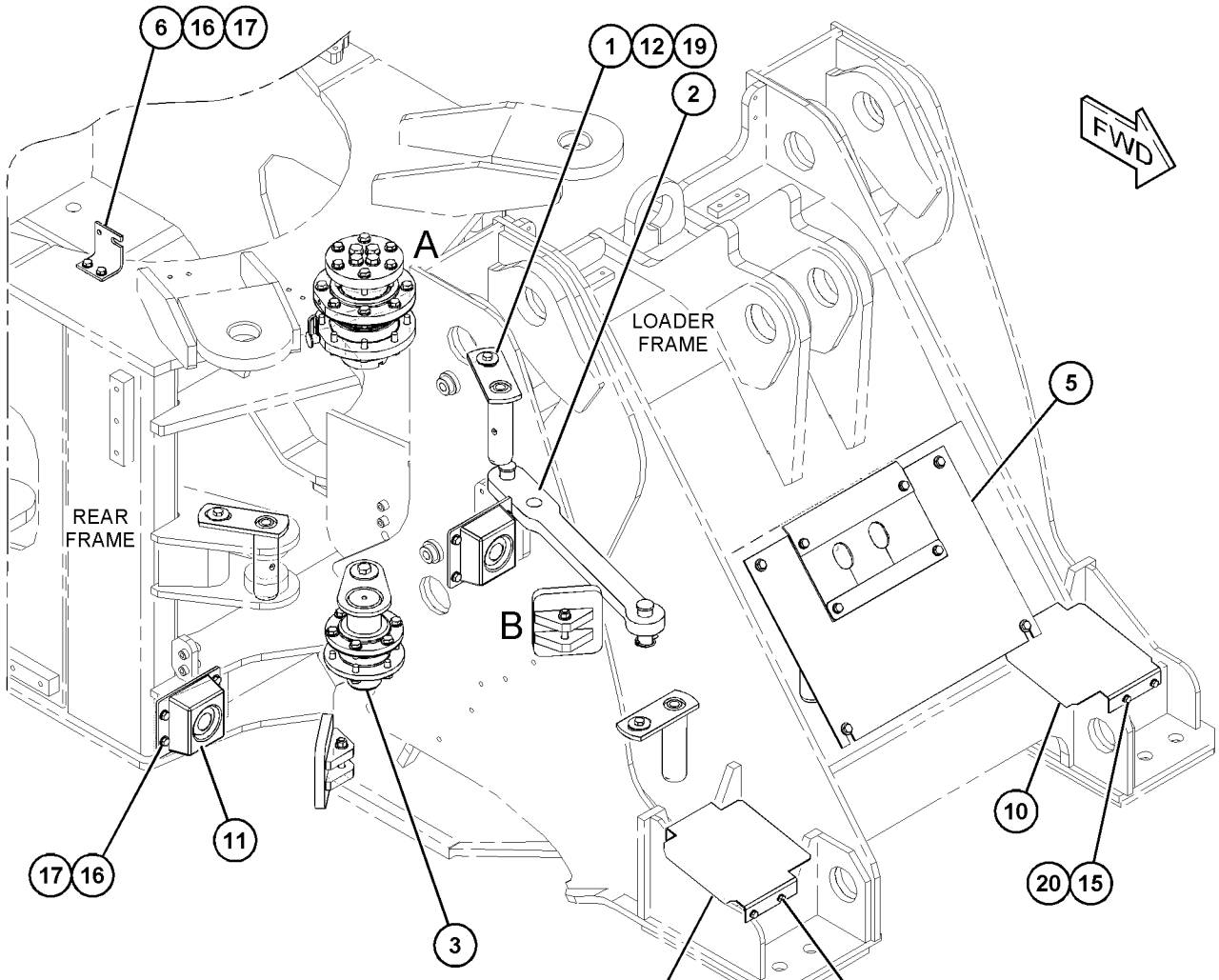

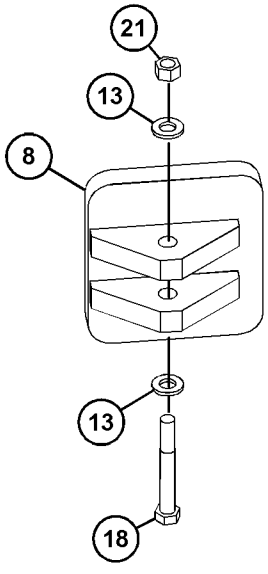

VIEW OF AREA B

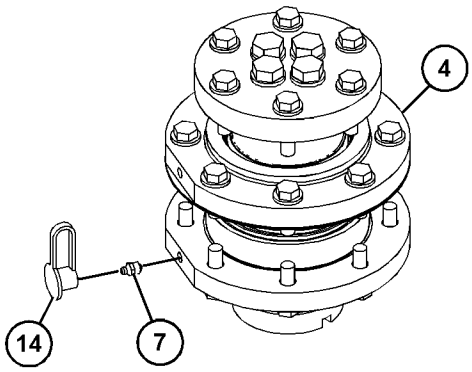

VIEW OF AREA A

GRAPHIC #1 **<END>** g03747545

392-3726 LADDER GP–LEFT

S/N: M5K1-UP

PART OF 392-3720 PLATFORM GP-CAB

SMCS-7254 **i05426776**

NOTE	REF NO	GRAPHIC REF	PART NUMBER	QTY	PART NAME 1 2 3 4 5 6 (PRODUCT LEVEL)	SEE PAGE
	1	1	**234-5107**	2	SUPPORT-STEP (RUBBER)	
	2	1	**392-3755**	1	LADDER AS	
	3	1	**392-3760**	1	STEP AS	
	4	1	**234-3545**	4	PLATE	
	5	1	**272-1777**	8	WASHER-HARD (11X18.5X15-MM THK)	
	6	1	**8T-4121**	8	WASHER-HARD (11X21X2.5-MM THK)	
M	7	1	**8T-4186**	8	BOLT (M10X1.5X40-MM)	

M - METRIC PART

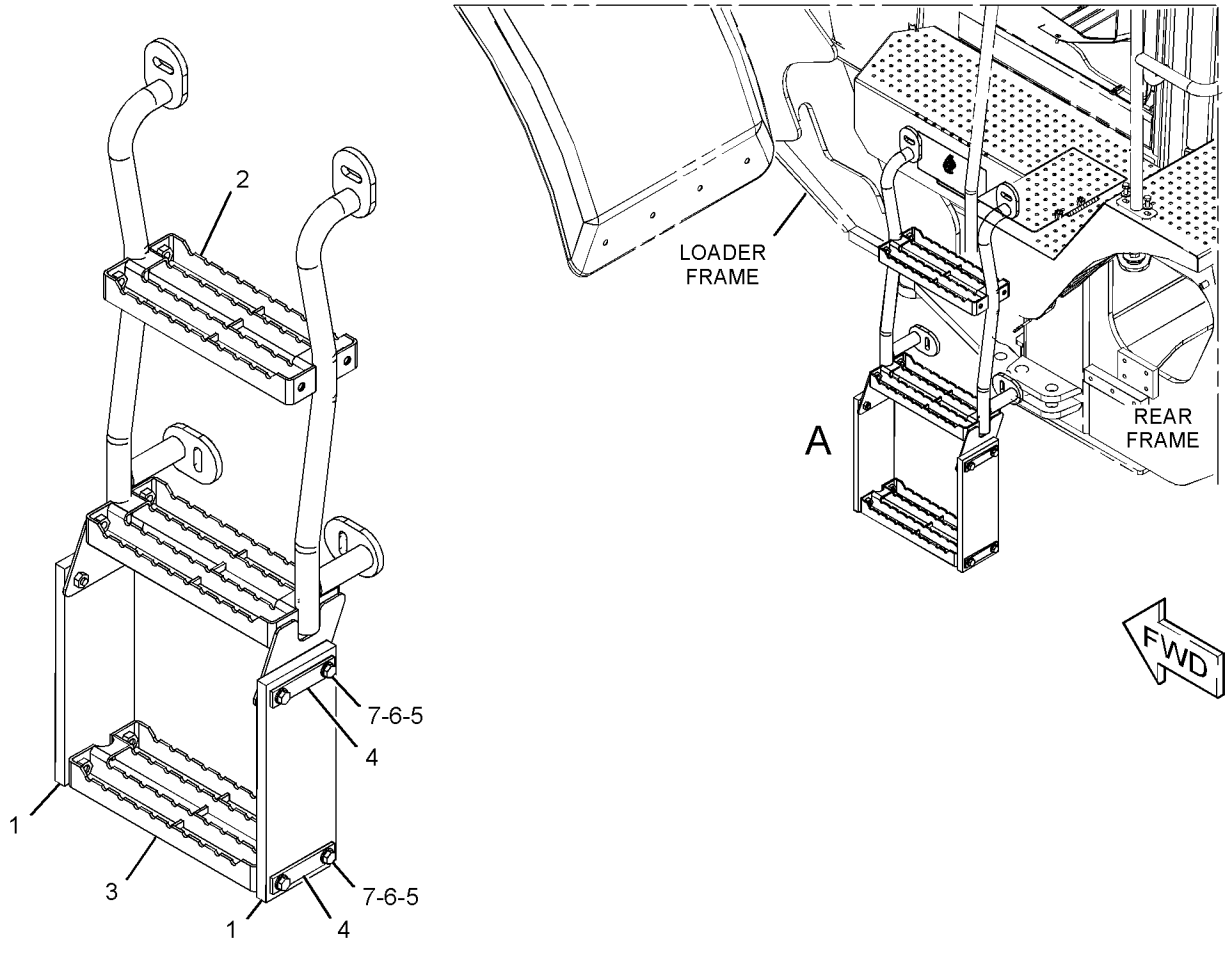

VIEW OF AREA A

GRAPHIC #1 **<END>** g03429831

392-3727 LADDER GP–RIGHT

S/N: M5K1-UP

PART OF 392-3720 PLATFORM GP-CAB

SMCS-7254 **i05426777**

NOTE	REF NO	GRAPHIC REF	PART NUMBER	QTY	PART NAME 1 2 3 4 5 6 (PRODUCT LEVEL)	SEE PAGE
	1	1	**234-5107**	2	SUPPORT-STEP (RUBBER)	
	2	1	**392-3760**	1	STEP AS	
	3	1	**392-3762**	1	LADDER AS	
	4	1	**234-3545**	4	PLATE	
	5	1	**272-1777**	8	WASHER-HARD (11X18.5X15-MM THK)	
	6	1	**8T-4121**	8	WASHER-HARD (11X21X2.5-MM THK)	
M	7	1	**8T-4186**	8	BOLT (M10X1.5X40-MM)	

M - METRIC PART

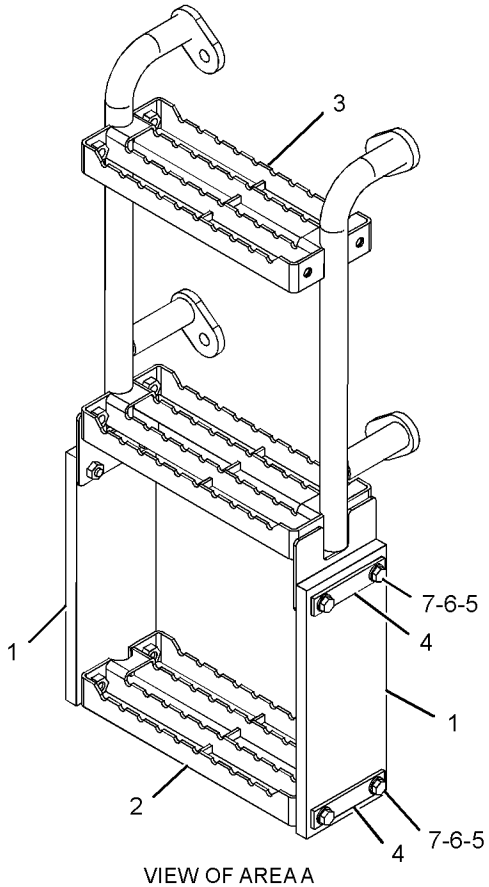

VIEW OF AREA A

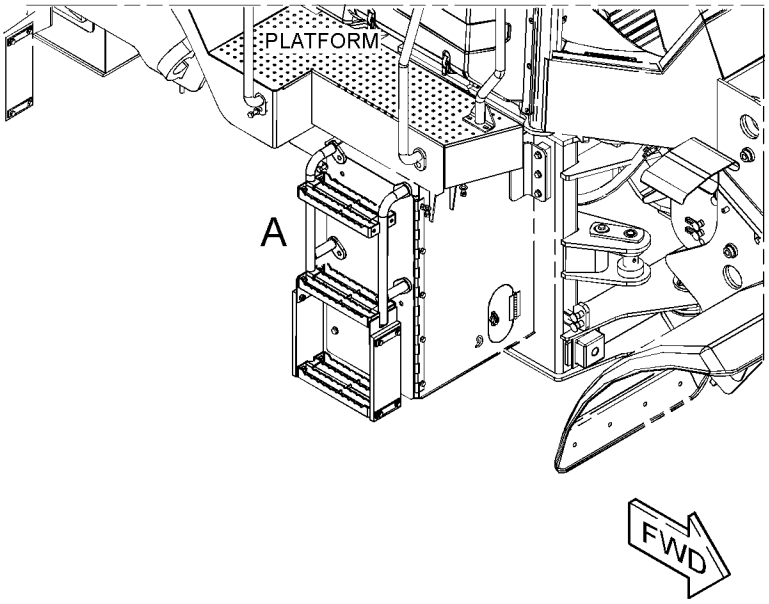

GRAPHIC #1 **<END>** g03429757

392-3728 LADDER GP–REAR

S/N: M5K1-UP
PART OF 392-3720 PLATFORM GP-CAB
TYPE 1

SMCS-7254 **i05667530**

NOTE	REF NO	GRAPHIC REF	PART NUMBER	QTY	PART NAME 1 2 3 4 5 6 (PRODUCT LEVEL)	SEE PAGE
	1	1	**234-5107**	2	SUPPORT-STEP (RUBBER)	
M	2	1	**8T-4133**	4	NUT (M10X1.5-THD)	
M	3	1	**8T-6466**	2	BOLT (M10X1.5X60-MM)	
	4	1	**234-3545**	4	PLATE	
	5	1	**272-1777**	8	WASHER-HARD (11X18.5X15-MM THK)	
	6	1	**8T-4121**	12	WASHER-HARD (11X21X2.5-MM THK)	
M	7	1	**8T-4182**	6	BOLT (M10X1.5X45-MM)	

M - METRIC PART

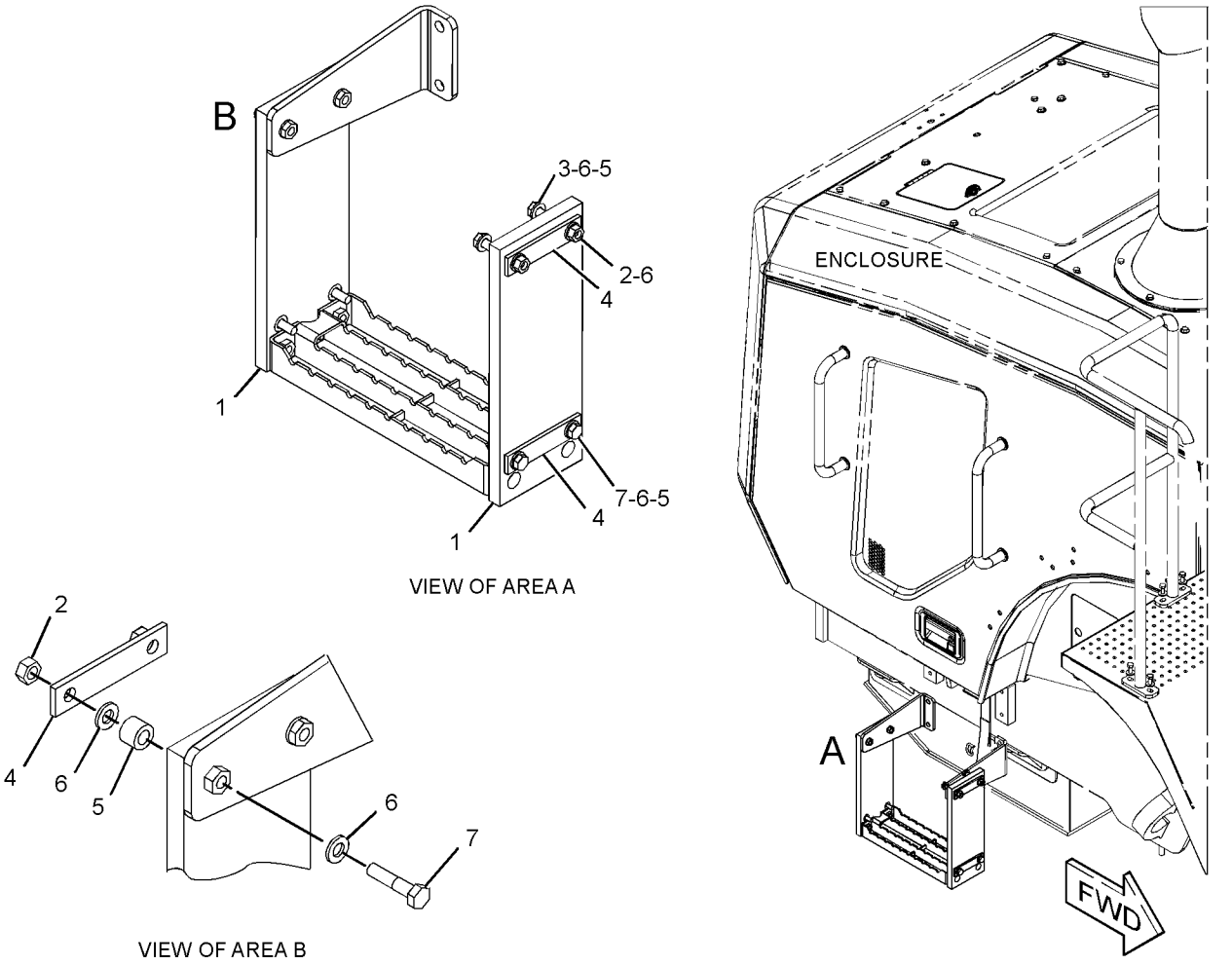

GRAPHIC #1 **<END>** g03699662

392-3728 LADDER GP–REAR

S/N: M5K1-UP
PART OF 392-3720 PLATFORM GP-CAB
TYPE 2

SMCS-7254 **i06063994**

NOTE	REF NO	GRAPHIC REF	PART NUMBER	QTY	PART NAME 1 2 3 4 5 6 (PRODUCT LEVEL)	SEE PAGE
C	1	1	**432-7327**	2	PLATE-RUBBER	
M	2	1	**8T-4133**	4	NUT (M10X1.5-THD)	
M	3	1	**8T-6466**	2	BOLT (M10X1.5X60-MM)	
	4	1	**234-3545**	4	PLATE	
	5	1	**272-1777**	8	WASHER-HARD (11X18.5X15-MM THK)	
	6	1	**8T-4121**	12	WASHER-HARD (11X21X2.5-MM THK)	
M	7	1	**8T-4182**	6	BOLT (M10X1.5X45-MM)	
C	8	1	**392-3763**	1	PLATE	
C	9	1	**392-3760**	1	STEP AS	
M		1	**8T-3490**	4	NUT-WELD (M10X1.5-THD)	

C - CHANGE FROM PREVIOUS TYPE
M - METRIC PART

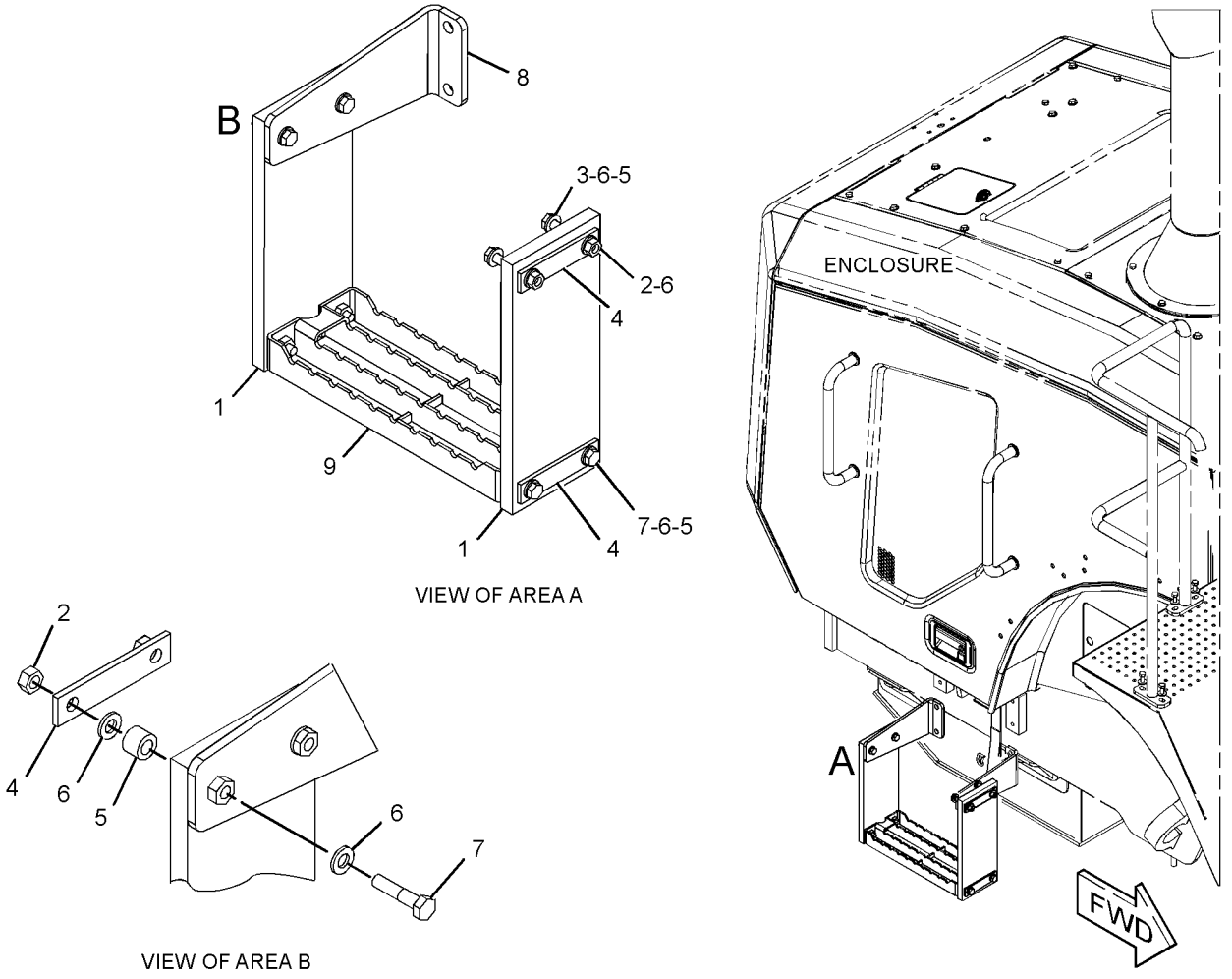

GRAPHIC #1 **<END>** g03797505

431-4625 LINES GP-GREASE

S/N: M5K1-UP
PART OF 446-6955 SERVICE CENTER AR
AN ATTACHMENT

SMCS-7510 **i05721150**

NOTE	REF NO	GRAPHIC REF	PART NUMBER	QTY	PART NAME 1 2 3 4 5 6 (PRODUCT LEVEL)	SEE PAGE
	1	2	**431-4630**	1	HOSE AS	
	2	2	**431-4631**	1	HOSE AS	
	3	2	**431-4632**	1	HOSE AS	
	4	2	**431-4633**	1	HOSE AS	
	5	2	**431-4634**	1	HOSE AS	
	6	2	**431-4635**	1	HOSE AS	
	7	2	**431-4636**	1	HOSE AS	
	8	2	**431-4644**	1	GUARD	
	9	2	**434-6690**	1	CONNECTOR	
	10	2	**434-6691**	2	CONNECTOR	
	11	2	**434-6692**	8	ADAPTER-ELBOW	
	12	2	**434-6693**	1	ADAPTER-ELBOW	
	13	2	**132-5789**	2	CLIP	
	14	2	**7K-1181**	20	STRAP-CABLE	
	15	2	**8T-4121**	3	WASHER-HARD (11X21X2.5-MM THK)	
M	16	2	**8T-4137**	3	BOLT (M10X1.5X20-MM)	
	17	2	**450-0049**	2	CONNECTOR-MALE	
	18	2	**355-9625**	1	FILM-INSTRUCTION (READ OMM)	
	19	2	**417-2117**	1	FILM-IDENTIFICATION (LUBRICATION POINTS)	
	20	2	**417-2118**	1	FILM-IDENTIFICATION (LUBRICATION POINTS)	
	21	2	**277-1873**	1	CLIP	

M - METRIC PART

431-4625 **LINES GP-GREASE (*contd.*)** **i05721150**

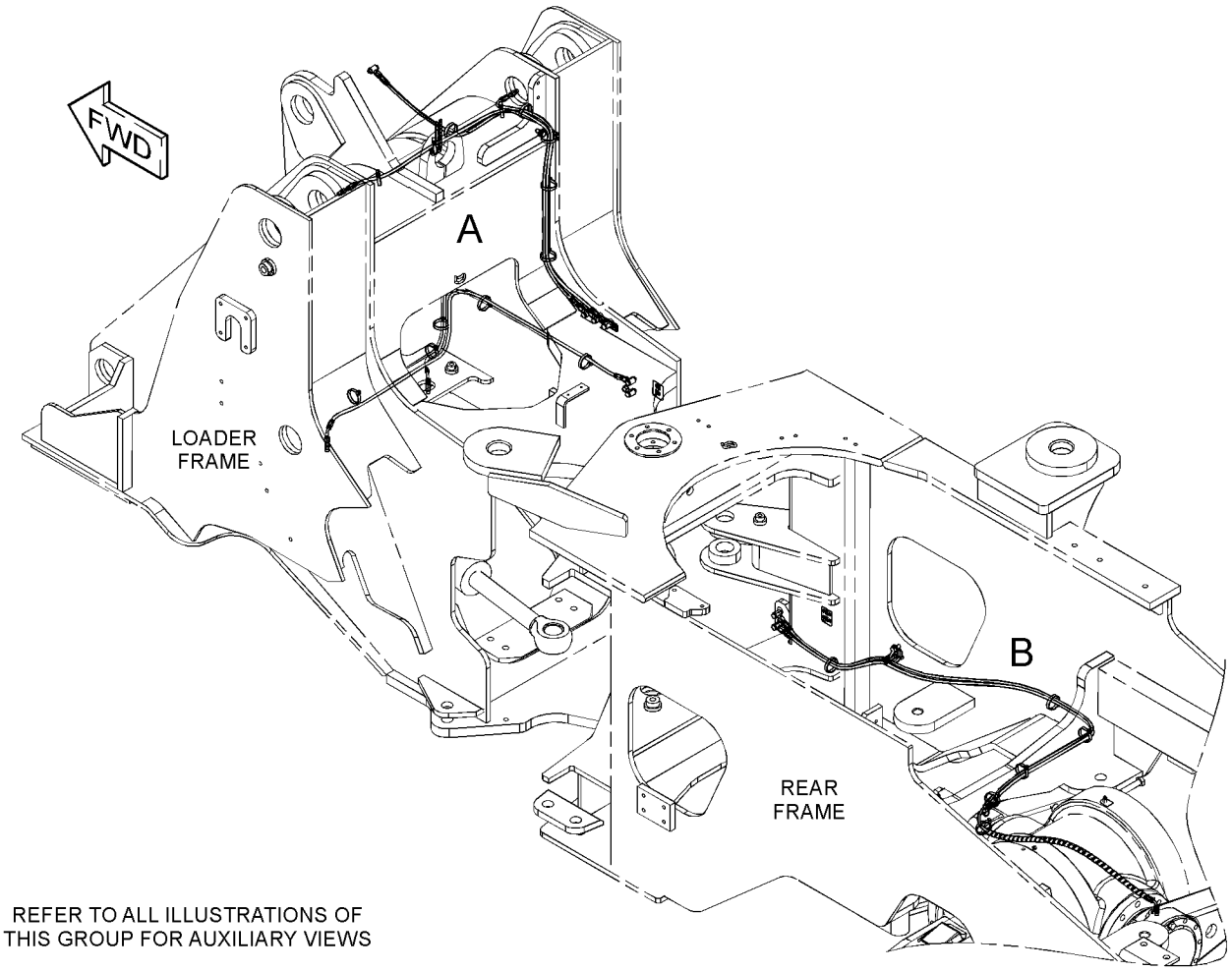

REFER TO ALL ILLUSTRATIONS OF
THIS GROUP FOR AUXILIARY VIEWS

GRAPHIC #1 g03706567

431-4625 **LINES GP-GREASE (*contd.*)** **i05721150**

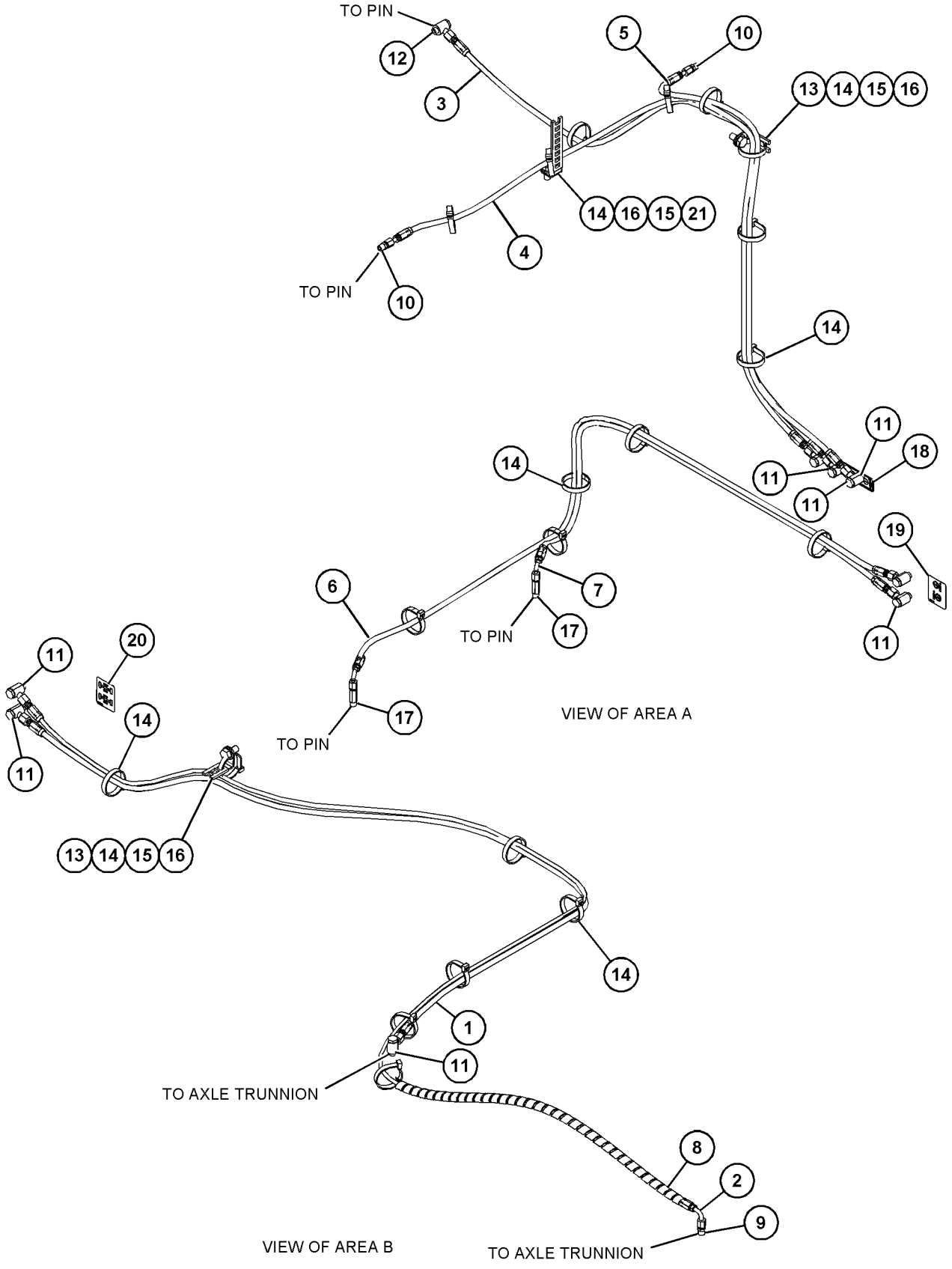

GRAPHIC #2 **<END>** g03706566

432-7338 LUBRICATION GP-AUTOMATIC

S/N: M5K1-UP
CANNOT BE USED WITH 431-4625 LINES GP-GREASE
PART OF 446-6956 SERVICE CENTER AR
AN ATTACHMENT

SMCS-7540 **i05677013**

NOTE	REF NO	GRAPHIC REF	PART NUMBER	QTY	PART NAME 1 2 3 4 5 6 (PRODUCT LEVEL)	SEE PAGE
	1	1	**7K-1181**	82	STRAP-CABLE	
M	2	1	**8T-7547**	2	BOLT (M8X1.25X30-MM)	
	3	1	**431-4635**	1	HOSE AS	
	4	1	**431-4636**	1	HOSE AS	
	5	1	**432-7339**	1	BRACKET	
	6	1	**432-7349**	1	HOSE AS	
	7	1	**432-7350**	1	HOSE AS	
	8	1	**432-7351**	1	HOSE AS	
	9	1	**432-7352**	1	HOSE AS	
	10	1	**432-7353**	1	HOSE AS	
	11	1	**432-7354**	1	HOSE AS	
	12	1	**432-7355**	1	HOSE AS	
	13	1	**432-7356**	1	HOSE AS	
	14	1	**432-7357**	1	HOSE AS	
	15	1	**432-7358**	1	HOSE AS	
	16	1	**432-7360**	1	HOSE AS	
	17	1	**432-7361**	1	HOSE AS	
	18	1	**432-7362**	1	HOSE AS	
	19	1	**432-7363**	1	HOSE AS	
	20	1	**432-7364**	1	HOSE AS	
	21	1	**432-7366**	1	HOSE AS	
	22	1	**432-7367**	1	HOSE AS	
	23	1	**434-6660**	1	HOSE AS	
	24	1	**434-6661**	1	HOSE AS	
	25	1	**434-6662**	1	HOSE AS	
	26	1	**434-6663**	1	HOSE AS	
	27	1	**434-6664**	1	HOSE AS	
	28	1	**434-6665**	1	HOSE AS	
	29	1	**434-6666**	1	HOSE AS	
	30	1	**434-6667**	1	HOSE AS	
	31	1	**446-6946**	1	BLOCK-MANIFOLD	
	32	1	**446-6947**	1	BLOCK-MANIFOLD	
	33	1	**446-6948**	1	BLOCK-MANIFOLD	
	34	1	**446-6949**	1	BLOCK-MANIFOLD	
	35	1	**446-6950**	1	RESERVOIR	
	36	1	**446-6951**	1	VALVE-RELIEF (PRESSURE)	
	37	1	**446-6952**	25	ADAPTER	
	38	1	**446-6953**	1	HARNESS AS-WIRING (AUTOLUBE)	
	39	1	**446-6954**	1	HOSE AS	
	40	1	**450-0043**	8	CONNECTOR (MALE)	
	41	1	**450-0044**	14	CONNECTOR (MALE)	
	42	1	**450-0045**	9	CONNECTOR	
	43	1	**450-0046**	1	CONNECTOR	
	44	1	**450-0047**	1	PUMP	
	45	1	**450-0048**	4	ADAPTER	
	46	1	**450-0050**	1	HOSE AS	
	47	1	**132-5789**	5	CLIP	
	48	1	**277-1873**	1	CLIP	
M	49	1	**2W-9499**	8	BOLT (M6X1X40-MM)	
	50	1	**4P-7581**	13	CLIP	
M	51	1	**5P-7970**	2	NUT (M8X1.25-THD)	
	52	1	**8T-4121**	14	WASHER-HARD (11X21X2.5-MM THK)	
M	53	1	**8T-4136**	3	BOLT (M10X1.5X25-MM)	
M	54	1	**8T-4137**	11	BOLT (M10X1.5X20-MM)	
	55	1	**8T-4205**	8	WASHER-HARD (7.2X14.5X2-MM THK)	
	56	1	**8T-4224**	4	WASHER-HARD (8.8X16X2-MM THK)	

M - METRIC PART

432-7338 **LUBRICATION GP-AUTOMATIC (*contd.*)** **i05677013**

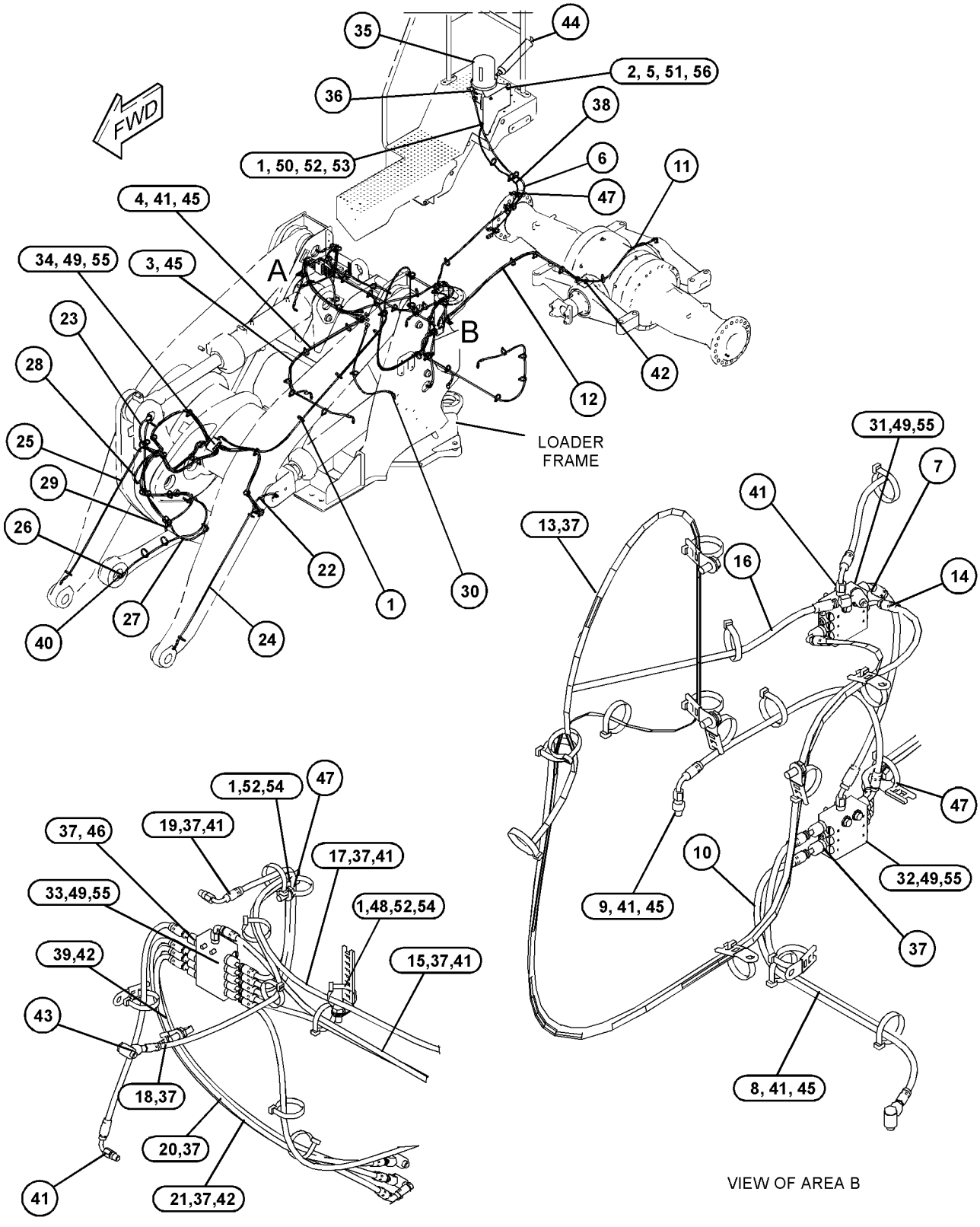

GRAPHIC #1 **<END>** g03702799

417-2102 MOUNTING GP-BRACKET

S/N: M5K1-UP

PART OF 387-6001 CHASSIS AR

SMCS-7050 **i05427255**

NOTE	REF NO	GRAPHIC REF	PART NUMBER	QTY	PART NAME 1 2 3 4 5 6 (PRODUCT LEVEL)	SEE PAGE
	1	1	**417-2103**	1	PLATE	
	2	1	**417-2104**	1	PLATE AS	
	3	1	**7X-7729**	2	WASHER (11X25X3-MM THK)	
	4	1	**8T-4121**	2	WASHER-HARD (11X21X2.5-MM THK)	
M	5	1	**8T-4137**	4	BOLT (M10X1.5X20-MM)	

M - METRIC PART

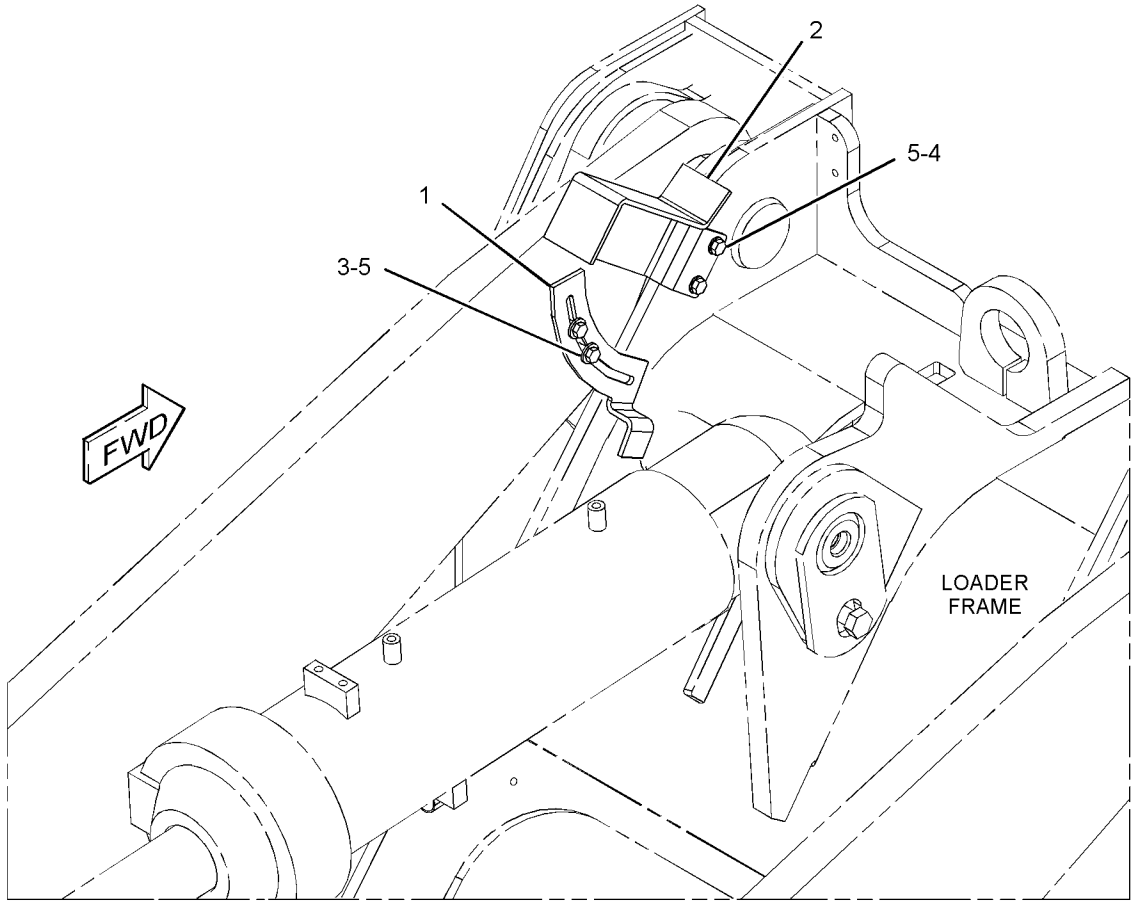

GRAPHIC #1 **<END>** g03536977

387-6245 PANEL AS-SIDE

S/N: M5K1-UP

PART OF 387-6220, 457-8580 ENCLOSURE GP-ENGINE

SMCS-7267 **i06068771**

NOTE	REF NO	GRAPHIC REF	PART NUMBER	QTY	PART NAME 1 2 3 4 5 6 (PRODUCT LEVEL)	SEE PAGE
	1	1	**387-6244**	1	PLATE	
	2	1	**457-8547**	1	PLATE	
	3	1	**5P-4116**	12	WASHER-HARD (8.8X20.5X2-MM THK)	
M	4	1	**5P-7970**	8	NUT (M8X1.25-THD)	
M	5	1	**8T-4189**	4	BOLT (M8X1.25X20-MM)	
M	6	1	**8T-4200**	4	BOLT (M8X1.25X16-MM)	

M - METRIC PART

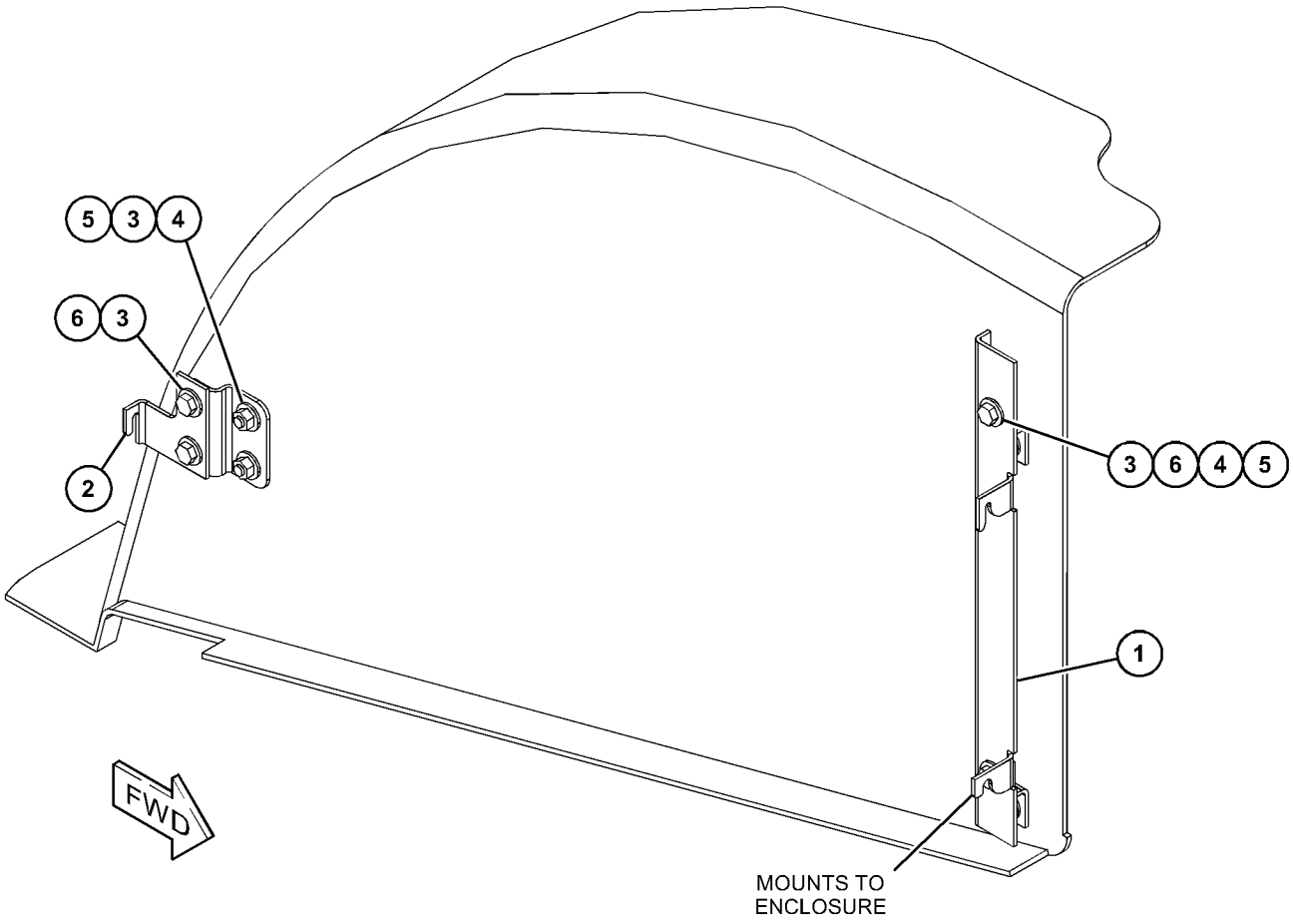

GRAPHIC #1 **<END>** g03800516

387-6246 PANEL AS-SIDE

S/N: M5K1-UP

PART OF 387-6220, 457-8580 ENCLOSURE GP-ENGINE

SMCS-7267 **i06068252**

NOTE	REF NO	GRAPHIC REF	PART NUMBER	QTY	PART NAME 1 2 3 4 5 6 (PRODUCT LEVEL)	SEE PAGE
	1	1	**415-7667**	1	PLATE	
	2	1	**457-8557**	1	PLATE	
	3	1	**5P-4116**	12	WASHER-HARD (8.8X20.5X2-MM THK)	
M	4	1	**5P-7970**	8	NUT (M8X1.25-THD)	
M	5	1	**8T-4189**	4	BOLT (M8X1.25X20-MM)	
M	6	1	**8T-4200**	4	BOLT (M8X1.25X16-MM)	

M - METRIC PART

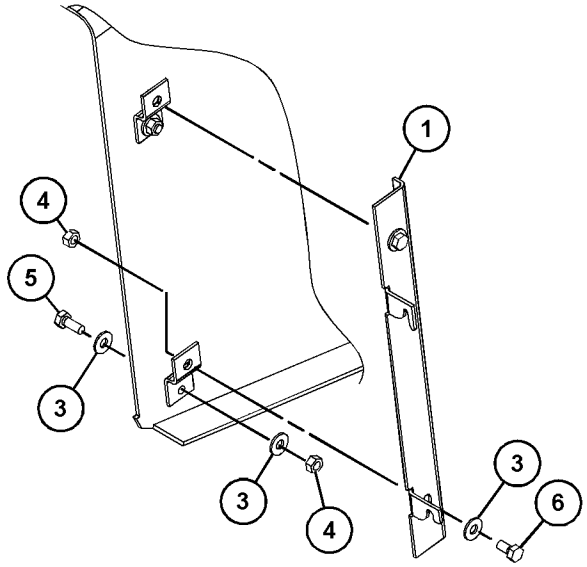

VIEW OF AREA A

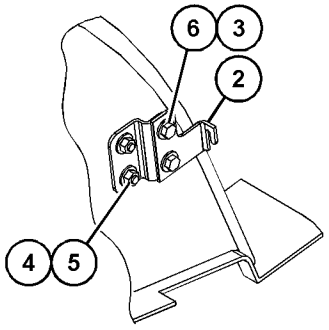

VIEW OF AREA B

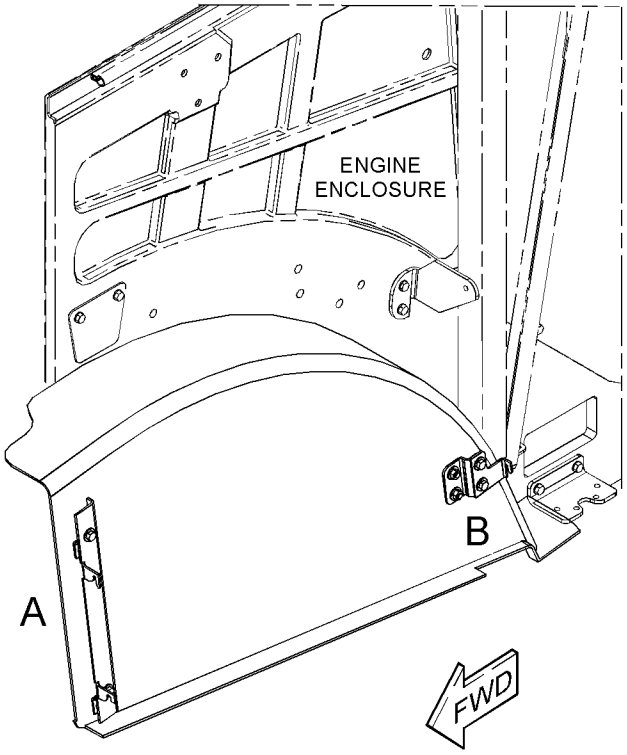

GRAPHIC #1 **<END>** g03799023

387-6091 SHIELD GP-ENGINE COMPARTMENT

S/N: M5K1-UP

PART OF 387-6001 CHASSIS AR

SMCS-7154, 7263 **i05819916**

NOTE	REF NO	GRAPHIC REF	PART NUMBER	QTY	PART NAME 1 2 3 4 5 6 (PRODUCT LEVEL)	SEE PAGE
	1	1	**387-6092**	1	SHIELD	
	2	1	**392-2307**	1	PLATE	
	3	1	**399-0944**	1	BAFFLE	
	4	1	**4I-3953**	1	GROMMET	
	5	1	**6W-7293**	1	GROMMET	
	6	1	**7X-7729**	6	WASHER (11X25X3-MM THK)	
	7	1	**8T-4121**	8	WASHER-HARD (11X21X2.5-MM THK)	
M	8	1	**8T-4133**	5	NUT (M10X1.5-THD)	
M	9	1	**8T-4136**	9	BOLT (M10X1.5X25-MM)	
D	10	1	**5P-7211**		SEAL (3.5-M)	
	11	1	**5F-9757**	1	GROMMET	
	12	1	**446-6978**	1	COVER AS	
		1	**7X-0579**	3	WASHER-HARD (8.8X25.5X2-MM THK)	
M		1	**7X-0818**	3	BOLT (M8X1.25X45-MM)	
		1	**245-1094**	3	NUT-RETAINING	

D - ORDER BY THE METER
M - METRIC PART

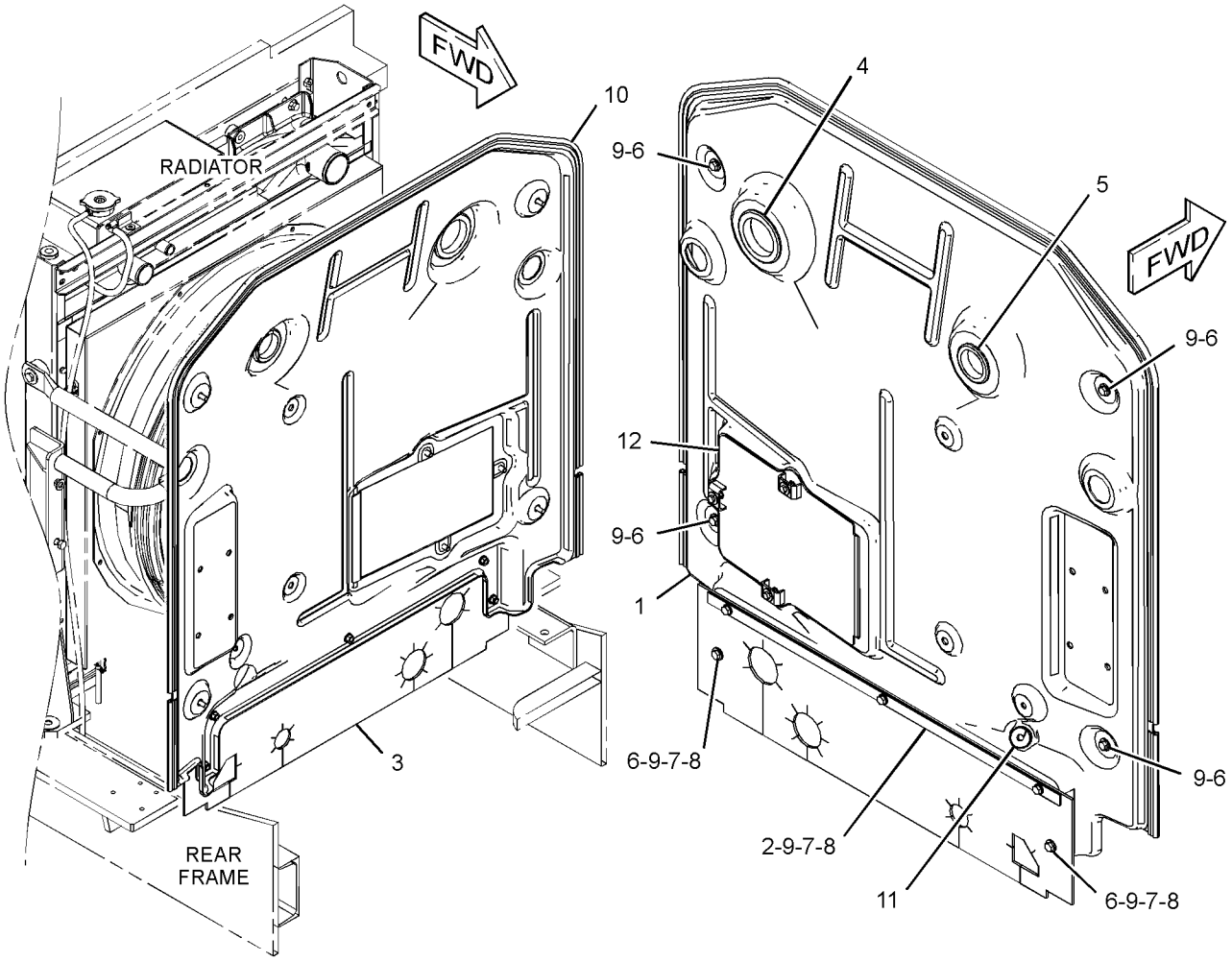

GRAPHIC #1 **<END>** g03692420

392-3715 SUPPORT GP-VALVE & FILTER

S/N: M5K1-UP

PART OF 387-6001 CHASSIS AR

SMCS-4263, 5068 **i05426694**

NOTE	REF NO	GRAPHIC REF	PART NUMBER	QTY	PART NAME 1 2 3 4 5 6 (PRODUCT LEVEL)	SEE PAGE
	1	1	**275-0571**	1	CAM-LATCH	
J	2	1	**275-0572**	1	LATCH AS	
Y	3	1	**392-3716**	1	SUPPORT GP-VALVE & FILTER	340
	4	1	**392-3717**	1	DOOR AS-ACCESS	
M		1	**8T-3597**	4	NUT-WELD (M12X1.75-THD)	
	5	1	**392-3718**	1	ROD AS	
		1	**8T-4121**	3	WASHER-HARD (11X21X2.5-MM THK)	
	6	1	**3B-4611**	1	PIN-COTTER	
	7	1	**8T-4121**	6	WASHER-HARD (11X21X2.5-MM THK)	
M	8	1	**8T-4137**	5	BOLT (M10X1.5X20-MM)	
M	9	1	**8T-4139**	9	BOLT (M12X1.75X30-MM)	
M	10	1	**8T-4192**	2	BOLT (M12X1.75X25-MM)	
	11	1	**8T-4223**	11	WASHER-HARD (13.5X25.5X3-MM THK)	

J - REQUIRES CORPORATE KEY
M - METRIC PART
Y - SEPARATE ILLUSTRATION

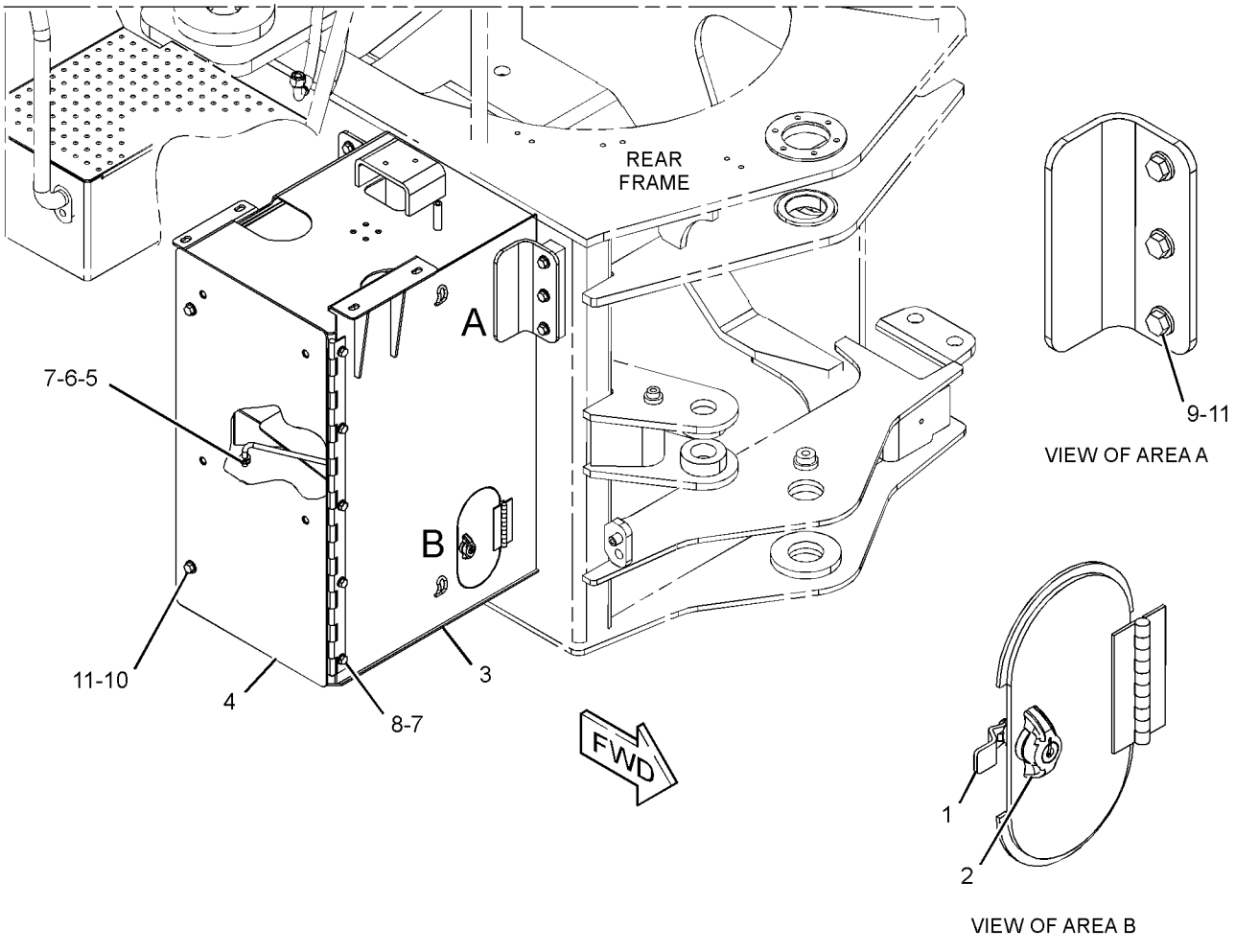

GRAPHIC #1 **<END>** g03426817

392-3716 SUPPORT GP-VALVE & FILTER

S/N: M5K1-UP

PART OF 392-3715 SUPPORT GP-VALVE & FILTER

SMCS-4263, 5068 **i06063986**

NOTE	REF NO	GRAPHIC REF	PART NUMBER	QTY	PART NAME 1 2 3 4 5 6 (PRODUCT LEVEL)	SEE PAGE
M	1	1	**416-8393**	1	BOSS-WELD (M10X1.5X56-MM)	
	2	1	**7T-1099**	7	LINK	
M	3	1	**8T-3490**	7	NUT-WELD (M10X1.5-THD)	
M	4	1	**8T-3597**	2	NUT-WELD (M12X1.75-THD)	
M	5	1	**8T-6462**	2	BOSS-WELD (M10X1.5X25-MM)	

M - METRIC PART

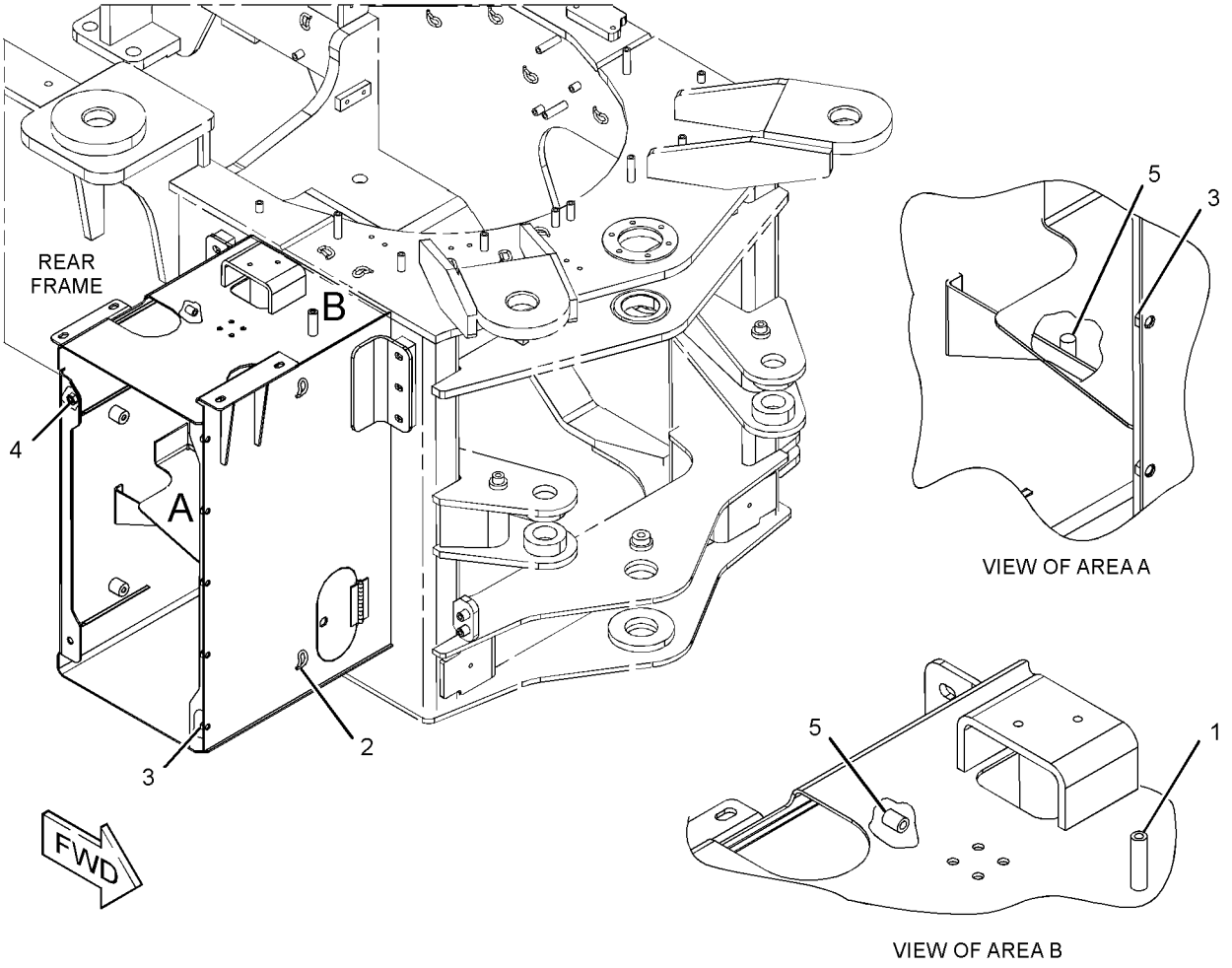

GRAPHIC #1 **<END>** g03798039

436-5823 ACCUMULATOR GP-HYDRAULIC–BRAKE

S/N: M5K1-UP
CHARGED
FIELD REPLACEMENT ORDER 436-5825–PAGE: 342
PART OF 392-3890 CONTROL GP-SERVICE BRAKE

SMCS-4263 **i05822737**

NOTE	REF NO	GRAPHIC REF	PART NUMBER	QTY	PART NAME 1 2 3 4 5 6 (PRODUCT LEVEL)	SEE PAGE
	1	1	**224-5132**	1	CAP (GAS VALVE)	
	2	1	**224-5152**	1	VALVE-GAS	
	3	1	**241-0037**	1	FILM-WARNING (HIGH PRESSURE, READ OMM)	
	4	1	**1J-9671**	1	SEAL-O-RING	
	5	1	**3J-7354**	1	SEAL-O-RING	

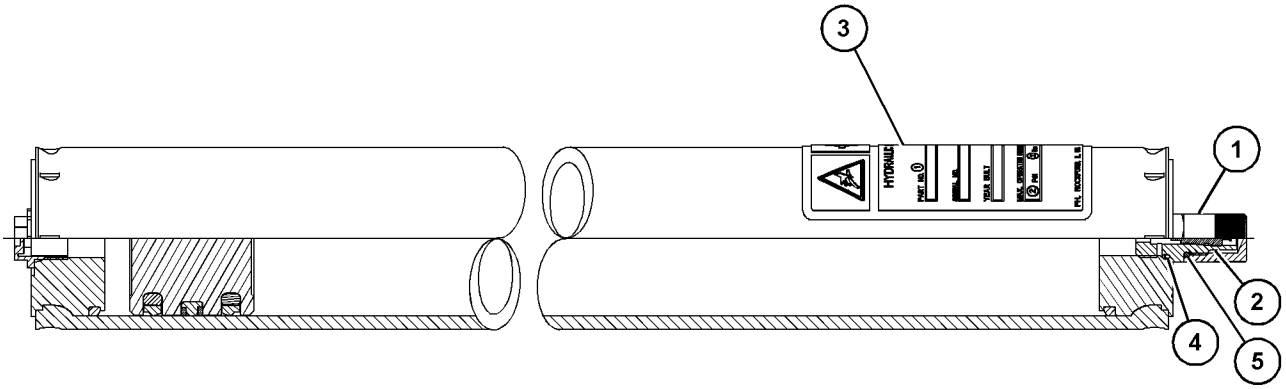

SECTION A-A

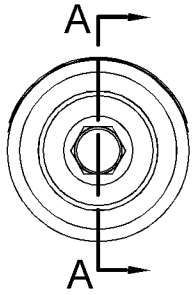

GRAPHIC #1 **<END>** g03525825

436-5825 ACCUMULATOR GP-HYDRAULIC

S/N: M5K1-UP
UNCHARGED
FIELD REPLACEMENT FOR 436-5823 ACCUMULATOR GP

SMCS-4263 **i05822547**

NOTE	REF NO	GRAPHIC REF	PART NUMBER	QTY	PART NAME 1 2 3 4 5 6 (PRODUCT LEVEL)	SEE PAGE
	1	1	**5P-3779**	1	TAG-NOTICE (SHIPPING INSTRUCTIONS)	
	2	1	**224-5132**	1	CAP (GAS VALVE)	
	3	1	**224-5152**	1	VALVE-GAS	
	4	1	**241-0037**	1	FILM-WARNING (HIGH PRESSURE, READ OMM)	
	5	1	**1J-9671**	1	SEAL-O-RING	
	6	1	**3J-7354**	1	SEAL-O-RING	

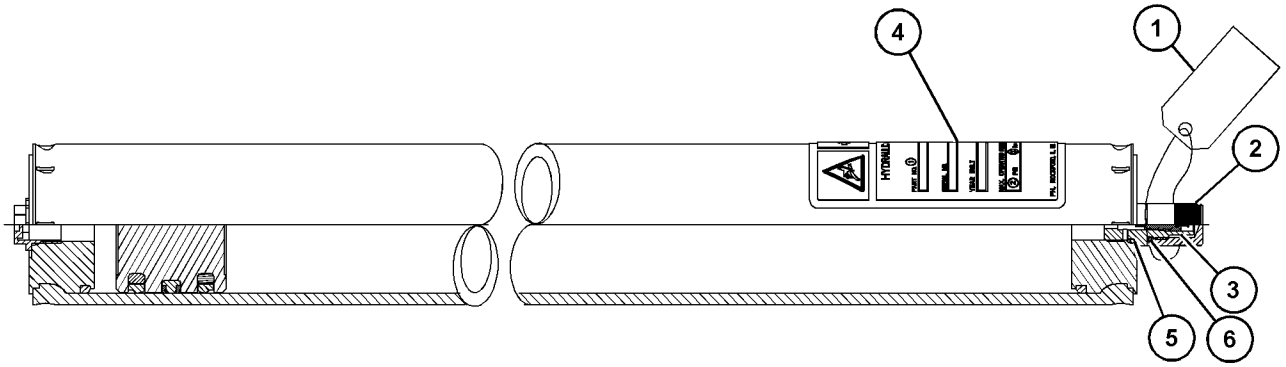

SECTION A-A

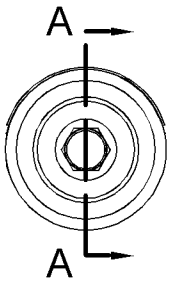

GRAPHIC #1 **<END>** g03524099

392-3891 ACTUATOR GP-PARKING BRAKE

S/N: M5K1-UP
PART OF 387-6025 POWER TRAIN AR
TYPE 1

SMCS-4262, 4267 **i06064460**

NOTE	REF NO	GRAPHIC REF	PART NUMBER	QTY	PART NAME 1 2 3 4 5 6 (PRODUCT LEVEL)	SEE PAGE
	1	1	**129-8090**	1	ACTUATOR AS-PARKING BRAKE	
	2	1	**209-0499**	1	END-YOKE ROD	
	3	1	**392-3896**	1	BRACKET AS	
	4	1	**3B-4617**	1	PIN-COTTER	
	5	1	**4K-1540**	1	PIN-CLEVIS	
	6	1	**8T-4121**	2	WASHER-HARD (11X21X2.5-MM THK)	
M	7	1	**8T-4133**	1	NUT (M10X1.5-THD)	
M	8	1	**8T-4956**	2	BOLT (M12X1.75X35-MM)	
M	9	1	**8T-4136**	2	BOLT (M10X1.5X25-MM)	
	10	1	**5P-8245**	5	WASHER-HARD (13.5X25.5X3-MM THK)	
M	11	1	**8T-4244**	2	NUT (M12X1.75-THD)	

M - METRIC PART

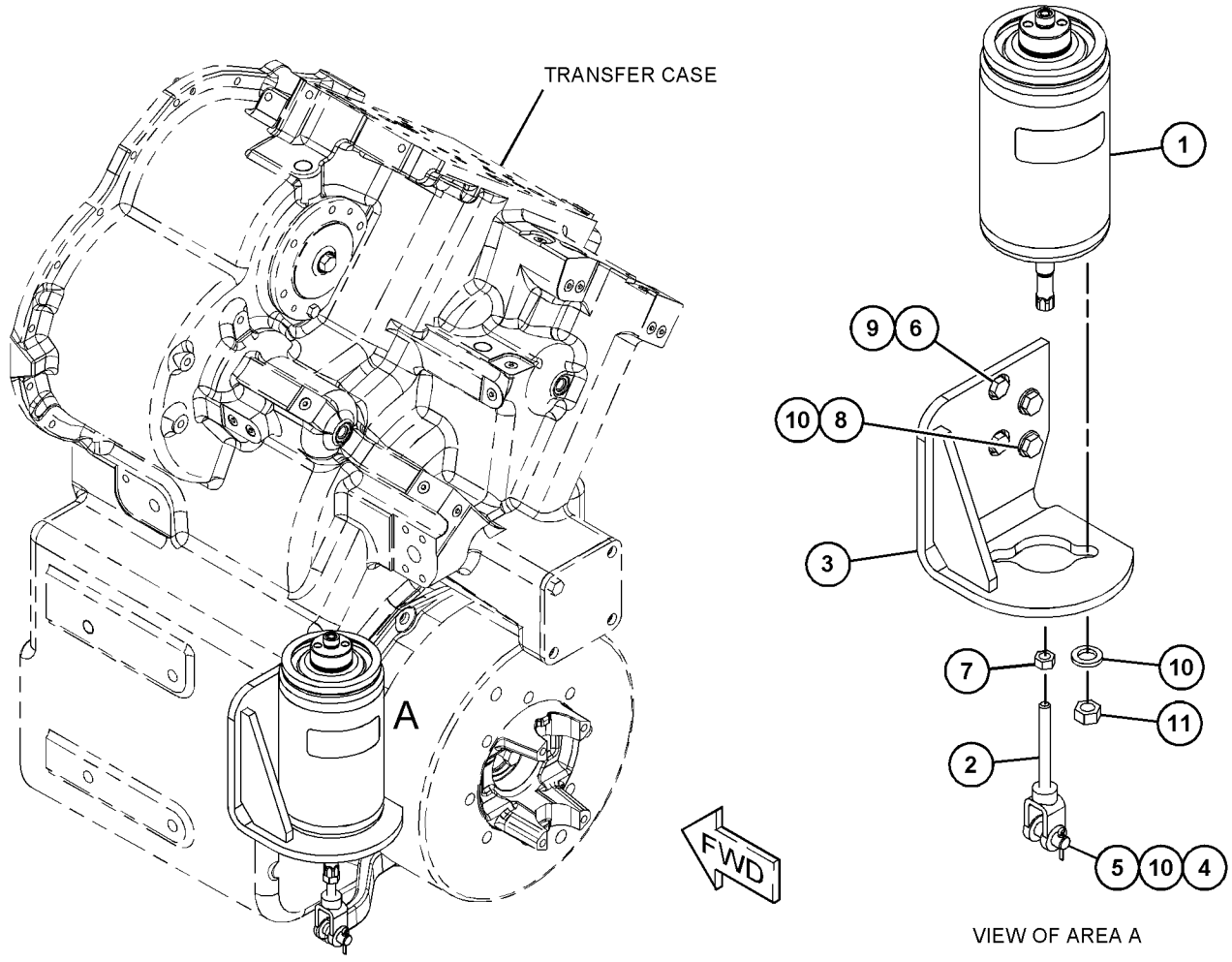

GRAPHIC #1 **<END>** g03525958

392-3891 ACTUATOR GP-PARKING BRAKE

S/N: M5K1-UP
PART OF 387-6025 POWER TRAIN AR
TYPE 2

SMCS-4262, 4267 **i06069308**

NOTE	REF NO	GRAPHIC REF	PART NUMBER	QTY	PART NAME 1 2 3 4 5 6 (PRODUCT LEVEL)	SEE PAGE
	1	1	**129-8090**	1	ACTUATOR AS-PARKING BRAKE	
	2	1	**209-0499**	1	END-YOKE ROD	
C	3	1	**464-6203**	1	BRACKET AS	
	4	1	**3B-4617**	1	PIN-COTTER	
	5	1	**4K-1540**	1	PIN-CLEVIS	
	6	1	**8T-4121**	2	WASHER-HARD (11X21X2.5-MM THK)	
M	7	1	**8T-4133**	1	NUT (M10X1.5-THD)	
CM	8	1	**8T-4139**	2	BOLT (M12X1.75X30-MM)	
M	9	1	**8T-4136**	2	BOLT (M10X1.5X25-MM)	
C	10	1	**8T-4223**	5	WASHER-HARD (13.5X25.5X3-MM THK)	
M	11	1	**8T-4244**	2	NUT (M12X1.75-THD)	

C - CHANGE FROM PREVIOUS TYPE
M - METRIC PART

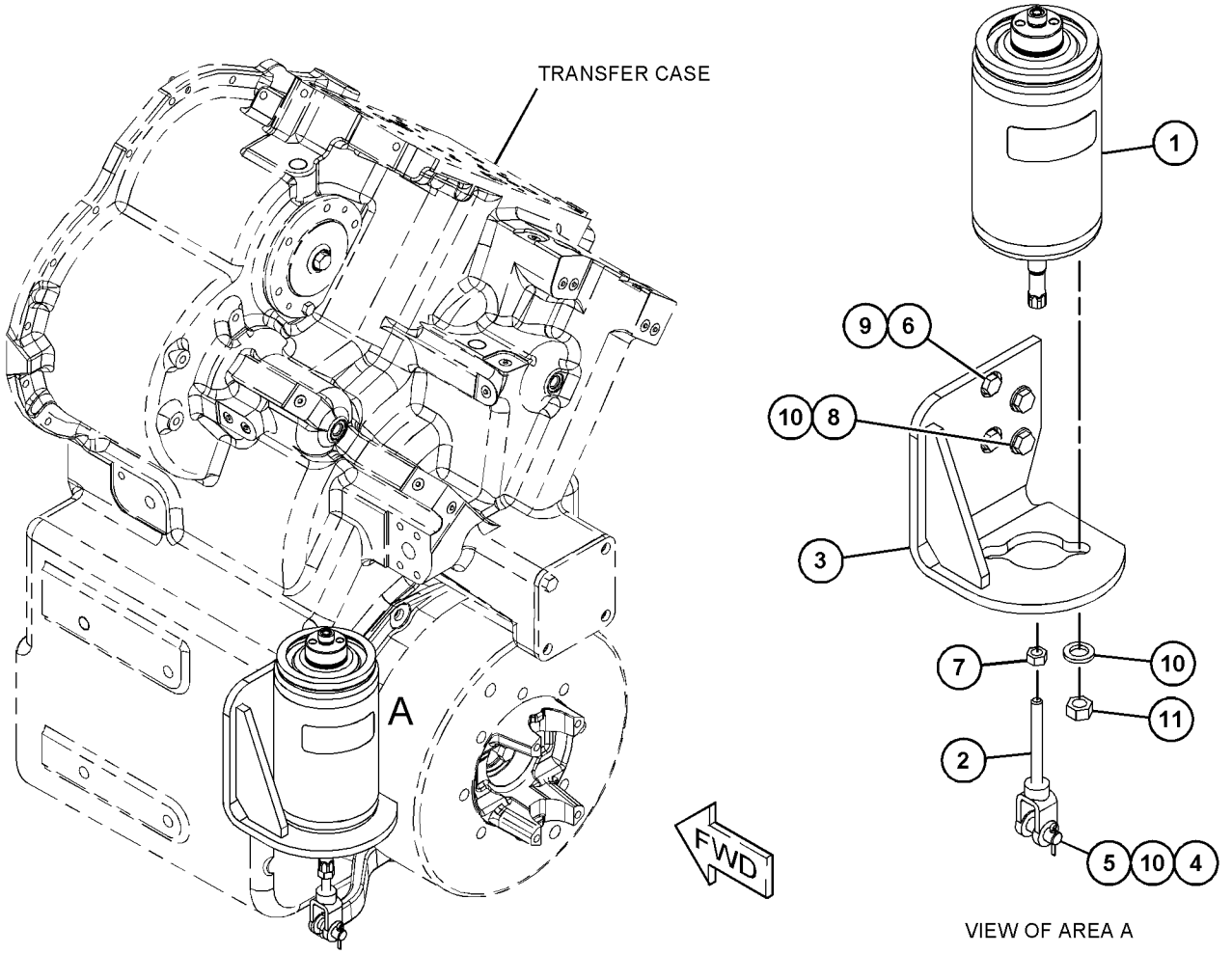

VIEW OF AREA A

GRAPHIC #1 **<END>** g03525958

387-6037 BRAKE GP-PARKING

S/N: S4X1-UP

PART OF 434-2641 DRIVE GP-POWER TAKE-OFF

SMCS-4267 **i06062413**

NOTE	REF NO	GRAPHIC REF	PART NUMBER	QTY	PART NAME 1 2 3 4 5 6 (PRODUCT LEVEL)	SEE PAGE
Y	1	1	*450-0097*	1	BRAKE GP-PARKING	346
	2	1	**450-0098**	1	DRUM	
	3	1	**464-1229**	1	LEVER	
M	4	1	**8T-4133**	1	NUT (M10X1.5-THD)	
	5	1	**7X-0796**	1	LOCKWASHER	
M	6	1	**8T-4182**	1	BOLT (M10X1.5X45-MM)	

M - METRIC PART
Y - SEPARATE ILLUSTRATION

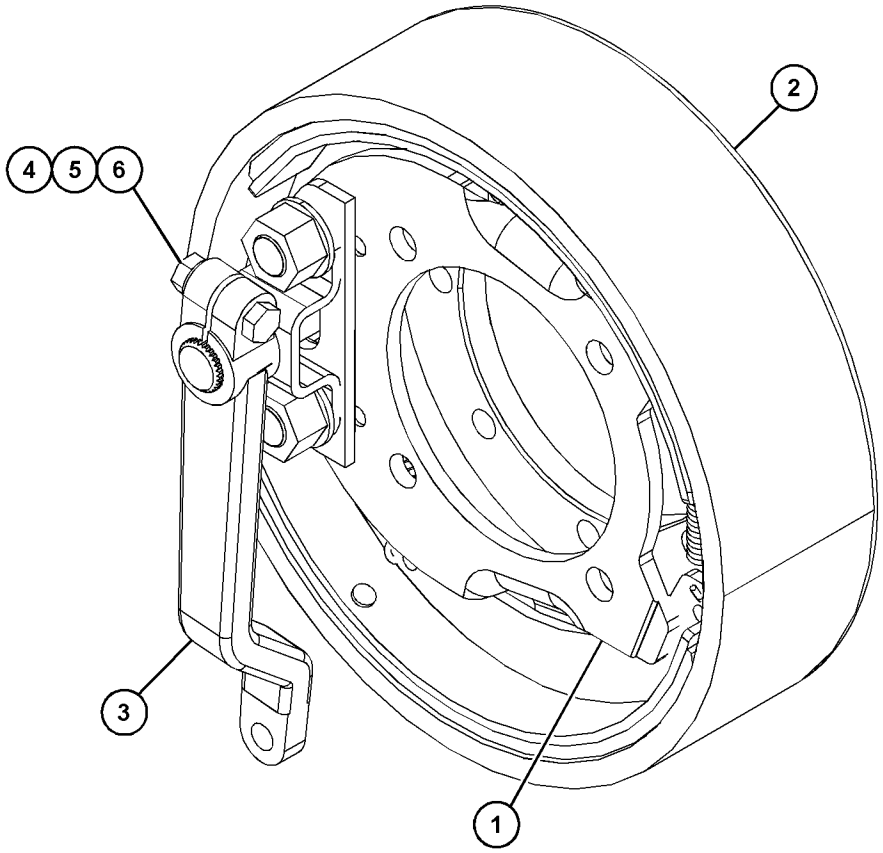

GRAPHIC #1 **<END>** g03566827

450-0097 BRAKE GP-PARKING

S/N: S4X1-UP

PART OF 387-6037 BRAKE GP-PARKING

SMCS-4267 **i06064459**

NOTE	REF NO	GRAPHIC REF	PART NUMBER	QTY	PART NAME 1 2 3 4 5 6 (PRODUCT LEVEL)	SEE PAGE
	1	1	**195-8313**	2	LOCKWASHER	
	2	1	**450-4795**	1	PLATE AS-BRAKE	
	3	1	**450-4796**	1	BRACKET	
	4	1	**464-1228**	1	CAMSHAFT	
	5	1	**450-4798**	2	PIN-ANCHOR	
	6	1	**450-4799**	2	SHOE AS-BRAKE	
	7	1	**450-4800**	1	BRACE-ANCHOR PIN	
	8	1	**450-4801**	1	SPRING	
	9	1	**450-4802**	1	NUT	
	10	1	**450-4803**	1	SCREW-ADJUSTING	
	11	1	**450-4804**	1	SCREW	
	12	1	**450-4805**	1	SPRING	
	13	1	**450-4806**	1	SPRING	
	14	1	**265-3291**	2	NUT (M20X1.5-THD)	

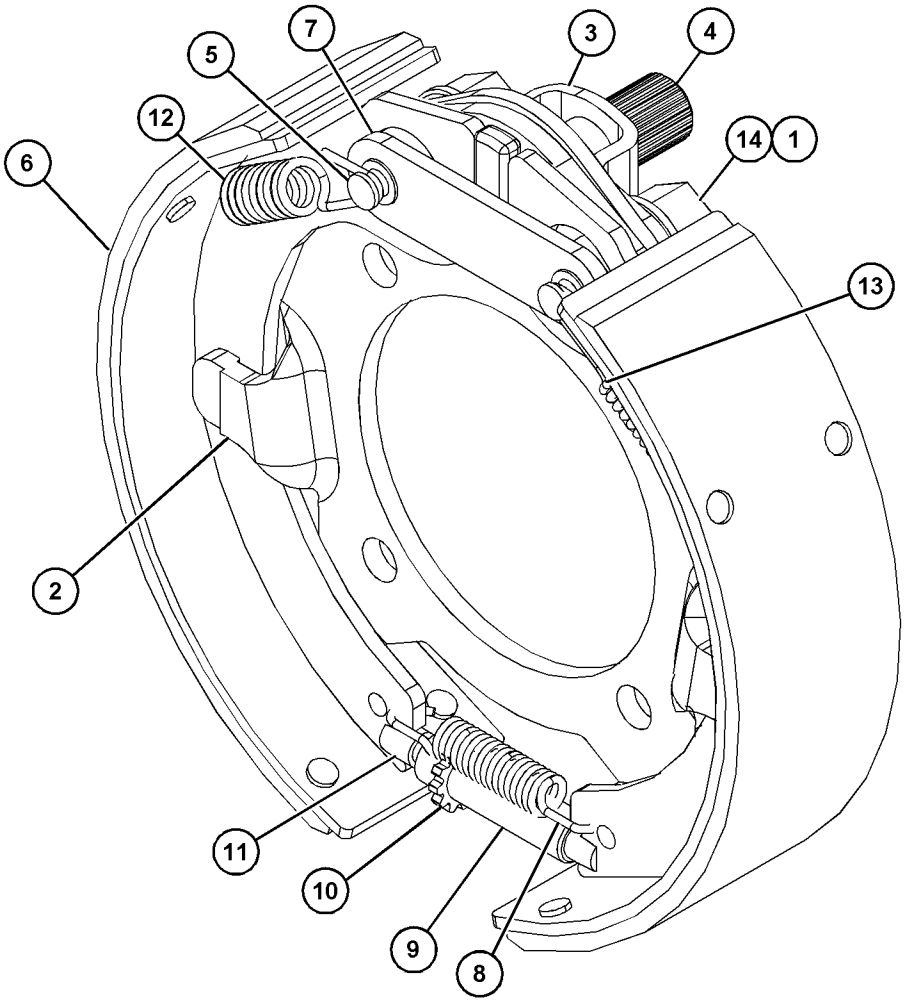

GRAPHIC #1 **<END>** g03566846

327-2254 BRAKE GP-SERVICE

S/N: M5K1-UP

PART OF 327-2256, 394-1675 AXLE AR-FIXED, 394-1676, 418-4767 AXLE AR-OSCILLATING AN ATTACHMENT

SMCS-4251 **i05403148**

NOTE	REF NO	GRAPHIC REF	PART NUMBER	QTY	PART NAME 1 2 3 4 5 6 (PRODUCT LEVEL)	SEE PAGE
	1	1	**293-3609**	3	SPRING	
	2	1	**310-1021**	1	PLATE-SEPARATOR	
	3	1	**311-1531**	1	PISTON	
	4	1	**312-4305**	1	SEAL-D-RING	
	5	1	**312-4313**	1	SEAL-D-RING	
	6	1	**327-2236**	1	PLATE	
	7	1	**327-2238**	2	DISK	
	8	1	**4M-1677**	6	DOWEL-REACTION	

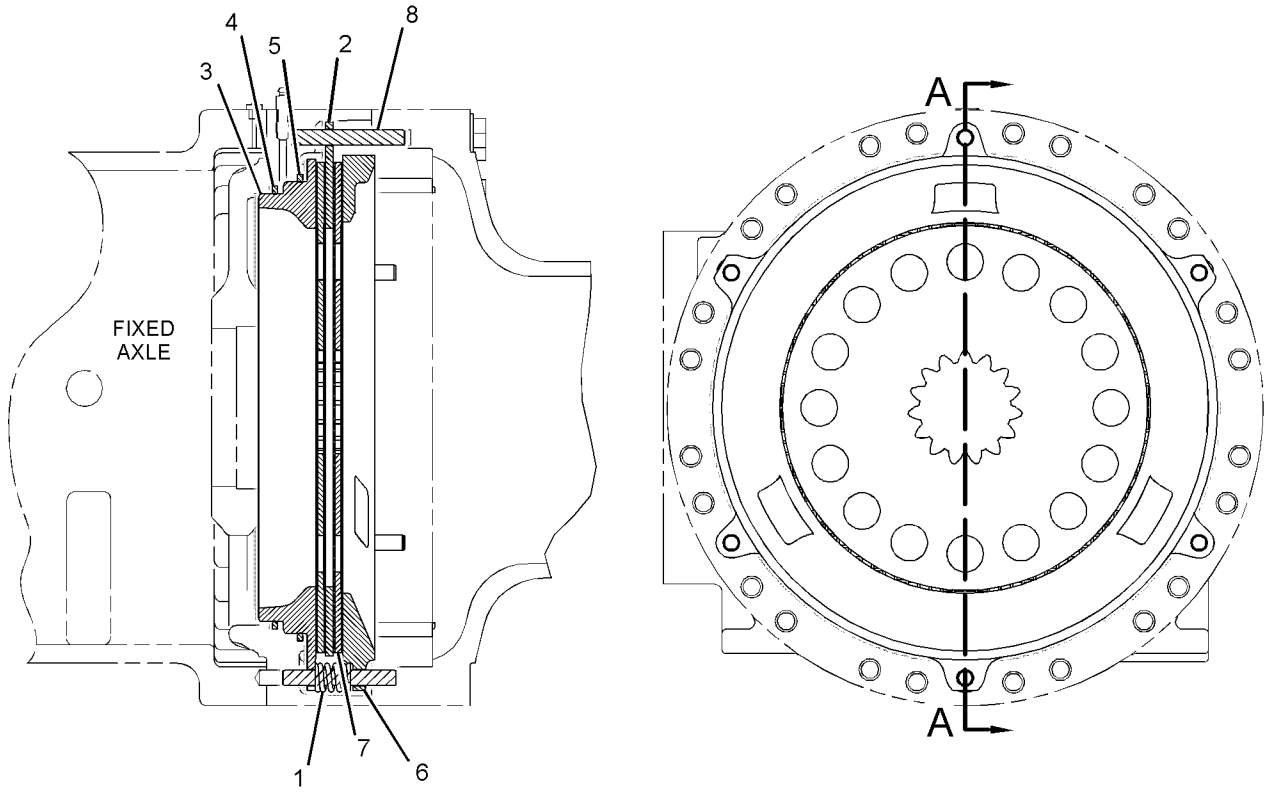

SECTION A-A

GRAPHIC #1 **<END>** g03420785

391-5329 CONTROL GP-PARKING BRAKE

S/N: M5K1-UP

PART OF 391-5301 CAB AR

SMCS-4282, 4284 **i05434592**

NOTE	REF NO	GRAPHIC REF	PART NUMBER	QTY	PART NAME 1 2 3 4 5 6 (PRODUCT LEVEL)	SEE PAGE
	1	1	**122-1671**	1	KNOB	
	2	1	**292-2491**	2	CLIP	
	3	1	**305-4491**	1	CABLE AS	
		1	**8T-4223**	3	WASHER-HARD (13.5X25.5X3-MM THK)	
M		1	**8T-4244**	4	NUT (M12X1.75-THD)	
		1	**9B-0453**	2	LOCKWASHER	
M	4	1	**5C-2890**	1	NUT (M6X1-THD)	
	5	1	**8T-4121**	2	WASHER-HARD (11X21X2.5-MM THK)	
M	6	1	**9X-2041**	2	SCREW-TRUSS HEAD (M10X1.5X20-MM)	
	7	1	**9X-7373**	1	GROMMET	

M - METRIC PART

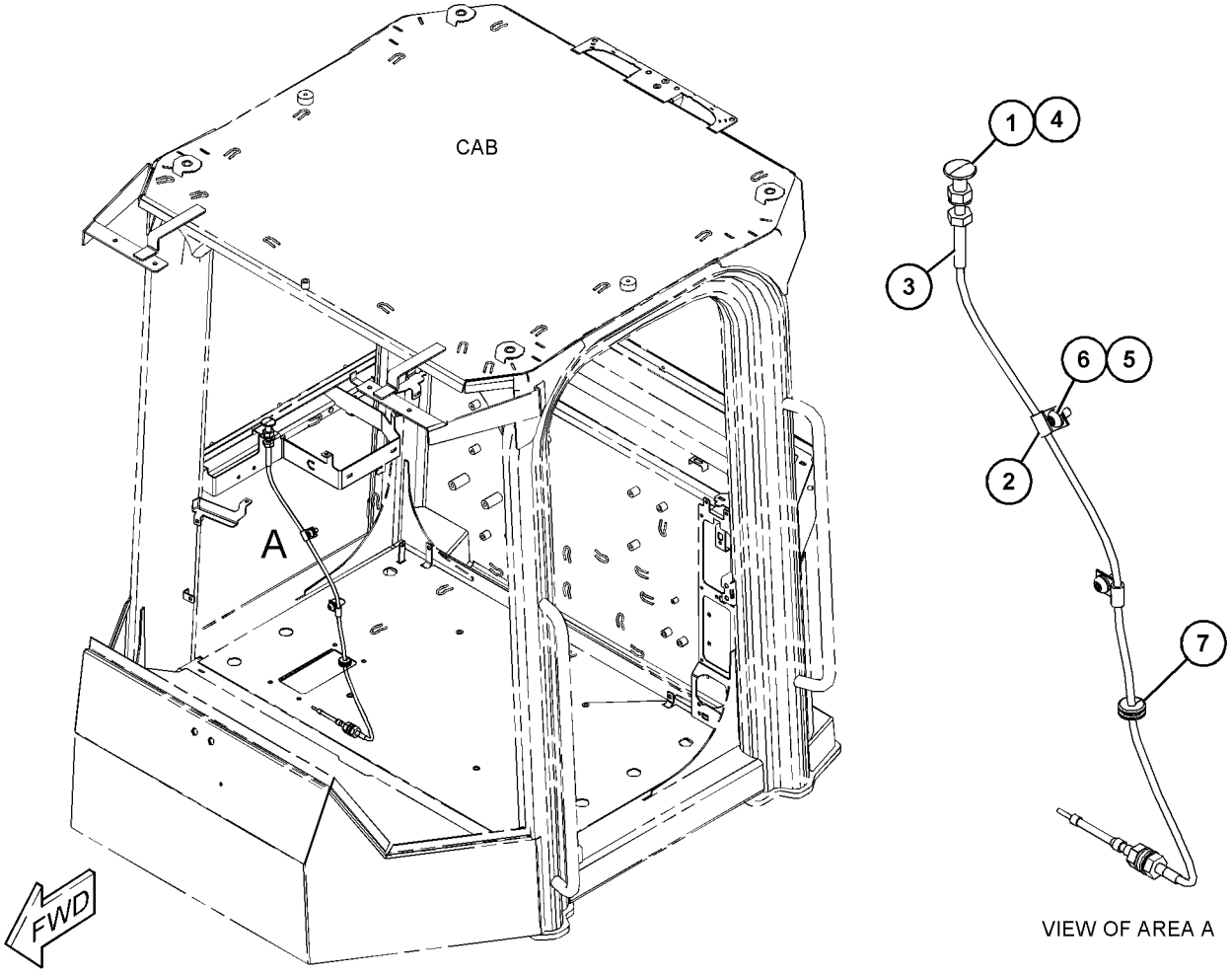

VIEW OF AREA A

GRAPHIC #1

<END>

g03531021

371-5010 CONTROL GP-SERVICE BRAKE

S/N: M5K1-UP
PART OF 387-6026 CONVERSION AR-ROADING
AN ATTACHMENT

SMCS-4257, 4258, 4263, 4265, 4269, 4280 **i05817802**

NOTE	REF NO	GRAPHIC REF	PART NUMBER	QTY	PART NAME 1 2 3 4 5 6 (PRODUCT LEVEL)	SEE PAGE
	1	1	**371-2223**	1	CONTROL GP-SERVICE BRAKE	
M	2	1	**099-3649**	6	BOLT (M8X1.25X40-MM)	
	3	1	**8T-4224**	6	WASHER-HARD (8.8X16X2-MM THK)	

M - METRIC PART

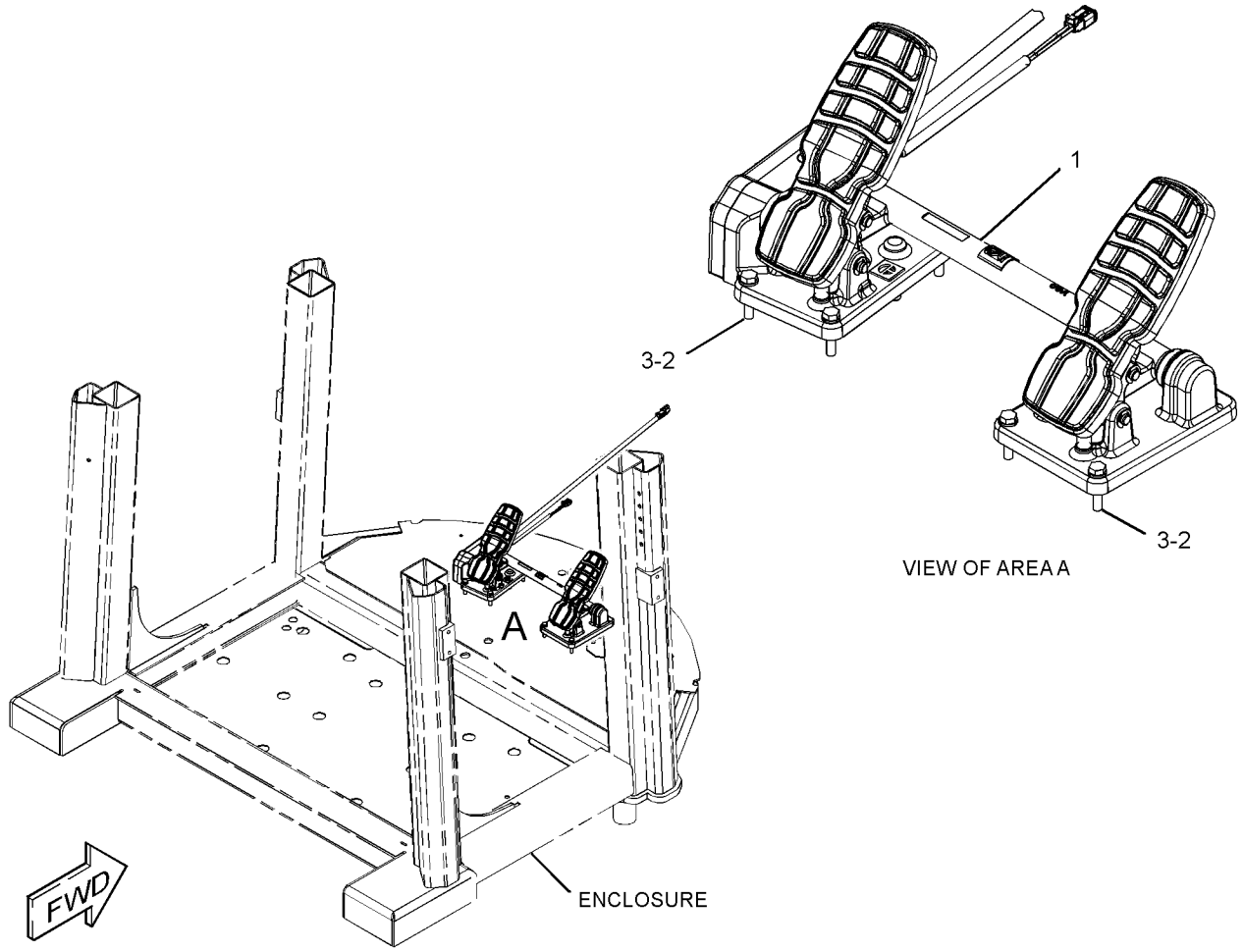

GRAPHIC #1 **<END>** g03492657

392-3890 CONTROL GP-SERVICE BRAKE

S/N: M5K1-UP

PART OF 387-6025 POWER TRAIN AR

SMCS-4257, 4258, 4263, 4265, 4269, 4280 **i06064000**

NOTE	REF NO	GRAPHIC REF	PART NUMBER	QTY	PART NAME 1 2 3 4 5 6 (PRODUCT LEVEL)	SEE PAGE
	1	2	**5I-4376**	1	FITTING	
	2	2	**7I-4078**	1	LEVER AS	
	3	2	**9U-0830**	1	END-YOKE ROD	
	4	1,2	**105-4177**	2	TUBE AS	
	5	2	**106-1774**	1	VALVE GP-BRAKE CONTROL (PARKING)	
		2	**4J-7533**	2	SEAL-O-RING	
		2	**9S-8001**	2	PLUG	
		2	**257-7676**	1	KIT-REPAIR (PARKING BRAKE)	
					(KIT INCLUDES BOOT, CUP, O-RINGS, SPRINGS, BACK-UP RINGS, RETAINING RING & WASHER)	
	6	2	**132-2453**	1	UNION	
	7	2	*168-1968*	1	TEE AS	
		2	**126-6872**	1	TEE	
		2	**3J-1907**	1	SEAL-O-RING	
		2	**6V-8397**	1	SEAL-O-RING	
	8	1	**200-6345**	2	MOUNT (DUAL SWIVEL)	
	9	2	**210-5587**	1	VALVE GP-BRAKE CONTROL (SERVICE)	
		2	**117-7798**	1	BOOT	
		2	**117-7799**	1	KIT-SEAL (BRAKE VALVE)	
					(KIT INCLUDES BOOT, O-RINGS, CUP & QUAD RING)	
	10	2	**243-0570**	1	BRACKET AS	
	11	2	*309-5127*	2	ELBOW AS	
					(EACH INCLUDES)	
		2	**152-3411**	1	ELBOW	
		2	**6V-8397**	1	SEAL-O-RING	
	12	2,3	*357-4432*	2	ELBOW AS	
					(EACH INCLUDES)	
		2,3	**6V-8724**	1	ELBOW	
		2,3	**3J-1907**	1	SEAL-O-RING	
		2,3	**6V-8397**	1	SEAL-O-RING	
	13	2	*357-4437*	2	ELBOW AS	
					(EACH INCLUDES)	
		2	**6V-8625**	1	ELBOW	
		2	**3K-0360**	1	SEAL-O-RING	
		2	**6V-8398**	1	SEAL-O-RING	
	14	2	*357-4474*	1	ELBOW AS	
		2	**6V-8980**	1	ELBOW	
		2	**6V-8397**	2	SEAL-O-RING	
	15	2,3	*357-4516*	3	TEE AS	
					(EACH INCLUDES)	
		2,3	**6V-8781**	1	TEE	
		2,3	**3J-1907**	1	SEAL-O-RING	
		2,3	**6V-8397**	2	SEAL-O-RING	
	16	1,2	*357-4517*	2	TEE AS	
					(EACH INCLUDES)	
		1,2	**6V-9161**	1	TEE	
		1,2	**3J-7354**	1	SEAL-O-RING	
		1,2	**6V-8397**	2	SEAL-O-RING	
	17	3	*357-4539*	3	TEE AS	
					(EACH INCLUDES)	
		3	**6V-9836**	1	TEE-SWIVEL	
		3	**6V-8397**	2	SEAL-O-RING	
I	18	3	**392-3899**	1	HOSE AS	
I	19	3	**392-3901**	1	HOSE AS	
I	20	2	**415-4325**	1	HOSE AS	
I	21	2	**415-4327**	1	HOSE AS	
I	22	2	**415-4329**	1	HOSE AS	
I	23	2	**415-4331**	1	HOSE AS	

392-3890 **CONTROL GP-SERVICE BRAKE (*contd.*)** **i06064000**

NOTE	REF NO	GRAPHIC REF	PART NUMBER	QTY	PART NAME 1 2 3 4 5 6 (PRODUCT LEVEL)	SEE PAGE
I	24	2	**415-4333**	1	HOSE AS	
I	25	2	**415-4335**	1	HOSE AS	
I	26	2	**415-4337**	1	HOSE AS	
I	27	2	**415-4339**	1	HOSE AS	
I	28	2	**415-4341**	1	HOSE AS	
	29	3	**415-4345**	2	PLATE	
	30	3	**415-4347**	4	CLAMP	
Y	31	3	*436-5823*	4	ACCUMULATOR GP-HYDRAULIC	341
I	32	1	**446-6968**	1	HOSE AS	
	33	2	**446-6970**	1	BRACKET	
	34	2	**446-6971**	1	BRACKET	
	35	2	**446-6972**	2	BRACKET	
	36	2	**446-6973**	4	BRACKET	
	37	2	**091-1745**	6	WASHER (16.6X24X1.2-MM THK)	
	38	2	**095-0841**	1	PIN-COTTER	
	39	2	**096-0067**	1	PIN-CLEVIS	
	40	2	**101-3846**	1	ROD-CONTROL	
	41	3	*148-8336*	2	CONNECTOR AS	
					(EACH INCLUDES)	
		3	**6V-8636**	1	CONNECTOR	
		3	**3J-1907**	1	SEAL-O-RING	
		3	**6V-8397**	1	SEAL-O-RING	
	42	2	*148-8340*	2	CONNECTOR AS	
					(EACH INCLUDES)	
		2	**6V-8639**	1	CONNECTOR	
		2	**3K-0360**	1	SEAL-O-RING	
		2	**6V-8398**	1	SEAL-O-RING	
	43	2	*148-8353*	1	ELBOW AS	
		2	**6V-9001**	1	ELBOW	
		2	**3J-1907**	1	SEAL-O-RING	
		2	**6V-8397**	1	SEAL-O-RING	
	44	3	*148-8367*	2	ELBOW AS	
					(EACH INCLUDES)	
		3	**6V-9850**	1	ELBOW	
		3	**6V-8397**	1	SEAL-O-RING	
	45	3	*148-8433*	1	TEE AS	
		3	**6V-9836**	1	TEE-SWIVEL	
		3	**6V-8397**	2	SEAL-O-RING	
	46	3	*150-4050*	2	ELBOW AS	
					(EACH INCLUDES)	
		3	**8T-0788**	1	ELBOW	
		3	**3J-1907**	1	SEAL-O-RING	
	47	3	*155-3502*	2	ADAPTER AS	
					(EACH INCLUDES)	
		3	**3E-7403**	1	ADAPTER	
		3	**6V-8398**	1	SEAL-O-RING	
	48	2	*164-5567*	2	COUPLER AS-QUICK DISCONNECT (MALE)	
					(EACH INCLUDES)	
		2	**6V-3965**	1	FITTING (QUICK DISCONNECT)	
		2	**214-7568**	1	SEAL-O-RING	
	49	2	*206-5121*	2	TEE AS	
					(EACH INCLUDES)	
		2	**206-5119**	1	TEE	
		2	**3K-0360**	1	SEAL-O-RING	
		2	**6V-8397**	2	SEAL-O-RING	
	50	2	*241-6215*	1	ELBOW AS	
		2	**6V-8076**	1	ELBOW	
		2	**3J-1907**	1	SEAL-O-RING	
	51	1,2	*357-4434*	2	ELBOW AS	
					(EACH INCLUDES)	
		1,2	**6V-9200**	1	ELBOW	
		1,2	**3J-7354**	1	SEAL-O-RING	
		1,2	**6V-8397**	1	SEAL-O-RING	

392-3890 **CONTROL GP-SERVICE BRAKE (*contd.*)** **i06064000**

NOTE	REF NO	GRAPHIC REF	PART NUMBER	QTY	PART NAME 1 2 3 4 5 6 (PRODUCT LEVEL)	SEE PAGE
	52	2	**3B-4607**	2	PIN-COTTER	
	53	2	**3B-4640**	1	PIN-COTTER	
	54	2	**3E-4321**	3	CLIP (LOOP)	
	55	2	**4D-7794**	1	CLIP	
M	56	2	**5C-2874**	1	NUT (M5X0.8-THD)	
	57	3	**5K-5338**	3	CLIP	
	58	2	**5P-6724**	1	BEARING-ROLLER	
	59	1,2,3	**6D-4246**	12	CLIP (LOOP)	
	60	2	**6V-0852**	2	CAP-DUST	
M	61	3	**6V-1820**	2	BOLT (M10X1.5X30-MM)	
	62	2	**6V-9168**	1	NUT (11/16-16-THD)	
	63	3	**6V-9829**	1	CAP AS	
	64	1	**204-2281**	4	STRAP-CABLE	
	65	3	**7X-0622**	4	WASHER (13X24X2.5-MM THK)	
	66	2	**7X-2618**	2	PIN	
	67	2	**8M-2773**	1	CLIP (LOOP)	
	68	2	**8T-0741**	2	SEAL-LIP TYPE	
	69	1,2,3	**8T-4121**	46	WASHER-HARD (11X21X2.5-MM THK)	
M	70	2,3	**8T-4133**	16	NUT (M10X1.5-THD)	
M	71	2,3	**8T-4136**	11	BOLT (M10X1.5X25-MM)	
M	72	1,2,3	**8T-4137**	17	BOLT (M10X1.5X20-MM)	
M	73	3	**8T-4139**	4	BOLT (M12X1.75X30-MM)	
	74	2	**8T-4224**	2	WASHER-HARD (8.8X16X2-MM THK)	
M	75	2	**8T-7547**	2	BOLT (M8X1.25X30-MM)	
	76	2	**9X-8257**	1	WASHER (17.5X30X3.5-MM THK)	

I - REFER TO HYDRAULIC INFORMATION SYSTEM
M - METRIC PART
Y - SEPARATE ILLUSTRATION

392-3890 **CONTROL GP-SERVICE BRAKE (*contd.*)** **i06064000**

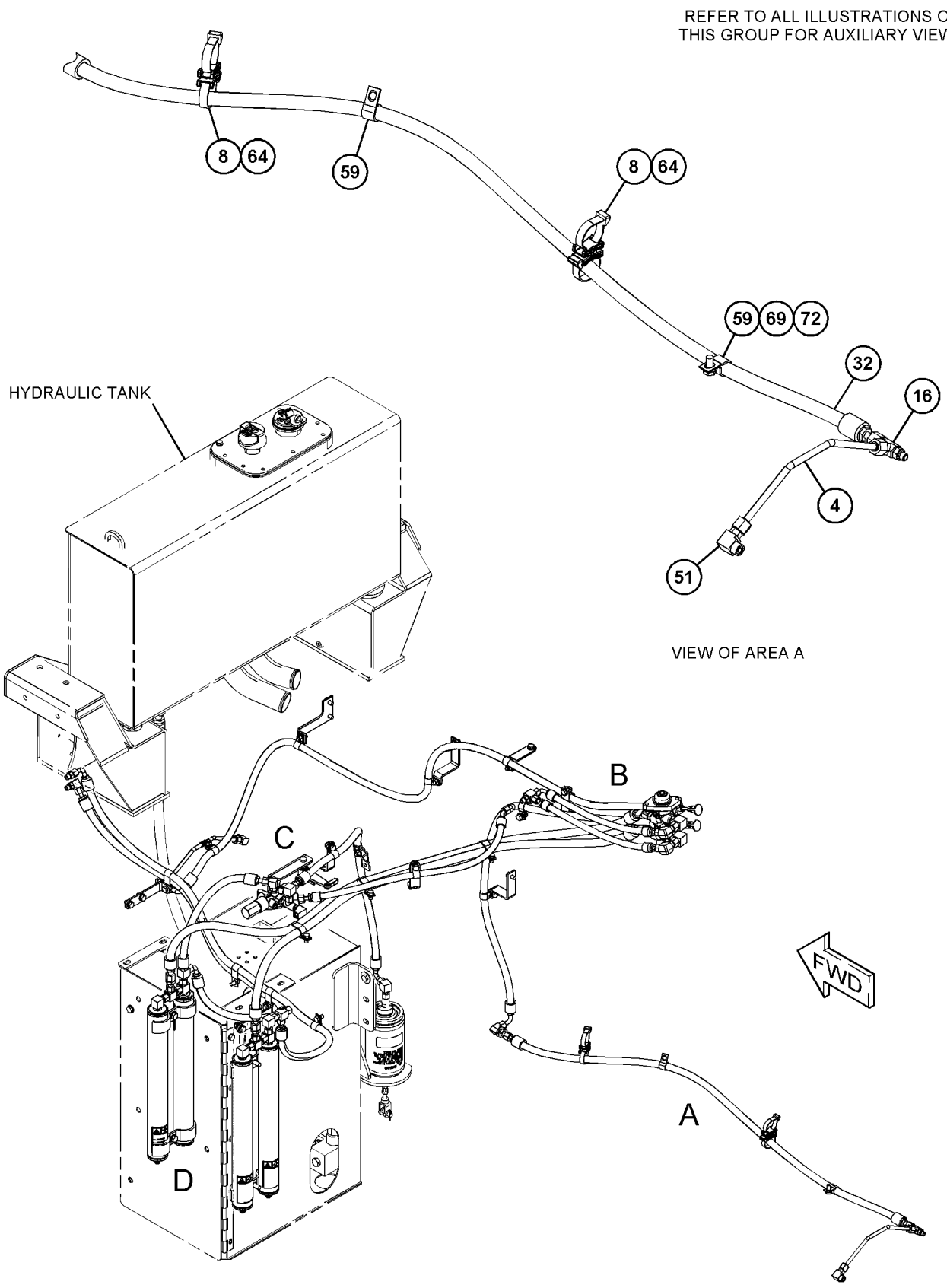

GRAPHIC #1 g03797577

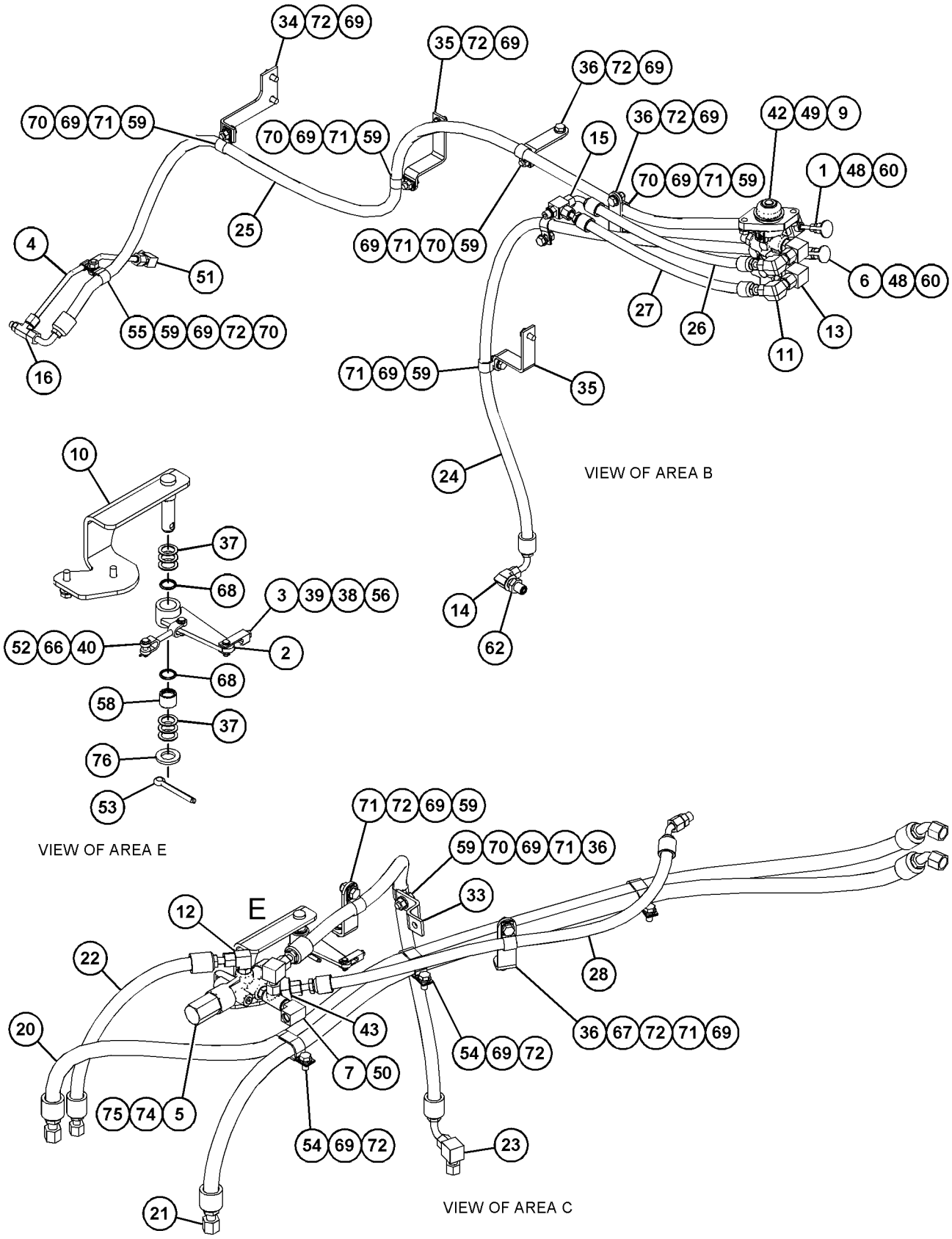

GRAPHIC #2 g03699194

392-3890 **CONTROL GP-SERVICE BRAKE (*contd.*)** **i06064000**

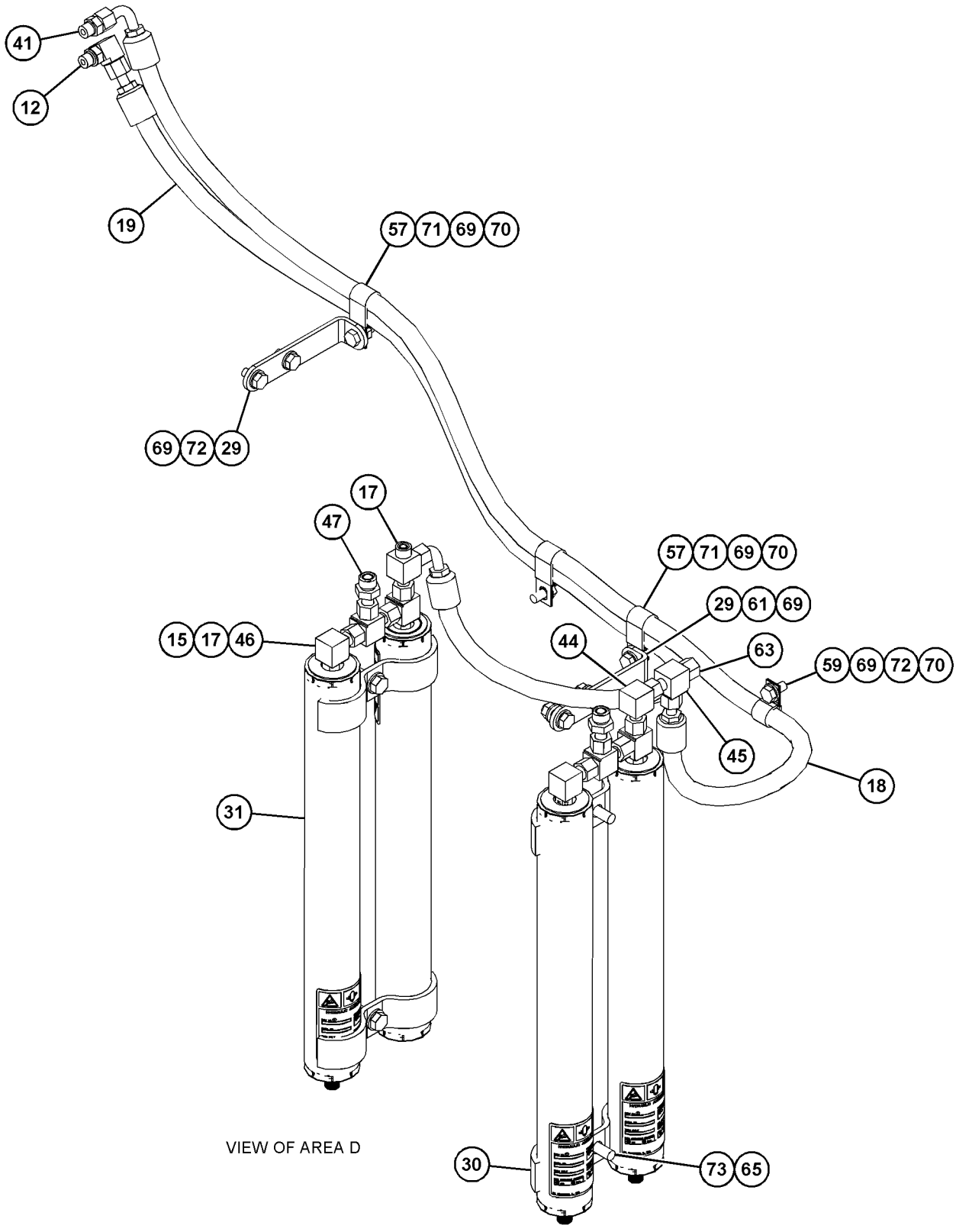

GRAPHIC #3 **<END>** g03699834

387-6027 CONVERSION AR-BRAKE CONTROL

S/N: M5K1-UP

FOR USE WITH 431-4650—PAGE: 280, 390-5985—PAGE: 378

CANNOT BE USED WITH 387-6026—PAGE: 277, 432-7392—PAGE: 356, 432-7393—PAGE: 357

AN ATTACHMENT

SMCS-4265, 4269, 4284 **i05818321**

NOTE	PART NUMBER	QTY	PART NAME 1 2 3 4 5 6 (PRODUCT LEVEL)	SEE PAGE
Y	*392-3702*	1	BRACKET GP-MOUNTING	273
Y	*415-4205*	1	CAMERA AR	109
Y	*425-6234*	1	PEDAL GP-BRAKE	576
Y	*393-4097*	1	ENGINE AR-PRIMARY	3
Y	*417-2120*	1	FILM GP	660
Y	*415-4227*	1	LIGHTING GP-WARNING BEACON	156
J	*432-7378*	1	FOAM	
J	*434-6695*	1	REFLECTOR GP	
	9R-1499	2	REFLECTOR (RED)	

J - THIS PART IS NOT RELEASED AT TIME OF PUBLICATION
Y - SEPARATE ILLUSTRATION

<END>

432-7392 CONVERSION AR-BRAKE CONTROL

S/N: M5K1-UP

AN ATTACHMENT

SMCS-4265, 4269, 4284 **i06063255**

NOTE	PART NUMBER	QTY	PART NAME 1 2 3 4 5 6 (PRODUCT LEVEL)	SEE PAGE
Y	*392-3702*	1	BRACKET GP-MOUNTING	273
Y	*455-9874*	1	CONTROL & MTG GP-PEDAL	552
Y	**393-4097**	1	ENGINE AR-PRIMARY	3
Y	*387-6023*	1	FILM GP	655
Y	*392-3978*	1	MIRROR GP-REAR VIEW	572
Y	*425-6234*	1	PEDAL GP-BRAKE	576
Y	*390-5961*	1	PUMP & MTG GP-STEERING	370
	417-2115	1	REFLECTOR GP	
	116-9621	6	REFLECTOR-YELLOW	
	9R-1499	2	REFLECTOR (RED)	

Y - SEPARATE ILLUSTRATION

<END>

432-7393 CONVERSION AR-BRAKE CONTROL

S/N: M5K1-UP

AN ATTACHMENT

SMCS-4265, 4269, 4284 **i06063781**

NOTE	PART NUMBER	QTY	PART NAME 1 2 3 4 5 6 (PRODUCT LEVEL)	SEE PAGE
Y	*392-3702*	1	BRACKET GP-MOUNTING	273
Y	*455-9874*	1	CONTROL & MTG GP-PEDAL	552
Y	**393-4097**	1	ENGINE AR-PRIMARY	3
Y	*434-6694*	1	FILM GP	663
Y	*392-3978*	1	MIRROR GP-REAR VIEW	572
Y	*425-6234*	1	PEDAL GP-BRAKE	576
Y	*390-5961*	1	PUMP & MTG GP-STEERING	370
	417-2115	1	REFLECTOR GP	
	9R-1499	2	REFLECTOR (RED)	
	116-9621	6	REFLECTOR-YELLOW	

Y - SEPARATE ILLUSTRATION

<END>

387-0614 CYLINDER GP-STEERING

S/N: M5K1-UP
90-MM (3.54-IN) BORE X 460-MM (18-IN) STROKE
PART OF 390-5960 CYLINDER GP-STEERING

SMCS-4303 **i05563195**

NOTE	REF NO	GRAPHIC REF	PART NUMBER	QTY	PART NAME 1 2 3 4 5 6 (PRODUCT LEVEL)	SEE PAGE
	1	1	**397-9889**	1	BODY-CYLINDER	
	2	1	**397-9890**	1	ROD-CYLINDER	
	3	1	**397-9891**	1	COVER-CYLINDER	
	4	1	**397-9892**	1	PISTON-CYLINDER	
	5	1	**397-9893**	1	KIT-SEAL (CYLINDER)	
					(INCLUDES SUPPORT RINGS, SEALS, O-RINGS, RING, Y RINGS, DUST RING & ALIGNING BEARINGS)	

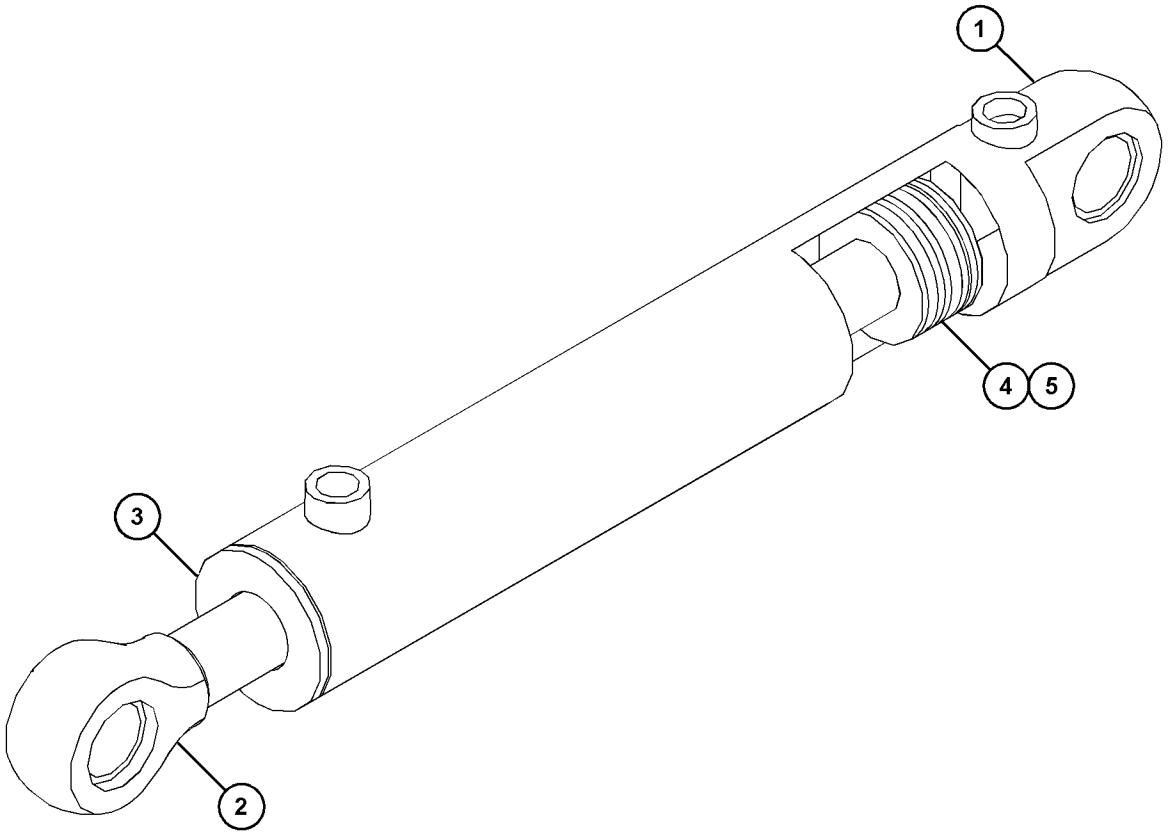

GRAPHIC #1 **<END>** g03559802

390-5960 CYLINDER GP-STEERING

S/N: M5K1-UP
90-MM BORE X 460-MM STROKE
PART OF 390-5959 HYDRAULIC AR

SMCS-4303 **i05436549**

NOTE	REF NO	GRAPHIC REF	PART NUMBER	QTY	PART NAME 1 2 3 4 5 6 (PRODUCT LEVEL)	SEE PAGE
Y	1	1	**387-0614**	2	CYLINDER GP-STEERING	358

Y - SEPARATE ILLUSTRATION

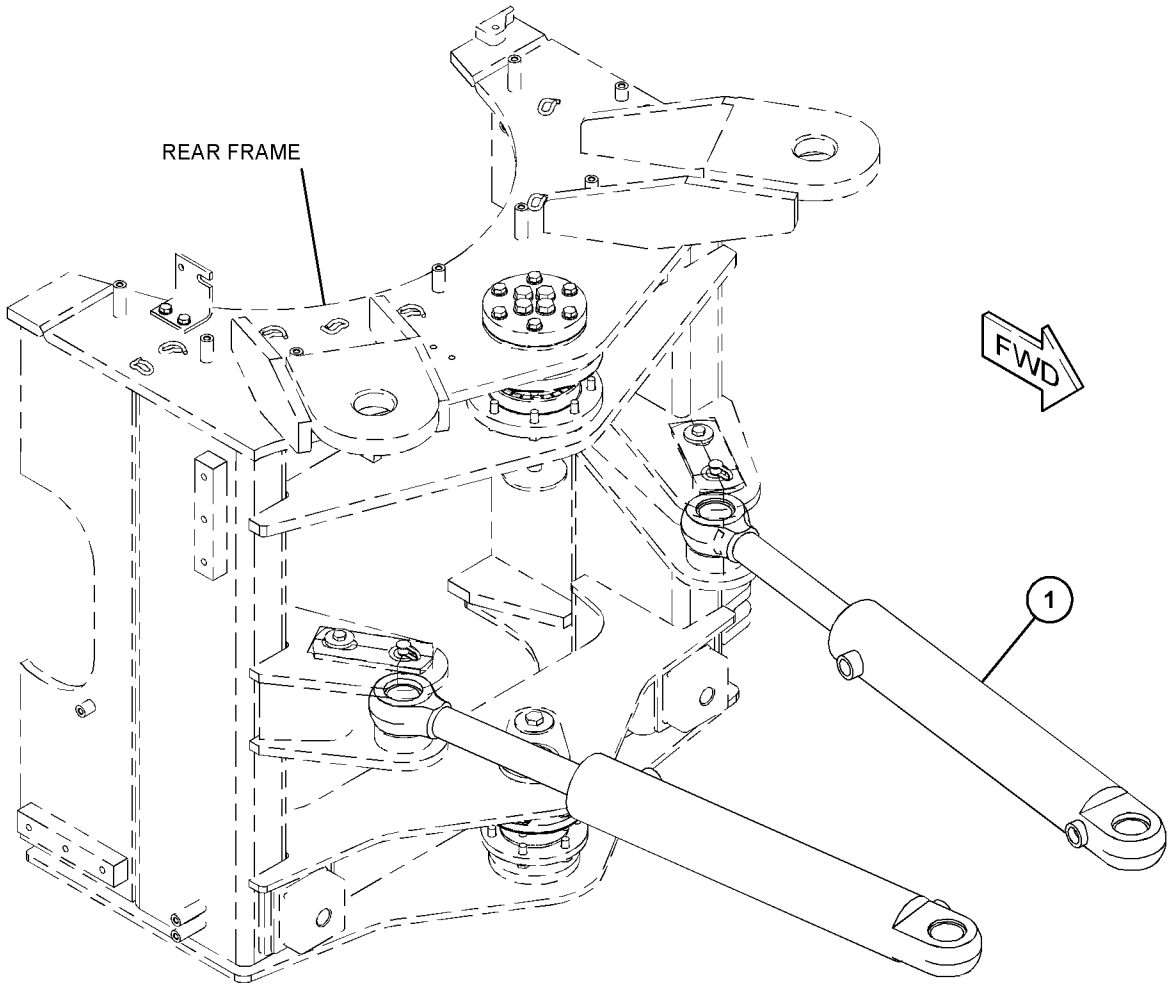

GRAPHIC #1 **<END>** g03526738

390-5987 LINES GP-SECONDARY STEERING

S/N: M5K1-UP

PART OF 390-5985 STEERING AR-SECONDARY

AN ATTACHMENT

SMCS-4304 **i05677151**

NOTE	REF NO	GRAPHIC REF	PART NUMBER	QTY	PART NAME 1 2 3 4 5 6 (PRODUCT LEVEL)	SEE PAGE
I	1	1	**390-5988**	1	HOSE AS	
I	2	1	**448-2987**	1	HOSE AS	
I	3	1	**390-5992**	1	HOSE AS	
I	4	1	**448-2985**	1	HOSE AS	
I	5	1	**448-2983**	1	HOSE AS	
	6	1	**397-9751**	1	ADAPTER AS	
M	7	1	**110-2460**	3	BOLT (M12X1.5X95-MM)	
Y	8	1	**141-2597**	1	VALVE GP-SECONDARY STEERING	382
	9	1	*148-8327*	1	CONNECTOR AS	
		1	**6V-8637**	1	CONNECTOR	
		1	**3D-2824**	1	SEAL-O-RING	
		1	**6V-9746**	1	SEAL-O-RING	
	10	1	*148-8328*	1	CONNECTOR AS	
		1	**6V-8633**	1	CONNECTOR	
		1	**3D-2824**	1	SEAL-O-RING	
		1	**6V-8398**	1	SEAL-O-RING	
	11	1	*148-8345*	1	CONNECTOR AS	
		1	**6V-8638**	1	CONNECTOR	
		1	**2M-9780**	1	SEAL-O-RING	
		1	**6V-8398**	1	SEAL-O-RING	
	13	1	**4J-0520**	1	SEAL-O-RING	
	14	1	**5P-1076**	3	WASHER-HARD (13.5X30X4-MM THK)	
	16	1	**1S-0994**	1	CLIP	
	17	1	**4S-4455**	2	CLIP	
	18	1	**6V-1889**	1	CLIP	
	19	1	**8T-4121**	4	WASHER-HARD (11X21X2.5-MM THK)	
M	20	1	**8T-4137**	4	BOLT (M10X1.5X20-MM)	

I - REFER TO HYDRAULIC INFORMATION SYSTEM
M - METRIC PART
Y - SEPARATE ILLUSTRATION

390-5987 **LINES GP-SECONDARY STEERING (*contd.*)** **i05677151**

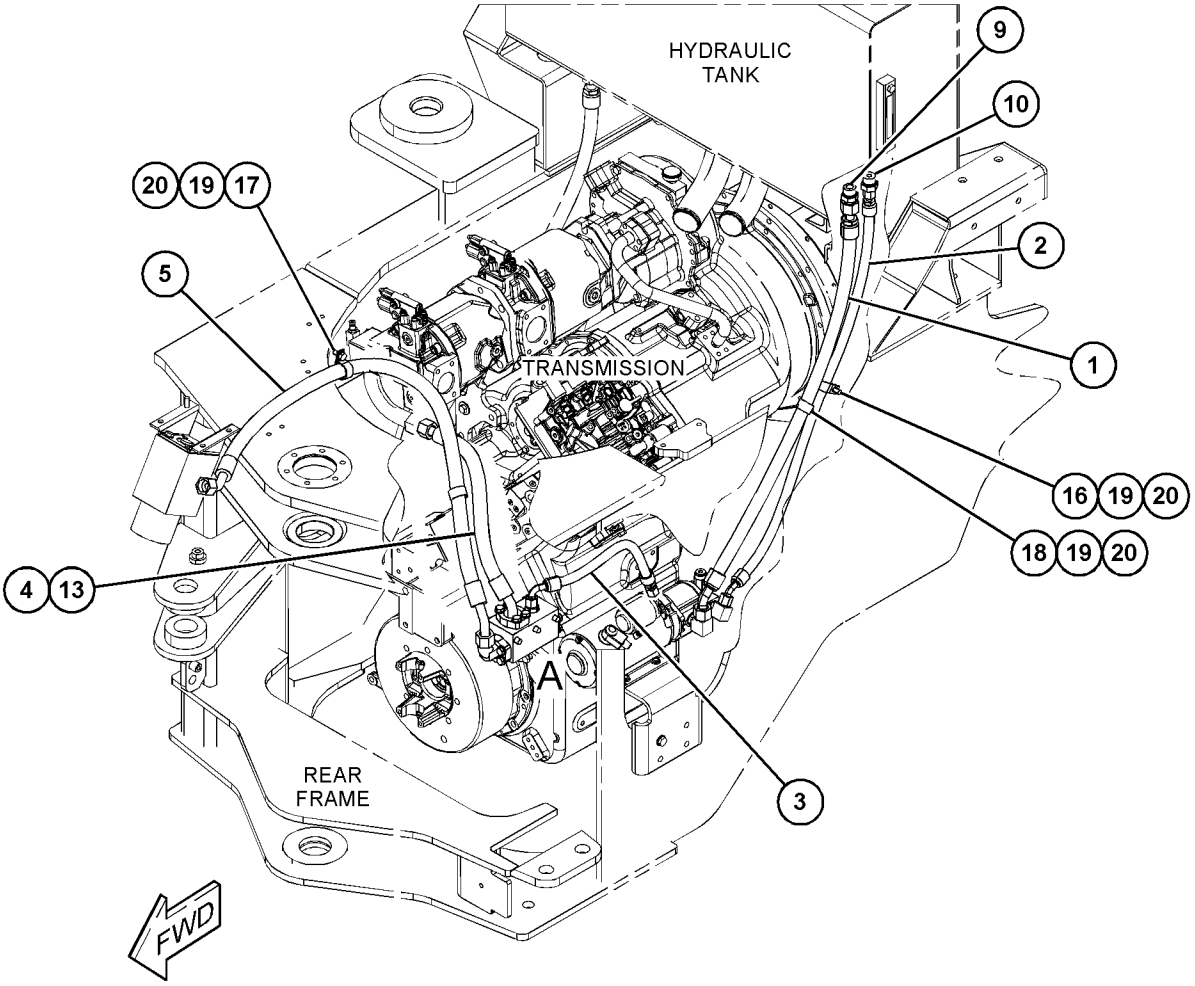

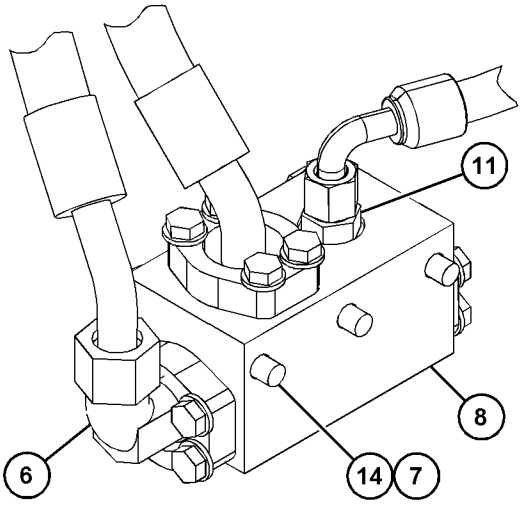

VIEW OF AREA A

GRAPHIC #1 **<END>** g03699425

390-6000 LINES GP-SECONDARY STEERING

S/N: M5K1-UP

CANNOT BE USED WITH 390-5985 STEERING AR-SECONDARY

AN ATTACHMENT

SMCS-4304 **i05425163**

NOTE	REF NO	GRAPHIC REF	PART NUMBER	QTY	PART NAME 1 2 3 4 5 6 (PRODUCT LEVEL)	SEE PAGE
	1	1	*148-8408*	2	PLUG AS	
					(EACH INCLUDES)	
		1	**3D-2824**	1	SEAL-O-RING	
		1	**9S-4183**	1	PLUG	
I	2	1	**397-9736**	1	HOSE AS	
	3	1	*148-8392*	1	ELBOW AS	
		1	**6V-9746**	1	SEAL-O-RING	
		1	**6V-9853**	1	ELBOW	

I - REFER TO HYDRAULIC INFORMATION SYSTEM

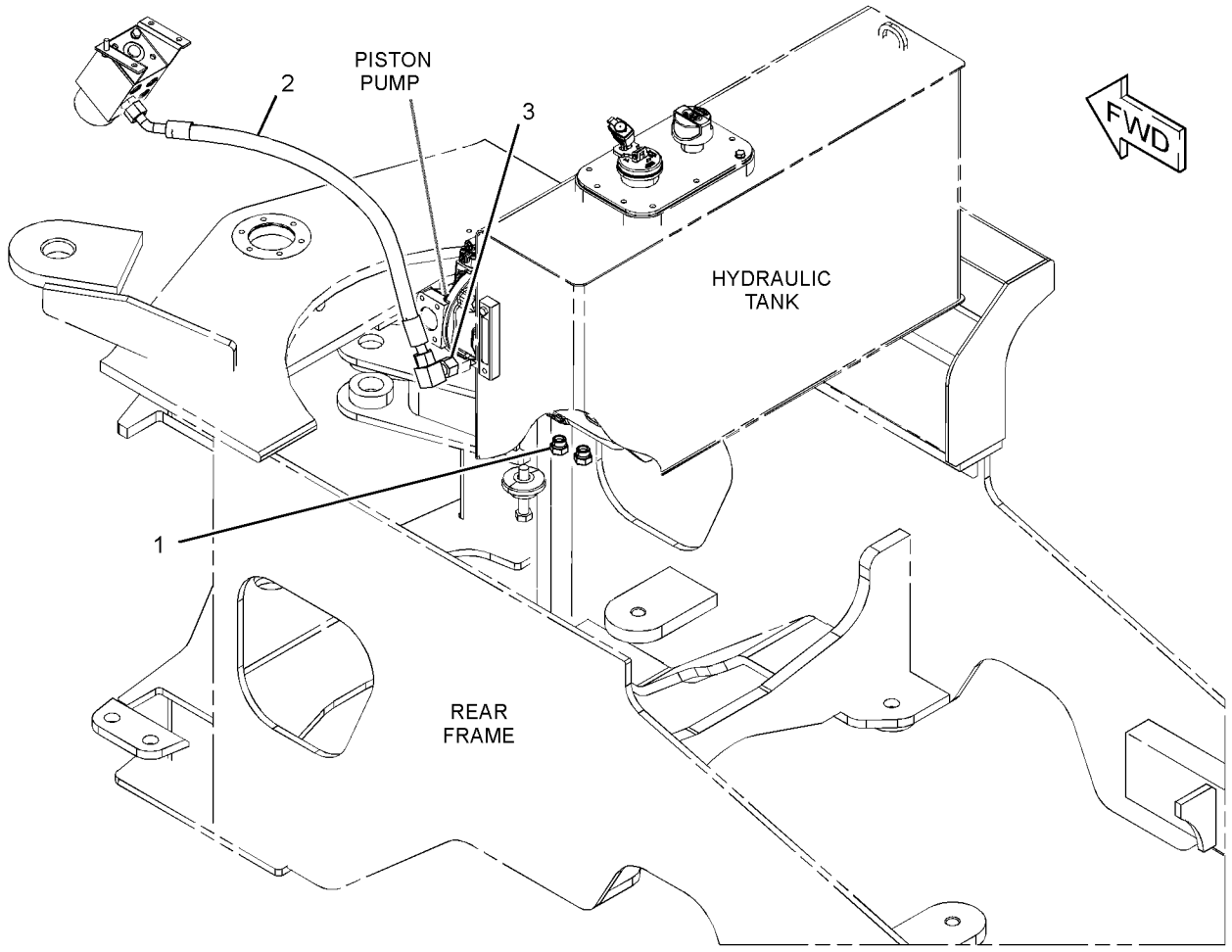

GRAPHIC #1 **<END>** g03427257

390-5962 LINES GP-STEERING

S/N: M5K1-UP

PART OF 390-5959 HYDRAULIC AR

TYPE 1

SMCS-4304 **i05830088**

NOTE	REF NO	GRAPHIC REF	PART NUMBER	QTY	PART NAME 1 2 3 4 5 6 (PRODUCT LEVEL)	SEE PAGE
J	1	1	**195-6617**	1	PUMP GP-METERING (HMU)	
		1	**9J-5685**	1	BEARING	
		1	**142-7061**	2	RACE-BEARING	
	2	1	**382-1511**	1	SCREEN AS (HYDRAULIC)	
I	3	1	**390-5972**	1	HOSE AS	
I	4	1	**390-5974**	1	HOSE AS	
I	5	1	**390-5976**	1	HOSE AS	
	6	1	**392-5558**	1	BRACKET	
	7	1	**397-9722**	1	BRACKET AS	
	8	1	**397-9725**	1	BRACKET AS	
	9	1	**397-9726**	1	BRACKET	
	10	1	**397-9727**	1	MANIFOLD	
	11	1	**397-9732**	2	ADAPTER	
	12	1	**397-9733**	1	ADAPTER	
	13	1	*148-8324*	4	CONNECTOR AS	
					(EACH INCLUDES)	
		1	**3K-0360**	1	SEAL-O-RING	
		1	**6V-9746**	1	SEAL-O-RING	
		1	**6V-9874**	1	CONNECTOR (STRAIGHT)	
	14	1	**397-9738**	2	ADAPTER AS	
	15	1	*148-8392*	3	ELBOW AS	
					(EACH INCLUDES)	
		1	**6V-9746**	1	SEAL-O-RING	
		1	**6V-9853**	1	ELBOW	
I	16	1	**397-9753**	1	HOSE AS	
	17	1	*148-8449*	4	TEE AS-SWIVEL	
					(EACH INCLUDES)	
		1	**6V-9746**	2	SEAL-O-RING	
		1	**6V-9839**	1	TEE-SWIVEL	
I	18	1	**397-9755**	1	HOSE AS	
I	19	1	**397-9757**	2	HOSE AS	
I	20	1	**397-9759**	2	HOSE AS	
I	21	1	**397-9761**	1	HOSE AS	
I	22	1	**448-2981**	1	HOSE AS	
	23	1	**092-7385**	1	CLIP	
	24	1	*148-8317*	1	CONNECTOR AS	
		1	**3D-2824**	1	SEAL-O-RING	
		1	**5K-9090**	1	SEAL-O-RING	
		1	**6V-8714**	1	CONNECTOR	
	25	1	*148-8359*	1	ELBOW AS	
		1	**3K-0360**	1	SEAL-O-RING	
		1	**6V-9746**	1	SEAL-O-RING	
		1	**6V-9877**	1	ELBOW	
	26	1	*148-8376*	2	ELBOW AS	
					(EACH INCLUDES)	
		1	**6V-8983**	1	ELBOW	
		1	**6V-9746**	2	SEAL-O-RING	
	27	1	*148-8424*	1	TEE AS	
		1	**6V-8397**	1	SEAL-O-RING	
		1	**8T-8902**	1	TEE	
	28	1	*164-5567*	1	COUPLER AS-QUICK DISCONNECT (MALE)	
		1	**6V-3965**	1	FITTING (QUICK DISCONNECT)	
		1	**214-7568**	1	SEAL-O-RING	
	29	1	*164-7908*	1	ELBOW AS	
		1	**3J-7354**	1	SEAL-O-RING	
		1	**6V-8397**	1	SEAL-O-RING	
		1	**8T-7546**	1	ELBOW	
	30	1	**2P-1293**	2	LOCKNUT (1-3/16-12-THD)	

390-5962 **LINES GP-STEERING (*contd.*)** **i05830088**

NOTE	REF NO	GRAPHIC REF	PART NUMBER	QTY	PART NAME 1 2 3 4 5 6 (PRODUCT LEVEL)	SEE PAGE
	31	1	**5M-2894**	16	WASHER-HARD (10.2X18.5X2.5-MM THK)	
	32	1	**5P-8245**	1	WASHER-HARD (13.5X25.5X3-MM THK)	
	33	1	**6D-4246**	1	CLIP (LOOP)	
	34	1	**6V-0852**	1	CAP-DUST	
M	35	1	**8T-4136**	7	BOLT (M10X1.5X25-MM)	
M	36	1	**8T-4137**	4	BOLT (M10X1.5X20-MM)	
M	37	1	**8T-4192**	1	BOLT (M12X1.75X25-MM)	
M	38	1	**8T-4195**	5	BOLT (M10X1.5X30-MM)	
					AVAILABLE REPAIR KIT(S):	
J			**258-8412**	1	KIT-SEAL (STEERING PUMP)	
					(KIT INCLUDES DUST SEAL, SEAL-U-SHAFT, RINGS & INSTRUCTIONS)	

I - REFER TO HYDRAULIC INFORMATION SYSTEM
J - KIT MARKED J SERVICES PART MARKED J
M - METRIC PART

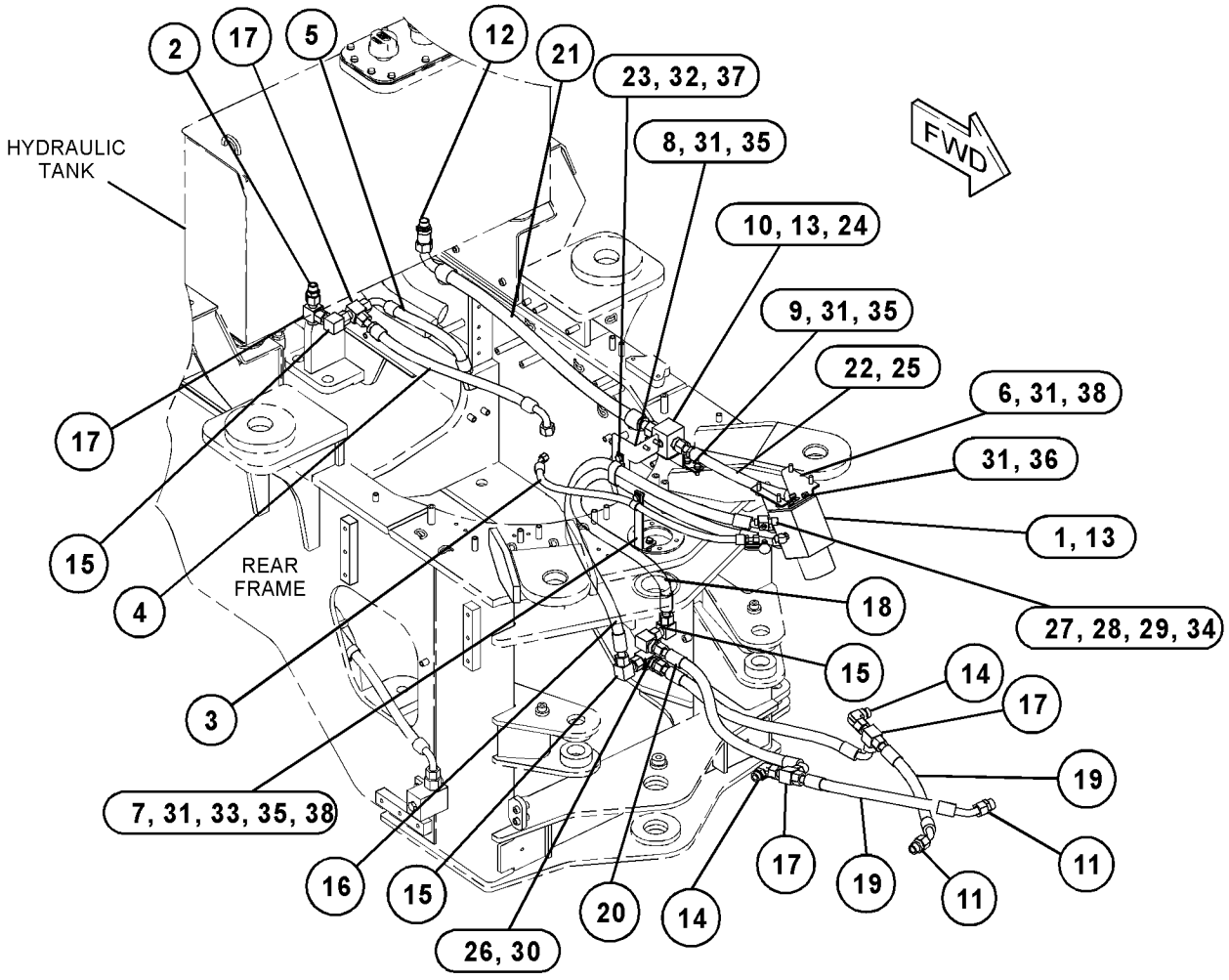

GRAPHIC #1 **<END>** g03693526

390-5962 LINES GP-STEERING

S/N: M5K1-UP
PART OF 390-5959 HYDRAULIC AR
TYPE 2

SMCS-4304 **i06064502**

NOTE	REF NO	GRAPHIC REF	PART NUMBER	QTY	PART NAME 1 2 3 4 5 6 (PRODUCT LEVEL)	SEE PAGE
J	1	1	**195-6617**	1	PUMP GP-METERING (HMU)	
		1	**9J-5685**	1	BEARING	
		1	**142-7061**	2	RACE-BEARING	
	2	1	**382-1511**	1	SCREEN AS (HYDRAULIC)	
I	3	1	**390-5972**	1	HOSE AS	
I	4	1	**390-5974**	1	HOSE AS	
I	5	1	**390-5976**	1	HOSE AS	
	7	1	**397-9722**	1	BRACKET AS	
	8	1	**397-9725**	1	BRACKET AS	
	9	1	**397-9726**	1	BRACKET	
	10	1	**397-9727**	1	MANIFOLD	
C	11	1	**397-9732**	1	ADAPTER	
	12	1	**397-9733**	1	ADAPTER	
	13	1	*148-8324*	4	CONNECTOR AS	
					(EACH INCLUDES)	
		1	**3K-0360**	1	SEAL-O-RING	
		1	**6V-9746**	1	SEAL-O-RING	
		1	**6V-9874**	1	CONNECTOR (STRAIGHT)	
C	14	1	**397-9738**	3	ADAPTER AS	
	15	1	*148-8392*	3	ELBOW AS	
					(EACH INCLUDES)	
		1	**6V-9746**	1	SEAL-O-RING	
		1	**6V-9853**	1	ELBOW	
I	16	1	**397-9753**	1	HOSE AS	
	17	1	*148-8449*	4	TEE AS-SWIVEL	
					(EACH INCLUDES)	
		1	**6V-9746**	2	SEAL-O-RING	
		1	**6V-9839**	1	TEE-SWIVEL	
I	18	1	**397-9755**	1	HOSE AS	
I	21	1	**397-9761**	1	HOSE AS	
I	22	1	**448-2981**	1	HOSE AS	
	23	1	**092-7385**	1	CLIP	
	24	1	*148-8317*	1	CONNECTOR AS	
		1	**3D-2824**	1	SEAL-O-RING	
		1	**5K-9090**	1	SEAL-O-RING	
		1	**6V-8714**	1	CONNECTOR	
	25	1	*148-8359*	1	ELBOW AS	
		1	**3K-0360**	1	SEAL-O-RING	
		1	**6V-9746**	1	SEAL-O-RING	
		1	**6V-9877**	1	ELBOW	
	26	1	*148-8376*	2	ELBOW AS	
					(EACH INCLUDES)	
		1	**6V-8983**	1	ELBOW	
		1	**6V-9746**	2	SEAL-O-RING	
	27	1	*148-8424*	1	TEE AS	
		1	**6V-8397**	1	SEAL-O-RING	
		1	**8T-8902**	1	TEE	
	28	1	*164-5567*	1	COUPLER AS-QUICK DISCONNECT (MALE)	
		1	**6V-3965**	1	FITTING (QUICK DISCONNECT)	
		1	**214-7568**	1	SEAL-O-RING	
	29	1	*164-7908*	1	ELBOW AS	
		1	**3J-7354**	1	SEAL-O-RING	
		1	**6V-8397**	1	SEAL-O-RING	
		1	**8T-7546**	1	ELBOW	
	30	1	**2P-1293**	2	LOCKNUT (1-3/16-12-THD)	
C	31	1	**5M-2894**	8	WASHER-HARD (10.2X18.5X2.5-MM THK)	
	32	1	**5P-8245**	1	WASHER-HARD (13.5X25.5X3-MM THK)	
	33	1	**6D-4246**	1	CLIP (LOOP)	

390-5962 **LINES GP-STEERING (*contd.*)** **i06064502**

NOTE	REF NO	GRAPHIC REF	PART NUMBER	QTY	PART NAME 1 2 3 4 5 6 (PRODUCT LEVEL)	SEE PAGE
	34	1	**6V-0852**	1	CAP-DUST	
M	35	1	**8T-4136**	7	BOLT (M10X1.5X25-MM)	
M	36	1	**8T-4137**	4	BOLT (M10X1.5X20-MM)	
M	37	1	**8T-4192**	1	BOLT (M12X1.75X25-MM)	
CM	38	1	**8T-4195**	1	BOLT (M10X1.5X30-MM)	
C	39		**452-6991**	2	CLAMP AS	
					(EACH INCLUDES)	
M			**8T-4133**	1	NUT (M10X1.5-THD)	
CI	40		**452-6987**	1	HOSE AS	
CI	41		**452-6985**	1	HOSE AS	
CI	42		**452-6983**	1	HOSE AS	
CI	43		**452-6981**	1	HOSE AS	
C	44		**448-2994**	1	PLATE	
C	45		**291-5392**	1	BOOT (HMU)	
C	46		**8T-4121**	6	WASHER-HARD (11X21X2.5-MM THK)	
C	47		**6N-6984**	4	MOUNT-RUBBER	
C	48		**5P-8112**	2	GROMMET (50-MM ID)	
C	49		**5P-7467**	2	CLIP (TAB)	
C	50		**5P-7466**	2	CLIP (SLOT)	
M	51		**160-8742**	2	BOLT (M10X1.5X55-MM)	
M	52		**6V-3822**	4	BOLT (M10X1.5X35-MM)	
	53		**448-2995**	4	WASHER-PLATED	
					AVAILABLE REPAIR KIT(S):	
J			**258-8412**	1	KIT-SEAL (STEERING PUMP)	
					(KIT INCLUDES DUST SEAL, SEAL-U-SHAFT, RINGS & INSTRUCTIONS)	

C - CHANGE FROM PREVIOUS TYPE
I - REFER TO HYDRAULIC INFORMATION SYSTEM
J - KIT MARKED J SERVICES PART MARKED J
M - METRIC PART

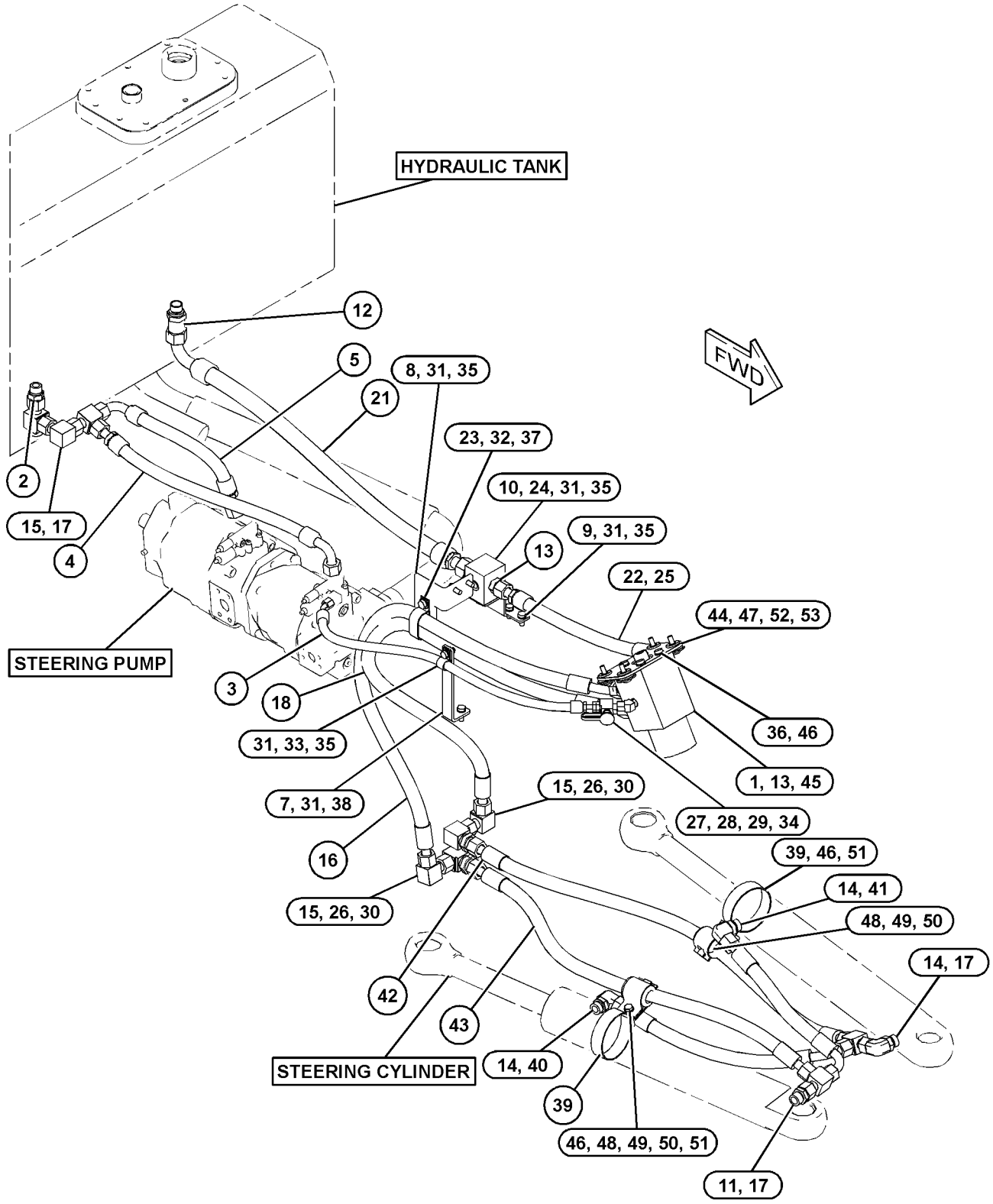

GRAPHIC #1 **<END>** g03799168

275-8544 PUMP & MOTOR GP-SEC STEERING–SECONDARY

S/N: M5K1-UP

PART OF 390-5986 PUMP & MTG GP-SECONDARY STEER

AN ATTACHMENT

SMCS-4324, 4325 **i05830090**

NOTE	REF NO	GRAPHIC REF	PART NUMBER	QTY	PART NAME 1 2 3 4 5 6 (PRODUCT LEVEL)	SEE PAGE
	1	1	**117-5268**	1	GASKET	
	2	1	**389-8169**	1	MOTOR GP-ELEC HYD PUMP (SECONDARY STEERING)	
	3	1	**183-6970**	1	RELAY (SECONDARY STEERING MOTOR)	
	4	1	**183-6971**	1	CABLE AS	
	5	1	**277-0731**	1	PUMP GP-GEAR (SECONDARY STEERING)	
	6	1	**237-9878**	1	VALVE GP-RELIEF	
	7	1	**017-8715**	1	SCREW-SELF-TAPPING	
	8	1	**8T-4205**	1	WASHER-HARD (7.2X14.5X2-MM THK)	
	9	1	**1H-3338**	1	LOCKWASHER (EXTERNAL TOOTH)	

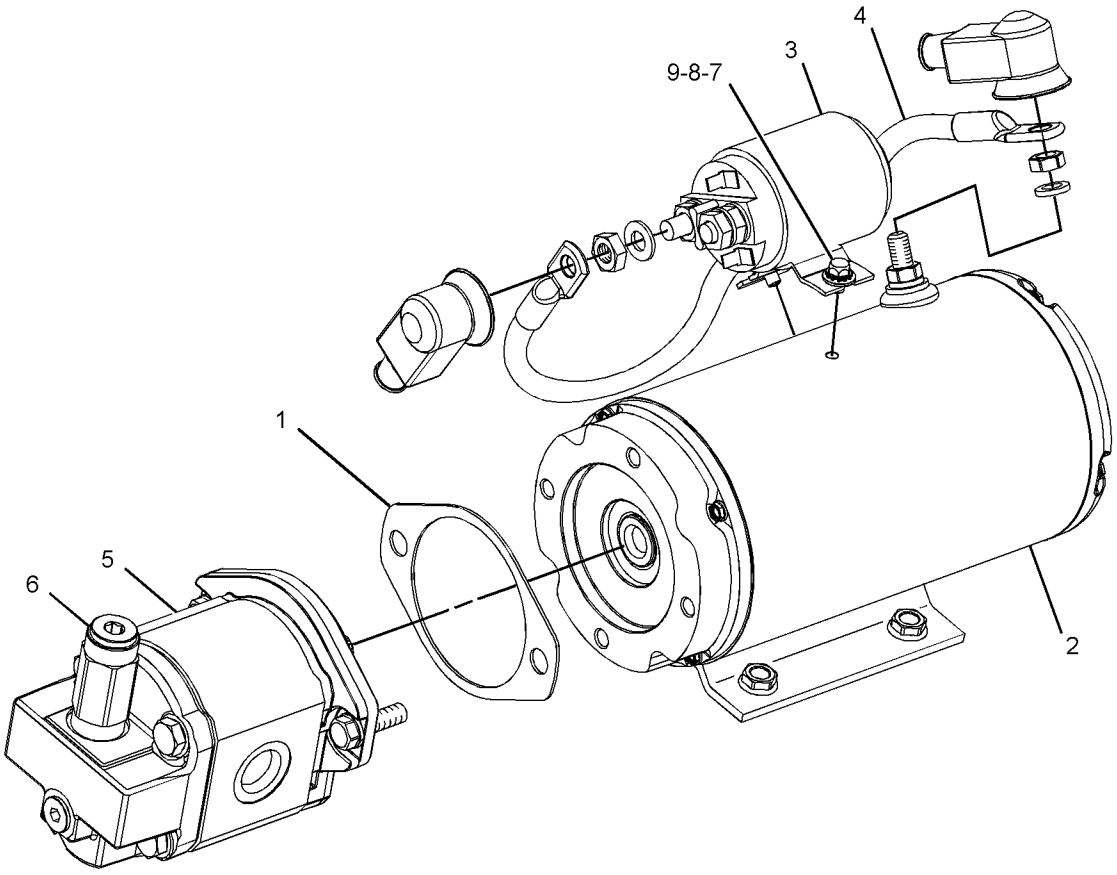

GRAPHIC #1 **<END>** g03692410

390-5986 PUMP & MTG GP-SECONDARY STEER

S/N: M5K1-UP
PART OF 390-5985 STEERING AR-SECONDARY
AN ATTACHMENT

SMCS-4324 **i05405556**

NOTE	REF NO	GRAPHIC REF	PART NUMBER	QTY	PART NAME 1 2 3 4 5 6 (PRODUCT LEVEL)	SEE PAGE
Y	1	1	**275-8544**	1	PUMP & MOTOR GP-SEC STEERING	368
	2	1	**390-5998**	1	BRACKET AS	
	3	1	*148-8359*	1	ELBOW AS	
		1	**3K-0360**	1	SEAL-O-RING	
		1	**6V-9746**	1	SEAL-O-RING	
		1	**6V-9877**	1	ELBOW	
	4	1	*148-8364*	2	ELBOW AS	
					(EACH INCLUDES)	
		1	**3K-0360**	1	SEAL-O-RING	
		1	**6V-8398**	1	SEAL-O-RING	
		1	**6V-8625**	1	ELBOW	
	5	1	*148-8370*	1	ELBOW AS	
		1	**6V-8398**	1	SEAL-O-RING	
		1	**6V-9851**	1	ELBOW	
	6	1	**5M-2894**	4	WASHER-HARD (10.2X18.5X2.5-MM THK)	
	7	1	**5P-1076**	4	WASHER-HARD (13.5X30X4-MM THK)	
M	8	1	**8T-4136**	4	BOLT (M10X1.5X25-MM)	
M	9	1	**8T-4139**	4	BOLT (M12X1.75X30-MM)	

M - METRIC PART
Y - SEPARATE ILLUSTRATION

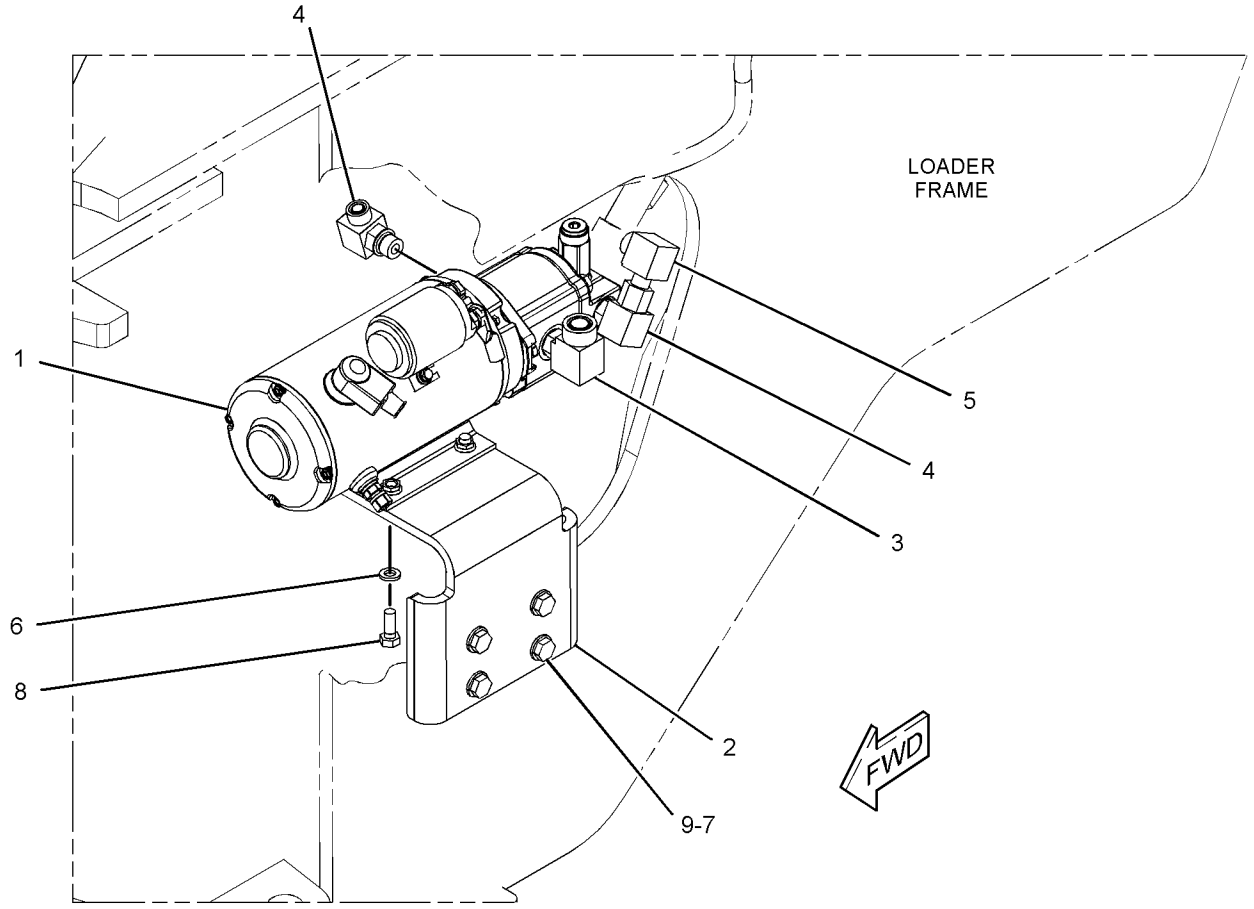

GRAPHIC #1 **<END>** g03421557

390-5961 PUMP & MTG GP-STEERING

S/N: M5K1-UP

PART OF 432-7392, 432-7393 CONVERSION AR-BRAKE CONTROL, 390-5959 HYDRAULIC AR

ALSO AN ATTACHMENT

SMCS-4306 **i05677130**

NOTE	REF NO	GRAPHIC REF	PART NUMBER	QTY	PART NAME 1 2 3 4 5 6 (PRODUCT LEVEL)	SEE PAGE
Y	1	1	**367-8076**	1	PUMP GP-PISTON (IMPLEMENT, STEERING)	372
	2	1	**390-5964**	1	TUBE AS	
	3	1	**390-5968**	1	TUBE AS	
	4	1	**390-5984**	1	PLATE	
	5	1	**397-9734**	1	GASKET	
	6	1	**397-9735**	1	HOSE	
	7	1	**4J-0520**	1	SEAL-O-RING	
	8	1	*148-8347*	1	ELBOW AS	
		1	**6V-9007**	1	ADAPTER	
		1	**3D-2824**	1	SEAL-O-RING	
		1	**6V-9746**	1	SEAL-O-RING	
	9	1	*148-8361*	1	ELBOW AS	
		1	**6V-9200**	1	ELBOW	
		1	**3J-7354**	1	SEAL-O-RING	
		1	**6V-8397**	1	SEAL-O-RING	
	10	1	*148-8388*	1	ELBOW AS	
		1	**6V-8629**	1	ELBOW	
		1	**2M-9780**	1	SEAL-O-RING	
		1	**6V-9746**	1	SEAL-O-RING	
	11	1	*164-5567*	1	COUPLER AS-QUICK DISCONNECT (MALE)	
		1	**6V-3965**	1	FITTING (QUICK DISCONNECT)	
		1	**214-7568**	1	SEAL-O-RING	
	12	1	**1P-4582**	2	FLANGE-HALF	
	13	1	*241-6215*	1	ELBOW AS	
		1	**6V-8076**	1	ELBOW	
		1	**3J-1907**	1	SEAL-O-RING	
	14	1	**5M-2894**	4	WASHER-HARD (10.2X18.5X2.5-MM THK)	
	15	1	**7X-7729**	3	WASHER (11X25X3-MM THK)	
	16	1	**6V-0852**	1	CAP-DUST	
	17	1	**6V-9746**	1	SEAL-O-RING	
	18	1	**5P-8245**	4	WASHER-HARD (13.5X25.5X3-MM THK)	
M	19	1	**8T-4779**	1	BOLT (M16X2X35-MM)	
M	20	1	**8T-4136**	3	BOLT (M10X1.5X25-MM)	
M	21	1	**8T-4956**	3	BOLT (M12X1.75X35-MM)	
M	22	1	**8T-6466**	3	BOLT (M10X1.5X60-MM)	
M	23	1	**8T-7338**	2	BOLT (M16X2X45-MM)	
	24	1	**9X-8268**	3	WASHER (17.5X30X3.5-MM THK)	
	25	1	**9M-7959**	4	CLAMP-HOSE	
	26	1	**397-9720**	1	BRACKET AS	
M		1	**8T-6462**	1	BOSS-WELD (M10X1.5X25-MM)	
M	27	1	**6V-7611**	1	BOLT (M12X1.75X40-MM)	
M	28	1	**6V-7731**	1	BOLT (M10X1.5X70-MM)	

M - METRIC PART
Y - SEPARATE ILLUSTRATION

390-5961 **PUMP & MTG GP-STEERING (*contd.*)** **i05677130**

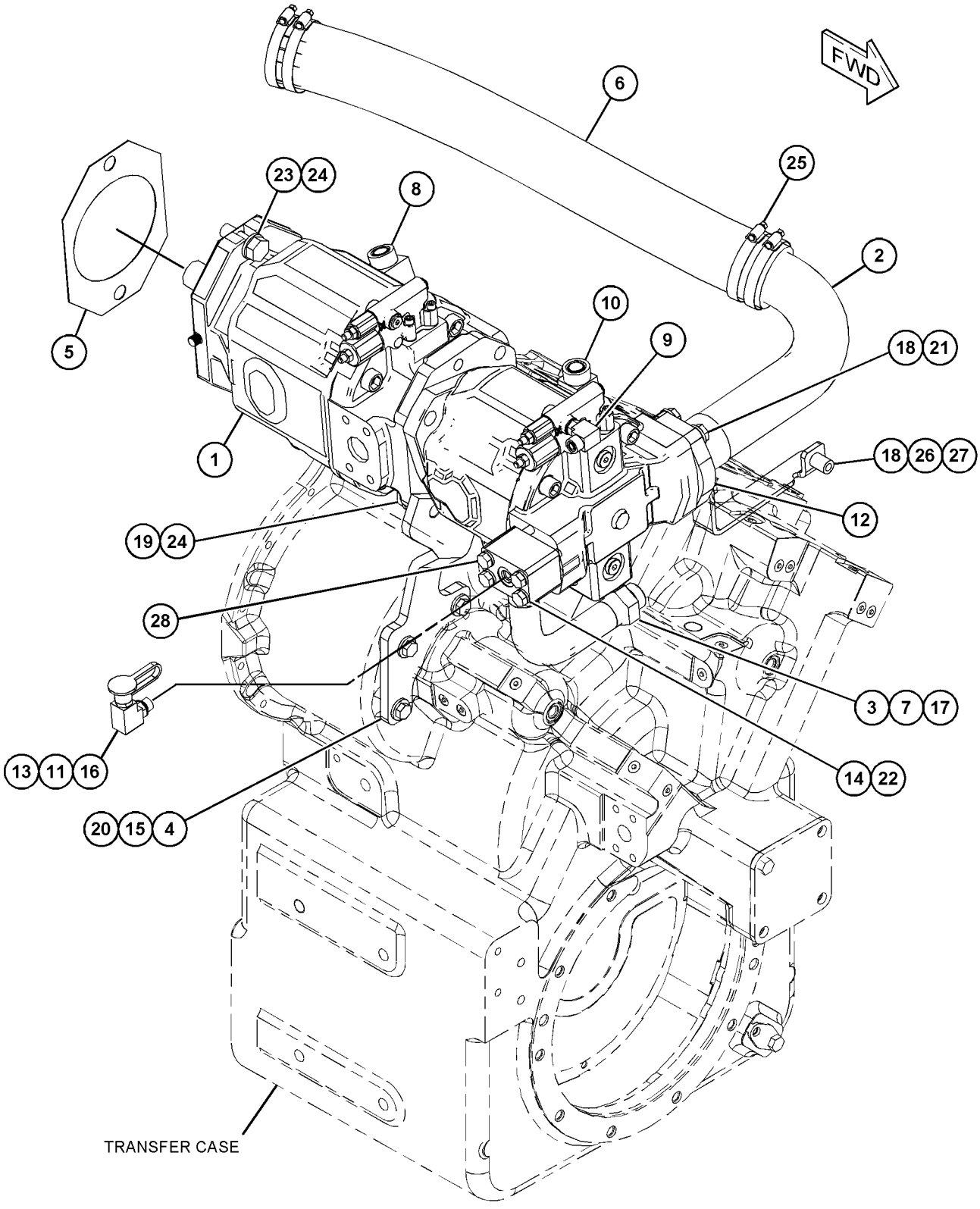

GRAPHIC #1 **<END>** g03699160

367-8076 PUMP GP-PISTON—IMPLEMENT, STEERING

S/N: M5K1-UP

PART OF 390-5961 PUMP & MTG GP-STEERING

ALSO AN ATTACHMENT

SMCS-4268, 4306, 5070

i05431089

NOTE	REF NO	GRAPHIC REF	PART NUMBER	QTY	PART NAME 1 2 3 4 5 6 (PRODUCT LEVEL)	SEE PAGE
Y	1	1	**367-8077**	1	PUMP GP-PISTON (IMPLEMENT)	373
Y	2	1	**367-8078**	1	PUMP GP-PISTON (STEERING)	375

Y - SEPARATE ILLUSTRATION

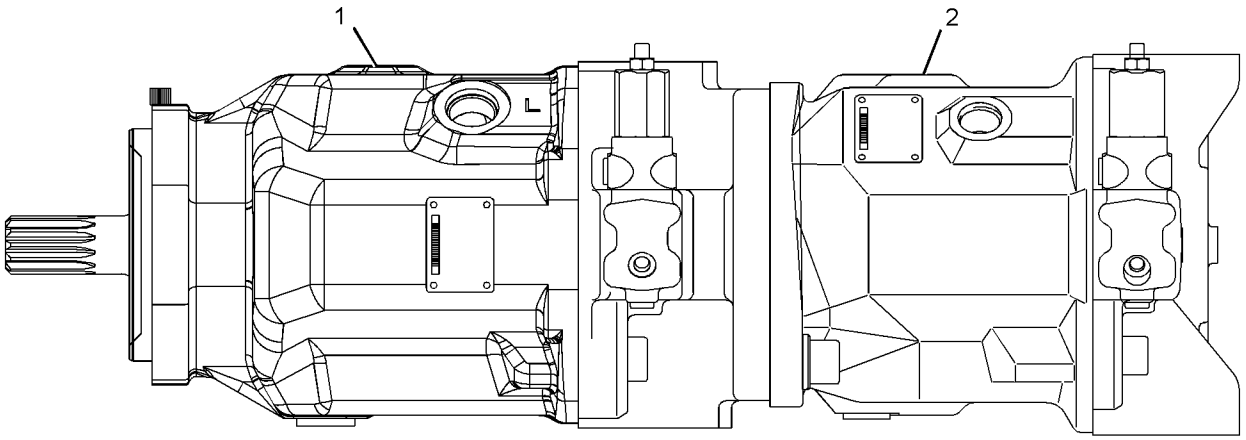

GRAPHIC #1

<END>

g02885401

367-8077 PUMP GP-PISTON—IMPLEMENT

S/N: M5K1-UP

PART OF 367-8076 PUMP GP-PISTON

ALSO AN ATTACHMENT

SMCS-4268, 4306, 5070 **i05431091**

NOTE	REF NO	GRAPHIC REF	PART NUMBER	QTY	PART NAME 1 2 3 4 5 6 (PRODUCT LEVEL)	SEE PAGE
	1	1	**140-1739**	1	RING-RETAINING	
	2	1	**105-1642**	2	BEARING	
Y	3	1	**393-5145**	1	ROTATING GP-PUMP	377
	4	1	**8U-5951**	4	SEAL-O-RING	
M	5	1	**6V-8201**	4	BOLT-SOCKET HEAD (M16X2X45-MM)	
	6	1	**105-3033**	1	CUP-BEARING	
	7	1	**105-3032**	1	CONE-BEARING	
	8	1	**373-8465**	1	COUPLER	
	9	1	**105-1638**	1	SPACER	
	10	1	**162-9997**	1	SEAL-O-RING	
	11	1	**105-1636**	1	CYLINDER-CONTROL	
	12	1	**105-1635**	1	SPRING	
	13	1	**105-1634**	1	PLUNGER	
	14	1	**9S-4183**	1	PLUG	
	15	1	**3D-2824**	1	SEAL-O-RING	
	16	1	**393-5150**	1	SHAFT	
	17	1	**3B-2263**	1	CUP-BEARING	
	18	1	**105-3031**	1	CONE-BEARING	
	19	1	**7X-1553**	2	SEAL-LIP TYPE	
	20	1	**393-5149**	1	SWASHPLATE AS	
	21	1	**188-9640**	1	PISTON-CONTROL	
	22	1	**188-9641**	1	GUIDE-CONTROL	
	23	1	**3J-7354**	1	SEAL-O-RING	
	24	1	**9X-8979**	1	DOWEL	
	25	1	**143-7052**	1	SLEEVE-STOP	
	26	1	**135-7935**	1	SEAL-O-RING	
M	27	1	**8T-8442**	4	BOLT-SOCKET HEAD (M6X1X30-MM)	
	28	1	**9S-8002**	1	PLUG-O-RING	
Y	29	1	**347-0612**	1	VALVE GP-PUMP CONTROL	380
	30	1	**280-7870**	1	GASKET	
	31	1	**120-4394**	1	PLUG-BREAK OFF	
	32	1	**173-0641**	1	PLUG-FILTER	
	33	1	**376-1583**	1	PLATE	
F			**293-8350**	1	KIT-SEAL	
					(INCLUDES O-RINGS & BACKUP RINGS)	

F - NOT SHOWN
M - METRIC PART
Y - SEPARATE ILLUSTRATION

367-8077 **PUMP GP-PISTON (*contd.*)** **i05431091**

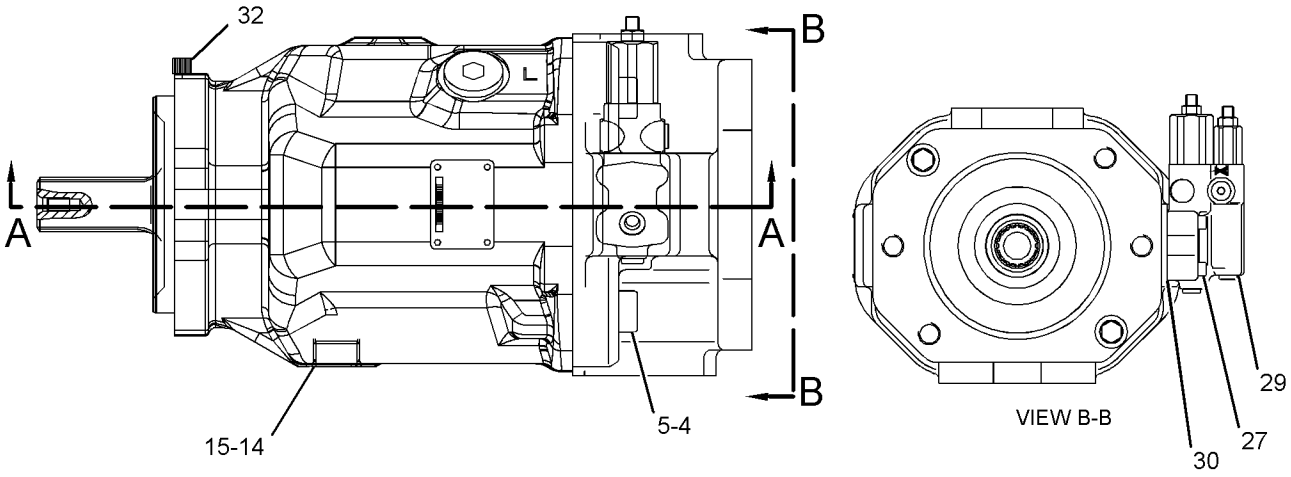

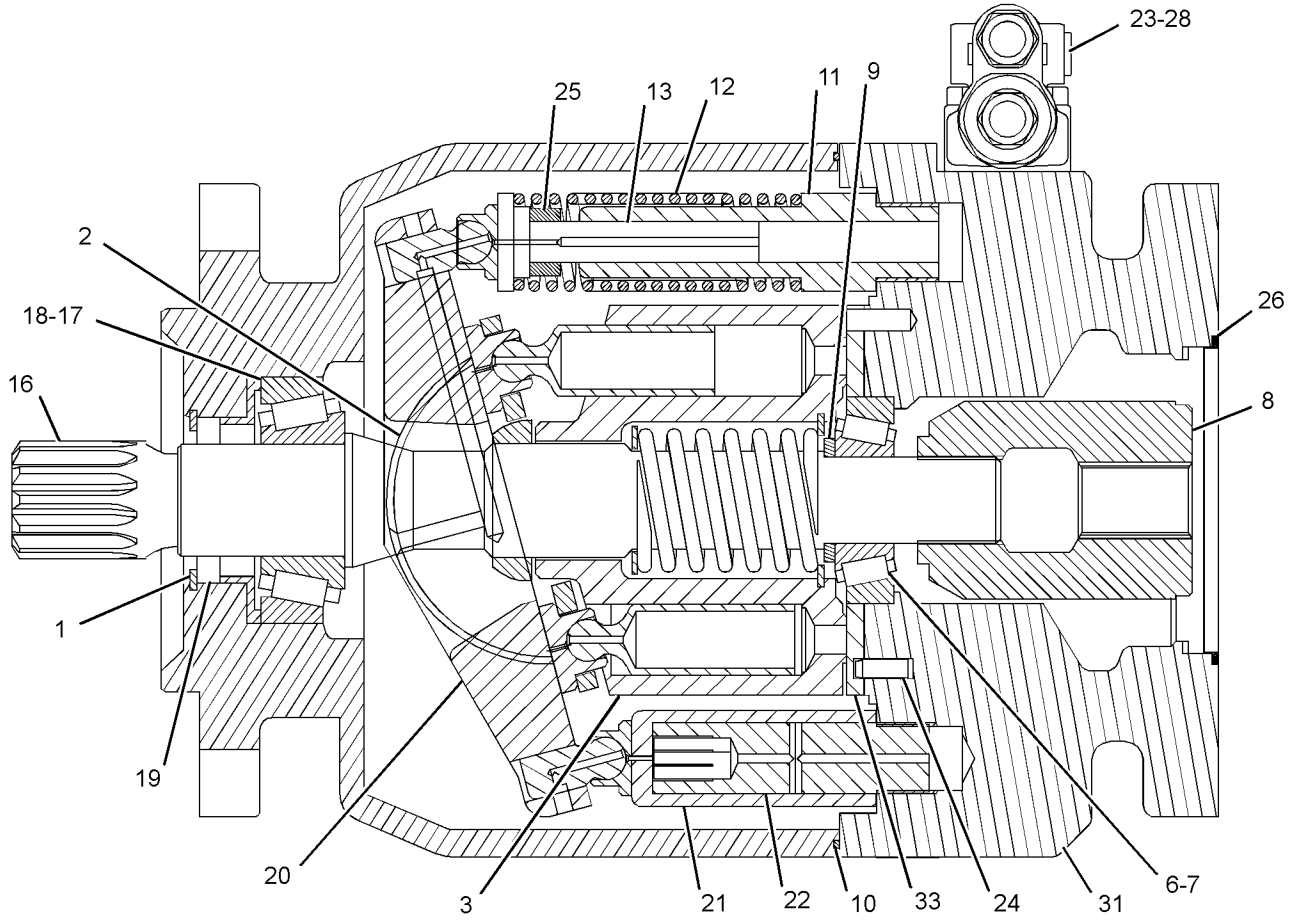

SECTION A-A

GRAPHIC #1 **<END>** g03370828

367-8078 PUMP GP-PISTON

S/N: M5K1-UP
PART OF 367-8076 PUMP GP-PISTON
ALSO AN ATTACHMENT

SMCS-4268, 4306, 5070 **i05431108**

NOTE	REF NO	GRAPHIC REF	PART NUMBER	QTY	PART NAME 1 2 3 4 5 6 (PRODUCT LEVEL)	SEE PAGE
	1	1	**180-6213**	1	RING-RETAINING	
	2	1	**6E-4003**	2	BEARING	
	3	1	**3J-7354**	1	SEAL-O-RING	
C	4	1	**378-3267**	1	ROTARY	
	5	1	**3E-6769**	4	SEAL-O-RING	
M	6	1	**095-9805**	4	BOLT-SOCKET HEAD (M14X2X40-MM)	
	7	1	**1P-6872**	1	CUP-BEARING	
	8	1	**109-1779**	1	CONE-BEARING	
	9	1	**6E-4000**	1	SPACER (25.5X35X3-MM THK)	
	10	1	**3E-6770**	1	SEAL-O-RING	
C	11	1	**393-5151**	1	PLATE	
C	12	1	**280-7870**	1	GASKET	
	14	1	**135-8853**	2	PLUG	
	15	1	**9S-8002**	1	PLUG-O-RING	
	16	1	**162-1604**	1	SHAFT-DRIVE	
	17	1	**3P-1210**	1	CONE-BEARING	
	18	1	**8J-0412**	1	CUP-BEARING	
	19	1	**6E-4004**	1	SEAL-SHAFT	
	20	1	**420-4773**	1	SWASHPLATE AS	
C	22	1	**262-0347**	1	KIT-PUMP	
	23	1	**120-4394**	1	PLUG-BREAK OFF	
	24	1	**9X-8979**	1	DOWEL	
CY	25	1	**393-5152**	1	VALVE GP-PUMP CONTROL	381
M	26	1	**8T-8442**	4	BOLT-SOCKET HEAD (M6X1X30-MM)	
					AVAILABLE REPAIR KIT(S):	
C			**293-8350**	1	KIT-SEAL	
					(INCLUDES O-RINGS & BACK-UP RINGS)	

C - CHANGE FROM PREVIOUS TYPE
M - METRIC PART
Y - SEPARATE ILLUSTRATION

367-8078 **PUMP GP-PISTON (*contd.*)** **i05431108**

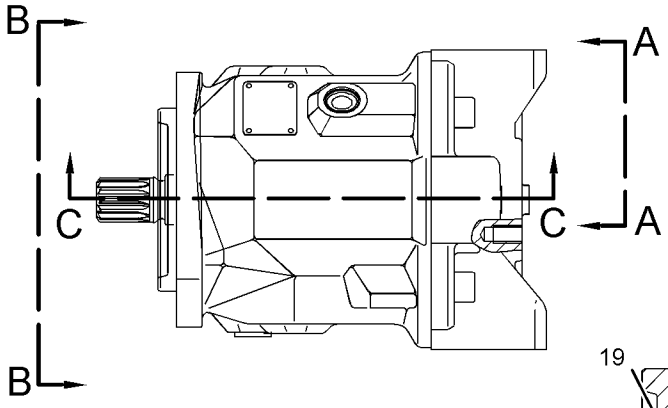

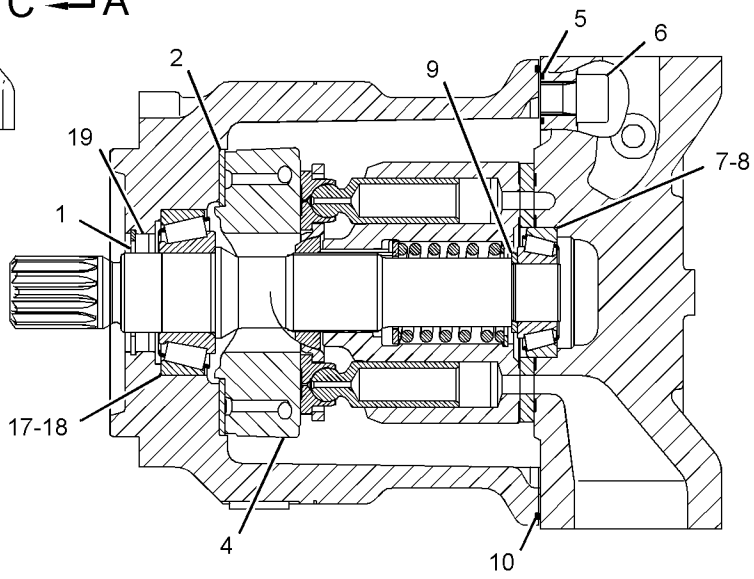

SECTION D-D

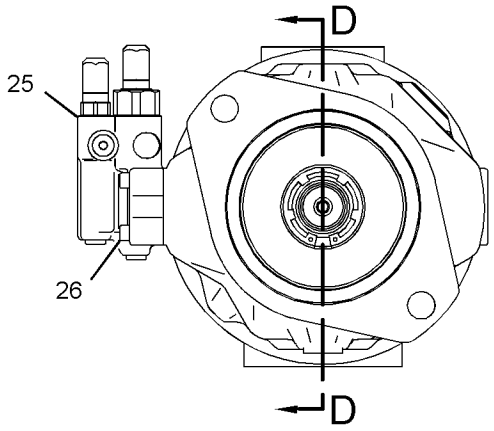

VIEW B-B

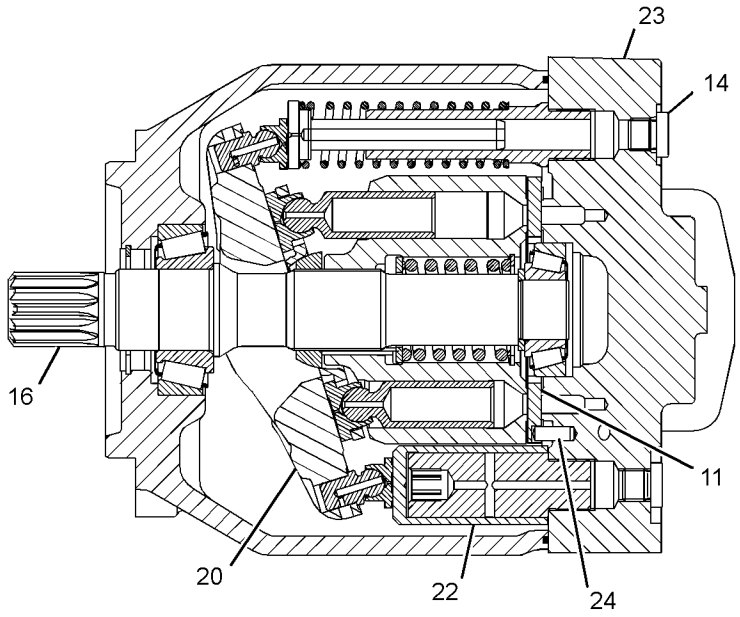

SECTION C-C

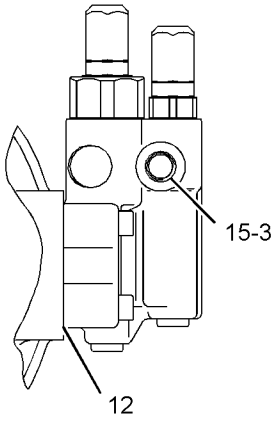

VIEW A-A

GRAPHIC #1 **<END>** g03370896

393-5145 ROTATING GP-PUMP

S/N: M5K1-UP
PART OF 367-8077 PUMP GP-PISTON
ALSO AN ATTACHMENT

SMCS-5070 **i05431107**

NOTE	REF NO	GRAPHIC REF	PART NUMBER	QTY	PART NAME 1 2 3 4 5 6 (PRODUCT LEVEL)	SEE PAGE
	1	1	**105-1646**	9	PISTON AS-PUMP	
	2	1	**188-9637**	1	PLATE-RETRACTION	
	3	1	**105-1648**	1	BEARING	
	4	1	**105-1651**	1	SPRING	
	5	1	**105-1653**	3	PIN-RETRACTION	
	6	1	**180-6213**	1	RING-RETAINING	
	7	1	**105-1650**	1	SPACER	

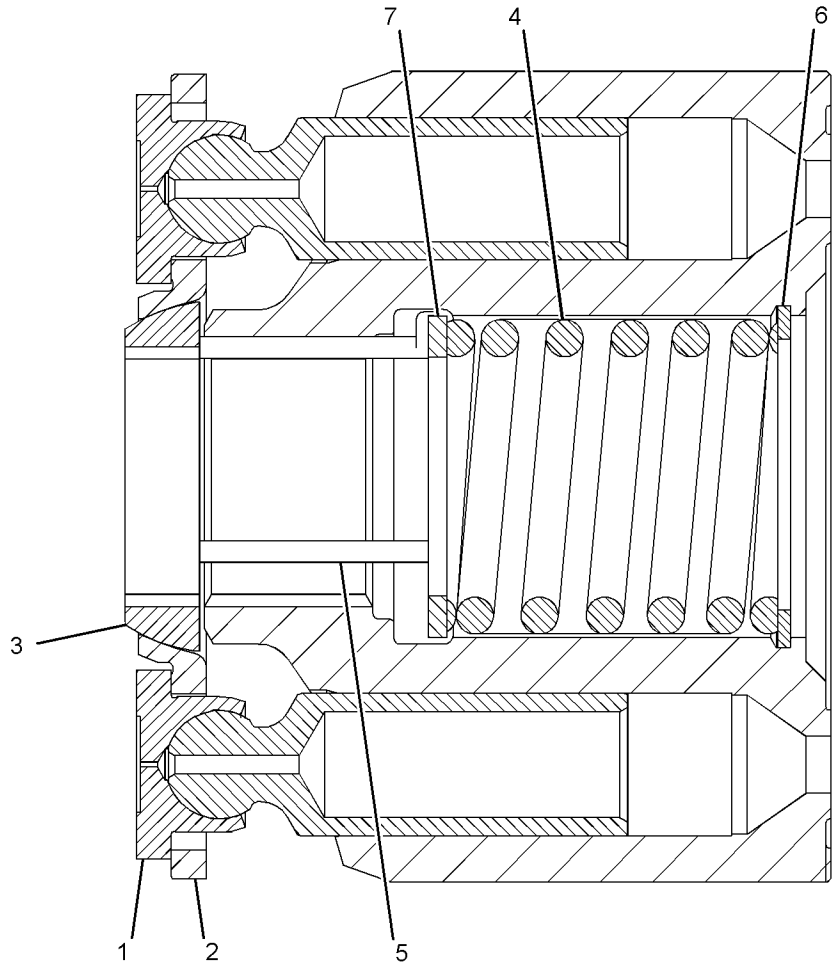

GRAPHIC #1 **<END>** g03372094

390-5985 STEERING AR-SECONDARY

S/N: M5K1-UP

AN ATTACHMENT

SMCS-4300 **i05405554**

NOTE	PART NUMBER	QTY	PART NAME 1 2 3 4 5 6 (PRODUCT LEVEL)	SEE PAGE
Y	*390-5987*	1	LINES GP-SECONDARY STEERING	360
Y	*390-5986*	1	PUMP & MTG GP-SECONDARY STEER	369
Y	*415-4236*	1	SWITCH GP-SECONDARY STEERING	172
Y	*415-4198*	1	WIRING GP-SECONDARY STEERING	193

Y - SEPARATE ILLUSTRATION

<END>

297-4926 STEERING COLUMN GP-ADJUSTABLE

S/N: M5K1-UP

PART OF 426-2594 CONTROL GP-STEERING

SMCS-4338 **i05434570**

NOTE	REF NO	GRAPHIC REF	PART NUMBER	QTY	PART NAME 1 2 3 4 5 6 (PRODUCT LEVEL)	SEE PAGE
	1	1	**332-6885**	1	KIT-CONTACT (GROUND)	
					(INCLUDES HORN CONTACT AS (BLACK WIRE) & SCREWS)	
	2	1	**332-6817**	1	KIT-CONTACT	
					(INCLUDES HORN CONTACT AS (BLUE WIRE) & SCREWS)	
M	3	1	**6V-8227**	1	NUT (M18X1.5-THD)	
	4	1	**319-9511**	1	KIT-GAS SPRING	
					(INCLUDES ONE GAS STRUT)	
	5	1	**271-9109**	1	KIT-TILT LEVER	
					(INCLUDES BOLTS, DOWEL, SPRING & TILT LEVER)	
	6	1	**325-4636**	1	KIT-PIVOT	
					(INCLUDES BUSHINGS & PINS)	

M - METRIC PART

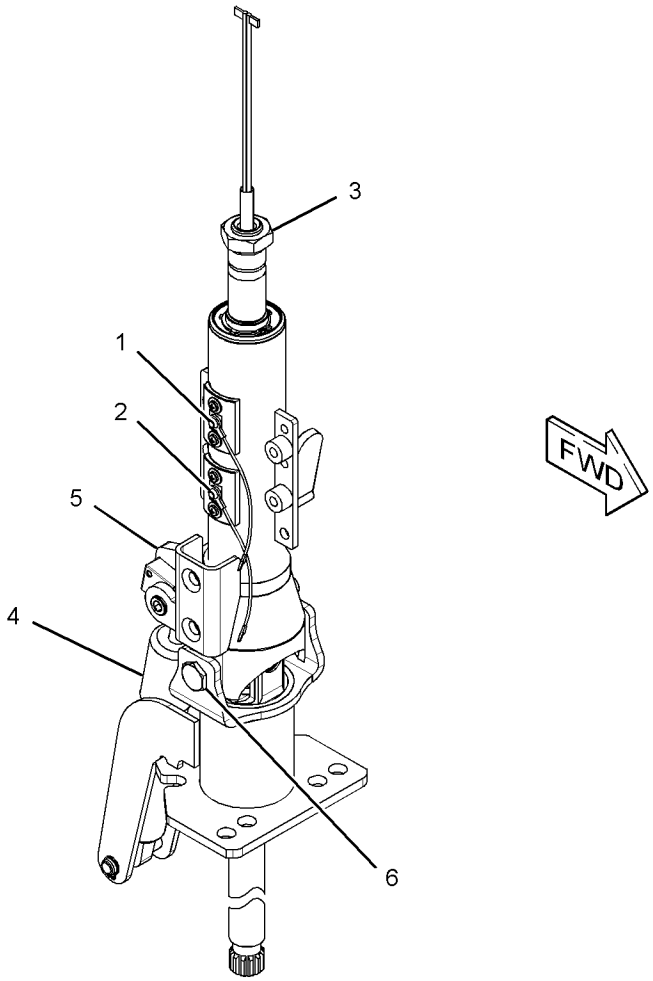

GRAPHIC #1 **<END>** g02130435

347-0612 VALVE GP-PUMP CONTROL–FLOW COMPENSATOR

S/N: M5K1-UP
PART OF 367-8077 PUMP GP-PISTON
ALSO AN ATTACHMENT

SMCS-5455 **i05431325**

NOTE	REF NO	GRAPHIC REF	PART NUMBER	QTY	PART NAME 1 2 3 4 5 6 (PRODUCT LEVEL)	SEE PAGE
M	1	1	**8T-8442**	4	BOLT-SOCKET HEAD (M6X1X30-MM)	
	2	1	**280-7870**	1	GASKET	
	3	1	**6E-6528**	2	SEAL	
	4	1	**9S-8002**	1	PLUG-O-RING	
	5	1	**3J-7354**	1	SEAL-O-RING	
	6	1	**033-6043**	1	SEAL-O-RING	
	7	1	**033-6034**	1	SEAL-O-RING	
	8	1	**6E-6527**	2	PLUG	
					AVAILABLE REPAIR KIT(S):	
			293-8350	1	KIT-SEAL (FLOW COMPENSATOR)	
					(INCLUDES O-RINGS & BACK-UP RINGS)	

M - METRIC PART

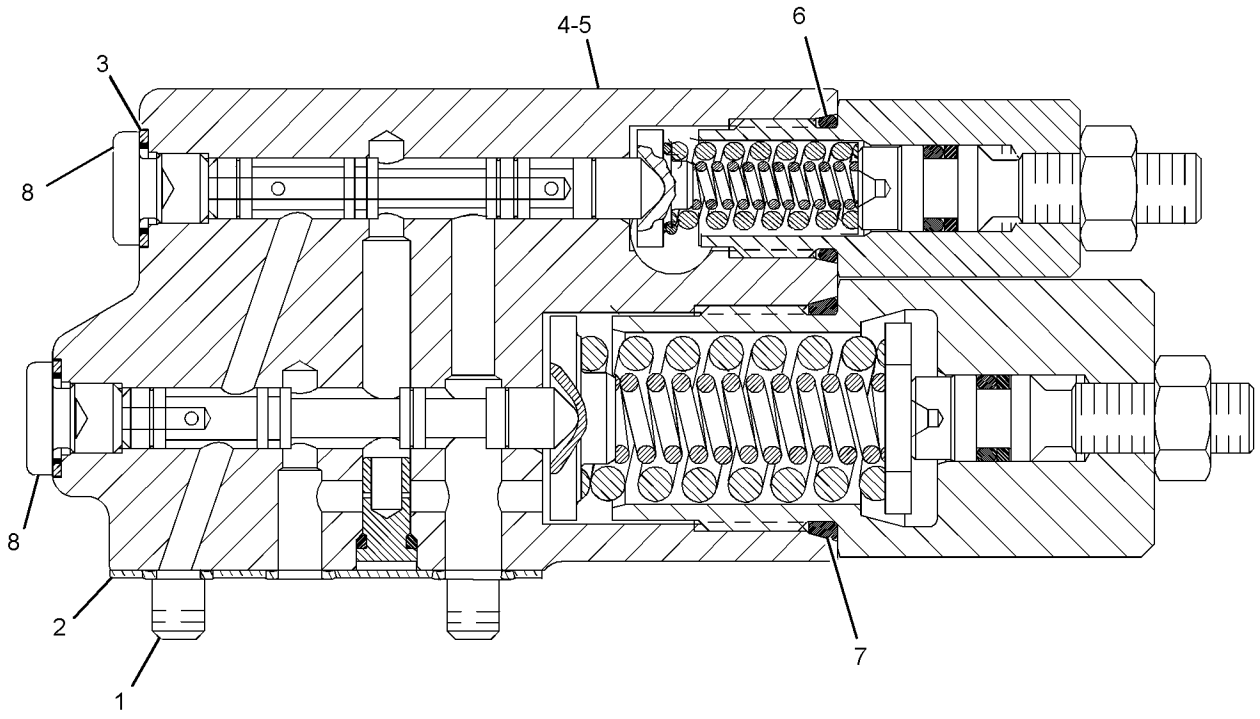

GRAPHIC #1 **<END>** g03113698

393-5152 VALVE GP-PUMP CONTROL

S/N: M5K1-UP
PART OF 367-8078 PUMP GP-PISTON
ALSO AN ATTACHMENT

SMCS-5455 **i05431110**

NOTE	REF NO	GRAPHIC REF	PART NUMBER	QTY	PART NAME 1 2 3 4 5 6 (PRODUCT LEVEL)	SEE PAGE
M	1	1	**8T-8442**	4	BOLT-SOCKET HEAD (M6X1X30-MM)	
	2	1	**280-7870**	1	GASKET	
	3	1	**6E-6528**	2	SEAL	
	4	1	**9S-8002**	1	PLUG-O-RING	
	5	1	**3J-7354**	1	SEAL-O-RING	
	6	1	**6E-6527**	2	PLUG	
					AVAILABLE REPAIR KIT(S):	
			293-8350	1	KIT-SEAL	
					(INCLUDES O-RINGS & BACK-UP RINGS)	

M - METRIC PART

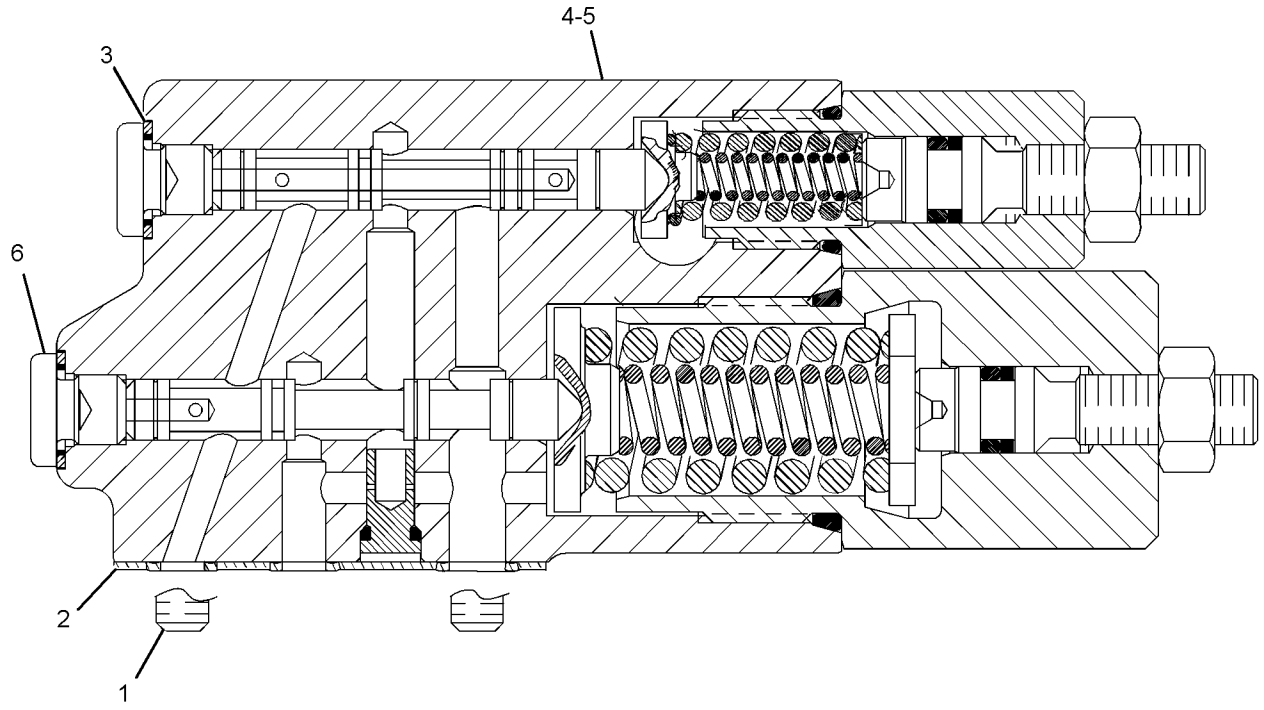

GRAPHIC #1 **<END>** g03333307

141-2597 VALVE GP-SECONDARY STEERING

S/N: M5K1-UP
PART OF 390-5987 LINES GP-SECONDARY STEERING
AN ATTACHMENT
TYPE 1

SMCS-4339 **i05405581**

NOTE	REF NO	GRAPHIC REF	PART NUMBER	QTY	PART NAME 1 2 3 4 5 6 (PRODUCT LEVEL)	SEE PAGE
	1	1	**2S-2596**	2	SPRING	
	2	1	**100-8010**	2	VALVE-CHECK	
	3	1	*368-2318*	2	PLUG AS	
					(EACH INCLUDES)	
	3A	1	**368-2317**	1	PLUG	
	3B	1	**368-2319**	1	BUSHING	
	4	1	**1P-4577**	4	FLANGE-HALF	
	5	1	**3J-7479**	1	COVER	
M	6	1	**8T-4136**	4	BOLT (M10X1.5X25-MM)	
	7	1	**4J-0519**	1	SEAL-O-RING	
M	8	1	**8T-4196**	8	BOLT (M10X1.5X35-MM)	
B	9	1	**8T-4121**	12	WASHER-HARD (11X21X2.5-MM THK)	
	10	1	**7M-8485**	2	SEAL-O-RING	
B	11	1	**5J-2722**	8	SHIM (1.22-MM THK)	

PARTS SHOWN IN GRAPHIC(S) WITHOUT A REFERENCE NUMBER ARE NOT SERVICED SEPARATELY

B - USE AS REQUIRED
M - METRIC PART

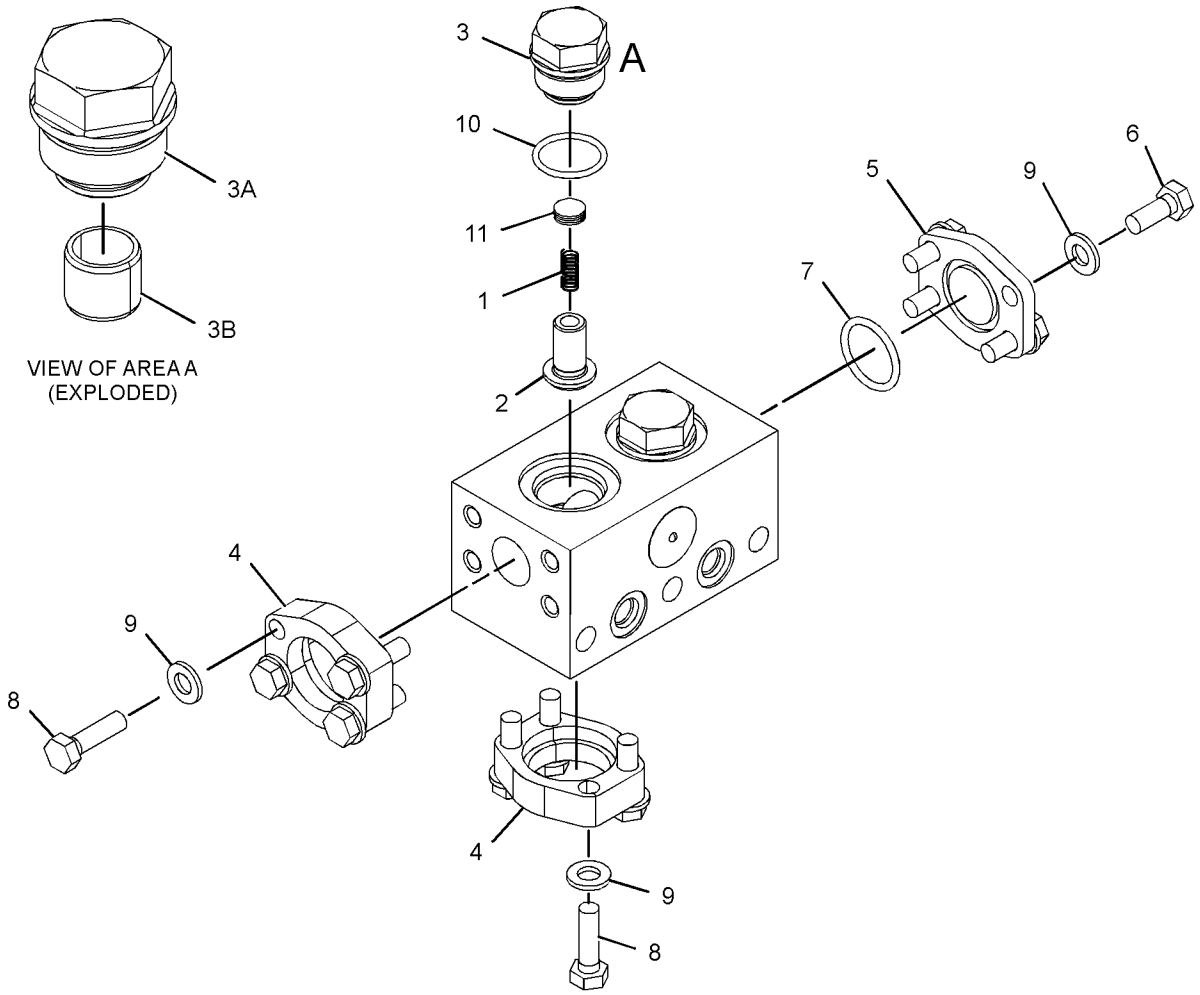

GRAPHIC #1 **<END>** g03341438

141-2597 VALVE GP-SECONDARY STEERING

S/N: M5K1-UP
PART OF 390-5987 LINES GP-SECONDARY STEERING
AN ATTACHMENT
TYPE 2

SMCS-4339 **i05839213**

NOTE	REF NO	GRAPHIC REF	PART NUMBER	QTY	PART NAME 1 2 3 4 5 6 (PRODUCT LEVEL)	SEE PAGE
	1	1	**3J-7479**	1	COVER	
	2	1	**4J-0519**	1	SEAL-O-RING	
B	3	1	**5J-2722**	8	SHIM (1.22-MM THK)	
	4	1	**7M-8485**	2	SEAL-O-RING	
	5	1	**100-8010**	2	VALVE-CHECK	
M	6	1	**8T-4136**	4	BOLT (M10X1.5X25-MM)	
	7	1	*368-2318*	2	PLUG AS	
					(EACH INCLUDES)	
	7A	1	**368-2317**	1	PLUG	
	7B	1	**368-2319**	1	BUSHING	
	8	1	**2S-2596**	2	SPRING	
	9	1	**8T-4121**	4	WASHER-HARD (11X21X2.5-MM THK)	
					PARTS SHOWN IN GRAPHIC(S) WITHOUT A REFERENCE NUMBER ARE NOT SERVICED SEPARATELY	

B - USE AS REQUIRED
M - METRIC PART

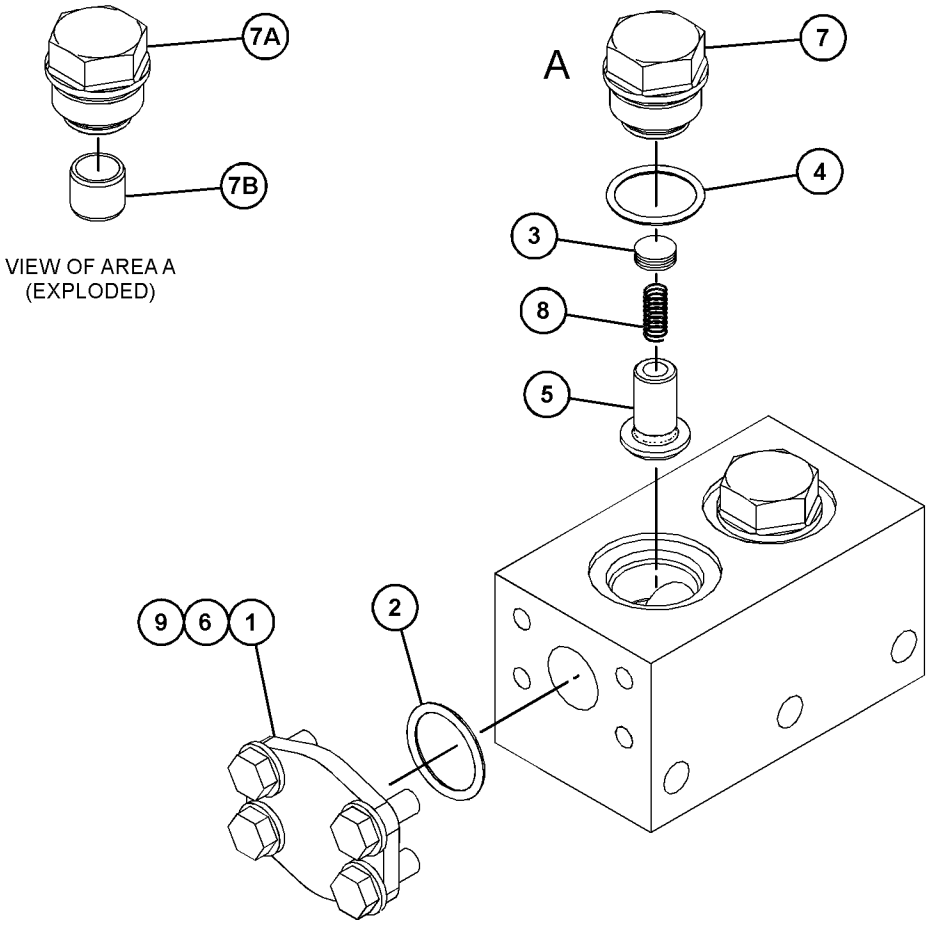

GRAPHIC #1 **<END>** g03693056

355-9981 ACCUMULATOR GP-HYDRAULIC—CHARGED

S/N: M5K1-UP

FIELD REPLACEMENT ORDER 355-9985—PAGE: 385

PART OF 390-5903 VALVE & MTG GP-HYDRAULIC, 390-5913 VALVE GP-MAIN CONTROL

AN ATTACHMENT

SMCS-5077 **i06052835**

NOTE	REF NO	GRAPHIC REF	PART NUMBER	QTY	PART NAME 1 2 3 4 5 6 (PRODUCT LEVEL)	SEE PAGE
	1	1	**232-3317**	2	FILM-IDENTIFICATION (HYDRAULIC ACCUMULATOR)	

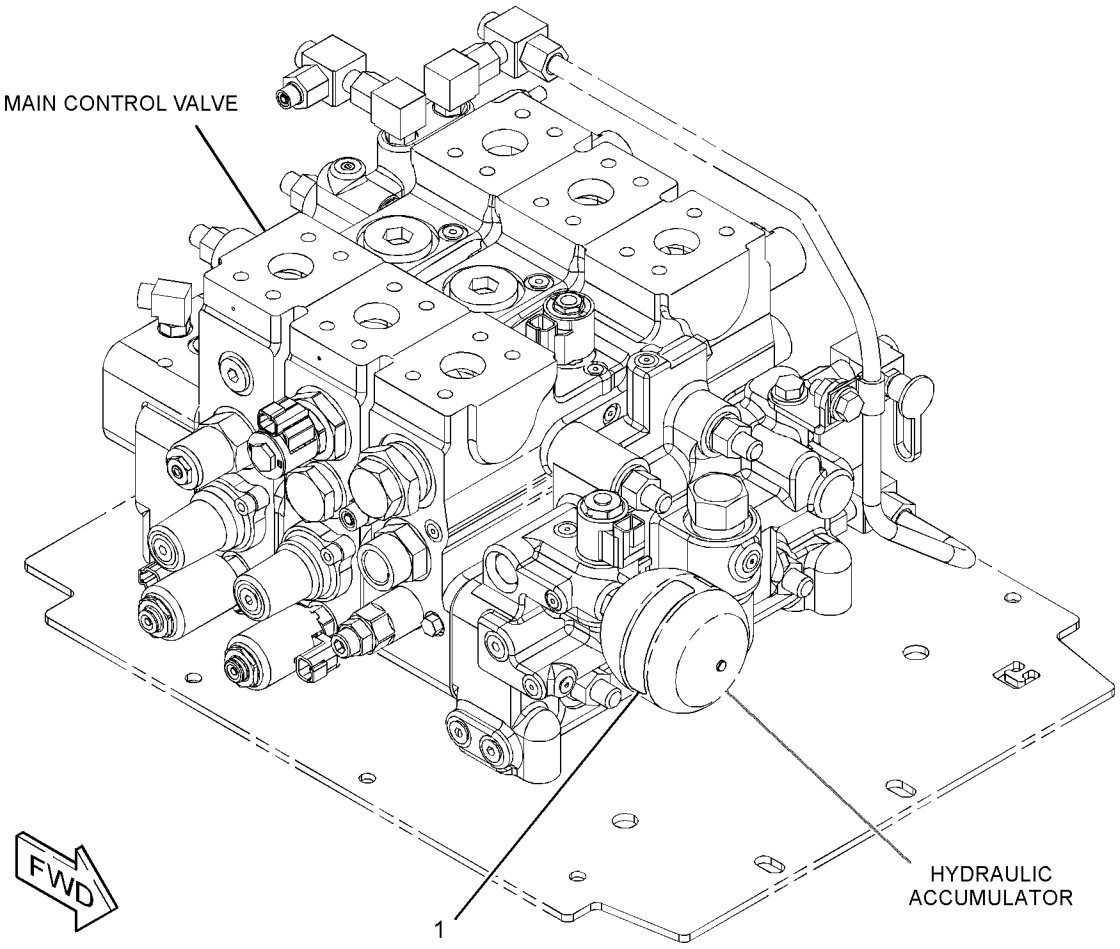

GRAPHIC #1 **<END>** g03666230

355-9985 ACCUMULATOR GP-PILOT OIL—UNCHARGED

S/N: M5K1-UP

FIELD REPLACEMENT FOR 355-9981—PAGE: 384

SMCS-5077 **i05672516**

NOTE	REF NO	GRAPHIC REF	PART NUMBER	QTY	PART NAME 1 2 3 4 5 6 (PRODUCT LEVEL)	SEE PAGE
	1	1	**312-1139**	1	CAP	
M	2	1	**222-3785**	1	SCREW-VENT (M8X1.5-THD)	
	3	1	**222-5765**	1	SEAL-RING	
	4	1	**232-3317**	2	FILM-IDENTIFICATION (HYDRAULIC ACCUMULATOR)	
					PARTS SHOWN IN GRAPHIC(S) WITHOUT A REFERENCE NUMBER ARE NOT SERVICED SEPARATELY	

M - METRIC PART

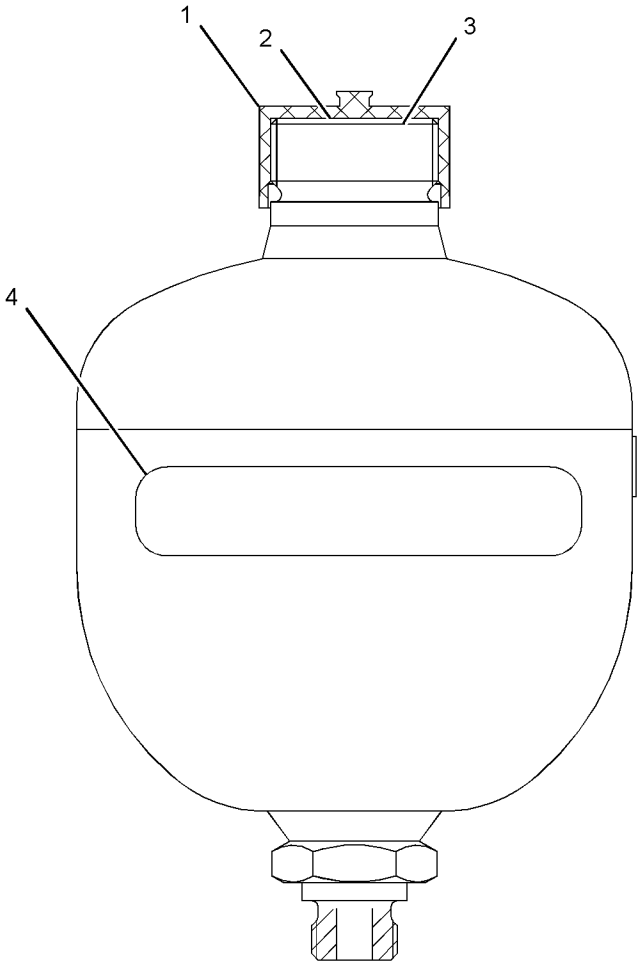

GRAPHIC #1 **<END>** g03507451

452-1719 ACCUMULATOR GP-PILOT OIL—CHARGED

S/N: M5K1-UP

FIELD REPLACEMENT ORDER 452-1720—PAGE: 387

PART OF 390-5903 VALVE & MTG GP-HYDRAULIC, 390-5913 VALVE GP-MAIN CONTROL

AN ATTACHMENT

SMCS-5077 **i05837831**

NOTE	REF NO	GRAPHIC REF	PART NUMBER	QTY	PART NAME 1 2 3 4 5 6 (PRODUCT LEVEL)	SEE PAGE
	1	1	**232-3317**	2	FILM-IDENTIFICATION (HYDRAULIC ACCUMULATOR)	

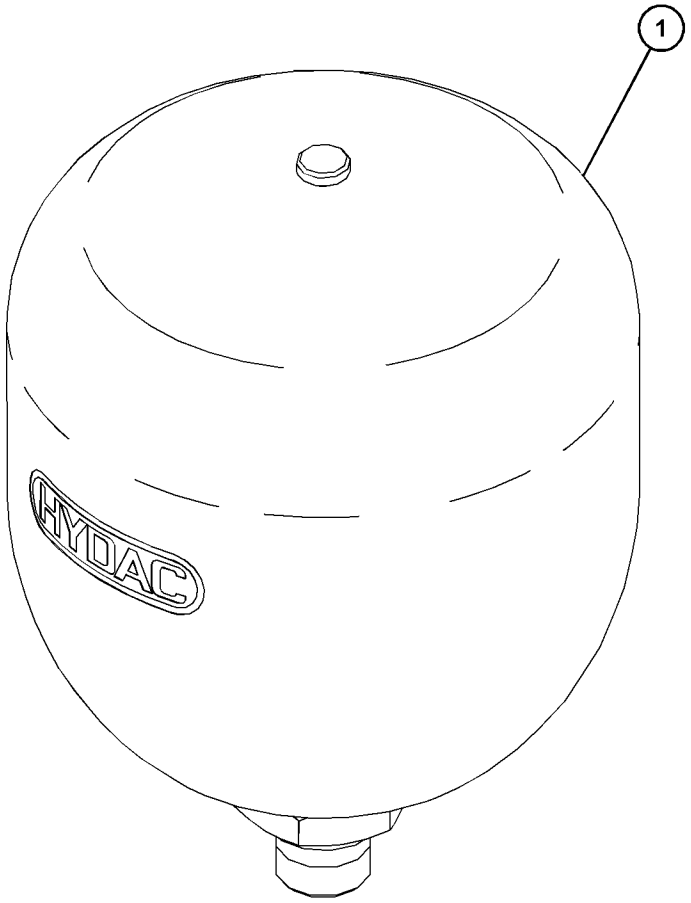

GRAPHIC #1 **<END>** g03692840

452-1720 ACCUMULATOR GP-PILOT OIL—UNCHARGED

S/N: M5K1-UP

FIELD REPLACEMENT FOR 452-1719—PAGE: 386

SMCS-5077 **i05837878**

NOTE	REF NO	GRAPHIC REF	PART NUMBER	QTY	PART NAME 1 2 3 4 5 6 (PRODUCT LEVEL)	SEE PAGE
	1	1	**232-3317**	2	FILM-IDENTIFICATION (HYDRAULIC ACCUMULATOR)	

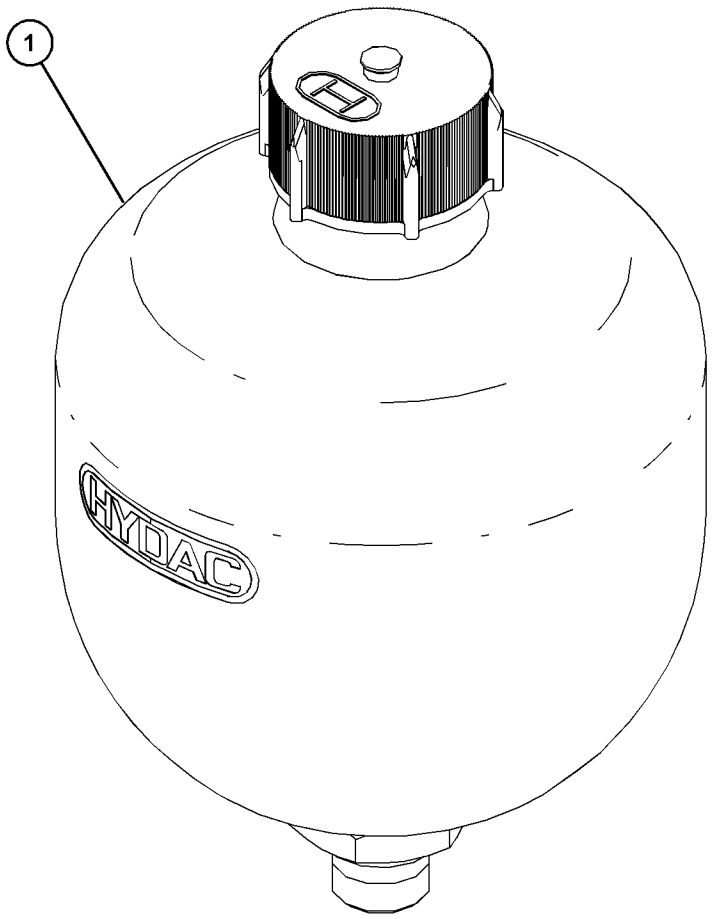

GRAPHIC #1 **<END>** g03692846

360-6812 ACCUMULATOR GP-RIDE CONTROL–CHARGED

S/N: M5K1-UP

PART OF 390-5903 VALVE & MTG GP-HYDRAULIC

AN ATTACHMENT

SMCS-5004, 5077

i05936484

NOTE	REF NO	GRAPHIC REF	PART NUMBER	QTY	PART NAME 1 2 3 4 5 6 (PRODUCT LEVEL)	SEE PAGE
	1	1	**217-0162**	1	CAP	
M	2	1	**222-3785**	1	SCREW-VENT (M8X1.5-THD)	
	3	1	**224-7262**	1	SEAL-O-RING	
	4	1	**222-5765**	1	SEAL-RING	
	5	1	**303-5977**	1	FILM-INFORMATION (HYD ACCUMULATOR, READ OMM)	

M - METRIC PART

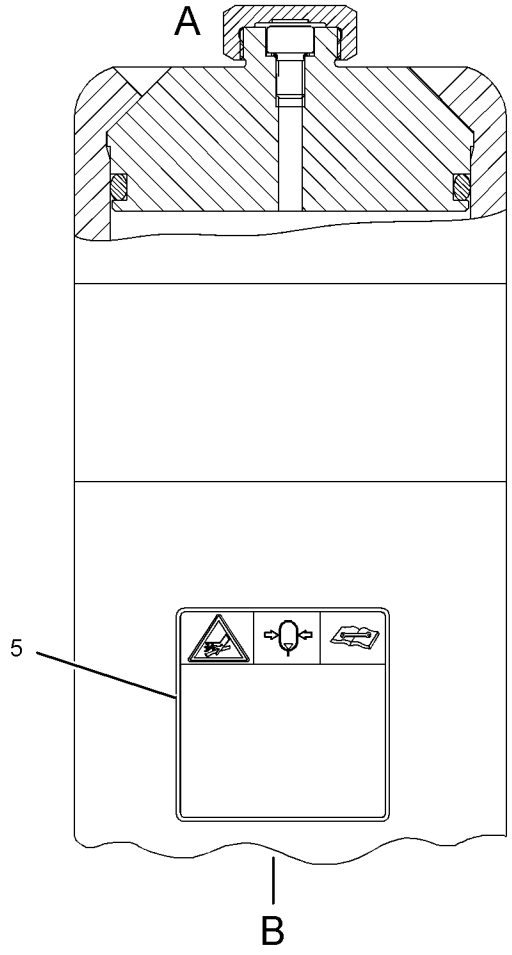

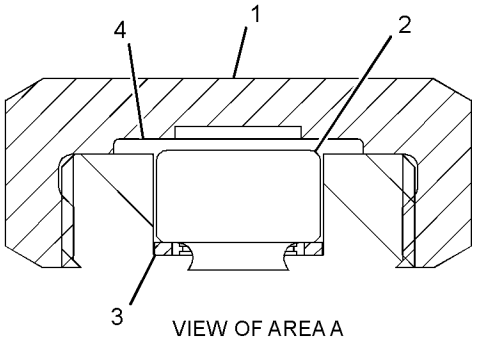

VIEW OF AREA A

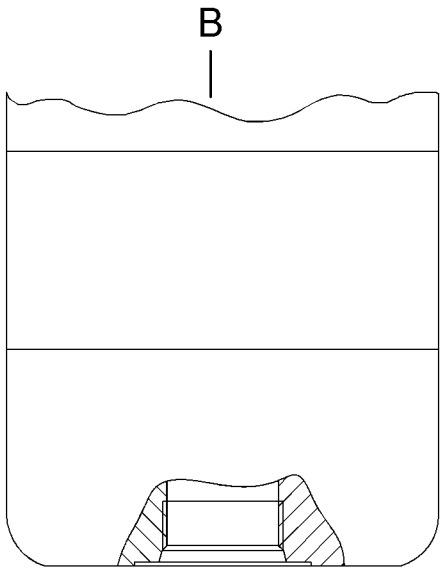

GRAPHIC #1

<END>

g02619976

361-3100 ACCUMULATOR GP-RIDE CONTROL–UNCHARGED

S/N: M5K1-UP

FIELD REPLACEMENT FOR 360-6812–PAGE: 388

SMCS-5004, 5077

i05407286

NOTE	REF NO	GRAPHIC REF	PART NUMBER	QTY	PART NAME 1 2 3 4 5 6 (PRODUCT LEVEL)	SEE PAGE
	1	1	**5P-3779**	1	TAG-NOTICE (SHIPPING INSTRUCTIONS)	
	2	1	**217-0162**	1	CAP	
	3	1	**222-3785**	1	SCREW-VENT (M8X1.5-THD)	
	4	1	**224-7262**	1	SEAL-O-RING	
	5	1	**222-5765**	1	SEAL-RING	
	6	1	**303-5977**	1	FILM-INFORMATION (HYD ACCUMULATOR, READ OMM)	

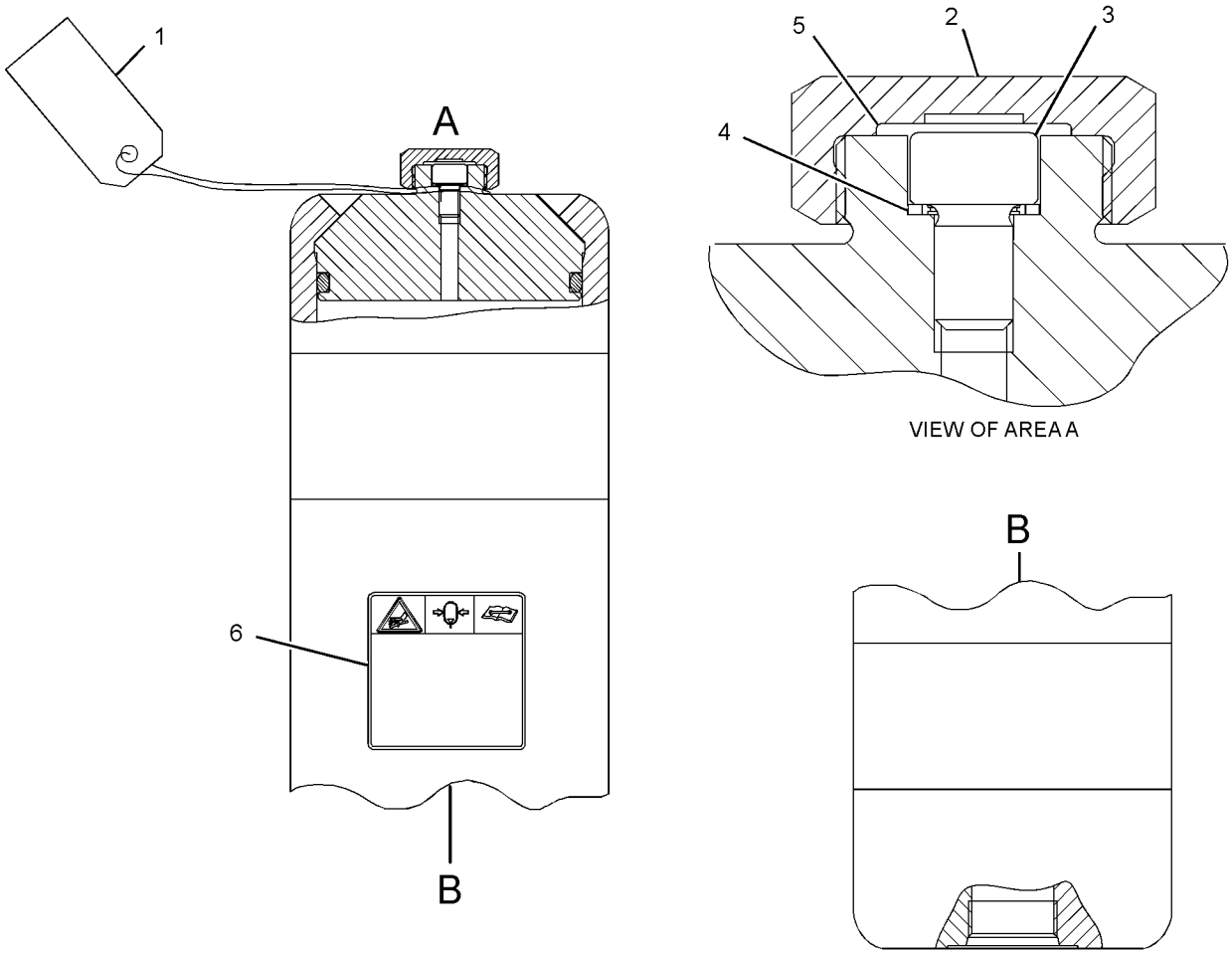

GRAPHIC #1

<END>

g02619147

444-8530 ACCUMULATOR GP-RIDE CONTROL–CHARGED

S/N: M5K1-UP
FIELD REPLACEMENT ORDER 444-8531–PAGE: 391
PART OF 390-5903 VALVE & MTG GP-HYDRAULIC
AN ATTACHMENT

SMCS-5004, 5077 **i05898088**

NOTE	REF NO	GRAPHIC REF	PART NUMBER	QTY	PART NAME 1 2 3 4 5 6 (PRODUCT LEVEL)	SEE PAGE
	1	1	**217-0162**	1	CAP	
M	2	1	**222-3785**	1	SCREW-VENT (M8X1.5-THD)	
	3	1	**224-7262**	1	SEAL-O-RING	
	4	1	**222-5765**	1	SEAL-RING	
	5	1	**303-5977**	1	FILM-INFORMATION (HYD ACCUMULATOR, READ OMM)	

M - METRIC PART

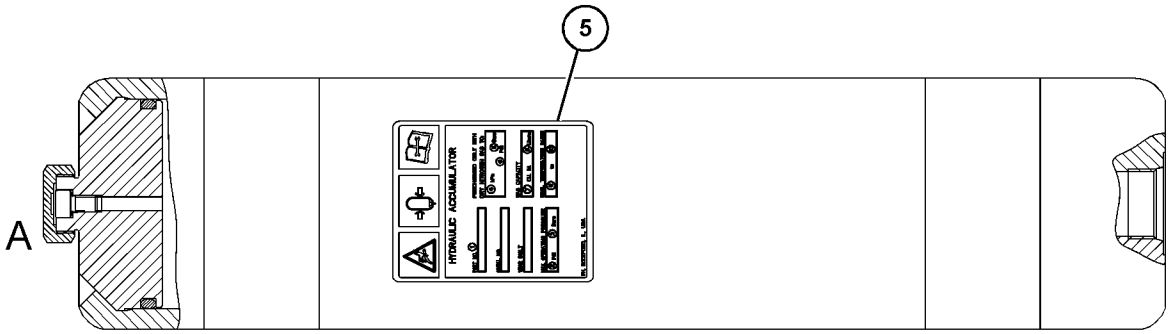

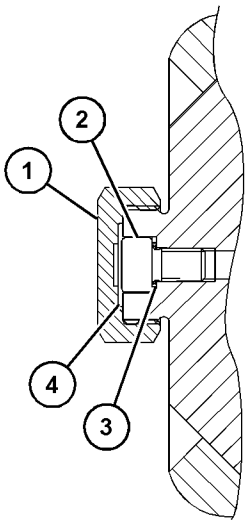

VIEW OF AREA A

GRAPHIC #1 **<END>** g03693284

444-8531 ACCUMULATOR GP-RIDE CONTROL–UNCHARGED

S/N: M5K1-UP

FIELD REPLACEMENT FOR 444-8530–PAGE: 390

SMCS-5004, 5077 **i06068254**

NOTE	REF NO	GRAPHIC REF	PART NUMBER	QTY	PART NAME 1 2 3 4 5 6 (PRODUCT LEVEL)	SEE PAGE
	1	1	**303-5977**	1	FILM-INFORMATION (HYD ACCUMULATOR, READ OMM)	
	2	1	**217-0162**	1	CAP	
M	3	1	**222-3785**	1	SCREW-VENT (M8X1.5-THD)	
	4	1	**224-7262**	1	SEAL-O-RING	
	5	1	**222-5765**	1	SEAL-RING	

M - METRIC PART

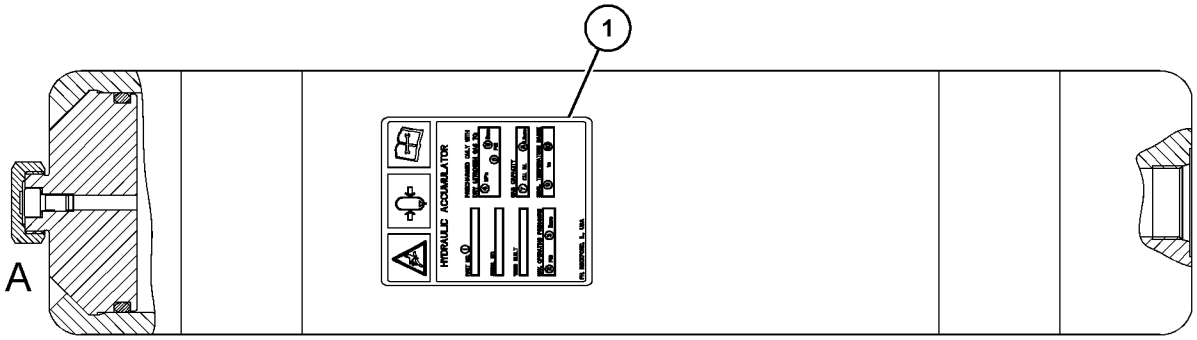

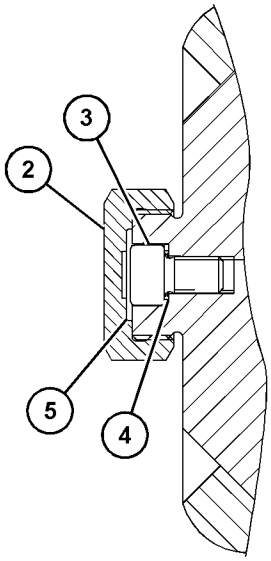

VIEW OF AREA A

GRAPHIC #1 **<END>** g03693283

308-2058 BODY GP-PILOT VALVE

S/N: M5K1-UP
PART OF 338-8504 VALVE GP-PILOT
AN ATTACHMENT

SMCS-5059 **i05438108**

NOTE	REF NO	GRAPHIC REF	PART NUMBER	QTY	PART NAME 1 2 3 4 5 6 (PRODUCT LEVEL)	SEE PAGE
	1	1	**141-1095**	2	ADAPTER	
M	2	1	**5C-2890**	2	NUT (M6X1-THD)	
	3	1	**3J-7354**	4	SEAL-O-RING	
M	4	1	**140-9926**	2	BOLT-SOCKET HEAD (M6X1X150-MM)	
	5	1	*183-7263*	12	PLUG AS	
					(EACH INCLUDES)	
		1	**3J-7354**	1	SEAL-O-RING	
		1	**9S-8002**	1	PLUG	

M - METRIC PART

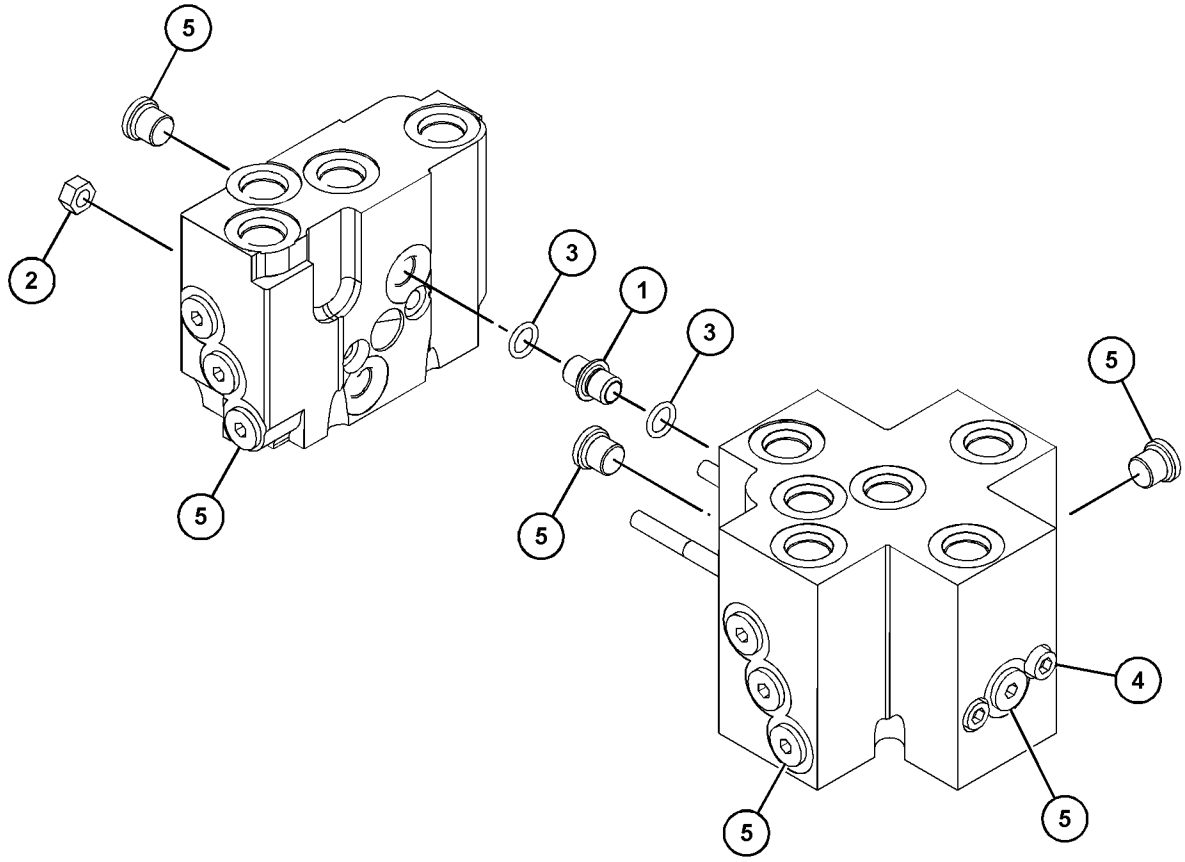

GRAPHIC #1 **<END>** g03524140

308-2059 BODY GP-PILOT VALVE

S/N: M5K1-UP
PART OF 370-8728 VALVE GP-PILOT
AN ATTACHMENT

SMCS-5059 **i05436949**

NOTE	REF NO	GRAPHIC REF	PART NUMBER	QTY	PART NAME 1 2 3 4 5 6 (PRODUCT LEVEL)	SEE PAGE
M	1	1	**5C-2890**	2	NUT (M6X1-THD)	
M	2	1	**141-8546**	2	BOLT-SOCKET HEAD (M6X1X100-MM)	
	3	1	**145-7977**	2	ADAPTER	
	4	1	*183-7263*	12	PLUG AS	
					(EACH INCLUDES)	
		1	**3J-7354**	1	SEAL-O-RING	
		1	**9S-8002**	1	PLUG	
	5	1	**3J-7354**	4	SEAL-O-RING	

M - METRIC PART

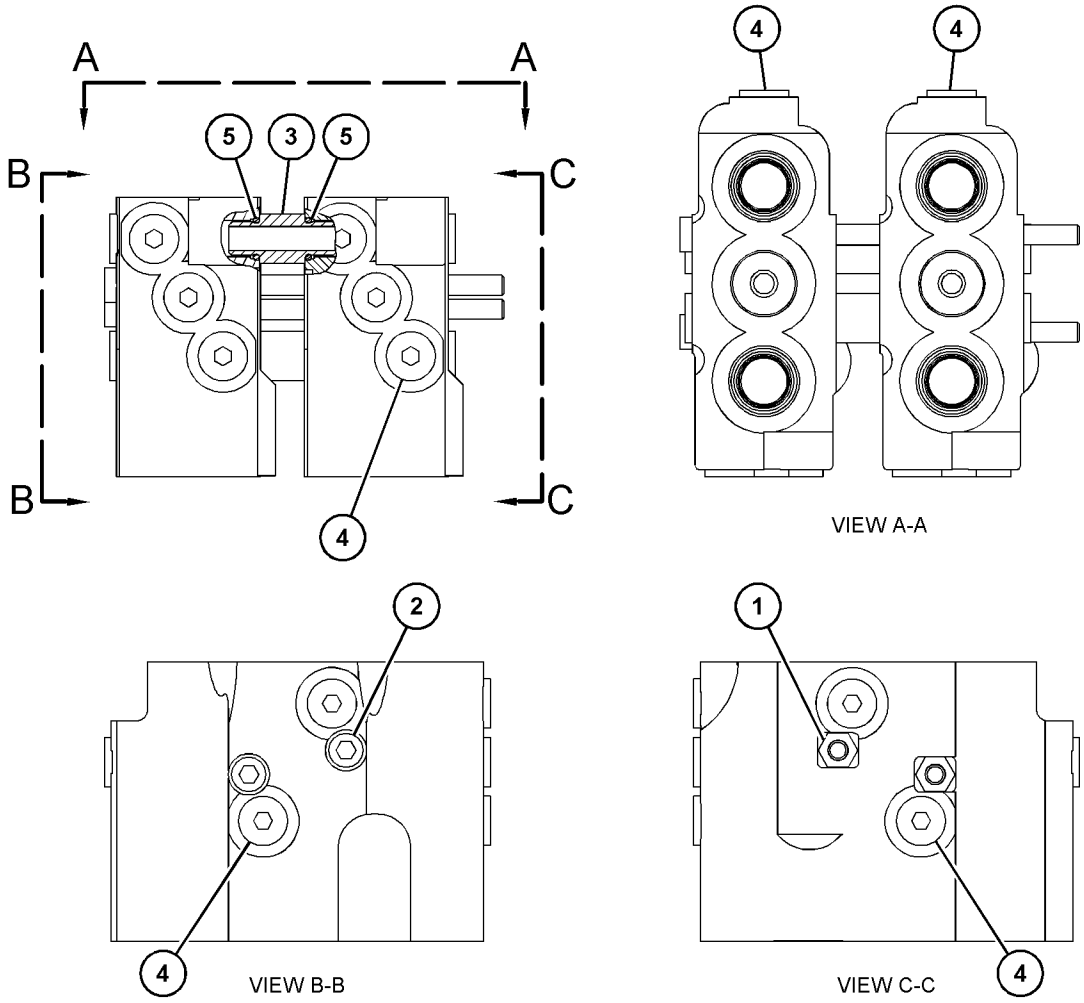

GRAPHIC #1 **<END>** g03523059

308-2060 BODY GP-PILOT VALVE

S/N: M5K1-UP
PART OF 370-8729 VALVE GP-PILOT
AN ATTACHMENT

SMCS-5059 **i05559969**

NOTE	REF NO	GRAPHIC REF	PART NUMBER	QTY	PART NAME 1 2 3 4 5 6 (PRODUCT LEVEL)	SEE PAGE
M	1	1	**5C-2890**	2	NUT (M6X1-THD)	
M	2	1	**140-9926**	2	BOLT-SOCKET HEAD (M6X1X150-MM)	
	3	1	**145-7977**	4	ADAPTER	
	4	1	*148-8407*	4	PLUG AS	
					(EACH INCLUDES)	
		1	**3J-1907**	1	SEAL-O-RING	
		1	**9S-4191**	1	PLUG	
	5	1	*183-7263*	16	PLUG AS	
					(EACH INCLUDES)	
		1	**3J-7354**	1	SEAL-O-RING	
		1	**9S-8002**	1	PLUG	
	6	1	**3J-7354**	8	SEAL-O-RING	

M - METRIC PART

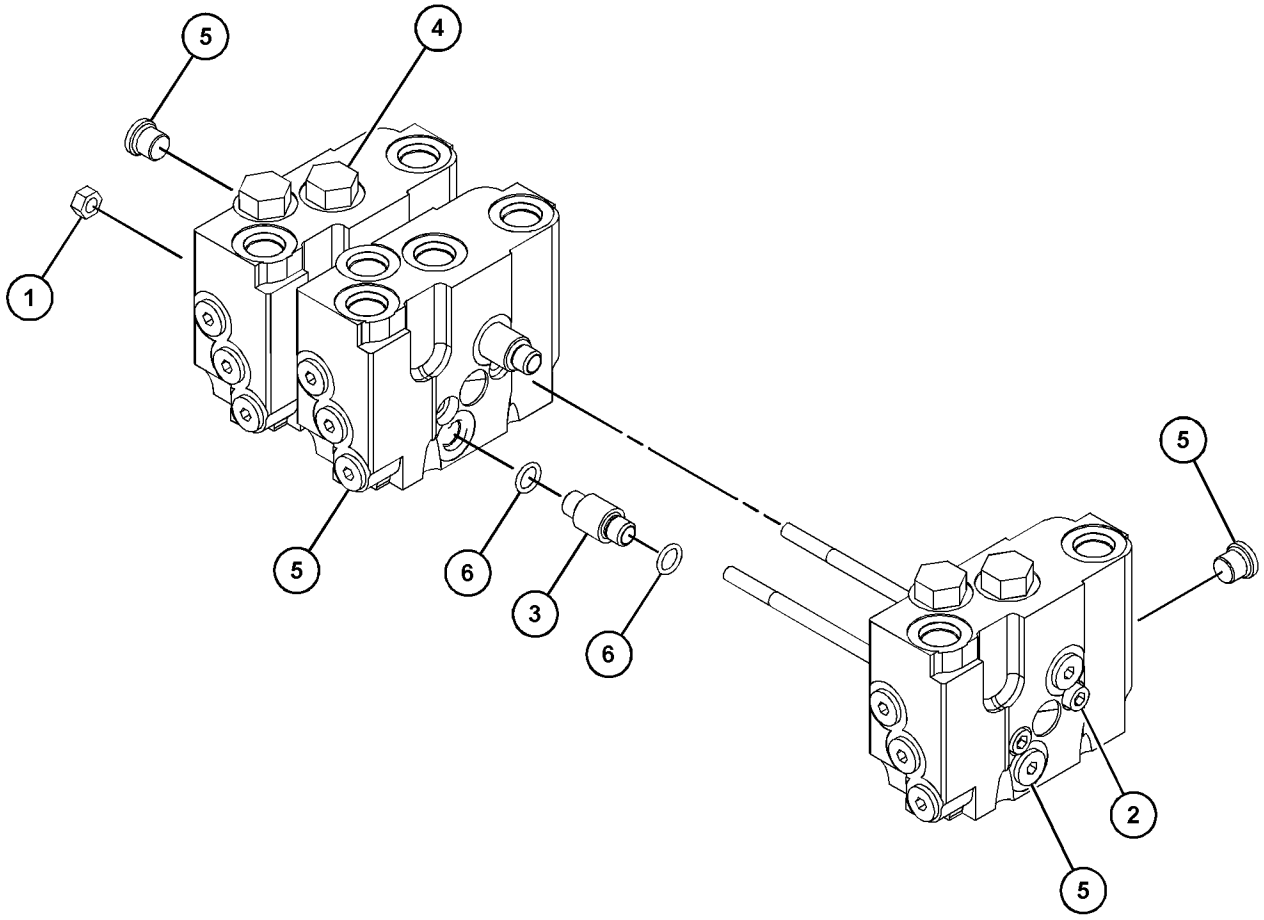

GRAPHIC #1 **<END>** g03530400

452-2509 CYLINDER GP-COUPLER

S/N: M5K1-UP
63.5-MM (2.5-IN) BORE X 95.3-MM (3.75-IN) STROKE
PART OF 310-9391 COUPLER GP-QUICK
AN ATTACHMENT

SMCS-5133 **i05817935**

NOTE	REF NO	GRAPHIC REF	PART NUMBER	QTY	PART NAME 1 2 3 4 5 6 (PRODUCT LEVEL)	SEE PAGE
	1	1	*216-9059*	1	PLUG AS	
		1	**216-8994**	1	SEAL-O-RING	
		1	**216-9058**	1	PLUG	
J	2	1	**237-0947**	1	VALVE GP-CHECK (QUICK COUPLER)	
	3	1	**9S-8002**	8	PLUG-O-RING	
					AVAILABLE REPAIR KIT(S):	
			456-0584	1	KIT-SEAL (COUPLER CYLINDER)	
					(KIT INCLUDES O-RINGS, BACK-UP RINGS, BP SEAL, POLYPAK & DUST SEAL)	
J			**213-8433**	1	KIT-SEAL (CHECK VALVE)	

J - KIT MARKED J SERVICES PART MARKED J

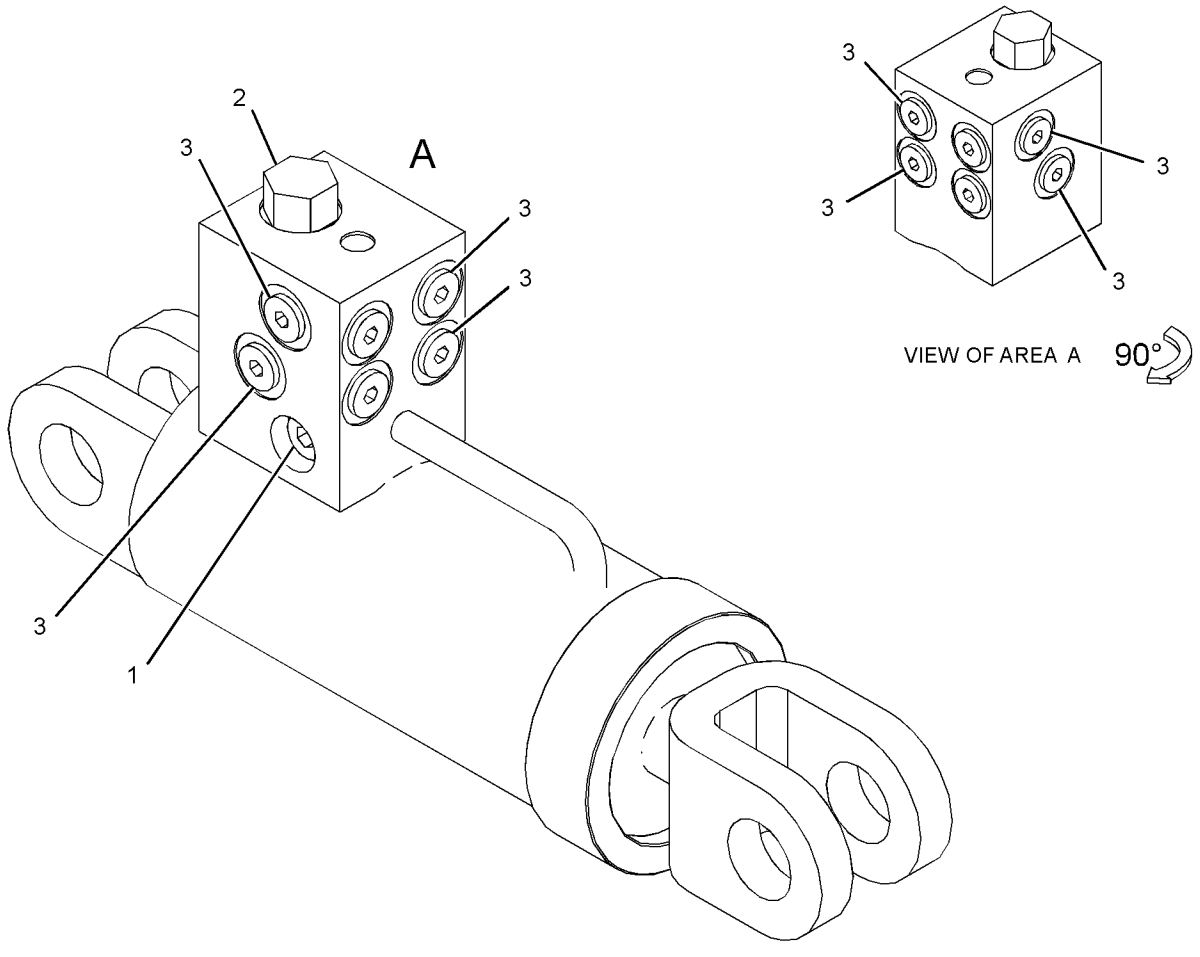

GRAPHIC #1 **<END>** g02722154

387-0611 CYLINDER GP-LIFT–RH

S/N: M5K1-UP
140-MM (6-IN) BORE X 800-MM (31.5-IN) STROKE
PART OF 390-5901 CYLINDER GP-LIFT & TILT

SMCS-5102 **i05563311**

NOTE	REF NO	GRAPHIC REF	PART NUMBER	QTY	PART NAME 1 2 3 4 5 6 (PRODUCT LEVEL)	SEE PAGE
	1	1	**397-9879**	1	BODY-CYLINDER	
	2	1	**397-9880**	1	ROD-CYLINDER	
	3	1	**397-9881**	1	COVER-CYLINDER	
	4	1	**397-9882**	1	PISTON-CYLINDER	
	5	1	**397-9883**	1	KIT-SEAL (CYLINDER)	
					(INCLUDES SUPPORT RINGS, SEALS, O-RINGS, RINGS, Y-RINGS & DUST RING)	

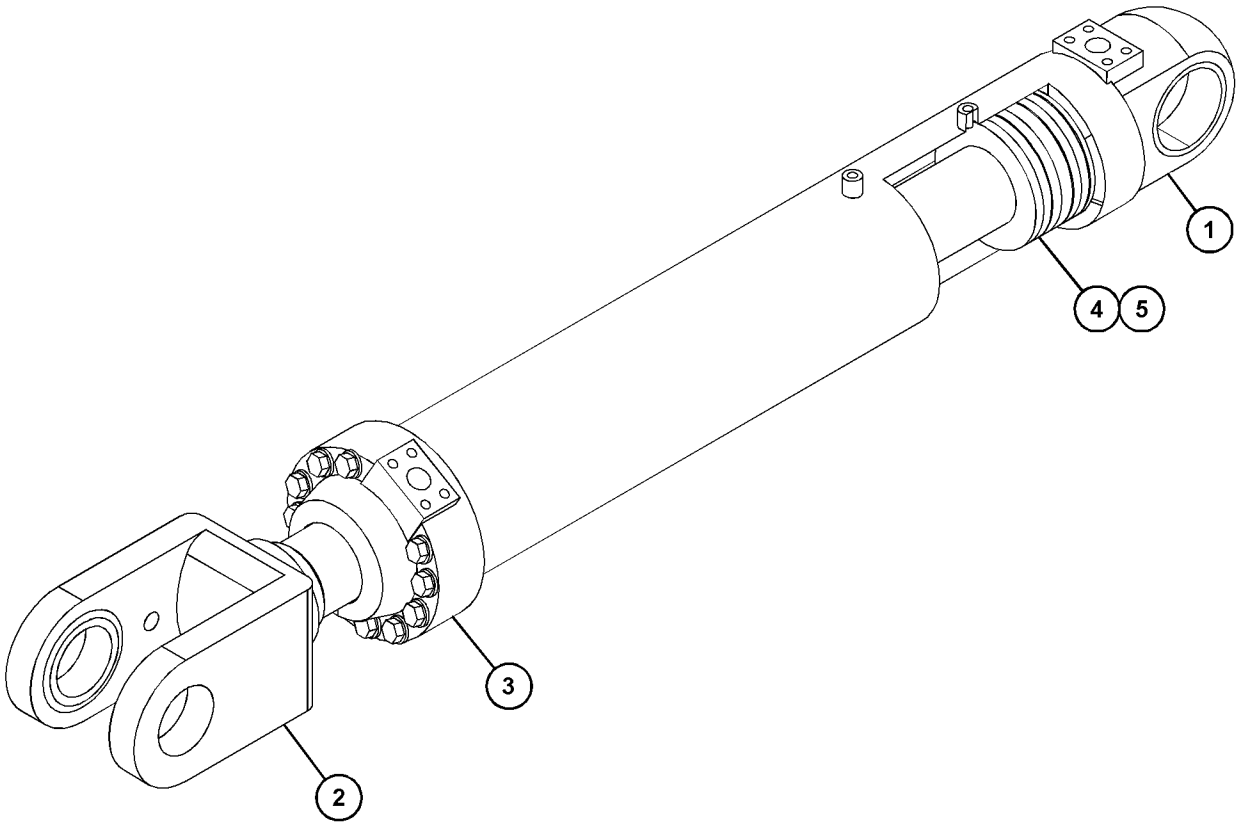

GRAPHIC #1 **<END>** g03537405

387-0612 CYLINDER GP-LIFT–LH

S/N: M5K1-UP
140-MM (5.51-IN) BORE X 800-MM (31.49-IN) STROKE
PART OF 390-5901 CYLINDER GP-LIFT & TILT

SMCS-5102 **i05563312**

NOTE	REF NO	GRAPHIC REF	PART NUMBER	QTY	PART NAME 1 2 3 4 5 6 (PRODUCT LEVEL)	SEE PAGE
	1	1	**397-9896**	1	BODY-CYLINDER	
	2	1	**397-9880**	1	ROD-CYLINDER	
	3	1	**397-9881**	1	COVER-CYLINDER	
	4	1	**397-9882**	1	PISTON-CYLINDER	
	5	1	**397-9883**	1	KIT-SEAL (LIFT CYLINDER)	
					(INCLUDES SUPPORT RINGS, SEALS, O-RINGS, RINGS, Y RING & DUST RING)	

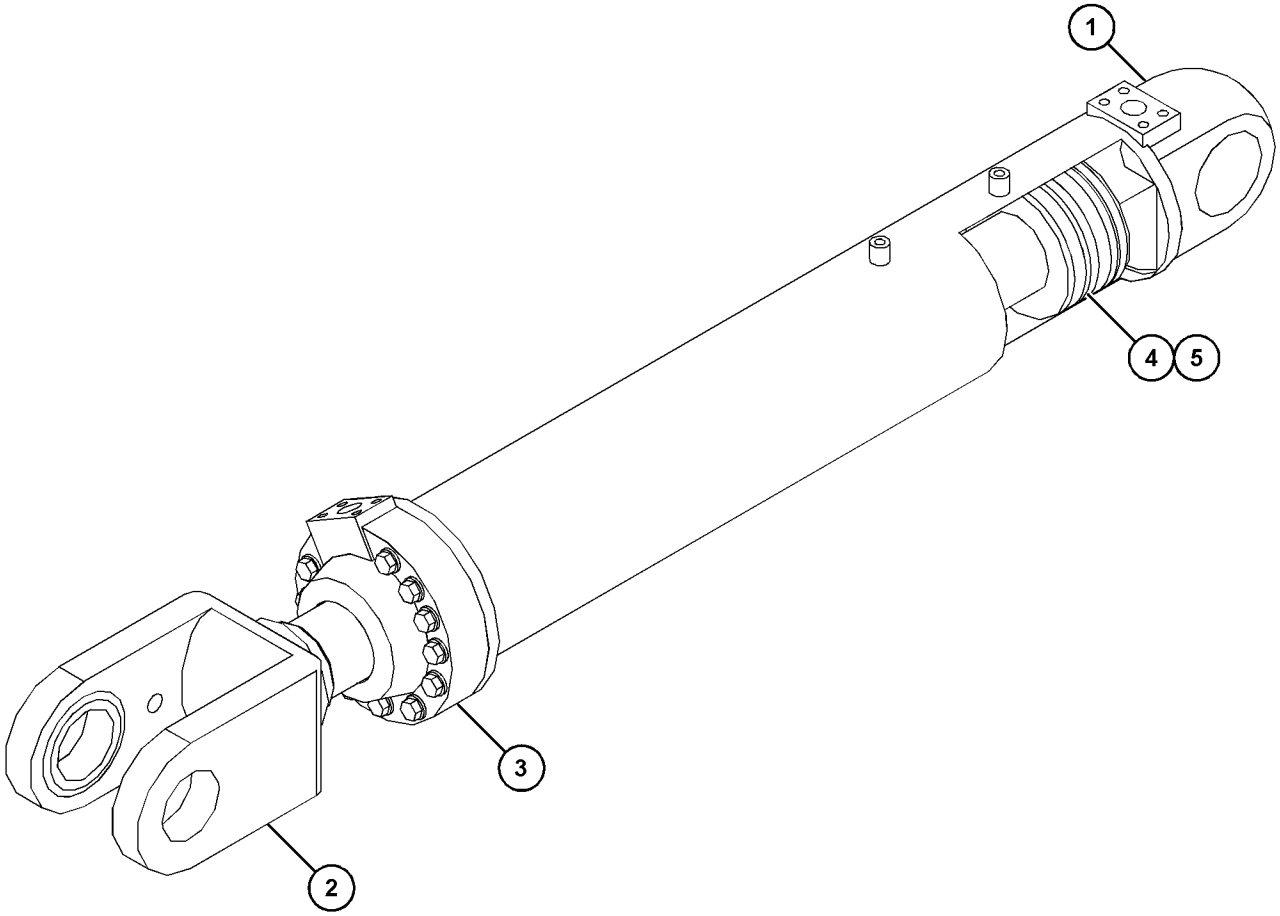

GRAPHIC #1 **<END>** g03559804

452-6974 CYLINDER GP-LIFT–LH

S/N: M5K1-UP
140-MM (5.5 IN) BORE X 800-MM (31.5-IN) STROKE
PART OF 390-5901 CYLINDER GP-LIFT & TILT

SMCS-5102 **i06064369**

NOTE	REF NO	GRAPHIC REF	PART NUMBER	QTY	PART NAME 1 2 3 4 5 6 (PRODUCT LEVEL)	SEE PAGE
					(NO SERVICED PARTS)	

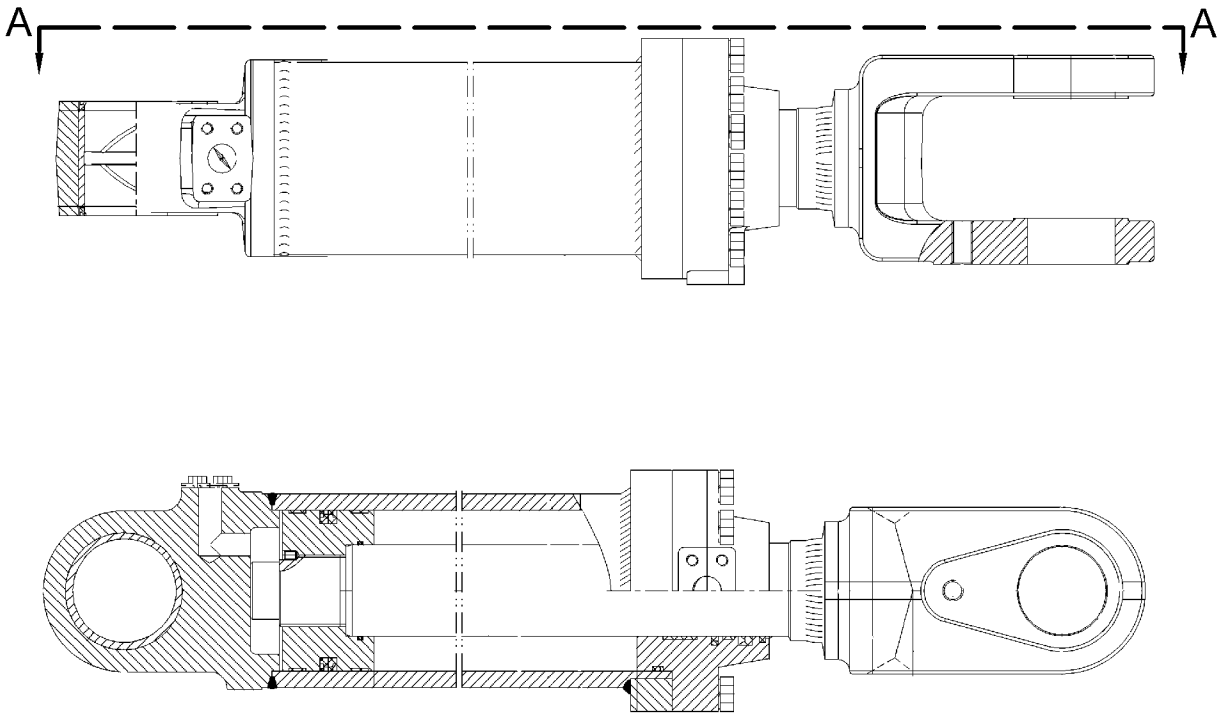

VIEW A-A

GRAPHIC #1 **<END>** g03797654

452-6975 CYLINDER GP-LIFT–RH

S/N: M5K1-UP
140-MM (5.5-IN) BORE X 800-MM (31.5-IN) STROKE
PART OF 390-5901 CYLINDER GP-LIFT & TILT

SMCS-5102 **i06064358**

NOTE	REF NO	GRAPHIC REF	PART NUMBER	QTY	PART NAME 1 2 3 4 5 6 (PRODUCT LEVEL)	SEE PAGE
					(NO SERVICED PARTS)	

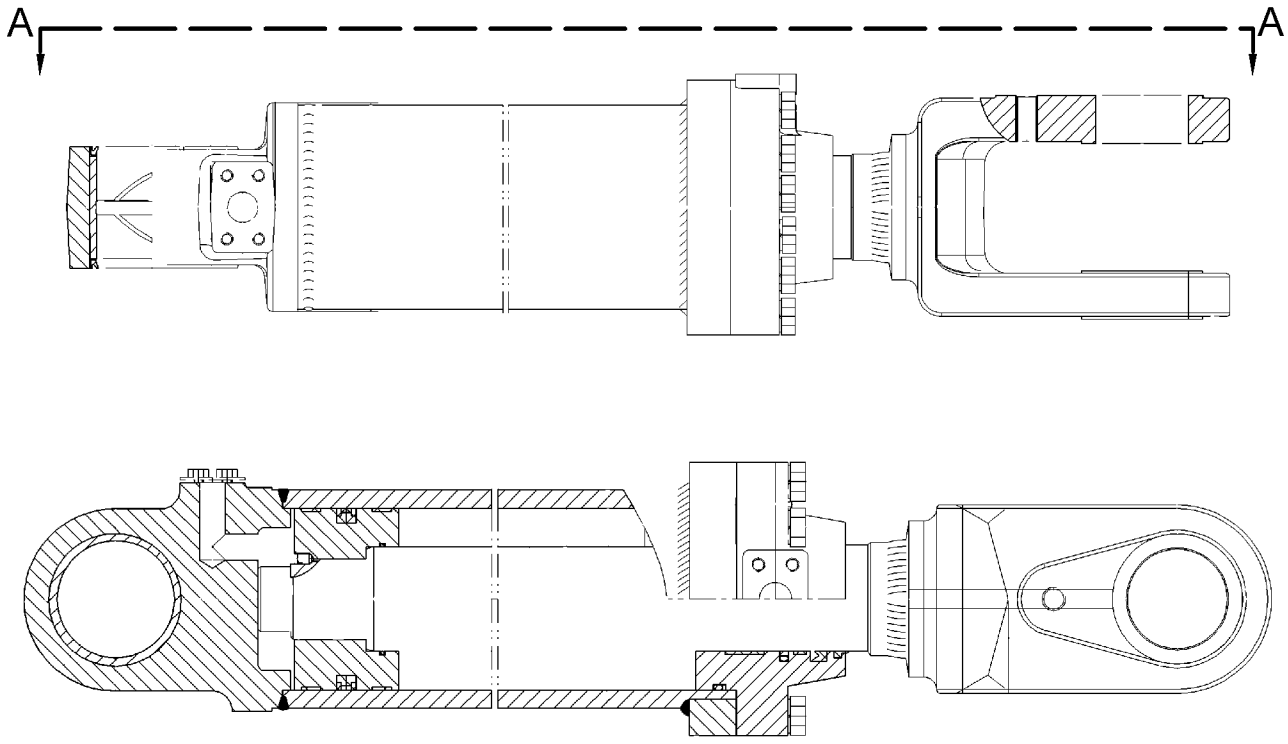

VIEW A-A

GRAPHIC #1 **<END>** g03797653

390-5901 CYLINDER GP-LIFT & TILT

S/N: M5K1-UP
PART OF 390-5959 HYDRAULIC AR
TYPE 1

SMCS-5102, 5104, 5736 **i05665614**

NOTE	REF NO	GRAPHIC REF	PART NUMBER	QTY	PART NAME 1 2 3 4 5 6 (PRODUCT LEVEL)	SEE PAGE
Y	1	1	**387-0611**	1	CYLINDER GP-LIFT (RH)	396
Y	2	1	**387-0612**	1	CYLINDER GP-LIFT (LH)	397
Y	3	1	**387-0613**	1	CYLINDER GP-TILT	403
	4	1	**431-4613**	1	ADAPTER	
	5	1	**448-2954**	1	PLATE	
	6	1	**448-2955**	1	PLATE	
	7	1	**448-2956**	4	CLIP	
	8	1	**5P-0600**	4	CLAMP-HOSE	
	9	1	**7X-7729**	2	WASHER (11X25X3-MM THK)	
M	10	1	**8T-4195**	2	BOLT (M10X1.5X30-MM)	

M - METRIC PART
Y - SEPARATE ILLUSTRATION

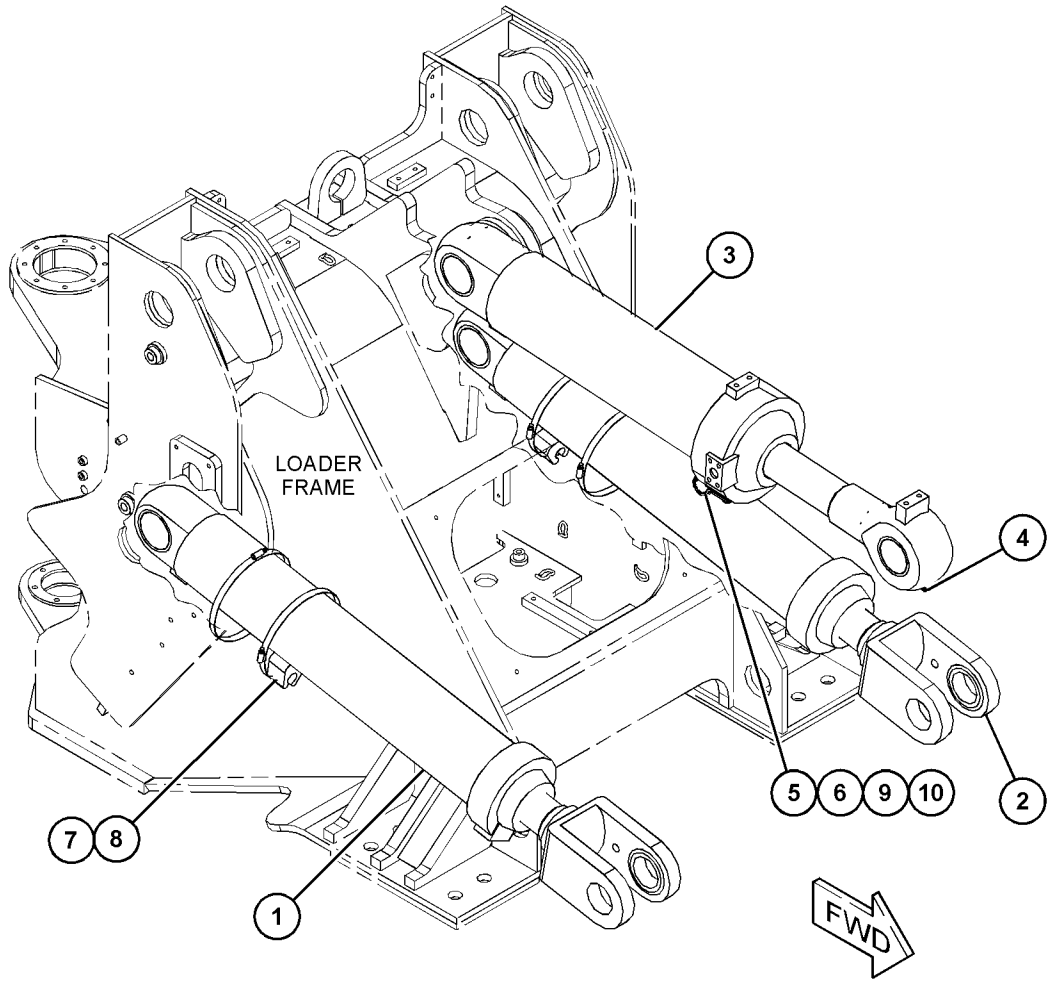

GRAPHIC #1 **<END>** g03699643

390-5901 CYLINDER GP-LIFT & TILT

S/N: M5K1-UP
PART OF 390-5959 HYDRAULIC AR
TYPE 2

SMCS-5102, 5104, 5736

i06125678

NOTE	REF NO	GRAPHIC REF	PART NUMBER	QTY	PART NAME 1 2 3 4 5 6 (PRODUCT LEVEL)	SEE PAGE
CY	1	1	**452-6975**	1	CYLINDER GP-LIFT (RH)	399
CY	2	1	**452-6974**	1	CYLINDER GP-LIFT (LH)	398
Y	3	1	**387-0613**	1	CYLINDER GP-TILT	403
	4	1	**431-4613**	1	ADAPTER	
	5	1	**448-2954**	1	PLATE	
	6	1	**448-2955**	1	PLATE	
	7	1	**448-2956**	4	CLIP	
	8	1	**5P-0600**	4	CLAMP-HOSE	
	9	1	**7X-7729**	2	WASHER (11X25X3-MM THK)	
M	10	1	**8T-4195**	2	BOLT (M10X1.5X30-MM)	

C - CHANGE FROM PREVIOUS TYPE
M - METRIC PART
Y - SEPARATE ILLUSTRATION

390-5901 **CYLINDER GP-LIFT & TILT (*contd.*)** **i06125678**

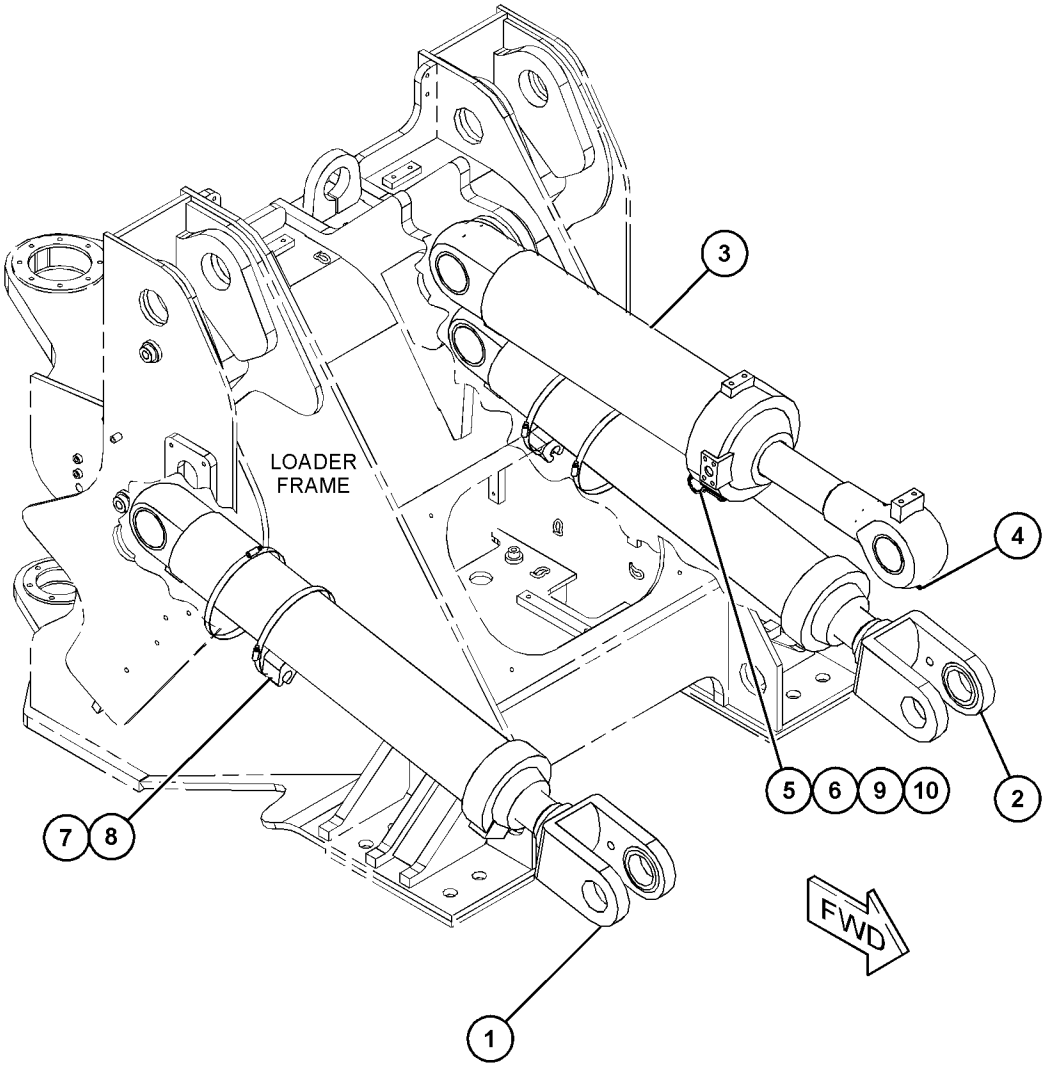

GRAPHIC #1 **<END>** g03817241

387-0613 CYLINDER GP-TILT

S/N: M5K1-UP
160-MM (6.3-IN) BORE X 545-MM (21.5-IN) STROKE
PART OF 390-5901 CYLINDER GP-LIFT & TILT

SMCS-5104 **i06064390**

NOTE	REF NO	GRAPHIC REF	PART NUMBER	QTY	PART NAME 1 2 3 4 5 6 (PRODUCT LEVEL)	SEE PAGE
	1	1	**397-9884**	1	BODY-CYLINDER	
	2	1	**397-9885**	1	ROD-CYLINDER	
	3	1	**397-9886**	1	COVER-CYLINDER	
	4	1	**397-9887**	1	PISTON-CYLINDER	
	5	1	**397-9888**	1	KIT-SEAL (CYLINDER)	
					(INCLUDES SUPPORT RINGS, SEALS, O-RINGS, RINGS, Y RING & DUST RINGS)	

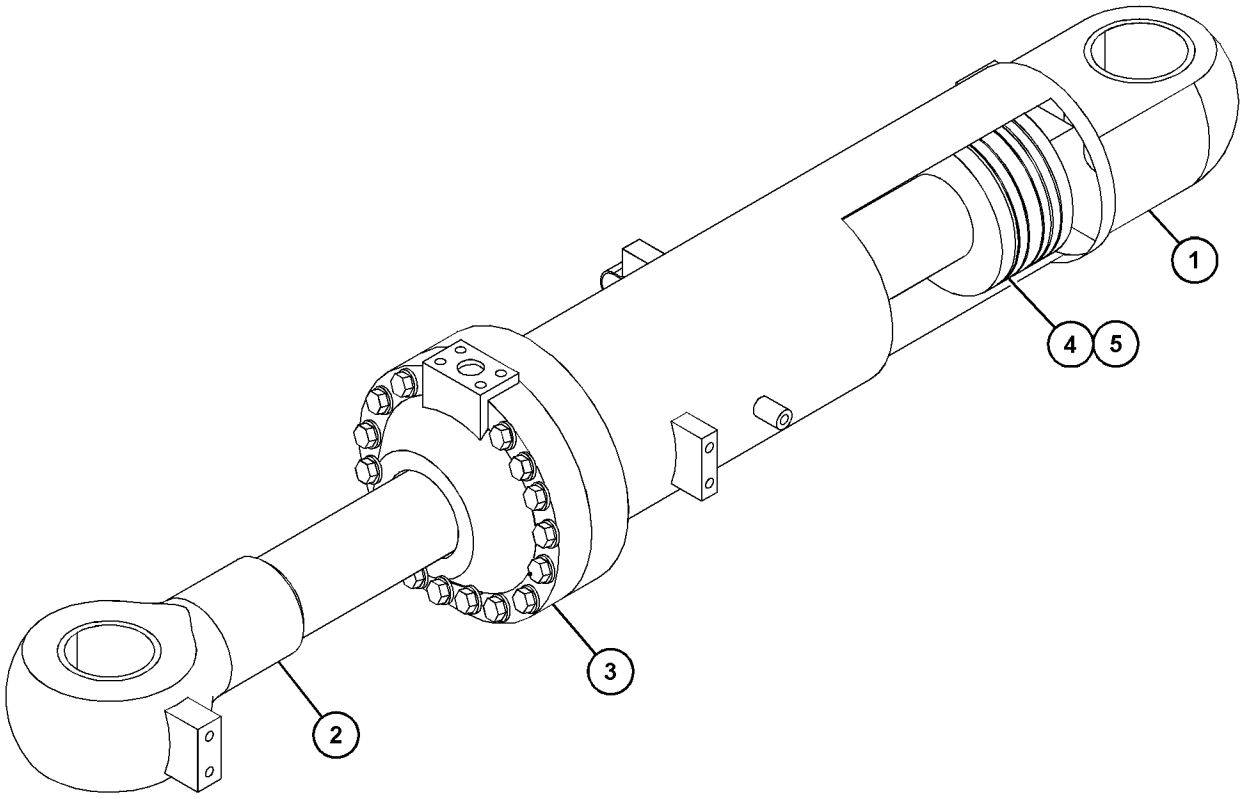

GRAPHIC #1 **<END>** g03536397

378-8331 FILTER GP-OIL–HYDRAULIC

S/N: M5K1-UP

PART OF 397-9800 LINES GP-HYD FAN DR & OIL CLR

SMCS-5068, 5091, 5092 **i06127289**

NOTE	REF NO	GRAPHIC REF	PART NUMBER	QTY	PART NAME 1 2 3 4 5 6 (PRODUCT LEVEL)	SEE PAGE
	1	1	**126-1818**	1	FILTER-OIL (ULTRA HIGH EFFICIENCY)	
	2	1	**227-6744**	1	SWITCH GP-PRESSURE (STEERING CHARGE)	
	2A	1	**3J-1907**	1	SEAL-O-RING	
	2B	1	**5F-9144**	1	SEAL-O-RING	
		1	**102-8802**	4	KIT-RECEPTACLE (2-PIN)	
					(EACH INCLUDES RECEPTACLE AS & WEDGE)	
		1	**8T-8729**	2	PIN-CONNECTOR (16-GA TO 18-GA)	
E		1	**9X-1813**		SLEEVE (14-CM)	

E - ORDER BY THE CENTIMETER

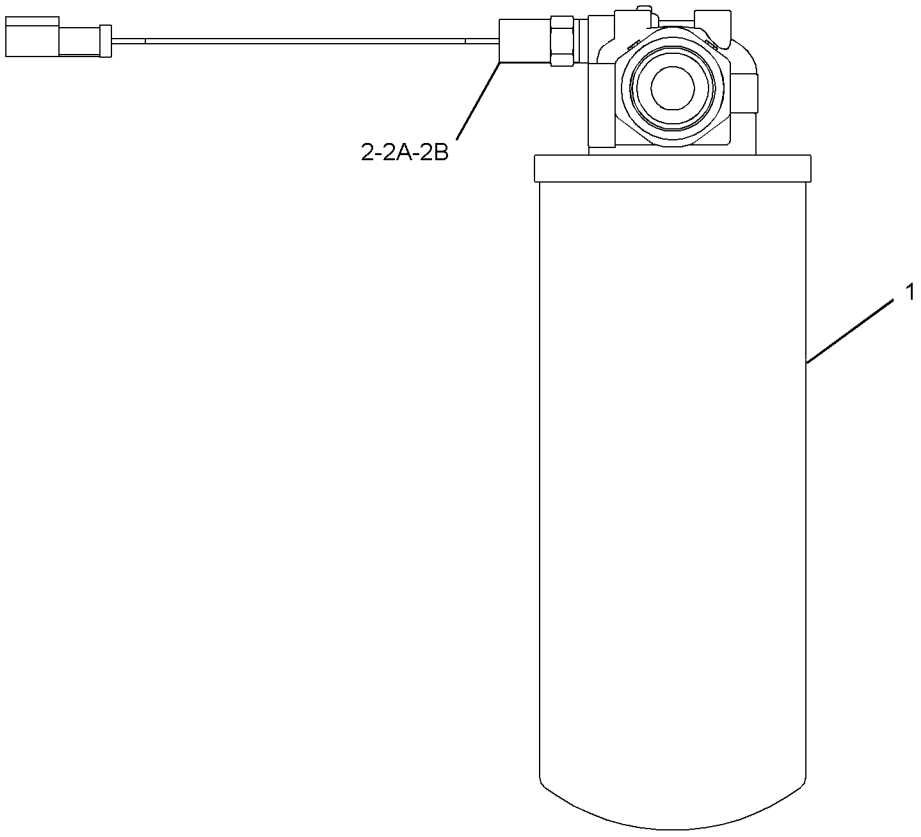

GRAPHIC #1 **<END>** g02730457

390-5959 HYDRAULIC AR

S/N: M5K1-UP

PART OF 387-6000 COMMON AR

SMCS-5051 **i06064321**

NOTE	PART NUMBER	QTY	PART NAME 1 2 3 4 5 6 (PRODUCT LEVEL)	SEE PAGE
Y	*390-5901*	1	CYLINDER GP-LIFT & TILT	400
Y	*390-5960*	1	CYLINDER GP-STEERING	359
Y	*397-9800*	1	LINES GP-HYD FAN DR & OIL CLR	413
Y	*390-5830*	1	LINES GP-IMPLEMENT	418
Y	*397-9706*	1	LINES GP-POWER TRAIN COOLER	235
Y	*390-5962*	1	LINES GP-STEERING	363
Y	*390-5828*	1	MOUNTING GP-BANK VALVE	441
Y	*390-5961*	1	PUMP & MTG GP-STEERING	370

Y - SEPARATE ILLUSTRATION

<END>

397-9894 HYDRAULIC AR-3 VALVE—WITH RIDE CONTROL

S/N: M5K1-UP

CANNOT BE USED WITH 393-9359 CONTROL & MTG GP-ELECTRONIC, 426-0184 CONTROL & MTG GP-ELECTRONIC

AN ATTACHMENT

SMCS-5051 **i05407135**

NOTE	PART NUMBER	QTY	PART NAME 1 2 3 4 5 6 (PRODUCT LEVEL)	SEE PAGE
Y	*390-5914*	1	LINES GP-FRONT	409
Y	*390-5903*	1	VALVE & MTG GP-HYDRAULIC	455

Y - SEPARATE ILLUSTRATION

<END>

397-9895 HYDRAULIC AR-3 VALVE

S/N: M5K1-UP

CANNOT BE USED WITH 393-9359 CONTROL & MTG GP-ELECTRONIC, 426-0184 CONTROL & MTG GP-ELECTRONIC

AN ATTACHMENT

SMCS-5051 **i06068239**

NOTE	PART NUMBER	QTY	PART NAME 1 2 3 4 5 6 (PRODUCT LEVEL)	SEE PAGE
Y	*390-5914*	1	LINES GP-FRONT	409
Y	*390-5913*	1	VALVE GP-MAIN CONTROL (IMPLEMENT CONTROL)	482

Y - SEPARATE ILLUSTRATION

<END>

417-2107 KICKOUT & POSITIONER GP

S/N: M5K1-UP

PART OF 387-6001 CHASSIS AR

SMCS-5109, 5112 **i05675709**

NOTE	REF NO	GRAPHIC REF	PART NUMBER	QTY	PART NAME 1 2 3 4 5 6 (PRODUCT LEVEL)	SEE PAGE
	1	1	**417-2108**	1	BRACKET	
	2	1	**417-2110**	1	GUARD AS	
	3	1	**417-2113**	1	BRACKET AS	
		1	**7T-1099**	2	LINK	
	4	1	**7X-7729**	2	WASHER (11X25X3-MM THK)	
	5	1	**8T-4121**	6	WASHER-HARD (11X21X2.5-MM THK)	
M	6	1	**8T-4133**	2	NUT (M10X1.5-THD)	
M	7	1	**8T-4137**	2	BOLT (M10X1.5X20-MM)	
M	8	1	**8T-4195**	2	BOLT (M10X1.5X30-MM)	
	9	1	**446-6959**	2	SPACER (11X30X20-MM THK)	
M	10	1	**8T-4185**	2	BOLT (M10X1.5X50-MM)	

M - METRIC PART

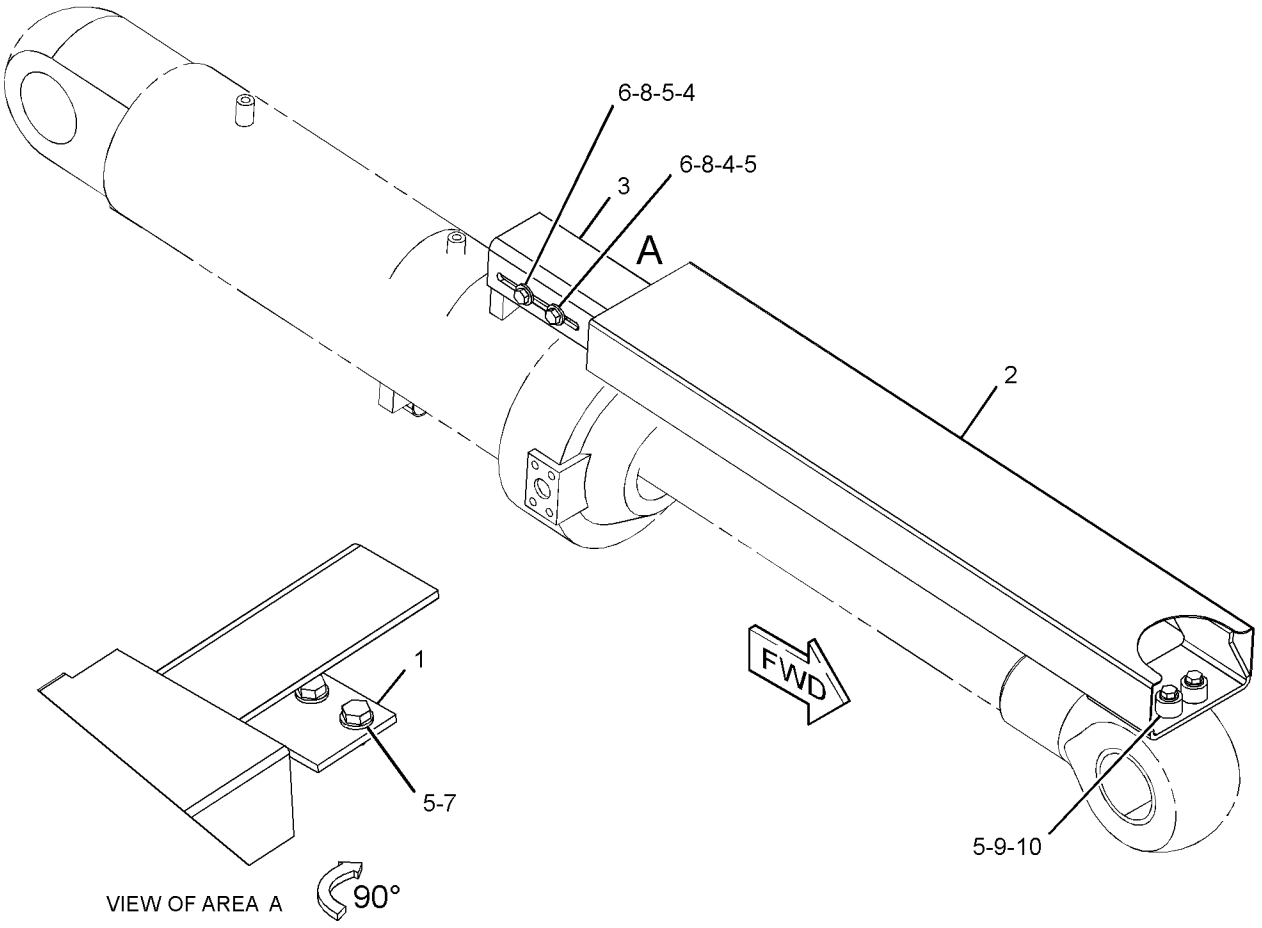

GRAPHIC #1 **<END>** g03681400

397-9860 LINES GP-COUPLER

S/N: M5K1-UP
FOR USE WITH 310-9391 COUPLER GP-QUICK
AN ATTACHMENT

SMCS-5057, 5133 **i05677850**

NOTE	REF NO	GRAPHIC REF	PART NUMBER	QTY	PART NAME 1 2 3 4 5 6 (PRODUCT LEVEL)	SEE PAGE
	1	1	**112-1817**	1	VALVE-BALL	
	2	1	*222-6869*	1	CONNECTOR AS	
		1	**9X-2614**	1	CONNECTOR	
		1	**3J-1907**	1	SEAL-O-RING	
		1	**6V-8397**	1	SEAL-O-RING	
	3	1	**390-5874**	1	BRACKET	
	4	1	*390-7970*	1	MANIFOLD GP-CONTROL	
		1	**390-7508**	1	VALVE GP-SOLENOID (COUPLER MANIFOLD)	
		1	**254-0072**	1	COIL AS (24-VOLT)	
		1	**390-7972**	1	MANIFOLD	
Y	5	1	*392-8369*	1	WIRING GP-CAB	180
I	6	1	**397-9861**	1	HOSE AS	
I	7	1	**397-9863**	1	HOSE AS	
	8	1	**397-9865**	1	BRACKET	
I	9	1	**397-9867**	1	HOSE AS	
I	10	1	**397-9869**	2	HOSE AS	
Y	11	1	*415-4230*	1	SWITCH GP-QUICK COUPLER	168
	12	1	**096-6166**	4	WASHER-HARD (4.5X9X1-MM THK)	
	13	1	*148-8336*	3	CONNECTOR AS	
					(EACH INCLUDES)	
		1	**6V-8636**	1	CONNECTOR	
		1	**3J-1907**	1	SEAL-O-RING	
		1	**6V-8397**	1	SEAL-O-RING	
	14	1	*148-8378*	2	ELBOW AS	
					(EACH INCLUDES)	
		1	**6V-8724**	1	ELBOW	
		1	**3J-1907**	1	SEAL-O-RING	
		1	**6V-8397**	1	SEAL-O-RING	
	15	1	*148-8433*	2	TEE AS	
					(EACH INCLUDES)	
		1	**6V-9836**	1	TEE-SWIVEL	
		1	**6V-8397**	2	SEAL-O-RING	
	16	1	*164-5570*	2	UNION AS	
					(EACH INCLUDES)	
		1	**6V-8730**	1	UNION (FACE SEAL)	
		1	**6V-8397**	2	SEAL-O-RING	
M	17	1	**2W-9499**	2	BOLT (M6X1X40-MM)	
	18	1	**4B-4674**	2	WASHER (6.4X14.5X1.6-MM THK)	
	19	1	**6D-4246**	18	CLIP (LOOP)	
M	21	1	**8T-0337**	4	SCREW-MACHINE (M4X0.7X12-MM)	
	22	1	**8T-4121**	14	WASHER-HARD (11X21X2.5-MM THK)	
M	23	1	**8T-4137**	13	BOLT (M10X1.5X20-MM)	
	24	1	**6V-9829**	2	CAP AS	
M	25	1	**8T-4136**	1	BOLT (M10X1.5X25-MM)	
	26	1	*148-8367*	1	ELBOW AS	
			6V-9850	1	ELBOW	
			6V-8397	1	SEAL-O-RING	
	27	1	**397-9718**	1	BRACKET AS	
M		1	**8T-4133**	1	NUT (M10X1.5-THD)	

I - REFER TO HYDRAULIC INFORMATION SYSTEM
M - METRIC PART
Y - SEPARATE ILLUSTRATION

397-9860 **LINES GP-COUPLER (*contd.*)** **i05677850**

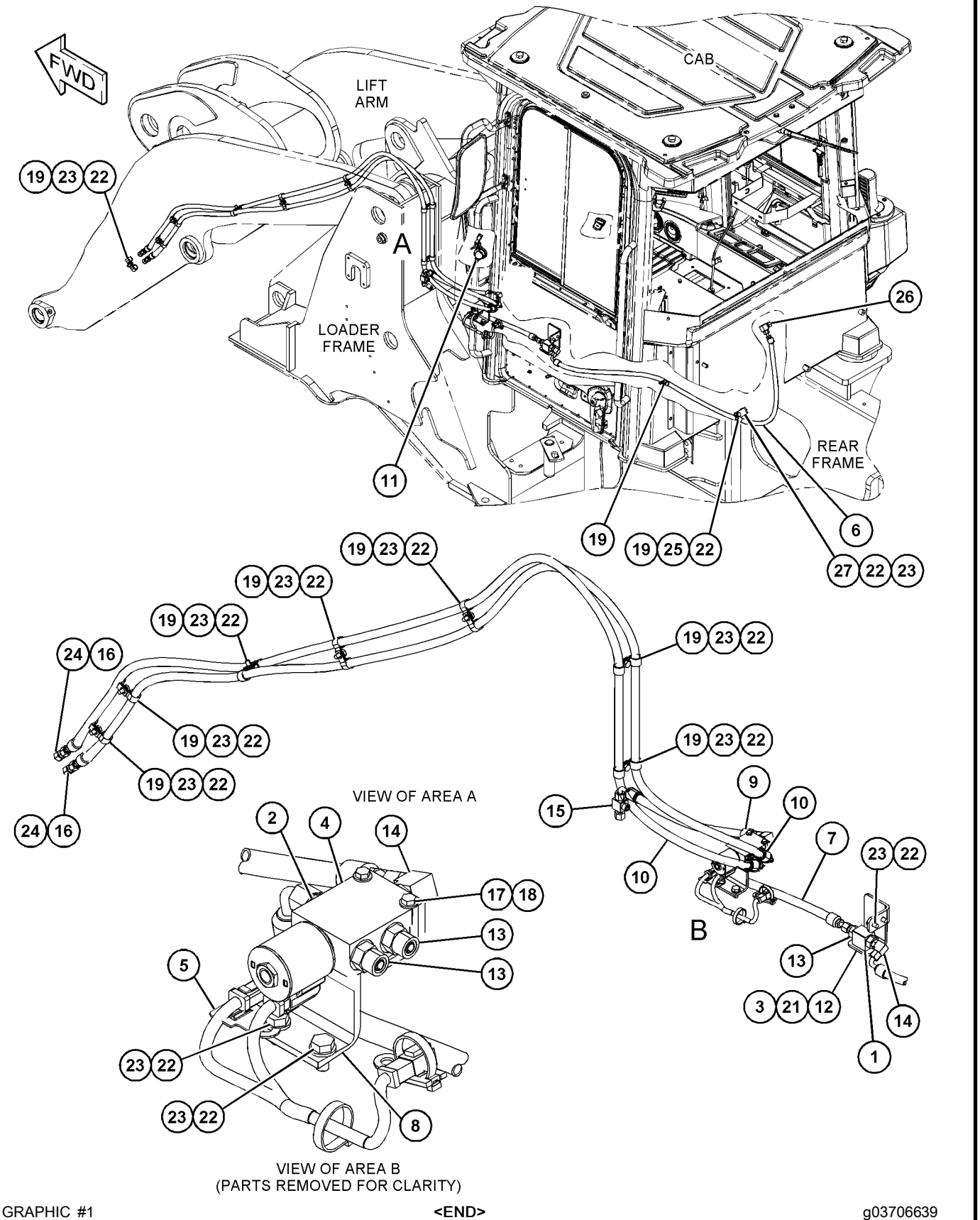

VIEW OF AREA B
(PARTS REMOVED FOR CLARITY)

GRAPHIC #1 **<END>** g03706639

390-5914 LINES GP-FRONT

S/N: M5K1-UP
CANNOT BE USED WITH 390-5913 VALVE GP-MAIN CONTROL
PART OF 397-9894, 397-9895 HYDRAULIC AR-3 VALVE
AN ATTACHMENT

SMCS-5057 **i05819497**

NOTE	REF NO	GRAPHIC REF	PART NUMBER	QTY	PART NAME 1 2 3 4 5 6 (PRODUCT LEVEL)	SEE PAGE
Y	1	1	**445-6169**	1	VALVE GP-CONTROL	472
I	2	1	**390-5915**	1	HOSE AS	
I	3	1	**390-5917**	1	HOSE AS	
	5	1	**390-5921**	1	BRACKET AS	
	6	1	**390-5925**	1	HOSE AS	
	7	1	**390-5931**	2	PLATE	
I	8	1	**390-5932**	2	HOSE AS	
I	9	1	**390-5935**	1	HOSE AS	
	10	1	**390-5945**	1	TUBE AS	
	11	1	**390-5948**	1	TUBE AS	
	12	2	**397-9874**	4	CLIP-HALF	
	13	2	**397-9875**	4	CLIP-HALF	
	14	1	*148-8335*	2	CONNECTOR AS	
					(EACH INCLUDES)	
		1	**5K-9090**	1	SEAL-O-RING	
		1	**6V-8635**	1	CONNECTOR	
		1	**7M-8485**	1	SEAL-O-RING	
	15	1	*150-4047*	1	ADAPTER AS	
		1	**3J-7354**	1	SEAL-O-RING	
		1	**8T-2353**	1	ADAPTER	
	16	1	*148-8352*	1	ELBOW AS	
		1	**5K-9090**	1	SEAL-O-RING	
		1	**6V-9854**	1	ELBOW	
	17	1	*148-8357*	1	ELBOW AS	
		1	**5K-9090**	1	SEAL-O-RING	
		1	**6V-9008**	1	ELBOW	
		1	**7M-8485**	1	SEAL-O-RING	
	18	1	*148-8360*	2	ELBOW AS	
					(EACH INCLUDES)	
		1	**6V-9182**	1	ELBOW	
		1	**6V-9746**	1	SEAL-O-RING	
		1	**7M-8485**	1	SEAL-O-RING	
	19	1	*148-8391*	1	ELBOW AS	
		1	**2S-4078**	1	SEAL-O-RING	
		1	**5K-9090**	1	SEAL-O-RING	
		1	**8T-8987**	1	ELBOW	
	20	1	*148-8455*	2	UNION AS	
					(EACH INCLUDES)	
		1	**6V-8997**	1	UNION	
		1	**6V-9746**	2	SEAL-O-RING	
	21	2	**1P-4577**	4	FLANGE-HALF	
	22	2	**1P-4578**	4	FLANGE-HALF	
	23	1	**2P-1293**	2	LOCKNUT (1-3/16-12-THD)	
	24	2	**4J-0520**	2	SEAL-O-RING	
	25	2	**4J-0522**	2	SEAL-O-RING	
	26	1	**4S-4455**	2	CLIP	
	27	2	**5H-4020**	2	COVER	
	28	1	**5P-8245**	3	WASHER-HARD (13.5X25.5X3-MM THK)	
	29	1,2	**8T-4121**	30	WASHER-HARD (11X21X2.5-MM THK)	
M	30	1,2	**8T-4137**	10	BOLT (M10X1.5X20-MM)	
M	31	1	**8T-4139**	3	BOLT (M12X1.75X30-MM)	
M	32	1,2	**8T-4195**	20	BOLT (M10X1.5X30-MM)	
I	33	1	**448-2958**	1	HOSE AS	
	34	1	**123-4750**	1	VALVE AS-CHECK	
		1	**3J-1907**	1	SEAL-O-RING	
		1	**6V-8397**	1	SEAL-O-RING	
	35	1	**204-2281**	1	STRAP-CABLE	

390-5914 **LINES GP-FRONT (*contd.*)** **i05819497**

NOTE	REF NO	GRAPHIC REF	PART NUMBER	QTY	PART NAME 1 2 3 4 5 6 (PRODUCT LEVEL)	SEE PAGE
	36	1	**200-6345**	1	MOUNT (DUAL SWIVEL)	
	37	1	*148-8378*	3	ELBOW AS	
					(EACH INCLUDES)	
		1	**3J-1907**	1	SEAL-O-RING	
		1	**6V-8397**	1	SEAL-O-RING	
		1	**6V-8724**	1	ELBOW	

I - REFER TO HYDRAULIC INFORMATION SYSTEM
M - METRIC PART
Y - SEPARATE ILLUSTRATION

390-5914 **LINES GP-FRONT (*contd.*)** **i05819497**

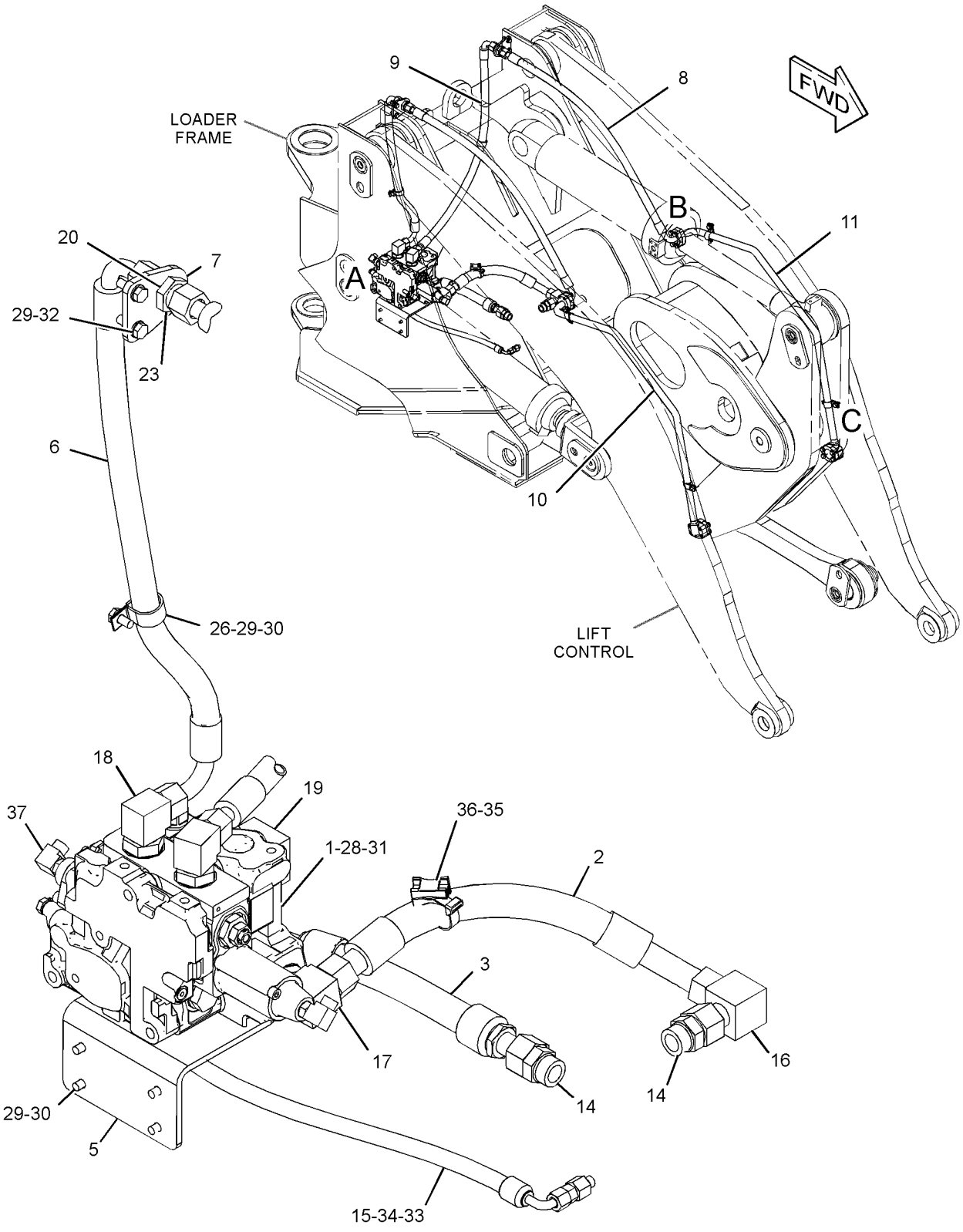

VIEW OF AREA A
(PARTS REMOVED FOR CLARITY)

REFER TO ALL ILLUSTRATIONS OF THIS GROUP FOR AUXILIARY VIEWS

GRAPHIC #1

g03688359

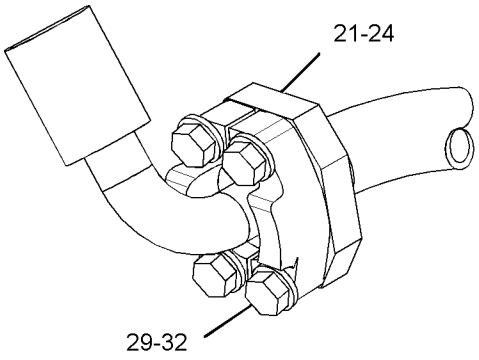

VIEW OF AREA B

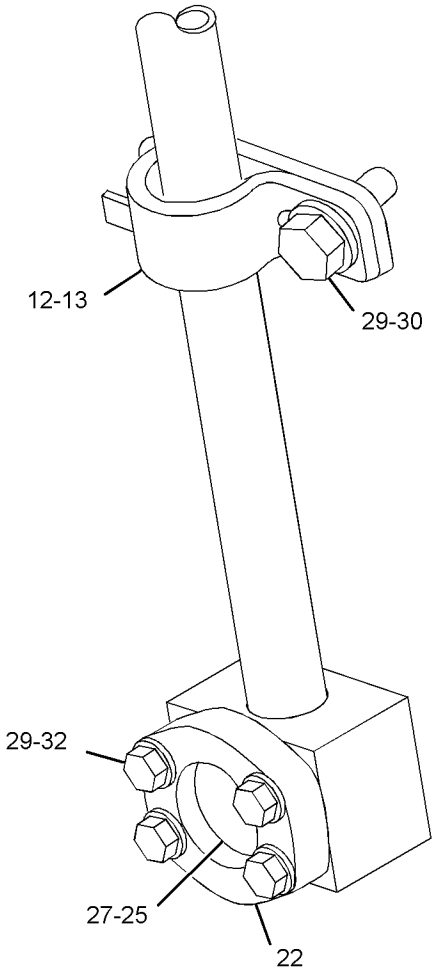

VIEW OF AREA C

GRAPHIC #2 **<END>** g03424122

397-9800 LINES GP-HYD FAN DR & OIL CLR

S/N: M5K1-UP

PART OF 390-5959 HYDRAULIC AR

SMCS-1374, 1386, 5057 **i05431240**

NOTE	REF NO	GRAPHIC REF	PART NUMBER	QTY	PART NAME 1 2 3 4 5 6 (PRODUCT LEVEL)	SEE PAGE
	1	2	**5I-4376**	1	FITTING	
	2	1	**154-5143**	3	STRAP	
	3	1	**244-1426**	1	VALVE GP-CHECK (HYDRAULIC OIL COOLER BYPASS)	
		1	**3D-2824**	1	SEAL-O-RING	
		1	**6V-9746**	1	SEAL-O-RING	
	4	2	**307-5393**	1	VALVE GP-CHECK (HYDRAULIC)	
J	5	1	*338-2885*	1	PUMP GP-GEAR (BRAKE, FAN)	
		1	**8T-5095**	4	WASHER-PLATED (11X16X2-MM THK)	
M		1	**095-0662**	4	BOLT-SOCKET HEAD (M10X1.5X125-MM)	
		1	**442-6237**	1	WASHER-BACKUP	
	6	1	*348-2302*	1	VALVE GP-SOLENOID (HYDRAULIC FAN MOTOR)	
		1	**279-6530**	1	VALVE GP-SOLENOID (HYDRAULIC FAN)	
		1	**261-6728**	1	COIL AS (10-VOLT)	
		1	**376-1384**	1	MANIFOLD	
Y	7	1	**378-8331**	1	FILTER GP-OIL (HYDRAULIC)	404
H	8	2	**392-1005**	1	VALVE GP-ACCUMULATOR CHARGING (BRAKE)	
I	9	1	**397-9805**	1	HOSE AS	
I	10	1	**397-9807**	1	HOSE AS	
I	11	1	**397-9809**	1	HOSE AS	
I	12	1	**397-9811**	1	HOSE AS	
I	13	1	**397-9813**	1	HOSE AS	
I	14	1	**397-9815**	1	HOSE AS	
I	15	1	**397-9817**	1	HOSE AS	
I	16	1	**397-9819**	1	HOSE AS	
	17	1	**397-9821**	1	BRACKET (REAR)	
	18	2	**397-9822**	1	BRACKET (FRONT)	
	19	1	**397-9845**	1	WASHER	
	20	1	*148-8327*	2	CONNECTOR AS	
					(EACH INCLUDES)	
		1	**3D-2824**	1	SEAL-O-RING	
		1	**6V-8637**	1	CONNECTOR	
		1	**6V-9746**	1	SEAL-O-RING	
	21	1	*148-8347*	1	ELBOW AS	
		1	**3D-2824**	1	SEAL-O-RING	
		1	**6V-9007**	1	ADAPTER	
		1	**6V-9746**	1	SEAL-O-RING	
	22	2	*148-8359*	2	ELBOW AS	
					(EACH INCLUDES)	
		2	**3K-0360**	1	SEAL-O-RING	
		2	**6V-9746**	1	SEAL-O-RING	
		2	**6V-9877**	1	ELBOW	
	23	2	*148-8360*	1	ELBOW AS	
		2	**6V-9182**	1	ELBOW	
		2	**6V-9746**	1	SEAL-O-RING	
		2	**7M-8485**	1	SEAL-O-RING	
	24	1	*148-8373*	1	ELBOW AS	
		1	**6V-8400**	1	SEAL-O-RING	
		1	**7M-8485**	1	SEAL-O-RING	
		1	**8C-3364**	1	ELBOW	
	25	2	*148-8374*	2	ELBOW AS	
					(EACH INCLUDES)	
		2	**3K-0360**	1	SEAL-O-RING	
		2	**6V-8397**	1	SEAL-O-RING	
		2	**6V-8723**	1	ELBOW	
	26	1,2	*148-8392*	3	ELBOW AS	
					(EACH INCLUDES)	
		1,2	**6V-9746**	1	SEAL-O-RING	
		1,2	**6V-9853**	1	ELBOW	

397-9800 **LINES GP-HYD FAN DR & OIL CLR (*contd.*)** **i05431240**

NOTE	REF NO	GRAPHIC REF	PART NUMBER	QTY	PART NAME 1 2 3 4 5 6 (PRODUCT LEVEL)	SEE PAGE
	27	1	*148-8430*	1	TEE AS	
		1	**6V-9746**	1	SEAL-O-RING	
		1	**7X-0873**	1	TEE	
	28	1,2	*148-8449*	3	TEE AS-SWIVEL	
					(EACH INCLUDES)	
		1,2	**6V-9746**	2	SEAL-O-RING	
		1,2	**6V-9839**	1	TEE-SWIVEL	
	29	2	*153-6238*	1	ELBOW AS	
		2	**2S-4078**	1	SEAL-O-RING	
		2	**6V-8400**	1	SEAL-O-RING	
		2	**6V-9006**	1	ELBOW	
	30	1	*153-6259*	1	TEE AS	
		1	**3D-2824**	1	SEAL-O-RING	
		1	**6V-8777**	1	TEE-FACE SEAL	
		1	**6V-9746**	2	SEAL-O-RING	
	31	1,2	*164-5567*	2	COUPLER AS-QUICK DISCONNECT (MALE)	
					(EACH INCLUDES)	
		1,2	**6V-3965**	1	FITTING (QUICK DISCONNECT)	
		1,2	**214-7568**	1	SEAL-O-RING	
	32	2	*164-5574*	1	TEE AS	
		2	**3D-2824**	1	SEAL-O-RING	
		2	**6V-8784**	1	TEE-FACE SEAL	
		2	**6V-9746**	2	SEAL-O-RING	
	33	2	*164-5611*	1	TEE AS	
		2	**6V-9746**	1	SEAL-O-RING	
		2	**7M-8485**	1	SEAL-O-RING	
		2	**8T-3312**	1	TEE	
	34	2	*169-5862*	1	ELBOW AS	
		2	**3J-1907**	1	SEAL-O-RING	
		2	**8C-6712**	1	ELBOW	
	35	2	*171-6725*	1	ELBOW AS	
		2	**3D-2824**	1	SEAL-O-RING	
		2	**8T-6451**	1	ELBOW	
	36	1	**1S-0994**	3	CLIP (LOOP)	
	37	1	**200-6345**	1	MOUNT (DUAL SWIVEL)	
	38	1	**204-2281**	2	STRAP-CABLE	
	39	1	*241-6215*	1	ELBOW AS	
		1	**3J-1907**	1	SEAL-O-RING	
		1	**6V-8076**	1	ELBOW	
	40	2	**3J-7354**	1	SEAL-O-RING	
	41	1,2	**4S-4455**	2	CLIP	
	42	1,2	**5M-2894**	20	WASHER-HARD (10.2X18.5X2.5-MM THK)	
	43	2	**5P-2370**	1	CLIP	
	44	1,2	**6V-0852**	2	CAP-DUST	
	45	1	**6V-1889**	8	CLIP (LOOP)	
M	46	2	**7X-2552**	1	BOLT (M16X2X30-MM)	
	47	2	**8C-3446**	1	VALVE-SAMPLING (HYDRAULIC OIL)	
	48	2	**8C-3451**	1	CAP-DUST	
M	49	1,2	**8T-4136**	10	BOLT (M10X1.5X25-MM)	
M	50	2	**8T-4137**	8	BOLT (M10X1.5X20-MM)	
M	51	1	**8T-4195**	2	BOLT (M10X1.5X30-MM)	
	52	1	**8T-4224**	2	WASHER-HARD (8.8X16X2-MM THK)	
M	53	1	**8T-6870**	2	BOLT (M8X1.25X70-MM)	
	54	2	**9X-8268**	1	WASHER (17.5X30X3.5-MM THK)	
					AVAILABLE REPAIR KIT(S):	
J			**442-6277**	1	KIT-SEAL	
					(KIT INCLUDES SEALS, STANDARD SEAL, SQUARE SECTION SEAL, SHAFT SEALS, RING & ANTIEXTRUSION RINGS)	
H			**415-1062**	1	KIT-SEAL	
					(KIT INCLUDES O-RINGS, POPPETS, SCREEN & PLUG)	

397-9800 **LINES GP-HYD FAN DR & OIL CLR (*contd.*)** **i05431240**

NOTE	REF NO	GRAPHIC REF	PART NUMBER	QTY	PART NAME 1 2 3 4 5 6 (PRODUCT LEVEL)	SEE PAGE

H - KIT MARKED H SERVICES PART MARKED H
I - REFER TO HYDRAULIC INFORMATION SYSTEM
J - KIT MARKED J SERVICES PART MARKED J
M - METRIC PART
Y - SEPARATE ILLUSTRATION

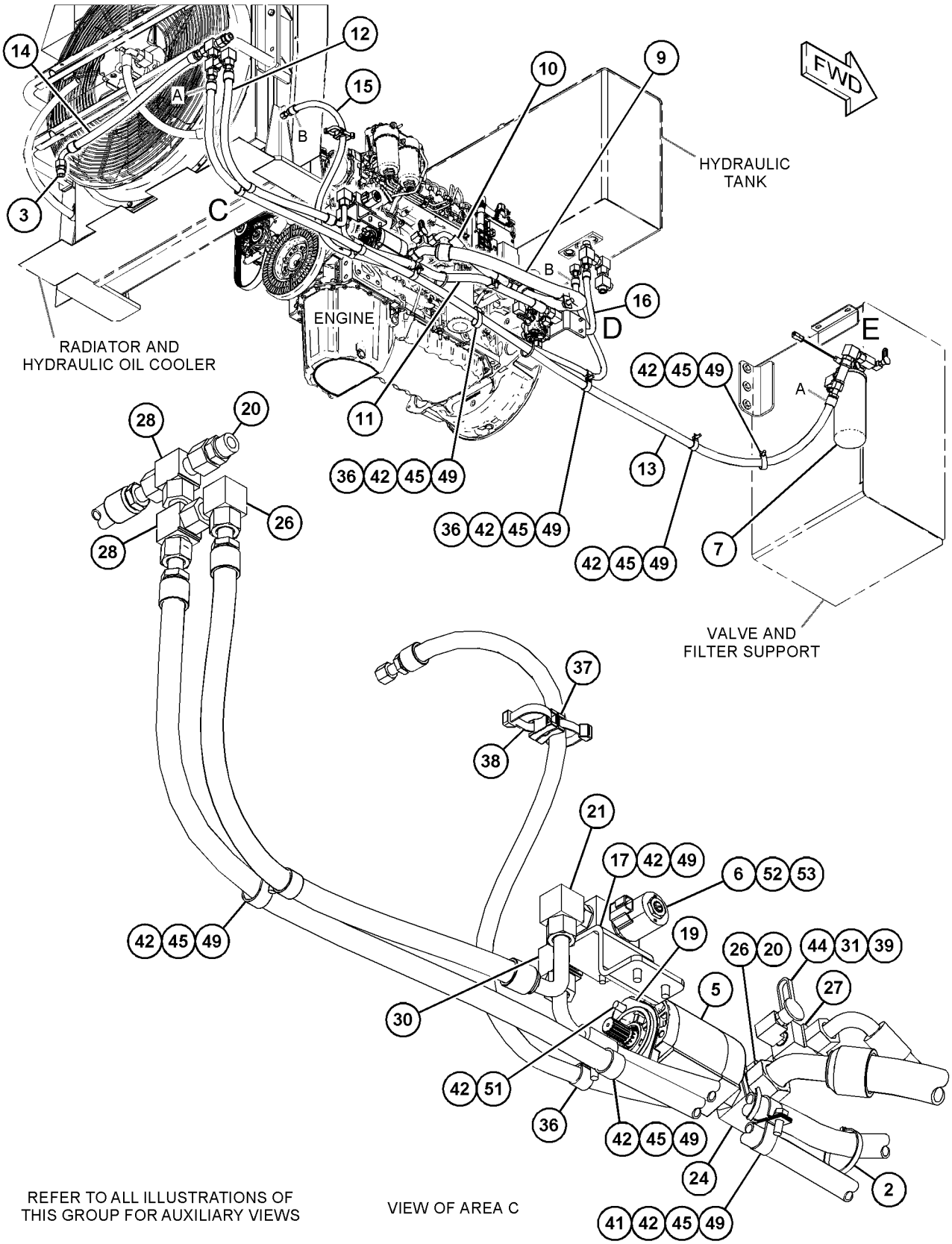

REFER TO ALL ILLUSTRATIONS OF THIS GROUP FOR AUXILIARY VIEWS

VIEW OF AREA C

GRAPHIC #1

g03566589

397-9800 **LINES GP-HYD FAN DR & OIL CLR (*contd.*)** **i05431240**

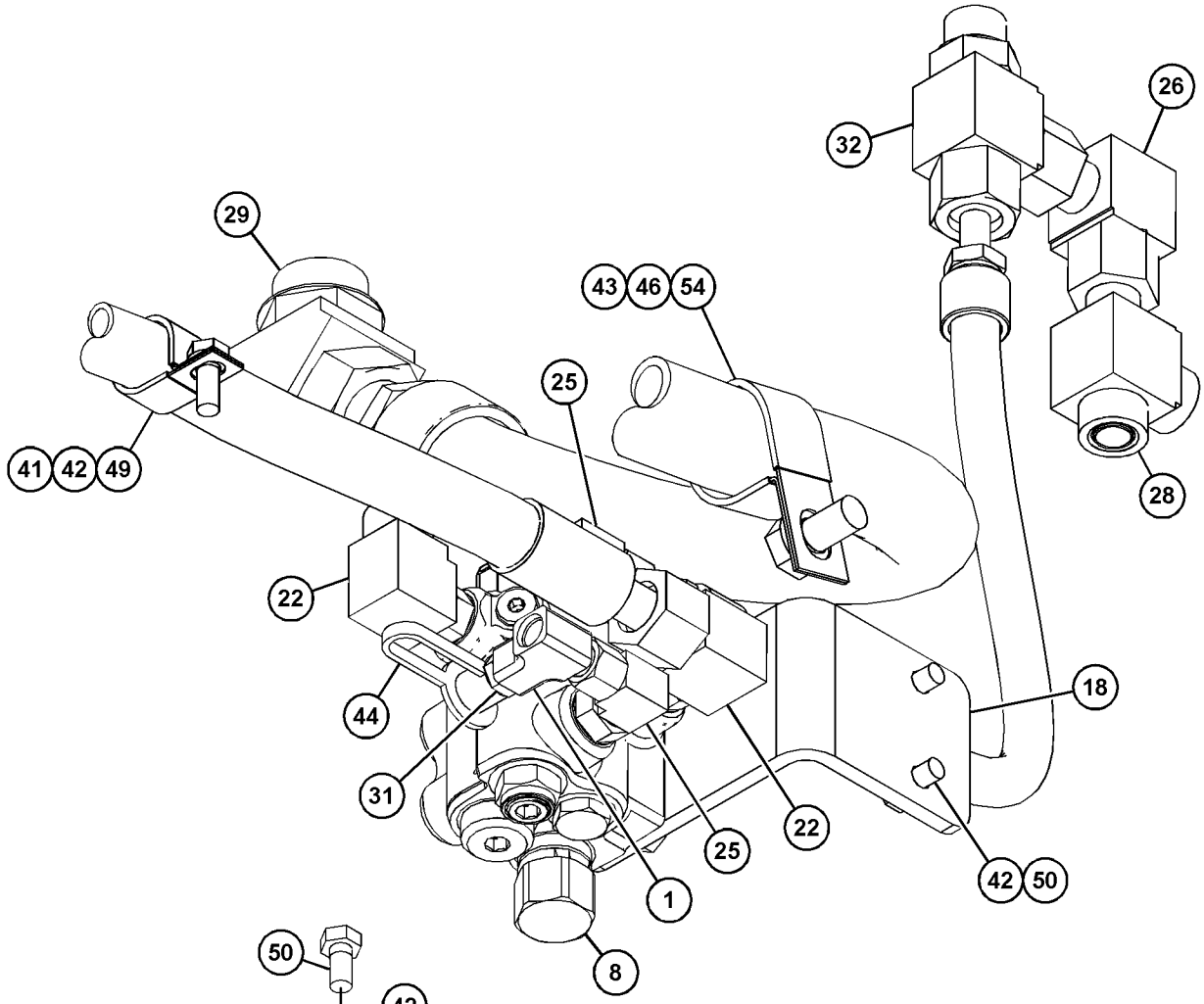

VIEW OF AREA D
(PARTS REMOVED FOR CLARITY)

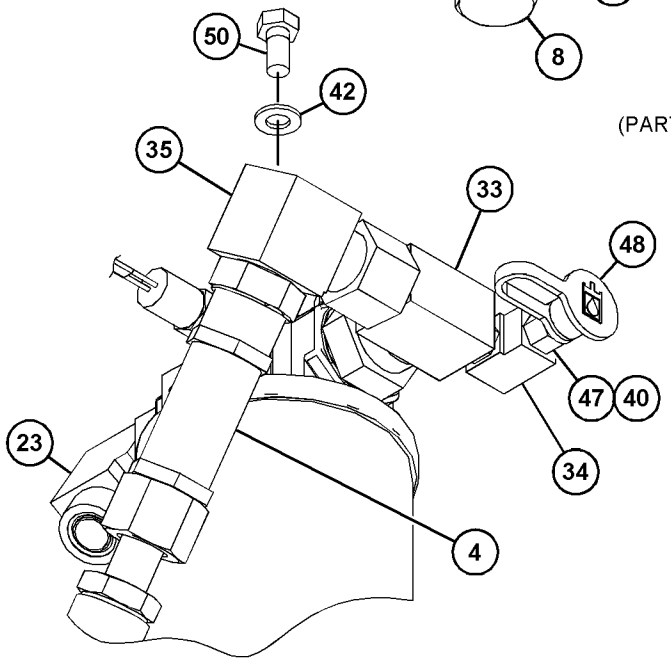

VIEW OF AREA E

GRAPHIC #2 **<END>** g03566590

390-5830 LINES GP-IMPLEMENT

S/N: M5K1-UP

PART OF 390-5959 HYDRAULIC AR

TYPE 1

SMCS-5057 **i05665609**

NOTE	REF NO	GRAPHIC REF	PART NUMBER	QTY	PART NAME 1 2 3 4 5 6 (PRODUCT LEVEL)	SEE PAGE
	1	1	**7K-1181**	7	STRAP-CABLE	
	3	2	**367-8969**	1	VALVE GP-PRESSURE REDUCING (IMPLEMENT)	
	4	2	**390-5831**	1	TUBE AS	
	5	2	**390-5835**	1	TUBE AS	
	6	2	**390-5837**	1	TUBE AS	
I	7	2	**390-5839**	1	HOSE AS	
I	8	2	**390-5841**	1	HOSE AS	
I	9	2	**390-5843**	2	HOSE AS	
I	10	2	**390-5845**	2	HOSE AS	
	11	2	**390-5847**	1	TUBE AS	
	12	2	**390-5852**	1	TUBE AS	
	13	2	**390-5854**	1	TUBE AS	
	14	2	**390-5856**	1	TUBE AS	
	15	2	**390-5858**	1	TUBE AS	
	16	2	**390-5861**	1	TUBE AS	
	17	2	**390-5863**	1	TUBE AS	
	18	2	**390-5864**	1	TUBE AS	
I	19	2	**390-5865**	1	HOSE AS	
I	20	2	**390-5867**	1	HOSE AS	
I	21	2	**390-5869**	1	HOSE AS	
I	22	2	**390-5871**	1	HOSE AS	
	23	2	**390-5873**	2	BRACKET	
	24	1	**390-5874**	1	BRACKET	
I	25	1	**390-5875**	1	HOSE AS	
I	26	1	**390-5877**	1	HOSE AS	
I	27	1	**390-5881**	1	HOSE AS	
I	28	1	**390-5885**	1	HOSE AS	
I	29	1	**390-5887**	1	HOSE AS	
	30	1	**390-5896**	1	HOSE-SUCTION	
	31	1	**390-5898**	1	FITTING AS	
	32	2	**390-5939**	1	FLANGE	
	33	2	**390-5956**	1	BRACKET	
	34	1	**390-5957**	1	PLATE	
	35	1	**390-5958**	4	SLEEVE	
	36	1	**397-9782**	1	BRACKET	
	37	1	**397-9783**	2	CLIP	
	38	1	**397-9784**	2	PLATE	
	39	2	**397-9877**	2	U-BOLT	
	40	2	**448-2957**	2	BRACKET	
I	41	1	**448-2960**	1	HOSE AS	
I	42	1	**448-2962**	1	HOSE AS	
I	43	1	**448-2964**	1	HOSE AS	
I	44	1	**448-2966**	1	HOSE AS	
	45	1	**448-2968**	1	PLATE	
	46	1	**448-2969**	1	BLOCK	
	47	1	**448-2976**	1	PLATE AS	
	48	1	**448-2977**	1	BRACKET	
	49	2	**448-2978**	2	CLAMP	
	50	1	**096-6166**	4	WASHER-HARD (4.5X9X1-MM THK)	
	51	2	*148-8335*	4	CONNECTOR AS	
					(EACH INCLUDES)	
		2	**6V-8635**	1	CONNECTOR	
		2	**5K-9090**	1	SEAL-O-RING	
		2	**7M-8485**	1	SEAL-O-RING	
	52	2	*148-8336*	1	CONNECTOR AS	
		2	**6V-8636**	1	CONNECTOR	
		2	**3J-1907**	1	SEAL-O-RING	
		2	**6V-8397**	1	SEAL-O-RING	

390-5830 **LINES GP-IMPLEMENT (*contd.*)** **i05665609**

NOTE	REF NO	GRAPHIC REF	PART NUMBER	QTY	PART NAME 1 2 3 4 5 6 (PRODUCT LEVEL)	SEE PAGE
	53	1	*148-8361*	1	ELBOW AS	
		1	**6V-9200**	1	ELBOW	
		1	**3J-7354**	1	SEAL-O-RING	
		1	**6V-8397**	1	SEAL-O-RING	
	54	1,2	*148-8367*	3	ELBOW AS	
					(EACH INCLUDES)	
		1,2	**6V-9850**	1	ELBOW	
		1,2	**6V-8397**	1	SEAL-O-RING	
	55	1	*148-8377*	1	ELBOW AS	
		1	**6V-8980**	1	ELBOW	
		1	**6V-8397**	2	SEAL-O-RING	
	56	1,2	*148-8378*	4	ELBOW AS	
					(EACH INCLUDES)	
		1,2	**6V-8724**	1	ELBOW	
		1,2	**3J-1907**	1	SEAL-O-RING	
		1,2	**6V-8397**	1	SEAL-O-RING	
	57	1	*148-8424*	1	TEE AS	
		1	**8T-8902**	1	TEE	
		1	**6V-8397**	1	SEAL-O-RING	
	58	1	*164-5567*	1	COUPLER AS-QUICK DISCONNECT (MALE)	
		1	**6V-3965**	1	FITTING (QUICK DISCONNECT)	
		1	**214-7568**	1	SEAL-O-RING	
	59	1	**166-2383**	1	CLAMP	
	60	1	**1P-3703**	1	SEAL-RECTANGULAR	
	61	1,2	**1P-4577**	12	FLANGE-HALF	
	62	1,2	**1P-4578**	8	FLANGE-HALF	
	63	1	**1P-5767**	2	FLANGE-HALF	
	64	1,2	**1S-0994**	5	CLIP	
	65	2	**200-6345**	1	MOUNT (DUAL SWIVEL)	
	66	2	**204-2281**	2	STRAP-CABLE	
	67	1	**235-2475**	1	SEAL-RECTANGULAR	
	68	2	**2R-1939**	1	CLIP	
	69	2	**4B-4674**	2	WASHER (6.4X14.5X1.6-MM THK)	
	70	1,2	**4J-0520**	11	SEAL-O-RING	
	71	1,2	**4J-0522**	7	SEAL-O-RING	
	72	1	**5H-8848**	1	SEAL-O-RING	
	73	1,2	**5M-2894**	92	WASHER-HARD (10.2X18.5X2.5-MM THK)	
	74	1	**5P-2369**	1	CLIP	
	75	2	**5P-4116**	4	WASHER-HARD (8.8X20.5X2-MM THK)	
M	76	2	**5P-7970**	4	NUT (M8X1.25-THD)	
	77	1	**5P-8245**	13	WASHER-HARD (13.5X25.5X3-MM THK)	
	78	1	**6V-0400**	2	FLANGE-HALF	
	79	1	**6V-0852**	1	CAP-DUST	
M	80	1,2	**6V-3668**	9	BOLT (M12X1.75X30-MM)	
M	81	1,2	**6V-3822**	32	BOLT (M10X1.5X35-MM)	
M	82	1	**6V-5684**	8	BOLT (M12X1.75X45-MM)	
M	83	2	**6V-7728**	2	BOLT (M6X1X45-MM)	
	84	1	**6V-9168**	1	NUT (11/16-16-THD)	
	85	2	**6V-9746**	8	SEAL-O-RING	
	86	2	**7X-7729**	6	WASHER (11X25X3-MM THK)	
M	87	2	**8T-0271**	20	BOLT-SOCKET HEAD (M10X1.5X35-MM)	
M	88	1	**8T-0337**	4	SCREW-MACHINE (M4X0.7X12-MM)	
M	89	2	**8T-0389**	2	LOCKNUT (M10X1.5-THD)	
M	90	1,2	**8T-4133**	5	NUT (M10X1.5-THD)	
M	91	1	**8T-4136**	4	BOLT (M10X1.5X25-MM)	
M	92	1,2	**8T-4137**	18	BOLT (M10X1.5X20-MM)	
M	93	1	**8T-4172**	2	BOLT (M10X1.5X80-MM)	
M	94	1	**8T-4178**	2	BOLT (M10X1.5X90-MM)	
M	95	2	**8T-4185**	4	BOLT (M10X1.5X50-MM)	
M	96	2	**8T-4186**	2	BOLT (M10X1.5X40-MM)	
M	97	1,2	**8T-4195**	14	BOLT (M10X1.5X30-MM)	

390-5830 **LINES GP-IMPLEMENT (*contd.*)** **i05665609**

NOTE	REF NO	GRAPHIC REF	PART NUMBER	QTY	PART NAME 1 2 3 4 5 6 (PRODUCT LEVEL)	SEE PAGE
	98	2	**8T-4223**	4	WASHER-HARD (13.5X25.5X3-MM THK)	
	99	1	**9M-7959**	4	CLAMP-HOSE	

I - REFER TO HYDRAULIC INFORMATION SYSTEM
M - METRIC PART

390-5830 **LINES GP-IMPLEMENT (*contd.*)** **i05665609**

REFER TO ALL ILLUSTRATIONS OF THIS GROUP FOR AUXILIARY VIEWS

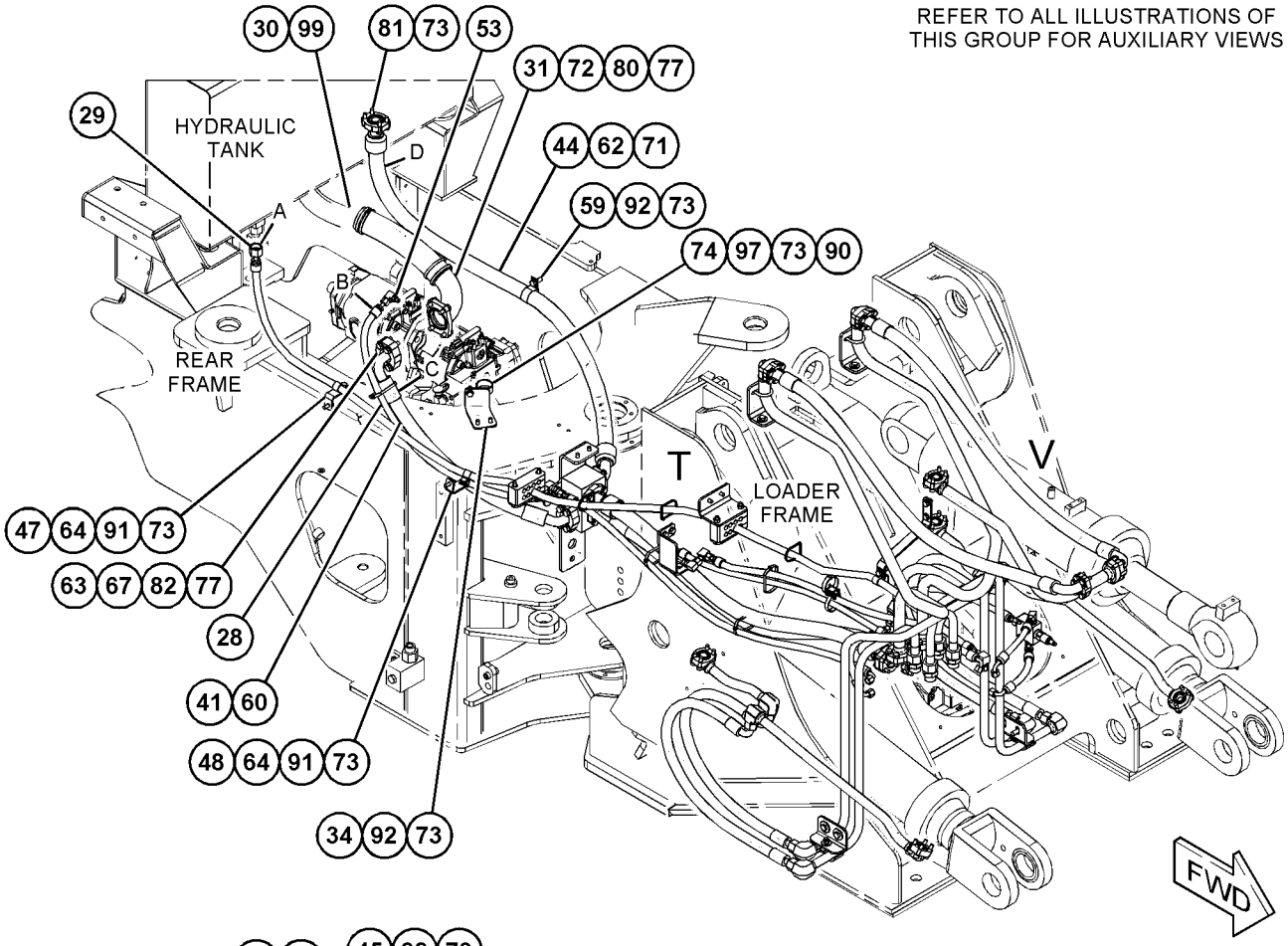

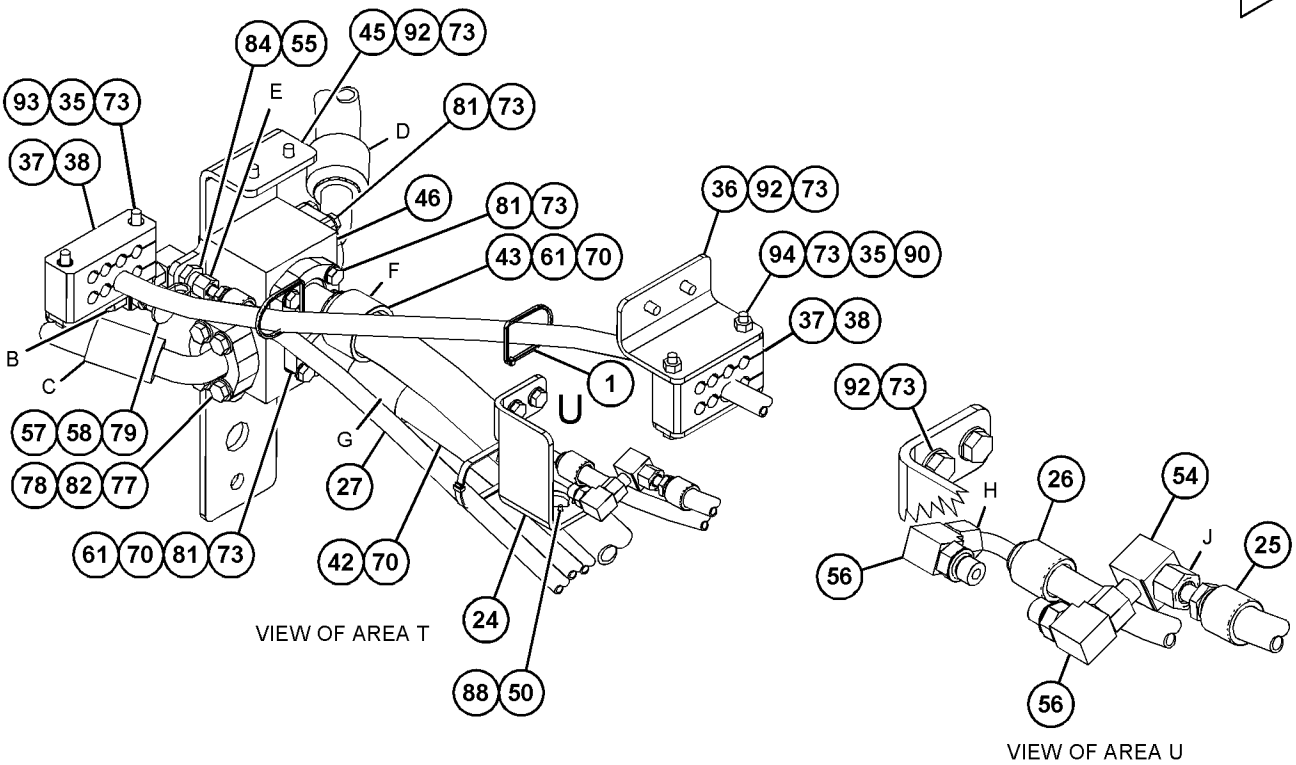

GRAPHIC #1 g03699637

390-5830 **LINES GP-IMPLEMENT (*contd.*)** **i05665609**

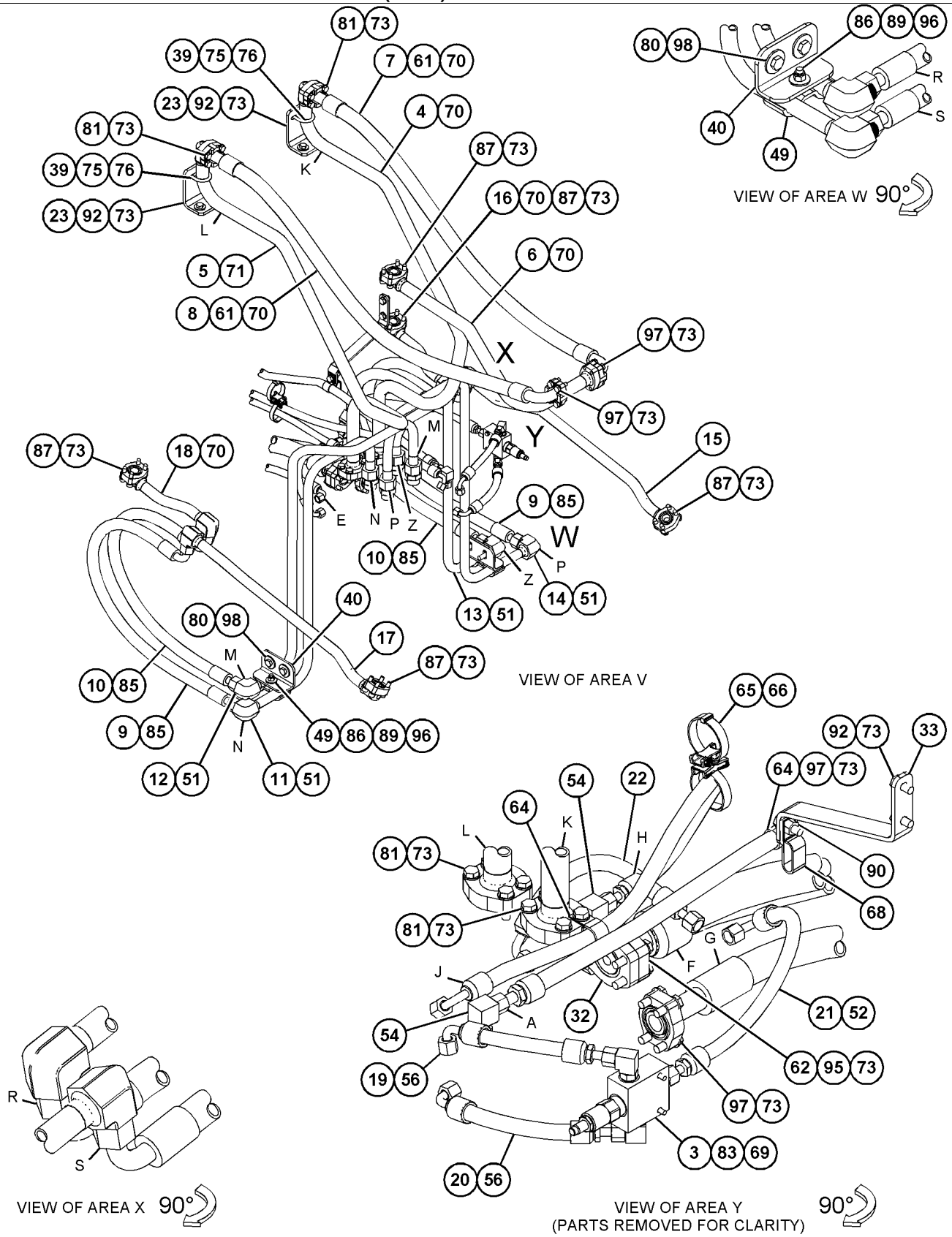

GRAPHIC #2 **<END>** g03699638

390-5830 LINES GP-IMPLEMENT

S/N: M5K1-UP

PART OF 390-5959 HYDRAULIC AR

TYPE 2

SMCS-5057 **i06064345**

NOTE	REF NO	GRAPHIC REF	PART NUMBER	QTY	PART NAME 1 2 3 4 5 6 (PRODUCT LEVEL)	SEE PAGE
C	1	1	**7K-1181**	9	STRAP-CABLE	
	3	2	**367-8969**	1	VALVE GP-PRESSURE REDUCING (IMPLEMENT)	
	4	2	**390-5831**	1	TUBE AS	
	5	2	**390-5835**	1	TUBE AS	
	6	2	**390-5837**	1	TUBE AS	
I	7	2	**390-5839**	1	HOSE AS	
I	8	2	**390-5841**	1	HOSE AS	
I	9	2	**390-5843**	2	HOSE AS	
I	10	2	**390-5845**	2	HOSE AS	
	11	2	**390-5847**	1	TUBE AS	
	12	2	**390-5852**	1	TUBE AS	
	13	2	**390-5854**	1	TUBE AS	
	14	2	**390-5856**	1	TUBE AS	
C	15	2	**452-6979**	1	TUBE AS	
	16	2	**390-5861**	1	TUBE AS	
C	17	2	**452-6977**	1	TUBE AS	
	18	2	**390-5864**	1	TUBE AS	
I	19	2	**390-5865**	1	HOSE AS	
I	20	2	**390-5867**	1	HOSE AS	
I	21	2	**390-5869**	1	HOSE AS	
I	22	2	**390-5871**	1	HOSE AS	
	23	2	**390-5873**	2	BRACKET	
	24	1	**390-5874**	1	BRACKET	
I	25	1	**390-5875**	1	HOSE AS	
I	26	1	**390-5877**	1	HOSE AS	
I	27	1	**390-5881**	1	HOSE AS	
I	28	1	**390-5885**	1	HOSE AS	
I	29	1	**390-5887**	1	HOSE AS	
	30	1	**390-5896**	1	HOSE-SUCTION	
	31	1	**390-5898**	1	FITTING AS	
	32	2	**390-5939**	1	FLANGE	
	33	2	**390-5956**	1	BRACKET	
	34	1	**390-5957**	1	PLATE	
	35	1	**390-5958**	4	SLEEVE	
	36	1	**397-9782**	1	BRACKET	
	37	1	**397-9783**	2	CLIP	
	38	1	**397-9784**	2	PLATE	
	39	2	**397-9877**	2	U-BOLT	
	40	2	**448-2957**	2	BRACKET	
I	41	1	**448-2960**	1	HOSE AS	
I	42	1	**448-2962**	1	HOSE AS	
I	43	1	**448-2964**	1	HOSE AS	
I	44	1	**448-2966**	1	HOSE AS	
	45	1	**448-2968**	1	PLATE	
	46	1	**448-2969**	1	BLOCK	
	47	1	**448-2976**	1	PLATE AS	
	48	1	**448-2977**	1	BRACKET	
	49	2	**448-2978**	2	CLAMP	
	50	1	**096-6166**	4	WASHER-HARD (4.5X9X1-MM THK)	
	51	2	*148-8335*	4	CONNECTOR AS	
					(EACH INCLUDES)	
		2	**6V-8635**	1	CONNECTOR	
		2	**5K-9090**	1	SEAL-O-RING	
		2	**7M-8485**	1	SEAL-O-RING	
	52	2	*148-8336*	1	CONNECTOR AS	
		2	**6V-8636**	1	CONNECTOR	
		2	**3J-1907**	1	SEAL-O-RING	
		2	**6V-8397**	1	SEAL-O-RING	

390-5830 **LINES GP-IMPLEMENT (*contd.*)** **i06064345**

NOTE	REF NO	GRAPHIC REF	PART NUMBER	QTY	PART NAME 1 2 3 4 5 6 (PRODUCT LEVEL)	SEE PAGE
	53	1	*148-8361*	1	ELBOW AS	
		1	**6V-9200**	1	ELBOW	
		1	**3J-7354**	1	SEAL-O-RING	
		1	**6V-8397**	1	SEAL-O-RING	
	54	1,2	*148-8367*	3	ELBOW AS	
					(EACH INCLUDES)	
		1,2	**6V-9850**	1	ELBOW	
		1,2	**6V-8397**	1	SEAL-O-RING	
	55	1	*148-8377*	1	ELBOW AS	
		1	**6V-8980**	1	ELBOW	
		1	**6V-8397**	2	SEAL-O-RING	
	56	1,2	*148-8378*	4	ELBOW AS	
					(EACH INCLUDES)	
		1,2	**6V-8724**	1	ELBOW	
		1,2	**3J-1907**	1	SEAL-O-RING	
		1,2	**6V-8397**	1	SEAL-O-RING	
	57	1	*148-8424*	1	TEE AS	
		1	**8T-8902**	1	TEE	
		1	**6V-8397**	1	SEAL-O-RING	
	58	1	*164-5567*	1	COUPLER AS-QUICK DISCONNECT (MALE)	
		1	**6V-3965**	1	FITTING (QUICK DISCONNECT)	
		1	**214-7568**	1	SEAL-O-RING	
	59	1	**166-2383**	1	CLAMP	
	60	1	**1P-3703**	1	SEAL-RECTANGULAR	
C	61	1	**1P-4577**	4	FLANGE-HALF	
	62	1,2	**1P-4578**	8	FLANGE-HALF	
	63	1	**1P-5767**	2	FLANGE-HALF	
	64	1,2	**1S-0994**	5	CLIP	
	65	2	**200-6345**	1	MOUNT (DUAL SWIVEL)	
	66	2	**204-2281**	2	STRAP-CABLE	
	67	1	**235-2475**	1	SEAL-RECTANGULAR	
	68	2	**2R-1939**	1	CLIP	
C	69	2	**4B-4674**	4	WASHER (6.4X14.5X1.6-MM THK)	
	70	1,2	**4J-0520**	11	SEAL-O-RING	
	71	1,2	**4J-0522**	7	SEAL-O-RING	
	72	1	**5H-8848**	1	SEAL-O-RING	
	73	1,2	**5M-2894**	92	WASHER-HARD (10.2X18.5X2.5-MM THK)	
	74	1	**5P-2369**	1	CLIP	
	75	2	**5P-4116**	4	WASHER-HARD (8.8X20.5X2-MM THK)	
M	76	2	**5P-7970**	4	NUT (M8X1.25-THD)	
	77	1	**5P-8245**	13	WASHER-HARD (13.5X25.5X3-MM THK)	
	78	1	**6V-0400**	2	FLANGE-HALF	
	79	1	**6V-0852**	1	CAP-DUST	
M	80	1,2	**6V-3668**	9	BOLT (M12X1.75X30-MM)	
M	81	1,2	**6V-3822**	32	BOLT (M10X1.5X35-MM)	
M	82	1	**6V-5684**	8	BOLT (M12X1.75X45-MM)	
M	83	2	**6V-7728**	2	BOLT (M6X1X45-MM)	
	84	1	**6V-9168**	1	NUT (11/16-16-THD)	
	85	2	**6V-9746**	8	SEAL-O-RING	
	86	2	**7X-7729**	6	WASHER (11X25X3-MM THK)	
M	87	2	**8T-0271**	20	BOLT-SOCKET HEAD (M10X1.5X35-MM)	
M	88	1	**8T-0337**	4	SCREW-MACHINE (M4X0.7X12-MM)	
M	89	2	**8T-0389**	2	LOCKNUT (M10X1.5-THD)	
M	90	1,2	**8T-4133**	5	NUT (M10X1.5-THD)	
M	91	1	**8T-4136**	4	BOLT (M10X1.5X25-MM)	
M	92	1,2	**8T-4137**	18	BOLT (M10X1.5X20-MM)	
M	93	1	**8T-4172**	2	BOLT (M10X1.5X80-MM)	
M	94	1	**8T-4178**	2	BOLT (M10X1.5X90-MM)	
M	95	2	**8T-4185**	4	BOLT (M10X1.5X50-MM)	
M	96	2	**8T-4186**	2	BOLT (M10X1.5X40-MM)	
M	97	1,2	**8T-4195**	14	BOLT (M10X1.5X30-MM)	

390-5830 **LINES GP-IMPLEMENT (*contd.*)** **i06064345**

NOTE	REF NO	GRAPHIC REF	PART NUMBER	QTY	PART NAME 1 2 3 4 5 6 (PRODUCT LEVEL)	SEE PAGE
	98	2	**8T-4223**	4	WASHER-HARD (13.5X25.5X3-MM THK)	
	99	1	**9M-7959**	4	CLAMP-HOSE	
C	100	2	**1P-5760**	8	FLANGE-HALF	
CM	101	2	**5C-2890**	2	NUT (M6X1-THD)	
C	102	2	**220-2609**	4	CLIP	
C	103	1	**112-1817**	1	VALVE-BALL	
CM	104	2	**6V-2315**	2	BOLT (M6X1X35-MM)	
CG	105	1	**160-2250**		SLEEVE-ABRASION (4-IN)	
CG	106	1	**160-2252**		SLEEVE-ABRASION (4.5-IN)	

C - CHANGE FROM PREVIOUS TYPE
G - ORDER BY THE INCH
I - REFER TO HYDRAULIC INFORMATION SYSTEM
M - METRIC PART

390-5830 **LINES GP-IMPLEMENT (*contd.*)** **i06064345**

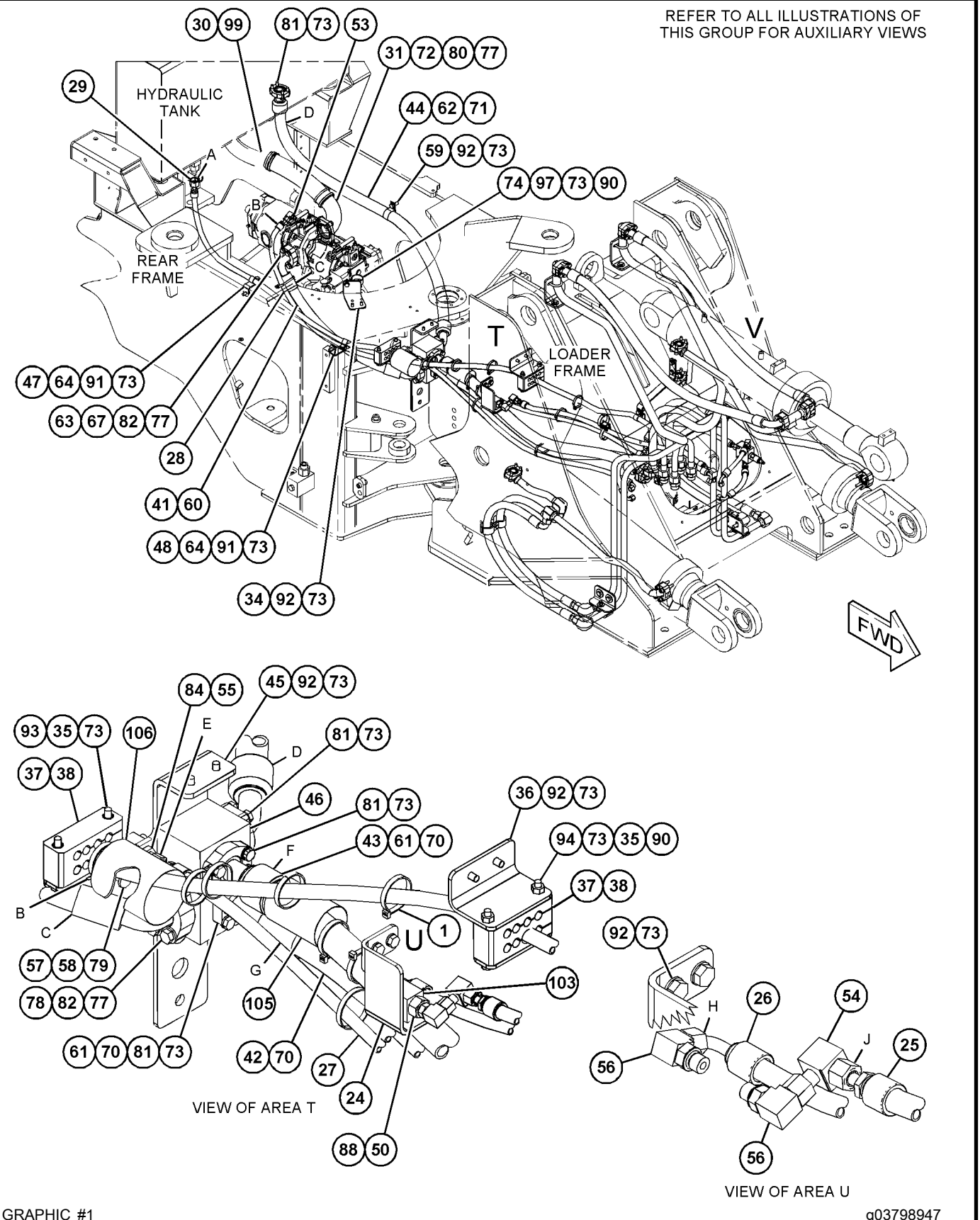

GRAPHIC #1 g03798947

390-5830 **LINES GP-IMPLEMENT (*contd.*)** **i06064345**

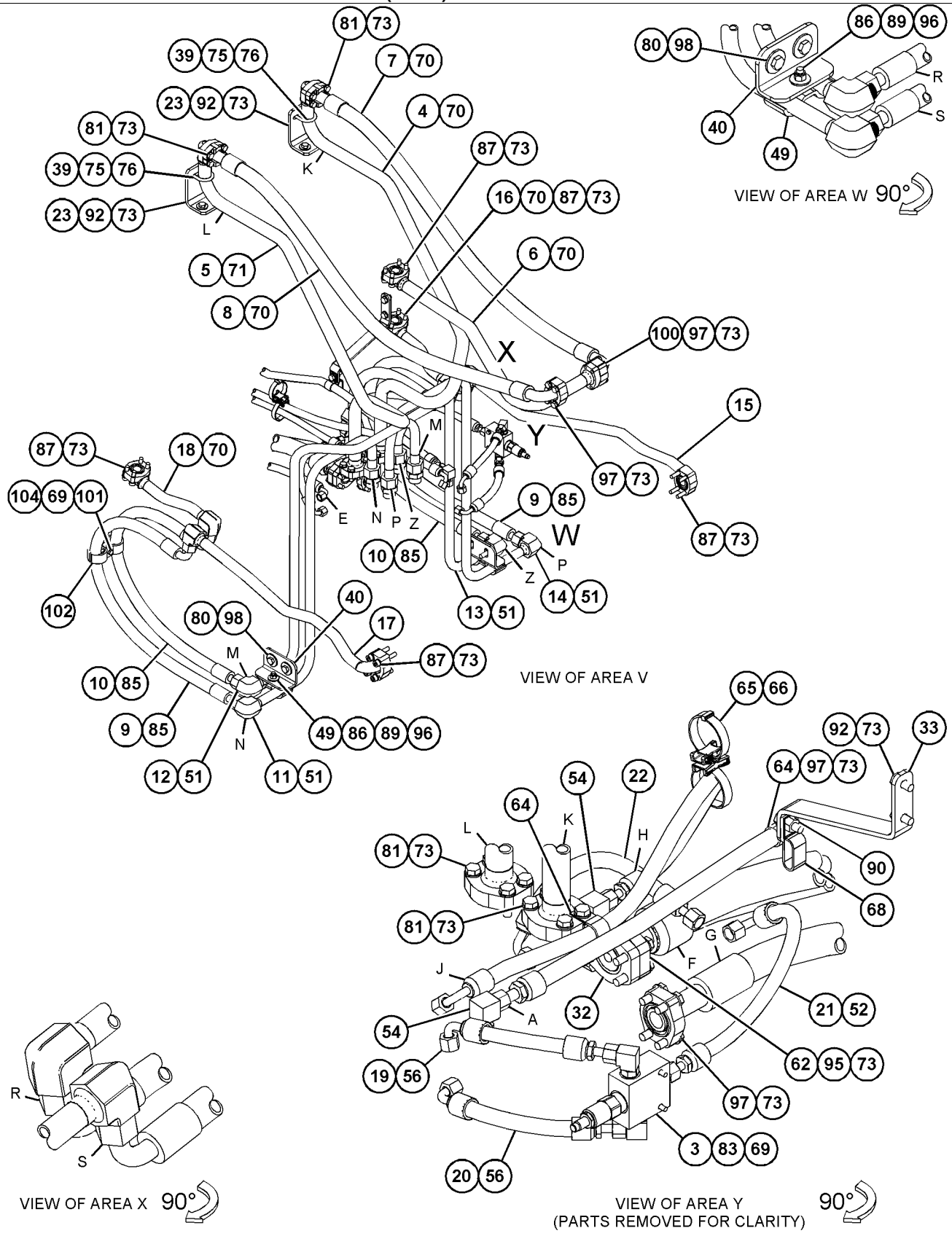

GRAPHIC #2 **<END>** g03798957

397-9764 LINES GP-PILOT–3-LEVER

S/N: M5K1-UP

PART OF 426-0185 CONTROL & MTG GP-ELHYD

AN ATTACHMENT

SMCS-5057, 5059 **i05465978**

NOTE	REF NO	GRAPHIC REF	PART NUMBER	QTY	PART NAME 1 2 3 4 5 6 (PRODUCT LEVEL)	SEE PAGE
Y	1	1	*370-8729*	1	VALVE GP-PILOT	499
I	2	1	**397-9766**	1	HOSE AS	
I	3	1	**397-9768**	1	HOSE AS	
I	4	1	**397-9770**	1	HOSE AS	
I	5	1	**397-9772**	1	HOSE AS	
I	6	1	**397-9774**	1	HOSE AS	
I	7	1	**397-9776**	1	HOSE AS	
I	8	1	**397-9778**	1	HOSE AS	
I	9	1	**397-9780**	1	HOSE AS	
	10	1	*148-8367*	1	ELBOW AS	
		1	**6V-8397**	1	SEAL-O-RING	
		1	**6V-9850**	1	ELBOW	
	11	1	**7K-1181**	2	STRAP-CABLE	

I - REFER TO HYDRAULIC INFORMATION SYSTEM
Y - SEPARATE ILLUSTRATION

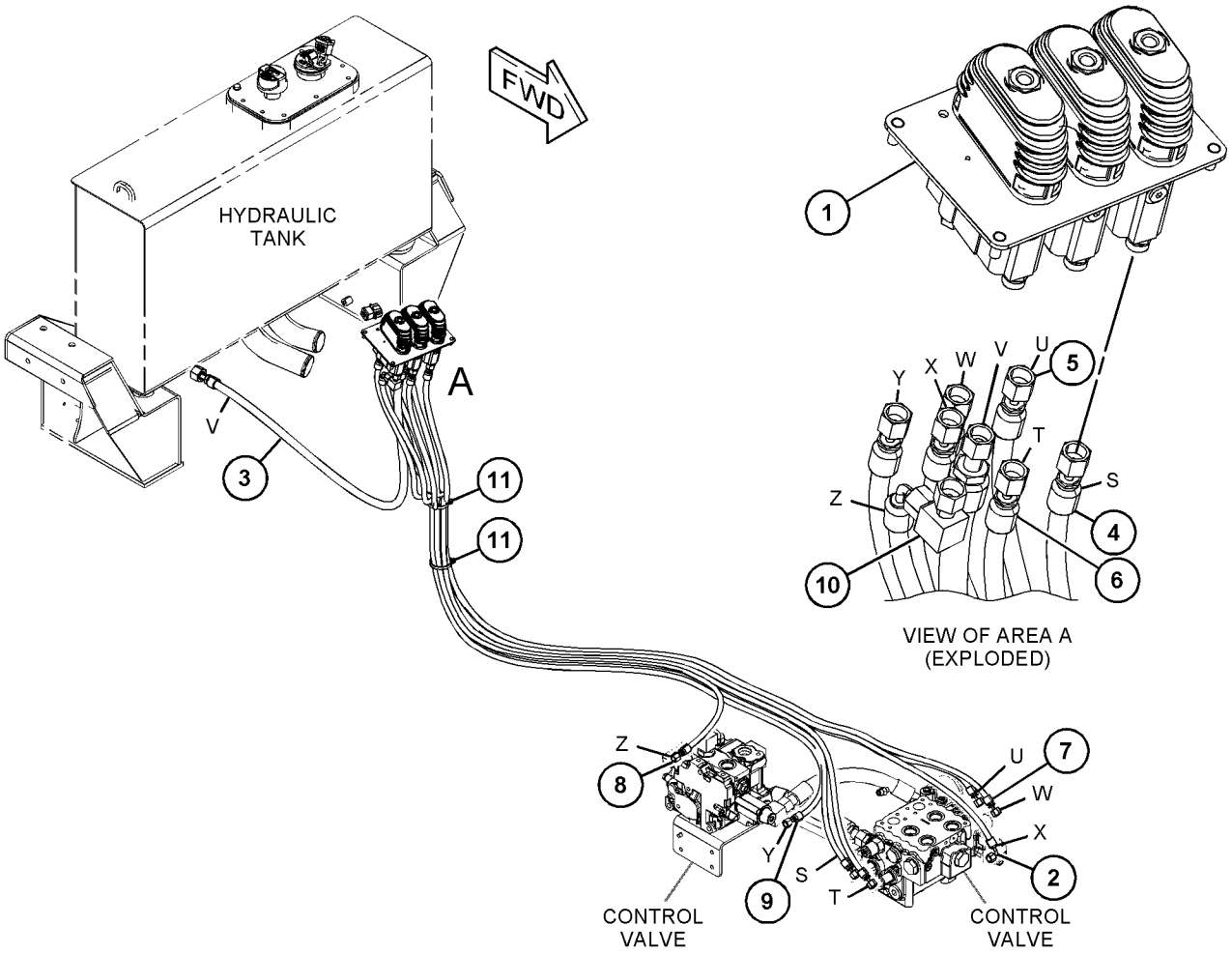

GRAPHIC #1 **<END>** g03526658

397-9765 LINES GP-PILOT–JOYSTICK, 3-LEVER

S/N: M5K1-UP

PART OF 393-9360 CONTROL & MTG GP-JOYSTICK

AN ATTACHMENT

SMCS-5057, 5059 **i05438103**

NOTE	REF NO	GRAPHIC REF	PART NUMBER	QTY	PART NAME 1 2 3 4 5 6 (PRODUCT LEVEL)	SEE PAGE
Y	1	1	*338-8504*	1	VALVE GP-PILOT	492
I	2	1	**397-9766**	1	HOSE AS	
I	3	1	**397-9768**	1	HOSE AS	
I	4	1	**397-9770**	1	HOSE AS	
I	5	1	**397-9772**	1	HOSE AS	
I	6	1	**397-9774**	1	HOSE AS	
I	7	1	**397-9776**	1	HOSE AS	
I	8	1	**397-9778**	1	HOSE AS	
I	9	1	**397-9780**	1	HOSE AS	
	10	1	*148-8367*	1	ELBOW AS	
		1	**6V-8397**	1	SEAL-O-RING	
		1	**6V-9850**	1	ELBOW	
	11	1	**7K-1181**	2	STRAP-CABLE	

I - REFER TO HYDRAULIC INFORMATION SYSTEM
Y - SEPARATE ILLUSTRATION

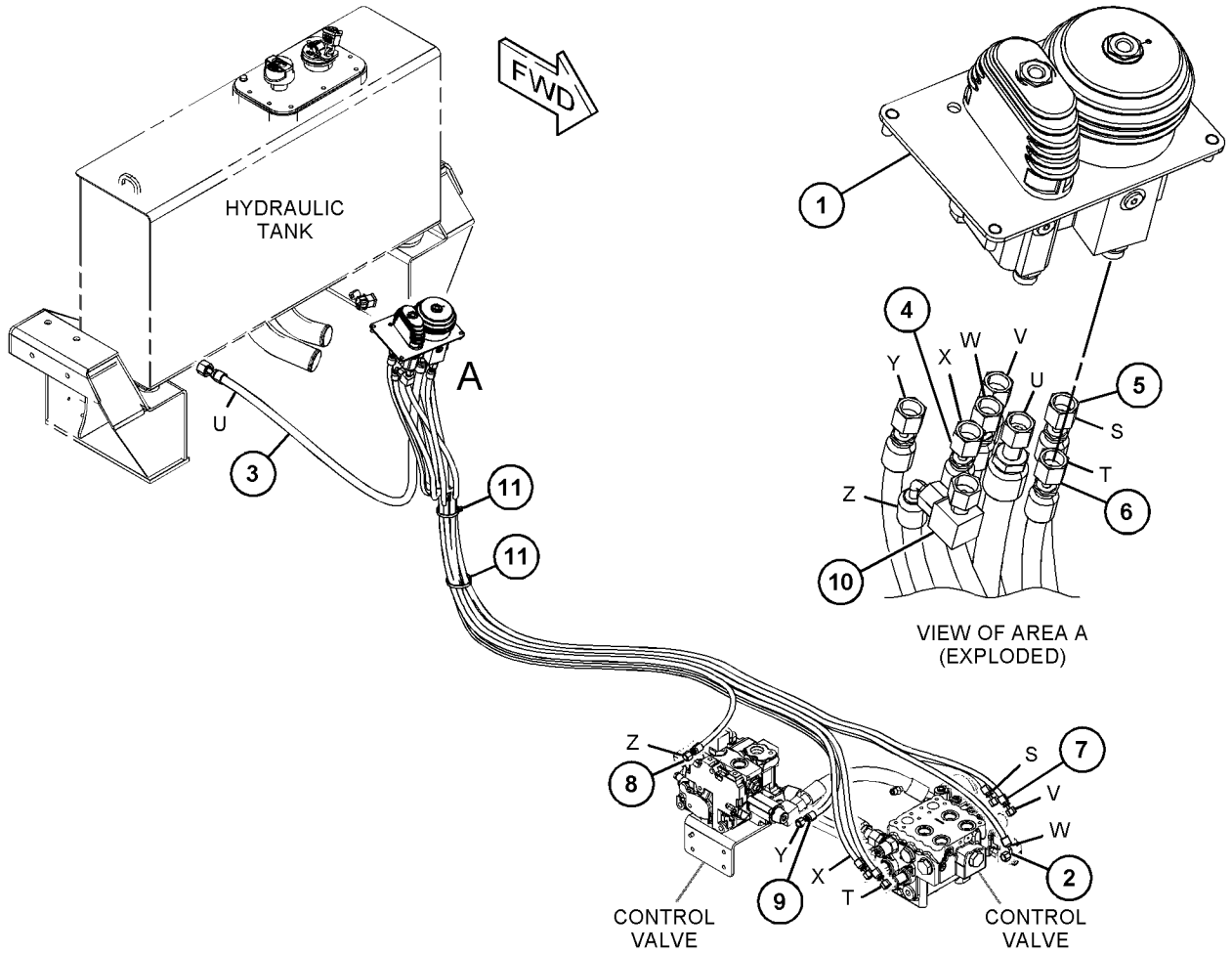

GRAPHIC #1 **<END>** g03526663

397-9846 LINES GP-PILOT–2-LEVER

S/N: M5K1-UP

PART OF 393-9359 CONTROL & MTG GP-ELHYD

AN ATTACHMENT

SMCS-5057, 5059 **i05436930**

NOTE	REF NO	GRAPHIC REF	PART NUMBER	QTY	PART NAME 1 2 3 4 5 6 (PRODUCT LEVEL)	SEE PAGE
Y	1	1	**370-8728**	1	VALVE GP-PILOT	495
I	2	1	**397-9766**	1	HOSE AS	
I	3	1	**397-9768**	1	HOSE AS	
I	4	1	**397-9770**	1	HOSE AS	
I	5	1	**397-9772**	1	HOSE AS	
I	6	1	**397-9774**	1	HOSE AS	
I	7	1	**397-9776**	1	HOSE AS	
	8	1	**7K-1181**	2	STRAP-CABLE	

I - REFER TO HYDRAULIC INFORMATION SYSTEM
Y - SEPARATE ILLUSTRATION

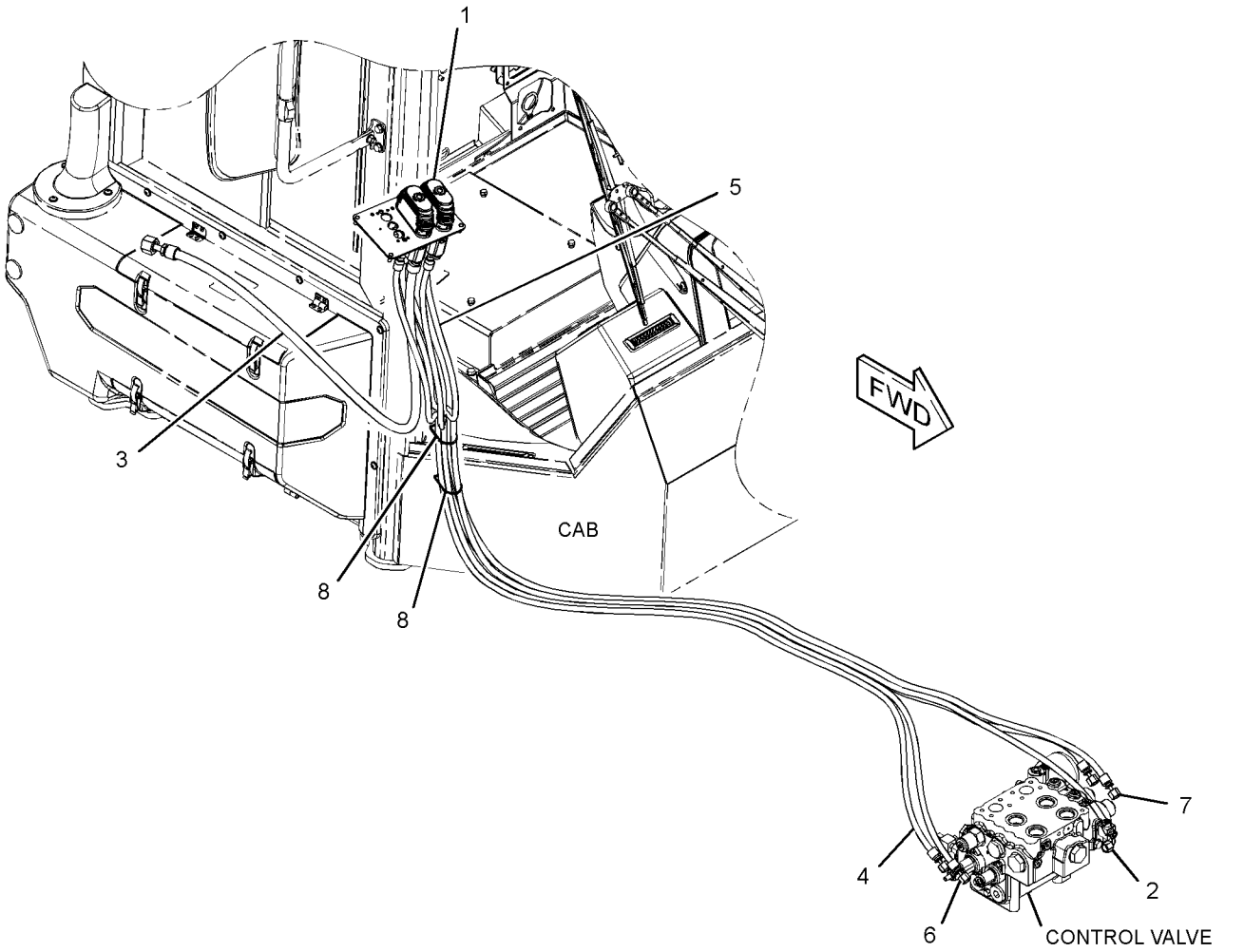

GRAPHIC #1 **<END>** g03522086

397-9847 LINES GP-PILOT–JOYSTICK

S/N: M5K1-UP

PART OF 426-0184 CONTROL & MTG GP-JOYSTICK

AN ATTACHMENT

SMCS-5057, 5059

i05465942

NOTE	REF NO	GRAPHIC REF	PART NUMBER	QTY	PART NAME 1 2 3 4 5 6 (PRODUCT LEVEL)	SEE PAGE
Y	1	1	*338-8502*	1	VALVE GP-PILOT	490
I	2	1	**397-9766**	1	HOSE AS	
I	3	1	**397-9768**	1	HOSE AS	
I	4	1	**397-9770**	1	HOSE AS	
I	5	1	**397-9772**	1	HOSE AS	
I	6	1	**397-9774**	1	HOSE AS	
I	7	1	**397-9776**	1	HOSE AS	
	8	1	**7K-1181**	2	STRAP-CABLE	

I - REFER TO HYDRAULIC INFORMATION SYSTEM
Y - SEPARATE ILLUSTRATION

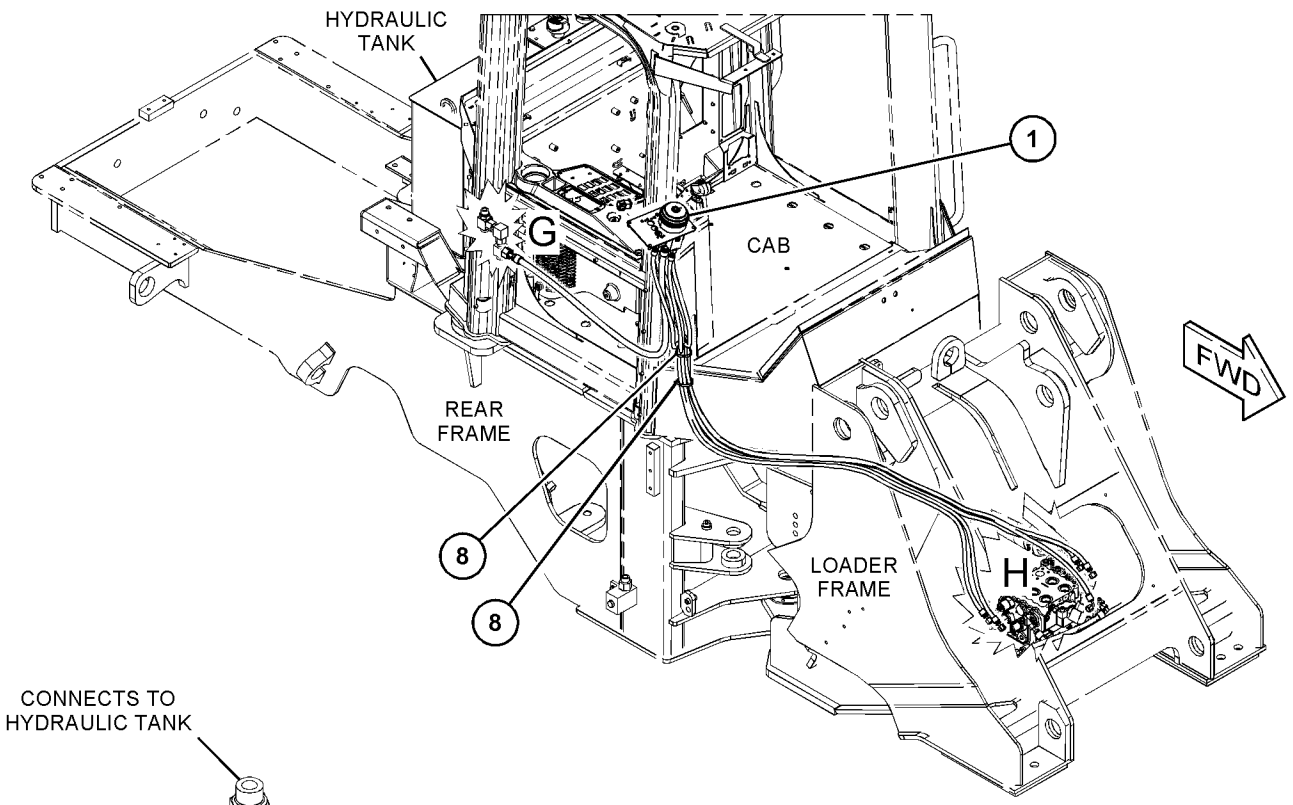

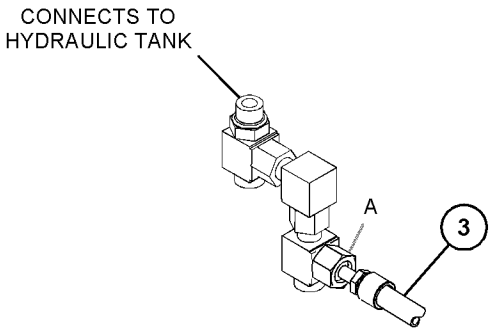

VIEW OF AREA G

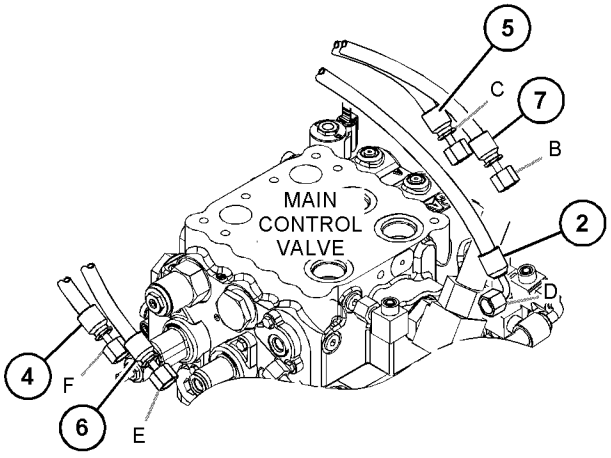

VIEW OF AREA H

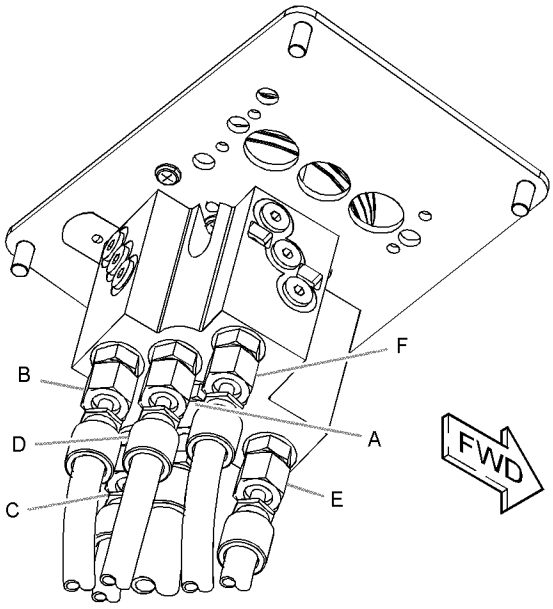

GRAPHIC #1 **<END>** g03522958

387-4652 MANIFOLD GP-CONTROL

S/N: M5K1-UP
PART OF 383-8642, 451-5885 VALVE GP-MAIN CONTROL
AN ATTACHMENT

SMCS-4264, 5072, 5264, 5467, 5479 **i05837908**

NOTE	REF NO	GRAPHIC REF	PART NUMBER	QTY	PART NAME 1 2 3 4 5 6 (PRODUCT LEVEL)	SEE PAGE
	1	1	**282-8827**	3	PLUG	
	2	1	**363-1613**	1	BOLT (M5X0.8X15-MM)	
	3	1	*367-6003*	1	PLUG AS	
		1	**3K-0360**	1	SEAL-O-RING	
		1	**360-3680**	1	PLUG	
	4	1	**423-1786**	2	RETAINER	
	5	1	**423-1787**	1	SPRING	
	6	1	*440-5279*	1	VALVE GP-CONTROL (RIDE CONTROL)	
JY	7	1	**445-8805**	1	VALVE GP-RELIEF	510
	8	1	*148-8410*	1	PLUG AS	
		1	**2M-9780**	1	SEAL-O-RING	
		1	**9S-4190**	1	PLUG-O-RING	
	9	1	**5P-6300**	4	SEAL-O-RING	
					AVAILABLE REPAIR KIT(S):	
J			**133-5545**	1	KIT-SEAL (RELIEF VALVE)	
					(INCLUDES O-RINGS & BACKUP RINGS)	

J - KIT MARKED J SERVICES PART(S) MARKED J
Y - SEPARATE ILLUSTRATION

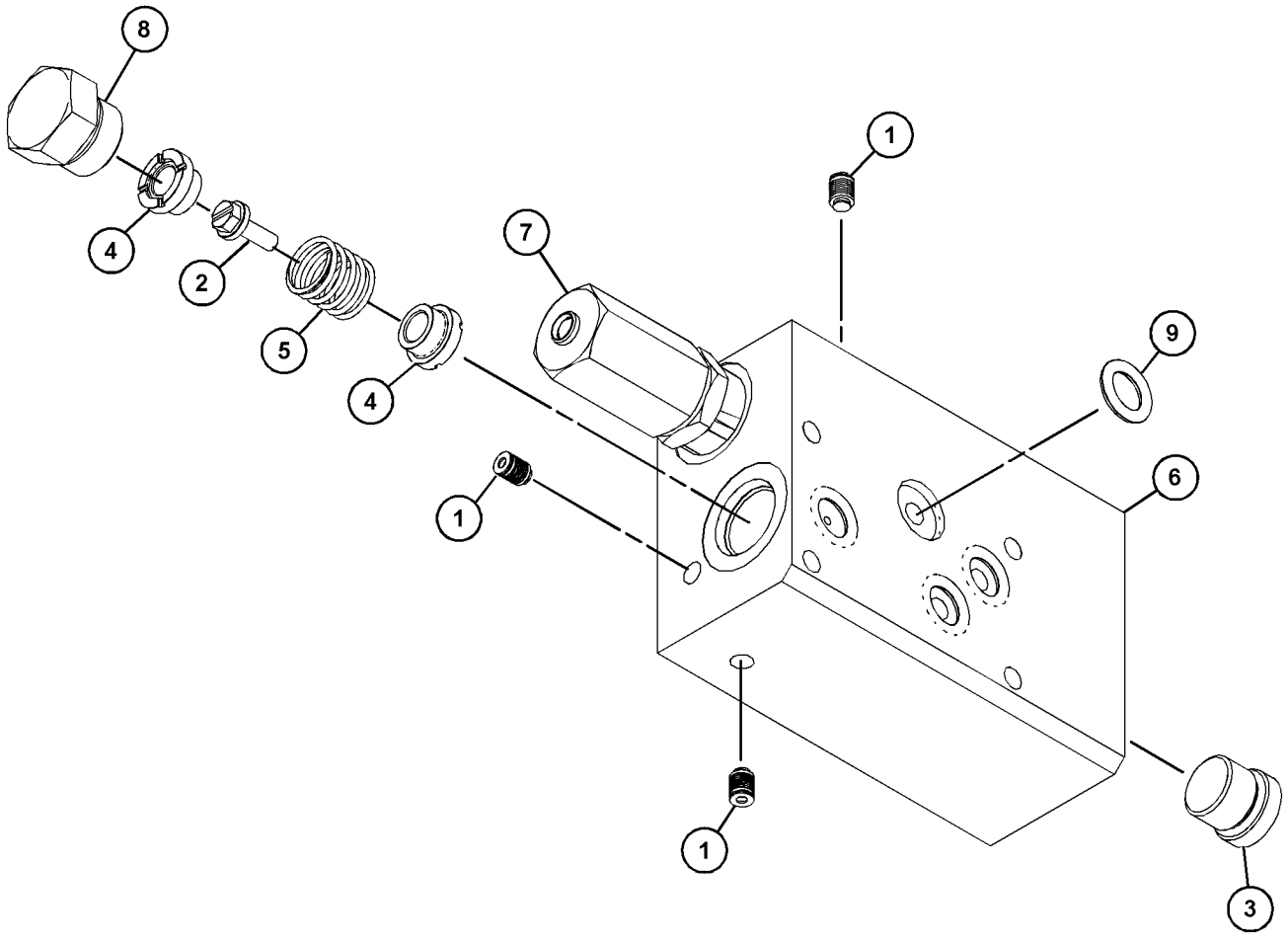

GRAPHIC #1 **<END>** g03695124

445-4983 MANIFOLD GP-VALVE

S/N: M5K1-UP

PART OF 445-6169 VALVE GP-CONTROL

AN ATTACHMENT

SMCS-5264 **i06034388**

NOTE	REF NO	GRAPHIC REF	PART NUMBER	QTY	PART NAME 1 2 3 4 5 6 (PRODUCT LEVEL)	SEE PAGE
	1	1	**3K-0360**	1	SEAL-O-RING	
	2	1	**6E-6129**	1	PLUG-MAIN RELIEF	
	3	1	**7J-9933**	1	SEAL-O-RING	
	4	1	**096-3831**	1	ORIFICE	
	5	1	*148-8406*	2	PLUG AS	
					(EACH INCLUDES)	
		1	**7M-8485**	1	SEAL-O-RING	
		1	**9S-9334**	1	PLUG-O-RING	
	6	1	**282-8827**	3	PLUG	
	7	1	**292-8061**	4	PLUG-EXPANSION	
	8	1	**305-4563**	1	VALVE GP-SHUTTLE (PILOT OIL)	
		1	**2M-9780**	1	SEAL-O-RING	
	9	1	*445-4982*	1	MANIFOLD-INLET	

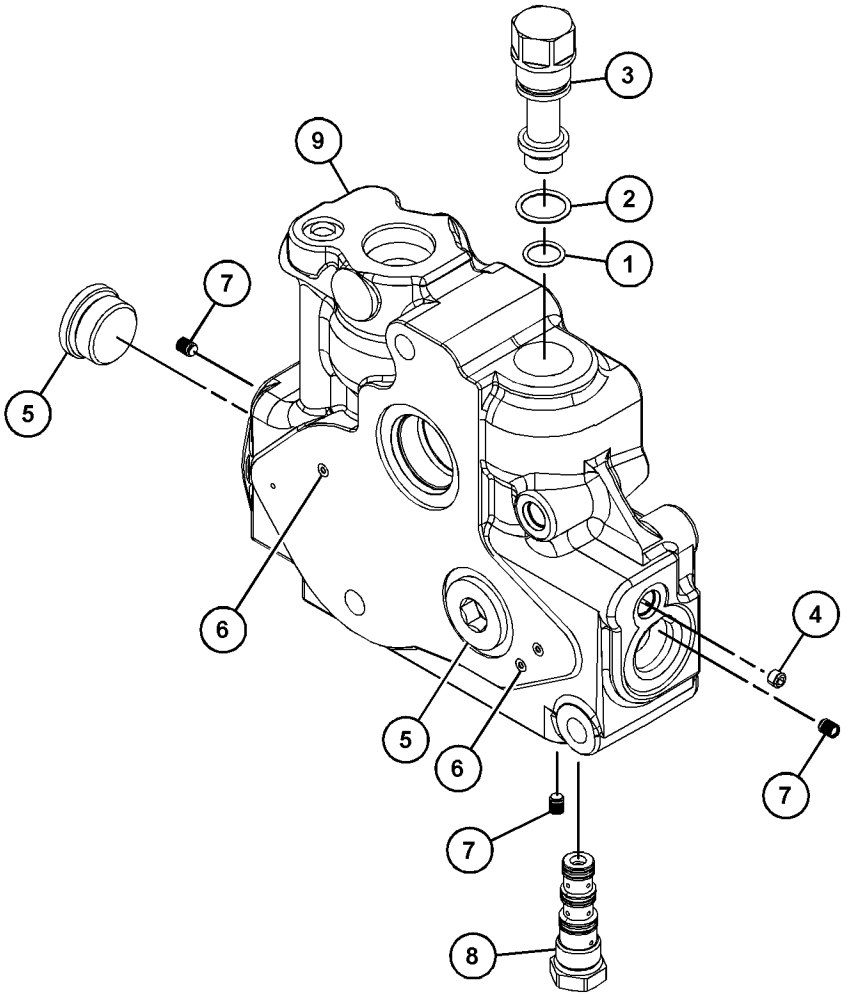

GRAPHIC #1 **<END>** g03487821

397-9801 MOTOR & LINES GP-HYDRAULIC FAN—REVERSING FAN

S/N: M5K1-UP

CANNOT BE USED WITH 397-9802—PAGE: 437

AN ATTACHMENT

SMCS-1386, 5057, 5061

i05675138

NOTE	REF NO	GRAPHIC REF	PART NUMBER	QTY	PART NAME 1 2 3 4 5 6 (PRODUCT LEVEL)	SEE PAGE
	1	1	**6V-0852**	1	CAP-DUST	
Y	2	1	**338-2913**	1	MOTOR GP-GEAR (REVERSING FAN)	440
I	3	1	**397-9823**	1	HOSE AS	
I	4	1	**397-9825**	1	HOSE AS	
I	5	1	**397-9827**	1	HOSE AS	
I	6		**397-9829**	1	HOSE AS	
	7	1	**397-9831**	1	BRACKET	
Y	8	1	*415-4235*	1	SWITCH GP-REVERSING FAN	169
Y	9		**435-1940**	1	VALVE GP-FAN REVERSING	477
	10	1	*148-8327*	5	CONNECTOR AS	
					(EACH INCLUDES)	
		1	**6V-8637**	1	CONNECTOR	
		1	**3D-2824**	1	SEAL-O-RING	
		1	**6V-9746**	1	SEAL-O-RING	
	11	1	*148-8347*	2	ELBOW AS	
					(EACH INCLUDES)	
		1	**6V-9007**	1	ADAPTER	
		1	**3D-2824**	1	SEAL-O-RING	
		1	**6V-9746**	1	SEAL-O-RING	
	12	1	*148-8378*	1	ELBOW AS	
		1	**6V-8724**	1	ELBOW	
		1	**3J-1907**	1	SEAL-O-RING	
		1	**6V-8397**	1	SEAL-O-RING	
	13	1	*148-8392*	3	ELBOW AS	
					(EACH INCLUDES)	
		1	**6V-9853**	1	ELBOW	
		1	**6V-9746**	1	SEAL-O-RING	
	14	1	*148-8424*	1	TEE AS	
		1	**8T-8902**	1	TEE	
		1	**6V-8397**	1	SEAL-O-RING	
	15		*164-5567*	1	COUPLER AS-QUICK DISCONNECT (MALE)	
			6V-3965	1	FITTING (QUICK DISCONNECT)	
			214-7568	1	SEAL-O-RING	
	16	1	**5P-8245**	2	WASHER-HARD (13.5X25.5X3-MM THK)	
	17	1	**6V-1889**	1	CLIP	
	18	1	**8T-4121**	5	WASHER-HARD (11X21X2.5-MM THK)	
M	19	1	**8T-4133**	2	NUT (M10X1.5-THD)	
M	20	1	**8T-4137**	3	BOLT (M10X1.5X20-MM)	
M	21	1	**8T-4178**	2	BOLT (M10X1.5X90-MM)	
M	22	1	**8T-4183**	2	BOLT (M12X1.75X40-MM)	

I - REFER TO HYDRAULIC INFORMATION SYSTEM
M - METRIC PART
Y - SEPARATE ILLUSTRATION

397-9801 **MOTOR & LINES GP-HYDRAULIC FAN (*contd.*)** **i05675138**

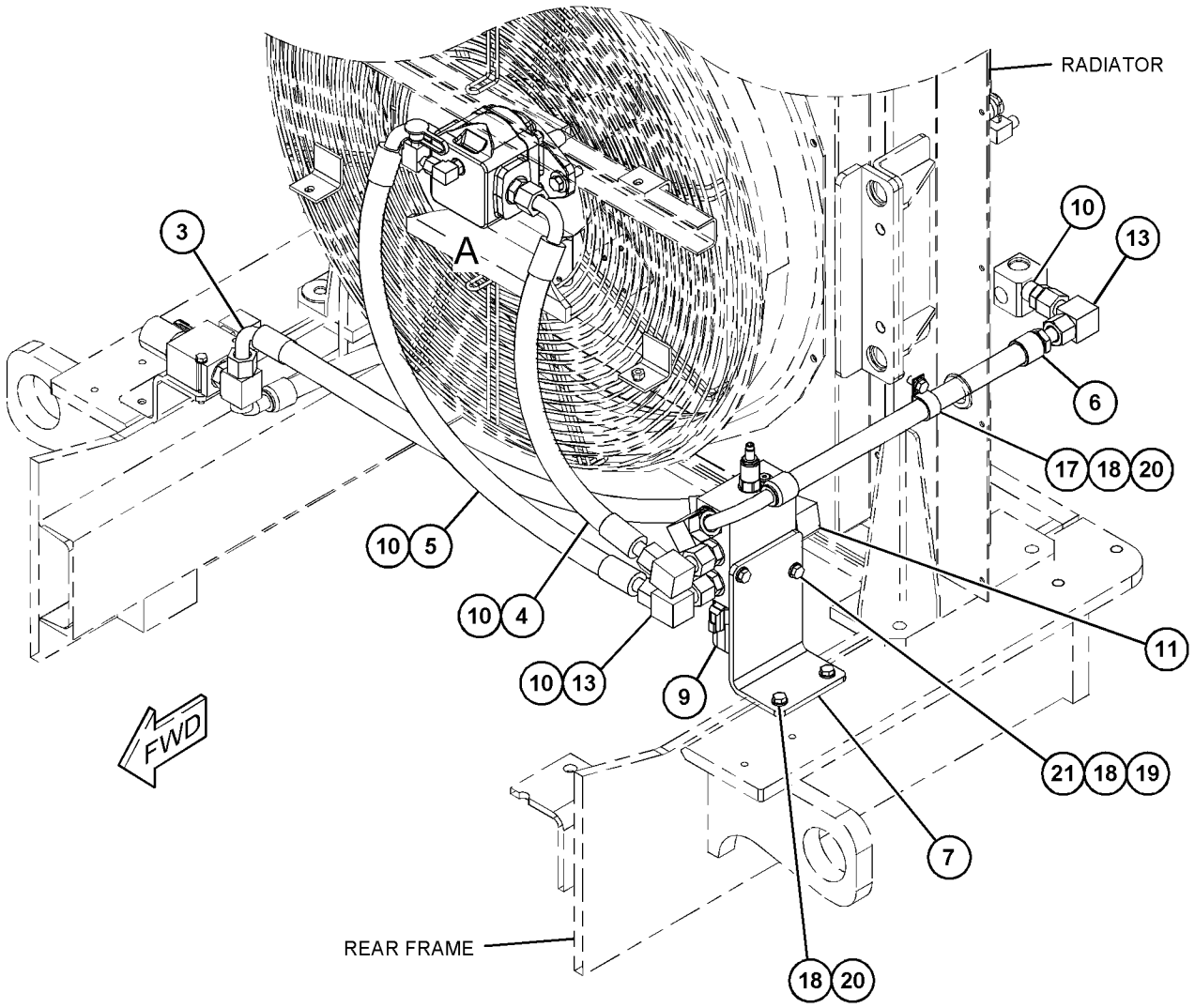

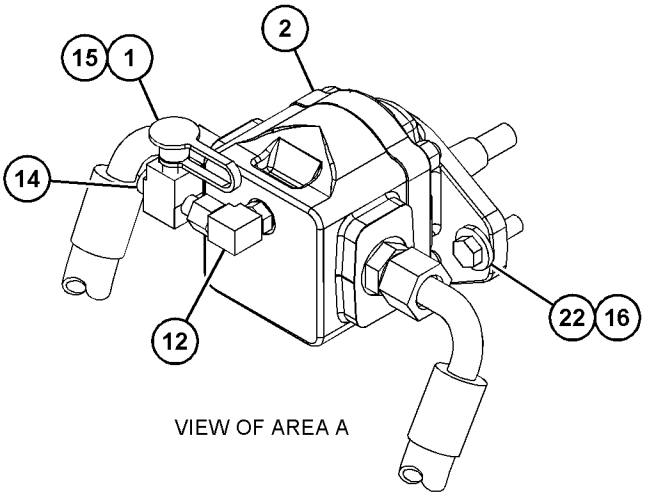

VIEW OF AREA A

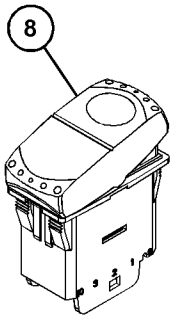

GRAPHIC #1 **<END>** g03543220

397-9802 MOTOR & LINES GP-HYDRAULIC FAN

S/N: M5K1-UP

CANNOT BE USED WITH 397-9801—PAGE: 435

AN ATTACHMENT

SMCS-1386, 5057, 5061

i05675167

NOTE	REF NO	GRAPHIC REF	PART NUMBER	QTY	PART NAME 1 2 3 4 5 6 (PRODUCT LEVEL)	SEE PAGE
	1	1	**204-2281**	3	STRAP-CABLE	
Y	2	1	**246-6152**	1	MOTOR GP-GEAR (HYDRAULIC FAN)	439
I	3	1	**397-9832**	1	HOSE AS	
I	4	1	**397-9834**	1	HOSE AS	
	5	1	*148-8327*	2	CONNECTOR AS	
					(EACH INCLUDES)	
		1	**6V-8637**	1	CONNECTOR	
		1	**3D-2824**	1	SEAL-O-RING	
		1	**6V-9746**	1	SEAL-O-RING	
	6	1	*148-8347*	1	ELBOW AS	
		1	**6V-9007**	1	ADAPTER	
		1	**3D-2824**	1	SEAL-O-RING	
		1	**6V-9746**	1	SEAL-O-RING	
	7	1	*148-8378*	1	ELBOW AS	
		1	**6V-8724**	1	ELBOW	
		1	**3J-1907**	1	SEAL-O-RING	
		1	**6V-8397**	1	SEAL-O-RING	
	8	1	*148-8392*	1	ELBOW AS	
		1	**6V-9853**	1	ELBOW	
		1	**6V-9746**	1	SEAL-O-RING	
	9	1	*148-8424*	1	TEE AS	
		1	**8T-8902**	1	TEE	
		1	**6V-8397**	1	SEAL-O-RING	
	10	1	*164-5567*	1	COUPLER AS-QUICK DISCONNECT (MALE)	
		1	**6V-3965**	1	FITTING (QUICK DISCONNECT)	
		1	**214-7568**	1	SEAL-O-RING	
	11	1	**200-6345**	1	MOUNT (DUAL SWIVEL)	
	12	1	**5P-8245**	2	WASHER-HARD (13.5X25.5X3-MM THK)	
	13	1	**6V-0852**	1	CAP-DUST	
	14	1	**6V-1889**	1	CLIP	
	15	1	**8T-4121**	1	WASHER-HARD (11X21X2.5-MM THK)	
M	16	1	**8T-4137**	1	BOLT (M10X1.5X20-MM)	
M	17	1	**8T-4183**	2	BOLT (M12X1.75X40-MM)	

I - REFER TO HYDRAULIC INFORMATION SYSTEM
M - METRIC PART
Y - SEPARATE ILLUSTRATION

397-9802 **MOTOR & LINES GP-HYDRAULIC FAN (*contd.*)** **i05675167**

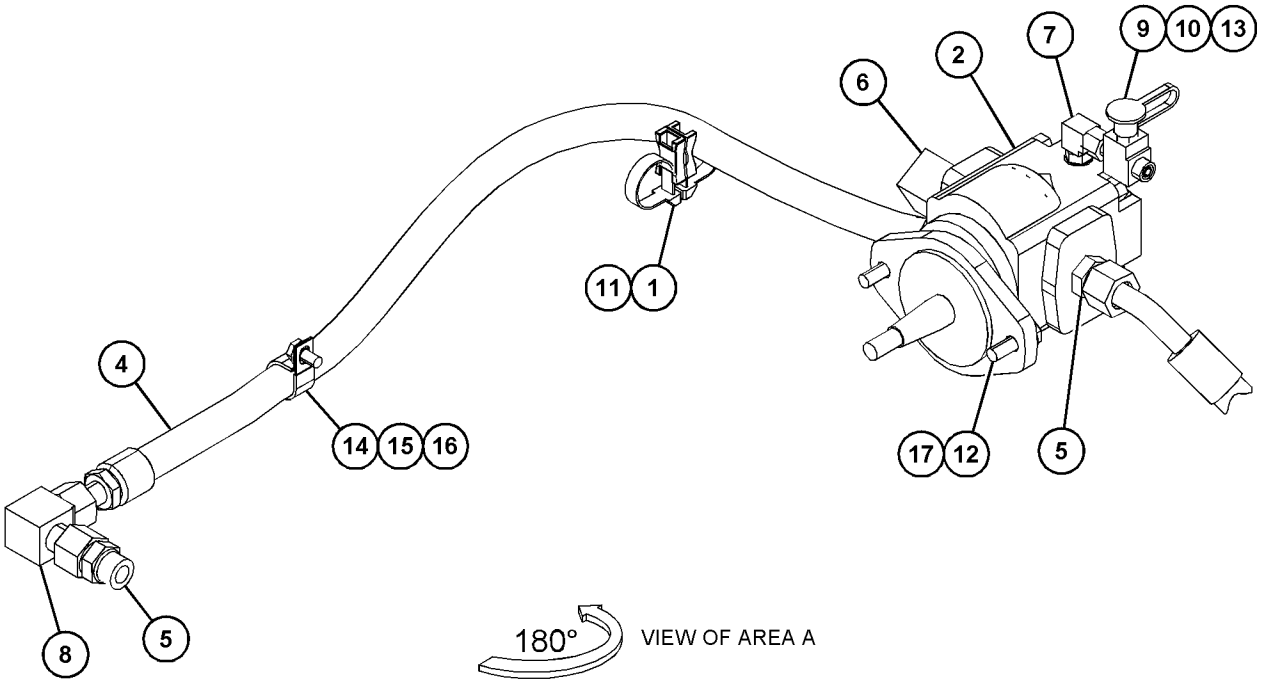

180° VIEW OF AREA A

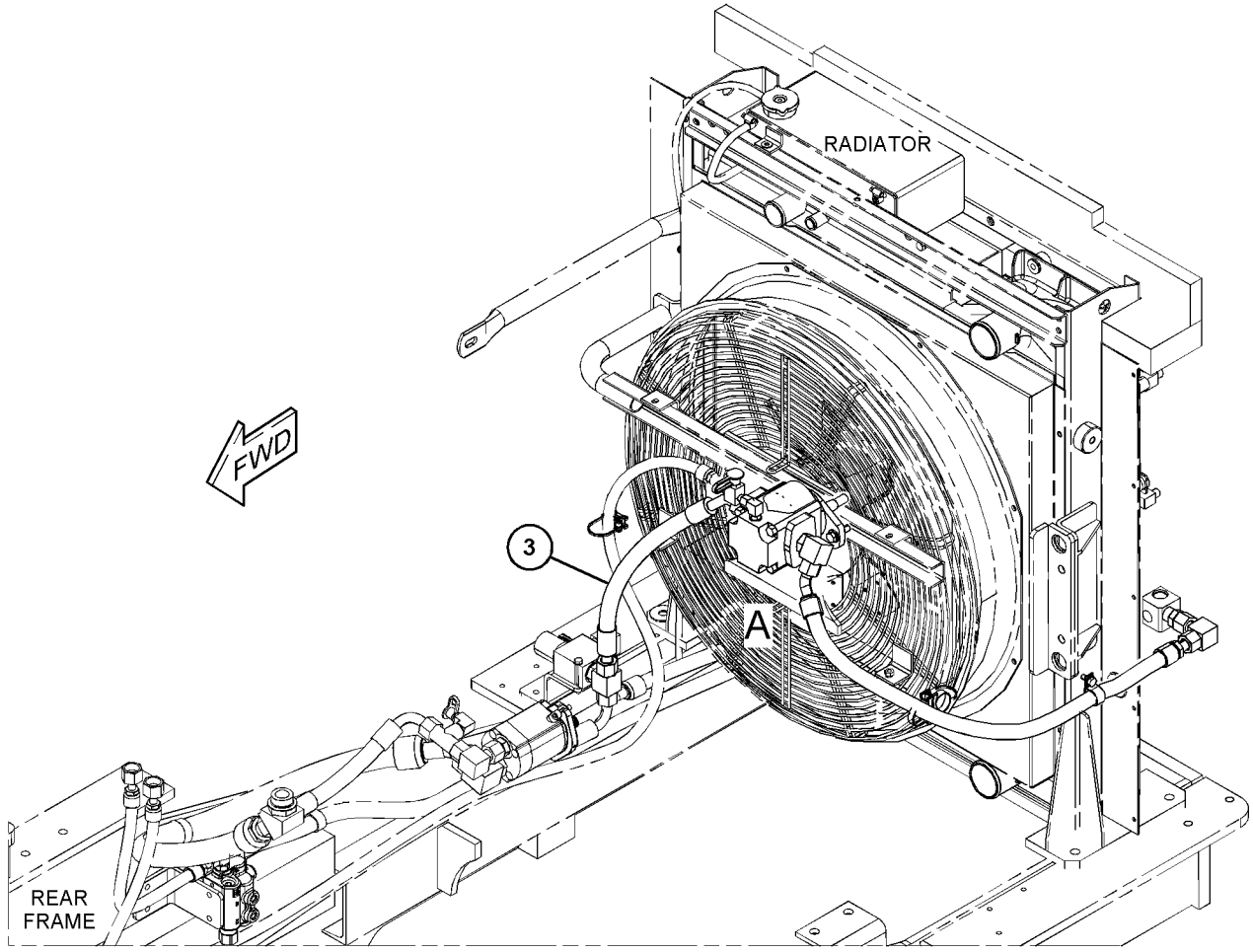

GRAPHIC #1 **<END>** g03699413

246-6152 MOTOR GP-GEAR–HYDRAULIC FAN

S/N: M5K1-UP

PART OF 397-9802 MOTOR & LINES GP-HYDRAULIC FAN

AN ATTACHMENT

SMCS-1386, 5061

i05465791

NOTE	REF NO	GRAPHIC REF	PART NUMBER	QTY	PART NAME 1 2 3 4 5 6 (PRODUCT LEVEL)	SEE PAGE
M	1	1	**136-9029**	4	BOLT	
	2	1	**136-9030**	4	WASHER (12.5X18X1.5-MM THK)	
J	3	1	**150-3378**	1	SEAL-SHAFT	
J	4	1	**096-0194**	1	RING-RETAINING	
	5	1	**9S-4191**	1	PLUG-O-RING	
	6	1	**3J-1907**	1	SEAL-O-RING	
					AVAILABLE REPAIR KIT(S):	
J			**194-9632**	1	KIT-SEAL	

J - REPAIR KIT(S) MARKED J SERVICES PART(S) MARKED J
M - METRIC PART

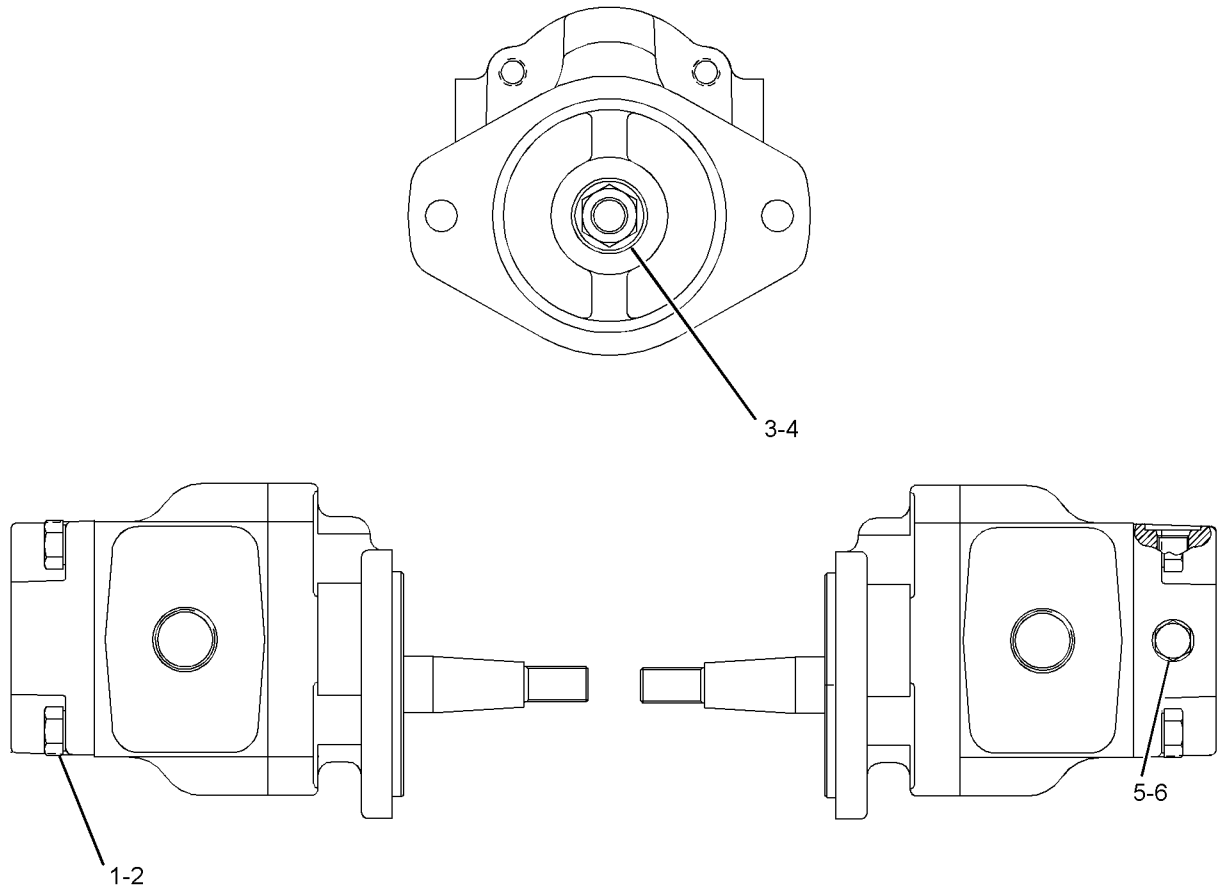

GRAPHIC #1

<END>

g01136938

338-2913 MOTOR GP-GEAR–REVERSING FAN–HYDRAULIC FAN

S/N: M5K1-UP

PART OF 397-9801 MOTOR & LINES GP-HYDRAULIC FAN

AN ATTACHMENT

SMCS-1386, 5061

i06060516

NOTE	REF NO	GRAPHIC REF	PART NUMBER	QTY	PART NAME 1 2 3 4 5 6 (PRODUCT LEVEL)	SEE PAGE
JM	1	1	**7X-3342**	4	STUD-LOCKING (M12X1.75X60-MM)	
JM	2	1	**329-3356**	4	NUT (M12X1.75-THD)	
J	3	1	**136-9030**	4	WASHER (12.5X18X1.5-MM THK)	
					AVAILABLE REPAIR KIT(S):	
J			**441-5062**	1	KIT-SEAL (FAN MOTOR)	
					(INCLUDES SEALS & RING)	

J - KIT MARKED J INCLUDES PART(S) MARKED J
M - METRIC PART

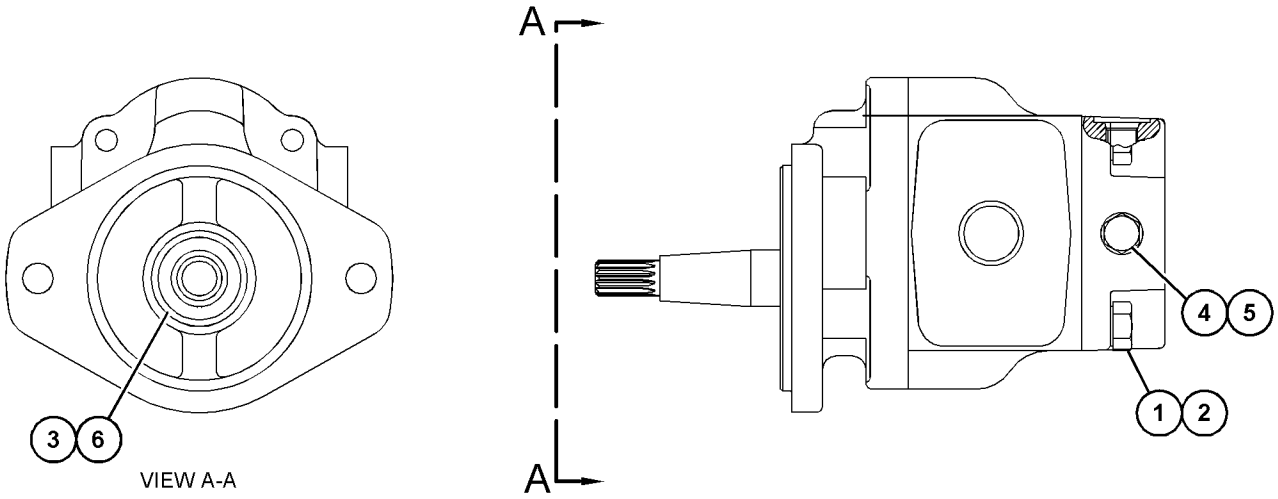

VIEW A-A

GRAPHIC #1

<END>

g03526277

390-5828 MOUNTING GP-BANK VALVE

S/N: M5K1-UP

PART OF 390-5959 HYDRAULIC AR

SMCS-5051 **i05431157**

NOTE	REF NO	GRAPHIC REF	PART NUMBER	QTY	PART NAME 1 2 3 4 5 6 (PRODUCT LEVEL)	SEE PAGE
	1	1	**390-5829**	1	PLATE	
	2	1	**5P-1076**	8	WASHER-HARD (13.5X30X4-MM THK)	
M	3	1	**6V-8097**	8	BOLT (M12X1.75X30-MM)	

M - METRIC PART

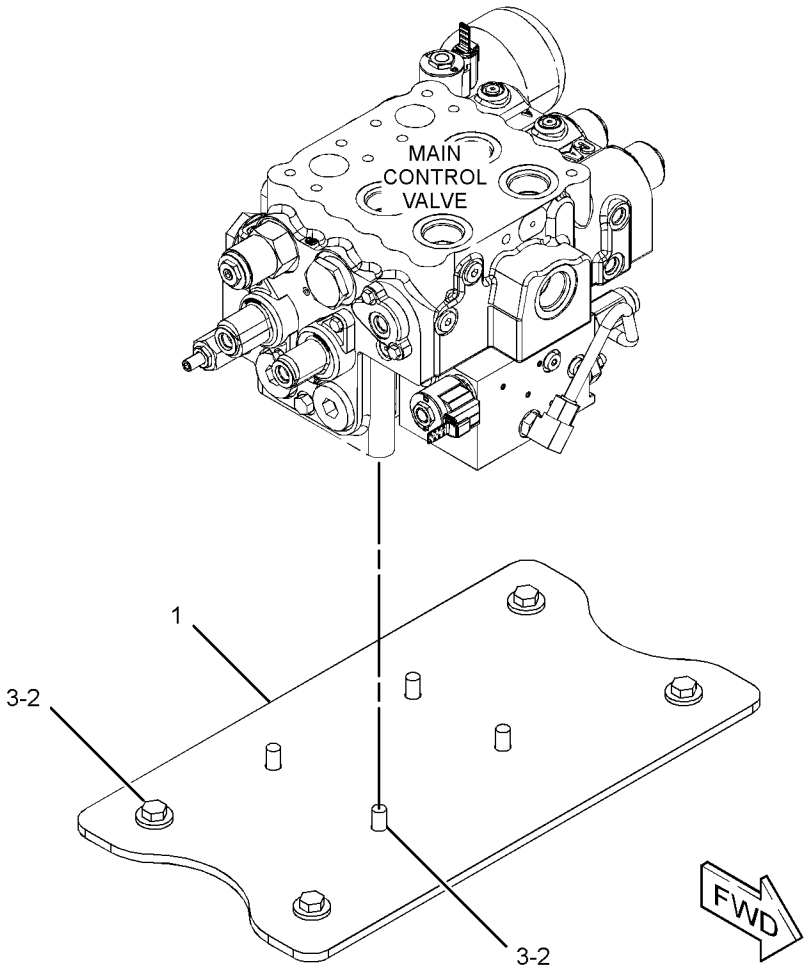

GRAPHIC #1 **<END>** g03430113

147-2038 PIVOT GP-PILOT VALVE–TILT

S/N: M5K1-UP

PART OF 370-8728, 370-8729 VALVE GP-PILOT

AN ATTACHMENT

SMCS-5059 **i05559999**

NOTE	REF NO	GRAPHIC REF	PART NUMBER	QTY	PART NAME 1 2 3 4 5 6 (PRODUCT LEVEL)	SEE PAGE
	1	1	**174-1366**	1	PLATE	
	2	1	**141-7481**	1	SPACER	
	3	1	**146-6315**	2	PIN-ADJUSTMENT	
	4	1	**146-8479**	1	SWIVEL	
	5	1	**146-6317**	1	RETAINER	
	6	1	**159-3781**	1	SPRING	
M	7	1	**5C-2890**	2	NUT (M6X1-THD)	

M - METRIC PART

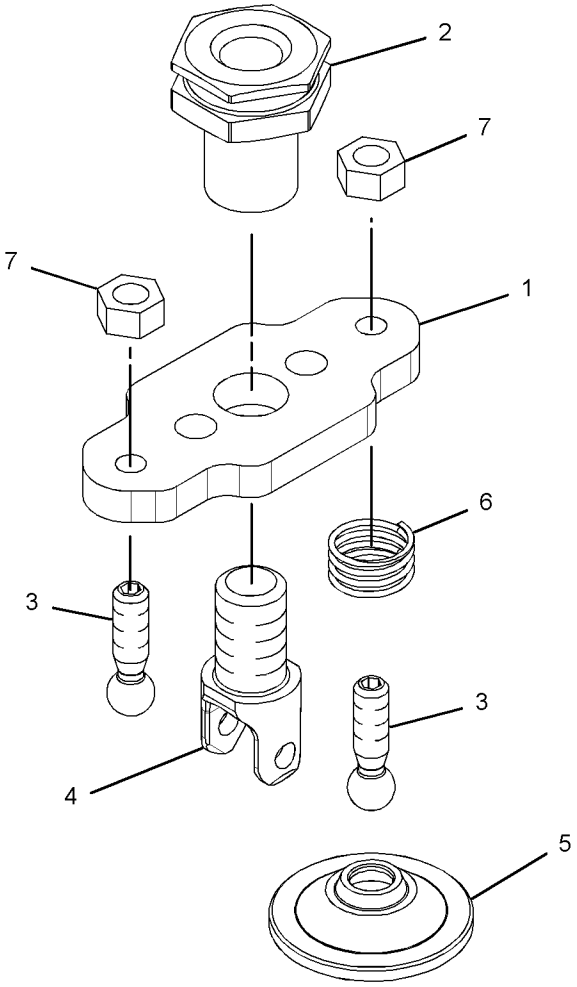

GRAPHIC #1 **<END>** g01890233

160-6299 PIVOT GP-PILOT VALVE

S/N: M5K1-UP

PART OF 338-8504, 370-8728, 370-8729 VALVE GP-PILOT

AN ATTACHMENT

SMCS-5059 **i05550492**

NOTE	REF NO	GRAPHIC REF	PART NUMBER	QTY	PART NAME 1 2 3 4 5 6 (PRODUCT LEVEL)	SEE PAGE
	1	1	**141-7481**	1	SPACER	
	2	1	**146-6315**	2	PIN-ADJUSTMENT	
	3	1	**146-8479**	1	SWIVEL	
	4	1	**153-8945**	1	PLUNGER AS	
		1	**3H-7180**	1	SETSCREW (1/4-28X0.25-IN)	
		1	**6J-9996**	1	SPRING	
	5	1	**174-1366**	1	PLATE	
	6	1	**146-6317**	1	RETAINER	
	7	1	**159-3781**	1	SPRING	
M	8	1	**5C-2890**	2	NUT (M6X1-THD)	

M - METRIC PART

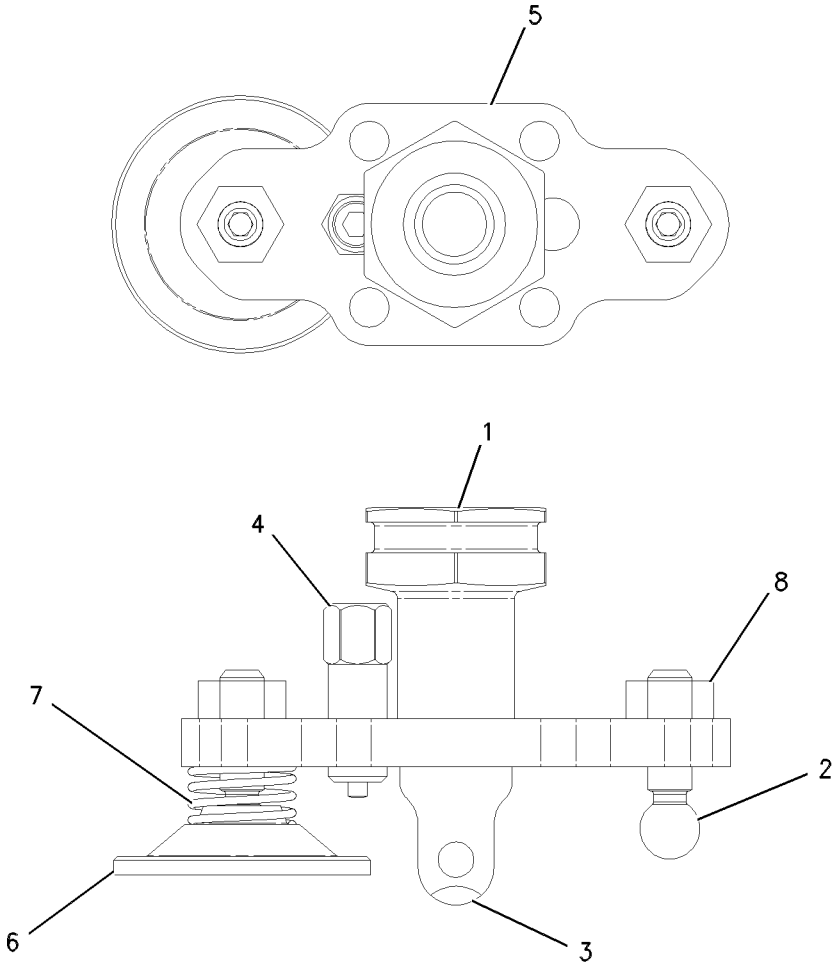

GRAPHIC #1 **<END>** g00620807

160-6300 PIVOT GP-PILOT VALVE–LIFT

S/N: M5K1-UP
PART OF 370-8728, 370-8729 VALVE GP-PILOT
AN ATTACHMENT

SMCS-5059 **i05838804**

NOTE	REF NO	GRAPHIC REF	PART NUMBER	QTY	PART NAME 1 2 3 4 5 6 (PRODUCT LEVEL)	SEE PAGE
	1	1	**141-7481**	1	SPACER	
	2	1	**146-6315**	2	PIN-ADJUSTMENT	
	3	1	**146-8479**	1	SWIVEL	
	4	1	**153-8945**	2	PLUNGER AS	
					(EACH INCLUDES)	
		1	**3H-7180**	1	SETSCREW (1/4-28X0.25-IN)	
		1	**6J-9996**	1	SPRING	
	5	1	**174-1366**	1	PLATE	
	6	1	**146-6317**	2	RETAINER	
	7	1	**159-3781**	2	SPRING	
M	8	1	**5C-2890**	2	NUT (M6X1-THD)	

M - METRIC PART

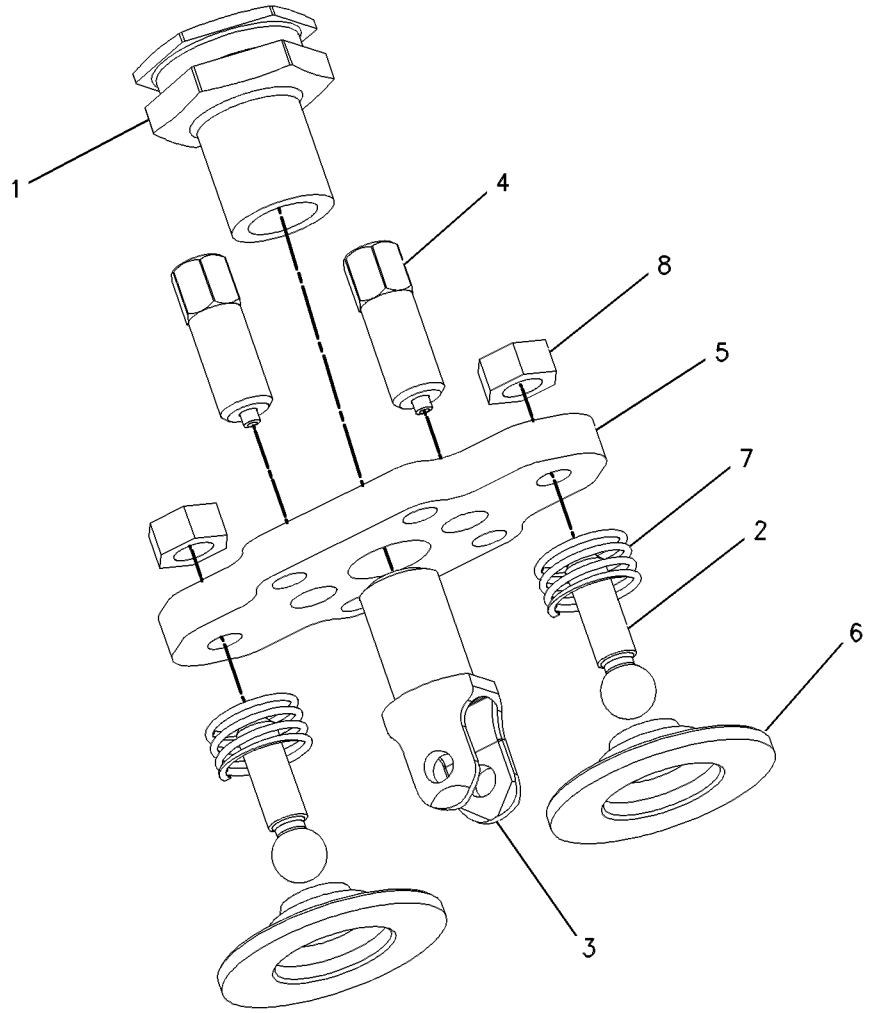

GRAPHIC #1 **<END>** g00636667

325-5760 PIVOT GP-PILOT VALVE–LIFT

S/N: M5K1-UP
PART OF 370-8728, 370-8729 VALVE GP-PILOT
AN ATTACHMENT

SMCS-5059 **i05559991**

NOTE	REF NO	GRAPHIC REF	PART NUMBER	QTY	PART NAME 1 2 3 4 5 6 (PRODUCT LEVEL)	SEE PAGE
	1	1	**141-7481**	1	SPACER	
	2	1	**146-6315**	2	PIN-ADJUSTMENT	
	3	1	**146-6317**	2	RETAINER	
	4	1	**146-8479**	1	SWIVEL	
	5	1	**153-8945**	1	PLUNGER AS	
		1	**3H-7180**	1	SETSCREW (1/4-28X0.25-IN)	
		1	**6J-9996**	1	SPRING	
	6	1	**159-3781**	2	SPRING	
	7	1	**174-1366**	1	PLATE	
M	8	1	**5C-2890**	2	NUT (M6X1-THD)	

M - METRIC PART

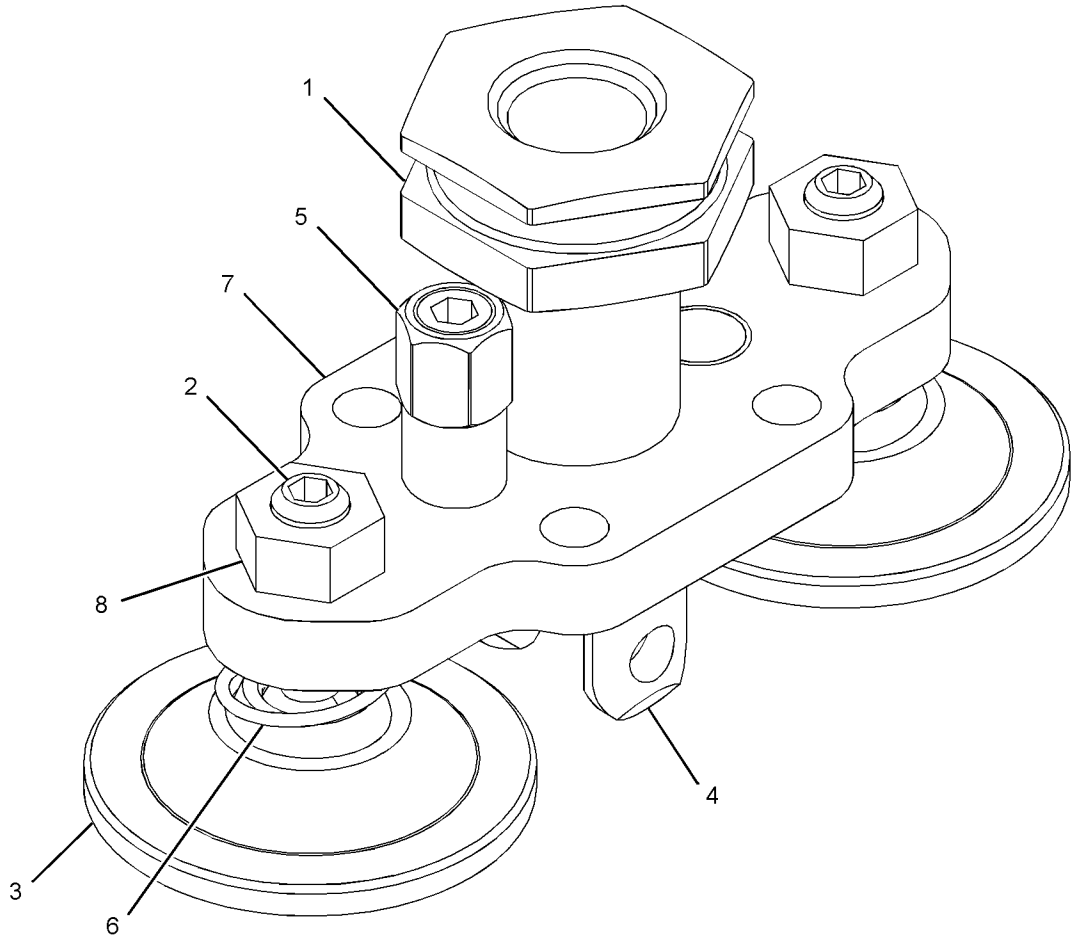

GRAPHIC #1 **<END>** g01871913

147-3322 PLATE GP-PILOT VALVE—JOYSTICK

S/N: M5K1-UP

PART OF 338-8502, 338-8504 VALVE GP-PILOT

AN ATTACHMENT

SMCS-5059 **i05550350**

NOTE	REF NO	GRAPHIC REF	PART NUMBER	QTY	PART NAME 1 2 3 4 5 6 (PRODUCT LEVEL)	SEE PAGE
M	1	1	**5C-2890**	4	NUT (M6X1-THD)	
	2	1	**146-6315**	3	PIN-ADJUSTMENT	
	3	1	**153-8945**	3	PLUNGER AS	
					(EACH INCLUDES)	
		1	**3H-7180**	1	SETSCREW (1/4-28X0.25-IN)	
		1	**6J-9996**	1	SPRING	
M	4	1	**178-7877**	1	SETSCREW (M6X1X25-MM)	
	5	1	**146-6317**	3	RETAINER	
	6	1	**159-3781**	3	SPRING	

M - METRIC PART

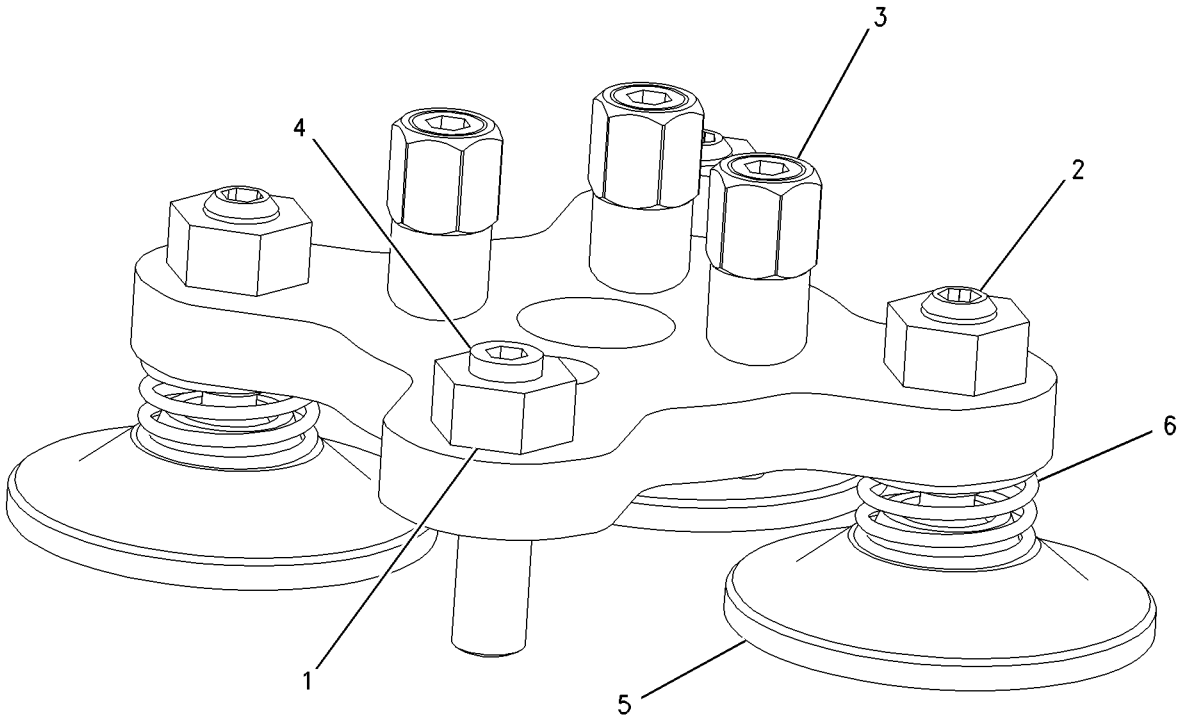

GRAPHIC #1 **<END>** g00810224

206-2749 PLATE GP-PILOT VALVE

S/N: M5K1-UP
PART OF 370-8729 VALVE GP-PILOT
AN ATTACHMENT

SMCS-5059 **i06061601**

NOTE	REF NO	GRAPHIC REF	PART NUMBER	QTY	PART NAME 1 2 3 4 5 6 (PRODUCT LEVEL)	SEE PAGE
	1	1	**141-1556**	3	RETAINER	
	2	1	**141-2032**	3	PLATE	
	3	1	**145-2334**	3	ADAPTER	
	4	1	**148-7922**	3	PLATE	
	5	1	**8L-2786**	3	SEAL-O-RING	
	6	1	**163-5512**	7	GROMMET	
	7	1	**145-8428**	4	COIL AS-DETENT	
					(EACH INCLUDES)	
		1	**8T-8729**	2	PIN-CONNECTOR (16-GA TO 18-GA)	
M	8	1	**191-8920**	12	BOLT-SOCKET HEAD (M6X1X12-MM)	

M - METRIC PART

206-2749 **PLATE GP-PILOT VALVE (*contd.*)** **i06061601**

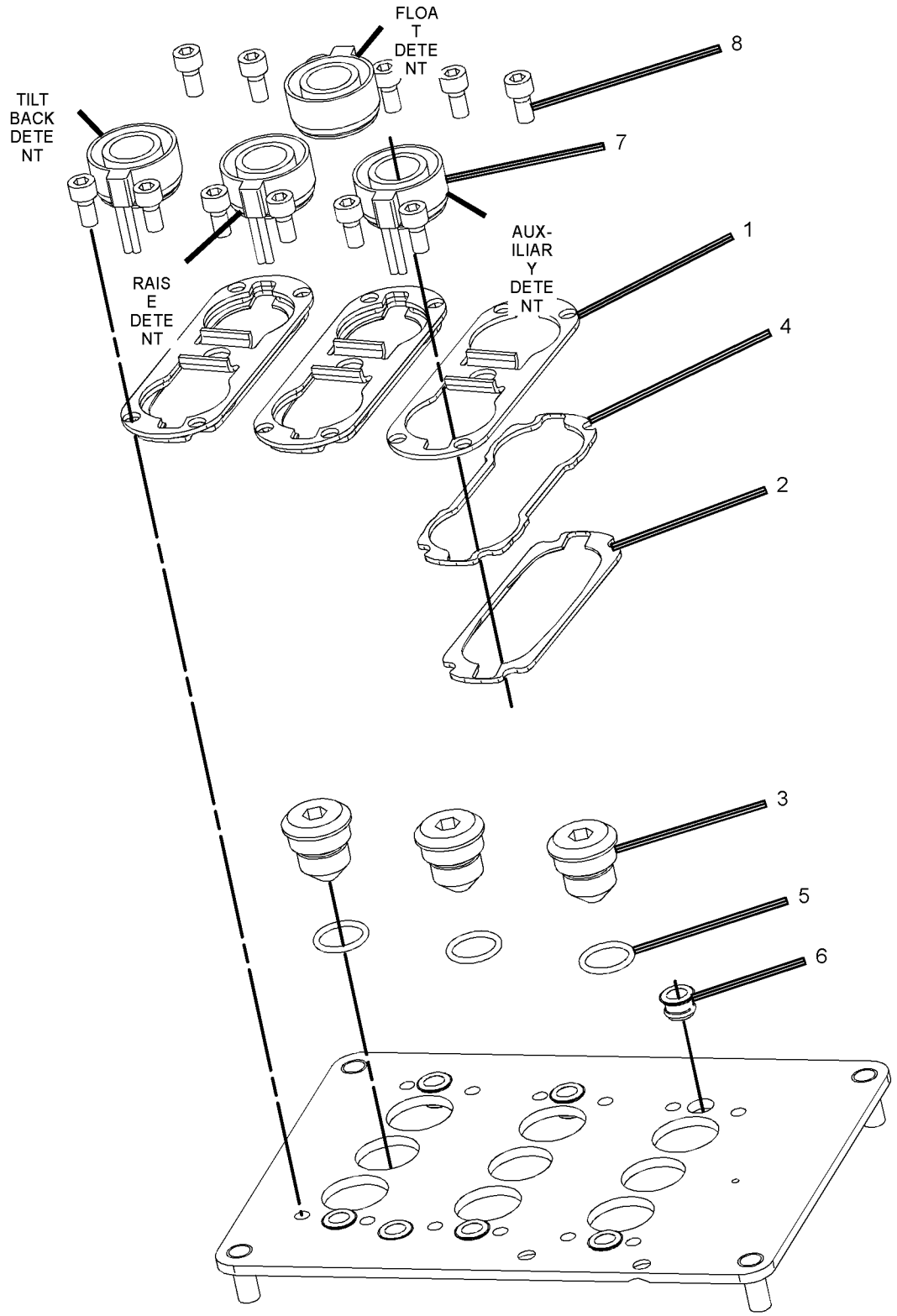

GRAPHIC #1 **<END>** g03796412

206-2750 PLATE GP-PILOT VALVE

S/N: M5K1-UP
PART OF 338-8504 VALVE GP-PILOT
AN ATTACHMENT

SMCS-5059 **i05550369**

NOTE	REF NO	GRAPHIC REF	PART NUMBER	QTY	PART NAME 1 2 3 4 5 6 (PRODUCT LEVEL)	SEE PAGE
	1	1	**136-9297**	1	PLATE	
	2	1	**136-9298**	1	RETAINER	
	3	1	**141-1556**	1	RETAINER	
	4	1	**141-2032**	1	PLATE	
	5	1	**145-2334**	1	ADAPTER	
	6	1	**148-7922**	1	PLATE	
	7	1	**149-5470**	1	PLATE	
	8	1	**153-8952**	1	ADAPTER	
	9	1	**219-4213**	1	PLATE AS	
	10	1	**163-5512**	7	GROMMET	
	11	1	**145-8428**	4	COIL AS-DETENT	
					(EACH INCLUDES)	
		1	**8T-8729**	2	PIN-CONNECTOR (16-GA TO 18-GA)	
M	12	1	**191-8920**	8	BOLT-SOCKET HEAD (M6X1X12-MM)	
	13	1	**3K-0360**	2	SEAL-O-RING	

M - METRIC PART

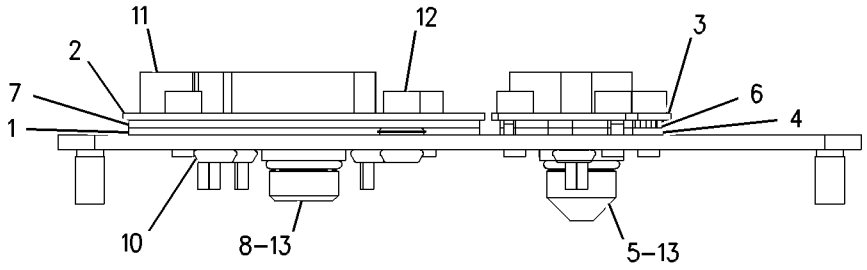

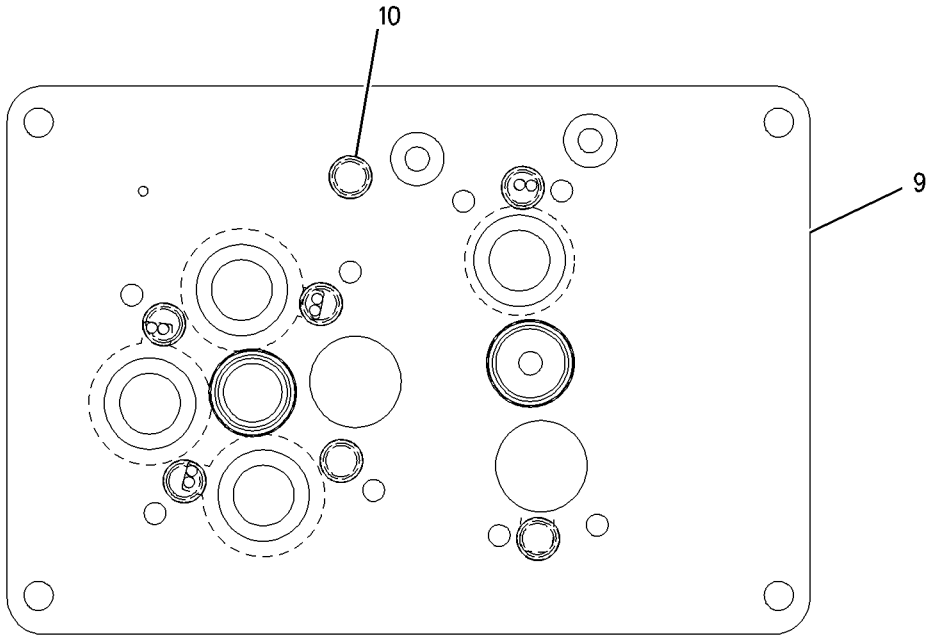

GRAPHIC #1 **<END>** g00948276

219-4215 PLATE GP-PILOT VALVE

S/N: M5K1-UP
2 FUNCTION
PART OF 370-8728 VALVE GP-PILOT
AN ATTACHMENT

SMCS-5059 **i05565678**

NOTE	REF NO	GRAPHIC REF	PART NUMBER	QTY	PART NAME 1 2 3 4 5 6 (PRODUCT LEVEL)	SEE PAGE
	1	1	**141-1556**	2	RETAINER	
	2	1	**141-2032**	2	PLATE	
	3	1	**145-2334**	2	ADAPTER	
	4	1	**148-7922**	2	PLATE	
	5	1	**163-5512**	5	GROMMET	
	7	1	**102-8806**	2	KIT-RECEPTACLE (8-PIN)	
	8	1	**145-8428**	3	COIL AS-DETENT	
M	9	1	**191-8920**	8	BOLT-SOCKET HEAD (M6X1X12-MM)	
	10	1	**3E-3389**	1	WEDGE-RECEPTACLE LOCK (8-PIN)	
	11	1	**8L-2786**	2	SEAL-O-RING	
	12	1	**8T-8737**	2	PLUG-SEAL	

M - METRIC PART

219-4215 **PLATE GP-PILOT VALVE (*contd.*)** **i05565678**

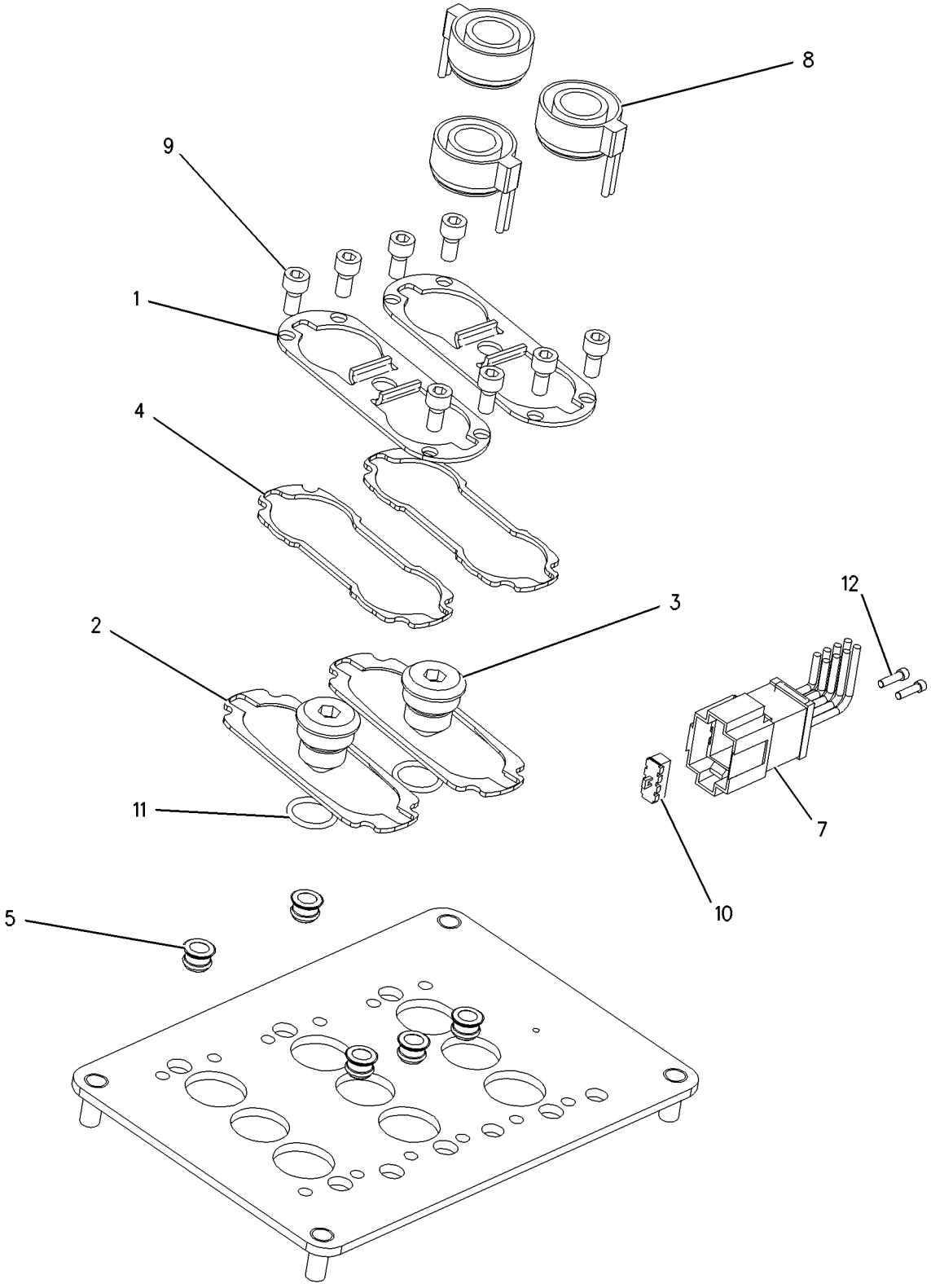

GRAPHIC #1 **<END>** g00945742

387-6150 TANK GP-HYDRAULIC

S/N: M5K1-UP
100-L (26.5-US GAL)
PART OF 387-6001 CHASSIS AR

SMCS-5056 **i06063978**

NOTE	REF NO	GRAPHIC REF	PART NUMBER	QTY	PART NAME 1 2 3 4 5 6 (PRODUCT LEVEL)	SEE PAGE
	1	1	**246-2641**	1	PADLOCK GP	
		1	**5P-8500**	1	KEY	
	2	1	**387-6149**	1	DRAIN AS (HYDRAULIC TANK)	
Y	3	1	**387-6151**	1	TANK GP-HYDRAULIC	454
	4	1	**387-6173**	8	MOUNTING AS	
	5	1	**431-4696**	1	BRACKET AS	
M		1	**8T-3597**	2	NUT-WELD (M12X1.75-THD)	
M		1	**8T-6462**	2	BOSS-WELD (M10X1.5X25-MM)	
	6	1	**431-4695**	1	BRACKET AS	
M		1	**8T-3597**	2	NUT-WELD (M12X1.75-THD)	
I	7	1	**431-4645**	1	HOSE AS	
	8	1	**5M-2894**	2	WASHER-HARD (10.2X18.5X2.5-MM THK)	
	9	1	**6V-1889**	2	CLIP (LOOP)	
	10	1	**6V-9746**	2	SEAL-O-RING	
M	11	1	**7X-2553**	6	BOLT (M16X2X40-MM)	
M	12	1	**8T-0362**	4	BOLT (M20X2.5X110-MM)	
	13	1	**8T-4121**	2	WASHER-HARD (11X21X2.5-MM THK)	
	14	1	**8T-4122**	1	WASHER-HARD (17X32X3.5-MM THK)	
M	15	1	**8T-4190**	1	BOLT (M16X2X25-MM)	
M	16	1	**8T-4195**	2	BOLT (M10X1.5X30-MM)	
M	17	1	**8T-4201**	2	BOLT-LOCKING (M10X1.5X20-MM)	
	18	1	**8X-0674**	4	WASHER (22X100X10-MM THK)	
	19	1	**9X-8268**	6	WASHER (17.5X30X3.5-MM THK)	

I - REFER TO HYDRAULIC INFORMATION SYSTEM
M - METRIC PART
Y - SEPARATE ILLUSTRATION

387-6150 **TANK GP-HYDRAULIC (*contd.*)** **i06063978**

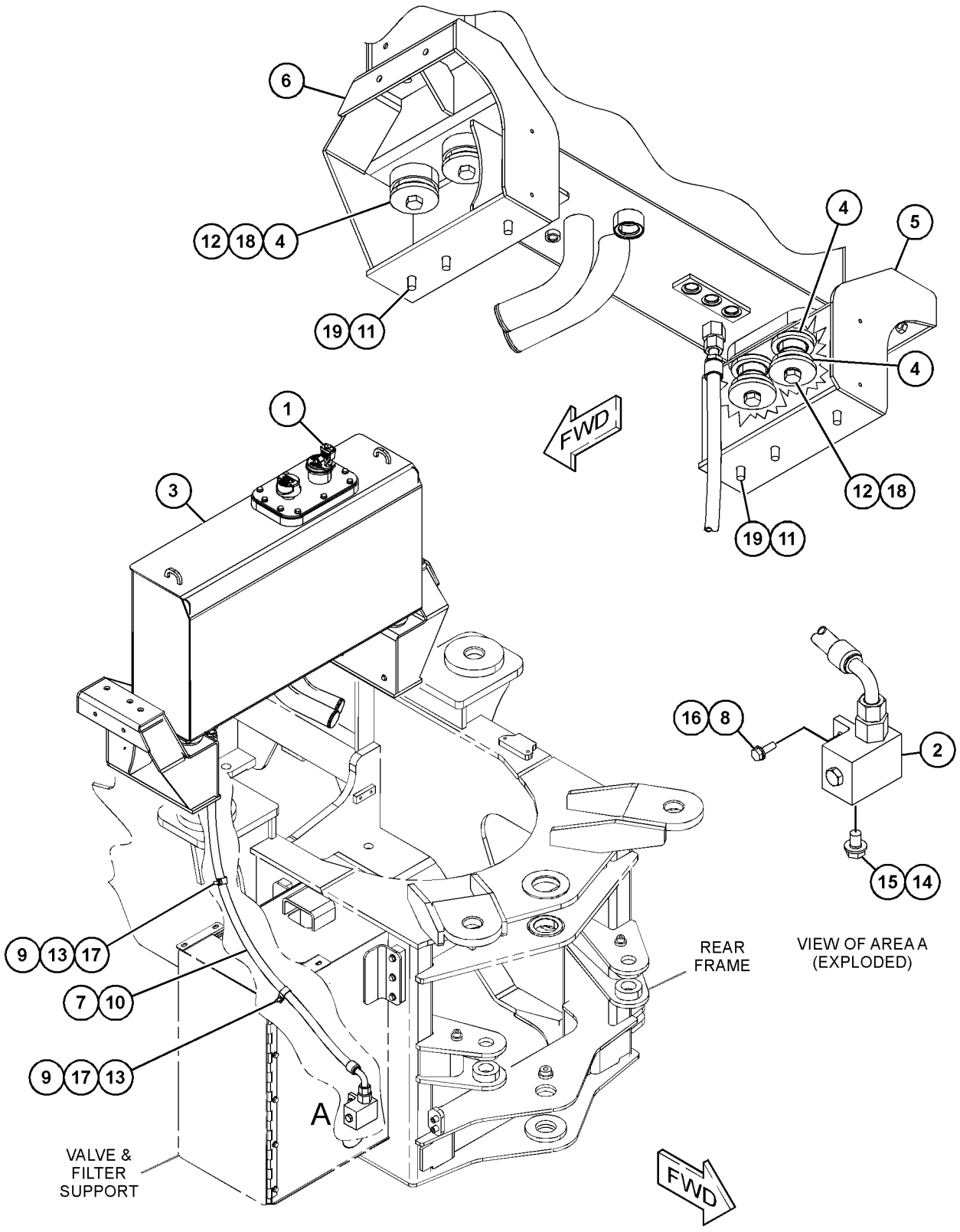

GRAPHIC #1 **<END>** g03798797

387-6151 TANK GP-HYDRAULIC

S/N: M5K1-UP
100-L (26.4-US GAL)
PART OF 387-6150 TANK GP-HYDRAULIC

SMCS-5056 **i06063984**

NOTE	REF NO	GRAPHIC REF	PART NUMBER	QTY	PART NAME 1 2 3 4 5 6 (PRODUCT LEVEL)	SEE PAGE
	1	1	**9T-9227**	2	SCREEN AS (HYDRAULIC TANK)	
	2	1	**392-3882**	1	COVER AS	
	3	1	**387-6176**	1	SEAL	
	4	1	**387-6192**	2	PLATE	
	5	1	**392-3881**	1	TANK AS-HYDRAULIC	
	6	1	**8T-4121**	10	WASHER-HARD (11X21X2.5-MM THK)	
M	7	1	**8T-4136**	10	BOLT (M10X1.5X25-MM)	
M	8	1	**8T-4133**	2	NUT (M10X1.5-THD)	
	9	1	**392-3880**	1	METER (HYDRAULIC OIL LEVEL)	
	10	1	**387-6169**	1	FILTER (HYDRAULIC)	
	11	1	**258-2829**	1	BREATHER (HYDRAULIC TANK)	
	12	1	**142-8937**	1	CAP AS-FILLER (LOCKABLE) (HYDRAULIC TANK)	

M - METRIC PART

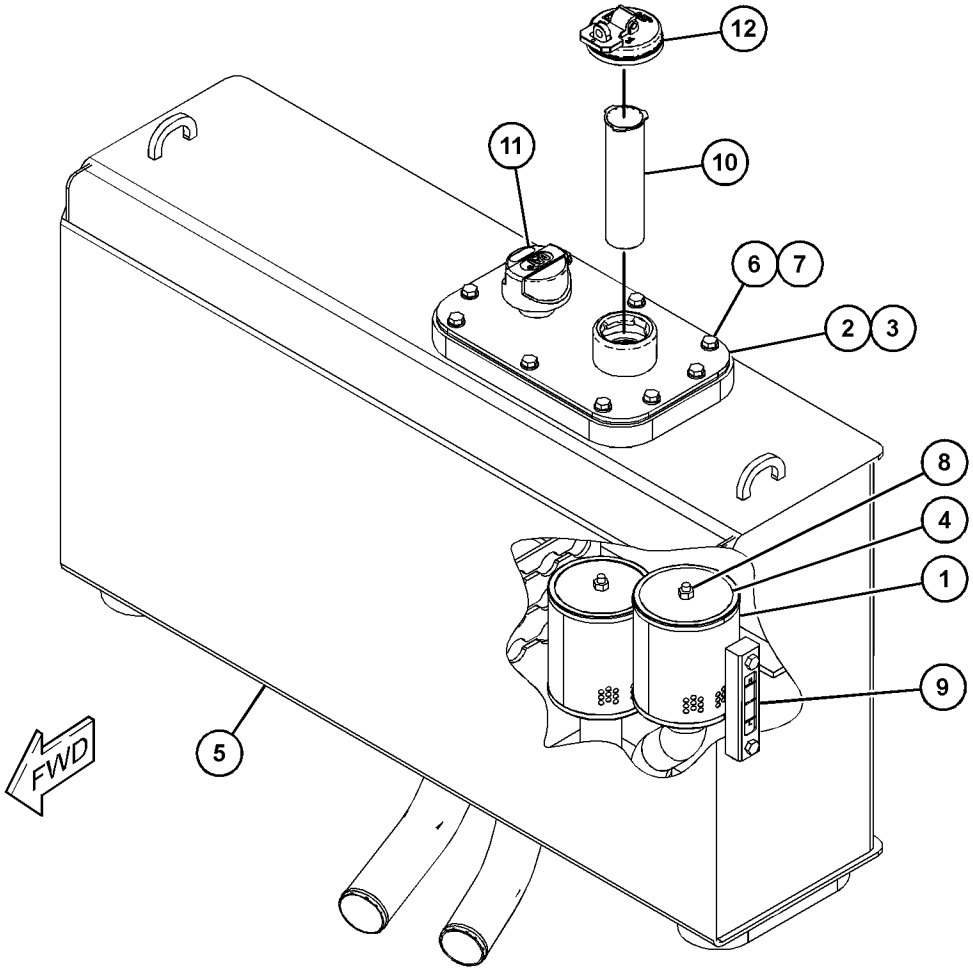

GRAPHIC #1 **<END>** g03797896

390-5903 VALVE & MTG GP-HYDRAULIC—RIDE CONTROL

S/N: M5K1-UP
PART OF 397-9894 HYDRAULIC AR-3 VALVE
AN ATTACHMENT
TYPE 1

SMCS-5051 **i05407143**

NOTE	REF NO	GRAPHIC REF	PART NUMBER	QTY	PART NAME 1 2 3 4 5 6 (PRODUCT LEVEL)	SEE PAGE
Y	1	1	**6E-4701**	1	VALVE GP-CHECK (RIDE CONTROL)	462
	2	1	**123-4750**	1	VALVE AS-CHECK	
		1	**3J-1907**	1	SEAL-O-RING	
		1	**6V-8397**	1	SEAL-O-RING	
Y	3	1	*355-9981*	1	ACCUMULATOR GP-HYDRAULIC (CHARGED)	384
	4	1	*357-4517*	1	TEE AS	
		1	**3J-7354**	1	SEAL-O-RING	
		1	**6V-8397**	2	SEAL-O-RING	
		1	**6V-9161**	1	TEE	
Y	5	1	*360-6812*	1	ACCUMULATOR GP-RIDE CONTROL (CHARGED)	388
Y	6	1	**383-8642**	1	VALVE GP-MAIN CONTROL	478
Y	7	1	*385-0693*	1	VALVE & MTG GP-SOLENOID (RIDE CONTROL)	461
I	8	1	**390-5905**	1	HOSE AS	
I	9	1	**390-5907**	1	HOSE AS	
I	10	1	**390-5909**	1	HOSE AS	
I	11	1	**390-5911**	1	HOSE AS	
Y	12	1	*415-4234*	1	SWITCH GP-RIDE CONTROL	170
	13	1	*148-8326*	1	CONNECTOR AS	
		1	**3J-7354**	1	SEAL-O-RING	
		1	**6V-8397**	1	SEAL-O-RING	
		1	**6V-9872**	1	CONNECTOR	
	14	1	*148-8336*	4	CONNECTOR AS	
					(EACH INCLUDES)	
		1	**3J-1907**	1	SEAL-O-RING	
		1	**6V-8397**	1	SEAL-O-RING	
		1	**6V-8636**	1	CONNECTOR	
	15	1	*148-8357*	2	ELBOW AS	
					(EACH INCLUDES)	
		1	**5K-9090**	1	SEAL-O-RING	
		1	**6V-9008**	1	ELBOW	
		1	**7M-8485**	1	SEAL-O-RING	
	16	1	*148-8367*	2	ELBOW AS	
					(EACH INCLUDES)	
		1	**6V-8397**	1	SEAL-O-RING	
		1	**6V-9850**	1	ELBOW	
	17	1	*148-8378*	7	ELBOW AS	
					(EACH INCLUDES)	
		1	**3J-1907**	1	SEAL-O-RING	
		1	**6V-8397**	1	SEAL-O-RING	
		1	**6V-8724**	1	ELBOW	
	18	1	*148-8424*	3	TEE AS	
					(EACH INCLUDES)	
		1	**6V-8397**	1	SEAL-O-RING	
		1	**8T-8902**	1	TEE	
	19	1	*148-8433*	3	TEE AS	
					(EACH INCLUDES)	
		1	**6V-8397**	2	SEAL-O-RING	
		1	**6V-9836**	1	TEE-SWIVEL	
	20	1	*148-8435*	1	TEE AS	
		1	**3J-1907**	1	SEAL-O-RING	
		1	**6V-8397**	2	SEAL-O-RING	
		1	**6V-8781**	1	TEE	
	21	1	*164-5567*	2	COUPLER AS-QUICK DISCONNECT (MALE)	
					(EACH INCLUDES)	
		1	**6V-3965**	1	FITTING (QUICK DISCONNECT)	
		1	**214-7568**	1	SEAL-O-RING	
M	22	1	**2W-9499**	2	BOLT (M6X1X40-MM)	

390-5903 **VALVE & MTG GP-HYDRAULIC (*contd.*)** **i05407143**

NOTE	REF NO	GRAPHIC REF	PART NUMBER	QTY	PART NAME 1 2 3 4 5 6 (PRODUCT LEVEL)	SEE PAGE
	23	1	**360-8161**	2	CLAMP	
	24	1	**3J-1907**	1	SEAL-O-RING	
	25	1	**4B-4674**	2	WASHER (6.4X14.5X1.6-MM THK)	
	26	1	**5P-4116**	4	WASHER-HARD (8.8X20.5X2-MM THK)	
	27	1	**6V-0852**	2	CAP-DUST	
	28	1	**6V-9829**	1	CAP AS	
M	29	1	**8T-4189**	4	BOLT (M8X1.25X20-MM)	

I - REFER TO HYDRAULIC INFORMATION SYSTEM
M - METRIC PART
Y - SEPARATE ILLUSTRATION

390-5903 **VALVE & MTG GP-HYDRAULIC (*contd.*)** **i05407143**

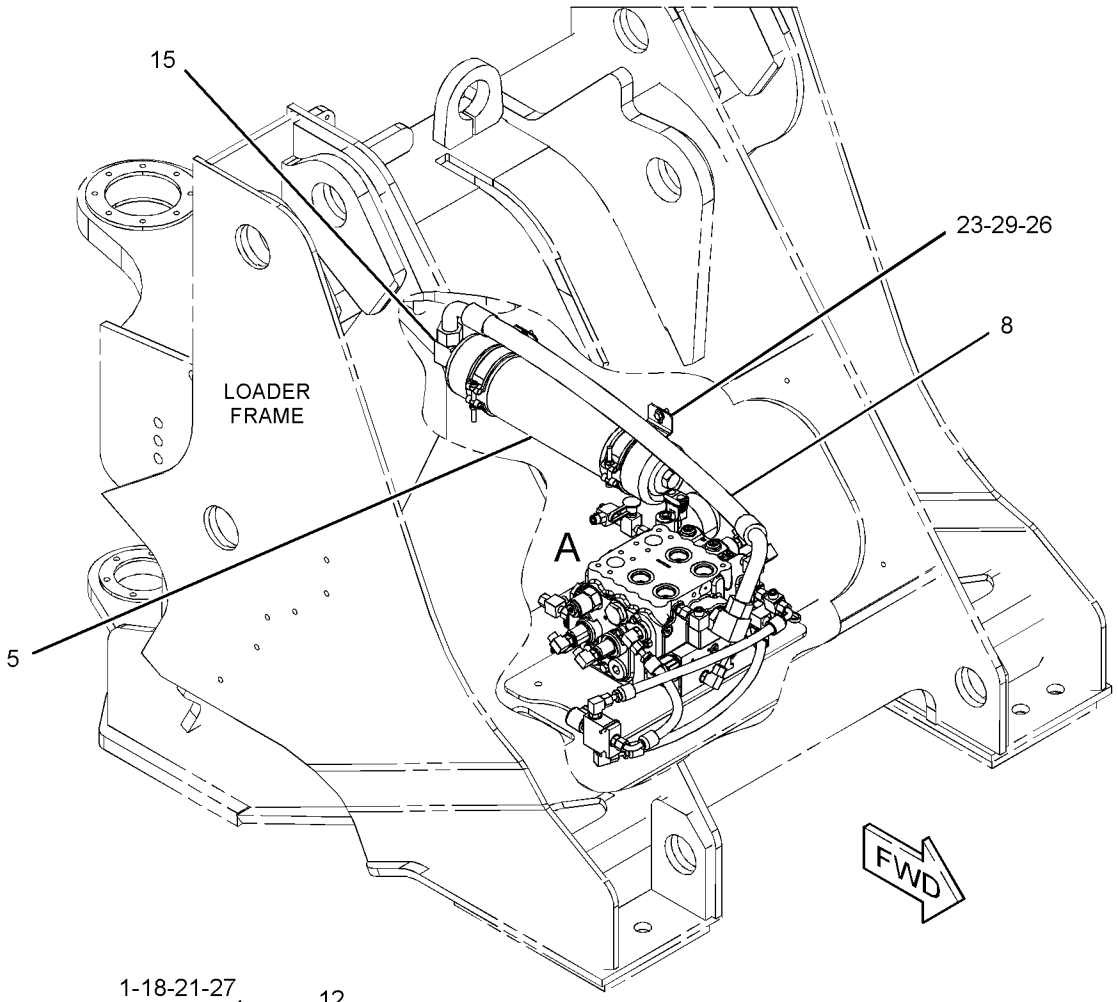

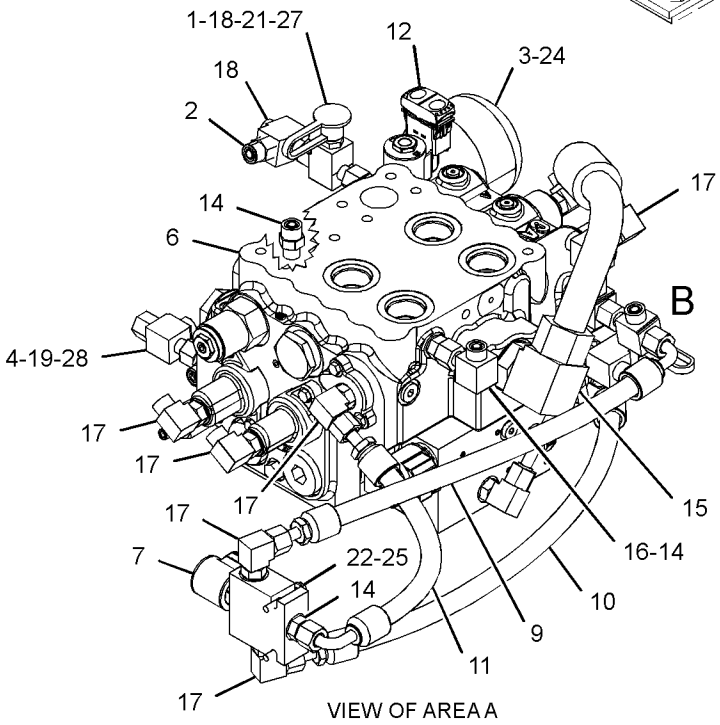

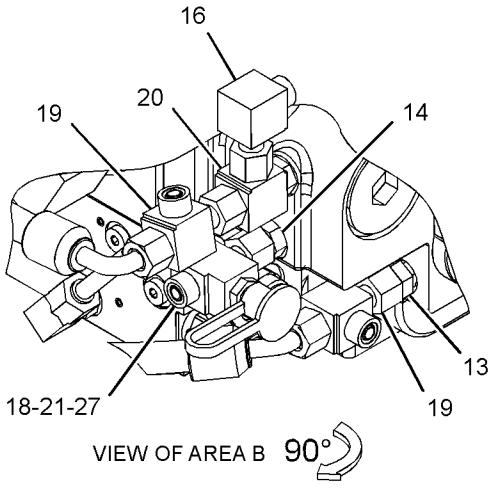

GRAPHIC #1 **<END>** g03423138

390-5903 VALVE & MTG GP-HYDRAULIC—RIDE CONTROL

S/N: M5K1-UP
PART OF 397-9894 HYDRAULIC AR-3 VALVE
AN ATTACHMENT
TYPE 2

SMCS-5051 **i05837801**

NOTE	REF NO	GRAPHIC REF	PART NUMBER	QTY	PART NAME 1 2 3 4 5 6 (PRODUCT LEVEL)	SEE PAGE
Y	1	1	**6E-4701**	1	VALVE GP-CHECK (RIDE CONTROL)	462
	2	1	**123-4750**	1	VALVE AS-CHECK	
		1	**3J-1907**	1	SEAL-O-RING	
		1	**6V-8397**	1	SEAL-O-RING	
CY	3	1	*452-1719*	1	ACCUMULATOR GP-PILOT OIL (CHARGED)	386
	4	1	*357-4517*	1	TEE AS	
		1	**3J-7354**	1	SEAL-O-RING	
		1	**6V-8397**	2	SEAL-O-RING	
		1	**6V-9161**	1	TEE	
CY	5	1	*444-8530*	1	ACCUMULATOR GP-RIDE CONTROL (CHARGED)	390
CY	6	1	**451-5885**	1	VALVE GP-MAIN CONTROL (HYDRAULIC)	486
Y	7	1	*385-0693*	1	VALVE & MTG GP-SOLENOID (RIDE CONTROL)	461
I	8	1	**390-5905**	1	HOSE AS	
I	9	1	**390-5907**	1	HOSE AS	
I	10	1	**390-5909**	1	HOSE AS	
I	11	1	**390-5911**	1	HOSE AS	
Y	12	1	*415-4234*	1	SWITCH GP-RIDE CONTROL	170
	13	1	*148-8326*	1	CONNECTOR AS	
		1	**3J-7354**	1	SEAL-O-RING	
		1	**6V-8397**	1	SEAL-O-RING	
		1	**6V-9872**	1	CONNECTOR	
	14	1	*148-8336*	4	CONNECTOR AS	
					(EACH INCLUDES)	
		1	**3J-1907**	1	SEAL-O-RING	
		1	**6V-8397**	1	SEAL-O-RING	
		1	**6V-8636**	1	CONNECTOR	
	15	1	*148-8357*	2	ELBOW AS	
					(EACH INCLUDES)	
		1	**5K-9090**	1	SEAL-O-RING	
		1	**6V-9008**	1	ELBOW	
		1	**7M-8485**	1	SEAL-O-RING	
	16	1	*148-8367*	2	ELBOW AS	
					(EACH INCLUDES)	
		1	**6V-8397**	1	SEAL-O-RING	
		1	**6V-9850**	1	ELBOW	
	17	1	*148-8378*	7	ELBOW AS	
					(EACH INCLUDES)	
		1	**3J-1907**	1	SEAL-O-RING	
		1	**6V-8397**	1	SEAL-O-RING	
		1	**6V-8724**	1	ELBOW	
	18	1	*148-8424*	3	TEE AS	
					(EACH INCLUDES)	
		1	**6V-8397**	1	SEAL-O-RING	
		1	**8T-8902**	1	TEE	
	19	1	*148-8433*	3	TEE AS	
					(EACH INCLUDES)	
		1	**6V-8397**	2	SEAL-O-RING	
		1	**6V-9836**	1	TEE-SWIVEL	
	20	1	*148-8435*	1	TEE AS	
		1	**3J-1907**	1	SEAL-O-RING	
		1	**6V-8397**	2	SEAL-O-RING	
		1	**6V-8781**	1	TEE	
	21	1	*164-5567*	2	COUPLER AS-QUICK DISCONNECT (MALE)	
					(EACH INCLUDES)	
		1	**6V-3965**	1	FITTING (QUICK DISCONNECT)	
		1	**214-7568**	1	SEAL-O-RING	
M	22	1	**2W-9499**	2	BOLT (M6X1X40-MM)	

390-5903 **VALVE & MTG GP-HYDRAULIC (*contd.*)** **i05837801**

NOTE	REF NO	GRAPHIC REF	PART NUMBER	QTY	PART NAME 1 2 3 4 5 6 (PRODUCT LEVEL)	SEE PAGE
	23	1	**360-8161**	2	CLAMP	
	24	1	**3J-1907**	1	SEAL-O-RING	
	25	1	**4B-4674**	2	WASHER (6.4X14.5X1.6-MM THK)	
	26	1	**5P-4116**	4	WASHER-HARD (8.8X20.5X2-MM THK)	
	27	1	**6V-0852**	2	CAP-DUST	
	28	1	**6V-9829**	1	CAP AS	
M	29	1	**8T-4189**	4	BOLT (M8X1.25X20-MM)	

C - CHANGE FROM PREVIOUS TYPE
I - REFER TO HYDRAULIC INFORMATION SYSTEM
M - METRIC PART
Y - SEPARATE ILLUSTRATION

390-5903 **VALVE & MTG GP-HYDRAULIC (*contd.*)** **i05837801**

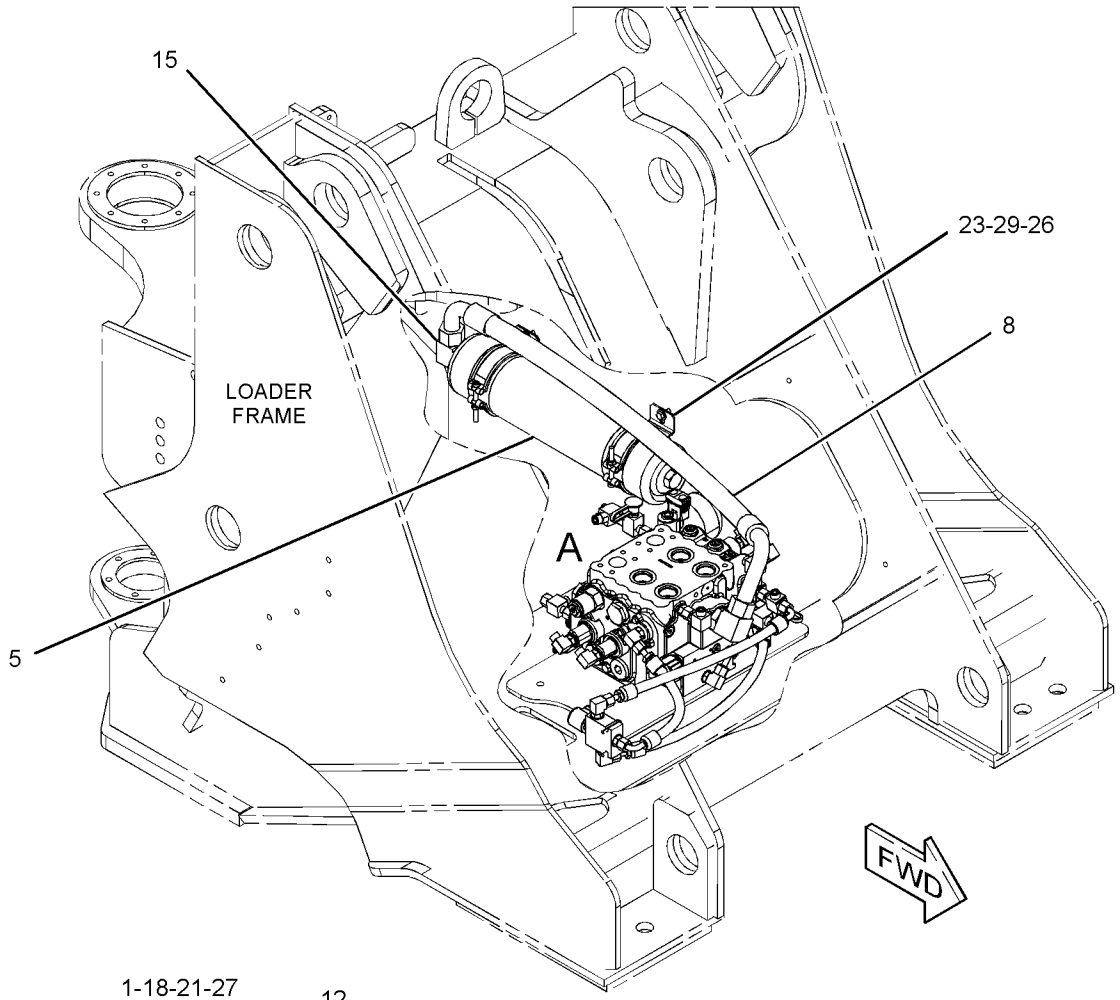

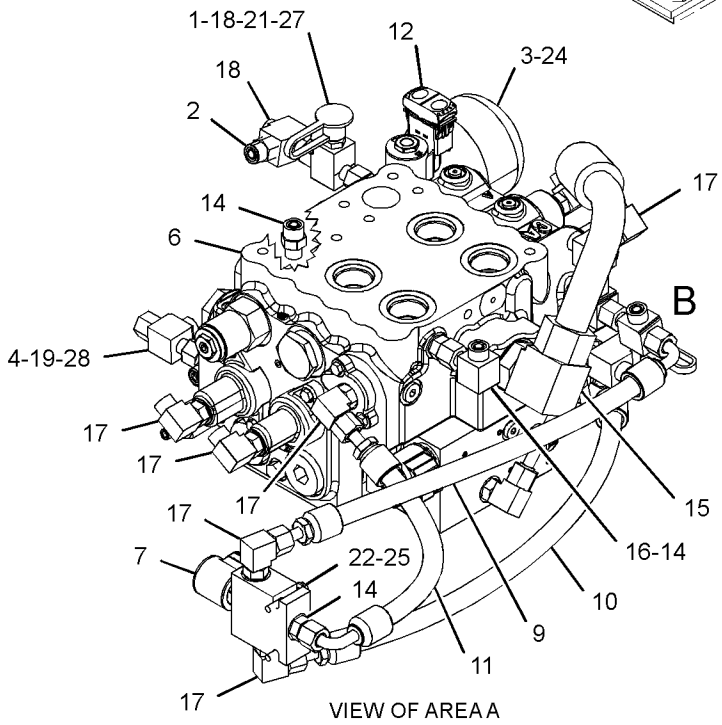

VIEW OF AREA A

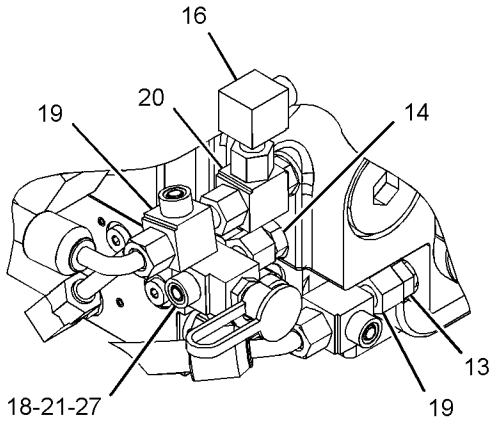

VIEW OF AREA B 90°

GRAPHIC #1 **<END>** g03423138

385-0693 VALVE & MTG GP-SOLENOID

S/N: M5K1-UP
24-VOLT DC. RIDE CONTROL
PART OF 390-5903 VALVE & MTG GP-HYDRAULIC
AN ATTACHMENT

SMCS-4805, 5479

i05714431

NOTE	REF NO	GRAPHIC REF	PART NUMBER	QTY	PART NAME 1 2 3 4 5 6 (PRODUCT LEVEL)	SEE PAGE
	1	1	**277-8863**	1	VALVE GP-SOLENOID (24-VOLT) (RIDE CONTROL)	
		1	**384-8750**		COIL AS (24-VOLT)	

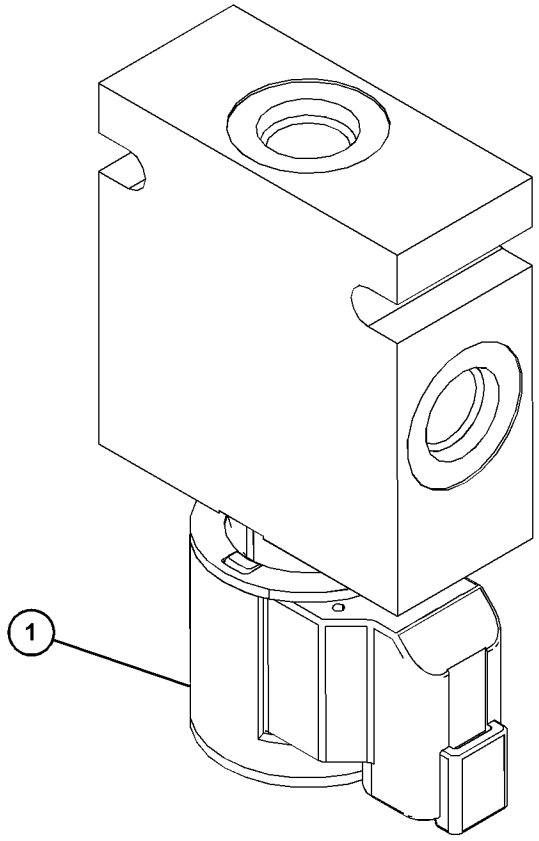

GRAPHIC #1

<END>

g03668824

6E-4701 VALVE GP-CHECK

S/N: M5K1-UP

PART OF 390-5903 VALVE & MTG GP-HYDRAULIC, 390-5913 VALVE GP-MAIN CONTROL AN ATTACHMENT

SMCS-5067 **i05407243**

NOTE	REF NO	GRAPHIC REF	PART NUMBER	QTY	PART NAME 1 2 3 4 5 6 (PRODUCT LEVEL)	SEE PAGE
	1	1	**3J-1907**	1	SEAL-O-RING	
	2	1	**6V-8397**	1	SEAL-O-RING	

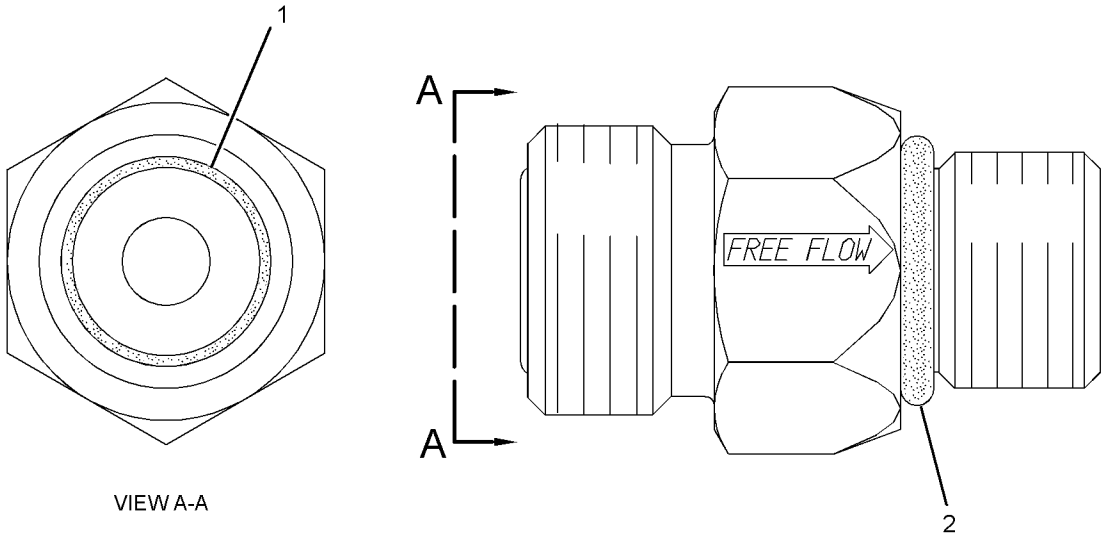

VIEW A-A

GRAPHIC #1 **<END>** g01944653

443-3773 VALVE GP-CHECK–PILOT OPERATED

S/N: M5K1-UP

PART OF 383-8643 VALVE GP-CONTROL, 383-8642 VALVE GP-MAIN CONTROL AN ATTACHMENT

SMCS-5067 **i05411372**

NOTE	REF NO	GRAPHIC REF	PART NUMBER	QTY	PART NAME 1 2 3 4 5 6 (PRODUCT LEVEL)	SEE PAGE
	1	1	**4J-8996**	1	SEAL-O-RING	
	2	1	**5H-2767**	1	SEAL-O-RING	
	3	1	**7M-8485**	1	SEAL-O-RING	
	4	1	*148-8395*	1	PLUG AS	
		1	**3K-0360**	1	SEAL-O-RING	
		1	**9S-8005**	1	PLUG-O-RING	
	5	1	**364-2634**	1	RING-BACKUP	
	6	1	**356-8613**	1	SPRING	
	7	1	**361-3169**	1	SPRING	
	8	1	**364-2542**	1	PLUG-RETAINER	
					PARTS SHOWN IN GRAPHIC(S) WITHOUT A REFERENCE NUMBER ARE NOT SERVICED SEPARATELY	

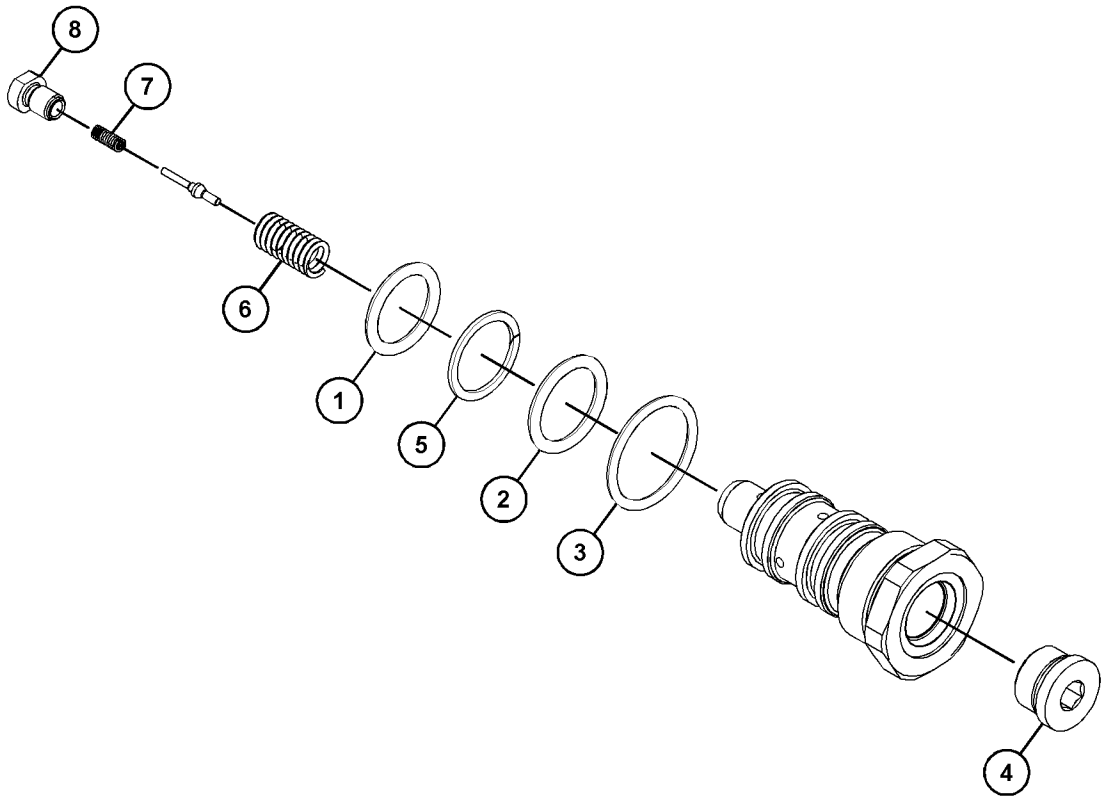

GRAPHIC #1 **<END>** g03527980

445-6109 VALVE GP-CHECK—PILOT OPERATED

S/N: M5K1-UP

PART OF 451-5886 VALVE GP-CONTROL, 451-5885 VALVE GP-MAIN CONTROL AN ATTACHMENT

SMCS-5067 **i05834071**

NOTE	REF NO	GRAPHIC REF	PART NUMBER	QTY	PART NAME 1 2 3 4 5 6 (PRODUCT LEVEL)	SEE PAGE
	1	1	**4J-8996**	1	SEAL-O-RING	
	2	1	**5H-2767**	1	SEAL-O-RING	
	3	1	**7M-8485**	1	SEAL-O-RING	
	4	1	*164-5619*	1	PLUG AS	
		1	**2M-9780**	1	SEAL-O-RING	
		1	**9S-8006**	1	PLUG-O-RING	
	5	1	**364-2634**	1	RING-BACKUP	
					AVAILABLE REPAIR KIT(S):	
			383-7557	1	KIT-SEAL (CHECK VALVE)	
					(INCLUDES RINGS & BACKUP RINGS)	

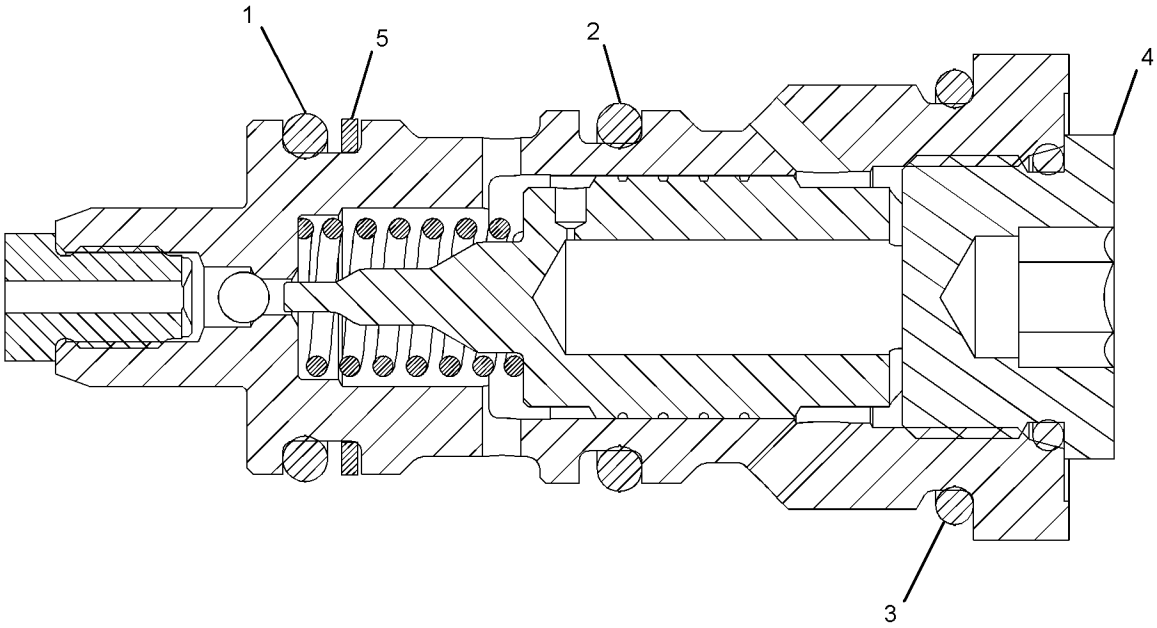

GRAPHIC #1 **<END>** g03645486

9T-1573 VALVE GP-CHECK & RELIEF

S/N: M5K1-UP
PART OF 387-2116 VALVE GP-CONTROL
AN ATTACHMENT

SMCS-5453 **i05407180**

NOTE	REF NO	GRAPHIC REF	PART NUMBER	QTY	PART NAME 1 2 3 4 5 6 (PRODUCT LEVEL)	SEE PAGE
	1	1	**9T-7202**	1	RETAINER AS	
	2	1	**6E-4431**	1	BODY AS	
	3	1	**8J-0331**	1	VALVE	
	4	1	**1J-9671**	1	SEAL-O-RING	
	5	1	**9S-8003**	1	PLUG	
	6	1	**6E-3518**	1	SPRING	
	7	1	**9X-6395**	1	NUT (3/4-16-THD)	
	8	1	**4K-1388**	1	SEAL-O-RING	
	9	1	**4T-0935**	1	SPRING	
	10	1	**7J-9933**	1	SEAL-O-RING	
	11	1	**4T-0946**	1	VALVE GP	
	12	1	**4T-0932**	1	BUSHING	
	13	1	**2M-9780**	1	SEAL-O-RING	
	14	1	**4T-0933**	1	RING-RETAINING	
	15	1	**4T-5073**	1	RING-BACKUP	
	16	1	**3K-0360**	1	SEAL-O-RING	

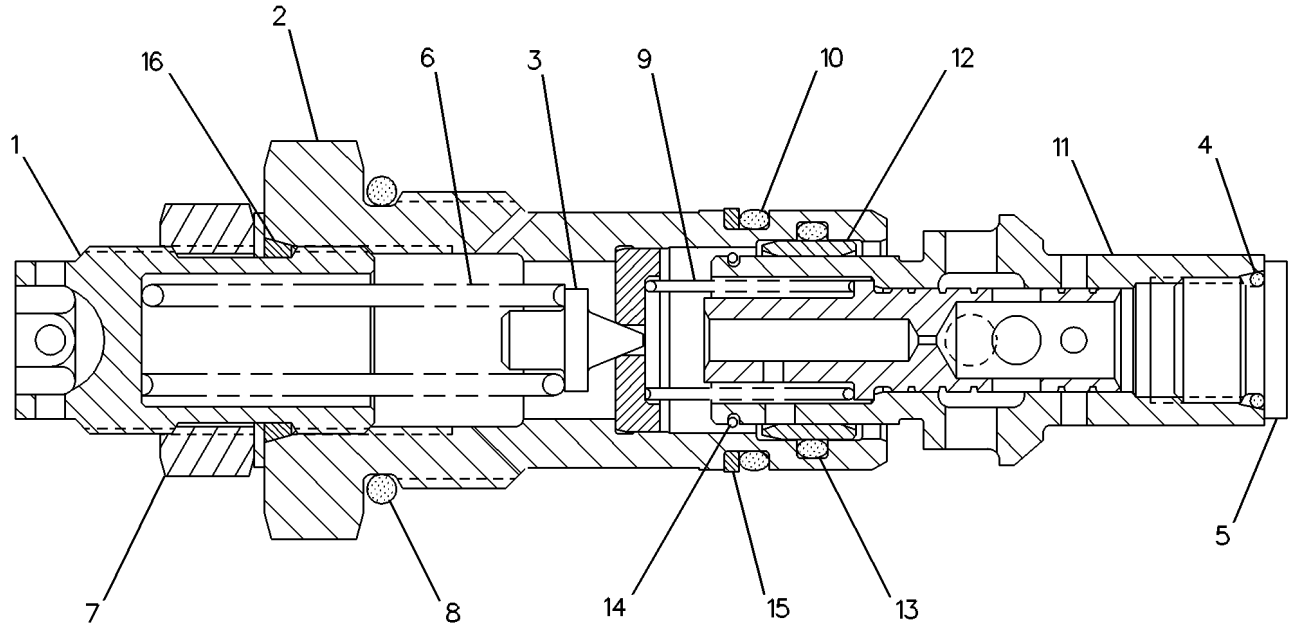

GRAPHIC #1 **<END>** g00130994

383-8643 VALVE GP-CONTROL

S/N: M5K1-UP

PART OF 390-5913 VALVE GP-MAIN CONTROL

AN ATTACHMENT

SMCS-5051 **i05411886**

NOTE	REF NO	GRAPHIC REF	PART NUMBER	QTY	PART NAME 1 2 3 4 5 6 (PRODUCT LEVEL)	SEE PAGE
M	1	1	**8T-4138**	7	BOLT (M6X1X20-MM)	
J	2	2	**234-4869**	1	VALVE GP-MAKEUP (BUCKET LIFT)	
	3	2	**236-9832**	2	SPRING	
	4	2	**240-4695**	1	RING-BACKUP	
	5	1,2	**282-8827**	7	PLUG	
	6	2	**284-1010**	2	SPRING	
	7	2	**284-1011**	2	SPRING	
	8	1	**292-8061**	4	PLUG-EXPANSION	
	9	2	**295-0993**	4	RETAINER	
X	10	2	**332-1987**	1	VALVE GP-RELIEF (TILT CONTROL)	
	11	1	**333-8242**	1	VALVE GP-SOLENOID (24-VOLT) (PILOT SUPPLY)	
		1	**384-8750**	1	COIL AS (24-VOLT)	
	14	2	**356-8550**	2	PLUG-RETAINER	
	15	2	**356-8561**	2	VALVE-CONTROL	
M	16	2	**359-4661**	2	BOLT (M10X1.5X25-MM)	
	17	2	**363-1610**	2	SPRING	
H	21	1	**370-5764**	1	VALVE GP-RELIEF (MARGIN)	
	22	2	**370-8160**	1	PLUG	
L	23	1	**375-3788**	1	VALVE GP-RELIEF (LIFT)	
P	28	1	**388-4493**	2	VALVE GP-CHECK (LOAD SIGNAL)	
S		1	**3H-0442**	1	SEAL-O-RING	
S		1	**095-1513**	1	SEAL-O-RING	
	29	1	**421-1769**	1	VALVE GP-RELIEF (TILT)	
Y	30	2	**443-3773**	2	VALVE GP-CHECK (PILOT OPERATED) (PILOT OPERATED)	463
	31	1	*148-8407*	4	PLUG AS	
					(EACH INCLUDES)	
		1	**3J-1907**	1	SEAL-O-RING	
		1	**9S-4191**	1	PLUG	
	32	1,2	*155-3624*	2	PLUG AS	
					(EACH INCLUDES)	
		1,2	**3J-7354**	1	SEAL-O-RING	
		1,2	**9S-4182**	1	PLUG	
	33	2	*162-0177*	5	PLUG AS	
					(EACH INCLUDES)	
		2	**3J-1907**	1	SEAL-O-RING	
		2	**9S-8004**	1	PLUG	
	34	1,2	*164-4180*	4	PLUG AS	
					(EACH INCLUDES)	
		1,2	**7M-8485**	1	SEAL-O-RING	
		1,2	**9S-4181**	1	PLUG	
	35	2	*222-4737*	2	PLUG AS	
					(EACH INCLUDES)	
		2	**4J-7533**	1	SEAL-O-RING	
		2	**9S-4180**	1	PLUG	
	36	2	**225-6948**	2	SEAL-O-RING	
	37	2	**2S-4078**	1	SEAL-O-RING	
	38	2	**6V-0357**	1	SEAL-O-RING	
	39	2	**6V-5393**	2	SEAL-O-RING	
	40	2	**7M-8485**	2	SEAL-O-RING	
					AVAILABLE REPAIR KIT(S):	
J			**238-9842**	1	KIT-SEAL (RELIEF VALVE)	
					(INCLUDES SEALS & BACKUP RINGS)	
H			**239-6336**	1	KIT-SEAL (RELIEF VALVE)	
					(INCLUDES SEALS & BACKUP RINGS)	
L			**133-5545**	1	KIT-SEAL (RELIEF VALVE)	

383-8643 **VALVE GP-CONTROL (*contd.*)** **i05411886**

NOTE	REF NO	GRAPHIC REF	PART NUMBER	QTY	PART NAME 1 2 3 4 5 6 (PRODUCT LEVEL)	SEE PAGE
					(INCLUDES SEALS & BACKUP RINGS)	
PS			**239-5157**	1	KIT-SEAL (CHECK VALVE)	
					(INCLUDES SEALS & BACKUP RINGS)	
X			**310-5742**	1	KIT-SEAL (RELIEF VALVE)	
					(INCLUDES SEALS & BACKUP RING)	

H - KIT MARKED H SERVICES PART(S) MARKED H
J - KIT MARKED J SERVICES PART(S) MARKED J
L - KIT MARKED L SERVICES PART(S) MARKED L
M - METRIC PART
P - KIT MARKED P SERVICES PART(S) MARKED P
S - PART(S) MARKED S INCLUDED IN KIT MARKED S
X - KIT MARKED X SERVICES PART(S) MARKED X
Y - SEPARATE ILLUSTRATION

383-8643 **VALVE GP-CONTROL (*contd.*)** **i05411886**

REFER TO ALL ILLUSTRATIONS OF
THIS GROUP FOR AUXILIARY VIEWS

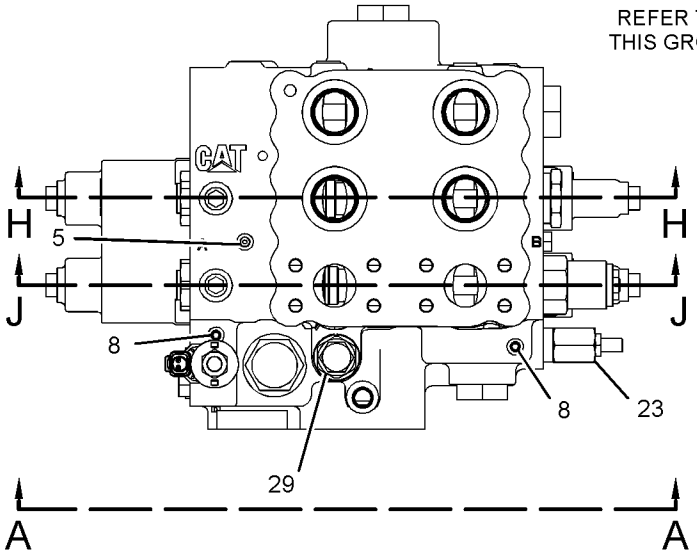

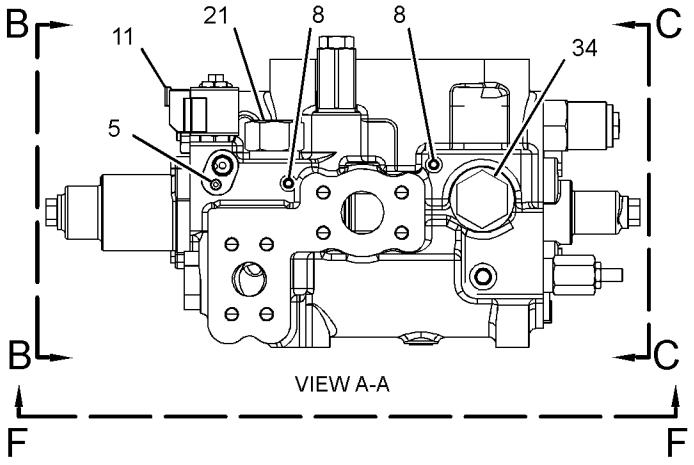

VIEW A-A

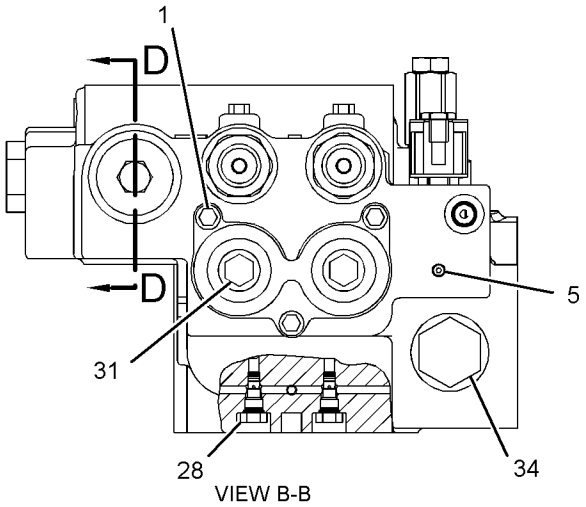

VIEW B-B

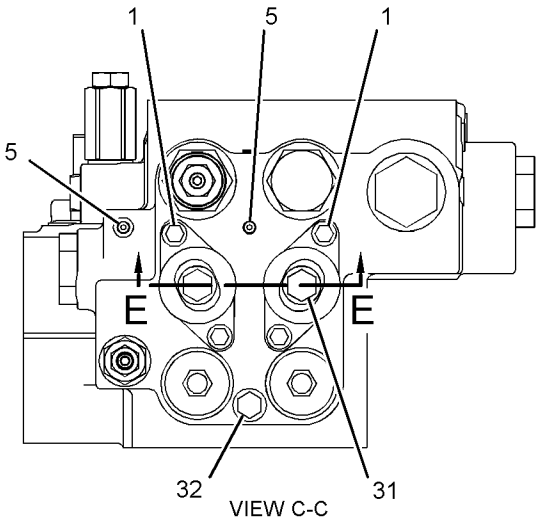

VIEW C-C

GRAPHIC #1 g03421224

383-8643 **VALVE GP-CONTROL (*contd.*)** **i05411886**

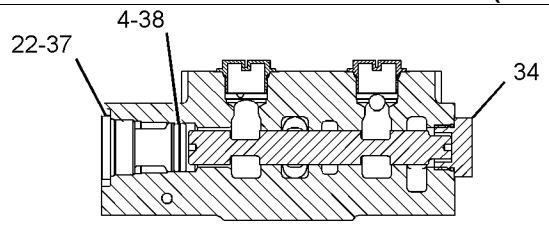

SECTION D-D

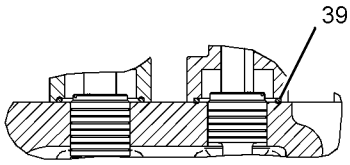

SECTION E-E

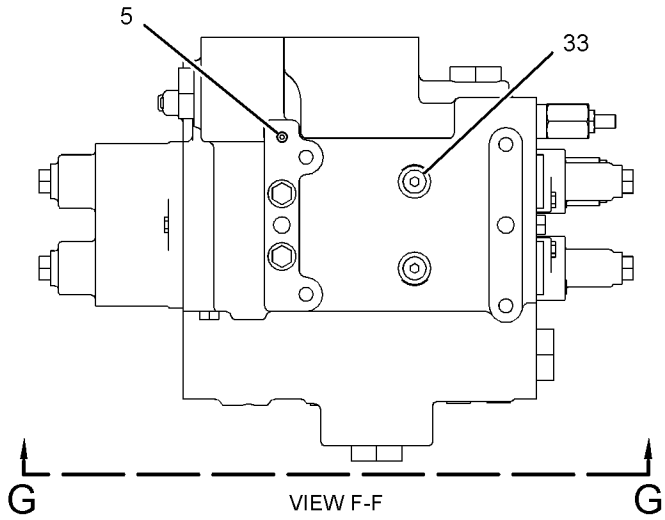

VIEW F-F

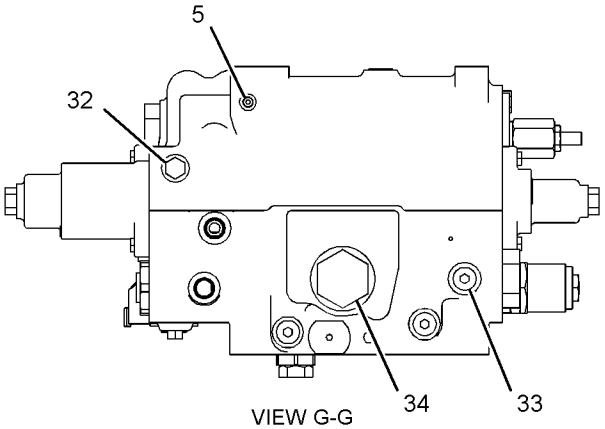

VIEW G-G

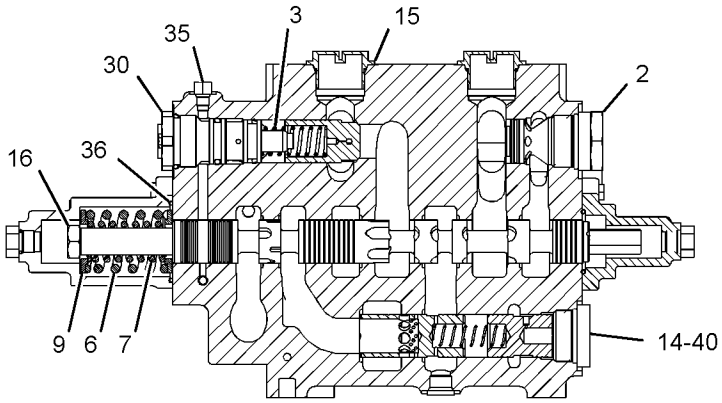

SECTION H-H

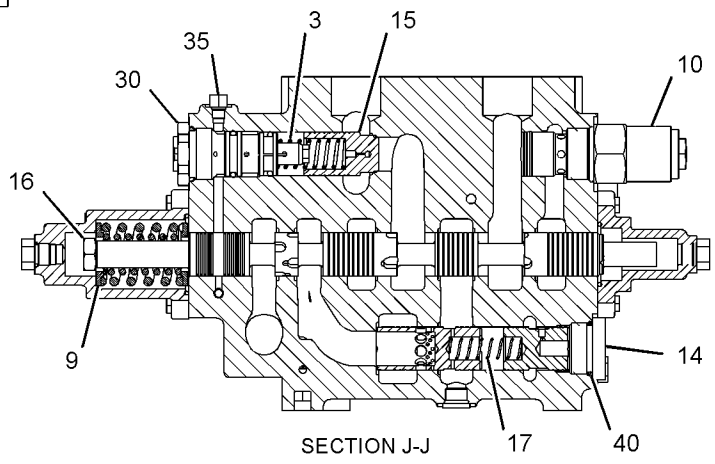

SECTION J-J

GRAPHIC #2 **<END>** g03421226

387-2116 VALVE GP-CONTROL—AUXILIARY

S/N: M5K1-UP

PART OF 445-6169 VALVE GP-CONTROL

AN ATTACHMENT

SMCS-5051 **i05407171**

NOTE	REF NO	GRAPHIC REF	PART NUMBER	QTY	PART NAME 1 2 3 4 5 6 (PRODUCT LEVEL)	SEE PAGE
	1	1	**2S-2596**	1	SPRING	
	2	1	**9X-2027**	2	WASHER (11X18X2-MM THK)	
B	3	1	**4T-4628**	6	SHIM (0.5-MM THK)	
	4	1	**4T-4631**	1	SPRING	
Y	5	1	**9T-1573**	2	VALVE GP-CHECK & RELIEF (AUXILIARY CONTROL VALVE)	465
	6	1	**096-3831**	1	ORIFICE	
	7	1	**100-8010**	1	VALVE-CHECK	
	8	1	**100-8011**	1	PLUG	
	9	1	**121-6653**	1	VALVE	
	10	1	**153-6976**	1	SPRING	
	11	1	**153-7067**	1	RETAINER	
	12	1	**153-7551**	1	RETAINER	
	13	1	**161-2684**	1	SCREW (3/8-24X2.48-IN)	
	14	1	**173-0511**	1	HOUSING	
	15	1	**173-0514**	1	COVER	
Y	16	1	**371-1784**	1	VALVE GP-RELIEF (AUXILIARY)	509
	17	1	**7M-8485**	1	SEAL-O-RING	
	18	1	**7J-0204**	1	SEAL-O-RING	
M	19	1	**6V-5192**	2	BOLT-SOCKET HEAD (M8X1.25X30-MM)	
M	20	1	**085-8091**	2	BOLT (M10X1.5X55-MM)	
M	21	1	**102-7365**	2	BOLT-SOCKET HEAD (M8X1.25X100-MM)	
	22	1	**123-9624**	1	SPRING	
	23	1	*162-0177*	1	PLUG AS	
		1	**3J-1907**	1	SEAL-O-RING	
		1	**9S-8004**	1	PLUG	
	24	1	*173-3993*	2	PLUG AS	
					(EACH INCLUDES)	
		1	**4J-7533**	1	SEAL-O-RING	
		1	**9S-8001**	1	PLUG	
	25	1	*183-7263*	1	PLUG AS	
		1	**3J-7354**	1	SEAL-O-RING	
		1	**9S-8002**	1	PLUG	
B	26	1	**2J-2866**	2	SHIM (0.12-MM THK)	
	27	1	**5K-0227**	1	SEAL-O-RING	
	28	1	**5M-2057**	2	SEAL-O-RING	
B	29	1	**6E-1637**	4	SHIM (1-MM THK)	

B - USE AS REQUIRED
M - METRIC PART
Y - SEPARATE ILLUSTRATION

387-2116 **VALVE GP-CONTROL (*contd.*)** **i05407171**

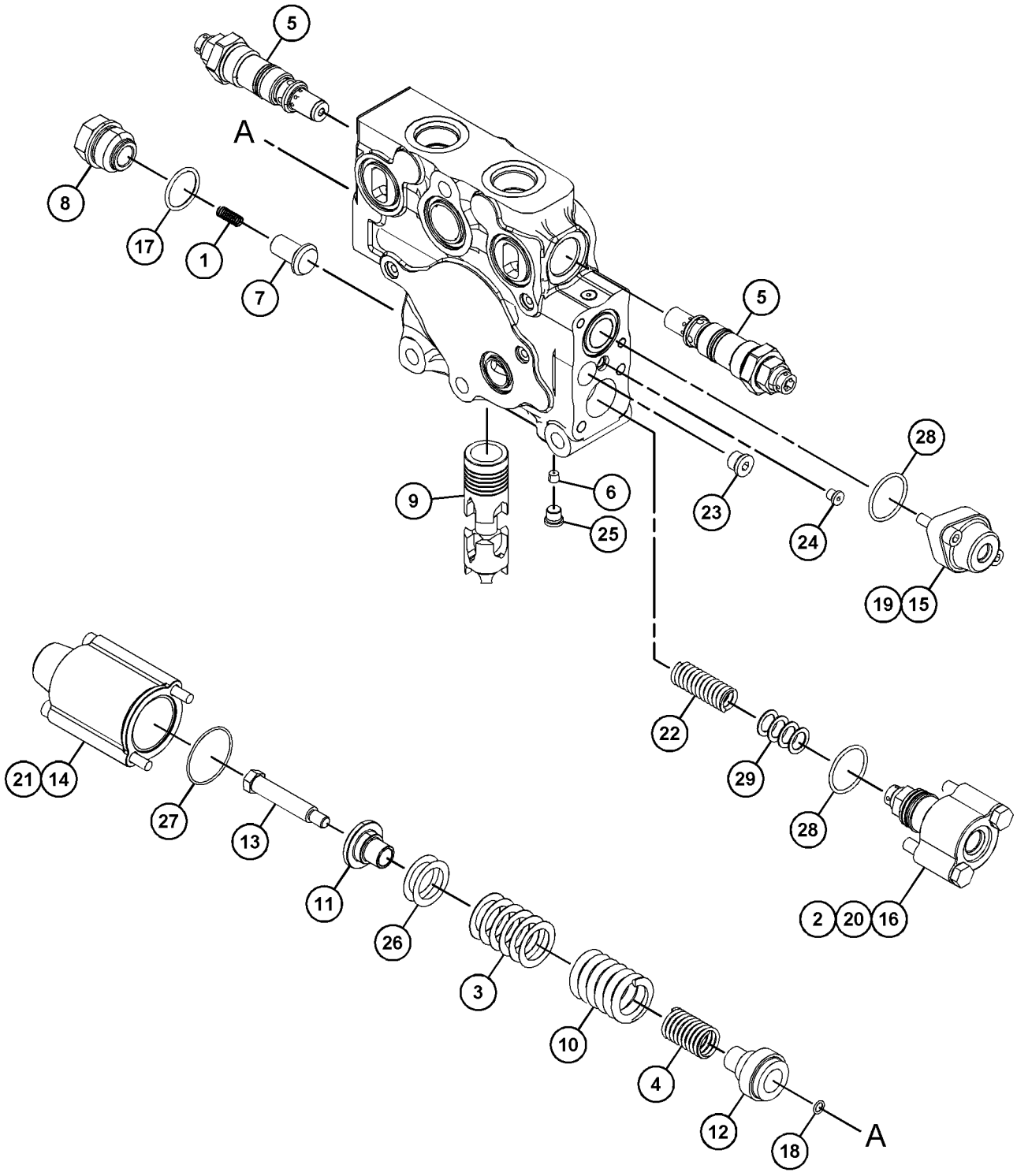

GRAPHIC #1 **<END>** g03423217

445-6169 VALVE GP-CONTROL

S/N: M5K1-UP
PART OF 390-5914 LINES GP-FRONT
AN ATTACHMENT

SMCS-5051 **i05818359**

NOTE	REF NO	GRAPHIC REF	PART NUMBER	QTY	PART NAME 1 2 3 4 5 6 (PRODUCT LEVEL)	SEE PAGE
	1	1	**1P-3702**	1	SEAL-RECTANGULAR	
	2	1	**4J-0522**	6	SEAL-O-RING	
	3	1	**4J-8997**	1	SEAL-O-RING	
	4	1	**6V-5555**	6	SEAL-O-RING	
	5	1	*183-7263*	2	PLUG AS	
					(EACH INCLUDES)	
		1	**3J-7354**	1	SEAL-O-RING	
		1	**9S-8002**	1	PLUG	
	6	1	**270-7836**	1	COVER	
Y	7	1	**387-2116**	1	VALVE GP-CONTROL (AUXILIARY)	470
Y	8	1	**445-4983**	1	MANIFOLD GP-VALVE (INLET)	434
	9	1	**8T-4223**	6	WASHER-HARD (13.5X25.5X3-MM THK)	
M	10	1	**8T-4244**	3	NUT (M12X1.75-THD)	
M	11	1	**8C-3226**	3	BOLT (M12X1.75X200-MM)	

M - METRIC PART
Y - SEPARATE ILLUSTRATION

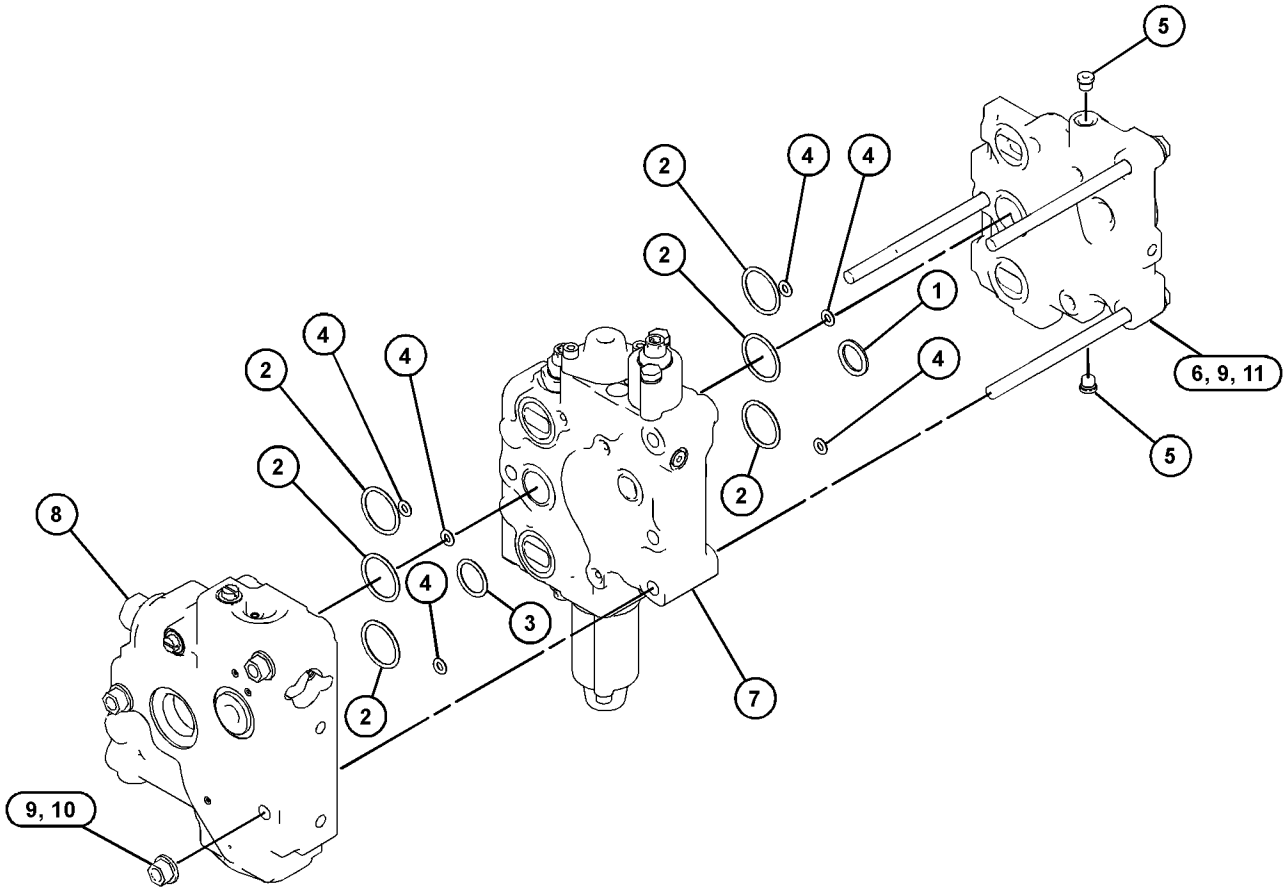

GRAPHIC #1 **<END>** g03692274

451-5886 VALVE GP-CONTROL

S/N: M5K1-UP
LIFT & TILT
PART OF 390-5913 VALVE GP-MAIN CONTROL
AN ATTACHMENT

SMCS-5051 **i06068218**

NOTE	REF NO	GRAPHIC REF	PART NUMBER	QTY	PART NAME 1 2 3 4 5 6 (PRODUCT LEVEL)	SEE PAGE
	1	1	**2S-4078**	1	SEAL-O-RING	
	3	1	**6V-0357**	1	SEAL-O-RING	
	4	2	**6V-5393**	2	SEAL-O-RING	
	5	2	**7M-8485**	2	SEAL-O-RING	
	6	2	*155-3624*	2	PLUG AS	
					(EACH INCLUDES)	
		2	**3J-7354**	1	SEAL-O-RING	
		2	**9S-4182**	1	PLUG (7/16-20-THD)	
	7	1,2	*162-0177*	5	PLUG AS	
					(EACH INCLUDES)	
		1,2	**3J-1907**	1	SEAL-O-RING	
		1,2	**9S-8004**	1	PLUG	
	8	1,2	*164-4180*	4	PLUG AS	
					(EACH INCLUDES)	
		1,2	**7M-8485**	1	SEAL-O-RING	
		1,2	**9S-4181**	1	PLUG	
	9	2	*222-4737*	2	PLUG AS	
					(EACH INCLUDES)	
		2	**4J-7533**	1	SEAL-O-RING	
		2	**9S-4180**	1	PLUG	
	10	2	**225-6948**	2	SEAL-O-RING	
P	11	2	**234-4869**	1	VALVE GP-MAKEUP	
	12	2	**236-9832**	2	SPRING	
	13	1	**240-4695**	1	RING-BACKUP	
	14	1,2	**282-8827**	7	PLUG	
	15	2	**284-1010**	2	SPRING	
	16	2	**284-1011**	2	SPRING	
	17	1	**292-8061**	4	PLUG-EXPANSION	
	18	2	**295-0993**	4	RETAINER	
H	19	2	**332-1987**	1	VALVE GP-RELIEF (DIRECT OPERATED)	
	20	1	**333-8242**	1	VALVE GP-SOLENOID (24-VOLT) (PILOT SUPPLY)	
		1	**384-8750**	1	COIL AS (24-VOLT)	
	23	2	**356-8561**	2	VALVE-CONTROL	
	24	2	**363-1610**	2	SPRING	
N	26	1	**370-5764**	1	VALVE GP-RELIEF (MARGIN)	
	27	1	**370-8160**	1	PLUG	
J	28	1	**375-3788**	1	VALVE GP-RELIEF (PILOT OPERATED)	
L	31	1	**388-4493**	2	VALVE GP-CHECK (LOAD SIGNAL)	
					(EACH INCLUDES)	
		1	**095-1513**	1	SEAL-O-RING	
		1	**3H-0442**	1	SEAL-O-RING	
Y	32	2	**445-6109**	2	VALVE GP-CHECK (PILOT OPERATED)	464
	36	1	**451-6644**	1	VALVE GP-RELIEF (TILT)	
	37	2	**451-9131**	2	PLUG-RETAINER	
M	39	2	**359-4661**	2	BOLT (M10X1.5X25-MM)	
M	40	1,2	**8T-4138**	7	BOLT (M6X1X20-MM)	
					AVAILABLE REPAIR KIT(S):	
J			**133-5545**	1	KIT-SEAL (RELIEF VALVE)	
					(INCLUDES SEAL O-RINGS & BACKUP RINGS)	
L			**239-5157**	1	KIT-SEAL (CHECK VALVE)	
					(INCLUDES SEAL O-RINGS & BACKUP RINGS)	
N			**239-6336**	1	KIT-SEAL (RELIEF VALVE)	
					(INCLUDES SEAL O-RINGS & BACKUP RINGS)	
H			**310-5742**	1	KIT-SEAL (RELIEF VALVE)	

451-5886 **VALVE GP-CONTROL (*contd.*)** **i06068218**

NOTE	REF NO	GRAPHIC REF	PART NUMBER	QTY	PART NAME 1 2 3 4 5 6 (PRODUCT LEVEL)	SEE PAGE
					(INCLUDES O-RINGS & BACKUP RING)	
P			**238-9842**	1	KIT-SEAL (RELIEF VALVE)	
					(INCLUDES BACKUP RINGS & SEAL O-RINGS)	

H - KIT MARKED H SERVICES PART(S) MARKED H
J - KIT MARKED J SERVICES PART MARKED J
L - KIT MARKED L SERVICES PART(S) MARKED L
M - METRIC PART
N - KIT MARKED N SERVICES PART(S) MARKED N
P - KIT MARKED P SERVICES PART(S) MARKED P
Y - SEPARATE ILLUSTRATION

451-5886 **VALVE GP-CONTROL** (*contd.*) **i06068218**

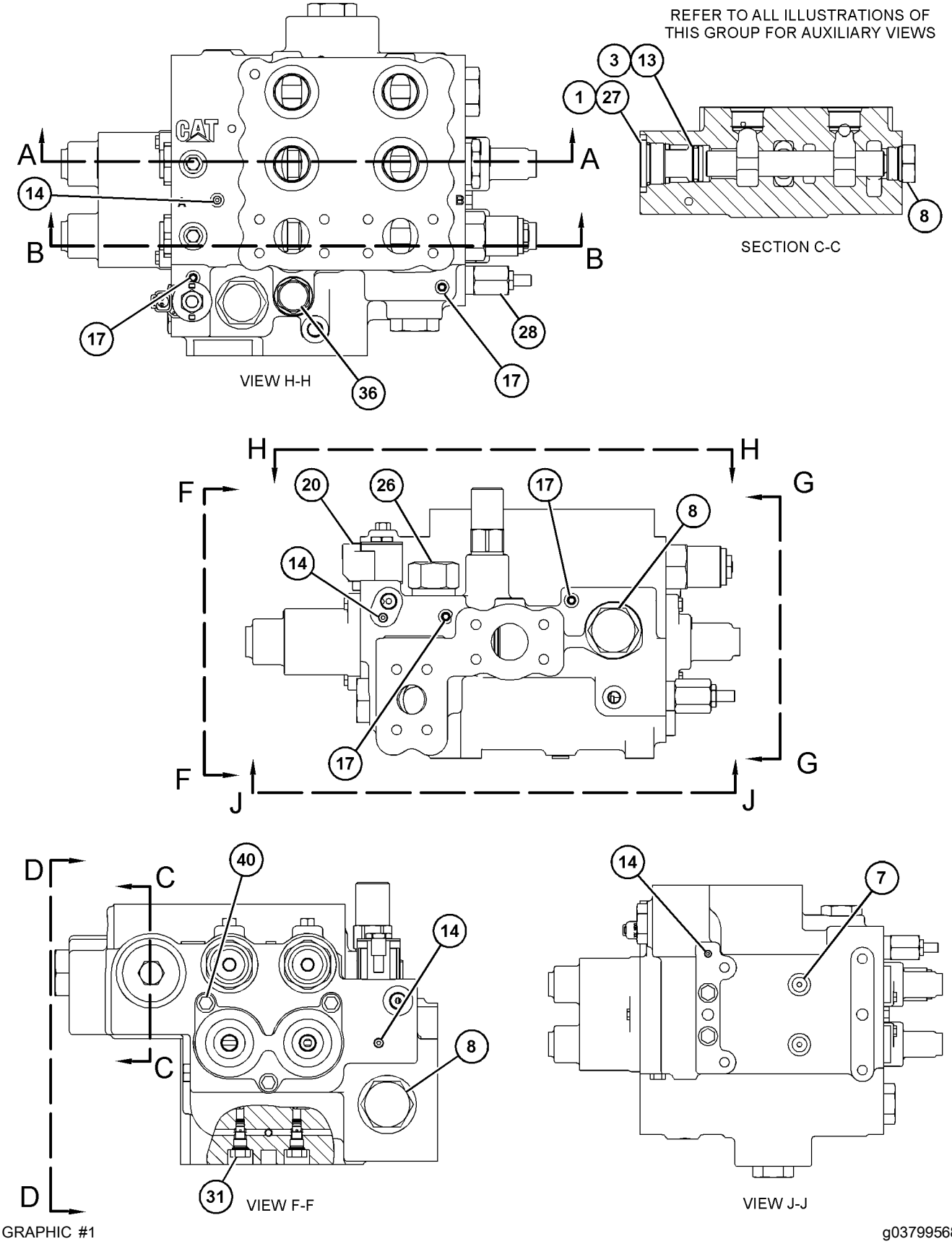

GRAPHIC #1

g03799568

451-5886 **VALVE GP-CONTROL** (*contd.*) **i06068218**

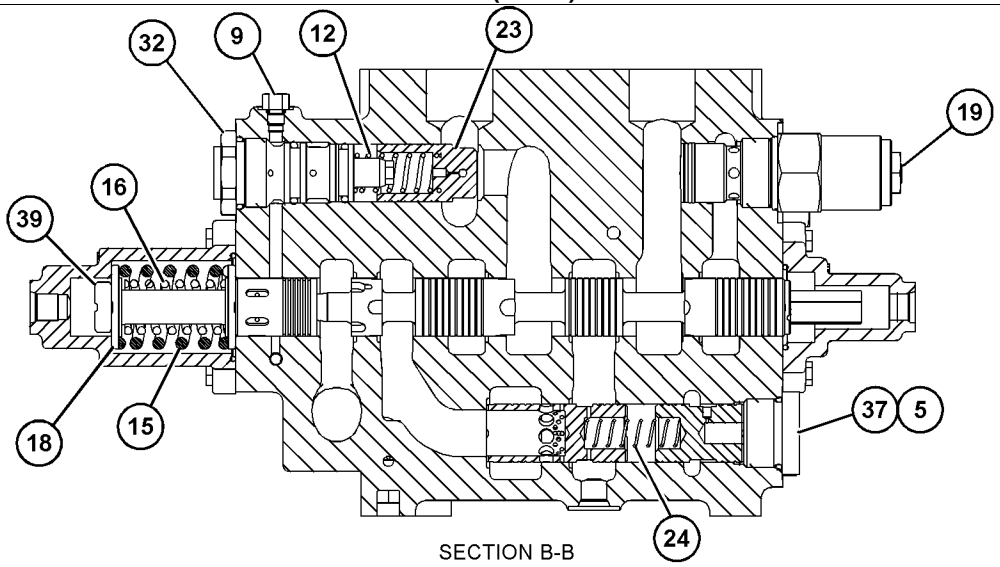

SECTION B-B

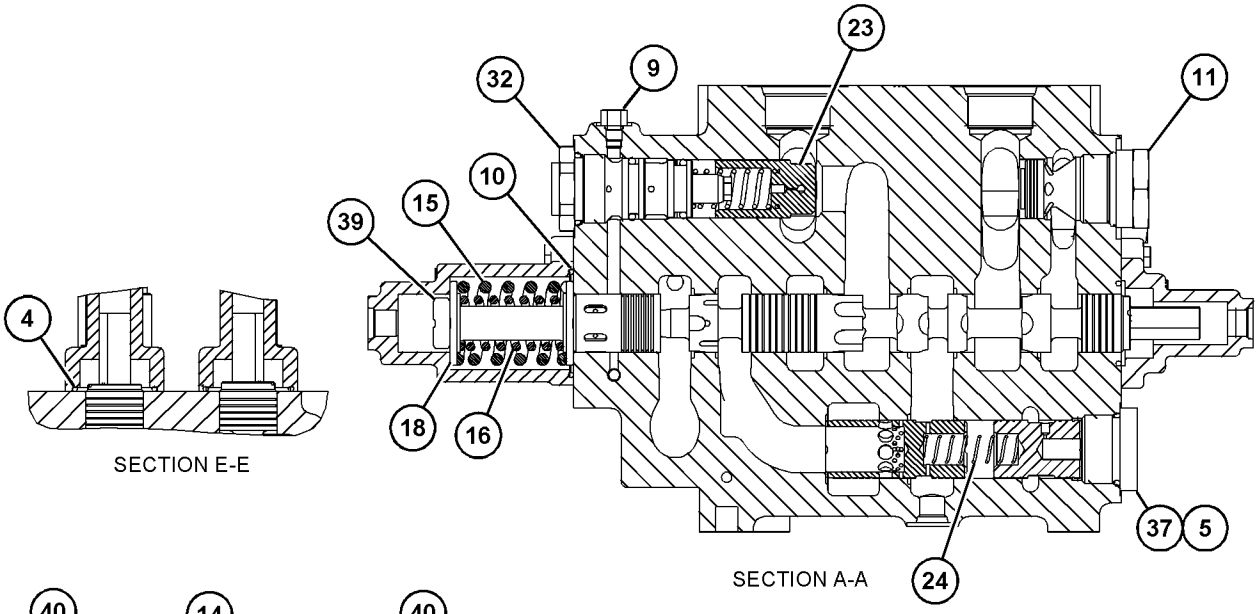

SECTION E-E

SECTION A-A

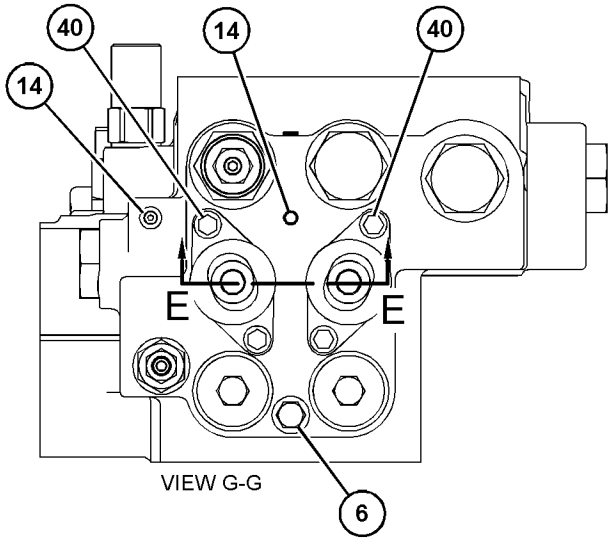

VIEW G-G

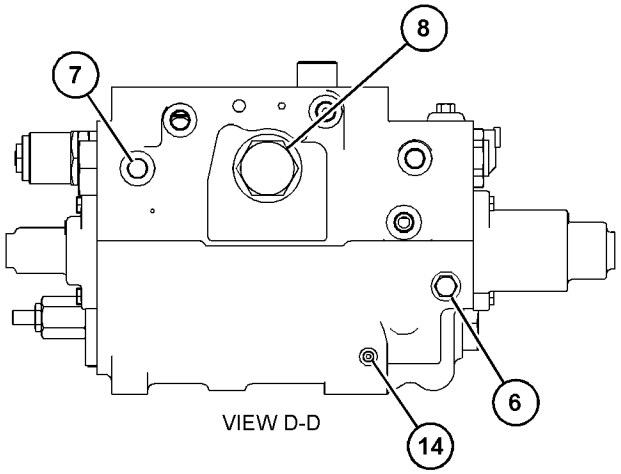

VIEW D-D

GRAPHIC #2 **<END>** g03799569

435-1940 VALVE GP-FAN REVERSING—FAN

S/N: M5K1-UP

PART OF 397-9801 MOTOR & LINES GP-HYDRAULIC FAN

AN ATTACHMENT

SMCS-138R **i05465771**

NOTE	REF NO	GRAPHIC REF	PART NUMBER	QTY	PART NAME 1 2 3 4 5 6 (PRODUCT LEVEL)	SEE PAGE
	1	1	**434-3993**	1	VALVE GP-SOLENOID (REVERSING FAN)	
		1	**434-3992**	1	COIL AS	
J	2	1	**436-5942**	1	VALVE GP-RELIEF	
L	3	1	**177-3868**	1	VALVE GP-CHECK	
		1	**3K-0360**	1	SEAL-O-RING	
	4	1	**9S-8002**	1	PLUG	
	5	1	**3J-7354**	1	SEAL-O-RING	
					AVAILABLE REPAIR KIT(S):	
J			**120-9047**	1	KIT-SEAL	
					(INCLUDES SEALS & BACKUP RING)	
L			**120-9051**	1	KIT-SEAL	
					(INCLUDES O-RINGS & RING RETAINER)	

J - KIT MARKED J SERVICES PART(S) MARKED J
L - KIT MARKED L SERVICES PART(S) MARKED L

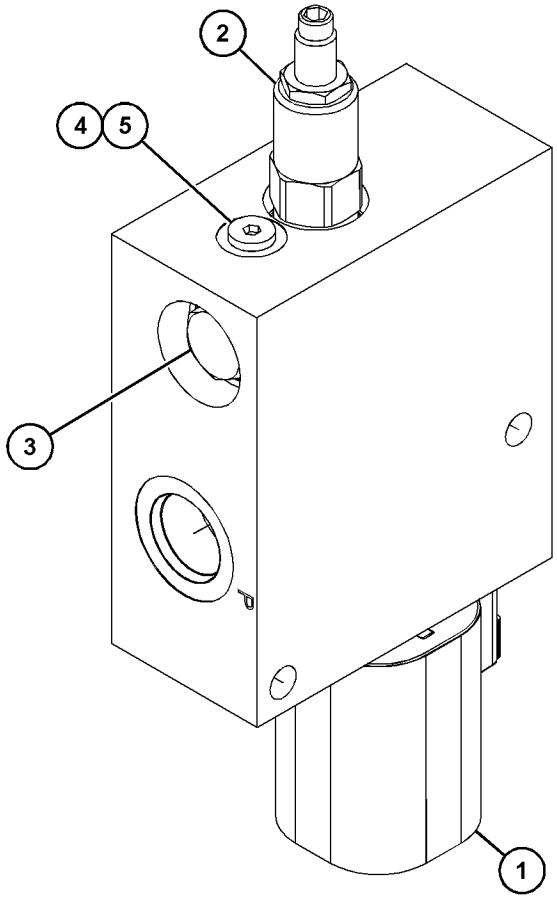

GRAPHIC #1 **<END>** g03546399

383-8642 VALVE GP-MAIN CONTROL

S/N: M5K1-UP

PART OF 390-5903 VALVE & MTG GP-HYDRAULIC

AN ATTACHMENT

SMCS-5051 **i05838710**

NOTE	REF NO	GRAPHIC REF	PART NUMBER	QTY	PART NAME 1 2 3 4 5 6 (PRODUCT LEVEL)	SEE PAGE
	1	2	**6J-2419**	1	SEAL-O-RING	
M	2	1	**287-8257**	4	BOLT (M6X1X65-MM)	
	3	2	**123-4750**	1	VALVE AS-CHECK	
		2	**3J-1907**	1	SEAL-O-RING	
		2	**6V-8397**	1	SEAL-O-RING	
H	4	2	**234-4869**	1	VALVE GP-MAKEUP	
	5	1	**236-9832**	2	SPRING	
	6	1	**240-4695**	1	RING-BACKUP	
	7	1,2	**282-8827**	7	PLUG	
	8	1	**284-1010**	2	SPRING	
	9	1	**284-1011**	2	SPRING	
	10	2	**292-8061**	4	PLUG-EXPANSION	
	11	1	**295-0993**	4	RETAINER	
J	12	2	**332-1987**	1	VALVE GP-RELIEF (TILT CONTROL)	
	13	1	**333-8242**	1	VALVE GP-SOLENOID (24-VOLT) (PILOT SUPPLY)	
		1	**384-8750**	1	COIL AS (24-VOLT)	
	16	1	**356-8550**	2	PLUG-RETAINER	
	17	1	**356-8561**	2	VALVE-CONTROL	
	18	2	*148-8378*	1	ELBOW AS	
		2	**3J-1907**	1	SEAL-O-RING	
		2	**6V-8397**	1	SEAL-O-RING	
		2	**6V-8724**	1	ELBOW	
M	19	1	**359-4661**	2	BOLT (M10X1.5X25-MM)	
	20	1	**363-1610**	2	SPRING	
	21	2	**363-2687**	1	HOUSING	
	22	1	**363-2692**	1	SPRING	
	23	1	**363-2697**	1	RETAINER	
	25	2	**444-7322**	1	TUBE AS	
L	28	2	**370-5764**	1	VALVE GP-RELIEF	
N	29	1	**375-3788**	1	VALVE GP-RELIEF	
O	34	1	**388-4493**	2	VALVE GP-CHECK (LOAD SIGNAL)	
	35	1	**394-8568**	1	PLUG-RETAINER	
	36	1	**396-4852**	1	SEAL-O-RING	
	37	2	**421-1769**	1	VALVE GP-RELIEF (TILT)	
Y	38	1	**387-4652**	1	MANIFOLD GP-CONTROL (MAIN)	433
Y	39	1	**443-3773**	2	VALVE GP-CHECK (PILOT OPERATED)	463
	40	2	*148-8407*	5	PLUG AS	
					(EACH INCLUDES)	
		2	**3J-1907**	1	SEAL-O-RING	
		2	**9S-4191**	1	PLUG	
	41	1,2	*155-3624*	2	PLUG AS	
					(EACH INCLUDES)	
		1,2	**3J-7354**	1	SEAL-O-RING	
		1,2	**9S-4182**	1	PLUG	
	42	1	*162-0177*	5	PLUG AS	
					(EACH INCLUDES)	
		1	**3J-1907**	1	SEAL-O-RING	
		1	**9S-8004**	1	PLUG	
	43	1,2	*164-4180*	2	PLUG AS	
					(EACH INCLUDES)	
		1,2	**7M-8485**	1	SEAL-O-RING	
		1,2	**9S-4181**	1	PLUG	
	44	2	*207-8218*	1	PLUG AS	
		2	**7J-0204**	1	SEAL-O-RING	
		2	**9S-8007**	1	PLUG	
	45	1	*222-4737*	2	PLUG AS	
					(EACH INCLUDES)	

383-8642 **VALVE GP-MAIN CONTROL (*contd.*)** **i05838710**

NOTE	REF NO	GRAPHIC REF	PART NUMBER	QTY	PART NAME 1 2 3 4 5 6 (PRODUCT LEVEL)	SEE PAGE
		1	**4J-7533**	1	SEAL-O-RING	
		1	**9S-4180**	1	PLUG	
	46	1	**225-6948**	2	SEAL-O-RING	
	48	1	**6K-6307**	1	SEAL-O-RING	
	49	1	**6V-0357**	1	SEAL-O-RING	
	50	2	**6V-5393**	2	SEAL-O-RING	
	51	1	**6V-7607**	1	WASHER-HARD (20X30X2.5-MM THK)	
	52	1	**7M-8485**	2	SEAL-O-RING	
M	53	1,2	**8T-4138**	9	BOLT (M6X1X20-MM)	
	54	1	**9X-6381**	4	WASHER (6.5X12.5X1.6-MM THK)	
					AVAILABLE REPAIR KIT(S):	
J			**310-5742**	1	KIT-SEAL (RELIEF VALVE)	
					(INCLUDES RINGS)	
H			**238-9842**	1	KIT-SEAL (RELIEF VALVE)	
					(INCLUDES RINGS)	
L			**239-6336**	1	KIT-SEAL (RELIEF VALVE)	
					(INCLUDES RINGS)	
N			**133-5545**	1	KIT-SEAL (RELIEF VALVE)	
					(INCLUDES RINGS)	
O			**239-5157**	1	KIT-SEAL (CHECK VALVE)	

H - KIT MARKED H SERVICES PART(S) MARKED H
J - KIT MARKED J SERVICES PART(S) MARKED J
L - KIT MARKED L SERVICES PART(S) MARKED L
M - METRIC PART
N - KIT MARKED N SERVICES PART MARKED N
O - KIT MARKED O SERVICES PARTS MARKED O
Y - SEPARATE ILLUSTRATION

383-8642 **VALVE GP-MAIN CONTROL (*contd.*)** **i05838710**

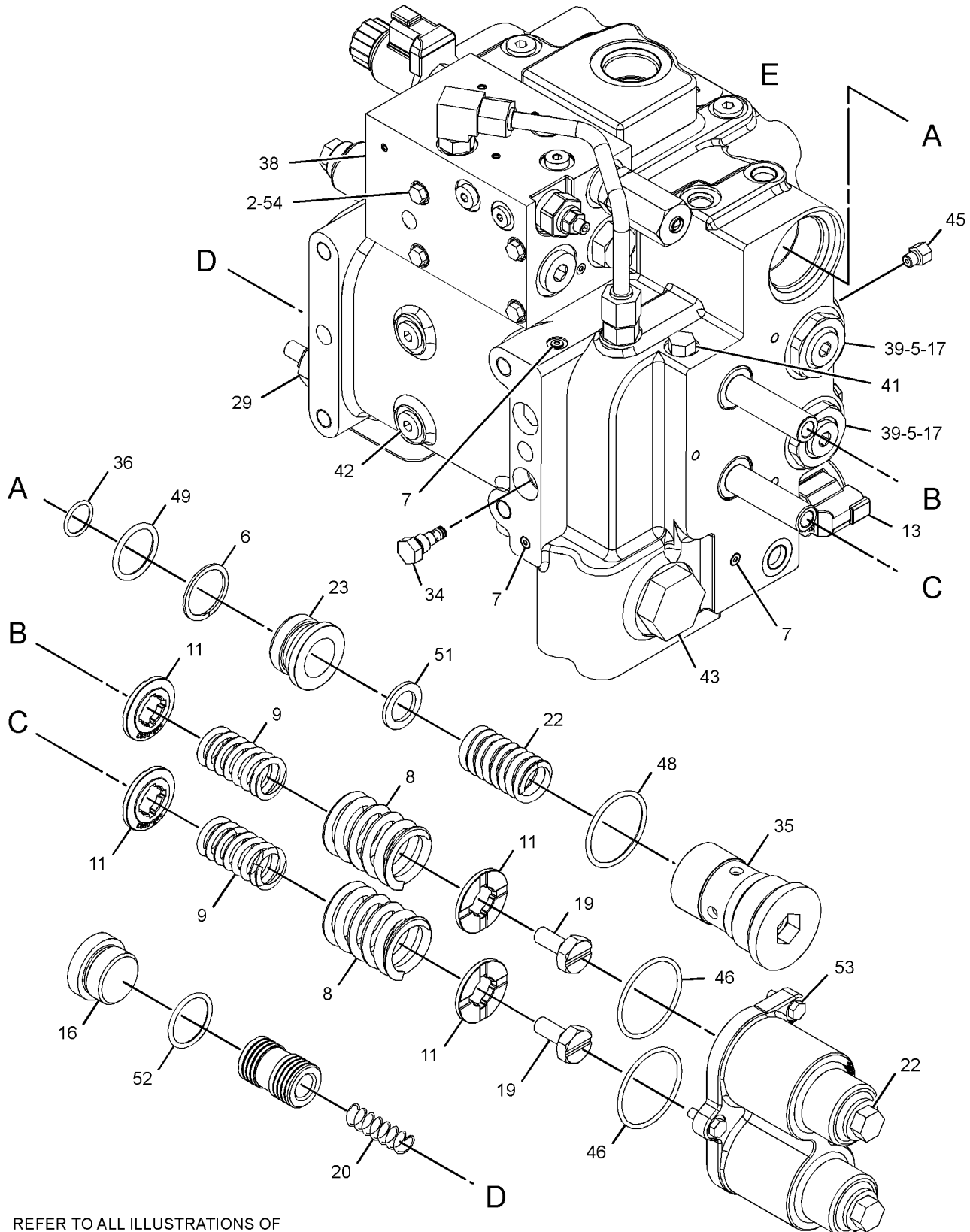

REFER TO ALL ILLUSTRATIONS OF THIS GROUP FOR AUXILIARY VIEWS

GRAPHIC #1 g03423278

383-8642 **VALVE GP-MAIN CONTROL (*contd.*)** **i05838710**

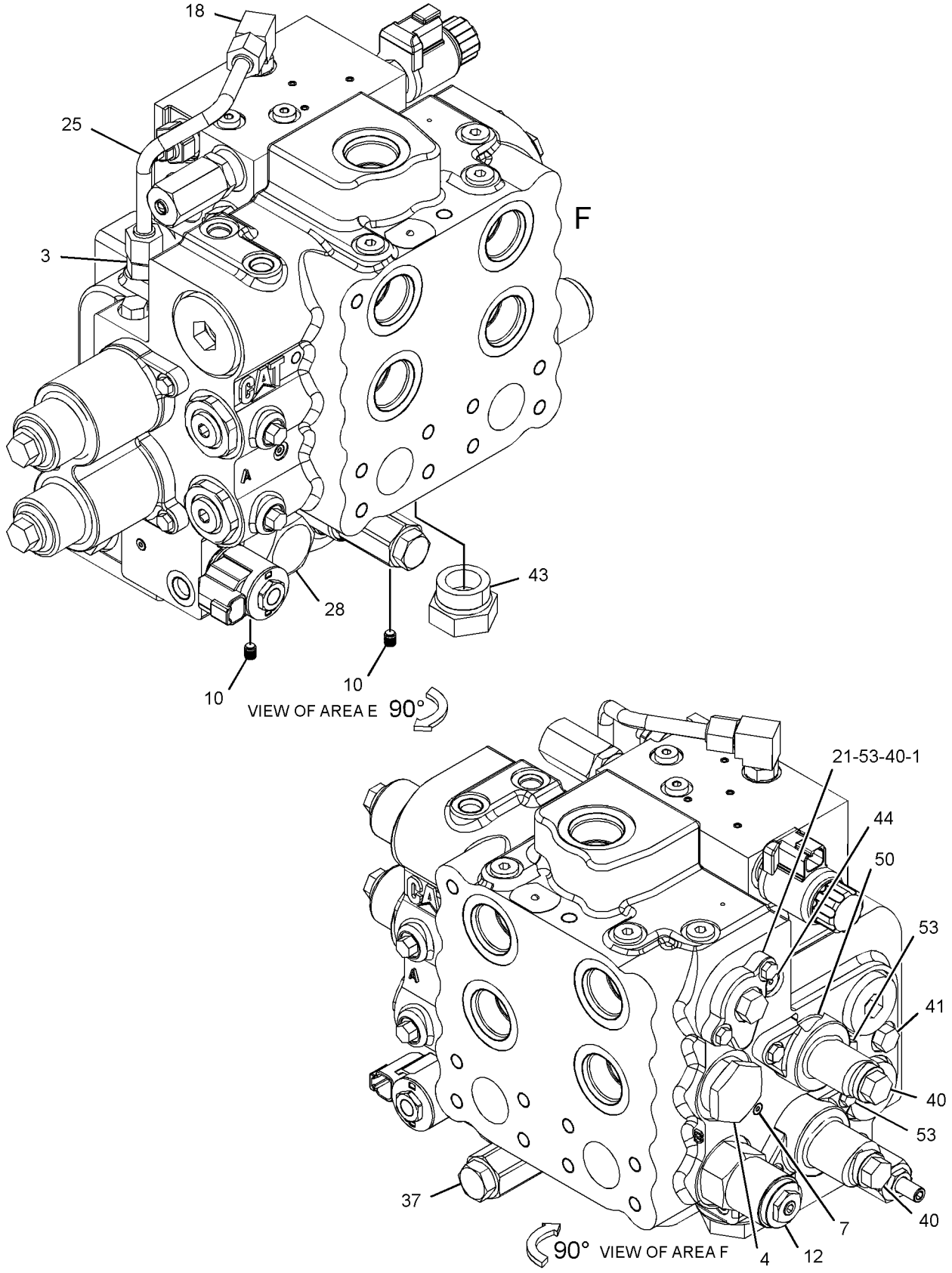

GRAPHIC #2 **<END>** g03423281

390-5913 VALVE GP-MAIN CONTROL

S/N: M5K1-UP
IMPLEMENT CONTROL
PART OF 397-9895 HYDRAULIC AR-3 VALVE
AN ATTACHMENT
TYPE 1

SMCS-5051 **i05411826**

NOTE	REF NO	GRAPHIC REF	PART NUMBER	QTY	PART NAME 1 2 3 4 5 6 (PRODUCT LEVEL)	SEE PAGE
Y	1	1	**6E-4701**	1	VALVE GP-CHECK (PILOT OIL)	462
	2	1	**123-4750**	1	VALVE AS-CHECK (IMPLEMENT CONTROL VALVE)	
		1	**3J-1907**	1	SEAL-O-RING	
		1	**6V-8397**	1	SEAL-O-RING	
Y	3	1	*355-9981*	1	ACCUMULATOR GP-HYDRAULIC (CHARGED)	384
	4	1	*357-4517*	1	TEE AS	
		1	**3J-7354**	1	SEAL-O-RING	
		1	**6V-8397**	2	SEAL-O-RING	
		1	**6V-9161**	1	TEE	
Y	5	1	**383-8643**	1	VALVE GP-CONTROL (LIFT & TILT)	466
	6	1	*148-8326*	1	CONNECTOR AS	
		1	**3J-7354**	1	SEAL-O-RING	
		1	**6V-8397**	1	SEAL-O-RING	
		1	**6V-9872**	1	CONNECTOR	
	7	1	*148-8336*	3	CONNECTOR AS	
					(EACH INCLUDES)	
		1	**3J-1907**	1	SEAL-O-RING	
		1	**6V-8397**	1	SEAL-O-RING	
		1	**6V-8636**	1	CONNECTOR	
	8	1	*148-8367*	4	ELBOW AS	
					(EACH INCLUDES)	
		1	**6V-8397**	1	SEAL-O-RING	
		1	**6V-9850**	1	ELBOW	
	9	1	*148-8378*	4	ELBOW AS	
					(EACH INCLUDES)	
		1	**3J-1907**	1	SEAL-O-RING	
		1	**6V-8397**	1	SEAL-O-RING	
		1	**6V-8724**	1	ELBOW	
	10	1	*148-8424*	3	TEE AS	
					(EACH INCLUDES)	
		1	**6V-8397**	1	SEAL-O-RING	
		1	**8T-8902**	1	TEE	
	11	1	*148-8433*	1	TEE AS	
		1	**6V-8397**	2	SEAL-O-RING	
		1	**6V-9836**	1	TEE-SWIVEL	
	12	1	*148-8435*	1	TEE AS	
		1	**3J-1907**	1	SEAL-O-RING	
		1	**6V-8397**	2	SEAL-O-RING	
		1	**6V-8781**	1	TEE	
	13	1	*164-5567*	2	COUPLER AS-QUICK DISCONNECT (MALE)	
					(EACH INCLUDES)	
		1	**6V-3965**	1	FITTING (QUICK DISCONNECT)	
		1	**214-7568**	1	SEAL-O-RING	
	14	1	**3J-1907**	1	SEAL-O-RING	
	15	1	**6V-0852**	2	CAP-DUST	
	16	1	**6V-9829**	1	CAP AS	

Y - SEPARATE ILLUSTRATION

390-5913 **VALVE GP-MAIN CONTROL (*contd.*)** **i05411826**

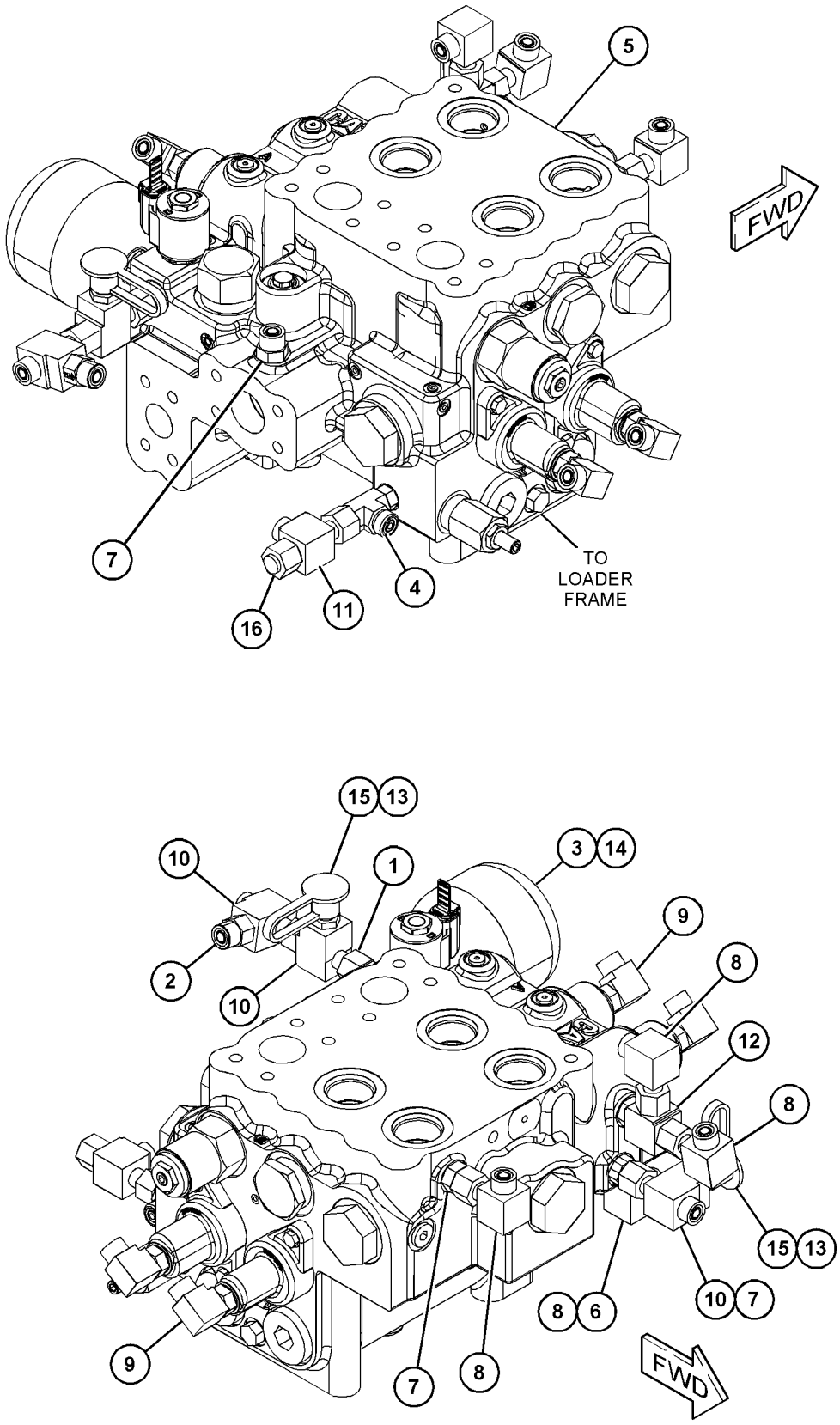

GRAPHIC #1 **<END>** g03556586

390-5913 VALVE GP-MAIN CONTROL

S/N: M5K1-UP
IMPLEMENT CONTROL
PART OF 397-9895 HYDRAULIC AR-3 VALVE
AN ATTACHMENT
TYPE 2

SMCS-5051 **i06068222**

NOTE	REF NO	GRAPHIC REF	PART NUMBER	QTY	PART NAME 1 2 3 4 5 6 (PRODUCT LEVEL)	SEE PAGE
Y	1	1	**6E-4701**	1	VALVE GP-CHECK (PILOT OIL)	462
	2	1	**123-4750**	1	VALVE AS-CHECK (IMPLEMENT CONTROL VALVE)	
		1	**3J-1907**	1	SEAL-O-RING	
		1	**6V-8397**	1	SEAL-O-RING	
CY	3	1	*452-1719*	1	ACCUMULATOR GP-PILOT OIL (CHARGED)	386
	4	1	*357-4517*	1	TEE AS	
		1	**3J-7354**	1	SEAL-O-RING	
		1	**6V-8397**	2	SEAL-O-RING	
		1	**6V-9161**	1	TEE	
CY	5	1	**451-5886**	1	VALVE GP-CONTROL (MAIN)	473
	6	1	*148-8326*	1	CONNECTOR AS	
		1	**3J-7354**	1	SEAL-O-RING	
		1	**6V-8397**	1	SEAL-O-RING	
		1	**6V-9872**	1	CONNECTOR	
	7	1	*148-8336*	3	CONNECTOR AS	
					(EACH INCLUDES)	
		1	**3J-1907**	1	SEAL-O-RING	
		1	**6V-8397**	1	SEAL-O-RING	
		1	**6V-8636**	1	CONNECTOR	
	8	1	*148-8367*	4	ELBOW AS	
					(EACH INCLUDES)	
		1	**6V-8397**	1	SEAL-O-RING	
		1	**6V-9850**	1	ELBOW	
	9	1	*148-8378*	4	ELBOW AS	
					(EACH INCLUDES)	
		1	**3J-1907**	1	SEAL-O-RING	
		1	**6V-8397**	1	SEAL-O-RING	
		1	**6V-8724**	1	ELBOW	
	10	1	*148-8424*	3	TEE AS	
					(EACH INCLUDES)	
		1	**6V-8397**	1	SEAL-O-RING	
		1	**8T-8902**	1	TEE	
	11	1	*148-8433*	1	TEE AS	
		1	**6V-8397**	2	SEAL-O-RING	
		1	**6V-9836**	1	TEE-SWIVEL	
	12	1	*148-8435*	1	TEE AS	
		1	**3J-1907**	1	SEAL-O-RING	
		1	**6V-8397**	2	SEAL-O-RING	
		1	**6V-8781**	1	TEE	
	13	1	*164-5567*	2	COUPLER AS-QUICK DISCONNECT (MALE)	
					(EACH INCLUDES)	
		1	**6V-3965**	1	FITTING (QUICK DISCONNECT)	
		1	**214-7568**	1	SEAL-O-RING	
	14	1	**3J-1907**	1	SEAL-O-RING	
	15	1	**6V-0852**	2	CAP-DUST	
	16	1	**6V-9829**	1	CAP AS	

C - CHANGE FROM PREVIOUS TYPE
Y - SEPARATE ILLUSTRATION

390-5913 **VALVE GP-MAIN CONTROL (*contd.*)** **i06068222**

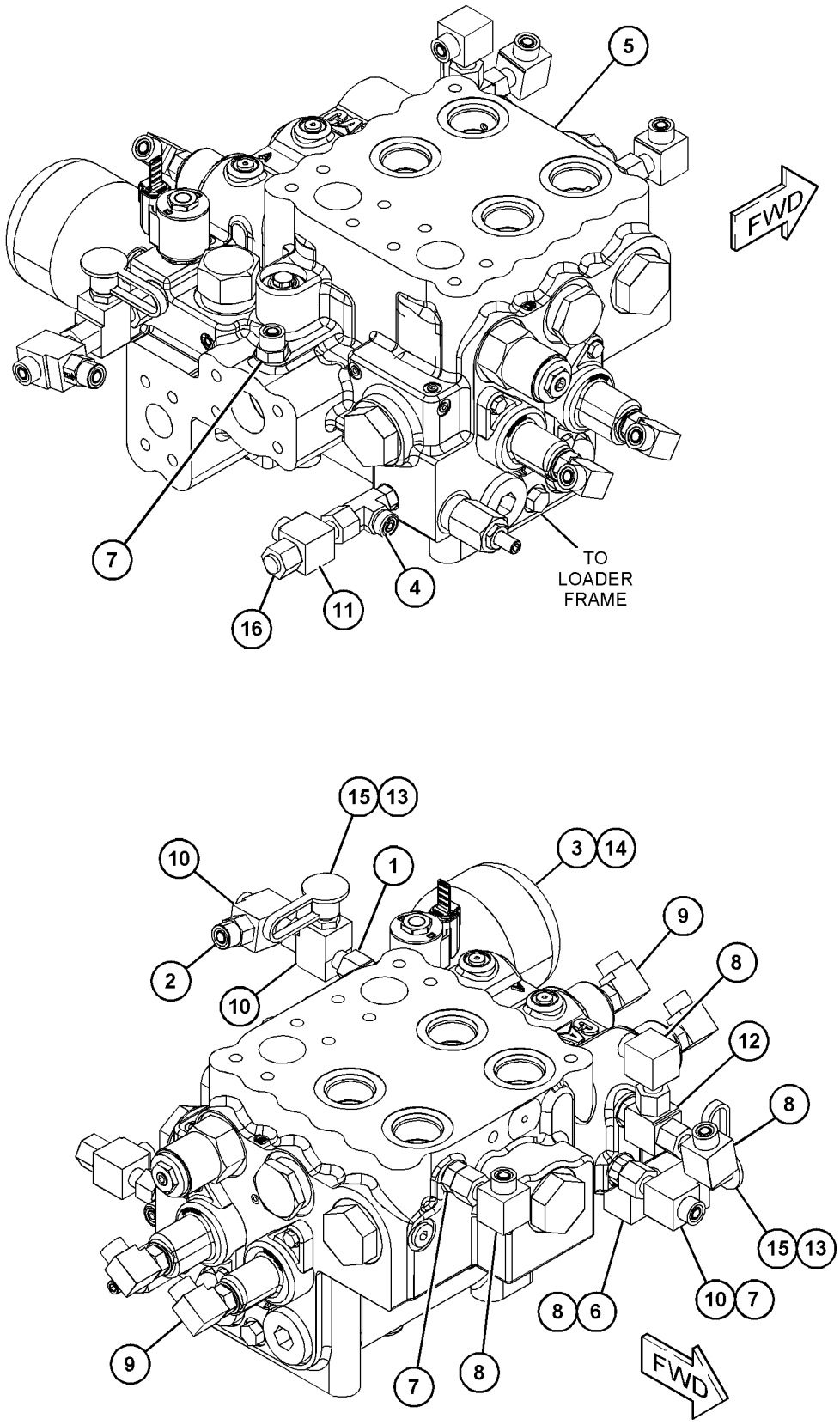

GRAPHIC #1 **<END>** g03556586

451-5885 VALVE GP-MAIN CONTROL

S/N: M5K1-UP

PART OF 390-5903 VALVE & MTG GP-HYDRAULIC

AN ATTACHMENT

SMCS-5051 **i05837904**

NOTE	REF NO	GRAPHIC REF	PART NUMBER	QTY	PART NAME 1 2 3 4 5 6 (PRODUCT LEVEL)	SEE PAGE
	1	1	**9X-6381**	4	WASHER (6.5X12.5X1.6-MM THK)	
	2	2	**6J-2419**	1	SEAL-O-RING	
	3	2	**6K-6307**	1	SEAL-O-RING	
	4	2	**6V-0357**	1	SEAL-O-RING	
	5	2	**6V-5393**	2	SEAL-O-RING	
	6	2	**7M-8485**	2	SEAL-O-RING	
	7	1	**123-4750**	1	VALVE AS-CHECK	
		1	**3J-1907**	1	SEAL-O-RING	
		1	**6V-8397**	1	SEAL-O-RING	
	8	1	*148-8378*	1	ELBOW AS	
		1	**3J-1907**	1	SEAL-O-RING	
		1	**6V-8397**	1	SEAL-O-RING	
		1	**6V-8724**	1	ELBOW	
	9	1	*148-8407*	1	PLUG AS	
		1	**9S-4191**	1	PLUG	
		1	**3J-1907**	1	SEAL-O-RING	
	10	1,2	*155-3624*	2	PLUG AS	
					(EACH INCLUDES)	
		1,2	**3J-7354**	1	SEAL-O-RING	
		1,2	**9S-4182**	1	PLUG	
	11	1,2	*162-0177*	5	PLUG AS	
					(EACH INCLUDES)	
		1,2	**3J-1907**	1	SEAL-O-RING	
		1,2	**9S-8004**	1	PLUG	
	12	1	*164-4180*	2	PLUG AS	
					(EACH INCLUDES)	
		1	**7M-8485**	1	SEAL-O-RING	
		1	**9S-4181**	1	PLUG	
	13	1	*207-8218*	1	PLUG AS	
		1	**7J-0204**	1	SEAL-O-RING	
		1	**9S-8007**	1	PLUG	
	14	2	*222-4737*	2	PLUG AS	
					(EACH INCLUDES)	
		2	**4J-7533**	1	SEAL-O-RING	
		2	**9S-4180**	1	PLUG	
	15	2	**225-6948**	2	SEAL-O-RING	
J	16	2	**234-4869**	1	VALVE GP-MAKEUP (LIFT, ROD END)	
	17	2	**236-9832**	2	SPRING	
	18	2	**240-4695**	1	RING-BACKUP	
	19	1,2	**282-8827**	7	PLUG	
	20	2	**284-1010**	2	SPRING	
	21	2	**284-1011**	2	SPRING	
	22	1	**292-8061**	4	PLUG-EXPANSION	
	23	2	**295-0993**	4	RETAINER	
L	24	2	**332-1987**	1	VALVE GP-RELIEF (TILT CONTROL)	
	25	1	**333-8242**	1	VALVE GP-SOLENOID (24-VOLT) (PILOT ON, OFF)	
		1	**384-8750**	1	COIL AS (24-VOLT)	
	28	2	**356-8561**	2	VALVE-CONTROL	
	29	2	**363-1610**	2	SPRING	
	30	1	**363-2687**	1	HOUSING	
	31	2	**363-2692**	1	SPRING	
	32	2	**363-2697**	1	RETAINER	
N	34	1	**370-5764**	1	VALVE GP-RELIEF (MARGIN)	
X	35	1	**375-3788**	1	VALVE GP-RELIEF (LOAD SIGNAL)	
Y	38	2	*387-4652*	1	MANIFOLD GP-CONTROL (RIDE CONTROL)	433
P	39	1	**388-4493**	2	VALVE GP-CHECK (LOAD SIGNAL)	
	40	2	**394-8568**	1	PLUG-RETAINER	

451-5885 **VALVE GP-MAIN CONTROL (*contd.*)** **i05837904**

NOTE	REF NO	GRAPHIC REF	PART NUMBER	QTY	PART NAME 1 2 3 4 5 6 (PRODUCT LEVEL)	SEE PAGE
	41	2	**396-4852**	1	SEAL-O-RING	
	42	1	**444-7322**	1	TUBE AS	
Y	43	2	**445-6109**	2	VALVE GP-CHECK	464
	47	1	**451-6644**	1	VALVE GP-RELIEF (TILT)	
	48	2	**451-9131**	2	PLUG-RETAINER	
M	50	2	**359-4661**	2	BOLT (M10X1.5X25-MM)	
	51	2	**6V-7607**	1	WASHER-HARD (20X30X2.5-MM THK)	
M	52	1	**8T-3844**	4	BOLT (M6X1X70-MM)	
M	53	1	**8T-4138**	9	BOLT (M6X1X20-MM)	
					AVAILABLE REPAIR KIT(S):	
J			**238-9842**	1	KIT-SEAL (RELIEF VALVE)	
					(INCLUDES O-RINGS & BACKUP RINGS)	
N			**239-6336**	1	KIT-SEAL (RELIEF VALVE)	
					(INCLUDES O-RINGS & BACKUP RINGS)	
X			**133-5545**	1	KIT-SEAL (RELIEF VALVE)	
					(INCLUDES O-RINGS & BACKUP RINGS)	
P			**239-5157**	1	KIT-SEAL (CHECK VALVE)	
					(INCLUDES O-RINGS & BACKUP RINGS)	
L			**310-5742**	1	KIT-SEAL (RELIEF VALVE)	
					(INCLUDES O-RINGS & BACKUP RING)	

J - KIT MARKED J SERVICES PART(S) MARKED J
L - KIT MARKED L SERVICES PART(S) MARKED L
M - METRIC PART
N - KIT MARKED N SERVICES PART(S) MARKED N
P - KIT MARKED P SERVICES PART(S) MARKED P
X - KIT MARKED X SERVICES PART(S) MARKED X
Y - SEPARATE ILLUSTRATION

451-5885 **VALVE GP-MAIN CONTROL (*contd.*)** **i05837904**

REFER TO ALL ILLUSTRATIONS OF THIS GROUP FOR AUXILIARY VIEWS

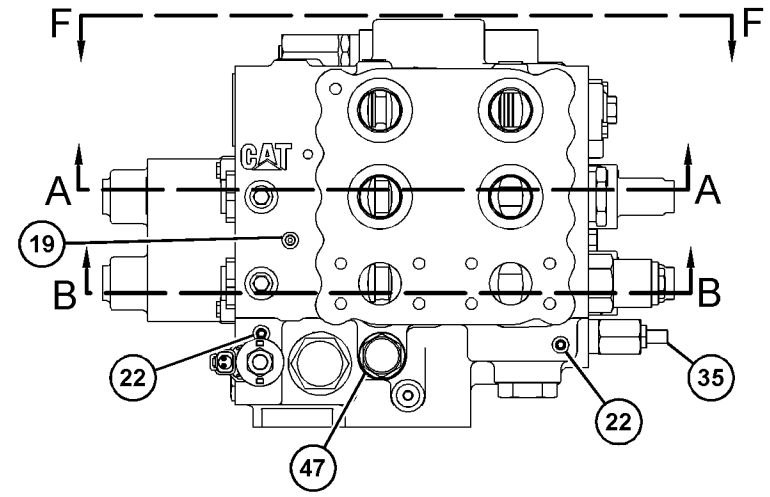

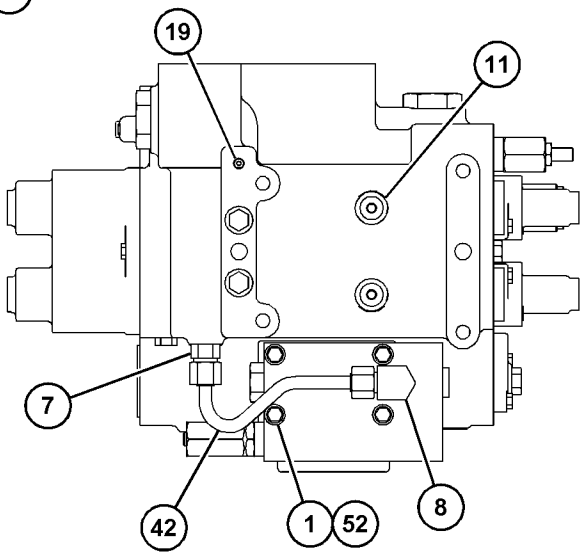

VIEW G-G

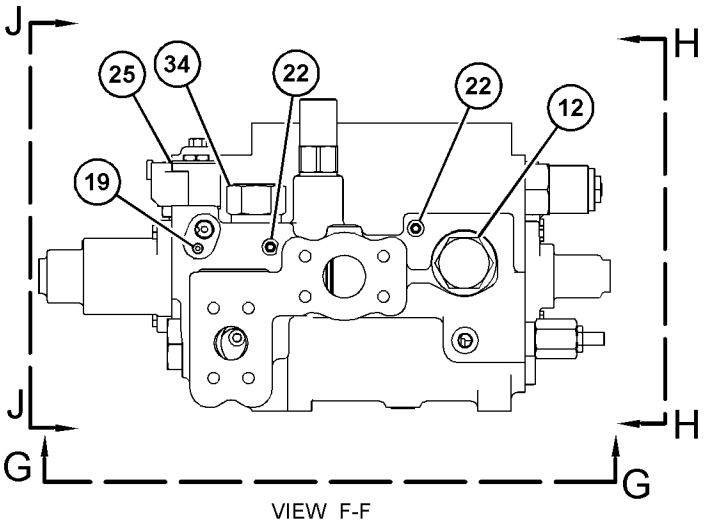

VIEW F-F

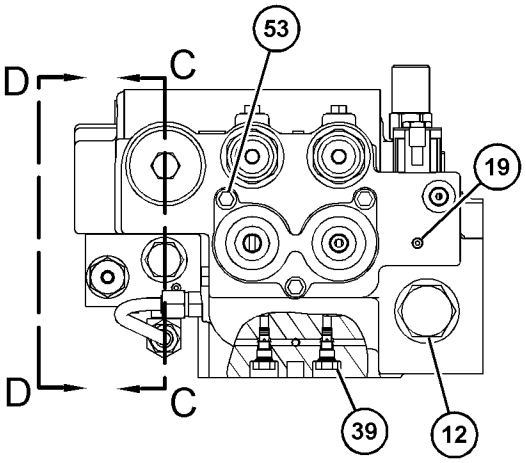

VIEW J-J

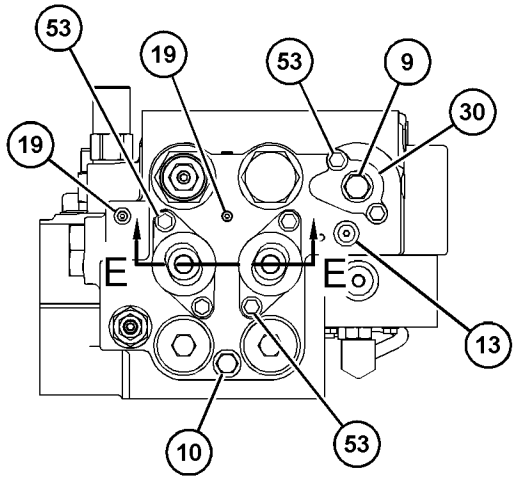

VIEW H-H

GRAPHIC #1 g03694068

451-5885 **VALVE GP-MAIN CONTROL (*contd.*)** **i05837904**

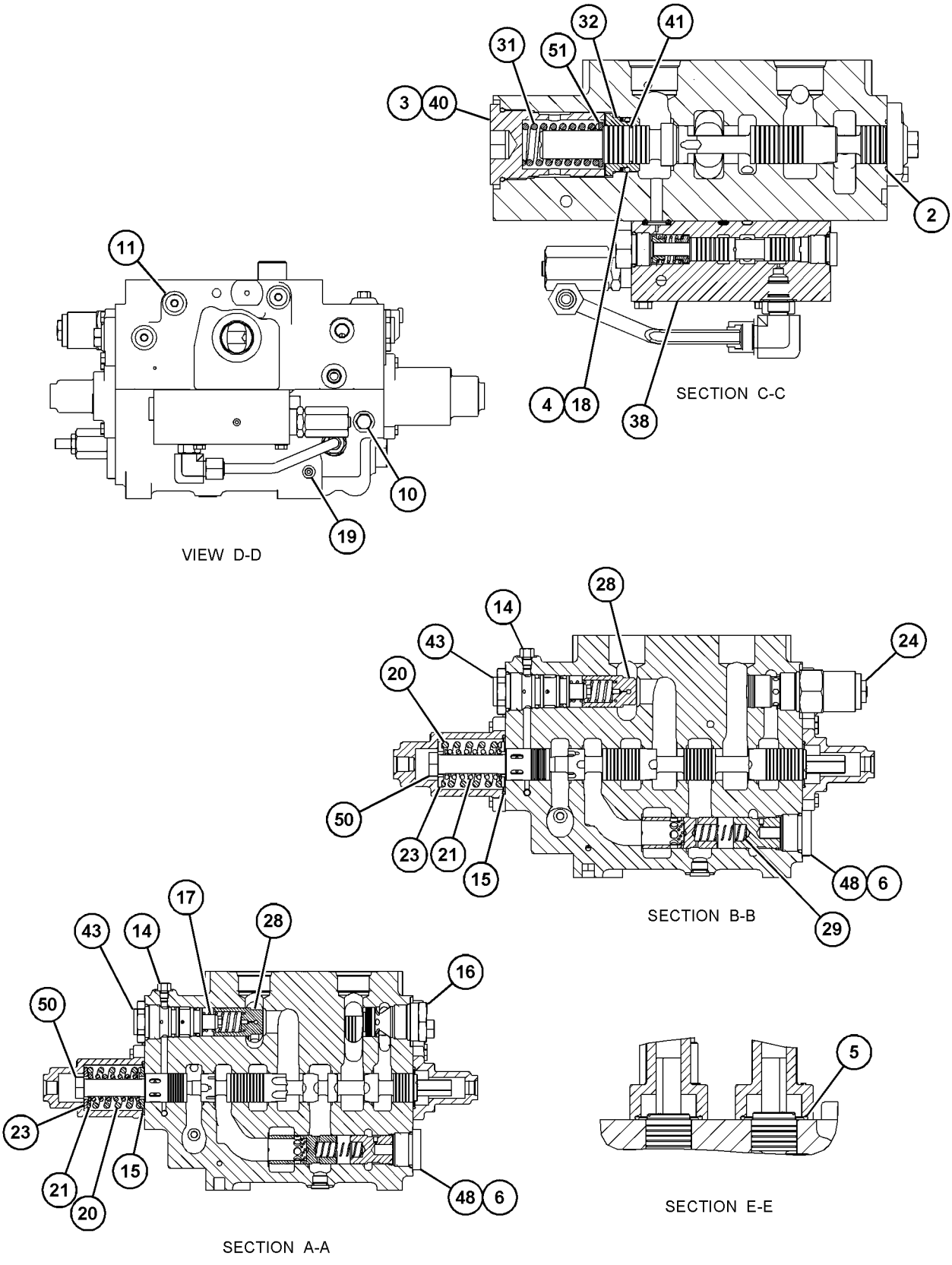

GRAPHIC #2 **<END>** g03694493

338-8502 VALVE GP-PILOT–2-FUNCTION–LIFT, TILT

S/N: M5K1-UP
PART OF 397-9847 LINES GP-PILOT
AN ATTACHMENT

SMCS-5059 **i05465945**

NOTE	REF NO	GRAPHIC REF	PART NUMBER	QTY	PART NAME 1 2 3 4 5 6 (PRODUCT LEVEL)	SEE PAGE
	1	1	**102-8806**	1	KIT-RECEPTACLE (8-PIN)	
					(INCLUDES RECEPTACLE AS & WEDGE)	
	2	1	**8T-8737**	2	PLUG-SEAL	
	3	1	**141-4852**	1	BOOT	
	4	1	**141-7481**	1	SPACER	
	5	1	**141-9236**	1	SCREEN AS (PILOT OIL)	
	6	1	**146-8478**	1	CUP	
Y	7	1	**147-3322**	1	PLATE GP-PILOT VALVE (JOYSTICK)	446
	8	1	*164-6873*	5	CONNECTOR AS	
					(EACH INCLUDES)	
		1	**3J-1907**	1	SEAL-O-RING	
		1	**6V-8397**	1	SEAL-O-RING	
		1	**113-9234**	1	CONNECTOR	
	9	1	**206-2748**	1	PLATE GP-PILOT VALVE (JOYSTICK)	
	10	1	**308-2057**	1	BODY AS	
		1	*183-7263*	8	PLUG AS	
		1	**3J-7354**	1	SEAL-O-RING	
		1	**9S-8002**	1	PLUG	
	11	1	**153-8947**	1	SWIVEL AS	
Y	12	1	**350-9169**	2	VALVE GP-PILOT CARTRIDGE (LOWER, RAISE, FLOAT POSITION)	505
Y	13	1	**350-9170**	2	VALVE GP-PILOT CARTRIDGE (DUMP, TILT BACK)	506
	14	1	*148-8336*	1	CONNECTOR AS	
		1	**3J-1907**	1	SEAL-O-RING	
		1	**6V-8397**	1	SEAL-O-RING	
		1	**6V-8636**	1	CONNECTOR	

Y - SEPARATE ILLUSTRATION

338-8502 **VALVE GP-PILOT (*contd.*)** **i05465945**

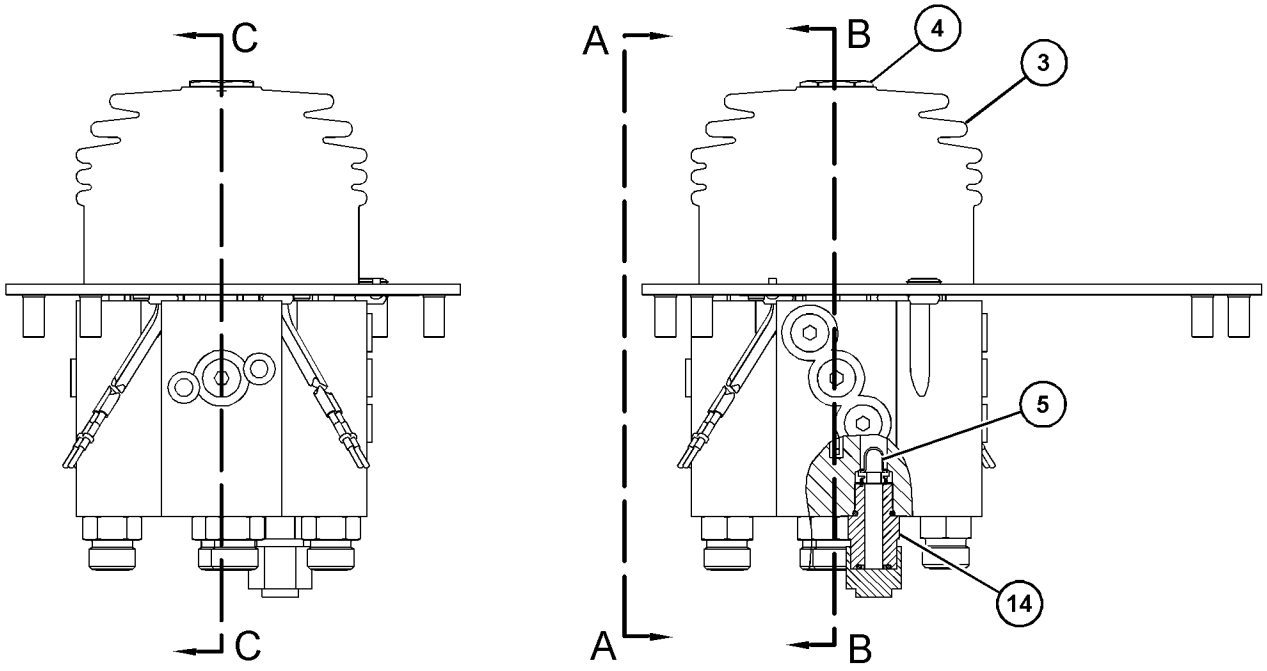

GRAPHIC #1 **<END>** g03527699

338-8504 VALVE GP-PILOT–AUXILIARY, LIFT, TILT

S/N: M5K1-UP
3-FUNCTION
PART OF 397-9765 LINES GP-PILOT
AN ATTACHMENT

SMCS-5059 **i05820531**

NOTE	REF NO	GRAPHIC REF	PART NUMBER	QTY	PART NAME 1 2 3 4 5 6 (PRODUCT LEVEL)	SEE PAGE
	1	1	**102-8806**	1	KIT-RECEPTACLE (8-PIN)	
					(INCLUDES RECEPTACLE AS & WEDGE)	
	2	2	**033-9139**	2	RING-RETAINING	
	3	1	**136-9292**	1	BOOT	
	4	1	**141-4852**	1	BOOT	
	5	1	**141-7481**	1	SPACER	
	6	1	**141-9236**	1	SCREEN AS (PILOT OIL)	
	7	2	**146-8477**	1	BRACKET	
	8	2	**146-8478**	1	CUP	
	9	2	**146-8981**	1	PIN	
Y	10	2	**147-3322**	1	PLATE GP-PILOT VALVE (JOYSTICK)	446
Y	11	2	**160-6299**	1	PIVOT GP-PILOT VALVE	443
	12	2	*164-6873*	7	CONNECTOR AS	
					(EACH INCLUDES)	
		2	**3J-1907**	1	SEAL-O-RING	
		2	**6V-8397**	1	SEAL-O-RING	
		2	**113-9234**	1	CONNECTOR	
Y	13	2	**262-7182**	2	VALVE GP-PILOT CARTRIDGE (AUXILIARY)	504
Y	14	2	**206-2750**	1	PLATE GP-PILOT VALVE	449
Y	15	1	**308-2058**	1	BODY GP-PILOT VALVE	392
Y	17	2	**350-9169**	2	VALVE GP-PILOT CARTRIDGE (LOWER, RAISE, FLOAT POSITION)	505
Y	18	2	**350-9170**	2	VALVE GP-PILOT CARTRIDGE (DUMP, TILT BACK)	506
	19	1	*148-8336*	1	CONNECTOR AS	
		1	**3J-1907**	1	SEAL-O-RING	
		1	**6V-8397**	1	SEAL-O-RING	
		1	**6V-8636**	1	CONNECTOR	
	20	1	*148-8407*	2	PLUG AS	
					(EACH INCLUDES)	
		1	**3J-1907**	1	SEAL-O-RING	
		1	**9S-4191**	1	PLUG (9/16-18-THD)	
	21	2	**153-8947**	1	SWIVEL AS	
M	24	2	**5A-3604**	1	BOLT-SOCKET HEAD (M8X1.25X25-MM)	
	25	1	**173-9964**	1	PLATE-BUMPER	

M - METRIC PART
Y - SEPARATE ILLUSTRATION

338-8504 **VALVE GP-PILOT (*contd.*)** **i05820531**

REFER TO ALL ILLUSTRATIONS OF
THIS GROUP FOR AUXILIARY VIEWS

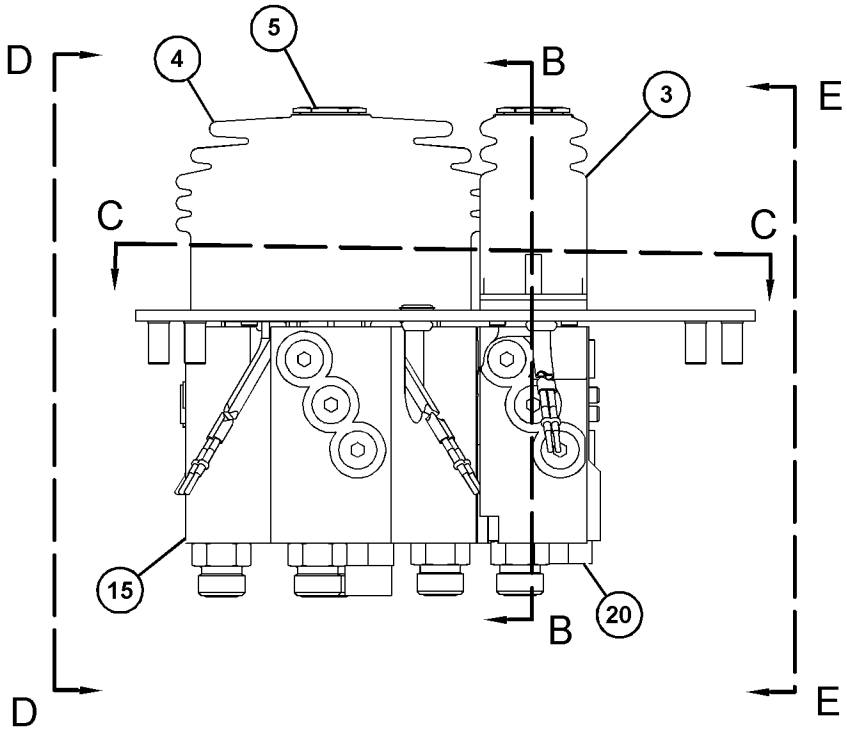

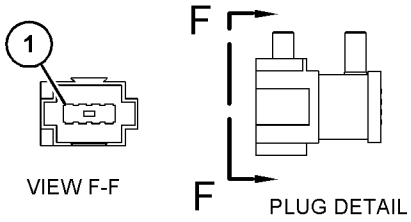

VIEW F-F

PLUG DETAIL

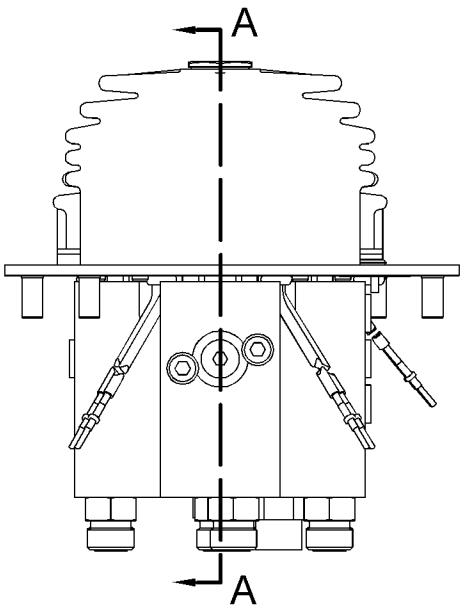

VIEW D-D

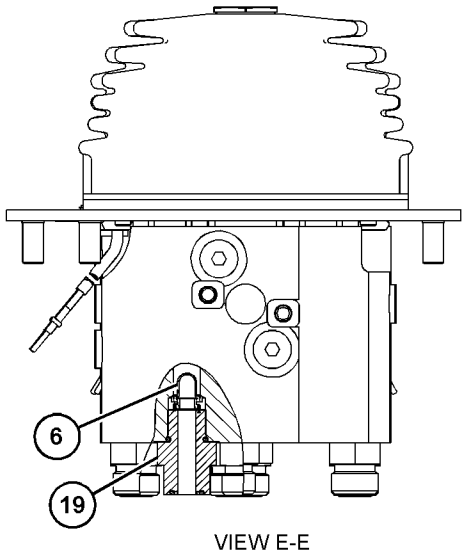

VIEW E-E

GRAPHIC #1

g03699678

338-8504 **VALVE GP-PILOT (*contd.*)** **i05820531**

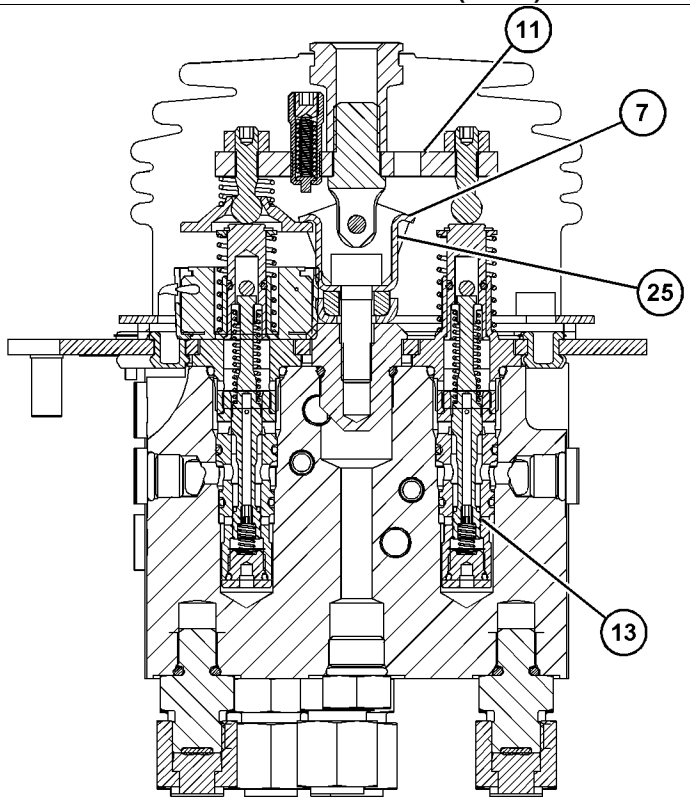

SECTION B-B

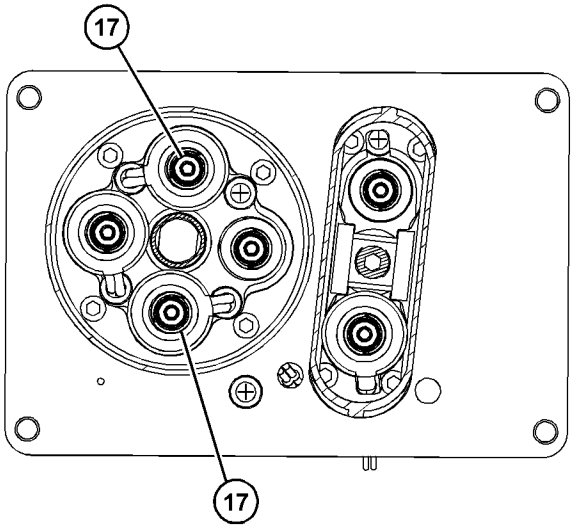

SECTION C-C

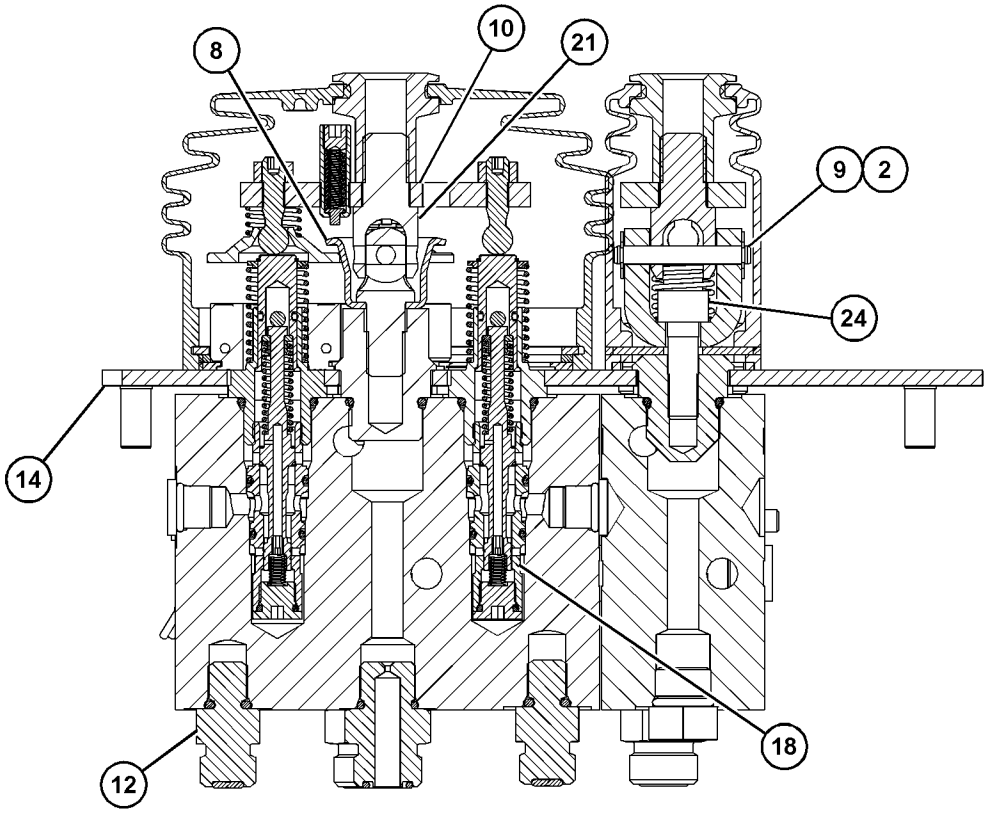

SECTION A-A

GRAPHIC #2 **<END>** g03699680

370-8728 VALVE GP-PILOT–LIFT, TILT

S/N: M5K1-UP
2-FUNCTION
PART OF 397-9846 LINES GP-PILOT
AN ATTACHMENT
TYPE 1

SMCS-5059 **i05436931**

NOTE	REF NO	GRAPHIC REF	PART NUMBER	QTY	PART NAME 1 2 3 4 5 6 (PRODUCT LEVEL)	SEE PAGE
	1	1	**033-9139**	4	RING-RETAINING	
	2	1	**136-9292**	2	BOOT	
	3	1	**141-9236**	1	SCREEN AS (PILOT OIL)	
	4	1	**146-8477**	2	BRACKET	
	5	1	**146-8981**	2	PIN	
Y	6	1	**147-2038**	1	PIVOT GP-PILOT VALVE (TILT)	442
	7	1	*164-6873*	4	CONNECTOR AS	
					(EACH INCLUDES)	
		1	**3J-1907**	1	SEAL-O-RING	
		1	**6V-8397**	1	SEAL-O-RING	
		1	**113-9234**	1	CONNECTOR	
Y	8	1	**219-4215**	1	PLATE GP-PILOT VALVE	450
Y	9	1	**308-2059**	1	BODY GP-PILOT VALVE	393
Y	10	1	**325-5760**	1	PIVOT GP-PILOT VALVE (LIFT)	445
Y	11	1	**350-9169**	4	VALVE GP-PILOT CARTRIDGE	505
M	12	1	**5A-3604**	2	BOLT-SOCKET HEAD (M8X1.25X25-MM)	
	13	1	*148-8336*	2	CONNECTOR AS	
					(EACH INCLUDES)	
		1	**3J-1907**	1	SEAL-O-RING	
		1	**6V-8397**	1	SEAL-O-RING	
		1	**6V-8636**	1	CONNECTOR	
	14	1	*148-8407*	2	PLUG AS	
					(EACH INCLUDES)	
		1	**3J-1907**	1	SEAL-O-RING	
		1	**9S-4191**	1	PLUG (9/16-18-THD)	

M - METRIC PART
Y - SEPARATE ILLUSTRATION

370-8728 **VALVE GP-PILOT (*contd.*)** **i05436931**

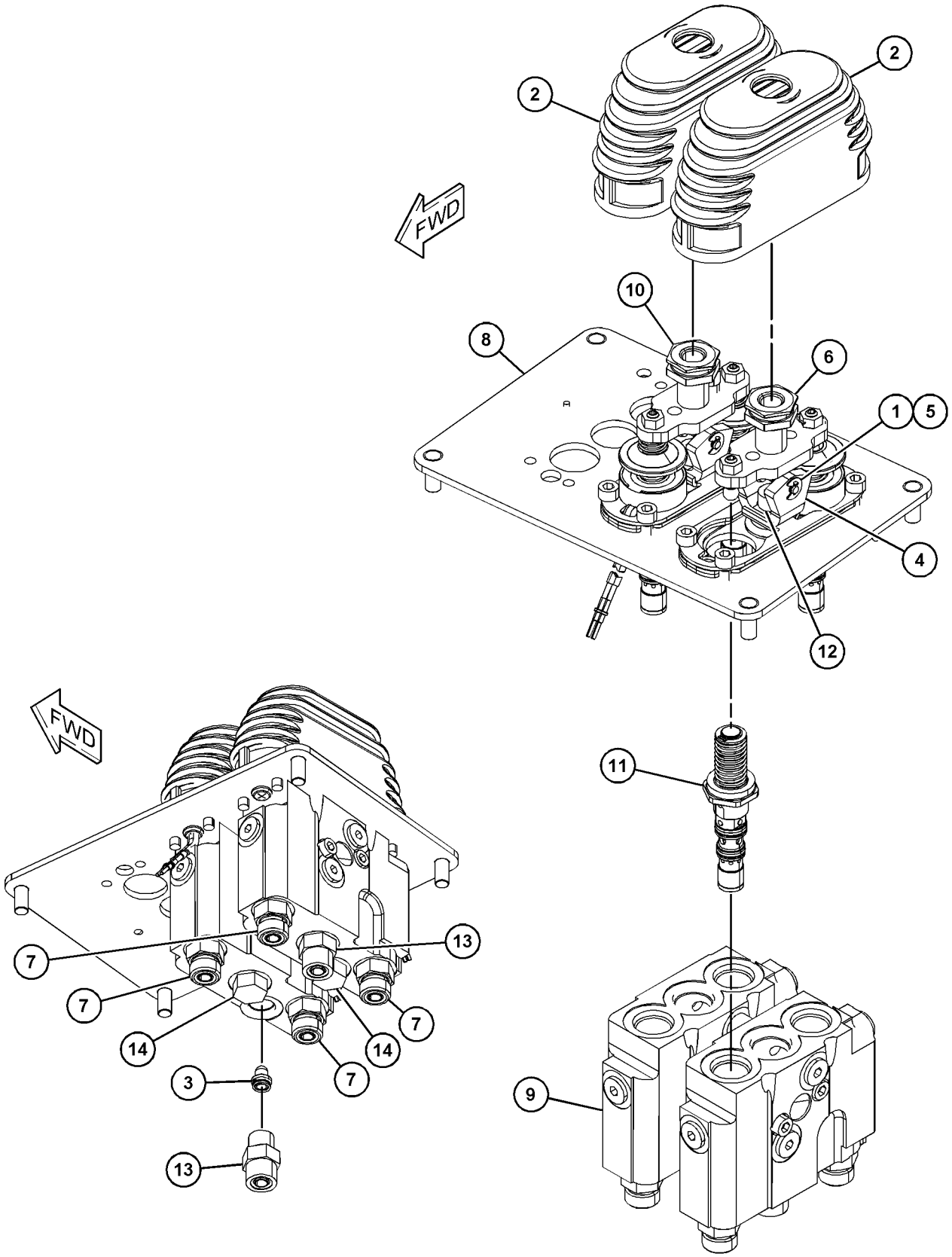

GRAPHIC #1 **<END>** g03531107

370-8728 VALVE GP-PILOT–LIFT, TILT

S/N: M5K1-UP
2-FUNCTION
PART OF 397-9846 LINES GP-PILOT
AN ATTACHMENT
TYPE 2

SMCS-5059 **i05838887**

NOTE	REF NO	GRAPHIC REF	PART NUMBER	QTY	PART NAME 1 2 3 4 5 6 (PRODUCT LEVEL)	SEE PAGE
M	1	1	**5A-3604**	2	BOLT-SOCKET HEAD (M8X1.25X25-MM)	
	2	1	**136-9292**	2	BOOT	
	3	1	**141-9236**	1	SCREEN AS (PILOT OIL)	
	4	1	**146-8477**	2	BRACKET	
	5	1	**146-8981**	2	PIN	
	6	1	*148-8336*	2	CONNECTOR AS	
					(EACH INCLUDES)	
		1	**3J-1907**	1	SEAL-O-RING	
		1	**6V-8397**	1	SEAL-O-RING	
		1	**6V-8636**	1	CONNECTOR	
	7	1	*148-8407*	2	PLUG AS	
					(EACH INCLUDES)	
		1	**3J-1907**	1	SEAL-O-RING	
		1	**9S-4191**	1	PLUG (9/16-18-THD)	
CY	8	1	**160-6299**	1	PIVOT GP-PILOT VALVE (TILT)	443
CY	9	1	*160-6300*	1	PIVOT GP-PILOT VALVE (LIFT)	444
	10	1	*164-6873*	4	CONNECTOR AS	
					(EACH INCLUDES)	
		1	**3J-1907**	1	SEAL-O-RING	
		1	**6V-8397**	1	SEAL-O-RING	
		1	**113-9234**	1	CONNECTOR	
C	11	1	**173-9964**	2	PLATE-BUMPER	
Y	12	1	**219-4215**	1	PLATE GP-PILOT VALVE	450
Y	13	1	**308-2059**	1	BODY GP-PILOT VALVE	393
CY	15	1	**454-6745**	4	VALVE GP-PILOT CARTRIDGE (PILOT VALVE)	507
	16	1	**033-9139**	4	RING-RETAINING	

C - CHANGE FROM PREVIOUS TYPE
M - METRIC PART
Y - SEPARATE ILLUSTRATION

370-8728 **VALVE GP-PILOT (*contd.*)** **i05838887**

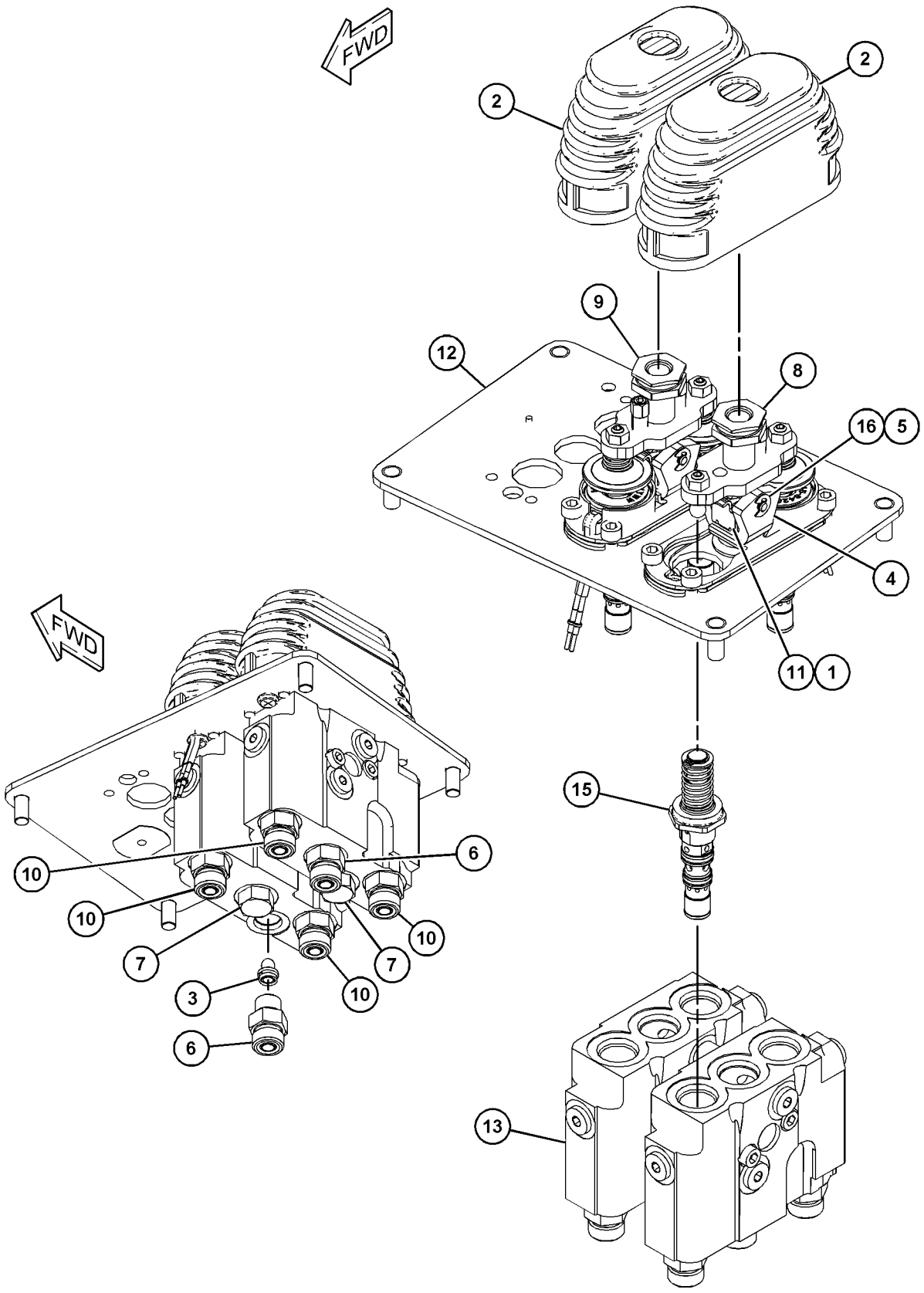

GRAPHIC #1 **<END>** g03693074

370-8729 VALVE GP-PILOT—AUXILIARY, LIFT, TILT

S/N: M5K1-UP
PART OF 397-9764 LINES GP-PILOT
AN ATTACHMENT
TYPE 1

SMCS-5059 **i05465981**

NOTE	REF NO	GRAPHIC REF	PART NUMBER	QTY	PART NAME 1 2 3 4 5 6 (PRODUCT LEVEL)	SEE PAGE
	1	1	**102-8806**	1	KIT-RECEPTACLE (8-PIN)	
					(INCLUDES RECEPTACLE AS & WEDGE)	
	2	1	**033-9139**	6	RING-RETAINING	
	3	1	**136-9292**	3	BOOT	
	4	1	**141-9236**	1	SCREEN AS (PILOT OIL)	
	5	1	**146-8477**	3	BRACKET	
	6	1	**146-8981**	3	PIN	
Y	7	1	**147-2038**	1	PIVOT GP-PILOT VALVE (TILT)	442
Y	8	1	**160-6299**	1	PIVOT GP-PILOT VALVE (AUXILIARY)	443
	9	1	*164-6873*	7	CONNECTOR AS	
					(EACH INCLUDES)	
		1	**3J-1907**	1	SEAL-O-RING	
		1	**6V-8397**	1	SEAL-O-RING	
		1	**113-9234**	1	CONNECTOR	
Y	10	1	**194-5032**	2	VALVE GP-PILOT CARTRIDGE	503
Y	11	1	**206-2749**	1	PLATE GP-PILOT VALVE	447
Y	12	1	**308-2060**	1	BODY GP-PILOT VALVE	394
Y	13	1	**325-5760**	1	PIVOT GP-PILOT VALVE (LIFT)	445
Y	14	1	**350-9169**	4	VALVE GP-PILOT CARTRIDGE	505
	16	1	*148-8336*	1	CONNECTOR AS	
		1	**3J-1907**	1	SEAL-O-RING	
		1	**6V-8397**	1	SEAL-O-RING	
		1	**6V-8636**	1	CONNECTOR	
M	19	1	**5A-3604**	3	BOLT-SOCKET HEAD (M8X1.25X25-MM)	

M - METRIC PART
Y - SEPARATE ILLUSTRATION

370-8729 **VALVE GP-PILOT (*contd.*)** **i05465981**

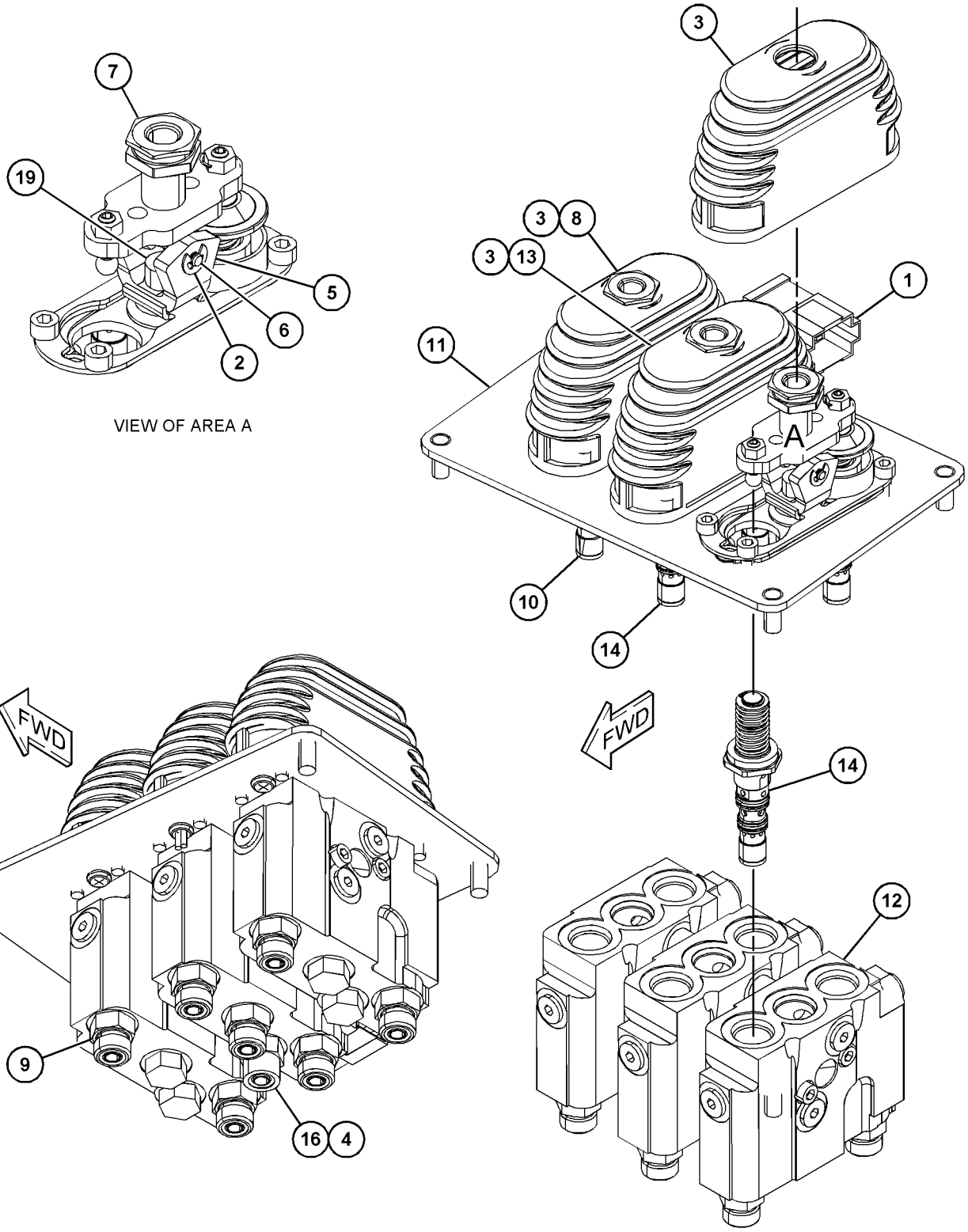

GRAPHIC #1 **<END>** g03538096

370-8729 VALVE GP-PILOT—AUXILIARY, LIFT, TILT

S/N: M5K1-UP
PART OF 397-9764 LINES GP-PILOT
AN ATTACHMENT
TYPE 2

SMCS-5059 **i05838817**

NOTE	REF NO	GRAPHIC REF	PART NUMBER	QTY	PART NAME 1 2 3 4 5 6 (PRODUCT LEVEL)	SEE PAGE
	1	1	**102-8806**	1	KIT-RECEPTACLE (8-PIN)	
					(INCLUDES RECEPTACLE AS & WEDGE)	
	2	1	**033-9139**	6	RING-RETAINING	
	3	1	**136-9292**	3	BOOT	
	4	1	**141-9236**	1	SCREEN AS (PILOT OIL)	
	5	1	**146-8477**	3	BRACKET	
	6	1	**146-8981**	3	PIN	
CY	8	1	**160-6299**	2	PIVOT GP-PILOT VALVE (AUXILIARY)	443
	9	1	*164-6873*	7	CONNECTOR AS	
					(EACH INCLUDES)	
		1	**3J-1907**	1	SEAL-O-RING	
		1	**6V-8397**	1	SEAL-O-RING	
		1	**113-9234**	1	CONNECTOR	
CY	10	1	**262-7182**	2	VALVE GP-PILOT CARTRIDGE	504
Y	11	1	**206-2749**	1	PLATE GP-PILOT VALVE	447
Y	12	1	**308-2060**	1	BODY GP-PILOT VALVE	394
CY	13	1	*160-6300*	1	PIVOT GP-PILOT VALVE (LIFT)	444
CY	14	1	**454-6745**	4	VALVE GP-PILOT CARTRIDGE	507
	16	1	*148-8336*	1	CONNECTOR AS	
		1	**3J-1907**	1	SEAL-O-RING	
		1	**6V-8397**	1	SEAL-O-RING	
		1	**6V-8636**	1	CONNECTOR	
M	19	1	**5A-3604**	3	BOLT-SOCKET HEAD (M8X1.25X25-MM)	
C	20	1	**173-9964**	3	PLATE-BUMPER	

C - CHANGE FROM PREVIOUS TYPE
M - METRIC PART
Y - SEPARATE ILLUSTRATION

370-8729 **VALVE GP-PILOT (*contd.*)** **i05838817**

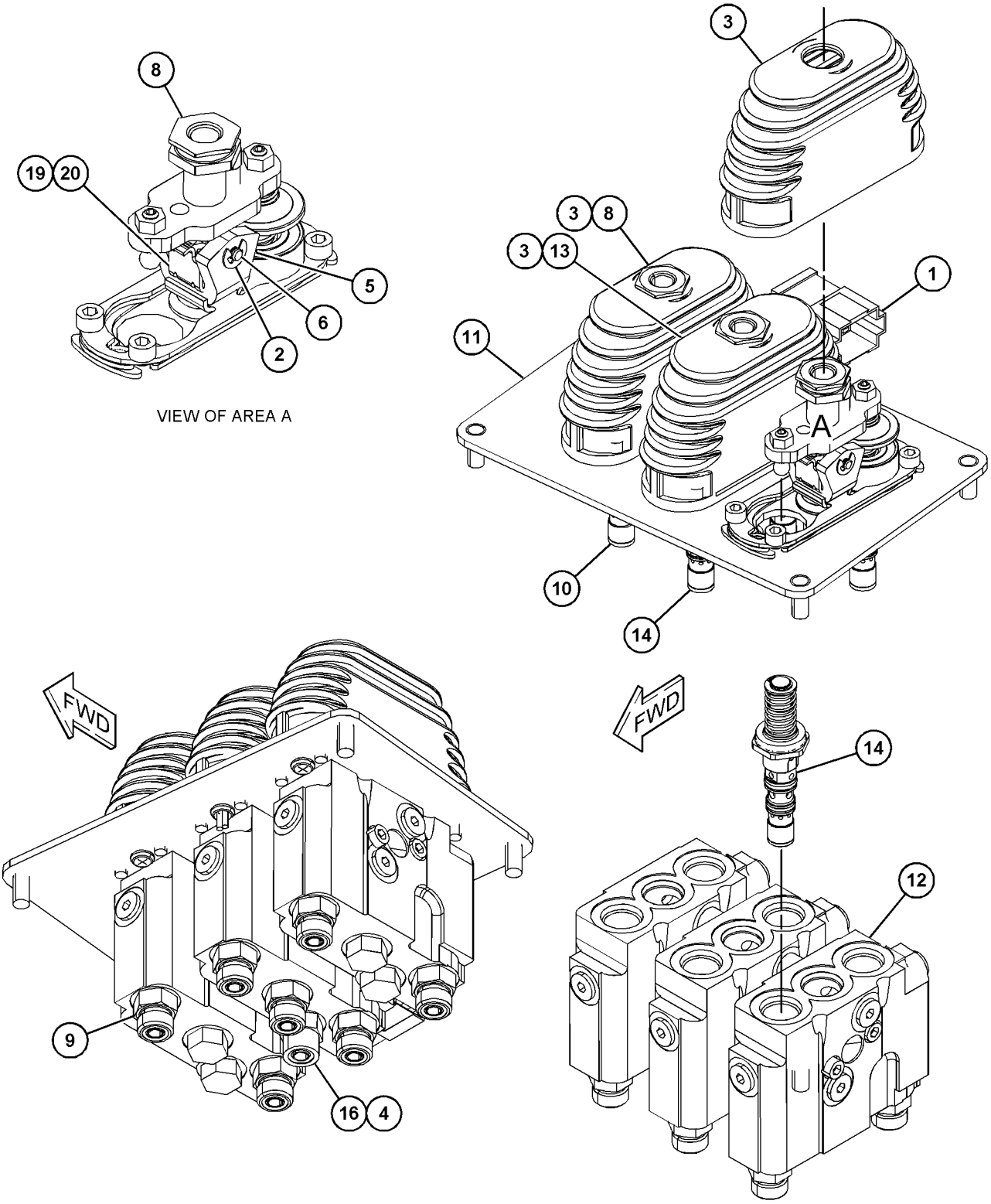

GRAPHIC #1 **<END>** g03693096

194-5032 VALVE GP-PILOT CARTRIDGE

S/N: M5K1-UP
PART OF 370-8729 VALVE GP-PILOT
AN ATTACHMENT

SMCS-5059 **i05437950**

NOTE	REF NO	GRAPHIC REF	PART NUMBER	QTY	PART NAME 1 2 3 4 5 6 (PRODUCT LEVEL)	SEE PAGE
	1	1	**3K-0360**	1	SEAL-O-RING	
	2	1	**4K-2039**	1	SEAL-O-RING	
	3	1	**6M-5062**	1	SEAL-O-RING	

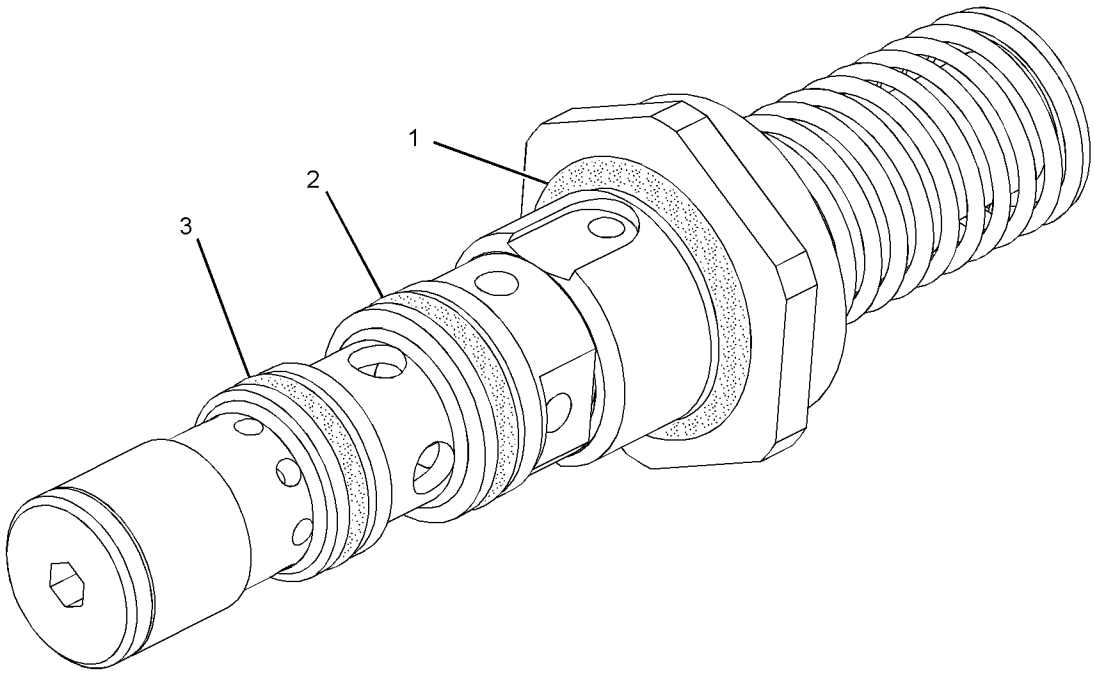

GRAPHIC #1 **<END>** g01218398

262-7182 VALVE GP-PILOT CARTRIDGE

S/N: M5K1-UP

PART OF 338-8504, 370-8729 VALVE GP-PILOT

AN ATTACHMENT

SMCS-5059 **i05833968**

NOTE	REF NO	GRAPHIC REF	PART NUMBER	QTY	PART NAME 1 2 3 4 5 6 (PRODUCT LEVEL)	SEE PAGE
	1	1	**136-9301**	1	SPRING	
	2	1	**146-6319**	1	RETAINER	
	3	1	**153-8926**	1	SPRING	
	4	1	**153-8925**	1	STOP	
	5	1	**2H-3429**	1	RING-RETAINING	
	6	1	**3K-0360**	1	SEAL-O-RING	
	7	1	**4K-2039**	1	SEAL-O-RING	
	8	1	**6M-5062**	1	SEAL-O-RING	
	9	1	**7J-0204**	1	SEAL-O-RING	

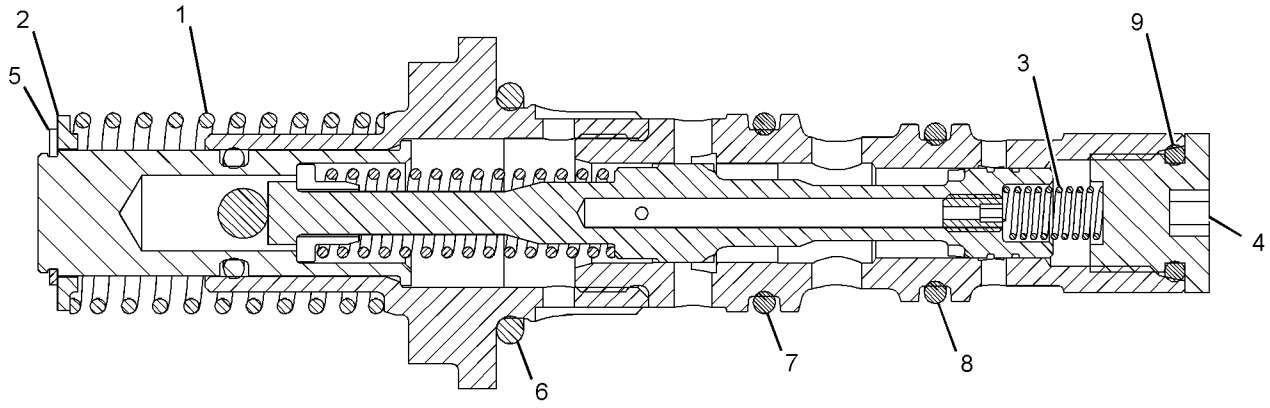

GRAPHIC #1 **<END>** g01423570

350-9169 VALVE GP-PILOT CARTRIDGE

S/N: M5K1-UP

PART OF 338-8502, 338-8504, 370-8728, 370-8729 VALVE GP-PILOT

AN ATTACHMENT

SMCS-5059 **i05436950**

NOTE	REF NO	GRAPHIC REF	PART NUMBER	QTY	PART NAME 1 2 3 4 5 6 (PRODUCT LEVEL)	SEE PAGE
	1	1	**1M-6718**	1	BALL	
	2	1	**7J-0204**	1	SEAL-O-RING	
	3	1	**6M-5062**	1	SEAL-O-RING	
	4	1	**4K-2039**	1	SEAL-O-RING	
	5	1	**3K-0360**	1	SEAL-O-RING	
	6	1	**146-6319**	1	RETAINER	
	7	1	**153-8926**	1	SPRING	
	8	1	**157-2152**	1	SPRING	
	9	1	**2H-3429**	1	RING-RETAINING	

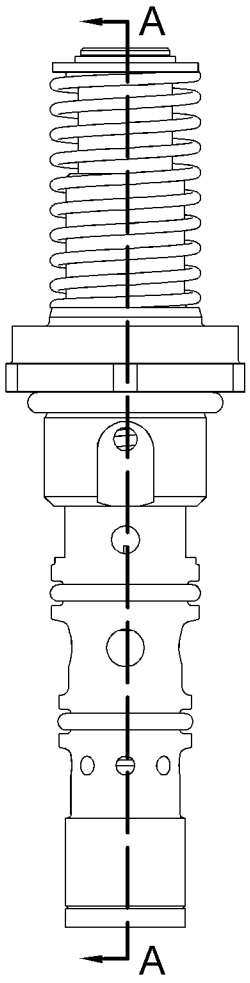

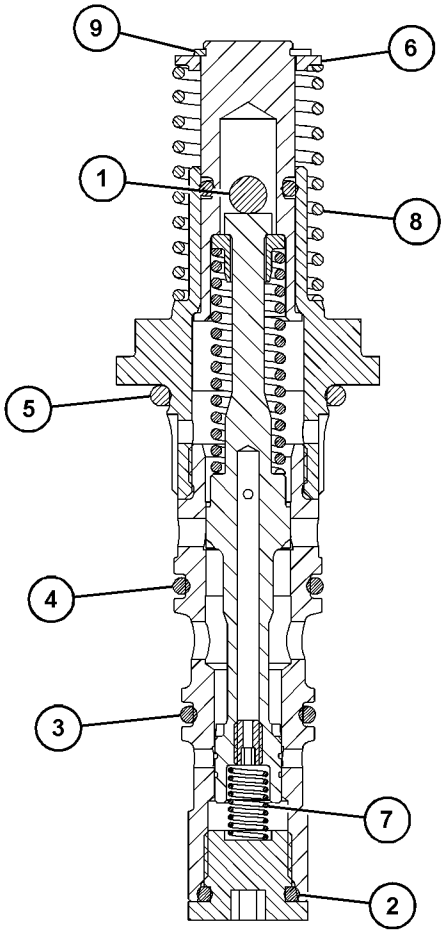

SECTION A-A

GRAPHIC #1

<END>

g03520359

350-9170 VALVE GP-PILOT CARTRIDGE

S/N: M5K1-UP

PART OF 338-8502, 338-8504 VALVE GP-PILOT

AN ATTACHMENT

SMCS-5059 **i05438109**

NOTE	REF NO	GRAPHIC REF	PART NUMBER	QTY	PART NAME 1 2 3 4 5 6 (PRODUCT LEVEL)	SEE PAGE
	1	1	**7J-0204**	1	SEAL-O-RING	
	2	1	**6M-5062**	1	SEAL-O-RING	
	3	1	**4K-2039**	1	SEAL-O-RING	
	4	1	**3K-0360**	1	SEAL-O-RING	
	5	1	**146-6319**	1	RETAINER	
	6	1	**153-8926**	1	SPRING	
	7	1	**157-2153**	1	SPRING	
	8	1	**2H-3429**	1	RING-RETAINING	
	9	1	**153-8925**	1	STOP	

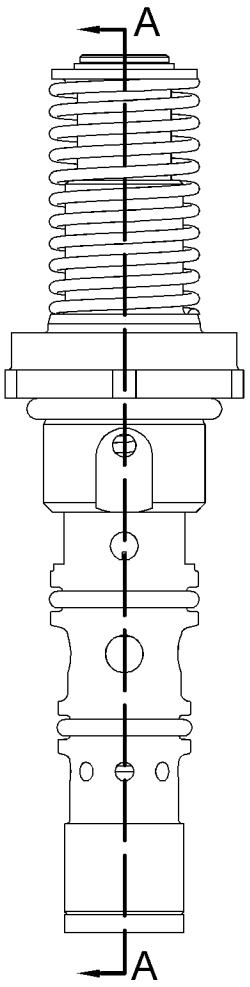

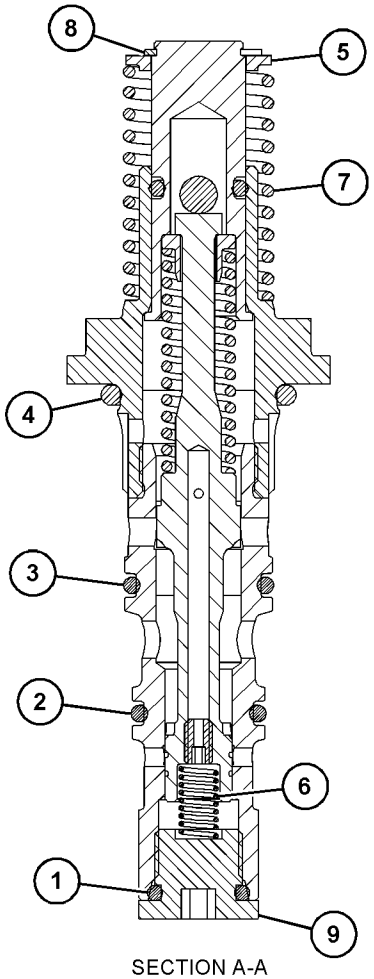

SECTION A-A

GRAPHIC #1

<END>

g03524037

454-6745 VALVE GP-PILOT CARTRIDGE

S/N: M5K1-UP

PART OF 370-8728, 370-8729 VALVE GP-PILOT

AN ATTACHMENT

SMCS-5059 **i05838884**

NOTE	REF NO	GRAPHIC REF	PART NUMBER	QTY	PART NAME 1 2 3 4 5 6 (PRODUCT LEVEL)	SEE PAGE
	1	1	**2H-3429**	1	RING-RETAINING	
	2	1	**3K-0360**	1	SEAL-O-RING	
	3	1	**4K-2039**	1	SEAL-O-RING	
	4	1	**6M-5062**	1	SEAL-O-RING	
	5	1	**7J-0204**	1	SEAL-O-RING	
	6	1	**153-8926**	1	SPRING	
	7	1	**136-9301**	1	SPRING	
	8	1	**153-8925**	1	STOP	
	9	1	**146-6319**	1	RETAINER	

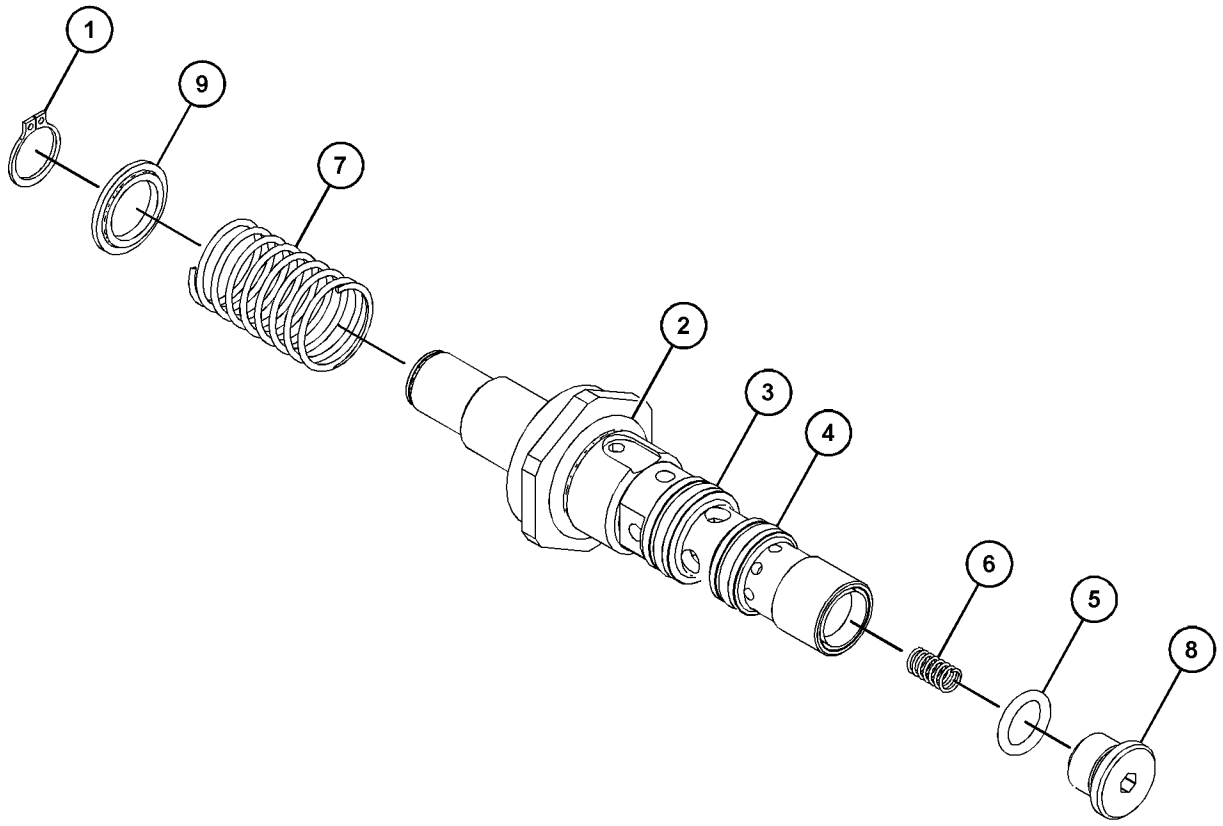

GRAPHIC #1 **<END>** g03694741

346-3800 VALVE GP-RELIEF

S/N: M5K1-UP
PART OF 371-1784 VALVE GP-RELIEF
AN ATTACHMENT

SMCS-5069, 5117 **i05549929**

NOTE	REF NO	GRAPHIC REF	PART NUMBER	QTY	PART NAME 1 2 3 4 5 6 (PRODUCT LEVEL)	SEE PAGE
	1	1	**4T-4509**	1	SEAT	
	2	1	**6E-5200**	1	RETAINER AS	
	3	1	**9X-6395**	1	NUT (3/4-16-THD)	
	4	1	**108-5157**	1	VALVE	
	5	1	**6V-5556**	1	SEAL-O-RING	
	6	1	**125-1393**	1	SPRING	
					-OR-	
			4T-1700	1	SPRING	
	7	1	**366-4972**	2	RING-BACKUP	
B	8	1	**096-6166**	1	WASHER-HARD (4.5X9X1-MM THK)	
	9	1	**3J-7354**	1	SEAL-O-RING	
	10	1	**3K-0360**	1	SEAL-O-RING	

B - USE AS REQUIRED

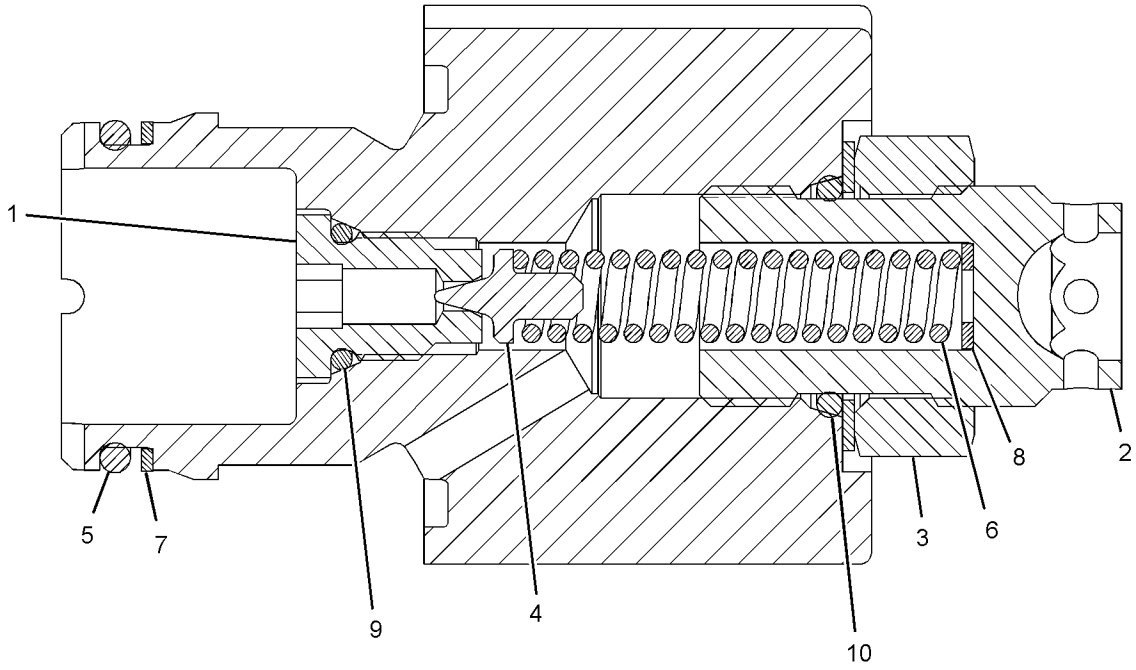

GRAPHIC #1 **<END>** g03325059

371-1784 VALVE GP-RELIEF

S/N: M5K1-UP
PART OF 387-2116 VALVE GP-CONTROL
AN ATTACHMENT

SMCS-5069, 5117

i05407183

NOTE	REF NO	GRAPHIC REF	PART NUMBER	QTY	PART NAME 1 2 3 4 5 6 (PRODUCT LEVEL)	SEE PAGE
Y	1	1	*346-3800*	1	VALVE GP-RELIEF	508
	2	1	**3J-7354**	1	SEAL-O-RING	
	3	1	**3K-0360**	1	SEAL-O-RING	
	4	1	**366-4972**	1	RING-BACKUP	
	5	1	**6V-5556**	1	SEAL-O-RING	

Y - SEPARATE ILLUSTRATION

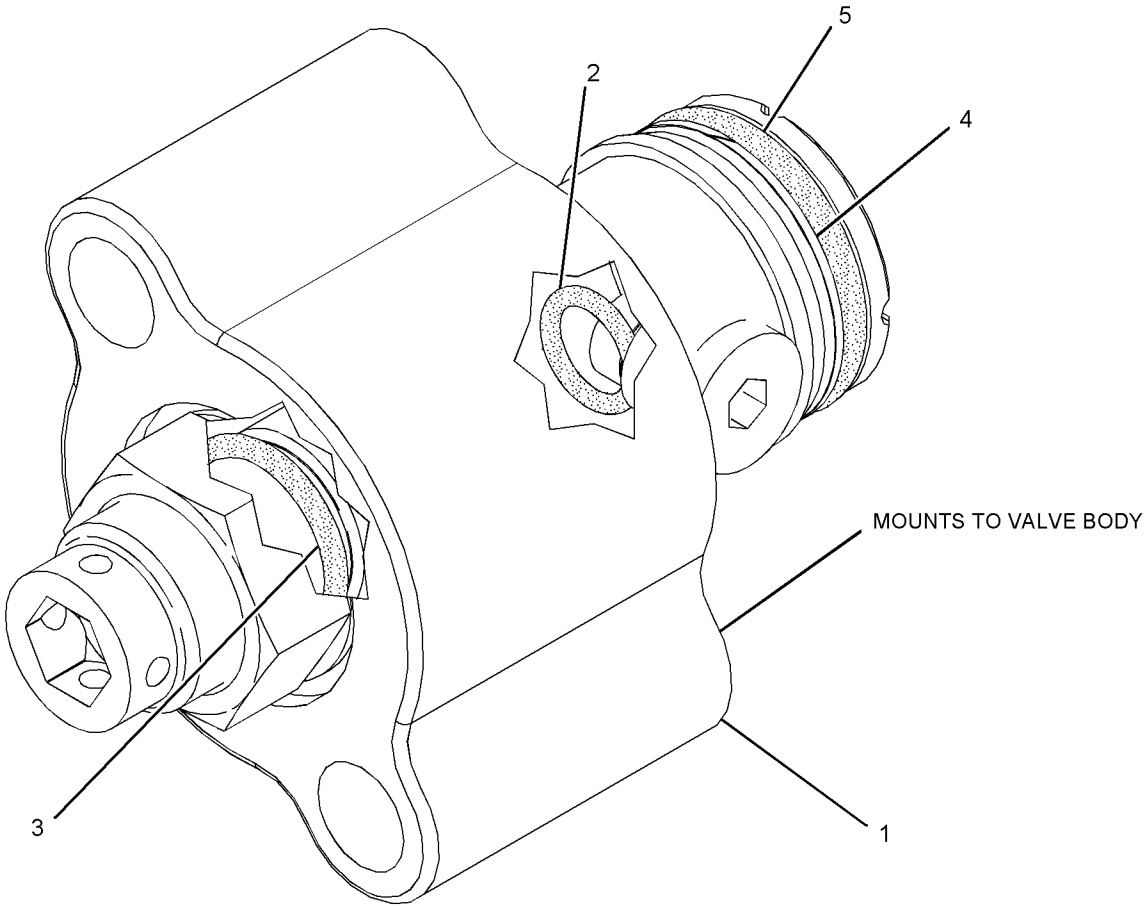

GRAPHIC #1 **<END>** g02897278

445-8805 VALVE GP-RELIEF

S/N: M5K1-UP
DIRECT OPERATED
PART OF 387-4652 MANIFOLD GP-CONTROL
AN ATTACHMENT

SMCS-5069, 5117 **i05848778**

NOTE	REF NO	GRAPHIC REF	PART NUMBER	QTY	PART NAME 1 2 3 4 5 6 (PRODUCT LEVEL)	SEE PAGE
J	1	1	**2M-9780**	1	SEAL-O-RING	
J	2	1	**161-6149**	1	SEAL-O-RING	
J	3	1	**161-6161**	2	RING-BACKUP	
					AVAILABLE REPAIR KIT(S):	
J			**133-5545**	1	KIT-SEAL (RELIEF VALVE)	
					(INCLUDES SEAL O-RINGS & BACKUP RINGS)	

J - KIT MARKED J INCLUDES PART(S) MARKED J

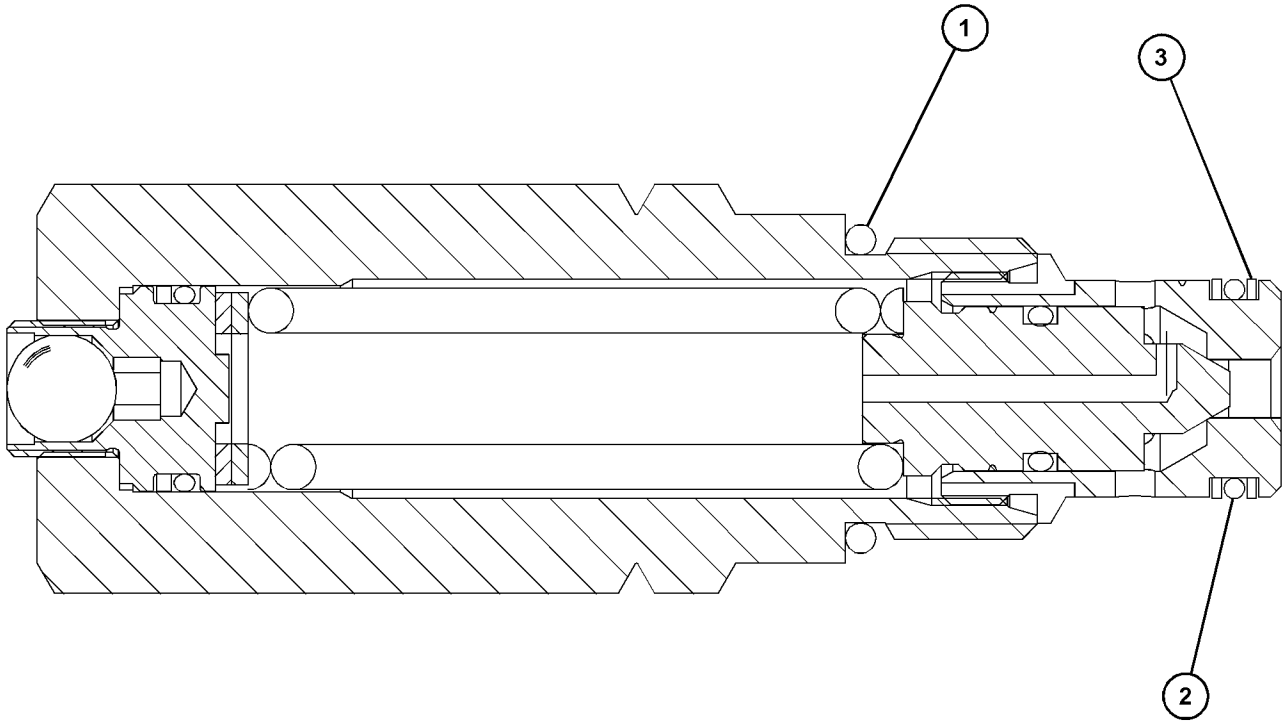

GRAPHIC #1 **<END>** g03698482

431-4642 ARM AS-LIFT

S/N: M5K1-UP
PART OF 431-4637 CONTROL GP-BUCKET
AN ATTACHMENT

SMCS-6119 **i05583930**

NOTE	REF NO	GRAPHIC REF	PART NUMBER	QTY	PART NAME 1 2 3 4 5 6 (PRODUCT LEVEL)	SEE PAGE
	1	1	**387-5919**	2	BUSHING	
	2	1	**431-4643**	1	SUPPORT AS-AXLE	
	3	1	**3V-2333**	2	BUSHING	
	4	1	**4V-8674**	2	BUSHING	

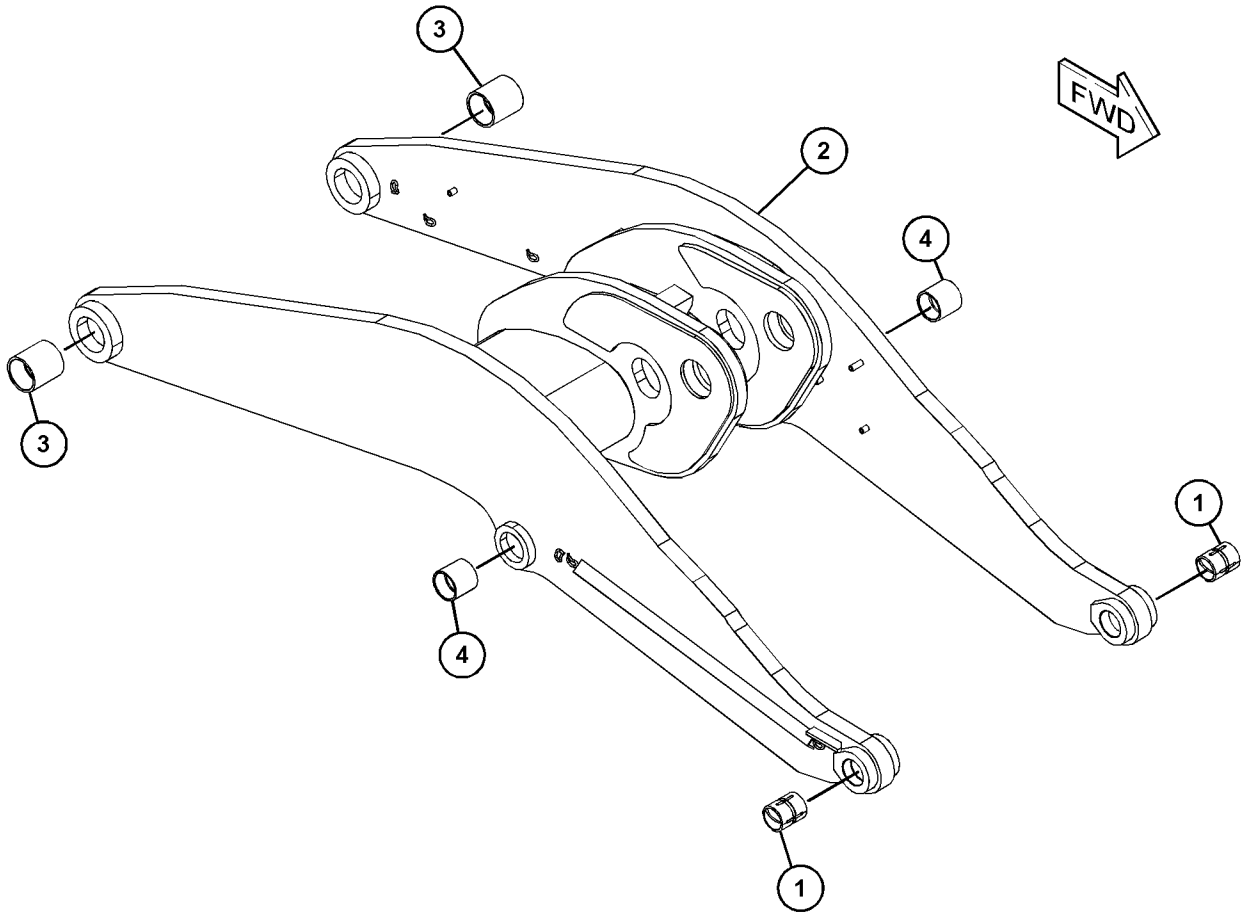

GRAPHIC #1 **<END>** g03552459

387-5780 CONTROL GP-BUCKET

S/N: M5K1-UP

CANNOT BE USED WITH 387-5940—PAGE: 514

AN ATTACHMENT

SMCS-6107 **i06068245**

NOTE	REF NO	GRAPHIC REF	PART NUMBER	QTY	PART NAME 1 2 3 4 5 6 (PRODUCT LEVEL)	SEE PAGE
	1	1	**3B-8489**	4	FITTING-GREASE (1/8-27 PTF)	
	2	1	**4E-3196**	2	PIN AS	
	3	1	**5V-1508**	2	PIN AS	
	4	1	**5V-1511**	2	PIN AS	
	5	1	**096-6467**	13	WASHER (22X60X8-MM THK)	
	6	1	**127-6371**	1	LINK AS	
	6A	1	**3G-8779**	2	BUSHING	
	7	1	**136-9380**	3	PIN AS	
B	8	1	**159-0268**	8	SHIM (1-MM THK)	
B	9	1	**159-0269**	6	SHIM (2-MM THK)	
	10	1	**304-7345**	1	PIN AS	
	11	1	**310-1899**	1	PIN AS	
	12	1	**387-5930**	1	LEVER AS	
		1	**387-5938**	1	BUSHING	
	13	1	**387-5970**	1	ARM AS-LIFT	
	13A	1	**3V-2333**	2	BUSHING	
	13B	1	**4V-8674**	2	BUSHING	
	13C	1	**387-5919**	2	BUSHING	
	14	1	**431-4613**	6	ADAPTER	
	15	1	**4E-3197**	2	PIN AS	
	16	1	**5V-0353**	4	WASHER (65X133X1.6-MM THK)	
	17	1	**5V-0354**	6	WASHER (66X133X3-MM THK)	
	18	1	**7K-9205**	4	SEAL-LIP TYPE	
	19	1	**7K-9209**	4	SEAL-LIP TYPE	
	20	1	**7K-9210**	4	SEAL-LIP TYPE	
	21	1	**7K-9212**	4	SEAL-LIP TYPE	
	22	1	**7K-9218**	2	SEAL-LIP TYPE	
M	23	1	**8T-4780**	6	BOLT (M20X2.5X30-MM)	
M	24	1	**8T-6430**	7	BOLT (M20X2.5X50-MM)	
	25	1	**9C-7907**	7	SPACER (21.5X28X14-MM THK)	
	26	1	**6V-0852**	10	CAP-DUST	

B - USE AS REQUIRED
M - METRIC PART

387-5780 **CONTROL GP-BUCKET (*contd.*)** **i06068245**

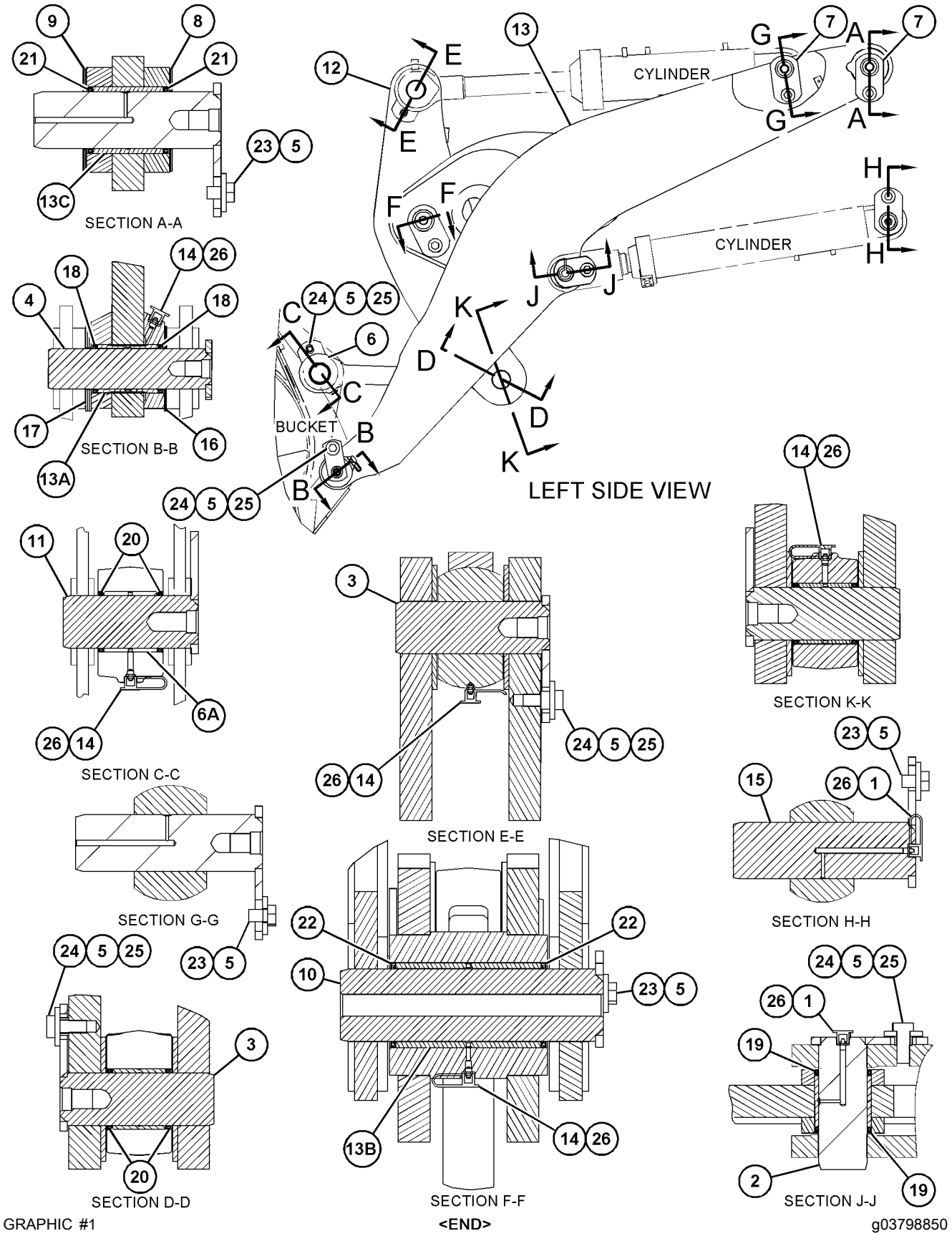

GRAPHIC #1

<END>

g03798850

387-5940 CONTROL GP-BUCKET

S/N: M5K1-UP

CANNOT BE USED WITH 387-5780 CONTROL GP-BUCKET

AN ATTACHMENT

SMCS-6107 **i05819491**

NOTE	REF NO	GRAPHIC REF	PART NUMBER	QTY	PART NAME 1 2 3 4 5 6 (PRODUCT LEVEL)	SEE PAGE
	1	1	**4E-3196**	2	PIN AS	
	2	1	**5V-1508**	2	PIN AS	
	3	1	**5V-1511**	2	PIN AS	
	4	1	**096-6467**	13	WASHER (22X60X8-MM THK)	
	5	1	**127-6371**	1	LINK AS	
		1	**3G-8779**	2	BUSHING	
	6	1	**136-9380**	3	PIN AS	
B	7	1	**159-0268**	8	SHIM (1-MM THK)	
B	8	1	**159-0269**	6	SHIM (2-MM THK)	
	9	1	**304-7345**	1	PIN AS	
	10	1	**310-1899**	1	PIN AS	
	11	1	**387-5930**	1	LEVER AS	
		1	**387-5938**	1	BUSHING	
	12	1	*387-5950*	1	ARM AS-LIFT	
		1	**3V-2333**	2	BUSHING	
		1	**4V-8674**	2	BUSHING	
		1	**387-5919**	2	BUSHING	
	13	1	**431-4613**	6	ADAPTER	
	14	1	**4E-3197**	2	PIN AS	
	15	1	**3B-8489**	4	FITTING-GREASE (1/8-27 PTF)	
B	16	1	**5V-0353**	4	WASHER (65X133X1.6-MM THK)	
B	17	1	**5V-0354**	6	WASHER (66X133X3-MM THK)	
	18	1	**7K-9205**	4	SEAL-LIP TYPE	
	19	1	**7K-9209**	4	SEAL-LIP TYPE	
	20	1	**7K-9210**	4	SEAL-LIP TYPE	
	21	1	**7K-9212**	4	SEAL-LIP TYPE	
	22	1	**7K-9218**	2	SEAL-LIP TYPE	
M	23	1	**8T-4780**	6	BOLT (M20X2.5X30-MM)	
	24	1	**8T-5439**	7	WASHER-HARD (21.5X45X6-MM THK)	
M	25	1	**8T-6430**	7	BOLT (M20X2.5X50-MM)	
	26	1	**6V-0852**	10	CAP-DUST	

B - USE AS REQUIRED
M - METRIC PART

387-5940 **CONTROL GP-BUCKET (*contd.*)** **i05819491**

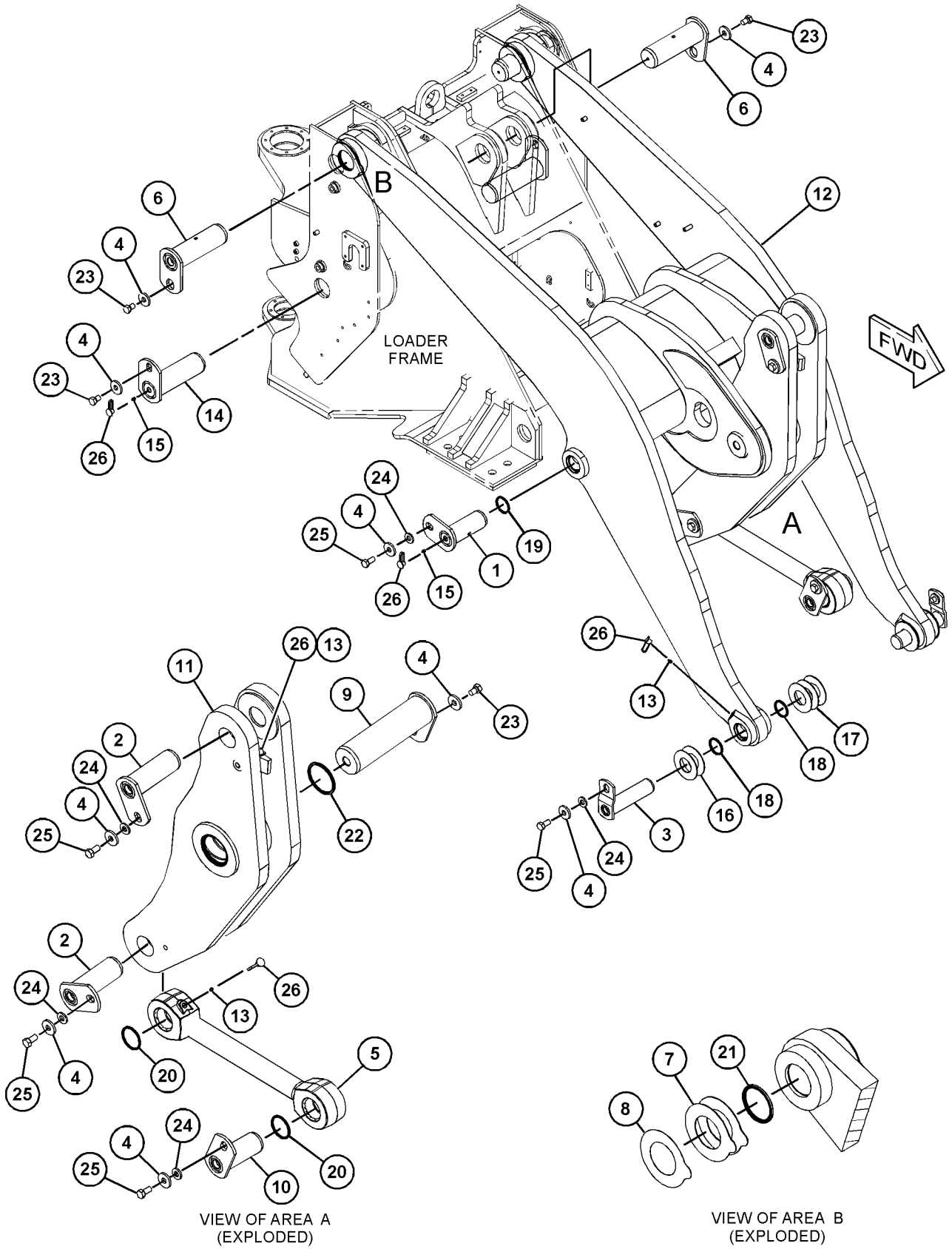

GRAPHIC #1 **<END>** g03688485

431-4637 CONTROL GP-BUCKET

S/N: M5K1-UP

CANNOT BE USED WITH 387-5780 CONTROL GP-BUCKET, 387-5940 CONTROL GP-BUCKET AN ATTACHMENT

SMCS-6107 **i05676985**

NOTE	REF NO	GRAPHIC REF	PART NUMBER	QTY	PART NAME 1 2 3 4 5 6 (PRODUCT LEVEL)	SEE PAGE
	1	2	**4E-3196**	2	PIN AS	
	2	1	**5V-1511**	2	PIN AS	
	3	1,2	**096-6467**	13	WASHER (22X60X8-MM THK)	
	4	2	**136-9380**	3	PIN AS	
B	5	2	**159-0268**	8	SHIM (1-MM THK)	
B	6	2	**159-0269**	6	SHIM (2-MM THK)	
	7	1	**304-7345**	1	PIN AS	
	8	1	**310-1899**	1	PIN AS	
	9	1	**431-4613**	2	ADAPTER	
	10	1	**431-4638**	1	LINK GP	
	10A	1	**3G-8779**	2	BUSHING	
		1	**7T-1099**	1	LINK	
	11	1	**431-4640**	1	LEVER AS	
	11A	1	**387-5938**	1	BUSHING	
Y	12	1	**431-4642**	1	ARM AS-LIFT	511
	13	1	**432-7347**	2	PIN AS	
	14	2	**4E-3197**	2	PIN AS	
	15	1	**5V-0353**	4	WASHER (65X133X1.6-MM THK)	
	16	1	**5V-0354**	6	WASHER (66X133X3-MM THK)	
	17	1	**6V-0852**	2	CAP-DUST	
	18	1	**7K-9205**	4	SEAL-LIP TYPE	
	19	2	**7K-9209**	4	SEAL-LIP TYPE	
	20	1	**7K-9210**	4	SEAL-LIP TYPE	
	21	2	**7K-9211**	4	SEAL-LIP TYPE	
	22	2	**7K-9212**	4	SEAL-LIP TYPE	
	23	1	**7K-9218**	2	SEAL-LIP TYPE	
M	24	1,2	**8T-4780**	6	BOLT (M20X2.5X30-MM)	
M	25	1,2	**8T-6430**	7	BOLT (M20X2.5X50-MM)	
	26	1,2	**9C-7907**	7	SPACER (21.5X28X14-MM THK)	

B - USE AS REQUIRED
M - METRIC PART
Y - SEPARATE ILLUSTRATION

431-4637 **CONTROL GP-BUCKET (*contd.*)** **i05676985**

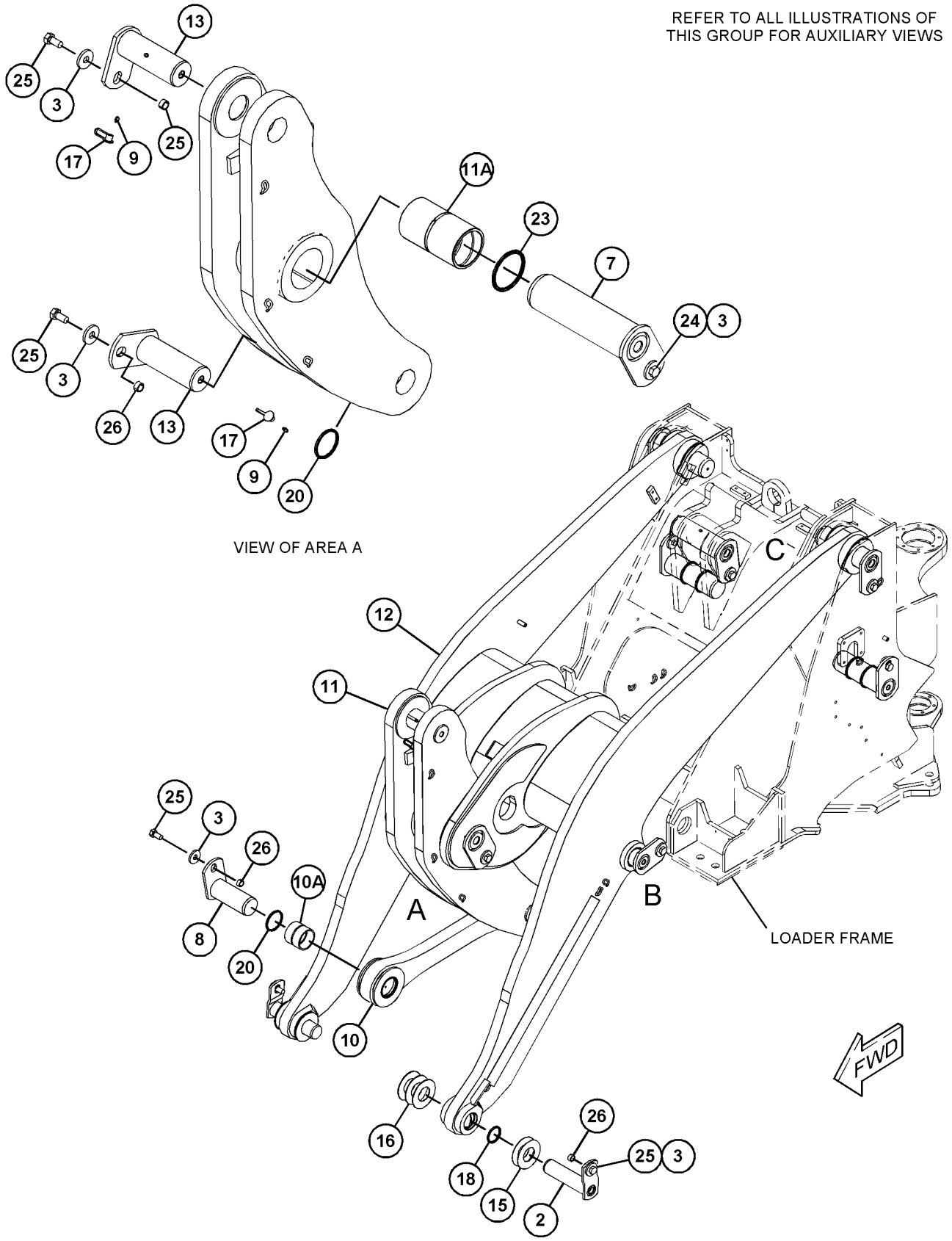

GRAPHIC #1 g03699730

431-4637 **CONTROL GP-BUCKET (*contd.*)** **i05676985**

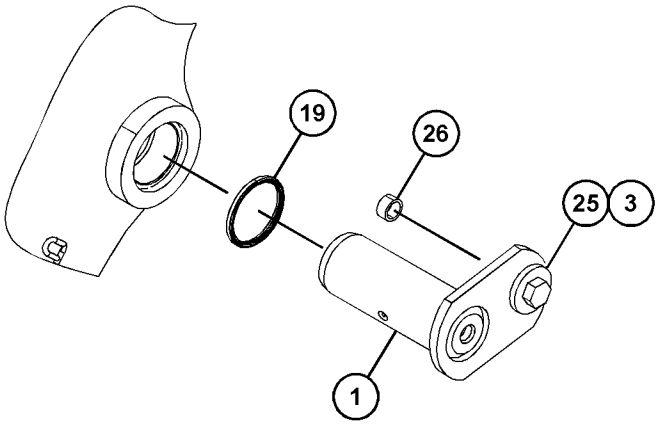

VIEW OF AREA B

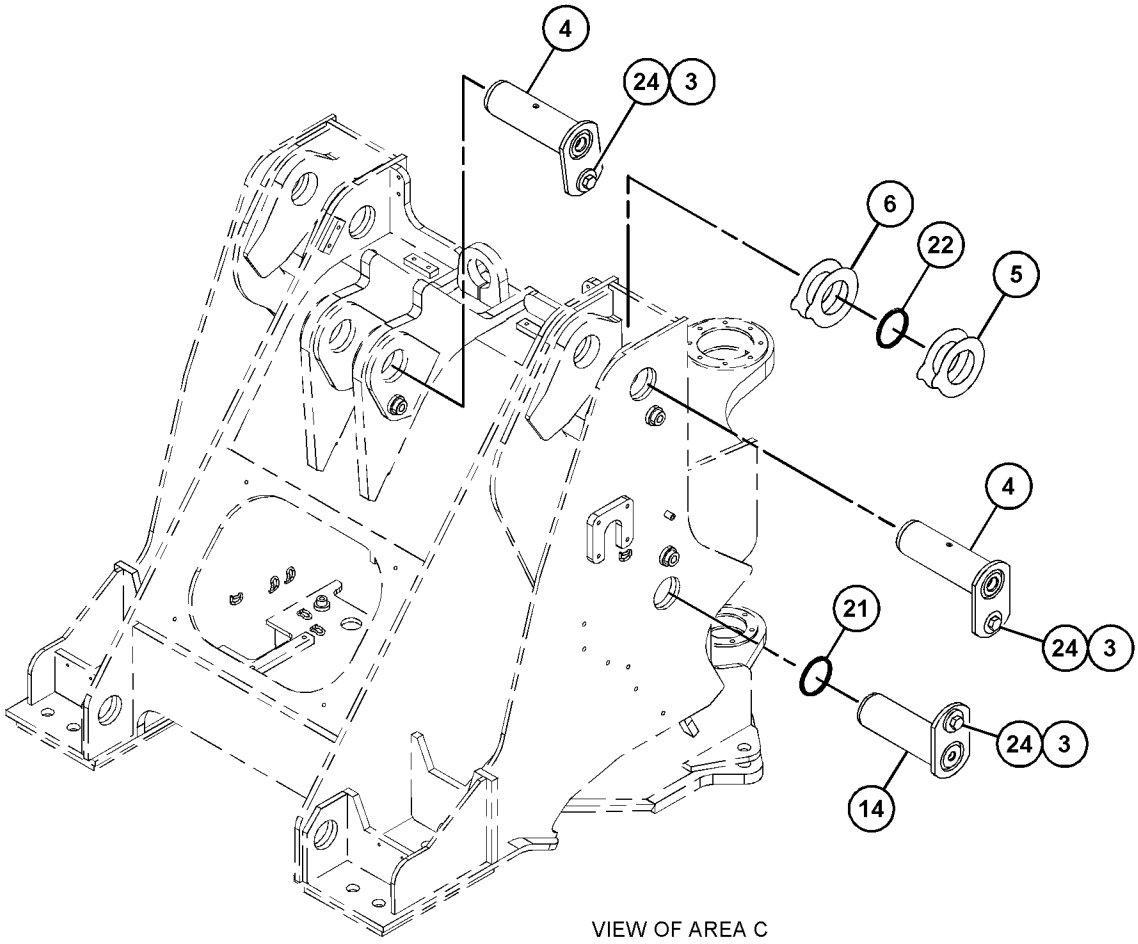

VIEW OF AREA C
(PARTS REMOVED FOR CLARITY)

GRAPHIC #2 **<END>** g03699729

475-0944 LINK & BEARING AS—HIGH LIFT MACHINES

S/N: M5K1-UP
FOR USE WITH 310-9391—PAGE: 640
FIELD INSTALLATION

SMCS-6117, 6513

i06056592

NOTE	REF NO	GRAPHIC REF	PART NUMBER	QTY	PART NAME 1 2 3 4 5 6 (PRODUCT LEVEL)	SEE PAGE
	1	1	**475-0943**	1	LINK AS-LIFT	
	2	1	**3G-8779**	1	BUSHING	
	3	1	**4V-8520**	1	BUSHING	

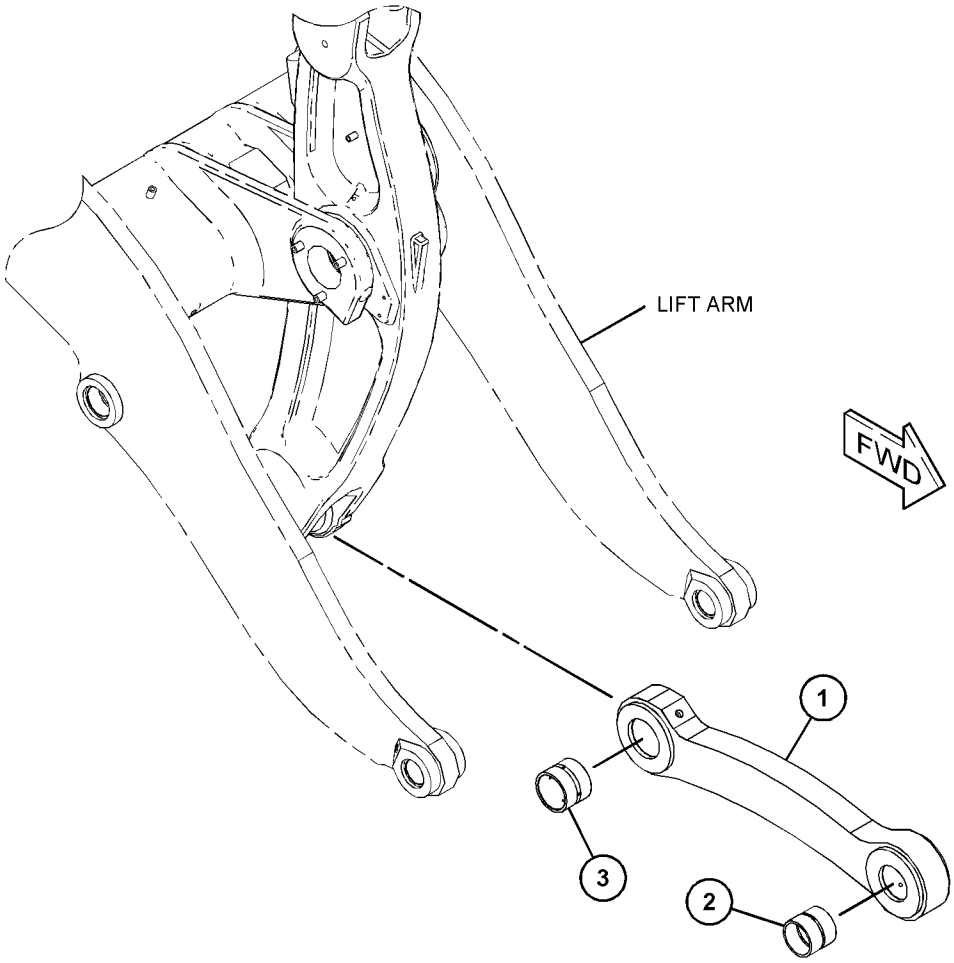

GRAPHIC #1

<END>

g03796893

424-2863 AIR CONDITIONER GP

S/N: M5K1-UP

PART OF 391-5301 CAB AR

SMCS-7320 **i06066989**

NOTE	REF NO	GRAPHIC REF	PART NUMBER	QTY	PART NAME 1 2 3 4 5 6 (PRODUCT LEVEL)	SEE PAGE
	1	1	**450-6492**	1	DRYER-REFRIGERANT (RECEIVER)	
	2	1	**9X-2488**	4	CLAMP-HOSE	
	3	1	**290-2287**	1	FILTER ELEMENT-CAB AIR (STANDARD)	
					—OR—	
		1	**348-3432**	1	FILTER ELEMENT AS-AIR (ACTIVATED CHARCOAL)	
	4	1	**290-2288**	1	FILTER-AIR	
	5	1	**293-6151**	2	TUBE	
Y	6	1	**424-2864**	1	AIR CONDITIONER GP	522
	7	1	**424-2865**	1	BRACKET AS	
M		1	**8T-3490**	1	NUT-WELD (M10X1.5-THD)	
M		1	**6V-9632**	10	NUT-WELD (M6X1-THD)	
	8	1	**424-4571**	1	HOSE AS	
I	9	1	**424-4572**	1	HOSE AS	
I	10	1	**424-4573**	1	HOSE AS	
M	11	1	**5C-2890**	2	NUT (M6X1-THD)	
	12	1	**6L-4725**	2	CLAMP-HOSE	
	13	1	**8T-4121**	2	WASHER-HARD (11X21X2.5-MM THK)	
M	14	1	**8T-4137**	2	BOLT (M10X1.5X20-MM)	
M	15	1	**8T-4138**	10	BOLT (M6X1X20-MM)	
	16	1	**9M-8406**	4	CLIP	
	17	1	**9X-6165**	12	WASHER (6.5X22X2.5-MM THK)	
	18	1	**9X-7380**	3	SEAL-O-RING	
	19	1	**9X-7382**	1	SEAL-O-RING	
E	20	1	**5P-0767**		HOSE (21-CM)	
E	20A	1	**5P-0767**		HOSE (15-CM)	

E - ORDER BY THE CENTIMETER
I - REFER TO HYDRAULIC INFORMATION SYSTEM
M - METRIC PART
Y - SEPARATE ILLUSTRATION

424-2863 **AIR CONDITIONER GP (*contd.*)** **i06066989**

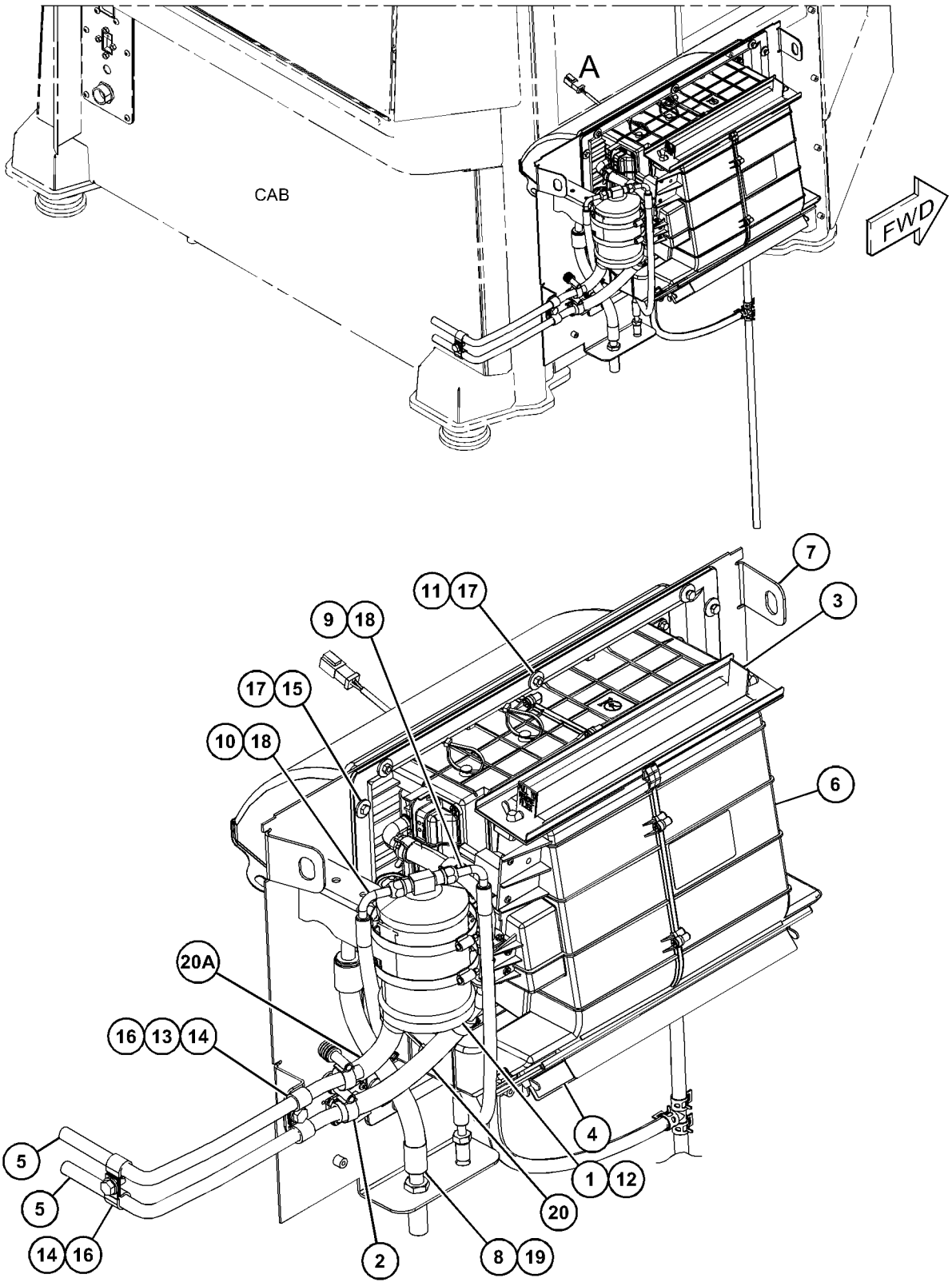

VIEW OF AREA A

GRAPHIC #1 **<END>** g03798602

424-2864 AIR CONDITIONER GP

S/N: M5K1-UP

PART OF 424-2863 AIR CONDITIONER GP

TYPE 1

SMCS-7320 **i06067189**

NOTE	REF NO	GRAPHIC REF	PART NUMBER	QTY	PART NAME 1 2 3 4 5 6 (PRODUCT LEVEL)	SEE PAGE
	1	2	**3E-5464**	1	SWITCH AS-THERMOSTAT (HVAC)	
	2	2	**7K-1181**	2	STRAP-CABLE	
M	3	1	**096-4034**	4	BOLT-WING (M6X1X15-MM)	
	4	2	**106-5121**	1	VALVE AS-EXPANSION	
	5	2	**172-4702**	2	CLAMP	
	6	1	**206-1345**	7	STRAP-CABLE	
	8	1	**291-9146**	1	PLATE	
	9	1	**302-8727**	1	SEAL	
	10	1	**322-4474**	1	FILM-INFORMATION (24-VOLT HEATER)	
	11	2	**322-7212**	1	BLOWER AS	
		2	**5W-1992**	4	TERMINAL	
		2	**5W-2005**	1	HOUSING	
		2	**9W-0852**	2	PIN-CONNECTOR (14-GA TO 16-GA)	
		2	**102-8802**	1	KIT-RECEPTACLE (2-PIN)	
					(RECEPTACLE KIT INCLUDES RECEPTACLE AS & WEDGE)	
	12	1	**329-0238**	1	FILM-IDENTIFICATION (HVAC FILTER)	
	13	2	**455-2815**	1	HARNESS AS-HEATER & AIR COND	
		2	**6A-5277**	1	CONNECTOR	
		2	**6T-6505**	2	HOUSING-RECEPTACLE (BLADE, POSITIVE LOCK)	
		2	**6T-6506**	2	TERMINAL-BLADE (14-GA TO 18-GA)	
		2	**6V-0491**	4	TERMINAL-BLADE (14-GA TO 18-GA)	
		2	**8T-8737**	1	PLUG-SEAL	
E		2	**119-3662**		TUBE-HEAT SHRINK (10.85-MM DIA) (7-CM)	
		2	**9X-3402**	5	SOCKET-CONNECTOR (16-GA TO 18-GA)	
					—OR—	
		2	**126-1768**	5	SOCKET-CONNECTOR (14-GA TO 16-GA)	
		2	**9X-3401**	8	PIN-CONNECTOR (16-GA TO 18-GA)	
					—OR—	
		2	**126-1767**	8	PIN-CONNECTOR (14-GA TO 16-GA)	
		2	**155-2270**	1	KIT-CONNECTING PLUG (2-PIN)	
		2	**155-2271**	1	KIT-CONNECTING PLUG (4-PIN)	
					(EACH PLUG KIT INCLUDES PLUG AS, WEDGE, & INTERFACE SEAL)	
B		2	**1P-0810**		TAPE-ELECTRICAL	
		2	**194-4254**	1	KIT-RECEPTACLE (8-PIN)	
					(INCLUDES RECEPTACLE AS & WEDGE)	
	14	1	**431-3852**	1	CASE AS	
	15	1	**431-3853**	1	CASE AS	
	16	2	**431-3854**	1	COIL AS-HEATER	
	17	1	**431-3855**	1	CASE	
	18	1	**431-3856**	2	SEAL	
	19	1	**431-3857**	1	PLATE AS	
M		1	**9X-2032**	8	NUT-WELD (M4X0.7-THD)	
	20	1	**431-3858**	1	SEAL	
	21	1	**431-3863**	1	CASE	
	22	1	**431-3865**	1	CASE	
	23	2	**431-3867**	1	PAN-DRAIN	
	24	2	**431-3868**	2	GROMMET	
	25	2	**431-3869**	2	VALVE	
	26	2	**431-3870**	1	COIL AS-EVAPORATOR	
	27	1	**441-4588**	1	PLATE	
Y	28	2	**441-4589**	1	VALVE GP-WATER	595
	29	1	**208-9331**	19	BOLT	
M	30	1,2	**8T-0337**	14	SCREW-MACHINE (M4X0.7X12-MM)	
	31	1	**9G-2673**	1	GROMMET	
E	33	2	**136-1953**		HOSE (12-CM)	

424-2864 **AIR CONDITIONER GP (*contd.*)** **i06067189**

NOTE	REF NO	GRAPHIC REF	PART NUMBER	QTY	PART NAME 1 2 3 4 5 6 (PRODUCT LEVEL)	SEE PAGE
H	34	1	**267-8575**		TUBE (16-DM)	
H	34A	1	**267-8575**		TUBE (15-DM)	
	35	2	**134-4126**	4	WASHER (4.52X8.28X0.76-MM THK)	
	36	1	**6V-2687**	16	SCREW-PAN HEAD (10-24X1-IN)	

B - USE AS REQUIRED
E - ORDER BY THE CENTIMETER
H - ORDER BY THE DECIMETER
M - METRIC PART
Y - SEPARATE ILLUSTRATION

REFER TO ALL ILLUSTRATIONS OF
THIS GROUP FOR AUXILIARY VIEWS

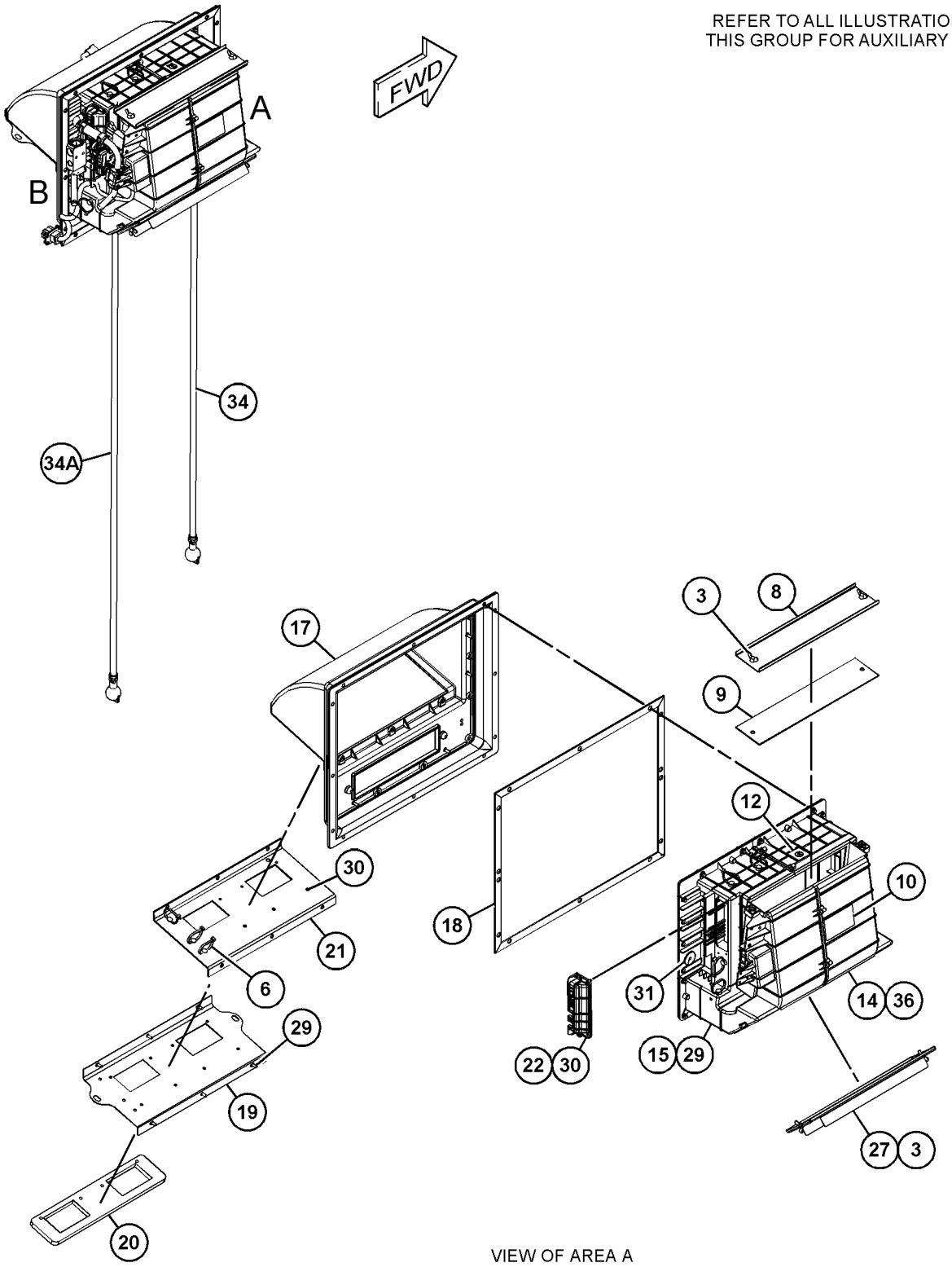

VIEW OF AREA A
(PARTS REMOVED FOR CLARITY)

GRAPHIC #1 g03797824

424-2864 **AIR CONDITIONER GP (*contd.*)** **i06067189**

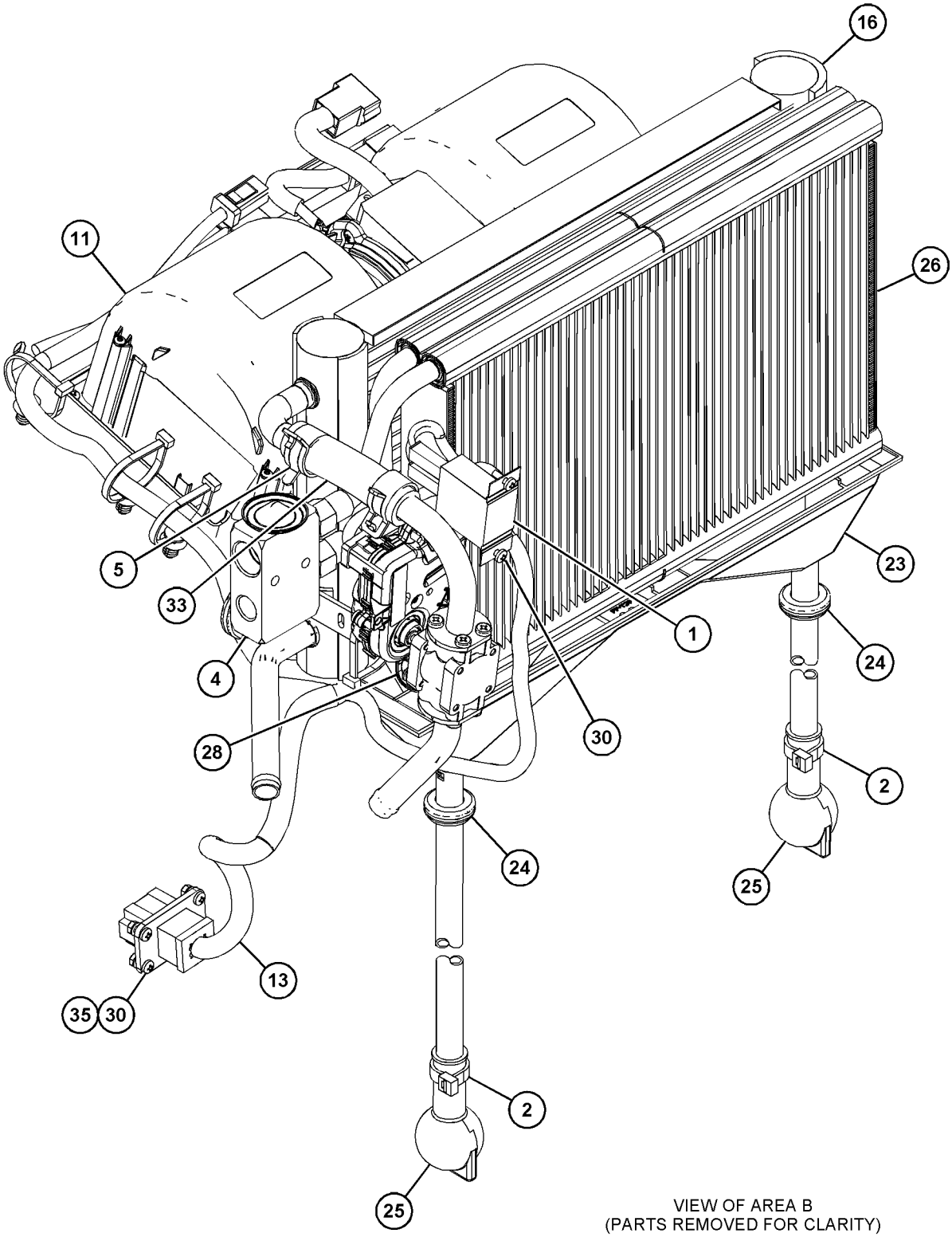

VIEW OF AREA B
(PARTS REMOVED FOR CLARITY)

GRAPHIC #2 **<END>** g03797825

424-2864 AIR CONDITIONER GP

S/N: M5K1-UP

PART OF 424-2863 AIR CONDITIONER GP

TYPE 2

SMCS-7320 **i06075226**

NOTE	REF NO	GRAPHIC REF	PART NUMBER	QTY	PART NAME 1 2 3 4 5 6 (PRODUCT LEVEL)	SEE PAGE
C	1	2	**8C-5682**	1	TEE	
	2	2	**106-5121**	1	VALVE AS-EXPANSION	
	3	1	**291-9146**	1	PLATE	
	4	1	**302-8727**	1	SEAL	
	5	1	**322-4474**	1	FILM-INFORMATION (24-VOLT HEATER)	
	6	1	**329-0238**	1	FILM-IDENTIFICATION (HVAC FILTER)	
C	7	2	**335-6983**	5	CLAMP-BAND	
	8	1	**431-3852**	1	CASE AS	
	9	1	**431-3853**	1	CASE AS	
	10	2	**431-3854**	1	COIL AS-HEATER	
	11	1	**431-3855**	1	CASE	
	12	1	**431-3856**	2	SEAL	
	13	1	**431-3857**	1	PLATE AS	
M		1	**9X-2032**	8	NUT-WELD (M4X0.7-THD)	
	14	1	**431-3858**	1	SEAL	
	15	1	**431-3863**	1	CASE	
	16	1	**431-3865**	1	CASE	
	17	2	**431-3867**	1	PAN-DRAIN	
	18	2	**431-3868**	2	GROMMET	
	19	2	**431-3870**	1	COIL AS-EVAPORATOR	
	20	1	**441-4588**	1	PLATE	
C	21	2	**453-2441**	1	BLOWER AS (AIR CONDITIONER, HEATER)	
		2	**9W-0852**	2	PIN-CONNECTOR (14-GA TO 16-GA)	
		2	**102-8802**	1	KIT-RECEPTACLE (2-PIN)	
					(RECEPTACLE KIT INCLUDES RECEPTACLE AS & WEDGE)	
CY	22	2	**465-7767**	1	HARNESS AS-HEATER & AIR COND	124
	23	1	**468-8952**	1	VALVE	
CY	24	2	**471-5064**	1	VALVE GP-WATER	596
M	25	1	**096-4034**	4	BOLT-WING (M6X1X15-MM)	
C	26	1	**100-4838**	19	BOLT (M6X1X20-MM)	
	27	2	**134-4126**	4	WASHER (4.52X8.28X0.76-MM THK)	
	28	1	**206-1345**	7	STRAP-CABLE	
	29	2	**3E-5464**	1	SWITCH AS-THERMOSTAT (HVAC)	
	30	1,2	**6V-2687**	16	SCREW-PAN HEAD (10-24X1-IN)	
M	31	1,2	**8T-0337**	14	SCREW-MACHINE (M4X0.7X12-MM)	
	32	1	**9G-2673**	1	GROMMET	
	33	2	**9X-2488**	2	CLAMP-HOSE	
E	34	2	**136-1953**		HOSE (12-CM)	
H	35	1	**5P-6129**		TUBE (10-DM)	
H	35A	1	**5P-6129**		TUBE (6-DM)	
H	35B	1	**5P-6129**		TUBE (3-DM)	

C - CHANGE FROM PREVIOUS TYPE
E - ORDER BY THE CENTIMETER
H - ORDER BY THE DECIMETER
M - METRIC PART
Y - SEPARATE ILLUSTRATION

REFER TO ALL ILLUSTRATIONS OF
THIS GROUP FOR AUXILIARY VIEWS

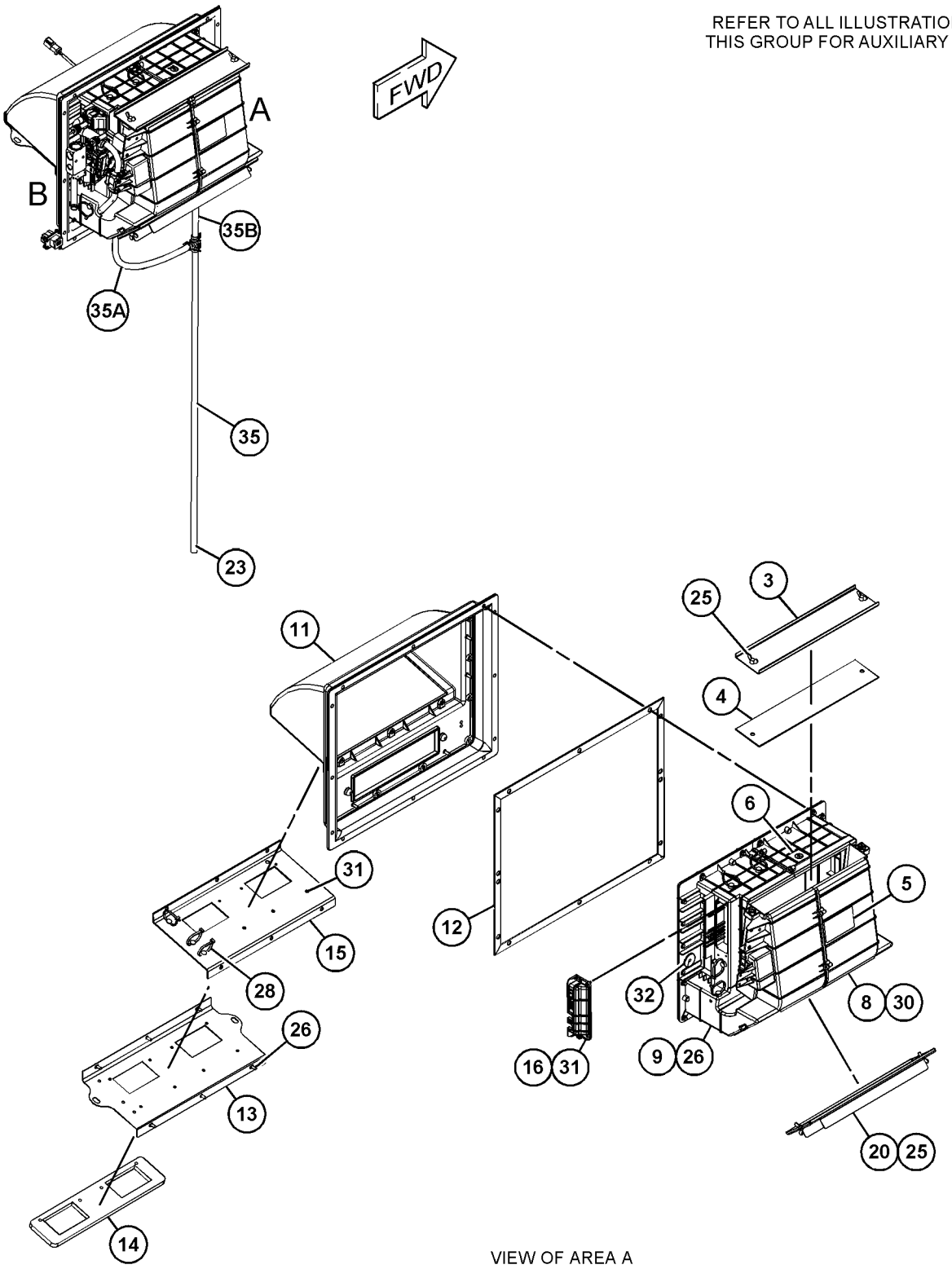

VIEW OF AREA A
(PARTS REMOVED FOR CLARITY)

GRAPHIC #1 g03799130

424-2864 **AIR CONDITIONER GP (*contd.*)** **i06075226**

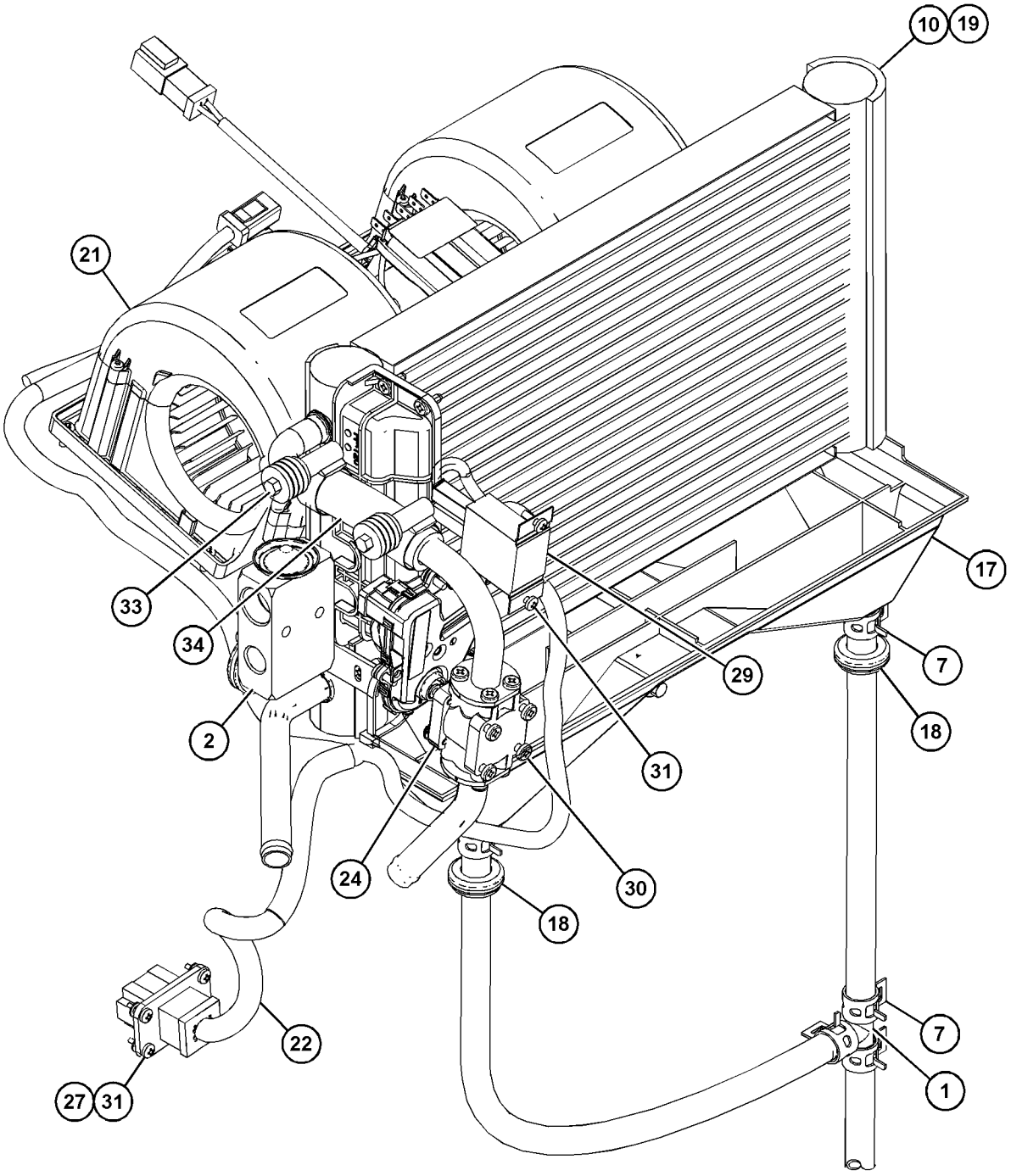

VIEW OF AREA B
(PARTS REMOVED FOR CLARITY)

GRAPHIC #2 **<END>** g03799131

391-5316 ARMREST GP

S/N: M5K1-UP
PART OF 391-5301 CAB AR
TYPE 1

SMCS-7307, 7312

i05434574

NOTE	REF NO	GRAPHIC REF	PART NUMBER	QTY	PART NAME 1 2 3 4 5 6 (PRODUCT LEVEL)	SEE PAGE
M	1	2	**172-8591**	11	NUT-SPRING (M6X1-THD)	
	2	2	**114-6658**	8	WASHER (6.5X17X1-MM THK)	
	3	2	**200-8154**	1	FILM-IDENTIFICATION (12-VOLT)	
	4	2	**206-1667**	3	CLIP	
	5	2	**387-6883**	1	BRACKET	
	6	2	**391-5332**	1	COVER	
	7	2	**391-5347**	1	COVER	
	8	1	**391-5390**	1	COVER	
	9	1	**391-5391**	1	BRACKET	
	10	1	**391-5392**	1	BRACKET	
	11	2	**392-5562**	1	CUSHION AS	
	12	2	**392-5563**	1	SUPPORT AS	
	13	2	**392-5564**	1	SUPPORT	
	14	2	**392-5569**	1	PLATE AS	
	15	2	**392-5572**	1	PLATE	
	16	2	**393-1075**	1	KNOB	
	17	1,2	**154-8079**	10	NUT-RETAINER (U-TYPE)	
	18	2	**293-1501**	1	NUT (M10X1.5-THD)	
M	19	2	**6V-8214**	4	BOLT (M6X1X20-MM)	
	20	2	**8P-6364**	2	PLUG	
	21	2	**8T-2228**	14	WASHER-HARD (6.5X17X2-MM THK)	
M	22	2	**8T-4189**	2	BOLT (M8X1.25X20-MM)	
	23	2	**8T-4224**	4	WASHER-HARD (8.8X16X2-MM THK)	
	24	2	**8T-4896**	1	WASHER-HARD (10.2X18.5X2.5-MM THK)	
M	25	2	**8T-7547**	2	BOLT (M8X1.25X30-MM)	
M	26	2	**9X-1046**	4	SCREW (M4X0.7X18-MM)	
M	27	2	**9X-2043**	5	SCREW-TRUSS HEAD (M6X1X14-MM)	
M	28	2	**9X-2045**	13	SCREW-TRUSS HEAD (M6X1X20-MM)	
M	29	2	**9X-6155**	4	BOLT-SOCKET HEAD (M6X1X16.7-MM)	

M - METRIC PART

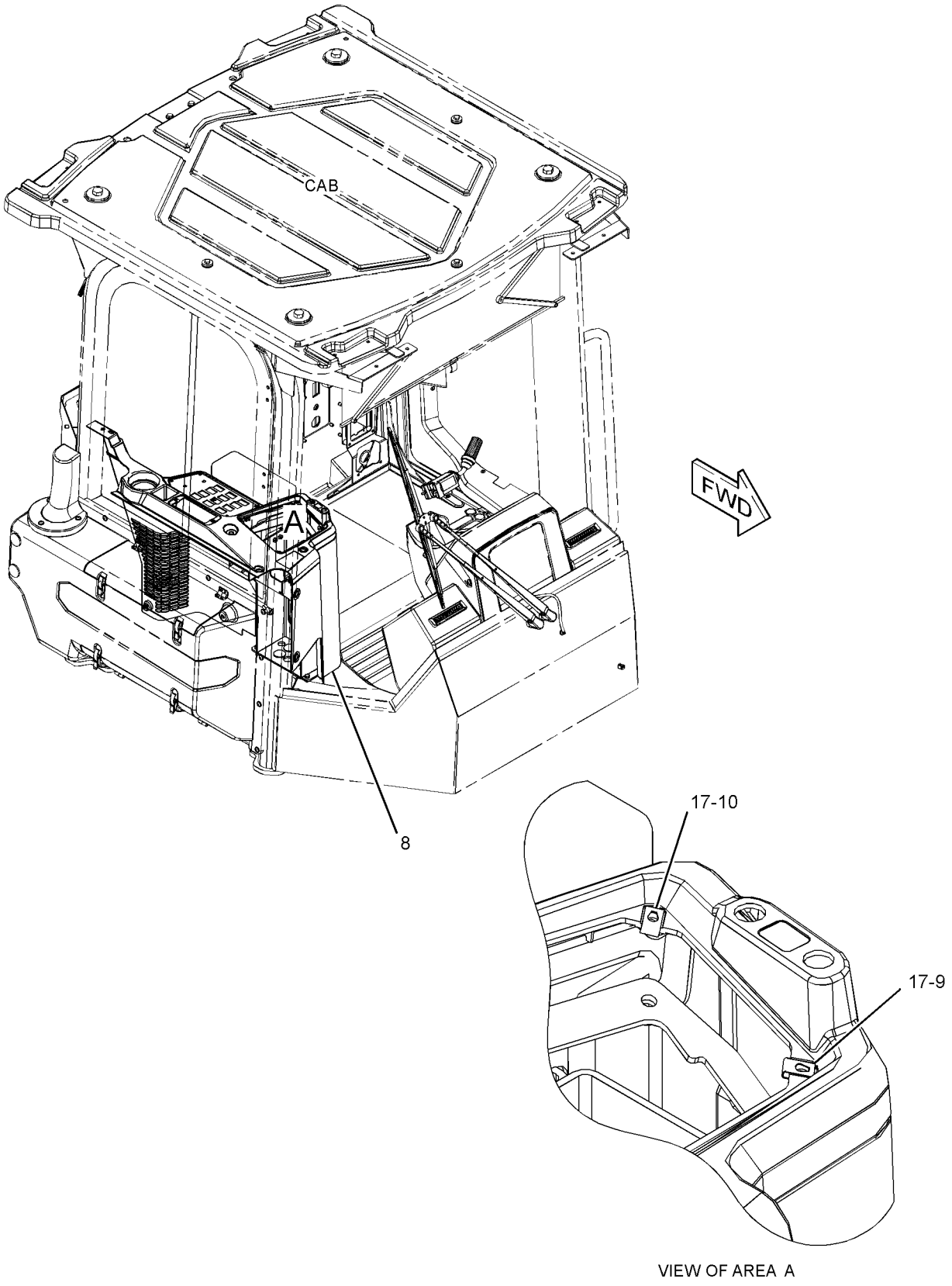

VIEW OF AREA A

GRAPHIC #1 g03525956

391-5316 **ARMREST GP (*contd.*)** **i05434574**

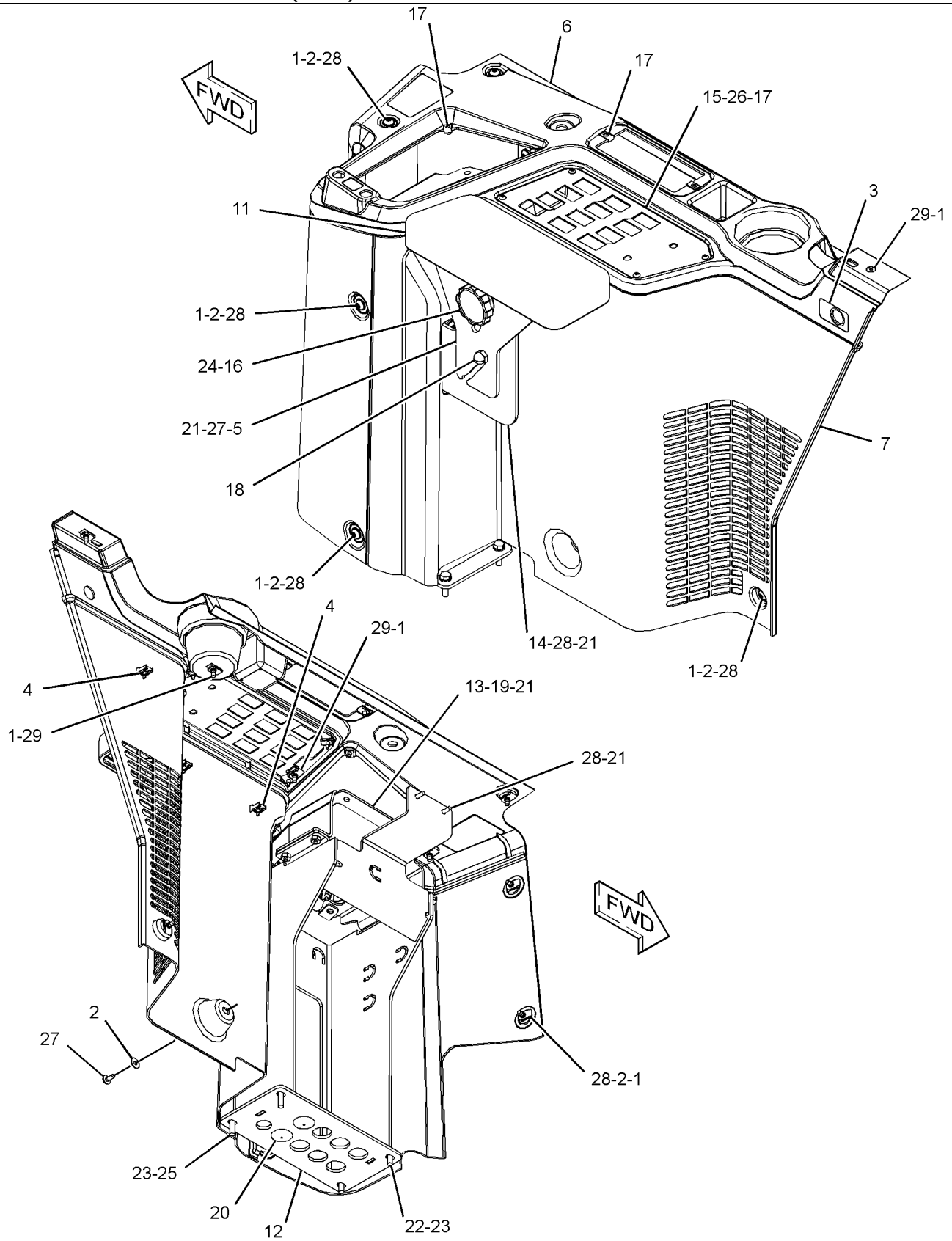

GRAPHIC #2 **<END>** g03526219

391-5316 ARMREST GP

S/N: M5K1-UP
PART OF 391-5301 CAB AR
TYPE 2

SMCS-7307, 7312 **i06068901**

NOTE	REF NO	GRAPHIC REF	PART NUMBER	QTY	PART NAME 1 2 3 4 5 6 (PRODUCT LEVEL)	SEE PAGE
M	1	2	**172-8591**	11	NUT-SPRING (M6X1-THD)	
	2	2	**114-6658**	8	WASHER (6.5X17X1-MM THK)	
	3	2	**200-8154**	1	FILM-IDENTIFICATION (12-VOLT)	
	4	2	**206-1667**	3	CLIP	
	5	2	**387-6883**	1	BRACKET	
	6	2	**391-5332**	1	COVER	
	7	2	**391-5347**	1	COVER	
	8	1	**391-5390**	1	COVER	
	11	2	**392-5562**	1	CUSHION AS	
M		2	**6V-9632**	4	NUT-WELD (M6X1-THD)	
	12	2	**392-5563**	1	SUPPORT AS	
M		2	**6V-9632**	8	NUT-WELD (M6X1-THD)	
M		2	**9R-2672**	2	BOSS-THREADED (M10X1.5-THD)	
	14	2	**392-5569**	1	PLATE AS	
M		2	**8T-3490**	1	NUT-WELD (M10X1.5-THD)	
	15	2	**392-5572**	1	PLATE	
	16	2	**393-1075**	1	KNOB	
	17	1,2	**154-8079**	10	NUT-RETAINER (U-TYPE)	
	18	2	**293-1501**	1	NUT (M10X1.5-THD)	
M	19	2	**6V-8214**	4	BOLT (M6X1X20-MM)	
	20	2	**8P-6364**	2	PLUG	
M	22	2	**8T-4189**	2	BOLT (M8X1.25X20-MM)	
C	23	2	**8T-4224**	8	WASHER-HARD (8.8X16X2-MM THK)	
	24	2	**8T-4896**	1	WASHER-HARD (10.2X18.5X2.5-MM THK)	
M	25	2	**8T-7547**	2	BOLT (M8X1.25X30-MM)	
M	26	2	**9X-1046**	4	SCREW (M4X0.7X18-MM)	
M	27	2	**9X-2043**	5	SCREW-TRUSS HEAD (M6X1X14-MM)	
M	28	2	**9X-2045**	13	SCREW-TRUSS HEAD (M6X1X20-MM)	
M	29	2	**9X-6155**	4	BOLT-SOCKET HEAD (M6X1X16.7-MM)	
C	30	2	**9X-2038**	10	WASHER (7X19X2-MM THK)	

C - CHANGE FROM PREVIOUS TYPE
M - METRIC PART

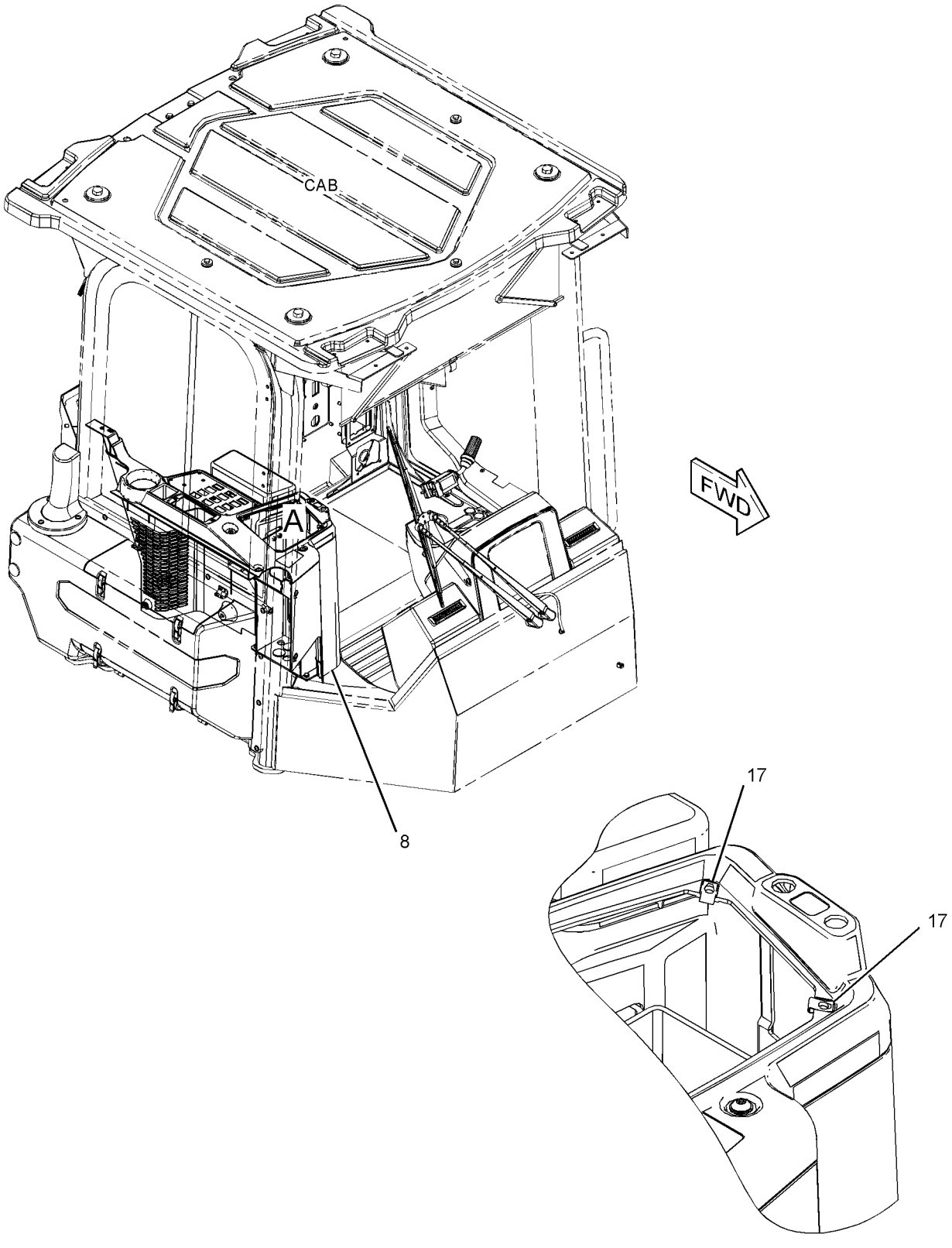

REFER TO ALL ILLUSTRATIONS OF THIS GROUP FOR AUXILIARY VIEWS

VIEW OF AREA A

GRAPHIC #1

g03799085

391-5316 **ARMREST GP (*contd.*)** **i06068901**

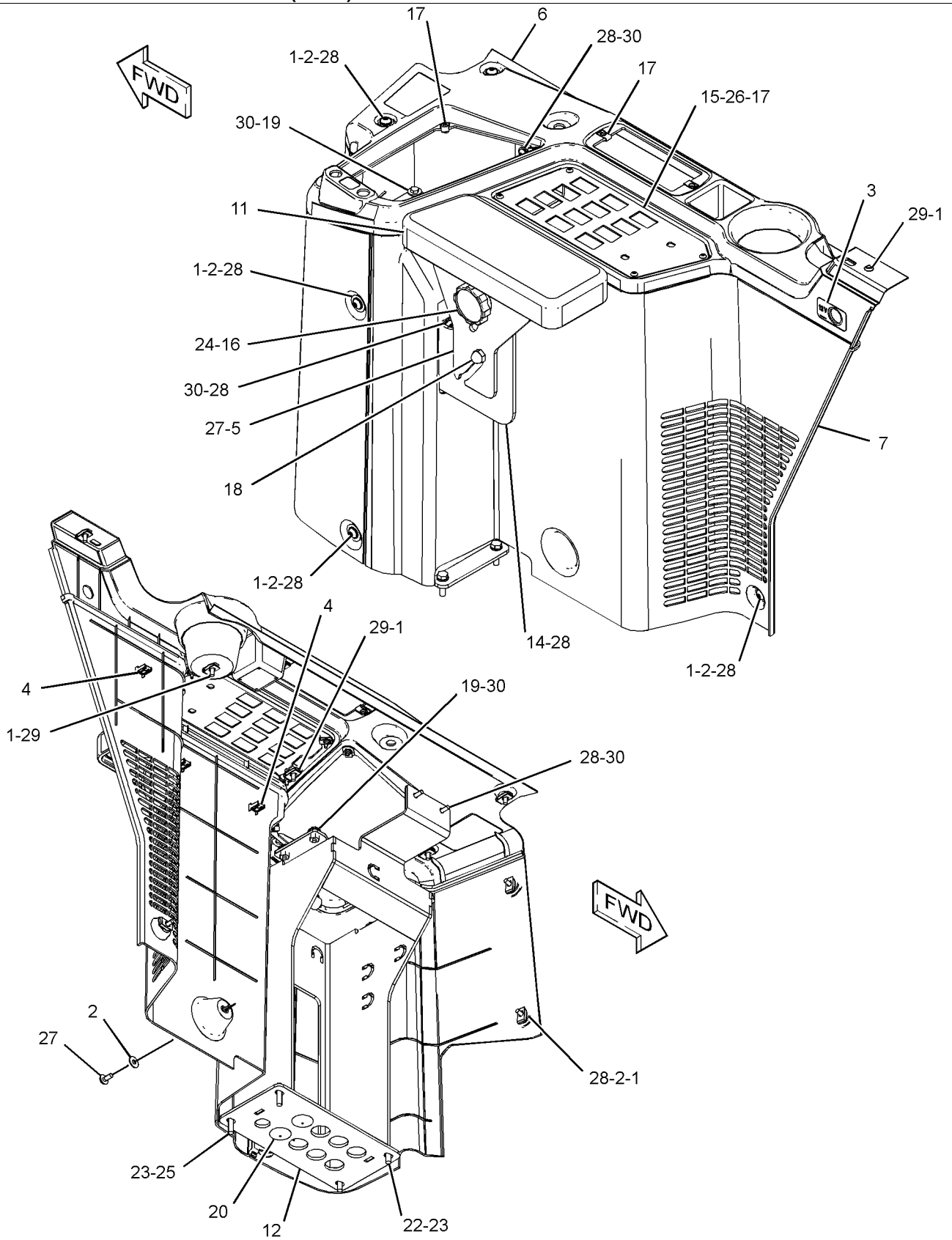

GRAPHIC #2 **<END>** g03799082

391-5301 CAB AR

S/N: M5K1-UP

PART OF 391-5300 OPERATOR AR

SMCS-7301 **i05838342**

NOTE	PART NUMBER	QTY	PART NAME 1 2 3 4 5 6 (PRODUCT LEVEL)	SEE PAGE
Y	*424-2863*	1	AIR CONDITIONER GP	520
Y	*391-5316*	1	ARMREST GP	529
Y	*391-5313*	1	CAB AR	536
Y	*391-5303*	1	CAB GP-ENCLOSED ROPS	542
Y	*391-5329*	1	CONTROL GP-PARKING BRAKE	348
Y	*425-6234*	1	PEDAL GP-BRAKE	576
Y	*391-5317*	1	CONTROL GP-STEERING	555
Y	*391-5328*	1	COVER GP-ACCESS	559
Y	*352-7475*	1	COVER GP-CAB	561
Y	*391-5314*	1	DUCT GP-CAB AIR	565
Y	*391-5350*	1	FILM GP	658
Y	*391-5312*	1	PANEL GP-CAB	575
Y	*431-9788*	1	PEDAL GP-GOVERNOR	577
Y	*391-5311*	1	ROOF GP-CAB	581
Y	*391-5310*	1	WIPER GP-WINDOW	603
Y	*392-8351*	1	WIRING GP-CAB	176
	392-3977	1	MIRROR GP-REAR VIEW	
M	**096-4833**	2	BOLT-SOCKET HEAD (M5X0.8X20-MM)	
	392-3976	1	MIRROR	
	391-5308	1	VISOR GP-CAB	
M	**3E-8020**	4	SCREW-TRUSS HEAD (M6X1X25-MM)	
	392-5588	1	VISOR AS	

M - METRIC PART
Y - SEPARATE ILLUSTRATION

<END>

OPERATOR STATION

391-5313 CAB AR

S/N: M5K1-UP
PART OF 391-5301 CAB AR
TYPE 1

SMCS-7301 **i05834450**

NOTE	REF NO	GRAPHIC REF	PART NUMBER	QTY	PART NAME 1 2 3 4 5 6 (PRODUCT LEVEL)	SEE PAGE
M	1	1,2	**172-8591**	15	NUT-SPRING (M6X1-THD)	
	2	2	**9U-8263**	1	COVER	
	3	2	**206-1667**	16	CLIP	
	4	1	**296-1210**	1	COVER-FUSE	
	5	2	**334-6089**	1	RECEPTACLE	
	6	2	**334-6090**	1	STUD	
	7	2	**357-2108**	1	PLATE AS	
	8	2	**365-8363**	1	BEZEL-RADIO	
	9	1	**365-8366**	1	COVER (WIRING)	
	10	1	**365-8368**	1	COVER (REAR)	
	11	1	**365-8369**	1	COVER-STORAGE	
	12	1	**365-8371**	1	COVER (ELECTRICAL)	
	13	2	**365-8373**	11	FASTENER	
	14	2	**373-4446**	1	PLUG	
	15	2	**391-5331**	1	LINER-CAB	
	16	1	**391-5333**	1	FLOOR MAT (CAB)	
	17	2	**391-5338**	1	LINER-CAB	
	18	2	**391-5346**	1	COVER-DOOR	
	19	1,2	**114-6658**	19	WASHER (6.5X17X1-MM THK)	
	20	2	**212-6891**	1	RETAINER	
	22	2	**4S-8264**	2	RIVET-POP	
M	23	2	**9X-2044**	1	SCREW-TRUSS HEAD (M6X1X16-MM)	
M	24	1,2	**9X-2045**	18	SCREW-TRUSS HEAD (M6X1X20-MM)	
M	25	2	**9X-6155**	6	BOLT-SOCKET HEAD (M6X1X16.7-MM)	
	26	1	**391-5394**	1	PLUG	

M - METRIC PART

REFER TO ALL ILLUSTRATIONS OF THIS GROUP FOR AUXILIARY VIEWS

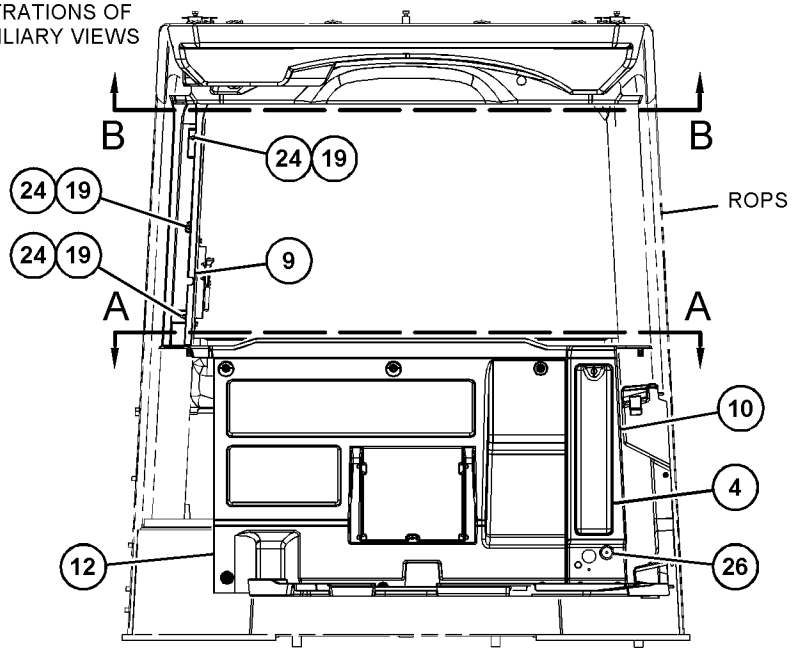

FRONT VIEW

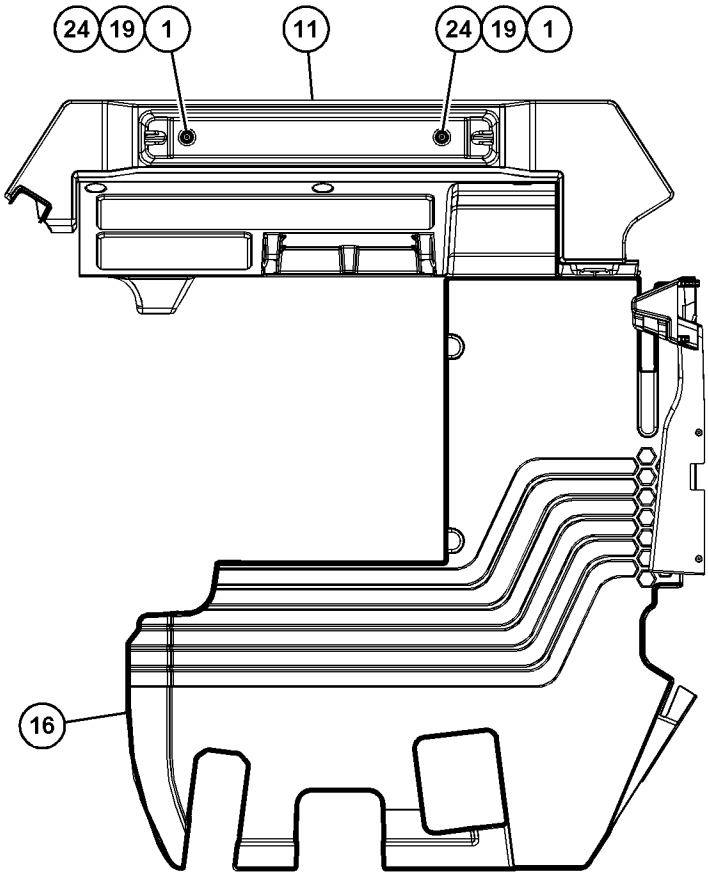

VIEW A-A

GRAPHIC #1 g03692261

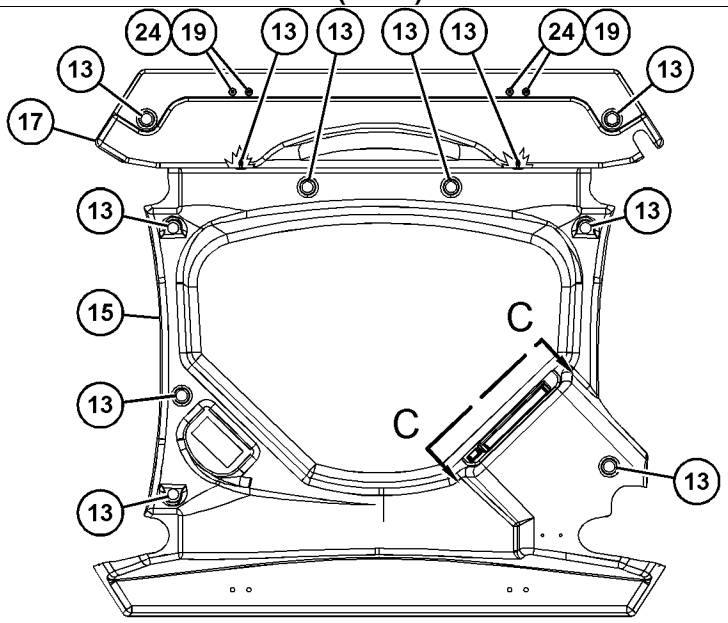

VIEW B-B

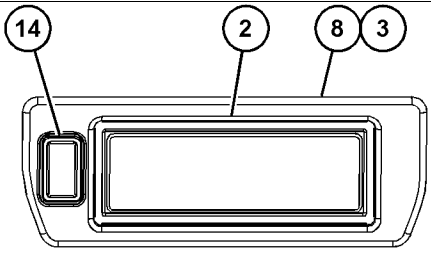

VIEW C-C

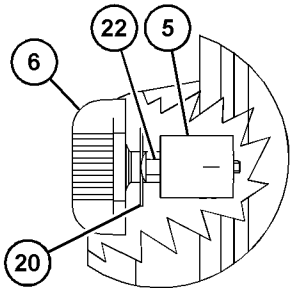

VIEW OF AREA D

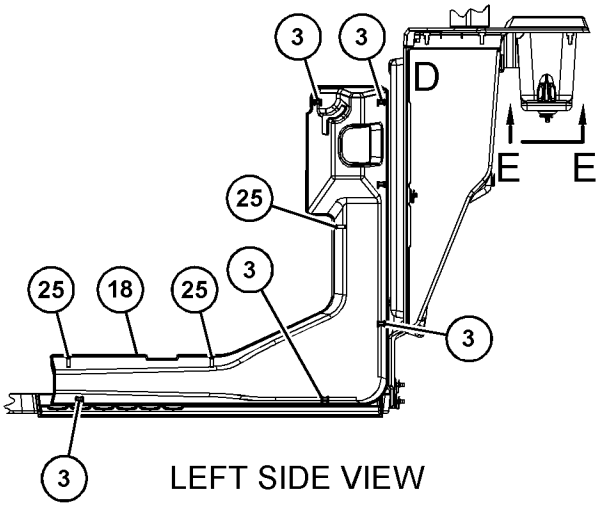

LEFT SIDE VIEW

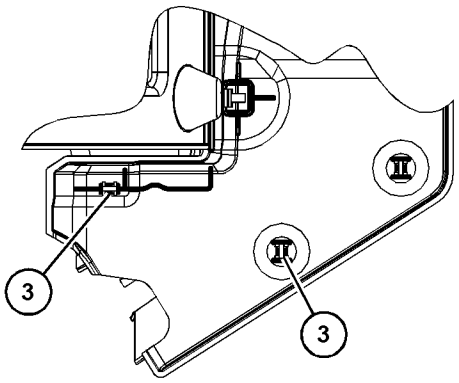

VIEW E-E

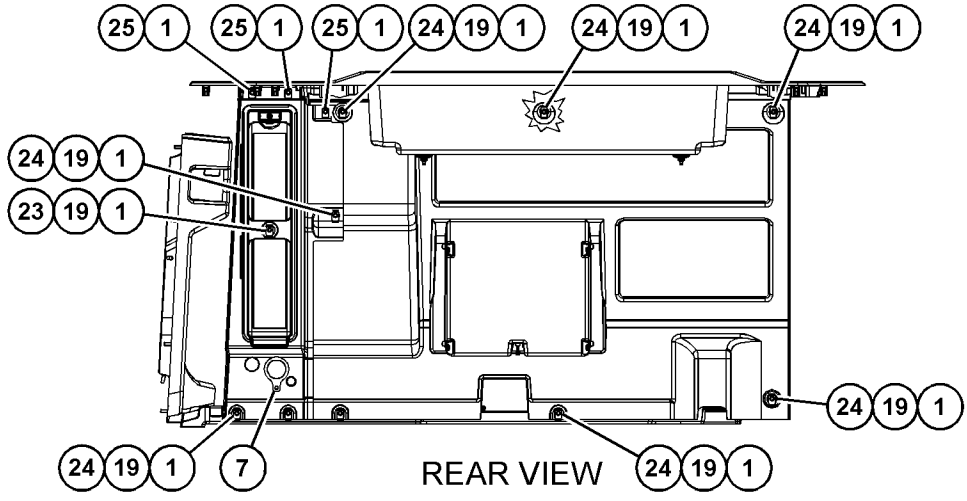

REAR VIEW

GRAPHIC #2

<END>

g03526657

391-5313 CAB AR

S/N: M5K1-UP
PART OF 391-5301 CAB AR
TYPE 2

SMCS-7301 **i06061732**

NOTE	REF NO	GRAPHIC REF	PART NUMBER	QTY	PART NAME 1 2 3 4 5 6 (PRODUCT LEVEL)	SEE PAGE
M	1	1,2	**172-8591**	15	NUT-SPRING (M6X1-THD)	
	2	2	**9U-8263**	1	COVER	
	3	2	**206-1667**	16	CLIP	
	4	1	**296-1210**	1	COVER-FUSE	
	5	2	**334-6089**	1	RECEPTACLE	
	6	2	**334-6090**	1	STUD	
	7	2	**357-2108**	1	PLATE AS	
	8	2	**365-8363**	1	BEZEL-RADIO	
	9	1	**365-8366**	1	COVER (WIRING)	
	10	1	**365-8368**	1	COVER (REAR)	
	11	1	**365-8369**	1	COVER-STORAGE	
	12	1	**365-8371**	1	COVER (ELECTRICAL)	
	13	2	**365-8373**	11	FASTENER	
	14	2	**373-4446**	1	PLUG	
	15	2	**391-5331**	1	LINER-CAB	
	17	2	**391-5338**	1	LINER-CAB	
	18	2	**391-5346**	1	COVER-DOOR	
	19	1,2	**114-6658**	19	WASHER (6.5X17X1-MM THK)	
	20	2	**212-6891**	1	RETAINER	
	22	2	**4S-8264**	2	RIVET-POP	
M	23	2	**9X-2044**	1	SCREW-TRUSS HEAD (M6X1X16-MM)	
M	24	1,2	**9X-2045**	18	SCREW-TRUSS HEAD (M6X1X20-MM)	
M	25	2	**9X-6155**	6	BOLT-SOCKET HEAD (M6X1X16.7-MM)	
	26	1	**391-5394**	1	PLUG	

M - METRIC PART

REFER TO ALL ILLUSTRATIONS OF THIS GROUP FOR AUXILIARY VIEWS

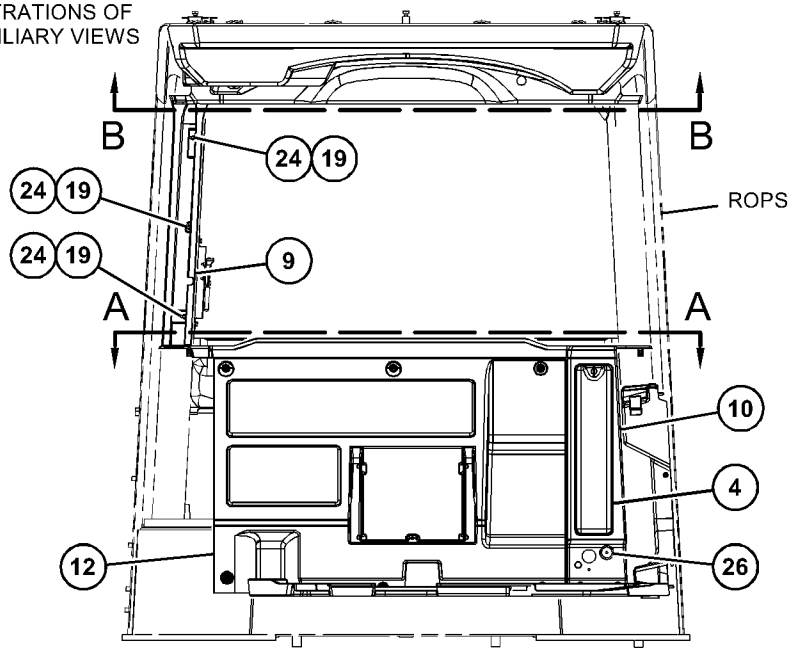

FRONT VIEW

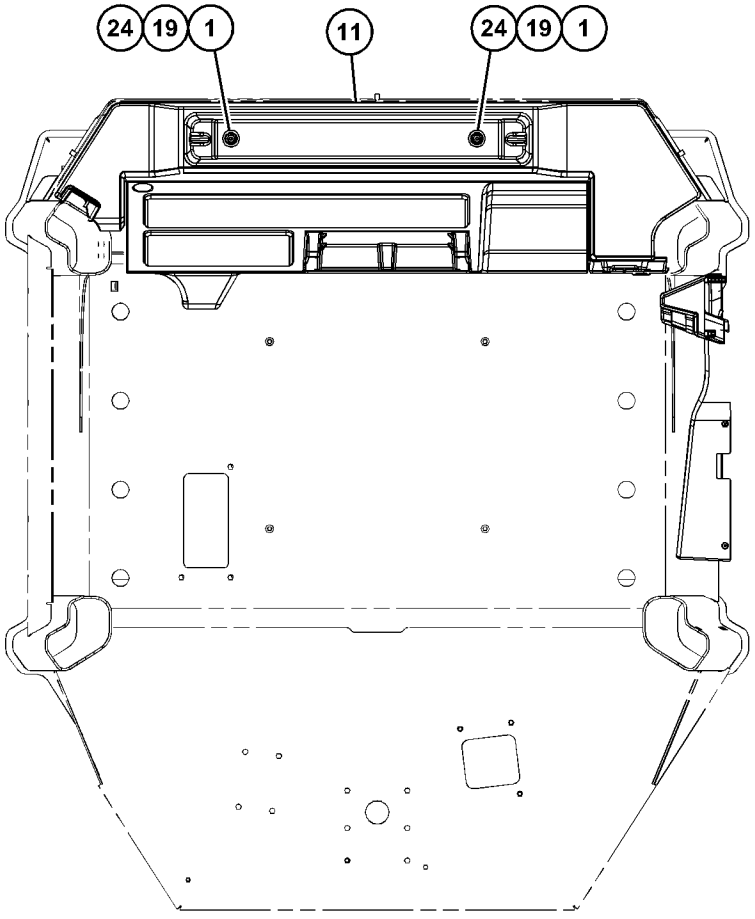

VIEW A-A

GRAPHIC #1 g03801645

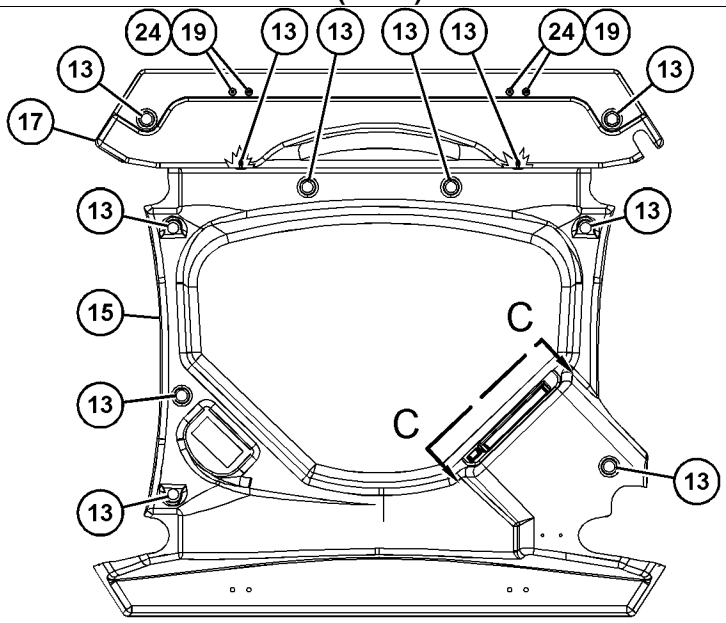

VIEW B-B

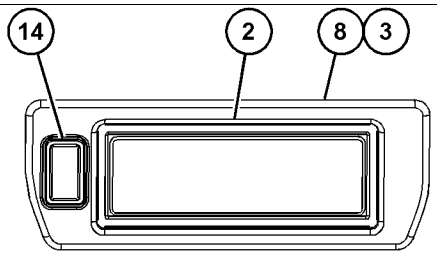

VIEW C-C

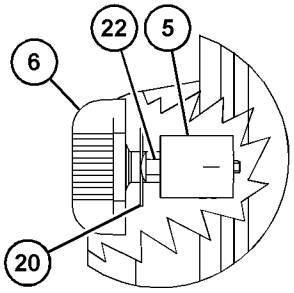

VIEW OF AREA D

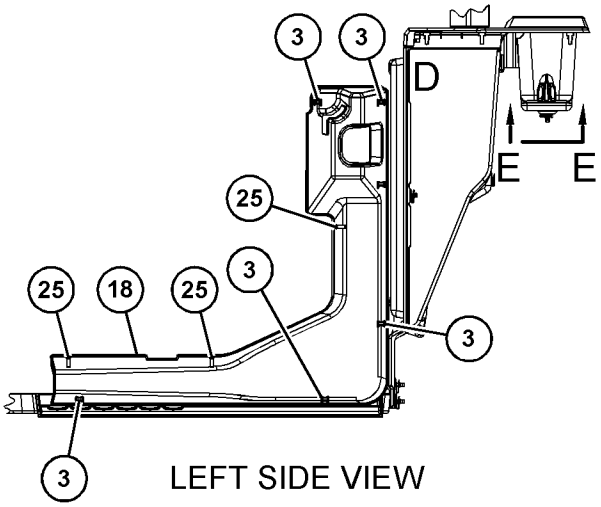

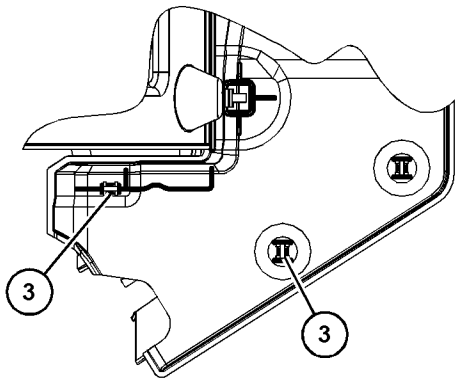

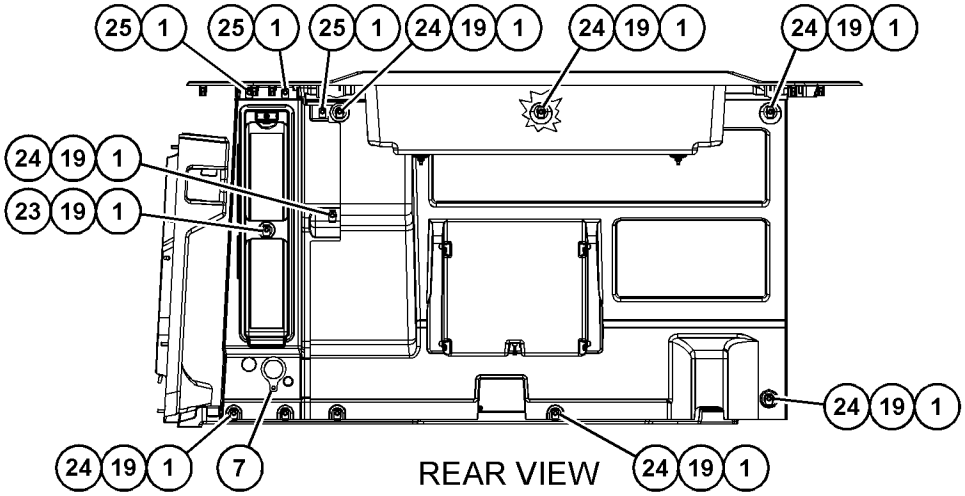

GRAPHIC #2

<END>

g03526657

OPERATOR STATION

391-5303 CAB GP-ENCLOSED ROPS

S/N: M5K1-UP

PART OF 391-5301 CAB AR

SMCS-7301 **i05834449**

NOTE	REF NO	GRAPHIC REF	PART NUMBER	QTY	PART NAME 1 2 3 4 5 6 (PRODUCT LEVEL)	SEE PAGE
M	1	1	**172-8591**	2	NUT-SPRING (M6X1-THD)	
	2	1	**6V-8928**	1	HOOK-COAT	
	3	1	**8T-5401**	4	PLUG-BUTTON	
	4	1	**209-4212**	1	HAMMER GP (CAB WINDOW)	
		1	**234-8738**	1	HAMMER	
		1	**234-8739**	1	BRACKET	
	5	1	**237-2179**	1	RELEASE-HAMMER (CAB WINDOW)	
	6	1	**237-2180**	1	WIRE	
	7	1	**346-1061**	1	BRACKET AS	
Y	8	1	*391-5318*	1	SUPPORT GP-SEAT	590
	9	1	**391-5325**	1	PLATE	
	10	1	**391-5326**	1	GASKET	
Y	11	1	*391-5327*	1	DOOR GP-CAB	562
Y	12	1	*392-1877*	1	ROPS GP-ENCLOSED	582
	13	1	**392-1919**	1	BRACKET	
Y	14	1	**392-3981**	1	WINDOW GP-DOOR (RH)	602
M	15	1	**3E-8020**	1	SCREW-TRUSS HEAD (M6X1X25-MM)	
M	16	1	**6V-7357**	4	BOLT (M6X1X25-MM)	
M	17	1	**7Y-3173**	2	SCREW-BUTTON HEAD (M4X0.7X12-MM)	
	18	1	**8D-6542**	11	GROMMET	
	19	1	**8P-6364**	2	PLUG	
	20	1	**9X-2038**	4	WASHER (7X19X2-MM THK)	
M	21	1	**9X-2044**	13	SCREW-TRUSS HEAD (M6X1X16-MM)	
D	22	1	**8T-3426**		CHANNEL-TRIM (0.4-M EACH)	
B	23	1	**110-7524**	24	BUTTON	

B - USE AS REQUIRED
D - ORDER BY THE METER
M - METRIC PART
Y - SEPARATE ILLUSTRATION

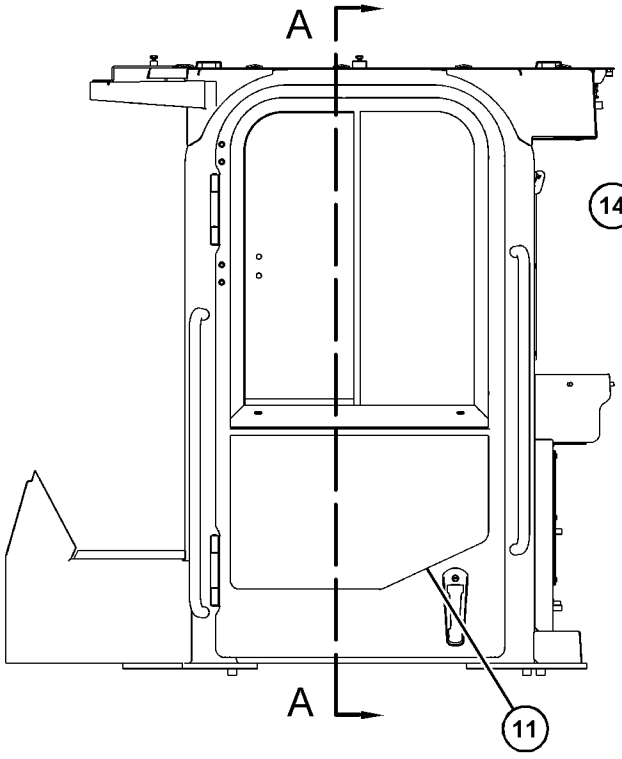

LEFT SIDE VIEW

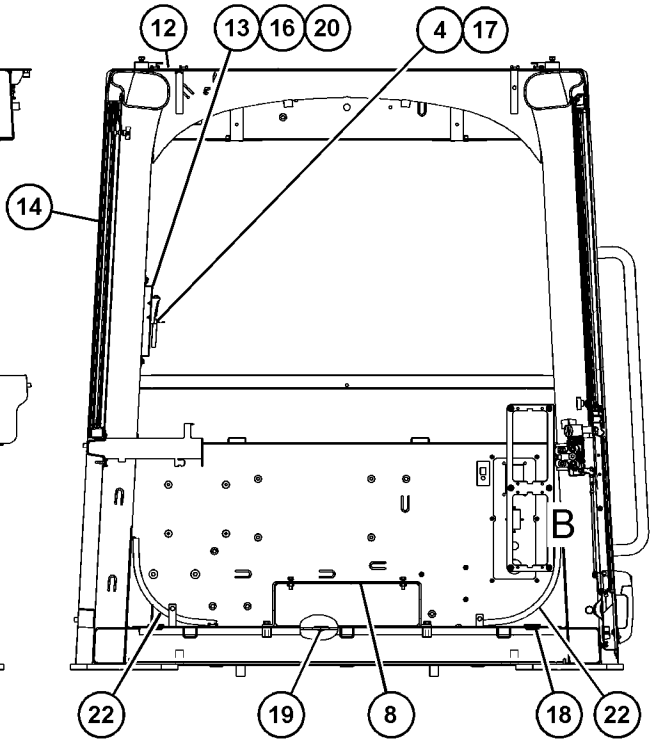

SECTION A-A

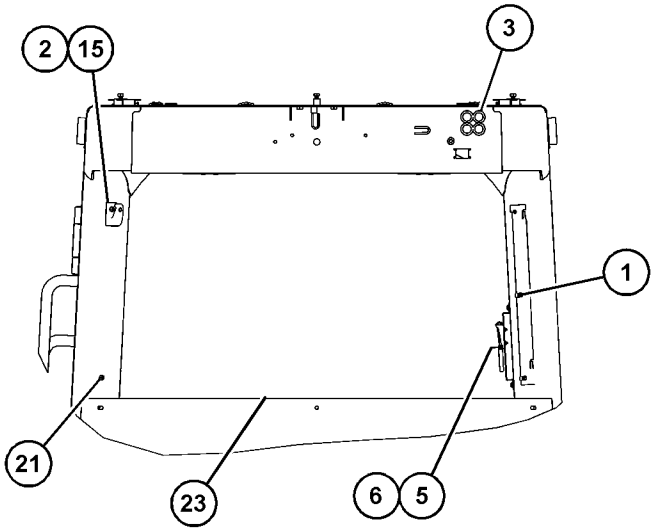

REAR VIEW

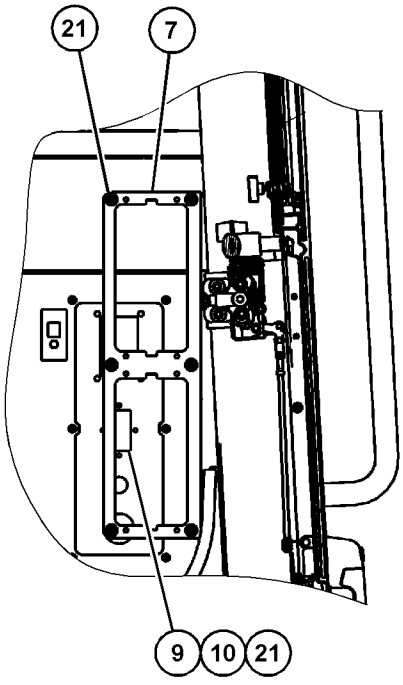

VIEW OF AREA B

GRAPHIC #1 **<END>** g03692291

424-2859 COMPRESSOR & MTG GP-REFRIG

S/N: M5K1-UP

PART OF 391-5302 INSTALLATION GP-CAB

SMCS-1802 **i05435732**

NOTE	REF NO	GRAPHIC REF	PART NUMBER	QTY	PART NAME 1 2 3 4 5 6 (PRODUCT LEVEL)	SEE PAGE
Y	1	1	**394-9671**	1	COMPRESSOR GP-REFRIGERANT	545
	2	1	**130-5300**	1	CLIP	
M	3	1	**7X-2538**	4	BOLT (M8X1.25X100-MM)	
	4	1	**8T-4224**	4	WASHER-HARD (8.8X16X2-MM THK)	

M - METRIC PART
Y - SEPARATE ILLUSTRATION

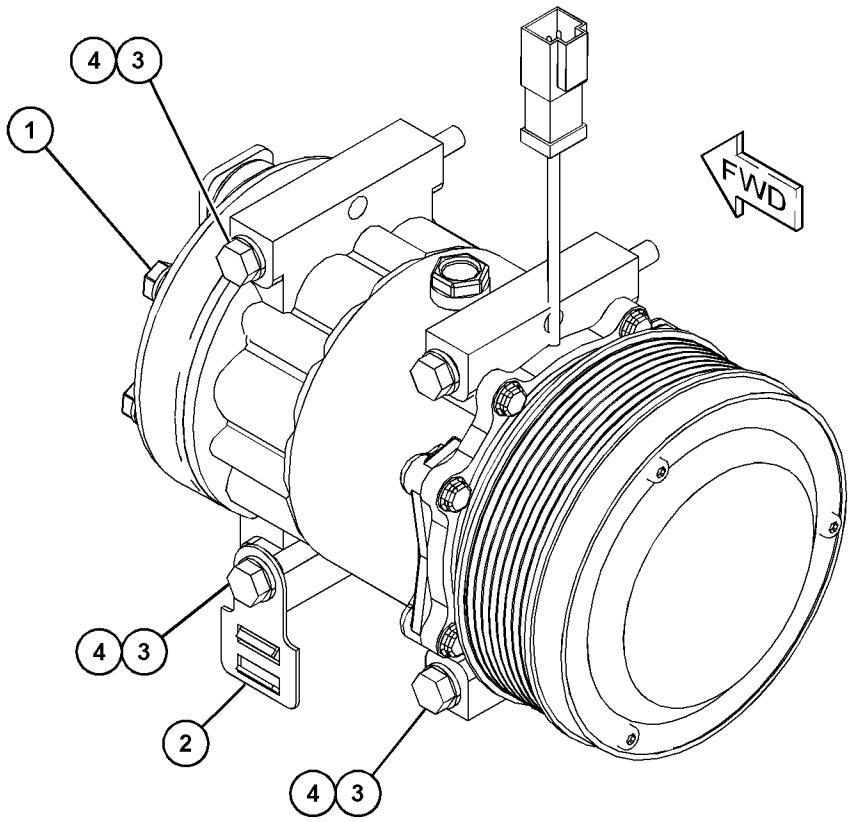

GRAPHIC #1 **<END>** g03525717

394-9671 COMPRESSOR GP-REFRIGERANT

S/N: M5K1-UP

PART OF 424-2859 COMPRESSOR & MTG GP-REFRIG

SMCS-1802 **i05795145**

NOTE	REF NO	GRAPHIC REF	PART NUMBER	QTY	PART NAME 1 2 3 4 5 6 (PRODUCT LEVEL)	SEE PAGE
	1	1	**102-8802**	1	KIT-RECEPTACLE (2-PIN)	
					(INCLUDES RECEPTACLE AS & WEDGE)	
	2	1	**314-4018**	1	VALVE AS-PRESSURE RELIEF (REFRIGERANT COMPRESSOR)	
	3	1	**7T-4532**	1	PLUG AS	
	4	1	**9X-7385**	2	SEAL-O-RING	
	5	1	**9X-3401**	2	PIN-CONNECTOR (16-GA TO 18-GA)	
					—OR—	
		1	**126-1767**	2	PIN-CONNECTOR (14-GA TO 16-GA)	

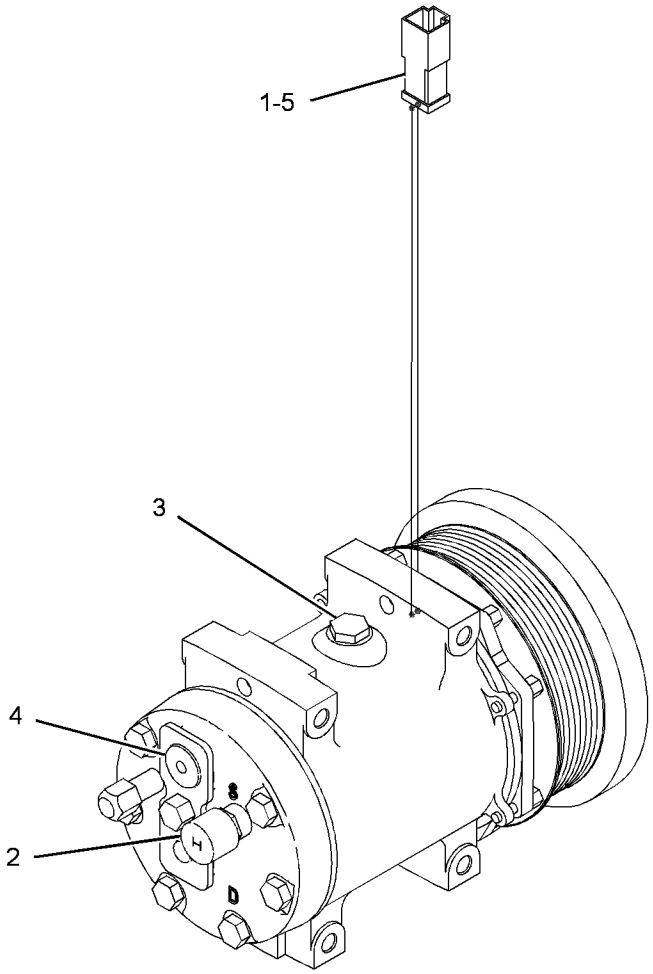

GRAPHIC #1 **<END>** g02158859

393-9359 CONTROL & MTG GP-ELHYD–2-LEVER

S/N: M5K1-UP

CANNOT BE USED WITH 426-0184–PAGE: 551, 426-0185–PAGE: 548, 393-9360–PAGE: 550, 397-9895–PAGE: 405, 397-9894–PAGE: 405, 397-9860–PAGE: 407

AN ATTACHMENT

SMCS-5702 **i05817821**

NOTE	REF NO	GRAPHIC REF	PART NUMBER	QTY	PART NAME 1 2 3 4 5 6 (PRODUCT LEVEL)	SEE PAGE
Y	1	1	*397-9846*	1	LINES GP-PILOT	430
	2	1	**392-5573**	1	PLATE	
	3	1	**430-9498**	2	ROD	
M	4	1	**9X-1046**	4	SCREW (M4X0.7X18-MM)	
	5	1	**440-2770**	2	KNOB	
M	6	1	**344-5674**	4	NUT (M8X1.25-THD)	
	7	1	**2Y-5429**	5	GROMMET	
	8	1	**1M-4543**	1	GROMMET	
	9	1	**263-1493**	1	SWITCH AS-PUSH BUTTON (DOWNSHIFT)	
		1	**6F-0253**	1	LOCKWASHER	
		1	**9X-3402**	3	SOCKET-CONNECTOR (16-GA TO 18-GA)	
					–OR–	
		1	**126-1768**	3	SOCKET-CONNECTOR (14-GA TO 16-GA)	
		1	**155-2260**	1	KIT-CONNECTING PLUG (3-PIN)	
					(KIT INCLUDES PLUG AS, WEDGE, & INTERFACE SEAL)	
		1	**172-3511**	1	NUT (5/8-24-THD)	
	10	1	**170-1821**	1	SWITCH AS-PUSH BUTTON (HORN)	
		1	**8T-8729**	2	PIN-CONNECTOR (16-GA TO 18-GA)	
		1	**172-3511**	1	NUT (5/8-24-THD)	
		1	**6F-0253**	1	LOCKWASHER	
	11	1	**391-5389**	1	FILM-IDENTIFICATION (HORN, TRANSMISSION DIRECTION)	
	12	1	**391-5348**	1	FILM-INSTRUCTION (BUCKET POSITION)	
	13	1	**455-5660**	1	SUPPORT	
	14	1	**455-8227**	1	BRACKET	
	15	1	**455-8228**	1	BRACKET	

M - METRIC PART
Y - SEPARATE ILLUSTRATION

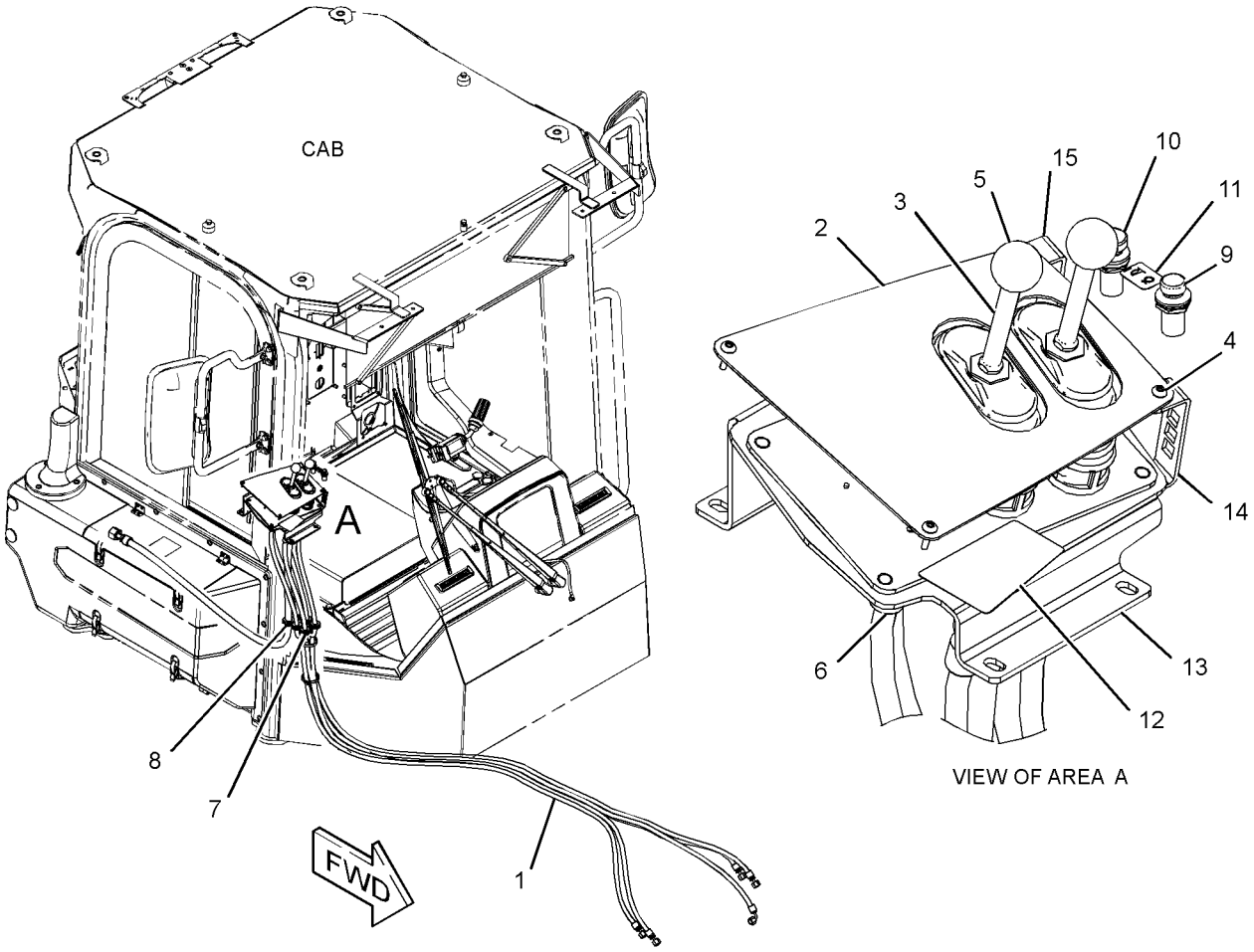

GRAPHIC #1 **<END>** g03684843

426-0185 CONTROL & MTG GP-ELHYD

S/N: M5K1-UP

CANNOT BE USED WITH 393-9359—PAGE: 546, 426-0184—PAGE: 551, 393-9360—PAGE: 550, 390-5913—PAGE: 482, 390-5903—PAGE: 455, 387-5780—PAGE: 512

AN ATTACHMENT

SMCS-5702 **i05817819**

NOTE	REF NO	GRAPHIC REF	PART NUMBER	QTY	PART NAME 1 2 3 4 5 6 (PRODUCT LEVEL)	SEE PAGE
Y	1	1	*397-9764*	1	LINES GP-PILOT	428
	2	1	**392-5571**	1	PLATE	
	3	1	**430-9498**	3	ROD	
	4	1	**440-2770**	3	KNOB	
M	5	1	**9X-1046**	4	SCREW (M4X0.7X18-MM)	
M	6	1	**344-5674**	4	NUT (M8X1.25-THD)	
	7	1	**2Y-5429**	7	GROMMET	
	8	1	**1M-4543**	1	GROMMET	
	9	1	**391-5349**	1	FILM-INSTRUCTION (IMPLEMENT CONTROL)	
	10	1	**391-5389**	1	FILM-IDENTIFICATION (HORN, TRANSMISSION DIRECTION)	
	11	1	**170-1821**	1	SWITCH AS-PUSH BUTTON (HORN)	
		1	**6F-0253**	1	LOCKWASHER	
		1	**8T-8729**	2	PIN-CONNECTOR (16-GA TO 18-GA)	
		1	**172-3511**	1	NUT (5/8-24-THD)	
	12	1	**263-1493**	1	SWITCH AS-PUSH BUTTON (DOWNSHIFT)	
		1	**6F-0253**	1	LOCKWASHER	
		1	**9X-3402**	3	SOCKET-CONNECTOR (16-GA TO 18-GA)	
					—OR—	
		1	**126-1768**	3	SOCKET-CONNECTOR (14-GA TO 16-GA)	
		1	**172-3511**	1	NUT (5/8-24-THD)	
		1	**155-2260**	1	KIT-CONNECTING PLUG (3-PIN)	
					(INCLUDES PLUG AS, WEDGE, & INTERFACE SEAL)	
	13	1	**455-5660**	1	SUPPORT	
	14	1	**455-8227**	1	BRACKET	
	15	1	**455-8228**	1	BRACKET	

M - METRIC PART
Y - SEPARATE ILLUSTRATION

426-0185 **CONTROL & MTG GP-ELHYD (*contd.*)** **i05817819**

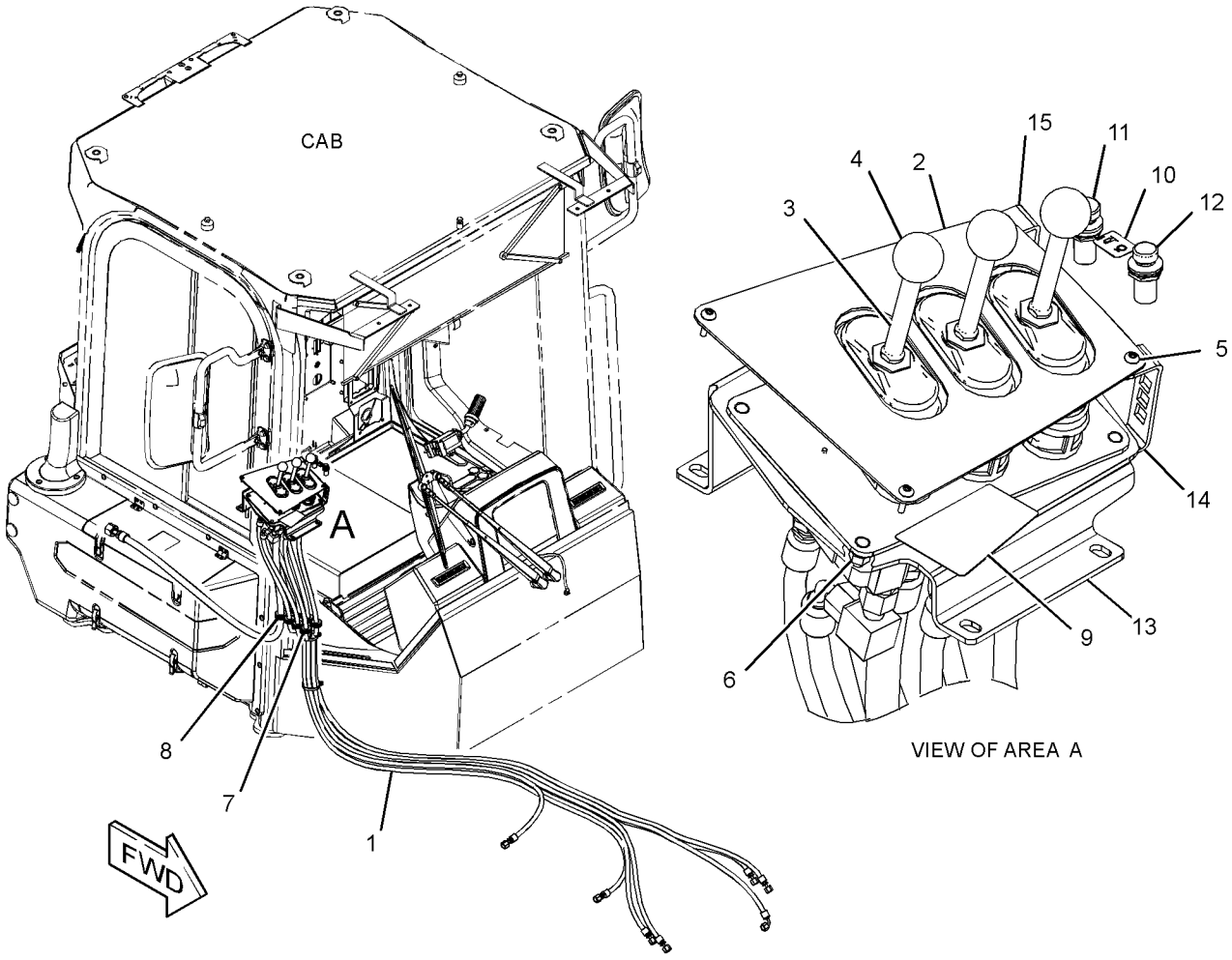

VIEW OF AREA A

GRAPHIC #1 **<END>** g03684884

393-9360 CONTROL & MTG GP-JOYSTICK

S/N: M5K1-UP

CANNOT BE USED WITH 426-0184 CONTROL & MTG GP-ELECTRONIC, 426-0185 CONTROL & MTG GP-ELECTRONIC, 390-5913 VALVE GP-MAIN CONTROL, 390-5903 VALVE & MTG GP-HYDRAULIC, 387-5780 CONTROL GP-BUCKET, 393-9359 CONTROL & MTG GP-ELECTRONIC

AN ATTACHMENT

SMCS-5063, 5705 **i05817822**

NOTE	REF NO	GRAPHIC REF	PART NUMBER	QTY	PART NAME 1 2 3 4 5 6 (PRODUCT LEVEL)	SEE PAGE
Y	1	1	*397-9765*	1	LINES GP-PILOT	429
	2	1	**392-5575**	1	PLATE	
Y	3	1	**394-8525**	1	CONTROL GP-JOYSTICK (IMPLEMENT CONTROLS)	553
	4	1	**430-9500**	1	ROD	
M	5	1	**095-1207**	2	NUT (M12X1.75-THD)	
	6	1	**440-2770**	1	KNOB	
M	7	1	**9X-1046**	4	SCREW (M4X0.7X18-MM)	
M	8	1	**344-5674**	4	NUT (M8X1.25-THD)	
	9	1	**2Y-5429**	7	GROMMET	
	10	1	**1M-4543**	1	GROMMET	
	11	1	**393-9071**	1	FILM-INSTRUCTION (IMPLEMENT)	
	12	1	**392-5564**	1	SUPPORT	
	13	1	**391-5391**	1	BRACKET	
	14	1	**391-5392**	1	BRACKET	

M - METRIC PART
Y - SEPARATE ILLUSTRATION

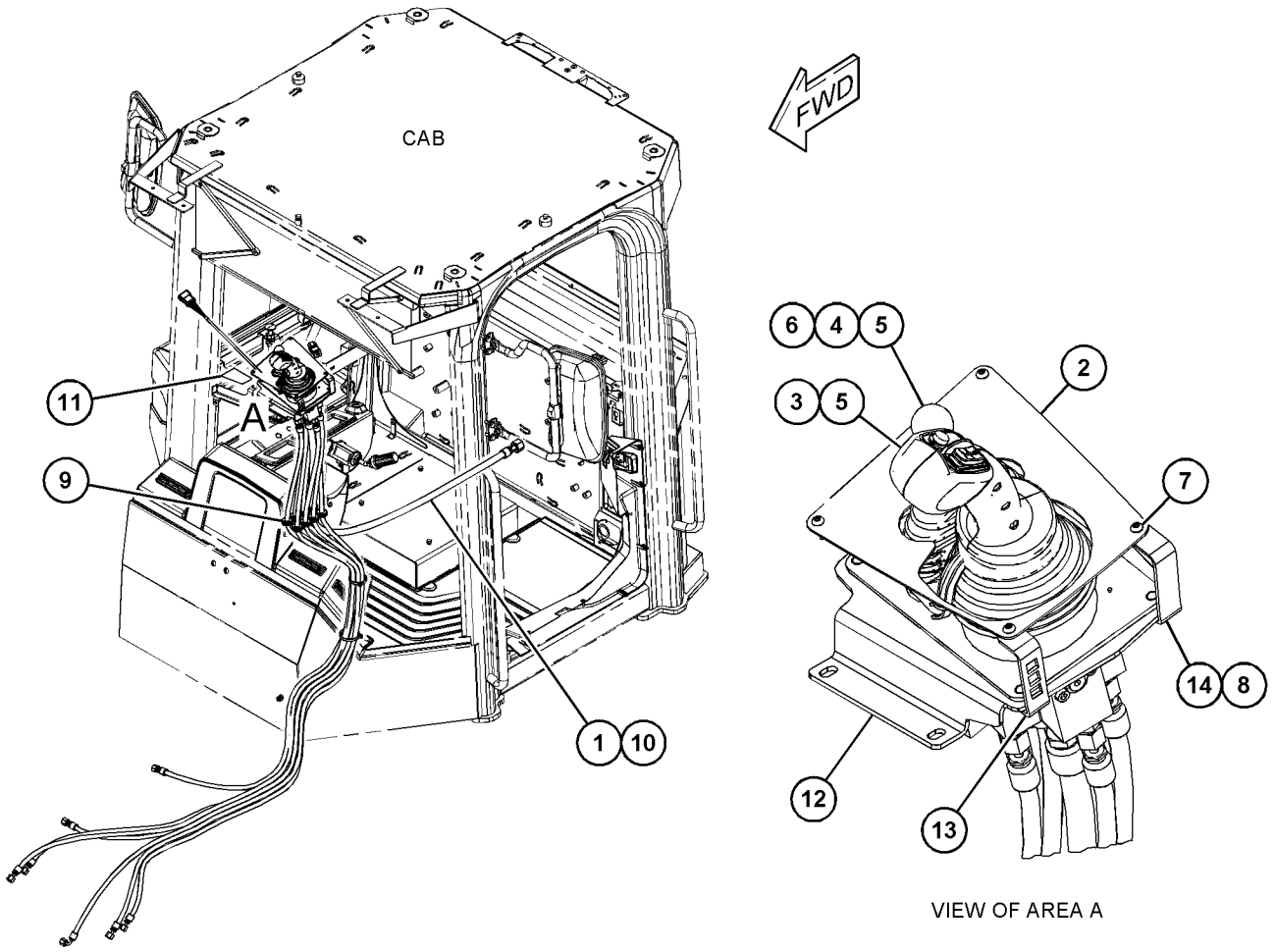

VIEW OF AREA A

GRAPHIC #1 **<END>** g03684473

426-0184 CONTROL & MTG GP-JOYSTICK

S/N: M5K1-UP

CANNOT BE USED WITH 393-9359—PAGE: 546, 426-0185—PAGE: 548, 393-9360—PAGE: 550, 397-9895—PAGE: 405, 397-9894—PAGE: 405

AN ATTACHMENT

SMCS-5063, 5705 **i05817818**

NOTE	REF NO	GRAPHIC REF	PART NUMBER	QTY	PART NAME 1 2 3 4 5 6 (PRODUCT LEVEL)	SEE PAGE
Y	1	1	*397-9847*	1	LINES GP-PILOT	431
	2	1	**392-5576**	1	PLATE	
Y	3	1	**394-8525**	1	CONTROL GP-JOYSTICK	553
M	4	1	**095-1207**	1	NUT (M12X1.75-THD)	
M	5	1	**9X-1046**	4	SCREW (M4X0.7X18-MM)	
M	6	1	**344-5674**	4	NUT (M8X1.25-THD)	
	7	1	**2Y-5429**	5	GROMMET	
	8	1	**1M-4543**	1	GROMMET	
	9	1	**393-9070**	1	FILM-INSTRUCTION (IMPLEMENT)	
	10	1	**392-5564**	1	SUPPORT	
	11	1	**391-5391**	1	BRACKET	
	12	1	**391-5392**	1	BRACKET	

M - METRIC PART
Y - SEPARATE ILLUSTRATION

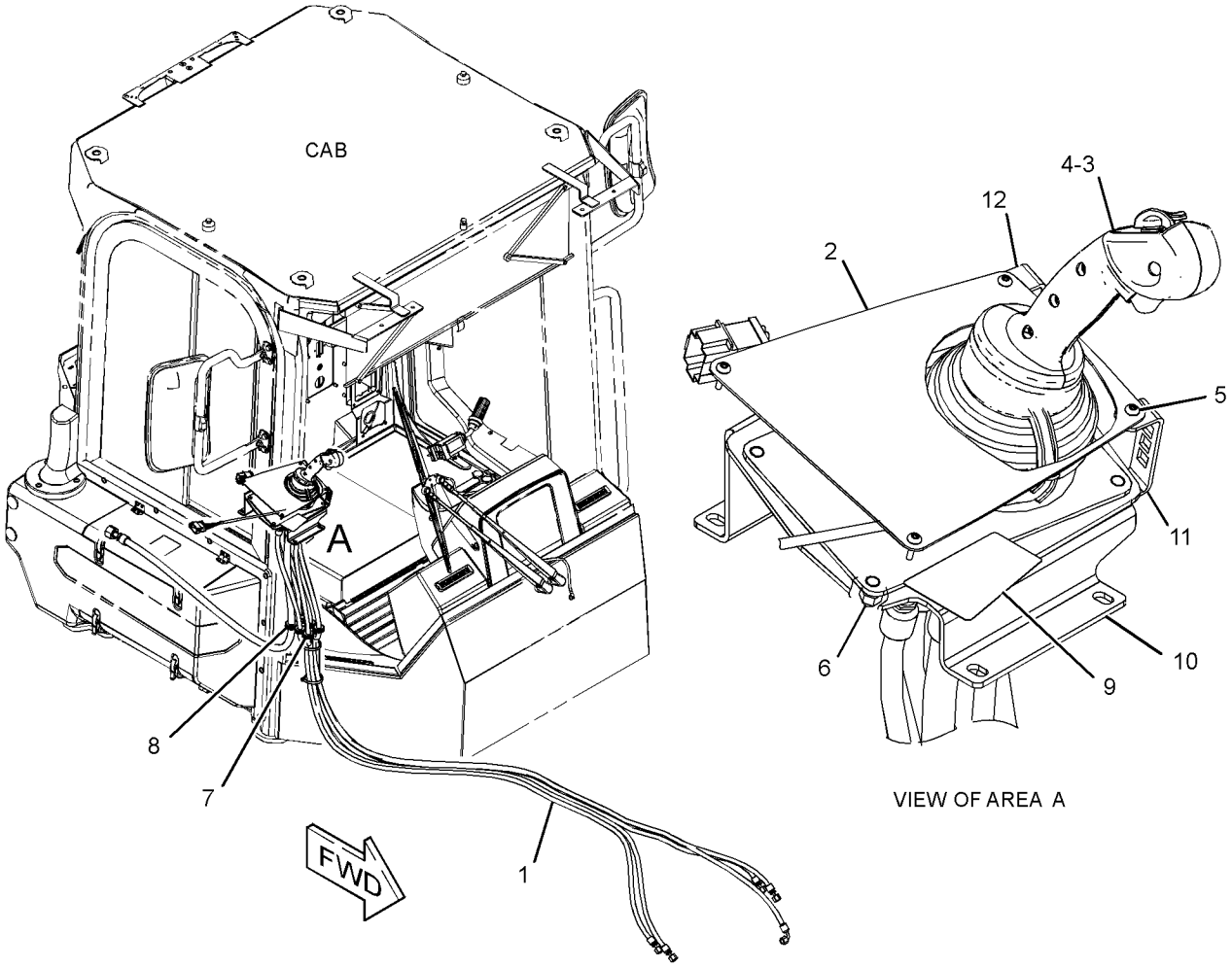

GRAPHIC #1 **<END>** g03684443

455-9874 CONTROL & MTG GP-PEDAL

S/N: M5K1-UP
FOOT BRAKE
PART OF 432-7392, 432-7393 CONVERSION AR-BRAKE CONTROL
AN ATTACHMENT

SMCS-1265, 1276 **i06063758**

NOTE	REF NO	GRAPHIC REF	PART NUMBER	QTY	PART NAME 1 2 3 4 5 6 (PRODUCT LEVEL)	SEE PAGE
Y	1	1	*425-6234*	1	PEDAL GP-BRAKE (FOOT BRAKE)	576
	2	1	**458-0485**	1	FLOOR MAT	

Y - SEPARATE ILLUSTRATION

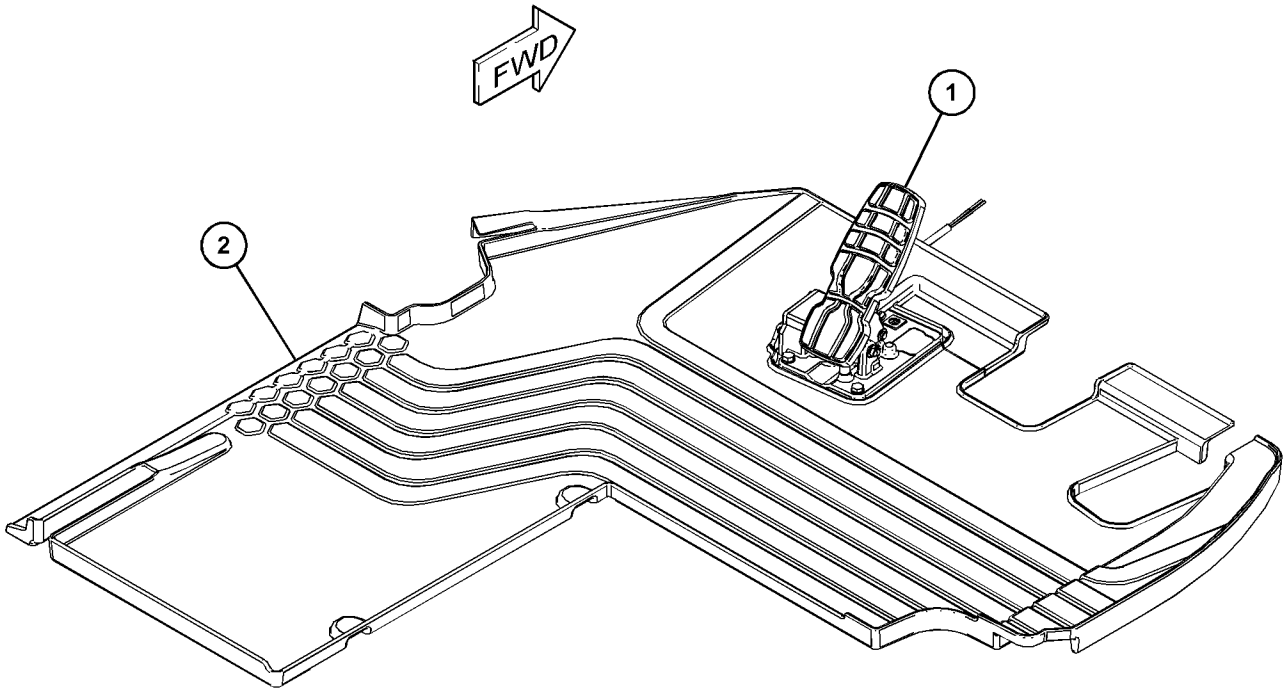

GRAPHIC #1 **<END>** g03796883

394-8525 CONTROL GP-JOYSTICK

S/N: M5K1-UP

PART OF 393-9360, 426-0184 CONTROL & MTG GP-JOYSTICK

AN ATTACHMENT

SMCS-5063, 5705

i05438101

NOTE	REF NO	GRAPHIC REF	PART NUMBER	QTY	PART NAME 1 2 3 4 5 6 (PRODUCT LEVEL)	SEE PAGE
Y	1	1	**399-3347**	1	CONTROL GP-JOYSTICK	554
	2	1	**322-6230**	1	SHROUD	
	3	1	**317-8731**	1	ELBOW	
	4	1	**231-4262**	1	ADAPTER (RH)	
	5	1	**1S-9593**	3	STRAP-CABLE	
M	6	1	**213-7489**	3	SCREW (M4X0.7X25-MM)	
M	7	1	**178-9983**	3	LOCKNUT (M4X0.7-THD)	
	8	1	**144-0331**	1	CAP-PUSH BUTTON (YELLOW)	

M - METRIC PART
Y - SEPARATE ILLUSTRATION

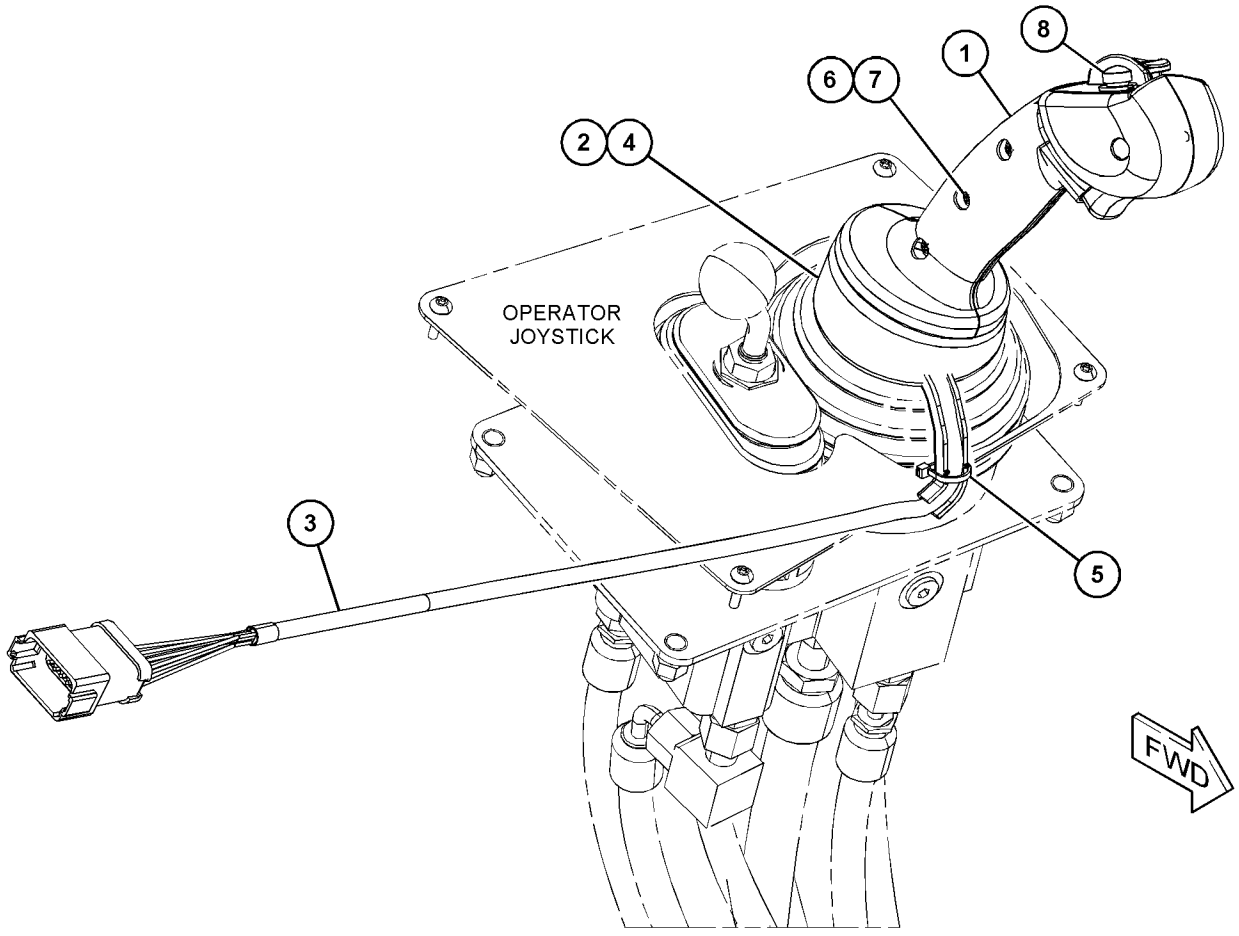

GRAPHIC #1

<END>

g03526341

399-3347 CONTROL GP-JOYSTICK—IMPLEMENT CONTROLS

S/N: M5K1-UP
PART OF 394-8525 CONTROL GP-JOYSTICK
AN ATTACHMENT

SMCS-5063, 5705

i05438102

NOTE	REF NO	GRAPHIC REF	PART NUMBER	QTY	PART NAME 1 2 3 4 5 6 (PRODUCT LEVEL)	SEE PAGE
	1	1	**322-6230**	1	SHROUD	
	2	1	**144-0331**	1	CAP-PUSH BUTTON (YELLOW)	
	3	1	**317-8731**	1	ELBOW	
	4	1	**1S-9593**	3	STRAP-CABLE	

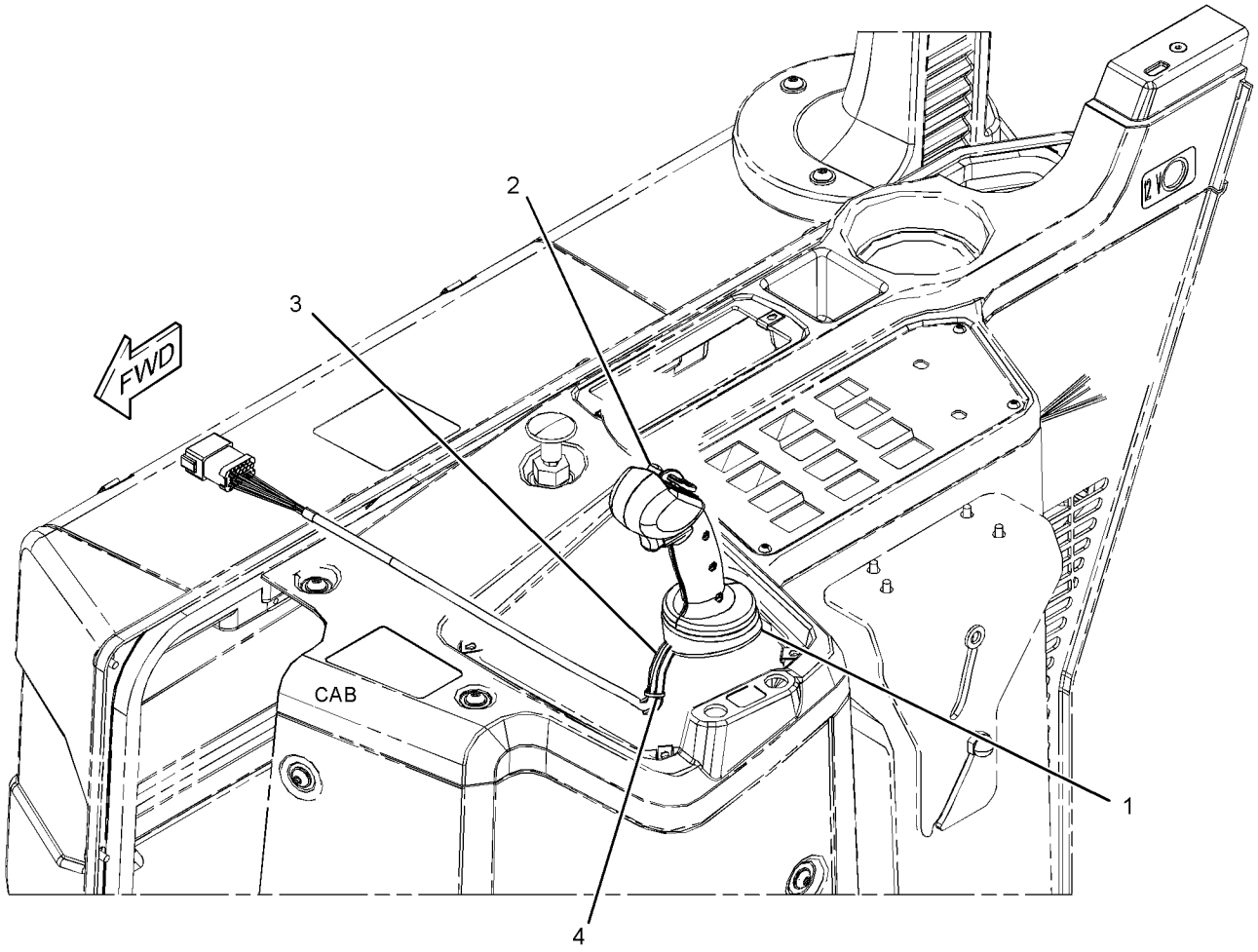

GRAPHIC #1

<END>

g03521199

391-5317 CONTROL GP-STEERING

S/N: M5K1-UP
PART OF 391-5301 CAB AR
TYPE 1

SMCS-4310, 4338, 4343 **i05434575**

NOTE	REF NO	GRAPHIC REF	PART NUMBER	QTY	PART NAME 1 2 3 4 5 6 (PRODUCT LEVEL)	SEE PAGE
	1	1	**392-5553**	1	BRACKET AS	
	2	1	**422-4086**	1	SHIFTER	
Y	3	1	*426-2594*	1	CONTROL GP-STEERING	557
M	4	1	**8T-4189**	6	BOLT (M8X1.25X20-MM)	
	5	1	**8T-4224**	6	WASHER-HARD (8.8X16X2-MM THK)	
M	6	1	**9X-6615**	2	BOLT (M5X0.8X30-MM)	

M - METRIC PART
Y - SEPARATE ILLUSTRATION

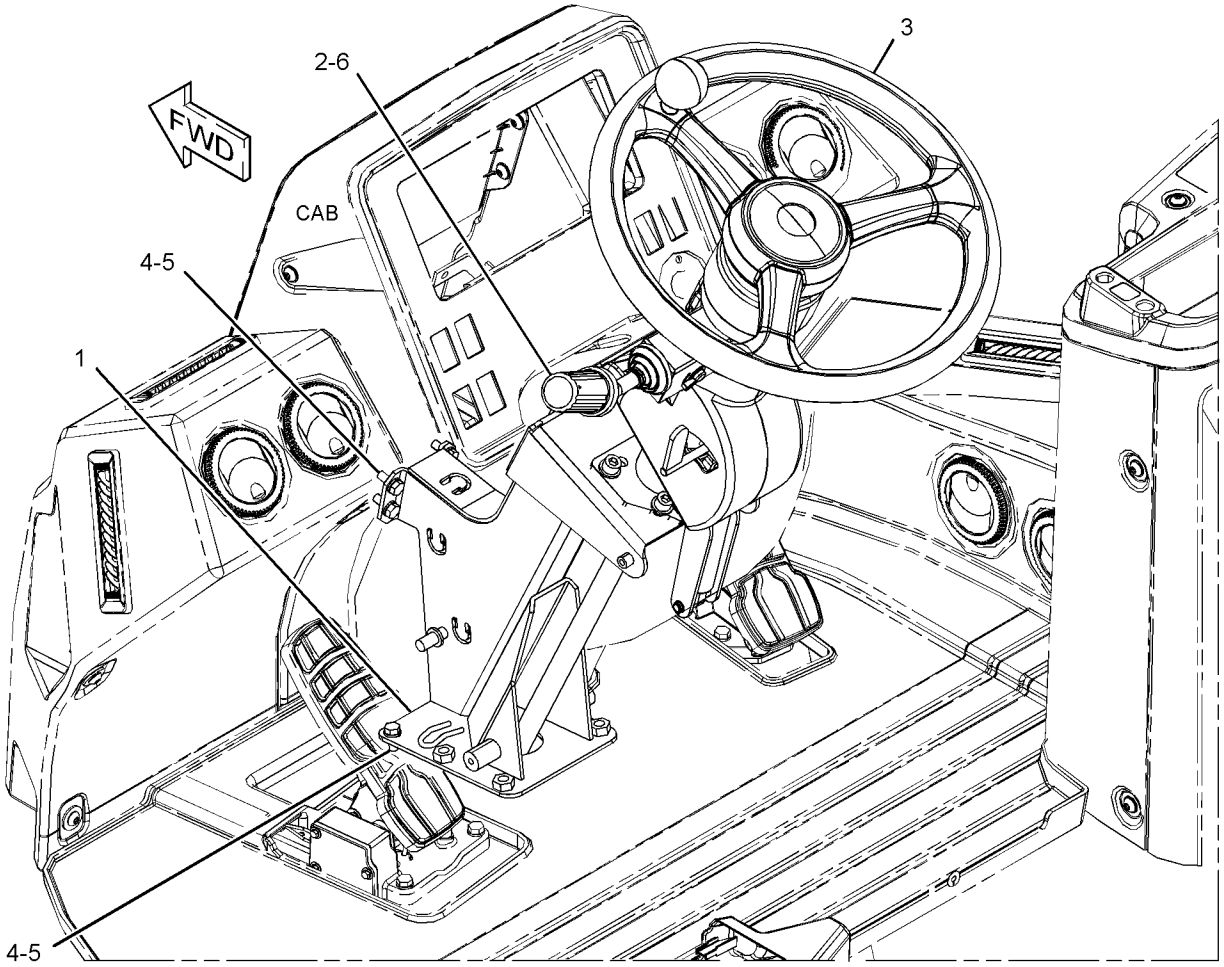

GRAPHIC #1 **<END>** g03526042

391-5317 CONTROL GP-STEERING

S/N: M5K1-UP
PART OF 391-5301 CAB AR
TYPE 2

SMCS-4310, 4338, 4343 **i06066565**

NOTE	REF NO	GRAPHIC REF	PART NUMBER	QTY	PART NAME 1 2 3 4 5 6 (PRODUCT LEVEL)	SEE PAGE
C	1	1	**448-7692**	1	BRACKET AS	
C	2	1	**447-3257**	1	CONTROL GP-TRANSMISSION (POWER SHIFT)	
		1	**8T-8729**	11	PIN-CONNECTOR (16-GA TO 18-GA)	
		1	**8T-8737**	1	PLUG-SEAL	
		1	**102-8801**	1	KIT-RECEPTACLE (12-PIN)	
					(INCLUDES RECEPTACLE AS & WEDGE)	
Y	3	1	*426-2594*	1	CONTROL GP-STEERING	557
M	4	1	**8T-4189**	6	BOLT (M8X1.25X20-MM)	
	5	1	**8T-4224**	6	WASHER-HARD (8.8X16X2-MM THK)	
M	6	1	**9X-6615**	2	BOLT (M5X0.8X30-MM)	
C	7	1	**455-9873**	1	BRACKET AS (POWER SHIFT)	
M		1	**8T-3490**	8	NUT-WELD (M10X1.5-THD)	
C	8	1	**391-5396**	1	INSULATION	
CM	9	1	**8T-4136**	4	BOLT (M10X1.5X25-MM)	
C	10	1	**8T-4121**	4	WASHER-HARD (11X21X2.5-MM THK)	

C - CHANGE FROM PREVIOUS TYPE
M - METRIC PART
Y - SEPARATE ILLUSTRATION

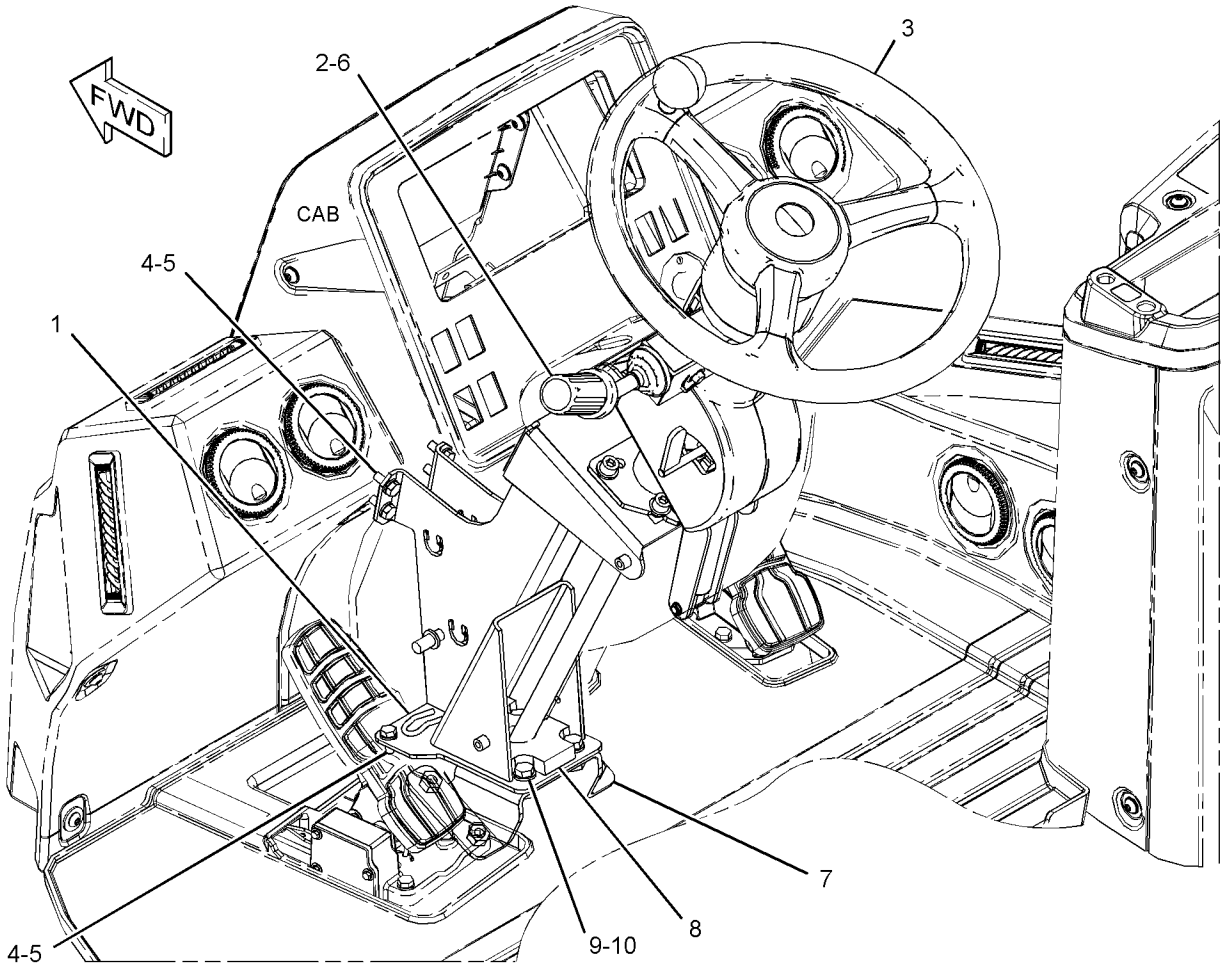

GRAPHIC #1 **<END>** g03797848

426-2594 CONTROL GP-STEERING

S/N: M5K1-UP

PART OF 391-5317 CONTROL GP-STEERING

SMCS-4310, 4338, 4343

i05434576

NOTE	REF NO	GRAPHIC REF	PART NUMBER	QTY	PART NAME 1 2 3 4 5 6 (PRODUCT LEVEL)	SEE PAGE
Y	1	1	**297-4926**	1	STEERING COLUMN GP-ADJUSTABLE	379
	2	1	**363-5911**	1	STEERING WHEEL AS	
		1	**363-6423**	1	PLUG	
	3	1	**099-7241**	1	WASHER-HARD (19X34X3-MM THK)	
	4	1	**8R-2916**	1	COVER AS (CAT STEERING WHEEL)	
	5	1	**8R-2918**	1	KNOB AS	
M		1	**8T-4244**	1	NUT (M12X1.75-THD)	
	6	1	**433-0030**	1	BRACKET	
	7	1	**361-2566**	1	COVER	
M	8	1	**174-8131**	3	SCREW-TRUSS HEAD (M4X0.7X12-MM)	
M	9	1	**134-1374**	4	BOLT-SOCKET HEAD (M5X0.8X20-MM)	
	10	1	**391-5344**	1	COVER AS (LH)	
M	11	1	**6V-5683**	4	BOLT (M6X1X16-MM)	
	12	1	**391-5343**	1	COVER AS (RH)	
	13	1	**8T-4121**	4	WASHER-HARD (11X21X2.5-MM THK)	
M	14	1	**8T-1159**	4	BOLT-SOCKET HEAD (M10X1.5X25-MM)	
	15	1	**124-0065**	1	BLOCK	

M - METRIC PART
Y - SEPARATE ILLUSTRATION

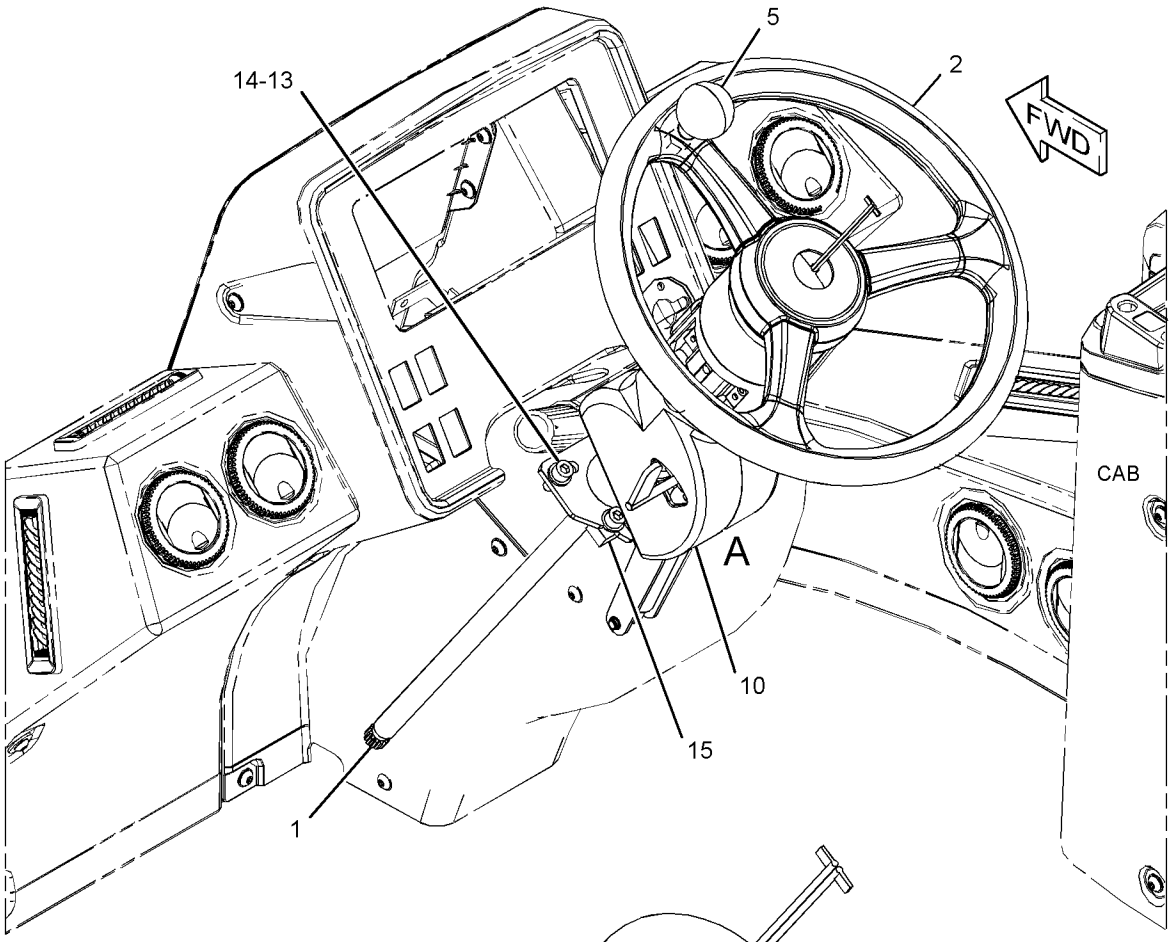

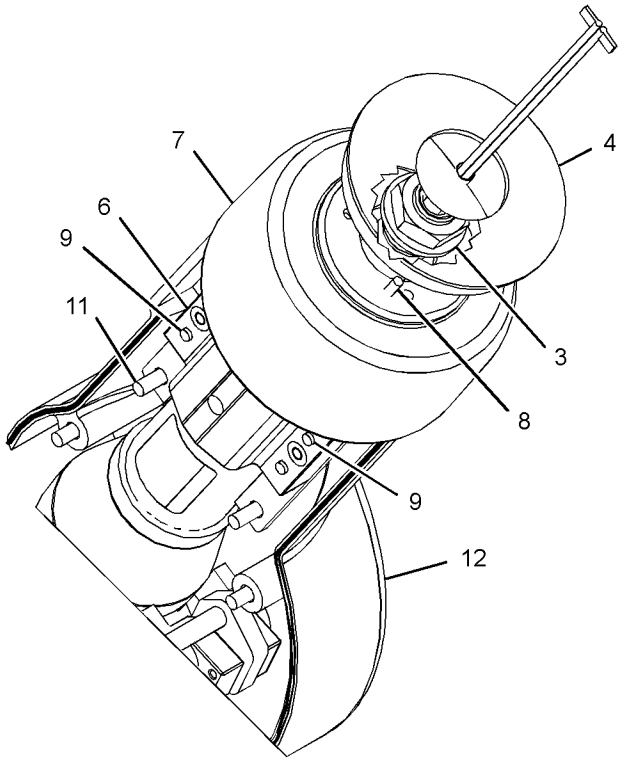

VIEW OF AREA A
(PARTS REMOVED FOR CLARITY)

GRAPHIC #1 **<END>** g03521456

391-5328 COVER GP-ACCESS–HVAC

S/N: M5K1-UP

PART OF 391-5301 CAB AR

SMCS-726A **i06066850**

NOTE	REF NO	GRAPHIC REF	PART NUMBER	QTY	PART NAME 1 2 3 4 5 6 (PRODUCT LEVEL)	SEE PAGE
	1	1	**296-6748**	1	COVER AS (HVAC) (MAIN)	
	2	1	**296-6750**	1	COVER AS (HVAC) (TOP)	
	3	1	**296-6752**	1	SEAL	
	4	1	**299-3204**	1	SEAL	
	5	1	**299-3210**	1	COVER AS	
	6	1	**352-4145**	2	KEEPER	
	7	1	**372-0686**	1	DUCT-INLET	
	8	1	**391-5345**	1	SEAL	
	9	1	**392-5579**	4	LATCH AS	
	10	1	**392-5581**	4	HINGE AS	
M	11	1	**138-8454**	24	SCREW-TRUSS HEAD (M4X0.7X10-MM)	
	12	1	**2G-8096**	1	MOUNTING	
	13	1	**368-0571**	2	SCREW-MACHINE (M4X0.7X16-MM)	
M	14	1	**5P-7848**	2	NUT (M4X0.7-THD)	
	15	1	**6P-5560**	2	GROMMET	
	16	1	**9X-2038**	16	WASHER (7X19X2-MM THK)	
M	17	1	**9X-2043**	13	SCREW-TRUSS HEAD (M6X1X14-MM)	
M	18	1	**9X-2046**	3	SCREW-TRUSS HEAD (M6X1X35-MM)	
E	19	1	**3E-6602**		SEAL (180-CM)	
E	19A	1	**3E-6602**		SEAL (46-CM)	
E	19B	1	**3E-6602**		SEAL (14-CM)	
E	20	1	**3E-3805**		SEAL (118-CM EACH)	

E - ORDER BY THE CENTIMETER
M - METRIC PART

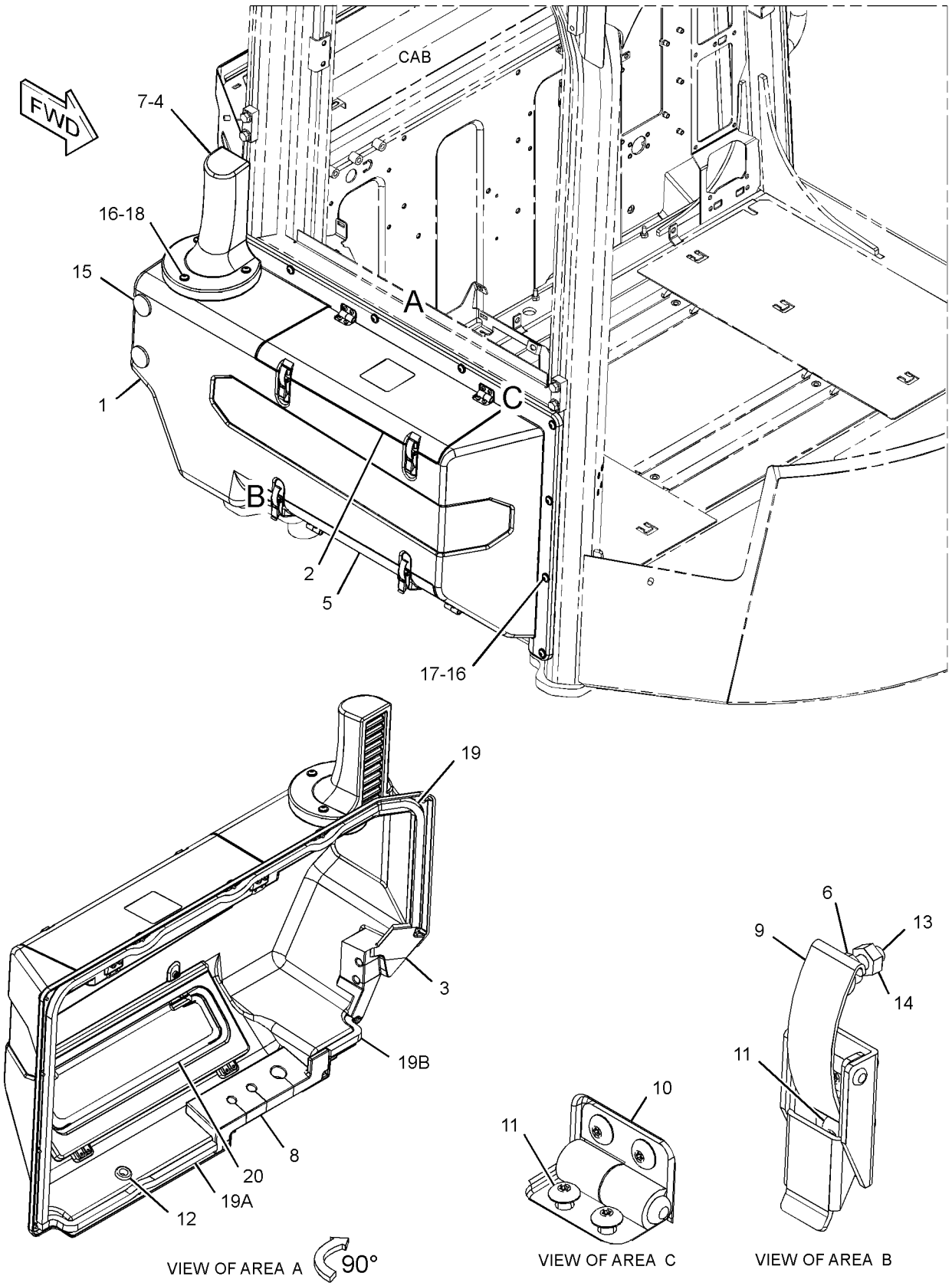

GRAPHIC #1

<END>

g03530043

OPERATOR STATION

352-7475 COVER GP-CAB

S/N: M5K1-UP

PART OF 391-5301 CAB AR

SMCS-7301 **i05434341**

NOTE	REF NO	GRAPHIC REF	PART NUMBER	QTY	PART NAME 1 2 3 4 5 6 (PRODUCT LEVEL)	SEE PAGE
	1	1	**352-6099**	1	COVER	
M	2	1	**9X-2043**	4	SCREW-TRUSS HEAD (M6X1X14-MM)	

M - METRIC PART

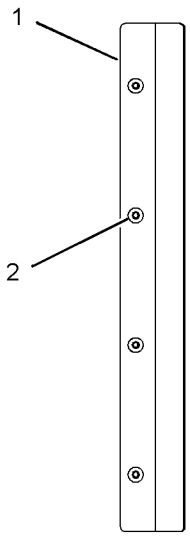

VIEW OF AREA A

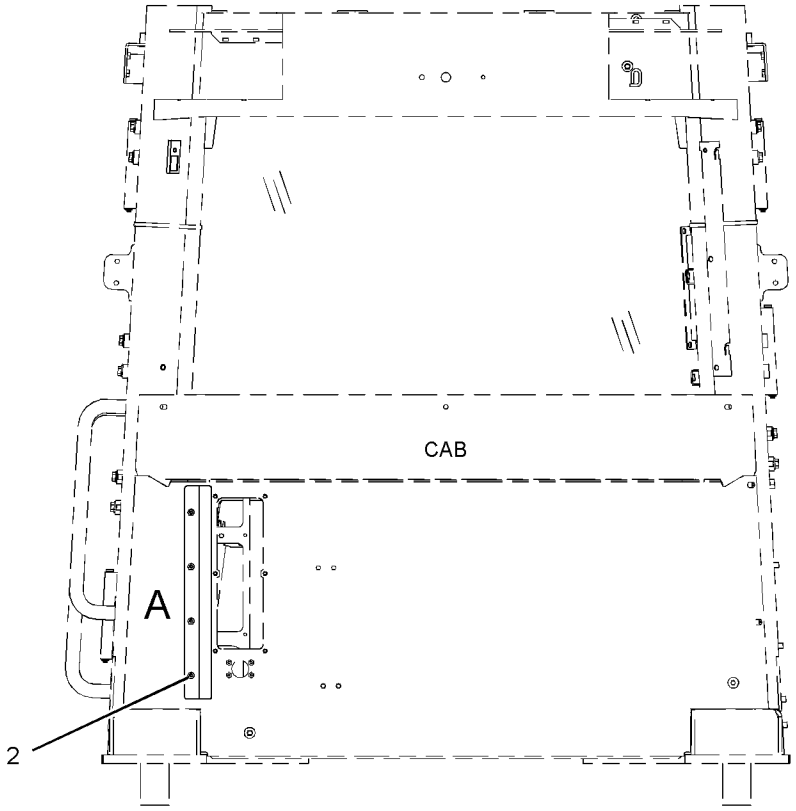

REAR VIEW

GRAPHIC #1

<END>

g02353061

391-5327 DOOR GP-CAB

S/N: M5K1-UP

PART OF 391-5303 CAB GP-ENCLOSED ROPS

SMCS-7308 **i05434443**

NOTE	REF NO	GRAPHIC REF	PART NUMBER	QTY	PART NAME 1 2 3 4 5 6 (PRODUCT LEVEL)	SEE PAGE
	1	1	**6V-7636**	1	PIN AS-SPRING	
	2	1	**085-7329**	2	SPACER (9X19X30-MM THK)	
	3	1	**108-5471**	1	CLEVIS	
	4	1	**110-8152**	1	HANDLE AS-PULL	
	5	1	**178-5572**	2	SPACER-SPECIAL (WINDOW)	
	6	1	**195-3699**	1	NUT (M8X1.25-THD)	
	7	1	**214-9186**	12	BUTTON	
	8	1	**242-5206**	3	SPACER (6.4X12.5X0.76-MM THK)	
J	9	1	**252-1862**	1	HANDLE AS (PULL)	
	10	1	**252-1863**	1	GASKET	
	11	1	**269-2890**	1	CLEVIS	
	12	1	**269-2892**	1	PIN	
	13	1	**285-3692**	1	SPACER-SPECIAL	
	14	1	**302-6392**	1	PLUG	
M	15	1	**322-0819**	6	INSERT-THREADED (M10X1.5-THD)	
	16	1	**346-3811**	1	NUT-SQUARE	
	17	1	**366-4535**	1	DOOR AS-CAB (LH)	
		1	**5P-0537**	2	WASHER-HARD (7.2X14.5X2-MM THK)	
M		1	**184-0982**	2	SCREW-PAN HEAD (M6X1X16-MM)	
	18	1	**371-6088**	1	GLASS	
	19	1	**371-9511**	2	HINGE AS	
					(EACH INCLUDES)	
		1	**372-5042**	2	BUSHING	
	20	1	**371-9520**	1	TUBE AS	
	21	1	**379-2111**	2	PLATE AS	
M		1	**8T-4133**	2	NUT (M10X1.5-THD)	
	22	1	**383-3563**	1	BELLCRANK AS	
Y	23	1	**392-3980**	1	WINDOW GP-DOOR (LH)	601
	24	1	**392-5582**	1	SPRING-GAS (DOOR)	
	25	1	**392-6310**	1	PLATE AS	
	26	1	**418-0207**	1	ROD	
	27	1	**418-0210**	1	BUSHING	
	28	1	**422-1675**	2	KNOB	
	29	1	**423-2603**	1	LATCH AS	
	30	1	*426-5412*	1	SEAL AS	
		1	**426-2831**	1	SEAL-DOOR	
		1	**426-5409**	48	PIN	
	31	1	**436-1542**	4	PLUG-BUTTON	
	32	1	**439-0688**	1	STRIKER AS	
	33	1	**031-0249**	1	LOCKNUT (10-24-THD)	
M	34	1	**105-3486**	2	BOLT-SOCKET HEAD (M6X1X50-MM)	
	35	1	**117-8929**	1	WASHER (6.6X22X2-MM THK)	
M	36	1	**127-2170**	10	SCREW-TRUSS HEAD (M8X1.25X20-MM)	
M	37	1	**137-2255**	1	BOLT (M8X1.25X8-MM)	
M	38	1	**195-0936**	5	INSERT-THREADED (M6X1-THD)	
	39	1	**3E-4353**	4	WASHER-HARD (11X25X3-MM THK)	
M	40	1	**5C-9553**	1	BOLT (M6X1X16-MM)	
	41	1	**5P-4116**	11	WASHER-HARD (8.8X20.5X2-MM THK)	
	42	1	**6V-5839**	2	WASHER (11X21X2.5-MM THK)	
	43	1	**7M-9910**	1	SCREW-MACHINE (10-24X1-IN)	
M	44	1	**8T-3991**	4	SCREW-BUTTON HEAD (M6X1X20-MM)	
M	45	1	**8T-4138**	2	BOLT (M6X1X20-MM)	
	46	1	**8T-6902**	2	CLIP	
M	47	1	**9X-2039**	8	SCREW-TRUSS HEAD (M10X1.5X35-MM)	
M	48	1	**9X-2040**	2	SCREW-TRUSS HEAD (M10X1.5X25-MM)	
M	49	1	**9X-2041**	2	SCREW-TRUSS HEAD (M10X1.5X20-MM)	
	50	1	**9X-8256**	2	WASHER (6.6X12X2-MM THK)	

391-5327 **DOOR GP-CAB (*contd.*)** **i05434443**

NOTE	REF NO	GRAPHIC REF	PART NUMBER	QTY	PART NAME 1 2 3 4 5 6 (PRODUCT LEVEL)	SEE PAGE

J - REQUIRES CORPORATE KEY
M - METRIC PART
Y - SEPARATE ILLUSTRATION

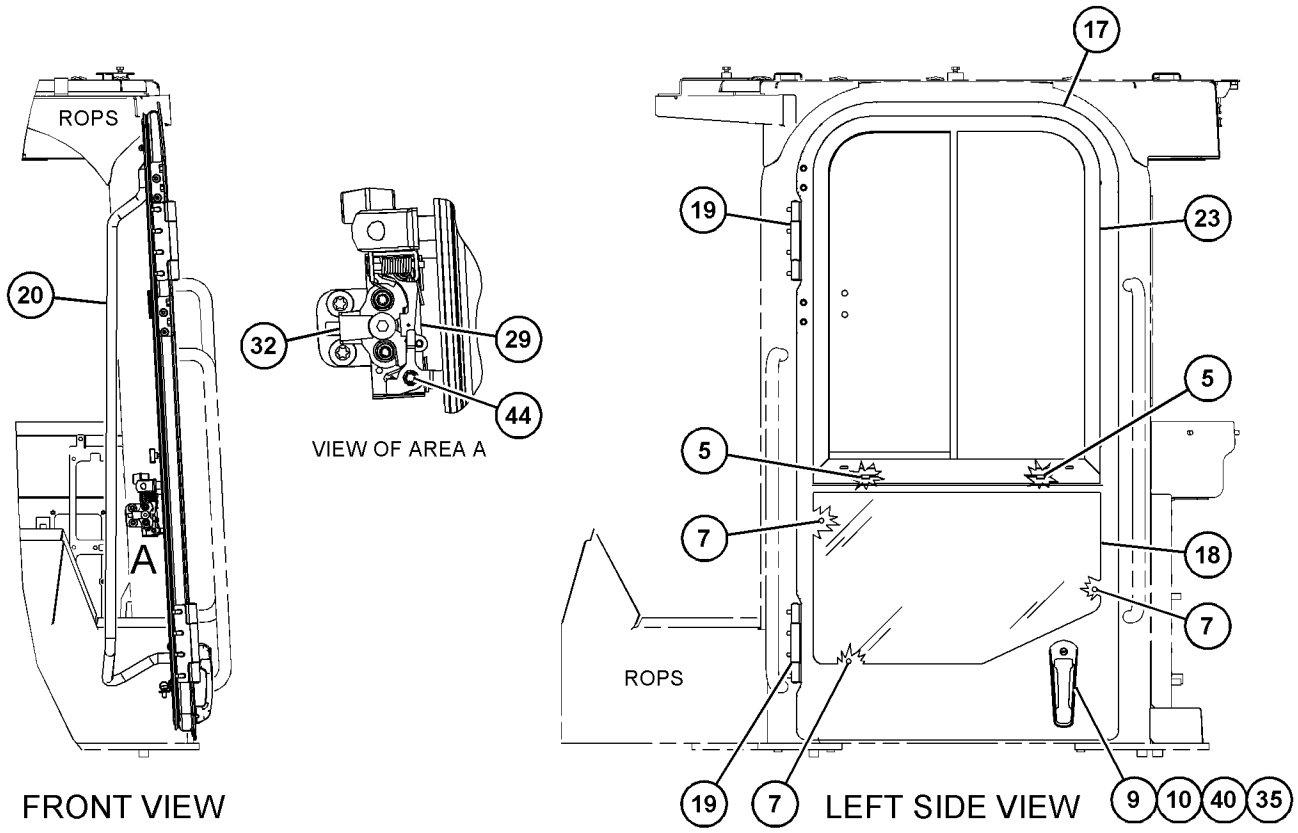

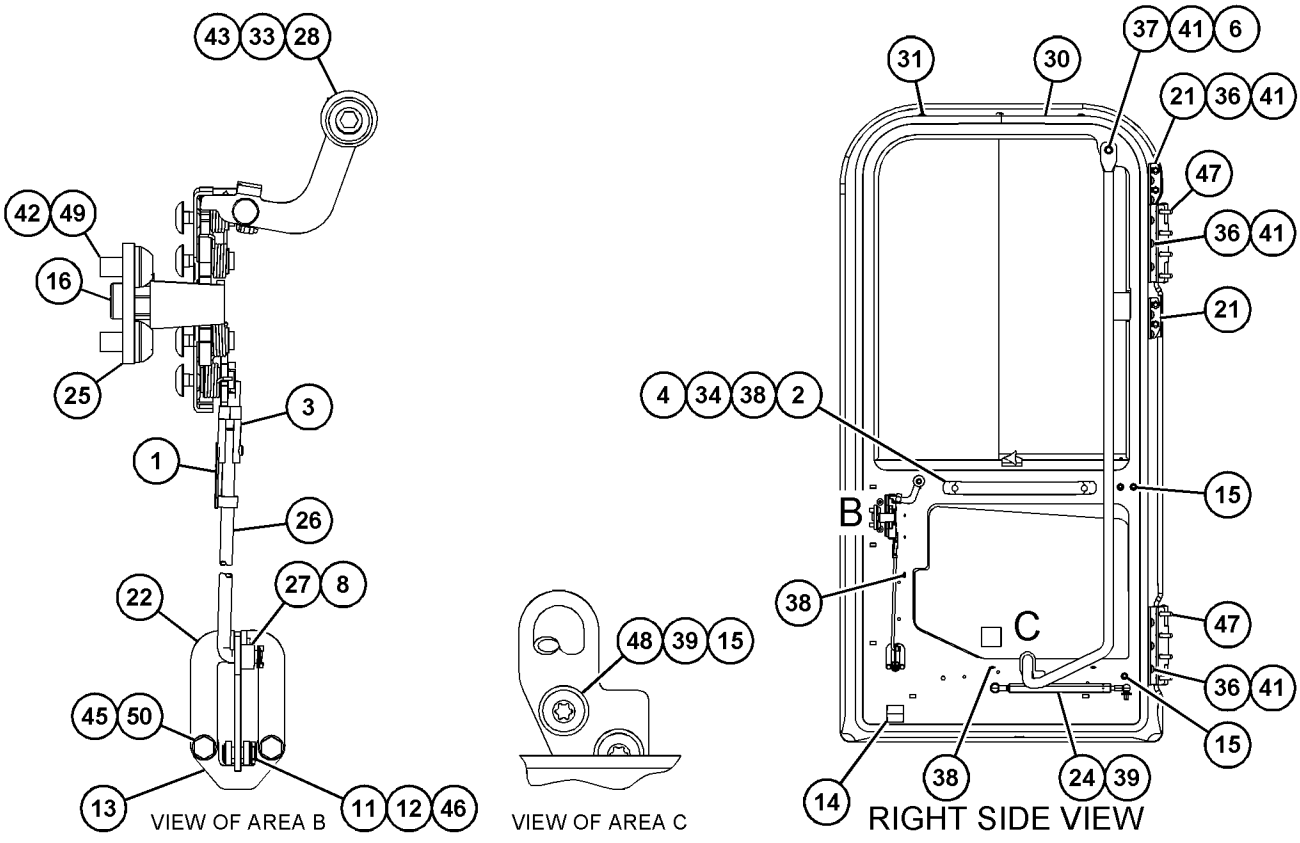

GRAPHIC #1

<END>

g03530250

391-5314 DUCT GP-CAB AIR

S/N: M5K1-UP

PART OF 391-5301 CAB AR

SMCS-734D **i05834453**

NOTE	REF NO	GRAPHIC REF	PART NUMBER	QTY	PART NAME 1 2 3 4 5 6 (PRODUCT LEVEL)	SEE PAGE
M	1	2	**172-8591**	5	NUT-SPRING (M6X1-THD)	
	2	2	**391-5320**	1	BRACKET	
	3	1	**391-5334**	1	DUCT AS (RH)	
	4	1	**391-5335**	1	DUCT AS (RH)	
	5	1	**391-5336**	1	DUCT AS (LH)	
	6	1	**391-5337**	1	DUCT AS (LH)	
	7	2	**396-2352**	6	LOUVER AS	
	8	2	**424-4574**	4	LOUVER AS	
M	9	2	**111-4627**	2	SCREW-MACHINE (M6X1X30-MM)	
	10	2	**148-3626**	8	SCREW-FLAT HEAD (6-20X0.75-IN)	
	11	2	**9N-0869**	14	WASHER-HARD (8.8X25.5X2-MM THK)	
M	12	2	**9X-2043**	5	SCREW-TRUSS HEAD (M6X1X14-MM)	
M	13	2	**9X-2045**	1	SCREW-TRUSS HEAD (M6X1X20-MM)	
M	14	2	**9X-2046**	6	SCREW-TRUSS HEAD (M6X1X35-MM)	
E	15	2	**8T-9005**		SEAL (51-CM)	
D	16	1	**5P-5637**		SEAL (1.1-M)	

D - ORDER BY THE METER
E - ORDER BY THE CENTIMETER
M - METRIC PART

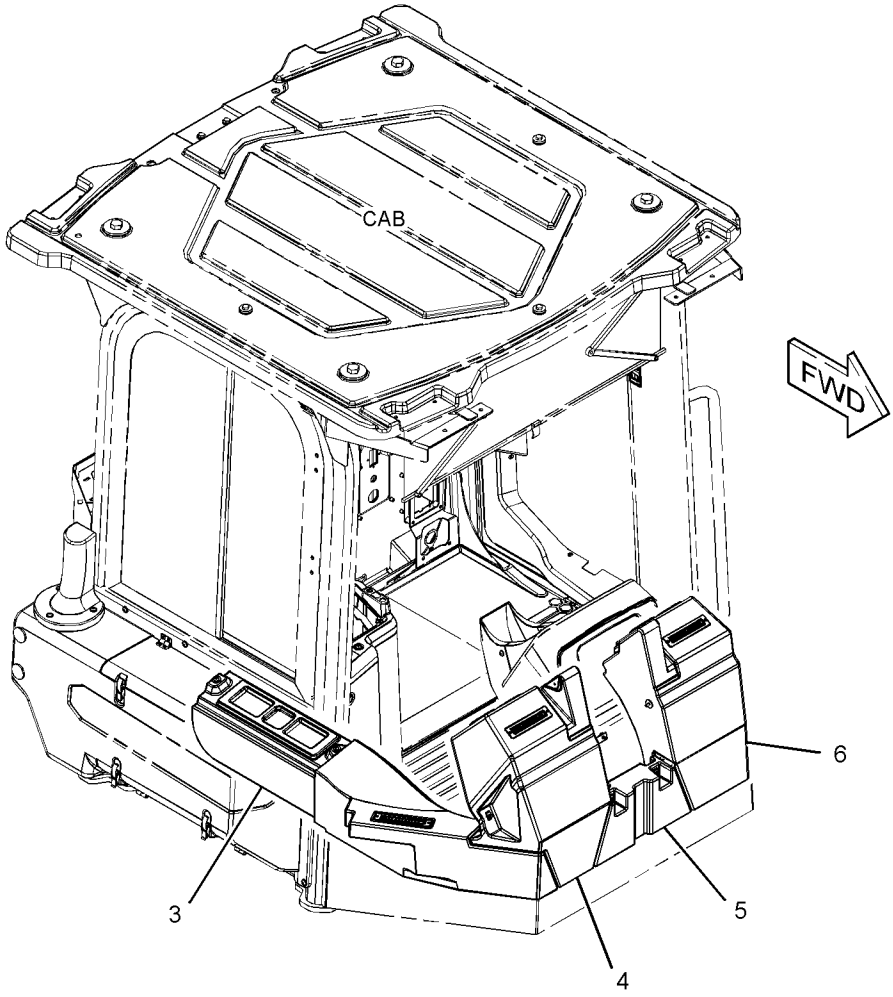

GRAPHIC #1 g03694070

391-5314 **DUCT GP-CAB AIR (*contd.*)** **i05834453**

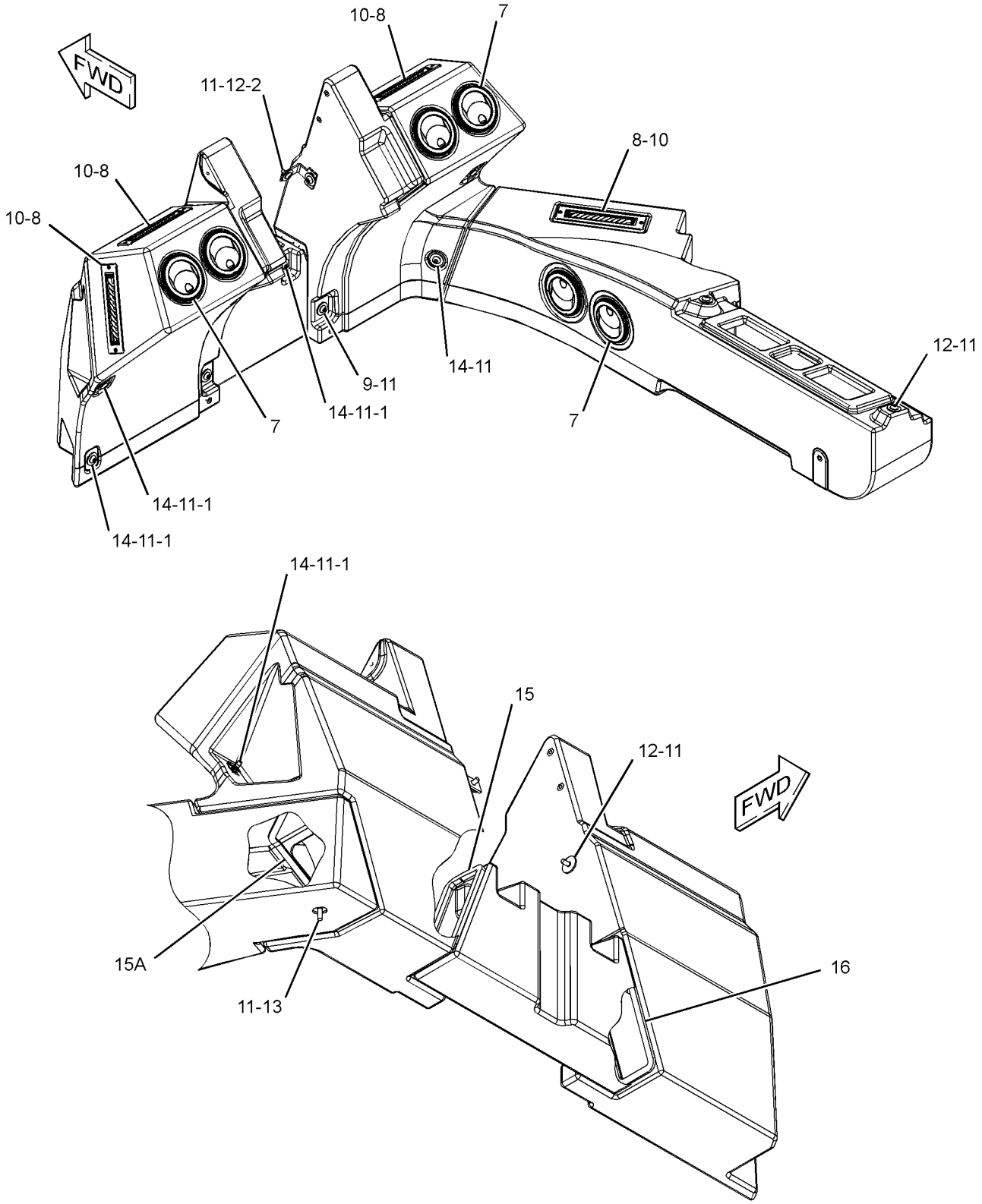

GRAPHIC #2 **<END>** g03694071

391-5302 INSTALLATION GP-CAB

S/N: M5K1-UP

PART OF 391-5300 OPERATOR AR

SMCS-1265, 4284, 7301 **i05434334**

NOTE	REF NO	GRAPHIC REF	PART NUMBER	QTY	PART NAME 1 2 3 4 5 6 (PRODUCT LEVEL)	SEE PAGE
Y	1	1	*387-6030*	1	MOUNTING GP-CAB	573
Y	2	1	*387-6031*	1	WASHER GP-WINDOW	598
Y	3	1	*392-3978*	1	MIRROR GP-REAR VIEW	572
Y	4	1	*424-2859*	1	COMPRESSOR & MTG GP-REFRIG	544

Y - SEPARATE ILLUSTRATION

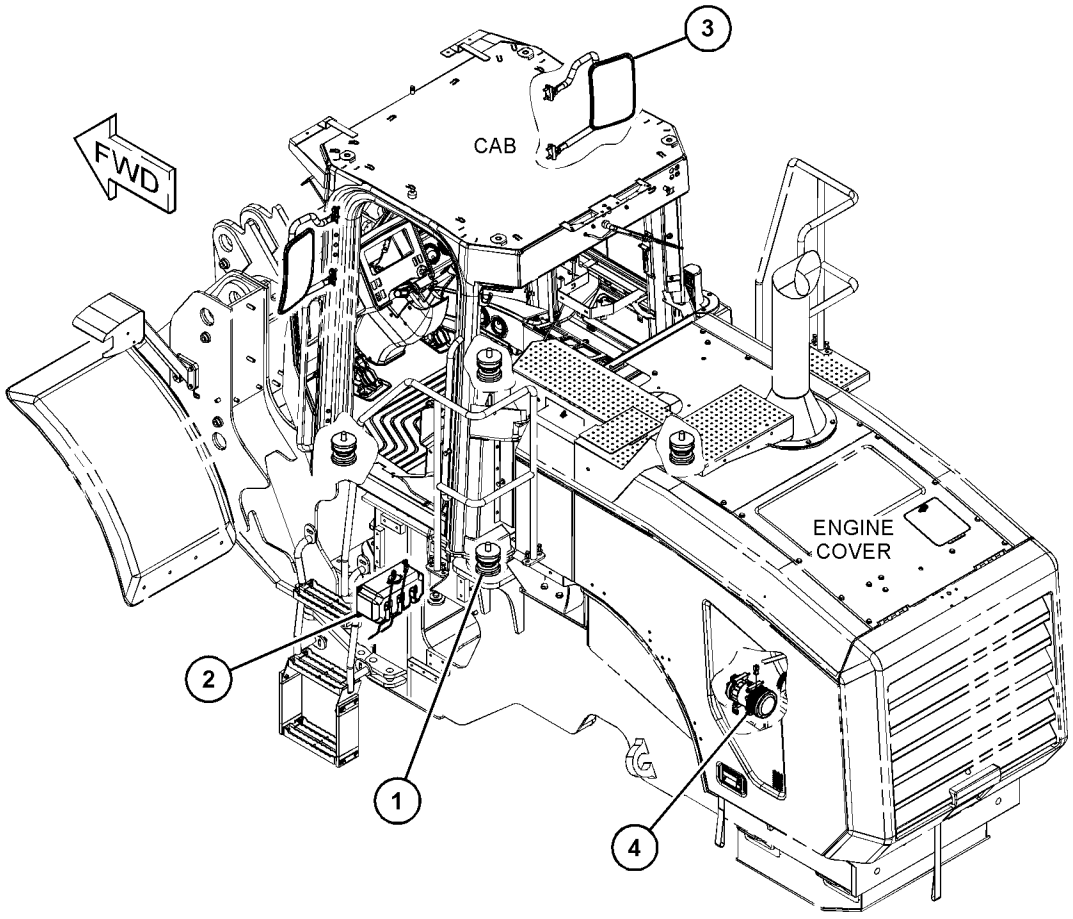

GRAPHIC #1 **<END>** g03529781

415-4206 INSTALLATION GP-RADIO

S/N: M5K1-UP

AN ATTACHMENT

SMCS-7338 **i05412671**

NOTE	REF NO	GRAPHIC REF	PART NUMBER	QTY	PART NAME 1 2 3 4 5 6 (PRODUCT LEVEL)	SEE PAGE
	1	1	**7K-1181**	7	STRAP-CABLE	
	2	1	**9U-2331**	1	ANTENNA AS (COMMUNICATION RADIO)	
	3	1	**9U-4431**	1	MOUNT-ANTENNA	
	4	1	**124-4884**	1	CABLE AS	
	5	1	**154-8079**	8	NUT-RETAINER (U-TYPE)	
	6	1	**168-8772**	2	SPEAKER AS-RADIO	
Y	7	1	*241-4941*	1	RADIO GP (AM/FM/WB)	580
	8	1	**2D-2751**	1	GROMMET	
M	9	1	**7Y-3173**	8	SCREW-BUTTON HEAD (M4X0.7X12-MM)	
	10	1	**8T-0328**	8	WASHER-HARD (5.5X10X1-MM THK)	

M - METRIC PART
Y - SEPARATE ILLUSTRATION

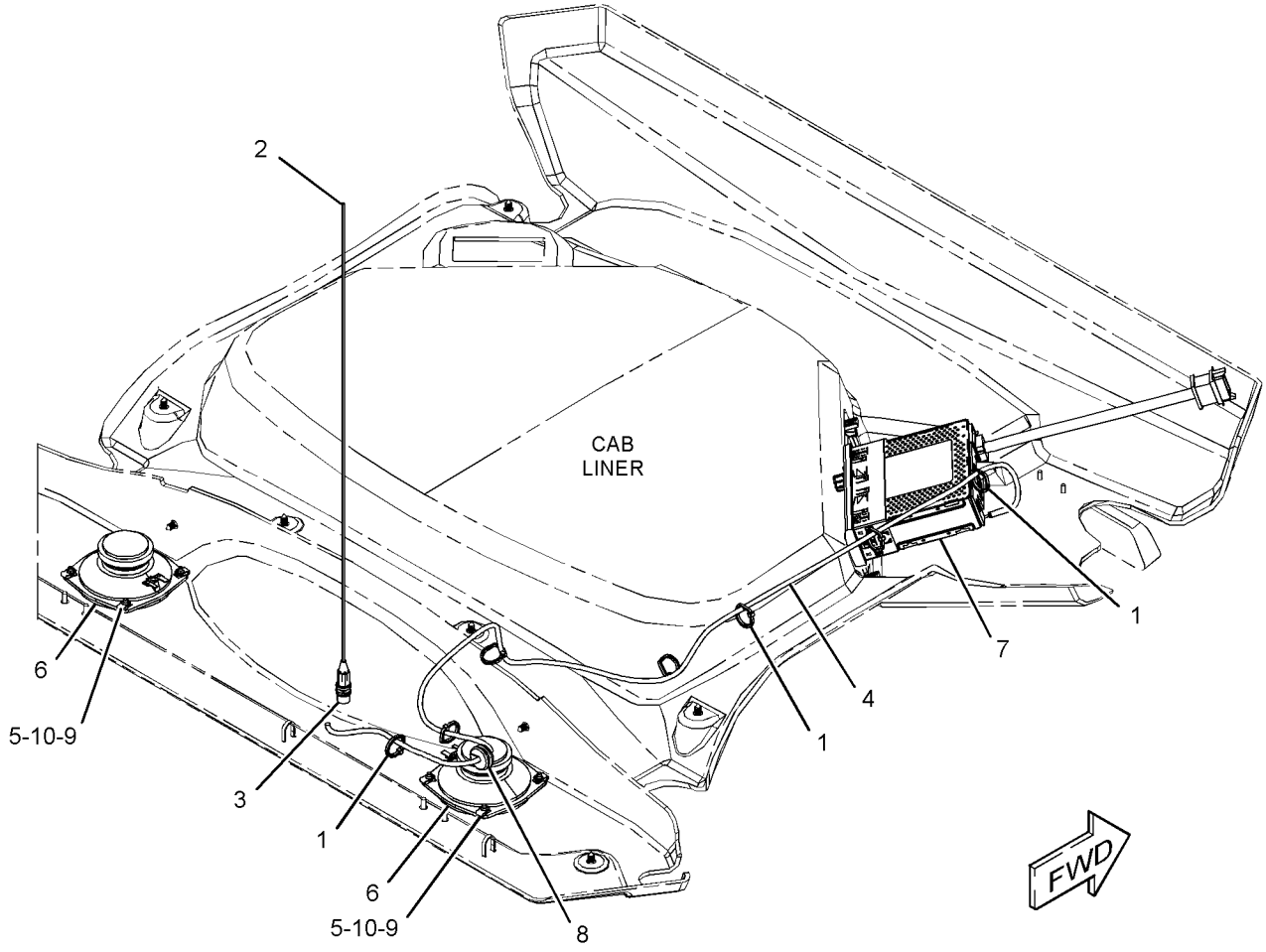

GRAPHIC #1 **<END>** g03547743

424-2855 LINES GP-AIR CONDITIONER

S/N: M5K1-UP

PART OF 387-6001 CHASSIS AR

SMCS-1808 **i05838676**

NOTE	REF NO	GRAPHIC REF	PART NUMBER	QTY	PART NAME 1 2 3 4 5 6 (PRODUCT LEVEL)	SEE PAGE
	1	1	**1P-6356**	1	PLATE	
	2	1	**424-2860**	1	BRACKET	
I	3	1	**424-2861**	1	HOSE AS	
I	4	1	**424-2862**	1	HOSE AS	
I	5	1	**424-2866**	1	HOSE AS	
	6	1	**431-3864**	1	BRACKET AS	
	7	1	**449-4074**	1	BRACKET	
	8	1	**125-2796**	1	FITTING AS-AIR CONDITIONER (LOW SIDE)	
		1	**3E-4051**	1	CAP-SEAL (LOW SIDE CHARGE PORT)	
		1	**3E-4057**	1	VALVE AS (REFRIGERANT, LOW SIDE)	
	9	1	**177-2215**	1	STRAP-DUAL CLAMP	
	10	1	**3E-4066**	1	FITTING AS-AIR CONDITIONER (HIGH SIDE)	
		1	**3E-4052**	1	CAP-SEAL (HIGH SIDE CHARGE PORT)	
		1	**3E-4058**	1	VALVE AS (REFRIGERANT, HIGH SIDE)	
	11	1	**422-8423**	1	SCREW-TRUSS HEAD (M5X0.8X25-MM)	
	12	1	**8M-2773**	3	CLIP	
	13	1	**8T-2561**	1	WASHER-HARD (10.5X28.5X5-MM THK)	
	14	1	**8T-4121**	10	WASHER-HARD (11X21X2.5-MM THK)	
M	15	1	**8T-4133**	2	NUT (M10X1.5-THD)	
M	16	1	**8T-4137**	5	BOLT (M10X1.5X20-MM)	
M	17	1	**8T-4195**	3	BOLT (M10X1.5X30-MM)	
M	18	1	**8T-6466**	1	BOLT (M10X1.5X60-MM)	
	19	1	**9M-8406**	8	CLIP	
	20	1	**9X-7380**	2	SEAL-O-RING	
	21	1	**9X-7381**	2	SEAL-O-RING	
	22	1	**9X-7382**	2	SEAL-O-RING	
	23	1	**9X-7385**	2	SEAL-O-RING	
	24	1	**9X-8250**	5	CLIP	

I - REFER TO HYDRAULIC INFORMATION SYSTEM
M - METRIC PART

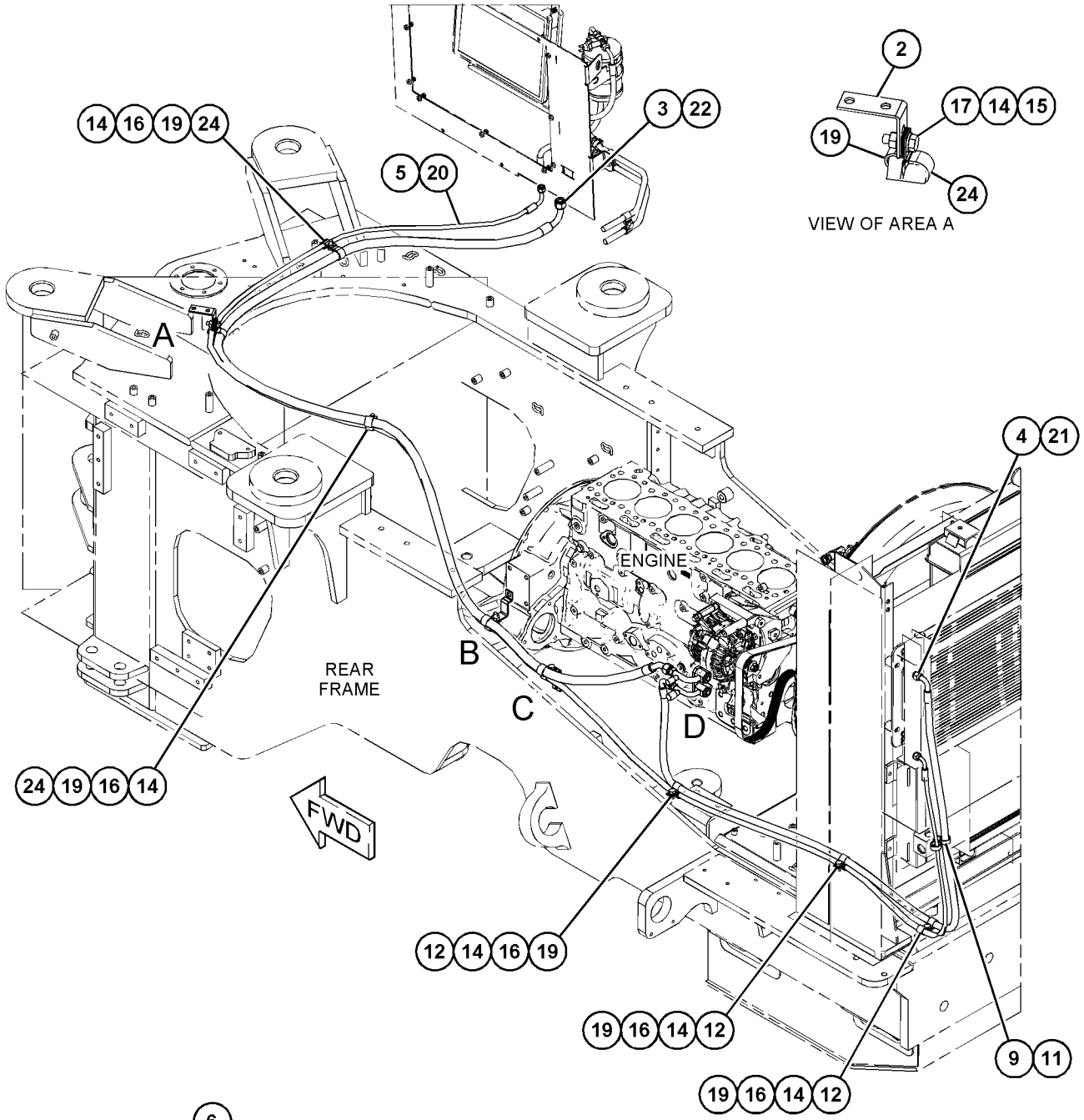

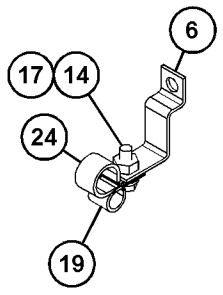

VIEW OF AREA B

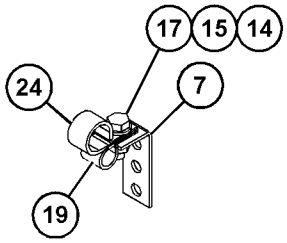

VIEW OF AREA C

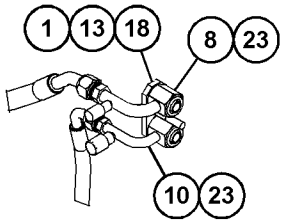

VIEW OF AREA D

GRAPHIC #1

<END>

g03695418

424-2857 LINES GP-HEATER

S/N: M5K1-UP

PART OF 387-6001 CHASSIS AR

SMCS-1380, 1812, 7304 **i05838677**

NOTE	REF NO	GRAPHIC REF	PART NUMBER	QTY	PART NAME 1 2 3 4 5 6 (PRODUCT LEVEL)	SEE PAGE
	1	1	**172-4702**	4	CLAMP	
	2	1	**424-2860**	2	BRACKET	
	3	1	**3E-4321**	2	CLIP	
	4	1	**8T-4121**	8	WASHER-HARD (11X21X2.5-MM THK)	
M	5	1	**8T-4133**	3	NUT (M10X1.5-THD)	
M	6	1	**8T-4137**	2	BOLT (M10X1.5X20-MM)	
E	7	1	**5P-0767**		HOSE (303.3-CM)	
E	7A	1	**5P-0767**		HOSE (278.2-CM)	
	8	1	**449-4074**	1	BRACKET	
	9	1	**9X-8250**	6	CLIP	
M	10	1	**8T-4195**	3	BOLT (M10X1.5X30-MM)	

E - ORDER BY THE CENTIMETER
M - METRIC PART

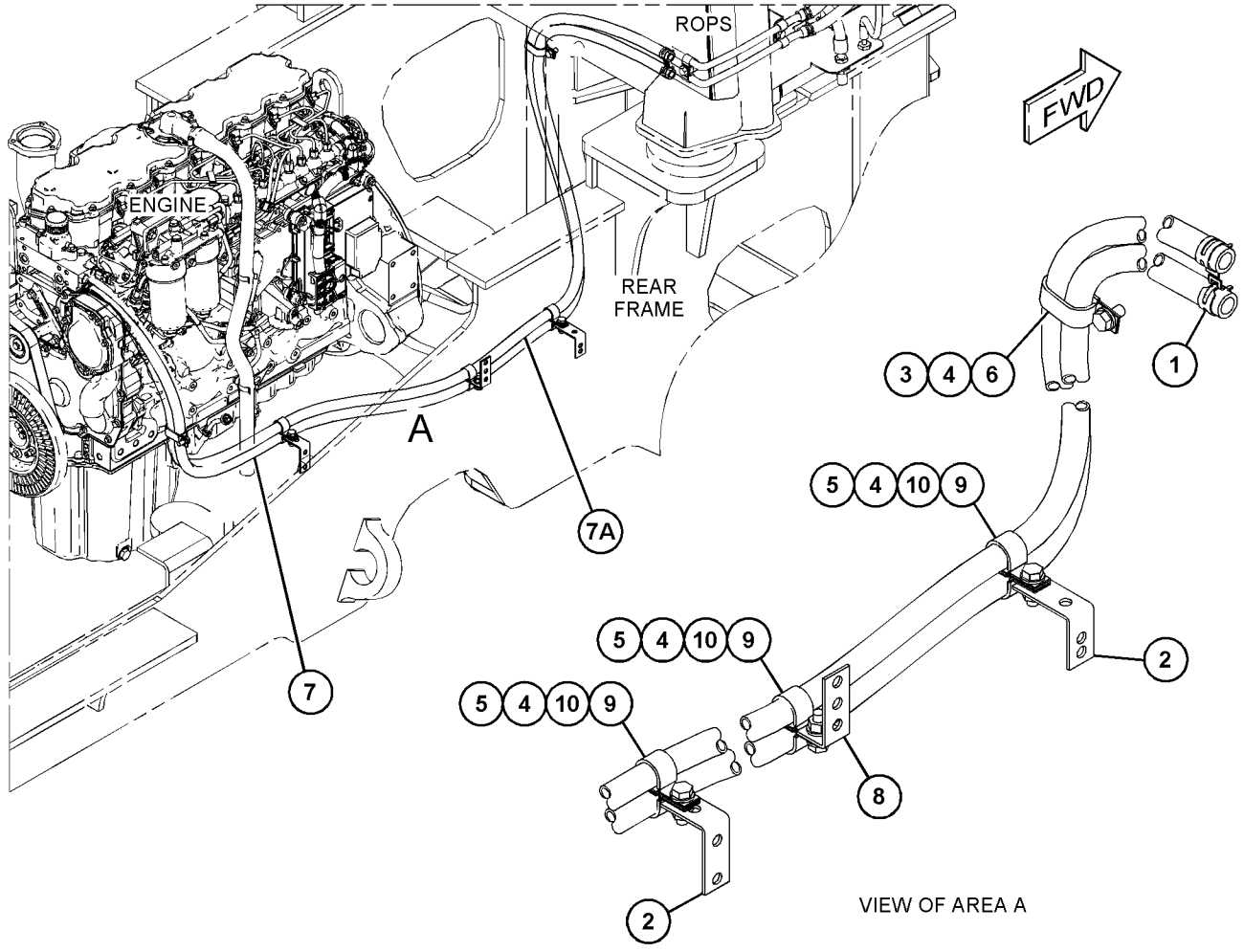

GRAPHIC #1 **<END>** g03693350

392-3978 MIRROR GP-REAR VIEW

S/N: M5K1-UP

PART OF 432-7392, 432-7393 CONVERSION AR-BRAKE CONTROL, 391-5302 INSTALLATION GP-CAB

ALSO AN ATTACHMENT

SMCS-7319 **i05899170**

NOTE	REF NO	GRAPHIC REF	PART NUMBER	QTY	PART NAME 1 2 3 4 5 6 (PRODUCT LEVEL)	SEE PAGE
	1	1	**392-3979**	4	BRACKET	
	2	1	**392-3982**	2	BRACKET	
	3	1	**463-4837**	2	MIRROR	
M	4	1	**8T-4195**	12	BOLT (M10X1.5X30-MM)	
	5	1	**8T-4121**	16	WASHER-HARD (11X21X2.5-MM THK)	
M	6	1	**8T-4133**	4	NUT (M10X1.5-THD)	

M - METRIC PART

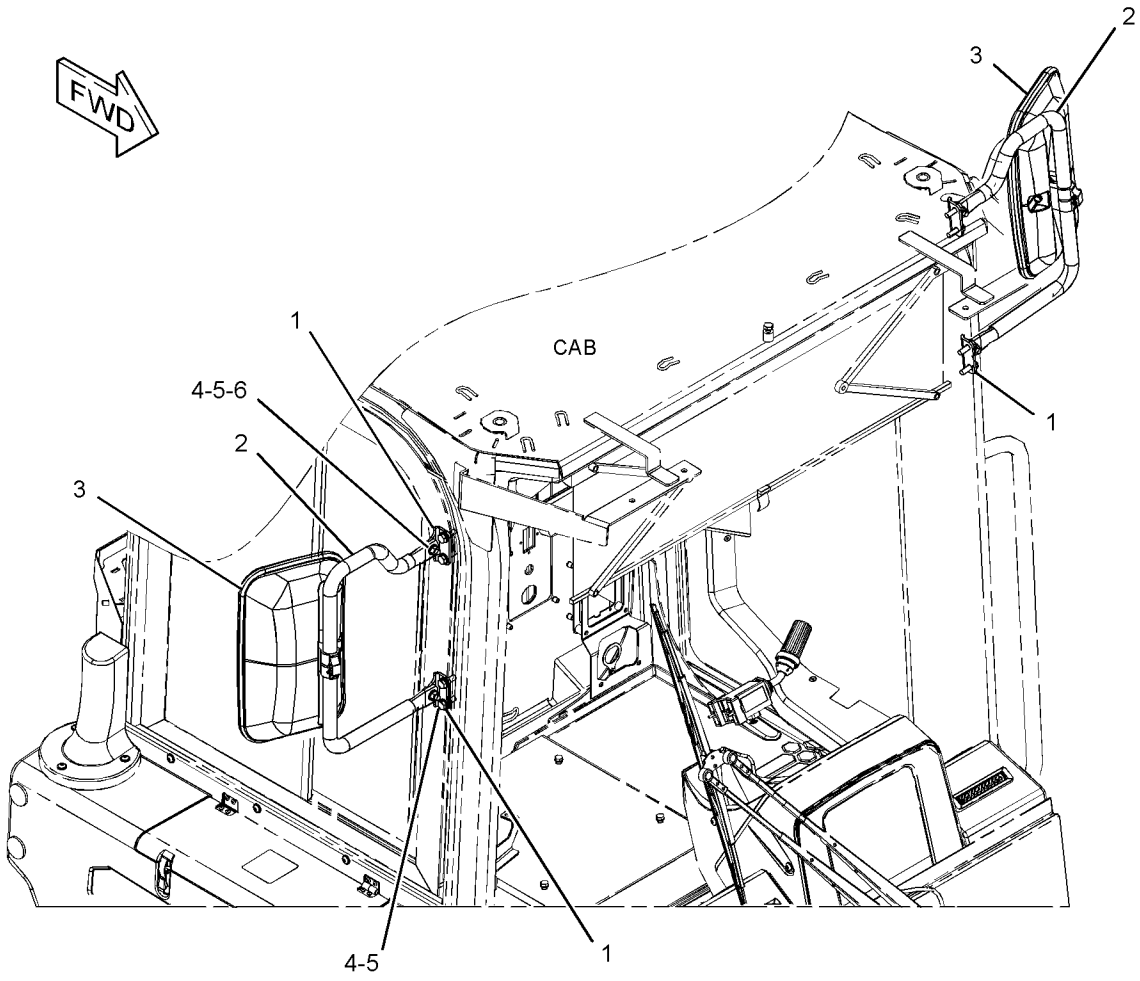

GRAPHIC #1 **<END>** g03748366

387-6030 MOUNTING GP-CAB

S/N: M5K1-UP

PART OF 391-5302 INSTALLATION GP-CAB

SMCS-7301 **i06064685**

NOTE	REF NO	GRAPHIC REF	PART NUMBER	QTY	PART NAME 1 2 3 4 5 6 (PRODUCT LEVEL)	SEE PAGE
	1	1	**6Y-9930**	4	MOUNT AS (CAB)	
	2	1	**434-6687**	8	WASHER (26X114X12-MM THK)	
	3	1	**434-6688**	4	SLEEVE	
M	4	1	**8C-3290**	4	BOLT (M24X3X150-MM)	
	5	1	**8T-4167**	4	WASHER-HARD (26X44X4-MM THK)	

M - METRIC PART

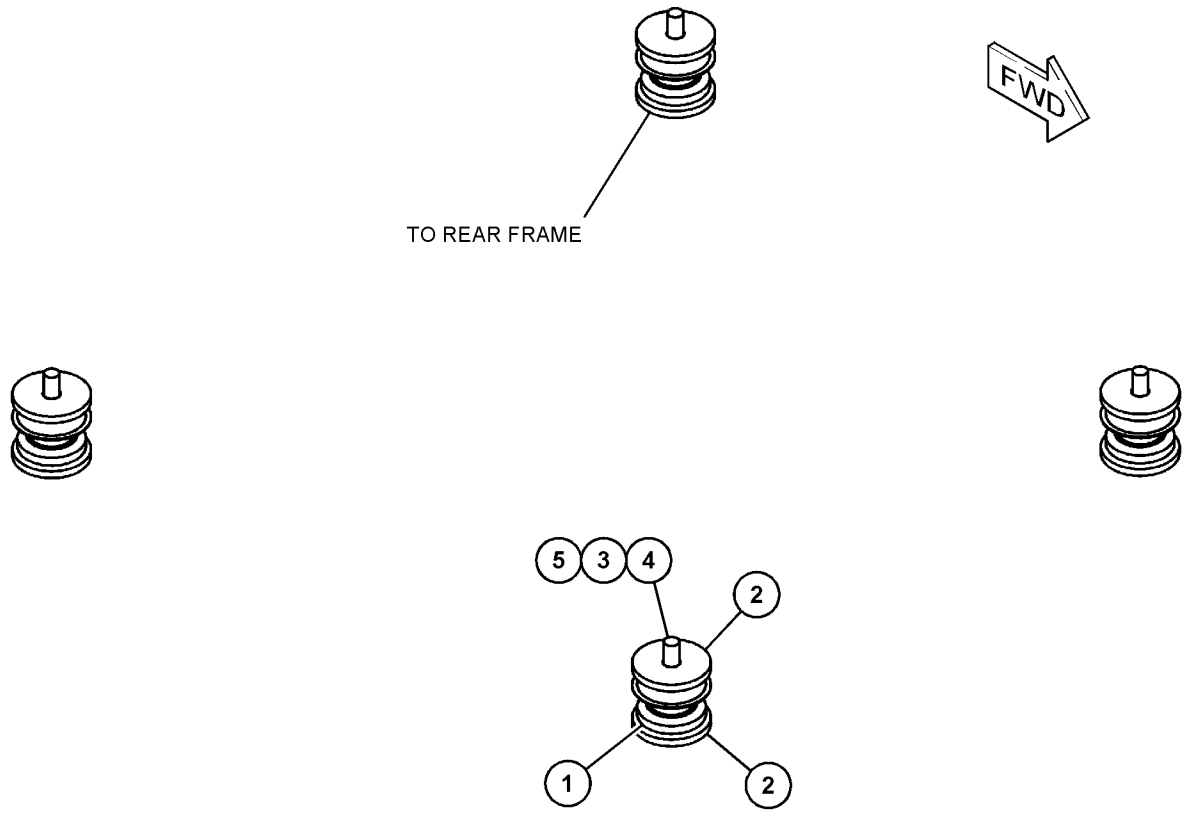

GRAPHIC #1 **<END>** g03530196

OPERATOR STATION

391-5300 OPERATOR AR

S/N: M5K1-UP

PART OF 387-6000 COMMON AR

SMCS-7301 **i05434329**

NOTE	PART NUMBER	QTY	PART NAME 1 2 3 4 5 6 (PRODUCT LEVEL)	SEE PAGE
Y	*391-5301*	1	CAB AR	535
Y	*391-5302*	1	INSTALLATION GP-CAB	567

Y - SEPARATE ILLUSTRATION

<END>

OPERATOR STATION

391-5312 PANEL GP-CAB

S/N: M5K1-UP

PART OF 391-5301 CAB AR

SMCS-7301 **i05434479**

NOTE	REF NO	GRAPHIC REF	PART NUMBER	QTY	PART NAME 1 2 3 4 5 6 (PRODUCT LEVEL)	SEE PAGE
M	1	1	**172-8591**	4	NUT-SPRING (M6X1-THD)	
	2	1	**391-5339**	1	DASH	
	3	1	**391-5340**	1	COVER-DASH	
	4	1	**391-5341**	1	COVER	
	5	1	**391-5342**	1	COVER	
	6	1	**114-6658**	21	WASHER (6.5X17X1-MM THK)	
M	7	1	**9X-2043**	12	SCREW-TRUSS HEAD (M6X1X14-MM)	
M	8	1	**9X-2044**	9	SCREW-TRUSS HEAD (M6X1X16-MM)	

M - METRIC PART

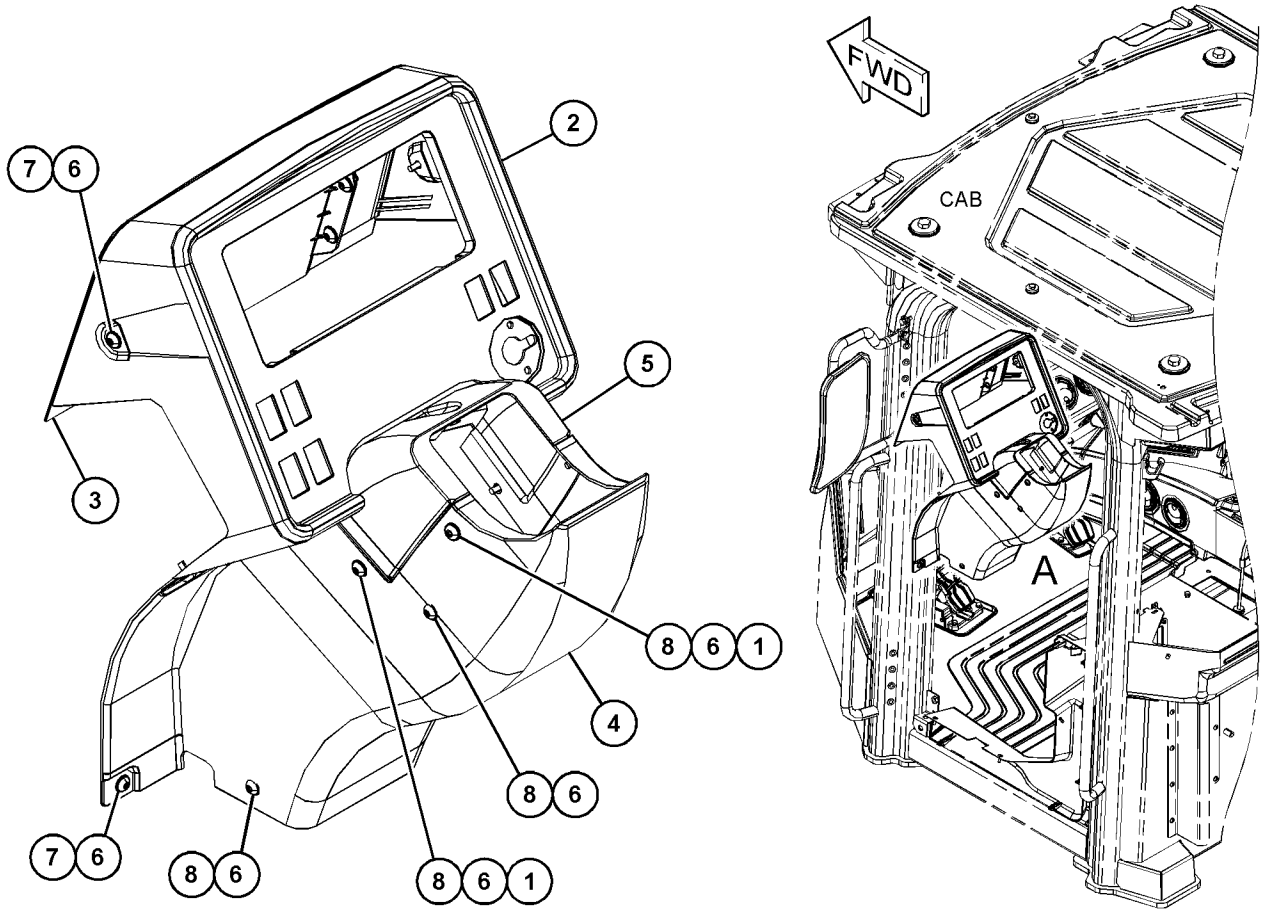

VIEW OF AREA A

GRAPHIC #1 **<END>** g03528259

425-6234 PEDAL GP-BRAKE

S/N: M5K1-UP

PART OF 391-5301 CAB AR, 455-9874 CONTROL & MTG GP-PEDAL, 387-6027, 432-7392, 432-7393 CONVERSION AR-BRAKE CONTROL

ALSO AN ATTACHMENT

SMCS-4269, 4290 **i05457729**

NOTE	REF NO	GRAPHIC REF	PART NUMBER	QTY	PART NAME 1 2 3 4 5 6 (PRODUCT LEVEL)	SEE PAGE
	1	1	**398-1412**	1	PEDAL AS-BRAKE	
		1	**105-6117**	1	SWITCH AS-LIMIT (NORMALLY CLOSED) (BRAKE PEDAL)	
M		1	**125-3295**	2	SCREW-PAN HEAD (M2.5X0.45X12-MM)	
		1	**146-1892**	1	HARNESS AS-BRAKE (STOP LIGHT)	
		1	**8T-8730**	2	SOCKET-CONNECTOR (16-GA TO 18-GA)	
		1	**5P-2957**	2	TERMINAL-BLADE (14-GA TO 16-GA)	
					—OR—	
		1	**5P-5602**	2	TERMINAL-BLADE (18-GA TO 22-GA)	
		1	**155-2270**	1	KIT-CONNECTING PLUG (2-PIN)	
					(INCLUDES PLUG AS, WEDGE, & INTERFACE SEAL)	
M	2	1	**099-3649**	3	BOLT (M8X1.25X40-MM)	
	3	1	**8T-4224**	3	WASHER-HARD (8.8X16X2-MM THK)	

M - METRIC PART

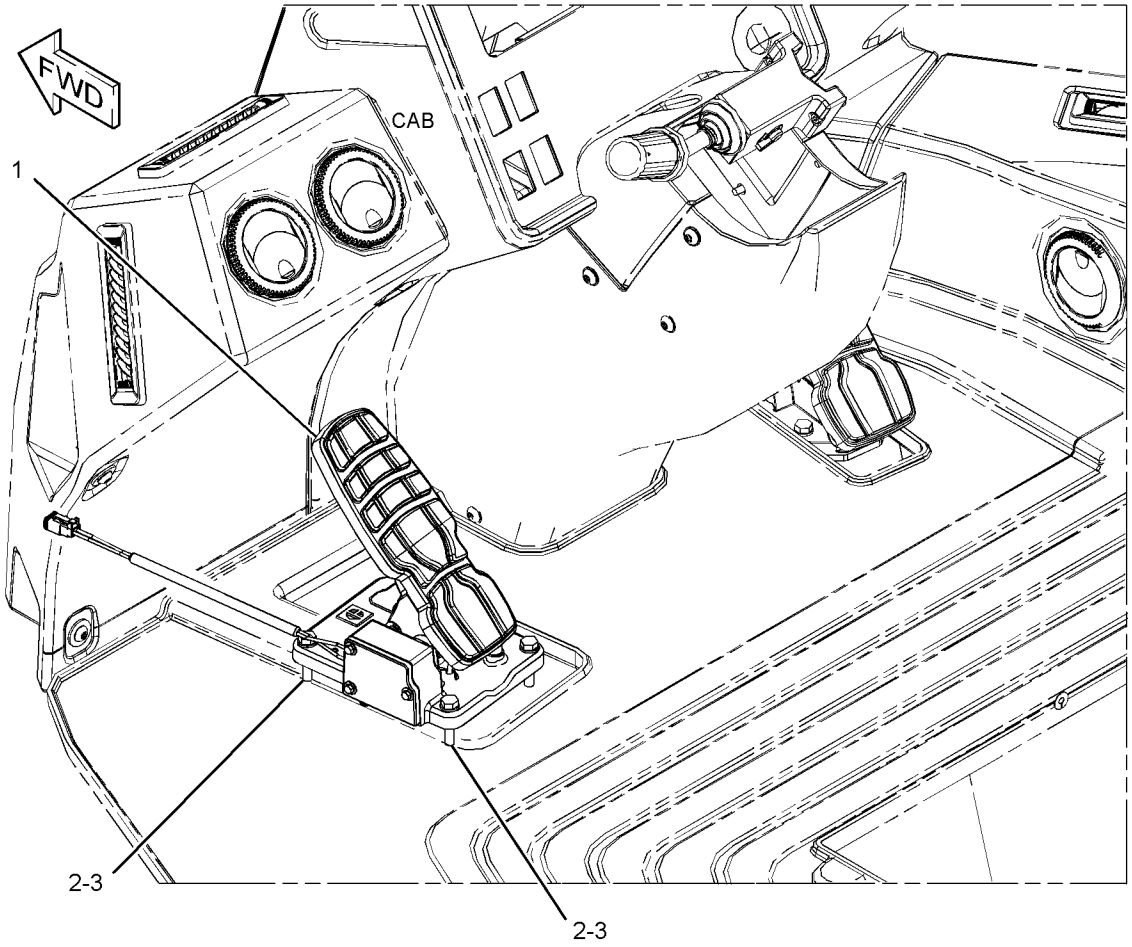

GRAPHIC #1 **<END>** g03521696

431-9788 PEDAL GP-GOVERNOR

S/N: M5K1-UP

PART OF 391-5301 CAB AR

SMCS-1276 **i05435606**

NOTE	REF NO	GRAPHIC REF	PART NUMBER	QTY	PART NAME 1 2 3 4 5 6 (PRODUCT LEVEL)	SEE PAGE
	1	1	**383-1467**	1	PEDAL GP-GOVERNOR	
		1	**269-1983**	1	SENSOR GP-POSITION (THROTTLE)	
		1	**292-9802**	1	COVER	
	2	1	**431-9787**	1	SPACER	
M	3	1	**099-3649**	4	BOLT (M8X1.25X40-MM)	
	4	1	**8T-4224**	4	WASHER-HARD (8.8X16X2-MM THK)	

M - METRIC PART

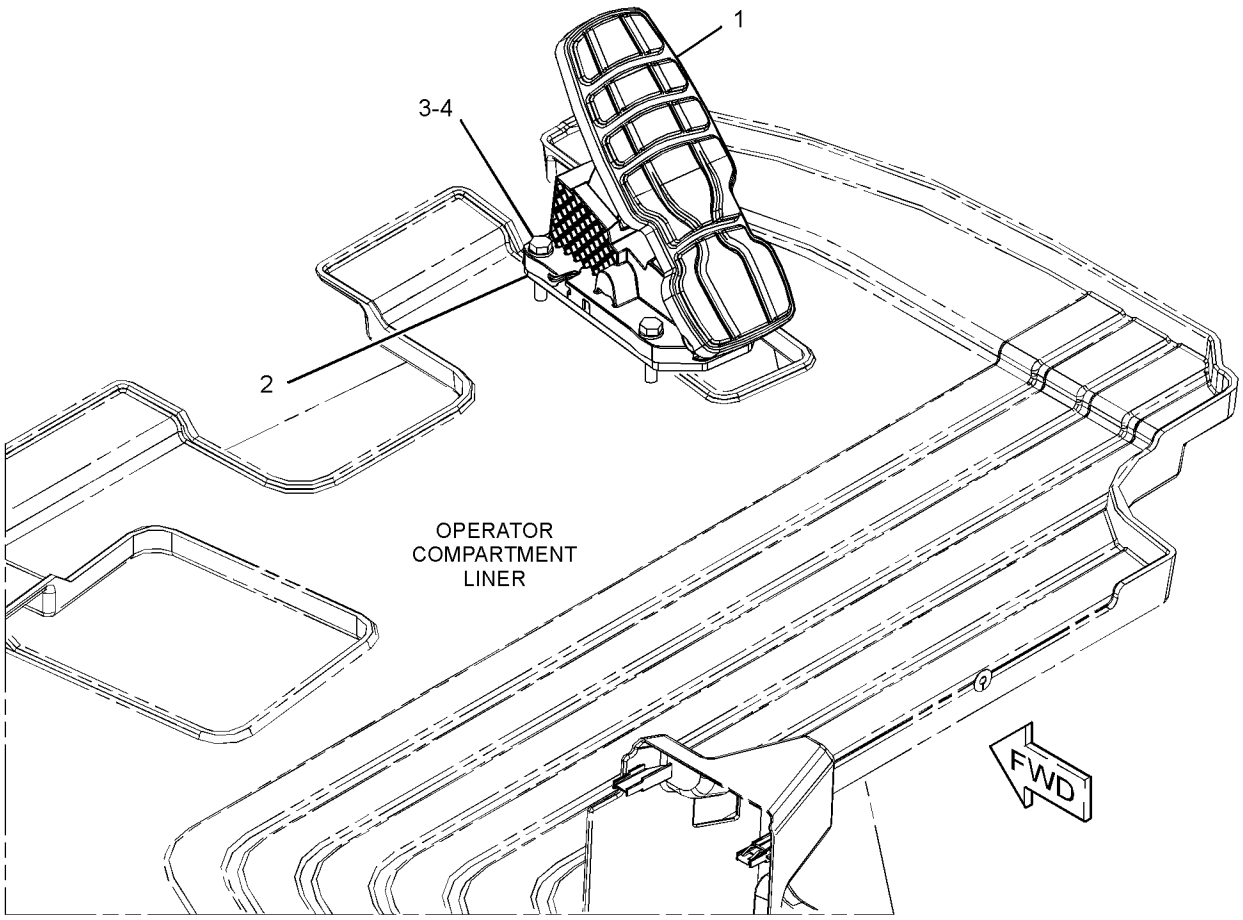

GRAPHIC #1 **<END>** g03521245

OPERATOR STATION

392-3720 PLATFORM GP-CAB–CAB

S/N: M5K1-UP

PART OF 387-6001 CHASSIS AR

SMCS-7253 **i05667455**

NOTE	REF NO	GRAPHIC REF	PART NUMBER	QTY	PART NAME 1 2 3 4 5 6 (PRODUCT LEVEL)	SEE PAGE
Y	1	1	**392-3721**	1	FENDER GP (LH)	296
	2	1	**392-3722**	1	FENDER AS (RH)	
M		1	**8T-3490**	9	NUT-WELD (M10X1.5-THD)	
M		1	**8T-3597**	6	NUT-WELD (M12X1.75-THD)	
Y	3	1	**392-3726**	1	LADDER GP (LEFT)	326
Y	4	1	**392-3727**	1	LADDER GP (RIGHT)	327
Y	5	1	**392-3728**	1	LADDER GP (REAR)	328
	6	1	**392-3729**	1	HANDRAIL AS	
	7	1	**392-3730**	1	HANDRAIL AS	
	8	1	**392-3731**	1	HANDRAIL AS	
	9	1,2	**6V-8178**	9	WASHER (13X24X2.5-MM THK)	
	10	1	**7X-7729**	10	WASHER (11X25X3-MM THK)	
M	11	1	**8T-4136**	10	BOLT (M10X1.5X25-MM)	
M	12	1,2	**8T-4139**	21	BOLT (M12X1.75X30-MM)	
	13	1,2	**8T-4223**	16	WASHER-HARD (13.5X25.5X3-MM THK)	
M	14	1,2	**6V-8197**	4	BOLT (M12X1.75X40-MM)	

M - METRIC PART
Y - SEPARATE ILLUSTRATION

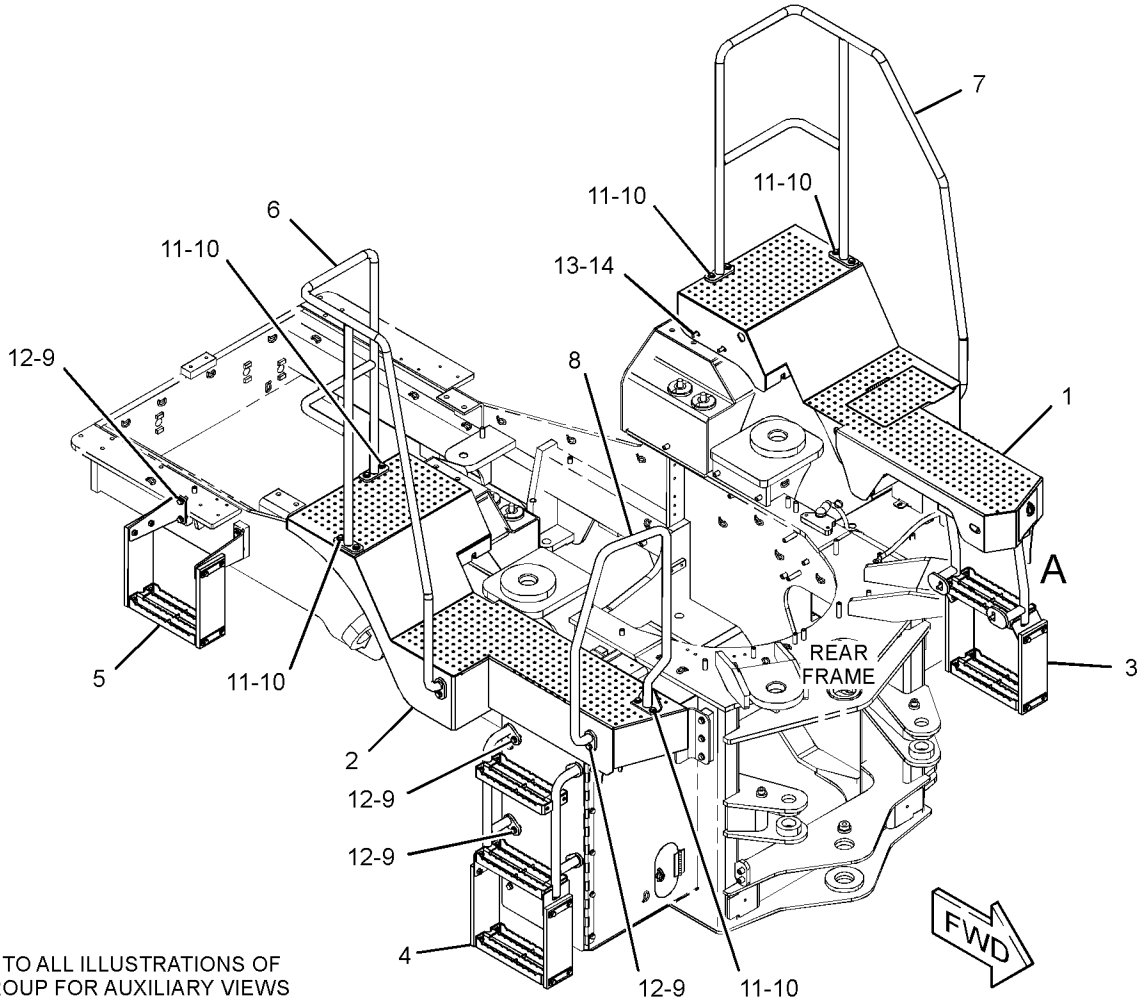

REFER TO ALL ILLUSTRATIONS OF THIS GROUP FOR AUXILIARY VIEWS

GRAPHIC #1

g03668738

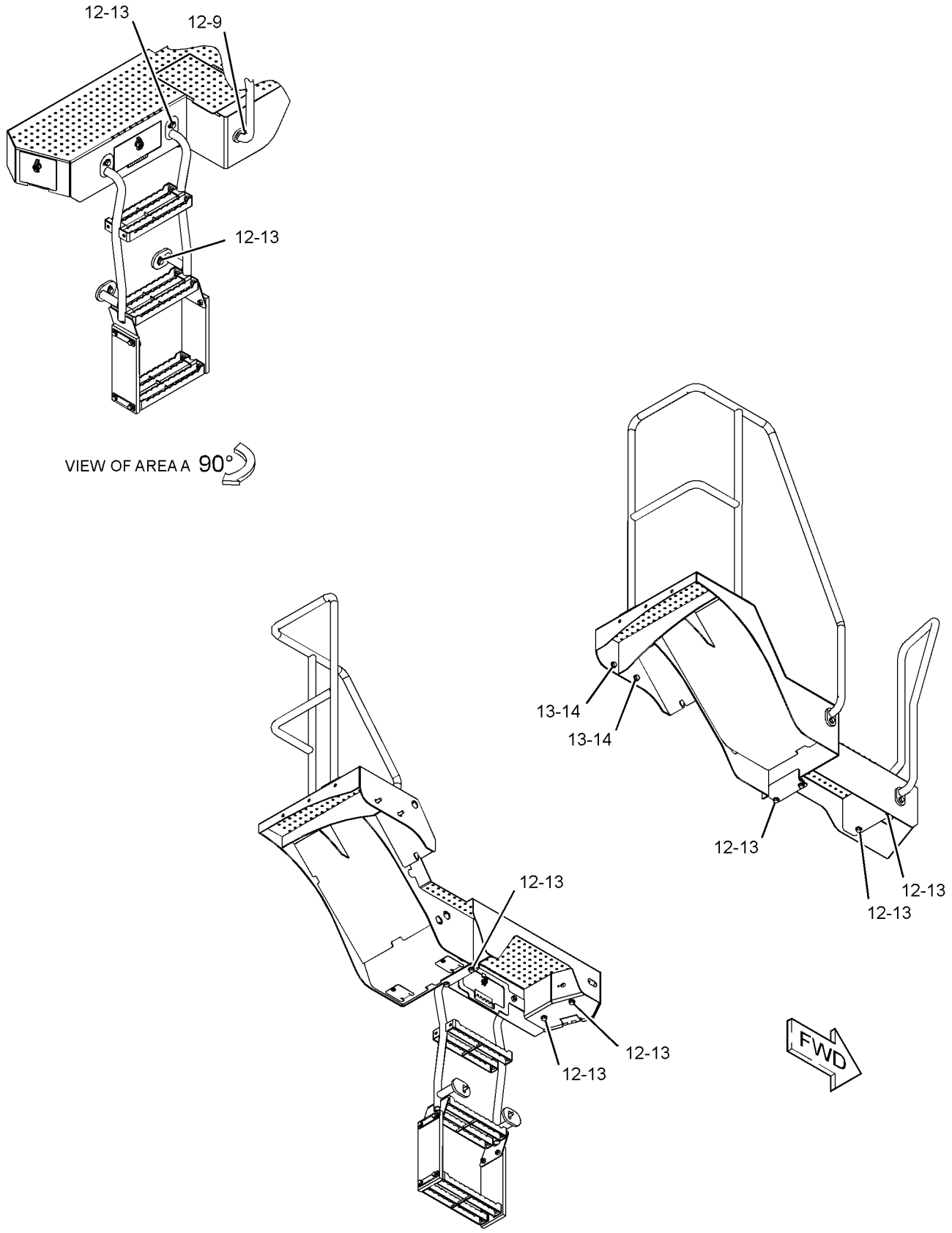

GRAPHIC #2

<END>

g03668739

241-4941 RADIO GP–AM/FM/WB

S/N: M5K1-UP
12-VOLT
PART OF 415-4206 INSTALLATION GP-RADIO
AN ATTACHMENT

SMCS-7338 **i05838709**

NOTE	REF NO	GRAPHIC REF	PART NUMBER	QTY	PART NAME 1 2 3 4 5 6 (PRODUCT LEVEL)	SEE PAGE
	1	1	**200-5728**	1	HARNESS AS-RADIO	
		1	**160-3518**	1	KIT-RECEPTACLE (8-PIN)	
					(INCLUDES RECEPTACLE AS & WEDGE)	
		1	**8T-8737**	1	PLUG-SEAL	
		1	**172-8037**	1	CONNECTOR (RADIO)	
		1	**172-8039**	11	TERMINAL (RADIO)	
		1	**186-3735**	7	PIN-CONNECTOR (16-GA TO 18-GA)	
	2	1	**241-4939**	1	BUSHING	
	3	1	**439-1561**	1	RADIO GP (AM/FM/WB)	

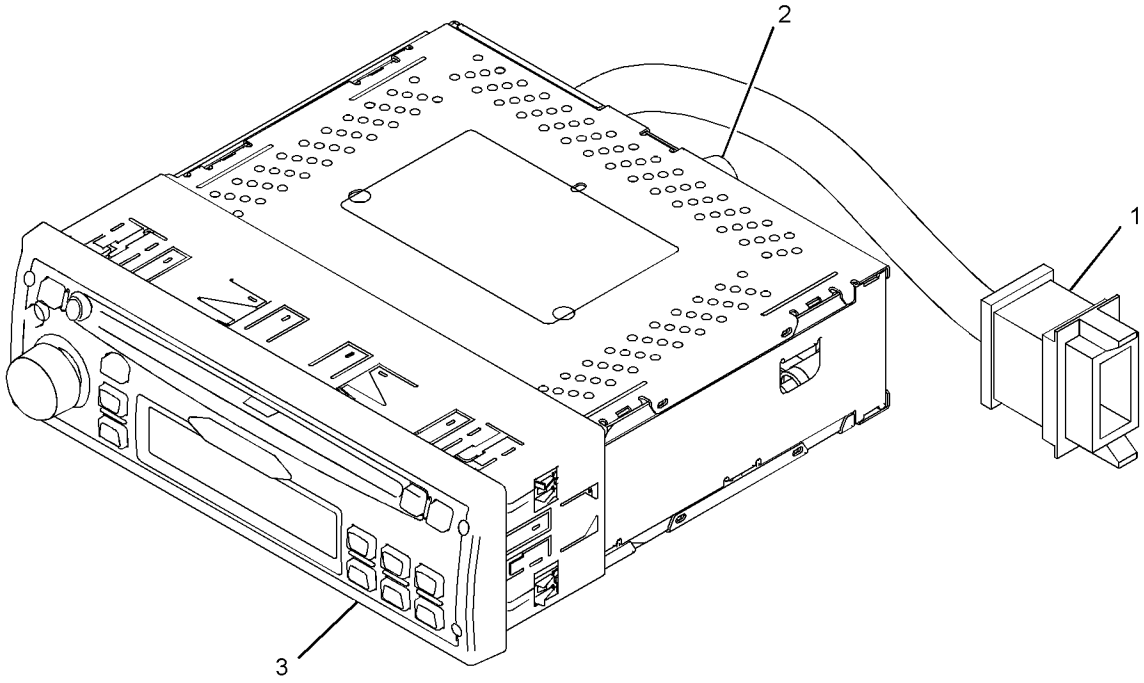

GRAPHIC #1 **<END>** g01948127

OPERATOR STATION

391-5311 ROOF GP-CAB

S/N: M5K1-UP

PART OF 391-5301 CAB AR

SMCS-7301 **i05434476**

NOTE	REF NO	GRAPHIC REF	PART NUMBER	QTY	PART NAME 1 2 3 4 5 6 (PRODUCT LEVEL)	SEE PAGE
	1	1	**197-5470**	4	GROMMET	
	2	1	**358-7862**	1	ROOF	
	3	1	**107-3157**	4	WASHER (22X76.2X6-MM THK)	
	4	1	**133-3260**	3	SPACER (11X19X10-MM THK)	
	5	1	**196-0436**	4	SPACER (25X40X12-MM THK)	
	6	1	**3P-3839**	3	GROMMET	
	7	1	**7X-0632**	3	WASHER-HARD (11X36X6-MM THK)	
	8	1	**7X-7729**	2	WASHER (11X25X3-MM THK)	
M	9	1	**8T-4137**	2	BOLT (M10X1.5X20-MM)	
M	10	1	**8T-4195**	3	BOLT (M10X1.5X30-MM)	
M	11	1	**8T-6430**	4	BOLT (M20X2.5X50-MM)	

M - METRIC PART

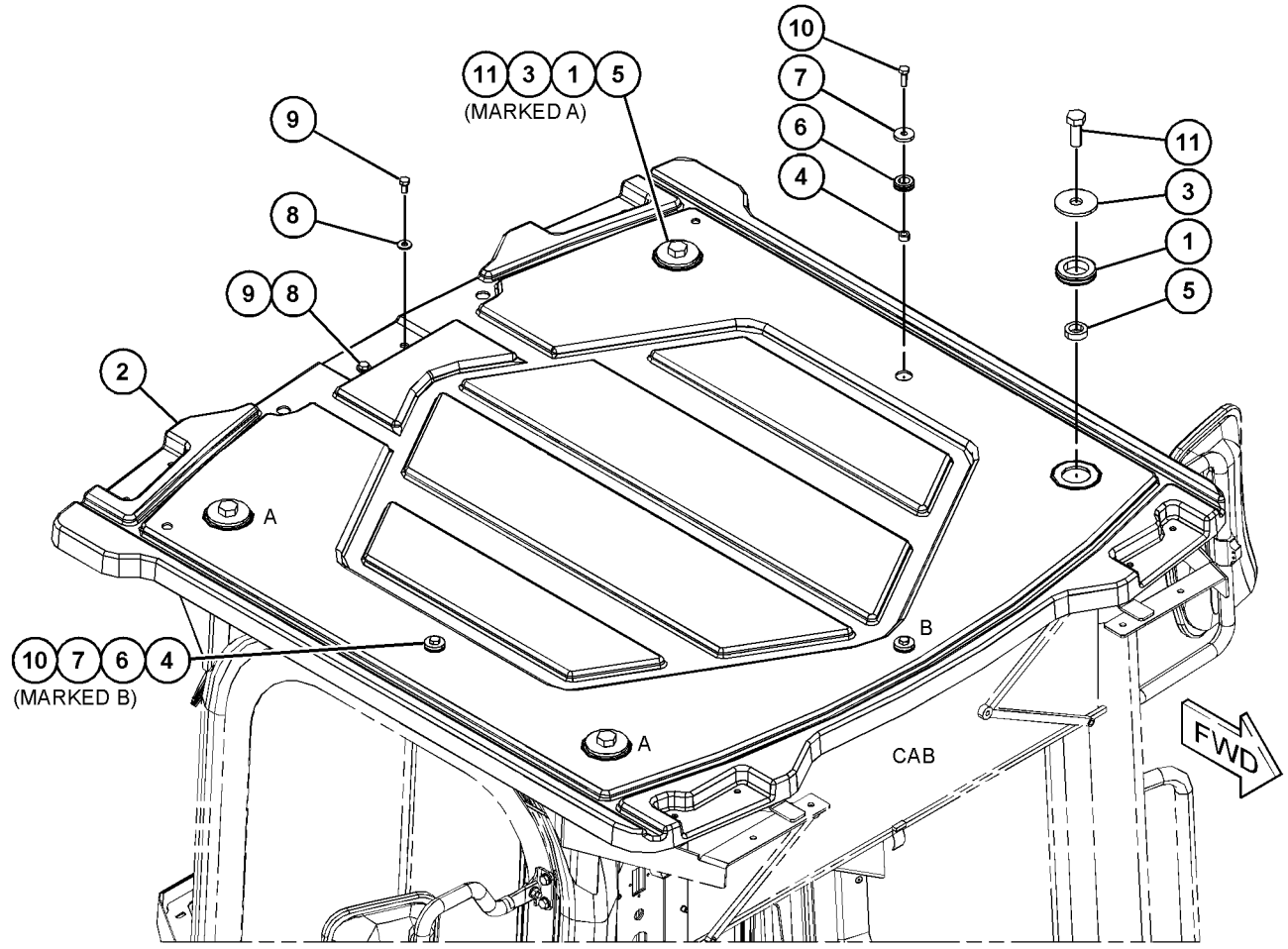

GRAPHIC #1 **<END>** g03527978

OPERATOR STATION

392-1877 ROPS GP-ENCLOSED

S/N: M5K1-UP

PART OF 391-5303 CAB GP-ENCLOSED ROPS

SMCS-7301 **i05434446**

NOTE	REF NO	GRAPHIC REF	PART NUMBER	QTY	PART NAME 1 2 3 4 5 6 (PRODUCT LEVEL)	SEE PAGE
M	1	1	**195-0936**	22	INSERT-THREADED (M6X1-THD)	
M	2	1	**234-0095**	6	INSERT-THREADED (M6X1-THD)	
	3	1	**288-5377**	8	NUT (M10X1.5-THD)	
M	4	1	**6V-6317**	3	BOLT (M10X1.5X20-MM)	

M - METRIC PART

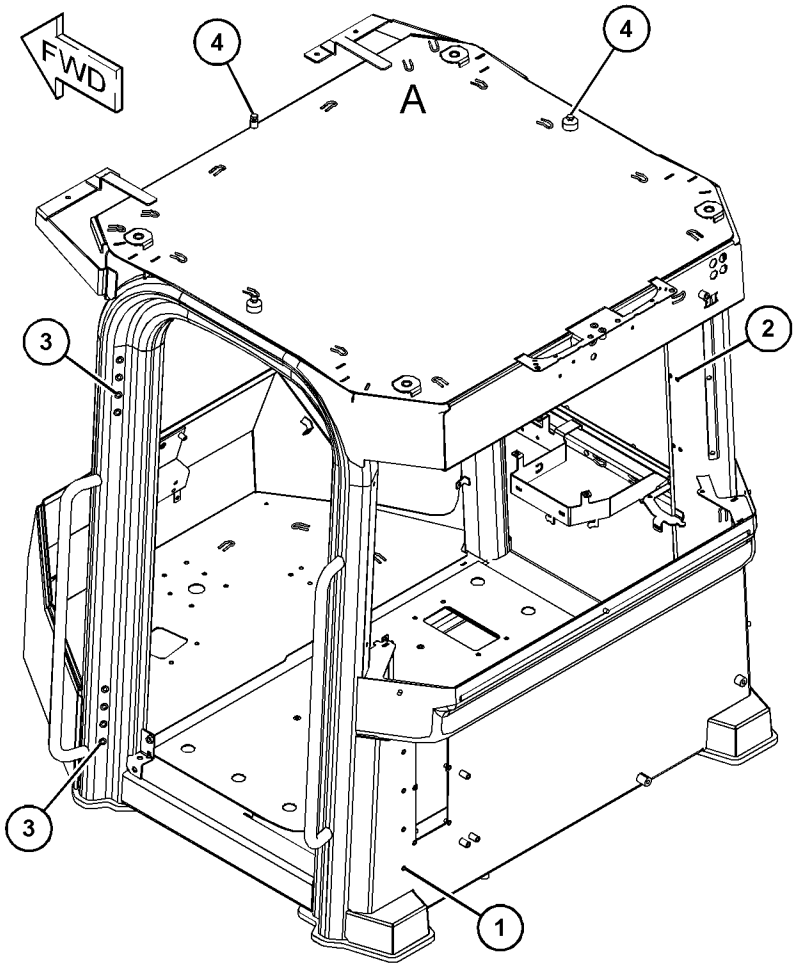

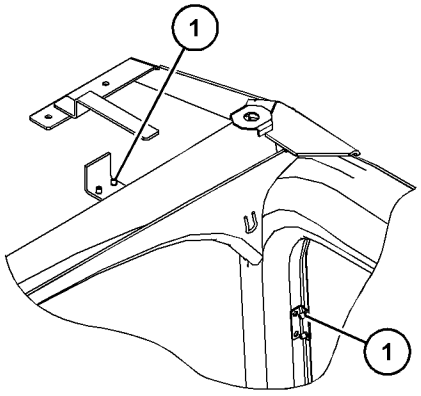

VIEW OF AREA A
(PARTS REMOVED FOR CLARITY)

GRAPHIC #1 **<END>** g03566135

391-5306 SEAT BELT GP–RETRACTABLE

S/N: M5K1-UP
CANNOT BE USED WITH 391-5307 SEAT BELT GP
AN ATTACHMENT

SMCS-7327 **i05405737**

NOTE	REF NO	GRAPHIC REF	PART NUMBER	QTY	PART NAME 1 2 3 4 5 6 (PRODUCT LEVEL)	SEE PAGE
	1	1	**8T-4223**	2	WASHER-HARD (13.5X25.5X3-MM THK)	
	2	1	**0T-0489**	2	BOLT (7/16-20X2-IN)	
	3	1	**1V-5872**	2	SPACER (0.493X0.675X0.95-IN THK)	
	4	1	**388-3220**	1	SEAT BELT (2-IN)	

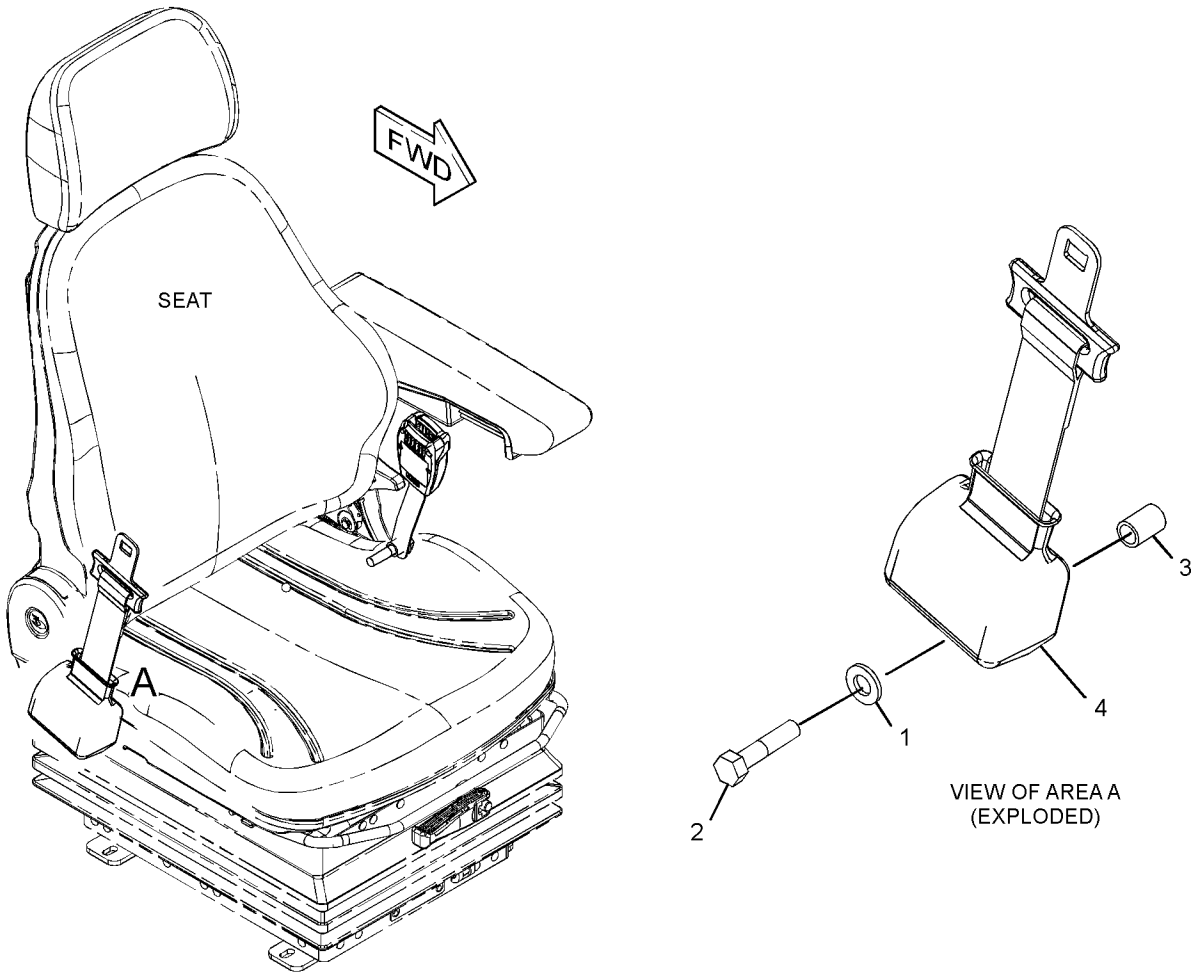

GRAPHIC #1 **<END>** g03424462

391-5307 SEAT BELT GP–RETRACTABLE, 2-IN

S/N: M5K1-UP

CANNOT BE USED WITH 391-5306 SEAT BELT GP

AN ATTACHMENT

SMCS-7327 **i05405786**

NOTE	REF NO	GRAPHIC REF	PART NUMBER	QTY	PART NAME 1 2 3 4 5 6 (PRODUCT LEVEL)	SEE PAGE
	1	1	**8T-4223**	2	WASHER-HARD (13.5X25.5X3-MM THK)	
	2	1	**0T-0489**	2	BOLT (7/16-20X2-IN)	
	3	1	**1V-5872**	2	SPACER (0.493X0.675X0.95-IN THK)	
	4	1	**206-1749**	1	SEAT BELT (2-IN)	

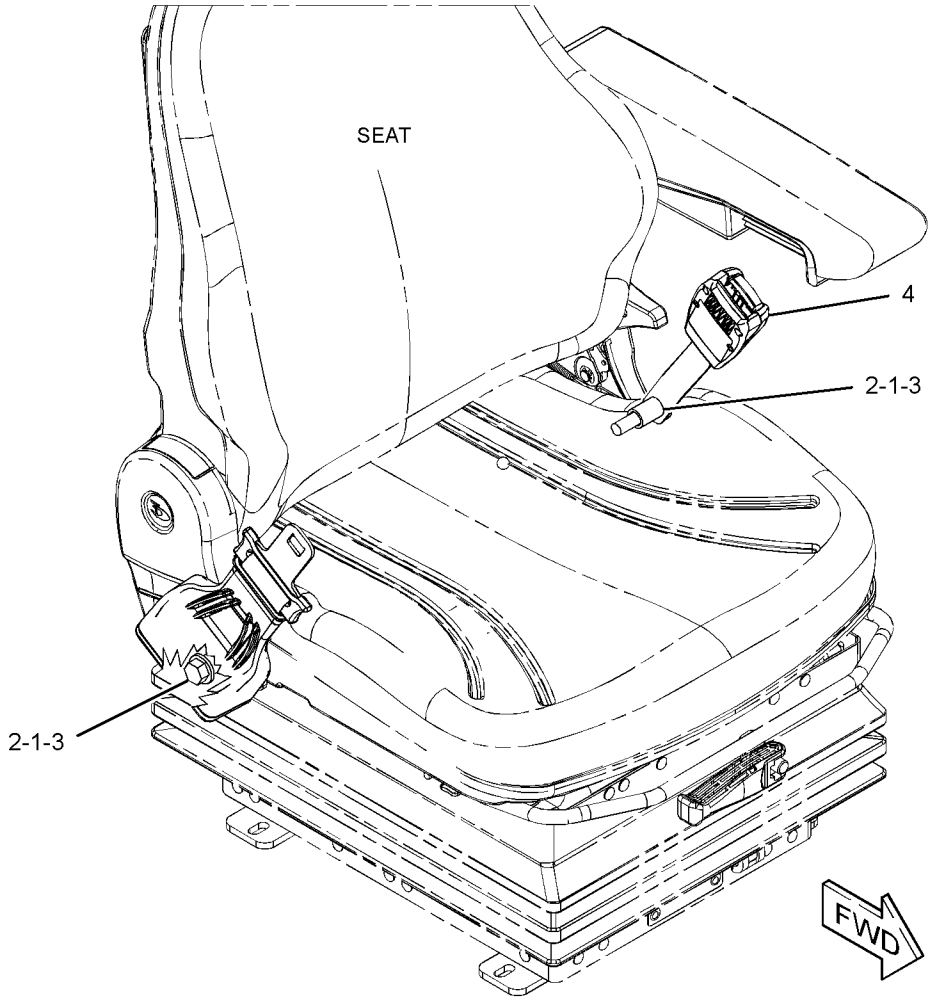

GRAPHIC #1 **<END>** g03422555

391-5315 SEAT BELT GP—RETRACTABLE, 3-IN

S/N: M5K1-UP

CANNOT BE USED WITH 391-5306 SEAT BELT GP

AN ATTACHMENT

SMCS-7327 **i05405979**

NOTE	REF NO	GRAPHIC REF	PART NUMBER	QTY	PART NAME 1 2 3 4 5 6 (PRODUCT LEVEL)	SEE PAGE
	1	1	**8T-4223**	2	WASHER-HARD (13.5X25.5X3-MM THK)	
	2	1	**206-1750**	1	SEAT BELT (3-IN)	
	3	1	**0T-0489**	2	BOLT (7/16-20X2-IN)	
	4	1	**1V-5872**	2	SPACER (0.493X0.675X0.95-IN THK)	

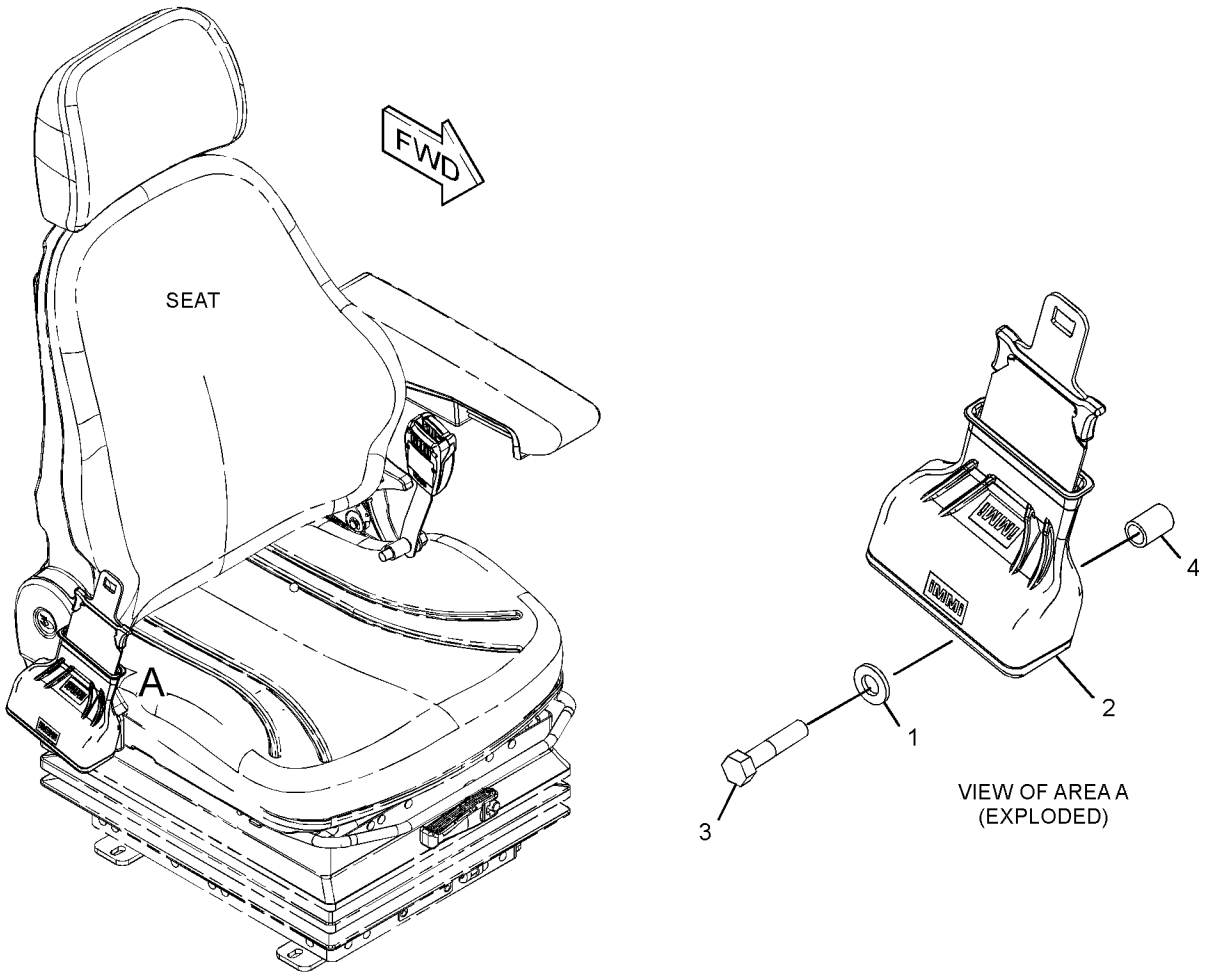

GRAPHIC #1 **<END>** g03424426

388-3217 SEAT GP-SUSPENSION

S/N: M5K1-UP
CLOTH
PART OF 391-5401 SEAT GP-SUSPENSION
AN ATTACHMENT

SMCS-7324, 7336 **i05838206**

NOTE	REF NO	GRAPHIC REF	PART NUMBER	QTY	PART NAME 1 2 3 4 5 6 (PRODUCT LEVEL)	SEE PAGE
	1	1	**373-3495**	4	PLATE	
Y	2	1	**446-9615**	1	SUSPENSION GP-SEAT	591
Y	3	1	**446-9616**	1	SEAT GP-SUSPENSION (CLOTH)	589
	4	1	**446-9617**	1	KIT-SLIDE (SUSPENSION SEAT)	
M		1	**6V-7743**	2	LOCKNUT (M6X1-THD)	
					(KIT ALSO INCLUDES SLIDER ASSEMBLIES & BAR)	
	5	1	**107-2961**	4	WASHER (8.25X17X1.136-MM THK)	
M	6	1	**6V-8202**	8	BOLT-SOCKET HEAD (M8X1.25X16-MM)	
	7	1	**7X-0579**	8	WASHER-HARD (8.8X25.5X2-MM THK)	

M - METRIC PART
Y - SEPARATE ILLUSTRATION

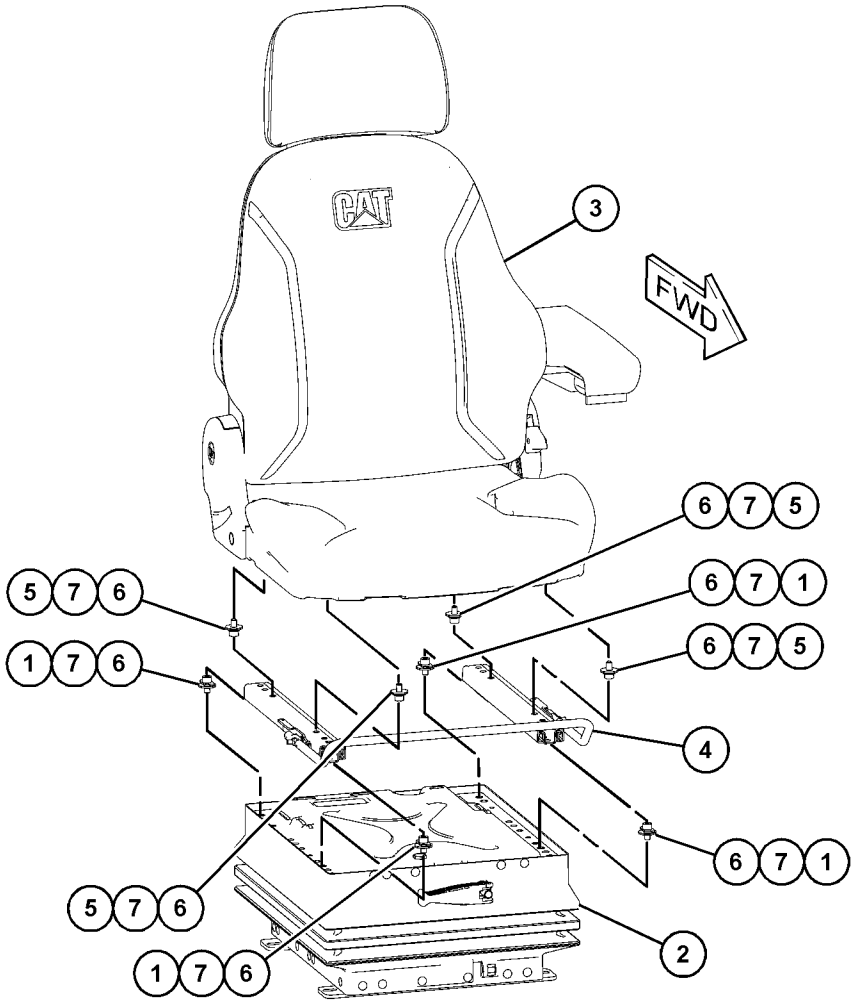

GRAPHIC #1 <END> g03693597

388-3218 SEAT GP-SUSPENSION

S/N: M5K1-UP
24-VOLT, CLOTH
PART OF 391-5402 SEAT GP-SUSPENSION
AN ATTACHMENT

SMCS-7324, 7336 **i05838207**

NOTE	REF NO	GRAPHIC REF	PART NUMBER	QTY	PART NAME 1 2 3 4 5 6 (PRODUCT LEVEL)	SEE PAGE
	1	1	**373-3495**	4	PLATE	
Y	2	1	**446-9616**	1	SEAT GP-SUSPENSION (CLOTH)	589
	3	1	**446-9617**	1	KIT-SLIDE (SUSPENSION SEAT)	
M		1	**6V-7743**	2	LOCKNUT (M6X1-THD)	
					(KIT ALSO INCLUDES SLIDER ASSEMBLIES & BAR)	
Y	4	1	**453-1721**	1	SUSPENSION GP-SEAT (24-VOLT)	593
	5	1	**107-2961**	4	WASHER (8.25X17X1.136-MM THK)	
M	6	1	**6V-8202**	8	BOLT-SOCKET HEAD (M8X1.25X16-MM)	
	7	1	**7X-0579**	8	WASHER-HARD (8.8X25.5X2-MM THK)	

M - METRIC PART
Y - SEPARATE ILLUSTRATION

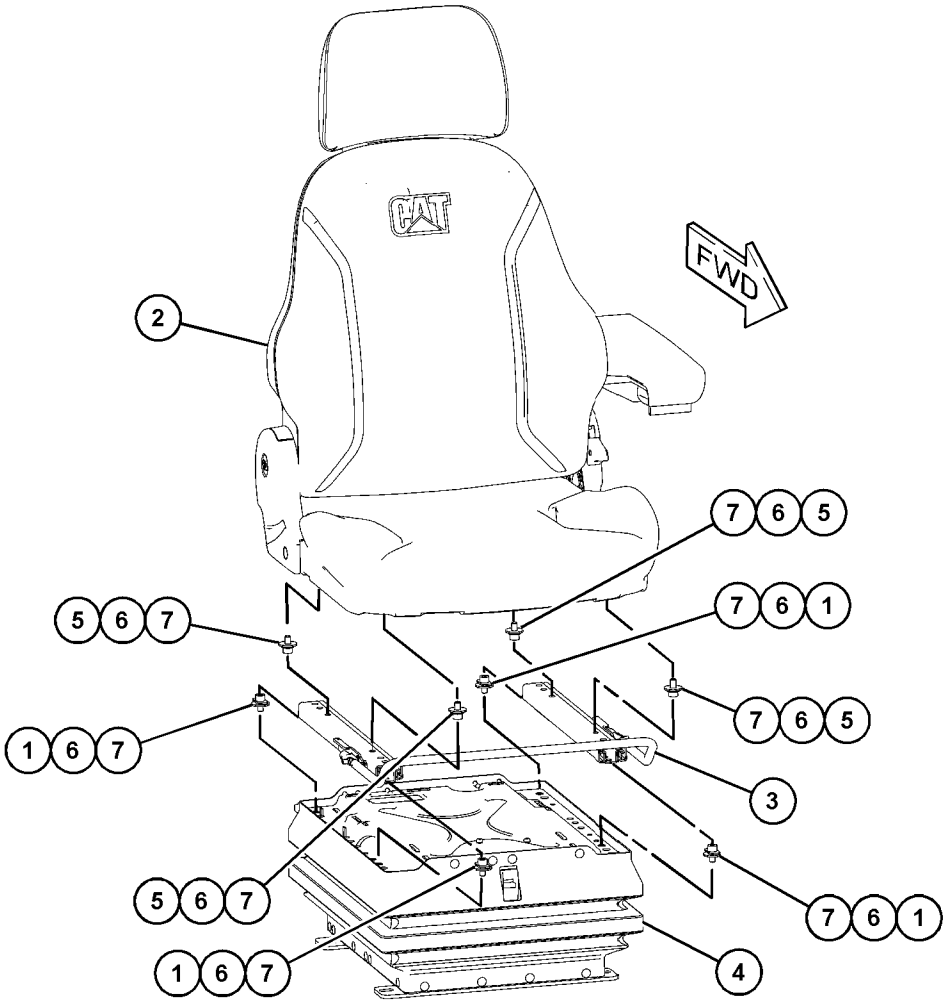

GRAPHIC #1 **<END>** g03694087

391-5401 SEAT GP-SUSPENSION

S/N: M5K1-UP
CANNOT BE USED WITH 391-5402 SEAT GP-SUSPENSION
AN ATTACHMENT

SMCS-7324, 7336 **i05833284**

NOTE	PART NUMBER	QTY	PART NAME 1 2 3 4 5 6 (PRODUCT LEVEL)	SEE PAGE
Y	**388-3217**	1	SEAT GP-SUSPENSION (CLOTH)	586

Y - SEPARATE ILLUSTRATION

<END>

391-5402 SEAT GP-SUSPENSION

S/N: M5K1-UP
CANNOT BE USED WITH 391-5401 SEAT GP-SUSPENSION
AN ATTACHMENT

SMCS-7324, 7336 **i05882586**

NOTE	PART NUMBER	QTY	PART NAME 1 2 3 4 5 6 (PRODUCT LEVEL)	SEE PAGE
Y	**388-3218**	1	SEAT GP-SUSPENSION (24-VOLT, CLOTH)	587
	130-5300	1	CLIP	
M	**9X-2616**	1	SCREW-SOCKET (M8X1.25X16-MM)	
	8T-4224	1	WASHER-HARD (8.8X16X2-MM THK)	

M - METRIC PART
Y - SEPARATE ILLUSTRATION

<END>

446-9616 SEAT GP-SUSPENSION

S/N: M5K1-UP
CLOTH
PART OF 388-3217, 388-3218 SEAT GP-SUSPENSION
AN ATTACHMENT

SMCS-7324, 7336 **i05838290**

NOTE	REF NO	GRAPHIC REF	PART NUMBER	QTY	PART NAME 1 2 3 4 5 6 (PRODUCT LEVEL)	SEE PAGE
	1	1	**373-2596**	1	COVER (LH)	
	2	1	**373-2597**	1	COVER (RH)	
	3	1	**374-5958**	1	HANDLE	
	4	1	**377-2843**	1	HOLDER	
	5	1	**446-9618**	1	PAN AS	
	6	1	**446-9619**	1	CUSHION AS-SEAT	
	7	1	**446-9620**	1	CUSHION AS-BACK	
	8	1	**446-9621**	1	HEADREST AS-SEAT	
	9	1	**446-9622**	1	SUPPORT AS-SEAT (LUMBAR)	
	10	1	**446-9623**	1	KNOB	
	11	1	**446-9624**	1	ARMREST GP (SUSPENSION SEAT)	
	12	1	**452-6952**	2	NUT	
	13	1	**203-9203**	6	SCREW	
	14	1	**4K-9429**	4	RIVET-POP	
	15	1	**8U-7803**	1	SCREW	

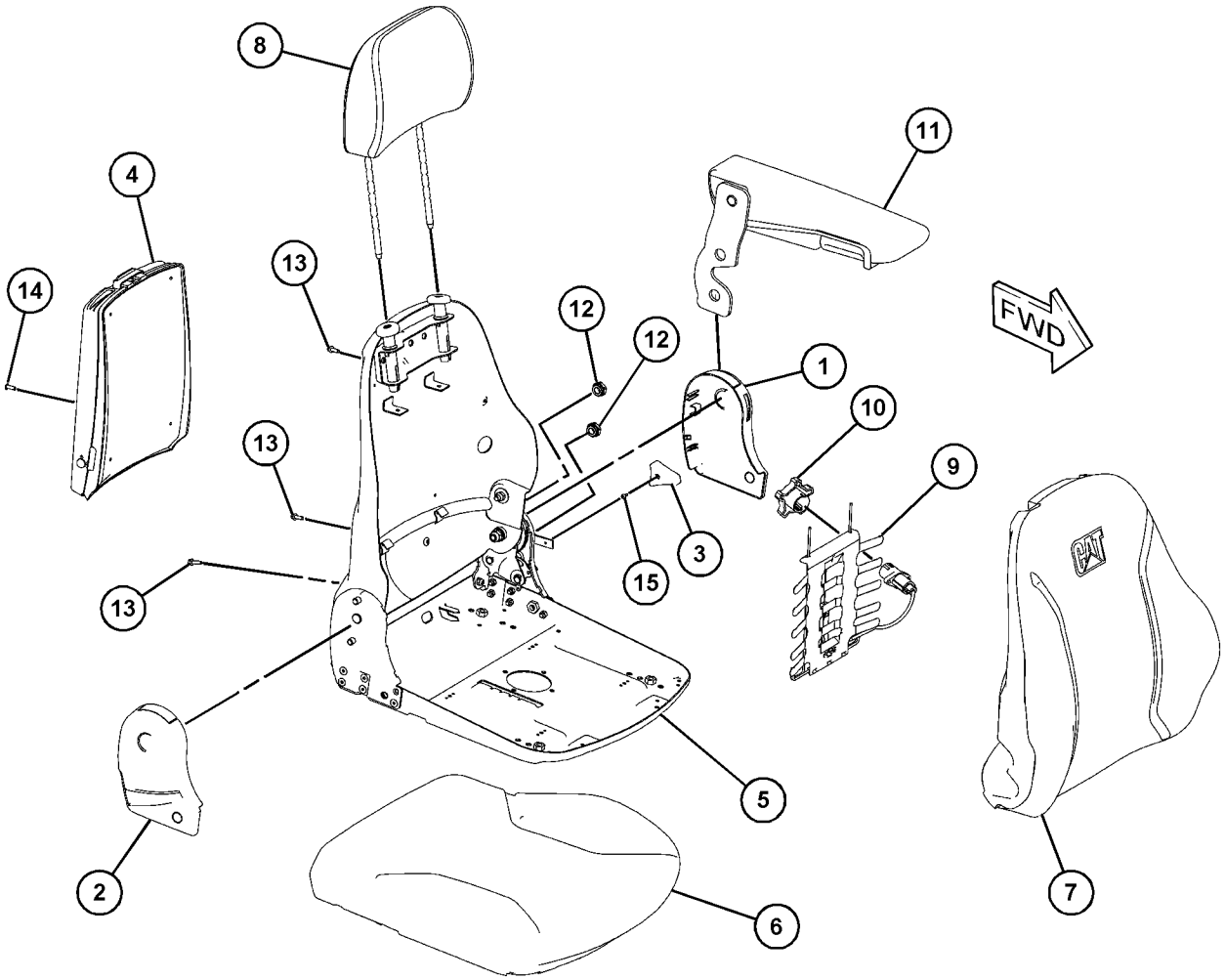

GRAPHIC #1 **<END>** g03693703

OPERATOR STATION

391-5318 SUPPORT GP-SEAT

S/N: M5K1-UP

PART OF 391-5303 CAB GP-ENCLOSED ROPS

SMCS-7321 **i05434439**

NOTE	REF NO	GRAPHIC REF	PART NUMBER	QTY	PART NAME 1 2 3 4 5 6 (PRODUCT LEVEL)	SEE PAGE
	1	1	**391-5321**	1	SUPPORT AS (SEAT)	
M	2	1	**6V-2317**	4	BOLT (M8X1.25X30-MM)	
	3	1	**8T-4121**	4	WASHER-HARD (11X21X2.5-MM THK)	
M	4	1	**8T-4136**	4	BOLT (M10X1.5X25-MM)	
	5	1	**8T-4224**	4	WASHER-HARD (8.8X16X2-MM THK)	

M - METRIC PART

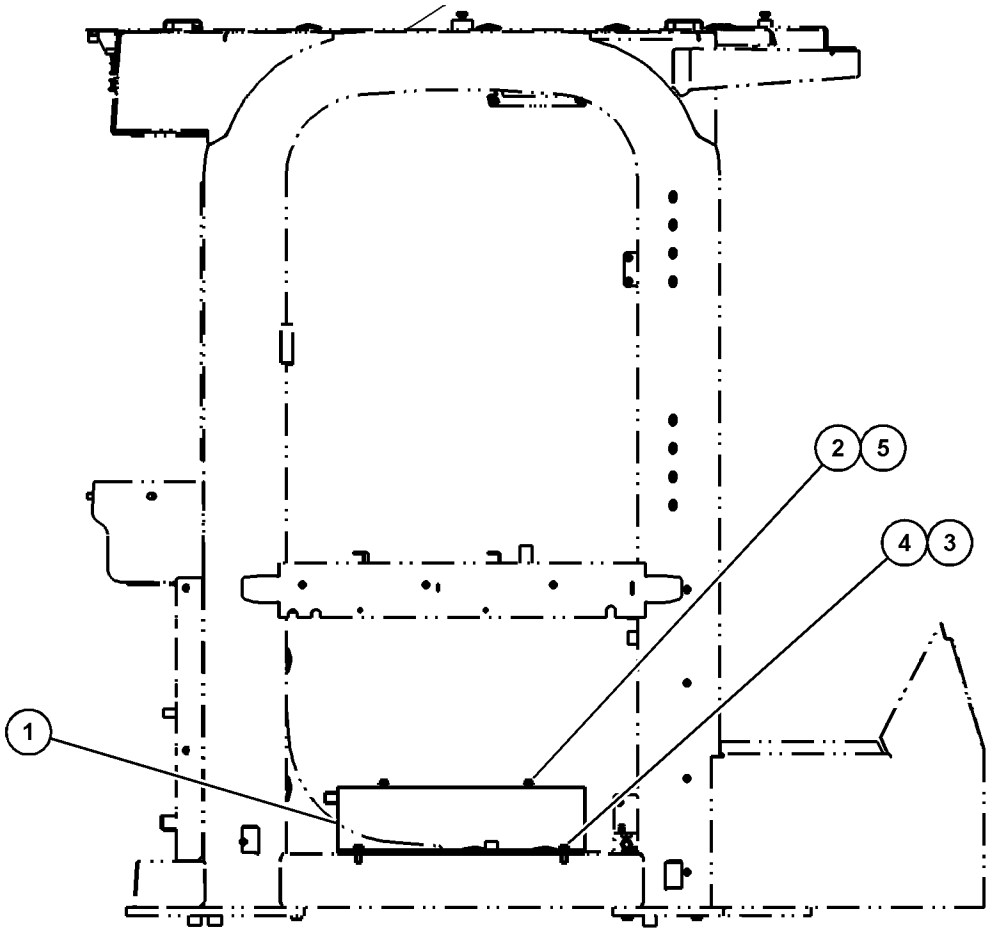

RIGHT SIDE VIEW

GRAPHIC #1 **<END>** g03526097

446-9615 SUSPENSION GP-SEAT

S/N: M5K1-UP
MECHANICAL
PART OF 388-3217 SEAT GP-SUSPENSION
AN ATTACHMENT

SMCS-7324 **i05984078**

NOTE	REF NO	GRAPHIC REF	PART NUMBER	QTY	PART NAME 1 2 3 4 5 6 (PRODUCT LEVEL)	SEE PAGE
	1	1	**6W-8281**	2	BUMPER	
	2	1	**356-2353**	1	BUSHING	
	4	1	**359-3582**	1	BOOT	
	5	1	**371-7140**	1	ARM AS-SUSPENSION	
	6	1	**371-7141**	1	HOUSING AS (UPPER)	
	7	1	**371-7144**	4	ROLLER	
	8	1	**371-7148**	1	SHAFT	
	9	1	**380-6351**	2	BUSHING	
	10	1	**385-1278**	1	LINK AS	
	11	1	**385-1279**	1	ADJUSTER AS	
		1	**6V-8235**	1	PIN-SPRING	
		1	**371-7147**	1	HANDLE	
	12	1	**385-1400**	4	BUMPER	
	13	1	**386-6071**	2	BOLT-PIVOT	
	14	1	**386-6072**	1	BOLT-PIVOT	
	15	1	**446-9625**	1	HOUSING AS	
	16	1	**446-9627**	1	KIT-SPRING (SUSPENSION SEAT)	
	17	1	**107-2961**	1	WASHER (8.25X17X1.136-MM THK)	
	18	1	**5P-8244**	2	WASHER-HARD (12X22.5X2.5-MM THK)	
	19	1	**5V-1497**	1	RETAINER	
	20	1	**8T-0114**	1	PIN-SPRING	
M	21	1	**8T-0389**	1	LOCKNUT (M10X1.5-THD)	
	22	1	**9M-5048**	2	LOCKNUT (7/16-14-THD)	
	23	1	**9T-7303**	2	SPACER (16X28X1.5-MM THK)	
	24	1	**9V-6754**	31	FASTENER	
	25	1	**446-9614**	1	KIT-SHOCK ABSORBER (SEAT)	
M		1	**131-3540**	2	LOCKNUT (M8X1.25-THD)	
	26	1	**385-2474**	1	INDICATOR AS (SEAT ADJUSTMENT)	
					PARTS IN GRAPHIC THAT ARE NOT CALLED OUT ARE NOT SERVICED SEPARATELY	

M - METRIC PART

446-9615 **SUSPENSION GP-SEAT (*contd.*)** **i05984078**

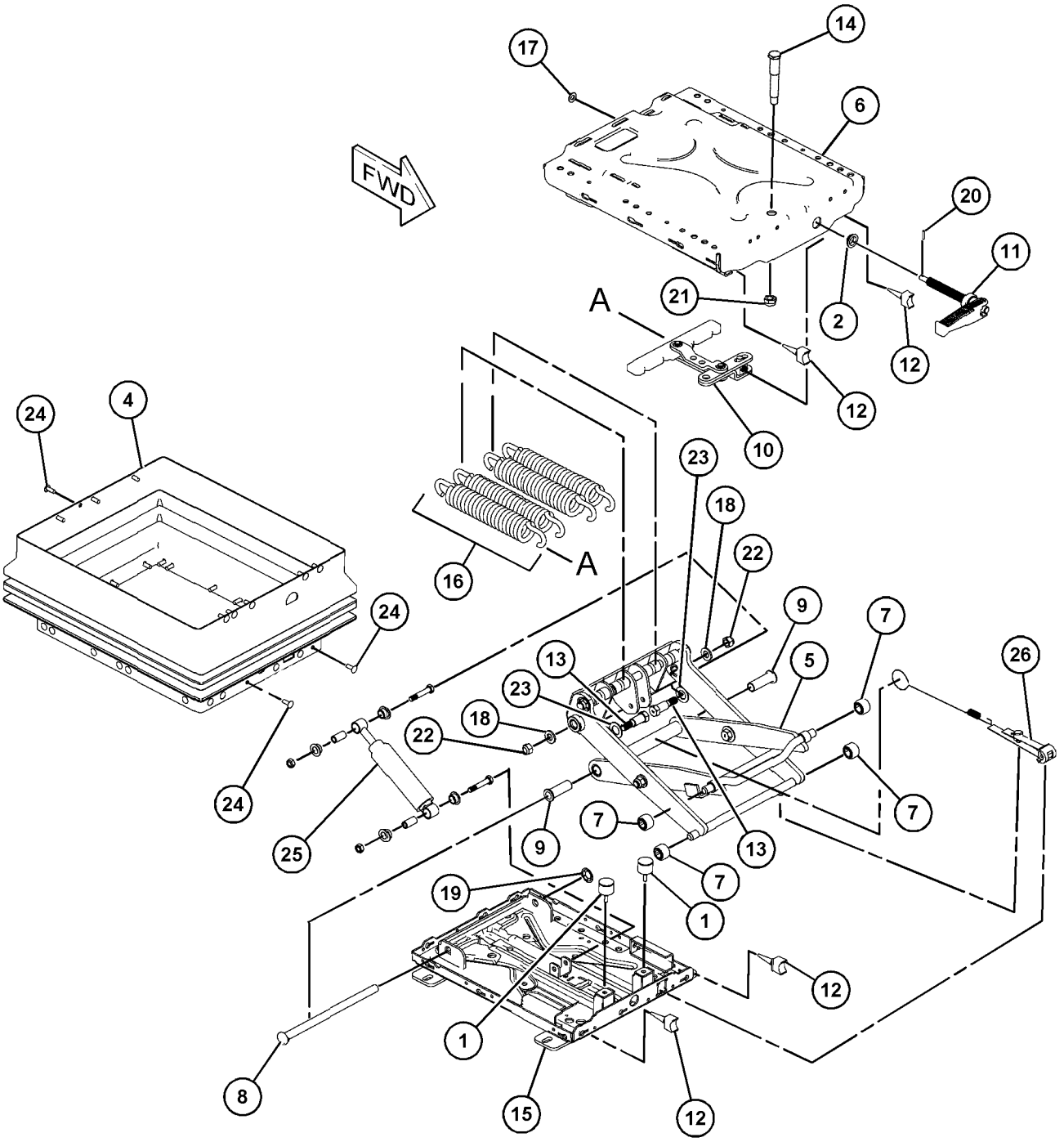

GRAPHIC #1 **<END>** g03747768

453-1721 SUSPENSION GP-SEAT

S/N: M5K1-UP
24-VOLT
PART OF 388-3218 SEAT GP-SUSPENSION
AN ATTACHMENT

SMCS-7324 **i05898306**

NOTE	REF NO	GRAPHIC REF	PART NUMBER	QTY	PART NAME 1 2 3 4 5 6 (PRODUCT LEVEL)	SEE PAGE
	1	1	**6W-8281**	2	BUMPER	
	2	1	**371-7144**	4	ROLLER	
	3	1	**371-7148**	1	SHAFT	
	4	1	**380-6351**	4	BUSHING	
	5	1	**385-1400**	4	BUMPER	
	6	1	**453-1714**	1	HOUSING AS	
	7	1	**453-1715**	1	ARM AS (AIR SUSPENSION SEAT)	
	8	1	**453-1716**	1	PLATE AS	
	9	1	**453-1717**	1	COMPRESSOR AS	
	10	1	**453-1718**	1	KIT-SEAT SUSPENSION	
	11	1	**453-1719**	1	KIT-VALVE (SUSPENSION SEAT)	
	12	1	**453-1720**	1	SHAFT	
	13	1	**453-1722**	1	HOUSING AS	
	14	1	**454-2625**	1	SPRING AS-AIR	
	15	1	**454-2626**	1	BOOT	
	16	1	**454-2628**	1	KIT-HARNESS (SUSPENSION SEAT)	
		1	**7K-1181**	4	STRAP-CABLE	
	17	1	**5V-1497**	2	RETAINER	
M	18	1	**8T-4200**	6	BOLT (M8X1.25X16-MM)	
	19	1	**9V-6754**	31	FASTENER	
	20	1	**454-2627**	1	KIT-SHOCK ABSORBER (SUSPENSION SEAT)	
M		1	**131-3540**	2	LOCKNUT (M8X1.25-THD)	

M - METRIC PART

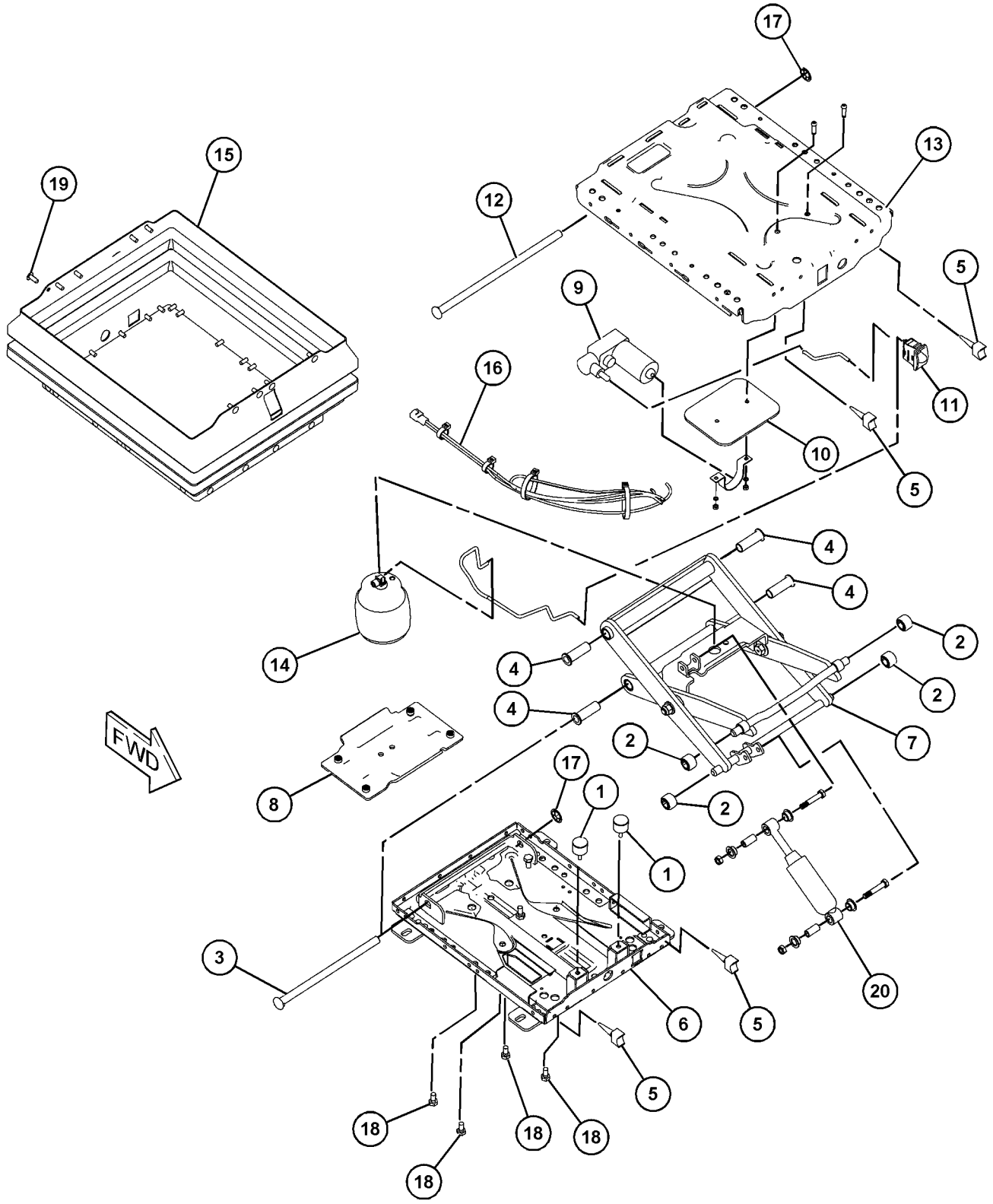

GRAPHIC #1 **<END>** g03694120

441-4589 VALVE GP-WATER

S/N: M5K1-UP

PART OF 424-2864 AIR CONDITIONER GP

SMCS-1800, 7320 **i05582153**

NOTE	REF NO	GRAPHIC REF	PART NUMBER	QTY	PART NAME 1 2 3 4 5 6 (PRODUCT LEVEL)	SEE PAGE
M	1	1	**8T-0337**	3	SCREW-MACHINE (M4X0.7X12-MM)	
	2	1	**6V-2687**	8	SCREW-PAN HEAD (10-24X1-IN)	
	3	1	**4M-6582**	2	SEAL-O-RING	
	4	1	**131-3093**	1	BUSHING	
	5	1	**268-8769**	1	VALVE & MOUNTING AS-WATER	
	6	1	**279-0850**	1	ACTUATOR (ELECTRONIC)	

M - METRIC PART

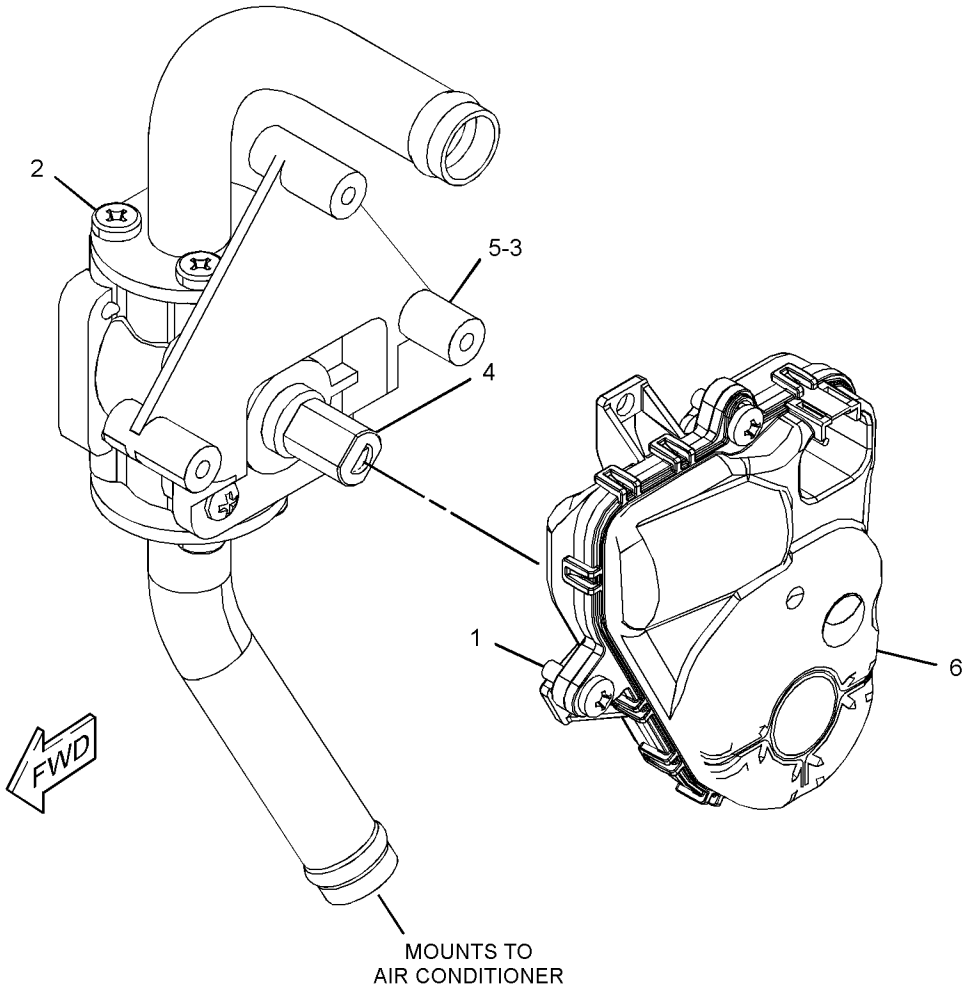

GRAPHIC #1 **<END>** g03542763

471-5064 VALVE GP-WATER

S/N: M5K1-UP

PART OF 424-2864 AIR CONDITIONER GP

SMCS-1800, 7320 **i06075888**

NOTE	REF NO	GRAPHIC REF	PART NUMBER	QTY	PART NAME 1 2 3 4 5 6 (PRODUCT LEVEL)	SEE PAGE
M	1	1	**8T-0337**	3	SCREW-MACHINE (M4X0.7X12-MM)	
	2	1	**6V-2687**	8	SCREW-PAN HEAD (10-24X1-IN)	
	3	1	**131-3093**	1	BUSHING	
	4	1	**265-9620**	1	ACTUATOR (ELECTRONIC)	
	5	1	**268-8769**	1	VALVE & MOUNTING AS-WATER	
	6	1	**4M-6582**	2	SEAL-O-RING	

M - METRIC PART

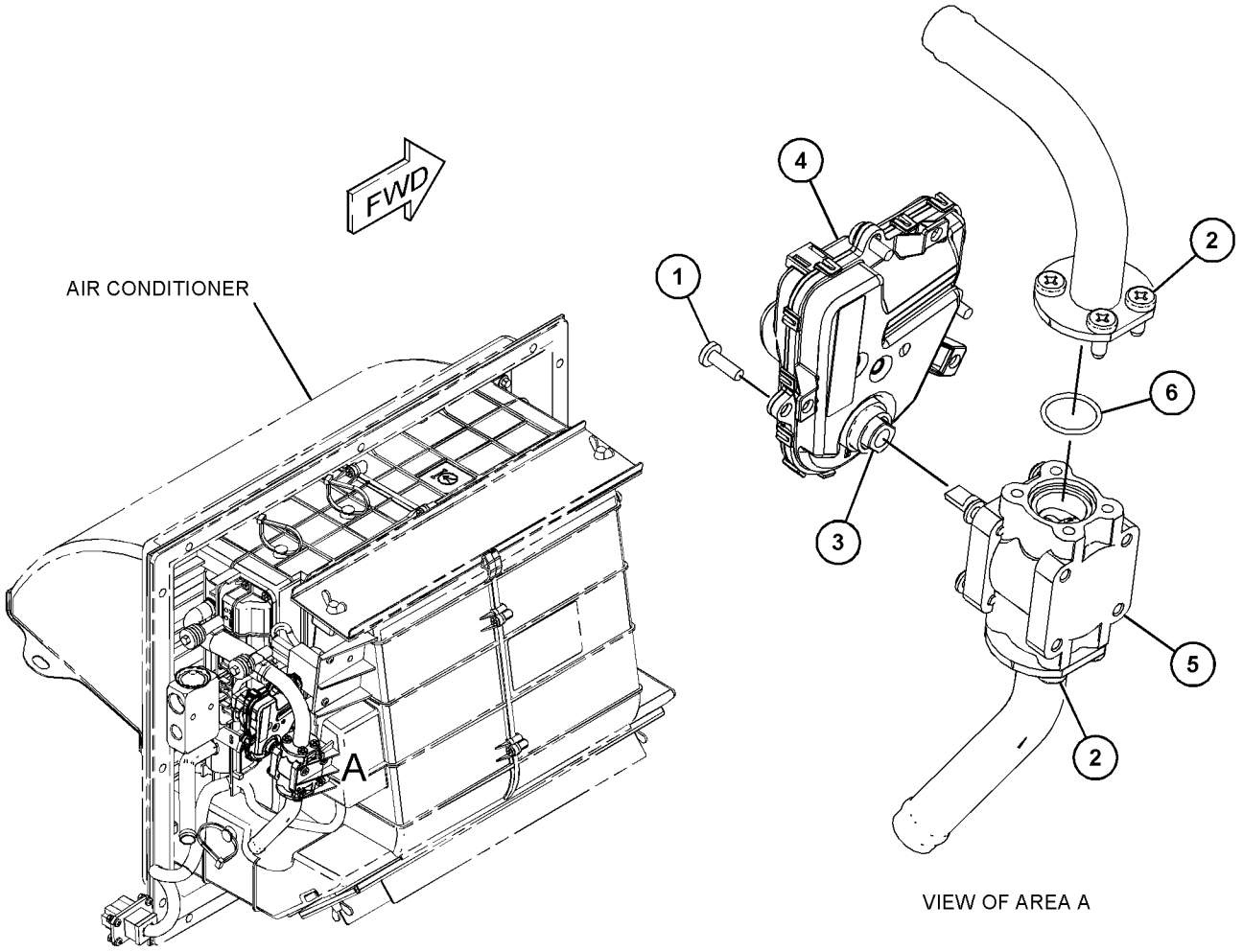

GRAPHIC #1 **<END>** g03799149

391-5330 VISOR GP-CAB

S/N: M5K1-UP
REAR
AN ATTACHMENT

SMCS-7301 **i05406146**

NOTE	REF NO	GRAPHIC REF	PART NUMBER	QTY	PART NAME 1 2 3 4 5 6 (PRODUCT LEVEL)	SEE PAGE
	1	1	**392-5588**	1	VISOR AS	
M	2	1	**3E-8020**	4	SCREW-TRUSS HEAD (M6X1X25-MM)	

M - METRIC PART

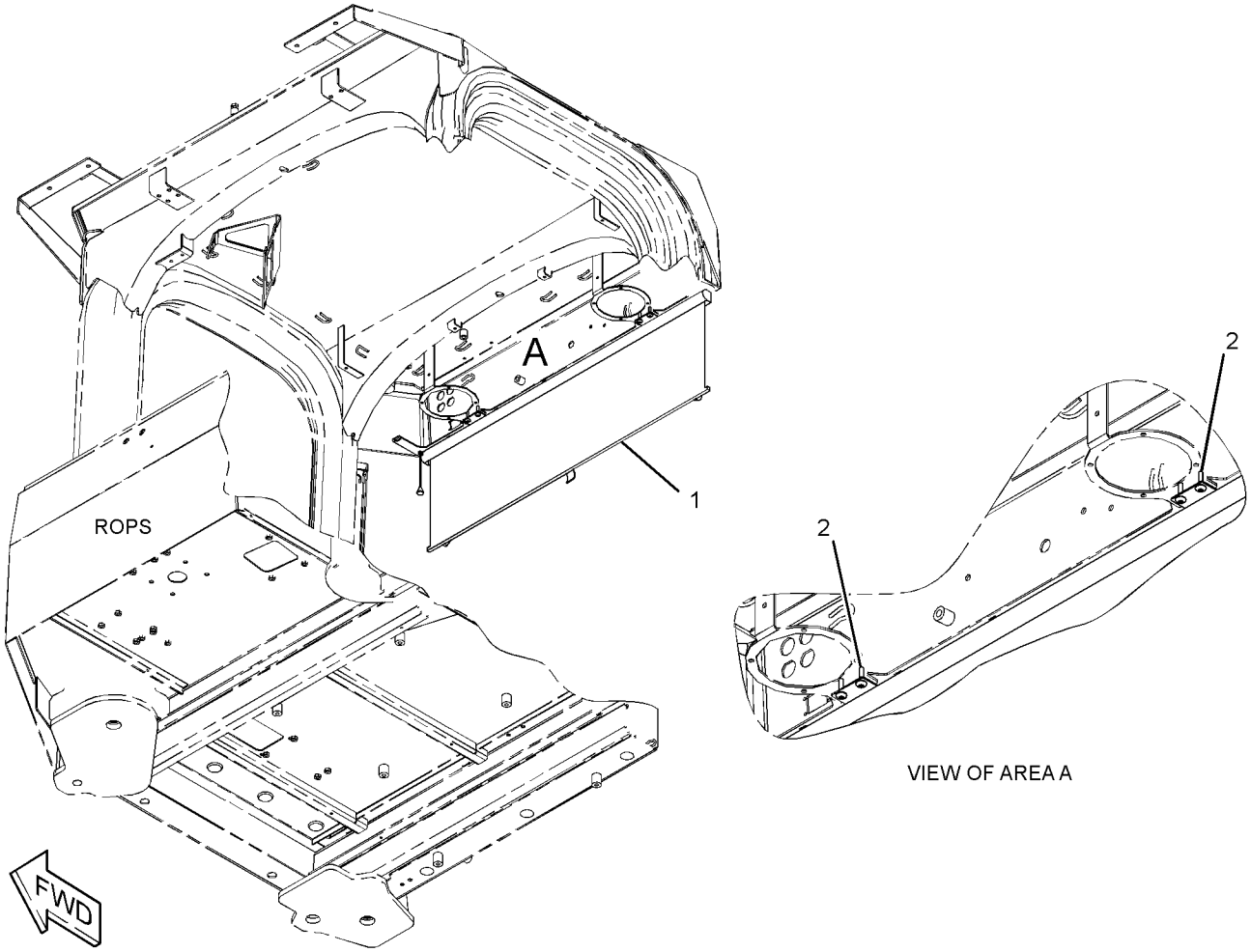

VIEW OF AREA A

GRAPHIC #1 **<END>** g03422556

387-6031 WASHER GP-WINDOW

S/N: M5K1-UP

PART OF 391-5302 INSTALLATION GP-CAB

SMCS-7306 **i05435626**

NOTE	REF NO	GRAPHIC REF	PART NUMBER	QTY	PART NAME 1 2 3 4 5 6 (PRODUCT LEVEL)	SEE PAGE
	1	1	**394-0461**	1	TANK GP-WINDOW WASHER	
		1	**425-0083**	2	PUMP AS-WASHER	
		1	**425-0085**	1	CAP-VENTED	
M	2	1	**5C-9553**	4	BOLT (M6X1X16-MM)	
	3	1	**8T-4205**	4	WASHER-HARD (7.2X14.5X2-MM THK)	

M - METRIC PART

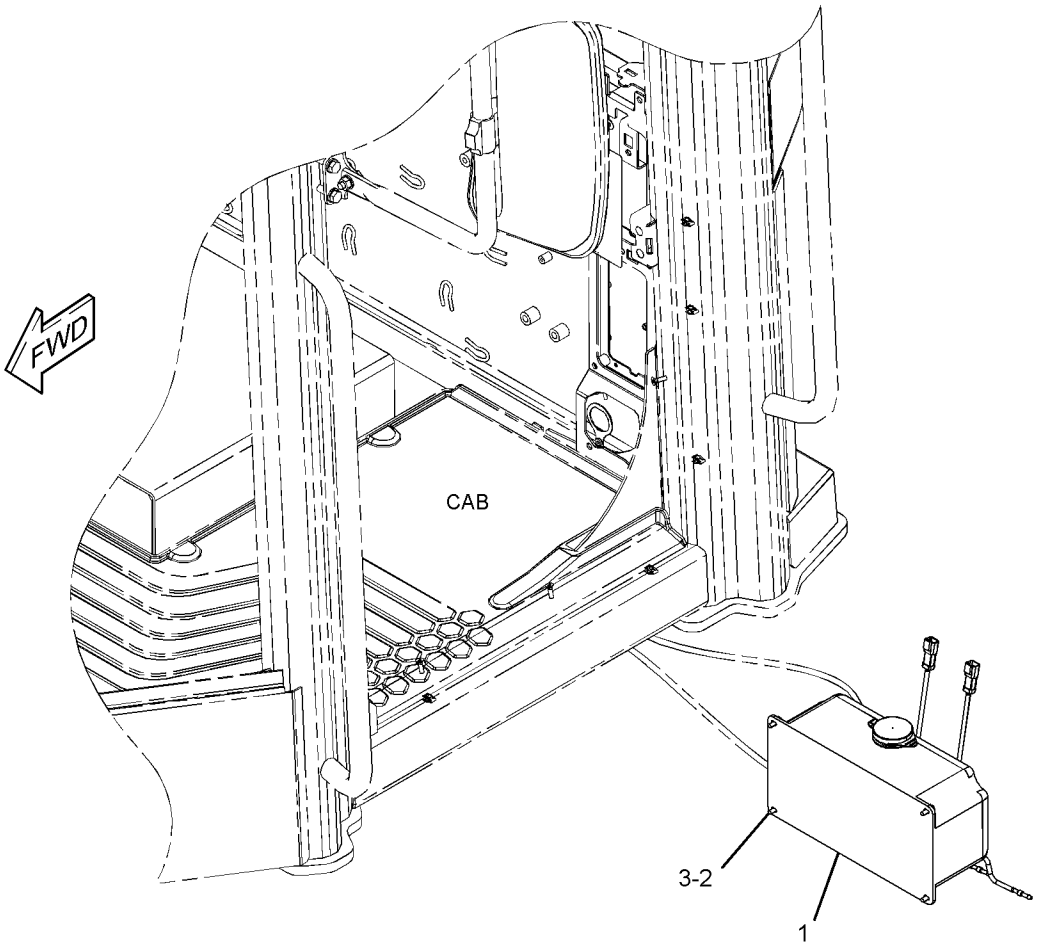

GRAPHIC #1 **<END>** g03529496

391-5304 WINDOW GP-CAB

S/N: M5K1-UP
CANNOT BE USED WITH 391-5305 WINDOW GP-CAB
AN ATTACHMENT

SMCS-7310 **i05411925**

NOTE	REF NO	GRAPHIC REF	PART NUMBER	QTY	PART NAME 1 2 3 4 5 6 (PRODUCT LEVEL)	SEE PAGE
	1	1	**390-6075**	1	GLASS-FRONT	
	2	1	**390-6076**	1	GLASS-FRONT (LH)	
	3	1	**390-6077**	1	GLASS-FRONT (RH)	
	4	1	**390-6086**	1	GLASS-REAR (LH)	
	5	1	**390-6087**	1	GLASS-REAR (RH)	
	6	1	**394-5950**	1	GLASS AS-HEATED	
		1	**102-8802**	1	KIT-RECEPTACLE (2-PIN)	
					(INCLUDES RECEPTACLE AS & WEDGE)	
		1	**126-1767**	2	PIN-CONNECTOR (14-GA TO 16-GA)	
	7	1	*415-4233*	1	SWITCH GP-ROCKER (DEFROSTER)	
		1	**248-2841**	1	RELAY AS (24-VOLT) (RESISTOR)	
		1	**351-0887**	1	SWITCH AS-ROCKER (DEFROSTER)	

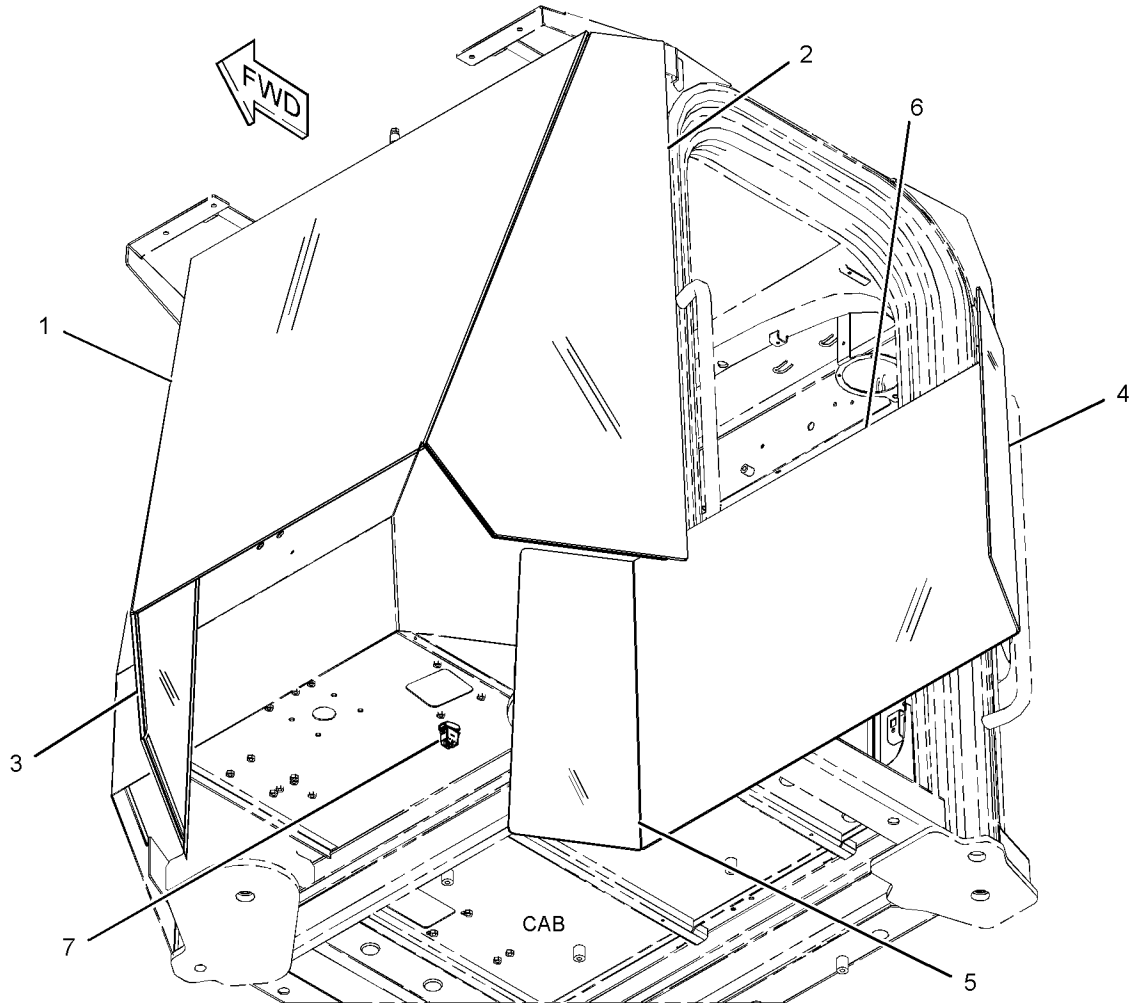

GRAPHIC #1 **<END>** g03428192

391-5305 WINDOW GP-CAB

S/N: M5K1-UP

CANNOT BE USED WITH 391-5304 WINDOW GP-FRONT

AN ATTACHMENT

SMCS-7310 **i05405640**

NOTE	REF NO	GRAPHIC REF	PART NUMBER	QTY	PART NAME 1 2 3 4 5 6 (PRODUCT LEVEL)	SEE PAGE
	1	1	**390-6075**	1	GLASS-FRONT	
	2	1	**390-6076**	1	GLASS-FRONT (LH)	
	3	1	**390-6077**	1	GLASS-FRONT (RH)	
	4	1	**390-6086**	1	GLASS-REAR (LH)	
	5	1	**390-6087**	1	GLASS-REAR (RH)	
	6	1	**390-6088**	1	GLASS-REAR	

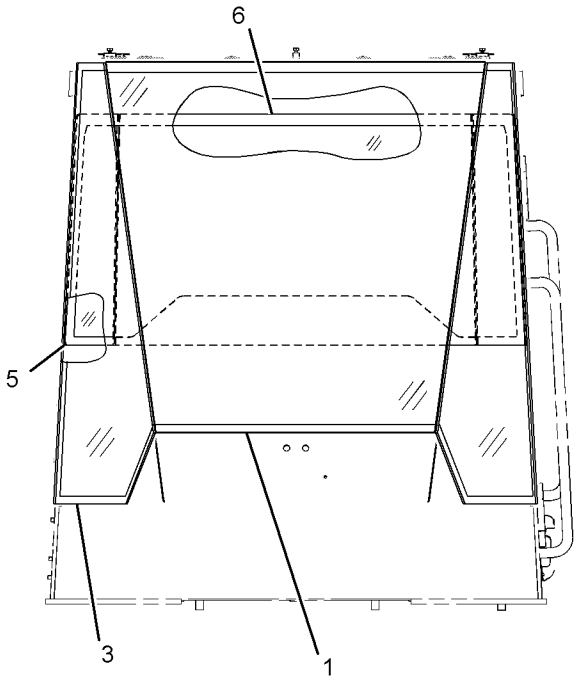

FRONT VIEW

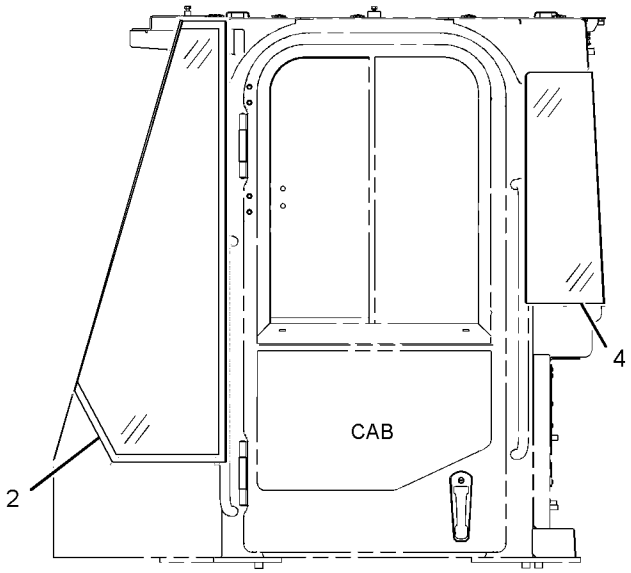

LEFT SIDE VIEW

GRAPHIC #1 **<END>** g03420606

OPERATOR STATION

392-3980 WINDOW GP-DOOR–LH

S/N: M5K1-UP

PART OF 391-5327 DOOR GP-CAB

SMCS-7308, 7310 **i05834455**

NOTE	REF NO	GRAPHIC REF	PART NUMBER	QTY	PART NAME 1 2 3 4 5 6 (PRODUCT LEVEL)	SEE PAGE
	1	1	**302-2136**	1	CATCH AS	
	2	1	**352-4897**	1	LOCK AS	
	3	1	**454-4269**	1	GLASS-SLIDING	
	4	1	**392-3985**	1	GLASS-FIXED	
	5	1	**394-5941**	1	RAIL	
	6	1	**394-5936**	2	SLIDER	
	7	1	**394-5937**	1	PILLAR	
	8	1	**425-0261**	1	SEAL	
	9	1	**425-0263**	1	SEAL	
E	10	1	**430-4119**		RUBBER (7.5-CM)	
E	10A	1	**430-4119**		RUBBER (2.5-CM EACH)	
E	11	1	**462-3639**		SEAL (114-CM)	
E	12	1	**462-3639**		SEAL (33.9-CM)	
E	13	1	**462-3639**		SEAL (140.2-CM)	
E	14	1	**462-3639**		SEAL (84.1-CM EACH)	

E - ORDER BY THE CENTIMETER

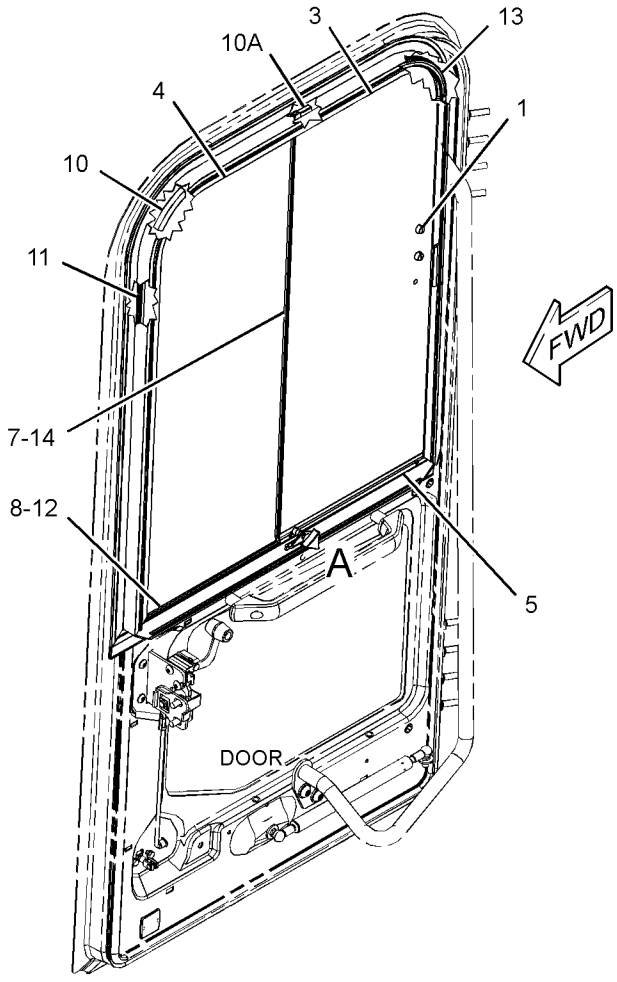

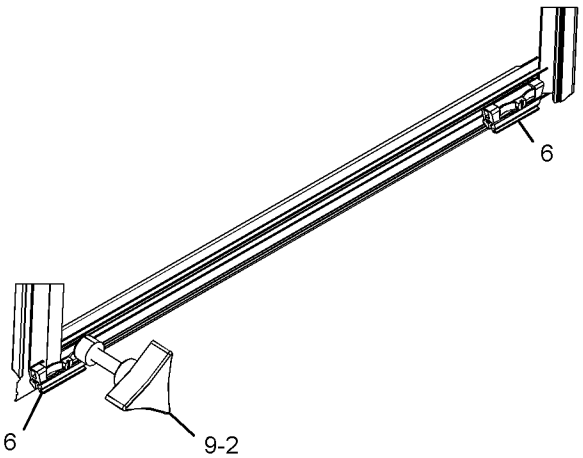

VIEW OF AREA A

GRAPHIC #1 **<END>** g03526478

OPERATOR STATION

392-3981 WINDOW GP-DOOR–RH

S/N: M5K1-UP

PART OF 391-5303 CAB GP-ENCLOSED ROPS

SMCS-7308, 7310 **i06064167**

NOTE	REF NO	GRAPHIC REF	PART NUMBER	QTY	PART NAME 1 2 3 4 5 6 (PRODUCT LEVEL)	SEE PAGE
	1	1	**302-2136**	1	CATCH AS	
	2	1	**352-4897**	1	LOCK AS	
	3	1	**394-5936**	2	SLIDER	
	4	1	**454-4268**	1	GLASS-SLIDING	
	5	1	**394-5939**	1	GLASS-FIXED	
	6	1	**394-5941**	1	RAIL	
	7	1	**394-5942**	1	PILLAR	
E	8	1	**430-4119**		RUBBER (2.5-CM EACH)	
E	8A	1	**430-4119**		RUBBER (7.5-CM)	
E	9	1	**425-0265**		SEAL (123-CM)	
	10	1	**392-3986**	1	SEAL	
	11	1	**394-5940**	1	SEAL	
	12	1	**424-8521**	1	SEAL	
E	13	1	**425-0260**		SEAL (146.3-CM)	
	14	1	**462-3639**		SEAL (91-CM EACH)	
	15	1	**447-0303**	1	STOP	

E - ORDER BY THE CENTIMETER

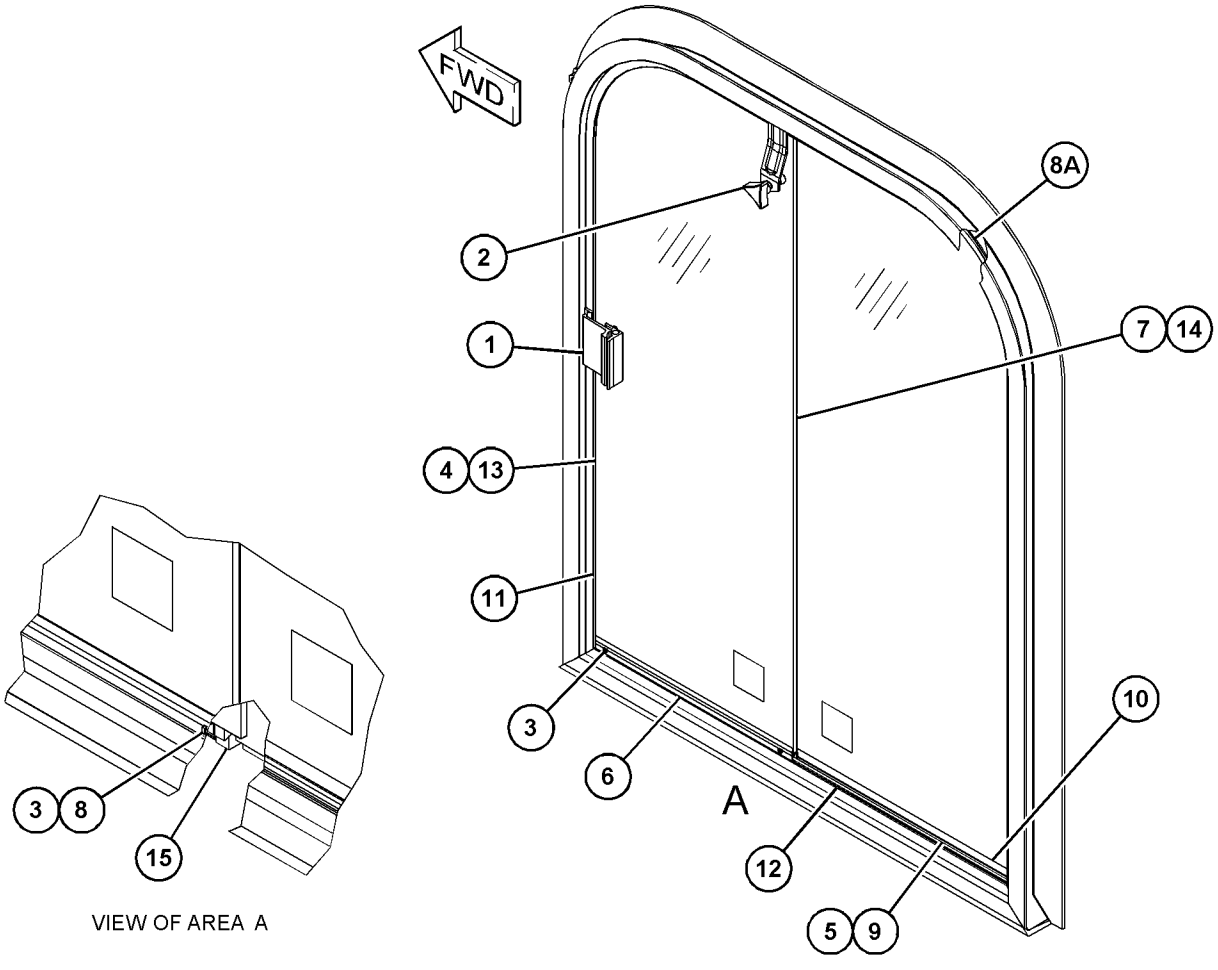

VIEW OF AREA A

GRAPHIC #1 **<END>** g03671825

391-5310 WIPER GP-WINDOW

S/N: M5K1-UP

PART OF 391-5301 CAB AR

SMCS-7305 **i05434462**

NOTE	REF NO	GRAPHIC REF	PART NUMBER	QTY	PART NAME 1 2 3 4 5 6 (PRODUCT LEVEL)	SEE PAGE
	1	1	**3S-2093**	5	STRAP-CABLE	
	2	1	**425-0076**	1	MOTOR GP-WINDOW WIPER (FRONT)	
M		1	**178-3336**	2	NUT-HEX FLANGE (M8X1.25-THD)	
		1	**425-0082**	2	CAP-WIPER	
	3	1	**425-0077**	1	ARM GP-WINDOW WIPER (FRONT)	
	4	1	**425-0078**	1	BLADE AS-WIPER (700-MM)	
	5	1	**425-0079**	1	MOTOR GP-WINDOW WIPER (REAR)	
M		1	**178-3336**	1	NUT-HEX FLANGE (M8X1.25-THD)	
		1	**425-0082**	1	CAP-WIPER	
	6	1	**425-0080**	1	ARM AS-WINDOW WIPER (REAR)	
	7	1	**425-0081**	1	BLADE AS-WIPER (450-MM)	
	8	1	**425-0084**	4	CONNECTOR AS	
	9	1	**206-1345**	6	STRAP-CABLE	
M	10	1	**5C-7261**	2	NUT (M8X1.25-THD)	
M	11	1	**8T-4189**	4	BOLT (M8X1.25X20-MM)	
	12	1	**8T-4224**	6	WASHER-HARD (8.8X16X2-MM THK)	
E	13	1	**144-0195**		HOSE (40-CM)	
	13A	1	**144-0195**		HOSE (250-CM)	
E	13B	1	**144-0195**		HOSE (220-CM)	
E	13C	1	**144-0195**		HOSE (270-CM)	

E - ORDER BY THE CENTIMETER
M - METRIC PART

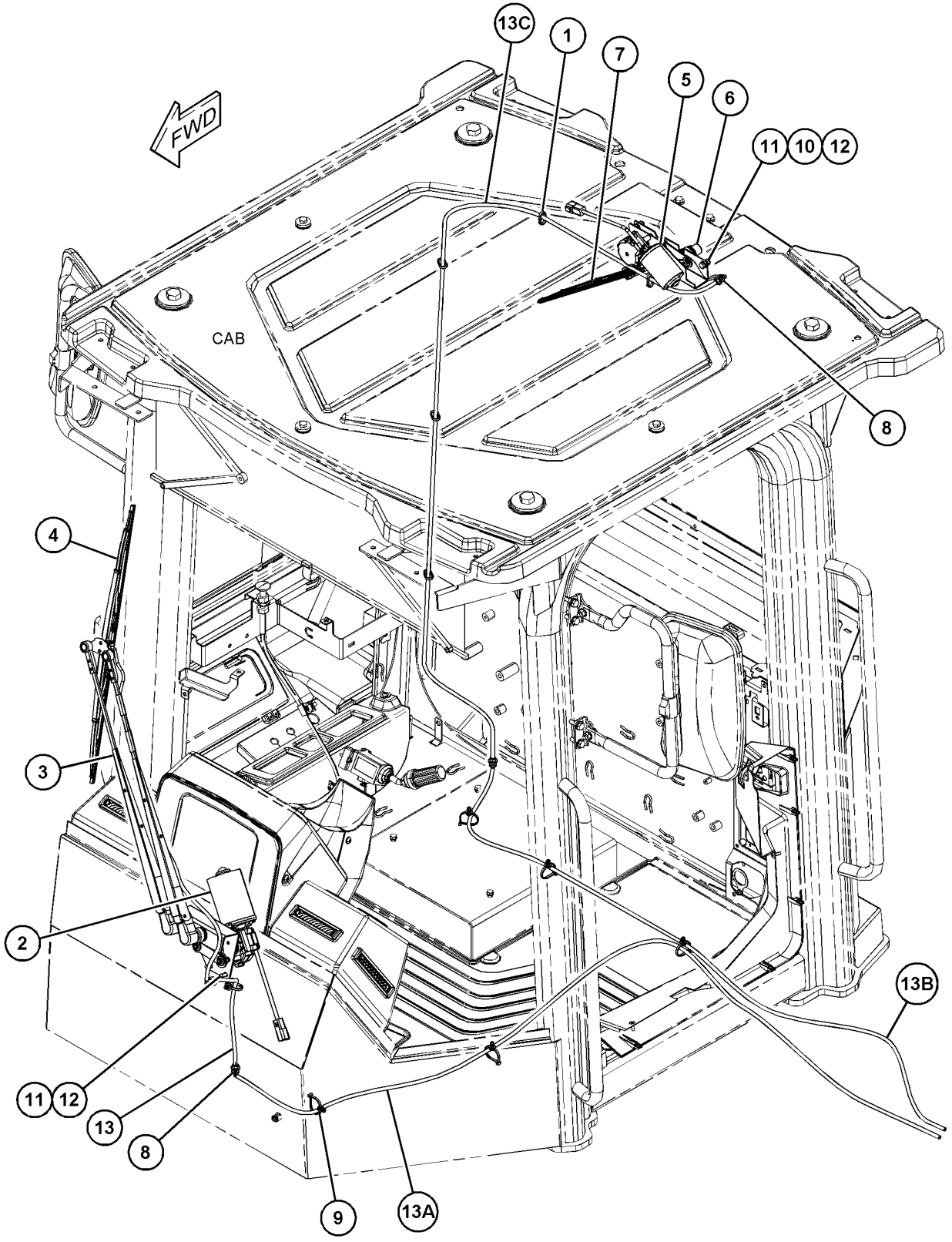

GRAPHIC #1 **<END>** g03528558

107-3411 ADAPTER GP-TIP

S/N: M5K1-UP

CANNOT BE USED WITH 361-1437—PAGE: 650, 139-9229—PAGE: 642, 257-1766—PAGE: 606, 229-6969—PAGE: 651

AN ATTACHMENT

SMCS-6803 **i05815833**

NOTE	PART NUMBER	QTY	PART NAME 1 2 3 4 5 6 (PRODUCT LEVEL)	SEE PAGE
	4T-4307	6	ADAPTER-STRAP	
	8E-5308	1	ADAPTER-STRAP (LH)	
	8E-5309	1	ADAPTER-STRAP (RH)	
	8T-9079	2	BOLT-PLOW (1-1/4-7X3.35-IN)	
	5P-8823	2	BOLT-PLOW (1-1/4-7X4.13-IN)	
	5P-8136	12	BOLT-PLOW (1-8X4-IN)	
	8J-2933	12	NUT (1-8-THD)	
	3K-9770	4	NUT-FULL (1-1/4-7-THD)	

<END>

257-1766 ADAPTER GP-TIP

S/N: M5K1-UP
K-80
AN ATTACHMENT

SMCS-6803 **i05397759**

NOTE	REF NO	GRAPHIC REF	PART NUMBER	QTY	PART NAME 1 2 3 4 5 6 (PRODUCT LEVEL)	SEE PAGE
	1	1	**2J-5997**	4	LOCKNUT (1-1/4-7-THD)	
	2	1	**8J-2933**	12	NUT (1-8-THD)	
	3	1	**222-1087**	6	ADAPTER-TIP (K-80, 2-STRAP, CENTER)	
	4	1	**222-1088**	1	ADAPTER-TIP (K-80, RH)	
	5	1	**222-1089**	1	ADAPTER-TIP (K-80, LH)	
	6	1	**5P-8136**	12	BOLT-PLOW (1-8X4-IN)	
	7	1	**6V-6535**	2	BOLT-PLOW (1-1/4-7X3.74-IN)	
	8	1	**8T-9079**	2	BOLT-PLOW (1-1/4-7X3.35-IN)	

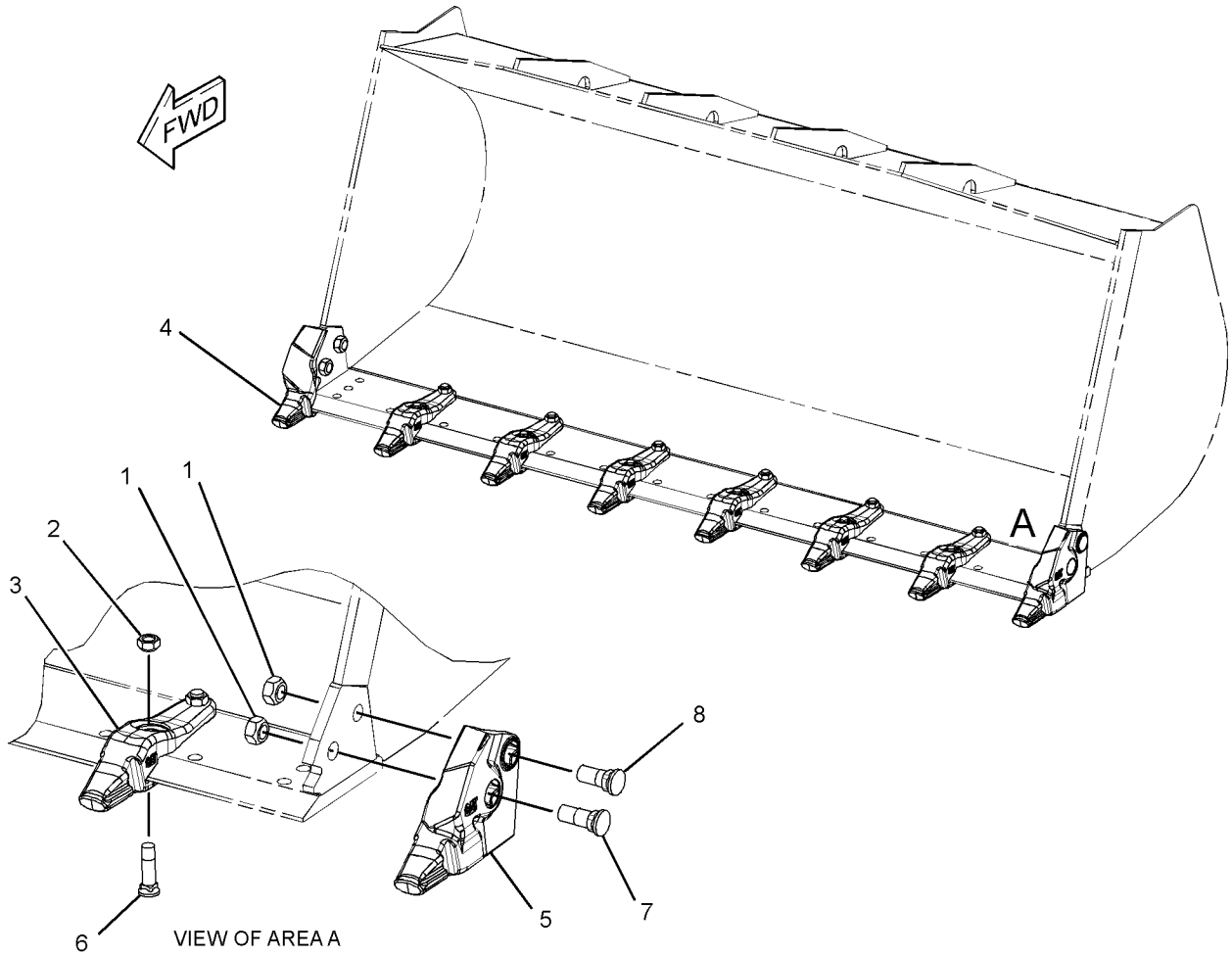

GRAPHIC #1 **<END>** g02153204

384-5554 BUCKET AS-GENERAL PURPOSE

S/N: M5K1-UP
2.87-CU M (3.75-CU YD). 3.1-CU M (4.00-CU YD) W/BOLT-ON CUTTING EDGES
PART OF 382-9834 BUCKET GP-GENERAL PURPOSE
AN ATTACHMENT

SMCS-6101 **i05398105**

NOTE	REF NO	GRAPHIC REF	PART NUMBER	QTY	PART NAME 1 2 3 4 5 6 (PRODUCT LEVEL)	SEE PAGE
	1	1	**141-4847**	1	EDGE	
	2	1	*384-5556*	1	PLATE AS-SIDE (RH)	
	2A	1	**2C-9259**	1	PLATE-IDENTIFICATION (CAT)	
	2B	1	**8E-5300**	1	CORNER (RH)	
	2C	1	**384-5573**	1	PLATE-SIDE BAR	
	2D	1	**384-5574**	1	PLATE-WEAR	
	3	1	*384-5557*	1	PLATE AS-SIDE (LH)	
	3A	1	**2C-9259**	1	PLATE-IDENTIFICATION (CAT)	
	3B	1	**8E-5301**	1	CORNER (LH)	
	3C	1	**384-5573**	1	PLATE-SIDE BAR	
	3D	1	**384-5574**	1	PLATE-WEAR	
	4	1	**384-5559**	1	PLATE-WEAR	
	5	1	**384-5560**	2	PLATE-HOOK	
	6	1	**384-5568**	2	PLATE-WEAR	

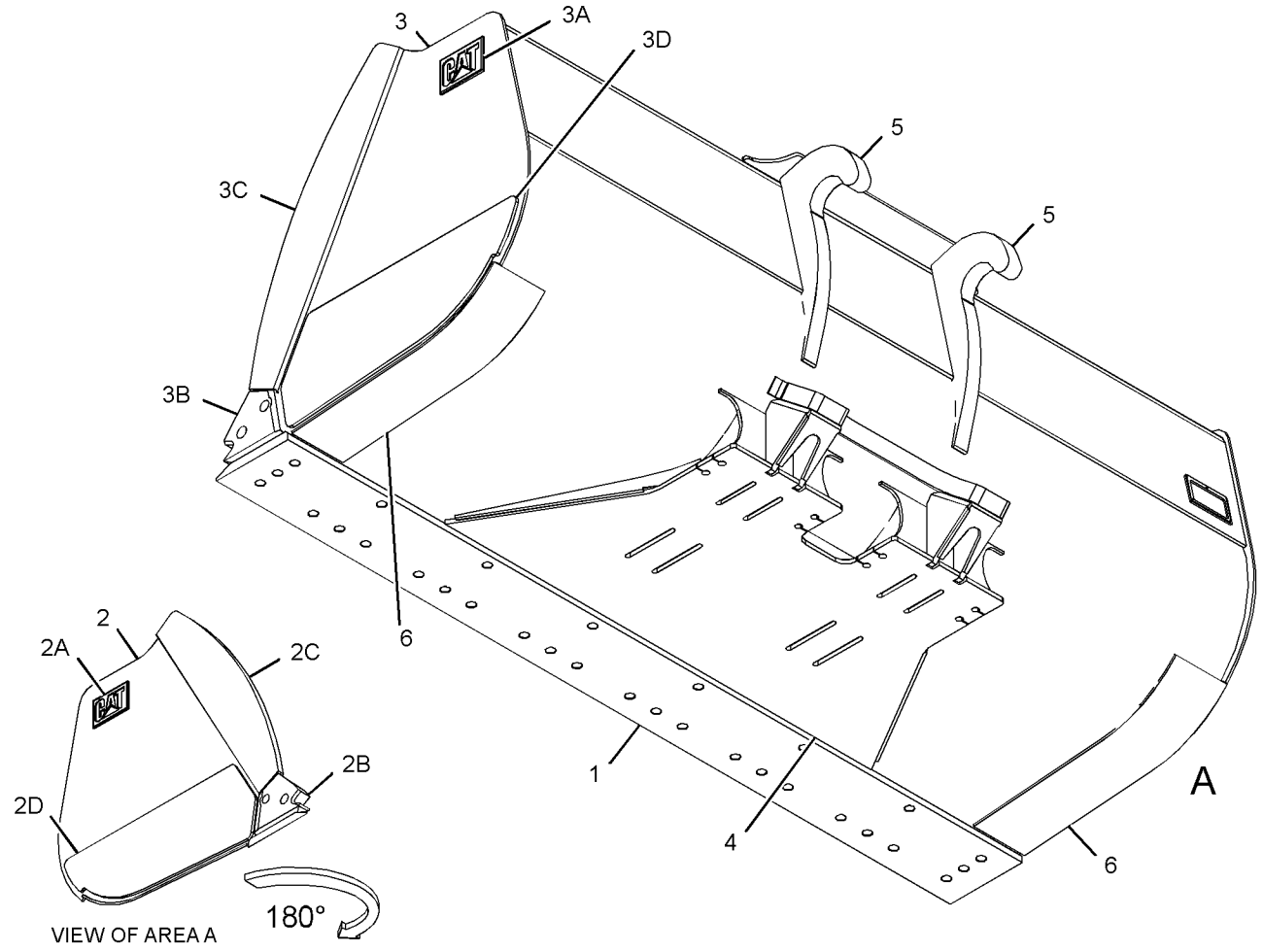

GRAPHIC #1 **<END>** g03029457

391-4951 BUCKET AS-GENERAL PURPOSE

S/N: M5K1-UP
3.08-CU M (4.00-CU YD) W/ BOLT-ON CUTTING EDGES
PART OF 391-4950 BUCKET GP-GENERAL PURPOSE
AN ATTACHMENT

SMCS-6101 **i05398684**

NOTE	REF NO	GRAPHIC REF	PART NUMBER	QTY	PART NAME 1 2 3 4 5 6 (PRODUCT LEVEL)	SEE PAGE
	1	1	**391-4976**	2	PLATE-WEAR	
	2	1	**141-4847**	1	EDGE	
	3	1	*391-4958*	1	PLATE AS-HINGE (TILT, RH)	
M	3A	1	**147-7633**	1	BOSS-TAPPED (M20X2.5X38-MM)	
	4	1	**147-2864**	2	PAD-WEAR	
	5	1	*391-4956*	1	PLATE AS-HINGE (LIFT, OUTER, LH)	
M	5A	1	**147-7633**	1	BOSS-TAPPED (M20X2.5X38-MM)	
	6	1	*391-4954*	1	PLATE AS-HINGE (LIFT, OUTER, RH)	
M	6A	1	**147-7633**	1	BOSS-TAPPED (M20X2.5X38-MM)	
	7	1	**384-5568**	2	PLATE-WEAR	
	8	1	*384-5557*	1	PLATE AS-SIDE (LH)	
	8A	1	**2C-9259**	1	PLATE-IDENTIFICATION (CAT)	
	8B	1	**8E-5301**	1	CORNER (LH)	
	8C	1	**384-5573**	1	PLATE-SIDE BAR	
	8D	1	**384-5574**	1	PLATE-WEAR	
	9	1	*384-5556*	1	PLATE AS-SIDE (RH)	
	9A	1	**2C-9259**	1	PLATE-IDENTIFICATION (CAT)	
	9B	1	**8E-5300**	1	CORNER (RH)	
	9C	1	**384-5573**	1	PLATE-SIDE BAR	
	9D	1	**384-5574**	1	PLATE-WEAR	

M - METRIC PART

391-4951 **BUCKET AS-GENERAL PURPOSE (*contd.*)** **i05398684**

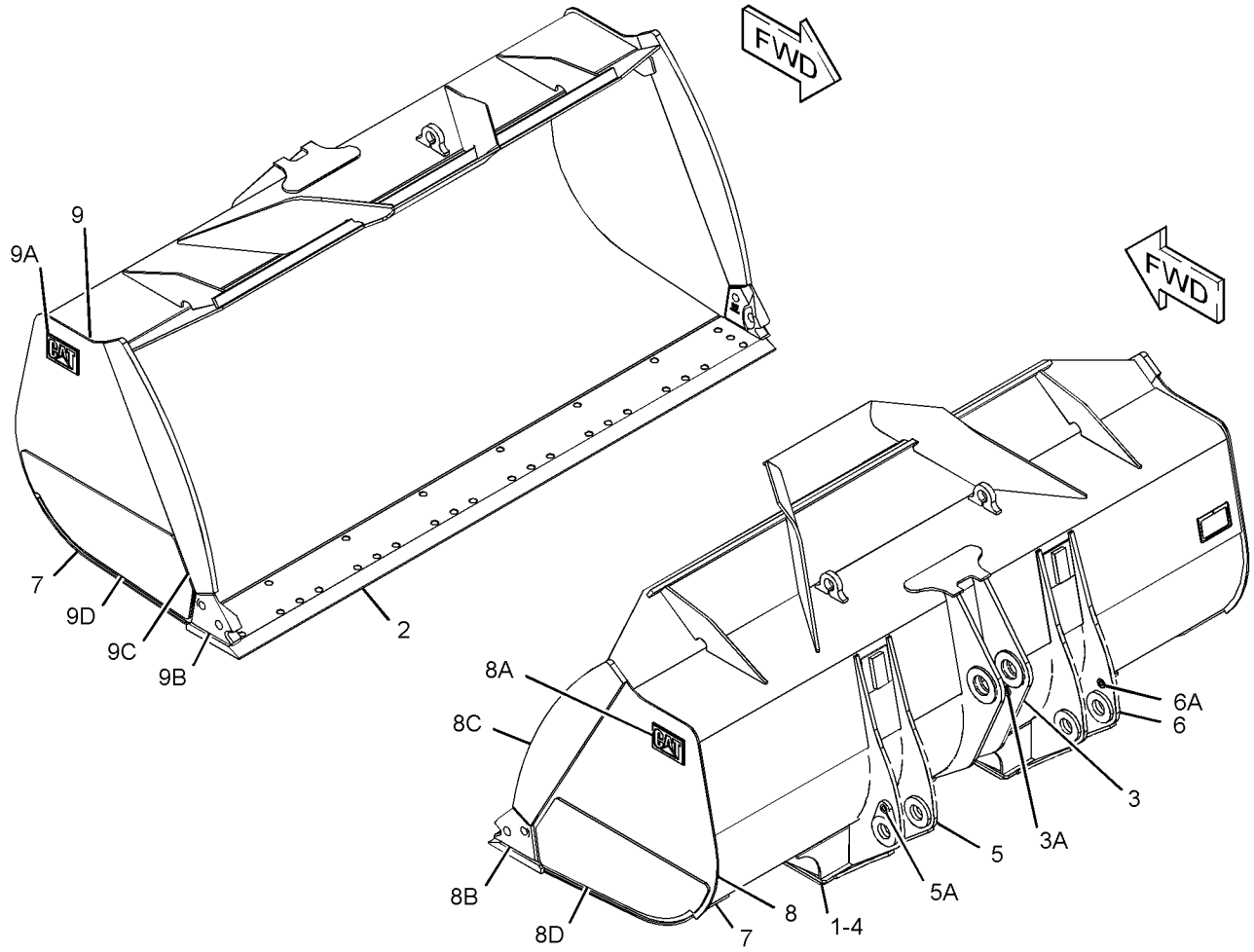

GRAPHIC #1 **<END>** g03423458

394-8478 BUCKET AS-GENERAL PURPOSE

S/N: M5K1-UP
3.4-CU M (4.5-CU YD) W/ BOLT-ON CUTTING EDGES
PART OF 394-8476 BUCKET GP-GENERAL PURPOSE
AN ATTACHMENT

SMCS-6101 **i05406812**

NOTE	REF NO	GRAPHIC REF	PART NUMBER	QTY	PART NAME 1 2 3 4 5 6 (PRODUCT LEVEL)	SEE PAGE
	1	1	**141-4847**	1	EDGE	
	2	1	**147-2864**	2	PAD-WEAR	
	3	1	**360-8095**	4	PLATE	
	4	1	*384-5579*	1	PLATE AS-SIDE (RH)	
	4A	1	**2C-9259**	1	PLATE-IDENTIFICATION (CAT)	
	4B	1	**8E-5300**	1	CORNER (RH)	
	4C	1	**384-5588**	1	PLATE-SIDE BAR	
	4D	1	**384-5589**	1	PLATE-WEAR	
	5	1	*384-5580*	1	PLATE AS-SIDE (LH)	
	5A	1	**2C-9259**	1	PLATE-IDENTIFICATION (CAT)	
	5B	1	**8E-5301**	1	CORNER (LH)	
	5C	1	**384-5588**	1	PLATE-SIDE BAR	
	5D	1	**384-5589**	1	PLATE-WEAR	
	6	1	**384-5583**	2	PLATE-WEAR	
	7	1	**391-4954**	1	PLATE AS-HINGE (LIFT, OUTER, RH)	
	8	1	**391-4955**	1	PLATE AS-HINGE (LIFT, INNER, LH)	
	8A	1	**391-4955**	1	PLATE AS-HINGE (LIFT, INNER, RH)	
	9	1	**391-4956**	1	PLATE AS-HINGE (LIFT, OUTER, LH)	
	10	1	**391-4957**	1	PLATE AS-HINGE (TILT, LH)	
	11	1	**391-4958**	1	PLATE AS-HINGE (TILT, RH)	
	12	1	**395-0379**	2	PLATE-WEAR	

394-8478 **BUCKET AS-GENERAL PURPOSE (*contd.*)** **i05406812**

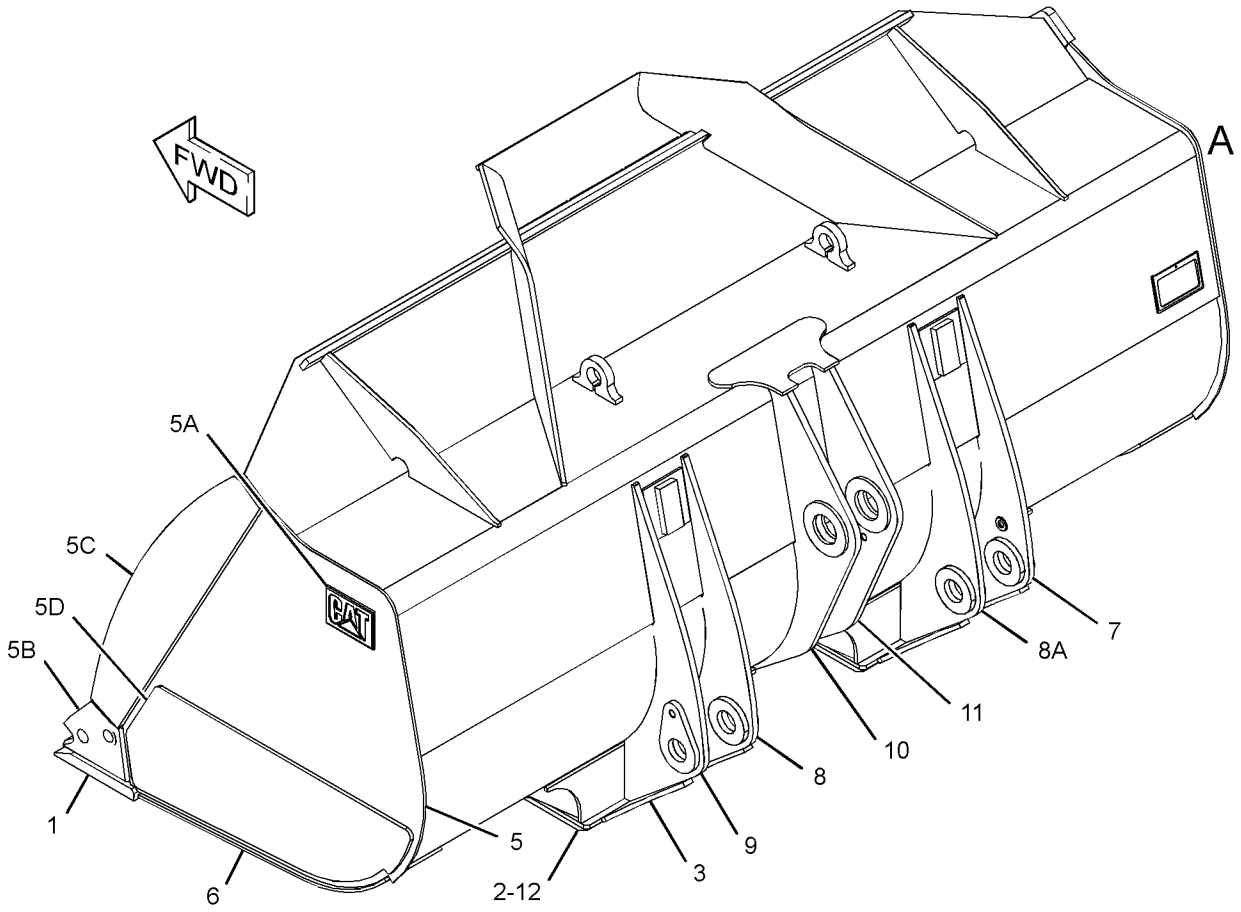

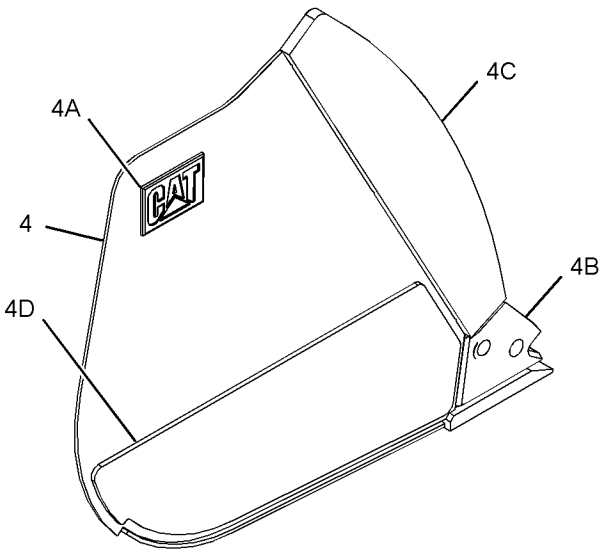

VIEW OF AREA A

90°

GRAPHIC #1 **<END>** g03370386

395-3266 BUCKET AS-GENERAL PURPOSE

S/N: M5K1-UP
3.3-CU M(4.25-CU YD) W/ BOLT ON EDGES
PART OF 395-3265 BUCKET GP-GENERAL PURPOSE
AN ATTACHMENT

SMCS-6101 **i05406833**

NOTE	REF NO	GRAPHIC REF	PART NUMBER	QTY	PART NAME 1 2 3 4 5 6 (PRODUCT LEVEL)	SEE PAGE
	1	1	**141-4847**	1	EDGE	
	2	1	**147-2864**	2	PAD-WEAR	
	3	1	*395-3340*	1	PLATE AS-SIDE (RH)	
	3A	1	**2C-9259**	1	PLATE-IDENTIFICATION (CAT)	
	3B	1	**8E-5300**	1	CORNER (RH)	
	3C	1	**384-5588**	1	PLATE-SIDE BAR	
	3D	1	**395-3353**	1	PLATE-WEAR	
	4	1	*395-3341*	1	PLATE AS-SIDE (LH)	
	4A	1	**2C-9259**	1	PLATE-IDENTIFICATION (CAT)	
	4B	1	**8E-5301**	1	CORNER (LH)	
	4C	1	**384-5588**	1	PLATE-SIDE BAR	
	4D	1	**395-3353**	1	PLATE-WEAR	
	5	1	**395-3344**	2	PLATE-WEAR	
	6	1	**395-3348**	2	PLATE-WEAR	

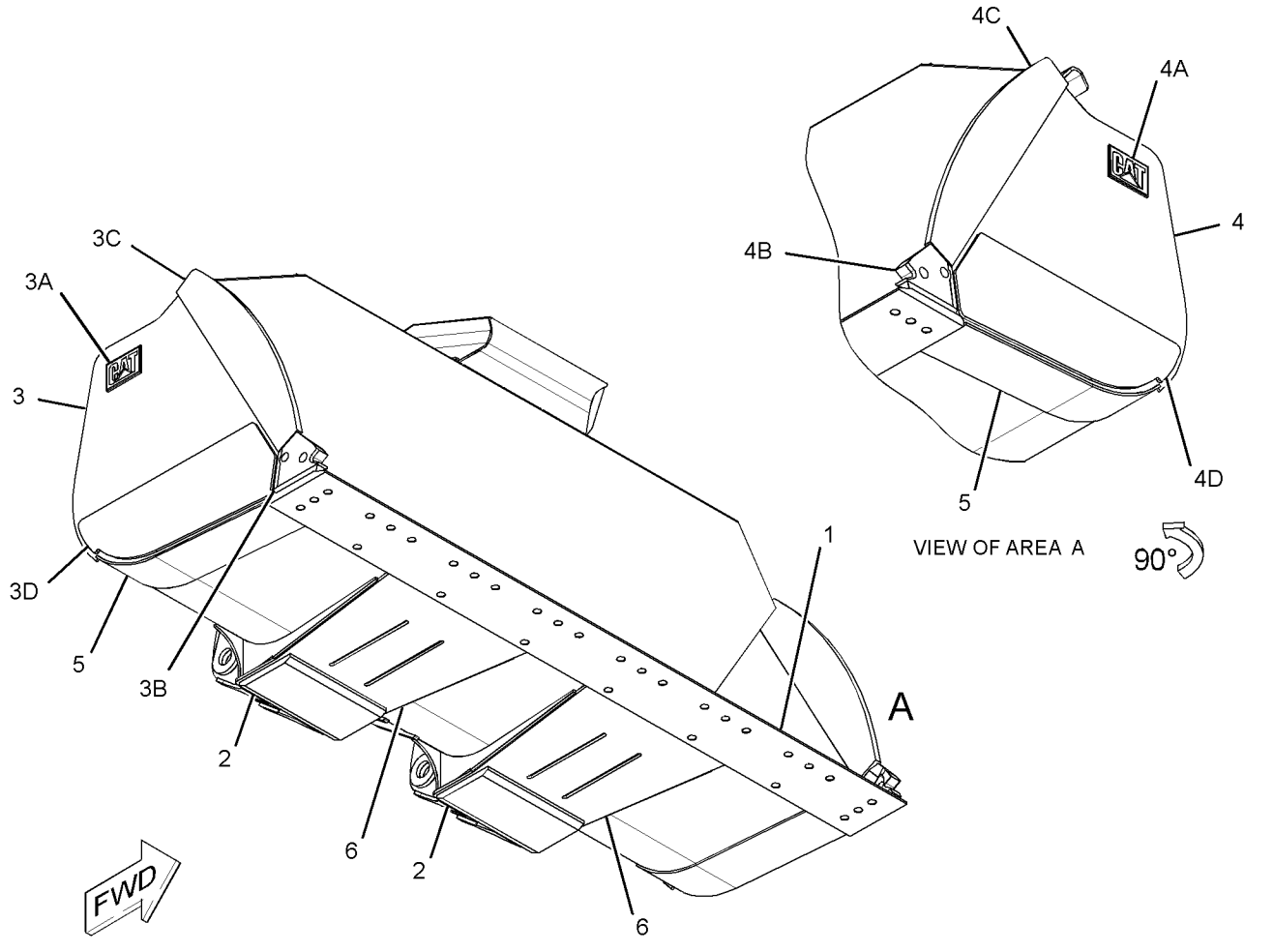

GRAPHIC #1 **<END>** g03027196

395-3950 BUCKET AS-GENERAL PURPOSE

S/N: M5K1-UP
3.6-CU M (4.75-CU YD) W/ BOLT ON EDGES
PART OF 395-3949 BUCKET GP-GENERAL PURPOSE
AN ATTACHMENT

SMCS-6101 **i05495950**

NOTE	REF NO	GRAPHIC REF	PART NUMBER	QTY	PART NAME 1 2 3 4 5 6 (PRODUCT LEVEL)	SEE PAGE
	1	1	**141-4847**	1	EDGE	
	2	1	**147-2864**	2	PAD-WEAR	
	3	1	*395-4224*	1	PLATE AS-SIDE (RH)	
	3A	1	**2C-9259**	1	PLATE-IDENTIFICATION (CAT)	
	3B	1	**8E-5300**	1	CORNER (RH)	
	3C	1	**395-4227**	1	PLATE-WEAR	
	4	1	*395-4225*	1	PLATE AS-SIDE (LH)	
	4A	1	**2C-9259**	1	PLATE-IDENTIFICATION (CAT)	
	4B	1	**8E-5301**	1	CORNER (LH)	
	4C	1	**395-4227**	1	PLATE-WEAR	
	5	1	**395-4232**	2	PLATE-WEAR	
	6	1	**395-4234**	2	PLATE-WEAR	

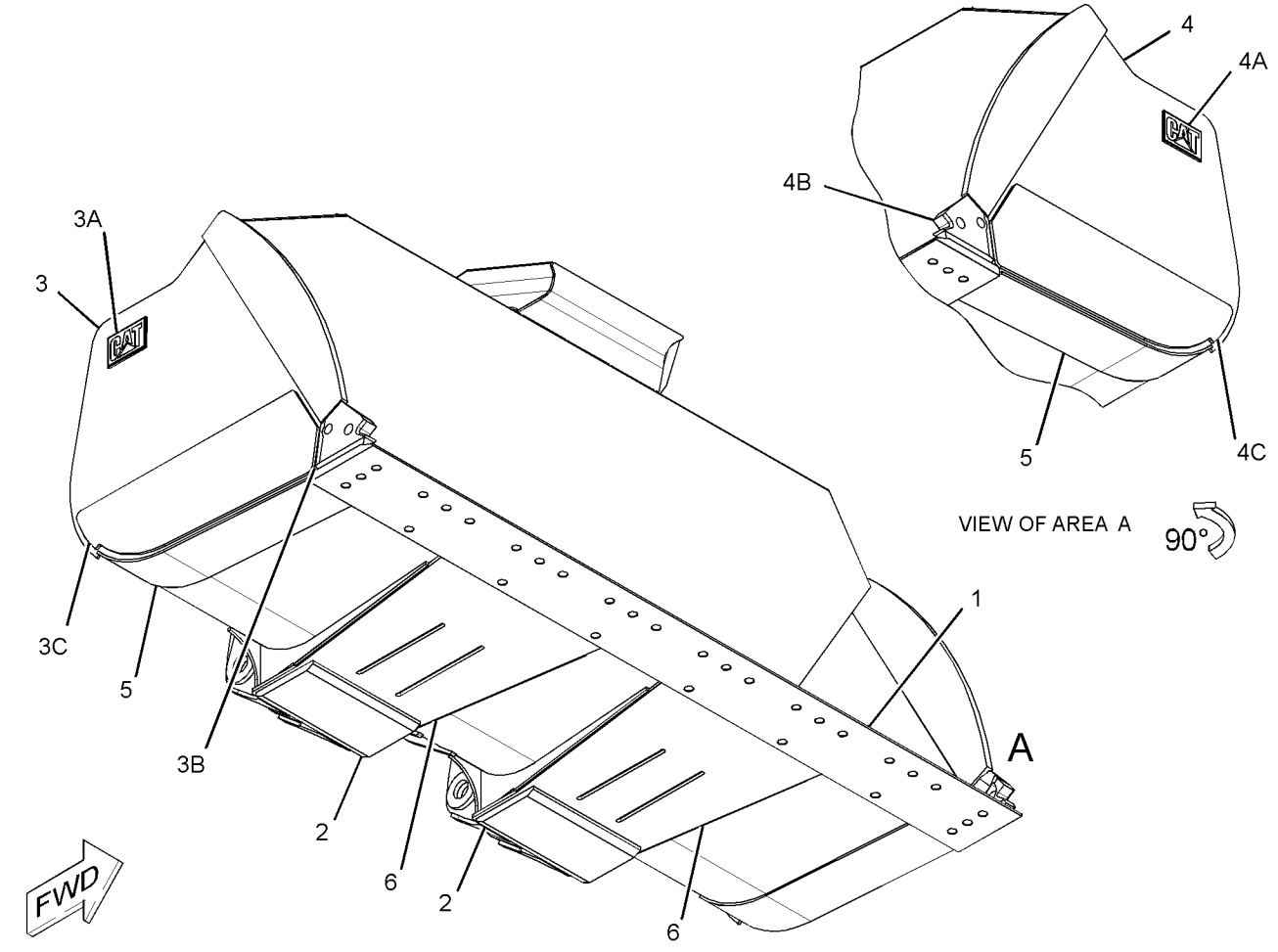

GRAPHIC #1 **<END>** g03027316

415-3252 BUCKET AS-GENERAL PURPOSE

S/N: M5K1-UP
2.7-CU M (3.5-CU YD) W/ BOLT-ON CUTTING EDGES
PART OF 415-3251 BUCKET GP-GENERAL PURPOSE
AN ATTACHMENT

SMCS-6101 **i06060532**

NOTE	REF NO	GRAPHIC REF	PART NUMBER	QTY	PART NAME 1 2 3 4 5 6 (PRODUCT LEVEL)	SEE PAGE
	1	1	**415-3267**	2	PLATE-WEAR	
	2	1	**141-4847**	1	EDGE	
	3	1	**415-3264**	2	PLATE-WEAR	
	4	1	**147-2864**	2	PAD-WEAR	
	5	1	*415-3260*	1	PLATE AS-SIDE (LH)	
	5A	1	**2C-9259**	1	PLATE-IDENTIFICATION (CAT)	
	5B	1	**8E-5301**	1	CORNER (LH)	
	5C	1	**415-3271**	1	PLATE-SIDE BAR	
	5D	1	**415-3272**	1	PLATE-WEAR	
	6	1	*415-3259*	1	PLATE AS-SIDE (RH)	
	6A	1	**2C-9259**	1	PLATE-IDENTIFICATION (CAT)	
	6B	1	**8E-5300**	1	CORNER (RH)	
	6C	1	**415-3271**	1	PLATE-SIDE BAR	
	6D	1	**415-3272**	1	PLATE-WEAR	

415-3252 **BUCKET AS-GENERAL PURPOSE (*contd.*)** **i06060532**

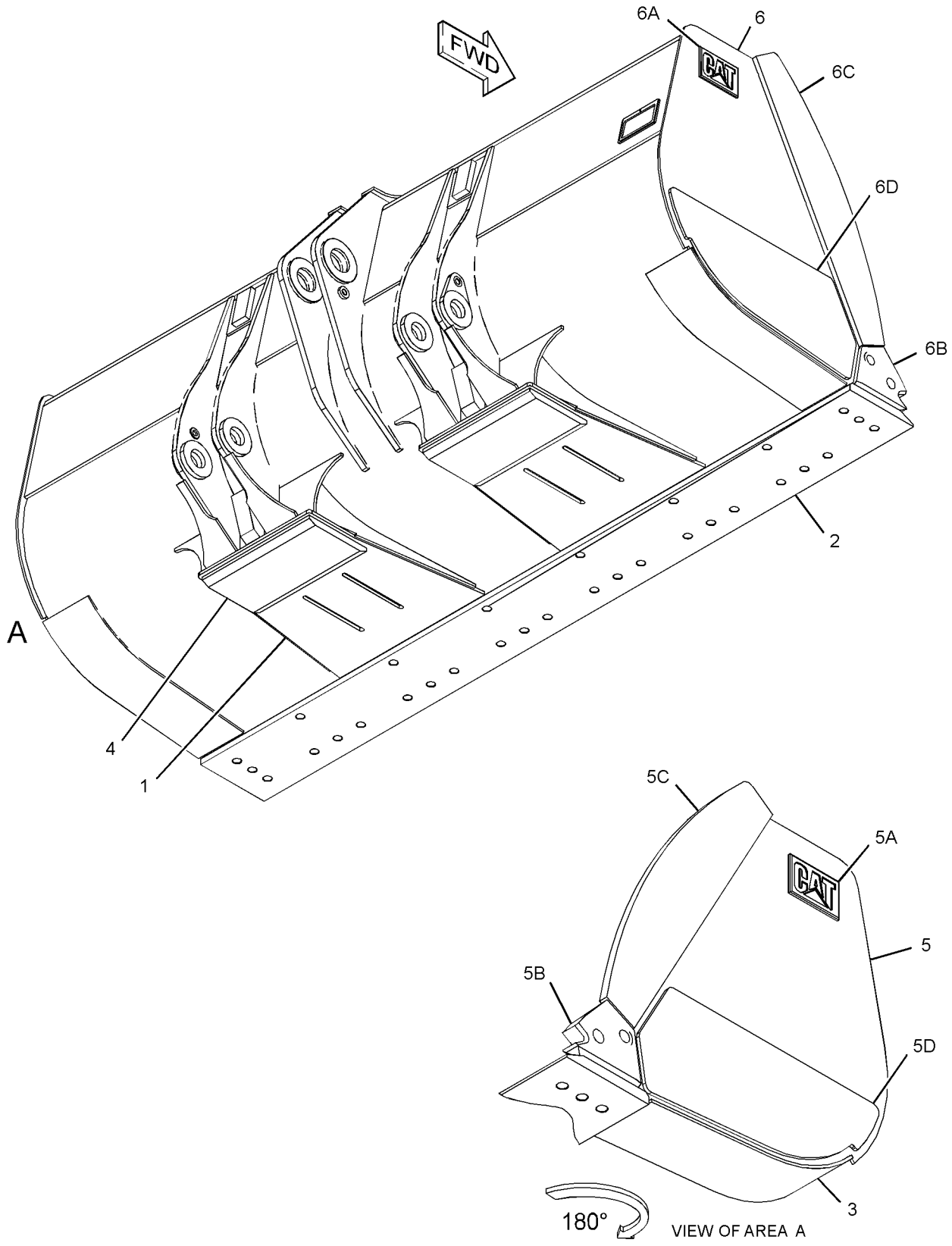

GRAPHIC #1 **<END>** g03410798

448-7760 BUCKET AS-GENERAL PURPOSE

S/N: M5K1-UP
2.9-CU M (3.8-CU YD) W/O BOLT-ON CUTTING EDGE. 3.1-CU M (4.0-CU YD) W/ BOLT-ON CUTTING EDGE
PART OF 448-5092 BUCKET GP-GENERAL PURPOSE
AN ATTACHMENT

SMCS-6101 **i05817021**

NOTE	REF NO	GRAPHIC REF	PART NUMBER	QTY	PART NAME 1 2 3 4 5 6 (PRODUCT LEVEL)	SEE PAGE
	1	1	*452-9291*	1	PLATE AS-HINGE (TILT, RH)	
M	1A	1	**147-7633**	1	BOSS-TAPPED (M20X2.5X38-MM)	
	2	1	*449-2049*	1	PLATE AS-HINGE (LIFT, OUTER, LH)	
M	2A	1	**147-7633**	1	BOSS-TAPPED (M20X2.5X38-MM)	
	3	1	**147-2864**	2	PAD-WEAR	
	4	1	*449-2047*	1	PLATE AS-HINGE (LIFT, OUTER, RH)	
M	4A	1	**147-7633**	1	BOSS-TAPPED (M20X2.5X38-MM)	
	5	1	*449-2045*	1	PLATE AS-SIDE (LH)	
	5A	1	**2C-9259**	1	PLATE-IDENTIFICATION (CAT)	
	5B	1	**8E-5301**	1	CORNER (LH)	
	5C	1	**448-7758**	1	PLATE-SIDE BAR	
	5D	1	**456-0408**	1	PLATE-WEAR	
	6	1	*449-2044*	1	PLATE AS-SIDE (RH)	
	6A	1	**2C-9259**	1	PLATE-IDENTIFICATION (CAT)	
	6B	1	**8E-5300**	1	CORNER (RH)	
	6C	1	**448-7758**	1	PLATE-SIDE BAR	
	6D	1	**456-0408**	1	PLATE-WEAR	
	7	1	**448-7759**	2	PLATE-WEAR	
	8	1	**448-7747**	2	PLATE-WEAR	

M - METRIC PART

448-7760 **BUCKET AS-GENERAL PURPOSE (*contd.*)** **i05817021**

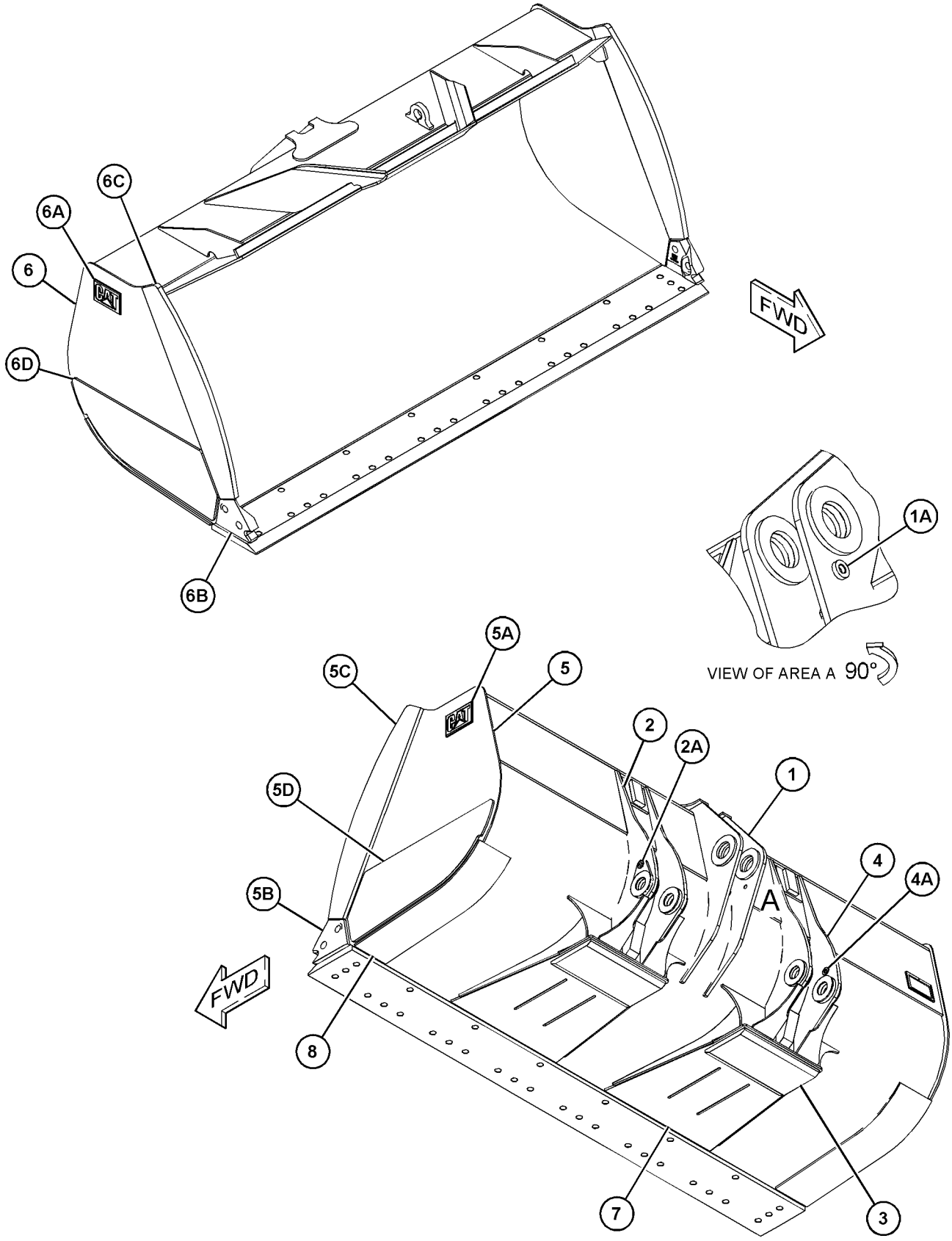

GRAPHIC #1 **<END>** g03693403

458-9406 BUCKET AS-GENERAL PURPOSE

S/N: M5K1-UP

2.9-CU M (3.8-CU YD) W/O BOLT-ON CUTTING EDGE. 3.1-CU M (4-CU YD) W/ BOLT-ON CUTTING EDGE

PART OF 448-5092 BUCKET GP-GENERAL PURPOSE

AN ATTACHMENT

SMCS-6101 **i05858220**

NOTE	REF NO	GRAPHIC REF	PART NUMBER	QTY	PART NAME 1 2 3 4 5 6 (PRODUCT LEVEL)	SEE PAGE
	1	1	**448-7759**	1	PLATE-WEAR	
	2	1	*458-9408*	1	PLATE AS-SIDE (RH)	
	2A	1	**2C-9259**	1	PLATE-IDENTIFICATION (CAT)	
	2B	1	**8E-5300**	1	CORNER (RH)	
	2C	1	**458-9413**	1	PLATE-SIDE BAR	
	2D	1	**458-9414**	1	PLATE-WEAR	
	3	1	*458-9409*	1	PLATE AS-SIDE (LH)	
	3A	1	**2C-9259**	1	PLATE-IDENTIFICATION (CAT)	
	3B	1	**8E-5301**	1	CORNER (LH)	
	3C	1	**458-9413**	1	PLATE-SIDE BAR	
	3D	1	**458-9414**	1	PLATE-WEAR	

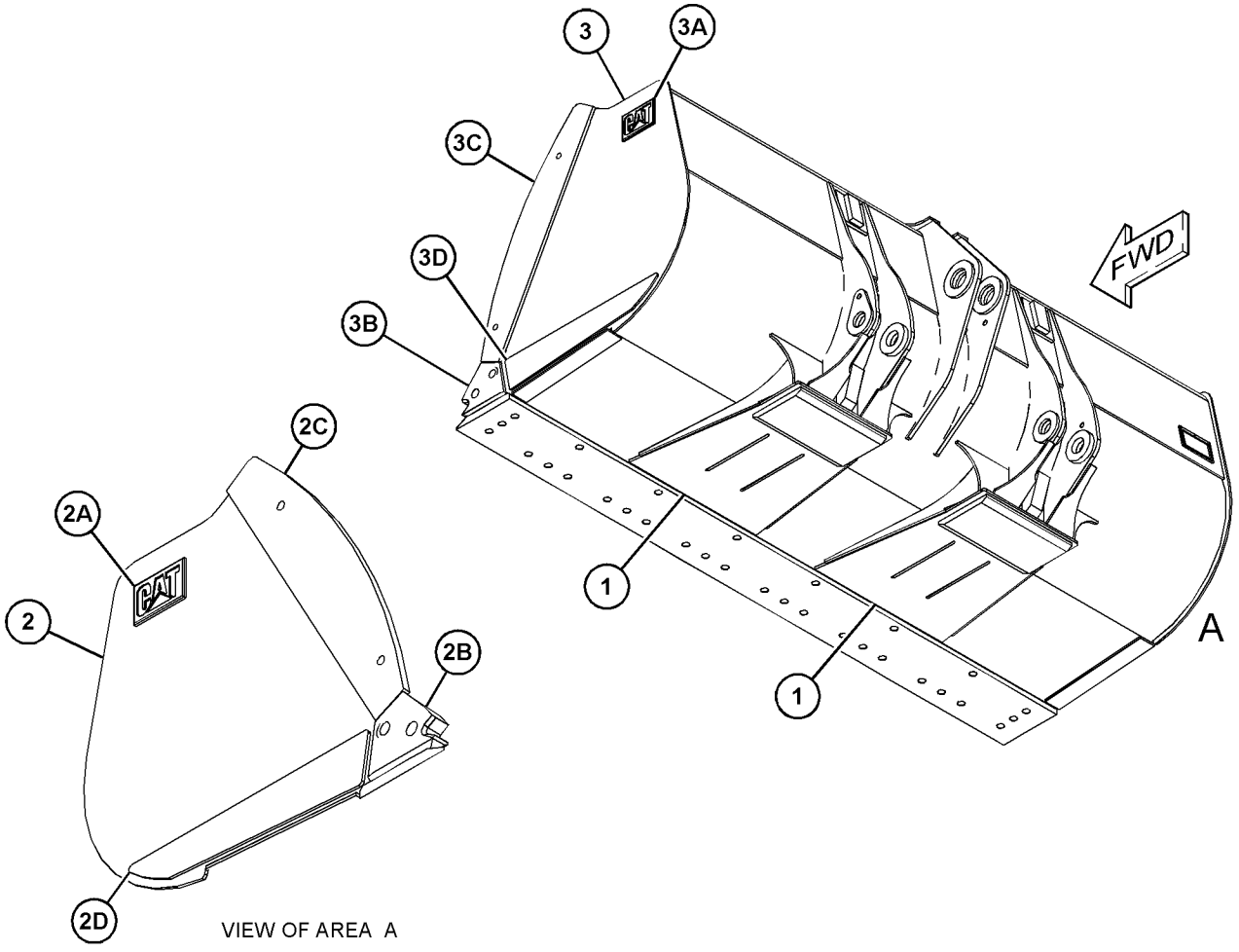

GRAPHIC #1 **<END>** g03702468

461-9047 BUCKET AS-GENERAL PURPOSE

S/N: M5K1-UP

3.1-CU M (4.0-CU YD) W/O BOLT-ON CUTTING EDGE. 3.3-CU M (4.3-CU YD) W/BOLT-ON CUTTING EDGE

PART OF 461-6531 BUCKET GP-GENERAL PURPOSE

AN ATTACHMENT

SMCS-6101 **i05817929**

NOTE	REF NO	GRAPHIC REF	PART NUMBER	QTY	PART NAME 1 2 3 4 5 6 (PRODUCT LEVEL)	SEE PAGE
	1	1	**461-9059**	2	PLATE-WEAR	
	2	1	*461-9051*	1	PLATE AS-SIDE (LH)	
	2A	1	**2C-9259**	1	PLATE-IDENTIFICATION (CAT)	
	2B	1	**8E-5301**	1	CORNER (LH)	
	2C	1	**461-9064**	1	PLATE-SIDE BAR	
	2D	1	**461-9066**	1	PLATE-WEAR	
	3	1	*461-9050*	1	PLATE AS-SIDE (RH)	
	3A	1	**2C-9259**	1	PLATE-IDENTIFICATION (CAT)	
	3B	1	**8E-5300**	1	CORNER (RH)	
	3C	1	**461-9064**	1	PLATE-SIDE BAR	
	3D	1	**461-9066**	1	PLATE-WEAR	

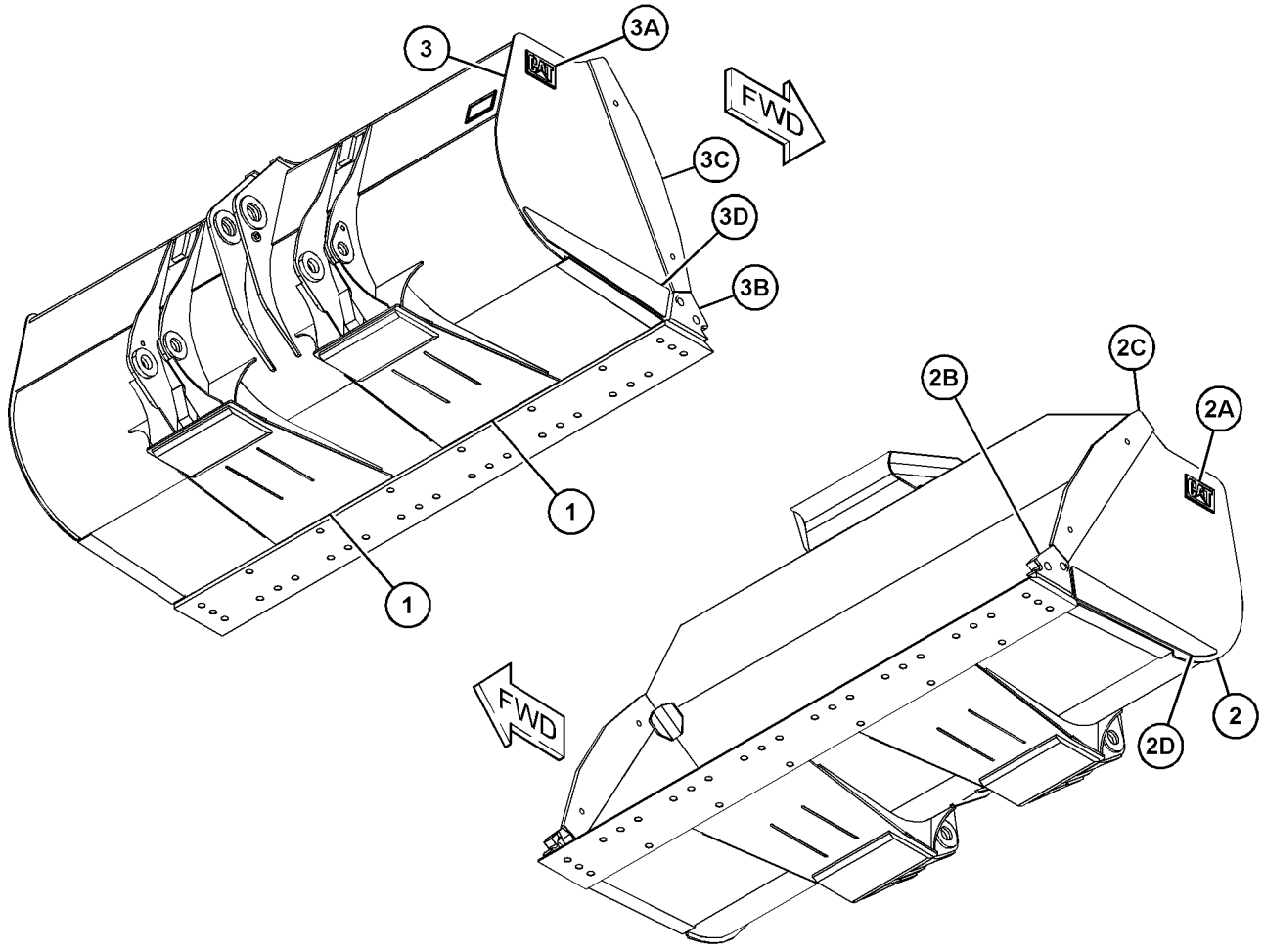

GRAPHIC #1 **<END>** g03693099

461-9146 BUCKET AS-GENERAL PURPOSE

S/N: M5K1-UP
3.2-CU ME (4.3-CU YD) W/O BOLT-ON CUTTING EDGE. 3.4-CU M (4.5-CU YD) W/BOLT-ON CUTTING EDGE
PART OF 461-6533 BUCKET GP-GENERAL PURPOSE
AN ATTACHMENT

SMCS-6101 **i05817924**

NOTE	REF NO	GRAPHIC REF	PART NUMBER	QTY	PART NAME 1 2 3 4 5 6 (PRODUCT LEVEL)	SEE PAGE
	1	1	**461-9160**	2	PLATE-WEAR	
	2	1	*461-9150*	1	PLATE AS-SIDE (LH)	
	2A	1	**2C-9259**	1	PLATE-IDENTIFICATION (CAT)	
	2B	1	**8E-5301**	1	CORNER (LH)	
	2C	1	**461-9165**	1	PLATE-SIDE BAR	
	2D	1	**461-9166**	1	PLATE-WEAR	
	3	1	*461-9148*	1	PLATE AS-SIDE (RH)	
	3A	1	**2C-9259**	1	PLATE-IDENTIFICATION (CAT)	
	3B	1	**8E-5300**	1	CORNER (RH)	
	3C	1	**461-9165**	1	PLATE-SIDE BAR	
	3D	1	**461-9166**	1	PLATE-WEAR	

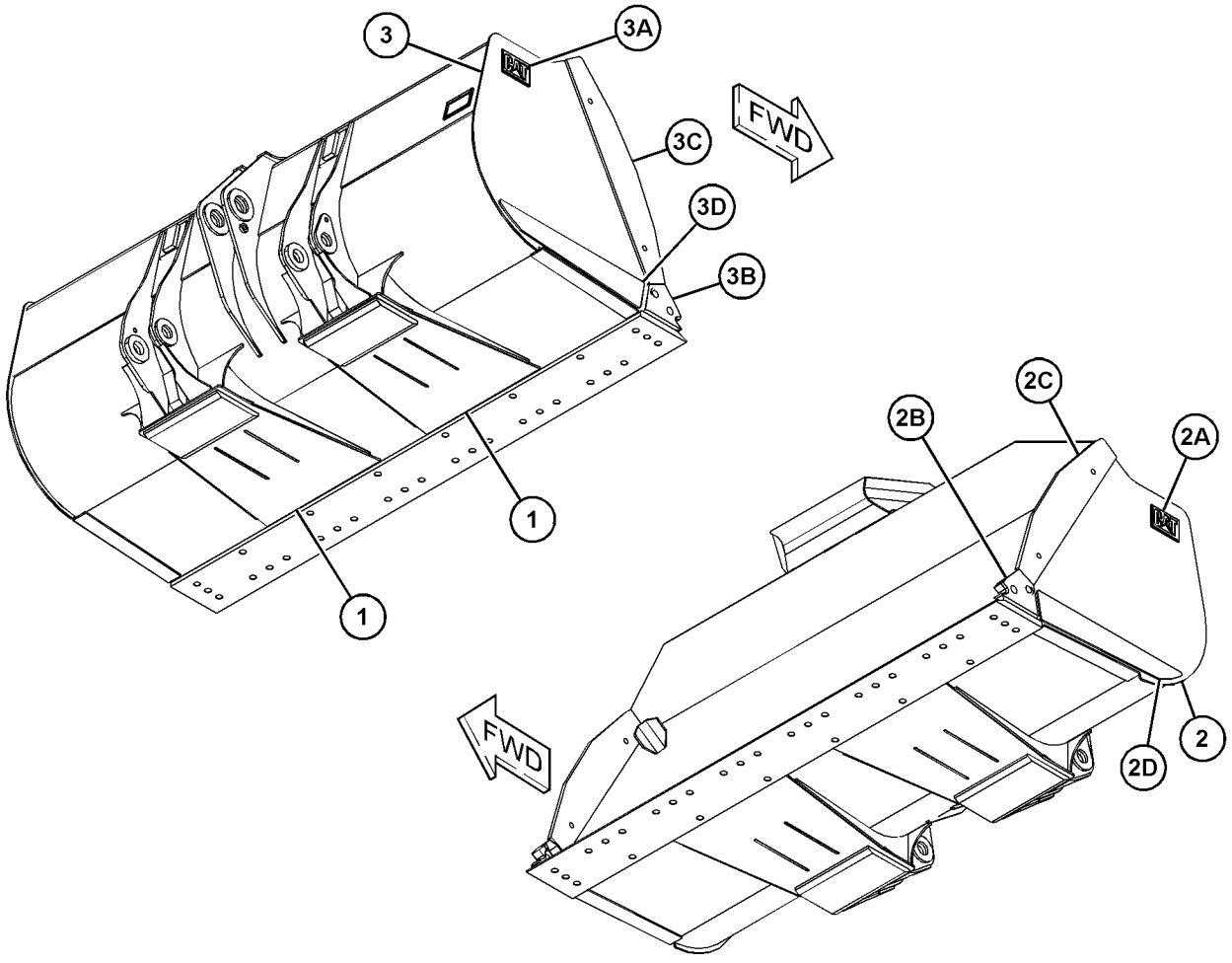

GRAPHIC #1 **<END>** g03693097

466-9207 BUCKET AS-GENERAL PURPOSE

S/N: M5K1-UP
2.7-CU M (3.5-CU YD). 2.9-CU M (3.75-CU YD) W/BOLT ON EDGES
PART OF 466-9206 BUCKET GP-GENERAL PURPOSE
AN ATTACHMENT

SMCS-6101 **i06061956**

NOTE	REF NO	GRAPHIC REF	PART NUMBER	QTY	PART NAME 1 2 3 4 5 6 (PRODUCT LEVEL)	SEE PAGE
	1	1	**448-7757**	1	EDGE-CUTTING	
	2	1	**458-9422**	2	PLATE-WEAR	
	3	1	*466-9208*	1	PLATE AS-SIDE (RH)	
	3A	1	**2C-9259**	1	PLATE-IDENTIFICATION (CAT)	
	3B	1	**8E-5300**	1	CORNER (RH)	
	3C	1	**466-9223**	1	PLATE-SIDE BAR	
	3D	1	**466-9224**	1	PLATE-WEAR	
	4	1	*466-9210*	1	PLATE AS-SIDE (LH)	
	4A	1	**2C-9259**	1	PLATE-IDENTIFICATION (CAT)	
	4B	1	**8E-5301**	1	CORNER (LH)	
	4C	1	**466-9223**	1	PLATE-SIDE BAR	
	4D	1	**466-9224**	1	PLATE-WEAR	
	5	1	**466-9213**	2	PLATE-WEAR	
	6	1	**466-9217**	2	PLATE-WEAR	

466-9207 **BUCKET AS-GENERAL PURPOSE (*contd.*)** **i06061956**

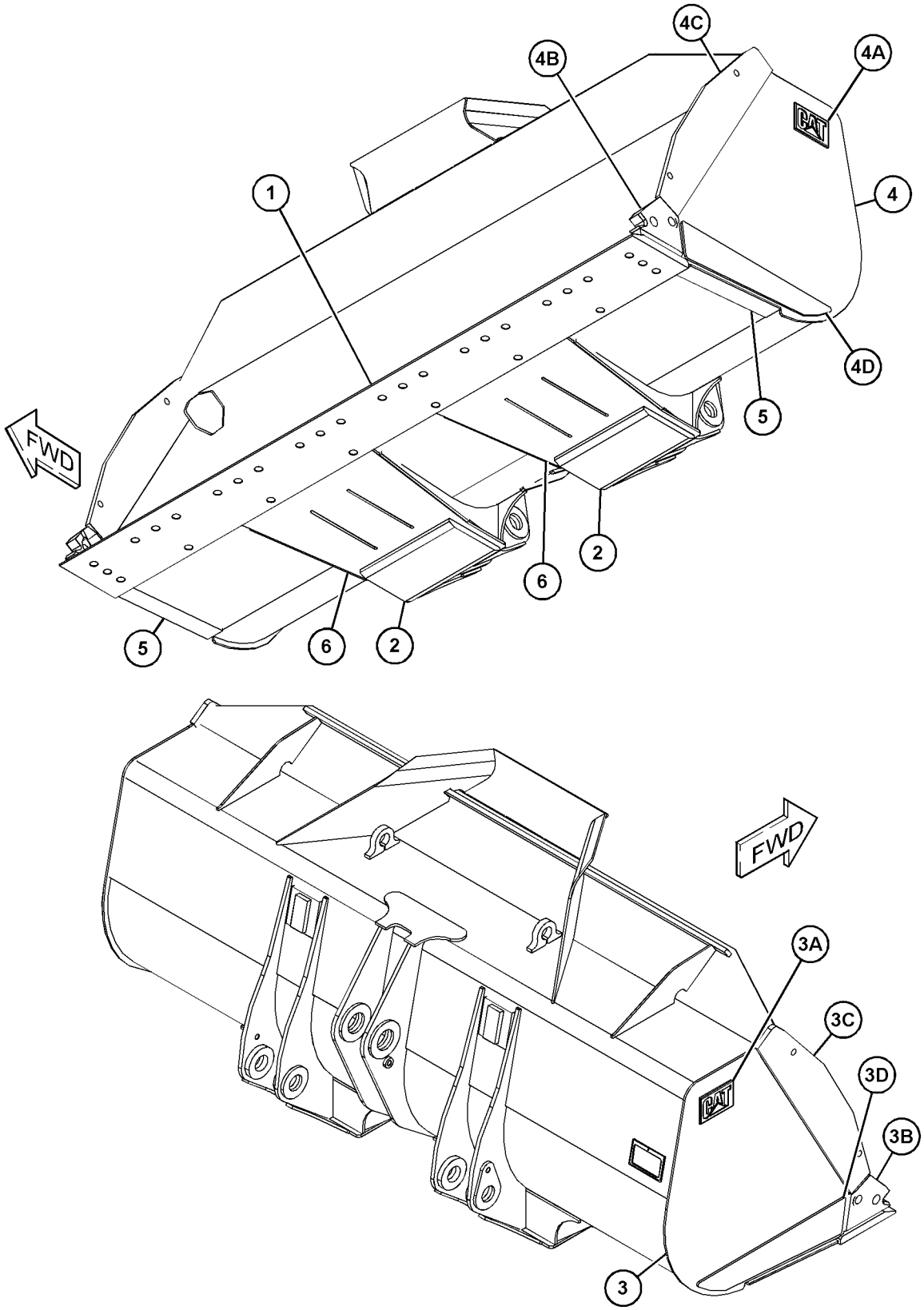

GRAPHIC #1 **<END>** g03799959

467-6006 BUCKET AS-GENERAL PURPOSE

S/N: M5K1-UP
2.5-CU M (3.25-CU YD). 2.7-CU M (3.5-CU YD) W/BOLT ON EDGES
PART OF 467-6004 BUCKET GP-GENERAL PURPOSE
AN ATTACHMENT

SMCS-6101 **i06061950**

NOTE	REF NO	GRAPHIC REF	PART NUMBER	QTY	PART NAME 1 2 3 4 5 6 (PRODUCT LEVEL)	SEE PAGE
	1	1	**448-7757**	1	EDGE-CUTTING	
	2	1	**458-9422**	2	PLATE-WEAR	
	3	1	*467-6007*	1	PLATE AS-SIDE (RH)	
	3A	1	**2C-9259**	1	PLATE-IDENTIFICATION (CAT)	
	3B	1	**8E-5300**	1	CORNER (RH)	
	3C	1	**467-6021**	1	PLATE-SIDE BAR	
	3D	1	**467-6023**	1	PLATE-WEAR	
	4	1	*467-6008*	1	PLATE AS-SIDE (LH)	
	4A	1	**2C-9259**	1	PLATE-IDENTIFICATION (CAT)	
	4B	1	**8E-5301**	1	CORNER (LH)	
	4C	1	**467-6021**	1	PLATE-SIDE BAR	
	4D	1	**467-6023**	1	PLATE-WEAR	
	5	1	**467-6012**	2	PLATE-WEAR	
	6	1	**467-6017**	2	PLATE-WEAR	

467-6006 **BUCKET AS-GENERAL PURPOSE (*contd.*)** **i06061950**

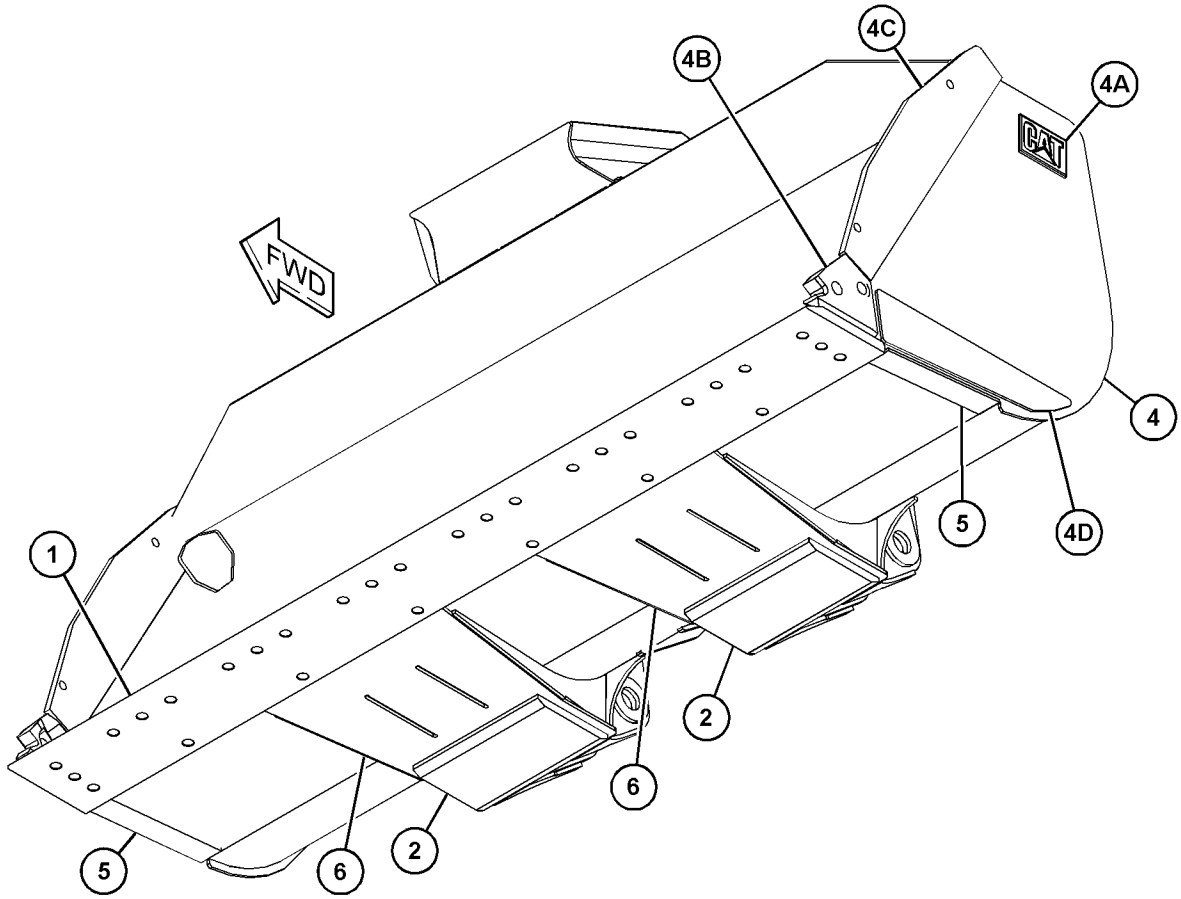

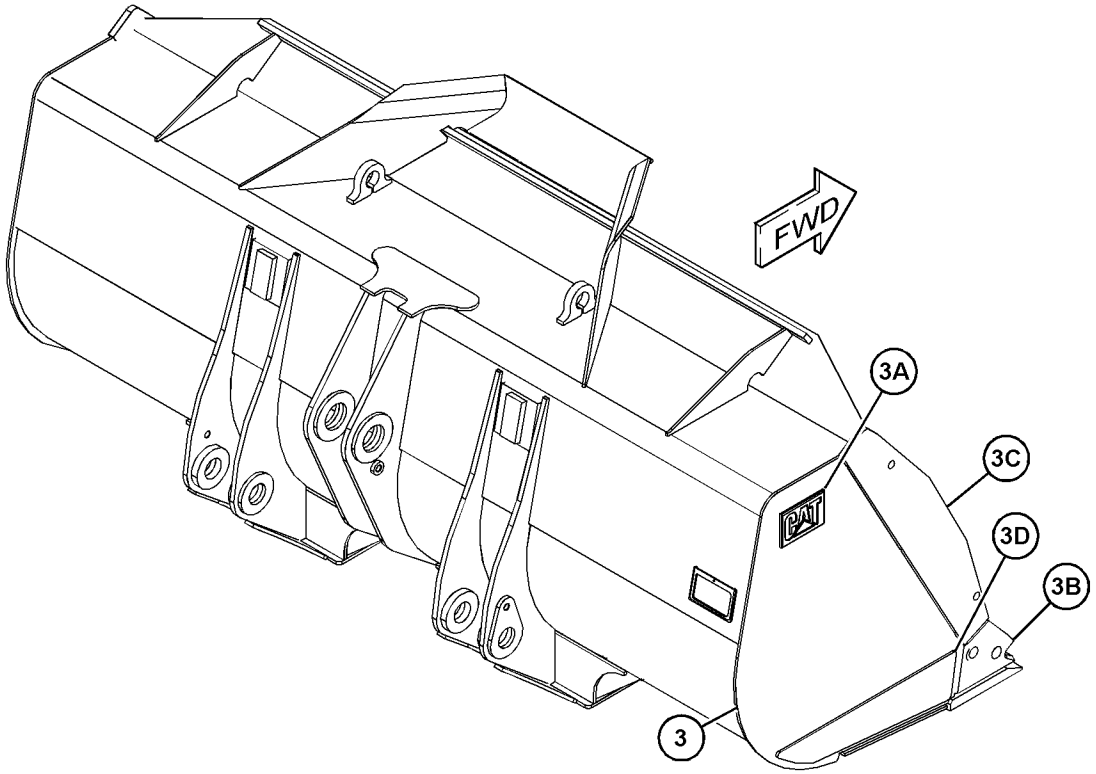

GRAPHIC #1 **<END>** g03799664

419-1687 BUCKET AS-MATERIAL HANDLING

S/N: M5K1-UP
4.20-CU M (5.50-CU YD). 4.40-CU M (5.75-CU YD) W/ BOLT-ON CUTTING EDGES
PART OF 419-1626 BUCKET GP-MATERIAL HANDLING
AN ATTACHMENT

SMCS-6101 **i05815853**

NOTE	REF NO	GRAPHIC REF	PART NUMBER	QTY	PART NAME 1 2 3 4 5 6 (PRODUCT LEVEL)	SEE PAGE
	1	1	**419-1699**	2	PLATE-WEAR	
	2	1	**9V-6575**	1	EDGE-CUTTING	
	3	1	**147-2864**	2	PAD-WEAR	
	4	1	*419-1691*	1	PLATE AS-SIDE (LH)	
	4A	1	**2C-9259**	1	PLATE-IDENTIFICATION (CAT)	
	4B	1	**8E-5301**	1	CORNER (LH)	
	4C	1	**419-1701**	1	PLATE-SIDE BAR	
	5	1	**241-4925**	1	BAR	
	6	1	*419-1690*	1	PLATE AS-SIDE (RH)	
	6A	1	**2C-9259**	1	PLATE-IDENTIFICATION (CAT)	
	6B	1	**8E-5300**	1	CORNER (RH)	
	6C	1	**419-1701**	1	PLATE-SIDE BAR	

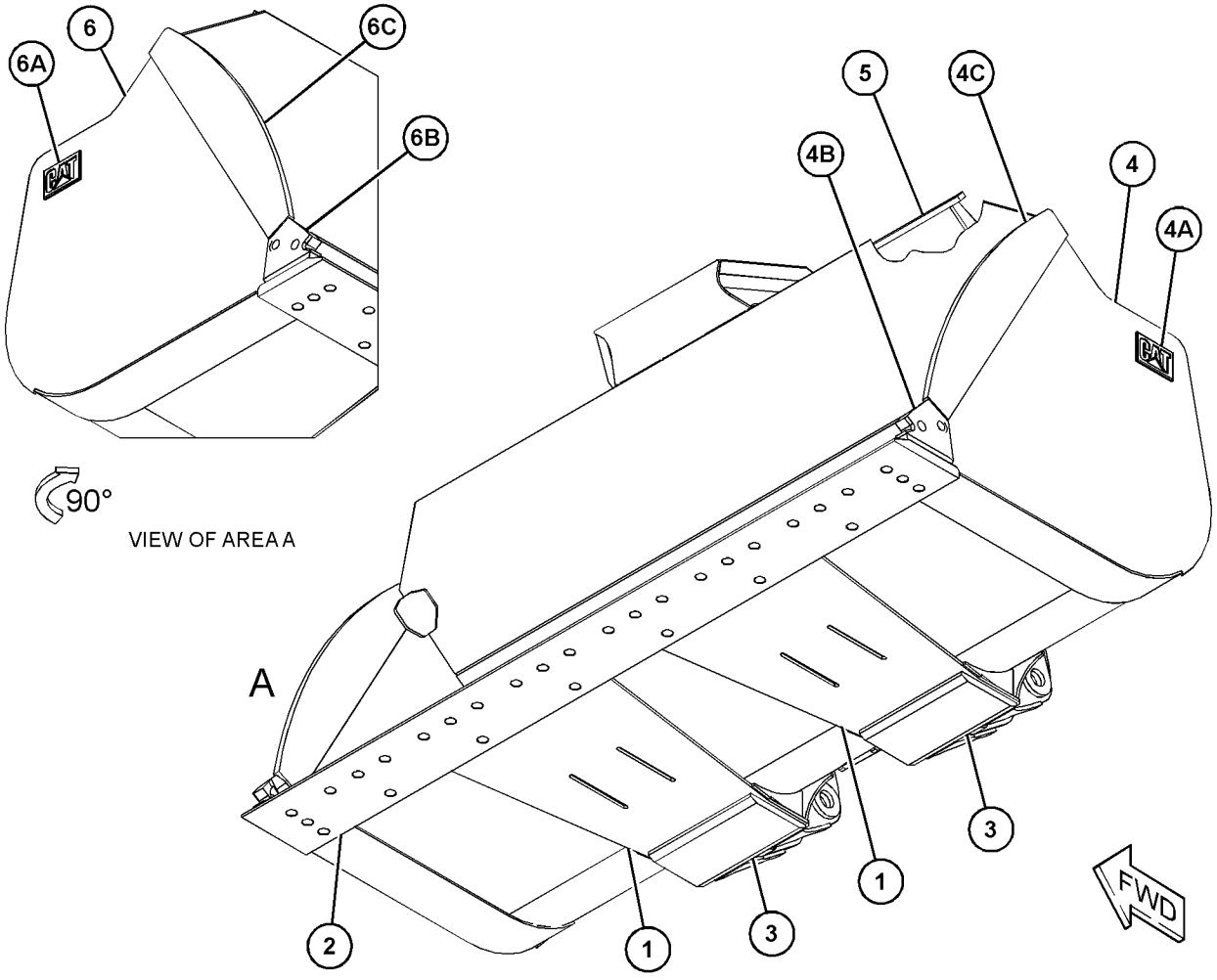

GRAPHIC #1 **<END>** g03566955

382-9834 BUCKET GP-GENERAL PURPOSE

S/N: M5K1-UP
3.1-CU M (4.00-CU YD) W/BOLT-ON CUTTING EDGES
AN ATTACHMENT

SMCS-6101 **i05398075**

NOTE	REF NO	GRAPHIC REF	PART NUMBER	QTY	PART NAME 1 2 3 4 5 6 (PRODUCT LEVEL)	SEE PAGE
	1	1	**5P-8248**	8	WASHER-HARD (20X36.5X3.5-MM THK)	
	2	1	**315-0096**	2	PLATE-WEAR	
	3	1	**332-2788**	2	FILM-WARNING (DO NOT LIFT, READ OMM)	
Y	4	1	*384-5554*	1	BUCKET AS-GENERAL PURPOSE	607
	5	1	**2J-3506**	8	NUT-FULL (3/4-10-THD)	
	6	1	**4F-7827**	8	BOLT-PLOW (3/4-10X2.25-IN)	

Y - SEPARATE ILLUSTRATION

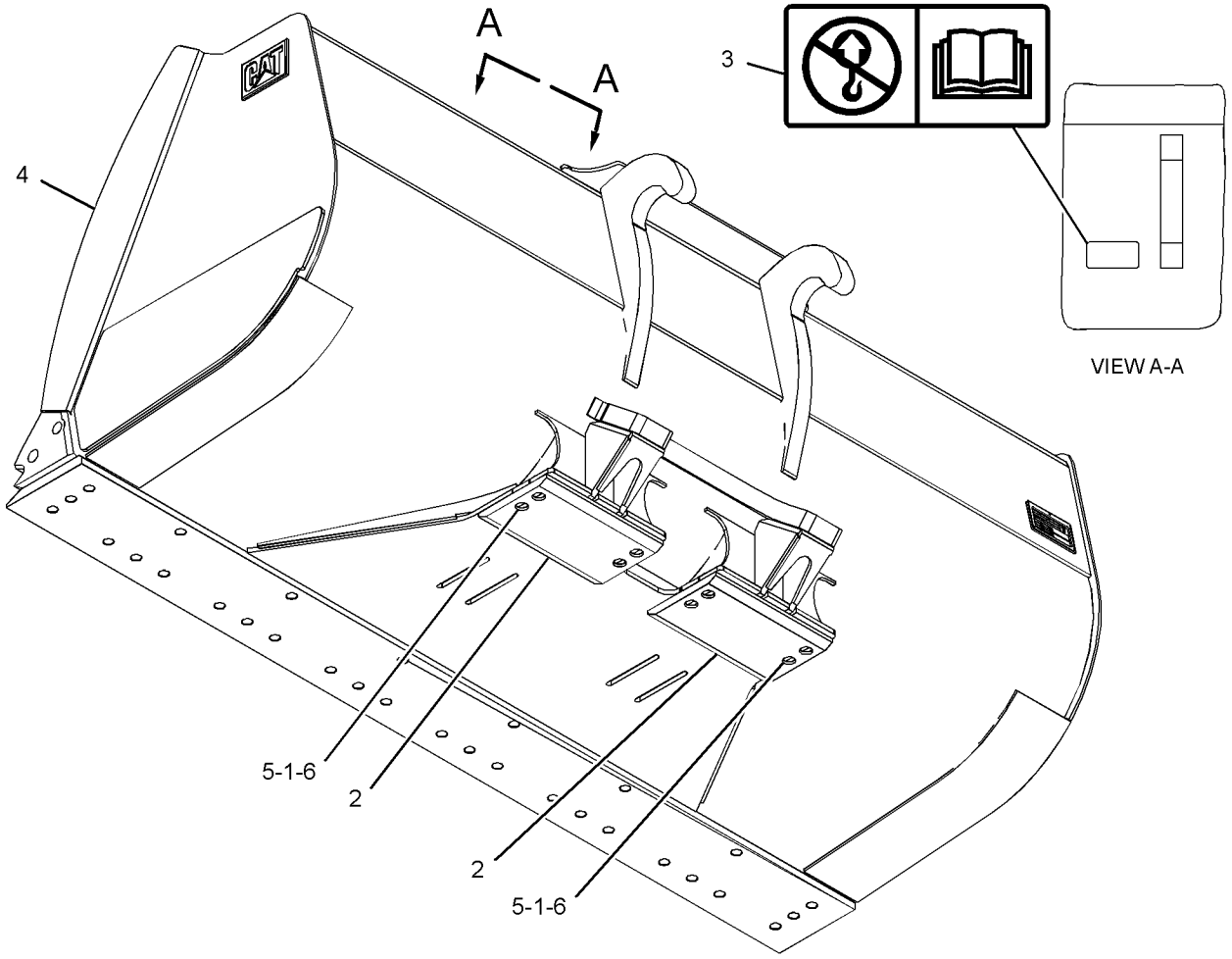

GRAPHIC #1 **<END>** g03029456

391-4950 BUCKET GP-GENERAL PURPOSE

S/N: M5K1-UP

2.87-CU M (3.75-CU YD). 3.1-CU M (4.0-CU YD) W/ BOLT-ON CUTTING EDGES

AN ATTACHMENT

SMCS-6101 **i05398503**

NOTE	REF NO	GRAPHIC REF	PART NUMBER	QTY	PART NAME 1 2 3 4 5 6 (PRODUCT LEVEL)	SEE PAGE
Y	1	1	*391-4951*	1	BUCKET AS-GENERAL PURPOSE	608
	2	1	**332-2788**	2	FILM-WARNING (DO NOT LIFT, READ OMM)	

Y - SEPARATE ILLUSTRATION

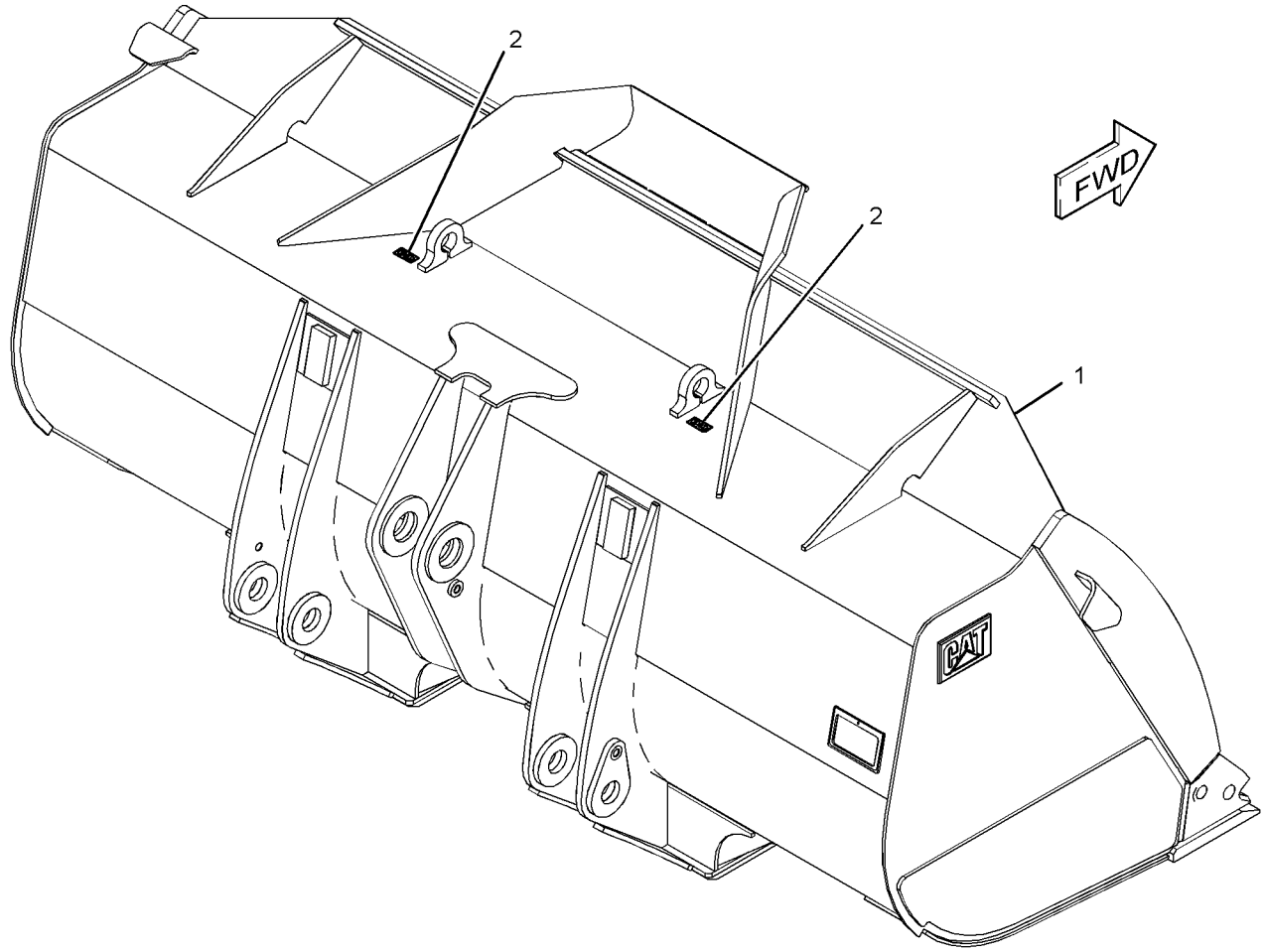

GRAPHIC #1 **<END>** g03421734

394-8476 BUCKET GP-GENERAL PURPOSE

S/N: M5K1-UP

3.4-CU M (4.5-CU YD) W/ BOLT-ON CUTTING EDGES

AN ATTACHMENT

SMCS-6101 **i05406794**

NOTE	REF NO	GRAPHIC REF	PART NUMBER	QTY	PART NAME 1 2 3 4 5 6 (PRODUCT LEVEL)	SEE PAGE
	1	1	**312-5694**	1	SETSCREW (1/4-20X0.25-IN)	
	2	1	**332-2788**	2	FILM-WARNING (DO NOT LIFT, READ OMM)	
Y	3	1	*394-8478*	1	BUCKET AS-GENERAL PURPOSE	610

Y - SEPARATE ILLUSTRATION

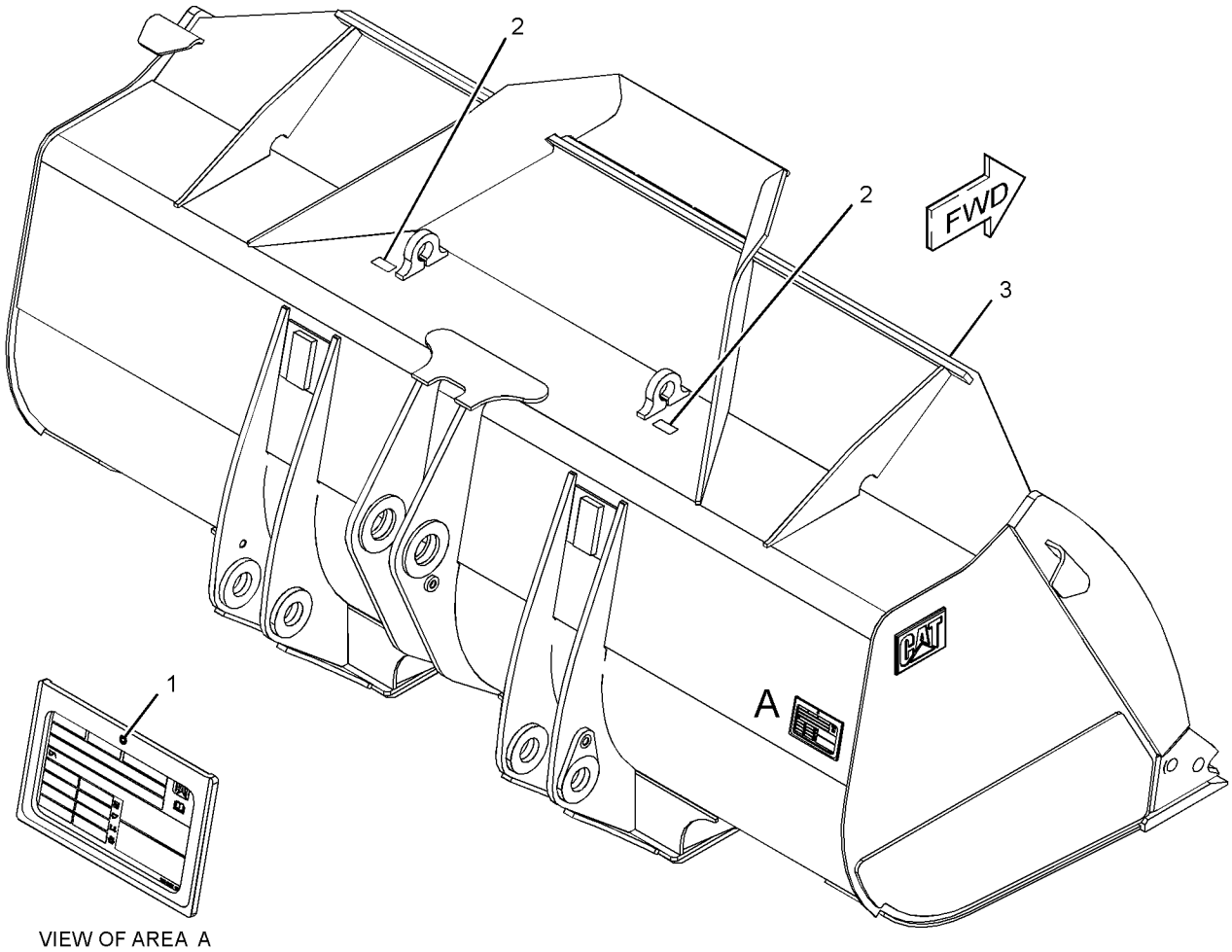

VIEW OF AREA A

GRAPHIC #1 **<END>** g03370377

395-3265 BUCKET GP-GENERAL PURPOSE

S/N: M5K1-UP

3.1-CU M (4-CU YD). 3.3-CU M (4.25-CU YD) W/ BOLT ON EDGES

AN ATTACHMENT

SMCS-6101 **i05406831**

NOTE	REF NO	GRAPHIC REF	PART NUMBER	QTY	PART NAME 1 2 3 4 5 6 (PRODUCT LEVEL)	SEE PAGE
Y	1	1	*395-3266*	1	BUCKET AS-GENERAL PURPOSE	612
	2	1	**332-2788**	2	FILM-WARNING (DO NOT LIFT, READ OMM)	

Y - SEPARATE ILLUSTRATION

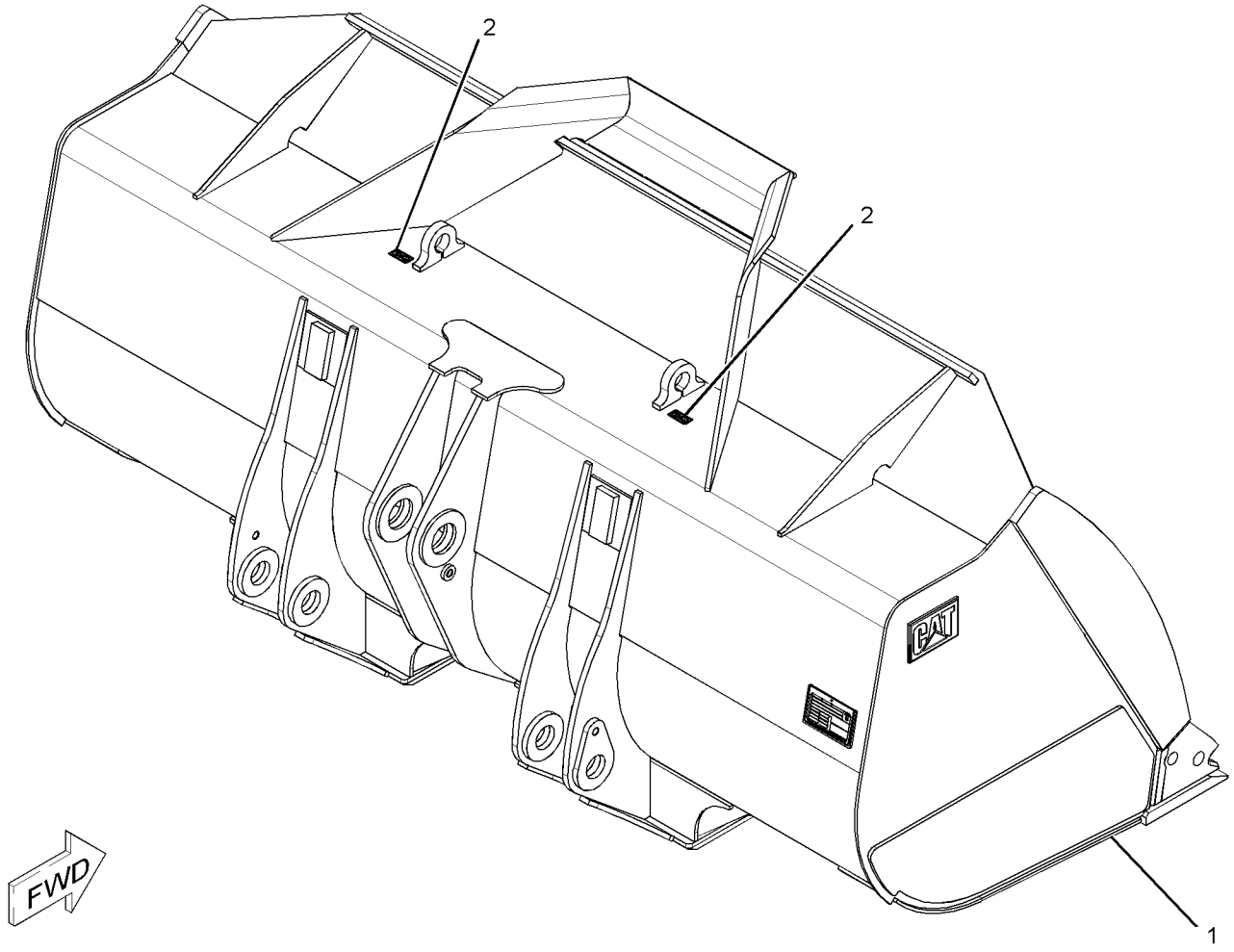

GRAPHIC #1 **<END>** g03027236

395-3949 BUCKET GP-GENERAL PURPOSE

S/N: M5K1-UP

3.4-CU M (4.5-CU YD). 3.6-CU M (4.75-CU YD) W/ BOLT ON EDGES

AN ATTACHMENT

SMCS-6101 **i05736695**

NOTE	REF NO	GRAPHIC REF	PART NUMBER	QTY	PART NAME 1 2 3 4 5 6 (PRODUCT LEVEL)	SEE PAGE
Y	1	1	*395-3950*	1	BUCKET AS-GENERAL PURPOSE	613
	2	1	**332-2788**	2	FILM-WARNING (DO NOT LIFT, READ OMM)	

Y - SEPARATE ILLUSTRATION

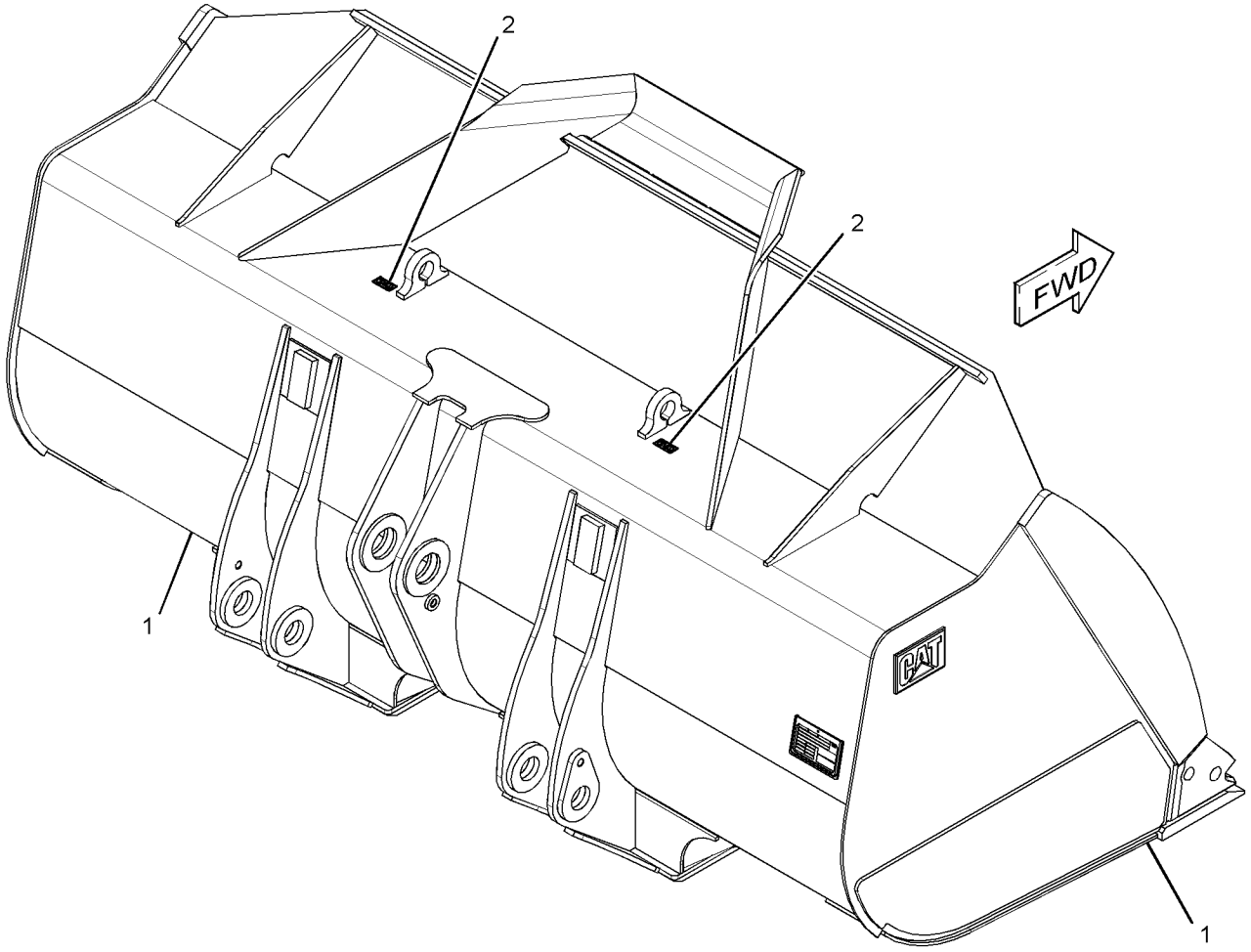

GRAPHIC #1 **<END>** g03027278

415-3251 BUCKET GP-GENERAL PURPOSE

S/N: M5K1-UP

2.5-CU M (3.25-CU YD). 2.7-CU M (3.5-CU YD) W/ BOLT-ON CUTTING EDGES

AN ATTACHMENT

SMCS-6101 **i06060530**

NOTE	REF NO	GRAPHIC REF	PART NUMBER	QTY	PART NAME 1 2 3 4 5 6 (PRODUCT LEVEL)	SEE PAGE
Y	1	1	*415-3252*	1	BUCKET AS-GENERAL PURPOSE	614
	2	1	**332-2788**	2	FILM-WARNING (DO NOT LIFT, READ OMM)	

Y - SEPARATE ILLUSTRATION

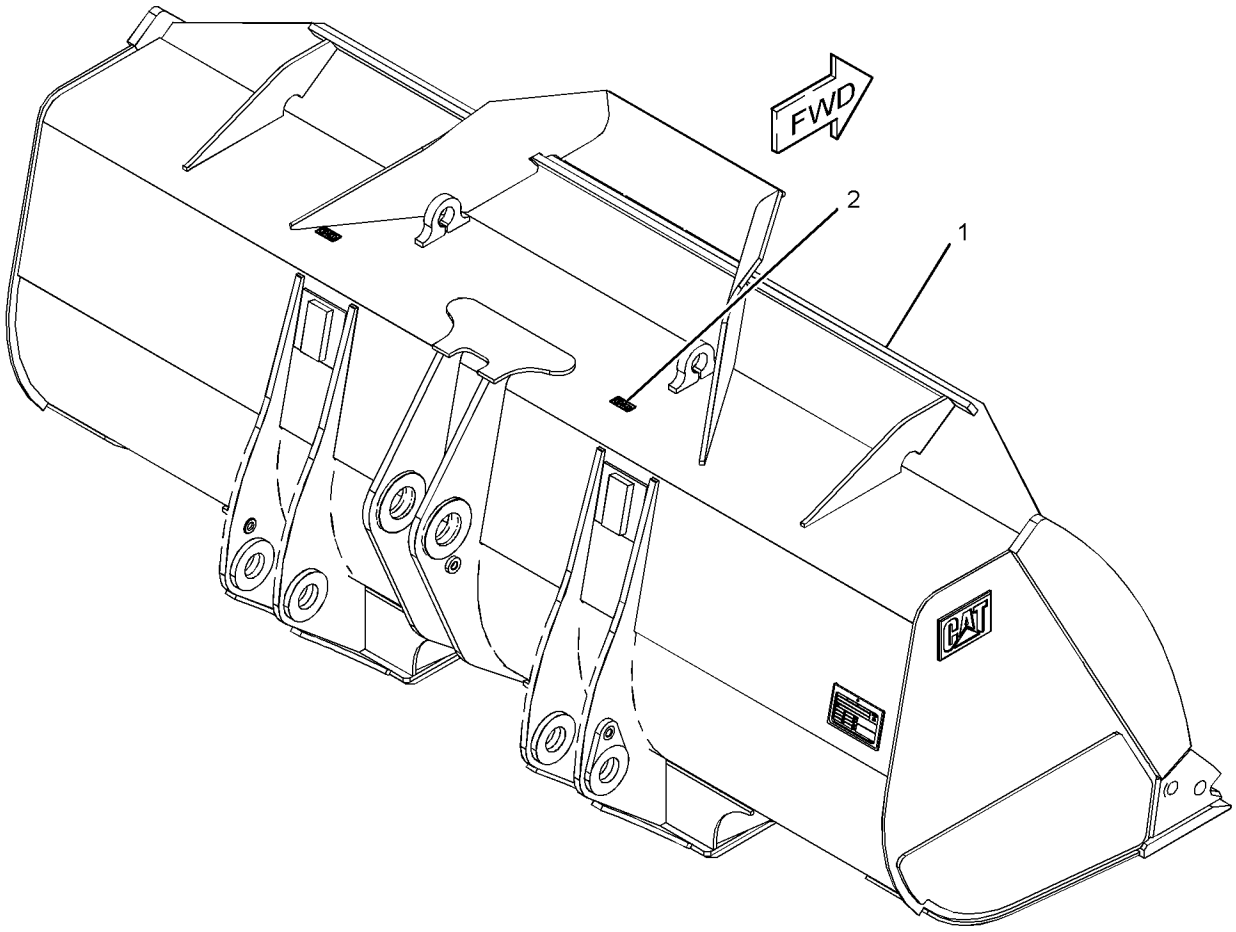

GRAPHIC #1 **<END>** g03409914

448-5092 BUCKET GP-GENERAL PURPOSE

S/N: M5K1-UP

2.9-CU M (3.8-CU YD) W/O BOLT-ON CUTTING EDGE. 3.1-CU M (4.0-CU YD) W/BOLT-ON CUTTING EDGE

AN ATTACHMENT

TYPE 1

SMCS-6101 **i05817008**

NOTE	REF NO	GRAPHIC REF	PART NUMBER	QTY	PART NAME 1 2 3 4 5 6 (PRODUCT LEVEL)	SEE PAGE
Y	1	1	*448-7760*	1	BUCKET AS-GENERAL PURPOSE	616
	2	1	**332-2788**	2	FILM-WARNING (DO NOT LIFT, READ OMM)	

Y - SEPARATE ILLUSTRATION

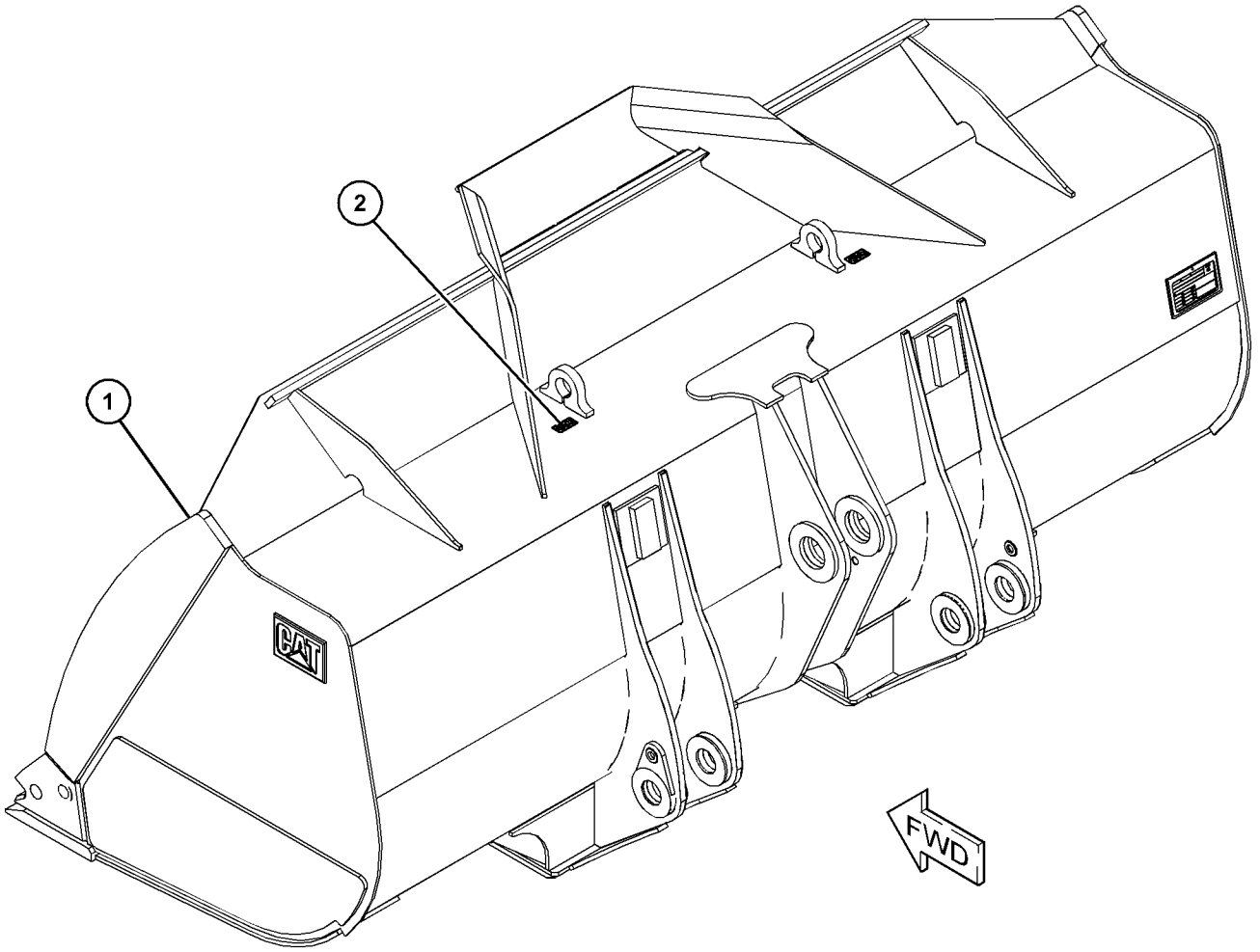

GRAPHIC #1 **<END>** g03692779

448-5092 BUCKET GP-GENERAL PURPOSE

S/N: M5K1-UP

2.9-CU M (3.8-CU YD) W/O BOLT-ON CUTTING EDGE. 3.1-CU M (4.0-CU YD) W/BOLT-ON CUTTING EDGE

AN ATTACHMENT

TYPE 2

SMCS-6101 **i05858208**

NOTE	REF NO	GRAPHIC REF	PART NUMBER	QTY	PART NAME 1 2 3 4 5 6 (PRODUCT LEVEL)	SEE PAGE
CY	1	1	*458-9406*	1	BUCKET AS-GENERAL PURPOSE	618
	2	1	**332-2788**	2	FILM-WARNING (DO NOT LIFT, READ OMM)	

C - CHANGE FROM PREVIOUS TYPE
Y - SEPARATE ILLUSTRATION

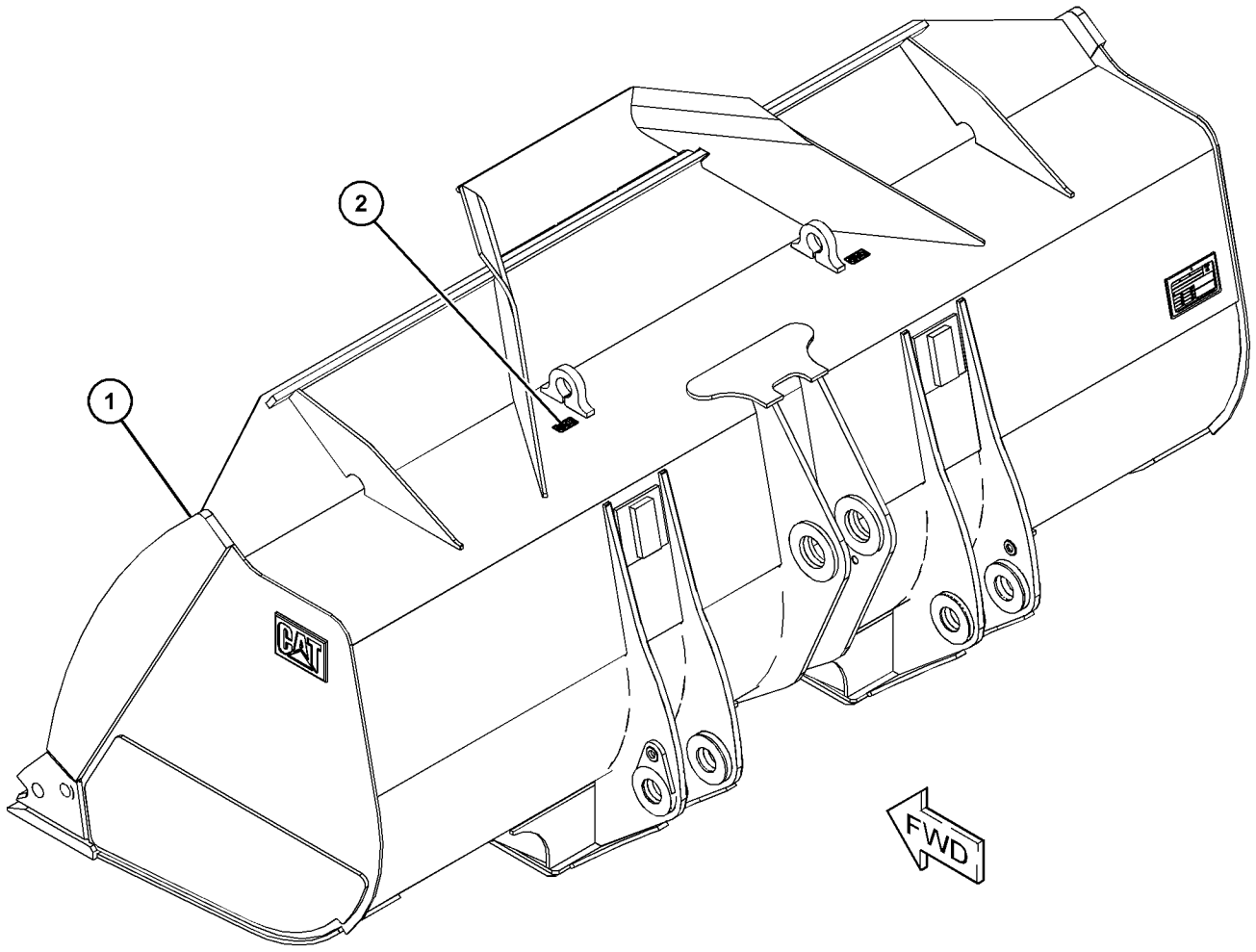

GRAPHIC #1 **<END>** g03692779

461-6531 BUCKET GP-GENERAL PURPOSE

S/N: M5K1-UP

3.1-CU M (4.0-CU YD) W/O BOLT-ON CUTTING EDGES. 3.3-CU M (4.3-CU YD) W/ BOLT-ON CUTTING EDGES

AN ATTACHMENT

SMCS-6101 **i05817918**

NOTE	REF NO	GRAPHIC REF	PART NUMBER	QTY	PART NAME 1 2 3 4 5 6 (PRODUCT LEVEL)	SEE PAGE
Y	1	1	*461-9047*	1	BUCKET AS-GENERAL PURPOSE	619
	2	1	**332-2788**	2	FILM-WARNING (DO NOT LIFT, READ OMM)	

Y - SEPARATE ILLUSTRATION

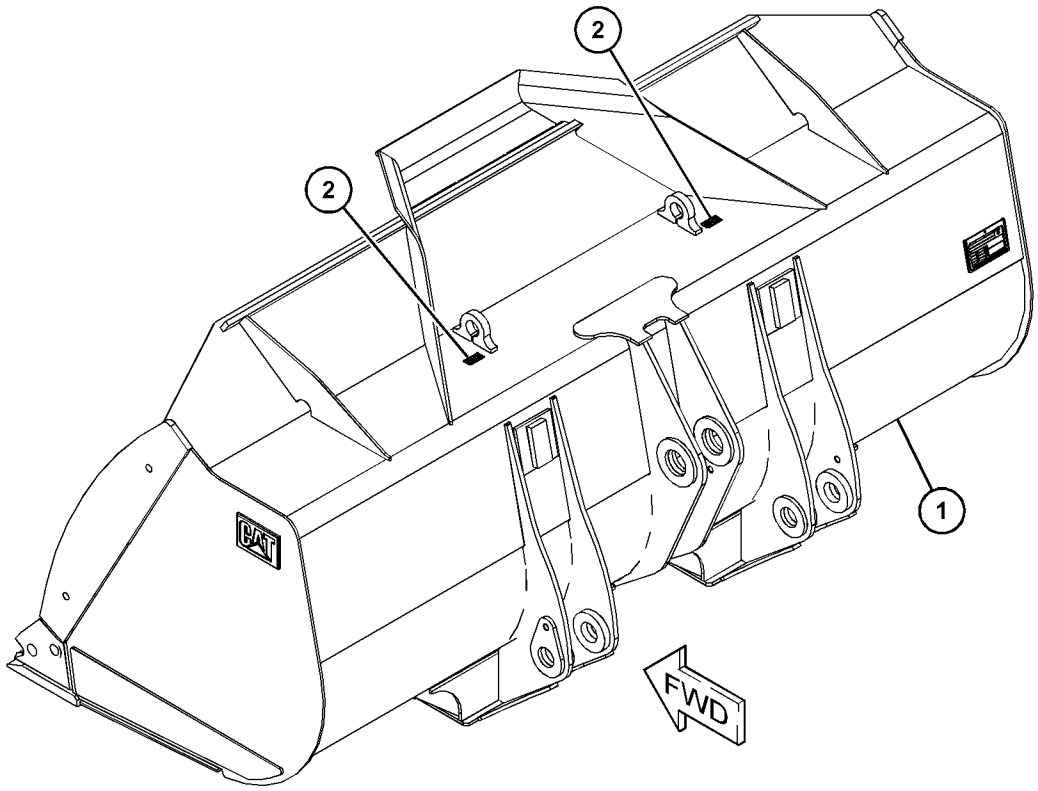

GRAPHIC #1 **<END>** g03684292

461-6533 BUCKET GP-GENERAL PURPOSE

S/N: M5K1-UP

3.2-CU M (4.3-CU YD) W/O BOLT-ON CUTTING EDGES. 3.4-CU M (4.5-CU YD) W/BOLT-ON CUTTING EDGES

AN ATTACHMENT

SMCS-6101 **i05817922**

NOTE	REF NO	GRAPHIC REF	PART NUMBER	QTY	PART NAME 1 2 3 4 5 6 (PRODUCT LEVEL)	SEE PAGE
Y	1	1	*461-9146*	1	BUCKET AS-GENERAL PURPOSE	620
	2	1	**332-2788**	2	FILM-WARNING (DO NOT LIFT, READ OMM)	

Y - SEPARATE ILLUSTRATION

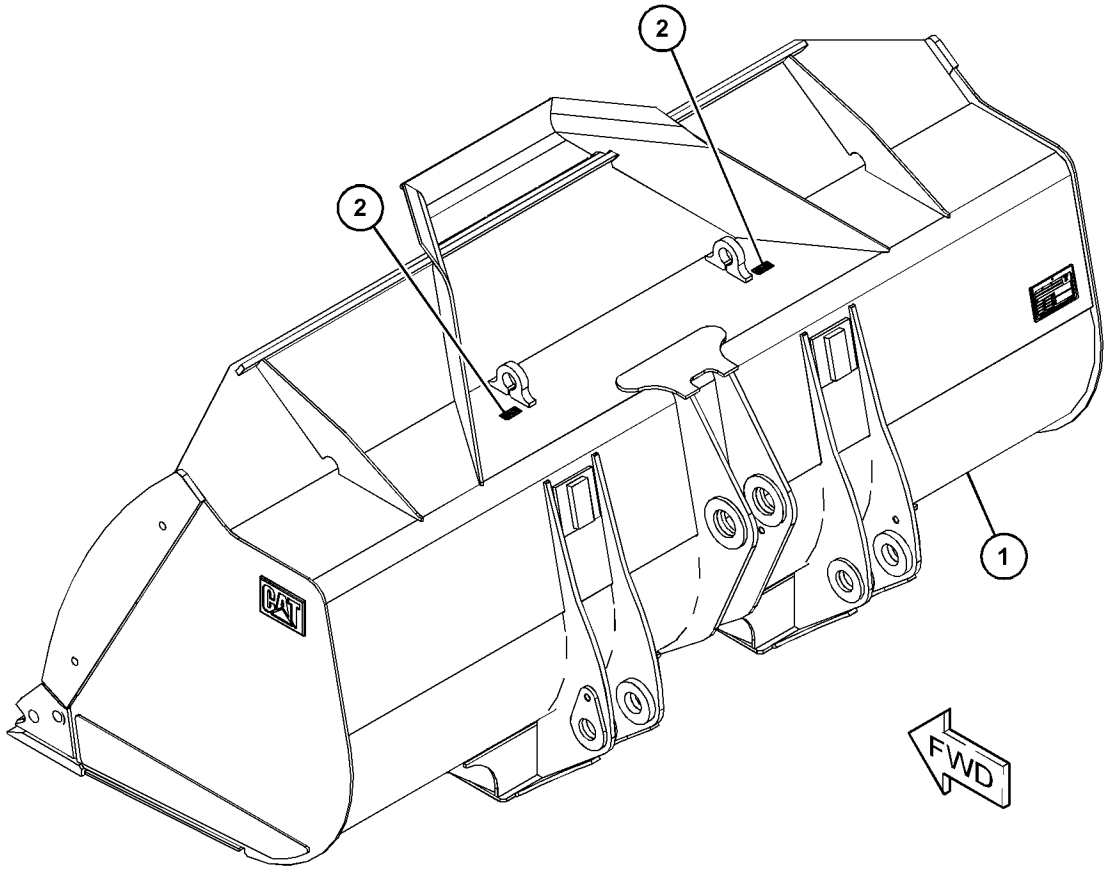

GRAPHIC #1 **<END>** g03684299

466-9206 BUCKET GP-GENERAL PURPOSE

S/N: M5K1-UP

2.7-CU M (3.5-CU YD). 2.9-CU M (3.75-CU YD) W/BOLT ON EDGES

AN ATTACHMENT

SMCS-6101 **i06061954**

NOTE	REF NO	GRAPHIC REF	PART NUMBER	QTY	PART NAME 1 2 3 4 5 6 (PRODUCT LEVEL)	SEE PAGE
	1	1	**137-4234**	1	PLATE-IDENTIFICATION (WORK TOOL)	
	2	1	**332-2788**	2	FILM-WARNING (DO NOT LIFT, READ OMM)	
Y	3	1	*466-9207*	1	BUCKET AS-GENERAL PURPOSE	621
	4	1	**312-5694**	1	SETSCREW (1/4-20X0.25-IN)	

Y - SEPARATE ILLUSTRATION

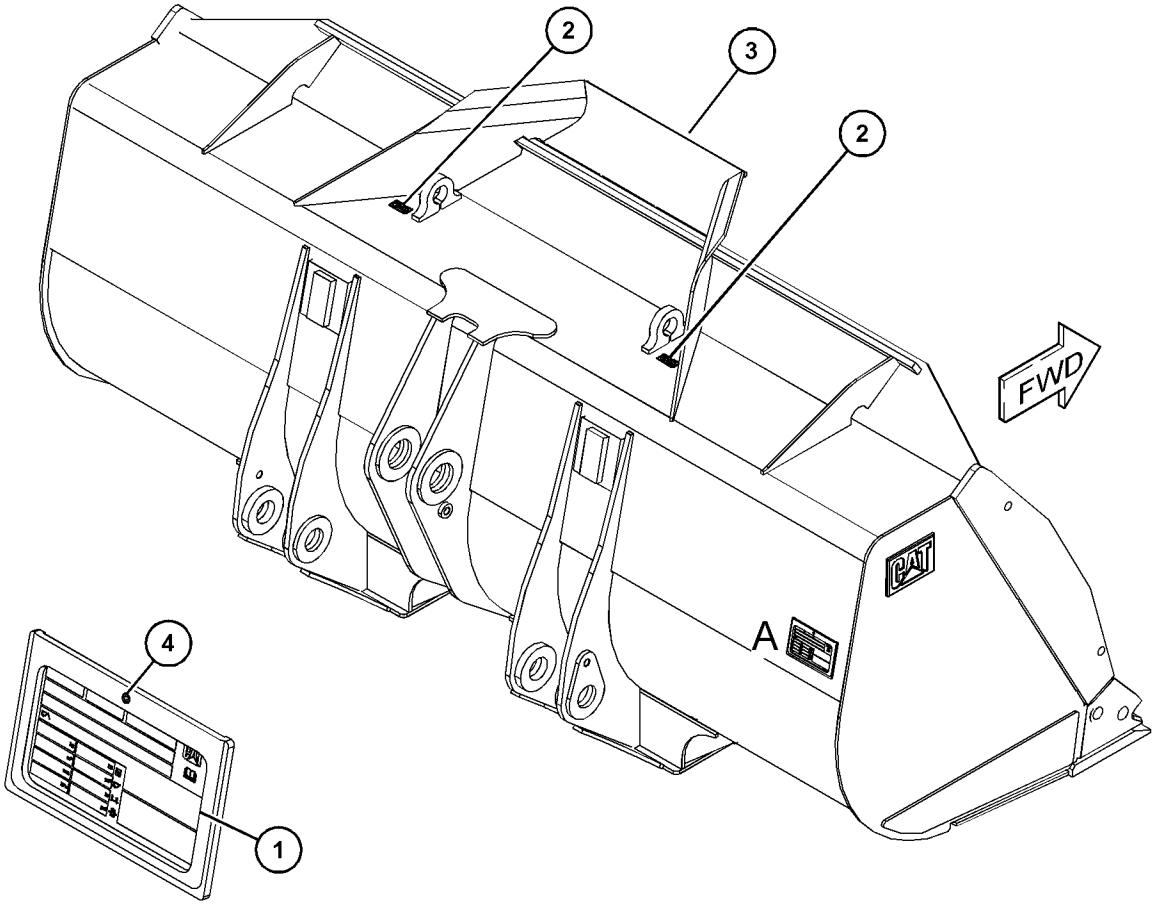

VIEW OF AREA A

GRAPHIC #1 **<END>** g03797159

467-6004 BUCKET GP-GENERAL PURPOSE

S/N: M5K1-UP

2.5-CU M (3.25-CU YD). 2.7-CU M (3.5-CU YD) W/BOLT-ON EDGES

AN ATTACHMENT

SMCS-6101 **i06061949**

NOTE	REF NO	GRAPHIC REF	PART NUMBER	QTY	PART NAME 1 2 3 4 5 6 (PRODUCT LEVEL)	SEE PAGE
	1	1	**137-4234**	1	PLATE-IDENTIFICATION (WORK TOOL)	
	2	1	**332-2788**	2	FILM-WARNING (DO NOT LIFT, READ OMM)	
Y	3	1	*467-6006*	1	BUCKET AS-GENERAL PURPOSE	623
	4	1	**312-5694**	1	SETSCREW (1/4-20X0.25-IN)	

Y - SEPARATE ILLUSTRATION

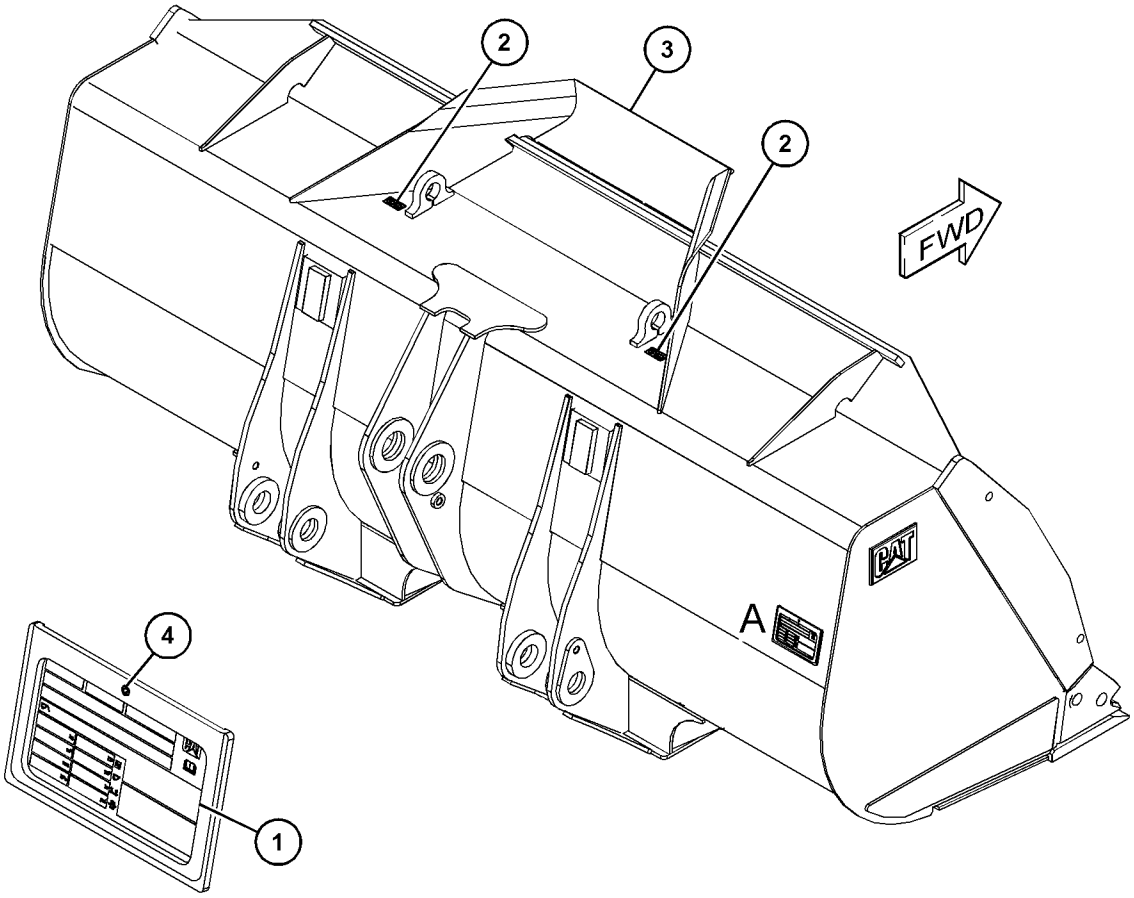

VIEW OF AREA A

GRAPHIC #1 **<END>** g03796844

419-1626 BUCKET GP-MATERIAL HANDLING

S/N: M5K1-UP

CANNOT BE USED WITH 361-1437—PAGE: 650, 310-9391—PAGE: 640, 139-9229—PAGE: 642, 139-9279—PAGE: 643, 257-1766—PAGE: 606, 229-6969—PAGE: 651, 454-9209—PAGE: 652 AN ATTACHMENT

SMCS-6101 **i05815851**

NOTE	REF NO	GRAPHIC REF	PART NUMBER	QTY	PART NAME 1 2 3 4 5 6 (PRODUCT LEVEL)	SEE PAGE
	1	1	**3G-6395**	2	EDGE-END	
	2	1	**3K-9770**	12	NUT-FULL (1-1/4-7-THD)	
	3	1	**332-2788**	2	FILM-WARNING (DO NOT LIFT, READ OMM)	
Y	4	1	*419-1687*	1	BUCKET AS-MATERIAL HANDLING	625
	5	1	**1U-0593**	2	EDGE-CUTTING	
	6	1	**5P-8823**	12	BOLT-PLOW (1-1/4-7X4.13-IN)	

Y - SEPARATE ILLUSTRATION

419-1626 **BUCKET GP-MATERIAL HANDLING (*contd.*)** **i05815851**

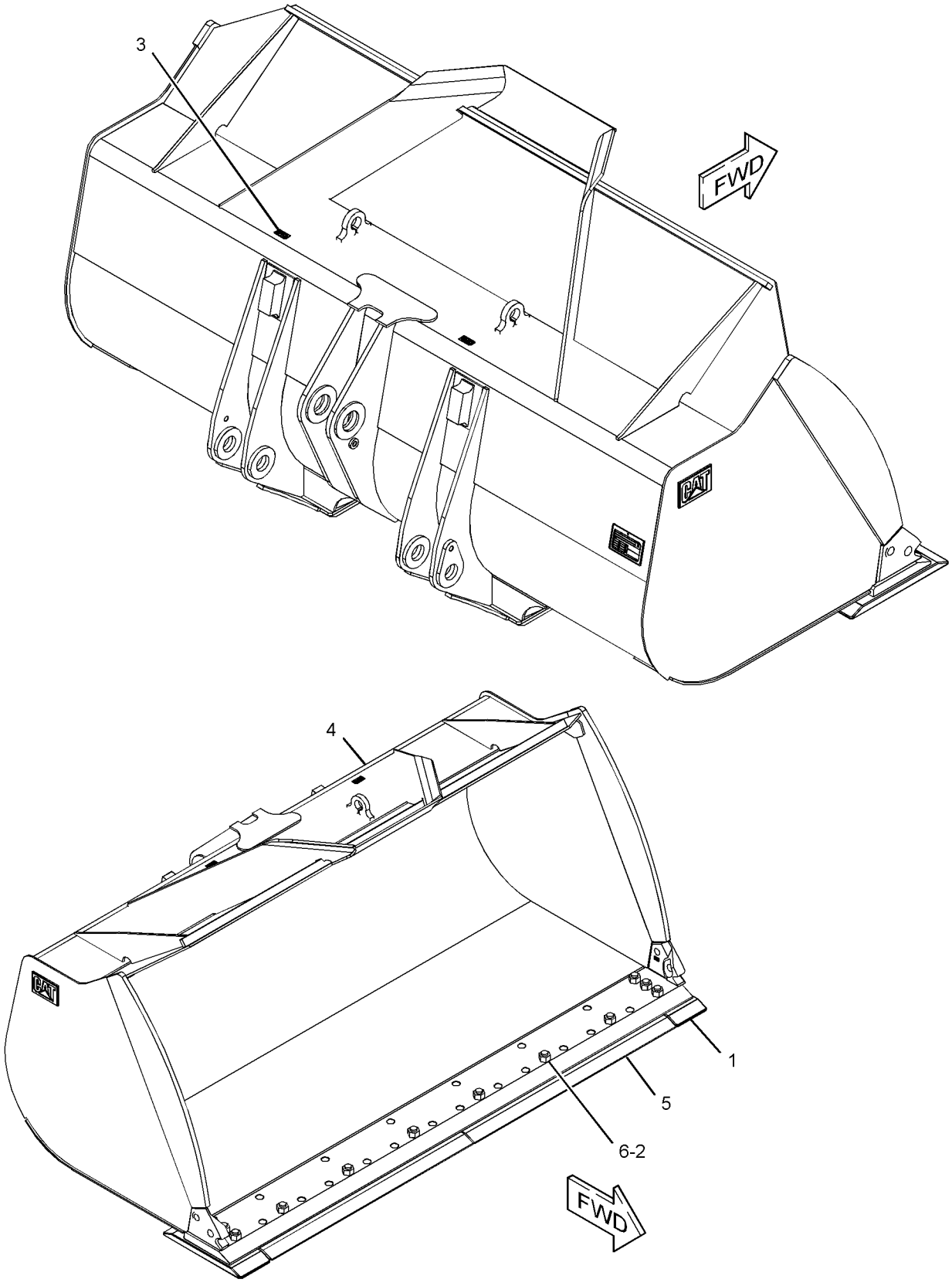

GRAPHIC #1 **<END>** g03414317

310-9391 COUPLER GP-QUICK

S/N: M5K1-UP

AN ATTACHMENT

SMCS-6129 **i05817813**

NOTE	REF NO	GRAPHIC REF	PART NUMBER	QTY	PART NAME 1 2 3 4 5 6 (PRODUCT LEVEL)	SEE PAGE
	1	1	**3B-8489**	2	FITTING-GREASE (1/8-27 PTF)	
	2	1	**192-5881**	4	PIN	
	3	1	**295-5619**	1	FILM-WARNING (HAND CRUSH HAZARD, READ OMM)	
CY	4	1	**452-2509**	2	CYLINDER GP-COUPLER	395
	5	1	**312-4181**	2	WEDGE AS	
I	6	1	**323-5871**	2	HOSE AS	
	7	1	**323-7089**	1	FRAME AS	
M		1	**9R-2640**	1	BOSS (M12X1.75X25-MM)	
M		1	**147-7633**	1	BOSS-TAPPED (M20X2.5X38-MM)	
I	8	1	**135-4061**	2	HOSE AS	
	9	1	**148-8316**	6	CONNECTOR AS	
					(EACH INCLUDES)	
		1	**3J-7354**	1	SEAL-O-RING	
		1	**4J-5477**	1	SEAL-O-RING	
		1	**6V-8647**	1	CONNECTOR	
	10	1	**3B-4631**	4	PIN-COTTER	
	11	1	**7G-2950**	3	CLIP (SLOT)	
	12	1	**7G-2951**	3	CLIP (TAB)	
M	13	1	**8T-4179**	3	BOLT (M12X1.75X20-MM)	
	14	1	**8T-4223**	3	WASHER-HARD (13.5X25.5X3-MM THK)	

C - CHANGE FROM PREVIOUS TYPE
I - REFER TO HYDRAULIC INFORMATION SYSTEM
M - METRIC PART
Y - SEPARATE ILLUSTRATION

310-9391 **COUPLER GP-QUICK (*contd.*)** **i05817813**

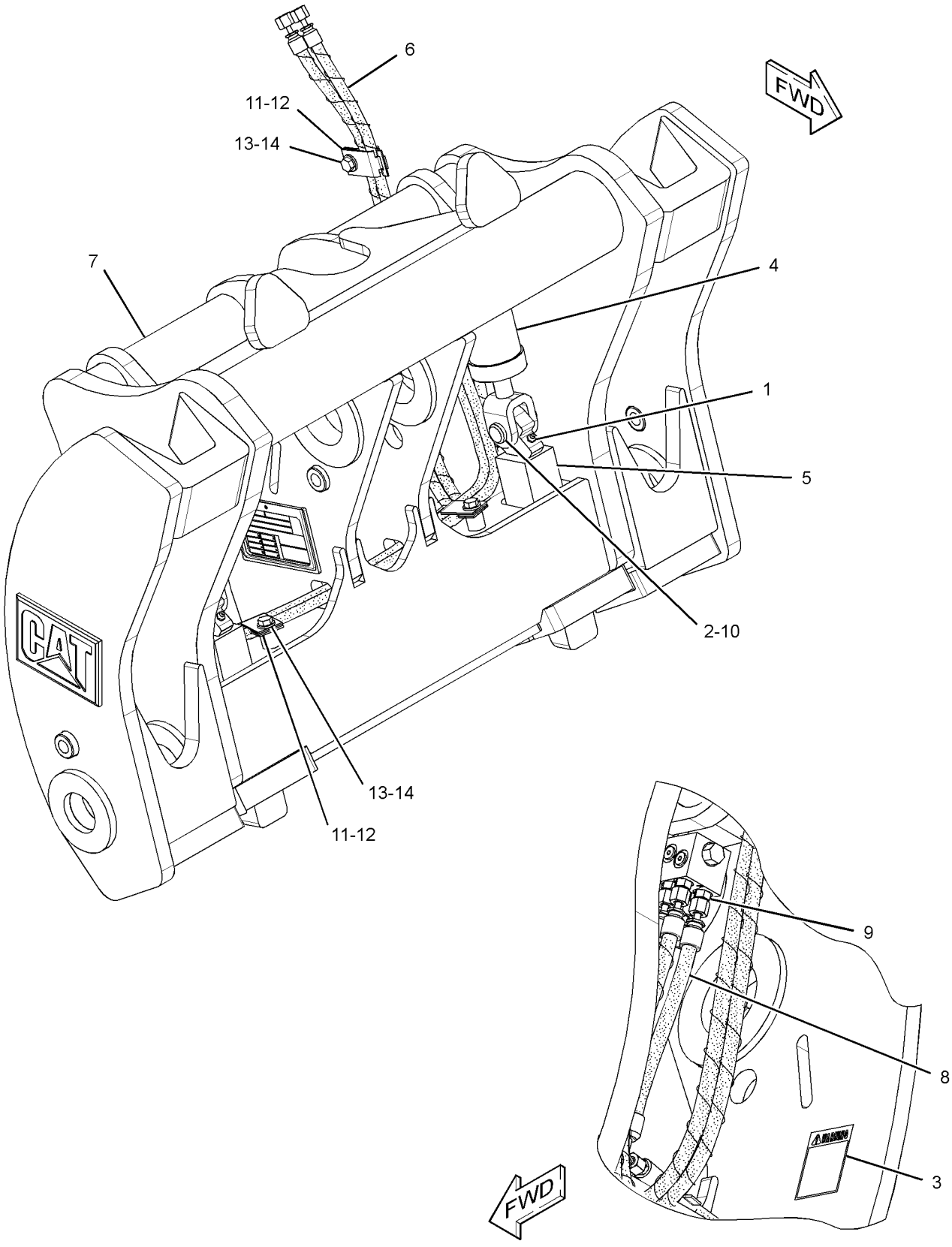

GRAPHIC #1 **<END>** g02511236

139-9229 EDGE GP-CUTTING

S/N: M5K1-UP

AN ATTACHMENT

SMCS-6801 **i05397428**

NOTE	PART NUMBER	QTY	PART NAME 1 2 3 4 5 6 (PRODUCT LEVEL)	SEE PAGE
	4F-4042	12	BOLT-PLOW (1-8X3-IN)	
	139-9230	2	EDGE-CUTTING	
	4T-8101	2	EDGE-END	
	2J-3507	12	NUT-FULL (1-8-THD)	

<END>

139-9279 EDGE GP-SEGMENT

S/N: M5K1-UP

AN ATTACHMENT

SMCS-6818 **i05397436**

NOTE	REF NO	GRAPHIC REF	PART NUMBER	QTY	PART NAME 1 2 3 4 5 6 (PRODUCT LEVEL)	SEE PAGE
	1	1	**140-7601**	5	EDGE-SEGMENT	
	2	1	**4F-4042**	14	BOLT-PLOW (1-8X3-IN)	
	3	1	**2J-3507**	14	NUT-FULL (1-8-THD)	
	4	1	**263-7545**	2	EDGE-SEGMENT	

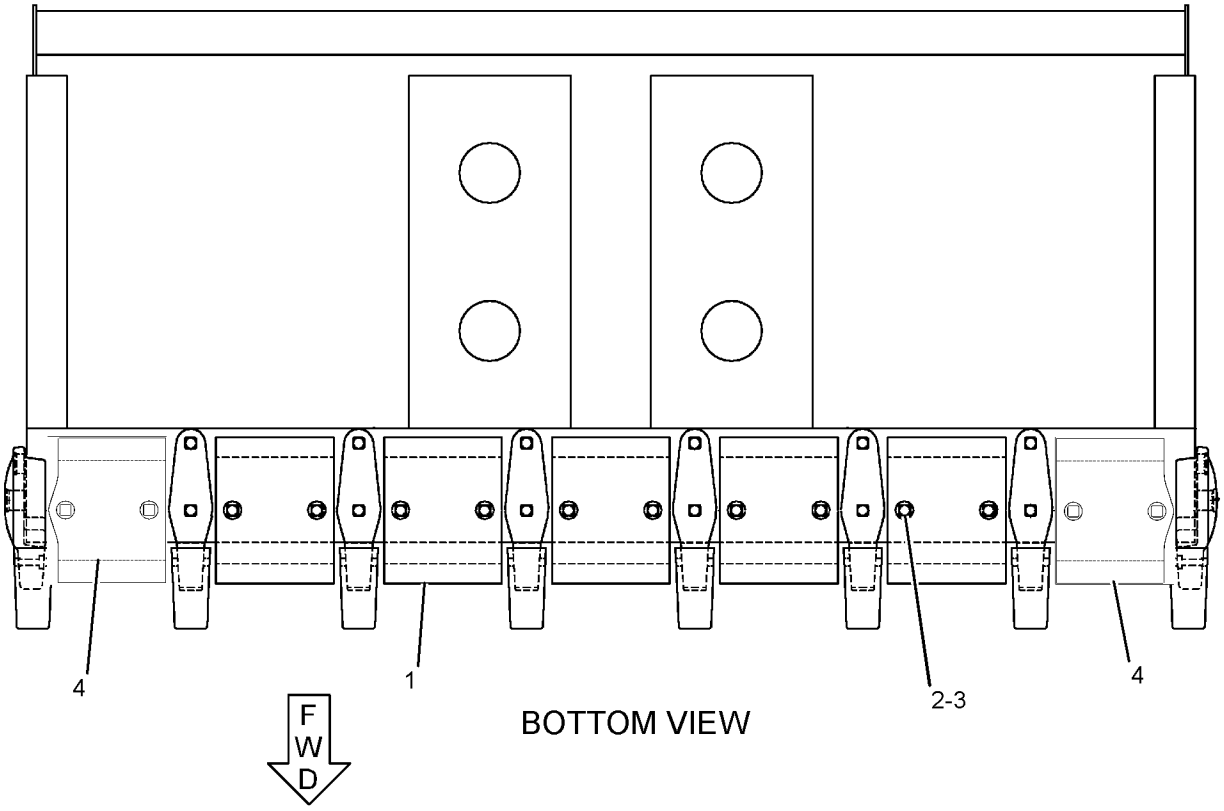

BOTTOM VIEW

GRAPHIC #1 **<END>** g01255885

447-0350 EDGE-COVER—CENTER

S/N: M5K1-UP

FIELD INSTALLATION

SMCS-6801 **i06056610**

NOTE	REF NO	GRAPHIC REF	PART NUMBER	QTY	PART NAME 1 2 3 4 5 6 (PRODUCT LEVEL)	SEE PAGE
					(NO SERVICED PARTS)	

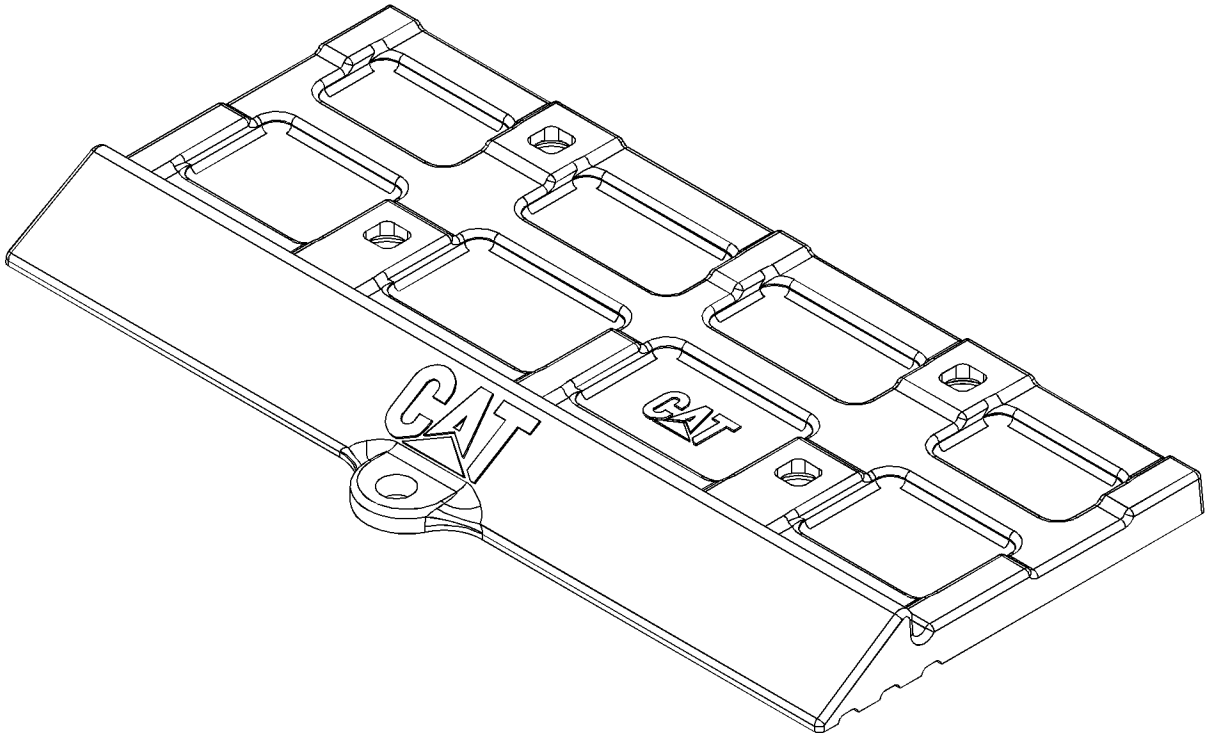

GRAPHIC #1 **<END>** g03795632

447-0351 EDGE-END—LH

S/N: M5K1-UP

FIELD INSTALLATION

SMCS-6801 **i06056608**

NOTE	REF NO	GRAPHIC REF	PART NUMBER	QTY	PART NAME 1 2 3 4 5 6 (PRODUCT LEVEL)	SEE PAGE
					(NO SERVICED PARTS)	

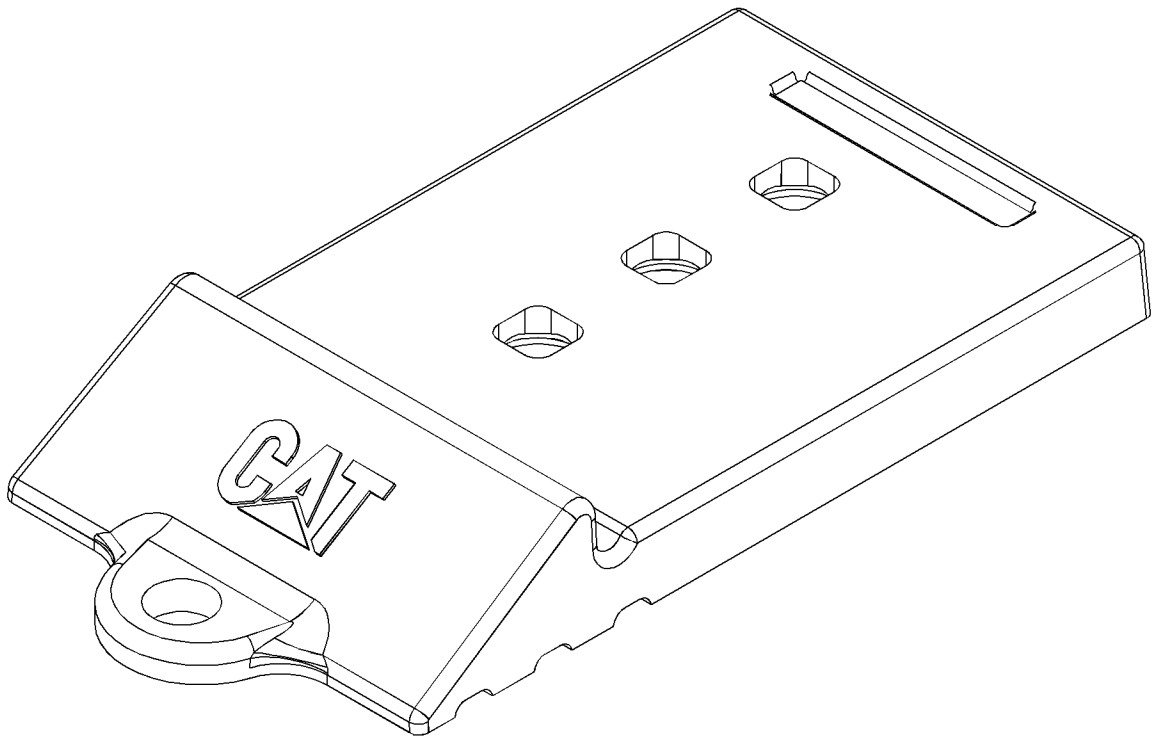

GRAPHIC #1 **<END>** g03795663

447-0352 EDGE-END—RH

S/N: M5K1-UP

FIELD INSTALLATION

SMCS-6801 **i06056602**

NOTE	REF NO	GRAPHIC REF	PART NUMBER	QTY	PART NAME 1 2 3 4 5 6 (PRODUCT LEVEL)	SEE PAGE
(NO SERVICED PARTS)						

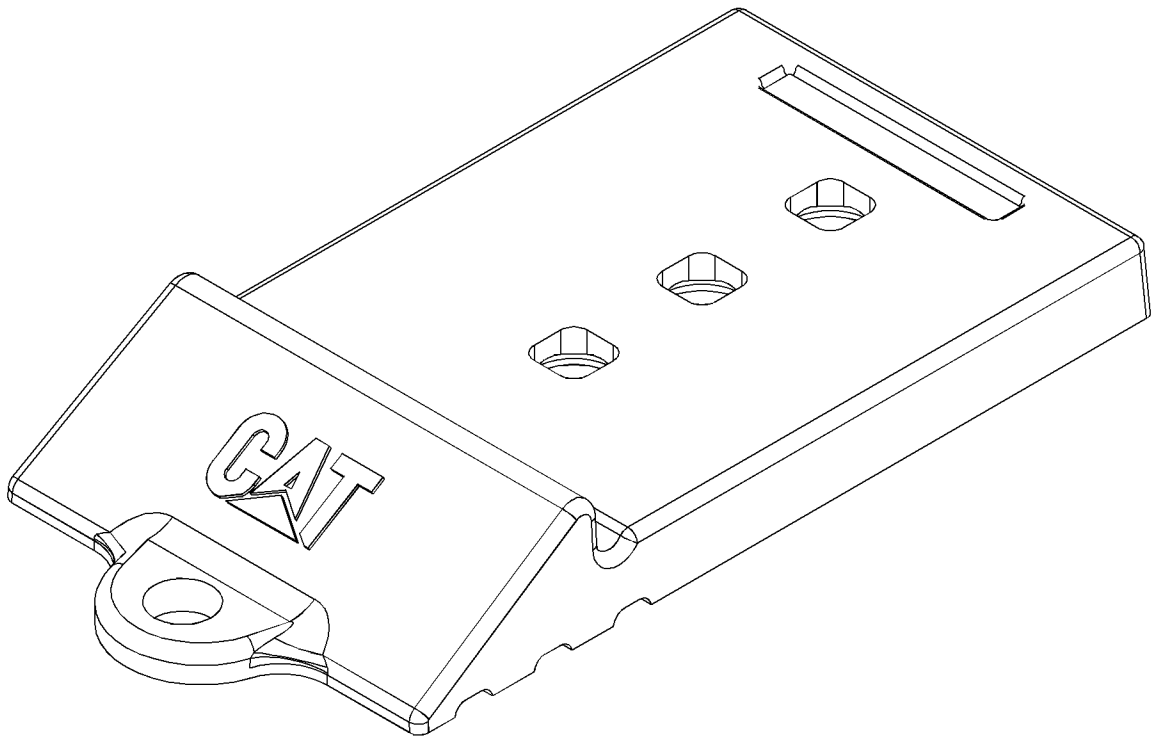

GRAPHIC #1 **<END>** g03795660

447-0353 PLATE-WEAR–CENTER

S/N: M5K1-UP

AN ATTACHMENT

SMCS-6120, 6820 **i06056599**

NOTE	REF NO	GRAPHIC REF	PART NUMBER	QTY	PART NAME 1 2 3 4 5 6 (PRODUCT LEVEL)	SEE PAGE
					(NO SERVICED PARTS)	

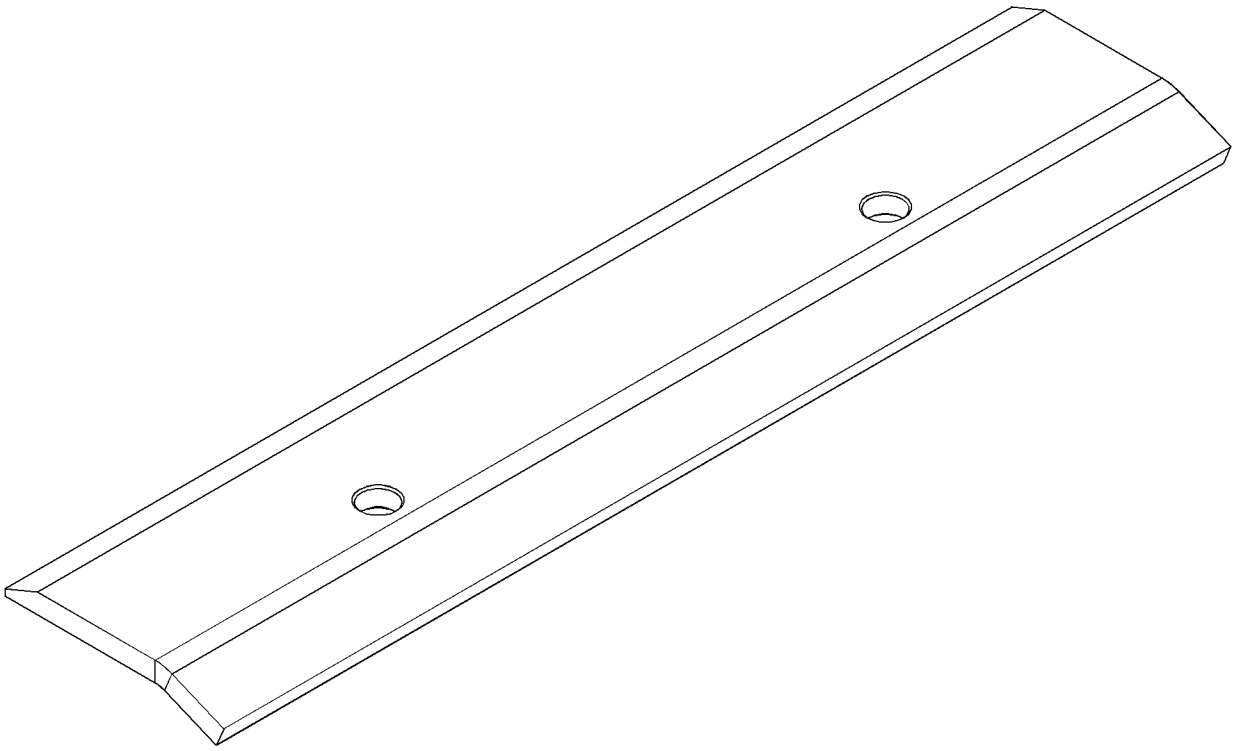

GRAPHIC #1 **<END>** g03795753

447-0354 PLATE-WEAR–LH

S/N: M5K1-UP

FIELD INSTALLATION

SMCS-6120, 6820 **i06056598**

NOTE	REF NO	GRAPHIC REF	PART NUMBER	QTY	PART NAME 1 2 3 4 5 6 (PRODUCT LEVEL)	SEE PAGE
					(NO SERVICED PARTS)	

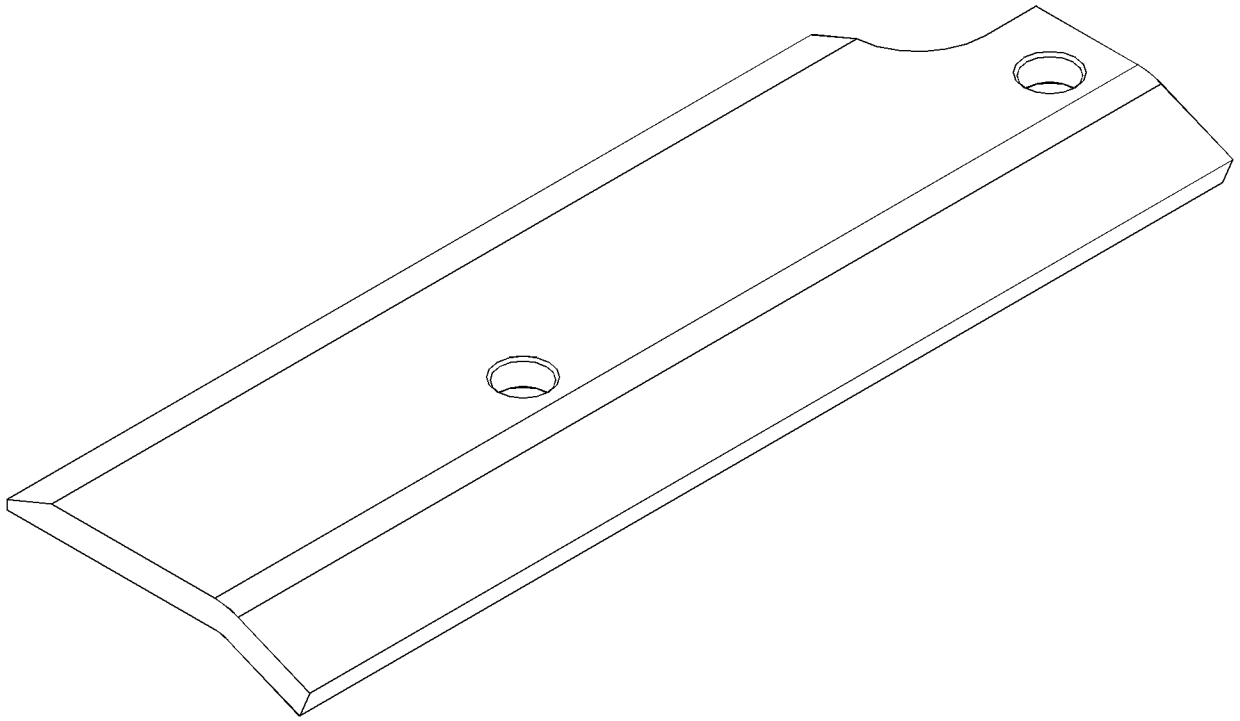

GRAPHIC #1 **<END>** g03795754

447-0355 PLATE-WEAR—RH

S/N: M5K1-UP

FIELD INSTALLATION

SMCS-6120, 6820

i06056595

NOTE	REF NO	GRAPHIC REF	PART NUMBER	QTY	PART NAME 1 2 3 4 5 6 (PRODUCT LEVEL)	SEE PAGE
					(NO SERVICED PARTS)	

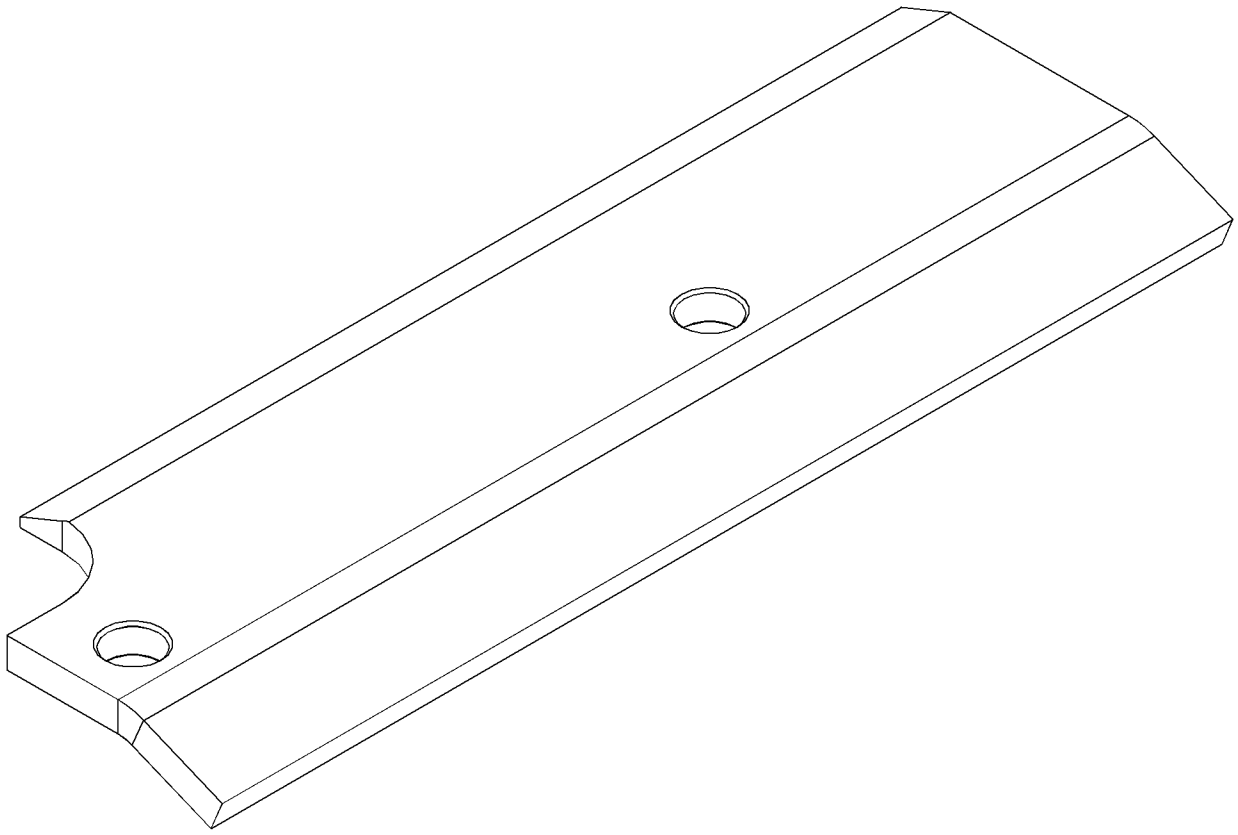

GRAPHIC #1

<END>

g03795755

361-1437 PROTECTOR GP-LINKAGE

S/N: M5K1-UP

AN ATTACHMENT

SMCS-5063 **i05817811**

NOTE	REF NO	GRAPHIC REF	PART NUMBER	QTY	PART NAME 1 2 3 4 5 6 (PRODUCT LEVEL)	SEE PAGE
	1	1	**456-5130**	1	BAR	
M	2	1	**8T-4131**	1	NUT (M20X2.5-THD)	
	3	1	**8T-5439**	1	WASHER-HARD (21.5X45X6-MM THK)	

M - METRIC PART

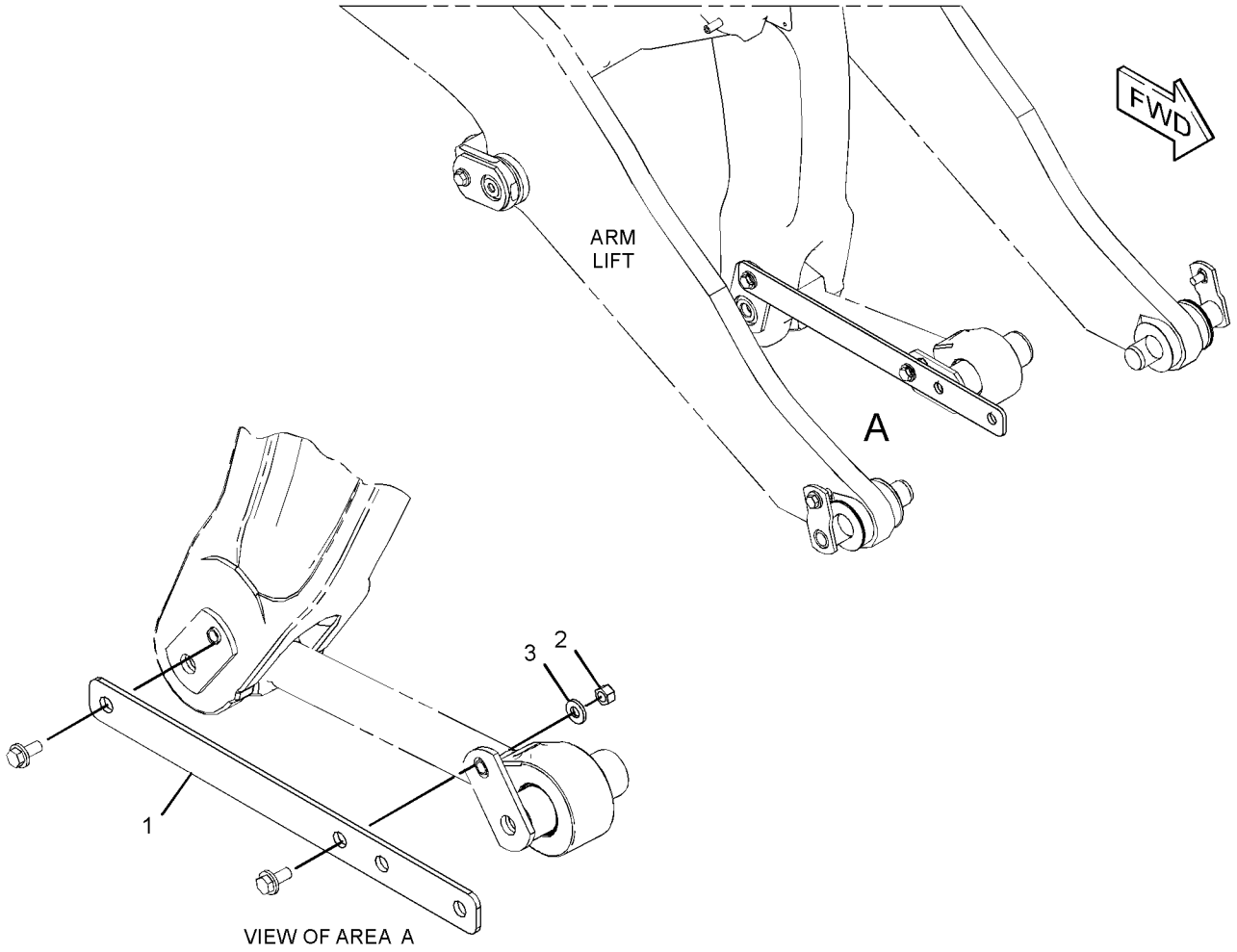

GRAPHIC #1 **<END>** g03684562

229-6969 TIP GP-GENERAL PURPOSE–K-80

S/N: M5K1-UP

AN ATTACHMENT

SMCS-6805 **i06056486**

NOTE	PART NUMBER	QTY	PART NAME 1 2 3 4 5 6 (PRODUCT LEVEL)	SEE PAGE
	220-9090	1	RETAINER-G.E.T. (K-80, K-90, K-100)	
	475-5473	1	TIP-GENERAL PURPOSE (K-80)	

<END>

454-9209 TIP GP-LONG

S/N: M5K1-UP

CANNOT BE USED WITH 361-1437—PAGE: 650, 139-9229—PAGE: 642, 229-6969—PAGE: 651 AN ATTACHMENT

SMCS-6805 **i05815848**

NOTE	REF NO	GRAPHIC REF	PART NUMBER	QTY	PART NAME 1 2 3 4 5 6 (PRODUCT LEVEL)	SEE PAGE
	1	1	**8E-6259**	1	RETAINER AS	
	2	1	**107-3308**	1	PIN	
	3	1	**449-2159**	1	TIP-LONG (J-300)	

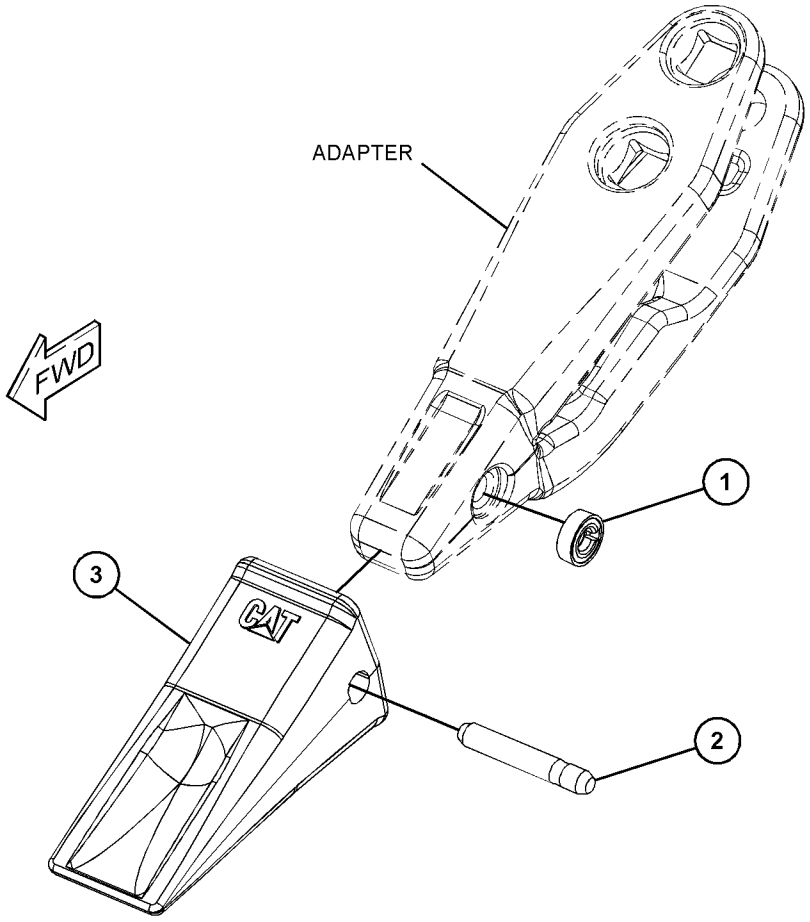

GRAPHIC #1 **<END>** g03684381

392-3809 BOX GP-TOOL

S/N: M5K1-UP

CANNOT BE USED WITH 392-3725 BRACKET GP-SUPPORT AN ATTACHMENT

SMCS-7259 **i06108056**

NOTE	REF NO	GRAPHIC REF	PART NUMBER	QTY	PART NAME 1 2 3 4 5 6 (PRODUCT LEVEL)	SEE PAGE
	1	1	**305-3159**	1	PAWL	
J	2	1	**326-0610**	1	LATCH AS	
			1H-3244	4	LOCKWASHER	
M			**095-1207**	2	NUT (M12X1.75-THD)	
			326-0612	2	WASHER-TAB	
M			**344-5673**	4	NUT (M6X1-THD)	
	3	1	**392-3810**	1	BOX AS-TOOL	
M		1	**8T-3597**	6	NUT-WELD (M12X1.75-THD)	
	4	1	**392-3817**	1	PLATE AS	
	5	1	**392-3824**	1	SHEET	
	6	1	**8T-4121**	4	WASHER-HARD (11X21X2.5-MM THK)	
M	7	1	**8T-4133**	2	NUT (M10X1.5-THD)	
M	8	1	**8T-4137**	2	BOLT (M10X1.5X20-MM)	
M	9	1	**8T-4139**	7	BOLT (M12X1.75X30-MM)	
M	10	1	**8T-4192**	4	BOLT (M12X1.75X25-MM)	
	11	1	**8T-4223**	11	WASHER-HARD (13.5X25.5X3-MM THK)	
E	12	1	**392-3816**		SEAL (105-CM)	

E - ORDER BY THE CENTIMETER
J - REQUIRES CORPORATE KEY
M - METRIC PART

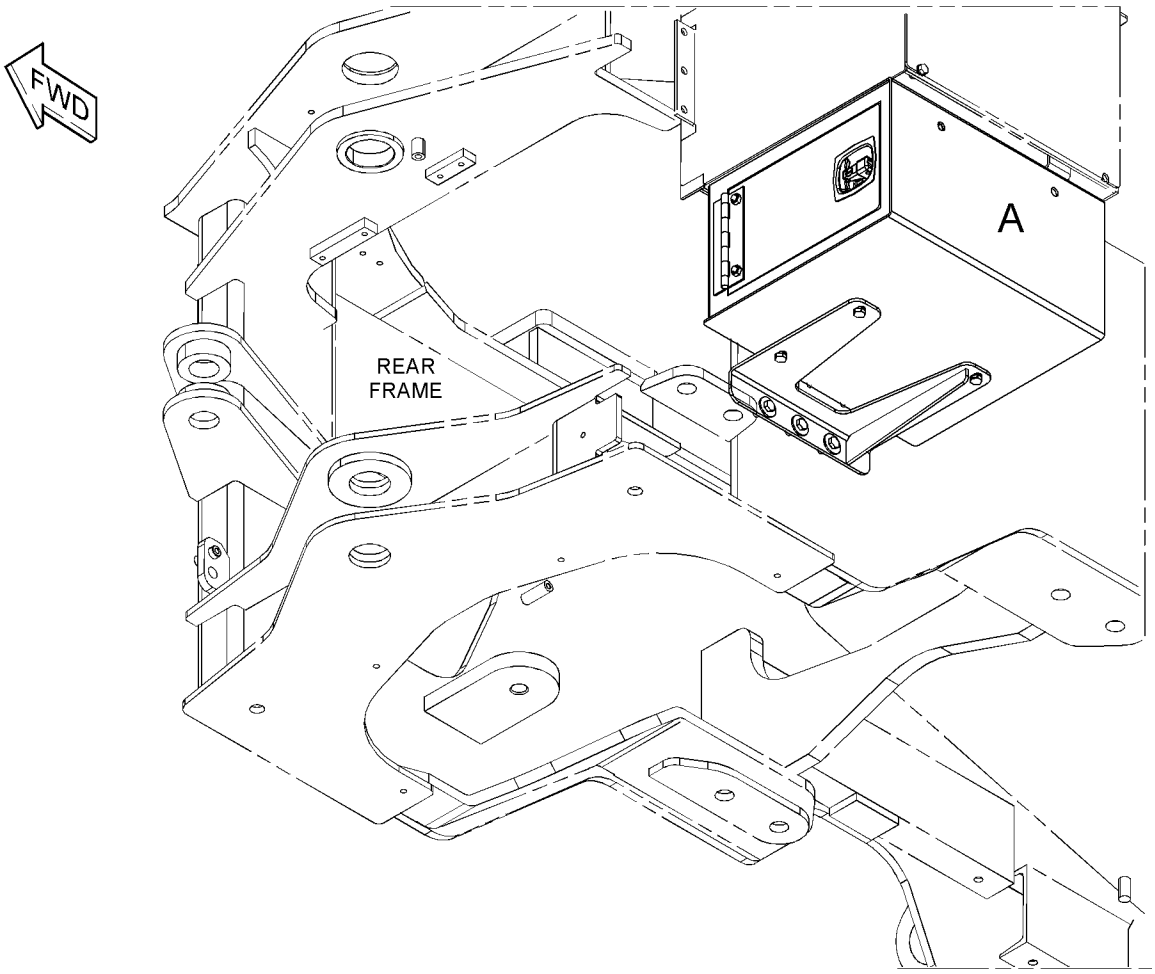

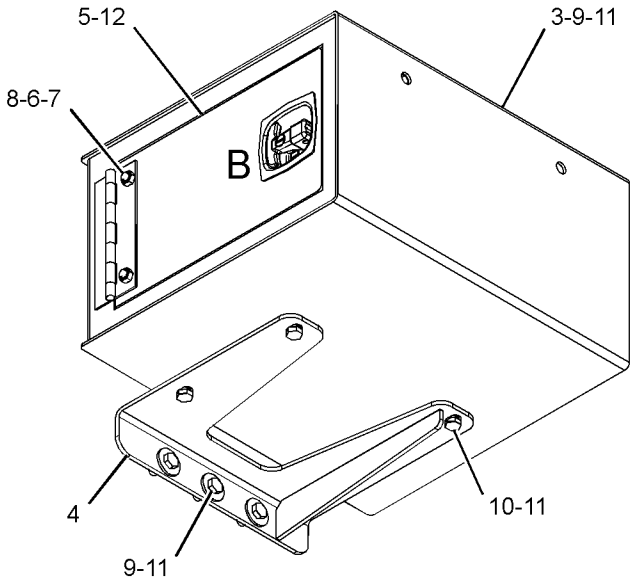

VIEW OF AREA A

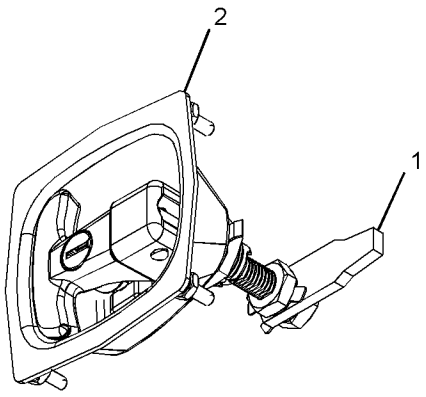

VIEW OF AREA B
(PARTS REMOVED FOR CLARITY)

GRAPHIC #1 **<END>** g03431199

387-6023 FILM GP

S/N: M5K1-UP

PART OF 432-7392 CONVERSION AR-BRAKE CONTROL

AN ATTACHMENT

SMCS-7405, 7557

i05776276

NOTE	REF NO	GRAPHIC REF	PART NUMBER	QTY	PART NAME 1 2 3 4 5 6 (PRODUCT LEVEL)	SEE PAGE
	1	1	**1P-2807**	2	FILM-IDENTIFICATION (LIFT EYE LOCATION)	
	2	1	**7X-3229**	2	FILM-IDENTIFICATION (LIFT EYE, TIE-DOWN LOCATION)	
	3	1	**7X-7644**	2	FILM-IDENTIFICATION (TIE-DOWN)	
	4	1	**124-2456**	2	FILM-INSTRUCTION (NO STEP)	
	5	1	**134-7258**	1	FILM-INFORMATION (EXTENDED LIFE COOLANT)	
	6	1	**146-6747**	1	FILM-INFORMATION (24-VOLT)	
	7	1	**158-7864**	1	FILM-IDENTIFICATION (HYDRAULIC OIL)	
	8	2	**209-0516**	1	FILM-IDENTIFICATION (CATERPILLAR, FRONT WINDOW)	
	9	1	**224-8946**	1	FILM-WARNING (NO ETHER SPRAY/AIR INTK, INTL)	
	10	1	**225-0312**	1	FILM-WARNING (JUMP START, READ OMM, INTL)	
	11	1	**225-4131**	2	FILM-WARNING (FLYING DEBRIS, STAY BACK, INTL)	
	12	1	**225-4257**	2	FILM-WARNING (HOT FLUID UNDER PRESS)	
	13	1	**226-1240**	2	FILM-WARNING (CRUSH HAZARD, STAY BACK, INTL)	
	14	1	**226-1274**	1	FILM-WARNING (CRUSH HAZARD, READ OMM, INTL)	
	15	2	**228-9106**	1	FILM-WARNING (HOT SURFACE, HANDS CLEAR, INTL)	
	20	2	**236-7230**	1	TAG-WARNING (STEERING FRAME LOCK)	
	22	2	**398-8246**	2	FILM-WARNING (ROTATING FAN, ENTANGLEMENT)	
	23	1	**346-5282**	1	FILM-WARNING (CRUSH HAZARD, STAY BACK)	
	24	2	**367-0844**	1	FILM-INSTRUCTION (FUEL, READ OMM)	
	25	2	**417-2121**	1	FILM-INSTRUCTION (AIR CONDITIONER, READ MAN)	
	26	1	**417-2124**	1	FILM-IDENTIFICATION (CIRCUIT BREAKER)	
	27	2	**417-2125**	1	FILM GP-INTERNATIONAL	
	29	2	**417-2128**	1	FILM-INSTRUCTION (SERVICE POINTS, READ OMM)	
	31	1	**434-6697**	1	FILM-IDENTIFICATION (CAT 950GC, LH)	
	32	1	**434-6698**	1	FILM-IDENTIFICATION (CAT 950GC, RH)	
	33	1	**434-6699**	1	FILM-IDENTIFICATION (CAT)	

387-6023 **FILM GP (*contd.*)** **i05776276**

REFER TO ALL ILLUSTRATIONS OF THIS GROUP FOR AUXILIARY VIEWS

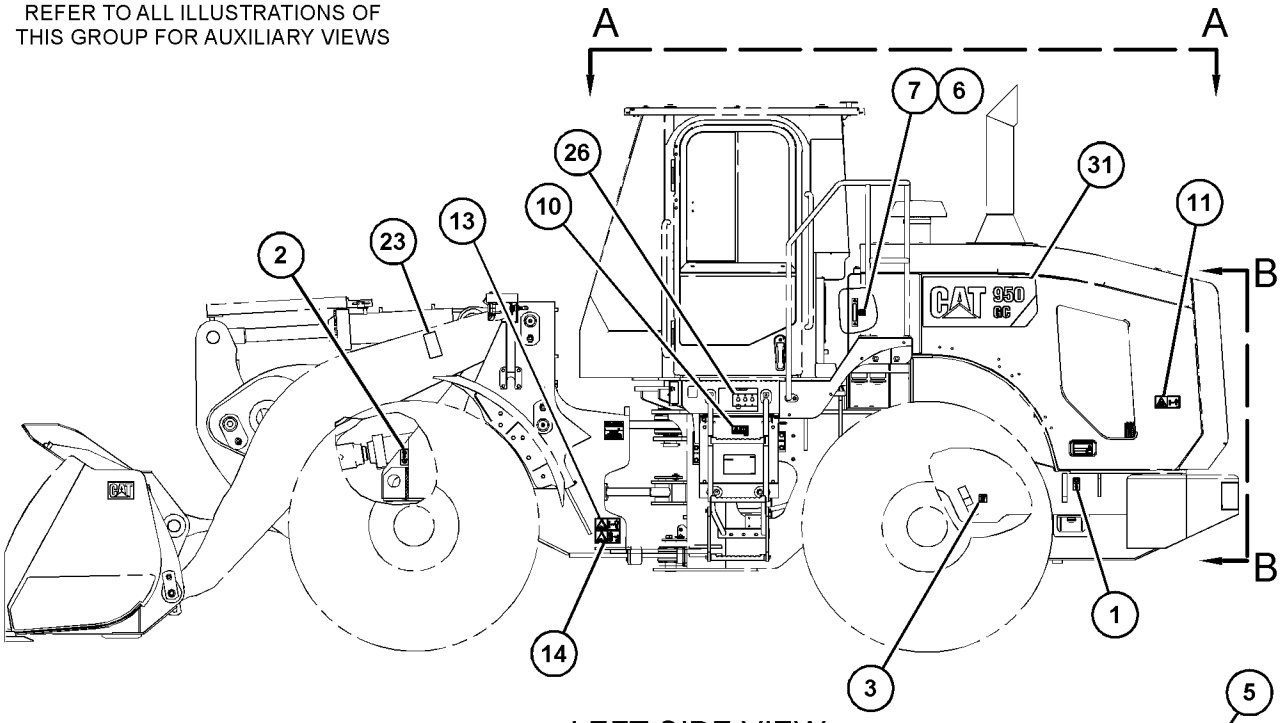

LEFT SIDE VIEW

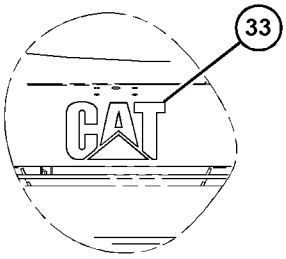

VIEW B-B

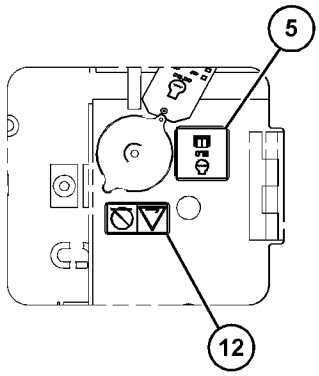

VIEW OF AREA C

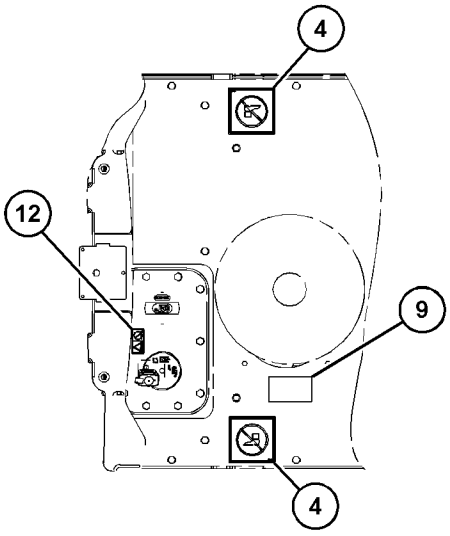

VIEW OF AREA D

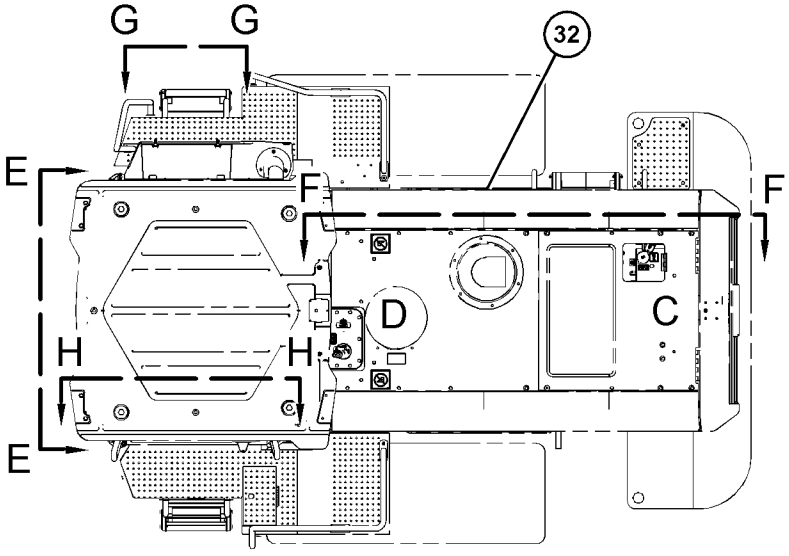

VIEW A-A

GRAPHIC #1 g03555997

387-6023 **FILM GP (*contd.*)** **i05776276**

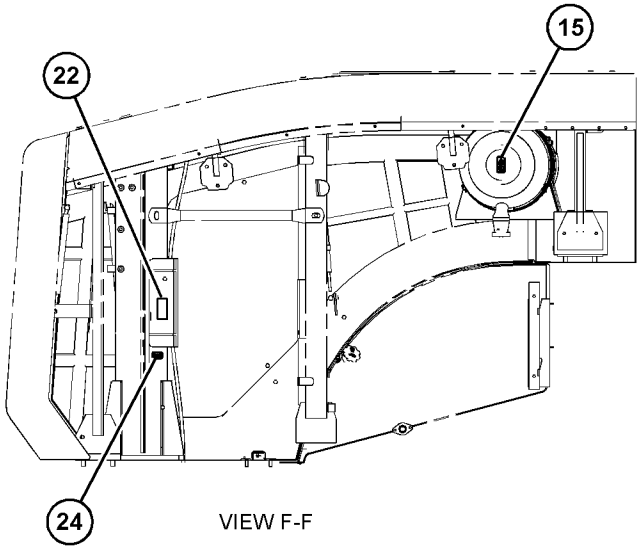

VIEW F-F

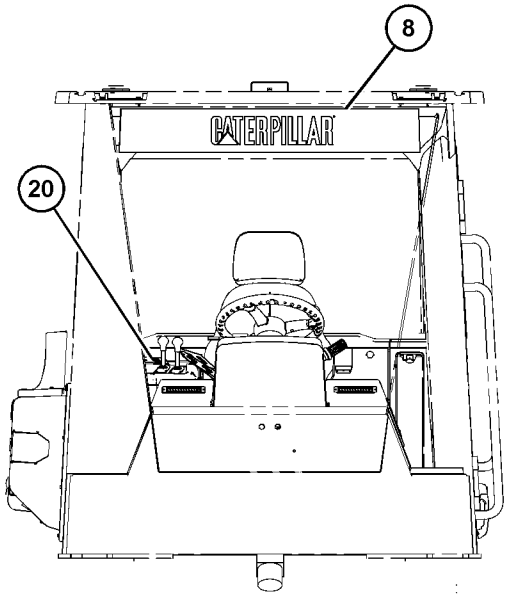

VIEW E-E

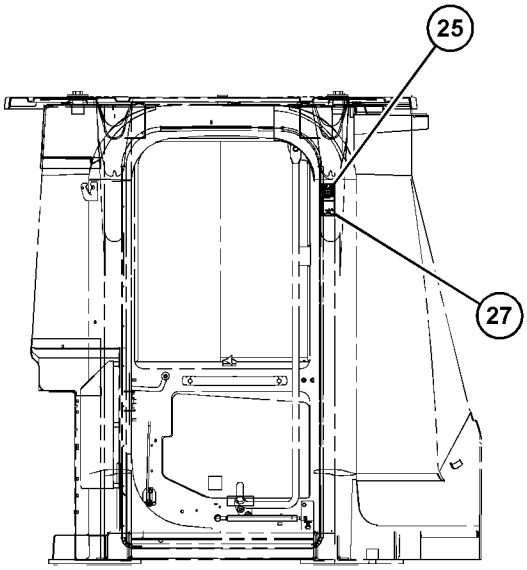

VIEW H-H

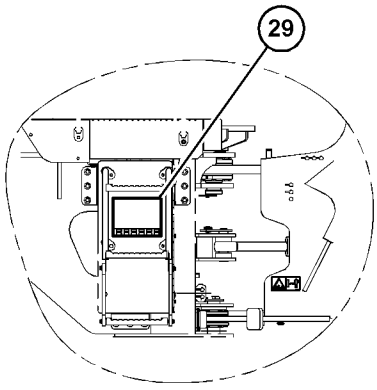

VIEW G-G

GRAPHIC #2 **<END>** g03667765

SERVICE EQUIPMENT AND SUPPLIES

391-5350 FILM GP

S/N: M5K1-UP

PART OF 391-5301 CAB AR

SMCS-7405, 7557 **i06066851**

NOTE	REF NO	GRAPHIC REF	PART NUMBER	QTY	PART NAME 1 2 3 4 5 6 (PRODUCT LEVEL)	SEE PAGE
	1	1	**276-2331**	1	FILM-INSTRUCTION (EXIT)	
	2	1	**219-0302**	1	FILM-WARNING (NO WELD, NO DRILL, READ OMM)	
	3	1	**227-7391**	1	FILM-WARNING (SEAT BELT, INTERNATIONAL)	
	4	1	**228-2616**	1	FILM-WARNING (UNIVERSAL, READ OMM)	
	5	1	**299-7880**	1	FILM-INSTRUCTION (NO STEP)	
	6	1	**417-2122**	1	FILM-IDENTIFICATION (FRONT & REAR WIPER)	
	7	1	**417-2123**	1	FILM-IDENTIFICATION (FUSE PANEL)	

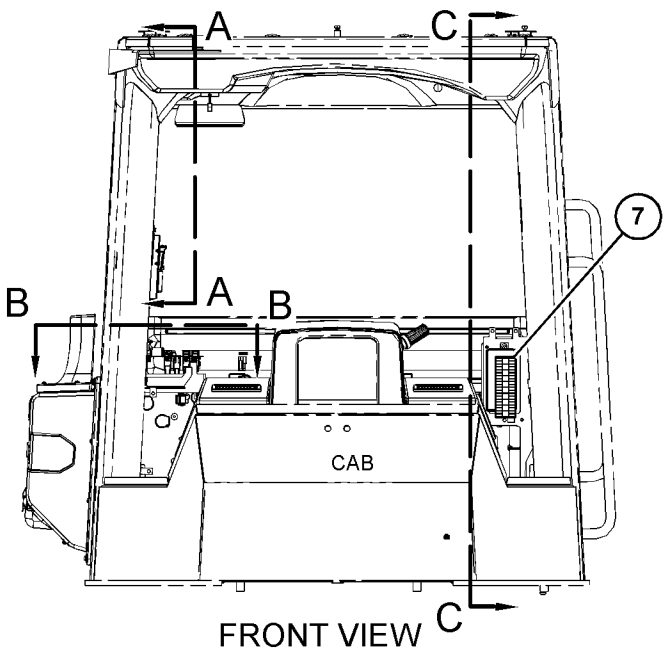

FRONT VIEW

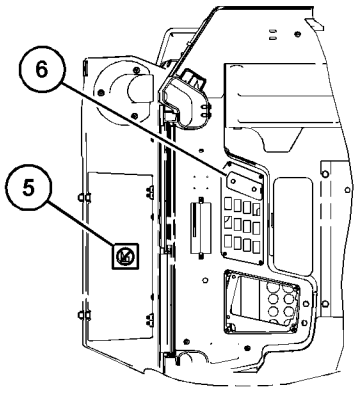

VIEW B-B

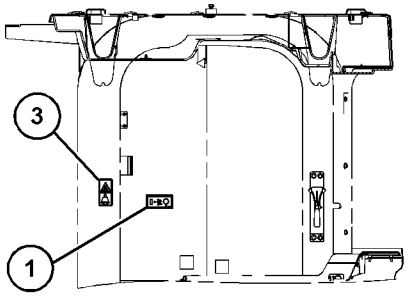

VIEW A-A

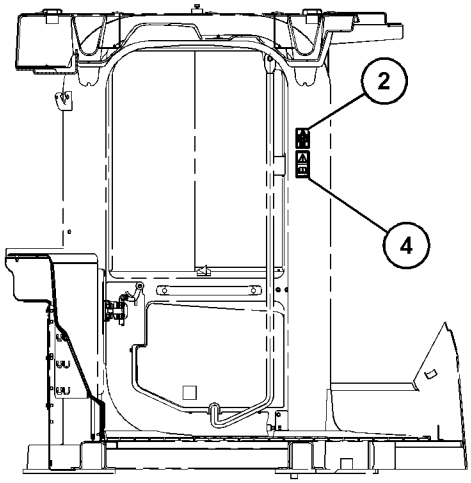

VIEW C-C

GRAPHIC #1 **<END>** g03530219

415-5625 FILM GP

S/N: E7A1-UP
PART OF 393-4097, 446-7556 ENGINE AR-PRIMARY
ALSO AN ATTACHMENT

SMCS-7405, 7557

i06041153

NOTE	REF NO	GRAPHIC REF	PART NUMBER	QTY	PART NAME 1 2 3 4 5 6 (PRODUCT LEVEL)	SEE PAGE
	1	1	**451-7225**	1	FILM-IDENTIFICATION (CAT)	

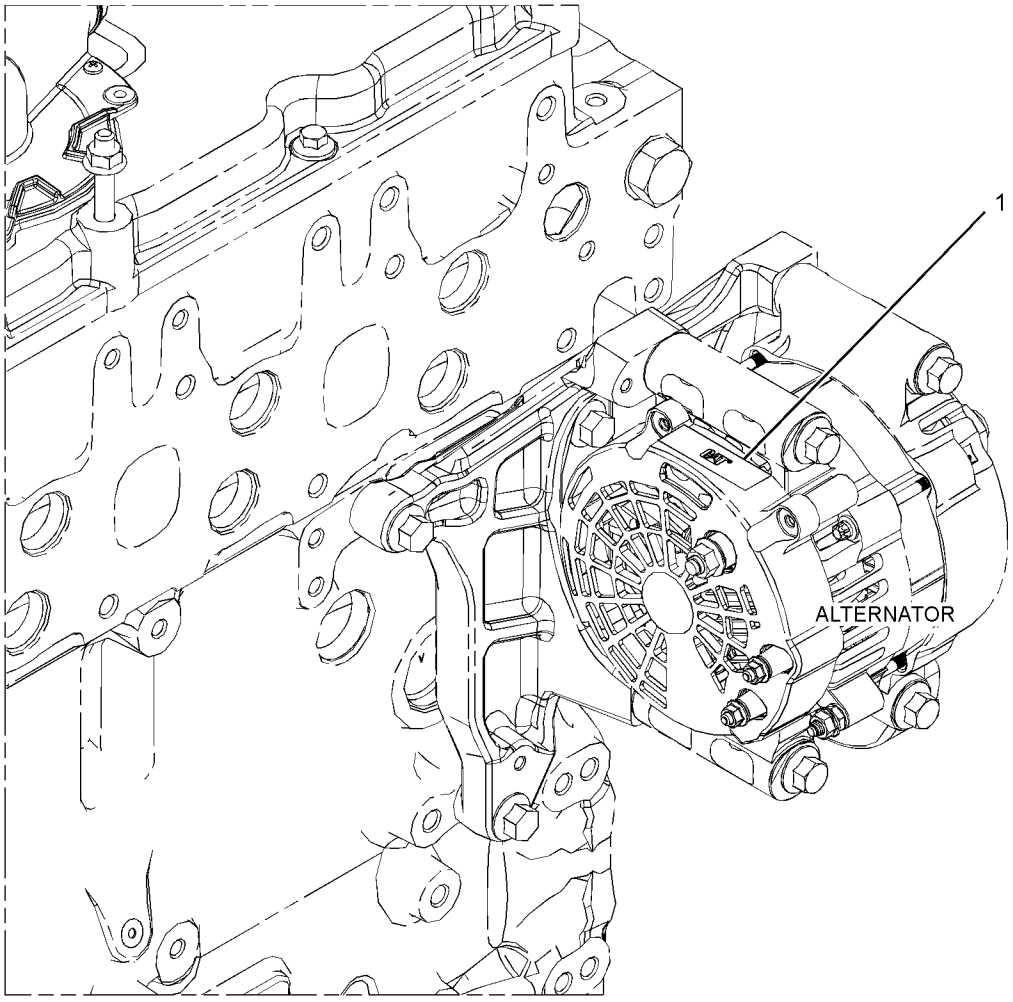

GRAPHIC #1 **<END>** g02675436

417-2120 FILM GP

S/N: M5K1-UP

PART OF 387-6027 CONVERSION AR-BRAKE CONTROL

AN ATTACHMENT

SMCS-7405, 7557

i05765502

NOTE	REF NO	GRAPHIC REF	PART NUMBER	QTY	PART NAME 1 2 3 4 5 6 (PRODUCT LEVEL)	SEE PAGE
	1	1	**1P-2807**	2	FILM-IDENTIFICATION (LIFT EYE LOCATION)	
	2	1	**7X-3229**	2	FILM-IDENTIFICATION (LIFT EYE, TIE-DOWN LOCATION)	
	3	1	**7X-7644**	2	FILM-IDENTIFICATION (TIE-DOWN)	
	4	1	**124-2456**	2	FILM-INSTRUCTION (NO STEP)	
	5	1	**134-7258**	1	FILM-INFORMATION (EXTENDED LIFE COOLANT)	
	6	1	**146-6747**	1	FILM-INFORMATION (24-VOLT)	
	7	1	**158-7864**	1	FILM-IDENTIFICATION (HYDRAULIC OIL)	
	9	2	**209-0516**	1	FILM-IDENTIFICATION (CATERPILLAR, FRONT WINDOW)	
	10	1	**224-8946**	1	FILM-WARNING (NO ETHER SPRAY/AIR INTK, INTL)	
	11	1	**225-0312**	1	FILM-WARNING (JUMP START, READ OMM, INTL)	
	12	1	**225-4131**	2	FILM-WARNING (FLYING DEBRIS, STAY BACK, INTL)	
	14	1	**225-4257**	2	FILM-WARNING (HOT FLUID UNDER PRESS)	
	15	1,2	**226-1240**	2	FILM-WARNING (CRUSH HAZARD, STAY BACK, INTL)	
	16	1	**226-1274**	1	FILM-WARNING (CRUSH HAZARD, READ OMM, INTL)	
	17	2	**228-9106**	1	FILM-WARNING (HOT SURFACE, HANDS CLEAR, INTL)	
	22	2	**236-7230**	1	TAG-WARNING (STEERING FRAME LOCK)	
	23	2	**398-8246**	2	FILM-WARNING (ROTATING FAN, ENTANGLEMENT)	
	25	2	**367-0844**	1	FILM-INSTRUCTION (FUEL, READ OMM)	
	27	2	**417-2121**	1	FILM-INSTRUCTION (AIR CONDITIONER, READ MAN)	
	28	1	**417-2124**	1	FILM-IDENTIFICATION (CIRCUIT BREAKER)	
	29	2	**417-2126**	1	FILM-CERTIFICATION (ROPS, FOPS, READ OMM)	
	31	2	**417-2128**	1	FILM-INSTRUCTION (SERVICE POINTS, READ OMM)	
	32	1	**434-6697**	1	FILM-IDENTIFICATION (CAT 950GC, LH)	
	33	1	**434-6698**	1	FILM-IDENTIFICATION (CAT 950GC, RH)	
	34	2	**434-6699**	1	FILM-IDENTIFICATION (CAT)	
	35	1	**346-5282**	1	FILM-WARNING (CRUSH HAZARD, STAY BACK)	

417-2120 **FILM GP (*contd.*)** **i05765502**

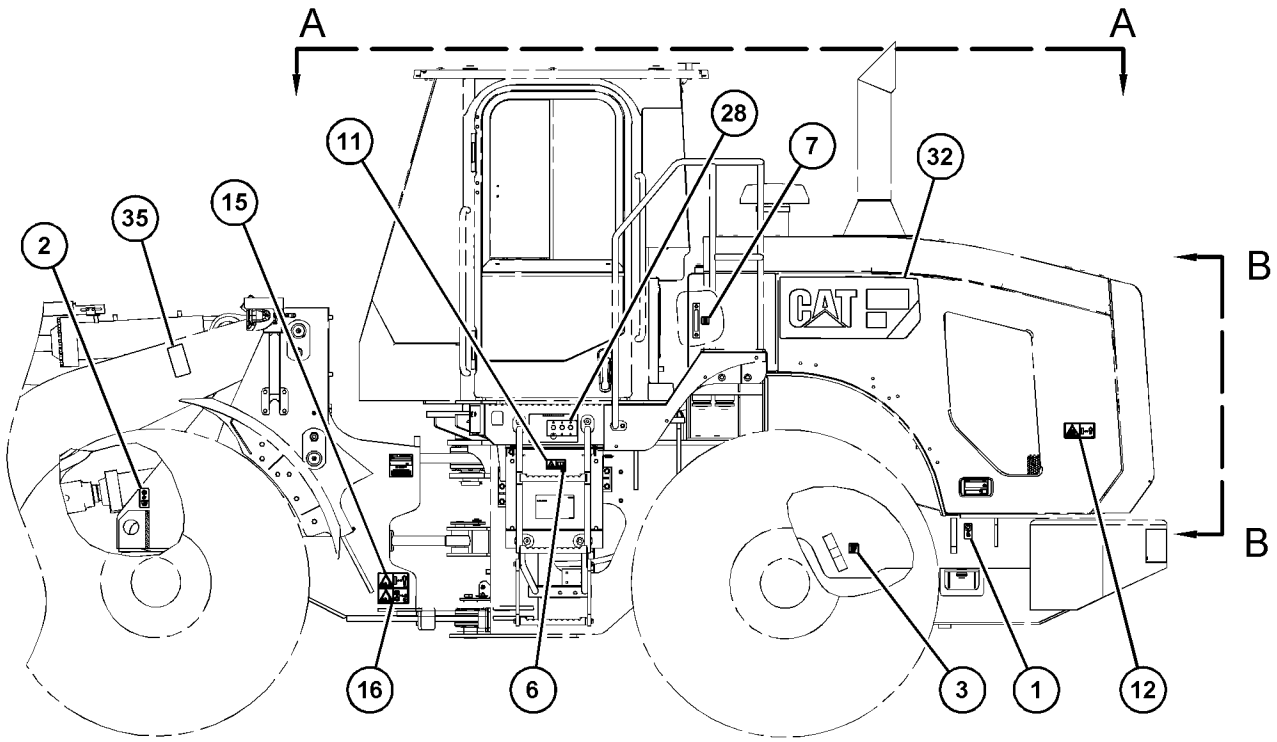

LEFT SIDE VIEW

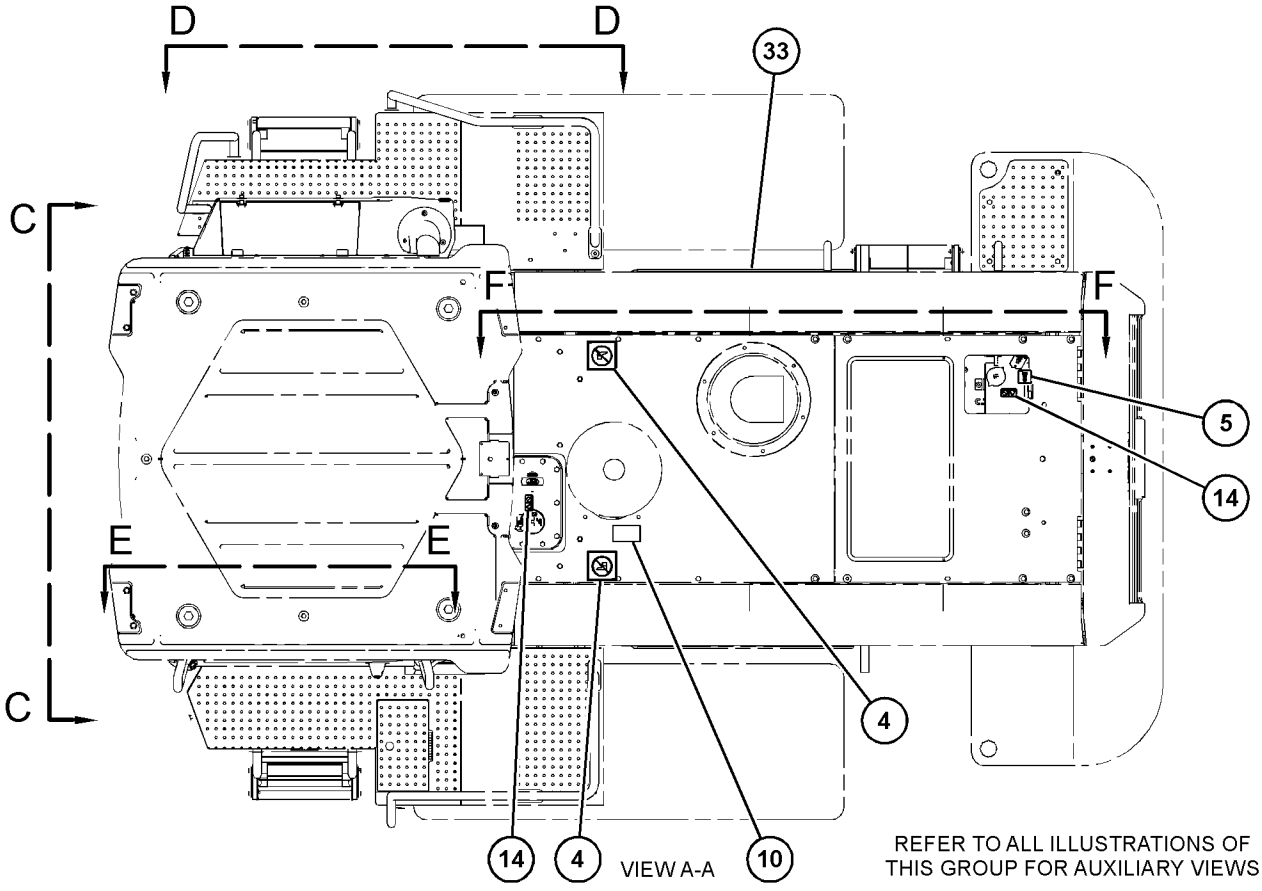

VIEW A-A

REFER TO ALL ILLUSTRATIONS OF THIS GROUP FOR AUXILIARY VIEWS

GRAPHIC #1

g03557021

417-2120 **FILM GP (*contd.*)** **i05765502**

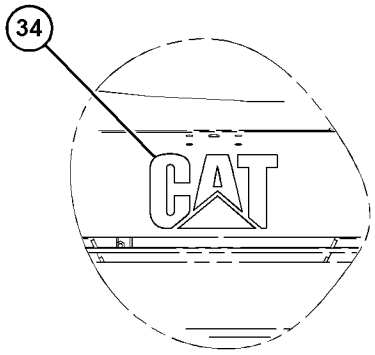

VIEW B-B

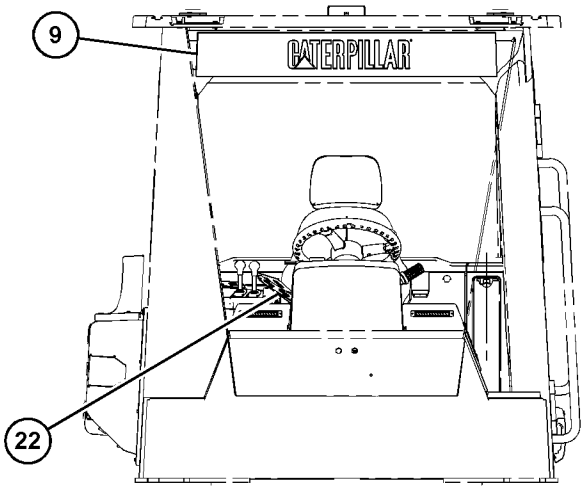

VIEW C-C

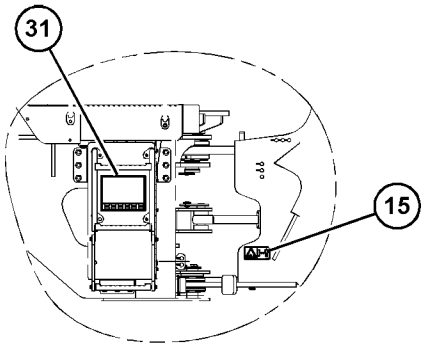

VIEW D-D

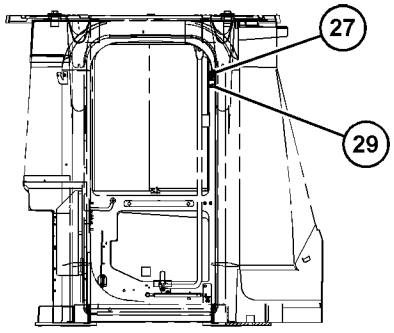

VIEW E-E

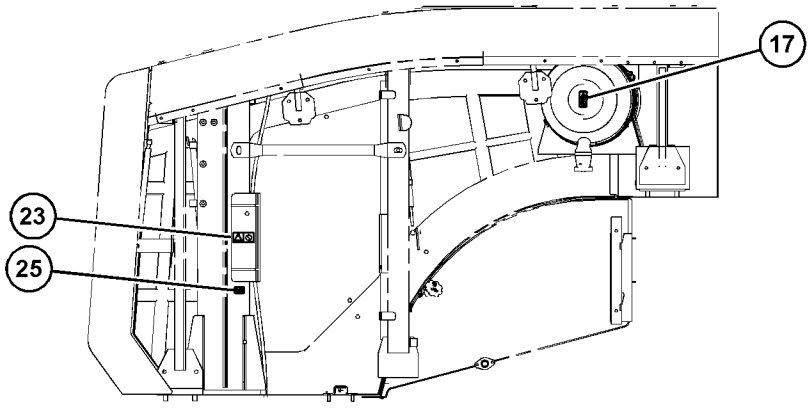

VIEW F-F

GRAPHIC #2 **<END>** g03554618

434-6694 FILM GP

S/N: M5K1-UP

PART OF 432-7393 CONVERSION AR-BRAKE CONTROL, 387-6026 CONVERSION AR-ROADING AN ATTACHMENT

SMCS-7405, 7557

i05776159

NOTE	REF NO	GRAPHIC REF	PART NUMBER	QTY	PART NAME 1 2 3 4 5 6 (PRODUCT LEVEL)	SEE PAGE
	1	1	**1P-2807**	2	FILM-IDENTIFICATION (LIFT EYE LOCATION)	
	2	1	**7X-3229**	2	FILM-IDENTIFICATION (LIFT EYE, TIE-DOWN LOCATION)	
	3	1	**7X-7644**	2	FILM-IDENTIFICATION (TIE-DOWN)	
	4	1	**124-2456**	2	FILM-INSTRUCTION (NO STEP)	
	5	1	**134-7258**	1	FILM-INFORMATION (EXTENDED LIFE COOLANT)	
	6	1	**146-6747**	1	FILM-INFORMATION (24-VOLT)	
	7	1	**158-7864**	1	FILM-IDENTIFICATION (HYDRAULIC OIL)	
	8	2	**209-0516**	1	FILM-IDENTIFICATION (CATERPILLAR, FRONT WINDOW)	
	9	1	**224-8946**	1	FILM-WARNING (NO ETHER SPRAY/AIR INTK, INTL)	
	10	1	**225-0312**	1	FILM-WARNING (JUMP START, READ OMM, INTL)	
	11	1	**225-4131**	2	FILM-WARNING (FLYING DEBRIS, STAY BACK, INTL)	
	12	1	**225-4257**	2	FILM-WARNING (HOT FLUID UNDER PRESS)	
	13	1,2	**226-1240**	2	FILM-WARNING (CRUSH HAZARD, STAY BACK, INTL)	
	14	1	**226-1274**	1	FILM-WARNING (CRUSH HAZARD, READ OMM, INTL)	
	15	2	**228-9106**	1	FILM-WARNING (HOT SURFACE, HANDS CLEAR, INTL)	
	20	2	**236-7230**	1	TAG-WARNING (STEERING FRAME LOCK)	
	21	2	**398-8246**	2	FILM-WARNING (ROTATING FAN, ENTANGLEMENT)	
	23	1	**346-5282**	1	FILM-WARNING (CRUSH HAZARD, STAY BACK)	
	24	2	**367-0844**	1	FILM-INSTRUCTION (FUEL, READ OMM)	
	25	2	**417-2121**	1	FILM-INSTRUCTION (AIR CONDITIONER, READ MAN)	
	26	1	**417-2124**	1	FILM-IDENTIFICATION (CIRCUIT BREAKER)	
	27	2	**417-2126**	1	FILM-CERTIFICATION (ROPS, FOPS, READ OMM)	
	29	2	**417-2128**	1	FILM-INSTRUCTION (SERVICE POINTS, READ OMM)	
	30	2	**434-6699**	1	FILM-IDENTIFICATION (CAT)	
	31	1	**434-6697**	1	FILM-IDENTIFICATION (CAT 950GC, LH)	
	32	1	**434-6698**	1	FILM-IDENTIFICATION (CAT 950GC, RH)	

434-6694 **FILM GP (*contd.*)** **i05776159**

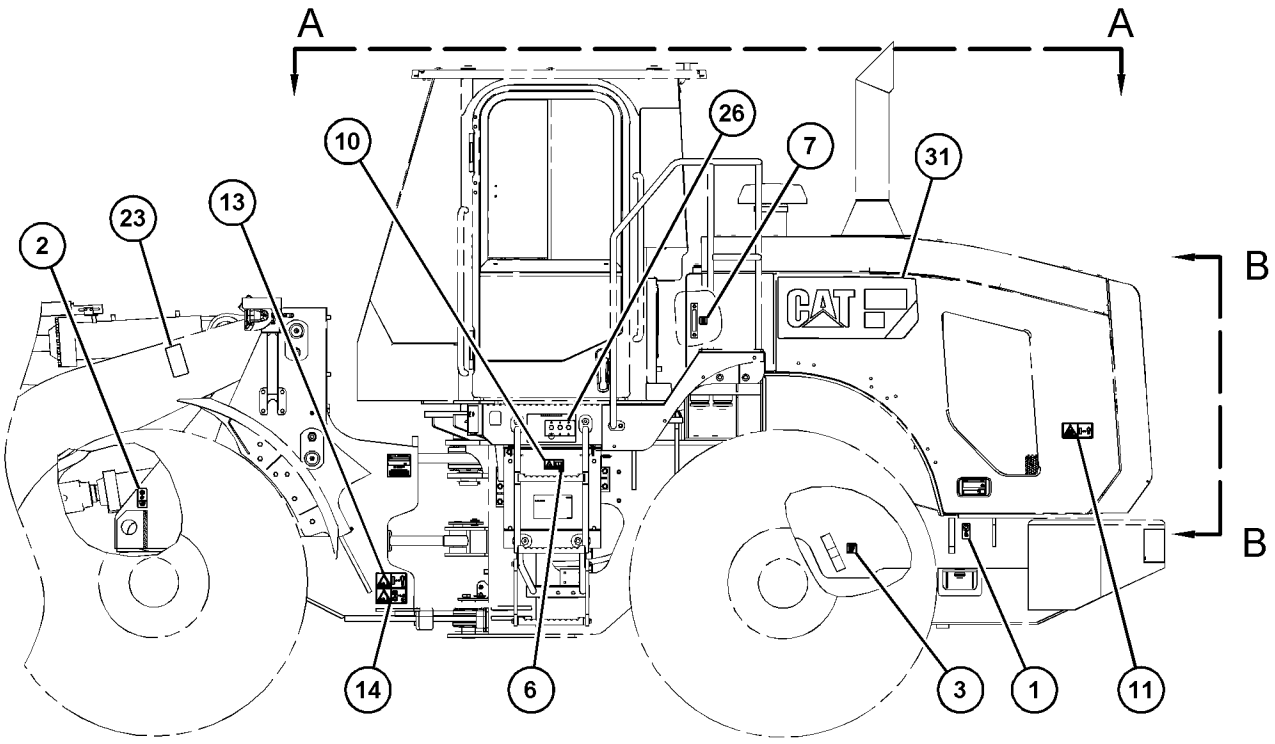

LEFT SIDE VIEW

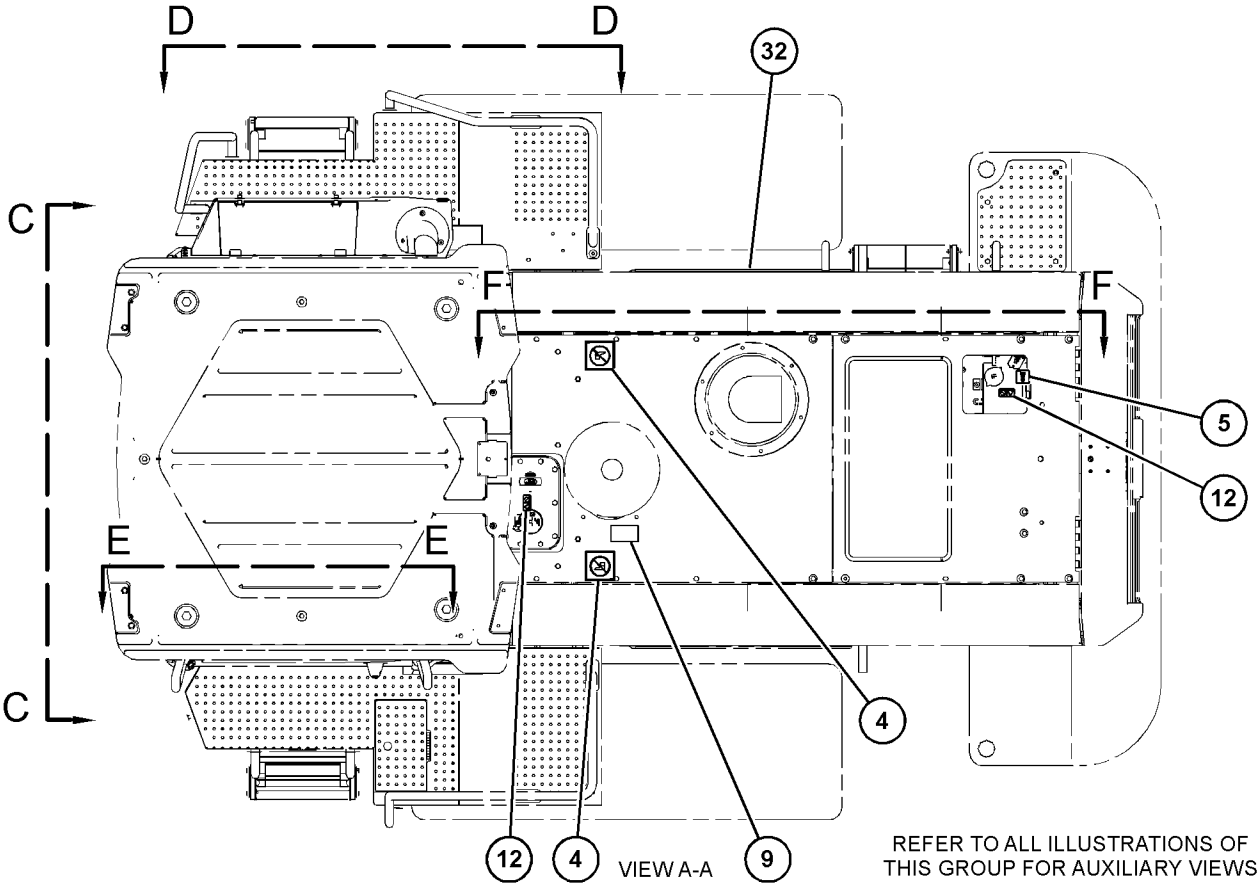

VIEW A-A

REFER TO ALL ILLUSTRATIONS OF THIS GROUP FOR AUXILIARY VIEWS

GRAPHIC #1

g03557036

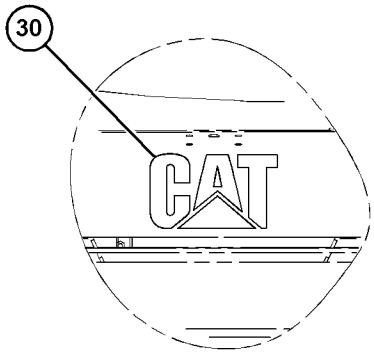

VIEW B-B

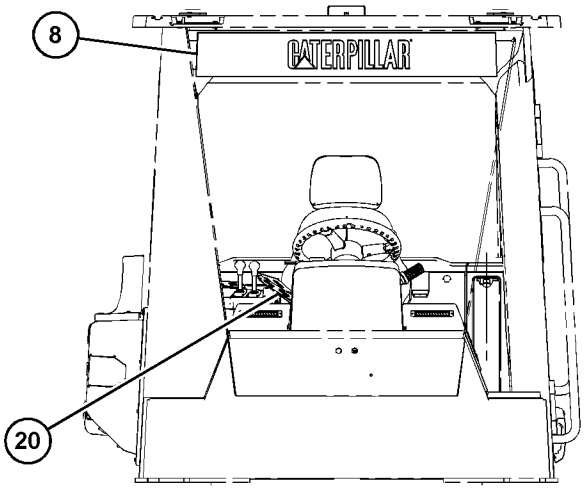

VIEW C-C

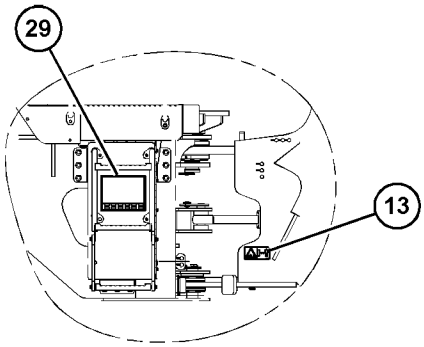

VIEW D-D

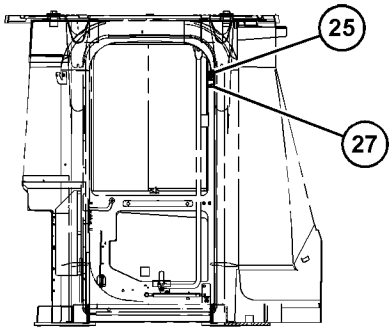

VIEW E-E

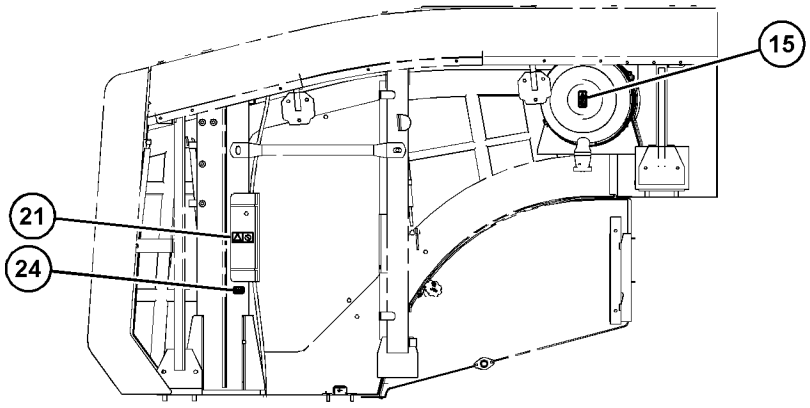

VIEW F-F

GRAPHIC #2 **<END>** g03557037

SERVICE EQUIPMENT AND SUPPLIES

378-8167 PLATE & FILM GP

S/N: E7A1-UP

PART OF 393-4097, 446-7556 ENGINE AR-PRIMARY

ALSO AN ATTACHMENT

SMCS-7405, 7557 **i05472849**

NOTE	REF NO	GRAPHIC REF	PART NUMBER	QTY	PART NAME 1 2 3 4 5 6 (PRODUCT LEVEL)	SEE PAGE
	1	1	**392-8477**	1	PLATE-IDENTIFICATION (CAT)	
	2	1	**326-9053**	1	FILM-WARNING (DO NOT SPRAY, READ OMM)	
	3	1	**346-8219**	2	FILM-WARNING (UNIVERSAL WARNING)	
	4	1	**355-3486**	1	STRIP-ADHESIVE	

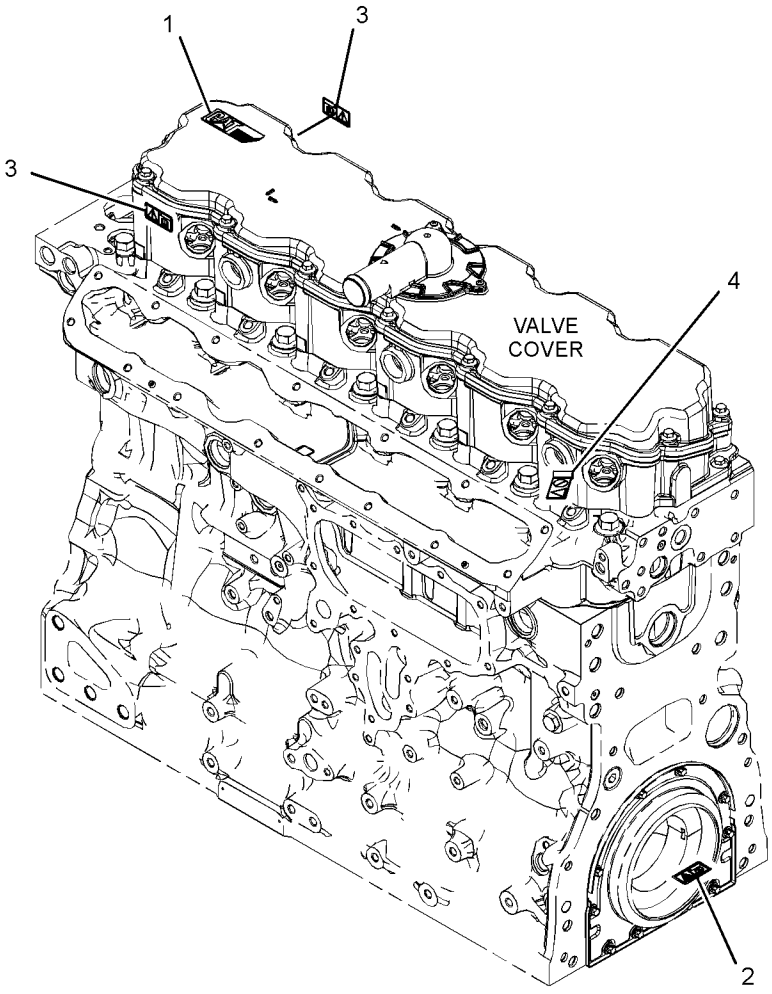

GRAPHIC #1 **<END>** g03378858

446-6955 SERVICE CENTER AR

S/N: M5K1-UP

CANNOT BE USED WITH 446-6956 LUBRICANT AR, 431-4637 ARM GP-LIFT

AN ATTACHMENT

SMCS-7513 **i05466314**

NOTE	PART NUMBER	QTY	PART NAME 1 2 3 4 5 6 (PRODUCT LEVEL)	SEE PAGE
Y	*387-5837*	1	FRAME AR	302
Y	*431-4625*	1	LINES GP-GREASE	330

Y - SEPARATE ILLUSTRATION

<END>

446-6956 SERVICE CENTER AR

S/N: M5K1-UP

CANNOT BE USED WITH 446-6955 LUBRICANT AR, 387-5780 CONTROL GP-BUCKET, 387-5940 CONTROL GP-BUCKET

AN ATTACHMENT

SMCS-7513 **i05522340**

NOTE	PART NUMBER	QTY	PART NAME 1 2 3 4 5 6 (PRODUCT LEVEL)	SEE PAGE
Y	*432-7340*	1	FRAME AR	302
Y	*432-7338*	1	LUBRICATION GP-AUTOMATIC	333

Y - SEPARATE ILLUSTRATION

<END>

PART NUMBER INDEX

Part	Page
0	
0T-0489	583
	584
	585
1	
1H-3244	133
	182
	653
1H-3338	368
1J-2860	216
	218
	220
	222
1J-4757	216
	218
	220
	222
1J-9671	341
	342
	465
1K-8374	248
	249
	250
1K-8850	296
1L-5072	231
1M-4543	546
	548
	550
	551
1M-6119	100
	103
1M-6120	100
	103
1M-6718	505
1P-0810	120
	123
	124
	522
1P-2807	655
	660
	663
1P-3321	292
1P-3702	472
1P-3703	419
	424
1P-3707	199
1P-4577	235
	382
	409
	419
	424
1P-4578	409
	419
	424
1P-4582	370
1P-5760	425
1P-5767	419
	424
1P-6356	569
1P-6872	375
1S-0994	5
	100
	103
	183
	193
	360
	414
	419
	424
1S-1164	199
1S-6595	199
1S-7251	100
	103
	182
	193
1S-7252	193
1S-9593	262
	553
	554
1T-0738	265
1U-0593	638
1V-5872	583
	584
	585
1V-6341	252
2	
2C-9259	607
	608
	610
	612
	613
	614
	616
	618
	619
	620
	621
	623
	625
2D-0094	214
2D-2443	248
	249
	250
2D-2507	248
	249
	250
2D-2508	248
	249
	250
2D-2509	248
	249
	250
2D-2751	129
	131
	133
	135
	568
2D-5658	240
2D-9454	216
	218
	220
	222
2D-9455	216
	218
	220
	222
2G-8096	559
2H-3088	216
	220
	225
2H-3429	504
	505
	506
	507
2H-3920	171
2H-3922	166
2H-6184	199
2J-2866	470
2J-3506	626
2J-3507	642
	643
2J-5997	606
2J-7761	231
2L-6726	259
2L-8050	119
	122
	161
	182
2L-8051	182
2L-8058	119
	122
	161
	182
2L-8069	116
	126
2L-8071	119
2L-8077	120
2L-8078	111
	116
2L-8079	116
	125
2M-0344	197
	198
2M-9780	51
	258
	260
	360
	370
	433
	434
	464
	465
	510
2N-7006	199
2N-7007	199
2P-1293	363
	365
	409
2P-1373	197
	198
2P-5755	257
2P-8986	199
	225
2P-8987	225
2R-1939	419
	424
2S-2596	382
	383
	470
2S-3440	49
	50
2S-4078	199
	409
	414
	466
	473
2V-1771	100
	103
	183
	193
2W-9499	333
	407
	455
	458
2Y-5429	546
	548
	550
	551
3	
3B-0551	196
	230
3B-2263	373
3B-4510	241
3B-4605	292
3B-4607	352
3B-4611	339
3B-4617	343
	344
3B-4631	640
3B-4640	352
3B-8488	243
	244
	256
3B-8489	313
	316
	512
	514
	640
3D-2824	51
	53
	235
	360
	362
	363
	365
	370
	373
	413
	414
	435
	437
3E-3371	182
3E-3389	450
3E-3805	559
3E-4051	569
3E-4052	569
3E-4057	569
3E-4058	569
3E-4066	569
3E-4321	352
	571
3E-4352	199
3E-4353	562
3E-4367	127
3E-5464	522
	526
3E-6328	►97
	176
3E-6602	559
3E-6769	375
3E-6770	375
3E-7403	351
3E-8020	535
	542
	597
3E-8320	100
	103
3E-8558	127
3E-9850	237
3F-3442	197
	198
3F-9556	167
3G-6395	638
3G-8779	512
	514
	516
	519
3H-0442	466
	473
3H-7180	443
	444

► **PRIMARY REFERENCE**

PART NUMBER INDEX

Part	Page
	445
	446
3J-1907	183
	193
	199
	233
	258
	265
	350
	351
	370
	394
	404
	407
	409
	410
	414
	418
	419
	423
	424
	435
	437
	439
	455
	456
	458
	459
	462
	466
	470
	473
	478
	482
	484
	486
	490
	492
	495
	497
	499
	501
3J-6956	265
3J-7354	212
	341
	342
	350
	351
	363
	365
	370
	373
	375
	380
	381
	392
	393
	394
	409
	414
	419
	424
	455
	458
	466
	470
	472
	473
	477
	478
	482
	484
	486
	490
	508
	509
	640
3J-7479	382
	383
3K-0158	254
3K-0159	254
3K-0360	19
	183
	252
	258
	265
	350
	351
	363
	365
	369
	413
	433
	434
	449
	463
	465
	477
	503
	504
	505
	506
	507
	508
	509
3K-2316	248
	249
	250
3K-9770	605
	638
3L-2221	73
3P-0647	199
3P-1210	375
3P-3839	581
3S-2093	100
	103
	116
	152
	182
	189
	191
	193
	603
3S-6049	103
3S-6050	103
3V-2333	511
	512
	514

4

Part	Page
4B-4274	181
	183
	288
	292
4B-4674	407
	419
	424
	456
	459
4B-9782	231
4D-1322	265
4D-7388	183
	235
4D-7794	352
4D-9517	189
4D-9986	128
	199
4E-3196	512
	514
	516
4E-3197	512
	514
	516
4E-3273	241
4E-5724	182
4E-5985	241
4F-2294	183
4F-4042	642
	643
4F-4097	265
4F-7827	626
4F-7952	199
4H-6520	216
	218
	220
	222
4I-3953	338
4J-0519	382
	383
4J-0520	199
	235
	360
	370
	409
	419
	424
4J-0522	409
	419
	424
	472
4J-2506	265
4J-5477	640
4J-7533	258
	260
	350
	466
	470
	473
	479
	486
4J-8996	463
	464
4J-8997	472
4K-1388	465
4K-1540	343
	344
4K-2039	503
	504
	505
	506
	507
4K-4284	240
4K-9429	589
4M-1677	347
4M-6582	595
	596
4M-7945	259
4P-7428	189
	193
4P-7429	193
4P-7581	133
	177
	180
	183
	189
	191
	252
	333
4S-4455	183
	360
	409
	414
4S-5824	225
4S-5971	214
4S-8264	536
	539
4S-8598	199
4T-0932	465
4T-0933	465
4T-0935	465
4T-0946	465
4T-1700	508
4T-4307	605
4T-4509	508
4T-4628	470
4T-4631	470
4T-5073	465
4T-8101	642
4V-8520	519
4V-8674	511
	512
	514

5

Part	Page
5A-3604	492
	495
	497
	499
	501
5A-3646	125
5A-3647	125
5C-2874	352
5C-2890	133
	147
	161
	177
	287
	292
	299
	348
	392
	393
	394
	425
	442
	443
	444
	445
	446
	520
5C-7261	100
	103
	117
	162
	183
	603
5C-8312	278
5C-9553	296
	310
	562
	598
5C-9583	146
5F-9144	233
	404
5F-9757	338
5G-6505	106
5H-2767	463
	464
5H-3701	216
	218

PART NUMBER INDEX

Part	Page
	220
	222
5H-4020	409
5H-8848	419
	424
5I-4376	350
	413
5J-2722	382
	383
5K-0227	470
5K-1568	231
5K-5338	189
	352
5K-9090	235
	363
	365
	409
	418
	423
	455
	458
5L-7200	173
5M-2057	470
5M-2894	235
	364
	365
	369
	370
	414
	419
	424
	452
5M-3154	199
5P-0537	148
	562
5P-0600	400
	401
5P-0747	193
5P-0761	103
	182
	193
5P-0767	520
	571
5P-1076	60
	61
	62
	191
	360
	369
	441
5P-1506	123
5P-2369	419
	424
5P-2370	414
5P-2957	576
5P-3119	238
5P-3454	119
5P-3455	182
5P-3779	342
	389
5P-4116	54
	56
	288
	292
	316
	324
	336
	337
	419
	424
	456
	459
	562
5P-4484	216
	218
	220
	222
5P-4571	116
	126
	173
5P-4961	54
	56
5P-5602	576
5P-5630	162
5P-5637	565
5P-6006	111
5P-6129	526
5P-6300	433
5P-6724	352
5P-7211	338
5P-7466	366
5P-7467	366
5P-7848	559
5P-7958	176
5P-7970	65
	72
	267
	284
	286
	287
	288
	292
	333
	336
	337
	419
	424
5P-8112	366
5P-8136	605
	606
5P-8244	591
5P-8245	21
	71
	199
	216
	218
	220
	222
	225
	235
	255
	276
	292
	299
	319
	320
	322
	324
	343
	364
	365
	370
	409
	419
	424
	435
	437
5P-8247	216
	218
	220
	222
	229
5P-8248	626
5P-8500	231
	452
5P-8823	605
	638
5P-9147	199
5P-9297	5
	183
5V-0353	512
	514
	516
5V-0354	512
	514
	516
5V-1497	591
	593
5V-1508	512
	514
5V-1511	512
	514
	516
5V-6152	191
5V-6153	191
5W-1417	296
5W-1992	522
5W-2005	522
5W-2817	228
6	
6A-5277	123
	522
6A-5591	199
6C-5303	229
6D-4246	352
	364
	365
	407
6E-1637	470
6E-3518	465
6E-4000	375
6E-4003	375
6E-4004	375
6E-4431	465
6E-4701	455
	458
	462
	482
	484
6E-5200	508
6E-6129	434
6E-6527	380
	381
6E-6528	380
	381
6F-0253	546
	548
6F-3930	248
	249
	250
6F-3931	248
	249
	250
6F-5188	231
6F-7045	166
6G-4703	216
	218
	220
	222
6H-3957	31
6H-5139	231
6I-0217	13
	23
	27
	39
	47
	59
	74
	87
	89
	93
6I-0233	164
	165
6I-0254	39
	59
6I-0260	27
	47
	70
	87
	89
	94
6I-0292	158
6I-0293	158
6I-0363	27
6I-0455	47
6I-0456	110
6I-0563	74
6I-0572	27
6I-0593	74
	87
	89
6I-0594	93
6I-0631	91
	92
6I-0645	23
6I-0650	23
6I-0654	26
	93
6I-0839	47
	59
6I-0917	70
6I-1090	41
	42
6I-1418	176
6I-4200	87
	89
6I-4374	39
6I-4681	27
6I-9395	259
6J-2419	478
	486
6J-9996	443
	444
	445
	446
6K-6307	479
	486
6L-4725	520
6M-5062	503
	504
	505
	506
	507
6N-1604	128
6N-6984	366
6P-5560	559
6T-6505	123
	124
	522
6T-6506	123
	124
	522
6V-0357	252
	466
	473
	479
	486
6V-0400	419
	424
6V-0491	116
	123
	522

► **PRIMARY REFERENCE**

PART NUMBER INDEX

Part	Page
6V-0852	233
	265
	313
	316
	322
	324
	352
	364
	366
	370
	414
	419
	424
	435
	437
	456
	459
	482
	484
	512
	514
	516
6V-1506	243
	244
6V-1820	199
	228
	352
6V-1889	51
	53
	235
	360
	414
	435
	437
	452
6V-2315	425
6V-2317	590
6V-2394	204
	206
	208
6V-2686	162
6V-2687	177
	523
	526
	595
	596
6V-3668	199
	225
	320
	419
	424
6V-3821	199
6V-3822	252
	366
	419
	424
6V-3823	267
	270
	288
6V-3940	103
	199
	292
	313
	316
	322
	324
6V-3965	233
	265
	351
	363
	365
	370
	414
	419
	424
	435
	436
6V-4248	240
6V-4249	214
6V-5192	470
6V-5217	199
6V-5218	162
6V-5219	65
6V-5223	199
6V-5393	466
	473
	479
	486
6V-5555	472
6V-5556	508
	509
6V-5683	557
6V-5684	419
	424
6V-5686	216
	218
	220
	222
	288
	292
6V-5696	225
6V-5839	199
	562
6V-5842	199
6V-6228	200
6V-6317	582
6V-6535	606
6V-7238	19
6V-7357	288
	292
	542
6V-7607	479
	487
6V-7611	370
6V-7636	562
6V-7673	319
6V-7728	419
	424
6V-7731	370
6V-7732	216
	218
	220
	222
6V-7743	586
	587
6V-7981	200
6V-7991	225
6V-8076	351
	370
	414
6V-8097	441
6V-8178	288
	578
6V-8186	167
6V-8197	255
	320
	578
6V-8201	225
	373
6V-8202	586
	587
6V-8212	252
	265
6V-8214	529
	532
6V-8225	148
6V-8227	379
6V-8235	591
6V-8369	171
6V-8378	167
6V-8397	350
	351
	363
	365
	370
	407
	409
	410
	413
	418
	419
	423
	424
	428
	429
	435
	437
	455
	458
	462
	478
	482
	484
	486
	490
	492
	495
	497
	499
	501
6V-8398	350
	351
	360
	369
6V-8400	413
	414
6V-8625	350
	369
6V-8629	370
6V-8633	360
6V-8635	409
	418
	423
6V-8636	351
	407
	418
	423
	455
	458
	482
	484
	490
	492
	495
	497
	499
	501
6V-8637	51
	53
	360
	413
	435
	437
6V-8638	360
6V-8639	351
6V-8640	51
6V-8647	640
6V-8714	363
	365
6V-8723	413
6V-8724	350
	407
	410
	419
	424
	435
	437
	455
	458
	478
	482
	484
	486
6V-8730	407
6V-8777	414
6V-8781	350
	455
	458
	482
	484
6V-8784	414
6V-8928	542
6V-8980	350
	419
	424
6V-8983	363
	365
6V-8997	409
6V-8998	235
6V-9001	351
6V-9006	414
6V-9007	235
	370
	413
	435
	437
6V-9008	235
	409
	455
	458
6V-9161	350
	455
	458
	482
	484
6V-9168	352
	419
	424
6V-9172	235
6V-9182	409
	413
6V-9189	137
6V-9200	351
	370
	419
	424
6V-9313	313
	316
6V-9632	296
	304
	520
	532
6V-9672	177
6V-9746	51
	53
	235
	360
	362
	363
	365
	369
	370

PART NUMBER INDEX

Part	Page
	409
	413
	414
	419
	424
	435
	437
	452
6V-9829	352
	407
	456
	459
	482
	484
6V-9836	350
	351
	407
	455
	458
	482
	484
6V-9839	51
	363
	365
	414
6V-9846	51
6V-9850	351
	407
	419
	424
	428
	429
	455
	458
	482
	484
6V-9851	369
6V-9853	51
	53
	235
	362
	363
	365
	413
	435
	437
6V-9854	409
6V-9872	455
	458
	482
	484
6V-9874	363
	365
6V-9877	363
	365
	369
	413
6W-1638	216
	218
	220
	222
6W-7293	338
6W-8281	591
	593
6Y-0373	208
6Y-0871	260
6Y-1763	260
6Y-2522	265
6Y-2538	197
	198
6Y-2539	216
	218
	220
	222
6Y-2540	216
	218
	220
	222
6Y-2584	265
6Y-4638	260
6Y-7582	258
6Y-7621	258
6Y-8262	234
6Y-8265	204
	206
	208
6Y-8286	208
6Y-8288	208
6Y-8506	199
6Y-9692	265
6Y-9930	573
7	
7C-4616	23
7D-7233	49
	50
7D-7496	313
	316
	322
	324
7F-0560	106
7F-8268	214
	231
7G-2950	640
7G-2951	640
7G-7917	116
	119
7G-7919	116
	119
7I-2272	177
	181
7I-4078	350
7J-0204	470
	478
	486
	504
	505
	506
	507
7J-3554	214
7J-5925	288
	292
7J-8209	200
7J-8210	234
7J-9933	434
	465
7K-1181	5
	54
	56
	108
	116
	119
	120
	128
	129
	131
	133
	135
	138
	153
	155
	176
	180
	181
	183
	189
	191
	193
	210
	278
	330
	333
	418
	423
	428
	429
	430
	431
	522
	568
	593
7K-5634	231
7K-9205	512
	514
	516
7K-9209	512
	514
	516
7K-9210	512
	514
	516
7K-9211	516
7K-9212	512
	514
	516
7K-9218	512
	514
	516
7M-8485	216
	218
	220
	222
	235
	257
	260
	382
	383
	409
	413
	414
	418
	423
	434
	455
	458
	463
	464
	466
	470
	473
	478
	479
	486
7M-9910	562
7N-0718	100
	103
	166
7N-2059	162
7N-7221	173
7N-9801	175
7R-2750	116
7R-2751	116
7S-8920	191
	231
7S-8921	191
	231
7T-1099	267
	272
	279
	280
	282
	292
	296
	303
	304
	305
	306
	307
	308
	309
	340
	406
	516
7T-4515	262
	264
7T-4532	545
7T-6799	176
7T-7679	260
7T-8797	260
7T-8810	265
7T-9987	103
7T-9988	103
7U-4891	183
7V-3791	218
	222
7W-2632	110
7W-4669	44
7X-0578	54
	56
7X-0579	338
	586
	587
7X-0583	60
	61
	62
7X-0608	117
7X-0622	352
7X-0623	273
	274
7X-0632	581
7X-0796	345
7X-0818	338
7X-0873	414
7X-1553	373
7X-2533	133
7X-2537	54
	56
7X-2538	544
7X-2552	414
7X-2553	60
	61
	252
	452
7X-2554	5
	95
7X-2555	319
7X-2585	237
7X-2586	237
7X-2618	352
7X-3229	655
	660
	663
7X-3342	440
7X-6222	127
7X-6315	111
	112
	114
7X-7644	655
	660
	663
7X-7729	54
	56
	67

► **PRIMARY REFERENCE**

PART NUMBER INDEX

Part	Page
	71
	267
	269
	270
	288
	292
	299
	311
	312
	335
	338
	370
	400
	401
	406
	419
	424
	578
	581
7Y-3173	173
	542
	568
7Y-3951	125
7Y-3954	125
8	
8B-6342	197
	198
8B-6343	197
	198
8C-0596	189
8C-3056	189
8C-3205	235
8C-3226	472
8C-3290	5
	573
8C-3364	413
8C-3445	43
8C-3446	233
	414
8C-3447	233
8C-3451	414
8C-3979	208
8C-5176	199
	265
8C-5607	129
	131
	135
8C-5608	129
	131
	135
8C-5682	526
8C-5917	100
	103
8C-5918	100
	103
8C-6354	176
8C-6358	106
8C-6712	414
8C-8422	200
	216
	218
	220
	222
	229
8C-8550	208
8C-8722	279
	280
	282
8D-5054	292
8D-6542	542
8E-0987	257
8E-1139	260
8E-1142	260
8E-1143	260
8E-1279	208
8E-2035	257
8E-3433	208
8E-3674	260
8E-3675	260
8E-4884	258
8E-4958	258
8E-4959	258
8E-5261	199
8E-5300	607
	608
	610
	612
	613
	614
	616
	618
	619
	620
	621
	623
	625
8E-5301	607
	608
	610
	612
	613
	614
	616
	618
	619
	620
	621
	623
	625
8E-5308	605
8E-5309	605
8E-5380	200
8E-5523	►258
	265
8E-5735	208
8E-5737	208
8E-5742	208
8E-6051	258
8E-6259	652
8E-6703	►257
	265
8E-8317	204
	206
	208
8E-8321	208
8E-8652	208
8E-8653	204
8E-8654	204
	206
	208
8E-9550	225
8E-9571	265
8F-1434	167
8H-5303	166
8H-5306	166
8H-7521	200
8J-0331	465
8J-0412	375
8J-2283	260
8J-2933	605
	606
8L-2786	27
	447
	450
8L-8413	100
	103
8M-2773	5
	352
	569
8M-5248	199
	216
	220
8N-0869	100
	103
	182
	193
8N-1532	116
8N-1533	119
8N-1535	116
	119
8N-1536	116
8N-1537	116
8N-1540	116
8N-1541	119
8N-1544	116
8N-1545	119
8N-1548	116
8N-1549	119
8N-2622	173
8P-0346	258
8P-6364	529
	532
	542
8R-1703	215
8R-1704	215
8R-2916	557
8R-2918	557
8R-3695	177
8S-2634	101
	104
8T-0087	147
8T-0088	292
8T-0114	591
8T-0122	182
8T-0207	215
8T-0251	204
	206
	208
8T-0271	419
	424
8T-0287	288
	292
8T-0289	113
	177
8T-0293	214
8T-0327	237
8T-0328	177
	568
8T-0336	216
	218
	220
	222
8T-0337	407
	419
	424
	522
	526
	595
	596
8T-0362	452
8T-0372	216
	220
8T-0389	140
	141
	419
	424
	591
8T-0643	200
8T-0646	276
8T-0649	229
	288
	292
8T-0741	352
8T-0788	351
8T-1159	557
8T-2228	529
8T-2353	409
8T-2561	569
8T-2659	177
8T-2925	238
8T-3312	414
8T-3426	542
8T-3490	101
	103
	176
	189
	193
	210
	267
	272
	287
	291
	292
	296
	303
	304
	311
	312
	329
	340
	520
	532
	556
	578
8T-3518	106
8T-3597	296
	339
	340
	452
	578
	653
8T-3612	291
	292
	303
	304
8T-3844	487
8T-3980	60
	61
	62
	241
8T-3991	562
8T-4121	5
	49
	50
	51
	60
	61
	62
	71
	100
	103
	107
	138
	152
	155
	162
	168
	177
	183
	189
	191
	193

► PRIMARY REFERENCE

PART NUMBER INDEX

Part	Page
	210
	211
	212
	213
	228
	231
	252
	267
	270
	279
	280
	282
	288
	292
	299
	310
	311
	312
	313
	316
	322
	324
	326
	327
	328
	329
	330
	333
	335
	338
	339
	343
	344
	348
	352
	360
	366
	382
	383
	406
	407
	409
	435
	437
	452
	454
	520
	556
	557
	569
	571
	572
	590
	653
8T-4122	452
8T-4131	650
8T-4132	288
	292
	303
8T-4133	5
	49
	50
	71
	183
	191
	213
	235
	270
	288
	292
	299
	310
	328
	329
	338
	343
	344
	345
	352
	366
	406
	407
	419
	424
	435
	454
	562
	569
	571
	572
	653
8T-4136	5
	49
	50
	54
	56
	60
	61
	62
	101
	104
	107
	189
	191
	200
	235
	267
	270
	273
	274
	279
	280
	282
	292
	311
	312
	333
	338
	343
	344
	352
	364
	366
	369
	370
	382
	383
	407
	414
	419
	424
	454
	556
	578
	590
8T-4137	5
	51
	54
	56
	67
	71
	100
	103
	155
	162
	183
	189
	191
	193
	200
	210
	211
	212
	213
	214
	231
	235
	240
	267
	269
	270
	288
	292
	310
	313
	316
	322
	324
	330
	333
	335
	339
	352
	360
	364
	366
	406
	407
	409
	414
	419
	424
	435
	437
	520
	569
	571
	581
	653
8T-4138	54
	56
	183
	310
	466
	473
	479
	487
	520
	562
8T-4139	224
	275
	288
	292
	295
	298
	299
	339
	344
	352
	369
	409
	578
	653
8T-4140	62
8T-4167	245
	246
	573
8T-4171	5
8T-4172	419
	424
8T-4176	313
	316
	322
	324
8T-4178	419
	424
	435
8T-4179	640
8T-4182	54
	56
	288
	292
	328
	329
	345
8T-4183	60
	61
	62
	191
	435
	437
8T-4185	54
	56
	71
	292
	406
	419
	424
8T-4186	5
	326
	327
	419
	424
8T-4189	54
	56
	72
	96
	100
	104
	108
	280
	284
	286
	288
	292
	336
	337
	456
	459
	529
	532
	555
	556
	603
8T-4190	319
	452
8T-4192	54
	56
	60
	61
	62
	183
	191
	235
	297
	313
	316
	319
	322
	324
	339
	364
	366
	653
8T-4195	5
	71

► **PRIMARY REFERENCE**

PART NUMBER INDEX

Part	Page
	183
	189
	191
	235
	288
	292
	299
	364
	366
	400
	401
	406
	409
	414
	419
	424
	452
	569
	571
	572
	581
8T-4196	54
	56
	382
8T-4199	213
	287
8T-4200	56
	128
	173
	203
	252
	279
	282
	292
	336
	337
	593
8T-4201	452
8T-4205	54
	56
	113
	177
	183
	191
	288
	292
	299
	310
	333
	368
	598
8T-4223	54
	56
	60
	61
	62
	71
	183
	191
	267
	270
	288
	292
	295
	297
	313
	316
	339
	344
	348
	420
	425
	472
	578
	583
	584
	585
	640
	653
8T-4224	5
	51
	57
	60
	61
	62
	65
	72
	96
	101
	104
	108
	128
	137
	162
	173
	183
	213
	252
	279
	280
	282
	284
	286
	287
	288
	292
	313
	322
	333
	349
	352
	414
	529
	532
	544
	555
	556
	576
	577
	588
	590
	603
8T-4244	71
	191
	276
	288
	292
	299
	313
	316
	322
	324
	343
	344
	348
	472
	557
8T-4776	265
8T-4779	370
8T-4780	512
	514
	516
8T-4821	275
8T-4896	529
	532
8T-4908	5
	54
	57
	101
	183
8T-4935	272
	306
	307
	308
8T-4956	54
	57
	71
	343
	370
8T-4970	183
8T-4971	135
	299
8T-5065	237
8T-5095	413
8T-5401	542
8T-5439	514
	650
8T-6430	241
	512
	514
	516
	581
8T-6451	414
8T-6462	267
	272
	279
	282
	292
	296
	303
	305
	306
	307
	308
	309
	340
	370
	452
8T-6466	235
	328
	329
	370
	569
8T-6684	235
8T-6870	51
	414
8T-6902	562
8T-6912	137
	199
8T-6974	191
8T-7338	5
	370
8T-7546	363
	365
8T-7547	288
	333
	352
	529
	532
8T-8442	373
	375
	380
	381
8T-8729	97
	116
	118
	119
	140
	141
	146
	147
	150
	167
	171
	175
	176
	181
	182
	189
	193
	233
	278
	404
	447
	449
	546
	548
	556
8T-8730	118
	123
	124
	125
	126
	183
	278
	576
8T-8737	116
	118
	119
	120
	122
	123
	124
	125
	126
	127
	140
	141
	147
	171
	181
	186
	450
	490
	522
	556
	580
8T-8874	176
8T-8902	363
	365
	419
	424
	435
	437
	455
	458
	482
	484
8T-8987	409
8T-9005	565
8T-9079	605
	606
8T-9535	265
8T-9655	176
8T-9757	100
8U-5951	373
8U-7803	589
8V-0622	100
8X-0674	452
8X-9618	176
8Y-4501	287
	291

PART NUMBER INDEX

Part	Page
9	
9B-0453	348
9B-7233	173
9C-6041	216
	218
	220
	222
9C-6327	196
	230
9C-7907	512
	516
9C-8419	197
	198
9C-8421	197
	198
9F-5644	117
	166
9G-0003	100
9G-0004	100
	103
9G-0005	100
	103
9G-2673	522
	526
9G-4343	182
9G-4344	182
9G-5127	199
9G-5315	197
	198
9J-5685	363
	365
9L-9068	265
9L-9188	258
9M-0164	231
9M-2008	234
9M-5048	591
9M-7394	231
9M-7959	370
	420
	425
9M-8406	183
	191
	210
	520
	569
9N-0869	133
	177
	565
9P-7121	96
9P-9150	199
	265
9R-1499	356
	357
9R-2640	640
9R-2672	532
9R-7240	182
9S-4180	466
	473
	479
	486
9S-4181	466
	473
	478
	486
9S-4182	466
	473
	478
	486
9S-4183	362
	373
9S-4185	27
9S-4190	433
9S-4191	199
	394
	439
	466
	478
	486
	492
	495
	497
9S-8001	350
	470
9S-8002	373
	375
	380
	381
	392
	393
	394
	395
	470
	472
	477
	490
9S-8003	465
9S-8004	258
	466
	470
	473
	478
	486
9S-8005	258
	265
	463
9S-8006	258
	464
9S-8007	478
	486
9S-9334	434
9T-1573	►465
	470
9T-7202	465
9T-7303	591
9T-9227	454
9U-0830	350
9U-2331	568
9U-4431	568
9U-8263	536
	539
9U-9322	208
9U-9328	260
9V-2429	216
	220
9V-6563	216
	218
	220
	222
9V-6575	625
9V-6754	591
	593
9W-0719	204
	206
	208
9W-0852	173
	522
	526
9W-0884	259
9W-6096	260
9W-6097	260
9W-8279	260
9W-8839	260
9W-9399	204
	206
	208
9W-9436	204
	206
	208
9X-0145	116
9X-1046	177
	529
	532
	546
	548
	550
	551
9X-1386	150
9X-1813	182
	193
	233
	252
	404
9X-2027	216
	218
	220
	222
	470
9X-2032	522
	526
9X-2038	173
	532
	542
	559
9X-2039	562
9X-2040	562
9X-2041	138
	152
	168
	177
	348
	562
9X-2042	173
	288
	292
9X-2043	529
	532
	559
	561
	565
	575
9X-2044	177
	181
	536
	539
	542
	575
9X-2045	529
	532
	536
	539
	565
9X-2046	559
	565
9X-2480	129
	131
	135
9X-2488	520
	526
9X-2614	407
9X-2616	216
	218
	220
	222
	588
9X-2858	243
	244
	256
9X-3265	127
9X-3401	116
	118
	119
	120
	122
	123
	124
	125
	126
	127
	173
	186
	252
	522
	545
9X-3402	116
	118
	119
	120
	121
	122
	123
	124
	126
	127
	522
	546
	548
9X-3404	100
	103
9X-3465	140
	141
9X-3959	44
9X-4244	137
9X-4492	147
	153
9X-4493	147
	153
9X-4609	200
9X-6000	200
9X-6032	252
9X-6155	529
	532
	536
	539
9X-6165	129
	131
	135
	520
9X-6381	479
	486
9X-6395	465
	508
9X-6615	555
	556
9X-7373	348
9X-7380	520
	569
9X-7381	569
9X-7382	520
	569
9X-7385	545
	569
9X-7849	148
9X-8139	148
9X-8243	123
9X-8250	189
	569
	571
9X-8256	135
	562
9X-8257	5
	288
	352
9X-8268	215
	225
	252

► **PRIMARY REFERENCE**

PART NUMBER INDEX

Part	Page
	288
	292
	319
	370
	414
	452
9X-8600	96
9X-8979	373
	375

0

Part	Page
017-8715	368
030-0060	216
	218
	220
	222
030-0061	216
	218
	220
	222
031-0249	562
033-6034	380
033-6043	380
033-9139	492
	495
	497
	499
	501
067-6043	15
067-6135	10
	14
067-6179	23
067-6823	15
	44
085-7329	562
085-8091	470
091-1745	351
091-5942	227
092-7385	363
	365
095-0662	413
095-0673	216
	218
	220
	222
095-0841	351
095-0865	287
095-1207	550
	551
	653
095-1513	466
	473
095-7932	292
095-9805	375
096-0067	351
096-0194	439
096-3831	434
	470
096-4034	522
	526
096-4833	535
096-5486	288
	292
096-5867	255
096-6166	176
	278
	407
	418
	423
	508
096-6467	512
	514
	516
097-7234	116
099-3649	349
	576
	577
099-5217	228
099-6418	94
099-7241	557

1

Part	Page
100-3253	140
	141
100-3254	140
	141
100-3255	140
	141
100-3751	23
100-4458	87
	89
100-4830	23
	31
	74
100-4838	526
100-4841	25
100-8010	382
	383
	470
100-8011	470
101-0852	114
101-3846	351
101-3895	13
	23
101-7178	9
102-2073	31
102-2075	31
102-2076	31
102-2078	31
102-7365	470
102-8801	119
	120
	183
	186
	556
102-8802	97
	98
	116
	118
	119
	146
	148
	149
	150
	167
	175
	182
	189
	233
	252
	262
	278
	404
	522
	526
	545
	599
102-8803	116
	182
	193
102-8804	127
	176
102-8805	119
	124
	125
	140
	141
	147
	173
	181
102-8806	126
	171
	450
	490
	492
	499
	501
103-5705	13
104-3947	262
104-7336	208
105-1634	373
105-1635	373
105-1636	373
105-1638	373
105-1642	373
105-1646	377
105-1648	377
105-1650	377
105-1651	377
105-1653	377
105-2740	38
	70
105-3031	373
105-3032	373
105-3033	373
105-3486	562
105-4177	350
105-6117	576
106-1774	350
106-5121	522
	526
107-2348	68
107-2961	586
	587
	591
107-3157	581
107-3308	652
107-3411	▶605
107-6032	176
108-5157	508
108-5471	562
109-1779	375
110-2460	360
110-7524	542
110-7887	176
110-8152	562
111-0859	20
	99
111-4627	565
112-0782	216
	220
112-1817	407
	425
112-6174	▶171
	176
112-7704	161
113-1504	39
113-4630	127
113-8129	59
113-8490	176
113-8491	176
113-8492	176
113-9234	490
	492
	495
	497
	499
	501
114-1071	204
	206
	208
114-6658	176
	529
	532
	536
	539
	575
116-2659	73
116-9621	356
	357
117-2311	113
	176
117-5268	368
117-7798	350
117-7799	350
117-8929	562
119-3662	116
	117
	119
	122
	123
	522
120-4394	373
	375
120-9047	477
120-9051	477
121-4405	278
121-6653	470
122-1671	348
123-2899	26
	45
123-4003	216
	218
	220
	222
123-4750	409
	455
	458
	478
	482
	484
	486
123-7615	116
123-9624	470
124-0065	557
124-1479	189
124-2456	655
	660
	663
124-3307	227
124-3536	28
124-3815	23
	38
	74
	160
	187
	188
124-4884	568
124-8821	116
125-1393	508
125-2796	569
125-3295	576
125-7874	116
	118
	119
	120
	121
	122
	123
	124

PART NUMBER INDEX

Part	Page
	125
	126
	127
125-7875	116
	119
	122
	123
	124
	125
	126
	127
125-7876	123
	129
	131
	189
126-1766	119
126-1767	116
	118
	120
	122
	123
	124
	125
	126
	127
	173
	186
	252
	522
	545
	599
126-1768	116
	118
	119
	120
	121
	122
	123
	124
	126
	127
	522
	546
	548
126-1774	116
	119
	120
126-1818	404
126-3212	31
126-6872	350
126-9093	76
126-9993	199
127-2170	133
	562
127-6371	512
	514
128-4123	116
	117
128-5016	116
128-8617	176
129-7184	176
129-8090	343
	344
130-3280	73
130-3515	140
	141
130-5300	155
	176
	180
	183
	191
	193
	252
	544
	588
130-9888	39
131-3093	595
	596
131-3201	122
131-3540	591
	593
132-1829	▶98
	168
132-2453	350
132-5789	183
	187
	188
	189
	191
	252
	330
	333
133-1011	23
133-2905	227
133-3260	581
133-5545	433
	466
	473
	479
	487
	510
133-9469	68
134-1374	557
134-2540	116
	122
134-4126	111
	112
	114
	523
	526
134-7258	655
	660
	663
134-9569	173
135-2946	215
135-4061	640
135-7935	373
135-8853	375
136-1953	522
	526
136-9029	439
136-9030	439
	440
136-9292	492
	495
	497
	499
	501
136-9297	449
136-9298	449
136-9301	504
	507
136-9380	512
	514
	516
137-2255	562
137-4234	636
	637
137-6645	182
138-1645	238
138-8454	176
	559
139-6911	111
139-9229	▶642
139-9230	642
139-9279	▶643
140-1739	373
140-7601	643
140-9926	392
	394
141-1095	392
141-1556	447
	449
	450
141-2032	447
	449
	450
141-2597	360
	▶382
	▶383
141-3889	299
141-3890	299
141-4847	607
	608
	610
	612
	613
	614
141-4852	490
	492
141-7481	442
	443
	444
	445
	490
	492
141-8546	393
141-9236	490
	492
	495
	497
	499
	501
142-0038	235
142-1767	265
142-4431	199
142-7061	363
	365
142-8937	454
143-7052	373
144-0195	603
144-0331	553
	554
145-2334	447
	449
	450
145-6669	73
145-7977	393
	394
145-8428	447
	449
	450
146-1892	576
146-6315	442
	443
	444
	445
	446
146-6317	442
	443
	444
	445
	446
146-6319	504
	505
	506
	507
146-6747	655
	660
	663
146-8477	492
	495
	497
146-8478	490
	492
146-8479	442
	443
	444
	445
146-8981	492
	495
	497
	499
	501
147-1445	116
147-1446	116
147-2038	▶442
	495
	499
147-2864	608
	610
	612
	613
	614
	616
	625
147-3322	▶446
	490
	492
147-7633	608
	616
	640
148-1928	199
148-3626	565
148-7922	447
	449
	450
148-8316	640
148-8317	363
	365
148-8322	51
148-8324	363
	365
148-8326	455
	458
	482
	484
148-8327	51
	53
	360
	413
	435
	437
148-8328	360
148-8335	409
	418
	423
148-8336	351
	407
	418
	423
	455
	458
	482
	484
	490
	492
	495
	497
	499
	501
148-8340	351
148-8345	360
148-8347	235

► **PRIMARY REFERENCE**

PART NUMBER INDEX

Part	Page
	370
	413
	435
	437
148-8352	409
148-8353	351
148-8357	235
	409
	455
	458
148-8359	363
	365
	369
	413
148-8360	409
	413
148-8361	370
	419
	424
148-8362	235
148-8364	369
148-8367	351
	407
	419
	424
	428
	429
	455
	458
	482
	484
148-8370	369
148-8373	413
148-8374	413
148-8376	363
	365
148-8377	419
	424
148-8378	407
	410
	419
	424
	435
	437
	455
	458
	478
	482
	484
	486
148-8388	370
148-8391	409
148-8392	51
	53
	235
	362
	363
	365
	413
	435
	437
148-8395	463
148-8406	434
148-8407	394
	466
	478
	486
	492
	495
	497
148-8408	362
148-8410	433
148-8424	363
	365
	419
	424
	435
	437
148-8430	414
148-8433	351
	407
	455
	458
	482
	484
148-8435	455
	458
	482
	484
148-8449	51
	363
	365
	414
148-8455	409
149-0668	173
149-5470	449
150-3378	439
150-4033	51
150-4047	409
150-4050	351
152-3411	350
153-1277	73
153-6238	414
153-6259	414
153-6976	470
153-7067	470
153-7551	470
153-8925	504
	506
	507
153-8926	504
	505
	506
	507
153-8945	443
	444
	445
	446
153-8947	490
	492
153-8952	449
154-4563	173
154-5143	413
154-8079	529
	532
	568
154-8262	173
154-9023	212
155-0576	110
155-2026	235
155-2255	116
	120
	123
155-2260	116
	119
	122
	123
	126
	546
	548
155-2265	116
	119
	125
	126
155-2270	116
	118
	119
	122
	123
	124
	125
	126
	127
	183
	278
	522
	576
155-2271	116
	121
	123
	124
	522
155-2274	116
	118
	119
	123
	124
155-3502	351
155-3624	466
	473
	478
	486
156-1151	218
	222
156-1153	218
	222
156-5899	257
157-0670	212
157-0950	255
157-2152	505
157-2153	506
158-7864	655
	660
	663
159-0268	512
	514
	516
159-0269	512
	514
	516
159-3781	442
	443
	444
	445
	446
159-8049	100
	103
159-8050	100
	103
159-9322	116
	117
	119
	120
160-2250	425
160-2252	425
160-3518	580
160-6299	►443
	492
	497
	499
	501
160-6300	►444
	497
	501
160-7689	119
160-7690	120
160-8742	366
161-2684	470
161-6149	510
161-6161	510
161-7614	82
	86
161-9820	9
	99
162-0177	466
	470
	473
	478
	486
162-1604	375
162-8772	215
162-9997	373
163-5512	447
	449
	450
164-4180	466
	473
	478
	486
164-5567	351
	363
	365
	370
	414
	419
	424
	435
	437
	455
	458
	482
	484
164-5570	407
164-5574	414
164-5611	414
164-5619	464
164-6873	490
	492
	495
	497
	499
	501
164-7468	87
	89
	99
164-7556	137
164-7908	363
	365
166-2383	419
	424
168-1968	350
168-8772	568
169-5862	414
170-1807	199
170-1821	546
	548
171-2205	182
171-2210	182
171-5349	252
171-6725	414
172-3511	546
	548
172-4702	522
	571
172-8037	580
172-8039	580
172-8591	529
	532
	536
	539
	542
	565

► **PRIMARY REFERENCE**

PART NUMBER INDEX

Part	Page
	575
172-9200	117
173-0511	►470
173-0514	470
173-0641	373
173-3993	470
173-9964	492
	497
	501
174-1366	442
	443
	444
	445
174-5414	65
174-5415	73
174-7875	191
174-8131	557
175-4291	137
175-4292	137
176-1477	122
176-1521	122
177-1061	235
177-2215	569
177-3868	477
178-3336	603
178-5572	562
178-7877	446
178-9983	553
179-6377	265
179-9392	176
180-6213	375
	377
180-9900	176
183-1343	164
	165
183-6970	368
183-6971	368
183-7263	392
	393
	394
	470
	472
	490
184-0982	562
184-6636	182
185-0884	15
185-1860	121
185-1861	117
	122
186-1526	260
	►262
	►263
186-3735	98
	148
	149
	262
	580
187-7331	95
188-9637	377
188-9640	373
188-9641	373
189-3158	117
189-8789	291
190-0544	307
	308
191-8920	447
	449
	450
192-5881	640
192-9207	76
193-2200	199
	225
194-4254	123
	124
	522
194-5032	499
	►503
194-5226	121
194-5227	121
194-9632	439
195-0936	562
	582
195-3699	562
195-6617	363
	365
195-8313	241
	346
195-9245	13
196-0436	581
196-2412	116
196-2413	117
197-5470	581
198-4780	5
198-8262	31
198-8263	31
199-2235	60
	61
	62
199-9252	160
199-9267	160
199-9751	18
	160
2	
200-5728	580
200-6345	350
	410
	414
	419
	424
	437
200-8154	529
	532
201-2733	176
201-5555	173
202-5397	117
202-6614	137
203-9007	176
203-9203	589
204-1297	117
204-2281	352
	409
	414
	419
	424
	437
204-6195	122
204-8000	176
206-1345	121
	522
	526
	603
206-1667	529
	532
	536
	539
206-1749	584
206-1750	585
206-1826	94
206-2748	490
206-2749	►447
	499
	501
206-2750	►449
	492
206-5119	351
206-5121	351
207-1738	320
207-8218	478
	486
208-8469	161
208-9287	87
	89
208-9331	522
209-0499	343
	344
209-0516	655
	660
	663
209-3090	147
209-3091	147
209-3093	147
209-4212	542
209-8296	227
209-9219	16
210-5587	350
211-0052	119
212-6891	536
	539
212-6933	50
	67
213-1365	254
213-7489	553
213-8433	395
213-9100	182
214-4208	117
214-7566	233
214-7568	233
	351
	363
	365
	370
	414
	419
	424
	435
	437
	455
	458
	482
	484
214-9186	562
214-9453	173
216-4983	49
	67
216-6944	50
216-8634	23
216-8994	395
216-9058	395
216-9059	395
216-9633	43
217-0099	110
217-0162	388
	389
	390
	391
217-3680	215
217-5288	72
	►73
217-7024	214
217-8166	176
217-9039	121
	161
	187
	188
218-4935	118
	122
	126
218-6645	5
219-0302	658
219-4213	449
219-4215	►450
	495
	497
219-6487	►137
	138
	151
	152
220-2609	425
220-3976	56
220-9090	651
222-1087	606
222-1088	606
222-1089	606
222-2277	66
	72
222-3785	385
	388
	389
	390
	391
222-4737	466
	473
	478
	486
222-5765	385
	388
	389
	390
	391
222-6869	407
224-5132	341
	342
224-5152	341
	342
224-7262	388
	389
	390
	391
224-8946	655
	660
	663
225-0312	655
	660
	663
225-4131	655
	660
	663
225-4257	655
	660
	663
225-6948	466
	473
	479
	486
225-7738	59
225-7944	47
225-8019	59
225-8524	68
225-8526	68
225-8858	15
226-1240	655
	660
	663
226-1274	655
	660
	663
226-2684	216
	218
	220
	222
226-8766	23
226-8767	23

► **PRIMARY REFERENCE**

PART NUMBER INDEX

Part	Page
227-6744	233
	404
227-7391	658
228-2616	658
228-4947	160
228-6052	140
	141
228-6054	140
	141
228-6056	140
	141
228-6089	176
228-7100	87
	89
228-7102	5
228-9106	655
	660
	663
229-6969	▶651
230-4011	121
	122
230-4012	164
	165
230-4013	117
	119
	122
230-8094	27
231-4262	553
232-0893	129
	131
232-1322	16
	18
232-1693	187
	188
232-3317	384
	385
	386
	387
232-3666	23
232-3751	47
232-7449	16
232-7596	15
232-7597	15
232-7599	15
234-0095	582
234-3545	326
	327
	328
	329
234-4869	466
	473
	478
	486
234-5107	326
	327
	328
234-6666	262
234-8738	542
234-8739	542
235-1061	31
235-1063	31
235-2475	419
	424
235-3937	▶148
	156
235-4123	117
236-2541	204
	206
	208
236-4545	162
236-4609	176
236-4610	176
236-4612	170
236-4623	169
236-7230	655
	660
	663
236-9832	466
	473
	478
	486
237-0227	119
237-0947	395
237-2179	542
237-2180	542
237-9736	156
	157
237-9878	368
238-0120	160
238-4523	277
238-4524	277
238-4525	277
238-8245	121
238-8247	121
238-8288	70
238-8292	69
238-9842	466
	474
	479
	487
239-1134	162
	▶175
239-5157	467
	473
	479
	487
239-6336	466
	473
	479
	487
240-4695	466
	473
	478
	486
241-0037	341
	342
241-4925	625
241-4934	319
241-4939	580
241-4941	568
	▶580
241-6157	87
	89
241-6215	351
	370
	414
241-8368	183
242-0588	140
	141
242-5206	562
243-0570	350
244-0357	▶64
	65
244-1426	413
245-1042	122
245-1043	121
245-1044	121
	122
245-1045	122
245-1048	121
	122
245-1094	338
245-6375	64
245-6376	64
245-7434	116
246-0616	60
	61
	62
246-2641	231
	452
246-4361	83
246-4611	66
246-4612	64
246-4614	64
246-4615	64
246-6152	437
	▶439
246-8026	65
	72
247-4928	83
	85
248-2432	252
248-2841	176
	599
249-5478	176
249-5479	176
251-1195	176
251-2031	176
251-4162	108
251-4336	23
251-4339	138
251-8248	181
251-9335	204
	206
	208
252-1862	562
252-1863	562
253-2111	182
254-0072	51
	407
254-3633	188
256-6454	160
256-6881	162
256-7823	176
257-1766	▶606
257-3736	153
257-7676	350
258-2829	454
258-7485	108
258-8412	364
	366
259-0134	▶146
	278
259-1286	176
259-2627	216
	218
	220
	222
260-1556	128
260-1569	128
261-6728	413
262-0347	375
262-1421	▶114
	135
262-2043	▶114
	135
262-7182	492
	501
	▶504
263-1493	546
	548
263-7545	643
264-3659	288
264-4297	182
	252
264-4451	279
	280
	282
264-7029	121
	122
264-7030	117
	121
	122
265-3291	346
265-4123	117
265-5287	204
	206
	208
265-9620	596
267-0339	2
	▶128
267-2265	182
267-7207	121
	122
267-7208	122
267-8575	523
267-9572	121
	122
268-8643	108
268-8769	595
	596
269-1983	577
269-2890	562
269-2892	562
270-7836	472
271-9109	379
271-9408	176
272-0002	287
	291
272-1777	326
	327
	328
	329
272-9800	148
274-1931	34
274-1935	33
274-3868	5
274-4284	129
	131
	133
	135
274-4990	122
274-7409	176
275-0571	287
	291
	296
	339
275-0572	287
	291
	296
	339
275-2428	161
275-8544	▶368
	369
276-1151	119
276-1786	100
	103
276-2331	658
276-4053	112
276-4836	189
276-5436	162
276-5600	15
276-5602	15
276-5603	16
	160
276-7391	14
276-7394	14
276-7478	12
276-8116	17
276-8117	17
276-8123	37
276-8133	37
276-8134	18
276-9200	35
276-9201	35
276-9206	35

PART NUMBER INDEX

Part	Page
276-9207	35
276-9230	35
277-0588	21
277-0731	368
277-1873	191
	193
	330
	333
277-1974	39
277-1975	39
277-2500	47
277-2537	47
277-2923	59
277-2925	59
277-3012	23
277-3013	23
277-4223	31
277-4302	18
277-4409	161
277-4993	82
	86
277-5064	187
277-5065	187
277-5067	81
277-5307	35
277-8863	461
277-9938	84
278-0017	74
278-4834	56
278-5111	35
278-5112	35
278-5113	35
278-5125	11
278-5170	81
278-5203	110
279-0850	595
279-6530	413
279-9651	26
280-1911	▶35
	37
280-1912	35
280-1913	35
280-1914	35
280-2424	74
280-2711	177
280-4244	168
280-7870	373
	375
	380
	381
281-7040	47
281-8737	191
281-8738	191
281-8744	45
281-8804	121
282-2830	74
282-8827	433
	434
	466
	473
	478
	486
283-0266	233
283-4559	47
283-4662	22
284-1010	466
	473
	478
	486
284-1011	466
	473
	478
	486
284-3623	176
284-3757	▶149
284-8481	117
	119
	182
285-1133	114
285-3692	562
286-0123	93
286-0323	176
286-2890	82
	84
	85
	86
286-7851	69
286-8817	27
287-7424	47
287-8257	478
287-8597	22
288-5377	582
288-6974	22
288-6975	22
289-1157	21
290-2287	520
290-2288	520
291-5392	366
291-9146	522
	526
292-2491	348
292-2896	121
292-3462	70
292-8061	434
	466
	473
	478
	486
292-9802	577
293-1501	529
	532
293-3609	347
293-6151	520
293-8350	373
	375
	380
	381
295-0993	466
	473
	478
	486
295-4670	84
	85
295-5619	640
295-6661	18
295-7712	21
295-8961	119
296-1210	536
	539
296-6748	559
296-6750	559
296-6752	559
297-3211	216
	218
	220
	222
297-4926	▶379
	557
299-3204	559
299-3210	559
299-5511	37
299-7880	658
301-0589	135
301-3118	262
	264
302-2136	601
	602
302-6392	562
302-8727	522
	526
303-5977	388
	389
	390
	391
304-5062	26
304-7167	153
304-7168	153
304-7345	512
	514
	516
305-3159	653
305-4491	348
305-4563	434
306-2337	39
307-0047	129
	131
	133
	135
307-0649	176
307-5393	413
308-0467	176
308-2057	490
308-2058	▶392
	492
308-2059	▶393
	495
	497
308-2060	▶394
	499
	501
308-9236	307
309-5127	350
309-6678	37
309-9886	117
310-0674	119
310-1021	347
310-1899	512
	514
	516
310-2393	135
310-5742	467
	473
	479
	487
310-9391	▶640
311-1531	347
311-3475	100
	103
312-1139	385
312-4181	640
312-4305	347
312-4313	347
312-5694	628
	636
	637
314-4018	545
315-0096	626
315-0180	100
	103
315-7907	248
316-9351	121
	161
317-1204	186
317-5482	28
317-5483	28
317-5485	14
317-5486	14
317-8731	553
	554
318-1182	252
319-7428	249
319-8100	122
319-8101	119
319-8426	11
319-9511	379
320-3060	160
320-3062	160
321-2383	39
321-8628	5
322-0819	562
322-3305	▶106
	182
322-4474	522
	526
322-6230	553
	554
322-7212	522
323-5871	640
323-7089	640
323-7347	188
323-9312	12
324-0444	23
325-3767	119
325-4636	379
325-5440	238
325-5760	▶445
	495
	499
326-0532	▶215
	216
	218
326-0535	215
326-0610	653
326-0612	653
326-0616	▶234
	251
326-0622	▶204
	251
326-0624	▶206
	251
326-0626	▶208
	251
326-0639	234
326-0641	234
326-0643	234
326-0645	225
326-0648	225
326-0651	225
326-0652	225
326-0668	199
326-0681	204
	206
326-0684	206
326-0756	204
326-0757	227
326-0782	204
	206
326-0791	208
326-0838	204
	206
	208
326-0839	208
326-2071	195
	▶216
326-2381	240
326-2382	240
326-3017	206
326-3018	204
326-3019	208
326-3049	199
326-3709	204

3

► **PRIMARY REFERENCE**

PART NUMBER INDEX

Part	Page
326-3710	225
326-3718	199
	▶259
326-3735	199
326-3736	199
326-3737	199
	216
	220
326-3738	203
	240
326-3744	199
	216
	220
326-3745	199
326-3757	208
326-3758	204
	206
	208
326-3784	204
	206
	208
326-3785	208
326-3786	204
326-3799	204
	206
	208
326-3801	204
	206
	208
326-3811	208
326-3814	208
326-3817	208
326-4354	216
	218
	220
	222
326-7402	47
326-9053	666
327-2226	216
	220
327-2229	195
	▶197
327-2232	238
327-2234	195
	196
	▶238
327-2235	195
	196
	▶229
327-2236	347
327-2238	347
327-2240	238
327-2241	238
327-2243	238
327-2244	216
	220
327-2246	218
	222
327-2248	196
	▶198
327-2251	218
	222
327-2254	195
	196
	▶347
327-2256	2
	▶195
327-6903	215
327-7104	▶147
	155
327-7185	238
327-8556	216
	218
	220
	222
327-8692	216
	220
328-2266	220
	222
328-6197	204
	208
328-6198	208
329-0238	522
	526
329-3356	288
	440
329-3734	117
329-3796	25
329-5555	227
329-5556	199
330-1725	9
330-5681	196
	▶230
330-9723	87
	89
331-0290	▶12
	28
331-3321	227
331-3418	▶227
	251
331-6835	15
332-1987	466
	473
	478
	486
332-2788	626
	627
	628
	629
	630
	631
	632
	633
	634
	635
	636
	637
	638
332-4175	54
	56
332-6817	379
332-6885	379
332-7865	127
	188
333-0270	251
333-2230	313
	316
	322
	324
333-5931	224
333-8153	181
333-8242	466
	473
	478
	486
334-6089	536
	539
334-6090	536
	539
335-6983	526
335-8611	68
336-3545	135
	▶159
337-0831	▶233
	235
337-6324	8
337-7325	71
338-0499	5
338-2885	413
338-2913	435
	▶440
338-5716	153
338-5719	153
338-5720	153
338-8502	431
	▶490
338-8504	429
	▶492
339-8780	14
339-9637	37
340-0864	224
340-2566	117
340-2567	117
340-7161	113
	176
340-8734	▶224
	251
340-8736	224
341-6643	233
342-6502	34
342-6510	34
342-9022	111
	112
342-9290	111
	112
342-9671	100
	103
344-2733	181
344-3455	▶140
	143
344-3456	▶141
	143
344-3847	181
344-5081	99
344-5673	653
344-5674	546
	548
	550
	551
344-7389	182
344-7391	183
345-0188	▶142
	144
	145
345-9029	3
	4
	▶21
346-0006	93
346-0007	93
346-0220	3
	4
	▶40
346-0408	23
346-0737	3
	4
	▶41
346-1061	542
346-2911	3
	4
	▶44
346-3800	▶508
	509
346-3811	562
346-4709	37
346-5282	655
	660
	663
346-7763	111
	112
346-8219	666
346-9376	129
	131
347-0612	373
	▶380
347-1668	108
347-8645	85
347-8647	5
348-2302	413
348-3432	520
348-4637	187
	188
349-6847	82
	86
349-7059	96
350-7735	95
	96
350-9169	490
	492
	495
	499
	▶505
350-9170	490
	492
	▶506
351-0887	599
351-1724	34
351-3454	129
	131
351-3455	129
	131
351-4749	27
351-8488	111
351-8490	▶111
	131
351-9309	100
	103
351-9918	137
352-3964	183
	189
	191
	193
352-4145	559
352-4897	601
	602
352-6099	561
352-7475	535
	▶561
352-9944	287
	291
353-4515	182
354-5671	164
354-8322	22
	30
355-0598	135
355-1213	129
	131
355-3148	189
355-3486	666
355-8710	59
355-9625	330
355-9981	▶384
	455
	482
355-9985	▶385
356-1219	121
356-2353	591
356-7550	287
	291
356-8550	466
	478
356-8561	466
	473
	478
	486
356-8613	463
357-2108	536

PART NUMBER INDEX

Part	Page
	539
357-4432	350
357-4434	351
357-4437	350
357-4474	350
357-4516	350
357-4517	350
	455
	458
	482
	484
357-4539	350
357-7399	96
358-4889	175
358-7862	581
359-3582	591
359-4661	466
	473
	478
	487
360-1564	28
360-1978	14
360-2691	71
360-3680	433
360-6812	▶388
	455
360-8095	610
360-8161	456
	459
360-8958	▶75
	78
360-8960	75
361-1045	129
	131
361-1437	▶650
361-2566	557
361-3100	▶389
361-3169	463
361-4435	71
361-9875	161
362-5412	75
	78
362-9689	78
363-0559	14
363-1610	466
	473
	478
	486
363-1613	433
363-2687	478
	486
363-2692	478
	486
363-2697	478
	486
363-5813	38
363-5907	287
	291
363-5911	557
363-6423	557
364-1995	96
364-2542	463
364-2634	463
	464
364-5145	14
365-2574	313
	316
	322
	324
365-6745	251
	▶265
365-6746	▶260
	265
365-6747	265
365-6765	176
365-8363	536
	539
365-8366	536
	539
365-8368	536
	539
365-8369	536
	539
365-8371	536
	539
365-8373	536
	539
366-4535	562
366-4972	508
	509
366-7721	27
366-9373	87
	89
367-0844	655
	660
	663
367-3340	69
367-6003	433
367-8076	370
	▶372
367-8077	372
	▶373
367-8078	372
	▶375
367-8969	418
	423
367-9074	193
368-0571	559
368-2317	382
	383
368-2318	382
	383
368-2319	382
	383
368-3145	161
368-8557	74
369-1255	8
369-1658	70
369-3186	28
	▶29
369-7304	3
	4
	▶28
369-7799	81
370-5513	92
370-5516	91
370-5517	91
370-5518	91
370-5520	▶91
	94
370-5764	466
	473
	478
	486
370-8160	466
	473
370-8728	430
	▶495
	▶497
370-8729	428
	▶499
	▶501
371-1784	470
	▶509
371-2223	349
371-2241	▶150
	157
371-2478	3
	4
	▶25
371-2480	3
	4
	▶37
371-2537	3
	4
	▶110
371-2554	3
	4
	▶34
371-2684	93
371-2691	93
371-2725	3
	4
	▶23
371-2740	3
	4
	▶26
371-2745	3
	4
	▶43
371-5010	277
	▶349
371-6088	562
371-7140	591
371-7141	591
371-7144	591
	593
371-7147	591
371-7148	591
	593
371-7263	93
371-8298	20
371-9511	562
371-9520	562
372-0686	559
372-2297	3
	4
	▶59
372-4531	▶112
	129
372-4532	112
372-5042	562
373-2596	589
373-2597	589
373-3495	586
	587
373-3607	3
	4
	▶45
373-4446	536
	539
373-8014	41
373-8292	▶114
	131
373-8465	373
374-5958	589
374-6300	3
	4
	▶14
374-7463	117
	119
	123
	125
	126
374-7467	117
	119
374-7468	117
375-0098	3
	4
	▶33
375-0482	94
375-0483	94
375-2647	93
375-2649	94
375-3788	466
	473
	478
	486
375-3937	3
	4
	▶20
375-4479	3
	4
	▶8
375-6988	94
375-7128	129
375-8254	93
375-8407	▶127
	187
376-1384	413
376-1583	373
376-4074	14
376-4078	14
376-4761	13
376-6403	80
376-6405	80
376-6409	93
376-6410	93
376-6411	93
376-6509	299
376-6533	218
	222
377-0034	51
377-0399	17
377-0400	17
377-1293	187
	188
377-2843	589
377-5988	82
	86
377-6932	121
377-9255	20
378-0593	3
	4
	▶27
378-0628	3
	4
	▶31
378-3267	375
378-5311	38
378-8166	3
	4
	▶19
378-8167	3
	4
	▶666
378-8276	3
	4
	▶47
378-8331	▶404
	413
379-2111	562
379-6637	3
	4
	▶9
380-6351	591
	593
380-9615	13
382-1511	363
	365
382-4478	172
382-9834	▶626
383-1382	13
383-1383	13
383-1467	577
383-3207	299

▶ **PRIMARY REFERENCE**

PART NUMBER INDEX

Part	Page
383-3563	562
383-3581	▶15
	16
383-7557	464
383-8642	455
	▶478
383-8643	▶466
	482
384-5313	▶17
	18
384-5554	▶607
	626
384-5556	607
	608
384-5557	607
	608
384-5559	607
384-5560	607
384-5568	607
	608
384-5573	607
	608
384-5574	607
	608
384-5579	610
384-5580	610
384-5583	610
384-5588	610
	612
384-5589	610
384-7567	161
384-8750	461
	466
	473
	478
	486
385-0693	455
	458
	▶461
385-1278	591
385-1279	591
385-1398	83
385-1400	591
	593
385-2474	591
385-2572	3
	4
	▶18
385-5997	▶121
	187
	188
385-8000	4
	▶164
385-8001	3
	4
	▶99
386-1864	83
386-2737	85
386-2971	93
386-2976	93
386-3004	133
386-3819	93
386-6071	591
386-6072	591
387-0611	▶396
	400
387-0612	▶397
	400
387-0613	400
	401
	▶403
387-0614	▶358
	359
387-2116	▶470
	472
387-4652	▶433
	478
	486
387-5750	313
	316
	322
	324
387-5751	313
	316
	322
	324
387-5780	▶512
387-5783	1
	302
	305
	▶306
387-5794	1
	302
	▶313
	▶316
387-5795	313
	316
	▶319
	322
	324
387-5796	313
	316
	▶320
	322
	324
387-5835	1
	302
	▶307
	▶308
	309
387-5837	▶302
	667
387-5840	307
	308
387-5915	319
387-5916	319
387-5919	511
	512
	514
387-5930	512
	514
387-5938	512
	514
	516
387-5940	▶514
387-5950	514
387-5970	512
387-5994	▶311
	313
	322
387-5995	311
	312
387-5997	312
387-5998	312
387-6000	▶1
387-6001	▶1
387-6023	356
	▶655
387-6025	1
	▶239
387-6026	▶277
387-6027	▶356
387-6028	▶2
387-6030	567
	▶573
387-6031	567
	▶598
387-6032	319
387-6033	319
387-6034	313
	316
	322
	324
387-6037	225
	▶345
387-6038	247
387-6039	255
387-6040	▶228
	241
387-6041	241
	▶243
387-6042	241
	▶244
387-6043	241
	▶256
387-6044	▶2
387-6045	▶195
387-6046	▶196
387-6047	245
	▶247
387-6048	255
387-6049	247
387-6050	▶54
	60
387-6051	54
	56
387-6052	54
	56
387-6053	54
	56
387-6054	54
387-6055	54
	56
387-6057	54
	56
387-6059	60
	61
	62
387-6060	60
	61
	62
387-6061	54
	56
387-6062	54
	56
387-6063	54
	56
387-6064	54
	56
387-6065	54
	56
387-6066	54
	56
387-6067	54
387-6068	54
	56
387-6069	54
	56
387-6070	54
	56
387-6071	54
	56
387-6072	54
	56
387-6073	54
	56
387-6074	54
	56
387-6075	54
387-6076	54
387-6077	54
	56
387-6078	54
387-6079	54
	56
387-6080	1
	▶49
	▶50
387-6081	49
	50
387-6082	49
	50
387-6083	49
	50
387-6084	67
387-6085	1
	▶67
387-6086	67
387-6087	67
387-6088	67
387-6089	67
387-6090	67
387-6091	1
	▶338
387-6092	338
387-6093	49
387-6094	60
	61
	62
387-6095	1
	▶60
	61
	62
387-6096	60
	61
	62
387-6097	67
387-6098	67
387-6099	54
387-6100	1
	▶95
387-6101	95
	▶96
387-6102	96
387-6121	95
387-6129	96
387-6130	96
387-6140	96
387-6149	452
387-6150	1
	▶452
387-6151	452
	▶454
387-6169	454
387-6173	452
387-6176	454
387-6192	454
387-6200	287
	▶303
387-6203	287
	291
387-6208	287
387-6209	▶284
	287
	291
387-6210	213
	287
387-6211	287
387-6220	1
	▶287
387-6224	286
387-6225	▶286
	287
	291
387-6230	287

PART NUMBER INDEX

Part	Page
	291
	▶310
387-6231	310
387-6232	310
387-6233	▶304
	310
387-6234	304
387-6244	336
387-6245	287
	291
	▶336
387-6246	287
	291
	▶337
387-6249	287
387-6253	287
	291
387-6272	286
387-6273	286
387-6277	287
387-6286	286
387-6291	287
387-6292	287
387-6297	284
	286
387-6299	287
387-6300	287
387-6883	529
	532
387-8412	93
388-0536	13
388-3217	▶586
	588
388-3218	▶587
	588
388-3220	583
388-4493	466
	473
	478
	486
388-4707	18
388-6274	139
388-9447	51
388-9448	51
389-0463	133
389-1995	38
389-3346	3
	4
	▶13
389-3863	187
	188
389-5708	150
389-5775	87
	89
389-5784	87
	89
389-8169	368
390-0755	87
	89
390-0854	3
	4
	▶16
390-2764	133
390-3737	3
	4
	▶39
390-5828	405
	▶441
390-5829	441
390-5830	405
	▶418
	▶423
390-5831	418
	423
390-5835	418
	423
390-5837	418
	423
390-5839	418
	423
390-5841	418
	423
390-5843	418
	423
390-5845	418
	423
390-5847	418
	423
390-5852	418
	423
390-5854	418
	423
390-5856	418
	423
390-5858	418
390-5861	418
	423
390-5863	418
390-5864	418
	423
390-5865	418
	423
390-5867	418
	423
390-5869	418
	423
390-5871	418
	423
390-5873	418
	423
390-5874	407
	418
	423
390-5875	418
	423
390-5877	418
	423
390-5881	418
	423
390-5885	418
	423
390-5887	418
	423
390-5896	418
	423
390-5898	418
	423
390-5901	▶400
	▶401
	405
390-5903	405
	▶455
	▶458
390-5905	455
	458
390-5907	455
	458
390-5909	455
	458
390-5911	455
	458
390-5913	405
	▶482
	▶484
390-5914	405
	▶409
390-5915	409
390-5917	409
390-5921	409
390-5925	409
390-5931	409
390-5932	409
390-5935	409
390-5939	418
	423
390-5945	409
390-5948	409
390-5956	418
	423
390-5957	418
	423
390-5958	418
	423
390-5959	1
	▶405
390-5960	▶359
	405
390-5961	356
	357
	▶370
390-5962	▶363
	▶365
	405
390-5964	370
390-5968	370
390-5972	363
	365
390-5974	363
	365
390-5976	363
	365
390-5984	370
390-5985	▶378
390-5986	▶369
	378
390-5987	▶360
	378
390-5988	360
390-5992	360
390-5998	369
390-6000	▶362
390-6075	599
	600
390-6076	599
	600
390-6077	599
	600
390-6086	599
	600
390-6087	599
	600
390-6088	600
390-7508	407
390-7626	70
390-7970	407
390-7972	407
390-8738	87
	89
391-1817	87
	89
391-4811	3
	4
	▶93
391-4950	▶627
391-4951	▶608
	627
391-4954	608
	610
391-4955	610
391-4956	608
	610
391-4957	610
391-4958	608
	610
391-4976	608
391-5300	1
	▶574
391-5301	▶535
	574
391-5302	▶567
	574
391-5303	535
	▶542
391-5304	▶599
391-5305	▶600
391-5306	▶583
391-5307	▶584
391-5308	535
391-5310	535
	▶603
391-5311	535
	▶581
391-5312	535
	▶575
391-5313	535
	▶536
	▶539
391-5314	535
	▶565
391-5315	▶585
391-5316	▶529
	▶532
	535
391-5317	535
	▶555
	▶556
391-5318	542
	▶590
391-5320	565
391-5321	590
391-5324	156
391-5325	542
391-5326	542
391-5327	542
	▶562
391-5328	535
	▶559
391-5329	▶348
	535
391-5330	▶597
391-5331	536
	539
391-5332	529
	532
391-5333	536
391-5334	565
391-5335	565
391-5336	565
391-5337	565
391-5338	536
	539
391-5339	575
391-5340	575
391-5341	575
391-5342	575
391-5343	557
391-5344	557
391-5345	559
391-5346	536
	539
391-5347	529
	532
391-5348	546
391-5349	548
391-5350	535

▶ **PRIMARY REFERENCE**

PART NUMBER INDEX

Part	Page
	▶658
391-5389	546
	548
391-5390	529
	532
391-5391	529
	550
	551
391-5392	529
	550
	551
391-5394	536
	539
391-5396	556
391-5401	▶588
391-5402	▶588
391-5523	3
	4
	▶70
391-9320	182
392-0632	3
	4
	▶38
392-1005	413
392-1877	542
	▶582
392-1919	542
392-1926	181
392-2252	1
	▶5
392-2253	5
	▶65
392-2254	5
	▶71
392-2255	71
392-2261	▶66
392-2263	66
392-2266	65
392-2267	65
392-2268	65
392-2273	5
392-2277	252
392-2281	5
392-2287	5
392-2294	72
392-2295	72
392-2302	▶72
392-2303	71
392-2307	338
392-2308	211
392-2314	211
392-2315	211
	212
392-2780	187
	188
392-3702	1
	▶273
	▶274
	356
	357
392-3704	273
	274
392-3711	273
	274
392-3715	1
	▶339
392-3716	339
	▶340
392-3717	339
392-3718	339
392-3720	1
	▶578
392-3721	▶296
	578
392-3722	578
392-3723	296
392-3725	▶275
392-3726	▶326
	578
392-3727	▶327
	578
392-3728	▶328
	▶329
	578
392-3729	578
392-3730	578
392-3731	578
392-3740	296
392-3755	326
392-3760	326
	327
	329
392-3762	327
392-3763	329
392-3778	267
392-3779	267
392-3780	▶267
392-3781	267
392-3782	267
	▶269
	270
392-3793	269
392-3794	269
392-3796	267
	270
392-3797	267
	270
392-3798	267
392-3800	1
	▶297
392-3801	297
392-3802	297
392-3809	▶653
392-3810	653
392-3816	653
392-3817	653
392-3824	653
392-3830	▶279
392-3831	279
392-3833	280
	282
392-3861	279
392-3871	279
	280
	282
392-3874	280
	282
392-3875	279
	280
	282
392-3876	279
392-3878	279
	280
	282
392-3880	454
392-3881	454
392-3882	454
392-3886	279
	280
	282
392-3890	239
	▶350
392-3891	239
	▶343
	▶344
392-3892	248
	249
	250
392-3893	245
	▶248
392-3894	239
	▶241
392-3895	▶237
	239
392-3896	343
392-3899	350
392-3901	350
392-3976	535
392-3977	535
392-3978	356
	357
	567
	▶572
392-3979	572
392-3980	562
	▶601
392-3981	542
	▶602
392-3982	572
392-3985	601
392-3986	602
392-4097	38
392-4904	186
392-5553	555
392-5558	363
392-5562	529
	532
392-5563	529
	532
392-5564	529
	550
	551
392-5569	529
	532
392-5571	548
392-5572	529
	532
392-5573	546
392-5575	550
392-5576	551
392-5579	559
392-5581	559
392-5582	562
392-5588	535
	597
392-6310	562
392-8338	182
392-8339	189
392-8344	189
392-8346	100
	103
392-8351	▶176
	535
392-8352	1
	▶114
392-8353	114
	▶115
392-8354	114
	▶115
392-8355	▶129
392-8356	▶120
	129
	131
392-8357	182
392-8359	▶124
	155
392-8360	▶125
	153
392-8361	189
392-8362	114
	▶182
392-8363	▶131
392-8364	182
392-8366	189
392-8367	182
392-8369	▶180
	407
392-8370	▶116
	176
392-8371	▶125
	152
392-8372	▶126
	138
392-8373	▶138
392-8377	▶127
	210
392-8378	▶122
	189
392-8380	▶123
	191
392-8381	▶118
	180
392-8382	▶119
	182
392-8383	▶118
	181
392-8384	▶123
392-8385	182
392-8389	182
392-8390	103
392-8391	100
	103
392-8392	100
	103
392-8393	100
	103
392-8394	▶103
	267
392-8395	▶126
	193
392-8396	193
392-8397	193
392-8398	182
392-8399	189
392-8400	189
392-8461	176
392-8477	666
393-1075	529
	532
393-2034	94
393-2035	94
393-3369	3
	4
	▶22
393-4006	22
393-4007	22
393-4097	1
	▶3
	356
	357
393-5145	373
	▶377
393-5149	373
393-5150	373
393-5151	375
393-5152	375
	▶381
393-5467	92
393-5468	92
393-9070	551
393-9071	550
393-9359	▶546
393-9360	▶550
394-0461	598
394-0525	▶92
	94

PART NUMBER INDEX

Part	Page
394-1675	▶195
	196
394-1676	195
	▶196
394-1677	2
	195
	196
	▶254
394-1678	254
394-1679	2
	195
	196
	▶255
394-1680	255
394-1681	218
	222
394-1682	255
394-4451	99
394-5936	601
	602
394-5937	601
394-5939	602
394-5940	602
394-5941	601
	602
394-5942	602
394-5950	599
394-8476	▶628
394-8478	▶610
	628
394-8525	550
	551
	▶553
394-8568	478
	486
394-9639	3
	4
	▶94
394-9671	544
	▶545
395-0110	3
	4
	▶160
395-0112	3
	4
	▶158
395-0113	3
	4
	▶187
	▶188
395-0114	3
	4
	▶161
395-0379	610
395-1633	91
	92
395-1802	▶10
	11
395-3265	▶629
395-3266	▶612
	629
395-3340	612
395-3341	612
395-3344	612
395-3348	612
395-3353	612
395-3949	▶630
395-3950	▶613
	630
395-4224	613
395-4225	613
395-4227	613
395-4232	613
395-4234	613
396-2352	565
396-2617	3
	4
	▶11
396-4852	478
	487
396-5149	199
396-5150	199
396-5151	214
396-5153	214
396-5154	203
396-5175	▶251
	252
396-5182	199
	▶203
396-5183	▶199
	251
396-5185	▶214
	251
396-7070	263
	▶264
396-8052	69
396-9529	68
396-9532	▶68
	74
396-9626	▶80
	81
397-9706	▶235
	405
397-9707	235
397-9709	235
397-9711	235
397-9713	235
397-9716	235
397-9718	235
	407
397-9720	370
397-9722	363
	365
397-9724	235
397-9725	363
	365
397-9726	363
	365
397-9727	363
	365
397-9732	363
	365
397-9733	363
	365
397-9734	370
397-9735	370
397-9736	362
397-9738	363
	365
397-9744	235
397-9748	199
397-9749	235
397-9751	360
397-9753	363
	365
397-9755	363
	365
397-9757	363
397-9759	363
397-9761	363
	365
397-9764	▶428
	548
397-9765	▶429
	550
397-9766	428
	429
	430
	431
397-9768	428
	429
	430
	431
397-9770	428
	429
	430
	431
397-9772	428
	429
	430
	431
397-9774	428
	429
	430
	431
397-9776	428
	429
	430
	431
397-9778	428
	429
397-9780	428
	429
397-9782	418
	423
397-9783	418
	423
397-9784	418
	423
397-9800	405
	▶413
397-9801	▶435
397-9802	▶437
397-9803	▶51
397-9804	▶53
397-9805	413
397-9807	413
397-9809	413
397-9811	413
397-9813	413
397-9815	413
397-9817	413
397-9819	413
397-9821	413
397-9822	413
397-9823	435
397-9825	435
397-9827	435
397-9829	435
397-9831	435
397-9832	437
397-9834	437
397-9836	51
397-9838	51
397-9840	51
397-9842	51
397-9843	53
397-9845	413
397-9846	▶430
	546
397-9847	▶431
	551
397-9860	▶407
397-9861	407
397-9863	407
397-9865	407
397-9867	407
397-9869	407
397-9874	409
397-9875	409
397-9877	418
	423
397-9879	396
397-9880	396
	397
397-9881	396
	397
397-9882	396
	397
397-9883	396
	397
397-9884	403
397-9885	403
397-9886	403
397-9887	403
397-9888	403
397-9889	358
397-9890	358
397-9891	358
397-9892	358
397-9893	358
397-9894	▶405
397-9895	▶405
397-9896	397
398-0940	▶167
	183
398-1412	576
398-6226	94
398-8246	655
	660
	663
399-0913	71
399-0920	71
399-0928	5
399-0929	5
399-0930	5
399-0931	2
	▶162
399-0933	5
399-0936	5
399-0937	5
399-0939	5
399-0940	5
399-0941	54
399-0942	49
	50
399-0944	338
399-0946	60
	61
	62
399-0947	54
	56
399-0949	54
	56
399-3347	553
	▶554

4

Part	Page
415-1062	414
415-1604	26
415-3251	▶631
415-3252	▶614
	631
415-3259	614
415-3260	614
415-3264	614
415-3267	614
415-3271	614
415-3272	614
415-4189	210
415-4190	189
415-4191	100

PART NUMBER INDEX

Part	Page
	103
	153
	182
	191
	278
415-4192	182
415-4193	100
	103
415-4194	189
415-4198	▶193
	378
415-4201	183
415-4202	▶139
415-4203	▶151
415-4205	▶109
	356
415-4206	▶568
415-4208	109
	▶181
415-4209	▶108
	109
415-4210	▶173
	176
415-4211	153
	155
415-4214	101
	103
	193
	210
415-4215	▶152
415-4217	114
	▶210
415-4218	114
	▶189
415-4219	114
	▶191
415-4223	191
415-4224	182
415-4227	▶156
	356
415-4228	▶113
415-4229	153
415-4230	▶168
	407
415-4231	176
415-4232	277
	▶278
415-4233	599
415-4234	▶170
	455
	458
415-4235	▶169
	435
415-4236	▶172
	378
415-4239	▶133
415-4240	133
415-4241	133
	▶186
415-4244	▶155
	279
415-4245	▶153
	280
	282
415-4246	▶100
	270
415-4247	▶143
415-4249	▶144
415-4325	350
415-4327	350
415-4329	350
415-4331	350
415-4333	351
415-4335	351
415-4337	351
415-4339	351
415-4341	351
415-4345	351
415-4347	351
415-4348	▶245
415-4349	▶245
415-5625	3
	4
	▶659
415-7667	337
415-7670	287
415-7671	287
	291
415-7673	287
415-7677	284
415-7678	287
415-7680	287
415-7682	287
415-7687	287
	291
415-7689	284
415-7696	284
415-7697	287
415-7698	287
415-7701	284
415-7703	287
	291
415-7704	287
415-7713	62
	287
	291
415-7714	287
	291
415-7716	299
415-7717	299
415-7735	▶295
415-7736	295
415-7737	295
416-6971	3
	4
	▶74
416-7727	69
416-7808	3
	4
	▶69
416-8390	275
416-8393	267
	272
	306
	307
	308
	340
416-8908	3
	4
	▶81
417-2102	1
	▶335
417-2103	335
417-2104	335
417-2107	1
	▶406
417-2108	406
417-2110	406
417-2113	406
417-2115	356
	357
417-2116	277
417-2117	330
417-2118	330
417-2120	356
	▶660
417-2121	655
	660
	663
417-2122	658
417-2123	658
417-2124	655
	660
	663
417-2125	655
417-2126	660
	663
417-2128	655
	660
	663
417-4072	203
417-4077	199
417-7151	▶231
	252
417-7782	45
417-8029	231
418-0207	562
418-0210	562
418-0758	231
418-4767	▶196
418-4768	196
	▶218
418-4769	195
	▶220
418-4770	196
	▶222
419-1626	▶638
419-1687	▶625
	638
419-1690	625
419-1691	625
419-1699	625
419-1701	625
420-2372	74
420-4773	375
420-5114	231
421-1769	466
	478
421-4449	239
	▶252
422-1675	562
422-4086	555
422-8423	569
423-1786	433
423-1787	433
423-1981	54
	57
423-1982	123
423-2603	562
423-9049	165
423-9984	240
424-2855	1
	▶569
424-2857	1
	▶571
424-2859	▶544
	567
424-2860	569
	571
424-2861	569
424-2862	569
424-2863	▶520
	535
424-2864	520
	▶522
	▶526
424-2865	520
424-2866	569
424-4571	520
424-4572	520
424-4573	520
424-4574	565
424-4578	176
424-6652	165
424-8521	602
424-8654	▶240
	251
425-0076	603
425-0077	603
425-0078	603
425-0079	603
425-0080	603
425-0081	603
425-0082	603
425-0083	598
425-0084	603
425-0085	598
425-0260	602
425-0261	601
425-0263	601
425-0265	602
425-2178	▶82
	87
425-6234	356
	357
	535
	552
	▶576
425-7391	191
426-0184	▶551
426-0185	▶548
426-2594	555
	556
	▶557
426-2831	562
426-3312	3
	4
	▶87
	▶89
426-5409	562
426-5412	562
430-4119	601
	602
430-9498	546
	548
430-9500	550
431-3852	522
	526
431-3853	522
	526
431-3854	522
	526
431-3855	522
	526
431-3856	522
	526
431-3857	522
	526
431-3858	522
	526
431-3863	522
	526
431-3864	569
431-3865	522
	526
431-3867	522
	526
431-3868	522
	526
431-3869	522
431-3870	522
	526
431-4595	313
	316
	322

PART NUMBER INDEX

Part	Page
	324
431-4596	319
431-4597	319
431-4598	319
431-4599	320
431-4600	320
431-4601	320
431-4602	320
431-4603	320
431-4604	320
431-4605	320
431-4606	320
431-4607	320
431-4609	319
431-4610	307
431-4611	320
431-4613	313
	316
	322
	324
	400
	401
	512
	514
	516
431-4614	320
431-4615	305
	306
431-4619	313
	316
	322
	324
431-4625	▶330
	667
431-4630	330
431-4631	330
431-4632	330
431-4633	330
431-4634	330
431-4635	330
	333
431-4636	330
	333
431-4637	▶516
431-4638	516
431-4640	516
431-4642	▶511
	516
431-4643	511
431-4644	330
431-4645	452
431-4650	▶280
	▶282
431-4651	280
431-4669	280
	282
431-4671	280
431-4676	280
431-4677	280
431-4682	282
431-4683	282
431-4695	452
431-4696	452
431-9787	577
431-9788	535
	▶577
432-7289	287
	291
432-7293	284
	286
432-7295	287
432-7296	288
432-7297	286
432-7298	288
	292
432-7299	284
432-7302	287
	291
432-7308	287
	291
432-7310	284
	286
432-7315	284
	286
432-7327	329
432-7328	270
432-7329	270
432-7330	▶270
432-7331	270
	▶272
432-7334	▶299
432-7335	241
432-7336	241
432-7338	▶333
	667
432-7339	333
432-7340	▶302
	667
432-7341	302
	▶305
432-7342	302
	▶309
432-7343	302
	▶322
	▶324
432-7346	305
	309
432-7347	516
432-7349	333
432-7350	333
432-7351	333
432-7352	333
432-7353	333
432-7354	333
432-7355	333
432-7356	333
432-7357	333
432-7358	333
432-7360	333
432-7361	333
432-7362	333
432-7363	333
432-7364	333
432-7366	333
432-7367	333
432-7368	49
432-7369	199
432-7378	356
432-7381	287
432-7382	287
	291
432-7384	287
432-7385	287
432-7386	287
	291
432-7389	287
	291
432-7392	▶356
432-7393	▶357
432-7394	▶46
432-7396	287
	291
432-7717	299
432-7718	299
432-7719	299
432-7720	299
432-7723	299
432-7724	299
432-8537	252
432-8538	199
433-0030	557
433-1316	▶83
	87
	89
433-4342	250
433-7185	203
434-1356	159
434-2641	▶225
	251
434-3992	477
434-3993	477
434-6660	333
434-6661	333
434-6662	333
434-6663	333
434-6664	333
434-6665	333
434-6666	333
434-6667	333
434-6671	5
434-6672	1
	▶211
	▶212
434-6673	5
434-6687	573
434-6688	573
434-6690	330
434-6691	330
434-6692	330
434-6693	330
434-6694	277
	357
	▶663
434-6695	356
434-6697	655
	660
	663
434-6698	655
	660
	663
434-6699	655
	660
	663
435-1940	435
	▶477
435-4501	74
436-0521	37
436-0820	252
436-1542	562
436-5823	▶341
	351
436-5825	▶342
436-5942	477
437-4170	74
437-7034	135
438-7763	▶76
	77
439-0688	562
439-1561	580
439-5037	76
439-5039	76
439-5040	76
440-0510	197
	198
440-0511	197
440-0512	198
440-2770	546
	548
	550
440-5279	433
441-1215	3
	4
	▶77
441-4588	522
	526
441-4589	522
	▶595
441-5062	440
442-6237	413
442-6277	414
442-6441	114
442-8465	▶84
	87
	89
442-8530	85
442-8531	▶85
	87
	89
442-8569	87
	89
443-1076	264
443-3773	▶463
	466
	478
443-9076	23
443-9425	255
443-9475	28
443-9543	28
443-9898	28
443-9919	28
444-6523	140
	141
444-7322	478
	487
444-8530	▶390
	458
444-8531	▶391
445-2631	114
445-4703	3
	▶165
445-4982	434
445-4983	▶434
	472
445-6109	▶464
	473
	487
445-6169	409
	▶472
445-8805	433
	▶510
446-1268	158
446-6229	245
	▶249
446-6230	▶245
446-6231	246
	▶250
446-6232	▶246
446-6946	333
446-6947	333
446-6948	333
446-6949	333
446-6950	333
446-6951	333
446-6952	333
446-6953	333
446-6954	333
446-6955	▶667
446-6956	▶667
446-6959	406
446-6965	5
446-6967	255
446-6968	351
446-6970	351
446-6971	351
446-6972	351

▶ **PRIMARY REFERENCE**

PART NUMBER INDEX

Part	Page
446-6973	351
446-6974	237
446-6976	5
446-6977	5
446-6978	338
446-6981	67
446-6982	71
446-6985	307
	308
446-6986	307
	308
446-6988	313
	316
	322
	324
446-6989	313
	316
	322
	324
446-7556	▶4
	277
446-9614	591
446-9615	586
	▶591
446-9616	586
	587
	▶589
446-9617	586
	587
446-9618	589
446-9619	589
446-9620	589
446-9621	589
446-9622	589
446-9623	589
446-9624	589
446-9625	591
446-9627	591
447-0303	602
447-0350	▶644
447-0351	▶645
447-0352	▶646
447-0353	▶647
447-0354	▶648
447-0355	▶649
447-3257	556
447-7816	4
448-2945	319
448-2946	5
448-2954	400
	401
448-2955	400
	401
448-2956	400
	401
448-2957	418
	423
448-2958	409
448-2960	418
	423
448-2962	418
	423
448-2964	418
	423
448-2966	418
	423
448-2968	418
	423
448-2969	418
	423
448-2976	418
	423
448-2977	418
	423
448-2978	418
	423
448-2981	363
	365
448-2983	360
448-2985	360
448-2987	360
448-2994	366
448-2995	366
448-4763	3
448-5092	▶632
	▶633
448-7692	556
448-7747	616
448-7757	621
	623
448-7758	616
448-7759	616
	618
448-7760	▶616
	632
448-9996	245
	246
449-2044	616
449-2045	616
449-2047	616
449-2049	616
449-2159	652
449-4074	569
	571
449-4915	189
449-4917	▶135
449-4918	191
449-4919	▶120
	135
449-4920	278
449-4921	278
449-4931	▶157
449-4932	157
449-4935	145
449-4936	▶145
449-6277	111
	112
450-0043	333
450-0044	333
450-0045	333
450-0046	333
450-0047	333
450-0048	333
450-0049	330
450-0050	333
450-0059	287
	291
450-0065	291
450-0066	287
450-0084	291
450-0085	291
450-0087	291
450-0097	345
	▶346
450-0098	345
450-3463	56
450-3464	56
450-3465	54
	56
450-3466	56
450-3467	54
	56
450-3468	56
450-3469	56
450-3471	54
	56
450-3472	212
450-3473	54
	57
450-3474	212
450-3475	56
450-3476	56
450-3478	54
	56
450-3479	54
	56
450-3481	▶56
	61
	62
450-4795	346
450-4796	346
450-4798	346
450-4799	346
450-4800	346
450-4801	346
450-4802	346
450-4803	346
450-4804	346
450-4805	346
450-4806	346
450-4807	243
	244
450-4808	243
	244
	256
450-4809	228
450-4810	228
450-4814	313
	316
	322
	324
450-4827	291
450-4830	213
450-4860	▶107
	277
450-4861	107
450-4867	107
450-4870	1
	▶298
450-4871	298
450-4872	298
450-4874	298
450-4897	308
450-6492	520
451-5885	458
	▶486
451-5886	▶473
	484
451-6644	473
	487
451-7225	659
451-8385	3
451-9131	473
	487
452-1719	▶386
	458
	484
452-1720	▶387
452-2509	▶395
	640
452-6952	589
452-6974	▶398
	401
452-6975	▶399
	401
452-6977	423
452-6979	423
452-6981	366
452-6983	366
452-6985	366
452-6987	366
452-6991	366
452-8547	▶78
	79
452-9291	616
452-9704	70
453-1714	593
453-1715	593
453-1716	593
453-1717	593
453-1718	593
453-1719	593
453-1720	593
453-1721	587
	▶593
453-1722	593
453-2441	526
453-7163	3
	4
	▶79
454-2625	593
454-2626	593
454-2627	593
454-2628	593
454-4268	602
454-4269	601
454-6745	497
	501
	▶507
454-9209	▶652
455-0705	119
455-2815	522
455-5660	546
	548
455-8227	546
	548
455-8228	546
	548
455-9873	556
455-9874	356
	357
	▶552
456-0408	616
456-0584	395
456-5130	650
457-3274	5
	▶276
457-3275	276
457-3280	276
457-3281	276
457-3282	50
457-3284	5
457-5441	50
457-8546	291
457-8547	336
457-8551	291
457-8556	291
457-8557	337
457-8558	291
457-8559	291
457-8561	▶213
	291
457-8563	291
457-8564	291
457-8566	291
457-8580	1
	▶291
457-8582	213
457-8586	291
457-8588	291
457-8591	291
457-8595	291
457-8596	291
458-0485	552
458-3745	188
458-9406	▶618

PART NUMBER INDEX

Part	Page
	633
458-9408	618
458-9409	618
458-9413	618
458-9414	618
458-9422	621
	623
458-9768	3
	4
	►30
461-1370	115
461-2749	56
461-2750	56
461-2751	56
461-2752	56
461-2951	5
461-3440	13
461-6531	►634
461-6533	►635
461-9047	►619
	634
461-9050	619
461-9051	619
461-9059	619
461-9064	619
461-9066	619
461-9146	►620
	635
461-9148	620
461-9150	620
461-9160	620
461-9165	620
461-9166	620
462-1171	40
462-3639	601
	602
462-6685	3
	4
	►42
463-4837	572
464-1228	346
464-1229	345
464-6203	344
464-7899	►86
	89
465-1810	292
465-1812	292
465-7767	►124
	526
466-7316	115
466-9206	►636
466-9207	►621
	636
466-9208	621
466-9210	621
466-9213	621
466-9217	621
466-9223	621
466-9224	621
467-6004	►637
467-6006	►623
	637
467-6007	623
467-6008	623
467-6012	623
467-6017	623
467-6021	623
467-6023	623
468-8952	526
469-3107	312
469-3122	►312
	316
	324
469-3133	312
469-3138	316
469-5033	42
471-5064	526
	►596
475-0943	519
475-0944	►519
475-5473	651

► **PRIMARY REFERENCE**

MEMORANDA



©2015 Caterpillar
All Rights Reserved

CAT, CATERPILLAR, their respective logos, “Caterpillar Yellow”, and the POWER EDGE trade dress as well as corporate and product identity used herein, are trademarks of Caterpillar and may not be used without permission.