CATERPILLAR®

SEBP3845-01
December 2005
Volume I: p.1-491

RUTHZIL TRATOR COMERCIAL DE PEÇAS LTDA 11 97083-6812 ROLANDO

Parts Manual

SIS

See "General Information" for New Parts Manual Features.

950H Wheel Loader

N1A1-Up (Machine)
KHX1-Up (Engine)
FAH1-Up (Transmission)
FAK1-Up (Transmission)
CJF1-Up (Torque Converter)

Powered By C7 Engine
This Parts Manual is also Available in .PDF Format on Compact Disc(CD-ROM)-Caterpillar Form No. SERP3845

CATERPILLAR®

SEBP3845-01
December 2005
Volume I: p.1-491

Parts Manual



See "General Information" for New Parts Manual Features.

950H Wheel Loader

N1A1-Up (Machine)
KHX1-Up (Engine)
FAH1-Up (Transmission)
FAK1-Up (Transmission)
CJF1-Up (Torque Converter)

Powered By C7 Engine

This Parts Manual is also Available in .PDF Format on Compact Disc(CD-ROM)-Caterpillar Form No. SERP3845

Product and Dealer Information

Note: For product identification plate locations, see the section "Product Identification Information" in the Operation and Maintenance Manual.

Delivery Date: _____

Product Information

Model: _____

Product Identification Number: _____

Engine Serial Number: _____

Transmission Serial Number: _____

Generator Serial Number: _____

Attachment Serial Numbers: _____

Attachment Information: _____

Customer Equipment Number: _____

Dealer Equipment Number: _____

Dealer Information

Name: _____ Branch: _____

Address: _____

_____

_____

	Dealer Contact	Phone Number	Hours
Sales:	_____	_____	_____
Parts:	_____	_____	_____
Service:	_____	_____	_____

Informations produit et concessionnaire

Nota: Voir l'emplacement de la plaque signalétique du produit au chapitre "Informations produit" du guide d'utilisation et d'entretien.

Date de livraison: _____

Informations produit

Modèle: _____

Numéro d'identification produit: _____

Numéro de série du moteur: _____

Numéro de série de la boîte de vitesses: _____

Numéro de série de l'alternateur: _____

Numéros de série d'équipement: _____

Informations sur l'équipement: _____

Numéro matériel client: _____

Numéro matériel concessionnaire: _____

Informations concessionnaire

Nom: _____ Agence: _____

Adresse: _____

_____

_____

	Contact concessionnaire	Numéro de téléphone	Heures
Ventes:	_____	_____	_____
Pièces:	_____	_____	_____
Service:	_____	_____	_____

Información del Producto/Distribuidor

Nota: Para saber la ubicación de las placas de identificación del producto, ver la sección "Información sobre identificación del producto" en el Manual de Operación y Mantenimiento.

Fecha de entrega: _____

Información del producto

Modelo: _____

Número de identificación del producto: _____

Número de serie del motor: _____

Número de serie de la transmisión: _____

Número de serie del generador: _____

Números de serie de los accesorios: _____

Información sobre los accesorios: _____

Número del equipo del cliente: _____

Número del equipo del distribuidor: _____

Información del distribuidor

Nombre: _____ Sucursal: _____

Dirección: _____

_____

_____

	Comunicación con el distribuidor	Número de teléfono	Horas
Ventas:	_____	_____	_____
Piezas:	_____	_____	_____
Servicio:	_____	_____	_____

Informações Sobre Produto e Revendedor

Nota: Para localizações da placa de identificação do produto, consulte a seção, "Informações Sobre Identificação do Produto" no Manual de Operação e Manutenção.

Data de Entrega: _____

Informações Sobre o Produto

Modelo: _____

Número de Identificação do Produto: _____

Número de Série do Motor: _____

Número de Série da Transmissão: _____

Número de Série do Gerador: _____

Números de Série de Acessórios: _____

Informações Sobre Acessórios: _____

Número do Equipamento do Cliente: _____

Número do Equipamento do Revendedor: _____

Informações Sobre o Revendedor

Nome: _____ Filial: _____

Endereço: _____

_____

_____

	Contato do Revendedor	Telefone	Horas
Vendas:	_____	_____	_____
Peças:	_____	_____	_____
Serviço:	_____	_____	_____

Produkt- und Händlerinformation

Anmerkung: Für die Lage der Produkt-Identnummer und Seriennummern siehe Abschnitt "Produkt-Identinformation" im Betriebs- und Wartungshandbuch.

Lieferdatum: _____

Produkt-Identinformation

Modell: _____

Produkt-Identnummer: _____

Seriennummer des Motors: _____

Seriennummer des Getriebes: _____

Seriennummer des Generators: _____

Seriennummern der Arbeitsgeräte: _____

Arbeitsgeräteinformation: _____

Kundennummer: _____

Händlernummer: _____

Händlerinformation

Name: _____ Niederlassung: _____

Adresse: _____

_____

_____

	Kontaktperson beim Händler	Telefon	Dienststunden
Verkauf:	_____	_____	_____
Ersatzteile:	_____	_____	_____
Service:	_____	_____	_____

MEMORANDA

TABLE OF CONTENTS

Name	Page
GENERAL INFORMATION	A29
REPAIR ALTERNATIVES	A48
SUPPLEMENTAL COOLANT ADDITIVES	A53
MAINTENANCE PARTS	A58
INDEX	A77
MACHINE ARRANGEMENT	1
CHASSIS AR	1
CONVERSION AR-CERTIFICATION	2
GENERAL AR	4
SPECIAL AR-QUARRY	4
WASTE HANDLING AR	5
ENGINE ARRANGEMENT	6
ENGINE AR-COMPLETE	6
ENGINE AR-CORE	7
INSTALLATION AR-ENGINE	8
BASIC ENGINE	9
CAMSHAFT GP	9
CARRIER GP-SEAL	10
COVER GP-CYLINDER BLOCK	11
COVER GP-FRONT HOUSING	12
COVER GP-VALVE MECHANISM	14
CRANKSHAFT GP	17
CYLINDER BLOCK GP	19
CYLINDER HEAD AS	23
CYLINDER HEAD GP	24
DAMPER & PULLEY GP	27
DRAIN GP-ENGINE OIL	28
FASTENER GP-DAMPER	29
FASTENER GP-FRONT HOUSING	30
FASTENER GP-VALVE COVER	32
FASTENER GP-VALVE MECHANISM	33
FLYWHEEL GP	34
GEAR GP-FRONT	35
HOUSING GP-FLYWHEEL	37
HOUSING GP-FRONT	38
IDLER GP-BELT	40
LIFTER GP-VALVE	41
LIFTING GP-ENGINE	42
MOUNTING GP-ALTERNATOR	43
MOUNTING GP-ENGINE & TMSN	44
PAN GP-OIL	46
PISTON & ROD GP	47
PLUG GP-CYLINDER BLOCK	48
PLUG GP-ENGINE	49
PULLEY GP-IDLER	50
SEAL GP-CRANKSHAFT	51
SEAL GP-FLYWHEEL HOUSING	52
VALVE MECHANISM GP	53
LUBRICATION SYSTEM	56
ADAPTER GP-OIL LINE	56
BREATHER GP	57
FILLER GP-ENGINE OIL	58
FILTER GP-ENGINE OIL	59
GAUGE GP-OIL LEVEL (DIPSTICK)	60
LINES GP-ENGINE OIL	62
LINES GP-ENGINE OIL DRAIN	63
LINES GP-TURBOCHARGER OIL	64
PUMP GP-ENGINE OIL	65
COOLING SYSTEM	67
COOLER GP-ENGINE OIL	67
COOLING AR-HIGH AMBIENT TEMP	68
ELBOW GP-WATER	69
LINES GP-WATER	70
PUMP GP-WATER	76
RADIATOR & FAN GP	78
TANK GP-RADIATOR TOP	82
AIR INLET AND EXHAUST SYSTEM	83
AIR CLEANER GP	83
COVER GP-AIR INLET	85
ELBOW GP-AIR INLET	87
LINES GP-AFTERCOOLER AIR	88
LINES GP-AIR	89
MANIFOLD GP-EXHAUST	90
MUFFLER GP	91
PIPE GP-EXHAUST	92
PRECLEANER GP	93
TURBOCHARGER GP	95
FUEL SYSTEM	97
FILTER & LINES GP-FUEL	97
FILTER GP-WATER SEP & FUEL	100
INJECTOR GP-FUEL	101
LINES GP-FUEL	103
LINES GP-FUEL DRAIN	105
LINES GP-INJECTOR HYD PUMP	106
PUMP & MTG GP-UNIT INJ HYD	107
PUMP GP-FUEL INJECTION	109
PUMP GP-FUEL PRM & PRIM FILTER	111
PUMP GP-UNIT INJECTOR HYD	116
REGULATOR GP-FUEL PRESSURE	117
TANK GP-FUEL	118
WATER SEP & FUEL PRM PUMP GP	120
ELECTRICAL AND STARTING SYSTEM	121
ALARM GP	121
ALTERNATOR GP-CHARGING	122
BATTERY & WIRING GP	126
CAMERA AR	129

TABLE OF CONTENTS

Name	Page
CONTROL & MTG GP-COMMUNICATION	131
CONTROL & MTG GP-ENGINE ELEK	133
CONTROL AR-AUTODIG	135
CONTROL GP-AUTODIG	136
CONTROL GP-UNPROGRAMMED	140
CONVERSION AR-AUTODIG	141
DISPLAY GP-CAMERA	142
ELECTRICAL AR	143
ELECTRONICS GP-COMMUNICATION	144
ELECTRONICS GP-IMPLEMENT	145
ELECTRONICS GP-MONITOR	145
ELECTRONICS GP-POWER TRAIN	145
HEATER GP-JACKET WATER	147
INSTALLATION AR-COMMUNICATION	148
INSTALLATION AR-SECURITY	148
INSTALLATION GP-SECURITY	149
LAMP GP-DOME	151
LAMP GP-FLOOD	152
LAMP GP-HEAD & SIGNAL	156
LAMP GP-SIGNAL	160
LAMP GP-STOP & TAIL	162
LAMP GP-WARNING BEACON	163
LIGHTING AR-ROADING	164
LIGHTING AR-SIGNAL	164
LIGHTING GP-BACKUP	165
LIGHTING GP-FLOOD	166
LIGHTING GP-FLOOD & SIGNAL	172
LIGHTING GP-ROADING	176
LIGHTING GP-WARNING BEACON	178
PLUG GP-CONNECTOR	181
RECEPTACLE GP-AUXILIARY START	182
SENSOR & MTG GP-LIFT POSITION	183
SENSOR & MTG GP-PRESSURE	185
SENSOR & MTG GP-TILT POSITION	186
SENSOR GP-ENGINE	188
SENSOR GP-POSITION	190
SENSOR GP-PRESSURE	192
SENSOR GP-SPEED	200
SENSOR GP-TEMPERATURE	202
STARTING AID AR-ETHER	205
STARTING AID GP	206
STARTING AID GP-ETHER	207
STARTING MOTOR GP-ELECTRIC	209
SWITCH GP-BYPASS	212
SWITCH GP-DIMMER	213
SWITCH GP-DISCONNECT	214
SWITCH GP-MAGNETIC	215
SWITCH GP-PRESSURE	218
SWITCH GP-QUICK COUPLER	219
SWITCH GP-REVERSING FAN	220
SWITCH GP-RIDE CONTROL	221
SWITCH GP-ROCKER	222
SWITCH GP-ROTARY	224
SWITCH GP-SECONDARY STEERING	225
SWITCH GP-SIGNAL	226
SWITCH GP-TOGGLE	230
SWITCH GP-TRANSMISSION	231
VALVE GP-ETHER STARTING	232
WARNING GP-BACKUP	233
WIRING GP-AIR CONDITIONER	234
WIRING GP-LUBRICATION	236
WIRING GP-AXLE MONITORING	238
WIRING GP-CAB	240
WIRING GP-CHASSIS	253
WIRING GP-COUPLER	259
WIRING GP-ELECTRIC CLUTCH	260
WIRING GP-ENGINE	261
WIRING GP-ETHER STARTING AID	266
WIRING GP-FRONT	267
WIRING GP-LIGHTING	270
WIRING GP-SECONDARY STEERING	276
WIRING GP-SENSOR	279
WIRING GP-WASTE HANDLER	282
POWER TRAIN	284
AXLE AR-FIXED	284
AXLE AR-OSCILLATING	285
BRAKE & PLANETARY GP	287
CONTROL GP-TRANSMISSION	291
CONTROL GP-TRANSMISSION HYD	293
COOLER & MTG GP-TRANSMISSION	295
COOLER AR-AXLE OIL	296
COVER GP-TMSN OIL FILLER CAP	297
DIFFERENTIAL GP	298
DIFFERENTIAL GP-LIMITED SLIP	299
DIFFERENTIAL GP-NOSPIN	301
DRAIN GP-ECOLOGY	303
FILLER GP-POWER TRAIN OIL	304
FILTER & LINES GP-TRANSMISSION	306
FILTER GP-OIL	308
GEAR GP-BEVEL & PINION	309
GEAR GP-OUTPUT TRANSFER	315
HOUSING GP-FIXED AXLE	324
HOUSING GP-OSCILLATING AXLE	326
LINES GP-AXLE OIL COOLER	328
LINES GP-TORQUE CONV COOLER	333
MOUNTING GP-AXLE	336
MOUNTING GP-AXLE OIL COOLER	337
MOUNTING GP-RIM	338
PLANETARY GP-TRANSMISSION	339
POWER TRAIN AR	343
PUMP & MTG GP-AXLE OIL COOLER	344
PUMP GP-TRANSMISSION	345
RIM AR	348
RIM GP-DEMOUNTABLE	349
SHAFT GP-DRIVE	352

TABLE OF CONTENTS

Name	Page
SLIP JOINT GP	356
TIRE & RIM AR	358
TORQUE CONVERTER & HOUSING GP	367
TORQUE CONVERTER GP	370
TRANSMISSION AR	372
UNIVERSAL JOINT GP	373
VALVE GP-MODULATING	376
VALVE GP-RELIEF	377
VALVE GP-TIRE	379
FRAME AND BODY	380
ACTUATOR GP-HOOD TILT	380
ACTUATOR GP-POWER	382
ACTUATOR GP-POWER GUARD	383
BAFFLE GP	384
BLOCK GP-AXLE OSC LIMITER	385
BOSS GP-REAR FRAME	386
BOX GP-BATTERY	387
CONVERSION AR-ROADING	388
COUNTERWEIGHT GP	396
DOOR GP-ACCESS	399
FENDER AR-ROADING	401
FENDER GP	402
FENDER GP-FRONT	406
FENDER GP-ROADING	408
FRAME AS-LOADER	412
FRAME AS-REAR	415
GRILL GP-RADIATOR	417
GUARD GP-ARTICULATION	419
GUARD GP-AXLE OIL COOLER	421
GUARD GP-AXLE SEAL	423
GUARD GP-DRIVE SHAFT	424
GUARD GP-FRONT	425
GUARD GP-LIGHTING	426
GUARD GP-POWER TRAIN	427
HARDWARE GP-LOADER FRAME	430
HARDWARE GP-MOUNTING	433
HARDWARE GP-REAR FRAME	436
HINGE GP-ROADING FENDER	439
HITCH GP-ARTICULATING	441
HOOD & GUARD GP	443
LADDER GP	446
LINES GP-AUTOMATIC LUBRICATION	448
LINES GP-GREASE	456
LINES GP-LUBRICATION	458
LINK GP-STEERING FRAME LOCK	460
LUBRICATION AR-AUTOMATIC	461
MOUNTING GP-REGISTRATION	465
PANEL GP-HOOD	466
PANEL GP-SIDE	469
PUMP & MTG GP-LUBRICATION	471
PUMP GP-LUBRICATION	473
SHIELD GP-ENGINE COMPARTMENT	474
STEP GP	476
SUPPORT GP-AIR INLET	478
SUPPORT GP-VALVE & FILTER	479
SUPPRESSION AR-SOUND	481
SUPPRESSION GP-SOUND	482
TILT GP-HOOD	485
VALVE & LINES GP-LUBRICATION	486
VALVE GP-LUBE DISTRIBUTION	488
BRAKING SYSTEM	492
ACCUMULATOR GP-BRAKE	492
ACTUATOR GP-PARKING BRAKE	494
BASE GP-FOOT BRAKE	495
BRAKE GP-PARKING	498
CONTROL GP-FOOT BRAKE	499
CONTROL GP-PARKING BRAKE	501
CONTROL GP-SERVICE BRAKE	502
VALVE GP-BRAKE CONTROL	508
STEERING SYSTEM	509
CONTROL GP-STEERING	509
CYLINDER & MTG GP-STEERING	513
CYLINDER GP-HYDRAULIC	514
LINES GP-SECONDARY STEERING	516
LINES GP-STEERING	519
PUMP & MOTOR GP-SEC STEERING	532
PUMP & MTG GP-SECONDARY STEER	533
PUMP GP-PISTON	534
ROTATING GP-PUMP	537
SCREEN GP-CASE DRAIN	538
STEERING AR-COMMAND CONTROL	539
STEERING AR-SECONDARY	539
STEERING COLUMN GP	540
STEERING WHEEL GP	541
VALVE GP-CHECK	543
VALVE GP-PILOT	546
VALVE GP-PRESSURE REDUCING	548
VALVE GP-RELIEF	549
VALVE GP-SECONDARY STEERING	551
VALVE GP-SHUTTLE	552
VALVE GP-STEERING	554
VALVE GP-STEERING NEUTRALIZER	559
HYDRAULIC SYSTEM	561
ACCUMULATOR GP-PILOT OIL	561
CONTROL & LINES GP-RIDE	563
CONTROL AR-RIDE	564
CONTROL GP-ELECTROHYDRAULIC	565
CONTROL GP-HANDLE	573
CONTROL GP-JOYSTICK	574
CYLINDER & SEAL GP-LIFT	578
CYLINDER & SEAL GP-TILT	580
CYLINDER GP-LIFT	583
CYLINDER GP-TILT	585

TABLE OF CONTENTS

Name	Page
FILTER GP-OIL	590
GUARD GP-LIFT CYLINDER	592
HEAD GP-PUMP	595
HYDRAULIC AR-2 VALVE	598
HYDRAULIC AR-3 VALVE	598
HYDRAULIC AR-BIODEGRADABLE OIL	599
LINES GP-CONNECTING	600
LINES GP-COUPLER	604
LINES GP-FRONT	612
LINES GP-HYDRAULIC	615
LINES GP-HYDRAULIC OIL COOLER	619
LINES GP-LIFT CYLINDER	623
LINES GP-TILT CYLINDER	625
MANIFOLD GP-CONTROL	629
MANIFOLD GP-VALVE	631
MOTOR GP-GEAR	634
MOUNTING GP-HYDRAULIC TANK	635
PUMP & MTG GP-BRAKE & HYD FAN	636
PUMP & MTG GP-HYDRAULIC	638
PUMP GP-PISTON	639
ROTATING GP-PUMP	644
TANK GP-HYDRAULIC	645
VALVE & MTG GP-MAIN CONTROL	647
VALVE GP-CHECK	662
VALVE GP-CONTROL	664
VALVE GP-DIVERTER	675
VALVE GP-DRAIN	677
VALVE GP-LOWERING CONTROL	678
VALVE GP-MAIN CONTROL	680
VALVE GP-MANUAL	689
VALVE GP-PRESSURE REDUCING	690
VALVE GP-PUMP CONTROL	691
VALVE GP-RELIEF	693
VALVE GP-RIDE CONTROL	694
VALVE GP-SHUTTLE	696
VALVE GP-SOLENOID	699
IMPLEMENTS	702
ARM AS-LIFT	702
BOSS GP-LEVER	706
BOSS GP-LIFT ARM	708
CONTROL GP-BUCKET	711
LIFT AR	715
LINK GP-BUCKET	716
LOGGING AR	717
WORK TOOLS	718
ADAPTER GP-TIP	718
BUCKET AS-GENERAL PURPOSE	719
BUCKET AS-MATERIAL HANDLING	723
BUCKET AS-PENETRATION	736
BUCKET AS-ROCK	748
BUCKET GP-GENERAL PURPOSE	755
BUCKET GP-MATERIAL HANDLING	757
BUCKET GP-PENETRATION	768
BUCKET GP-ROCK	774
CONTROL AR-QUICK COUPLER	778
COUPLER AR-QUICK	779
COUPLER GP-QUICK	781
EDGE GP-CUTTING	782
EDGE GP-SEGMENT	785
GUARD GP-BUCKET	786
LOCK GP-QUICK COUPLER	788
PIN GP	790
TIP GP-EXTRA DUTY	791
TIP GP-GENERAL PURPOSE	793
OPERATOR STATION	795
ADJUSTER GP-SEAT	795
AIR COMPRESSOR GP-SEAT	797
AIR CONDITIONER AR	798
AIR CONDITIONER GP	799
ARM GP-WINDOW WIPER	804
ARMREST GP	806
CAB AR-ENCLOSED ROPS	807
COMPRESSOR GP-REFRIGERANT	809
CONDENSER & MTG GP-REFRIGERANT	811
CONTROL GP-MONITOR	813
CONTROL GP-UNPRGMED MONITOR	814
DOOR GP-CAB	815
DUCT & FILTER GP-AIR	821
FLOOR GP-SOUND SUPPRESSION	823
GUARD GP-WINDOW	827
HANDHOLD GP	831
HEATER GP-CAB	832
HORN GP-ELECTRIC	836
INSTALLATION GP-CONTROLS	837
INSTALLATION GP-RADIO	838
LATCH GP-CAB DOOR & WINDOW	840
LINER GP-CAB	842
LINES GP-AIR CONDITIONER	845
LINES GP-CAB HEATER	851
MIRROR GP-REAR VIEW	854
MODULE GP-DISPLAY	868
MODULE GP-QUAD GAUGE	869
MODULE GP-SPEEDOMETER & TACH	870
MONITOR AR-CAMERA	871
MONITOR AR-PAYLOAD	873
MOTOR GP-WINDOW WIPER	874
MOUNTING GP-CAB	876
OPERATOR AR-ENCLOSED ROPS	878
PAN GP-BACKREST	879
PANEL GP-INSTRUMENT	881
PEDAL GP-GOVERNOR	888
PLATFORM AR	890
PLATFORM GP	891

TABLE OF CONTENTS

Name	Page	Name	Page
RADIO GP	893		
RADIO GP-COMMUNICATION	894		
RECLINER GP-SEAT	895		
ROPS GP-ENCLOSED	896		
SEAT BELT & LIGHTING GP	903		
SEAT BELT GP	904		
SEAT GP	905		
SEAT GP-SUSPENSION	909		
SUPPORT GP-HYDRAULIC CONTROL	912		
SUPPRESSION GP-CAB SOUND	916		
SUSPENSION GP-SEAT	922		
VISOR GP-CAB	926		
WASHER GP-WINDOW	927		
WINDOW GP-DOOR	928		
WIPER GP-WINDOW	932		
SERVICE EQUIPMENT AND SUPPLIES	935		
BOX GP-TOOL	935		
FILM GP	937		
LINES GP-DIAGNOSTIC	938		
PLATE & FILM GP	944		
PLATE GP-AXLE IDENTIFICATION	947		
PROTECTION GP-VANDALISM	947		
PART NUMBER INDEX	B1		

TABLE DES MATIÈRES

Désignation	Page
GÉNÉRALITÉS	A32
OPTIONS DE RÉPARATION	A49
ADDITIFS POUR LIQUIDE DE REFROIDISSEMENT	A54
PIÈCES DE RECHANGE	A61
INDEX	A90
VERSION DE MACHINE	1
VERSION DE CHASSIS	1
VERSION DE TRANSFORMATION - HOMOLOGATION	2
VUE DU MODÈLE	4
VERSION SPÉCIALE - CARRIÈRE	4
ÉLIMINATION DES DÉCHETS (VERSION)	5
MOTEUR (VERSION)	6
VERSION DE MOTEUR COMPLET	6
MOTEUR - PARTIE CENTRALE (VERSION)	7
MONTAGE DE MOTEUR (VERSION)	8
MOTEUR STANDARD	9
ARBRE A CAMES (ASS)	9
CHÂSSIS-PORTEUR DE JOINT (ASS)	10
BLOC-CYLINDRES - COUVERCLE (ASS)	11
COUVERCLE DE CARTER AV (ASS)	12
CACHE-SOUPAPES (ASS)	14
VILEBREQUIN (ASS)	17
BLOC-CYLINDRES (ASS)	19
CULASSE (ENS)	23
CULASSE (ASS)	24
AMORTISSEUR DE VIBRATIONS ET POULIE (ASS)	27
VIDANGE-HUILE DE MOTEUR (ASS)	28
AMORTISSEUR DE VIBRATIONS - BOULONNERIE (ASS)	29
BOULONNERIE DE CARTER AV (ASS)	30
CACHE-SOUPAPE - BOULONNERIE (ASS)	32
CULBUTERIE - BOULONNERIE (ASS)	33
VOLANT MOTEUR (ASS)	34
PIGNONNERIE AV (ASS)	35
CARTER DE VOLANT (ASS)	37
CARTER AV (ASS)	38
COURROIE INTERMÉDIAIRE (ASS)	40
POUSSOIR DE SOUPAPE (ASS)	41
OEILLETONS DE LEVAGE MOTEUR (ASS)	42
MONTAGE D'ALTERNATEUR (ASS)	43
MONTAGE DE MOTEUR ET BOÎTE (ASS)	44
HUILE MOTEUR - CARTER (ASS)	46
PISTON ET BIELLE (ASS)	47
BOUCHON DE BLOC-CYLINDRES (ASS)	48
BOUCHON DE MOTEUR (ASS)	49
POULIE-ROUE AVANT (ASS)	50
JOINT DE VILEBREQUIN (ASS)	51
JOINT DE CARTER DE VOLANT (ASS)	52
CULBUTERIE (ASS)	53
CIRCUIT DE GRAISSAGE	56
RACCORD DE CANALISATION D'HUILE (ASS)	56
RENIFLARD (ASS)	57
BOUCHON DE REMPLISSAGE D'HUILE MOTEUR (ASS)	58
FILTRE À HUILE MOTEUR (ASS)	59
JAUGE D'HUILE MOTEUR (BAIONNETTE) (ASS)	60
CANALISATIONS D'HUILE MOTEUR (ASS)	62
CANALISATIONS-VIDANGE D'HUILE DE MOTEUR (ASS)	63
CANALISATIONS D'HUILE DE TURBOCOMPRESSEUR (ASS)	64
POMPE A HUILE MOTEUR (ASS)	65
CIRCUIT DE REFROIDISSEMENT	67
REFROIDISSEUR D'HUILE MOTEUR (ASS)	67
REFROIDISSEMENT AUX TEMPÉRATURES ÉLEVÉES (VERSION)	68
COUDE D'EAU (ASS)	69
CANALISATIONS D'EAU (ASS)	70
POMPE A EAU (ASS)	76
RADIATEUR ET VENTILATEUR (ASS)	78
RÉSERVOIR DU COUVERCLE DE RADIATEUR (ASS)	82
CIRCUIT D'ADMISSION D'AIR ET D'ÉCHAPPEMENT	83
FILTRE A AIR (ASS)	83
COUVERCLE DE COLLECTEUR D'ADMISSION (ASS)	85
COUDE D'ADMISSION D'AIR (ASS)	87
CANALISATIONS D'AIR DE REFROIDISSEUR D'ADMISSION (ASS)	88

* TRADUCTION NON DISPONIBLE AU MOMENT DE LA PUBLICATION

TABLE DES MATIÈRES

Désignation	Page
CANALISATIONS D'AIR (ASS)	89
COLLECTEUR D'ÉCHAPPEMENT (ASS)	90
SILENCIEUX (ASS)	91
ECHAPPEMENT - TUYAU (ASS)	92
PREFILTRE (ASS)	93
TURBOCOMPRESSEUR (ASS)	95
CIRCUIT DE CARBURANT	97
FILTRE ET CANALISATIONS DE CARBURANT (ASS)	97
FILTRE DE SÉPARATEUR D'EAU ET DE CARBURANT (ASS)	100
INJECTEUR DE CARBURANT (ASS)	101
CANALISATIONS DE CARBURANT (ASS)	103
CARBURANT - CANALISATIONS DE VIDANGE (ASS)	105
CANALISATIONS - INJECTEURS-POMPES HYDRAULIQUES	106
POMPE D'INJECTEURS-POMPES HYDRAU. ET MONTAGE	107
POMPE D'INJECTION DE CARBURANT (ASS)	109
POMPE D'AMORÇAGE DE CARBURANT ET FILTRE PRINCIPAL	111
INJECTEURS-POMPES HYDRAULIQUES (ENS)	116
REGULATEUR DE PRESSION DE CARBURANT (ASS)	117
RÉSERVOIR DE CARBURANT (ASS)	118
POMPE DE SÉPARATEUR D'EAU ET D'AMORÇAGE DE CARBURANT (ASS)	120
CIRCUIT ELECTRIQUE ET DE DEMARRAGE	121
AVERTISSEUR (ASS)	121
ALTERNATEUR DE CHARGE (ASS)	122
BATTERIE ET CÂBLAGE	126
VERSION DE CAMÉRA	129
COMMANDE ET MONTAGE-COMMUNICATION (ASS)	131
COMMANDE ET MONTAGE - MOTEUR	133
VERSION DE COMMANDE-AUTODIG	135
COMMANDE DE CREUSAGE AUTOMATIQUE AUTODIG (ASS)	136
COMMANDE NON PROGRAMMEE (ASS)	140
*CONVERSION AR-AUTODIG	141
*DISPLAY GP-CAMERA	142
VERSION ÉLECTRIQUE	143
ÉLECTRONIQUE - COMMUNICATION (ASS)	144
COMMANDE ÉLECTRONIQUE D'ÉQUIPEMENT (ASS)	145
ÉLECTRONIQUE-MONITEUR (ASS)	145
ÉLECTRONIQUE DE TRANSMISSION (ASS)	145
EAU DES CHEMISES - RECHAUFFEUR (ASS)	147
VERSION DE MONTAGE-COMMUNICATION	148
VERSION DE MONTAGE-SÉCURITÉ	148
MONTAGE-SÉCURITÉ (ASS)	149
PLAFONNIER (ASS)	151
LAMPE - PHARE (ASS)	152
LAMPE - PHARE ET CLIGNOTANT	156
LAMPE - CLIGNOTANT DE DIRECTION (ASS)	160
FEUX ARRIÈRE ET FEUX D'ARRÊT	162
LAMPE - GYROPHARE (ASS)	163
ÉCLAIRAGE - FEUX DE ROUTE (VERSION)	164
ÉCLAIRAGE - CLIGNOTANT (VERSION)	164
ECLAIRAGE AR (ASS)	165
ÉCLAIRAGE - PROJECTEURS (ASS)	166
ÉCLAIRAGE - PROJECTEURS ET CLIGNOTANTS (ASS)	172
ÉCLAIRAGE - FEUX DE ROUTE (ASS)	176
ÉCLAIRAGE - GYROPHARE (ASS)	178
PRISE (ASS)	181
PRISE DE BATTERIE AUXILIAIRE (ASS)	182
CAPTEUR ET MONTAGE-POSITION DE LEVAGE (ASS)	183
CAPTEUR DE PRESSION ET MONTAGE	185
CAPTEUR ET MONTAGE-POSITION D'INCLINAISON (ASS)	186
CAPTEUR - MOTEUR (ASS)	188
SONDE - CIRCUIT DE CARBURANT	190
CAPTEUR DE PRESSION (ASS)	192
CAPTEUR DE VITESSE (ASS)	200
CAPTEUR DE TEMPERATURE (ASS)	202
AUXILIAIRE DE DÉMARRAGE À L'ÉTHER (VERSION)	205
AUXILIAIRE DE DÉMARRAGE (ASS)	206
AUXILIAIRE DE DÉMARRAGE À L'ÉTHER	207
DÉMARREUR ÉLECTRIQUE (ASS)	209
INTERRUPTEUR - DÉRIVATION (ASS)	212
INVERSEUR D'ÉCLAIRAGE (ASS)	213
ROBINET DE BATTERIE (ASS)	214

* TRADUCTION NON DISPONIBLE AU MOMENT DE LA PUBLICATION

TABLE DES MATIÈRES

Désignation	Page
CONTACTEUR MAGNETIQUE (ASS)	215
MANOCONTACT	218
CONTACTEUR DE COUPLEUR EXPRESS (ASS)	219
CONTACTEUR DE MARCHE ARRIÈRE DES PALES DE VENTILATEUR	220
CONTACTEUR DE COMMANDE DU SYSTÈME ANTITANGAGE (ASS)	221
INTERRUPTEUR À BASCULE (ASS)	222
CONTACTEUR ROTATIF (ASS)	224
INTERRUPTEUR DE DIRECTION AUXILIAIRE (ASS)	225
INTERRUPTEUR - SIGNAL (ASS)	226
INTERRUPTEUR À BASCULE (ASS)	230
INTERRUPTEUR DE BOITE DE VITESSES (ASS)	231
SOUPAPE DE DÉMARRAGE À L'ÉTHER (ASS)	232
AVERTISSEUR DE RECUL (ASS)	233
CABLAGE - CLIMATISEUR (ASS)	234
CÂBLAGE (ASS)-GRAISSAGE	236
CÂBLE DE SURVEILLANCE D'ESSIEU (ASS)	238
CABLAGE DE CABINE (ASS)	240
CABLAGE DE CHASSIS (ASS)	253
CÂBLAGE-COUPLEUR (ASS)	259
CABLAGE - EMBRAYAGE ÉLECTRIQUE (ASS)	260
CABLAGE DE MOTEUR (ASS)	261
CÂBLAGE-AUXILIAIRE DE DÉMARRAGE À L'ÉTHER	266
CABLAGE AV (ASS)	267
CABLAGE D'ÉCLAIRAGE (ASS)	270
CABLAGE DE DIRECTION AUXILIAIRE (ASS)	276
CABLAGE - CAPTEUR (ASS)	279
*WIRING GP-WASTE HANDLER	282
TRANSMISSION	284
ESSIEU FIXE (VERSION)	284
ESSIEU OSCILLANT (VERSION)	285
FREIN ET TRAINS PLANÉTAIRES (ASS)	287
COMMANDE DE BOITE DE VITESSES (ASS)	291
COMMANDE HYDRAULIQUE DE BOÎTE (ASS)	293
REFROIDISSEUR DE BOÎTE DE VITESSES ET MONTAGE (ASS)	295
REFROIDISSEUR D'HUILE D'ESSIEU (VERSION)	296
BOUCHON DE REMPLISSAGE D'HUILE DE BOÎTE (ASS)	297
DIFFERENTIEL (ASS)	298
DIFFÉRENTIEL - GLISSEMENT LIMITÉ (ASS)	299
DIFFÉRENTIEL NOSPIN (ASS)	301
VIDANGE-ÉCOLOGIE (ASS)	303
GOULOTTE DE REMPLISSAGE D'HUILE DE TRANSMISSION	304
FILTRE ET CANALISATIONS - BOÎTE DE VITESSE (ASS)	306
FILTRE A HUILE (ASS)	308
COURONNE CONIQUE ET PIGNON	309
ENGRENAGE DE TRANSFERT DE RENDEMENT (ASS)	315
CARTER D'ESSIEU FIXE	324
CARTER D'ESSIEU OSCILLANT	326
CANALISATIONS DE REFROIDISSEUR D'HUILE D'ESSIEU (ASS)	328
CANALIS. DE REFROIDISSEMENT DU CONV. DE COUPLE	333
MONTAGE D'ESSIEU (ASS)	336
MONTAGE DE REFROIDISSEUR D'HUILE D'ESSIEU (ASS)	337
MONTAGE DE JANTE (ASS)	338
BOÎTE PLANÉTAIRE (ASS)	339
TRANSMISSION (VERSION)	343
POMPE ET MONTAGE DE REFROIDISSEUR D'HUILE D'ESSIEU	344
POMPE DE BOÎTE DE VITESSES (ASS)	345
JANTE (VERSION)	348
JANTE DÉMONTABLE (ASS)	349
ARBRE D'ENTRAÎNEMENT (ASS)	352
CARDAN COULISSANT (ASS)	356
PNEU ET JANTE (VERSION)	358
CONVERTISSEUR DE COUPLE ET CARTER (ASS)	367
CONVERTISSEUR DE COUPLE (ASS)	370
BOÎTE DE VITESSES (VERSION)	372
JOINT UNIVERSEL (ASS)	373
SOUPAPE DE MODULATION (ASS)	376
CLAPET DE DECHARGE (ASS)	377
PNEU - GROUPE DE VALVE	379
CHÂSSIS ET BENNE	380
MÉCANISME DE COMMANDE D'INCLINAISON (ASS)	380
MÉCANISME DE COMMANDE - PUISSANCE (ASS)	382
MÉCANISME DE COMMANDE DE GR. MOTO-PROPUL. (ASS)	383
DEFLECTEUR (ASS)	384
BLOC - LIMITEUR D'ESSIEU OSCILLANT (ASS)	385

* TRADUCTION NON DISPONIBLE AU MOMENT DE LA PUBLICATION

TABLE DES MATIÈRES

Désignation	Page
BOSSAGE DE CHÂSSIS ARRIÈRE (ASS)	386
COMPARTIMENT DE BATTERIE (ASS)	387
VERSION DE TRANSFORMATION POUR DÉPLACEMENT ROUTIER	388
CONTREPOIDS (ASS)	396
PORTE DE VISITE (ASS)	399
GARDE-BOUE (VERSION)	401
GARDE-BOUE (ASS)	402
GARDE-BOUE AV (ASS)	406
GARDE-BOUE (ASS)	408
BÂTI - CHARGEUSE (ENS)	412
BÂTI AR (ENS)	415
GRILLE DE RADIATEUR (ASS)	417
PROTECTION-ARTICULATION (ASS)	419
PROTECTION DE REFROIDISSEUR D'HUILE D'ESSIEU	421
GROUPE DE PROTECTION (ASS)-JOINT D'ESSIEU	423
BLINDAGE D'ARBRE DE TRANSMISSION (ASS)	424
PROTECTION AV (ASS)	425
PROTECTION - ÉCLAIRAGE (ASS)	426
BLINDAGE DE TRANSMISSION (ASS)	427
BOULONNERIE DE BÂTI DE CHARGEUSE (ASS)	430
FIXATION DE MONTAGE (ASS)	433
BOULONNERIE DE BÂTI ARRIÈRE (ASS)	436
CHARNIÈRE DE GARDE-BOUE (ASS)	439
ATTELAGE D'ARTICULATION (ASS)	441
CAPOT ET PROTECTION (ASS)	443
ECHELLE (ASS)	446
CANALISATIONS DE GRAISSAGE AUTOMATIQUE (ASS)	448
CANALISATIONS DE GRAISSAGE (ASS)	456
LIAISON - VERROUILLAGE DE CHÂSSIS DE DIRECTION (ASS)	460
GRAISSAGE AUTOMATIQUE (VERSION)	461
MONTAGE - IMMATRICULATION (ASS)	465
TABLEAU - CAISSON (ASS)	466
PANNEAU LATERAL (ASS)	469
POMPE DE GRAISSAGE ET MONTAGE (ASS)	471
POMPE DE GRAISSAGE (ASS)	473
ÉCRAN THERMIQUE DE COMPARTIMENT MOTEUR	474
MARCHEPIED (ASS)	476
SUPPORTS D'ADMISSION D'AIR (ASS)	478
SUPPORT DE SOUPAPE ET FILTRE (ASS)	479
INSONORISATION (VERSION)	481
INSONORISATION (ASS)	482
INCLINAISON DU CAPOT (ASS)	485
SOUPAPE ET CONDUITES DE GRAISSAGE (ASS)	486
SOUPAPE DE DISTRIBUTION DE GRAISSAGE (ASS)	488
CIRCUIT DE FREINS	492
ACCUMULATEUR - FREIN	492
COMMANDE DE FREIN DE STATIONNEMENT (ASS)	494
SUPPORT - PÉDALE DE FREIN (ASS)	495
FREIN DE STATIONNEMENT (ASS)	498
COMMANDE DE LA PÉDALE DE FREIN (ASS)	499
COMMANDE DE FREIN DE STATIONNEMENT (ASS)	501
FREIN DE MANOEUVRE - COMMANDE (ASS)	502
DISTRIBUTEUR DE FREIN (ASS)	508
CIRCUIT DE DIRECTION	509
COMMANDE DE DIRECTION (ASS)	509
VERIN DE DIRECTION ET MONTAGE (ASS)	513
VÉRIN HYDRAULIQUE (ASS)	514
CANALISATION DE DIRECTION AUXILIAIRE	516
CANALISATIONS DE DIRECTION (ASS)	519
POMPE DE DIRECTION AUXILIAIRE ET MONTAGE (ASS)	532
POMPE A PISTONS (ASS)	534
GROUPE DE ROTATION DE POMPE	537
*SCREEN GP-CASE DRAIN	538
VERSION DE COMMANDE DE DIRECTION	539
DIRECTION AUXILIAIRE (VERSION)	539
COLONNE DE DIRECTION (ASS)	540
VOLANT DE DIRECTION (ASS)	541
CLAPET DE RETENUE (ENS)	543
SOUPAPE PILOTE (ASS)	546
SOUPAPE RÉDUCTRICE DE PRESSION (ASS)	548
CLAPET DE DECHARGE (ASS)	549
SOUPAPE DE DIRECTION AUXILIAIRE (ASS)	551
VANNE PILOTE (ASS)	552

* TRADUCTION NON DISPONIBLE AU MOMENT DE LA PUBLICATION

TABLE DES MATIÈRES

Désignation	Page
SOUPAPE DE DIRECTION (ASS)	554
SOUPAPE DE NEUTRALISATION DE DIRECTION (ASS)	559
CIRCUIT HYDRAULIQUE	561
ACCUMULATEUR - HUILE PILOTE (ASS)	561
COMMANDE ET CANALIS. - TRANSLATION (ASS)	563
COMMANDE DE TRANSLATION (VERSION)	564
COMMANDE ÉLECTROHYDRAULIQUE (ASS)	565
COMMANDE DE POIGNÉE (ASS)	573
PALONNIER - GROUPE DE COMMANDE (ASS)	574
VÉRIN DE LEVAGE ET JOINT (ASS)	578
VÉRIN D'INCLINAISON ET JOINT (ASS)	580
VÉRIN DE LEVAGE (ASS)	583
VÉRIN D'INCLINAISON (ASS)	585
FILTRE A HUILE (ASS)	590
PROTECTION DE VÉRIN DE LEVAGE (ASS)	592
TÊTE DE POMPE (ASS)	595
DISTRIBUTEUR - 2 VOIES (VERSION)	598
DISTRIBUTEUR - 3 VOIES (VERSION)	598
VERSION HYDRAULIQUE - HUILE BIODÉGRADABLE	599
CANALISATIONS - BRANCHEMENT (ASS)	600
CANALISATIONS DE COUPLEUR (ASS)	604
CANALISATIONS AV	612
CANALISATIONS HYDRAULIQUES (ASS)	615
CANALISATIONS DE REFROIDISSEUR D'HUILE HYDR. (ASS)	619
CANALISATIONS DE VÉRIN DE LEVAGE (ASS)	623
CANALISATIONS DU VÉRIN D'INCLINAISON (ASS)	625
COLLECTEUR - COMMANDE (ASS)	629
COLLECTEUR - SOUPAPE (ASS)	631
MOTEUR À ENGRENAGES (ASS)	634
RÉSERVOIR HYDRAULIQUE - MONTAGE (ASS)	635
POMPE DE VENTILATEUR HYDRAULIQUE ET DE FREIN ET MONTAGE (ASS)	636
POMPE ET MONTAGE - HYDRAULIQUE (ASS)	638
POMPE A PISTONS (ASS)	639
GROUPE DE ROTATION DE POMPE	644
RÉSERVOIR HYDRAULIQUE (ASS)	645
COMMANDE PRINCIPALE DE SOUPAPE ET MONTAGE (ASS)	647
CLAPET DE RETENUE (ENS)	662
DISTRIBUTEUR (ASS)	664
SOUPAPE DE DERIVATION (ASS)	675
SOUPAPE DE VIDANGE	677
SOUPAPE DE COMMANDE D'ABAISSEMENT (ASS)	678
SOUPAPE DE COMMANDE PRINCIPALE (ASS)	680
SOUPAPE A COMMANDE MANUELLE (ASS)	689
SOUPAPE RÉDUCTRICE DE PRESSION (ASS)	690
DISTRIBUTEUR DE POMPE (ASS)	691
CLAPET DE DECHARGE (ASS)	693
DISTRIBUTEUR DE COMMANDE ANTI-TANGAGE	694
VANNE PILOTE (ASS)	696
SOUPAPE - SOLÉNOÏDE (ASS)	699
ÉQUIPEMENTS	702
BRAS DE LEVAGE (ENS)	702
BOSSAGE DE LEVIER (ASS)	706
BOSSAGE DE BRAS DE LEVAGE (ASS)	708
COMMANDE DE GODET (ASS)	711
LEVAGE (VERSION)	715
LIAISON-GODET (ASS)	716
VERSION POUR ÉQUIPEMENT FORESTIER	717
OUTILS DE TRAVAIL	718
PORTE-POINTE (ASS)	718
GODET NORMAL (ENS)	719
GODET DE MANUTENTION	723
GODET-PÉNÉTRATION (ENS)	736
GODET-ROCHE (ENS)	748
GODET NORMAL (ASS)	755
GODET POUR MANUTENTION	757
GODET PÉNÉTRATION (ASS)	768
GODET-ROCHE (ASS)	774
COMMANDE - COUPLEUR EXPRESS (VERSION)	778
COUPLEUR EXPRESS (VERSION)	779
COUPLEUR EXPRESS (ASS)	781
LAME DE COUPE (ASS)	782
SEGMENT DE LAME DE COUPE (ASS)	785
PROTECTION DE GODET (ASS)	786
VERROUILLAGE DE COUPLEUR EXPRESS (ASS)	788

* TRADUCTION NON DISPONIBLE AU MOMENT DE LA PUBLICATION

TABLE DES MATIÈRES

Désignation	Page
AXE DE GODET (ASS)	790
POINTE EXTRA-ROBUSTE (ASS)	791
POINTE - UNIVERSELLE (ASS)	793
POSTE DE CONDUITE	795
REGLAGE DE SIEGE (ASS)	795
SIÈGE - COMPRESSEUR D'AIR (ASS)	797
CLIMATISEUR (VERSION)	798
CLIMATISEUR (ASS)	799
BRAS D'ESSUIE-GLACE (ASS)	804
ACCOUDOIR (ASS)	806
CABINE ROPS FERMÉE (VERSION)	807
COMPRESSEUR DE REFRIGERANT (ASS)	809
CONDENSATEUR ET MONTAGE (RÉFRIGÉRANT)	811
GROUPE DE CONTROLE	813
COMMANDE DE MONITEUR NON PROGRAMMÉE (ASS)	814
PORTIÈRE DE CABINE (ASS)	815
CONDUIT ET FILTRE À AIR (ASS)	821
PLANCHER-ISOLATION (ASS)	823
PROTECTION DE GLACE (ASS)	827
POIGNÉE	831
CHAUFFAGE DE CABINE (ASS)	832
KLAXON ÉLECTRIQUE (ASS)	836
MONTAGE DES COMMANDES (ASS)	837
MONTAGE DE RADIO (ASS)	838
LOQUET - PORTE DE CABINE ET GLACE	840
CABINE - REVÊTEMENT (ASS)	842
CANALISATIONS DE CLIMATISEUR (ASS)	845
CANALISATIONS DE CHAUFFAGE DE CABINE (ASS)	851
RÉTROVISEUR (ASS)	854
MODULE D'AFFICHAGE (ASS)	868
MODULE - QUATRE INSTRUMENTS (ASS)	869
MODULE D'INDICATEUR DE VITESSE ET COMPTE-TOURS (ASS)	870
*MONITOR AR-CAMERA	871
ELECTROMODULE DE CHARGE UTILE DE BENNE	873
MOTEUR D'ESSUIE-GLACE (ASS)	874
MONTAGE DE CABINE (ASS)	876
CABINE ROPS FERMÉE (VERSION)	878
COUVERCLE INFÉRIEUR-DOSSIER (ASS)	879
TABLEAU DE BORD (ASS)	881
RÉGULATEUR - PÉDALE (ASS)	888
PLATE-FORME (VERSION)	890
PLATE-FORME (ASS)	891
RADIO (ASS)	893
RADIO -COMMUNICATION (ASS)	894
SIÈGE INCLINABLE (ASS)	895
CABINE ROPS FERMÉE (ASS)	896
*SEAT BELT & LIGHTING GP	903
CEINTURE DE SECURITE (ASS)	904
SIÈGE (ASS)	905
SIÈGE AVEC SUSPENSION (ASS)	909
SUPPORT DE COMMANDE HYDRAULIQUE (ASS)	912
INSONORISATION DE CABINE (ASS)	916
SIÈGE AVEC SUSPENSION (ASS)	922
RETROVISEUR - CABINE (ASS)	926
LAVE-GLACE - VITRE (ASS)	927
GLACE DE PORTIÈRE (ASS)	928
ESSUIE-GLACE (ASS)	932
MATÉRIEL ET FOURNITURES D'ENTRETIEN	935
COFFRE A OUTILS (ASS)	935
PLAQUE SIGNALÉTIQUE (ASS)	937
CANALISATIONS DE DIAGNOSTIC (ASS)	938
PLAQUES SIGNALETIQUES ET AUTOCOLLANTS (ASS)	944
PLAQUE SIGNALÉTIQUE D'ESSIEU (ASS)	947
PROTECTION ANTIVANDALISME (ASS)	947
INDEX DE NUMÉROS DE PIÈCES	B1

* TRADUCTION NON DISPONIBLE AU MOMENT DE LA PUBLICATION

CONTENIDO

Nombre	Página
INFORMACIÓN GENERAL	A36
ALTERNATIVAS DE REPARACIÓN	A50
ADITIVOS DE REFRIGERANTE SUPLEMENTARIOS	A55
PIEZAS DE MANTENIMIENTO	A65
INDICE	A104
CONFIGURACIÓN DE MÁQUINAS	1
CHASIS (CONFIG)	1
CONFIGURACIÓN DE TRANSFORMACIÓN PARA CERTIFICACIÓN	2
CONFIGURACIÓN GENERAL	4
ESPECIAL PARA CANTERAS (CONFIG)	4
CONFIGURACIÓN DE ELIMINACIÓN DE BASURAS	5
CONFIGURACION DE MOTOR	6
MOTOR COMPLETO (CONFIG)	6
MOTOR - NÚCLEO (CONFIG)	7
CONFIGURACIÓN DE INSTALACIÓN DEL MOTOR	8
MOTOR BÁSICO	9
ÁRBOL DE LEVAS (GR)	9
SELLO DEL PORTADOR (GR)	10
TAPA DEL BLOQUE MOTOR (GR)	11
TAPA DE LA CAJA DELANTERA (GR)	12
TAPA DEL MECANISMO DE VÁLVULAS (GR)	14
CIGÜEÑAL (GR)	17
BLOQUE MOTOR (GR)	19
CULATA DE CILINDROS (CONJ)	23
CULATA DE CILINDROS (GR)	24
AMORTIGUADOR Y POLEA (GR)	27
DRENAJE DEL ACEITE DE MOTOR	28
TORNILLERÍA AMORTIGUADORA DE VIBRACIONES (GR)	29
CAJA DELANTERA - TORNILLERÍA DE LA (GR)	30
TORNILLERÍA DE LA TAPA DE VÁLVULAS (GR)	32
TORNILLERÍA DEL MECANISMO DE VÁLVULAS (GR)	33
VOLANTE (GR)	34
ENGRANAJE DELANTERO (GR)	35
VOLANTE - CAJA DE (GR)	37
CAJA DELANTERA (GR)	38
GRUPO DE GUIA, CORREA	40
VÁLVULA DE LEVANTAMIENTO (GR)	41
CÁNCAMOS DE LEVANTAMIENTO DEL MOTOR (GR)	42
MONTAJE DEL ALTERNADOR (GR)	43
MONTAJE DEL MOTOR Y LA TRANSMISIÓN (GR)	44
CÁRTER - COLECTOR DEL (GR)	46
PISTÓN Y BIELA (GR)	47
TAPÓN DEL BLOQUE MOTOR (GR)	48
TAPÓN DEL MOTOR (GR)	49
POLEA DE RUEDA GUIA (GR)	50
SELLO DE CIGÜEÑAL (GR)	51
SELLO DE LA CAJA DE VOLANTE (GR)	52
MECANISMO DE VÁLVULAS (GR)	53
SISTEMA DE LUBRICACIÓN	56
GRUPO ADAPTADOR-TUBERIA DE ACEITE	56
RESPIRADERO (GR)	57
TUBO DE LLENADO DE ACEITE (GR)	58
FILTRO DE ACEITE DEL MOTOR (GR)	59
INDICADOR DEL NIVEL DE ACEITE (VARILLA) (GR)	60
TUBERÍAS DE ACEITE DEL MOTOR (GR)	62
TUBERIAS DE DRENAJE DE ACEITE DE MOTOR (GR)	63
TURBOCOMPRESOR - TUBERÍAS DE ACEITE DEL (GR)	64
BOMBA DE ACEITE DEL MOTOR (GR)	65
SISTEMA DE ENFRIAMIENTO	67
ENFRIADOR DE ACEITE DEL MOTOR (GR)	67
ENFRIADOR PARA ALTA TEMPERATURA DE AMBIENTE (CONFIG)	68
CODO DE AGUA (GR)	69
TUBERÍAS DEL AGUA (GR)	70
BOMBA DE AGUA (GR)	76
RADIADOR Y VENTILADOR (GR)	78
TAPA DEL TANQUE DE RADIADOR (GR)	82
SISTEMA DE AIRE DE ADMISIÓN Y ESCAPE	83
FILTRO DE AIRE (GR)	83
TAPA DE ADMISIÓN DE AIRE (GR)	85
CODO DE ADMISIÓN DE AIRE (GR)	87
TUBERÍAS DE POSENFRIADOR DE AIRE (CONJ)	88
AIRE - TUBERÍAS DE (GR)	89

* NO HAY TRADUCCION DISPONIBLE EN EL MOMENTO DE LA IMPRESION

CONTENIDO

Nombre	Página
MÚLTIPLE DE ESCAPE (GR)	90
SILENCIADOR (GR)	91
TUBO DE ESCAPE (GR)	92
ANTEFILTRO (GR)	93
TURBOCOMPRESOR (GR)	95
SISTEMA DE COMBUSTIBLE	97
FILTRO Y TUBERÍAS DE COMBUSTIBLE (GR)	97
FILTRO DE COMBUSTIBLE Y SEPARADOR DE AGUA (GR)	100
INYECTOR DE COMBUSTIBLE (GR)	101
TUBERÍAS DE COMBUSTIBLE (GR)	103
COMBUSTIBLE - TUBERÍAS DE DRENAJE DE (GR)	105
TUBERÍAS DE BOMBA HIDRÁULICA DE INYECCIÓN (GR)	106
BOMBA HIDRÁULICA DEL INYECTOR UNITARIO Y MONTAJE	107
BOMBA DE INYECCIÓN DE COMBUSTIBLE (GR)	109
BOMBA DE CEBADO Y FILTRO PRIMARIO DE COMBUSTIBLE (GR)	111
BOMBA HIDRÁULICA DEL INYECTOR UNITARIO (GR)	116
REGULADOR DE LA PRESION DE COMBUSTIBLE (GR)	117
COMBUSTIBLE - TANQUE DE (GR)	118
SEPARADOR DE AGUA Y BOMBA DE CEBADO DE COMBUSTIBLE (GR)	120
SISTEMA ELECTRICO Y DE ARRANQUE	121
ALARMA (GR)	121
CARGA - ALTERNADOR DE (GR)	122
BATERÍA Y CABLES (GR)	126
*CAMERA AR	129
CONTROL DE COMUNICACION Y MONTAJE (GR)	131
CONTROL ELECTRÓNICO DEL MOTOR Y MONTAJE	133
CONTROL DE AUTOCARGA (CONFIG)	135
CONTROL DE AUTOCARGA (GR)	136
CONTROL NO PROGRAMADO (GR)	140
*CONVERSION AR-AUTODIG	141
*DISPLAY GP-CAMERA	142
CONFIGURACIÓN ELÉCTRICA	143
GRUPO ELECTRONICO-COMUNICACION	144
IMPLEMENTOS (GR ELECTRÓNICO)	145
ELECTRONICA DE MONITOR (GR)	145
TREN DE FUERZA-GRUPO ELECTRÓNICO	145
AGUA DE LAS CAMISAS - CALENTADOR DEL (GR)	147
INSTALACION DE COMUNICATION (CONFIG)	148
INSTALACION DE SEGURIDAD (CONFIG)	148
INSTALACION DE SEGURIDAD (GR)	149
LÁMPARA DEL TECHO (GR)	151
REFLECTOR (GR)	152
LÁMPARA DE LUZ DELANTERA Y DE SEÑAL (GR)	156
LUZ DE SEÑAL DE GIRO (GR)	160
LUCES DE PARADA Y COLA (GR)	162
LÁMPARA DE BALIZA DE ADVERTENCIA (GR)	163
LUCES DE DESPLAZAMIENTO (CONFIG)	164
SEÑAL DE LUCES (CONFIG)	164
LUCES DE RETROCESO (GR)	165
LUCES DE REFLECTOR (GR)	166
LUCES DE REFLECTOR Y CAMBIO DE DIRECCION (GR)	172
LUCES DE DESPLAZAMIENTO (GR)	176
LUZ DE BALIZA (GR)	178
*PLUG GP-CONNECTOR	181
ENCHUFE DE ARRANQUE AUXILIAR (GR)	182
SENSOR DE LA POSICION DE LEVANTAMIENTO Y MONTAJE (GR)	183
SENSOR DE PRESIÓN Y MONTAJE (GR)	185
SENSOR DE LA POSICION DE INCLINACION Y MONTAJE (GR)	186
SENSOR DEL MOTOR (GR)	188
DETECTOR DE POSICIÓN (SISTEMA DE COMBUST.) (GR)	190
SENSOR DE PRESIÓN (GR)	192
SENSOR DE VELOCIDAD (GR)	200
SENSOR DE TEMPERATURA (GR)	202
AUXILIAR DE ARRANQUE CON ÉTER (CONFIG)	205
AUXILIAR DE ARRANQUE (GR)	206
AUXILIAR DE ARRANQUE CON ÉTER (GR)	207
MOTOR DE ARRANQUE ELÉCTRICO (GR)	209
INTERRUPTOR DE DERIVACIÓN	212
REDUCTOR DE INTENSIDAD DE LUCES (GR)	213
DISYUNTOR (GR)	214
INTERRUPTOR MAGNÉTICO (GR)	215

* NO HAY TRADUCCION DISPONIBLE EN EL MOMENTO DE LA IMPRESION

CONTENIDO

Nombre	Página
INTERRUPTOR DE PRESIÓN (GR)	218
GRUPO DE INTERRUPTOR, ACOPLAMIENTO RAPIDO	219
*SWITCH GP-REVERSING FAN	220
INTERRUPTOR DEL CONTROL DE AMORTIGUACIÓN (GR)	221
INTERRUPTOR DE VOLQUETE (GR)	222
GRUPO DE INTERRUPTOR ROTATORIO	224
INTERRUPTOR DE DIRECCIÓN SECUNDARIA (GR)	225
INTERRUPTOR DEL SEÑALERO (GR)	226
INTERRUPTOR DE VOLQUETE (GR)	230
INTERRUPTOR DE TRANSMISION (GR)	231
GRUPO DE VÁLVULA-ARRANQUE CON ÉTER	232
RETROCESO - ALARMA DE (GR)	233
CABLES DEL ACONDICIONADOR DE AIRE (GR)	234
CABLES DE LUBRICACION (GR)	236
GRUPO DE CABLES, MONITOREO DEL EJE	238
CABLES DE LA CABINA (GR)	240
CABLES DEL CHASIS (GR)	253
ALAMBRADO DE ACOPLADOR (GR)	259
CABLES DEL SISTEMA ELÉCTRICO DE EMBRAGUE	260
CABLES DEL MOTOR (GR)	261
ALAMBRADO DE AUXILIAR DE ARRANQUE CON ETER (GR)	266
CABLES DELANTEROS (GR)	267
CABLES DE LAS LUCES (GR)	270
CABLES DE LA DIRECCIÓN SECUNDARIA	276
CABLES DE SENSOR (GR)	279
*WIRING GP-WASTE HANDLER	282
TREN DE FUERZA	284
EJE FIJO (CONFIG)	284
EJE OSCILANTE (CONFIG)	285
FRENO Y PLANETARIOS (GR)	287
CONTROL DE LA TRANSMISIÓN (GR)	291
CONTROL HIDRÁULICO DE LA TRANSMISIÓN (GR)	293
GRUPO DE MONTAJE Y ENFRIAMIENTO DE LA TRANSMISIÓN	295
ENFRIADOR DEL ACEITE DEL EJE (CONFIG)	296
CUBIERTA (GR)-TAPA DE LLENADO DE ACEITE DE LA TRANSMISIÓN	297
DIFERENCIAL (GR)	298
DIFERENCIAL DE DESLIZAMIENTO LIMITADO (GR)	299
DIFERENCIAL NOSPIN (GR)	301
DRENAJE DE SEGURIDAD ECOLÓGICA (GR)	303
TUBO DE LLENADO DE ACEITE DE LA TRANSMISIÓN (GR)	304
TUBERÍAS DEL FILTRO Y LA TRANSMISIÓN (GR)	306
FILTRO DE ACEITE (GR)	308
ENGRANAJE DE CORONA Y PIÑÓN (GR)	309
ENGRANAJE DE TRANSFERENCIA DE SALIDA	315
CAJA DEL EJE OSCILANTE (GR)	324
CAJA DE EJE OSCILANTE (GR)	326
TUBERÍAS DEL ENFRIADOR DE ACEITE DEL EJE (GR)	328
TUBERIAS DEL ENFRIADOR DEL CONVERTIDOR DE PAR	333
EJE - GRUPO DE MONTAJE	336
MONTAJE DE ENFRIADOR DE ACEITE DE EJE (GR)	337
MONTAJE DE ARO	338
TRANSMISIÓN PLANETARIA (GR)	339
TREN DE FUERZA (CONFIG)	343
BOMBA DEL ENFRIADOR DE ACEITE DEL EJE Y MONTAJE (GR)	344
BOMBA DE LA TRANSMISIÓN (GR)	345
LLANTA (CONFIG)	348
ARO DESMONTABLE (GR)	349
EJE DE MANDO (GR)	352
JUNTA DESLIZANTE (GR)	356
ARO Y RUEDA	358
CONVERTIDOR DE PAR Y CAJA (GR)	367
CONVERTIDOR DE PAR (GR)	370
TRANSMISION (CONFIG)	372
JUNTA UNIVERSAL (GR)	373
VÁLVULA DE MODULACIÓN (GR)	376
VÁLVULA DE ALIVIO (GR)	377
VÁLVULA DEL NEUMÁTICO (GR)	379
BASTIDOR Y CAJA	380
ACCIONADOR DE INCLINACIÓN DEL CAPO (GR)	380
ACCIONADOR DEL PROTECTOR (GR)	382
ACCIONADOR DEL PROTECTOR DEL TREN DE FUERZA (GR)	383
DEFLECTOR (GR)	384
BLOQUE LIMITADOR DEL EJE OSCILANTE (GR)	385
*BOSS GP-REAR FRAME	386

* NO HAY TRADUCCION DISPONIBLE EN EL MOMENTO DE LA IMPRESION

CONTENIDO

Nombre	Página
CAJA DE BATERÍA	387
CONFIGURACIÓN DE TRANSFORMACIÓN PARA CARRETERA	388
CONTRAPESO (GR)	396
PUERTA DE ACCESO (GR)	399
GUARDABARROS (CONFIG)	401
GUARDABARROS (GR)	402
GUARDABARROS DELANTERO (GR)	406
GUARDABARROS PARA DESPLAZAMIENTO EN CARRETERA (GR)	408
BASTIDOR DEL CARGADOR (CONJ)	412
BASTIDOR TRASERO (CONJ)	415
REJILLA DEL RADIADOR (GR)	417
PROTECTOR DE ARTICULACION (GR)	419
PROTECTOR DEL ENFRIADOR DE ACEITE DEL EJE (GR)	421
PROTECTOR DE SELLO DEL EJE (GR)	423
PROTECTOR DEL EJE IMPULSOR (GR)	424
PROTECTOR DELANTERO (GR)	425
PROTECTOR DE LAS LUCES (GR)	426
PROTECTOR DEL TREN DE FUERZA (GR)	427
TORNILLERIA GR-BASTIDOR CARGADOR	430
GRUPO DE TORNILLERIA- MONTAJE	433
TORNILLERIA GR-BASTIDOR TRASERO	436
BISAGRA DEL GUARDABARROS PARA DESPLAZ. POR CARRETERA	439
ENGANCHE ARTICULADO (GR)	441
CAPO Y PROTECTOR (GR)	443
ESCALERILLA (GR)	446
GRUPO DE TUBERIAS DE LUBRICACIÓN AUTOMÁTICA	448
TUBERÍAS DE ENGRASE (GR)	456
TUBERÍAS DE LUBRICACIÓN (GR)	458
TIRANTE DE TRABA DEL BASTIDOR DE DIRECCIÓN (GR)	460
LUBRICACION AUTOMATICA (CONFIG)	461
MONTAJE-REGISTRO (GR)	465
PANEL DEL CAPÓ (GR)	466
PANEL LATERAL (GR)	469
BOMBA DE LUBRICACIÓN Y MONTAJE (GR)	471
BOMBA DE LUBRICACIÓN (GR)	473
PROTECTOR TÉRMICO DEL COMPARTIMIENTO DEL MOTOR (GR)	474
ESTRIBO DEL OPERADOR (GR)	476
SOPORTE DE LA ADMISIÓN DE AIRE (GR)	478
*SUPPORT GP-VALVE & FILTER	479
INSONORIZADOR (CONFIG)	481
INSONORIZADOR (GR)	482
INCLINACIÓN DEL CAPÓ (GR)	485
VÁLVULAS Y TUBERIAS, LUBRICACIÓN	486
VÁLVULA DE DISTRIBUCIÓN DE LUBRICACIÓN (GR)	488
SISTEMA DE FRENOS	492
ACUMULADOR DEL FRENO (GR)	492
ACCIONADOR DEL FRENO DE ESTACIONAMIENTO (GR)	494
BASE DEL FRENO DE PIE (GR)	495
FRENO DE ESTACIONAMIENTO (GR)	498
CONTROL DEL PEDAL DE FRENO (GR)	499
CONTROL DEL FRENO DE ESTACIONAMIENTO	501
FRENO DE SERVICIO - CONTROL (GR)	502
VÁLVULA DE CONTROL DEL FRENO (GR)	508
SISTEMA DE DIRECCIÓN	509
CONTROL DE DIRECCIÓN (GR)	509
CILINDRO DE DIRECCIÓN Y MONTAJE (GR)	513
CILINDRO HIDRÁULICO (GRUPO)	514
TUBERÍAS DE LA DIRECCIÓN SECUNDARIA (GR)	516
TUBERÍAS DE DIRECCIÓN (GR)	519
BOMBA Y MOTOR DE DIRECCION SECUNDARIA (GR)	532
BOMBA Y MONTAJE DE LA DIRECCIÓN SECUNDARIA (GR)	533
BOMBA DE PISTONES (GR)	534
GRUPO GIRATORIO DE BOMBA	537
*SCREEN GP-CASE DRAIN	538
*STEERING AR-COMMAND CONTROL	539
DIRECCIÓN SECUNDARIA (CONFIG)	539
COLUMNA DE DIRECCIÓN (GR)	540
VOLANTE DE DIRECCIÓN (GR)	541
VÁLVULA DE RETENCIÓN (GR)	543
VÁLVULA PILOTO (GR)	546
VÁLVULA REDUCTORA DE PRESIÓN (GR)	548
VÁLVULA DE ALIVIO (GR)	549
VALVULA DE DIRECCION SECUNDARIA (GR)	551

* NO HAY TRADUCCION DISPONIBLE EN EL MOMENTO DE LA IMPRESION

CONTENIDO

Nombre	Página
VÁLVULA DE LANZADERA (GR)	552
VÁLVULAS DE LA DIRECCIÓN (GR)	554
VÁLVULA NEUTRALIZADORA DE DIRECCIÓN (GR)	559
SISTEMA HIDRÁULICO	561
ACUMULADOR DE ACEITE PILOTO (GR)	561
CONTROL DE DESPLAZAMIENTO Y TUBERÍAS (GR)	563
CONTROL DE AMORTIGUACIÓN (CONFIG)	564
CONTROL ELECTROHIDRAULICO (GR)	565
CONTROL DE MANIJA (GR)	573
PALANCA UNIVERSAL DE CONTROL (GR)	574
CILINDRO DE LEVANTAMIENTO Y SELLO (GR)	578
CILINDRO DE INCLINACIÓN Y SELLO (GR)	580
CILINDRO DE LEVANTAMIENTO (GR)	583
INCLINACIÓN HORIZONTAL - CILINDRO DE (GR)	585
FILTRO DE ACEITE (GR)	590
GRUPO DE PROTECTOR DE CILINDRO DE LEVANTAMIENTO	592
CABEZA DE BOMBA (GR)	595
CONFIGURACIÓN HIDRÁULICA DE 2 VÁLVULAS	598
VÁLVULA HIDRÁULICA DE 3 VÍAS (CONFIG)	598
ACEITE HIDRAULICO BIODEGRADABLE (CONFIG)	599
CABLES DE CONEXION (GR)	600
ACOPLADOR - TUBERÍAS DE (GR)	604
TUBERÍAS DELANTERAS (GR)	612
TUBERÍAS HIDRÁULICAS (GR)	615
TUBERÍAS DEL ENFRIADOR DE ACEITE HIDRÁULICO (GR)	619
CILINDRO DE LEVANTAMIENTO - TUBERÍAS DEL (GR)	623
TUBERÍAS DEL CILINDRO DE INCLINACIÓN (GR)	625
CONTROL DEL MULTIPLE (GR)	629
MULTIPLE DE VALVULA (GR)	631
MOTOR DE ENGRANAJES (GR)	634
MONTAJE DEL TANQUE HIDRÁULICO (GR)	635
GRUPO DE BOMBA Y MONTAJE, FRENOS Y VENTILADOR HIDRÁULICO	636
BOMBA HIDRÁULICA Y MONTAJE (GR)	638
BOMBA DE PISTONES (GR)	639
GRUPO GIRATORIO DE BOMBA	644
TANQUE HIDRÁULICO (GR)	645
MONTAJE Y VALVULA DEL CONTROL PRINCIPAL (GR)	647
VÁLVULA DE RETENCIÓN (GR)	662
VÁLVULA DE CONTROL (GR)	664
VÁLVULA DE DERIVACIÓN (GR)	675
VÁLVULA DE DRENAJE (GR)	677
VÁLVULA DE CONTROL DE BAJADA (GR)	678
VÁLVULA DEL CONTROL PRINCIPAL (GR)	680
VÁLVULA DE CONTROL MANUAL (GR)	689
VÁLVULA REDUCTORA DE PRESIÓN (GR)	690
VALVULA DE CONTROL DE LA BOMBA (GR)	691
VÁLVULA DE ALIVIO (GR)	693
VÁLVULA DE CONTROL DE LA AMORTIGUACIÓN (GR)	694
VÁLVULA DE LANZADERA (GR)	696
VÁLVULA DE SOLENOIDE (GR)	699
IMPLEMENTOS	702
BRAZO DE LEVANTAMIENTO (CONJ)	702
*BOSS GP-LEVER	706
*BOSS GP-LIFT ARM	708
CONTROL DEL CUCHARÓN (GR)	711
LEVANTAMIENTO (CONFIG)	715
ESLABON DEL CUCHARON (GR)	716
CONFIGURACIÓN PARA EXPLOTACIÓN FORESTAL	717
HERRAMIENTAS	718
GRUPO DE PUNTA Y ADAPTADOR	718
CUCHARÓN DE USO GENERAL (CONJ)	719
CUCHARÓN DE MANEJO DE MATERIAL (CONJ)	723
CUCHARON PARA PENETRACIÓN (CONJ)	736
CUCHARÓN PARA ROCA (CONJ)	748
CUCHARÓN DE USO GENERAL (GR)	755
CUCHARÓN DE MANEJO DE MATERIAL (GR)	757
PENETRACIÓN DEL CUCHARÓN	768
CUCHARÓN PARA ROCA (GR)	774
CONTROL DE ACOPLADOR RÁPIDO (CONFIG)	778
ACOPLADOR RÁPIDO (CONFIG)	779
ACOPLADOR RÁPIDO (GR)	781

* NO HAY TRADUCCION DISPONIBLE EN EL MOMENTO DE LA IMPRESION

CONTENIDO

Nombre	Página
CUCHILLA (GR)	782
SEGMENTO DE CUCHILLA (GR)	785
GRUPO DE PROTECTOR DEL CUCHARON	786
TRABA-ACOPLADOR RAPIDO (GR)	788
PASADOR	790
GRUPO DE PUNTA-SERVICIO ADICIONAL	791
PUNTA PARA CUCHARON DE USO GENERAL (GR)	793
PUESTO DEL OPERADOR	795
AJUSTADOR DEL ASIENTO (GR)	795
COMPRESOR DE AIRE DEL ASIENTO (GR)	797
ACONDICIONADOR DE AIRE (CONFIG)	798
ACONDICIONADOR DE AIRE (GR)	799
BRAZO DE LIMPIAPARABRISAS (GR)	804
POSABRAZOS (GR)	806
SISTEMA ROPS DE CABINA CERRADA (CONFIG)	807
COMPRESOR DE REFRIGERANTE (GR)	809
CONDENSADOR DEL REFRIGERANTE Y MONTAJE (GR)	811
CONTROL DE MONITOR (GR)	813
GRUPO DE CONTROL-MONITOR NO PROGRAMADO	814
PUERTA DE CABINA	815
CONDUCTO Y FILTRO DE AIRE (GR)	821
*FLOOR GP-SOUND SUPPRESSION	823
PROTECTOR DE LA VENTANA	827
PASAMANOS (GR)	831
CALEFACCIÓN DE LA CABINA (GR)	832
BOCINA ELÉCTRICA (GR)	836
INSTALACIÓN DE CONTROLES (GR)	837
INSTALACIÓN DE RADIO (GR)	838
PESTILLO DE PUERTA Y VENTANA DE LA CABINA (GR)	840
REVESTIMIENTO DE LA CABINA (GR)	842
TUBERÍAS DE ACONDICIONADOR DE AIRE (GR)	845
TUBERÍAS DE CALEFACCIÓN DE LA CABINA	851
RETROVISOR (GR)	854
MODULO DE LA PANTALLA (GR)	868
MODULO ELECTRÓNICO DE CUATRO INDICADORES (GR)	869
MÓDULO DEL TACÓMETRO Y DEL VELOCÍMETRO (GR)	870
*MONITOR AR-CAMERA	871
MONITOR DE CARGA ÚTIL (CONFIG)	873
MOTOR-LIMPIAPARABRISAS (GR)	874
GRUPO DE MONTAJE DE LA CABINA	876
CABINA ROPS CERRADA (CONFIG)	878
SOPORTE DEL RESPALDO (GR)	879
TABLERO DE INSTRUMENTOS (GR)	881
REGULADOR - PEDAL DEL (GR)	888
PLATAFORMA (CONFIG)	890
PLATAFORMA (GR)	891
RADIO (GR)	893
*RADIO GP-COMMUNICATION	894
RECLINACION DE ASIENTO (GR)	895
CABINA ROPS CERRADA (GR)	896
*SEAT BELT & LIGHTING GP	903
CINTURÓN DE SEGURIDAD (GR)	904
ASIENTO (GR)	905
SUSPENSIÓN - ASIENTO CON (GR)	909
SOPORTE DEL CONTROL HIDRÁULICO (GR)	912
INSONORIZACION DE CABINA (GR)	916
ASIENTO CON SUSPENSIÓN (GR)	922
VISERA (GR)	926
LAVAPARABRISAS DE LA VENTANA (GR)	927
VENTANA DE LA PUERTA (GR)	928
LIMPIAPARABRISAS DE LA VENTANA (GR)	932
EQUIPO DE SERVICIO Y SUMINISTROS	935
CAJA DE HERRAMIENTAS (GR)	935
ETIQUETA DE ADVERTENCIA (GR)	937
GRUPO DE TUBERIAS DE DIAGNÓSTICO	938
CALCOMANÍAS Y PLACAS DE IDENTIFICACIÓN (GR)	944
GRUPO DE PLACA DE IDENTIFICACIÓN DEL EJE	947
GRUPO DE PROTECCIÓN CONTRA EL VANDALISMO	947
INDICE DE NUMEROS DE PIEZA	B1

* NO HAY TRADUCCION DISPONIBLE EN EL MOMENTO DE LA IMPRESION

ÍNDICE

Designação	Página
INFORMAÇÃO GERAL	A40
ALTERNATIVAS DE REPARO	A51
ADITIVOS SUPLEMENTARES DO LÍQUIDO ARREFECEDOR	A56
PEÇAS DE MANUTENÇÃO	A69
ÍNDICE	A119
MÁQUINA - ARRANJO	1
CHASSI	1
GR. DE CONVERSÃO - CERTIFICADO	2
ARRANJO GERAL	4
ARRANJO ESPECIAL PARA PEDREIRAS	4
ATERRO SANITÁRIO	5
MOTOR - ARRANJO	6
MOTOR COMPLETO	6
MOTOR - NÚCLEO	7
GRUPO DE INSTALAÇÃO - MOTOR	8
MOTOR BÁSICO	9
EIXO-COMANDO DE VÁLVULA	9
SUPORTE DO RETENTOR	10
TAMPA - BLOCO DO MOTOR	11
TAMPA - CAIXA DIANTEIRA	12
TAMPA - MECANISMO DAS VÁLVULAS	14
VIRABREQUIM	17
BLOCO DO MOTOR	19
CABEÇOTE DO MOTOR	23
AMORTECEDOR DE VIBRAÇÕES E POLIA	27
DRENO - ÓLEO DO MOTOR	28
FIXADORES - AMORTECEDOR	29
FIXADORES - CAIXA DIANTEIRA	30
FIXADORES - TAMPA DA VÁLVULA	32
FIXADORES - MECANISMO DAS VÁLVULAS	33
VOLANTE DO MOTOR	34
ENGRENAGENS DE DISTRIBUIÇÃO	35
CAIXA DO VOLANTE DO MOTOR	37
CAIXA DIANTEIRA	38
RODA-GUIA - CORREIA	40
TUCHO DA VÁLVULA	41
LEVANTAMENTO DO MOTOR	42
MONTAGEM - ALTERNADOR	43
MONTAGEM - MOTOR E TRANSMISSÃO	44
CÁRTER DO ÓLEO DO MOTOR	46
PISTÃO E BIELA	47
BUJÃO DO BLOCO DO CILINDRO	48
BUJÃO DO MOTOR	49
POLIA DA RODA-GUIA	50
RETENTOR DO VIRABREQUIM	51
RETENTOR - CAIXA DO VOLANTE	52
MECANISMO DAS VÁLVULAS	53
SISTEMA DE LUBRIFICAÇÃO	56
ADAPTADOR-TUBULAÇÃO DE ÓLEO	56
RESPIRO	57
BOCAL DE ENCHIMENTO DE ÓLEO DO MOTOR	58
FILTRO - ÓLEO DO MOTOR	59
INDICADOR - NÍVEL DO ÓLEO (VARETA)	60
TUBOS - ÓLEO DO MOTOR	62
TUBULAÇÕES - DRENAGEM DE ÓLEO DO MOTOR	63
TUBOS - ÓLEO DO TURBOALIMENTADOR	64
BOMBA DE ÓLEO - MOTOR	65
SISTEMA DE ARREFECIMENTO	67
ARREFECEDOR - ÓLEO DO MOTOR	67
ARREFECIMENTO - TEMP. AMBIENTE ALTA	68
COTOVELO D'ÁGUA	69
TUBOS - ÁGUA	70
BOMBA DE ÁGUA	76
RADIADOR E VENTILADOR	78
TANQUE SUPERIOR DO RADIADOR	82
SISTEMA DA ADMISSÃO DE AR E DE ESCAPE	83
PURIFICADOR DE AR	83
TAMPA - ADMISSÃO DE AR	85
COTOVELO DE ADMISSÃO DE AR	87
TUBULAÇÕES - AR DO PÓS-ARREFECEDOR	88
TUBOS - AR	89
COLETOR DE ESCAPE	90
SILENCIADOR	91
CANO DE ESCAPE	92
PRÉ-PURIFICADOR	93
TURBOALIMENTADOR	95
SISTEMA DE COMBUSTÍVEL	97
FILTRO E TUBOS - COMBUSTÍVEL	97
FILTRO DE COMBUSTÍVEL E SEPARADOR DE ÁGUA	100
INJETOR DE COMBUSTÍVEL	101
TUBOS - COMBUSTÍVEL	103

* TRADUÇÃO NÃO DISPONÍVEL NO MOMENTO DA IMPRESSÃO

ÍNDICE

Designação	Página
TUBOS - DRENAGEM DO COMBUSTÍVEL	105
TUBOS - INJETOR DA BOMBA HIDRÁULICA	106
BOMBA HIDRÁULICA E MONTAGEM - UNIDADE INJETORA	107
BOMBA DE INJEÇÃO DO COMBUSTÍVEL	109
BOMBA DE ESCORVA DO COMBUSTÍVEL E DO FILTRO PRIMÁRIO	111
BOMBA HIDRÁULICA - UNIDADE INJETORA	116
REGULADOR DE PRESSÃO DO COMBUSTÍVEL	117
TANQUE DE COMBUSTÍVEL	118
SEPARADOR DE ÁGUA E BOMBA DE ESCORVA DE COMBUSTÍVEL	120
SISTEMA ELÉTRICO E DE PARTIDA	121
ALARME	121
ALTERNADOR DE CORRENTE	122
BATERIA E CABOS / FIOS ELÉTRICOS	126
CÂMERA	129
CONTROLE & MONTAGEM-COMUNICAÇÃO	131
CONTROLE ELETRÔNICO E MONTAGEM - MOTOR	133
CONTROLE-ESCAVAÇÃO AUTOMÁTICA	135
CONTROLE - NÃO PROGRAMADO	140
CONVERSÃO-AUTODIG	141
VISOR-CÂMERA	142
SISTEMA ELÉTRICO	143
SISTEMA ELETRÔNICO-COMUNICAÇÃO	144
SIST. ELETRÔNICO - ACESSÓRIO	145
SISTEMA ELETRÔNICO - MONITOR	145
SISTEMA ELETRÔNICO - TREM DE FORÇA	145
AQUECEDOR DA ÁGUA DO MOTOR	147
INSTALAÇÃO-COMUNICAÇÃO	148
INSTALAÇÃO-SEGURANÇA	148
LÂMPADA - TETO	151
LÂMPADA - FAROL	152
LÂMPADA DIANTEIRA E DE SINAL	156
LÂMPADA - SINALIZAÇÃO	160
LUZ TRASEIRA E DE FREIO	162
LUZ GIRATÓRIA DE ALARME	163
ILUMINAÇÃO RODOVIÁRIA	164
ILUMINAÇÃO - SINALIZAÇÃO	164
ILUMINAÇÃO - MARCHA A RÉ	165
SISTEMA DE ILUMINAÇÃO - FARÓIS	166
SISTEMA DE ILUMINAÇÃO - FARÓIS E SINAL	172
ILUMINAÇÃO - RODOVIÁRIA	176
SIST. DE ILUMINAÇÃO - PISCA-PISCA GIRATÓRIO DE ADVERTÊNCIA	178
BUJÃO - CONECTOR	181
RECEPTÁCULO-PARTIDA AUXILIAR	182
SENSOR - POSIÇÃO DE LEVANTAMENTO E MONTAGEM	183
SENSOR DE PRESSÃO E MONTAGEM	185
SENSOR - POSIÇÃO DE INCLINAÇÃO E MONTAGEM	186
SENSOR DO MOTOR	188
EMISSOR - POSIÇÃO	190
SENSOR - PRESSÃO	192
SENSOR DE VELOCIDADE	200
SENSOR - TEMPERATURA	202
AUXILIAR DE PARTIDA A ÉTER	205
AUXILIAR DE PARTIDA	206
AUXILIAR DE PARTIDA A ÉTER	207
MOTOR ELÉTRICO DE PARTIDA	209
INTERRUPTOR DE DERIVAÇÃO	212
COMUTADOR-LUZ ALTA/BAIXA	213
CHAVE GERAL	214
INTERRUPTOR - MAGNÉTICO	215
INTERRUPTOR - PRESSÃO	218
INTERRUPTOR-ACOPLADOR RÁPIDO	219
INTERRUPTOR-VENTILADOR DE INVERSÃO	220
INTERRUPTOR - SISTEMA DE ABSORCAO DE IMPACTOS	221
INTERRUPTOR - BALANCIM	222
INTERRUPTOR GIRATÓRIO	224
INTERRUPTOR - DIREÇÃO SECUNDÁRIA	225
INTERRUPTOR DE SINALIZAÇÃO	226
INTERRUPTOR - BALANCIM	230
INTERRUPTOR - TRANSMISSÃO	231
VALVULA - PARTIDA A ETER	232
ALARME DE MARCHA À RÉ	233
CABOS/FIOS ELÉTRICOS - AR CONDICIONADO	234
CABOS/FIOS ELÉTRICOS - LUBRIFICAÇÃO	236
FIAÇÃO - MONITORAÇÃO DO EIXO	238
CABOS/FIOS ELÉTRICOS - CABINE	240
CABOS/FIOS ELÉTRICOS - CHASSI	253
CABOS/FIOS ELÉTRICOS - ACOPLADOR	259
CABOS/FIOS ELÉTRICOS - EMBREAGEM	260

* TRADUÇÃO NÃO DISPONÍVEL NO MOMENTO DA IMPRESSÃO

ÍNDICE

Designação	Página
CABOS/FIOS ELÉTRICOS - MOTOR	261
CABOS/FIOS ELÉTRICOS - AUXILIAR DE PARTIDA A ETER	266
CABOS/FIOS ELÉTRICOS - DIANTEIROS	267
CABOS/FIOS ELÉTRICOS DE ILUMINAÇÃO	270
CABOS/FIOS ELÉTRICOS - DIREÇÃO SECUNDÁRIA	276
CABOS/FIOS ELÉTRICOS - SENSOR	279
FIAÇÃO - MANIPULADOR DE RESÍDUOS	282
TREM DE FORÇA	284
EIXO FIXO	284
EIXO OSCILANTE	285
FREIOS E ENGRENAGENS PLANETARIAS	287
CONTROLE DA TRANSMISSÃO	291
CONTROLE HIDRÁULICO DA TRANSMISSÃO	293
ARREFECEDOR E MONTAGEM - TRANSMSSÃO	295
ARREFECEDOR DO ÓLEO DO EIXO	296
TAMPA - BOCAL DE ENCHIMENTO DE ÓLEO DA TRANSMISSÃO	297
DIFERENCIAL	298
DIFERENCIAL - DESLIZAMENTO LIMITADO	299
DIFERENCIAL - NOSPIN	301
DRENO - ECOLOGIA	303
BOCAL DE ENCHIMENTO DE ÓLEO DO TREM DE FORÇA	304
FILTRO E TUBOS - TRANSMISSÃO	306
FILTRO - ÓLEO	308
ENGRENAGEM-COROA E PINHÃO	309
ENGRENAGENS DE SAÍDA DE TRANSFERÊNCIA	315
CAIXA - EIXO FIXO	324
CAIXA - EIXO OSCILANTE	326
TUBOS - ARREFECEDOR DE ÓLEO DO EIXO	328
TUBOS - ARREFECEDOR DO CONVERSOR DE TORQUE	333
MONTAGEM DO EIXO	336
MONTAGEM - ARREFECEDOR DE ÓLEO DO EIXO	337
MONTAGEM - ARO	338
ENGRENAGENS PLANETÁRIAS - TRANSMISSÃO	339
TREM DE FORÇA	343
BOMBA DO ARREFECEDOR DE ÓLEO DO EIXO E MONTAGEM	344
BOMBA DA TRANSMISSÃO	345
ARO	348
ARO DESMONTÁVEL	349
EIXO DE TRANSMISSÃO	352
JUNTA CORREDIÇA	356
PNEU E ARO	358
CONVERSOR DE TORQUE E CARCAÇA	367
CONVERSOR DE TORQUE	370
TRANSMISSÃO	372
JUNTA UNIVERSAL	373
VÁLVULA DE MODULAÇÃO	376
VÁLVULA DE ALÍVIO	377
VÁLVULA DE PNEU	379
CHASSI E CARROCERIA	380
ACIONADOR - INCLINAÇÃO DO CAPÔ	380
ACIONADOR DE POTÊNCIA	382
ACIONADOR - PROTETOR DE POTÊNCIA	383
DEFLETOR	384
BLOCO LIMITADOR DE OSCILAÇÃO DO EIXO	385
RESSALTO-ARMAÇÃO TRASEIRA	386
CAIXA - BATERIA	387
GRUPO DE CONVERSÃO - ARRANJO RODOVIÁRIO	388
CONTRAPESO	396
PORTA DE ACESSO	399
PÁRA-LAMA	401
PÁRA-LAMA DIANTEIRO	406
PÁRA-LAMA	408
CHASSI DIANTEIRO	412
CHASSI TRASEIRO	415
GRADE DO RADIADOR	417
PROTETOR - ARTICULAÇÃO	419
PROTETOR - ARREFECEDOR DO ÓLEO DO EIXO	421
PROTETOR - VEDADOR DO EIXO	423
PROTETOR - EIXO DE TRANSMISSÃO	424
PROTETOR - DIANTEIRO	425
PROTETOR - ILUMINAÇÃO	426
PROTETOR - TREM DE FORÇA	427
FERRAGEM - CHASSI DA CARREGADEIRA	430
FERRAGENS-MONTAGEM	433
FERRAGEM - CHASSI TRASEIRO	436
DOBRADIÇA DO PÁRA-LAMA	439
ENGATE - ARTICULAÇÃO	441
CAPÔ E PROTETOR	443
ESCADA	446

* TRADUÇÃO NÃO DISPONÍVEL NO MOMENTO DA IMPRESSÃO

ÍNDICE

Designação	Página
TUBULAÇÕES - LUBRIFICAÇÃO AUTOMÁTICA	448
TUBOS - GRAXA	456
TUBOS - LUBRIFICAÇÃO	458
ELO - TRAVA DA ARMAÇÃO DA DIREÇÃO	460
LUBRIFICAÇÃO - AUTOMÁTICA	461
MONTAGEM DA PLACA DE REGISTRO	465
PAINEL DO CAPÔ	466
PAINEL LATERAL	469
BOMBA E MONTAGEM - LUBRIFICAÇÃO	471
BOMBA DE LUBRIFICAÇÃO	473
BLINDAGEM DO COMPARTIMENTO DO MOTOR	474
DEGRAU	476
SUPORTE - ADMISSÃO DE AR	478
SUPORTE - VALVULA E FILTRO	479
RUÍDO - ARRANJO PARA SUPRESSÃO	481
REDUÇÃO DE RUÍDO	482
INCLINAÇÃO - CAPÔ	485
VÁLVULA E TUBULAÇÕES - LUBRIFICAÇÃO	486
VÁLVULA DE LUBRIFICAÇÃO - DISTRIBUIÇÃO	488
SISTEMA DE FREIO	492
ACUMULADOR - FREIO	492
ACIONADOR DO FREIO DE ESTACIONAMENTO	494
BASE DO FREIO - PEDAL	495
FREIO DE ESTACIONAMENTO	498
CONTROLE DO PEDAL DO FREIO	499
CONTROLE DO FREIO DE ESTACIONAMENTO	501
CONTROLE DO FREIO DE SERVIÇO	502
VÁLVULA DE CONTROLE DOS FREIOS	508
SISTEMA DE DIREÇÃO	509
CONTROLE DE DIREÇÃO	509
CILINDRO DE DIREÇÃO E MONTAGEM	513
CILINDRO HIDRÁULICO	514
TUBOS - DIREÇÃO SECUNDÁRIA	516
TUBOS - DIREÇÃO	519
BOMBA DE DIREÇÃO SECUNDÁRIA E MOTOR	532
BOMBA DA DIREÇÃO SECUNDÁRIA E MONTAGEM	533
BOMBA DE PISTÃO	534
GRUPO ROTATIVO DA BOMBA	537
*SCREEN GP-CASE DRAIN	538
DIREÇÃO-CONTROLE A COMANDO	539
DIREÇÃO SECUNDÁRIA	539
COLUNA DA DIREÇÃO	540
VOLANTE	541
VÁLVULA DE RETENÇÃO	543
VÁLVULA DE CONTROLE PILOTO	546
VÁLVULA DE REDUÇÃO DE PRESSÃO	548
VÁLVULA DE ALÍVIO	549
VÁLVULA DE DIREÇÃO SECUNDÁRIA	551
VÁLVULA DE SEPARAÇÃO	552
VÁLVULA DA DIREÇÃO	554
VÁLVULA - NEUTRALIZADOR DA DIREÇÃO	559
SISTEMA HIDRÁULICO	561
ACUMULADOR D ÓLEO - PILOTO	561
SISTEMA DE ABSORÇÃO DE IMPACTOS E TUBOS	563
SISTEMA DE ABSORÇÃO DE IMPACTOS	564
CONTROLE-ELETROIDRÁULICO	565
CONTROLE-CABO	573
CONTROLE - ALAVANCA	574
CILINDRO DE LEVANTAMENTO E RETENTOR	578
CILINDRO DE INCLINAÇÃO E RETENTOR	580
CILINDRO DE LEVANTAMENTO	583
CILINDRO DE INCLINAÇÃO	585
FILTRO - ÓLEO	590
PROTETOR - CILINDRO DE LEVANTAMENTO	592
CABEÇA DA BOMBA	595
ARRANJO HIDRÁULICO - 2 VÁLVULAS	598
ARRANJO HIDRÁULICO - 3 VÁLVULAS	598
SIST. HIDRÁULICO - ÓLEO BIODEGRADÁVEL	599
TUBOS DE CONEXÃO	600
TUBOS - ACOPLADOR	604
TUBOS - DIANTEIROS	612
TUBOS - ÓLEO HIDRÁULICO	615
TUBOS - ARREFECEDOR DE ÓLEO HIDRÁULICO	619
TUBOS - CILINDRO DE LEVANTAMENTO	623
TUBOS - CILINDRO DE INCLINAÇÃO	625
COLETOR - CONTROLE	629

* TRADUÇÃO NÃO DISPONÍVEL NO MOMENTO DA IMPRESSÃO

ÍNDICE

Designação	Página
COLETOR - VÁLVULA	631
MOTOR - ENGRENAGENS	634
MONTAGEM - TANQUE HIDRÁULICO	635
BOMBA E MONTAGEM - FREIO E VENTILADOR HIDRÁULICO	636
BOMBA HIDRÁULICA E MONTAGEM	638
BOMBA DE PISTÃO	639
GRUPO ROTATIVO DA BOMBA	644
TANQUE HIDRÁULICO	645
VÁLVULA DO CONTROLE PRINCIPAL E MONTAGEM	647
VÁLVULA DE RETENÇÃO	662
VÁLVULA DE CONTROLE	664
VÁLVULA DESVIADORA	675
VÁLVULA DE DRENAGEM	677
VÁLVULA DE CONTROLE DE ABAIXAMENTO	678
VÁLVULA - CONTROLE PRINCIPAL	680
VÁLVULA MANUAL	689
VÁLVULA DE REDUÇÃO DE PRESSÃO	690
VÁLVULA DE CONTROLE DA BOMBA	691
VÁLVULA DE ALÍVIO	693
VÁLVULA DE CONTROLE DE ABSORÇÃO DE IMPACTOS	694
VÁLVULA DE SEPARAÇÃO	696
VÁLVULA SOLENÓIDE	699
ACESSÓRIOS	702
BRAÇO DE LEVANTAMENTO	702
RESSALTO-ALAVANCA	706
RESSALTO - BRAÇO DE LEVANTAMENTO	708
CONTROLE DA CAÇAMBA	711
LEVANTAMENTO - ARRANJO	715
ARTICULAÇÃO - CAÇAMBA	716
ARRANJO PARA EXTRAÇÃO DE MADEIRA	717
FERRAMENTAS DE TRABALHO	718
ADAPTADOR DA PONTA	718
CAÇAMBA PARA APLICAÇÃO GERAL	719
CAÇAMBA - MANUSEIO DE MATERIAL	723
CAÇAMBA PARA PENETRAÇÃO	736
CAÇAMBA PARA ROCHAS	748
CAÇAMBA PARA APLICAÇÃO GERAL	755
CAÇAMBA - MANUSEIO DE MATERIAL	757
CAÇAMBA PARA PENETRAÇÃO	768
CAÇAMBA PARA ROCHAS	774
CONTROLE - ACOPLADOR RÁPIDO	778
ACOPLADOR RÁPIDO	779
BORDA CORTANTE	782
BORDA SEGMENTADA DA CAÇAMBA	785
PROTETOR - CAÇAMBA	786
TRAVA - ACOPLADOR RÁPIDO	788
PINO	790
PONTA-SERVIÇO PESADO	791
PONTA PARA APLICAÇÕES GERAIS	793
ESTAÇÃO DO OPERADOR	795
AJUSTADOR DO ASSENTO	795
COMPRESSOR DE AR - ASSENTO	797
CONDICIONADOR DE AR	798
BRACO DO LIMPADOR	804
BRAÇO DO ASSENTO	806
CABINE - ESTRUTURA ROPS COBERTA	807
COMPRESSOR DE REFRIGERANTE	809
CONDENSADOR DO REFRIGERANTE E MONTAGEM	811
CONTROLE DO PAINEL MONITOR	813
CONTROLE-MONITOR NÃO PROGRAMADO	814
PORTA DA CABINE	815
DUCTO E FILTRO	821
PISO-SUPRESSÃO DE RUÍDOS	823
PROTETOR - JANELA	827
PEGA-MÃO	831
AQUECEDOR DA CABINE	832
BUZINA ELÉTRICA	836
INSTALAÇÃO DOS CONTROLES	837
INSTALAÇÃO DO RÁDIO	838
TRINCO - PORTA DA CABINA E JANELA	840
REVESTIMENTO DA CABINE	842
TUBOS - AR CONDICIONADO	845
TUBOS - AQUECEDOR DA CABINE	851
ESPELHO RETROVISOR	854
MÓDULO DO VISOR	868
MÓDULO ELETRÔNICO DE QUATRO INDICADORES	869
MÓDULO - VELOCÍMETRO E TACÔMETRO	870
*MONITOR AR-CAMERA	871
PAINEL MONITOR DE CARGA ÚTIL	873
MOTOR - LIMPADOR DO VIDRO	874
MONTAGEM - CABINE	876
CABINE - ESTRUTURA ROPS COBERTA	878
FUNDO - ENCOSTO	879
PAINEL DE INSTRUMENTOS	881
PEDAL DO GOVERNADOR	888
PISO	890
PLATAFORMA	891

* TRADUÇÃO NÃO DISPONÍVEL NO MOMENTO DA IMPRESSÃO

ÍNDICE

Designação	Página
RÁDIO	893
RÁDIO - COMUNICAÇÃO	894
RECLINAÇÃO - ASSENTO	895
ROPS FECHADA	896
CINTO DE SEGURANÇA E LUZES	903
CINTO DE SEGURANÇA	904
ASSENTO	905
ASSENTO COM SUSPENSÃO	909
SUPORTE - CONTROLE HIDRÁULICO	912
SUPRESSÃO DE RUÍDOS - CABINE	916
SUSPENSÃO - ASSENTO	922
PÁRA-SOL DA CABINE	926
LAVADOR DO VIDRO	927
VIDRO DA PORTA	928
LIMPADOR DO VIDRO	932
EQUIPAMENTOS DE SERVIÇO E SUPRIMENTOS	935
CAIXA DE FERRAMENTAS	935
DECALQUE	937
TUBULAÇÕES DE DIAGNÓSTICO	938
PLACA E DECALQUE	944
PLACA - IDENTIFICAÇÃO DO EIXO	947
PROTEÇÃO CONTRA VANDALISMO	947
ÍNDICE DE NÚMERO DE PEÇA	B1

* TRADUÇÃO NÃO DISPONÍVEL NO MOMENTO DA IMPRESSÃO

INHALTSVERZEICHNIS

Bezeichnung	Seite
ALLGEMEINE HINWEISE	A44
REPARATURALTERNATIVEN	A52
KÜHLMITTELZUSATZ	A57
WARTUNGSTEILE	A73
STICHWORTVERZEICHNIS	A132
MASCHINE	1
FAHRWERK	1
UMBAUSATZ - ZULASSUNG	2
GRUNDAUSFÜHRUNG	4
*SPECIAL AR-QUARRY	4
ABFALLBESEITIGUNGSMONTAGE	5
MOTOR	6
MOTOR, KOMPLETT	6
MOTORKÜHLERBLOCK	7
MOTOR-EINBAUSATZ	8
MOTOR (GRUNDAUSFÜHRUNG)	9
NOCKENWELLE	9
DICHTUNGSTRÄGER	10
MOTORBLOCKDECKEL	11
STIRNRADGEHÄUSEDECKEL	12
VENTILDECKEL	14
KURBELWELLE	17
MOTORBLOCK	19
ZYLINDERKOPF	23
DÄMPFER UND RIEMENSCHEIBE	27
MOTORÖLABLASS	28
DÄMPFER-HALTETEILE	29
STIRNRADGEHÄUSE-HALTETEILE	30
VENTILDECKELBEFESTIGUNG	32
VENTILMECHANISMUS-HALTETEILE	33
SCHWUNGRAD	34
STIRNRAD	35
SCHWUNGRADGEHÄUSE	37
STIRNRADGEHÄUSE	38
LEITRAD - RIEMEN	40
HUBVENTIL	41
MOTORHUBÖSE	42
DREHSTROMGENERATOR - BEFESTIGUNG	43
MOTOR- UND GETRIEBEAUFLAGER	44
ÖLWANNE	46
PLEUELSTANGE UND KOLBEN	47
ZYLINDERBLOCKSCHRAUBE	48
MOTORSTOPFEN	49
RIEMENSPANNER	50
KURBELWELLENDICHTUNG	51
SCHWUNGRADGEHÄUSEDICHTUNG	52
VENTILSTEUERUNG	53
SCHMIERSYSTEM	56
ADAPTER - ÖLLEITUNG	56
ENTLÜFTER	57
MOTORÖLEINFÜLLSTUTZEN	58
ÖLFILTER	59
ÖLMESSSTAB	60
MOTORÖLLEITUNGEN	62
MOTORÖLABLASSLEITUNGEN	63
TURBOLADERÖLLEITUNGEN	64
SCHMIERPUMPE	65
KÜHLSYSTEM	67
MOTORÖLKÜHLER	67
KÜHLSYSTEM - HOHE UMGEBUNGSTEMPERATUREN	68
WASSERKNIESTÜCK	69
KÜHLWASSERLEITUNGEN	70
KÜHLWASSERPUMPE	76
KÜHLER UND LÜFTER	78
KÜHLERWASSERKASTEN, OBEN	82
LUFTANSAUG- UND ABGASSYSTEM	83
LUFTREINIGER	83
LUFTEINLASSDECKEL	85
LUFTEINLASSBOGEN	87
LADELUFTKÜHLERLEITUNGEN	88
DRUCKLUFTLEITUNGEN	89
AUSPUFFKRÜMMER	90
SCHALLDÄMPFER	91
AUSPUFFROHR	92
VORREINIGER	93
TURBOLADER	95
KRAFTSTOFFSYSTEM	97
KRAFTSTOFFILTER UND LEITUNGEN	97
WASSERABSCHEIDER- U. KRAFTSTOFFILTER	100
KRAFTSTOFFEINSPRITZDÜSE	101
KRAFTSTOFFLEITUNGEN	103
KRAFTSTOFFABLASSLEITUNGEN	105
EINSPRITZLEITUNGEN - HYDRAULIKPUMPE	106
PUMPE UND BEFESTIGUNGSTEILE	107
KRAFTSTOFFEINSPRITZPUMPE	109
KRAFTSTOFFENTLÜFTUNGSPUMPE UND -HAUPTFILTER	111
PUMPENDÜSE, HYDRAULISCH	116
KRAFTSTOFFDRUCKREGLER	117

* ÜBERSETZUNG ZUM ZEITPUNKT DER DRUCKLEGUNG NICHT VORHANDEN

INHALTSVERZEICHNIS

Bezeichnung	Seite
KRAFTSTOFFTANK	118
WASSERABSCHEIDER U. KRAFTSTOFFENTLÜFTUNGSPUMPE	120
ELEKTRISCHE ANLAGE U. STARTSYSTEM	121
WARNVORRICHTUNG	121
DREHSTROMGENERATOR	122
BATTERIE UND VERDRAHTUNG	126
KAMERA	129
ÜBERTRAGUNGSSTEUERUNG U. BEFESTIGUNG	131
STEUERUNGSEINHEIT, ELEKTRON. FÜR MOTOR UND BEFEST.	133
AUTOMATISCHES LADESYSTEM (AUTODIG) - STEUERUNG	135
STEUERUNG - NICHT PROGRAMMIERT	140
*CONVERSION AR-AUTODIG	141
*DISPLAY GP-CAMERA	142
ELEKTR. ANLAGE	143
ELEKTRONIK, KOMMUNIKATION	144
ARBEITSGERÄTEELEKTRONIK	145
ELEKTRONIK - MONITOR	145
KRAFTÜBERTRAGUNGSELEKTRONIK	145
UMLAUFKÜHLWASSERHEIZUNG	147
ÜBERTRAGUNGSEINBAUSATZ	148
SICHERHEITSEINBAUSATZ	148
FAHRERHAUSBELEUCHTUNG	151
ARBEITSLEUCHTEN	152
SCHEINWERFER U. RICHTUNGSLEUCHTE	156
BLINKLEUCHTE	160
BREMS- UND RÜCKLEUCHTE	162
RUNDUM-KENNLEUCHTE	163
BELEUCHTUNGSANLAGE (STRASSENAUSRÜSTUNG)	164
BLINKERLEUCHTEN	164
SCHEINWERFER, HINTEN	165
ARBEITSLEUCHTEN	166
ARBEITS- U. SIGNALLEUCHTE	172
BELEUCHTUNGSANLAGE (STRASSENAUSRÜSTUNG)	176
RUNDUM-KENNLEUCHTE	178
VERBINDUNGSSTECKER	181
STARTHILFEANSCHLUSS	182
HUBSTELLUNGSSENSOR U. BEFESTIGUNGSTEILE	183
DRUCKSENSOR UND BEFESTIGUNGSTEILE	185
KIPPSTELLUNGS-SENSOR U. BEFESTIGUNGSTEILE	186
MOTORSENSOR	188
STELLUNGSSENSOR	190
DRUCKSENSOR	192
DREHZAHLSENSOR	200
TEMPERATURSENSOR	202
ÄTHERSTARTHILFE	205
STARTHILFE	206
ÄTHERSTARTHILFE	207
STARTERMOTOR	209
UMGEHUNGSSCHALTER	212
HELLIGKEITSREGLER	213
TRENNSCHALTER	214
MAGNETSCHALTER	215
DRUCKSCHALTER	218
SCHNELLWECHSELEINRICHTUNG - SCHALTER	219
SCHALTER - UMKEHRLÜFTER	220
SCHALTER FÜR HYDRAULISCHE SCHWINGUNGSDÄMPFUNG	221
KIPPSCHALTER	222
DREHSCHALTER	224
NOTLENKUNGSSCHALTER	225
RICHTUNGSSIGNALSCHALTER	226
KIPPSCHALTER	230
GETRIEBESCHALTER	231
ÄTHERSTARTVENTIL	232
RÜCKFAHRWARNHORN	233
KLIMAANLAGENVERDRAHTUNG	234
SCHMIERUNGSVERDRAHTUNG	236
ACHSENÜBERWACHUNG - VERDRAHTUNG	238
FAHRERHAUSVERDRAHTUNG	240
FAHRGESTELLVERDRAHTUNG	253
SCHNELLWECHSELEINRICHTUNG - VERDRAHTUNG	259
VERDRAHTUNG - ELEKTR. KUPPLUNG	260
MOTORVERDRAHTUNG	261
ÄTHERSTARTHILFE - VERDRAHTUNG	266
VERDRAHTUNG, VORNE	267
BELEUCHTUNGSVERDRAHTUNG	270
NOTLENKUNGSVERDRAHTUNG	276
SENSORVERDRAHTUNG	279
ABFALLBESEITIGUNGSAUSFÜHRUNG - VERDRAHTUNG	282
KRAFTÜBERTRAGUNG	284
STARRACHSE	284
PENDELACHSE	285
BREMSE UND PLANETENGETRIEBE	287
GETRIEBESTEUERUNG	291
GETRIEBEHYDRAULIK	293

* ÜBERSETZUNG ZUM ZEITPUNKT DER DRUCKLEGUNG NICHT VORHANDEN

INHALTSVERZEICHNIS

Bezeichnung	Seite
GETRIEBEKÜHLER U. BEFESTIGUNG	295
ACHSÖLKÜHLER	296
GETRIEBEÖLEINFÜLLKAPPE	297
DIFFERENTIAL	298
DIFFERENTIAL (BEGRENZTER SCHLUPF)	299
NOSPIN-DIFFERENTIAL	301
ABLASS (UMWELTFREUNDLICH)	303
GETRIEBEÖLFÜLLSTUTZEN	304
GETRIEBEFILTER UND -LEITUNGEN	306
ÖLFILTER	308
TELLER- UND KEGELRAD	309
VERTEILERGETRIEBEANTRIEB	315
GEHÄUSE - STARRACHSE	324
GEHÄUSE - PENDELACHSE	326
ACHSENÖLKÜHLERLEITUNGEN	328
DREHMOMENTWANDLER-KÜHLERLEITUNGEN	333
ACHSENANBAUSATZ	336
BEFESTIGUNGSSATZ - ACHSÖLKÜHLER	337
FELGENAUFHÄNGUNG	338
PLANETENGETRIEBE	339
KRAFTÜBERTRAGUNG	343
ACHSENÖLKÜHLERPUMPE U. BEFESTIGUNGSTEILE	344
GETRIEBEPUMPE	345
FELGE	348
FELGE (TEILBAR)	349
ANTRIEBSWELLE	352
ANTRIEBSWELLEN-KEILVERZAHNUNG	356
REIFEN UND FELGE	358
DREHZAHLWANDLER U. GEHÄUSE	367
DREHMOMENTWANDLER	370
GETRIEBE	372
KREUZGELENK	373
MODULATORVENTIL	376
ÜBERDRUCKVENTIL	377
REIFENVENTIL	379
RAHMEN UND FAHRGESTELL	380
MOTORHAUBENKIPPBETÄTIGUNG	380
STROMBETÄTIGUNG	382
STROMSCHUTZSCHALTER	383
LEITBLECH	384
PENDELACHSBEGRENZUNGSBLOCK	385
VORSPRUNG - HINTERER RAHMEN	386
BATTERIEKASTEN	387
UMBAUSATZ - FÜR STRASSENVERKEHR	388
GEGENGEWICHT	396
ZUGANGSKLAPPE	399
SCHUTZBLECHE (STRASSENAUSRÜSTUNG)	401
SCHUTZBLECHE	402
SCHUTZBLECHE, VORNE	406
SCHUTZBLECHE (STRASSENAUSRÜSTUNG)	408
LADERRAHMEN	412
HINTERRAHMEN	415
KÜHLERGRILL	417
KNICKGELENKSCHUTZ	419
ACHSENÖLKÜHLERSCHUTZ	421
ACHSDICHTUNGSABDECKUNG	423
ANTRIEBSWELLENVERKLEIDUNG	424
VERKLEIDUNGEN, VORN	425
BLITZSCHUTZ	426
ANTRIEBSSCHUTZ	427
RAHMEN - BEFESTIGUNGSTEILE	430
BEFESTIGUNGSTEILE	433
HARDWARE, HINTERRAHMEN	436
GELENK FÜR SCHUTZBLECHE (STRASSENAUSRÜSTUNG)	439
KNICKGELENK-ANHÄNGUNG	441
MOTORHAUBE UND VERKLEIDUNG	443
STEIGLEITER	446
AUTOMATISCHE SCHMIERLEITUNGEN	448
SCHMIERLEITUNGEN	456
KNICKGELENKSPERRE	460
SCHMIERSYSTEM, AUTOM.	461
TYPENSCHILDBEFESTIGUNG	465
HAUBENBLENDE	466
SEITENVERKLEIDUNG	469
SCHMIERPUMPE U. BEFESTIGUNGSTEILE	471
SCHMIERPUMPE	473
MOTORRAUM-SCHUTZVERKLEIDUNG	474
STEIGLEITER	476
LUFTEINLASS-TRÄGER	478
BEFESTIGUNG - VENTIL U. FILTER	479
SCHALLDÄMPFUNG	481
MOTORHAUBEN-KIPPSTELLUNG	485
SCHMIERVENTIL U. -LEITUNGEN	486
SCHMIERÖLVERTEILERVENTIL	488
BREMSSYSTEM	492
BREMSDRUCKSPEICHER	492
FESTSTELLBREMSBETÄTIGUNG	494
FUSSBREMSSOCKEL	495
FESTSTELLBREMSE	498
FUSSBREMSGESTÄNGE	499

* ÜBERSETZUNG ZUM ZEITPUNKT DER DRUCKLEGUNG NICHT VORHANDEN

INHALTSVERZEICHNIS

Bezeichnung	Seite
FESTSTELLBREMSGESTÄNGE	501
BREMSGESTÄNGE	502
BREMSSTEUERVENTIL	508
LENKSYSTEM	509
LENKBETÄTIGUNG	509
LENKZYLINDER UND AUFHÄNGUNG	513
HYDRAULIKZYLINDER	514
NOTLENKUNGSLEITUNGEN	516
LENKÖLLEITUNGEN	519
NOTLENKUNGSPUMPE UND -MOTOR	532
NOTLENKUNGSPUMPE UND BEFESTIGUNGSTEILE	533
KOLBENPUMPE	534
KOLBENPUMPENUMLAUFSATZ	537
*SCREEN GP-CASE DRAIN	538
*STEERING AR-COMMAND CONTROL	539
NOTLENKUNG	539
LENKSÄULE	540
LENKRAD	541
SPERRVENTIL	543
VORSTEUERVENTIL	546
DRUCKREDUZIERVENTIL	548
ÜBERDRUCKVENTIL	549
NOTLENKUNGSVENTIL	551
PENDELVENTIL	552
LENKVENTIL	554
LENKNEUTRALISIERVENTIL	559
HYDRAULIKSYSTEM	561
VORSTEUERÖLDRUCKSAMMLER	561
SCHWINGUNGSDÄMPFUNG U. LEITUNGEN	563
HYDRAULISCHE SCHWINGUNGSDÄMPFUNG	564
ELEKTROHYDRAULISCHE STEUERUNG	565
STEUERHEBEL	573
JOYSTICK -STEUERUNG	574
HUBZYLINDER UND DICHTUNG	578
KIPPZYLINDER UND DICHTUNG	580
HUBZYLINDER	583
KIPPZYLINDER	585
ÖLFILTER	590
SCHUTZ - HUBZYLINDER	592
PUMPENKOPF	595
HYDRAULIKANORDNUNG (2-VENTIL-HYDRAULIK)	598
HYDRAULIKANORDNUNG (3-VENTIL-HYDRAULIK)	598
HYDRAULIKÖL - BIOLOGISCH ABBAUBAR	599
ANSCHLUSSLEITUNGEN	600
ANSCHLUSSKUPPLUNGSLEITUNGEN	604
LEITUNGEN, VORNE	612
HYDRAULIKLEITUNGEN	615
HYDRAULIKÖLKÜHLERLEITUNGEN	619
HUBZYLINDERLEITUNGEN	623
NEIGEZYLINDERLEITUNGEN	625
STEUERKRÜMMER	629
*MANIFOLD GP-VALVE	631
MOTORANTRIEB	634
HYDRAULIKTANK UND ANBAUSATZ	635
PUMPE U. BEFESTIGUNG - BREMSE U. HYDRAULIKLÜFTER	636
HYDRAULIKPUMPE UND BEFESTIGUNGSTEILE	638
KOLBENPUMPE	639
KOLBENPUMPENUMLAUFSATZ	644
HYDRAULIKTANK	645
VENTIL UND BEFESTIGUNGSTEILE - HAUPTSTEUERUNG	647
SPERRVENTIL	662
STEUERVENTIL	664
UMLEITVENTIL	675
ABLASSVENTIL	677
ABSENKSTEUERVENTIL	678
HAUPTSTEUERVENTIL	680
VENTIL, MECH.	689
DRUCKREDUZIERVENTIL	690
PUMPENSTEUERVENTIL	691
ÜBERDRUCKVENTIL	693
VENTIL - HYDRAULISCHE SCHWINGUNGSDÄMPFUNG	694
PENDELVENTIL	696
MAGNETVENTIL	699
ARBEITSGERÄTE	702
HUBARM	702
VORSPRUNG - HEBEL	706
VORSPRUNG - HUBARM	708
SCHAUFELSTEUERUNG	711
HUBVORRICHTUNG	715
SCHAUFELUMLENKMECHANISMUS	716
FORSTAUSRÜSTUNG	717
ARBEITSGERÄTE	718
ZAHNHALTER	718
UNIVERSALSCHAUFEL	719
MATERIALUMSCHLAGSCHAUFEL	723
ERDBAUSCHAUFEL	736
FELSSCHAUFEL	748

* ÜBERSETZUNG ZUM ZEITPUNKT DER DRUCKLEGUNG NICHT VORHANDEN

INHALTSVERZEICHNIS

Bezeichnung	Seite
UNEVERSALSCHAUFEL	755
MATERIALUMSCHLAGSCHAUFEL	757
ERDBAUSCHAUFEL	768
FELSSCHAUFEL	774
SCHNELLWECHSELANSCHLUSSSTEUERUNG	778
SCHNELLWECHSELVORRICHTUNG	779
SCHNELLWECHSELEINRICHTUNG	781
SCHNEIDMESSER	782
SCHNEIDMESSERSEGMENT	785
SCHAUFELSCHUTZ	786
SCHNELLWECHSELEINRICHTUNGSSPERRE	788
BOLZENSATZ	790
ZAHN, HD AUSFÜHRUNG	791
NORMALZAHNSPITZE	793
FAHRERHAUS	795
FAHRERSITZVERSTELLER	795
LUFTKOMPRESSORSITZ	797
KLIMAANLAGE	798
SCHEIBENWISCHERARM	804
ARMLEHNE	806
FAHRERHAUS MIT ÜBERROLLSCHUTZ	807
KÄLTEMITTELKOMPRESSOR	809
KÄLTEMITTELKONDENSATOR U. BEFESTIGUNGSTEILE	811
MONITORSTEUERUNG	813
STEUERUNG, NICHT PROGRAMMIERTER MONITOR	814
FAHRERHAUSTÜR	815
LUFTKANAL U. FILTER	821
BODEN - GERÄUSCHSCHUTZ	823
SCHEIBENSCHUTZ	827
HALTEGRIFF	831
FAHRERHAUSHEIZUNG	832
WARNHORN, ELEKTR.	836
BEDIENUNGSEINBAUSATZ	837
RADIOEINBAUSATZ	838
FAHRERHAUSTÜR- U. FENSTERVERRIEGELUNG	840
FAHRERHAUSAUSKLEIDUNG	842
KLIMAANLAGENLEITUNGEN	845
FAHRERHAUSHEIZUNGSLEITUNGEN	851
RÜCKSPIEGEL	854
ANZEIGEMODUL	868
MODUL - VIER ELEKTRON. ANZEIGEN	869
GESCHWINDIGKEITS- U. DREHZAHLMESSERMODUL	870
*MONITOR AR-CAMERA	871
WÄGEEINRICHTUNG - MONITOR	873
SCHEIBENWISCHERMOTOR	874
FAHRERHAUSANBAUSATZ	876
FAHRERHAUSAUSFÜHRUNG MIT GESCHL. ÜBERROLLSCHUTZ	878
SCHALE - RÜCKENLEHNE	879
INSTRUMENTENTAFEL	881
GASPEDAL	888
PLATTFORM	890
RADIO	893
RADIO - KOMMUNIKATION	894
VERSTELLBARER SITZ	895
ÜBERROLL-SCHUTZKABINE	896
*SEAT BELT & LIGHTING GP	903
SICHERHEITSGURT	904
FAHRERSITZ	905
SCHWINGSITZ	909
HYDRAULIKSTEUERAUFHÄNGUNG	912
FAHRERHAUSLÄRMDÄMPFUNG	916
FAHRERSITZFEDERUNG	922
FAHRERHAUS, SONNENBLENDE	926
SCHEIBENWASCHANLAGE	927
TÜRFENSTER	928
SCHEIBENWISCHER	932
WARTUNGSAUSRÜSTUNG UND -ZUBEHÖR	935
WERKZEUGKASTEN	935
AUFKLEBER	937
DIAGNOSELEITUNGEN	938
SCHILD UND AUFKLEBER	944
ACHSE - IDENTIFIKATIONSSCHILD	947
SCHUTZABDECKUNG	947
ERSATZTEILNUMMERNINDEX	B1

* ÜBERSETZUNG ZUM ZEITPUNKT DER DRUCKLEGUNG NICHT VORHANDEN

1. MACHINE IDENTIFICATION

Caterpillar machines are identified by Product Identification Numbers (PIN). Some components included in a machine may be identified by Serial Numbers (S/N). Typical components that will be serialized include engines, transmissions, bulldozers, and rippers. The machine and engine are further identified by arrangement numbers and in some cases modification numbers. These numbers are shown on the product identification plate(s) and on the master plate in the operator's compartment.

Caterpillar dealers need all of these numbers to determine accurate parts identification.

SIS ***New Feature***

Effective First Quarter 2001 the Caterpillar Product Identification Number (PIN) changed from 8 to 17 characters. In an effort to provide uniform equipment identification, Caterpillar and other construction equipment manufacturers are moving to comply with the latest version of the product identification numbering standard. Non-road machine PINs are defined by ISO 10261. The new PIN format will apply to all Caterpillar machines and generator sets. The PIN plates and frame marking will display the 17 character PIN. The new format will look like the following:

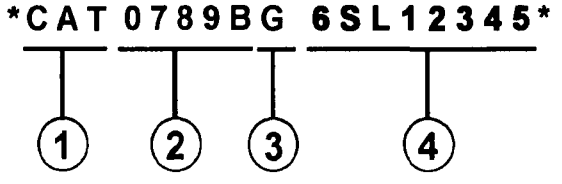

Where:

1. Caterpillar's World Manufacturing Code (characters 1-3)

2. Machine Descriptor (characters 4-8)

3. Check Character (character 9)

4. Machine Indicator Section (MIS) or Product Sequence Number (characters 10-17). These were previously referred to as the Serial Number.

Machines and generator sets produced before First Quarter 2001 will maintain their 8 character PIN format.

Components such as engines, transmissions, axles, etc. and work tools will continue to use an 8 character Serial Number (S/N).

2. ORDERING PARTS

⚠ WARNING

When replacement parts are required for this product Caterpillar recommends using Caterpillar replacement parts or parts with equivalent specifications including, but not limited to, physical dimensions, type, strength and material.

Failure to heed this warning can lead to premature failures, product damage, personal injury or death.

Quality Caterpillar replacement parts are available from Caterpillar dealers throughout the world. Their parts inventories are up to date and include all parts normally required to protect your investment in Caterpillar machines. Dealers may offer repair kits or remanufactured parts to allow selection of the most effective repair alternative for a particular situation. When ordering parts, your order should specify the quantity, part number, part name, and the serial number/product identification number of the machine for which the parts are needed.

3. PARTS MANUAL ORGANIZATION

Product information in this manual is presented as "information elements" that represent all of the components for the specific model. Engine Arrangement and Seat Group are examples of information elements. The information elements are organized alphabetically by part name and secondarily by part number within each major section of the manual.

4. TABLE OF CONTENTS

A table of contents (TOC) is found at the beginning of the manual. The TOC lists each section of the manual with a complete list of all information elements organized as they appear in the manual. Page numbers are provided for quick reference to detailed parts identification illustrations and serviceable consist lists.

5. MAINTENANCE PARTS INDEX

The Maintenance Parts Index, located near the beginning of the manual, references most frequently used maintenance part numbers, providing description, quantity, usage and page number. This information is organized alphabetically by part description.

6. INDEX

The index located near the front of the manual is an alphabetical listing of all information elements included in the manual. Page numbers are provided for quick reference to detailed parts identification illustrations and serviceable consist lists.

7. PART NUMBER INDEX

A numerical index listing all part numbers and the corresponding page number(s) appears at the back of the manual.

8. CAPTIONS

Captions located at the beginning of each information element identify the part number and part name along with additional descriptive information. PIN and S/N information found in each caption should be used to select correct information for a specific machine. Field replacement options, identification of optional attachment components, and where used ("part of") information is also provided.

The first line of a caption is shown in larger type font to indicate the beginning of an information element. Captions for additional pages that may be required to illustrate an information element will be shown in standard type font and will include the term *(contd.)* .

9. NON-SERVICED PARTS

In some instances it is necessary to display non-serviced parts that are a link to a lower level serviceable consist lists. These non-serviced part numbers are shown in *italic* type indicating that they are not available.

10. PARTS LIST REFERENCE NUMBERS

Numbers shown in the Ref No column correspond to numbers used in the associated graphic(s). An alphabetic suffix may be added to a reference number to identify lower level consist items. Numbers shown in the Graphic Ref column refer to the graphic number identifier displayed in the lower left corner of each illustration. The Graphic Ref number may be used in combination with the item Ref No to determine the correct part number. There may be intentional omission of a Ref No in a consist list as information is updated to reflect the latest serviceable part numbers.

11. INDENTED PART NAMES

When a part name is indented in a parts list, it is part of (included in) the group or assembly under which it is indented.

12. ILLUSTRATION REFERENCE LETTERS

When necessary, illustrations contain reference letters (A, B, C etc.) that are intended to track lines and harnesses from one point to another. They are also used to show where to reconnect illustrations that have been separated.

13. ABBREVIATIONS AND SYMBOLS

O.D. – Outside Diameter
I.D. – Inside Diameter
A – Not Part Of This Group
B – Use As Required
C – Change From Previous Type
D – Order By The Meter
E – Order By The Centimeter
F – Not Shown
G – Order By The Inch
I – Refer To Hydraulic Information System
M – Metric Part
R – Remfg Part May Be Available
Y – Separate Illustration
Z – Not Serviced Separately

SIS ***New Feature***

14.<END>

This symbol indicates the end of an information element.

NOTE:

Continuing improvement and advancement of product design may cause changes to your machine which may not be included in this publication. Whenever a question arises regarding your caterpillar product or this publication, please consult your caterpillar dealer for the latest available information.

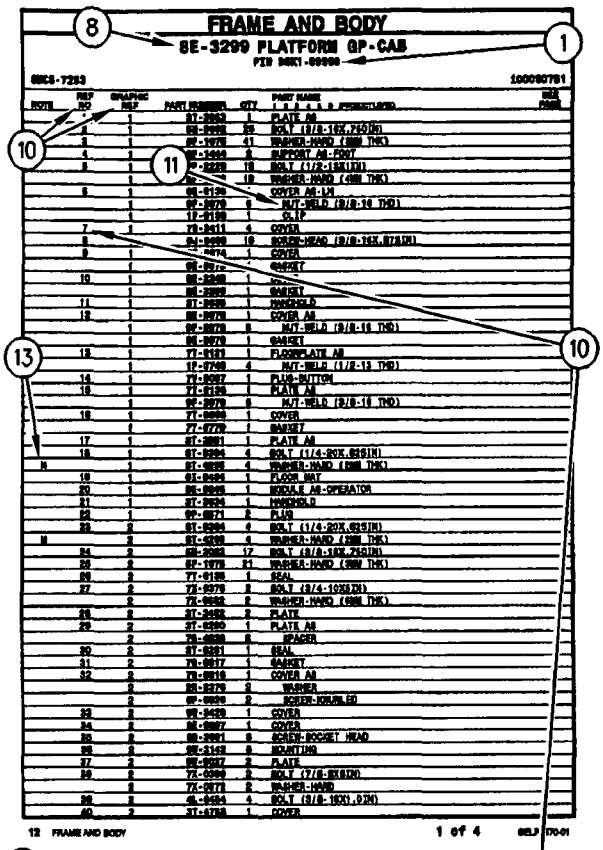
FRAME AND BODY
SE-3299 PLATFORM GP-CAB
1 of 4

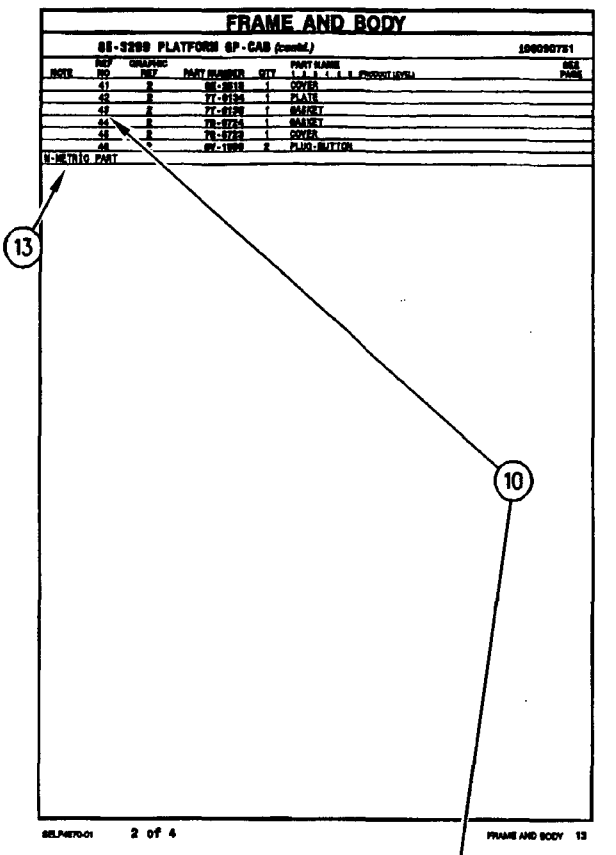
FRAME AND BODY
SE-3299 PLATFORM GP-CAB (contd.)
2 of 4

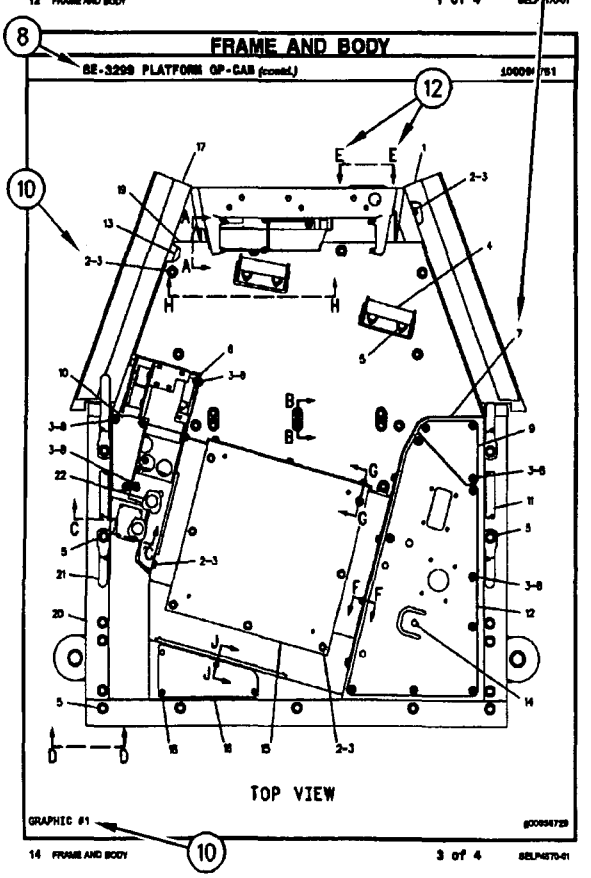
FRAME AND BODY
SE-3299 PLATFORM GP-CAB (contd.)
TOP VIEW
3 of 4

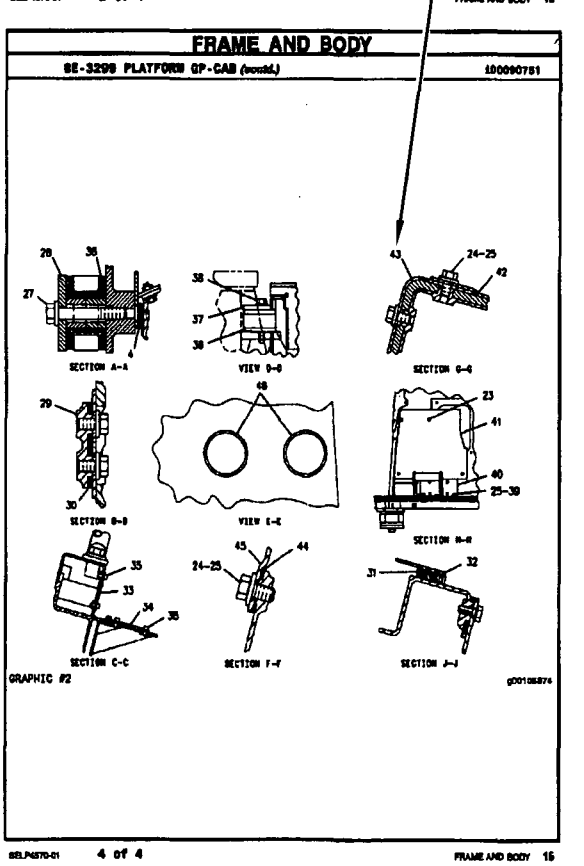
FRAME AND BODY
SE-3299 PLATFORM GP-CAB (contd.)
4 of 4

1. IDENTIFICATION DE LA MACHINE

Toutes les machines Caterpillar portent un numéro d'identification (PIN). Certains composants des machines peuvent porter des numéros de série (S/N). En général, parmi les composants qui portent des numéros de série il y a les moteurs, les transmissions, les bulldozers et les rippers. En plus, la machine et le moteur peuvent recevoir des numéros de version, et dans certains cas, de modification. Ces numéros figurent sur les plaques de numéro de série et sur la plaque signalétique principale qui se trouve dans le poste de conduite.

Les concessionnaires Caterpillar doivent connaître tous ces numéros pour identifier correctement les pièces.

SIS ***Nouvelle Caractéristique***

À partir du premier trimestre 2001, le numéro d'identification produit (PIN) Caterpillar passe de 8 à 17 caractères. Afin de permettre une identification uniforme des matériels, Caterpillar et d'autres constructeurs de machines de travaux publics s'efforcent de se conformer à la norme la plus récente portant sur les numéros d'identification des produits. Les numéros d'identification (PIN) de machines de chantier sont définis par la norme ISO 10261. Le nouveau format du numéro d'identification est valable pour toutes les machines et tous les groupes électrogènes Caterpillar. Le numéro d'identification produit (PIN) figurant sur la plaque et sur le châssis se composera de 17 caractères. Le nouveau format ressemblera à ceci:

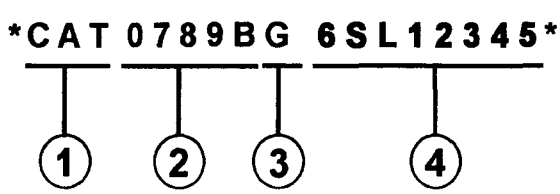

Il se décomposera de la façon suivante:

1. Code international de fabrication de Caterpillar (caractères 1 à 3)

2. Descriptif de la machine (caractères 4 à 8)

3. Contrôle (caractère 9)

4. Indicateur machine (MIS) ou numéro de séquence produit (caractères 10 à 17). Ceux-ci étaient auparavant désignés sous le terme de numéro de série.

Les machines et les groupes électrogènes construits avant le premier trimestre 2001 garderont le format à 8 caractères du numéro d'identification produit (PIN).

Les organes tels que les moteurs, les boîtes de vitesses, les essieux, etc., continueront d'être désignés par un numéro de série (S/N) à 8 caractères.

2. COMMANDE DE PIÈCES

⚠ DANGER

Lorsqu'il faut remplacer des pièces de rechange pour ce produit Caterpillar recommande d'utiliser les pièces de rechange Caterpillar ou les pièces qui ont des spécifications équivalentes dont les dimensions physiques, le type, la force et le matériau. Ces équivalences ne se limitent pas à l'énoncé précédent.

L'inobservation de cette mise en garde peut entraîner des défaillances prématurées, des dommages au produit, des blessures ou même la mort.

Les concessionnaires Caterpillar fournissent dans le monde entier des pièces de rechange de qualité Caterpillar. Leurs stocks de pièces sont constamment réapprovisionnés et comptent toutes les pièces nécessaires pour assurer la bonne marche de vos machines Caterpillar. Certains concessionnaires proposent également des kits de réparation ou des pièces rénovées, ce qui permet de choisir la solution la plus économique dans une situation donnée. Lors des commandes de pièces, mentionner la quantité, le numéro et la désignation des pièces ainsi que le numéro de série ou le numéro d'identification (PIN) de la machine pour laquelle ces pièces sont requises.

3. ORGANISATION DU CATALOGUE DE PIÈCES

Les renseignements sur les produits sont présentés sous forme de "Information element" (élément d'information) représentant tous les composants d'un modèle donné. "Engine Arrangement" (version de moteur) et "Seat Group" (assemblage de siège)" sont des exemples d'éléments d'information. Les éléments d'information sont classés par ordre alphabétique par la désignation standard des pièces et par numéros de pièces dans chaque partie importante du manuel.

4. TABLE DES MATIÈRES

Nouvelle Caractéristique

La table des matières se trouve au début du manuel. La table des matières fournit la liste de tous les chapitres du manuel avec une liste complète de tous les éléments d'information classés par ordre d'apparition dans le manuel. Les numéros de page sont fournis afin que l'utilisateur puisse trouver rapidement les illustrations détaillées concernant l'identification des pièces et les listes des pièces d'entretien.

5. INDEX DES PIÈCES D'ENTRETIEN

La rubrique "Index des pièces d'entretien" qui se trouve au début du manuel renvoie aux pièces d'entretien les plus fréquemment utilisées en précisant la désignation, la quantité, là où la pièce est utilisée et le numéro de page. Ces pièces sont classés par ordre alphabétique.

6. INDEX

L'index qui se trouve vers le début du manuel est une liste alphabétique de tous les éléments d'information du manuel. Les numéros de page sont fournis afin que l'utilisateur puisse trouver rapidement les illustrations détaillées concernant l'identification des pièces et les listes des pièces d'entretien.

7. INDEX DES NUMÉROS DE PIÈCES

Une liste numérique de tous les numéros de pièces et des pages correspondantes se trouve à la fin du manuel.

8. LÉGENDES

Les légendes qui se trouvent en haut de chaque page de chaque élément d'information fournissent le numéro de pièce, la désignation ainsi que des renseignements supplémentaires sur les pièces. Les renseignements concernant les numéros de série (S/N) qui se trouvent dans chaque légende doivent être utilisés pour sélectionner les informations correctes pour un moteur donné. Les informations concernant les options de remplacement sur le chantier, l'identification des composants des équipements offerts en option et les lieux d'application sont aussi fournies.

Nouvelle Caractéristique

Les lettres de la première ligne d'une légende sont présentées en police plus grande afin d'indiquer le début d'une unité d'information. Les légendes qui pourraient être requises pour des pages supplémentaires afin d'illustrer une unité d'information seront présentées en police standard et comprendront le terme (à suivre).

9. PIÈCES NON FOURNIES

Nouvelle Caractéristique

Dans certains cas, il est nécessaire d'indiquer les pièces non fournies qui sont en aval de la liste des pièces d'entretien. Les numéros des pièces non fournies dans la liste des pièces et les légendes seront en italique pour signaler qu'ils ne sont pas disponibles.

10. NUMÉROS DE RÉFÉRENCE DE LA LISTE DES PIÈCES

Nouvelle Caractéristique

Les numéros indiqués dans la colonne des numéros de références correspondent aux numéros utilisés dans les illustrations auxquelles ils sont associés. Un suffixe alphabétique peut être ajouté à un numéro de référence pour identifier la liste des articles en aval. Les numéros indiqués dans la colonne de référence de l'illustration renvoient à l'identification du numéro affiché dans le coin inférieur gauche de chaque illustration. Le numéro de référence de l'illustration pourrait être utilisé avec le numéro de référence de l'article pour déterminer le numéro de pièce correct. Il peut y avoir une omission intentionnelle d'un numéro de référence dans une liste de pièces suite à la mise à jour des informations en vue de refléter les numéros de pièces les plus récentes.

11. DÉSIGNATIONS DE PIÈCES EN RETRAIT

Lorsqu'une désignation de pièce est en retrait, cela veut dire que l'article en regard fait partie de l'ensemble sous lequel il figure.

12. LETTRES DE RÉFÉRENCE DES ILLUSTRATIONS

Quand cela est nécessaire, les illustrations comportent des lettres de référence (A, B, C, etc.) pour montrer le trajet des canalisations et faisceaux de câbles d'un point à l'autre. Elles sont utilisées également pour indiquer où relier les illustrations séparées auparavant.

13. ABRÉVIATIONS ET SYMBOLES

O.D. – Diamètre extérieur
I.D. – Diamètre intérieur
A – Ne fait pas partie de ce groupe
B – Utiliser selon besoin
C – Modification
D – Commander par mètre
E – Commander par centimètre
F – Non représenté
G – Commander par pouce
I – Voir "Hydraulic Information System"
M – Pièce métrique
R – Pièce rénovée éventuellement disponible
Y – Illustration séparée
Z – Non fourni séparément

NOTA:

En raison du progrès technique et des améliorations continuelles apportées au matériel, votre machine comporte peut-être des modifications qui n'apparaissent pas dans la présente publication. En cas de doute sur un détail de votre machine Caterpillar ou sur le texte de la présente publication, adressez-vous à votre concessionnaire Caterpillar.

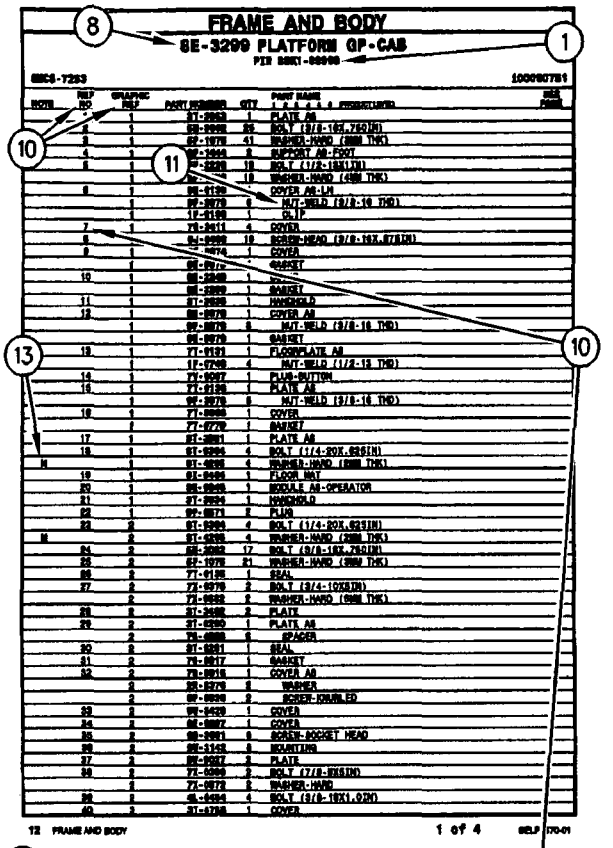
FRAME AND BODY
SE-3299 PLATFORM GP-CAB
1 of 4

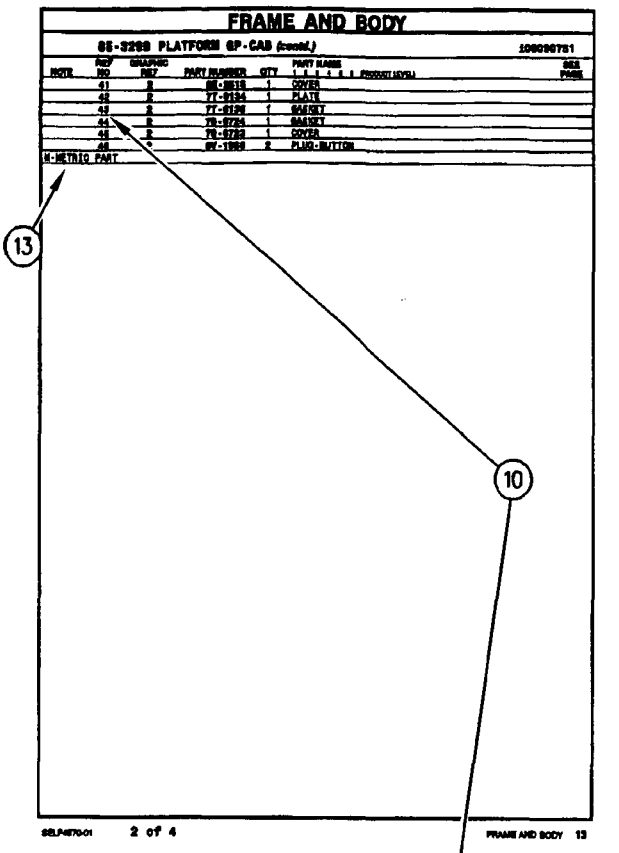
FRAME AND BODY
SE-3299 PLATFORM GP-CAB (contd.)
2 of 4

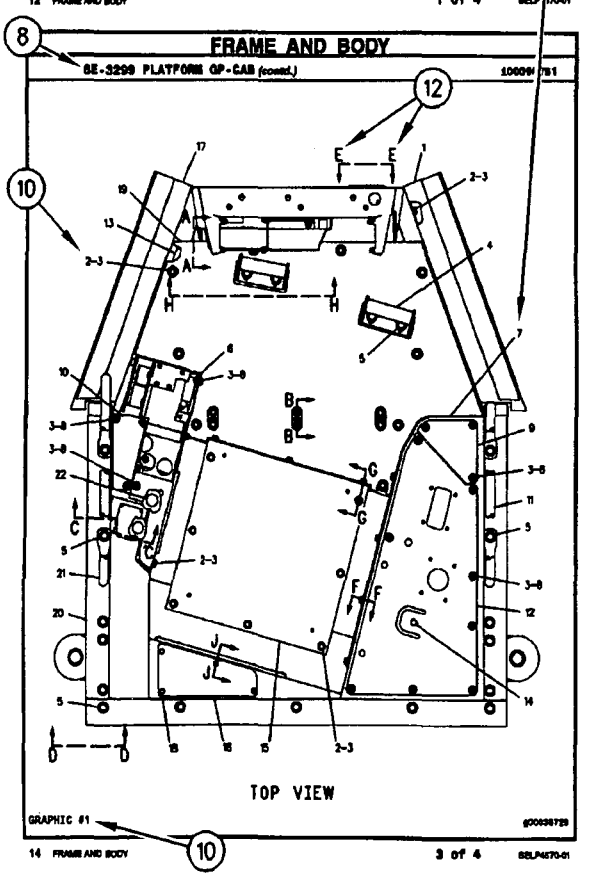
FRAME AND BODY
SE-3299 PLATFORM GP-CAB (contd.)
TOP VIEW
3 of 4

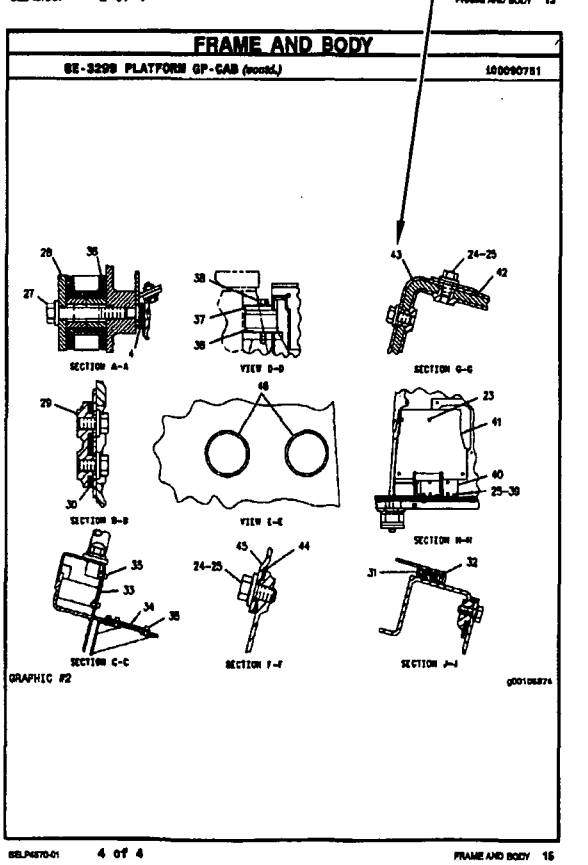
FRAME AND BODY
SE-3299 PLATFORM GP-CAB (contd.)
4 of 4

1. MÁQUINAS

Las máquinas Caterpillar se identifican con Números de Identificación del Producto (PIN). Algunos componentes incluídos en la máquina pueden estar identificados con Números de Serie (N/S). Los componentes que tienen típicamente esta identificación incluyen motores, transmisiones, hojas topadoras y desgarradores. La máquina y el motor se identifican además con Números de Configuración y en algunos casos, Números de Modificación. Estos números están en las placas de identificación del producto o en la placa principal en la cabina del operador.

Los distribuidores Caterpillar necesitan estos números para identificar con exactitud los números de piezas de repuesto.

SIS ***Nueva Característica***

A partir del primer trimestre del 2001, el Número de Identificación de Producto (PIN) de Caterpillar cambió de 8 a 17 caracteres. Para hacer más uniforme el método de identificación de equipos, Caterpillar y otros fabricantes de equipo de construcción han tomado medidas para cumplir con la versión más reciente de la norma de numeración de identificación de productos. Los Números de Identificación de Producto para máquinas que no se operan en carreteras son definidos por la norma ISO 10261. El nuevo formato PIN corresponderá a todas las máquinas y grupos electrógenos Caterpillar. Las placas y los caracteres PIN estampados en el bastidor mostrarán el PIN de 17 caracteres. El nuevo formato tendrá la apariencia siguiente:

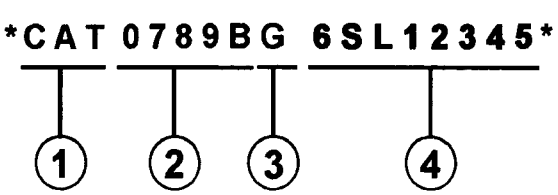

Significado de los caracteres:

1. Código de Fabricación Mundial de Caterpillar (caracteres 1-3)

2. Sección Descriptor de la Máquina (caracteres 4-8)

3. Carácter de Verificación (carácter 9)

4. Sección Indicador de la Máquina (MIS) o Número de Secuencia de Producto (caracteres 10-17). Anteriormente, estos caracteres constituían el Número de Serie.

Las máquinas y grupos electrógenos producidos antes del primer semestre del 2001 mantendrán su formato PIN de 8 caracteres.

Los componentes como motores, transmisiones, ejes, herramientas de trabajo, etc., continuarán usando un Número de Serie (S/N) de 8 caracteres.

2. COMO PEDIR REPUESTOS

⚠ ADVERTENCIA

Cuando se necesiten piezas de repuesto para este producto, Caterpillar recomienda usar piezas de repuesto Caterpillar o piezas que tengan especificaciones equivalentes incluyendo, pero sin estar limitadas a, dimensiones físicas, tipo, fortaleza y material.

El no hacer caso de esta advertencia puede llevar a fallas prematuras, daños al producto y lesiones graves o mortales.

Las piezas de repuesto Caterpillar de calidad están a la disposición de los distribuidores Caterpillar en todo el mundo. Sus existencias actualizadas incluyen todas las piezas normalmente requeridas para proteger su inversión en máquinas Caterpillar. Los distribuidores pueden tener juegos de reparación o piezas remanufacturadas para permitir la selección de la mejor alternativa de reparación en un caso en particular. Al pedir piezas de repuesto, especifique en su pedido la cantidad, el número de pieza, el nombre de la pieza y el número de serie/número de identificación del producto, de la máquina para la cual se necesitan estas piezas.

3. ORGANIZACION DEL MANUAL DE PIEZAS

La información sobre el producto, se presenta en este manual, como "elementos de información" que representan todos los componentes de un modelo específico. Las configuraciones de motores y los grupos de asientos son ejemplos de elementos de información. Los elementos de información están organizados primeramente por nombres de piezas en orden alfabético y en segundo lugar, por el número de pieza dentro de cada sección principal del manual.

4. CONTENIDO

La página de Contenido se encuentra al principio del manual. El Contenido indica cada sección del manual con una lista completa de todos los elementos de información organizados en el orden que aparecen en el manual. Los números de página proporcionan una referencia rápida a las ilustraciones detalladas de identificación de piezas y a las listas de componentes de repuesto de dichas piezas.

5. ÍNDICE DE PIEZAS DE MANTENIMIENTO

Al principio de este catálogo se encuentra un índice de los números de piezas utilizadas más frecuentemente para el mantenimiento, que incluye descripción, cantidad necesaria, lugar de utilización y número de página. Esta información está organizada alfabéticamente, por descripción de la pieza.

6. ÍNDICE

El Índice, ubicado cerca del principio del manual, es una lista en orden alfabético de todos los elementos de información incluídos en el manual. Los números de página proporcionan una referencia rápida a las ilustraciones detalladas de identificación de piezas y a las listas de componentes de repuesto de dichas piezas.

7. INDICE NUMÉRICO DE PIEZAS

Un índice numérico de piezas con el correspondiente número de página aparece al final de este catálogo.

8. TÍTULOS

Los títulos ubicados al principio de cada elemento de información identifican el número y el nombre de la pieza junto con información descriptiva. Se debe usar información sobre los Números de Identificación de Pieza (PIN) y los números de serie (S/N) para seleccionar la información que corresponda a una máquina en particular. También se suministra información sobre las opciones de reparación en el campo, la identificación de componentes de accesorios optativos y el lugar de ubicación de la pieza ("es parte de").

La primera línea del título se muestra con un tipo de letra más grande para indicar el comienzo de un elemento de información. Si se requieren páginas adicionales para ilustrar un elemento de información, los títulos se muestran con un tipo de letra normal y la continuación se indica entre paréntesis.

9. PIEZAS QUE NO SE SUMINISTRAN COMO REPUESTO

En algunos casos es necesario indicar piezas que no se suministran como repuesto pero que pueden estar conectadas a listas de componentes de otras piezas de repuesto. En tal caso, dichas piezas se muestran en cursiva para indicar que no son piezas disponibles.

10. NÚMEROS DE REFERENCIA

Los números en la columna de No. de Referencia corresponden a los números indicados en la ilustración que pertenece a ese número de pieza. Los números que tienen un sufijo alfabético identifican artículos de las listas de componentes de piezas. Los números en la columna de Referencia de la ilustración se identifican en la esquina inferior izquierda de cada ilustración. Para determinar el número de pieza correcto se puede utilizar tanto el No. de Referencia de la ilustración como el No. de Referencia del artículo. A medida que se actualiza la información para indicar los más recientes números de piezas de repuesto, puede omitirse intencionalmente un No. de Referencia en una lista de componentes de piezas.

11. NOMBRES DE PIEZA SANGRADOS

Cuando el nombre de una pieza está sangrado en una lista, significa que esta pieza forma parte del grupo o conjunto del renglón inmediatamente superior.

12. LETRAS DE REFERENCIA DE ILUSTRACIONES

Las ilustraciones contienen algunas veces letras de referencia (A, B, C etc.) cuyo propósito es seguir el trayecto de líneas y mazos de cables de un punto a otro. También se utilizan para mostrar dónde volver a unir ilustraciones que se habían separado.

13. ABREVIATURAS Y SIMBOLOS

O.D. – Diámetro exterior
I.D. – Diámetro interior
A – No es pieza de este grupo
B – Utilizado según la demanda
C – Indica cambio
D – Se pide por metro
E – Se pide por centímetro
F – No se muestra
G – Se pide por pulgada
I – Consulte el sistema de información hidráulica
M – Pieza métrica
R – Puede estar disponible como pieza remanufacturada
Y – Ilustración separada
Z – No se suministra por separado

SIS ***Nueva Característica***

14.<END>

Este símbolo indica el final de un elemento de información.

NOTA:

Las contínuas mejoras y adelantos en diseño podrían originar cambios a su máquina que no se incluyen en esta publicación. Cuando tenga alguna pregunta acerca de su producto Caterpillar o de esta publicación, consulte al distribuidor Caterpillar para obtener la información más reciente.

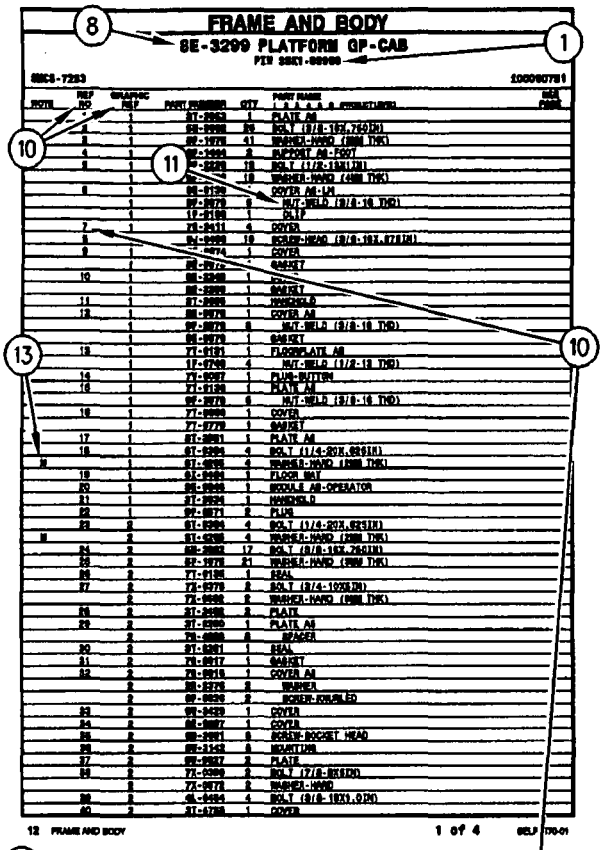
FRAME AND BODY
8E-3299 PLATFORM GP-CAB
8
1
10
11
13
10

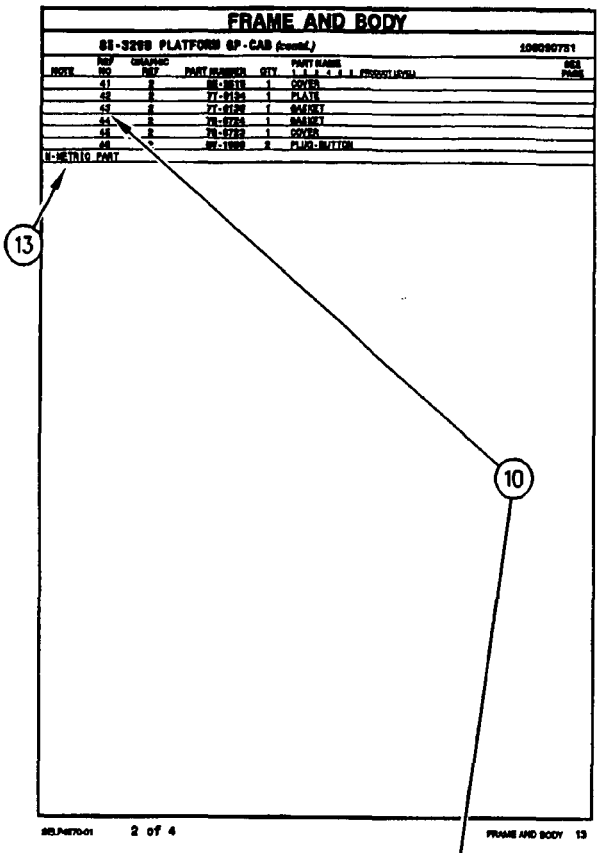
FRAME AND BODY
8E-3299 PLATFORM GP-CAB (contd.)
13
10

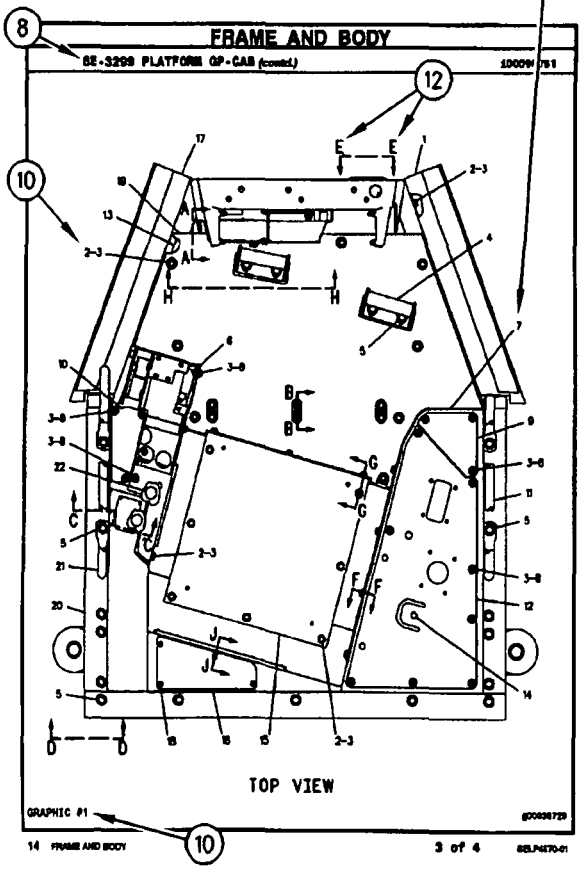
FRAME AND BODY
8E-3299 PLATFORM GP-CAB (contd.)
8
12
10
TOP VIEW
GRAPHIC #1
10

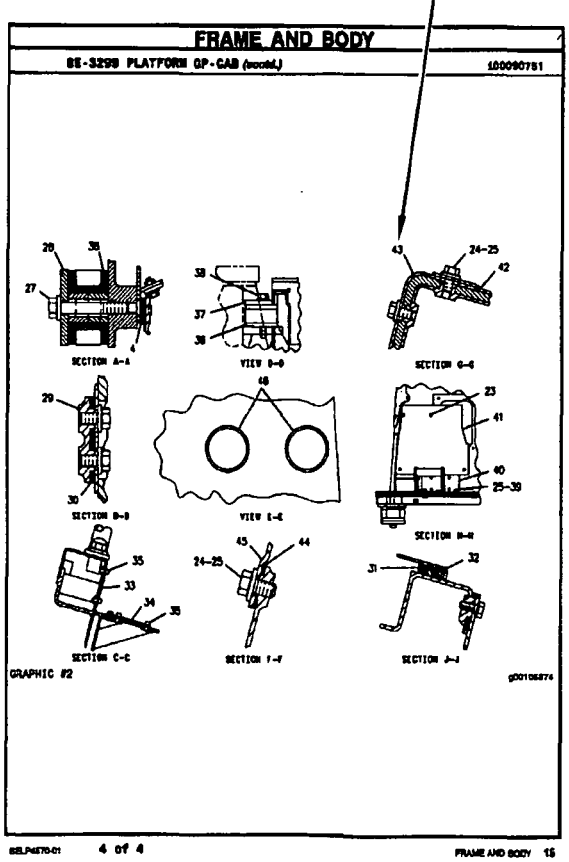
FRAME AND BODY
8E-3299 PLATFORM GP-CAB (contd.)
SECTION A-A
VIEW B-B
SECTION C-C
VIEW E-E
SECTION D-D
SECTION F-F
SECTION G-G
SECTION H-H
SECTION J-J
GRAPHIC #2

INFORMAÇÃO GERAL

1. IDENTIFICAÇÃO DA MÁQUINA

As máquinas Caterpillar são identificadas pelos Números de Informação do Produto (PIN). Alguns componentes incluídos numa máquina podem ser identificados por Números de Série (S/N). Componentes típicos que serão enumerados com números de série incluem motores, transmissões, lâminas e ríperes. Além do número de série, a máquina e o motor são ainda identificados por números de arranjo e, em alguns casos, números de modificações. Tais números encontram-se na(s) placa(s) de identificação do produto e na placa mestre no compartimento do operador.

Novidades

A partir do primeiro trimestre de 2001 o Número de Identificação de Produto da Caterpillar (PIN) precisa ser mudado de 8 para 17 caracteres. Esforçando-se para fornecer uma identificação uniforme de equipamentos, a Caterpillar e outros fabricantes de equipamento de construção estão mudando para atender a versão mais atualizada do padrão de identificação de produtos. Os números de PIN para produtos de aplicações não rodoviárias são definidos pela ISO 10261. O novo formato de número PIN será adotado em todas as máquinas e grupos geradores Caterpillar. As placas e as marcações do chassi mostrarão os 17 dígitos de PIN. O novo formato terá a seguinte disposição:

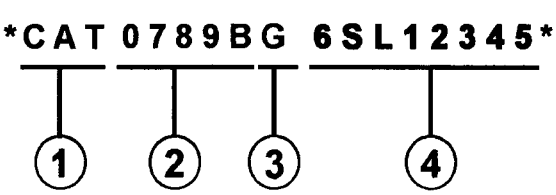

Onde:

1. Código de Fabricação Mundial da Caterpillar (dígitos 1-3)

2. Descrição da Máquina (dígitos 4-8)

3. Dígito de Verificação (dígito 9)

4. Seção de Indicador da Máquina (MIS) ou Número de Seqüência de Produto (dígitos 10-17). Estes eram anteriormente chamados de Número de Série.

Máquinas e grupos geradores produzidos antes do primeiro trimestre de 2001 manterão o formato de 8 caracteres de PIN.

Componentes como motores, transmissões, eixos, ferramentas de trabalho, etc. continuarão a usar Número de Série (S/N) com oito caracteres.

2. COMO OBTER PEÇAS

⚠ CUIDADO

Quando peças de substituição são exigidas para este produto, a Caterpillar recomenda a utilização de peças de substituição Caterpillar ou peças com as especificações equivalentes incluindo, mas não limitadas, à dimensões físicas, tipos, resistência e materiais.

A inobservância desta advertência poderá resultar em falhas prematuras, danos ao produto, ferimentos ou morte.

As Peças de Reposição de Qualidade Caterpillar encontram-se disponíveis nos revendedores Caterpillar no mundo inteiro. Seus estoques de peças são atualizados e incluem todas as peças normalmente necessárias para proteger seu investimento em máquinas Caterpillar. Alguns revendedores podem oferecer jogos de reparo ou peças de troca/remanufaturadas disponíveis como uma opção da alternativa de reparo mais eficaz para uma situação específica. Ao encomendar peças, seu pedido deve especificar a quantidade, o número e o nome da peça e o número de série/número de identificação do produto referentes à máquina para a qual as peças se destinam.

3. ORGANIZAÇÃO DO MANUAL DE PEÇAS

A informação do produto neste manual é apresentada em forma de "elementos de informação" que representam todos os componentes para o modelo específico. Arranjo de Motor e Grupo de Assento são exemplos de elementos de informação. Os elementos de informação são organizados em ordem alfabética por nome de peça ou secundariamente, por número de peça incluído em cada seção principal do manual.

4. LISTA DE CONTEÚDOS

A Lista de Conteúdos (TOC) se encontra no princípio do manual. A Lista de Conteúdos (TOC) relaciona em cada seção do manual uma lista completa com todos os elementos de informação organizados conforme aparecem no manual. Números de página são fornecidos para que se tenha referência rápida de ilustrações de peças detalhadas e listas de conteúdos que podem receber serviço de manutenção.

5. ÍNDICE DE PEÇAS DE MANUTENÇÃO

O Índice de Peças de Manutenção, localizado perto do princípio do manual, faz referência aos números de peça de manutenção usados com maior frequência, fornecendo uma descrição, a quantidade, o uso e o número de página. Esta informação é organizada com a descrição da peça em ordem alfabética.

6. ÍNDICE

O Índice localizado perto do princípio do manual, consiste de uma lista em ordem alfabética de todos os elementos de informação incluídos no manual. Números de página são fornecidos para que se tenha referência rápida de ilustrações de peças detalhadas e listas de conteúdos que podem receber serviço de manutenção.

7. ÍNDICE DE NÚMERO DE PEÇA

Um índice numérico relacionando todos os números de peça e a(s) página(s) correspondentes, aparece no final do manual.

8. LEGENDAS

As legendas localizadas no início de cada elemento de informação identificam o número e o nome de peça, juntamente com informação descritiva adicional. Informações sobre o Número de Informação do Produto (PIN) e o Número de Série (S/N) encontradas em cada legenda devem ser usadas para selecionar a informação correta sobre uma máquina específica. Opções de substituição no campo, identificação de componentes de acessórios opcionais e informações sobre onde são utilizados ("parte de") são também fornecidas.

A primeira linha de uma legenda é indicada em tipo maior para indicar o princípio de um elemento de informação. Legendas para páginas adicionais que podem ser necessárias para ilustrar um elemento de informação serão apresentadas em tipo padrão e incluirão o termo *(continua)* .

9. NÃO DISPONÍVEL SEPARADAMENTE

Em alguns casos, é necessário mostrar peças não disponíveis separadamente que têm uma ligação com listas de conteúdos de nível inferior que podem receber serviço de manutenção. Os números de peça destes componentes não disponíveis aparecerão em *itálico* , a fim de indicar que não estão disponíveis.

10. NÙMEROS DE REFERÊNCIA À LISTA DE PEÇAS

Os números indicados na coluna Ref No (No. de Referência) correspondem-se aos números usados no(s) gráfico(s) correspondente(s). Um sufixo com letras pode ser acrescentado a um número de referência para identificar itens de conteúdo de nível inferior. Os números indicados na coluna Graphic Ref (Referência de Gráfico) referem-se ao identificador de número de gráfico presente no canto esquerdo inferior de cada ilustração. O número de Referência de Gráfico pode ser usado em combinação com o item Ref No para determinar-se o número de peça correto. Poderá haver omissão intencional de um número de referência (Ref No) de uma lista de conteúdos uma vez que as informações são atualizadas para refletir os números de peça mais recentes que podem receber serviço de manutenção.

11. NOMES DE PEÇAS DESALINHADOS

Quando um nome de peça encontra-se desalinhado numa lista de peças, significa que tal item faz parte do (está incluído no) grupo ou conjunto sob o qual está relacionado.

12. LETRAS DE REFERÊNCIA NAS ILUSTRAÇÕES

Quando necessário, as ilustrações contêm letras de referência (A, B, C, etc.) que são utilizadas para seguir tubulações e cabos elétricos de um ponto a outro. Também foram utilizadas para indicar onde se pode reconectar as ilustrações que foram separadas.

13. ABREVIAÇÕES E SÍMBOLOS

O.D. – "Outside Diameter" (Diâmetro Externo)
I.D. – "Inside Diameter" (Diâmetro Interno)
A – Não faz parte deste grupo
B – Use conforme necessário
C – Indica modificação
D – Vendido por metro
E – Vendido por centímetro
F – Não ilustrado
G – Vendido por polegada
I – Consultar o Sistema de Informações Hidráulicas
M – Peça métrica
R – Peça remanufaturada pode estar disponível; consulte o seu revendedor Cat
Y – Ilustração separada
Z – Não disponível separadamente

SIS ***Novidades***

14. <END>

Este símbolo indica o final de um elemento de informação.

NOTA:

Os contínuos aperfeiçoamentos e avanços no projeto do produto podem ocasionar modificações em sua máquina que talvez ainda não estejam incluídas nesta publicação. Sempre que surgirem dúvidas quanto a um produto Caterpillar ou quanto à presente publicação, consulte o seu revendedor Caterpillar para obter as informações mais recentes disponíveis.

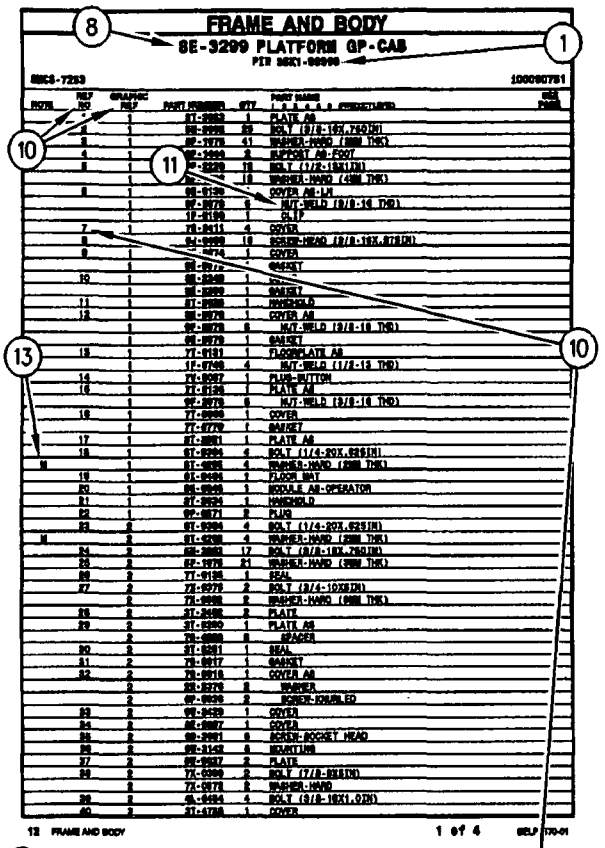
FRAME AND BODY
SE-3299 PLATFORM GP-CAB
1
8
10
11
13
10

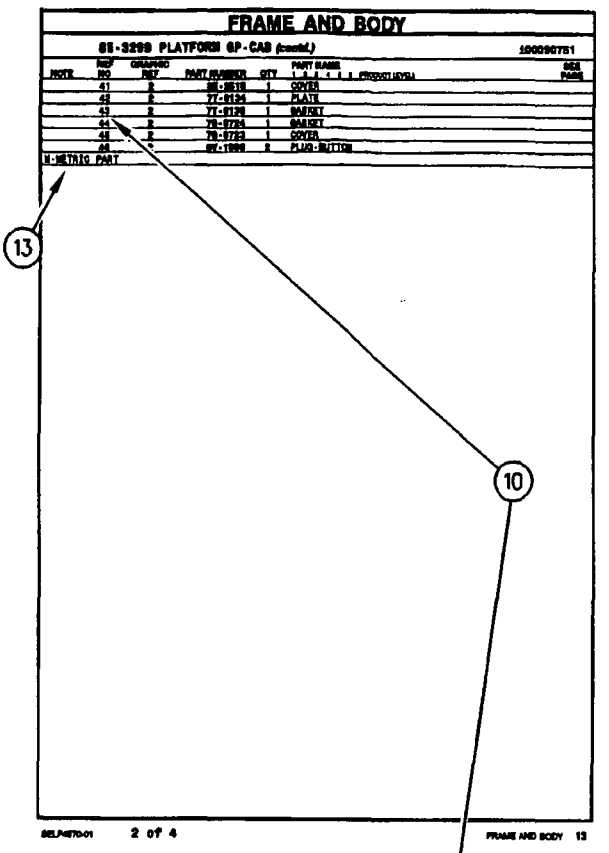
FRAME AND BODY
SE-3299 PLATFORM GP-CAB (contd.)
13
10

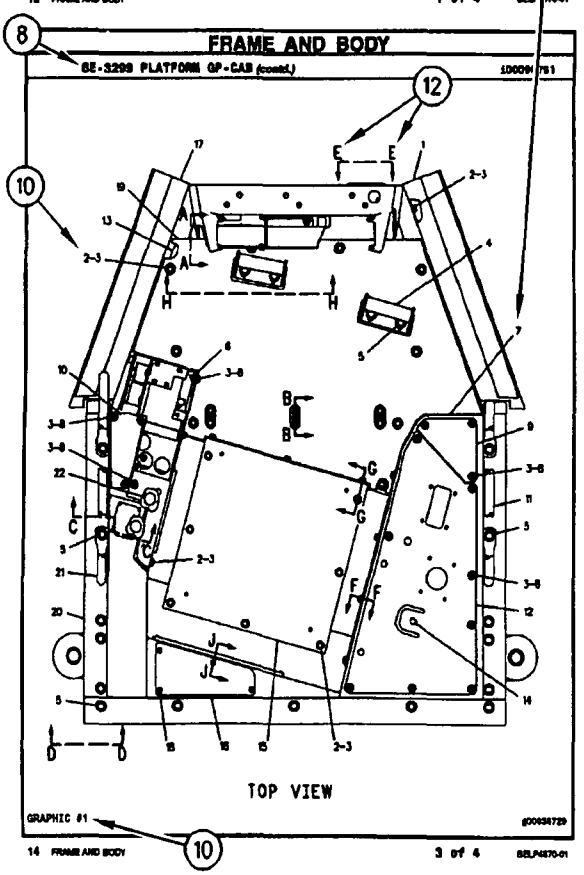
FRAME AND BODY
SE-3299 PLATFORM GP-CAB (contd.)
8
12
10
TOP VIEW
GRAPHIC #1
10

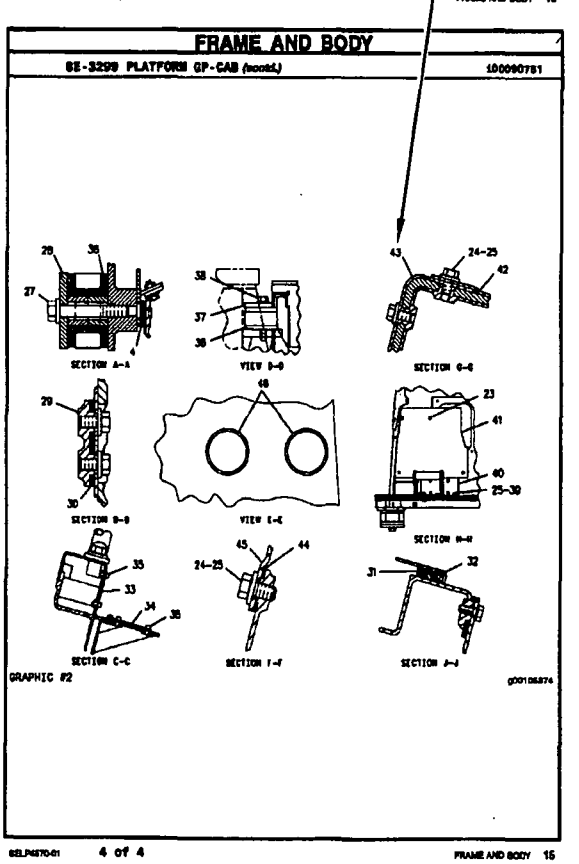
FRAME AND BODY
SE-3299 PLATFORM GP-CAB (contd.)
SECTION A-A
VIEW B-B
SECTION C-C
VIEW E-E
SECTION F-F
SECTION G-G
SECTION H-H
SECTION J-J
GRAPHIC #2

ALLGEMEINE HINWEISE

1. MASCHINENKENNZEICHNUNG

Caterpillar-Maschinen sind mit PRODUCT IDENTIFICATION NUMBERS (PIN) (Produkt-Identnummern) gekennzeichnet. Einige Baugruppen, z.B. Motoren, Getriebe, Planierschilde und Aufreißer, sind mit SERIAL NUMBERS (S/N) (Seriennummern) gekennzeichnet. An der Maschine und am Motor befinden sich außerdem ARRANGEMENT NUMBERS (Ausrüstungsnummern) sowie in einigen Fällen MODIFICATION NUMBERS (Änderungsnummern). Sie befinden sich auf den PIN-Schildern und auf dem Typenschild im Fahrerhaus.

Bei Ersatzteilbestellungen müssen dem Händler alle diese Nummern zur Verfügung gestellt werden.

SIS ***Neu im Parts Manual***

Vom ersten Quartal 2001 ab wurde die Caterpillar Produkt-Identnummer (PIN) von 8 auf 17 Zeichen geändert. Um zur Standardisierung der Produkt-Identnummer beizutragen, sind Caterpillar und andere Baumaschinenhersteller bestrebt, die aktuellste Norm zur Produkt-Identnummerierung einzuführen. Produkt-Identnummern für Baumaschinen sind durch ISO 10261 definiert. Das neue Format der Produkt-Identnummern gilt für alle Caterpillar-Maschinen und -Stromaggregate. Die Produkt-Identschilder und -Identrahmenmarkierung enthalten die aus 17 Zeichen bestehende Identnummer. Das neue Format hat folgende Abschnitte:

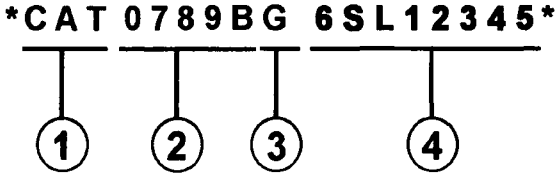

Abschnitte:

1. Caterpillars weltweiter Herstellungscode (Zeichen 1-3)

2. Modell (Zeichen 4-8)

3. Kontrollzeichen (Zeichen 9)

4. Maschinenspezifische Kennung (MIS) oder Produktsequenznummer (Zeichen 10-17). Diese wurde früher als Seriennummer bezeichnet.

Für vor dem ersten Quartal 2001 hergestellte Maschinen und Stromaggregate wird das aus 8 Zeichen bestehende PIN-Format beibehalten.

Bauteile wie z.B. Motoren, Getriebe, Achsen sowie Arbeitsgeräte werden weiterhin eine aus 8 Zeichen bestehende Seriennummer (S/N) aufweisen.

2. BESTELLEN VON ERSATZTEILEN

⚠ WARNUNG

Wenn für diese Maschine Ersatzteile benötigt werden, empfiehlt Caterpillar, ausschließlich Caterpillar-Ersatzteile oder solche zu verwenden, die die gleichen technischen Merkmale hinsichtlich Typ, Festigkeit, Werkzeugeigenschaften und die gleichen Maße aufweisen.

Bei Nichtbeachtung dieser Warnung besteht Verletzungs- oder sogar Lebensgefahr! Ferner kann Nichtbeachtung vorzeitige Ausfälle der Teile und Beschädigung der Maschine zur Folge haben.

Original Caterpillar-Ersatzteile können weltweit bei jedem Caterpillar-Händlern bestellt werden. Die umfangreichen Händlerlager enthalten normalerweise alle Teile, die Sie für Ihre Caterpillar-Maschine benötigen. Einige Händler bieten Reparatursätze, Austausch- oder werküberholte Teile an, so daß Sie eine Auswahl unter verschiedenen Reparaturmöglichkeiten treffen können. Ihre Bestellung muß folgende Angaben enthalten: Anzahl der benötigten Teile, Bestellnummer, Bezeichnung des Teils, Serien-Nr./Produkt-Ident-Nr., Ausrüstungs-Nr. und Änderungs-Nr. der Maschine, für die diese Teile benötigt werden.

3. AUFBAU DES PARTS MANUAL

Die Produktinformationen für alle Komponenten eines bestimmten Modells sind in INFORMATION ELEMENTS (Informationseinheiten) gegliedert. ENGINE ARRANGEMENT (Motorausführung) und SEAT GROUP (Fahrersitz) sind Beispiele für solche Informationseinheiten. Sie sind innerhalb jeder Gruppe alphabetisch, entsprechend der Ersatzteilbezeichnung, und zusätzlich numerisch, entsprechend der Ersatzteilnummer, geordnet.

4. INHALTSVERZEICHNIS

Das Inhaltsverzeichnis befindet sich am Anfang des Buches. Im Inhaltsverzeichnis werden die einzelnen Abschnitte des Buches aufgeführt. Die Abschnitte enthalten eine vollständige Aufstellung aller Informationseinheiten. Diese sind entsprechend ihrem Erscheinen im Buch geordnet. Das Inhaltsverzeichnis enthält Seitenangaben für Schnellverweise auf detaillierte Abbildungen und Teillisten.

5. INDEX FÜR WARTUNGSTEILE

Der Index für Wartungsteile vorn im Buch enthält die Bestellnummern, Seitenangaben, Mengenangaben und Informationen über den Einsatzbereich für die am häufigsten benötigten Ersatzteile. Die Angaben sind alphabetisch entsprechend der Teilebezeichnung geordnet.

6. INDEX

Der Index vorn im Buch enthält eine alphabetische Liste aller Informationseinheiten. Er enthält Seitenangaben für Schnellverweise auf detaillierte Abbildungen und Teillisten.

7. INDEX FÜR BESTELLNUMMERN

Hinten im Buch befindet sich ein numerischer Index, mit allen Bestellnummern und dem Hinweis auf die Seite, auf der sich die betreffende Abbildung befindet.

8. ÜBERSCHRIFTEN

Die Überschriften, die sich am Anfang jeder der Informationseinheiten befinden, enthalten Bestellnummern, Ersatzteilbezeichnungen und zusätzliche beschreibende Informationen. Produkt-Ident- und Seriennummern in den Überschriften sollten zur Auswahl der richtigen Informationen für die betreffende Maschine verwendet werden. Die Überschriften enthalten außerdem Informationen über möglichen Außendienstersatz, mögliche Baugerätekomponenten und die Baugruppe, zu der das Teil gehört.

Die erste Zeile einer Überschrift erscheint in einer größeren Schriftart, um den Anfang einer Informationseinheit zu kennzeichnen. Überschriften für zusätzliche Seiten, die zur Erläuterung einer Informationseinheit notwendig sind, erscheinen in normaler Schriftart und enthalten den Begriff "(contd.)".

9. NICHT EINZELN LIEFERBARE TEILE

In einigen Fällen ist es notwendig nicht lieferbare Teile, die selbst mit einer eigenen Teilliste im Buch vertreten sind, aufzuführen. Die Bestellnummern dieser nicht einzeln lieferbaren Teile erscheinen kursiv, wodurch angezeigt wird, daß sie nur in Verbindung mit anderen Teilen lieferbar sind.

10. REFERENZNUMMER FÜR ERSATZTEILE

Die Zahlen, die in der Spalte "Ref No" aufgeführt sind, stimmen mit den Zahlen in den beigefügten Abbildungen überein. Ein Buchstaben-Suffix kann zu einer Referenznummer hinzugefügt werden, um zu kennzeichnen, daß das Teil mit einer eigenen Teilliste im Buch aufgeführt ist. Die in der Spalte "Graphic Ref" angeführten Zahlen verweisen auf die Identifikationsnummer der Abbildung, die sich in der linken unteren Ecke der Abbildung befindet. Diese Nummer kann zusammen mit der Referenznummer des Teils angegeben werden, um die richtige Ersatzteilnummer zu ermitteln. Referenznummern können absichtlich weggelassen werden, da die Nummern der lieferbaren Ersatzteile ständig aktualisiert werden.

11. EINGERÜCKTE BEZEICHNUNGEN

Wenn eine Bezeichnung eingerückt ist, wird dadurch angezeigt, daß das Teil zu einer Baugruppe gehört, unter deren Bezeichnung es eingerückt ist.

12. REFERENZBUCHSTABEN

Falls erforderlich sind in den Abbildungen Referenzbuchstaben enthalten (z.B. A, B, C, usw.), die Leitungen und Kabelbäume von einem Punkt zum anderen verfolgen. Außerdem geben sie die Stelle an, an der getrennte Abbildungen fortgesetzt werden.

13. ABKÜRZUNGEN UND SYMBOLE

O.D. – Außendurchmesser
I.D. – Innendurchmesser
A – kein Teil dieser Gruppe
B – nach Bedarf verwenden
C – Hinweis auf eine Änderung
D – in Meter-Länge bestellen
E – in Zentimeter-Länge bestellen
F – nicht gezeigt
G – in Zoll-Länge bestellen
I – siehe Hydraulikinformationssystem
M – metrisches Teil
R – werküberholtes Teil unter Umständen lieferbar
Y – separate Abbildung
Z – nicht einzeln lieferbar

SIS ***Neu im Parts Manual***

14. <END>

Dieses Symbol zeigt das Ende eines Informationselements an.

ANMERKUNG:

Ständig vorgenommene Verbesserungen und Weiterentwicklungen an Ihrer Maschine können Änderungen verursachen, die in der vorliegenden Ausgabe noch nicht berücksichtigt sind. Fragen zu Ihrer Caterpillar-Maschine oder diesem Ersatzteilbuch beantwortet Ihr Caterpillar-Händler.

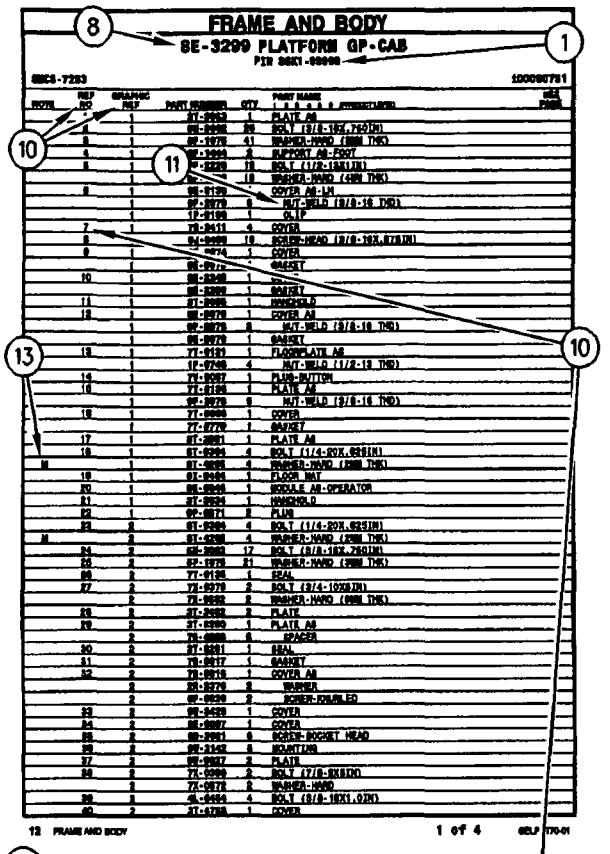
FRAME AND BODY
SE-3299 PLATFORM GP-CAB
1
8
10
11
13
10

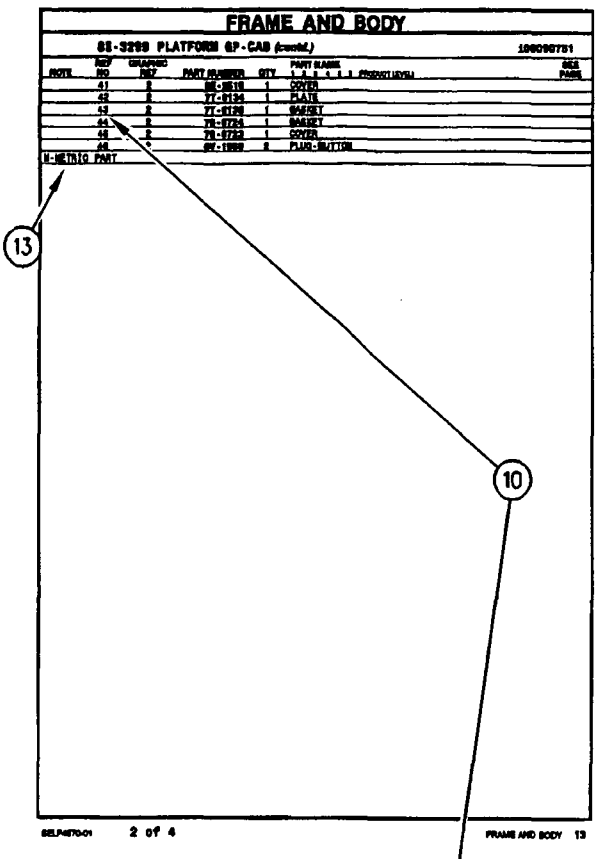
FRAME AND BODY
SE-3299 PLATFORM GP-CAB (contd.)
13
10

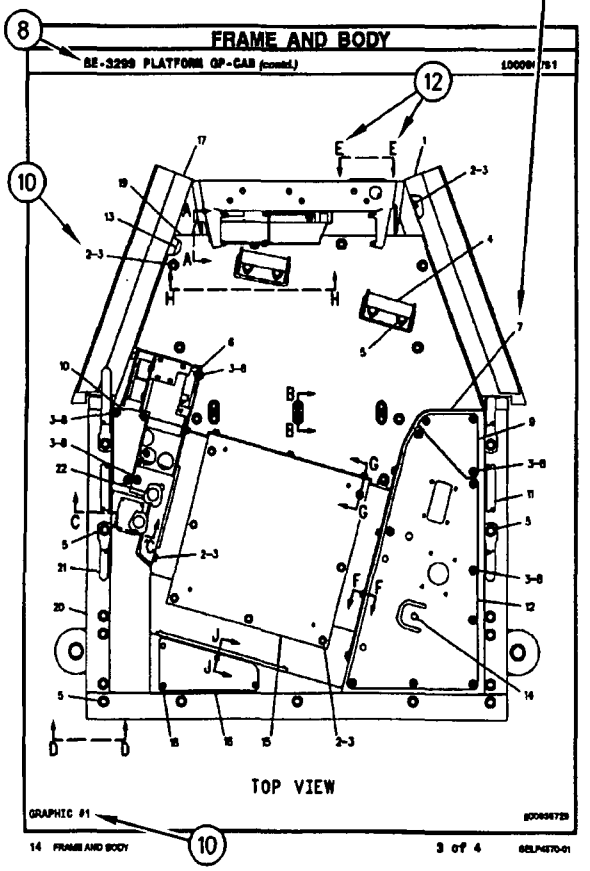
FRAME AND BODY
SE-3299 PLATFORM GP-CAB (contd.)
8
12
10
TOP VIEW
GRAPHIC #1
10

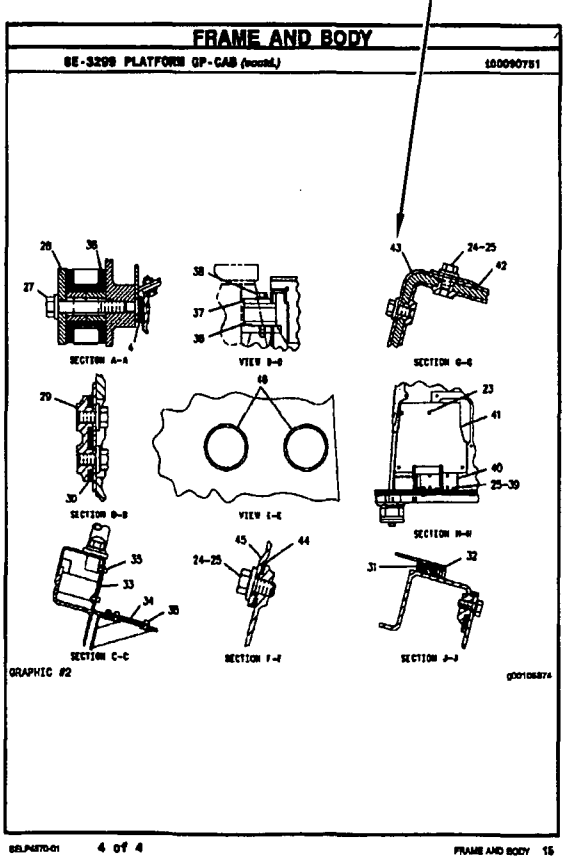
FRAME AND BODY
SE-3299 PLATFORM GP-CAB (contd.)
SECTION A-A
VIEW B-B
SECTION C-C
SECTION D-D
VIEW E-E
SECTION F-F
SECTION G-G
SECTION H-H
SECTION J-J
GRAPHIC #2

REMANUFACTURED COMPONENTS

As an option when making repairs consider Caterpillar Remanufactured Components. Components that are available through the Caterpillar Remanufactured Program are identified three ways in the parts book:

- with the letter R in the note field of the parts list
- with an R* at the beginning of the first line of the caption
- with an *R at the end of the first line of the caption

Typical components included in the Remanufacturing Program include:

ALTERNATORS
CONNECTING RODS
CRANKSHAFTS - UNDERSIZE
CRANKSHAFTS - UPGRADE TO NEW
CYLINDER HEADS
ELECTRONIC CONTROL MODULES (ECM)
ELECTRONIC SENSORS
FUEL INJECTORS
FUEL NOZZLES
FUEL PUMPS
GOVERNORS
OIL PUMPS
PISTONS
SHORT BLOCKS
STARTERS
TURBOCHARGERS - COMPLETE
TURBOCHARGER CARTRIDGES
WATER PUMPS

Caterpillar Remanufactured engines for many engine arrangements are also available.

COMPOSANTS RÉNOVÉS

Comme option de réparation, considérer les composants rénovés Caterpillar. Les composants disponibles dans le cadre du programme Caterpillar de composants rénovés sont identifiés de trois façons dans le catalogue de pièces:

- avec la lettre "R" dans l'espace note de la liste des pièces
- avec R* au début de la première ligne des légendes
- avec *R à la fin de la première ligne des légendes

Les composants suivants figurent parmi les composants typiques du programme de rénovation:

ALTERNATEURS
BIELLES
VILEBREQUINS - SOUS-DIMENSIONNÉS
VILEBREQUINS - REMIS À NEUF
CULASSES
MODULES DE COMMANDE ÉLECTRONIQUE (ECM)
CAPTEURS ÉLECTRONIQUES
INJECTEURS
TÊTES D'INJECTEURS
POMPES À CARBURANT
RÉGULATEURS
POMPES À HUILE
PISTONS
BLOCS EMBIELLÉS
DÉMARREURS
TURBOCOMPRESSEURS - COMPLETS
CARTOUCHES DE TURBOCOMPRESSEUR
POMPES À EAU

Des moteurs rénovés sont aussi disponibles pour plusieurs versions de moteur.

ALTERNATIVAS DE REPARACIÓN

COMPONENTES REMANUFACTURADOS

Al hacer reparaciones, tenga en cuenta la opción de Componentes Remanufacturados Caterpillar. Los componentes que están disponibles por medio del programa de Productos Remanufacturados Caterpillar se identifican de tres maneras en el manual de piezas:

- con la letra R en el espacio de Nota de la lista de piezas
- con una R* al comienzo de la primera línea de la leyenda
- con una *R al final de la primera línea de la leyenda

Los componentes que se incluyen típicamente en el Programa de Productos Remanufacturados son:

ALTERNADORES
BIELAS
CIGÜEÑALES - BAJOMEDIDA
CIGÜEÑALES - REMANUFACTURADOS A NUEVO
CULATAS
MÓDULOS DE CONTROL ELECTRÓNICO (ECM)
SENSORES ELECTRONICOS
INYECTORES
BOQUILLAS
BOMBAS DE COMBUSTIBLE
REGULADORES
BOMBAS DE ACEITE
PISTONES
MONOBLOQUES
MOTORES DE ARRANQUE
TURBOCOMPRESORES - COMPLETOS
NÚCLEOS DE TURBOCOMPRESOR
BOMBAS DE AGUA

También hay disponibles motores Remanufacturados Caterpillar para muchas de las configuraciones de motores.

COMPONENTES REMANUFATURADOS

Considere o uso de Componentes Remanufaturados Caterpillar ao efetuar reparos. Os componentes disponíveis através do Programa de Remanufatura Caterpillar são identificados de três formas no manual de peças:

- com um R na área da nota da lista de peças
- com um R* no princípio da primeira linha da legenda
- com um *R no final da primeira linha da legenda

Os componentes típicos que constam no Programa de Remanufatura incluem:

ALTERNADORES
BIELAS
VIRABREQUINS - SUBMEDIDAS
VIRABREQUINS - ATUALIZAÇÃO
CABEÇOTES
MÓDULOS DE CONTROLE ELETRÔNICO (ECM)
SENSORES ELETRÔNICOS
INJETORES DE COMBUSTÍVEL
BICOS DE ABASTECIMENTO DE COMBUSTÍVEL
BOMBAS DE COMBUSTÍVEL
GOVERNADORES
BOMBAS DE ÓLEO
PISTÕES
BLOCOS BÁSICOS DO MOTOR
MOTORES DE PARTIDA
TURBOALIMENTADORES - COMPLETOS
CARTUCHOS DE TURBOALIMENTADORES
BOMBAS D'ÁGUA

Motores Remanufaturados Caterpillar também encontram-se disponíveis para diversos arranjos de motor.

WERKÜBERHOLTE AT-PRODUKTE

Bei Reparaturen sollten werküberholte AT-Produkte von Caterpillar in Betracht gezogen werden. Die durch das AT-Programm von Caterpillar erhältlichen Teile sind im Parts Book auf drei verschiedene Arten gekennzeichnet:

- mit dem Buchstaben R in der Spalte NOTE der Ersatzteilliste
- mit einem R* am Anfang der ersten Zeile der Überschrift
- mit einem *R am Ende der ersten Zeile der Überschrift

Das AT-Programm umfaßt u.a. folgende Produkte:

DREHSTROMGENERATOREN
PLEUELSTANGEN
KURBELWELLEN - MIT UNTERMASS
KURBELWELLEN - MIT ORIGINALMASS
ZYLINDERKÖPFE
ELEKTRONISCHE STEUEREINHEITEN (EMC)
ELEKTRONISCHE SENSOREN
PUMPENDÜSEN
EINSPRITZDÜSEN
KRAFTSTOFFPUMPEN
DREHZAHLREGLER
ÖLPUMPEN
KOLBEN
TEILMOTOREN
ANLASSER
TURBOLADER - KOMPLETT
TURBOLADERLAUFZEUGE
KÜHLWASSERPUMPEN

Viele Motoren können durch werküberholte AT-Motoren von Caterpillar ersetzt werden.

SUPPLEMENTAL COOLANT ADDITIVES

CUSTOMER BENEFITS:

Protects against cavitation, foam, erosion, corrosion, and scale buildup in cooling systems.

- Provides measured coolant conditioner.

DESCRIPTION:

Additives deplete from the coolant with normal operation. For this reason, Supplemental Coolant Additives (SCA) must be added to all heavy duty coolants at regular intervals. In addition, when not using a fully formulated, pre-charged antifreeze, like Caterpillar's DEAC, an initial charge of SCA must be added to the cooling system. The amount of SCA added to the system is dependent on the capacity of the system.

The SCA for initial fill is provided as a liquid. SCA's for maintenance intervals are available in liquid form and as a spin-on element. (No Spin-on available for 3600 Family of Engines)

NOTE:

The amount of SCA added at initial fill is not the same as the amount added at maintenance intervals.

The coolant additive elements can be used with any ethylene or propylene glycol type antifreeze which meets ASTM D4985 or ASTM D5345 Specifications.

NOTE:

For use with standard heavy duty coolant only, not for use with Extended Life Coolant.

PARTS NEEDED:

Cooling System Capacity		Liquid SCA at Initial Fill	Liquid SCA at Maintenance*	Spin-on SCA Maintenance Element*
Liters	Gallons			
22-30	(6-8)	3P-2044 (1)	6V-3542 (1)	111-2370 (1)
30-38	(8-10)	3P-2044 (1) 6V-3542 (1)	111-2372 (1)	111-2369 (1)
38-49	(10-13)	3P-2044 (1) 8T-1589 (1)	111-2372 (1)	111-2369 (1)
49-64	(13-17)	3P-2044 (2)	8T-1589 (1)	9N-3368 (1)
64-83	(17-22)	3P-2044 (2) 8T-1589 (1)	111-2372 (1) 6V-3542 (1)	111-2371 (1)
83-114	(22-30)	3P-2044 (3) 8T-1589 (1)	3P-2044 (1)	9N-3718 (1)
114-163	(30-43)	3P-2044 (5)	3P-2044 (1) 6V-3542 (1)	111-2371 (2)
163-242	(43-64)	3P-2044 (8)	3P-2044 (2)	9N-3718 (2)

** Normal maintenance period is 250 hrs. See your Operation and Maintenance Manual for complete coolant maintenance instructions.*

( ) Indicates quantity required.

ADDITIFS POUR LIQUIDE DE REFROIDISSEMENT

AVANTAGES POUR LE CLIENT

L'additif protège contre la cavitation, la mousse, l'érosion, la corrosion et l'accumulation de dépôts dans le circuit de refroidissement.

- L'additif complémentaire fournit une quantité mesurée d'additif.

DESCRIPTION:

Les additifs s'épuisent pendant l'utilisation du moteur. C'est pourquoi l'on doit ajouter de l'additif au liquide de refroidissement/antigel pour moteurs diesel à intervalles réguliers. En plus, si l'on n'utilise pas de l'antigel entièrement formulé et pré-chargé comme le liquide de refroidissement/antigel Caterpillar pour moteurs diesel, une quantité initiale d'additif doit être ajoutée au circuit de refroidissement. La quantité d'additif à ajouter au circuit dépend de la contenance du circuit.

L'additif pour le remplissage initial est fourni sous forme liquide. L'additif pour l'entretien ultérieur est disponible sous forme liquide et sous forme d'élément à visser. (Il n'y a pas d'élément à visser pour les moteurs de la famille 3600).

NOTA:

La quantité d'additif à ajouter au remplissage initial diffère de la quantité à ajouter aux intervalles d'entretien.

Les éléments d'additif peuvent être utilisés avec tout antigel de type éthylène ou propylène-glycol conforme à la norme ASTM D4985 ou ASTM D5345.

NOTA:

A utiliser uniquement avec du liquide de refroidissement pour moteurs diesel et non avec le liquide de refroidissement longue durée.

PIÈCES NÉCESSAIRES:

Contenance du circuit de refroidissement		Additif liquide au remplissage initial	Additif liquide aux intervalles d'entretien*	Elément d'additif à visser aux intervalles d'entretien*
Litres	Gallons U.S.			
22-30	(6-8)	3P-2044 (1)	6V-3542 (1)	111-2370 (1)
30-38	(8-10)	3P-2044 (1) 6V-3542 (1)	111-2372 (1)	111-2369 (1)
38-49	(10-13)	3P-2044 (1) 8T-1589 (1)	111-2372 (1)	111-2369 (1)
49-64	(13-17)	3P-2044 (2)	8T-1589 (1)	9N-3368 (1)
64-83	(17-22)	3P-2044 (2) 8T-1589 (1)	111-2372 (1) 6V-3542 (1)	111-2371 (1)
83-114	(22-30)	3P-2044 (3) 8T-1589 (1)	3P-2044 (1)	9N-3718 (1)
114-163	(30-43)	3P-2044 (5)	3P-2044 (1) 6V-3542 (1)	111-2371 (2)
163-242	(43-64)	3P-2044 (8)	3P-2044 (2)	9N-3718 (2)

** L'intervalle d'entretien normal est de 250 heures-service. Voir le Guide d'utilisation et d'entretien pour de plus amples renseignements concernant l'entretien du circuit de refroidissement.*

( ) Indique la quantité exigée.

ADITIVOS DE REFRIGERANTE SUPLEMENTARIOS

VENTAJAS PARA EL USUARIO:

Protegen contra la cavitación, la formación de espuma, la corrosión y la acumulación de escamas en los sistemas de enfriamiento.

- Suministra un acondicionador dosificado de refrigerante.

DESCRIPCIÓN:

Los aditivos en el refrigerante se agotan con la operación normal. Por esta razón, se debe agregar Aditivo de refrigerante suplementario (SCA) a todos los refrigerantes para servicio pesado, a intervalos regulares. Además, cuando no se usa un anticongelante de precarga completo, tal como el DEAC de Caterpillar, es necesario agregar una cantidad de aditivo de refrigerante suplementario inicial al sistema de enfriamiento. La cantidad de aditivo que se debe agregar depende de la capacidad del sistema.

El SCA de llenado inicial es líquido. El que se usa para el mantenimiento está disponible tanto en líquido como en un elemento enroscable. (No hay elemento enroscable disponible para la Familia de Motores 3600).

NOTA:

La cantidad de aditivo de llenado inicial no es la misma que se agrega en los intervalos de mantenimiento.

Los elementos de aditivo de refrigerante se pueden usar con cualquier anticongelante de tipo glicol etilénico o propílico que esté de acuerdo con las especificaciones de las normas ASTM D4985 o ASTM D5345.

NOTA:

Se debe utilizar únicamente con refrigerante estándar para servicio pesado; no se debe usar con Refrigerante de Larga Duración.

PIEZAS NECESARIAS:

Capacidad del Sistema de Enfriamiento		SCA líquido de llenado inicial	SCA líquido de mantenimiento*	Elemento de mantenimiento enroscable*
litros	gal EE.UU.			
22-30	6-8	3P-2044 (1)	6V-3542 (1)	111-2370 (1)
30-38	8-10	3P-2044 (1) 6V-3542 (1)	111-2372 (1)	111-2369 (1)
38-49	10-13	3P-2044 (1) 8T-1589 (1)	111-2372 (1)	111-2369 (1)
49-64	13-17	3P-2044 (2)	8T-1589 (1)	9N-3368 (1)
64-83	17-22	3P-2044 (2) 8T-1589 (1)	111-2372 (1) 6V-3542 (1)	111-2371 (1)
83-114	22-30	3P-2044 (3) 8T-1589 (1)	3P-2044 (1)	9N-3718 (1)
114-163	30-43	3P-2044 (5)	3P-2044 (1) 6V-3542 (1)	111-2371 (2)
163-242	43-64	3P-2044 (8)	3P-2044 (2)	9N-3718 (2)

** El período normal de mantenimiento es de 250 horas. Para ver las instrucciones completas sobre el mantenimiento del refrigerante, consulte el Manual de Operación y Mantenimiento.*

( ) Indica la cantidad necesaria.

ADITIVOS SUPLEMENTARES DO LÍQUIDO ARREFECEDOR

BENEFÍCIOS PARA O CLIENTE:

Protege contra cavitação, espuma, erosão, corrosão e acúmulo de crostas nos sistemas de arrefecimento.

- Fornece uma quantidade pré-determinada de condicionador de arrefecimento.

DESCRIÇÃO:

Com a operação normal, os aditivos se esgotam do líquido arrefecedor. Por isso, Aditivos Suplementares do Líquido Arrefecedor (SCA) devem ser acrescentados a todos os líquidos arrefecedores para serviço pesado em intervalos regulares. Além disso, quando um anticongelante pré-carregado, totalmente formulado não for usado, como o DEAC Caterpillar, uma carga inicial de SCA deve ser acrescentada ao sistema de arrefecimento. A quantidade de SCA acrescentada ao sistema depende da capacidade do sistema.

O SCA para abastecimento inicial é fornecido em forma de líquido. Os aditivos suplementares (SCA) para intervalos de manutenção estão à disposição em forma líquida e como um elemento com roscas. (Exceto os Motores da Família 3600)

NOTA:

A quantidade de SCA adicionada no abastecimento inicial não é a mesma que a acrescentada nos intervalos de manutenção.

Os elementos do aditivo do líquido arrefecedor podem ser usados com qualquer tipo de anticongelante etileno ou propileno que satisfaz as Especificações ASTM D4985 ou ASTM D5345.

NOTA:

Para uso apenas com líquido arrefecedor para serviço pesado padrão, não deve ser usado com Líquido Arrefecedor de Vida Longa.

PEÇAS NECESSÁRIAS:

Capacidade do Sistema de Arrefecimento		Líquido SCA Durante Abastecimento Inicial	Líquido SCA Durante Manutenção*	Elemento de Manutenção de SCA com Roscas*
Litros	Galões			
22-30	6-8	3P-2044 (1)	6V-3542 (1)	111-2370 (1)
30-38	8-10	3P-2044 (1) 6V-3542 (1)	111-2372 (1)	111-2369 (1)
38-49	10-13	3P-2044 (1) 8T-1589 (1)	111-2372 (1)	111-2369 (1)
49-64	13-17	3P-2044 (2)	8T-1589 (1)	9N-3368 (1)
64-83	17-22	3P-2044 (2) 8T-1589 (1)	111-2372 (1) 6V-3542 (1)	111-2371 (1)
83-114	22-30	3P-2044 (3) 8T-1589 (1)	3P-2044 (1)	9N-3718 (1)
114-163	30-43	3P-2044 (5)	3P-2044 (1) 6V-3542 (1)	111-2371 (2)
163-242	43-64	3P-2044 (8)	3P-2044 (2)	9N-3718 (2)

** O período normal de manutenção é de 250 horas. Consulte o Manual de Operação e Manutenção para obter instruções completas quanto à manutenção do líquido arrefecedor.*

( ) Indica a quantidade exigida.

KÜHLMITTELZUSATZ

VORTEILE FÜR DEN KUNDEN:

Schutz gegen Kavitation, Schaumbildung, Erosion, Korrosion und Kesselsteinbildung in Kühlsystemen.

- Richtig dosierter Kühlmittelzusatz

BESCHREIBUNG:

Additive erschöpfen sich während des Motorbetriebs. Deshalb muß allen HD-Kühlmitteln regelmäßig Kühlmittelzusatz beigefügt werden. Wenn bei Erstfüllung kein vollwertiges Fertigkühlmittel, wie das Frostschutz- und Kühlmittel für Dieselmotoren von Caterpiller (DEAC), verwendet wird, muß bei Erstfüllung Kühlmittelzusatz beigefügt werden. Wieviel Kühlmittelzusatz beigefügt werden muß, hängt vom Inhalt des Kühlsystems ab.

Für Erstfüllung ist Kühlmittelzusatz nur in flüssiger Form erhältlich. Für Wartungsintervalle ist Kühlmittelzusatz in flüssiger Form und als Zusatzelement erhältlich. (Für die Motorbaureihe 3600 sind keine Zusatzelemente erhältlich.)

ANMERKUNG:

Die Kühlmittelmenge bei Erstfüllung ist nicht die gleiche Menge, die bei Wartungsintervallen beigefügt werden muß.

Die Kühlmittelzusatzelemente können mit allen Frostschutzmitteln auf Ethylen- oder Propylenglykolbasis verwendet werden, die den Standards nach ASTM D4985 oder ASTM D5345 entsprechen.

ANMERKUNG:

Den Kühlmittelzusatz nicht mit Langzeitkühlmittel (ELC) von Caterpillar verwenden. Der Kühlmittelzusatz ist nur für HD-Kühlmittel bestimmt.

TEILEBEZEICHNUNG:

Kühlsysteminhalt		Kühlmittelzusatz bei Erstfüllung	Flüssiger Kühlmittelzusatz bei Wartung*	Kühlmittelzusatzelement bei Wartung*
Liter	US-Gall.			
22-30	(6-8)	3P-2044 (1)	6V-3542 (1)	111-2370 (1)
30-38	(8-10)	3P-2044 (1) 6V-3542 (1)	111-2372 (1)	111-2369 (1)
38-49	(10-13)	3P-2044 (1) 8T-1589 (1)	111-2372 (1)	111-2369 (1)
49-64	(13-17)	3P-2044 (2)	8T-1589 (1)	9N-3368 (1)
64-83	(17-22)	3P-2044 (2) 8T-1589 (1)	111-2372 (1) 6V-3542 (1)	111-2371 (1)
83-114	(22-30)	3P-2044 (3) 8T-1589 (1)	3P-2044 (1)	9N-3718 (1)
114-163	(30-43)	3P-2044 (5)	3P-2044 (1) 6V-3542 (1)	111-2371 (2)
163-242	(43-64)	3P-2044 (8)	3P-2044 (2)	9N-3718 (2)

** Der normale Wartungsintervall beträgt 250 Betriebsstunden. Für vollständige Anweisungen zur Wartung des Kühlsystems, siehe Betriebs- und Wartungshandbuch.*

( ) Erforderliche Anzahl

MAINTENANCE PARTS

DESCRIPTION	PART NUMBER	QTY	WHERE USED	PAGE
AIR INLET AND EXHAUST SYSTEM				
FILTER ELEMENT AS-AIR (PRIMARY)	245-6375	1	AIR CLEANER GP	84
FILTER ELEMENT AS-AIR (SECONDARY)	245-6376	1	AIR CLEANER GP	84
COOLING SYSTEM				
CAP-PRESSURE (7-PSI)	6L-8617	1	TANK GP-RADIATOR TOP	82
GASKET (TEMPERATURE REGULATOR HOUSING)	222-5915	1	LINES GP-WATER	72
REGULATOR-WATER TEMPERATURE (94-DEG C) (COOLANT)	119-3075	2	LINES GP-WATER	72
ELECTRICAL AND STARTING SYSTEM				
BELT-SERPENTINE	246-6296	1	ALTERNATOR GP-CHARGING	124
CAP AS-DUST (JACKET WATER HEATER)	133-6517	1	HEATER GP-JACKET WATER	147
CIRCUIT BREAKER AS (105-AMPERE) (ALTERNATOR)	171-2212	1	WIRING GP-CHASSIS	254
CIRCUIT BREAKER AS (15-AMPERE) (POWER GUARD ACTUATOR)	3T-2662	1	WIRING GP-WASTE HANDLER	282
CIRCUIT BREAKER AS (15-AMPERE) (RUNNING LIGHTS)	3T-2662	1	WIRING GP-CHASSIS	254
CIRCUIT BREAKER AS (15-AMPERE) (SEAT BELT ALARM)	6T-3643	2	WIRING GP-CAB	240
CIRCUIT BREAKER AS (50-AMPERE) (START)	171-2206	1	WIRING GP-CHASSIS	254
CIRCUIT BREAKER AS (80-AMPERE) (MAIN)	171-2210	1	WIRING GP-CHASSIS	254
CIRCUIT BREAKER AS (90-AMPERE) (STARTING AID)	171-2211	1	WIRING GP-CHASSIS	254
CIRCUIT BREAKER GP (20-AMPERE) (HOOD TILT ACTUATOR)	6T-3644	1	WIRING GP-CHASSIS	254
CIRCUIT BREAKER GP (20-AMPERE) (UNSWITCHED BAT POWER TO CAB)	6T-3644	1	WIRING GP-CHASSIS	255
ELEMENT AS-JACKET WATER HEATER	124-0687	1	HEATER GP-JACKET WATER	147
FLASHER AS (24-VOLT)	217-8166	1	SWITCH GP-SIGNAL	226
		1	SWITCH GP-SIGNAL	228
FUSE (10-AMPERE)	9W-1442	24	WIRING GP-CAB	241
FUSE (15-AMPERE)	9W-1441	6	WIRING GP-CAB	241
FUSE (20-AMPERE)	9W-1446	2	WIRING GP-CAB	241
KEY AS-ELECTRONIC (SECURITY)	206-5162	2	INSTALLATION GP-SECURITY	149
LAMP AS (BACKUP)	259-5588	2	LIGHTING GP-BACKUP	165
LAMP AS-WARNING (SEAT BELT)	260-0955	1	LIGHTING GP-WARNING BEACON	180
LAMP-HALOGEN (24-VOLT, 65-WATT)	9X-3463	1	LAMP GP-FLOOD	154
LAMP-HALOGEN (24-VOLT, 65-WATT) (FLOODLIGHT)	9X-3463	1	LAMP GP-FLOOD	155
LAMP (12-VOLT, 24-VOLT, 35-WATT)	209-6638	1	LAMP GP-FLOOD	152
		1	LAMP GP-FLOOD	153
LAMP (24-VOLT)	7N-5876	4	WIRING GP-CAB	241
	7N-9943	1	LAMP GP-DOME	151
LAMP (24-VOLT) (RUNNING LAMP)	100-3245	1	LAMP GP-HEAD & SIGNAL	158
LAMP (24-VOLT) (RUNNING LIGHTS)	100-3245	1	LAMP GP-HEAD & SIGNAL	156
LAMP (24-VOLT) (TURN SIGNAL)	100-3245	1	LAMP GP-HEAD & SIGNAL	156
		1	LAMP GP-HEAD & SIGNAL	158

MAINTENANCE PARTS

DESCRIPTION	PART NUMBER	QTY	WHERE USED	PAGE
LAMP (24-VOLT, 21-WATT)	9X-4493	1	LAMP GP-STOP & TAIL	162
LAMP (24-VOLT, 21-WATT) (SIGNAL)	9X-4493	1	LAMP GP-SIGNAL	160
LAMP (24-VOLT, 21-WATT) (TURN SIGNAL)	9X-4493	1	LAMP GP-HEAD & SIGNAL	156
		1	LAMP GP-HEAD & SIGNAL	158
LAMP (24-VOLT, 5-WATT)	9X-4492	1	LAMP GP-STOP & TAIL	162
LAMP (24-VOLT, 70-WATT)	9X-7849	1	LAMP GP-WARNING BEACON	163
LAMP (24-VOLT, 75/70-WATT) (HIGH/LOW BEAM)	9X-3465	1	LAMP GP-HEAD & SIGNAL	156
LAMP (24-VOLT, 75/70-WATT) (HIGH/LOW BEAM)(RH)	9X-3465	1	LAMP GP-HEAD & SIGNAL	158
LENS-AMBER (SIGNAL)	9X-3066	1	LAMP GP-SIGNAL	160
LENS (AMBER) (TURN SIGNAL)	100-3250	1	LAMP GP-HEAD & SIGNAL	156
		1	LAMP GP-HEAD & SIGNAL	158
LENS AS (AMBER) (TURN SIGNAL)	136-3848	1	LAMP GP-HEAD & SIGNAL	156
		1	LAMP GP-HEAD & SIGNAL	158
LENS AS (HEADLIGHT) (HIGH/LOW BEAM)	100-3248	1	LAMP GP-HEAD & SIGNAL	156
		1	LAMP GP-HEAD & SIGNAL	158
FRAME AND BODY				
FILTER AS-GREASE	196-1062	1	PUMP GP-LUBRICATION	473
LAMP AS	115-5774	2	CONVERSION AR-ROADING	388
LAMP (24-VOLT, 5-WATTS)	263-2541	1	MOUNTING GP-REGISTRATION	465
FUEL SYSTEM				
CAP-FUEL	246-1479	1	TANK GP-FUEL	118
FILTER AS-FUEL (FILLER NECK SCREEN)	180-3730	1	TANK GP-FUEL	118
FILTER AS-FUEL (SECONDARY)	1R-0762	1	FILTER & LINES GP-FUEL	98
FILTER AS-WATER SEP & FUEL (PRIMARY)	1R-0770	1	FILTER GP-WATER SEP & FUEL	100
SEAL	220-8678	1	FILTER GP-WATER SEP & FUEL	100
VALVE-BREAKER RELIEF	188-8844	1	TANK GP-FUEL	118
HYDRAULIC SYSTEM				
CAP-FILLER (HYDRAULIC TANK)	7H-1447	1	TANK GP-HYDRAULIC	645
FILTER AS-OIL	144-0832	1	FILTER GP-OIL	591
FILTER ELEMENT AS-OIL (HYDRAULIC)	225-4118	1	FILTER GP-OIL	590
PLUG-DRAIN	9J-7031	1	VALVE GP-DRAIN	677
SCREEN	6E-5066	1	MANIFOLD GP-VALVE	631
		1	MANIFOLD GP-VALVE	633
SCREEN AS (HYDRAULIC TANK)	9T-9227	2	TANK GP-HYDRAULIC	645
SCREEN (CONTROL VALVE MANIFOLD)	6E-5066	1	MANIFOLD GP-CONTROL	629
STRAINER AS (HYDRAULIC TANK FILL)	5D-7927	1	TANK GP-HYDRAULIC	645
LUBRICATION SYSTEM				
BREATHER AS (CRANKCASE)	164-0210	1	BREATHER GP	57
CAP AS-FILLER (ENGINE OIL)	5L-2952	1	FILLER GP-ENGINE OIL	58
FILTER AS-ENGINE OIL	1R-1807	1	FILTER GP-ENGINE OIL	59

MAINTENANCE PARTS

DESCRIPTION	PART NUMBER	QTY	WHERE USED	PAGE
OPERATOR STATION				
ACCUMULATOR GP-REFRIGERANT	186-6189	1	LINES GP-AIR CONDITIONER	847
BELT-SERPENTINE	253-4531	1	COMPRESSOR GP-REFRIGERANT	810
BLADE AS-WIPER	6V-7419	2	WIPER GP-WINDOW	932
FILTER-CAB AIR	7X-6041	2	DUCT & FILTER GP-AIR	821
FUSE (15-AMPERE)	133-9012	1	AIR CONDITIONER GP	800
		1	HEATER GP-CAB	834
KEY-HANDLE	3V-7476	1	DUCT & FILTER GP-AIR	821
SEAT BELT GP	236-7019	1	SEAT GP-SUSPENSION	909
	258-8372	1	SEAT BELT & LIGHTING GP	903
POWER TRAIN				
BELT-SERPENTINE	215-3015	1	PUMP & MTG GP-AXLE OIL COOLER	344
	217-3031	1	PUMP & MTG GP-AXLE OIL COOLER	344
BREATHER AS	9C-4937	1	GEAR GP-OUTPUT TRANSFER	316
		1	GEAR GP-OUTPUT TRANSFER	321
CAP-FILLER	5K-1568	1	FILLER GP-POWER TRAIN OIL	304
CAP-FILLER (POWER TRAIN)	5K-1568	1	FILLER GP-POWER TRAIN OIL	305
FILTER ELEMENT (POWER TRAIN)	1G-8878	1	FILTER GP-OIL	308
FILTER-MAGNETIC (AXLE OIL COOLER)	251-6351	2	LINES GP-AXLE OIL COOLER	328
PADLOCK GP	5P-8502	1	COVER GP-TMSN OIL FILLER CAP	297
PLUG	138-1510	1	GEAR GP-OUTPUT TRANSFER	315
		1	GEAR GP-OUTPUT TRANSFER	320
	175-4966	1	DRAIN GP-ECOLOGY	303
PLUG-MAGNETIC	5P-4484	1	HOUSING GP-OSCILLATING AXLE	326
SCREEN GP-MAGNETIC	4S-8603	1	GEAR GP-OUTPUT TRANSFER	315
		1	GEAR GP-OUTPUT TRANSFER	320
SCREEN-SUCTION	4S-8598	1	GEAR GP-OUTPUT TRANSFER	315
		1	GEAR GP-OUTPUT TRANSFER	320
SERVICE EQUIPMENT AND SUPPLIES				
PADLOCK GP	246-2641	3	PROTECTION GP-VANDALISM	947
STEERING SYSTEM				
SCREEN	6E-5066	2	SCREEN GP-CASE DRAIN	538

PIÈCES DE RECHANGE

DESCRIPTION	NUMÉRO DE PIECÈS	QTÉ	DOMAINE D'APPLICATION	PAGE
CHÂSSIS ET BENNE				
AMPOULE (*24-VOLT, 5-WATTS)	263-2541	1	MONTAGE - IMMATRICULATION (ASS)	465
FILTRE À GRAISSE (ENS)	196-1062	1	POMPE DE GRAISSAGE (ASS)	473
LAMPE (ENS)	115-5774	2	VERSION DE TRANSFORMATION POUR DÉPLACEMENT ROUTIER	388
CIRCUIT D'ADMISSION D'AIR ET D'ÉCHAPPEMENT				
ÉLÉMENT DE FILTRE À AIR (ENS) (PRINCIPAL)	245-6375	1	FILTRE A AIR (ASS)	84
ÉLÉMENT DE FILTRE À AIR (ENS) (SECONDAIRE)	245-6376	1	FILTRE A AIR (ASS)	84
CIRCUIT DE CARBURANT				
BOUCHON DE CARBURANT	246-1479	1	RÉSERVOIR DE CARBURANT (ASS)	118
BOURRELET D'ÉTANCHÉITÉ	220-8678	1	FILTRE DE SÉPARATEUR D'EAU ET DE CARBURANT (ASS)	100
CLAPET DE DÉCHARGE HYDRAULIQUE	188-8844	1	RÉSERVOIR DE CARBURANT (ASS)	118
FILTRE - SÉPARATEUR D'EAU ET DE CARBURANT (ENS) (PRINCIPAL)	1R-0770	1	FILTRE DE SÉPARATEUR D'EAU ET DE CARBURANT (ASS)	100
FILTRE A CARBURANT (ENS) (AUXILIAIRE)	1R-0762	1	FILTRE ET CANALISATIONS DE CARBURANT (ASS)	98
FILTRE A CARBURANT (ENS) (TAMIS DE GOULOTTE DE REMPLISSAGE)	180-3730	1	RÉSERVOIR DE CARBURANT (ASS)	118
CIRCUIT DE DIRECTION				
ÉCRAN	6E-5066	2	*SCREEN GP-CASE DRAIN	538
CIRCUIT DE GRAISSAGE				
BOUCHON DE GOULOTTE DE REMPLISSAGE (ENS) (HUILE MOTEUR)	5L-2952	1	BOUCHON DE REMPLISSAGE D'HUILE MOTEUR (ASS)	58
FILTRE A HUILE MOTEUR (ENS)	1R-1807	1	FILTRE À HUILE MOTEUR (ASS)	59
RENIFLARD (ENS) (CARTER)	164-0210	1	RENIFLARD (ASS)	57
CIRCUIT DE REFROIDISSEMENT				
COUVERCLE DE PRESSION (7-PSI)	6L-8617	1	RÉSERVOIR DU COUVERCLE DE RADIATEUR (ASS)	82
JOINT PLAT (BOÎTIER DE RÉGULATEUR DE TEMPÉRATURE)	222-5915	1	CANALISATIONS D'EAU (ASS)	72
THERMOSTAT-TEMPÉRATURE D'EAU (94-DEG C) (LIQUIDE DE REFROIDISSEMENT)	119-3075	2	CANALISATIONS D'EAU (ASS)	72
CIRCUIT ELECTRIQUE ET DE DEMARRAGE				
AMPOULE (12V, 24V, 35W)	209-6638	1	LAMPE - PHARE (ASS)	152
		1	LAMPE - PHARE (ASS)	153
AMPOULE (24 VOLTS)	7N-5876	4	CABLAGE DE CABINE (ASS)	241
	7N-9943	1	PLAFONNIER (ASS)	151
AMPOULE (24 VOLTS) (CLIGNOTANT DE DIRECTION)	100-3245	1	LAMPE - PHARE ET CLIGNOTANT	156
		1	LAMPE - PHARE ET CLIGNOTANT	158

* TRADUCTION NON DISPONIBLE AU MOMENT DE LA PUBLICATION

PIÈCES DE RECHANGE

DESCRIPTION	NUMÉRO DE PIECÈS	QTÉ	DOMAINE D'APPLICATION	PAGE
AMPOULE (24 VOLTS) (FEU DE ROUTE)	100-3245	1	LAMPE - PHARE ET CLIGNOTANT	158
AMPOULE (24 VOLTS) (FEUX DE ROUTE)	100-3245	1	LAMPE - PHARE ET CLIGNOTANT	156
AMPOULE (24V, 21W)	9X-4493	1	FEUX ARRIÈRE ET FEUX D'ARRÊT	162
AMPOULE (24V, 21W) (CLIGNOTANT DE DIRECTION)	9X-4493	1	LAMPE - PHARE ET CLIGNOTANT	156
		1	LAMPE - PHARE ET CLIGNOTANT	158
AMPOULE (24V, 21W) (SIGNAL)	9X-4493	1	LAMPE - CLIGNOTANT DE DIRECTION (ASS)	160
AMPOULE (24V, 5W)	9X-4492	1	FEUX ARRIÈRE ET FEUX D'ARRÊT	162
AMPOULE (24V, 70W)	9X-7849	1	LAMPE - GYROPHARE (ASS)	163
AMPOULE (24V, 75/70W) (FEUX DE ROUTE/DE CROISEMENT)(DROIT)	9X-3465	1	LAMPE - PHARE ET CLIGNOTANT	158
AMPOULE (24V, 75/70W) (FEUX DE ROUTE/FEUX DE CROISEMENT)	9X-3465	1	LAMPE - PHARE ET CLIGNOTANT	156
CHAPEAU ANTI-POUSSIERE (RÉCHAUFFEUR D'EAU)	133-6517	1	EAU DES CHEMISES - RECHAUFFEUR (ASS)	147
CLÉ ÉLECTRONIQUE (ENS) (SÉCURITÉ)	206-5162	2	MONTAGE-SÉCURITÉ (ASS)	149
CLIGNOTANT (ENS) (24 VOLTS)	217-8166	1	INTERRUPTEUR - SIGNAL (ASS)	226
		1	INTERRUPTEUR - SIGNAL (ASS)	228
COURROIE MULTIPLE	246-6296	1	ALTERNATEUR DE CHARGE (ASS)	124
DISJONCTEUR (ASS) (20A) (ALIM BAT NON RELIÉE À LA CABINE)	6T-3644	1	CABLAGE DE CHASSIS (ASS)	255
DISJONCTEUR (ASS) (20A) (COMMANDE VÉRIN DE CAPOT)	6T-3644	1	CABLAGE DE CHASSIS (ASS)	254
DISJONCTEUR (ENS) (105A) (ALTERNATEUR)	171-2212	1	CABLAGE DE CHASSIS (ASS)	254
DISJONCTEUR (ENS) (15A) (COMMANDE DE PROTECTION À ASSISTANCE)	3T-2662	1	*WIRING GP-WASTE HANDLER	282
DISJONCTEUR (ENS) (15A) (FEUX DE ROUTE)	3T-2662	1	CABLAGE DE CHASSIS (ASS)	254
DISJONCTEUR (ENS) (15A) (*SEAT BELT ALARM)	6T-3643	2	CABLAGE DE CABINE (ASS)	240
DISJONCTEUR (ENS) (32-AMPÈRES) (DÉMARRAGE)	171-2206	1	CABLAGE DE CHASSIS (ASS)	254
DISJONCTEUR (ENS) (80A) (PRINCIPAL)	171-2210	1	CABLAGE DE CHASSIS (ASS)	254
DISJONCTEUR (ENS) (90A) (AUXILIAIRE DE DÉMARRAGE)	171-2211	1	CABLAGE DE CHASSIS (ASS)	254
ÉLÉMENT DU RÉCHAUFFEUR D'EAU DES CHEMISES (ENS)	124-0687	1	EAU DES CHEMISES - RECHAUFFEUR (ASS)	147
FUSIBLE (10A)	9W-1442	24	CABLAGE DE CABINE (ASS)	241
FUSIBLE (15A)	9W-1441	6	CABLAGE DE CABINE (ASS)	241
FUSIBLE (20A)	9W-1446	2	CABLAGE DE CABINE (ASS)	241
*LAMP AS-WARNING (CEINTURE DE SÉCURITÉ)	260-0955	1	ÉCLAIRAGE - GYROPHARE (ASS)	180
LAMPE (ENS) (RECUL)	259-5588	2	ECLAIRAGE AR (ASS)	165
LAMPE HALOGÈNE (24V, 65W)	9X-3463	1	LAMPE - PHARE (ASS)	154
LAMPE HALOGÈNE (24V, 65W) (PROJECTEUR)	9X-3463	1	LAMPE - PHARE (ASS)	155

* TRADUCTION NON DISPONIBLE AU MOMENT DE LA PUBLICATION

PIÈCES DE RECHANGE

DESCRIPTION	NUMÉRO DE PIECÈS	QTÉ	DOMAINE D'APPLICATION	PAGE
LENTILLE (ENS) (JAUNE) (CLIGNOTANT DE DIRECTION)	136-3848	1	LAMPE - PHARE ET CLIGNOTANT	156
		1	LAMPE - PHARE ET CLIGNOTANT	158
LENTILLE (ENS) (PHARE AVANT) (FEUX DE ROUTE/FEUX DE CROISEMENT)	100-3248	1	LAMPE - PHARE ET CLIGNOTANT	158
		1	LAMPE - PHARE ET CLIGNOTANT	156
LENTILLE (JAUNE) (CLIGNOTANT DE DIRECTION)	100-3250	1	LAMPE - PHARE ET CLIGNOTANT	156
		1	LAMPE - PHARE ET CLIGNOTANT	158
LENTILLE ORANGE (SIGNAL)	9X-3066	1	LAMPE - CLIGNOTANT DE DIRECTION (ASS)	160
CIRCUIT HYDRAULIQUE				
BOUCHON DE GOULOTTE DE REMPLISSAGE (RÉSERVOIR HYDRAULIQUE)	7H-1447	1	RÉSERVOIR HYDRAULIQUE (ASS)	645
BOUCHON DE VIDANGE	9J-7031	1	SOUPAPE DE VIDANGE	677
CREPINE (ENS) (REMPLISSAGE DE RÉSERVOIR HYDRAULIQUE)	5D-7927	1	RÉSERVOIR HYDRAULIQUE (ASS)	645
ÉCRAN	6E-5066	1	COLLECTEUR - SOUPAPE (ASS)	631
		1	COLLECTEUR - SOUPAPE (ASS)	633
ÉCRAN (COLLECTEUR DE DISTRIBUTEUR)	6E-5066	1	COLLECTEUR - COMMANDE (ASS)	629
ÉCRAN (ENS) (RÉSERVOIR HYDRAULIQUE)	9T-9227	2	RÉSERVOIR HYDRAULIQUE (ASS)	645
ÉLÉMENT DE FILTRE À HUILE (ENS) (HYDRAULIQUE)	225-4118	1	FILTRE A HUILE (ASS)	590
FILTRE À HUILE (ENS)	144-0832	1	FILTRE A HUILE (ASS)	591
MATÉRIEL ET FOURNITURES D'ENTRETIEN				
CADENAS (ASS)	246-2641	3	PROTECTION ANTIVANDALISME (ASS)	947
POSTE DE CONDUITE				
ACCUMULATEUR - CLIMATISEUR (ASS)	186-6189	1	CANALISATIONS DE CLIMATISEUR (ASS)	847
BALAI D'ESSUIE-GLACE (ENS)	6V-7419	2	ESSUIE-GLACE (ASS)	932
CEINTURE DE SECURITE (ASS)	236-7019	1	SIÈGE AVEC SUSPENSION (ASS)	909
	258-8372	1	*SEAT BELT & LIGHTING GP	903
CLAVETTE - POIGNÉE	3V-7476	1	CONDUIT ET FILTRE À AIR (ASS)	821
COURROIE MULTIPLE	253-4531	1	COMPRESSEUR DE REFRIGERANT (ASS)	810
FILTRE À AIR DE CABINE	7X-6041	2	CONDUIT ET FILTRE À AIR (ASS)	821
FUSIBLE (15A)	133-9012	1	CHAUFFAGE DE CABINE (ASS)	834
		1	CLIMATISEUR (ASS)	800

* TRADUCTION NON DISPONIBLE AU MOMENT DE LA PUBLICATION

PIÈCES DE RECHANGE

DESCRIPTION	NUMÉRO DE PIECÈS	QTÉ	DOMAINE D'APPLICATION	PAGE
TRANSMISSION				
BOUCHON AIMANTÉ	5P-4484	1	CARTER D'ESSIEU OSCILLANT	326
BOUCHON DE GOULOTTE DE REMPLISSAGE	5K-1568	1	GOULOTTE DE REMPLISSAGE D'HUILE DE TRANSMISSION	304
BOUCHON DE GOULOTTE DE REMPLISSAGE (TRANSMISSION)	5K-1568	1	GOULOTTE DE REMPLISSAGE D'HUILE DE TRANSMISSION	305
BOUCHON FILETÉ	138-1510	1	ENGRENAGE DE TRANSFERT DE RENDEMENT (ASS)	315
		1	ENGRENAGE DE TRANSFERT DE RENDEMENT (ASS)	320
	175-4966	1	VIDANGE-ÉCOLOGIE (ASS)	303
CADENAS (ASS)	5P-8502	1	BOUCHON DE REMPLISSAGE D'HUILE DE BOÎTE (ASS)	297
COURROIE MULTIPLE	215-3015	1	POMPE ET MONTAGE DE REFROIDISSEUR D'HUILE D'ESSIEU	344
	217-3031	1	POMPE ET MONTAGE DE REFROIDISSEUR D'HUILE D'ESSIEU	344
ÉCRAN MAGNÉTIQUE (ASS)	4S-8603	1	ENGRENAGE DE TRANSFERT DE RENDEMENT (ASS)	320
		1	ENGRENAGE DE TRANSFERT DE RENDEMENT (ASS)	315
ÉCRAN MAGNÉTIQUE (REFROIDISSEUR D'HUILE D'ESSIEU)	251-6351	2	CANALISATIONS DE REFROIDISSEUR D'HUILE D'ESSIEU (ASS)	328
ÉLÉMENT DE FILTRE (TRANSMISSION)	1G-8878	1	FILTRE A HUILE (ASS)	308
RENIFLARD (ENS)	9C-4937	1	ENGRENAGE DE TRANSFERT DE RENDEMENT (ASS)	316
		1	ENGRENAGE DE TRANSFERT DE RENDEMENT (ASS)	321
TAMIS D'ASPIRATION	4S-8598	1	ENGRENAGE DE TRANSFERT DE RENDEMENT (ASS)	315
		1	ENGRENAGE DE TRANSFERT DE RENDEMENT (ASS)	320

* TRADUCTION NON DISPONIBLE AU MOMENT DE LA PUBLICATION

PIEZAS DE MANTENIMIENTO

DESCRIPCION	NUMERO DE PIEZA	CANT	SE UTILIZA EN	PAGINA
BASTIDOR Y CAJA				
CONJUNTO DE FILTRO-ENGRASE	196-1062	1	BOMBA DE LUBRICACIÓN (GR)	473
LÁMPARA (CONJ)	115-5774	2	CONFIGURACIÓN DE TRANSFORMACIÓN PARA CARRETERA	388
LÁMPARA (*24-VOLT, 5-WATTS)	263-2541	1	MONTAJE-REGISTRO (GR)	465
EQUIPO DE SERVICIO Y SUMINISTROS				
CANDADO (GR)	246-2641	3	GRUPO DE PROTECCIÓN CONTRA EL VANDALISMO	947
PUESTO DEL OPERADOR				
ACUMULADOR DEL ACONDICIONADOR DE AIRE (GR)	186-6189	1	TUBERÍAS DE ACONDICIONADOR DE AIRE (GR)	847
CINTURÓN DE SEGURIDAD (GR)	236-7019	1	SUSPENSIÓN - ASIENTO CON (GR)	909
	258-8372	1	*SEAT BELT & LIGHTING GP	903
CORREA-SERPENTIN	253-4531	1	COMPRESOR DE REFRIGERANTE (GR)	810
FILTRO DE AIRE DE CABINA	7X-6041	2	CONDUCTO Y FILTRO DE AIRE (GR)	821
FUSIBLE (15 AMPERIOS)	133-9012	1	ACONDICIONADOR DE AIRE (GR)	800
		1	CALEFACCIÓN DE LA CABINA (GR)	834
HOJA DE LIMPIAPARABRISAS (CONJ)	6V-7419	2	LIMPIAPARABRISAS DE LA VENTANA (GR)	932
LLAVE - MANIJA	3V-7476	1	CONDUCTO Y FILTRO DE AIRE (GR)	821
SISTEMA DE AIRE DE ADMISIÓN Y ESCAPE				
ELEMENTO DEL FILTRO DE AIRE (CONJ) (PRIMARIO)	245-6375	1	FILTRO DE AIRE (GR)	84
ELEMENTO DEL FILTRO DE AIRE (CONJ) (SECUNDARIO)	245-6376	1	FILTRO DE AIRE (GR)	84
SISTEMA DE COMBUSTIBLE				
FILTRO DE COMBUSTIBLE (CONJ) (REJILLA DE TUBO DE LLENADO)	180-3730	1	COMBUSTIBLE - TANQUE DE (GR)	118
FILTRO DE COMBUSTIBLE (CONJ) (SECUNDARIO(A))	1R-0762	1	FILTRO Y TUBERÍAS DE COMBUSTIBLE (GR)	98
FILTRO DE COMBUSTIBLE Y SEPARADOR DE AGUA (CONJ) (PRIMARIO)	1R-0770	1	FILTRO DE COMBUSTIBLE Y SEPARADOR DE AGUA (GR)	100
SELLO	220-8678	1	FILTRO DE COMBUSTIBLE Y SEPARADOR DE AGUA (GR)	100
TAPA PARA EL COMBUSTIBLE	246-1479	1	COMBUSTIBLE - TANQUE DE (GR)	118
VÁLVULA DE ALIVIO DEL FRENO	188-8844	1	COMBUSTIBLE - TANQUE DE (GR)	118
SISTEMA DE DIRECCIÓN				
REJILLA	6E-5066	2	*SCREEN GP-CASE DRAIN	538

* NO HAY TRADUCCION DISPONIBLE EN EL MOMENTO DE LA IMPRESION

PIEZAS DE MANTENIMIENTO

DESCRIPCION	NUMERO DE PIEZA	CANT	SE UTILIZA EN	PAGINA
SISTEMA DE ENFRIAMIENTO				
EMPAQUETADURA (CAJA DEL REGULADOR DE TEMPERATURA)	222-5915	1	TUBERÍAS DEL AGUA (GR)	72
REGULADOR DE TEMPERATURA DEL AGUA (94-GRADOS C) (REFRIGERANTE)	119-3075	2	TUBERÍAS DEL AGUA (GR)	72
TAPA DE PRESION (7 LB/PULG2)	6L-8617	1	TAPA DEL TANQUE DE RADIADOR (GR)	82
SISTEMA DE LUBRICACIÓN				
FILTRO DE ACEITE DEL MOTOR (CONJ)	1R-1807	1	FILTRO DE ACEITE DEL MOTOR (GR)	59
RESPIRADERO (CONJ) (CÁRTER DEL MOTOR)	164-0210	1	RESPIRADERO (GR)	57
TAPA DE LLENADO (CONJ) (ACEITE DEL MOTOR)	5L-2952	1	TUBO DE LLENADO DE ACEITE (GR)	58
SISTEMA ELECTRICO Y DE ARRANQUE				
CONJUNTO DE DESTELLADOR (24 VOLTIOS)	217-8166	1	INTERRUPTOR DEL SEÑALERO (GR)	226
		1	INTERRUPTOR DEL SEÑALERO (GR)	228
CONJUNTO DE LLAVE, ELECTRONICA (SEGURIDAD)	206-5162	2	INSTALACION DE SEGURIDAD (GR)	149
CORREA-SERPENTIN	246-6296	1	CARGA - ALTERNADOR DE (GR)	124
CRISTAL (AMBAR) (SEÑAL DE VIRAJE)	100-3250	1	LÁMPARA DE LUZ DELANTERA Y DE SEÑAL (GR)	156
		1	LÁMPARA DE LUZ DELANTERA Y DE SEÑAL (GR)	158
DISYUNTOR (CONJ) (105 AMPERIOS) (ALTERNADOR)	171-2212	1	CABLES DEL CHASIS (GR)	254
DISYUNTOR (CONJ) (15 AMPERIOS) (ACCIONADOR DE PROTECTOR ELÉCTRICO)	3T-2662	1	*WIRING GP-WASTE HANDLER	282
DISYUNTOR (CONJ) (15 AMPERIOS) (LUCES DE TRABAJO)	3T-2662	1	CABLES DEL CHASIS (GR)	254
DISYUNTOR (CONJ) (15 AMPERIOS) (*SEAT BELT ALARM)	6T-3643	2	CABLES DE LA CABINA (GR)	240
DISYUNTOR (CONJ) (50 AMPERIOS) (ARRANQUE)	171-2206	1	CABLES DEL CHASIS (GR)	254
DISYUNTOR (CONJ) (80 AMPERIOS) (PRINCIPAL)	171-2210	1	CABLES DEL CHASIS (GR)	254
DISYUNTOR (CONJ) (90-AMPERIOS) (AUXILIAR DE ARRANQUE)	171-2211	1	CABLES DEL CHASIS (GR)	254
DISYUNTOR DE CIRCUITO (GR) (20-AMPERIOS) (ACCIONADOR DE INCLINACION DE CAPO)	6T-3644	1	CABLES DEL CHASIS (GR)	254
DISYUNTOR DE CIRCUITO (GR) (20-AMPERIOS) (*UNSWITCHED BAT POWER TO CAB)	6T-3644	1	CABLES DEL CHASIS (GR)	255
ELEMENTO DEL CALENTADOR DEL AGUA DE LAS CAMISAS	124-0687	1	AGUA DE LAS CAMISAS - CALENTADOR DEL (GR)	147
FUSIBLE (10-AMPERIOS)	9W-1442	24	CABLES DE LA CABINA (GR)	241
FUSIBLE (15 AMPERIOS)	9W-1441	6	CABLES DE LA CABINA (GR)	241

* NO HAY TRADUCCION DISPONIBLE EN EL MOMENTO DE LA IMPRESION

PIEZAS DE MANTENIMIENTO

DESCRIPCION	NUMERO DE PIEZA	CANT	SE UTILIZA EN	PAGINA
FUSIBLE (20-AMPERIOS)	9W-1446	2	CABLES DE LA CABINA (GR)	241
*LAMP AS-WARNING (*SEAT BELT)	260-0955	1	LUZ DE BALIZA (GR)	180
LÁMPARA (CONJ) (RESPALDO)	259-5588	2	LUCES DE RETROCESO (GR)	165
LÁMPARA (12 VOLTIOS, 24 VOLTIOS, 35 VATIOS)	209-6638	1	REFLECTOR (GR)	152
		1	REFLECTOR (GR)	153
LÁMPARA (24 VOLTIOS)	7N-5876	4	CABLES DE LA CABINA (GR)	241
	7N-9943	1	LÁMPARA DEL TECHO (GR)	151
LÁMPARA (24 VOLTIOS) (LÁMPARA DE FUNCIONAMIENTO)	100-3245	1	LÁMPARA DE LUZ DELANTERA Y DE SEÑAL (GR)	158
LÁMPARA (24 VOLTIOS) (LUCES DE TRABAJO)	100-3245	1	LÁMPARA DE LUZ DELANTERA Y DE SEÑAL (GR)	156
LÁMPARA (24 VOLTIOS) (SEÑAL DE VIRAJE)	100-3245	1	LÁMPARA DE LUZ DELANTERA Y DE SEÑAL (GR)	158
		1	LÁMPARA DE LUZ DELANTERA Y DE SEÑAL (GR)	156
LÁMPARA (24-VOLTIOS, 21 VATIOS)	9X-4493	1	LUCES DE PARADA Y COLA (GR)	162
LÁMPARA (24-VOLTIOS, 21 VATIOS) (SEÑAL)	9X-4493	1	LUZ DE SEÑAL DE GIRO (GR)	160
LÁMPARA (24-VOLTIOS, 21 VATIOS) (SEÑAL DE VIRAJE)	9X-4493	1	LÁMPARA DE LUZ DELANTERA Y DE SEÑAL (GR)	156
		1	LÁMPARA DE LUZ DELANTERA Y DE SEÑAL (GR)	158
LÁMPARA (24 VOLTIOS, 5 VATIOS)	9X-4492	1	LUCES DE PARADA Y COLA (GR)	162
LÁMPARA (24-VOLTIOS, 70-VATIOS)	9X-7849	1	LÁMPARA DE BALIZA DE ADVERTENCIA (GR)	163
LÁMPARA (24 VOLTIOS, 75/70 VATIOS) (LUCES DE MANO DERECHA, ALTAS/BAJAS)	9X-3465	1	LÁMPARA DE LUZ DELANTERA Y DE SEÑAL (GR)	158
LÁMPARA (24 VOLTIOS, 75/70 VATIOS) (LUZ ALTA/BAJA)	9X-3465	1	LÁMPARA DE LUZ DELANTERA Y DE SEÑAL (GR)	156
LENTE AMBAR (SEÑAL)	9X-3066	1	LUZ DE SEÑAL DE GIRO (GR)	160
LUCES DE ALÓGENO (24 VOLTIOS, 65 VATIOS)	9X-3463	1	REFLECTOR (GR)	154
LUCES DE ALÓGENO (24 VOLTIOS, 65 VATIOS) (REFLECTOR)	9X-3463	1	REFLECTOR (GR)	155
TAPA CONTRA EL POLVO (CONJ) (CALENTADOR DE AGUA DE LAS CAMISAS)	133-6517	1	AGUA DE LAS CAMISAS - CALENTADOR DEL (GR)	147
VIDRIO (CONJ) (AMBAR) (SEÑAL DE VIRAJE)	136-3848	1	LÁMPARA DE LUZ DELANTERA Y DE SEÑAL (GR)	156
		1	LÁMPARA DE LUZ DELANTERA Y DE SEÑAL (GR)	158
VIDRIO (CONJ) (FARO DELANTERO) (LUZ ALTA/BAJA)	100-3248	1	LÁMPARA DE LUZ DELANTERA Y DE SEÑAL (GR)	156
		1	LÁMPARA DE LUZ DELANTERA Y DE SEÑAL (GR)	158

* NO HAY TRADUCCION DISPONIBLE EN EL MOMENTO DE LA IMPRESION

PIEZAS DE MANTENIMIENTO

DESCRIPCION	NUMERO DE PIEZA	CANT	SE UTILIZA EN	PAGINA
SISTEMA HIDRÁULICO				
COLADOR (CONJ) (LLENADO DEL TANQUE HIDRÁULICO)	5D-7927	1	TANQUE HIDRÁULICO (GR)	645
ELEMENTO DE FILTRO DE ACEITE (CONJ) (HIDRAULICO)	225-4118	1	FILTRO DE ACEITE (GR)	590
FILTRO DE ACEITE (CONJ)	144-0832	1	FILTRO DE ACEITE (GR)	591
PANTALLA (CONJ) (TANQUE HIDRAULICO)	9T-9227	2	TANQUE HIDRÁULICO (GR)	645
REJILLA	6E-5066	1	MULTIPLE DE VALVULA (GR)	631
		1	MULTIPLE DE VALVULA (GR)	633
REJILLA (VÁLVULA DE CONTROL DEL MULTIPLE)	6E-5066	1	CONTROL DEL MULTIPLE (GR)	629
TAPA DEL TUBO DE LLENADO (TANQUE HIDRÁULICO)	7H-1447	1	TANQUE HIDRÁULICO (GR)	645
TAPÓN DE DRENAJE	9J-7031	1	VÁLVULA DE DRENAJE (GR)	677
TREN DE FUERZA				
CANDADO (GR)	5P-8502	1	CUBIERTA (GR)-TAPA DE LLENADO DE ACEITE DE LA TRANSMISIÓN	297
CORREA-SERPENTIN	215-3015	1	BOMBA DEL ENFRIADOR DE ACEITE DEL EJE Y MONTAJE (GR)	344
	217-3031	1	BOMBA DEL ENFRIADOR DE ACEITE DEL EJE Y MONTAJE (GR)	344
ELEMENTO DE FILTRO (TREN DE FUERZA)	1G-8878	1	FILTRO DE ACEITE (GR)	308
FILTRO MAGNÉTICO (ENFRIADOR DE ACEITE DE EJE)	251-6351	2	TUBERÍAS DEL ENFRIADOR DE ACEITE DEL EJE (GR)	328
REJILLA DE SUCCIÓN	4S-8598	1	ENGRANAJE DE TRANSFERENCIA DE SALIDA	315
		1	ENGRANAJE DE TRANSFERENCIA DE SALIDA	320
REJILLA MAGNÉTICA (GR)	4S-8603	1	ENGRANAJE DE TRANSFERENCIA DE SALIDA	315
		1	ENGRANAJE DE TRANSFERENCIA DE SALIDA	320
RESPIRADERO (CONJ)	9C-4937	1	ENGRANAJE DE TRANSFERENCIA DE SALIDA	316
		1	ENGRANAJE DE TRANSFERENCIA DE SALIDA	321
TAPA DEL TUBO DE LLENADO	5K-1568	1	TUBO DE LLENADO DE ACEITE DE LA TRANSMISIÓN (GR)	304
TAPA DEL TUBO DE LLENADO (TREN DE FUERZA)	5K-1568	1	TUBO DE LLENADO DE ACEITE DE LA TRANSMISIÓN (GR)	305
TAPÓN	138-1510	1	ENGRANAJE DE TRANSFERENCIA DE SALIDA	315
		1	ENGRANAJE DE TRANSFERENCIA DE SALIDA	320
	175-4966	1	DRENAJE DE SEGURIDAD ECOLÓGICA (GR)	303
TAPÓN MAGNÉTICO	5P-4484	1	CAJA DE EJE OSCILANTE (GR)	326

* NO HAY TRADUCCION DISPONIBLE EN EL MOMENTO DE LA IMPRESION

PEÇAS DE MANUTENÇÃO

DESCRIÇÃO	NÚMERO DE PEÇA	QUANT	UTILIZADA EM	PÁGINA
CHASSI E CARROCERIA				
FILTRO-GRAXA	196-1062	1	BOMBA DE LUBRIFICAÇÃO	473
LÂMPADA	115-5774	2	GRUPO DE CONVERSÃO - ARRANJO RODOVIÁRIO	388
LÂMPADA (*24-VOLT, 5-WATTS)	263-2541	1	MONTAGEM DA PLACA DE REGISTRO	465
EQUIPAMENTOS DE SERVIÇO E SUPRIMENTOS				
CADEADO	246-2641	3	PROTEÇÃO CONTRA VANDALISMO	947
ESTAÇÃO DO OPERADOR				
ACUMULADOR - AR CONDICIONADO	186-6189	1	TUBOS - AR CONDICIONADO	847
CHAVE - ALAVANCA	3V-7476	1	DUCTO E FILTRO	821
CINTO DE SEGURANÇA	236-7019	1	ASSENTO COM SUSPENSÃO	909
	258-8372	1	CINTO DE SEGURANÇA E LUZES	903
CORREIA- SERPENTINA	253-4531	1	COMPRESSOR DE REFRIGERANTE	810
FILTRO DE AR DE CABINA	7X-6041	2	DUCTO E FILTRO	821
FUSÍVEL (15 AMPERES)	133-9012	1	AQUECEDOR DA CABINE	834
		1	CONDICIONADOR DE AR	800
LÂMINA DO LIMPADOR DE PÁRA-BRISA	6V-7419	2	LIMPADOR DO VIDRO	932
SISTEMA DA ADMISSÃO DE AR E DE ESCAPE				
ELEMENTO DO FILTRO DE AR (PRIMÁRIO)	245-6375	1	PURIFICADOR DE AR	84
ELEMENTO DO FILTRO DE AR (SECUNDÁRIO)	245-6376	1	PURIFICADOR DE AR	84
SISTEMA DE ARREFECIMENTO				
JUNTA (ALOJAMENTO DO REGULADOR DE TEMPERATURA)	222-5915	1	TUBOS - ÁGUA	72
REGULADOR DE TEMPERATURA DA ÁGUA (94 GRAUS C) (LÍQUIDO ARREFECEDOR)	119-3075	2	TUBOS - ÁGUA	72
TAMPA DE PRESSÃO (7 PSI)	6L-8617	1	TANQUE SUPERIOR DO RADIADOR	82
SISTEMA DE COMBUSTÍVEL				
FILTRO - COMBUSTÍVEL (SECUNDÁRIO)	1R-0762	1	FILTRO E TUBOS - COMBUSTÍVEL	98
FILTRO - COMBUSTÍVEL (TELA DO BOCAL DE ENCHIMENTO)	180-3730	1	TANQUE DE COMBUSTÍVEL	118
FILTRO - SEPARADOR DE ÁGUA E COMBUSTÍVEL (PRIMÁRIO)	1R-0770	1	FILTRO DE COMBUSTÍVEL E SEPARADOR DE ÁGUA	100
RETENTOR	220-8678	1	FILTRO DE COMBUSTÍVEL E SEPARADOR DE ÁGUA	100
TAMPA - TANQUE DE COMBUSTÍVEL	246-1479	1	TANQUE DE COMBUSTÍVEL	118
VÁLVULA DISJUNTORA	188-8844	1	TANQUE DE COMBUSTÍVEL	118
SISTEMA DE DIREÇÃO				
TELA FILTRANTE	6E-5066	2	*SCREEN GP-CASE DRAIN	538

* TRADUÇÃO NÃO DISPONÍVEL NO MOMENTO DA IMPRESSÃO

PEÇAS DE MANUTENÇÃO

DESCRIÇÃO	NÚMERO DE PEÇA	QUANT	UTILIZADA EM	PÁGINA
SISTEMA DE LUBRIFICAÇÃO				
FILTRO - ÓLEO DO MOTOR	1R-1807	1	FILTRO - ÓLEO DO MOTOR	59
RESPIRO (CÁRTER DO MOTOR)	164-0210	1	RESPIRO	57
TAMPA - BOCAL DE ENCHIMENTO (ÓLEO DO MOTOR)	5L-2952	1	BOCAL DE ENCHIMENTO DE ÓLEO DO MOTOR	58
SISTEMA ELÉTRICO E DE PARTIDA				
CHAVE - ELETRÔNICO (SEGURANÇA)	206-5162	2	INSTALAÇÃO-SEGURANÇA	149
CORREIA- SERPENTINA	246-6296	1	ALTERNADOR DE CORRENTE	124
DISJUNTOR AUTOMÁTICO DE CIRCUITO (105 AMPERES) (ALTERNADOR)	171-2212	1	CABOS/FIOS ELÉTRICOS - CHASSI	254
DISJUNTOR AUTOMÁTICO DE CIRCUITO (15 AMPERES) (ACIONADOR DO PROTETOR DE ENERGIA)	3T-2662	1	FIAÇÃO - MANIPULADOR DE RESÍDUOS	282
DISJUNTOR AUTOMÁTICO DE CIRCUITO (15 AMPERES) (ILUMINAÇÃO DE OPERAÇÃO)	3T-2662	1	CABOS/FIOS ELÉTRICOS - CHASSI	254
DISJUNTOR AUTOMÁTICO DE CIRCUITO (15 AMPERES) (*SEAT BELT ALARM)	6T-3643	2	CABOS/FIOS ELÉTRICOS - CABINE	240
DISJUNTOR AUTOMÁTICO DE CIRCUITO (50 AMPÈRES) (PARTIDA)	171-2206	1	CABOS/FIOS ELÉTRICOS - CHASSI	254
DISJUNTOR AUTOMÁTICO DE CIRCUITO (80 AMPERES) (PRINCIPAL)	171-2210	1	CABOS/FIOS ELÉTRICOS - CHASSI	254
DISJUNTOR AUTOMÁTICO DE CIRCUITO (90 AMPERES) (AUXILIAR DE PARTIDA)	171-2211	1	CABOS/FIOS ELÉTRICOS - CHASSI	254
ELEMENTO - AQUECEDOR DE ÁGUA DA CAMISA	124-0687	1	AQUECEDOR DA ÁGUA DO MOTOR	147
FUSÍVEL (10 AMPERES)	9W-1442	24	CABOS/FIOS ELÉTRICOS - CABINE	241
FUSÍVEL (15 AMPERES)	9W-1441	6	CABOS/FIOS ELÉTRICOS - CABINE	241
FUSÍVEL (20-AMPERES)	9W-1446	2	CABOS/FIOS ELÉTRICOS - CABINE	241
INTERRUPTOR - CIRCUITO (20-AMPERES) (ACIONADOR DE INCLINAÇÃO DO CAPÔ)	6T-3644	1	CABOS/FIOS ELÉTRICOS - CHASSI	254
INTERRUPTOR - CIRCUITO (20-AMPERES) (ENERGIA DA BATERIA PARA CABINE DESLIGADA)	6T-3644	1	CABOS/FIOS ELÉTRICOS - CHASSI	255
*LAMP AS-WARNING (CINTO DE SEGURANÇA)	260-0955	1	SIST. DE ILUMINAÇÃO - PISCA-PISCA GIRATÓRIO DE ADVERTÊNCIA	180
LÂMPADA - HALOGÊNEO (24 VOLTS, 65 WATTS)	9X-3463	1	LÂMPADA - FAROL	154
LÂMPADA - HALOGÊNEO (24 VOLTS, 65 WATTS) (FAROL)	9X-3463	1	LÂMPADA - FAROL	155
LÂMPADA (MARCHA-À-RÉ)	259-5588	2	ILUMINAÇÃO - MARCHA A RÉ	165
LÂMPADA (12 VOLTS, 24 VOLTS, 35 WATTS)	209-6638	1	LÂMPADA - FAROL	152
		1	LÂMPADA - FAROL	153
LÂMPADA (24 VOLTS)	7N-5876	4	CABOS/FIOS ELÉTRICOS - CABINE	241
	7N-9943	1	LÂMPADA - TETO	151

* TRADUÇÃO NÃO DISPONÍVEL NO MOMENTO DA IMPRESSÃO

PEÇAS DE MANUTENÇÃO

DESCRIÇÃO	NÚMERO DE PEÇA	QUANT	UTILIZADA EM	PÁGINA
LÂMPADA (24 VOLTS) (ILUMINAÇÃO DE OPERAÇÃO)	100-3245	1	LÂMPADA DIANTEIRA E DE SINAL	156
LÂMPADA (24 VOLTS) (LUZ DE OPERAÇÃO)	100-3245	1	LÂMPADA DIANTEIRA E DE SINAL	158
LÂMPADA (24 VOLTS) (SETA DE DIREÇÃO)	100-3245	1	LÂMPADA DIANTEIRA E DE SINAL	156
		1	LÂMPADA DIANTEIRA E DE SINAL	158
LÂMPADA (24 VOLTS, 21 WATTS)	9X-4493	1	LUZ TRASEIRA E DE FREIO	162
LÂMPADA (24 VOLTS, 21 WATTS) (SETA DE DIREÇÃO)	9X-4493	1	LÂMPADA DIANTEIRA E DE SINAL	156
		1	LÂMPADA DIANTEIRA E DE SINAL	158
LÂMPADA (24 VOLTS, 21 WATTS) (SINAL)	9X-4493	1	LÂMPADA - SINALIZAÇÃO	160
LÂMPADA (24 VOLTS, 5 WATTS)	9X-4492	1	LUZ TRASEIRA E DE FREIO	162
LÂMPADA (24 VOLTS, 70 WATTS)	9X-7849	1	LUZ GIRATÓRIA DE ALARME	163
LÂMPADA (24 VOLTS, 75-70 WATTS) (FACHO ALTO - BAIXO)(LADO DIREITO)	9X-3465	1	LÂMPADA DIANTEIRA E DE SINAL	158
LÂMPADA (24 VOLTS, 75-70 WATTS) (LUZ ALTA/BAIXA)	9X-3465	1	LÂMPADA DIANTEIRA E DE SINAL	156
LENTE ÂMBAR (SINAL)	9X-3066	1	LÂMPADA - SINALIZAÇÃO	160
LENTE (ÂMBER) (SETA DE DIREÇÃO)	100-3250	1	LÂMPADA DIANTEIRA E DE SINAL	156
		1	LÂMPADA DIANTEIRA E DE SINAL	158
	136-3848	1	LÂMPADA DIANTEIRA E DE SINAL	156
		1	LÂMPADA DIANTEIRA E DE SINAL	158
LENTE (LUZES DIANTEIRAS) (LUZ ALTA/BAIXA)	100-3248	1	LÂMPADA DIANTEIRA E DE SINAL	156
		1	LÂMPADA DIANTEIRA E DE SINAL	158
LUZ INTERMITENTE (24 VOLTS)	217-8166	1	INTERRUPTOR DE SINALIZAÇÃO	226
		1	INTERRUPTOR DE SINALIZAÇÃO	228
TAMPA CONTRA POEIRA (AQUECEDOR DE ÁGUA DA CAMISA)	133-6517	1	AQUECEDOR DA ÁGUA DO MOTOR	147
SISTEMA HIDRÁULICO				
BUJÃO DO DRENO	9J-7031	1	VÁLVULA DE DRENAGEM	677
ELEMENTO FILTRANTE - ÓLEO (HIDRÁULICO)	225-4118	1	FILTRO - ÓLEO	590
FILTRO - ÓLEO	144-0832	1	FILTRO - ÓLEO	591
TAMPA - BOCAL DE ENCHIMENTO (TANQUE HIDRÁULICO)	7H-1447	1	TANQUE HIDRÁULICO	645
TELA FILTRANTE	6E-5066	1	COLETOR - VÁLVULA	631
		1	COLETOR - VÁLVULA	633
TELA FILTRANTE (COLETOR DA VÁLVULA DE CONTROLE)	6E-5066	1	COLETOR - CONTROLE	629
TELA FILTRANTE (ENCHIMENTO DO TANUQE HIDRÁULICO)	5D-7927	1	TANQUE HIDRÁULICO	645
TELA FILTRANTE (TANQUE HIDRÁULICO)	9T-9227	2	TANQUE HIDRÁULICO	645

* TRADUÇÃO NÃO DISPONÍVEL NO MOMENTO DA IMPRESSÃO

PEÇAS DE MANUTENÇÃO

DESCRIÇÃO	NÚMERO DE PEÇA	QUANT	UTILIZADA EM	PÁGINA
TREM DE FORÇA				
BUJÃO MAGNÉTICO	5P-4484	1	CAIXA - EIXO OSCILANTE	326
CADEADO	5P-8502	1	TAMPA - BOCAL DE ENCHIMENTO DE ÓLEO DA TRANSMISSÃO	297
CORREIA- SERPENTINA	215-3015	1	BOMBA DO ARREFECEDOR DE ÓLEO DO EIXO E MONTAGEM	344
	217-3031	1	BOMBA DO ARREFECEDOR DE ÓLEO DO EIXO E MONTAGEM	344
ELEMENTO FILTRANTE (TREM DE FORÇA)	1G-8878	1	FILTRO - ÓLEO	308
FILTRO - MAGNÉTICO	4S-8603	1	ENGRENAGENS DE SAÍDA DE TRANSFERÊNCIA	315
		1	ENGRENAGENS DE SAÍDA DE TRANSFERÊNCIA	320
FILTRO - MAGNÉTICO (ARREFECEDOR DO ÓLEO DO EIXO)	251-6351	2	TUBOS - ARREFECEDOR DE ÓLEO DO EIXO	328
RESPIRO	9C-4937	1	ENGRENAGENS DE SAÍDA DE TRANSFERÊNCIA	316
		1	ENGRENAGENS DE SAÍDA DE TRANSFERÊNCIA	321
TAMPA - BOCAL DE ENCHIMENTO	5K-1568	1	BOCAL DE ENCHIMENTO DE ÓLEO DO TREM DE FORÇA	304
TAMPA - BOCAL DE ENCHIMENTO (TREM DE FORÇA)	5K-1568	1	BOCAL DE ENCHIMENTO DE ÓLEO DO TREM DE FORÇA	305
TAMPÃO	138-1510	1	ENGRENAGENS DE SAÍDA DE TRANSFERÊNCIA	315
		1	ENGRENAGENS DE SAÍDA DE TRANSFERÊNCIA	320
	175-4966	1	DRENO - ECOLOGIA	303
TELA DE SUCÇÃO	4S-8598	1	ENGRENAGENS DE SAÍDA DE TRANSFERÊNCIA	315
		1	ENGRENAGENS DE SAÍDA DE TRANSFERÊNCIA	320

* TRADUÇÃO NÃO DISPONÍVEL NO MOMENTO DA IMPRESSÃO

WARTUNGSTEILE

BESCHREIBUNG	ERSATZTEIL-NUMMER	MENGE	VERWENDET IN	SEITE
ELEKTRISCHE ANLAGE U. STARTSYSTEM				
ABDECKGLAS (FRONTSCHEINWERFER) (FERNLICHT/ABBLENDLICHT)	100-3248	1	SCHEINWERFER U. RICHTUNGSLEUCHTE	158
		1	SCHEINWERFER U. RICHTUNGSLEUCHTE	156
ABDECKGLAS (GELB) (FAHRTRICHTUNGSANZEIGER)	100-3250	1	SCHEINWERFER U. RICHTUNGSLEUCHTE	156
		1	SCHEINWERFER U. RICHTUNGSLEUCHTE	158
	136-3848	1	SCHEINWERFER U. RICHTUNGSLEUCHTE	156
		1	SCHEINWERFER U. RICHTUNGSLEUCHTE	158
ABDECKGLAS (GELB) (SIGNAL)	9X-3066	1	BLINKLEUCHTE	160
BELEUCHTUNGSANLAGE (SICHERHEITSSCHALTER)	259-5588	2	SCHEINWERFER, HINTEN	165
BLINKER (24 V)	217-8166	1	RICHTUNGSSIGNALSCHALTER	226
		1	RICHTUNGSSIGNALSCHALTER	228
ELEKTRONISCHER SCHLÜSSEL (SICHERHEIT)	206-5162	2	SICHERHEITSEINBAUSATZ	149
HALOGENSCHINWERFER (24V)(65W)	9X-3463	1	ARBEITSLEUCHTEN	154
HALOGENSCHINWERFER (24V)(65W) (ARBEITSSCHEINWERFER)	9X-3463	1	ARBEITSLEUCHTEN	155
*LAMP AS-WARNING (SICHERHEITSGURT)	260-0955	1	RUNDUM-KENNLEUCHTE	180
LEUCHTE (12 V, 24 V, 35 W)	209-6638	1	ARBEITSLEUCHTEN	152
		1	ARBEITSLEUCHTEN	153
LEUCHTE (24 V)	7N-5876	4	FAHRERHAUSVERDRAHTUNG	241
	7N-9943	1	FAHRERHAUSBELEUCHTUNG	151
LEUCHTE (24 V) (FAHRLEUCHTE)	100-3245	1	SCHEINWERFER U. RICHTUNGSLEUCHTE	158
LEUCHTE (24 V) (FAHRSCHEINWERFER)	100-3245	1	SCHEINWERFER U. RICHTUNGSLEUCHTE	156
LEUCHTE (24 V) (FAHRTRICHTUNGSANZEIGER)	100-3245	1	SCHEINWERFER U. RICHTUNGSLEUCHTE	156
		1	SCHEINWERFER U. RICHTUNGSLEUCHTE	158
LEUCHTE (24 V, 5 W)	9X-4492	1	BREMS- UND RÜCKLEUCHTE	162
LEUCHTE (24 V, 70 W)	9X-7849	1	RUNDUM-KENNLEUCHTE	163
LEUCHTE (24 V, 75/70 W) (FERNLICHT/ABBLENDLICHT)	9X-3465	1	SCHEINWERFER U. RICHTUNGSLEUCHTE	156
LEUCHTE (24 V, 75/70 W) (FERNLICHT/ ABBLENDLICHT)(RECHTS)	9X-3465	1	SCHEINWERFER U. RICHTUNGSLEUCHTE	158
LEUCHTE (24V, 21W)	9X-4493	1	BREMS- UND RÜCKLEUCHTE	162
LEUCHTE (24V, 21W) (FAHRTRICHTUNGSANZEIGER)	9X-4493	1	SCHEINWERFER U. RICHTUNGSLEUCHTE	156
		1	SCHEINWERFER U. RICHTUNGSLEUCHTE	158
LEUCHTE (24V, 21W) (SIGNAL)	9X-4493	1	BLINKLEUCHTE	160
SERPENTINENFÖRMIGER RIEMEN	246-6296	1	DREHSTROMGENERATOR	124
SICHERUNG (10 A)	9W-1442	24	FAHRERHAUSVERDRAHTUNG	241
SICHERUNG (15 A)	9W-1441	6	FAHRERHAUSVERDRAHTUNG	241

* ÜBERSETZUNG ZUM ZEITPUNKT DER DRUCKLEGUNG NICHT VORHANDEN

WARTUNGSTEILE

BESCHREIBUNG	ERSATZTEIL-NUMMER	MENGE	VERWENDET IN	SEITE
SICHERUNG (20 A)	9W-1446	2	FAHRERHAUSVERDRAHTUNG	241
STAUBKAPPE (UMLAUFKÜHLWASSERHEIZUNG)	133-6517	1	UMLAUFKÜHLWASSERHEIZUNG	147
UMLAUFKÜHLWASSERHEIZUNGSELEMENT	124-0687	1	UMLAUFKÜHLWASSERHEIZUNG	147
UNTERBRECHER (105 A) (DREHSTROMGENERATOR)	171-2212	1	FAHRGESTELLVERDRAHTUNG	254
UNTERBRECHER (15 A) (FAHRSCHEINWERFER)	3T-2662	1	FAHRGESTELLVERDRAHTUNG	254
UNTERBRECHER (15 A) (*SEAT BELT ALARM)	6T-3643	2	FAHRERHAUSVERDRAHTUNG	240
UNTERBRECHER (15 A) (STELLGLIED - ELEKTRISCH BETRIEBENE SCHUTZVORRICHTUNG)	3T-2662	1	ABFALLBESEITIGUNGSAUSFÜHRUNG - VERDRAHTUNG	282
UNTERBRECHER (20 A) (HAUBENNEIGESTELLGLIED)	6T-3644	1	FAHRGESTELLVERDRAHTUNG	254
UNTERBRECHER (20 A) (UNGESCHALTETER BATTREIESTROM ZUM FAHRERHAUS)	6T-3644	1	FAHRGESTELLVERDRAHTUNG	255
UNTERBRECHER (50 A) (STARTEN)	171-2206	1	FAHRGESTELLVERDRAHTUNG	254
UNTERBRECHER (80 A) (HAUPTUNTERBRECHER)	171-2210	1	FAHRGESTELLVERDRAHTUNG	254
UNTERBRECHER (90 A) (STARTHILFE)	171-2211	1	FAHRGESTELLVERDRAHTUNG	254
FAHRERHAUS				
FAHRERHAUSLUFTFILTER	7X-6041	2	LUFTKANAL U. FILTER	821
KLIMAANLAGENDRUCKSPEICHER	186-6189	1	KLIMAANLAGENLEITUNGEN	847
SCHEIBENWISCHERBLATT	6V-7419	2	SCHEIBENWISCHER	932
SCHLÜSSELGRIFF	3V-7476	1	LUFTKANAL U. FILTER	821
SERPENTINENFÖRMIGER RIEMEN	253-4531	1	KÄLTEMITTELKOMPRESSOR	810
SICHERHEITSGURT	236-7019	1	SCHWINGSITZ	909
	258-8372	1	*SEAT BELT & LIGHTING GP	903
SICHERUNG (15 A)	133-9012	1	FAHRERHAUSHEIZUNG	834
		1	KLIMAANLAGE	800
HYDRAULIKSYSTEM				
ABLASSSTOPFEN	9J-7031	1	ABLASSVENTIL	677
EINFÜLLSTUTZENKAPPE (HYDRAULIKTANK)	7H-1447	1	HYDRAULIKTANK	645
FILTERSIEB (HYDRAULIKTANKEINFÜLLSIEB)	5D-7927	1	HYDRAULIKTANK	645
ÖLFILTER	144-0832	1	ÖLFILTER	591
ÖLFILTERELEMENT (HYDRAULISCH)	225-4118	1	ÖLFILTER	590
SCREEN	6E-5066	1	*MANIFOLD GP-VALVE	631
		1	*MANIFOLD GP-VALVE	633
SCREEN (STEUERVENTIL-KRÜMMER)	6E-5066	1	STEUERKRÜMMER	629
SIEB (HYDRAULIKTANK)	9T-9227	2	HYDRAULIKTANK	645

* ÜBERSETZUNG ZUM ZEITPUNKT DER DRUCKLEGUNG NICHT VORHANDEN

WARTUNGSTEILE

BESCHREIBUNG	ERSATZTEIL-NUMMER	MENGE	VERWENDET IN	SEITE
KRAFTSTOFFSYSTEM				
DICHTUNG	220-8678	1	WASSERABSCHEIDER- U. KRAFTSTOFFILTER	100
KRAFTSTOFFILTER (AUSFALLSCHUTZ)	1R-0762	1	KRAFTSTOFFILTER UND LEITUNGEN	98
KRAFTSTOFFILTER (EINFÜLLSTURZENSIEB)	180-3730	1	KRAFTSTOFFTANK	118
KRAFTSTOFFTANKKAPPE	246-1479	1	KRAFTSTOFFTANK	118
RÜCKSCHLAGVENTIL (GEGEN VAKUUM)	188-8844	1	KRAFTSTOFFTANK	118
WASSERABSCHEIDER UND KRAFTSTOFFILTER (HAUPTELEMENT)	1R-0770	1	WASSERABSCHEIDER- U. KRAFTSTOFFILTER	100
KRAFTÜBERTRAGUNG				
ANSAUGSIEB	4S-8598	1	VERTEILERGETRIEBEANTRIEB	315
		1	VERTEILERGETRIEBEANTRIEB	320
EINFÜLLSTUTZENKAPPE	5K-1568	1	GETRIEBEÖLFÜLLSTUTZEN	304
EINFÜLLSTUTZENKAPPE (KRAFTÜBERTRAGUNG)	5K-1568	1	GETRIEBEÖLFÜLLSTUTZEN	305
ENTLÜFTER	9C-4937	1	VERTEILERGETRIEBEANTRIEB	316
		1	VERTEILERGETRIEBEANTRIEB	321
FILTER (KRAFTÜBERTRAGUNG)	1G-8878	1	ÖLFILTER	308
MAGNETFILTER (ACHSÖLKÜHLER)	251-6351	2	ACHSENÖLKÜHLERLEITUNGEN	328
MAGNETSIEB	4S-8603	1	VERTEILERGETRIEBEANTRIEB	315
		1	VERTEILERGETRIEBEANTRIEB	320
MAGNETSTOPFEN	5P-4484	1	GEHÄUSE - PENDELACHSE	326
SCHRAUBE	138-1510	1	VERTEILERGETRIEBEANTRIEB	315
		1	VERTEILERGETRIEBEANTRIEB	320
	175-4966	1	ABLASS (UMWELTFREUNDLICH)	303
SERPENTINENFÖRMIGER RIEMEN	215-3015	1	ACHSENÖLKÜHLERPUMPE U. BEFESTIGUNGSTEILE	344
	217-3031	1	ACHSENÖLKÜHLERPUMPE U. BEFESTIGUNGSTEILE	344
VORHÄNGESCHLOSS	5P-8502	1	GETRIEBEÖLEINFÜLLKAPPE	297
KÜHLSYSTEM				
DICHTUNG (TEMPERATURREGELGEHÄUSE)	222-5915	1	KÜHLWASSERLEITUNGEN	72
DRUCKKAPPE (7 PSI)	6L-8617	1	KÜHLERWASSERKASTEN, OBEN	82
WASSERTEMPERATURREGLER (94 GRAD CELSIUS) (KÜHLMITTEL)	119-3075	2	KÜHLWASSERLEITUNGEN	72
LENKSYSTEM				
SCREEN	6E-5066	2	*SCREEN GP-CASE DRAIN	538
LUFTANSAUG- UND ABGASSYSTEM				
LUFTFILTER (HAUPTELEMENT)	245-6375	1	LUFTREINIGER	84
LUFTFILTER (HILFSELEMENT)	245-6376	1	LUFTREINIGER	84

* ÜBERSETZUNG ZUM ZEITPUNKT DER DRUCKLEGUNG NICHT VORHANDEN

WARTUNGSTEILE

BESCHREIBUNG	ERSATZTEIL-NUMMER	MENGE	VERWENDET IN	SEITE
RAHMEN UND FAHRGESTELL				
BELEUCHTUNGSANLAGE	115-5774	2	UMBAUSATZ - FÜR STRASSENVERKEHR	388
LEUCHTE (*24-VOLT, 5-WATTS)	263-2541	1	TYPENSCHILDBEFESTIGUNG	465
SCHMIERFILTER	196-1062	1	SCHMIERPUMPE	473
SCHMIERSYSTEM				
EINFÜLLKAPPE (MOTORÖL)	5L-2952	1	MOTORÖLEINFÜLLSTUTZEN	58
ENTLÜFTER (KURBELGEHÄUSE)	164-0210	1	ENTLÜFTER	57
ÖLFILTER	1R-1807	1	ÖLFILTER	59
WARTUNGSAUSRÜSTUNG UND -ZUBEHÖR				
VORHÄNGESCHLOSS	246-2641	3	SCHUTZABDECKUNG	947

* ÜBERSETZUNG ZUM ZEITPUNKT DER DRUCKLEGUNG NICHT VORHANDEN

INDEX

Name	Page
A	
ACCUMULATOR GP-BRAKE–CHARGED	492
ACCUMULATOR GP-BRAKE–UNCHARGED	493
ACCUMULATOR GP-PILOT OIL–CHARGED	561
ACCUMULATOR GP-PILOT OIL–UNCHARGED	562
ACCUMULATOR GP-REFRIGERANT	847
ACTUATOR GP-HOOD TILT	380
ACTUATOR GP-PARKING BRAKE	494
ACTUATOR GP-POWER	382
ACTUATOR GP-POWER GUARD	383
ADAPTER GP	74 851
ADAPTER GP-OIL LINE–ENGINE	56
ADAPTER GP-TIP	718
ADJUSTER GP-SEAT	795
AIR CLEANER GP	83 84
AIR COMPRESSOR GP-SEAT	797
AIR CONDITIONER AR	798
AIR CONDITIONER GP	799 800
ALARM GP–ACTION	121
ALTERNATOR GP-CHARGING	122 124
ARM AS-LIFT	704
ARM AS-LIFT–HIGH LIFT MACHINES	702 705
ARM GP-WINDOW WIPER–FRONT	805
ARM GP-WINDOW WIPER–REAR	804
ARMREST GP–LH	806
AXLE AR-FIXED–FRONT, LIMITED SLIP DIFFERENTIAL	285
AXLE AR-FIXED–FRONT, STANDARD DIFFERENTIAL	284
AXLE AR-OSCILLATING–REAR, LIMITED SLIP DIFFERENTIAL	285
AXLE AR-OSCILLATING–REAR, NOSPIN DIFFERENTIAL	286
AXLE AR-OSCILLATING–REAR, STANDARD DIFFERENTIAL	285
B	
BAFFLE GP	384
BASE AS-JOYSTICK	574 576
BASE GP-FOOT BRAKE–PEDAL, LH	496
BASE GP-FOOT BRAKE–PEDAL, RH	495
BATTERY & WIRING GP	126
BEARING GP-MAIN (CRANKSHAFT)	17
BELT-SERPENTINE	124 344 810
BLADE AS-WIPER	932
BLOCK AS-FUSE	243
BLOCK GP-AXLE OSC LIMITER	385
BOSS GP-LEVER	706 707
BOSS GP-LIFT ARM	708 709
BOSS GP-REAR FRAME	386
BOX GP-BATTERY	387
BOX GP-TOOL	935
BRACKET AS-ADJUSTABLE SWITCH	496
BRAKE & PLANETARY GP	287 289
BRAKE GP-PARKING	498
BREATHER AS	316 321
BREATHER AS (CRANKCASE)	57
BREATHER GP–CRANKCASE	57
BUCKET AS-GENERAL PURPOSE	719 720 721
BUCKET AS-MATERIAL HANDLING	723 724 725 726 727 728 729 730 731 732 733 734
BUCKET AS-PENETRATION	736 738 740 742
BUCKET AS-PENETRATION–QUICK COUPLER	744 746
BUCKET AS-ROCK	748 749 751 753
BUCKET GP-GENERAL PURPOSE	755 756
BUCKET GP-MATERIAL HANDLING	757 758 759 760 761 762 763 764 765

INDEX

Name	Page
	766
BUCKET GP-MATERIAL HANDLING–QUICK COUPLER	767
BUCKET GP-PENETRATION	768
	769
	770
	771
BUCKET GP-PENETRATION–QUICK COUPLER	772
	773
BUCKET GP-ROCK	774
	775
	776
	777
CAB AR-ENCLOSED ROPS	807
	808
CAMERA AR	129
	130
CAMERA GP (115-DEGREE, COLOR)	129
CAMSHAFT GP	9
CAP AS-DUST (JACKET WATER HEATER)	147
CAP AS-FILLER (ENGINE OIL)	58
CAP-FILLER	304
CAP-FILLER (HYDRAULIC TANK)	645
CAP-FILLER (POWER TRAIN)	305
CAP-FUEL	118
CAP-PRESSURE (7-PSI)	82
CARRIER GP-SEAL	10
CHASSIS AR	1
CIRCUIT BREAKER AS (105-AMPERE) (ALTERNATOR)	254
CIRCUIT BREAKER AS (15-AMPERE) (POWER GUARD ACTUATOR)	282
CIRCUIT BREAKER AS (15-AMPERE) (RUNNING LIGHTS)	254
CIRCUIT BREAKER AS (15-AMPERE) (SEAT BELT ALARM)	240
CIRCUIT BREAKER AS (50-AMPERE) (START)	254
CIRCUIT BREAKER AS (80-AMPERE) (MAIN)	254
CIRCUIT BREAKER AS (90-AMPERE) (STARTING AID)	254
CIRCUIT BREAKER GP (20-AMPERE) (HOOD TILT ACTUATOR)	254
CIRCUIT BREAKER GP (20-AMPERE) (UNSWITCHED BAT POWER TO CAB)	255
COMPRESSOR GP-REFRIGERANT	809
	810
CONDENSER & MTG GP-REFRIGERANT	811
CONTROL & LINES GP-RIDE	563
CONTROL & MTG GP-COMMUNICATION–PRODUCT LINK 321SR	131
CONTROL & MTG GP-ENGINE ELEK	133
	134
CONTROL AR-AUTODIG–COMMAND CONTROL STEERING	135
CONTROL AR-AUTODIG–HMU STEERING	135
CONTROL AR-QUICK COUPLER–MID LIFT MACHINES–QUICK COUPLER READY	778
CONTROL AR-RIDE–2-VALVE	564
CONTROL AR-RIDE–3-VALVE	564
CONTROL GP-AUTODIG–COMMAND CONTROL STEERING	136
CONTROL GP-AUTODIG–HMU STEERING	138
CONTROL GP-BUCKET	711
CONTROL GP-BUCKET–HIGH LIFT MACHINES	713
CONTROL GP-DISPLAY ELECTRONIC (INDICATOR PANEL, CENTER)	136
	138
CONTROL GP-DISPLAY ELECTRONIC (INDICATOR PANEL, RH, LH)	243
CONTROL GP-ELECTROHYDRAULIC–JOYSTICK, 2-FUNCTION	569
CONTROL GP-ELECTROHYDRAULIC–JOYSTICK, 3-FUNCTION	571
CONTROL GP-ELECTROHYDRAULIC–2-FUNCTION	565
CONTROL GP-ELECTROHYDRAULIC–3-FUNCTION	567
CONTROL GP-FOOT BRAKE	499
	500
CONTROL GP-HANDLE	573
CONTROL GP-HANDLE (LIFT, TILT, AUX, DOWNSHIFT SW)	574
CONTROL GP-HANDLE (LIFT, TILT, DOWNSHIFT SWITCH)	576
CONTROL GP-JOYSTICK–2-FUNCTION, WITH DOWNSHIFT	576
CONTROL GP-JOYSTICK–3-FUNCTION, WITH DOWNSHIFT	574
CONTROL GP-JOYSTICK (3-FUNCTION, WITH DOWNSHIFT)	571
CONTROL GP-MACHINE	133
CONTROL GP-MONITOR–DIMMER	813
CONTROL GP-PARKING BRAKE	501
CONTROL GP-SERVICE BRAKE	502
CONTROL GP-STEERING–COMMAND CONTROL STEERING	511
CONTROL GP-STEERING–HMU STEERING	509
CONTROL GP-TRANSMISSION–HMU STEERING	291
	292
CONTROL GP-TRANSMISSION HYD	293
CONTROL GP-UNPRGMED MONITOR–CATERPILLAR MONITORING SYSTEM	814

C

INDEX

Name	Page
CONTROL GP-UNPRGMED MONITOR (CATERPILLAR MONITORING SYSTEM)	242
CONTROL GP-UNPROGRAMMED–PRODUCT LINK 300	140
CONTROL GP-UNPROGRAMMED (TRANSMISSION)	243
CONVERSION AR-AUTODIG–COMMAND CONTROL STEERING	141
CONVERSION AR-CERTIFICATION	2
	3
CONVERSION AR-ROADING–GERMANY	388
CONVERSION AR-ROADING–ITALY	392
COOLANT HEATER LINES	851
	853
COOLER & MTG GP-TRANSMISSION	295
COOLER AR-AXLE OIL	296
COOLER AS-TRANSMISSION OIL	295
COOLER GP-ENGINE OIL	67
COOLING AR-HIGH AMBIENT TEMP	68
CORE AS-AXLE OIL COOLER	337
CORE AS-CONDENSER (REFRIGERANT)	68
	811
CORE AS-ENGINE OIL COOLER	67
CORE AS-HYDRAULIC OIL COOLER	78
CORE AS-POWER TRAIN OIL COOLER	295
CORE AS-RADIATOR	78
COUNTERWEIGHT GP	396
	397
	398
COUPLER AR-QUICK	779
	780
COUPLER GP-QUICK	781
COVER GP-AIR INLET–STARTING AID HEATER	85
	86
COVER GP-CYLINDER BLOCK	11
COVER GP-FRONT HOUSING	12
	13
COVER GP-TMSN OIL FILLER CAP	297
	947
COVER GP-VALVE MECHANISM	14
	15
	16
CRANKSHAFT GP	17
CYLINDER & MTG GP-STEERING	513
CYLINDER & SEAL GP-LIFT–LH	578
CYLINDER & SEAL GP-LIFT–RH	579
CYLINDER & SEAL GP-TILT	580
CYLINDER & SEAL GP-TILT–HIGH LIFT MACHINES	581
CYLINDER & SEAL GP-TILT–LOGGING	582
CYLINDER BLOCK GP	19
	20
	22
CYLINDER GP-HYDRAULIC–STEERING	514
CYLINDER GP-LIFT–LH	584
CYLINDER GP-LIFT–RH	583
CYLINDER GP-TILT	585
	587
CYLINDER GP-TILT–HIGH LIFT MACHINES	588
CYLINDER HEAD AS	23
CYLINDER HEAD GP	24
	25
	26

D

DAMPER & PULLEY GP	27
DAMPER AS-ALARM	136
	138
DIFFERENTIAL GP	298
DIFFERENTIAL GP-LIMITED SLIP	299
	300
DIFFERENTIAL GP-NOSPIN	301
	302
DISPLAY	868
DISPLAY GP-CAMERA–WAVES	142
DOOR GP-ACCESS–HOOD SIDE, LH	400
DOOR GP-ACCESS–HOOD SIDE, RH	399
DOOR GP-CAB	820
DOOR GP-CAB–SLIDING WINDOW, LH	816
DOOR GP-CAB–SLIDING WINDOW, RH	815
	819
DRAIN GP-ECOLOGY–POWER TRAIN	303
DRAIN GP-ENGINE OIL	28
DUCT & FILTER GP-AIR	821

E

EDGE GP-CUTTING	782
	783
	784
EDGE GP-SEGMENT	785
ELBOW GP-AIR INLET	87
ELBOW GP-WATER	69
ELECTRICAL AR	143
ELECTRONICS GP-COMMUNICATION–PRODUCT LINK 300	144
ELECTRONICS GP-IMPLEMENT	145
ELECTRONICS GP-MONITOR–CATERPILLAR MONITORING SYSTEM	145
ELECTRONICS GP-POWER TRAIN	146
ELECTRONICS GP-POWER TRAIN–SPEED LIMITER	145
ELEMENT AS-JACKET WATER HEATER	147
ENGINE AR-COMPLETE	6
ENGINE AR-CORE	7
EXTENSION GP-BACKREST (CLOTH)	907

INDEX

Name	Page
F	
FASTENER GP-CYLINDER HEAD	26
FASTENER GP-DAMPER	29
FASTENER GP-FRONT HOUSING	30
	31
FASTENER GP-VALVE COVER	32
FASTENER GP-VALVE MECHANISM–VALVE COVER BASE	33
FENDER AR-ROADING	401
FENDER GP	402
	404
FENDER GP-FRONT	406
	407
FENDER GP-ROADING	408
FILLER GP-ENGINE OIL	58
FILLER GP-POWER TRAIN OIL	304
	305
FILM (AUTODIG)	136
	138
FILM-CONTROL (AUTODIG)	136
FILM-CONTROL (DUMP, TILT BACK)	565
	567
FILM-CONTROL (JOYSTICK, 2-FCTN, DOWNSHIFT SW)	569
FILM-CONTROL (JOYSTICK, 3-FCTN, DOWNSHIFT SW)	571
FILM-CONTROL (LIFT, FLOAT, LOWER)	565
	567
FILM-CONTROL (UPPER PANEL)	242
	883
FILM-CONTROLS	885
FILM (FOREST MACHINE)	717
FILM-FUSE PANEL	842
FILM GP	937
FILM-IDENTIFICATION (AUXILIARY HYDRAULIC)	567
FILM-IDENTIFICATION (BIODEGRADABLE HYDRAULIC OIL)	599
FILM-IDENTIFICATION (HORN)	565
	567
FILM-IDENTIFICATION (IGNITION SWITCH)	149
FILM-IDENTIFICATION (POWER GUARD ACTUATOR SWITCH)	282
FILM-IDENTIFICATION (WASTE HANDLER)	5
FILM-IDENTIFICATION (12-VOLT)	885
FILM-IDENTIFICATION (20-KM/H)	145
FILM-INFORMATION (INPUT/OUTPUT)	885
FILM-INFORMATION (KEY)	149
FILM-INFORMATION (TIE-DOWN)	945
FILM-INSTRUCTION (ALTERNATE EXIT)	842
FILM-INSTRUCTION (ENGINE START)	885
FILM-INSTRUCTION (MAINTENANCE)	569
	571
FILM-INSTRUCTION (MAINTENANCE)	565
	567
FILM-INSTRUCTION (NO STEP)	945
FILM-INSTRUCTION (READ OMM)	149
FILM-INSTRUCTION (SEAT ADJUSTMENT)	924
FILM-INSTRUCTION (SEAT ADJUSTMENT)	922
FILM (LUXUSKABINE)	388
FILM-MONITOR (CATERPILLAR MONITORING SYSTEM)	881
	883
FILM-NOTICE (LIFT EYE LOCATION)	756
	772
	773
FILM-NOTICE (LIFT POINT)	767
FILM-PANEL (CENTER)	885
FILM-PANEL (LH)	885
FILM-PANEL (RH)	885
FILM (RED, WHITE STRIPES)	392
FILM (REFLECTOR)	392
FILM-TRANSMISSION (DOWNSHIFT SWITCH)	565
	567
FILM-WARNING (CRUSH HAZARD, STAY BACK)	944
FILM-WARNING (NO WELD, NO DRILL, READ OMM)	945
FILM-WARNING (PRODUCT LINK RADIO, NON NACD)	148
FILM-WARNING (READ OMM)	779
FILM-WARNING (READ OPERATION MANUAL)	944
FILM-WARNING (STEERING)	388
FILM (40-KM/H)	388
FILTER & LINES GP-FUEL	97
FILTER & LINES GP-TRANSMISSION	306
FILTER AS-ENGINE OIL	59
FILTER AS-FUEL (FILLER NECK SCREEN)	118
FILTER AS-FUEL (SECONDARY)	98
FILTER AS-GREASE	473
FILTER AS-OIL	591
FILTER AS-WATER SEP & FUEL (PRIMARY)	100
FILTER-CAB AIR	821
FILTER ELEMENT AS-AIR (PRIMARY)	84
FILTER ELEMENT AS-AIR (SECONDARY)	84
FILTER ELEMENT AS-OIL (HYDRAULIC)	590
FILTER ELEMENT (POWER TRAIN)	308
FILTER GP-ENGINE OIL	59
FILTER GP-OIL–HYDRAULIC	590
FILTER GP-OIL–HYDRAULIC CASE DRAIN	591
FILTER GP-OIL–POWER TRAIN	308
FILTER GP-WATER SEP & FUEL–PRIMARY	100
FILTER-MAGNETIC (AXLE OIL COOLER)	328
FITTING GP-TEE	502
FLASHER AS (24-VOLT)	226
	228
FLOOR GP-SOUND SUPPRESSION	823

INDEX

Name	Page
	824
	825
FLOOR MAT	842
FLYWHEEL GP	34
FRAME AS-LOADER	412
FRAME AS-REAR	415
FUSE (10-AMPERE)	241
FUSE (15-AMPERE)	241
	800
	834
FUSE (20-AMPERE)	241

G

GASKET (TEMPERATURE REGULATOR HOUSING)	72
GAUGE AS-OIL LEVEL	304
	305
GAUGE GP-OIL LEVEL (DIPSTICK)–ENGINE	60
GAUGE-LIQUID LEVEL (SIGHT GLASS)	645
GAUGE-SIGHT	70
GEAR GP-BEVEL & PINION	309
	311
	313
GEAR GP-FRONT	35
GEAR GP-OUTPUT TRANSFER	315
	320
GENERAL AR	4
GRILL GP-RADIATOR	417
GUARD GP-ARTICULATION	419
GUARD GP-AXLE OIL COOLER	421
GUARD GP-AXLE SEAL	423
GUARD GP-BUCKET	786
	787
GUARD GP-DRIVE SHAFT	424
GUARD GP-FRONT	425
GUARD GP-LIFT CYLINDER–LIFT	592
GUARD GP-LIFT CYLINDER–LIFT, LH	593
GUARD GP-LIFT CYLINDER–LIFT, RH	594
GUARD GP-LIGHTING	426
GUARD GP-POWER TRAIN	427
	428
	429
GUARD GP-WINDOW–FRONT	827
	829

H

HANDHOLD GP–CAB	831
HARDWARE GP-LOADER FRAME	430
HARDWARE GP-LOADER FRAME–AXLE OIL COOLER MOUNTING	432
HARDWARE GP-LOADER FRAME–COMMAND CONTROL STEERING	431
HARDWARE GP-MOUNTING	434
	435
HARDWARE GP-MOUNTING–SECONDARY STEERING	433
HARDWARE GP-REAR FRAME	436
	438
HARDWARE GP-REAR FRAME–AXLE OIL COOLER MOUNTING	437
HARNESS AS-BRAKE (STOP LIGHT)	496
HARNESS AS-CHASSIS (HYDRAULIC TANK)	254
HARNESS AS-CHASSIS (MAIN)	253
HARNESS AS-CONTROL	131
HARNESS AS-CONTROL (AUTOMATIC LUBRICATION)	473
HARNESS AS-CONTROL (HEATED MIRRORS)	864
	866
HARNESS AS-CONTROL (POWER GUARD ACTUATOR)	282
HARNESS AS-ENGINE	263
HARNESS AS-ENGINE (ELECTRONIC CONTROL MODULE)	261
HARNESS AS-ENGINE (FUEL INJECTION)	261
HARNESS AS-FRONT CHASSIS	267
HARNESS AS-FRONT LIGHTING	169
HARNESS AS-HEATER & AIR COND	800
	834
HARNESS AS-LIGHTING	167
HARNESS AS-LIGHTING (CAB FLOODLIGHTS)	242
HARNESS AS-LIGHTING (FRONT TURN, POSITION LIGHTS)	388
HARNESS AS-LIGHTING (LH)	275
HARNESS AS-LIGHTING (LOADER FRAME)	273
HARNESS AS-LIGHTING (RH)	275
HARNESS AS-LIGHTING (TURN SIGNAL)	226
	228
HARNESS AS-LIGHTING (WARNING BEACON)	178
HARNESS AS-OPERATOR CONTROLS	242
HARNESS AS-OPERATOR CONTROLS (ELECTROHYDRAULIC, JOYSTICK)	571
HARNESS AS-OPERATOR CONTROLS (ELECTROHYDRAULIC, JOYSTICK)	569
HARNESS AS-PUMP	236
HARNESS AS-PUMP (AUTOMATIC LUBRICATION)	473
HARNESS AS-REAR LIGHTING	169
HARNESS AS-SENSOR (AXLE, FRONT)	238
HARNESS AS-SENSOR (REAR AXLE)	238
HARNESS AS-STEERING (COLUMN, WHEEL)	541
HARNESS AS-STEERING (SECONDARY)	276
HARNESS AS-SWITCH	236
HARNESS AS-SWITCH (LEVEL)	473

INDEX

Name	Page
HARNESS AS-TRANSMISSION CONT (STEERING WHEEL)	541
HARNESS AS-VALVE (SEAT AIR COMPRESSOR)	922, 924
HARNESS AS-WIRING (FUEL PRESSURE) (SENSOR)	97
HARNESS AS-WIRING (SERVICE TOOL)	243
HARNESS AS-WORK TOOL (QUICK COUPLER)	259
HEAD GP-PUMP	595
HEATER GP-CAB	832, 834
HEATER GP-JACKET WATER	147
HINGE GP-ROADING FENDER–LH	440
HINGE GP-ROADING FENDER–RH	439
HITCH GP-ARTICULATING	441
HOOD & GUARD GP	443
HORN GP-ELECTRIC	836
HOUSING GP-FIXED AXLE	324
HOUSING GP-FLYWHEEL	37
HOUSING GP-FRONT	38
HOUSING GP-OSCILLATING AXLE	326
HYDRAULIC AR-BIODEGRADABLE OIL	599
HYDRAULIC AR-2 VALVE	598
HYDRAULIC AR-3 VALVE	598
HYDRAULIC AR-3 VALVE–LOGGING	599

I

IDLER GP-BELT–ALTERNATOR, REFRIGERANT COMPRESSOR–AXLE OIL COOLER PUMP	40
INJECTOR GP-FUEL	101, 102
INSTALLATION AR-COMMUNICATION–PRODUCT LINK 321SR	148
INSTALLATION AR-ENGINE	8
INSTALLATION AR-SECURITY	148
INSTALLATION GP-CONTROLS–PARKING BRAKE CABLE	837
INSTALLATION GP-RADIO	838
INSTALLATION GP-SECURITY	149

K

KEY AS-ELECTRONIC (SECURITY)	149
KEY-HANDLE	821
KIT-AIR VALVE	922, 924
KIT-BEARING (ALTERNATOR)	122
KIT-BIAS PISTON	534
KIT-BOLT (ELECTRICAL CONNECTORS)	253, 267
KIT-BRAKE LINING	498
KIT-BRUSH (STARTING MOTOR)	210
KIT-BUSHING (STARTING MOTOR)	210
KIT-DISC	300
KIT-GAS ASSIST	509
KIT-GAS ASSIST (STEERING COLUMN)	540
KIT-HARDWARE (ALTERNATOR)	122
KIT-HORN	509
KIT-HOUSING (STEERING COLUMN)	540
KIT-INDICATOR	924
KIT-INSULATOR (STARTING MOTOR)	210
KIT-LEVER (STARTING MOTOR)	210
KIT-NUT	509
KIT-NUT (STEERING COLUMN)	540
KIT-PISTON CONTROL	534
KIT-RELIEF VALVE	532
KIT-ROLLER	888
KIT-SEAL	502, 550, 631, 689, 700
KIT-SEAL (DIVERTER VALVE)	629
KIT-SEAL (DIVERTER VALVE) (HYDRAULIC FAN FLUID FLOW)	676
KIT-SEAL (JACKET WATER HEATER)	147
KIT-SEAL (METERING PUMP, STEERING)	521
KIT-SEAL (QUICK COUPLER)	788
KIT-SEAL (RELIEF VALVE)	629, 633
KIT-SEAL (SHUTTLE VALVE)	629
KIT-SHAFT	509
KIT-SHAFT SHIM (INCLUDES 17-SHIMS)	534
KIT-SHOCK ABSORBER	922, 924
KIT-SLIDER BLOCK	910
KIT-SOLENOID (STARTING MOTOR)	210
KIT-TERMINAL (ALTERNATOR)	122
KIT-TETHER	922, 924
KIT-THICK DISC (12.75 MM THK)	299
KIT-THIN DISC (12.57 MM THK)	299
KIT-TILT LEVER	509
KIT-TILT LEVER (STEERING COLUMN)	540
KIT-TREADLE PIN	888
KIT-VALVE (QUICK COUPLER)	788

L

LADDER GP	446
LAMP AS	388
LAMP AS (BACKUP)	165
LAMP AS-WARNING (SEAT BELT)	180
LAMP GP-DOME	151
LAMP GP-FLOOD–HID, SUSPENDED MOUNT	152

INDEX

Name	Page
LAMP GP-FLOOD–HID, VERTCAL MOUNT	153
LAMP GP-FLOOD–SUSPENDED MOUNT	155
LAMP GP-FLOOD–VERTICAL MOUNT	154
LAMP GP-HEAD & SIGNAL–LH	156
LAMP GP-HEAD & SIGNAL–RH	158
LAMP GP-SIGNAL–FRONT TURN	160
LAMP GP-SIGNAL–STOP, TAIL	161
LAMP GP-STOP & TAIL	162
LAMP GP-WARNING BEACON–AMBER	163
LAMP-HALOGEN (24-VOLT, 65-WATT)	154
LAMP-HALOGEN (24-VOLT, 65-WATT) (FLOODLIGHT)	155
LAMP (12-VOLT, 24-VOLT, 35-WATT)	152
	153
LAMP (24-VOLT)	151
	241
LAMP (24-VOLT) (RUNNING LAMP)	158
LAMP (24-VOLT) (RUNNING LIGHTS)	156
LAMP (24-VOLT) (TURN SIGNAL)	156
LAMP (24-VOLT) (TURN SIGNAL)	158
LAMP (24-VOLT, 21-WATT)	162
LAMP (24-VOLT, 21-WATT) (SIGNAL)	160
LAMP (24-VOLT, 21-WATT) (TURN SIGNAL)	156
	158
LAMP (24-VOLT, 5-WATT)	162
LAMP (24-VOLT, 5-WATTS)	465
LAMP (24-VOLT, 70-WATT)	163
LAMP (24-VOLT, 75/70-WATT) (HIGH/LOW BEAM)	156
LAMP (24-VOLT, 75/70-WATT) (HIGH/LOW BEAM)(RH)	158
LATCH GP-CAB DOOR & WINDOW	840
LENS-AMBER (SIGNAL)	160
LENS (AMBER) (TURN SIGNAL)	156
	158
LENS AS (AMBER) (TURN SIGNAL)	156
	158
LENS AS (HEADLIGHT) (HIGH/LOW BEAM)	156
	158
LIFT AR–HIGH LIFT MACHINES	715
LIFT AR–HIGH LIFT MACHINES, 2-VALVE	715
LIFT AR–HIGH LIFT MACHINES, 3-VALVE	715
LIFTER GP-VALVE–MECHANISM	41
LIFTING GP-ENGINE	42
LIGHTER GP-CIGAR (12-VOLT)	242
LIGHTING AR-ROADING–COMMAND CONTROL STEERING	164
LIGHTING AR-ROADING–HMU STEERING	164
LIGHTING AR-SIGNAL–COMMAND CONTROL STEERING	164
LIGHTING AR-SIGNAL–HMU STEERING	165
LIGHTING GP-BACKUP	165
LIGHTING GP-FLOOD–4-LAMP, CAB FRONT, REAR	166
	169
LIGHTING GP-FLOOD–4-LAMP, HID, CAB FRONT, REAR	167
LIGHTING GP-FLOOD & SIGNAL–4-LAMP, FRONT, REAR	172
LIGHTING GP-FLOOD & SIGNAL–6-LAMP, FRONT, REAR	174
LIGHTING GP-ROADING	176
LIGHTING GP-WARNING BEACON	178
LIGHTING GP-WARNING BEACON–GREEN	180
LINER GP-CAB	842
LINES GP-AFTERCOOLER AIR–AIR TO AIR AFTERCOOLER	88
LINES GP-AIR	89
LINES GP-AIR CONDITIONER	845
	847
LINES GP-AUTOMATIC LUBRICATION–ARTICULATING HITCH, LOADER FRAME, REAR	453
LINES GP-AUTOMATIC LUBRICATION–CENTRAL STRUCTURE	448
LINES GP-AUTOMATIC LUBRICATION–LOADER FRAME, FRONT	451
LINES GP-AXLE OIL COOLER	328
LINES GP-CAB HEATER	851
	853
LINES GP-CONNECTING	601
LINES GP-CONNECTING–COUPLER	600
	602
LINES GP-COUPLER	604
LINES GP-COUPLER–FRONT	608
LINES GP-COUPLER–HIGH LIFT MACHINES, FRONT	610
LINES GP-COUPLER–REAR	605
LINES GP-DIAGNOSTIC–REMOTE PRESSURE TAPS	938
LINES GP-DIAGNOSTIC–REMOTE PRESSURE TAPS–TRANSMISSION CLUTCH	941
LINES GP-ENGINE OIL	62
LINES GP-ENGINE OIL DRAIN	63
LINES GP-FRONT	612
LINES GP-FUEL	103
LINES GP-FUEL DRAIN	105
LINES GP-GREASE	456
LINES GP-HYDRAULIC	615
LINES GP-HYDRAULIC OIL COOLER	619
LINES GP-INJECTOR HYD PUMP	106
LINES GP-LIFT CYLINDER	623
LINES GP-LUBRICATION–REAR FRAME, LIFT ARMS	458
LINES GP-SECONDARY STEERING	516
LINES GP-STEERING–COMMAND CONTROL STEERING	525
LINES GP-STEERING–HMU STEERING	519
LINES GP-TILT CYLINDER	625

INDEX

Name	Page
	627
LINES GP-TORQUE CONV COOLER	333
LINES GP-TURBOCHARGER OIL	64
LINES GP-WATER	74
LINES GP-WATER–ENGINE	72
LINES GP-WATER–RADIATOR	70
LINK GP-BUCKET	716
LINK GP-STEERING FRAME LOCK	460
LOCK GP-QUICK COUPLER–HYDRAULIC	788
LOGGING AR–3-FUNCTION, WITH RIDE CONTROL	717
LUBRICATION AR-AUTOMATIC	461
	463

M

MANIFOLD GP-CONTROL–BRAKE CHARGE, HYD FAN CONTROL	629
MANIFOLD GP-EXHAUST–DRY	90
MANIFOLD GP-VALVE–END COVER	631
MANIFOLD GP-VALVE–INLET	633
MIRROR GP-REAR VIEW	854
	855
	858
	861
	862
MIRROR GP-REAR VIEW–HEATED	864
	866
MIRROR GP-REAR VIEW–HEATED, LH	856
MIRROR GP-REAR VIEW–HEATED, RH	857
MIRROR GP-REAR VIEW–LH	859
MIRROR GP-REAR VIEW–RH	860
MODULE GP-DISPLAY–AUTOMATIC LUBRICATION SYSTEM	868
MODULE GP-DISPLAY (WAVES)	142
MODULE GP-INTERFACE (KEY)	149
MODULE GP-QUAD GAUGE	869
MODULE GP-SPEEDOMETER & TACH	870
MONITOR AR-CAMERA	871
MONITOR AR-PAYLOAD	873
MOTOR GP-ELECTRIC	532
MOTOR GP-GEAR–HYDRAULIC FAN	634
MOTOR GP-WINDOW WIPER–FRONT	875
MOTOR GP-WINDOW WIPER–REAR	874
MOUNTING GP-ALTERNATOR	43
MOUNTING GP-AXLE	336
MOUNTING GP-AXLE OIL COOLER	337
MOUNTING GP-CAB	876
MOUNTING GP-ENGINE & TMSN	44
MOUNTING GP-HYDRAULIC TANK	635
MOUNTING GP-REGISTRATION	465
MOUNTING GP-RIM	338
MUFFLER GP	91

O

OPERATOR AR-ENCLOSED ROPS–COMMAND CONTROL STEERING	878
OPERATOR AR-ENCLOSED ROPS–HMU STEERING	878

P

PADLOCK GP	297
	947
PAN GP-BACKREST	880
PAN GP-BACKREST–CLOTH	879
PAN GP-OIL	46
PANEL GP-HOOD–SIDE, LH	468
PANEL GP-HOOD–SIDE, RH	467
PANEL GP-HOOD–TOP	466
PANEL GP-INSTRUMENT–LOWER	885
PANEL GP-INSTRUMENT–UPPER	881
	883
PANEL GP-SIDE	469
PEDAL GP-GOVERNOR	888
	889
PIN GP	790
PIPE GP-EXHAUST	92
PISTON & ROD GP	47
PLANETARY GP-TRANSMISSION	339
PLATE & FILM GP	944
	945
	946
PLATE GP-AXLE IDENTIFICATION	284
	285
	947
PLATE-IDENTIFICATION (CAT)	738
	742
	748
	749
	751
	753
	756
	772
	773
	779
PLATE-IDENTIFICATION (MAXIMUM WEIGHT)	388
	392
PLATE-INFORMATION (MANUAL FUEL)	111
PLATE-INSTRUCTION (AIR CONDITIONER)	798
PLATE-INSTRUCTION (BATTERY)	126
PLATE-SERIAL NUMBER (TRANSMISSION)	316
	321
PLATFORM AR	890
PLATFORM GP	891
PLUG	303
	315

INDEX

Name	Page
	320
PLUG-DRAIN	677
PLUG GP-CONNECTOR–ENGINE HARNESS, PROTECTIVE COVER	181
PLUG GP-CYLINDER BLOCK	48
PLUG GP-ENGINE	49
PLUG-MAGNETIC	326
POWER TRAIN AR	343
PRECLEANER GP	93
	94
PROTECTION GP-VANDALISM	947
PULLEY GP-IDLER–BELT TENSIONER	50
PUMP & MOTOR GP-SEC STEERING	532
PUMP & MTG GP-AXLE OIL COOLER	344
PUMP & MTG GP-BRAKE & HYD FAN	636
PUMP & MTG GP-HYDRAULIC	638
PUMP & MTG GP-LUBRICATION	471
PUMP & MTG GP-SECONDARY STEER	533
PUMP & MTG GP-UNIT INJ HYD	107
PUMP GP-ENGINE OIL	65
	66
PUMP GP-FUEL INJECTION	109
	110
PUMP GP-FUEL PRM & PRIM FILTER	111
	113
PUMP GP-FUEL PRM & WATER SEP	120
PUMP GP-FUEL TRANSFER	116
PUMP GP-GEAR	532
PUMP GP-GEAR (AXLE OIL COOLER)	344
PUMP GP-LUBRICATION–DOUBLE	473
PUMP GP-METERING (HMU STEERING)	519
PUMP GP-PISTON–BRAKE, HYDRAULIC FAN	642
PUMP GP-PISTON–IMPLEMENT, PILOT	639
PUMP GP-PISTON–STEERING	534
PUMP GP-TRANSMISSION	345
	346
PUMP GP-UNIT INJECTOR HYD	116
PUMP GP-WATER	76
	77

R

Name	Page
RADIATOR & FAN GP	78
RADIO GP–AM/FM	893
RADIO GP-COMMUNICATION–PRODUCT LINK 121SR	894
RADIO GP-COMMUNICATION (PRODUCT LINK 121SR)	131
RECEPTACLE GP-AUXILIARY START–JUMP START	182
RECLINER GP-SEAT	895
REGULATOR AS (FUEL PRESSURE)	117
REGULATOR AS-VOLTAGE (24-VOLT)	122
REGULATOR GP-FUEL PRESSURE	117
REGULATOR-WATER TEMPERATURE (94-DEG C) (COOLANT)	72
RELAY AS (SHELL)	243
RELAY AS (24-VOLT)	270
RELAY AS (24-VOLT)	241
RELAY AS (24-VOLT) (AXLE OIL COOLER)	260
RELAY AS (24-VOLT) (HEATED MIRRORS)	864
	866
RELAY AS (24-VOLT) (HOOD TILT MOTOR)	253
RELAY AS (24-VOLT) (SEAT BELT ALARM)	240
RELAY AS (24-VOLT) (SECONDARY STEER INTERMEDIATE)	276
RIM AR	348
RIM GP-DEMOUNTABLE	349
	350
	351
ROCKER ARM GP (EXHAUST)	54
ROCKER ARM GP (INTAKE)	54
ROPS GP-ENCLOSED	896
ROTATING GP-PUMP–BRAKE, HYDRAULIC FAN	644
ROTATING GP-PUMP–STEERING	537

S

Name	Page
SCREEN	538
	631
	633
SCREEN AS (HYDRAULIC TANK)	645
SCREEN (CONTROL VALVE MANIFOLD)	629
SCREEN GP-CASE DRAIN–STEERING PILOT	538
SCREEN GP-MAGNETIC	315
	320
SCREEN-SUCTION	315
	320
SEAL	100
SEAL GP-CRANKSHAFT	51
SEAL GP-CRANKSHAFT (FRONT)	51
SEAL GP-FLYWHEEL HOUSING	52
SEAT BELT & LIGHTING GP	903
SEAT BELT GP	903
	904
	909
SEAT GP	907
SEAT GP–CLOTH	905
SEAT GP-SUSPENSION	909
	910
SEAT GP-SUSPENSION–HEATED	911
SEGMENT-EDGE	785
SENDER AS-FUEL LEVEL	118
SENSOR & MTG GP-LIFT POSITION	183
SENSOR & MTG GP-PRESSURE–LIFT CYLINDER OIL	185
SENSOR & MTG GP-TILT POSITION	186

INDEX

Name	Page
SENSOR AS-POSITION (LIFT)	190
SENSOR GP-ENGINE	188
SENSOR GP-POSITION–LIFT, TILT	190
SENSOR GP-POSITION–THROTTLE	191
SENSOR GP-PRESSURE	194
	195
	196
SENSOR GP-PRESSURE–ATMOSPHERIC AIR	194
SENSOR GP-PRESSURE–BOOST	196
SENSOR GP-PRESSURE–ENGINE OIL	195
SENSOR GP-PRESSURE–FUEL	193
SENSOR GP-PRESSURE–INJECTION ACTUATION	198
	199
SENSOR GP-PRESSURE–LIFT CYLINDER OIL	197
SENSOR GP-PRESSURE–TURBOCHARGER INLET	192
SENSOR GP-PRESSURE (LIFT CYLINDER OIL)	185
SENSOR GP-SPEED–ENGINE TIMING	201
SENSOR GP-SPEED–MAGNETIC, HIGH OUTPUT–TMSN, TORQUE CONVERTER OUTPUT	200
SENSOR GP-SPEED (TORQUE CONVERTER OUTPUT)	367
SENSOR GP-SPEED (TRANSMISSION OUTPUT 1)	315
	320
SENSOR GP-SPEED (TRANSMISSION OUTPUT 2)	315
	320
SENSOR GP-TEMPERATURE–ENGINE COOLANT	204
SENSOR GP-TEMPERATURE–INTAKE AIR	203
SENSOR GP-TEMPERATURE–TMSN, TORQUE CONVERTER OIL	202
SERVICE GP-COMMUNICATION (PRODUCT LINK 300)	144
SHAFT GP-DRIVE	352
	353
	354
	355
SHIELD GP-ENGINE COMPARTMENT	474
SLIP JOINT GP	356
	357
SOFTWARE GP-COMMUNICATION (PRODUCT LINK 121SR)	894
SOFTWARE GP-COMMUNICATION (PRODUCT LINK 300)	144
SPECIAL AR-QUARRY	4
SPIDER & BEARING GP	356
	357
	373
	374
	375
STARTING AID AR-ETHER	205
STARTING AID GP–STARTING AID	206
STARTING AID GP-ETHER	207
STARTING MOTOR GP-ELECTRIC	209
	210
STEERING AR-COMMAND CONTROL	539
STEERING AR-SECONDARY	539
STEERING COLUMN GP	540
STEERING WHEEL GP–COMMAND CONTROL STEERING	541
STEP GP	476
STRAINER AS (HYDRAULIC TANK FILL)	645
SUPPORT GP-AIR INLET	478
SUPPORT GP-HYDRAULIC CONTROL	912
SUPPORT GP-VALVE & FILTER–SERVICE CENTER	479
SUPPRESSION AR-SOUND	481
SUPPRESSION GP-CAB SOUND–A/C, HEATER	918
SUPPRESSION GP-CAB SOUND–CAB REAR, CAB ROOF	920
SUPPRESSION GP-CAB SOUND–FRONT	916
SUPPRESSION GP-CAB SOUND–REAR	919
SUPPRESSION GP-SOUND–REAR FRAME	482
SUSPENSION GP-SEAT–AIR	922
	924
SWITCH AS (AUTOMATIC LUBRICATION TEST)	473
SWITCH AS-DIMMER (ROADING)	213
SWITCH AS-LEVEL (GREASE)	473
SWITCH AS-LIMIT (STOP LIGHT)	496
SWITCH AS-MAGNETIC (24-VOLT) (AIR INLET HEATER)	216
SWITCH AS-PRESSURE (DIFFERENTIAL)	590
SWITCH AS-PRESSURE (PARKING BRAKE OIL)	253
SWITCH AS-PRESSURE (PRIMARY STEERING OIL)	276
SWITCH AS-PRESSURE (REFRIGERANT)	234
SWITCH AS-PRESSURE (SECONDARY STEERING OIL)	276
SWITCH AS-PRESSURE (SERVICE BRAKE OIL)	263
SWITCH AS-PUSH BUTTON (AUTODIG TRIGGER)	136
	138
SWITCH AS-PUSH BUTTON (DOWNSHIFT)	243
SWITCH AS-PUSH BUTTON (HORN)	242
SWITCH AS-PUSH BUTTON (TRANSMISSION DOWNSHIFT)	541
SWITCH AS-PUSH BUTTON (TRANSMISSION UPSHIFT)	541

INDEX

Name	Page
SWITCH AS-ROCKER (AIR CONDITIONER, HEATER)	243
SWITCH AS-ROCKER (AUTO LOADING KICKOUT SET)	136, 138
SWITCH AS-ROCKER (AUTO LOADING MODE SELECT)	136, 138
SWITCH AS-ROCKER (AUTO REVERSING FAN)	220
SWITCH AS-ROCKER (CATERPILLAR MONITORING SYSTEM)	243
SWITCH AS-ROCKER (FAN BLOWER SPEED)	243
SWITCH AS-ROCKER (FINE MODULATION)	243
SWITCH AS-ROCKER (FORWARD, NEUTRAL, REVERSE)	231
SWITCH AS-ROCKER (FRONT, REAR FLOODLIGHTS)	167
SWITCH AS-ROCKER (HAZARD)	226, 228
SWITCH AS-ROCKER (HEATED MIRRORS)	864, 866
SWITCH AS-ROCKER (HYDRAULIC LOCKOUT)	243
SWITCH AS-ROCKER (LIFT, TILT KICKOUT)	243
SWITCH AS-ROCKER (QUICK COUPLER)	219, 222, 223
SWITCH AS-ROCKER (RIDE CONTROL)	221
SWITCH AS-ROCKER (SECONDARY STEERING)	225
SWITCH AS-ROCKER (TMSN NEUTRALIZER OVERRIDE)	243
SWITCH AS-ROCKER (TRANSMISSION DIRECTION)	541
SWITCH AS-ROCKER (WARNING BEACON)	178
SWITCH AS-ROCKER (3RD FUNCTION SELECT)	571
SWITCH AS-ROCKER (3RD FUNCTION SELECT)	567
SWITCH AS-ROTARY (24-VOLT) (AUTOSHIFT CONTROL)	242
SWITCH AS-ROTARY (24-VOLT) (REAR WIPER)	241
SWITCH AS-ROTARY (24-VOLT) (RUNNING LIGHTS)	241
SWITCH AS-ROTARY (24-VOLT) (VARIABLE SHIFT CONTROL)	242
SWITCH AS-TEMPERATURE (AIR CONDITIONER)	800
SWITCH AS-TOGGLE (POWER GUARD ACTUATOR)	282
SWITCH AS-TURN SIGNAL	226, 228
SWITCH AS-WIPER (24-VOLT) (FRONT INTERMITTENT)	241
SWITCH GP-BYPASS–POWER TRAIN OIL FILTER	212
SWITCH GP-DIMMER–ROADING	213
SWITCH GP-DISCONNECT–BATTERY	214
SWITCH GP-DISCONNECT (BATTERY)	126
SWITCH GP-MAGNETIC–AIR INLET HEATER RELAY	216
SWITCH GP-MAGNETIC–MAIN RELAY	217
SWITCH GP-MAGNETIC–START RELAY	215
SWITCH GP-MAGNETIC (24-VOLT) (MAIN RELAY)	254
SWITCH GP-PRESSURE–FUEL	218
SWITCH GP-PRESSURE (OIL FILTER BYPASS) (POWER TRAIN OIL FILTER)	308
SWITCH GP-QUICK COUPLER	219
SWITCH GP-REVERSING FAN	220
SWITCH GP-RIDE CONTROL	221
SWITCH GP-ROCKER–QUICK COUPLER, BUCKET/FORK SELECT, KICKOUT	222, 223
SWITCH GP-ROTARY–AUTODIG MATERIAL SELECT	224
SWITCH GP-SECONDARY STEERING	225
SWITCH GP-SIGNAL–TURN	226, 228
SWITCH GP-START (KEY)	241
SWITCH GP-TOGGLE–FUEL PRIMING PUMP	230
SWITCH GP-TOGGLE (GROUND LEVEL SHUTDOWN)	253
SWITCH GP-TOGGLE (HOOD TILT ACTUATOR)	253
SWITCH GP-TRANSMISSION–REMOTE FORWARD, NEUTRAL, REVERSE CONTROL	231
SWITCH-PRESSURE (AUTOLUBE ACTUATION)	488

T

Name	Page
TANK GP-FUEL	118
TANK GP-HYDRAULIC	645
TANK GP-RADIATOR TOP	82
TILT GP-HOOD	485
TIP GP-EXTRA DUTY	791
TIP GP-EXTRA DUTY–K-90	792
TIP GP-GENERAL PURPOSE	793, 794
TIRE & RIM AR	358, 359, 360, 361, 362

INDEX

Name	Page
	363
	364
	365
	366
TORQUE CONVERTER & HOUSING GP–FREEWHEEL STATOR	367
TORQUE CONVERTER GP–FREEWHEEL STATOR	370
TRANSMISSION AR–FREE WHEEL STATOR TORQUE CONVERTER	372
TRANSMISSION AR–FREEWHEEL STATOR TORQUE CONVERTER	372
TURBOCHARGER GP	95
	96

U

UNIVERSAL JOINT GP	373
	374
	375

V

VALVE & LINES GP-LUBRICATION	486
VALVE & MTG GP-MAIN CONTROL–2-FUNCTION	647
VALVE & MTG GP-MAIN CONTROL–2-FUNCTION, WITH RIDE CONTROL	653
VALVE & MTG GP-MAIN CONTROL–3-FUNCTION	650
VALVE & MTG GP-MAIN CONTROL–3-FUNCTION, LOGGING, WITH RIDE CONTROL	659
VALVE & MTG GP-MAIN CONTROL–3-FUNCTION, WITH RIDE CONTROL	656
VALVE AS-TIRE	379
VALVE-BREAKER RELIEF	118
VALVE GP	546
VALVE GP-BRAKE CONTROL–PARKING	508
VALVE GP-BRAKE CONTROL (SERVICE)	502
VALVE GP-CHECK	544
	545
VALVE GP-CHECK–BRAKE OIL, PILOT OIL	662
VALVE GP-CHECK–PILOT OIL	663
VALVE GP-CHECK–STEERING QUAD, CCS	543
VALVE GP-CHECK (AXLE OIL COOLER BYPASS)	337
VALVE GP-CHECK (STEERING QUAD)	525
VALVE GP-CONTROL–AUXILIARY	668
VALVE GP-CONTROL–HYDRAULIC BLOCK	664
VALVE GP-CONTROL–LIFT	673
VALVE GP-CONTROL–TILT	666
	670
VALVE GP-DIVERTER–HYDRAULIC FAN	676
VALVE GP-DIVERTER–QUICK COUPLER	675
VALVE GP-DIVERTER (HYDRAULIC TANK)	629
VALVE GP-DRAIN–ECOLOGY, HYDRAULIC	677
VALVE GP-ETHER STARTING	232
VALVE GP-LOWERING CONTROL	678
VALVE GP-LUBE DISTRIBUTION	488
	490
VALVE GP-LUBE DISTRIBUTION–FRONT	489
VALVE GP-MAIN CONTROL–2-FUNCTION	686
VALVE GP-MAIN CONTROL–2-FUNCTION, WITH RIDE CONTROL	682
VALVE GP-MAIN CONTROL–3-FUNCTION	687
VALVE GP-MAIN CONTROL–3-FUNCTION, LOGGING, WITH RIDE CONTROL	680
VALVE GP-MAIN CONTROL–3-FUNCTION, WITH RIDE CONTROL	684
VALVE GP-MANUAL–LOWERING CONTROL	689
VALVE GP-MODULATING–TRANSMISSION CLUTCH	376
VALVE GP-PILOT–COMMAND CONTROL STEERING	546
VALVE GP-PRESSURE REDUCING	548
VALVE GP-PRESSURE REDUCING–SIGNAL DUPLICATION	690
VALVE GP-PUMP CONTROL–PRESSURE, FLOW COMPENSATOR–BRAKE, HYDRAULIC FAN	691
VALVE GP-RELIEF–PUMP BACKUP	550
VALVE GP-RELIEF–RIDE CONTROL	693
VALVE GP-RELIEF–STEERING CYLINDER CROSSOVER	549
VALVE GP-RELIEF–TRANSMISSION HYDRAULIC CONTROL	377
VALVE GP-RELIEF (BRAKE)	629
VALVE GP-RELIEF (HYDRAULIC TANK)	629
VALVE GP-RELIEF (REFRIGERANT COMPRESSOR)	809
VALVE GP-RIDE CONTROL	694
VALVE GP-SECONDARY STEERING	551
VALVE GP-SELECTOR (STEERING)	556
VALVE GP-SHUTOFF	615
VALVE GP-SHUTOFF (RADIATOR DRAIN)	295
VALVE GP-SHUTOFF (RETURN MANIFOLD)	851
VALVE GP-SHUTTLE	552
	553
	698
VALVE GP-SHUTTLE–BALL RESOLVER	697
VALVE GP-SHUTTLE–BRAKE ACCUMULATOR	696
VALVE GP-SHUTTLE (BRAKE, HYDRAULIC FAN)	629
VALVE GP-SHUTTLE (STEERING OIL)	525
VALVE GP-SOLENOID–BRAKE, HYDRAULIC FAN	699
VALVE GP-SOLENOID–HYDRAULIC LOCKOUT	700

INDEX

Name	Page
VALVE GP-SOLENOID–PILOT PROPORTIONING	701
VALVE GP-SOLENOID (24-VOLT) (BRAKE, HYDRAULIC FAN)	629
VALVE GP-STEERING	554
VALVE GP-STEERING–HMU STEERING	556
VALVE GP-STEERING NEUTRALIZER	519
	560
VALVE GP-STEERING NEUTRALIZER–COMMAND CONTROL STEERING	559
VALVE GP-TIRE	349
	350
	351
	379
VALVE MECHANISM GP	53
	54
VISOR GP-CAB	926

W

Name	Page
WARNING GP-BACKUP	233
WASHER GP-WINDOW	927
WASTE HANDLING AR	5
WATER SEP & FUEL PRM PUMP GP–ELECTRIC	120
WINDOW GP-DOOR–LH	930
WINDOW GP-DOOR–RH	928
WIPER GP-WINDOW	932
WIRING GP-AIR CONDITIONER	234
WIRING GP-AXLE MONITORING–OIL TEMPERATURE	238
WIRING GP-CAB	241
WIRING GP-CAB–SEAT BELT ALARM, WARNING BEACON	240
WIRING GP-CHASSIS	253
WIRING GP-COUPLER	259
WIRING GP-ELECTRIC CLUTCH–AXLE OIL COOLER PUMP	260
WIRING GP-ENGINE	261
	263
WIRING GP-ETHER STARTING AID	266
WIRING GP-FRONT	267
WIRING GP-LIGHTING	270
	274
WIRING GP-LIGHTING–LOADER FRAME	273
	275
WIRING GP-LUBRICATION	236
WIRING GP-SECONDARY STEERING	276
WIRING GP-SENSOR	279
WIRING GP-SENSOR–TILT POSITION	280
WIRING GP-WASTE HANDLER	282

INDEX

Désignation	Page
A	
ACCOUDOIR (ASS)	806
ACCUMULATEUR - CLIMATISEUR (ASS)	847
ACCUMULATEUR - FREIN	492 493
ACCUMULATEUR - HUILE PILOTE (ASS)	561 562
ADAPTATEUR (ASS)	74 851
ALLUME-CIGARETTES (ASS) (12 VOLTS)	242
ALTERNATEUR DE CHARGE (ASS)	122 124
AMORTISSEUR DE VIBRATIONS - BOULONNERIE (ASS)	29
AMORTISSEUR DE VIBRATIONS ET POULIE (ASS)	27
AMPOULE (12V, 24V, 35W)	152 153
AMPOULE (*24-VOLT, 5-WATTS)	465
AMPOULE (24 VOLTS)	151 241
AMPOULE (24 VOLTS) (CLIGNOTANT DE DIRECTION)	156 158
AMPOULE (24 VOLTS) (FEU DE ROUTE)	158
AMPOULE (24 VOLTS) (FEUX DE ROUTE)	156
AMPOULE (24V, 21W)	162
AMPOULE (24V, 21W) (CLIGNOTANT DE DIRECTION)	156 158
AMPOULE (24V, 21W) (SIGNAL)	160
AMPOULE (24V, 5W)	162
AMPOULE (24V, 70W)	163
AMPOULE (24V, 75/70W) (FEUX DE ROUTE/DE CROISEMENT)(DROIT)	158
AMPOULE (24V, 75/70W) (FEUX DE ROUTE/FEUX DE CROISEMENT)	156
ARBRE A CAMES (ASS)	9
ARBRE D'ENTRAÎNEMENT (ASS)	352 353 354 355
ATTELAGE D'ARTICULATION (ASS)	441
AUTOCOLLANT (AUTODIG)	136 138
AUTOCOLLANT (BANDES ROUGES, BLANCHES)	392
AUTOCOLLANT-COMMANDE (AUTODIG)	136
AUTOCOLLANT-COMMANDE (*JOYSTICK, 2-FCTN, DOWNSHIFT SW)	569
AUTOCOLLANT-COMMANDE (*JOYSTICK, 3-FCTN, DOWNSHIFT SW)	571
AUTOCOLLANT-COMMANDE (RELEVAGE, LIBRE, ABAISSEMENT)	565 567
AUTOCOLLANT-COMMANDE (*UPPER PANEL)	242 883
AUTOCOLLANT-COMMANDE (VIDAGE, REDRESSEMENT)	565 567
AUTOCOLLANT DE MISE EN GARDE (DIRECTION)	388
AUTOCOLLANT DE MISE EN GARDE (LIRE LE GUIDE D'UTILISATION)	944
AUTOCOLLANT DE MISE EN GARDE (LIRE LE GUIDE D'UTILISATION ET D'ENTRETIEN)	779
AUTOCOLLANT DE MISE EN GARDE (PAS DE SOUDAGE, PAS DE PERÇAGE, LIRE LE GUIDE D'UTILISATION ET D'ENTRETIEN)	945
AUTOCOLLANT DE MISE EN GARDE (RADIO PRODUCT LINK, AUTRE QUE NACD)	148
AUTOCOLLANT DE MISE EN GARDE (RISQUE D'ÉCRASEMENT, RESTER À L'ÉCART)	944
AUTOCOLLANT DE PANNEAU DE FUSIBLES	842
AUTOCOLLANT DES COMMANDES	885
AUTOCOLLANT D'IDENTIFICATION (CONTACTEUR D'ALLUMAGE)	149
AUTOCOLLANT D'IDENTIFICATION (CONTACTEUR D'ALLUMAGE)	149
AUTOCOLLANT D'IDENTIFICATION (CONTACTEUR DE COMMANDE DE BLINDAGE HYDRAULIQUE)	282
AUTOCOLLANT D'IDENTIFICATION (HUILE HYDRAULIQUE BIODÉGRADABLE)	599
AUTOCOLLANT D'IDENTIFICATION (HYDRAULIQUE AUXILIAIRE)	567
AUTOCOLLANT D'IDENTIFICATION (KLAXON)	565 567
AUTOCOLLANT D'IDENTIFICATION (MANUTENTION DES DÉCHETS)	5
AUTOCOLLANT D'IDENTIFICATION (12 VOLTS)	885
AUTOCOLLANT D'IDENTIFICATION (20 KM/H)	145
AUTOCOLLANT DU PANNEAU (CENTRE)	885
AUTOCOLLANT DU PANNEAU (DROITE)	885
AUTOCOLLANT DU PANNEAU (GAUCHE)	885
AUTOCOLLANT-INFORMATION (CLAVETTE)	149
AUTOCOLLANT-INFORMATION (ENTRÉE/ SORTIE)	885
AUTOCOLLANT-INFORMATION (TIRANT)	945
AUTOCOLLANT (LUXUSKABINE)	388

* TRADUCTION NON DISPONIBLE AU MOMENT DE LA PUBLICATION

INDEX

Désignation	Page
AUTOCOLLANT (MACHINE FORESTIÈRE)	717
AUTOCOLLANT (RÉFLECTEUR)	392
AUTOCOLLANT-TRANSMISSION (*DOWNSHIFT SWITCH)	565, 567
AUTOCOLLANT (40-KM/H)	388
AUXILIAIRE DE DÉMARRAGE À L'ÉTHER	207
AUXILIAIRE DE DÉMARRAGE À L'ÉTHER (VERSION)	205
AUXILIAIRE DE DÉMARRAGE (ASS)	206
AVERTISSEUR (ASS)	121
AVERTISSEUR DE RECUL (ASS)	233
AXE DE CULBUTEUR (ASS) (ADMISSION)	54
AXE DE CULBUTEUR (ASS) (ÉCHAPPEMENT)	54
AXE DE GODET (ASS)	790

B

Désignation	Page
BALAI D'ESSUIE-GLACE (ENS)	932
*BASE AS-JOYSTICK	574, 576
BÂTI - CHARGEUSE (ENS)	412
BÂTI AR (ENS)	415
BATTERIE ET CÂBLAGE	126
BLINDAGE D'ARBRE DE TRANSMISSION (ASS)	424
BLINDAGE DE TRANSMISSION (ASS)	427, 428, 429
BLOC - LIMITEUR D'ESSIEU OSCILLANT (ASS)	385
BLOC-CYLINDRES - COUVERCLE (ASS)	11
BLOC-CYLINDRES (ASS)	19, 20, 22
BLOC-FUSIBLE (ENS)	243
BOÎTE DE VITESSES (VERSION)	372
BOÎTE PLANÉTAIRE (ASS)	339
BOSSAGE DE BRAS DE LEVAGE (ASS)	708, 709
BOSSAGE DE CHÂSSIS ARRIÈRE (ASS)	386
BOSSAGE DE LEVIER (ASS)	706, 707
BOUCHON AIMANTÉ	326
BOUCHON DE BLOC-CYLINDRES (ASS)	48
BOUCHON DE CARBURANT	118
BOUCHON DE GOULOTTE DE REMPLISSAGE	304
BOUCHON DE GOULOTTE DE REMPLISSAGE (ENS) (HUILE MOTEUR)	58
BOUCHON DE GOULOTTE DE REMPLISSAGE (RÉSERVOIR HYDRAULIQUE)	645
BOUCHON DE GOULOTTE DE REMPLISSAGE (TRANSMISSION)	305
BOUCHON DE MOTEUR (ASS)	49
BOUCHON DE REMPLISSAGE D'HUILE DE BOÎTE (ASS)	947
BOUCHON DE REMPLISSAGE D'HUILE DE BOÎTE (ASS)	297
BOUCHON DE REMPLISSAGE D'HUILE MOTEUR (ASS)	58
BOUCHON DE VIDANGE	677
BOUCHON FILETÉ	303, 315, 320
BOULONNERIE DE BÂTI ARRIÈRE (ASS)	436, 437, 438
BOULONNERIE DE BÂTI DE CHARGEUSE (ASS)	430, 431, 432
BOULONNERIE DE CARTER AV (ASS)	30, 31
BOULONNERIE DE LA CULASSE (ASS)	26
BOURRELET D'ÉTANCHÉITÉ	100
BRAS DE LEVAGE (ENS)	702, 704, 705
BRAS D'ESSUIE-GLACE (ASS)	804, 805

C

Désignation	Page
CABINE - REVÊTEMENT (ASS)	842
CABINE ROPS FERMÉE (ASS)	896
CABINE ROPS FERMÉE (VERSION)	807, 808, 878
CABLAGE - CAPTEUR (ASS)	279, 280
CABLAGE - CLIMATISEUR (ASS)	234
CABLAGE - EMBRAYAGE ÉLECTRIQUE (ASS)	260
CÂBLAGE (ASS)-GRAISSAGE	236
CÂBLAGE-AUXILIAIRE DE DÉMARRAGE À L'ÉTHER	266
CABLAGE AV (ASS)	267
CÂBLAGE-COUPLEUR (ASS)	259
CABLAGE DE CABINE (ASS)	240, 241
CABLAGE DE CHASSIS (ASS)	253
CABLAGE DE DIRECTION AUXILIAIRE (ASS)	276
CABLAGE DE MOTEUR (ASS)	261

* TRADUCTION NON DISPONIBLE AU MOMENT DE LA PUBLICATION

INDEX

Désignation	Page
	263
CABLAGE D'ÉCLAIRAGE (ASS)	270
	273
CABLAGE D'ÉCLAIRAGE (ASS)	274
	275
CABLAGE MOTEUR (ENS)	263
CABLAGE MOTEUR (ENS) (INJECTION DE CARBURANT)	261
CABLAGE MOTEUR (ENS) (MODULE DE COMMANDE ÉLECTRONIQUE)	261
CÂBLE DE SURVEILLANCE D'ESSIEU (ASS)	238
CACHE-SOUPAPE - BOULONNERIE (ASS)	32
CACHE-SOUPAPES (ASS)	14
	15
	16
CADENAS (ASS)	297
	947
*CAMERA GP (*115-DEGREE, COLOR)	129
CANALIS. DE REFROIDISSEMENT DU CONV. DE COUPLE	333
CANALISATION DE DIRECTION AUXILIAIRE	516
CANALISATIONS - BRANCHEMENT (ASS)	600
	601
	602
CANALISATIONS - INJECTEURS-POMPES HYDRAULIQUES	106
CANALISATIONS AV	612
CANALISATIONS D'AIR (ASS)	89
CANALISATIONS D'AIR DE REFROIDISSEUR D'ADMISSION (ASS)	88
CANALISATIONS DE CARBURANT (ASS)	103
CANALISATIONS DE CHAUFFAGE DE CABINE (ASS)	851
	853
CANALISATIONS DE CLIMATISEUR (ASS)	845
	847
CANALISATIONS DE COUPLEUR (ASS)	604
	605
	608
	610
CANALISATIONS DE DIAGNOSTIC (ASS)	938
	941
CANALISATIONS DE DIRECTION (ASS)	519
CANALISATIONS DE DIRECTION (ASS)	525
CANALISATIONS DE GRAISSAGE (ASS)	456
	458
CANALISATIONS DE GRAISSAGE AUTOMATIQUE (ASS)	448
	451
	453
CANALISATIONS DE RÉCHAUFFEUR DE LIQUIDE DE REFROIDISSEMENT	851
	853
CANALISATIONS DE REFROIDISSEUR D'HUILE D'ESSIEU (ASS)	328
CANALISATIONS DE REFROIDISSEUR D'HUILE HYDR. (ASS)	619
CANALISATIONS DE VÉRIN DE LEVAGE (ASS)	623
CANALISATIONS D'EAU (ASS)	70
	72
	74
CANALISATIONS D'HUILE DE TURBOCOMPRESSEUR (ASS)	64
CANALISATIONS D'HUILE MOTEUR (ASS)	62
CANALISATIONS DU VÉRIN D'INCLINAISON (ASS)	625
	627
CANALISATIONS HYDRAULIQUES (ASS)	615
CANALISATIONS-VIDANGE D'HUILE DE MOTEUR (ASS)	63
CAPOT ET PROTECTION (ASS)	443
CAPTEUR - MOTEUR (ASS)	188
CAPTEUR DE POSITION (ENS) (LEVAGE)	190
CAPTEUR DE PRESSION (ASS)	192
	193
	194
	195
	196
	197
	198
	199
CAPTEUR DE PRESSION (ASS) (*LIFT CYLINDER OIL)	185
CAPTEUR DE PRESSION ET MONTAGE	185
CAPTEUR DE TEMPERATURE (ASS)	202
	203
	204
CAPTEUR DE VITESSE (ASS)	200
	201
CAPTEUR DE VITESSE (ASS) (SORTIE DU CONVERTISSEUR DE COUPLE)	367
CAPTEUR DE VITESSE (ASS) (SORTIE 1 DE BOÎTE)	315
	320
CAPTEUR DE VITESSE (ASS) (SORTIE 2 DE BOÎTE)	315
	320
CAPTEUR ET MONTAGE-POSITION DE LEVAGE (ASS)	183
CAPTEUR ET MONTAGE-POSITION D'INCLINAISON (ASS)	186
CARBURANT - CANALISATIONS DE VIDANGE (ASS)	105
CARDAN COULISSANT (ASS)	356
	357

* TRADUCTION NON DISPONIBLE AU MOMENT DE LA PUBLICATION

INDEX

Désignation	Page
CARTER AV (ASS)	38
CARTER DE VOLANT (ASS)	37
CARTER D'ESSIEU FIXE	324
CARTER D'ESSIEU OSCILLANT	326
CEINTURE DE SECURITE (ASS)	903
	904
CEINTURE DE SECURITE (ASS)	909
CHAPEAU ANTI-POUSSIERE (RÉCHAUFFEUR D'EAU)	147
CHARNIÈRE DE GARDE-BOUE (ASS)	439
	440
CHÂSSIS-PORTEUR DE JOINT (ASS)	10
CHAUFFAGE DE CABINE (ASS)	832
	834
CLAPET (ASS)	546
CLAPET DE DECHARGE (ASS)	377
	549
	550
	693
CLAPET DE DECHARGE (ASS) (COMPRESSEUR DE RÉFRIGÉRANT)	809
CLAPET DE DECHARGE (ASS) (FREIN)	629
CLAPET DE DECHARGE (ASS) (RÉSERVOIR HYDRAULIQUE)	629
CLAPET DE DÉCHARGE HYDRAULIQUE	118
CLAPET DE RETENUE (ENS)	543
	544
	545
	662
	663
CLAPET DE RETENUE (ENS) (DÉRIVATION DE REFROIDISSEUR D'HUILE D'ESSIEU)	337
CLAPET DE RETENUE (ENS) (DIRECTION QUADRUPLE)	525
CLAVETTE - POIGNÉE	821
CLÉ ÉLECTRONIQUE (ENS) (SÉCURITÉ)	149
CLIGNOTANT (ENS) (24 VOLTS)	226
	228
CLIMATISEUR (ASS)	799
	800
CLIMATISEUR (VERSION)	798
COFFRE A OUTILS (ASS)	935
COLLECTEUR - COMMANDE (ASS)	629
COLLECTEUR - SOUPAPE (ASS)	631
	633
COLLECTEUR D'ÉCHAPPEMENT (ASS)	90
COLONNE DE DIRECTION (ASS)	540
COMMANDE - COUPLEUR EXPRESS (VERSION)	778
COMMANDE D'AFFICHAGE ÉLECTRONIQUE (PANNEAU DE TÉMOINS, DROIT, GAUCHE)	243
COMMANDE D'AFFICHAGE ÉLECTRONIQUE (TABLEAU DE TÉMOINS, CENTRE)	136
	138
COMMANDE DE BOITE DE VITESSES (ASS)	291
	292
COMMANDE DE CREUSAGE AUTOMATIQUE AUTODIG (ASS)	136
	138
COMMANDE DE DIRECTION (ASS)	509
	511
COMMANDE DE FAISCEAU (ENS)	131
COMMANDE DE FAISCEAU (ENS) (COMMANDE DE BLINDAGE HYDRAULIQUE)	282
COMMANDE DE FAISCEAU (ENS) (GRAISSAGE AUTOMATIQUE)	473
COMMANDE DE FAISCEAU (ENS) (*HEATED MIRRORS)	864
	866
COMMANDE DE FREIN DE STATIONNEMENT (ASS)	494
COMMANDE DE FREIN DE STATIONNEMENT (ASS)	501
COMMANDE DE GODET (ASS)	711
	713
COMMANDE DE LA PÉDALE DE FREIN (ASS)	499
	500
COMMANDE DE MACHINE (ASS)	133
COMMANDE DE MONITEUR NON PROGRAMMÉE (ASS)	814
COMMANDE DE MONITEUR NON PROGRAMMÉE (ASS) (SYSTÈME DE SURVEILLANCE CATERPILLAR)	242
COMMANDE DE POIGNÉE (ASS)	573
COMMANDE DE POIGNÉE (ASS) (*LIFT, TILT, AUX, DOWNSHIFT SW)	574
COMMANDE DE POIGNÉE (ASS) (*LIFT, TILT, DOWNSHIFT SWITCH)	576
COMMANDE DE TRANSLATION (VERSION)	564
COMMANDE ÉLECTROHYDRAULIQUE (ASS)	565
	567
	569
	571
COMMANDE ÉLECTRONIQUE D'ÉQUIPEMENT (ASS)	145
COMMANDE ET CANALIS. - TRANSLATION (ASS)	563
COMMANDE ET MONTAGE - MOTEUR	133
	134
COMMANDE ET MONTAGE-COMMUNICATION (ASS)	131

* TRADUCTION NON DISPONIBLE AU MOMENT DE LA PUBLICATION

INDEX

Désignation	Page
COMMANDE HYDRAULIQUE DE BOÎTE (ASS)	293
COMMANDE NON PROGRAMMEE (ASS)	140
COMMANDE NON PROGRAMMEE (ASS) (BOÎTE DE VITESSES)	243
COMMANDE PRINCIPALE DE SOUPAPE ET MONTAGE (ASS)	647
	650
	653
	656
	659
COMPARTIMENT DE BATTERIE (ASS)	387
COMPRESSEUR DE REFRIGERANT (ASS)	809
	810
CONDENSATEUR ET MONTAGE (RÉFRIGÉRANT)	811
CONDUIT ET FILTRE À AIR (ASS)	821
CONTACTEUR DE CLIGNOTANT (ENS)	226
	228
CONTACTEUR DE COMMANDE DU SYSTÈME ANTITANGAGE (ASS)	221
CONTACTEUR DE COUPLEUR EXPRESS (ASS)	219
CONTACTEUR DE MARCHE ARRIÈRE DES PALES DE VENTILATEUR	220
CONTACTEUR DE NIVEAU (ENS) (GRAISSER)	473
CONTACTEUR (ENS) (ESSAI DE GRAISSAGE AUTOMATIQUE)	473
CONTACTEUR MAGNETIQUE (ASS)	215
	216
	217
CONTACTEUR MAGNETIQUE (ASS) (24 VOLTS) (RELAIS PRINCIPAL)	254
CONTACTEUR MAGNETIQUE (ENS) (24 VOLTS) (RÉCHAUFFEUR D'ADMISSION D'AIR)	216
CONTACTEUR RÉGLABLE DE SUPPORT (ENS)	496
CONTACTEUR ROTATIF (ASS)	224
CONTREPOIDS (ASS)	396
	397
	398
*CONVERSION AR-AUTODIG	141
CONVERTISSEUR DE COUPLE (ASS)	370
CONVERTISSEUR DE COUPLE ET CARTER (ASS)	367
COUDE D'ADMISSION D'AIR (ASS)	87
COUDE D'EAU (ASS)	69
COUPLEUR EXPRESS (ASS)	781
COUPLEUR EXPRESS (VERSION)	779
	780
COURONNE CONIQUE ET PIGNON	309
	311
	313
COURROIE INTERMÉDIAIRE (ASS)	40
COURROIE MULTIPLE	124
	344
	810
COUVERCLE DE CARTER AV (ASS)	12
	13
COUVERCLE DE COLLECTEUR D'ADMISSION (ASS)	85
	86
COUVERCLE DE PRESSION (7-PSI)	82
COUVERCLE INFÉRIEUR-DOSSIER (ASS)	879
	880
CREPINE (ENS) (REMPLISSAGE DE RÉSERVOIR HYDRAULIQUE)	645
CROISILLON ET ROULEMENT	356
	357
	373
	374
	375
CULASSE (ASS)	24
	25
	26
CULASSE (ENS)	23
CULBUTERIE - BOULONNERIE (ASS)	33
CULBUTERIE (ASS)	53
	54

D

Désignation	Page
DEFLECTEUR (ASS)	384
DÉMARREUR ÉLECTRIQUE (ASS)	209
	210
DIFFÉRENTIEL - GLISSEMENT LIMITÉ (ASS)	299
	300
DIFFERENTIEL (ASS)	298
DIFFÉRENTIEL NOSPIN (ASS)	301
	302
DIRECTION AUXILIAIRE (VERSION)	539
DISJONCTEUR (ASS) (20A) (ALIM BAT NON RELIÉE À LA CABINE)	255
DISJONCTEUR (ASS) (20A) (COMMANDE VÉRIN DE CAPOT)	254
DISJONCTEUR DE SECURITE (ENS) (FEUX D'ARRÊT)	496
DISJONCTEUR (ENS) (105A) (ALTERNATEUR)	254
DISJONCTEUR (ENS) (15A) (COMMANDE DE PROTECTION À ASSISTANCE)	282
DISJONCTEUR (ENS) (15A) (FEUX DE ROUTE)	254

* TRADUCTION NON DISPONIBLE AU MOMENT DE LA PUBLICATION

INDEX

Désignation	Page
DISJONCTEUR (ENS) (15A) (*SEAT BELT ALARM)	240
DISJONCTEUR (ENS) (32-AMPÈRES) (DÉMARRAGE)	254
DISJONCTEUR (ENS) (80A) (PRINCIPAL)	254
DISJONCTEUR (ENS) (90A) (AUXILIAIRE DE DÉMARRAGE)	254
*DISPLAY	868
*DISPLAY GP-CAMERA	142
DISTRIBUTEUR - 2 VOIES (VERSION)	598
DISTRIBUTEUR - 3 VOIES (VERSION)	598
	599
DISTRIBUTEUR (ASS)	664
	666
	668
	670
	673
DISTRIBUTEUR DE COMMANDE ANTI-TANGAGE	694
DISTRIBUTEUR DE FREIN (ASS)	508
DISTRIBUTEUR DE FREIN (ASS) (ENTRETIEN)	502
DISTRIBUTEUR DE POMPE (ASS)	691

E

Désignation	Page
EAU DES CHEMISES - RECHAUFFEUR (ASS)	147
ECHAPPEMENT - TUYAU (ASS)	92
ECHELLE (ASS)	446
ÉCLAIRAGE - CLIGNOTANT (VERSION)	164
	165
ÉCLAIRAGE - FEUX DE ROUTE (ASS)	176
ÉCLAIRAGE - FEUX DE ROUTE (VERSION)	164
ÉCLAIRAGE - GYROPHARE (ASS)	178
ÉCLAIRAGE - GYROPHARE (ASS)	180
ÉCLAIRAGE - PROJECTEURS (ASS)	166
	167
	169
ÉCLAIRAGE - PROJECTEURS ET CLIGNOTANTS (ASS)	172
	174
ECLAIRAGE AR (ASS)	165
ECLAIRAGE AR (ASS)	165
ÉCRAN	538
	631
	633
ÉCRAN (COLLECTEUR DE DISTRIBUTEUR)	629
ÉCRAN (ENS) (RÉSERVOIR HYDRAULIQUE)	645
ÉCRAN MAGNÉTIQUE (ASS)	315
	320
ÉCRAN MAGNÉTIQUE (REFROIDISSEUR D'HUILE D'ESSIEU)	328
ÉCRAN THERMIQUE DE COMPARTIMENT MOTEUR	474
ELECTROMODULE DE CHARGE UTILE DE BENNE	873
ÉLECTRONIQUE - COMMUNICATION (ASS)	144
ÉLECTRONIQUE DE TRANSMISSION (ASS)	145
ÉLECTRONIQUE DE TRANSMISSION (ASS)	146
ÉLECTRONIQUE-MONITEUR (ASS)	145
ÉLÉMENT DE FILTRE À AIR (ENS) (PRINCIPAL)	84
ÉLÉMENT DE FILTRE À AIR (ENS) (SECONDAIRE)	84
ÉLÉMENT DE FILTRE À HUILE (ENS) (HYDRAULIQUE)	590
ÉLÉMENT DE FILTRE (TRANSMISSION)	308
ÉLÉMENT DU RÉCHAUFFEUR D'EAU DES CHEMISES (ENS)	147
ÉLIMINATION DES DÉCHETS (VERSION)	5
ENGRENAGE DE TRANSFERT DE RENDEMENT (ASS)	320
ENGRENAGE DE TRANSFERT DE RENDEMENT (ASS)	315
ENTRETIEN - COMMUNICATION (ASS) (PRODUCT LINK 300)	144
ESSIEU FIXE (VERSION)	284
	285
ESSIEU OSCILLANT (VERSION)	285
	286
ESSUIE-GLACE (ASS)	932

F

Désignation	Page
FAISCEAU DE CABLES - CAPTEUR (ENS) (ESSIEU ARRIÈRE)	238
FAISCEAU DE CABLES - CAPTEUR (ENS) (ESSIEU AVANT)	238
FAISCEAU DE CÂBLES DE FREINS (ENS) (FEU DE STOP)	496
FAISCEAU DE CABLES (ENS) (OUTIL D'ENTRETIEN)	243
FAISCEAU DE CABLES (ENS) (PRESSION DU CARBURANT) (CAPTEUR)	97
FAISCEAU DE CHÂSSIS AVANT (ENS)	267
FAISCEAU DE CHÂSSIS (ENS) (PRINCIPAL)	253
FAISCEAU DE CHÂSSIS (ENS) (RÉSERVOIR HYDRAULIQUE)	254
FAISCEAU DE CHAUFFAGE ET CLIMATISATION	800
	834
FAISCEAU DE COMMANDES (ENS)	242
FAISCEAU DE COMMANDES (ENS) (*ELECTROHYDRAULIC, JOYSTICK)	569

* TRADUCTION NON DISPONIBLE AU MOMENT DE LA PUBLICATION

INDEX

Désignation	Page
FAISCEAU DE COMMANDES (ENS) (*ELECTROHYDRAULIC, JOYSTICK)	571
FAISCEAU DE CONDENSEUR (ENS) (RÉFRIGÉRANT)	68
FAISCEAU DE CONDENSEUR (ENS) (RÉFRIGÉRANT)	811
FAISCEAU DE CONTACTEUR (ENS)	236
FAISCEAU DE CONTACTEUR (ENS) (NIVEAU)	473
FAISCEAU DE DIRECTION (ENS) (COLONNE, VOLANT)	541
FAISCEAU DE DIRECTION (ENS) (SECONDAIRE)	276
FAISCEAU DE REFROIDISSEUR D'HUILE DE TRANSMISSION (ENS)	295
FAISCEAU DE REFROIDISSEUR D'HUILE D'ESSIEU	337
FAISCEAU DE REFROIDISSEUR D'HUILE HYDRAULIQUE (ENS)	78
FAISCEAU DE REFROIDISSEUR D'HUILE MOTEUR (ENS)	67
FAISCEAU DE SOUPAPE (ENS) (COMPRESSEUR PNEUMATIQUE DE SIÈGE)	922 924
FAISCEAU D'ÉCLAIRAGE ARRIÈRE (ENS)	169
FAISCEAU D'ÉCLAIRAGE AVANT (ENS)	169
FAISCEAU D'ÉCLAIRAGE (ENS)	167
FAISCEAU D'ÉCLAIRAGE (ENS) (CHÂSSIS DE CHARGEUSE)	273
FAISCEAU D'ÉCLAIRAGE (ENS) (CLIGNOTANT)	226 228
FAISCEAU D'ÉCLAIRAGE (ENS) (CLIGNOTANT AVANT, FEUX DE POSITION)	388
FAISCEAU D'ÉCLAIRAGE (ENS) (DROITE)	275
FAISCEAU D'ÉCLAIRAGE (ENS) (GAUCHE)	275
FAISCEAU D'ÉCLAIRAGE (ENS) (GYROPHARE)	178
FAISCEAU D'ÉCLAIRAGE (ENS) (PROJECTEURS DE CABINE)	242
FAISCEAU D'OUTIL DE TRAVAIL (ENS) (COUPLEUR EXPRESS)	259
FEUX ARRIÈRE ET FEUX D'ARRÊT	162
FILTRE - SÉPARATEUR D'EAU ET DE CARBURANT (ENS) (PRINCIPAL)	100
FILTRE A AIR (ASS)	83 84
FILTRE À AIR DE CABINE	821
FILTRE A CARBURANT (ENS) (AUXILIAIRE)	98
FILTRE A CARBURANT (ENS) (TAMIS DE GOULOTTE DE REMPLISSAGE)	118
FILTRE À GRAISSE (ENS)	473
FILTRE A HUILE (ASS)	308 591
FILTRE A HUILE (ASS)	590
FILTRE À HUILE (ENS)	591
FILTRE À HUILE MOTEUR (ASS)	59
FILTRE A HUILE MOTEUR (ENS)	59
FILTRE DE SÉPARATEUR D'EAU ET DE CARBURANT (ASS)	100
FILTRE ET CANALISATIONS - BOÎTE DE VITESSE (ASS)	306
FILTRE ET CANALISATIONS DE CARBURANT (ASS)	97
FIXATION DE MONTAGE (ASS)	433 434 435
FREIN DE MANOEUVRE - COMMANDE (ASS)	502
FREIN DE STATIONNEMENT (ASS)	498
FREIN ET TRAINS PLANÉTAIRES (ASS)	287 289
FUSIBLE (10A)	241
FUSIBLE (15A)	241 834
FUSIBLE (15A)	800
FUSIBLE (20A)	241

G

Désignation	Page
GARDE-BOUE (ASS)	402 404 408
GARDE-BOUE AV (ASS)	406 407
GARDE-BOUE (VERSION)	401
GLACE DE PORTIÈRE (ASS)	928 930
GODET DE MANUTENTION	723 724 725 726 727 728 729 730 731 732 733 734
GODET NORMAL (ASS)	755 756
GODET NORMAL (ENS)	719 720 721

* TRADUCTION NON DISPONIBLE AU MOMENT DE LA PUBLICATION

INDEX

Désignation	Page
GODET PÉNÉTRATION (ASS)	768 769 770 771 772 773
GODET-PÉNÉTRATION (ENS)	736 738 740 742 744 746
GODET POUR MANUTENTION	757 758 759 760 761 762 763 764 765 766 767
GODET-ROCHE (ASS)	774 775 776 777
GODET-ROCHE (ENS)	749 751 753
GODET-ROCHE (ENS)	748
GOULOTTE DE REMPLISSAGE D'HUILE DE TRANSMISSION	304 305
GRAISSAGE AUTOMATIQUE (VERSION)	461 463
GRILLE DE RADIATEUR (ASS)	417
GROUPE DE CONTROLE	813
GROUPE DE PROTECTION (ASS)-JOINT D'ESSIEU	423
GROUPE DE ROTATION DE POMPE	537 644

H

Désignation	Page
*HARNESS AS-TRANSMISSION CONT (VOLANT DE DIRECTION)	541
HUILE DE TRANSMISSION DE REFROIDISSEUR (ENS)	295
HUILE MOTEUR - CARTER (ASS)	46

I

Désignation	Page
INCLINAISON DU CAPOT (ASS)	485
INJECTEUR DE CARBURANT (ASS)	101 102
INJECTEURS-POMPES HYDRAULIQUES (ENS)	116
INSONORISATION (ASS)	482
INSONORISATION DE CABINE (ASS)	916 918 919 920
INSONORISATION (VERSION)	481
INTERRUPTEUR - BOUTON-POUSSOIR (ENS) (CHANG. DE VITESSE)	243
INTERRUPTEUR - BOUTON-POUSSOIR (ENS) (DÉCLENCHEUR DE FONCTION AUTODIG)	136 138
INTERRUPTEUR - BOUTON-POUSSOIR (ENS) (KLAXON)	242
INTERRUPTEUR - BOUTON-POUSSOIR (ENS) (MONTÉE EN VITESSE DE LA BOÎTE)	541
INTERRUPTEUR - BOUTON-POUSSOIR (ENS) (RETROGRADATION)	541
INTERRUPTEUR - DÉRIVATION (ASS)	212
INTERRUPTEUR - SIGNAL (ASS)	226 228
INTERRUPTEUR À BASCULE (ASS)	222 223
INTERRUPTEUR À BASCULE (ASS)	230
INTERRUPTEUR À BASCULE (ASS) (ARRÊT DEPUIS LE SOL)	253
INTERRUPTEUR À BASCULE (ASS) (COMMANDE VÉRIN DE CAPOT)	253
INTERRUPTEUR À BASCULE (ENS) (COMMANDE DE PROTECTION À ASSISTANCE)	282
INTERRUPTEUR BALANCIER (ENS) (BLOCAGE HYDRAULIQUE)	243
INTERRUPTEUR BALANCIER (ENS) (CLIMATISATION, CHAUFFAGE)	243
INTERRUPTEUR BALANCIER (ENS) (COMMANDE DE SENS DE MARCHE)	541
INTERRUPTEUR BALANCIER (ENS) (COMMANDE DE TRANSLATION)	221
INTERRUPTEUR BALANCIER (ENS) (COUPLEUR EXPRESS)	219 222 223
INTERRUPTEUR BALANCIER (ENS) (DIRECTION AUXILIAIRE)	225

* TRADUCTION NON DISPONIBLE AU MOMENT DE LA PUBLICATION

INDEX

Désignation	Page
INTERRUPTEUR BALANCIER (ENS) (ÉLECTROMODULE DE SURVEILLANCE CATERPILLAR)	243
INTERRUPTEUR BALANCIER (ENS) (FEUX DE DÉTRESSE)	226 228
INTERRUPTEUR BALANCIER (ENS) (GYROPHARE)	178
INTERRUPTEUR BALANCIER (ENS) (LIMITEUR DE LEVAGE , D'INCLINAISON)	243
INTERRUPTEUR BALANCIER (ENS) (MARCHE ARRIÈRE AUTOMATIQUE DES PALES DE VENTILATEUR)	220
INTERRUPTEUR BALANCIER (ENS) (MARCHE AVANT, POINT MORT, MARCHE ARRIÈRE)	231
INTERRUPTEUR BALANCIER (ENS) (MODULATION PRÉCISE)	243
INTERRUPTEUR BALANCIER (ENS) (NEUTRALISATION DE LA BOÎTE DE VITESSES)	243
INTERRUPTEUR BALANCIER (ENS) (PROJECTEURS AVANT, ARRIÈRE)	167
INTERRUPTEUR BALANCIER (ENS) (RÉGLAGE DU LIMITEUR DE CHARGEMENT AUTOMATIQUE)	136 138
INTERRUPTEUR BALANCIER (ENS) (RÉTROVISEURS À CHAUFFAGE INTÉGRÉ)	864
INTERRUPTEUR BALANCIER (ENS) (RÉTROVISEURS À CHAUFFAGE INTÉGRÉ)	866
INTERRUPTEUR BALANCIER (ENS) (SÉLECTEUR DE MODE DE CHARGEMENT AUTOMATIQUE)	136
INTERRUPTEUR BALANCIER (ENS) (SÉLECTEUR DE MODE DE CHARGEMENT AUTOMATIQUE)	138
INTERRUPTEUR BALANCIER (ENS) (VITESSE DU VENTILATEUR SOUFFLANT)	243
INTERRUPTEUR BALANCIER (ENS) (*3RD FUNCTION SELECT)	567 571
INTERRUPTEUR DE BOITE DE VITESSES (ASS)	231
INTERRUPTEUR DE DÉMARRAGE (ASS) (CLAVETTE)	241
INTERRUPTEUR DE DIRECTION AUXILIAIRE (ASS)	225
INTERRUPTEUR D'ESSUIE-GLACE (24 VOLTS) (AV, INTERMITTENT)	241
INTERRUPTEUR ROTATIF (ENS) (24 VOLTS) (COMMANDE DE CHANGEMENT DE VITESSES VARIABLE)	242
INTERRUPTEUR ROTATIF (ENS) (24 VOLTS) (COMMANDE DE PASSAGE AUTOMATIQUE DES VITESSES)	242
INTERRUPTEUR ROTATIF (ENS) (24 VOLTS) (ESSUIE-GLACE ARRIÈRE)	241
INTERRUPTEUR ROTATIF (ENS) (24 VOLTS) (FEUX DE ROUTE)	241
INVERSEUR D'ÉCLAIRAGE (ASS)	213
INVERSEUR D'ECLAIRAGE (ENS) (DÉPLACEMENT ROUTIER)	213

J

Désignation	Page
JANTE DÉMONTABLE (ASS)	349 350 351
JANTE (VERSION)	348
JAUGE DE NIVEAU D'HUILE (ENS)	304 305
JAUGE DE NIVEAU D'HUILE (REGARD)	645
JAUGE D'HUILE MOTEUR (BAIONNETTE) (ASS)	60
JOINT DE CARTER DE VOLANT (ASS)	52
JOINT DE VILEBREQUIN (ASS)	51
JOINT DE VILEBREQUIN (ASS) (AVANT)	51
JOINT PLAT (BOÎTIER DE RÉGULATEUR DE TEMPÉRATURE)	72
JOINT UNIVERSEL (ASS)	373 374 375

K

Désignation	Page
KIT D'AMORTISSEUR	922 924
KIT D'ARBRE DE CULBUTEURS	509
KIT D'ASSISTANCE À L'ACCÉLÉRATION	509
KIT D'ASSISTANCE À L'ACCÉLÉRATION (COLONNE DE DIRECTION)	540
KIT D'ATTACHE	922 924
KIT D'AXE À PÉDALE	888
KIT DE BAGUE (DÉMARREUR)	210
KIT DE BALAIS (DÉMARREUR)	210
KIT DE BLOC COULISSANT	910
KIT DE BORNE (ALTERNATEUR)	122
KIT DE BOULONNERIE (ALTERNATEUR)	122
KIT DE CALE D'ÉPAISSEUR D'ARBRE (COMPREND 17 CALES)	534
KIT DE CARTER (COLONNE DE DIRECTION)	540

* TRADUCTION NON DISPONIBLE AU MOMENT DE LA PUBLICATION

INDEX

Désignation	Page
KIT DE CLAPET DE DECHARGE	532
KIT DE COMMANDE DE PISTON	534
KIT DE COUSSINET (ALTERNATEUR)	122
KIT DE DISQUE	300
KIT DE DISQUE ÉPAIS (ÉPAISSEUR 12,75 MM)	299
KIT DE DISQUE ÉTROIT (ÉPAISSEUR 12.57 MM)	299
KIT DE GARNITURE DE FREIN	498
KIT DE JOINTS	502
	550
	631
	689
	700
KIT DE JOINTS (CLAPET DE DÉCHARGE)	629
	633
KIT DE JOINTS (COUPLEUR EXPRESS)	788
KIT DE JOINTS (POMPE RÉGULATRICE, DIRECTION)	521
KIT DE JOINTS (RÉCHAUFFEUR D'EAU)	147
KIT DE JOINTS (SOUPAPE DE DÉRIVATION)	629
KIT DE JOINTS (SOUPAPE DE DÉRIVATION) (DÉBIT DE LIQUIDE DE VENTILATEUR HYDRAULIQUE)	676
KIT DE JOINTS (VANNE-PILOTE)	629
KIT DE KLAXON	509
KIT DE LEVIER (DÉMARREUR)	210
KIT DE LEVIER D'INCLINAISON	509
KIT DE LEVIER D'INCLINAISON (COLONNE DE DIRECTION)	540
KIT DE PISTON EXCENTRIQUE	534
KIT DE ROULEAU	888
KIT DE SOLÉNOÏDE (DÉMARREUR)	210
KIT DE SOUPAPE (COUPLEUR EXPRESS)	788
KIT DE SOUPAPE PNEUMATIQUE	922
	924
KIT DE VIS (CONNECTEURS ÉLECTRIQUES)	253
	267
KIT D'ÉCROU	509
KIT D'ÉCROU (COLONNE DE DIRECTION)	540
KIT D'INDICATEUR	924
KIT D'ISOLANT (DÉMARREUR)	210
KLAXON ÉLECTRIQUE (ASS)	836

L

Désignation	Page
LAME DE COUPE (ASS)	782
	783
	784
*LAMP AS-WARNING (CEINTURE DE SÉCURITÉ)	180
LAMPE - CLIGNOTANT DE DIRECTION (ASS)	160
	161
LAMPE - GYROPHARE (ASS)	163
LAMPE - PHARE (ASS)	152
	153
	154
LAMPE - PHARE (ASS)	155
LAMPE - PHARE ET CLIGNOTANT	156
	158
LAMPE (ENS)	388
LAMPE (ENS) (RECUL)	165
LAMPE HALOGÈNE (24V, 65W)	154
LAMPE HALOGÈNE (24V, 65W) (PROJECTEUR)	155
LAVE-GLACE - VITRE (ASS)	927
LENTILLE (ENS) (JAUNE) (CLIGNOTANT DE DIRECTION)	156
	158
LENTILLE (ENS) (PHARE AVANT) (FEUX DE ROUTE/FEUX DE CROISEMENT)	156
	158
LENTILLE (JAUNE) (CLIGNOTANT DE DIRECTION)	156
	158
LENTILLE ORANGE (SIGNAL)	160
LEVAGE (VERSION)	715
LIAISON - VERROUILLAGE DE CHÂSSIS DE DIRECTION (ASS)	460
LIAISON-GODET (ASS)	716
LOGICIEL DE COMMUNICATION (ASS) (PRODUCT LINK 121SR)	894
LOGICIEL DE COMMUNICATION (ASS) (PRODUCT LINK 300)	144
LOQUET - PORTE DE CABINE ET GLACE	840

M

Désignation	Page
MANOCONTACT	218
MANOCONTACT (*AUTOLUBE ACTUATION)	488
MANOCONTACT (DÉRIVATION DU FILTRE À HUILE) (FILTRE À HUILE DE TRANSMISSION)	308
MANOCONTACT (ENS) (DIFFÉRENTIEL)	590
MANOCONTACT (ENS) (HUILE DE DIRECTION AUXILIAIRE)	276
MANOCONTACT (ENS) (HUILE DE DIRECTION PRINCIPALE)	276
MANOCONTACT (ENS) (HUILE DE FREIN DE MANOEUVRE)	263
MANOCONTACT (ENS) (HUILE DE FREIN DE STATIONNEMENT)	253
MANOCONTACT (ENS) (RÉFRIGÉRANT)	234

* TRADUCTION NON DISPONIBLE AU MOMENT DE LA PUBLICATION

INDEX

Désignation	Page
MARCHEPIED (ASS)	476
MÉCANISME DE COMMANDE - PUISSANCE (ASS)	382
MÉCANISME DE COMMANDE DE GR. MOTO-PROPUL. (ASS)	383
MÉCANISME DE COMMANDE D'INCLINAISON (ASS)	380
MODULE - QUATRE INSTRUMENTS (ASS)	869
MODULE D'AFFICHAGE (ASS)	868
MODULE D'AFFICHAGE (ASS) (*WAVES)	142
MODULE D'INDICATEUR DE VITESSE ET COMPTE-TOURS (ASS)	870
MODULE-INTERFACE (ASS) (CLAVETTE)	149
*MONITOR AR-CAMERA	871
MONTAGE - IMMATRICULATION (ASS)	465
MONTAGE D'ALTERNATEUR (ASS)	43
MONTAGE DE CABINE (ASS)	876
MONTAGE DE JANTE (ASS)	338
MONTAGE DE MOTEUR ET BOÎTE (ASS)	44
MONTAGE DE MOTEUR (VERSION)	8
MONTAGE DE RADIO (ASS)	838
MONTAGE DE REFROIDISSEUR D'HUILE D'ESSIEU (ASS)	337
MONTAGE DES COMMANDES (ASS)	837
MONTAGE D'ESSIEU (ASS)	336
MONTAGE-SÉCURITÉ (ASS)	149
MOTEUR - PARTIE CENTRALE (VERSION)	7
MOTEUR À ENGRENAGES (ASS)	634
MOTEUR D'ESSUIE-GLACE (ASS)	874
	875
MOTEUR ELECTRIQUE (ASS)	532

O

OEILLETONS DE LEVAGE MOTEUR (ASS)	42

P

PALIER PRINCIPAL (ASS) (VILEBREQUIN)	17
PALONNIER - GROUPE DE COMMANDE (ASS)	574
	576
PALONNIER - GROUPE DE COMMANDE (ASS) (*3-FUNCTION, WITH DOWNSHIFT)	571
PANNEAU LATERAL (ASS)	469
PIGNONNERIE AV (ASS)	35
PISTON ET BIELLE (ASS)	47
PLAFONNIER (ASS)	151
PLANCHER-ISOLATION (ASS)	823
	824
	825
PLAQUE DE NUMÉRO DE SÉRIE (BOITE DE VITESSE)	316
	321
PLAQUE D'INSTRUCTIONS (BATTERIE)	126
PLAQUE D'INSTRUCTIONS (CLIMATISEUR)	798
PLAQUE (IDENTIFICATION) (CAT)	772
	773
	779
PLAQUE (IDENTIFICATION) (CAT)	738
	742
	748
	749
	751
	753
	756
PLAQUE (IDENTIFICATION) (POIDS MAXIMUM)	388
PLAQUE (IDENTIFICATION) (POIDS MAXIMUM)	392
PLAQUE SIGNALÉTIQUE (ASS)	937
PLAQUE SIGNALÉTIQUE (CARBURANT MANUEL)	111
PLAQUE SIGNALÉTIQUE DE CONTROLEUR (SYSTÈME DE SURVEILLANCE CATERPILLAR)	881
	883
PLAQUE SIGNALÉTIQUE D'ESSIEU (ASS)	284
	285
	947
PLAQUE SIGNALÉTIQUE (REMARQUE) (EMPLACEMENT D'OEILLETON DE LEVAGE)	756
	772
	773
PLAQUE SIGNALÉTIQUE (REMARQUE) (POINT DE LEVAGE)	767
PLAQUES SIGNALETIQUES ET AUTOCOLLANTS (ASS)	944
	945
	946
PLATE-FORME (ASS)	891
PLATE-FORME (VERSION)	890
PNEU - GROUPE DE VALVE	349
	350
	351
	379
PNEU ET JANTE (VERSION)	358
	359
	360
	361
	362
	363
	364
	365
	366

* TRADUCTION NON DISPONIBLE AU MOMENT DE LA PUBLICATION

INDEX

Désignation	Page
POIGNÉE	831
POINTE - UNIVERSELLE (ASS)	793
	794
POINTE EXTRA-ROBUSTE (ASS)	791
	792
POMPE A EAU (ASS)	76
	77
POMPE A ENGRENAGES (ASS)	532
POMPE A ENGRENAGES (ASS) (REFROIDISSEUR D'HUILE D'ESSIEU)	344
POMPE A HUILE MOTEUR (ASS)	65
	66
POMPE A PISTONS (ASS)	534
	639
	642
POMPE D'ALIMENTATION EN CARBURANT (ASS)	116
POMPE D'AMORÇAGE DE CARBURANT ET FILTRE PRINCIPAL	111
	113
POMPE D'AMORÇAGE DE CARBURANT ET SÉPARATEUR D'EAU (ASS)	120
POMPE DE BOÎTE DE VITESSES (ASS)	345
	346
POMPE DE DIRECTION AUXILIAIRE ET MONTAGE (ASS)	532
	533
POMPE DE FAISCEAU (ENS)	236
POMPE DE FAISCEAU (ENS) (GRAISSAGE AUTOMATIQUE)	473
POMPE DE GRAISSAGE (ASS)	473
POMPE DE GRAISSAGE ET MONTAGE (ASS)	471
POMPE DE REGULARISATION DE DEBIT (ASS) (*HMU STEERING)	519
POMPE DE SÉPARATEUR D'EAU ET D'AMORÇAGE DE CARBURANT (ASS)	120
POMPE DE VENTILATEUR HYDRAULIQUE ET DE FREIN ET MONTAGE (ASS)	636
POMPE D'INJECTEURS-POMPES HYDRAU. ET MONTAGE	107
POMPE D'INJECTION DE CARBURANT (ASS)	109
	110
POMPE ET MONTAGE - HYDRAULIQUE (ASS)	638
POMPE ET MONTAGE DE REFROIDISSEUR D'HUILE D'ESSIEU	344
PORTE DE VISITE (ASS)	399
	400
PORTE-POINTE (ASS)	718
PORTIÈRE DE CABINE (ASS)	815
	816
	819
	820
POULIE-ROUE AVANT (ASS)	50
POUSSOIR DE SOUPAPE (ASS)	41
PREFILTRE (ASS)	93
	94
PRISE (ASS)	181
PRISE DE BATTERIE AUXILIAIRE (ASS)	182
PROTECTION - ÉCLAIRAGE (ASS)	426
PROTECTION ANTIVANDALISME (ASS)	947
PROTECTION-ARTICULATION (ASS)	419
PROTECTION AV (ASS)	425
PROTECTION DE GLACE (ASS)	827
	829
PROTECTION DE GODET (ASS)	786
	787
PROTECTION DE REFROIDISSEUR D'HUILE D'ESSIEU	421
PROTECTION DE VÉRIN DE LEVAGE (ASS)	592
	593
	594

R

RACCORD DE CANALISATION D'HUILE (ASS)	56
RACCORD EN T (ASS)	502
RADIATEUR-CORPS (ENS)	78
RADIATEUR ET VENTILATEUR (ASS)	78
RADIO -COMMUNICATION (ASS)	894
RADIO -COMMUNICATION (ASS) (PRODUCT LINK 121SR)	131
RADIO (ASS)	893
RALLONGE DU DOSSIER DE SIEGE (TOILE)	907
REFROIDISSEMENT AUX TEMPÉRATURES ÉLEVÉES (VERSION)	68
REFROIDISSEMENT AUX TEMPÉRATURES ÉLEVÉES (VERSION)	68
REFROIDISSEUR DE BOÎTE DE VITESSES ET MONTAGE (ASS)	295
REFROIDISSEUR D'HUILE D'ESSIEU (VERSION)	296
REFROIDISSEUR D'HUILE MOTEUR (ASS)	67
REGARD DE NIVEAU	70
REGISTRE D'AVERTISSEUR	136
	138
REGLAGE DE SIEGE (ASS)	795
RÉGULATEUR - PÉDALE (ASS)	888
	889
REGULATEUR DE LA TENSION (ENS) (24 VOLTS)	122
REGULATEUR DE PRESSION DE CARBURANT (ASS)	117

* TRADUCTION NON DISPONIBLE AU MOMENT DE LA PUBLICATION

INDEX

Désignation	Page
RÉGULATEUR (ENS) (PRESSION DE CARBURANT)	117
RELAIS (ENS) (COQUILLE)	243
RELAIS (ENS) (24 VOLTS)	241
RELAIS (ENS) (24 VOLTS)	270
RELAIS (ENS) (24 VOLTS) (DIRECTION SECONDAIRE INTERMÉDIAIRE)	276
RELAIS (ENS) (24 VOLTS) (MOTEUR D'INCLINAISON DE CAPOT)	253
RELAIS (ENS) (24 VOLTS) (REFROIDISSEUR D'HUILE D'ESSIEU)	260
RELAIS (ENS) (24 VOLTS) (RÉTROVISEURS À CHAUFFAGE INTÉGRÉ)	864
RELAIS (ENS) (24 VOLTS) (RÉTROVISEURS À CHAUFFAGE INTÉGRÉ)	866
RELAIS (ENS) (24 VOLTS) (*SEAT BELT ALARM)	240
RENIFLARD (ASS)	57
RENIFLARD (ENS)	316
	321
RENIFLARD (ENS) (CARTER)	57
RÉSERVOIR DE CARBURANT (ASS)	118
RÉSERVOIR DU COUVERCLE DE RADIATEUR (ASS)	82
RÉSERVOIR HYDRAULIQUE - MONTAGE (ASS)	635
RÉSERVOIR HYDRAULIQUE (ASS)	645
RETROVISEUR - CABINE (ASS)	926
RÉTROVISEUR (ASS)	854
	855
	856
	857
	858
	859
	860
	861
	862
	864
	866
ROBINET DE BATTERIE (ASS)	214
ROBINET DE BATTERIE (ASS) (BATTERIE)	126
ROTATION DE LA ROUE DU VENTILATEUR SOUFFLANT (DÉMARRAGE DU MOTEUR)	885
ROTATION DE LA ROUE DU VENTILATEUR SOUFFLANT (ENTRETIEN)	565
	567
	569
	571
ROTATION DE LA ROUE DU VENTILATEUR SOUFFLANT (ISSUE DE SECOURS)	842
ROTATION DE LA ROUE DU VENTILATEUR SOUFFLANT (LIRE LE GUIDE D'UTILISATION ET D'ENTRETIEN)	149
ROTATION DE LA ROUE DU VENTILATEUR SOUFFLANT (N. D'ÉTAPE)	945
ROTATION DE LA ROUE DU VENTILATEUR SOUFFLANT (RÉGLAGE DU SIÈGE)	922
	924

S

Désignation	Page
*SCREEN GP-CASE DRAIN	538
*SEAT BELT & LIGHTING GP	903
SEGMENT DE LAME	785
SEGMENT DE LAME DE COUPE (ASS)	785
SIÈGE - COMPRESSEUR D'AIR (ASS)	797
SIÈGE (ASS)	905
	907
SIÈGE AVEC SUSPENSION (ASS)	909
	910
	911
	922
SIÈGE AVEC SUSPENSION (ASS)	924
SIÈGE INCLINABLE (ASS)	895
SILENCIEUX (ASS)	91
SONDE - CIRCUIT DE CARBURANT	190
	191
SONDE - NIVEAU DE CARBURANT (ENS)	118
SOUPAPE - SOLÉNOÏDE (ASS)	699
	700
	701
SOUPAPE - SOLÉNOÏDE (ASS) (24 VOLTS) (FREIN, VENTILATEUR HYDRAULIQUE)	629
SOUPAPE A COMMANDE MANUELLE (ASS)	689
SOUPAPE D'ARRÊT (ASS)	615
SOUPAPE D'ARRÊT (ASS) (COLLECTEUR DE RETOUR)	851
SOUPAPE D'ARRÊT (ASS) (VIDANGE DE RADIATEUR)	295
SOUPAPE DE COMMANDE D'ABAISSEMENT (ASS)	678
SOUPAPE DE COMMANDE PRINCIPALE (ASS)	680
	682
	684
	686
	687
SOUPAPE DE DÉMARRAGE À L'ÉTHER (ASS)	232
SOUPAPE DE DERIVATION (ASS)	675
	676
SOUPAPE DE DERIVATION (ASS) (RÉSERVOIR HYDRAULIQUE)	629

* TRADUCTION NON DISPONIBLE AU MOMENT DE LA PUBLICATION

INDEX

Désignation	Page
SOUPAPE DE DIRECTION (ASS)	554
	556
SOUPAPE DE DIRECTION AUXILIAIRE (ASS)	551
SOUPAPE DE DISTRIBUTION DE GRAISSAGE (ASS)	488
	489
	490
SOUPAPE DE MODULATION (ASS)	376
SOUPAPE DE NEUTRALISATION DE DIRECTION (ASS)	519
	559
	560
SOUPAPE DE VIDANGE	677
SOUPAPE ET CONDUITES DE GRAISSAGE (ASS)	486
SOUPAPE PILOTE (ASS)	546
SOUPAPE RÉDUCTRICE DE PRESSION (ASS)	548
	690
SOUPAPE SÉLECTRICE (ASS) (DIRECTION)	556
SUPPORT - PÉDALE DE FREIN (ASS)	495
	496
SUPPORT DE COMMANDE HYDRAULIQUE (ASS)	912
SUPPORT DE SOUPAPE ET FILTRE (ASS)	479
SUPPORTS D'ADMISSION D'AIR (ASS)	478

T

Désignation	Page
TABLEAU - CAISSON (ASS)	466
	467
	468
TABLEAU DE BORD (ASS)	881
	883
	885
TAMIS D'ASPIRATION	315
	320
TAPIS DE PLANCHER	842
TÊTE DE POMPE (ASS)	595
THERMOCONTACT (ENS) (CLIMATISEUR)	800
THERMOSTAT-TEMPÉRATURE D'EAU (94-DEG C) (LIQUIDE DE REFROIDISSEMENT)	72
TRANSMISSION (VERSION)	343
TURBOCOMPRESSEUR (ASS)	95
	96

V

Désignation	Page
*VALVE AS-TIRE	379
VANNE PILOTE (ASS)	552
	553
	696
	697
	698
VANNE PILOTE (ASS) (FREIN, VENTILATEUR HYDRAULIQUE)	629
VANNE PILOTE (ASS) (HUILE DE DIRECTION)	525
VERIN DE DIRECTION ET MONTAGE (ASS)	513
VÉRIN DE LEVAGE (ASS)	583
	584
VÉRIN DE LEVAGE ET JOINT (ASS)	578
	579
VÉRIN D'INCLINAISON (ASS)	585
	587
	588
VÉRIN D'INCLINAISON ET JOINT (ASS)	580
	581
	582
VÉRIN HYDRAULIQUE (ASS)	514
VERROUILLAGE DE COUPLEUR EXPRESS (ASS)	788
VERSION DE CAMÉRA	129
	130
VERSION DE CHASSIS	1
VERSION DE COMMANDE-AUTODIG	135
VERSION DE COMMANDE DE DIRECTION	539
VERSION DE MONTAGE-COMMUNICATION	148
VERSION DE MONTAGE-SÉCURITÉ	148
VERSION DE MOTEUR COMPLET	6
VERSION DE TRANSFORMATION - HOMOLOGATION	2
	3
VERSION DE TRANSFORMATION POUR DÉPLACEMENT ROUTIER	388
	392
VERSION ÉLECTRIQUE	143
VERSION HYDRAULIQUE - HUILE BIODÉGRADABLE	599
VERSION POUR ÉQUIPEMENT FORESTIER	717
VERSION SPÉCIALE - CARRIÈRE	4
VIDANGE-ÉCOLOGIE (ASS)	303
VIDANGE-HUILE DE MOTEUR (ASS)	28
VILEBREQUIN (ASS)	17
VOLANT DE DIRECTION (ASS)	541
VOLANT MOTEUR (ASS)	34
VUE DU MODÈLE	4

W

Désignation	Page
*WIRING GP-WASTE HANDLER	282

* TRADUCTION NON DISPONIBLE AU MOMENT DE LA PUBLICATION

INDICE

Nombre	Página
A	
ACCIONADOR DE INCLINACIÓN DEL CAPO (GR)	380
ACCIONADOR DEL FRENO DE ESTACIONAMIENTO (GR)	494
ACCIONADOR DEL PROTECTOR DEL TREN DE FUERZA (GR)	383
ACCIONADOR DEL PROTECTOR (GR)	382
ACEITE HIDRAULICO BIODEGRADABLE (CONFIG)	599
ACONDICIONADOR DE AIRE (CONFIG)	798
ACONDICIONADOR DE AIRE (GR)	799
	800
ACOPLADOR - TUBERÍAS DE (GR)	604
	605
	608
	610
ACOPLADOR RÁPIDO (CONFIG)	779
	780
ACOPLADOR RÁPIDO (GR)	781
ACUMULADOR DE ACEITE PILOTO (GR)	561
	562
ACUMULADOR DEL ACONDICIONADOR DE AIRE (GR)	847
ACUMULADOR DEL FRENO (GR)	492
	493
ADAPTADOR (GR)	74
	851
AGUA DE LAS CAMISAS - CALENTADOR DEL (GR)	147
AIRE - TUBERÍAS DE (GR)	89
AJUSTADOR DEL ASIENTO (GR)	795
ALAMBRADO DE ACOPLADOR (GR)	259
ALAMBRADO DE AUXILIAR DE ARRANQUE CON ETER (GR)	266
ALARMA (GR)	121
ALFOMBRILLA DEL PISO	842
AMORTIGUADOR Y POLEA (GR)	27
ANTEFILTRO (GR)	93
	94
ÁRBOL DE LEVAS (GR)	9
ARO DESMONTABLE (GR)	349
	350
	351
ARO Y RUEDA	358
	359
	360
	361
	362
	363
	364
	365
	366
ARRANQUE - INTERRUPTOR DE (GR) (LLAVE)	241
ASIENTO CON SUSPENSIÓN (GR)	922
	924
ASIENTO (GR)	905
	907
AUXILIAR DE ARRANQUE CON ÉTER (CONFIG)	205
AUXILIAR DE ARRANQUE CON ÉTER (GR)	207
AUXILIAR DE ARRANQUE (GR)	206
B	
BALANCÍN (GR) (ADMISION)	54
BALANCÍN (GR) (ESCAPE)	54
*BASE AS-JOYSTICK	574
	576
BASE DEL FRENO DE PIE (GR)	495
	496
BASTIDOR DEL CARGADOR (CONJ)	412
BASTIDOR TRASERO (CONJ)	415
BATERÍA Y CABLES (GR)	126
BISAGRA DEL GUARDABARROS PARA DESPLAZ. POR CARRETERA	439
	440
BLOQUE DE FUSIBLES (CONJ)	243
BLOQUE DESLIZANTE-JUEGO	910
BLOQUE LIMITADOR DEL EJE OSCILANTE (GR)	385
BLOQUE MOTOR (GR)	19
	20
	22
BOCINA ELÉCTRICA (GR)	836
BOMBA DE ACEITE DEL MOTOR (GR)	65
	66
BOMBA DE AGUA (GR)	76
	77
BOMBA DE CEBADO Y FILTRO PRIMARIO DE COMBUSTIBLE (GR)	111
	113
BOMBA DE ENGRANAJES (GR)	532
BOMBA DE ENGRANAJES (GR) (ENFRIADOR DE ACEITE DE EJE)	344
BOMBA DE INYECCIÓN DE COMBUSTIBLE (GR)	109
	110
BOMBA DE LA TRANSMISIÓN (GR)	345
	346
BOMBA DE LUBRICACIÓN (GR)	473
BOMBA DE LUBRICACIÓN Y MONTAJE (GR)	471
BOMBA DE PISTONES (GR)	534
	639
	642

* NO HAY TRADUCCION DISPONIBLE EN EL MOMENTO DE LA IMPRESION

INDICE

Nombre	Página
BOMBA DE SEPARADOR DE AGUA Y CEBADO DE COMBUSTIBLE (GR)	120
BOMBA DE TRANSFERENCIA DE COMBUSTIBLE (GR)	116
BOMBA DEL ENFRIADOR DE ACEITE DEL EJE Y MONTAJE (GR)	344
BOMBA HIDRÁULICA DEL INYECTOR UNITARIO (GR)	116
BOMBA HIDRÁULICA DEL INYECTOR UNITARIO Y MONTAJE	107
BOMBA HIDRÁULICA Y MONTAJE (GR)	638
BOMBA Y MONTAJE DE LA DIRECCIÓN SECUNDARIA (GR)	533
BOMBA Y MOTOR DE DIRECCION SECUNDARIA (GR)	532
*BOSS GP-LEVER	706
	707
*BOSS GP-LIFT ARM	708
	709
*BOSS GP-REAR FRAME	386
*BRACKET AS-ADJUSTABLE SWITCH	496
BRAZO DE LEVANTAMIENTO (CONJ)	702
	704
	705
BRAZO DE LIMPIAPARABRISAS (GR)	804
	805

C

CABEZA DE BOMBA (GR)	595
CABINA ROPS CERRADA (CONFIG)	878
CABINA ROPS CERRADA (GR)	896
CABLES DE CONEXION (GR)	600
	601
	602
CABLES DE LA CABINA (GR)	241
CABLES DE LA CABINA (GR)	240
CABLES DE LA DIRECCIÓN SECUNDARIA	276
CABLES DE LAS LUCES (GR)	270
	273
	274
	275
CABLES DE LUBRICACION (GR)	236
CABLES DE SENSOR (GR)	279
	280
CABLES DEL ACONDICIONADOR DE AIRE (GR)	234
CABLES DEL CHASIS (GR)	253
CABLES DEL MOTOR (GR)	261
	263
CABLES DEL SISTEMA ELÉCTRICO DE EMBRAGUE	260
CABLES DELANTEROS (GR)	267
CAJA DE BATERÍA	387
CAJA DE EJE OSCILANTE (GR)	326
CAJA DE HERRAMIENTAS (GR)	935
CAJA DEL EJE OSCILANTE (GR)	324
CAJA DELANTERA - TORNILLERÍA DE LA (GR)	30
	31
CAJA DELANTERA (GR)	38
CALCOMANÍA (AUTOCARGA)	136
	138
CALCOMANÍA (CABINA DE LUJO)	388
CALCOMANÍA DE ADVERTENCIA (ARRANQUE DEL MOTOR)	885
CALCOMANÍA DE ADVERTENCIA (ASIENTO AJUSTABLE)	922
	924
CALCOMANÍA DE ADVERTENCIA (DIRECCIÓN)	388
CALCOMANÍA DE ADVERTENCIA (LEA EL OMM)	149
	779
CALCOMANÍA DE ADVERTENCIA (LEER EL MANUAL DE OPERACIÓN)	944
CALCOMANÍA DE ADVERTENCIA (MANTENIMIENTO)	565
	567
	569
CALCOMANÍA DE ADVERTENCIA (MANTENIMIENTO)	571
CALCOMANÍA DE ADVERTENCIA (NO PISAR)	945
CALCOMANÍA DE ADVERTENCIA (NO SUELDE, NO TALADRE, LEA EL OMM)	945
CALCOMANÍA DE ADVERTENCIA (PELIGRO DE APLASTAMIENTO, MANTENGASE DETRAS DE ESTE LUGAR)	944
CALCOMANÍA DE ADVERTENCIA (PRODUCTO DE ENLACE DE RADIO, NO NACD)	148
CALCOMANÍA DE ADVERTENCIA (PUNTO DE LEVANTAMIENTO)	767
CALCOMANÍA DE ADVERTENCIA (SALIDA ALTERNATIVA)	842
CALCOMANÍA DE ADVERTENCIA (UBICACIÓN DEL CONECTOR DE LEVANTAMIENTO)	756
	772
	773
CALCOMANÍA DE IDENTIFICACIÓN (*BIODEGRADABLE HYDRAULIC OIL)	599
CALCOMANÍA DE IDENTIFICACIÓN (BOCINA)	565
	567
CALCOMANÍA DE IDENTIFICACIÓN (HIDRAULICO AUXILIAR)	567

* NO HAY TRADUCCION DISPONIBLE EN EL MOMENTO DE LA IMPRESION

INDICE

Nombre	Página
CALCOMANÍA DE IDENTIFICACIÓN (INTERRUPTOR DE ENCENDIDO)	149
CALCOMANÍA DE IDENTIFICACIÓN (MANIPULADOR DE DESPERDICIOS)	5
CALCOMANÍA DE IDENTIFICACIÓN (*POWER GUARD ACTUATOR SWITCH)	282
CALCOMANÍA DE IDENTIFICACIÓN (12 VOLTIOS)	885
CALCOMANÍA DE IDENTIFICACIÓN (20 KM/H)	145
CALCOMANÍA (MÁQUINA FORESTAL)	717
CALCOMANÍA (REFLECTOR)	392
CALCOMANÍA (ROJA, FRANJAS BLANCAS)	392
CALCOMANIA, TABLERO DE FUSIBLE	842
CALCOMANÍA (40 KM/H)	388
CALCOMANÍAS Y PLACAS DE IDENTIFICACIÓN (GR)	944
	945
	946
CALEFACCIÓN DE LA CABINA (GR)	832
	834
*CAMERA AR	129
	130
*CAMERA GP (*115-DEGREE, COLOR)	129
CÁNCAMOS DE LEVANTAMIENTO DEL MOTOR (GR)	42
CANDADO (GR)	297
	947
CAPO Y PROTECTOR (GR)	443
CARGA - ALTERNADOR DE (GR)	122
	124
CÁRTER - COLECTOR DEL (GR)	46
CHASIS (CONFIG)	1
CIGÜEÑAL (GR)	17
CILINDRO DE DIRECCIÓN Y MONTAJE (GR)	513
CILINDRO DE INCLINACIÓN Y SELLO (GR)	580
	581
	582
CILINDRO DE LEVANTAMIENTO - TUBERÍAS DEL (GR)	623
CILINDRO DE LEVANTAMIENTO (GR)	583
	584
CILINDRO DE LEVANTAMIENTO Y SELLO (GR)	578
	579
CILINDRO HIDRÁULICO (GRUPO)	514
CINTURÓN DE SEGURIDAD (GR)	909
CINTURÓN DE SEGURIDAD (GR)	903
	904
CODO DE ADMISIÓN DE AIRE (GR)	87
CODO DE AGUA (GR)	69
COLADOR (CONJ) (LLENADO DEL TANQUE HIDRÁULICO)	645
COLUMNA DE DIRECCIÓN (GR)	540
COMBUSTIBLE - TANQUE DE (GR)	118
COMBUSTIBLE - TUBERÍAS DE DRENAJE DE (GR)	105
COMPRESOR DE AIRE DEL ASIENTO (GR)	797
COMPRESOR DE REFRIGERANTE (GR)	810
COMPRESOR DE REFRIGERANTE (GR)	809
CONDENSADOR DEL REFRIGERANTE Y MONTAJE (GR)	811
CONDUCTO Y FILTRO DE AIRE (GR)	821
(CONFIG) CABLERIA, CHASIS DELANTERO	267
CONFIGURACIÓN DE CABLERIA, CALENTADOR Y ACONDICIONADOR DE AIRE	800
CONFIGURACIÓN DE CABLERIA, CALENTADOR Y ACONDICIONADOR DE AIRE	834
CONFIGURACIÓN DE ELIMINACIÓN DE BASURAS	5
CONFIGURACIÓN DE INSTALACIÓN DEL MOTOR	8
CONFIGURACIÓN DE TRANSFORMACIÓN PARA CARRETERA	388
	392
CONFIGURACIÓN DE TRANSFORMACIÓN PARA CERTIFICACIÓN	2
	3
CONFIGURACIÓN ELÉCTRICA	143
CONFIGURACIÓN GENERAL	4
CONFIGURACIÓN HIDRÁULICA DE 2 VÁLVULAS	598
CONFIGURACIÓN PARA EXPLOTACIÓN FORESTAL	717
CONJUNTO DE ALARMA Y DEFLECTOR	136
	138
CONJUNTO DE CABLES-BOMBA	236
CONJUNTO DE CABLES-BOMBA (LUBRICACION AUTOMATICA)	473
CONJUNTO DE CABLES, VÁLVULA (COMPRESOR DE AIRE DEL ASIENTO)	922
	924
CONJUNTO DE DESTELLADOR (24 VOLTIOS)	226
	228
CONJUNTO DE FILTRO-ENGRASE	473
CONJUNTO DE INTERRUPTOR DE SEÑAL DE GIRO	226
	228
CONJUNTO DE LLAVE, ELECTRONICA (SEGURIDAD)	149
CONJUNTO DE NÚCLEO-CONDENSADOR (REFRIGERANTE)	68
	811

* NO HAY TRADUCCION DISPONIBLE EN EL MOMENTO DE LA IMPRESION

INDICE

Nombre	Página
CONJUNTO MAZO DE CABLES-CONTROLES DEL OPERADOR	242
CONJUNTO MAZO DE CABLES-CONTROLES DEL OPERADOR (*ELECTROHYDRAULIC, JOYSTICK)	569
CONJUNTO MAZO DE CABLES-CONTROLES DEL OPERADOR (*ELECTROHYDRAULIC, JOYSTICK)	571
CONJUNTO, MAZO DE CABLES, LUCES DELANTERAS	169
CONTRAPESO (GR)	396
	397
	398
CONTROL DE ACOPLADOR RÁPIDO (CONFIG)	778
CONTROL DE AMORTIGUACIÓN (CONFIG)	564
CONTROL DE AUTOCARGA (CONFIG)	135
CONTROL DE AUTOCARGA (GR)	136
	138
CONTROL DE COMUNICACION Y MONTAJE (GR)	131
CONTROL DE DESPLAZAMIENTO Y TUBERÍAS (GR)	563
CONTROL DE DIRECCIÓN (GR)	509
	511
CONTROL DE LA TRANSMISIÓN (GR)	291
	292
CONTROL DE MANIJA (GR)	573
CONTROL DE MANIJA (GR) (*LIFT, TILT, AUX, DOWNSHIFT SW)	574
CONTROL DE MANIJA (GR) (*LIFT, TILT, DOWNSHIFT SWITCH)	576
CONTROL DE MAQUINA (GR)	133
CONTROL DE MONITOR (GR)	813
CONTROL DEL CUCHARÓN (GR)	711
	713
CONTROL DEL FRENO DE ESTACIONAMIENTO	501
CONTROL DEL MULTIPLE (GR)	629
CONTROL DEL PEDAL DE FRENO (GR)	499
	500
CONTROL ELECTROHIDRAULICO (GR)	565
	567
	569
CONTROL ELECTROHIDRAULICO (GR)	571
CONTROL ELECTRÓNICO DEL MOTOR Y MONTAJE	133
	134
CONTROL HIDRÁULICO DE LA TRANSMISIÓN (GR)	293
CONTROL NO PROGRAMADO (GR)	140
CONTROL NO PROGRAMADO (GR) (TRANSMISION)	243
*CONVERSION AR-AUTODIG	141
CONVERTIDOR DE PAR (GR)	370
CONVERTIDOR DE PAR Y CAJA (GR)	367
*COOLER AS-TRANSMISSION OIL	295
*CORE AS-AXLE OIL COOLER	337
CORREA-SERPENTIN	124
	344
	810
CRISTAL (AMBAR) (SEÑAL DE VIRAJE)	156
	158
CRUCETA Y COJINETE (GR)	356
	357
CRUCETA Y COJINETE (GR)	373
	374
	375
CUBIERTA (GR)-TAPA DE LLENADO DE ACEITE DE LA TRANSMISIÓN	297
	947
CUCHARÓN DE MANEJO DE MATERIAL (CONJ)	723
	724
	725
	726
	727
	728
	729
	730
	731
	732
	733
	734
CUCHARÓN DE MANEJO DE MATERIAL (GR)	757
	758
	759
	760
	761
	762
	763
	764
	765
	766
	767
CUCHARÓN DE USO GENERAL (CONJ)	719
	720
	721
CUCHARÓN DE USO GENERAL (GR)	755
	756
CUCHARON PARA PENETRACIÓN (CONJ)	736
	738
	740
	742
	744

* NO HAY TRADUCCION DISPONIBLE EN EL MOMENTO DE LA IMPRESION

INDICE

Nombre	Página
	746
CUCHARÓN PARA ROCA (CONJ)	749
	751
	753
CUCHARÓN PARA ROCA (CONJ)	748
CUCHARÓN PARA ROCA (GR)	774
	775
	776
	777
CUCHILLA (GR)	782
	783
	784
CULATA DE CILINDROS - TORNILLERÍA DE LA (GR)	26
CULATA DE CILINDROS (CONJ)	23
CULATA DE CILINDROS (GR)	24
	25
	26

D

DEFLECTOR (GR)	384
DETECTOR DE NIVEL DEL COMBUSTIBLE	118
DETECTOR DE POSICIÓN (SISTEMA DE COMBUST.) (GR)	190
DETECTOR DE POSICIÓN (SISTEMA DE COMBUST.) (GR)	191
DIFERENCIAL DE DESLIZAMIENTO LIMITADO (GR)	299
	300
DIFERENCIAL (GR)	298
DIFERENCIAL NOSPIN (GR)	301
	302
DIRECCIÓN SECUNDARIA (CONFIG)	539
*DISPLAY	868
*DISPLAY GP-CAMERA	142
DISYUNTOR (CONJ) (105 AMPERIOS) (ALTERNADOR)	254
DISYUNTOR (CONJ) (15 AMPERIOS) (ACCIONADOR DE PROTECTOR ELÉCTRICO)	282
DISYUNTOR (CONJ) (15 AMPERIOS) (LUCES DE TRABAJO)	254
DISYUNTOR (CONJ) (15 AMPERIOS) (*SEAT BELT ALARM)	240
DISYUNTOR (CONJ) (50 AMPERIOS) (ARRANQUE)	254
DISYUNTOR (CONJ) (80 AMPERIOS) (PRINCIPAL)	254
DISYUNTOR (CONJ) (90-AMPERIOS) (AUXILIAR DE ARRANQUE)	254
DISYUNTOR DE CIRCUITO (GR) (20-AMPERIOS) (ACCIONADOR DE INCLINACION DE CAPO)	254
DISYUNTOR DE CIRCUITO (GR) (20-AMPERIOS) (*UNSWITCHED BAT POWER TO CAB)	255
DISYUNTOR (GR)	214
DISYUNTOR (GR) (BATERÍA)	126
DOSIFICACIÓN - BOMBA DE (GR) (*HMU STEERING)	519
DRENAJE DE SEGURIDAD ECOLÓGICA (GR)	303
DRENAJE DEL ACEITE DE MOTOR	28

E

EJE - GRUPO DE MONTAJE	336
EJE DE MANDO (GR)	352
	353
	354
	355
EJE FIJO (CONFIG)	285
EJE FIJO (CONFIG)	284
EJE OSCILANTE (CONFIG)	285
	286
ELECTRONICA DE MONITOR (GR)	145
ELEMENTO DE FILTRO DE ACEITE (CONJ) (HIDRAULICO)	590
ELEMENTO DE FILTRO (TREN DE FUERZA)	308
ELEMENTO DEL CALENTADOR DEL AGUA DE LAS CAMISAS	147
ELEMENTO DEL FILTRO DE AIRE (CONJ) (PRIMARIO)	84
ELEMENTO DEL FILTRO DE AIRE (CONJ) (SECUNDARIO)	84
EMPAQUETADURA (CAJA DEL REGULADOR DE TEMPERATURA)	72
ENCENDEDOR DE CIGARRILLOS (GR) (12 VOLTIOS)	242
ENCHUFE DE ARRANQUE AUXILIAR (GR)	182
ENFRIADOR DE ACEITE DEL MOTOR (GR)	67
ENFRIADOR DEL ACEITE DEL EJE (CONFIG)	296
ENFRIADOR PARA ALTA TEMPERATURA DE AMBIENTE (CONFIG)	68
ENGANCHE ARTICULADO (GR)	441
ENGRANAJE DE CORONA Y PIÑÓN (GR)	309
	311
	313
ENGRANAJE DE TRANSFERENCIA DE SALIDA	315
	320
ENGRANAJE DELANTERO (GR)	35

* NO HAY TRADUCCION DISPONIBLE EN EL MOMENTO DE LA IMPRESION

INDICE

Nombre	Página
ESCALERILLA (GR)	446
ESLABON DEL CUCHARON (GR)	716
ESPECIAL PARA CANTERAS (CONFIG)	4
ESTRIBO DEL OPERADOR (GR)	476
ETIQUETA DE ADVERTENCIA (GR)	937
EXTENSIÓN DEL RESPALDO (GR) (DE TELA)	907

F

*FILM-TRANSMISSION (*DOWNSHIFT SWITCH)	565
	567
FILTRO DE ACEITE (CONJ)	591
FILTRO DE ACEITE DEL MOTOR (CONJ)	59
FILTRO DE ACEITE DEL MOTOR (GR)	59
FILTRO DE ACEITE (GR)	308
	590
	591
FILTRO DE AIRE DE CABINA	821
FILTRO DE AIRE (GR)	83
	84
FILTRO DE COMBUSTIBLE (CONJ) (REJILLA DE TUBO DE LLENADO)	118
FILTRO DE COMBUSTIBLE (CONJ) (SECUNDARIO(A))	98
FILTRO DE COMBUSTIBLE Y SEPARADOR DE AGUA (CONJ) (PRIMARIO)	100
FILTRO DE COMBUSTIBLE Y SEPARADOR DE AGUA (GR)	100
FILTRO MAGNÉTICO (ENFRIADOR DE ACEITE DE EJE)	328
FILTRO Y TUBERÍAS DE COMBUSTIBLE (GR)	97
*FLOOR GP-SOUND SUPPRESSION	823
	824
	825
FRENO DE ESTACIONAMIENTO (GR)	498
FRENO DE SERVICIO - CONTROL (GR)	502
FRENO Y PLANETARIOS (GR)	287
	289
FUSIBLE (10-AMPERIOS)	241
FUSIBLE (15 AMPERIOS)	241
	800
	834
FUSIBLE (20-AMPERIOS)	241

G

GRUPO ADAPTADOR-TUBERIA DE ACEITE	56
GRUPO DE BOMBA Y MONTAJE, FRENOS Y VENTILADOR HIDRÁULICO	636
GRUPO DE CABLES, MONITOREO DEL EJE	238
GRUPO DE COJINETES DE BANCADA (CIGÜEÑAL)	17
GRUPO DE CONEXIÓN EN TE	502
GRUPO DE CONTROL-MONITOR NO PROGRAMADO	814
GRUPO DE CONTROL-MONITOR NO PROGRAMADO (SISTEMA MONITOR CATERPILLAR)	242
GRUPO DE GUIA, CORREA	40
GRUPO DE INTERRUPTOR, ACOPLAMIENTO RAPIDO	219
GRUPO DE INTERRUPTOR ROTATORIO	224
GRUPO DE MONTAJE DE LA CABINA	876
GRUPO DE MONTAJE Y ENFRIAMIENTO DE LA TRANSMISIÓN	295
GRUPO DE PLACA DE IDENTIFICACIÓN DEL EJE	284
	285
	947
GRUPO DE PROTECCIÓN CONTRA EL VANDALISMO	947
GRUPO DE PROTECTOR DE CILINDRO DE LEVANTAMIENTO	592
	593
	594
GRUPO DE PROTECTOR DEL CUCHARON	786
	787
GRUPO DE PUNTA-SERVICIO ADICIONAL	791
	792
GRUPO DE PUNTA Y ADAPTADOR	718
GRUPO DE SOFTWARE, COMUNICACIÓN (*PRODUCT LINK 121SR)	894
GRUPO DE SOFTWARE, COMUNICACIÓN (*PRODUCT LINK 300)	144
GRUPO DE TORNILLERIA- MONTAJE	433
	434
	435
GRUPO DE TUBERIAS DE DIAGNÓSTICO	938
	941
GRUPO DE TUBERIAS DE LUBRICACIÓN AUTOMÁTICA	448
	451
	453
GRUPO DE VÁLVULA-ARRANQUE CON ÉTER	232
GRUPO DE VÁLVULAS	546
GRUPO ELECTRONICO-COMUNICACION	144
GRUPO GIRATORIO DE BOMBA	537
	644
GUARDABARROS (CONFIG)	401
GUARDABARROS DELANTERO (GR)	406
	407
GUARDABARROS (GR)	402

* NO HAY TRADUCCION DISPONIBLE EN EL MOMENTO DE LA IMPRESION

INDICE

Nombre	Página
	404
GUARDABARROS PARA DESPLAZAMIENTO EN CARRETERA (GR)	408

H

*HARNESS AS-TRANSMISSION CONT (VOLANTE DE DIRECCION)	541
HOJA DE LIMPIAPARABRISAS (CONJ)	932

I

IMPLEMENTOS (GR ELECTRÓNICO)	145
INCLINACIÓN DEL CAPÓ (GR)	485
INCLINACIÓN HORIZONTAL - CILINDRO DE (GR)	585
	587
	588
INDICADOR DEL NIVEL DE ACEITE (VARILLA) (GR)	60
INSONORIZACION DE CABINA (GR)	916
	918
	919
	920
INSONORIZADOR (CONFIG)	481
INSONORIZADOR (GR)	482
INSTALACION DE COMUNICATION (CONFIG)	148
INSTALACIÓN DE CONTROLES (GR)	837
INSTALACIÓN DE RADIO (GR)	838
INSTALACION DE SEGURIDAD (CONFIG)	148
INSTALACION DE SEGURIDAD (GR)	149
INTERRUPTOR (CONJ) (PRUEBA DE LUBRICACION AUTOMATICA)	473
INTERRUPTOR DE DERIVACIÓN	212
INTERRUPTOR DE DIRECCIÓN SECUNDARIA (GR)	225
INTERRUPTOR DE LÍMITE (CONJ) (LUZ DE PARADA)	496
INTERRUPTOR DE NIVEL (CONJ) (ENGRASE)	473
INTERRUPTOR DE PRESIÓN (*AUTOLUBE ACTUATION)	488
INTERRUPTOR DE PRESIÓN (CONJ) (ACEITE DE FRENO DE ESTACIONAMIENTO)	253
INTERRUPTOR DE PRESIÓN (CONJ) (ACEITE DE LA DIRECCION PRIMARIA)	276
INTERRUPTOR DE PRESIÓN (CONJ) (ACEITE DE LA DIRECCION SECUNDARIA)	276
INTERRUPTOR DE PRESIÓN (CONJ) (ACEITE DEL FRENO DE SERVICIO)	263
INTERRUPTOR DE PRESIÓN (CONJ) (DIFERENCIAL)	590
INTERRUPTOR DE PRESIÓN (CONJ) (REFRIGERANTE)	234
INTERRUPTOR DE PRESIÓN (GR)	218
INTERRUPTOR DE PRESIÓN (GR) (DERIVADOR DE FILTRO DE ACEITE) (FILTRO DE ACEITE DEL TREN DE FUERZA)	308
INTERRUPTOR DE TEMPERATURA (CONJ) (AIRE ACONDICIONADO)	800
INTERRUPTOR DE TRANSMISION (GR)	231
INTERRUPTOR DE VOLQUETE (CONJ) (ACCIONADOR DE PROTECTOR ELÉCTRICO)	282
INTERRUPTOR DE VOLQUETE (CONJ) (ACOPLADOR RAPIDO)	219
	222
	223
INTERRUPTOR DE VOLQUETE (CONJ) (AIRE ACONDICIONADO, CALENTADOR)	243
INTERRUPTOR DE VOLQUETE (CONJ) (ANULACIÓN DEL NEUTRALIZADOR DE LA TRANSMISIÓN)	243
INTERRUPTOR DE VOLQUETE (CONJ) (*AUTO REVERSING FAN)	220
INTERRUPTOR DE VOLQUETE (CONJ) (BALIZA DE ADVERTENCIA)	178
INTERRUPTOR DE VOLQUETE (CONJ) (CONTROL DE AMORT.)	221
INTERRUPTOR DE VOLQUETE (CONJ) (DESCONEXIÓN HIDRÁULICA)	243
INTERRUPTOR DE VOLQUETE (CONJ) (DIRECCIÓN SECUNDARIA)	225
INTERRUPTOR DE VOLQUETE (CONJ) (*FORWARD, NEUTRAL, REVERSE)	231
INTERRUPTOR DE VOLQUETE (CONJ) (*FRONT, REAR FLOODLIGHTS)	167
INTERRUPTOR DE VOLQUETE (CONJ) (*HAZARD)	226
	228
INTERRUPTOR DE VOLQUETE (CONJ) (*HEATED MIRRORS)	864
	866
INTERRUPTOR DE VOLQUETE (CONJ) (JUEGO DE DESCONEXIÓN DE CARGADOR AUTOMÁTICO)	136
INTERRUPTOR DE VOLQUETE (CONJ) (JUEGO DE DESCONEXIÓN DE CARGADOR AUTOMÁTICO)	138
INTERRUPTOR DE VOLQUETE (CONJ) (*LIFT, TILT KICKOUT)	243
INTERRUPTOR DE VOLQUETE (CONJ) (MODULACIÓN PRECISA)	243

* NO HAY TRADUCCION DISPONIBLE EN EL MOMENTO DE LA IMPRESION

INDICE

Nombre	Página
INTERRUPTOR DE VOLQUETE (CONJ) (SELECTOR DE MODALIDAD DE CARGADOR AUTOMÁTICO)	136
INTERRUPTOR DE VOLQUETE (CONJ) (SELECTOR DE MODALIDAD DE CARGADOR AUTOMÁTICO)	138
INTERRUPTOR DE VOLQUETE (CONJ) (SENTIDO DE TRANSMISION)	541
INTERRUPTOR DE VOLQUETE (CONJ) (SISTEMA MONITOR CATERPILLAR)	243
INTERRUPTOR DE VOLQUETE (CONJ) (VELOCIDAD DEL VENTILADOR SOPLADOR)	243
INTERRUPTOR DE VOLQUETE (CONJ) (*3RD FUNCTION SELECT)	567 571
INTERRUPTOR DE VOLQUETE (GR)	222 223 230
INTERRUPTOR DE VOLQUETE (GR) (ACCIONADOR DE INCLINACION DE CAPO)	253
INTERRUPTOR DE VOLQUETE (GR) (APAGADO A NIVEL DEL SUELO)	253
INTERRUPTOR DEL CONTROL DE AMORTIGUACIÓN (GR)	221
INTERRUPTOR DEL LIMPIAPARABRISAS (CONJ) (24 VOLTIOS) (INTERMITENTE DELANTERO)	241
INTERRUPTOR DEL SEÑALERO (GR)	226 228
INTERRUPTOR MAGNÉTICO (CONJ) (24 VOLTIOS) (AIRE DE ADMISIÓN DE LA CALEFACCIÓN)	216
INTERRUPTOR MAGNÉTICO (GR)	215 216 217
INTERRUPTOR MAGNÉTICO (GR) (24 VOLTIOS) (RELE PRINCIPAL)	254
INTERRUPTOR PULSADOR (CONJ) (*AUTODIG TRIGGER)	136
INTERRUPTOR PULSADOR (CONJ) (*AUTODIG TRIGGER)	138
INTERRUPTOR PULSADOR (CONJ) (BOCINA)	242
INTERRUPTOR PULSADOR (CONJ) (CAMBIO ASCENDENTE DE TRANSMISION)	541
INTERRUPTOR PULSADOR (CONJ) (CAMBIO DESCENDENTE)	243
INTERRUPTOR PULSADOR (CONJ) (CAMBIO DESCENDENTE DE LA TRANSMISION)	541
INTERRUPTOR ROTATIVO (CONJ) (24 VOLTIOS) (CONTROL DE CAMBIO AUTOMATICO)	242
INTERRUPTOR ROTATIVO (CONJ) (24 VOLTIOS) (CONTROL VARIABLE DE PALANCA)	242
INTERRUPTOR ROTATIVO (CONJ) (24 VOLTIOS) (LIMPIAPARABRISAS TRASERO)	241
INTERRUPTOR ROTATIVO (CONJ) (24 VOLTIOS) (LUCES DE TRABAJO)	241
INYECTOR DE COMBUSTIBLE (GR)	101 102

J

JUEGO (AISLADOR) (MOTOR DE ARRANQUE)	210
JUEGO DE AMORTIGUADOR	922 924
JUEGO DE ATADURA	922 924
JUEGO DE BOCINA	509
JUEGO DE BUJES (MOTOR DE ARRANQUE)	210
JUEGO DE CAJA (COLUMNA DE LA DIRECCION)	540
JUEGO DE CALCE DE EJE (*INCLUDES 17-SHIMS)	534
JUEGO DE COJINETES (ALTERNADOR)	122
JUEGO DE CONTROL DE PISTÓN	534
JUEGO DE DISCO	300
JUEGO DE DISCO DELGADO (12.57 MM ANCHO)	299
JUEGO DE DISCO GRUESO (12,75 MM ANCHO)	299
JUEGO DE DISPOSITIVO DE GAS AUXILIAR	509
JUEGO DE DISPOSITIVO DE GAS AUXILIAR (COLUMNA DE LA DIRECCION)	540
JUEGO DE EJE	509
JUEGO DE ESCOBILLAS (MOTOR DE ARRANQUE)	210
JUEGO DE INDICADOR	924
JUEGO DE PALANCA DE INCLINACIÓN	509
JUEGO DE PALANCA DE INCLINACIÓN (COLUMNA DE LA DIRECCION)	540
JUEGO DE PALANCA (MOTOR DE ARRANQUE)	210
JUEGO DE PASADOR DE PEDAL	888
JUEGO DE PERNOS (CONECTORES ELECTRICOS)	253
JUEGO DE PERNOS (CONECTORES ELECTRICOS)	267
JUEGO DE PISTÓN	534

* NO HAY TRADUCCION DISPONIBLE EN EL MOMENTO DE LA IMPRESION

INDICE

Nombre	Página
JUEGO DE REVESTIMIENTO DE FRENO	498
JUEGO DE RODILLO	888
JUEGO DE SELLOS	502
	550
	631
	689
	700
JUEGO DE SELLOS (ACOPLADOR RAPIDO)	788
JUEGO DE SELLOS (BOMBA DOSIFICADORA, DIRECCIÓN)	521
JUEGO DE SELLOS (CALENTADOR DE AGUA DE LAS CAMISAS)	147
JUEGO DE SELLOS (VALVULA DE ALIVIO)	629
	633
JUEGO DE SELLOS (VÁLVULA DE DERIVADOR)	629
JUEGO DE SELLOS (VÁLVULA DE DERIVADOR) (*HYDRAULIC FAN FLUID FLOW)	676
JUEGO DE SELLOS (VÁLVULA DE LANZADERA)	629
JUEGO DE SOLENOIDE (MOTOR DE ARRANQUE)	210
JUEGO DE TERMINAL (ALTERNADOR)	122
JUEGO DE TERMINAL (ALTERNADOR)	122
JUEGO DE TORNILLERÍA (ALTERNADOR)	122
JUEGO DE TUERCAS	509
JUEGO DE TUERCAS (COLUMNA DE LA DIRECCION)	540
JUEGO DE VALVULA DE AIRE	922
	924
JUEGO DE VÁLVULA DE ALIVIO	532
JUEGO DE VÁLVULAS (ACOPLADOR RAPIDO)	788
JUNTA DESLIZANTE (GR)	357
JUNTA DESLIZANTE (GR)	356
JUNTA UNIVERSAL (GR)	373
	374
	375

L

Nombre	Página
*LAMP AS-WARNING (*SEAT BELT)	180
LÁMPARA (CONJ)	388
LÁMPARA (CONJ) (RESPALDO)	165
LÁMPARA DE BALIZA DE ADVERTENCIA (GR)	163
LÁMPARA DE LUZ DELANTERA Y DE SEÑAL (GR)	158
LÁMPARA DE LUZ DELANTERA Y DE SEÑAL (GR)	156
LÁMPARA DEL TECHO (GR)	151
LÁMPARA (12 VOLTIOS, 24 VOLTIOS, 35 VATIOS)	152
	153
LÁMPARA (*24-VOLT, 5-WATTS)	465
LÁMPARA (24 VOLTIOS)	151
	241
LÁMPARA (24 VOLTIOS) (LÁMPARA DE FUNCIONAMIENTO)	158
LÁMPARA (24 VOLTIOS) (LUCES DE TRABAJO)	156
LÁMPARA (24 VOLTIOS) (SEÑAL DE VIRAJE)	158
LÁMPARA (24 VOLTIOS) (SEÑAL DE VIRAJE)	156
LÁMPARA (24-VOLTIOS, 21 VATIOS)	162
LÁMPARA (24-VOLTIOS, 21 VATIOS) (SEÑAL)	160
LÁMPARA (24-VOLTIOS, 21 VATIOS) (SEÑAL DE VIRAJE)	156
	158
LÁMPARA (24 VOLTIOS, 5 VATIOS)	162
LÁMPARA (24-VOLTIOS, 70-VATIOS)	163
LÁMPARA (24 VOLTIOS, 75/70 VATIOS) (LUCES DE MANO DERECHA, ALTAS/BAJAS)	158
LÁMPARA (24 VOLTIOS, 75/70 VATIOS) (LUZ ALTA/BAJA)	156
LAVAPARABRISAS DE LA VENTANA (GR)	927
LENTE AMBAR (SEÑAL)	160
LEVANTAMIENTO (CONFIG)	715
LIMPIAPARABRISAS DE LA VENTANA (GR)	932
LLANTA (CONFIG)	348
LLAVE - MANIJA	821
LUBRICACION AUTOMATICA (CONFIG)	461
	463
LUCES DE ALÓGENO (24 VOLTIOS, 65 VATIOS)	154
LUCES DE ALÓGENO (24 VOLTIOS, 65 VATIOS) (REFLECTOR)	155
LUCES DE DESPLAZAMIENTO (CONFIG)	164
LUCES DE DESPLAZAMIENTO (GR)	176
LUCES DE PARADA Y COLA (GR)	162
LUCES DE REFLECTOR (GR)	166
	167
LUCES DE REFLECTOR (GR)	169
LUCES DE REFLECTOR Y CAMBIO DE DIRECCION (GR)	172
	174
LUCES DE RETROCESO (GR)	165
LUCES DE RETROCESO (GR)	165
LUZ DE BALIZA (GR)	178
	180
LUZ DE SEÑAL DE GIRO (GR)	160
	161

* NO HAY TRADUCCION DISPONIBLE EN EL MOMENTO DE LA IMPRESION

INDICE

Nombre	Página
M	
MAZO DE CABLES (CONJ) (HERRAMIENTA DE SERVICIO)	243
MAZO DE CABLES (CONJ) (PRESION DE COMBUSTIBLE) (DETECTOR)	97
MAZO DE CABLES DE CONTROL (CONJ)	131
MAZO DE CABLES DE CONTROL (CONJ) (*HEATED MIRRORS)	864 866
MAZO DE CABLES DE CONTROL (CONJ) (LUBRICACION AUTOMATICA)	473
MAZO DE CABLES DE CONTROL (CONJ) (*POWER GUARD ACTUATOR)	282
MAZO DE CABLES DE DIRECCION (CONJ) (*COLUMN, WHEEL)	541
MAZO DE CABLES DE DIRECCION (CONJ) (SECUNDARIO)	276
MAZO DE CABLES DE LA HERRAMIENTA (ACOPLADOR RAPIDO)	259
MAZO DE CABLES DE LOS FRENOS (CONJ) (LUZ DE PARADA)	496
MAZO DE CABLES DE LUCES TRASERAS (CONJ)	169
MAZO DE CABLES DE SENSOR (CONJ) (*AXLE, FRONT)	238
MAZO DE CABLES DE SENSOR (CONJ) (*REAR AXLE)	238
MAZO DE CABLES DEL CHASIS (CONJ) (PRINCIPAL)	253
MAZO DE CABLES DEL CHASIS (CONJ) (TANQUE HIDRAULICO)	254
MAZO DE CABLES DEL INTERRUPTOR (CONFIG)	236
MAZO DE CABLES DEL INTERRUPTOR (CONFIG) (PALANCA)	473
MAZO DE CABLES DEL MOTOR (CONJ)	263
MAZO DE CABLES DEL MOTOR (CONJ) (INYECCIÓN DE COMBUSTIBLE)	261
MAZO DE CABLES DEL MOTOR (CONJ) (MODULO DE CONTROL ELECTRONICO)	261
MAZO DE CABLES, LUCES	167
MAZO DE CABLES, LUCES (BALIZA DE ADVERTENCIA)	178
MAZO DE CABLES, LUCES (BASTIDOR DEL CARGADOR)	273
MAZO DE CABLES, LUCES (*CAB FLOODLIGHTS)	242
MAZO DE CABLES, LUCES (IZQUIERDO)	275
MAZO DE CABLES, LUCES (LADO DERECHO)	275
MAZO DE CABLES, LUCES (LUCES DELANTERAS, DE POSICIÓN DE GIRO)	388
MAZO DE CABLES, LUCES (SEÑAL DE GIRO)	226 228
MECANISMO DE VÁLVULAS (GR)	53 54
MEDIDOR DEL NIVEL DE LÍQUIDO (MIRILLA DE CRISTAL)	645
MIRILLA	70
MODULO DE INTERFAZ (GR) (LLAVE)	149
MODULO DE LA PANTALLA (GR)	868
MODULO DE LA PANTALLA (GR) (*WAVES)	142
MÓDULO DEL TACÓMETRO Y DEL VELOCÍMETRO (GR)	870
MODULO ELECTRÓNICO DE CUATRO INDICADORES (GR)	869
*MONITOR AR-CAMERA	871
MONITOR DE CARGA ÚTIL (CONFIG)	873
MONTAJE DE ARO	338
MONTAJE DE ENFRIADOR DE ACEITE DE EJE (GR)	337
MONTAJE DEL ALTERNADOR (GR)	43
MONTAJE DEL MOTOR Y LA TRANSMISIÓN (GR)	44
MONTAJE DEL TANQUE HIDRÁULICO (GR)	635
MONTAJE-REGISTRO (GR)	465
MONTAJE Y VALVULA DEL CONTROL PRINCIPAL (GR)	647 650 653 656 659
MOTOR - NÚCLEO (CONFIG)	7
MOTOR COMPLETO (CONFIG)	6
MOTOR DE ARRANQUE ELÉCTRICO (GR)	209 210
MOTOR DE ENGRANAJES (GR)	634
MOTOR ELÉCTRICO (GR)	532
MOTOR-LIMPIAPARABRISAS (GR)	874 875
MÚLTIPLE DE ESCAPE (GR)	90
MULTIPLE DE VALVULA (GR)	631 633
N	
NÚCLEO CONJ.-ENFRIADOR DE ACEITE DE TREN DE FUERZA	295
NUCLEO DE ENFRIADOR DE ACEITE DE MOTOR (CONJ)	67
NUCLEO DE RADIADOR (CONJ)	78

* NO HAY TRADUCCION DISPONIBLE EN EL MOMENTO DE LA IMPRESION

INDICE

Nombre	Página

P

PALANCA UNIVERSAL DE CONTROL (GR) 576
PALANCA UNIVERSAL DE CONTROL (GR) 574
PALANCA UNIVERSAL DE CONTROL (GR) (*3-FUNCTION, WITH DOWNSHIFT) 571
PANEL DEL CAPÓ (GR) 466
467
468
PANEL LATERAL (GR) 469
PANTALLA (CONJ) (TANQUE HIDRAULICO) ... 645
PASADOR 790
PASAMANOS (GR) 831
PENETRACIÓN DEL CUCHARÓN 768
769
770
771
772
773
PESTILLO DE PUERTA Y VENTANA DE LA CABINA (GR) 840
PISTÓN Y BIELA (GR) 47
PLACA DE CONTROL (AUTOCARGA) 136
PLACA DE CONTROL (*DUMP, TILT BACK) 565
567
PLACA DE CONTROL (*JOYSTICK, 2-FCTN, DOWNSHIFT SW) 569
PLACA DE CONTROL (*JOYSTICK, 3-FCTN, DOWNSHIFT SW) 571
PLACA DE CONTROL (*LIFT, FLOAT, LOWER) 565
567
PLACA DE CONTROL (SISTEMA MONITOR CATERPILLAR) 881
883
PLACA DE CONTROL (*UPPER PANEL) 242
883
PLACA DE IDENTIFICACION (CAT) 738
742
772
773
779
PLACA DE IDENTIFICACION (CAT) 748
749
751
753
756
PLACA DE IDENTIFICACION (PESO MAXIMO) 388
392
PLACA DE INFORMACION (AMARRE) 945
PLACA DE INFORMACION (COMBUSTIBLE MANUAL) 111
PLACA DE INFORMACION (ENTRADA/SALIDA) 885
PLACA DE INFORMACION (LLAVE) 149
PLACA DE INSTRUCCIONES (ACONDICIONADOR DE AIRE) 798
PLACA DE INSTRUCCIONES (BATERÍA) 126
PLACA DE PATRÓN DE LOS CONTROLES 885
PLACA DEL NÚMERO DE SERIE (TRANSMISION) 316
321
PLACA DEL TABLERO (CENTRAL) 885
PLACA DEL TABLERO (IZQUIERDO) 885
PLACA DEL TABLERO (LADO DERECHO) 885
PLATAFORMA (CONFIG) 890
PLATAFORMA (GR) 891
*PLUG GP-CONNECTOR 181
POLEA DE RUEDA GUIA (GR) 50
POSABRAZOS (GR) 806
POSICIÓN DEL SENSOR (CONJ) (LEVANTAMIENTO) 190
PROTECTOR DE ARTICULACION (GR) 419
PROTECTOR DE LA VENTANA 827
829
PROTECTOR DE LAS LUCES (GR) 426
PROTECTOR DE SELLO DEL EJE (GR) 423
PROTECTOR DEL EJE IMPULSOR (GR) 424
PROTECTOR DEL ENFRIADOR DE ACEITE DEL EJE (GR) 421
PROTECTOR DEL TREN DE FUERZA (GR) 427
428
429
PROTECTOR DELANTERO (GR) 425
PROTECTOR TÉRMICO DEL COMPARTIMIENTO DEL MOTOR (GR) 474
PUERTA DE ACCESO (GR) 399
400
PUERTA DE CABINA 815
816
819
820
PUNTA PARA CUCHARON DE USO GENERAL (GR) 793
794

R

RADIADOR Y VENTILADOR (GR) 78
*RADIO GP-COMMUNICATION 894
*RADIO GP-COMMUNICATION (*PRODUCT LINK 121SR) 131
RADIO (GR) 893
RECLINACION DE ASIENTO (GR) 895

* NO HAY TRADUCCION DISPONIBLE EN EL MOMENTO DE LA IMPRESION

INDICE

Nombre	Página
REDUCTOR DE INTENSIDAD DE LAS LUCES (CONJ) (DESPLAZAMIENTO POR CARRETERA)	213
REDUCTOR DE INTENSIDAD DE LUCES (GR)	213
REFLECTOR (GR)	152
	153
	154
	155
REFRIGERANTE DE ACEITE, NÚCLEO (CONJ)	78
REGULADOR - PEDAL DEL (GR)	888
	889
REGULADOR (CONJ) (PRESIÓN DE COMBUSTIBLE)	117
REGULADOR DE LA PRESION DE COMBUSTIBLE (GR)	117
REGULADOR DE TEMPERATURA DEL AGUA (94-GRADOS C) (REFRIGERANTE)	72
REGULADOR DE VOLTAJE (24 VOLTIOS)	122
REJILLA	538
	631
	633
REJILLA DE SUCCIÓN	315
	320
REJILLA DEL RADIADOR (GR)	417
REJILLA MAGNÉTICA (GR)	315
	320
REJILLA (VÁLVULA DE CONTROL DEL MULTIPLE)	629
RELÉ (CONJ) (*SHELL)	243
RELÉ (CONJ) (24 VOLTIOS)	241
	270
RELÉ (CONJ) (24 VOLTIOS) (ENFRIADOR DE ACEITE DE EJE)	260
RELÉ (CONJ) (24 VOLTIOS) (*HEATED MIRRORS)	866
RELÉ (CONJ) (24 VOLTIOS) (*HEATED MIRRORS)	864
RELÉ (CONJ) (24 VOLTIOS) (MOTOR, INCLINACION DEL CAPO)	253
RELÉ (CONJ) (24 VOLTIOS) (*SEAT BELT ALARM)	240
RELÉ (CONJ) (24 VOLTIOS) (*SECONDARY STEER INTERMEDIATE)	276
RESPIRADERO (CONJ)	316
	321
RESPIRADERO (CONJ) (CÁRTER DEL MOTOR)	57
RESPIRADERO (GR)	57
RETROCESO - ALARMA DE (GR)	233
RETROVISOR (GR)	854
	855
	856
	857
	858
	859
	860
	861
	862
	864
	866
REVESTIMIENTO DE LA CABINA (GR)	842

S

*SCREEN GP-CASE DRAIN	538
*SEAT BELT & LIGHTING GP	903
SEGMENTO-BORDE	785
SEGMENTO DE CUCHILLA (GR)	785
SELLO	100
SELLO DE CIGÜEÑAL (GR)	51
SELLO DE CIGÜEÑAL (GR) (*FRONT)	51
SELLO DE LA CAJA DE VOLANTE (GR)	52
SELLO DEL PORTADOR (GR)	10
SEÑAL DE LUCES (CONFIG)	164
	165
SENSOR DE LA POSICION DE INCLINACION Y MONTAJE (GR)	186
SENSOR DE LA POSICION DE LEVANTAMIENTO Y MONTAJE (GR)	183
SENSOR DE PRESIÓN (GR)	192
	193
	194
	195
	196
	197
	198
	199
SENSOR DE PRESIÓN (GR) (*LIFT CYLINDER OIL)	185
SENSOR DE PRESIÓN Y MONTAJE (GR)	185
SENSOR DE TEMPERATURA (GR)	202
	203
	204
SENSOR DE VELOCIDAD (GR)	200
	201
SENSOR DE VELOCIDAD (GR) (SALIDA DE TRANSMISIÓN 1)	315
	320
SENSOR DE VELOCIDAD (GR) (SALIDA DE TRANSMISIÓN 2)	315
	320
SENSOR DE VELOCIDAD (GR) (SALIDA DEL CONVERTIDOR DE PAR)	367
SENSOR DEL MOTOR (GR)	188

* NO HAY TRADUCCION DISPONIBLE EN EL MOMENTO DE LA IMPRESION

INDICE

Nombre	Página
SEPARADOR DE AGUA Y BOMBA DE CEBADO DE COMBUSTIBLE (GR)	120
*SERVICE GP-COMMUNICATION (*PRODUCT LINK 300)	144
SILENCIADOR (GR)	91
SISTEMA ROPS DE CABINA CERRADA (CONFIG)	807
	808
SOPORTE DE LA ADMISIÓN DE AIRE (GR)	478
SOPORTE DEL CONTROL HIDRÁULICO (GR)	912
SOPORTE DEL RESPALDO (GR)	879
	880
*STEERING AR-COMMAND CONTROL	539
*SUPPORT GP-VALVE & FILTER	479
SUSPENSIÓN - ASIENTO CON (GR)	909
SUSPENSIÓN - ASIENTO CON (GR)	910
	911
*SWITCH GP-REVERSING FAN	220

T

Nombre	Página
TABLERO DE INSTRUMENTOS (GR)	883
	885
TABLERO DE INSTRUMENTOS (GR)	881
TABLERO ELECTRÓNICO DE CONTROL (GR) (*INDICATOR PANEL, CENTER)	136
	138
TABLERO ELECTRÓNICO DE CONTROL (GR) (*INDICATOR PANEL, RH, LH)	243
TANQUE HIDRÁULICO (GR)	645
TAPA CONTRA EL POLVO (CONJ) (CALENTADOR DE AGUA DE LAS CAMISAS)	147
TAPA DE ADMISIÓN DE AIRE (GR)	85
	86
TAPA DE LA CAJA DELANTERA (GR)	12
	13
TAPA DE LLENADO (CONJ) (ACEITE DEL MOTOR)	58
TAPA DE PRESION (7 LB/PULG2)	82
TAPA DEL BLOQUE MOTOR (GR)	11
TAPA DEL MECANISMO DE VÁLVULAS (GR)	14
	15
	16
TAPA DEL TANQUE DE RADIADOR (GR)	82
TAPA DEL TUBO DE LLENADO	304
TAPA DEL TUBO DE LLENADO (TANQUE HIDRÁULICO)	645
TAPA DEL TUBO DE LLENADO (TREN DE FUERZA)	305
TAPA PARA EL COMBUSTIBLE	118
TAPÓN	303
	315
	320
TAPÓN DE DRENAJE	677
TAPÓN DEL BLOQUE MOTOR (GR)	48
TAPÓN DEL MOTOR (GR)	49
TAPÓN MAGNÉTICO	326
TIRANTE DE TRABA DEL BASTIDOR DE DIRECCIÓN (GR)	460
TORNILLERÍA AMORTIGUADORA DE VIBRACIONES (GR)	29
TORNILLERÍA DE LA TAPA DE VÁLVULAS (GR)	32
TORNILLERÍA DEL MECANISMO DE VÁLVULAS (GR)	33
TORNILLERIA GR-BASTIDOR CARGADOR	430
	431
	432
TORNILLERIA GR-BASTIDOR TRASERO	436
	437
	438
TRABA-ACOPLADOR RAPIDO (GR)	788
TRANSMISION (CONFIG)	372
TRANSMISIÓN PLANETARIA (GR)	339
TREN DE FUERZA (CONFIG)	343
TREN DE FUERZA-GRUPO ELECTRÓNICO	145
	146
TUBERÍAS DE ACEITE DEL MOTOR (GR)	62
TUBERÍAS DE ACONDICIONADOR DE AIRE (GR)	845
	847
TUBERÍAS DE BOMBA HIDRÁULICA DE INYECCIÓN (GR)	106
TUBERIAS DE CALEFACCION	851
	853
TUBERÍAS DE CALEFACCIÓN DE LA CABINA	851
	853
TUBERÍAS DE COMBUSTIBLE (GR)	103
TUBERÍAS DE DIRECCIÓN (GR)	519
	525
TUBERIAS DE DRENAJE DE ACEITE DE MOTOR (GR)	63
TUBERÍAS DE ENGRASE (GR)	456
TUBERÍAS DE LA DIRECCIÓN SECUNDARIA (GR)	516
TUBERÍAS DE LUBRICACIÓN (GR)	458
TUBERÍAS DE POSENFRIADOR DE AIRE (CONJ)	88
TUBERÍAS DEL AGUA (GR)	70
	72
	74
TUBERÍAS DEL CILINDRO DE INCLINACIÓN (GR)	625

* NO HAY TRADUCCION DISPONIBLE EN EL MOMENTO DE LA IMPRESION

INDICE

Nombre	Página
	627
TUBERÍAS DEL ENFRIADOR DE ACEITE DEL EJE (GR)	328
TUBERÍAS DEL ENFRIADOR DE ACEITE HIDRÁULICO (GR)	619
TUBERIAS DEL ENFRIADOR DEL CONVERTIDOR DE PAR	333
TUBERÍAS DEL FILTRO Y LA TRANSMISIÓN (GR)	306
TUBERÍAS DELANTERAS (GR)	612
TUBERÍAS HIDRÁULICAS (GR)	615
TUBO DE ESCAPE (GR)	92
TUBO DE LLENADO DE ACEITE DE LA TRANSMISIÓN (GR)	304
	305
TUBO DE LLENADO DE ACEITE (GR)	58
TURBOCOMPRESOR - TUBERÍAS DE ACEITE DEL (GR)	64
TURBOCOMPRESOR (GR)	95
	96

V

*VALVE AS-TIRE	379
VÁLVULA DE ALIVIO DEL FRENO	118
VÁLVULA DE ALIVIO (GR)	549
	550
	693
VÁLVULA DE ALIVIO (GR)	377
VÁLVULA DE ALIVIO (GR) (COMPRESOR DEL REFRIGERANTE)	809
VÁLVULA DE ALIVIO (GR) (FRENO)	629
VÁLVULA DE ALIVIO (GR) (TANQUE HIDRÁULICO)	629
VÁLVULA DE CONTROL DE BAJADA (GR)	678
VÁLVULA DE CONTROL DE LA AMORTIGUACIÓN (GR)	694
VALVULA DE CONTROL DE LA BOMBA (GR)	691
VÁLVULA DE CONTROL DEL FRENO (GR)	508
VÁLVULA DE CONTROL DEL FRENO (GR) (SERVICIO)	502
VÁLVULA DE CONTROL (GR)	664
	666
	668
	670
	673
VÁLVULA DE CONTROL MANUAL (GR)	689
VÁLVULA DE CORTE (GR)	615
VÁLVULA DE CORTE (GR) (DRENAJE DEL RADIADOR)	295
VÁLVULA DE CORTE (GR) (MULTIPLE, RETORNO)	851
VÁLVULA DE DERIVACIÓN (GR)	675
	676
VÁLVULA DE DERIVACIÓN (GR) (TANQUE HIDRÁULICO)	629
VALVULA DE DIRECCION SECUNDARIA (GR)	551
VÁLVULA DE DISTRIBUCIÓN DE LUBRICACIÓN (GR)	488
	489
	490
VÁLVULA DE DRENAJE (GR)	677
VÁLVULA DE LANZADERA (GR)	552
	553
	696
	697
	698
VÁLVULA DE LANZADERA (GR) (ACEITE DE LA DIRECCIÓN)	525
VÁLVULA DE LANZADERA (GR) (*BRAKE, HYDRAULIC FAN)	629
VÁLVULA DE LEVANTAMIENTO (GR)	41
VÁLVULA DE MODULACIÓN (GR)	376
VÁLVULA DE RETENCIÓN (GR)	543
	544
	545
	662
	663
VÁLVULA DE RETENCIÓN (GR) (DERIVACION DE ENFRIADOR DE ACEITE DEL EJE)	337
VÁLVULA DE RETENCIÓN (GR) (GRUPO DE CUATRO VALVULAS HIDRAULICAS DE LA DIRECCION)	525
VÁLVULA DE SOLENOIDE (GR)	699
	700
	701
VÁLVULA DE SOLENOIDE (GR) (24 VOLTIOS) (*BRAKE, HYDRAULIC FAN)	629
VÁLVULA DEL CONTROL PRINCIPAL (GR)	680
	682
	684
	686
	687
VÁLVULA DEL NEUMÁTICO (GR)	349
	350
	351
VÁLVULA DEL NEUMÁTICO (GR)	379
VÁLVULA HIDRÁULICA DE 3 VÍAS (CONFIG)	598
	599
VÁLVULA NEUTRALIZADORA DE DIRECCIÓN (GR)	519
VÁLVULA NEUTRALIZADORA DE DIRECCIÓN (GR)	559
	560
VÁLVULA PILOTO (GR)	546

* NO HAY TRADUCCION DISPONIBLE EN EL MOMENTO DE LA IMPRESION

INDICE

Nombre	Página
VÁLVULA REDUCTORA DE PRESIÓN (GR)	548
VÁLVULA REDUCTORA DE PRESIÓN (GR)	690
VÁLVULA SELECTORA (GR) (DIRECCIÓN)	556
VÁLVULAS DE LA DIRECCIÓN (GR)	554
	556
VÁLVULAS Y TUBERIAS, LUBRICACIÓN	486
VARILLA DE NIVEL DE ACEITE (CONJ)	304
	305
VENTANA DE LA PUERTA (GR)	928
	930
VIDRIO (CONJ) (AMBAR) (SEÑAL DE VIRAJE)	156
	158
VIDRIO (CONJ) (FARO DELANTERO) (LUZ ALTA/BAJA)	156
VIDRIO (CONJ) (FARO DELANTERO) (LUZ ALTA/BAJA)	158
VISERA (GR)	926
VOLANTE - CAJA DE (GR)	37
VOLANTE DE DIRECCIÓN (GR)	541
VOLANTE (GR)	34

W

Nombre	Página
*WIRING GP-WASTE HANDLER	282

* NO HAY TRADUCCION DISPONIBLE EN EL MOMENTO DE LA IMPRESION

ÍNDICE

Designação	Página
A	
ACENDEDOR DE CIGARROS (12-VOLTS)	242
ACIONADOR - INCLINAÇÃO DO CAPÔ	380
ACIONADOR - PROTETOR DE POTÊNCIA	383
ACIONADOR DE POTÊNCIA	382
ACIONADOR DO FREIO DE ESTACIONAMENTO	494
ACOPLADOR RÁPIDO	779 780 781
ACUMULADOR - AR CONDICIONADO	847
ACUMULADOR - FREIO	492 493
ACUMULADOR D ÓLEO - PILOTO	561 562
ADAPTADOR	74 851
ADAPTADOR DA PONTA	718
ADAPTADOR-TUBULAÇÃO DE ÓLEO	56
ADESIVO - PAINEL DE FUSÍVEIS	842
ADESIVO-TRANSMISSÃO (INTERRUPTOR DE REDUÇÃO DE MARCHA)	567
ADESIVO-TRANSMISSÃO (INTERRUPTOR DE REDUÇÃO DE MARCHA)	565
AJUSTADOR DO ASSENTO	795
ALARME	121
ALARME DE MARCHA À RÉ	233
ALTERNADOR DE CORRENTE	122 124
AMORTECEDOR - ALARME	136 138
AMORTECEDOR DE VIBRAÇÕES E POLIA	27
AQUECEDOR DA ÁGUA DO MOTOR	147
AQUECEDOR DA CABINE	832 834
ARO	348
ARO DESMONTÁVEL	349 350 351
ARRANJO ESPECIAL PARA PEDREIRAS	4
ARRANJO GERAL	4
ARRANJO HIDRÁULICO - 2 VÁLVULAS	598
ARRANJO HIDRÁULICO - 3 VÁLVULAS	598 599
ARRANJO PARA EXTRAÇÃO DE MADEIRA	717
ARREFECEDOR - ÓLEO DO MOTOR	67
ARREFECEDOR DO ÓLEO DO EIXO	296
ARREFECEDOR E MONTAGEM - TRANSMSSÃO	295
ARREFECEDOR-ÓLEO DA TRANSMISSÃO	295
ARREFECIMENTO - TEMP. AMBIENTE ALTA	68
ARTICULAÇÃO - CAÇAMBA	716
ARTICULAÇÃO-T	502

Designação	Página
ASSENTO	905 907
ASSENTO COM SUSPENSÃO	909 910 911
ATERRO SANITÁRIO	5
AUXILIAR DE PARTIDA	206
AUXILIAR DE PARTIDA A ÉTER	205 207
B	
BALANCIM (ADMISSÃO)	54
BALANCIM (ESCAPE)	54
*BASE AS-JOYSTICK	574 576
BASE DO FREIO - PEDAL	495 496
BATERIA E CABOS / FIOS ELÉTRICOS	126
BLINDAGEM DO COMPARTIMENTO DO MOTOR	474
BLOCO DE FUSÍVEIS	243
BLOCO DO MOTOR	19 20 22
BLOCO LIMITADOR DE OSCILAÇÃO DO EIXO	385
BOCAL DE ENCHIMENTO DE ÓLEO DO MOTOR	58
BOCAL DE ENCHIMENTO DE ÓLEO DO TREM DE FORÇA	304 305
BOMBA - ESCORVA DE COMBUSTÍVEL E SEPARADOR DE ÁGUA	120
BOMBA DA DIREÇÃO SECUNDÁRIA E MONTAGEM	533
BOMBA DA TRANSMISSÃO	345 346
BOMBA DE ÁGUA	76 77
BOMBA DE DIREÇÃO SECUNDÁRIA E MOTOR	532
BOMBA DE ENGRENAGENS	532
BOMBA DE ENGRENAGENS (ARREFECEDOR DO ÓLEO DO EIXO)	344
BOMBA DE ESCORVA DO COMBUSTÍVEL E DO FILTRO PRIMÁRIO	111 113
BOMBA DE INJEÇÃO DO COMBUSTÍVEL	109 110
BOMBA DE LUBRIFICAÇÃO	473
BOMBA DE ÓLEO - MOTOR	65 66

* TRADUÇÃO NÃO DISPONÍVEL NO MOMENTO DA IMPRESSÃO

ÍNDICE

Designação	Página
BOMBA DE PISTÃO	534
	639
	642
BOMBA DE TRANSFERÊNCIA DO COMBUSTÍVEL	116
BOMBA DO ARREFECEDOR DE ÓLEO DO EIXO E MONTAGEM	344
BOMBA E MONTAGEM - FREIO E VENTILADOR HIDRÁULICO	636
BOMBA E MONTAGEM - LUBRIFICAÇÃO	471
BOMBA HIDRÁULICA - UNIDADE INJETORA	116
BOMBA HIDRÁULICA E MONTAGEM	638
BOMBA HIDRÁULICA E MONTAGEM - UNIDADE INJETORA	107
BOMBA REGULADORA (DIREÇÃO HMU)	519
BORDA CORTANTE	782
	783
	784
BORDA SEGMENTADA DA CAÇAMBA	785
BRAÇO DE LEVANTAMENTO	702
	704
	705
BRAÇO DO ASSENTO	806
BRACO DO LIMPADOR	804
	805
BUJÃO - CONECTOR	181
BUJÃO DO BLOCO DO CILINDRO	48
BUJÃO DO DRENO	677
BUJÃO DO MOTOR	49
BUJÃO MAGNÉTICO	326
BUZINA ELÉTRICA	836

C

CABEÇA DA BOMBA	595
CABEÇOTE DO MOTOR	23
	24
	25
	26
CABINE - ESTRUTURA ROPS COBERTA	807
	808
	878
CABOS/FIOS ELÉTRICOS - ACOPLADOR	259
CABOS/FIOS ELÉTRICOS - AR CONDICIONADO	234
CABOS/FIOS ELÉTRICOS - AUXILIAR DE PARTIDA A ETER	266
CABOS/FIOS ELÉTRICOS - CABINE	240
	241
CABOS/FIOS ELÉTRICOS - CHASSI	253
CABOS/FIOS ELÉTRICOS - DIANTEIROS	267
CABOS/FIOS ELÉTRICOS - DIREÇÃO SECUNDÁRIA	276
CABOS/FIOS ELÉTRICOS - EMBREAGEM	260
CABOS/FIOS ELÉTRICOS - LUBRIFICAÇÃO	236
CABOS/FIOS ELÉTRICOS - MOTOR	261
	263
CABOS/FIOS ELÉTRICOS - SENSOR	279
	280
CABOS/FIOS ELÉTRICOS DE ILUMINAÇÃO	270
	273
	274
	275
CAÇAMBA - MANUSEIO DE MATERIAL	723
	724
	725
	726
	727
	728
	729
	730
	731
	732
	733
	734
	757
	758
	759
	760
	761
	762
	763
	764
	765
	766
	767
CAÇAMBA PARA APLICAÇÃO GERAL	719
	720
	721
	755
	756
CAÇAMBA PARA PENETRAÇÃO	736
	738
	740
	742
	744
	746
	768
	769
	770
	771
	772
	773
CAÇAMBA PARA ROCHAS	748
	749
	751

* TRADUÇÃO NÃO DISPONÍVEL NO MOMENTO DA IMPRESSÃO

ÍNDICE

Designação	Página
	753
	774
	775
	776
	777
CADEADO	297
	947
CAIXA - BATERIA	387
CAIXA - EIXO FIXO	324
CAIXA - EIXO OSCILANTE	326
CAIXA DE FERRAMENTAS	935
CAIXA DIANTEIRA	38
CAIXA DO VOLANTE DO MOTOR	37
CÂMERA	129
	130
CÂMERA (115 GRAUS, COR)	129
CANO DE ESCAPE	92
CAPÔ E PROTETOR	443
CÁRTER DO ÓLEO DO MOTOR	46
CHASSI	1
CHASSI DIANTEIRO	412
CHASSI TRASEIRO	415
CHAVE - ALAVANCA	821
CHAVE - ELETRÔNICO (SEGURANÇA)	149
CHAVE GERAL	214
CHAVE GERAL (BATERIA)	126
CHICOTE - CABOS ELÉTRICOS (FERRAMENTA DE SERVIÇO)	243
CHICOTE - CABOS ELÉTRICOS (PRESSÃO DO COMBUSTÍVEL) (SENSOR)	97
CHICOTE - CHASSI (PRINCIPAL)	253
CHICOTE - CHASSI (TANQUE HIDRÁULICO)	254
CHICOTE - FREIOS (LUZ DO FREIO)	496
CHICOTE - ILUMINAÇÃO	167
CHICOTE - ILUMINAÇÃO (CHASSI DA CARREGADEIRA)	273
CHICOTE - ILUMINAÇÃO (CURVA DIANTEIRA, LUZES DE POSIÇÃO)	388
CHICOTE - ILUMINAÇÃO (FARÓIS DA CABINE)	242
CHICOTE - ILUMINAÇÃO (LADO DIREITO)	275
CHICOTE - ILUMINAÇÃO (LADO ESQUERDO)	275
CHICOTE - ILUMINAÇÃO (PISCA-ALERTA)	178
CHICOTE - ILUMINAÇÃO (SETA DE DIREÇÃO)	226
	228
CHICOTE - MOTOR	263
CHICOTE - MOTOR (INJEÇÃO DE COMBUSTÍVEL)	261
CHICOTE - MOTOR (MÓDULO DE CONTROLE ELETRÔNICO)	261
CHICOTE - SENSOR (EIXO, DIANTEIRO)	238
CHICOTE - SENSOR (EIXO TRASEIRO)	238
CHICOTE - VÁLVULA (COMPRESSOR DE AR DO ASSENTO)	922
	924
CHICOTE-CHASSI DIANTEIRO	267
CHICOTE-DIREÇÃO (COLUNA, RODA)	541
CHICOTE-DIREÇÃO (SECUNDÁRIO)	276
CILINDRO DE DIREÇÃO E MONTAGEM	513
CILINDRO DE INCLINAÇÃO	585
	587
	588
CILINDRO DE INCLINAÇÃO E RETENTOR	580
	581
	582
CILINDRO DE LEVANTAMENTO	583
	584
CILINDRO DE LEVANTAMENTO E RETENTOR	578
	579
CILINDRO HIDRÁULICO	514
CINTO DE SEGURANÇA	903
	904
	909
CINTO DE SEGURANÇA E LUZES	903
COLETOR - CONTROLE	629
COLETOR - VÁLVULA	631
	633
COLETOR DE ESCAPE	90
COLMÉIA - ARREFECEDOR DE ÓLEO HIDRÁULICO	78
COLMÉIA-ARREFECEDOR DE ÓLEO DO MOTOR	67
COLMÉIA-ARREFECEDOR DO ÓLEO DO EIXO	337
COLMÉIA-ARREFECEDOR DO ÓLEO DO TREM DE FORÇA	295
COLMEIA DO CONDENSADOR (REFRIGERANTE)	68
	811
COLMEIA DO RADIADOR	78
COLUNA DA DIREÇÃO	540
COMPRESSOR DE AR - ASSENTO	797
COMPRESSOR DE REFRIGERANTE	809
	810
COMUTADOR-LUZ ALTA/BAIXA	213
CONDENSADOR DO REFRIGERANTE E MONTAGEM	811
CONDICIONADOR DE AR	798
	799
	800
CONTRAPESO	396
	397

* TRADUÇÃO NÃO DISPONÍVEL NO MOMENTO DA IMPRESSÃO

ÍNDICE

Designação	Página
	398
CONTROLE - ACOPLADOR RÁPIDO	778
CONTROLE - ALAVANCA	574
	576
CONTROLE - ALAVANCA (3 FUNÇÕES, COM REDUÇÃO DE MARCHA)	571
CONTROLE - NÃO PROGRAMADO	140
CONTROLE - NÃO PROGRAMADO (TRANSMISSÃO)	243
CONTROLE & MONTAGEM-COMUNICAÇÃO	131
CONTROLE-CABO	573
CONTROLE-CABO (LEVANTAMENTO, INCLINAÇÃO, INTERRUPTOR DE REDUÇÃO DE MARCHA)	574
CONTROLE-CABO (*LIFT, TILT, DOWNSHIFT SWITCH)	576
CONTROLE DA CAÇAMBA	711
	713
CONTROLE DA MÁQUINA	133
CONTROLE DA TRANSMISSÃO	291
	292
CONTROLE DE DIREÇÃO	509
	511
CONTROLE DO FREIO DE ESTACIONAMENTO	501
CONTROLE DO FREIO DE SERVIÇO	502
CONTROLE DO PAINEL MONITOR	813
CONTROLE DO PEDAL DO FREIO	499
	500
CONTROLE-ELETROIDRÁULICO	565
	567
	569
	571
CONTROLE ELETRÔNICO - VISOR (PAINEL DE INDICADORES, CENTRAL)	136
	138
CONTROLE ELETRÔNICO - VISOR (PAINEL DE INDICADORES, DIREITO, ESQUERDO)	243
CONTROLE ELETRÔNICO E MONTAGEM - MOTOR	133
	134
CONTROLE-ESCAVAÇÃO AUTOMÁTICA	135
	136
	138
CONTROLE HIDRÁULICO DA TRANSMISSÃO	293
CONTROLE-MONITOR NÃO PROGRAMADO	814
CONTROLE-MONITOR NÃO PROGRAMADO (SISTEMA DE MONITORIZAÇÃO CATERPILLAR)	242
CONVERSÃO-AUTODIG	141
CONVERSOR DE TORQUE	370
CONVERSOR DE TORQUE E CARCAÇA	367
CORREIA- SERPENTINA	124
	344
	810
COTOVELO D'ÁGUA	69
COTOVELO DE ADMISSÃO DE AR	87
CRUZETA E MANCAL	356
	357
	373
	374
	375

D

DECALQUE	937
DECALQUE - ADVERTÊNCIA (CONSULTAR OMM)	779
DECALQUE - ADVERTÊNCIA (DIREÇÃO)	388
DECALQUE - ADVERTÊNCIA (LER MANUAL DE OPERAÇÃO)	944
DECALQUE - ADVERTÊNCIA (NÃO SOLDAR, NÃO PERFURAR, CONSULTAR OMM)	945
DECALQUE - ADVERTÊNCIA (PERIGO DE ESMAGAMENTO, MANTENHA DISTÂNCIA)	944
DECALQUE - ADVERTÊNCIA (RÁDIO DO PRODUCT LINK, NÃO NACD)	148
DECALQUE - AVISO (LOCAL DO OLHAL DE LEVANTAMENTO)	756
	772
	773
DECALQUE - AVISO (PONTO DE LEVANTAMENTO)	767
DECALQUE - CONTROLE (ALAVANCA DE CONTROLE, 2 FUNÇÕES, INTERRUPTOR DE REDUÇÃO DE MARCHA)	569
DECALQUE - CONTROLE (ALAVANCA DE CONTROLE, 3 FUNÇÕES, INTERRUPTOR DE REDUÇÃO DE MARCHA)	571
DECALQUE - CONTROLE (DESPEJAR, INCLINAR PARA TRÁS)	565
	567
DECALQUE - CONTROLE (ESCAVAÇÃO AUTOMÁTICA)	136
DECALQUE - CONTROLE (LEVANTAR, FLUTUAR, ABAIXAR)	565
	567
DECALQUE - CONTROLE (PAINEL SUPERIOR)	242
	883
DECALQUE - CONTROLES	885
DECALQUE - IDENTIFICAÇÃO (AUXILIAR HIDRÁULICO)	567
DECALQUE - IDENTIFICAÇÃO (BUZINA)	565

* TRADUÇÃO NÃO DISPONÍVEL NO MOMENTO DA IMPRESSÃO

ÍNDICE

Designação	Página
	567
DECALQUE - IDENTIFICAÇÃO (IGNIÇÃO)	149
DECALQUE - IDENTIFICAÇÃO (INTERRUPTOR DO ACIONADOR DO PROTETOR DE ENERGIA)	282
DECALQUE - IDENTIFICAÇÃO (MANIPULADOR DE RESÍDUOS)	5
DECALQUE - IDENTIFICAÇÃO (ÓLEO HIDRÁULICO BIODEGRADÁVEL)	599
DECALQUE - IDENTIFICAÇÃO (12-VOLTS)	885
DECALQUE - IDENTIFICAÇÃO (20-KM/H)	145
DECALQUE - INFORMAÇÕES (AMARRAÇÃO)	945
DECALQUE - INFORMAÇÕES (CHAVE)	149
DECALQUE - INFORMAÇÕES (ENTRADA-SAÍDA)	885
DECALQUE - INSTRUÇÃO (AJUSTE DO ASSENTO)	922
	924
DECALQUE - INSTRUÇÃO (CONSULTAR OMM)	149
DECALQUE - INSTRUÇÃO (MANUTENÇÃO)	565
	567
	569
	571
DECALQUE - INSTRUÇÃO (PARTIDA DO MOTOR)	885
DECALQUE - INSTRUÇÃO (SAÍDA DE EMERGÊNCIA)	842
DECALQUE - INSTRUÇÃO (SEM DEGRAUS)	945
DECALQUE - PAINEL (CENTRAL)	885
DECALQUE - PAINEL (LADO DIREITO)	885
DECALQUE - PAINEL (LADO ESQUERDO)	885
DECALQUE (ESCAVAÇÃO AUTOMÁTICA)	136
	138
DECALQUE (FAIXAS VERMELHAS E BRANCAS)	392
DECALQUE (LUXUSKABINE)	388
DECALQUE (MÁQUINA FLORESTAL)	717
DECALQUE MONITOR (SISTEMA DE MONITORIZAÇÃO CATERPILLAR)	881
	883
DECALQUE (REFLETOR)	392
DECALQUE (40 KM-H)	388
DEFLETOR	384
DEGRAU	476
DIFERENCIAL	298
DIFERENCIAL - DESLIZAMENTO LIMITADO	299
	300
DIFERENCIAL - NOSPIN	301
	302
DIREÇÃO-CONTROLE A COMANDO	539
DIREÇÃO SECUNDÁRIA	539
DISJUNTOR AUTOMÁTICO DE CIRCUITO (105 AMPERES) (ALTERNADOR)	254
DISJUNTOR AUTOMÁTICO DE CIRCUITO (15 AMPERES) (ACIONADOR DO PROTETOR DE ENERGIA)	282
DISJUNTOR AUTOMÁTICO DE CIRCUITO (15 AMPERES) (ILUMINAÇÃO DE OPERAÇÃO)	254
DISJUNTOR AUTOMÁTICO DE CIRCUITO (15 AMPERES) (*SEAT BELT ALARM)	240
DISJUNTOR AUTOMÁTICO DE CIRCUITO (50 AMPÈRES) (PARTIDA)	254
DISJUNTOR AUTOMÁTICO DE CIRCUITO (80 AMPERES) (PRINCIPAL)	254
DISJUNTOR AUTOMÁTICO DE CIRCUITO (90 AMPERES) (AUXILIAR DE PARTIDA)	254
DOBRADIÇA DO PÁRA-LAMA	439
	440
DRENO - ECOLOGIA	303
DRENO - ÓLEO DO MOTOR	28
DUCTO E FILTRO	821

E

EIXO-COMANDO DE VÁLVULA	9
EIXO DE TRANSMISSÃO	352
	353
	354
	355
EIXO FIXO	284
	285
EIXO OSCILANTE	285
	286
ELEMENTO - AQUECEDOR DE ÁGUA DA CAMISA	147
ELEMENTO DO FILTRO DE AR (PRIMÁRIO)	84
ELEMENTO DO FILTRO DE AR (SECUNDÁRIO)	84
ELEMENTO FILTRANTE - ÓLEO (HIDRÁULICO)	590
ELEMENTO FILTRANTE (TREM DE FORÇA)	308
ELO - TRAVA DA ARMAÇÃO DA DIREÇÃO	460
EMISSOR - NÍVEL DO COMBUSTÍVEL	118
EMISSOR - POSIÇÃO	190
	191
ENGATE - ARTICULAÇÃO	441
ENGRENAGEM-COROA E PINHÃO	309
	311
	313
ENGRENAGENS DE DISTRIBUIÇÃO	35
ENGRENAGENS DE SAÍDA DE TRANSFERÊNCIA	315
	320

* TRADUÇÃO NÃO DISPONÍVEL NO MOMENTO DA IMPRESSÃO

ÍNDICE

Designação	Página
ENGRENAGENS PLANETÁRIAS - TRANSMISSÃO	339
ESCADA	446
ESPELHO RETROVISOR	854
	855
	856
	857
	858
	859
	860
	861
	862
	864
	866
EXTENSÃO - ENCOSTO (TECIDO)	907

F

FERRAGEM - CHASSI DA CARREGADEIRA	430
	431
	432
FERRAGEM - CHASSI TRASEIRO	436
	437
	438
FERRAGENS-MONTAGEM	433
	434
	435
FIAÇÃO - AQUECEDOR E AR CONDICIONADO	800
	834
FIACAO - BOMBA	236
FIACAO - BOMBA (LUBRIFICAÇÃO AUTOMÁTICA)	473
FIAÇÃO - CONTROLE	131
FIAÇÃO - CONTROLE (ACIONADOR DO PROTETOR DE ENERGIA)	282
FIAÇÃO - CONTROLE (ESPELHOS AQUECIDOS)	864
	866
FIAÇÃO - CONTROLE (LUBRIFICAÇÃO AUTOMÁTICA)	473
FIAÇAO - CONTROLES DO OPERADOR	242
FIAÇAO - CONTROLES DO OPERADOR (ELETROIDRÁULICA, ALAVANCA DE CONTROLE)	569
	571
FIAÇÃO - FERRAMENTA DE TRABALHO (ACOPLADOR RAPIDO)	259
FIAÇÃO - INTERRUPTOR	236
FIAÇÃO - INTERRUPTOR (NÍVEL)	473
FIAÇÃO - LUZES TRASEIRAS	169
FIAÇÃO - MANIPULADOR DE RESÍDUOS	282
FIAÇÃO - MONITORAÇÃO DO EIXO	238
FIAÇÃO -LUZES DIANTEIRAS	169
FIAÇÃO-CONT TRANSMISSÃO (VOLANTE)	541
FILTRO - COMBUSTÍVEL (SECUNDÁRIO)	98
FILTRO - COMBUSTÍVEL (TELA DO BOCAL DE ENCHIMENTO)	118
FILTRO - MAGNÉTICO	315
	320
FILTRO - MAGNÉTICO (ARREFECEDOR DO ÓLEO DO EIXO)	328
FILTRO - ÓLEO	308
	590
	591
FILTRO - ÓLEO DO MOTOR	59
FILTRO - SEPARADOR DE ÁGUA E COMBUSTÍVEL (PRIMÁRIO)	100
FILTRO DE AR DE CABINA	821
FILTRO DE COMBUSTÍVEL E SEPARADOR DE ÁGUA	100
FILTRO E TUBOS - COMBUSTÍVEL	97
FILTRO E TUBOS - TRANSMISSÃO	306
FILTRO-GRAXA	473
FIXADORES - AMORTECEDOR	29
FIXADORES - CABEÇOTE DO MOTOR	26
FIXADORES - CAIXA DIANTEIRA	30
	31
FIXADORES - MECANISMO DAS VÁLVULAS	33
FIXADORES - TAMPA DA VÁLVULA	32
FREIO DE ESTACIONAMENTO	498
FREIOS E ENGRENAGENS PLANETARIAS	287
	289
FUNDO - ENCOSTO	879
	880
FUSÍVEL (10 AMPERES)	241
FUSÍVEL (15 AMPERES)	241
	800
	834
FUSÍVEL (20-AMPERES)	241

G

GR. DE CONVERSÃO - CERTIFICADO	2
	3
GRADE DO RADIADOR	417
GRUPO DE CONVERSÃO - ARRANJO RODOVIÁRIO	388
	392
GRUPO DE INSTALAÇÃO - MOTOR	8
GRUPO ROTATIVO DA BOMBA	537
	644

I

ILUMINAÇÃO - MARCHA A RÉ	165

* TRADUÇÃO NÃO DISPONÍVEL NO MOMENTO DA IMPRESSÃO

ÍNDICE

Designação	Página
ILUMINAÇÃO - RODOVIÁRIA	176
ILUMINAÇÃO - SINALIZAÇÃO	164
	165
ILUMINAÇÃO RODOVIÁRIA	164
INCLINAÇÃO - CAPÔ	485
INDICADOR - NÍVEL DE LÍQUIDO (VISOR DE VIDRO)	645
INDICADOR - NÍVEL DE ÓLEO	304
	305
INDICADOR - NÍVEL DO ÓLEO (VARETA)	60
INJETOR DE COMBUSTÍVEL	101
	102
INSTALAÇÃO-COMUNICAÇÃO	148
INSTALAÇÃO DO RÁDIO	838
INSTALAÇÃO DOS CONTROLES	837
INSTALAÇÃO-SEGURANÇA	148
	149
INTERRUPTOR - BALANCIM	222
	223
	230
INTERRUPTOR - BALANCIM (ACIONADOR DE INCLINAÇÃO DO CAPÔ)	253
INTERRUPTOR - BALANCIM (ACIONADOR DO PROTETOR DE ENERGIA)	282
INTERRUPTOR - BALANCIM (ACOPLADOR RÁPIDO)	219
	222
	223
INTERRUPTOR - BALANCIM (AJUSTE DE ATIVAÇÃO DE CARREGAMENTO AUTOMÁTICO)	136
	138
INTERRUPTOR - BALANCIM (ANULAR NEUTRALIZADOR DA TRANSMISSÃO)	243
INTERRUPTOR - BALANCIM (AQUECIMENTO DOS ESPELHOS)	864
	866
INTERRUPTOR - BALANCIM (CONDICIONADOR DE AR, AQUECEDOR)	243
INTERRUPTOR - BALANCIM (DESENGATE AUTOMÁTICO DE LEVANTAMENTO, INCLINAÇÃO)	243
INTERRUPTOR - BALANCIM (DIREÇÃO SECUNDÁRIA)	225
INTERRUPTOR - BALANCIM (FARÓIS DIANTEIRO, TRASEIRO)	167
INTERRUPTOR - BALANCIM (MARCHA AVANTE, NEUTRO, MARCHA À RÉ)	231
INTERRUPTOR - BALANCIM (MODULAÇÃO PRECISA)	243
INTERRUPTOR - BALANCIM (PARADA A NÍVEL DO SOLO)	253
INTERRUPTOR - BALANCIM (PERIGO)	226
	228
INTERRUPTOR - BALANCIM (PISCA-ALERTA)	178
INTERRUPTOR - BALANCIM (SELEÇÃO DE TERCEIRA FUNÇÃO)	567
	571
INTERRUPTOR - BALANCIM (SELETOR DE MODO DE CARREGAMENTO AUTOMÁTICO)	136
	138
INTERRUPTOR - BALANCIM (SENTIDO DA TRANSMISSÃO)	541
INTERRUPTOR - BALANCIM (SISTEMA DE ABSORÇÃO DE IMPACTOS)	221
INTERRUPTOR - BALANCIM (SISTEMA DE MONITORIZAÇÃO CATERPILLAR)	243
INTERRUPTOR - BALANCIM (TRAVA HIDRÁULICA)	243
INTERRUPTOR - BALANCIM (VELOCIDADE DO VENTILADOR)	243
INTERRUPTOR - BALANCIM (VENTILADOR DE INVERSÃO AUTOMÁTICA)	220
INTERRUPTOR - BOTÃO (ACIONADOR DO AUTODIG)	136
	138
INTERRUPTOR - BOTÃO (BUZINA)	242
INTERRUPTOR - BOTÃO (REDUÇÃO DE MARCHA)	243
	541
INTERRUPTOR - BOTÃO (TRANSMISSÃO - MUDANÇA DE MARCHAS ACIMA)	541
INTERRUPTOR - CIRCUITO (20-AMPERES) (ACIONADOR DE INCLINAÇÃO DO CAPÔ)	254
INTERRUPTOR - CIRCUITO (20-AMPERES) (ENERGIA DA BATERIA PARA CABINE DESLIGADA)	255
INTERRUPTOR - DIREÇÃO SECUNDÁRIA	225
INTERRUPTOR - LIMITADOR (LUZ DE FREIO)	496
INTERRUPTOR - LIMPADOR (24 VOLTS) (PISCA-PISCA DIANTEIRA)	241
INTERRUPTOR - MAGNÉTICO	215
	216
	217
INTERRUPTOR - MAGNÉTICO (24 VOLTS) (AQUECEDOR DE ADMISSÃO DE AR)	216
INTERRUPTOR - MAGNÉTICO (24 VOLTS) (RELÉ PRINCIPAL)	254
INTERRUPTOR - NÍVEL (GRAXA)	473
INTERRUPTOR - PARTIDA (CHAVE)	241
INTERRUPTOR - PISCA-PISCA	226
	228
INTERRUPTOR - PRESSÃO	218

* TRADUÇÃO NÃO DISPONÍVEL NO MOMENTO DA IMPRESSÃO

ÍNDICE

Designação	Página
INTERRUPTOR - PRESSÃO (ATIVAÇÃO DA LUBRIFICAÇÃO AUTOMÁTICA)	488
INTERRUPTOR - PRESSÃO (DERIVAÇÃO DO FILTRO DO ÓLEO) (FILTRO DE ÓLEO DO TREM DE FORÇA)	308
INTERRUPTOR - PRESSÃO (DIFERENCIAL)	590
INTERRUPTOR - PRESSÃO (ÓLEO DA DIREÇÃO PRIMÁRIA)	276
INTERRUPTOR - PRESSÃO (ÓLEO DA DIREÇÃO SECUNDÁRIA)	276
INTERRUPTOR - PRESSÃO (ÓLEO DO FREIO DE ESTACIONAMENTO)	253
INTERRUPTOR - PRESSÃO (ÓLEO DO FREIO DE SERVIÇO)	263
INTERRUPTOR - PRESSÃO (REFRIGERANTE)	234
INTERRUPTOR - REDUTOR DE LUMINOSIDADE (RODAGEM)	213
INTERRUPTOR - ROTATIVO (24 VOLTS) (CONTROLE DE MUDANÇA AUTOMÁTICA)	242
INTERRUPTOR - ROTATIVO (24 VOLTS) (CONTROLE VARÍAVEL DE MUDANÇA DAS MARCHAS)	242
INTERRUPTOR - ROTATIVO (24 VOLTS) (ILUMINAÇÃO DE OPERAÇÃO)	241
INTERRUPTOR - ROTATIVO (24 VOLTS) (LIMPADOR TRASEIRO)	241
INTERRUPTOR - SISTEMA DE ABSORCAO DE IMPACTOS	221
INTERRUPTOR - TEMPERATURA (AR CONDICIONADO)	800
INTERRUPTOR - TRANSMISSÃO	231
INTERRUPTOR-ACOPLADOR RÁPIDO	219
INTERRUPTOR DE DERIVAÇÃO	212
INTERRUPTOR DE SINALIZAÇÃO	226 228
INTERRUPTOR GIRATÓRIO	224
INTERRUPTOR (TESTE DE LUBRIFICAÇÃO AUTOMÁTICA)	473
INTERRUPTOR-VENTILADOR DE INVERSÃO	220

J

Designação	Página
JOGO - BUZINA	509
JOGO DE ALAVANCA DE INCLINAÇÃO	509
JOGO DE ALAVANCA DE INCLINAÇÃO (COLUNA DA DIREÇÃO)	540
JOGO DE ALAVANCA (MOTOR DE PARTIDA)	210
JOGO DE AMORTECEDOR DE CHOQUES	922 924
JOGO DE BLOCO DESLIZADOR	910
JOGO DE BUCHA (MOTOR DE PARTIDA)	210
JOGO DE CAIXA (COLUNA DA DIREÇÃO)	540
JOGO DE CALÇO (INCLUI 17 CALÇOS)	534
JOGO DE CONTROLE DE PISTÃO	534
JOGO DE CORDÃO	922 924
JOGO DE DISCO	300
JOGO DE DISCOS ESTREITOS (12,57 MM DE ESPESSURA)	299
JOGO DE DISCOS GROSSOS (12,75 MM DE ESPESSURA)	299
JOGO DE DISPOSITIVO AUXILIAR DE GÁS	509
JOGO DE DISPOSITIVO AUXILIAR DE GÁS (COLUNA DA DIREÇÃO)	540
JOGO DE EIXO	509
JOGO DE ESCOVA (MOTOR DE PARTIDA)	210
JOGO DE FIXADORES (ALTERNADOR)	122
JOGO DE INDICADOR	924
JOGO DE ISOLADOR (MOTOR DE PARTIDA)	210
JOGO DE LONA DO FREIO	498
JOGO DE MANCAL (ALTERNADOR)	122
JOGO DE PARAFUSO (CONECTORES ELÉTRICOS)	253 267
JOGO DE PINO DO PEDAL	888
JOGO DE PISTÃO	534
JOGO DE PORCAS	509
JOGO DE PORCAS (COLUNA DA DIREÇÃO)	540
JOGO DE RETENTOR	502 550 631 689 700
JOGO DE RETENTOR (ACOPLADOR RAPIDO)	788
JOGO DE RETENTOR (AQUECEDOR DE ÁGUA DA CAMISA)	147
JOGO DE RETENTOR (BOMBA DE MEDIÇÃO, DIREÇÃO)	521
JOGO DE RETENTOR (VALVULA DE ALIVIO)	629 633
JOGO DE RETENTOR (VÁLVULA DE DESVIO)	629
JOGO DE RETENTOR (VÁLVULA DE DESVIO) (FLUXO DO FLUIDO DO VENTILADOR HIDRÁULICO)	676
JOGO DE RETENTOR (VÁLVULA DE VAIVÉM)	629
JOGO DE ROLO	888
JOGO DE SOLENÓIDE (MOTOR DE PARTIDA)	210
JOGO DE TERMINAL (ALTERNADOR)	122
JOGO DE VÁLVULA (ACOPLADOR RAPIDO)	788

* TRADUÇÃO NÃO DISPONÍVEL NO MOMENTO DA IMPRESSÃO

ÍNDICE

Designação	Página
JOGO DE VÁLVULA DE ALÍVIO	532
JOGO DE VÁLVULA DE AR	922
	924
JUNTA (ALOJAMENTO DO REGULADOR DE TEMPERATURA)	72
JUNTA CORREDIÇA	356
	357
JUNTA UNIVERSAL	373
	374
	375

L

LÂMINA DO LIMPADOR DE PÁRA-BRISA	932
*LAMP AS-WARNING (CINTO DE SEGURANÇA)	180
LÂMPADA	388
LÂMPADA - FAROL	152
	153
	154
	155
LÂMPADA - HALOGÊNEO (24 VOLTS, 65 WATTS)	154
LÂMPADA - HALOGÊNEO (24 VOLTS, 65 WATTS) (FAROL)	155
LÂMPADA - SINALIZAÇÃO	160
	161
LÂMPADA - TETO	151
LÂMPADA DIANTEIRA E DE SINAL	156
	158
LÂMPADA (MARCHA-À-RÉ)	165
LÂMPADA (12 VOLTS, 24 VOLTS, 35 WATTS)	152
	153
LÂMPADA (*24-VOLT, 5-WATTS)	465
LÂMPADA (24 VOLTS)	151
	241
LÂMPADA (24 VOLTS) (ILUMINAÇÃO DE OPERAÇÃO)	156
LÂMPADA (24 VOLTS) (LUZ DE OPERAÇÃO)	158
LÂMPADA (24 VOLTS) (SETA DE DIREÇÃO)	156
	158
LÂMPADA (24 VOLTS, 21 WATTS)	162
LÂMPADA (24 VOLTS, 21 WATTS) (SETA DE DIREÇÃO)	156
	158
LÂMPADA (24 VOLTS, 21 WATTS) (SINAL)	160
LÂMPADA (24 VOLTS, 5 WATTS)	162
LÂMPADA (24 VOLTS, 70 WATTS)	163
LÂMPADA (24 VOLTS, 75-70 WATTS) (FACHO ALTO - BAIXO)(LADO DIREITO)	158
LÂMPADA (24 VOLTS, 75-70 WATTS) (LUZ ALTA/BAIXA)	156
LAVADOR DO VIDRO	927
LENTE ÂMBAR (SINAL)	160
LENTE (ÂMBER) (SETA DE DIREÇÃO)	156
	158
LENTE (LUZES DIANTEIRAS) (LUZ ALTA/BAIXA)	156
	158
LEVANTAMENTO - ARRANJO	715
LEVANTAMENTO DO MOTOR	42
LIMPADOR DO VIDRO	932
LUBRIFICAÇÃO - AUTOMÁTICA	461
	463
LUZ GIRATÓRIA DE ALARME	163
LUZ INTERMITENTE (24 VOLTS)	226
	228
LUZ TRASEIRA E DE FREIO	162

M

MANCAL - PRINCIPAL (VIRABREQUIM)	17
MECANISMO DAS VÁLVULAS	53
	54
MÓDULO - INTERFACE (CHAVE)	149
MÓDULO - VELOCÍMETRO E TACÔMETRO	870
MÓDULO DO VISOR	868
MÓDULO DO VISOR (ONDAS)	142
MÓDULO ELETRÔNICO DE QUATRO INDICADORES	869
MONITOR	868
*MONITOR AR-CAMERA	871
MONTAGEM - ALTERNADOR	43
MONTAGEM - ARO	338
MONTAGEM - ARREFECEDOR DE ÓLEO DO EIXO	337
MONTAGEM - CABINE	876
MONTAGEM - MOTOR E TRANSMISSÃO	44
MONTAGEM - TANQUE HIDRÁULICO	635
MONTAGEM DA PLACA DE REGISTRO	465
MONTAGEM DO EIXO	336
MOTOR - ENGRENAGENS	634
MOTOR - LIMPADOR DO VIDRO	874
	875
MOTOR - NÚCLEO	7
MOTOR COMPLETO	6
MOTOR ELÉTRICO	532
MOTOR ELÉTRICO DE PARTIDA	209
	210

P

PAINEL DE INSTRUMENTOS	881
	883
	885
PAINEL DO CAPÔ	466

* TRADUÇÃO NÃO DISPONÍVEL NO MOMENTO DA IMPRESSÃO

ÍNDICE

Designação	Página
	467
	468
PAINEL LATERAL	469
PAINEL MONITOR DE CARGA ÚTIL	873
PÁRA-LAMA	401
	402
	404
	408
PÁRA-LAMA DIANTEIRO	406
	407
PÁRA-SOL DA CABINE	926
PEDAL DO GOVERNADOR	888
	889
PEGA-MÃO	831
PINO	790
PISO	890
PISO-SUPRESSÃO DE RUÍDOS	823
	824
	825
PISTÃO E BIELA	47
PLACA - IDENTIFICAÇÃO DO EIXO	284
	285
	947
PLACA - NÚMERO DE SÉRIE (TRANSMISSÃO)	316
	321
PLACA DE IDENTIFICAÇÃO (CATERPILLAR)	738
	742
	748
	749
	751
	753
	756
	772
	773
	779
PLACA DE IDENTIFICAÇÃO (PESO MÁXIMO)	388
PLACA DE IDENTIFICAÇÃO (PESO MÁXIMO)	392
PLACA DE INFORMAÇÃO (COMBUSTIVEL MANUAL)	111
PLACA DE INSTRUÇÃO (BATERIA)	126
PLACA DE INSTRUÇÃO (CONDICIONADOR DE AR)	798
PLACA E DECALQUE	944
	945
	946
PLATAFORMA	891
PNEU E ARO	358
	359
	360
	361
	362
	363
	364
	365
	366
POLIA DA RODA-GUIA	50
PONTA PARA APLICAÇÕES GERAIS	793
	794
PONTA-SERVIÇO PESADO	791
	792
PORTA DA CABINE	815
	816
	819
	820
PORTA DE ACESSO	399
	400
POSIÇÃO DO SENSOR (LEVANTAMENTO)	190
PRÉ-PURIFICADOR	93
	94
PROTEÇÃO CONTRA VANDALISMO	947
PROTETOR - ARREFECEDOR DO ÓLEO DO EIXO	421
PROTETOR - ARTICULAÇÃO	419
PROTETOR - CAÇAMBA	786
	787
PROTETOR - CILINDRO DE LEVANTAMENTO	592
	593
	594
PROTETOR - DIANTEIRO	425
PROTETOR - EIXO DE TRANSMISSÃO	424
PROTETOR - ILUMINAÇÃO	426
PROTETOR - JANELA	827
	829
PROTETOR - TREM DE FORÇA	427
	428
	429
PROTETOR - VEDADOR DO EIXO	423
PURIFICADOR DE AR	83
	84

R

RADIADOR E VENTILADOR	78
RÁDIO	893
RÁDIO - COMUNICAÇÃO	894
RÁDIO - COMUNICAÇÃO (PRODUCT LINK 121SR)	131
RECEPTÁCULO-PARTIDA AUXILIAR	182
RECLINAÇÃO - ASSENTO	895
REDUÇÃO DE RUÍDO	482
REGULADOR DE PRESSÃO DO COMBUSTÍVEL	117

* TRADUÇÃO NÃO DISPONÍVEL NO MOMENTO DA IMPRESSÃO

ÍNDICE

Designação	Página
REGULADOR DE TEMPERATURA DA ÁGUA (94 GRAUS C) (LÍQUIDO ARREFECEDOR)	72
REGULADOR DE VOLTAGEM (24 VOLTS)	122
REGULADOR (PRESSÃO DO COMBUSTÍVEL)	117
RELÉ (CONJ) (CASQUILHO)	243
RELÉ (CONJ) (24 VOLTS)	241
	270
RELÉ (CONJ) (24 VOLTS) (AQUECIMENTO DOS ESPELHOS)	864
	866
RELÉ (CONJ) (24 VOLTS) (ARREFECEDOR DO ÓLEO DO EIXO)	260
RELÉ (CONJ) (24 VOLTS) (DIREÇÃO SECUNDÁRIA INTERMEDIÁRIA)	276
RELÉ (CONJ) (24 VOLTS) (MOTOR DE INCLINAÇÃO DO CAPÔ)	253
RELÉ (CONJ) (24 VOLTS) (*SEAT BELT ALARM)	240
RESPIRO	57
	316
	321
RESPIRO (CÁRTER DO MOTOR)	57
RESSALTO - BRAÇO DE LEVANTAMENTO	708
	709
RESSALTO-ALAVANCA	706
	707
RESSALTO-ARMAÇÃO TRASEIRA	386
RETENTOR	100
RETENTOR - CAIXA DO VOLANTE	52
RETENTOR DO VIRABREQUIM	51
RETENTOR DO VIRABREQUIM (DIANTEIRO)	51
REVESTIMENTO DA CABINE	842
RODA-GUIA - CORREIA	40
ROPS FECHADA	896
RUÍDO - ARRANJO PARA SUPRESSÃO	481

S

*SCREEN GP-CASE DRAIN	538
SEGUIMENTO - BORDA	785
SENSOR - POSIÇÃO DE INCLINAÇÃO E MONTAGEM	186
SENSOR - POSIÇÃO DE LEVANTAMENTO E MONTAGEM	183
SENSOR - PRESSÃO	192
	193
	194
	195
	196
	197
	198
	199
SENSOR - PRESSÃO (ÓLEO DO CILINDRO DE LEVANTAMENTO)	185
SENSOR - TEMPERATURA	202
	203
	204
SENSOR DE PRESSÃO E MONTAGEM	185
SENSOR DE VELOCIDADE	200
	201
SENSOR DE VELOCIDADE (SAÍDA DA TRANSMISSÃO 1)	315
	320
SENSOR DE VELOCIDADE (SAÍDA DA TRANSMISSÃO 2)	315
	320
SENSOR DE VELOCIDADE (SAÍDA DO CONVERSOR DE TORQUE)	367
SENSOR DO MOTOR	188
SEPARADOR DE ÁGUA E BOMBA DE ESCORVA DE COMBUSTÍVEL	120
SERVIÇO-COMUNICAÇÃO (PRODUCT LINK 300)	144
SILENCIADOR	91
SIST. DE ILUMINAÇÃO - PISCA-PISCA GIRATÓRIO DE ADVERTÊNCIA	178
	180
SIST. ELETRÔNICO - ACESSÓRIO	145
SIST. HIDRÁULICO - ÓLEO BIODEGRADÁVEL	599
SISTEMA DE ABSORÇÃO DE IMPACTOS	564
SISTEMA DE ABSORÇÃO DE IMPACTOS E TUBOS	563
SISTEMA DE ILUMINAÇÃO - FARÓIS	166
	167
	169
SISTEMA DE ILUMINAÇÃO - FARÓIS E SINAL	172
	174
SISTEMA ELÉTRICO	143
SISTEMA ELETRÔNICO - MONITOR	145
SISTEMA ELETRÔNICO - TREM DE FORÇA	145
	146
SISTEMA ELETRÔNICO-COMUNICAÇÃO	144
SOFTWARE - COMUNICAÇÃO (PRODUCT LINK 121SR)	894
SOFTWARE - COMUNICAÇÃO (PRODUCT LINK 300)	144
SUPORTE - ADMISSÃO DE AR	478
SUPORTE - CONTROLE HIDRÁULICO	912
SUPORTE - VALVULA E FILTRO	479
SUPORTE DO RETENTOR	10
SUPORTE-INTERRUPTOR AJUSTÁVEL	496
SUPRESSÃO DE RUÍDOS - CABINE	916

* TRADUÇÃO NÃO DISPONÍVEL NO MOMENTO DA IMPRESSÃO

ÍNDICE

Designação	Página
	918
	919
	920
SUSPENSÃO - ASSENTO	922
	924

T

TAMPA - ADMISSÃO DE AR	85
	86
TAMPA - BLOCO DO MOTOR	11
TAMPA - BOCAL DE ENCHIMENTO	304
TAMPA - BOCAL DE ENCHIMENTO DE ÓLEO DA TRANSMISSÃO	297
	947
TAMPA - BOCAL DE ENCHIMENTO (ÓLEO DO MOTOR)	58
TAMPA - BOCAL DE ENCHIMENTO (TANQUE HIDRÁULICO)	645
TAMPA - BOCAL DE ENCHIMENTO (TREM DE FORÇA)	305
TAMPA - CAIXA DIANTEIRA	12
	13
TAMPA - MECANISMO DAS VÁLVULAS	14
	15
	16
TAMPA - TANQUE DE COMBUSTÍVEL	118
TAMPA CONTRA POEIRA (AQUECEDOR DE ÁGUA DA CAMISA)	147
TAMPA DE PRESSÃO (7 PSI)	82
TAMPÃO	303
	315
	320
TANQUE DE COMBUSTÍVEL	118
TANQUE HIDRÁULICO	645
TANQUE SUPERIOR DO RADIADOR	82
TAPETE	842
TELA DE SUCÇÃO	315
	320
TELA FILTRANTE	538
	631
	633
TELA FILTRANTE (COLETOR DA VÁLVULA DE CONTROLE)	629
TELA FILTRANTE (ENCHIMENTO DO TANUQE HIDRÁULICO)	645
TELA FILTRANTE (TANQUE HIDRÁULICO)	645
TRANSMISSÃO	372
TRAVA - ACOPLADOR RÁPIDO	788
TREM DE FORÇA	343
TRINCO - PORTA DA CABINA E JANELA	840
TUBOS - ACOPLADOR	604
	605
	608
	610
TUBOS - ÁGUA	70
	72
	74
TUBOS - AQUECEDOR DA CABINE	851
	853
TUBOS - AR	89
TUBOS - AR CONDICIONADO	845
	847
TUBOS - ARREFECEDOR DE ÓLEO DO EIXO	328
TUBOS - ARREFECEDOR DE ÓLEO HIDRÁULICO	619
TUBOS - ARREFECEDOR DO CONVERSOR DE TORQUE	333
TUBOS - CILINDRO DE INCLINAÇÃO	625
	627
TUBOS - CILINDRO DE LEVANTAMENTO	623
TUBOS - COMBUSTÍVEL	103
TUBOS - DIANTEIROS	612
TUBOS - DIREÇÃO	519
	525
TUBOS - DIREÇÃO SECUNDÁRIA	516
TUBOS - DRENAGEM DO COMBUSTÍVEL	105
TUBOS - GRAXA	456
TUBOS - INJETOR DA BOMBA HIDRÁULICA	106
TUBOS - LUBRIFICAÇÃO	458
TUBOS - ÓLEO DO MOTOR	62
TUBOS - ÓLEO DO TURBOALIMENTADOR	64
TUBOS - ÓLEO HIDRÁULICO	615
TUBOS DE CONEXÃO	600
	601
	602
TUBOS DO AQUECEDOR	851
	853
TUBULAÇÕES - AR DO PÓS-ARREFECEDOR	88
TUBULAÇÕES - DRENAGEM DE ÓLEO DO MOTOR	63
TUBULAÇÕES - LUBRIFICAÇÃO AUTOMÁTICA	448
	451
	453
TUBULAÇÕES DE DIAGNÓSTICO	938
	941
TUCHO DA VÁLVULA	41
TURBOALIMENTADOR	95
	96

V

VÁLVULA	546

* TRADUÇÃO NÃO DISPONÍVEL NO MOMENTO DA IMPRESSÃO

ÍNDICE

Designação	Página
VÁLVULA - CONTROLE PRINCIPAL	680
	682
	684
	686
	687
VÁLVULA - NEUTRALIZADOR DA DIREÇÃO	519
	559
	560
VALVULA - PARTIDA A ETER	232
VÁLVULA DA DIREÇÃO	554
	556
VÁLVULA DE ALÍVIO	377
	549
	550
	693
VÁLVULA DE ALÍVIO (COMPRESSOR DO REFRIGERANTE)	809
VÁLVULA DE ALÍVIO (FREIO)	629
VÁLVULA DE ALÍVIO (TANQUE HIDRÁULICO)	629
VÁLVULA DE CONTROLE	664
	666
	668
	670
	673
VÁLVULA DE CONTROLE DA BOMBA	691
VÁLVULA DE CONTROLE DE ABAIXAMENTO	678
VÁLVULA DE CONTROLE DE ABSORÇÃO DE IMPACTOS	694
VÁLVULA DE CONTROLE DOS FREIOS	508
VÁLVULA DE CONTROLE DOS FREIOS (SERVIÇO)	502
VÁLVULA DE CONTROLE PILOTO	546
VÁLVULA DE DIREÇÃO SECUNDÁRIA	551
VÁLVULA DE DRENAGEM	677
VÁLVULA DE LUBRIFICAÇÃO - DISTRIBUIÇÃO	488
	489
	490
VÁLVULA DE MODULAÇÃO	376
VÁLVULA DE PARADA	615
VÁLVULA DE PARADA (COLETOR DE RETORNO)	851
VÁLVULA DE PARADA (DRENO DO RADIAOR)	295
VÁLVULA DE PNEU	349
	350
	351
	379
VÁLVULA DE REDUÇÃO DE PRESSÃO	548
	690
VÁLVULA DE RETENÇÃO	543
	544
	545
	662
	663
VÁLVULA DE RETENÇÃO (DERIVAÇÃO DO ARREFECEDOR DE ÓLEO DO EIXO)	337
VÁLVULA DE RETENÇÃO (DIREÇÃO)	525
VÁLVULA DE SEPARAÇÃO	552
	553
	696
	697
	698
VÁLVULA DE SEPARAÇÃO (FREIO, VENTILADOR HIDRÁULICO)	629
VÁLVULA DE SEPARAÇÃO (ÓLEO DA DIREÇÃO)	525
VÁLVULA DESVIADORA	675
	676
VÁLVULA DESVIADORA (TANQUE HIDRÁULICO)	629
VÁLVULA DISJUNTORA	118
VÁLVULA DO CONTROLE PRINCIPAL E MONTAGEM	647
	650
	653
	656
	659
VÁLVULA E TUBULAÇÕES - LUBRIFICAÇÃO	486
VÁLVULA MANUAL	689
VÁLVULA-PNEU	379
VÁLVULA SELETORA (DIREÇÃO)	556
VÁLVULA SOLENÓIDE	699
	700
	701
VÁLVULA SOLENÓIDE (24 VOLTS) (FREIO, VENTILADOR HIDRÁULICO)	629
VIDRO DA PORTA	928
	930
VIGIA	70
VIRABREQUIM	17
VISOR-CÂMERA	142
VOLANTE	541
VOLANTE DO MOTOR	34

* TRADUÇÃO NÃO DISPONÍVEL NO MOMENTO DA IMPRESSÃO

STICHWORTVERZEICHNIS

Bezeichnung	Seite
A	
ABBLENDSCHALTER (STRASSENFAHRT)	213
ABDECKGLAS (FRONTSCHEINWERFER) (FERNLICHT/ABBLENDLICHT)	158
ABDECKGLAS (FRONTSCHEINWERFER) (FERNLICHT/ABBLENDLICHT)	156
ABDECKGLAS (GELB) (FAHRTRICHTUNGSANZEIGER)	156 158
ABDECKGLAS (GELB) (SIGNAL)	160
ABFALLBESEITIGUNGSAUSFÜHRUNG - VERDRAHTUNG	282
ABFALLBESEITIGUNGSMONTAGE	5
ABLASS (UMWELTFREUNDLICH)	303
ABLASSSTOPFEN	677
ABLASSVENTIL	677
ABSENKSTEUERVENTIL	678
ABSPERRVENTIL	615
ABSPERRVENTIL (KÜHLERABLASS)	295
ABSPERRVENTIL (RÜCKLAUFVERTEILER)	851
ACHSDICHTUNGSABDECKUNG	423
ACHSE - IDENTIFIKATIONSSCHILD	284 285 947
ACHSENANBAUSATZ	336
ACHSENÖLKÜHLERLEITUNGEN	328
ACHSENÖLKÜHLERPUMPE U. BEFESTIGUNGSTEILE	344
ACHSENÖLKÜHLERSCHUTZ	421
ACHSENÜBERWACHUNG - VERDRAHTUNG	238
ACHSÖLKÜHLER	296
ADAPTER - ÖLLEITUNG	56
ALARM - DÄMPFER	136 138
ANSAUGSIEB	315 320
ANSCHLUSS	74 851
ANSCHLUSSKLEMMENSATZ (DREHSTROMGENERATOR)	122
ANSCHLUSSKLEMMENSATZ (DREHSTROMGENERATOR)	122
ANSCHLUSSKUPPLUNGSLEITUNGEN	604 605 608 610
ANSCHLUSSLEITUNGEN	600 601 602
ANTRIEBSSCHUTZ	427 428 429
ANTRIEBSWELLE	352 353 354 355
ANTRIEBSWELLEN-KEILVERZAHNUNG	356 357
ANTRIEBSWELLENVERKLEIDUNG	424
ANZEIGEMODUL	868
ANZEIGEMODUL (*WAVES)	142
ANZEIGEN-EINBAUSATZ	924
ANZUGSLEINE	922 924
ARBEITS- U. SIGNALLEUCHTE	172 174
ARBEITSGERÄTEELEKTRONIK	145
ARBEITSLEUCHTEN	152 153 154 155 166 167 169
ARMLEHNE	806
ÄTHERSTARTHILFE	205 207
ÄTHERSTARTHILFE - VERDRAHTUNG	266
ÄTHERSTARTVENTIL	232
AUFKLEBER	937
AUFKLEBER - GETRIEBE (*DOWNSHIFT SWITCH)	565 567
AUFKLEBER - INFORMATION (EINGANG/AUSGANG)	885
AUFKLEBER - INFORMATION (FESTZURREN)	945
AUFKLEBER - INFORMATION (TASTE)	149
AUFKLEBER - MONITOR (CATERPILLAR ÜBERWACHUNGSSYSTEM)	881 883
AUFKLEBER - SICHERUNGSTAFEL	842
AUFKLEBER (AUTODIG)	136 138
AUFKLEBER (FORSTAUSFÜHRUNG)	717
AUFKLEBER (HUBÖSE)	756 772 773
AUFKLEBER (HUBPUNKT)	767
AUFKLEBER (KONTROLLE) (ABKIPPEN, ZURÜCKNEIGEN)	565 567
AUFKLEBER (KONTROLLE) (ANHEBEN, SCHWIMMEN, ABSENKEN)	565 567

* ÜBERSETZUNG ZUM ZEITPUNKT DER DRUCKLEGUNG NICHT VORHANDEN

STICHWORTVERZEICHNIS

Bezeichnung	Seite
AUFKLEBER (KONTROLLE) (AUTODIG)	136
AUFKLEBER (KONTROLLE) (*JOYSTICK, 2-FCTN, DOWNSHIFT SW)	569
AUFKLEBER (KONTROLLE) (*JOYSTICK, 3-FCTN, DOWNSHIFT SW)	571
AUFKLEBER (KONTROLLE) (*UPPER PANEL)	883
AUFKLEBER (KONTROLLE) (*UPPER PANEL)	242
AUFKLEBER (LUXUSFAHRERHAUS)	388
AUFKLEBER (REFLEKTIEREND)	392
AUFKLEBER (ROT, WEISSE STREIFEN)	392
AUFKLEBER (40 KM/H)	388
AUSPUFFKRÜMMER	90
AUSPUFFROHR	92
AUTOMATISCHE SCHMIERLEITUNGEN	448
	451
	453
AUTOMATISCHES LADESYSTEM (AUTODIG) - STEUERUNG	135
	136
	138

B

*BASE AS-JOYSTICK	574
	576
BATTERIE UND VERDRAHTUNG	126
BATTERIEKASTEN	387
BEDIENUNGSEINBAUSATZ	837
BEDIENUNGSELEMENTE - KABELSTRANG	242
BEDIENUNGSELEMENTE - KABELSTRANG (*ELECTROHYDRAULIC, JOYSTICK)	571
BEDIENUNGSELEMENTE - KABELSTRANG (*ELECTROHYDRAULIC, JOYSTICK)	569
BEDIENUNGSHEBEL-AUFKLEBER	885
BEFESTIGUNG - VENTIL U. FILTER	479
BEFESTIGUNGSSATZ - ACHSÖLKÜHLER	337
BEFESTIGUNGSTEILE	433
	434
	435
BEFESTIGUNGSTEILE (DREHSTROMGENERATOR)	122
BELEUCHTUNGSANLAGE	388
BELEUCHTUNGSANLAGE (SICHERHEITS-SCHALTER)	165
BELEUCHTUNGSANLAGE (STRASSENAUSRÜSTUNG)	164
	176
BELEUCHTUNGSKABELSTRANG	167
BELEUCHTUNGSKABELSTRANG (FAHRERHAUS-ARBEITSSCHEINWERFER)	242
BELEUCHTUNGSKABELSTRANG (FAHRTRICHTUNGSBLINKER)	226
	228
BELEUCHTUNGSKABELSTRANG (LADERRAHMEN)	273
BELEUCHTUNGSKABELSTRANG (LINKS)	275
BELEUCHTUNGSKABELSTRANG (RECHTS)	275
BELEUCHTUNGSKABELSTRANG (RUNDUM-KENNLEUCHTE)	178
BELEUCHTUNGSKABELSTRANG (WENDEN VORN, MARKIERUNGSLEUCHTEN)	388
BELEUCHTUNGSVERDRAHTUNG	270
	273
	274
	275
BLINKER (24 V)	226
	228
BLINKERLEUCHTEN	164
	165
BLINKLEUCHTE	160
	161
BLITZSCHUTZ	426
BODEN - GERÄUSCHSCHUTZ	823
	824
	825
BOLZENSATZ	790
BREMS- UND RÜCKLEUCHTE	162
BREMS-KABELBAUM (BREMSLEUCHTE)	496
BREMSBELAG-EINBAUSATZ	498
BREMSDRUCKSPEICHER	492
	493
BREMSE UND PLANETENGETRIEBE	287
	289
BREMSGESTÄNGE	502
BREMSSTEUERVENTIL	508
BREMSSTEUERVENTIL (SERVICE)	502
BUCHSEN-EINBAUSATZ (STARTERMOTOR)	210
BÜRSTEN-EINBAUSATZ (STARTERMOTOR)	210

C

*CAMERA GP (*115-DEGREE, COLOR)	129
*CONVERSION AR-AUTODIG	141
*COOLER AS-TRANSMISSION OIL	295
*CORE AS-AXLE OIL COOLER	337

D

DÄMPFER-HALTETEILE	29
DÄMPFER UND RIEMENSCHEIBE	27
DIAGNOSELEITUNGEN	938
	941

* ÜBERSETZUNG ZUM ZEITPUNKT DER DRUCKLEGUNG NICHT VORHANDEN

STICHWORTVERZEICHNIS

Bezeichnung	Seite
DICHTUNG	100
DICHTUNG (TEMPERATURREGELGEHÄUSE)	72
DICHTUNGSSATZ	502
	550
	631
	689
	700
DICHTUNGSSATZ (AUSGELEICHSVENTIL)	629
	633
DICHTUNGSSATZ (*METERING PUMP, STEERING)	521
DICHTUNGSSATZ (SCHNELLWECHSELEINRICHTUNG)	788
DICHTUNGSSATZ (UMLAUFKÜHLWASSERHEIZUNG)	147
DICHTUNGSSATZ (VERTEILERVENTIL)	629
DICHTUNGSSATZ (VERTEILERVENTIL) (HYDRAULIKLÜFTERFLUSS)	676
DICHTUNGSSATZ (WECHSELVENTIL)	629
DICHTUNGSTRÄGER	10
DIFFERENTIAL	298
DIFFERENTIAL (BEGRENZTER SCHLUPF)	299
	300
*DISPLAY	868
*DISPLAY GP-CAMERA	142
DREHKNOPFSCHALTER (24 V) (AUTOSHIFT STEUERUNG)	242
DREHKNOPFSCHALTER (24 V) (FAHRSCHEINWERFER)	241
DREHKNOPFSCHALTER (24 V) (HINTERER SCHEIBENWISCHER)	241
DREHKNOPFSCHALTER (24 V) (VARIABLE SCHALTSTEUERUNG)	242
DREHMOMENTWANDLER	370
DREHMOMENTWANDLER-KÜHLERLEITUNGEN	333
DREHSCHALTER	224
DREHSTROMGENERATOR	122
	124
DREHSTROMGENERATOR - BEFESTIGUNG	43
DREHZAHLSENSOR	200
	201
DREHZAHLSENSOR (DREHMOMENTWANDLERAUSGANG)	367
DREHZAHLSENSOR (GETRIEBEAUSGANG 1)	315
	320
DREHZAHLSENSOR (GETRIEBEAUSGANG 2)	315
	320
DREHZAHLWANDLER U. GEHÄUSE	367
DRUCKKAPPE (7 PSI)	82
DRUCKKNOPFSCHALTER (AUTODIG AUSLÖSER)	136
	138
DRUCKKNOPFSCHALTER (GETRIEBEHERUNTERSCHALTUNG)	541
DRUCKKNOPFSCHALTER (GETRIEBE HOCHSCHALTEN)	541
DRUCKKNOPFSCHALTER (HERUNTERSCHALTEN)	243
DRUCKKNOPFSCHALTER (HUPE)	242
DRUCKLUFTLEITUNGEN	89
DRUCKLUFTVENTILSATZ	922
	924
DRUCKREDUZIERVENTIL	548
	690
DRUCKSCHALTER	218
DRUCKSCHALTER (*AUTOLUBE ACTUATION)	488
DRUCKSCHALTER (BETRIEBSBREMSENÖL)	263
DRUCKSCHALTER (DIFFERENTIAL)	590
DRUCKSCHALTER (FESTSTELLBREMSÖL)	253
DRUCKSCHALTER (HAUPTLENKUNGSÖL)	276
DRUCKSCHALTER (KÜHLMITTEL)	234
DRUCKSCHALTER (NOTLENKUNGSÖL)	276
DRUCKSCHALTER (ÖLFILTERUMGEHUNG) (ÖLFILTER - KRAFTÜBERTRAGUNG)	308
DRUCKSENSOR	192
	193
	194
	195
	196
	197
	198
	199
DRUCKSENSOR (*LIFT CYLINDER OIL)	185
DRUCKSENSOR UND BEFESTIGUNGSTEILE	185

E

EINBAUSATZ - DÜNNE SCHEIBE (12,57 MM DURCHMESSER)	299
EINBAUSSATZ - DICKE SCHEIBE (12,75 MM DURCHMESSER)	299
EINFÜLLKAPPE (MOTORÖL)	58
EINFÜLLSTUTZENKAPPE	304
EINFÜLLSTUTZENKAPPE (HYDRAULIKTANK)	645
EINFÜLLSTUTZENKAPPE (KRAFTÜBERTRAGUNG)	305
EINSPRITZLEITUNGEN - HYDRAULIKPUMPE	106

* ÜBERSETZUNG ZUM ZEITPUNKT DER DRUCKLEGUNG NICHT VORHANDEN

STICHWORTVERZEICHNIS

Bezeichnung	Seite
ELEKTR. ANLAGE	143
ELEKTROHYDRAULISCHE STEUERUNG	565
	567
	569
	571
ELEKTRONIK - MONITOR	145
ELEKTRONIK, KOMMUNIKATION	144
ELEKTRONISCHER SCHLÜSSEL (SICHERHEIT)	149
ENDSCHALTER (BREMSLEUCHTE)	496
ENTLÜFTER	57
	316
	321
ENTLÜFTER (KURBELGEHÄUSE)	57
ERDBAUSCHAUFEL	736
	738
	740
	742
	744
	746
	768
	769
	770
	771
	772
	773

F

Bezeichnung	Seite
FAHRERHAUS MIT ÜBERROLLSCHUTZ	807
	808
FAHRERHAUS, SONNENBLENDE	926
FAHRERHAUSANBAUSATZ	876
FAHRERHAUSAUSFÜHRUNG MIT GESCHL. ÜBERROLLSCHUTZ	878
FAHRERHAUSAUSKLEIDUNG	842
FAHRERHAUSBELEUCHTUNG	151
FAHRERHAUSHEIZUNG	832
	834
FAHRERHAUSHEIZUNGSLEITUNGEN	851
	853
FAHRERHAUSLÄRMDÄMPFUNG	916
	918
	919
	920
FAHRERHAUSLUFTFILTER	821
FAHRERHAUSTÜR	815
	816
	819
	820
FAHRERHAUSTÜR- U. FENSTERVERRIEGELUNG	840
FAHRERHAUSVERDRAHTUNG	240
	241
FAHRERSITZ	905
	907
FAHRERSITZFEDERUNG	922
	924
FAHRERSITZVERSTELLER	795
FAHRGESTELLVERDRAHTUNG	253
FAHRWERK	1
FAHRWERK-KABELBAUM (HAUPT)	253
FAHRWERK-KABELBAUM (HYDRAULIK-TANK)	254
FELGE	348
FELGE (TEILBAR)	349
	350
	351
FELGENAUFHÄNGUNG	338
FELSSCHAUFEL	748
	749
	751
	753
	774
	775
	776
	777
FESTSTELLBREMSBETÄTIGUNG	494
FESTSTELLBREMSE	498
FESTSTELLBREMSGESTÄNGE	501
FILTER (KRAFTÜBERTRAGUNG)	308
FILTERSIEB (HYDRAULIKTANKEINFÜLL-SIEB)	645
FORSTAUSRÜSTUNG	717
FUSSBREMSGESTÄNGE	499
	500
FUSSBREMSSOCKEL	495
	496
FUSSMATTE	842

G

Bezeichnung	Seite
GASFÜLLSATZ	509
GASFÜLLSATZ (LENKSÄULE)	540
GASPEDAL	888
	889
GEGENGEWICHT	396
	397
	398
GEHÄUSE - PENDELACHSE	326
GEHÄUSE - STARRACHSE	324
GEHÄUSE-EINBAUSATZ (LENKSÄULE)	540
GELENK FÜR SCHUTZBLECHE (STRASSENAUSRÜSTUNG)	439
	440

* ÜBERSETZUNG ZUM ZEITPUNKT DER DRUCKLEGUNG NICHT VORHANDEN

STICHWORTVERZEICHNIS

Bezeichnung	Seite
GESCHWINDIGKEITS- U. DREHZAHLMESSER-MODUL	870
GETRIEBE	372
GETRIEBEFILTER UND -LEITUNGEN	306
GETRIEBEHYDRAULIK	293
GETRIEBEKÜHLER U. BEFESTIGUNG	295
GETRIEBEÖLEINFÜLLKAPPE	297
	947
GETRIEBEÖLFÜLLSTUTZEN	304
	305
GETRIEBEPUMPE	345
	346
GETRIEBESCHALTER	231
GETRIEBESTEUERUNG	291
	292
GLEITSCHIENENBLOCK-EINBAUSATZ	910
GRUNDAUSFÜHRUNG	4

H

HALOGENSCHINWERFER (24V)(65W)	154
HALOGENSCHINWERFER (24V)(65W) (ARBEITSSCHEINWERFER)	155
HALTEGRIFF	831
HALTERUNG, EINSTELLBARER SCHALTER	496
HARDWARE, HINTERRAHMEN	436
	437
	438
*HARNESS AS-TRANSMISSION CONT (LENKRAD)	541
HAUBENBLENDE	466
	467
	468
HAUPTLAGER (KURBELWELLE)	17
HAUPTSTEUERVENTIL	680
	682
	684
	686
	687
HEBEL-EINBAUSATZ (STARTERMOTOR)	210
HEIZUNGSLEITUNGEN	851
	853
HELLIGKEITSREGLER	213
HINTERRAHMEN	415
HUBARM	702
	704
	705
HUBSTELLUNGSSENSOR U. BEFESTIGUNGS-TEILE	183
HUBVENTIL	41
HUBVORRICHTUNG	715
HUBZYLINDER	583
	584
HUBZYLINDER UND DICHTUNG	578
	579
HUBZYLINDERLEITUNGEN	623
HYDRAULIKANORDNUNG (2-VENTIL-HYDRAULIK)	598
HYDRAULIKANORDNUNG (3-VENTIL-HYDRAULIK)	598
	599
HYDRAULIKLEITUNGEN	615
HYDRAULIKÖL - BIOLOGISCH ABBAUBAR	599
HYDRAULIKÖLKÜHLERBLOCK	78
HYDRAULIKÖLKÜHLERLEITUNGEN	619
HYDRAULIKPUMPE UND BEFESTIGUNGSTEI-LE	638
HYDRAULIKSTEUERAUFHÄNGUNG	912
HYDRAULIKTANK	645
HYDRAULIKTANK UND ANBAUSATZ	635
HYDRAULIKZYLINDER	514
HYDRAULISCHE SCHWINGUNGSDÄMP-FUNG	564

I

IDENTIFIKATIONSSCHILD (CAT)	738
	742
	748
	749
	751
	753
	756
	772
	773
	779
IDENTIFIKATIONSSCHILD (MAX. GEWICHT)	388
	392
IDENTIFIZIERUNGS-AUFKLEBER (ABFALLBESEITIGUNG)	5
IDENTIFIZIERUNGS-AUFKLEBER (BIOLOGISCH ABBAUBARES HYDRAULIKÖL)	599
IDENTIFIZIERUNGS-AUFKLEBER (STARTSCHLÜSSELSCHALTER)	149
IDENTIFIZIERUNGS-AUFKLEBER (STROM-SCHUTZ - BETÄTIGUNGSSCHALTER)	282
IDENTIFIZIERUNGS-AUFKLEBER (WARNHORN)	567
IDENTIFIZIERUNGS-AUFKLEBER (WARNHORN)	565
IDENTIFIZIERUNGS-AUFKLEBER (ZUSATZHYDRAULIK)	567
IDENTIFIZIERUNGS-AUFKLEBER (12 V)	885
IDENTIFIZIERUNGS-AUFKLEBER (20 KM/H)	145

* ÜBERSETZUNG ZUM ZEITPUNKT DER DRUCKLEGUNG NICHT VORHANDEN

STICHWORTVERZEICHNIS

Bezeichnung	Seite
INFORMATIONSSCHILD (MANUELL KRAFTSTOFF)	111
INSTRUKTIONS-AUFKLEBER (BETRIEBS- U. WARTUNGSHANDBUCH LESEN)	149
INSTRUKTIONS-AUFKLEBER (FÜR SITZVERSTELLUNG)	922 924
INSTRUKTIONS-AUFKLEBER (MOTOR-START)	885
INSTRUKTIONS-AUFKLEBER (NICHT BETRETEN)	945
INSTRUKTIONS-AUFKLEBER (NOTAUS-GANG)	842
INSTRUKTIONS-AUFKLEBER (WARTUNG)	569 571
INSTRUKTIONS-AUFKLEBER (WARTUNG)	565 567
INSTRUKTONSSCHILD (BATTERIE)	126
INSTRUKTONSSCHILD (KLIMAANLAGE)	798
INSTRUMENTENBRETT-AUFKLEBER (LINKS)	885
INSTRUMENTENBRETT-AUFKLEBER (MITTE)	885
INSTRUMENTENBRETT-AUFKLEBER (RECHTS)	885
INSTRUMENTENTAFEL	881 883 885
ISOLATOR-EINBAUSATZ (STARTERMO-TOR)	210

J

JOYSTICK -STEUERUNG	574 576
JOYSTICK -STEUERUNG (*3-FUNCTION, WITH DOWNSHIFT)	571

K

KABELSTRANG - ARBEITSGERÄT (SCHNELLWECHSELEINRICHTUNG)	259
KABELSTRANG - HECKBELEUCHTUNG	169
KABELSTRANG - HEIZUNG U. KLIMAANLAGE	800 834
KABELSTRANG - LENKUNG (*COLUMN, WHEEL)	541
KABELSTRANG - LENKUNG (HILFSELE-MENT)	276
KABELSTRANG - VORDERE BELEUCH-TUNG	169
KABELSTRANG - VORDERES FAHRWERK	267
KÄLTEMITTELKOMPRESSOR	809 810
KÄLTEMITTELKONDENSATOR U. BEFESTIGUNGSTEILE	811
KAMERA	129 130
KIPPHEBELSATZ	509
KIPPHEBELSATZ (LENKSÄULE)	540
KIPPSCHALTER	222 223 230
KIPPSCHALTER (ABSTELLUNG AUF STANDEBENE)	253
KIPPSCHALTER (AUTO LOADING AUSSCHALTEINSTELLUNG)	136 138
KIPPSCHALTER (AUTO LOADING MODUSSCHALTER)	136 138
KIPPSCHALTER (AUTOM. UMKEHRLÜF-TER)	220
KIPPSCHALTER (BEHEIZTE SPIEGEL)	864 866
KIPPSCHALTER (CATERPILLAR ÜBER-WACHUNGSSYSTEM)	243
KIPPSCHALTER (FEINMODULATION)	243
KIPPSCHALTER (GEBLÄSEGESCHWINDIG-KEIT)	243
KIPPSCHALTER (GEFAHR)	226 228
KIPPSCHALTER (GETRIEBENEUTRALISIER-ÜBERSTEUERUNG)	243
KIPPSCHALTER (HAUBENNEIGESTELL-GLIED)	253
KIPPSCHALTER (HUB, NEIGUNG AUSSCHALTUNG)	243
KIPPSCHALTER (HYDRAULIKSPERRE)	243
KIPPSCHALTER (KLIMAANLAGE, HEIZUNG)	243
KIPPSCHALTER (NOTLENKUNG)	225
KIPPSCHALTER (RUNDUM-KENNLEUCH-TE)	178
KIPPSCHALTER (SCHNELLWECHSELEINRICH-TUNG)	219 222 223
KIPPSCHALTER (SCHWINGUNGSDÄMP-FUNG)	221
KIPPSCHALTER (STELLGLIED - ELEKTRISCH BETRIEBENE SCHUTZVORRICHTUNG)	282
KIPPSCHALTER (*TRANSMISSION DIRECTION)	541
KIPPSCHALTER (VORN, HINTERE ARBEITSSCHEINWERFER)	167

* ÜBERSETZUNG ZUM ZEITPUNKT DER DRUCKLEGUNG NICHT VORHANDEN

STICHWORTVERZEICHNIS

Bezeichnung	Seite
KIPPSCHALTER (VORWÄRTS, NEUTRAL, RÜCKWÄRTS)	231
KIPPSCHALTER (*3RD FUNCTION SELECT)	567
	571
KIPPSTELLUNGS-SENSOR U. BEFESTIGUNGSTEILE	186
KIPPZYLINDER	585
	587
	588
KIPPZYLINDER UND DICHTUNG	580
	581
	582
KLIMAANLAGE	798
	799
	800
KLIMAANLAGENDRUCKSPEICHER	847
KLIMAANLAGENLEITUNGEN	845
	847
KLIMAANLAGENVERDRAHTUNG	234
KNICKGELENK-ANHÄNGUNG	441
KNICKGELENKSCHUTZ	419
KNICKGELENKSPERRE	460
KOLBENGESTÄNGE-EINBAUSATZ	534
KOLBENPUMPE	534
	639
	642
KOLBENPUMPENUMLAUFSATZ	537
	644
KONDENSATORBLOCK (KÜHLMITTEL)	68
	811
KRAFTSTOFFABLASSLEITUNGEN	105
KRAFTSTOFFDRUCKREGLER	117
KRAFTSTOFFEINSPRITZDÜSE	101
	102
KRAFTSTOFFEINSPRITZPUMPE	109
	110
KRAFTSTOFFENTLÜFTUNGSPUMPE UND -HAUPTFILTER	111
	113
KRAFTSTOFFILTER (AUSFALLSCHUTZ)	98
KRAFTSTOFFILTER (EINFÜLLSTURZEN-SIEB)	118
KRAFTSTOFFILTER UND LEITUNGEN	97
KRAFTSTOFFLEITUNGEN	103
KRAFTSTOFFÖRDERPUMPE	116
KRAFTSTOFFSTANDGEBER	118
KRAFTSTOFFTANK	118
KRAFTSTOFFTANKKAPPE	118
KRAFTÜBERTRAGUNG	343
KRAFTÜBERTRAGUNGSELEKTRONIK	145
	146
KRAFTÜBERTRAGUNGSÖLKÜHLERBLOCK	295
KREUZGELENK	373
	374
	375
KREUZGELENK UND LAGER	356
	357
	373
	374
	375
KÜHLER UND LÜFTER	78
KÜHLERBLOCK	78
KÜHLERGRILL	417
KÜHLERWASSERKASTEN, OBEN	82
KÜHLSYSTEM - HOHE UMGEBUNGSTEMPERATUREN	68
KÜHLWASSERLEITUNGEN	70
	72
	74
KÜHLWASSERPUMPE	76
	77
KURBELWELLE	17
KURBELWELLENDICHTUNG	51
KURBELWELLENDICHTUNG (VORN)	51

L

LADELUFTKÜHLERLEITUNGEN	88
LADERRAHMEN	412
LAGERSATZ (DREHSTROMGENERATOR)	122
*LAMP AS-WARNING (SICHERHEITSGURT)	180
LEITBLECH	384
LEITRAD - RIEMEN	40
LEITUNGEN, VORNE	612
LENKBETÄTIGUNG	509
	511
LENKNEUTRALISIERVENTIL	519
	559
	560
LENKÖLLEITUNGEN	519
	525
LENKRAD	541
LENKSÄULE	540
LENKVENTIL	554
	556
LENKZYLINDER UND AUFHÄNGUNG	513
LEUCHTE (12 V, 24 V, 35 W)	152
	153
LEUCHTE (24 V)	151
	241
LEUCHTE (24 V) (FAHRLEUCHTE)	158
LEUCHTE (24 V) (FAHRSCHEINWERFER)	156
LEUCHTE (24 V) (FAHRTRICHTUNGSANZEIGER)	156
	158
LEUCHTE (24 V, 5 W)	162

* ÜBERSETZUNG ZUM ZEITPUNKT DER DRUCKLEGUNG NICHT VORHANDEN

STICHWORTVERZEICHNIS

Bezeichnung	Seite
LEUCHTE (24 V, 70 W)	163
LEUCHTE (24 V, 75/70 W) (FERNLICHT/ ABBLENDLICHT)	156
LEUCHTE (24 V, 75/70 W) (FERNLICHT/ ABBLENDLICHT)(RECHTS)	158
LEUCHTE (*24-VOLT, 5-WATTS)	465
LEUCHTE (24V, 21W)	162
LEUCHTE (24V, 21W) (FAHRTRICHTUNGSAN- ZEIGER)	156
	158
LEUCHTE (24V, 21W) (SIGNAL)	160
LUFTEINLASS-TRÄGER	478
LUFTEINLASSBOGEN	87
LUFTEINLASSDECKEL	85
	86
LUFTFILTER (HAUPTELEMENT)	84
LUFTFILTER (HILFSELEMENT)	84
LUFTKANAL U. FILTER	821
LUFTKOMPRESSORSITZ	797
LUFTREINIGER	83
	84

M

MAGNETFILTER (ACHSÖLKÜHLER)	328
MAGNETSCHALTER	215
	216
	217
MAGNETSCHALTER (24 V) (ANSAUGLUFT- VORWÄRMANLAGE)	216
MAGNETSCHALTER (24 V) (HAUPTRELAIS)	254
MAGNETSIEB	315
	320
MAGNETSTOPFEN	326
MAGNETVENTIL	699
	700
	701
MAGNETVENTIL (24 V) (*BRAKE, HYDRAULIC FAN)	629
*MANIFOLD GP-VALVE	631
	633
MASCHINENSTEUERUNG	133
MATERIALUMSCHLAGSCHAUFEL	723
	724
	725
	726
	727
	728
	729
	730
	731
	732
	733
	734
	757
	758
	759
	760
	761
	762
	763
	764
	765
	766
	767
MODUL - VIER ELEKTRON. ANZEIGEN	869
MODULATORVENTIL	376
*MONITOR AR-CAMERA	871
MONITORSTEUERUNG	813
MOTOR- UND GETRIEBEAUFLAGER	44
MOTOR-EINBAUSATZ	8
MOTOR, ELEKTR.	532
MOTOR, KOMPLETT	6
MOTORANTRIEB	634
MOTORBLOCK	19
	20
	22
MOTORBLOCKDECKEL	11
MOTORHAUBE UND VERKLEIDUNG	443
MOTORHAUBEN-KIPPSTELLUNG	485
MOTORHAUBENKIPPBETÄTIGUNG	380
MOTORHUBÖSE	42
MOTORKABELSTRANG	263
MOTORKABELSTRANG (ELEKTRON. STEUERMODUL)	261
MOTORKABELSTRANG (KRAFTSTOFFEIN- SPRITZUNG)	261
MOTORKÜHLERBLOCK	7
MOTORÖLABLASS	28
MOTORÖLABLASSLEITUNGEN	63
MOTORÖLEINFÜLLSTUTZEN	58
MOTORÖLKÜHLER	67
MOTORÖLKÜHLERBLOCK	67
MOTORÖLLEITUNGEN	62
MOTORRAUM-SCHUTZVERKLEIDUNG	474
MOTORSENSOR	188
MOTORSTOPFEN	49
MOTORVERDRAHTUNG	261
	263
MUTTERNSATZ	509
MUTTERNSATZ (LENKSÄULE)	540

N

NEIGEZYLINDERLEITUNGEN	625
	627

* ÜBERSETZUNG ZUM ZEITPUNKT DER DRUCKLEGUNG NICHT VORHANDEN

STICHWORTVERZEICHNIS

Bezeichnung	Seite
NOCKENWELLE	9
NORMALZAHNSPITZE	793
	794
NOSPIN-DIFFERENTIAL	301
	302
NOTLENKUNG	539
NOTLENKUNGSLEITUNGEN	516
NOTLENKUNGSPUMPE UND -MOTOR	532
NOTLENKUNGSPUMPE UND BEFESTIGUNGS-TEILE	533
NOTLENKUNGSSCHALTER	225
NOTLENKUNGSVENTIL	551
NOTLENKUNGSVERDRAHTUNG	276
O	
ÖLFILTER	59
	308
	590
	591
ÖLFILTERELEMENT (HYDRAULISCH)	590
ÖLMESSSTAB	60
	304
	305
ÖLWANNE	46
P	
PEDALBOLZEN	888
PENDELACHSBEGRENZUNGSBLOCK	385
PENDELACHSE	285
	286
PENDELVENTIL	552
	553
	696
	697
	698
PENDELVENTIL (*BRAKE, HYDRAULIC FAN)	629
PENDELVENTIL (LENKUNGSÖL)	525
PLANETENGETRIEBE	339
PLATTFORM	890
	891
PLEUELSTANGE UND KOLBEN	47
PUMPE FÜR KRAFTSTOFFENTLÜFTUNG U. WASSERABSCHEIDER	120
PUMPE U. BEFESTIGUNG - BREMSE U. HYDRAULIKLÜFTER	636
PUMPE UND BEFESTIGUNGSTEILE	107
PUMPENDÜSE, HYDRAULISCH	116
PUMPENKABELSTRANG	236
PUMPENKABELSTRANG (AUTOM. SCHMIERUNG)	473
PUMPENKOPF	595
PUMPENSTEUERVENTIL	691
R	
RADIO	893
RADIO - KOMMUNIKATION	894
RADIO - KOMMUNIKATION (PRODUCT LINK 212SR)	131
RADIOEINBAUSATZ	838
RAHMEN - BEFESTIGUNGSTEILE	430
	431
	432
REGLER (KRAFTSTOFFDRUCK)	117
REIFEN UND FELGE	358
	359
	360
	361
	362
	363
	364
	365
	366
REIFENVENTIL	349
	350
	351
	379
RELAIS (SCHALE)	243
RELAIS (24 V)	241
	270
RELAIS (24 V) (ACHSÖLKÜHLER)	260
RELAIS (24 V) (BEHEIZTE SPIEGEL)	866
RELAIS (24 V) (BEHEIZTE SPIEGEL)	864
RELAIS (24 V) (HAUBENNEIGEMOTOR)	253
RELAIS (24 V) (NOTLENKUNG)	276
RELAIS (24 V) (*SEAT BELT ALARM)	240
RICHTUNGSBLINKERSCHALTER	226
	228
RICHTUNGSSIGNALSCHALTER	226
	228
RIEMENSPANNER	50
ROLLENSATZ	888
RÜCKFAHRWARNHORN	233
RÜCKLEHNENVERLÄNGERUNG (STOFF)	907
RÜCKSCHLAGVENTIL (GEGEN VAKUUM)	118
RÜCKSPIEGEL	854
	855
	856
	857
	858
	859
	860
	861
	862

* ÜBERSETZUNG ZUM ZEITPUNKT DER DRUCKLEGUNG NICHT VORHANDEN

STICHWORTVERZEICHNIS

Bezeichnung	Seite
	864
	866
RUNDUM-KENNLEUCHTE	163
	178
	180

S

SCHALE - RÜCKENLEHNE	879
	880
SCHALLDÄMPFER	91
SCHALLDÄMPFUNG	481
	482
SCHALTER - STAND (SCHMIERFETT)	473
SCHALTER - UMKEHRLÜFTER	220
SCHALTER FÜR HYDRAULISCHE SCHWINGUNGSDÄMPFUNG	221
SCHALTER (PRÜFUNG, AUTOM. SCHMIERUNG)	473
SCHALTERKABELSTRANG	236
SCHALTERKABELSTRANG (STAND)	473
SCHALTVENTIL (LENKUNG)	556
SCHAUFELSCHUTZ	786
	787
SCHAUFELSTEUERUNG	711
	713
SCHAUFELUMLENKMECHANISMUS	716
SCHAUGLAS	70
SCHAUGLAS - FLÜSSIGKEITSSTAND (SCHAUGLAS)	645
SCHEIBENSATZ	300
SCHEIBENSCHUTZ	827
	829
SCHEIBENWASCHANLAGE	927
SCHEIBENWISCHER	932
SCHEIBENWISCHERARM	804
	805
SCHEIBENWISCHERBLATT	932
SCHEIBENWISCHERMOTOR	874
	875
SCHEIBENWISCHERSCHALTER (24 V) (VORN, INTERVALLSCHALTUNG)	241
SCHEINWERFER, HINTEN	165
SCHEINWERFER U. RICHTUNGSLEUCHTE	156
	158
SCHILD UND AUFKLEBER	944
	945
	946
SCHLÜSSELGRIFF	821
SCHMIERFILTER	473
SCHMIERLEITUNGEN	456
	458
SCHMIERÖLVERTEILERVENTIL	488
	489
	490
SCHMIERPUMPE	65
	66
	473
SCHMIERPUMPE U. BEFESTIGUNGSTEILE	471
SCHMIERSYSTEM, AUTOM.	461
	463
SCHMIERUNGSVERDRAHTUNG	236
SCHMIERVENTIL U. -LEITUNGEN	486
SCHNEIDMESSER	782
	783
	784
SCHNEIDMESSERSEGMENT	785
SCHNELLWECHSELANSCHLUSSSTEUERUNG	778
SCHNELLWECHSELEINRICHTUNG	781
SCHNELLWECHSELEINRICHTUNG - SCHALTER	219
SCHNELLWECHSELEINRICHTUNG - VERDRAHTUNG	259
SCHNELLWECHSELEINRICHTUNGSSPERRE	788
SCHNELLWECHSELVORRICHTUNG	779
	780
SCHNITTSTELLENMODUL (TASTE)	149
SCHRÄGKOLBEN-EINBAUSATZ	534
SCHRAUBE	303
	315
	320
SCHRAUBENSATZ (ELEKTRISCHE VERBINDER)	253
	267
SCHUTZ - HUBZYLINDER	592
	593
	594
SCHUTZABDECKUNG	947
SCHUTZBLECHE	402
	404
SCHUTZBLECHE (STRASSENAUSRÜSTUNG)	401
	408
SCHUTZBLECHE, VORNE	406
	407
SCHWINGSITZ	909
	910
	911
SCHWINGUNGSDÄMPFUNG U. LEITUNGEN	563
SCHWUNGRAD	34
SCHWUNGRADGEHÄUSE	37
SCHWUNGRADGEHÄUSEDICHTUNG	52
SCREEN	538
	631

* ÜBERSETZUNG ZUM ZEITPUNKT DER DRUCKLEGUNG NICHT VORHANDEN

STICHWORTVERZEICHNIS

Bezeichnung	Seite
	633
*SCREEN GP-CASE DRAIN	538
SCREEN (STEUERVENTIL-KRÜMMER)	629
*SEAT BELT & LIGHTING GP	903
SEITENVERKLEIDUNG	469
SENSOR, KABELSTRANG (*AXLE, FRONT)	238
SENSOR, KABELSTRANG (HINTERACHSE)	238
SENSORVERDRAHTUNG	279
	280
SERIENNUMMERNSCHILD (GETRIEBE)	316
	321
SERPENTINENFÖRMIGER RIEMEN	124
	344
	810
SERVICE GP- KOMMUNIKATION (PRODUCT LINK 300)	144
SICHERHEITSEINBAUSATZ	148
	149
SICHERHEITSGURT	903
	904
	909
SICHERUNG (10 A)	241
SICHERUNG (15 A)	241
	800
	834
SICHERUNG (20 A)	241
SICHERUNGSBLOCK	243
SIEB (HYDRAULIKTANK)	645
SOFTWARE - KOMMUNIKATION (PRODUCT LINK 212SR)	894
SOFTWARE - KOMMUNIKATION (PRODUCT LINK 300)	144
SOLENOID-EINBAUSATZ (STARTERMOTOR)	210
SPANNUNGSREGLER (24 V)	122
*SPECIAL AR-QUARRY	4
SPERRVENTIL	543
	544
	545
	662
	663
SPERRVENTIL (ACHSÖLKÜHLERNEBENSTROM-VENTIL)	337
SPERRVENTIL (VIERWEGLENKVENTIL)	525
STARRACHSE	284
	285
STARTERMOTOR	209
	210
STARTHILFE	206
STARTHILFEANSCHLUSS	182
STARTSCHALTER (TASTE)	241
STAUBKAPPE (UMLAUFKÜHLWASSERHEIZUNG)	147
*STEERING AR-COMMAND CONTROL	539
STEIGLEITER	446
	476
STELLUNGSSENSOR	190
	191
STELLUNGSSENSOR (HUB)	190
STEUERHEBEL	573
STEUERHEBEL (*LIFT, TILT, AUX, DOWNSHIFT SW)	574
STEUERHEBEL (*LIFT, TILT, DOWNSHIFT SWITCH)	576
STEUERKRÜMMER	629
STEUERUNG - NICHT PROGRAMMIERT	140
STEUERUNG - NICHT PROGRAMMIERT (GETRIEBE)	243
STEUERUNG, ELEKTRON. ANZEIGE (ANZEIGENTAFEL, RECHTS, LINKS)	243
STEUERUNG, ELEKTRON. ANZEIGE (ANZEIGETAFEL, MITTE)	138
STEUERUNG, ELEKTRON. ANZEIGE (ANZEIGETAFEL, MITTE)	136
STEUERUNG, NICHT PROGRAMMIERTER MONITOR	814
STEUERUNG, NICHT PROGRAMMIERTER MONITOR (CATERPILLAR ÜBERWACHUNGSSYSTEM)	242
STEUERUNGS-KABELSTRANG	131
STEUERUNGS-KABELSTRANG (AUTOM. SCHMIERUNG)	473
STEUERUNGS-KABELSTRANG (*HEATED MIRRORS)	864
	866
STEUERUNGS-KABELSTRANG (STROMSCHUTZ - BETÄTIGER)	282
STEUERUNGSEINHEIT, ELEKTRON. FÜR MOTOR UND BEFEST.	133
	134
STEUERVENTIL	664
	666
	668
	670
	673
STIRNRAD	35
STIRNRADGEHÄUSE	38
STIRNRADGEHÄUSE-HALTETEILE	30
	31
STIRNRADGEHÄUSEDECKEL	12
	13
STOSSDÄMPFER-REPARATURSATZ	922
	924
STROMBETÄTIGUNG	382
STROMSCHUTZSCHALTER	383

* ÜBERSETZUNG ZUM ZEITPUNKT DER DRUCKLEGUNG NICHT VORHANDEN

STICHWORTVERZEICHNIS

Bezeichnung	Seite
T	
T-STÜCK	502
TELLER- UND KEGELRAD	309, 311, 313
TEMPERATURSCHALTER (KLIMAANLAGE)	800
TEMPERATURSENSOR	202, 203, 204
TRENNSCHALTER	214
TRENNSCHALTER (BATTERIE)	126
TURBOLADER	95, 96
TURBOLADERÖLLEITUNGEN	64
TÜRFENSTER	928, 930
TYPENSCHILDBEFESTIGUNG	465
U	
ÜBERDRUCKVENTIL	377, 549, 550, 693
ÜBERDRUCKVENTIL (BREMSE)	629
ÜBERDRUCKVENTIL-EINBAUSATZ	532
ÜBERDRUCKVENTIL (HYDRAULIKTANK)	629
ÜBERDRUCKVENTIL (KÄLTEMITTELKOMPRESSOR)	809
ÜBERROLL-SCHUTZKABINE	896
ÜBERTRAGUNGSEINBAUSATZ	148
ÜBERTRAGUNGSSTEUERUNG U. BEFESTIGUNG	131
UMBAUSATZ - FÜR STRASSENVERKEHR	388, 392
UMBAUSATZ - ZULASSUNG	2, 3
UMGEHUNGSSCHALTER	212
UMLAUFKÜHLWASSERHEIZUNG	147
UMLAUFKÜHLWASSERHEIZUNGS-ELEMENT	147
UMLEITVENTIL	675, 676
UMLEITVENTIL (HYDRAULIKTANK)	629
UNEVERSALSCHAUFEL	755, 756
UNIVERSALSCHAUFEL	719, 720, 721
UNTERBRECHER (105 A) (DREHSTROMGENERATOR)	254
UNTERBRECHER (15 A) (FAHRSCHEINWERFER)	254
UNTERBRECHER (15 A) (*SEAT BELT ALARM)	240
UNTERBRECHER (15 A) (STELLGLIED - ELEKTRISCH BETRIEBENE SCHUTZVORRICHTUNG)	282
UNTERBRECHER (20 A) (HAUBENNEIGE-STELLGLIED)	254
UNTERBRECHER (20 A) (UNGESCHALTETER BATTREIESTROM ZUM FAHRERHAUS)	255
UNTERBRECHER (50 A) (STARTEN)	254
UNTERBRECHER (80 A) (HAUPTUNTERBRECHER)	254
UNTERBRECHER (90 A) (STARTHILFE)	254
UNTERSCHRAUBSEGMENT	785
V	
*VALVE AS-TIRE	379
VENTIL	546
VENTIL - HYDRAULISCHE SCHWINGUNGS-DÄMPFUNG	694
VENTIL, MECH.	689
VENTIL UND BEFESTIGUNGSTEILE - HAUPTSTEUERUNG	647, 650, 653, 656, 659
VENTILDECKEL	14, 15, 16
VENTILDECKELBEFESTIGUNG	32
VENTILKABELSTRANG (SITZ LUFTKOMPRESSOR)	922, 924
VENTILKIPPHEBEL (AUSLASS)	54
VENTILKIPPHEBEL (EINLASS)	54
VENTILMECHANISMUS-HALTETEILE	33
VENTILSATZ (SCHNELLWECHSELEINRICHTUNG)	788
VENTILSTEUERUNG	53, 54
VERBINDUNGSSTECKER	181
VERDRAHTUNG - ELEKTR. KUPPLUNG	260
VERDRAHTUNG, VORNE	267
VERDRAHTUNGSKABELBAUM (KRAFTSTOFFDRUCK) (SENSOR)	97
VERDRAHTUNGSKABELBAUM (WARTUNGSWERKZEUG)	243
VERKLEIDUNGEN, VORN	425
VERSTELLBARER SITZ	895
VERTEILERGETRIEBEANTRIEB	315, 320

* ÜBERSETZUNG ZUM ZEITPUNKT DER DRUCKLEGUNG NICHT VORHANDEN

STICHWORTVERZEICHNIS

Bezeichnung	Seite
VORHÄNGESCHLOSS	297, 947
VORREINIGER	93, 94
VORSPRUNG - HEBEL	706, 707
VORSPRUNG - HINTERER RAHMEN	386
VORSPRUNG - HUBARM	708, 709
VORSTEUERÖLDRUCKSAMMLER	561, 562
VORSTEUERVENTIL	546

W

WÄGEEINRICHTUNG - MONITOR	873
WARNAUFKLEBER (BETRIEBS- U. WARTUNGSHANDBUCH LESEN)	779
WARNAUFKLEBER (HANDBUCH LESEN)	944
WARNAUFKLEBER (LENKUNG)	388
WARNAUFKLEBER (NICHT SCHWEISSEN, NICHT BOHREN, HANDBUCH LESEN)	945
WARNAUFKLEBER (PRODUCT LINK RADIO, NICHT NACD)	148
WARNAUFKLEBER (QUETSCHGEFAHR, NICHT BETRETEN)	944
WARNHORN	509
WARNHORN, ELEKTR.	836
WARNVORRICHTUNG	121
WASSERABSCHEIDER- U. KRAFTSTOFFILTER	100
WASSERABSCHEIDER U. KRAFTSTOFFENTLÜFTUNGSPUMPE	120
WASSERABSCHEIDER UND KRAFTSTOFFILTER (HAUPTELEMENT)	100
WASSERKNIESTÜCK	69
WASSERTEMPERATURREGLER (94 GRAD CELSIUS) (KÜHLMITTEL)	72
WELLENEINBAUSATZ	509
WELLENSCHEIBEN-EINBAUSATZ (EINSCHL. 17 BEILAGSCHEIBEN)	534
WERKZEUGKASTEN	935

Z

ZAHN, HD AUSFÜHRUNG	791, 792
ZAHNHALTER	718
ZAHNRADPUMPE	532
ZAHNRADPUMPE (ACHSÖLKÜHLER)	344
ZIGARETTENANZÜNDER (12 V)	242
ZUGANGSKLAPPE	399, 400
ZUMESSPUMPE (*HMU STEERING)	519
ZYLINDERBLOCKSCHRAUBE	48
ZYLINDERKOPF	23, 24, 25, 26
ZYLINDERKOPF-HALTETEILE	26

* ÜBERSETZUNG ZUM ZEITPUNKT DER DRUCKLEGUNG NICHT VORHANDEN

MACHINE ARRANGEMENT

237-0234 CHASSIS AR

S/N: N1A1-UP

PART OF 237-0231 GENERAL AR

SMCS-7000 **i02288529**

NOTE	PART NUMBER	QTY	PART NAME 1 2 3 4 5 6 (PRODUCT LEVEL)	SEE PAGE
Y	*237-0423*	1	BOX GP-BATTERY	387
Y	*190-6728*	1	CONTROL GP-BUCKET	711
Y	*237-0421*	1	CONTROL GP-SERVICE BRAKE	502
Y	*241-2921*	1	COOLER & MTG GP-TRANSMISSION	295
Y	*237-0422*	1	COUNTERWEIGHT GP	396
Y	*112-6956*	1	CYLINDER & MTG GP-STEERING	513
Y	*237-0424*	1	FENDER GP	402
Y	*248-7613*	1	FENDER GP	404
Y	**237-0426**	1	FRAME AS-LOADER	412
Y	**237-0425**	1	FRAME AS-REAR	415
Y	*237-0428*	1	GUARD GP-FRONT	425
Y	*112-6953*	1	HITCH GP-ARTICULATING	441
Y	*251-1700*	1	HOOD & GUARD GP	443
Y	*237-0430*	1	LADDER GP	446
Y	*237-0431*	1	LINES GP-AFTERCOOLER AIR	88
Y	*237-0434*	1	LINES GP-CAB HEATER	851
Y	*237-0432*	1	LINES GP-FUEL	103
Y	*237-0433*	1	LINES GP-GREASE	456
Y	*237-0435*	1	LINES GP-HYDRAULIC OIL COOLER	619
Y	*237-0436*	1	LINES GP-STEERING (HMU STEERING)	519
Y	*237-0438*	1	LINES GP-TORQUE CONV COOLER	333
Y	*237-0439*	1	LINES GP-WATER (RADIATOR)	70
Y	*112-6973*	1	LINK GP-STEERING FRAME LOCK	460
Y	*245-4083*	1	PANEL GP-SIDE	469
Y	*237-0440*	1	PLATE & FILM GP	945
Y	*237-0443*	1	RADIATOR & FAN GP	78
Y	*237-0445*	1	SHIELD GP-ENGINE COMPARTMENT	474
Y	*237-0447*	1	SUPPORT GP-AIR INLET	478
Y	*200-0008*	1	SUPPORT GP-VALVE & FILTER (SERVICE CENTER)	479
Y	*240-5150*	1	TANK GP-FUEL	118
Y	*236-9039*	1	WASHER GP-WINDOW	927
	6V-1970	1	LITERATURE GP	
	5P-7958	1	SLEEVE-CABLE SPLICE	
	5P-8500	2	KEY	

Y-SEPARATE ILLUSTRATION

<END>

MACHINE ARRANGEMENT

249-8107 CONVERSION AR-CERTIFICATION

S/N: N1A1-UP

AN ATTACHMENT

SMCS-7000 **i02442463**

NOTE	PART NUMBER	QTY	PART NAME 1 2 3 4 5 6 (PRODUCT LEVEL)	SEE PAGE
Y	*126-7710*	1	GUARD GP-POWER TRAIN	427
Y	*244-3599*	1	LIGHTING AR-SIGNAL (HMU STEERING)	165
Y	*246-4791*	1	PROTECTION GP-VANDALISM	947
Y	*244-5424*	1	STEERING AR-SECONDARY	539
Y	*262-1085*	1	SUPPRESSION AR-SOUND	481

Y-SEPARATE ILLUSTRATION

<END>

MACHINE ARRANGEMENT

266-7478 CONVERSION AR-CERTIFICATION

S/N: N1A1-UP
UNITED KINGDOM
AN ATTACHMENT

SMCS-7000 **i02443482**

NOTE	REF NO	GRAPHIC REF	PART NUMBER	QTY	PART NAME 1 2 3 4 5 6 (PRODUCT LEVEL)	SEE PAGE
	1	1	**162-7039**	1	BLOCK	
	2	1	**268-1264**	1	LOCK AS-BRACKET	
	3	1	**269-8066**	2	BRACKET AS	
	4	1	**8T-4223**	2	WASHER-HARD (13.5X25.5X3-MM THK)	
M	5	1	**8T-5041**	2	BOLT (M12X1.75X120-MM)	
F			**268-1166**	1	FILM-INSTRUCTION (ROAD HEIGHT, READ OMM) AT BOTTOM OF LH WINDSHIELD PANEL ABOVE INSTRUMENT PANEL VISIBLE FROM THE OPERATOR SEAT	

F-NOT SHOWN
M-METRIC PART

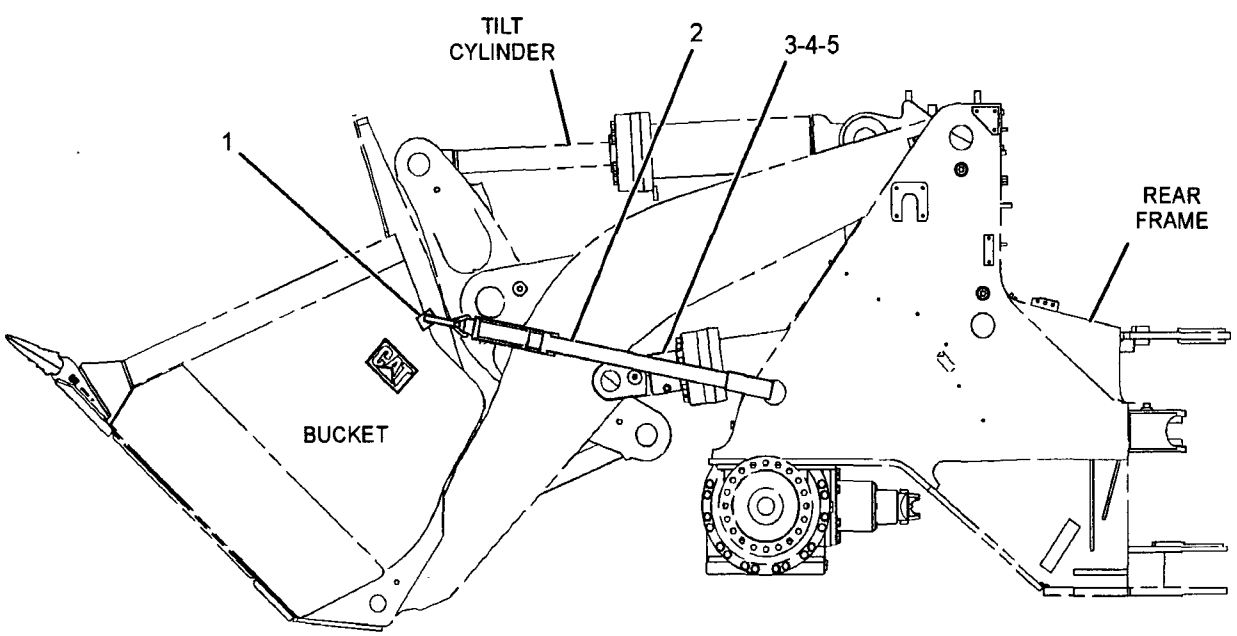

LEFT SIDE VIEW

GRAPHIC #1 **<END>** g01228748

MACHINE ARRANGEMENT

237-0231 GENERAL AR

S/N: N1A1-UP

SMCS-7000 **i02277348**

NOTE	PART NUMBER	QTY	PART NAME 1 2 3 4 5 6 (PRODUCT LEVEL)	SEE PAGE
Y	*237-0234*	1	CHASSIS AR	1
Y	*237-0235*	1	ELECTRICAL AR	143
Y	**235-1422**	1	ENGINE AR-COMPLETE	6
Y	*237-0238*	1	HYDRAULIC AR-2 VALVE	598
Y	*237-3995*	1	INSTALLATION AR-ENGINE	8
Y	*243-1076*	1	OPERATOR AR-ENCLOSED ROPS (HMU STEERING)	878
Y	*237-0240*	1	POWER TRAIN AR	343

Y-SEPARATE ILLUSTRATION

<END>

269-0671 SPECIAL AR-QUARRY

S/N: N1A1-UP

AN ATTACHMENT

SMCS-7000 **i02443526**

NOTE	PART NUMBER	QTY	PART NAME 1 2 3 4 5 6 (PRODUCT LEVEL)	SEE PAGE
Y	*281-8875*	1	CAMERA AR	130
Y	*269-6608*	1	LIGHTING GP-BACKUP	165
Y	*237-1012*	1	LIGHTING GP-WARNING BEACON	178
Y	*266-7477*	1	PLATFORM AR	890
Y	*265-5046*	1	SEAT BELT & LIGHTING GP	903
	263-7063	1	COUNTERWEIGHT	

Y-SEPARATE ILLUSTRATION

<END>

MACHINE ARRANGEMENT

244-6607 WASTE HANDLING AR

S/N: N1A1-UP

AN ATTACHMENT

SMCS-7000 **i02390382**

NOTE	PART NUMBER	QTY	PART NAME 1 2 3 4 5 6 (PRODUCT LEVEL)	SEE PAGE
Y	*247-8561*	1	ACTUATOR GP-POWER GUARD	383
Y	*247-8559*	1	BAFFLE GP	384
Y	*247-1909*	1	BOX GP-TOOL	935
Y	*247-8560*	1	FENDER GP-FRONT	406
Y	*251-9754*	1	FILLER GP-POWER TRAIN OIL	305
Y	*247-8557*	1	GUARD GP-ARTICULATION	419
Y	*227-4094*	1	GUARD GP-AXLE SEAL	423
Y	*214-4141*	1	GUARD GP-DRIVE SHAFT	424
Y	*262-1379*	1	GUARD GP-LIGHTING	426
Y	*247-8558*	1	GUARD GP-POWER TRAIN (TRANSMISSION, HINGED)	429
Y	**251-9758**	1	HARDWARE GP-LOADER FRAME	430
Y	**251-9759**	1	HARDWARE GP-REAR FRAME	436
Y	*251-9760*	1	STEP GP	476
	199-2090	1	COVER AS	
	262-9762	2	FILM-IDENTIFICATION (WASTE HANDLER)	
	070-0384	1	SHROUD-LH	
	070-0385	1	SHROUD-RH	

Y-SEPARATE ILLUSTRATION

<END>

ENGINE ARRANGEMENT

235-1422 ENGINE AR-COMPLETE

S/N: KHX1-UP

PART OF 237-0231 GENERAL AR

SMCS-1000 **i02430959**

NOTE	PART NUMBER	QTY	PART NAME 1 2 3 4 5 6 (PRODUCT LEVEL)	SEE PAGE
Y	222-5946	1	BREATHER GP	57
Y	4W-3462	1	CARRIER GP-SEAL	10
Y	**246-9345**	1	CONTROL & MTG GP-ENGINE ELEK	134
			S/N: KHX1-409	
Y	241-7602	1	CONTROL & MTG GP-ENGINE ELEK	133
			S/N: KHX410-UP	
Y	189-8780	1	COVER GP-AIR INLET (STARTING AID HEATER)	86
Y	238-0371	1	COVER GP-CYLINDER BLOCK	11
Y	118-1727	1	COVER GP-FRONT HOUSING	12
Y	222-5952	1	COVER GP-VALVE MECHANISM	14
			S/N: KHX1-409	
Y	261-3721	1	COVER GP-VALVE MECHANISM	16
			S/N: KHX410-UP	
Y	165-4557	1	DAMPER & PULLEY GP	27
Y	118-2073	1	DRAIN GP-ENGINE OIL	28
Y	246-2931	1	ELBOW GP-AIR INLET	87
Y	237-9821	1	ELBOW GP-WATER	69
Y	235-1423	1	ENGINE AR-CORE	7
Y	218-0859	1	FASTENER GP-DAMPER & PULLEY	29
Y	116-4556	1	FASTENER GP-FRONT HOUSING	30
Y	238-0373	1	FASTENER GP-FRONT HOUSING	31
Y	212-4287	1	FASTENER GP-VALVE COVER	32
			S/N: KHX1-409	
Y	258-8723	1	FASTENER GP-VALVE MECHANISM	33
			S/N: KHX410-UP	
Y	237-9836	1	FILLER GP-ENGINE OIL	58
Y	237-9823	1	FILTER & LINES GP-FUEL (SECONDARY)	97
Y	189-5433	1	FILTER GP-ENGINE OIL	59
Y	7E-0519	1	FLYWHEEL GP	34
Y	248-0369	1	GAUGE GP-OIL LEVEL (DIPSTICK) (ENGINE)	60
Y	197-5210	1	HOUSING GP-FLYWHEEL	37
Y	237-9822	1	LIFTING GP-ENGINE	42
Y	7C-2475	1	LINES GP-ENGINE OIL	62
Y	187-6279	1	LINES GP-TURBOCHARGER OIL	64
Y	238-4802	1	LINES GP-WATER (ENGINE)	72
Y	183-6845	1	MANIFOLD GP-EXHAUST (DRY)	90
Y	215-6982	1	MOUNTING GP-ALTERNATOR	43
Y	201-6850	1	PAN GP-OIL	46
Y	235-8200	1	PLUG GP-CONNECTOR (ENGINE HARNESS, PROT COVER)	181
			S/N: KHX1-409	
Y	159-0303	1	PLUG GP-CYLINDER BLOCK	48
Y	162-8068	1	PLUG GP-ENGINE	49
Y	172-5754	1	PULLEY GP-IDLER (BELT TENSIONER)	50
Y	238-4803	1	PUMP GP-FUEL PRM & PRIM FILTER	111
Y	209-4600	1	PUMP GP-WATER	76
Y	115-4210	1	SEAL GP-CRANKSHAFT	51
Y	7C-1770	1	SEAL GP-FLYWHEEL HOUSING	52
Y	238-4808	1	SENSOR GP-ENGINE (TEMPERATURE, PRESSURE, SPEED)	188
Y	249-9223	1	STARTING AID GP (MAGNETIC SWITCH)	206
Y	198-2714	1	WIRING GP-ENGINE	261
			PLEASE USE THE GASKET KIT LINK IN SIS OR CONTACT YOUR LOCAL DEALER FOR THE LATEST GASKET KIT INFORMATION	

Y-SEPARATE ILLUSTRATION

ENGINE ARRANGEMENT

235-1423 ENGINE AR-CORE

S/N: KHX1-UP

PART OF 235-1422 ENGINE AR-COMPLETE

SMCS-1000 **i02439169**

NOTE	PART NUMBER	QTY	PART NAME 1 2 3 4 5 6 (PRODUCT LEVEL)	SEE PAGE
Y	*212-4289*	1	CAMSHAFT GP	9
Y	*117-3643*	1	COOLER GP-ENGINE OIL	67
Y	*211-9120*	1	COVER GP-FRONT HOUSING	13
Y	*210-5590*	1	CRANKSHAFT GP	17
Y	*221-4482*	1	CYLINDER BLOCK GP	22
Y	*219-5849*	1	CYLINDER HEAD GP	26
Y	*205-1321*	1	GEAR GP-FRONT	35
Y	*165-4446*	1	HOUSING GP-FRONT	38
Y	*191-0461*	1	LINES GP-INJECTOR HYD PUMP	106
Y	*212-3652*	6	PISTON & ROD GP	47
Y	*222-5900*	1	PUMP & MTG GP-UNIT INJ HYD	107
Y	*192-2981*	1	PUMP GP-ENGINE OIL	65
Y	*222-5958*	6	PUMP GP-FUEL INJECTION	109
			S/N: KHX1-410	
Y	*268-1839*	6	PUMP GP-FUEL INJECTION	110
			S/N: KHX411-UP	
Y	*258-2403*	1	TURBOCHARGER GP	96
Y	*232-3717*	1	VALVE MECHANISM GP	53
	247-0829	1	ELECTRONICS GP-ENGINE RATINGS	

Y-SEPARATE ILLUSTRATION

ENGINE ARRANGEMENT

237-3995 INSTALLATION AR-ENGINE

S/N: N1A1-UP
PART OF 237-0231 GENERAL AR
ALSO AN ATTACHMENT

SMCS-1000 **i02226052**

NOTE	PART NUMBER	QTY	PART NAME 1 2 3 4 5 6 (PRODUCT LEVEL)	SEE PAGE
Y	*237-4848*	1	AIR CLEANER GP	83
Y	*237-4847*	1	ALTERNATOR GP-CHARGING	124
Y	*237-4850*	1	LINES GP-AIR	89
Y	*168-8976*	1	LINES GP-ENGINE OIL DRAIN	63
Y	*237-4851*	1	LINES GP-FUEL DRAIN	105
Y	*116-8666*	1	MOUNTING GP-ENGINE & TMSN	44
Y	*237-4853*	1	MUFFLER GP	91
Y	*111-4275*	1	STARTING MOTOR GP-ELECTRIC	209
	238-4804	1	FUMES DISPOSAL GP	
	2S-2053	1	CLIP	
	9M-2904	1	CLAMP-HOSE	
	238-4805	1	HOSE-DISPOSAL	

Y-SEPARATE ILLUSTRATION

BASIC ENGINE

212-4289 CAMSHAFT GP

S/N: KHX1-UP

PART OF 235-1423 ENGINE AR-CORE

SMCS-1210, 1211, 1212 **i02242048**

NOTE	REF NO	GRAPHIC REF	PART NUMBER	QTY	PART NAME 1 2 3 4 5 6 (PRODUCT LEVEL)	SEE PAGE
	1	1	107-7694	1	PLATE-THRUST	
	2	1	212-4288	1	CAMSHAFT AS	
	2A	1	1B-8705	1	KEY-WOODRUFF	
	2B	1	224-3247	1	GEAR (100-TEETH)	
M	3	1	6V-3940	2	BOLT (M8X1.25X25-MM)	

M-METRIC PART

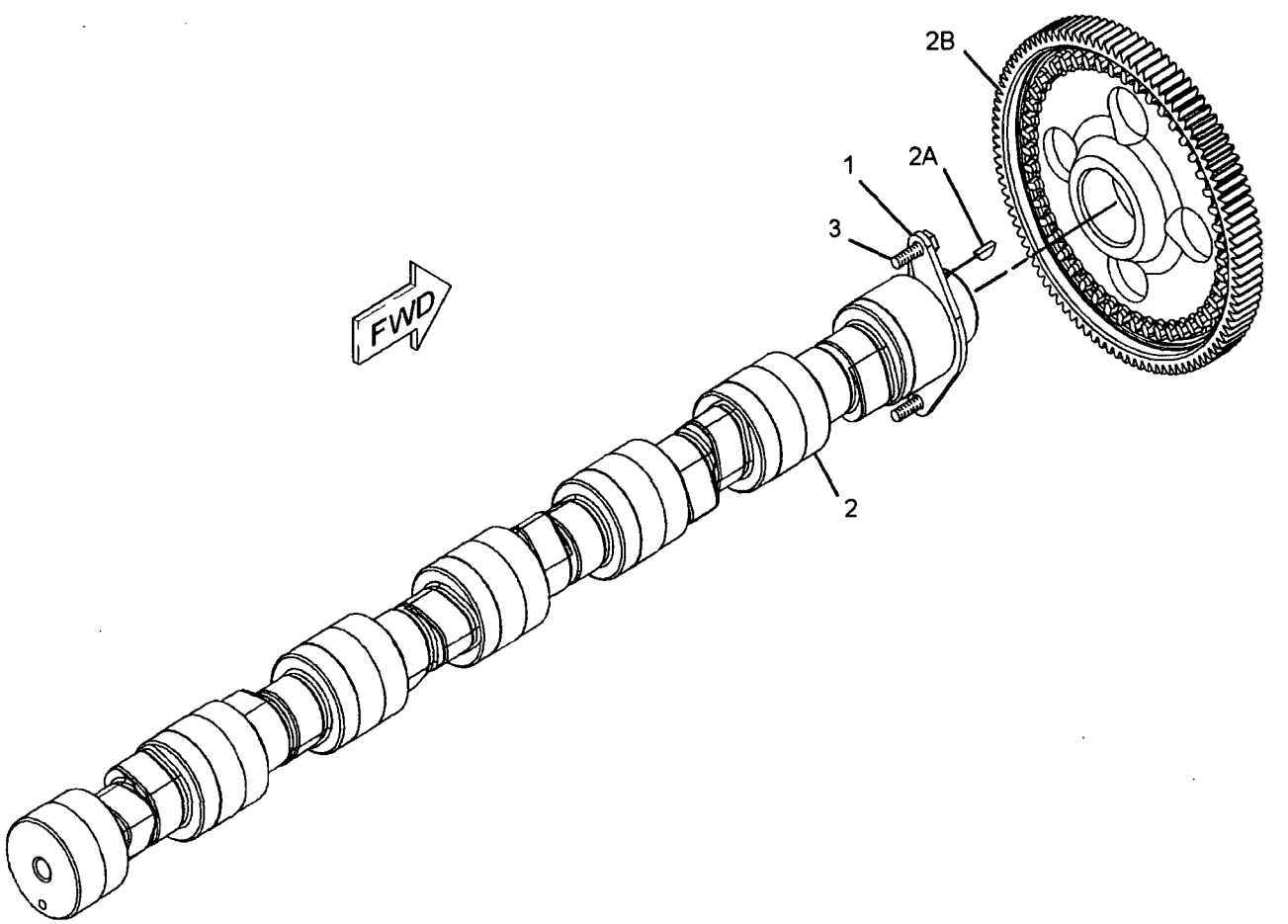

GRAPHIC #1 **<END>** g01099239

4W-3462 CARRIER GP-SEAL

S/N: KHX1-UP

PART OF 235-1422 ENGINE AR-COMPLETE

SMCS-1160, 1161 **i02041302**

NOTE	REF NO	GRAPHIC REF	PART NUMBER	QTY	PART NAME 1 2 3 4 5 6 (PRODUCT LEVEL)	SEE PAGE
	1	1	2W-6546	1	COVER	
	2	1	8C-3091	1	SEAL-O-RING	
	3	1	239-0583	1	GASKET	
	4	1	6V-3538	2	DOWEL	
M	5	1	6V-3940	8	BOLT (M8X1.25X25-MM)	
	6	1	9M-1974	8	WASHER-HARD (8.8X16X2-MM THK)	
B	7	1	4C-9612		SEALANT-SILICONE	

B-USE AS REQUIRED
M-METRIC PART

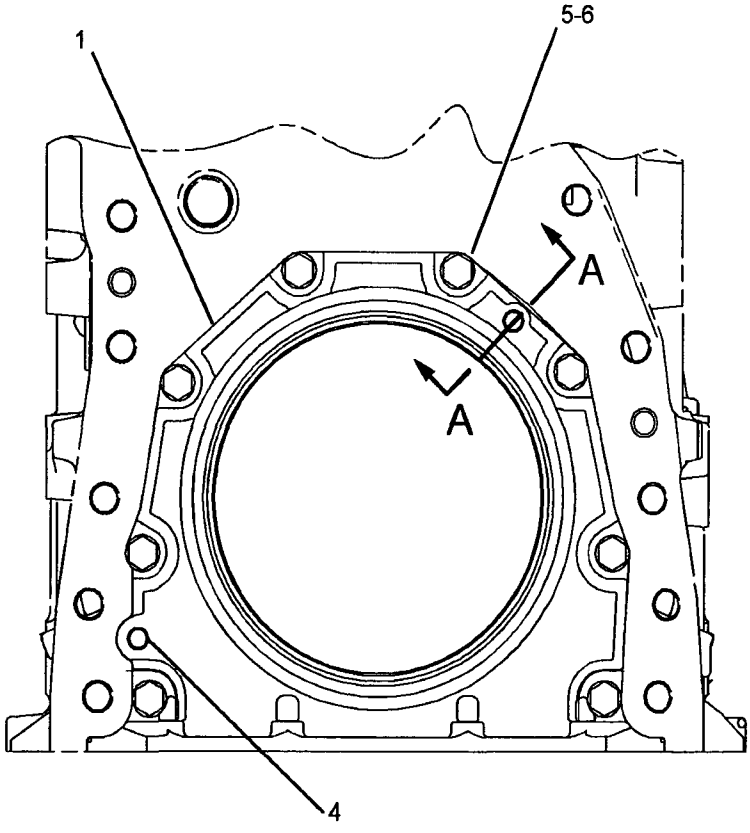

FRONT VIEW

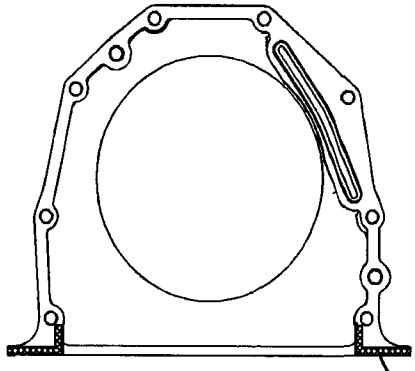

REAR VIEW

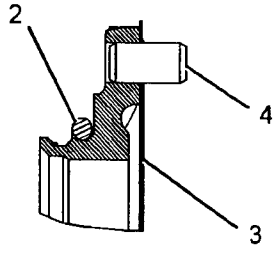

SECTION A-A

GRAPHIC #1 **<END>** g01051044

BASIC ENGINE

238-0371 COVER GP-CYLINDER BLOCK

S/N: KHX1-UP

PART OF 235-1422 ENGINE AR-COMPLETE

SMCS-1201 **i02242397**

NOTE	REF NO	GRAPHIC REF	PART NUMBER	QTY	PART NAME 1 2 3 4 5 6 (PRODUCT LEVEL)	SEE PAGE
	1	1	**2W-6544**	1	COVER	
	2	1	**4P-5918**	2	CLIP	
	3	1	**4Y-9652**	3	GASKET	
	4	1	**7W-3871**	2	COVER-SIDE	
	5	1	**7W-3872**	6	SLEEVE	
	6	1	**8E-9571**	8	WASHER-HARD (8.8X16X7-MM THK)	
M	7	1	**9X-2097**	1	STUD (M8X1.25 THD)	
	8	1	**110-7618**	3	BOLT AS	
	9	1	**222-5893**	1	COVER AS	
	10	1	**210-3321**	1	STUD (M8X1.25 THD)	
	11	1	**4P-7581**	1	CLIP	
M	12	1	**5C-7261**	1	NUT (M8X1.25-THD)	
M	13	1	**6V-2317**	23	BOLT (M8X1.25X30-MM)	
	14	1	**8T-4224**	1	WASHER-HARD (8.8X16X2-MM THK)	
	15	1	**9M-1974**	14	WASHER-HARD (8.8X16X2-MM THK)	
B	16	1	**1U-8846**		SEALANT-GASKET (2-ML)	

B-USE AS REQUIRED
M-METRIC PART

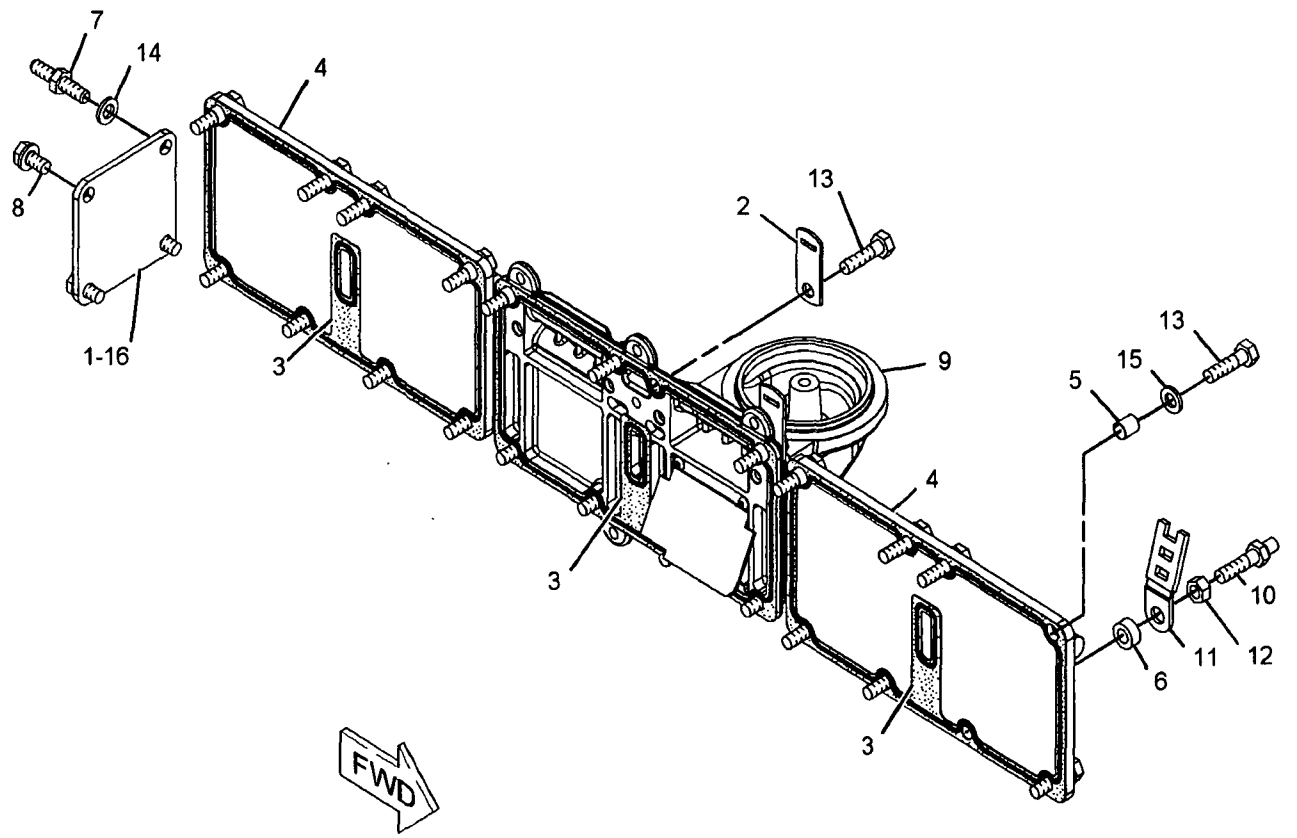

GRAPHIC #1 **<END>** g01118434

118-1727 COVER GP-FRONT HOUSING

S/N: KHX1-UP

REQUIRED ON ENGINES WITH NO FACTORY INSTALLED AIR COMPRESSOR

PART OF 235-1422 ENGINE AR-COMPLETE

SMCS-1151, 1166 **i02445680**

NOTE	REF NO	GRAPHIC REF	PART NUMBER	QTY	PART NAME 1 2 3 4 5 6 (PRODUCT LEVEL)	SEE PAGE
	1	1	5P-8245	4	WASHER-HARD (13.5X25.5X3-MM THK)	
M	2	1	6V-5696	2	BOLT (M12X1.75X80-MM)	
	3	1	4W-2026	1	COVER	
	4	1	135-9819	1	SEAL	
M	5	1	6V-8149	2	NUT (M12X1.75-THD)	

M-METRIC PART

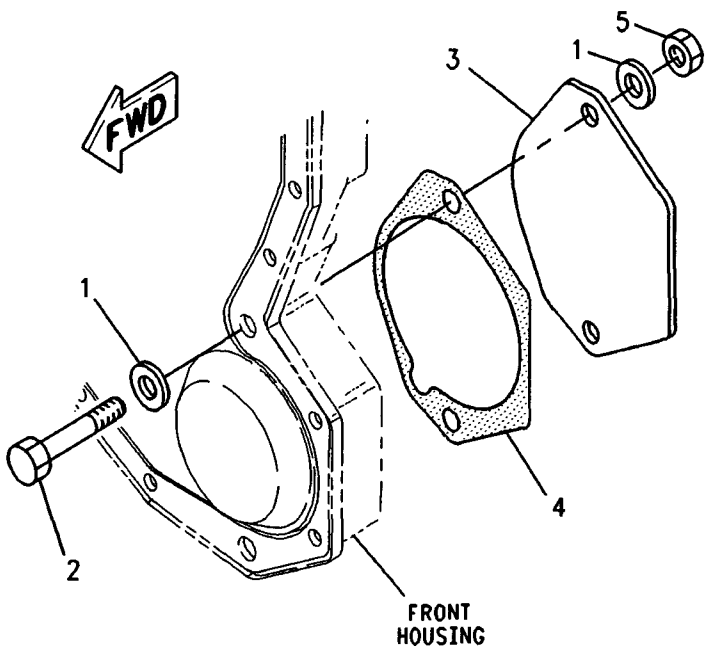

GRAPHIC #1 **<END>** g00897312

211-9120 COVER GP-FRONT HOUSING

S/N: KHX1-UP
PART OF 235-1423 ENGINE AR-CORE
FOR USE WITH OIL FILLER

SMCS-1151, 1166 **i02246431**

NOTE	REF NO	GRAPHIC REF	PART NUMBER	QTY	PART NAME 1 2 3 4 5 6 (PRODUCT LEVEL)	SEE PAGE
	1	1	166-1776	1	COVER AS-FRONT	
	1A	1	126-1757	2	WASHER (10.85X19.3X1.27-MM THK)	
	1B	1	136-0822	2	STUD	
	2	1	166-1781	1	GASKET	

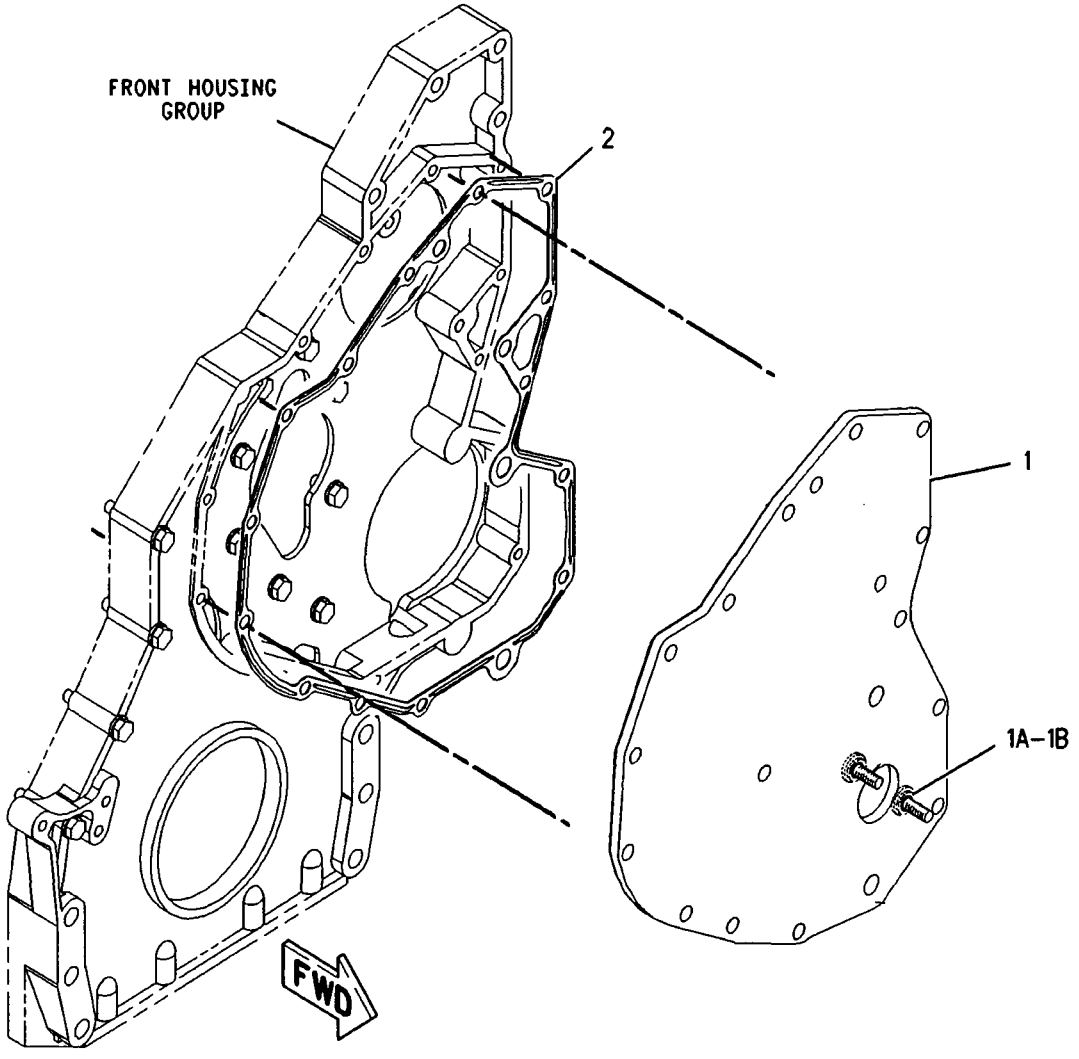

GRAPHIC #1 **<END>** g00873836

222-5952 COVER GP-VALVE MECHANISM

S/N: KHX1-UP

PART OF 235-1422 ENGINE AR-COMPLETE

SMCS-1107 **i02419498**

NOTE	REF NO	GRAPHIC REF	PART NUMBER	QTY	PART NAME 1 2 3 4 5 6 (PRODUCT LEVEL)	SEE PAGE
	1	1	**246-5083**	13	SLEEVE-SPACER	
	2	1	**249-0150**	1	COVER GP-VALVE MECHANISM (BASE)	
J		1	**217-5701**		SEAL (21-DECIMETER)	
Y	3	1	**242-2411**	1	COVER GP-VALVE MECHANISM (TOP)	15
M	4	1	**099-3649**	13	BOLT (M8X1.25X40-MM)	
	5	1	**8T-4224**	13	WASHER-HARD (8.8X16X2-MM THK)	

J-ORDER BY THE DECIMETER
M-METRIC PART
Y-SEPARATE ILLUSTRATION

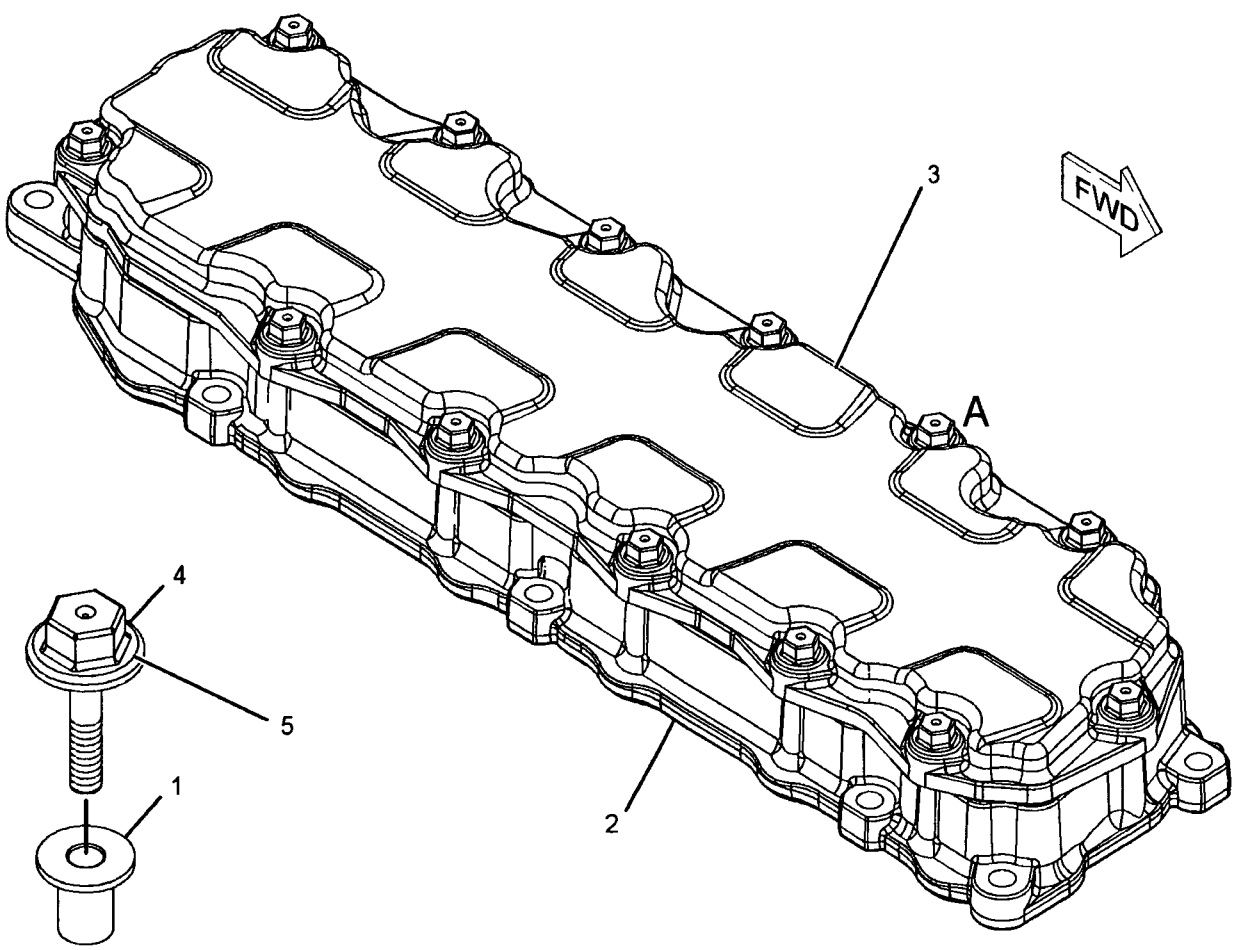

EXPLODED VIEW
OF AREA A

GRAPHIC #1

<END>

g01060391

242-2411 COVER GP-VALVE MECHANISM

S/N: KHX1-UP

PART OF 222-5952, 261-3721 COVER GP-VALVE MECHANISM

SMCS-1107 **i02246469**

NOTE	REF NO	GRAPHIC REF	PART NUMBER	QTY	PART NAME 1 2 3 4 5 6 (PRODUCT LEVEL)	SEE PAGE
L	1	1	217-5701		SEAL (21-DM)	

L-ORDER BY THE DECIMETER

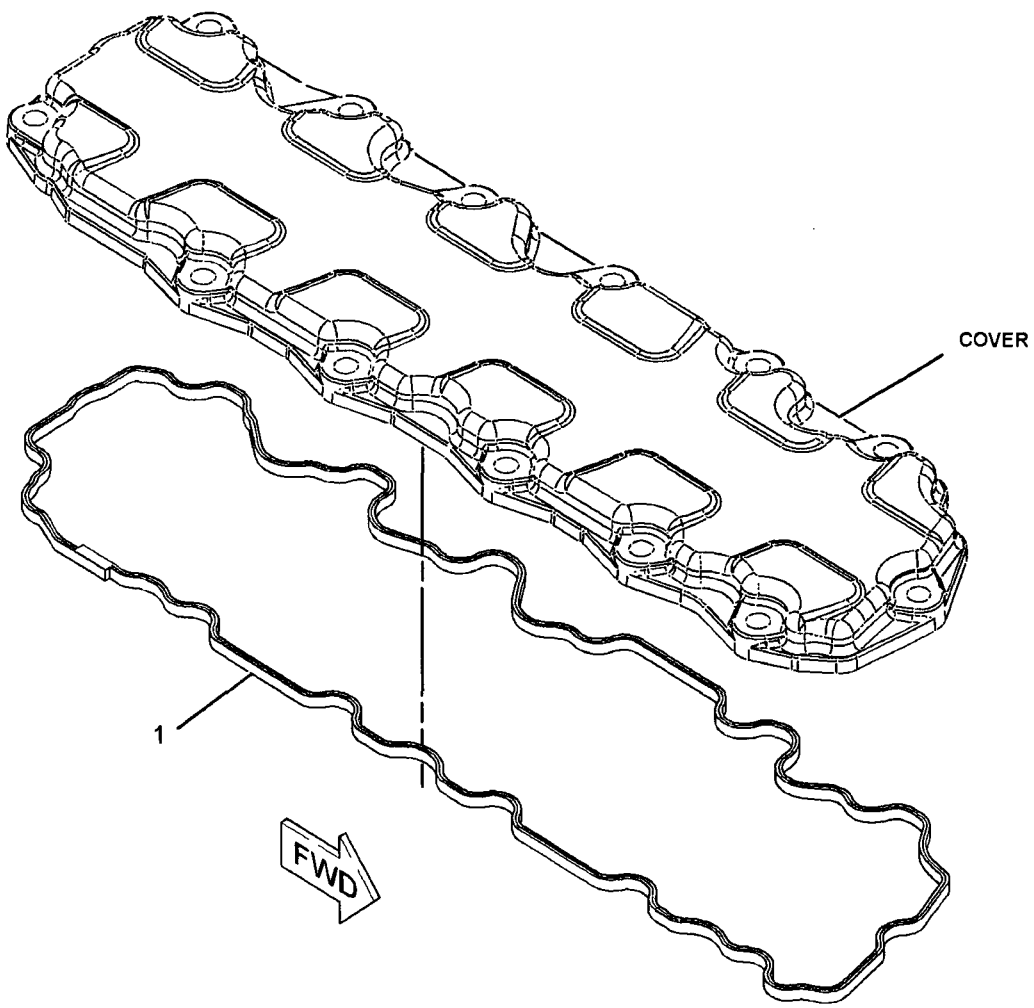

GRAPHIC #1 **<END>** g01118526

261-3721 COVER GP-VALVE MECHANISM

S/N: KHX1-UP

PART OF 235-1422 ENGINE AR-COMPLETE

SMCS-1107 **i02423178**

NOTE	REF NO	GRAPHIC REF	PART NUMBER	QTY	PART NAME 1 2 3 4 5 6 (PRODUCT LEVEL)	SEE PAGE
Y	1	1	242-2411	1	COVER GP-VALVE MECHANISM	15
	2	1	246-5083	13	SLEEVE-SPACER	
	3	1	271-2417	1	COVER GP-VALVE MECHANISM	
		1	245-6796	1	COVER AS-BASE	
	3A	1	244-4486	1	SEAL-COVER	
M	4	1	099-3649	13	BOLT (M8X1.25X40-MM)	
	5	1	8T-4224	13	WASHER-HARD (8.8X16X2-MM THK)	

M-METRIC PART
Y-SEPARATE ILLUSTRATION

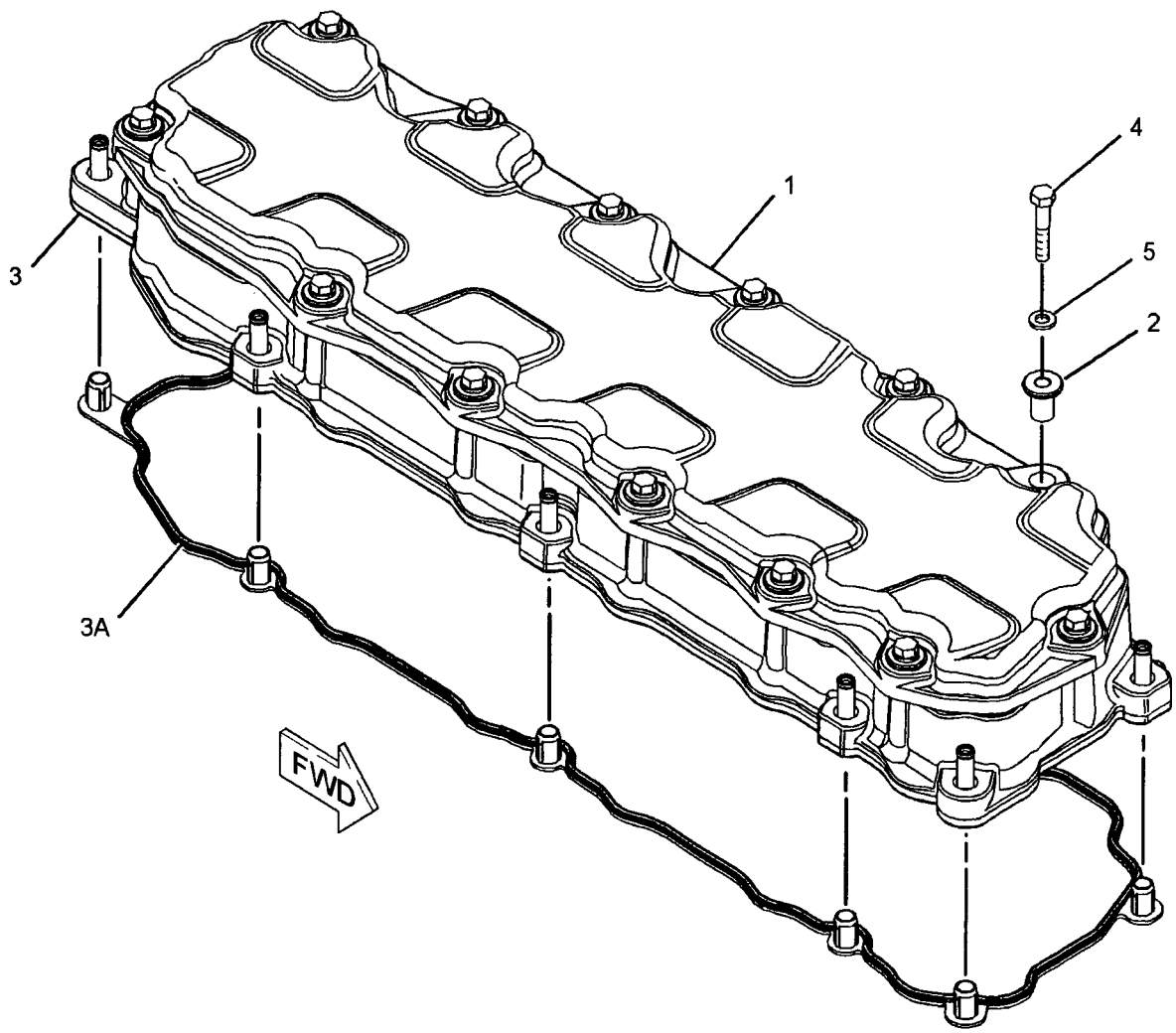

GRAPHIC #1 **<END>** g01209275

210-5590 CRANKSHAFT GP

S/N: KHX1-UP

PART OF 235-1423 ENGINE AR-CORE

SMCS-1202 **i02242072**

NOTE	REF NO	GRAPHIC REF	PART NUMBER	QTY	PART NAME 1 2 3 4 5 6 (PRODUCT LEVEL)	SEE PAGE
	1	1	227-5480	1	CRANKSHAFT AS	
	1A	1	1B-8705	1	KEY-WOODRUFF	
	1B	1	2W-8147	1	GEAR (50-TEETH)	
J	2	1	212-4893	1	BEARING-THRUST (STANDARD)	
AB		1	229-5153		BEARING-THRUST (0.25-MM US)	
AB		1	229-5154		BEARING-THRUST (0.5-MM US)	
AB		1	229-5155		BEARING-THRUST (0.5-MM OS)	
AB		1	229-5156		BEARING-THRUST (0.5-MM US - 0.5-MM OS)	
J	3	1	107-7708	6	BEARING-MAIN (STANDARD)	
AB		1	145-0168		BEARING-MAIN (0.5-MM OS)	
AB		1	145-0170		BEARING-MAIN (0.5-MM US - 0.5-MM OS)	
AB		1	145-0162		BEARING-MAIN (0.25-MM US)	
AB		1	145-0164		BEARING-MAIN (0.5-MM US)	
ABF		1	7C-7980	1	SLEEVE-OIL SEAL	
					(THIS WEAR SLEEVE IS USED ONLY TO SALVAGE (REPAIR) THE REAR SEAL SURFACE OF THE CRANKSHAFT)	
					AVAILABLE REPAIR KIT(S):	
AJ			196-9519		BEARING GP-MAIN (CRANKSHAFT)	

A-NOT PART OF THIS GROUP
B-USE AS REQUIRED
F-NOT SHOWN
J-KIT MARKED J SERVICES PARTS MARKED J

210-5590 CRANKSHAFT GP (contd.) i02242072

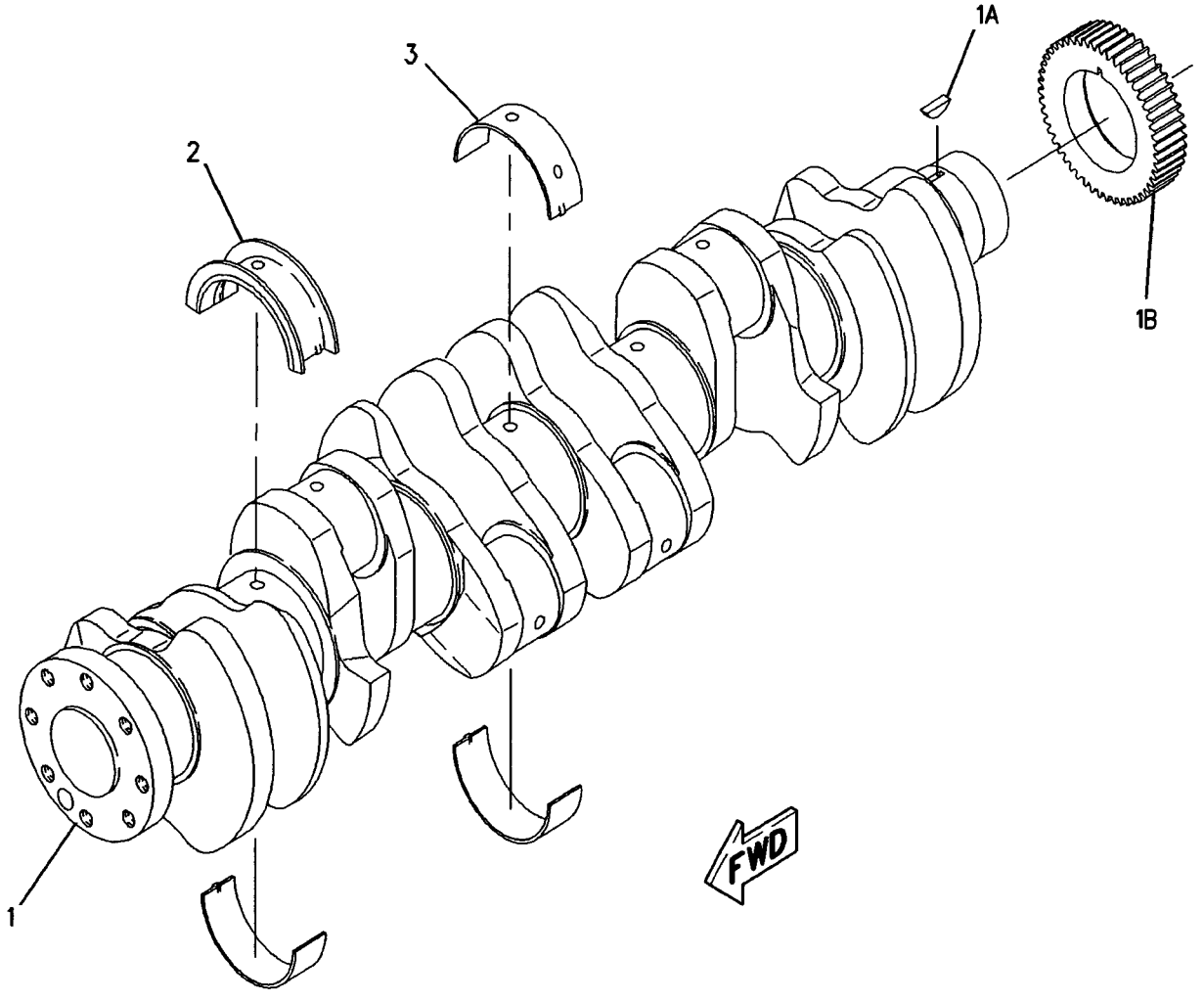

GRAPHIC #1 <END> g00977492

221-4480 CYLINDER BLOCK GP

S/N: KHX1-UP

PART OF 221-4481 CYLINDER BLOCK GP

SMCS-1201 **i01974590**

NOTE	REF NO	GRAPHIC REF	PART NUMBER	QTY	PART NAME 1 2 3 4 5 6 (PRODUCT LEVEL)	SEE PAGE
	2	1	**7E-2968**	7	CAP-CRANKSHAFT BEARING	
M	3	1	**9X-8916**	14	BOLT (M16X2.0X140MM)	
	4	1	**5P-8247**	14	WASHER-HARD (17X32X3.5MM THK)	

M-METRIC PART

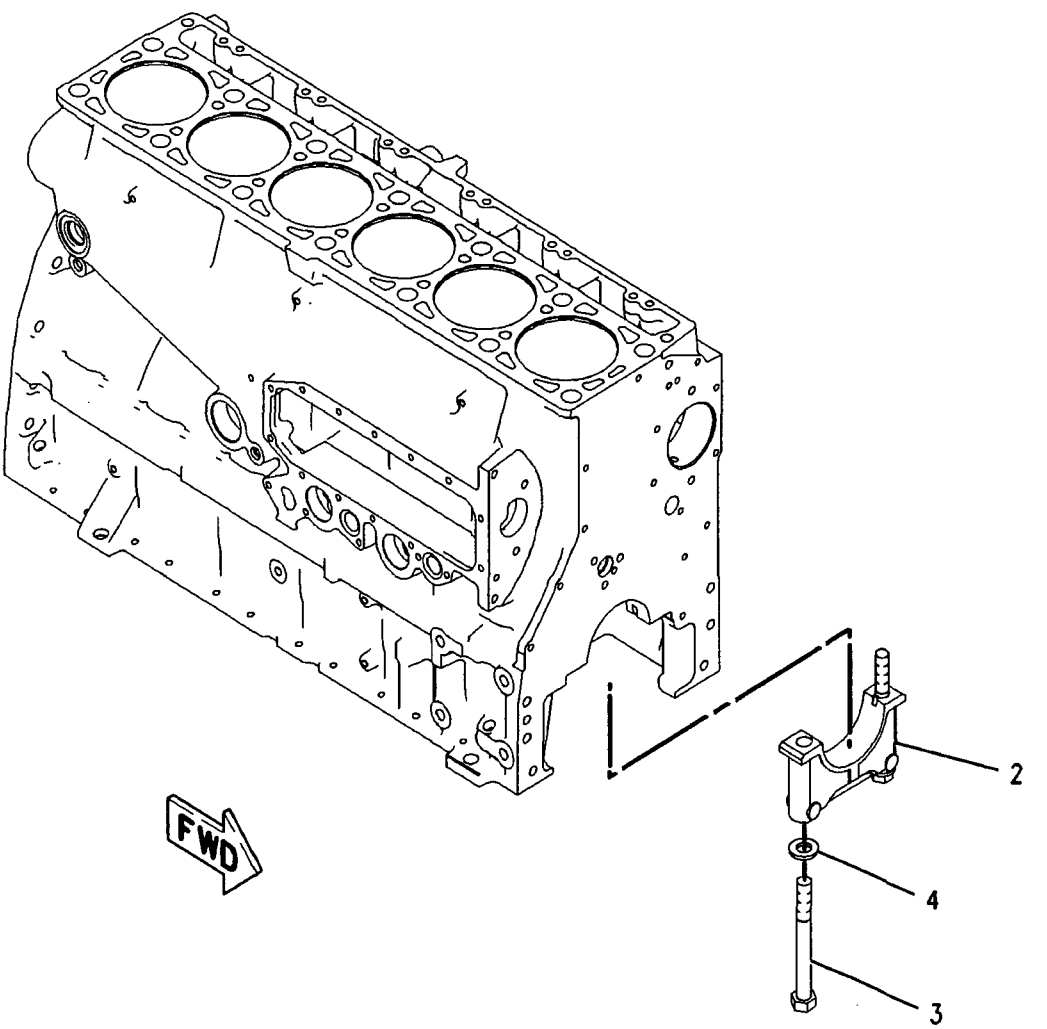

GRAPHIC #1 **<END>** g00948902

221-4481 CYLINDER BLOCK GP

S/N: KHX1-UP

PART OF 221-4482 CYLINDER BLOCK GP

SMCS-1201 **i01974526**

NOTE	REF NO	GRAPHIC REF	PART NUMBER	QTY	PART NAME 1 2 3 4 5 6 (PRODUCT LEVEL)	SEE PAGE
Y	1	1	*221-4480*	1	CYLINDER BLOCK GP	19
	2	1	**2M-6471**	2	PLUG-CUP	
	3	1	**3H-5552**	1	PLUG-CUP	
	4	1	**9S-8006**	1	PLUG	
	5	1	**2M-9780**	1	SEAL-O-RING	
	6	1	**216-5586**	1	BEARING-SLEEVE (CAMSHAFT)	
	7	1	**2W-7213**	6	BEARING-SLEEVE (CAMSHAFT)	

Y-SEPARATE ILLUSTRATION

221-4481 CYLINDER BLOCK GP *(contd.)* i01974526

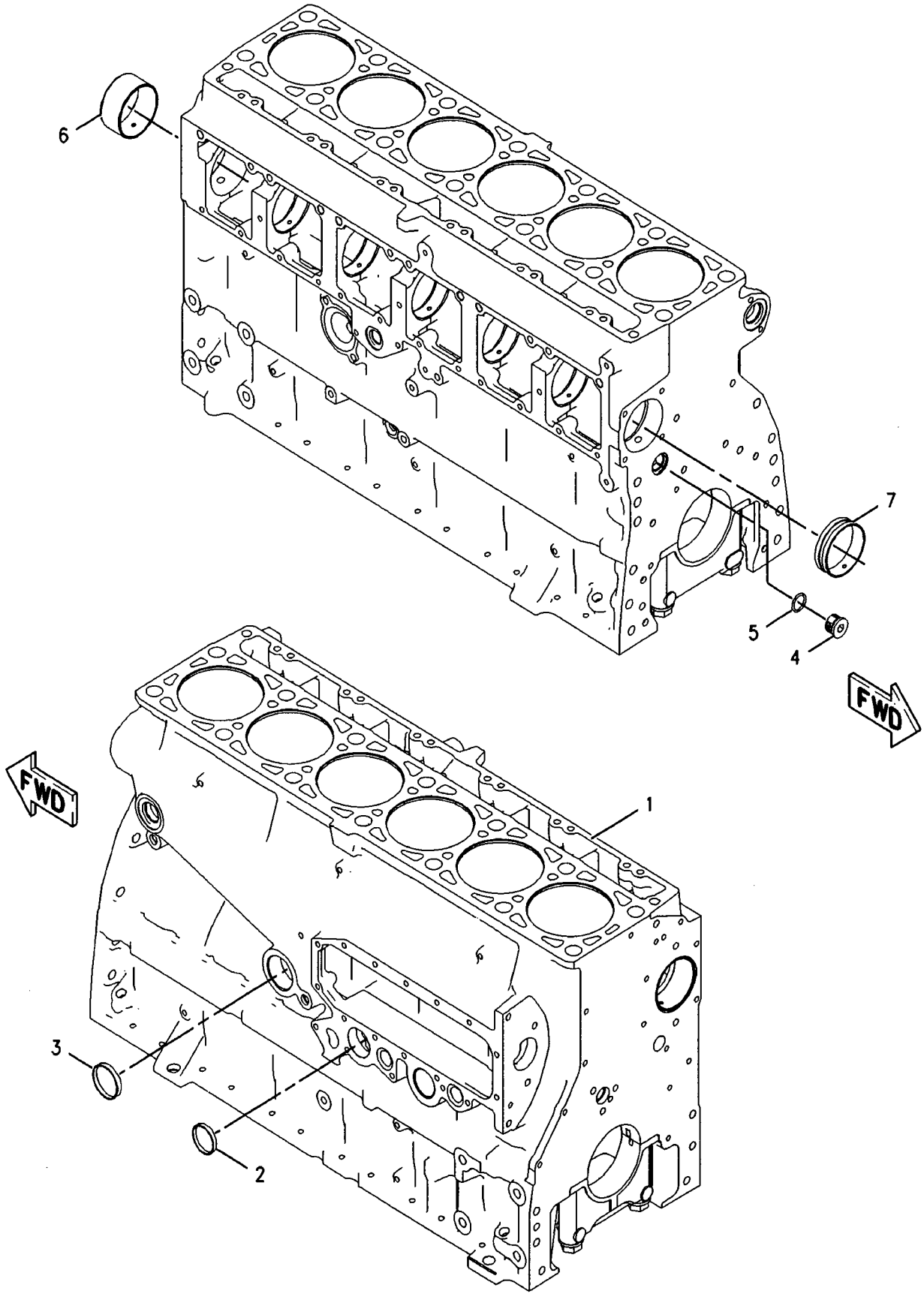

GRAPHIC #1 **<END>** g00947530

BASIC ENGINE

221-4482 CYLINDER BLOCK GP

S/N: KHX1-UP

PART OF 235-1423 ENGINE AR-CORE

SMCS-1201 **i02242050**

NOTE	REF NO	GRAPHIC REF	PART NUMBER	QTY	PART NAME 1 2 3 4 5 6 (PRODUCT LEVEL)	SEE PAGE
Y	1	1	**221-4481**	1	CYLINDER BLOCK GP	20
	2	1	**7N-5683**	2	DOWEL	
	3	1	**1W-8407**	2	SLEEVE	
	4	1	**6V-3538**	2	DOWEL	

Y-SEPARATE ILLUSTRATION

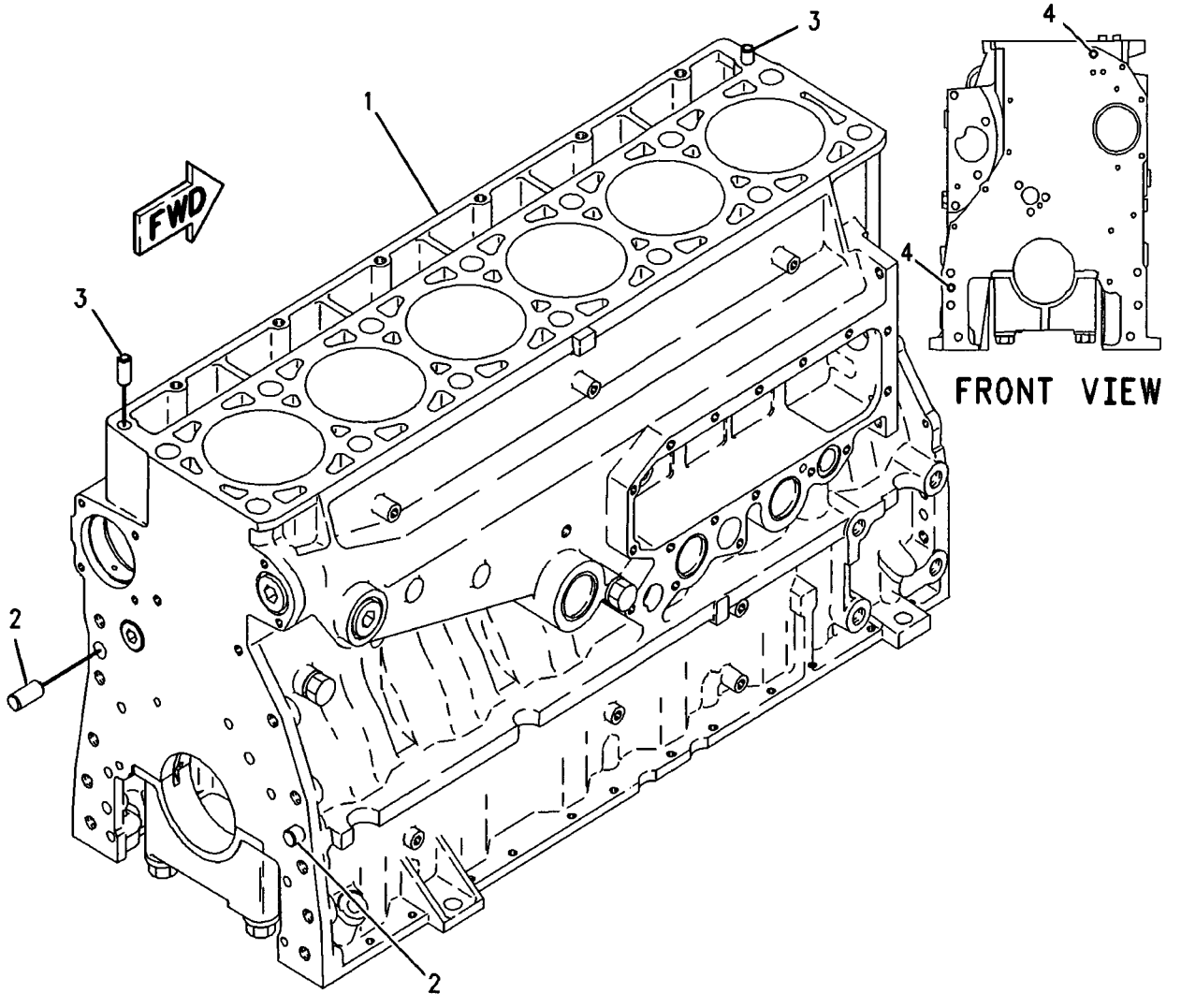

GRAPHIC #1 **<END>** g00800849

219-5844 CYLINDER HEAD AS

S/N: KHX1-UP

PART OF 219-5846 CYLINDER HEAD GP

SMCS-1100, 1101 **i02246465**

NOTE	REF NO	GRAPHIC REF	PART NUMBER	QTY	PART NAME 1 2 3 4 5 6 (PRODUCT LEVEL)	SEE PAGE
	2	1	8M-5860	12	PLUG-CUP	
	3	1	4F-5695	2	PLUG-CUP	
	4	1	227-1200	6	SLEEVE-INJECTOR	
	5	1	217-5213	12	INSERT-VALVE SEAT (INLET)	
	6	1	147-8218	6	INSERT-VALVE SEAT (EXHAUST)	
	7	1	8C-0563	12	SEAL-O-RING	
	8	1	9S-9334	1	PLUG	
	9	1	9X-7712	1	SEAL-O-RING	

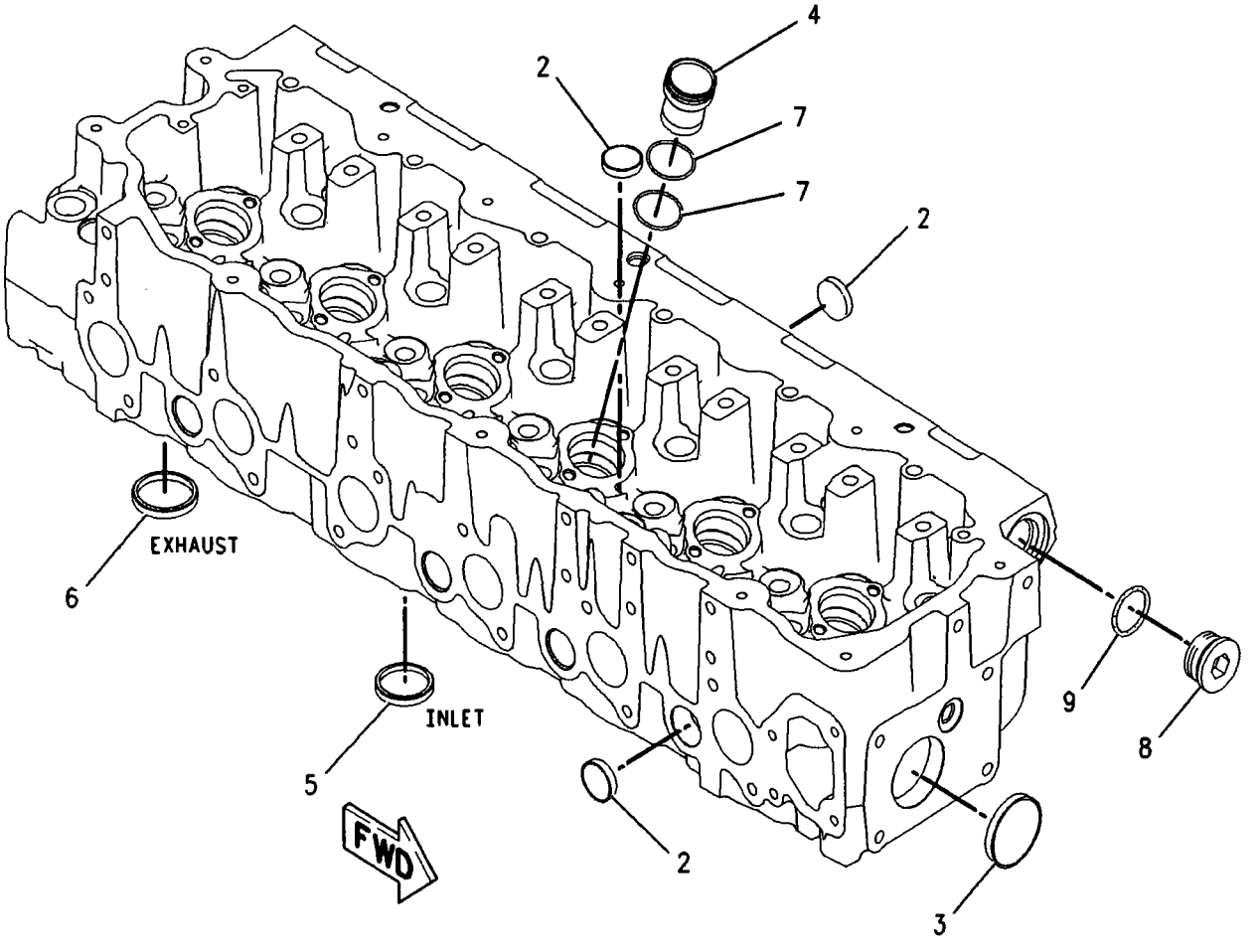

GRAPHIC #1 **<END>** g00948980

219-5846 CYLINDER HEAD GP*R

S/N: KHX1-UP

PART OF 219-5847 CYLINDER HEAD GP

SMCS-1100 i02246464

NOTE	REF NO	GRAPHIC REF	PART NUMBER	QTY	PART NAME 1 2 3 4 5 6 (PRODUCT LEVEL)	SEE PAGE
Y	1	1	*219-5844*	1	CYLINDER HEAD AS	23
	2	1	**145-7390**	12	VALVE-INLET	
	3	1	**147-8211**	6	VALVE-EXHAUST	
	4	1	**1W-2715**	24	LOCK-RETAINER	
	5	1	**7E-7779**	12	RETAINER-SPRING	
	6	1	**147-8214**	12	SEAL-VALVE STEM	
	7	1	**140-9670**	12	GUIDE-VALVE	
	8	1	**137-6718**	6	SPRING-VALVE	
	9	1	**140-6188**	12	SPRING-VALVE	
	10	1	**2A-4429**	12	LOCK-RETAINER	
	11	1	**134-4483**	6	RETAINER-SPRING	
	12	1	**147-8220**	6	GUIDE-VALVE	
	13	1	**163-2478**	6	SEAL-VALVE STEM	
	14	1	**137-6715**	6	SEAT-VALVE SPRING	

Y-SEPARATE ILLUSTRATION

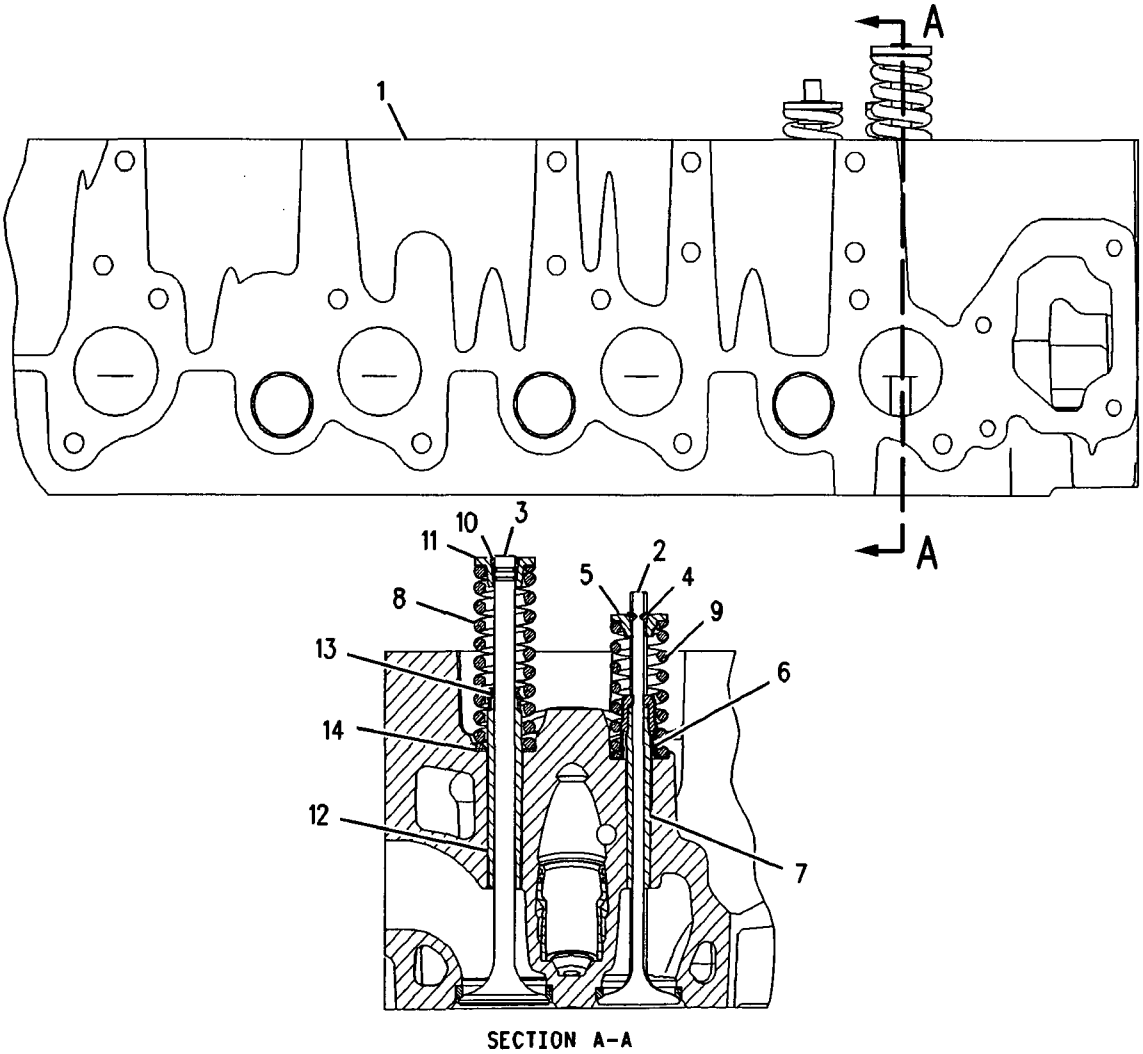

SECTION A-A

GRAPHIC #1 <END> g00947786

219-5847 CYLINDER HEAD GP

S/N: KHX1-UP

PART OF 219-5849 CYLINDER HEAD GP

SMCS-1100 i02246461

NOTE	REF NO	GRAPHIC REF	PART NUMBER	QTY	PART NAME 1 2 3 4 5 6 (PRODUCT LEVEL)	SEE PAGE
YR	1	1	219-5846	1	CYLINDER HEAD GP	24
	2	1	1N-5999	2	PLUG	
	3	1	2M-9780	1	SEAL-O-RING	
	4	1	3J-1907	2	SEAL-O-RING	
	5	1	6V-5048	6	SEAL-O-RING	
	6	1	7J-0204	2	SEAL-O-RING	
	7	1	9S-8002	6	PLUG	
	8	1	9S-8004	2	PLUG	
	9	1	9S-8006	1	PLUG	
	10	1	9S-9334	1	PLUG	
	11	1	9X-7712	1	SEAL-O-RING	

R-REMFG PART MAY BE AVAILABLE
Y-SEPARATE ILLUSTRATION

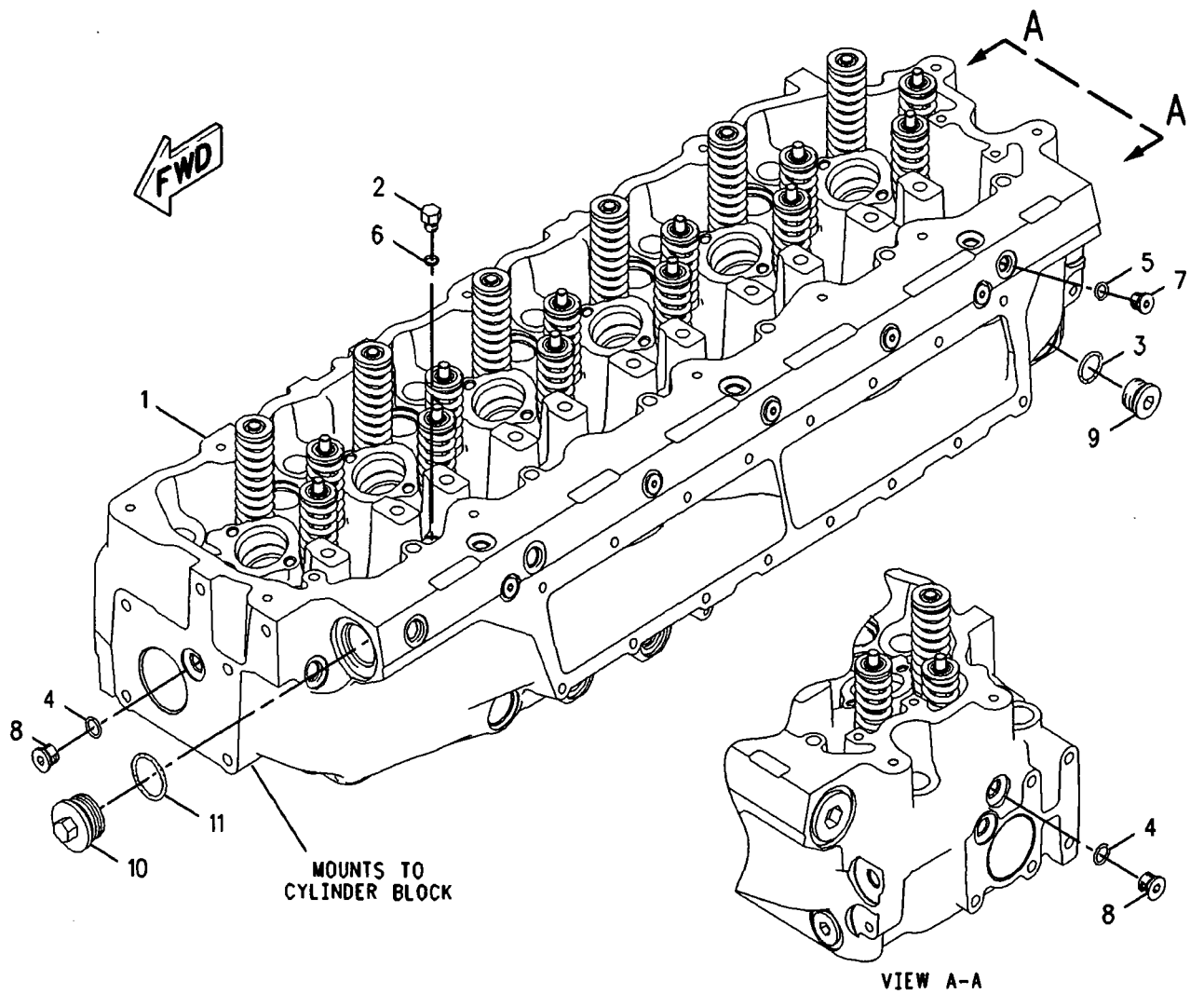

GRAPHIC #1 <END> g00947578

219-5849 CYLINDER HEAD GP

S/N: KHX1-UP

PART OF 235-1423 ENGINE AR-CORE

SMCS-1100 **i02242054**

NOTE	REF NO	GRAPHIC REF	PART NUMBER	QTY	PART NAME 1 2 3 4 5 6 (PRODUCT LEVEL)	SEE PAGE
Y	1	1	*219-5847*	1	CYLINDER HEAD GP	25
	2	1	**133-4995**	1	GASKET-CYLINDER HEAD	
	3	1	*142-7289*	14	FASTENER GP-CYLINDER HEAD	
					(EACH INCLUDES)	
		1	**138-3252**	1	BOLT-12 POINT HEAD	
		1	**8T-3282**	1	WASHER-HARD (22X35X3.5-MM THK)	
		1	**6V-4876**	1	LUBRICANT	
M	4	1	**8T-7950**	6	BOLT (M10X1.5X180-MM)	
	5	1	**6V-5839**	6	WASHER (11X21X2.5-MM THK)	

M-METRIC PART
Y-SEPARATE ILLUSTRATION

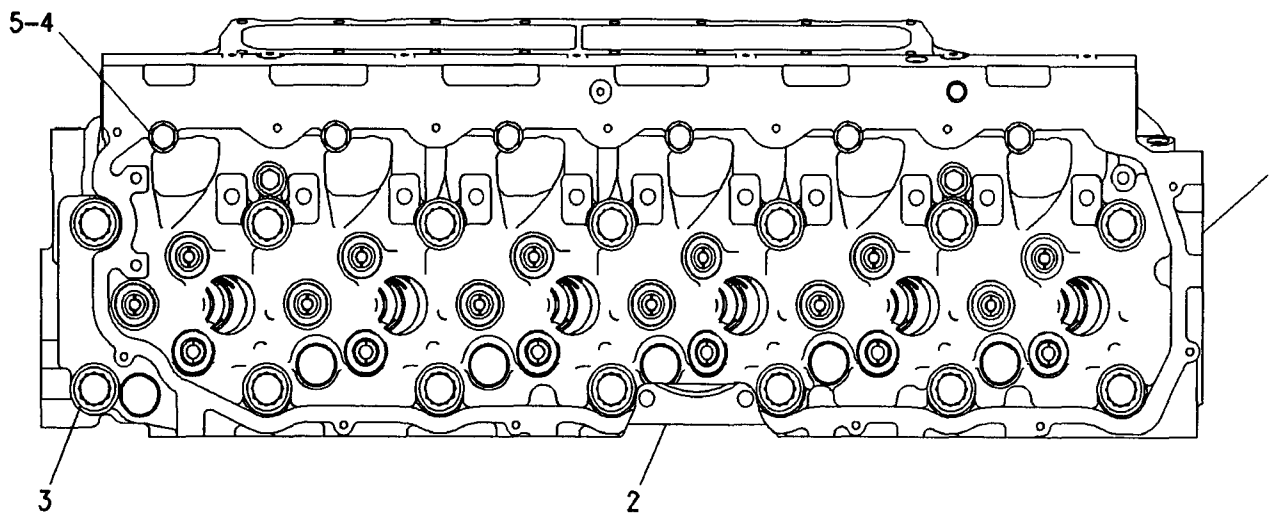

TOP VIEW

GRAPHIC #1 **<END>** g00760746

165-4557 DAMPER & PULLEY GP

S/N: KHX1-UP

PROVIDES VISCOUS DAMPER W/8 GROOVE POLY-RIB PULLEY

PART OF 235-1422 ENGINE AR-COMPLETE

SMCS-1205 i01615703

NOTE	REF NO	GRAPHIC REF	PART NUMBER	QTY	PART NAME 1 2 3 4 5 6 (PRODUCT LEVEL)	SEE PAGE
	1	1	2W-7381	1	WASHER	
	2	1	167-8121	1	DAMPER AS	
	3	1	153-1036	1	PULLEY-CRANKSHAFT	
M	4	1	8T-3666	4	BOLT (M14X60-MM)	

M-METRIC PART

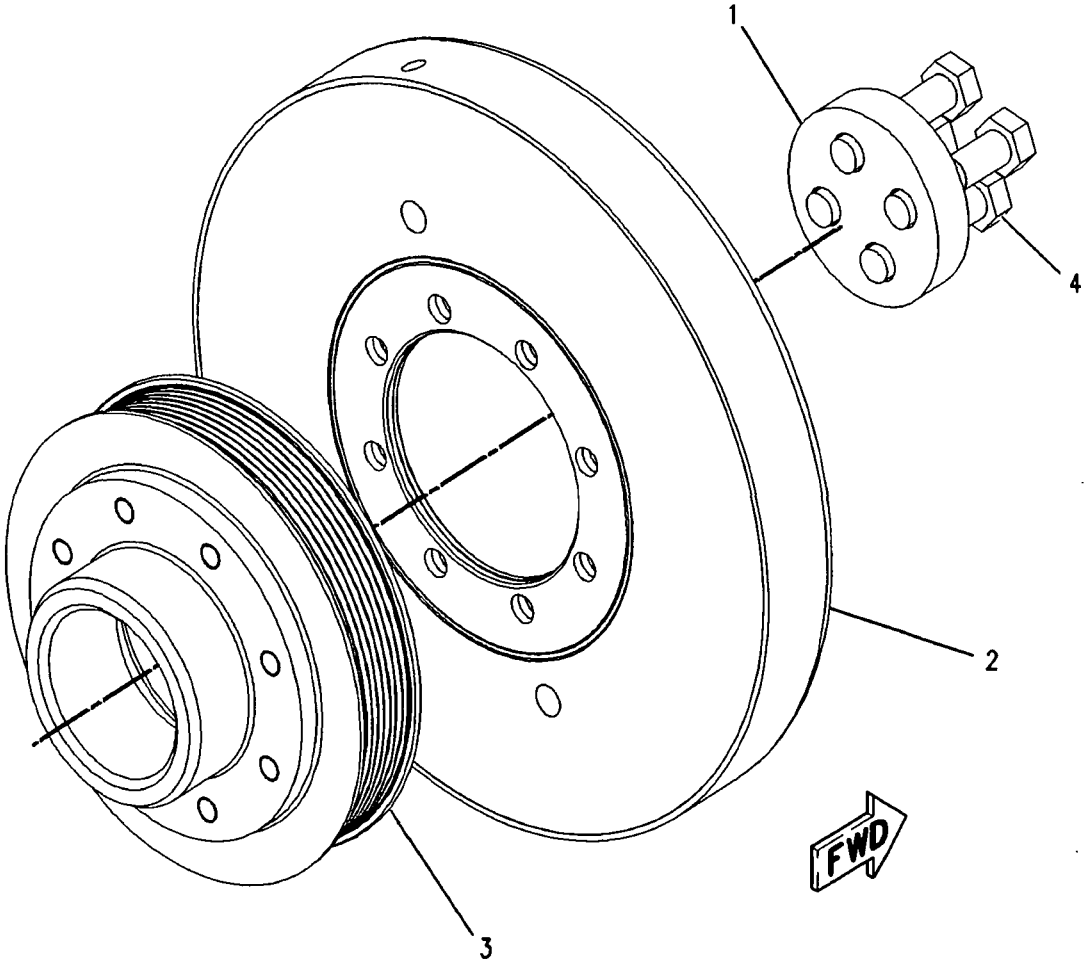

GRAPHIC #1 <END> g00836511

118-2073 DRAIN GP-ENGINE OIL

S/N: KHX1-UP

PART OF 235-1422 ENGINE AR-COMPLETE

SMCS-1302 i02019112

NOTE	REF NO	GRAPHIC REF	PART NUMBER	QTY	PART NAME 1 2 3 4 5 6 (PRODUCT LEVEL)	SEE PAGE
	1	1	3K-0360	1	SEAL-O-RING	
	2	1	6V-7238	1	VALVE-SHUTOFF (ENGINE OIL)	

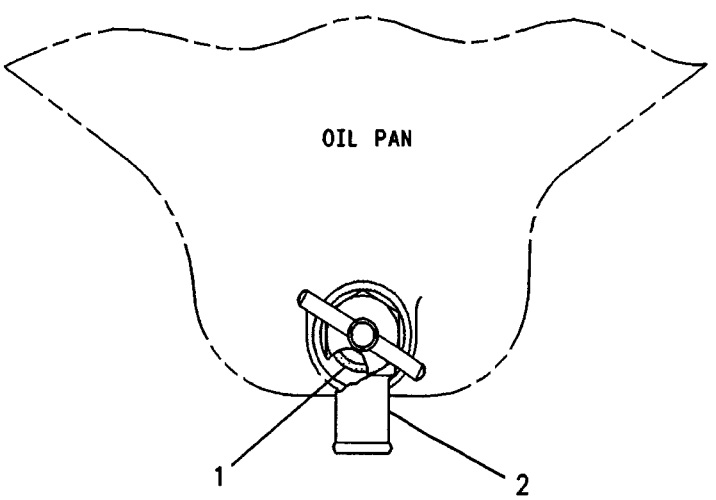

GRAPHIC #1 <END> g00117513

218-0859 FASTENER GP-DAMPER

S/N: KHX1-UP

PART OF 235-1422 ENGINE AR-COMPLETE

SMCS-1205, 7553 **i02178303**

NOTE	REF NO	GRAPHIC REF	PART NUMBER	QTY	PART NAME 1 2 3 4 5 6 (PRODUCT LEVEL)	SEE PAGE
	1	1	228-3621	1	SPACER	
M	2	1	6V-4249	8	BOLT (M10X1.5X50-MM)	

M-METRIC PART

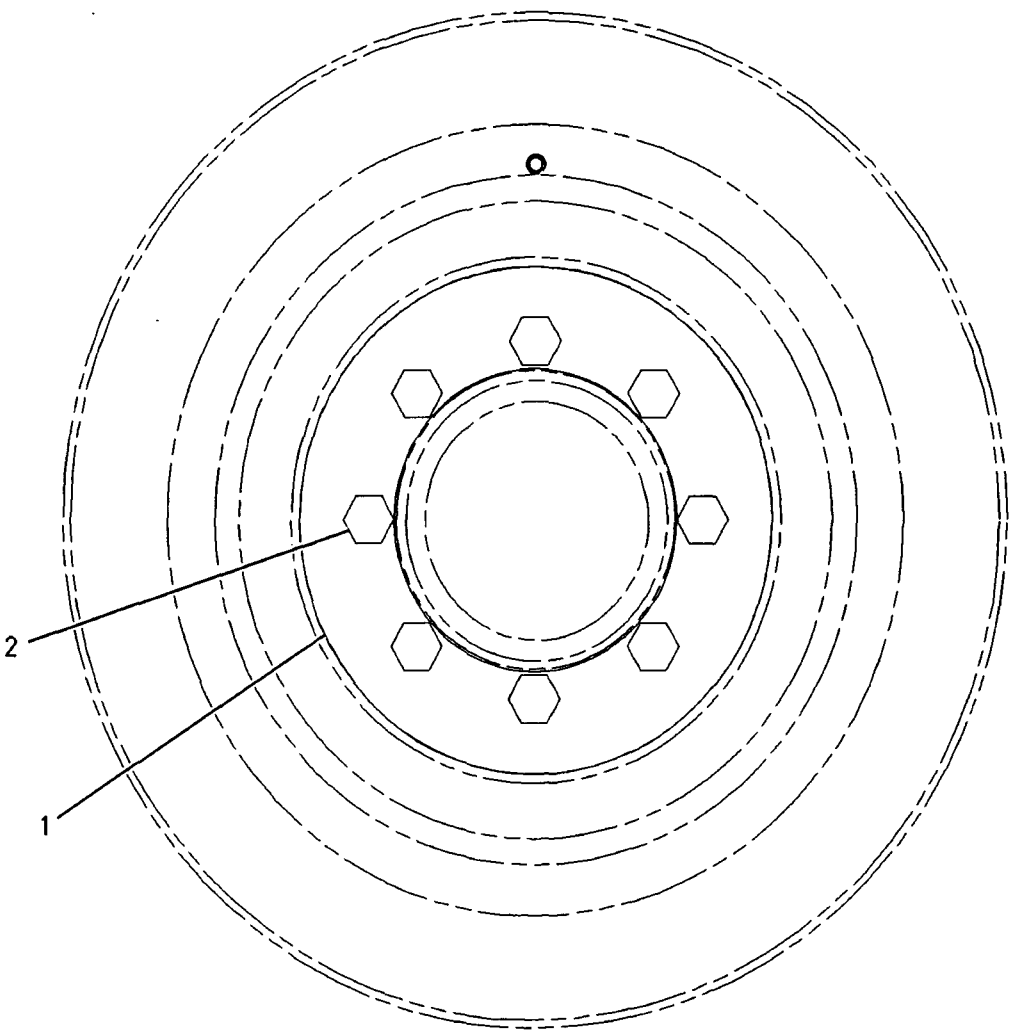

FRONT VIEW

GRAPHIC #1 **<END>** g00919524

116-4556 FASTENER GP-FRONT HOUSING

S/N: KHX1-UP

PART OF 235-1422 ENGINE AR-COMPLETE

CANNOT BE USED WITH FRONT ENGINE SUPPORT

SMCS-1151, 1162 i00670220

NOTE	REF NO	GRAPHIC REF	PART NUMBER	QTY	PART NAME 1 2 3 4 5 6 (PRODUCT LEVEL)	SEE PAGE
M	1	1	6V-8336	6	BOLT (M12X1.75X70-MM)	
		1	5P-8245	6	WASHER-HARD (13.5X25.5X3-MM THK)	

M-METRIC PART

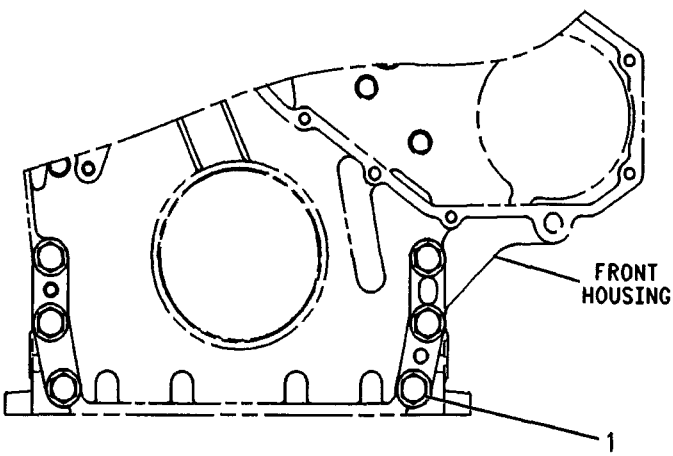

FRONT VIEW

GRAPHIC #1 <END> g00244671

238-0373 FASTENER GP-FRONT HOUSING

S/N: KHX1-UP

PART OF 235-1422 ENGINE AR-COMPLETE

SMCS-1151, 1162 **i02242175**

NOTE	REF NO	GRAPHIC REF	PART NUMBER	QTY	PART NAME 1 2 3 4 5 6 (PRODUCT LEVEL)	SEE PAGE
M	1	1	9X-2099	5	STUD (M8X1.25-THD) (MARKED Y)	
M	2	1	185-9356	1	STUD (M8X1.25-THD)	
	3	1	210-3321	1	STUD (M8X1.25-THD)	
M	4	1	6V-2317	6	BOLT (M8X1.25X30-MM) (MARKED X)	
M	5	1	8T-0100	1	BOLT (M8X1.25X60-MM)	

M-METRIC PART

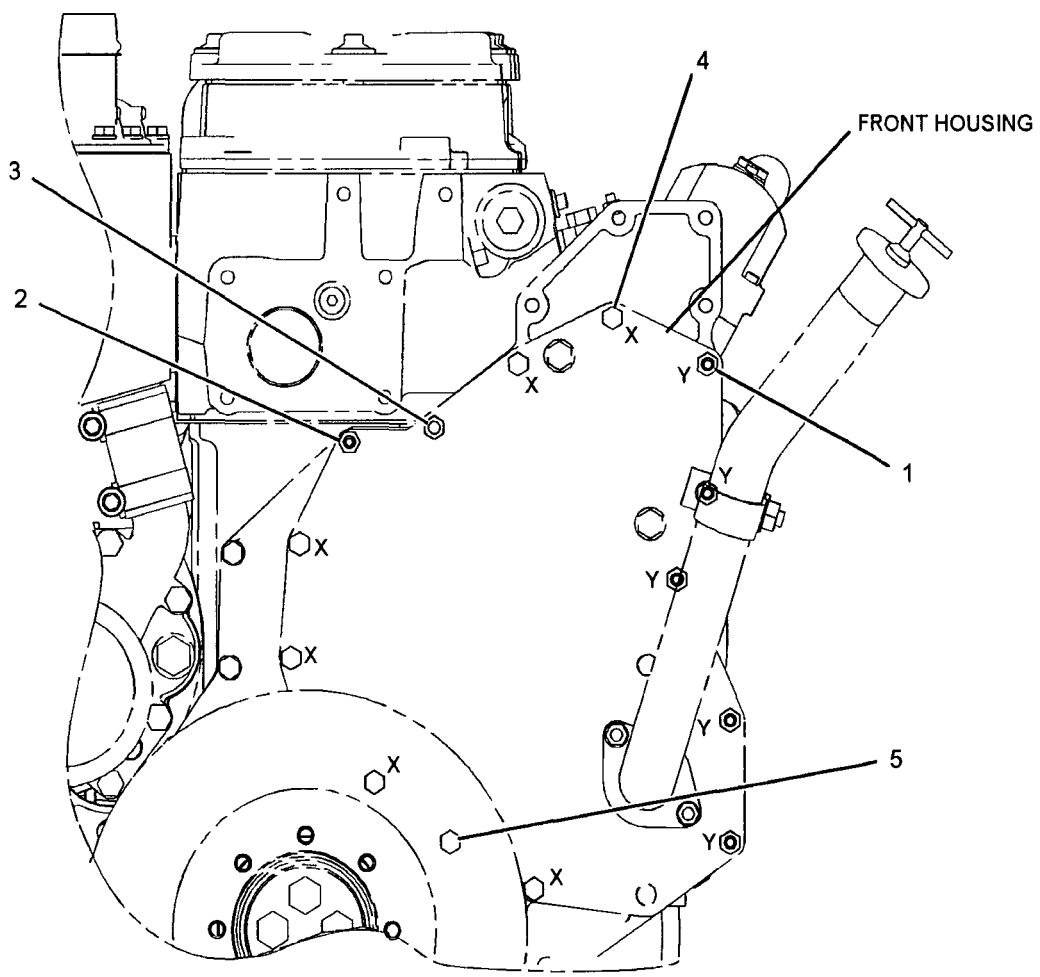

FRONT VIEW

GRAPHIC #1 **<END>** g01119959

212-4287 FASTENER GP-VALVE COVER

S/N: KHX1-409

PART OF 235-1422 ENGINE AR-COMPLETE

SMCS-1107 i02253968

NOTE	REF NO	GRAPHIC REF	PART NUMBER	QTY	PART NAME 1 2 3 4 5 6 (PRODUCT LEVEL)	SEE PAGE
	1	1	208-0039	8	FASTENER AS	
	2	1	229-8198	3	FASTENER AS	
	3	1	241-4960	11	SHIM	

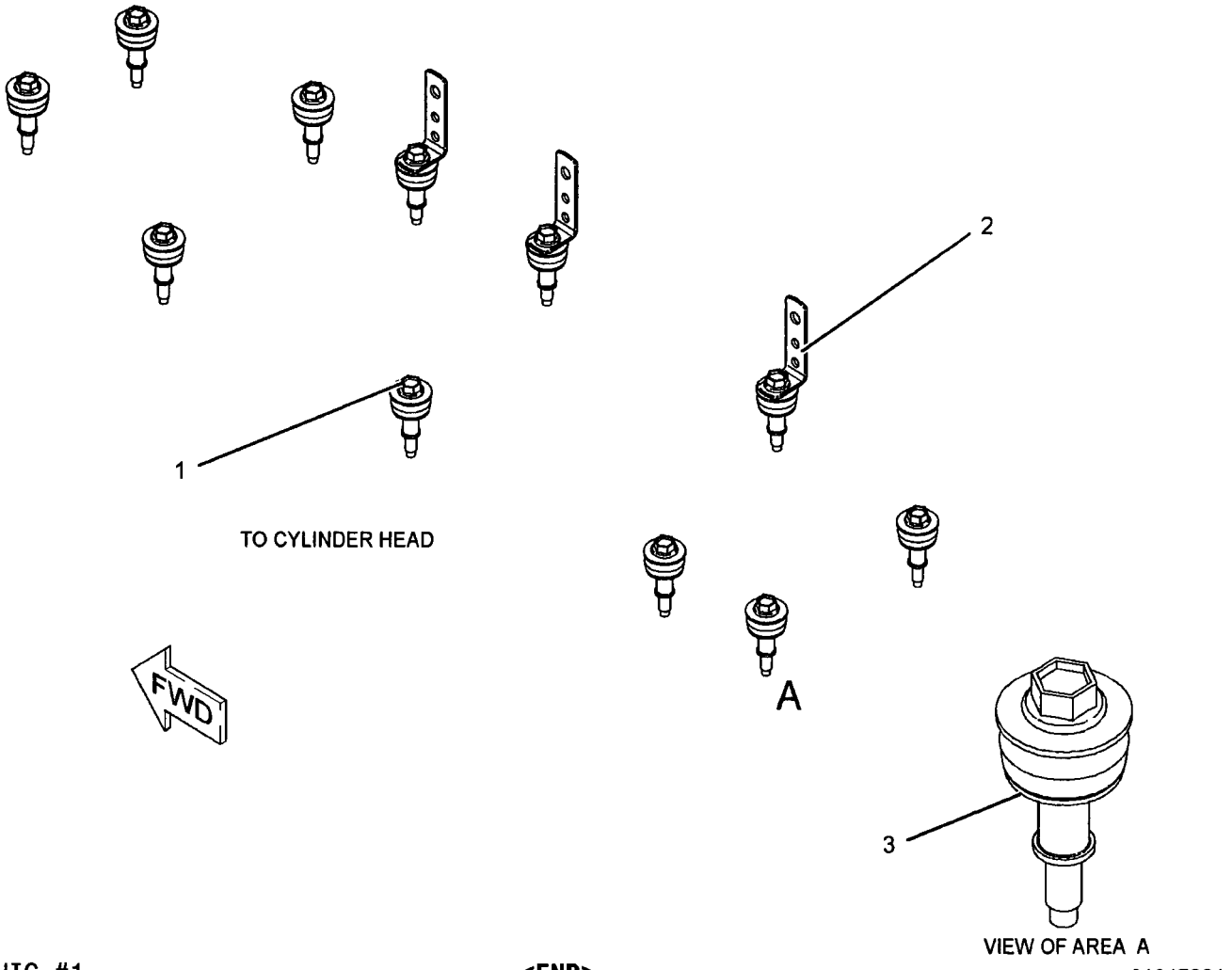

GRAPHIC #1

<END>

g01047384

258-8723 FASTENER GP-VALVE MECHANISM-

VALVE COVER BASE

S/N: KHX410-UP

PART OF 235-1422 ENGINE AR-COMPLETE

SMCS-1102 **i02242179**

NOTE	REF NO	GRAPHIC REF	PART NUMBER	QTY	PART NAME 1 2 3 4 5 6 (PRODUCT LEVEL)	SEE PAGE
	1	1	229-8844	3	CLIP	
	2	1	244-4500	11	SPRING	
M	3	1	8T-0100	11	BOLT (M8X1.25X60-MM)	
	4	1	9N-0869	11	WASHER-HARD (8.8X25.5X2-MM THK)	

M-METRIC PART

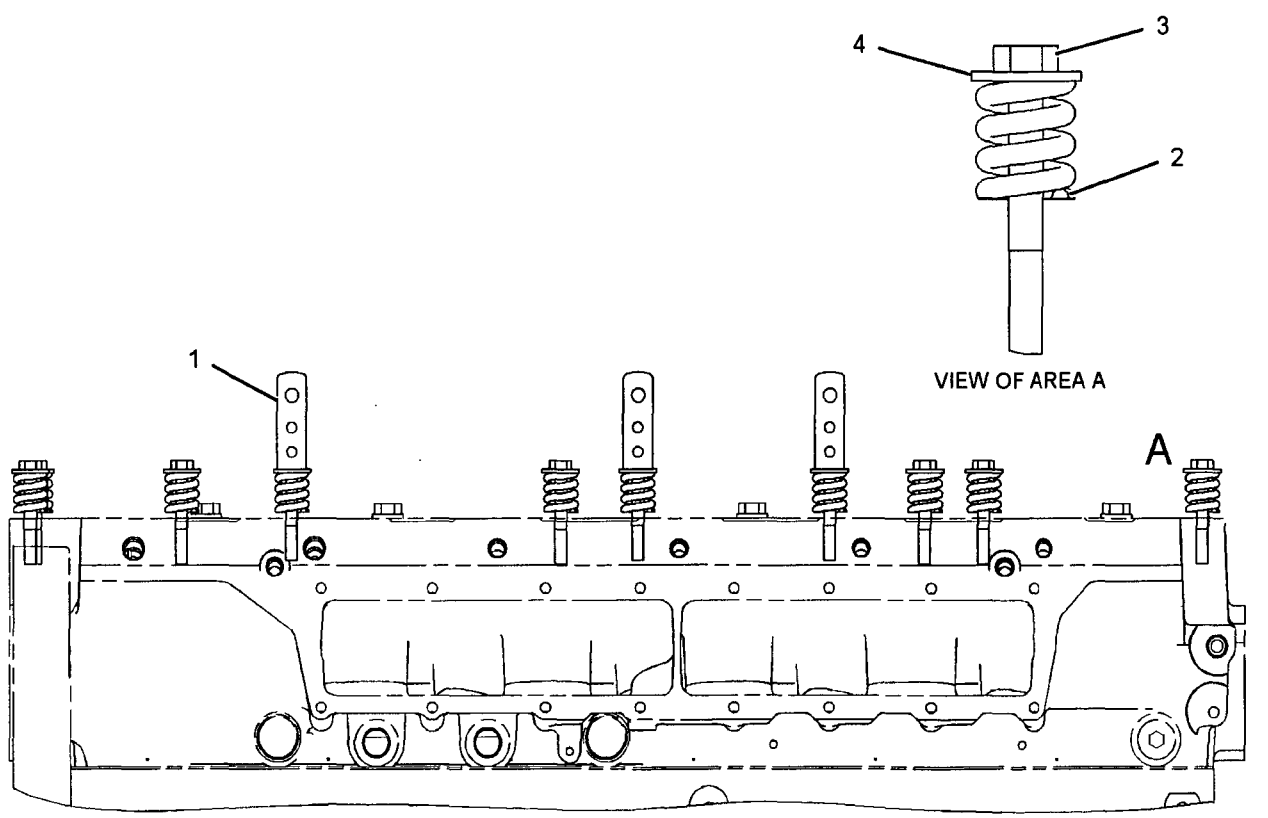

RIGHT SIDE VIEW

GRAPHIC #1 **<END>** g01125046

BASIC ENGINE

7E-0519 FLYWHEEL GP

S/N: KHX1-UP

PART OF 235-1422 ENGINE AR-COMPLETE

SMCS-1156 **i01451620**

NOTE	REF NO	GRAPHIC REF	PART NUMBER	QTY	PART NAME 1 2 3 4 5 6 (PRODUCT LEVEL)	SEE PAGE
	1	1	160-8230	1	FLYWHEEL AS	
		1	7W-5095	1	GEAR-FLYWHEEL (134-TEETH)	
	2	1	5P-8245	8	WASHER-HARD (13.5X25.5X3-MM THK)	
M	3	1	7X-3344	8	BOLT (M12X1.75X40-MM)	

M-METRIC PART

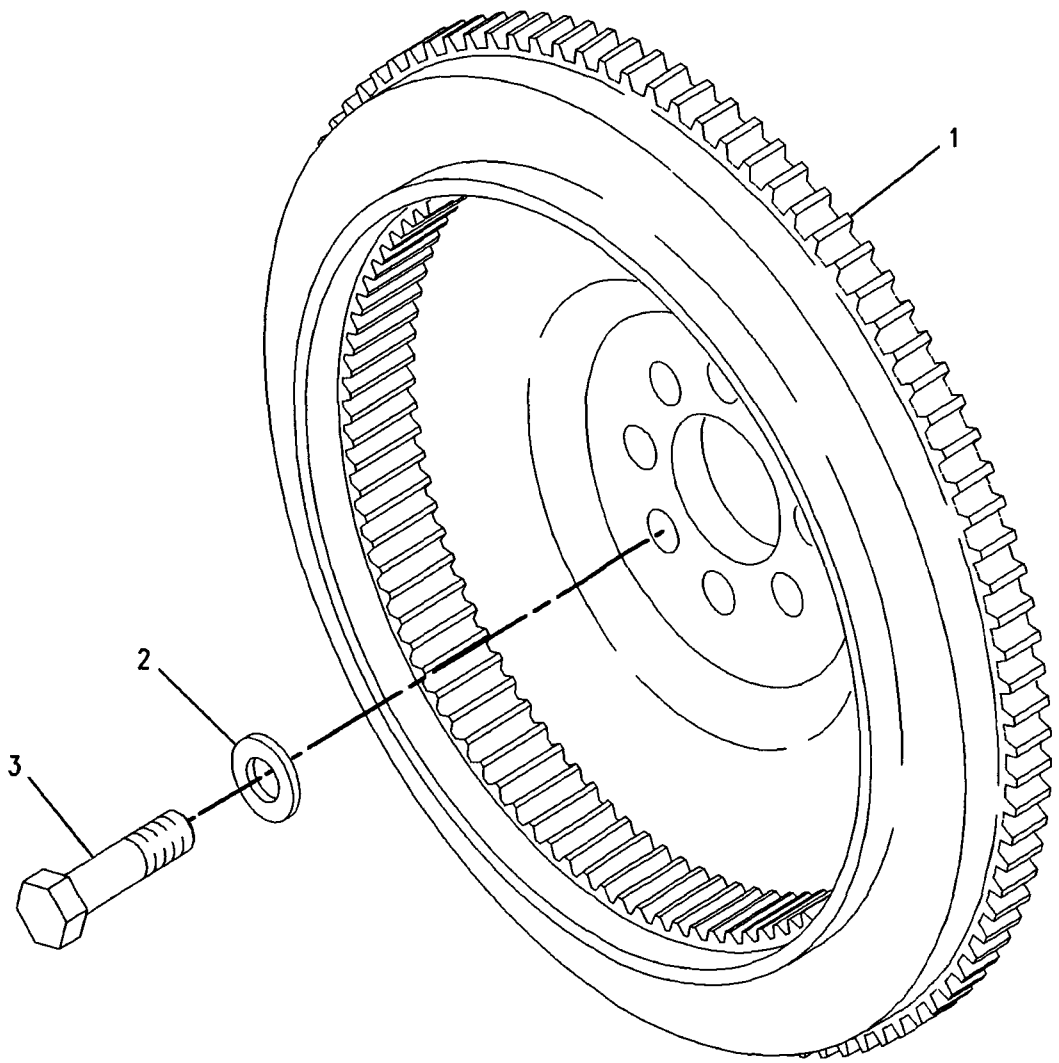

GRAPHIC #1 **<END>** g00759559

205-1321 GEAR GP-FRONT

S/N: KHX1-UP

PART OF 235-1423 ENGINE AR-CORE

SMCS-1206 **i01686025**

NOTE	REF NO	GRAPHIC REF	PART NUMBER	QTY	PART NAME 1 2 3 4 5 6 (PRODUCT LEVEL)	SEE PAGE
	1	1	113-6069	1	PLATE-THRUST	
	2	1	115-4219	1	PLATE-RETAINING	
	3	1	200-4495	1	SHAFT-IDLER	
	4	1	205-1320	1	GEAR AS-IDLER (50 TEETH)	
	4A	1	115-4072	1	BEARING	
M	5	1	136-4183	1	BOLT-12 POINT HEAD (M10X1.5X30MM)	
M	6	1	6V-5843	2	BOLT (M10X1.50X45MM)	

M-METRIC PART

205-1321 GEAR GP-FRONT (contd.) i01686025

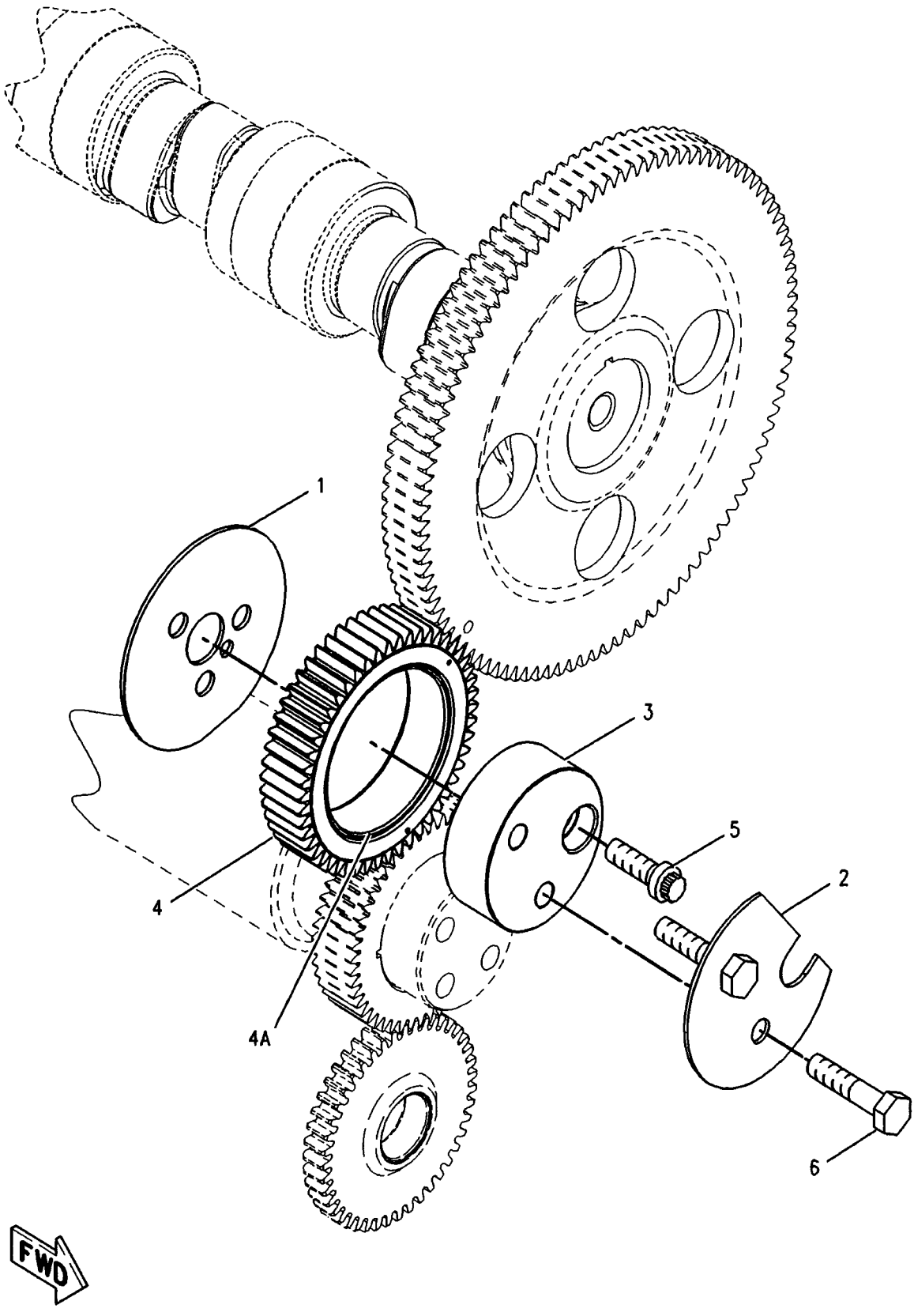

GRAPHIC #1 <END> g00870175

BASIC ENGINE

197-5210 HOUSING GP-FLYWHEEL

S/N: KHX1-UP

PART OF 235-1422 ENGINE AR-COMPLETE

SMCS-1157 **i02333441**

NOTE	REF NO	GRAPHIC REF	PART NUMBER	QTY	PART NAME 1 2 3 4 5 6 (PRODUCT LEVEL)	SEE PAGE
	1	1	**5F-0304**	1	PLUG	
	2	1	**100-6551**	1	HOUSING-FLYWHEEL	
	4	1	**2A-1162**	1	GASKET	
	5	1	**3D-2824**	1	SEAL-O-RING	
	6	1	**3J-7354**	1	SEAL-O-RING	
M	7	1	**6V-5842**	2	BOLT (M10X1.5X40-MM)	
M	9	1	**8T-0226**	10	BOLT (M14X2X45-MM)	
	10	1	**9S-4182**	1	PLUG	
	11	1	**9S-4183**	1	PLUG	
BF		1	**1U-8846**		SEALANT-GASKET	

B-USE AS REQUIRED
F-NOT SHOWN
M-METRIC PART

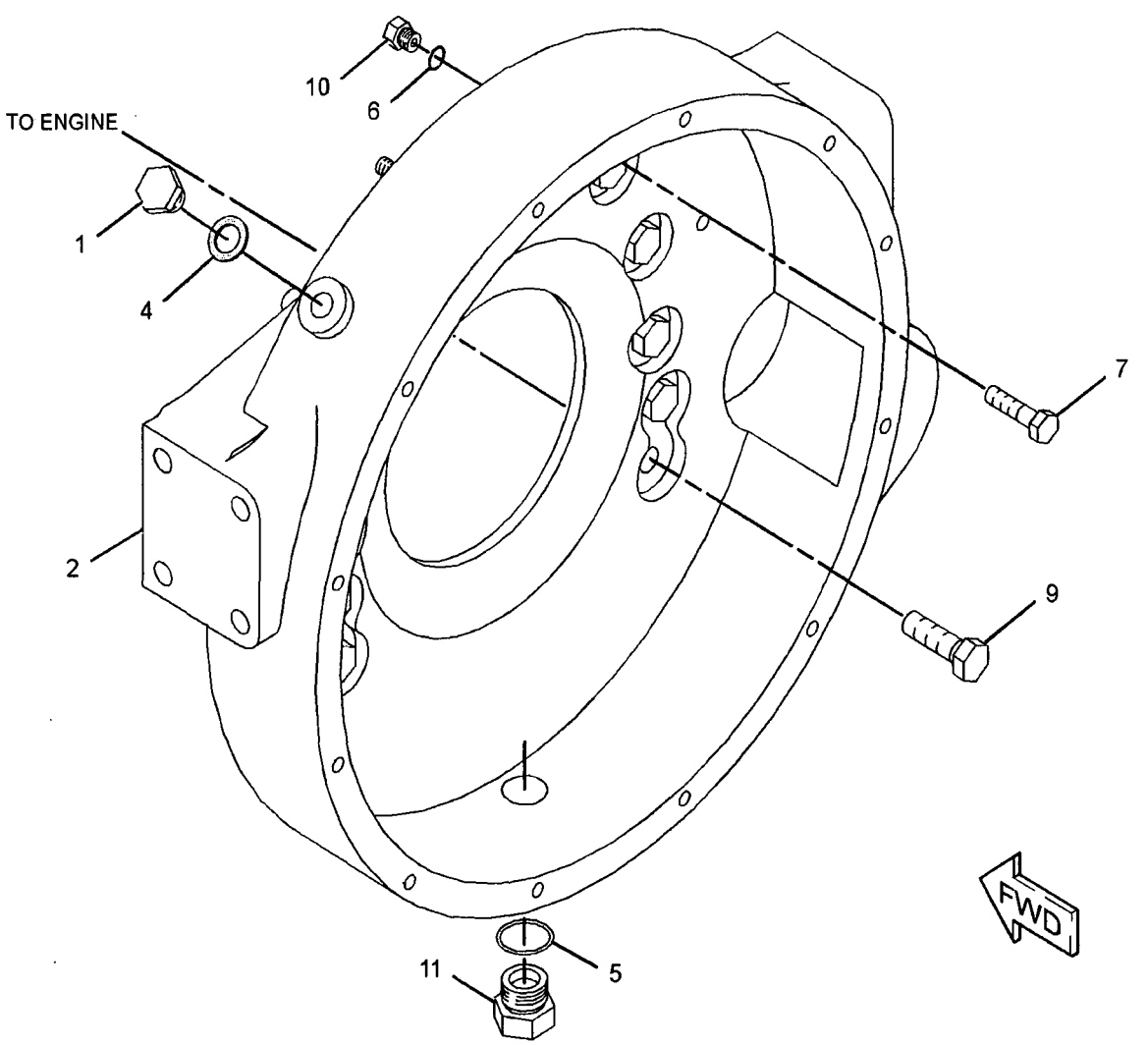

GRAPHIC #1

<END>

g01170483

BASIC ENGINE

165-4446 HOUSING GP-FRONT

S/N: KHX1-UP

PART OF 235-1423 ENGINE AR-CORE

SMCS-1151, 1162 **i02421336**

NOTE	REF NO	GRAPHIC REF	PART NUMBER	QTY	PART NAME 1 2 3 4 5 6 (PRODUCT LEVEL)	SEE PAGE
	1	1	**245-3259**	1	HOUSING-FRONT	
M	2	1	**6V-3918**	4	BOLT (M8X1.25X50-MM)	
M	3	1	**6V-5217**	8	BOLT (M8X1.25X20-MM)	
	4	1	**9M-1974**	12	WASHER-HARD (8.8X16X2-MM THK)	
BF			**1U-8846**		SEALANT-GASKET	

B-USE AS REQUIRED
F-NOT SHOWN
M-METRIC PART

165-4446 **HOUSING GP-FRONT** *(contd.)* **i02421336**

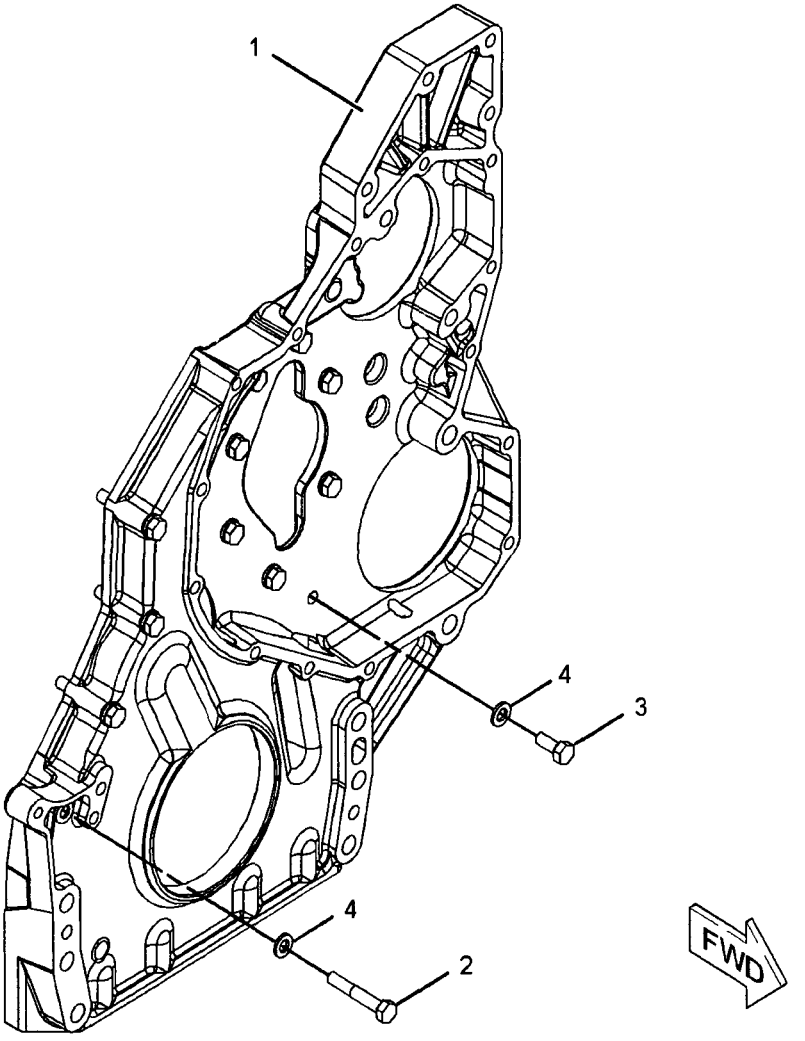

GRAPHIC #1 **<END>** g01212833

192-1563 IDLER GP-BELT–
ALTERNATOR, REFRIGERANT COMPRESSOR–
AXLE OIL COOLER PUMP

S/N: N1A1-UP

PART OF 237-4857 COMPRESSOR GP-REFRIGERANT, 241-0080 PUMP & MTG GP-AXLE OIL COOLER

AN ATTACHMENT

SMCS-1358, 1365, 1397, 1802 **i02046133**

NOTE	REF NO	GRAPHIC REF	PART NUMBER	QTY	PART NAME 1 2 3 4 5 6 (PRODUCT LEVEL)	SEE PAGE
	1	1	**151-2898**	1	SPACER (10.4X38.1X20-MM THK)	
	2	1	**144-5611**	1	PULLEY AS-IDLER	
	3	1	**145-2901**	1	COVER-DUST	
	4	1	**151-2900**	1	BOLT (M10X1.5X54.25-MM)	
	5	1	**6V-9027**	1	SEAL-O-RING	

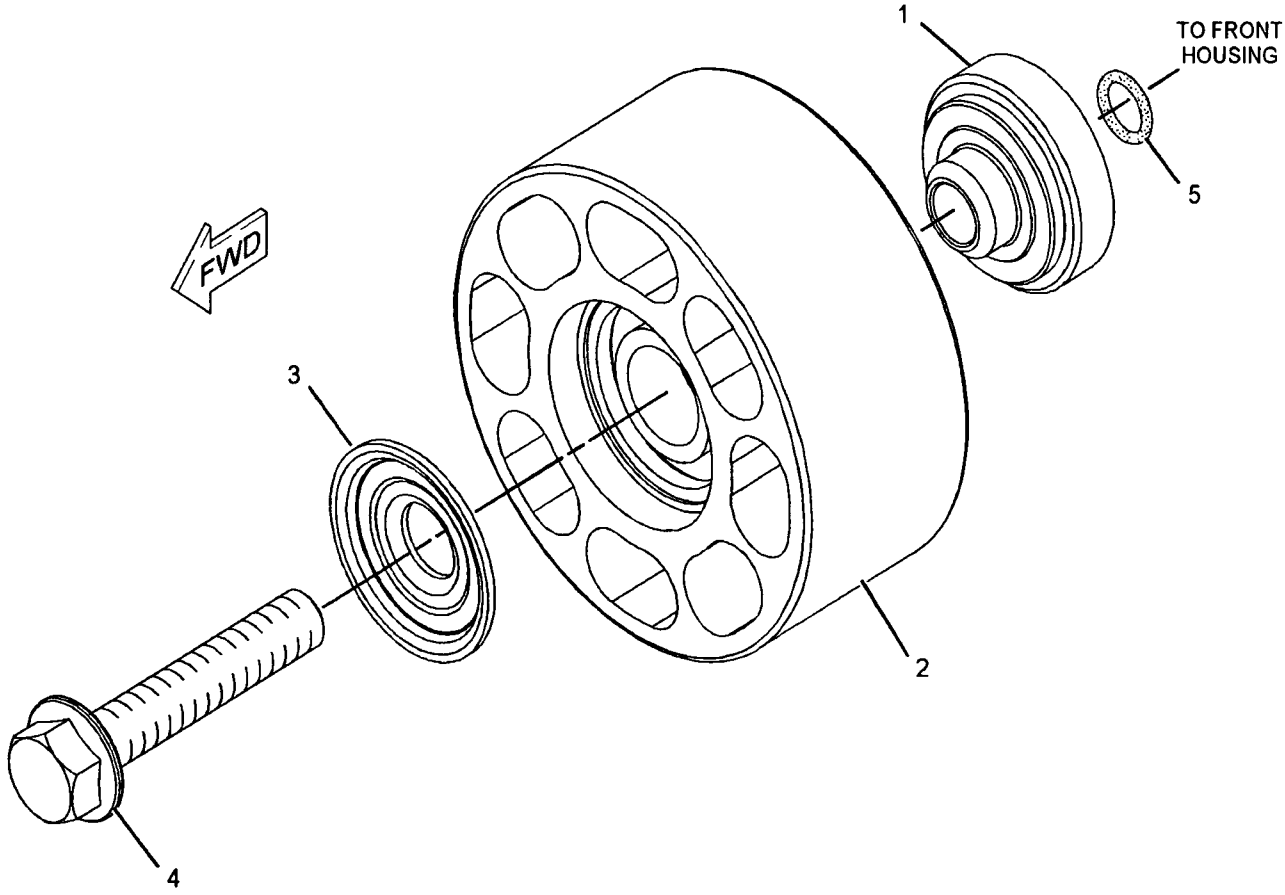

GRAPHIC #1 **<END>** g01051933

139-4081 LIFTER GP-VALVE–MECHANISM

S/N: KHX1-UP

PART OF 232-3717 VALVE MECHANISM GP

SMCS-1209 **i01308656**

NOTE	REF NO	GRAPHIC REF	PART NUMBER	QTY	PART NAME 1 2 3 4 5 6 (PRODUCT LEVEL)	SEE PAGE
	1	1	**139-9476**	1	SHAFT AS-LIFTER	
		1	**2D-6642**	2	BALL	
	2	1	**7E-6794**	4	ARM AS-INJECTOR	
	3	1	**139-4084**	2	SPACER	

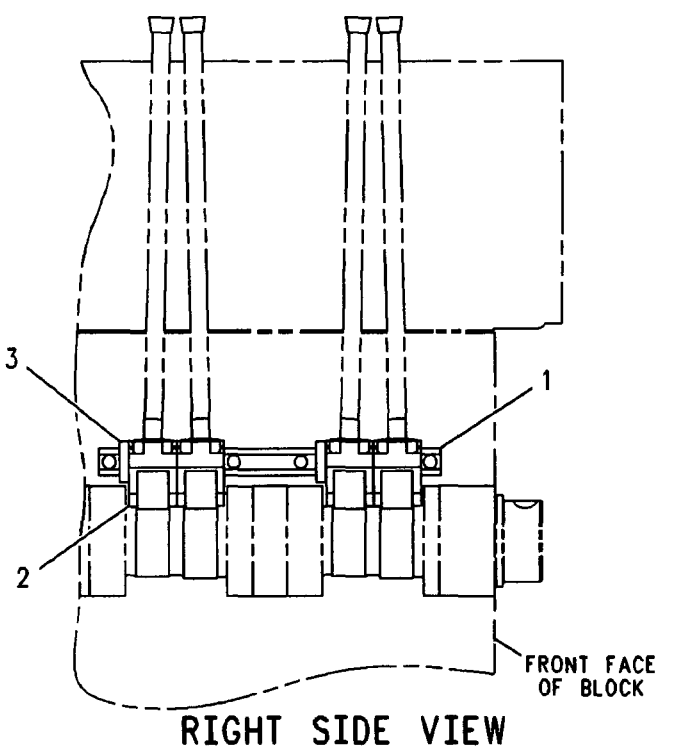

RIGHT SIDE VIEW

GRAPHIC #1 **<END>** g00288708

BASIC ENGINE

237-9822 LIFTING GP-ENGINE

S/N: KHX1-UP

PART OF 235-1422 ENGINE AR-COMPLETE

SMCS-1122 **i02241976**

NOTE	REF NO	GRAPHIC REF	PART NUMBER	QTY	PART NAME 1 2 3 4 5 6 (PRODUCT LEVEL)	SEE PAGE
	1	1	**154-0896**	1	PLATE-LIFTING	
	2	1	**8T-4121**	4	WASHER-HARD (11X21X2.5-MM THK)	
M	3	1	**8T-4136**	4	BOLT (M10X1.5X25-MM)	

M-METRIC PART

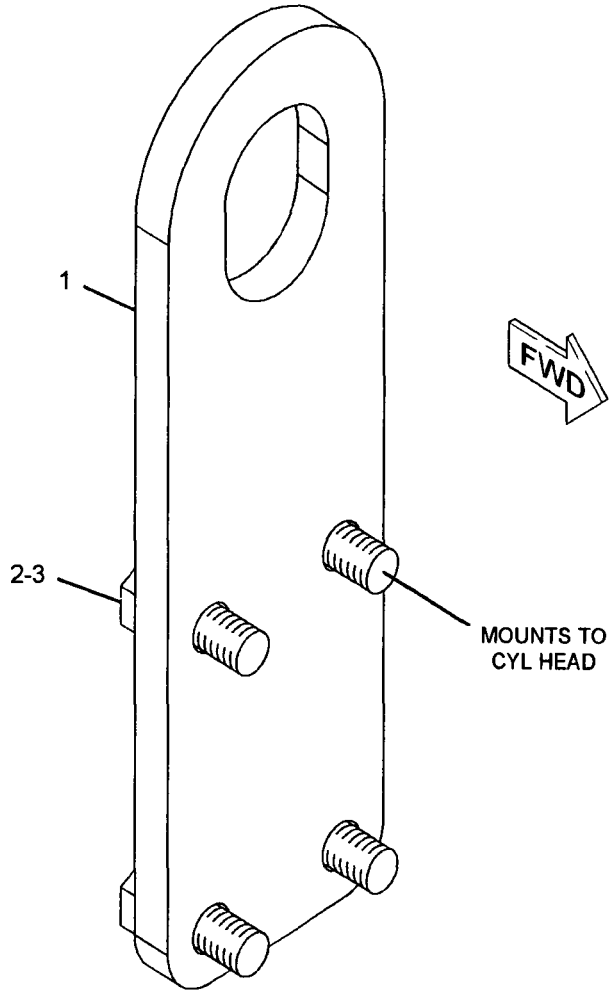

GRAPHIC #1 **<END>** g01118450

215-6982 MOUNTING GP-ALTERNATOR

S/N: KHX1-UP

PART OF 235-1422 ENGINE AR-COMPLETE

SMCS-1405 **i02242255**

NOTE	REF NO	GRAPHIC REF	PART NUMBER	QTY	PART NAME 1 2 3 4 5 6 (PRODUCT LEVEL)	SEE PAGE
	1	1	211-2101	2	SLEEVE	
	2	1	215-6981	1	BRACKET-MOUNTING	
M	3	1	8T-4137	1	BOLT (M10X1.5X20-MM)	
M	4	1	8T-4195	2	BOLT (M10X1.5X30-MM)	

M-METRIC PART

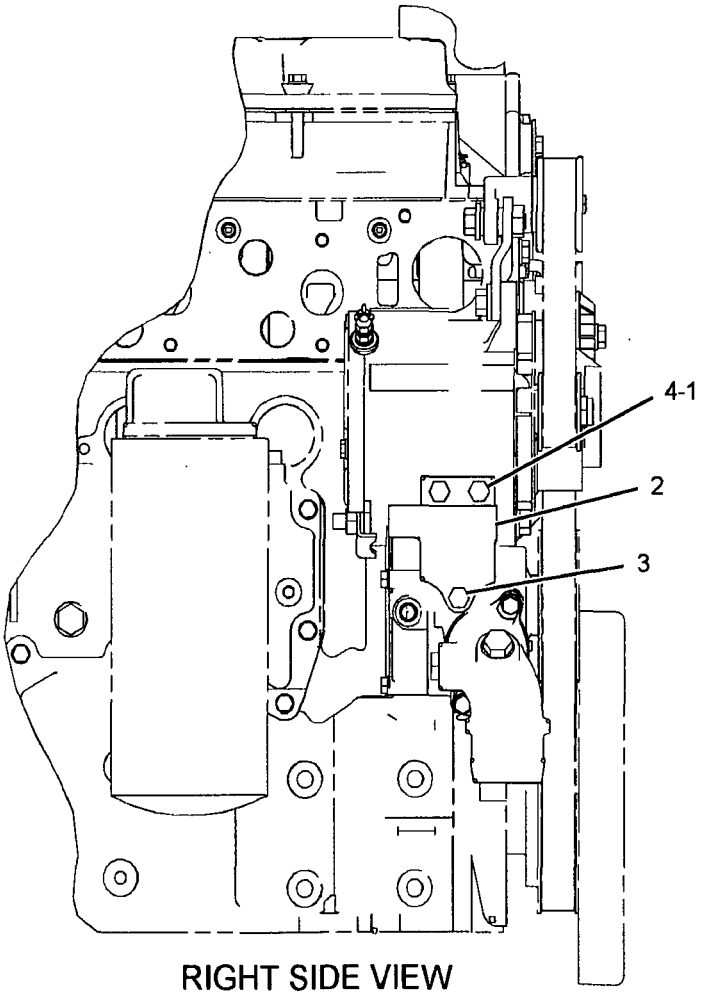

RIGHT SIDE VIEW

GRAPHIC #1 **<END>** g01108789

116-8666 MOUNTING GP-ENGINE & TMSN

S/N: N1A1-UP

PART OF 237-3995 INSTALLATION AR-ENGINE

ALSO AN ATTACHMENT

SMCS-1152, 1154, 3082 i01423860

NOTE	REF NO	GRAPHIC REF	PART NUMBER	QTY	PART NAME 1 2 3 4 5 6 (PRODUCT LEVEL)	SEE PAGE
	1	1	3E-4883	4	SLEEVE	
	2	1	7X-2622	4	WASHER (22X115X10-MM THK)	
M	3	1	8C-6855	4	BOLT (M14X2-THD)	
M	4	1	8T-3653	4	BOLT (M14X2X80-MM)	
	5	1	9W-9930	4	MOUNT AS	
	6	1	126-7757	2	BRACKET AS	
	7	1	128-1008	2	SUPPORT	
	8	1	7X-0510	8	WASHER-HARD (15.5X29X3-MM THK)	
M	9	1	7X-2563	8	BOLT (M20X2.5X60-MM)	
	10	1	8T-4121	11	WASHER-HARD (11X21X2.5-MM THK)	
	11	1	8T-4123	12	WASHER-PLATED (22X35X3.5-MM THK)	
M	12	1	8T-4195	11	BOLT (M10X1.5X30-MM)	
M	13	1	8T-6381	4	BOLT (M20X2.5X120-MM)	

M-METRIC PART

116-8666 MOUNTING GP-ENGINE & TMSN *(contd.)* i01423860

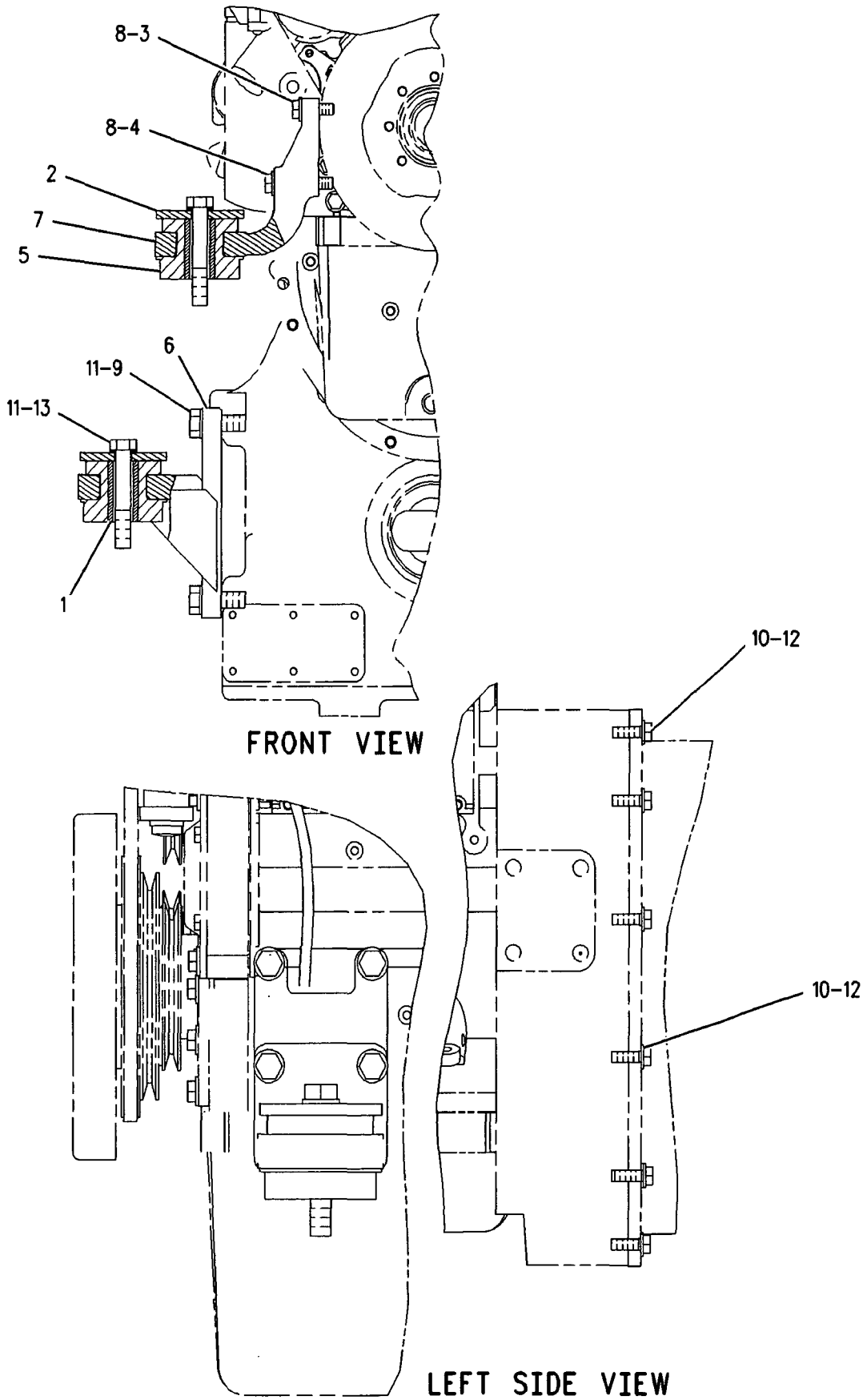

GRAPHIC #1 **<END>** g00747991

201-6850 PAN GP-OIL

S/N: KHX1-UP

PART OF 235-1422 ENGINE AR-COMPLETE

SMCS-1302 **i02048995**

NOTE	REF NO	GRAPHIC REF	PART NUMBER	QTY	PART NAME 1 2 3 4 5 6 (PRODUCT LEVEL)	SEE PAGE
	1	1	166-2905	1	SEAL-INTEGRAL	
	2	1	200-4516	1	PAN-OIL	
M	3	1	6V-3918	36	BOLT (M8X1.25X50-MM)	
	4	1	9M-1974	36	WASHER-HARD (8.8X16X2-MM THK)	
B	5	1	4C-9612		SEALANT-SILICONE	

B-USE AS REQUIRED
M-METRIC PART

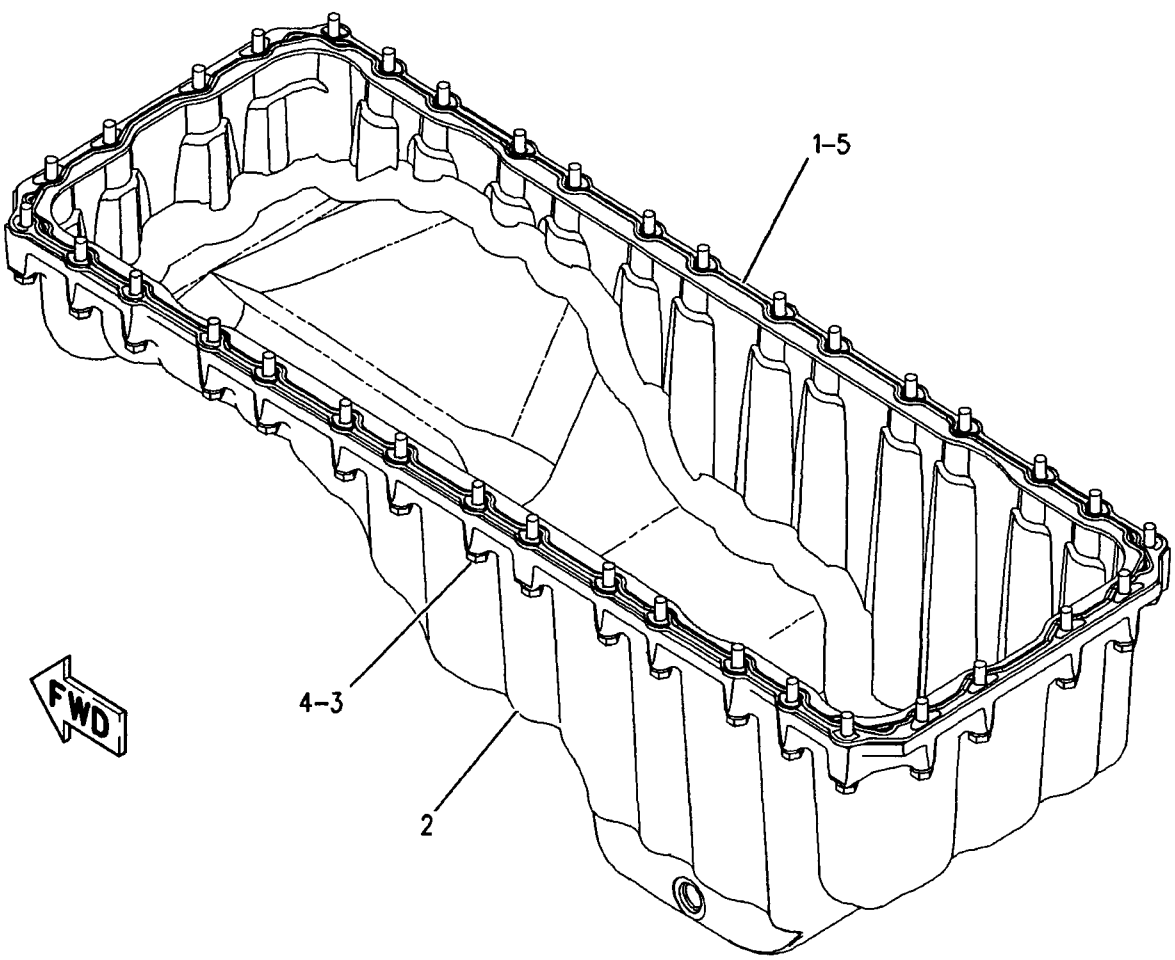

GRAPHIC #1 **<END>** g01001517

212-3652 PISTON & ROD GP

S/N: KHX1-UP

PART OF 235-1423 ENGINE AR-CORE

SMCS-1225 **i02421066**

NOTE	REF NO	GRAPHIC REF	PART NUMBER	QTY	PART NAME 1 2 3 4 5 6 (PRODUCT LEVEL)	SEE PAGE
R	1	1	213-3193	1	ROD AS-CONNECTING (NON-DRILLED)	
	1A	1	2W-0027	1	BEARING (EYE END)	
	1B	1	195-0321	2	BOLT	
	2	1	224-6638	1	BEARING-CONNECTING ROD (STANDARD)	
AB		1	7C-6976		BEARING-CONNECTING ROD (0.25-MM US)	
AB		1	7C-6977		BEARING-CONNECTING ROD (0.5-MM US)	
	3	1	238-2706	1	RING-PISTON-OIL	
	4	1	197-9353	1	RING-PISTON (INTERMEDIATE)	
	5	1	197-9386	1	RING-PISTON-TOP	
	6	1	197-9371	1	PIN-PISTON	
	7	1	280-2748	1	TUBE AS-OIL JET	
	8	1	238-2720	1	BODY AS-PISTON	
M	9	1	6V-3940	1	BOLT (M8X1.25X25-MM)	
	10	1	197-9372	2	RETAINER-PIN	

A-NOT PART OF THIS GROUP
B-USE AS REQUIRED
M-METRIC PART
R-REMFG PART MAY BE AVAILABLE

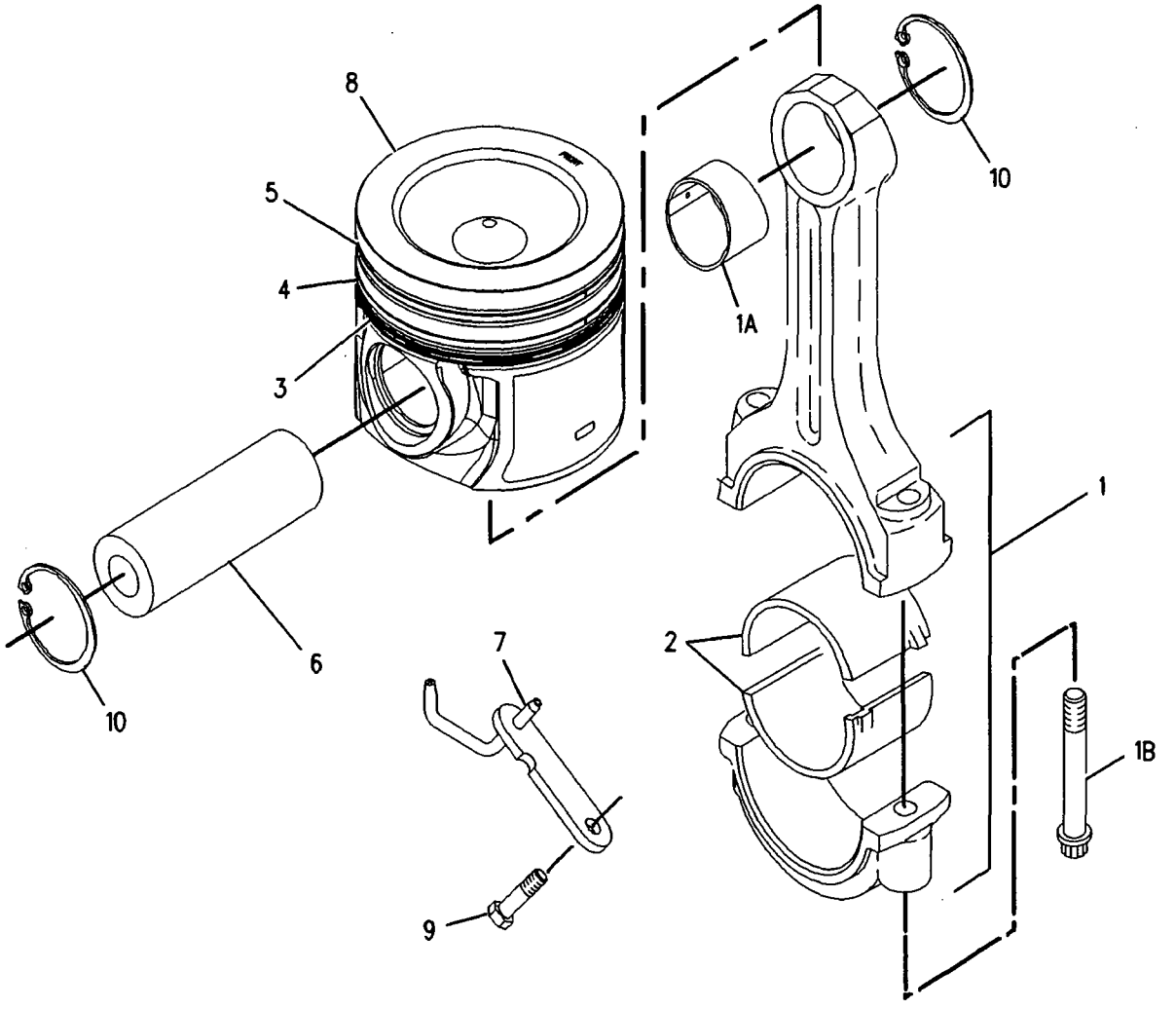

GRAPHIC #1 **<END>** g00903037

159-0303 PLUG GP-CYLINDER BLOCK

S/N: KHX1-UP

PART OF 235-1422 ENGINE AR-COMPLETE

SMCS-1201 i01330263

NOTE	REF NO	GRAPHIC REF	PART NUMBER	QTY	PART NAME 1 2 3 4 5 6 (PRODUCT LEVEL)	SEE PAGE
M	1	1	8T-0293	1	BOLT (M12X1.75X20-MM)	
	2	1	6F-7062	1	WASHER (12.7X19.05X1.83-MM THK)	
	3	1	9S-8008	2	PLUG	
	4	1	3D-2824	2	SEAL-O-RING	

M-METRIC PART

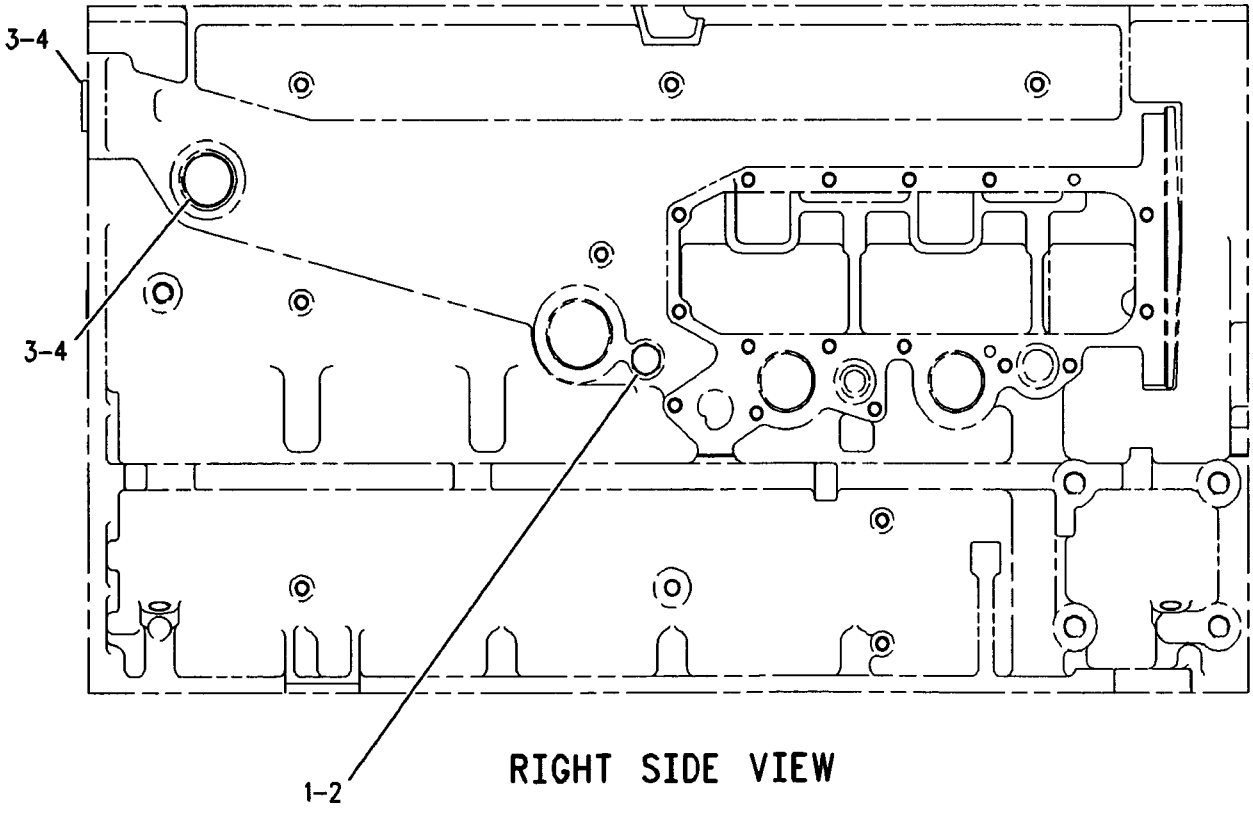

RIGHT SIDE VIEW

GRAPHIC #1 <END> g00677138

162-8068 PLUG GP-ENGINE

S/N: KHX1-UP

PART OF 235-1422 ENGINE AR-COMPLETE

SMCS-1000 i01740907

NOTE	REF NO	GRAPHIC REF	PART NUMBER	QTY	PART NAME 1 2 3 4 5 6 (PRODUCT LEVEL)	SEE PAGE
	1	1	9S-8005	1	PLUG-O RING	
	2	1	3K-0360	1	SEAL-O-RING	

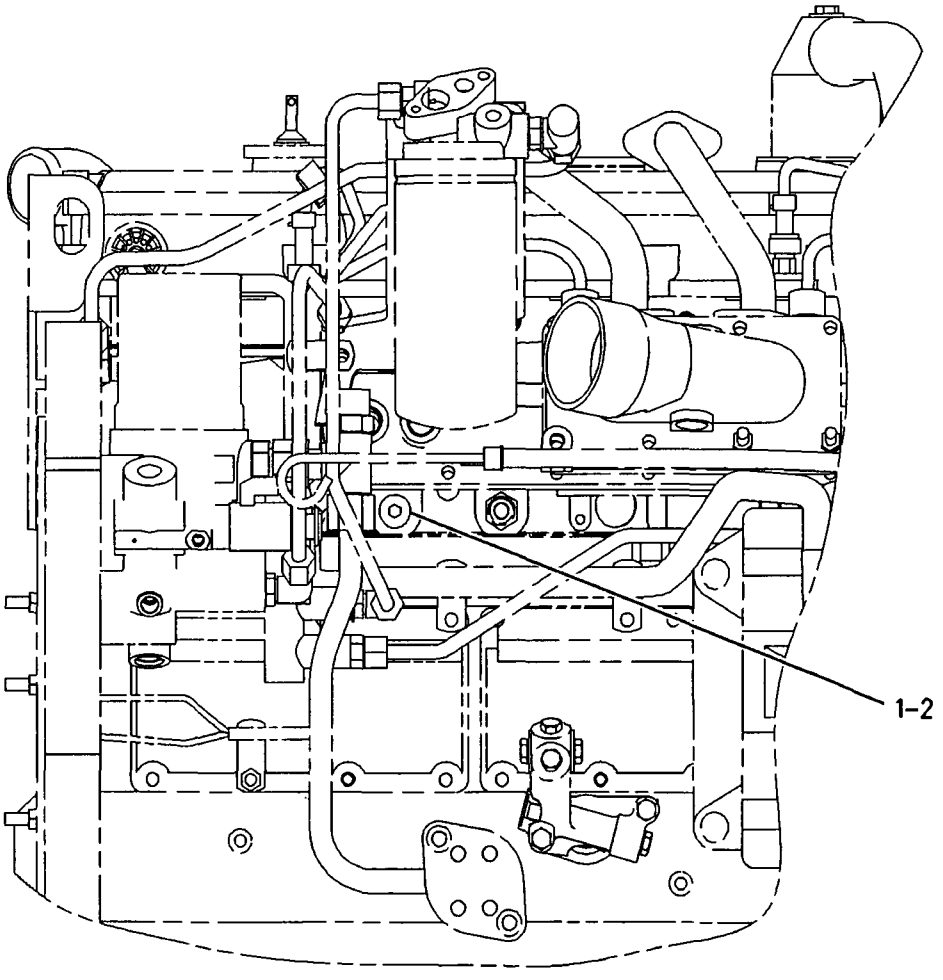

LEFT SIDE VIEW

GRAPHIC #1 <END> g00891417

172-5754 PULLEY GP-IDLER–BELT TENSIONER

S/N: KHX1-UP

PART OF 235-1422 ENGINE AR-COMPLETE

SMCS-1358 **i02056002**

NOTE	REF NO	GRAPHIC REF	PART NUMBER	QTY	PART NAME 1 2 3 4 5 6 (PRODUCT LEVEL)	SEE PAGE
	1	1	**173-1498**	1	PULLEY AS-IDLER (8-GROOVE)	
	1A	1	**166-6358**	1	COVER-DUST	
	1B	1	**151-2900**	1	BOLT (M10X1.5X54.25-MM)	
	2	1	**190-0643**	1	BELT TIGHTENER (IDLER PULLEY)	
	3	1	**8T-4121**	1	WASHER-HARD (11X21X2.5-MM THK)	
M	4	1	**8T-4172**	1	BOLT (M10X1.5X80-MM)	

M-METRIC PART

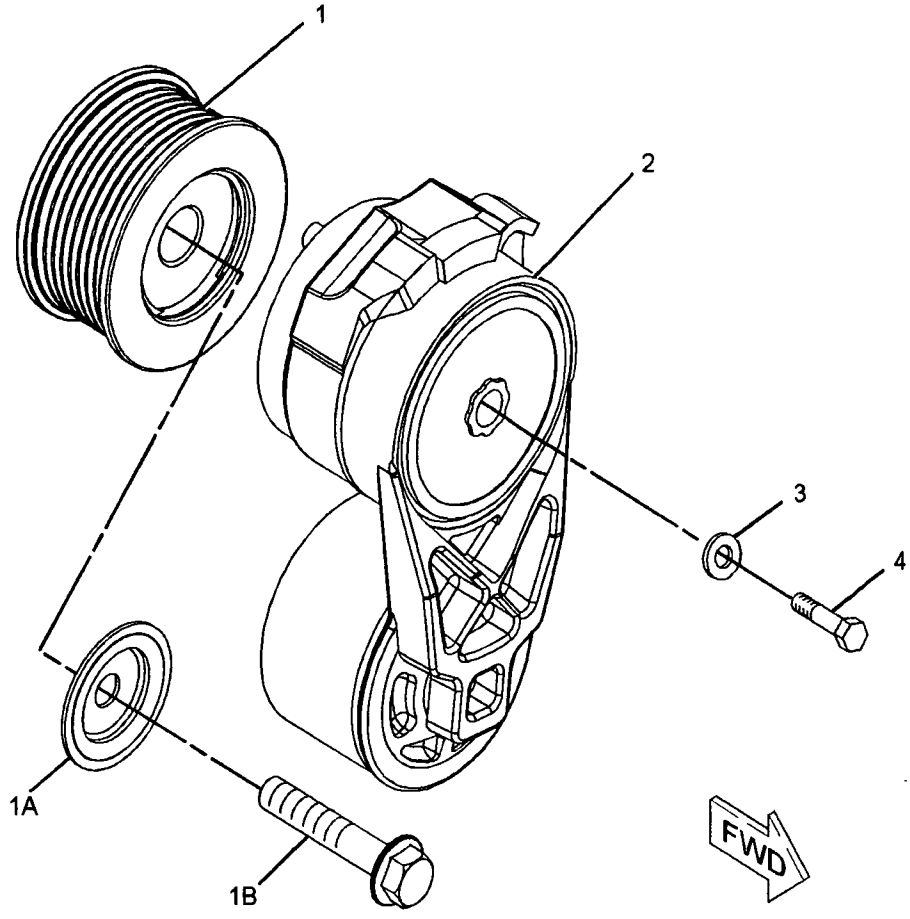

GRAPHIC #1

<END>

g01060759

115-4210 SEAL GP-CRANKSHAFT

S/N: KHX1-UP

PART OF 235-1422 ENGINE AR-COMPLETE

SMCS-1160, 1161 i02265234

NOTE	REF NO	GRAPHIC REF	PART NUMBER	QTY	PART NAME 1 2 3 4 5 6 (PRODUCT LEVEL)	SEE PAGE
	1	1	115-4120	1	SEAL GP-CRANKSHAFT	
	2	1	119-2921	1	SEAL GP-CRANKSHAFT (FRONT)	
	3	1	4R-9999	1	EXCLUDER-CRANKSHAFT SEAL	

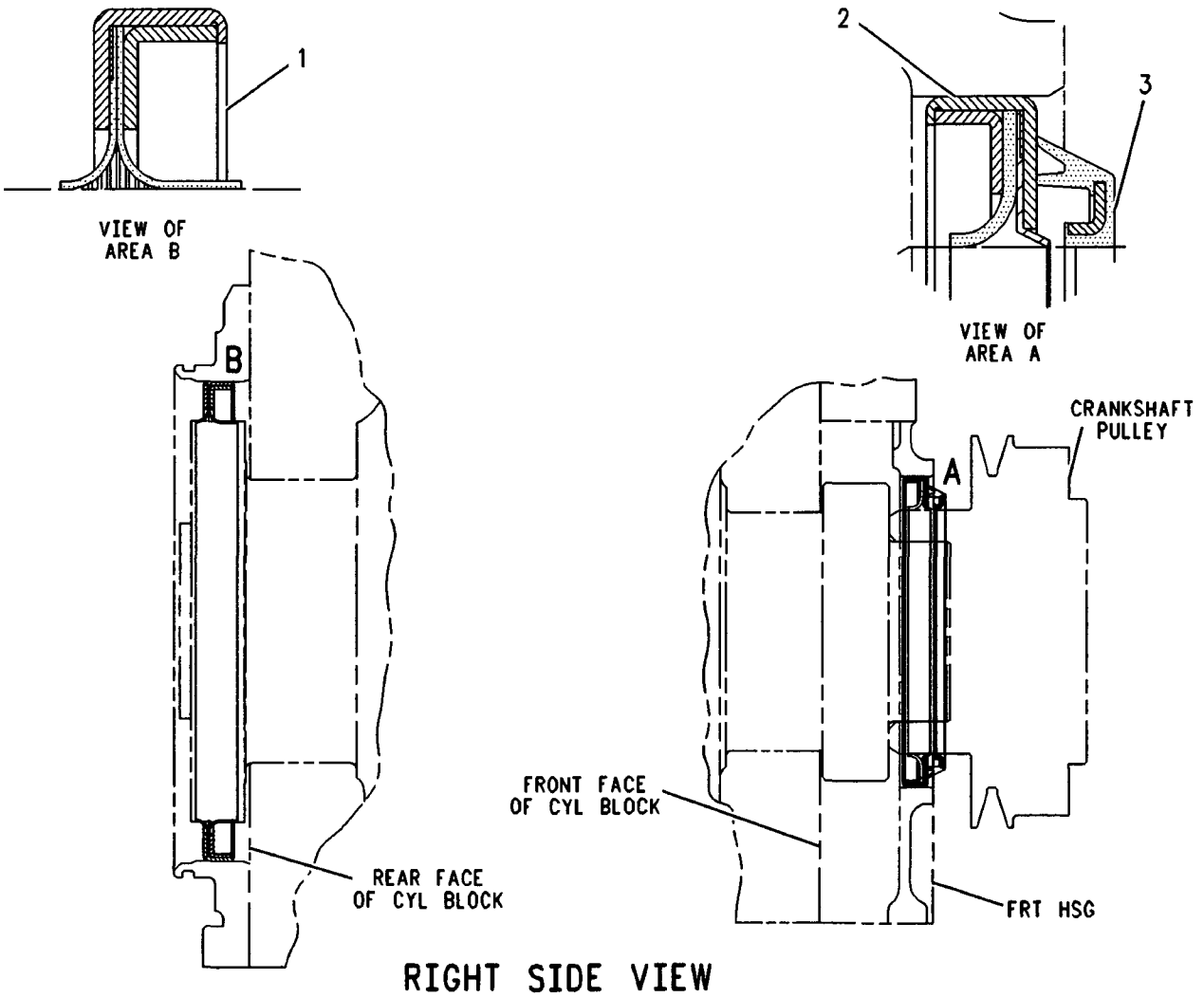

RIGHT SIDE VIEW

GRAPHIC #1 <END> g00109240

7C-1770 SEAL GP-FLYWHEEL HOUSING

S/N: KHX1-UP

PART OF 235-1422 ENGINE AR-COMPLETE

SMCS-1157 i01251875

NOTE	REF NO	GRAPHIC REF	PART NUMBER	QTY	PART NAME 1 2 3 4 5 6 (PRODUCT LEVEL)	SEE PAGE
B	1	1	1U-8846		SEALANT-GASKET	
	2	1	3J-7354	1	SEAL-O-RING	
B	3	1	3D-2824	1	SEAL-O-RING	

B-USE AS REQUIRED

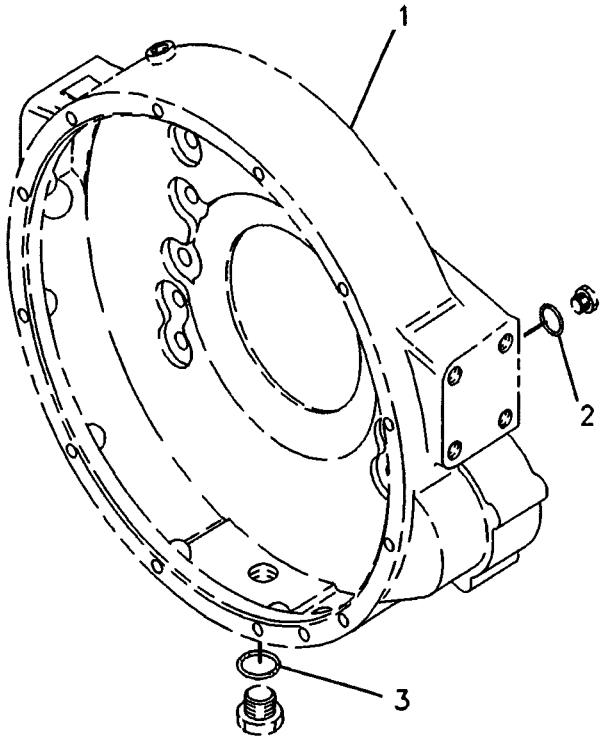

GRAPHIC #1 <END> g00108872

232-3717 VALVE MECHANISM GP

S/N: KHX1-UP

PART OF 235-1423 ENGINE AR-CORE

SMCS-1102, 1121, 1123 **i02242058**

NOTE	REF NO	GRAPHIC REF	PART NUMBER	QTY	PART NAME 1 2 3 4 5 6 (PRODUCT LEVEL)	SEE PAGE
	1	1	**133-6379**	12	ROD	
	2	1	**219-3309**	6	BRIDGE-VALVE	
Y	3	1	*139-4081*	3	LIFTER GP-VALVE	41
M	4	1	**8T-8442**	12	BOLT-SOCKET HEAD (M6X1X30-MM)	
	5	1	**3E-9412**	6	DOWEL	
Y	6	1	*235-5528*	1	VALVE MECHANISM GP	54
M	7	1	**6V-5696**	11	BOLT (M12X1.75X80-MM)	
	8	1	**9M-1974**	2	WASHER-HARD (8.8X16X2-MM THK)	
	9	1	**3H-7654**	9	WASHER-HARD (13.5X22.5X3-MM THK)	
M	10	1	**8T-0100**	2	BOLT (M8X1.25X60-MM)	
	11	1	**232-1754**	1	CLIP	

M-METRIC PART
Y-SEPARATE ILLUSTRATION

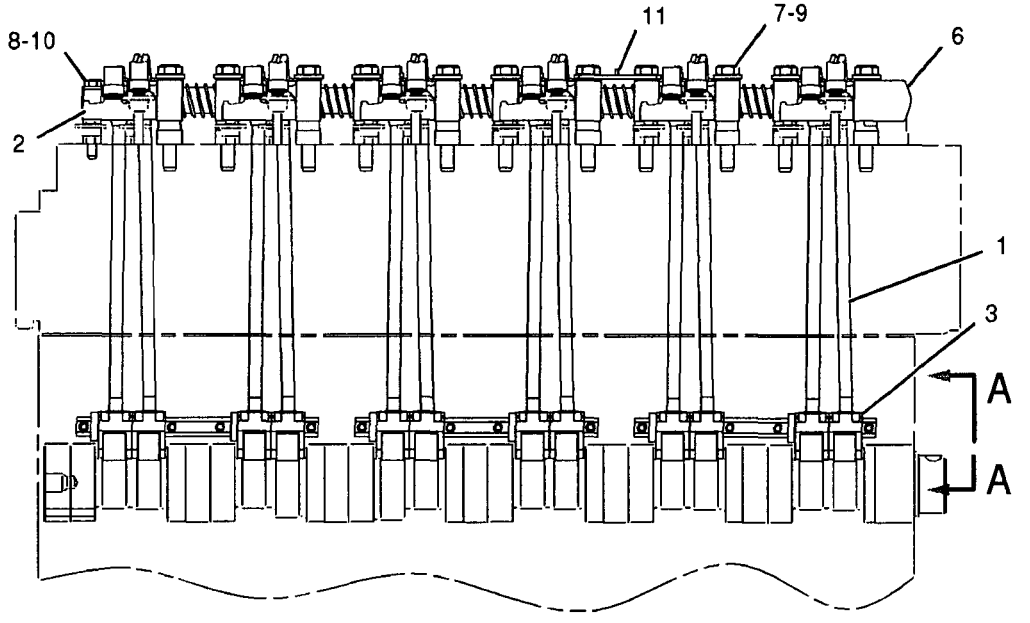

RIGHT SIDE VIEW

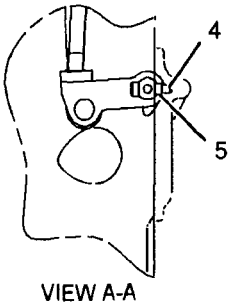

VIEW A-A

GRAPHIC #1

<END>

g01028897

BASIC ENGINE

235-5528 VALVE MECHANISM GP

S/N: KHX1-UP

PART OF 232-3717 VALVE MECHANISM GP

SMCS-1102, 1121, 1123 **i01935363**

NOTE	REF NO	GRAPHIC REF	PART NUMBER	QTY	PART NAME 1 2 3 4 5 6 (PRODUCT LEVEL)	SEE PAGE
	1	1	**137-6717**	5	SPRING	
	2	1	*222-1185*	6	ROCKER ARM GP (INTAKE)	
					(EACH INCLUDES)	
M	2A	1	**2Y-5829**	1	NUT (M10X1.5 THD)	
M		1	**183-4365**	1	SCREW-ADJUSTING (M10X1.5 THD)	
	2B	1	**153-8467**	1	ROCKER ARM AS	
	2C	1	**173-5549**	1	SEAL-O-RING	
	2D	1	**145-7376**	1	BUTTON-ROCKER ARM	
	2E	1	**145-7385**	1	SOCKET-ROCKER ARM	
	3	1	**138-8403**	1	STAND	
	4	1	*222-1186*	6	ROCKER ARM GP (EXHAUST)	
					(EACH INCLUDES)	
M	4A	1	**2Y-5829**	1	NUT (M10X1.5 THD)	
M		1	**183-4365**	1	SCREW-ADJUSTING (M10X1.5 THD)	
	4B	1	**153-8470**	1	ROCKER ARM AS	
	4C	1	**173-5549**	1	SEAL-O-RING	
	4D	1	**145-7376**	1	BUTTON-ROCKER ARM	
	4E	1	**145-7385**	1	SOCKET-ROCKER ARM	
	5	1	**235-5527**	10	STAND	
	6	1	**138-8402**	1	STAND	
	7	1	**138-9868**	1	RING-RETAINING	
	8	1	**8H-5244**	1	DOWEL	
	9	1	**138-7198**	1	SHAFT AS	
		1	**5B-1866**	1	PLUG-CUP	

M-METRIC PART

235-5528 VALVE MECHANISM GP *(contd.)* i01935363

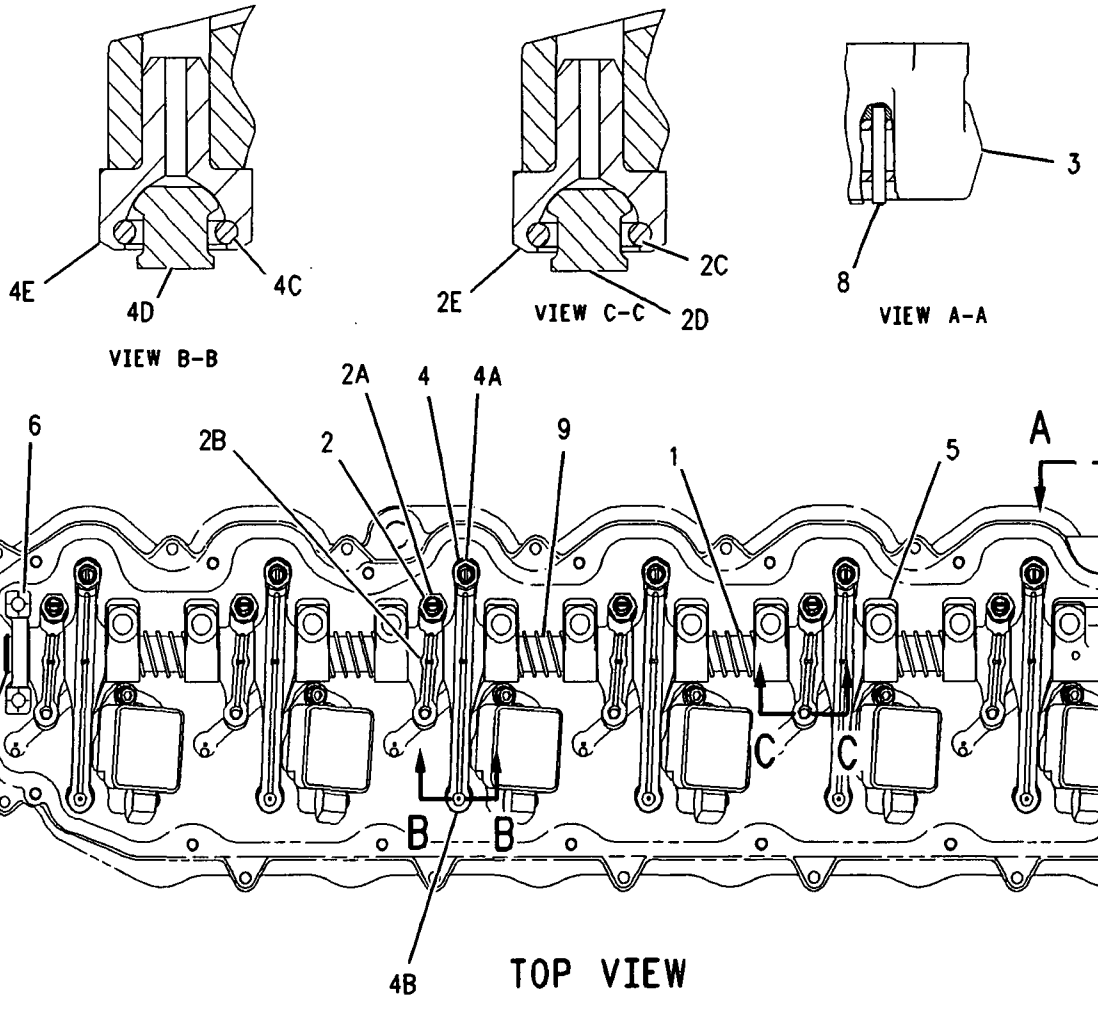

GRAPHIC #1 **<END>** g00901133

191-0523 ADAPTER GP-OIL LINE–ENGINE

S/N: KHX1-UP

PART OF 191-0461 LINES GP-INJECTOR HYD PUMP

SMCS-1307 i02246436

NOTE	REF NO	GRAPHIC REF	PART NUMBER	QTY	PART NAME 1 2 3 4 5 6 (PRODUCT LEVEL)	SEE PAGE
	1	1	191-0522	1	ADAPTER	
	2	1	033-6027	1	SEAL-O-RING	

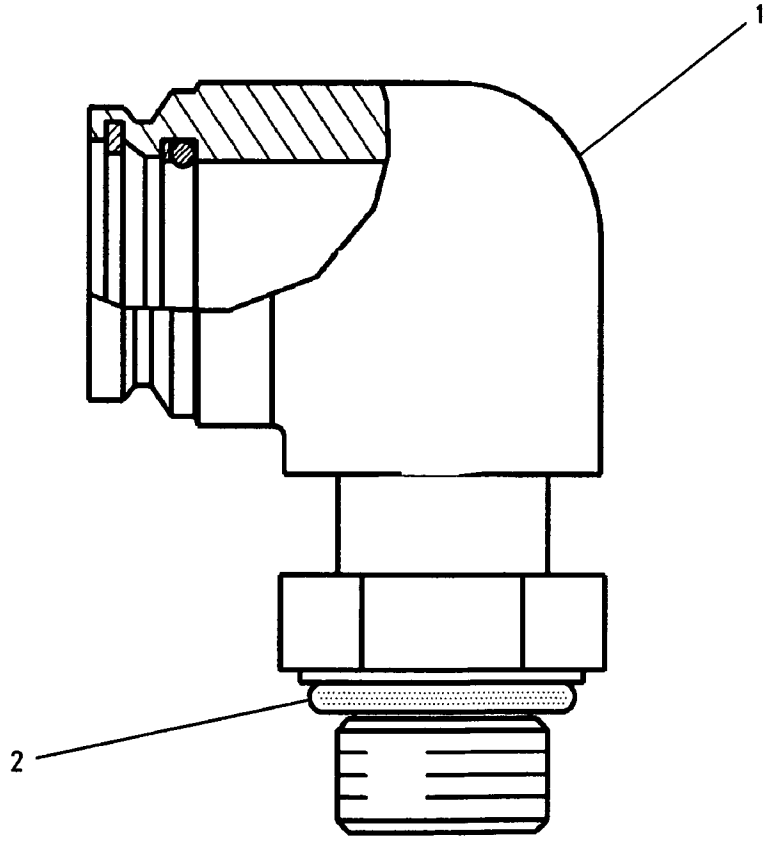

GRAPHIC #1 <END> g00807476

222-5946 BREATHER GP–CRANKCASE

S/N: KHX1-UP

PART OF 235-1422 ENGINE AR-COMPLETE

SMCS-1317 **i02241947**

NOTE	REF NO	GRAPHIC REF	PART NUMBER	QTY	PART NAME 1 2 3 4 5 6 (PRODUCT LEVEL)	SEE PAGE
	1	1	164-0210	1	BREATHER AS (CRANKCASE)	
M	2	1	143-4654	1	BOLT (M8X1.25X105-MM)	
	3	1	8H-2046	1	SEAL-O-RING (BREATHER)	
	4	1	9N-0869	1	WASHER-HARD (8.8X25.5X2-MM THK)	

M-METRIC PART

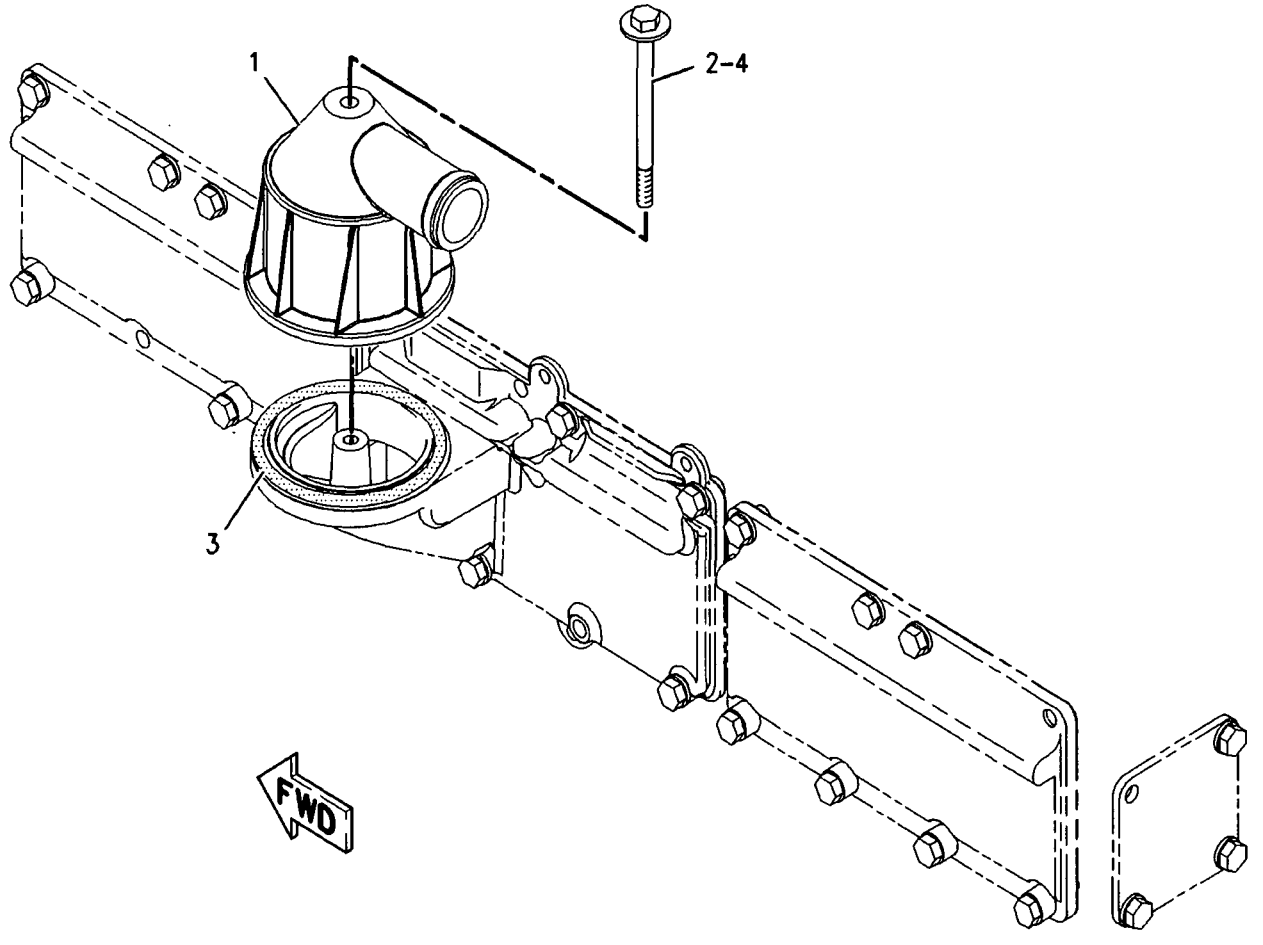

GRAPHIC #1 **<END>** g00947923

237-9836 FILLER GP-ENGINE OIL

S/N: KHX1-UP

PART OF 235-1422 ENGINE AR-COMPLETE

SMCS-1316 i02242174

NOTE	REF NO	GRAPHIC REF	PART NUMBER	QTY	PART NAME 1 2 3 4 5 6 (PRODUCT LEVEL)	SEE PAGE
	1	1	5L-2952	1	CAP AS-FILLER (ENGINE OIL)	
		1	6L-2609	1	SEAL-RUBBER	
	2	1	191-5213	1	TUBE AS	
	3	1	191-7699	1	BRACKET AS	
	4	1	061-9455	1	SEAL-O-RING	
M	5	1	5P-7970	3	NUT (M8X1.25-THD)	
	6	1	6V-5839	1	WASHER (11X21X2.5-MM THK)	
M	7	1	6V-6317	1	BOLT (M10X1.5X20-MM)	
	8	1	7D-7233	1	CLIP	
	9	1	9M-1974	4	WASHER-HARD (8.8X16X2-MM THK)	

M-METRIC PART

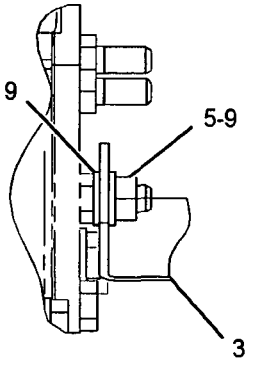

VIEW A-A

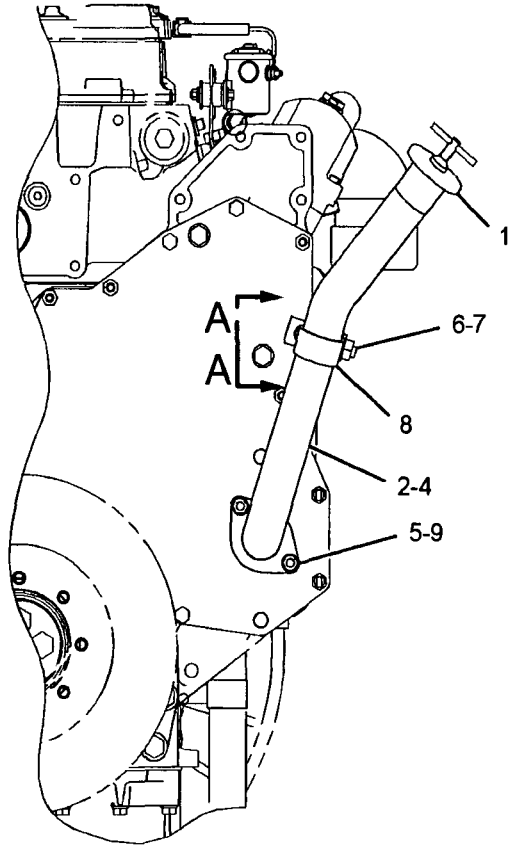

FRONT VIEW

GRAPHIC #1 <END> g01118435

LUBRICATION SYSTEM

189-5433 FILTER GP-ENGINE OIL

S/N: KHX1-UP

PART OF 235-1422 ENGINE AR-COMPLETE

SMCS-1306, 1308 **i02086251**

NOTE	REF NO	GRAPHIC REF	PART NUMBER	QTY	PART NAME 1 2 3 4 5 6 (PRODUCT LEVEL)	SEE PAGE
	1	1	7C-1493	2	VALVE AS-BYPASS (ENGINE OIL FILTER)	
	2	1	8C-3445	1	CAP-DUST	
	3	1	068-9526	2	CAP-TUBE	
	4	1	201-9774	1	BASE AS-OIL FILTER	
	4A	1	2P-2537	1	STUD-HOLLOW	
	5	1	1R-1807	1	FILTER AS-ENGINE OIL	
	6	1	2M-9780	2	SEAL-O-RING	
	7	1	3J-7354	1	SEAL-O-RING	
	8	1	3P-1932	1	ADAPTER	
M	9	1	5P-8196	2	PLUG	
M	10	1	6V-2317	10	BOLT (M8X1.25X30-MM)	
	11	1	233-7654	1	GASKET	
	12	1	8C-3446	1	VALVE-FLUID SAMPLING (ENGINE OIL)	
	13	1	8L-2786	1	SEAL-O-RING	
M	14	1	8T-0276	3	BOLT (M8X1.25X45-MM)	
	15	1	242-3864	2	SPRING	
	16	1	9M-1974	15	WASHER-HARD (8.8X16X2-MM THK)	
M	17	1	9X-2098	2	STUD-TAPERLOCK (BOLT)	

M-METRIC PART

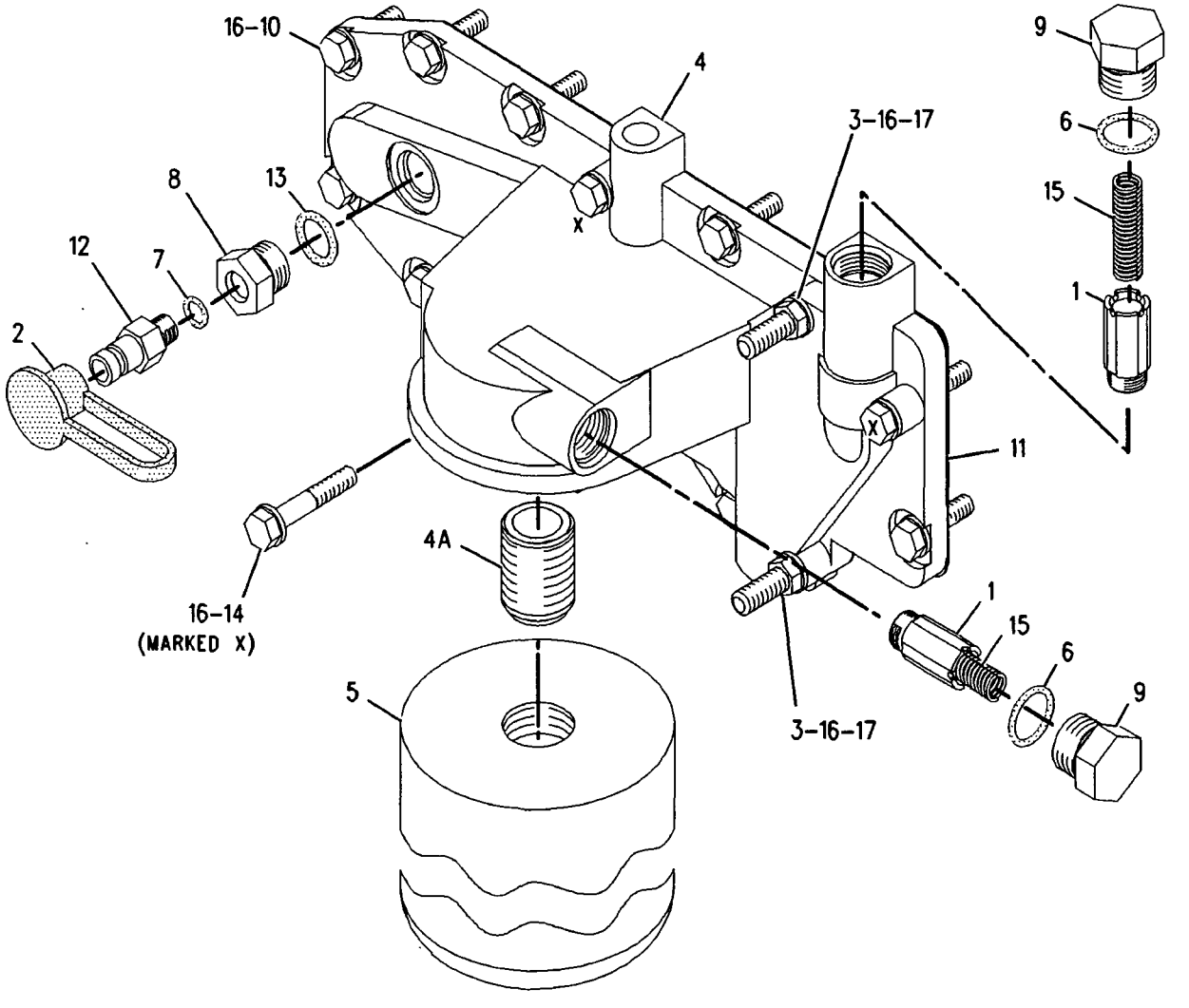

GRAPHIC #1 **<END>** g00943879

248-0369 GAUGE GP-OIL LEVEL (DIPSTICK)-ENGINE

S/N: KHX1-UP

PART OF 235-1422 ENGINE AR-COMPLETE

SMCS-1326 i02455539

NOTE	REF NO	GRAPHIC REF	PART NUMBER	QTY	PART NAME 1 2 3 4 5 6 (PRODUCT LEVEL)	SEE PAGE
J	1	1	1S-2563	3	PLUG	
	2	1	225-1461	1	BRACKET	
	3	1	261-5689	1	GAUGE AS (DIPSTICK) (ENGINE OIL LEVEL)	
	4	1	261-5690	1	TUBE AS	
M	5	1	5C-7261	2	NUT (M8X1.25-THD)	
	6	1	6V-3265	1	CLIP	
M	7	1	8T-4200	1	BOLT (M8X1.25X16-MM)	
	8	1	8T-4224	2	WASHER-HARD (8.8X16X2-MM THK)	
	9	1	9M-1974	2	WASHER-HARD (8.8X16X2-MM THK)	
	10	1	119-5708	1	CLIP	
M	11	1	6V-6317	1	BOLT (M10X1.5X20-MM)	
	12	1	6V-5839	1	WASHER (11X21X2.5-MM THK)	

J-USE TO PLUG OPTIONAL DIPSTICK LOCATIONS
M-METRIC PART

248-0369 GAUGE GP-OIL LEVEL (DIPSTICK) *(contd.)* i02455539

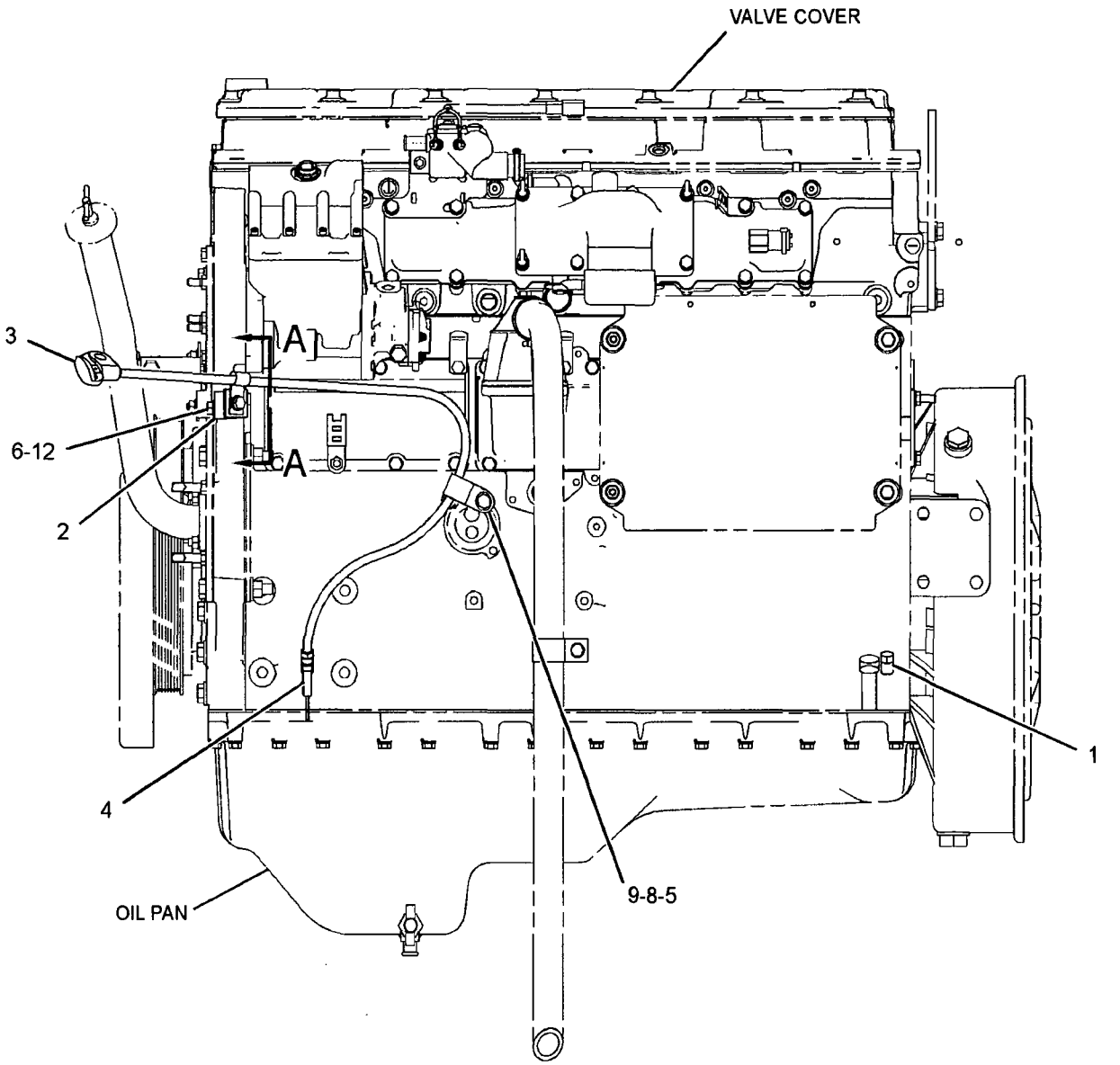

LEFT SIDE VIEW

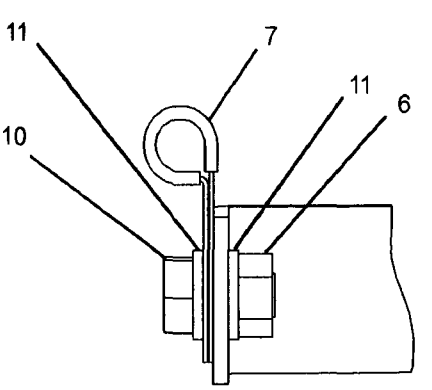

VIEW A-A

GRAPHIC #1 **<END>** g01225845

LUBRICATION SYSTEM

7C-2475 LINES GP-ENGINE OIL

S/N: KHX1-UP

PART OF 235-1422 ENGINE AR-COMPLETE

SMCS-1307 **i01740833**

NOTE	REF NO	GRAPHIC REF	PART NUMBER	QTY	PART NAME 1 2 3 4 5 6 (PRODUCT LEVEL)	SEE PAGE
	1	1	**7C-5403**	1	TUBE AS	
	2	1	**7W-5340**	1	GASKET	
	3	1	**9M-1974**	2	WASHER-HARD (8.8X16X2MM THK)	
M	4	1	**6V-3940**	4	BOLT (M8X1.25X25MM)	
	5	1	**4W-2232**	1	ELBOW-OUTLET	
	6	1	**3P-1156**	2	SEAL-O-RING	

M-METRIC PART

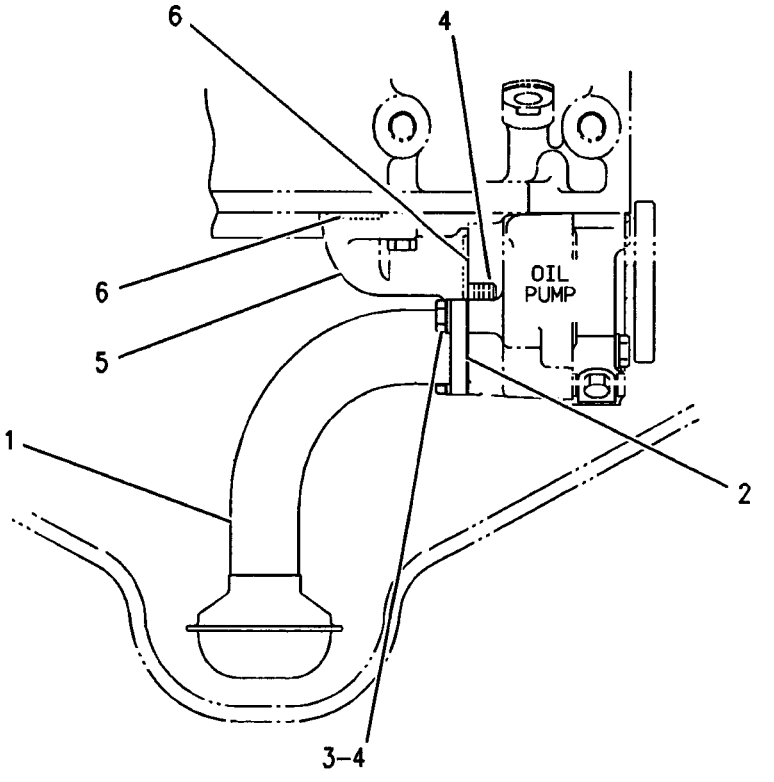

RIGHT SIDE VIEW

GRAPHIC #1 **<END>** g00891413

LUBRICATION SYSTEM

168-8976 LINES GP-ENGINE OIL DRAIN

S/N: N1A1-UP

PART OF 237-3995 INSTALLATION AR-ENGINE

ALSO AN ATTACHMENT

SMCS-1307 **i01045233**

NOTE	PART NUMBER	QTY	PART NAME 1 2 3 4 5 6 (PRODUCT LEVEL)	SEE PAGE
	5D-1026	1	CLAMP-HOSE	
E	**5P-0767**		HOSE (14CM)	

E-ORDER BY THE CENTIMETER

<END>

187-6279 LINES GP-TURBOCHARGER OIL

S/N: KHX1-UP

PART OF 235-1422 ENGINE AR-COMPLETE

SMCS-1052, 1307 **i01963827**

NOTE	REF NO	GRAPHIC REF	PART NUMBER	QTY	PART NAME 1 2 3 4 5 6 (PRODUCT LEVEL)	SEE PAGE
	1	1	6V-8636		CONNECTOR	
	1A	1	214-7568	1	SEAL-O-RING (11.89MM ID)	
	1B	1	221-3494	1	SEAL-O-RING (12.83MM OD)	
	2	1	228-4709	1	HOSE AS	
	3	1	187-6294	1	HOSE AS-OIL SUPPLY	
	4	1	6V-8724	1	ELBOW	
	4A	1	3J-1907	1	SEAL-O-RING (11.89MM ID)	
	4B	1	6V-8397	1	SEAL-O-RING (12.83MM OD)	
	5	1	3P-1156	1	SEAL-O-RING (21.82MM ID)	
	6	1	5P-8066	1	SEAL-O-RING (32.92MM ID)	
M	7	1	9X-2099	2	STUD (M8X1.25-THD)	
	8	1	8T-4224	4	WASHER-HARD (8.8X16X2-MM THK)	
M	9	1	8T-7547	2	BOLT (M8X1.25X30-MM)	

M-METRIC PART

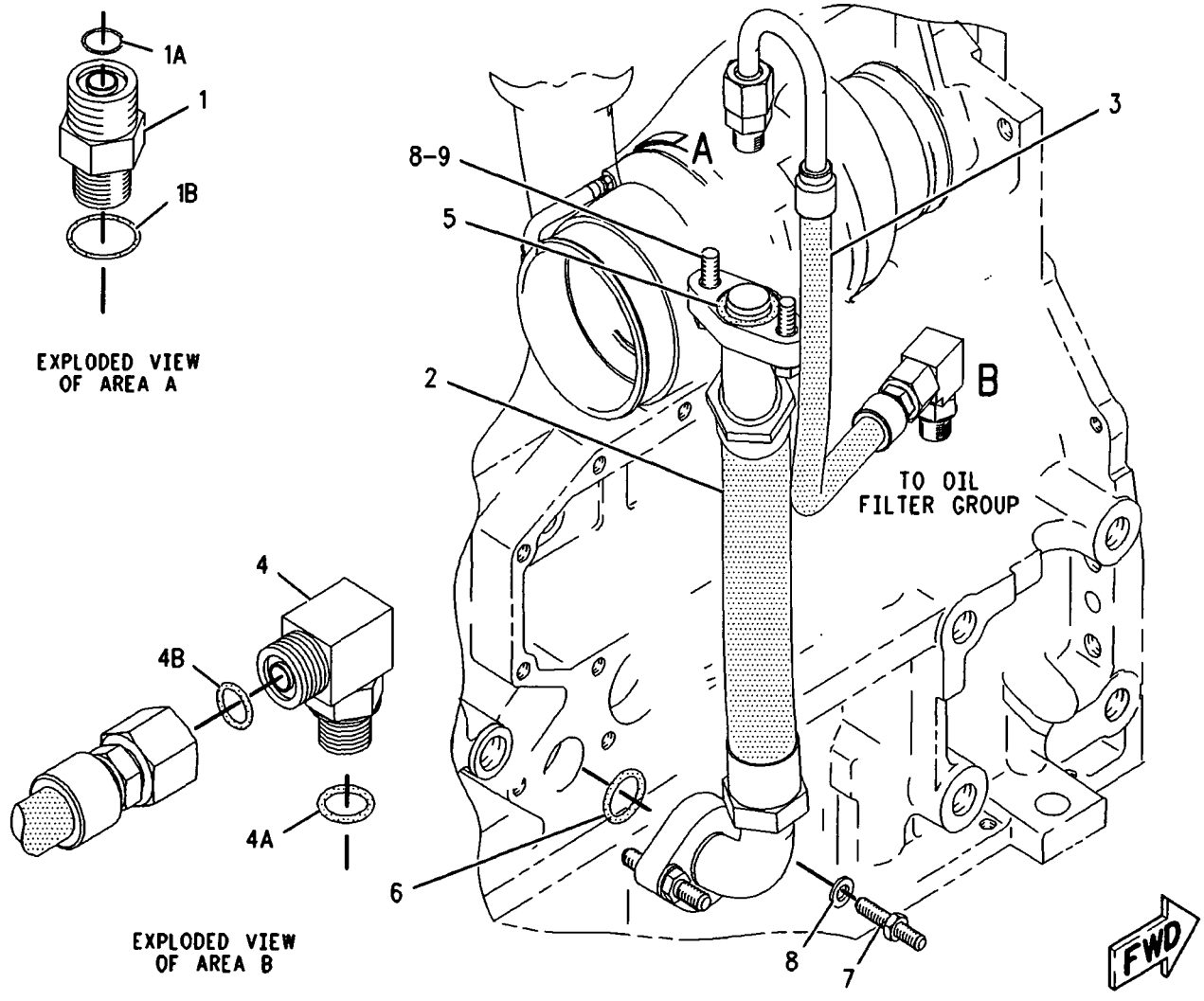

GRAPHIC #1

<END>

g00993616

192-2981 PUMP GP-ENGINE OIL

S/N: KHX1-UP

PART OF 235-1423 ENGINE AR-CORE

FOR USE WITH FRONT GEAR TRAIN GPS NOT HAVING IDLER GEAR PUMP COMPONENTS IN CONSIST

SMCS-1304, 1315 **i01740946**

NOTE	REF NO	GRAPHIC REF	PART NUMBER	QTY	PART NAME 1 2 3 4 5 6 (PRODUCT LEVEL)	SEE PAGE
Y	1	1	*200-4497*	1	PUMP GP-ENGINE OIL	66
M	2	1	**6V-5815**	2	BOLT (M10X1.5X75MM)	
	3	1	**6V-5839**	2	WASHER (11X21X2.5MM THK)	

M-METRIC PART
Y-SEPARATE ILLUSTRATION

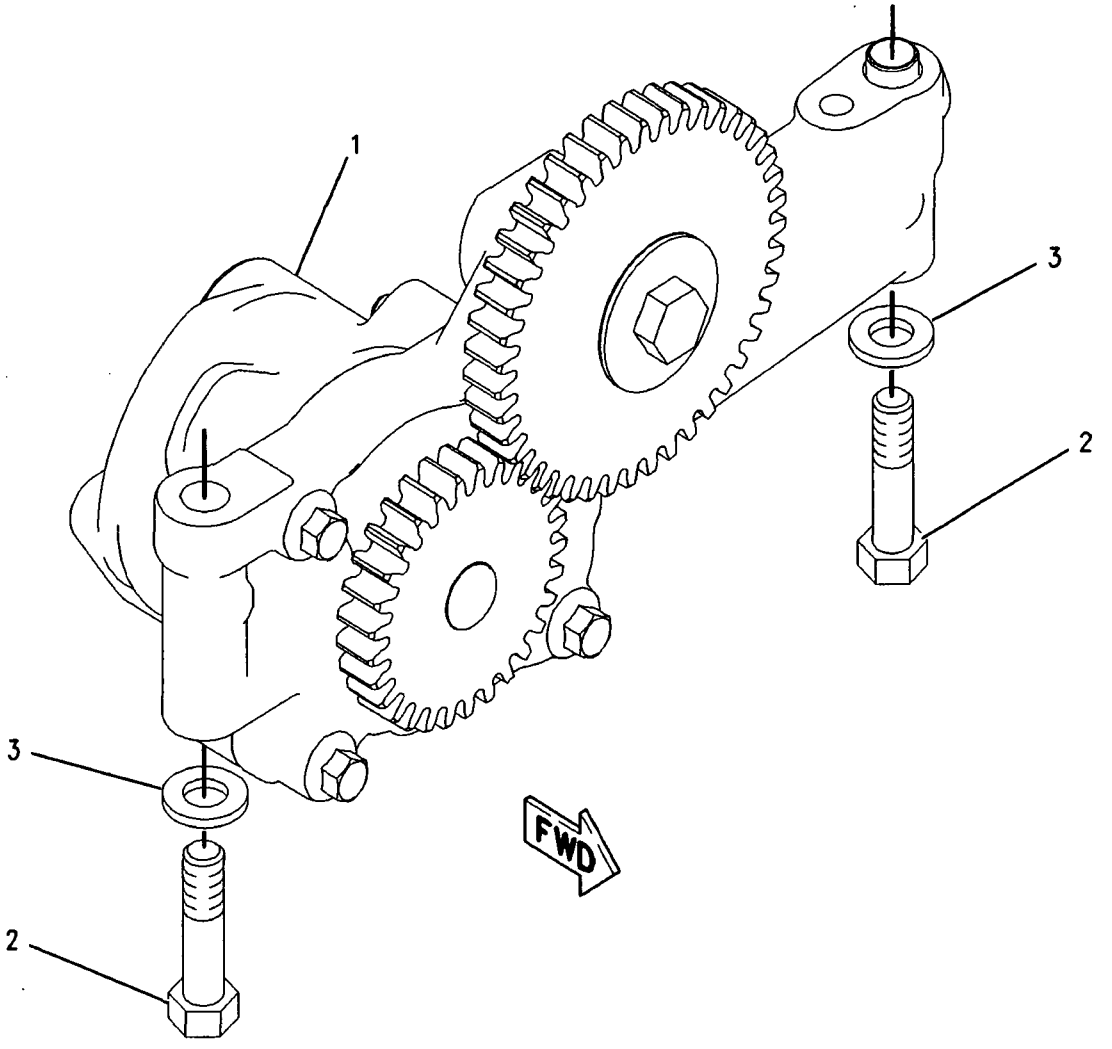

GRAPHIC #1 **<END>** g00891422

200-4497 PUMP GP-ENGINE OIL

S/N: KHX1-UP

PART OF 192-2981 PUMP GP-ENGINE OIL

SMCS-1304, 1315 **i02065218**

NOTE	REF NO	GRAPHIC REF	PART NUMBER	QTY	PART NAME 1 2 3 4 5 6 (PRODUCT LEVEL)	SEE PAGE
	1	1	7W-9737	1	SHAFT	
	2	1	7W-9738	1	WASHER (10.5X38X1.6-MM THK)	
	3	1	7W-9740	1	GEAR AS-IDLER (43-TEETH)	
	3A	1	7W-9930	1	BEARING-SLEEVE	
M	4	1	9X-2305	1	BOLT-LOCKING (M10X1.5X50-MM)	
	5	1	189-8777	1	PUMP GP-ENGINE OIL	

M-METRIC PART

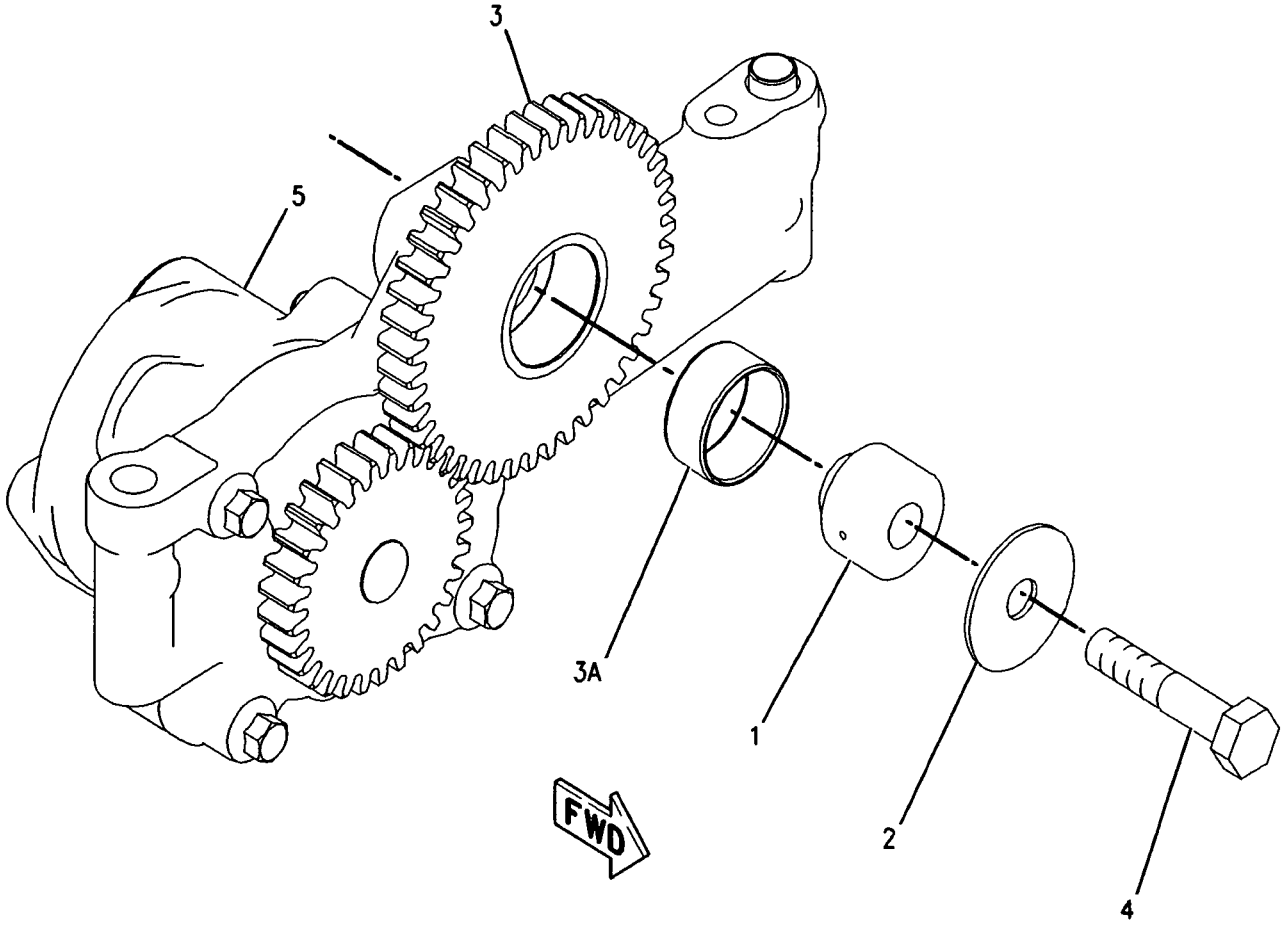

GRAPHIC #1 **<END>** g00891419

117-3643 COOLER GP-ENGINE OIL

S/N: KHX1-UP
RH MOUNTED
PART OF 235-1423 ENGINE AR-CORE

SMCS-1378 **i02065220**

NOTE	REF NO	GRAPHIC REF	PART NUMBER	QTY	PART NAME 1 2 3 4 5 6 (PRODUCT LEVEL)	SEE PAGE
R	1	1	**187-8595**	1	CORE AS-ENGINE OIL COOLER	
	2	1	**233-7655**	1	GASKET	
	3	1	**3P-1156**	2	SEAL-O-RING	

R-REMFG PART MAY BE AVAILABLE

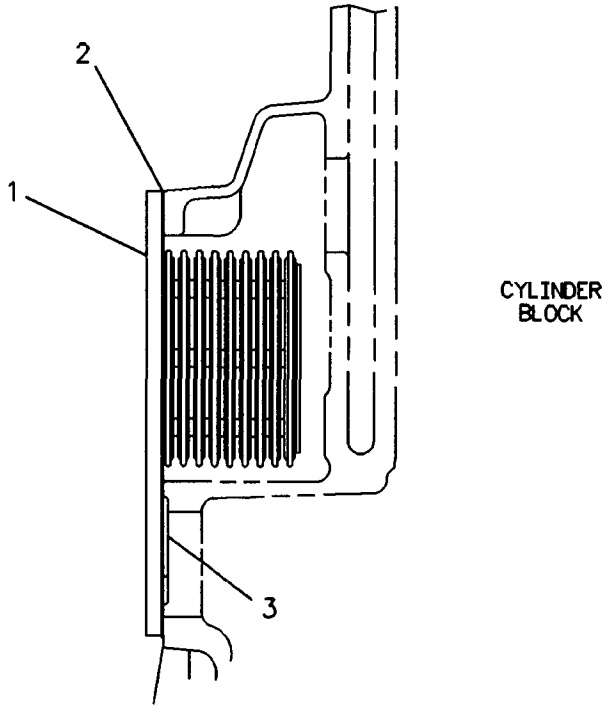

GRAPHIC #1 **<END>** g00117316

260-5786 COOLING AR-HIGH AMBIENT TEMP

S/N: N1A1-UP

AN ATTACHMENT

SMCS-1350, 1353, 1374, 1386, 1387, 5057 **i02241788**

NOTE	PART NUMBER	QTY	PART NAME 1 2 3 4 5 6 (PRODUCT LEVEL)	SEE PAGE
	244-8840	1	CORE AS-CONDENSER (REFRIGERANT)	
	250-8327	1	CORE AS-HYDRAULIC OIL COOLER	
	256-6628	1	CORE AS-RADIATOR	

<END>

272-0181 COOLING AR-HIGH AMBIENT TEMP

S/N: N1A1-UP

AN ATTACHMENT

SMCS-1350, 1353, 1374, 1386, 1387, 5057 **i02443616**

NOTE	PART NUMBER	QTY	PART NAME 1 2 3 4 5 6 (PRODUCT LEVEL)	SEE PAGE
	250-8327	1	CORE AS-HYDRAULIC OIL COOLER	
	256-6628	1	CORE AS-RADIATOR	

<END>

237-9821 ELBOW GP-WATER

S/N: KHX1-UP

PART OF 235-1422 ENGINE AR-COMPLETE

SMCS-1380 **i02241984**

NOTE	REF NO	GRAPHIC REF	PART NUMBER	QTY	PART NAME 1 2 3 4 5 6 (PRODUCT LEVEL)	SEE PAGE
	1	1	**200-2258**	1	GASKET	
	2	1	**244-6602**	1	ELBOW	
	3	1	*148-8410*	2	PLUG AS	
					(EACH INCLUDES)	
	3A	1	**2M-9780**	1	SEAL-O-RING	
		1	**9S-4190**	1	PLUG	
	4	1	*241-6185*	1	PLUG AS	
	4A	1	**3D-2824**	2	SEAL-O-RING	
		1	**5P-9436**	2	PLUG-THREADED O-RING	
M	5	1	**6V-3940**	2	BOLT (M8X1.25X25-MM)	
	6	1	**9M-1974**	2	WASHER-HARD (8.8X16X2-MM THK)	

M-METRIC PART

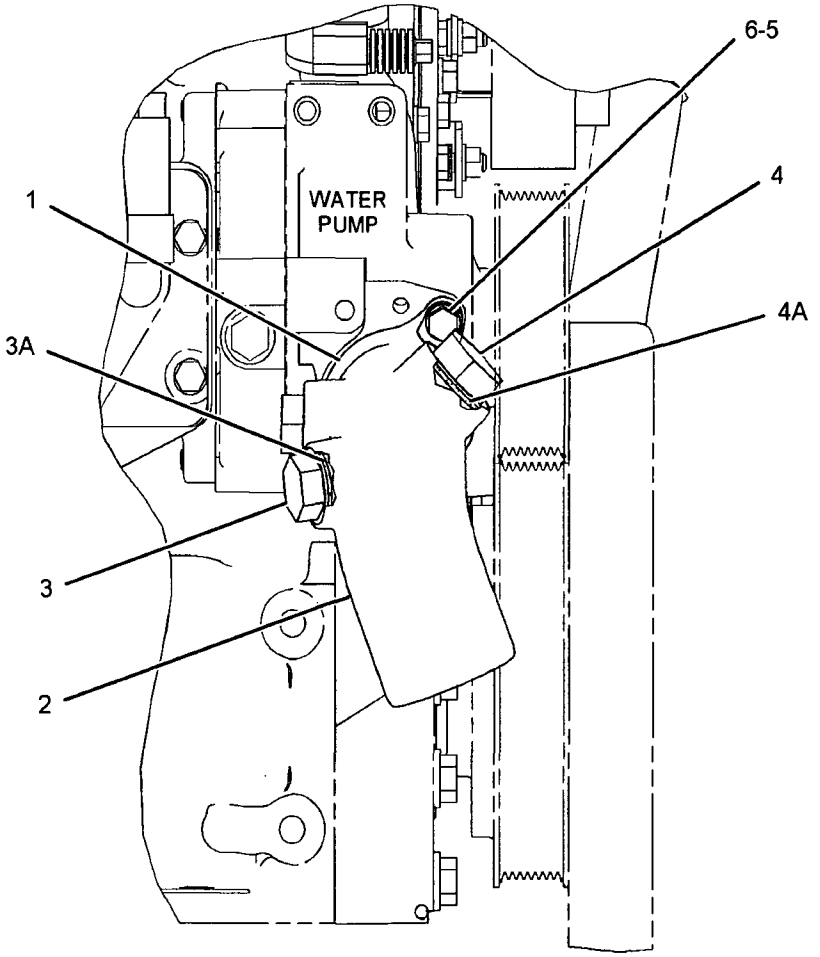

RIGHT SIDE VIEW

GRAPHIC #1 **<END>** g01118508

237-0439 LINES GP-WATER–RADIATOR

S/N: N1A1-UP

PART OF 237-0234 CHASSIS AR

SMCS-1380 i02437665

NOTE	REF NO	GRAPHIC REF	PART NUMBER	QTY	PART NAME 1 2 3 4 5 6 (PRODUCT LEVEL)	SEE PAGE
	1	1	1P-4278	2	CLAMP-HOSE	
	2	1	5P-1230	1	CONNECTOR	
	3	1	6V-1355	1	ELBOW	
	4	1	7X-1448	1	ELBOW	
	5	1	8T-4983	2	CLAMP-HOSE	
E	6	1	5P-1262		HOSE (16-CM)	
	7	1	9Y-9236	1	GAUGE-SIGHT	
	8	1	111-7092	1	HOSE	
	9	1	132-7370	1	HOSE	
	10	1	157-0670	1	CAP-DUST	
	11	1	158-0851	1	CLIP	
	12	1	*217-9060*	1	VALVE AS-FLUID SAMPLING	
		1	3J-7354	1	SEAL-O-RING	
		1	154-9023	1	VALVE-SAMPLING	
	13	1	230-4015	1	CONNECTOR	
	14	1	239-9884	1	TUBE AS	
Y	15	1	*242-4340*	1	TANK GP-RADIATOR TOP	82
	16	1	243-2372	1	HOSE	
	17	1	243-2373	1	HOSE	
	18	1	243-2374	1	TUBE AS	
	19	1	268-1497	1	ELBOW	
	20	1	274-7407	1	TEE	
	21	1,1	109-1145	4	CLAMP-HOSE	
	22	1	209-4573	7	CLAMP	
	23	1	212-6934	3	CLAMP	
	24	1	3D-2824	1	SEAL-O-RING	
	25	1	3J-1907	2	SEAL-O-RING	
	26	1	3J-7354	2	SEAL-O-RING	
M	27	1	5C-7261	1	NUT (M8X1.25-THD)	
	28	1	5P-4116	1	WASHER-HARD (8.8X20.5X2-MM THK)	
	29	1	5P-9299	2	CLIP	
	30	1	7M-8485	1	SEAL-O-RING	
	31	1	7X-7729	2	WASHER (11X25X3-MM THK)	
	32	1	8T-4121	2	WASHER-HARD (11X21X2.5-MM THK)	
M	33	1	8T-4136	2	BOLT (M10X1.5X25-MM)	
M	34	1	8T-4137	2	BOLT (M10X1.5X20-MM)	
E	35	1	5P-1251		HOSE (99-CM)	
E	36	1	5P-1442		HOSE (27-CM)	
E	36A	1	5P-1442		HOSE (73-CM)	
E	37	1	5P-6442		HOSE (50-CM)	
E	38	1	7Y-1976		HOSE (221-CM)	

E-ORDER BY THE CENTIMETER
M-METRIC PART
Y-SEPARATE ILLUSTRATION

237-0439 **LINES GP-WATER** *(contd.)* **i02437665**

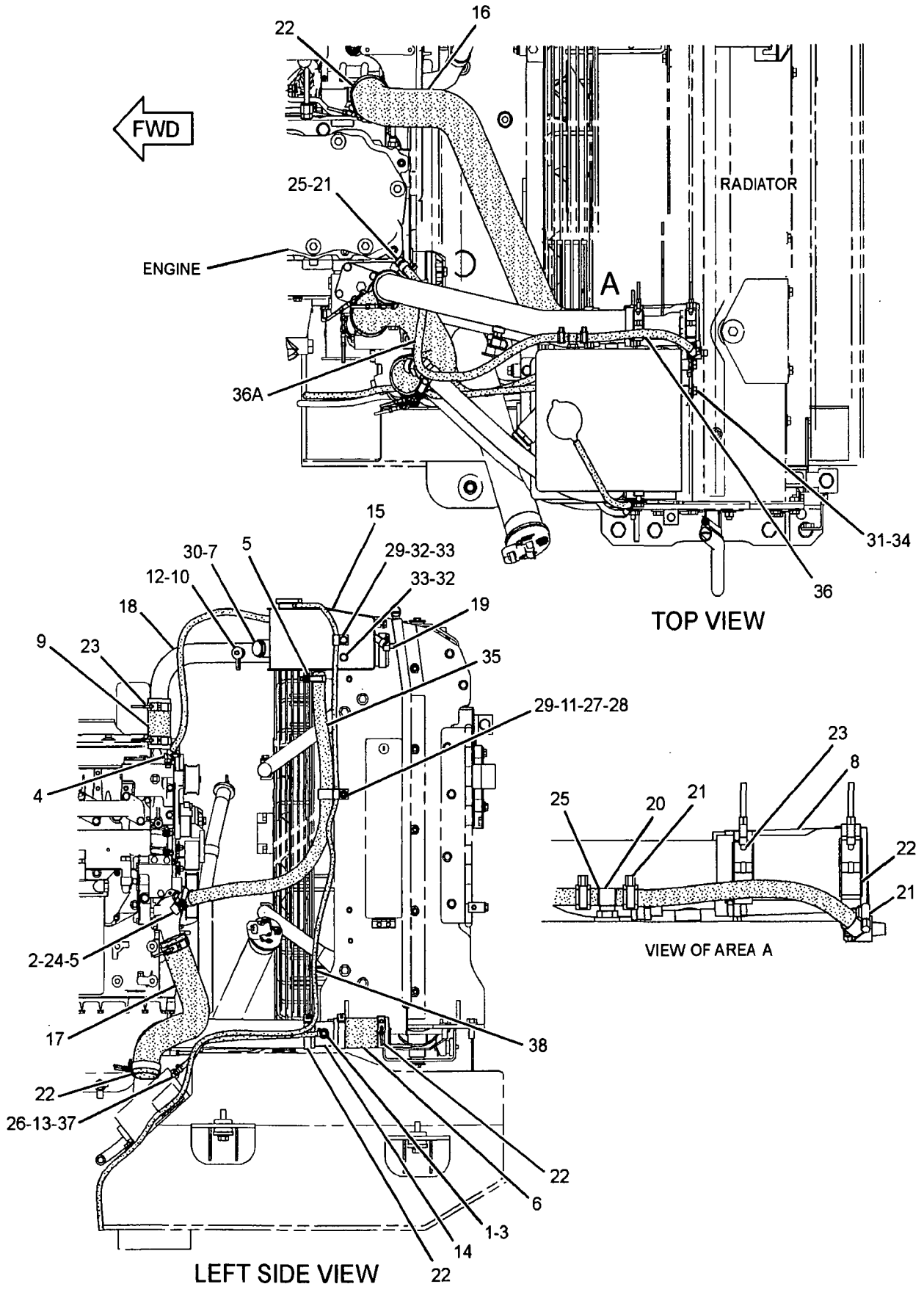

GRAPHIC #1 **<END>** g01225460

COOLING SYSTEM

238-4802 LINES GP-WATER–ENGINE

S/N: KHX1-UP

PART OF 235-1422 ENGINE AR-COMPLETE

SMCS-1380 **i02375320**

NOTE	REF NO	GRAPHIC REF	PART NUMBER	QTY	PART NAME 1 2 3 4 5 6 (PRODUCT LEVEL)	SEE PAGE
	1	1	**7E-0759**	1	HOSE	
	3	1	**237-5176**	2	CLAMP-BAND	
	4	1	**119-3075**	2	REGULATOR-WATER TEMPERATURE (94-DEG C) (COOLANT)	
	5	1	**126-5466**	1	GASKET	
	6	1	**222-5915**	1	GASKET (TEMPERATURE REGULATOR HOUSING)	
	7	1	**160-5131**	1	PIPE (OUTLET)	
	8	1	**227-5942**	1	HOUSING-WATER REGULATOR	
	9	1	*148-8395*	1	PLUG AS	
	9A	1	**3K-0360**	1	SEAL-O-RING	
		1	**9S-8005**	1	PLUG-O RING	
	10	1	*148-8411*	3	PLUG AS	
					(EACH INCLUDES)	
	10A	1	**3K-0360**	1	SEAL-O-RING	
		1	**9S-4185**	1	PLUG (WATER TEMPERATURE REGULATOR)	
	11	1	*155-3624*	1	PLUG AS	
	11A	1	**3J-7354**	1	SEAL-O-RING	
		1	**9S-4182**	1	PLUG	
	12	1	*162-0177*	1	PLUG AS	
	12A	1	**3J-1907**	1	SEAL-O-RING	
		1	**9S-8004**	1	PLUG	
M	13	1	**5P-8347**	2	BOLT (M8X1.25X70-MM)	
M	14	1	**6V-3940**	6	BOLT (M8X1.25X25-MM)	
M	15	1	**6V-5223**	1	BOLT (M8X1.25X100-MM)	
	16	1	**9M-1974**	6	WASHER-HARD (8.8X16X2-MM THK)	

M-METRIC PART

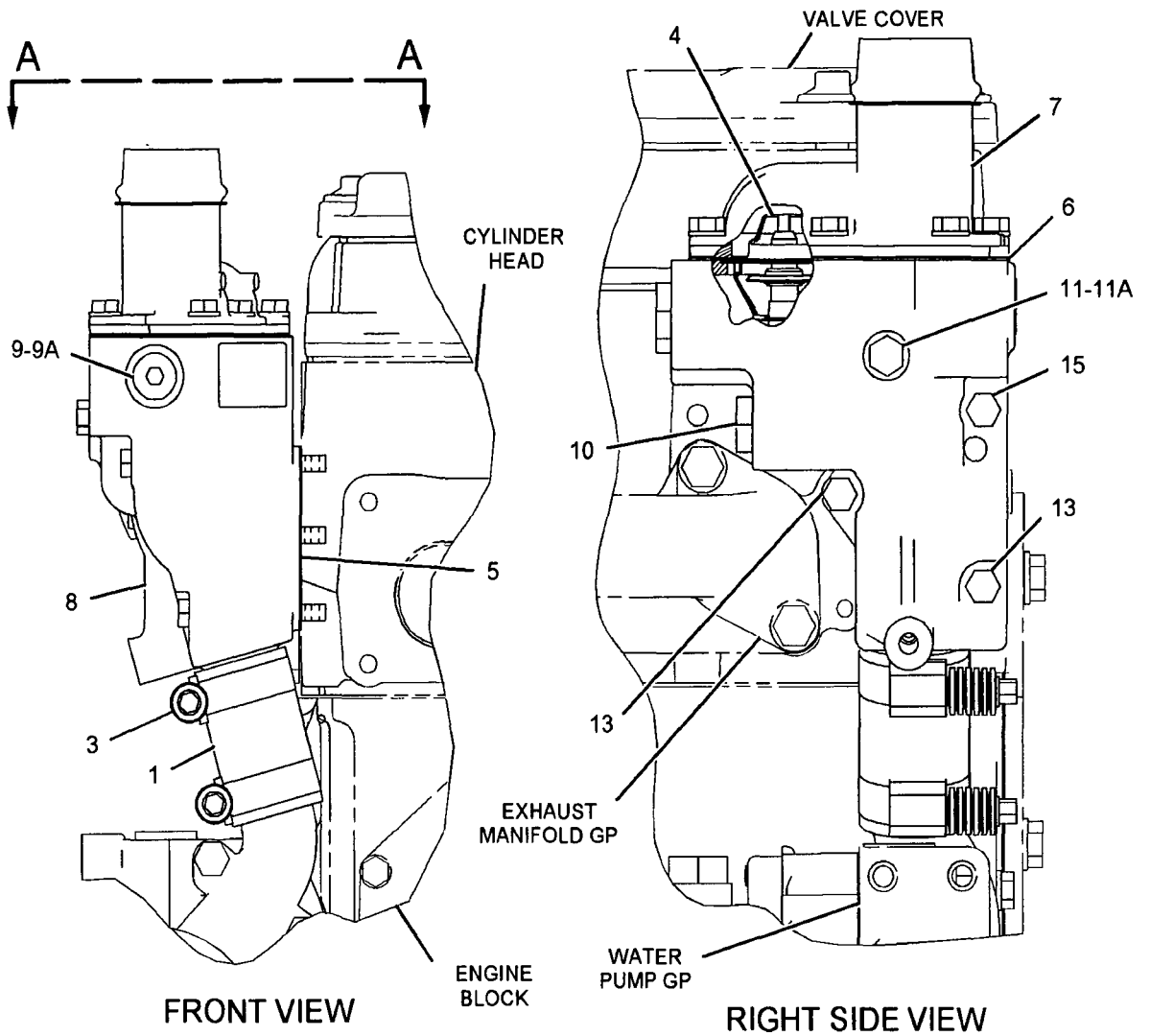

GRAPHIC #1 **<END>** g01118619

COOLING SYSTEM

241-0078 LINES GP-WATER

S/N: N1A1-UP
PART OF 241-0073 COOLER AR-AXLE OIL
FOR USE WITH AXLE OIL COOLER
AN ATTACHMENT

SMCS-1380 **i02438882**

NOTE	REF NO	GRAPHIC REF	PART NUMBER	QTY	PART NAME 1 2 3 4 5 6 (PRODUCT LEVEL)	SEE PAGE
	1	1	**5D-1026**	4	CLAMP-HOSE	
	2	1	**7K-1181**	3	STRAP-CABLE	
	3	1	**4S-1962**	4	CLIP	
	4	1	*161-9916*	1	ADAPTER GP	
		1	**2M-9780**	1	SEAL-O-RING	
		1	**6V-7420**	1	ADAPTER	
	5	1	*170-0965*	2	CONNECTOR AS	
					(EACH INCLUDES)	
		1	**3K-0360**	1	SEAL-O-RING	
		1	**6V-1438**	1	CONNECTOR	
	6	1	**193-1034**	1	BRACKET AS	
	7	1	*155-7321*	1	ADAPTER GP	
		1	**3D-2824**	1	SEAL-O-RING	
		1	**6V-1722**	1	ADAPTER-O-RING	
	8	1	**3S-7608**	1	CLIP	
	9	1	**6V-1889**	1	CLIP	
M	10	1	**7X-2552**	1	BOLT (M16X2X30-MM)	
	11	1	**8M-2769**	1	CLIP	
	12	1	**8T-4121**	6	WASHER-HARD (11X21X2.5-MM THK)	
M	13	1	**8T-4133**	2	NUT (M10X1.5 THD)	
M	14	1	**8T-4136**	2	BOLT (M10X1.5X25-MM)	
M	15	1	**8T-4137**	1	BOLT (M10X1.5X20-MM)	
M	16	1	**8T-4195**	1	BOLT (M10X1.5X30-MM)	
	17	1	**9X-8257**	1	WASHER (17.5X30X3.5-MM THK)	
E	18	1	**5P-0767**		HOSE (252-CM)	
E	18A	1	**5P-0767**		HOSE (149-CM)	

E-ORDER BY THE CENTIMETER
M-METRIC PART

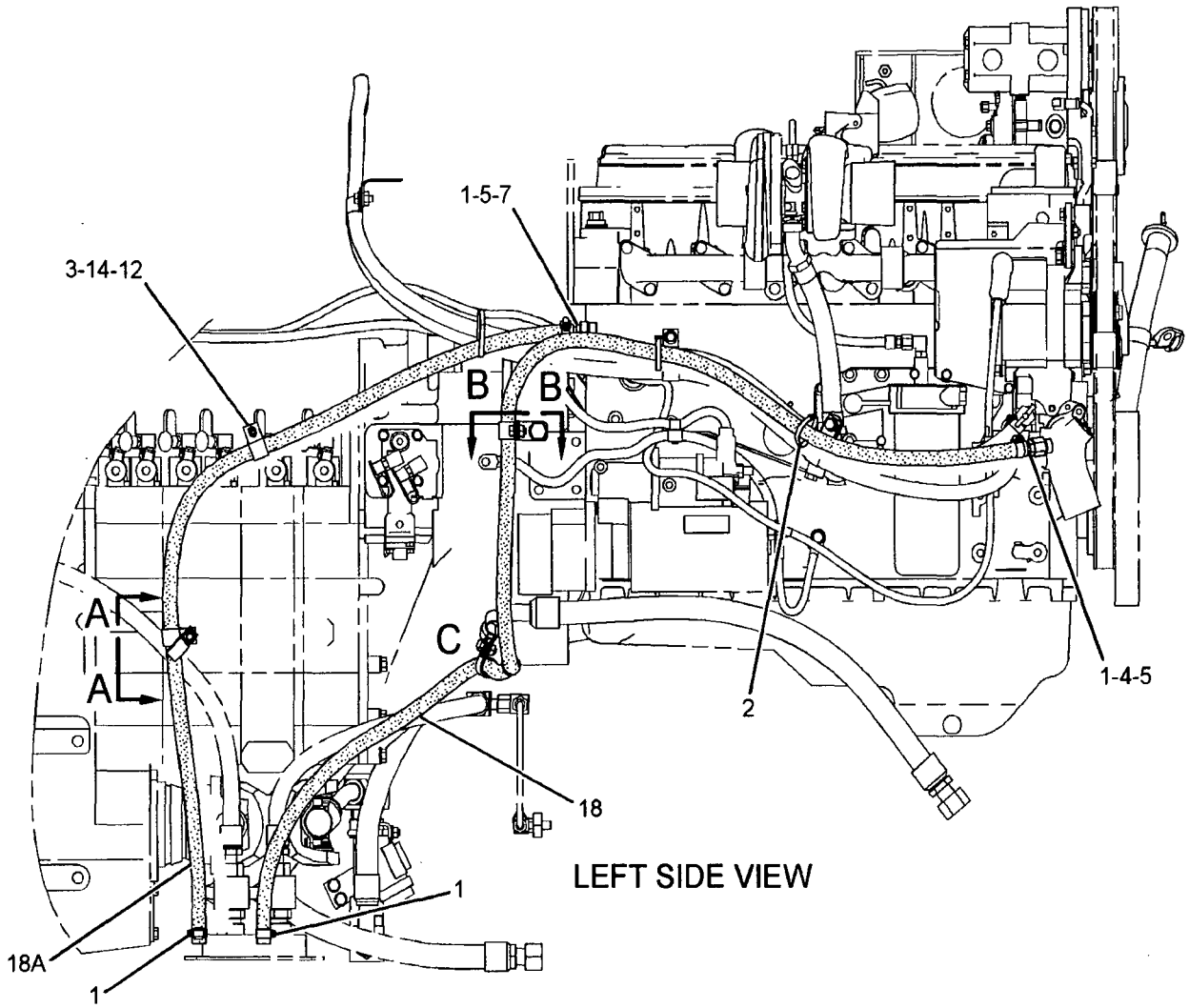

LEFT SIDE VIEW

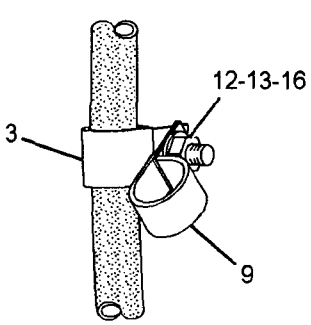

VIEW A-A

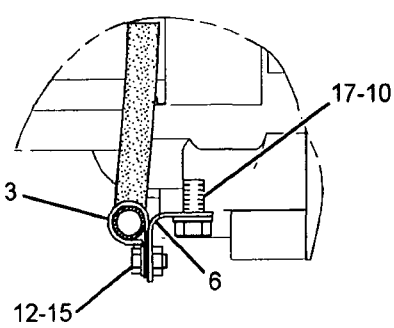

SECTION B-B

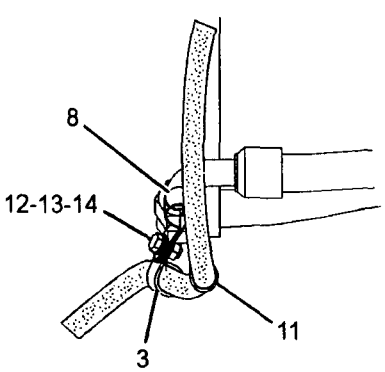

VIEW OF AREA C

GRAPHIC #1 **<END>** g01226308

209-4600 PUMP GP-WATER

S/N: KHX1-UP

PART OF 235-1422 ENGINE AR-COMPLETE

SMCS-1361 **i02299526**

NOTE	REF NO	GRAPHIC REF	PART NUMBER	QTY	PART NAME 1 2 3 4 5 6 (PRODUCT LEVEL)	SEE PAGE
Y	1	1	**227-4299**	1	PUMP GP-WATER	77
	2	1	*148-8407*	1	PLUG AS	
		1	**3J-1907**	1	SEAL-O-RING	
		1	**9S-4191**	1	PLUG-O RING	
	3	1	*148-8409*	1	PLUG AS	
		1	**3D-2824**	1	SEAL-O-RING	
		1	**9S-8008**	1	PLUG	
	4	1	**2M-4453**	1	SEAL-O-RING	
	5	1	**4J-0525**	1	SEAL-O-RING	
M	6	1	**8T-0644**	4	BOLT (M10X1.5X90-MM)	
	7	1	**3K-0360**	1	SEAL-O-RING	
	8	1	**9S-4185**	1	PLUG	

M-METRIC PART
Y-SEPARATE ILLUSTRATION

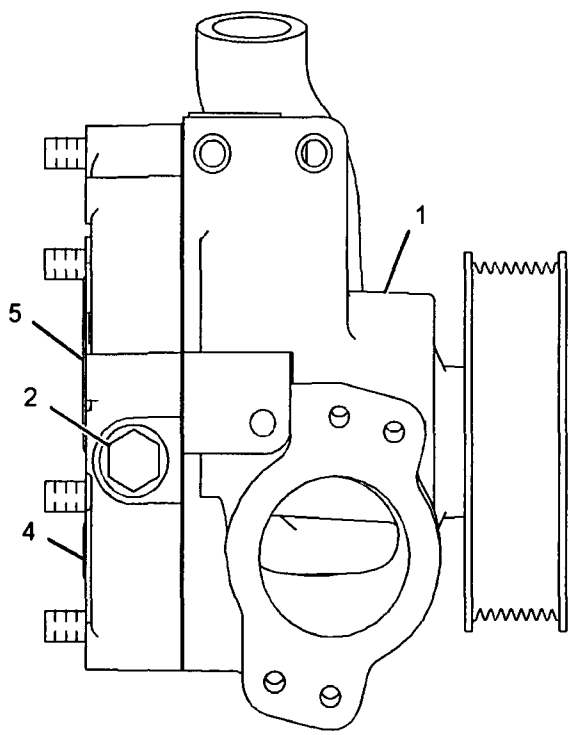

RIGHT SIDE VIEW

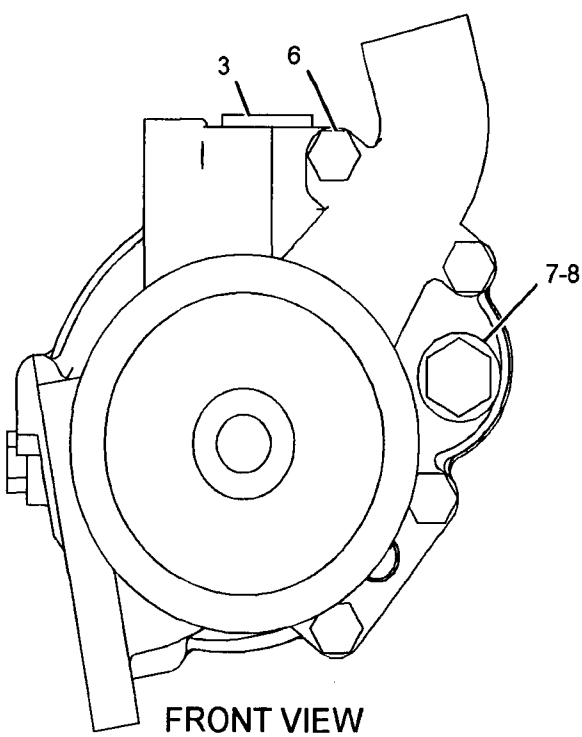

FRONT VIEW

GRAPHIC #1 **<END>** g01142678

COOLING SYSTEM

227-4299 PUMP GP-WATER

S/N: KHX1-UP

PART OF 209-4600 PUMP GP-WATER

SMCS-1361 **i02299455**

NOTE	REF NO	GRAPHIC REF	PART NUMBER	QTY	PART NAME 1 2 3 4 5 6 (PRODUCT LEVEL)	SEE PAGE
	1	1	*227-4301*	1	PUMP AS-WATER	
	1A	1	**203-6093**	1	HOUSING	
	1B	1	**177-1052**	1	SHAFT AS	
	1C	1	**177-1058**	1	PLUG	
	1D	1	**197-9581**	1	PULLEY	
	1E	1	**226-6039**	1	IMPELLER	
	1F	1	**147-5088**	1	SEAL AS-WATER PUMP	
	2	1	**226-6051**	1	COVER	
	3	1	**197-9580**	1	GASKET	
	4	1	*183-2931*	3	BOLT AS	
					(EACH INCLUDES)	
M		1	**6V-3918**	1	BOLT (M8X1.25X50-MM)	
		1	**9M-1974**	1	WASHER-HARD (8.8X16X2-MM THK)	

M-METRIC PART

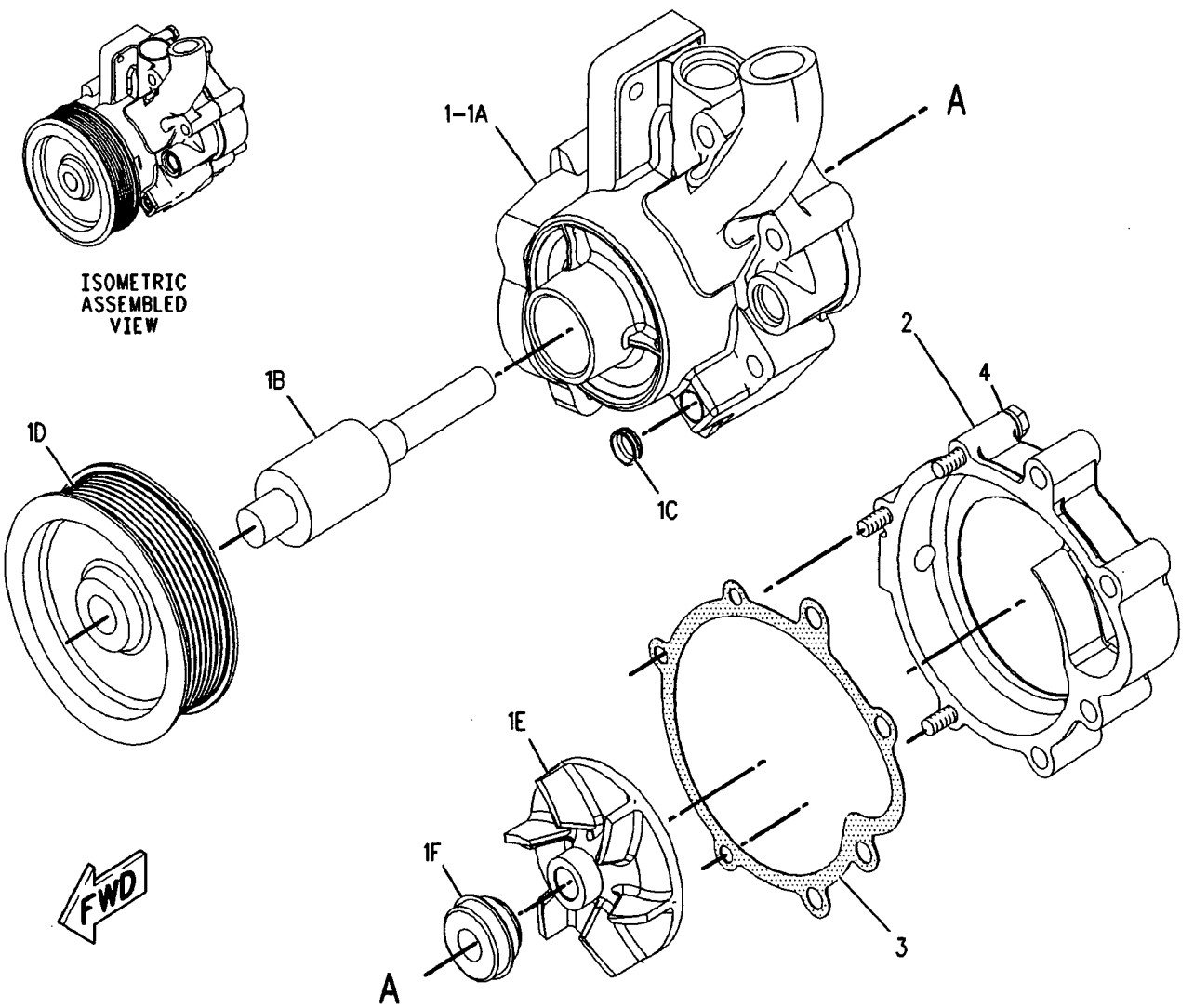

GRAPHIC #1 **<END>** g00949232

COOLING SYSTEM

237-0443 RADIATOR & FAN GP

S/N: N1A1-UP

PART OF 237-0234 CHASSIS AR

SMCS-1353, 1356 **i02460567**

NOTE	REF NO	GRAPHIC REF	PART NUMBER	QTY	PART NAME 1 2 3 4 5 6 (PRODUCT LEVEL)	SEE PAGE
	1	1	4E-1384	1	BUMPER-CONICAL	
	2	1	4I-7889	1	SPACER (11X25X45-MM THK)	
	3	1	5V-8780	1	KNOB	
	4	1	8T-2893	2	LOCK AS-CYLINDER	
					(EACH INCLUDES)	
		1	226-0291	1	LOCK AS	
		1	226-0321	1	CAM	
	5	1	112-5344	1	LATCH AS-DOOR	
	6	1	121-3307	2	MOUNT AS-RESILIENT	
	7	1	124-3019	2	BRACKET AS	
					(EACH INCLUDES)	
M		1	8T-3490	1	NUT-WELD (M10X1.5-THD)	
	8	1	144-4613	1	ANGLE AS	
	9	1	189-5594	2	COVER AS	
					(EACH INCLUDES)	
		1	194-5278	1	HINGE	
	10	1	209-5528	1	STRIKER	
	11	2	235-9822	1	CONE	
	12	1	239-9840	1	SUPPORT AS-LH	
	13	1	239-9841	1	SUPPORT AS-RH	
	14	2	239-9843	1	BAFFLE	
	15	1	239-9845	1	GUARD AS-FAN	
	16	2	239-9848	1	BRACKET AS	
	17	1	275-8903	1	BRACKET	
	18	2	239-9851	1	BAFFLE	
	19	2	239-9852	1	ANGLE AS	
	20	1	239-9853	1	SHROUD AS	
	21	1	239-9854	1	ANGLE AS	
	22	2	239-9856	1	ANGLE	
	23	2	239-9857	1	BAFFLE AS	
	24	2	239-9862	1	SUPPORT AS-MOTOR	
	25	1	239-9863	1	BAFFLE AS	
	26	1	239-9864	1	BAFFLE	
	27	1	239-9867	1	HINGE AS	
	28	1	239-9870	1	BRACKET AS	
	29	1	239-9876	1	ANGLE	
	30	2	239-9877	1	ANGLE	
	31	2	239-9880	1	BRACKET AS	
	32	2	239-9881	1	BRACKET AS	
	33	1	239-9883	1	SUPPORT AS	
	34	2	243-2289	2	MOUNT AS	
	35	2	243-3416	1	ADAPTER	
	36	1	243-5063	1	AFTERCOOLER AS	
	37	2	244-5427	1	CORE AS-HYDRAULIC OIL COOLER	
	38	2	245-9890	1	GROMMET	
	39	2	246-0511	1	SPACER	
	40	2	246-0616	1	SPIDER AS-FAN (8-BLADE)	
	41	2	278-2656	1	DEFLECTOR	
Y	42	2	246-6152	1	MOTOR GP-GEAR (HYDRAULIC FAN)	634
	43	1	256-5310	1	CORE AS-RADIATOR	
M	44	1	5C-7261	1	NUT (M8X1.25-THD)	
	45	1,2	5P-1076	10	WASHER-HARD (13.5X30X4-MM THK)	
	46	2	6P-4467	2	GROMMET	
	47	1	6V-1889	2	CLIP	
	48	2	7X-0515	1	WASHER-HARD (17X35X5-MM THK)	
M	49	2	7X-2546	4	BOLT (M10X1.5X180-MM)	

237-0443 RADIATOR & FAN GP *(contd.)* i02460567

NOTE	REF NO	GRAPHIC REF	PART NUMBER	QTY	PART NAME 1 2 3 4 5 6 (PRODUCT LEVEL)	SEE PAGE
M	50	1	**7X-2553**	8	BOLT (M16X2X40-MM)	
	51	1,2	**7X-7729**	81	WASHER (11X25X3-MM THK)	
	52	1,2	**8T-4121**	13	WASHER-HARD (11X21X2.5-MM THK)	
M	53	2	**8T-4132**	1	NUT (M16X2-THD)	
M	54	1	**8T-4133**	17	NUT (M10X1.5 THD)	
M	55	1,2	**8T-4136**	11	BOLT (M10X1.5X25-MM)	
M	56	1	**8T-4137**	4	BOLT (M10X1.5X20-MM)	
M	57	1,2	**8T-4195**	41	BOLT (M10X1.5X30-MM)	
M	58	2	**8T-4196**	16	BOLT (M10X1.5X35-MM)	
	59	1,2	**8T-4226**	5	WASHER-PLATED (10.5X45X3-MM THK)	
M	60	1,2	**8T-4956**	10	BOLT (M12X1.75X35-MM)	
M	61	1	**8T-4971**	8	BOLT (M6X1X30-MM)	
M	62	1	**8T-5005**	1	BOLT (M10X1.5X70-MM)	
M	63	1	**8T-6466**	2	BOLT (M10X1.5X60-MM)	
	64	1	**9X-8256**	8	WASHER (6.6X12X2-MM THK)	
	65	1	**9X-8257**	8	WASHER (17.5X30X3.5-MM THK)	
D	66	2	**054-7915**		SEAL (0.7-M EACH)	
D	67	1	**5P-8309**		SEAL (0.9-M EACH)	
D	67A	1	**5P-8309**		SEAL (0.5-M)	
D	67B	1	**5P-8309**		SEAL (0.3-M EACH)	
E	68	1	**112-9736**		SEAL (313-CM)	
M	69	1,2	**8T-4186**	7	BOLT (M10X1.5X40-MM)	
	70	1	**277-8628**	2	MOUNT	

D-ORDER BY THE METER
E-ORDER BY THE CENTIMETER
M-METRIC PART
Y-SEPARATE ILLUSTRATION

237-0443 RADIATOR & FAN GP *(contd.)* i02460567

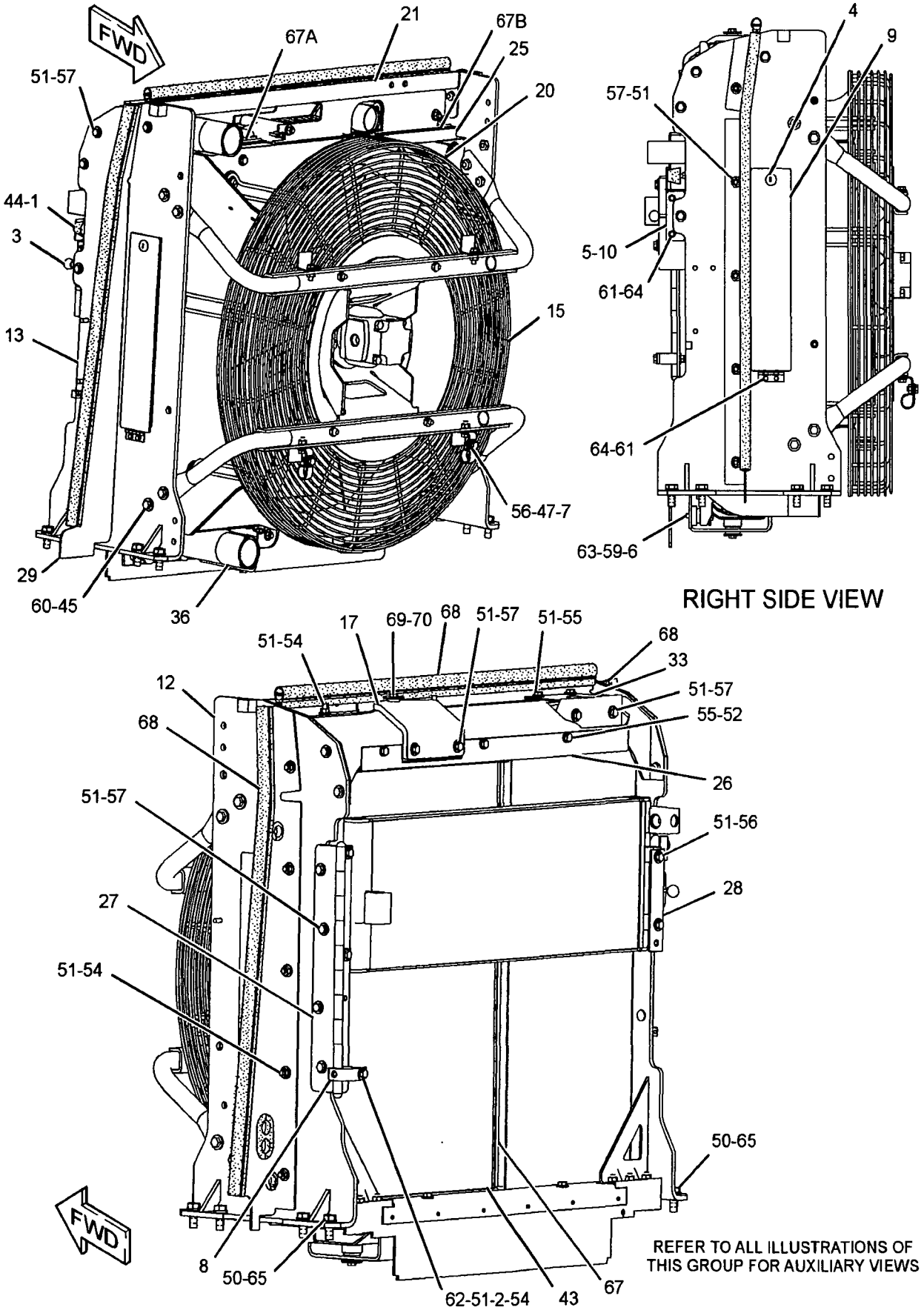

GRAPHIC #1 g01223419

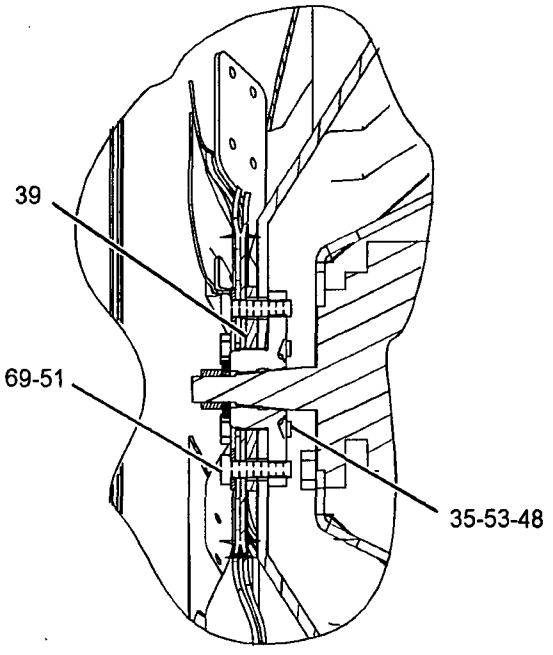

VIEW OF AREA B

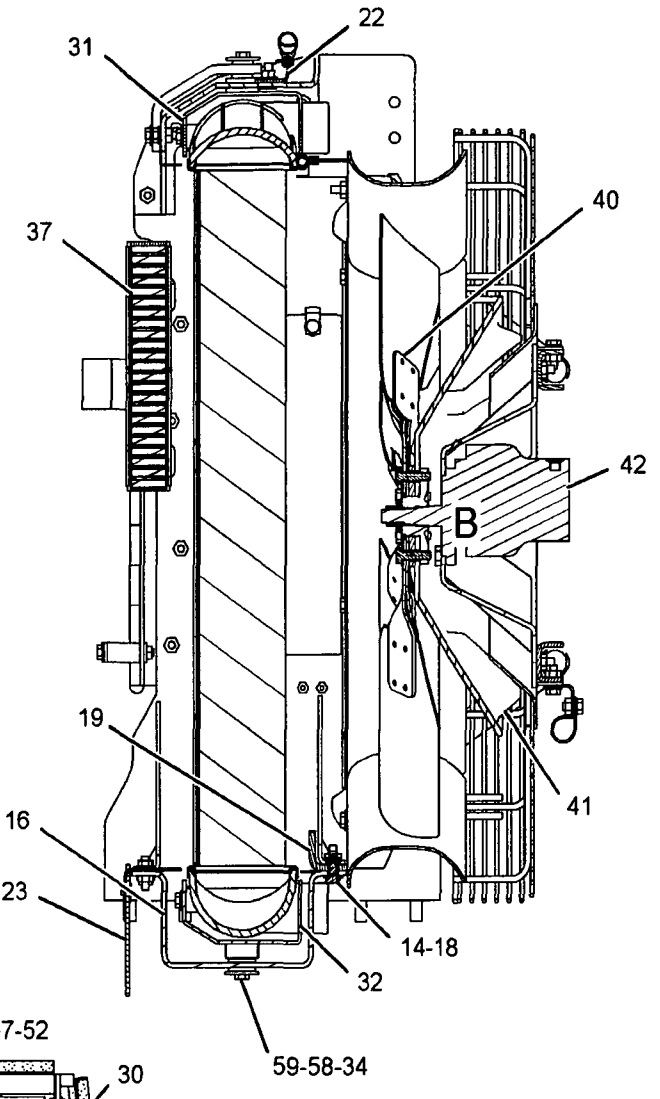

SECTION A-A

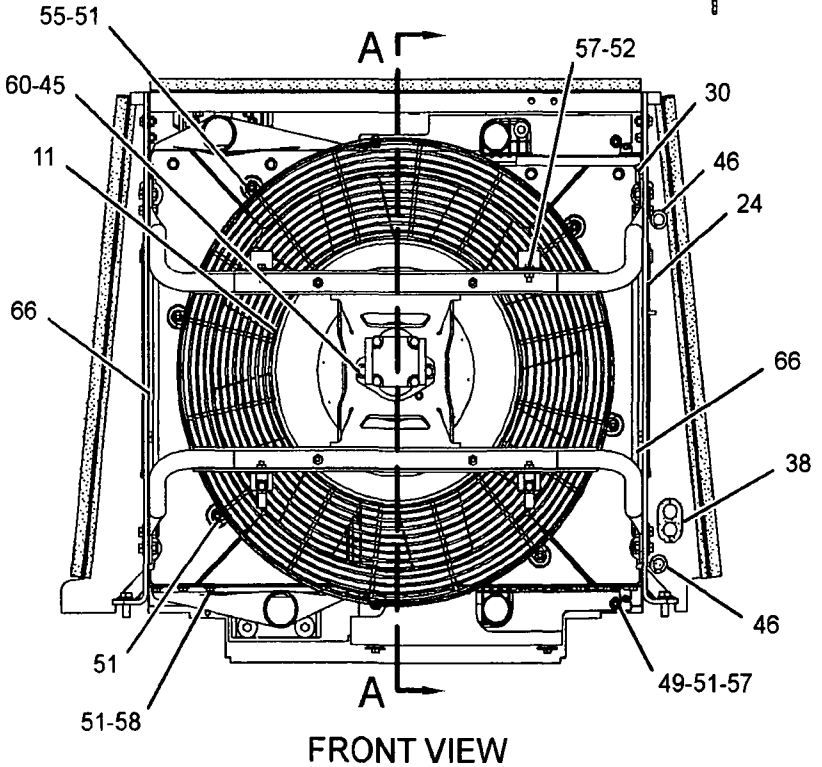

FRONT VIEW

GRAPHIC #2 **<END>** g01225407

242-4340 TANK GP-RADIATOR TOP

S/N: N1A1-UP

PART OF 237-0439 LINES GP-WATER

SMCS-1377 **i02412042**

NOTE	REF NO	GRAPHIC REF	PART NUMBER	QTY	PART NAME 1 2 3 4 5 6 (PRODUCT LEVEL)	SEE PAGE
	1	1	6L-8617	1	CAP-PRESSURE (7-PSI)	
	2	1	242-4339	1	TANK AS-COOLANT	

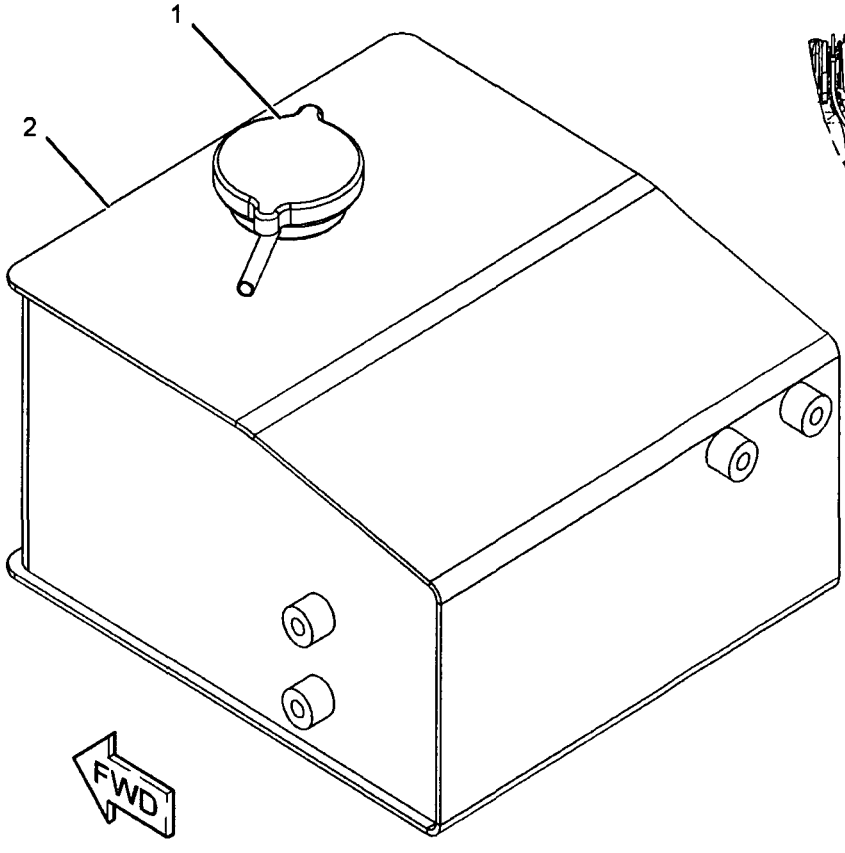

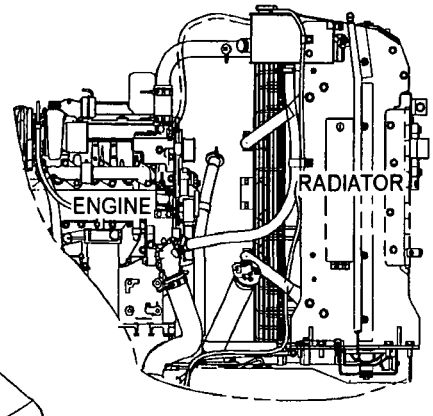

LEFT SIDE VIEW

GRAPHIC #1 **<END>** g01208737

AIR INLET AND EXHAUST SYSTEM

237-4848 AIR CLEANER GP

S/N: N1A1-UP

PART OF 237-3995 INSTALLATION AR-ENGINE

ALSO AN ATTACHMENT

SMCS-1051, 1054 **i02378104**

NOTE	REF NO	GRAPHIC REF	PART NUMBER	QTY	PART NAME 1 2 3 4 5 6 (PRODUCT LEVEL)	SEE PAGE
Y	1	1	**244-0357**	1	AIR CLEANER GP	84
	2	1	**246-1777**	1	PIPE-EXTENSION	
	3	1	**246-4611**	1	CAP AS-RAIN	
	4	1	**219-0314**	1	CLAMP	
	5	1	**7X-0579**	4	WASHER-HARD (8.8X25.5X2-MM THK)	
M	6	1	**7X-2537**	4	BOLT (M8X1.25X35-MM)	

M-METRIC PART
Y-SEPARATE ILLUSTRATION

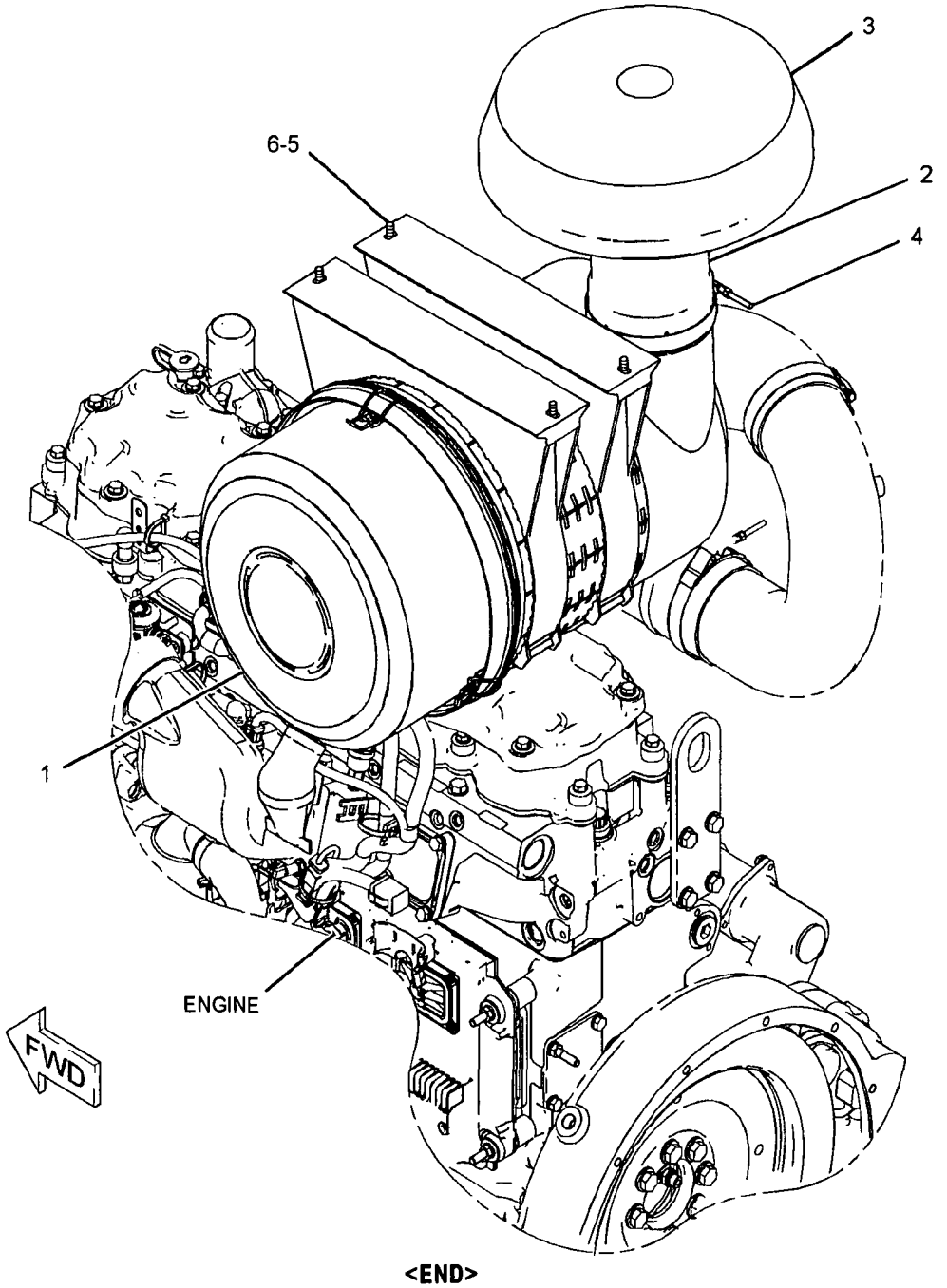

GRAPHIC #1 **<END>** g01102650

AIR INLET AND EXHAUST SYSTEM

244-0357 AIR CLEANER GP

S/N: N1A1-UP

PART OF 237-4848 AIR CLEANER GP

ALSO AN ATTACHMENT

SMCS-1051, 1054 **i02438064**

NOTE	REF NO	GRAPHIC REF	PART NUMBER	QTY	PART NAME 1 2 3 4 5 6 (PRODUCT LEVEL)	SEE PAGE
	1	1	245-6375	1	FILTER ELEMENT AS-AIR (PRIMARY)	
	2	1	245-6376	1	FILTER ELEMENT AS-AIR (SECONDARY)	
	3	1	246-4612	1	VALVE-AIR CLEANER DUST	
	4	1	246-4614	1	COVER AS	
	5	1	246-4615	2	BRACKET AS	

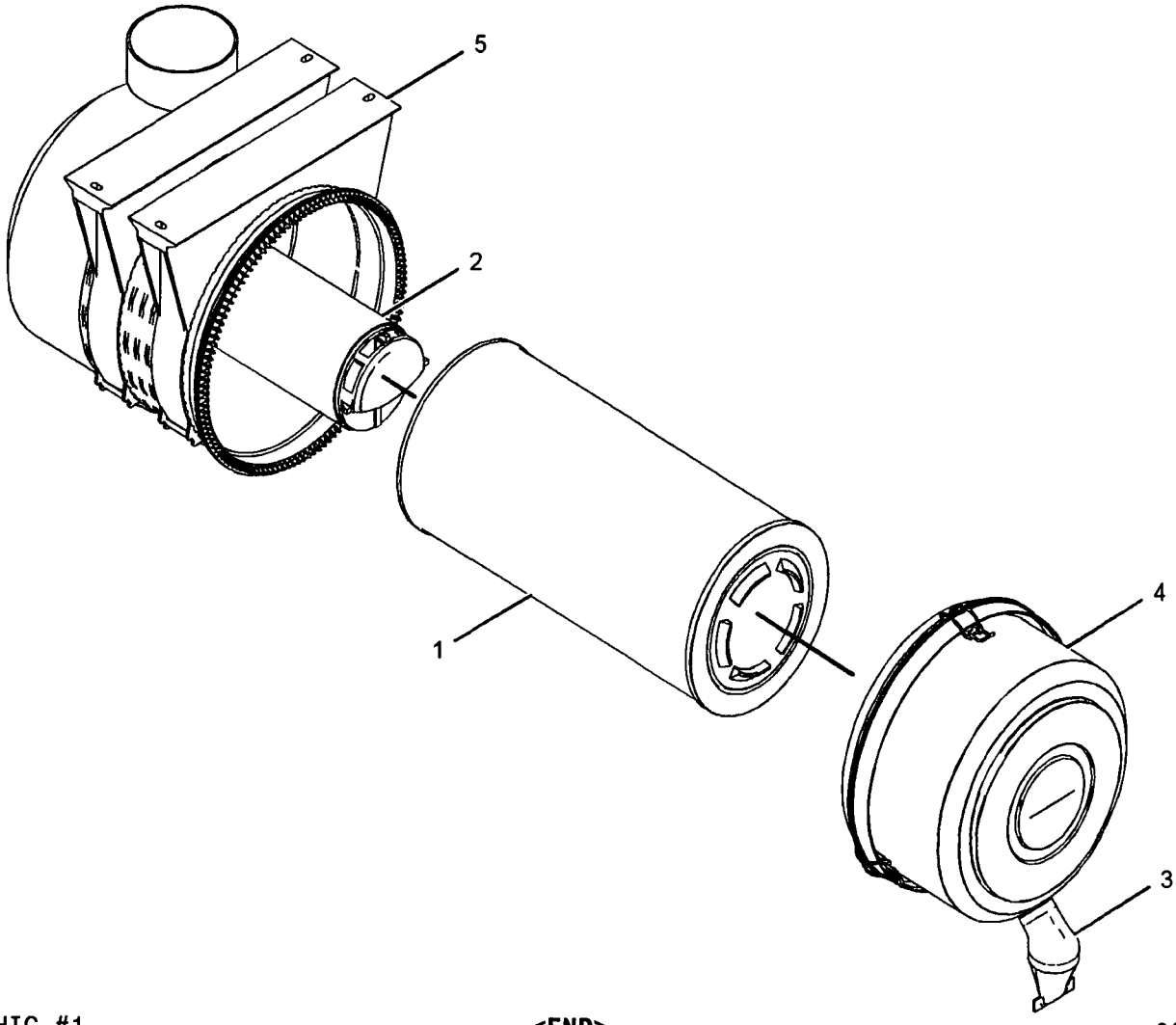

GRAPHIC #1 **<END>** g01102727

AIR INLET AND EXHAUST SYSTEM

189-8779 COVER GP-AIR INLET–STARTING AID HEATER

S/N: KHX1-UP

PART OF 189-8780 COVER GP-AIR INLET

SMCS-1087 **i02092261**

NOTE	REF NO	GRAPHIC REF	PART NUMBER	QTY	PART NAME 1 2 3 4 5 6 (PRODUCT LEVEL)	SEE PAGE
	1	1	**9S-4191**	2	PLUG-O RING (STORAGE)	
	2	1	**3J-1907**	2	SEAL-O-RING	
	3	1	**245-6795**	1	INSULATOR (STARTING AID HEATER)	

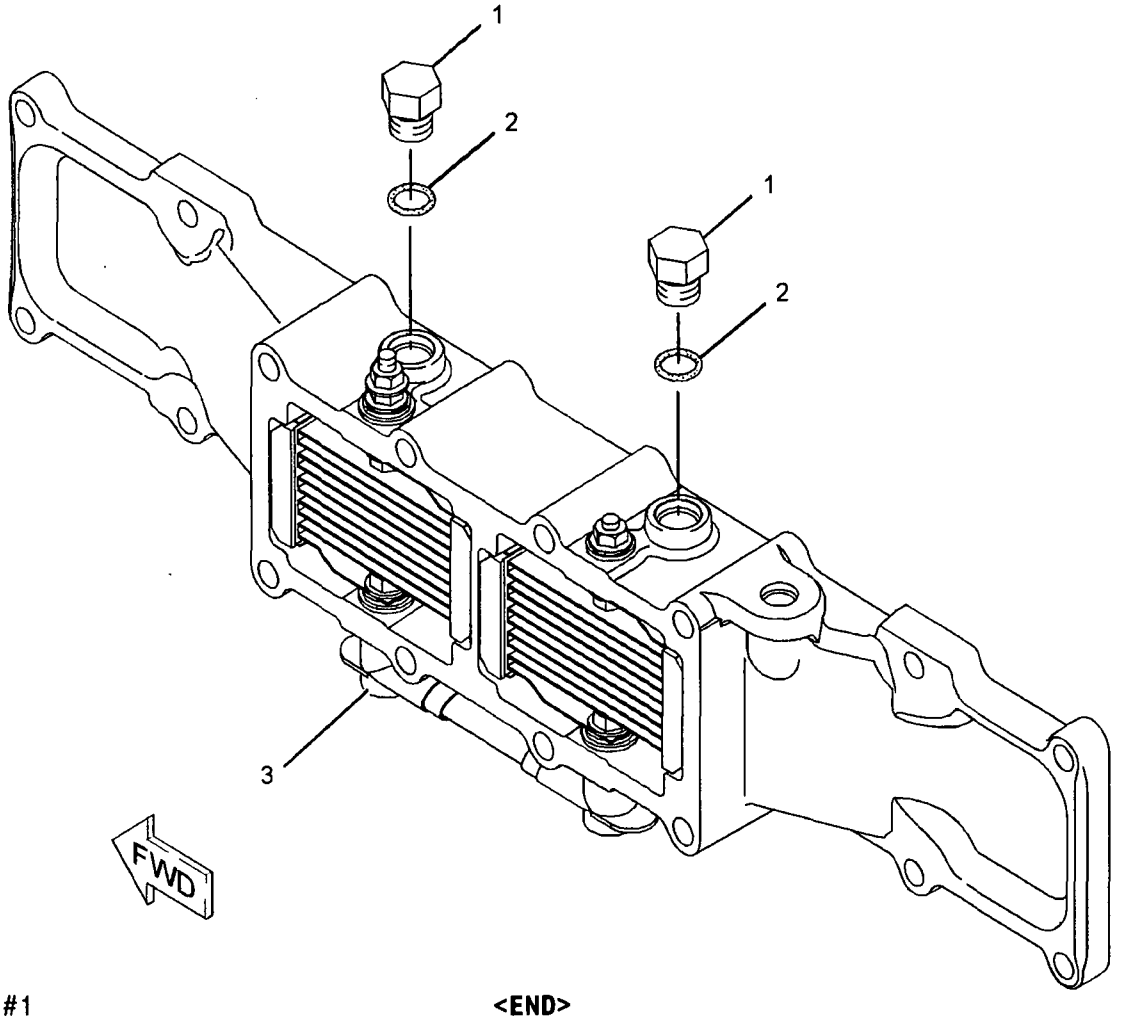

GRAPHIC #1 **<END>** g01071181

189-8780 COVER GP-AIR INLET–STARTING AID HEATER

S/N: KHX1-UP

PART OF 235-1422 ENGINE AR-COMPLETE

SMCS-1087 **i02228544**

NOTE	REF NO	GRAPHIC REF	PART NUMBER	QTY	PART NAME 1 2 3 4 5 6 (PRODUCT LEVEL)	SEE PAGE
BC	1	1	**1U-8846**		SEALANT-GASKET	
Y	2	1	**189-8779**	1	COVER GP-AIR INLET (STARTING AID HEATER)	85

B-USE AS REQUIRED
C-CHANGE FROM PREVIOUS TYPE
Y-SEPARATE ILLUSTRATION

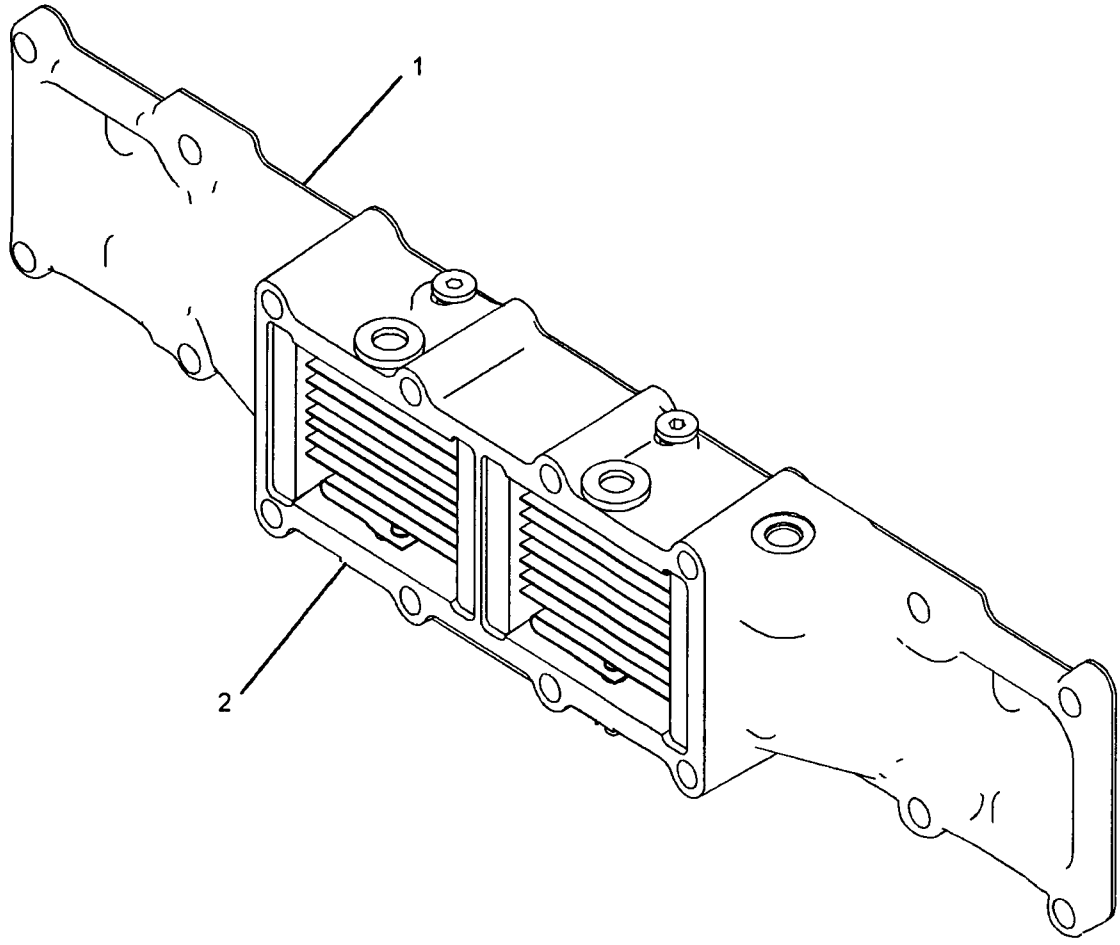

GRAPHIC #1 **<END>** g01125094

AIR INLET AND EXHAUST SYSTEM

246-2931 ELBOW GP-AIR INLET

S/N: KHX1-UP

PART OF 235-1422 ENGINE AR-COMPLETE

SMCS-1087 **i02242380**

NOTE	REF NO	GRAPHIC REF	PART NUMBER	QTY	PART NAME 1 2 3 4 5 6 (PRODUCT LEVEL)	SEE PAGE
	1	1	**4P-5918**	1	CLIP	
	2	1	**7S-6369**	1	WASHER (0.344X0.75X0.188-IN THK)	
M	3	1	**123-4511**	4	STUD (M8X1.25-THD)	
	4	1	**197-0416**	1	ELBOW	
	5	1	**3J-1907**	1	SEAL-O-RING	
M	6	1	**8T-4177**	4	BOLT (M8X1.25X90-MM)	
	7	1	**9M-1974**	7	WASHER-HARD (8.8X16X2-MM THK)	
	8	1	**9S-8004**	1	PLUG	
B	9	1	**1U-8846**		SEALANT-GASKET (1-ML)	

B-USE AS REQUIRED
M-METRIC PART

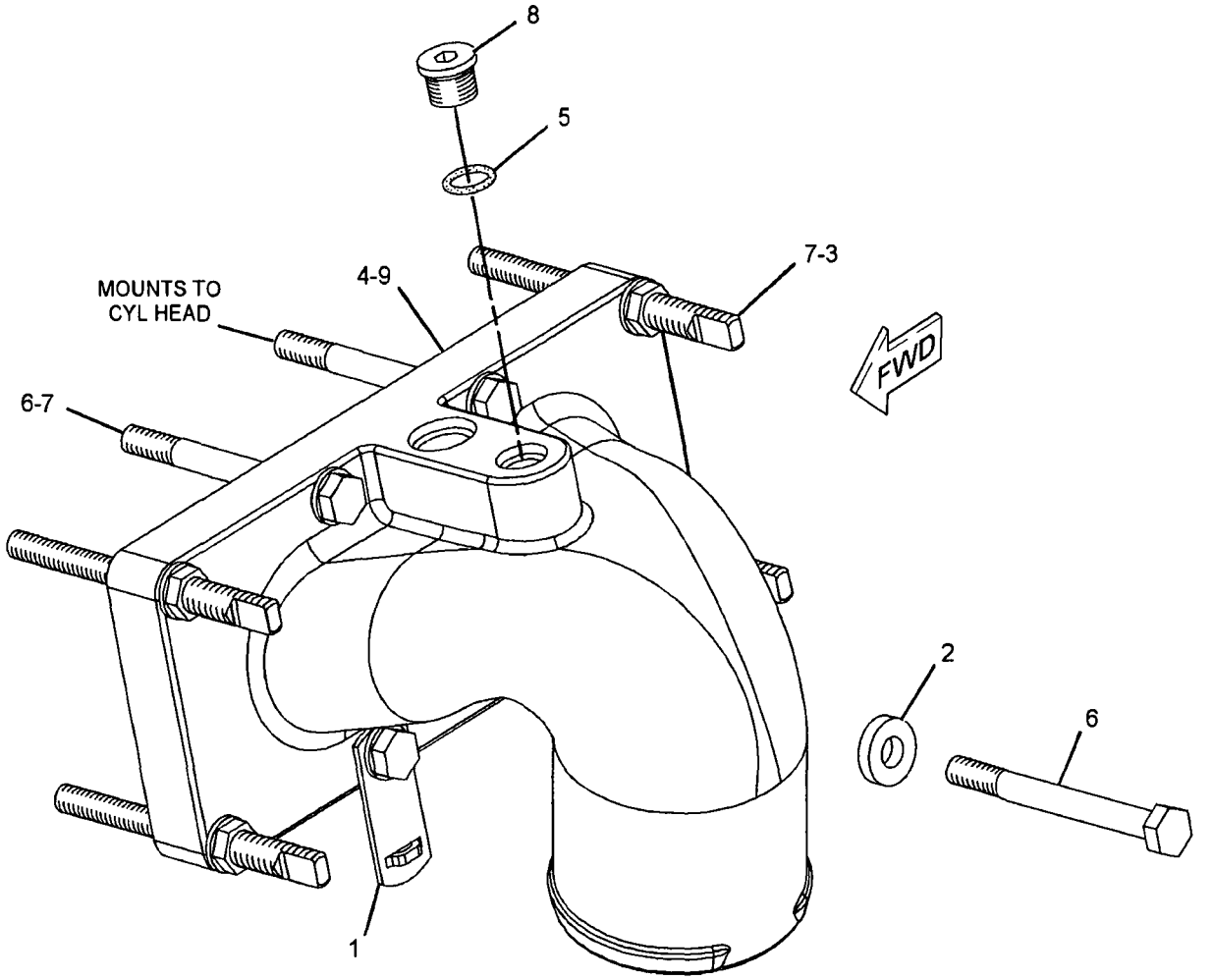

GRAPHIC #1 **<END>** g01118613

AIR INLET AND EXHAUST SYSTEM

237-0431 LINES GP-AFTERCOOLER AIR-

AIR TO AIR AFTERCOOLER

S/N: N1A1-UP

PART OF 237-0234 CHASSIS AR

SMCS-1063, 1071 **i02437672**

NOTE	REF NO	GRAPHIC REF	PART NUMBER	QTY	PART NAME 1 2 3 4 5 6 (PRODUCT LEVEL)	SEE PAGE
	1	1	**177-0581**	1	HOSE	
	2	1	**202-7935**	1	HOSE	
	3	1	**209-6477**	2	HOSE	
	4	1	**239-9887**	1	BRACKET	
	5	1	**243-5745**	1	TUBE	
	6	1	**243-5746**	1	TUBE	
	7	1	**132-2155**	1	U-BOLT	
	8	1	**208-6055**	4	CLAMP	
	9	1	**209-4579**	4	CLAMP	
	10	1	**8T-4121**	2	WASHER-HARD (11X21X2.5-MM THK)	
M	11	1	**8T-4195**	2	BOLT (M10X1.5X30-MM)	
	12	1	**8T-4223**	2	WASHER-HARD (13.5X25.5X3-MM THK)	
M	13	1	**129-3180**	2	LOCKNUT (M12X1.75-THD)	

M-METRIC PART

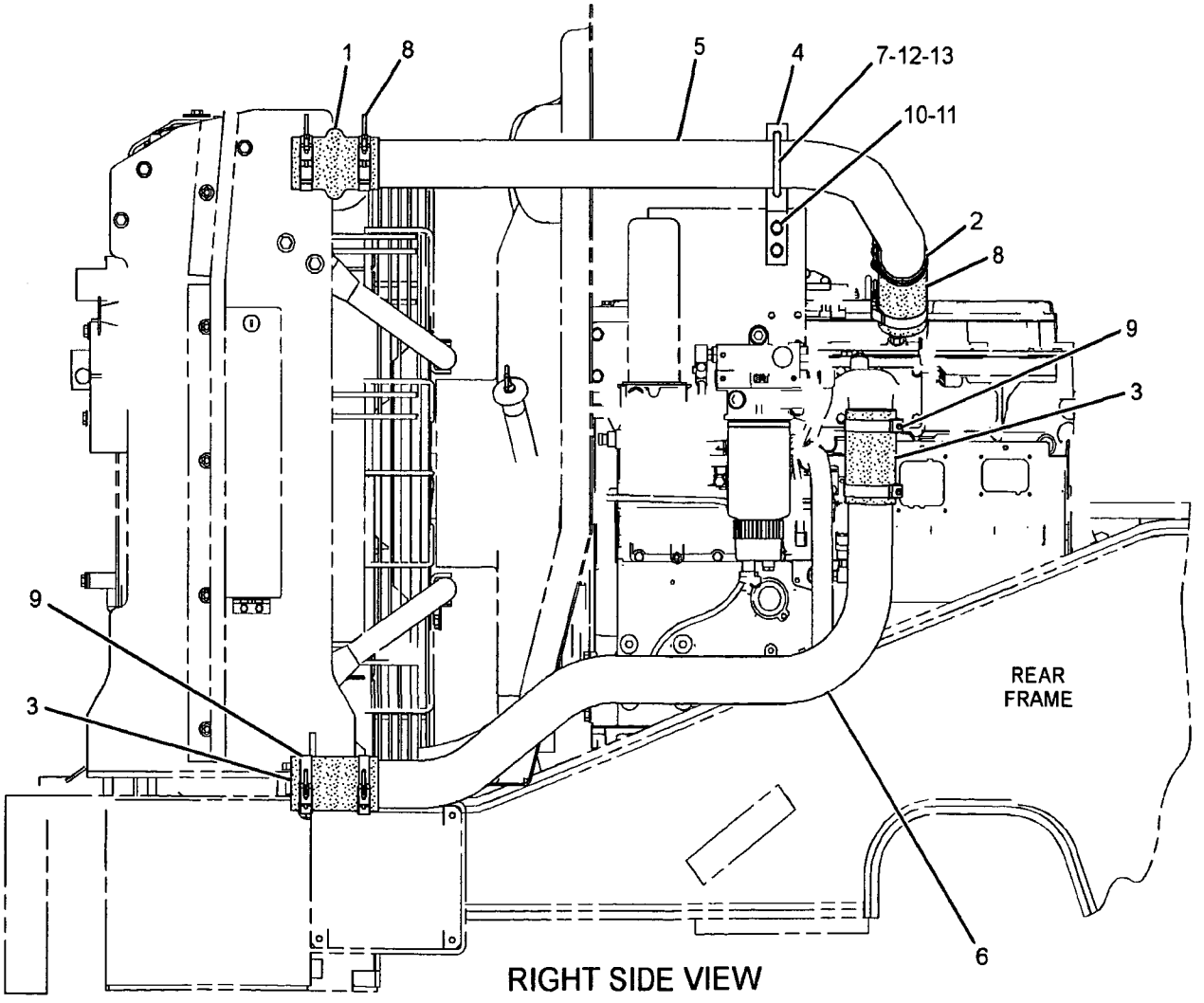

RIGHT SIDE VIEW

GRAPHIC #1

<END>

g01197751

AIR INLET AND EXHAUST SYSTEM

237-4850 LINES GP-AIR

S/N: N1A1-UP

PART OF 237-3995 INSTALLATION AR-ENGINE

ALSO AN ATTACHMENT

SMCS-1071 **i02230863**

NOTE	REF NO	GRAPHIC REF	PART NUMBER	QTY	PART NAME 1 2 3 4 5 6 (PRODUCT LEVEL)	SEE PAGE
	1	1	1W-2431	1	CLAMP-BAND	
	2	1	9L-4244	1	ELBOW	
	3	1	135-6259	1	CLAMP	
	4	1	239-6135	1	HOSE	
	5	1	246-1883	1	TUBE AS	
	6	1	261-8531	1	TUBE	
	7	1	219-0314	1	CLAMP	
	8	1	237-0226	2	CLAMP	

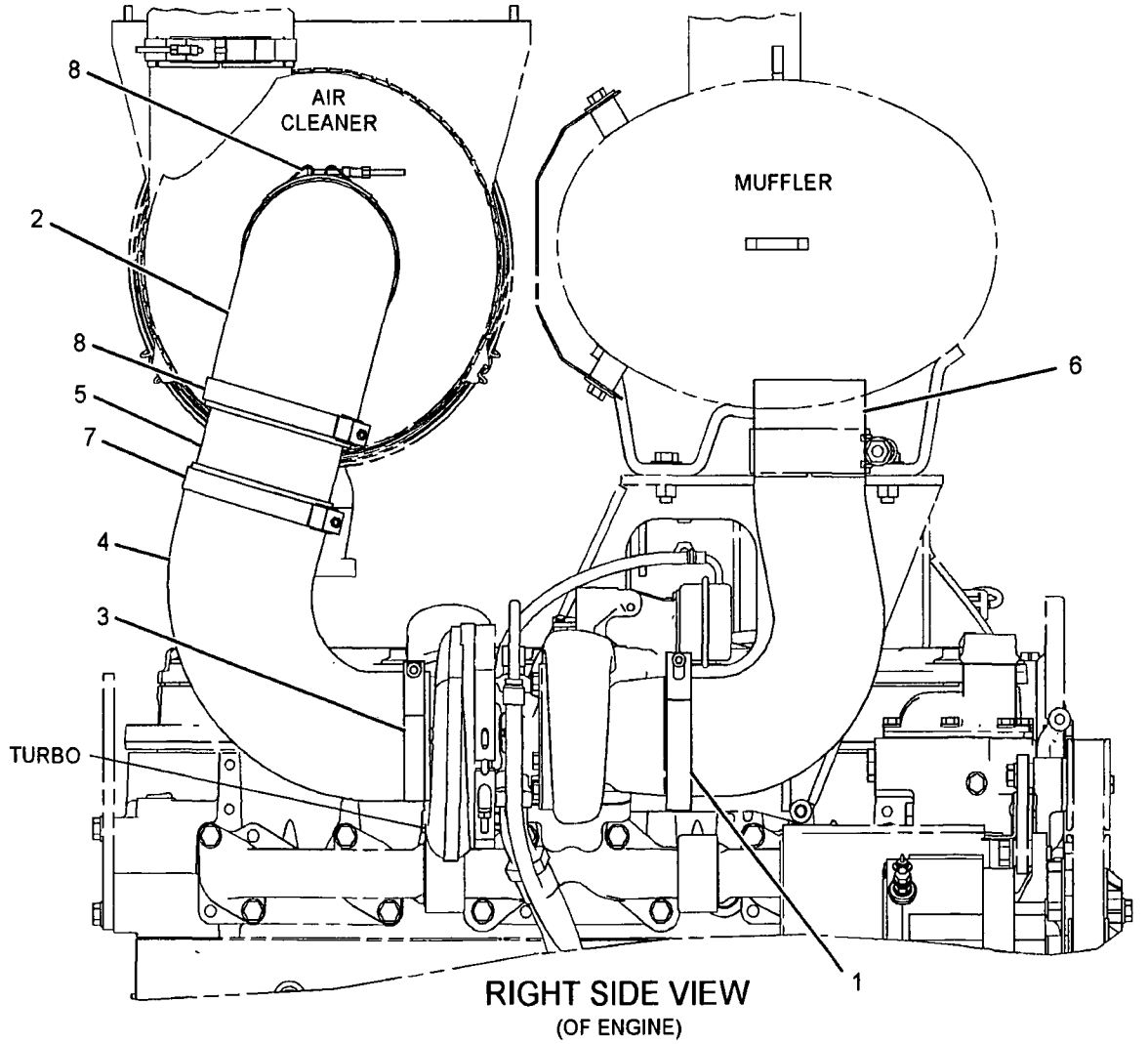

RIGHT SIDE VIEW
(OF ENGINE)

GRAPHIC #1

<END>

g01120877

AIR INLET AND EXHAUST SYSTEM

183-6845 MANIFOLD GP-EXHAUST-DRY

S/N: KHX1-UP

FOR USE WITH FRONT TURBO EXHAUST OR REAR EXHAUST, HIGH MOUNT

PART OF 235-1422 ENGINE AR-COMPLETE

SMCS-1059 **i02445560**

NOTE	REF NO	GRAPHIC REF	PART NUMBER	QTY	PART NAME 1 2 3 4 5 6 (PRODUCT LEVEL)	SEE PAGE
M	1	1	8T-7044	4	STUD-TAPERLOCK (M10X1.5X40-MM)	
	2	1	272-1956	6	GASKET	
M	3	1	172-6298	8	BOLT-FLANGE HEAD (M10)	
	4	1	183-6854	1	MANIFOLD-EXHAUST (CENTER)	
	5	1	183-6856	2	MANIFOLD-EXHAUST (END)	
	6	1	189-8772	8	SPACER (11X16X35-MM THK)	
	7	1	203-3768	4	SPACER (11X16X60-MM THK)	
	8	1	210-7722	4	BOLT-FLANGE HEAD (M10)	

M-METRIC PART

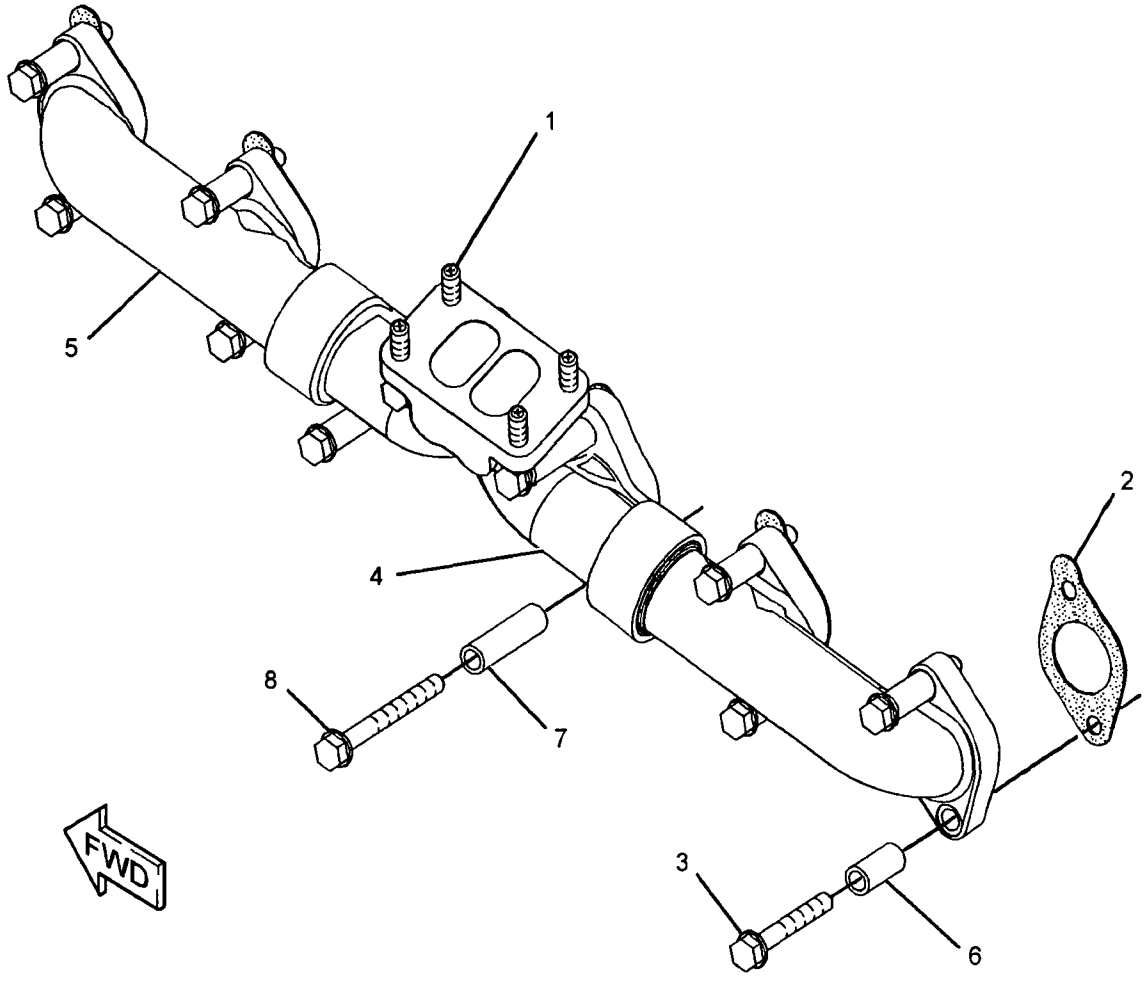

GRAPHIC #1 **<END>** g01211596

237-4853 MUFFLER GP

S/N: N1A1-UP

PART OF 237-3995 INSTALLATION AR-ENGINE

ALSO AN ATTACHMENT

SMCS-1062 **i02378043**

NOTE	REF NO	GRAPHIC REF	PART NUMBER	QTY	PART NAME 1 2 3 4 5 6 (PRODUCT LEVEL)	SEE PAGE
	1	1	255-4954	1	SHIELD-HEAT	
	2	1	261-0441	1	BRACKET AS	
	3	1	261-6639	1	MUFFLER AS	
		1	7E-3870	1	CLAMP	
	4	1	122-4026	4	SPACER (13X25X25-MM THK)	
	5	1	264-3637	2	BOLT (M10X1.5X55-MM)	
	6	1	7X-0605	8	WASHER-HARD (13X28X1.6-MM THK)	
	7	1	7X-7729	6	WASHER (11X25X3-MM THK)	
	8	1	8T-4121	4	WASHER-HARD (11X21X2.5-MM THK)	
M	9	1	8T-4137	6	BOLT (M10X1.5X20-MM)	
M	10	1	8T-4196	2	BOLT (M10X1.5X35-MM)	
M	11	1	8T-4244	4	NUT (M12X1.75-THD)	
M	12	1	8T-4910	4	BOLT (M12X1.75X60-MM)	

M-METRIC PART

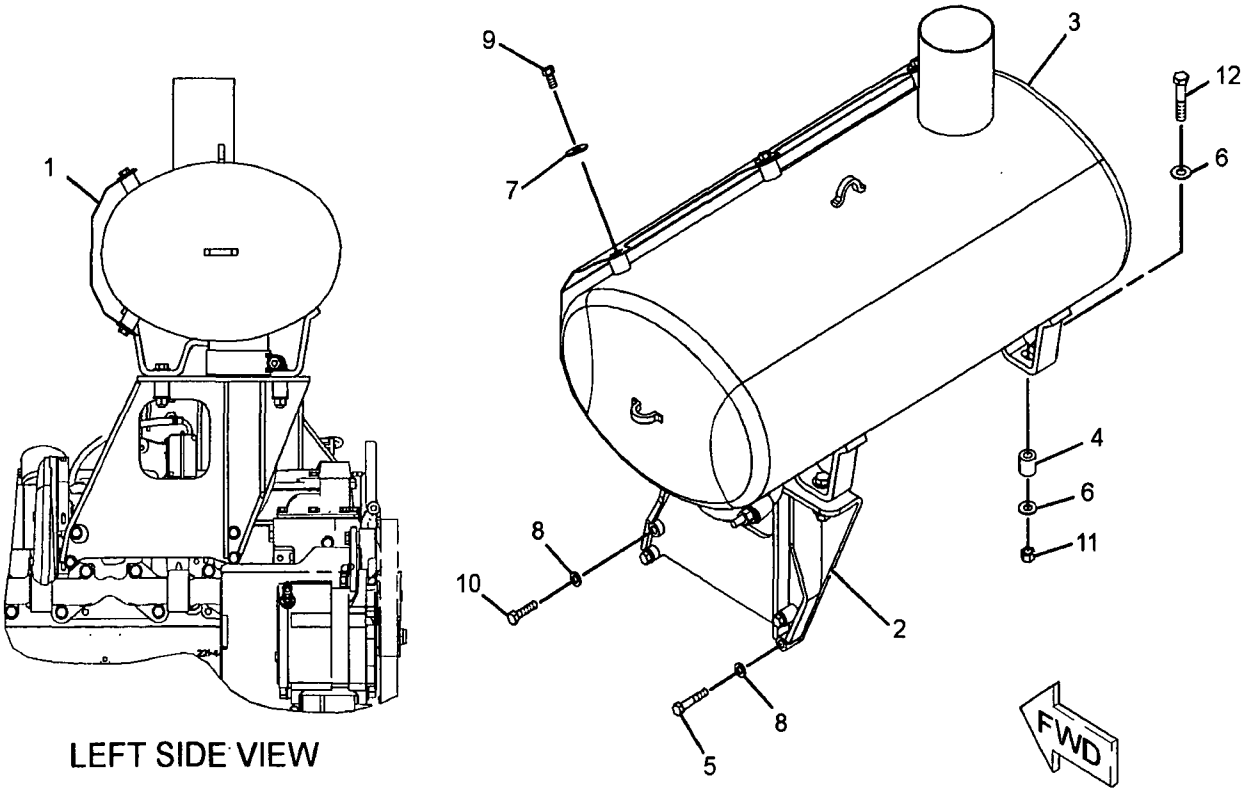

LEFT SIDE VIEW

GRAPHIC #1 **<END>** g01219673

AIR INLET AND EXHAUST SYSTEM

216-4515 PIPE GP-EXHAUST

S/N: N1A1-UP

PART OF 251-1700 HOOD & GUARD GP

SMCS-1061 **i01961252**

NOTE	REF NO	GRAPHIC REF	PART NUMBER	QTY	PART NAME 1 2 3 4 5 6 (PRODUCT LEVEL)	SEE PAGE
	1	1	127-9133	1	CLAMP-BENT BOLT	

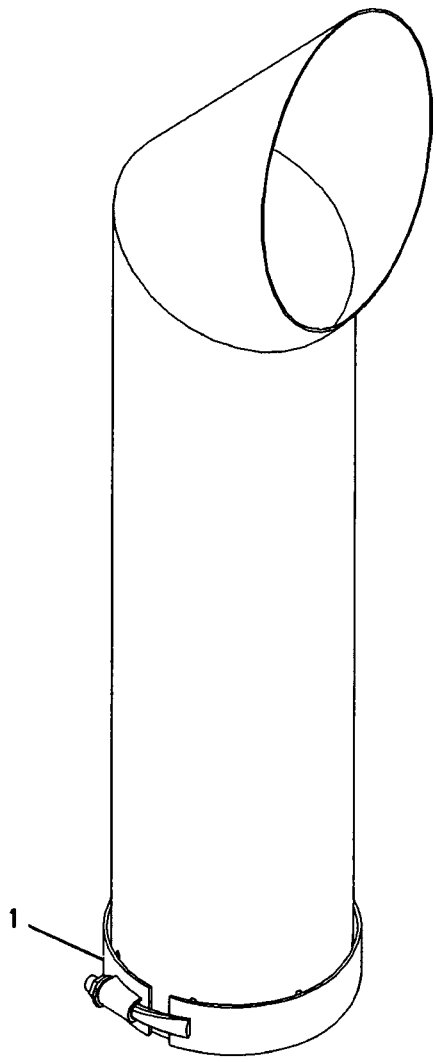

GRAPHIC #1

<END>

g00884562

AIR INLET AND EXHAUST SYSTEM

244-6601 PRECLEANER GP

S/N: N1A1-UP

AN ATTACHMENT

SMCS-1055 **i02460572**

NOTE	REF NO	GRAPHIC REF	PART NUMBER	QTY	PART NAME 1 2 3 4 5 6 (PRODUCT LEVEL)	SEE PAGE
	1	1	*200-7138*	1	PRECLEANER AS	
		1	**116-2659**	1	DAMPER	
		1	**130-3280**	1	PRECLEANER AS	
		1	**174-5415**	1	CLAMP	
	2	1	**251-9340**	1	PIPE-EXTENSION	
	3	1	**8T-4121**	6	WASHER-HARD (11X21X2.5-MM THK)	
M	4	1	**8T-4136**	3	BOLT (M10X1.5X25-MM)	
M	5	1	**8T-4133**	3	NUT (M10X1.5 THD)	

M-METRIC PART

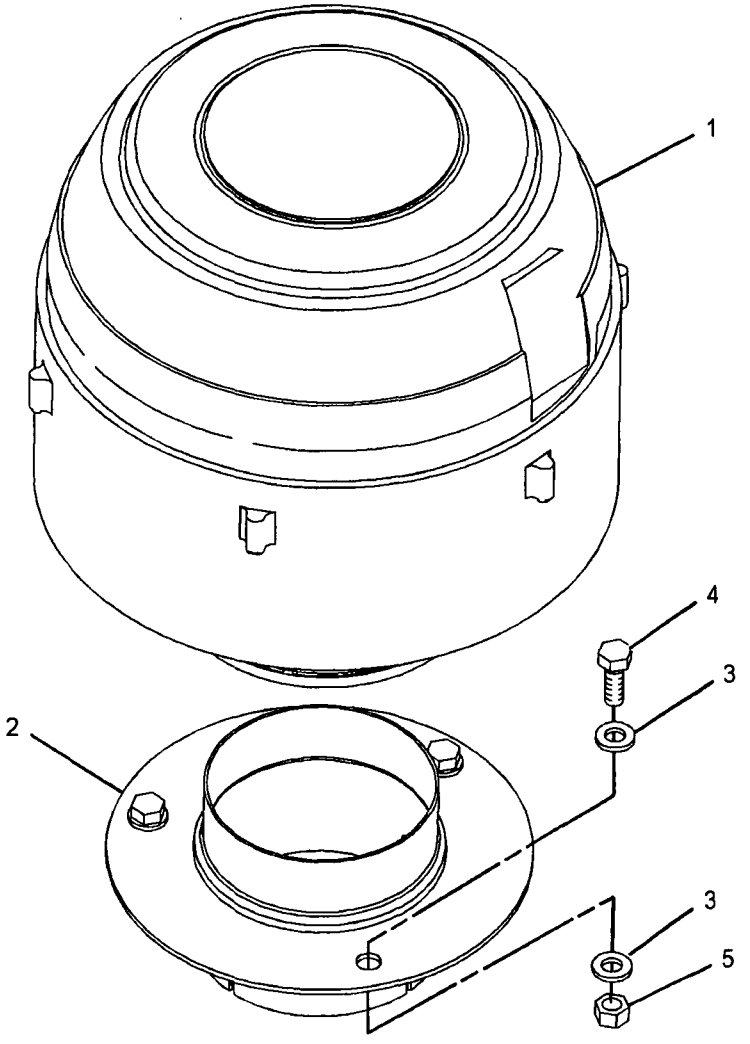

GRAPHIC #1

<END>

g01218866

AIR INLET AND EXHAUST SYSTEM

244-6603 PRECLEANER GP

S/N: N1A1-UP

AN ATTACHMENT

SMCS-1055 **i02441445**

NOTE	REF NO	GRAPHIC REF	PART NUMBER	QTY	PART NAME 1 2 3 4 5 6 (PRODUCT LEVEL)	SEE PAGE
	1	1	**130-3280**	1	PRECLEANER AS	
		1	**174-5415**	1	CLAMP	
			217-5287	1	PIPE	
			145-6669	6	SCREW-SELF-TAPPING	
			116-2659	2	DAMPER	
	2	1	**283-0660**	1	PIPE-EXTENSION	
	3	1	**222-2277**	1	CLAMP	
	4	1	**8T-4121**	6	WASHER-HARD (11X21X2.5-MM THK)	
M	5	1	**8T-4133**	3	NUT (M10X1.5 THD)	
M	6	1	**8T-4136**	3	BOLT (M10X1.5X25-MM)	

M-METRIC PART

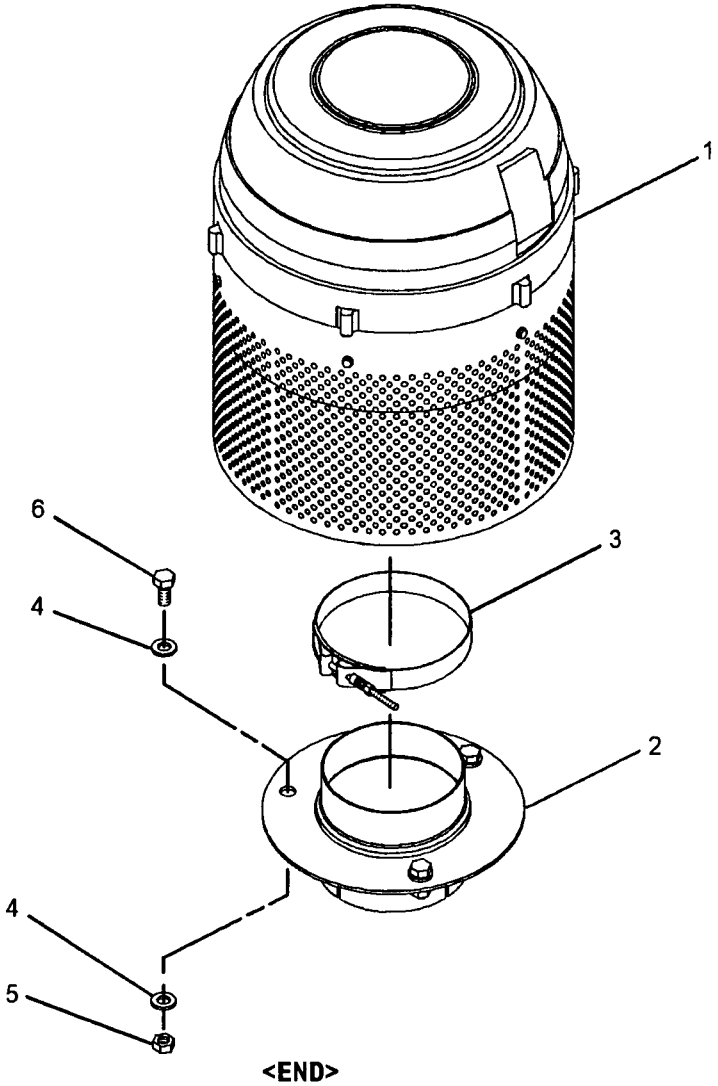

GRAPHIC #1 **<END>** g01226917

AIR INLET AND EXHAUST SYSTEM

250-0841 TURBOCHARGER GP

S/N: KHX1-UP

PART OF 258-2403 TURBOCHARGER GP

SMCS-1052, 1053 **i02242154**

NOTE	PART NUMBER	QTY	PART NAME 1 2 3 4 5 6 (PRODUCT LEVEL)	SEE PAGE
			(NO SERVICED PARTS)	

<END>

AIR INLET AND EXHAUST SYSTEM

258-2403 TURBOCHARGER GP

S/N: KHX1-UP

PART OF 235-1423 ENGINE AR-CORE

SMCS-1052, 1053 **i02246135**

NOTE	REF NO	GRAPHIC REF	PART NUMBER	QTY	PART NAME 1 2 3 4 5 6 (PRODUCT LEVEL)	SEE PAGE
	1	1	**7C-7431**	1	GASKET	
Y	2	1	**250-0841**	1	TURBOCHARGER GP	95
M	3	1	**3E-8017**	4	LOCKNUT (M10X1.5-MM THD)	

M-METRIC PART
Y-SEPARATE ILLUSTRATION

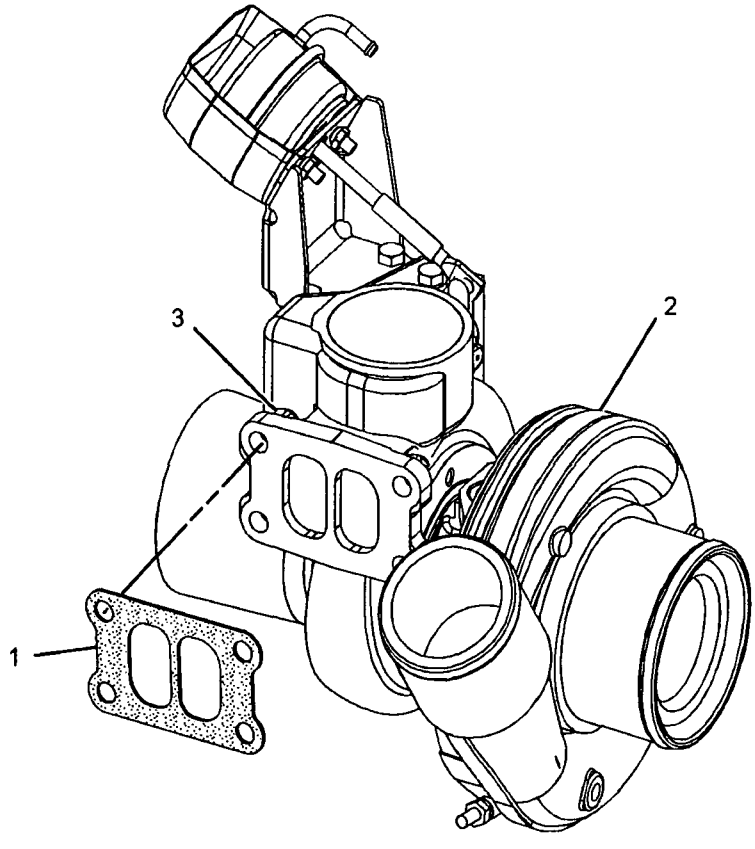

GRAPHIC #1 **<END>** g01118532

FUEL SYSTEM

237-9823 FILTER & LINES GP-FUEL

S/N: KHX1-UP

PART OF 235-1422 ENGINE AR-COMPLETE

SMCS-1261, 1274 **i02287960**

NOTE	REF NO	GRAPHIC REF	PART NUMBER	QTY	PART NAME 1 2 3 4 5 6 (PRODUCT LEVEL)	SEE PAGE
	1	1	3S-2093	3	STRAP-CABLE	
	2	1	*183-3406*	1	PLUG AS	
		1	6V-5049	1	SEAL-O-RING	
		1	9S-4191	1	PLUG-O RING	
Y	3	1	194-6725	1	SENSOR GP-PRESSURE (FUEL)	193
	4	1	206-6876	1	CAP-TUBE	
Y	5	1	*232-0343*	1	REGULATOR GP-FUEL PRESSURE	117
	6	1	*235-3596*	1	ADAPTER AS	
		1	6V-5048	2	SEAL-O-RING	
		1	8L-2786	2	SEAL-O-RING	
		1	235-3595	2	ADAPTER	
	7	1	237-9308	1	BASE AS	
		1	9S-4167	1	STUD-HOLLOW	
	8	1	238-1112	1	BRACKET	
I	9	1	244-6604	1	HOSE AS	
I	10	1	244-6605	1	HOSE AS	
	11	1	254-1425	1	BRACKET AS	
Y	12	1	258-0883	1	SWITCH GP-PRESSURE (DIFFERENTIAL) (FUEL)	218
	13	1	260-4861	1	HARNESS AS-WIRING (FUEL PRESSURE) (SENSOR)	
		1	102-8803	1	KIT-RECEPTACLE (3-PIN)	
					(INCLUDES RECEPTACLE AS AND WEDGE)	
		1	102-8806	1	KIT-RECEPTACLE (8-PIN)	
					(INCLUDES RECEPTACLE AS AND WEDGE)	
		1	8T-8737	3	PLUG-SEAL	
		1	155-2270	1	KIT-CONNECTING PLUG (2-PIN)	
					(INCLUDES PLUG AS AND WEDGE)	
	14	1	067-2551	1	CLIP	
	15	1	130-5301	1	CLIP	
	16	1	132-5789	1	CLIP	
	17	1	134-3988	3	CLIP	
	18	1	141-8275	1	VALVE-DRAIN (FUEL FILTER)	
	19	1	*148-8313*	1	ADAPTER AS	
		1	3K-0360	1	SEAL-O-RING	
		1	5P-6944	1	ADAPTER	
	20	1	*148-8336*	1	CONNECTOR AS	
		1	3J-1907	1	SEAL-O-RING	
		1	6V-8397	1	SEAL-O-RING	
		1	6V-8636	1	CONNECTOR	
	21	1	*148-8363*	1	ELBOW AS	
		1	3K-0360	1	SEAL-O-RING	
		1	6V-8397	1	SEAL-O-RING	
		1	6V-9876	1	ELBOW	
	22	1	*148-8374*	1	ELBOW AS	
		1	3K-0360	1	SEAL-O-RING	
		1	6V-8397	1	SEAL-O-RING	
		1	6V-8723	1	ELBOW	
	23	1	*148-8378*	1	ELBOW AS	
		1	3J-1907	1	SEAL-O-RING	
		1	6V-8397	1	SEAL-O-RING	
		1	6V-8724	1	ELBOW	
	24	1	*148-8411*	2	PLUG AS	
					(EACH INCLUDES)	
		1	3K-0360	1	SEAL-O-RING	
		1	9S-4185	1	PLUG (FUEL FILTER)	
	25	1	*162-0177*	1	PLUG AS	
		1	3J-1907	1	SEAL-O-RING	

237-9823 FILTER & LINES GP-FUEL (contd.) i02287960

NOTE	REF NO	GRAPHIC REF	PART NUMBER	QTY	PART NAME 1 2 3 4 5 6 (PRODUCT LEVEL)	SEE PAGE
		1	9S-8004	1	PLUG	
	26	1	174-5907	1	CLIP	
	27	1	1R-0762	1	FILTER AS-FUEL (SECONDARY)	
M	28	1	5C-7261	3	NUT (M8X1.25-THD)	
M	29	1	6V-3822	2	BOLT (M10X1.5X35-MM)	
	30	1	6V-5049	1	SEAL-O-RING	
	31	1	6V-5839	7	WASHER (11X21X2.5-MM THK)	
M	32	1	6V-6889	2	NUT (M8X1.25-THD)	
	33	1	8T-4121	4	WASHER-HARD (11X21X2.5-MM THK)	
M	34	1	8T-4137	3	BOLT (M10X1.5X20-MM)	
M	35	1	8T-4185	3	BOLT (M10X1.5X50-MM)	
M	36	1	8T-4196	4	BOLT (M10X1.5X35-MM)	
	37	1	8T-4224	4	WASHER-HARD (8.8X16X2-MM THK)	
	38	1	8T-4226	1	WASHER-PLATED (10.5X45X3-MM THK)	
	39	1	9M-1974	2	WASHER-HARD (8.8X16X2-MM THK)	

I-REFER TO HYDRAULIC INFORMATION SYSTEM
M-METRIC PART
Y-SEPARATE ILLUSTRATION

237-9823 FILTER & LINES GP-FUEL (contd.) i02287960

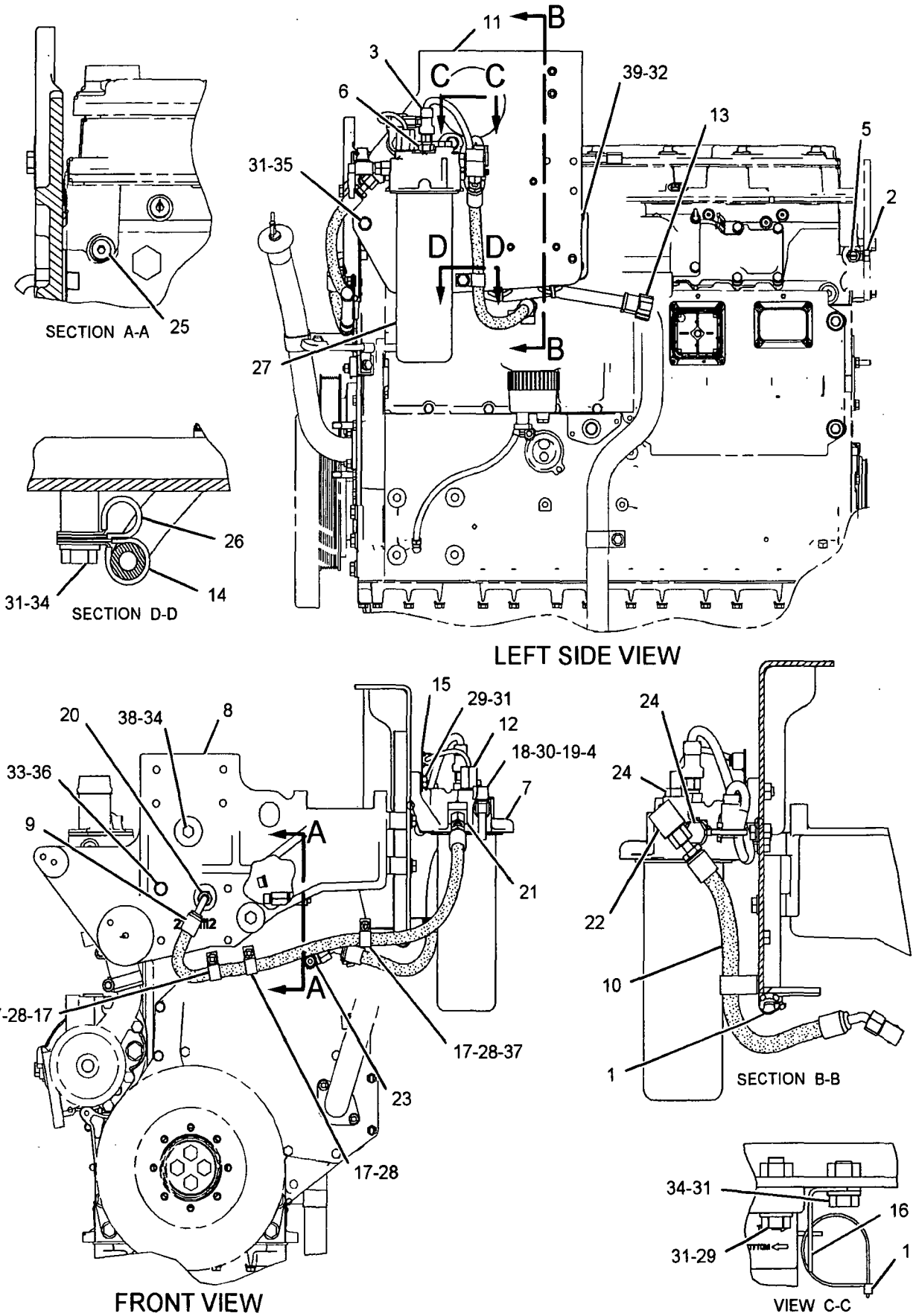

GRAPHIC #1 **<END>** g01130577

174-9570 FILTER GP-WATER SEP & FUEL–PRIMARY

S/N: KHX1-UP

PART OF 212-3657 WATER SEP & FUEL PRM PUMP GP

SMCS-1261, 1263 **i02390248**

NOTE	REF NO	GRAPHIC REF	PART NUMBER	QTY	PART NAME 1 2 3 4 5 6 (PRODUCT LEVEL)	SEE PAGE
	1	1	1R-0770	1	FILTER AS-WATER SEP & FUEL (PRIMARY)	
	1A	1	220-8678	1	SEAL	
	2	1	270-5320	1	BOWL AS (FUEL, WATER SEPARATOR)	

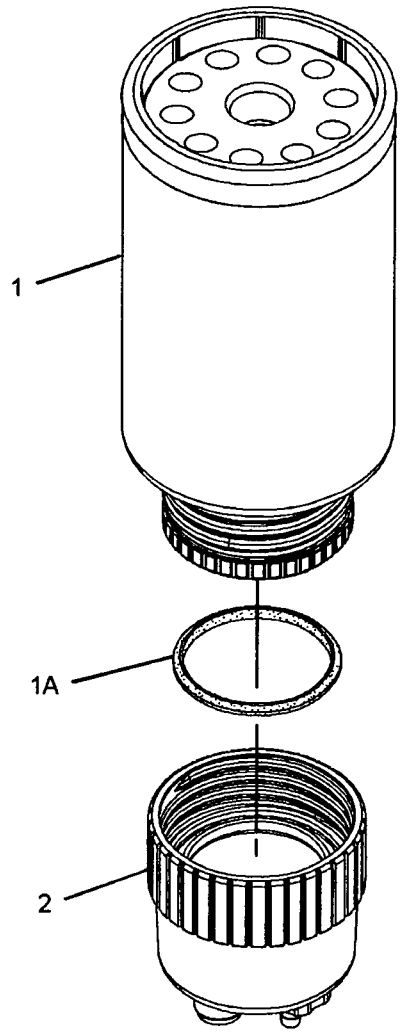

GRAPHIC #1

<END>

g01179858

241-3400 INJECTOR GP-FUEL

S/N: KHX1-UP

PART OF 222-5958 PUMP GP-FUEL INJECTION

SMCS-1251, 1254, 1290, 1713 i02246486

NOTE	REF NO	GRAPHIC REF	PART NUMBER	QTY	PART NAME 1 2 3 4 5 6 (PRODUCT LEVEL)	SEE PAGE
	1	1	149-5240	1	RING-BACKUP	
	2	1	169-3104	1	RING-BACKUP	
	3	1	169-8598	1	SEAL-O-RING	
	5	1	109-3207	1	SEAL-O-RING	
	6	1	148-2903	1	SEAL-O-RING	
	7	1	169-8586	1	RING-BACKUP	

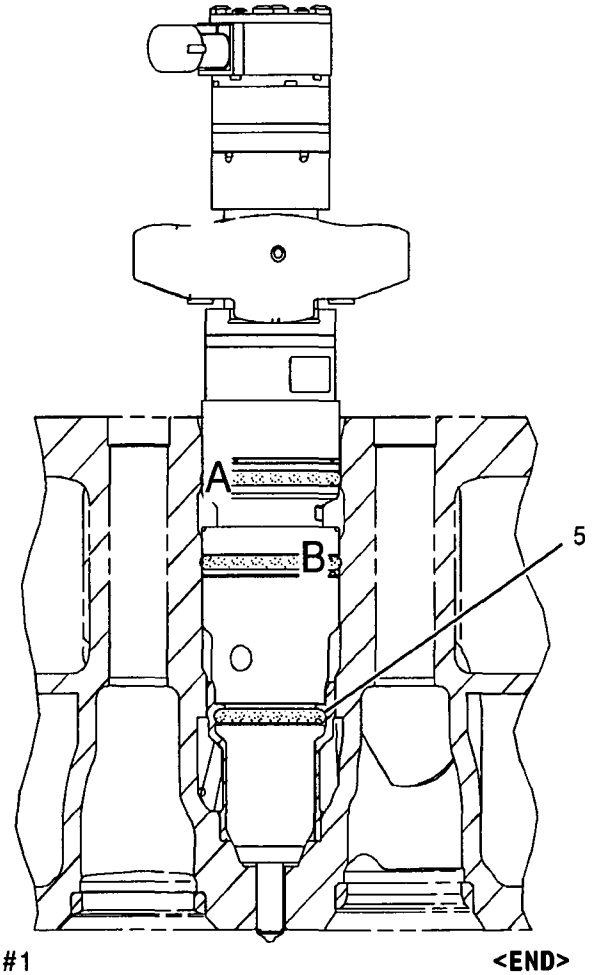

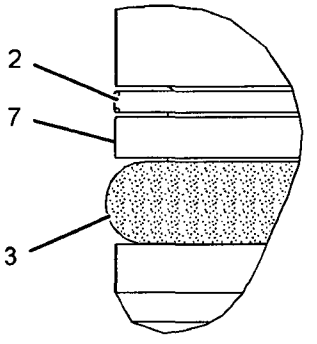

VIEW OF AREA A

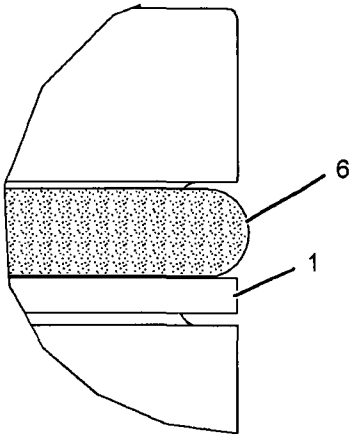

VIEW OF AREA B

GRAPHIC #1 <END> g01032697

268-1835 INJECTOR GP-FUEL

S/N: KHX411-UP

PART OF 268-1839 PUMP GP-FUEL INJECTION

SMCS-1251, 1254, 1290, 1713 **i02374734**

NOTE	REF NO	GRAPHIC REF	PART NUMBER	QTY	PART NAME 1 2 3 4 5 6 (PRODUCT LEVEL)	SEE PAGE
	1	1	149-5240	1	RING-BACKUP	
	2	1	169-3104	1	RING-BACKUP	
	3	1	169-8598	1	SEAL-O-RING	
	5	1	109-3207	1	SEAL-O-RING	
	6	1	148-2903	1	SEAL-O-RING	
	7	1	169-8586	1	RING-BACKUP	

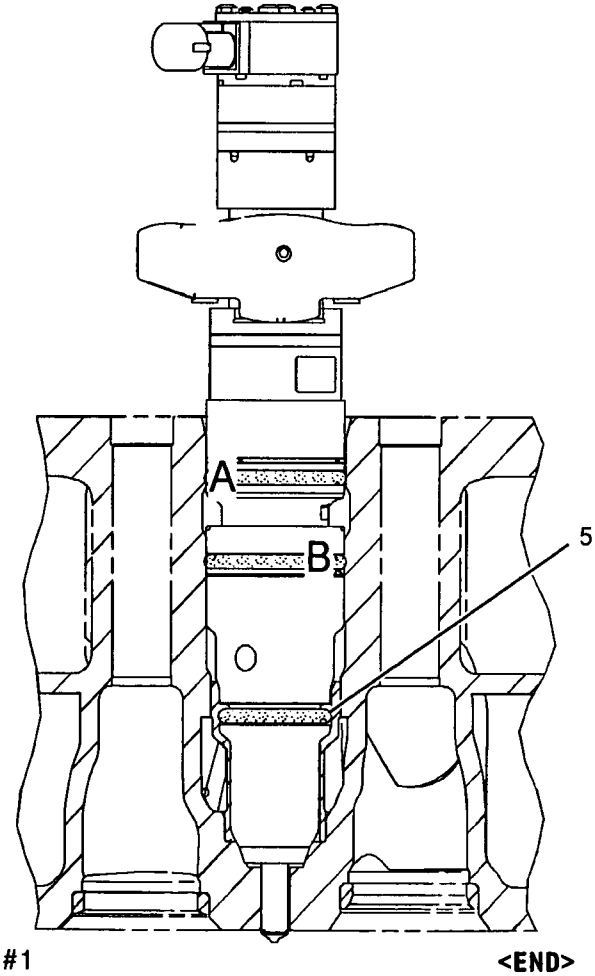

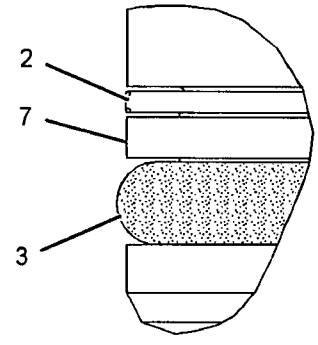

VIEW OF AREA A

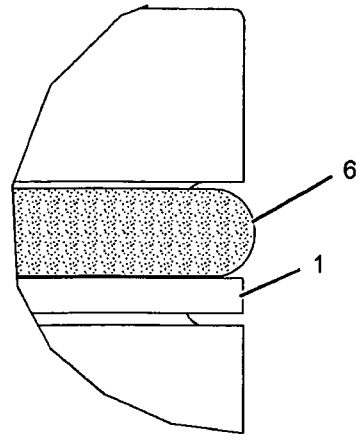

VIEW OF AREA B

GRAPHIC #1

<END>

g01032697

FUEL SYSTEM

237-0432 LINES GP-FUEL

S/N: N1A1-UP

PART OF 237-0234 CHASSIS AR

SMCS-1274 **i02437669**

NOTE	REF NO	GRAPHIC REF	PART NUMBER	QTY	PART NAME 1 2 3 4 5 6 (PRODUCT LEVEL)	SEE PAGE
	1	1	**7K-1181**	3	STRAP-CABLE	
	2	1	**124-3019**	1	BRACKET AS	
M		1	**8T-3490**	1	NUT-WELD (M10X1.5-THD)	
I	3	1	**244-7595**	1	HOSE AS	
I	4	1	**250-0155**	1	HOSE AS	
	5	1	*148-8336*	1	CONNECTOR AS	
		1	**3J-1907**	1	SEAL-O-RING	
		1	**6V-8397**	1	SEAL-O-RING	
		1	**6V-8636**	1	CONNECTOR	
	6	1	*148-8369*	1	ELBOW AS	
		1	**3J-7354**	1	SEAL-O-RING	
		1	**4J-5477**	1	SEAL-O-RING	
		1	**6V-8628**	1	ELBOW	
	7	1	*148-8378*	1	ELBOW AS	
		1	**3J-1907**	1	SEAL-O-RING	
		1	**6V-8397**	1	SEAL-O-RING	
		1	**6V-8724**	1	ELBOW	
	8	1	**6V-8397**	1	SEAL-O-RING	
	9	1	**8M-2770**	1	CLIP	
	10	1	**8T-4121**	1	WASHER-HARD (11X21X2.5-MM THK)	
M	11	1	**8T-4195**	1	BOLT (M10X1.5X30-MM)	
	12	1	**9M-8406**	1	CLIP	

I-REFER TO HYDRAULIC INFORMATION SYSTEM
M-METRIC PART

237-0432 **LINES GP-FUEL** *(contd.)* **i02437669**

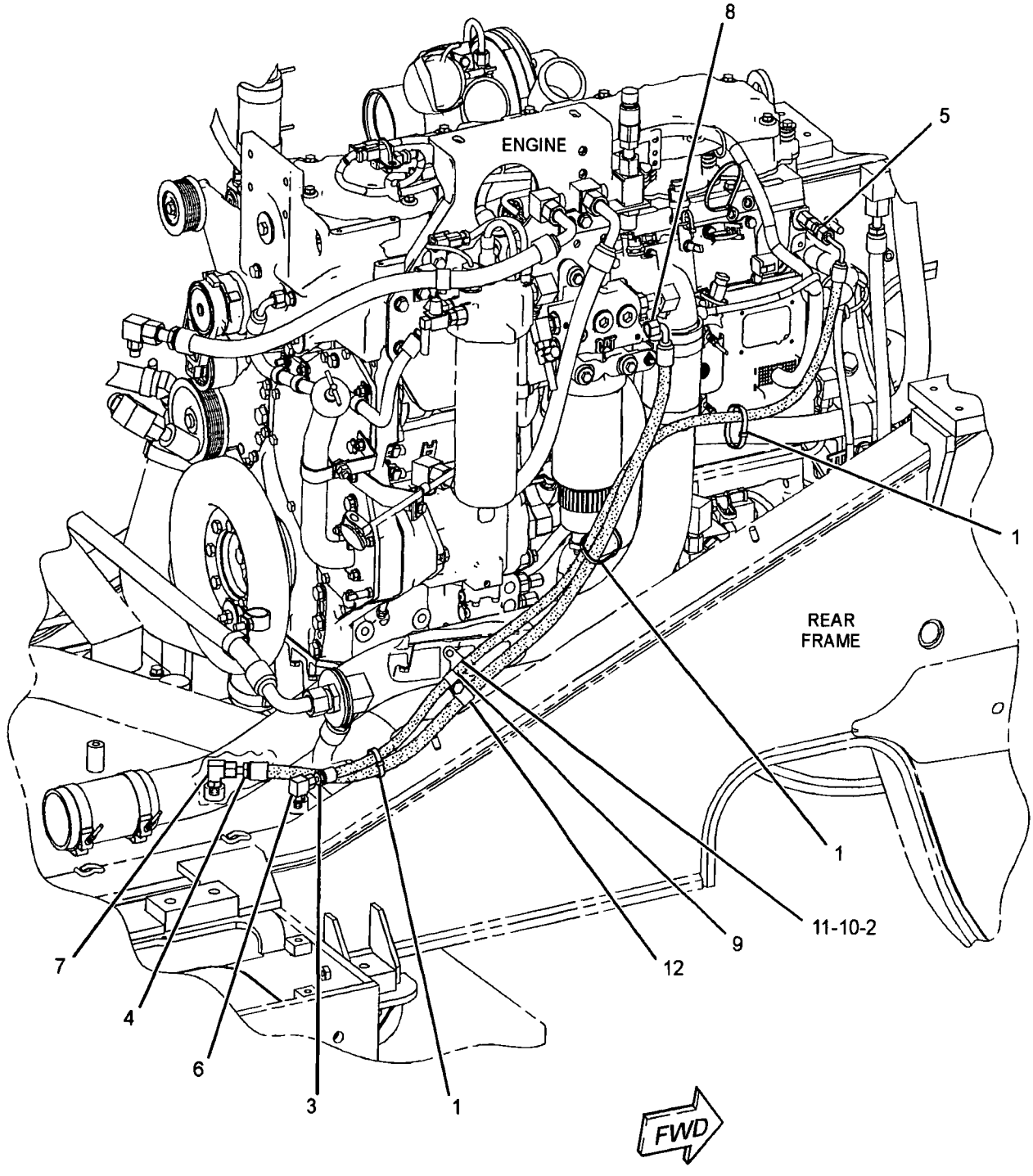

GRAPHIC #1 **<END>** g01220692

237-4851 LINES GP-FUEL DRAIN

S/N: N1A1-UP

PART OF 237-3995 INSTALLATION AR-ENGINE

ALSO AN ATTACHMENT

SMCS-1274 **i02438059**

NOTE	REF NO	GRAPHIC REF	PART NUMBER	QTY	PART NAME 1 2 3 4 5 6 (PRODUCT LEVEL)	SEE PAGE
	1	1	3S-2093	2	STRAP-CABLE	
	2	1	1P-4278	2	CLAMP-HOSE	
E	3	1	103-2529		HOSE (69.9-CM)	
E	3A	1	103-2529		HOSE (91.5-CM)	

E-ORDER BY THE CENTIMETER

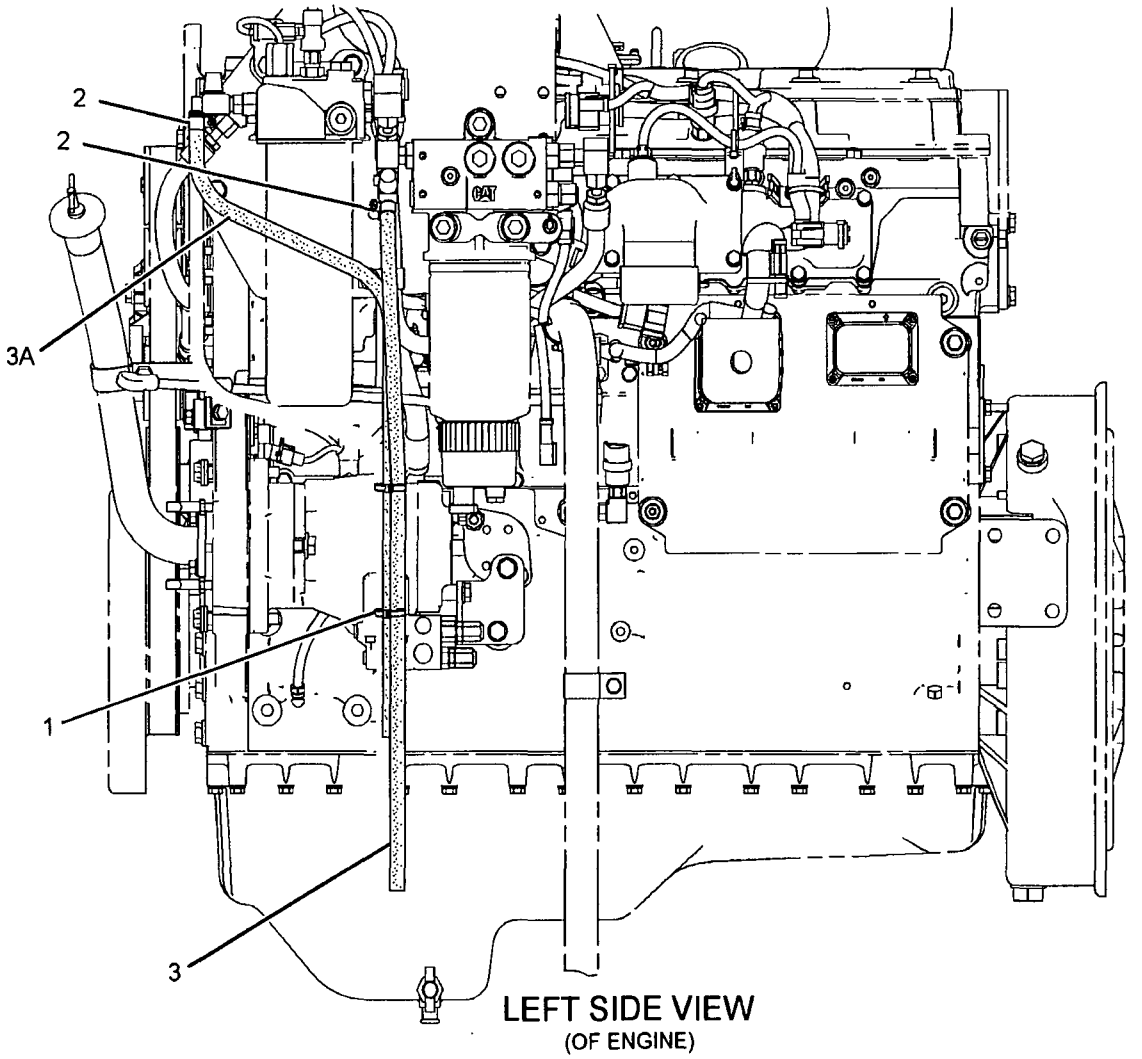

LEFT SIDE VIEW
(OF ENGINE)

GRAPHIC #1 **<END>** g01196666

191-0461 LINES GP-INJECTOR HYD PUMP

S/N: KHX1-UP

PART OF 235-1423 ENGINE AR-CORE

SMCS-1714 **i02242157**

NOTE	REF NO	GRAPHIC REF	PART NUMBER	QTY	PART NAME 1 2 3 4 5 6 (PRODUCT LEVEL)	SEE PAGE
	1	1	*183-3399*	2	CONNECTOR AS	
					(EACH INCLUDES)	
		1	**6V-8636**	1	CONNECTOR	
		1	**214-7568**	1	SEAL-O-RING	
		1	**221-3494**	1	SEAL-O-RING	
Y	2	1	*191-0523*	1	ADAPTER GP-OIL LINE	56
	3	1	**205-1280**	1	HOSE AS	
	4	1	**212-3706**	1	TUBE AS	
	5	1	**3V-2431**	2	WASHER (10.2X16X2-MM THK)	
	6	1	**4F-9653**	1	SEAL-O-RING	
M	7	1	**8T-1159**	2	BOLT-SOCKET HEAD (M10X1.5X25-MM)	

M-METRIC PART
Y-SEPARATE ILLUSTRATION

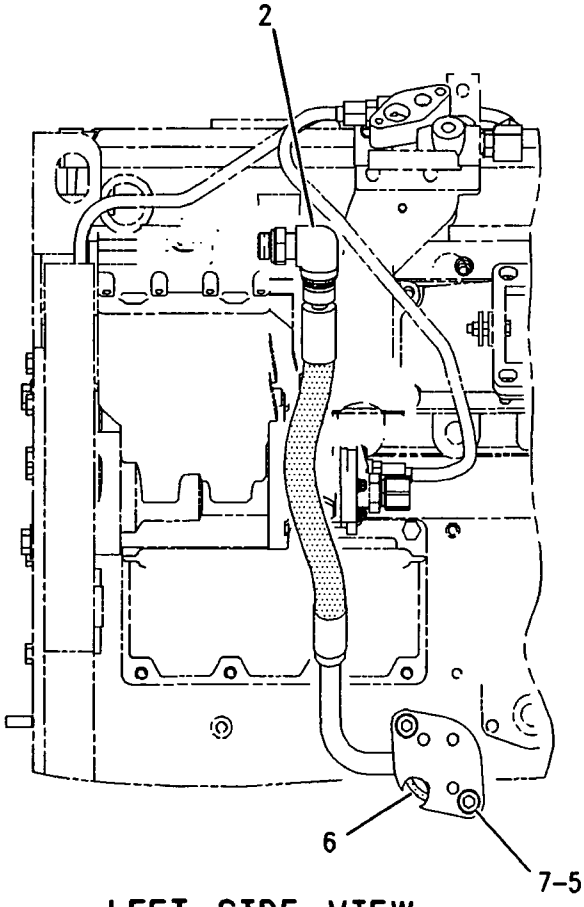

LEFT SIDE VIEW

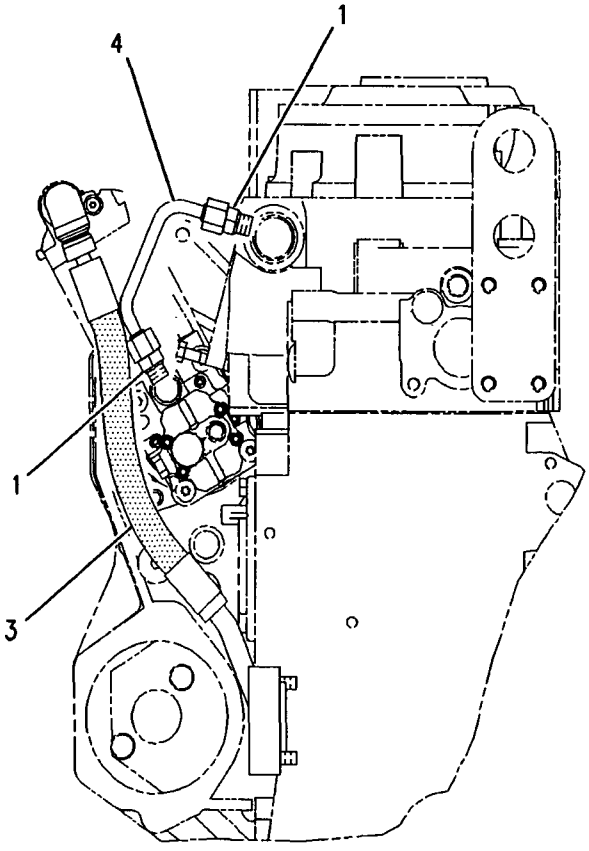

REAR VIEW

GRAPHIC #1 **<END>** g00881566

222-5900 PUMP & MTG GP-UNIT INJ HYD

S/N: KHX1-UP

PART OF 235-1423 ENGINE AR-CORE

SMCS-1714 **i02242170**

NOTE	REF NO	GRAPHIC REF	PART NUMBER	QTY	PART NAME 1 2 3 4 5 6 (PRODUCT LEVEL)	SEE PAGE
	1	1	**214-7568**	2	SEAL-O-RING	
	2	1	**227-5904**	1	SEAL-O-RING (UNIT INJECTOR HYD PUMP)	
YR	3	1	**254-4357**	1	PUMP GP-UNIT INJECTOR HYD	116
	4	1	**3E-9412**	1	DOWEL	
	5	1	**6V-5839**	2	WASHER (11X21X2.5-MM THK)	
M	6	1	**6V-7981**	2	BOLT (M10X1.5X70-MM)	
	7	1	**9S-8004**	2	PLUG	

M-METRIC PART
R-REMFG PART MAY BE AVAILABLE
Y-SEPARATE ILLUSTRATION

222-5900 PUMP & MTG GP-UNIT INJ HYD (contd.) i02242170

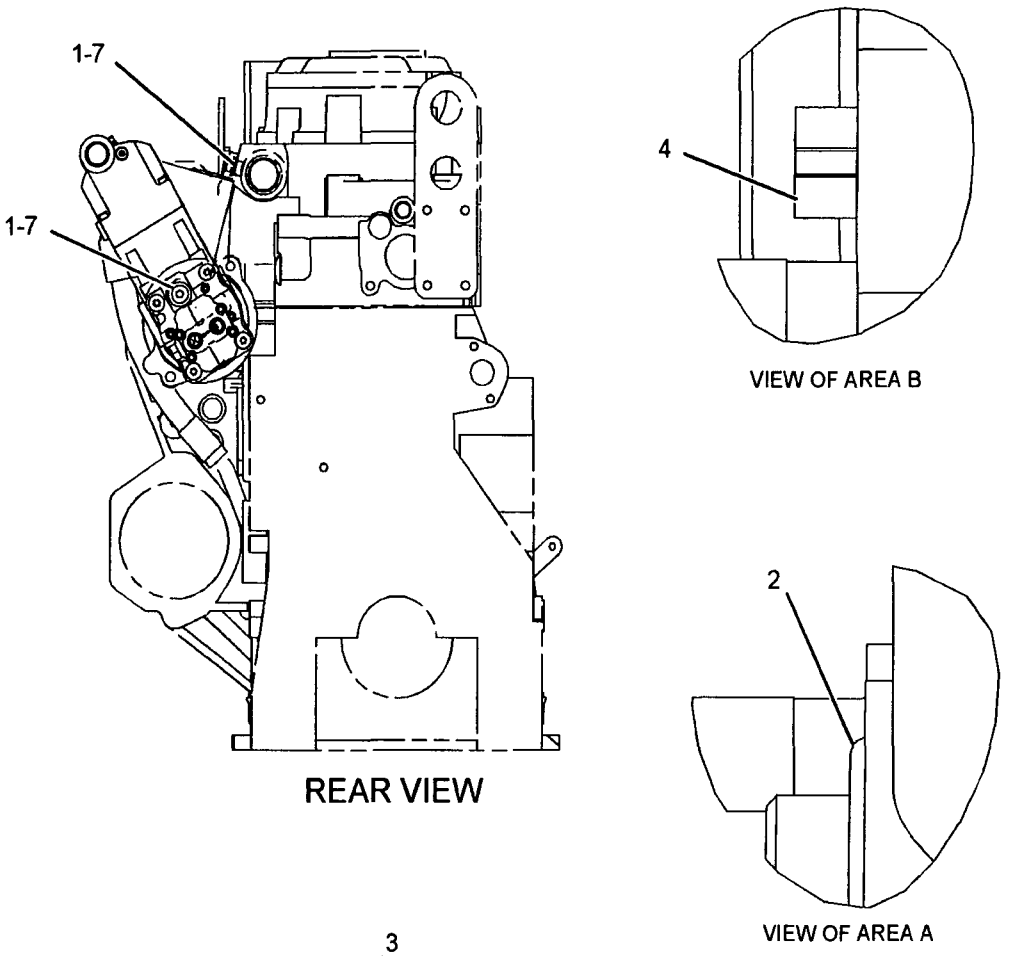

GRAPHIC #1

<END>

g01017748

222-5958 PUMP GP-FUEL INJECTION

S/N: KHX1-410

PART OF 235-1423 ENGINE AR-CORE

SMCS-1251, 1290 **i02242073**

NOTE	REF NO	GRAPHIC REF	PART NUMBER	QTY	PART NAME 1 2 3 4 5 6 (PRODUCT LEVEL)	SEE PAGE
	1	1	**235-9651**	2	BOLT-SOCKET HEAD (M8X1.25X65-MM)	
Y	2	1	**241-3400**	1	INJECTOR GP-FUEL	101

Y-SEPARATE ILLUSTRATION

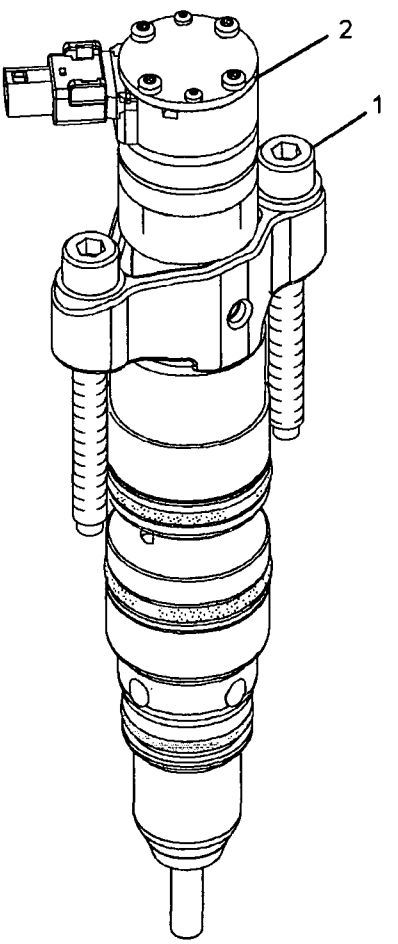

ISOMETRIC VIEW

GRAPHIC #1 **<END>** g01038652

268-1839 PUMP GP-FUEL INJECTION

S/N: KHX411-UP

PART OF 235-1423 ENGINE AR-CORE

SMCS-1251, 1290 **i02374712**

NOTE	REF NO	GRAPHIC REF	PART NUMBER	QTY	PART NAME 1 2 3 4 5 6 (PRODUCT LEVEL)	SEE PAGE
	1	1	**235-9651**	2	BOLT-SOCKET HEAD (M8X1.25X65-MM)	
Y	2	1	**268-1835**	1	INJECTOR GP-FUEL	102

Y-SEPARATE ILLUSTRATION

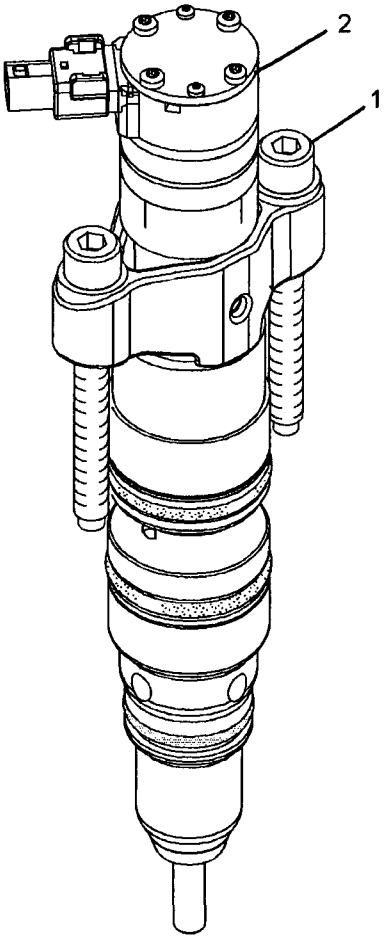

ISOMETRIC VIEW

GRAPHIC #1

<END>

g01038652

FUEL SYSTEM

238-4803 PUMP GP-FUEL PRM & PRIM FILTER

S/N: KHX1-409

PART OF 235-1422 ENGINE AR-COMPLETE

SMCS-1258, 1260 **i02241996**

NOTE	REF NO	GRAPHIC REF	PART NUMBER	QTY	PART NAME 1 2 3 4 5 6 (PRODUCT LEVEL)	SEE PAGE
Y	1	1	**165-5970**	1	SWITCH GP-TOGGLE (MANUAL FUEL)	230
	2	1	**179-9348**	1	VALVE-DRAIN (FUEL FILTER)	
	3	1	**191-1782**	1	SPACER (8.5X12.7X38.2-MM THK)	
	4	1	**206-6876**	1	CAP-TUBE	
	5	1	**209-7659**	1	PLATE-INFORMATION (MANUAL FUEL)	
Y	6	1	**212-3657**	1	WATER SEP & FUEL PRM PUMP GP	120
	7	1	**232-1374**	1	BRACKET	
	8	1	**232-1376**	2	SPACER (8.5X12.7X139.1-MM THK)	
I	9	1	**244-6606**	1	HOSE AS	
	10	1	**130-5301**	1	CLIP	
	11	1	*148-8319*	2	CONNECTOR AS	
					(EACH INCLUDES)	
		1	**2M-9780**	1	SEAL-O-RING	
		1	**6V-8397**	1	SEAL-O-RING	
		1	**6V-8715**	1	CONNECTOR	
	12	1	*148-8336*	1	CONNECTOR AS	
		1	**3J-1907**	1	SEAL-O-RING	
		1	**6V-8397**	1	SEAL-O-RING	
		1	**6V-8636**	1	CONNECTOR	
	13	1	*148-8367*	1	ELBOW AS	
		1	**6V-8397**	1	SEAL-O-RING	
		1	**6V-9850**	1	ELBOW	
	14	1	*150-3065*	1	ADAPTER AS	
		1	**3J-1907**	1	SEAL-O-RING	
		1	**6V-0484**	1	ADAPTER-O-RING	
	15	1	*150-4046*	1	ADAPTER AS	
		1	**2M-9780**	1	SEAL-O-RING	
		1	**5P-1404**	1	ADAPTER-O-RING	
	16	1	**164-5619**	1	PLUG AS	
		1	**2M-9780**	1	SEAL-O-RING	
		1	**9S-8006**	1	PLUG	
	17	1	**8T-4121**	1	WASHER-HARD (11X21X2.5-MM THK)	
M	18	1	**8T-4137**	1	BOLT (M10X1.5X20-MM)	
M	19	1	**8T-6869**	1	BOLT (M8X1.25X60-MM)	
M	20	1	**8T-7352**	2	BOLT (M8X160-MM)	
	21	1	**8T-9655**	8	MOUNT-ISOLATION	
	22	1	**9N-0869**	6	WASHER-HARD (8.8X25.5X2-MM THK)	

I-REFER TO HYDRAULIC INFORMATION SYSTEM
M-METRIC PART
Y-SEPARATE ILLUSTRATION

238-4803 PUMP GP-FUEL PRM & PRIM FILTER *(contd.)* i02241996

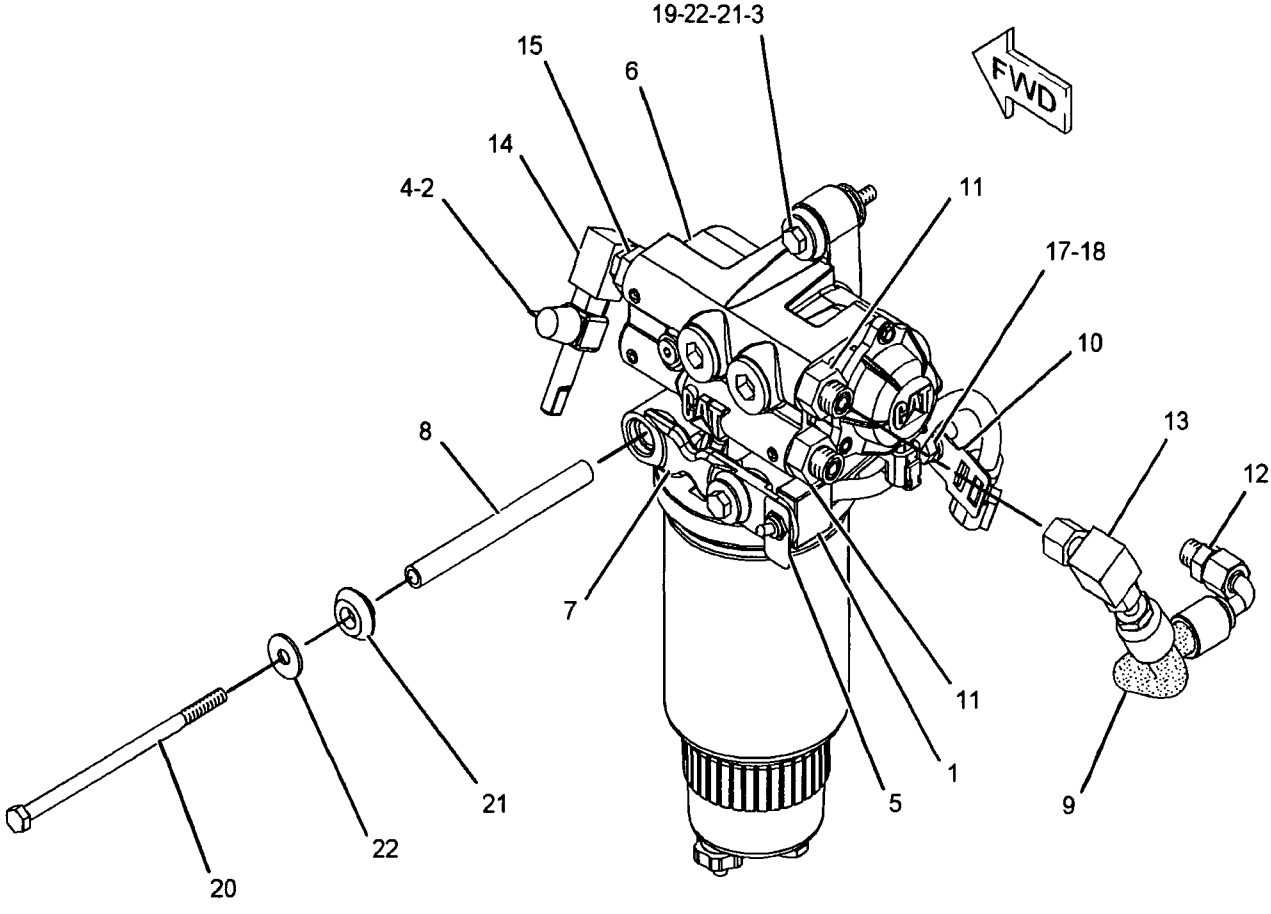

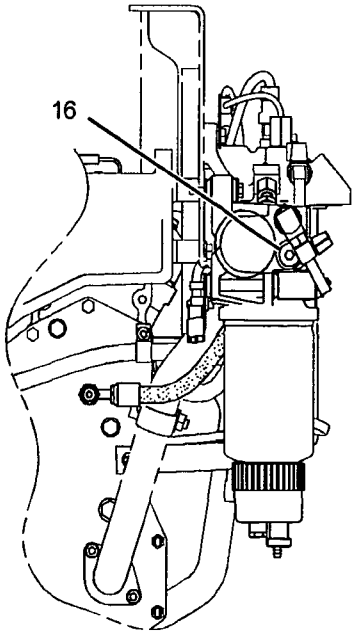

FRONT VIEW

GRAPHIC #1 **<END>** g01131963

238-4803 PUMP GP-FUEL PRM & PRIM FILTER

S/N: KHX410-UP

PART OF 235-1422 ENGINE AR-COMPLETE

SMCS-1258, 1260 **i02436415**

NOTE	REF NO	GRAPHIC REF	PART NUMBER	QTY	PART NAME 1 2 3 4 5 6 (PRODUCT LEVEL)	SEE PAGE
CI	1	2	148-7027	1	HOSE AS	
CI	2	2	155-3677	1	HOSE AS	
Y	3	1	165-5970	1	SWITCH GP-TOGGLE (FUEL PRIMING PUMP)	230
	4	1	179-9348	1	VALVE-DRAIN (FUEL FILTER)	
	5	1	191-1782	1	SPACER (8.5X12.7X38.2-MM THK)	
	6	1	206-6876	1	CAP-TUBE	
Y	7	1	212-3657	1	WATER SEP & FUEL PRM PUMP GP	120
	8	1	232-1374	1	BRACKET	
	9	1	232-1376	2	SPACER (8.5X12.7X139.1-MM THK)	
C	10	1	276-5386	1	TUBE AS	
C	11	1	119-5708	1	CLIP	
	12	2	130-5301	1	CLIP	
	13	1	*148-8319*	2	CONNECTOR AS	
					(EACH INCLUDES)	
		1	2M-9780	1	SEAL-O-RING	
		1	6V-8397	1	SEAL-O-RING	
		1	6V-8715	1	CONNECTOR	
	14	2	*148-8336*	1	CONNECTOR AS	
		2	3J-1907	1	SEAL-O-RING	
		2	6V-8397	1	SEAL-O-RING	
		2	6V-8636	1	CONNECTOR	
C	15	2	*148-8363*	1	ELBOW AS	
		2	3K-0360	1	SEAL-O-RING	
		2	6V-8397	1	SEAL-O-RING	
	16	1	*148-8367*	1	ELBOW AS	
		1	6V-8397	1	SEAL-O-RING	
		1	6V-9850	1	ELBOW	
	17	1	*150-3065*	1	ADAPTER AS	
		1	3J-1907	1	SEAL-O-RING	
		1	6V-0484	1	ADAPTER-O-RING	
	18	1	*150-4046*	1	ADAPTER AS	
		1	2M-9780	1	SEAL-O-RING	
		1	5P-1404	1	ADAPTER-O-RING	
C	19	1	*155-7329*	1	ELBOW GP	
		1	3K-0360	1	SEAL-O-RING	
		1	5H-8853	1	SEAL-O-RING	
	20	2	164-5619	1	PLUG AS	
		2	2M-9780	1	SEAL-O-RING	
		2	9S-8006	1	PLUG	
C	21	1	5H-8853	1	SEAL-O-RING	
CM	22	1	5P-7970	1	NUT (M8X1.25-THD)	
	23	2	8T-4121	1	WASHER-HARD (11X21X2.5-MM THK)	
M	24	2	8T-4137	1	BOLT (M10X1.5X20-MM)	
M	25	1	8T-6869	1	BOLT (M8X1.25X60-MM)	
M	26	1	8T-7352	2	BOLT (M8X160-MM)	
	27	1	8T-9655	8	MOUNT-ISOLATION	
C	28	1	9M-1974	1	WASHER-HARD (8.8X16X2-MM THK)	
	29	1	9N-0869	6	WASHER-HARD (8.8X25.5X2-MM THK)	

C-CHANGE FROM PREVIOUS TYPE
I-REFER TO HYDRAULIC INFORMATION SYSTEM
M-METRIC PART
Y-SEPARATE ILLUSTRATION

238-4803 PUMP GP-FUEL PRM & PRIM FILTER (contd.) i02436415

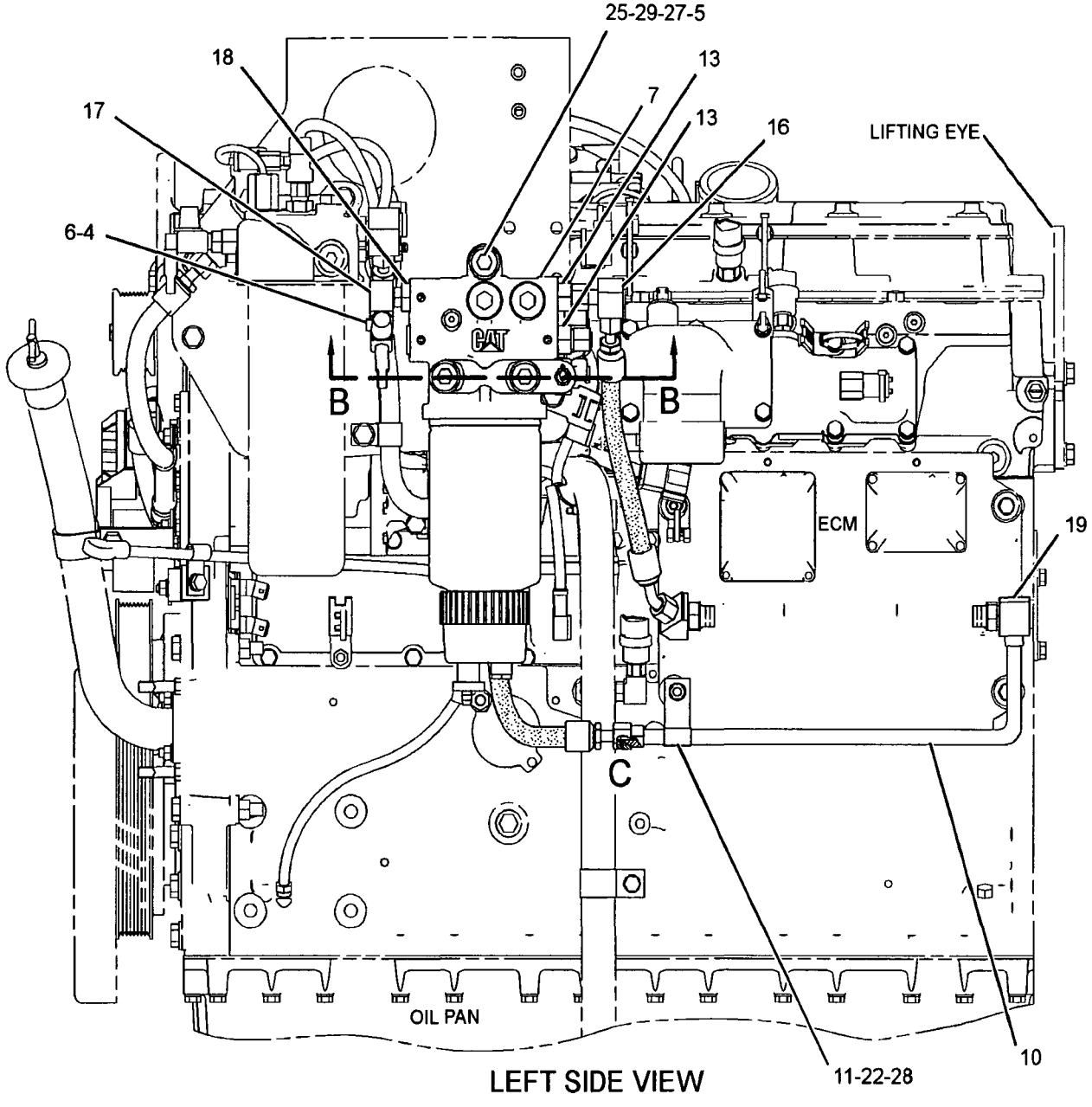

LEFT SIDE VIEW

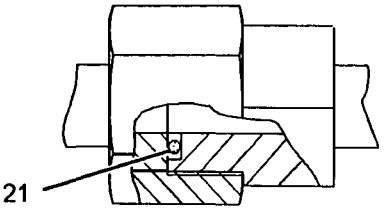

VIEW AREA C

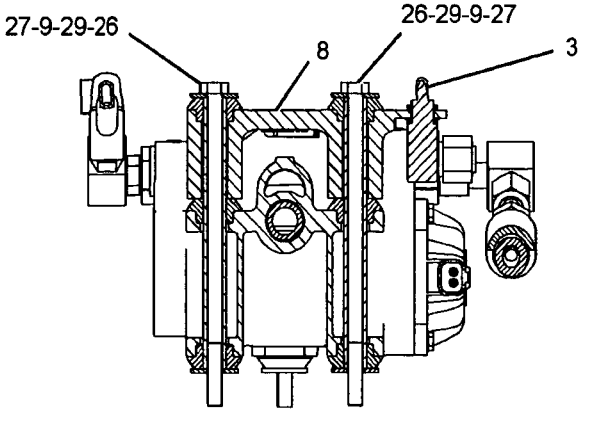

SECTION B-B

GRAPHIC #1 g01221865

238-4803 **PUMP GP-FUEL PRM & PRIM FILTER** *(contd.)* **i02436415**

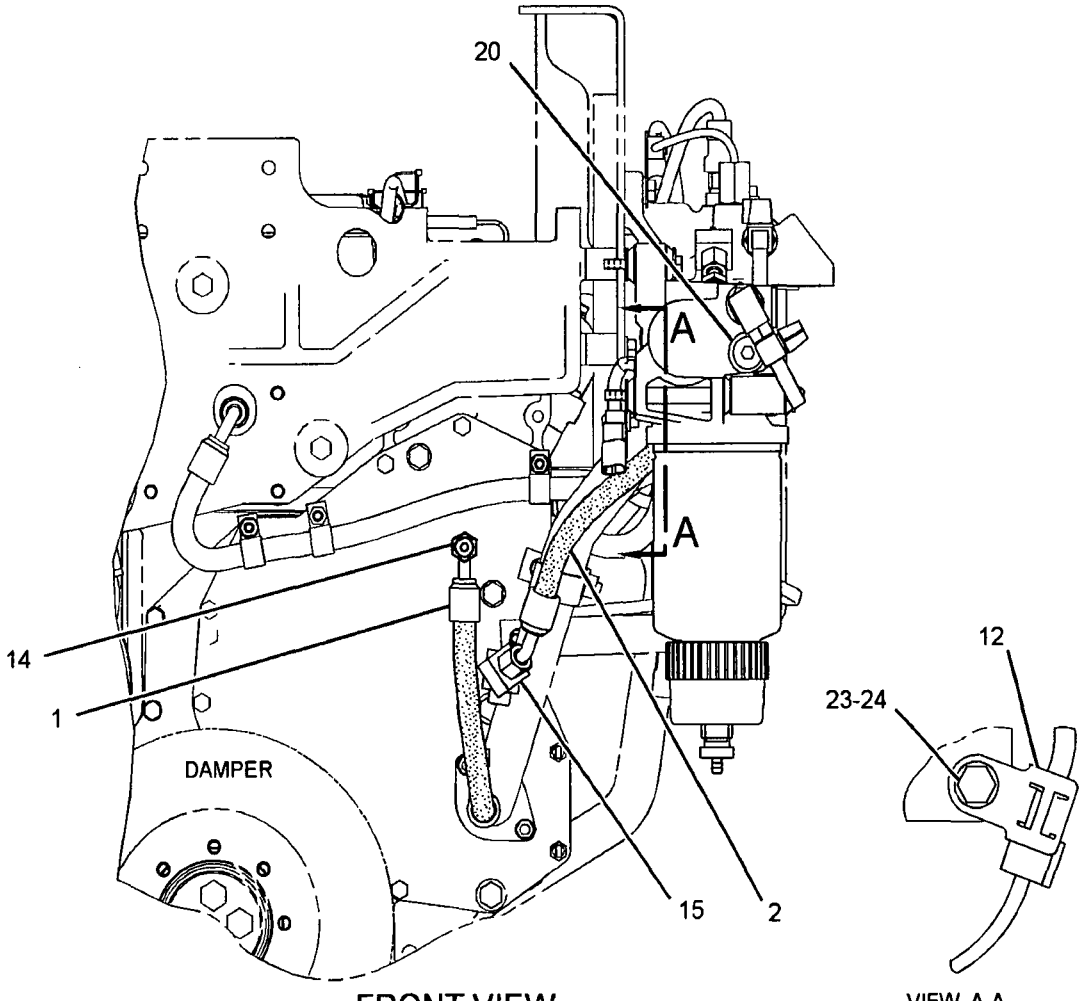

FRONT VIEW

VIEW A-A

GRAPHIC #2

<END>

g01221914

254-4357 PUMP GP-UNIT INJECTOR HYD*R

S/N: KHX1-UP

PART OF 222-5900 PUMP & MTG GP-UNIT INJ HYD

SMCS-1714 i02455451

NOTE	REF NO	GRAPHIC REF	PART NUMBER	QTY	PART NAME 1 2 3 4 5 6 (PRODUCT LEVEL)	SEE PAGE
	1	1	178-2357	1	PUMP GP-FUEL TRANSFER	
	2	1	179-8128	1	SEAL-O-RING (FUEL TRANSFER PUMP)	
	3	1	227-5904	1	SEAL-O-RING (UNIT INJECTOR HYD PUMP)	

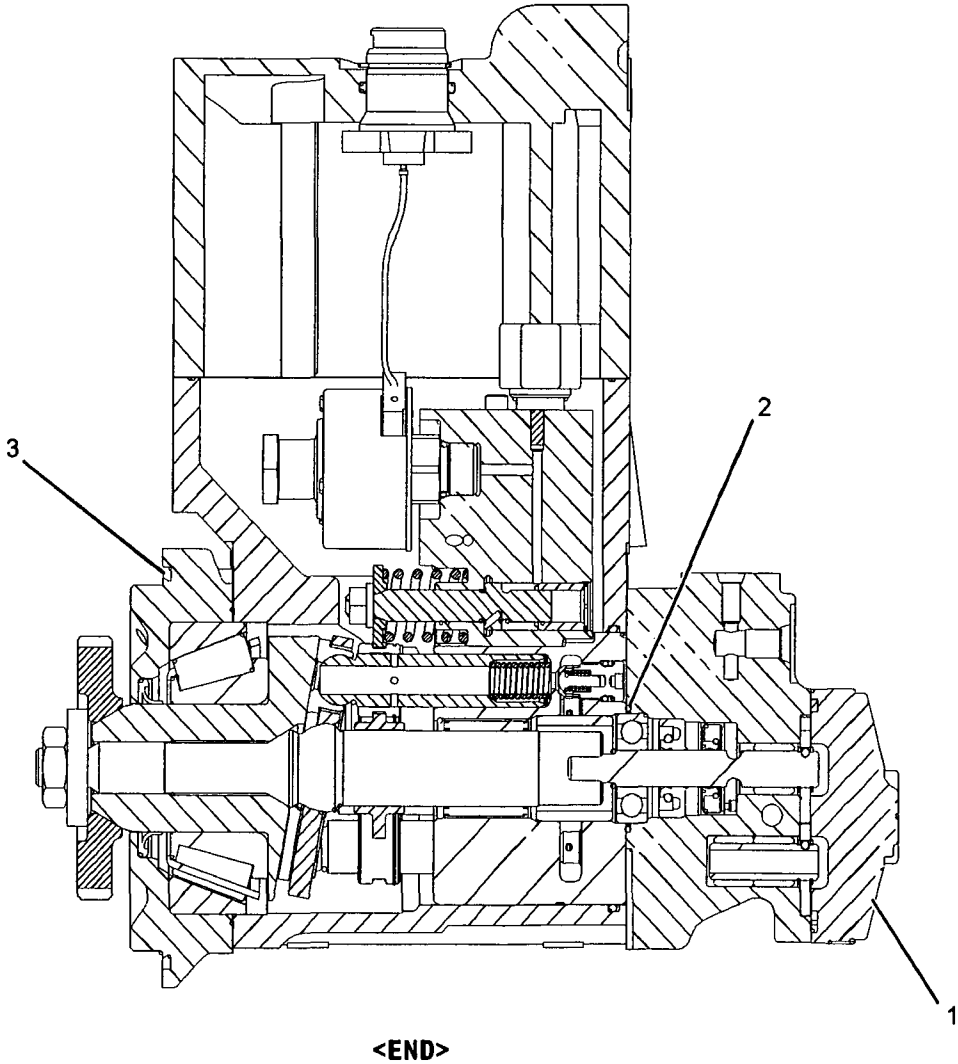

GRAPHIC #1

<END>

g01225442

232-0343 REGULATOR GP-FUEL PRESSURE

S/N: KHX1-UP

PART OF 237-9823 FILTER & LINES GP-FUEL

SMCS-1715 i02204852

NOTE	REF NO	GRAPHIC REF	PART NUMBER	QTY	PART NAME 1 2 3 4 5 6 (PRODUCT LEVEL)	SEE PAGE
	1	1	6V-5049	1	SEAL-O-RING	
	2	1	229-8870	1	REGULATOR AS (FUEL PRESSURE)	

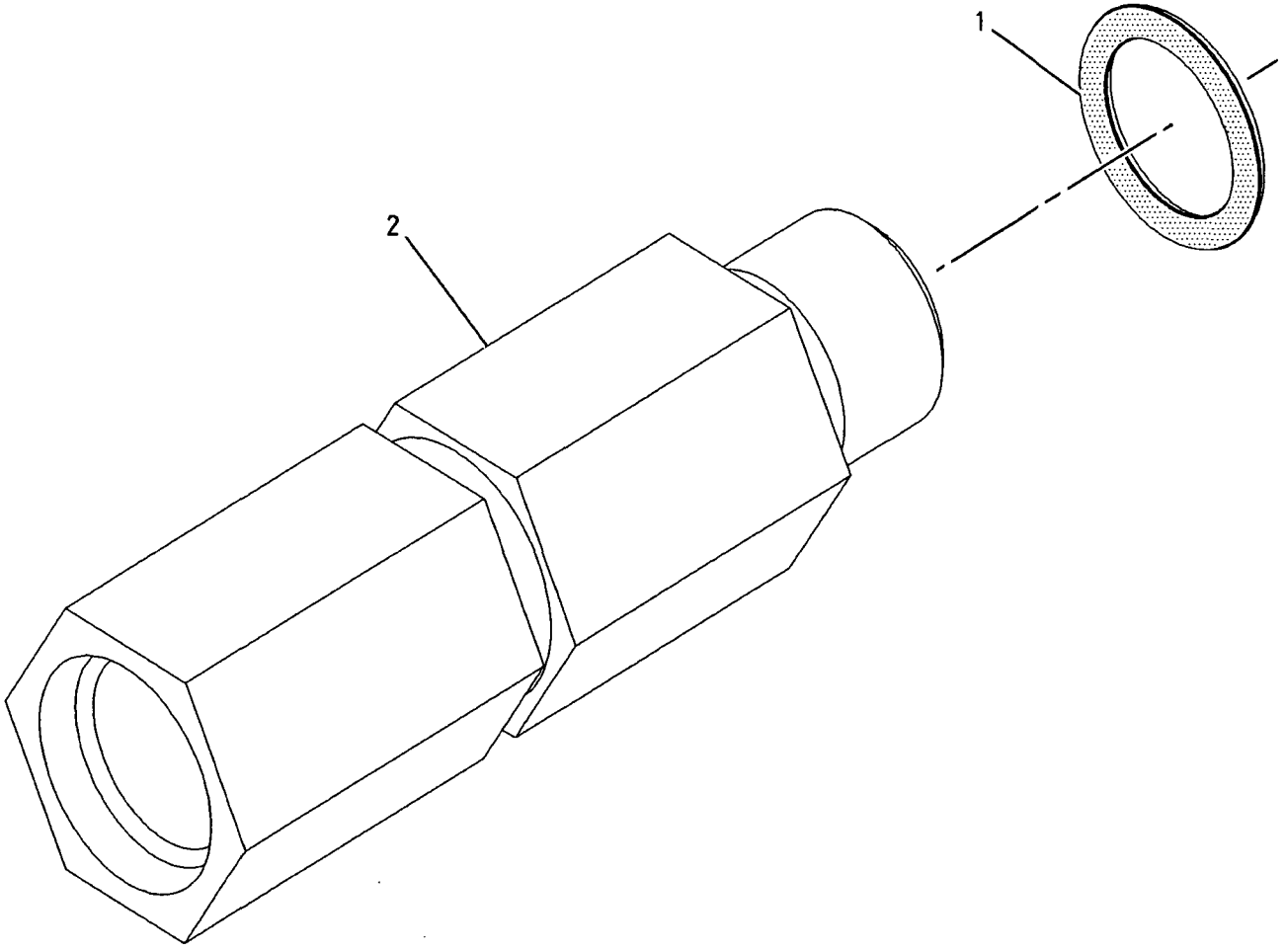

GRAPHIC #1 <END> g01004480

FUEL SYSTEM

240-5150 TANK GP-FUEL

S/N: N1A1-UP

PART OF 237-0234 CHASSIS AR

SMCS-1273 **i02437655**

NOTE	REF NO	GRAPHIC REF	PART NUMBER	QTY	PART NAME 1 2 3 4 5 6 (PRODUCT LEVEL)	SEE PAGE
	1	1	1H-8306	1	SCREW-PURGE (1/2-20X1.625-IN)	
B	2	1	8C-8422		SEALANT	
	3	1	8T-4121	3	WASHER-HARD (11X21X2.5-MM THK)	
	4	1	187-7331	8	MOUNT-RUBBER	
	5	1	180-3730	1	FILTER AS-FUEL (FILLER NECK SCREEN)	
	6	1	188-8844	1	VALVE-BREAKER RELIEF	
	7	1	240-5151	1	TANK AS-FUEL	
	8	1	245-4659	1	SENDER AS-FUEL LEVEL	
		1	102-8802	1	KIT-RECEPTACLE (2-PIN)	
					(INCLUDES RECEPTACLE AS AND WEDGE)	
		1	186-3735	2	PIN-CONNECTOR (16-GA TO 18-GA)	
	9	1	246-1479	1	CAP-FUEL	
	10	1	247-0261	1	TUBE AS	
	11	1	3D-2824	1	SEAL-O-RING	
	12	1	7M-8485	1	SEAL-O-RING	
	13	1	7X-0607	4	WASHER-HARD (20X55X8-MM THK)	
M	14	1	7X-2554	4	BOLT (M16X2X70-MM)	
M	15	1	8C-3210	5	BOLT (M6X1X16-MM)	
	16	1	8C-5172	1	SEAL-RECTANGULAR	
M	17	1	8T-4136	3	BOLT (M10X1.5X25-MM)	
	18	1	9S-9334	1	PLUG	
	19	1	9X-8256	5	WASHER (6.6X12X2-MM THK)	
	20	1	9X-8257	4	WASHER (17.5X30X3.5-MM THK)	

B-USE AS REQUIRED
M-METRIC PART

240-5150 **TANK GP-FUEL** *(contd.)* **i02437655**

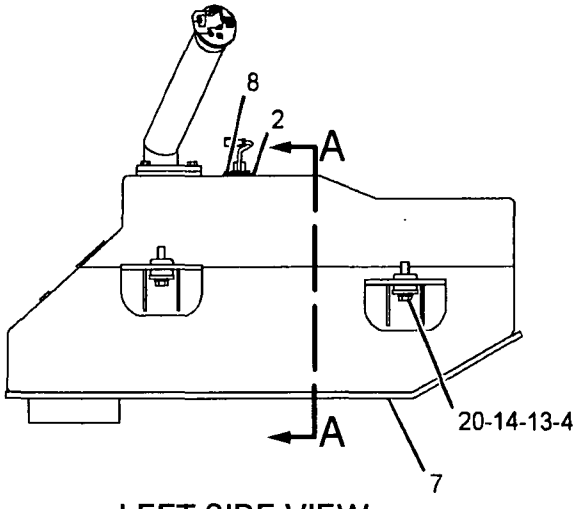

LEFT SIDE VIEW

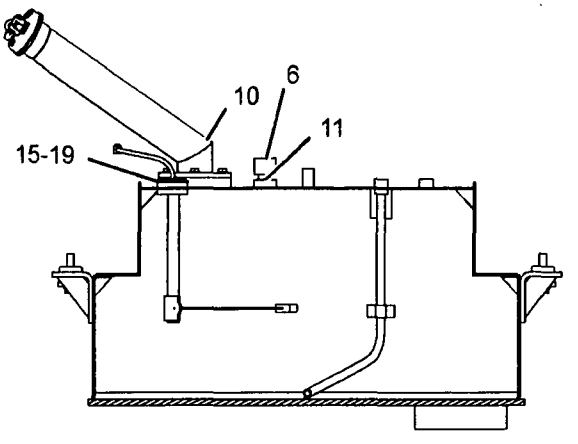

SECTION A-A

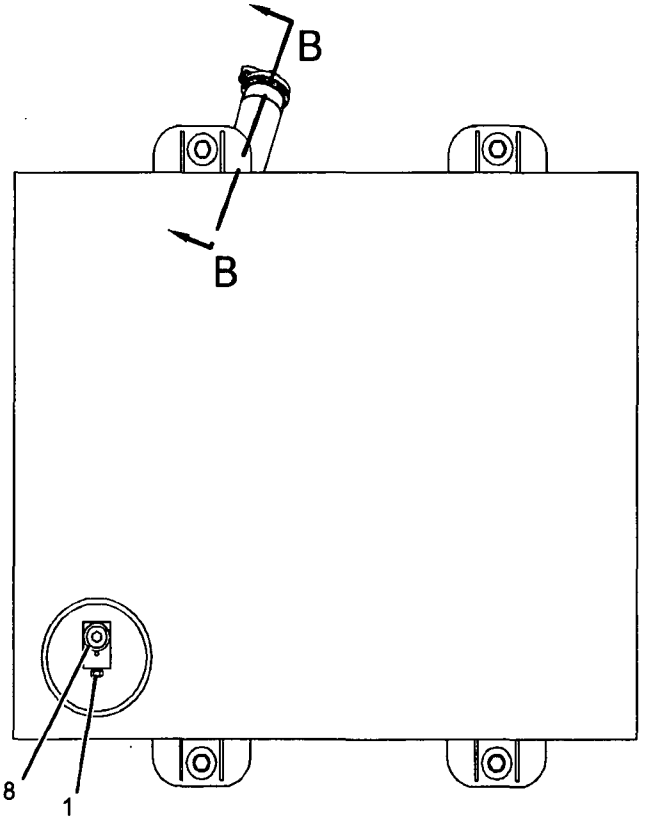

BOTTOM VIEW

FWD

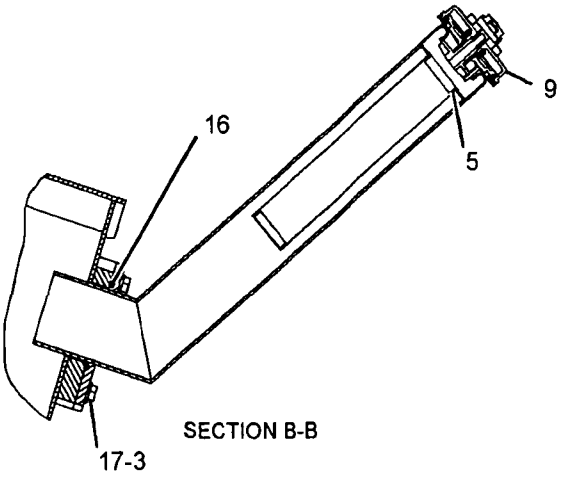

SECTION B-B

GRAPHIC #1 **<END>** g01223653

212-3657 WATER SEP & FUEL PRM PUMP GP-ELECTRIC

S/N: KHX1-UP

PART OF 238-4803 PUMP GP-FUEL PRM & PRIM FILTER

SMCS-1258, 1263 i02286003

NOTE	REF NO	GRAPHIC REF	PART NUMBER	QTY	PART NAME 1 2 3 4 5 6 (PRODUCT LEVEL)	SEE PAGE
Y	1	1	*174-9570*	1	FILTER GP-WATER SEP & FUEL (PRIMARY)	100
	2	1	**217-8339**	1	BASE AS-FUEL FILTER	

Y-SEPARATE ILLUSTRATION

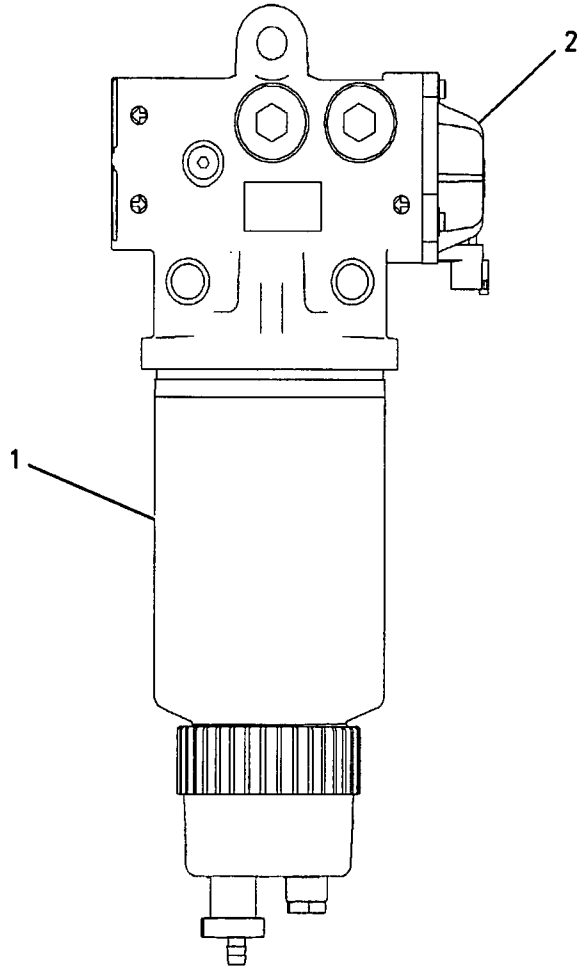

GRAPHIC #1 **<END>** g00875466

3E-6328 ALARM GP–ACTION

S/N: N1A1-UP
24 VOLT
PART OF 280-4118 WIRING GP-CAB
ALSO AN ATTACHMENT

SMCS-7400, 7402, 7407 i01475415

NOTE	REF NO	GRAPHIC REF	PART NUMBER	QTY	PART NAME 1 2 3 4 5 6 (PRODUCT LEVEL)	SEE PAGE
	1	1	**102-8802**	1	KIT-RECEPTACLE (2-PIN)	
					(INCLUDES RECEPTACLE AS AND WEDGE)	
	2	1	**3E-3365**	1	WEDGE-RECEPTACLE LOCK (2-PIN)	
	3	1	**186-3735**	2	PIN-CONNECTOR (16-GA TO 18-GA)	

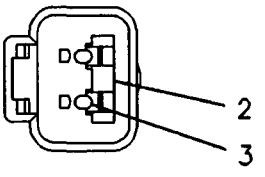

VIEW A-A

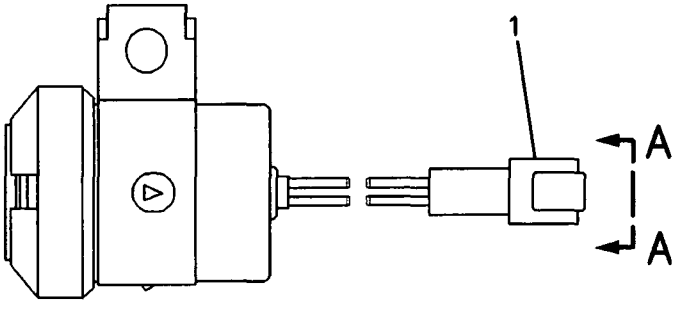

GRAPHIC #1 **<END>** g00083162

177-9953 ALTERNATOR GP-CHARGING*R

S/N: N1A1-UP
24 VOLT, 80 AMPERE
PART OF 237-4847 ALTERNATOR GP-CHARGING
ALSO AN ATTACHMENT

SMCS-1405 **i01787804**

NOTE	REF NO	GRAPHIC REF	PART NUMBER	QTY	PART NAME 1 2 3 4 5 6 (PRODUCT LEVEL)	SEE PAGE
	1	1	185-2653	1	FRAME	
	2	1	5S-7349	1	BOLT (1/4-20X0.5-IN)	
	3	1	185-2639	1	FAN AS	
	4	1	1H-3244	1	LOCKWASHER	
	5	1	185-2645	1	FRAME	
	6	1	2K-4821	1	LOCKNUT (5/8-18-THD)	
	7	1	5P-8247	1	WASHER-HARD (17X32X3.5-MM THK)	
	8	1	185-2651	1	COVER	
	9	1	8T-4205	1	WASHER-HARD (7.2X14.5X2-MM THK)	
	10	1	185-2647	1	GROMMET	
	11	1	9L-6770	1	CAP	
	12	1	185-2643	1	STATOR AS	
	13	1	185-2638	2	COLLAR	
	14	1	185-2654	1	PLATE	
	15	1	185-2650	1	ROTOR AS	
	16	1	185-2644	1	COIL AS	
	17	1	185-2648	1	REGULATOR AS-VOLTAGE (24-VOLT)	
J	18	1	6V-8189	1	NUT (5/16-18-THD)	
J	19	1	8T-4224	1	WASHER-HARD (8.8X16X2-MM THK)	
J	20	1	3F-9556	1	LOCKWASHER	
					AVAILABLE REPAIR KIT(S):	
J			199-7891		KIT-TERMINAL (ALTERNATOR)	
					(INCLUDES INSULATORS, WASHERS, NUT, STEP NUT)	
			185-2655		KIT-BEARING (ALTERNATOR)	
					(INCLUDES 3 BEARINGS)	
			199-8436		KIT-TERMINAL (ALTERNATOR)	
					(INCLUDES HOLDER AS, PLATE, INSULATOR, PIN, BOLT, GROMMET, NUT)	
			185-2658		KIT-HARDWARE (ALTERNATOR)	
					(INCLUDES BOLTS)	

J-KIT MARKED J AVAILABLE FOR PARTS MARKED J

177-9953 ALTERNATOR GP-CHARGING *(contd.)* i01787804

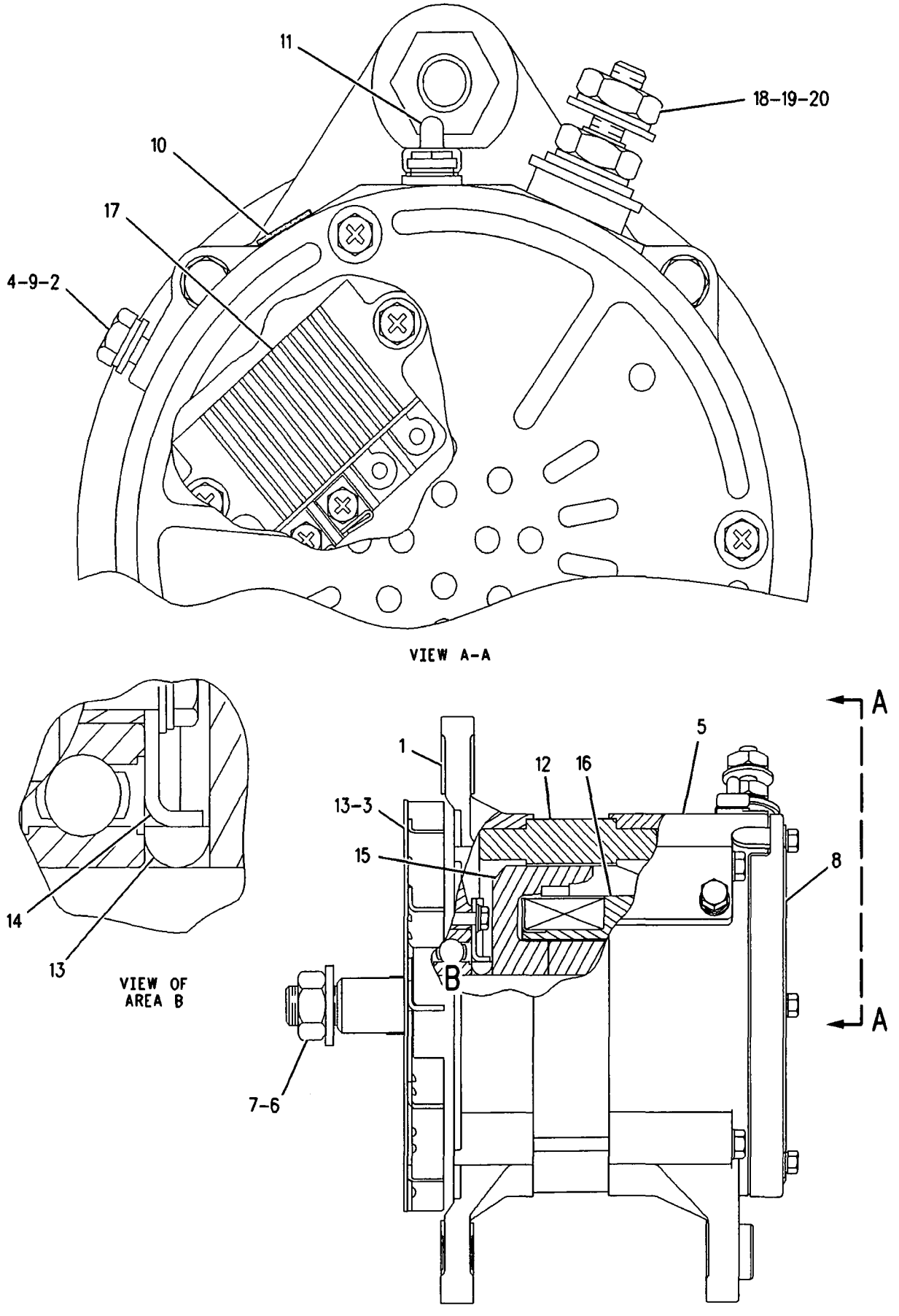

GRAPHIC #1 **<END>** g00795850

237-4847 ALTERNATOR GP-CHARGING

S/N: N1A1-UP

PART OF 237-3995 INSTALLATION AR-ENGINE

ALSO AN ATTACHMENT

SMCS-1405 **i02438058**

NOTE	REF NO	GRAPHIC REF	PART NUMBER	QTY	PART NAME 1 2 3 4 5 6 (PRODUCT LEVEL)	SEE PAGE
	1	1	4E-8329	1	SPACER (10.5X16.545X34-MM THK)	
	2	1	129-5096	1	PULLEY-ALTERNATOR	
	3	1	172-4211	1	SPACER (10.5X22X50.8-MM THK)	
	4	1	173-1498	1	PULLEY AS-IDLER (8-GROOVE)	
		1	151-2900	1	BOLT (M10X1.5X54.25-MM)	
		1	166-6358	1	COVER-DUST	
YR	5	1	177-9953	1	ALTERNATOR GP-CHARGING (24-VOLT, 80-AMPERE)	122
	6	1	238-1074	1	BRACKET	
	7	1	246-6296	1	BELT-SERPENTINE	
	8	1	262-4561	1	SHIELD AS-HEAT	
	9	1	5P-2566	1	BOLT (1/2-13X1.5-IN)	
	10	1	6V-8188	1	NUT (1/2-13-THD)	
	11	1	7X-0338	1	BOLT (1/2-13X6-IN)	
M	12	1	8T-3647	2	BOLT (M8X1.25X80-MM)	
	13	1	8T-4121	3	WASHER-HARD (11X21X2.5-MM THK)	
M	14	1	8T-4133	1	NUT (M10X1.5 THD)	
M	15	1	8T-4137	1	BOLT (M10X1.5X20-MM)	
M	16	1	8T-4196	1	BOLT (M10X1.5X35-MM)	
	17	1	8T-4223	4	WASHER-HARD (13.5X25.5X3-MM THK)	
	18	1	8T-4224	2	WASHER-HARD (8.8X16X2-MM THK)	
	19	1	8T-7934	2	WASHER-HARD (11X21X5-MM THK)	
	20	1	9S-2396	1	BUSHING-TERMINAL	
M	21	1	8T-4195	1	BOLT (M10X1.5X30-MM)	

M-METRIC PART
R-REMFG PART MAY BE AVAILABLE
Y-SEPARATE ILLUSTRATION

237-4847 **ALTERNATOR GP-CHARGING** *(contd.)* **i02438058**

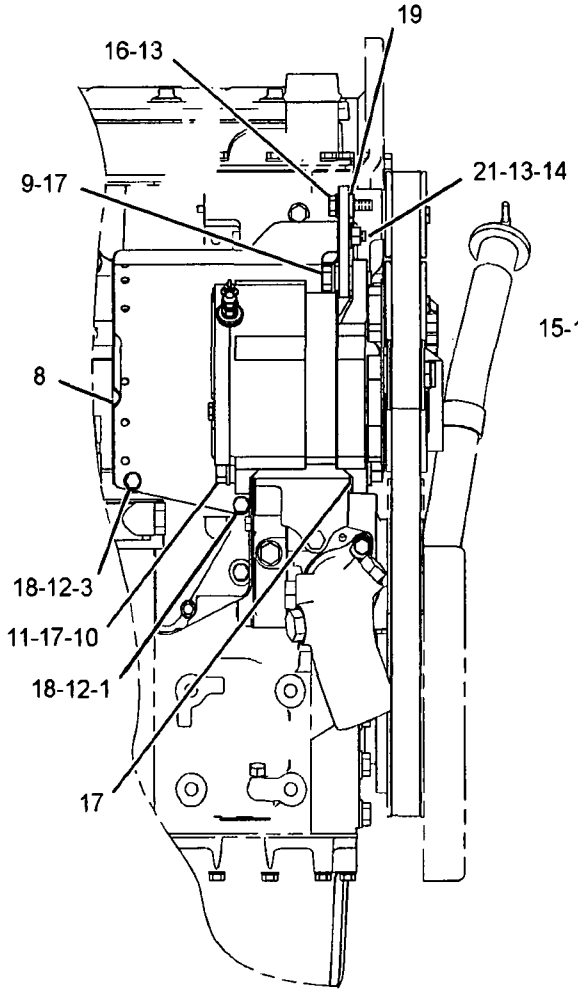

RIGHT SIDE VIEW

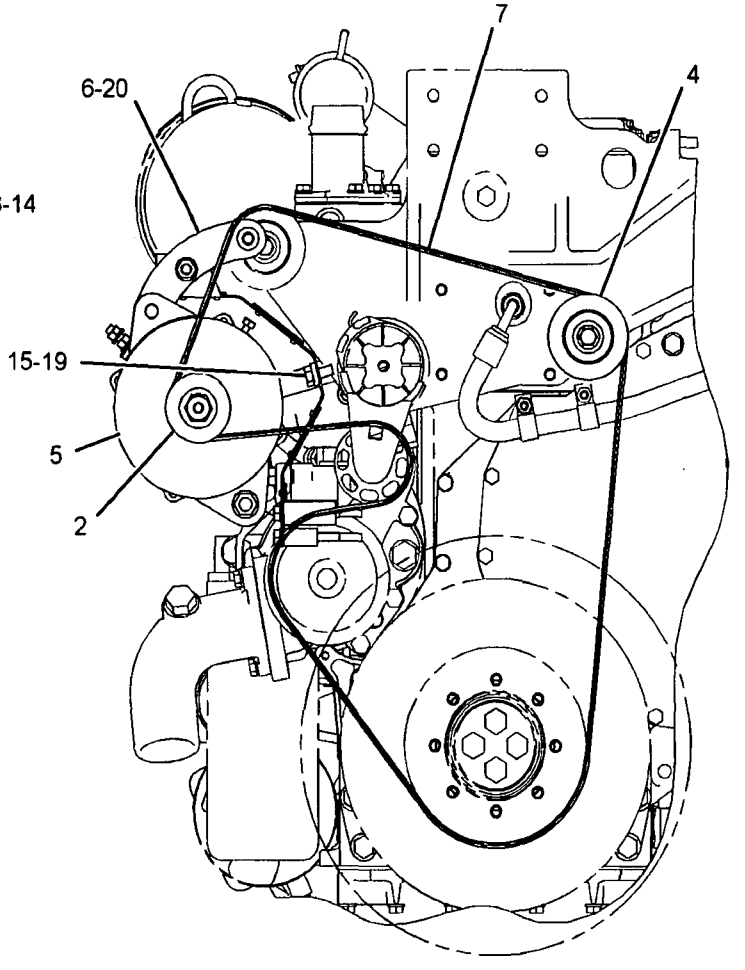

FRONT VIEW

GRAPHIC #1 **<END>** g01196638

ELECTRICAL AND STARTING SYSTEM

241-0639 BATTERY & WIRING GP

S/N: N1A1-UP

PART OF 237-0235 ELECTRICAL AR

ALSO AN ATTACHMENT

SMCS-1401, 1402, 1408 **i02437681**

NOTE	REF NO	GRAPHIC REF	PART NUMBER	QTY	PART NAME 1 2 3 4 5 6 (PRODUCT LEVEL)	SEE PAGE
	1	1	3E-8320	1	PLATE-INSTRUCTION (BATTERY)	
	2	1	3S-2093	7	STRAP-CABLE	
	3	1	5I-8304	1	ROD	
	4	1	6W-6005	1	HOLD-DOWN-BATTERY	
Y	5	1	7N-0718	1	SWITCH GP-DISCONNECT (BATTERY)	214
	6	1	116-0080	1	CABLE AS	
E		1	5P-0761		CABLE (00-GA, RED) (31-CM)	
		1	7N-5274	1	COVER-TERMINAL (BLACK)	
		1	8L-8413	1	STRAP-CABLE	
		1	8N-1725	1	COVER-TERMINAL (RED)	
		1	8L-8413	1	STRAP-CABLE	
		1	3S-6050	1	TERMINAL AS-BATTERY (NEGATIVE)	
		1	3S-6049	1	TERMINAL AS-BATTERY (POSITIVE)	
					(EACH TERMINAL AS INCLUDES)	
		1	1M-6119	1	BOLT (5/16-18X1.375-IN)	
		1	1M-6120	1	NUT (5/16-18-THD)	
	7	1	246-1696	1	CABLE AS	
		1	1S-7251	1	TERMINAL-RING (FOR 1/2-IN BOLT)	
E		1	5P-0761		CABLE (00-GA, RED) (71-CM)	
		1	8N-0869	1	COVER-TERMINAL (RED)	
		1	8N-1725	1	COVER-TERMINAL (RED)	
		1	8L-8413	1	STRAP-CABLE	
		1	3S-6049	1	TERMINAL AS-BATTERY (POSITIVE)	
		1	1M-6119	1	BOLT (5/16-18X1.375-IN)	
		1	1M-6120	1	NUT (5/16-18-THD)	
	8	1	246-1697	1	CABLE AS	
E		1	5P-0747		CABLE (00-GA, BLACK) (59-CM)	
		1	7N-5274	1	COVER-TERMINAL (BLACK)	
		1	8L-8413	1	STRAP-CABLE	
		1	8S-3020	1	TERMINAL-CABLE	
		1	3S-6050	1	TERMINAL AS-BATTERY (NEGATIVE)	
		1	1M-6119	1	BOLT (5/16-18X1.375-IN)	
		1	1M-6120	1	NUT (5/16-18-THD)	
		1	9X-5699	1	BOOT	
	9	1	246-1698	1	CABLE AS	
		1	1S-7251	2	TERMINAL-RING (FOR 1/2-IN BOLT)	
E		1	5P-0761		CABLE (00-GA, RED) (173-CM)	
		1	8N-0869	2	COVER-TERMINAL (RED)	
	10	1	246-1715	1	CABLE AS	
		1	1S-7251	2	TERMINAL-RING (FOR 1/2-IN BOLT)	
E		1	5P-0747		CABLE (00-GA, BLACK) (72-CM)	
	11	1	247-9989	1	CABLE AS	
E		1	5P-0747		CABLE (00-GA, BLACK) (48-CM)	
		1	8S-3020	1	TERMINAL-CABLE	
		1	216-7790	1	TERMINAL-RING	
	12	1	248-0072	1	CABLE AS	
E		1	8C-3056		CABLE (02-GA, RED) (300-CM)	
		1	8T-8827	1	BOOT	
E		1	6V-9023		TUBE-HEAT SHRINK (3-CM)	
		1	030-1712	2	TERMINAL-RING (2-GA, 6.35-MM)	
		1	231-4476	1	TERMINAL AS	
E		1	125-7876		TUBE-HEAT SHRINK (4-CM)	
	13	1	263-9574	2	BATTERY (12-VOLT, MAINTENANCE FREE)	
	14	1	272-6537	1	BRACKET AS	
M		1	8T-3490	3	NUT-WELD (M10X1.5-THD)	

241-0639 BATTERY & WIRING GP *(contd.)* i02437681

NOTE	REF NO	GRAPHIC REF	PART NUMBER	QTY	PART NAME 1 2 3 4 5 6 (PRODUCT LEVEL)	SEE PAGE
	15	1	033-8248	9	CLIP	
	16	1	132-7551	3	SPACER (11X19X6-MM THK)	
	17	1	133-9379	2	GROMMET	
	18	1	149-9129	1	CLIP	
	19	1	2W-7940	1	BRACKET	
	20	1	4D-9517	2	CLIP	
	21	1	4K-8864	1	CLIP	
M	22	1	5C-7261	1	NUT (M8X1.25-THD)	
	23	1	5G-6505	2	WASHER (25X38X14-MM THK)	
	24	1	5P-9299	6	CLIP	
	25	1	6V-8188	4	NUT (1/2-13-THD)	
	26	1	8C-6358	1	BLOCK GP-JUNCTION	
		1	1D-5117	3	NUT-JAM (1/2-13-THD)	
		1	8T-3519	3	BOLT-BRONZE (1/2-13X2-IN)	
	27	1	8M-2770	1	CLIP	
M	28	1	8T-0389	1	LOCKNUT (M10X1.15-THD)	
	29	1	8T-4121	16	WASHER-HARD (11X21X2.5-MM THK)	
M	30	1	8T-4133	4	NUT (M10X1.15-THD)	
M	31	1	8T-4136	6	BOLT (M10X1.5X25-MM)	
M	32	1	8T-4137	6	BOLT (M10X1.5X20-MM)	
M	33	1	8T-4189	1	BOLT (M8X1.25X20-MM)	
M	34	1	8T-4192	2	BOLT (M12X1.75X25-MM)	
M	35	1	8T-4196	1	BOLT (M10X1.5X35-MM)	
	36	1	8T-4223	7	WASHER-HARD (13.5X25.5X3-MM THK)	
	37	1	8T-4224	2	WASHER-HARD (8.8X16X2-MM THK)	
	38	1	8T-4226	1	WASHER-PLATED (10.5X45X3-MM THK)	
	39	1	9M-8406	3	CLIP	

E-ORDER BY THE CENTIMETER
M-METRIC PART
Y-SEPARATE ILLUSTRATION

241-0639 BATTERY & WIRING GP *(contd.)* i02437681

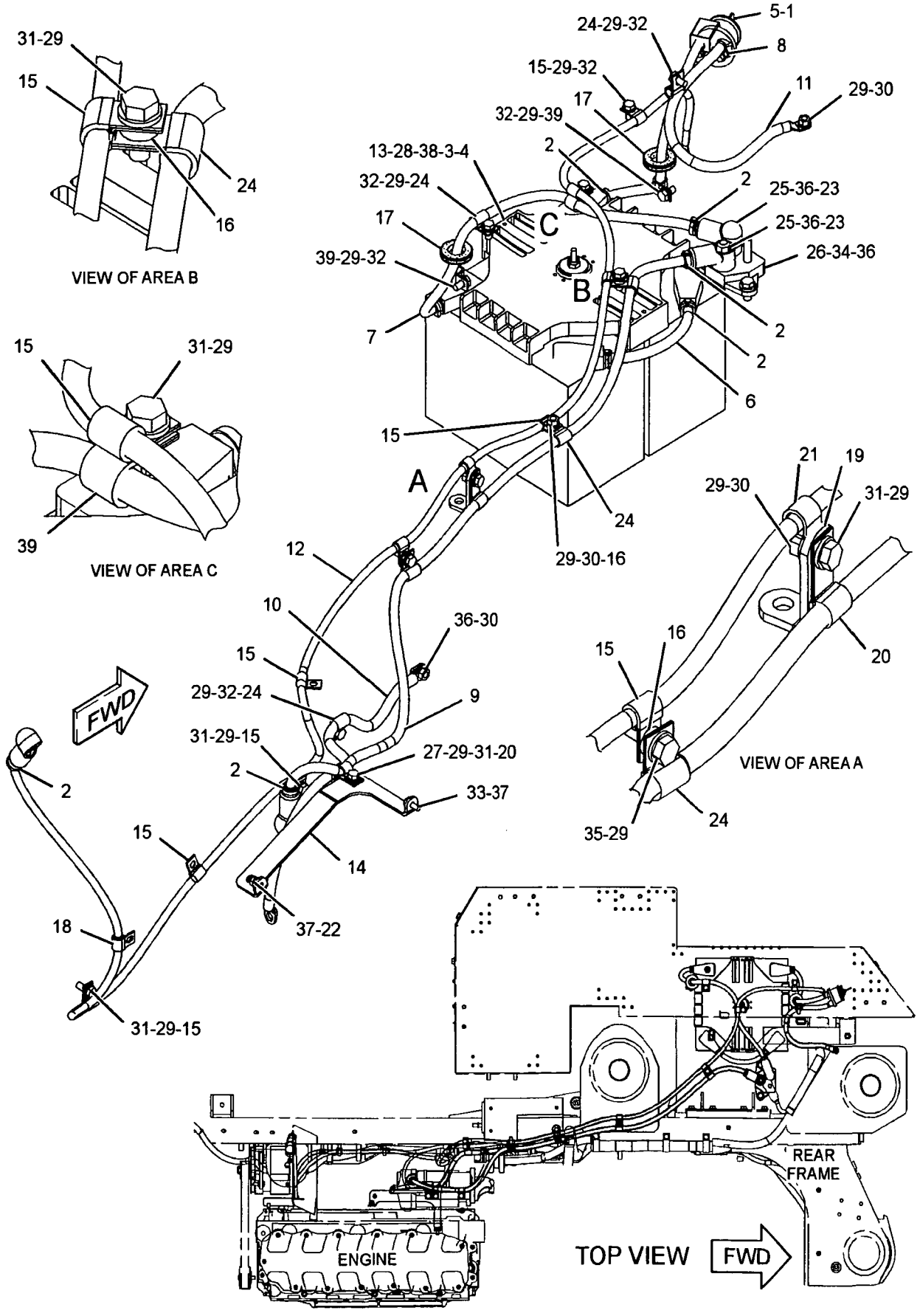

GRAPHIC #1

<END>

g01201749

281-8872 CAMERA AR

S/N: N1A1-UP
PART OF 281-8875 CAMERA AR
AN ATTACHMENT

SMCS-7348 **i02443571**

NOTE	REF NO	GRAPHIC REF	PART NUMBER	QTY	PART NAME 1 2 3 4 5 6 (PRODUCT LEVEL)	SEE PAGE
	1	1	251-4160	1	CAMERA GP (115-DEGREE, COLOR)	
	2	1	258-7484	1	BRACKET AS	
	3	1	268-4422	1	PANEL AS-TOP	
	4	1	268-5232	1	CABLE AS	
M		1	2Y-5829	1	NUT (M10X1.15-THD)	
		1	4D-7735	1	CLIP	
M		1	6V-1820	1	BOLT (M10X1.5X30-MM)	
		1	6V-5839	2	WASHER (11X21X2.5-MM THK)	
		1	7K-1181	1	STRAP-CABLE	
		1	8M-2772	15	CLIP	
M	5	1	6V-9189	4	LOCKNUT (M8X1.25-THD)	
	6	1	8T-4224	4	WASHER-HARD (8.8X16X2-MM THK)	

M-METRIC PART

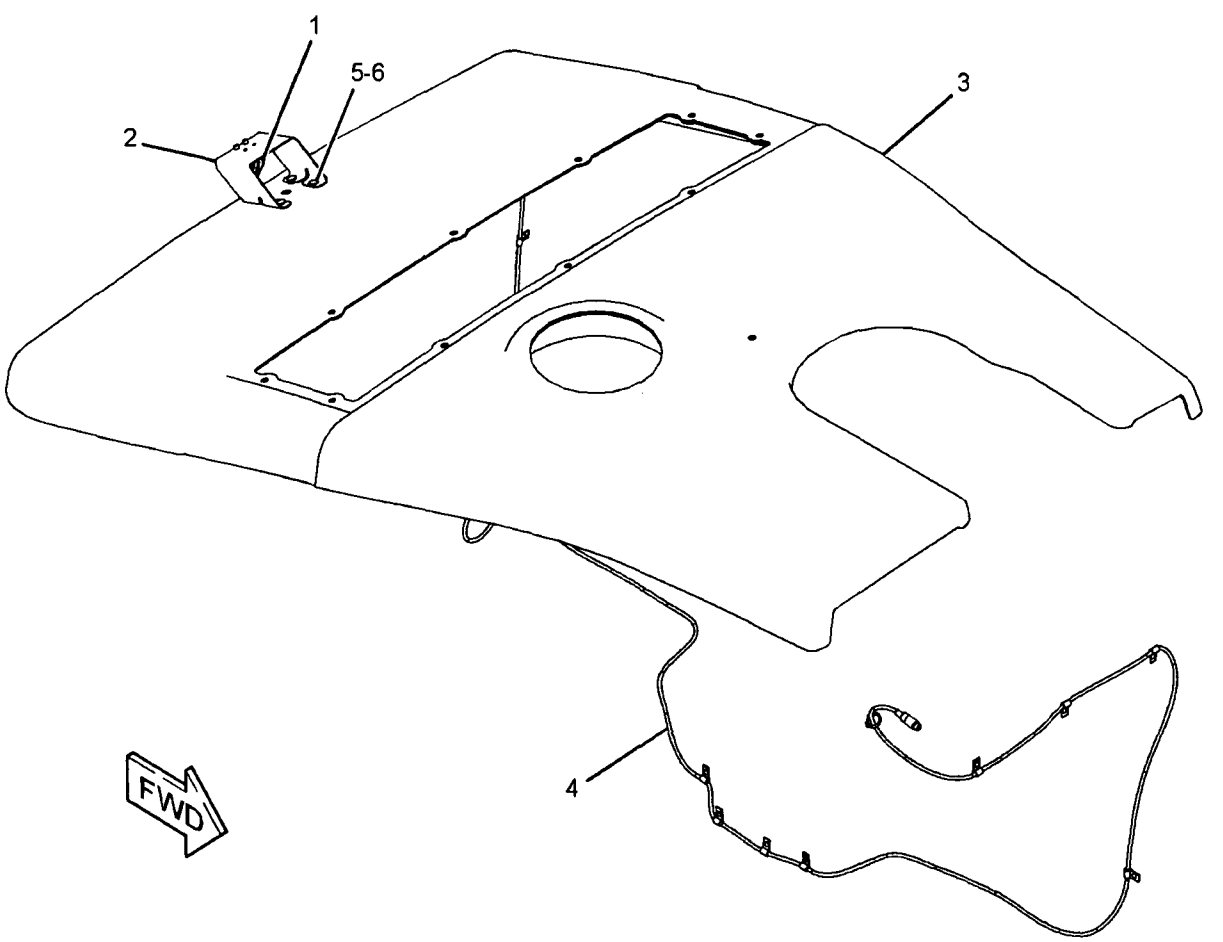

GRAPHIC #1 **<END>** g01227098

281-8875 CAMERA AR

S/N: N1A1-UP
PART OF 269-0671 SPECIAL AR-QUARRY
AN ATTACHMENT

SMCS-7348 **i02443564**

NOTE	PART NUMBER	QTY	PART NAME 1 2 3 4 5 6 (PRODUCT LEVEL)	SEE PAGE
Y	*281-8872*	1	CAMERA AR	129
Y	*281-8871*	1	MONITOR AR-CAMERA	871

Y-SEPARATE ILLUSTRATION

<END>

ELECTRICAL AND STARTING SYSTEM

256-5068 CONTROL & MTG GP-COMMUNICATION-

PRODUCT LINK 321SR

S/N: N1A1-UP

PART OF 263-3322 INSTALLATION AR-COMMUNICATION

AN ATTACHMENT

SMCS-7606 **i02415698**

NOTE	REF NO	GRAPHIC REF	PART NUMBER	QTY	PART NAME 1 2 3 4 5 6 (PRODUCT LEVEL)	SEE PAGE
	1	1	3S-2093	3	STRAP-CABLE	
	2	1	7K-1181	9	STRAP-CABLE	
	3	1	8C-5607	8	MOUNT-ISOLATION	
	4	1	8C-5608	4	SPACER (6.5X9.5X25.4-MM THK)	
	5	1	229-2704	4	WASHER-RUBBER	
Y	6	1	239-9954	1	CONTROL GP-UNPROGRAMMED (PRODUCT LINK 300)	140
	7	1	255-4369	1	GROMMET	
	8	1	263-8948	1	ANTENNA AS	
		1	223-4296	1	ANTENNA (FLEX)	
Y	9	1	263-9088	1	RADIO GP-COMMUNICATION (PRODUCT LINK 121SR)	894
	10	1	264-4872	1	BRACKET AS	
	11	1	264-7671	1	BRACKET	
	12	1	276-0031	1	HARNESS AS-CONTROL	
		1	102-8801	2	KIT-RECEPTACLE (12-PIN)	
					(EACH INCLUDES RECEPTACLE AS AND WEDGE)	
		1	9X-6772	2	STRAP-CABLE	
		1	155-2255	2	KIT-CONNECTING PLUG (12-PIN)	
					(EACH INCLUDES PLUG AS AND WEDGE)	
		1	160-7689	1	PLUG AS-CONNECTOR (70-PIN)	
	13	1	122-8705	1	U-BOLT	
	14	1	156-6175	2	CLIP	
M	15	1	5C-9553	1	BOLT (M6X1X16-MM)	
M	16	1	8C-8451	3	BOLT (M6X1X40-MM)	
M	17	1	8T-2947	1	BOLT (M6X1X45-MM)	
	18	1	8T-4121	2	WASHER-HARD (11X21X2.5-MM THK)	
M	19	1	8T-4133	2	NUT (M10X1.5 THD)	
M	20	1	8T-4138	4	BOLT (M6X1X20-MM)	
M	21	1	9X-2046	2	SCREW-TRUSS HEAD (M6X1X35-MM)	
	22	1	9X-6165	8	WASHER (6.5X22X2.5-MM THK)	
	23	1	9X-8256	6	WASHER (6.6X12X2-MM THK)	

M-METRIC PART
Y-SEPARATE ILLUSTRATION

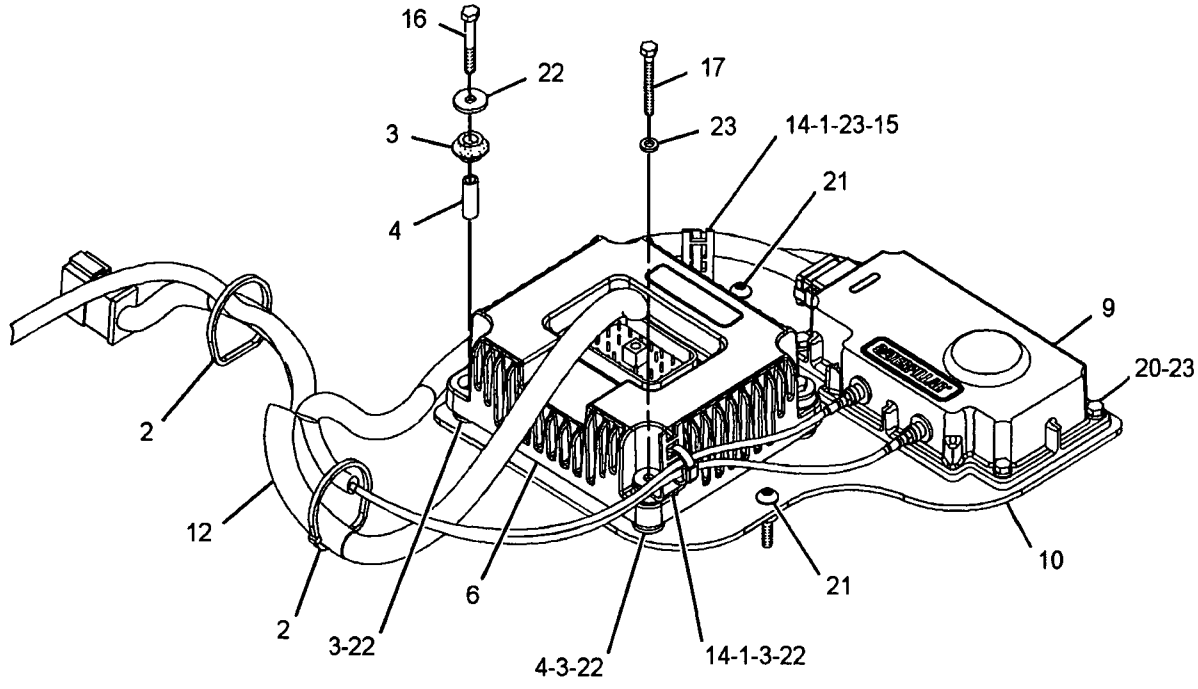

VIEW OF AREA A

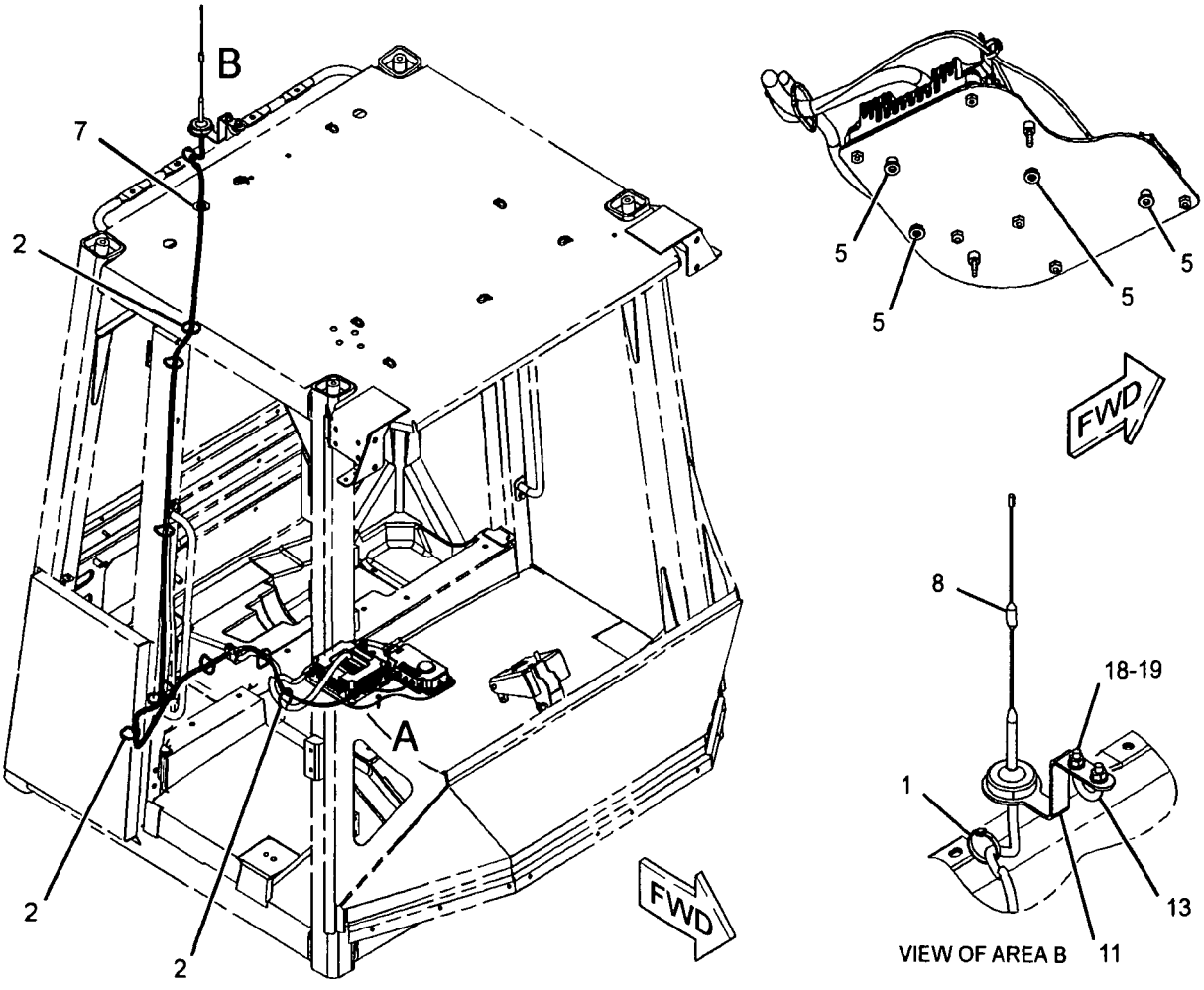

VIEW OF AREA B

GRAPHIC #1

<END>

g01182804

ELECTRICAL AND STARTING SYSTEM

241-7602 CONTROL & MTG GP-ENGINE ELEK

S/N: KHX410-UP
FUEL COOLED
PART OF 235-1422 ENGINE AR-COMPLETE

SMCS-1901, 7620 **i02297042**

NOTE	REF NO	GRAPHIC REF	PART NUMBER	QTY	PART NAME 1 2 3 4 5 6 (PRODUCT LEVEL)	SEE PAGE
	1	1	**8T-9655**	8	MOUNT-ISOLATION	
	2	1	**101-3128**	4	SPACER	
M	3	1	**143-9392**	2	STUD (M8X1.25-THD)	
	5	1	**244-3168**	1	BRACKET AS	
	6	1	**255-5285**	1	CONTROL GP-MACHINE	
M	7	1	**5P-8347**	2	BOLT (M8X1.25X70-MM)	
	8	1	**9M-1974**	4	WASHER-HARD (8.8X16X2-MM THK)	
	9	1	**9N-0869**	4	WASHER-HARD (8.8X25.5X2-MM THK)	

M-METRIC PART

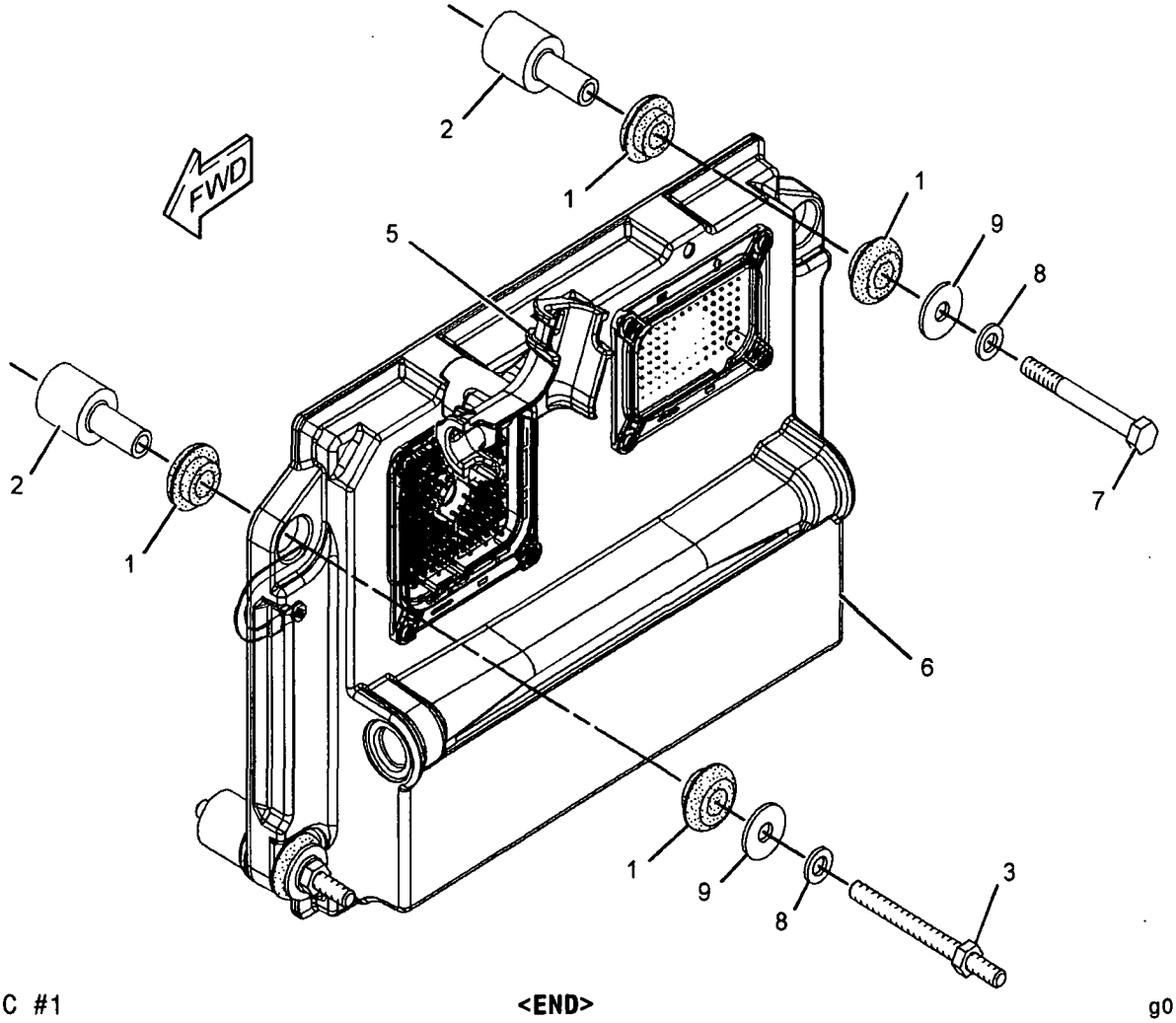

GRAPHIC #1 **<END>** g01152777

246-9345 CONTROL & MTG GP-ENGINE ELEK

S/N: KHX1-UP

PART OF 235-1422 ENGINE AR-COMPLETE

SMCS-1901, 7620 i02461826

NOTE	REF NO	GRAPHIC REF	PART NUMBER	QTY	PART NAME 1 2 3 4 5 6 (PRODUCT LEVEL)	SEE PAGE
	1	1	8T-9655	8	MOUNT-ISOLATION	
	2	1	101-3128	4	SPACER	
M	3	1	143-9392	4	STUD (M8X1.25-THD)	
	4	1	255-5284	1	CONTROL GP-UNPROGRAMMED (ENGINE)	
	6	1	244-3168	1	BRACKET AS	
	7	1	233-0891	1	BRACKET AS	
	8	1	9M-1974	4	WASHER-HARD (8.8X16X2-MM THK)	
	9	1	9N-0869	4	WASHER-HARD (8.8X25.5X2-MM THK)	

M-METRIC PART

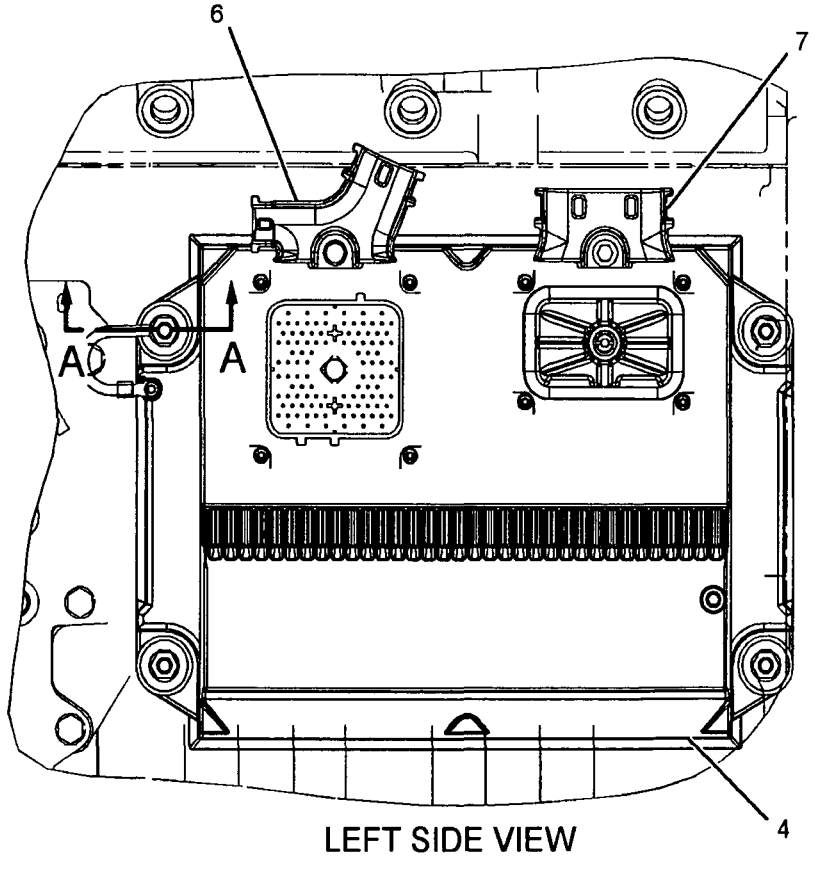

LEFT SIDE VIEW

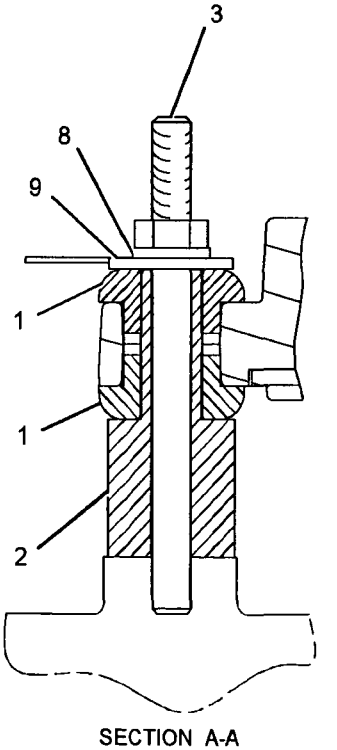

SECTION A-A

GRAPHIC #1 <END> g01093182

244-3253 CONTROL AR-AUTODIG–HMU STEERING

S/N: N1A1-UP

AN ATTACHMENT

SMCS-5741 **i02388985**

NOTE	PART NUMBER	QTY	PART NAME 1 2 3 4 5 6 (PRODUCT LEVEL)	SEE PAGE
Y	*253-3471*	1	CONTROL GP-AUTODIG (HMU STEERING)	138
Y	*239-4850*	1	SENSOR & MTG GP-PRESSURE (LIFT CYLINDER OIL)	185
	214-0113	1	SOFTWARE GP-IMPLEMENT (AUTODIG)	

Y-SEPARATE ILLUSTRATION

<END>

263-5255 CONTROL AR-AUTODIG–COMMAND CONTROL STEERING

S/N: N1A1-UP

AN ATTACHMENT

SMCS-5741 **i02242022**

NOTE	PART NUMBER	QTY	PART NAME 1 2 3 4 5 6 (PRODUCT LEVEL)	SEE PAGE
Y	*243-1939*	1	CONTROL GP-AUTODIG (COMMAND CONTROL STEERING)	136
Y	*239-4850*	1	SENSOR & MTG GP-PRESSURE (LIFT CYLINDER OIL)	185
	214-0113	1	SOFTWARE GP-IMPLEMENT (AUTODIG)	

Y-SEPARATE ILLUSTRATION

<END>

243-1939 CONTROL GP-AUTODIG–COMMAND CONTROL STEERING

S/N: N1A1-UP

PART OF 263-5255 CONTROL AR-AUTODIG, 282-6443 CONVERSION AR-AUTODIG AN ATTACHMENT

SMCS-5741 **i02388817**

NOTE	REF NO	GRAPHIC REF	PART NUMBER	QTY	PART NAME 1 2 3 4 5 6 (PRODUCT LEVEL)	SEE PAGE
	1	1	4E-2229	1	DAMPER AS-ALARM	
Y	2	1	106-0107	1	SWITCH GP-ROTARY (AUTODIG MATERIAL SELECTOR)	224
	3	1	110-6109	1	KNOB-CONTROL (AUTODIG SELECTOR SWITCH)	
	4	1	123-9694	1	HORN (AUDIBLE ALARM/AUTODIG CYCLE)	
	5	1	265-8171	1	SWITCH AS-PUSH BUTTON (AUTODIG TRIGGER)	
		1	3E-3371	1	WEDGE-RECEPTACLE LOCK (3-PIN)	
		1	6F-0253	1	LOCKWASHER	
		1	186-3735	3	PIN-CONNECTOR (16-GA TO 18-GA)	
		1	102-8803	1	KIT-RECEPTACLE (3-PIN)	
					(INCLUDES RECEPTACLE AS AND WEDGE)	
		1	172-3511	1	NUT (5/8-24-THD)	
	6	1	236-4620	1	SWITCH AS-ROCKER (AUTO LOADING MODE SELECT)	
	7	1	236-4621	1	SWITCH AS-ROCKER (AUTO LOADING KICKOUT SET)	
	8	1	2H-3920	1	LOCKWASHER	
B	9	1	200-8064	1	FILM-CONTROL (AUTODIG)	
	10	1	201-1531	1	FILM (AUTODIG)	
	11	1	249-2775	1	CONTROL GP-DISPLAY ELECTRONIC (INDICATOR PANEL, CENTER)	
	12	1	107-1964	4	SCREW-PAN HEAD (6-19X0.5-IN)	

B-USE AS REQUIRED
Y-SEPARATE ILLUSTRATION

243-1939 **CONTROL GP-AUTODIG** *(contd.)* **i02388817**

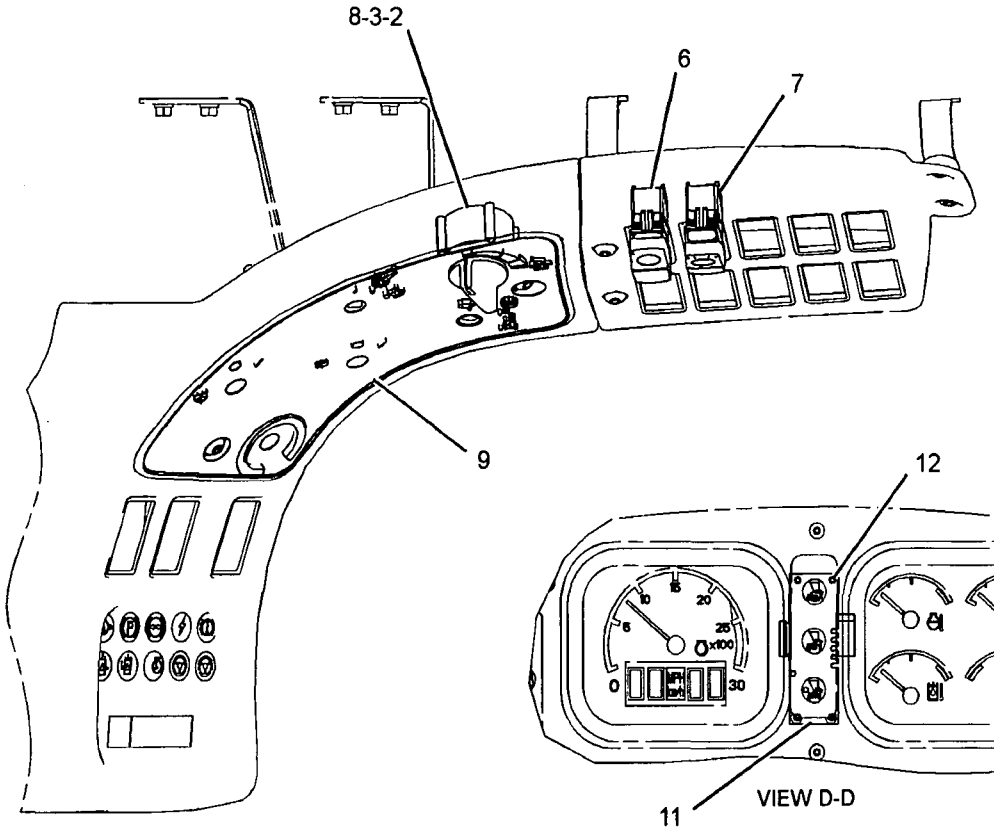

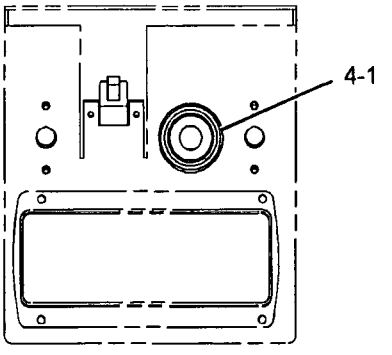

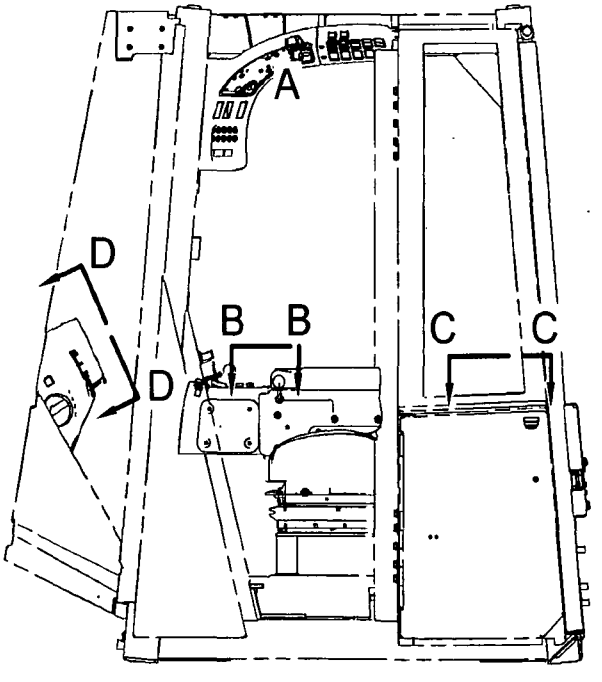

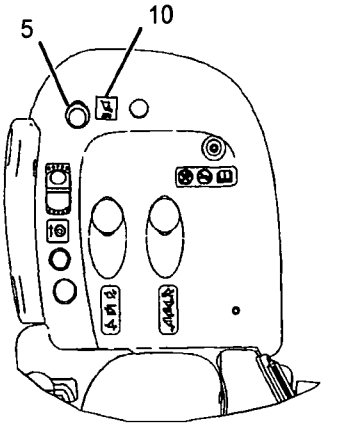

GRAPHIC #1 **<END>** g01195885

253-3471 CONTROL GP-AUTODIG–HMU STEERING

S/N: N1A1-UP

PART OF 244-3253 CONTROL AR-AUTODIG

AN ATTACHMENT

SMCS-5741 i02389747

NOTE	REF NO	GRAPHIC REF	PART NUMBER	QTY	PART NAME 1 2 3 4 5 6 (PRODUCT LEVEL)	SEE PAGE
	1	1	4E-2229	1	DAMPER AS-ALARM	
Y	2	1	106-0107	1	SWITCH GP-ROTARY (AUTODIG MATERIAL SELECT)	224
	3	1	110-6109	1	KNOB-CONTROL (AUTODIG SELECT SWITCH)	
	4	1	123-9694	1	HORN (AUDIBLE ALARM/ AUTODIG CYCLE)	
	5	1	265-8171	1	SWITCH AS-PUSH BUTTON (AUTODIG TRIGGER)	
		1	102-8803	1	KIT-RECEPTACLE (3-PIN)	
					(INCLUDES RECEPTACLE AS AND WEDGE)	
		1	172-3511	1	NUT (5/8-24-THD)	
		1	6F-0253	1	LOCKWASHER	
		1	186-3735	3	PIN-CONNECTOR (16-GA TO 18-GA)	
	6	1	201-1531	1	FILM (AUTODIG)	
	7	1	236-4620	1	SWITCH AS-ROCKER (AUTO LOADING MODE SELECT)	
	8	1	236-4621	1	SWITCH AS-ROCKER (AUTO LOADING KICKOUT SET)	
B	9	1	251-1082	1	FILM-CONTROL (AUTODIG)	
	10	1	2H-3920	1	LOCKWASHER	
	11	1	249-2775	1	CONTROL GP-DISPLAY ELECTRONIC (INDICATOR PANEL, CENTER)	
	12	1	107-1964	4	SCREW-PAN HEAD (6-19X0.5-IN)	

B-USE AS REQUIRED
Y-SEPARATE ILLUSTRATION

253-3471 **CONTROL GP-AUTODIG** *(contd.)* **i02389747**

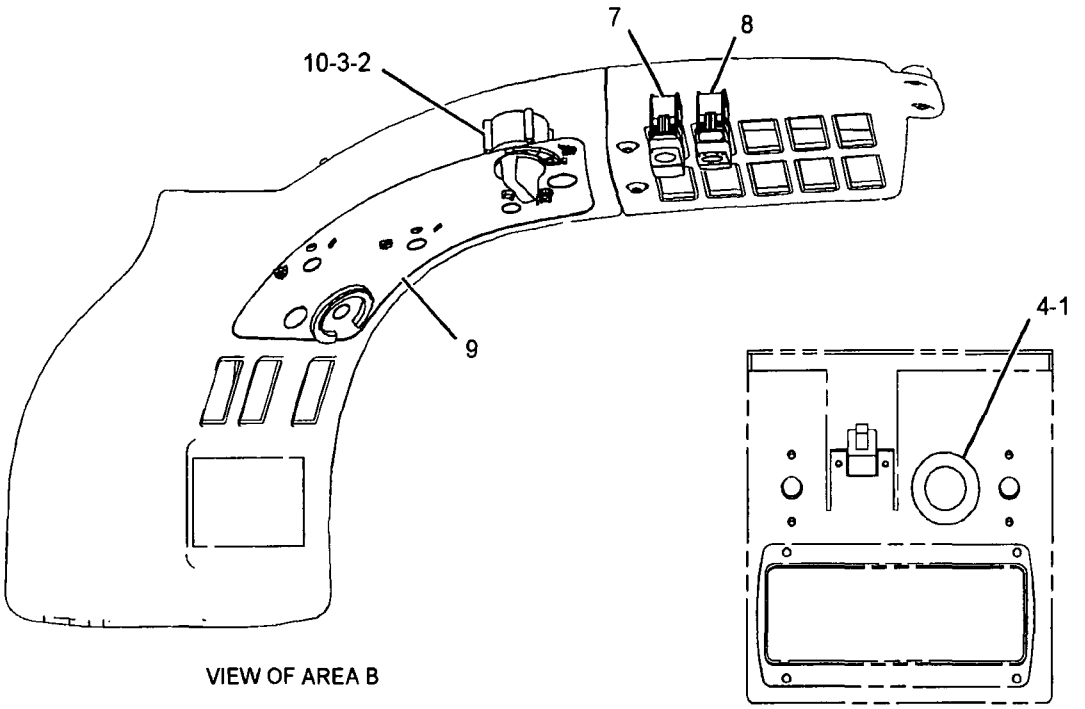

VIEW OF AREA B

VIEW A-A

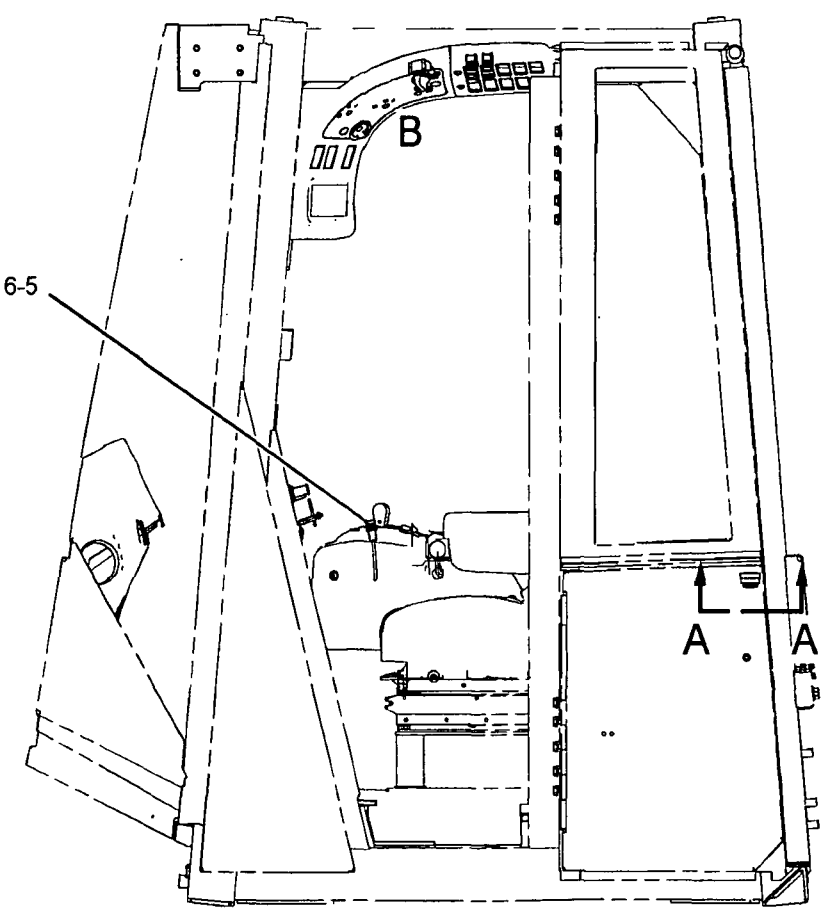

LEFT SIDE VIEW

GRAPHIC #1

<END>

g01115587

239-9954 CONTROL GP-UNPROGRAMMED–PRODUCT LINK 300

S/N: N1A1-UP

PART OF 256-5068 CONTROL & MTG GP-COMMUNICATION

AN ATTACHMENT

SMCS-7610 i02441905

NOTE	REF NO	GRAPHIC REF	PART NUMBER	QTY	PART NAME 1 2 3 4 5 6 (PRODUCT LEVEL)	SEE PAGE
	1	1	7X-6315	1	STRAP AS-GROUND	
	2	1	126-7574	1	SCREW-PAN HEAD (8-32X9.52-MM)	
	3	1	134-4126	1	WASHER (4.52X8.28X0.76-MM THK)	

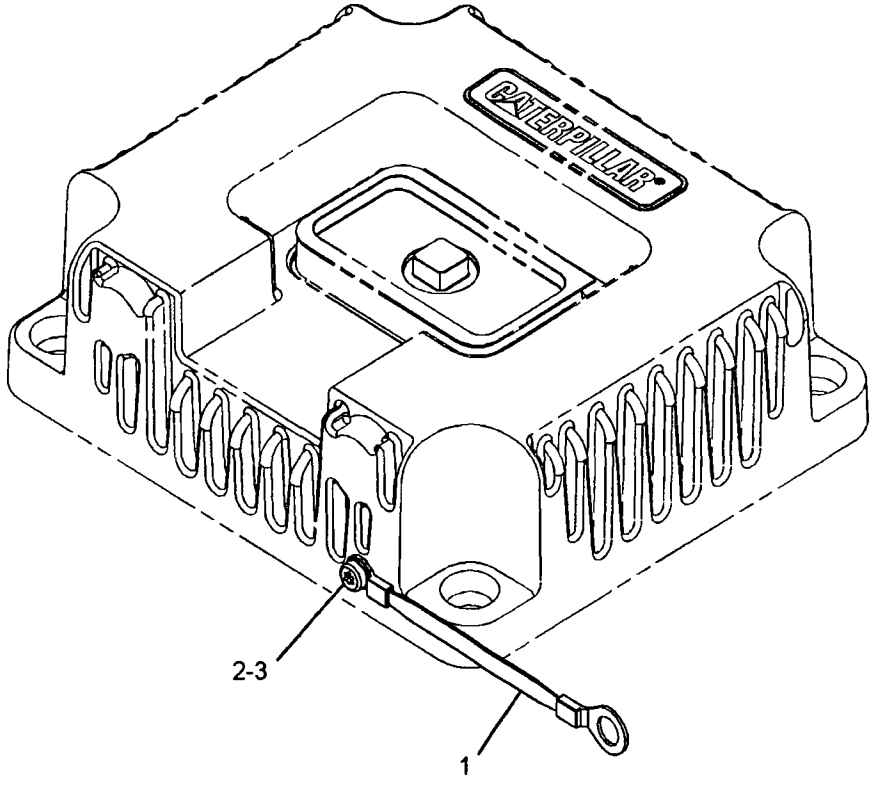

GRAPHIC #1 <END> g01225491

282-6443 CONVERSION AR-AUTODIG–

COMMAND CONTROL STEERING

S/N: N1A1-UP

FOR USE WITH 244-3922–PAGE 539

AN ATTACHMENT

SMCS-5741 **i02443489**

NOTE	PART NUMBER	QTY	PART NAME 1 2 3 4 5 6 (PRODUCT LEVEL)	SEE PAGE
Y	*243-1939*	1	CONTROL GP-AUTODIG (COMMAND CONTROL STEERING)	136
Y	*239-4850*	1	SENSOR & MTG GP-PRESSURE (LIFT CYLINDER OIL)	185
	214-0113	1	SOFTWARE GP-IMPLEMENT (AUTODIG)	

Y-SEPARATE ILLUSTRATION

<END>

261-3226 DISPLAY GP-CAMERA–WAVES

S/N: N1A1-UP

PART OF 281-8871 MONITOR AR-CAMERA

AN ATTACHMENT

SMCS-7347 **i02443598**

NOTE	REF NO	GRAPHIC REF	PART NUMBER	QTY	PART NAME 1 2 3 4 5 6 (PRODUCT LEVEL)	SEE PAGE
	1	1	261-3222	1	MOUNTING GP-CAMERA DISPLAY (WAVES)	
		1	259-4397	1	CLAMP GP	
		1	259-4399	2	BASE	
	2	1	261-3224	1	MODULE GP-DISPLAY (WAVES)	
		1	8T-8737	1	PLUG-SEAL	
		1	102-8805	1	KIT-RECEPTACLE (6-PIN)	
					(INCLUDES RECEPTACLE AS AND WEDGE)	
		1	186-3735	5	PIN-CONNECTOR (16-GA TO 18-GA)	
	3	1	4B-4274	4	WASHER (5.5X13X1.2-MM THK)	
M	4	1	8T-0288	4	BOLT (M5X0.8X12-MM)	

M-METRIC PART

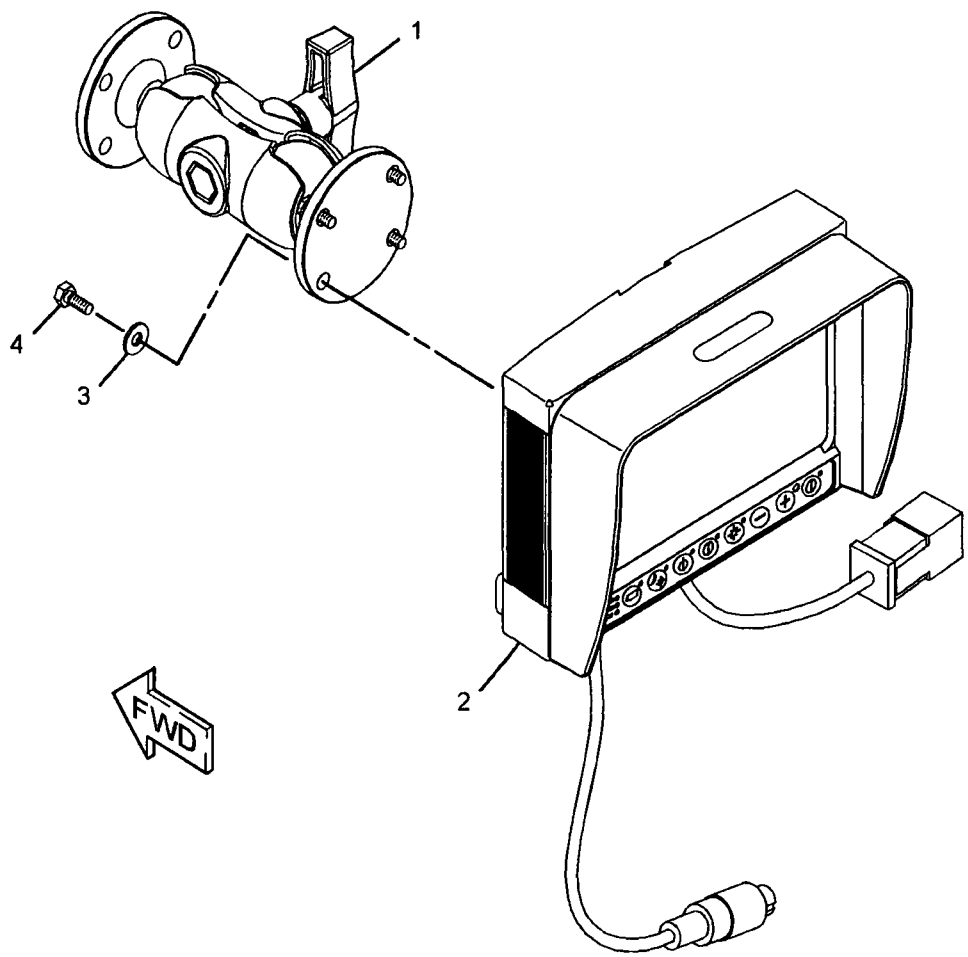

GRAPHIC #1 **<END>** g01173482

237-0235 ELECTRICAL AR

S/N: N1A1-UP
PART OF 237-0231 GENERAL AR
ALSO AN ATTACHMENT

SMCS-1408, 1429, 7402, 7406 **i02437677**

NOTE	PART NUMBER	QTY	PART NAME 1 2 3 4 5 6 (PRODUCT LEVEL)	SEE PAGE
Y	*241-0639*	1	BATTERY & WIRING GP	126
Y	*237-0965*	1	ELECTRONICS GP-IMPLEMENT	145
Y	*237-0962*	1	ELECTRONICS GP-MONITOR (CATERPILLAR MONITORING SYSTEM)	145
Y	*236-8995*	1	ELECTRONICS GP-POWER TRAIN	146
Y	*248-0420*	1	HORN GP-ELECTRIC	836
Y	*235-5275*	1	LIGHTING GP-FLOOD & SIGNAL (4-LAMP, FRONT, REAR)	172
Y	*180-0156*	1	SENSOR & MTG GP-LIFT POSITION	183
Y	*180-0157*	1	SENSOR & MTG GP-TILT POSITION	186
Y	*237-0969*	1	TILT GP-HOOD	485
Y	*241-0638*	1	WIRING GP-AXLE MONITORING (OIL TEMPERATURE)	238
Y	*241-0642*	1	WIRING GP-CHASSIS	253
Y	*241-0640*	1	WIRING GP-ENGINE	263
Y	*241-0641*	1	WIRING GP-FRONT	267
Y	*271-4016*	1	WIRING GP-LIGHTING (LOADER FRAME)	273
Y	*271-4010*	1	WIRING GP-SENSOR (TILT POSITION)	279

Y-SEPARATE ILLUSTRATION

<END>

262-2043 ELECTRONICS GP-COMMUNICATION-
PRODUCT LINK 300
S/N: N1A1-UP
PART OF 263-3322 INSTALLATION AR-COMMUNICATION
AN ATTACHMENT

SMCS-7606, 7610, 7620 **i02388833**

NOTE	REF NO	GRAPHIC REF	PART NUMBER	QTY	PART NAME 1 2 3 4 5 6 (PRODUCT LEVEL)	SEE PAGE
	1	1	265-9642	1	SOFTWARE GP-COMMUNICATION (PRODUCT LINK 300)	
					-OR-	
					(OPTIONAL SERVICE REPLACEMENT)	
	2	1	265-9643	1	SERVICE GP-COMMUNICATION (PRODUCT LINK 300)	
					(INCLUDES CONTROL GP & SOFTWARE)	
	3	1	7X-6315	1	STRAP AS-GROUND	
	4	1	126-7574	1	SCREW-PAN HEAD (8-32X9.52-MM)	
	5	1	134-4126	1	WASHER (4.52X8.28X0.76-MM THK)	

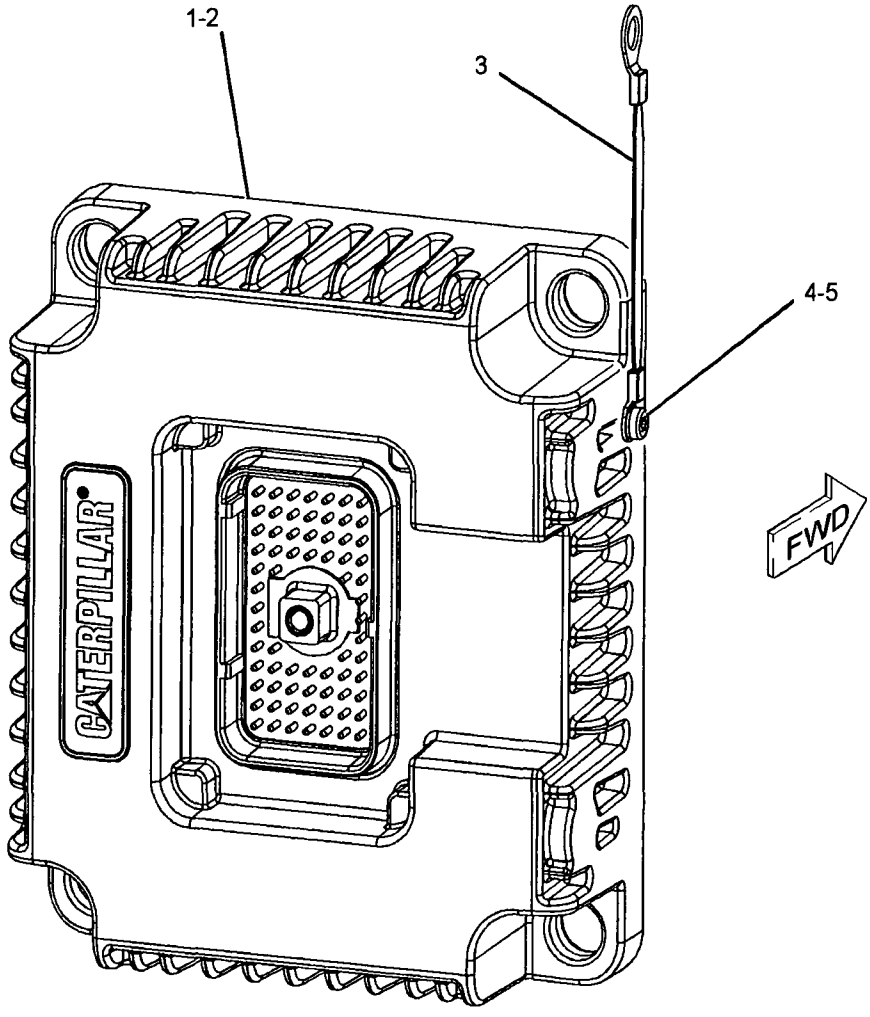

GRAPHIC #1 **<END>** g01157176

ELECTRICAL AND STARTING SYSTEM

237-0965 ELECTRONICS GP-IMPLEMENT

S/N: N1A1-UP
PART OF 237-0235 ELECTRICAL AR
ALSO AN ATTACHMENT

SMCS-5701, 7610, 7620 **i02277912**

NOTE	PART NUMBER	QTY	PART NAME 1 2 3 4 5 6 (PRODUCT LEVEL)	SEE PAGE
	248-0005	1	SOFTWARE GP-IMPLEMENT	
			–OR–	
	248-0006	1	SERVICE GP-IMPLEMENT	
			(INCLUDES SOFTWARE) (OPTIONAL SERVICE REPLACEMENT)	
			<END>	

237-0962 ELECTRONICS GP-MONITOR–CATERPILLAR MONITORING SYSTEM

S/N: N1A1-UP
PART OF 237-0235 ELECTRICAL AR
ALSO AN ATTACHMENT

SMCS-7490, 7494, 7601, 7603, 7610, 7620 **i02277911**

NOTE	PART NUMBER	QTY	PART NAME 1 2 3 4 5 6 (PRODUCT LEVEL)	SEE PAGE
	248-0015	1	SOFTWARE GP-MONITOR (CATERPILLAR MONITORING SYSTEM)	
			–OR–	
	248-0016	1	SERVICE GP-MONITOR (CATERPILLAR MONITORING SYSTEM)	
			(INCLUDES SOFTWARE)(OPTIONAL SERVICE REPLACEMENT)	
			<END>	

213-7276 ELECTRONICS GP-POWER TRAIN–SPEED LIMITER

S/N: N1A1-UP
AN ATTACHMENT

SMCS-4800, 4808, 7610, 7620 **i02015056**

NOTE	PART NUMBER	QTY	PART NAME 1 2 3 4 5 6 (PRODUCT LEVEL)	SEE PAGE
	106-0827	3	FILM-IDENTIFICATION (20-KM/H)	
			<END>	

ELECTRICAL AND STARTING SYSTEM

236-8995 ELECTRONICS GP-POWER TRAIN

S/N: N1A1-UP

PART OF 237-0235 ELECTRICAL AR

ALSO AN ATTACHMENT

SMCS-4800, 4808, 7610, 7620 **i02286040**

NOTE	PART NUMBER	QTY	PART NAME 1 2 3 4 5 6 (PRODUCT LEVEL)	SEE PAGE
	247-9760	1	SOFTWARE GP-POWER TRAIN	
			–OR–	
	247-9761	1	SERVICE GP-POWER TRAIN	
			(INCLUDES SOFTWARE)(OPTIONAL SERVICE REPLACEMENT)	

<END>

217-6280 HEATER GP-JACKET WATER

S/N: N1A1-UP
240V/1000W
AN ATTACHMENT

SMCS-1383 **i01730857**

NOTE	REF NO	GRAPHIC REF	PART NUMBER	QTY	PART NAME 1 2 3 4 5 6 (PRODUCT LEVEL)	SEE PAGE
	1	1	**217-6284**	1	CORD AS-HEATER	
	2	1	**124-0687**	1	ELEMENT AS-JACKET WATER HEATER	
	3	1	**132-1448**	1	KIT-SEAL (JACKET WATER HEATER)	
	4	1	**133-6517**	1	CAP AS-DUST (JACKET WATER HEATER)	

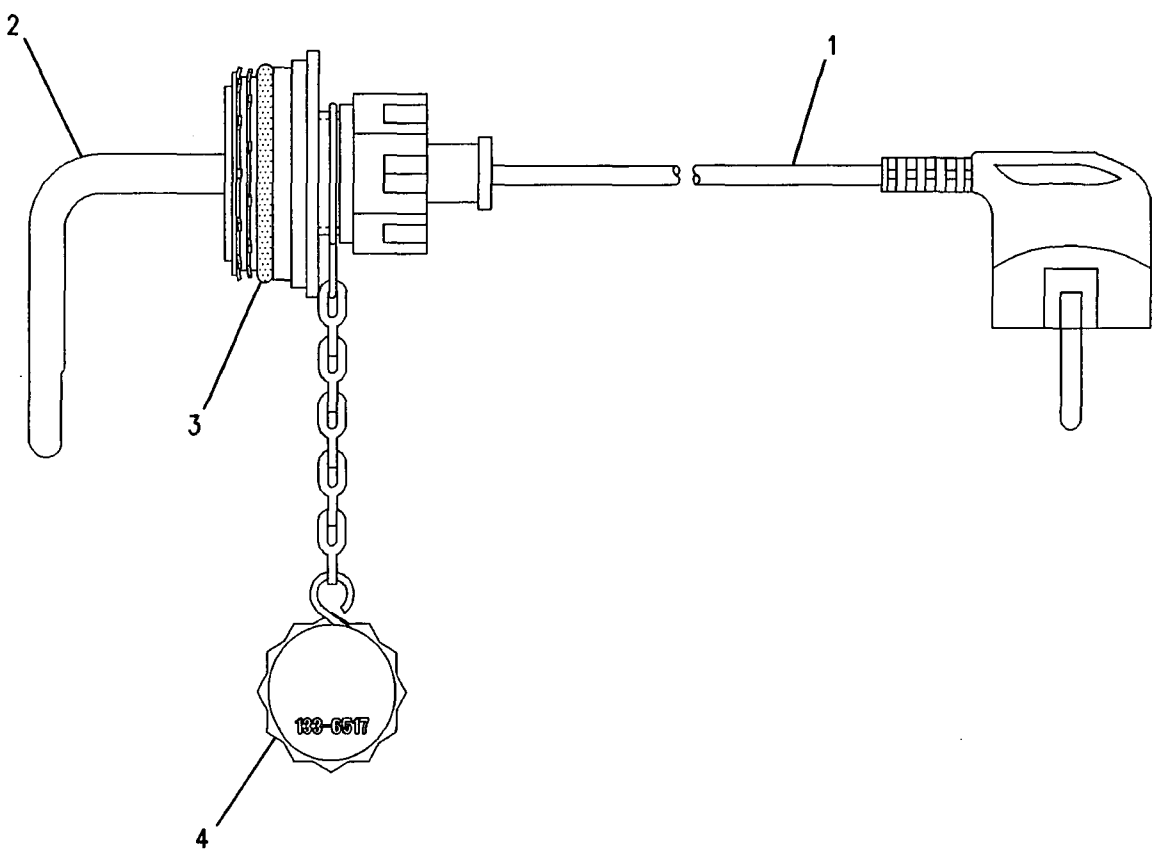

GRAPHIC #1 **<END>** g00898970

263-3322 INSTALLATION AR-COMMUNICATION-
PRODUCT LINK 321SR
S/N: N1A1-UP
AN ATTACHMENT

SMCS-7606 **i02241993**

NOTE	PART NUMBER	QTY	PART NAME 1 2 3 4 5 6 (PRODUCT LEVEL)	SEE PAGE
Y	*256-5068*	1	CONTROL & MTG GP-COMMUNICATION (PRODUCT LINK 321SR)	131
Y	*262-2043*	1	ELECTRONICS GP-COMMUNICATION (PRODUCT LINK 300)	144
	230-1341	1	FILM-WARNING (PRODUCT LINK RADIO, NON NACD)	
			INSIDE CAB ON LEFT FRONT METAL POST 1200-MM ABOVE CAB FLOOR	

Y-SEPARATE ILLUSTRATION

<END>

243-1945 INSTALLATION AR-SECURITY
S/N: N1A1-UP
AN ATTACHMENT

SMCS-7631 **i02418698**

NOTE	PART NUMBER	QTY	PART NAME 1 2 3 4 5 6 (PRODUCT LEVEL)	SEE PAGE
Y	*246-6291*	1	INSTALLATION GP-SECURITY	149
	264-0551	1	SOFTWARE GP-MACHINE (SECURITY)	

Y-SEPARATE ILLUSTRATION

<END>

246-6291 INSTALLATION GP-SECURITY

S/N: N1A1-UP

PART OF 243-1945 INSTALLATION AR-SECURITY

AN ATTACHMENT

SMCS-7631 **i02384912**

NOTE	REF NO	GRAPHIC REF	PART NUMBER	QTY	PART NAME 1 2 3 4 5 6 (PRODUCT LEVEL)	SEE PAGE
	1	1	3S-2093	4	STRAP-CABLE	
	2	1	8C-5607	4	MOUNT-ISOLATION	
	3	1	8C-5608	2	SPACER (6.5X9.5X25.4-MM THK)	
	4	1	198-5389	1	FILM-IDENTIFICATION (IGNITION SWITCH)	
	5	1	205-0826	1	FILM-INSTRUCTION (READ OMM)	
	6	1	206-5162	2	KEY AS-ELECTRONIC (SECURITY)	
	7	1	*206-5203*	1	COIL AS (EXCITER)	
		1	102-8802	1	KIT-RECEPTACLE (2-PIN)	
					(INCLUDES RECEPTACLE AS AND WEDGE)	
		1	3E-3365	1	WEDGE-RECEPTACLE LOCK (2-PIN)	
		1	198-5389	2	FILM-IDENTIFICATION (IGNITION SWITCH)	
		1	205-8257	2	COIL AS (EXCITER)	
D		1	5P-5677		WIRE (18-GA, BLACK) (0.4-M)	
		1	186-3735	2	PIN-CONNECTOR (16-GA TO 18-GA)	
	8	1	218-0404	1	MODULE GP-INTERFACE (KEY)	
		1	6V-6715	1	SCREW-PAN HEAD (4-20X0.25-IN)	
		1	8C-3095	1	SEAL-O-RING	
	9	1	219-6314	2	KEY RING (IDENTIFICATION)	
	10	1	219-6607	2	FILM-INFORMATION (KEY)	
M	12	1	7X-2533	2	BOLT (M6X1X35-MM)	
	13	1	9X-6165	2	WASHER (6.5X22X2.5-MM THK)	

D-ORDER BY THE METER
M-METRIC PART

246-6291 INSTALLATION GP-SECURITY *(contd.)* i02384912

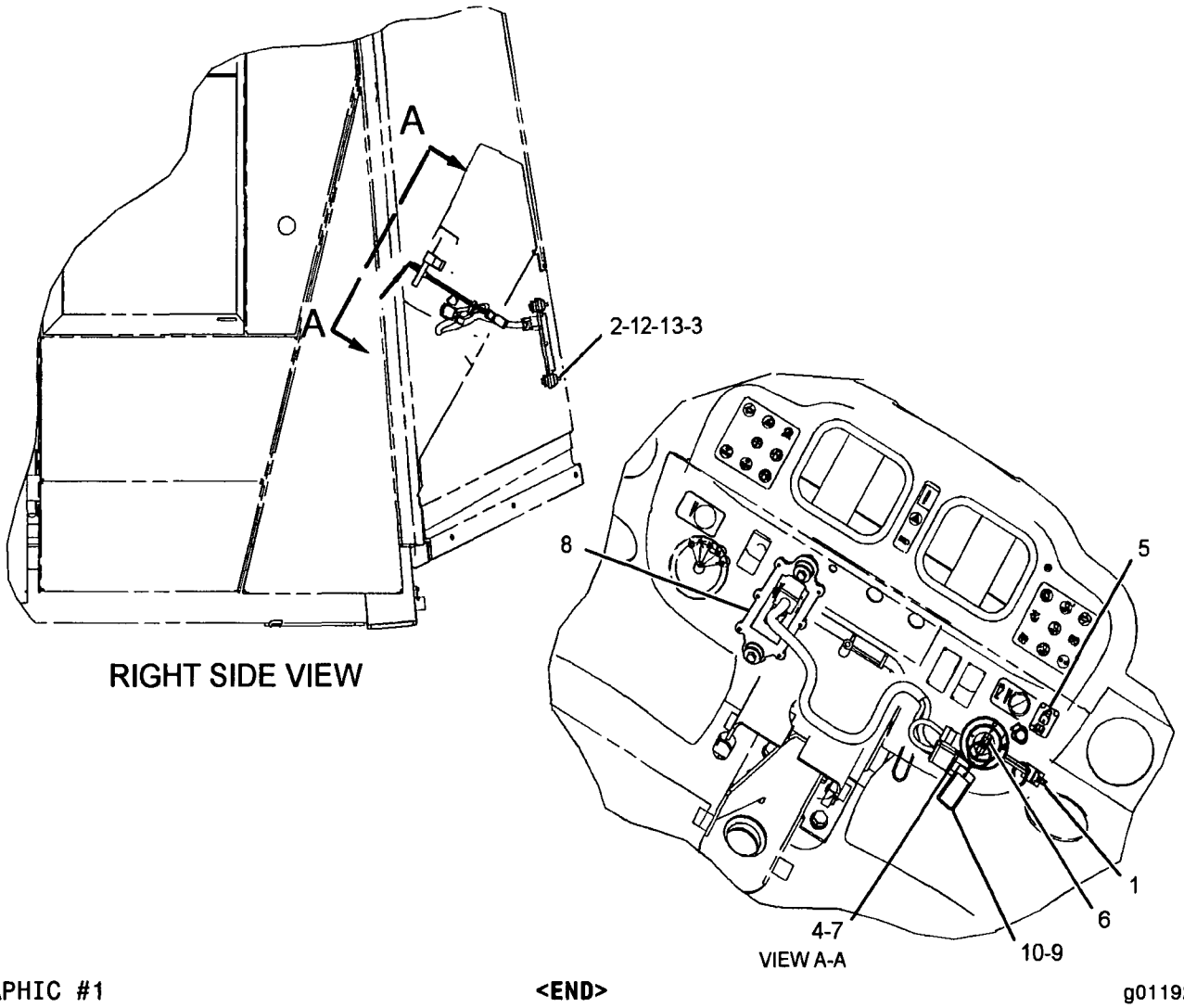

RIGHT SIDE VIEW

GRAPHIC #1 **<END>** g01192054

3E-6389 LAMP GP-DOME

S/N: N1A1-UP
24-VOLT, WITH SWITCH
PART OF 280-4118 WIRING GP-CAB
ALSO AN ATTACHMENT

SMCS-1433 **i02286061**

NOTE	REF NO	GRAPHIC REF	PART NUMBER	QTY	PART NAME 1 2 3 4 5 6 (PRODUCT LEVEL)	SEE PAGE
	1	1	7N-9943	1	LAMP (24-VOLT)	
	2	1	102-8803	1	KIT-RECEPTACLE (3-PIN)	
					(INCLUDES RECEPTACLE AS AND WEDGE)	
		1	3E-3371	1	WEDGE-RECEPTACLE LOCK (3-PIN)	
		1	8T-8729	3	PIN-CONNECTOR	
	3	1	7T-0020	1	LENS-DOME LAMP	

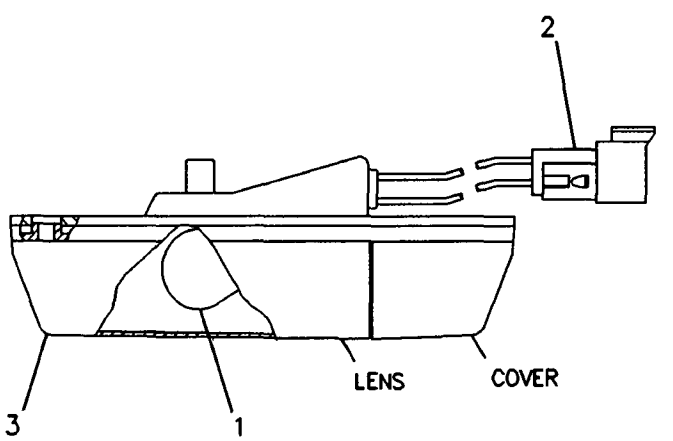

GRAPHIC #1 **<END>** g00083220

210-8422 LAMP GP-FLOOD–HID, SUSPENDED MOUNT

S/N: N1A1-UP
24-VOLT,35-WATT
PART OF 235-8560 LIGHTING GP-FLOOD
AN ATTACHMENT

SMCS-1434 **i02266547**

NOTE	REF NO	GRAPHIC REF	PART NUMBER	QTY	PART NAME 1 2 3 4 5 6 (PRODUCT LEVEL)	SEE PAGE
	1	1	229-9969	1	LENS AS (FLOODLIGHT)	
	2	1	209-6638	1	LAMP (12-VOLT, 24-VOLT, 35-WATT)	
M	3	1	151-8754	1	BOLT (M10X1.5X40-MM)	
	4	1	8T-4121	1	WASHER-HARD (11X21X2.5-MM THK)	
M	5	1	120-9027	4	SCREW-PAN HEAD (M3X0.5X16-MM)	
M	6	1	8T-4189	2	BOLT (M8X1.25X20-MM)	
M	7	1	6V-9189	2	LOCKNUT (M8X1.25-THD)	
	8	1	229-9972	1	BRACKET AS	
	9	1	229-9974	1	BEZEL	

M-METRIC PART

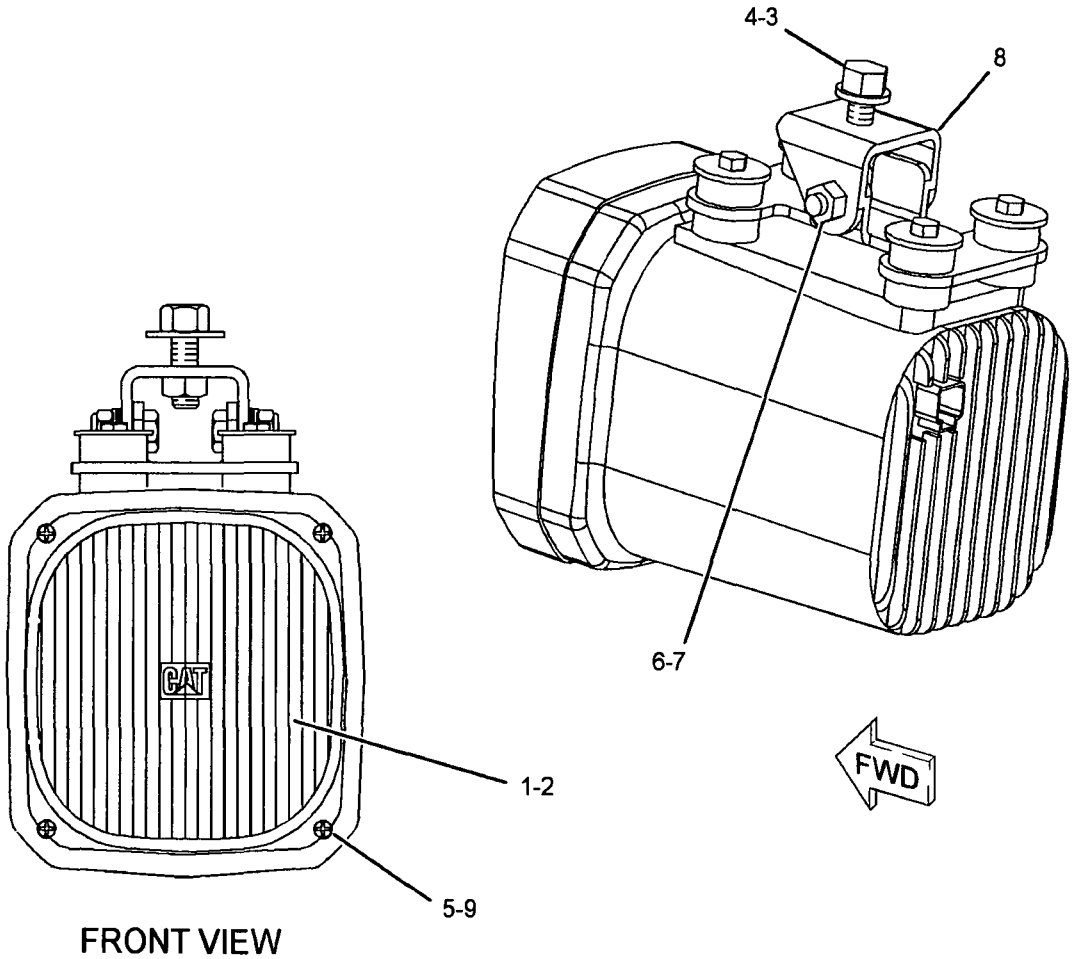

FRONT VIEW

GRAPHIC #1 **<END>** g01069665

210-8423 LAMP GP-FLOOD–HID, VERTCAL MOUNT

S/N: N1A1-UP
24-VOLT, 35-WATT
PART OF 235-8560 LIGHTING GP-FLOOD
AN ATTACHMENT

SMCS-1434 i02266552

NOTE	REF NO	GRAPHIC REF	PART NUMBER	QTY	PART NAME 1 2 3 4 5 6 (PRODUCT LEVEL)	SEE PAGE
	1	1	229-9969	1	LENS AS (FLOODLIGHT)	
	2	1	209-6638	1	LAMP (12-VOLT, 24-VOLT, 35-WATT)	
M	3	1	151-8754	1	BOLT (M10X1.5X40-MM)	
	4	1	8T-4121	1	WASHER-HARD (11X21X2.5-MM THK)	
M	5	1	120-9027	4	SCREW-PAN HEAD (M3X0.5X16-MM)	
M	6	1	8T-4189	2	BOLT (M8X1.25X20-MM)	
M	7	1	6V-9189	2	LOCKNUT (M8X1.25-THD)	
	8	1	229-9972	1	BRACKET AS	
	9	1	229-9974	1	BEZEL	

M-METRIC PART

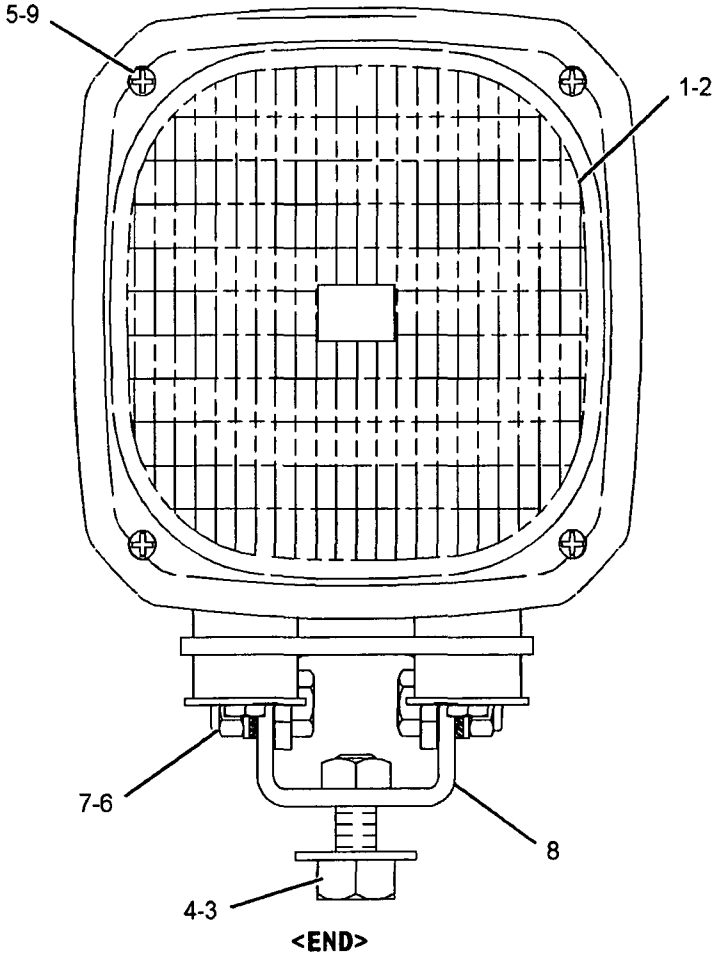

GRAPHIC #1

<END>

g01022778

219-6485 LAMP GP-FLOOD–VERTICAL MOUNT

S/N: N1A1-UP
24-VOLT
PART OF 235-5275, 235-5276 LIGHTING GP-FLOOD & SIGNAL
ALSO AN ATTACHMENT

SMCS-1434 **i02286088**

NOTE	REF NO	GRAPHIC REF	PART NUMBER	QTY	PART NAME 1 2 3 4 5 6 (PRODUCT LEVEL)	SEE PAGE
	1	1	9X-3463	1	LAMP-HALOGEN (24-VOLT, 65-WATT)	
	2	1	9X-4244	2	SCREW	
	4	1	202-6614	1	LENS AS (FLOODLIGHT)	
	5	1	175-4292	1	BODY AS	
	6	1	164-7556	1	CLIP	
	7	1	247-4285	1	BOLT (M8X1.25X50-MM)	
M	8	1	5C-7261	1	NUT (M8X1.25-THD)	
	9	1	8T-4224	2	WASHER-HARD (8.8X16X2-MM THK)	
	10	1	175-4291	1	BRACKET AS	

M-METRIC PART

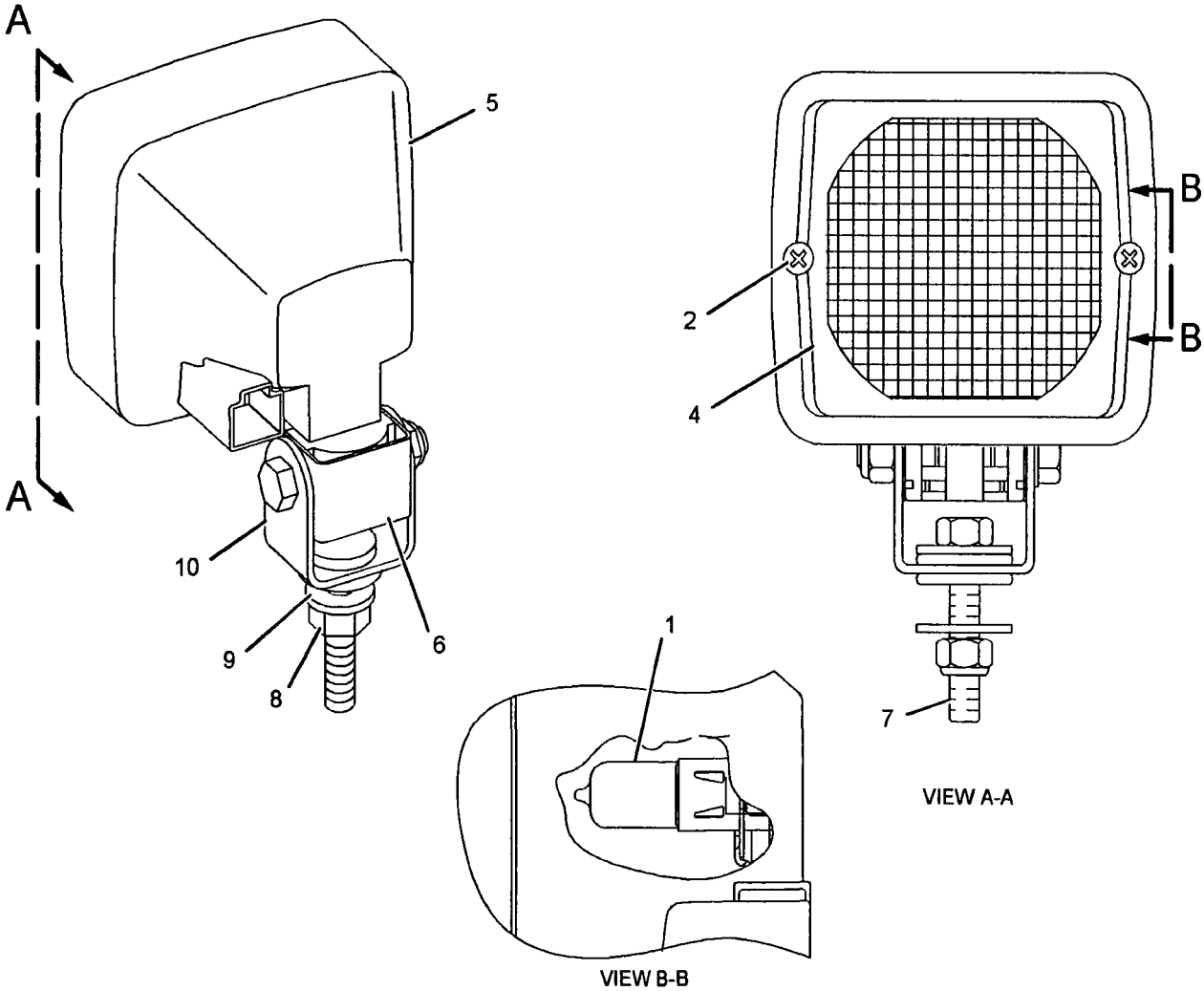

GRAPHIC #1

<END>

g01136857

219-6487 LAMP GP-FLOOD–SUSPENDED MOUNT

S/N: N1A1-UP
24-VOLT
PART OF 235-8559, 280-1456 LIGHTING GP-FLOOD
ALSO AN ATTACHMENT

SMCS-1434 **i02462048**

NOTE	REF NO	GRAPHIC REF	PART NUMBER	QTY	PART NAME 1 2 3 4 5 6 (PRODUCT LEVEL)	SEE PAGE
	1	1	**9X-3463**	1	LAMP-HALOGEN (24-VOLT, 65-WATT) (FLOODLIGHT)	
M	2	1	**8T-6912**	1	BOLT (M8X1.25X50-MM)	
M	3	1	**5C-7261**	1	NUT (M8X1.25-THD)	
	4	1	**8T-4224**	2	WASHER-HARD (8.8X16X2-MM THK)	
	5	1	**9X-4244**	2	SCREW	
	6	1	**202-6612**	1	SEAL	
	7	1	**202-6614**	1	LENS AS (FLOODLIGHT)	
	8	1	**175-4292**	1	BODY AS	
	9	1	**164-7556**	1	CLIP (LAMP RETAINING)	
	10	1	**175-4291**	1	BRACKET AS	

M-METRIC PART

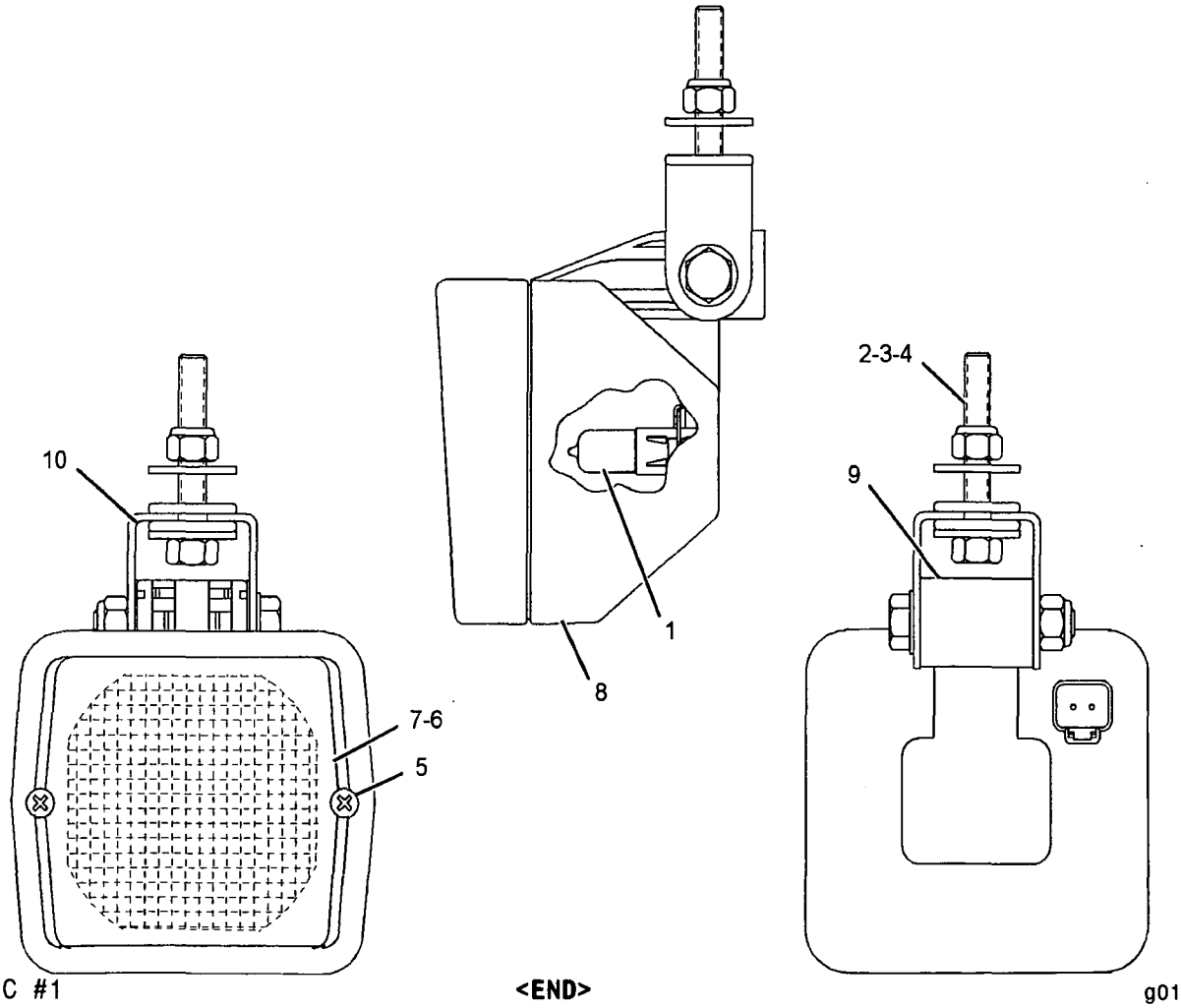

GRAPHIC #1

<END>

g01021977

105-4849 LAMP GP-HEAD & SIGNAL-LH

S/N: N1A1-UP
24-VOLT
PART OF 248-0414 LIGHTING GP-ROADING
AN ATTACHMENT

SMCS-1429, 1430 **i02461868**

NOTE	REF NO	GRAPHIC REF	PART NUMBER	QTY	PART NAME 1 2 3 4 5 6 (PRODUCT LEVEL)	SEE PAGE
	1	1	9X-4244	4	SCREW	
	2	1	100-3251	2	SCREW-LENS	
	3	1	9X-9865	1	SEAL	
	4	1	100-3248	1	LENS AS (HEADLIGHT) (HIGH/LOW BEAM)	
	5	1	9X-3465	1	LAMP (24-VOLT, 75/70-WATT) (HIGH/LOW BEAM)	
	6	1	136-3848	1	LENS AS (AMBER) (TURN SIGNAL)	
M	7	1	8T-5005	1	BOLT (M10X1.5X70-MM)	
M	8	1	8T-0389	1	LOCKNUT (M10X1.15-THD)	
	9	1	100-3253	1	SPACER	
	10	1	100-3254	1	SPACER	
	11	1	100-3255	1	WASHER	
	13	1	8T-8729	5	PIN-CONNECTOR (16-GA TO 18-GA)	
	14	1	3E-3383	1	WEDGE-RECEPTACLE LOCK (6-PIN)	
	15	1	8T-8737	1	PLUG-SEAL	
	16	1	100-3245	1	LAMP (24-VOLT) (RUNNING LIGHTS)	
	16A	1	100-3245	1	LAMP (24-VOLT) (TURN SIGNAL)	
	17	1	9X-4493	1	LAMP (24-VOLT, 21-WATT) (TURN SIGNAL)	
	18	1	100-3250	1	LENS (AMBER) (TURN SIGNAL)	
	19	1	136-3845	1	BODY AS-LAMP	
	20	1	102-8805	1	KIT-RECEPTACLE (6-PIN) (HEADLAMP)	
					(INCLUDES RECEPTACLE AS AND WEDGE)	

M-METRIC PART

105-4849 LAMP GP-HEAD & SIGNAL *(contd.)* i02461868

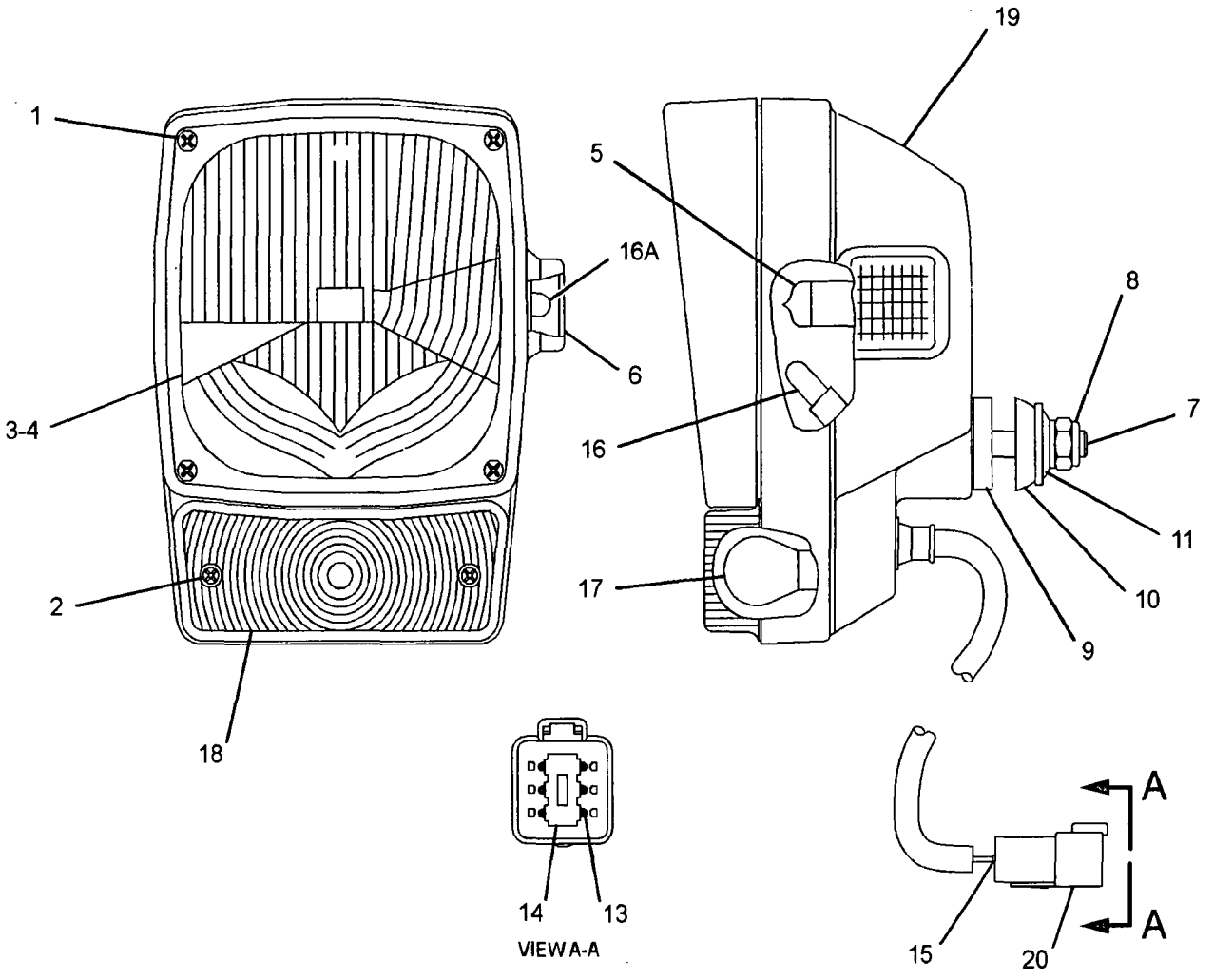

GRAPHIC #1 **<END>** g01228466

105-4850 LAMP GP-HEAD & SIGNAL-RH

S/N: N1A1-UP
24-VOLT
PART OF 248-0414 LIGHTING GP-ROADING
AN ATTACHMENT

SMCS-1429, 1430 i02462036

NOTE	REF NO	GRAPHIC REF	PART NUMBER	QTY	PART NAME 1 2 3 4 5 6 (PRODUCT LEVEL)	SEE PAGE
	1	1	9X-4244	4	SCREW	
	2	1	100-3251	2	SCREW-LENS	
	3	1	9X-9865	1	SEAL	
	4	1	100-3248	1	LENS AS (HEADLIGHT) (HIGH/LOW BEAM)	
	5	1	9X-3465	1	LAMP (24-VOLT, 75/70-WATT) (HIGH/LOW BEAM)(RH)	
	6	1	136-3848	1	LENS AS (AMBER) (TURN SIGNAL)	
M	7	1	8T-5005	1	BOLT (M10X1.5X70-MM)	
M	8	1	8T-0389	1	LOCKNUT (M10X1.15-THD)	
	9	1	100-3253	1	SPACER	
	10	1	100-3254	1	SPACER	
	11	1	100-3255	1	WASHER	
	12	1	102-8805	1	KIT-RECEPTACLE (6-PIN) (HEADLAMP) (INCUDES RECEPTALCE AS & WEDGE)	
	13	1	186-3735	5	PIN-CONNECTOR (16-GA TO 18-GA)	
	14	1	3E-3383	1	WEDGE-RECEPTACLE LOCK (6-PIN)	
	15	1	8T-8737	1	PLUG-SEAL	
	16	1	100-3245	1	LAMP (24-VOLT) (RUNNING LAMP)	
	16A	1	100-3245	1	LAMP (24-VOLT) (TURN SIGNAL)	
	17	1	9X-4493	1	LAMP (24-VOLT, 21-WATT) (TURN SIGNAL)	
	18	1	100-3250	1	LENS (AMBER) (TURN SIGNAL)	
	19	1	136-3846	1	BODY AS-LAMP	

M-METRIC PART

105-4850 LAMP GP-HEAD & SIGNAL *(contd.)* i02462036

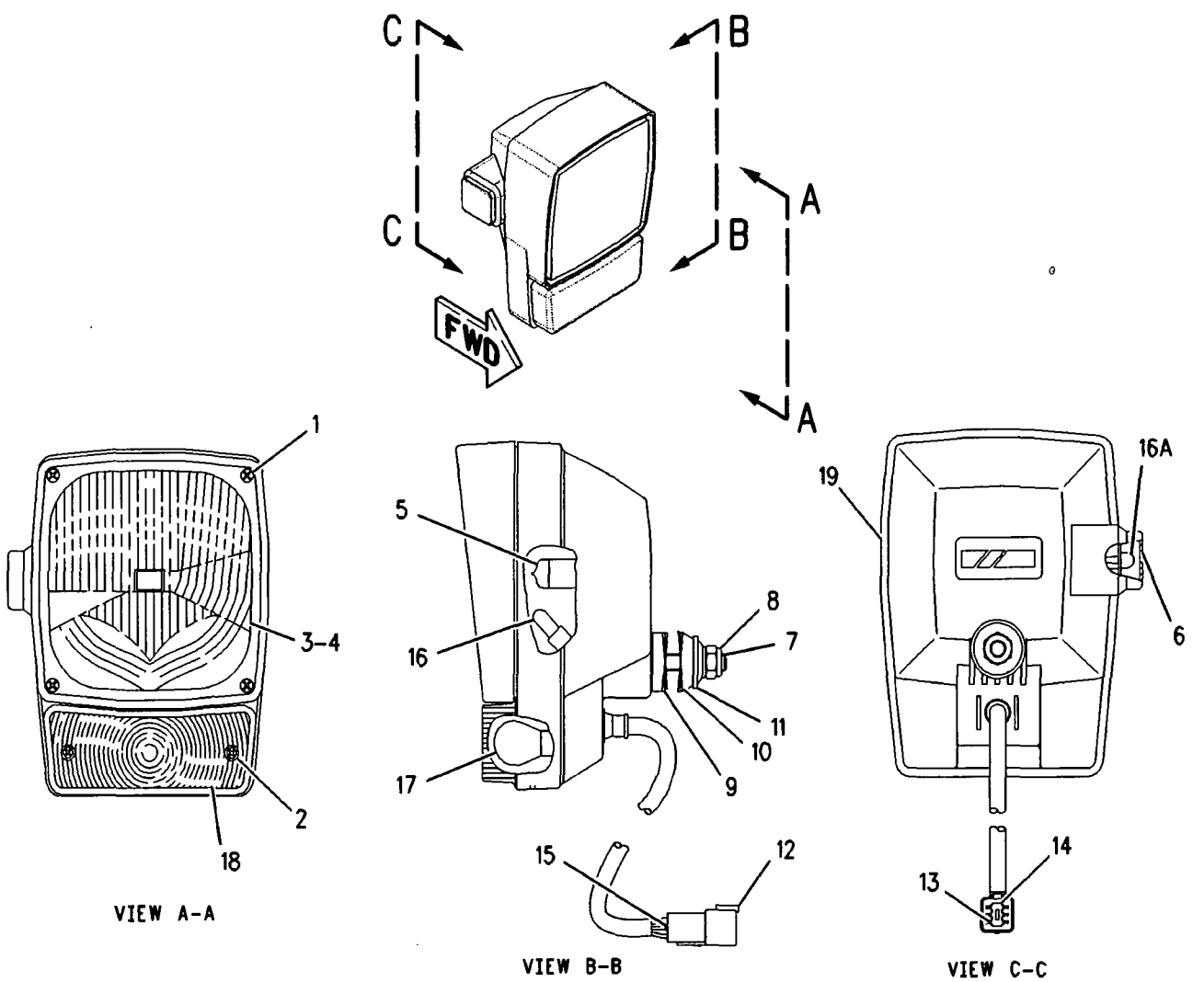

GRAPHIC #1 **<END>** g00853116

3E-6466 LAMP GP-SIGNAL–FRONT TURN

S/N: N1A1-UP
24-VOLT
PART OF 235-5276 LIGHTING GP-FLOOD & SIGNAL
AN ATTACHMENT

SMCS-1430 i02462176

NOTE	REF NO	GRAPHIC REF	PART NUMBER	QTY	PART NAME 1 2 3 4 5 6 (PRODUCT LEVEL)	SEE PAGE
	1	1	9X-3066	1	LENS-AMBER (SIGNAL)	
	2	1	9X-4493	1	LAMP (24-VOLT, 21-WATT) (SIGNAL)	
	3	1	102-8802	1	KIT-RECEPTACLE (2-PIN)	
					(INCLUDES RECEPTACLE AS AND WEDGE)	
	4	1	3E-3365	1	WEDGE-RECEPTACLE LOCK (2-PIN)	
	5	1	8T-8729	2	PIN-CONNECTOR	

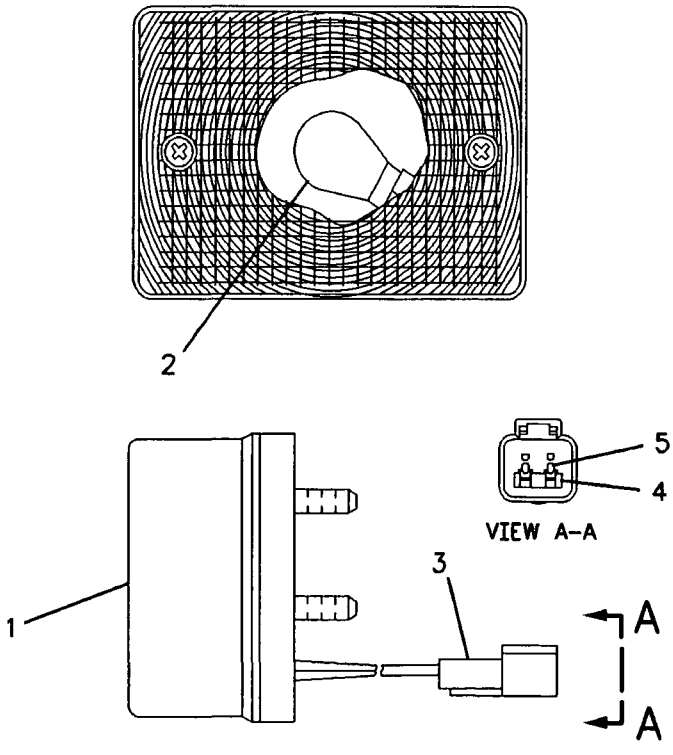

GRAPHIC #1 <END> g00589531

135-0426 LAMP GP-SIGNAL–STOP, TAIL

S/N: N1A1-UP
24-VOLT
PART OF 235-5275 LIGHTING GP-FLOOD & SIGNAL
ALSO AN ATTACHMENT

SMCS-1430 **i01539396**

NOTE	REF NO	GRAPHIC REF	PART NUMBER	QTY	PART NAME 1 2 3 4 5 6 (PRODUCT LEVEL)	SEE PAGE
	1	1	**102-8803**	1	KIT-RECEPTACLE (3-PIN)	
					(INCLUDES RECEPTACLE AS & WEDGE)	
	2	1	**3E-3371**	1	WEDGE-RECEPTACLE LOCK (3-PIN)	
	3	1	**186-3735**	3	PIN-CONNECTOR (16-GA TO 18-GA)	

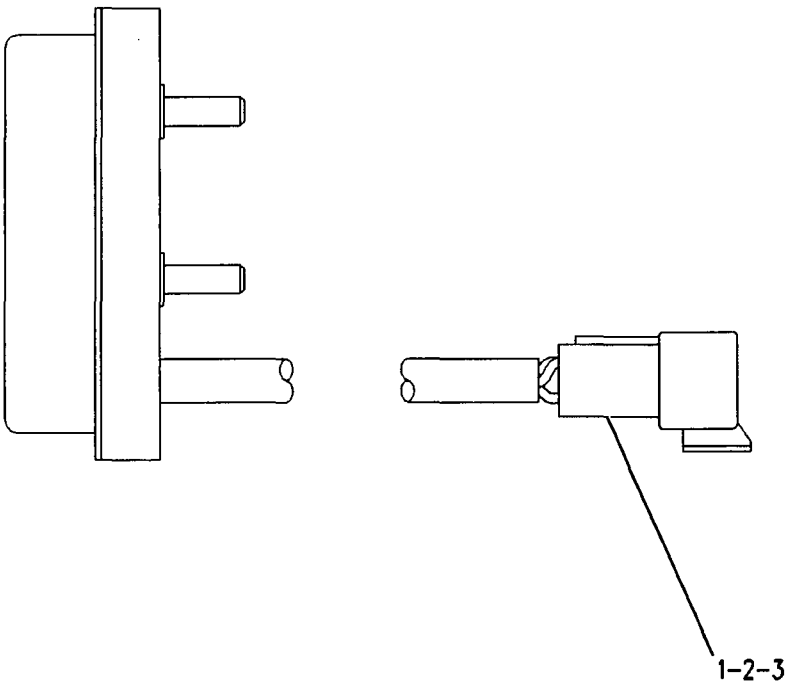

GRAPHIC #1 **<END>** g00305543

145-6929 LAMP GP-STOP & TAIL

S/N: N1A1-UP
24-VOLT
PART OF 235-5276 LIGHTING GP-FLOOD & SIGNAL, 248-0414 LIGHTING GP-ROADING AN ATTACHMENT

SMCS-1432 **i02414172**

NOTE	REF NO	GRAPHIC REF	PART NUMBER	QTY	PART NAME 1 2 3 4 5 6 (PRODUCT LEVEL)	SEE PAGE
	1	1	102-8803	1	KIT-RECEPTACLE (3-PIN)	
					(INCLUDES RECEPTACLE AS AND WEDGE)	
	2	1	267-2809	1	LENS (STOP, TAIL, TURN)	
	3	1	186-3735	5	PIN-CONNECTOR (16-GA TO 18-GA)	
	4	1	9X-4492	1	LAMP (24-VOLT, 5-WATT)	
	5	1	9X-4493	1	LAMP (24-VOLT, 21-WATT)	
	6	1	102-8802	1	KIT-RECEPTACLE (2-PIN)	
					(INCLUDES RECEPTACLE AS AND WEDGE)	

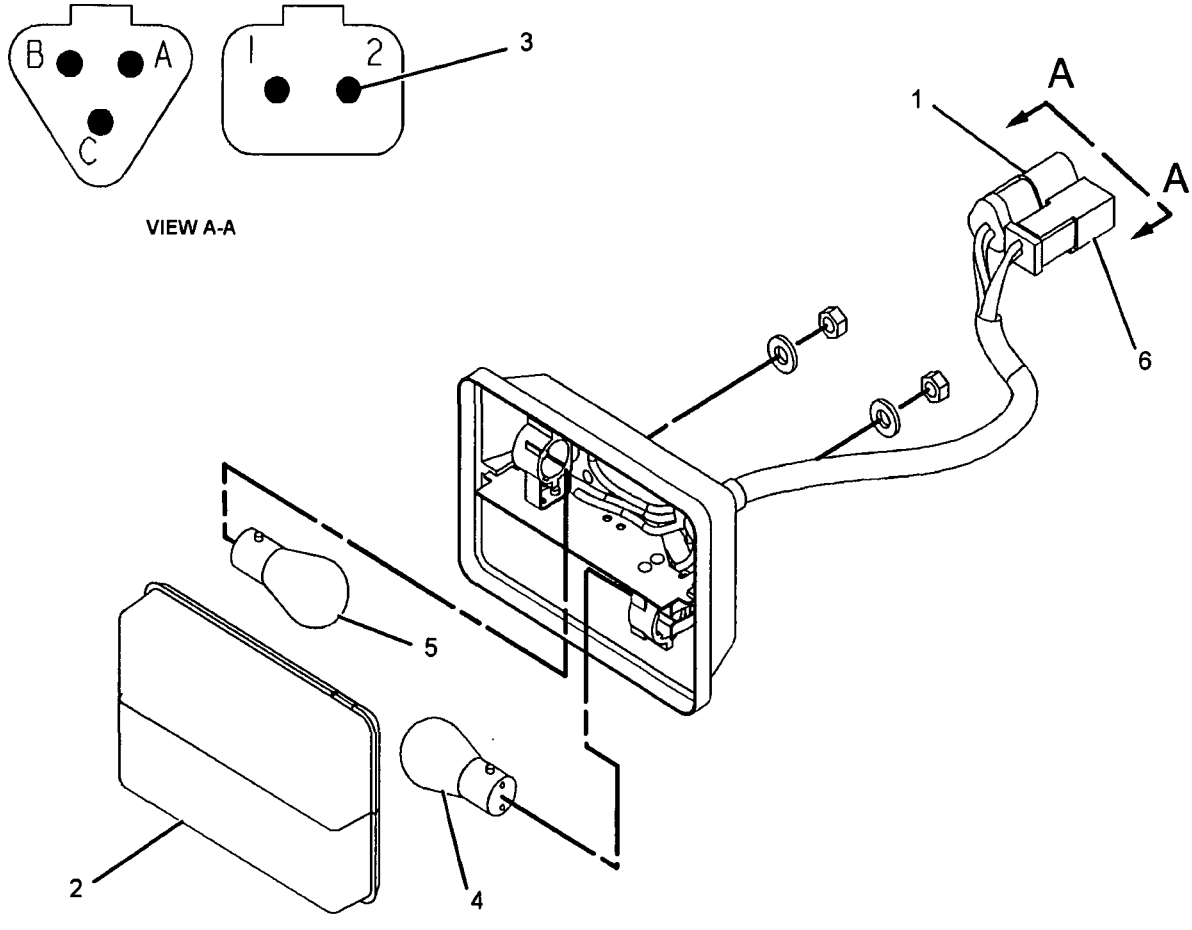

GRAPHIC #1 **<END>** g01146590

235-3937 LAMP GP-WARNING BEACON–AMBER

S/N: N1A1-UP
24-VOLT
PART OF 237-1012 LIGHTING GP-WARNING BEACON
AN ATTACHMENT

SMCS-1431 **i02281578**

NOTE	REF NO	GRAPHIC REF	PART NUMBER	QTY	PART NAME 1 2 3 4 5 6 (PRODUCT LEVEL)	SEE PAGE
	1	1	215-6672	1	LENS-AMBER (WARNING BEACON)	
	2	1	9X-7849	1	LAMP (24-VOLT, 70-WATT)	
	3	1	215-6673	1	BELT-WARNING BEACON (WARNING BEACON)	
	4	1	215-6674	1	CLIP	
M	5	1	6V-8225	3	NUT (M6X1-THD)	
	6	1	5P-0537	3	WASHER-HARD (7.2X14.5X2-MM THK)	
	7	1	102-8802	1	KIT-RECEPTACLE (2-PIN)	
					(KIT INCLUDES RECEPTACLE AS & WEDGE)	
	8	1	3E-3365	1	WEDGE-RECEPTACLE LOCK (2-PIN)	
	9	1	186-3735	2	PIN-CONNECTOR (16-GA TO 18-GA)	

M-METRIC PART

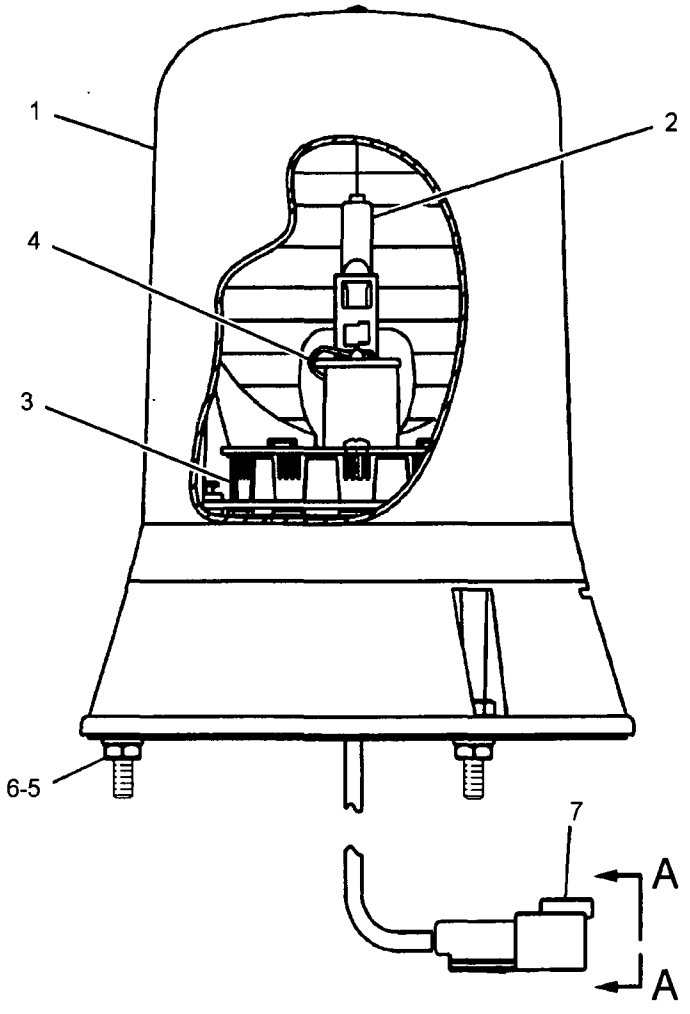

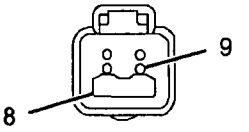

VIEW A-A

GRAPHIC #1 **<END>** g01047107

254-5525 LIGHTING AR-ROADING–HMU STEERING

S/N: N1A1-UP
AN ATTACHMENT

SMCS-1429 i02415812

NOTE	PART NUMBER	QTY	PART NAME 1 2 3 4 5 6 (PRODUCT LEVEL)	SEE PAGE
Y	248-0414	1	LIGHTING GP-ROADING	176
Y	197-6475	1	SWITCH GP-DIMMER (ROADING)	213
Y	253-3951	1	SWITCH GP-SIGNAL (TURN)	228
Y	271-4037	1	WIRING GP-LIGHTING (LOADER FRAME)	275

Y-SEPARATE ILLUSTRATION

<END>

260-7765 LIGHTING AR-ROADING–COMMAND CONTROL STEERING

S/N: N1A1-UP
AN ATTACHMENT

SMCS-1429 i02415884

NOTE	PART NUMBER	QTY	PART NAME 1 2 3 4 5 6 (PRODUCT LEVEL)	SEE PAGE
Y	248-0414	1	LIGHTING GP-ROADING	176
Y	197-6475	1	SWITCH GP-DIMMER (ROADING)	213
Y	252-5920	1	SWITCH GP-SIGNAL (TURN)	226
Y	271-4037	1	WIRING GP-LIGHTING (LOADER FRAME)	275

Y-SEPARATE ILLUSTRATION

<END>

235-5279 LIGHTING AR-SIGNAL–COMMAND CONTROL STEERING

S/N: N1A1-UP
AN ATTACHMENT

SMCS-1430 i02414174

NOTE	PART NUMBER	QTY	PART NAME 1 2 3 4 5 6 (PRODUCT LEVEL)	SEE PAGE
Y	235-5276	1	LIGHTING GP-FLOOD & SIGNAL (6-LAMP, FRONT, REAR)	174
Y	252-5920	1	SWITCH GP-SIGNAL (TURN)	226
Y	271-4028	1	WIRING GP-LIGHTING (LOADER FRAME)	274

Y-SEPARATE ILLUSTRATION

<END>

244-3599 LIGHTING AR-SIGNAL–HMU STEERING

S/N: N1A1-UP

PART OF 249-8107 CONVERSION AR-CERTIFICATION

AN ATTACHMENT

SMCS-1430 **i02415464**

NOTE	PART NUMBER	QTY	PART NAME 1 2 3 4 5 6 (PRODUCT LEVEL)	SEE PAGE
Y	*235-5276*	1	LIGHTING GP-FLOOD & SIGNAL (6-LAMP, FRONT, REAR)	174
Y	*253-3951*	1	SWITCH GP-SIGNAL (TURN)	228
Y	*271-4028*	1	WIRING GP-LIGHTING (LOADER FRAME)	274

Y-SEPARATE ILLUSTRATION

<END>

269-6606 LIGHTING GP-BACKUP

S/N: N1A1-UP

PART OF 269-6608 LIGHTING GP-BACKUP

AN ATTACHMENT

SMCS-1428 **i02443551**

NOTE	PART NUMBER	QTY	PART NAME 1 2 3 4 5 6 (PRODUCT LEVEL)	SEE PAGE
M	**8T-3844**	4	BOLT (M6X1X70-MM)	
	259-5588	2	LAMP AS (BACKUP)	
	6V-9501	8	LOCKWASHER	
M	**6V-9632**	1	NUT-WELD (M6X1-THD)	
	260-1321	2	PLATE	
	260-1060	1	PLATE	
	260-1059	2	PLATE AS	
			(EACH INCLUDES)	
M	**6V-9632**	2	NUT-WELD (M6X1-THD)	
M	**096-9278**	8	SCREW-PAN HEAD	
	9X-8256	4	WASHER (6.6X12X2-MM THK)	

M-METRIC PART

<END>

269-6608 LIGHTING GP-BACKUP

S/N: N1A1-UP

PART OF 269-0671 SPECIAL AR-QUARRY

AN ATTACHMENT

SMCS-1428 **i02443546**

NOTE	PART NUMBER	QTY	PART NAME 1 2 3 4 5 6 (PRODUCT LEVEL)	SEE PAGE
Y	*269-6606*	1	LIGHTING GP-BACKUP	165
Y	*269-5247*	1	WIRING GP-LIGHTING	270

Y-SEPARATE ILLUSTRATION

<END>

235-8559 LIGHTING GP-FLOOD–4-LAMP, CAB FRONT, REAR

S/N: N1A1-UP

PART OF 243-1080, 243-1081 CAB AR-ENCLOSED ROPS

ALSO AN ATTACHMENT

SMCS-1434 **i02265177**

NOTE	REF NO	GRAPHIC REF	PART NUMBER	QTY	PART NAME 1 2 3 4 5 6 (PRODUCT LEVEL)	SEE PAGE
Y	1	1	219-6487	4	LAMP GP-FLOOD (24-VOLT, SUSPENDED MOUNT) (WIDE SPAN)	155
	2	1	236-9773	1	BRACKET (LH)	
	3	1	236-9774	1	BRACKET (RH)	
	4	1	122-8705	2	U-BOLT	
	5	1	8T-4121	8	WASHER-HARD (11X21X2.5-MM THK)	
M	6	1	8T-4133	6	NUT (M10X1.5 THD)	
M	7	1	8T-4195	2	BOLT (M10X1.5X30-MM)	

M-METRIC PART
Y-SEPARATE ILLUSTRATION

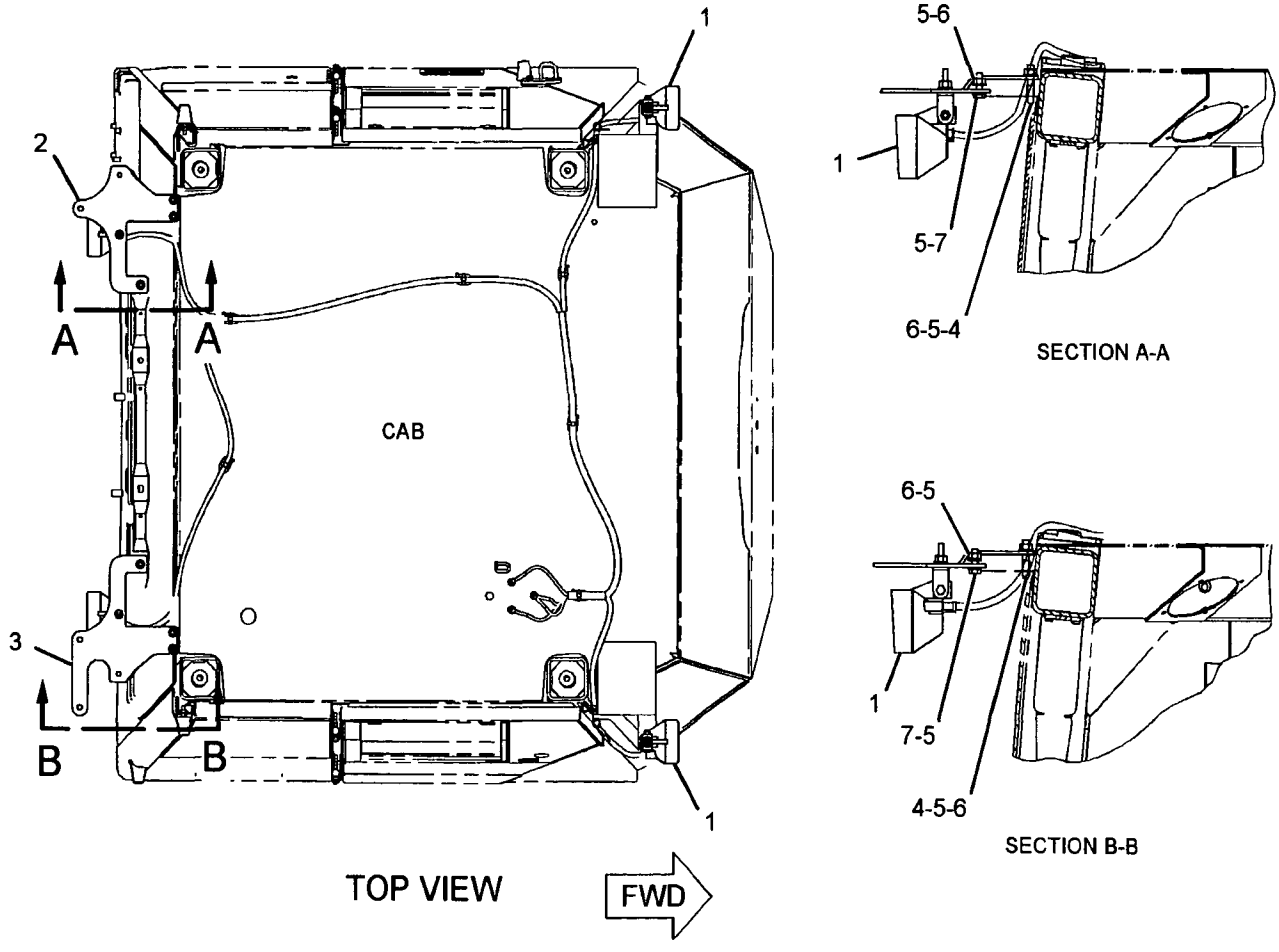

GRAPHIC #1 **<END>** g01116742

235-8560 LIGHTING GP-FLOOD-4-LAMP, HID, CAB FRONT, REAR

S/N: N1A1-UP

AN ATTACHMENT

SMCS-1434 i02336920

NOTE	REF NO	GRAPHIC REF	PART NUMBER	QTY	PART NAME 1 2 3 4 5 6 (PRODUCT LEVEL)	SEE PAGE
	1	1	3S-2093	8	STRAP-CABLE	
	2	1	236-7773	1	HARNESS AS-LIGHTING	
		1	155-2270	8	KIT-CONNECTING PLUG (2-PIN)	
					(EACH INCLUDES PLUG AS AND WEDGE)	
	5	1	236-9775	1	BRACKET AS (LH)	
	6	1	236-9776	1	BRACKET AS (RH)	
	8	1	132-5789	2	CLIP	
Y	9	1	210-8422	2	LAMP GP-FLOOD (24-VOLT, 35-WATT, HID, SUSP MT) (HIGH INTENSITY DISCHARGE, REAR)	152
Y	10	1	210-8423	2	LAMP GP-FLOOD (24-VOLT, 35-WATT, HID, VERT MT) (HIGH INTENSITY DISCHARGE, FR)	153
	11	1	251-4339	1	SWITCH AS-ROCKER (FRONT, REAR FLOODLIGHTS)	
	12	1	8T-4121	4	WASHER-HARD (11X21X2.5-MM THK)	
M	13	1	8T-4133	2	NUT (M10X1.5 THD)	
M	14	1	8T-4195	2	BOLT (M10X1.5X30-MM)	
	15	1	9M-8406	4	CLIP	

M-METRIC PART
Y-SEPARATE ILLUSTRATION

235-8560 **LIGHTING GP-FLOOD** *(contd.)* **i02336920**

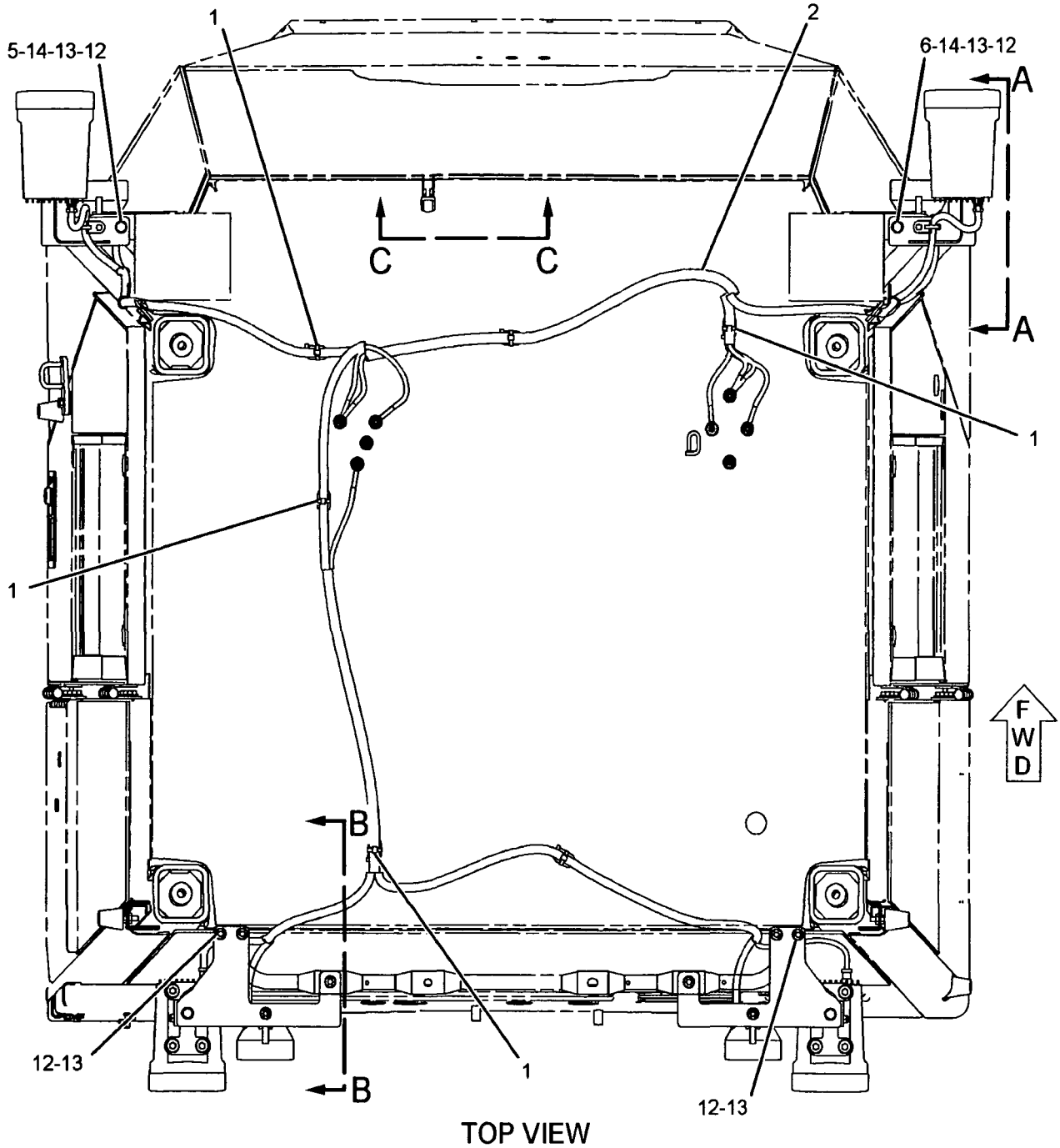

TOP VIEW

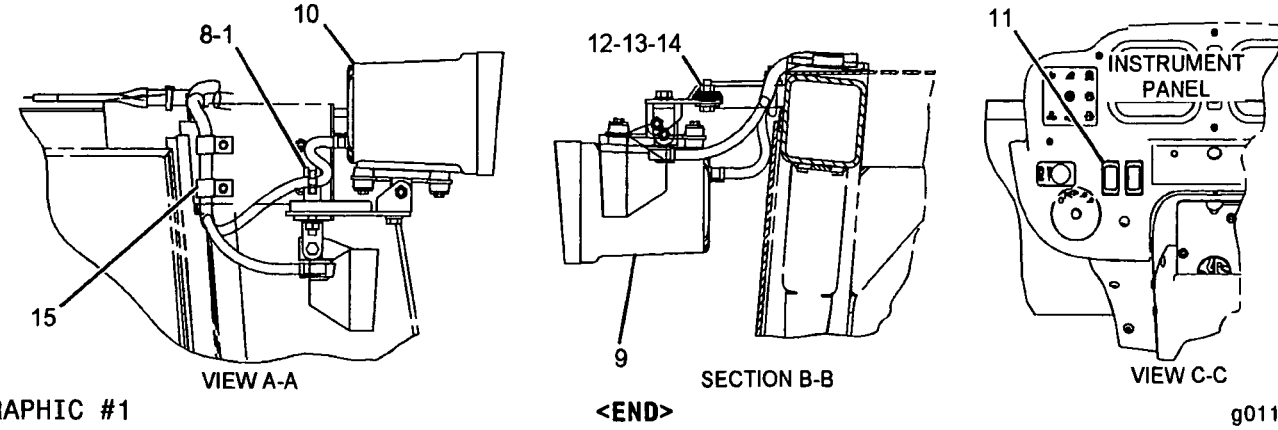

GRAPHIC #1

<END>

g01144307

280-1456 LIGHTING GP-FLOOD–4-LAMP, CAB FRONT, REAR

S/N: N1A1-UP

CANNOT BE USED WITH 235-8560–PAGE 167

AN ATTACHMENT

SMCS-1434 i02415957

NOTE	REF NO	GRAPHIC REF	PART NUMBER	QTY	PART NAME 1 2 3 4 5 6 (PRODUCT LEVEL)	SEE PAGE
	1	2	3S-2093	2	STRAP-CABLE	
	2	1	188-1616	2	PLATE	
Y	3	2	219-6487	4	LAMP GP-FLOOD (24-VOLT, SUSPENDED MOUNT)	155
	4	2	280-1436	2	HARNESS AS-FRONT LIGHTING	
					(EACH INCLUDES)	
		2	102-8802	1	KIT-RECEPTACLE (2-PIN)	
					(INCLUDES RECEPTACLE AS AND WEDGE)	
		2	155-2270	2	KIT-CONNECTING PLUG (2-PIN)	
					(EACH INCLUDES PLUG AS AND WEDGE)	
	5	2	280-1437	2	HARNESS AS-REAR LIGHTING	
					(EACH INCLUDES)	
		2	102-8802	1	KIT-RECEPTACLE (2-PIN)	
					(INCLUDE RECEPTACLE AS AND WEDGE)	
		2	155-2270	2	KIT-CONNECTING PLUG (2-PIN)	
					(EACH INCUDES PLUG AS AND WEDGE)	
	6	2	132-5789	2	CLIP	
	7	2	8T-4121	4	WASHER-HARD (11X21X2.5-MM THK)	
M	8	2	8T-4133	2	NUT (M10X1.5 THD)	
M	9	2	8T-4195	2	BOLT (M10X1.5X30-MM)	

M-METRIC PART
Y-SEPARATE ILLUSTRATION

280-1456 LIGHTING GP-FLOOD (contd.) i02415957

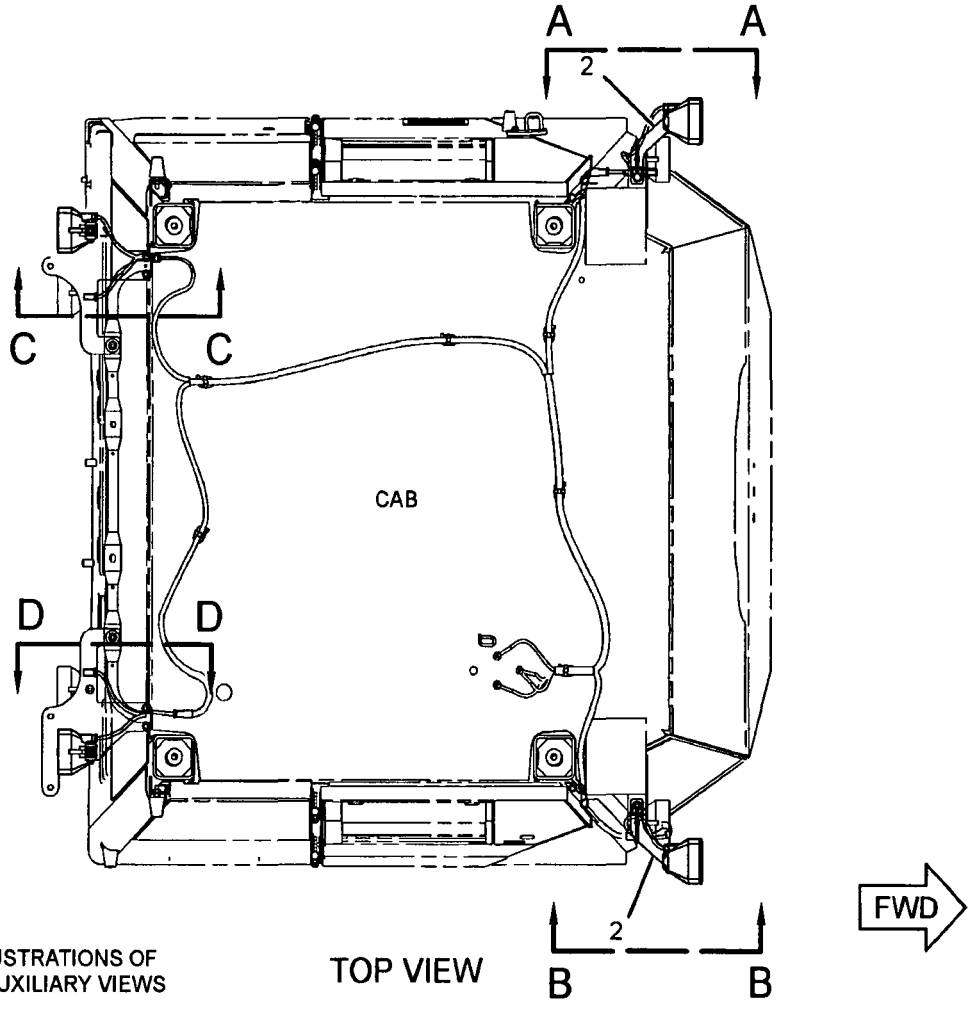

REFER TO ALL ILLUSTRATIONS OF THIS GROUP FOR AUXILIARY VIEWS

TOP VIEW

GRAPHIC #1 g01210771

280-1456 **LIGHTING GP-FLOOD** *(contd.)* **i02415957**

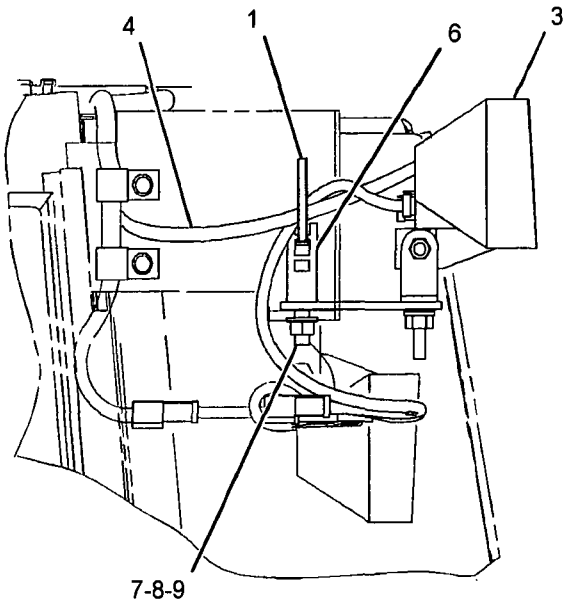

VIEW B-B

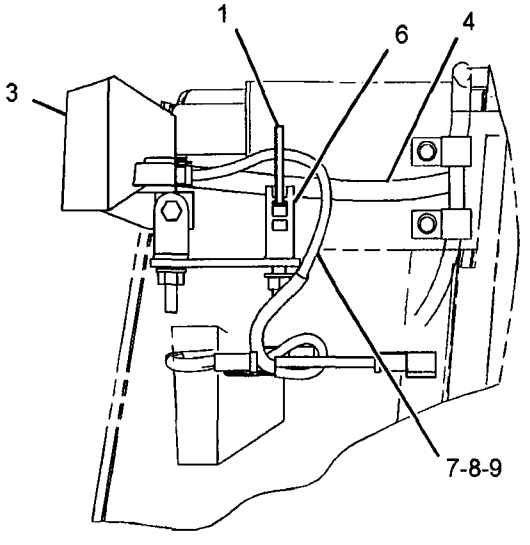

VIEW A-A

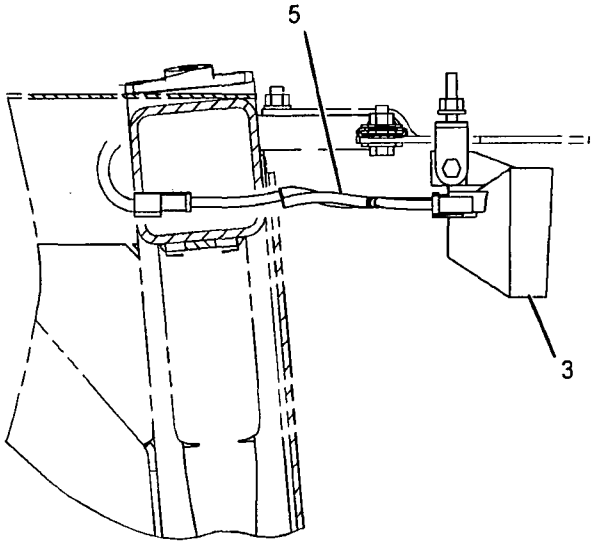

SECTION D-D

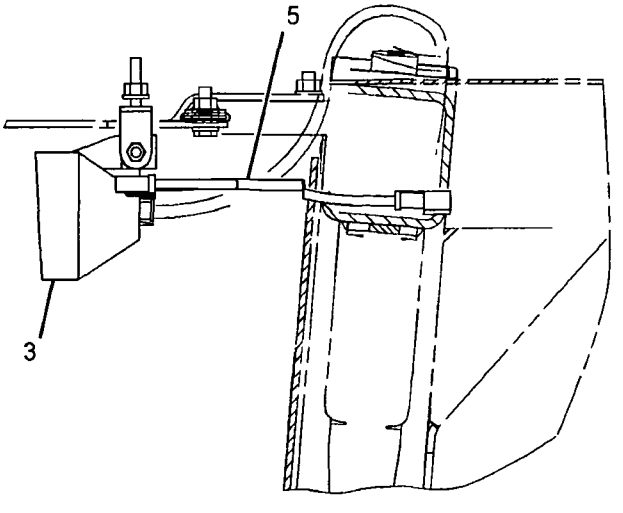

SECTION C-C

GRAPHIC #2 **<END>** g01210772

235-5275 LIGHTING GP-FLOOD & SIGNAL-
4-LAMP, FRONT, REAR
S/N: N1A1-UP
PART OF 237-0235 ELECTRICAL AR
ALSO AN ATTACHMENT

SMCS-1430, 1434 **i02411357**

NOTE	REF NO	GRAPHIC REF	PART NUMBER	QTY	PART NAME 1 2 3 4 5 6 (PRODUCT LEVEL)	SEE PAGE
Y	1	2	135-0426	2	LAMP GP-SIGNAL (24-VOLT, STOP, TAIL)	161
	2	1	111-4013	2	GROMMET	
Y	3	2	219-6485	2	LAMP GP-FLOOD (24-VOLT, VERTICAL MOUNT)	154
	4	2	246-3290	2	PLATE AS	
					(EACH INCLUDES)	
M		2	8T-4935	1	BOSS-WELD (M10X1.5X45-MM)	
	5	2	261-2332	1	BRACKET AS (RH)	
	6	2	261-2333	1	BRACKET AS (LH)	
	7	2	130-5300	4	CLIP	
M	8	2	5C-2890	6	NUT (M6X1-THD)	
	9	1,2	8T-4121	10	WASHER-HARD (11X21X2.5-MM THK)	
M	10	1,2	8T-4136	10	BOLT (M10X1.5X25-MM)	
M	11	2	9X-2044	8	SCREW-TRUSS HEAD (M6X1X16-MM)	
	12	2	9X-8256	6	WASHER (6.6X12X2-MM THK)	

M-METRIC PART
Y-SEPARATE ILLUSTRATION

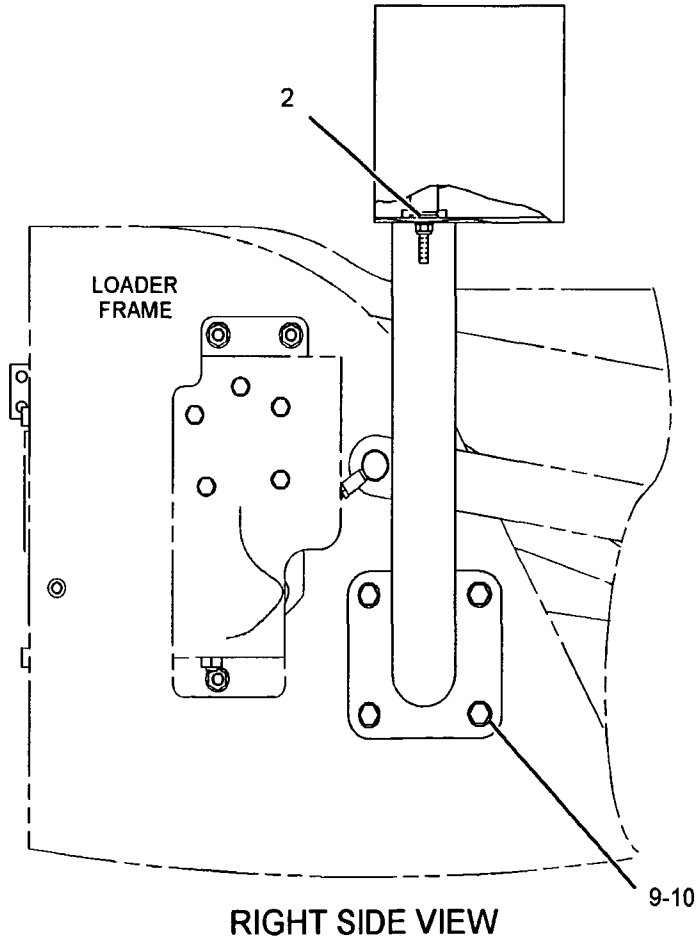

RIGHT SIDE VIEW
(FRONT)

GRAPHIC #1 g01208982

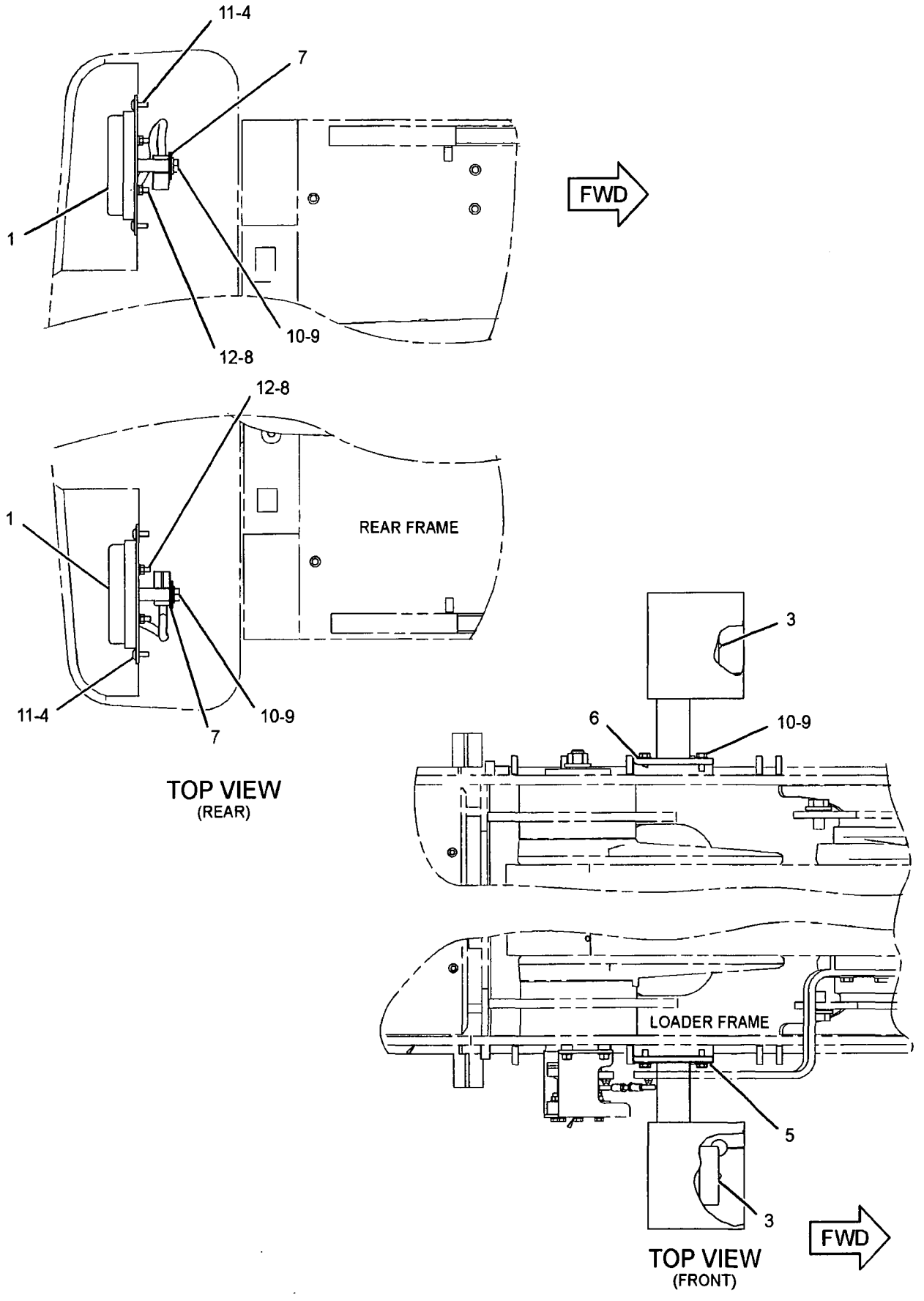

GRAPHIC #2 **<END>** g01208985

235-5276 LIGHTING GP-FLOOD & SIGNAL-

6-LAMP, FRONT, REAR

S/N: N1A1-UP

PART OF 235-5279, 244-3599 LIGHTING AR-SIGNAL

AN ATTACHMENT

SMCS-1430, 1434 i02210927

NOTE	REF NO	GRAPHIC REF	PART NUMBER	QTY	PART NAME 1 2 3 4 5 6 (PRODUCT LEVEL)	SEE PAGE
Y	1	1	3E-6466	2	LAMP GP-SIGNAL (24-VOLT) (FRONT TURN)	160
	2	1	111-4013	2	GROMMET	
Y	3	1	145-6929	2	LAMP GP-STOP & TAIL (24-VOLT)	162
Y	4	1	219-6485	2	LAMP GP-FLOOD (24-VOLT, VERTICAL MOUNT)	154
	5	1	246-3295	2	PLATE AS	
					(EACH INCLUDES)	
M		1	8T-4935	1	BOSS-WELD (M10X1.5X45-MM)	
		1	246-3296	1	PLATE	
	6	1	261-4405	1	BRACKET AS (RH)	
	7	1	261-4406	1	BRACKET AS (LH)	
	8	1	261-4884	2	COVER	
	9	1	130-5300	6	CLIP	
M	10	1	5C-2890	6	NUT (M6X1-THD)	
	11	1	8T-4121	12	WASHER-HARD (11X21X2.5-MM THK)	
M	12	1	8T-4136	10	BOLT (M10X1.5X25-MM)	
M	13	1	8T-4137	2	BOLT (M10X1.5X20-MM)	
M	14	1	8T-4138	8	BOLT (M6X1X20-MM)	
	15	1	8T-4205	8	WASHER-HARD (7.2X14.5X2-MM THK)	
M	16	1	9X-2044	8	SCREW-TRUSS HEAD (M6X1X16-MM)	
	17	1	9X-8256	6	WASHER (6.6X12X2-MM THK)	

M-METRIC PART
Y-SEPARATE ILLUSTRATION

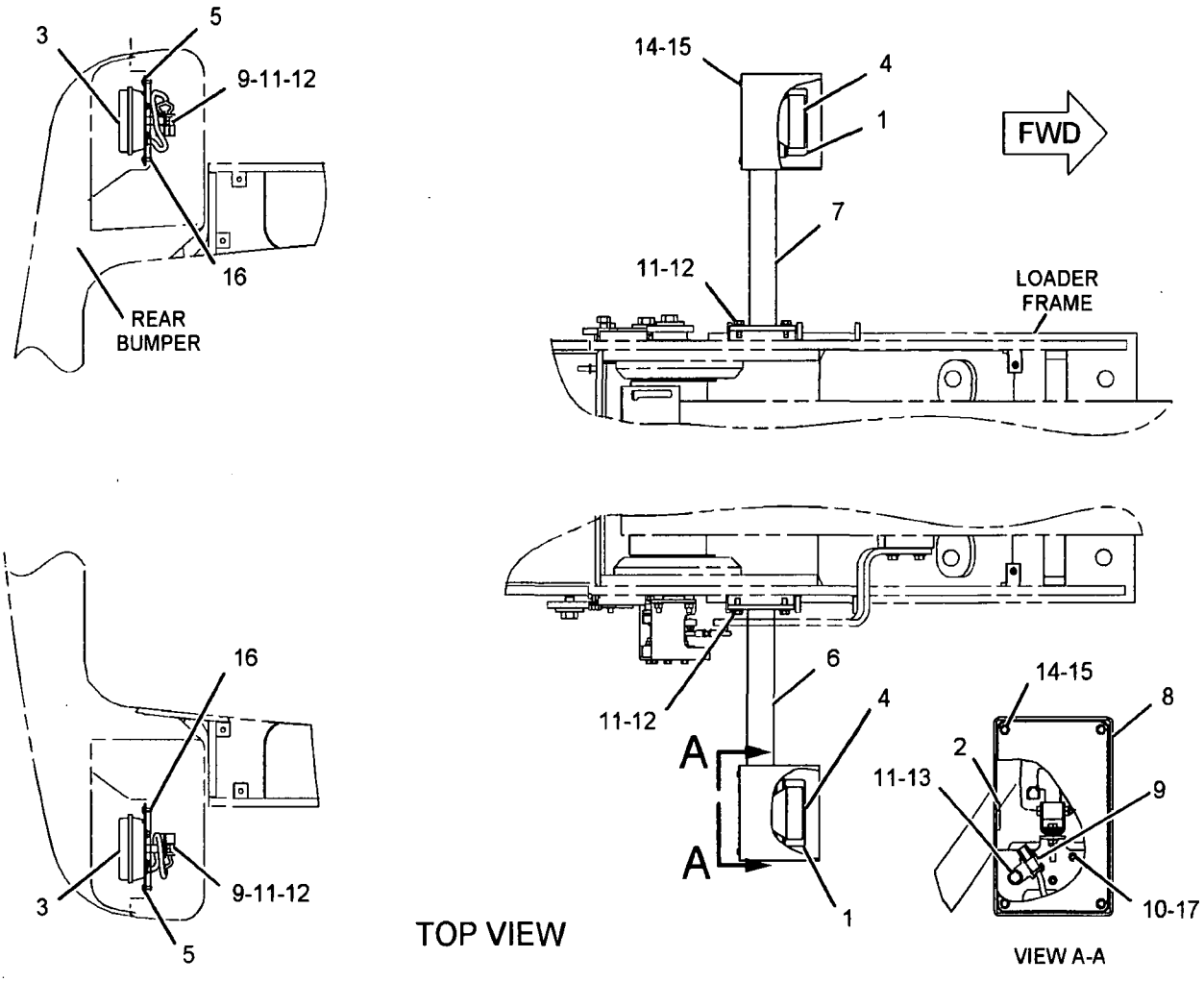

GRAPHIC #1

<END>

g01132886

248-0414 LIGHTING GP-ROADING

S/N: N1A1-UP

PART OF 254-5525, 260-7765 LIGHTING AR-ROADING

AN ATTACHMENT

SMCS-1429 **i02241690**

NOTE	REF NO	GRAPHIC REF	PART NUMBER	QTY	PART NAME 1 2 3 4 5 6 (PRODUCT LEVEL)	SEE PAGE
Y	1	1	**105-4849**	1	LAMP GP-HEAD & SIGNAL (LH)	156
Y	2	1	**105-4850**	1	LAMP GP-HEAD & SIGNAL (RH)	158
	3	1	**111-4013**	2	GROMMET	
Y	4	1	**145-6929**	2	LAMP GP-STOP & TAIL (24-VOLT)	162
	5	1	**246-3295**	2	PLATE AS	
					(EACH INCLUDES)	
M		1	**8T-4935**	1	BOSS-WELD (M10X1.5X45-MM)	
	6	1	**260-9984**	1	BRACKET AS (RH)	
	7	1	**260-9985**	1	BRACKET AS (LH)	
	8	1	**130-5300**	4	CLIP	
	9	1	**8T-4121**	10	WASHER-HARD (11X21X2.5-MM THK)	
M	10	1	**8T-4136**	10	BOLT (M10X1.5X25-MM)	
M	11	1	**9X-2044**	8	SCREW-TRUSS HEAD (M6X1X16-MM)	

M-METRIC PART
Y-SEPARATE ILLUSTRATION

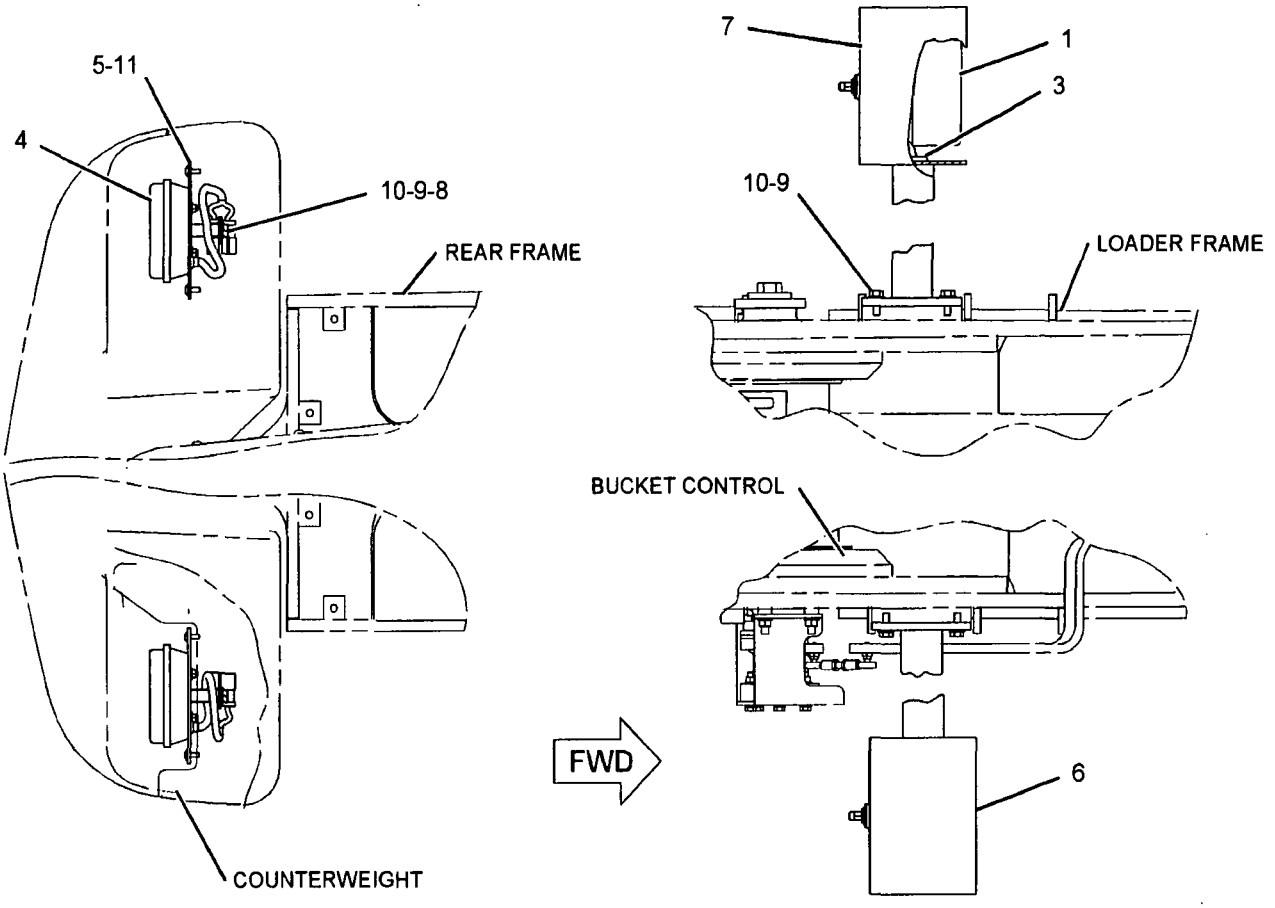

TOP VIEW

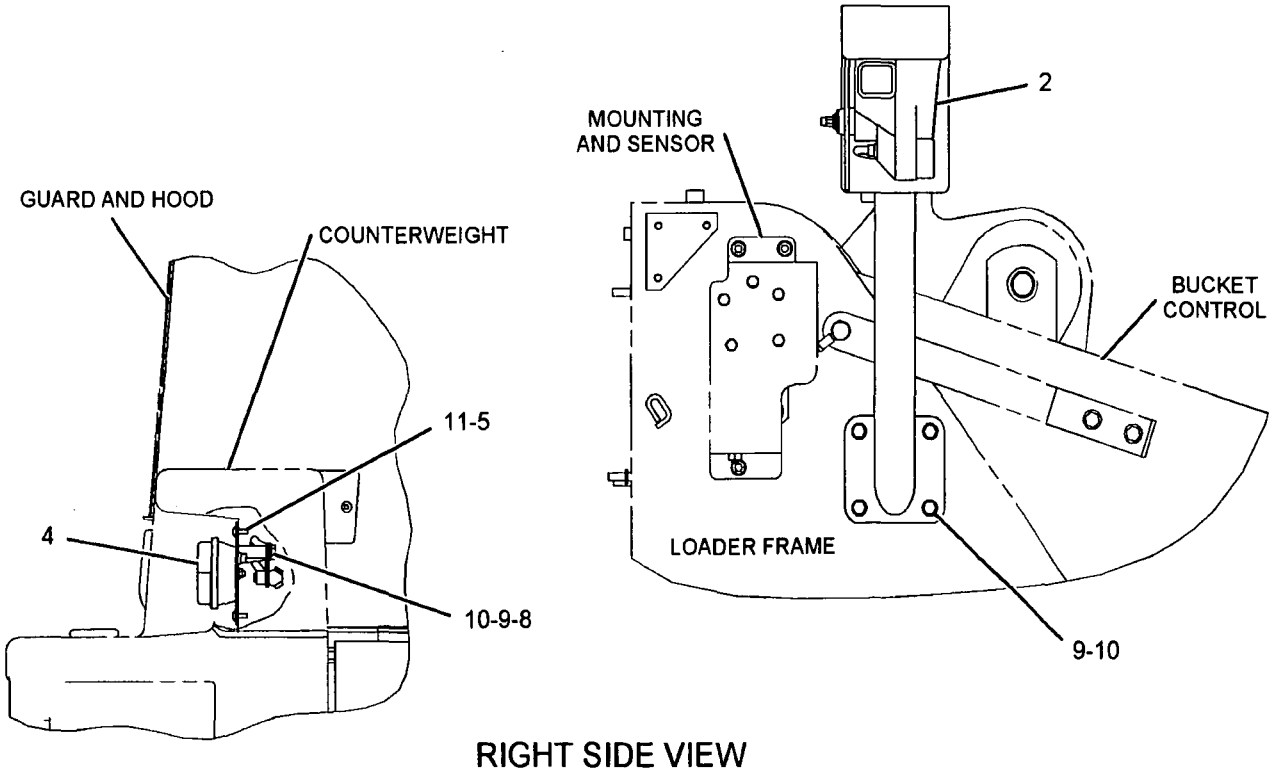

RIGHT SIDE VIEW

GRAPHIC #1

<END>

g01130691

237-1012 LIGHTING GP-WARNING BEACON

S/N: N1A1-UP

PART OF 250-0706 CONVERSION AR-ROADING, 269-0671 SPECIAL AR-QUARRY AN ATTACHMENT

SMCS-1431 **i02310364**

NOTE	REF NO	GRAPHIC REF	PART NUMBER	QTY	PART NAME 1 2 3 4 5 6 (PRODUCT LEVEL)	SEE PAGE
	1	1	3S-2093	5	STRAP-CABLE	
	2	1	9T-8556	1	SPRING	
Y	3	1	235-3937	1	LAMP GP-WARNING BEACON (24-VOLT, AMBER)	163
	4	1	236-7775	1	HARNESS AS-LIGHTING (WARNING BEACON)	
		1	155-2270	1	KIT-CONNECTING PLUG (2-PIN)	
					(INCLUDES PLUG AS AND WEDGE)	
	5	1	237-7262	1	PLATE AS	
	6	1	237-9736	1	SWITCH AS-ROCKER (WARNING BEACON)	
	7	1	255-4370	1	BRACKET	
	8	1	255-4371	1	BRACKET	
	9	1	122-8705	2	U-BOLT	
M	10	1	129-3180	1	LOCKNUT (M12X1.75-THD)	
	11	1	130-5300	1	CLIP	
	12	1	8T-0255	1	PIN-SPRING	
	13	1	8T-4121	11	WASHER-HARD (11X21X2.5-MM THK)	
M	14	1	8T-4122	1	WASHER-HARD (17X32X3.5-MM THK)	
M	15	1	8T-4133	4	NUT (M10X1.5 THD)	
M	16	1	8T-4137	7	BOLT (M10X1.5X20-MM)	
	17	1	8T-4223	1	WASHER-HARD (13.5X25.5X3-MM THK)	

M-METRIC PART
Y-SEPARATE ILLUSTRATION

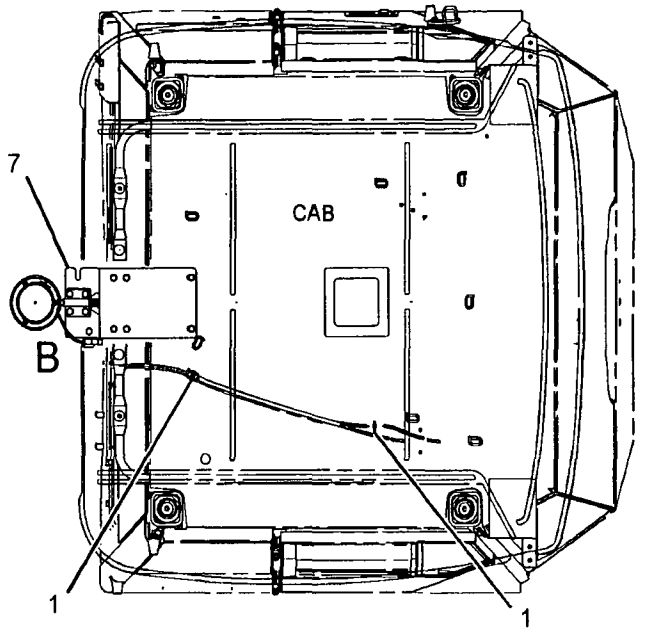

TOP VIEW



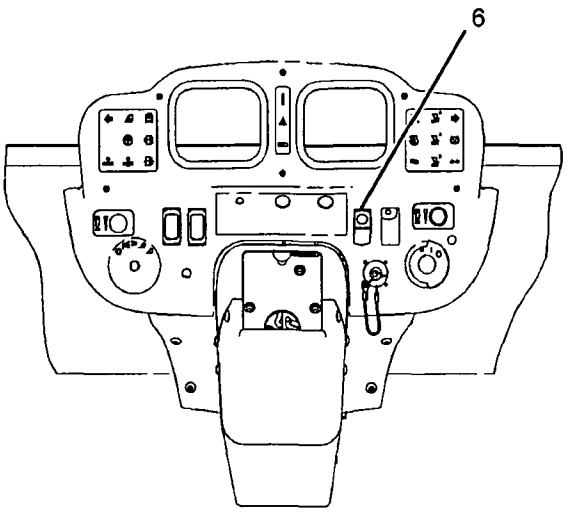

SECTION A-A

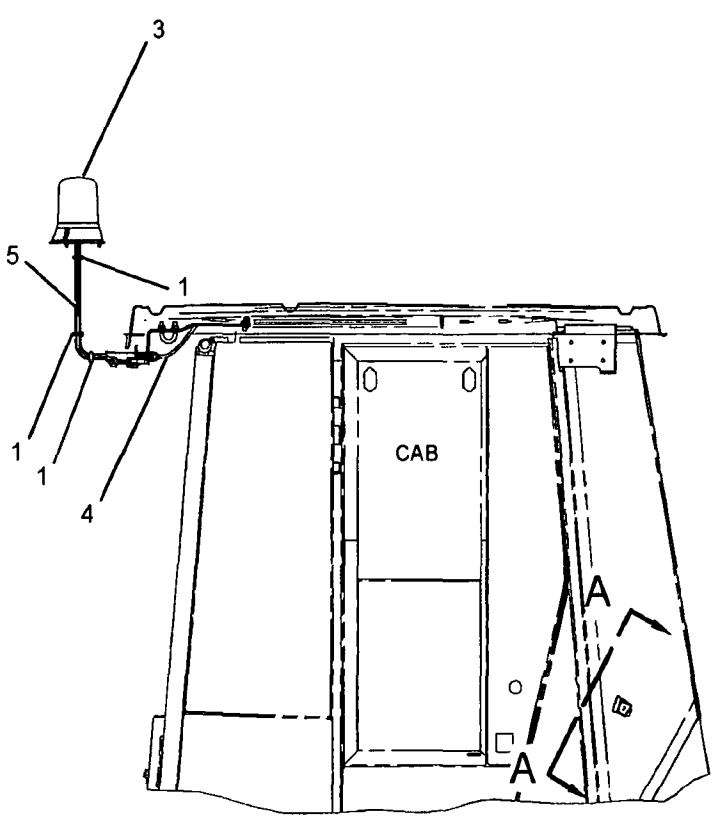

RIGHT SIDE VIEW

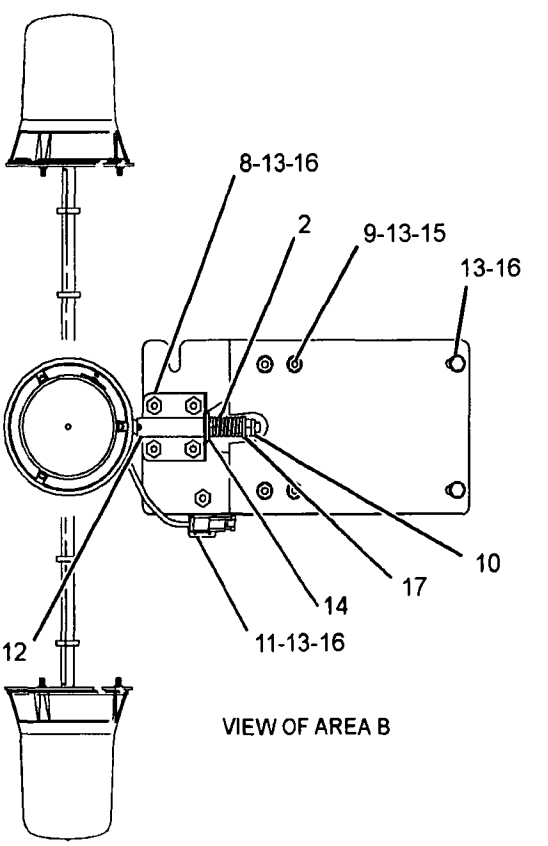

VIEW OF AREA B

GRAPHIC #1 **<END>** g01155151

265-5044 LIGHTING GP-WARNING BEACON–GREEN

S/N: N1A1-UP

PART OF 265-5046 SEAT BELT & LIGHTING GP

AN ATTACHMENT

SMCS-1431 **i02443542**

NOTE	REF NO	GRAPHIC REF	PART NUMBER	QTY	PART NAME 1 2 3 4 5 6 (PRODUCT LEVEL)	SEE PAGE
	1	1	260-0955	1	LAMP AS-WARNING (SEAT BELT)	
	2	1	263-1230	1	HARNESS AS-LIGHTING (WARNING BEACON)	
		1	102-8802	2	KIT-RECEPTACLE (2-PIN)	
					(EACH INCLUDES RECEPTACLE AS AND WEDGE)	
	3	1	265-5039	1	SUPPORT GP-WARNING BEACON	
	4	1	130-5300	1	CLIP	
M	5	1	5C-2890	3	NUT (M6X1-THD)	
	6	1	6V-5834	4	SCREW-HEAD (10-14X0.75-IN)	
	7	1	8T-4121	1	WASHER-HARD (11X21X2.5-MM THK)	
M	8	1	8T-4133	1	NUT (M10X1.5 THD)	
M	9	1	8T-4195	1	BOLT (M10X1.5X30-MM)	
M	10	1	8T-4971	3	BOLT (M6X1X30-MM)	
	11	1	9X-8256	3	WASHER (6.6X12X2-MM THK)	

M-METRIC PART

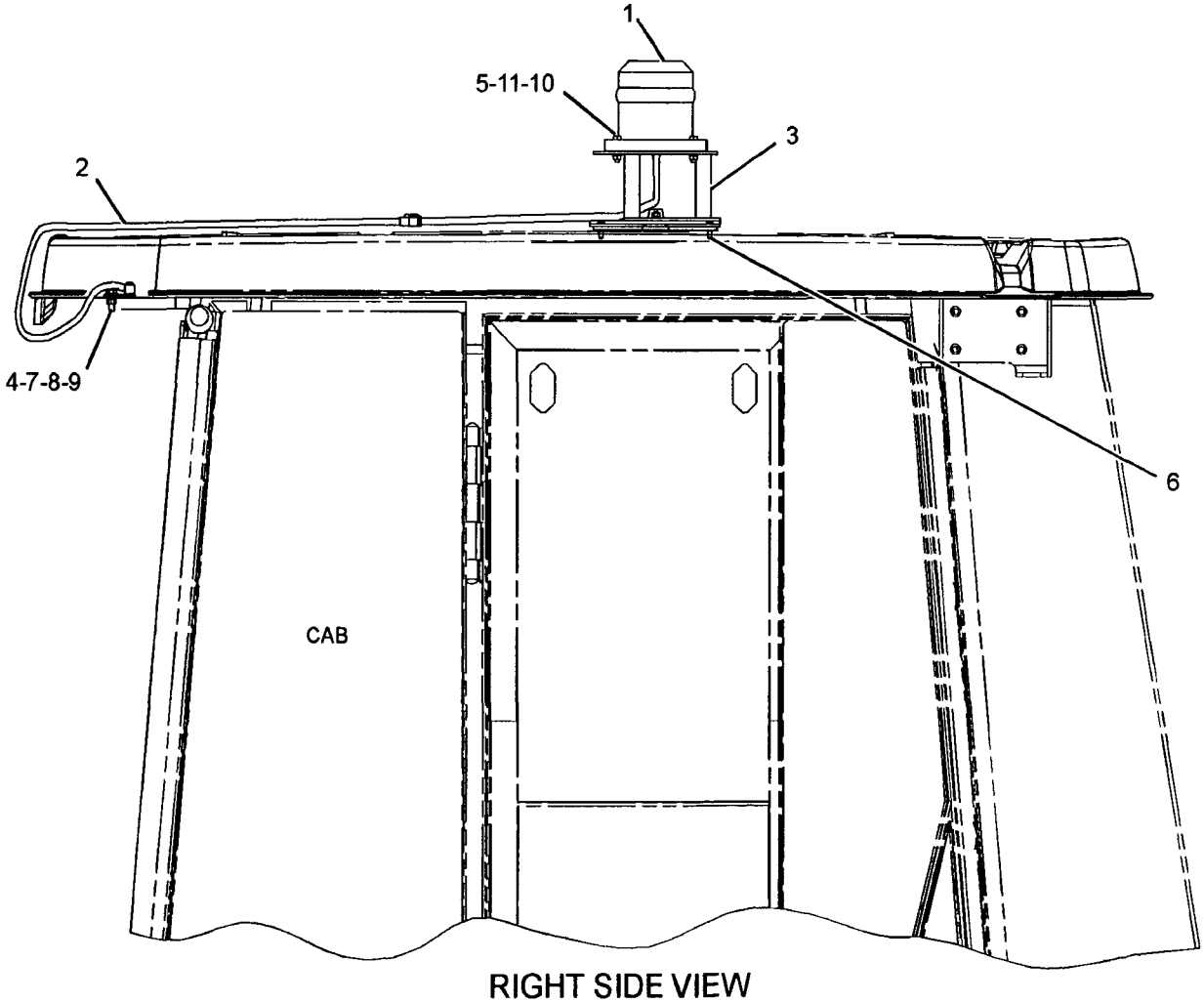

RIGHT SIDE VIEW

GRAPHIC #1 **<END>** g01228914

235-8200 PLUG GP-CONNECTOR-

ENGINE HARNESS, PROTECTIVE COVER

S/N: KHX1-UP

PART OF 235-1422 ENGINE AR-COMPLETE

SMCS-1403, 1408 **i02199715**

NOTE	REF NO	GRAPHIC REF	PART NUMBER	QTY	PART NAME 1 2 3 4 5 6 (PRODUCT LEVEL)	SEE PAGE
	1	1	246-9353	1	PLUG AS	
	1A	1	8T-8737	8	PLUG-SEAL	
	1B	1	102-8806	1	KIT-RECEPTACLE (8-PIN)	
					(INCLUDES RECEPTACLE AS AND WEDGE)	
	2	1	3S-2093	1	STRAP-CABLE	

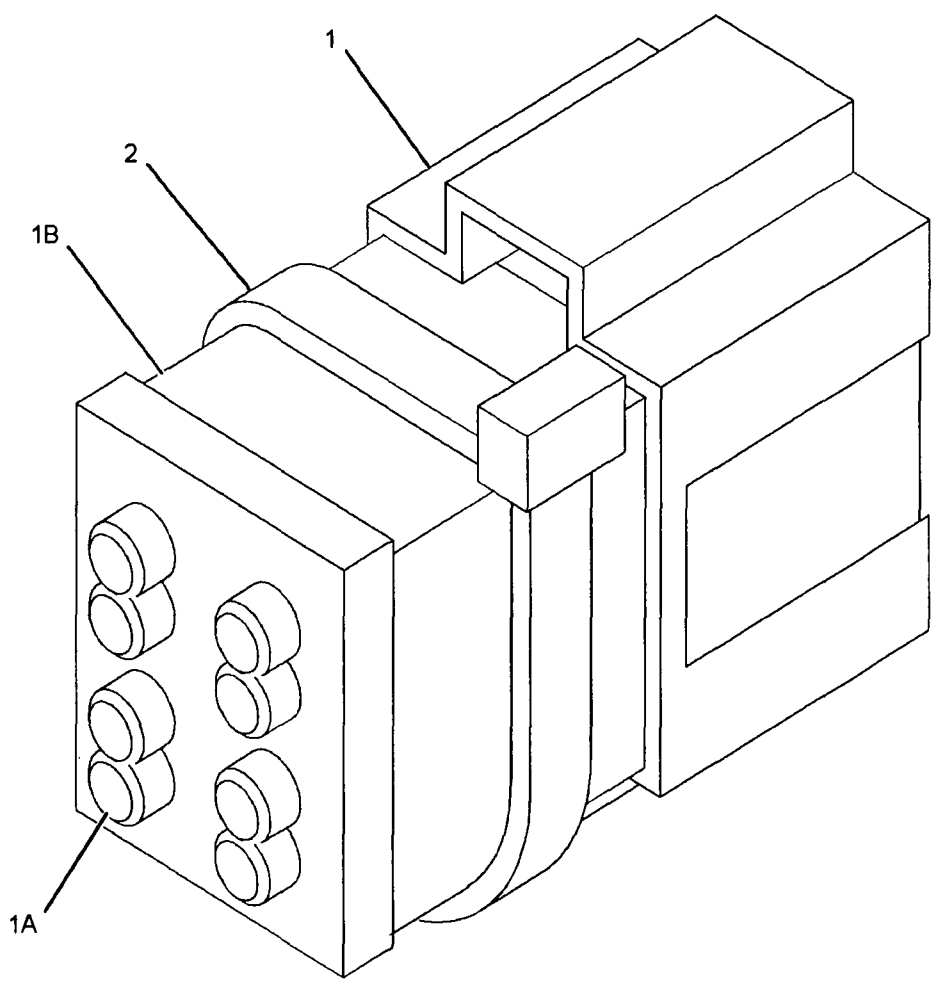

GRAPHIC #1

<END>

g01105455

241-0645 RECEPTACLE GP-AUXILIARY START-JUMP START

S/N: N1A1-UP

AN ATTACHMENT

SMCS-1463 **i02238868**

NOTE	REF NO	GRAPHIC REF	PART NUMBER	QTY	PART NAME 1 2 3 4 5 6 (PRODUCT LEVEL)	SEE PAGE
	1	1	246-6196	1	RECEPTACLE AS	
		1	1S-7251	1	TERMINAL-RING (FOR 1/2-IN BOLT)	
E		1	125-7876		TUBE-HEAT SHRINK (10-CM)	
E		1	159-8049		CABLE (00-GA, RED) (53-CM)	
E		1	159-8050		CABLE (00-GA, BLACK) (26-CM)	
		1	216-7790	1	TERMINAL-RING	
	2	1	205-7299	1	CLIP	
M	3	1	5C-7261	4	NUT (M8X1.25-THD)	
	4	1	8S-2634	1	COVER AS	
		1	2P-2975	2	SEAL-O-RING	
	5	1	8T-4121	1	WASHER-HARD (11X21X2.5-MM THK)	
M	6	1	8T-4137	1	BOLT (M10X1.5X20-MM)	
	7	1	8T-4224	8	WASHER-HARD (8.8X16X2-MM THK)	
M	8	1	8T-7547	4	BOLT (M8X1.25X30-MM)	

E-ORDER BY THE CENTIMETER
M-METRIC PART

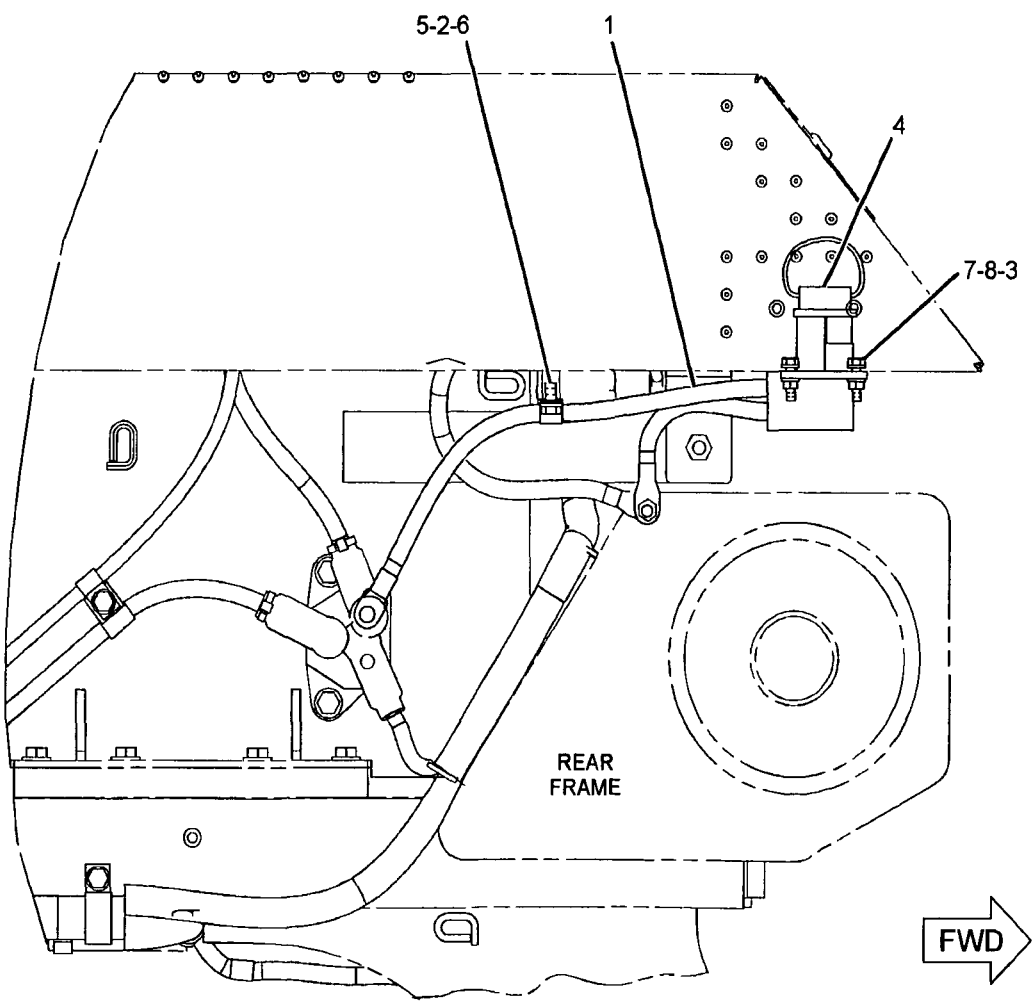

TOP VIEW

GRAPHIC #1

<END>

g01130186

180-0156 SENSOR & MTG GP-LIFT POSITION

S/N: N1A1-UP
PART OF 237-0235 ELECTRICAL AR
ALSO AN ATTACHMENT

SMCS-5736 **i02266576**

NOTE	REF NO	GRAPHIC REF	PART NUMBER	QTY	PART NAME 1 2 3 4 5 6 (PRODUCT LEVEL)	SEE PAGE
	1	1	7X-7662	2	ROD END	
	2	1	126-2743	3	SPACER (12X20X9-MM THK)	
	3	1	130-5300	1	CLIP	
	4	1	166-0599	1	ROD	
Y	5	1	169-0417	1	SENSOR GP-POSITION (LIFT)	190
	6	1	179-7000	1	ARM	
	7	1	199-4064	1	BRACKET AS	
	8	1	214-3616	1	PLATE	
	9	1	214-3617	1	PLATE	
M	10	1	160-8500	4	NUT (M8X1.25-THD)	
M	11	1	5C-7261	5	NUT (M8X1.25-THD)	
M	12	1	7X-0818	5	BOLT (M8X1.25X45-MM)	
	13	1	8T-4121	4	WASHER-HARD (11X21X2.5-MM THK)	
M	14	1	8T-4133	3	NUT (M10X1.5 THD)	
M	15	1	8T-4137	1	BOLT (M10X1.5X20-MM)	
	16	1	8T-4223	2	WASHER-HARD (13.5X25.5X3-MM THK)	
	17	1	8T-4224	10	WASHER-HARD (8.8X16X2-MM THK)	
M	18	1	8T-4956	2	BOLT (M12X1.75X35-MM)	
M	19	1	8T-4971	2	BOLT (M6X1X30-MM)	
	20	1	9X-8256	2	WASHER (6.6X12X2-MM THK)	

M-METRIC PART
Y-SEPARATE ILLUSTRATION

180-0156 SENSOR & MTG GP-LIFT POSITION *(contd.)* i02266576

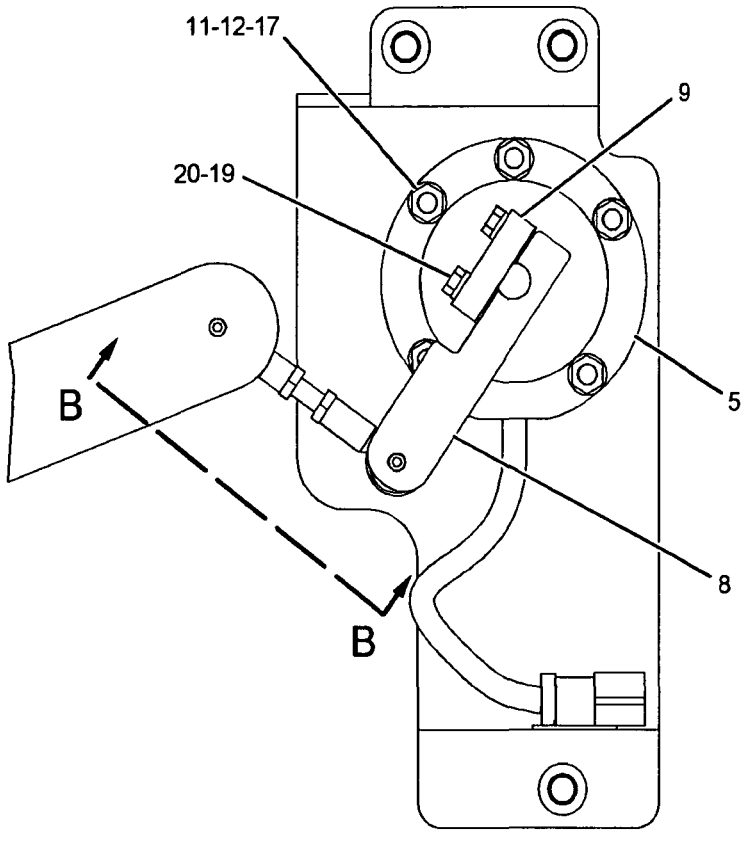

VIEW A-A

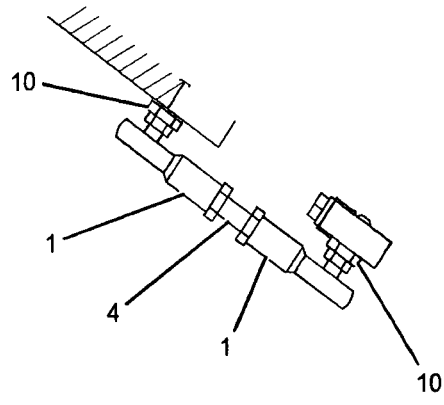

SECTION B-B

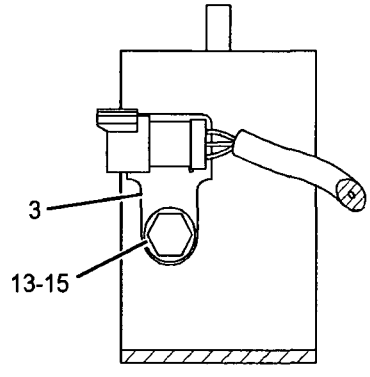

SECTION C-C

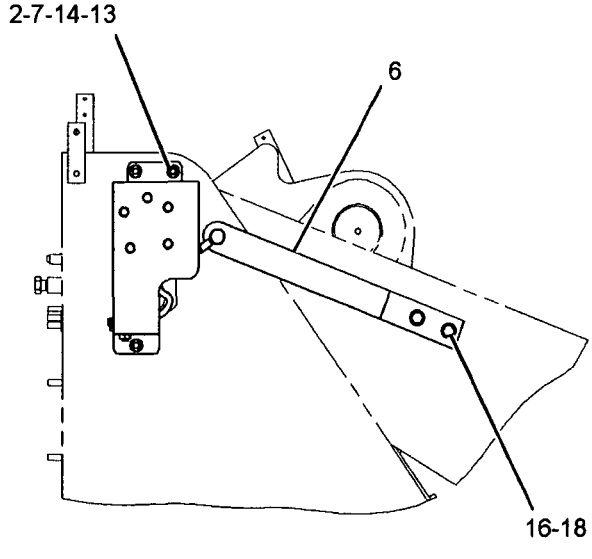

RIGHT SIDE VIEW

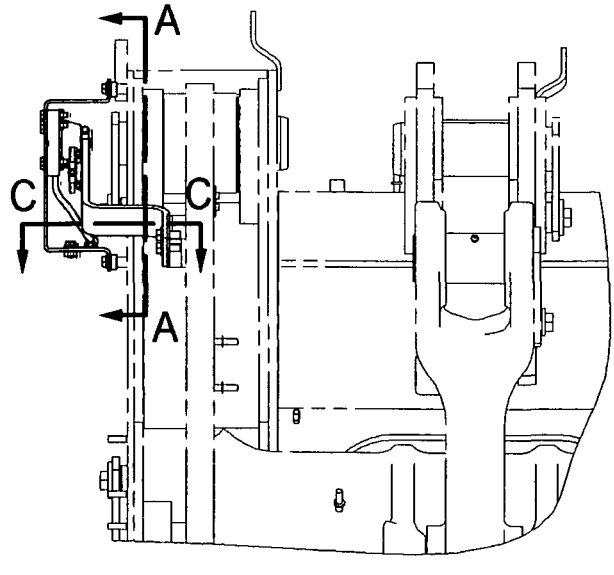

FRONT VIEW

GRAPHIC #1 **<END>** g01136878

239-4850 SENSOR & MTG GP-PRESSURE–LIFT CYLINDER OIL

S/N: N1A1-UP

PART OF 244-3253, 263-5255 CONTROL AR-AUTODIG, 282-6443 CONVERSION AR-AUTODIG, 244-4478 MONITOR AR-PAYLOAD AN ATTACHMENT

SMCS-1923 **i02460581**

NOTE	REF NO	GRAPHIC REF	PART NUMBER	QTY	PART NAME 1 2 3 4 5 6 (PRODUCT LEVEL)	SEE PAGE
	1	1	**5I-4376**	1	FITTING	
	2	1	**6V-0852**	1	CAP-DUST	
	3	1	**164-6871**	1	ADAPTER AS	
		1	**122-2222**	1	ADAPTER	
		1	**6V-8397**	1	SEAL-O-RING	
Y	4	1	**221-3416**	1	SENSOR GP-PRESSURE (LIFT CYLINDER OIL)	197
	5	1	*164-5567*	1	FITTING AS	
		1	**3J-1907**	1	SEAL-O-RING	
		1	**6V-3965**	1	FITTING AS (QUICK DISCONNECT)	
	6	1	**3J-1907**	1	SEAL-O-RING	

Y-SEPARATE ILLUSTRATION

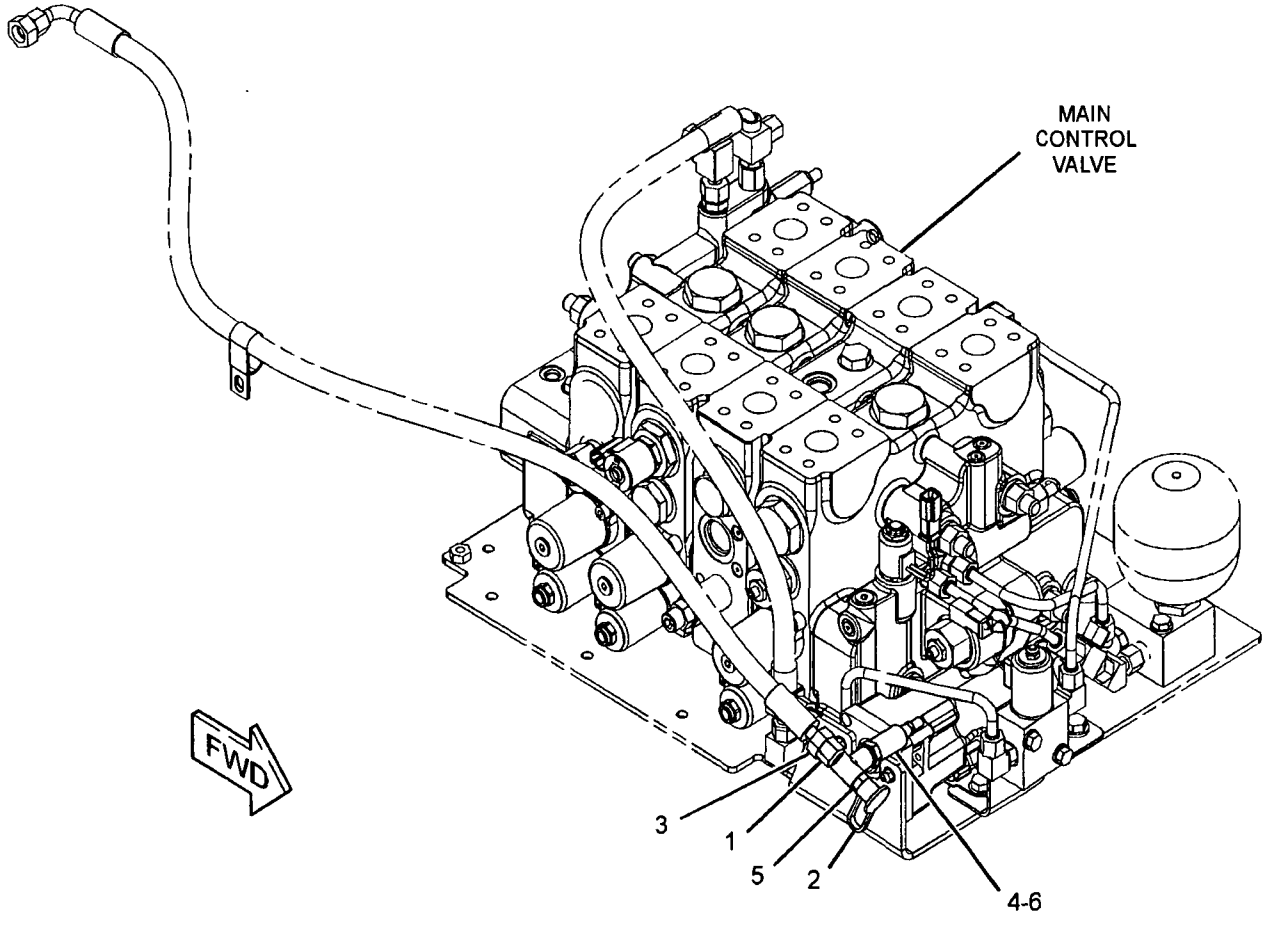

GRAPHIC #1 **<END>** g01198997

180-0157 SENSOR & MTG GP-TILT POSITION

S/N: N1A1-UP

PART OF 237-0235 ELECTRICAL AR

ALSO AN ATTACHMENT

SMCS-5736 **i02261307**

NOTE	REF NO	GRAPHIC REF	PART NUMBER	QTY	PART NAME 1 2 3 4 5 6 (PRODUCT LEVEL)	SEE PAGE
	1	1	7X-7662	2	ROD END	
	2	1	130-5300	1	CLIP	
Y	3	1	169-0417	1	SENSOR GP-POSITION (TILT)	190
	4	1	208-3908	1	COVER	
	5	1	210-5682	1	ARM AS	
	6	1	210-5683	1	COVER AS	
	7	1	213-0364	1	BRACKET AS	
	8	1	214-3616	1	PLATE	
	9	1	214-3617	1	PLATE	
M	10	1	160-8500	2	NUT (M8X1.25-THD)	
	11	1	4D-7794	1	CLIP	
M	12	1	5C-7261	5	NUT (M8X1.25-THD)	
M	13	1	7X-0818	5	BOLT (M8X1.25X45-MM)	
	14	1	7X-7729	4	WASHER (11X25X3-MM THK)	
	15	1	8T-4121	6	WASHER-HARD (11X21X2.5-MM THK)	
M	16	1	8T-4136	4	BOLT (M10X1.5X25-MM)	
M	17	1	8T-4137	2	BOLT (M10X1.5X20-MM)	
M	18	1	8T-4189	1	BOLT (M8X1.25X20-MM)	
M	19	1	8T-4195	4	BOLT (M10X1.5X30-MM)	
	20	1	8T-4224	11	WASHER-HARD (8.8X16X2-MM THK)	
M	21	1	8T-4971	2	BOLT (M6X1X30-MM)	
	22	1	9X-8256	2	WASHER (6.6X12X2-MM THK)	

M-METRIC PART
Y-SEPARATE ILLUSTRATION

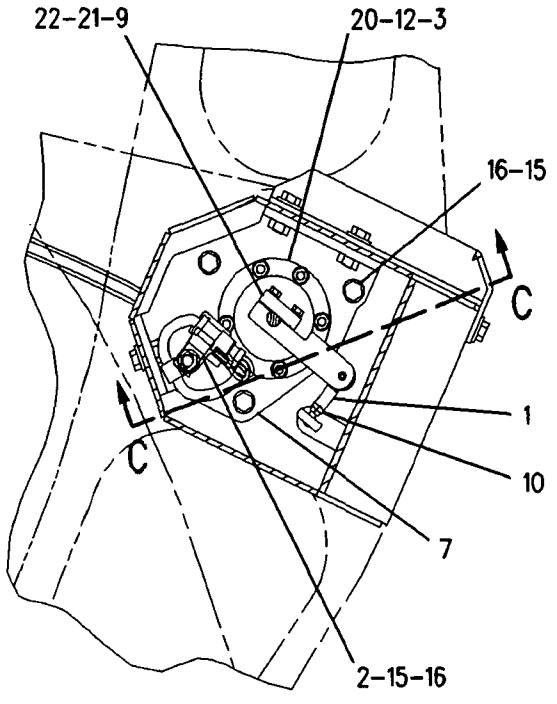

SECTION A-A

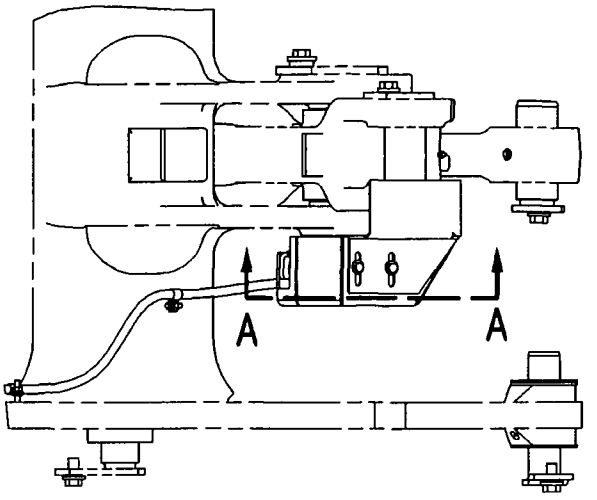

TOP VIEW

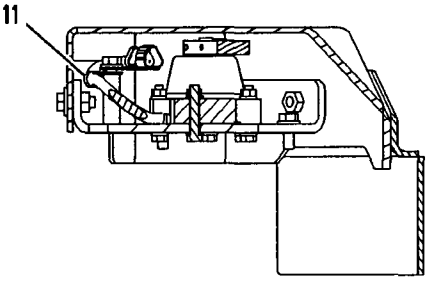

SECTION C-C

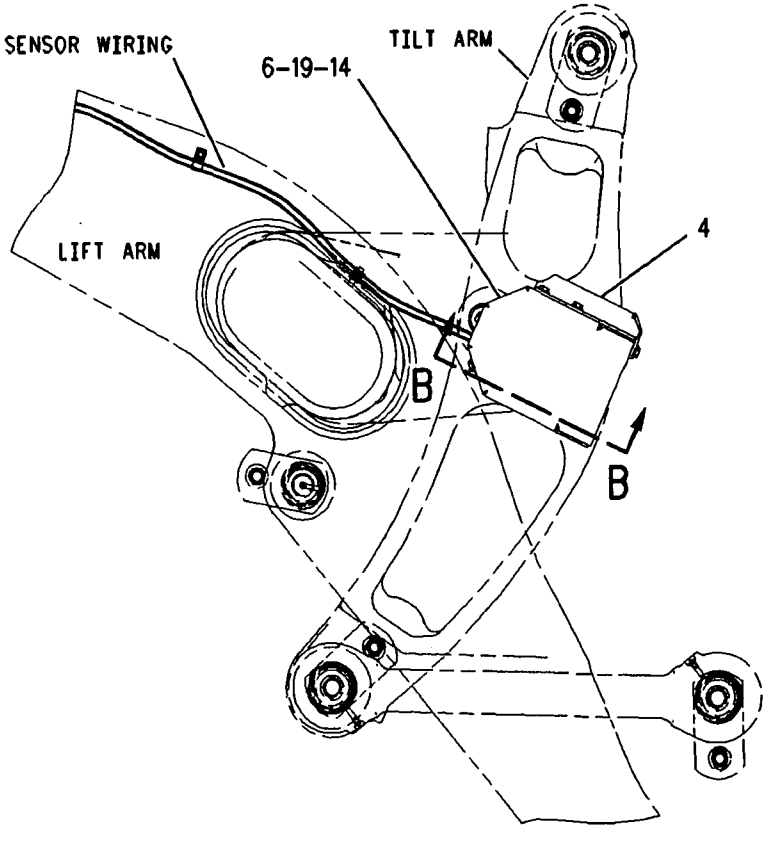

RIGHT SIDE VIEW

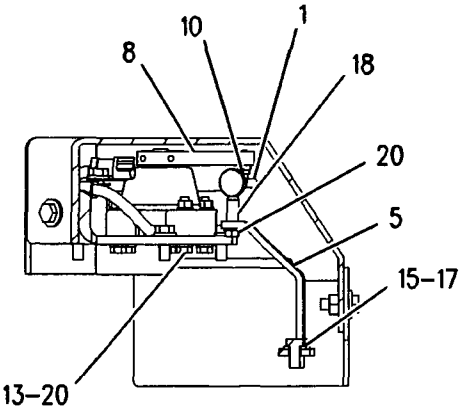

SECTION B-B

GRAPHIC #1 **<END>** g00919271

238-4808 SENSOR GP-ENGINE

S/N: KHX1-UP

PART OF 235-1422 ENGINE AR-COMPLETE

SMCS-1718, 1906, 1907, 1912, 1917, 1923, 1924, 1928, 1929, 7400

i02288272

NOTE	REF NO	GRAPHIC REF	PART NUMBER	QTY	PART NAME 1 2 3 4 5 6 (PRODUCT LEVEL)	SEE PAGE
	1	1	**3E-2332**	1	ELBOW	
	2	1	**9X-0262**	1	ADAPTER	
	3	1	*171-6718*	1	TEE AS	
	3A	1	**3K-0360**	1	SEAL-O-RING	
		1	**105-7704**	1	TEE	
Y	4	1	*197-8391*	1	SENSOR GP-TEMPERATURE (AIR INLET MANIFOLD)	203
Y	5	1	*197-8392*	1	SENSOR GP-TEMPERATURE (WATER, COOLANT)	204
Y	6	1	*197-8393*	1	SENSOR GP-PRESSURE (ATMOSPHERIC)	194
Y	7	1	*197-8394*	1	SENSOR GP-PRESSURE (ENGINE OIL)	195
Y	8	1	*210-1747*	1	SENSOR GP-PRESSURE (BOOST)	196
Y	9	1	*236-6220*	1	SENSOR GP-PRESSURE (INJECTION ACTUATION)	199
Y	10	1	*236-6221*	1	SENSOR GP-SPEED (ENGINE SPEED, TIMING)	201
	11	1	*244-3712*	1	PLUG AS	
	11A	1	**214-7568**	1	SEAL-O-RING	
		1	**9S-4191**	1	PLUG-O RING	
	12	1	*169-5861*	1	PLUG AS	
	12A	1	**5P-7814**	1	SEAL-O-RING	
		1	**3K-8460**	1	PLUG	
	13	1	*183-3406*	1	PLUG AS	
	13A	1	**6V-5049**	1	SEAL-O-RING	
		1	**9S-4191**	1	PLUG-O RING	
	14	1	*183-7263*	1	PLUG AS	
	14A	1	**3J-7354**	1	SEAL-O-RING	
		1	**9S-8002**	1	PLUG	
	15	1	**3E-4352**	1	WASHER-HARD (8.8X20.5X2.5-MM THK)	
M	16	1	**6V-3940**	1	BOLT (M8X1.25X25-MM)	
	17	1	**6V-5048**	1	SEAL-O-RING	
	18	1	**6V-5049**	1	SEAL-O-RING	

M-METRIC PART
Y-SEPARATE ILLUSTRATION

238-4808 **SENSOR GP-ENGINE** *(contd.)* **i02288272**

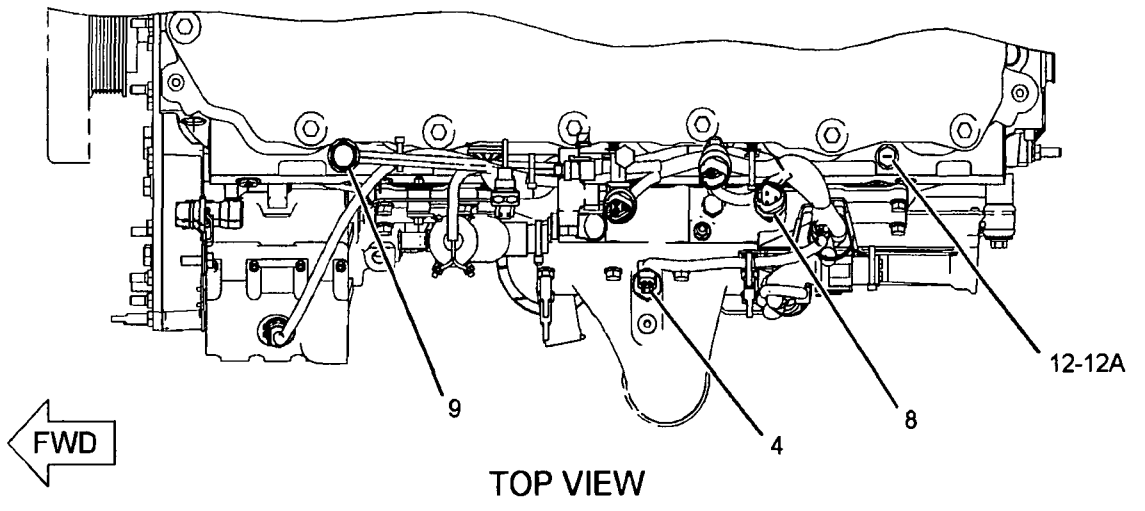

TOP VIEW

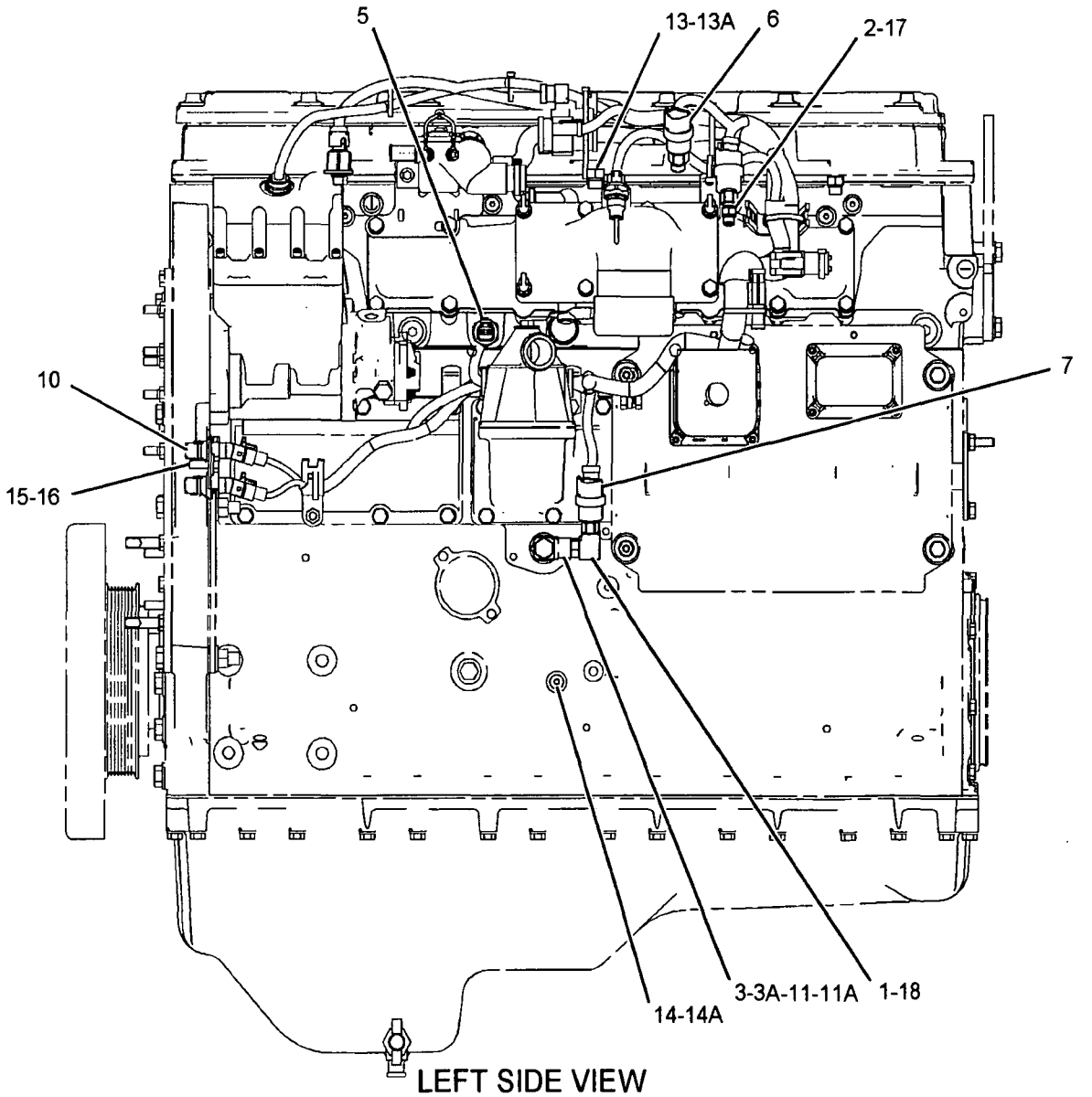

LEFT SIDE VIEW

GRAPHIC #1 **<END>** g01118746

169-0417 SENSOR GP-POSITION-LIFT, TILT

S/N: N1A1-UP

PART OF 180-0156 SENSOR & MTG GP-LIFT POSITION, 180-0157 SENSOR & MTG GP-TILT POSITION

ALSO AN ATTACHMENT

SMCS-4269, 5702, 5736, 5737, 7494 **i02015060**

NOTE	REF NO	GRAPHIC REF	PART NUMBER	QTY	PART NAME 1 2 3 4 5 6 (PRODUCT LEVEL)	SEE PAGE
	1	1	*169-0418*	1	SENSOR AS-POSITION (LIFT)	
M		1	**6V-9671**	4	SCREW-MACHINE (M3X0.5X12-MM)	
		1	**172-1483**	4	SPACER	
		1	**191-9253**	4	WASHER	
	2	1	**102-8803**	1	KIT-RECEPTACLE (3-PIN)	
					(INCLUDES RECEPTACLE AS & WEDGE)	
	3	1	**9X-3401**	3	PIN-CONNECTOR (16-GA TO 18-GA)	
	4	1	**3E-3371**	1	WEDGE-RECEPTACLE LOCK (3-PIN)	
E	5	1	**119-3662**		TUBE-HEAT SHRINK (5CM)	
E	6	1	**9X-1813**		SLEEVE (17CM)	
	7	1	**172-1482**	1	CLAMP	
M	8	1	**3E-8048**	2	SCREW-MACHINE (M3X0.5X6-MM)	

E-ORDER BY THE CENTIMETER
M-METRIC PART

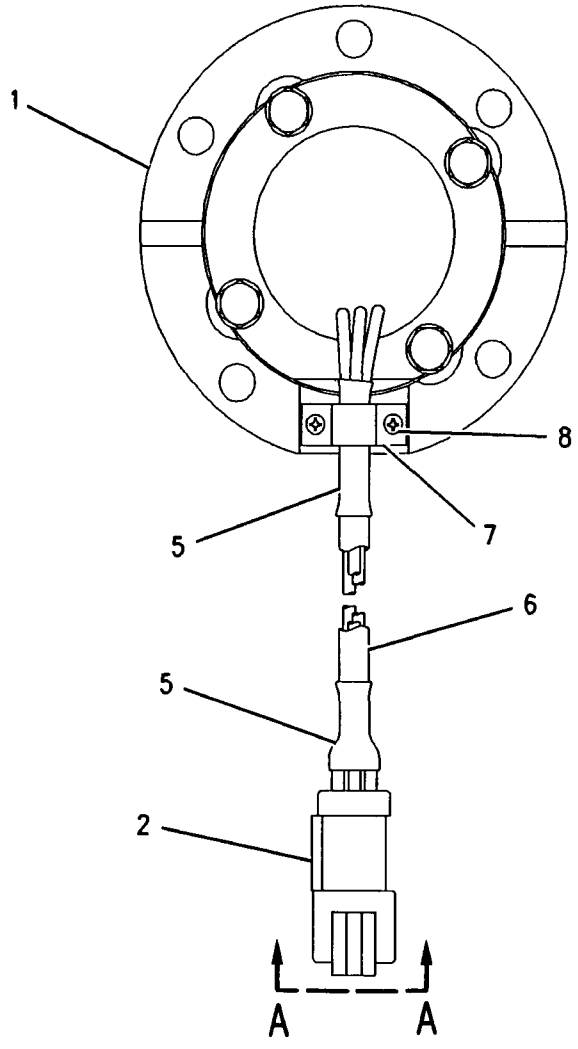

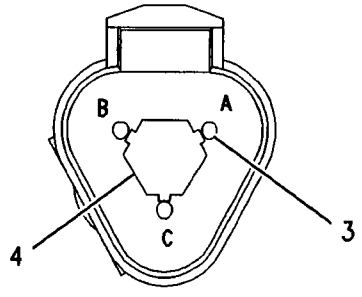

VIEW A-A

GRAPHIC #1 **<END>** g00744970

204-7949 SENSOR GP-POSITION–THROTTLE

S/N: N1A1-UP

PART OF 201-8616 PEDAL GP-GOVERNOR

ALSO AN ATTACHMENT

SMCS-4269, 5702, 5736, 5737, 7494 **i01855778**

NOTE	REF NO	GRAPHIC REF	PART NUMBER	QTY	PART NAME 1 2 3 4 5 6 (PRODUCT LEVEL)	SEE PAGE
	1	1	102-8803	1	KIT-RECEPTACLE (3-PIN)	
					(INCLUDES RECEPTACLE AS & WEDGE)	
	2	1	3E-3371	1	WEDGE-RECEPTACLE LOCK (3-PIN)	
	3	1	186-3735	3	PIN-CONNECTOR (16-GA TO 18-GA)	

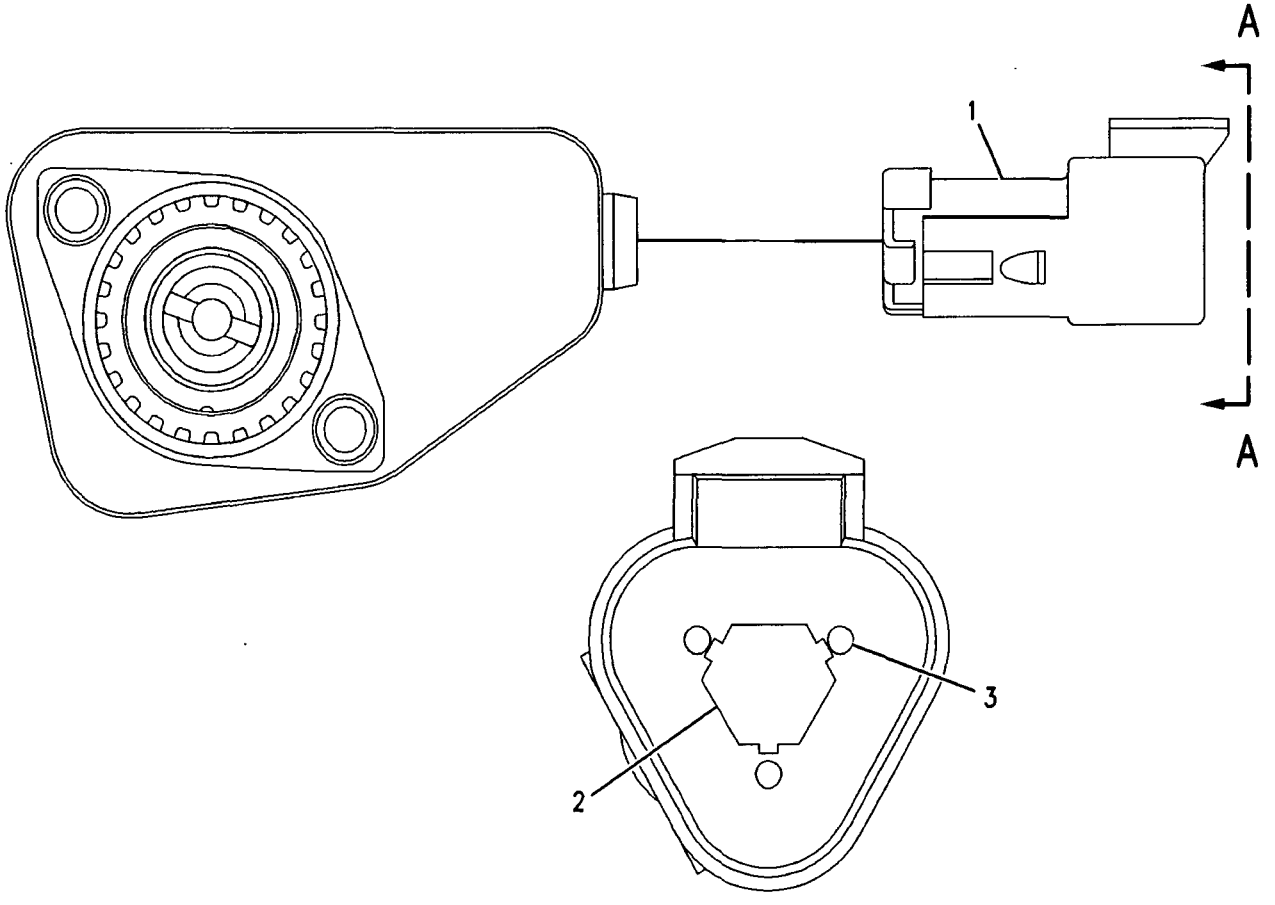

VIEW A-A

GRAPHIC #1 **<END>** g00925280

194-6722 SENSOR GP-PRESSURE–TURBOCHARGER INLET

S/N: N1A1-UP

PART OF 241-0640 WIRING GP-ENGINE

ALSO AN ATTACHMENT

SMCS-1408, 1925, 7494 **i01821057**

NOTE	REF NO	GRAPHIC REF	PART NUMBER	QTY	PART NAME 1 2 3 4 5 6 (PRODUCT LEVEL)	SEE PAGE
E	1	1	**9X-1813**		SLEEVE (34CM)	
	2	1	**155-2260**	1	KIT-CONNECTING PLUG (3-PIN)	
					(INCLUDES PLUG AS AND WEDGE)	
	3	1	*180-9340*	3	SOCKET-CONNECTOR	
	4	1	**3E-3368**	1	WEDGE-PLUG LOCK (3-PIN)	

E-ORDER BY THE CENTIMETER

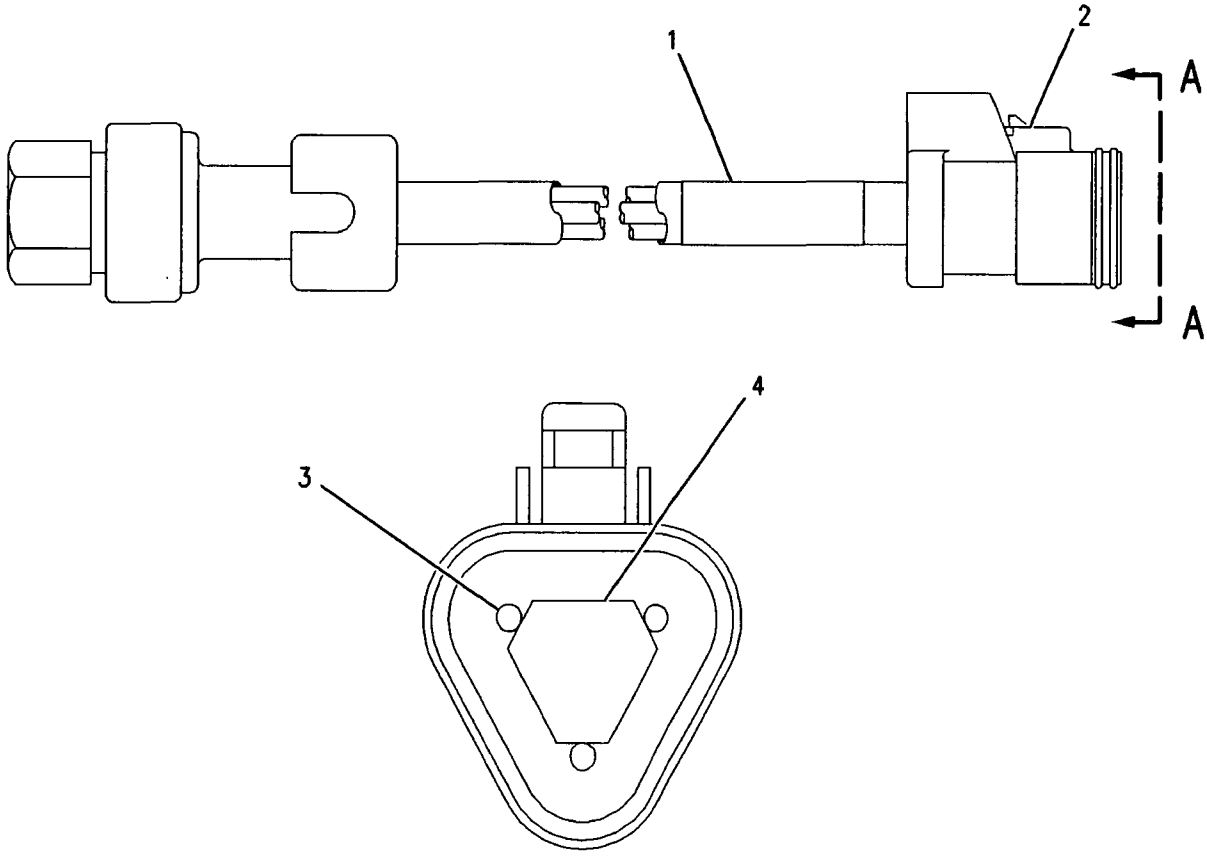

VIEW A-A

GRAPHIC #1 **<END>** g00851220

ELECTRICAL AND STARTING SYSTEM

194-6725 SENSOR GP-PRESSURE–FUEL

S/N: KHX1-UP

PART OF 237-9823 FILTER & LINES GP-FUEL

SMCS-1408, 1925, 7494 **i02301143**

NOTE	REF NO	GRAPHIC REF	PART NUMBER	QTY	PART NAME 1 2 3 4 5 6 (PRODUCT LEVEL)	SEE PAGE
E	1	1	9X-1813		SLEEVE (34-CM)	
	2	1	155-2260	1	KIT-CONNECTING PLUG (3-PIN)	
					(INCLUDES PLUG AS AND WEDGE)	
	3	1	180-9340	3	SOCKET-CONNECTOR	
	4	1	3E-3368	1	WEDGE-PLUG LOCK (3-PIN)	

E-ORDER BY THE CENTIMETER

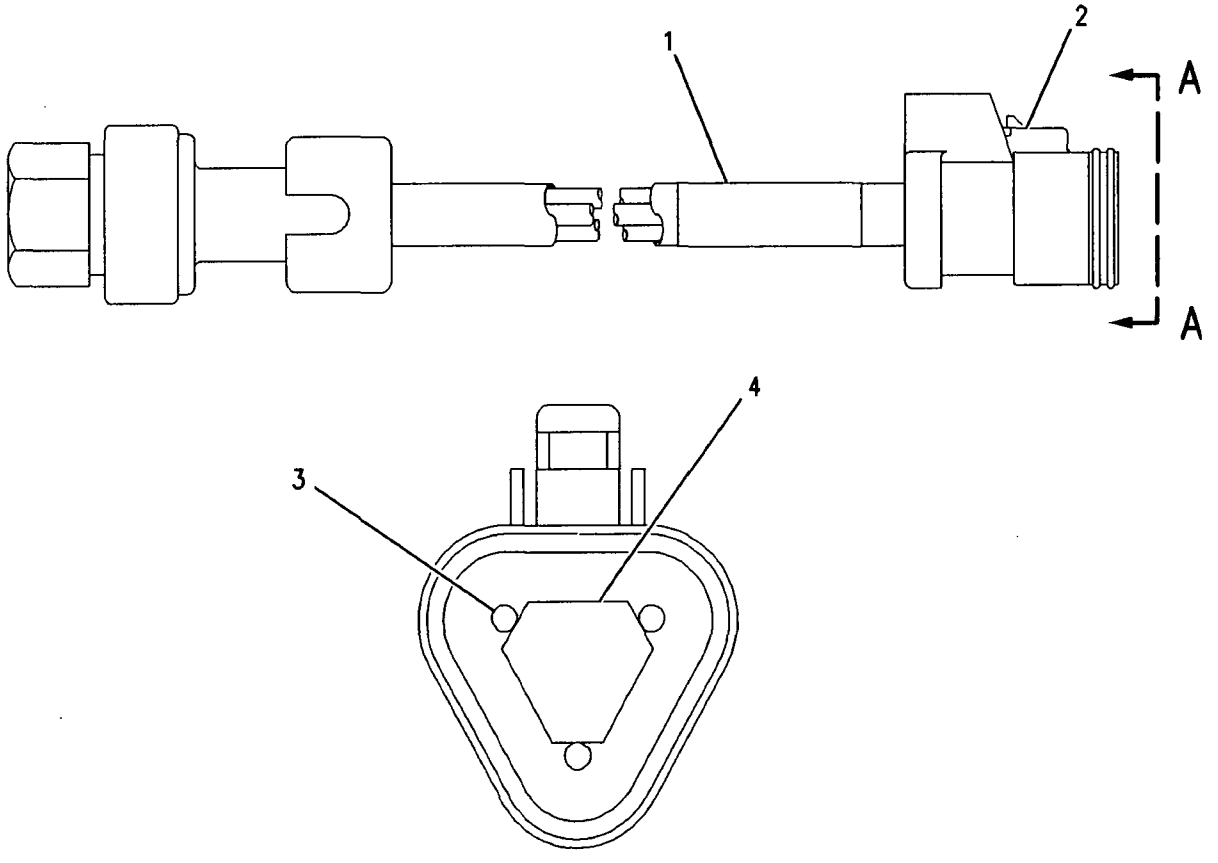

VIEW A-A

GRAPHIC #1 **<END>** g00851220

197-8393 SENSOR GP-PRESSURE–ATMOSPHERIC AIR

S/N: KHX1-UP

PART OF 238-4808 SENSOR GP-ENGINE

SMCS-1408, 1925, 7494 **i02343514**

NOTE	REF NO	GRAPHIC REF	PART NUMBER	QTY	PART NAME 1 2 3 4 5 6 (PRODUCT LEVEL)	SEE PAGE
	1	1	**161-1703**	1	SENSOR GP-PRESSURE	
	2	1	**6V-5049**	1	SEAL-O-RING	

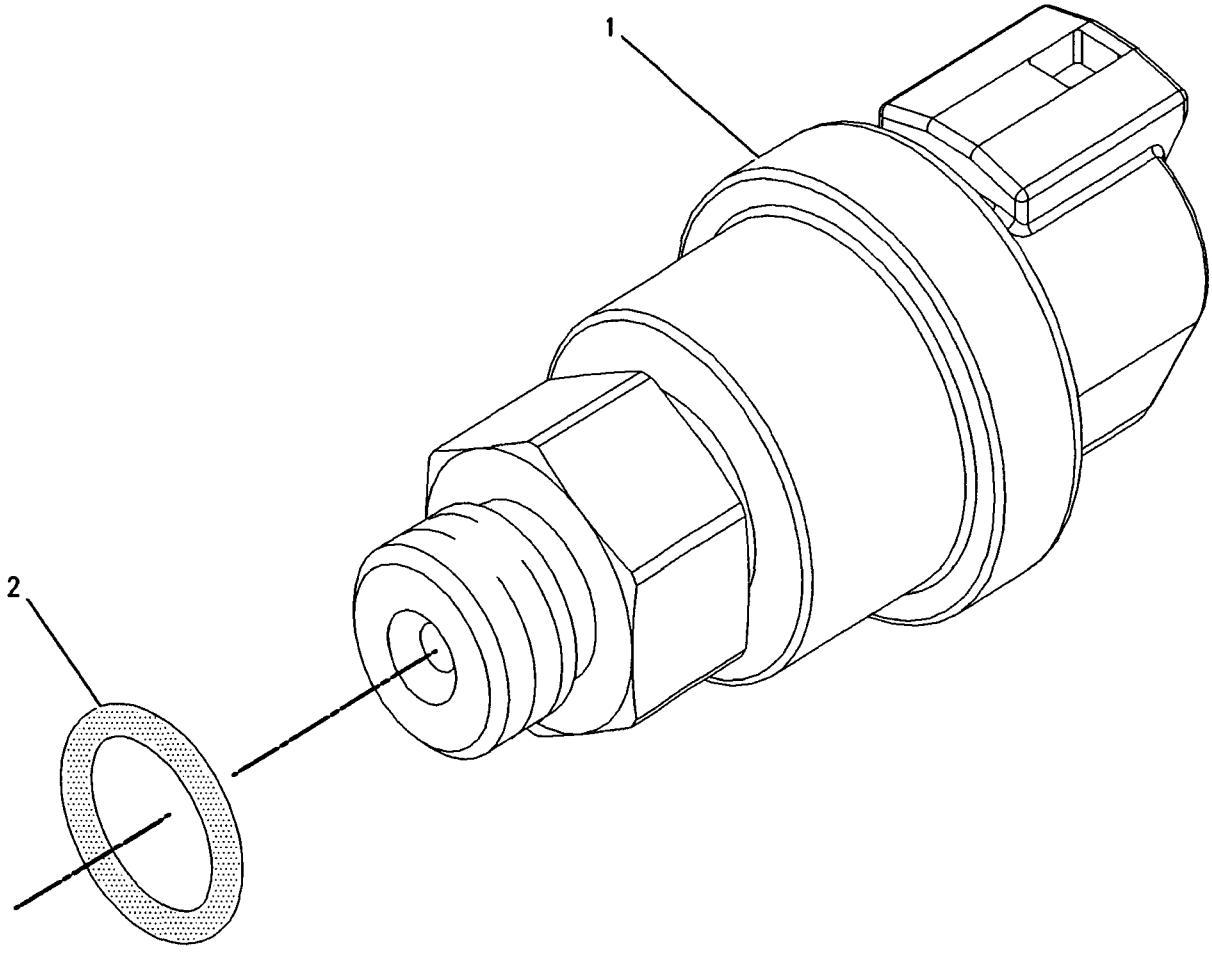

GRAPHIC #1 **<END>** g00855973

197-8394 SENSOR GP-PRESSURE–ENGINE OIL

S/N: KHX1-UP

PART OF 238-4808 SENSOR GP-ENGINE

SMCS-1408, 1925, 7494 **i02343513**

NOTE	REF NO	GRAPHIC REF	PART NUMBER	QTY	PART NAME 1 2 3 4 5 6 (PRODUCT LEVEL)	SEE PAGE
	1	1	**161-1705**	1	SENSOR GP-PRESSURE	
	2	1	**6V-5048**	1	SEAL-O-RING	

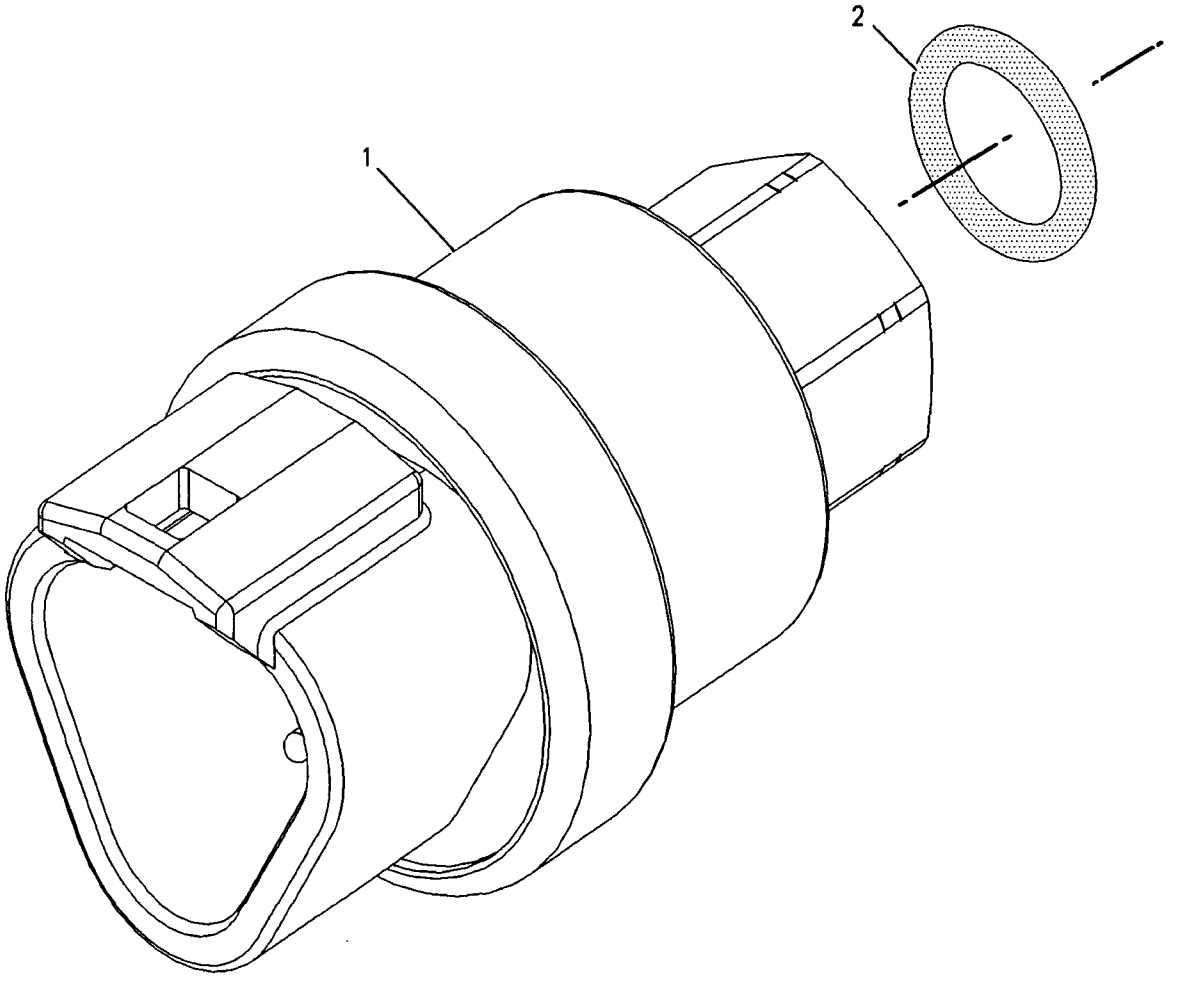

GRAPHIC #1 **<END>** g00856107

210-1747 SENSOR GP-PRESSURE–BOOST

S/N: KHX1-UP

PART OF 238-4808 SENSOR GP-ENGINE

SMCS-1408, 1925, 7494 **i02343512**

NOTE	REF NO	GRAPHIC REF	PART NUMBER	QTY	PART NAME 1 2 3 4 5 6 (PRODUCT LEVEL)	SEE PAGE
	1	1	**161-1704**	1	SENSOR GP-PRESSURE	
	2	1	**6V-5048**	1	SEAL-O-RING	

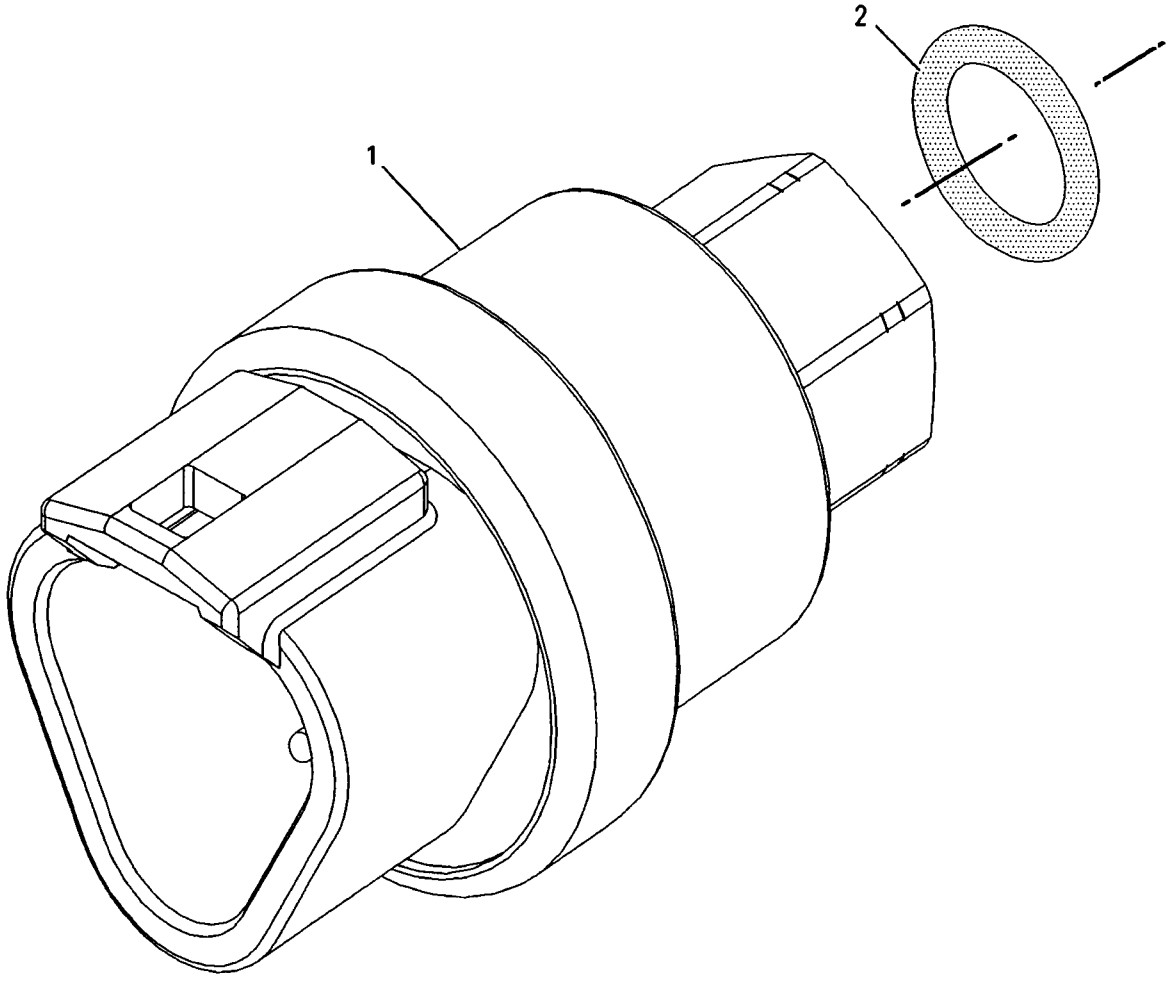

GRAPHIC #1 **<END>** g00856107

221-3416 SENSOR GP-PRESSURE–LIFT CYLINDER OIL

S/N: N1A1-UP

PART OF 239-4850 SENSOR & MTG GP-PRESSURE AN ATTACHMENT

SMCS-1408, 1925, 7494 **i02415323**

NOTE	REF NO	GRAPHIC REF	PART NUMBER	QTY	PART NAME 1 2 3 4 5 6 (PRODUCT LEVEL)	SEE PAGE
	1	1	**155-2260**	1	KIT-CONNECTING PLUG (3-PIN)	
					(INCLUDES PLUG AS AND WEDGE)	
	2	1	**180-9340**	3	SOCKET-CONNECTOR	
	3	1	**155-2276**	1	WEDGE-PLUG LOCK (3-PIN)	

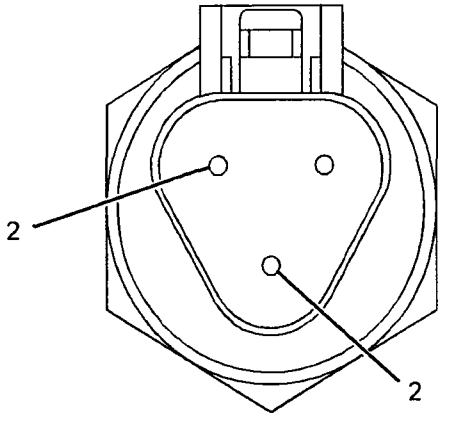

VIEW A-A

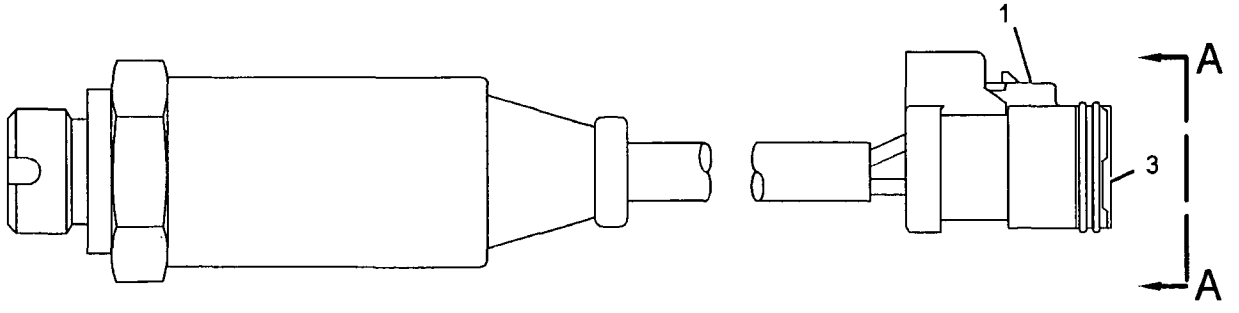

GRAPHIC #1 **<END>** g01175734

224-4536 SENSOR GP-PRESSURE–INJECTION ACTUATION

S/N: KHX1-UP

PART OF 236-6220 SENSOR GP-PRESSURE

SMCS-1408, 1925, 7494 **i02326547**

NOTE	REF NO	GRAPHIC REF	PART NUMBER	QTY	PART NAME 1 2 3 4 5 6 (PRODUCT LEVEL)	SEE PAGE
E	1	1	9X-1813		SLEEVE (35-CM)	
	2	1	155-2260	1	KIT-CONNECTING PLUG (3-PIN)	
					(INCLUDES PLUG AS AND WEDGE)	
	3	1	194-5226	1	WIRE AS-HARNESS (16-GA TO 18-GA) (INJECTION ACTUATION)	
					–OR–	
		1	194-5227	1	WIRE AS-HARNESS (14-GA WIRE) (INJECTION ACTUATION)	
	4	1	155-2276	1	WEDGE-PLUG LOCK (3-PIN)	

E-ORDER BY THE CENTIMETER

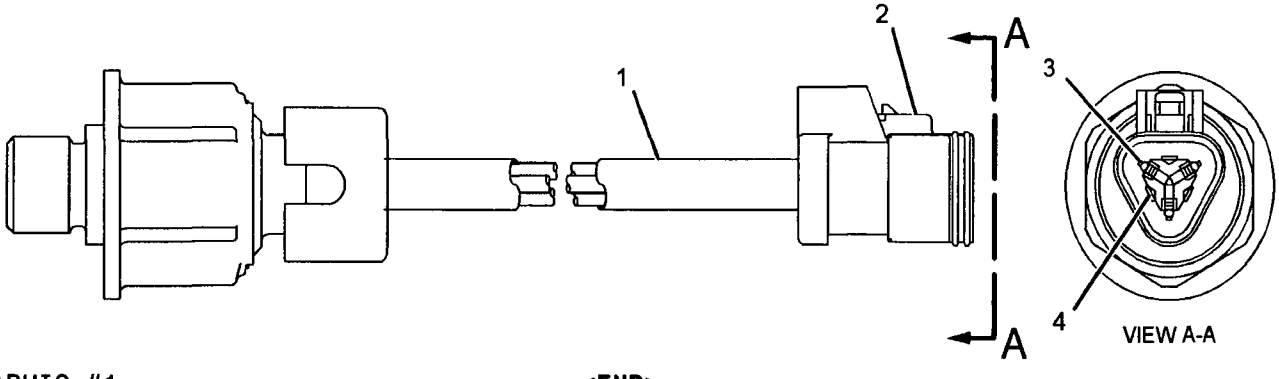

GRAPHIC #1 **<END>** g01040301

236-6220 SENSOR GP-PRESSURE–INJECTION ACTUATION

S/N: KHX1-UP

PART OF 238-4808 SENSOR GP-ENGINE

SMCS-1408, 1925, 7494 **i02386464**

NOTE	REF NO	GRAPHIC REF	PART NUMBER	QTY	PART NAME 1 2 3 4 5 6 (PRODUCT LEVEL)	SEE PAGE
	1	1	214-7567	1	SEAL-O-RING	
Y	2	1	224-4536	1	SENSOR GP-PRESSURE (INJECTION ACTUATION)	198

Y-SEPARATE ILLUSTRATION

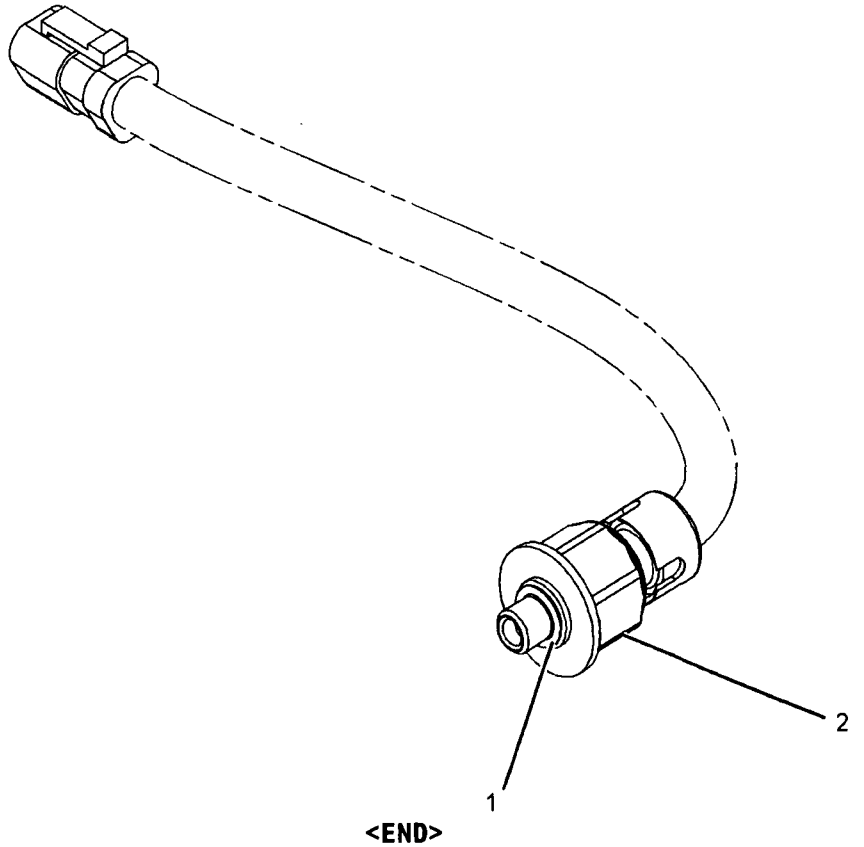

GRAPHIC #1 **<END>** g01054528

193-2550 SENSOR GP-SPEED–MAGNETIC, HIGH OUTPUT–TMSN, TORQUE CONVERTER OUTPUT

S/N: FAH1-UP; FAK1-UP

PART OF 249-8173, 249-8175 GEAR GP-OUTPUT TRANSFER, 241-9022 TORQUE CONVERTER & HOUSING GP

ALSO AN ATTACHMENT

SMCS-1907, 1912, 3175, 4803, 7493 **i01483093**

NOTE	REF NO	GRAPHIC REF	PART NUMBER	QTY	PART NAME 1 2 3 4 5 6 (PRODUCT LEVEL)	SEE PAGE
	1	1	171-5349	1	STRAP-MARKER	
	2	1	102-8802	1	KIT-RECEPTACLE (2-PIN)	
					(INCLUDES RECEPTACLE AS AND WEDGE)	
	3	1	8T-8729	2	PIN-CONNECTOR	
	4	1	3E-3365	1	WEDGE-RECEPTACLE LOCK (2-PIN)	
E	5	1	9X-1813		SLEEVE (14CM)	

E-ORDER BY THE CENTIMETER

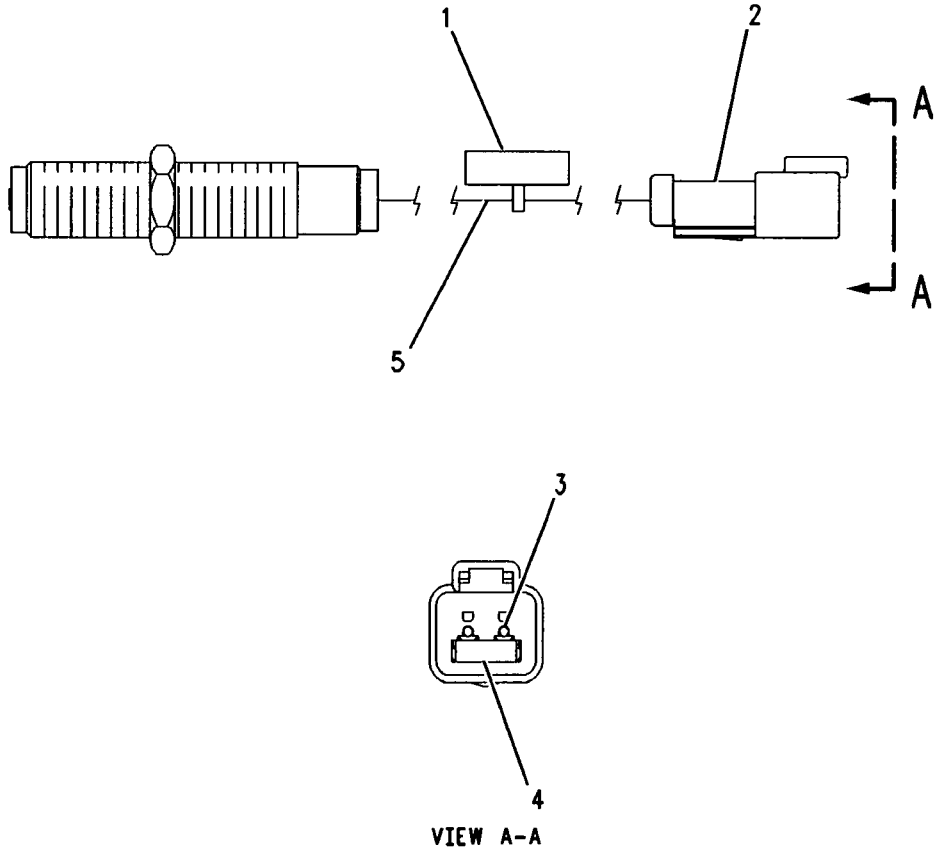

VIEW A-A

GRAPHIC #1 **<END>** g00690327

236-6221 SENSOR GP-SPEED–ENGINE TIMING

S/N: KHX1-UP

PART OF 238-4808 SENSOR GP-ENGINE

SMCS-1907, 1912, 3175, 4803, 7493 i02139097

NOTE	REF NO	GRAPHIC REF	PART NUMBER	QTY	PART NAME 1 2 3 4 5 6 (PRODUCT LEVEL)	SEE PAGE
	1	1	203-3940	2	SEAL-O-RING	
	2	1	245-4630	1	SENSOR GP-SPEED	

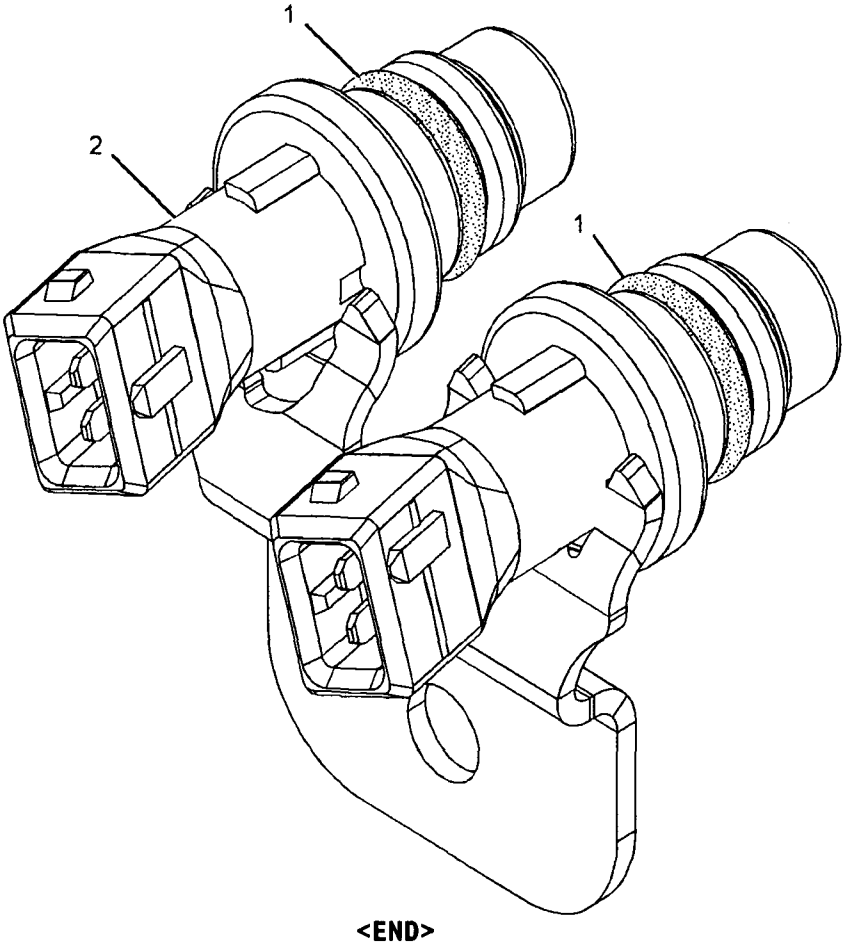

GRAPHIC #1

<END>

g01013894

145-7028 SENSOR GP-TEMPERATURE-

TMSN, TORQUE CONVERTER OIL

S/N: N1A1-UP; FAH1-UP; FAK1-UP

PART OF 247-7830 CONTROL GP-TRANSMISSION HYD, 241-0640 WIRING GP-ENGINE

ALSO AN ATTACHMENT

SMCS-1408, 1906, 1921, 1922, 301T, 429T, 509T i02222923

NOTE	REF NO	GRAPHIC REF	PART NUMBER	QTY	PART NAME 1 2 3 4 5 6 (PRODUCT LEVEL)	SEE PAGE
	1	1	102-8802	1	KIT-RECEPTACLE (2-PIN)	
					(INCLUDES RECEPTACLE AS AND WEDGE)	
E	2	1	153-5043		SLEEVE (3-CM)	
	3	1	8T-8729	2	PIN-CONNECTOR	
	4	1	3E-3365	1	WEDGE-RECEPTACLE LOCK (2-PIN)	

E-ORDER BY THE CENTIMETER

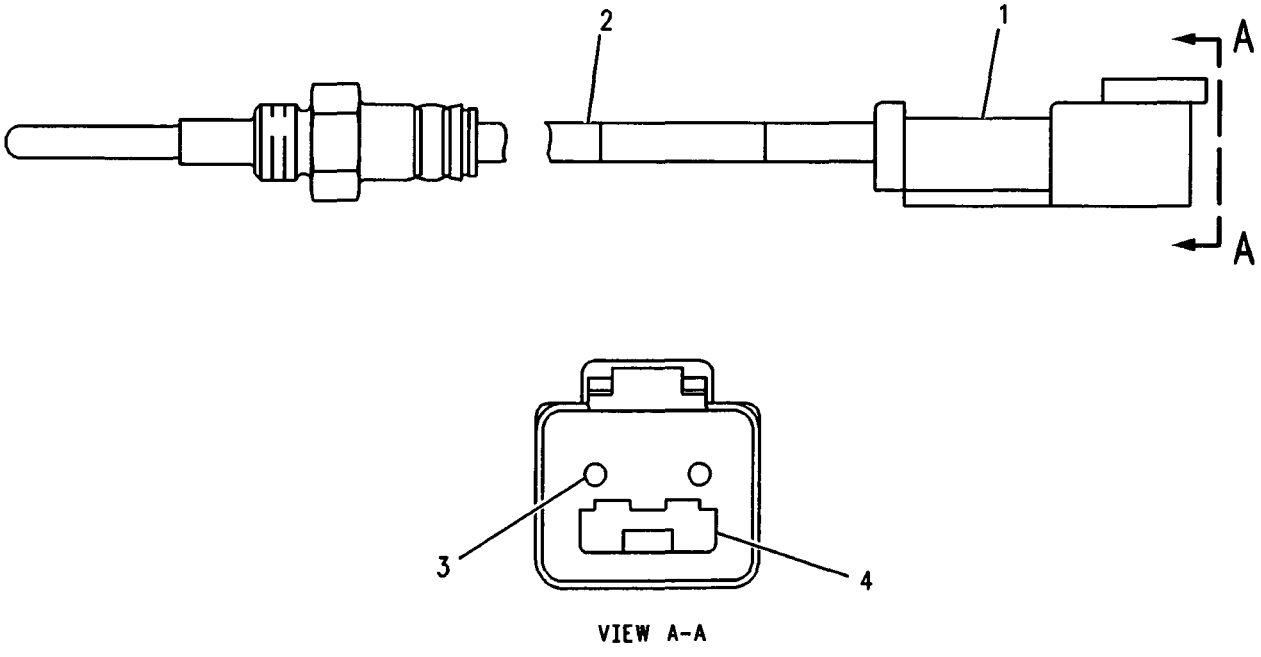

VIEW A-A

GRAPHIC #1 <END> g00334570

197-8391 SENSOR GP-TEMPERATURE–INTAKE AIR

S/N: KHX1-UP

PART OF 238-4808 SENSOR GP-ENGINE

SMCS-1408, 1906, 1921, 1922, 301T, 429T, 509T **i02460592**

NOTE	REF NO	GRAPHIC REF	PART NUMBER	QTY	PART NAME 1 2 3 4 5 6 (PRODUCT LEVEL)	SEE PAGE
	1	1	**130-9811**	1	SENSOR GP-TEMPERATURE (2-PIN) (INTAKE AIR)	
	2	1	**8L-2786**	1	SEAL-O-RING	

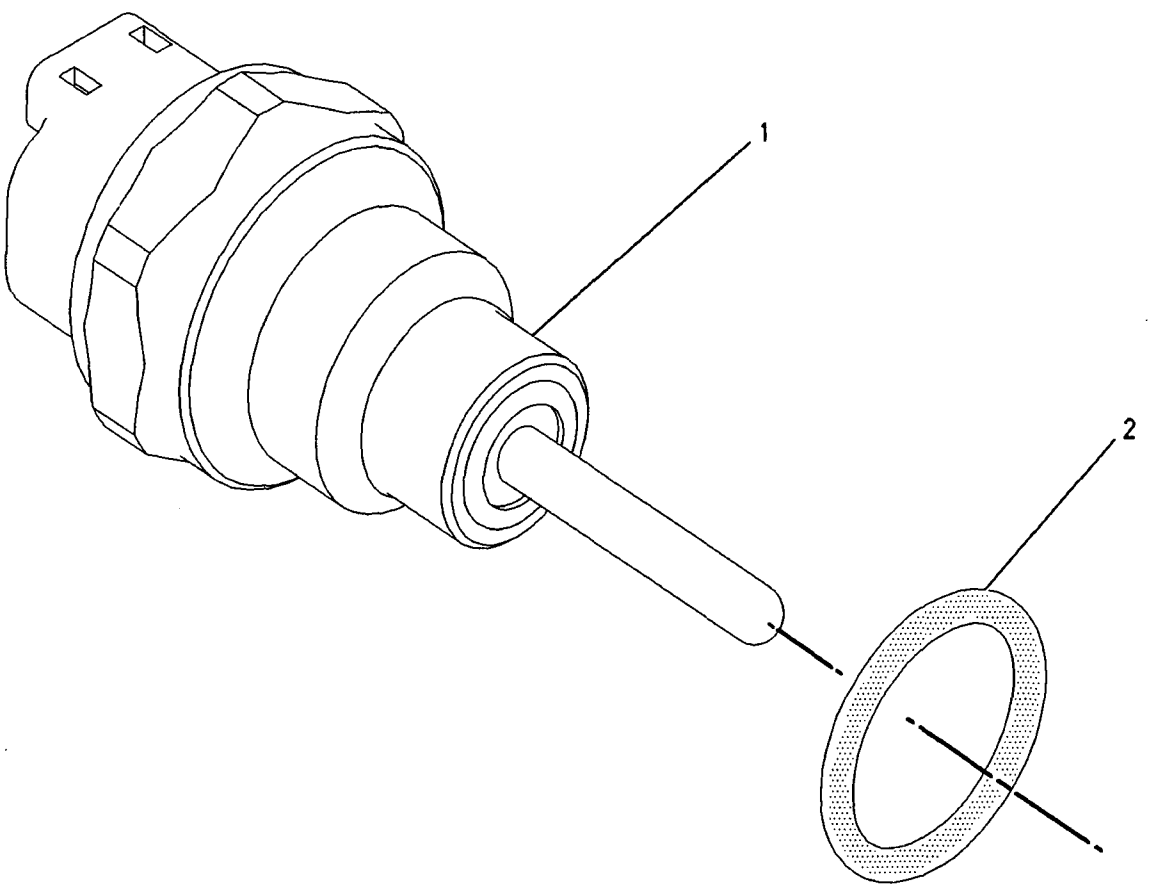

GRAPHIC #1 **<END>** g00856011

197-8392 SENSOR GP-TEMPERATURE–ENGINE COOLANT

S/N: KHX1-UP

PART OF 238-4808 SENSOR GP-ENGINE

SMCS-1408, 1906, 1921, 1922, 301T, 429T, 509T i02266451

NOTE	REF NO	GRAPHIC REF	PART NUMBER	QTY	PART NAME 1 2 3 4 5 6 (PRODUCT LEVEL)	SEE PAGE
	1	1	130-9811	1	SENSOR GP-TEMPERATURE (2-PIN)	
	2	1	6V-6609	1	SEAL-O-RING	

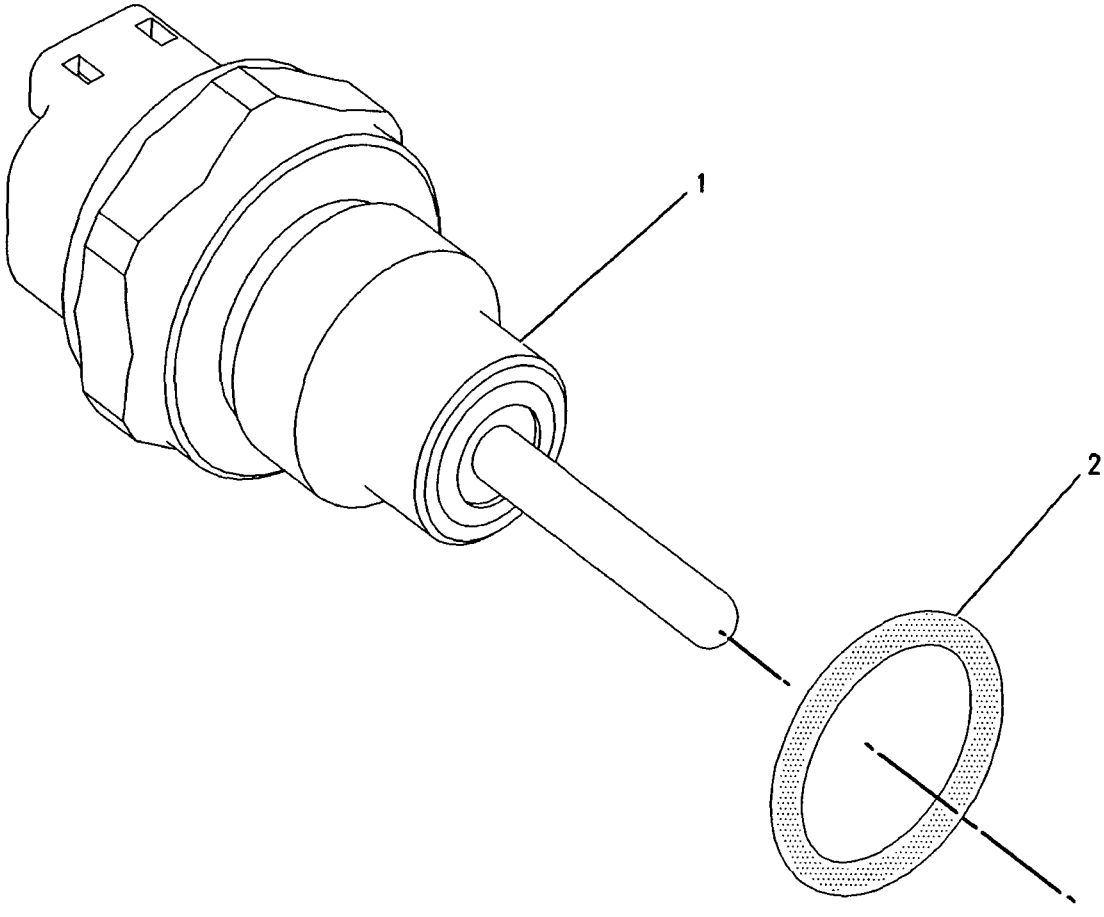

GRAPHIC #1 **<END>** g00856005

ELECTRICAL AND STARTING SYSTEM

263-6353 STARTING AID AR-ETHER

S/N: N1A1-UP

AN ATTACHMENT

SMCS-1456 **i02392106**

NOTE	PART NUMBER	QTY	PART NAME 1 2 3 4 5 6 (PRODUCT LEVEL)	SEE PAGE
Y	*261-3802*	1	STARTING AID GP-ETHER	207
Y	*263-6667*	1	WIRING GP-ETHER STARTING AID	266

Y-SEPARATE ILLUSTRATION

<END>

249-9223 STARTING AID GP–STARTING AID

S/N: KHX1-UP
24-VOLT
PART OF 235-1422 ENGINE AR-COMPLETE

SMCS-1090 **i02424008**

NOTE	REF NO	GRAPHIC REF	PART NUMBER	QTY	PART NAME 1 2 3 4 5 6 (PRODUCT LEVEL)	SEE PAGE
	1	1	3E-4352	2	WASHER-HARD (8.8X20.5X2.5-MM THK)	
	2	1	229-8851	1	CABLE AS	
E		1	6V-9023		TUBE-HEAT SHRINK (3-CM)	
		1	030-1712	1	TERMINAL-RING (2-GA, 6.35-MM)	
		1	135-2543	1	BOOT	
Y	3	1	223-7577	1	SWITCH GP-MAGNETIC (AIR INLET HEATER)	216
M	4	1	6V-2317	4	BOLT (M8X1.25X30-MM)	
M	5	1	6V-5192	1	BOLT-SOCKET HEAD (M8X1.25X30-MM)	
	6	1	5B-5492	1	WASHER	
	7	1	9M-1974	5	WASHER-HARD (8.8X16X2-MM THK)	
M	8	1	5P-7970	2	NUT (M8X1.25-THD)	
	9	1	210-3321	2	STUD (M8X1.25-THD)	

E-ORDER BY THE CENTIMETER
M-METRIC PART
Y-SEPARATE ILLUSTRATION

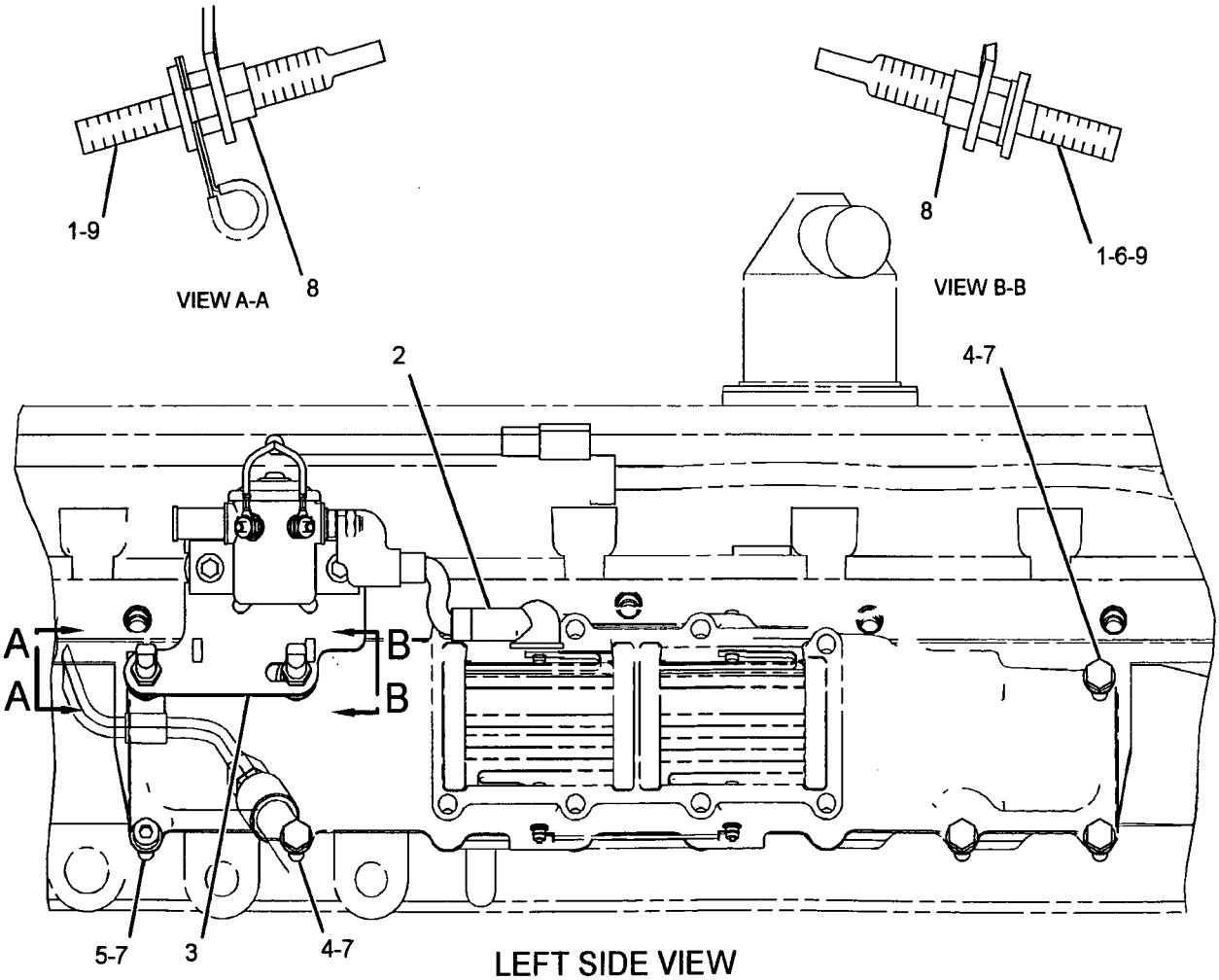

LEFT SIDE VIEW

GRAPHIC #1 **<END>** g01215621

261-3802 STARTING AID GP-ETHER

S/N: N1A1-UP
PART OF 263-6353 STARTING AID AR-ETHER
AN ATTACHMENT

SMCS-1456 **i02460691**

NOTE	REF NO	GRAPHIC REF	PART NUMBER	QTY	PART NAME 1 2 3 4 5 6 (PRODUCT LEVEL)	SEE PAGE
	1	1	**3Y-2888**	1	CONNECTOR	
	2	1	**5P-6313**	1	NUT-FLARELESS (5/16-24-THD)	
	3	1	**5P-6314**	1	SLEEVE	
	4	1	**7N-2059**	1	CLAMP AS	
	5	1	**144-4613**	1	ANGLE AS	
Y	6	1	**239-1134**	1	VALVE GP-ETHER STARTING (24-VOLT)	232
	7	1	**241-4194**	1	FITTING	
	8	1	**258-0733**	1	ATOMIZER AS	
	9	1	**263-1774**	1	PLATE AS	
	10	1	**130-5300**	1	CLIP	
	11	1	**3J-1907**	1	SEAL-O-RING	
M	12	1	**5C-7261**	1	NUT (M8X1.25-THD)	
	13	1	**6V-2686**	5	CLIP	
	14	1	**8T-4121**	7	WASHER-HARD (11X21X2.5-MM THK)	
M	15	1	**8T-4189**	4	BOLT (M8X1.25X20-MM)	
M	16	1	**8T-4191**	3	BOLT (M10X1.5X16-MM)	
M	17	1	**8T-4195**	4	BOLT (M10X1.5X30-MM)	
	18	1	**8T-4224**	5	WASHER-HARD (8.8X16X2-MM THK)	
E	19	1	**174-9169**		TUBE (150-CM)	
A		1	**7N-0296**	1	CYLINDER AS-ETHER	

A-NOT PART OF THIS GROUP
E-ORDER BY THE CENTIMETER
M-METRIC PART
Y-SEPARATE ILLUSTRATION

261-3802 STARTING AID GP-ETHER *(contd.)* i02460691

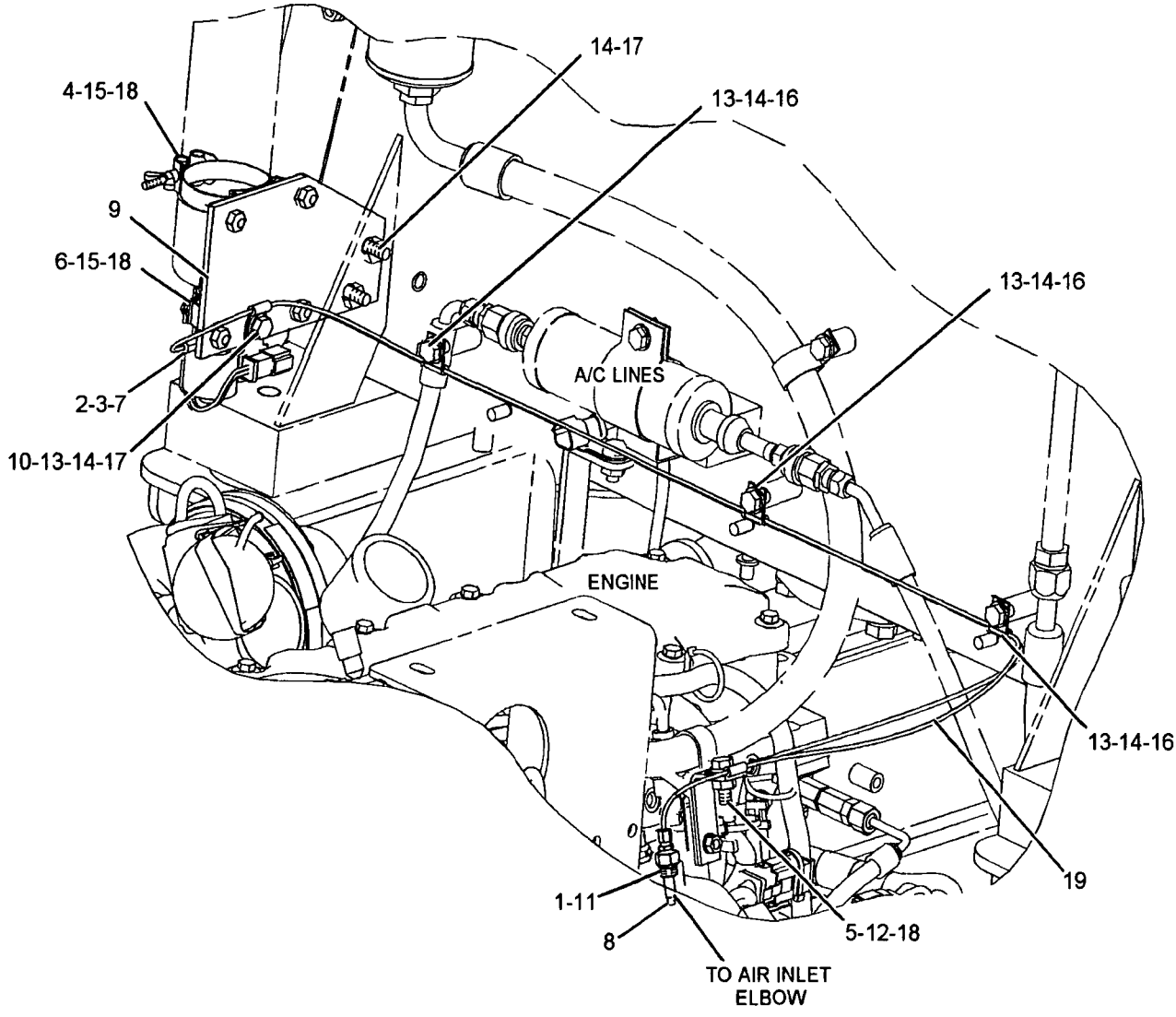

GRAPHIC #1 **<END>** g01145363

111-4275 STARTING MOTOR GP-ELECTRIC

S/N: N1A1-UP
24 VOLT
PART OF 237-3995 INSTALLATION AR-ENGINE
ALSO AN ATTACHMENT

SMCS-1453 **i01709242**

NOTE	REF NO	GRAPHIC REF	PART NUMBER	QTY	PART NAME 1 2 3 4 5 6 (PRODUCT LEVEL)	SEE PAGE
	1	1	118-9573	3	BOLT-12 POINT HEAD (M10X1.5-THD)	
CYR	2	1	207-1517	1	STARTING MOTOR GP-ELECTRIC	210
	3	1	3K-3257	1	GASKET	
M	4	1	8T-4191	1	BOLT (M10X1.5X16-MM)	
	5	1	8Y-9603	1	CABLE AS-STARTING MOTOR	
		1	1S-7251	1	TERMINAL-RING (FOR 1/2-IN BOLT)	
		1	1S-7252	1	TERMINAL-RING (FOR 3/8-IN BOLT)	
E		1	5P-0747		CABLE (00-GA, BLACK) (28CM)	
	6	1	8T-4121	4	WASHER-HARD (11X21X2.5-MM THK)	

C-CHANGE FROM PREVIOUS TYPE
E-ORDER BY THE CENTIMETER
M-METRIC PART
R-REMFG PART MAY BE AVAILABLE
Y-SEPARATE ILLUSTRATION

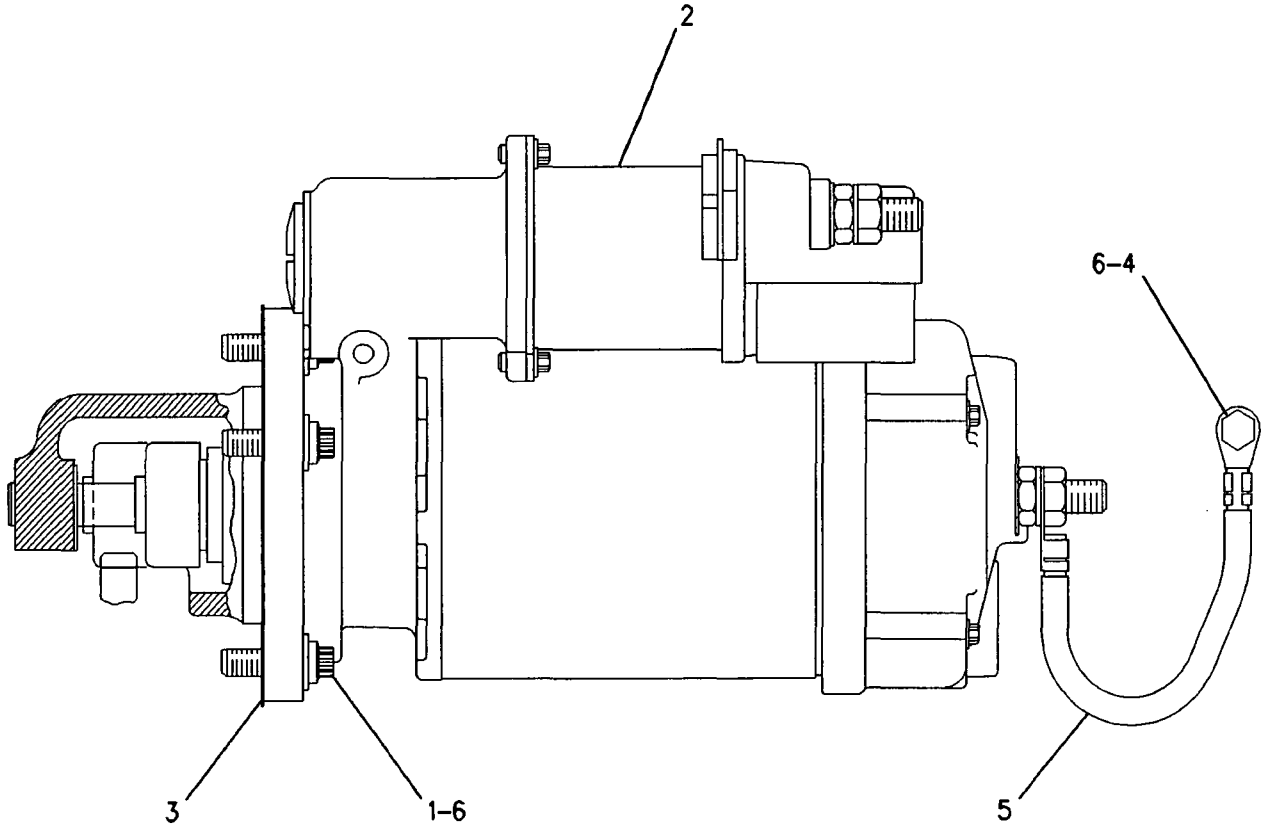

GRAPHIC #1 **<END>** g00613782

ELECTRICAL AND STARTING SYSTEM

207-1517 STARTING MOTOR GP-ELECTRIC*R

S/N: N1A1-UP
24 VOLT
PART OF 111-4275 STARTING MOTOR GP-ELECTRIC
ALSO AN ATTACHMENT

SMCS-1453 **i02247152**

NOTE	REF NO	GRAPHIC REF	PART NUMBER	QTY	PART NAME 1 2 3 4 5 6 (PRODUCT LEVEL)	SEE PAGE
	1	1	8T-9884	1	KIT-INSULATOR (STARTING MOTOR)	
					(INCLUDES INSULATORS AND BUSHING)	
	2	1	106-7149	1	HOUSING AS	
	3	1	102-9863	1	TERMINAL AS	
	4	1	6V-8188	4	NUT (1/2-13 THD)	
	5	1	7X-0562	4	WASHER-HARD (13.5X19X0.8-MM THK)	
	6	1	3E-7853	1	TERMINAL	
	7	1	9X-4821	1	PLATE AS	
	8	1	3E-7852	1	COIL-STARTING MOTOR	
	9	1	7T-3454	1	INSULATOR	
	10	1	9X-4271	1	CONNECTOR	
	11	1	7T-3451	1	INSULATOR-TERMINAL	
	12	1	8T-8569	1	INSULATOR-TERMINAL	
	13	1	5S-7349	4	BOLT (1/4-20X0.5-IN)	
	14	1	8T-4205	4	WASHER-HARD (7.2X14.5X2-MM THK)	
	15	1	7X-1950	4	SHOE-POLE	
	16	1	3E-7861	1	KIT-LEVER (STARTING MOTOR)	
					(INCLUDES LEVER AS, SHAFT AS, GASKET, O-RINGS, RING, AND NUT)	
	17	1	3F-0379	8	SCREW-POLE SHOE (3/8-24-THD)	
	18	1	3E-7855	1	ARMATURE AS-STARTER (24-VOLT)	
	19	1	7X-1952	1	HOUSING AS-LEVER	
	20	1	4M-1831	1	PLUG-LEVER HOUSING	
	21	1	7L-2894	1	GASKET	
	22	1	036-9823	5	BOLT (1/4-28X1-IN)	
	23	1	3E-7857	1	DRIVE AS-STARTING MOTOR	
	24	1	3E-7858	1	HOUSING AS	
	25	1	7X-3373	6	BOLT (5/16-18X0.88-IN)	
	26	1	206-8784	1	KIT-SOLENOID (STARTING MOTOR)	
					(INCLUDES SOLENOID AS, BOLT, AND NUTS)	
	27	1	6V-8378	2	NUT (10-32-THD)	
	28	1	8F-1434	1	LOCKWASHER	
	29	1	8T-0328	2	WASHER-HARD (5.5X10X1-MM THK)	
	30	1	9X-4824	1	COVER-STARTING MOTOR	
	31	1	9X-4825	1	KIT-BRUSH (STARTING MOTOR)	
					(INCLUDES O-RING, SCREWS, BRUSH, AND SPRING)	
					AVAILABLE REPAIR KIT(S):	
			3E-7860	1	KIT-BUSHING (STARTING MOTOR)	
					(INCLUDES BUSHINGS, PLUG, CUP, SEALS, NUT, O-RINGS, GASKET, SPACERS, WASHERS, AND SCREWS)	

207-1517 STARTING MOTOR GP-ELECTRIC *(contd.)* i02247152

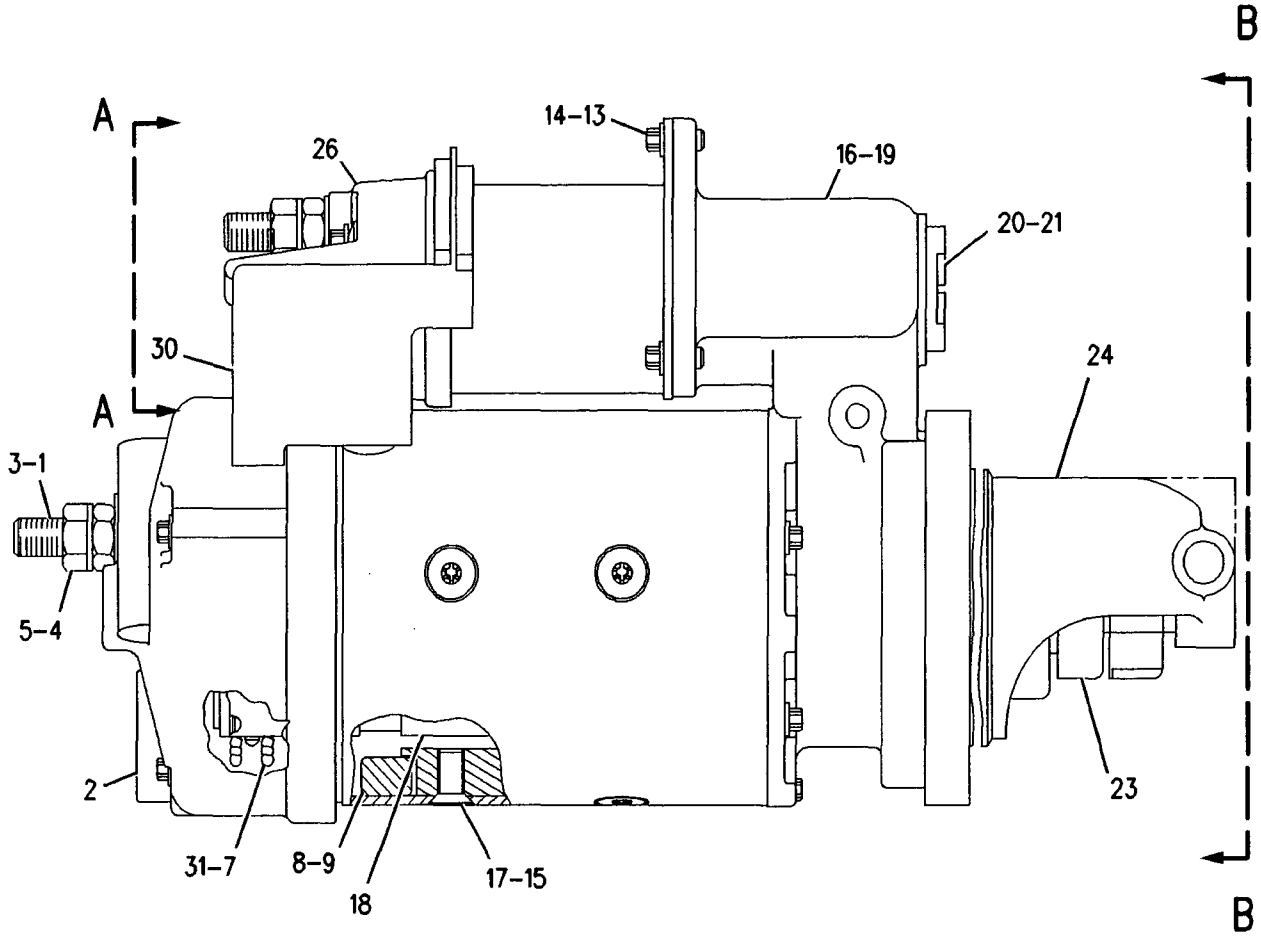

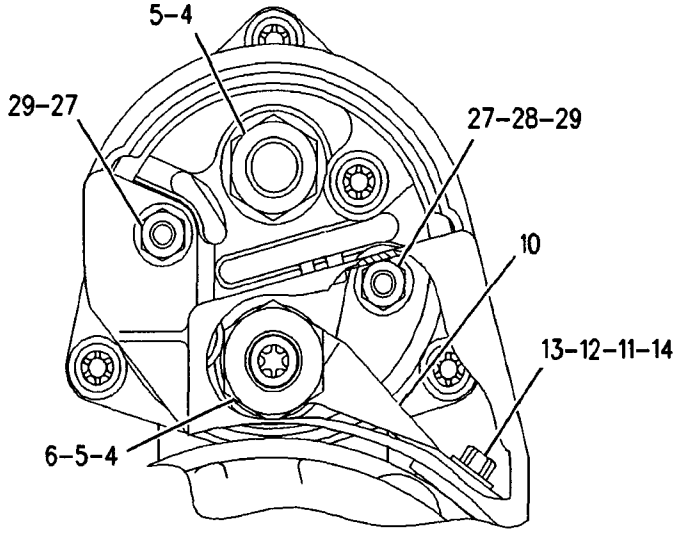

VIEW A-A

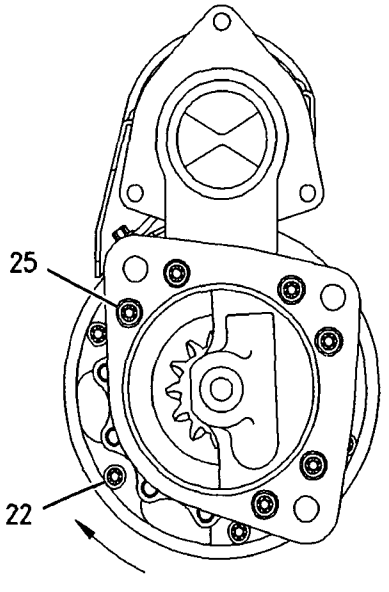

VIEW B-B

GRAPHIC #1 **<END>** g00839695

164-7577 SWITCH GP-BYPASS–POWER TRAIN OIL FILTER

S/N: N1A1-UP

PART OF 241-0642 WIRING GP-CHASSIS

ALSO AN ATTACHMENT

SMCS-1408, 1435 i01431491

NOTE	REF NO	GRAPHIC REF	PART NUMBER	QTY	PART NAME 1 2 3 4 5 6 (PRODUCT LEVEL)	SEE PAGE
BE	1	1	9X-1813		SLEEVE	
	2	1	102-8802	1	KIT-RECEPTACLE (2-PIN)	
					(INCLUDES RECEPTACLE AS & WEDGE)	
	3	1	186-3735	2	PIN-CONNECTOR (16-GA TO 18-GA)	
	4	1	3E-3365	1	WEDGE-RECEPTACLE LOCK (2-PIN)	
	5	1	3D-2824	1	SEAL-O-RING	
Z	6	1		1	SWITCH AS	

B-USE AS REQUIRED
E-ORDER BY THE CENTIMETER
Z-NOT SERVICED SEPARATELY

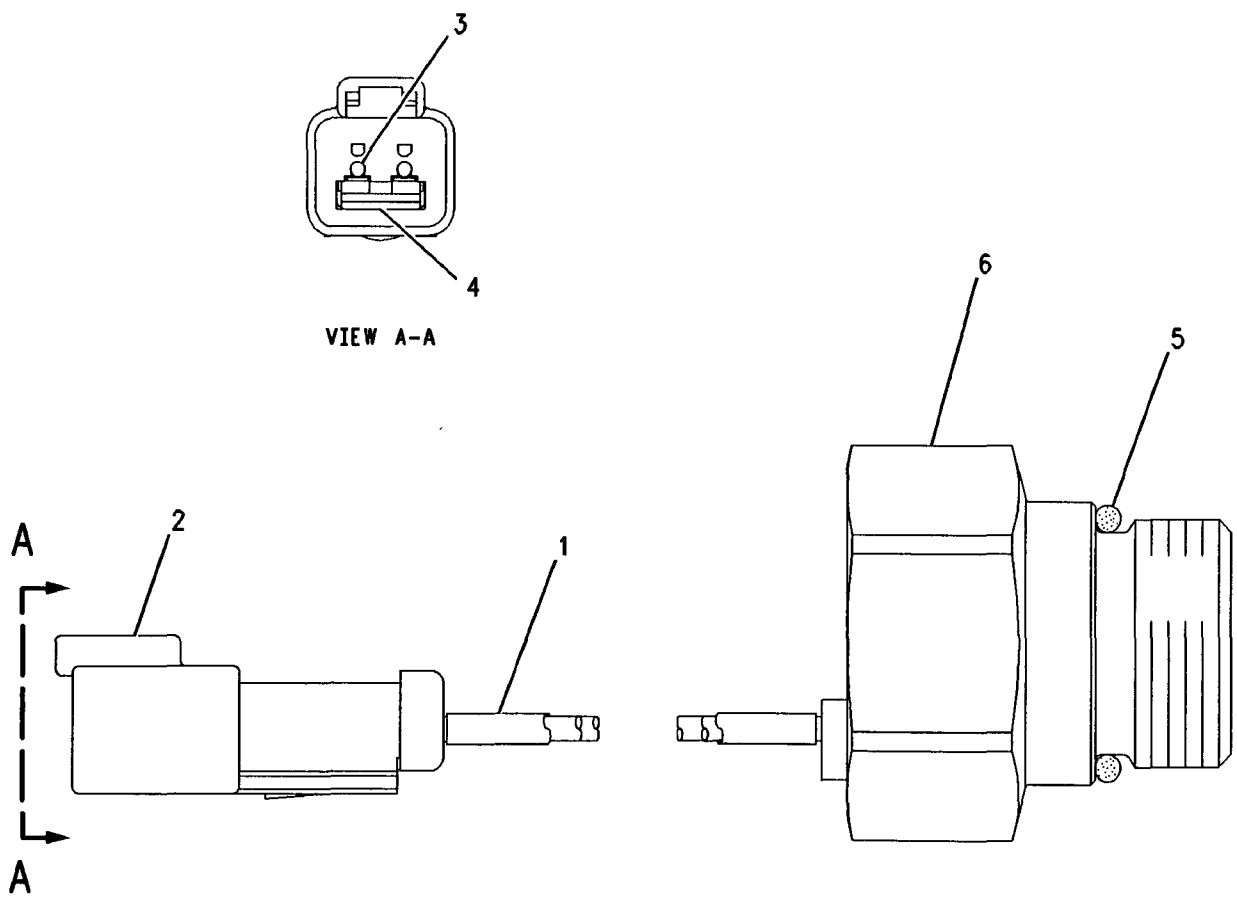

GRAPHIC #1 <END> g00750019

197-6475 SWITCH GP-DIMMER–ROADING

S/N: N1A1-UP

PART OF 254-5525, 260-7765 LIGHTING AR-ROADING

AN ATTACHMENT

SMCS-7332 i01538195

NOTE	REF NO	GRAPHIC REF	PART NUMBER	QTY	PART NAME 1 2 3 4 5 6 (PRODUCT LEVEL)	SEE PAGE
	1	1	2H-1855	1	SWITCH AS-DIMMER (ROADING)	
		1	6V-8362	3	SCREW-MACHINE (8-32X0.31-IN)	
		1	9B-7233	3	LOCKWASHER	
	2	1	121-8039	1	WIRE AS	
		1	102-8803	1	KIT-RECEPTACLE (3-PIN)	
					(INCLUDES RECEPTACLE AS & WEDGE)	
D		1	5P-5624	1	WIRE (14-GA, BLACK) (.6M)	
	3	1	5S-7349	3	BOLT (1/4-20X0.5-IN)	
	4	1	8T-4205	3	WASHER-HARD (7.2X14.5X2-MM THK)	

D-ORDER BY THE METER

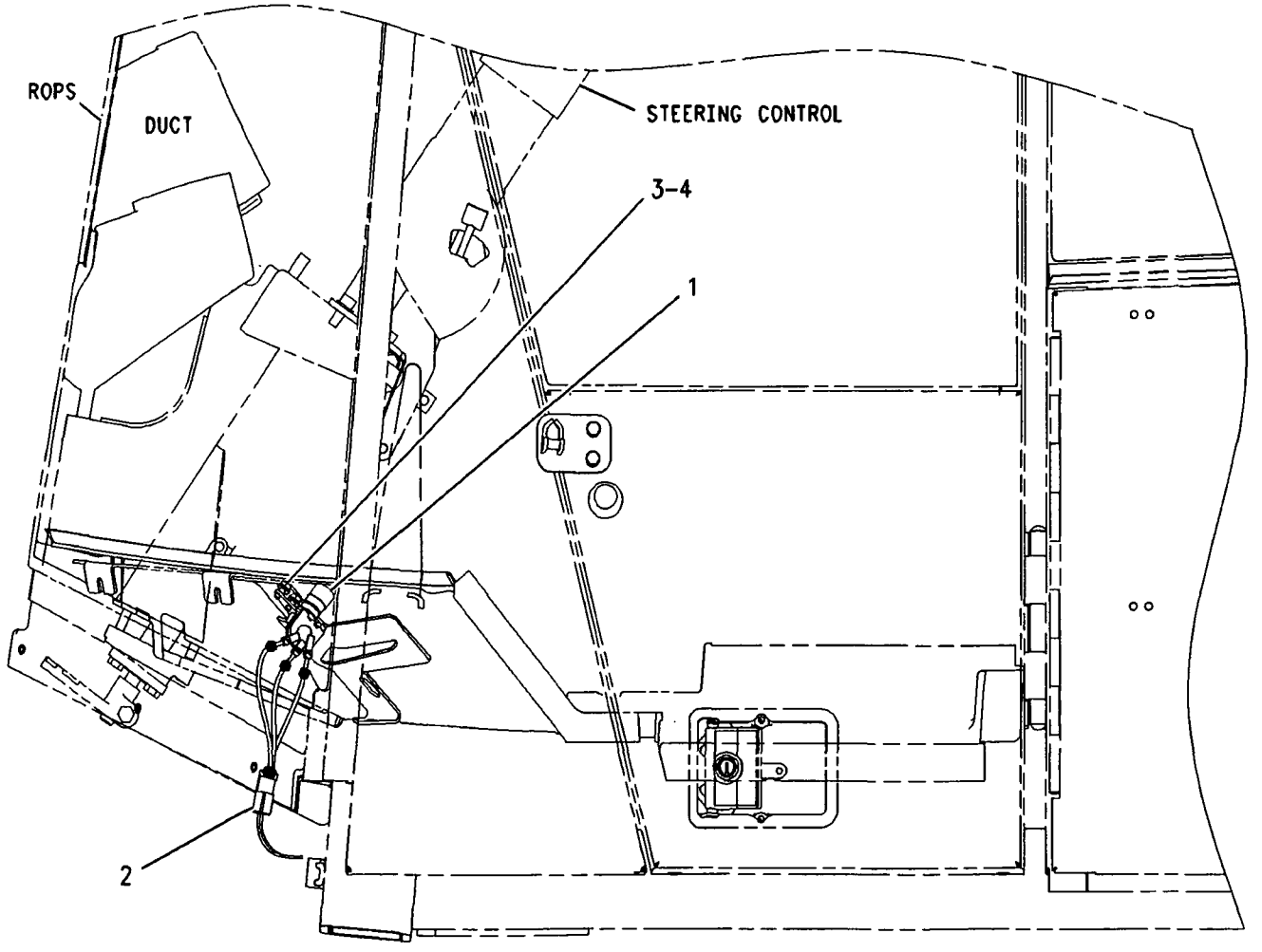

LEFT SIDE VIEW OF CAB

GRAPHIC #1 <END> g00799540

7N-0718 SWITCH GP-DISCONNECT-BATTERY

S/N: N1A1-UP
PART OF 241-0639 BATTERY & WIRING GP
ALSO AN ATTACHMENT

SMCS-1411 i01853569

NOTE	REF NO	GRAPHIC REF	PART NUMBER	QTY	PART NAME 1 2 3 4 5 6 (PRODUCT LEVEL)	SEE PAGE
	1	1	8H-5306	1	KEY (DISCONNECT SWITCH)	
	2	1	8H-5303	1	NUT (3/4-16-THD)	
	3	1	2H-3922	2	LOCKWASHER	
	4	1	9F-5644	2	LOCKWASHER	
	5	1	6F-7045	2	NUT-FULL (3/8X24-THD)	

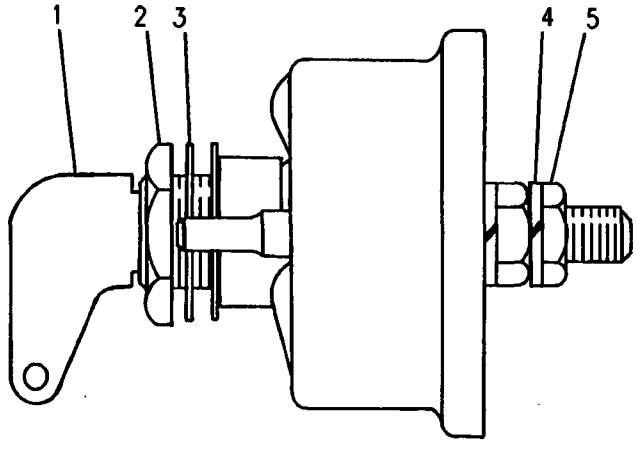

GRAPHIC #1 <END> g00699216

125-1302 SWITCH GP-MAGNETIC–START RELAY

S/N: N1A1-UP
24 VOLT
PART OF 241-0642 WIRING GP-CHASSIS
ALSO AN ATTACHMENT

SMCS-7499 i01896615

NOTE	REF NO	GRAPHIC REF	PART NUMBER	QTY	PART NAME 1 2 3 4 5 6 (PRODUCT LEVEL)	SEE PAGE
	1	1	102-8802	1	KIT-RECEPTACLE (2-PIN)	
					(INCLUDES RECEPTACLE AS & WEDGE)	
	2	1	186-3735	2	PIN-CONNECTOR (16-GA TO 18-GA)	
	3	1	1H-3338	2	LOCKWASHER	
	4	1	012-0380	2	LOCKWASHER	
M	5	1	5C-2890	2	NUT (M6X1-THD)	
E	6	1	9X-1813		SLEEVE (16CM)	

E-ORDER BY THE CENTIMETER
M-METRIC PART

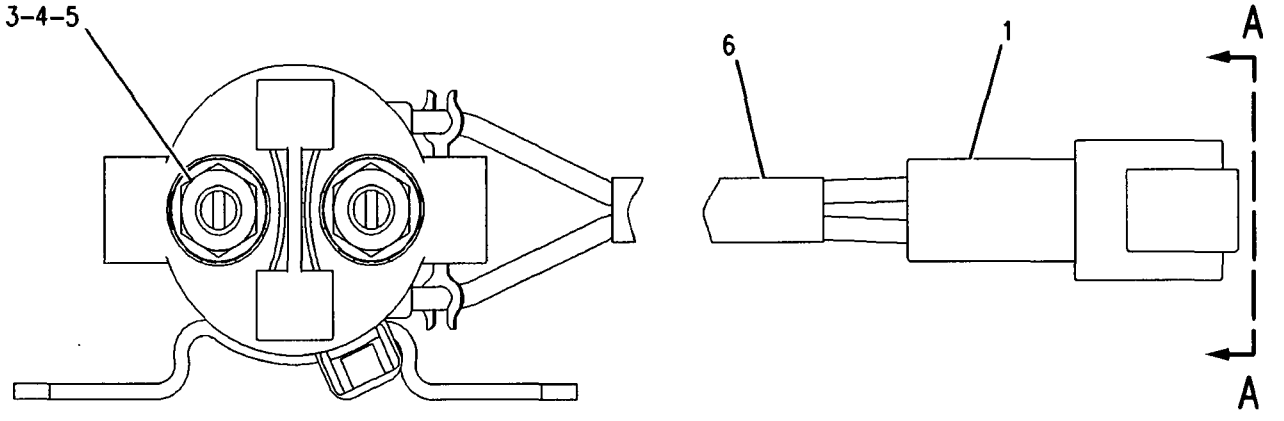

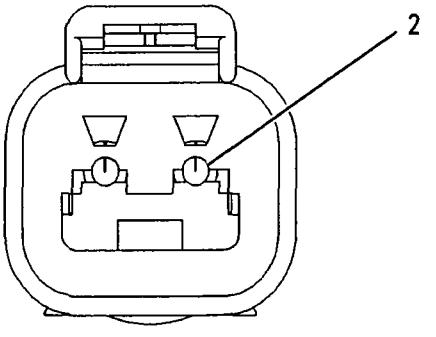

VIEW A-A

GRAPHIC #1 <END> g00988004

223-7577 SWITCH GP-MAGNETIC–AIR INLET HEATER RELAY

S/N: KHX1-UP
24 VOLT
PART OF 249-9223 STARTING AID GP

SMCS-7499 i02445655

NOTE	REF NO	GRAPHIC REF	PART NUMBER	QTY	PART NAME 1 2 3 4 5 6 (PRODUCT LEVEL)	SEE PAGE
	1	1	209-5582	1	SWITCH AS-MAGNETIC (24-VOLT) (AIR INLET HEATER)	
	1A	1	102-8802	1	KIT-RECEPTACLE (2-PIN)	
					(INCLUDES RECEPTACLE AS AND WEDGE)	
	1B	1	186-3735	2	PIN-CONNECTOR (16-GA TO 18-GA)	
	1C	1	3F-9556	2	LOCKWASHER	
	1D	1	6V-8186	2	NUT-FULL (5/16-24-THD)	
	1E	1	6V-8378	2	NUT (10-32-THD)	
	1F	1	8F-1434	2	LOCKWASHER	

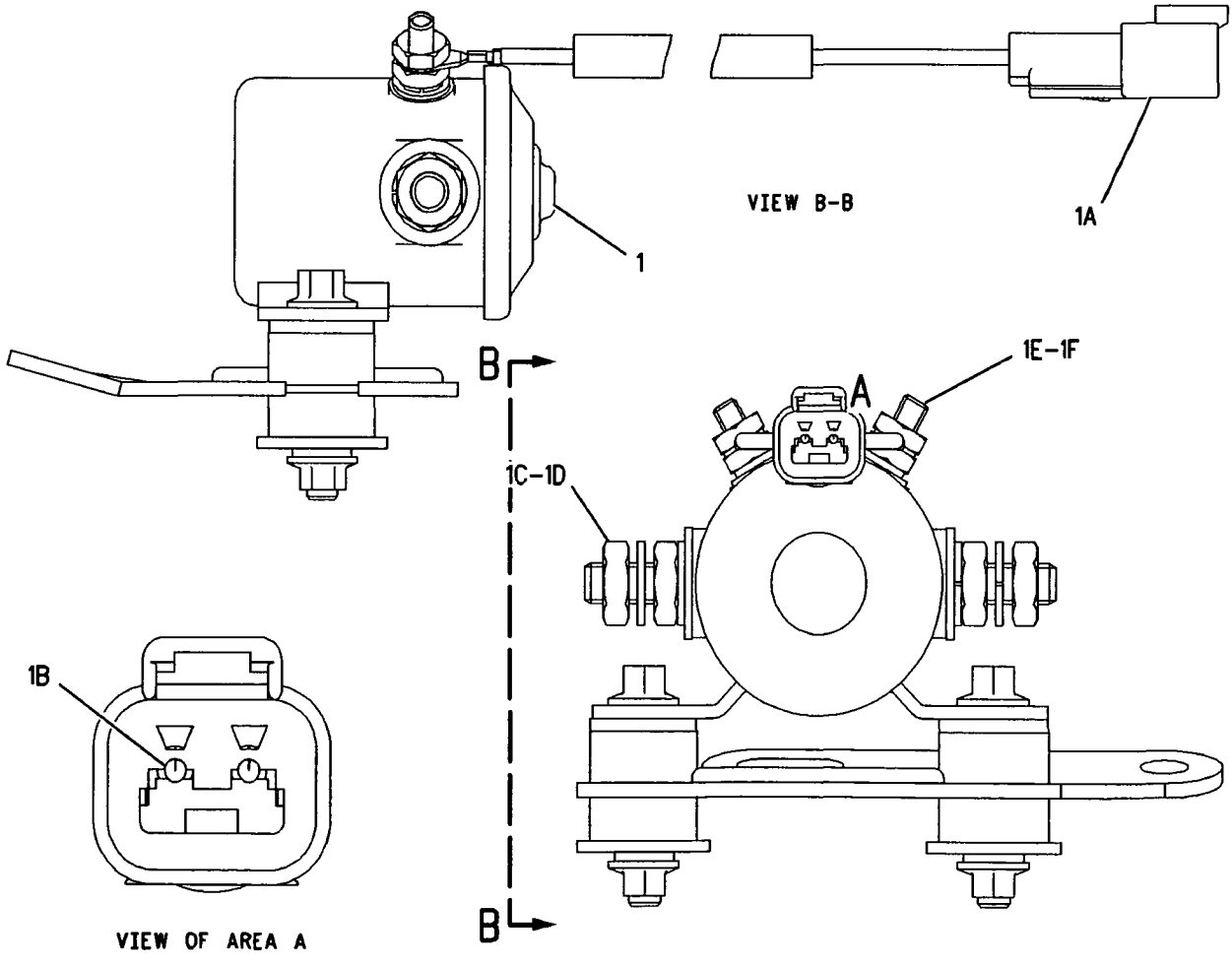

GRAPHIC #1 <END> g00976450

241-8368 SWITCH GP-MAGNETIC–MAIN RELAY

S/N: N1A1-UP

PART OF 241-0642 WIRING GP-CHASSIS

ALSO AN ATTACHMENT

SMCS-7499 i02288281

NOTE	REF NO	GRAPHIC REF	PART NUMBER	QTY	PART NAME 1 2 3 4 5 6 (PRODUCT LEVEL)	SEE PAGE
	1	1	155-2270	1	KIT-CONNECTING PLUG (2-PIN)	
					(KIT INCLUDES PLUG AS AND WEDGE)	
	2	1	4F-2294	2	NUT-JAM (5/16-24-THD)	
	3	1	186-3736	2	SOCKET-CONNECTOR (16-AWG TO 18-AWG)	

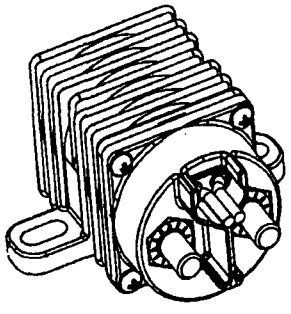

ISOMETRIC VIEW

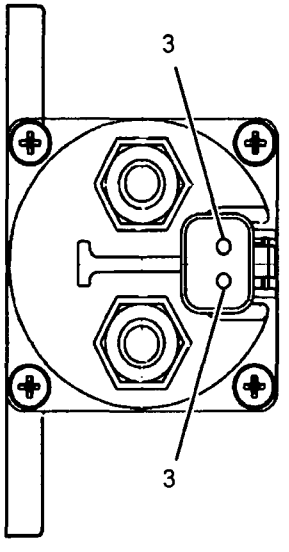

VIEW A-A

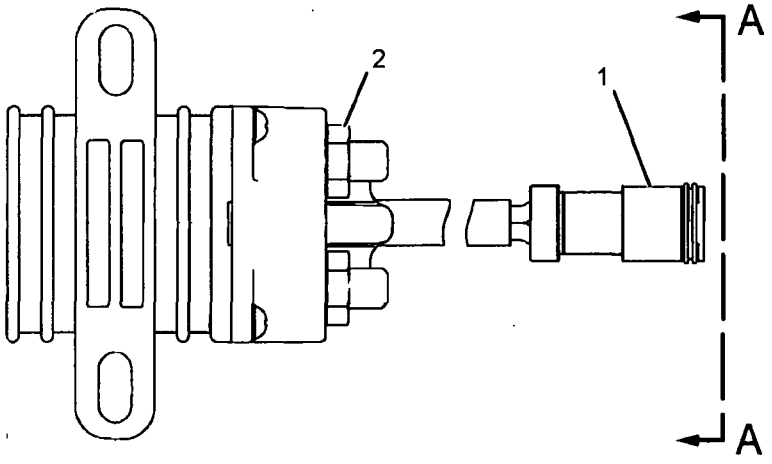

GRAPHIC #1 <END> g01077362

258-0883 SWITCH GP-PRESSURE–FUEL

S/N: KHX1-UP

PART OF 237-9823 FILTER & LINES GP-FUEL

SMCS-1435 **i02246432**

NOTE	REF NO	GRAPHIC REF	PART NUMBER	QTY	PART NAME 1 2 3 4 5 6 (PRODUCT LEVEL)	SEE PAGE
	1	1	102-8802	1	KIT-RECEPTACLE (2-PIN)	
					(INCLUDES RECEPTACLE AS AND WEDGE)	
	2	1	3E-3365	1	WEDGE-RECEPTACLE LOCK (2-PIN)	
	3	1	186-3735	2	PIN-CONNECTOR (16-GA TO 18-GA)	
BE	4	1	9X-1813		SLEEVE	
	5	1	6V-4589	1	SEAL-O-RING	
	6	1	7L-9061	1	SEAL-O-RING	

B-USE AS REQUIRED
E-ORDER BY THE CENTIMETER

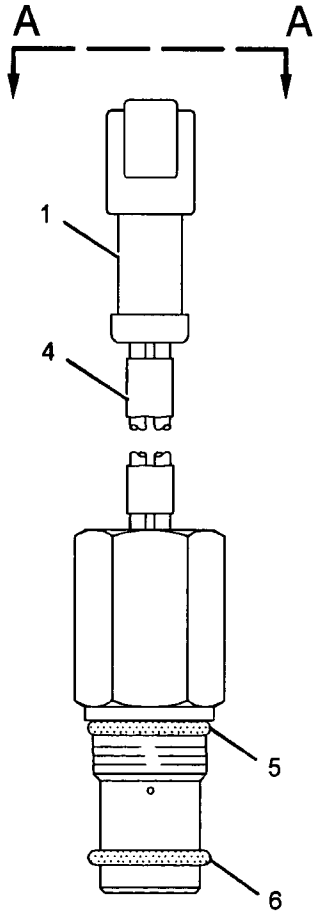

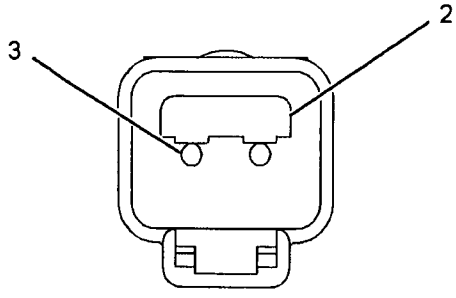

VIEW A-A

GRAPHIC #1 **<END>** g01072091

252-5925 SWITCH GP-QUICK COUPLER

S/N: N1A1-UP

PART OF 244-2662 CONTROL AR-QUICK COUPLER, 244-2665 LIFT AR AN ATTACHMENT

SMCS-6129, 7332 **i02143463**

NOTE	REF NO	GRAPHIC REF	PART NUMBER	QTY	PART NAME 1 2 3 4 5 6 (PRODUCT LEVEL)	SEE PAGE
	1	1	**248-5081**	1	SWITCH AS-ROCKER (QUICK COUPLER)	
	2	1	**249-5602**	1	GUARD-SWITCH	

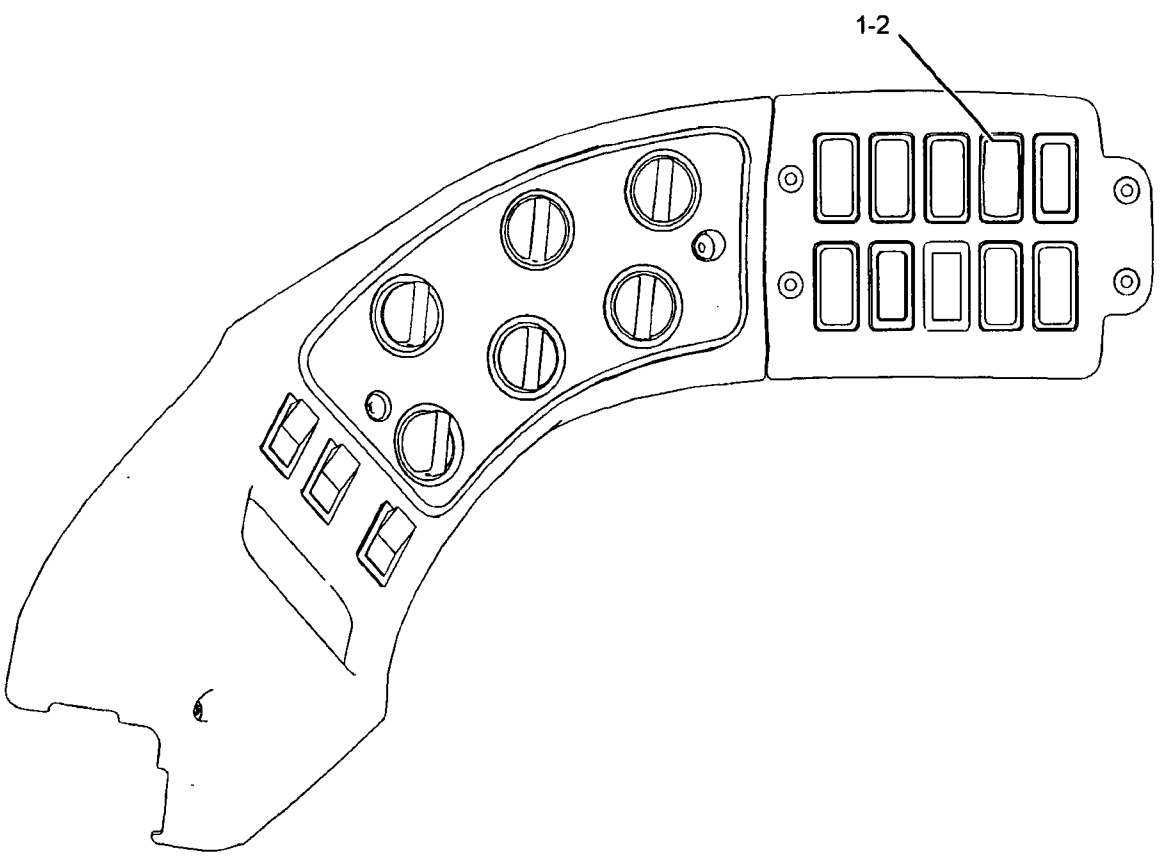

GRAPHIC #1 **<END>** g01089049

262-9949 SWITCH GP-REVERSING FAN

S/N: N1A1-UP

AN ATTACHMENT

SMCS-7332 **i02241834**

NOTE	REF NO	GRAPHIC REF	PART NUMBER	QTY	PART NAME 1 2 3 4 5 6 (PRODUCT LEVEL)	SEE PAGE
	1	1	236-4623	1	SWITCH AS-ROCKER (AUTO REVERSING FAN)	

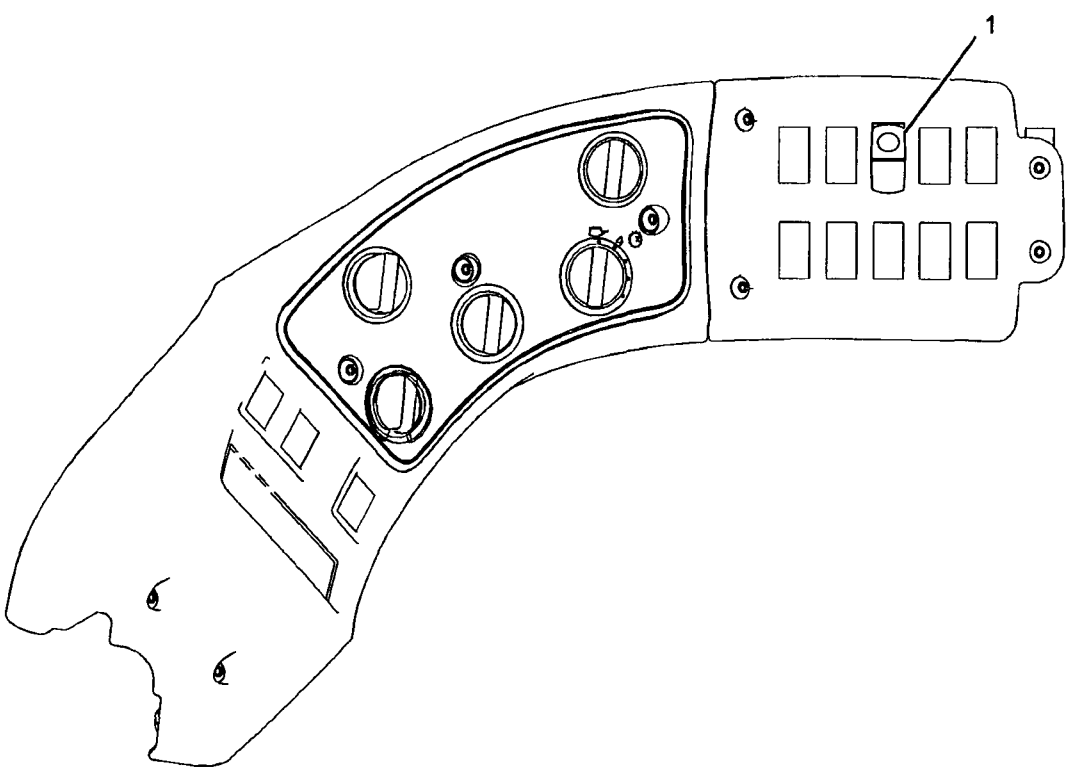

LEFT SIDE VIEW

GRAPHIC #1 **<END>** g01116598

252-5917 SWITCH GP-RIDE CONTROL

S/N: N1A1-UP

PART OF 244-3442, 244-3443 CONTROL AR-RIDE, 244-5611 HYDRAULIC AR-3 VALVE AN ATTACHMENT

SMCS-7332 i02116995

NOTE	REF NO	GRAPHIC REF	PART NUMBER	QTY	PART NAME 1 2 3 4 5 6 (PRODUCT LEVEL)	SEE PAGE
	1	1	236-4612	1	SWITCH AS-ROCKER (RIDE CONTROL)	

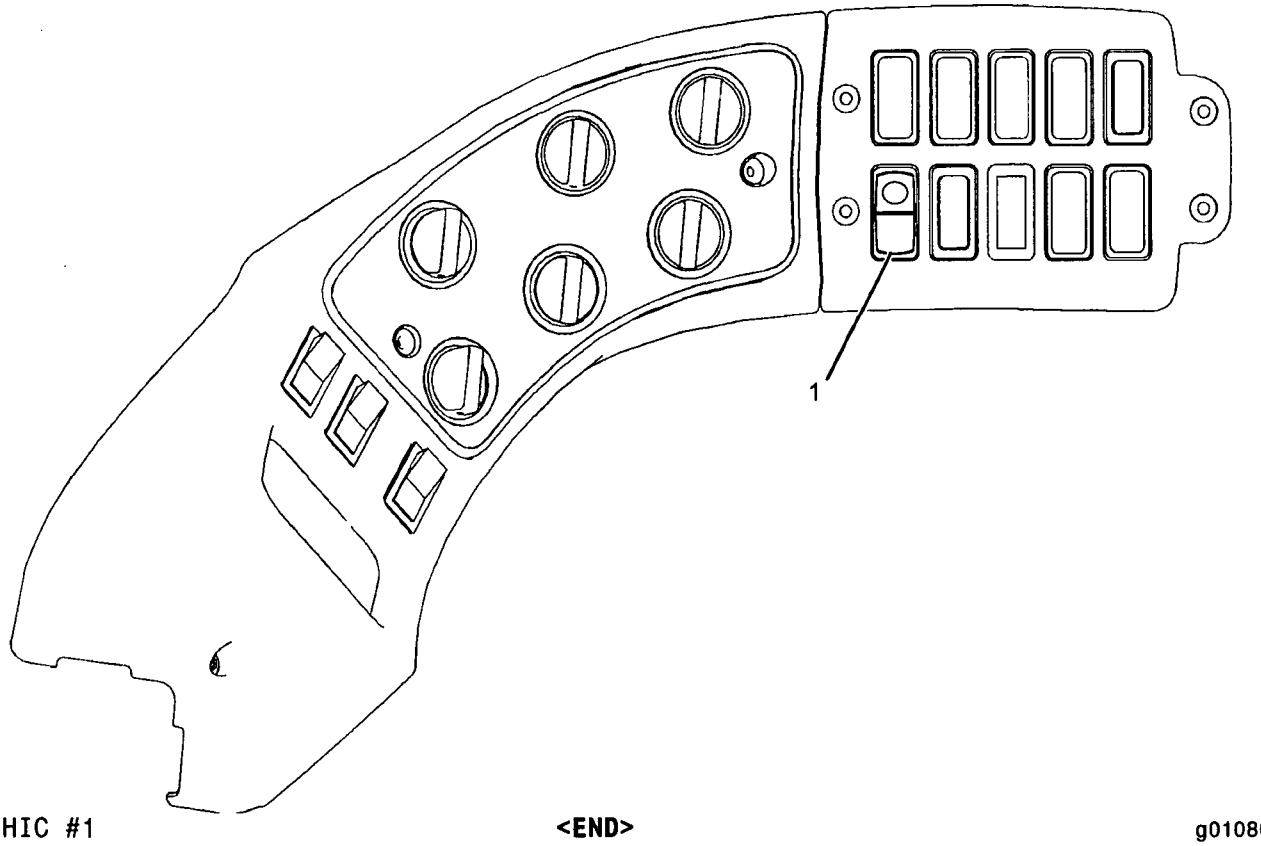

GRAPHIC #1 <END> g01080120

263-4133 SWITCH GP-ROCKER-
QUICK COUPLER, BUCKET/FORK SELECT, KICKOUT
S/N: N1A1-UP
AN ATTACHMENT

SMCS-7332 **i02242011**

NOTE	REF NO	GRAPHIC REF	PART NUMBER	QTY	PART NAME 1 2 3 4 5 6 (PRODUCT LEVEL)	SEE PAGE
	1	1	**248-5081**	1	SWITCH AS-ROCKER (QUICK COUPLER)	
	2	1	**219-9526**	1	SWITCH AS-ROCKER (BUCKET, FORK SELECT)	
	3	1	**219-9535**	1	SWITCH AS-ROCKER (LIFT, TILT KICKOUT ON, OFF)	
	4	1	**249-5602**	1	GUARD-SWITCH	

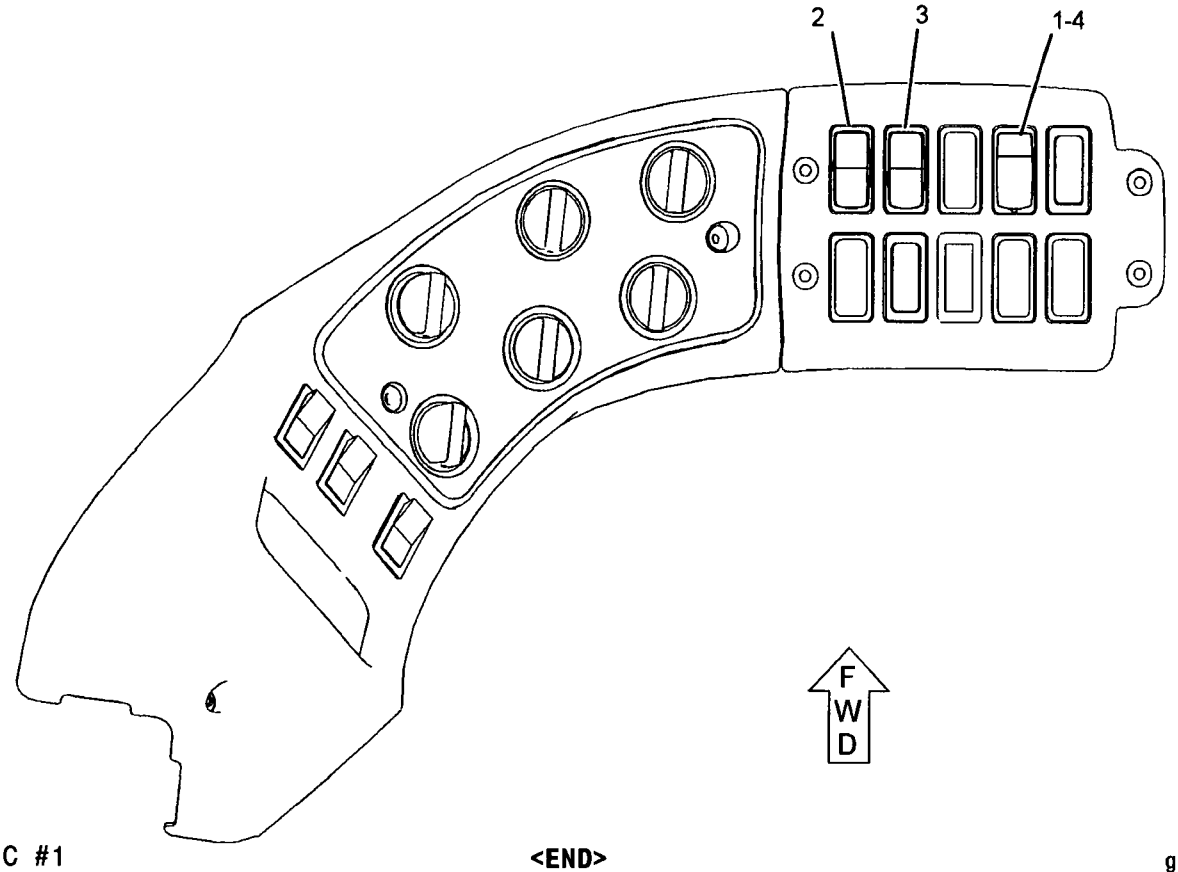

GRAPHIC #1 **<END>** g01130930

263-4134 SWITCH GP-ROCKER-
QUICK COUPLER, BUCKET/FORK SELECT, KICKOUT
S/N: N1A1-UP
AN ATTACHMENT

SMCS-7332 i02242020

NOTE	REF NO	GRAPHIC REF	PART NUMBER	QTY	PART NAME 1 2 3 4 5 6 (PRODUCT LEVEL)	SEE PAGE
	1	1	**248-5081**	1	SWITCH AS-ROCKER (QUICK COUPLER)	
	2	1	**219-9526**	1	SWITCH AS-ROCKER (BUCKET, FORK SELECT)	
	3	1	**219-9535**	1	SWITCH AS-ROCKER (KICKOUT ON, OFF)	
	4	1	**249-5602**	1	GUARD-SWITCH	

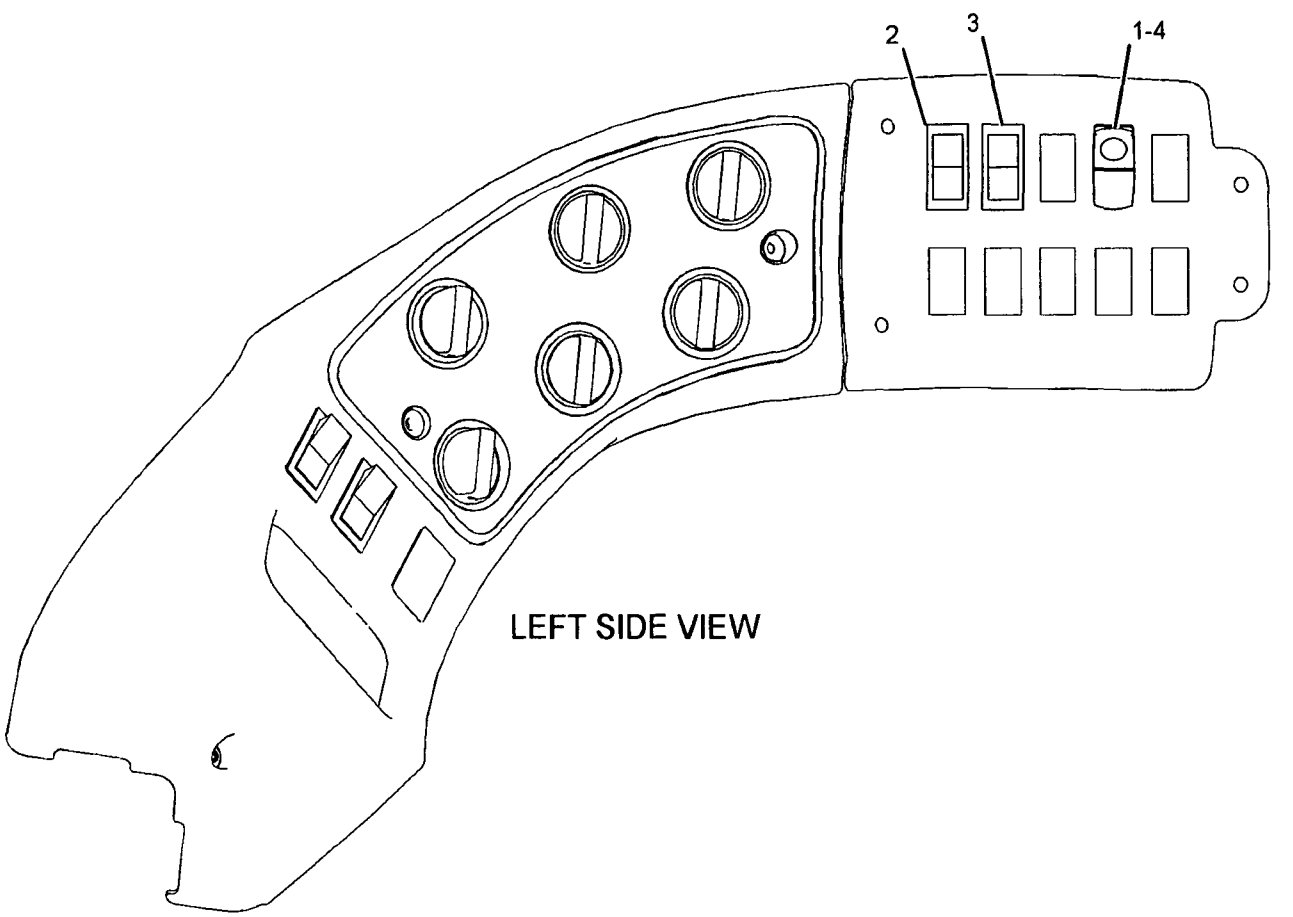

LEFT SIDE VIEW

GRAPHIC #1 **<END>** g01116635

106-0107 SWITCH GP-ROTARY–AUTODIG MATERIAL SELECT

S/N: N1A1-UP

PART OF 243-1939, 253-3471 CONTROL GP-AUTODIG

AN ATTACHMENT

SMCS-7332 **i02247455**

NOTE	REF NO	GRAPHIC REF	PART NUMBER	QTY	PART NAME 1 2 3 4 5 6 (PRODUCT LEVEL)	SEE PAGE
	1	1	102-8805	1	KIT-RECEPTACLE (6-PIN)	
					(INCLUDES RECEPTACLE AS AND WEDGE)	
	2	1	3E-3383	1	WEDGE-RECEPTACLE LOCK (6-PIN)	
	3	1	8T-8737	1	PLUG-SEAL	
	4	1	144-1636	5	PIN-CONNECTOR	
M	5	1	7Y-5458	1	NUT (M12X1-THD)	
	6	1	7Y-5464	1	WASHER (M12.2X15.4X0.5-MM THK)	
	7	1	106-0210	1	SEAL	

M-METRIC PART

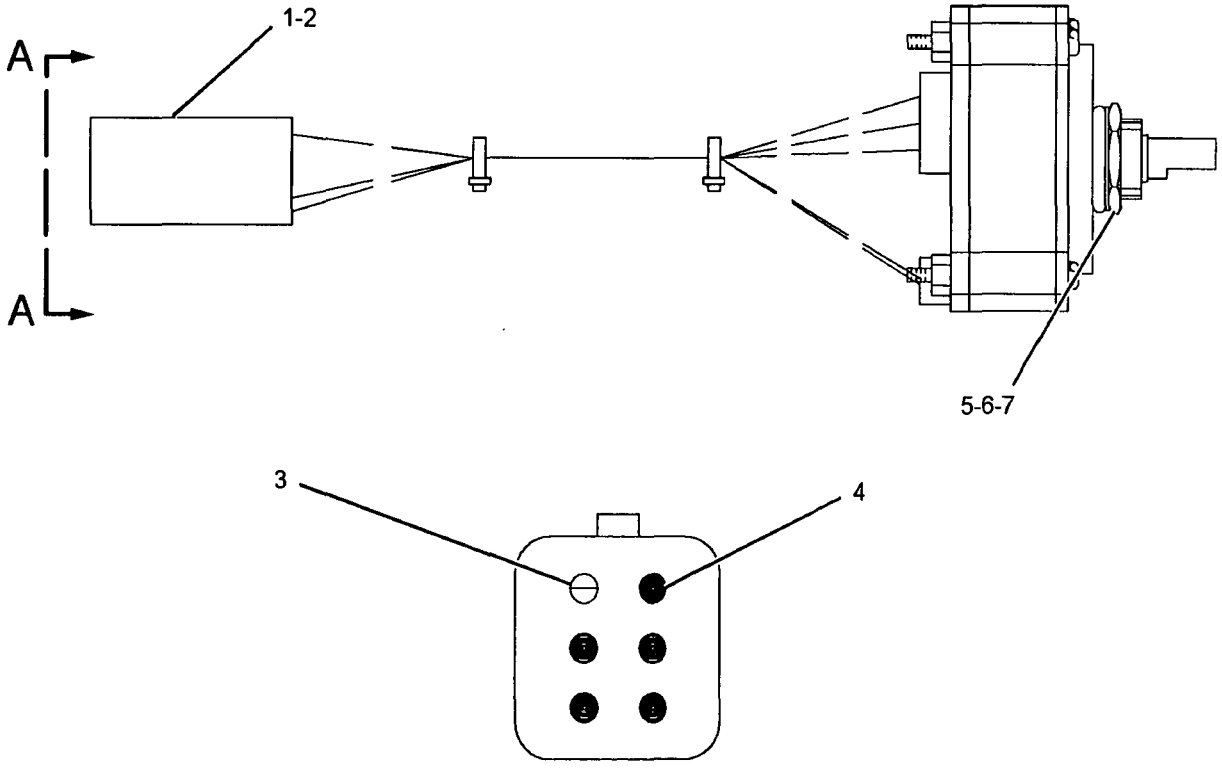

VIEW A-A

GRAPHIC #1 **<END>** g01098706

ELECTRICAL AND STARTING SYSTEM

252-5924 SWITCH GP-SECONDARY STEERING

S/N: N1A1-UP

PART OF 244-5424 STEERING AR-SECONDARY

AN ATTACHMENT

SMCS-7332 **i02118421**

NOTE	REF NO	GRAPHIC REF	PART NUMBER	QTY	PART NAME 1 2 3 4 5 6 (PRODUCT LEVEL)	SEE PAGE
	1	1	236-4615	1	SWITCH AS-ROCKER (SECONDARY STEERING)	

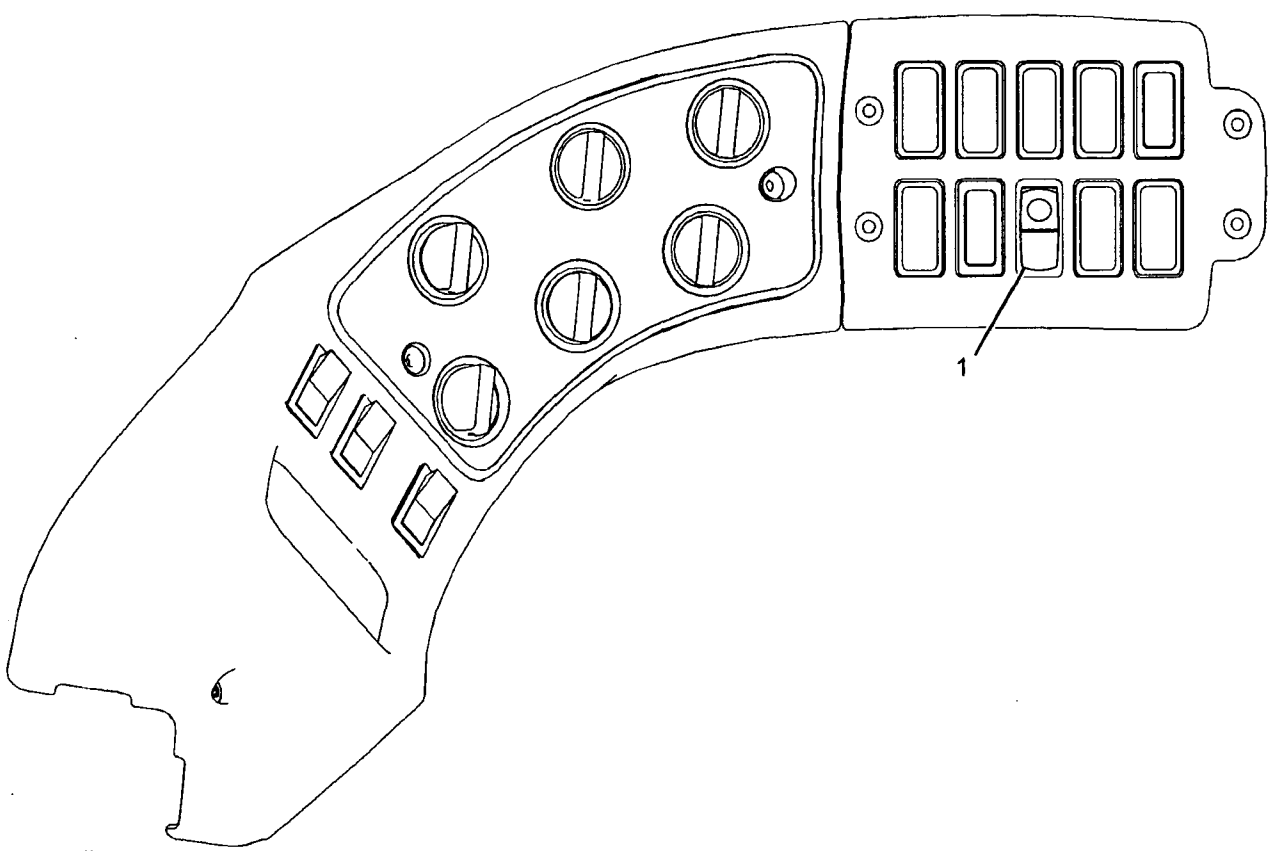

GRAPHIC #1 **<END>** g01079142

252-5920 SWITCH GP-SIGNAL-TURN

S/N: N1A1-UP

PART OF 260-7765 LIGHTING AR-ROADING, 235-5279 LIGHTING AR-SIGNAL AN ATTACHMENT

SMCS-7332 **i02225338**

NOTE	REF NO	GRAPHIC REF	PART NUMBER	QTY	PART NAME 1 2 3 4 5 6 (PRODUCT LEVEL)	SEE PAGE
	1	1	8N-2622	1	LEVER	
	2	1	134-9569	1	SWITCH AS-TURN SIGNAL	
		1	5L-7200	1	SCREW (8-32X0.375-IN)	
		1	9B-7233	1	LOCKWASHER	
	3	1	153-3945	1	COVER AS	
	4	1	154-4563	1	HARNESS AS-LIGHTING (TURN SIGNAL)	
		1	102-8805	3	KIT-RECEPTACLE (6-PIN)	
					(EACH KIT INCLUDES RECEPTACLE AS AND WEDGE)	
	5	1	172-9200	1	SUPPRESSOR-ARC	
	6	1	201-5555	1	PLATE-INSTRUCTION (TURN SIGNAL)	
	7	1	214-9453	1	BOOT	
	8	1	214-9454	1	BRACKET AS	
	9	1	217-8166	1	FLASHER AS (24-VOLT)	
	10	1	236-4616	1	SWITCH AS-ROCKER (HAZARD)	
	11	1	096-6166	3	WASHER-HARD (4.5X9X1-MM THK)	
M	12	1	123-0707	3	SCREW-HEX SOCKET (M4X0.7X20-MM)	
	13	1	189-3158	1	SUPPRESSOR-ARC	
M	14	1	5C-8312	3	NUT (M4X0.7-THD)	
M	15	1	6V-3938	2	BOLT (M10X1.5X20-MM)	
M	16	1	8T-0288	2	BOLT (M5X0.8X12-MM)	
	17	1	8T-0328	2	WASHER-HARD (5.5X10X1-MM THK)	
	18	1	8T-4121	6	WASHER-HARD (11X21X2.5-MM THK)	
	19	1	9M-8406	1	CLIP	

M-METRIC PART

252-5920 **SWITCH GP-SIGNAL** *(contd.)* **i02225338**

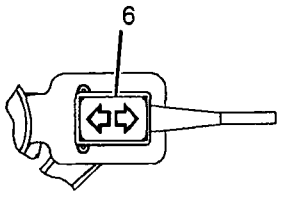

VIEW G-G

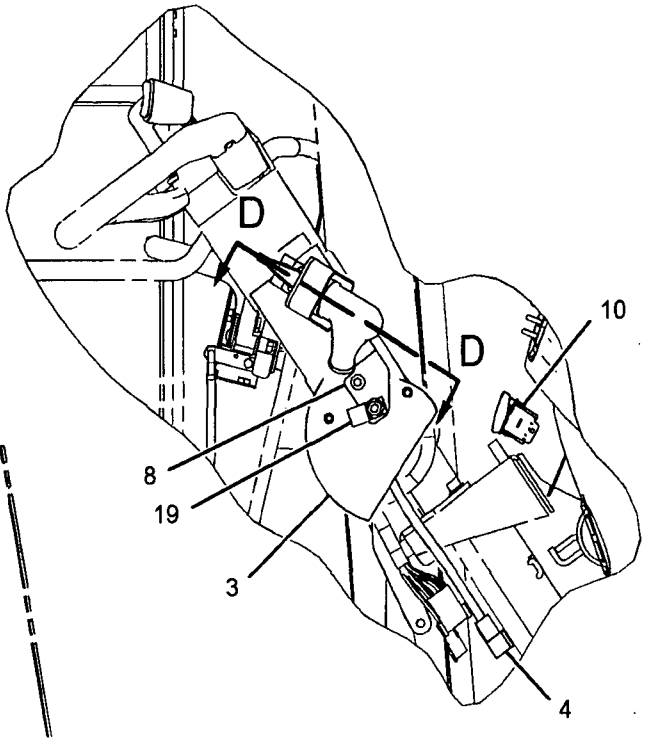

VIEW OF AREA A

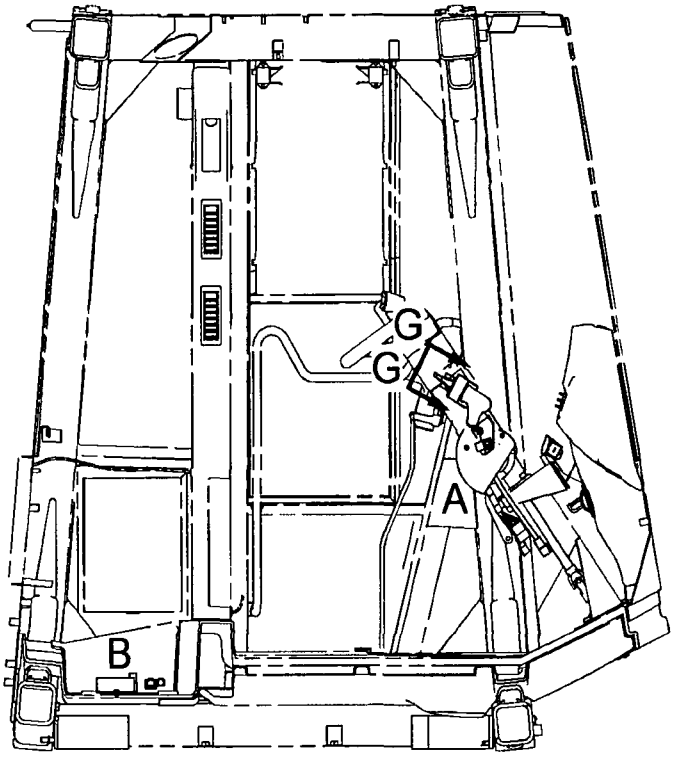

RIGHT SIDE VIEW

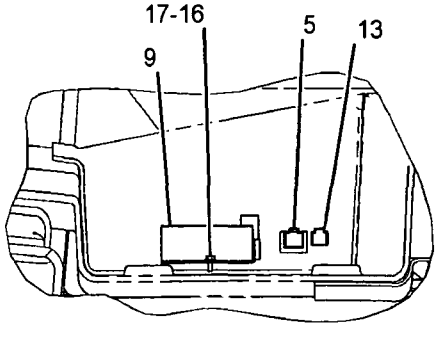

VIEW OF AREA B

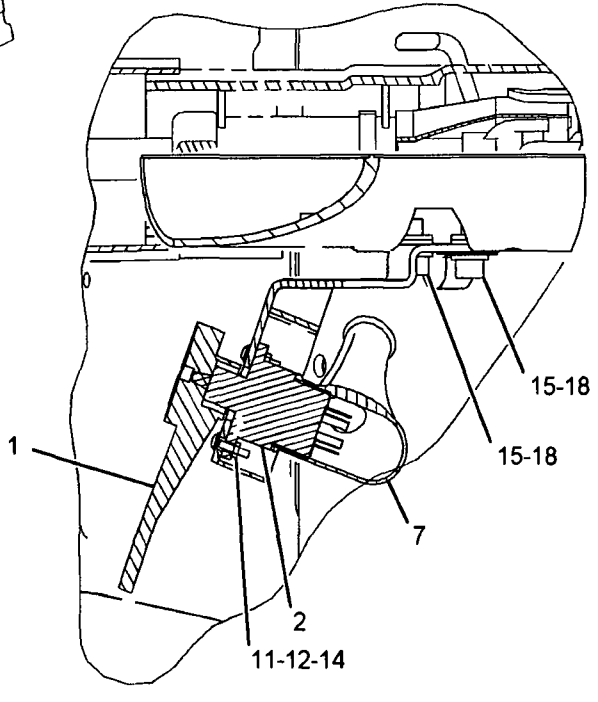

SECTION D-D

GRAPHIC #1 **<END>** g01116771

253-3951 SWITCH GP-SIGNAL-TURN

S/N: N1A1-UP

PART OF 254-5525 LIGHTING AR-ROADING, 244-3599 LIGHTING AR-SIGNAL AN ATTACHMENT

SMCS-7332 **i02286199**

NOTE	REF NO	GRAPHIC REF	PART NUMBER	QTY	PART NAME 1 2 3 4 5 6 (PRODUCT LEVEL)	SEE PAGE
	1	1	8N-2622	1	LEVER	
	2	1	134-9569	1	SWITCH AS-TURN SIGNAL	
		1	5L-7200	1	SCREW (8-32X0.375-IN)	
		1	9B-7233	1	LOCKWASHER	
	3	1	149-0668	1	COVER	
	4	1	154-4563	1	HARNESS AS-LIGHTING (TURN SIGNAL)	
		1	102-8805	1	KIT-RECEPTACLE (6-PIN)	
					(INCLUDES RECEPTACLE AS AND WEDGE)	
	5	1	154-8262	1	BRACKET AS	
	6	1	172-9200	1	SUPPRESSOR-ARC	
	7	1	201-5555	1	PLATE-INSTRUCTION (TURN SIGNAL)	
	8	1	217-8166	1	FLASHER AS (24-VOLT)	
	9	1	236-4616	1	SWITCH AS-ROCKER (HAZARD)	
	10	1	189-3158	1	SUPPRESSOR-ARC	
M	11	1	7Y-3173	3	SCREW-BUTTON HEAD (M4X0.7X12-MM)	
M	12	1	8T-0288	2	BOLT (M5X0.8X12-MM)	
	13	1	8T-0328	2	WASHER-HARD (5.5X10X1-MM THK)	
M	14	1	8T-4200	2	BOLT (M8X1.25X16-MM)	
	15	1	8T-4205	1	WASHER-HARD (7.2X14.5X2-MM THK)	
	16	1	9M-8406	1	CLIP	
	17	1	9X-2038	4	WASHER (7X19X2-MM THK)	
M	18	1	9X-2042	4	SCREW-TRUSS HEAD (M6X1X12-MM)	

M-METRIC PART

253-3951 **SWITCH GP-SIGNAL** *(contd.)* **i02286199**

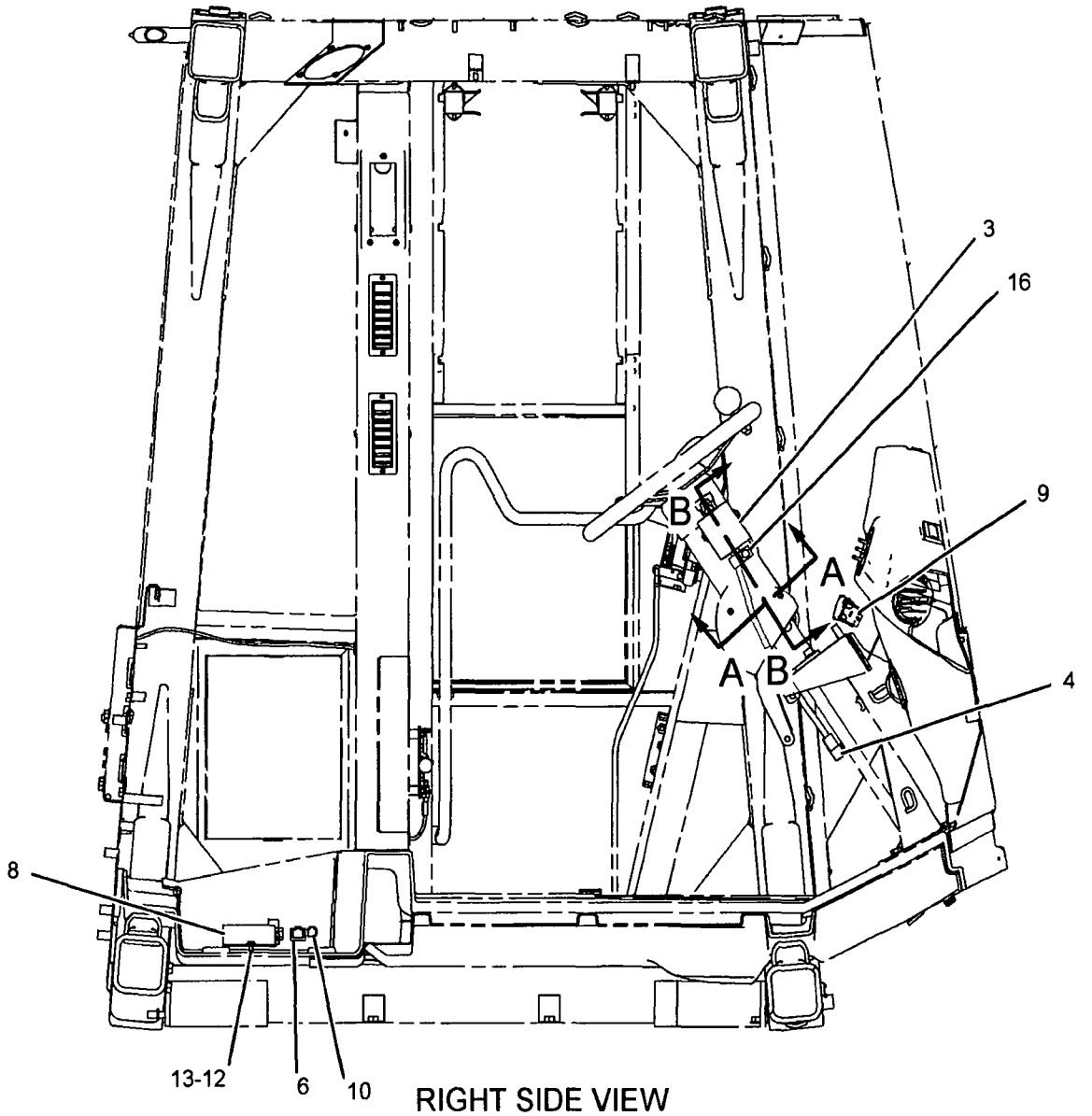

RIGHT SIDE VIEW

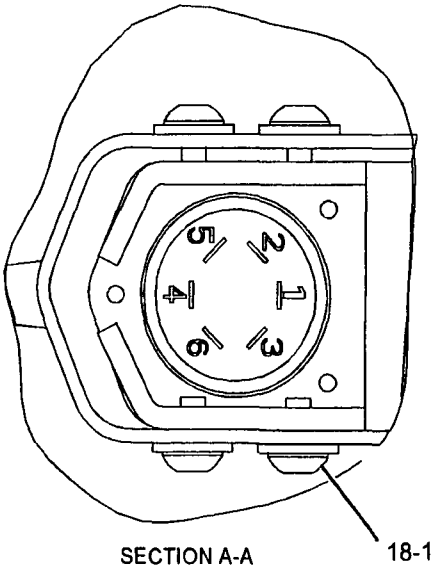

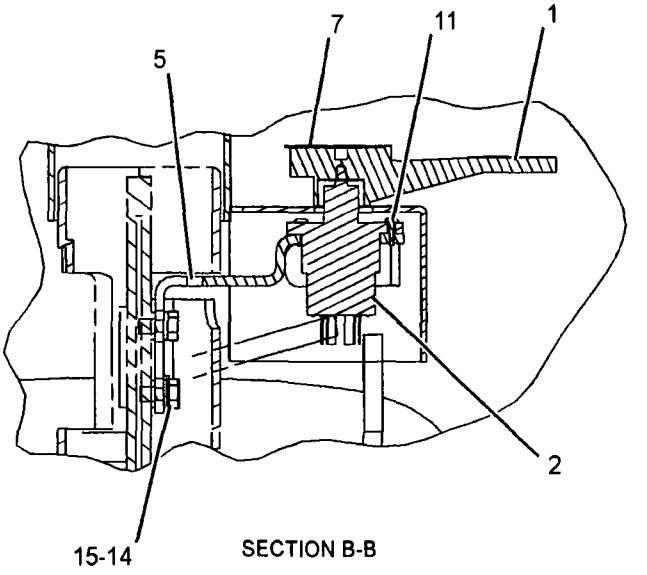

GRAPHIC #1

<END>

g01074399

165-5970 SWITCH GP-TOGGLE–FUEL PRIMING PUMP

S/N: KHX1-UP

PART OF 238-4803 PUMP GP-FUEL PRM & PRIM FILTER

SMCS-7332 i02409114

NOTE	REF NO	GRAPHIC REF	PART NUMBER	QTY	PART NAME 1 2 3 4 5 6 (PRODUCT LEVEL)	SEE PAGE
	1	1	6T-3631	2	NUT-HEX (15/32-32-THD)	
	2	1	6T-3632	1	LOCKWASHER	
	3	1	6T-3633	1	RING-LOCKING	
	4	1	102-8803	1	KIT-RECEPTACLE (3-PIN)	
					(INCLUDES RECEPTACLE AS & WEDGE)	
	5	1	186-3735	3	PIN-CONNECTOR (16-GA TO 18-GA)	

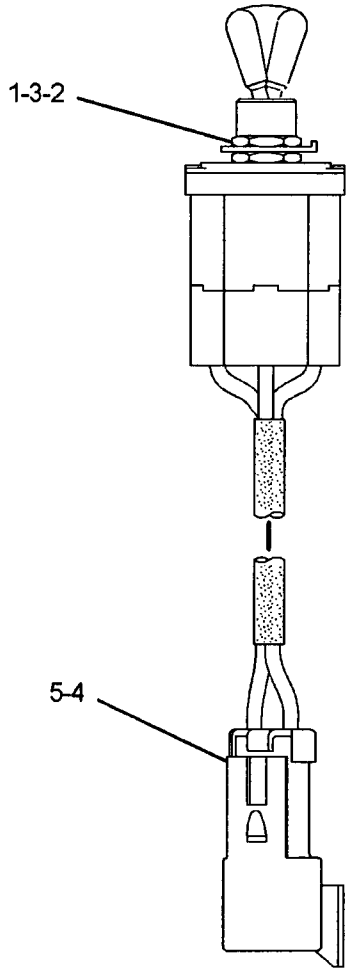

GRAPHIC #1

<END>

g01203825

ELECTRICAL AND STARTING SYSTEM

243-1938 SWITCH GP-TRANSMISSION-
REMOTE FORWARD, NEUTRAL, REVERSE CONTROL
S/N: N1A1-UP
AN ATTACHMENT

SMCS-1611, 3065, 4309, 7332 **i02415406**

NOTE	REF NO	GRAPHIC REF	PART NUMBER	QTY	PART NAME 1 2 3 4 5 6 (PRODUCT LEVEL)	SEE PAGE
	1	1	246-2642	1	SWITCH AS-ROCKER (FORWARD, NEUTRAL, REVERSE)	

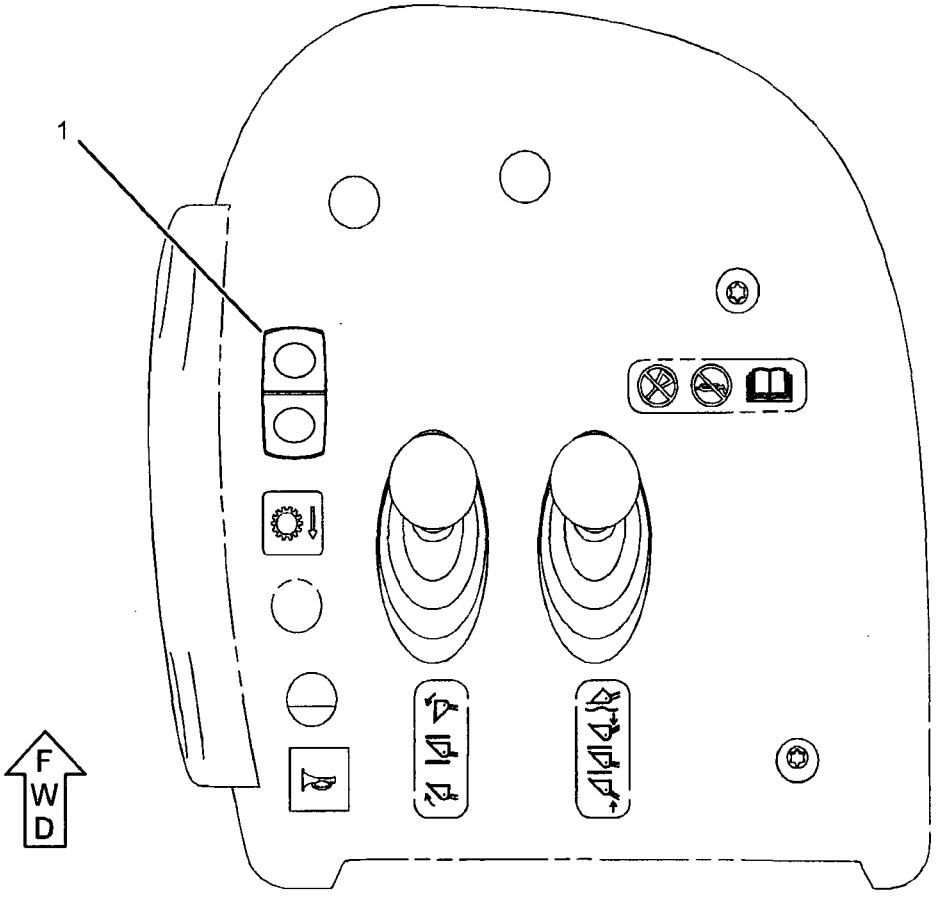

TOP VIEW

GRAPHIC #1 **<END>** g01202175

239-1134 VALVE GP-ETHER STARTING

S/N: N1A1-UP
24-VOLT
PART OF 261-3802 STARTING AID GP-ETHER
AN ATTACHMENT

SMCS-1456 **i02180779**

NOTE	REF NO	GRAPHIC REF	PART NUMBER	QTY	PART NAME 1 2 3 4 5 6 (PRODUCT LEVEL)	SEE PAGE
	1	1	3E-3365	1	WEDGE-RECEPTACLE LOCK (2-PIN)	
	2	1	7N-9801	1	GASKET	
	3	1	102-8802	1	KIT-RECEPTACLE (2-PIN)	
					(KIT INCLUDES RECEPTACLE AS & WEDGE)	
	4	1	186-3735	2	PIN-CONNECTOR (16-GA TO 18-GA)	

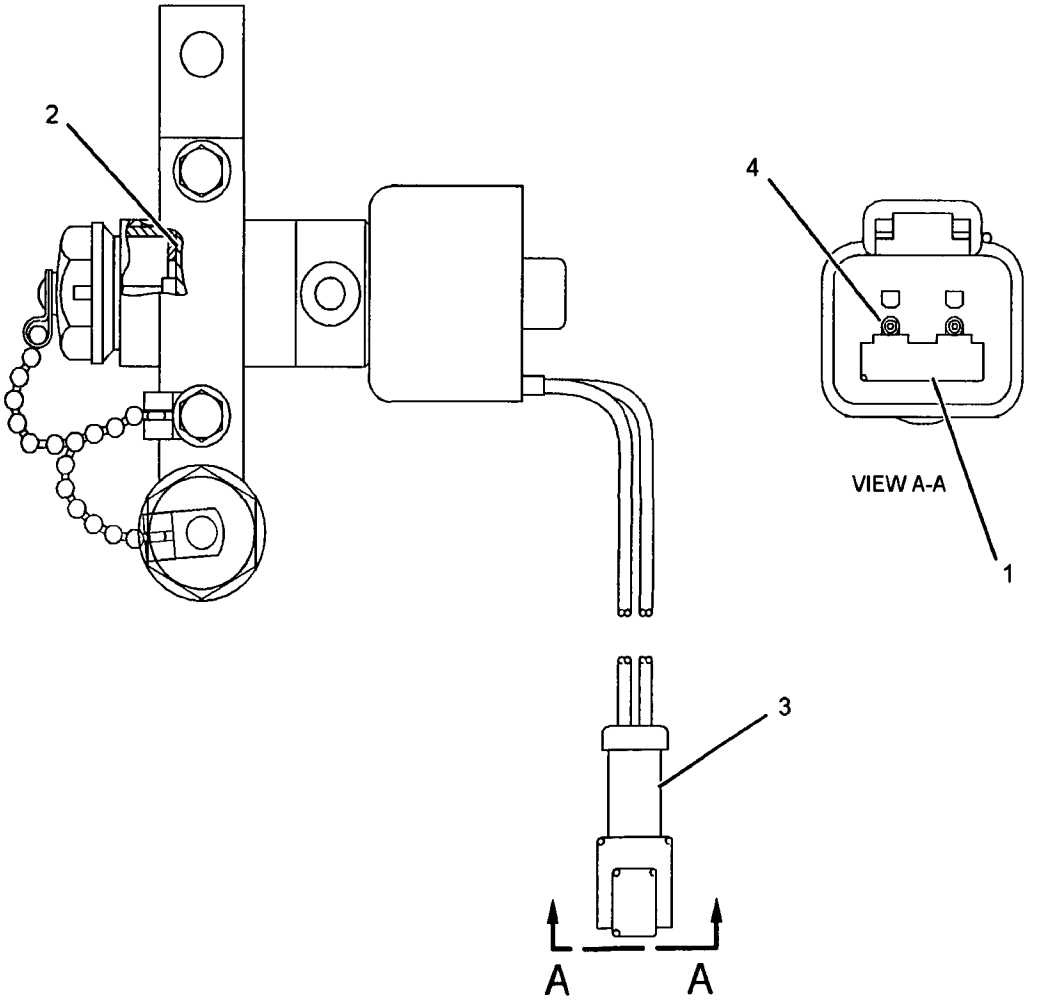

GRAPHIC #1

<END>

g01053000

237-0233 WARNING GP-BACKUP

S/N: N1A1-UP
AN ATTACHMENT

SMCS-7406 **i02238872**

NOTE	REF NO	GRAPHIC REF	PART NUMBER	QTY	PART NAME 1 2 3 4 5 6 (PRODUCT LEVEL)	SEE PAGE
	1	1	213-9100	1	ALARM AS (BACKUP)	
		1	102-8802	1	KIT-RECEPTACLE (2-PIN)	
					(INCLUDES RECEPTACLE AS AND WEDGE)	
D		1	5P-5623		WIRE-ELECTRICAL (16-GA, BLACK) (0.4-M)	
		1	186-3735	2	PIN-CONNECTOR (16-GA TO 18-GA)	
E		1	9X-1813		SLEEVE (31-CM)	
	2	1	7X-7729	3	WASHER (11X25X3-MM THK)	
M	3	1	8T-4133	3	NUT (M10X1.5 THD)	

D-ORDER BY THE METER
E-ORDER BY THE CENTIMETER
M-METRIC PART

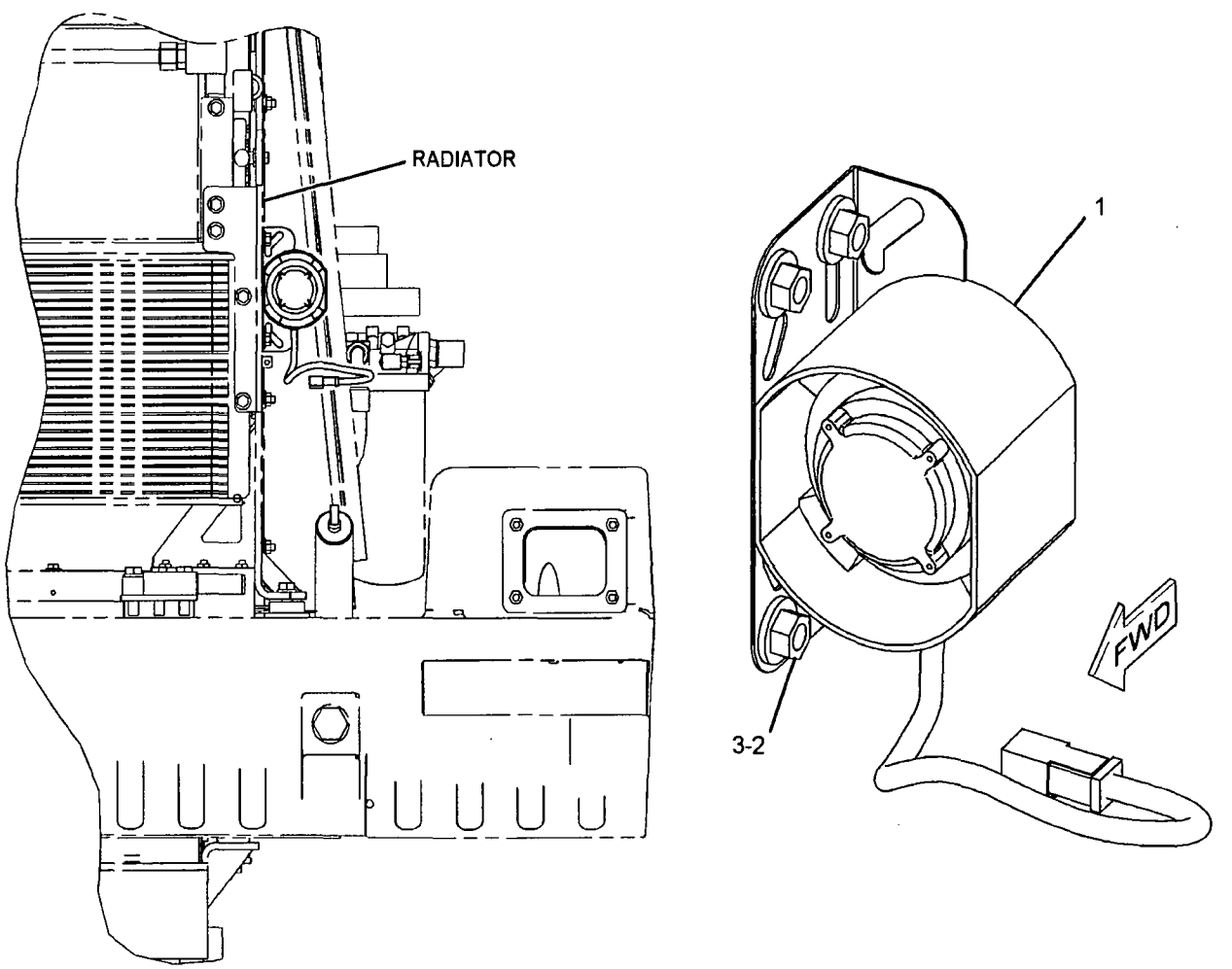

LEFT SIDE VIEW

GRAPHIC #1 **<END>** g01123604

271-4024 WIRING GP-AIR CONDITIONER

S/N: N1A1-UP

PART OF 243-6623 AIR CONDITIONER AR

AN ATTACHMENT

SMCS-1408, 7320 **i02438948**

NOTE	REF NO	GRAPHIC REF	PART NUMBER	QTY	PART NAME 1 2 3 4 5 6 (PRODUCT LEVEL)	SEE PAGE
	1	1	**7K-1181**	2	STRAP-CABLE	
	2	1	**114-5333**	1	SWITCH AS-PRESSURE (REFRIGERANT)	
		1	**102-8802**	2	KIT-RECEPTACLE (2-PIN)	
					(EACH KIT INCLUDES RECEPTACLE AS AND WEDGE)	
		1	**186-3735**	2	PIN-CONNECTOR (16-GA TO 18-GA)	
E		1	**9X-1386**		SLEEVE (25-CM)	
	3	1	**218-4935**	1	SUPPRESSOR-ARC	
	4	1	**132-5789**	1	CLIP	
	5	1	**156-6175**	1	CLIP	
	6	1	**9X-7378**	1	SEAL-O-RING	

E-ORDER BY THE CENTIMETER

271-4024 **WIRING GP-AIR CONDITIONER** *(contd.)* **i02438948**

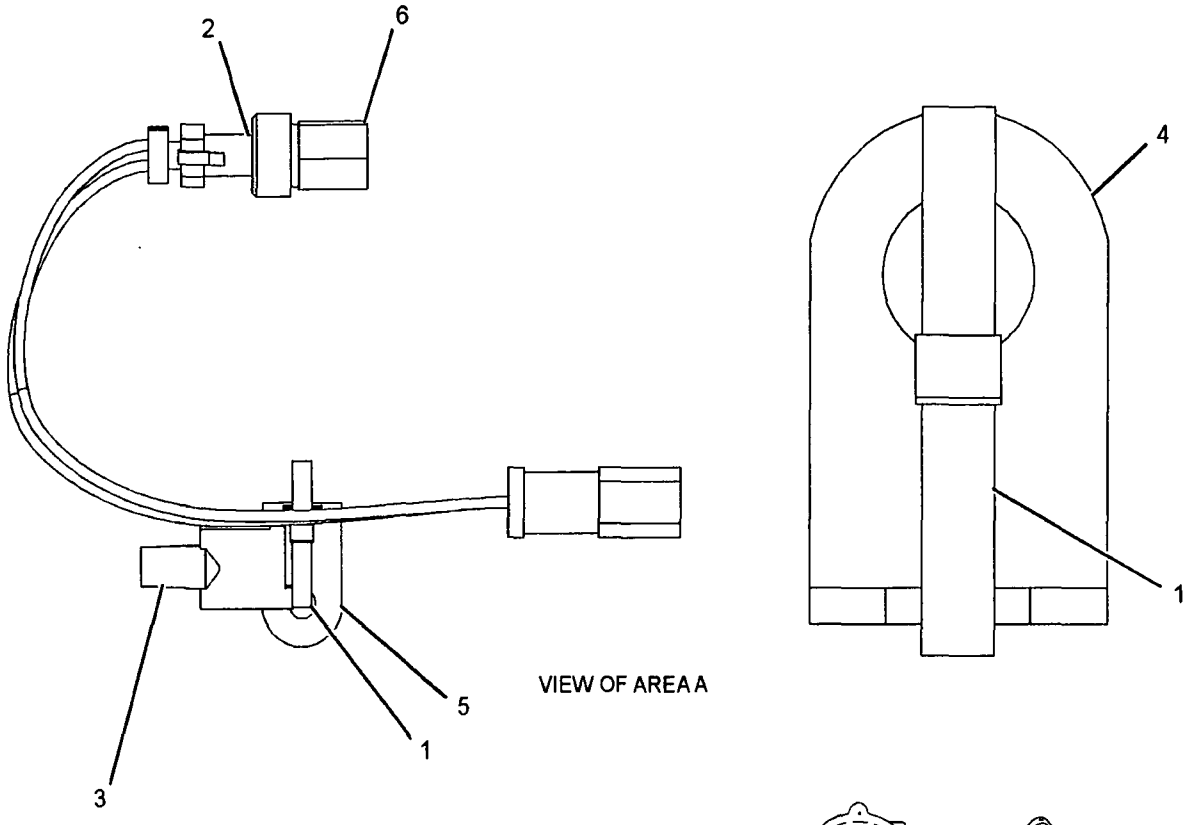

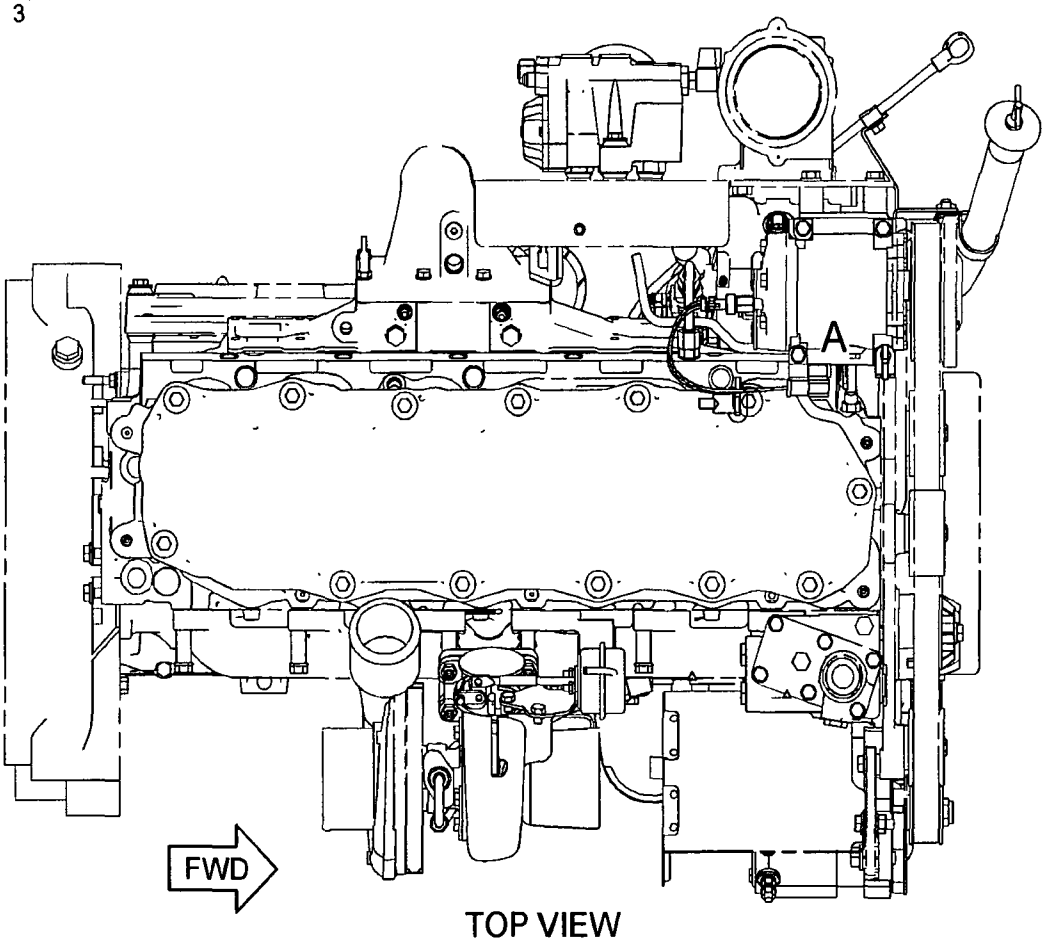

TOP VIEW

GRAPHIC #1 **<END>** g01198700

ELECTRICAL AND STARTING SYSTEM

281-8741 WIRING GP-LUBRICATION

S/N: N1A1-UP

PART OF 250-0337, 264-1082 LUBRICATION AR-AUTOMATIC AN ATTACHMENT

SMCS-1408, 7540 **i02429818**

NOTE	REF NO	GRAPHIC REF	PART NUMBER	QTY	PART NAME 1 2 3 4 5 6 (PRODUCT LEVEL)	SEE PAGE
	1	1	277-8271	1	HARNESS AS-PUMP	
		1	102-8806	1	KIT-RECEPTACLE (8-PIN)	
					(INCLUDES RECEPTACLE AS AND WEDGE)	
		1	146-4055	1	RECEPTACLE AS	
	2	1	277-8272	1	HARNESS AS-SWITCH	
		1	102-8802	1	KIT-RECEPTACLE (2-PIN)	
					(INCLUDES RECEPTACLE AS AND WEDGE)	
		1	146-4073	1	RECEPTACLE AS	
	3	1	281-8742	1	HARNESS AS-PUMP	
		1	102-8804	1	KIT-RECEPTACLE (4-PIN)	
					(INCLUDES RECEPTACLE AS AND WEDGE)	
		1	155-2265	1	KIT-CONNECTING PLUG (8-PIN)	
		1	155-2270	1	KIT-CONNECTING PLUG (2-PIN)	
					(EACH KIT PLUG INCLUDES PLUG AS AND WEDGE)	
	4	1	130-5300	2	CLIP	
	5	1	4K-8864	3	CLIP	
	6	1	6D-3479	1	CLIP	
	7	1	8T-4121	3	WASHER-HARD (11X21X2.5-MM THK)	
M	8	1	8T-4137	3	BOLT (M10X1.5X20-MM)	
B	9	1	7K-1181	31	STRAP-CABLE	

B-USE AS REQUIRED
M-METRIC PART

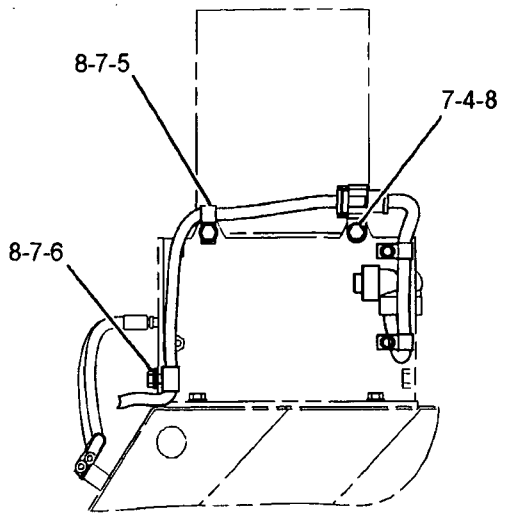

SECTION A-A

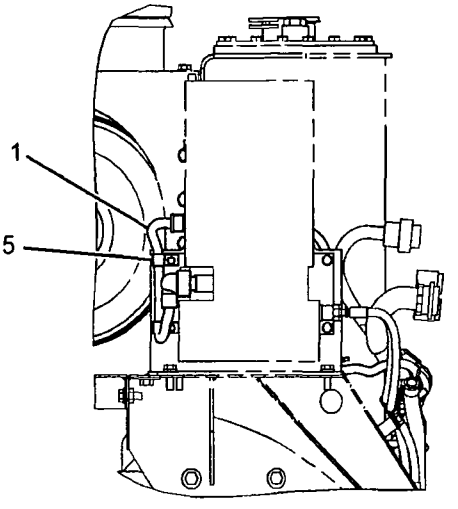

VIEW B-B

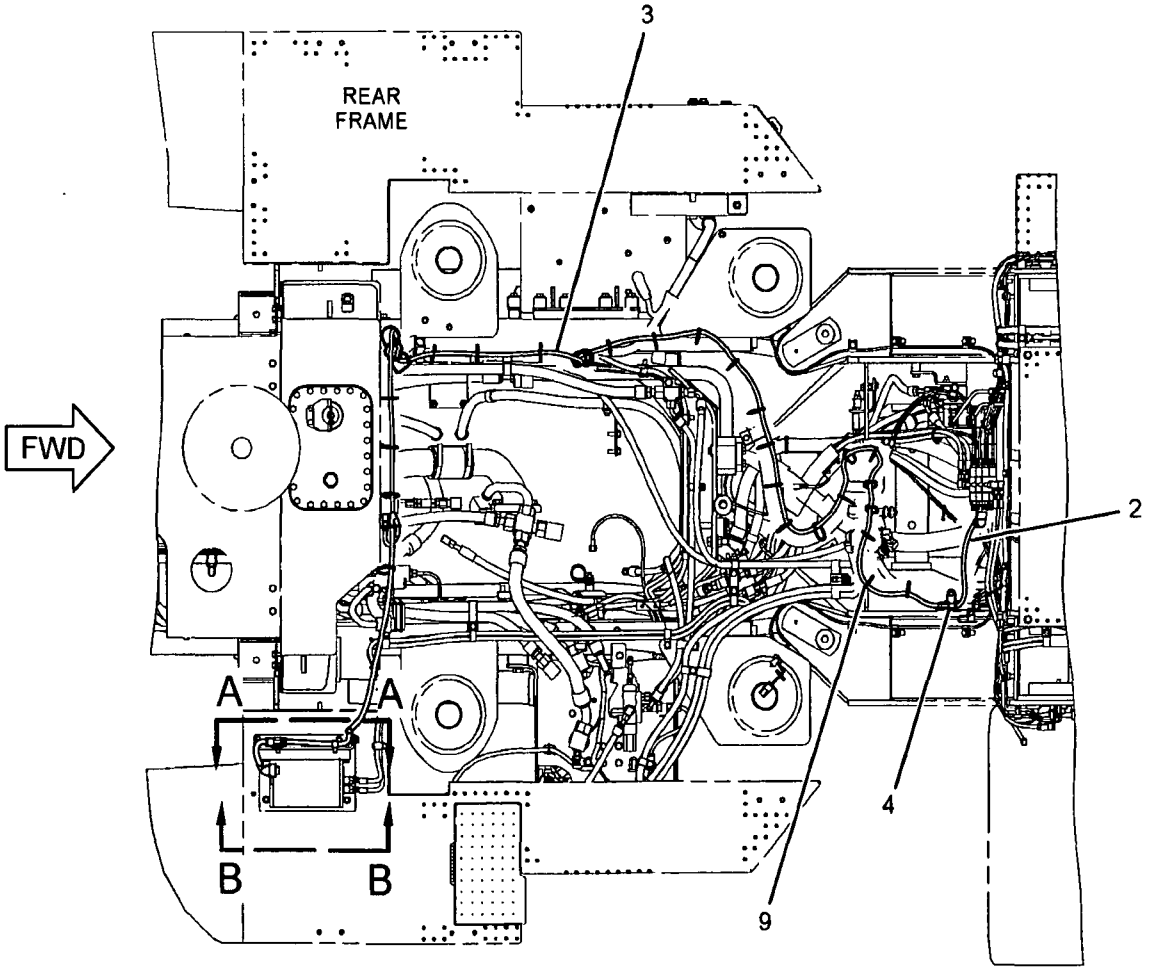

TOP VIEW

GRAPHIC #1 **<END>** g01222368

241-0638 WIRING GP-AXLE MONITORING–OIL TEMPERATURE

S/N: N1A1-UP
PART OF 237-0235 ELECTRICAL AR
ALSO AN ATTACHMENT

SMCS-1408, 7490 **i02437651**

NOTE	REF NO	GRAPHIC REF	PART NUMBER	QTY	PART NAME 1 2 3 4 5 6 (PRODUCT LEVEL)	SEE PAGE
	1	1	3S-2093	2	STRAP-CABLE	
	2	1	7K-1181	1	STRAP-CABLE	
	3	1	130-9811	1	SENSOR GP-TEMPERATURE (2-PIN) (FRONT AXLE OIL)	
	3A	1	130-9811	1	SENSOR GP-TEMPERATURE (2-PIN) (REAR AXLE OIL)	
	4	1	156-5892	2	BRACKET	
	5	1	247-8474	1	HARNESS AS-SENSOR (REAR AXLE)	
		1	102-8802	1	KIT-RECEPTACLE (2-PIN)	
					(INCLUDES RECEPTACLE AS AND WEDGE)	
		1	155-2270	1	KIT-CONNECTING PLUG (2-PIN)	
					(INCLUDES PLUG AS AND WEDGE)	
	6	1	247-8475	1	HARNESS AS-SENSOR (AXLE, FRONT)	
		1	155-2270	1	KIT-CONNECTING PLUG (2-PIN)	
					(INCLUDES PLUG AS AND WEDGE)	
	7	1	3K-0360	2	SEAL-O-RING	
	8	1	4D-7794	1	CLIP	
	9	1	5P-8247	4	WASHER-HARD (17X32X3.5-MM THK)	
	10	1	5P-9085	4	CLIP	
M	11	1	8T-0299	4	BOLT (M16X2X30-MM)	
	12	1	8T-4121	8	WASHER-HARD (11X21X2.5-MM THK)	
M	13	1	8T-4133	1	NUT (M10X1.5 THD)	
M	14	1	8T-4136	1	BOLT (M10X1.5X25-MM)	
M	15	1	8T-4137	6	BOLT (M10X1.5X20-MM)	
	16	1	9M-8406	2	CLIP	
	17	1	130-5300	1	CLIP	

M-METRIC PART

241-0638 WIRING GP-AXLE MONITORING (contd.) i02437651

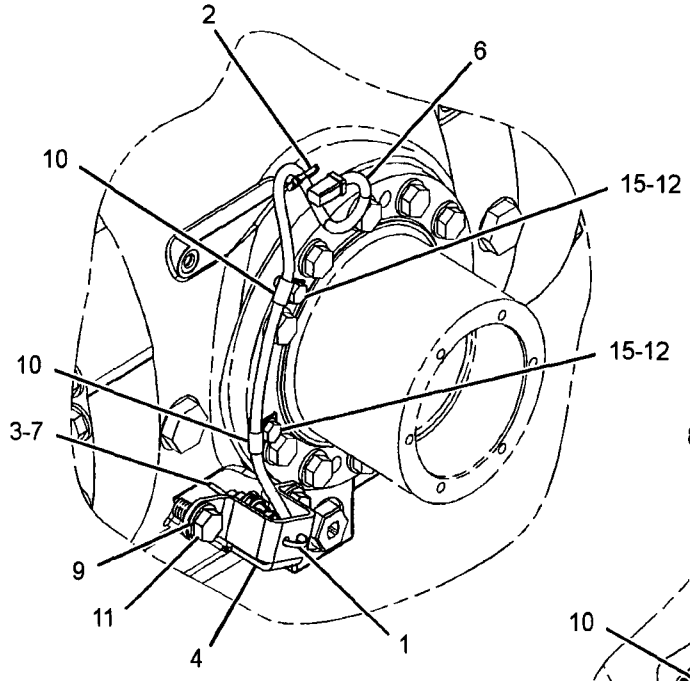

VIEW A-A

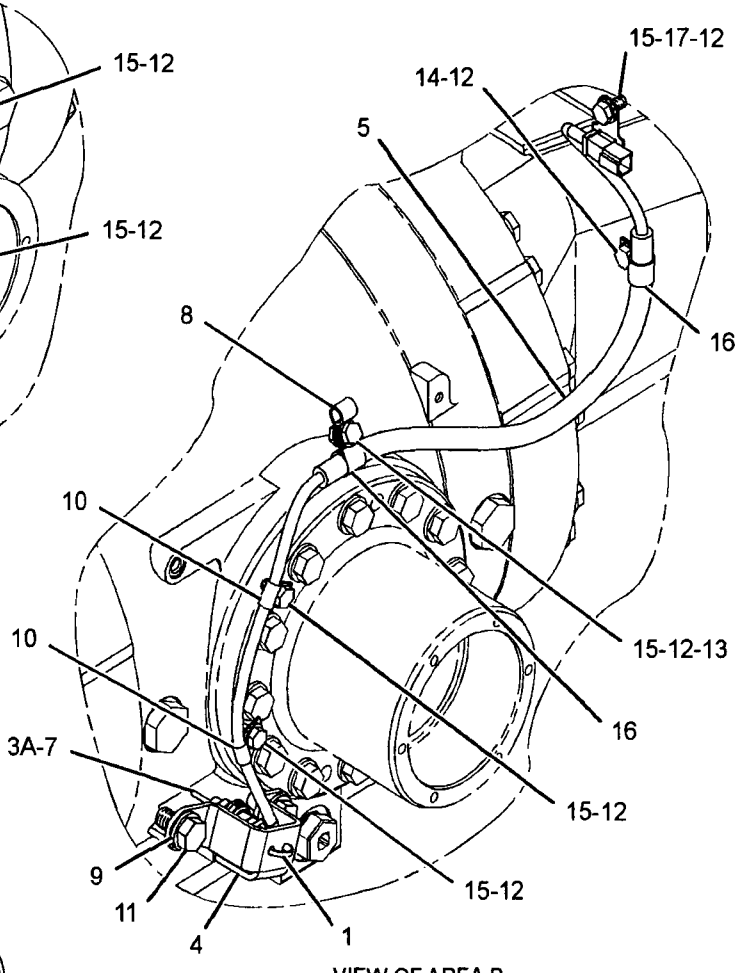

VIEW OF AREA B

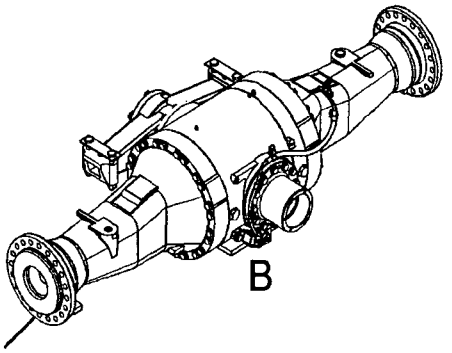

OSCILLATING AXLE



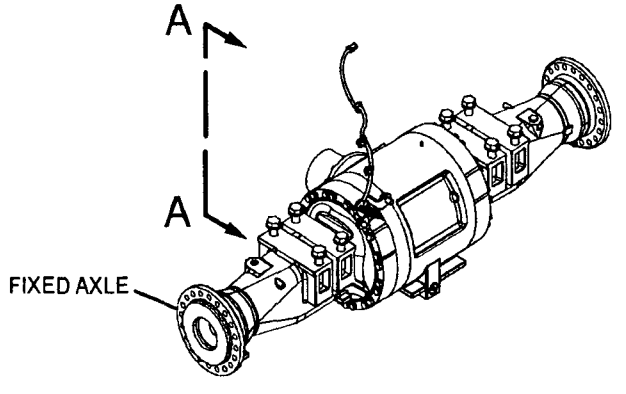

GRAPHIC #1 **<END>** g01221780

264-1135 WIRING GP-CAB–SEAT BELT ALARM, WARNING BEACON

S/N: N1A1-UP

PART OF 265-5046 SEAT BELT & LIGHTING GP

AN ATTACHMENT

SMCS-1408, 7301 **i02443540**

NOTE	REF NO	GRAPHIC REF	PART NUMBER	QTY	PART NAME 1 2 3 4 5 6 (PRODUCT LEVEL)	SEE PAGE
	1	1	3E-5239	1	RELAY AS (24-VOLT) (SEAT BELT ALARM)	
	2	1	264-1136	1	HARNESS AS-ALARM (SEAT BELT, WARNING BEACON)	
		1	9X-1054	1	PLUG AS-CONNECTOR (4-PIN)	
		1	155-2270	2	KIT-CONNECTING PLUG (2-PIN)	
					(EACH INCLUDES PLUG AS AND WEDGE)	
	3	1	133-9379	1	GROMMET	
	4	1	6T-3643	2	CIRCUIT BREAKER AS (15-AMPERE) (SEAT BELT ALARM)	
M	5	1	6V-9632	1	NUT-WELD (M6X1-THD)	
	6	1	8T-4205	1	WASHER-HARD (7.2X14.5X2-MM THK)	
M	7	1	8T-4970	1	BOLT (M6X1X14-MM)	

M-METRIC PART

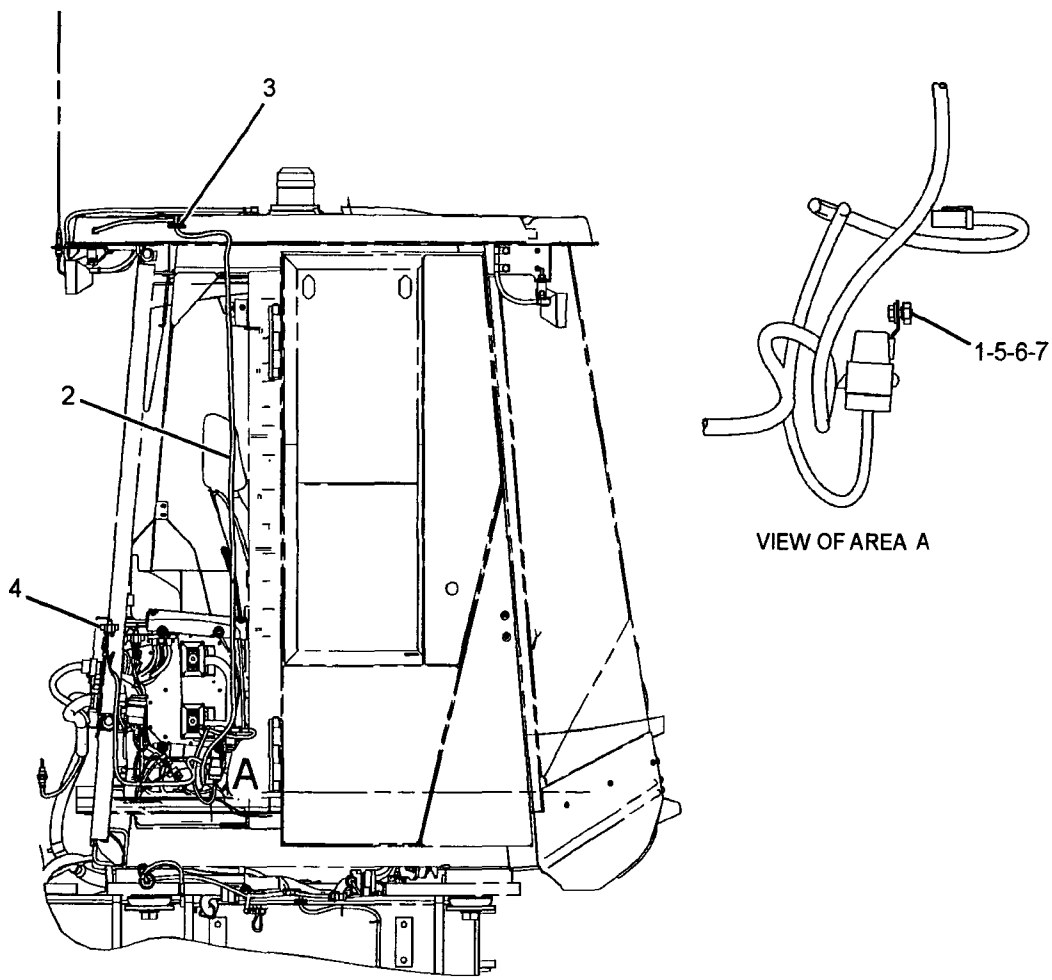

RIGHT SIDE VIEW

GRAPHIC #1 **<END>** g01228694

ELECTRICAL AND STARTING SYSTEM

280-4118 WIRING GP-CAB

S/N: N1A1-UP

PART OF 243-1080, 243-1081 CAB AR-ENCLOSED ROPS

ALSO AN ATTACHMENT

SMCS-1408, 7301 **i02438147**

NOTE	REF NO	GRAPHIC REF	PART NUMBER	QTY	PART NAME 1 2 3 4 5 6 (PRODUCT LEVEL)	SEE PAGE
	1	6	3E-3365	1	WEDGE-RECEPTACLE LOCK (2-PIN)	
	2	7	102-8805	1	KIT-RECEPTACLE (6-PIN)	
					(INCLUDES RECEPTACLE AS AND WEDGE)	
	3	5	3E-5239	3	RELAY AS (24-VOLT)	
Y	4	3	3E-6328	1	ALARM GP (24-VOLT) (ACTION)	121
Y	5	1,4	3E-6389	2	LAMP GP-DOME (24-VOLT, WITH SWITCH)	151
	6	2,3,4, 6,7,8	3S-2093	23	STRAP-CABLE	
	7	3,5	4P-8525	11	SPACER (9X16X30-MM THK)	
	8	2,4	4V-4164	16	BUSHING-TERMINAL	
	9	3,5	6I-1418	8	SPACER (8.2X12.7X28.7-MM THK)	
	10	8	6V-8369	2	NUT (7/16-28-THD)	
	11	2,3,4, 5,6,7	7K-1181	34	STRAP-CABLE	
	12	3,7	7N-5876	4	LAMP (24-VOLT)	
	13	7	8C-6354	1	CAP-RECEPTACLE (DUST)	
	14	7	8T-8737	6	PLUG-SEAL	
	15	3,5	8T-9655	16	MOUNT-ISOLATION	
	16	2	8X-5804	1	STRAP AS-GROUND	
	17	2,4	9F-8125	16	LOCKWASHER	
	18	5	9W-1441	6	FUSE (15-AMPERE)	
	19	5	9W-1442	24	FUSE (10-AMPERE)	
	20	5	9W-1446	2	FUSE (20-AMPERE)	
	21	2,4	098-8968	16	WASHER (5X16X1.2-MM THK)	
Y	22	5	103-5526	1	CONTROL GP-MONITOR (DIMMER)	813
	23	7	108-3320	1	SWITCH AS-ROTARY (24-VOLT) (RUNNING LIGHTS)	
		7	3E-3389	1	WEDGE-RECEPTACLE LOCK	
		7	9W-0852	8	PIN-CONNECTOR (14-GA)	
		7	102-8806	1	KIT-RECEPTACLE (8-PIN)	
					(INCLUDES RECEPTACLE AS AND WEDGE)	
	24	7,8	110-6109	6	KNOB-CONTROL	
	25	8	110-7886	1	SWITCH AS-WIPER (24-VOLT) (FRONT INTERMITTENT)	
		8	2H-3920	1	LOCKWASHER	
		8	3E-3389	1	WEDGE-RECEPTACLE LOCK	
		8	6V-8369	1	NUT (7/16-28-THD)	
		8	8T-8737	1	PLUG-SEAL	
		8	9W-0852	4	PIN-CONNECTOR (14-GA)	
		8	102-8806	1	KIT-RECEPTACLE (8-PIN)	
					(INCLUDES RECEPTACLE AS AND WEDGE)	
		8	186-3735	3	PIN-CONNECTOR (16-GA TO 18-GA)	
	26	7	110-7887	1	SWITCH GP-START (KEY)	
		7	7T-6799	1	NUT-MOUNTING (1-32-THD)	
		7	102-8804	1	KIT-RECEPTACLE (4-PIN)	
					(INCLUDES RECEPTACLE AS AND WEDGE)	
		7	186-3735	4	PIN-CONNECTOR (16-GA TO 18-GA)	
	27	6	111-4839	2	STRAP	
	28	8	112-6174	1	SWITCH AS-ROTARY (24-VOLT) (REAR WIPER)	
		8	2H-3920	1	LOCKWASHER	
		8	3E-3389	1	WEDGE-RECEPTACLE LOCK	
		8	6V-8369	1	NUT (7/16-28-THD)	
		8	186-3735	6	PIN-CONNECTOR (16-GA TO 18-GA)	
		8	8T-8737	2	PLUG-SEAL	
		8	102-8806	1	KIT-RECEPTACLE (8-PIN)	
					(INCLUDES RECEPTACLE AS AND WEDGE)	

280-4118 WIRING GP-CAB *(contd.)* i02438147

NOTE	REF NO	GRAPHIC REF	PART NUMBER	QTY	PART NAME 1 2 3 4 5 6 (PRODUCT LEVEL)	SEE PAGE
	29	7	117-2311	1	RECEPTACLE AS-POWER (12-VOLT)	
	30	1	121-8038	1	RECEPTACLE AS	
		1	102-8803	1	KIT-RECEPTACLE (3-PIN)	
					(INCLUDES RECEPTACLE AS AND WEDGE)	
		1	3E-3371	1	WEDGE-RECEPTACLE LOCK (3-PIN)	
D		1	5P-5624		WIRE (14-GA, BLACK) (0.3-M)	
		1	8T-8737	1	PLUG-SEAL	
		1	9W-0852	2	PIN-CONNECTOR (14-GA)	
	31	4	123-2896	1	GASKET	
	32	8	127-4540	1	POTENTIOMETER AS (TEMPERATURE SELECT)	
		8	102-8803	1	KIT-RECEPTACLE (3-PIN)	
					(INCLUDES RECEPTACLE AS AND WEDGE)	
		8	186-3735	4	PIN-CONNECTOR (16-GA TO 18-GA)	
		8	236-8722	1	WASHER	
Y	33	8	154-7443	1	CONTROL GP-UNPRGMED MONITOR (CATERPILLAR MONITORING SYSTEM)	814
Y	34	7	166-6928	1	MODULE GP-QUAD GAUGE	869
	35	6	170-1821	1	SWITCH AS-PUSH BUTTON (HORN)	
		6	6F-0253	1	LOCKWASHER	
		6	186-3735	2	PIN-CONNECTOR (16-GA TO 18-GA)	
		6	172-3511	1	NUT (5/8-24-THD)	
	36	5	173-2234	1	PLATE AS	
	37	8	185-6335	1	SWITCH AS-ROTARY (24-VOLT) (VARIABLE SHIFT CONTROL)	
	37A	8	185-6335	1	SWITCH AS-ROTARY (24-VOLT) (AUTOSHIFT CONTROL)	
					(EACH SWITCH AS INCLUDES)	
		8	3E-3383	1	WEDGE-RECEPTACLE LOCK (6-PIN)	
		8	8T-8737	2	PLUG-SEAL	
		8	9W-0852	4	PIN-CONNECTOR (14-GA)	
		8	102-8805	1	KIT-RECEPTACLE (6-PIN)	
					(INCLUDES RECEPTACLE AS AND WEDGE)	
	38	8	192-1954	1	FILM-CONTROL (UPPER PANEL)	
	39	7	198-6570	1	LIGHTER GP-CIGAR (12-VOLT)	
		7	198-6571	1	ELEMENT AS	
	40	5	209-0381	1	CONVERTER-POWER (24-VOLT TO 12-VOLT)	
	41	4	234-5925	1	GASKET	
	42	1	235-5506	1	HARNESS AS-LIGHTING (CAB FLOODLIGHTS)	
		1	155-2270	4	KIT-CONNECTING PLUG (2-PIN)	
					(EACH INCLUDES PLUG AS AND WEDGE)	
	43	6,7,8	236-4631	20	BEZEL	
	44	5	236-9993	1	PLATE AS	
		5	7T-1099	5	LINK	
M		5	8T-3490	2	NUT-WELD (M10X1.5-THD)	
M		5	8T-3612	4	NUT-WELD (M8X1.25-THD)	
M		5	8T-8874	9	NUT-WELD (M5X0.8-THD)	
	45	4	242-6099	1	CLIP	
	46	5	242-8421	1	PLATE AS	
	47	6	246-0578	1	HARNESS AS-OPERATOR CONTROLS	
		6	102-8803	2	KIT-RECEPTACLE (3-PIN)	
		6	102-8804	1	KIT-RECEPTACLE (4-PIN)	
					(EACH KIT INCLUDES RECEPTACLE AS AND WEDGE)	
		6	155-2255	1	KIT-CONNECTING PLUG (12-PIN)	
		6	155-2265	1	KIT-CONNECTING PLUG (8-PIN)	
		6	155-2260	1	KIT-CONNECTING PLUG (3-PIN)	
		6	155-2270	1	KIT-CONNECTING PLUG (2-PIN)	
		6	155-2271	3	KIT-CONNECTING PLUG (4-PIN)	
					(EACH KIT INCLUDES PLUG AS AND WEDGE)	
		6	245-7434	1	PLUG GP-CONNECTOR	
	48	4	246-5459	1	PLATE	

280-4118 WIRING GP-CAB *(contd.)* i02438147

NOTE	REF NO	GRAPHIC REF	PART NUMBER	QTY	PART NAME 1 2 3 4 5 6 (PRODUCT LEVEL)	SEE PAGE
	49	6	249-5602	2	GUARD-SWITCH	
	50	7	260-9602	1	HARNESS AS-WIRING (SERVICE TOOL)	
		7	102-8805	1	KIT-RECEPTACLE (6-PIN)	
					(INCLUDES RECEPTACLE AS AND WEDGE)	
	51	3,5	262-1408	2	CONTROL GP-UNPROGRAMMED (TRANSMISSION)	
	52	6	263-1493	1	SWITCH AS-PUSH BUTTON (DOWNSHIFT)	
		6	6F-0253	1	LOCKWASHER	
		6	126-1766	3	SOCKET-CONNECTOR	
		6	155-2260	1	KIT-CONNECTING PLUG (3-PIN)	
		6	174-0503	1	KIT-CONNECTING PLUG (3-PIN)	
					(EACH KIT INCLUDES PLUG AS AND WEDGE)	
		6	172-3511	1	NUT (5/8-24-THD)	
	53	1	280-4119	1	HARNESS AS-CAB	
		1	102-8802	4	KIT-RECEPTACLE (2-PIN)	
		1	102-8803	1	KIT-RECEPTACLE (3-PIN)	
		1	102-8804	3	KIT-RECEPTACLE (4-PIN)	
		1	102-8805	4	KIT-RECEPTACLE (6-PIN)	
		1	102-8806	3	KIT-RECEPTACLE (8-PIN)	
		1	102-8801	3	KIT-RECEPTACLE (12-PIN)	
		1	197-7565	1	KIT-RECEPTACLE (4-PIN)	
					(EACH KIT INCLUDES RECEPTACLE AS AND WEDGE)	
		1	3S-2093	8	STRAP-CABLE	
		1	8N-1532	1	RECEPTACLE AS-CONNECTOR (6-PIN)	
		1	8N-1535	1	BELL AS-END	
		1	8T-9834	1	PLUG AS-CONNECTOR (40-PIN)	
		1	9X-0145	1	RECEPTACLE AS-CONNECTOR (24-PIN)	
		1	9X-1054	3	PLUG AS-CONNECTOR (4-PIN)	
		1	9X-6772	1	STRAP-CABLE	
		1	147-1445	2	PLUG AS-CONNECTOR (70-PIN)	
		1	147-1446	2	PLUG AS-CONNECTOR (70-PIN)	
					(EACH INCLUDES)	
		1	159-9322	1	SEAL-O-RING	
		1	155-2255	6	KIT-CONNECTING PLUG (12-PIN)	
		1	155-2265	5	KIT-CONNECTING PLUG (8-PIN)	
		1	155-2260	7	KIT-CONNECTING PLUG (3-PIN)	
		1	155-2270	5	KIT-CONNECTING PLUG (2-PIN)	
		1	155-2271	5	KIT-CONNECTING PLUG (4-PIN)	
		1	155-2274	13	KIT-CONNECTING PLUG (6-PIN)	
					(EACH KIT INCLUDES PLUG AS AND WEDGE)	
		1	188-6253	1	BLOCK AS-FUSE	
		1	214-4208	1	RECEPTACLE AS-CONNECTOR (70-PIN)	
		1	245-7434	20	PLUG GP-CONNECTOR	
		1	230-4013	1	PLUG AS (3-PIN)	
		1	246-9371	2	RELAY AS (SHELL)	
	54	5,6	111-4838	2	CLIP	
	55	3,6	132-5789	3	CLIP	
	56	5	134-2540	1	RECEPTACLE AS-CONNECTOR (3-PIN)	
	57	6,7	156-6175	3	CLIP	
	58	6	198-4775	2	WASHER-HARD (6.6X15X6-MM THK)	
	59	6,7,8	228-6089	14	PLUG	
	60	8	236-4608	1	SWITCH AS-ROCKER (CATERPILLAR MONITORING SYSTEM)	
	61	8	236-4609	1	SWITCH AS-ROCKER (TMSN NEUTRALIZER OVERRIDE)	
	62	8	236-4610	1	SWITCH AS-ROCKER (AIR CONDITIONER, HEATER)	
	63	8	236-4611	1	SWITCH AS-ROCKER (FAN BLOWER SPEED)	
	64	8	236-4619	1	SWITCH AS-ROCKER (LIFT, TILT KICKOUT)	
	65	6	236-4622	1	SWITCH AS-ROCKER (FINE MODULATION)	
	66	7	249-2763	2	CONTROL GP-DISPLAY ELECTRONIC (INDICATOR PANEL, RH, LH)	
	67	6	251-1197	1	SWITCH AS-ROCKER (HYDRAULIC LOCKOUT)	

280-4118 WIRING GP-CAB *(contd.)* i02438147

NOTE	REF NO	GRAPHIC REF	PART NUMBER	QTY	PART NAME 1 2 3 4 5 6 (PRODUCT LEVEL)	SEE PAGE
	68	6	2A-2677	1	SPACER (0.75-IN THK)	
	69	8	2H-3920	6	LOCKWASHER	
	70	6	102-8802	1	KIT-RECEPTACLE (2-PIN)	
					(INCLUDES RECEPTACLE AS AND WEDGE)	
	71	2,4	4B-2049	16	NUT (10-32-THD)	
	72	6	4D-7388	1	CLIP	
	73	7	4P-7581	1	CLIP	
M	74	5	5C-7261	2	NUT (M8X1.25-THD)	
M	75	5	5C-8312	4	NUT (M4X0.7-THD)	
	76	7	5P-4116	1	WASHER-HARD (8.8X20.5X2-MM THK)	
	77	4	6D-1641	1	CLIP	
	78	2,4	6D-6146	8	SCREW-MACHINE (10-32X1.25-IN)	
	79	7	6V-1889	1	CLIP	
	80	4	6V-2687	8	SCREW-PAN HEAD (10-24X1-IN)	
	81	8	6V-3265	4	CLIP	
	82	5	6V-5645	4	SCREW-MACHINE (10-32X0.87-IN)	
M	83	3,5	6V-9673	3	SCREW-MACHINE (M5X0.8X12-MM)	
M	84	5	7X-0818	3	BOLT (M8X1.25X45-MM)	
M	85	5	8T-0337	4	SCREW-MACHINE (M4X0.7X12-MM)	
	86	3,4,5, 6,8	8T-4121	14	WASHER-HARD (11X21X2.5-MM THK)	
M	87	6	8T-4133	1	NUT (M10X1.5 THD)	
M	88	3	8T-4136	1	BOLT (M10X1.5X25-MM)	
M	89	3,4,5, 6,8	8T-4137	11	BOLT (M10X1.5X20-MM)	
M	90	4,6	8T-4138	10	BOLT (M6X1X20-MM)	
M	91	5	8T-4171	2	BOLT (M6X1X12-MM)	
M	92	6	8T-4186	1	BOLT (M10X1.5X40-MM)	
M	93	7	8T-4199	1	BOLT (M8X1.25X12-MM)	
	94	4,5,6	8T-4205	9	WASHER-HARD (7.2X14.5X2-MM THK)	
	95	2,3,4	8T-4223	4	WASHER-HARD (13.5X25.5X3-MM THK)	
	96	5	8T-4224	2	WASHER-HARD (8.8X16X2-MM THK)	
M	97	2,3,4	8T-4244	4	NUT (M12X1.75-THD)	
M	98	5,7	8T-4970	5	BOLT (M6X1X14-MM)	
M	99	3,5	8T-6870	8	BOLT (M8X1.25X70-MM)	
	100	3	9M-4972	1	CLIP	
	101	2,4	9M-5870	8	GROMMET	
	102	3,5	9N-0869	11	WASHER-HARD (8.8X25.5X2-MM THK)	
M	103	1,4	9X-1046	6	SCREW (M4X0.7X18-MM)	
M	104	5	9X-2480	2	BOLT (M6X1X45-MM)	
	105	7	9X-6165	1	WASHER (6.5X22X2.5-MM THK)	
	106	4,5,7	9X-8256	7	WASHER (6.6X12X2-MM THK)	
D	107	2,4,7	141-8061		TAPE (0.025-M EACH)	

D-ORDER BY THE METER
M-METRIC PART
Y-SEPARATE ILLUSTRATION

280-4118 **WIRING GP-CAB** *(contd.)* **i02438147**

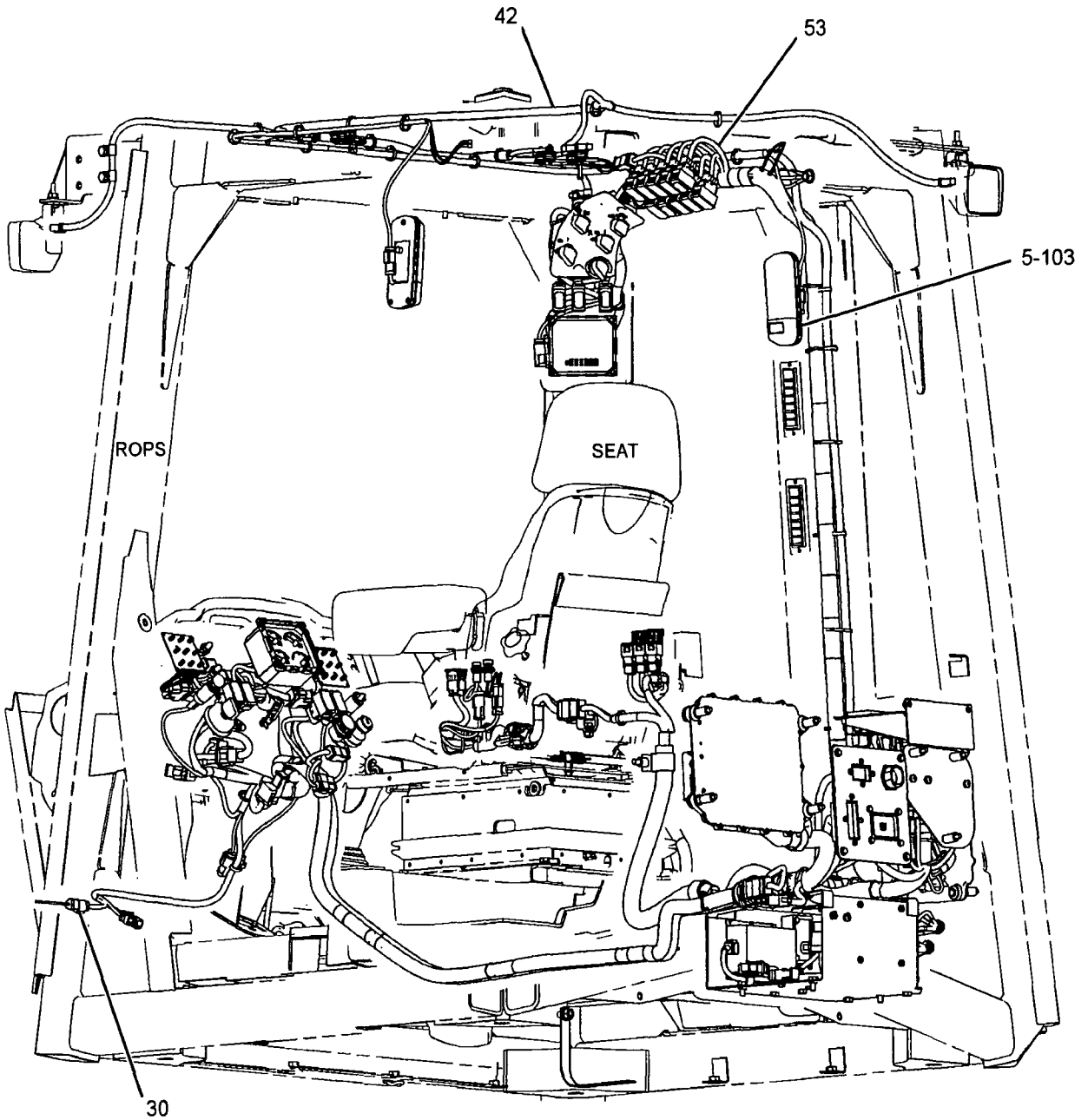

LEFT REAR VIEW

GRAPHIC #1 g01228925

280-4118 **WIRING GP-CAB** *(contd.)* **i02438147**

REFER TO ALL ILLUSTRATIONS OF
THIS GROUP FOR AUXILIARY VIEWS

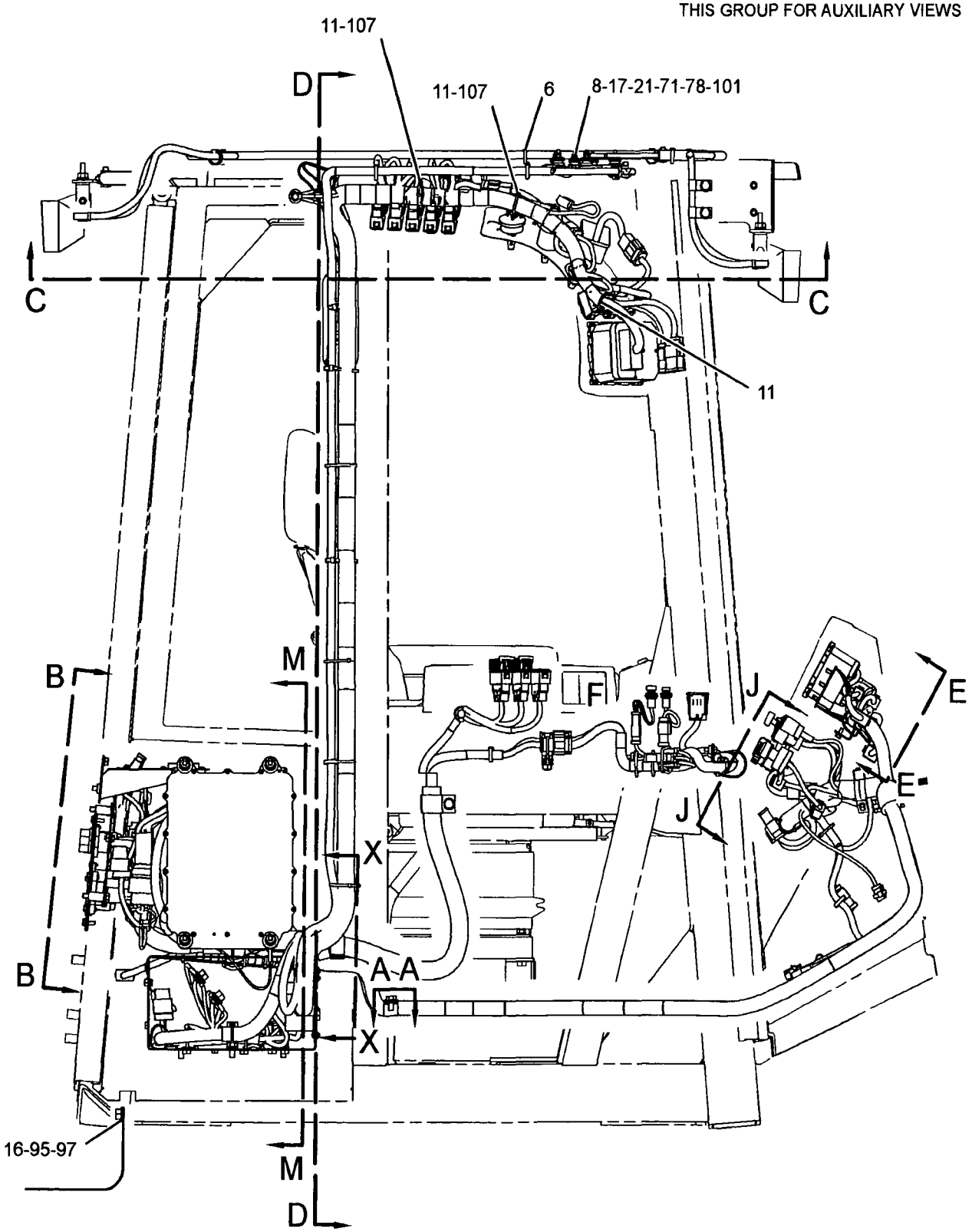

RIGHT SIDE VIEW

GRAPHIC #2

g01228927

REFER TO ALL ILLUSTRATIONS OF THIS GROUP FOR AUXILIARY VIEWS

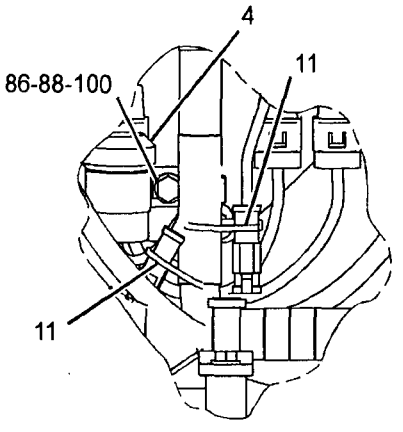

VIEW OF AREA CC

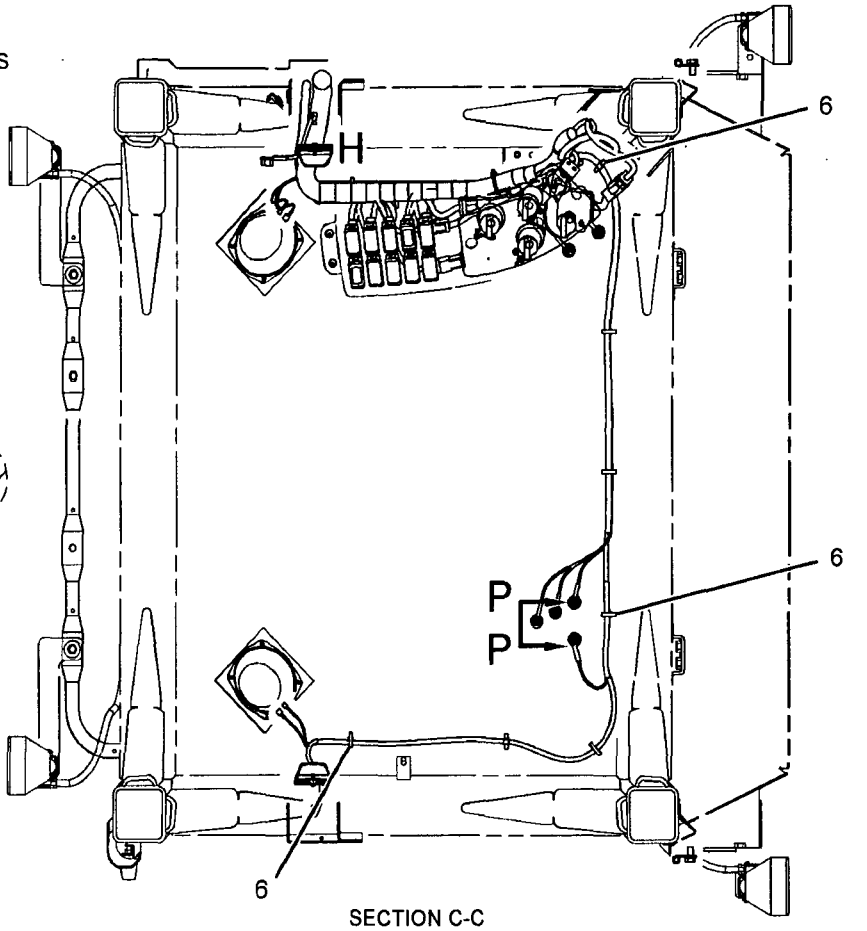

SECTION C-C

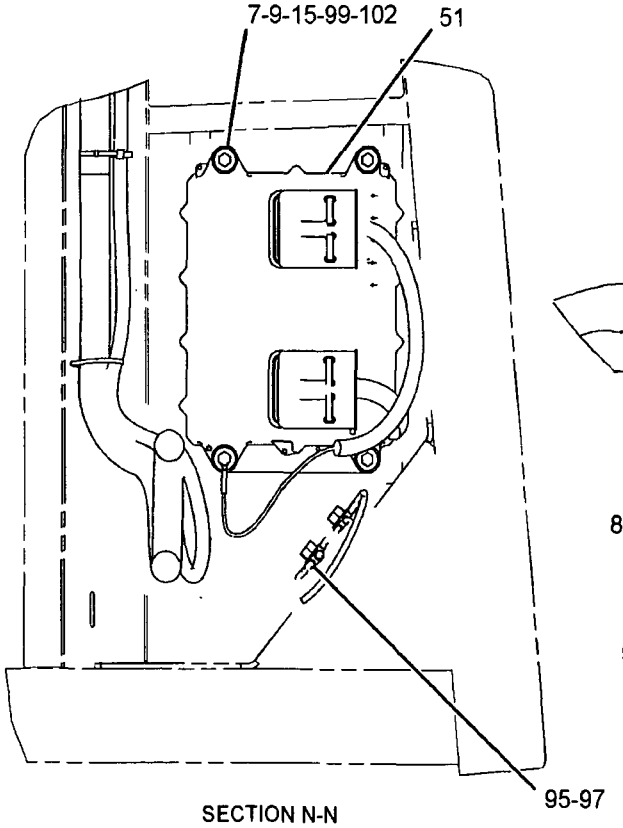

SECTION N-N

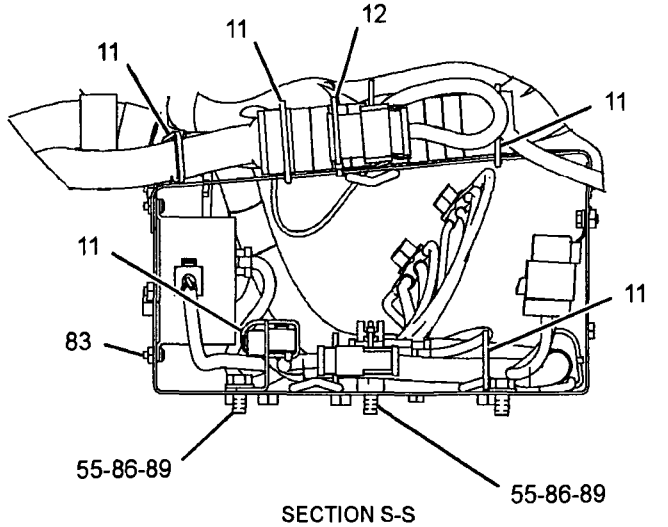

SECTION S-S

GRAPHIC #3

g01228928

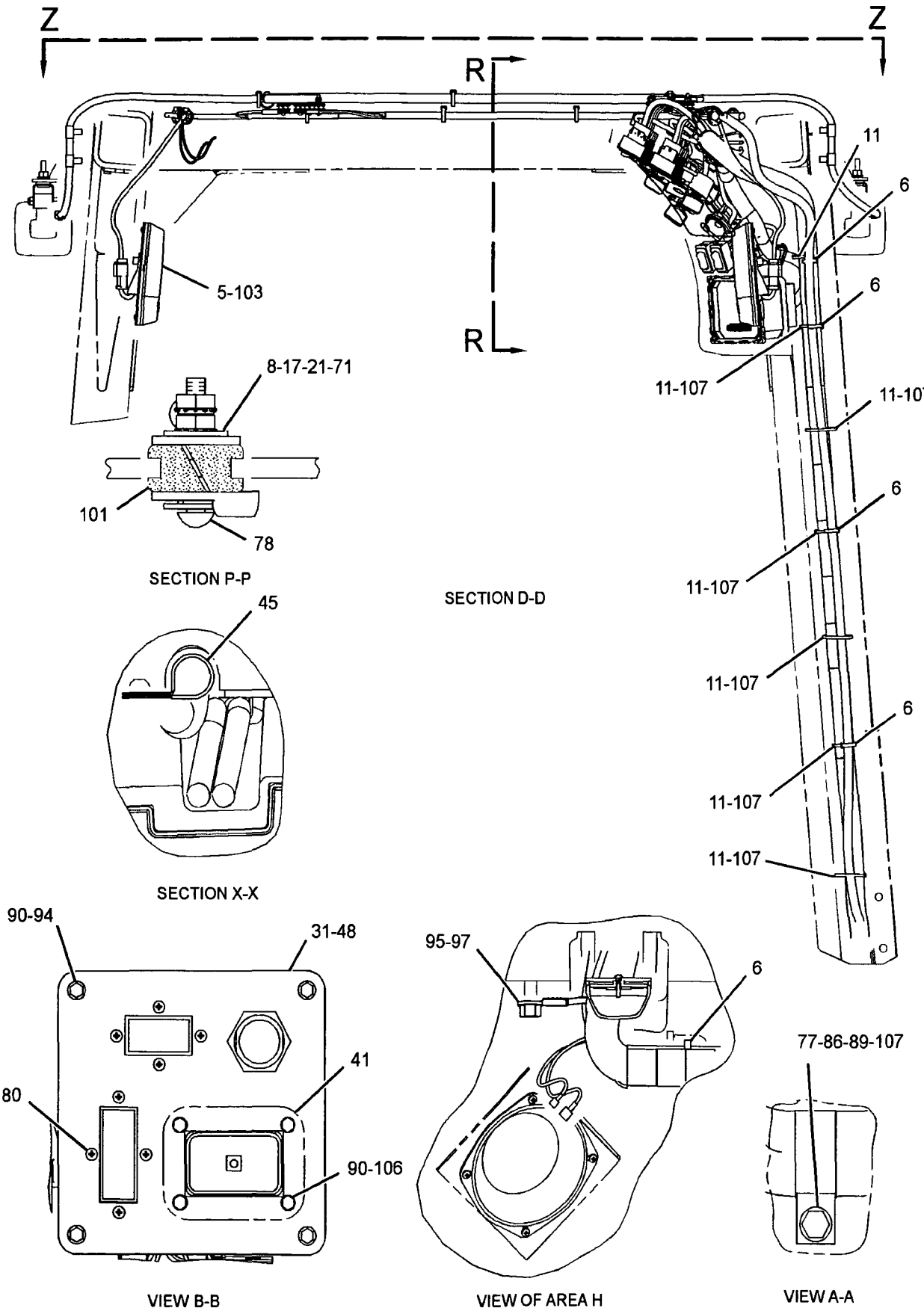

GRAPHIC #4

g01228929

REFER TO ALL ILLUSTRATIONS OF THIS GROUP FOR AUXILIARY VIEWS

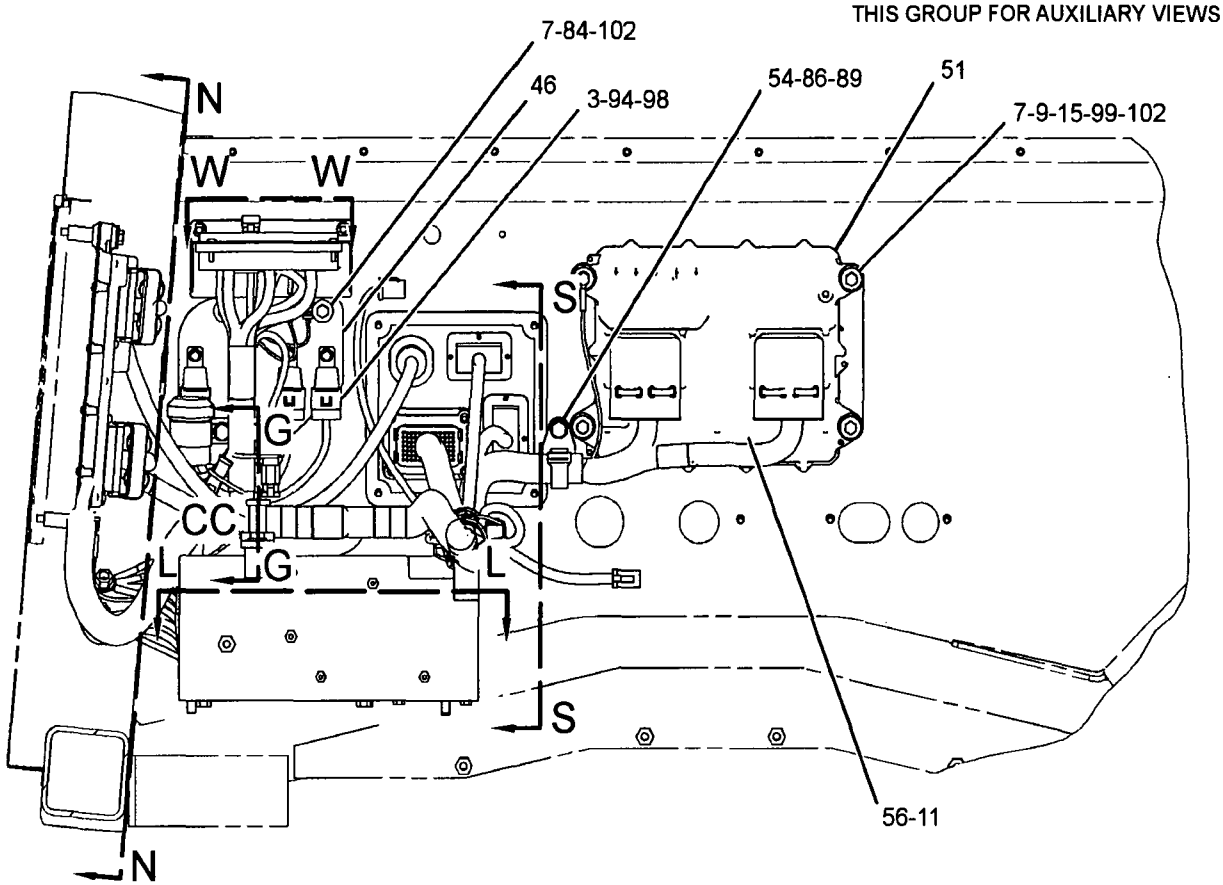

SECTION M-M

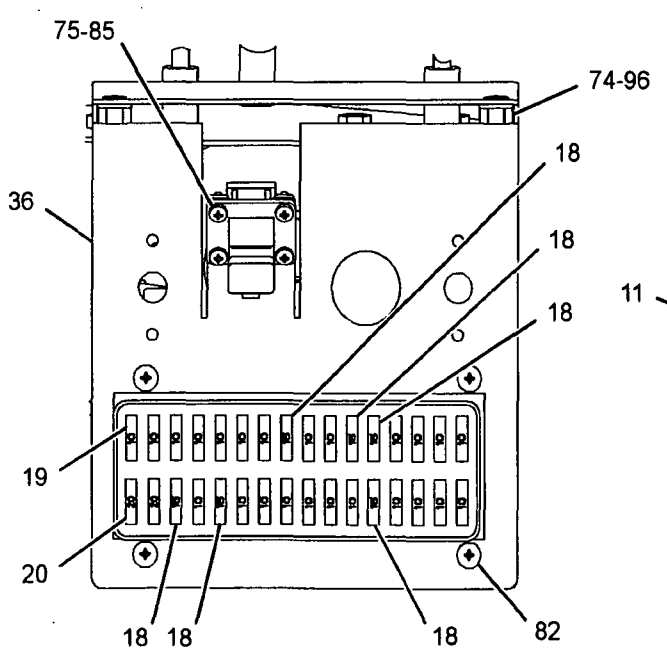

SECTION W-W

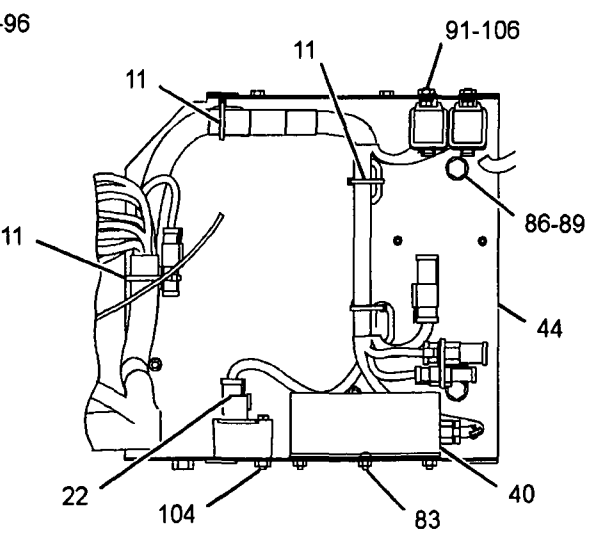

SECTION L-L

GRAPHIC #5 g01228932

280-4118 **WIRING GP-CAB** *(contd.)* **i02438147**

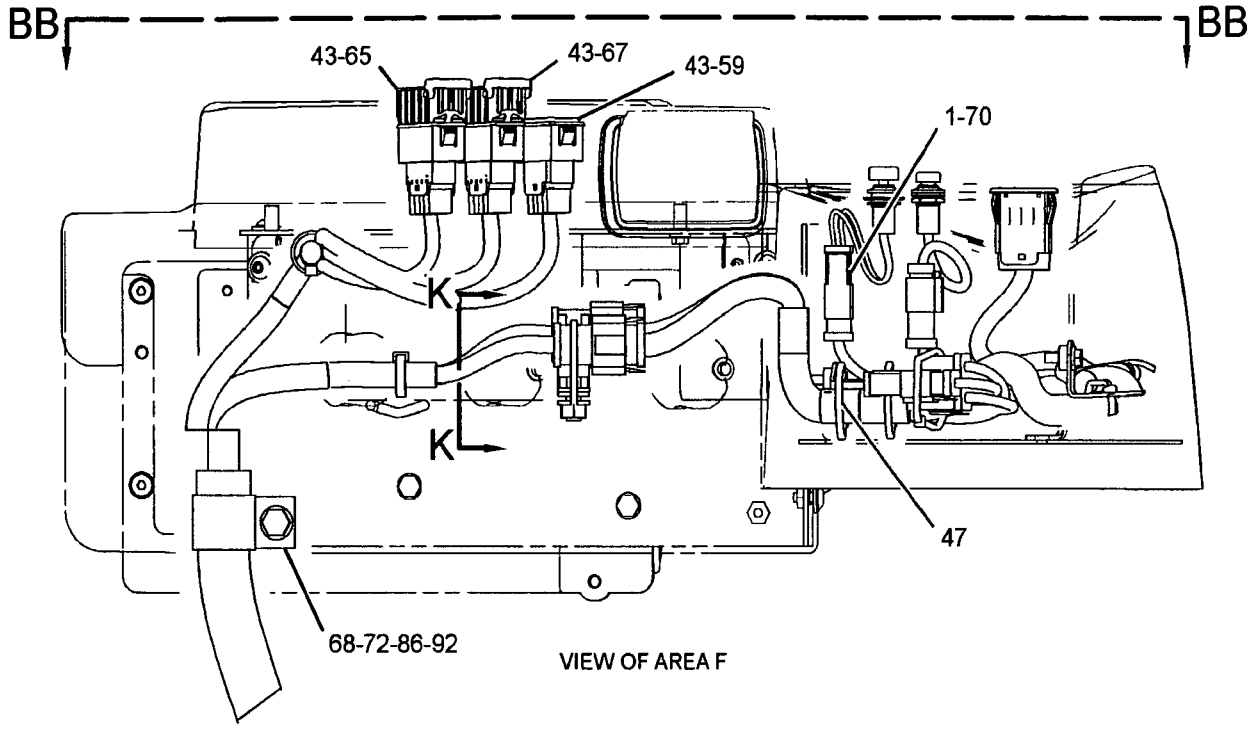

VIEW OF AREA F

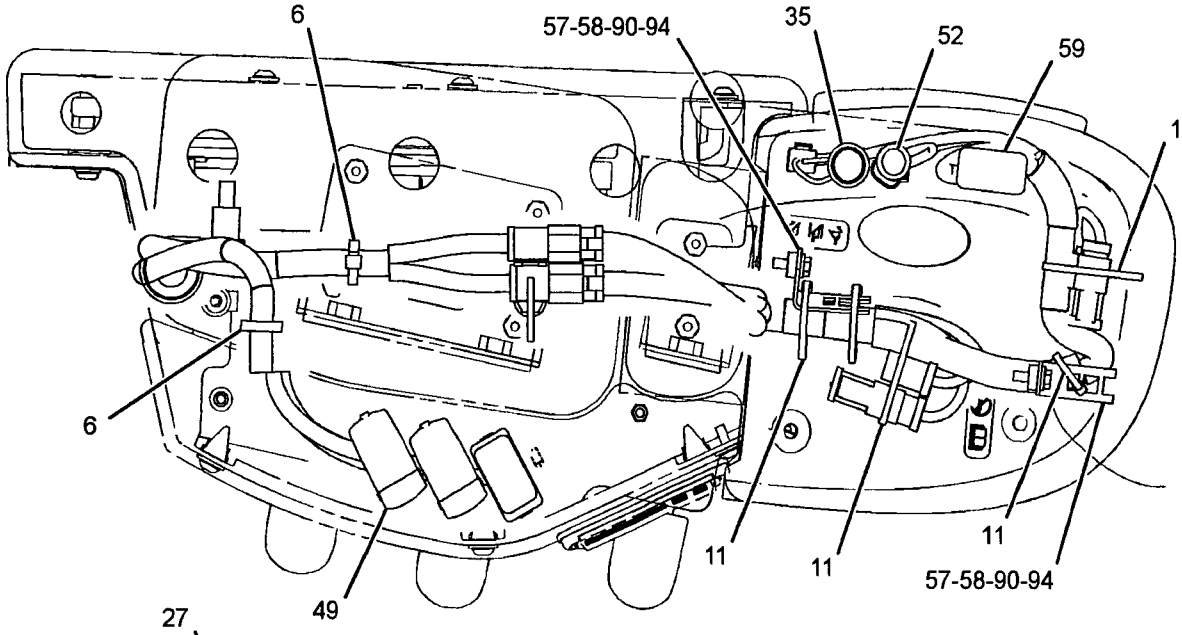

VIEW BB-BB

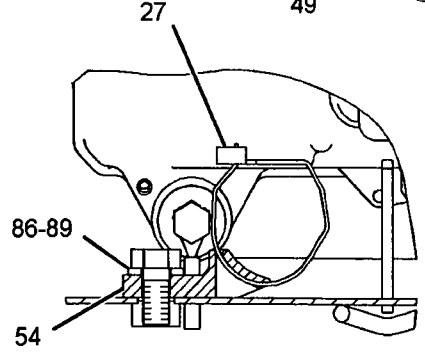

SECTION G-G

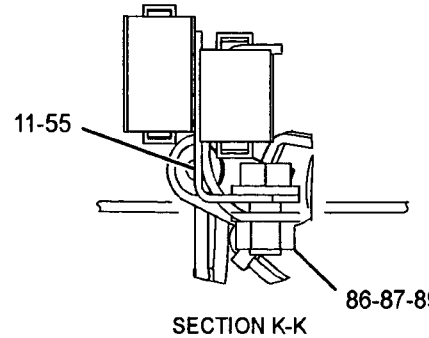

SECTION K-K

GRAPHIC #6

g01228934

280-4118 **WIRING GP-CAB** *(contd.)* **i02438147**

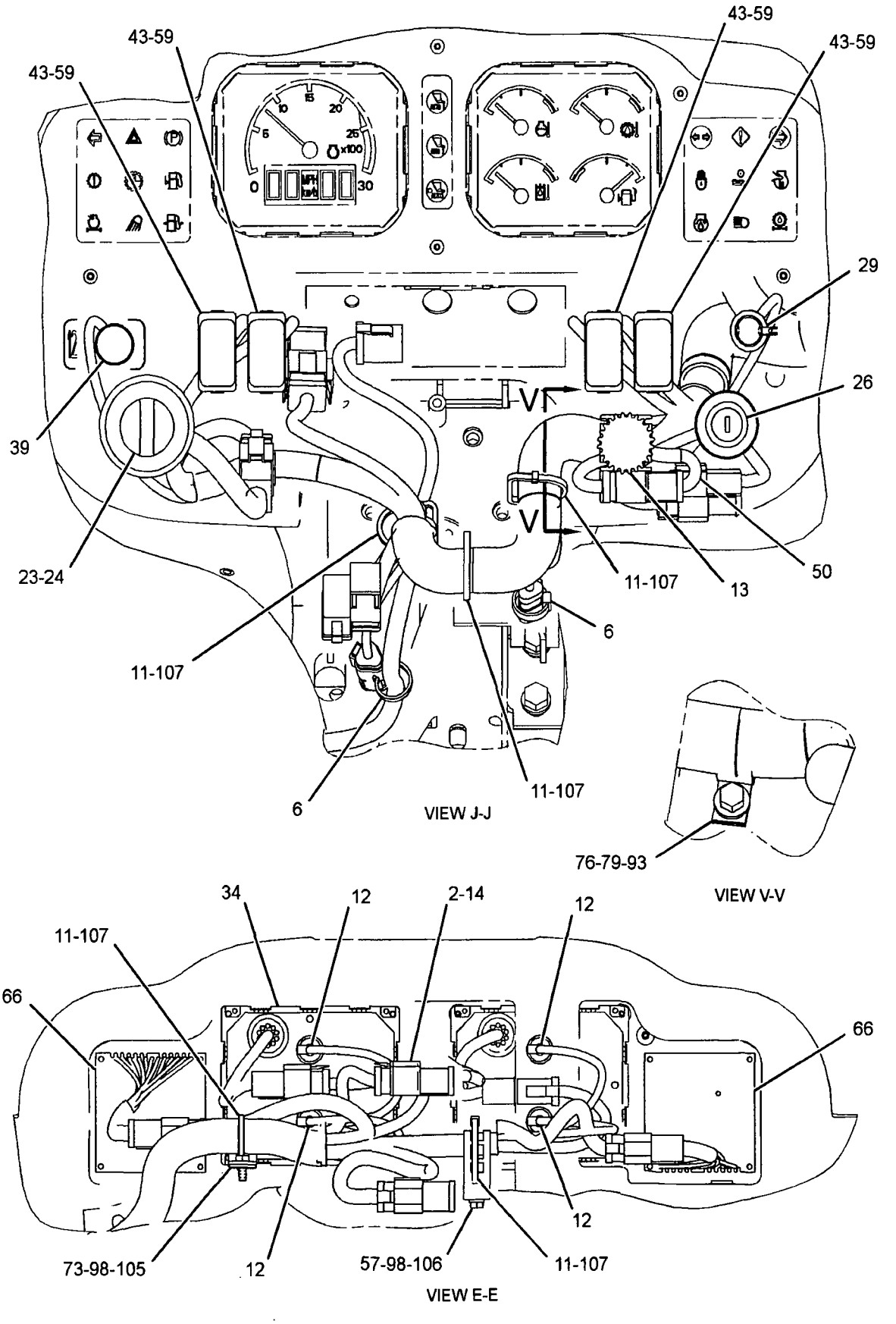

GRAPHIC #7 g01228936

280-4118 WIRING GP-CAB *(contd.)* i02438147

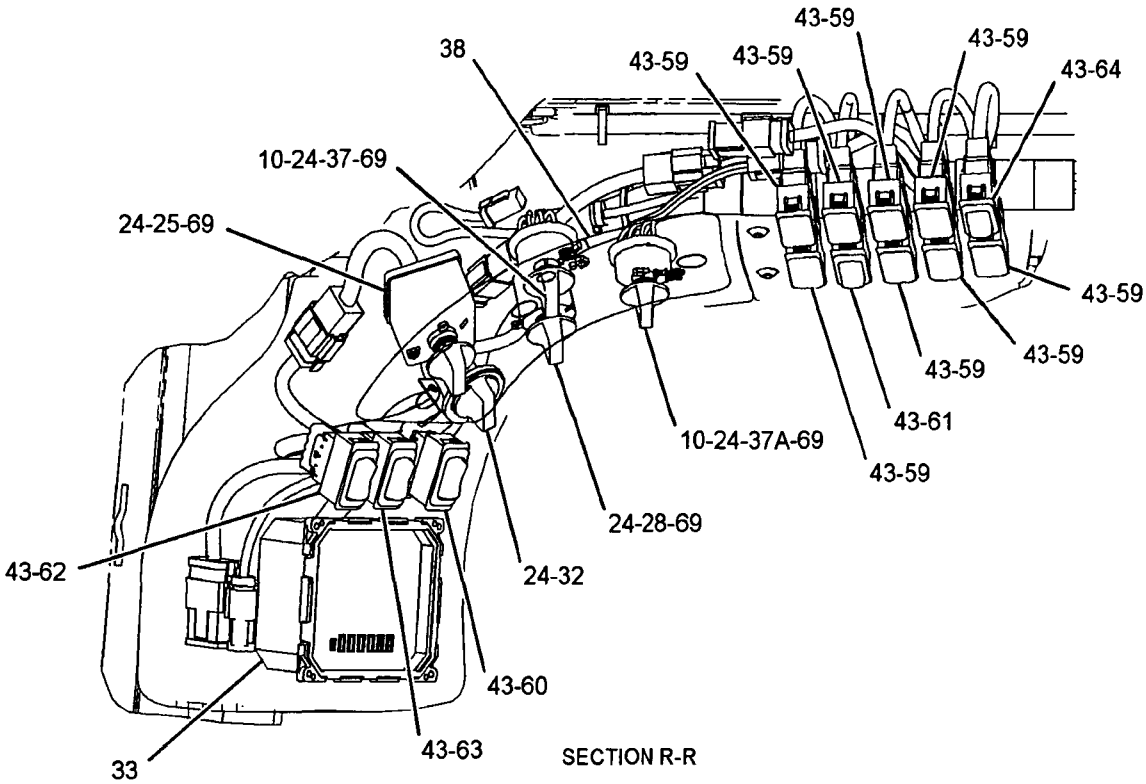

SECTION R-R

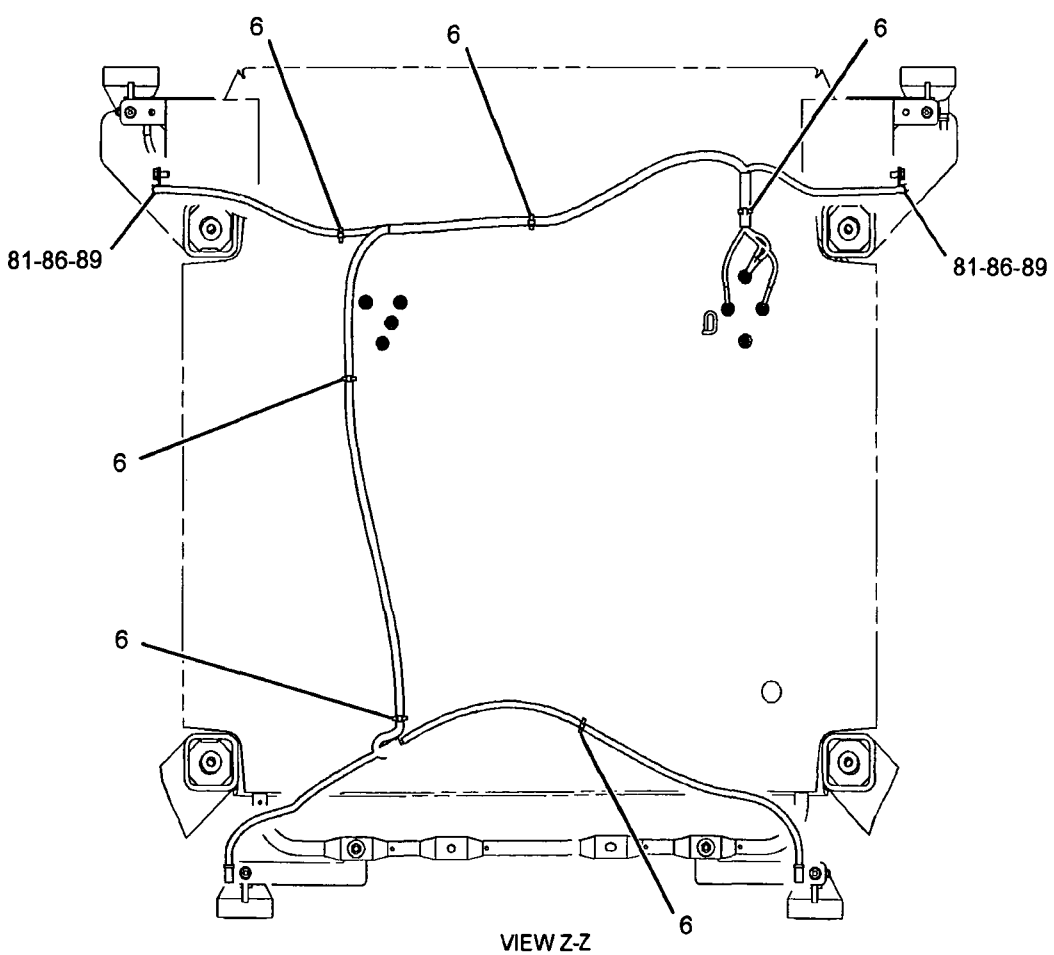

VIEW Z-Z

GRAPHIC #8 **<END>** g01228937

241-0642 WIRING GP-CHASSIS

S/N: N1A1-UP
PART OF 237-0235 ELECTRICAL AR
ALSO AN ATTACHMENT

SMCS-1408 **i02437650**

NOTE	REF NO	GRAPHIC REF	PART NUMBER	QTY	PART NAME 1 2 3 4 5 6 (PRODUCT LEVEL)	SEE PAGE
	1	3	3E-5169	1	GUARD-SWITCH	
	2	1,2,3	7K-1181	42	STRAP-CABLE	
Y	3	3	125-1302	1	SWITCH GP-MAGNETIC (24-VOLT) (START RELAY)	215
	4	2	130-9811	1	SENSOR GP-TEMPERATURE (2-PIN) (HYDRAULIC OIL)	
	5	3	146-0240	1	SWITCH GP-TOGGLE (HOOD TILT ACTUATOR)	
		3	3E-3371	1	WEDGE-RECEPTACLE LOCK (3-PIN)	
		3	6T-3631	2	NUT-HEX (15/32-32-THD)	
		3	6T-3632	1	LOCKWASHER	
		3	6T-3633	1	RING-LOCKING	
		3	186-3735	3	PIN-CONNECTOR (16-GA TO 18-GA)	
		3	102-8803	1	KIT-RECEPTACLE (3-PIN)	
					(INCLUDES RECEPTACLE AS AND WEDGE	
	6	3	149-2612	1	RELAY AS (24-VOLT) (HOOD TILT MOTOR)	
		3	186-3735	2	PIN-CONNECTOR (16-GA TO 18-GA)	
		3	9W-0852	4	PIN-CONNECTOR (14-GA)	
		3	102-8805	1	KIT-RECEPTACLE (6-PIN)	
					(INCLUDES RECEPTACLE AS AND WEDGE)	
	7	3	158-6634	1	SWITCH GP-TOGGLE (GROUND LEVEL SHUTDOWN)	
		3	3E-3377	1	WEDGE-RECEPTACLE LOCK (4-PIN)	
		3	6T-3631	2	NUT-HEX (15/32-32-THD)	
		3	6T-3632	1	LOCKWASHER	
		3	6T-3633	1	RING-LOCKING	
		3	186-3735	3	PIN-CONNECTOR (16-GA TO 18-GA)	
		3	9G-3695	1	PLUG (GROMMET SEALING)	
		3	102-8804	1	KIT-RECEPTACLE (4-PIN)	
					(INCLUDES RECEPTACLE AS AND WEDGE)	
Y	8	2	164-7577	1	SWITCH GP-BYPASS (POWER TRAIN OIL FILTER)	212
	9	2	172-4871	2	CLAMP	
	10	1	174-4312	1	SWITCH AS-PRESSURE (PARKING BRAKE OIL)	
		1	102-8803	1	KIT-RECEPTACLE (3-PIN)	
					(INCLUDES RECEPTACLE AS AND WEDGE)	
		1	3E-3371	1	WEDGE-RECEPTACLE LOCK (3-PIN)	
D		1	5P-6008		TUBE (0.2-M)	
D		1	8T-5677		SLEEVE (0.6-M)	
		1	186-3735	3	PIN-CONNECTOR (16-GA TO 18-GA)	
	11	3	178-3620	1	STRAP	
	12	3	246-4488	1	BAR-BUS	
	13	3	246-4489	1	WIRE AS	
	14	1	247-4506	1	HARNESS AS-CHASSIS (MAIN)	
		1	102-8802	6	KIT-RECEPTACLE (2-PIN)	
		1	102-8804	1	KIT-RECEPTACLE (4-PIN)	
		1	102-8801	3	KIT-RECEPTACLE (12-PIN)	
					(EACH KIT INCLUDES RECEPTACLE AS AND WEDGE)	
		1	110-6845	1	PLUG AS-CONNECTOR (40-PIN)	
		1	1U-9053	1	CAPSULE-LUBRICANT	
		1	110-6844	1	SEAL	
		1	8N-1533	1	PLUG AS-CONNECTOR (7-PIN)	
		1	8N-1535	1	BELL AS-END	
		1	9X-6772	1	STRAP-CABLE	
		1	113-0580	1	RECEPTACLE AS-CONNECTOR (40-PIN)	
		1	106-4155	1	KIT-BOLT (ELECTRICAL CONNECTORS)	
		1	127-5484	1	RECEPTACLE AS-CONNECTOR (1-PIN)	
		1	129-7163	1	PLUG AS-CONNECTOR (1-PIN)	
		1	129-7164	1	RECEPTACLE AS-CONNECTOR (1-PIN)	
		1	155-2255	2	KIT-CONNECTING PLUG (12-PIN)	

241-0642 WIRING GP-CHASSIS (contd.) i02437650

NOTE	REF NO	GRAPHIC REF	PART NUMBER	QTY	PART NAME 1 2 3 4 5 6 (PRODUCT LEVEL)	SEE PAGE
		1	155-2260	3	KIT-CONNECTING PLUG (3-PIN)	
		1	155-2270	10	KIT-CONNECTING PLUG (2-PIN)	
		1	155-2271	2	KIT-CONNECTING PLUG (4-PIN)	
		1	155-2274	1	KIT-CONNECTING PLUG (6-PIN)	
					(EACH KIT INCLUDES PLUG AS AND WEDGE)	
		1	160-7689	1	PLUG AS-CONNECTOR (70-PIN)	
		1	159-9322	1	SEAL-O-RING	
	15	1	247-7569	1	HARNESS AS-CHASSIS (HYDRAULIC TANK)	
		1	155-2255	1	KIT-CONNECTING PLUG (12-PIN)	
		1	155-2260	1	KIT-CONNECTING PLUG (3-PIN)	
		1	155-2270	2	KIT-CONNECTING PLUG (2-PIN)	
					(EACH KIT INCLUDES PLUG AS AND WEDGE)	
	16	3	248-1545	1	PLATE-FUSE	
	17	3	271-3952	1	BUSS BAR	
	18	3	275-4024	1	PANEL AS	
		3	3R-9322	1	HINGE	
M		3	6V-9632	7	NUT-WELD (M6X1-THD)	
		3	7T-1099	5	LINK	
M		3	8T-6462	1	BOSS-WELD (M10X1.5X25-MM OAL)	
	19	3	275-9916	1	BUSS BAR	
	20	1,2	033-8248	4	CLIP	
	21	1,2,3	130-5300	6	CLIP	
	22	3	132-5789	2	CLIP	
	23	3	171-2206	1	CIRCUIT BREAKER AS (50-AMPERE) (START)	
		3	6V-8187	2	NUT (1/4-28-THD)	
		3	8T-4205	2	WASHER-HARD (7.2X14.5X2-MM THK)	
		3	253-2111	2	LOCKWASHER	
	24	3	171-2210	1	CIRCUIT BREAKER AS (80-AMPERE) (MAIN)	
		3	6V-8187	2	NUT (1/4-28-THD)	
		3	8T-4205	2	WASHER-HARD (7.2X14.5X2-MM THK)	
		3	253-2111	2	LOCKWASHER	
	25	3	171-2211	1	CIRCUIT BREAKER AS (90-AMPERE) (STARTING AID)	
		3	6V-8187	2	NUT (1/4-28-THD)	
		3	8T-4205	2	WASHER-HARD (7.2X14.5X2-MM THK)	
		3	253-2111	2	LOCKWASHER	
	26	3	171-2212	1	CIRCUIT BREAKER AS (105-AMPERE) (ALTERNATOR)	
		3	6V-8187	2	NUT (1/4-28-THD)	
		3	8T-4205	2	WASHER-HARD (7.2X14.5X2-MM THK)	
		3	253-2111	2	LOCKWASHER	
	27	3	189-3158	1	SUPPRESSOR-ARC	
Y	28	3	241-8368	1	SWITCH GP-MAGNETIC (24-VOLT) (MAIN RELAY)	217
	29	3	2M-4004	1	BUTTON-PLUG	
	30	2	3E-6769	1	SEAL-O-RING	
	31	1	3E-6909	1	CLIP (SLOT)	
	32	1	3J-1907	1	SEAL-O-RING	
	33	2	3P-3839	1	GROMMET	
	34	3	3T-2662	1	CIRCUIT BREAKER AS (15-AMPERE) (RUNNING LIGHTS)	
		3	6V-8376	2	SCREW-MACHINE (8-32X0.25-IN)	
		3	9B-7233	2	LOCKWASHER	
	35	1	4K-8864	1	CLIP	
	36	2	4P-8134	1	CLIP	
	37	2	4S-1962	1	CLIP	
	38	3	5L-4507	8	SCREW-MACHINE (10-32X0.875-IN)	
	39	3	5M-6668	6	SCREW-MACHINE (8-32X0.75-IN)	
	40	1	6D-4244	1	CLIP	
	41	3	6T-3644	1	CIRCUIT BREAKER GP (20-AMPERE) (HOOD TILT ACTUATOR)	

241-0642 WIRING GP-CHASSIS (contd.) i02437650

NOTE	REF NO	GRAPHIC REF	PART NUMBER	QTY	PART NAME 1 2 3 4 5 6 (PRODUCT LEVEL)	SEE PAGE
	41A	3	6T-3644	1	CIRCUIT BREAKER GP (20-AMPERE) (UNSWITCHED BAT POWER TO CAB)	
					(EACH INCLUDES)	
		3	6V-8376	2	SCREW-MACHINE (8-32X0.25-IN)	
		3	9B-7233	2	LOCKWASHER	
	42	2	7C-4354	3	CLIP	
	43	1,2	7D-7233	6	CLIP	
	44	2	8M-2772	1	CLIP	
	45	1	8S-7583	1	GROMMET	
	46	1,2,3	8T-4121	21	WASHER-HARD (11X21X2.5-MM THK)	
M	47	1,2	8T-4133	9	NUT (M10X1.5 THD)	
M	48	1,2,3	8T-4137	11	BOLT (M10X1.5X20-MM)	
M	49	3	8T-4191	1	BOLT (M10X1.5X16-MM)	
M	50	3	8T-4970	7	BOLT (M6X1X14-MM)	
	51	3	9X-8256	7	WASHER (6.6X12X2-MM THK)	

D-ORDER BY THE METER
M-METRIC PART
Y-SEPARATE ILLUSTRATION

241-0642 WIRING GP-CHASSIS (contd.) i02437650

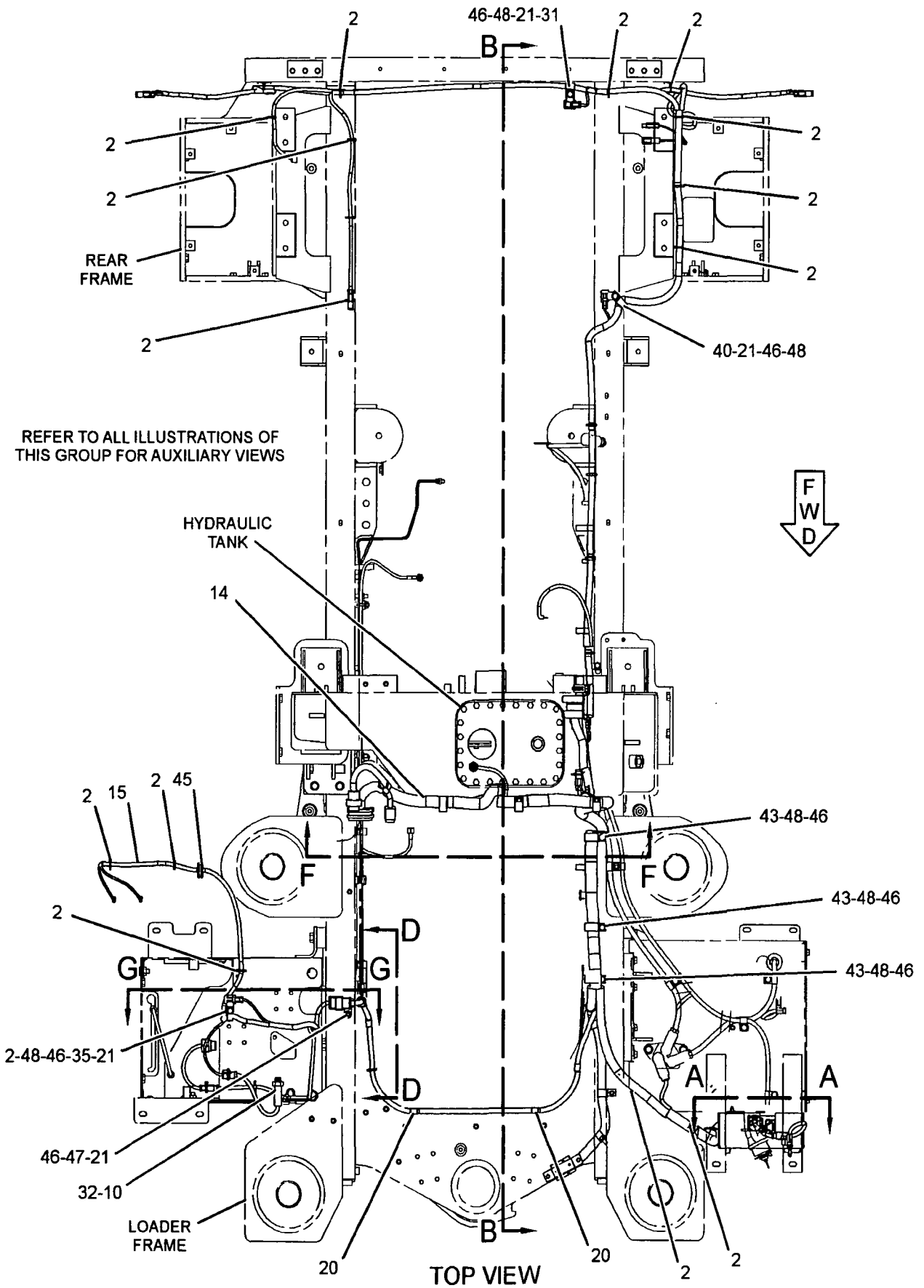

GRAPHIC #1 g01221755

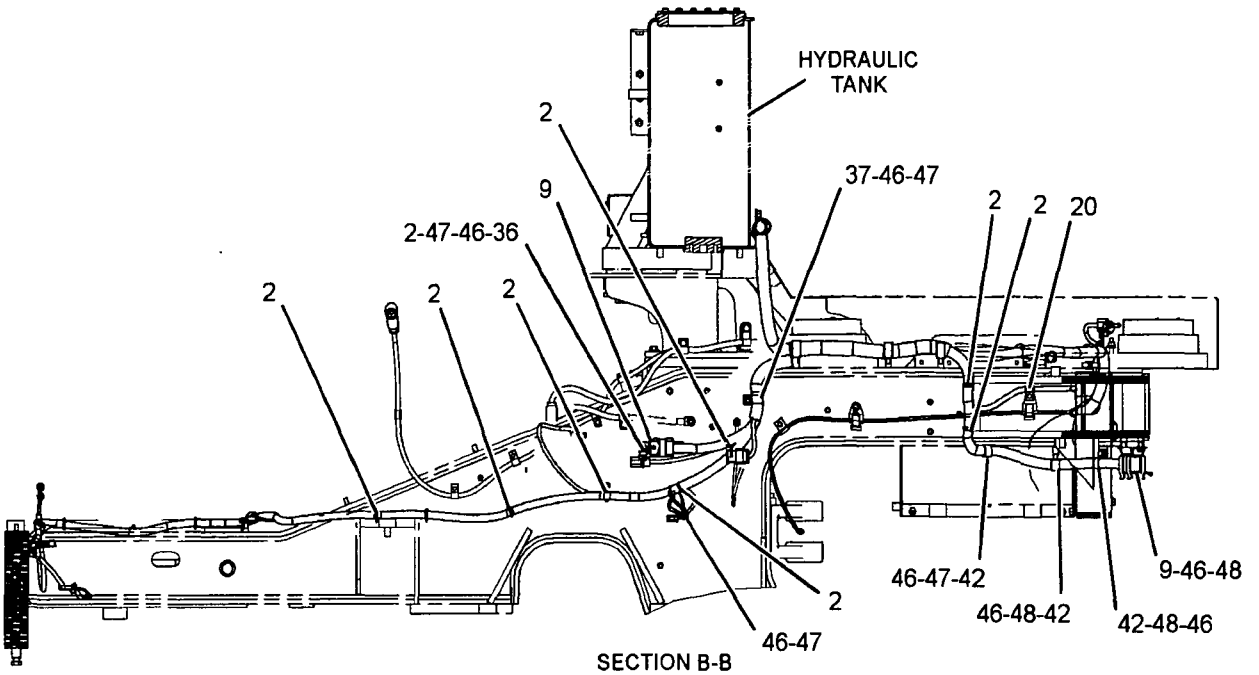

SECTION B-B

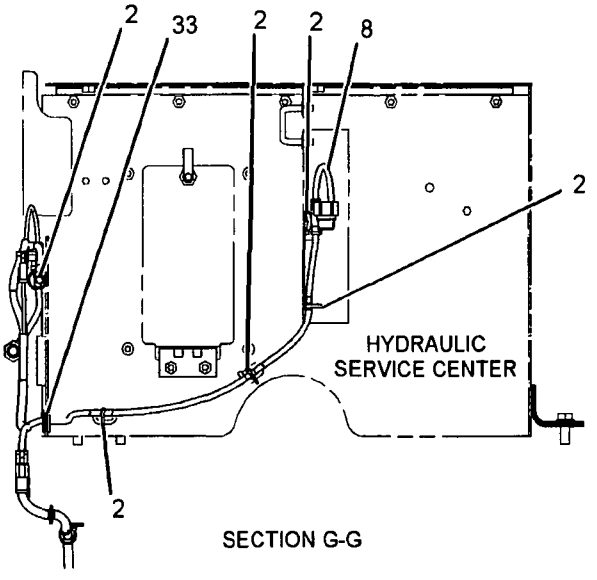

SECTION G-G

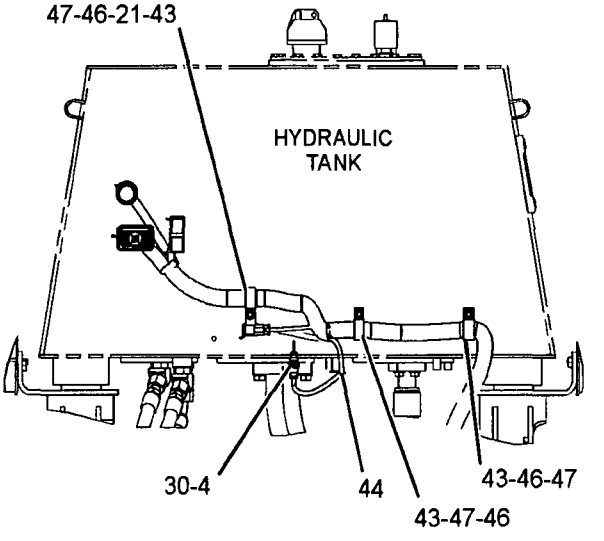

SECTION F-F

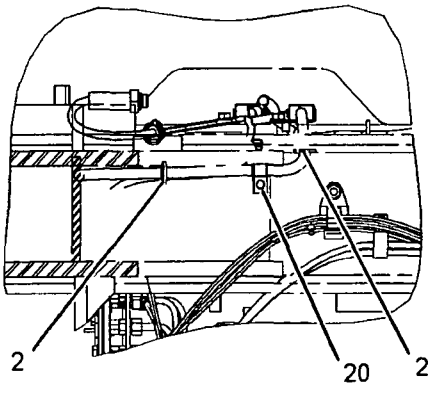

SECTION D-D

GRAPHIC #2

g01221756

241-0642 **WIRING GP-CHASSIS** *(contd.)* **i02437650**

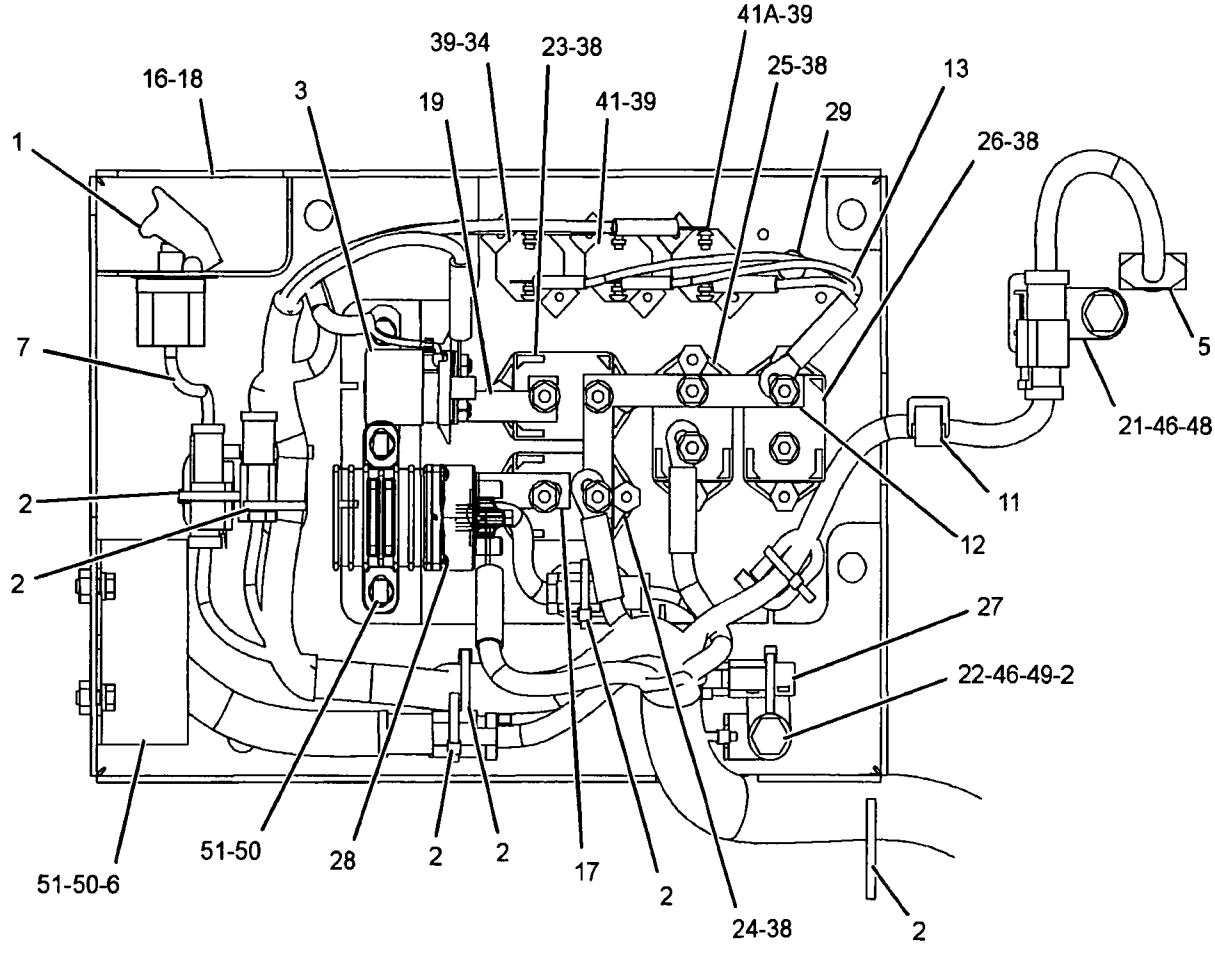

SECTION A-A

GRAPHIC #3 **<END>** g01221757

271-4026 WIRING GP-COUPLER

S/N: N1A1-UP

PART OF 244-2662 CONTROL AR-QUICK COUPLER, 244-2665 LIFT AR AN ATTACHMENT

SMCS-5734 **i02440923**

NOTE	REF NO	GRAPHIC REF	PART NUMBER	QTY	PART NAME 1 2 3 4 5 6 (PRODUCT LEVEL)	SEE PAGE
	1	1	7K-1181	4	STRAP-CABLE	
	2	1	218-4935	1	SUPPRESSOR-ARC	
	3	1	271-4027	1	HARNESS AS-WORK TOOL (QUICK COUPLER)	
		1	155-2260	1	KIT-CONNECTING PLUG (3-PIN)	
		1	155-2270	2	KIT-CONNECTING PLUG (2-PIN)	
					(EACH INCLUDES PLUG AS AND WEDGE)	

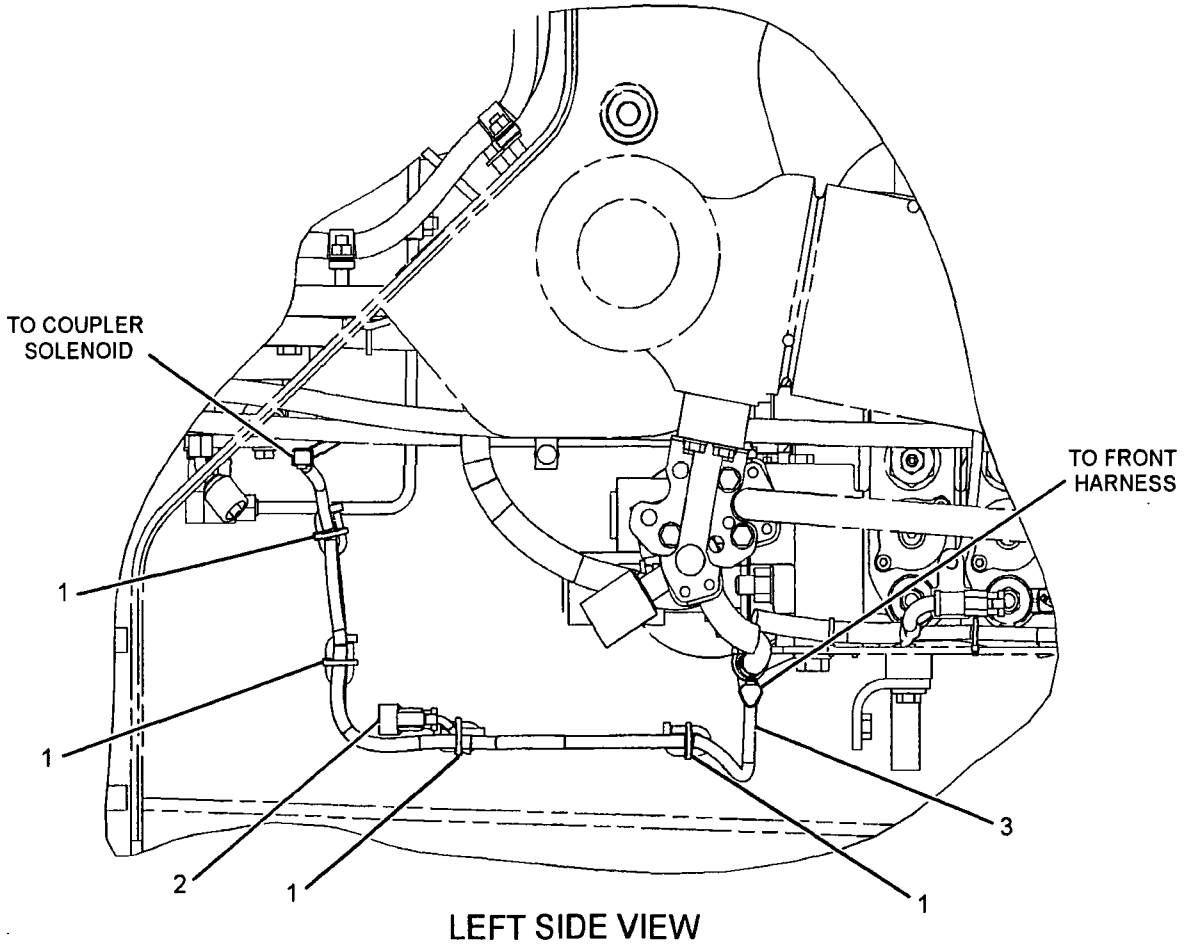

LEFT SIDE VIEW

GRAPHIC #1 **<END>** g01220808

244-6524 WIRING GP-ELECTRIC CLUTCH-

AXLE OIL COOLER PUMP

S/N: N1A1-UP

PART OF 241-0073 COOLER AR-AXLE OIL

AN ATTACHMENT

SMCS-1634 **i02240013**

NOTE	REF NO	GRAPHIC REF	PART NUMBER	QTY	PART NAME 1 2 3 4 5 6 (PRODUCT LEVEL)	SEE PAGE
	1	1	3E-5239	1	RELAY AS (24-VOLT) (AXLE OIL COOLER)	
	2	1	7K-1181	1	STRAP-CABLE	
	3	1	191-7699	1	BRACKET AS	
M		1	8T-3490	1	NUT-WELD (M10X1.5-THD)	
	4	1	130-5300	1	CLIP	
	5	1	147-0385	1	CLIP	
M	6	1	3E-9854	1	BOLT (M8X1.25X20-MM)	
	7	1	8T-4121	1	WASHER-HARD (11X21X2.5-MM THK)	
M	8	1	8T-4136	1	BOLT (M10X1.5X25-MM)	
	9	1	8T-4224	1	WASHER-HARD (8.8X16X2-MM THK)	

M-METRIC PART

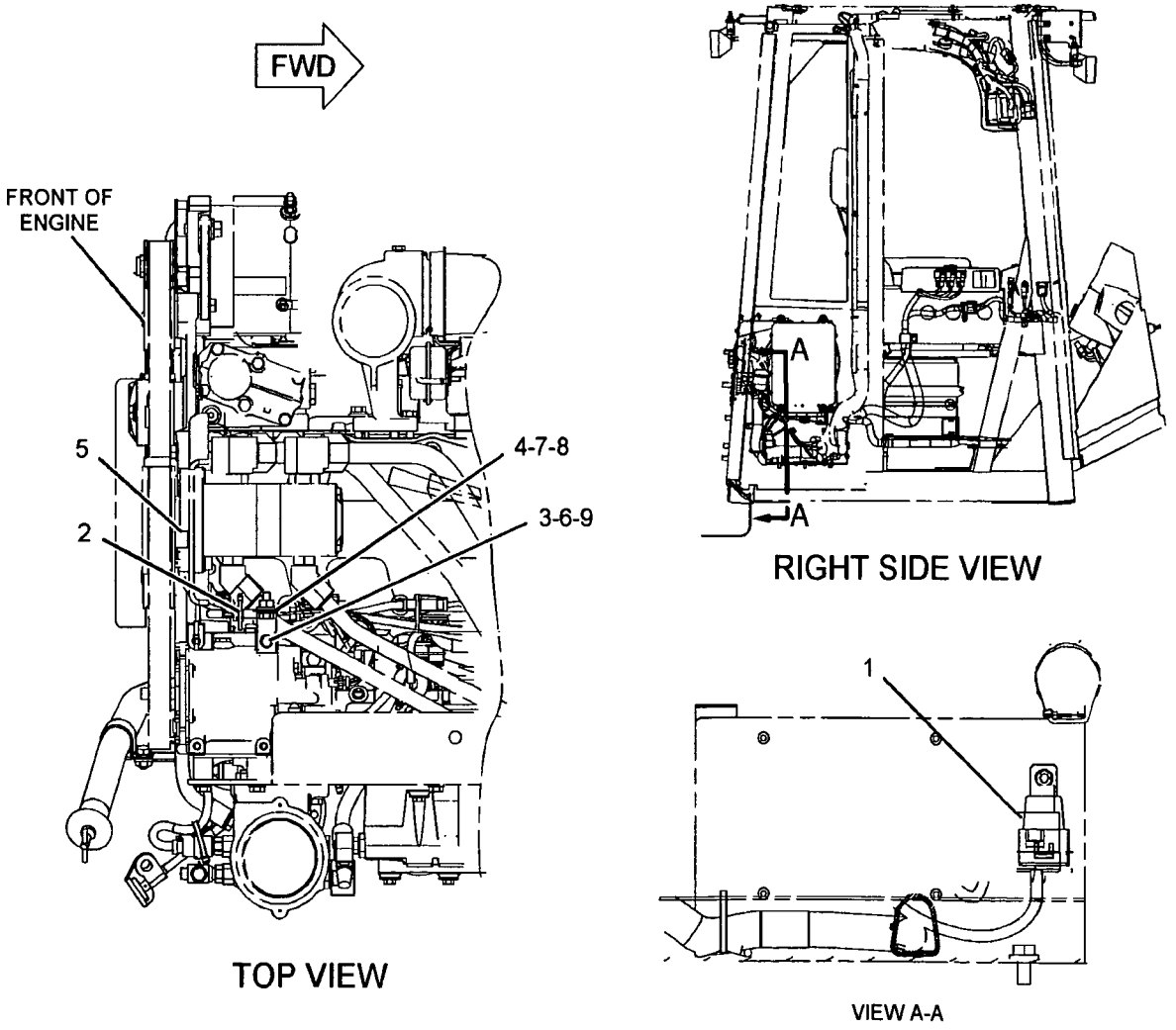

TOP VIEW

RIGHT SIDE VIEW

VIEW A-A

GRAPHIC #1 **<END>** g01127038

198-2714 WIRING GP-ENGINE

S/N: KHX1-UP

PART OF 235-1422 ENGINE AR-COMPLETE

SMCS-1403, 1408 **i02352074**

NOTE	REF NO	GRAPHIC REF	PART NUMBER	QTY	PART NAME 1 2 3 4 5 6 (PRODUCT LEVEL)	SEE PAGE
	1	1	3S-2093	18	STRAP-CABLE	
	2	1	4P-5918	1	CLIP	
	3	1	105-1797	7	MOUNT	
	4	1	198-2713	1	HARNESS AS-ENGINE (ELECTRONIC CONTROL MODULE)	
		1	102-8802	1	KIT-RECEPTACLE (2-PIN)	
		1	102-8803	1	KIT-RECEPTACLE (3-PIN)	
		1	102-8801	1	KIT-RECEPTACLE (12-PIN)	
					(EACH KIT RECEPTACLE INCLUDES RECEPTACLE AS AND WEDGE)	
		1	8T-8737	77	PLUG-SEAL	
		1	100-3320	1	PLUG AS-CONNECTOR (2-PIN)	
		1	126-5011	1	SEAL-CONNECTOR	
		1	111-2416	1	PLUG AS-CONNECTOR (2-PIN)	
		1	126-5011	1	SEAL-CONNECTOR	
		1	155-2265	1	KIT-CONNECTING PLUG (8-PIN)	
		1	155-2260	3	KIT-CONNECTING PLUG (3-PIN)	
		1	155-2270	5	KIT-CONNECTING PLUG (2-PIN)	
					(EACH KIT CONNECTING PLUG INCLUDES PLUG AS AND WEDGE)	
		1	227-4002	1	PLUG AS-CONNECTOR (108-PIN)	
	5	1	206-1345	2	STRAP-CABLE	
	6	1	222-5917	1	HARNESS AS-ENGINE (FUEL INJECTION)	
		1	6N-7523	1	WASHER (6.48X11.9X1.57-MM THK)	
		1	135-5975	1	GROMMET-WIRING	
		1	155-2255	1	KIT-CONNECTING PLUG (12-PIN)	
					(INCLUDES PLUG AS AND WEDGE)	
	7	1	4P-8134	1	CLIP	
M	8	1	6V-2317	1	BOLT (M8X1.25X30-MM)	
	9	1	9M-1974	1	WASHER-HARD (8.8X16X2-MM THK)	

M-METRIC PART

198-2714 **WIRING GP-ENGINE** *(contd.)* **i02352074**

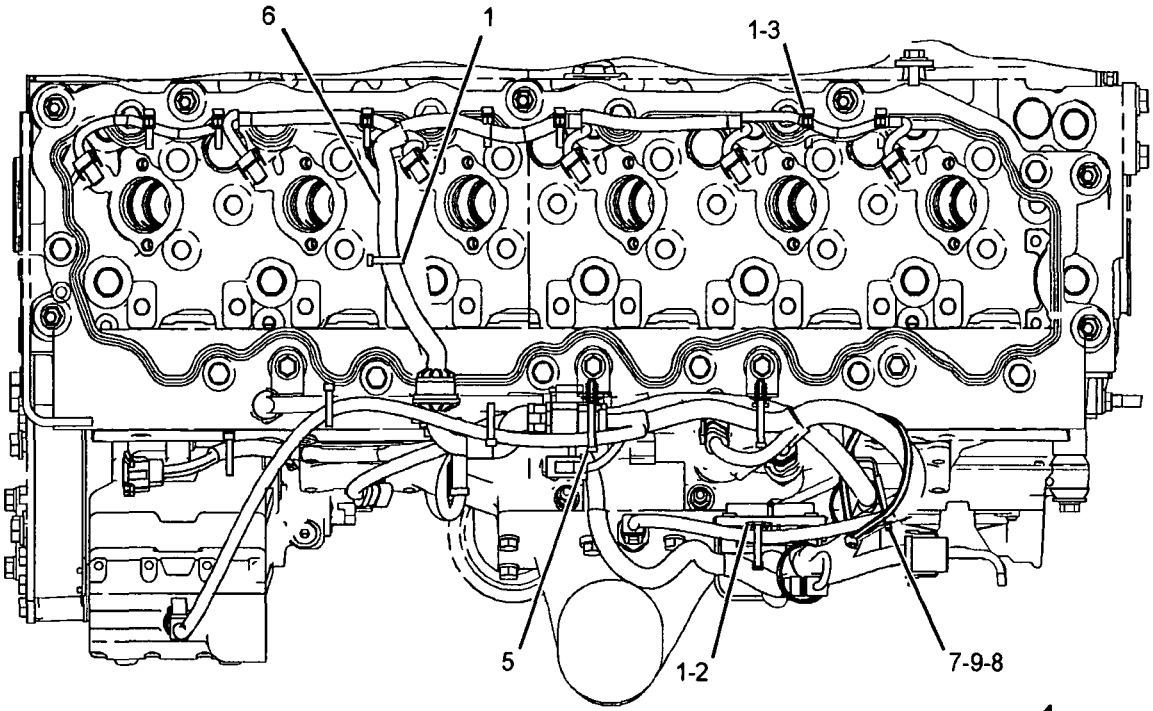

TOP VIEW

FWD

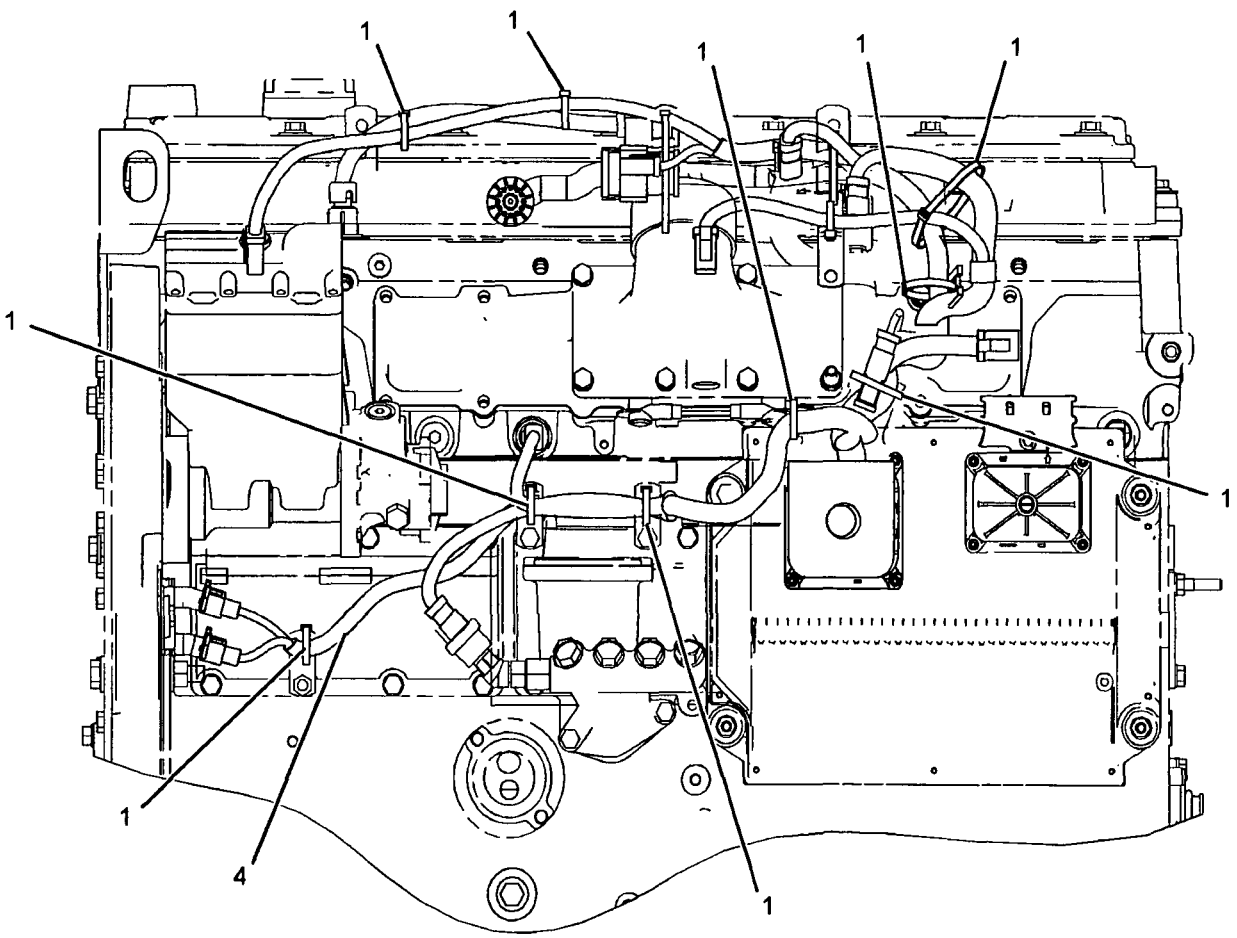

LEFT SIDE VIEW

GRAPHIC #1

<END>

g01175334

241-0640 WIRING GP-ENGINE

S/N: N1A1-UP
PART OF 237-0235 ELECTRICAL AR
ALSO AN ATTACHMENT

SMCS-1403, 1408 **i02437648**

NOTE	REF NO	GRAPHIC REF	PART NUMBER	QTY	PART NAME 1 2 3 4 5 6 (PRODUCT LEVEL)	SEE PAGE
	1	1,2	7K-1181	13	STRAP-CABLE	
	2	2	118-6878	1	BRACKET AS	
Y	3	2	145-7028	1	SENSOR GP-TEMPERATURE (TORQUE CONVERTER OIL)	202
	4	2	164-3652	1	ADAPTER	
	5	2	175-3244	1	SWITCH AS-PRESSURE (SERVICE BRAKE OIL)	
		2	102-8803	1	KIT-RECEPTACLE (3-PIN)	
					(INCLUDES RECEPTACLE AS AND WEDGE)	
	6	2	247-4389	1	CABLE AS	
		2	3L-6513	2	TERMINAL (FOR 1/2-IN BOLT)	
		2	6V-9023	3	TUBE-HEAT SHRINK	
E		2	8C-0596		CABLE (02-GA) (70-CM)	
		2	6V-9023	3	TUBE-HEAT SHRINK	
		2	030-1712	1	TERMINAL-RING (2-GA, 6.35-MM)	
	7	1,2	130-5300	5	CLIP	
	8	2	132-5789	3	CLIP	
M	9	2	142-8545	2	BOLT (M16X2X20-MM)	
	10	2	149-9129	4	CLIP	
Y	11	1	194-6722	1	SENSOR GP-PRESSURE (TURBOCHARGER INLET)	192
	12	2	1S-0994	1	CLIP	
	13	1	247-1086	1	HARNESS AS-ENGINE	
		1	102-8802	1	KIT-RECEPTACLE (2-PIN)	
		1	102-8803	1	KIT-RECEPTACLE (3-PIN)	
					(EACH RECEPTACLE KIT INCLUDES RECEPTACLE AS AND WEDGE)	
		1	110-6845	1	PLUG AS-CONNECTOR (40-PIN)	
		1	1U-9053	1	CAPSULE-LUBRICANT	
		1	110-6844	1	SEAL	
		1	3S-2093	2	STRAP-CABLE	
		1	7K-1181	3	STRAP-CABLE	
		1	127-5483	1	PLUG AS-CONNECTOR (1-PIN)	
		1	174-0503	1	KIT-CONNECTING PLUG (3-PIN)	
		1	155-2260	1	KIT-CONNECTING PLUG (3-PIN)	
		1	155-2270	1	KIT-CONNECTING PLUG (2-PIN)	
					(EACH PLUG KIT INCLUDES PLUG AS AND WEDGE)	
		1	160-7689	1	PLUG AS-CONNECTOR (70-PIN)	
		1	159-9322	1	SEAL-O-RING	
	14	1,2	3J-1907	2	SEAL-O-RING	
	15	2	3K-0360	1	SEAL-O-RING	
	16	2	4N-9170	2	CLIP	
	17	2	4P-7582	3	CLIP	
M	18	2	5C-7261	1	NUT (M8X1.25-THD)	
	19	1	6D-4636	2	CLIP	
	20	1	6V-3265	1	CLIP	
	21	2	7J-0204	1	SEAL-O-RING	
	22	2	8T-4121	5	WASHER-HARD (11X21X2.5-MM THK)	
M	23	2	8T-4133	1	NUT (M10X1.5 THD)	
M	24	2	8T-4136	2	BOLT (M10X1.5X25-MM)	
M	25	2	8T-4137	2	BOLT (M10X1.5X20-MM)	
M	26	2	8T-4200	1	BOLT (M8X1.25X16-MM)	
	27	2	8T-4224	2	WASHER-HARD (8.8X16X2-MM THK)	
	28	2	9X-8257	2	WASHER (17.5X30X3.5-MM THK)	

E-ORDER BY THE CENTIMETER
M-METRIC PART
Y-SEPARATE ILLUSTRATION

241-0640 WIRING GP-ENGINE *(contd.)* i02437648

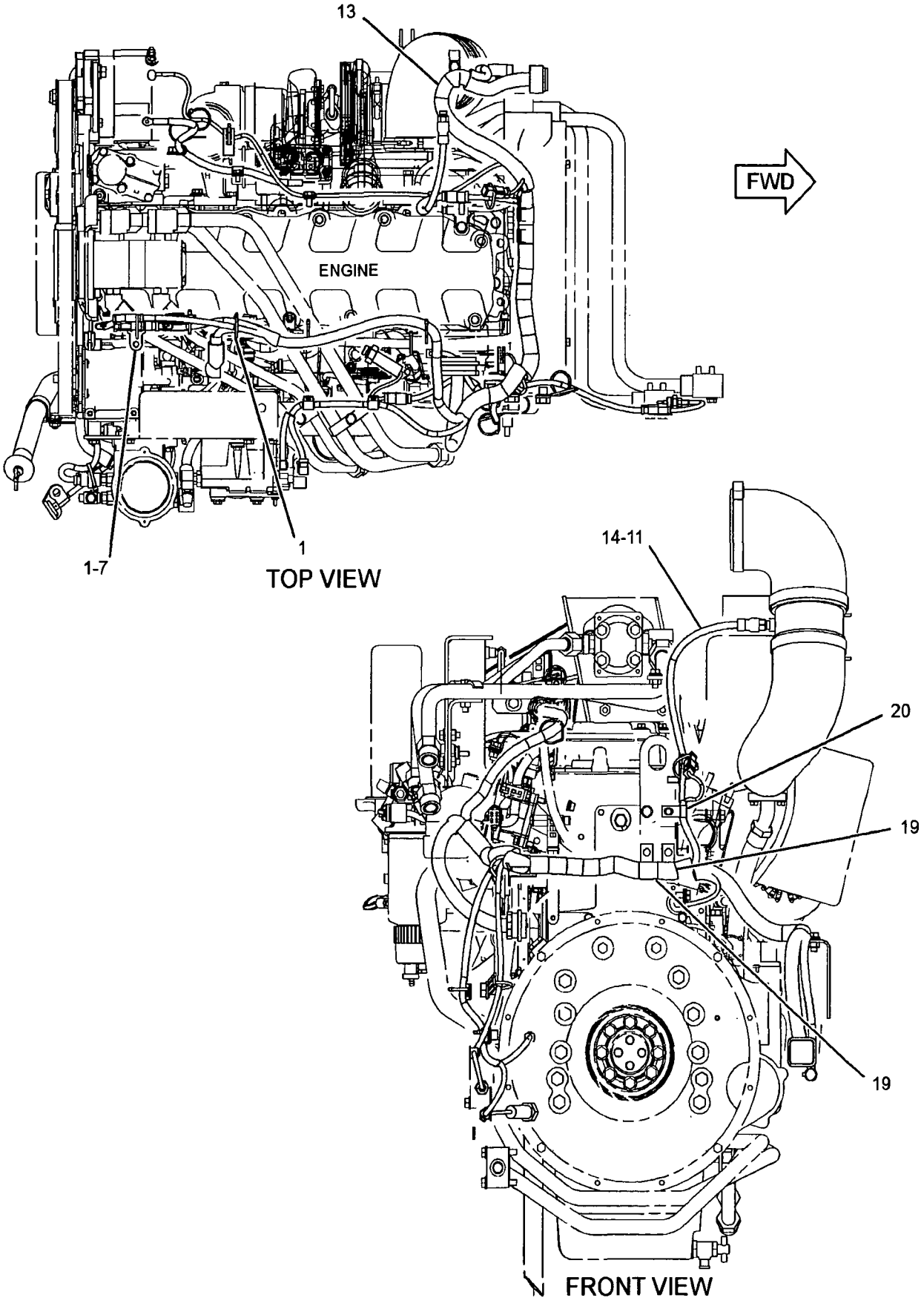

GRAPHIC #1 g01221839

241-0640 **WIRING GP-ENGINE** *(contd.)* **i02437648**

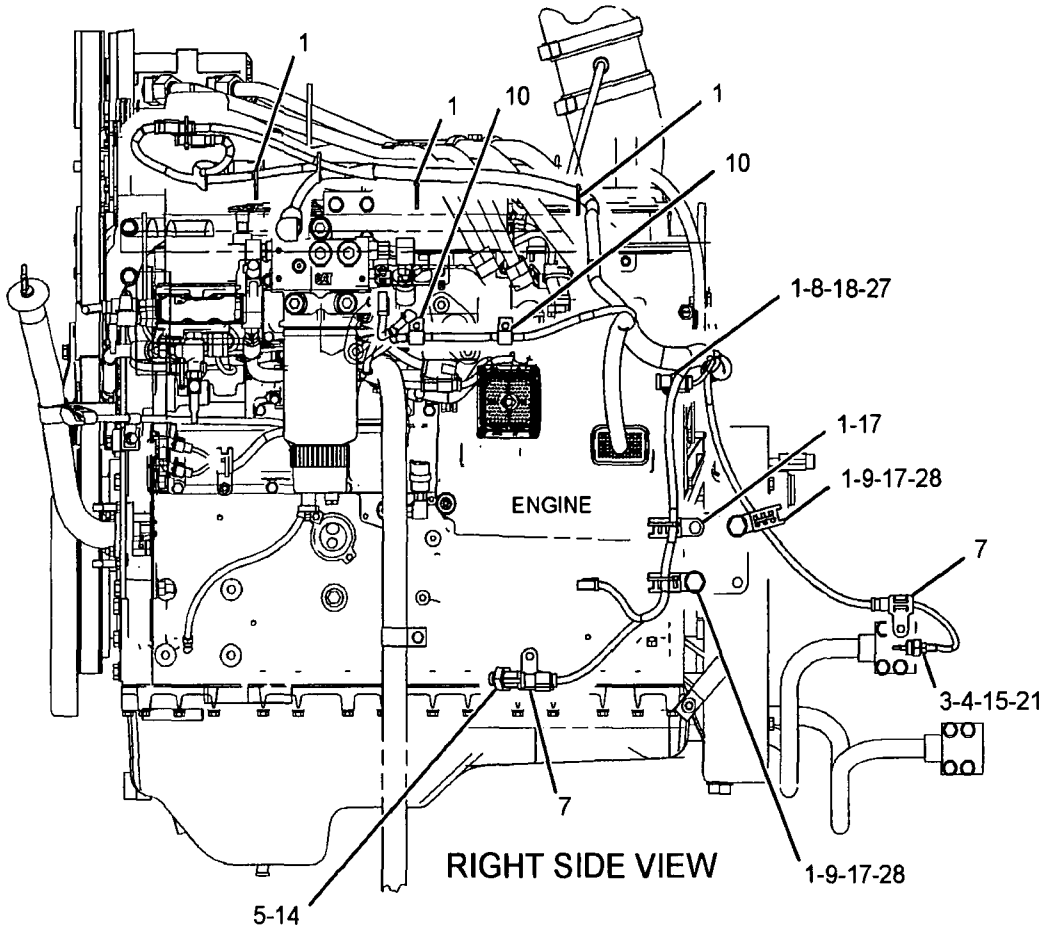

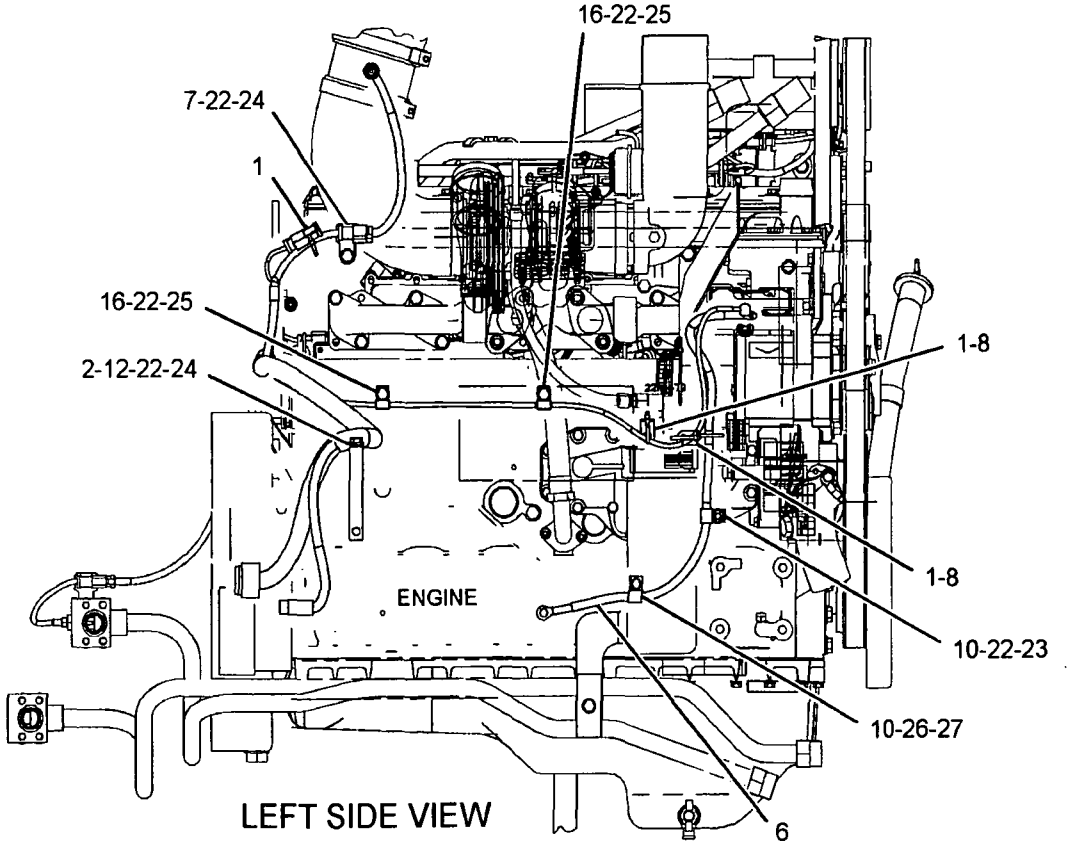

GRAPHIC #2

<END>

g01221840

263-6667 WIRING GP-ETHER STARTING AID

S/N: N1A1-UP

PART OF 263-6353 STARTING AID AR-ETHER

AN ATTACHMENT

SMCS-1408, 1456 i02392109

NOTE	REF NO	GRAPHIC REF	PART NUMBER	QTY	PART NAME 1 2 3 4 5 6 (PRODUCT LEVEL)	SEE PAGE
	1	1	263-6668	1	HARNESS AS-STARTING AID (ETHER)	
		1	102-8802	1	KIT-RECEPTACLE (2-PIN)	
					(INCLUDES RECEPTACLE AS AND WEDGE)	
		1	155-2270	1	KIT-CONNECTING PLUG (2-PIN)	
					(INCLUDES PLUG AS AND WEDGE)	
	2	1	5P-9085	1	CLIP	

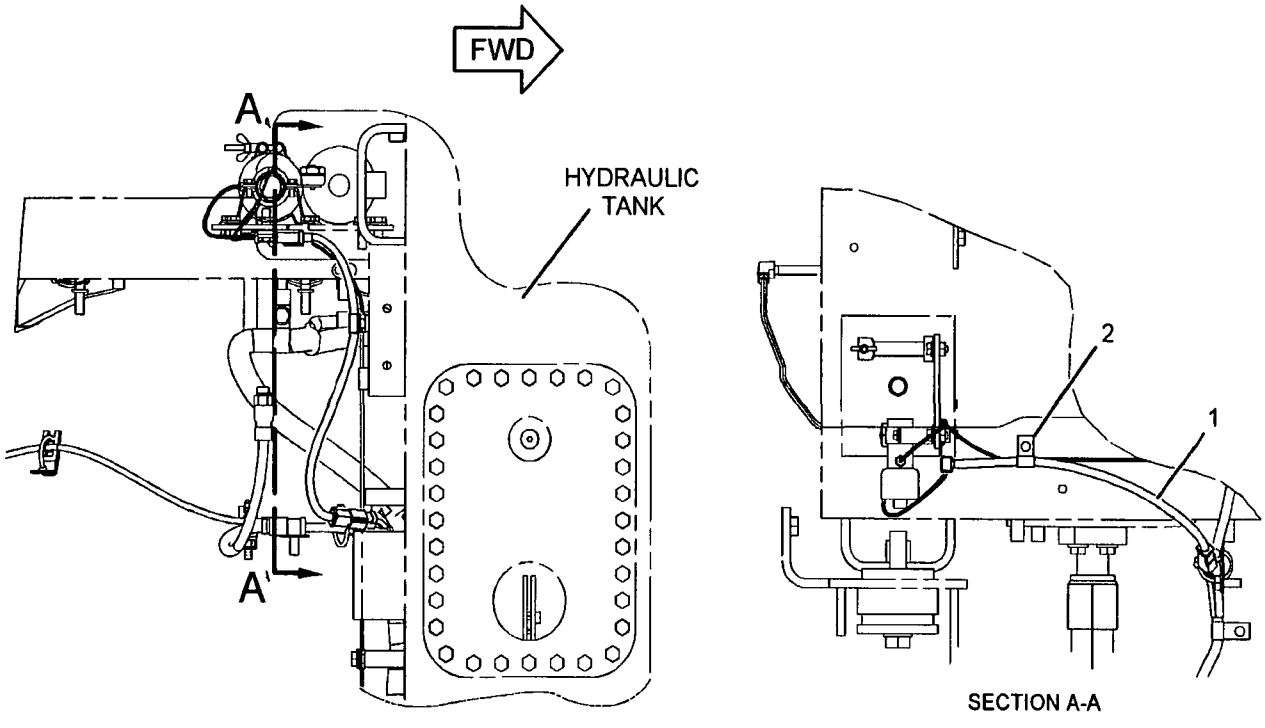

TOP VIEW

SECTION A-A

GRAPHIC #1 <END> g01223640

241-0641 WIRING GP-FRONT

S/N: N1A1-UP
PART OF 237-0235 ELECTRICAL AR
ALSO AN ATTACHMENT

SMCS-5734 i02437647

NOTE	REF NO	GRAPHIC REF	PART NUMBER	QTY	PART NAME 1 2 3 4 5 6 (PRODUCT LEVEL)	SEE PAGE
	1	1,2	4H-1225	6	WASHER (11X22X6-MM THK)	
	2	2	5V-6152	2	CLAMP	
	3	2	5V-6153	1	PLATE-COVER	
	4	2	7K-1181	19	STRAP-CABLE	
	5	1	241-5688	1	HARNESS AS-FRONT CHASSIS	
		1	102-8802	1	KIT-RECEPTACLE (2-PIN)	
		1	102-8803	1	KIT-RECEPTACLE (3-PIN)	
					(EACH KIT INCLUDES RECEPTACLE AS AND WEDGE)	
		1	113-0580	1	RECEPTACLE AS-CONNECTOR (40-PIN)	
		1	106-4155	1	KIT-BOLT (ELECTRICAL CONNECTORS)	
					(INCLUDES BOLT, RING, AND 2 SEALS)	
		1	155-2260	1	KIT-CONNECTING PLUG (3-PIN)	
		1	155-2270	1	KIT-CONNECTING PLUG (2-PIN)	
					(EACH KIT INCLUDES PLUG AS AND WEDGE)	
	6	1	124-1479	1	CLIP	
	7	1	130-5300	3	CLIP	
	8	1	147-0385	1	CLIP	
	9	2	1S-0994	3	CLIP	
	10	1	4D-9517	1	CLIP	
	11	2	5P-7464	2	CLIP (SLOT)	
	12	2	5P-7465	1	CLIP (TAB)	
	13	2	5P-9085	1	CLIP	
	14	1	8M-2770	4	CLIP	
	15	1,2	8T-4121	7	WASHER-HARD (11X21X2.5-MM THK)	
M	16	1,2	8T-4133	6	NUT (M10X1.5 THD)	
M	17	1	8T-4137	1	BOLT (M10X1.5X20-MM)	
M	18	2	8T-4139	1	BOLT (M12X1.75X30-MM)	
M	19	1	8T-4195	1	BOLT (M10X1.5X30-MM)	
	20	2	8T-4223	1	WASHER-HARD (13.5X25.5X3-MM THK)	
M	21	2	8T-6974	2	BOLT (M6X1X80-MM)	
	22	2	9X-8256	2	WASHER (6.6X12X2-MM THK)	

M-METRIC PART

241-0641 **WIRING GP-FRONT** *(contd.)* **i02437647**

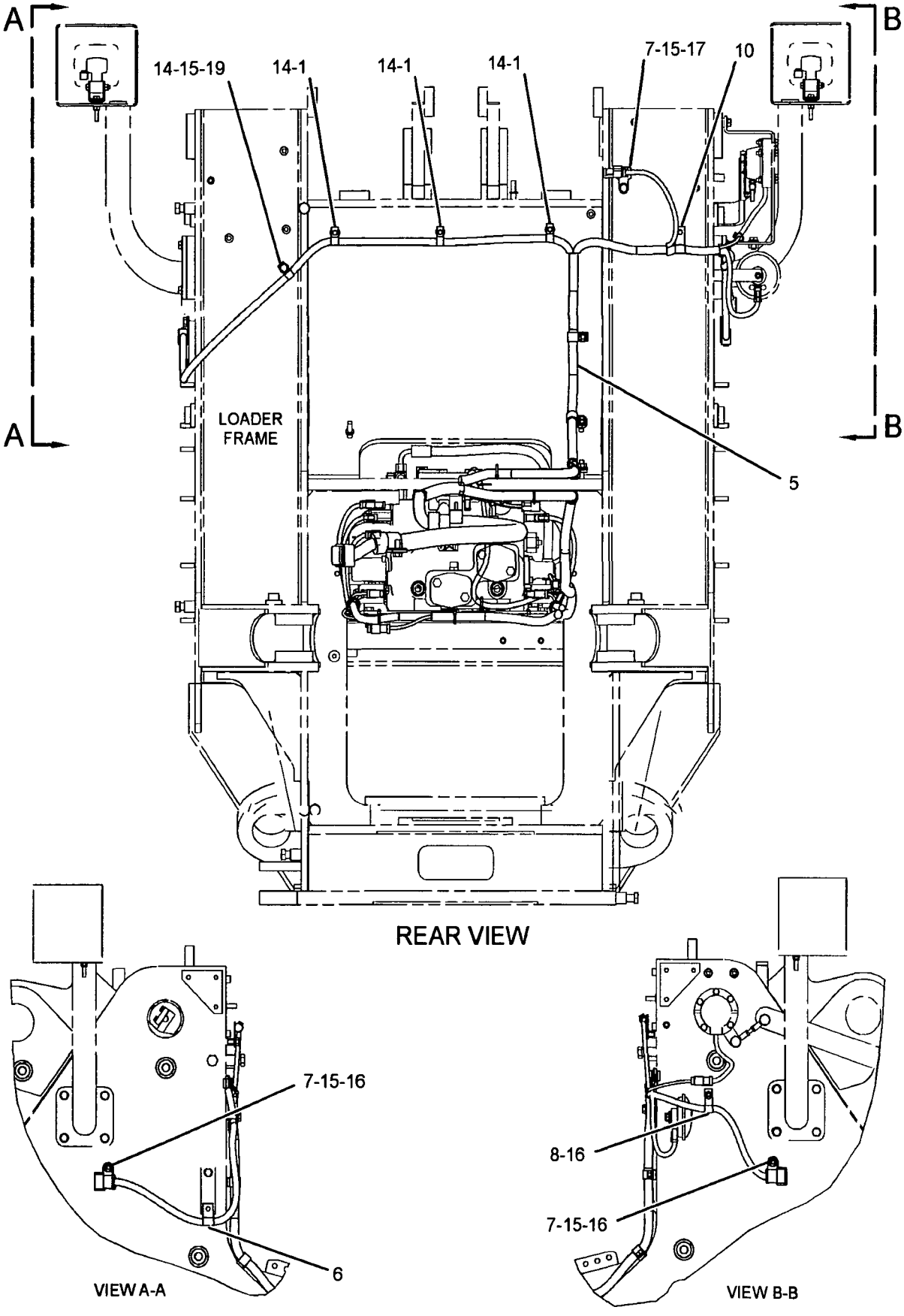

GRAPHIC #1

g01202673

241-0641 **WIRING GP-FRONT** *(contd.)* **i02437647**

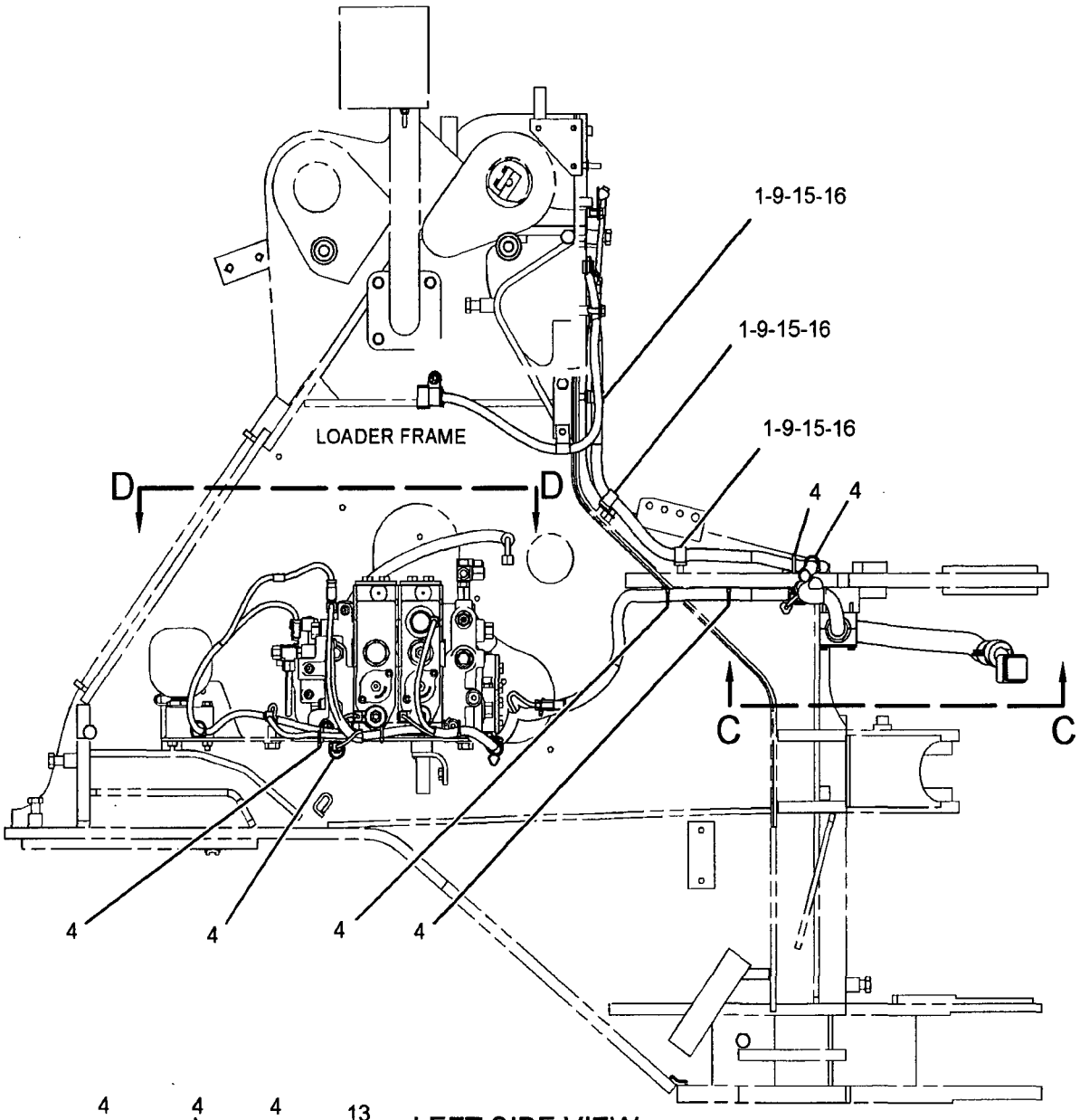

LEFT SIDE VIEW

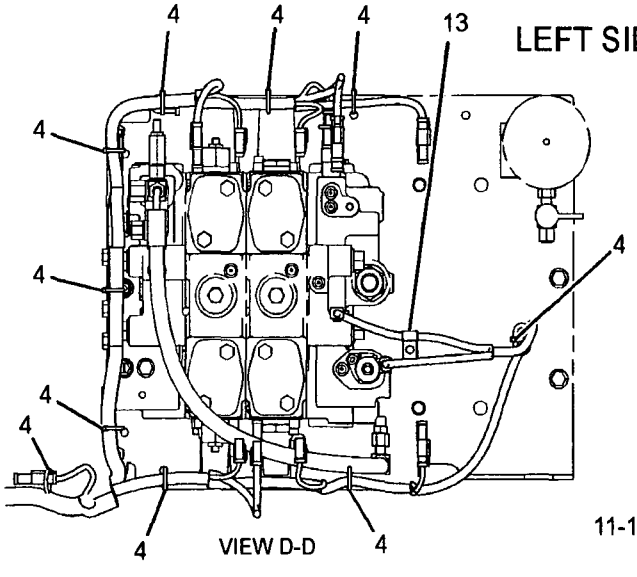

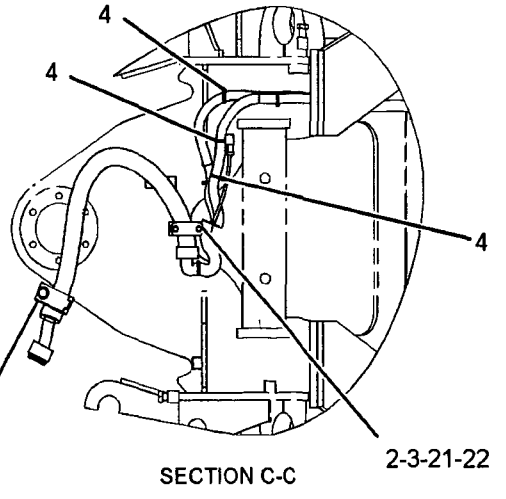

GRAPHIC #2

<END>

g01202777

269-5247 WIRING GP-LIGHTING

S/N: N1A1-UP

PART OF 269-6608 LIGHTING GP-BACKUP

AN ATTACHMENT

SMCS-1408, 1429 **i02443559**

NOTE	REF NO	GRAPHIC REF	PART NUMBER	QTY	PART NAME 1 2 3 4 5 6 (PRODUCT LEVEL)	SEE PAGE
	1	2	**3E-5239**	1	RELAY AS (24-VOLT)	
	2	1	**7K-1181**	36	STRAP-CABLE	
	3	2	**269-5245**	1	HARNESS AS-LIGHTING	
		2	**102-8802**	1	KIT-RECEPTACLE (2-PIN)	
					(INCLUDES RECEPTACLE AS AND WEDGE)	
		2	**9X-1054**	1	PLUG AS-CONNECTOR (4-PIN)	
		2	**155-2270**	1	KIT-CONNECTING PLUG (2-PIN)	
		2	**155-2271**	2	KIT-CONNECTING PLUG (4-PIN)	
					(EACH KIT PLUG INCLUDES PLUG AS AND WEDGE)	
	4	2	**033-8248**	3	CLIP	
	5	1	**124-1479**	1	CLIP	
	6	2	**4D-7794**	4	CLIP	
	7	1	**5P-9297**	2	CLIP	
M	8	2	**6V-9632**	1	NUT-WELD (M6X1-THD)	
M	9	2	**8T-4970**	1	BOLT (M6X1X14-MM)	
	10	2	**9X-8256**	1	WASHER (6.6X12X2-MM THK)	

M-METRIC PART

269-5247 **WIRING GP-LIGHTING** *(contd.)* **i02443559**

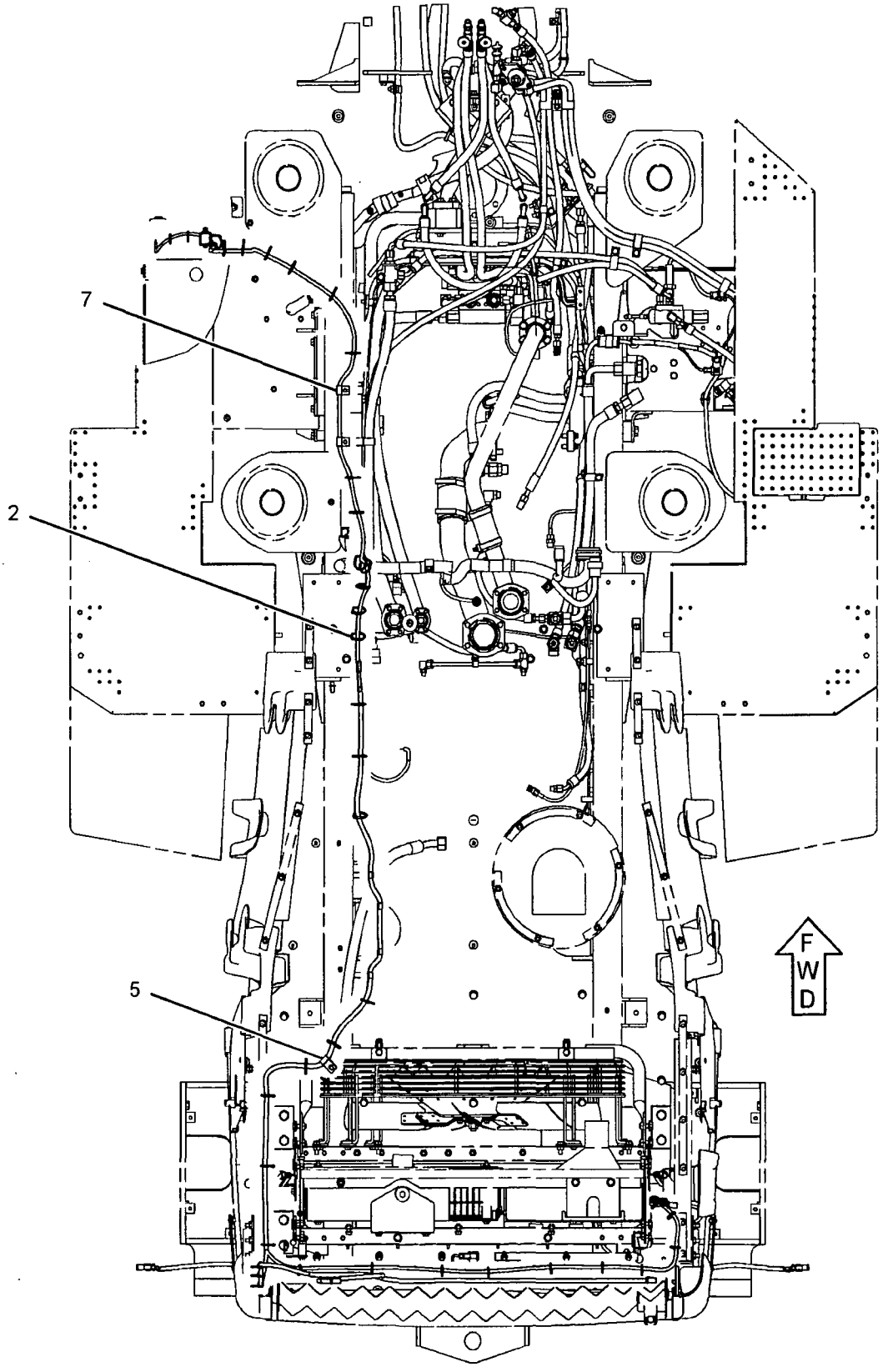

TOP VIEW

GRAPHIC #1 g01229065

269-5247 **WIRING GP-LIGHTING** *(contd.)* **i02443559**

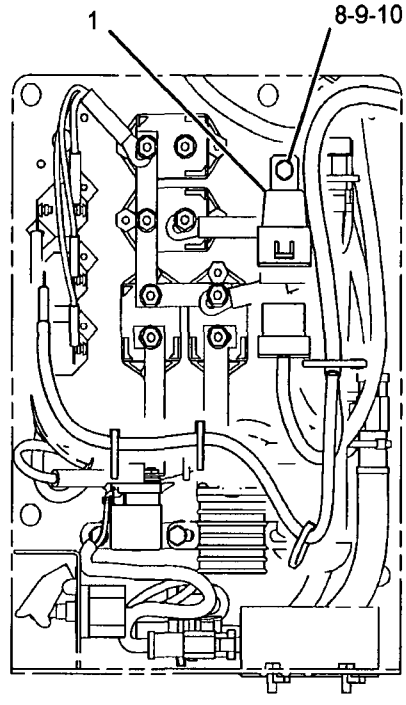

VIEW A-A

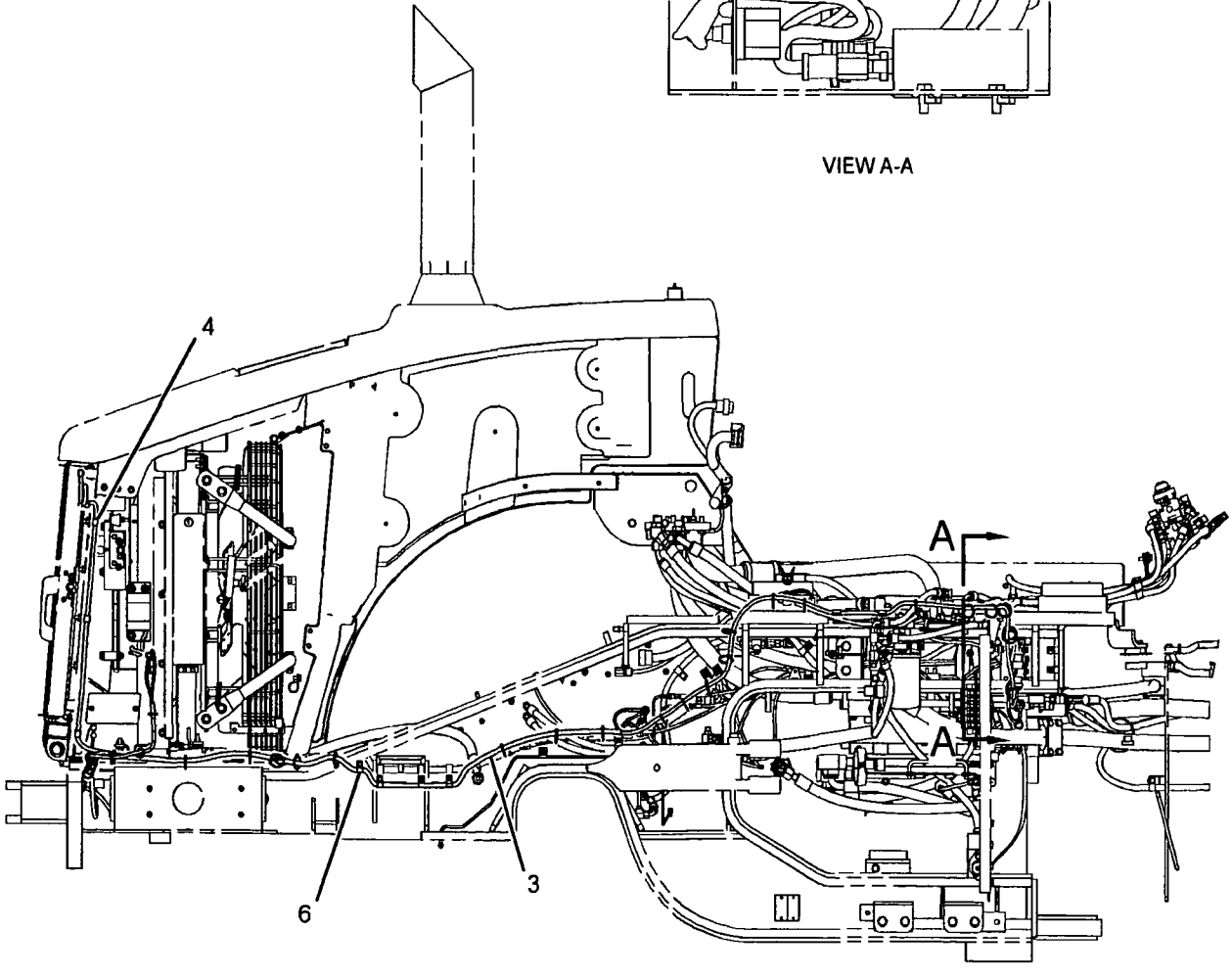

RIGHT SIDE VIEW

GRAPHIC #2 **<END>** g01229066

271-4016 WIRING GP-LIGHTING–LOADER FRAME

S/N: N1A1-UP
PART OF 237-0235 ELECTRICAL AR
ALSO AN ATTACHMENT

SMCS-1408, 1429 **i02460700**

NOTE	REF NO	GRAPHIC REF	PART NUMBER	QTY	PART NAME 1 2 3 4 5 6 (PRODUCT LEVEL)	SEE PAGE
	1	1	**271-4017**	2	HARNESS AS-LIGHTING (LOADER FRAME)	
					(EACH INCLUDES)	
		1	**155-2255**	1	KIT-CONNECTING PLUG (12-PIN)	
		1	**155-2270**	1	KIT-CONNECTING PLUG (2-PIN)	
					(EACH INCLUDES PLUG AS AND WEDGE)	

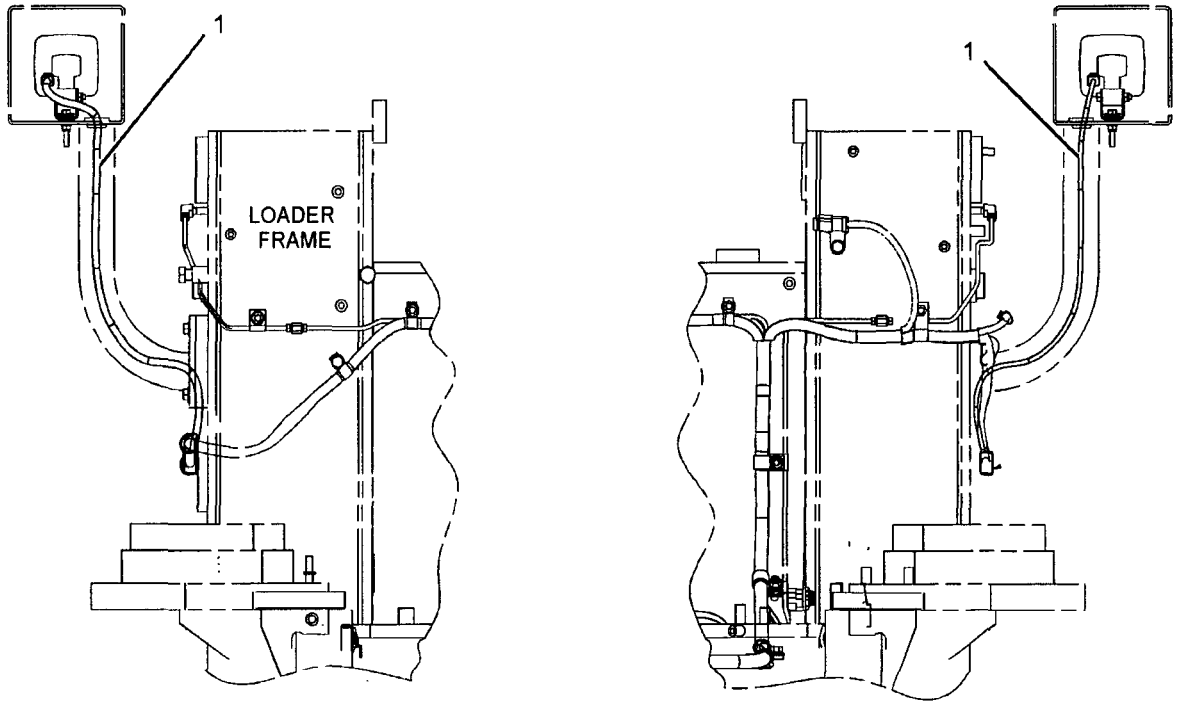

REAR VIEW

GRAPHIC #1 **<END>** g01201152

ELECTRICAL AND STARTING SYSTEM

271-4028 WIRING GP-LIGHTING

S/N: N1A1-UP

PART OF 235-5279, 244-3599 LIGHTING AR-SIGNAL AN ATTACHMENT

SMCS-1408, 1429 **i02414177**

NOTE	REF NO	GRAPHIC REF	PART NUMBER	QTY	PART NAME 1 2 3 4 5 6 (PRODUCT LEVEL)	SEE PAGE
	1	1	**271-4029**	1	HARNESS AS-LIGHTING (LH)	
		1	**155-2255**	1	KIT-CONNECTING PLUG (12-PIN)	
		1	**155-2270**	1	KIT-CONNECTING PLUG (2-PIN)	
					(EACH KIT INCLUDES PLUG AS AND WEDGE)	
	2	1	**271-4030**	1	HARNESS AS-LIGHTING (RH)	
		1	**155-2255**	1	KIT-CONNECTING PLUG (12-PIN)	
		1	**155-2270**	1	KIT-CONNECTING PLUG (2-PIN)	
					(EACH KIT INCLUDES PLUG AS AND WEDGE)	

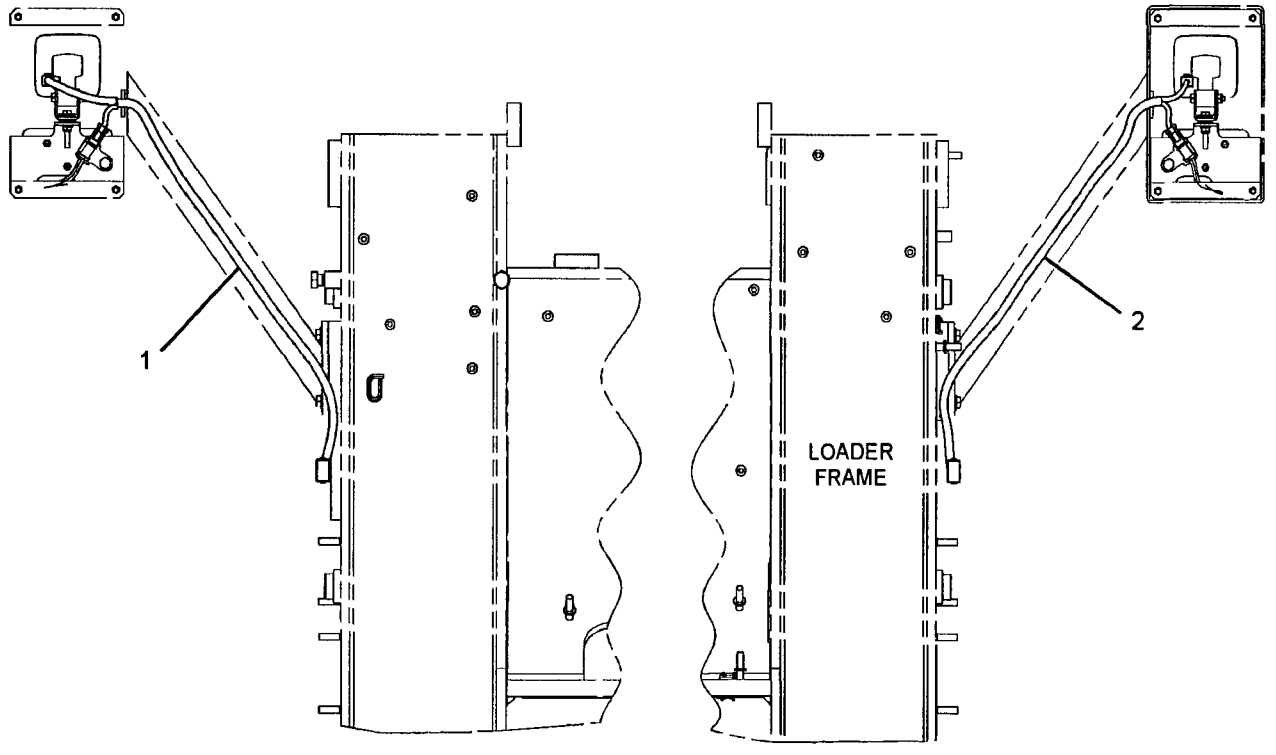

REAR VIEW

GRAPHIC #1 **<END>** g01195661

271-4037 WIRING GP-LIGHTING–LOADER FRAME

S/N: N1A1-UP

PART OF 254-5525, 260-7765 LIGHTING AR-ROADING AN ATTACHMENT

SMCS-1408, 1429 **i02415809**

NOTE	REF NO	GRAPHIC REF	PART NUMBER	QTY	PART NAME 1 2 3 4 5 6 (PRODUCT LEVEL)	SEE PAGE
	1	1	271-4038	1	HARNESS AS-LIGHTING (LH)	
		1	155-2255	1	KIT-CONNECTING PLUG (12-PIN)	
		1	155-2274	1	KIT-CONNECTING PLUG (6-PIN)	
					(EACH KIT INCLUDES PLUG AS AND WEDGE)	
	2	1	271-4039	1	HARNESS AS-LIGHTING (RH)	
		1	155-2255	1	KIT-CONNECTING PLUG (12-PIN)	
		1	155-2274	1	KIT-CONNECTING PLUG (6-PIN)	
					(EACH KIT INCLUDES PLUG AS AND WEDGE)	

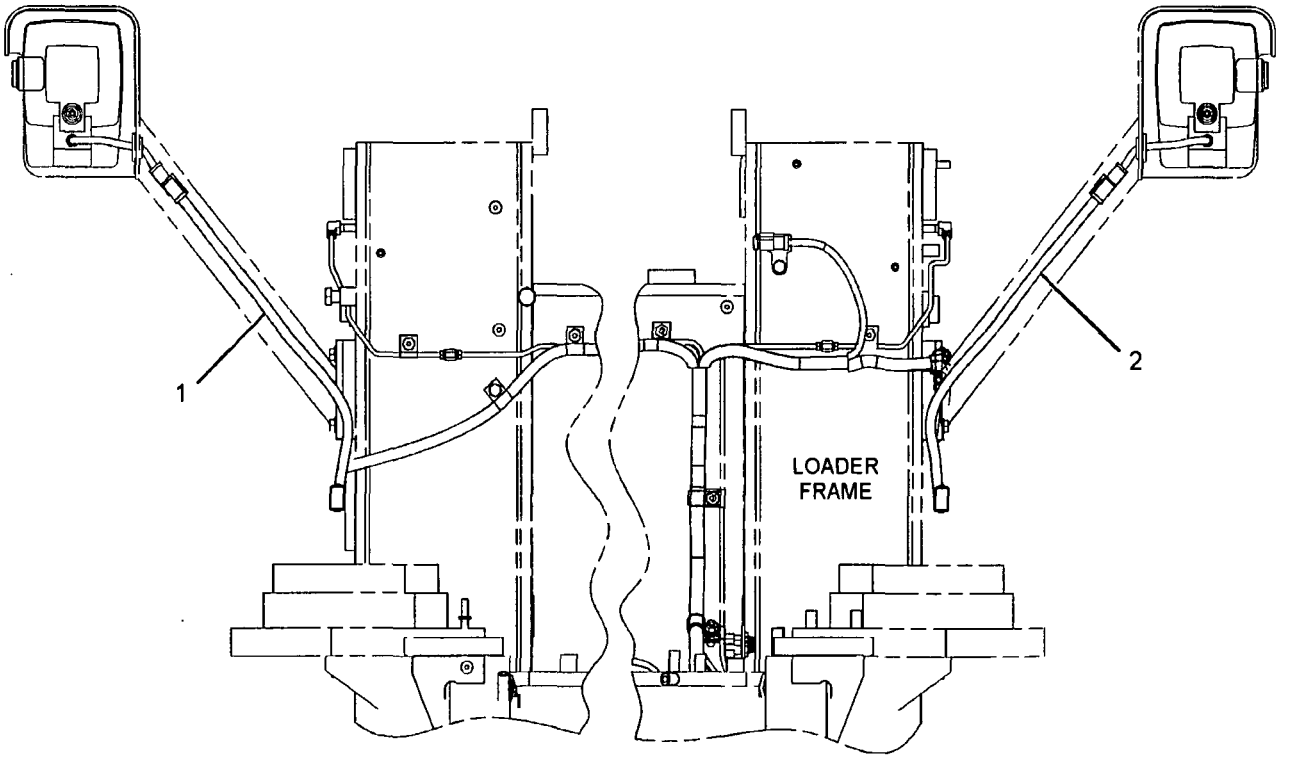

REAR VIEW

GRAPHIC #1 **<END>** g01195665

241-0643 WIRING GP-SECONDARY STEERING

S/N: N1A1-UP

PART OF 244-5424 STEERING AR-SECONDARY

AN ATTACHMENT

SMCS-1408, 4334 **i02441441**

NOTE	REF NO	GRAPHIC REF	PART NUMBER	QTY	PART NAME 1 2 3 4 5 6 (PRODUCT LEVEL)	SEE PAGE
	1	1	3E-5239	1	RELAY AS (24-VOLT) (SECONDARY STEER INTERMEDIATE)	
	2	2	3S-2093	3	STRAP-CABLE	
	3	2	7K-1181	2	STRAP-CABLE	
	4	2	107-2111	1	CABLE AS	
		2	1S-7251	1	TERMINAL-RING (FOR 1/2-IN BOLT)	
		2	1S-7252	1	TERMINAL-RING (FOR 3/8-IN BOLT)	
E		2	5P-0746		CABLE (0-GA, BLACK) (61-CM)	
E		2	5P-0747		CABLE (00-GA, BLACK) (1-CM)	
	5	2	127-9323	1	BRACKET AS	
M		2	8T-3490	1	NUT-WELD (M10X1.5-THD)	
	6	1	189-5604	1	PLATE AS	
	7	2	201-8428	1	BRACKET AS	
	8	1	248-0220	1	HARNESS AS-STEERING (SECONDARY)	
		1	102-8801	1	KIT-RECEPTACLE (12-PIN)	
					(INCLUDES RECEPTACLE AS AND WEDGE)	
		1	9X-1054	1	PLUG AS-CONNECTOR (4-PIN)	
		1	155-2260	2	KIT-CONNECTING PLUG (3-PIN)	
		1	155-2270	1	KIT-CONNECTING PLUG (2-PIN)	
					(EACH KIT PLUG INCLUDES PLUG AS AND WEDGE)	
	9	1	248-0221	1	CABLE AS	
		1	1S-7251	1	TERMINAL-RING (FOR 1/2-IN BOLT)	
		1	1S-7252	1	TERMINAL-RING (FOR 3/8-IN BOLT)	
E		1	5P-0761		CABLE (00-GA, RED) (167-CM)	
		1	8N-0869	1	COVER-TERMINAL (RED)	
	10	1,2	130-5300	3	CLIP	
	11	2	130-5301	1	CLIP	
	12	1,2	205-7299	8	CLIP	
	13	2	230-5771	1	SWITCH AS-PRESSURE (SECONDARY STEERING OIL)	
	13A	2	230-5771	1	SWITCH AS-PRESSURE (PRIMARY STEERING OIL)	
					(EACH SWITCH AS INCLUDES)	
		2	102-8803	1	KIT-RECEPTACLE (3-PIN)	
					(INCLUDES RECEPTACLE AS AND WEDGE)	
		2	3E-3371	1	WEDGE-RECEPTACLE LOCK (3-PIN)	
		2	186-3735	3	PIN-CONNECTOR (16-GA TO 18-GA)	
E		2	9X-1813		SLEEVE (30-CM)	
	14	2	2A-2677	2	SPACER (0.75-IN THK)	
	15	2	3K-0360	2	SEAL-O-RING	
	16	1	3S-8664	1	CLIP	
	17	2	5P-9085	1	CLIP	
	18	2	5P-9297	1	CLIP	
	19	1	8M-2770	3	CLIP	
	20	1,2	8T-4121	11	WASHER-HARD (11X21X2.5-MM THK)	
M	21	1,2	8T-4137	9	BOLT (M10X1.5X20-MM)	
M	22	1	8T-4171	1	BOLT (M6X1X12-MM)	
M	23	2	8T-4186	1	BOLT (M10X1.5X40-MM)	
M	24	2	8T-4196	1	BOLT (M10X1.5X35-MM)	
	25	2	8T-4223	2	WASHER-HARD (13.5X25.5X3-MM THK)	
M	26	2	8T-4244	1	NUT (M12X1.75-THD)	
	27	1	9X-8267	1	WASHER (6.6X12X2-MM THK)	

E-ORDER BY THE CENTIMETER
M-METRIC PART

241-0643 **WIRING GP-SECONDARY STEERING** *(contd.)* **i02441441**

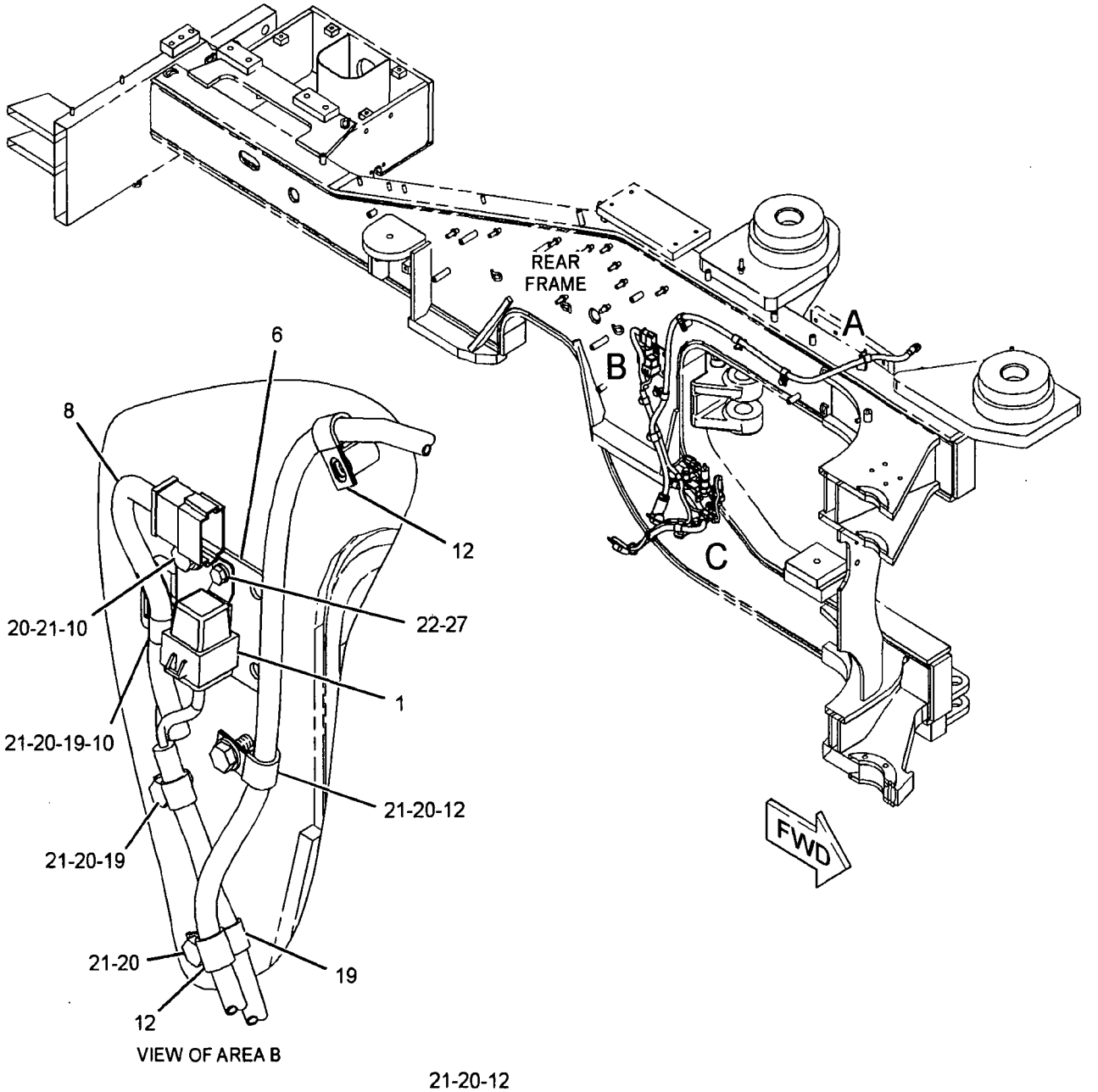

VIEW OF AREA B

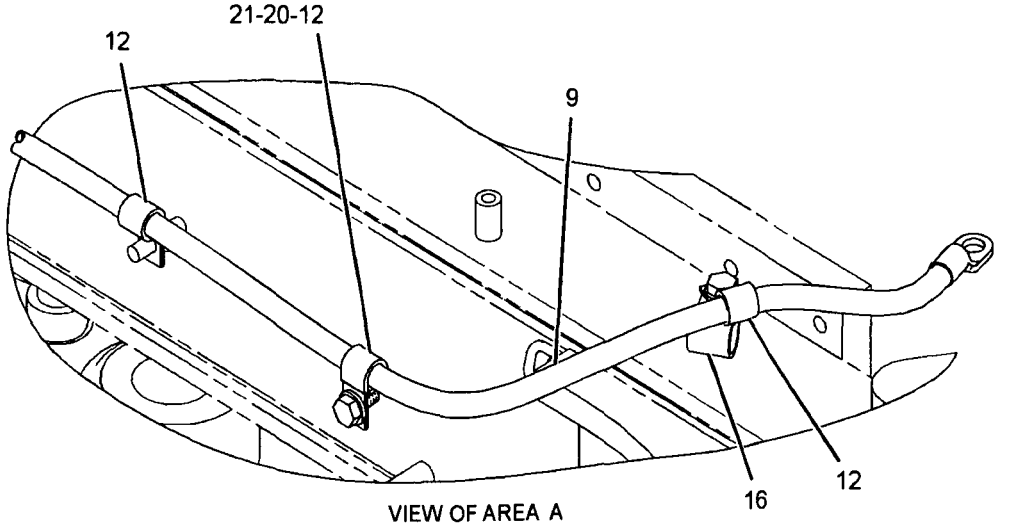

VIEW OF AREA A

GRAPHIC #1

g01200520

241-0643 WIRING GP-SECONDARY STEERING *(contd.)* i02441441

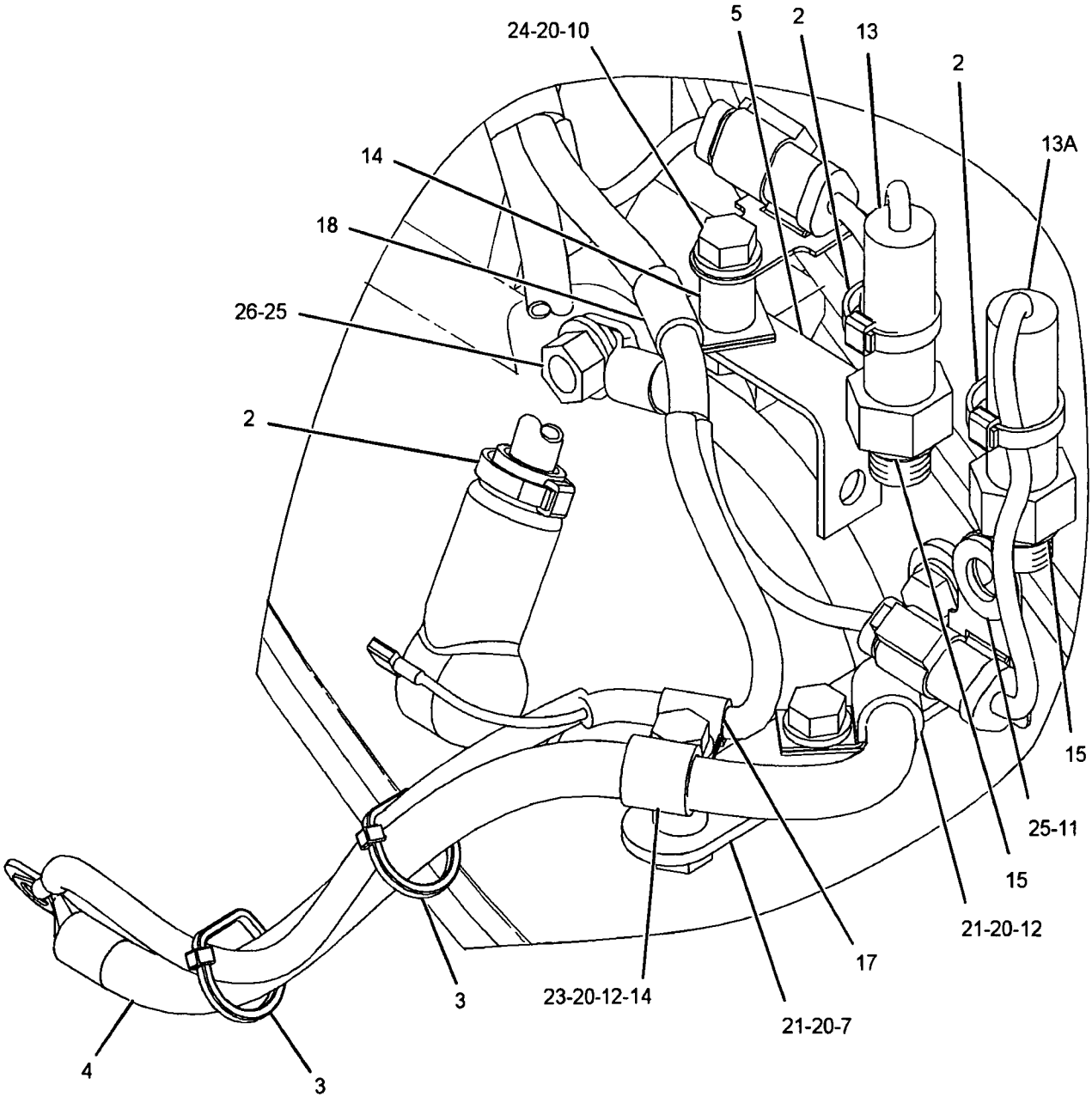

VIEW OF AREA C

GRAPHIC #2 **<END>** g01200522

271-4010 WIRING GP-SENSOR

S/N: N1A1-UP
PART OF 237-0235 ELECTRICAL AR
ALSO AN ATTACHMENT

SMCS-1408 **i02437787**

NOTE	REF NO	GRAPHIC REF	PART NUMBER	QTY	PART NAME 1 2 3 4 5 6 (PRODUCT LEVEL)	SEE PAGE
	1	1	4V-1939	4	CLAMP	
	2	1	107-4749	1	PLATE	
	3	1	271-4011	1	HARNESS AS-SENSOR	
		1	102-8803	1	KIT-RECEPTACLE (3-PIN)	
					(INCLUDES RECEPTACLE AS AND WEDGE)	
		1	155-2260	1	KIT-CONNECTING PLUG (3-PIN)	
					(INCLUDES PLUG AS AND WEDGE)	
	4	1	8T-4121	2	WASHER-HARD (11X21X2.5-MM THK)	
M	5	1	8T-4133	2	NUT (M10X1.5 THD)	
	6	1	9M-8406	3	CLIP	
M	7	1	9X-2480	4	BOLT (M6X1X45-MM)	
	8	1	9X-8256	4	WASHER (6.6X12X2-MM THK)	

M-METRIC PART

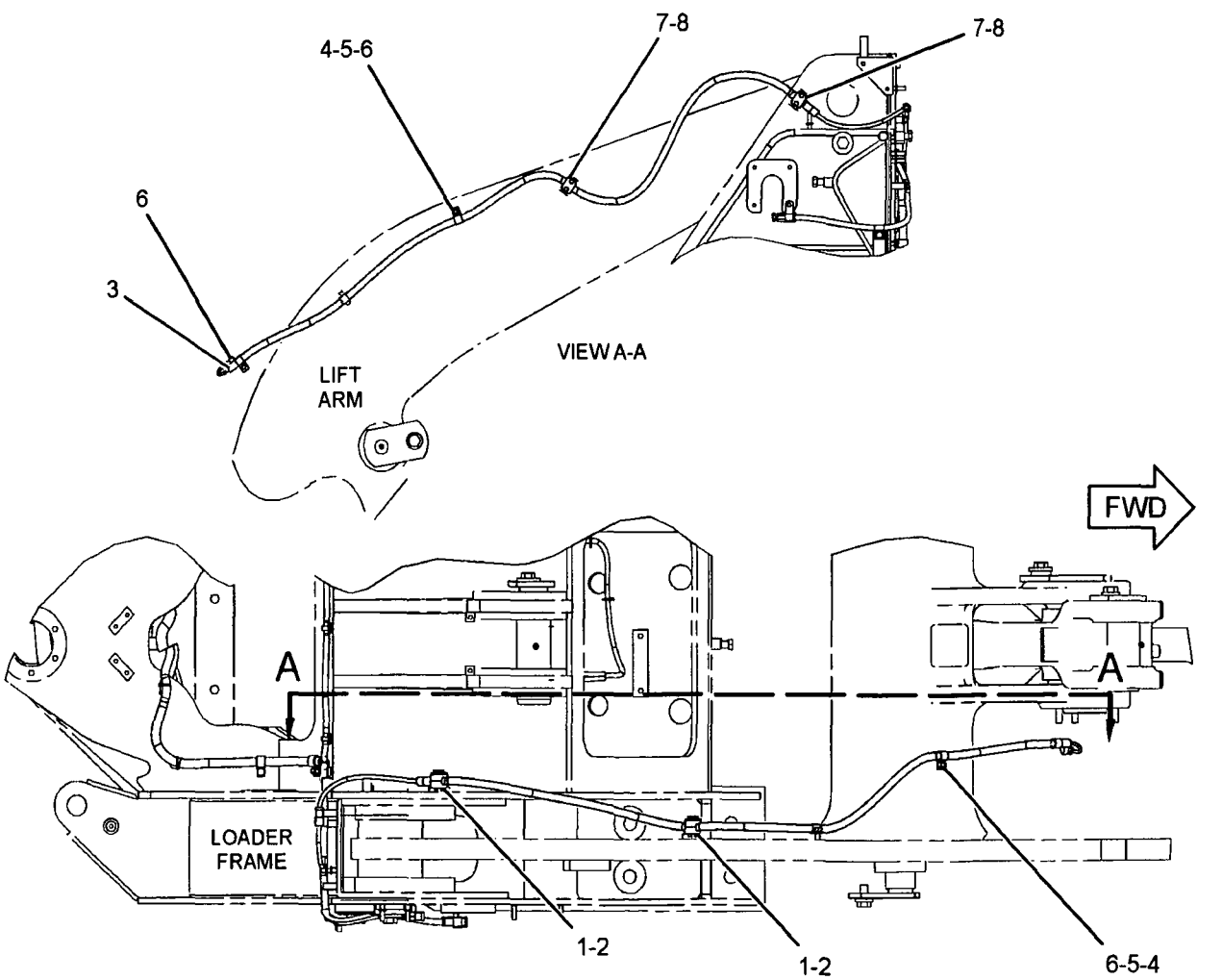

TOP VIEW

GRAPHIC #1 **<END>** g01227402

275-0023 WIRING GP-SENSOR–TILT POSITION

S/N: N1A1-UP

PART OF 244-3375, 244-3396 LIFT AR

AN ATTACHMENT

SMCS-1408 i02440866

NOTE	REF NO	GRAPHIC REF	PART NUMBER	QTY	PART NAME 1 2 3 4 5 6 (PRODUCT LEVEL)	SEE PAGE
	1	1	4V-1939	4	CLAMP	
	2	1	107-4749	2	PLATE	
	3	1	275-0025	1	HARNESS AS-SENSOR	
		1	155-2260	1	KIT-CONNECTING PLUG (3-PIN)	
					(INCLUDES PLUG AS AND WEDGE)	
	4	1	8T-4121	2	WASHER-HARD (11X21X2.5-MM THK)	
M	5	1	8T-4133	2	NUT (M10X1.5 THD)	
	6	1	9M-8406	3	CLIP	
M	7	1	9X-2480	4	BOLT (M6X1X45-MM)	
	8	1	9X-8256	4	WASHER (6.6X12X2-MM THK)	

M-METRIC PART

275-0023 **WIRING GP-SENSOR** *(contd.)* **i02440866**

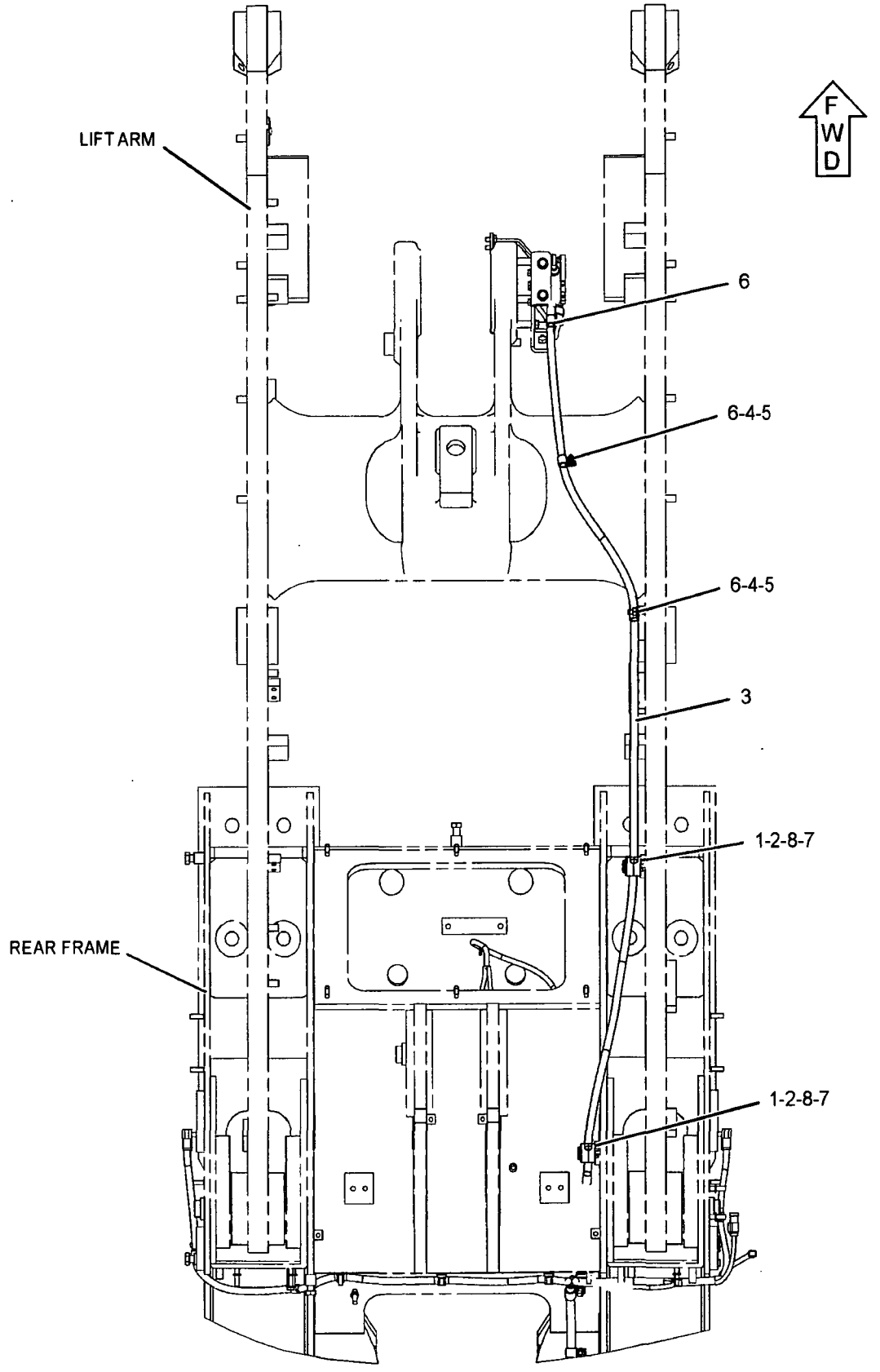

TOP VIEW

GRAPHIC #1 **<END>** g01229156

253-3945 WIRING GP-WASTE HANDLER

S/N: N1A1-UP

PART OF 247-8561 ACTUATOR GP-POWER GUARD

AN ATTACHMENT

SMCS-1408 i02281696

NOTE	REF NO	GRAPHIC REF	PART NUMBER	QTY	PART NAME 1 2 3 4 5 6 (PRODUCT LEVEL)	SEE PAGE
	1	1	7K-1181	11	STRAP-CABLE	
	2	1	157-1364	1	SWITCH AS-TOGGLE (POWER GUARD ACTUATOR)	
		1	102-8805	1	KIT-RECEPTACLE (6-PIN)	
					(INCLUDES RECEPTACLE AS AND WEDGE)	
		1	6T-3631	2	NUT-HEX (15/32-32-THD)	
		1	6T-3632	1	LOCKWASHER	
		1	6T-3633	1	RING-LOCKING	
		1	186-3735	1	PIN-CONNECTOR (16-GA TO 18-GA)	
	3	1	249-6463	1	FILM-IDENTIFICATION (POWER GUARD ACTUATOR SWITCH)	
	4	1	266-7230	1	HARNESS AS-CONTROL (POWER GUARD ACTUATOR)	
		1	155-2270	1	KIT-CONNECTING PLUG (2-PIN)	
		1	155-2274	1	KIT-CONNECTING PLUG (6-PIN)	
					(EACH PLUG KIT INCLUDES PLUG AS AND WEDGE)	
	5	1	130-5300	1	CLIP	
	6	1	186-3221	1	WIRE AS	
	7	1	3T-2662	1	CIRCUIT BREAKER AS (15-AMPERE) (POWER GUARD ACTUATOR)	
		1	6V-8376	2	SCREW-MACHINE (8-32X0.25-IN)	
		1	9B-7233	2	LOCKWASHER	
	8	1	4D-8123	1	CLIP	
	9	1	5M-6668	2	SCREW-MACHINE (8-32X0.75-IN)	
	10	1	5P-9085	3	CLIP	

253-3945 WIRING GP-WASTE HANDLER *(contd.)* i02281696

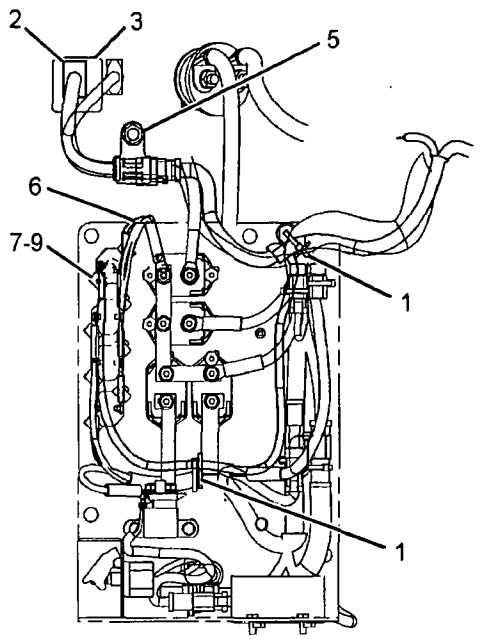

VIEW A-A

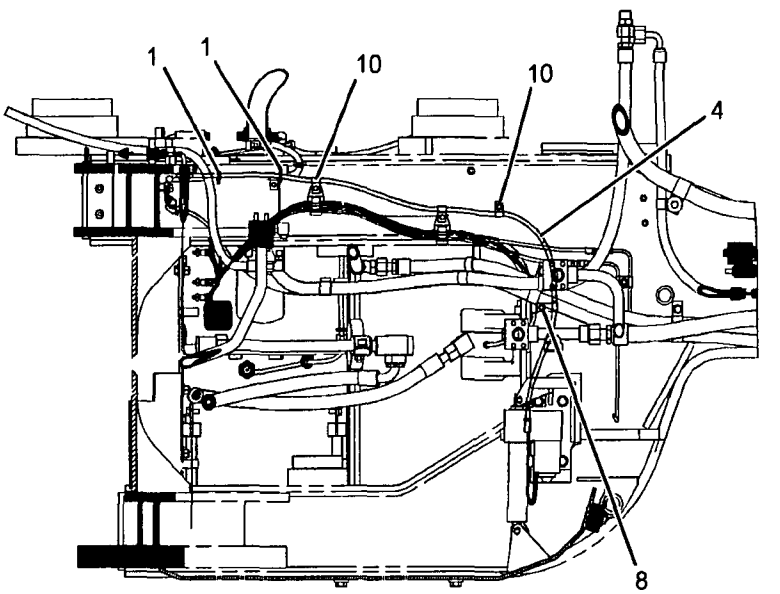

SECTION B-B

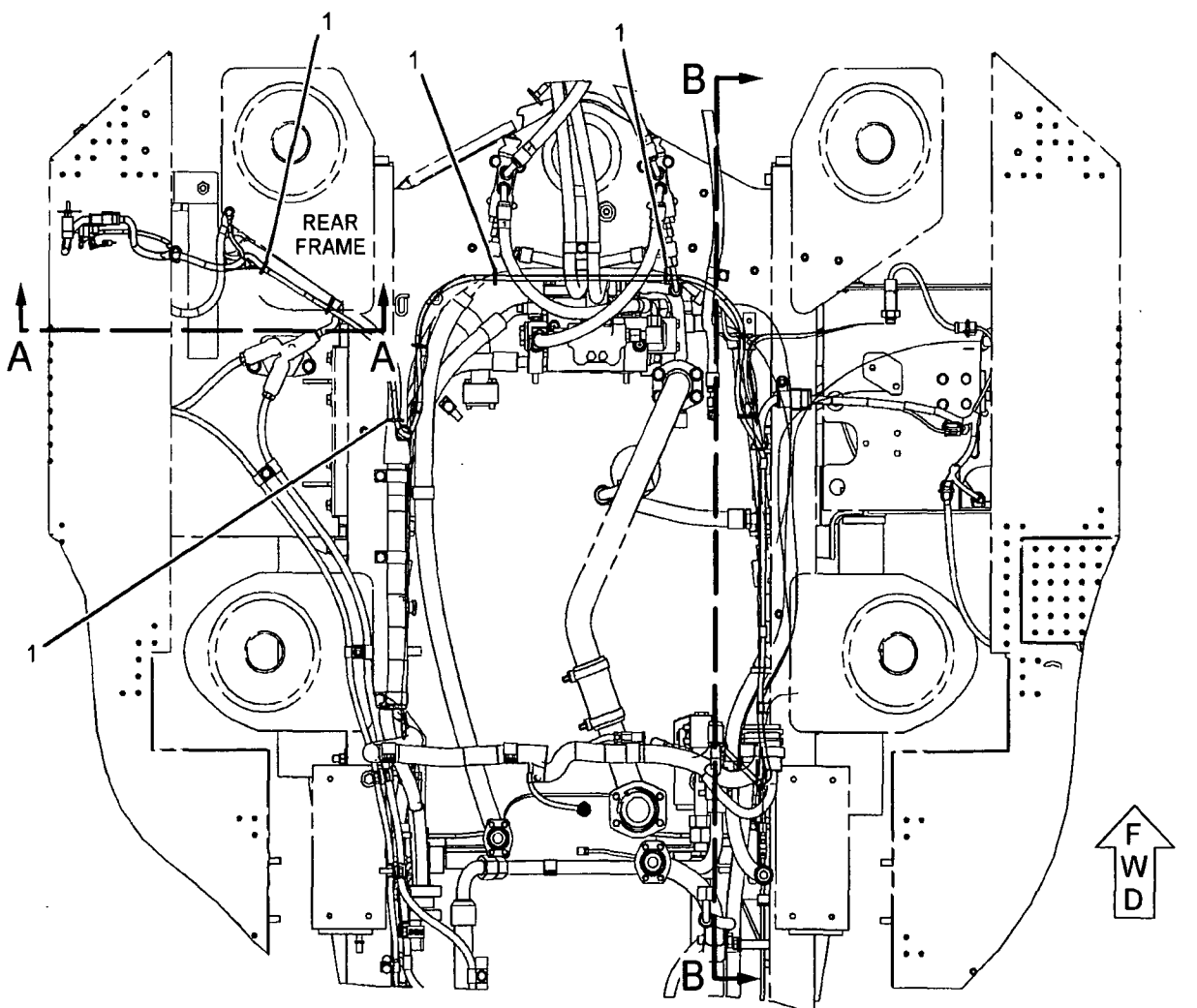

TOP VIEW

GRAPHIC #1

<END>

g01134237

214-6161 AXLE AR-FIXED–FRONT, STANDARD DIFFERENTIAL

S/N: N1A1-UP
PART OF 244-5421 LOGGING AR
AN ATTACHMENT

SMCS-3013, 3278 **i02116314**

NOTE	PART NUMBER	QTY	PART NAME 1 2 3 4 5 6 (PRODUCT LEVEL)	SEE PAGE
Y	*164-3018*	2	BRAKE & PLANETARY GP	289
Y	**137-1392**	1	DIFFERENTIAL GP	298
Y	*157-0340*	1	GEAR GP-BEVEL & PINION	313
Y	*214-6156*	1	HOUSING GP-FIXED AXLE	324
Y	**220-7925**	1	PLATE GP-AXLE IDENTIFICATION	947

Y-SEPARATE ILLUSTRATION

<END>

214-9398 AXLE AR-FIXED–FRONT, STANDARD DIFFERENTIAL

S/N: N1A1-UP
PART OF 237-0240 POWER TRAIN AR
ALSO AN ATTACHMENT

SMCS-3013, 3278 **i02283719**

NOTE	PART NUMBER	QTY	PART NAME 1 2 3 4 5 6 (PRODUCT LEVEL)	SEE PAGE
Y	*112-0757*	2	BRAKE & PLANETARY GP	287
Y	**137-1392**	1	DIFFERENTIAL GP	298
Y	*112-0738*	1	GEAR GP-BEVEL & PINION	309
Y	*214-6156*	1	HOUSING GP-FIXED AXLE	324
	220-7925	1	PLATE GP-AXLE IDENTIFICATION	
	220-3773	1	PLATE GP-AXLE IDENTIFICATION	
	109-8895	1	PLATE-IDENTIFICATION	
	220-3681	1	TAPE	
	220-7924	1	PLATE GP-AXLE IDENTIFICATION	
	082-2817	4	TACK	
	109-8895	1	PLATE-IDENTIFICATION	

Y-SEPARATE ILLUSTRATION

<END>

214-9402 AXLE AR-FIXED–FRONT, LIMITED SLIP DIFFERENTIAL

S/N: N1A1-UP

AN ATTACHMENT

SMCS-3013, 3278 **i02283718**

NOTE	PART NUMBER	QTY	PART NAME 1 2 3 4 5 6 (PRODUCT LEVEL)	SEE PAGE
Y	*112-0757*	2	BRAKE & PLANETARY GP	287
Y	**144-4465**	1	DIFFERENTIAL GP-LIMITED SLIP	300
Y	*112-0738*	1	GEAR GP-BEVEL & PINION	309
Y	*214-6156*	1	HOUSING GP-FIXED AXLE	324
Y	**220-7925**	1	PLATE GP-AXLE IDENTIFICATION	947
	220-3773	1	PLATE GP-AXLE IDENTIFICATION	
	109-8895	1	PLATE-IDENTIFICATION	
	220-3681	1	TAPE	
	220-7924	1	PLATE GP-AXLE IDENTIFICATION	
	082-2817	4	TACK	
	109-8895	1	PLATE-IDENTIFICATION	

Y-SEPARATE ILLUSTRATION

<END>

112-0723 AXLE AR-OSCILLATING–REAR, STANDARD DIFFERENTIAL

S/N: N1A1-UP

PART OF 237-0240 POWER TRAIN AR

ALSO AN ATTACHMENT

SMCS-3013, 3278 **i02437920**

NOTE	PART NUMBER	QTY	PART NAME 1 2 3 4 5 6 (PRODUCT LEVEL)	SEE PAGE
Y	*112-0757*	2	BRAKE & PLANETARY GP	287
Y	**137-1392**	1	DIFFERENTIAL GP	298
Y	*112-0778*	1	GEAR GP-BEVEL & PINION	311
Y	*112-0724*	1	HOUSING GP-OSCILLATING AXLE	326
Y	**220-7925**	1	PLATE GP-AXLE IDENTIFICATION	947

Y-SEPARATE ILLUSTRATION

<END>

126-7845 AXLE AR-OSCILLATING–REAR, LIMITED SLIP DIFFERENTIAL

S/N: N1A1-UP

AN ATTACHMENT

SMCS-3013, 3278 **i02460725**

NOTE	PART NUMBER	QTY	PART NAME 1 2 3 4 5 6 (PRODUCT LEVEL)	SEE PAGE
Y	*112-0757*	2	BRAKE & PLANETARY GP	287
Y	**103-2007**	1	DIFFERENTIAL GP-LIMITED SLIP	299
Y	*112-0778*	1	GEAR GP-BEVEL & PINION	311
Y	*112-0724*	1	HOUSING GP-OSCILLATING AXLE	326
Y	**220-7925**	1	PLATE GP-AXLE IDENTIFICATION	947

Y-SEPARATE ILLUSTRATION

<END>

126-7846 AXLE AR-OSCILLATING–REAR, NOSPIN DIFFERENTIAL

S/N: N1A1-UP

AN ATTACHMENT

SMCS-3013, 3278 **i02460726**

NOTE	PART NUMBER	QTY	PART NAME 1 2 3 4 5 6 (PRODUCT LEVEL)	SEE PAGE
Y	*112-0757*	2	BRAKE & PLANETARY GP	287
Y	*128-0745*	1	DIFFERENTIAL GP-NOSPIN	302
Y	*112-0778*	1	GEAR GP-BEVEL & PINION	311
Y	*112-0724*	1	HOUSING GP-OSCILLATING AXLE	326
Y	**220-7925**	1	PLATE GP-AXLE IDENTIFICATION	947

Y-SEPARATE ILLUSTRATION

<END>

112-0757 BRAKE & PLANETARY GP

S/N: N1A1-UP

PART OF 214-9398, 214-9402 AXLE AR-FIXED, 112-0723, 126-7845, 126-7846 AXLE AR-OSCILLATING

ALSO AN ATTACHMENT

SMCS-4011, 4255 **i02053373**

NOTE	REF NO	GRAPHIC REF	PART NUMBER	QTY	PART NAME 1 2 3 4 5 6 (PRODUCT LEVEL)	SEE PAGE
	1	1	8R-4568	1	PISTON	
	2	1	8R-9207	1	SEAL (353.19-MM ID)	
	3	1	228-0418	1	SEAL AS	
	4	1	6Y-2084	1	DISC-FRICTION	
	5	1	9C-8418	1	PLATE-REACTION	
	6	1	1F-5151	3	DOWEL	
	7	1	9C-7725	3	GEAR-PLANETARY (30-TEETH)	
	8	1	9C-7727	3	BEARING-SLEEVE	
	9	1	9C-9537	6	WASHER-THRUST	
	10	1	8T-2925	3	PIN-SPRING	
	11	1	8R-1888	3	SHAFT-PLANETARY	
	12	1	8R-4571	1	CARRIER-PLANETARY	
	13	1	9M-4335	2	DOWEL-REACTION	
	14	1	9C-8420	1	GEAR-SUN (18-TEETH)	
	15	1	149-9112	1	DOWEL-HOLLOW	
	16	1	117-1801	1	DOWEL	
	17	1	8R-1893	1	GEAR-RING (81-TEETH)	
	18	1	2N-2658	1	BOLT-SOCKET HEAD (8-32X15.88-MM)	
	19	1	096-6166	1	WASHER-HARD (4.5X9X1-MM THK)	
	20	1	112-0759	1	PLUG	
	21	1	138-1645	3	PIN-SPRING	
	22	1	149-9114	1	PIN (BRAKE DISC WEAR INDICATOR)	
	23	1	150-4651	1	SEAL-O-RING	
	24	1	112-0762	3	SPRING	
	25	1	117-1803	1	CUP	

112-0757 BRAKE & PLANETARY GP *(contd.)* i02053373

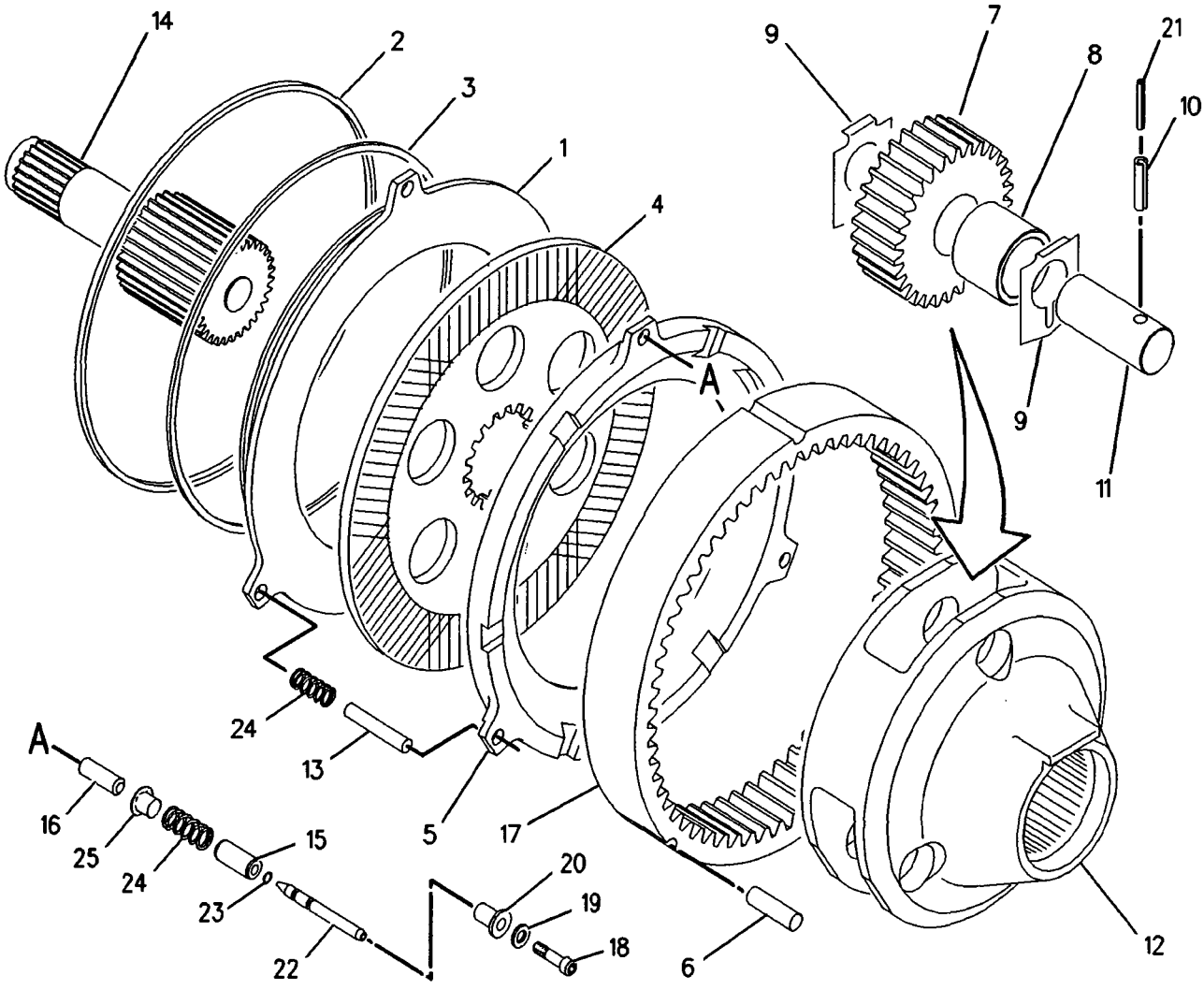

GRAPHIC #1 **<END>** g00466435

164-3018 BRAKE & PLANETARY GP

S/N: N1A1-UP

PART OF 214-6161 AXLE AR-FIXED

AN ATTACHMENT

SMCS-4011, 4255 i02009495

NOTE	REF NO	GRAPHIC REF	PART NUMBER	QTY	PART NAME 1 2 3 4 5 6 (PRODUCT LEVEL)	SEE PAGE
	1	1	8R-4568	1	PISTON	
	2	1	8R-9207	1	SEAL (353.19MM ID)	
	3	1	228-0418	1	SEAL AS	
	4	1	6Y-2084	1	DISC-FRICTION	
	5	1	9C-8418	1	PLATE-REACTION	
	6	1	1F-5151	3	DOWEL	
	7	1	164-3071	3	GEAR-PLANET (30 TEETH)	
	8	1	9C-7727	3	BEARING-SLEEVE	
	9	1	9C-9537	6	WASHER-THRUST	
	10	1	8T-2925	3	PIN-SPRING	
	11	1	8R-1888	3	SHAFT-PLANETARY	
	12	1	8R-4571	1	CARRIER-PLANETARY	
	13	1	9M-4335	2	DOWEL-REACTION	
	14	1	164-6476	1	GEAR-SUN (18 TEETH)	
	15	1	149-9112	1	DOWEL-HOLLOW	
	16	1	117-1801	1	DOWEL	
	17	1	8R-1893	1	GEAR-RING (81 TEETH)	
	18	1	2N-2658	1	BOLT-SOCKET HEAD (8-32X15.88MM)	
	19	1	096-6166	1	WASHER-HARD (4.5X9X1MM THK)	
	20	1	112-0759	1	PLUG	
	21	1	138-1645	3	PIN-SPRING	
	22	1	149-9114	1	PIN (BRAKE DISC WEAR INDICATOR)	
	23	1	150-4651	1	SEAL-O-RING	
	24	1	112-0762	3	SPRING	
	25	1	117-1803	1	CUP	

164-3018 BRAKE & PLANETARY GP *(contd.)* i02009495

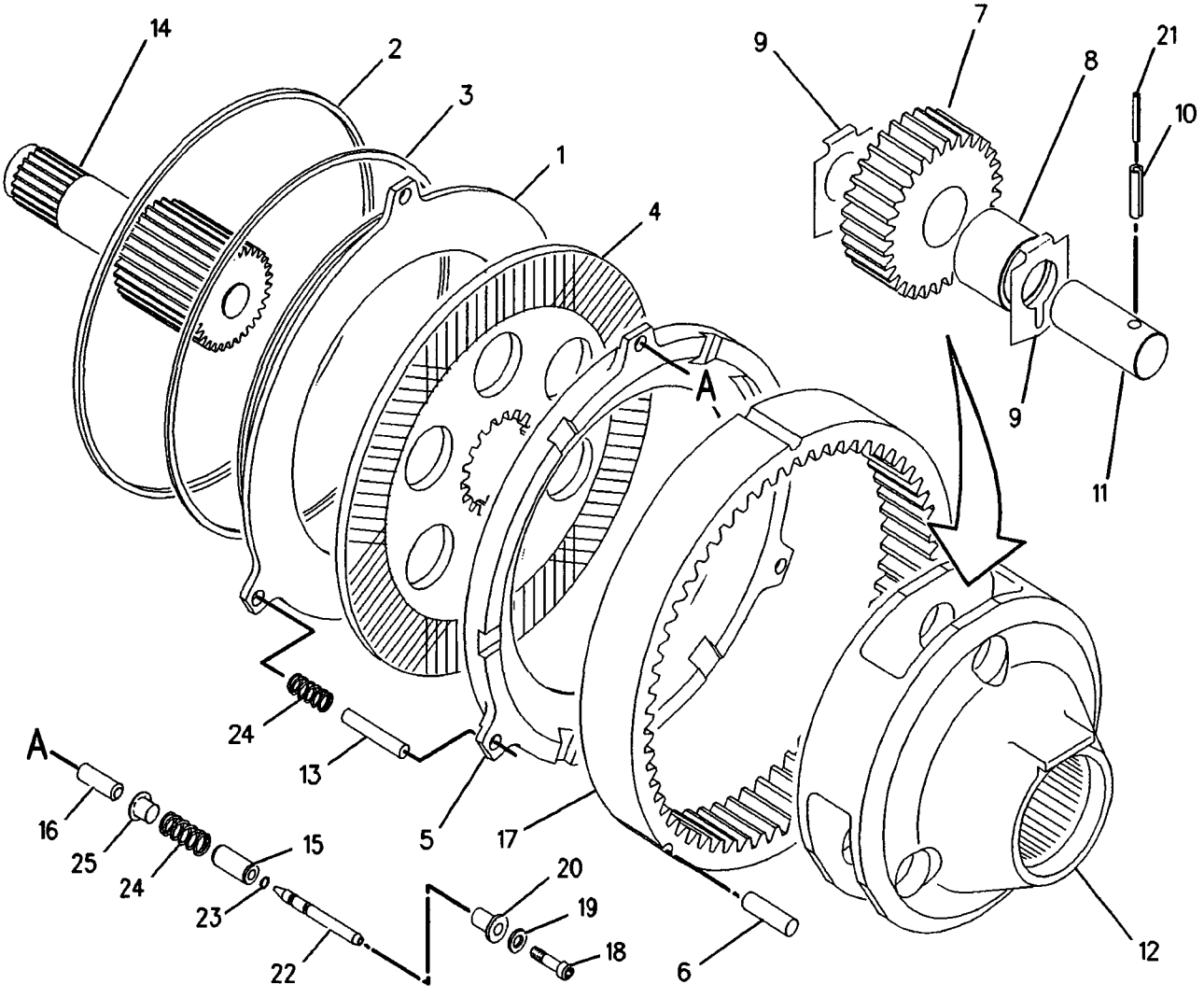

GRAPHIC #1 **<END>** g00455017

121-9300 CONTROL GP-TRANSMISSION–HMU STEERING

S/N: N1A1-UP

PART OF 243-1080 CAB AR-ENCLOSED ROPS

ALSO AN ATTACHMENT

SMCS-3065 i01864723

NOTE	REF NO	GRAPHIC REF	PART NUMBER	QTY	PART NAME 1 2 3 4 5 6 (PRODUCT LEVEL)	SEE PAGE
M	1	1	134-1374	4	BOLT-SOCKET HEAD (M5X0.8X20-MM)	
CY	2	1	201-0212	1	CONTROL GP-TRANSMISSION	292
	3	1	3S-2093	1	STRAP-CABLE	
	4	1	4P-7581	1	CLIP	
	5	1	7K-1181	1	STRAP-CABLE	
	6	1	8T-4121	1	WASHER-HARD (11X21X2.5-MM THK)	
M	7	1	8T-4137	1	BOLT (M10X1.5X20-MM)	

C-CHANGE FROM PREVIOUS TYPE
M-METRIC PART
Y-SEPARATE ILLUSTRATION

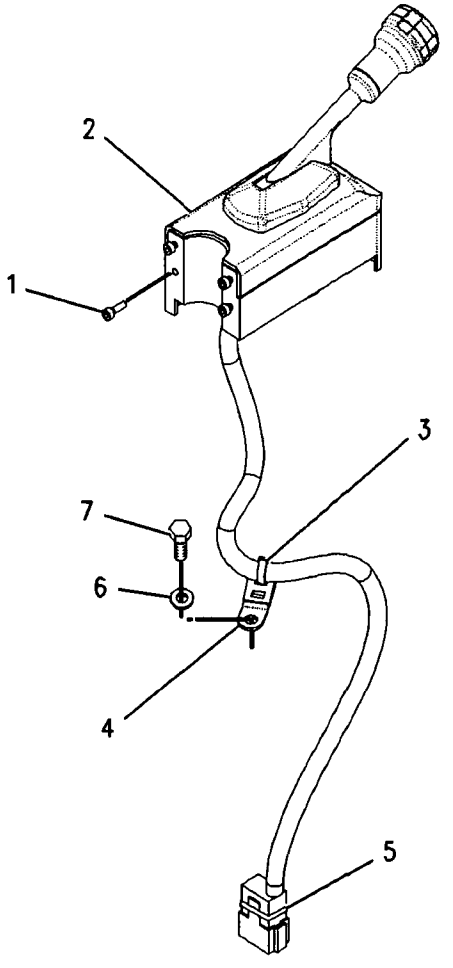

GRAPHIC #1 <END> g00851858

201-0212 CONTROL GP-TRANSMISSION–HMU STEERING

S/N: N1A1-UP

PART OF 121-9300 CONTROL GP-TRANSMISSION

ALSO AN ATTACHMENT

SMCS-3065 **i01582352**

NOTE	REF NO	GRAPHIC REF	PART NUMBER	QTY	PART NAME 1 2 3 4 5 6 (PRODUCT LEVEL)	SEE PAGE
	1	1	102-8801	1	KIT-RECEPTACLE (12-PIN)	
					(INCLUDES RECEPTACLE AS & WEDGE)	
	2	1	3E-5180	1	WEDGE-RECEPTACLE LOCK (12-PIN)	
	3	1	186-3736	4	SOCKET-CONNECTOR (16-GA TO 18-GA)	
	4	1	186-3735	9	PIN-CONNECTOR (16-GA TO 18-GA)	
	5	1	101-9161	1	WIRE AS	
	6	1	155-2271	1	KIT-CONNECTING PLUG (4-PIN)	
					(INCLUDES PLUG AS & WEDGE)	
	7	1	155-2262	1	WEDGE-PLUG LOCK (4-PIN)	
	8	1	9G-3695	3	PLUG (GROMMET SEALING)	

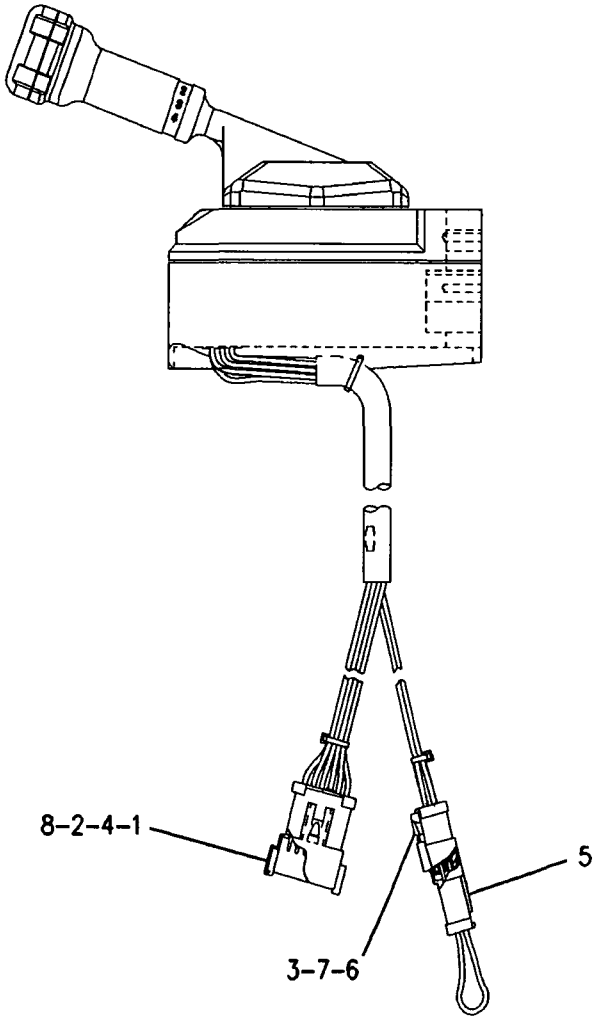

GRAPHIC #1

<END>

g00802298

247-7830 CONTROL GP-TRANSMISSION HYD

S/N: FAH1-UP; FAK1-UP
PART OF 237-8186, 237-8187 TRANSMISSION AR
ALSO AN ATTACHMENT

SMCS-3073, 3167 **i02460794**

NOTE	REF NO	GRAPHIC REF	PART NUMBER	QTY	PART NAME 1 2 3 4 5 6 (PRODUCT LEVEL)	SEE PAGE
Y	1	1	202-8933	1	VALVE GP-RELIEF (TRANSMISSION HYDRAULIC CONTROL)	377
	2	1	4F-4097	1	SEAL-O-RING	
Y	3	1	244-3114	6	VALVE GP-MODULATING (24-VOLT) (TRANSMISSION CLUTCH)	376
	4	1	8S-0768	6	SEAL-O-RING	
M	5	1	8T-0100	16	BOLT (M8X1.25X60-MM)	
	6	1	9M-1974	13	WASHER-HARD (8.8X16X2-MM THK)	
	7	1	148-1928	1	VALVE-RELIEF (TORQUE CONVERTER INLET)	
	8	1	247-4865	1	HARNESS AS-TRANSMISSION	
		1	7X-6222	1	PLUG AS-CONNECTOR (24-PIN)	
		1	155-2270	10	KIT-CONNECTING PLUG (2-PIN)	
		1	155-2270	10	KIT-CONNECTING PLUG (2-PIN)	
					(EACH KIT INCLUDES PLUG AS AND WEDGE)	
	9	1	9X-4609	1	SEAL-O-RING	
	10	1	5P-9085	1	CLIP	
	11	1	130-5300	4	CLIP	
Y	12	1	145-7028	1	SENSOR GP-TEMPERATURE (TRANSMISSION OIL)	202
	13	1	3J-1907	7	SEAL-O-RING	
	14	1	3S-2093	10	STRAP-CABLE	
	15	1	174-9603	3	PLATE	
	16	1	6V-0852	6	CAP-DUST	
	17	1	6D-4246	1	CLIP	
	18	1	4P-7428	1	CLIP	
	19	1	164-3651	1	ADAPTER	
	20	1	7J-0204	1	SEAL-O-RING	
	21	1	6V-0484	6	ADAPTER-O-RING	
	22	1	264-7757	1	PLATE AS	

M-METRIC PART
Y-SEPARATE ILLUSTRATION

247-7830 CONTROL GP-TRANSMISSION HYD (contd.) i02460794

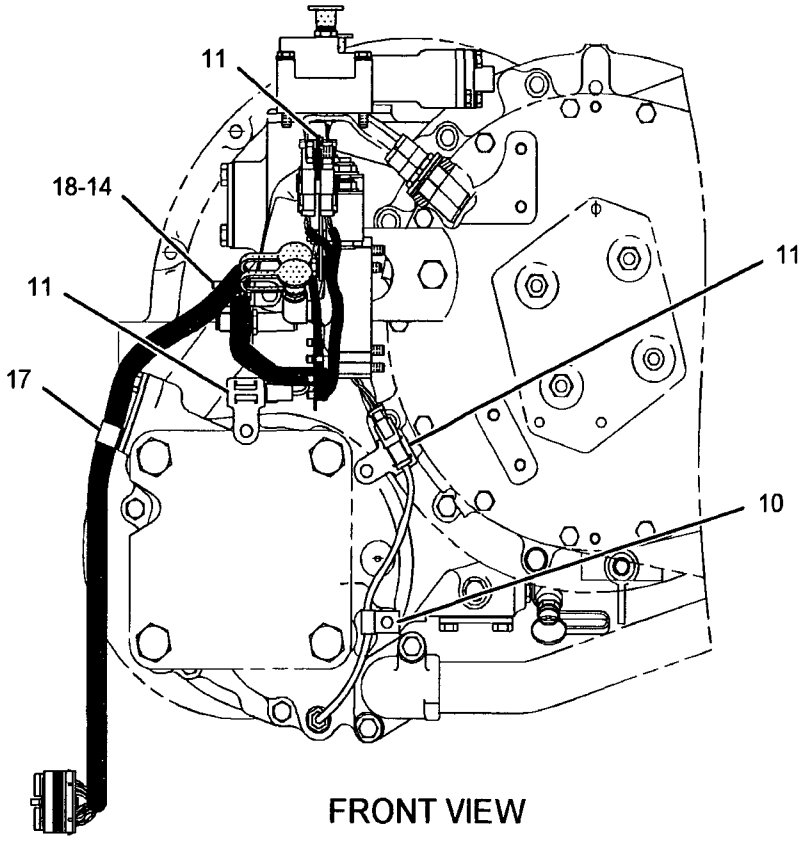

FRONT VIEW

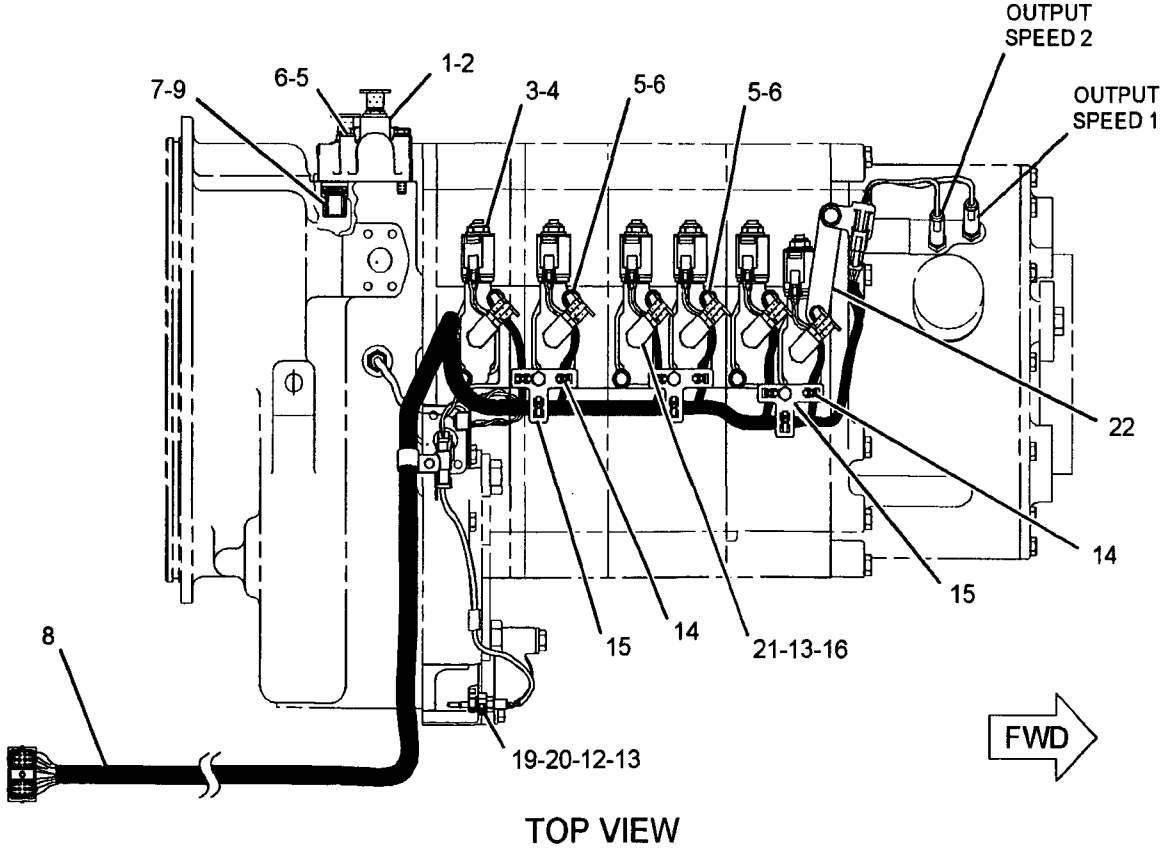

TOP VIEW

GRAPHIC #1 **<END>** g01128523

241-2921 COOLER & MTG GP-TRANSMISSION

S/N: N1A1-UP

PART OF 237-0234 CHASSIS AR

SMCS-1375 **i02226888**

NOTE	REF NO	GRAPHIC REF	PART NUMBER	QTY	PART NAME 1 2 3 4 5 6 (PRODUCT LEVEL)	SEE PAGE
	1	1	**5D-1026**	1	CLAMP-HOSE	
	2	1	*165-2273*	1	VALVE GP-SHUTOFF (RADIATOR DRAIN)	
		1	**3K-0360**	1	SEAL-O-RING	
		1	**6V-7238**	1	VALVE-SHUTOFF (RADIATOR DRAIN)	
	3	1	**242-3210**	1	COOLER AS-TRANSMISSION OIL	
		1	**7J-5544**	1	FITTING (3/4X16-THD)	
		1	**125-2871**	1	CORE AS-POWER TRAIN OIL COOLER	
	4	1	**7X-7729**	6	WASHER (11X25X3-MM THK)	
M	5	1	**8T-4137**	6	BOLT (M10X1.5X20-MM)	
E	6	1	**5P-0767**		HOSE (17.5-CM)	

E-ORDER BY THE CENTIMETER
M-METRIC PART

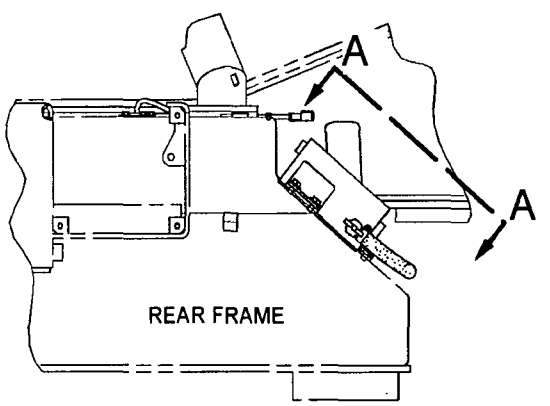

RIGHT SIDE VIEW

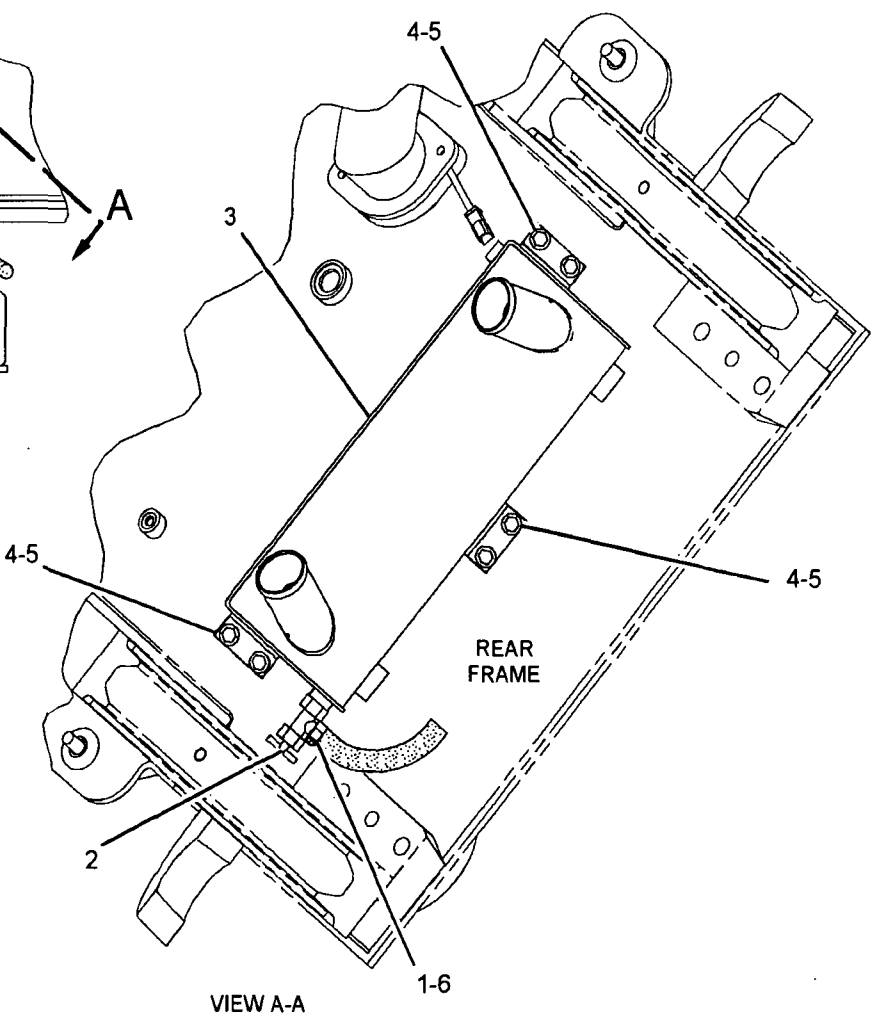

VIEW A-A

GRAPHIC #1 **<END>** g01119419

241-0073 COOLER AR-AXLE OIL

S/N: N1A1-UP

AN ATTACHMENT

SMCS-1365 **i02438869**

NOTE	PART NUMBER	QTY	PART NAME 1 2 3 4 5 6 (PRODUCT LEVEL)	SEE PAGE
Y	*143-0001*	1	GUARD GP-AXLE OIL COOLER	421
Y	*156-1137*	1	GUARD GP-POWER TRAIN (AXLE OIL COOLER) (AXLE OIL COOLER)	428
Y	**265-7929**	1	HARDWARE GP-LOADER FRAME (AXLE OIL COOLER MOUNTING)	432
Y	**260-1530**	1	HARDWARE GP-REAR FRAME (AXLE OIL COOLER MOUNTING)	437
Y	*241-0077*	1	LINES GP-AXLE OIL COOLER	328
Y	*241-0078*	1	LINES GP-WATER (FOR USE WITH AXLE OIL COOLER)	74
Y	*260-9584*	1	MOUNTING GP-AXLE OIL COOLER	337
Y	*241-0080*	1	PUMP & MTG GP-AXLE OIL COOLER	344
Y	*244-6524*	1	WIRING GP-ELECTRIC CLUTCH (AXLE OIL COOLER PUMP)	260

Y-SEPARATE ILLUSTRATION

<END>

7K-5636 COVER GP-TMSN OIL FILLER CAP

S/N: N1A1-UP

PART OF 246-4791 PROTECTION GP-VANDALISM

AN ATTACHMENT

SMCS-3005, 3030, 7315 i02023246

NOTE	REF NO	GRAPHIC REF	PART NUMBER	QTY	PART NAME 1 2 3 4 5 6 (PRODUCT LEVEL)	SEE PAGE
	1	1	1L-5072	1	DOWEL	
	2	1	9M-7394	1	LEVER (COVER)	
	3	1	7K-5634	1	COVER	
	4	1	2J-7761	1	RING-RETAINING	
	5	1	5P-8502	1	PADLOCK GP	
A		1	5P-8500	1	KEY	
A		1	8Y-6364	1	SLEEVE	

A-NOT PART OF THIS GROUP

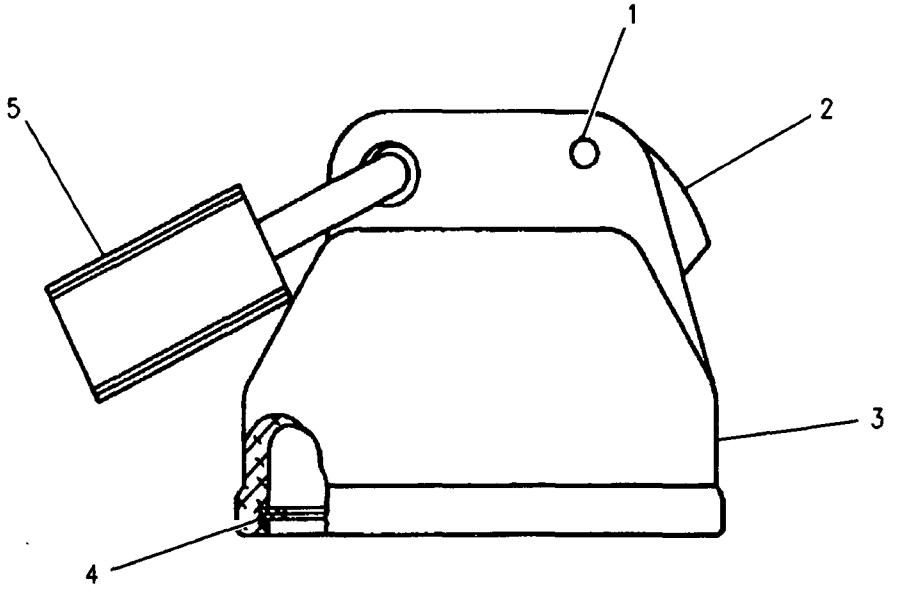

GRAPHIC #1 <END> g00661303

137-1392 DIFFERENTIAL GP

S/N: N1A1-UP

PART OF 214-6161, 214-9398 AXLE AR-FIXED, 112-0723 AXLE AR-OSCILLATING
ALSO AN ATTACHMENT

SMCS-3258 **i02325081**

NOTE	REF NO	GRAPHIC REF	PART NUMBER	QTY	PART NAME 1 2 3 4 5 6 (PRODUCT LEVEL)	SEE PAGE
	1	1	136-6550	1	CASE AS	
JM	1A	1	8T-5001	4	BOLT (M12X1.75X130-MM)	
J	1B	1	5P-8245	4	WASHER-HARD (13.5X25.5X3-MM THK)	
	2	1	148-7383	2	WASHER-THRUST	
	3	1	136-6551	2	GEAR (16-TEETH)	
	4	1	217-3681	4	WASHER-THRUST	
	5	1	136-6545	1	SPIDER	
	6	1	151-4809	4	BEARING-SLEEVE	
	7	1	9C-6016	4	PINION-DIFFERENTIAL BEVEL (11-TEETH)	
M	8	1	127-1960	8	SCREW-FLAT HEAD (M6X1X16-MM)	

J-PARTS MARKED J ARE FOR SHIPPING & STORAGE ONLY, REMOVE BEFORE INSTALLATION INTO AXLE
M-METRIC PART

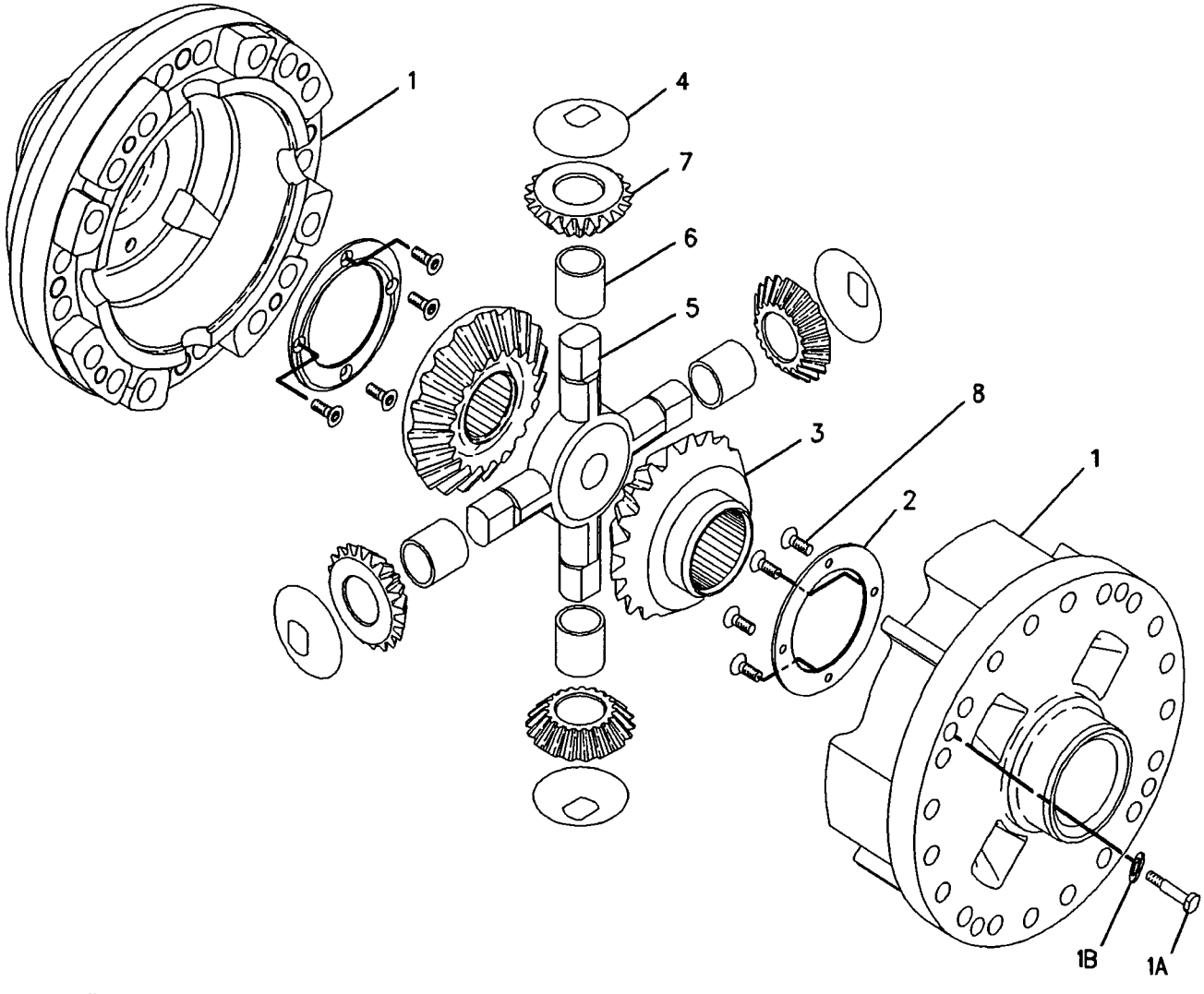

GRAPHIC #1 **<END>** g00834313

103-2007 DIFFERENTIAL GP-LIMITED SLIP

S/N: N1A1-UP

PART OF 126-7845 AXLE AR-OSCILLATING

AN ATTACHMENT

SMCS-3263 i01671852

NOTE	REF NO	GRAPHIC REF	PART NUMBER	QTY	PART NAME 1 2 3 4 5 6 (PRODUCT LEVEL)	SEE PAGE
	1	1	104-3358	2	WASHER-THRUST	
	2	1	104-3355	2	HOUSING-ACTUATOR	
	3	1	104-3353	4	PINION-BEVEL	
	4	1	104-3354	2	SHAFT-PINION	
	5	1	104-3351	2	GEAR-DIFFERENTIAL (16 TEETH)	
B	6	1	104-3357	2	KIT-THICK DISC (12.75 MM THK)	
	7	1	104-3359	1	CASE AS	
JM	7A	1	8T-9515	2	BOLT-SOCKET HEAD (M10X1.5X40MM)	
B	8	1	104-3356	2	KIT-THIN DISC (12.57 MM THK)	

B-USE AS REQUIRED
J-PARTS MARKED J ARE FOR SHIPPING & STORAGE ONLY, REMOVE BEFORE INSTALLATION INTO AXLE
M-METRIC PART

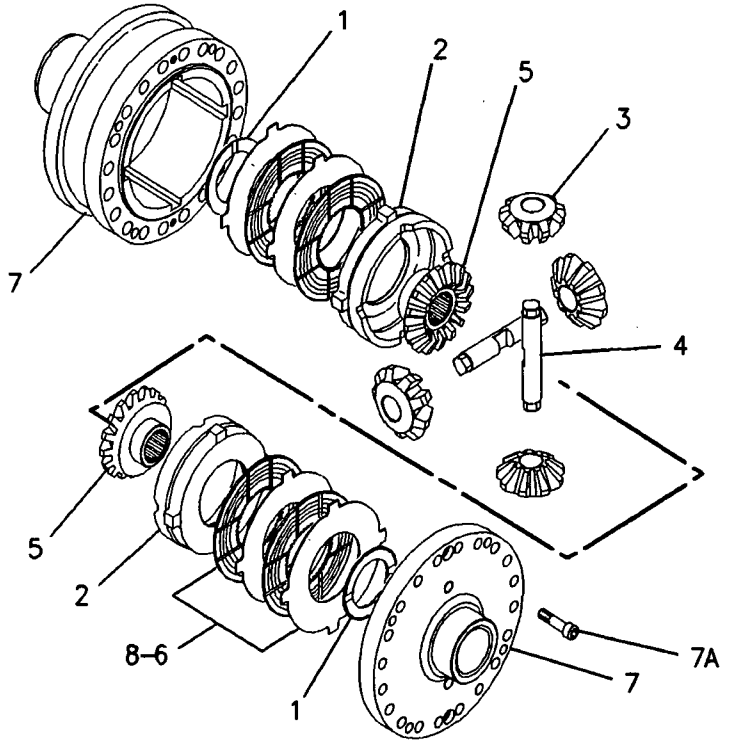

GRAPHIC #1 <END> g00864043

144-4465 DIFFERENTIAL GP-LIMITED SLIP

S/N: N1A1-UP

PART OF 214-9402 AXLE AR-FIXED

AN ATTACHMENT

SMCS-3263 **i01662493**

NOTE	REF NO	GRAPHIC REF	PART NUMBER	QTY	PART NAME 1 2 3 4 5 6 (PRODUCT LEVEL)	SEE PAGE
	1	1	104-3358	2	WASHER-THRUST	
	2	1	104-3355	2	HOUSING-ACTUATOR	
	3	1	104-3353	4	PINION-BEVEL	
	4	1	104-3354	2	SHAFT-PINION	
	5	1	104-3351	2	GEAR-DIFFERENTIAL (16 TEETH)	
	6	1	144-4470	2	KIT-DISC	
	7	1	104-3359	1	CASE AS	
JM	7A	1	8T-9515	2	BOLT-SOCKET HEAD (M10X1.5X40MM)	
	8	1	144-4468	2	KIT-DISC	

J-PARTS MARKED J ARE FOR SHIPPING & STORAGE ONLY, REMOVE BEFORE INSTALLATION INTO AXLE
M-METRIC PART

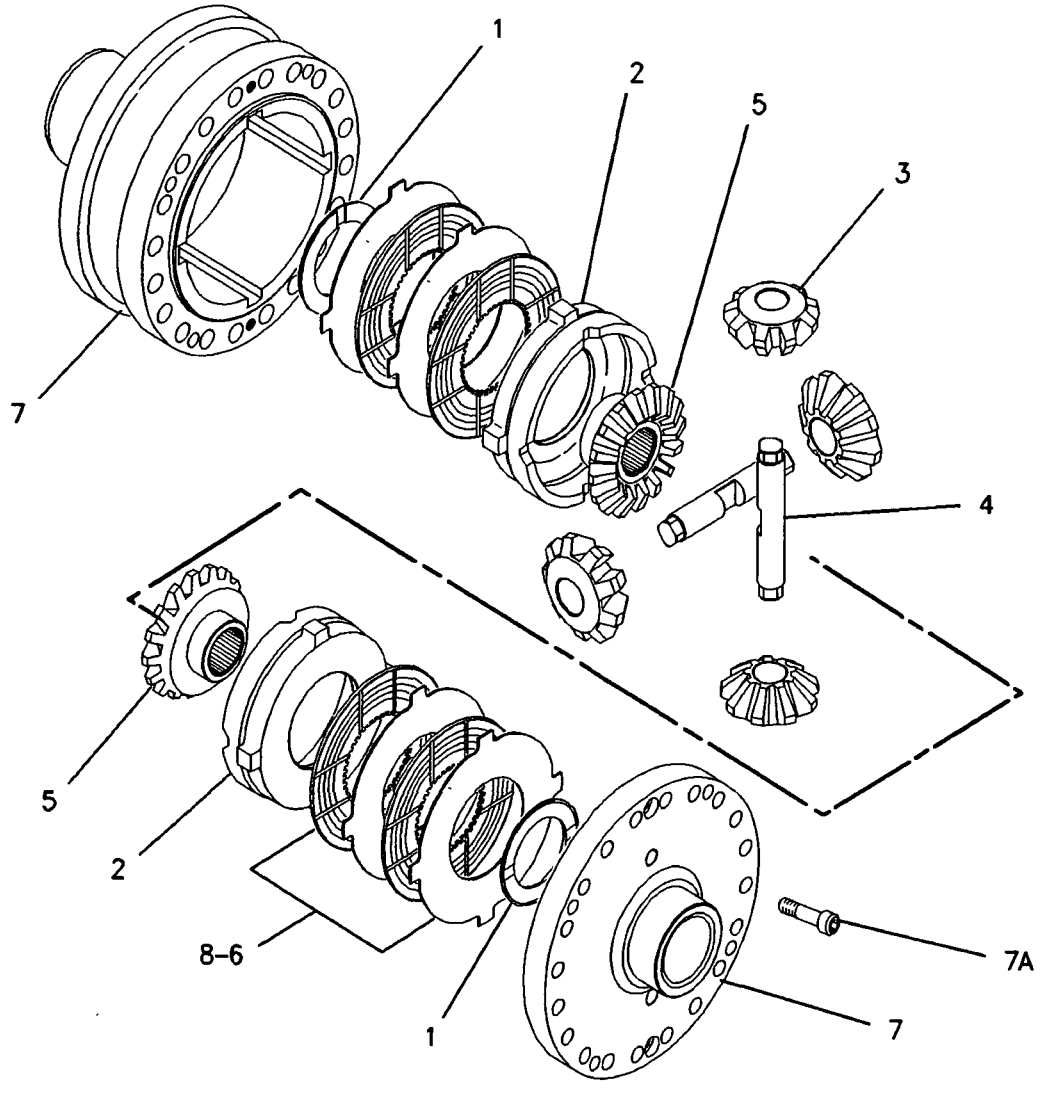

GRAPHIC #1 **<END>** g00857645

8R-9833 DIFFERENTIAL GP-NOSPIN

S/N: N1A1-UP

PART OF 128-0745 DIFFERENTIAL GP-NOSPIN

AN ATTACHMENT

SMCS-3265 i01348178

NOTE	REF NO	GRAPHIC REF	PART NUMBER	QTY	PART NAME 1 2 3 4 5 6 (PRODUCT LEVEL)	SEE PAGE
	1	1	8R-9831	1	CAM AS-SPIDER	
	2	1	3V-0908	2	CLUTCH & RING AS	
	3	1	3V-0905	2	SPRING-CONICAL	
	4	1	3V-0906	2	RETAINER	
	5	1	8R-9830	2	GEAR-SIDE (35 TEETH)	
	6	1	8R-9832	1	BLOCK-SPACER	

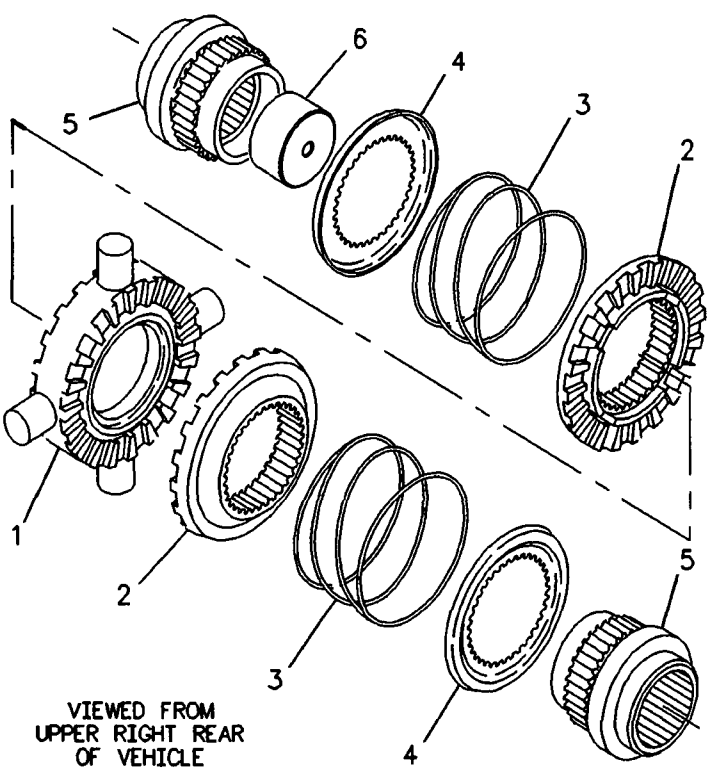

GRAPHIC #1 <END> g00118822

128-0745 DIFFERENTIAL GP-NOSPIN

S/N: N1A1-UP

PART OF 126-7846 AXLE AR-OSCILLATING

AN ATTACHMENT

SMCS-3265 **i01664419**

NOTE	REF NO	GRAPHIC REF	PART NUMBER	QTY	PART NAME 1 2 3 4 5 6 (PRODUCT LEVEL)	SEE PAGE
	1	1	**8R-9440**	1	CASE AS-DIFFERENTIAL	
JM	1A	1	**8T-5001**	4	BOLT (M12X1.75X130-MM)	
J	1B	1	**5P-8245**	4	WASHER-HARD (13.5X25.5X3-MM THK)	
Y	2	1	**8R-9833**	1	DIFFERENTIAL GP-NOSPIN	301

J-PARTS MARKED J ARE FOR SHIPPING & STORAGE ONLY, REMOVE BEFORE INSTALLATION INTO AXLE
M-METRIC PART
Y-SEPARATE ILLUSTRATION

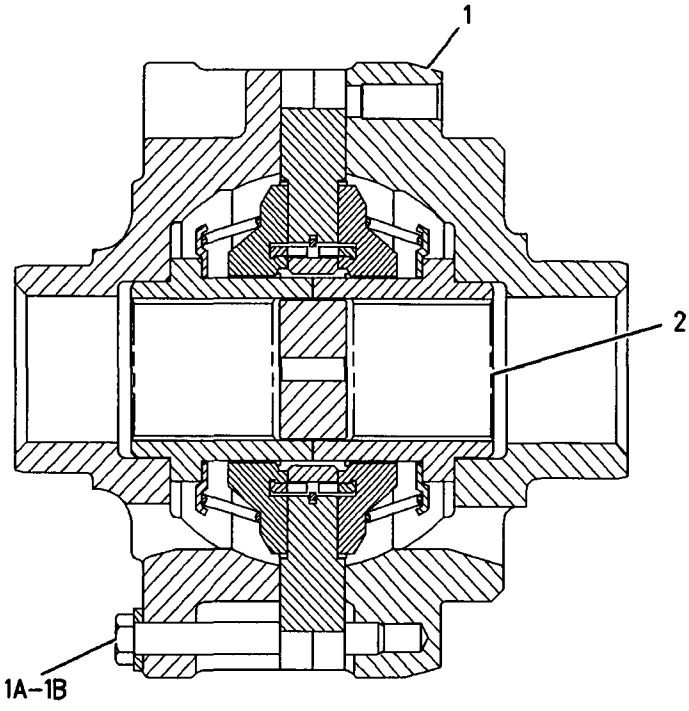

GRAPHIC #1 **<END>** g00858160

198-7248 DRAIN GP-ECOLOGY–POWER TRAIN

S/N: N1A1-UP
AN ATTACHMENT

SMCS-3260 i01706410

NOTE	REF NO	GRAPHIC REF	PART NUMBER	QTY	PART NAME 1 2 3 4 5 6 (PRODUCT LEVEL)	SEE PAGE
	1	1	173-0566	2	DRAIN GP-ECOLOGY	
					(EACH INCLUDES)	
	1A	1	2K-8199	1	SEAL-O-RING	
	1B	1	077-3241	1	SEAL-O-RING	
	1C	1	175-4966	1	PLUG	
	2	1	7M-8485	2	SEAL-O-RING	

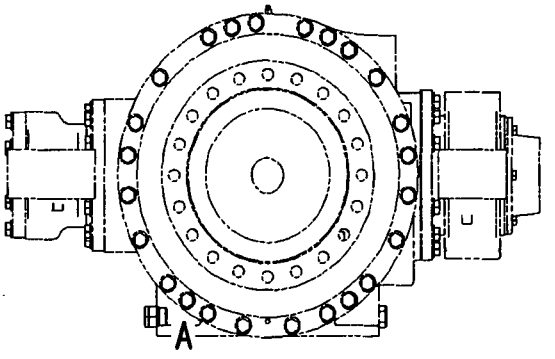

REAR AXLE

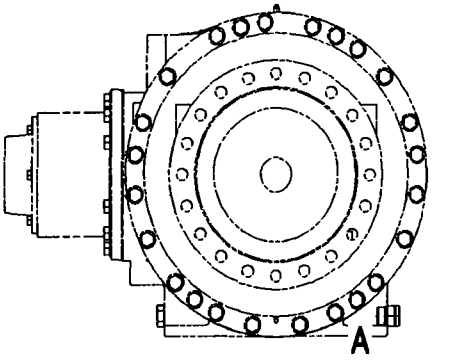

FRONT AXLE

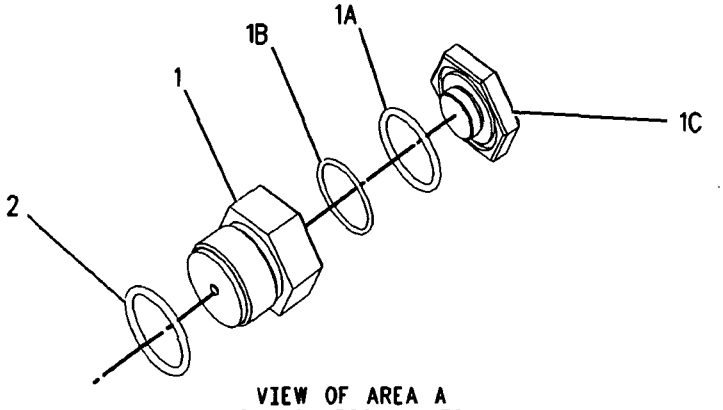

VIEW OF AREA A
COMMON BOTH AXLES

GRAPHIC #1 <END> g00886903

237-5114 FILLER GP-POWER TRAIN OIL

S/N: N1A1-UP
PART OF 237-0240 POWER TRAIN AR
ALSO AN ATTACHMENT

SMCS-3005, 3081 **i02226074**

NOTE	REF NO	GRAPHIC REF	PART NUMBER	QTY	PART NAME 1 2 3 4 5 6 (PRODUCT LEVEL)	SEE PAGE
	1	1	**4B-9782**	1	BALL	
	2	1	**246-5124**	1	TUBE AS	
E	3	1	**5P-1291**		HOSE (21-CM)	
	4	1	**5K-1568**	1	CAP-FILLER	
	5	1	**5P-7084**	1	SEAL-RECTANGULAR	
	6	1	**135-1708**	1	GAUGE AS-OIL LEVEL	
		1	**5J-2974**	1	SEAL-O-RING	
		1	**122-8353**	2	BOLT (M12X46.5-MM)	
	7	1	**6F-5188**	1	SEAL-RING	
	8	1	**6H-5139**	1	PLATE-PRESSURE	
	9	1	**9M-0164**	2	CLAMP-HOSE	
	10	1	**229-6625**	1	TUBE AS	
M	11	1	**8T-4185**	2	BOLT (M10X1.5X50-MM)	
M	12	1	**8T-4195**	2	BOLT (M10X1.5X30-MM)	
	13	1	**4D-2886**	2	CLIP	
	14	1	**8T-4121**	4	WASHER-HARD (11X21X2.5-MM THK)	

E-ORDER BY THE CENTIMETER
M-METRIC PART

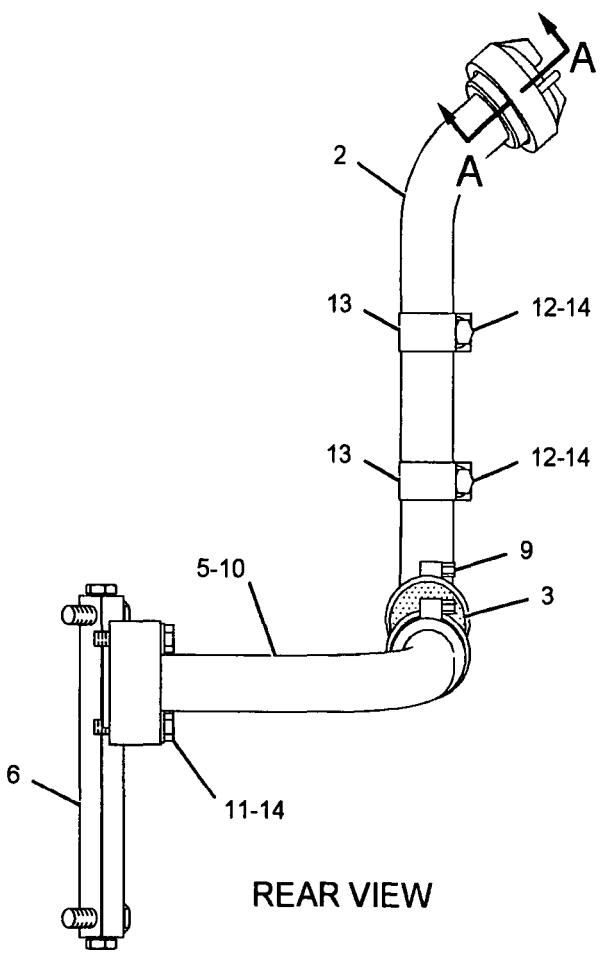

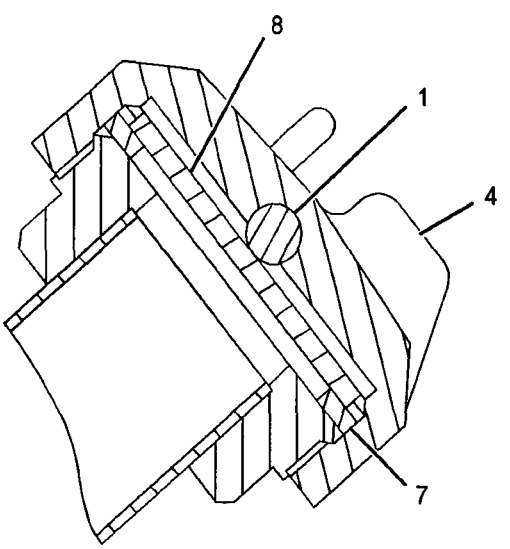

SECTION A-A

GRAPHIC #1 **<END>** g01078529

251-9754 FILLER GP-POWER TRAIN OIL

S/N: N1A1-UP
PART OF 244-6607 WASTE HANDLING AR
AN ATTACHMENT

SMCS-3005, 3081 i02281697

NOTE	REF NO	GRAPHIC REF	PART NUMBER	QTY	PART NAME 1 2 3 4 5 6 (PRODUCT LEVEL)	SEE PAGE
	1	1	4B-9782	1	BALL	
	2	1	5K-1568	1	CAP-FILLER (POWER TRAIN)	
	3	1	5P-7084	1	SEAL-RECTANGULAR	
	4	1	6F-5188	1	SEAL-RING	
	5	1	6H-5139	1	PLATE-PRESSURE	
	6	1	9M-0164	2	CLAMP-HOSE	
E	7	1	5P-1291	1	HOSE	
	8	1	135-1708	1	GAUGE AS-OIL LEVEL	
		1	5J-2974	1	SEAL-O-RING	
		1	122-8353	2	BOLT (M12X46.5-MM)	
	9	1	251-9755	1	TUBE AS	
	10	1	251-9757	1	TUBE AS	
	11	1	4D-2886	2	CLIP	
	12	1	8T-4121	4	WASHER-HARD (11X21X2.5-MM THK)	
M	13	1	8T-4185	2	BOLT (M10X1.5X50-MM)	
M	14	1	8T-4195	2	BOLT (M10X1.5X30-MM)	

E-ORDER BY THE CENTIMETER
M-METRIC PART

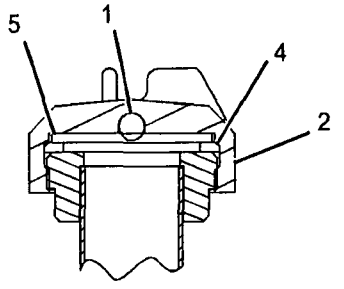

SECTION A-A

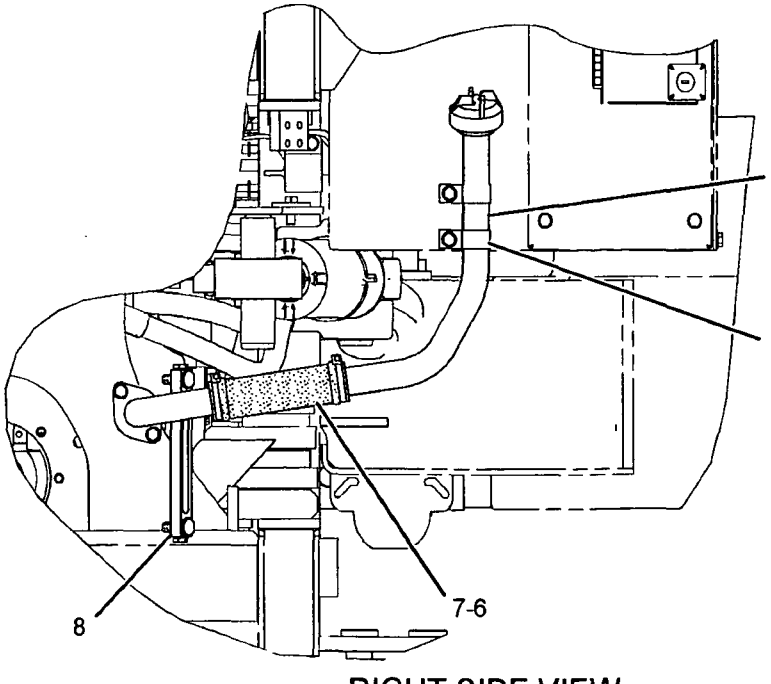

RIGHT SIDE VIEW

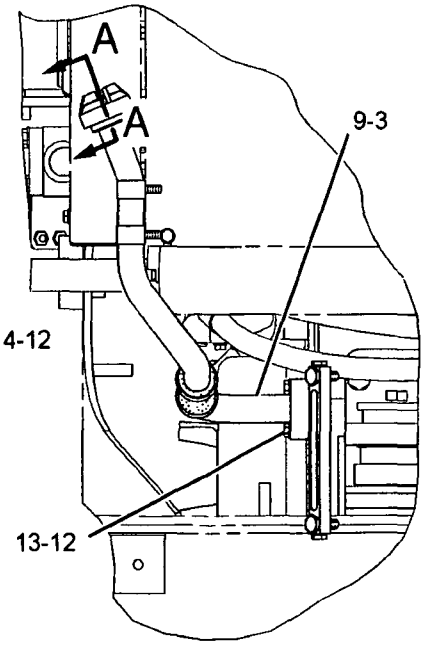

REAR VIEW

GRAPHIC #1 <END> g01134418

244-2339 FILTER & LINES GP-TRANSMISSION

S/N: N1A1-UP
PART OF 237-0240 POWER TRAIN AR
ALSO AN ATTACHMENT

SMCS-3067, 3154 i02433371

NOTE	REF NO	GRAPHIC REF	PART NUMBER	QTY	PART NAME 1 2 3 4 5 6 (PRODUCT LEVEL)	SEE PAGE
	1	1	**203-2287**	1	CLIP	
Y	2	1	**249-1750**	1	FILTER GP-OIL (POWER TRAIN)	308
I	3	1	**276-4044**	1	HOSE AS	
I	4	1	**276-4045**	1	HOSE AS	
	5	1	**277-2935**	1	BRACKET AS	
	6	1	**277-2936**	1	BRACKET AS	
	7	1	**277-2941**	1	BRACKET	
	8	1	*148-8362*	2	ELBOW AS	
					(EACH INCLUDES)	
		1	**3D-2824**	1	SEAL-O-RING	
		1	**5K-9090**	1	SEAL-O-RING	
		1	**8T-6684**	1	ELBOW (90-DEG)	
	9	1	**4J-0520**	2	SEAL-O-RING	
	10	1	**7D-7233**	4	CLIP	
	11	1	**8C-3206**	4	FLANGE-HALF	
	12	1	**8T-4121**	16	WASHER-HARD (11X21X2.5-MM THK)	
M	13	1	**8T-4133**	1	NUT (M10X1.5 THD)	
M	14	1	**8T-4136**	2	BOLT (M10X1.5X25-MM)	
M	15	1	**8T-4137**	4	BOLT (M10X1.5X20-MM)	
M	16	1	**8T-4195**	1	BOLT (M10X1.5X30-MM)	
M	17	1	**8T-4196**	8	BOLT (M10X1.5X35-MM)	

I-REFER TO HYDRAULIC INFORMATION SYSTEM
M-METRIC PART
Y-SEPARATE ILLUSTRATION

244-2339 FILTER & LINES GP-TRANSMISSION (contd.) i02433371

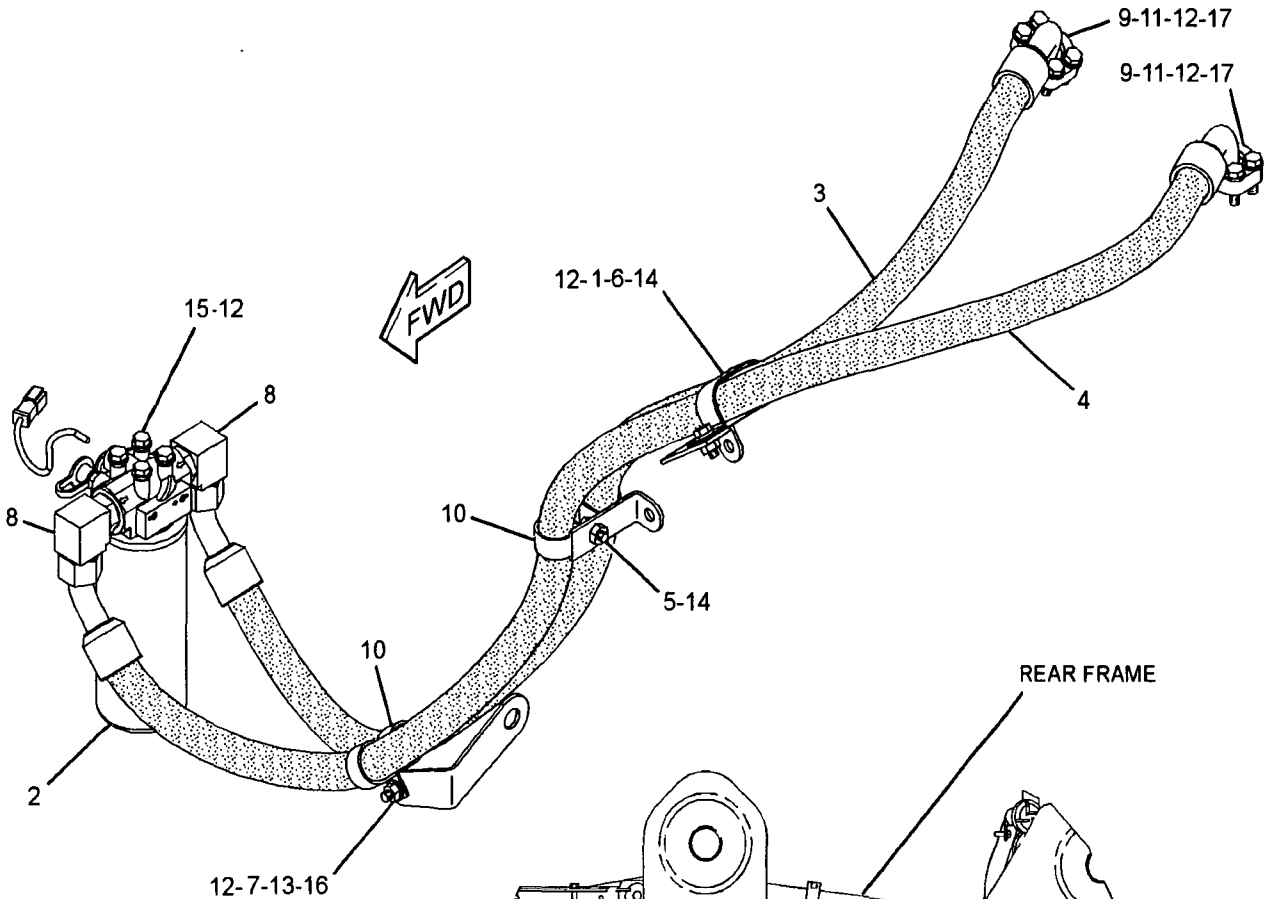

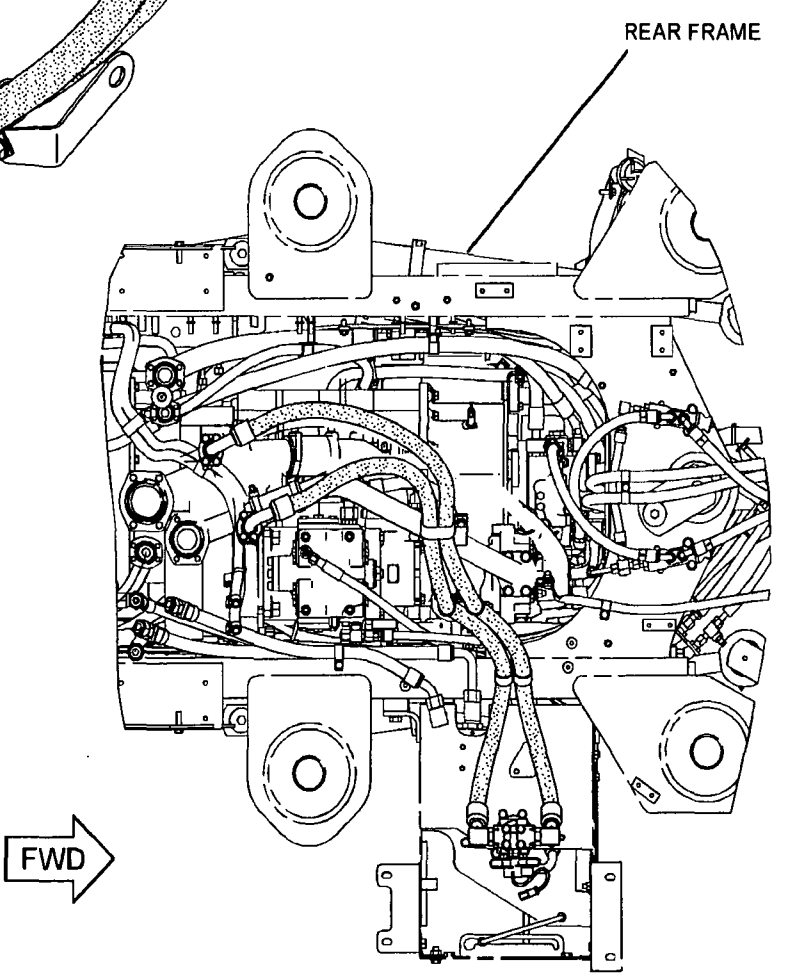

TOP VIEW

GRAPHIC #1 **<END>** g01221035

249-1750 FILTER GP-OIL–POWER TRAIN

S/N: N1A1-UP

PART OF 244-2339 FILTER & LINES GP-TRANSMISSION

ALSO AN ATTACHMENT

SMCS-3004, 3067 **i02189671**

NOTE	REF NO	GRAPHIC REF	PART NUMBER	QTY	PART NAME 1 2 3 4 5 6 (PRODUCT LEVEL)	SEE PAGE
	1	1	6V-0852	1	CAP-DUST	
	2	1	8C-3447	1	CAP-DUST	
	3	1	227-6744	1	SWITCH GP-PRESSURE (OIL FILTER BYPASS) (POWER TRAIN OIL FILTER)	
		1	102-8802	1	KIT-RECEPTACLE (2-PIN)	
					(INCLUDES RECEPTACLE AS AND WEDGE)	
		1	3E-3365	1	WEDGE-RECEPTACLE LOCK (2-PIN)	
		1	186-3735	2	PIN-CONNECTOR (16-GA TO 18-GA)	
BE		1	9X-1813		SLEEVE	
	4	1	1G-8878	1	FILTER ELEMENT (POWER TRAIN)	
	5	1	3J-1907	2	SEAL-O-RING	
	6	1	3J-7354	1	SEAL-O-RING	
	7	1	6V-3965	1	FITTING AS (QUICK DISCONNECT)	
	8	1	8C-3446	1	VALVE-FLUID SAMPLING (POWER TRAIN OIL)	
	9	1	8T-6850	1	SEAL-O-RING	

B-USE AS REQUIRED
E-ORDER BY THE CENTIMETER

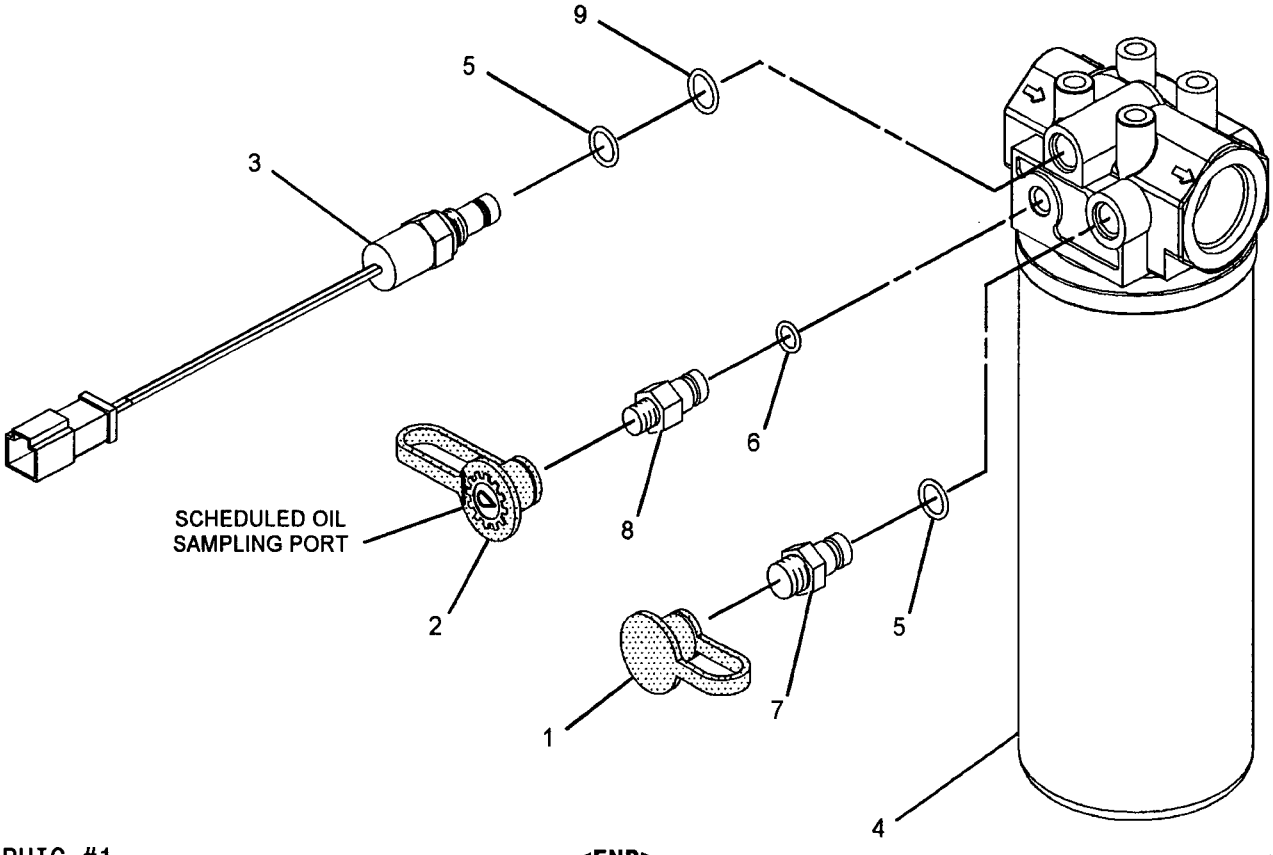

GRAPHIC #1 **<END>** g01063971

112-0738 GEAR GP-BEVEL & PINION

S/N: N1A1-UP

PART OF 214-9398, 214-9402 AXLE AR-FIXED

ALSO AN ATTACHMENT

SMCS-3254, 3256 **i00754345**

NOTE	REF NO	GRAPHIC REF	PART NUMBER	QTY	PART NAME 1 2 3 4 5 6 (PRODUCT LEVEL)	SEE PAGE
	1	1	**9U-1913**	1	SLEEVE AS	
	2	1	**030-0060**	1	CUP-ROLLER BEARING	
	3	1	**030-0061**	1	CONE-ROLLER BEARING	
	4	1	**4E-3897**	2	LOCK	
M	5	1	**4E-3896**	2	BOLT (M6X1X14MM)	
	6	1	**4E-4031**	2	PIN	
	7	1	**1J-4757**	1	CONE-BEARING	
	8	1	**1J-2860**	1	CUP-ROLLER BEARING	
	9	1	**2D-9455**	1	CONE-ROLLER BEARING	
	10	1	**2D-9454**	1	CUP-ROLLER BEARING	
	11	1	**6W-1638**	1	WASHER	
M	12	1	**9C-8287**	1	LOCKNUT-STAKE (M70X1.5 THD)	
	13	1	**112-0782**	1	YOKE	
	14	1	**9V-2429**	1	RETAINER	
	15	1	**9X-2619**	4	PIN-SPRING	
	16	1	**9X-2620**	4	PIN-SPRING	
	17	1	**6Y-2539**	1	CONE-ROLLER BEARING	
	18	1	**4E-4029**	1	NUT-ADJUSTMENT (M190X2 SPL THD)	
	19	1	**9U-1912**	1	SLEEVE AS	
	20	1	**6Y-2540**	1	CUP-ROLLER BEARING	
	21	1	**2H-3088**	1	SEAL-O-RING (50.17MM ID)	
M	22	1	**8T-0372**	1	BOLT (M12X1.75X90MM)	
	23	1	**8R-9215**	1	GEAR-BEVEL (44 TEETH)	
	24	1	**112-0742**	1	SHAFT-BEVEL PINION	
	25	1	**4E-4030**	1	NUT-ADJUSTMENT (M160X2 SPL THD)	
M	26	1	**9X-6493**	20	BOLT (M16X2X180 MM)	

M-METRIC PART

112-0738 GEAR GP-BEVEL & PINION *(contd.)* i00754345

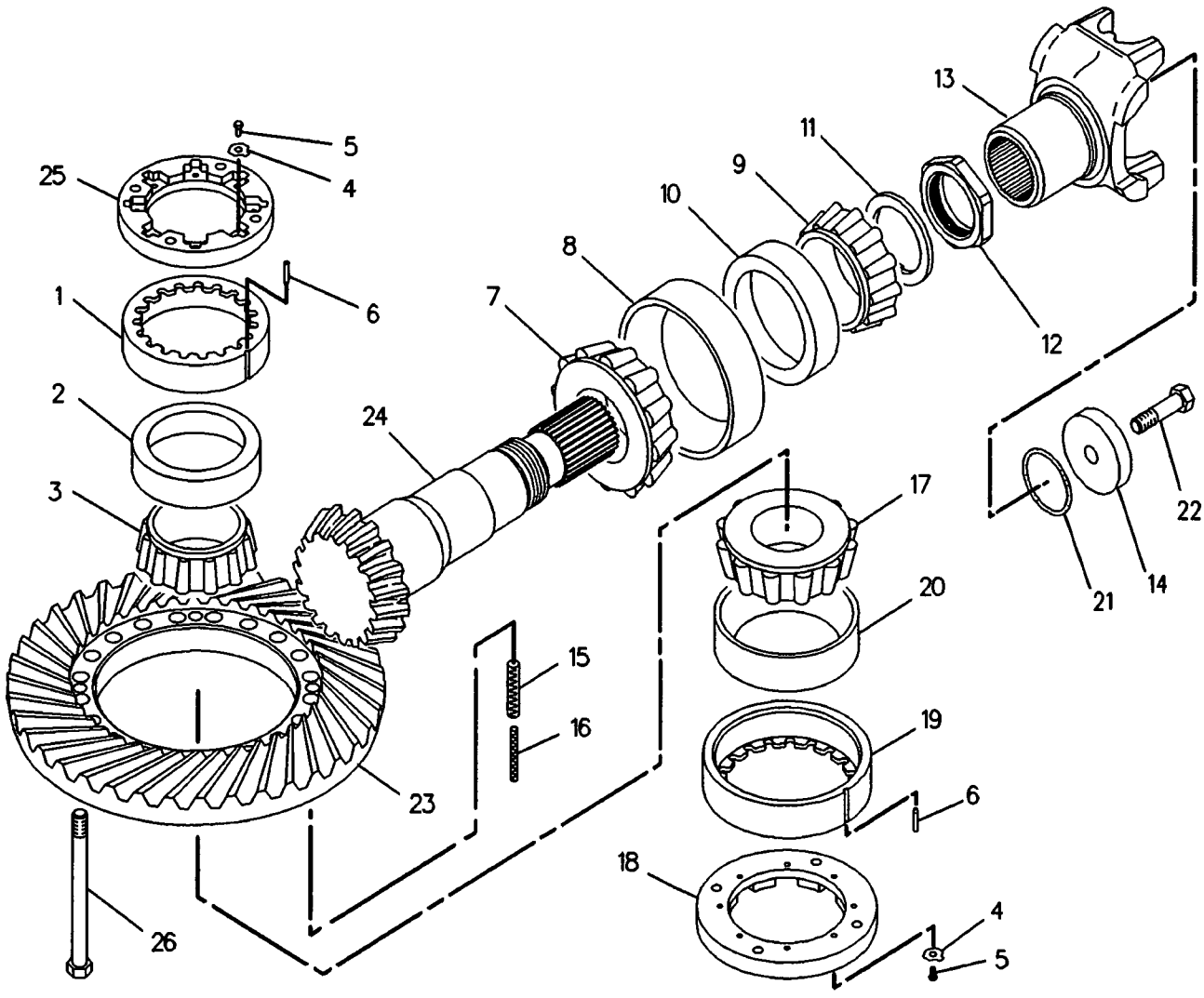

GRAPHIC #1 <END> g00261546

112-0778 GEAR GP-BEVEL & PINION

S/N: N1A1-UP

PART OF 112-0723, 126-7845, 126-7846 AXLE AR-OSCILLATING

ALSO AN ATTACHMENT

SMCS-3254, 3256 **i01145081**

NOTE	REF NO	GRAPHIC REF	PART NUMBER	QTY	PART NAME 1 2 3 4 5 6 (PRODUCT LEVEL)	SEE PAGE
	1	1	**9U-1913**	1	SLEEVE AS	
	2	1	**030-0060**	1	CUP-ROLLER BEARING	
	3	1	**030-0061**	1	CONE-ROLLER BEARING	
	4	1	**4E-3897**	2	LOCK	
M	5	1	**4E-3896**	2	BOLT (M6X1X14MM)	
	6	1	**4E-4031**	2	PIN	
	7	1	**1J-4757**	1	CONE-BEARING	
	8	1	**1J-2860**	1	CUP-ROLLER BEARING	
	9	1	**2D-9455**	1	CONE-ROLLER BEARING	
	10	1	**2D-9454**	1	CUP-ROLLER BEARING	
	11	1	**6W-1638**	1	WASHER	
M	12	1	**9C-8287**	1	LOCKNUT-STAKE (M70X1.5 THD)	
	13	1	**156-1151**	1	YOKE AS	
	14	1	**7V-3791**	1	GUARD	
	15	1	**9X-2619**	4	PIN-SPRING	
	16	1	**9X-2620**	4	PIN-SPRING	
	17	1	**6Y-2539**	1	CONE-ROLLER BEARING	
	18	1	**4E-4029**	1	NUT-ADJUSTMENT (M190X2 SPL THD)	
	19	1	**9U-1912**	1	SLEEVE AS	
	20	1	**6Y-2540**	1	CUP-ROLLER BEARING	
	21	1	**4E-4030**	1	NUT-ADJUSTMENT (M160X2 SPL THD)	
	22	1	**8R-9215**	1	GEAR-BEVEL (44 TEETH)	
	23	1	**9C-5853**	1	SHAFT-PINION	
M	24	1	**9X-6493**	20	BOLT (M16X2X180 MM)	

M-METRIC PART

112-0778 GEAR GP-BEVEL & PINION *(contd.)* i01145081

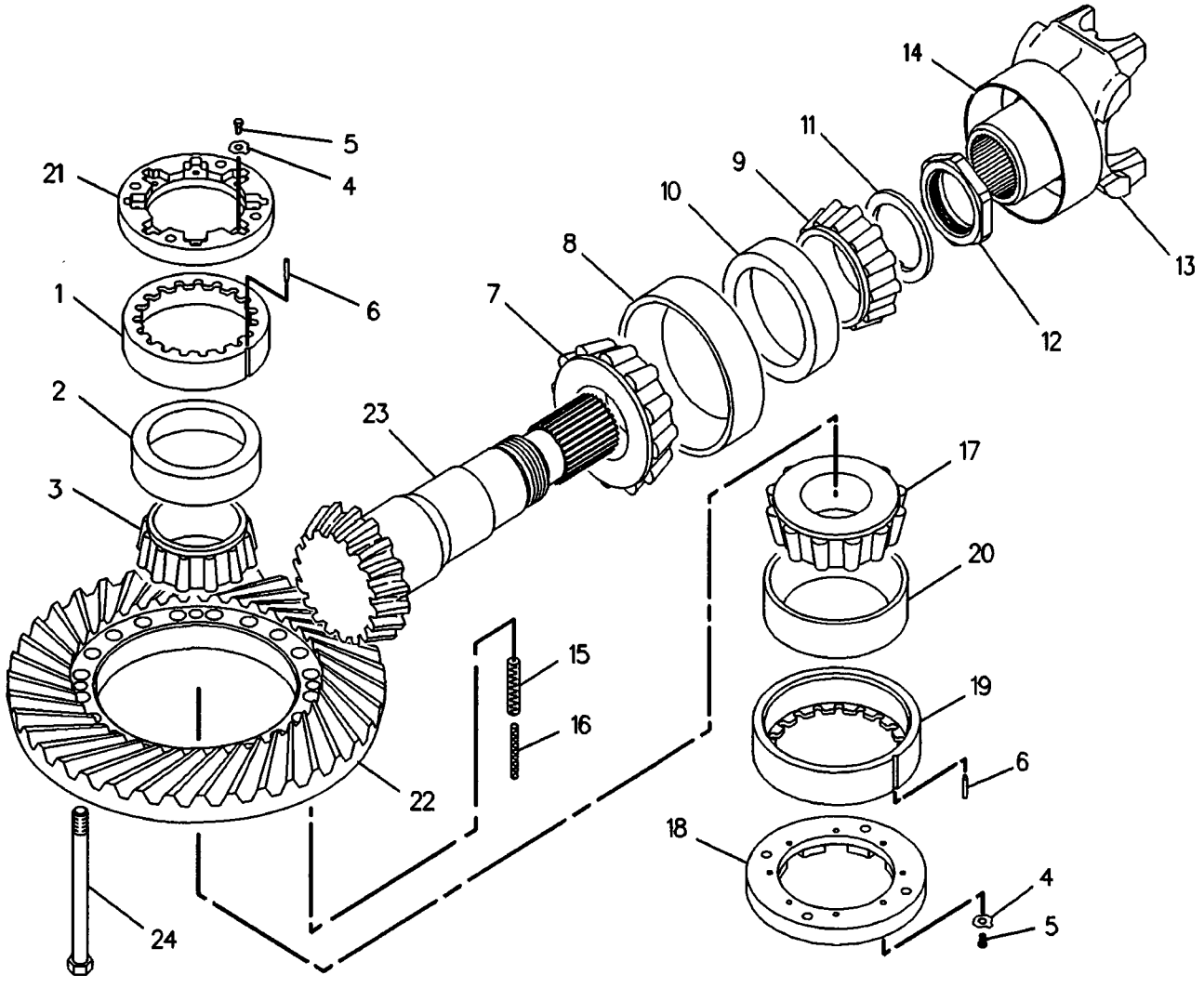

GRAPHIC #1 **<END>** g00261409

157-0340 GEAR GP-BEVEL & PINION

S/N: N1A1-UP

PART OF 214-6161 AXLE AR-FIXED

AN ATTACHMENT

SMCS-3254, 3256 **i01831284**

NOTE	REF NO	GRAPHIC REF	PART NUMBER	QTY	PART NAME 1 2 3 4 5 6 (PRODUCT LEVEL)	SEE PAGE
	1	1	9U-1913	1	SLEEVE AS	
	1A	1	030-0060	1	CUP-BEARING	
	2	1	4E-4030	1	NUT-ADJUSTMENT (M160X2 SPL THD)	
	3	1	030-0061	1	CONE-BEARING	
	4	1	4E-3897	2	LOCK	
M	5	1	4E-3896	2	BOLT (M6X1X14MM)	
	6	1	4E-4031	2	PIN	
	7	1	1J-4757	1	CONE-BEARING	
	8	1	1J-2860	1	CUP-BEARING	
	9	1	2D-9455	1	CONE-BEARING	
	10	1	2D-9454	1	CUP-BEARING	
	11	1	6W-1638	1	WASHER (5.0MM THK)	
M	12	1	9C-8287	1	LOCKNUT-STAKE (M70X1.5 THD)	
	13	1	155-5602	1	YOKE	
	14	1	112-0739	1	GEAR SET-BEVEL	
	14A	1	8R-9215	1	GEAR-BEVEL (44 TEETH)	
	15	1	9X-2619	4	PIN-SPRING	
	16	1	9X-2620	4	PIN-SPRING	
	17	1	6Y-2539	1	CONE-BEARING	
	18	1	4E-4029	1	NUT-ADJUSTMENT (M190X2 SPL THD)	
	19	1	9U-1912	1	SLEEVE AS	
	19A	1	6Y-2540	1	CUP-BEARING	
M	20	1	9X-6493	20	BOLT (M16X2X180MM)	
	21	1	2H-3088	1	SEAL-O-RING	
M	22	1	8T-0372	1	BOLT (M12X1.75X90MM)	
	23	1	9V-2429	1	RETAINER	

M-METRIC PART

157-0340 GEAR GP-BEVEL & PINION *(contd.)* i01831284

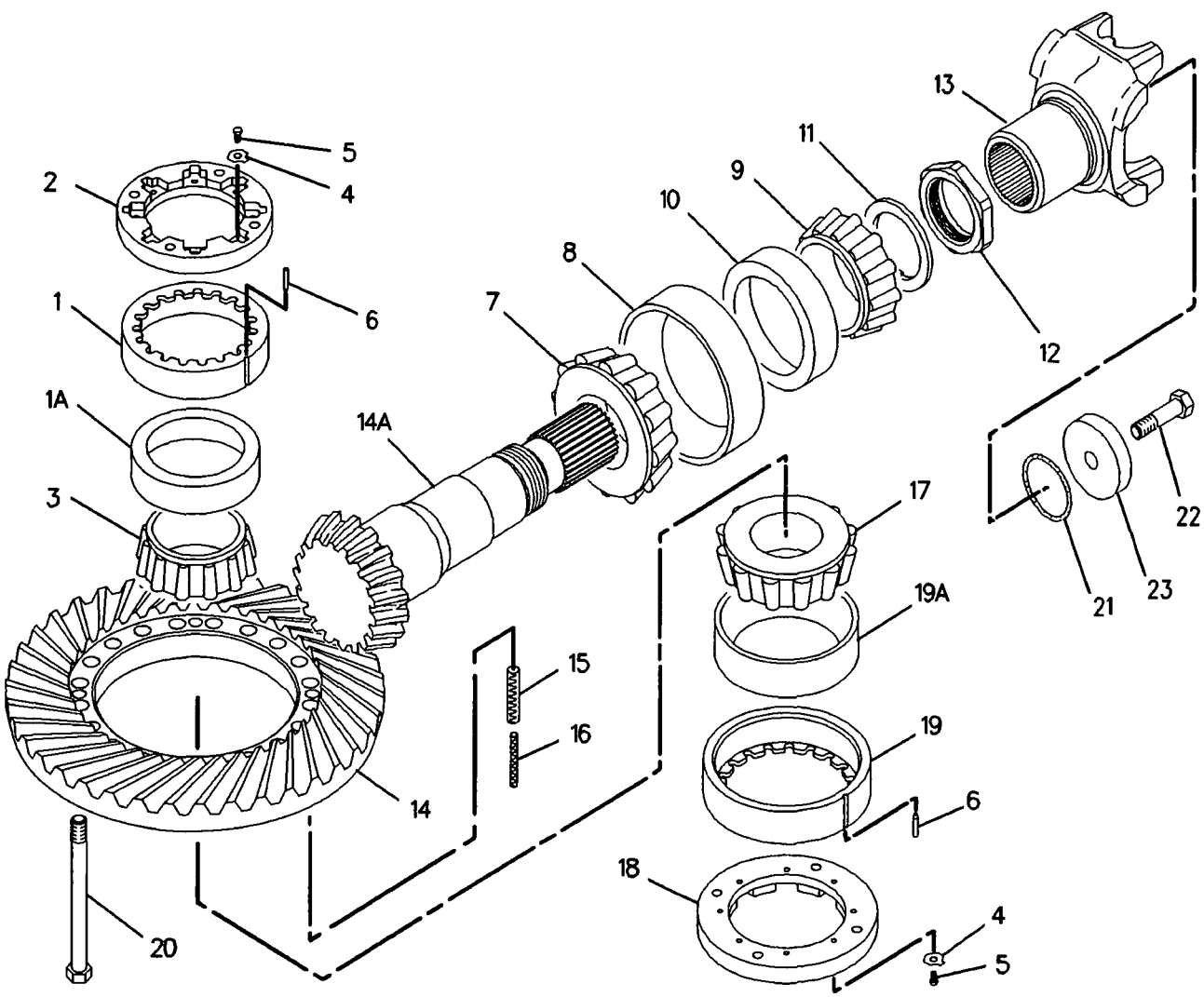

GRAPHIC #1 **<END>** g00935666

POWER TRAIN

249-8173 GEAR GP-OUTPUT TRANSFER

S/N: FAH1-UP
PART OF 237-8186 TRANSMISSION AR
ALSO AN ATTACHMENT

SMCS-3075, 3159 **i02277632**

NOTE	REF NO	GRAPHIC REF	PART NUMBER	QTY	PART NAME 1 2 3 4 5 6 (PRODUCT LEVEL)	SEE PAGE
	1	1	255-3686	1	CASE-TRANSFER	
	2	1	6T-7061	1	EYE-LIFTING	
M	3	1,2,3	6V-4248	2	BOLT (M10X1.5X25-MM)	
	4	3	4S-8603	1	SCREEN GP-MAGNETIC	
		3	8M-7160	3	MAGNET	
	5	3	4S-8598	1	SCREEN-SUCTION	
	6	3	8P-3251	1	COVER AS	
		3	7B-3028	2	SCREW-DRIVE (NO 4X3/16-IN)	
		3	7S-2962	1	WASHER-SPRING (52.3X82.5X9.1-MM THK)	
		3	8P-1722	1	COVER	
	7	3	8H-7521	1	SEAL-O-RING	
M	8	2	8T-0375	1	BOLT (M16X2X45-MM)	
	9	2	7S-8554	1	SEAL-O-RING	
	10	2	125-3375	1	GEAR-TRANSFER (68-TEETH)	
	11	2	155-6648	1	CONE-BEARING	
	12	2	155-6647	1	CUP-BEARING	
	13	2	157-5547	1	SHAFT-OUTPUT	
	14	2	2P-8987	2	CONE-BEARING	
	15	2	2P-8986	2	CUP-BEARING	
	16	2	223-3925	1	CAGE-BEARING	
	17	2	5F-3144	1	SEAL-O-RING	
M	18	2	8T-0358	2	BOLT (M16X2X90-MM)	
	19	2	138-1509	1	DRAIN AS (TRANSFER CASE)	
		2	7M-8485	1	SEAL-O-RING	
		2	8F-0212	1	SEAL-O-RING	
		2	138-1510	1	PLUG	
	20	2	125-3376	1	GEAR-TRANSFER (74-TEETH)	
	21	3	9G-6258	2	COVER-TRANSMISSION	
	22	3	9G-6257	2	GASKET-COVER	
M	23	3	6V-6317	12	BOLT (M10X1.5X20-MM)	
	24	2	3J-0634	1	SEAL-O-RING	
	25	2	223-3924	1	CAGE-BEARING	
B	26	2	6I-8497	1	SHIM PACK (INCLUDES 12-SHIMS)	
	27	3	193-2200	2	SEAL-LIP TYPE	
	28	2	115-1326	1	YOKE AS	
		2	7S-8158	1	GUARD	
	29	2	155-1634	2	RETAINER	
	30	2	2H-3088	2	SEAL-O-RING	
	31	1	3E-4353	10	WASHER-HARD (11X25X3-MM THK)	
B	32	2	188-5046	1	SHIM PACK (INCLUDES 13-SHIMS)	
	33	2	191-1830	1	YOKE	
	34	2	246-5423	1	COVER	
	35	2	2N-7007	1	GASKET	
M	36	1	6V-8149	4	NUT (M12X1.75-THD)	
Y	37	3	193-2550	1	SENSOR GP-SPEED (TRANSMISSION OUTPUT 1)	200
Y	37A	3	193-2550	1	SENSOR GP-SPEED (TRANSMISSION OUTPUT 2)	200
Y	38	2	200-1315	1	BRAKE GP-PARKING	498
M	39	2	6V-5686	4	BOLT (M16X2X50-MM)	
	40	2	103-1712	1	DRUM	
	41	2	7X-0622	8	WASHER (13X24X2.5-MM THK)	
M	42	2	6A-5591	8	BOLT (M12X1.75X25-MM)	
	43	1	129-6329	1	LEVER	
	44	2	188-5149	1	CAGE AS-BEARING	
M		2	8T-5414	4	STUD (M12X1.75X50-MM)	
M	45	1	6V-3822	1	BOLT (M10X1.5X35-MM)	

249-8173 GEAR GP-OUTPUT TRANSFER *(contd.)* i02277632

NOTE	REF NO	GRAPHIC REF	PART NUMBER	QTY	PART NAME 1 2 3 4 5 6 (PRODUCT LEVEL)	SEE PAGE
	46	1	115-4783	1	TUBE AS	
	47	3	2H-3927	1	SEAL-O-RING	
	48	1	1H-9696	1	SEAL-O-RING	
	49	3	110-7453	1	TUBE AS	
	50	3	3H-2652	1	SEAL-O-RING	
M	51	1	6V-8197	1	BOLT (M12X1.75X40-MM)	
M	52	1	6V-5696	1	BOLT (M12X1.75X80-MM)	
M	53	1	6V-1820	10	BOLT (M10X1.5X30-MM)	
	54	3	1H-8720	1	SEAL-O-RING	
	55	1	6V-1720	1	PLATE-SERIAL NUMBER (TRANSMISSION)	
	56	2	6V-0852	1	CAP-DUST	
	57	2	3J-1907	1	SEAL-O-RING	
	58	2	6V-3965	1	FITTING AS (QUICK DISCONNECT)	
	59	1	9X-8268	2	WASHER (17.5X30X3.5-MM THK)	
	60	1	1V-6341	2	SEAL	
	61	2	9H-1024	4	WASHER-HARD (17X30X6-MM THK)	
	62	1	2M-0849	2	WASHER-HARD (13.5X25.5X5-MM THK)	
	63	3	9C-4937	1	BREATHER AS	
	64	3	4F-0186	1	NIPPLE-PIPE	

B-USE AS REQUIRED
M-METRIC PART
Y-SEPARATE ILLUSTRATION

249-8173 GEAR GP-OUTPUT TRANSFER *(contd.)* i02277632

REFER TO ALL ILLUSTRATIONS OF THIS GROUP FOR AUXILIARY VIEWS

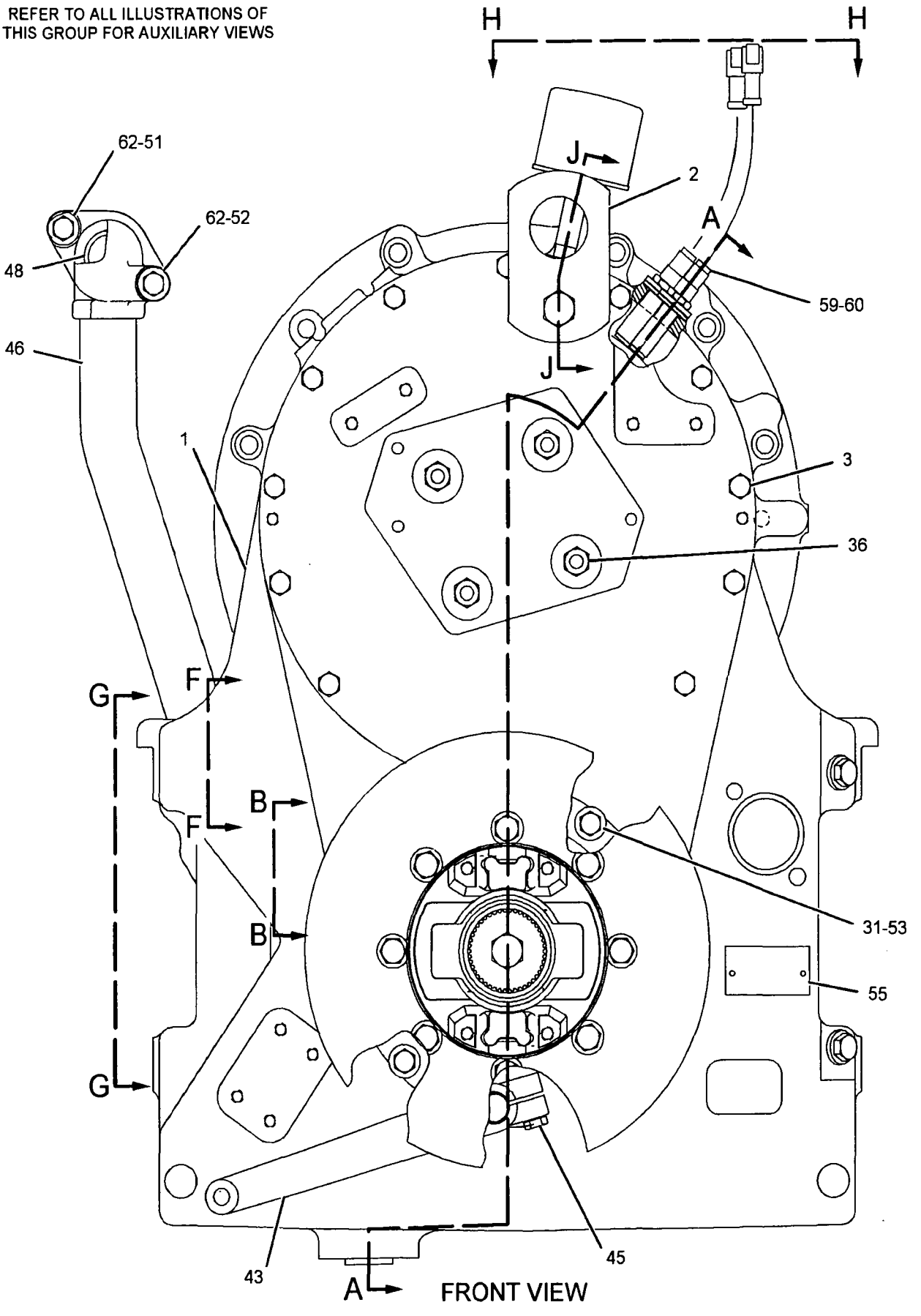

GRAPHIC #1 g01136298

249-8173 GEAR GP-OUTPUT TRANSFER (contd.) i02277632

REFER TO ALL ILLUSTRATIONS OF THIS GROUP FOR AUXILIARY VIEWS

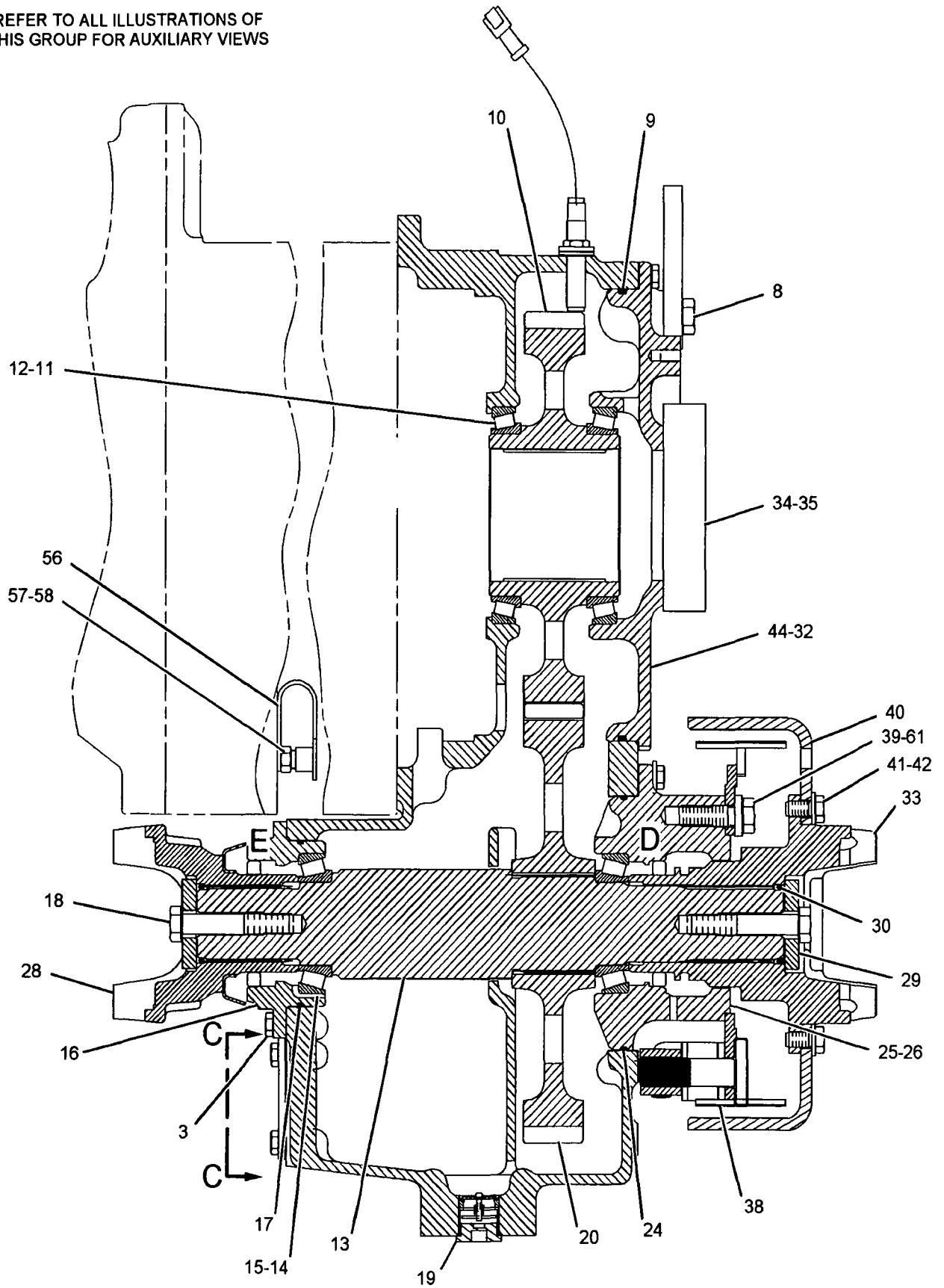

SECTION A-A

GRAPHIC #2 g01136299

249-8173 GEAR GP-OUTPUT TRANSFER (contd.) i02277632

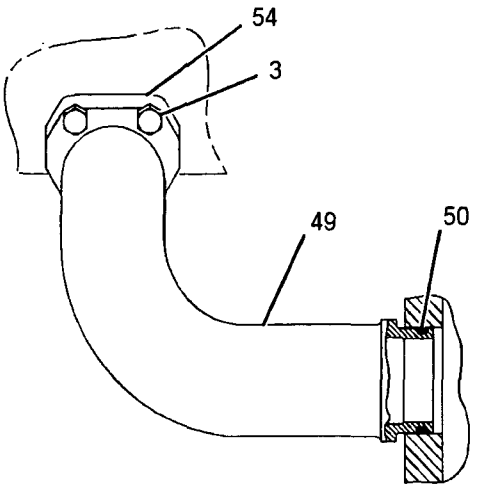

VIEW G-G

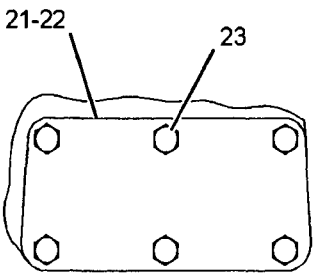

VIEW C-C

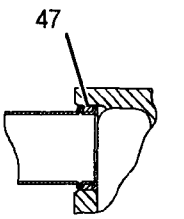

SECTION F-F

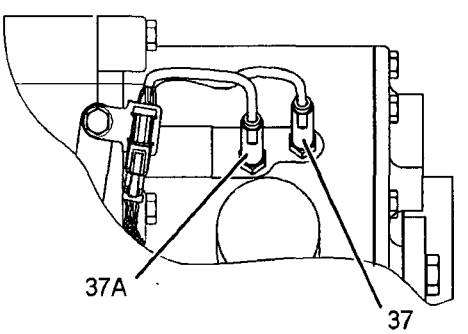

VIEW H-H

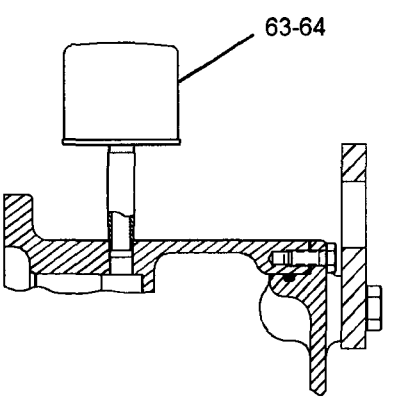

SECTION J-J

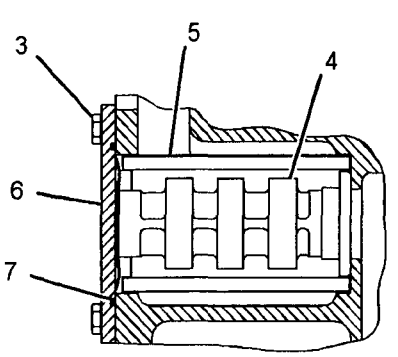

SECTION B-B

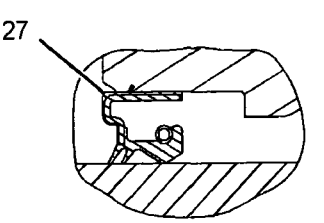

VIEW OF AREA E

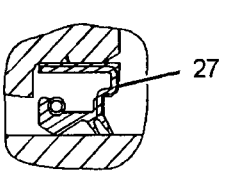

VIEW OF AREA D

GRAPHIC #3 **<END>** g01136300

249-8175 GEAR GP-OUTPUT TRANSFER

S/N: FAK1-UP
PART OF 237-8187 TRANSMISSION AR
AN ATTACHMENT

SMCS-3075, 3159 i02253631

NOTE	REF NO	GRAPHIC REF	PART NUMBER	QTY	PART NAME 1 2 3 4 5 6 (PRODUCT LEVEL)	SEE PAGE
	1	1	255-3686	1	CASE-TRANSFER	
	2	1	6T-7061	1	EYE-LIFTING	
M	3	1,2	6V-4248	27	BOLT (M10X1.5X25-MM)	
	4	2	4S-8603	1	SCREEN GP-MAGNETIC	
		2	8M-7160	3	MAGNET	
	5	2	4S-8598	1	SCREEN-SUCTION	
	6	2	8P-3251	1	COVER AS	
		2	7B-3028	2	SCREW-DRIVE (NO 4X3/16-IN)	
		2	7S-2962	1	WASHER-SPRING (52.3X82.5X9.1-MM THK)	
		2	8P-1722	1	COVER	
	7	2	8H-7521	1	SEAL-O-RING	
M	8	2	8T-0375	1	BOLT (M16X2X45-MM)	
	9	2	7S-8554	1	SEAL-O-RING	
	10	2	125-3375	1	GEAR-TRANSFER (68-TEETH)	
	11	2	155-6648	1	CONE-BEARING	
	12	2	155-6647	1	CUP-BEARING	
	13	2	157-5547	1	SHAFT-OUTPUT	
	14	2	2P-8987	2	CONE-BEARING	
	15	2	2P-8986	2	CUP-BEARING	
	16	2	223-3925	1	CAGE-BEARING	
	17	2	5F-3144	1	SEAL-O-RING	
M	18	2	8T-0358	2	BOLT (M16X2X90-MM)	
	19	2	138-1509	1	DRAIN AS	
		2	7M-8485	1	SEAL-O-RING	
		2	8F-0212	1	SEAL-O-RING	
		2	138-1510	1	PLUG	
	20	2	125-3376	1	GEAR-TRANSFER (74-TEETH)	
	21	2	9G-6258	2	COVER-TRANSMISSION	
	22	2	9G-6257	2	GASKET-COVER	
M	23	2	6V-6317	12	BOLT (M10X1.5X20-MM)	
	24	2	3J-0634	1	SEAL-O-RING	
	25	2	223-3924	1	CAGE-BEARING	
B	26	2	6I-8497	1	SHIM PACK (INCLUDES 12-SHIMS)	
	27	2	193-2200	2	SEAL-LIP TYPE	
	28	2	115-1326	1	YOKE AS	
		2	7S-8158	1	GUARD	
	29	2	155-1634	2	RETAINER	
	30	2	2H-3088	2	SEAL-O-RING	
	31	1	3E-4353	10	WASHER-HARD (11X25X3-MM THK)	
	32	2	188-5149	1	CAGE AS-BEARING	
M		2	8T-5414	4	STUD (M12X1.75X50-MM)	
B	33	2	188-5046	1	SHIM PACK (INCLUDES 13-SHIMS)	
	34	2	246-5423	1	COVER	
	35	2	2N-7007	1	GASKET	
M	36	1	6V-8149	4	NUT (M12X1.75-THD)	
Y	37	1	193-2550	1	SENSOR GP-SPEED (TRANSMISSION OUTPUT 1)	200
Y	37A	1	193-2550	1	SENSOR GP-SPEED (TRANSMISSION OUTPUT 2)	200
Y	38	2	200-1315	1	BRAKE GP-PARKING	498
M	39	2	6V-5686	4	BOLT (M16X2X50-MM)	
	40	2	155-5609	1	DRUM	
	41	2	7X-0622	8	WASHER (13X24X2.5-MM THK)	
M	42	2	6A-5591	8	BOLT (M12X1.75X25-MM)	
	43	1	129-6329	1	LEVER	
	44	2	191-1831	1	YOKE	
M	45	1	6V-3822	1	BOLT (M10X1.5X35-MM)	

249-8175 GEAR GP-OUTPUT TRANSFER *(contd.)* i02253631

NOTE	REF NO	GRAPHIC REF	PART NUMBER	QTY	PART NAME 1 2 3 4 5 6 (PRODUCT LEVEL)	SEE PAGE
	46	1	115-4783	1	TUBE AS	
	47	2	2H-3927	1	SEAL-O-RING	
	48	1	1H-9696	1	SEAL-O-RING	
	49	2	110-7453	1	TUBE AS	
	50	2	3H-2652	1	SEAL-O-RING	
	51	1	9C-4937	1	BREATHER AS	
M	52	1	6V-8197	1	BOLT (M12X1.75X40-MM)	
M	53	1	6V-5696	1	BOLT (M12X1.75X80-MM)	
M	54	1	6V-1820	10	BOLT (M10X1.5X30-MM)	
	55	2	1H-8720	1	SEAL-O-RING	
	56	1	6V-1720	1	PLATE-SERIAL NUMBER (TRANSMISSION)	
	57	2	6V-0852	1	CAP-DUST	
	58	2	3J-1907	1	SEAL-O-RING	
	59	2	6V-3965	1	FITTING AS (QUICK DISCONNECT)	
	60	1	9X-8268	2	WASHER (17.5X30X3.5-MM THK)	
	61	1	1V-6341	2	SEAL	
	62	2	9H-1024	4	WASHER-HARD (17X30X6-MM THK)	
	63	1	2M-0849	2	WASHER-HARD (13.5X25.5X5-MM THK)	
	64	1	4F-0186	1	NIPPLE-PIPE	

B-USE AS REQUIRED
M-METRIC PART
Y-SEPARATE ILLUSTRATION

249-8175 GEAR GP-OUTPUT TRANSFER (contd.) i02253631

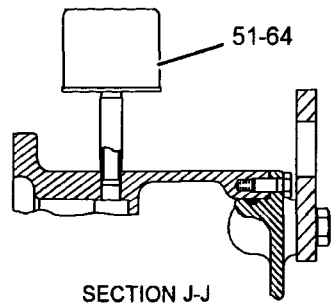

SECTION J-J

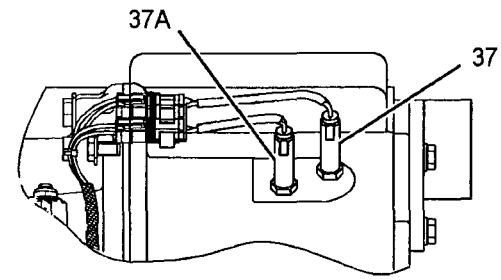

VIEW H-H

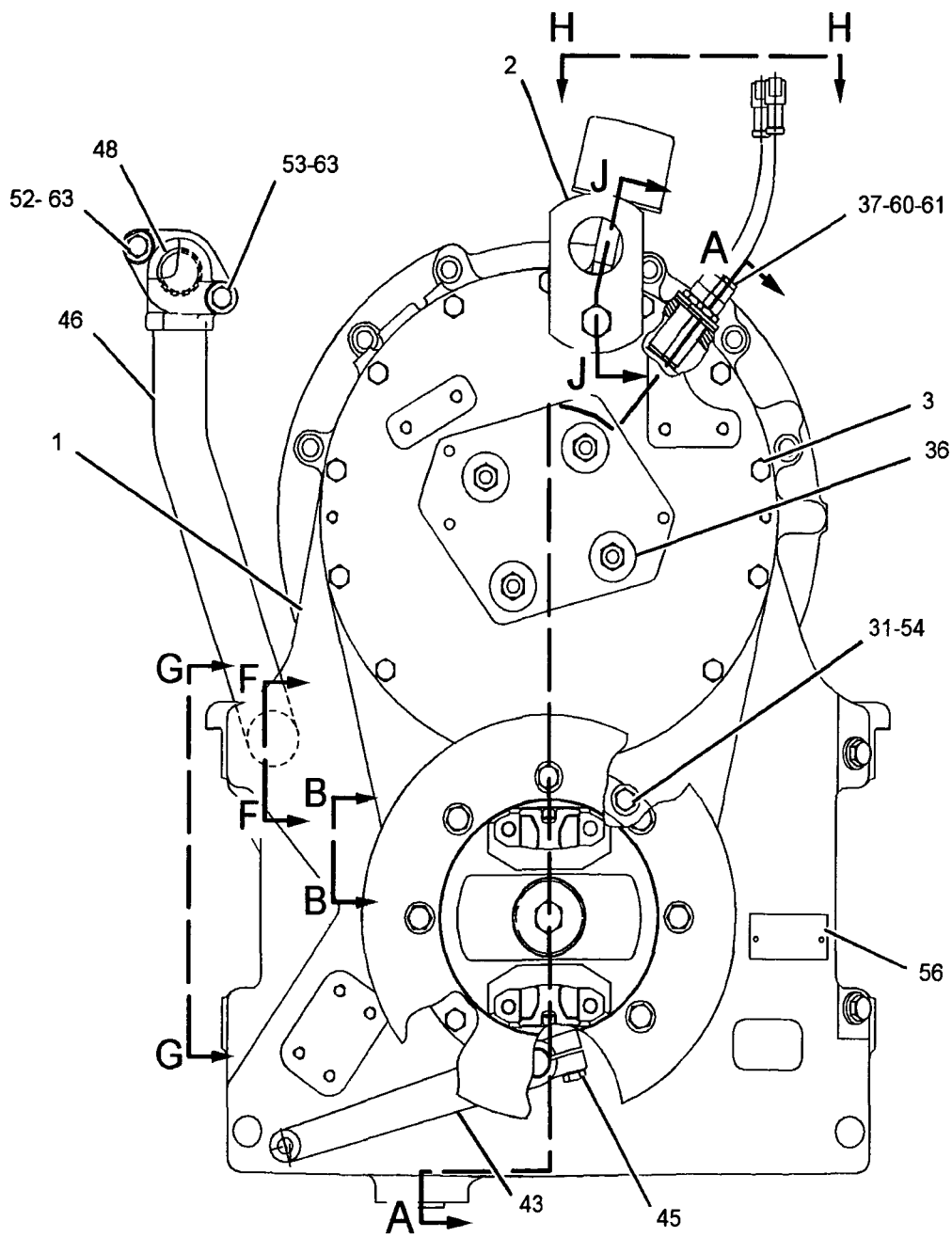

REFER TO ALL ILLUSTRATIONS OF THIS GROUP FOR AUXILIARY VIEWS

FRONT VIEW

GRAPHIC #1

g01135046

249-8175 GEAR GP-OUTPUT TRANSFER (contd.) i02253631

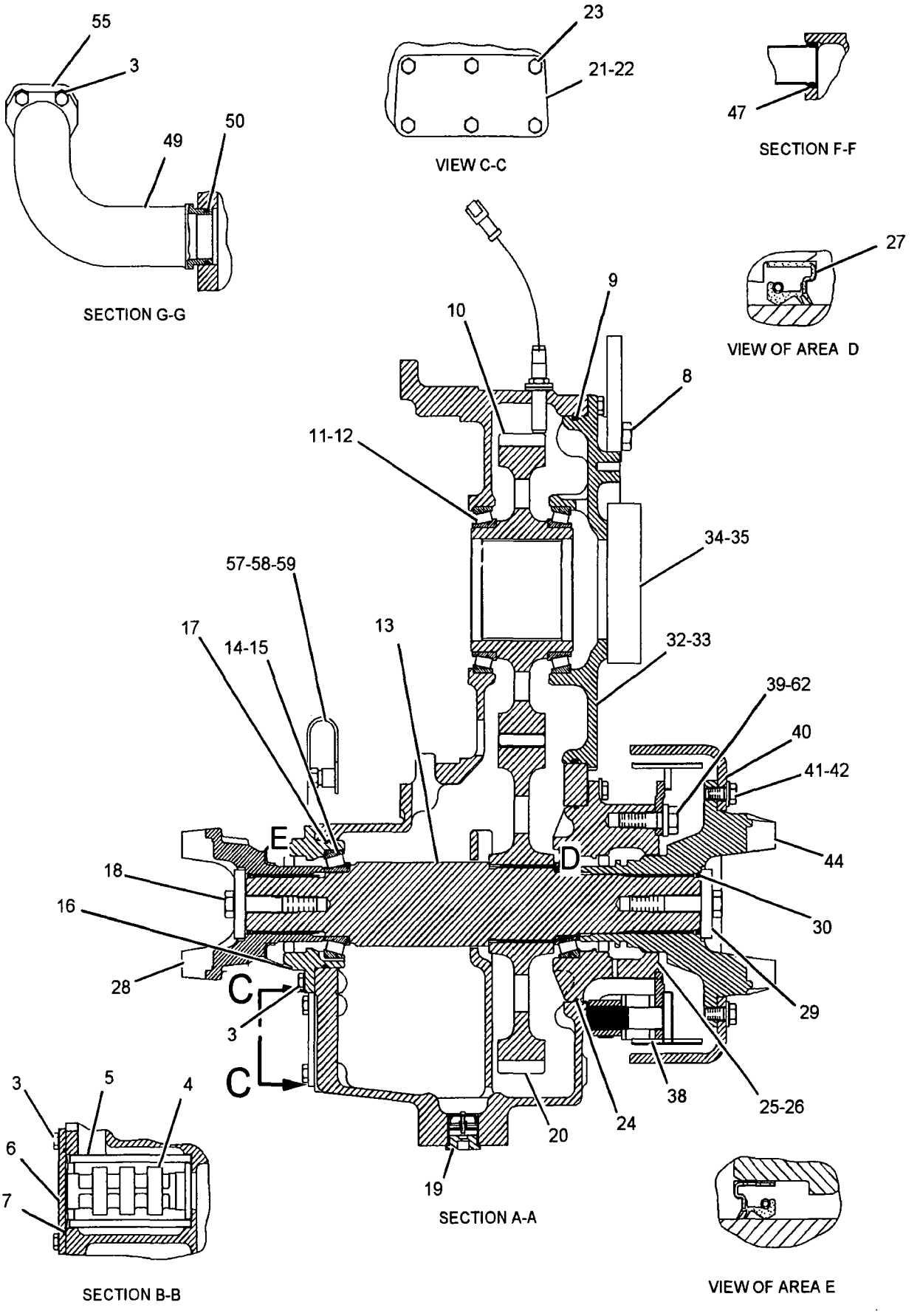

GRAPHIC #2 **<END>** g01128211

214-6156 HOUSING GP-FIXED AXLE

S/N: N1A1-UP

PART OF 214-6161, 214-9398, 214-9402 AXLE AR-FIXED

ALSO AN ATTACHMENT

SMCS-3260 **i02460795**

NOTE	REF NO	GRAPHIC REF	PART NUMBER	QTY	PART NAME 1 2 3 4 5 6 (PRODUCT LEVEL)	SEE PAGE
	1	1	9G-5315	2	SEAL GP-DUO-CONE	
	2	1	6Y-2538	2	CONE-BEARING	
	3	1	2P-1373	2	CUP-BEARING	
	4	1	9C-6327	1	GAUGE AS-OIL LEVEL (DIPSTICK)	
	5	1	5H-3701	2	SCREW-PURGE	
	6	1	192-9121	1	HOUSING AS	
CM		1	095-0673	4	BOLT-SOCKET HEAD (M12X1.75X60-MM)	
B	7	1	1U-8846		SEALANT-GASKET	
	8	1	9C-8421	2	SHAFT-AXLE	
M	9	1	6V-7732	6	BOLT (M10X1.5X25-MM)	
	10	1	9X-2027	6	WASHER (11X18X2-MM THK)	
M	11	1	6V-5686	10	BOLT (M16X2X50-MM)	
	12	1	5P-8247	58	WASHER-HARD (17X32X3.5-MM THK)	
	13	1	8T-0336	1	FITTING-PRESSURE RELIEF	
	14	1	4H-6520	1	SEAL-O-RING	
B	15	1	9C-6021	1	SHIM PACK (INCLUDES 11-SHIMS)	
	16	1	9C-9193	1	HOUSING-PINION	
	17	1	4E-8534	1	RETAINER-SEAL	
	18	1	123-4003	1	SEAL-LIP TYPE	
	19	1	9C-6041	3	DOWEL	
M	20	1	9X-6493	24	BOLT (M16X2X180-MM)	
	21	1	214-6154	2	HOUSING-AXLE	
	22	1	5P-4484	1	PLUG-MAGNETIC	
	23	1	3B-0551	1	PLUG-PIPE	
M	24	1	6C-5304	24	BOLT (M16X2X110-MM)	
C	25	1	7M-8485	4	SEAL-O-RING	
	26	1	9S-4181	2	PLUG	
	27	1	5P-3119	2	RING-RETAINING	
	28	1	9C-8419	2	NUT-BEARING	
	29	1	8B-6342	2	CONE-BEARING	
	30	1	8B-6343	2	CUP-BEARING	
C	31	1	9S-9334	1	PLUG	

B-USE AS REQUIRED
C-CHANGE FROM PREVIOUS TYPE
M-METRIC PART

214-6156 HOUSING GP-FIXED AXLE *(contd.)* i02460795

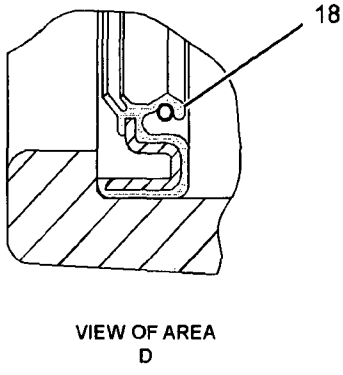

VIEW OF AREA D

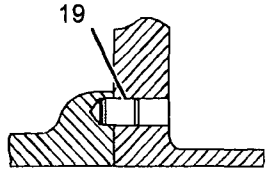

SECTION C-C

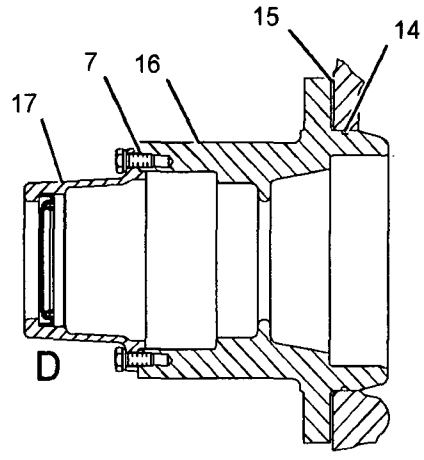

SECTION B-B

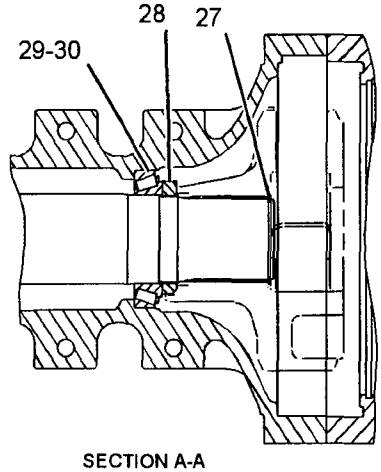

SECTION A-A

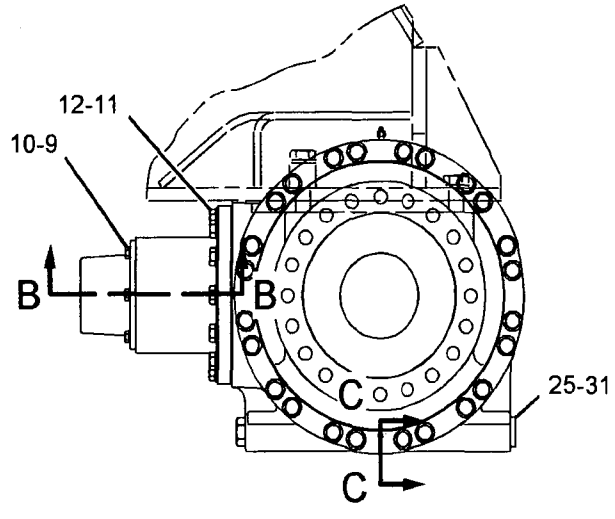

RIGHT SIDE VIEW

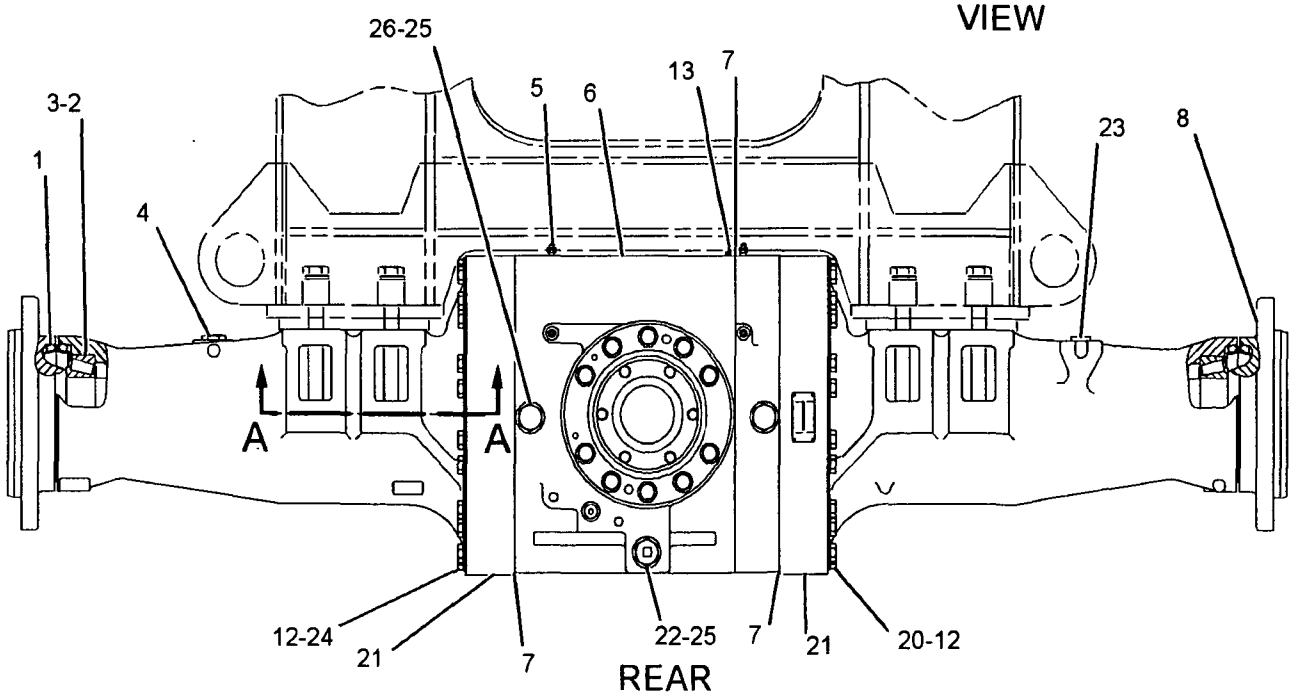

REAR VIEW

GRAPHIC #1

<END>

g01144399

112-0724 HOUSING GP-OSCILLATING AXLE

S/N: N1A1-UP

PART OF 112-0723, 126-7845, 126-7846 AXLE AR-OSCILLATING

ALSO AN ATTACHMENT

SMCS-3260, 3268 i01837277

NOTE	REF NO	GRAPHIC REF	PART NUMBER	QTY	PART NAME 1 2 3 4 5 6 (PRODUCT LEVEL)	SEE PAGE
	1	1	9C-6041	3	DOWEL	
	2	1	5H-3701	2	SCREW-PURGE	
	3	1	8T-0336	1	FITTING-PRESSURE RELIEF	
	4	1	9S-4181	2	PLUG	
C	5	1	7M-8485	4	SEAL-O-RING	
	6	1	5P-4484	1	PLUG-MAGNETIC	
	7	1	112-0764	1	SUPPORT-TRUNNION	
	8	1	5P-8247	78	WASHER-HARD (17X32X3.5-MM THK)	
M	9	1	6V-5686	30	BOLT (M16X2X50-MM)	
	10	1	112-0765	1	SUPPORT-TRUNNION	
	11	1	4V-5099	1	COVER	
	12	1	9C-8421	2	SHAFT-AXLE	
	13	1	9G-5315	2	SEAL GP-DUO-CONE	
	14	1	6Y-2538	2	CONE-BEARING	
	15	1	2P-1373	2	CUP-BEARING	
	16	1	8B-6342	2	CONE-BEARING	
	17	1	8B-6343	2	CUP-BEARING	
	18	1	127-5091	2	HOUSING-AXLE	
B	19	1	1U-8846		SEALANT-GASKET	
	20	1	4H-6520	1	SEAL-O-RING	
M	21	1	6V-7732	6	BOLT (M10X1.5X25-MM)	
	22	1	9X-2027	6	WASHER (11X18X2-MM THK)	
	23	1	4E-8534	1	RETAINER-SEAL	
	24	1	9C-9194	1	HOUSING-PINION	
B	25	1	9C-6021	1	SHIM PACK (INCLUDES 11-SHIMS)	
	26	1	5P-3119	2	RING-RETAINING	
	27	1	9C-8419	2	NUT-BEARING	
	28	1	3B-0551	1	PLUG-PIPE	
M	29	1	6C-5304	24	BOLT (M16X2X110-MM)	
	30	1	9C-9191	1	TRUNNION	
	31	1	2K-0715	2	WASHER-THRUST (6.35-MM THK)	
	32	1	109-4731	1	PLATE	
M	33	1	6V-3531	4	BOLT (M20X2.5X50-MM)	
	34	1	8T-3282	4	WASHER-HARD (22X35X3.5-MM THK)	
	35	1	213-1369	1	BEARING-SLEEVE	
C	36	1	192-9128	1	HOUSING AS-OSCILLATING	
M		1	095-0673	4	BOLT-SOCKET HEAD (M12X1.75X60-MM)	
M	37	1	9X-6493	24	BOLT (M16X2X180-MM)	
	38	1	9C-6327	1	GAUGE AS-OIL LEVEL (DIPSTICK)	
	39	1	123-4003	1	SEAL-LIP TYPE	
	40	1	3K-0159	1	RING-RETAINING	
	41	1	213-1365	1	BEARING-SLEEVE	
	42	1	3K-0158	2	SEAL-LIP TYPE	
	43	1	6K-2430	1	SEAL-LIP TYPE	
C	44	1	9S-9334	1	PLUG	

B-USE AS REQUIRED
C-CHANGE FROM PREVIOUS TYPE
M-METRIC PART

112-0724 HOUSING GP-OSCILLATING AXLE *(contd.)* i01837277

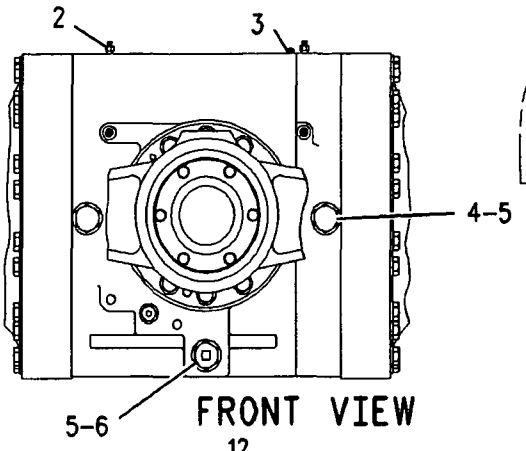

FRONT VIEW

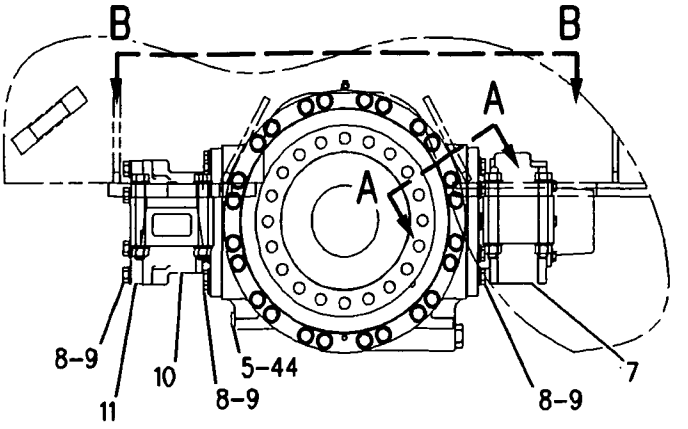

RIGHT SIDE VIEW

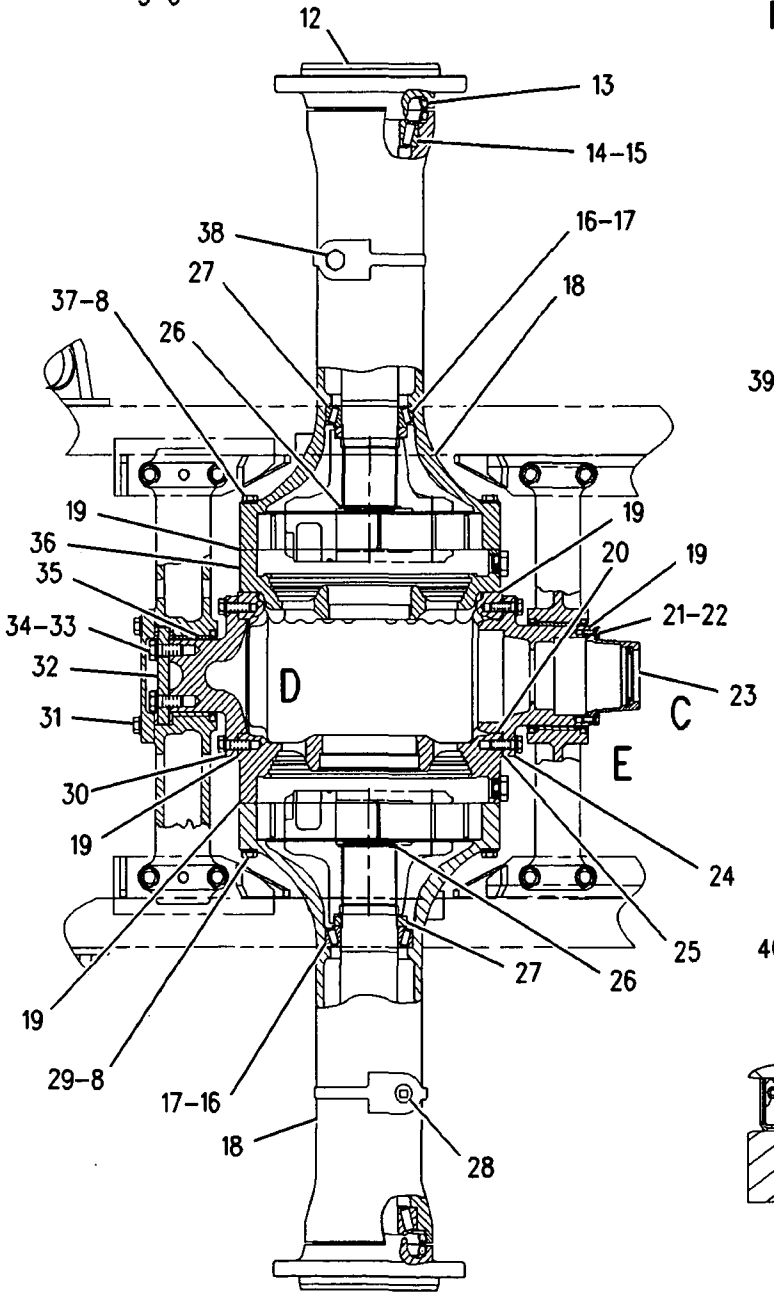

VIEW B-B

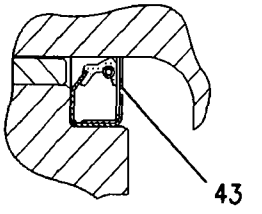

VIEW OF AREA D

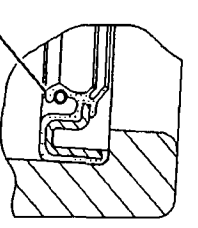

VIEW OF AREA C

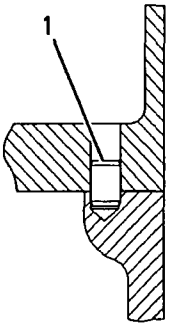

SECTION A-A

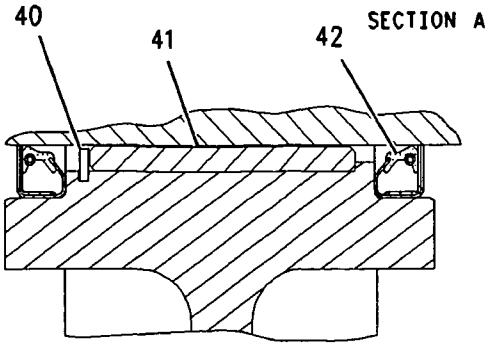

VIEW OF AREA E

GRAPHIC #1 <END> g00891458

241-0077 LINES GP-AXLE OIL COOLER

S/N: N1A1-UP

PART OF 241-0073 COOLER AR-AXLE OIL

AN ATTACHMENT

SMCS-1365, 3016 **i02438880**

NOTE	REF NO	GRAPHIC REF	PART NUMBER	QTY	PART NAME 1 2 3 4 5 6 (PRODUCT LEVEL)	SEE PAGE
	1	1,2,3	7K-1181	3	STRAP-CABLE	
	2	3	8R-5144	1	WASHER (12X30X9-MM THK)	
	3	3	091-0081	1	SPACER (10.5X20X10-MM THK)	
	4	1	114-9224	1	SPACER (11.13X19.05X47-MM THK)	
	5	1	119-4167	1	ROD	
	6	3	123-9814	1	SPACER	
	7	1	*150-3032*	2	ELBOW AS	
					(EACH INCLUDES)	
		1	6V-9746	1	SEAL-O-RING	
		1	8C-8762	1	ELBOW	
	8	2	151-4506	1	TUBE AS	
	9	2	151-4507	1	TUBE AS	
	10	2	153-3495	1	BRACKET AS	
	11	1	155-5510	1	BRACKET AS	
	12	2,3	162-8352	2	U-BOLT	
	13	2	192-4263	1	TUBE AS	
	14	2	192-4264	1	TUBE AS	
I	15	2	241-0086	1	HOSE AS	
I	16	1	241-0087	1	HOSE AS	
I	17	3	241-0088	1	HOSE AS	
I	18	3	241-0089	1	HOSE AS	
I	19	2	241-0091	1	HOSE AS	
I	20	1	241-0092	1	HOSE AS	
	21	2	242-8414	1	TUBE AS	
	22	2	242-8415	1	TUBE AS	
	23	2	242-8416	1	TUBE AS	
	24	2	242-8417	1	TUBE AS	
	25	3	242-8418	1	BRACKET AS	
	26	3	242-8419	1	BRACKET AS	
I	27	2	242-9820	1	HOSE AS	
	28	2,3	251-6351	2	FILTER-MAGNETIC (AXLE OIL COOLER)	
I	29	3	275-9955	1	HOSE AS	
	30	3	279-6141	1	BRACKET AS	
	31	1	279-6143	1	BRACKET AS	
	32	2	*148-8323*	2	CONNECTOR GP	
					(EACH INCLUDES)	
		2	2S-4078	1	SEAL-O-RING	
		2	5K-9090	1	SEAL-O-RING	
		2	6V-9875	1	CONNECTOR	
	33	1	*148-8335*	2	CONNECTOR AS	
					(EACH INCLUDES)	
		1	5K-9090	1	SEAL-O-RING	
		1	6V-8635	1	CONNECTOR	
		1	7M-8485	1	SEAL-O-RING	
	34	2	*148-8362*	2	ELBOW AS	
					(EACH INCLUDES)	
		2	3D-2824	1	SEAL-O-RING	
		2	5K-9090	1	SEAL-O-RING	
		2	8T-6684	1	ELBOW (90-DEG)	
	35	2	*148-8378*	4	ELBOW AS	
					(EACH INCLUDES)	
		2	3J-1907	1	SEAL-O-RING	
		2	6V-8397	1	SEAL-O-RING	
		2	6V-8724	1	ELBOW	

241-0077 LINES GP-AXLE OIL COOLER *(contd.)* i02438880

NOTE	REF NO	GRAPHIC REF	PART NUMBER	QTY	PART NAME 1 2 3 4 5 6 (PRODUCT LEVEL)	SEE PAGE
	36	3	*148-8391*	2	ELBOW AS	
					(EACH INCLUDES)	
		3	**2S-4078**	1	SEAL-O-RING	
		3	**5K-9090**	1	SEAL-O-RING	
		3	**8T-8987**	1	ELBOW	
	37	1	*148-8454*	2	TEE AS	
					(EACH INCLUDES)	
		1	**6V-8398**	3	SEAL-O-RING	
		1	**6V-8789**	1	TEE	
	38	2	*153-6244*	2	ELBOW GP	
					(EACH INCLUDES)	
		2	**2M-9780**	1	SEAL-O-RING	
		2	**6V-9746**	1	SEAL-O-RING	
		2	**8T-5389**	1	ELBOW	
	39	2	*164-5598*	4	PLUG AS	
					(EACH INCLUDES)	
		2	**7M-8485**	1	SEAL-O-RING	
		2	**8J-0426**	1	PLUG	
	40	3	**4H-7655**	1	CLAMP-TUBE	
	41	3	**5D-0718**	1	CLIP	
	42	3	**5K-2697**	1	CLIP	
	43	2	**5K-9090**	2	SEAL-O-RING	
	44	1,3	**5P-7468**	2	CLIP (SLOT)	
	45	1,3	**5P-7469**	2	CLIP (TAB)	
	46	1,3	**5P-8444**	2	GROMMET	
	47	1,2,3	**6V-1889**	6	CLIP	
	48	3	**6V-9746**	2	SEAL-O-RING	
	49	3	**7D-4092**	1	CLIP	
	50	2,3	**7D-7233**	5	CLIP	
	51	1,2,3	**8T-4121**	28	WASHER-HARD (11X21X2.5-MM THK)	
M	52	1,2,3	**8T-4133**	8	NUT (M10X1.5 THD)	
M	53	1,2,3	**8T-4136**	7	BOLT (M10X1.5X25-MM)	
M	54	2,3	**8T-4137**	2	BOLT (M10X1.5X20-MM)	
M	55	3	**8T-4186**	2	BOLT (M10X1.5X40-MM)	
M	56	1,3	**8T-4195**	10	BOLT (M10X1.5X30-MM)	
	57	1	**8T-4223**	2	WASHER-HARD (13.5X25.5X3-MM THK)	

I-REFER TO HYDRAULIC INFORMATION SYSTEM
M-METRIC PART

241-0077 LINES GP-AXLE OIL COOLER *(contd.)* i02438880

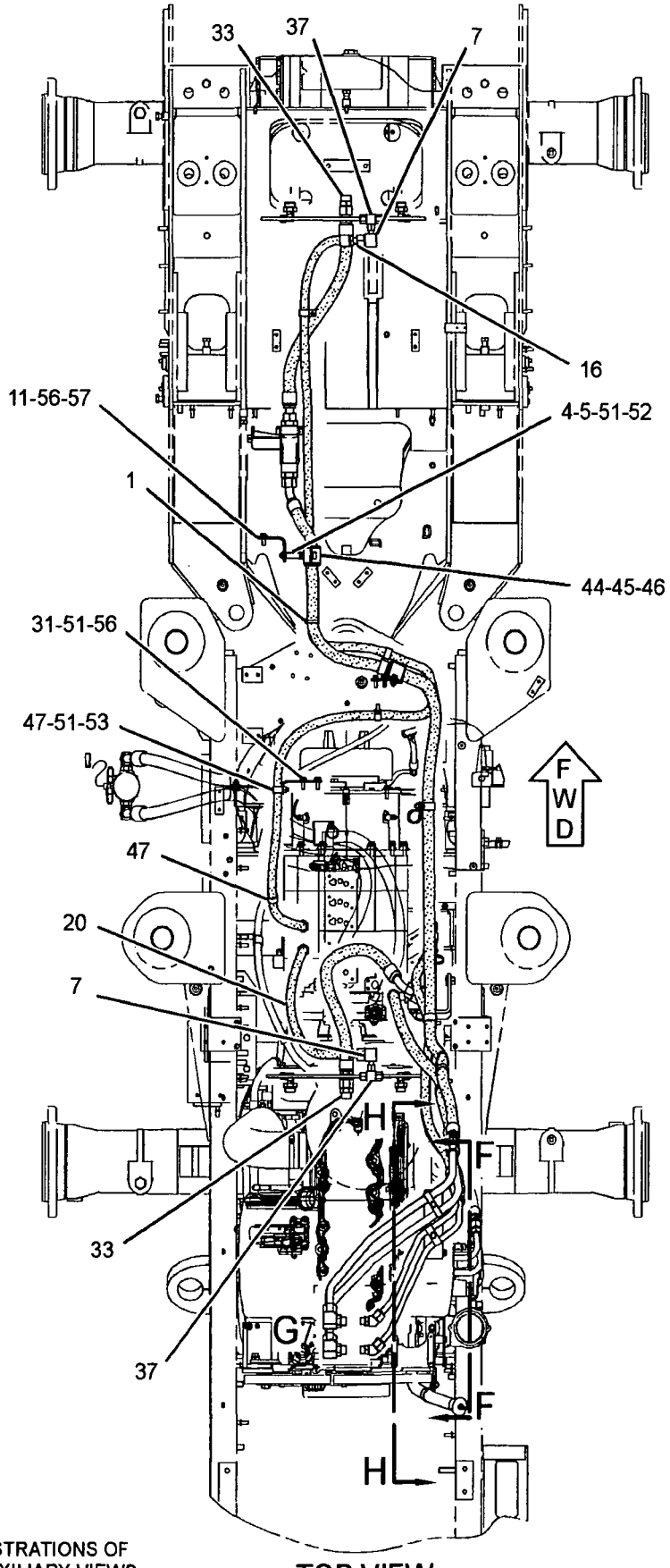

REFER TO ALL ILLUSTRATIONS OF THIS GROUP FOR AUXILIARY VIEWS

TOP VIEW

GRAPHIC #1

g01221932

REFER TO ALL ILLUSTRATIONS OF
THIS GROUP FOR AUXILIARY VIEWS

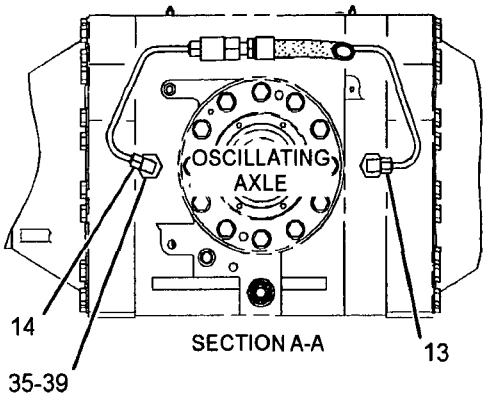

SECTION A-A

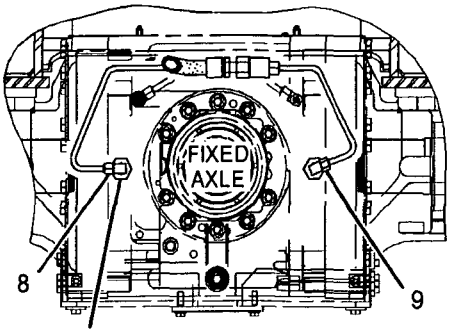

SECTION B-B

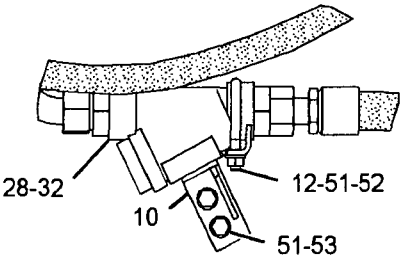

VIEW OF AREA D

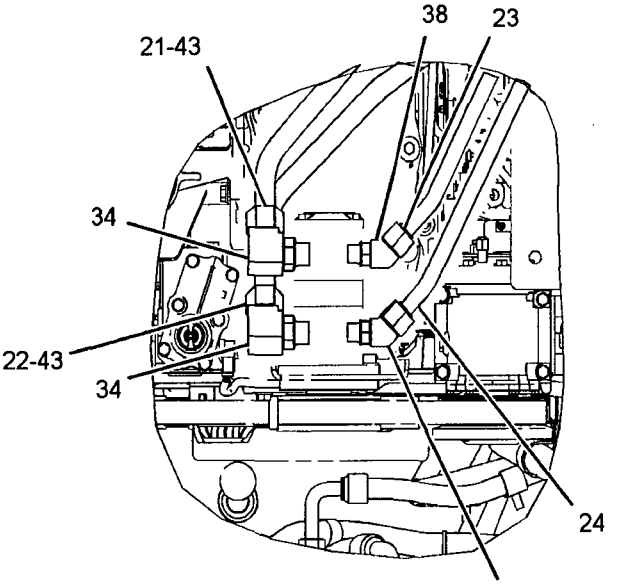

VIEW OF AREA G

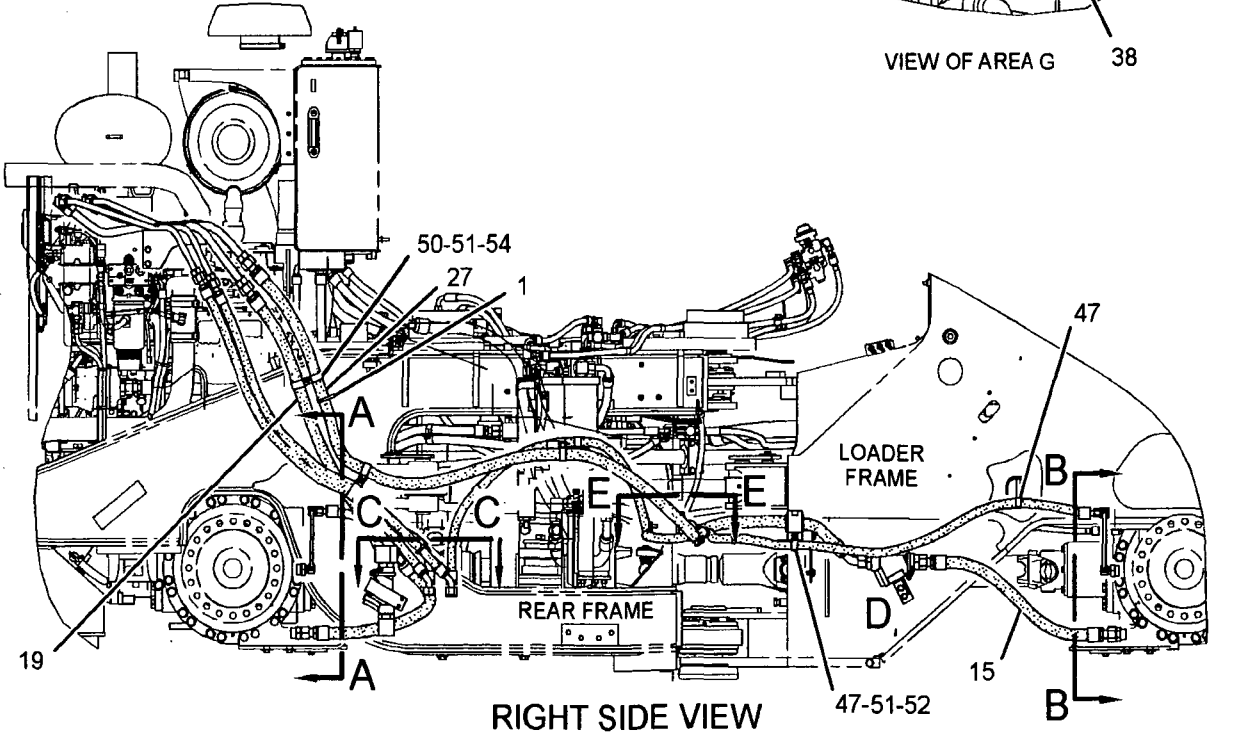

RIGHT SIDE VIEW

GRAPHIC #2

g01221327

241-0077 LINES GP-AXLE OIL COOLER *(contd.)* i02438880

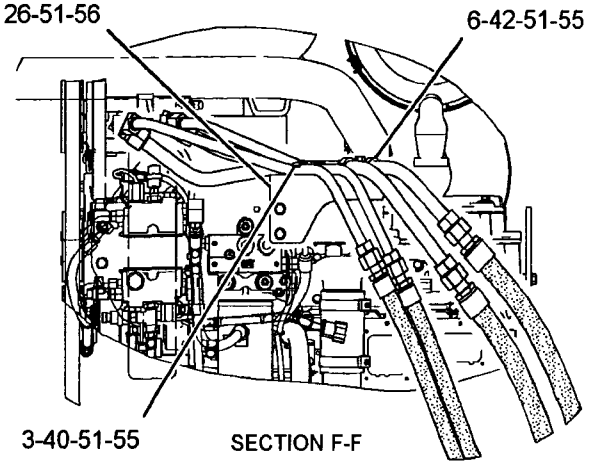

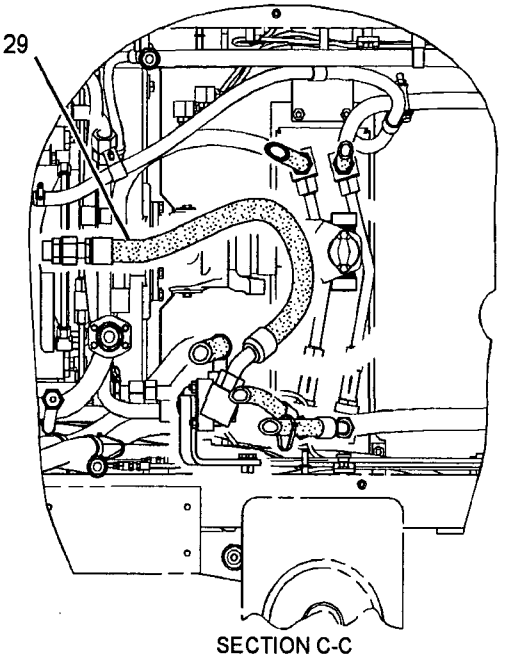

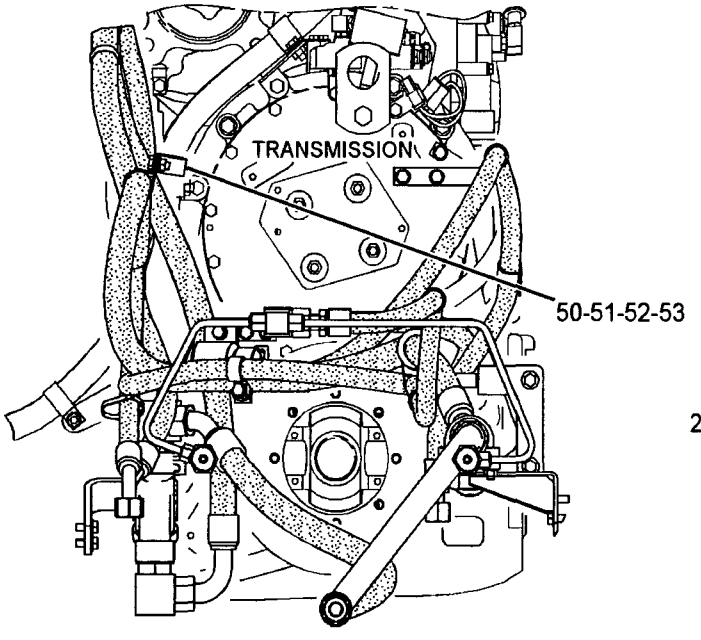

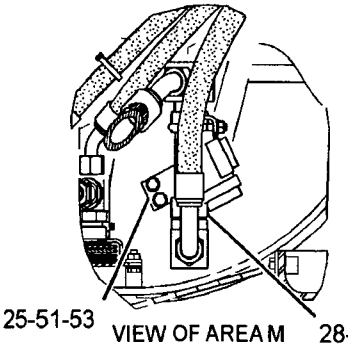

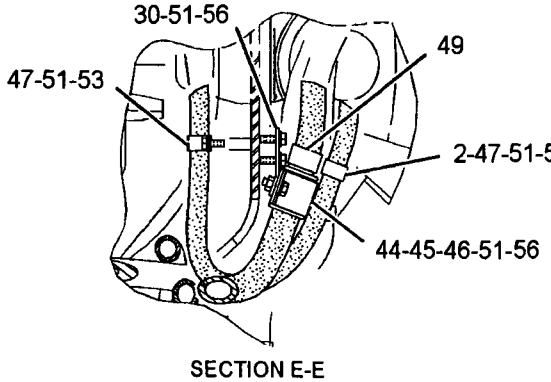

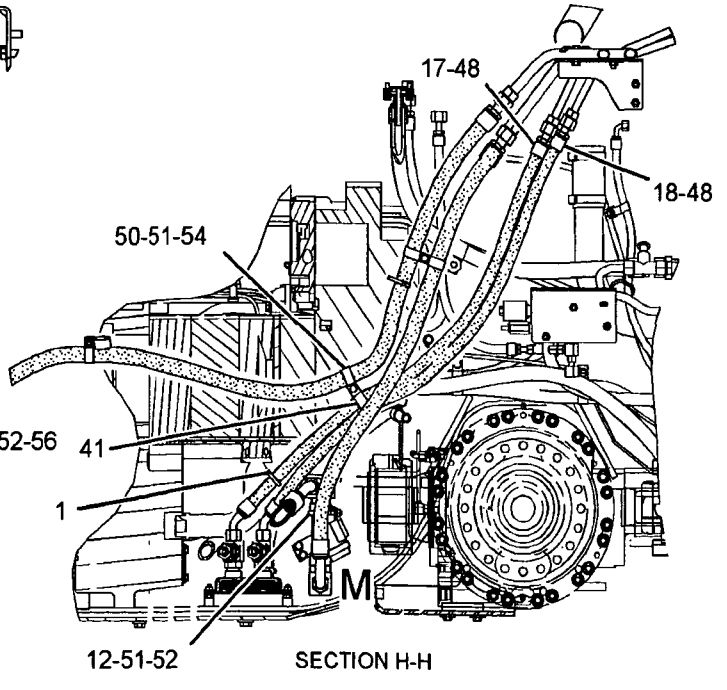

GRAPHIC #3 **<END>** g01221329

237-0438 LINES GP-TORQUE CONV COOLER

S/N: N1A1-UP

PART OF 237-0234 CHASSIS AR

SMCS-1375, 3016 **i02437666**

NOTE	REF NO	GRAPHIC REF	PART NUMBER	QTY	PART NAME 1 2 3 4 5 6 (PRODUCT LEVEL)	SEE PAGE
	1	2	**251-2009**	1	TUBE AS	
	2	2	**1P-3703**	2	SEAL-RECTANGULAR	
	3	2	**251-2008**	1	TUBE AS	
I	4	1	**251-2010**	1	HOSE AS	
I	5	1	**251-2011**	1	HOSE AS	
	6	2	*148-8357*	2	ELBOW AS	
					(EACH INCLUDES)	
		2	**5K-9090**	1	SEAL-O-RING	
		2	**6V-9008**	1	ELBOW	
		2	**7M-8485**	1	SEAL-O-RING	
	7	2	**3A-3692**	1	CLIP	
	8	1	**5K-9090**	2	SEAL-O-RING	
	9	2	**8T-4121**	9	WASHER-HARD (11X21X2.5-MM THK)	
M	10	2	**8T-6466**	8	BOLT (M10X1.5X60-MM)	
M	11	1	**8T-4196**	1	BOLT (M10X1.5X35-MM)	

I-REFER TO HYDRAULIC INFORMATION SYSTEM
M-METRIC PART

237-0438 LINES GP-TORQUE CONV COOLER *(contd.)* i02437666

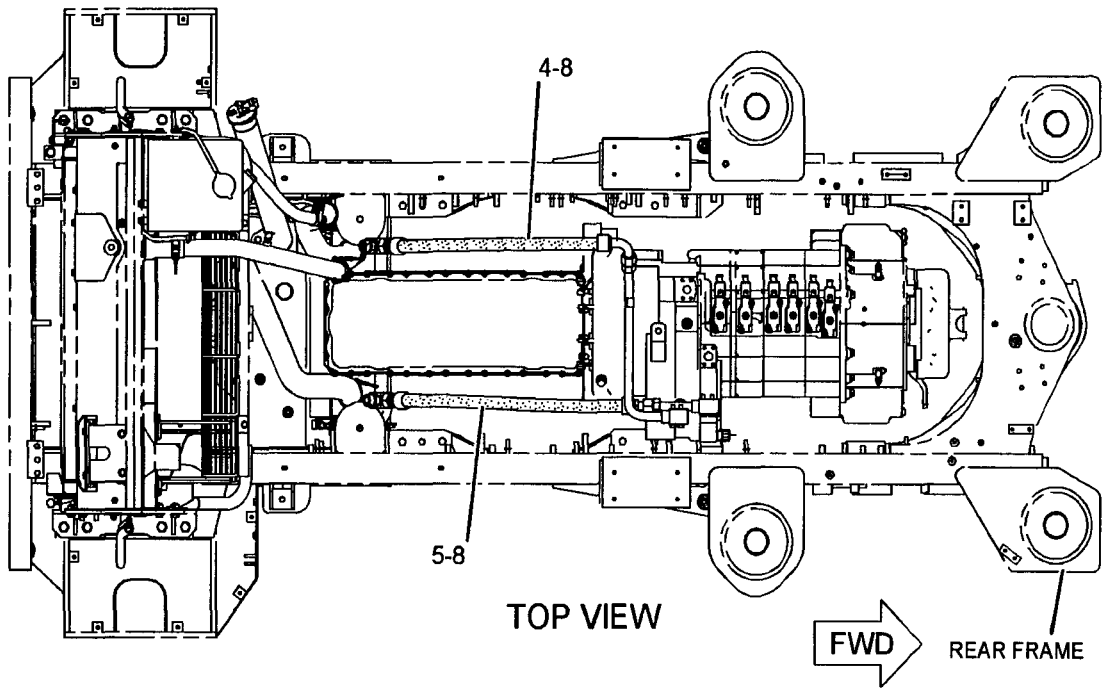

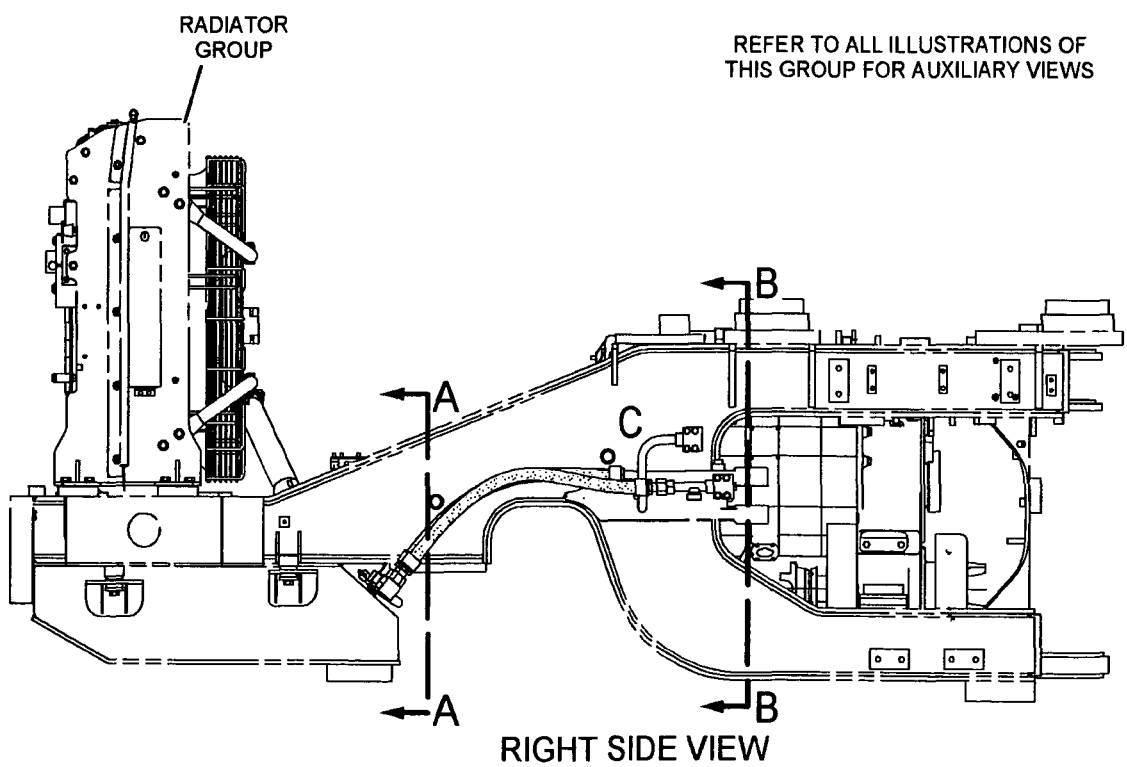

GRAPHIC #1 g01122522

237-0438 **LINES GP-TORQUE CONV COOLER** *(contd.)* **i02437666**

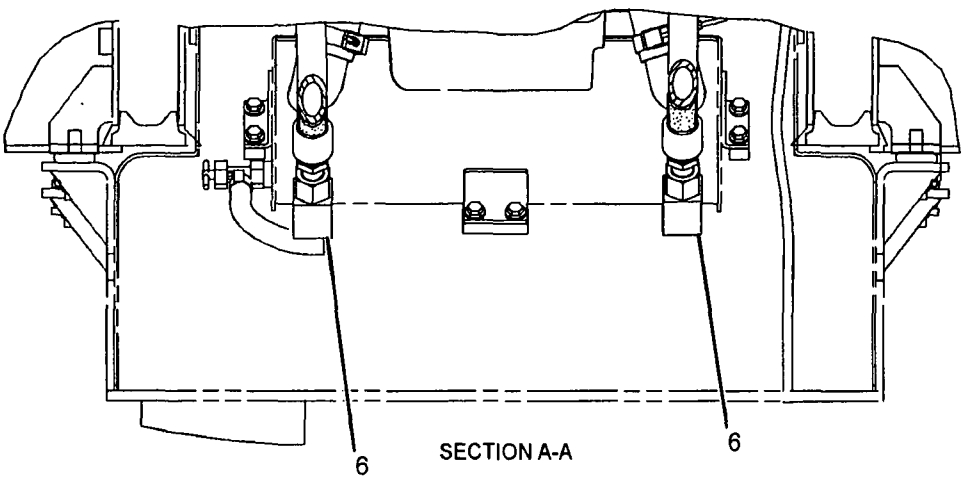

SECTION A-A

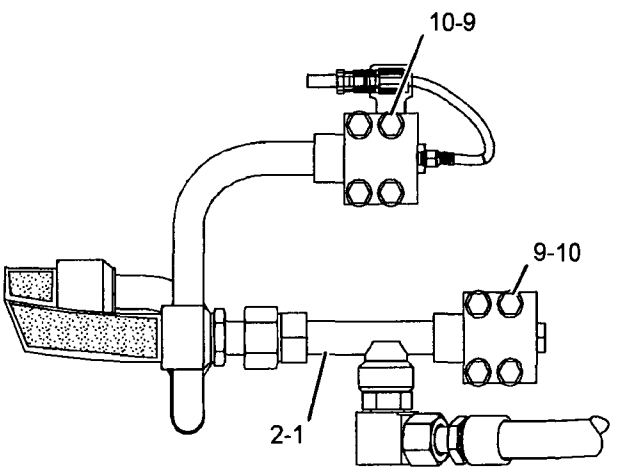

VIEW OF AREA C

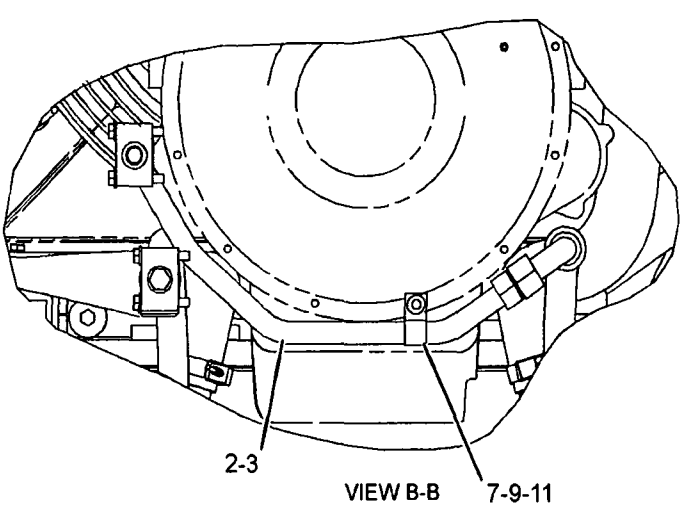

VIEW B-B

GRAPHIC #2 **<END>** g01220424

214-6162 MOUNTING GP-AXLE

S/N: N1A1-UP

PART OF 237-0240 POWER TRAIN AR

ALSO AN ATTACHMENT

SMCS-3268, 3278 **i02438055**

NOTE	PART NUMBER	QTY	PART NAME 1 2 3 4 5 6 (PRODUCT LEVEL)	SEE PAGE
	190-8494	8	BOLT (M30X3.5X200-MM)	
M	8T-4170	8	BOLT (M20X2.5X150-MM)	
M	8T-4137	4	BOLT (M10X1.5X20-MM)	
	6C-2356	2	DOWEL	
M	8T-4131	8	NUT (M20X2.5-THD)	
	145-0050	2	PLATE	
	6C-8352	2	PLATE	
	6C-8353	2	PLATE	
	9X-8258	8	WASHER (33X56X6-MM THK)	
	8T-4121	4	WASHER-HARD (11X21X2.5-MM THK)	
	8T-4123	16	WASHER-PLATED (22X35X3.5-MM THK)	

M-METRIC PART

<END>

260-9584 MOUNTING GP-AXLE OIL COOLER

S/N: N1A1-UP
PART OF 241-0073 COOLER AR-AXLE OIL
AN ATTACHMENT

SMCS-1365 **i02438896**

NOTE	REF NO	GRAPHIC REF	PART NUMBER	QTY	PART NAME 1 2 3 4 5 6 (PRODUCT LEVEL)	SEE PAGE
	1	1	130-5202	2	VALVE GP-CHECK (AXLE OIL COOLER BYPASS)	
					(EACH INCLUDES)	
		1	3D-2824	1	SEAL-O-RING	
		1	6V-9746	1	SEAL-O-RING	
	2	1	151-5711	1	CORE AS-AXLE OIL COOLER	
	3	1	250-1441	2	TEE	
	4	1	260-6465	2	TUBE AS	
	5	1	*148-8442*	2	TEE AS	
					(EACH INCLUDES)	
		1	6V-9746	2	SEAL-O-RING	
		1	7M-8485	1	SEAL-O-RING	
		1	8T-1685	1	TEE	
	6	1	3D-2824	2	SEAL-O-RING	
	7	1	6V-9746	4	SEAL-O-RING	
	8	1	7M-8485	2	SEAL-O-RING	
	9	1	8T-4121	4	WASHER-HARD (11X21X2.5-MM THK)	
M	10	1	8T-4136	4	BOLT (M10X1.5X25-MM)	

M-METRIC PART

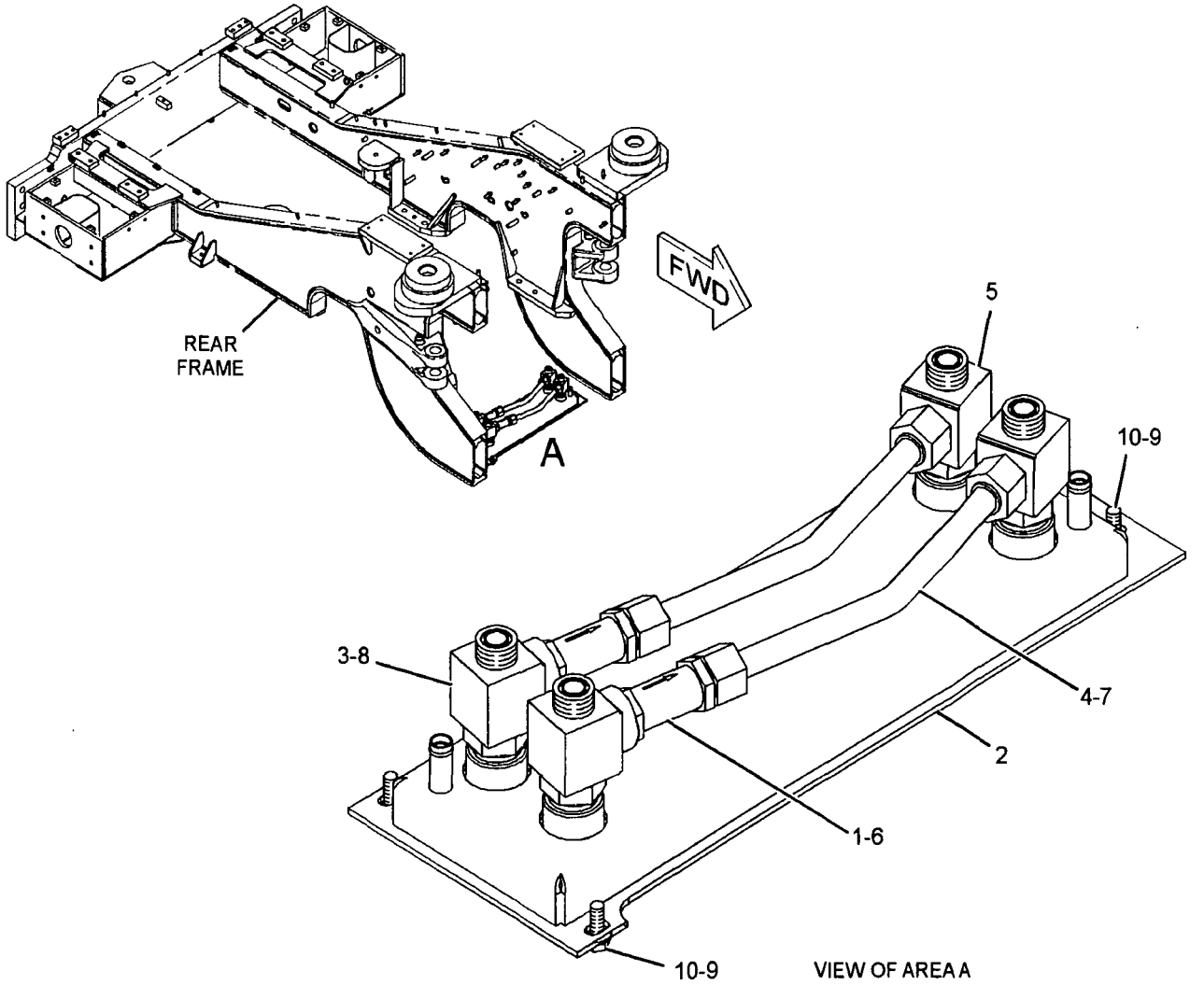

GRAPHIC #1 **<END>** g01219367

128-0678 MOUNTING GP-RIM

S/N: N1A1-UP

PART OF 237-0240 POWER TRAIN AR

ALSO AN ATTACHMENT

SMCS-4202, 4209 **i02438054**

NOTE	PART NUMBER	QTY	PART NAME 1 2 3 4 5 6 (PRODUCT LEVEL)	SEE PAGE
M	9X-2615	80	BOLT (M24X3X60-MM)	
	267-3506	80	WASHER-HARD (26X44X4-MM THK)	

M-METRIC PART

<END>

186-2522 PLANETARY GP-TRANSMISSION

S/N: FAH1-UP; FAK1-UP
PART OF 237-8186, 237-8187 TRANSMISSION AR
ALSO AN ATTACHMENT

SMCS-3160 i01564009

NOTE	REF NO	GRAPHIC REF	PART NUMBER	QTY	PART NAME 1 2 3 4 5 6 (PRODUCT LEVEL)	SEE PAGE
	6	1	6Y-7880	4	SHAFT-PLANETARY	
	7	1	4H-4737	4	PIN-SPRING	
	8	1	9G-5828	4	SPRING	
	9	1,2	8D-2714	6	SEAL-O-RING	
	10	1,2	6P-7773	5	RING-SEAL	
	11	1	8P-9723	1	RING-SEAL	
M	12	1	8T-0106	1	BOLT (M12X1.75X100-MM)	
	13	1,2	6Y-5352	15	DISC-FRICTION	
	14	1,2	7G-0437	15	PLATE-CLUTCH	
	15	1,2	7S-4534	8	BEARING-CAGED	
	16	1,2	8E-8299	32	DISC-THRUST	
	17	1	186-2517	1	GEAR-RING (82-TEETH)	
	18	1,2	7G-8121	2	RING-LOCK	
	19	1	176-9273	1	PISTON	
	20	1	6P-7772	1	RING-SEAL	
	21	1	6V-1586	1	RING-RETAINING	
	22	1	7G-5730	1	RING-SEAL	
	23	1,2	110-7450	5	PISTON-CLUTCH	
	24	1,2	7G-6945	8	SPRING	
M	25	1,2	114-9040	15	BOLT (M12X1.75X500-MM THD)	
	26	1	8E-8297	6	DISC-THRUST	
	27	1,2	3S-8109	15	PIN-SPRING	
	28	1	7G-3711	1	GEAR-RING (82-TEETH)	
	29	1	7G-5614	3	SHAFT-PLANETARY	
	30	1	7G-5444	1	CARRIER-PLANETARY	
	31	1	6Y-9713	1	GEAR AS-SUN (44-TEETH)	
	32	1	8S-0527	2	PLUG-CUP	
	33	1	110-7455	1	HOUSING	
	34	1	9M-1503	1	RING-METAL SEAL	
	35	1	9G-1231	1	PLATE	
	36	1	6P-7983	1	RING-RETAINING	
	37	1	3T-9960	5	DISC-FRICTION	
	38	1	6P-7968	4	PLATE-CLUTCH	
	39	1	035-3360	3	RING-RETAINING	
	40	1	9H-5604	1	RING-RETAINING	
	41	1	8E-1666	1	PLATE-RETAINER	
	42	1	9G-1234	5	SPRING-DISC	
	43	1	9N-4460	1	HOUSING AS-CLUTCH	
	44	1	3S-8109	1	PIN-SPRING	
	45	1	4S-8537	1	DOWEL	
	46	1	7X-7608	1	RING-RETAINING	
	47	1	143-4642	1	BEARING-SPECIAL	
	48	1	3P-3441	1	RING-RETAINING	
	49	1	112-7847	1	HOUSING	
	50	1	6Y-7881	1	GEAR-RING (86-TEETH)	
	51	1	6Y-7879	1	CARRIER-PLANETARY	
	52	1	6Y-5952	1	GEAR AS-SUN (42-TEETH)	
	53	1	6Y-2109	1	CARRIER-SEAL	
	54	1	6P-2233	3	GEAR-PLANETARY (20-TEETH)	
	55	1	5P-3131	3	BEARING AS-ROLLER	
	56	1	6P-7985	2	RING-SEAL	
	57	1	186-3402	1	HOUSING AS	
	57A	1	115-0532	1	PLUG-ORIFICE	
	58	1	1A-2223	1	DOWEL	
	59	1	7T-1285	4	GEAR-PLANETARY (23-TEETH)	

186-2522 PLANETARY GP-TRANSMISSION (contd.) i01564009

NOTE	REF NO	GRAPHIC REF	PART NUMBER	QTY	PART NAME 1 2 3 4 5 6 (PRODUCT LEVEL)	SEE PAGE
	60	1	6Y-8030	1	RING-SEAL	
	61	1	7T-3343	5	PLATE-CLUTCH	
	62	1	7T-3456	4	DISC-FRICTION	
	63	1	1M-3151	6	DOWEL-REACTION	
	64	1	9H-5546	6	DOWEL	
	65	1,2	7G-5675	5	RING-SEAL	
	66	2	114-9036	1	SHAFT-INPUT	
M	67	2	6V-5696	1	BOLT (M12X1.75X80-MM)	
	68	2	4S-5824	1	RETAINER	
	69	2	8E-7476	1	GEAR-TRANSFER (50-TEETH)	
	70	2	118-4264	1	HOUSING AS	
	71	2	1A-2223	2	DOWEL	
	72	2	3K-1432	2	RING-METAL SEAL	
	73	2	9W-0517	1	CARRIER-PLANETARY	
	74	2	8P-8950	2	RING-METAL SEAL	
	76	2	7G-6061	1	COUPLING	
	77	2	6F-6673	2	SEAL-O-RING	
	80	2	7G-5572	1	GEAR-SUN (29-TEETH)	
	81	2	110-7452	1	PLATE	
	82	2	9W-0518	1	CARRIER-RING	
	84	2	7G-5569	1	GEAR-RING (83-TEETH)	
	85	2	6V-1649	2	BALL BEARING	
	86	2	7G-5593	1	GEAR-SUN (38-TEETH)	
	87	2	7G-6062	1	GEAR-RING (82-TEETH)	
	89	2	5L-2931	1	RING-RETAINING	
	90	2	6V-0834	1	RING-RETAINING	
	91	2	7G-5594	1	GEAR-SUN (38-TEETH)	
	92	2	9G-1491	1	CARRIER-PLANETARY	
	93	2	3P-7019	2	SEAL-METAL	
	94	2	6V-0835	1	RING-RETAINING	
M	95	2	6V-8675	2	BOLT (M12X1.75X35-MM)	
	96	2	1M-3150	6	DOWEL-REACTION	
	99	2	7B-7515	1	BALL BEARING	
	100	2	1M-8649	1	RING-RETAINING	
	101	2	6P-7742	4	SHAFT-PLANETARY	
	102	2	6P-8003	4	GEAR (27-TEETH)	
	103	2	7G-3710	4	ROD	
	105	2	6P-7743	4	SHAFT-PLANETARY	
	106	2	9P-5558	1	RING-RETAINING	
	107	2	3T-7584	4	SPRING	
	108	2	6P-8005	8	GEAR (23-TEETH)	
	109	2	110-7454	1	HOUSING-CLUTCH	
	110	2	5P-3930	8	BEARING AS-ROLLER	
	113	2	9W-0519	1	DISC-THRUST	
	116	2	7G-6952	1	SHAFT AS-OUTPUT	
	117	2	8S-3426	1	DOWEL	
	118	2	9G-7683	2	BEARING-SLEEVE	
	119	1,2	5P-8245	12	WASHER-HARD (13.5X25.5X3-MM THK)	

M-METRIC PART

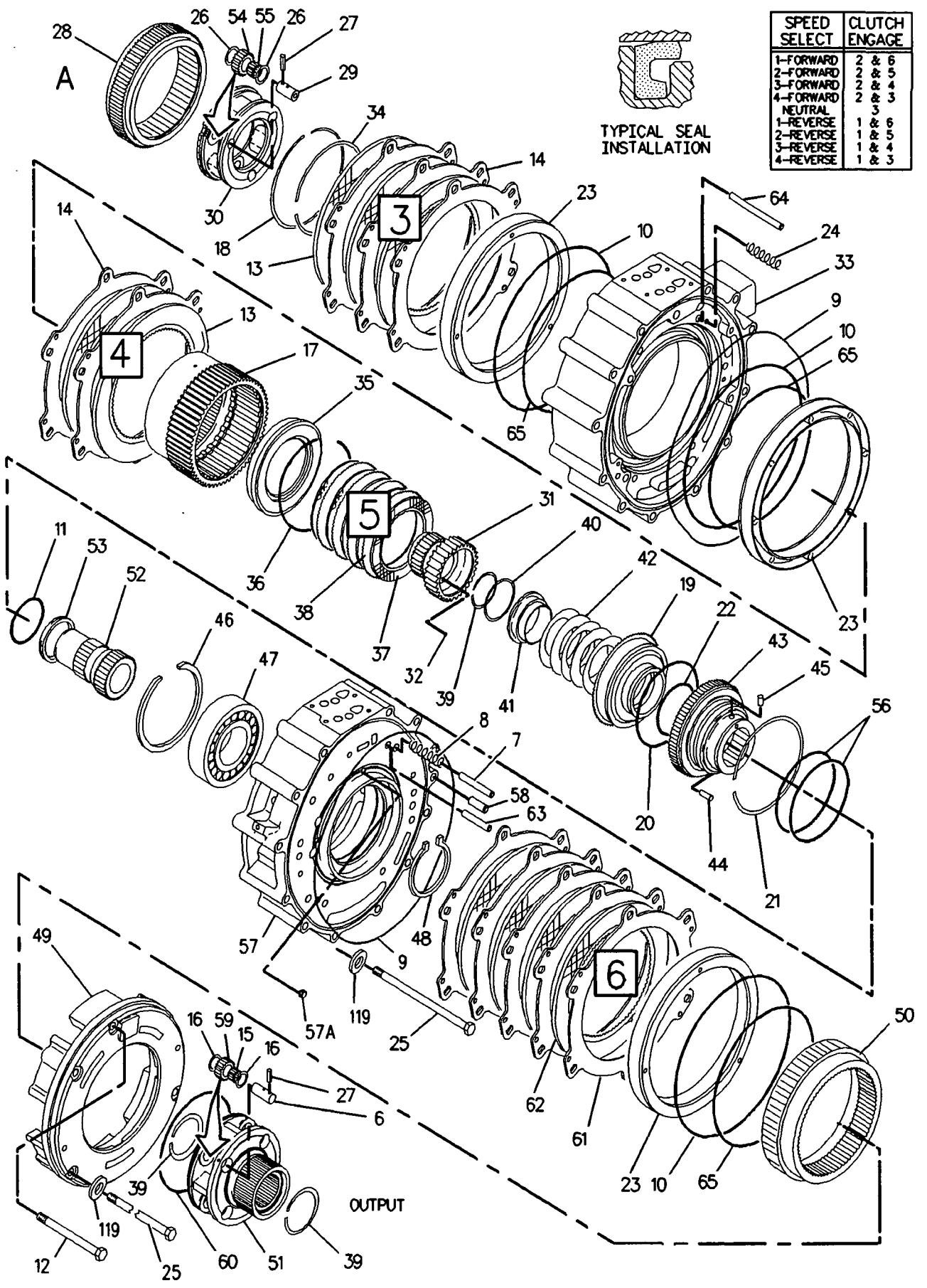

SPEED SELECT	CLUTCH ENGAGE
1-FORWARD	2 & 6
2-FORWARD	2 & 5
3-FORWARD	2 & 4
4-FORWARD	2 & 3
NEUTRAL	3
1-REVERSE	1 & 6
2-REVERSE	1 & 5
3-REVERSE	1 & 4
4-REVERSE	1 & 3

GRAPHIC #1 g00812419

186-2522 PLANETARY GP-TRANSMISSION *(contd.)* i01564009

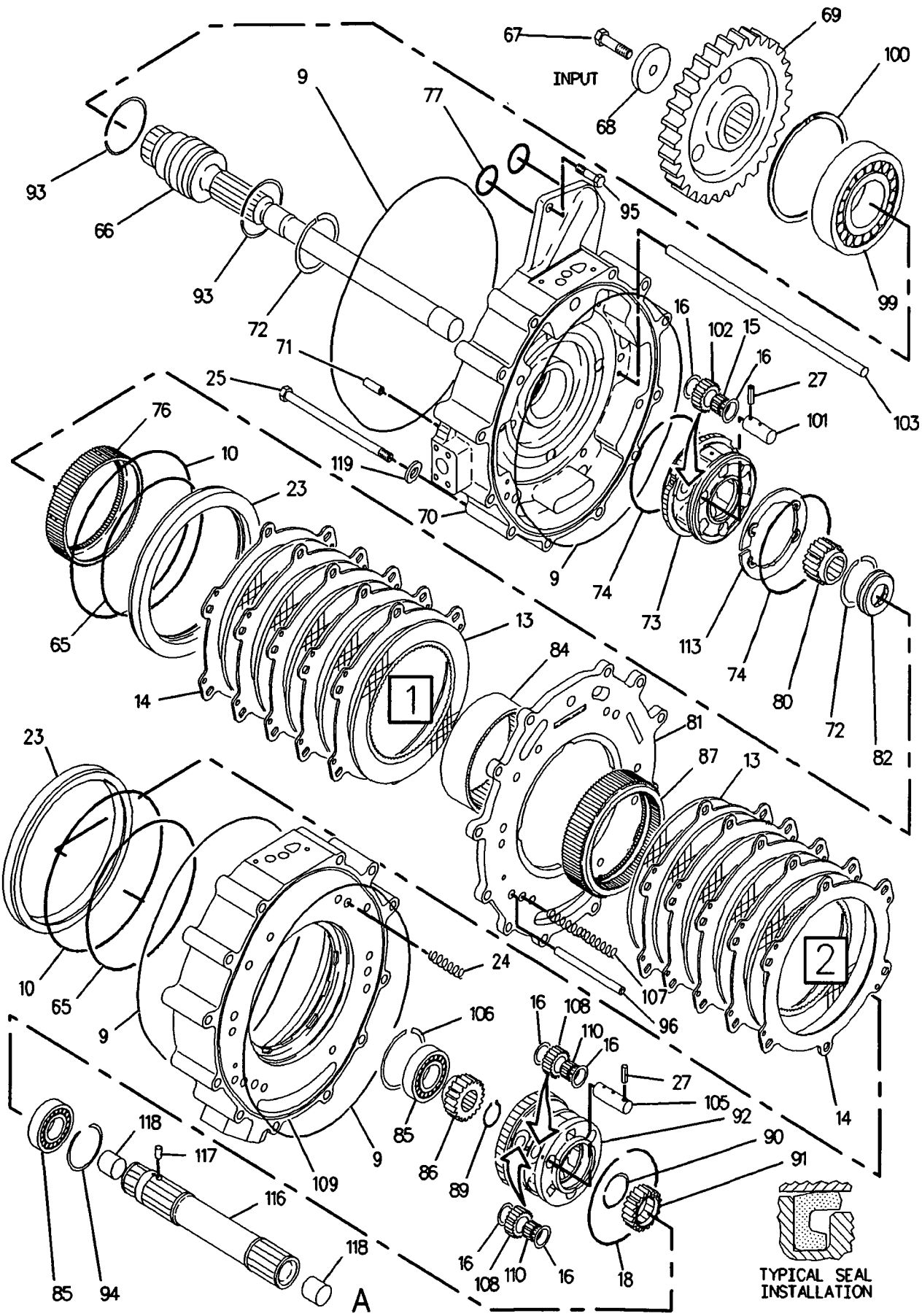

GRAPHIC #2 **<END>** g00670736

POWER TRAIN

237-0240 POWER TRAIN AR

S/N: N1A1-UP
PART OF 237-0231 GENERAL AR
ALSO AN ATTACHMENT

SMCS-3000, 4000 **i02277513**

NOTE	PART NUMBER	QTY	PART NAME 1 2 3 4 5 6 (PRODUCT LEVEL)	SEE PAGE
Y	*126-7698*	1	ACTUATOR GP-PARKING BRAKE	494
Y	*214-9398*	1	AXLE AR-FIXED (FRONT, STANDARD DIFFERENTIAL)	284
Y	*112-0723*	1	AXLE AR-OSCILLATING (REAR, STANDARD DIFFERENTIAL)	285
Y	*237-5114*	1	FILLER GP-POWER TRAIN OIL	304
Y	*244-2339*	1	FILTER & LINES GP-TRANSMISSION	306
Y	*214-6162*	1	MOUNTING GP-AXLE	336
Y	*128-0678*	1	MOUNTING GP-RIM	338
Y	*115-1648*	1	SHAFT GP-DRIVE	352
Y	*237-8186*	1	TRANSMISSION AR (FREEWHEEL STATOR TORQUE CONV)	372
	218-0481	1	SOFTWARE GP-POWER TRAIN	

Y-SEPARATE ILLUSTRATION

<END>

241-0080 PUMP & MTG GP-AXLE OIL COOLER

S/N: N1A1-UP

PART OF 241-0073 COOLER AR-AXLE OIL

AN ATTACHMENT

SMCS-5073 **i02438883**

NOTE	REF NO	GRAPHIC REF	PART NUMBER	QTY	PART NAME 1 2 3 4 5 6 (PRODUCT LEVEL)	SEE PAGE
Y	1		192-1563	1	IDLER GP-BELT (ALTERNATOR, REFRIGERANT COMPR) (AXLE OIL COOLER PUMP)	40
	2		215-3013	1	PUMP GP-GEAR (AXLE OIL COOLER)	
	3		215-3014	1	CLUTCH GP-ELECTRIC (AXLE OIL COOLER PUMP)	
	4		215-3015	1	BELT-SERPENTINE	
	5		276-7533	1	BRACKET AS	
	6		217-3031	1	BELT-SERPENTINE	
	7		6V-3960	1	BOLT (1/4-28X0.875-IN)	
M	8		8T-0271	2	BOLT-SOCKET HEAD (M10X1.5X35-MM)	
	9		8T-4121	6	WASHER-HARD (11X21X2.5-MM THK)	
M	10		8T-4196	4	BOLT (M10X1.5X35-MM)	
	11		8T-4205	1	WASHER-HARD (7.2X14.5X2-MM THK)	

M-METRIC PART
Y-SEPARATE ILLUSTRATION

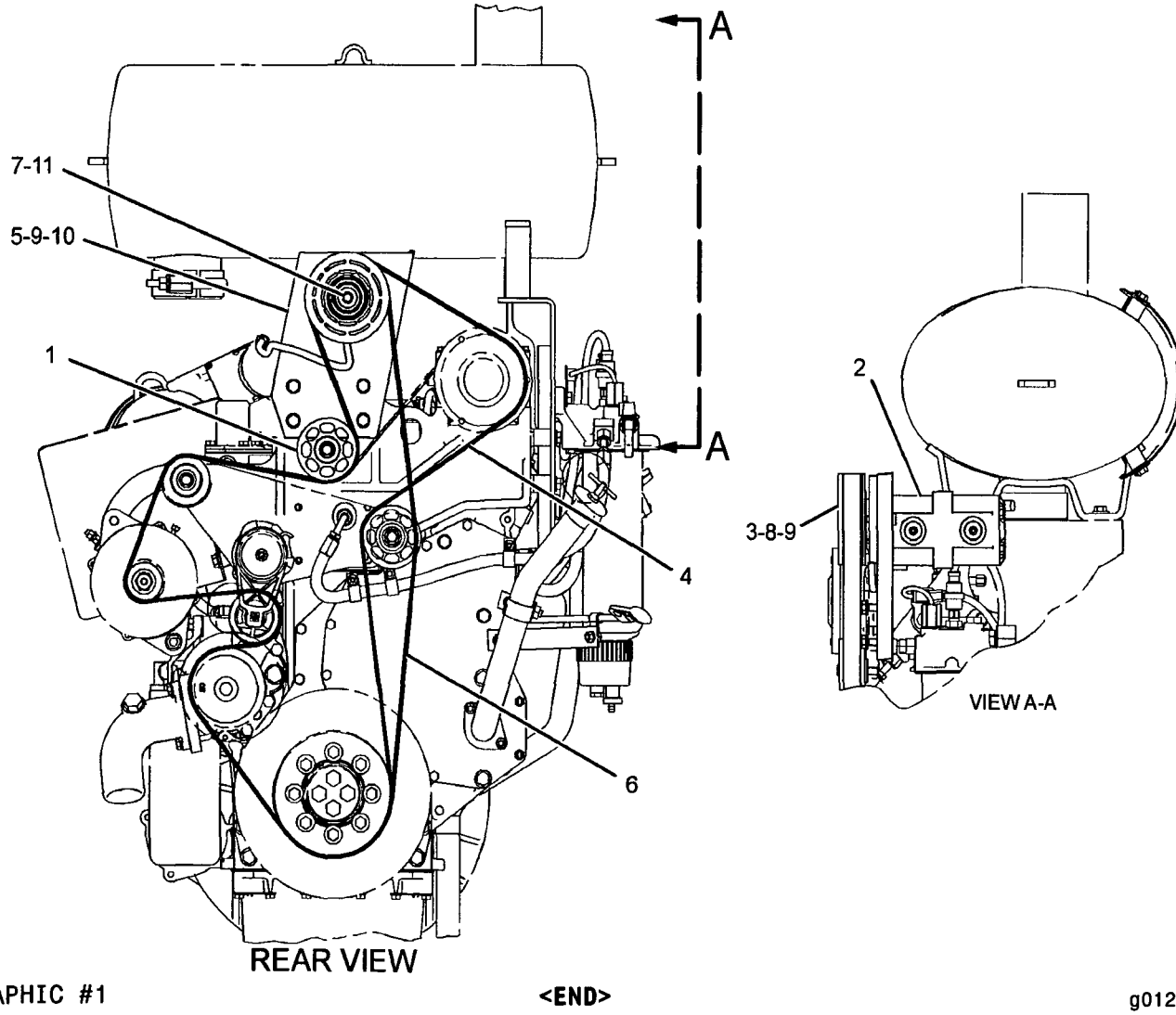

GRAPHIC #1 **<END>** g01226336

241-8692 PUMP GP-TRANSMISSION

S/N: FAH1-UP; FAK1-UP
PART OF 237-8186, 237-8187 TRANSMISSION AR
ALSO AN ATTACHMENT

SMCS-3066 i02226104

NOTE	REF NO	GRAPHIC REF	PART NUMBER	QTY	PART NAME 1 2 3 4 5 6 (PRODUCT LEVEL)	SEE PAGE
Y	1	1	241-8693	1	PUMP GP-TRANSMISSION	346
M	2	1	8T-5035	6	BOLT (M10X1.5X65-MM)	
	3	1	9M-5024	1	SEAL-O-RING	

M-METRIC PART
Y-SEPARATE ILLUSTRATION

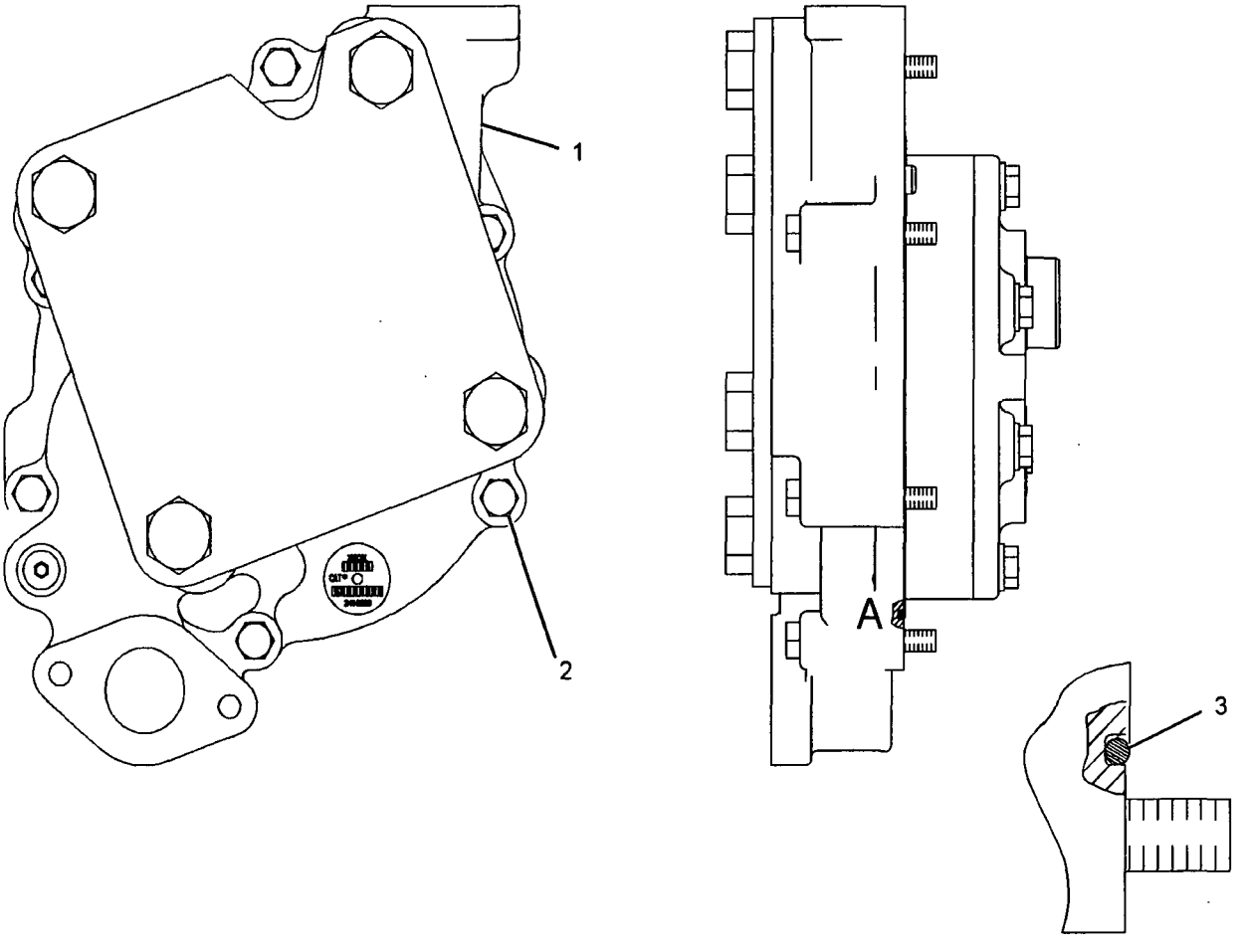

VIEW OF AREA A

GRAPHIC #1 <END> g01128148

241-8693 PUMP GP-TRANSMISSION

S/N: FAH1-UP; FAK1-UP
PART OF 241-8692 PUMP GP-TRANSMISSION
ALSO AN ATTACHMENT

SMCS-3066 **i02226136**

NOTE	REF NO	GRAPHIC REF	PART NUMBER	QTY	PART NAME 1 2 3 4 5 6 (PRODUCT LEVEL)	SEE PAGE
M	1	1	6V-7981	6	BOLT (M10X1.5X70-MM)	
	2	1	8P-1812	1	COVER AS-OIL PUMP	
		1	3P-7898	2	BEARING-SLEEVE	
	3	1	9G-7411	1	GEAR-OIL PUMP DRIVE (17-TEETH)	
	4	1	9G-7412	1	GEAR AS-OIL PUMP (17-TEETH)	
		1	2B-9373	1	KEY-WOODRUFF	
	5	1	122-6660	1	BODY AS-OIL PUMP	
		1	8M-8489	4	DOWEL	
	6	1	241-8694	1	BODY AS	
		1	1H-0974	2	DOWEL	
		1	3P-7898	2	BEARING-SLEEVE	
	7	1	6V-5839	6	WASHER (11X21X2.5-MM THK)	

M-METRIC PART

241-8693 **PUMP GP-TRANSMISSION** *(contd.)* **i02226136**

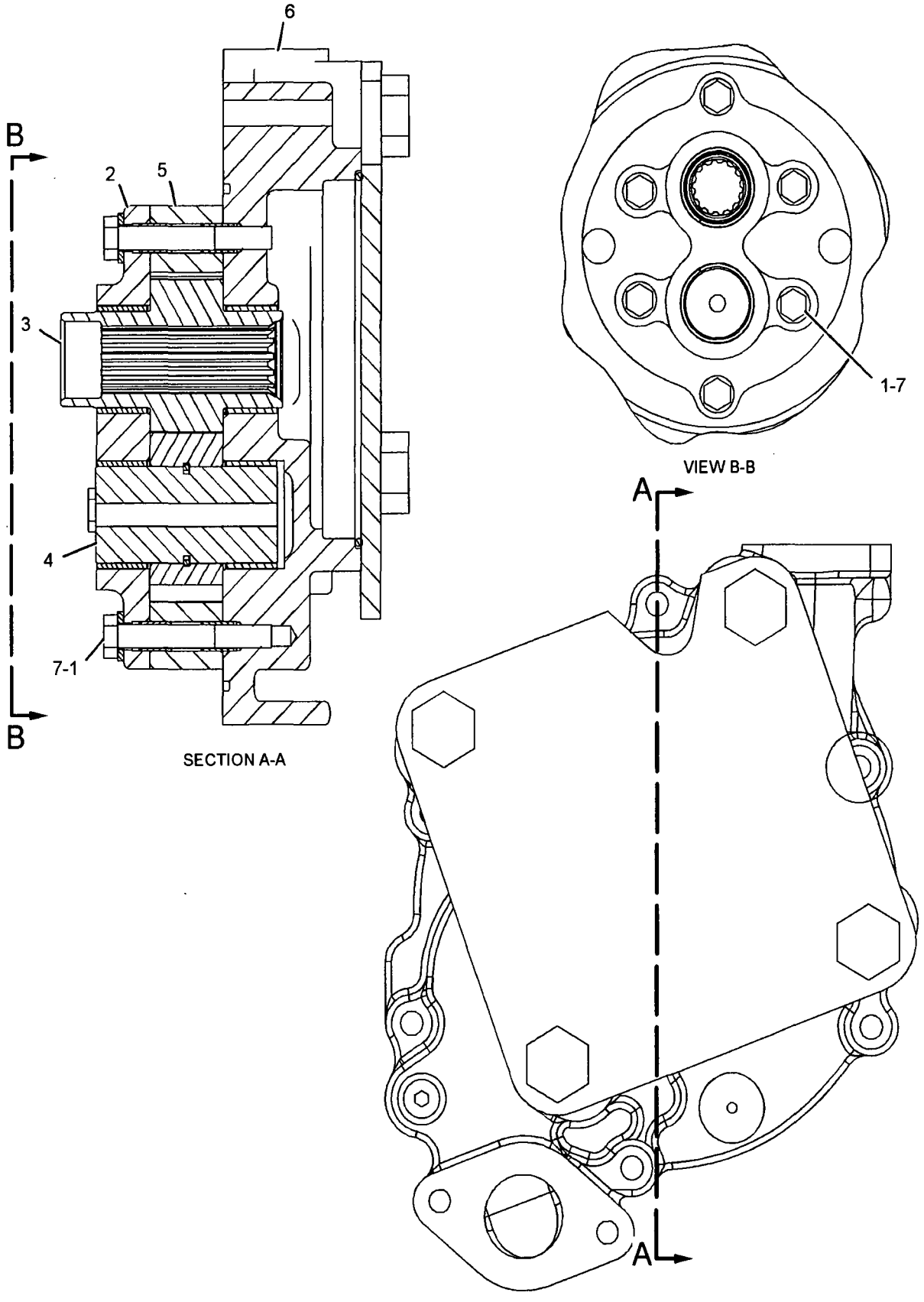

GRAPHIC #1 **<END>** g01128206

138-2373 RIM AR

S/N: N1A1-UP

PART OF 138-2795, 138-2796, 138-2917, 138-7662, 138-7663, 138-7664, 138-7665, 138-7666, 138-7668, 139-6146, 139-6148, 139-6149, 139-6150, 142-5905, 150-9253, 159-4839, 160-0397, 163-3954, 203-9784, 231-4157, 246-0843, 263-6322, 263-7121, 263-9321, 265-9525, 268-1169 TIRE & RIM AR

AN ATTACHMENT

SMCS-4209 **i01759635**

NOTE	PART NUMBER	QTY	PART NAME 1 2 3 4 5 6 (PRODUCT LEVEL)	SEE PAGE
Y	*131-2777*	4	RIM GP-DEMOUNTABLE	349
			–OR–	
Y	*206-9278*	4	RIM GP-DEMOUNTABLE	350
Y-SEPARATE ILLUSTRATION				

<END>

246-1576 RIM AR

S/N: N1A1-UP

PART OF 246-1584 TIRE & RIM AR

AN ATTACHMENT

SMCS-4209 **i02098794**

NOTE	PART NUMBER	QTY	PART NAME 1 2 3 4 5 6 (PRODUCT LEVEL)	SEE PAGE
Y	*246-1579*	4	RIM GP-DEMOUNTABLE	351
Y-SEPARATE ILLUSTRATION				

<END>

131-2777 RIM GP-DEMOUNTABLE

S/N: N1A1-UP

23.5X25

PART OF 151-0160, 156-6124, 171-8085, 183-2546, 188-0422 TIRE & RIM AR

AN ATTACHMENT

SMCS-4209 i00982936

NOTE	REF NO	GRAPHIC REF	PART NUMBER	QTY	PART NAME 1 2 3 4 5 6 (PRODUCT LEVEL)	SEE PAGE
	1	1	1J-8387	2	FLANGE	
	2	1	131-2778	1	RIM AS	
	3	1	8W-9602	1	BAND AS	
Y	5	1	2D-2511	1	VALVE GP-TIRE	379
	7	1	7D-7469	1	LOCKRING	

Y-SEPARATE ILLUSTRATION

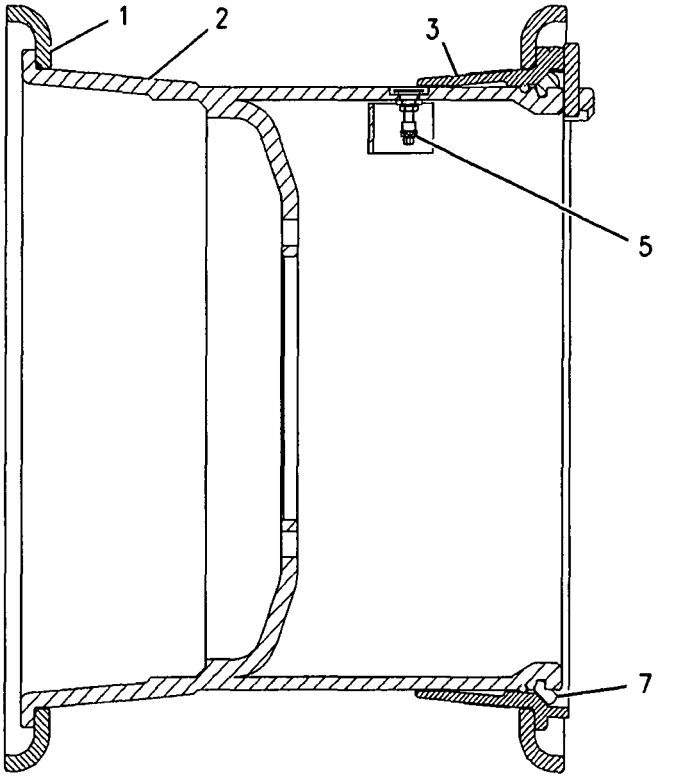

GRAPHIC #1 <END> g00500324

206-9278 RIM GP-DEMOUNTABLE

S/N: N1A1-UP
19.5 X 25 3 PIECE
PART OF 138-2373 RIM AR, 230-7839 TIRE & RIM AR
AN ATTACHMENT

SMCS-4209 i02265258

NOTE	REF NO	GRAPHIC REF	PART NUMBER	QTY	PART NAME 1 2 3 4 5 6 (PRODUCT LEVEL)	SEE PAGE
Y	1	1	2D-2511	1	VALVE GP-TIRE	379
	2	1	5T-5682	1	DRIVER	
	3	1	206-9271	1	RIM AS	
	4	1	208-7472	1	FLANGE AS	
	5	1	7D-7469	1	RING-LOCK	
	6	1	2D-2443	1	SEAL-O-RING	

Y-SEPARATE ILLUSTRATION

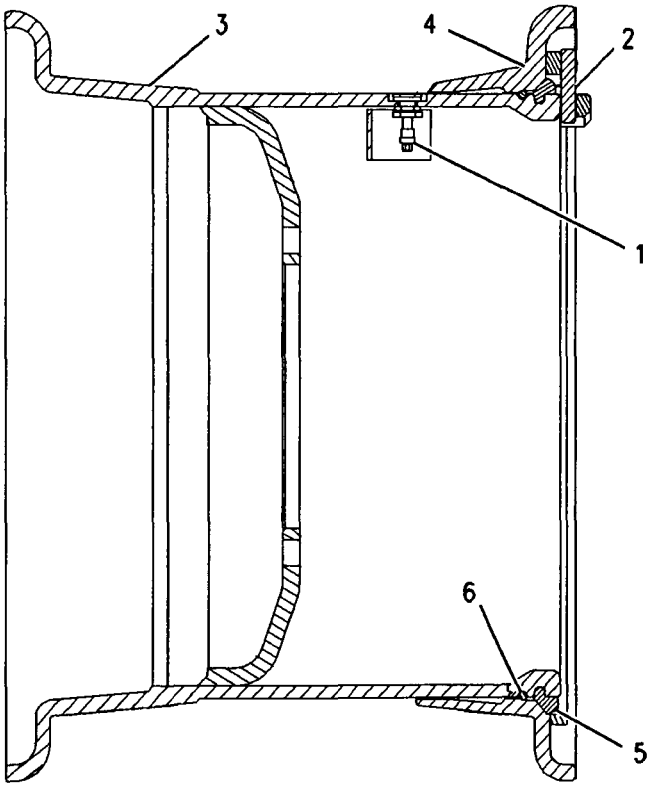

GRAPHIC #1

<END>

g00854653

245-7608 RIM GP-DEMOUNTABLE

S/N: N1A1-UP
22X25
PART OF 246-1579 RIM GP-DEMOUNTABLE
AN ATTACHMENT

SMCS-4209 i02118001

NOTE	PART NUMBER	QTY	PART NAME 1 2 3 4 5 6 (PRODUCT LEVEL)	SEE PAGE
	5T-5682	1	DRIVER	
	208-7473	1	FLANGE AS	
	245-7612	1	RIM AS	
	7D-7469	1	RING-LOCK	

<END>

246-1579 RIM GP-DEMOUNTABLE

S/N: N1A1-UP
PART OF 246-1576 RIM AR
AN ATTACHMENT

SMCS-4209 i02098737

NOTE	PART NUMBER	QTY	PART NAME 1 2 3 4 5 6 (PRODUCT LEVEL)	SEE PAGE
Y	245-7608	1	RIM GP-DEMOUNTABLE	351
Y	2D-2511	1	VALVE GP-TIRE	379
	2D-2443	1	SEAL-O-RING	

Y-SEPARATE ILLUSTRATION

<END>

115-1648 SHAFT GP-DRIVE

S/N: N1A1-UP
PART OF 237-0240 POWER TRAIN AR
ALSO AN ATTACHMENT

SMCS-3253 **i01369463**

NOTE	REF NO	GRAPHIC REF	PART NUMBER	QTY	PART NAME 1 2 3 4 5 6 (PRODUCT LEVEL)	SEE PAGE
	1	1	4E-3273	10	STRAP	
M	2	1	4E-5985	20	BOLT-12 POINT HEAD (M10X1.25X20-MM)	
Y	3	1	115-1650	1	UNIVERSAL JOINT GP	373
Y	4	1	115-1651	1	SLIP JOINT GP	356
M	5	1	7X-2564	2	BOLT (M20X2.5X90-MM)	
	6	1	8T-4123	2	WASHER-PLATED (22X35X3.5-MM THK)	
Y	7	1	115-1652	1	SHAFT GP-DRIVE	353
M	8	1	8T-4131	2	NUT (M20X2.5-THD)	
	9	1	8T-5439	2	WASHER (21.5X45X6-MM THK)	

M-METRIC PART
Y-SEPARATE ILLUSTRATION

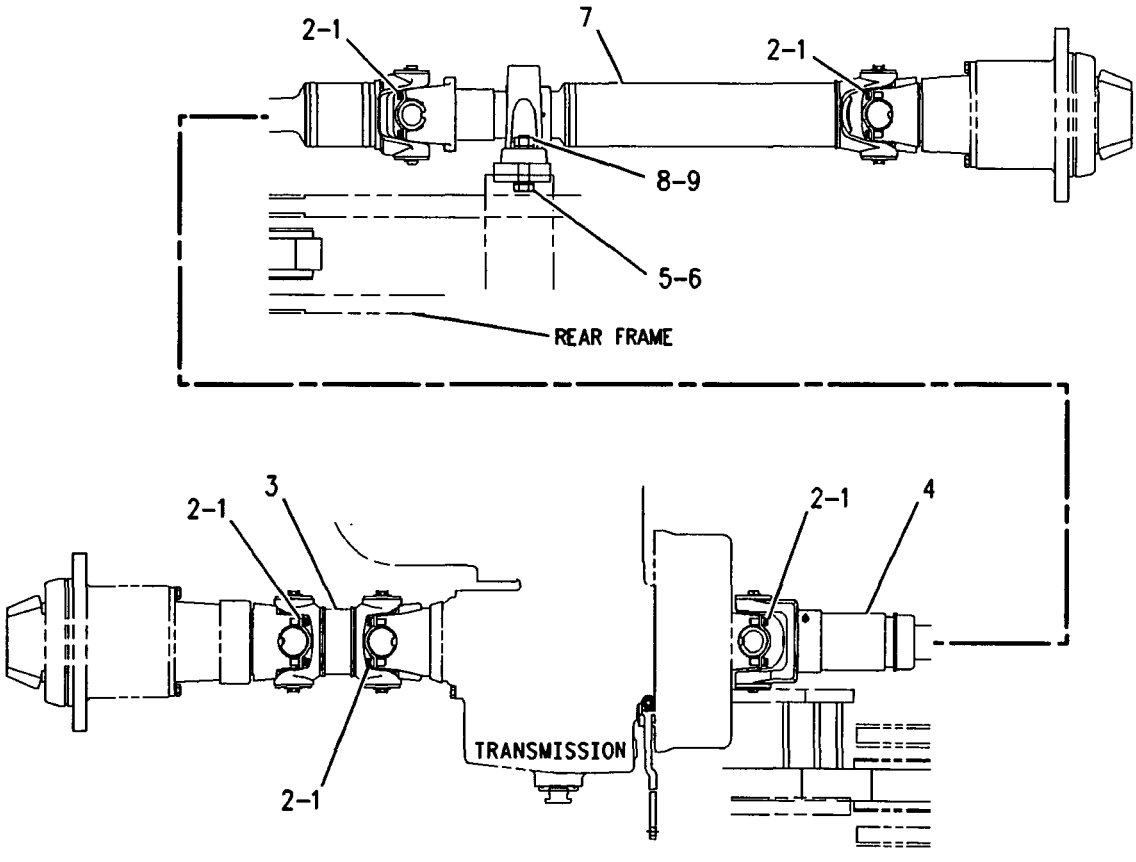

RIGHT SIDE VIEW

GRAPHIC #1 **<END>** g00696737

115-1652 SHAFT GP-DRIVE

S/N: N1A1-UP
PART OF 115-1648 SHAFT GP-DRIVE
ALSO AN ATTACHMENT

SMCS-3253 **i01556530**

NOTE	REF NO	GRAPHIC REF	PART NUMBER	QTY	PART NAME 1 2 3 4 5 6 (PRODUCT LEVEL)	SEE PAGE
M	1	1	**8T-0372**	1	BOLT (M12X1.75X90MM)	
Y	2	1	**115-1654**	1	UNIVERSAL JOINT GP	374
J	3	1	**112-8971**	1	BEARING GP-PILLOW BLOCK	
		1	**102-9542**	2	FITTING	
	4	1	**115-1653**	1	YOKE	
	5	1	**4E-6986**	1	RETAINER	
					AVAILABLE REPAIR KIT(S):	
J			**197-7996**	1	KIT-SETSCREW	
					(INCLUDES 2 SETSCREW-SOCKETS, SETSCREW-LOCK, NUT & NUT-HEX)	

J-GP MARKED J INCLUDES KIT MARKED J
M-METRIC PART
Y-SEPARATE ILLUSTRATION

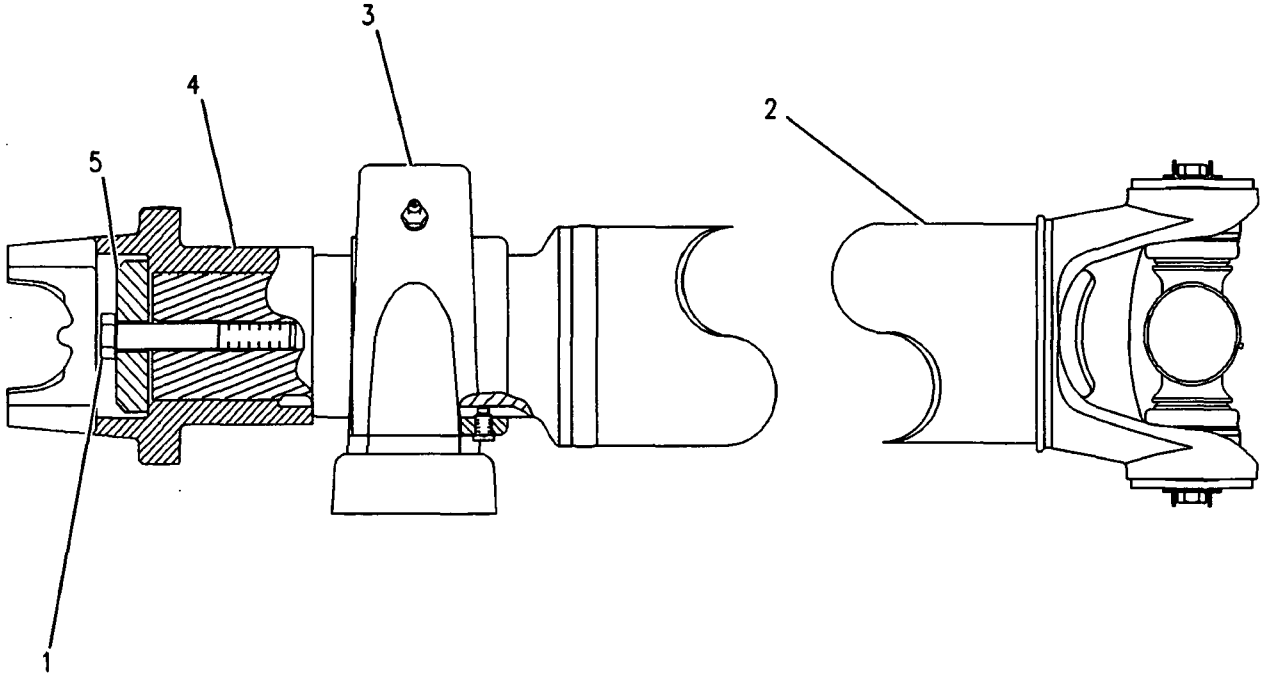

GRAPHIC #1 **<END>** g00261453

155-5600 SHAFT GP-DRIVE

S/N: N1A1-UP
PART OF 244-5421 LOGGING AR
AN ATTACHMENT

SMCS-3253 **i01830885**

NOTE	REF NO	GRAPHIC REF	PART NUMBER	QTY	PART NAME 1 2 3 4 5 6 (PRODUCT LEVEL)	SEE PAGE
	1	1	**4E-3273**	4	STRAP	
M	2	1	**4E-5985**	8	BOLT-12 POINT HEAD (M10X1.25X20-MM)	
Y	3	1	**115-1650**	1	UNIVERSAL JOINT GP	373
Y	4	1	**155-5607**	1	SLIP JOINT GP	357
M	5	1	**7X-2564**	2	BOLT (M20X2.5X90-MM)	
	6	1	**8T-4123**	2	WASHER-PLATED (22X35X3.5-MM THK)	
M	7	1	**8T-4131**	2	NUT (M20X2.5-THD)	
Y	8	1	*155-5604*	1	SHAFT GP-DRIVE	355
	9	1	**4V-7081**	6	STRAP	
	10	1	**138-3816**	12	BOLT-12 POINT HEAD (M12X1.25X30-MM)	
	11	1	**8T-5439**	2	WASHER (21.5X45X6-MM THK)	

M-METRIC PART
Y-SEPARATE ILLUSTRATION

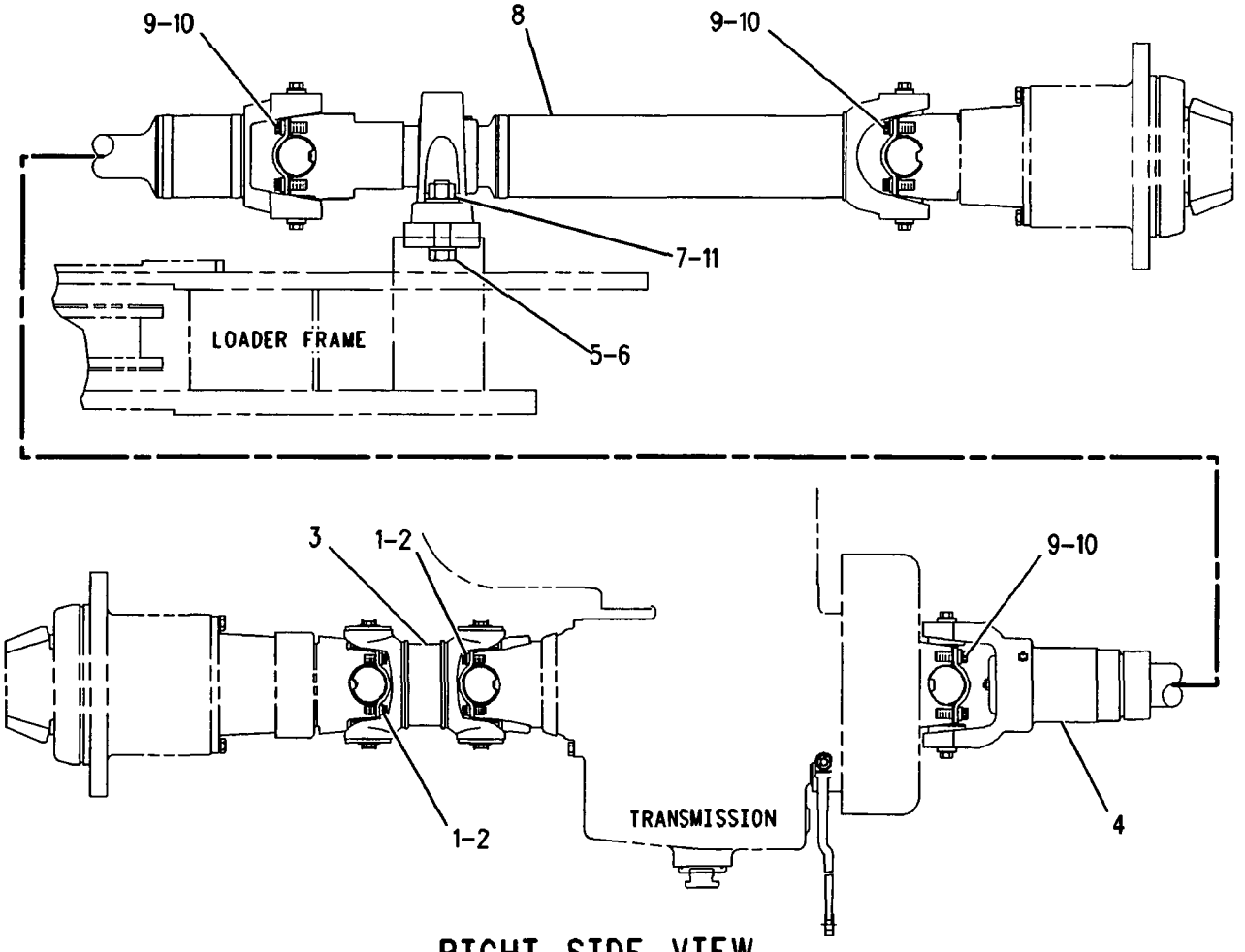

RIGHT SIDE VIEW

GRAPHIC #1 **<END>** g00875804

155-5604 SHAFT GP-DRIVE

S/N: N1A1-UP

PART OF 155-5600 SHAFT GP-DRIVE

AN ATTACHMENT

SMCS-3253 i01832876

NOTE	REF NO	GRAPHIC REF	PART NUMBER	QTY	PART NAME 1 2 3 4 5 6 (PRODUCT LEVEL)	SEE PAGE
M	1	1	8T-0372	1	BOLT (M12X1.75X90MM)	
Y	2	1	155-5605	1	UNIVERSAL JOINT GP	375
J	3	1	112-8971	1	BEARING GP-PILLOW BLOCK	
		1	102-9542	2	FITTING	
	4	1	155-5606	1	YOKE	
	5	1	4E-6986	1	RETAINER	
					AVAILABLE REPAIR KIT(S):	
J			197-7996	1	KIT-SETSCREW	
					(INCLUDES 2 SETSCREW-SOCKETS, SETSCREW-LOCK, NUT & NUT-HEX)	

J-GP MARKED J INCLUDES KIT MARKED J
M-METRIC PART
Y-SEPARATE ILLUSTRATION

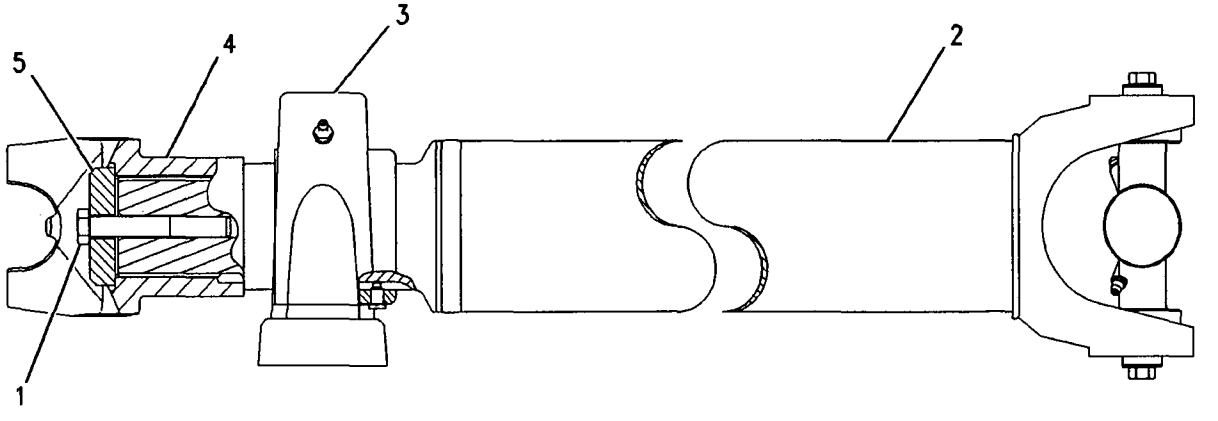

GRAPHIC #1 <END> g00387018

115-1651 SLIP JOINT GP

S/N: N1A1-UP

PART OF 115-1648 SHAFT GP-DRIVE

ALSO AN ATTACHMENT

SMCS-3251 **i02023609**

NOTE	REF NO	GRAPHIC REF	PART NUMBER	QTY	PART NAME 1 2 3 4 5 6 (PRODUCT LEVEL)	SEE PAGE
	1	1	3B-8489	1	FITTING-GREASE	
	2	1	4E-9324	2	SPIDER & BEARING GP	
					(EACH INCLUDES)	
M	3	1	3E-4315	4	BOLT-LOCKING (M8X1X14-MM)	
	4	1	6W-4126	2	STRAP-LOCKING	
	5	1	5P-8334	1	FITTING-HYDRAULIC	
	6	1	8V-1412	1	RETAINER	
					-OR-	
		1	111-8614	1	RETAINER	
	7	1	196-8488	1	CAP-DUST	

M-METRIC PART

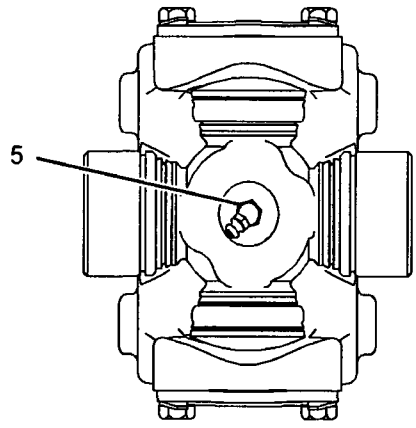

VIEW A-A

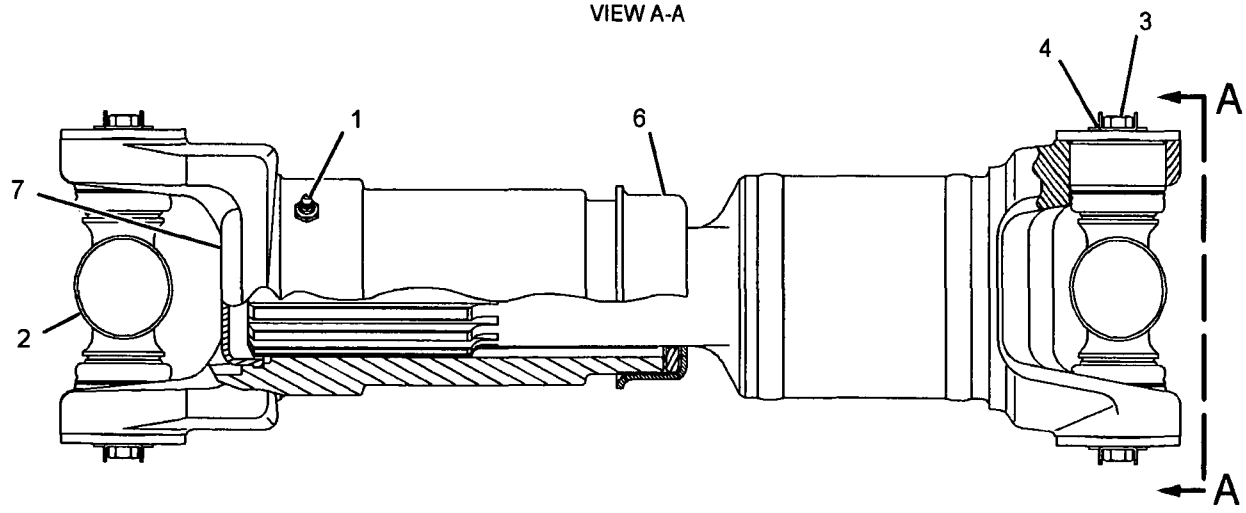

GRAPHIC #1 **<END>** g01020304

155-5607 SLIP JOINT GP

S/N: N1A1-UP
PART OF 155-5600 SHAFT GP-DRIVE
AN ATTACHMENT

SMCS-3251 **i02035512**

NOTE	REF NO	GRAPHIC REF	PART NUMBER	QTY	PART NAME 1 2 3 4 5 6 (PRODUCT LEVEL)	SEE PAGE
	1	1	**3B-8489**	1	FITTING-GREASE	
	2	1	**125-8810**	2	SPIDER & BEARING GP	
					(EACH INCLUDES)	
M		1	**153-1185**	4	BOLT (HEX HEAD, M10X1.25X16-MM)	
		1	**9C-9159**	2	PLATE	
		1	**027-1287**	2	FITTING-GREASE	
	3	1	**8V-1412**	1	RETAINER	
	4	1	**196-8490**	1	CAP-DUST	

M-METRIC PART

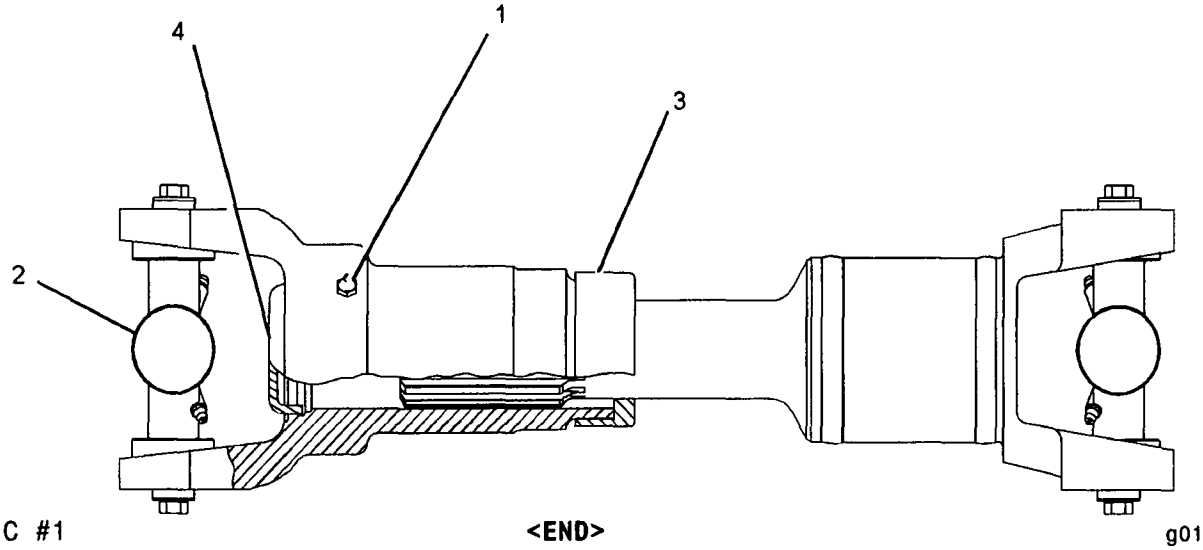

GRAPHIC #1 **<END>** g01015858

138-2795 TIRE & RIM AR

S/N: N1A1-UP
AN ATTACHMENT

SMCS-4202 i02286440

NOTE	PART NUMBER	QTY	PART NAME 1 2 3 4 5 6 (PRODUCT LEVEL)	SEE PAGE
Y	138-2373	1	RIM AR	348
	6C-2791	4	TIRE (23.5-R25)	

Y-SEPARATE ILLUSTRATION

<END>

138-2796 TIRE & RIM AR

S/N: N1A1-UP
AN ATTACHMENT

SMCS-4202 i02286387

NOTE	PART NUMBER	QTY	PART NAME 1 2 3 4 5 6 (PRODUCT LEVEL)	SEE PAGE
Y	138-2373	1	RIM AR	348
	6C-7368	4	TIRE (23.5-R25)	

Y-SEPARATE ILLUSTRATION

<END>

138-2917 TIRE & RIM AR

S/N: N1A1-UP
AN ATTACHMENT

SMCS-4202 i02286417

NOTE	PART NUMBER	QTY	PART NAME 1 2 3 4 5 6 (PRODUCT LEVEL)	SEE PAGE
Y	138-2373	1	RIM AR	348
	119-7463	4	TIRE (23.5-R25)	

Y-SEPARATE ILLUSTRATION

<END>

138-7662 TIRE & RIM AR

S/N: N1A1-UP
AN ATTACHMENT

SMCS-4202 i02286461

NOTE	PART NUMBER	QTY	PART NAME 1 2 3 4 5 6 (PRODUCT LEVEL)	SEE PAGE
Y	138-2373	1	RIM AR	348
	159-4838	1	BLOCK AS-AXLE OSC LIMITER	
	6C-1618	4	TIRE (23.5-25)	

Y-SEPARATE ILLUSTRATION

<END>

138-7663 TIRE & RIM AR

S/N: N1A1-UP

AN ATTACHMENT

SMCS-4202 **i02286462**

NOTE	PART NUMBER	QTY	PART NAME 1 2 3 4 5 6 (PRODUCT LEVEL)	SEE PAGE
Y	*138-2373*	1	RIM AR	348
	6C-9475	4	TIRE (23.5-25)	

Y-SEPARATE ILLUSTRATION

<END>

138-7664 TIRE & RIM AR

S/N: N1A1-UP

AN ATTACHMENT

SMCS-4202 **i02286463**

NOTE	PART NUMBER	QTY	PART NAME 1 2 3 4 5 6 (PRODUCT LEVEL)	SEE PAGE
Y	*138-2373*	1	RIM AR	348
	159-4838	1	BLOCK AS-AXLE OSC LIMITER	
	6C-1608	4	TIRE (23.5-25)	

Y-SEPARATE ILLUSTRATION

<END>

138-7665 TIRE & RIM AR

S/N: N1A1-UP

AN ATTACHMENT

SMCS-4202 **i02286466**

NOTE	PART NUMBER	QTY	PART NAME 1 2 3 4 5 6 (PRODUCT LEVEL)	SEE PAGE
Y	*138-2373*	1	RIM AR	348
	159-4838	1	BLOCK AS-AXLE OSC LIMITER	
	6C-8882	4	TIRE (23.5-R25)	

Y-SEPARATE ILLUSTRATION

<END>

138-7666 TIRE & RIM AR

S/N: N1A1-UP

AN ATTACHMENT

SMCS-4202 **i02286469**

NOTE	PART NUMBER	QTY	PART NAME 1 2 3 4 5 6 (PRODUCT LEVEL)	SEE PAGE
Y	*138-2373*	1	RIM AR	348
	159-4838	1	BLOCK AS-AXLE OSC LIMITER	
	9C-2230	4	TIRE (23.5-R25)	

Y-SEPARATE ILLUSTRATION

<END>

138-7668 TIRE & RIM AR

S/N: N1A1-UP

AN ATTACHMENT

SMCS-4202 i02286470

NOTE	PART NUMBER	QTY	PART NAME 1 2 3 4 5 6 (PRODUCT LEVEL)	SEE PAGE
Y	*138-2373*	1	RIM AR	348
	133-5200	4	TIRE (23.5-25)	

Y-SEPARATE ILLUSTRATION

<END>

139-6146 TIRE & RIM AR

S/N: N1A1-UP

AN ATTACHMENT

SMCS-4202 i02400151

NOTE	PART NUMBER	QTY	PART NAME 1 2 3 4 5 6 (PRODUCT LEVEL)	SEE PAGE
Y	*138-2373*	1	RIM AR	348
	128-0912	4	TIRE (23.5-25)	

Y-SEPARATE ILLUSTRATION

<END>

139-6148 TIRE & RIM AR

S/N: N1A1-UP

23.5-25 20 PR L-3

AN ATTACHMENT

SMCS-4202 i02460816

NOTE	PART NUMBER	QTY	PART NAME 1 2 3 4 5 6 (PRODUCT LEVEL)	SEE PAGE
Y	*138-2373*	1	RIM AR	348
	128-0913	1	TIRE (23.5-25)	

Y-SEPARATE ILLUSTRATION

<END>

139-6149 TIRE & RIM AR

S/N: N1A1-UP

AN ATTACHMENT

SMCS-4202 i02286477

NOTE	PART NUMBER	QTY	PART NAME 1 2 3 4 5 6 (PRODUCT LEVEL)	SEE PAGE
Y	*138-2373*	1	RIM AR	348
	134-1815	4	TIRE (23.5-25)	

Y-SEPARATE ILLUSTRATION

<END>

139-6150 TIRE & RIM AR

S/N: N1A1-UP
AN ATTACHMENT

SMCS-4202 **i02288089**

NOTE	PART NUMBER	QTY	PART NAME 1 2 3 4 5 6 (PRODUCT LEVEL)	SEE PAGE
Y	*138-2373*	1	RIM AR	348
	159-4838	1	BLOCK AS-AXLE OSC LIMITER	
	135-6337	4	TIRE (23.5-25)	
Y-SEPARATE ILLUSTRATION				

<END>

142-5905 TIRE & RIM AR

S/N: N1A1-UP
AN ATTACHMENT

SMCS-4202 **i02286570**

NOTE	PART NUMBER	QTY	PART NAME 1 2 3 4 5 6 (PRODUCT LEVEL)	SEE PAGE
Y	*138-2373*	1	RIM AR	348
	140-8314	4	TIRE (23.5-25)	
Y-SEPARATE ILLUSTRATION				

<END>

150-9253 TIRE & RIM AR

S/N: N1A1-UP
AN ATTACHMENT

SMCS-4202 **i02286595**

NOTE	PART NUMBER	QTY	PART NAME 1 2 3 4 5 6 (PRODUCT LEVEL)	SEE PAGE
Y	*138-2373*	1	RIM AR	348
	159-4838	1	BLOCK AS-AXLE OSC LIMITER	
	9K-0443	4	TIRE (23.5-25)	
Y-SEPARATE ILLUSTRATION				

<END>

151-0160 TIRE & RIM AR

S/N: N1A1-UP
AN ATTACHMENT

SMCS-4202 **i02288003**

NOTE	PART NUMBER	QTY	PART NAME 1 2 3 4 5 6 (PRODUCT LEVEL)	SEE PAGE
Y	*131-2777*	1	RIM GP-DEMOUNTABLE	349
	9K-0443	1	TIRE (23.5-25)	
Y-SEPARATE ILLUSTRATION				

<END>

156-6124 TIRE & RIM AR

S/N: N1A1-UP

AN ATTACHMENT

SMCS-4202 **i02288002**

NOTE	PART NUMBER	QTY	PART NAME 1 2 3 4 5 6 (PRODUCT LEVEL)	SEE PAGE
Y	*131-2777*	1	RIM GP-DEMOUNTABLE	349
	6C-2791	1	TIRE (23.5-R25)	
Y-SEPARATE ILLUSTRATION				

<END>

159-4839 TIRE & RIM AR

S/N: N1A1-UP

AN ATTACHMENT

SMCS-4202 **i02460835**

NOTE	PART NUMBER	QTY	PART NAME 1 2 3 4 5 6 (PRODUCT LEVEL)	SEE PAGE
Y	*138-2373*	1	RIM AR	348
	159-4838	1	BLOCK AS-AXLE OSC LIMITER	
	5V-1628	4	TIRE (23.5-25)	
Y-SEPARATE ILLUSTRATION				

<END>

160-0397 TIRE & RIM AR

S/N: N1A1-UP

AN ATTACHMENT

SMCS-4202 **i02288006**

NOTE	PART NUMBER	QTY	PART NAME 1 2 3 4 5 6 (PRODUCT LEVEL)	SEE PAGE
Y	*138-2373*	1	RIM AR	348
	119-3312	4	TIRE (23.5-R25)	
Y-SEPARATE ILLUSTRATION				

<END>

163-3954 TIRE & RIM AR

S/N: N1A1-UP

AN ATTACHMENT

SMCS-4202 **i02288007**

NOTE	PART NUMBER	QTY	PART NAME 1 2 3 4 5 6 (PRODUCT LEVEL)	SEE PAGE
Y	*138-2373*	1	RIM AR	348
	163-3949	4	TIRE (23.5-25)	
Y-SEPARATE ILLUSTRATION				

<END>

171-8085 TIRE & RIM AR

S/N: N1A1-UP

AN ATTACHMENT

SMCS-4202 **i02288008**

NOTE	PART NUMBER	QTY	PART NAME 1 2 3 4 5 6 (PRODUCT LEVEL)	SEE PAGE
Y	*131-2777*	1	RIM GP-DEMOUNTABLE	349
	6C-1608	1	TIRE (23.5-25)	

Y-SEPARATE ILLUSTRATION

<END>

183-2546 TIRE & RIM AR

S/N: N1A1-UP

AN ATTACHMENT

SMCS-4202 **i02288009**

NOTE	PART NUMBER	QTY	PART NAME 1 2 3 4 5 6 (PRODUCT LEVEL)	SEE PAGE
Y	*131-2777*	1	RIM GP-DEMOUNTABLE	349
	6C-7368	1	TIRE (23.5-R25)	

Y-SEPARATE ILLUSTRATION

<END>

188-0422 TIRE & RIM AR

S/N: N1A1-UP

AN ATTACHMENT

SMCS-4202 **i02288012**

NOTE	PART NUMBER	QTY	PART NAME 1 2 3 4 5 6 (PRODUCT LEVEL)	SEE PAGE
Y	*131-2777*	1	RIM GP-DEMOUNTABLE	349
	119-7463	1	TIRE (23.5-R25)	

Y-SEPARATE ILLUSTRATION

<END>

203-9784 TIRE & RIM AR

S/N: N1A1-UP

AN ATTACHMENT

SMCS-4202 **i02288014**

NOTE	PART NUMBER	QTY	PART NAME 1 2 3 4 5 6 (PRODUCT LEVEL)	SEE PAGE
Y	*138-2373*	1	RIM AR	348
	203-9782	4	TIRE (650/65-R25)	

Y-SEPARATE ILLUSTRATION

<END>

230-7839 TIRE & RIM AR

S/N: N1A1-UP
SPARE
AN ATTACHMENT

SMCS-4202 i02288016

NOTE	PART NUMBER	QTY	PART NAME 1 2 3 4 5 6 (PRODUCT LEVEL)	SEE PAGE
Y	206-9278	1	RIM GP-DEMOUNTABLE	350
	133-5200	1	TIRE (23.5-25)	
Y-SEPARATE ILLUSTRATION				

<END>

231-4157 TIRE & RIM AR

S/N: N1A1-UP
AN ATTACHMENT

SMCS-4202 i02288019

NOTE	PART NUMBER	QTY	PART NAME 1 2 3 4 5 6 (PRODUCT LEVEL)	SEE PAGE
Y	138-2373	1	RIM AR	348
	231-4156	4	TIRE (23.5-R25)	
Y-SEPARATE ILLUSTRATION				

<END>

246-0843 TIRE & RIM AR

S/N: N1A1-UP
AN ATTACHMENT

SMCS-4202 i02288021

NOTE	PART NUMBER	QTY	PART NAME 1 2 3 4 5 6 (PRODUCT LEVEL)	SEE PAGE
Y	138-2373	1	RIM AR	348
	159-4838	1	BLOCK AS-AXLE OSC LIMITER	
	246-0844	4	TIRE (23.5-25)	
Y-SEPARATE ILLUSTRATION				

<END>

246-1584 TIRE & RIM AR

S/N: N1A1-UP
AN ATTACHMENT

SMCS-4202 i02288023

NOTE	PART NUMBER	QTY	PART NAME 1 2 3 4 5 6 (PRODUCT LEVEL)	SEE PAGE
Y	176-2444	1	BLOCK GP-AXLE OSC LIMITER	385
Y	246-1576	1	RIM AR	348
	205-5412	4	TIRE (750/65-R25)	
Y-SEPARATE ILLUSTRATION				

<END>

263-6322 TIRE & RIM AR

S/N: N1A1-UP
AN ATTACHMENT

SMCS-4202 i02242024

NOTE	PART NUMBER	QTY	PART NAME 1 2 3 4 5 6 (PRODUCT LEVEL)	SEE PAGE
Y	*138-2373*	1	RIM AR	348
	159-4838	1	BLOCK AS-AXLE OSC LIMITER	
	263-6323	4	TIRE (23-25)	
Y-SEPARATE ILLUSTRATION				

<END>

263-7121 TIRE & RIM AR

S/N: N1A1-UP
AN ATTACHMENT

SMCS-4202 i02242025

NOTE	PART NUMBER	QTY	PART NAME 1 2 3 4 5 6 (PRODUCT LEVEL)	SEE PAGE
Y	*138-2373*	1	RIM AR	348
	263-7910	4	TIRE (23.5-R25)	
Y-SEPARATE ILLUSTRATION				

<END>

263-9321 TIRE & RIM AR

S/N: N1A1-UP
AN ATTACHMENT

SMCS-4202 i02296480

NOTE	PART NUMBER	QTY	PART NAME 1 2 3 4 5 6 (PRODUCT LEVEL)	SEE PAGE
Y	*138-2373*	1	RIM AR	348
	159-4838	1	BLOCK AS-AXLE OSC LIMITER	
	263-9322	4	TIRE (23.5-R25)	
Y-SEPARATE ILLUSTRATION				

<END>

265-9525 TIRE & RIM AR

S/N: N1A1-UP
AN ATTACHMENT

SMCS-4202 i02328445

NOTE	PART NUMBER	QTY	PART NAME 1 2 3 4 5 6 (PRODUCT LEVEL)	SEE PAGE
Y	*176-2444*	1	BLOCK GP-AXLE OSC LIMITER	385
Y	*138-2373*	1	RIM AR	348
	264-1379	4	TIRE (23.5-25)	
Y-SEPARATE ILLUSTRATION				

<END>

268-1169 TIRE & RIM AR

S/N: N1A1-UP

AN ATTACHMENT

SMCS-4202 **i02325907**

NOTE	PART NUMBER	QTY	PART NAME 1 2 3 4 5 6 (PRODUCT LEVEL)	SEE PAGE
Y	*138-2373*	1	RIM AR	348
	159-4838	1	BLOCK AS-AXLE OSC LIMITER	
	153-0066	4	TIRE (23.5-R25)	

Y-SEPARATE ILLUSTRATION

<END>

241-9022 TORQUE CONVERTER & HOUSING GP-

FREEWHEEL STATOR

S/N: FAH1-UP; FAK1-UP

PART OF 237-8186, 237-8187 TRANSMISSION AR

ALSO AN ATTACHMENT

SMCS-3101, 3105 **i02265186**

NOTE	REF NO	GRAPHIC REF	PART NUMBER	QTY	PART NAME 1 2 3 4 5 6 (PRODUCT LEVEL)	SEE PAGE
	1	2	241-9023	1	HOUSING-TORQUE CONVERTER	
	2	2	137-4549	1	GEAR-PUMP DRIVE (79-TEETH)	
M	3	2	6V-1820	6	BOLT (M10X1.5X30-MM)	
	4	2	6V-5839	14	WASHER (11X21X2.5-MM THK)	
	5	2	5F-1678	1	SEAL-O-RING	
M	6	2	8T-0372	1	BOLT (M12X1.75X90-MM)	
	7	2	5P-8245	1	WASHER-HARD (13.5X25.5X3-MM THK)	
	8	2	115-2021	1	FLANGE-PUMP DRIVE	
M	9	2	6V-5696	1	BOLT (M12X1.75X80-MM)	
	10	2	2S-6408	1	WASHER-RETAINING (0.531X3.25X0.438-IN THK)	
	11	2	8E-7475	1	GEAR-DRIVE (59-TEETH)	
M	12	2	6V-5842	8	BOLT (M10X1.5X40-MM)	
Y	13	2	168-5223	1	TORQUE CONVERTER GP (FREEWHEEL STATOR)	370
	14	2	144-8299	1	SEAL-O-RING	
	15	2	1T-1639	1	RING	
	16	2	3T-9958	1	SHAFT	
	17	2	1T-0043	1	BALL BEARING	
	18	1	6V-3965	1	FITTING AS (QUICK DISCONNECT)	
	19	1	3J-1907	2	SEAL-O-RING	
	20	1	6V-0852	1	CAP-DUST	
Y	21	1	193-2550	1	SENSOR GP-SPEED (TORQUE CONVERTER OUTPUT)	200
	22	1	6V-0484	1	ADAPTER-O-RING	
	23	1	8S-6365	1	PLUG-CUP	
	24	1	9X-8268	1	WASHER (17.5X30X3.5-MM THK)	
	25	1	1V-6341	1	SEAL	

M-METRIC PART
Y-SEPARATE ILLUSTRATION

REFER TO ALL ILLUSTRATIONS OF THIS GROUP FOR AUXILIARY VIEWS

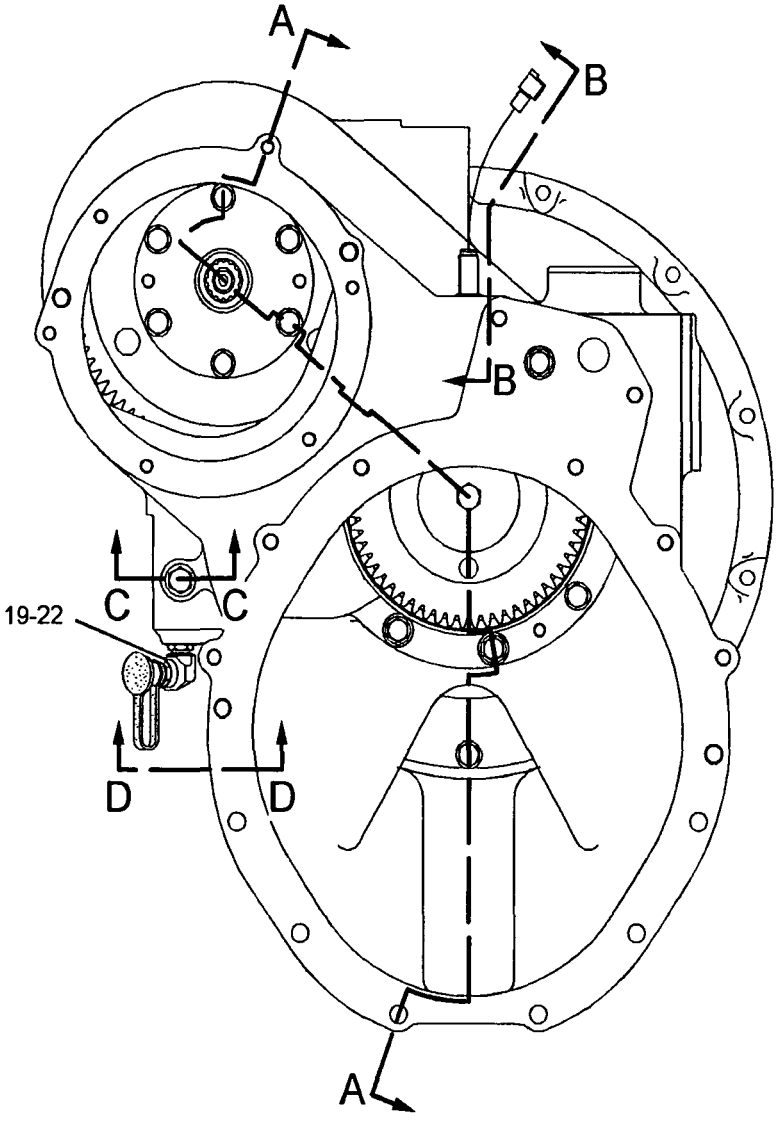

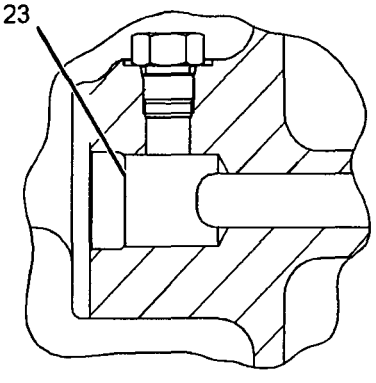

SECTION C-C

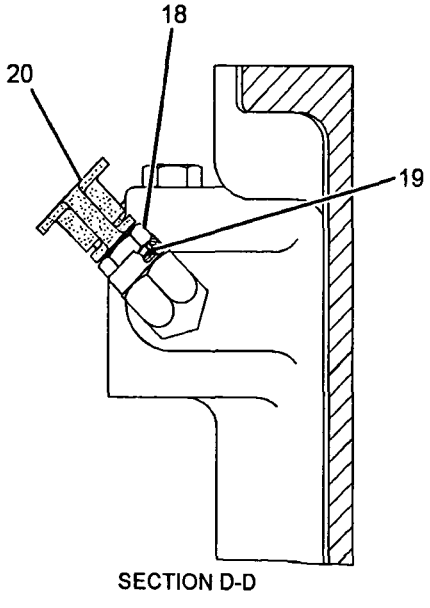

SECTION D-D

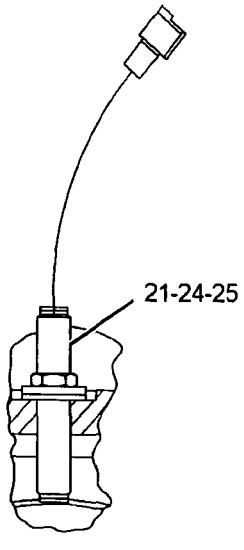

SECTION B-B

GRAPHIC #1

g01128454

241-9022 TORQUE CONVERTER & HOUSING GP *(contd.)* i02265186

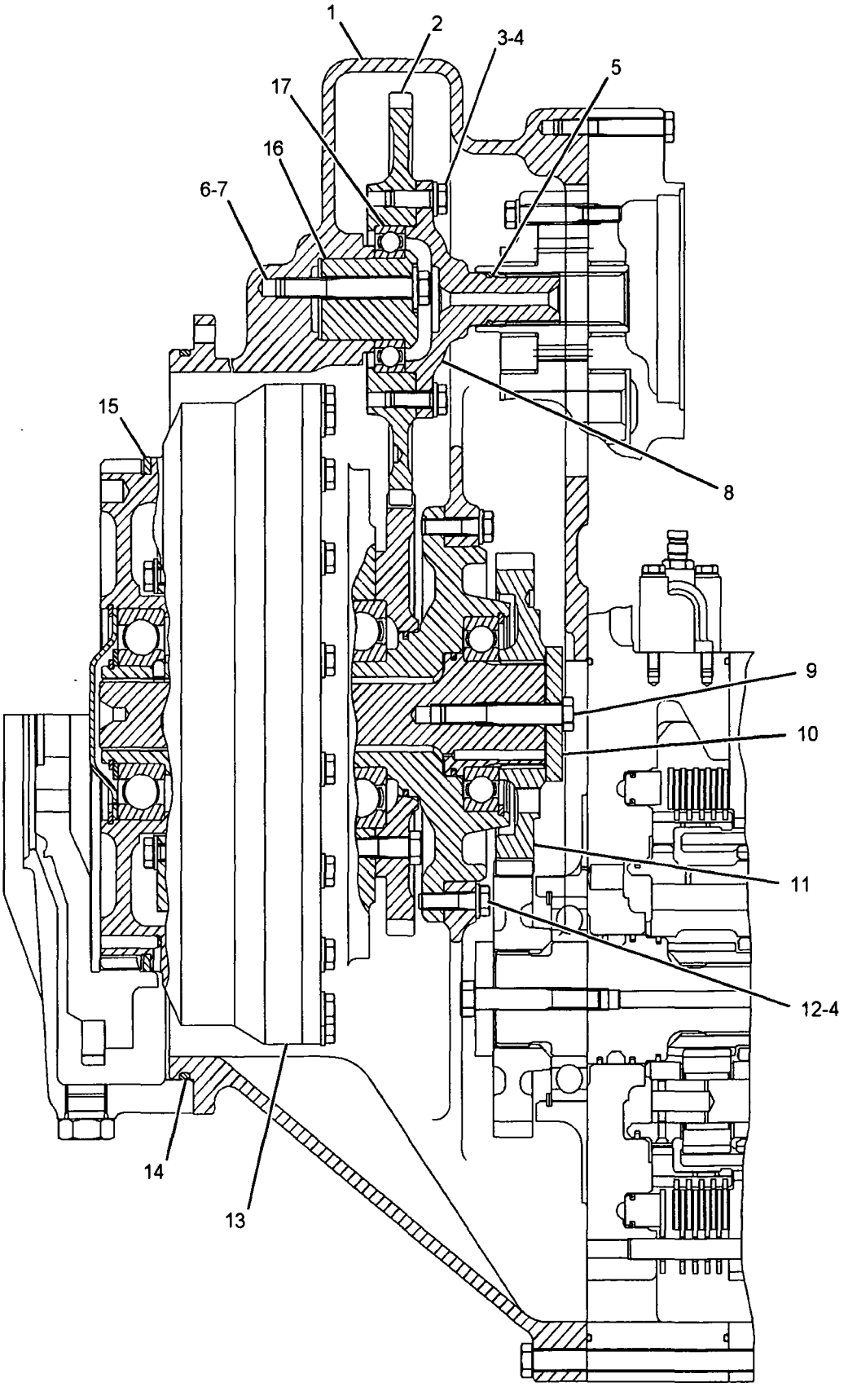

SECTION A-A

GRAPHIC #2 **<END>** g01128615

168-5223 TORQUE CONVERTER GP–FREEWHEEL STATOR

S/N: CJF1-UP

PART OF 241-9022 TORQUE CONVERTER & HOUSING GP

ALSO AN ATTACHMENT

SMCS-3101 i01638561

NOTE	REF NO	GRAPHIC REF	PART NUMBER	QTY	PART NAME 1 2 3 4 5 6 (PRODUCT LEVEL)	SEE PAGE
	1	1	6Y-4859	1	HOUSING	
M	2	1	6V-1820	34	BOLT (M10X1.50X30MM)	
	3	1	6V-5839	34	WASHER (11X21X2.5MM THK)	
	4	1	6Y-1085	1	IMPELLER-CONVERTER	
	5	1	137-4548	1	GEAR-DRIVE	
	6	1	1T-1621	1	RING-SEAL	
	7	1	171-1413	1	CARRIER AS	
		1	4S-8541	1	DOWEL	
	8	1	115-2023	1	SHAFT-OUTPUT	
	9	1	5P-6414	3	RING-RETAINING	
	10	1	1S-3743	1	BALL BEARING	
	11	1	1T-1622	1	RING-SEAL	
M	12	1	6V-7673	8	BOLT (M12X1.75X50MM)	
	13	1	129-2380	1	BALL BEARING	
	14	1	194-4411	2	WASHER-THRUST	
	15	1	6Y-3151	1	STATOR-CONVERTER	
	16	1	6Y-3149	1	TURBINE-CONVERTER	
	17	1	5K-9065	1	RING-RETAINING	
	18	1	191-8720	1	PLATE-SPLINED	
	19	1	8E-6539	1	HUB AS	
		1	4S-8541	1	DOWEL	
	20	1	6Y-1087	1	COVER-END	
	21	1	064-3843	1	RING-SNAP	
	22	1	8E-6648	1	SPACER-HUB	
	23	1	8E-5247	1	BALL BEARING	
	24	1	6V-8128	1	RING-RETAINING	
	25	1	3E-6799	1	SEAL-O-RING	
	26	1	141-0752	1	SPACER	
	27	1	8P-7857	9	ROLLER-FREEWHEEL	
	28	1	8P-7858	9	SPRING-FREEWHEEL	
	29	1	7G-8430	1	CAM-FREEWHEEL	
	30	1	141-1236	1	RACE-FREEWHEEL	

M-METRIC PART

168-5223 TORQUE CONVERTER GP *(contd.)*

i01638561

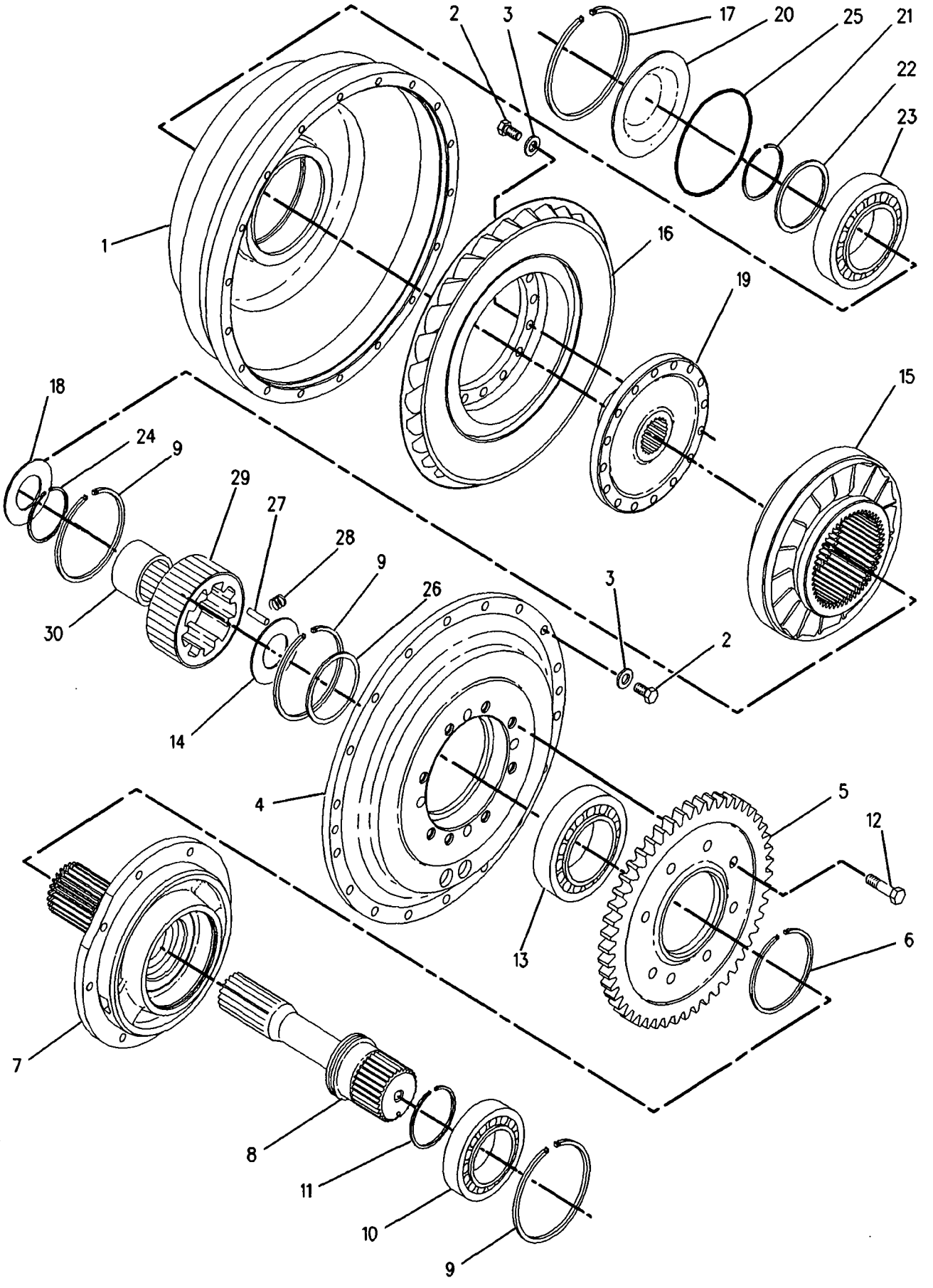

GRAPHIC #1

<END>

g00847977

237-8186 TRANSMISSION AR–
FREEWHEEL STATOR TORQUE CONVERTER
S/N: FAH1-UP
PART OF 237-0240 POWER TRAIN AR
ALSO AN ATTACHMENT

SMCS-3030 **i02277574**

NOTE	PART NUMBER	QTY	PART NAME 1 2 3 4 5 6 (PRODUCT LEVEL)	SEE PAGE
Y	*247-7830*	1	CONTROL GP-TRANSMISSION HYD	293
Y	*249-8173*	1	GEAR GP-OUTPUT TRANSFER	315
Y	*186-2522*	1	PLANETARY GP-TRANSMISSION	339
Y	*241-8692*	1	PUMP GP-TRANSMISSION	345
Y	*241-9022*	1	TORQUE CONVERTER & HOUSING GP (FREEWHEEL STATOR)	367

Y-SEPARATE ILLUSTRATION

<END>

237-8187 TRANSMISSION AR–
FREE WHEEL STATOR TORQUE CONVERTER
S/N: FAK1-UP
PART OF 244-5421 LOGGING AR
AN ATTACHMENT

SMCS-3030 **i02226080**

NOTE	PART NUMBER	QTY	PART NAME 1 2 3 4 5 6 (PRODUCT LEVEL)	SEE PAGE
Y	*247-7830*	1	CONTROL GP-TRANSMISSION HYD	293
Y	*249-8175*	1	GEAR GP-OUTPUT TRANSFER	320
Y	*186-2522*	1	PLANETARY GP-TRANSMISSION	339
Y	*241-8692*	1	PUMP GP-TRANSMISSION	345
Y	*241-9022*	1	TORQUE CONVERTER & HOUSING GP (FREE WHEEL STATOR)	367

Y-SEPARATE ILLUSTRATION

<END>

115-1650 UNIVERSAL JOINT GP

S/N: N1A1-UP

PART OF 115-1648, 155-5600 SHAFT GP-DRIVE

ALSO AN ATTACHMENT

SMCS-3251, 3253 **i00754441**

NOTE	REF NO	GRAPHIC REF	PART NUMBER	QTY	PART NAME 1 2 3 4 5 6 (PRODUCT LEVEL)	SEE PAGE
	1	1	**4E-9324**	2	SPIDER & BEARING GP	
					(EACH INCLUDES)	
M	2	1	**3E-4315**	4	BOLT-LOCKING (M8X1X14MM)	
	3	1	**6W-4126**	2	STRAP-LOCKING	
	4	1	**5P-8334**	1	FITTING-HYDRAULIC	

M-METRIC PART

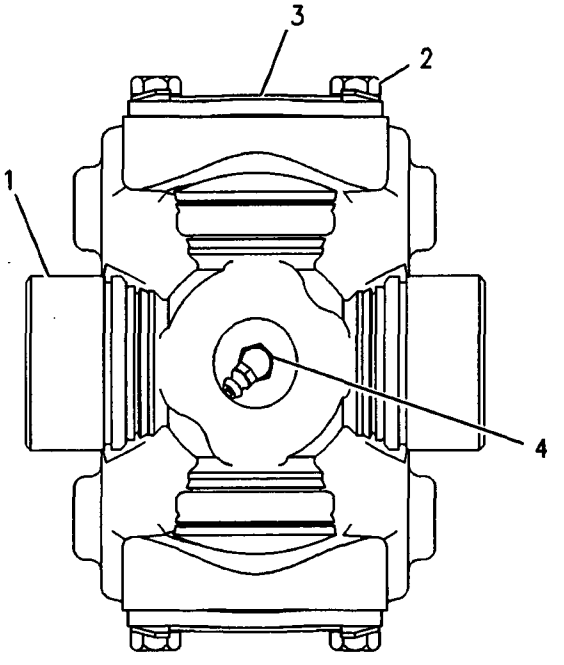

GRAPHIC #1 **<END>** g00269207

115-1654 UNIVERSAL JOINT GP

S/N: N1A1-UP

PART OF 115-1652 SHAFT GP-DRIVE

ALSO AN ATTACHMENT

SMCS-3251, 3253 **i00756173**

NOTE	REF NO	GRAPHIC REF	PART NUMBER	QTY	PART NAME 1 2 3 4 5 6 (PRODUCT LEVEL)	SEE PAGE
	1	1	4E-9324	1	SPIDER & BEARING GP	
M	2	1	3E-4315	4	BOLT-LOCKING (M8X1X14MM)	
	3	1	6W-4126	2	STRAP-LOCKING	
	4	1	5P-8334	1	FITTING-HYDRAULIC	

M-METRIC PART

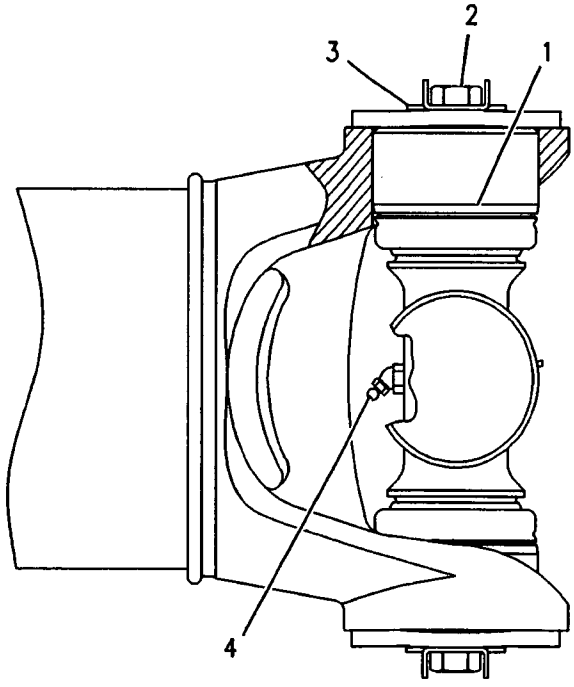

GRAPHIC #1 **<END>** g00278033

POWER TRAIN

155-5605 UNIVERSAL JOINT GP

S/N: N1A1-UP

PART OF 155-5604 SHAFT GP-DRIVE

AN ATTACHMENT

SMCS-3251, 3253 **i01832886**

NOTE	REF NO	GRAPHIC REF	PART NUMBER	QTY	PART NAME 1 2 3 4 5 6 (PRODUCT LEVEL)	SEE PAGE
	1	1	**125-8810**	1	SPIDER & BEARING GP	
	2	1	**9C-9159**	2	PLATE	
	3	1	**027-1287**	2	FITTING-GREASE	
M	4	1	**153-1185**	4	BOLT (HEX HEAD, M10X1.25X16-MM)	

M-METRIC PART

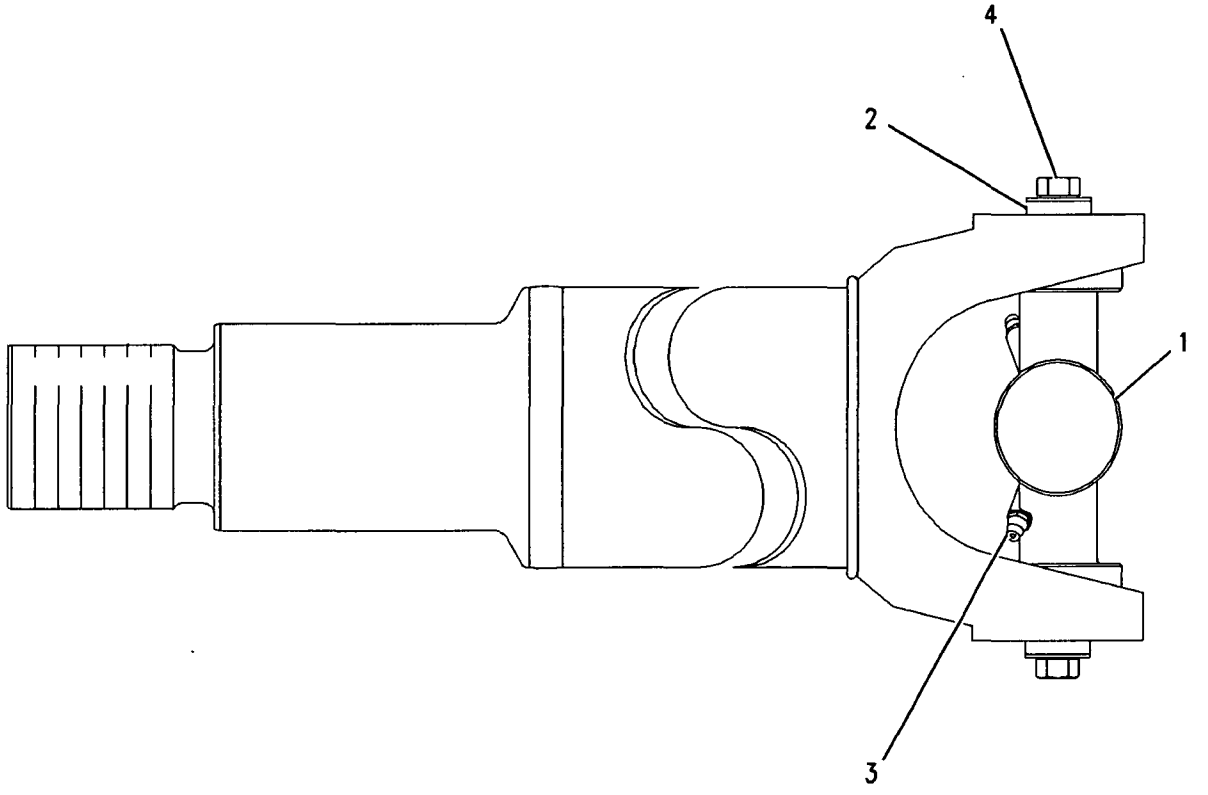

GRAPHIC #1 **<END>** g00742513

244-3114 VALVE GP-MODULATING–TRANSMISSION CLUTCH

S/N: FAH1-UP; FAK1-UP
24-VOLT
PART OF 247-7830 CONTROL GP-TRANSMISSION HYD
ALSO AN ATTACHMENT

SMCS-3139 i02288026

NOTE	REF NO	GRAPHIC REF	PART NUMBER	QTY	PART NAME 1 2 3 4 5 6 (PRODUCT LEVEL)	SEE PAGE
	1	1	6V-3965	1	FITTING AS (QUICK DISCONNECT)	
	2	1	164-2108	1	WASHER (13.03X25.4X2.38-MM THK)	
	3	1	167-9524	1	NUT-SELF-LOCKING (1/2-28-THD)	
	4	1	226-9622	1	COIL AS (24 VOLT)	
Z	5	1		1	VALVE AS	
	6	1	3J-1907	1	SEAL-O-RING	

Z-NOT SERVICED SEPARATELY

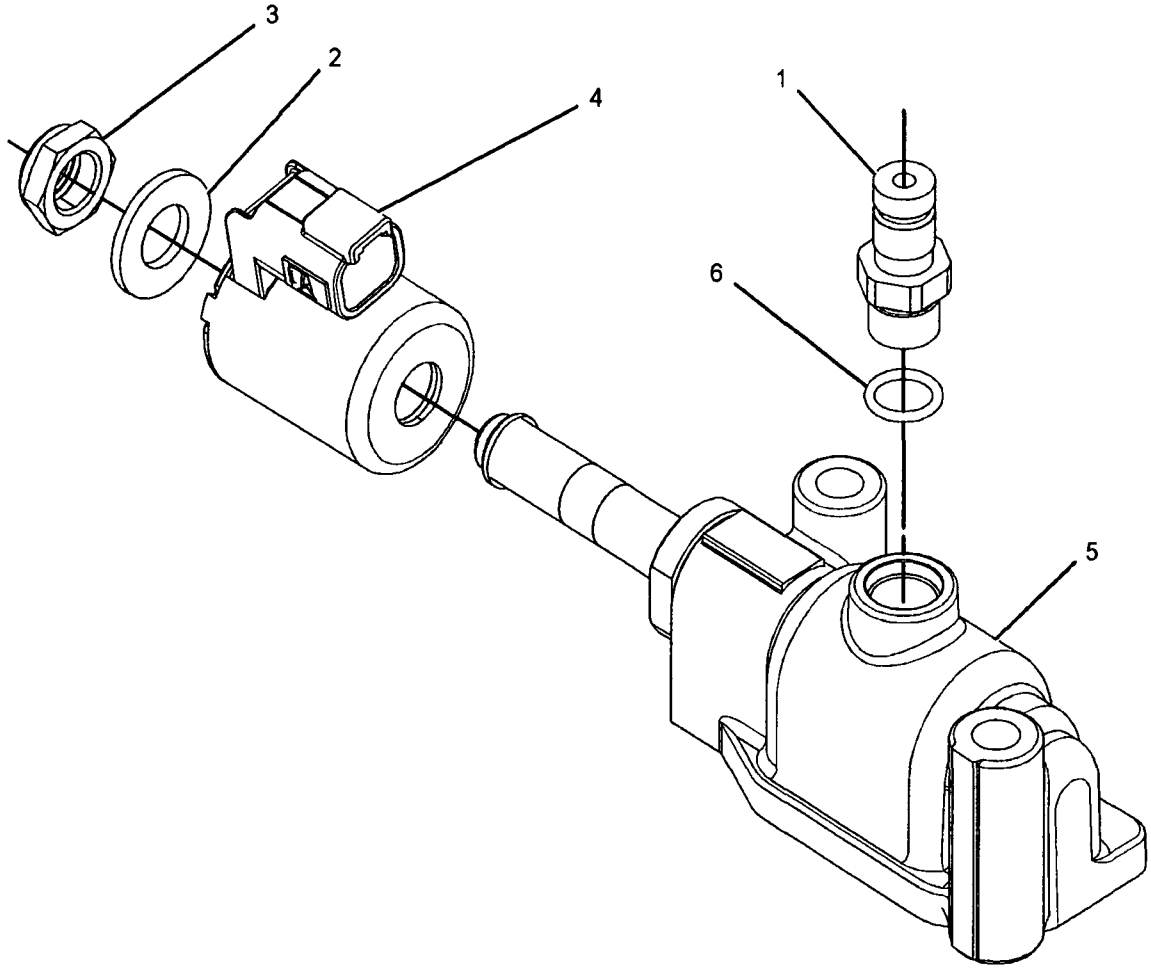

GRAPHIC #1 <END> g01128139

202-8933 VALVE GP-RELIEF–TRANSMISSION HYDRAULIC CONTROL

S/N: FAH1-UP; FAK1-UP
PART OF 247-7830 CONTROL GP-TRANSMISSION HYD
ALSO AN ATTACHMENT

SMCS-3133, 3182, 3210, 3213 i02288086

NOTE	REF NO	GRAPHIC REF	PART NUMBER	QTY	PART NAME 1 2 3 4 5 6 (PRODUCT LEVEL)	SEE PAGE
	1	1	2S-4663	1	SEAL-O-RING	
	2	1	6V-3965	2	FITTING AS (QUICK DISCONNECT)	
	3	1	3J-1907	4	SEAL-O-RING	
	4	1	6V-0852	2	CAP-DUST	
	5	1	9S-8006	1	PLUG	
	6	1	2M-9780	1	SEAL-O-RING	
	7	1	202-2005	1	COVER	
	8	1	9M-2110	1	COVER-ADJUSTMENT	
	9	1	9S-8001	3	PLUG	
	10	1	4J-7533	3	SEAL-O-RING	
M	11	1	6V-5218	2	BOLT (M8X1.25X35-MM)	
	12	1	9M-1974	2	WASHER-HARD (8.8X16X2-MM THK)	
M	13	1	6V-3940	2	BOLT (M8X1.25X25-MM)	
	14	1	8E-1143	1	SLUG	
	15	1	9U-8668	1	SPOOL AS	
		1	3D-8317	1	RING-RETAINING	
		1	4B-9880	1	BALL	
		1	4M-2381	1	SPRING	
		1	8E-9893	1	SPOOL-RELIEF	
		1	9U-8669	1	RETAINER	
	16	1	1M-9351	1	SPRING	
	17	1	2S-5835	1	PISTON-LOAD	
	18	1	202-2006	1	SCREW-ADJUSTMENT	
	19	1	8M-5253	1	SEAL-O-RING	
	20	1	6V-0484	2	ADAPTER-O-RING	
	21	1	111-3200	1	BODY	

M-METRIC PART

202-8933 **VALVE GP-RELIEF** *(contd.)* **i02288086**

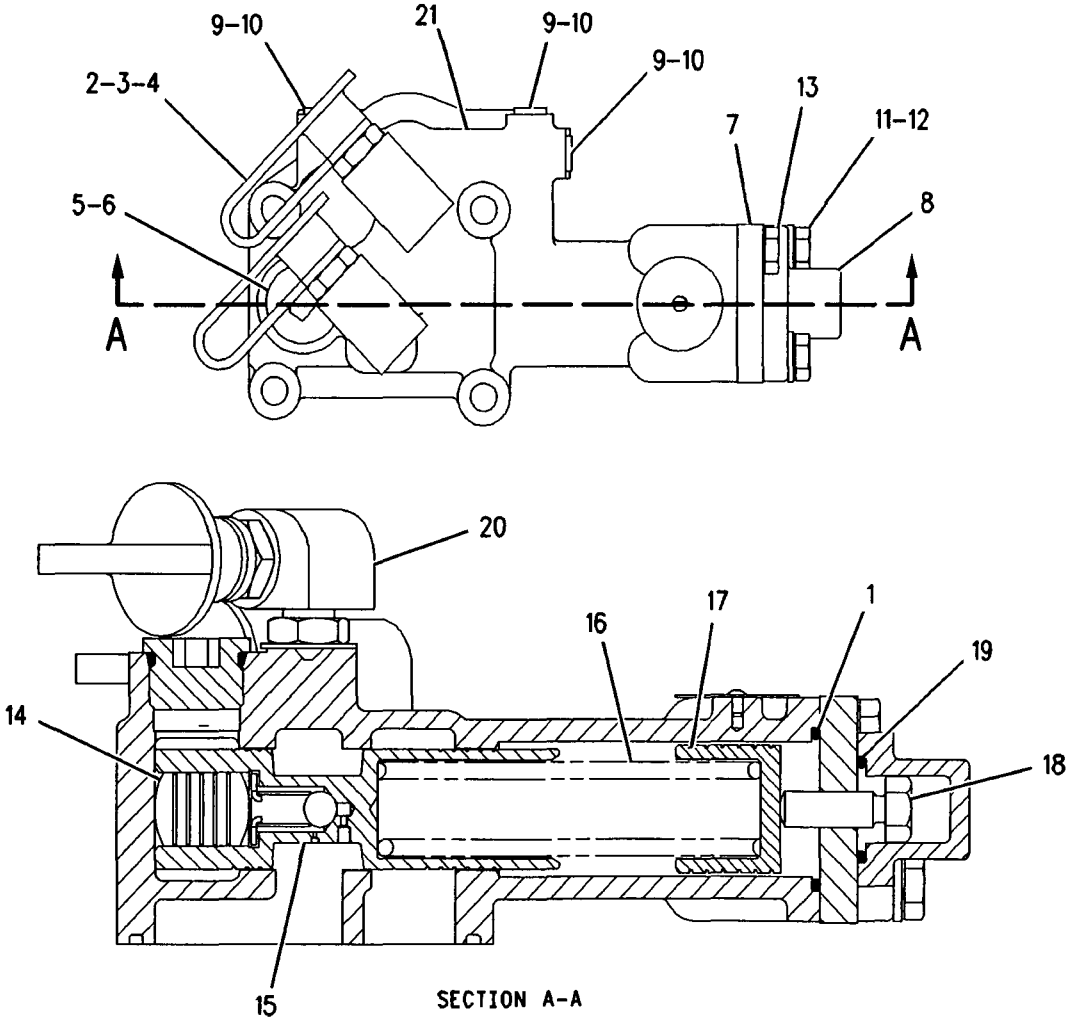

GRAPHIC #1 **<END>** g00905535

2D-2511 VALVE GP-TIRE

S/N: N1A1-UP

PART OF 131-2777, 206-9278, 246-1579 RIM GP-DEMOUNTABLE

AN ATTACHMENT

SMCS-4203 i00876166

NOTE	REF NO	GRAPHIC REF	PART NUMBER	QTY	PART NAME 1 2 3 4 5 6 (PRODUCT LEVEL)	SEE PAGE
	1	1	3D-2239	1	VALVE AS-TIRE	
	2	1	6F-3930	1	CORE-VALVE	
	3	1	9K-7951	1	CAP-VALVE (STEM)	
	4	1	7D-5252	1	SPUD AS	
	5	1	2D-2509	1	LOCKNUT (11/16-16-THD)	
	6	1	2D-2508	1	GROMMET	

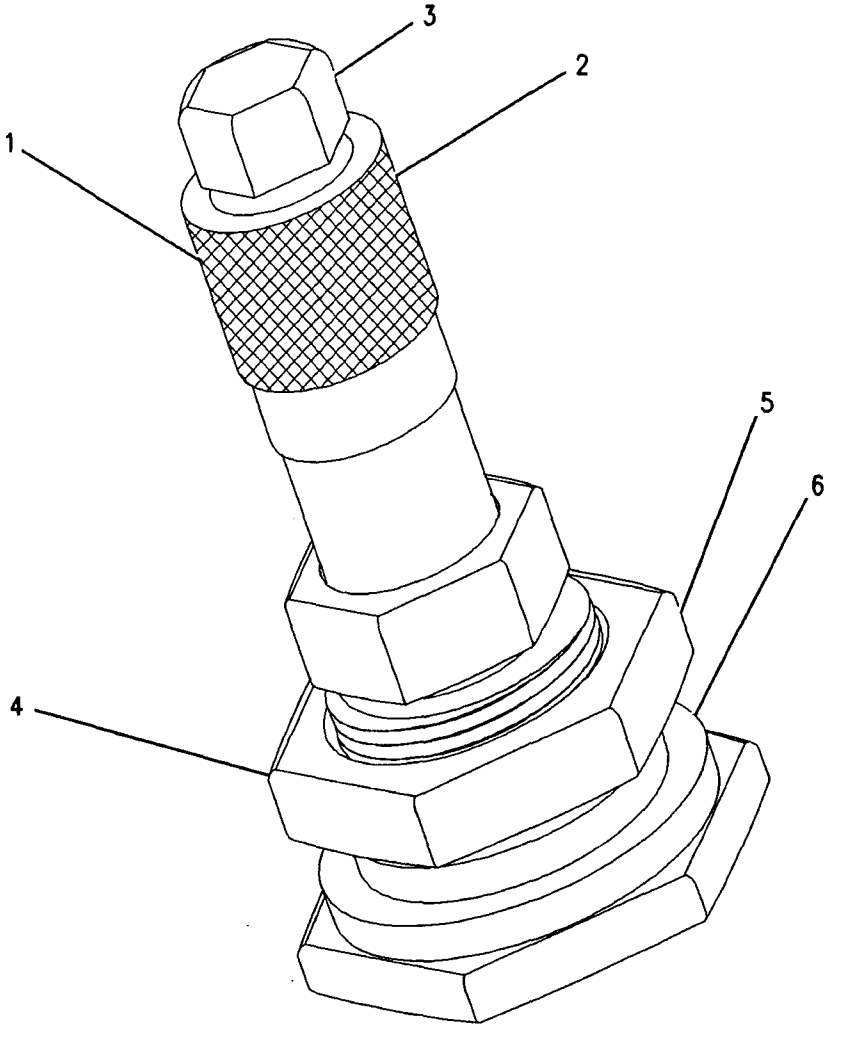

GRAPHIC #1 <END> g00457535

262-4914 ACTUATOR GP-HOOD TILT

S/N: N1A1-UP
PART OF 237-0969 TILT GP-HOOD
ALSO AN ATTACHMENT

SMCS-1427, 7275 **i02294014**

NOTE	REF NO	GRAPHIC REF	PART NUMBER	QTY	PART NAME 1 2 3 4 5 6 (PRODUCT LEVEL)	SEE PAGE
	1	1	117-1559	1	MOUNT AS	
	2	1	122-4233	1	WIPER	
	3	1	262-4917	1	POST AS	
		1	203-6473	1	GASKET	
	4	1	262-4918	1	POWERHEAD AS	
JM	5	1	179-4324	2	LOCKNUT (M5X0.8-THD)	
J	6	1	168-2166	1	GASKET-MOTOR	
J	7	1	203-6473	1	GASKET	
	8	1	205-6029	1	MOTOR AS-ELECTRIC (HOOD TILT)	
		1	8N-1540	1	PIN-CONNECTOR	
		1	8N-1541	1	SOCKET-CONNECTOR (12-GA TO 14-GA)	
		1	129-7163	1	PLUG AS-CONNECTOR (1-PIN)	
		1	129-7164	1	RECEPTACLE AS-CONNECTOR (1-PIN)	
	9	1	212-6854	1	ROD END	
	10	1	8T-4121	4	WASHER-HARD (11X21X2.5-MM THK)	
M	11	1	8T-4133	4	NUT (M10X1.5 THD)	
M	12	1	8T-4137	2	BOLT (M10X1.5X20-MM)	
J	13	1	171-3716	1	GASKET-COVER	
					AVAILABLE REPAIR KIT(S):	
J			203-6470		KIT-GASKET	

J-KIT(S) MARKED J SERVICES PART(S) MARKED J
M-METRIC PART

262-4914 ACTUATOR GP-HOOD TILT *(contd.)* i02294014

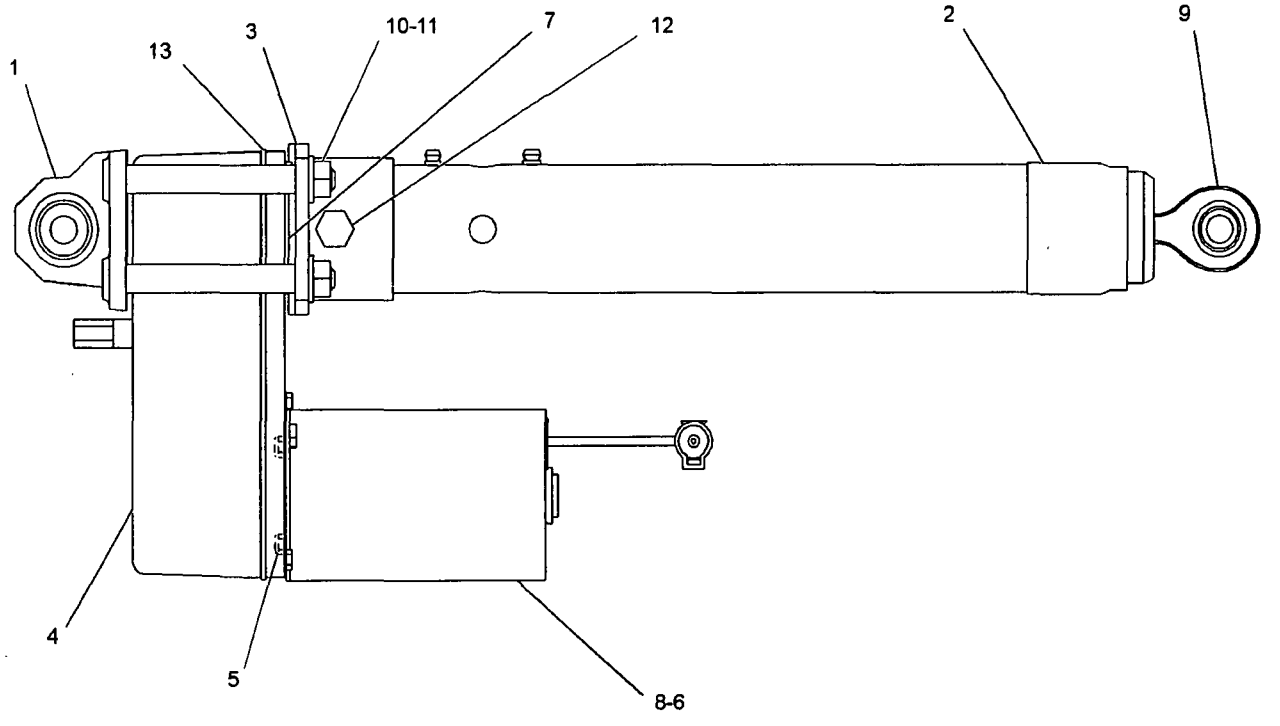

GRAPHIC #1 **<END>** g01128348

2Q-4181 ACTUATOR GP-POWER

S/N: N1A1-UP

PART OF 247-8561 ACTUATOR GP-POWER GUARD AN ATTACHMENT

SMCS-1427, 7153 **i01032367**

NOTE	REF NO	GRAPHIC REF	PART NUMBER	QTY	PART NAME 1 2 3 4 5 6 (PRODUCT LEVEL)	SEE PAGE
	1	1	**102-8802**	1	KIT-RECEPTACLE (2-PIN)	
	2	1	**9W-0852**	2	PIN-CONNECTOR (14-GA)	
	3	1	**3E-3365**	1	WEDGE-RECEPTACLE LOCK (2-PIN)	

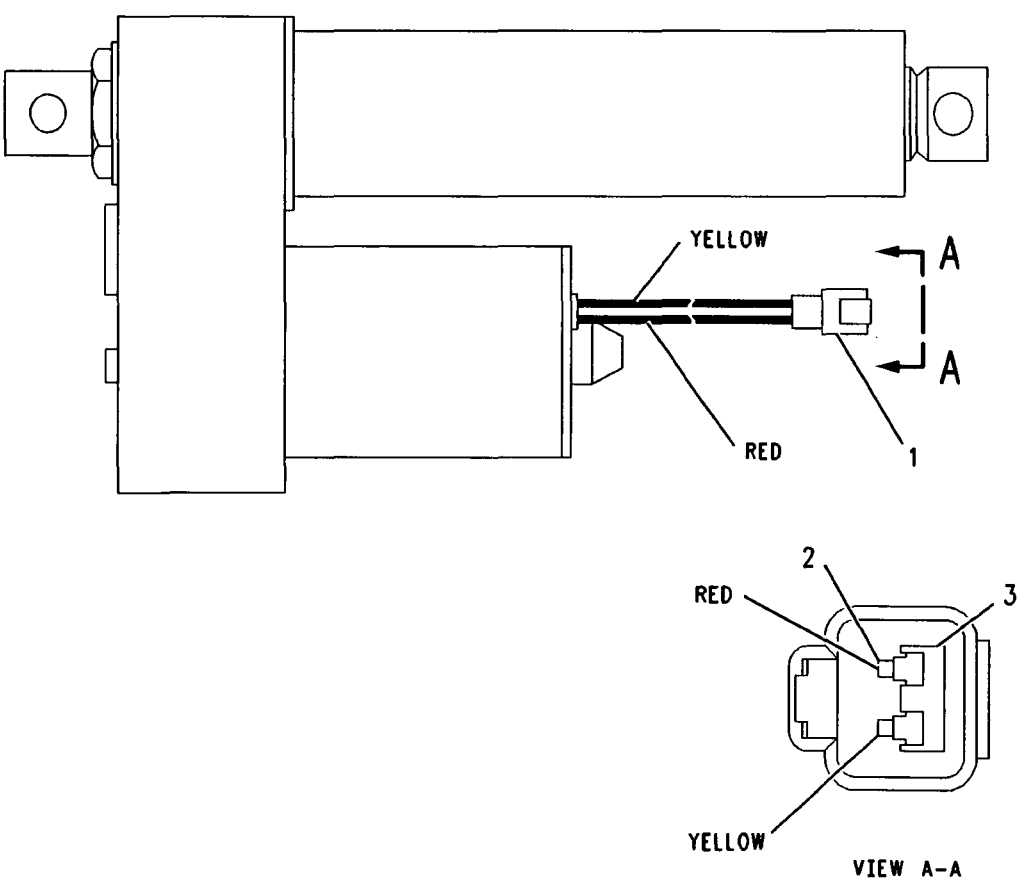

GRAPHIC #1 **<END>** g00533126

247-8561 ACTUATOR GP-POWER GUARD

S/N: N1A1-UP
PART OF 244-6607 WASTE HANDLING AR
AN ATTACHMENT

SMCS-1427, 7153 **i02281689**

NOTE	PART NUMBER	QTY	PART NAME 1 2 3 4 5 6 (PRODUCT LEVEL)	SEE PAGE
Y	*2Q-4181*	1	ACTUATOR GP-POWER	382
Y	*253-3945*	1	WIRING GP-WASTE HANDLER	282
M	**8T-4136**	1	BOLT (M10X1.5X25-MM)	
M	**8T-4183**	4	BOLT (M12X1.75X40-MM)	
	4S-1962	1	CLIP	
	5K-3294	2	CLIP	
M	**8T-4133**	1	NUT (M10X1.5 THD)	
	6B-2781	2	PIN	
	3B-4617	2	PIN-COTTER	
	250-2322	1	SUPPORT AS	
	8T-4121	2	WASHER-HARD (11X21X2.5-MM THK)	
	8T-4223	4	WASHER-HARD (13.5X25.5X3-MM THK)	

M-METRIC PART
Y-SEPARATE ILLUSTRATION

<END>

247-8559 BAFFLE GP

S/N: N1A1-UP

PART OF 244-6607 WASTE HANDLING AR

AN ATTACHMENT

SMCS-7076 i02282465

NOTE	REF NO	GRAPHIC REF	PART NUMBER	QTY	PART NAME 1 2 3 4 5 6 (PRODUCT LEVEL)	SEE PAGE
	1	1	253-3555	1	BAFFLE	

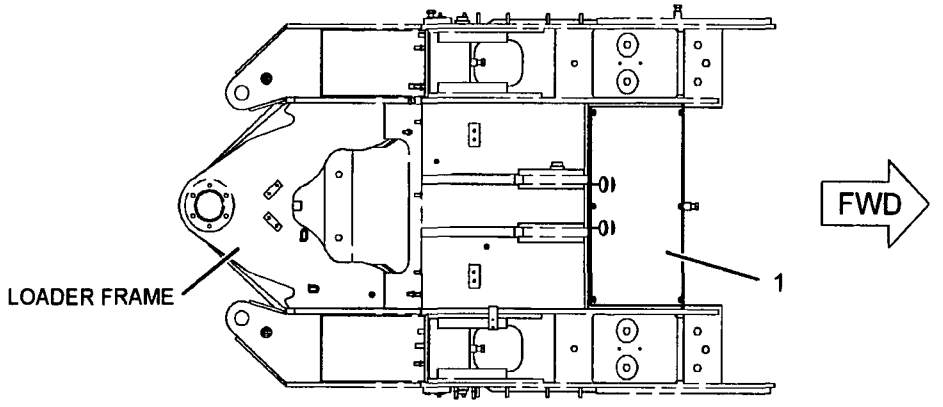

TOP VIEW

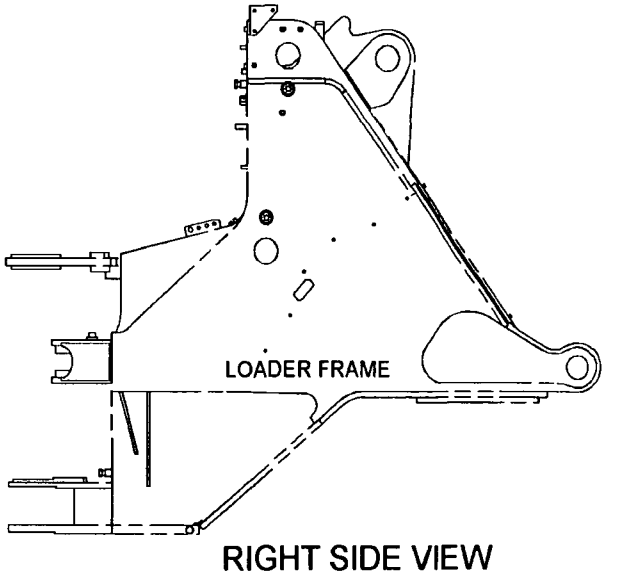

RIGHT SIDE VIEW

GRAPHIC #1

<END>

g01134450

176-2444 BLOCK GP-AXLE OSC LIMITER

S/N: N1A1-UP

PART OF 246-1584, 265-9525 TIRE & RIM AR

AN ATTACHMENT

SMCS-3278, 7051 i01590599

NOTE	REF NO	GRAPHIC REF	PART NUMBER	QTY	PART NAME 1 2 3 4 5 6 (PRODUCT LEVEL)	SEE PAGE
	1	1	4E-0684	2	BAR	

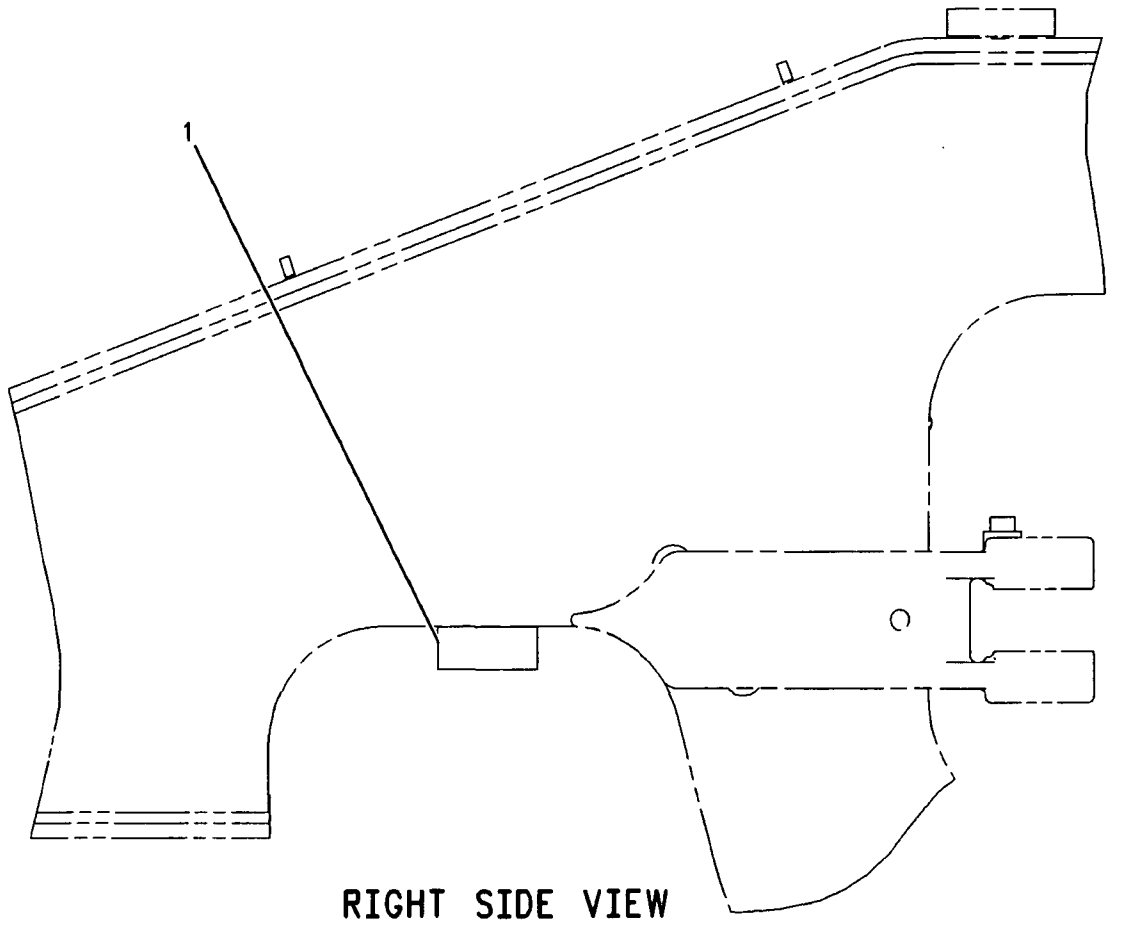

RIGHT SIDE VIEW

GRAPHIC #1 <END> g00606869

281-8137 BOSS GP-REAR FRAME

S/N: N1A1-UP

PART OF 250-0337, 264-1082 LUBRICATION AR-AUTOMATIC AN ATTACHMENT

SMCS-7054 **i02429967**

NOTE	REF NO	GRAPHIC REF	PART NUMBER	QTY	PART NAME 1 2 3 4 5 6 (PRODUCT LEVEL)	SEE PAGE
	1	1	*196-2778*	1	PLATE	
M	2	1	**8T-3851**	17	BOSS-WELD (M10X1.5X17.5-MM)	

M-METRIC PART

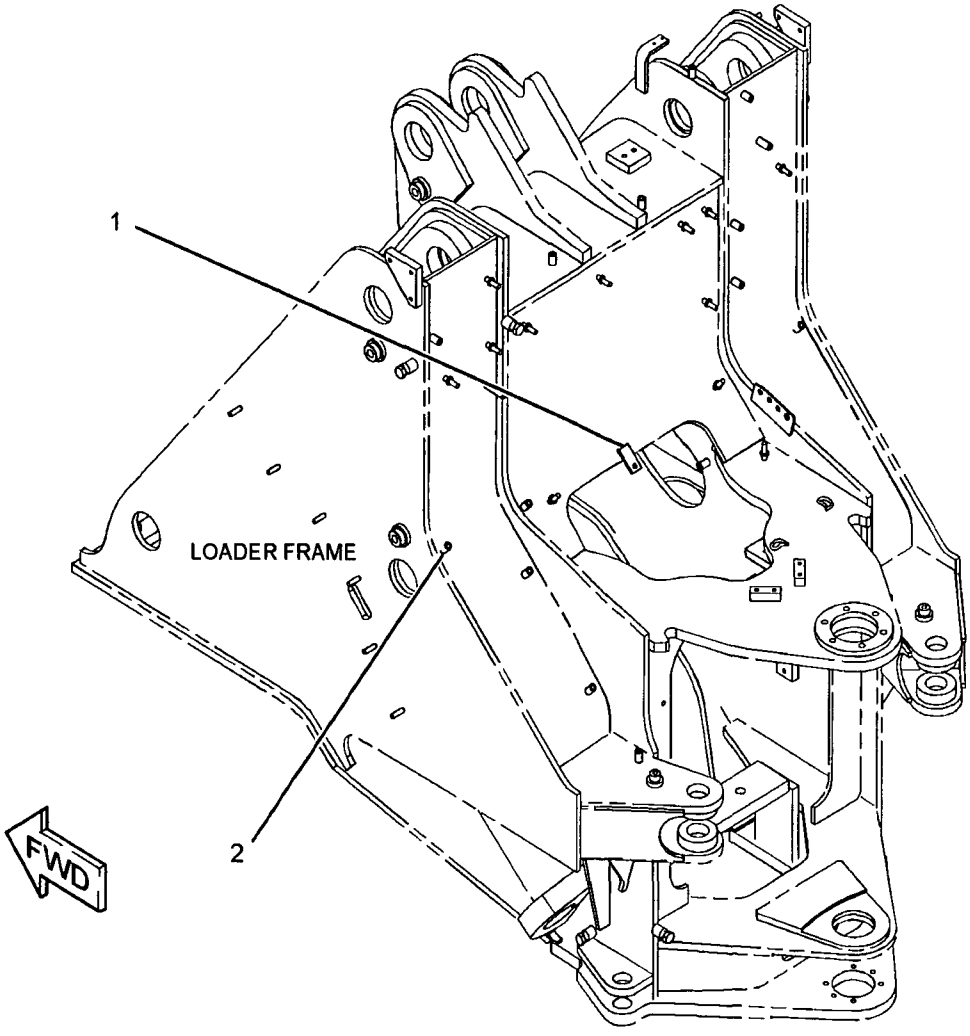

GRAPHIC #1 **<END>** g01202883

FRAME AND BODY

237-0423 BOX GP-BATTERY

S/N: N1A1-UP

PART OF 237-0234 CHASSIS AR

SMCS-7257 **i02437680**

NOTE	REF NO	GRAPHIC REF	PART NUMBER	QTY	PART NAME 1 2 3 4 5 6 (PRODUCT LEVEL)	SEE PAGE
	1	1	**8B-9294**	8	SPACER (13.5X38X30-MM THK)	
	2	1	**246-8110**	1	BOX AS-BATTERY	
	3	1	**275-5635**	1	COVER	
	4	1	**5P-1076**	8	WASHER-HARD (13.5X30X4-MM THK)	
	5	1	**8T-4121**	4	WASHER-HARD (11X21X2.5-MM THK)	
M	6	1	**8T-4137**	4	BOLT (M10X1.5X20-MM)	
M	7	1	**8T-4910**	8	BOLT (M12X1.75X60-MM)	

M-METRIC PART

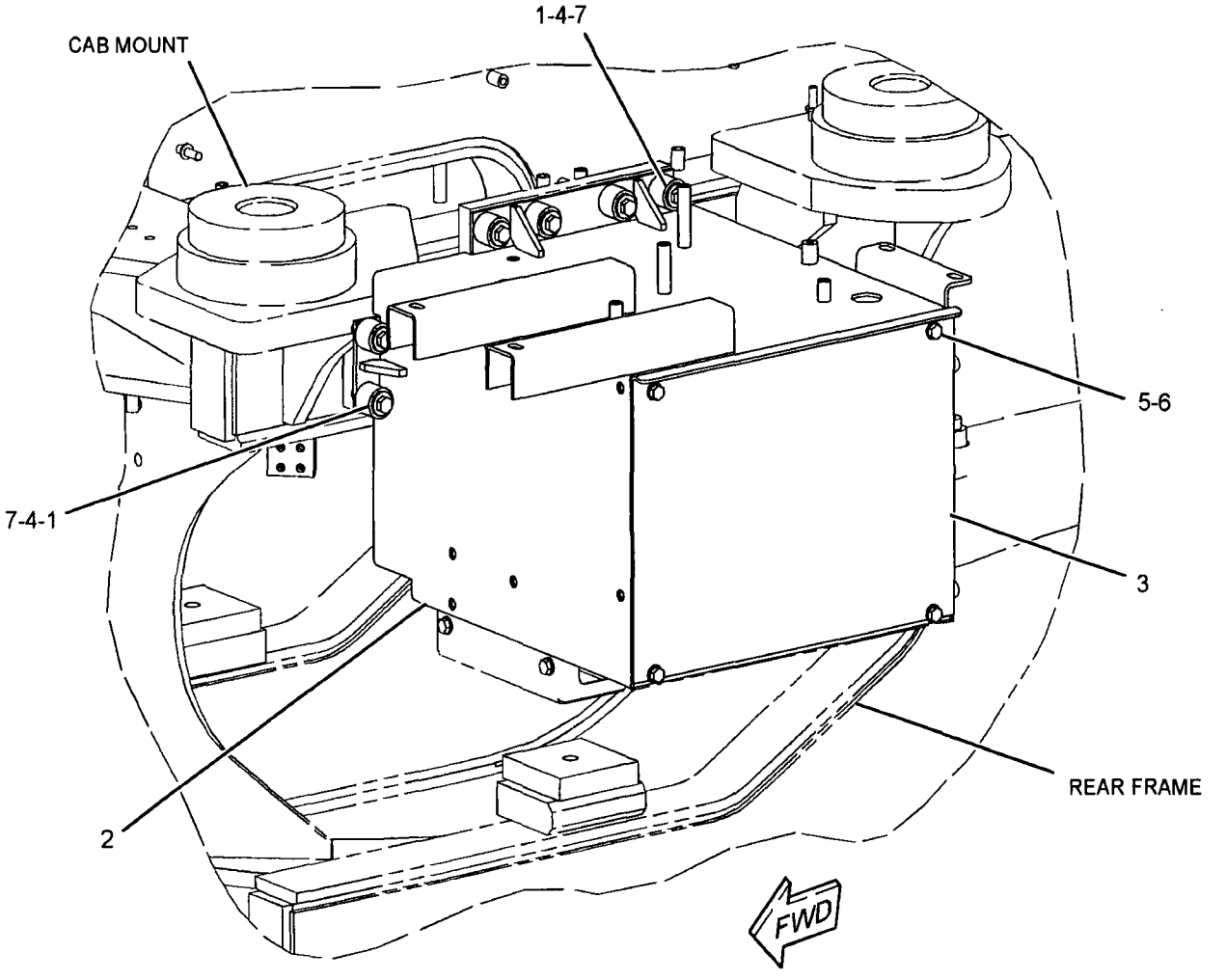

GRAPHIC #1 **<END>** g01219927

250-0705 CONVERSION AR-ROADING–GERMANY

S/N: N1A1-UP

AN ATTACHMENT

SMCS-7000, 7153 **i02442467**

NOTE	REF NO	GRAPHIC REF	PART NUMBER	QTY	PART NAME 1 2 3 4 5 6 (PRODUCT LEVEL)	SEE PAGE
	1	3	6C-5712	6	REFLECTOR (AMBER)	
	2	3	6C-5736	2	REFLECTOR (RED)	
	3	3	6C-7227	2	CHOCK-WHEEL	
	4	3	6C-7875	8	RIVET-POP	
M	5	3	6V-8949	2	NUT (M10X1.5-6H-THD)	
	6	3	7C-6921	2	SPACER (11X20X22.8-MM THK)	
	7	1	7K-1181	5	STRAP-CABLE	
	8	3	9X-8937	4	TACK-FASTENER	
	9	3	103-4816	1	PIN AS	
		3	6C-5575	1	CABLE	
	10	2	108-1786	3	FILM (40-KM/H)	
	11	3	109-6502	2	PANEL-REFLECTOR	
Y	12	1	*109-8203*	1	MIRROR GP-REAR VIEW	854
	13	3	110-3731	1	ROD	
	14	1	113-1635	1	FILM (LUXUSKABINE)	
	15	3	113-7634	1	FILM-WARNING (STEERING)	
	16	2,3	115-5774	2	LAMP AS	
	17	2,3	115-5777	1	HARNESS AS-LIGHTING (FRONT TURN, POSITION LIGHTS)	
	18	2	158-1202	2	REFLECTOR (RED)	
	19	3	159-7342	1	PLATE-IDENTIFICATION (MAXIMUM WEIGHT)	
	20	3	174-7350	1	GUARD AS (LH)	
	21	1	174-7351	1	GUARD AS (RH)	
Y	22	1	*267-4971*	1	MOUNTING GP-REGISTRATION	465
	23	1	272-2915	1	FILM-STRIPE (LH)	
	24	1	272-2916	1	FILM-STRIPE (RH)	
	25	1	272-4867	1	HARNESS AS-LIGHTING (ROADING, BUCKET POSITIONER)	
		1	155-2255	1	KIT-CONNECTING PLUG (12-PIN)	
		1	155-2274	1	KIT-CONNECTING PLUG (6-PIN)	
					(EACH KIT INCLUDES PLUG AS AND WEDGE)	
	26	1	272-4868	1	PLATE AS	
M		1	8T-3490	1	NUT-WELD (M10X1.5-THD)	
	27	1	272-5749	1	HARNESS AS-REAR LIGHTING (LICENSE PLATE)	
		1	102-8802	1	KIT-RECEPTACLE (2-PIN)	
					(KIT INCLUDES RECEPTACLE AS AND WEDGE)	
	28	1	275-9774	1	GRILL AS-REAR	
		1	271-7219	1	GRILL AS-REAR	
	29	1	277-9418	2	FILM	
	30	2	4B-4274	2	WASHER (5.5X13X1.2-MM THK)	
	31	3	5P-1075	4	WASHER-HARD (10.2X22.5X3-MM THK)	
	32	1	6C-3681	8	RIVET-POP	
	33	2	6V-7697	2	SCREW-MACHINE (8-32X1.25-IN)	
	34	1	7X-7729	8	WASHER (11X25X3-MM THK)	
	35	2	8T-4121	2	WASHER-HARD (11X21X2.5-MM THK)	
M	36	1	8T-4133	4	NUT (M10X1.5 THD)	
M	37	1	8T-4136	2	BOLT (M10X1.5X25-MM)	
M	38	1	8T-4137	4	BOLT (M10X1.5X20-MM)	
M	39	3	8T-5005	2	BOLT (M10X1.5X70-MM)	
	40	1	9L-6074	2	GROMMET	
B	41	3	9R-5008	2	SPACER (11X20X6-MM THK)	
	42	1	6C-7224	2	BRACKET AS	

B-USE AS REQUIRED
M-METRIC PART
Y-SEPARATE ILLUSTRATION

250-0705 CONVERSION AR-ROADING *(contd.)* i02442467

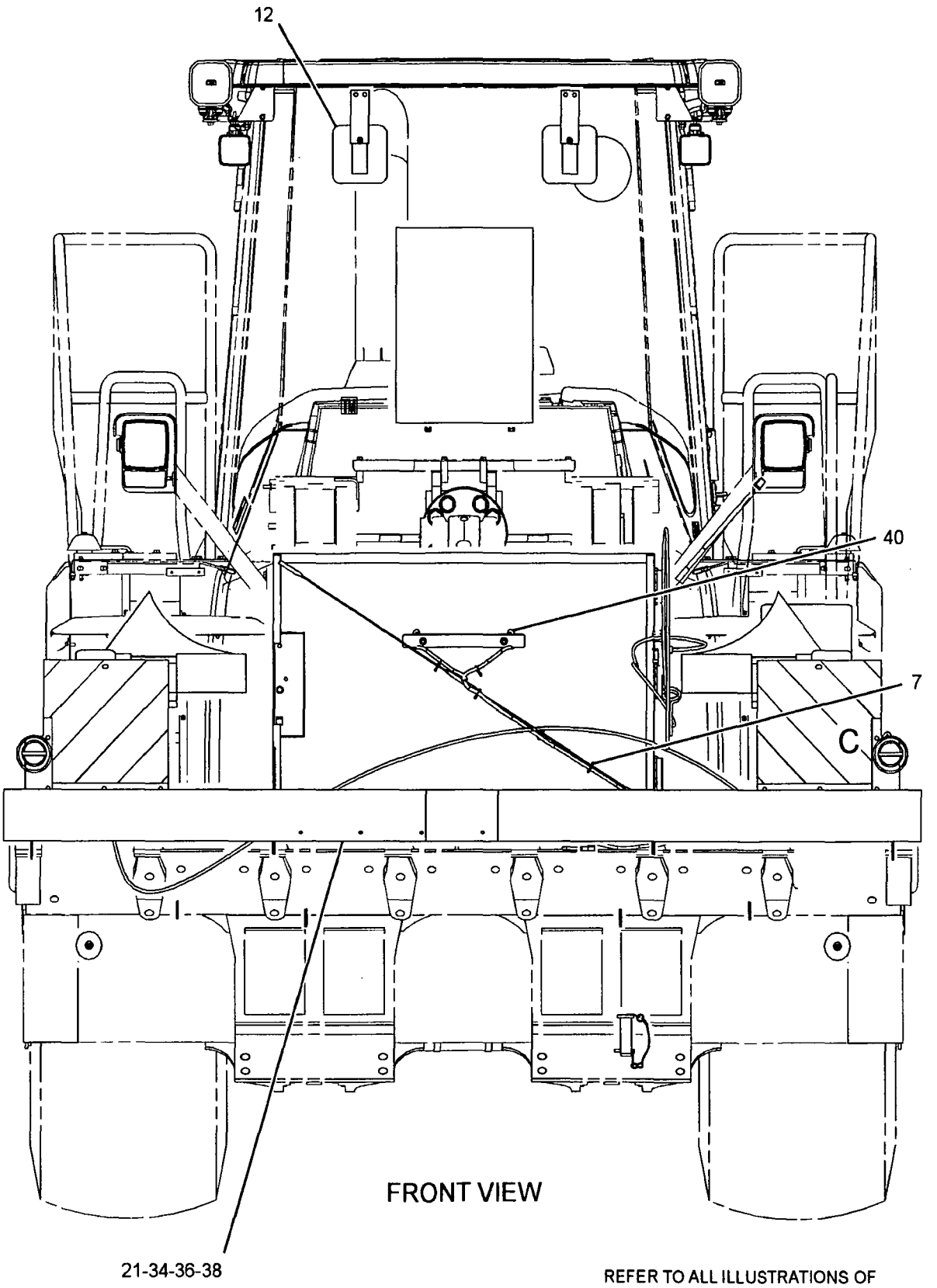

FRONT VIEW

REFER TO ALL ILLUSTRATIONS OF THIS GROUP FOR AUXILIARY VIEWS

GRAPHIC #1

g01228180

250-0705 CONVERSION AR-ROADING *(contd.)* i02442467

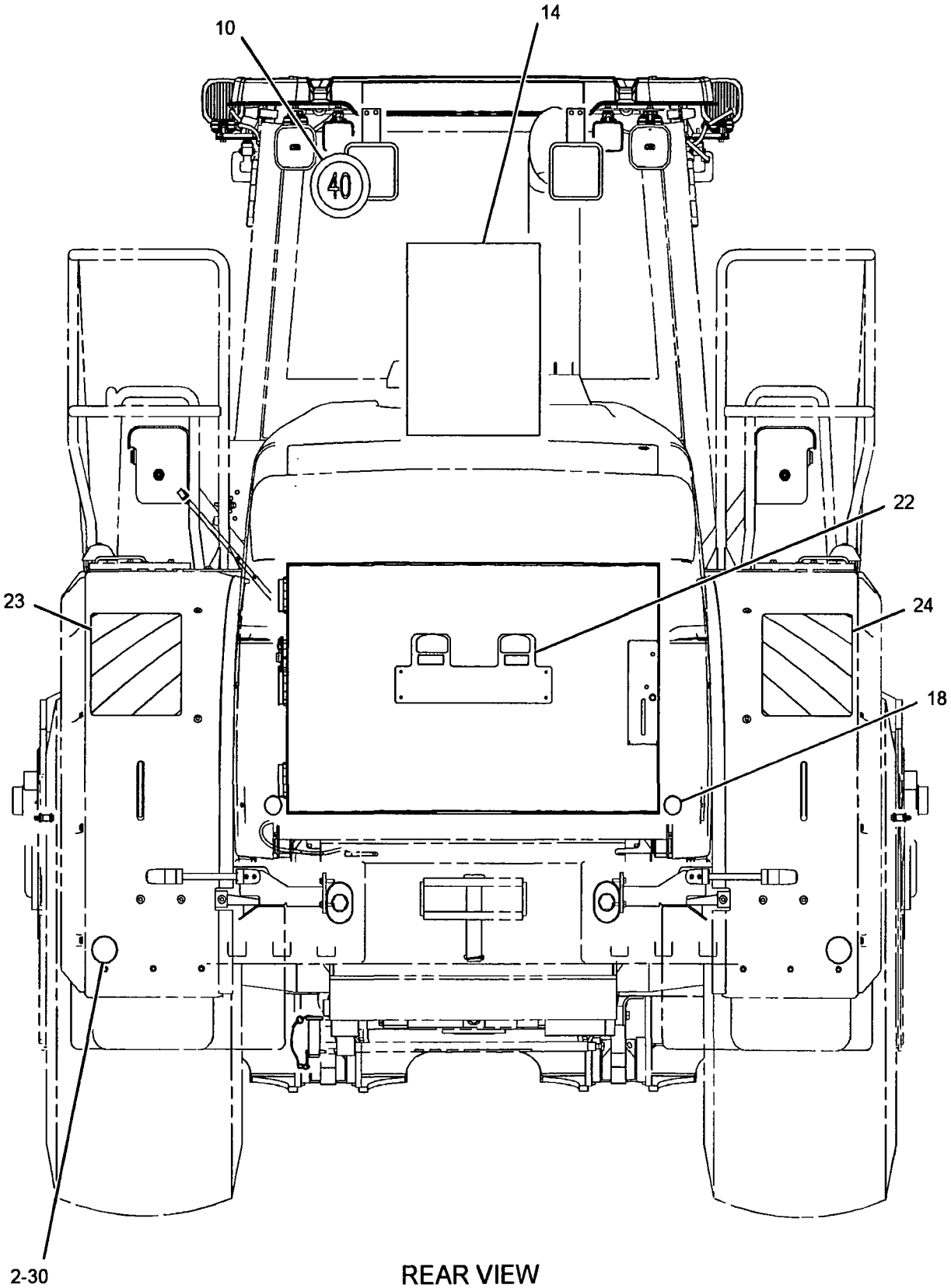

REAR VIEW

GRAPHIC #2 g01228181

250-0705 CONVERSION AR-ROADING (contd.) i02442467

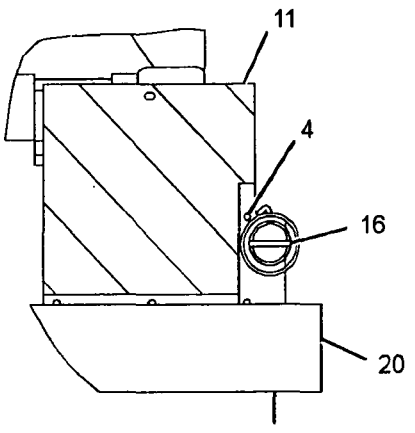

VIEW OF AREA C

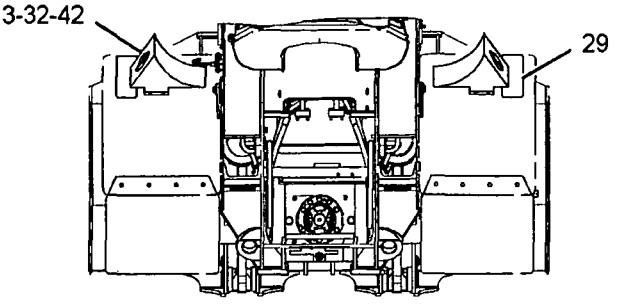

VIEW B-B

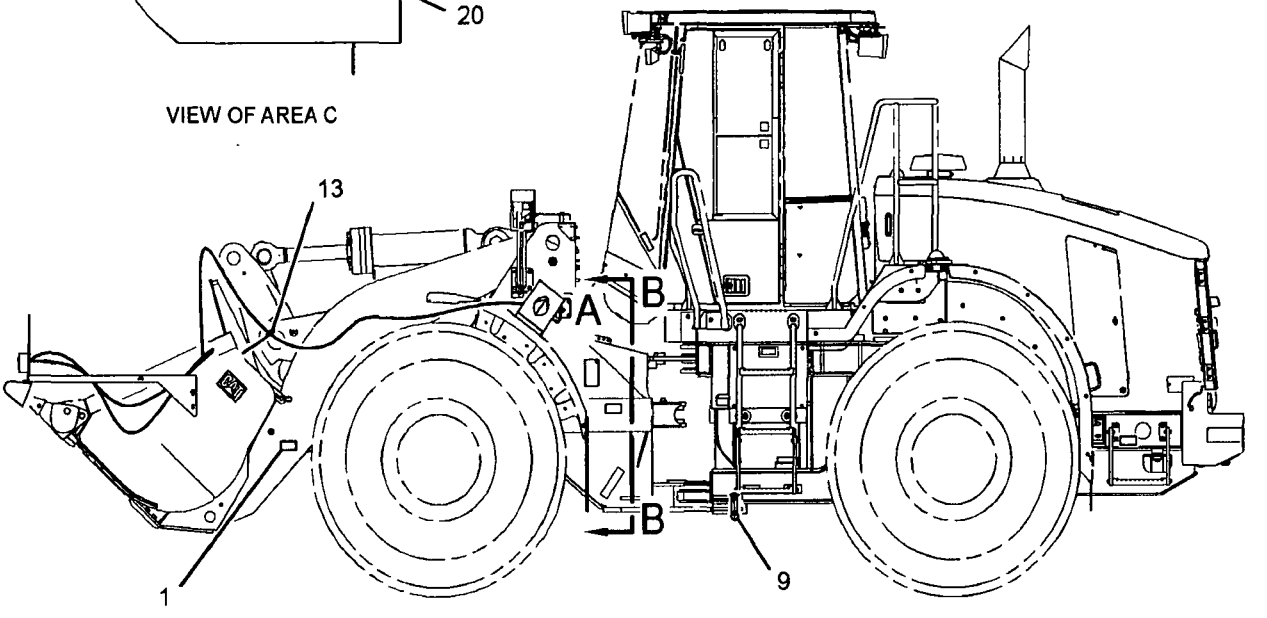

LEFT SIDE VIEW

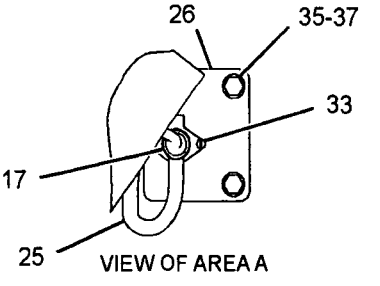

VIEW OF AREA A

RIGHT SIDE VIEW

GRAPHIC #3 **<END>** g01228182

FRAME AND BODY

250-0706 CONVERSION AR-ROADING–ITALY

S/N: N1A1-UP

AN ATTACHMENT

SMCS-7000, 7153 **i02443882**

NOTE	REF NO	GRAPHIC REF	PART NUMBER	QTY	PART NAME 1 2 3 4 5 6 (PRODUCT LEVEL)	SEE PAGE
	1	1	5P-8837	2	LOCK PIN	
	2	1	6C-5712	2	REFLECTOR (AMBER)	
	3	2	6C-5736	2	REFLECTOR (RED)	
	4	1	6C-7319	2	PLATE AS	
	5	1	6C-7320	2	FILM (REFLECTOR)	
	6	1	6C-7476	1	PLATE	
	7	1	6C-7485	1	BLOCK	
	8	2	6C-7589	2	PLATE	
	9	2	6C-7590	2	FILM (RED, WHITE STRIPES)	
	10	1	6C-7591	2	LAMP GP	
	11	1	6C-7607	2	CHAIN AS	
	12	1	6C-7608	2	SPRING	
	13	2	7K-1181	3	STRAP-CABLE	
	14	1	9X-8937	4	TACK-FASTENER	
	15	2	124-2541	1	GUARD AS	
	16	2	124-4131	1	FILM (RED, WHITE STRIPES)	
	17	2	144-3679	4	COVER-WORK LIGHT	
	18	2	158-1202	2	REFLECTOR (RED)	
	19	1	159-7342	1	PLATE-IDENTIFICATION (MAXIMUM WEIGHT)	
	20	1	198-9096	1	FILM	
	21	1	198-9098	2	FILM	
	22	1	220-4868	1	HARNESS AS-LIGHTING (BUCKET POSITION LIGHTS)	
Y	23	1	*237-1012*	1	LIGHTING GP-WARNING BEACON	178
Y	24	2	*267-4971*	1	MOUNTING GP-REGISTRATION	465
	25	1	269-8066	2	BRACKET AS	
	26	1	*272-2905*	1	PIN GP-LIFT ARM	
		1	6C-7460	2	PIN	
	27	2	272-2915	1	FILM-STRIPE (LH)	
	28	2	272-2916	1	FILM-STRIPE (RH)	
	29	1	272-4867	1	HARNESS AS-LIGHTING (ROADING, BUCKET POSITIONER)	
		1	155-2255	1	KIT-CONNECTING PLUG (12-PIN)	
		1	155-2274	1	KIT-CONNECTING PLUG (6-PIN) (EACH KIT INCLUDES PLUG AS AND WEDGE)	
	30	1	272-4868	1	PLATE AS	
M		1	8T-3490	1	NUT-WELD (M10X1.5-THD)	
	31	2	272-5749	1	HARNESS AS-REAR LIGHTING (LICENSE PLATE)	
		2	102-8802	1	KIT-RECEPTACLE (2-PIN) (INCLUDES RECEPTACLE AS AND WEDGE)	
	32	2	273-3592	4	COVER-WORK LIGHT	
	33	2	275-9774	1	GRILL AS-REAR	
		2	271-7219	1	GRILL AS-REAR	
	34	1	096-6166	4	WASHER-HARD (4.5X9X1-MM THK)	
	35	2	198-9099	2	FILM (REFLECTIVE)	
	36	2	4B-4274	2	WASHER (5.5X13X1.2-MM THK)	
M	37	1	5C-8312	4	NUT (M4X0.7-THD)	
	38	1	6V-7697	2	SCREW-MACHINE (8-32X1.25-IN)	
M	39	1	6V-9672	4	SCREW-MACHINE (M4X0.7X16-MM)	
	40	1	8M-2772	1	CLIP	
	41	1,2	8T-4121	5	WASHER-HARD (11X21X2.5-MM THK)	
M	42	1	8T-4133	4	NUT (M10X1.5 THD)	
M	43	2	8T-4137	4	BOLT (M10X1.5X20-MM)	
M	44	1	8T-4182	4	BOLT (M10X1.5X45-MM)	
M	45	1	8T-4191	1	BOLT (M10X1.5X16-MM)	
	46	1	8T-4223	2	WASHER-HARD (13.5X25.5X3-MM THK)	
M	47	1	8T-5041	2	BOLT (M12X1.75X120-MM)	

250-0706 CONVERSION AR-ROADING (contd.) i02443882

NOTE	REF NO	GRAPHIC REF	PART NUMBER	QTY	PART NAME 1 2 3 4 5 6 (PRODUCT LEVEL)	SEE PAGE
	48	1	9L-6074	1	GROMMET	
E	49	1	7X-7877		STRIP-EDGING (114-CM)	
E	49A	1	7X-7877		STRIP-EDGING (134-CM)	

E-ORDER BY THE CENTIMETER
M-METRIC PART
Y-SEPARATE ILLUSTRATION

250-0706 CONVERSION AR-ROADING (contd.) i02443882

REFER TO ALL ILLUSTRATIONS OF THIS GROUP FOR AUXILIARY VIEWS

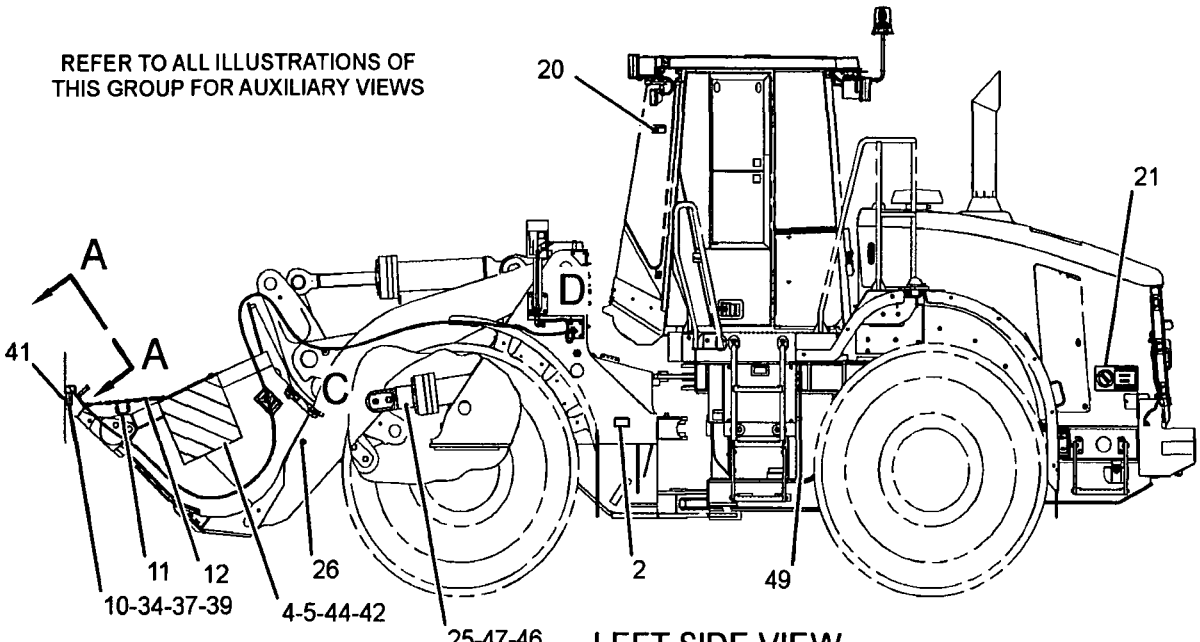

LEFT SIDE VIEW

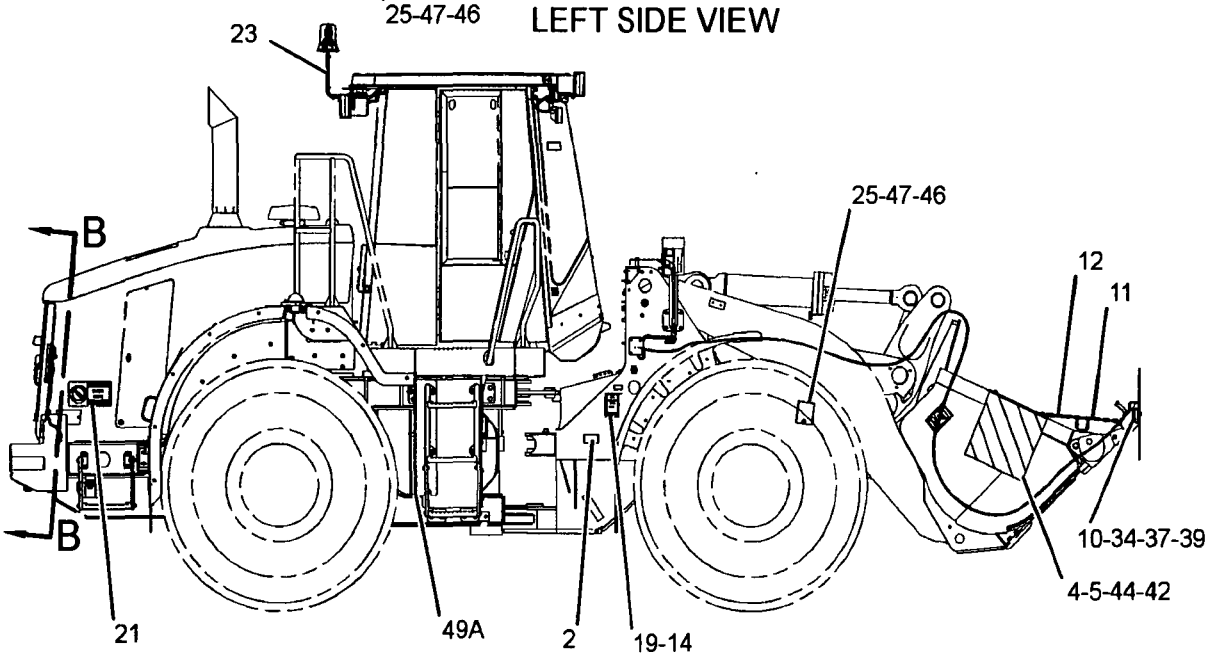

RIGHT SIDE VIEW

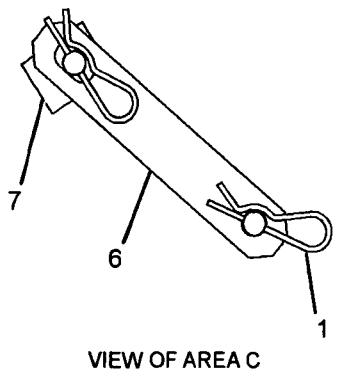

VIEW OF AREA C

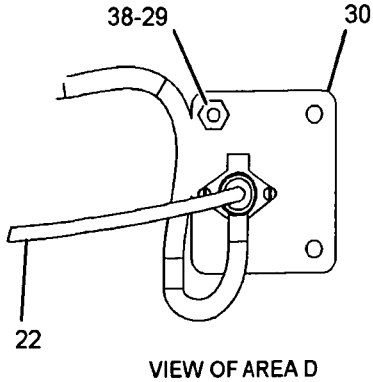

VIEW OF AREA D

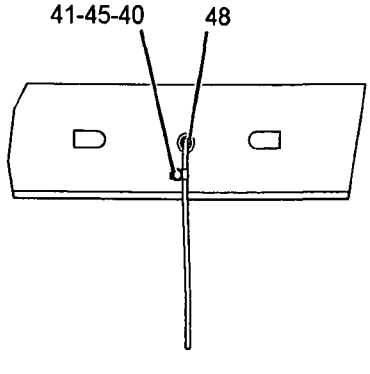

VIEW A-A

GRAPHIC #1 g01227631

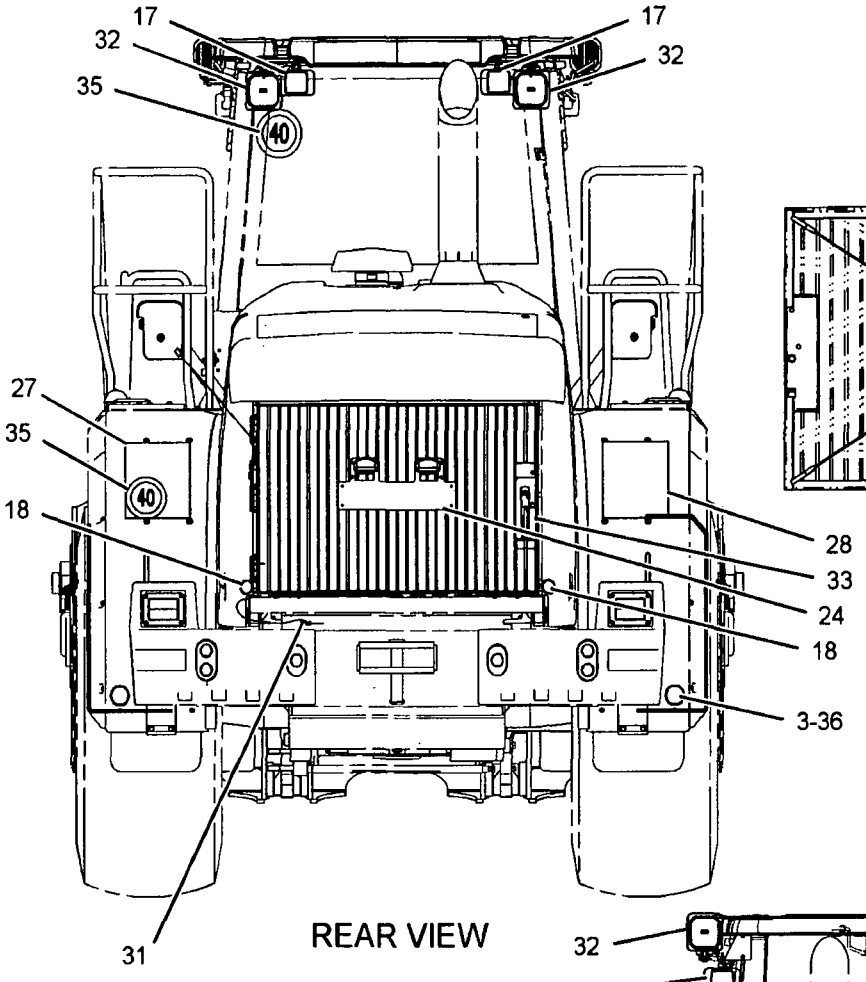

REAR VIEW

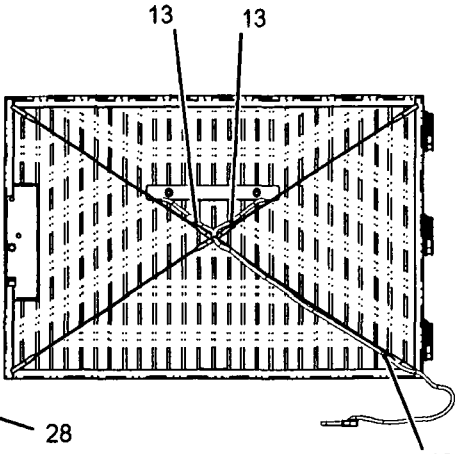

VIEW B-B

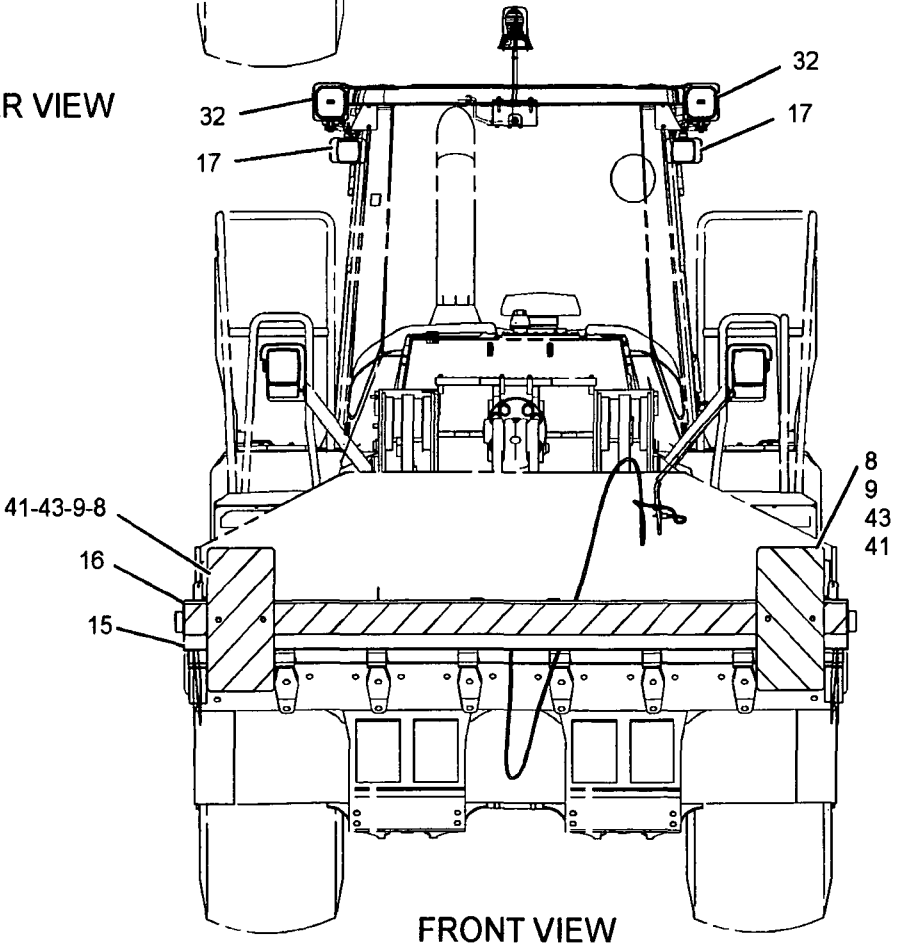

FRONT VIEW

GRAPHIC #2

<END>

g01227633

237-0422 COUNTERWEIGHT GP

S/N: N1A1-UP

PART OF 237-0234 CHASSIS AR

SMCS-7056 **i02437678**

NOTE	REF NO	GRAPHIC REF	PART NUMBER	QTY	PART NAME 1 2 3 4 5 6 (PRODUCT LEVEL)	SEE PAGE
	1	1	103-5796	1	PIN-KEEPER	
	2	1	266-9861	1	PIN	
	3	1	265-7605	1	COUNTERWEIGHT	
	4	1	265-7606	1	COUNTERWEIGHT	
M	5	1	7X-2586	6	BOLT (M30X35X180-MM)	
	6	1	9X-8258	6	WASHER (33X56X6-MM THK)	

M-METRIC PART

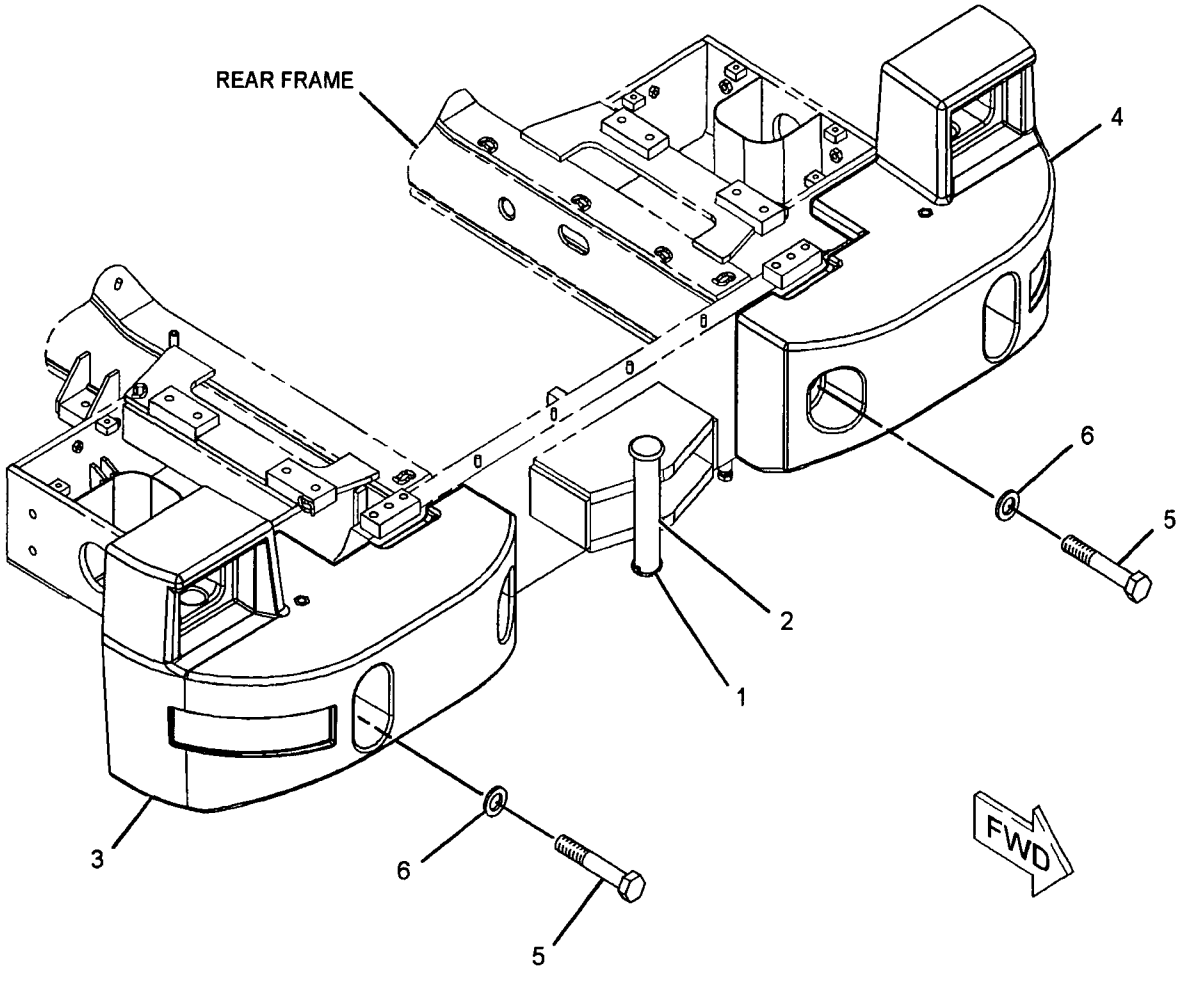

GRAPHIC #1 **<END>** g01131365

237-4948 COUNTERWEIGHT GP

S/N: N1A1-UP

PART OF 276-5414 COUNTERWEIGHT GP, 244-3375, 244-3396 LIFT AR, 244-5421 LOGGING AR AN ATTACHMENT

SMCS-7056 **i02439246**

NOTE	REF NO	GRAPHIC REF	PART NUMBER	QTY	PART NAME 1 2 3 4 5 6 (PRODUCT LEVEL)	SEE PAGE
	1	1	103-5796	1	PIN-KEEPER	
	2	1	115-5669	1	PIN	
	3	1	265-7607	1	COUNTERWEIGHT	
M	4	1	7X-2586	8	BOLT (M30X35X180-MM)	
	5	1	9X-8258	8	WASHER (33X56X6-MM THK)	

M-METRIC PART

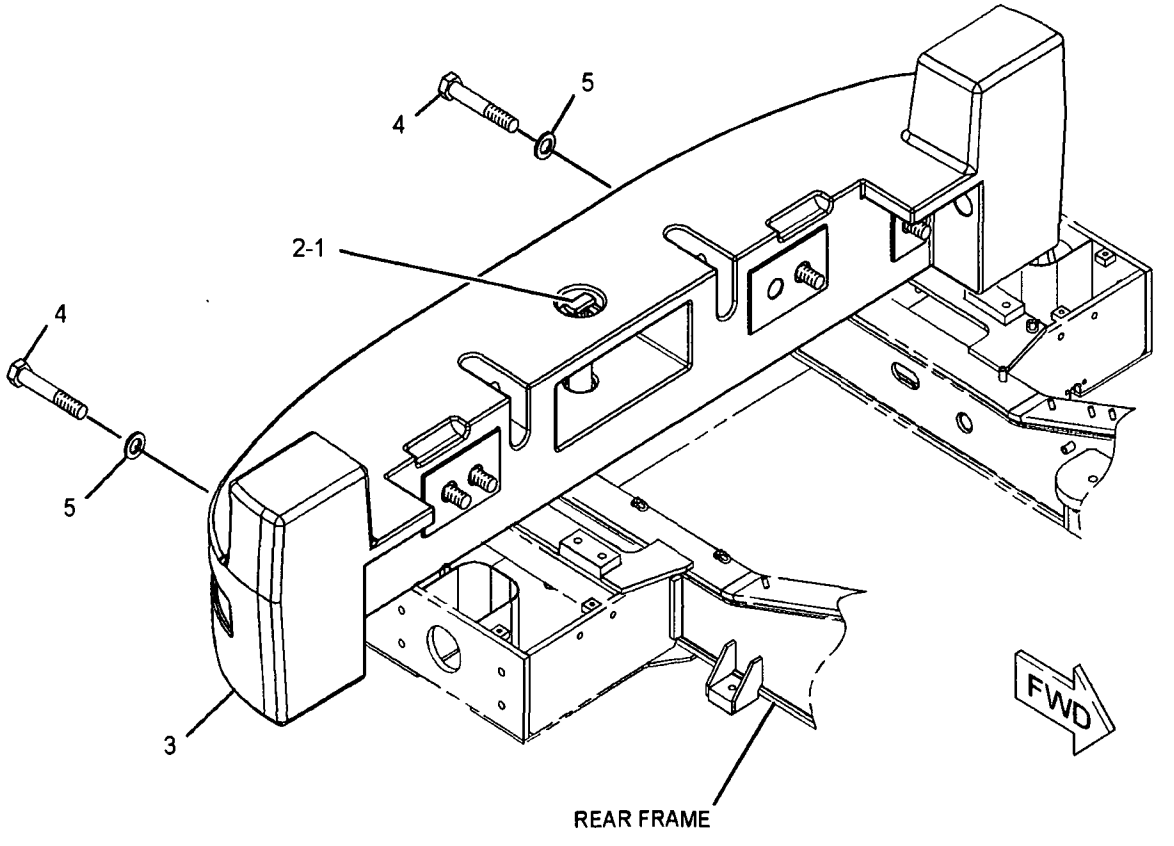

GRAPHIC #1 **<END>** g01133044

276-5414 COUNTERWEIGHT GP

S/N: N1A1-UP

AN ATTACHMENT

SMCS-7056 **i02443638**

NOTE	PART NUMBER	QTY	PART NAME 1 2 3 4 5 6 (PRODUCT LEVEL)	SEE PAGE
Y	237-4948	1	COUNTERWEIGHT GP	397

Y-SEPARATE ILLUSTRATION

<END>

247-4668 DOOR GP-ACCESS–HOOD SIDE, RH

S/N: N1A1-UP

PART OF 251-1700 HOOD & GUARD GP

SMCS-7273 i02460945

NOTE	REF NO	GRAPHIC REF	PART NUMBER	QTY	PART NAME 1 2 3 4 5 6 (PRODUCT LEVEL)	SEE PAGE
	1	1	6V-4604	1	RIVET-POP	
	2	1	8V-7162	1	CABLE	
	3	1	9V-1820	1	SPACER	
	4	1	119-0281	2	HINGE AS	
	5	1	233-4463	1	CAM	
	6	1	233-4466	1	LATCH AS	
	7	1	247-4669	1	DOOR-RH	

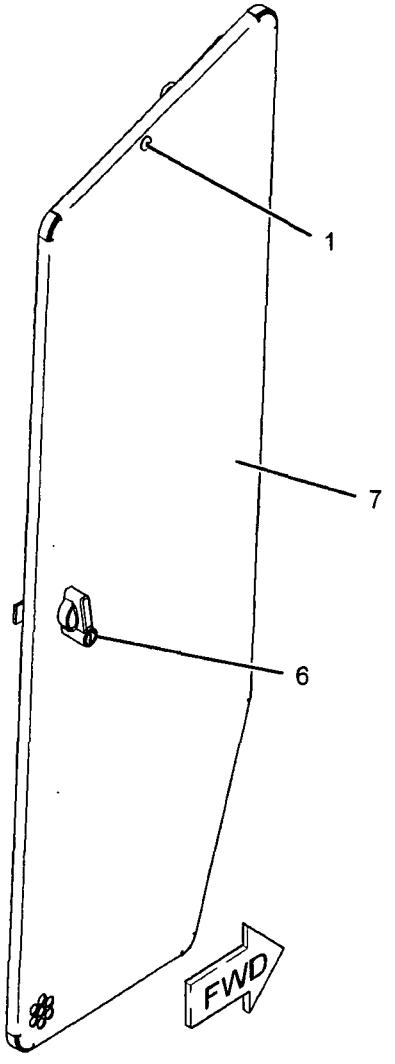

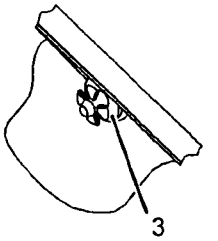

VIEW OF AREA A

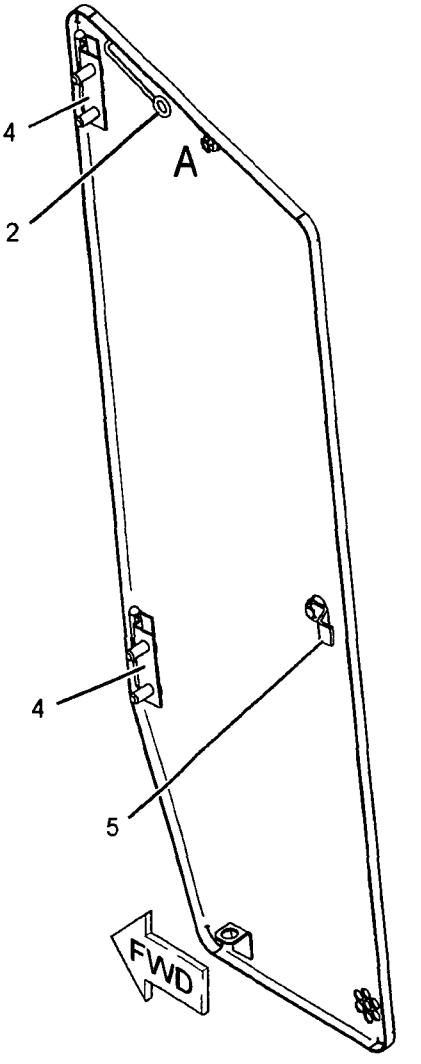

GRAPHIC #1

<END>

g01133488

247-4670 DOOR GP-ACCESS–HOOD SIDE, LH

S/N: N1A1-UP

PART OF 251-1700 HOOD & GUARD GP

SMCS-7273 **i02460956**

NOTE	REF NO	GRAPHIC REF	PART NUMBER	QTY	PART NAME 1 2 3 4 5 6 (PRODUCT LEVEL)	SEE PAGE
	1	1	6V-4604	1	RIVET-POP	
	2	1	8V-7162	1	CABLE	
	3	1	9V-1820	1	SPACER	
	4	1	119-0281	2	HINGE AS	
	5	1	233-4463	1	CAM	
	6	1	233-4466	1	LATCH AS	
	7	1	247-4671	1	DOOR-LH	

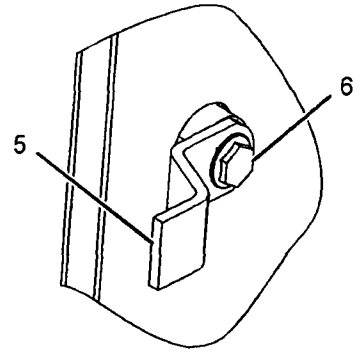

VIEW OF AREA B

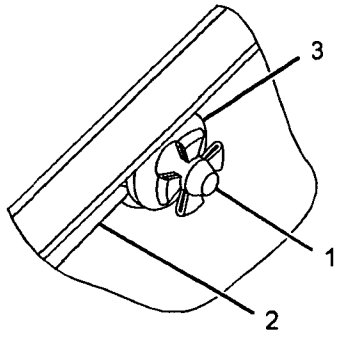

VIEW OF AREA A

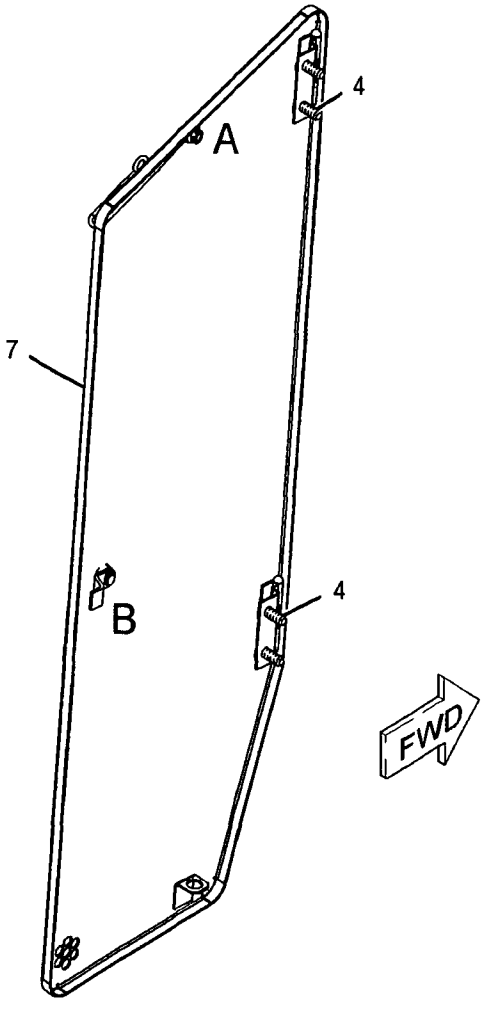

GRAPHIC #1 **<END>** g01133485

263-0056 FENDER AR-ROADING

S/N: N1A1-UP

AN ATTACHMENT

SMCS-7252 **i02424409**

NOTE	REF NO	GRAPHIC REF	PART NUMBER	QTY	PART NAME 1 2 3 4 5 6 (PRODUCT LEVEL)	SEE PAGE
Y	1	1	275-8388	1	FENDER GP-ROADING	408
Y	2	1	276-2128	1	HARDWARE GP-MOUNTING (FENDER)	434

Y-SEPARATE ILLUSTRATION

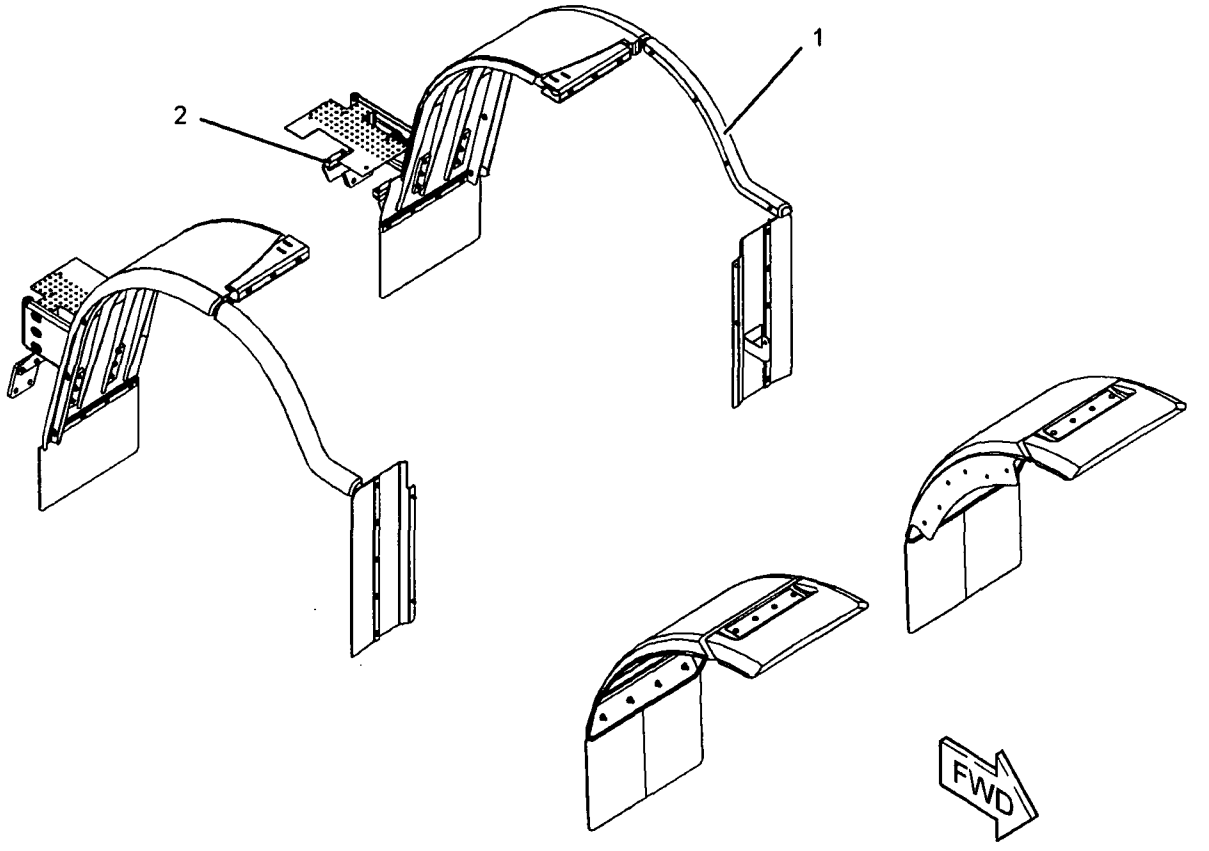

GRAPHIC #1 **<END>** g01198894

FRAME AND BODY

237-0424 FENDER GP

S/N: N1A1-UP

PART OF 237-0234 CHASSIS AR

SMCS-7252 **i02437676**

NOTE	REF NO	GRAPHIC REF	PART NUMBER	QTY	PART NAME 1 2 3 4 5 6 (PRODUCT LEVEL)	SEE PAGE
	1	1	1K-8850	1	SPRING	
	2	1	172-6251	1	FENDER AS-FRONT (LH)	
	3	1	172-6252	1	FENDER AS-FRONT (RH)	
	4	1	243-5856	1	FENDER AS-REAR (LH)	
		1	247-0126	1	DOOR AS	
		1	4V-7785	1	HINGE	
	5	1	243-5857	1	FENDER AS-REAR (RH)	
	6	1	245-7727	2	COVER	
	7	1	247-8238	1	DEFLECTOR AS-LH	
	8	1	247-8239	1	DEFLECTOR AS-RH	
					(EACH DEFLECTOR AS INCLUDES)	
M		1	8T-3490	4	NUT-WELD (M10X1.5-THD)	
	9	1	275-0571	1	CAM-LATCH	
	10	1	275-0572	1	LATCH AS	
M	11	1	5C-9553	2	BOLT (M6X1X16-MM)	
	12	1	5P-1076	12	WASHER-HARD (13.5X30X4-MM THK)	
	13	1	7X-0589	12	WASHER-HARD (12X28.5X5-MM THK)	
M	14	1	8T-0389	12	LOCKNUT (M10X1.15-THD)	
	15	1	8T-4121	6	WASHER-HARD (11X21X2.5-MM THK)	
M	16	1	8T-4139	12	BOLT (M12X1.75X30-MM)	
M	17	1	8T-4195	6	BOLT (M10X1.5X30-MM)	
	18	1	9X-8256	2	WASHER (6.6X12X2-MM THK)	

M-METRIC PART

237-0424 **FENDER GP** *(contd.)* **i02437676**

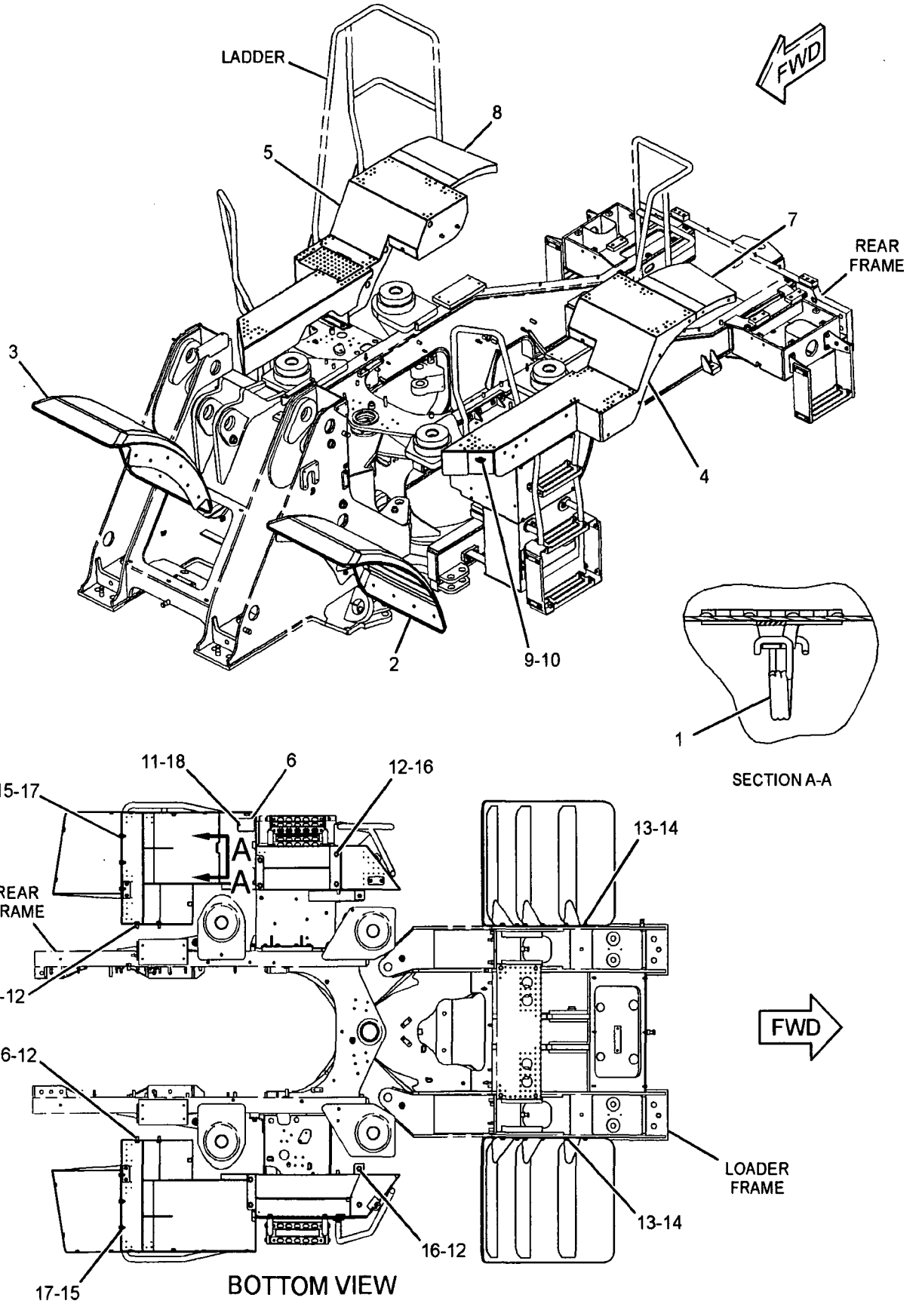

GRAPHIC #1 **<END>** g01227605

248-7613 FENDER GP

S/N: N1A1-UP

PART OF 237-0234 CHASSIS AR

SMCS-7252 **i02437675**

NOTE	REF NO	GRAPHIC REF	PART NUMBER	QTY	PART NAME 1 2 3 4 5 6 (PRODUCT LEVEL)	SEE PAGE
	1	1	138-6814	2	STRIP AS	
	2	1	138-6819	2	FLAP	
	3	1	271-4957	2	FLAP	
	4	1	271-4958	2	STRIP	
	5	1	272-5556	1	DEFLECTOR AS (LH)	
	6	1	273-2554	1	DEFLECTOR AS (RH)	
	7	1	276-1413	1	DEFLECTOR (LH)	
	8	1	276-1414	1	DEFLECTOR (RH)	
	9	1	276-1415	1	DEFLECTOR-LH	
	10	1	276-1416	1	DEFLECTOR (RH)	
M	11	1	6V-7357	10	BOLT (M6X1X25-MM)	
	12	1	7X-7729	28	WASHER (11X25X3-MM THK)	
M	13	1	8T-0389	8	LOCKNUT (M10X1.15-THD)	
M	14	1	8T-4136	20	BOLT (M10X1.5X25-MM)	
	15	1	9X-6165	10	WASHER (6.5X22X2.5-MM THK)	

M-METRIC PART

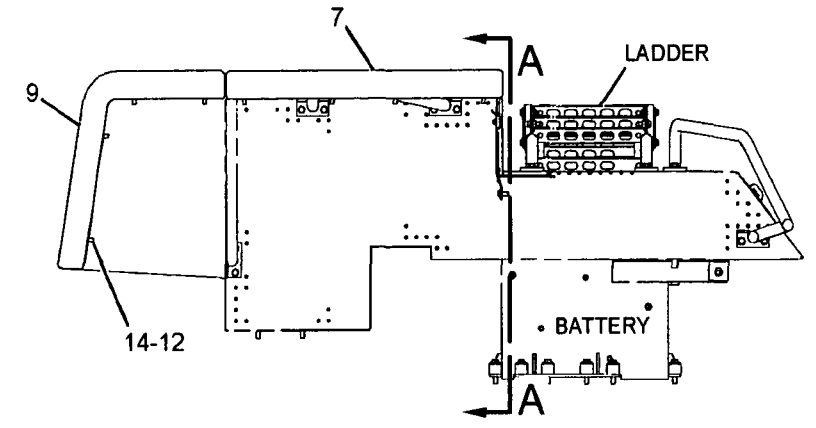

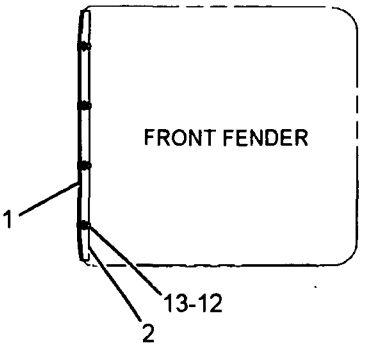

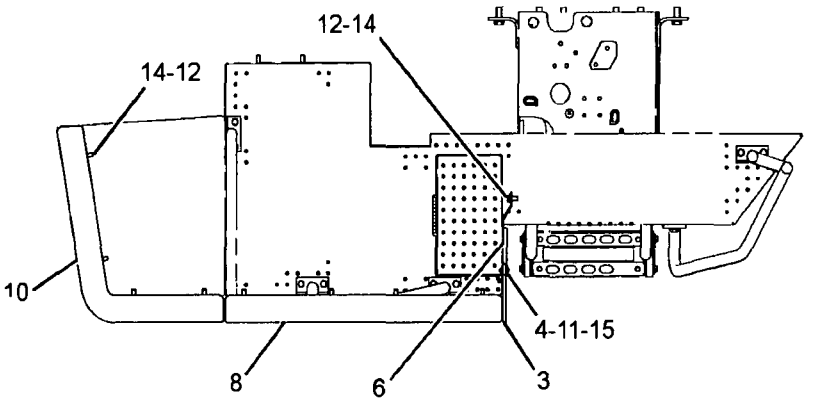

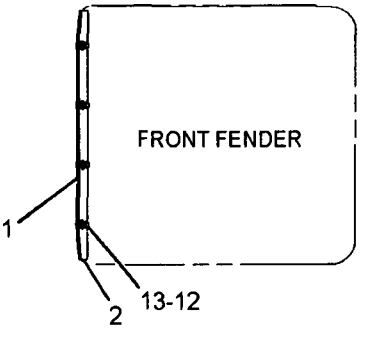

TOP VIEW



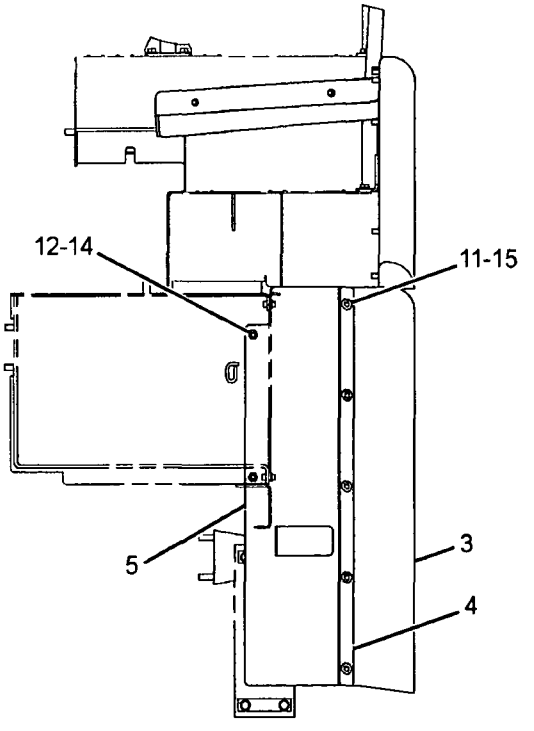

SECTION A-A

GRAPHIC #1 **<END>** g01220123

247-8560 FENDER GP-FRONT

S/N: N1A1-UP
PART OF 244-6607 WASTE HANDLING AR
AN ATTACHMENT

SMCS-7252 **i02281591**

NOTE	REF NO	GRAPHIC REF	PART NUMBER	QTY	PART NAME 1 2 3 4 5 6 (PRODUCT LEVEL)	SEE PAGE
	1	1	201-6775	1	FENDER AS-FRONT (LH)	
	2	1	201-6776	1	FENDER AS-FRONT (RH)	
	3	1	201-6780	1	PLATE (LH)	
	4	1	201-6781	1	PLATE (RH)	
	5	1	8T-4121	12	WASHER-HARD (11X21X2.5-MM THK)	
M	6	1	8T-4133	12	NUT (M10X1.5 THD)	
M	7	1	8T-4183	8	BOLT (M12X1.75X40-MM)	
	8	1	8T-4223	8	WASHER-HARD (13.5X25.5X3-MM THK)	

M-METRIC PART

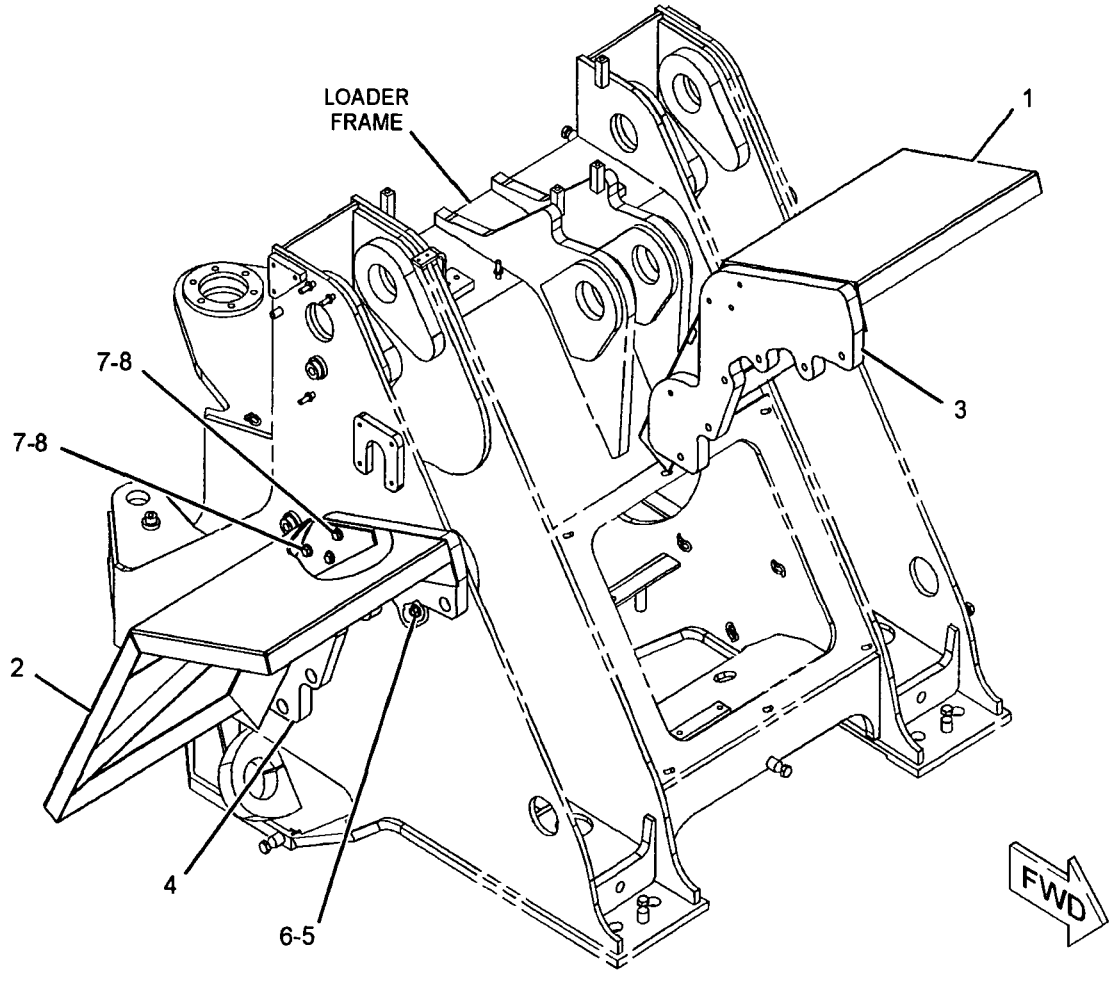

GRAPHIC #1 **<END>** g01133967

263-8008 FENDER GP-FRONT

S/N: N1A1-UP

AN ATTACHMENT

SMCS-7252 **i02443475**

NOTE	REF NO	GRAPHIC REF	PART NUMBER	QTY	PART NAME 1 2 3 4 5 6 (PRODUCT LEVEL)	SEE PAGE
	1	1	102-5846	2	ANGLE	
	2	1	102-5849	2	STRIP	
	3	1	141-3889	2	EXTENSION	
	4	1	141-3890	2	PLATE AS	
	5	1	188-9302	1	FENDER AS (RH)	
	6	1	188-9305	1	FENDER AS (LH)	
	7	1	189-0603	2	DEFLECTOR	
	8	1	7X-7729	8	WASHER (11X25X3-MM THK)	
M	9	1	8T-0389	16	LOCKNUT (M10X1.15-THD)	
M	10	1	8T-4192	6	BOLT (M12X1.75X25-MM)	
	11	1	8T-4223	12	WASHER-HARD (13.5X25.5X3-MM THK)	
M	12	1	8T-4244	6	NUT (M12X1.75-THD)	
M	13	1	9X-2040	8	SCREW-TRUSS HEAD (M10X1.5X25-MM)	

M-METRIC PART

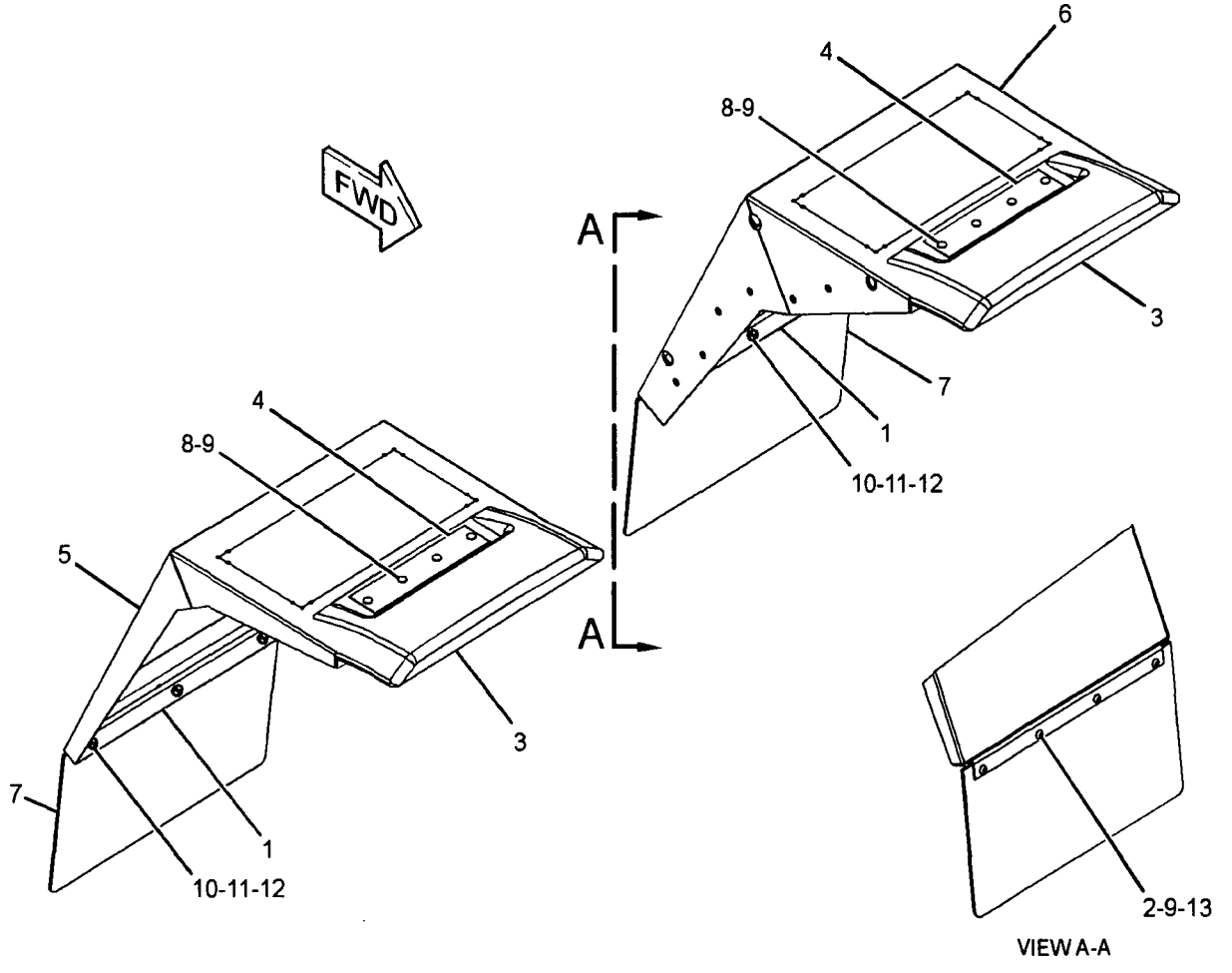

VIEW A-A

GRAPHIC #1 **<END>** g01228479

275-8388 FENDER GP-ROADING

S/N: N1A1-UP

PART OF 263-0056 FENDER AR-ROADING

AN ATTACHMENT

SMCS-7252 **i02424405**

NOTE	REF NO	GRAPHIC REF	PART NUMBER	QTY	PART NAME 1 2 3 4 5 6 (PRODUCT LEVEL)	SEE PAGE
	1	2	4E-1384	2	BUMPER-CONICAL	
	2	2	6W-5817	2	SPRING	
	3	2	8T-4968	2	END-YOKE ROD	
	4	2	132-1924	1	SUPPORT AS-FENDER LATCH (RH)	
	5	2	132-1929	1	SUPPORT AS-FENDER LATCH (LH)	
	6	1	138-6814	2	STRIP AS	
	7	1	138-6819	2	FLAP	
	8	2	141-3874	2	GUIDE AS	
	9	1	141-3889	2	EXTENSION	
	10	1	141-3890	2	PLATE AS	
	11	1	184-6259	1	FENDER AS-FRONT (RH)	
	12	1	184-6260	1	FENDER AS-FRONT (LH)	
	13	2	220-2612	2	LATCH	
	14	2	234-5106	4	BELT-STEP	
	15	1	271-4957	2	FLAP	
	16	1	271-4958	2	STRIP	
	17	1	272-5556	1	DEFLECTOR AS (LH)	
	18	1	273-2554	1	DEFLECTOR AS (RH)	
	19	1	274-7053	2	CHANNEL	
Y	20	1	*276-1187*	1	HINGE GP-ROADING FENDER (RH)	439
Y	21	1	*276-1190*	1	HINGE GP-ROADING FENDER (LH)	440
	22	2	276-1193	2	ROD AS	
	23	2	276-1201	2	COVER	
	24	1	276-1202	1	FENDER AS-REAR (RH)	
M		1	8T-3490	6	NUT-WELD (M10X1.5-THD)	
		1	9R-2060	4	BOSS (M10X1.5X21-MM)	
	25	1	276-1205	1	FENDER AS-REAR (LH)	
M		1	8T-3490	6	NUT-WELD (M10X1.5-THD)	
		1	9R-2060	4	BOSS (M10X1.5X21-MM)	
	26	1	276-1211	2	DEFLECTOR (REAR)	
	27	1	276-1212	2	STRIP	
	28	1	276-1413	1	DEFLECTOR (LH)	
	29	1	276-1414	1	DEFLECTOR (RH)	
	30	1	276-1417	1	DEFLECTOR (LH)	
	31	1	276-1418	1	DEFLECTOR (RH)	
	32	2	276-2129	2	BRACKET AS	
					(EACH INCLUDES)	
M		2	8T-3490	2	NUT-WELD (M10X1.5-THD)	
	33	1	277-4547	1	COVER	
	34	1	277-4548	1	COVER	
	35	2	277-4549	2	BRACKET AS	
					(EACH INCLUDES)	
M		2	8T-3490	2	NUT-WELD (M10X1.5-THD)	
	36	2	283-4380	1	SUPPORT AS (LH)	
	37	2	283-4381	1	SUPPORT AS (RH)	
	38	2	092-9741	2	GROMMET	
M	39	1	129-3178	8	LOCKNUT (M6X1-THD)	
	40	2	1B-0676	2	PIN	
	41	2	3B-2062	2	PIN	
	42	2	3B-4615	4	PIN-COTTER	
M	43	2	5C-7261	2	NUT (M8X1.25-THD)	
	44	2	5P-1076	2	WASHER-HARD (13.5X30X4-MM THK)	
M	45	1	6V-7357	18	BOLT (M6X1X25-MM)	
	46	1	7X-0578	20	WASHER-HARD (10.2X32X2.5-MM THK)	
M	47	1	7X-2552	12	BOLT (M16X2X30-MM)	

275-8388 FENDER GP-ROADING (contd.) i02424405

NOTE	REF NO	GRAPHIC REF	PART NUMBER	QTY	PART NAME 1 2 3 4 5 6 (PRODUCT LEVEL)	SEE PAGE
	48	1,2	**7X-7729**	48	WASHER (11X25X3-MM THK)	
M	49	1	**8T-0389**	16	LOCKNUT (M10X1.15-THD)	
	50	2	**8T-3985**	2	KNOB	
M	51	1	**8T-4122**	18	WASHER-HARD (17X32X3.5-MM THK)	
M	52	2	**8T-4133**	2	NUT (M10X1.5 THD)	
M	53	1,2	**8T-4136**	14	BOLT (M10X1.5X25-MM)	
M	54	1,2	**8T-4137**	28	BOLT (M10X1.5X20-MM)	
M	55	2	**8T-4191**	6	BOLT (M10X1.5X16-MM)	
M	56	2	**8T-4192**	8	BOLT (M12X1.75X25-MM)	
	57	2	**8T-4223**	8	WASHER-HARD (13.5X25.5X3-MM THK)	
M	58	1	**8T-6594**	6	BOLT-SOCKET HEAD (M16X2X35-MM)	
M	59	2	**9X-2041**	6	SCREW-TRUSS HEAD (M10X1.5X20-MM)	
	60	1	**9X-6165**	30	WASHER (6.5X22X2.5-MM THK)	
E	61	1	**246-0435**	2	SEAL (138.4-CM EACH)	

E-ORDER BY THE CENTIMETER
M-METRIC PART
Y-SEPARATE ILLUSTRATION

275-8388 FENDER GP-ROADING *(contd.)* i02424405

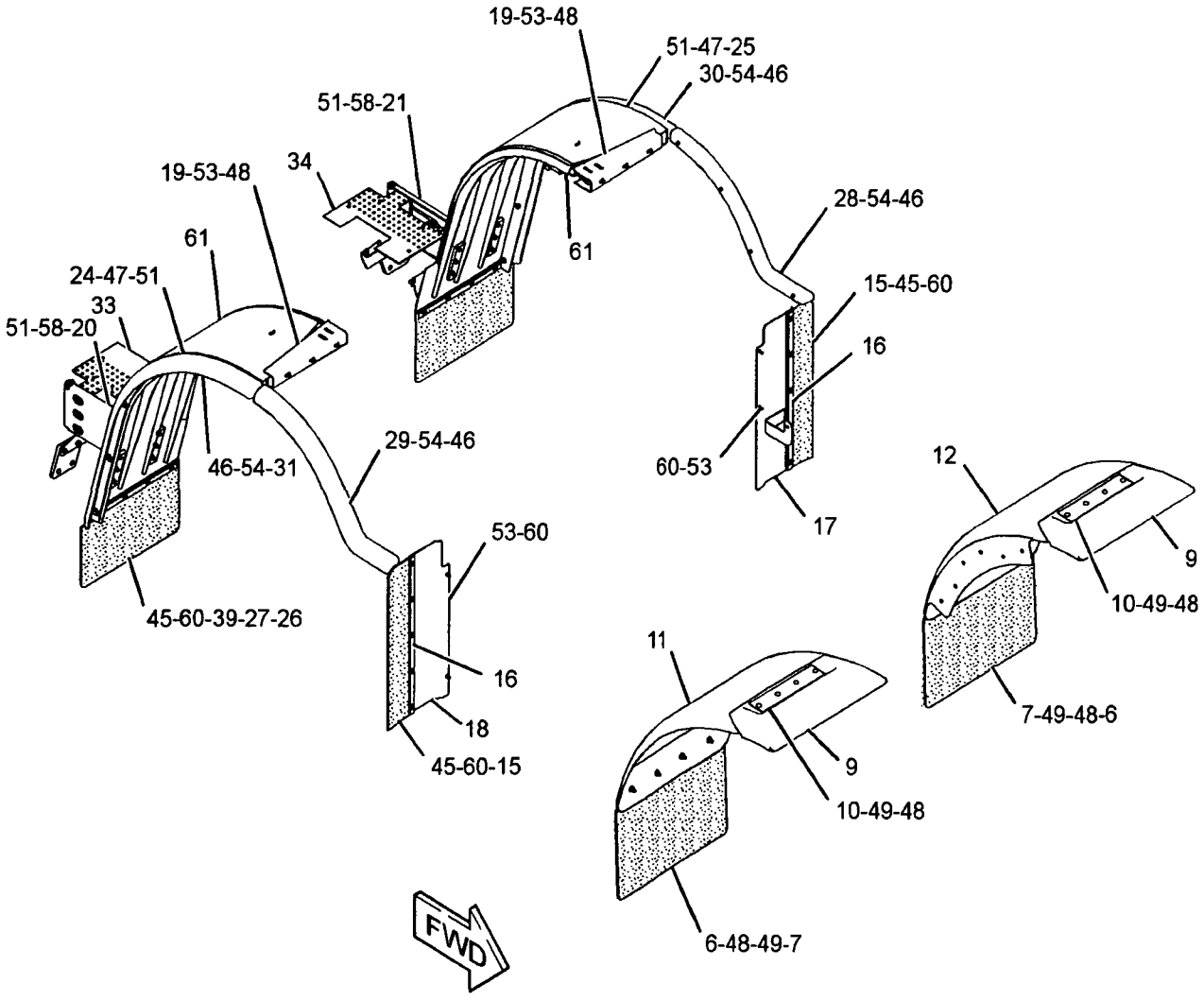

GRAPHIC #1 g01224388

275-8388 FENDER GP-ROADING (contd.) i02424405

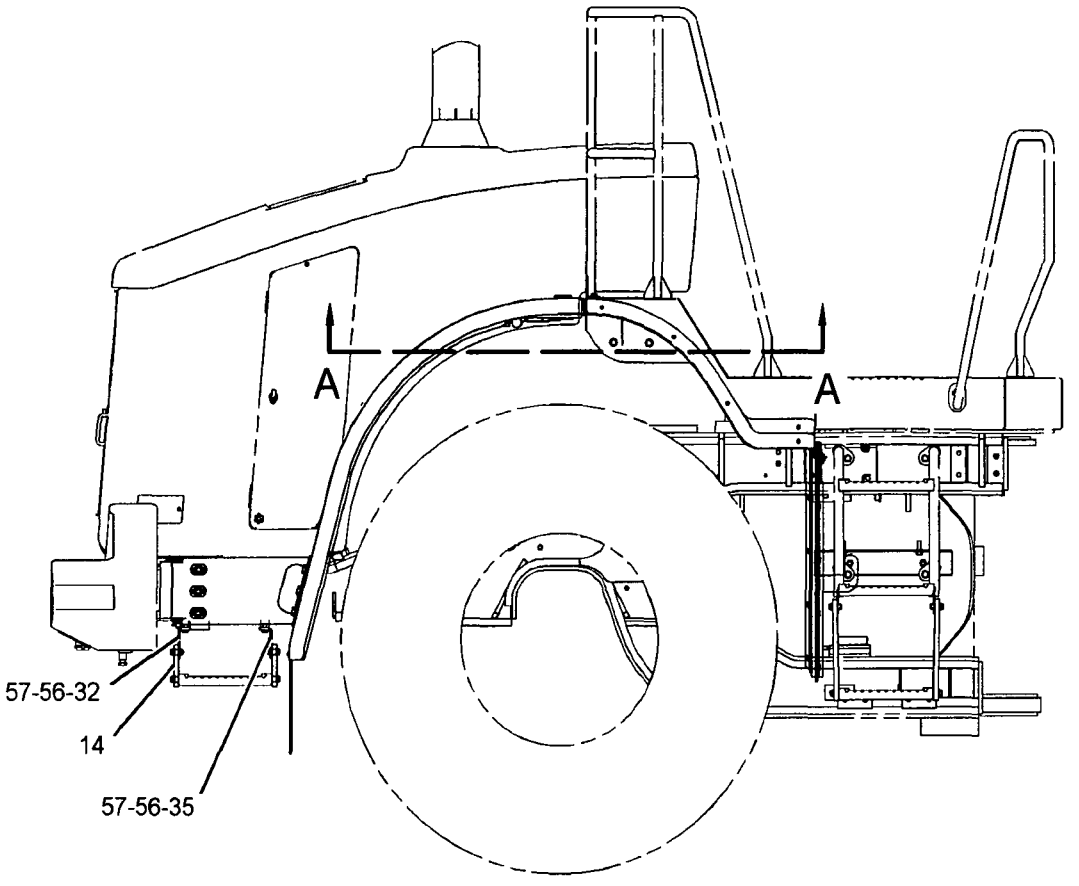

RIGHT SIDE VIEW

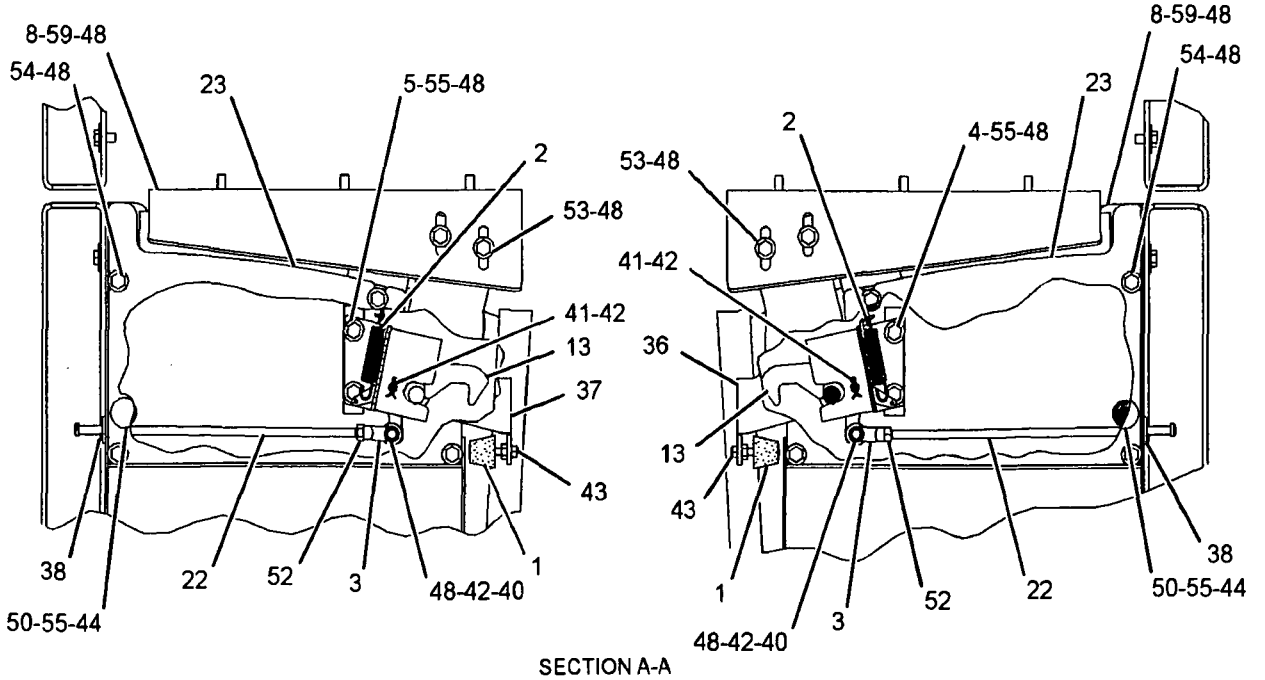

SECTION A-A

GRAPHIC #2 **<END>** g01224390

237-0426 FRAME AS-LOADER

S/N: N1A1-UP

PART OF 237-0234 CHASSIS AR

SMCS-7054 **i02457592**

NOTE	REF NO	GRAPHIC REF	PART NUMBER	QTY	PART NAME 1 2 3 4 5 6 (PRODUCT LEVEL)	SEE PAGE
	1	1,2	**7T-1099**	12	LINK	
M	2	2	**8T-3734**	1	BOSS-WELD (M10X1.5X40-MM)	
M	3	1	**8T-4219**	6	STUD-WELD (M10X1.5X17.5-MM)	
	4	2	**9C-6809**	3	BLOCK	
	5	1	**112-6319**	1	HITCH AS-UPPER	
	6	2	**090-8247**	1	BLOCK	
	7	1,2	**117-0986**	1	BAR	
M	8	1,2	**110-2023**	15	STUD-WELD (M10X1.5X25-MM)	
	9	2	**132-6964**	1	PLATE	
	10	1	**4I-3398**	1	PLATE	
M	11	2	**8T-4935**	2	BOSS-WELD (M10X1.5X45-MM)	
M	12	1,2	**8T-3851**	2	BOSS-WELD (M10X1.5X17.5-MM)	
M	13	1,2	**8T-7501**	12	STUD-WELD (M10X1.5X38-MM)	
	14	1	*254-0004*	1	BRACKET AS	
M		1	**8T-3490**	2	NUT-WELD (M10X1.5-THD)	
	15	1	**276-0730**	1	BRACKET AS	
M		1	**8T-3490**	2	NUT-WELD (M10X1.5-THD)	
M	16	1	**9R-2640**	3	BOSS (M12X1.75X25-MM)	
M	17	2	**7X-0752**	1	BOSS-WELD (M10X1.5X65-MM OAL)	
	18	1,2	**1P-1413**	11	BOSS	
	19	1,2	**4V-0301**	11	BOLT-STOP (5/8-11X1.25-IN)	

M-METRIC PART

237-0426 FRAME AS-LOADER *(contd.)* i02457592

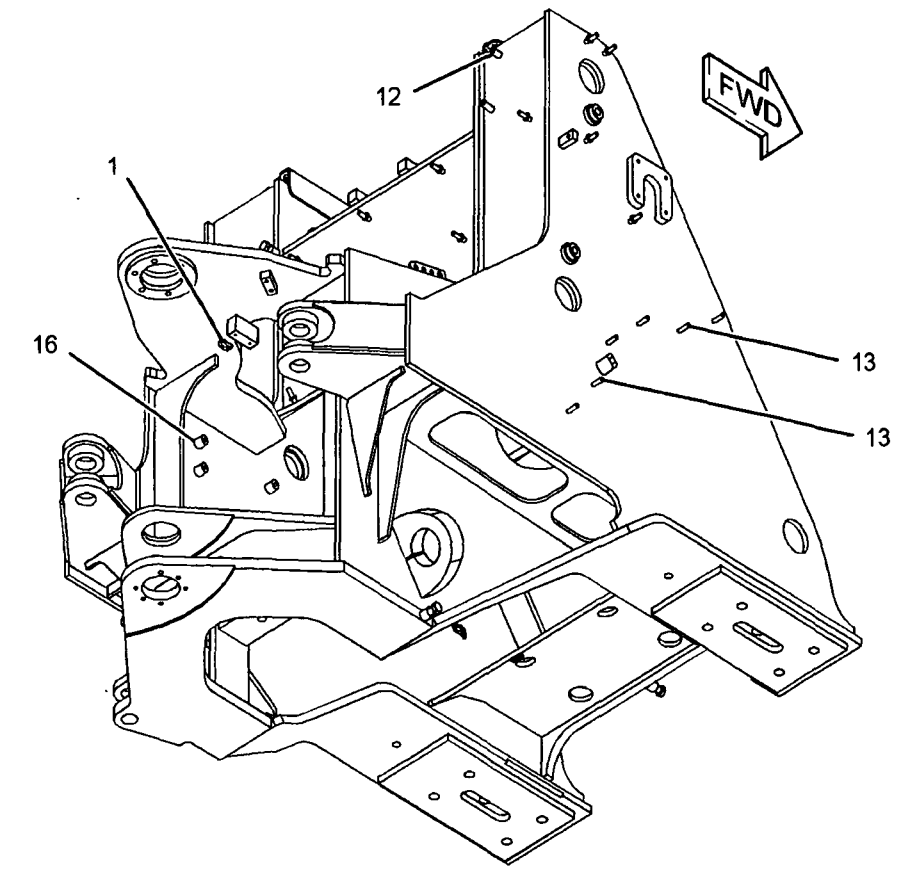

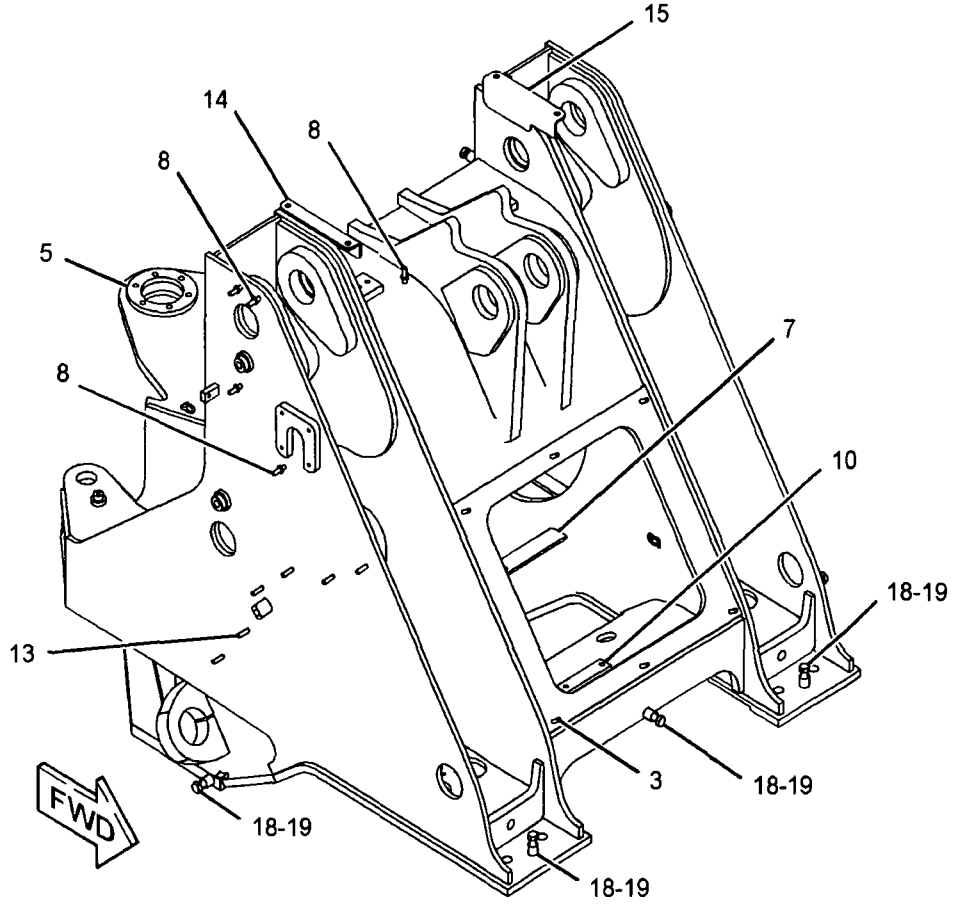

GRAPHIC #1 g01227659

237-0426 FRAME AS-LOADER *(contd.)* i02457592

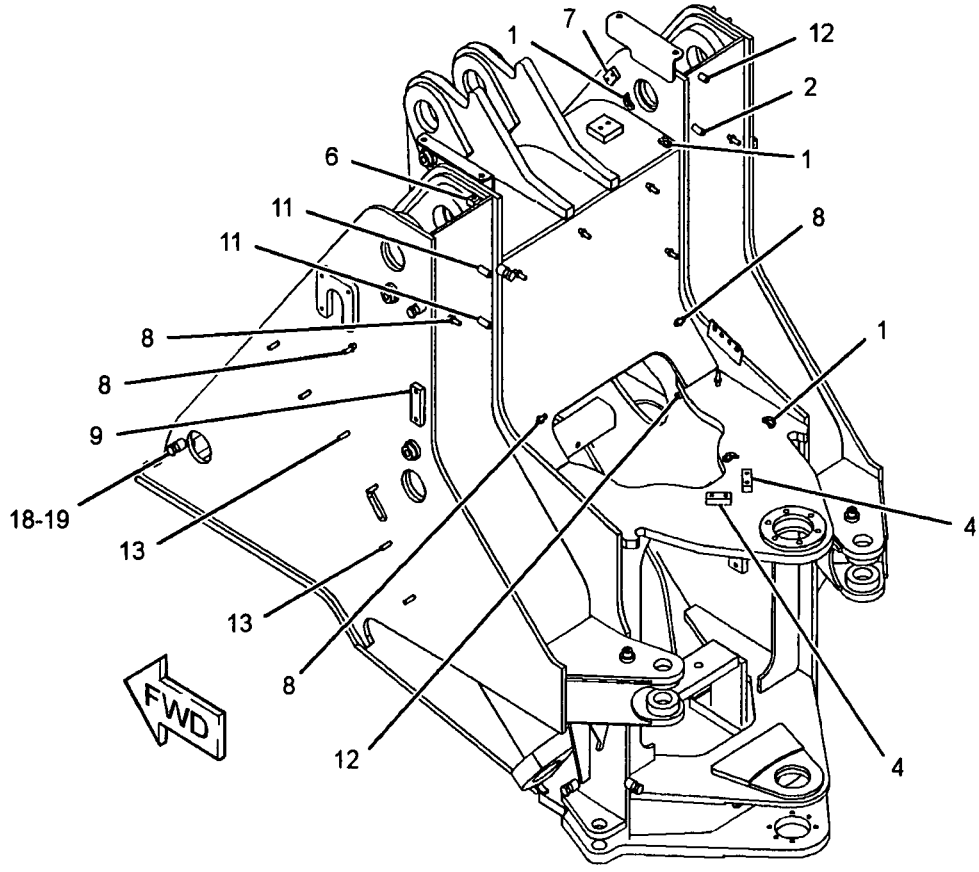

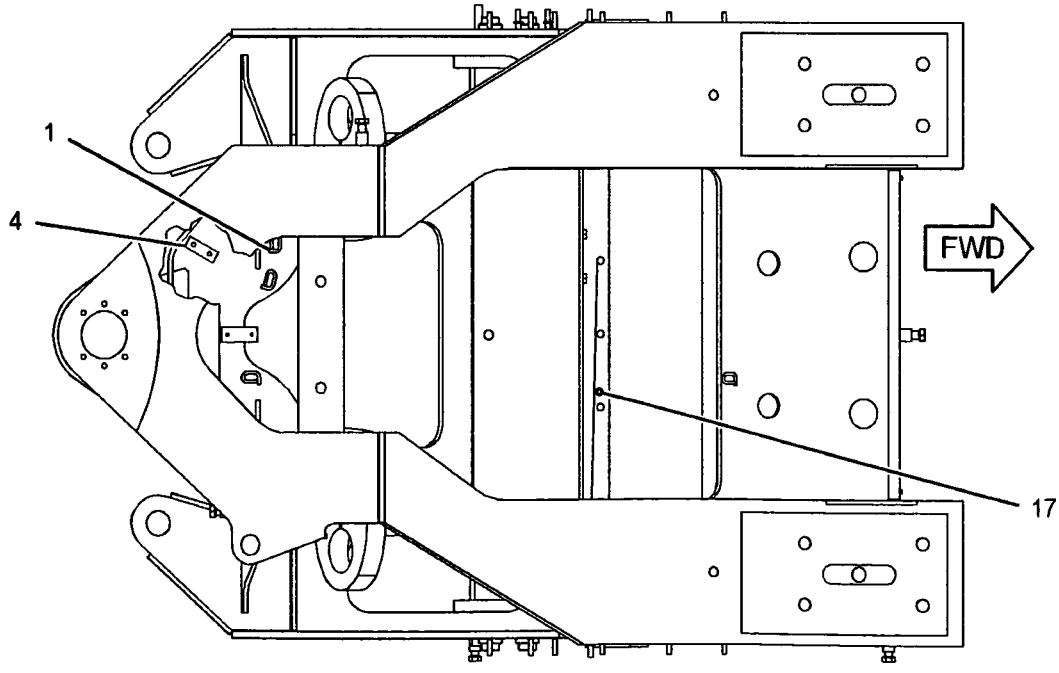

BOTTOM VIEW

GRAPHIC #2 **<END>** g01227660

237-0425 FRAME AS-REAR

S/N: N1A1-UP

PART OF 237-0234 CHASSIS AR

SMCS-7051 **i02363210**

NOTE	REF NO	GRAPHIC REF	PART NUMBER	QTY	PART NAME 1 2 3 4 5 6 (PRODUCT LEVEL)	SEE PAGE
	1	1	**9C-6809**	1	BLOCK	
	2	1	**133-6299**	1	BRACKET AS	
M		1	**8T-3490**	1	NUT-WELD (M10X1.5-THD)	
	3	1	**202-4797**	8	STUD-WELD (M10X1.5X23-MM)	
	4	1	**202-4798**	3	STUD-WELD (M10X1.5X17.5-MM)	
	5	1	*242-1689*	1	RAIL AS (LH)	
		1	**4K-7908**	1	GUSSET	
	6	1	*242-1690*	1	RAIL AS (RH)	
		1	**4K-7908**	1	GUSSET	
	7	1	**246-4225**	2	BRACKET AS	
	8	1	**246-4236**	1	BOX AS	
		1	**8X-5147**	4	BLOCK	
	9	1	**246-4237**	1	BOX AS	
		1	**8X-5147**	4	BLOCK	
	10	1	**7T-1099**	21	LINK	
M	11	1	**7X-0750**	2	BOSS-WELD (M10X1.5X55-MM)	
	12	1	**9C-7863**	2	BLOCK	
M	13	1	**9R-2640**	1	BOSS (M12X1.75X25-MM)	
	14	1	**9R-3845**	1	BOSS (M12X1.75X38-MM)	

M-METRIC PART

237-0425 FRAME AS-REAR *(contd.)* i02363210

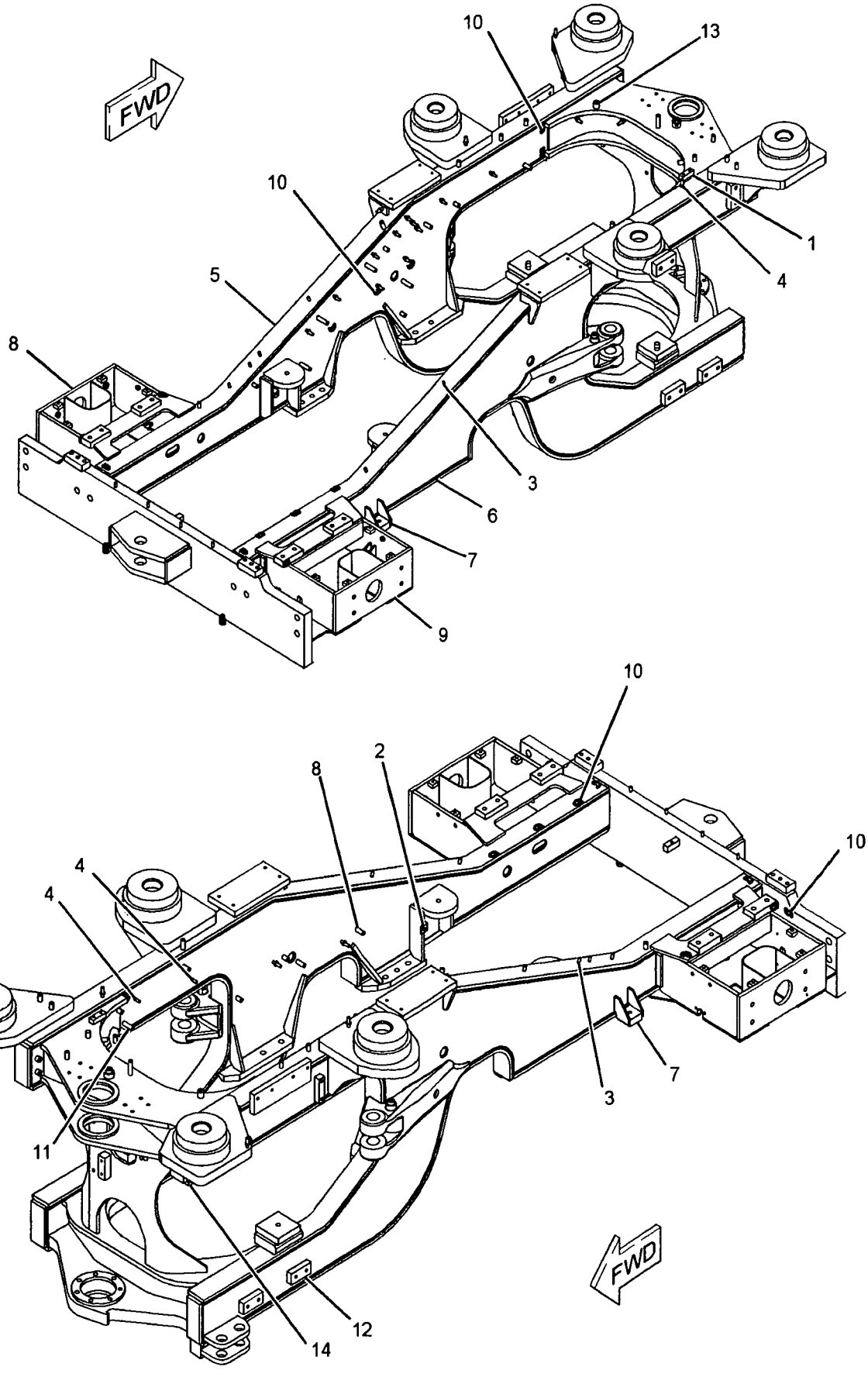

GRAPHIC #1 **<END>** g01227181

271-7220 GRILL GP-RADIATOR

S/N: N1A1-UP

PART OF 251-1700 HOOD & GUARD GP

SMCS-7170 **i02437780**

NOTE	REF NO	GRAPHIC REF	PART NUMBER	QTY	PART NAME 1 2 3 4 5 6 (PRODUCT LEVEL)	SEE PAGE
	1	1	6W-5817	1	SPRING	
	2	1	6W-5818	1	LATCH	
	3	1	174-3086	1	PIN AS	
	4	1	174-8663	1	PIN	
	5	1	229-7534	1	LATCH AS	
	6	1	236-9939	1	PLATE AS	
		1	8T-4121	2	WASHER-HARD (11X21X2.5-MM THK)	
	7	1	247-4255	1	SCREEN AS (RADIATOR)	
	8	1	265-6681	2	BAFFLE	
	9	1	271-7219	1	GRILL AS-REAR	
	10	1	096-3781	1	PIN-CLEVIS	
	11	1	131-5879	4	WASHER (11X32X3-MM THK)	
	12	1	3B-4615	1	PIN-COTTER	
	13	1	7X-7729	8	WASHER (11X25X3-MM THK)	
	14	1	8T-4121	4	WASHER-HARD (11X21X2.5-MM THK)	
M	15	1	8T-4133	6	NUT (M10X1.5 THD)	
M	16	1	8T-4136	8	BOLT (M10X1.5X25-MM)	
M	17	1	9X-2040	4	SCREW-TRUSS HEAD (M10X1.5X25-MM)	
D	18	1	6V-2803		SEAL (1-M)	
	19	1	3B-2062	1	PIN	
	20	1	5P-0372	1	LOCK PIN	

D-ORDER BY THE METER
M-METRIC PART

271-7220 GRILL GP-RADIATOR (contd.) i02437780

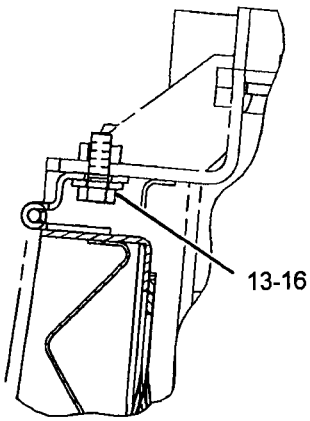

SECTION A-A

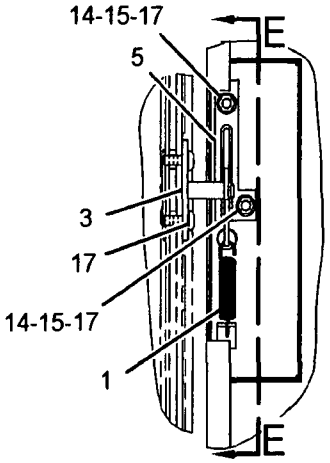

SECTION B-B

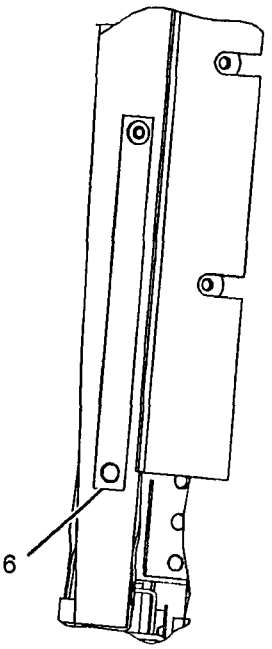

VIEW C-C

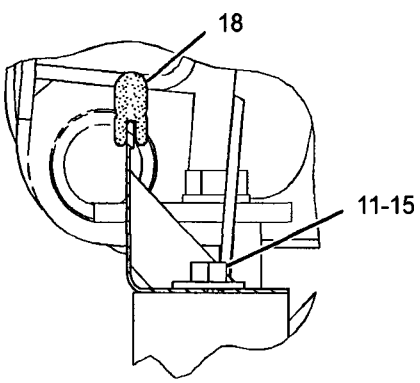

SECTION D-D

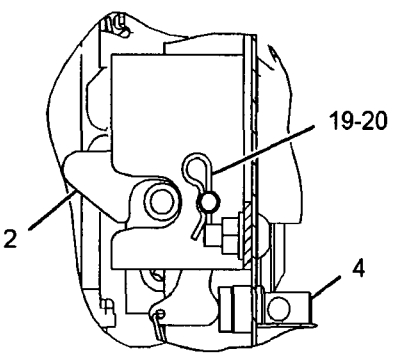

SECTION E-E

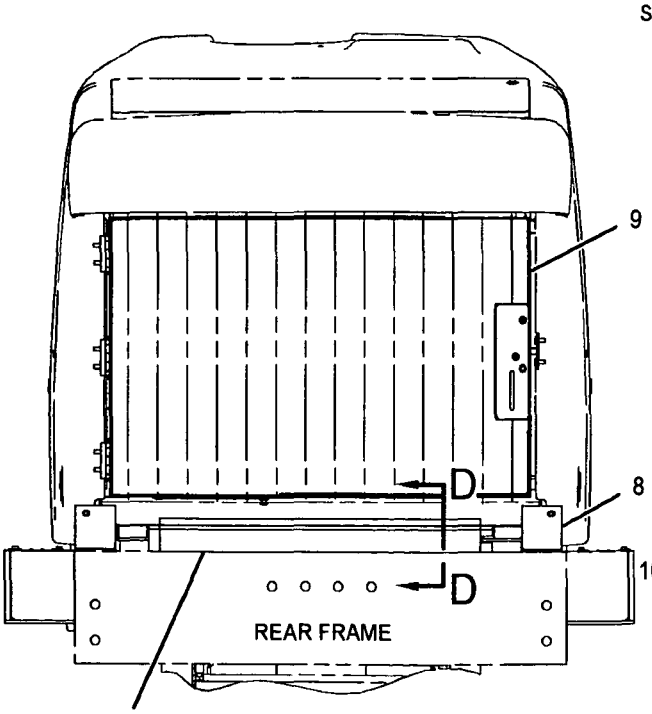

REAR VIEW

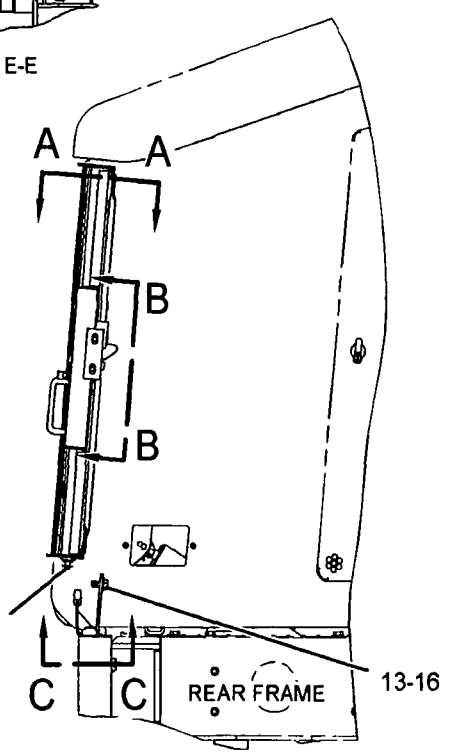

RIGHT SIDE VIEW

GRAPHIC #1 **<END>** g01222110

247-8557 GUARD GP-ARTICULATION

S/N: N1A1-UP
PART OF 244-6607 WASTE HANDLING AR
AN ATTACHMENT

SMCS-7150 **i02281643**

NOTE	REF NO	GRAPHIC REF	PART NUMBER	QTY	PART NAME 1 2 3 4 5 6 (PRODUCT LEVEL)	SEE PAGE
	1	1	5P-7211	1	SEAL	
	2	1	246-2392	1	COVER AS (LH)	
	3	1	246-2393	1	COVER AS (RH)	
	4	1	251-9739	1	COVER AS-CYLINDER	
M		1	8T-3490	4	NUT-WELD (M10X1.5-THD)	
	5	1	251-9742	1	GUARD AS-HITCH	
	6	1	251-9746	1	BAFFLE AS	
	7	1	251-9750	1	PLATE	
	8	1	251-9751	1	BOX AS-BATTERY	
	9	1	251-9752	1	ENCLOSURE AS-SERVICE CENTER	
	10	1	4Y-3046	10	WASHER (13.5X38X3-MM THK)	
	11	1	5P-1076	12	WASHER-HARD (13.5X30X4-MM THK)	
	12	1	8T-4121	7	WASHER-HARD (11X21X2.5-MM THK)	
M	13	1	8T-4133	2	NUT (M10X1.5 THD)	
M	14	1	8T-4137	5	BOLT (M10X1.5X20-MM)	
M	15	1	8T-4139	3	BOLT (M12X1.75X30-MM)	
M	16	1	8T-4244	19	NUT (M12X1.75-THD)	

M-METRIC PART

247-8557 **GUARD GP-ARTICULATION** *(contd.)* **i02281643**

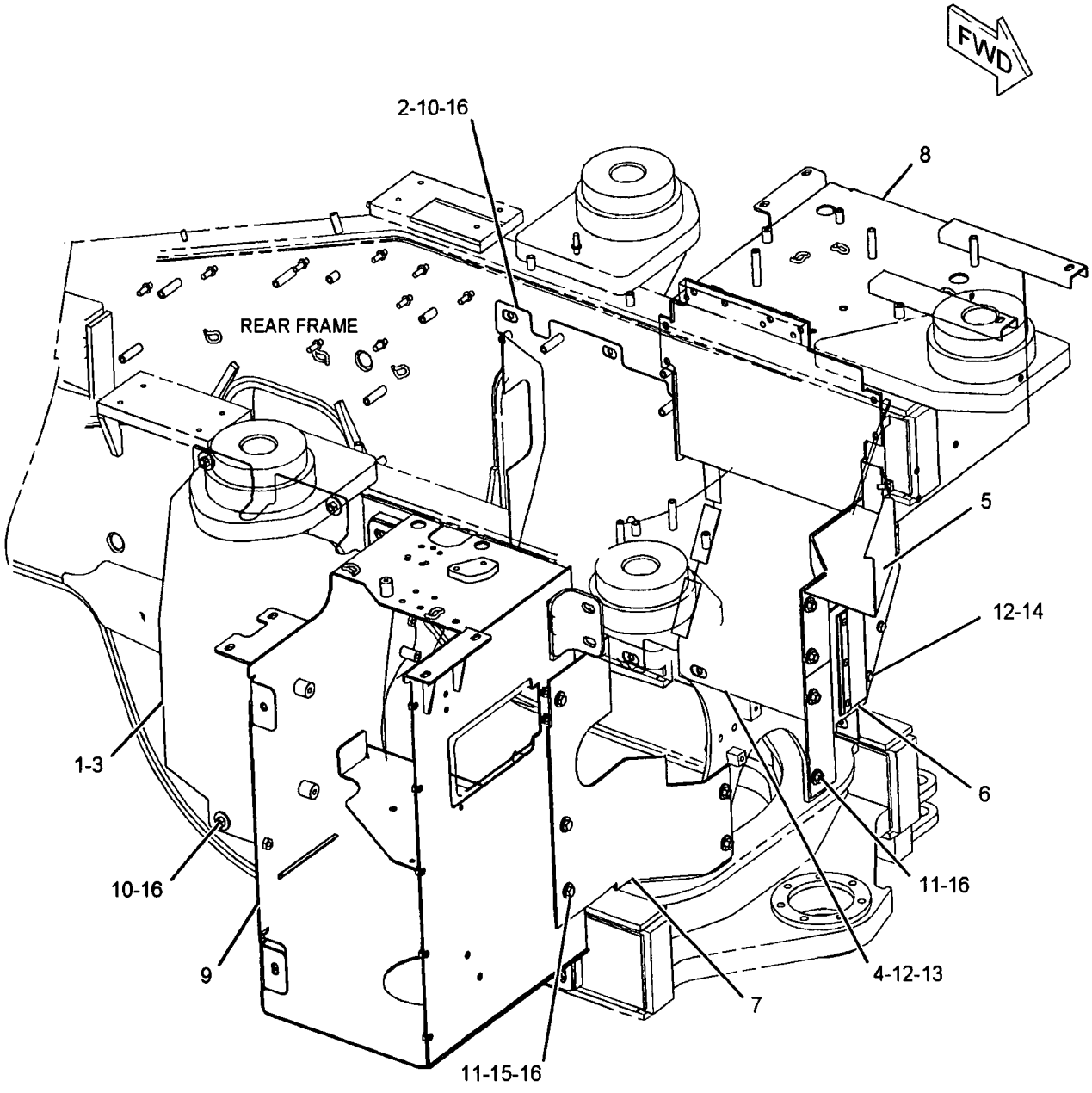

GRAPHIC #1 **<END>** g01134766

143-0001 GUARD GP-AXLE OIL COOLER

S/N: N1A1-UP

PART OF 241-0073 COOLER AR-AXLE OIL

AN ATTACHMENT

SMCS-7150 i01608535

NOTE	REF NO	GRAPHIC REF	PART NUMBER	QTY	PART NAME 1 2 3 4 5 6 (PRODUCT LEVEL)	SEE PAGE
	1	1	212-7753	2	PLATE AS	
					(EACH INCLUDES)	
M		1	8T-3490	2	NUT-WELD (M10X1.5 THD)	
	2	1	143-0003	2	PLATE AS (RH)	
	3	1	143-0004	2	PLATE AS (LH)	
M	5	1	6V-3668	12	BOLT (M12X1.75X30-MM)	
	6	1	7X-0618	12	WASHER-HARD (13.5X40X5-MM THK)	
M	7	1	9X-2075	6	BOLT (M16X2X200-MM)	
M	8	1	8T-0282	6	BOLT (M16X2X120-MM)	
	9	1	212-7754	2	PLATE	
M	10	1	8T-4186	4	BOLT (M10X1.5X40-MM)	
	11	1	8T-4121	4	WASHER-HARD (11X21X2.5-MM THK)	

M-METRIC PART

143-0001 GUARD GP-AXLE OIL COOLER *(contd.)* i01608535

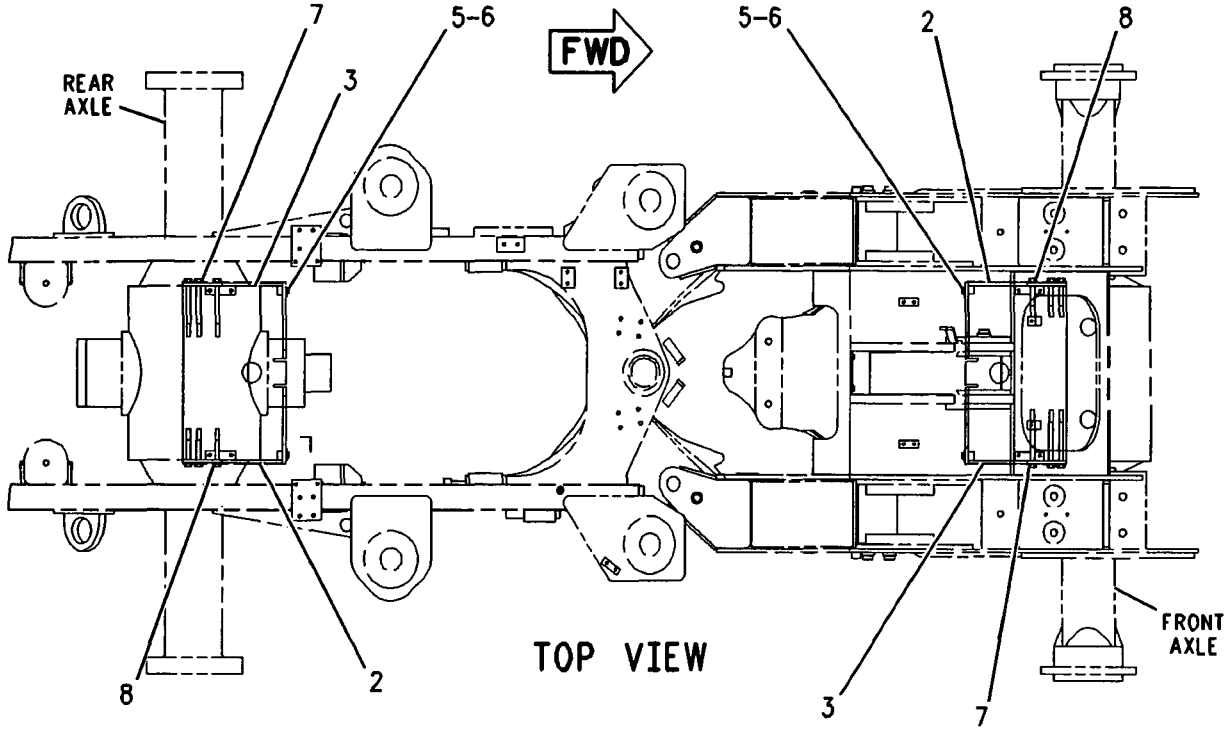

TOP VIEW

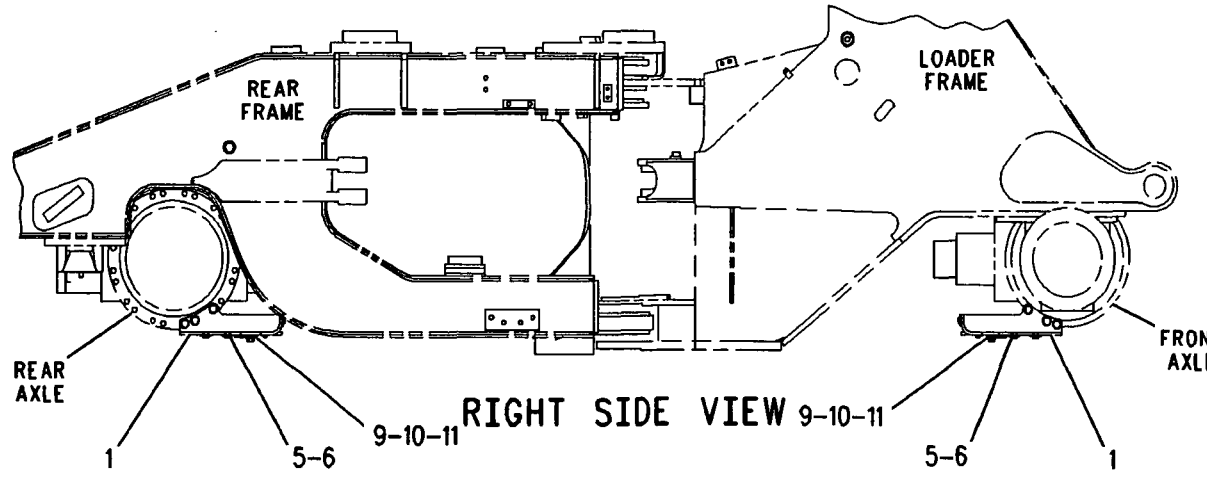

RIGHT SIDE VIEW

GRAPHIC #1 <END> g00833126

227-4094 GUARD GP-AXLE SEAL

S/N: N1A1-UP
PART OF 244-6607 WASTE HANDLING AR
AN ATTACHMENT

SMCS-3259, 3260 **i02328423**

NOTE	PART NUMBER	QTY	PART NAME 1 2 3 4 5 6 (PRODUCT LEVEL)	SEE PAGE
M	**8T-4196**	64	BOLT (M10X1.5X35-MM)	
	232-0928	8	PLATE	
	232-0929	8	PLATE AS	
			(EACH INCLUDES)	
M	**8T-3490**	4	NUT-WELD (M10X1.5-THD)	
	232-0931	4	SHAFT-AXLE	
	8T-4121	64	WASHER-HARD (11X21X2.5-MM THK)	

M-METRIC PART

<END>

214-4141 GUARD GP-DRIVE SHAFT

S/N: N1A1-UP
PART OF 244-6607 WASTE HANDLING AR
AN ATTACHMENT

SMCS-7153 i02328419

NOTE	REF NO	GRAPHIC REF	PART NUMBER	QTY	PART NAME 1 2 3 4 5 6 (PRODUCT LEVEL)	SEE PAGE
	1	1	9X-8279	1	U-BOLT	
	2	1	214-4142	1	CHANNEL AS	
M		1	8T-3597	6	NUT-WELD (M12X1.75 THD)	
	3	1	214-4143	1	CHANNEL AS	
	4	1	5P-1076	10	WASHER-HARD (13.5X30X4-MM THK)	
	5	1	6V-8188	2	NUT (1/2-13 THD)	
M	6	1	8T-4956	8	BOLT (M12X1.75X35-MM)	

M-METRIC PART

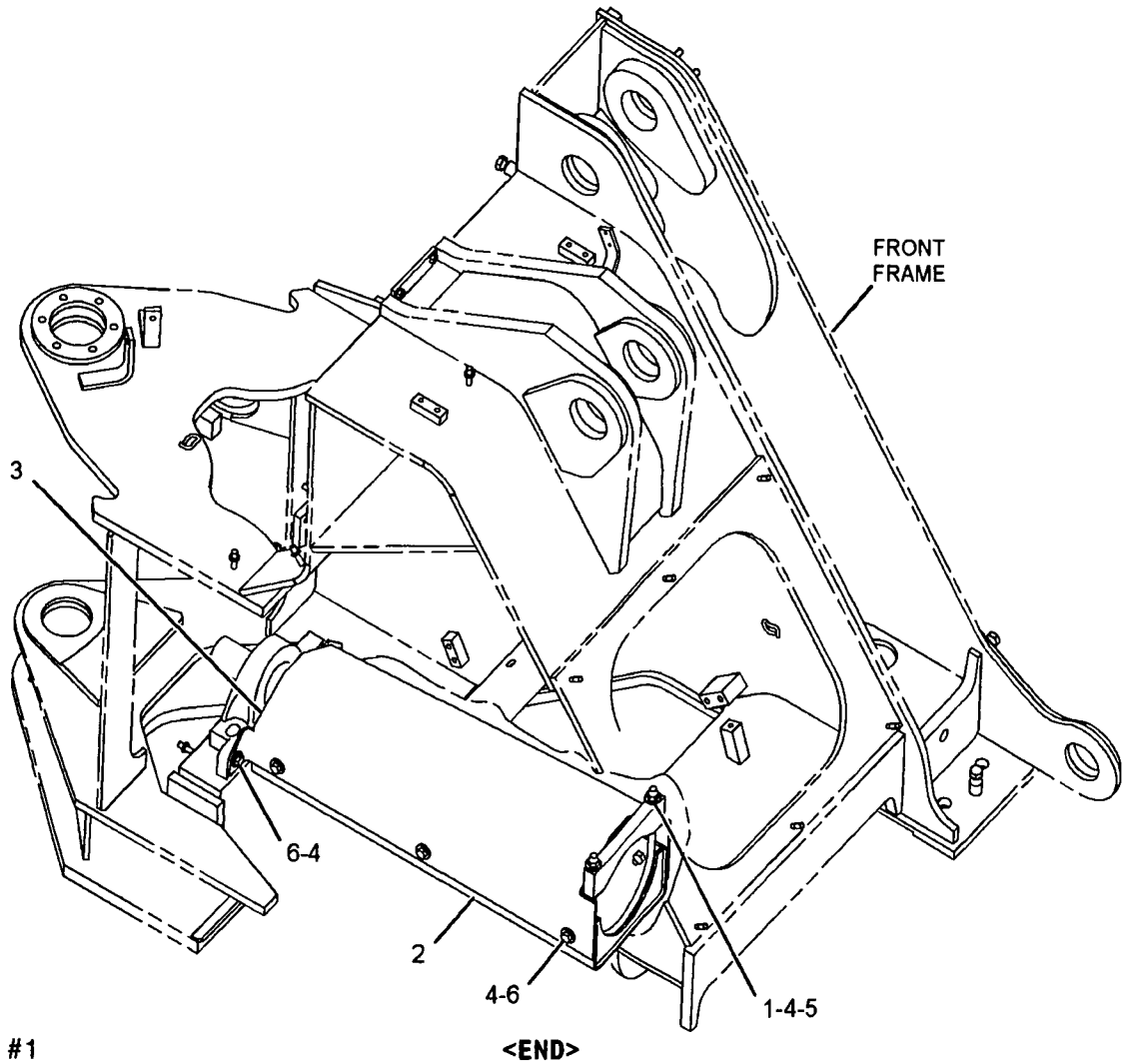

GRAPHIC #1 <END> g01062884

FRAME AND BODY

237-0428 GUARD GP-FRONT

S/N: N1A1-UP

PART OF 237-0234 CHASSIS AR

SMCS-7167 **i02226863**

NOTE	REF NO	GRAPHIC REF	PART NUMBER	QTY	PART NAME 1 2 3 4 5 6 (PRODUCT LEVEL)	SEE PAGE
	1	1	**241-7854**	1	PLATE	
	2	1	**8T-2561**	6	WASHER-HARD (10.5X28.5X5-MM THK)	
M	3	1	**8T-4133**	6	NUT (M10X1.5 THD)	

M-METRIC PART

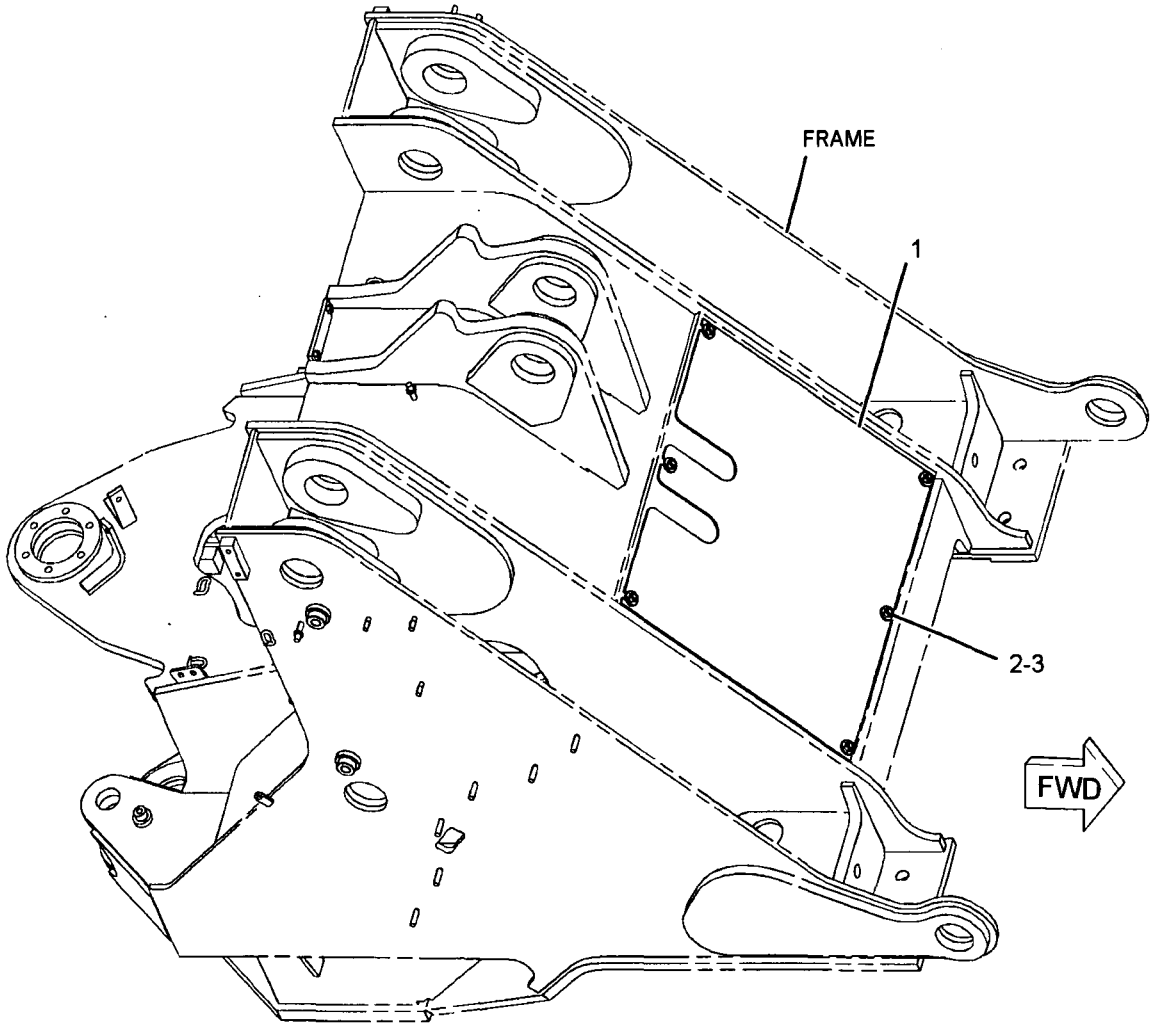

GRAPHIC #1 **<END>** g01128006

262-1379 GUARD GP-LIGHTING

S/N: N1A1-UP
PART OF 244-6607 WASTE HANDLING AR
AN ATTACHMENT

SMCS-715L **i02281684**

NOTE	REF NO	GRAPHIC REF	PART NUMBER	QTY	PART NAME 1 2 3 4 5 6 (PRODUCT LEVEL)	SEE PAGE
	1	1	262-1380	1	BRACKET AS (RH)	
M		1	6V-9632	4	NUT-WELD (M6X1-THD)	
	2	1	262-1381	1	BRACKET AS (LH)	
M		1	6V-9632	4	NUT-WELD (M6X1-THD)	
	3	1	262-1383	2	COVER	
M	4	1	8T-4138	8	BOLT (M6X1X20-MM)	
	5	1	8T-4205	8	WASHER-HARD (7.2X14.5X2-MM THK)	

M-METRIC PART

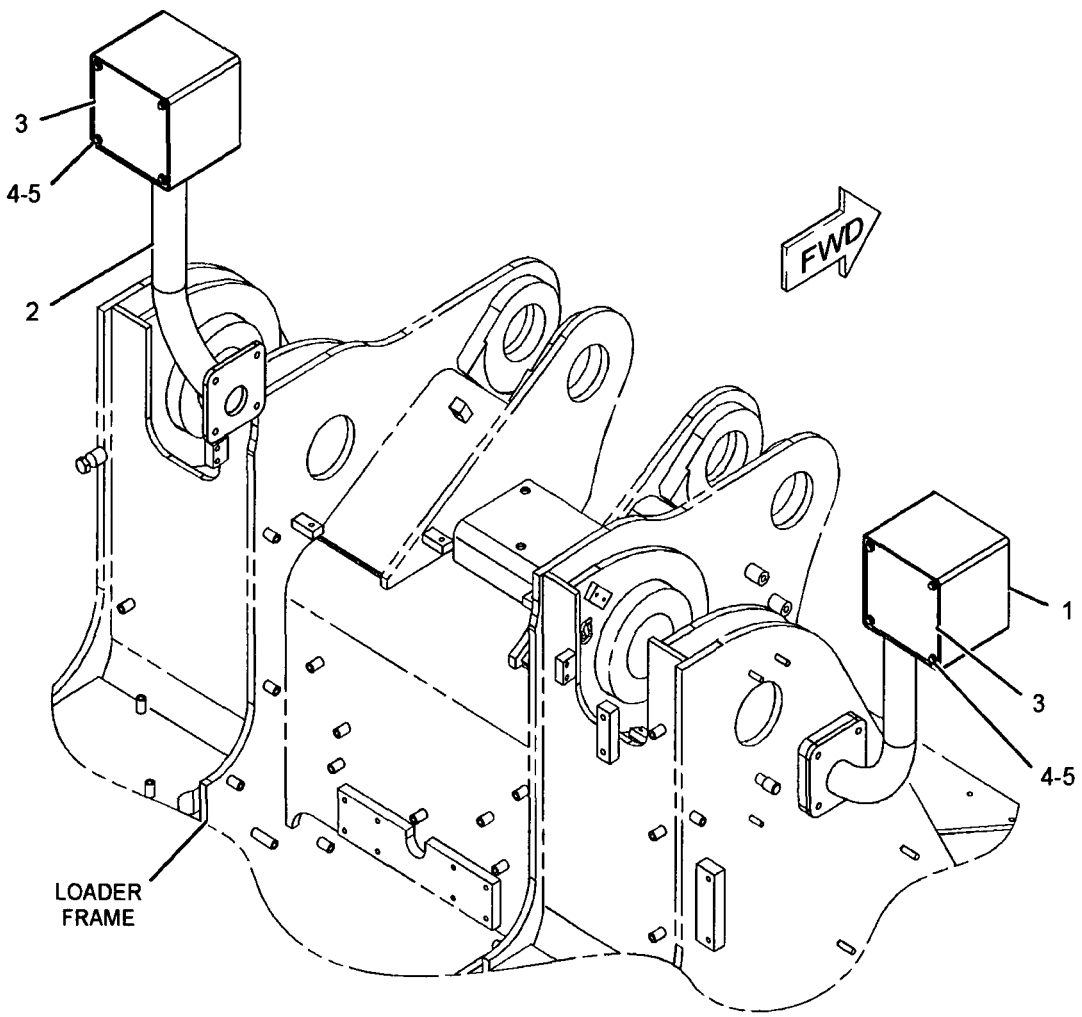

GRAPHIC #1 **<END>** g01134011

126-7710 GUARD GP-POWER TRAIN

S/N: N1A1-UP

PART OF 249-8107 CONVERSION AR-CERTIFICATION AN ATTACHMENT

SMCS-7153 **i01228812**

NOTE	REF NO	GRAPHIC REF	PART NUMBER	QTY	PART NAME 1 2 3 4 5 6 (PRODUCT LEVEL)	SEE PAGE
	1	1	**131-0030**	1	PLATE	
M	2	1	**7X-2552**	4	BOLT (M16X2.0X30MM)	
	3	1	**3E-9411**	4	WASHER-HARD (6MM THK)	

M-METRIC PART

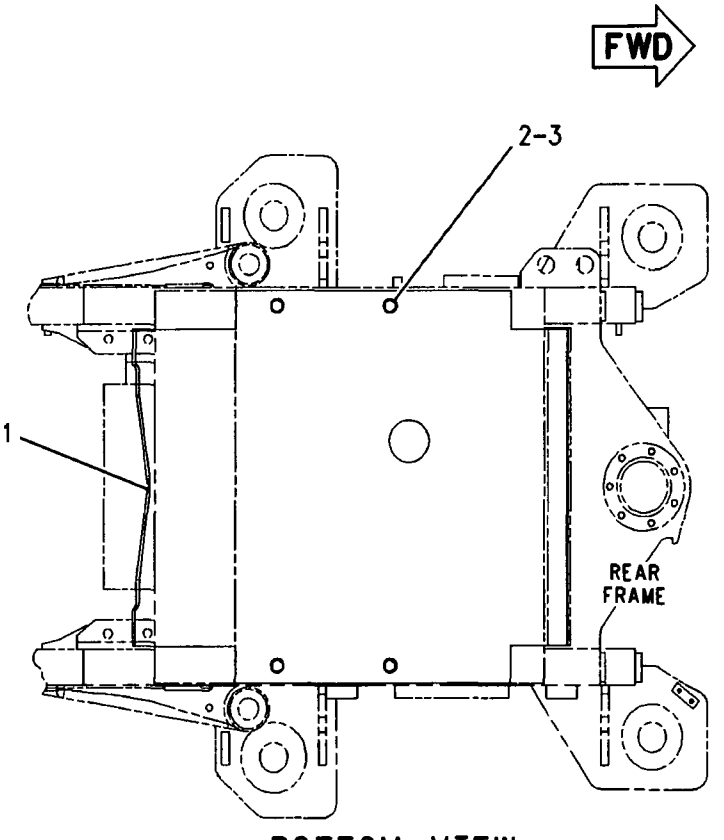

BOTTOM VIEW

GRAPHIC #1 **<END>** g00465725

156-1137 GUARD GP-POWER TRAIN

S/N: N1A1-UP
PART OF 241-0073 COOLER AR-AXLE OIL
AN ATTACHMENT

SMCS-7153 **i00950372**

NOTE	REF NO	GRAPHIC REF	PART NUMBER	QTY	PART NAME 1 2 3 4 5 6 (PRODUCT LEVEL)	SEE PAGE
	1	1	**153-3715**	1	PLATE	
	2	1	**3E-9411**	4	WASHER-HARD (17.5X38X6-MM THK)	
M	3	1	**7X-2552**	4	BOLT (M16X2X30-MM)	

M-METRIC PART

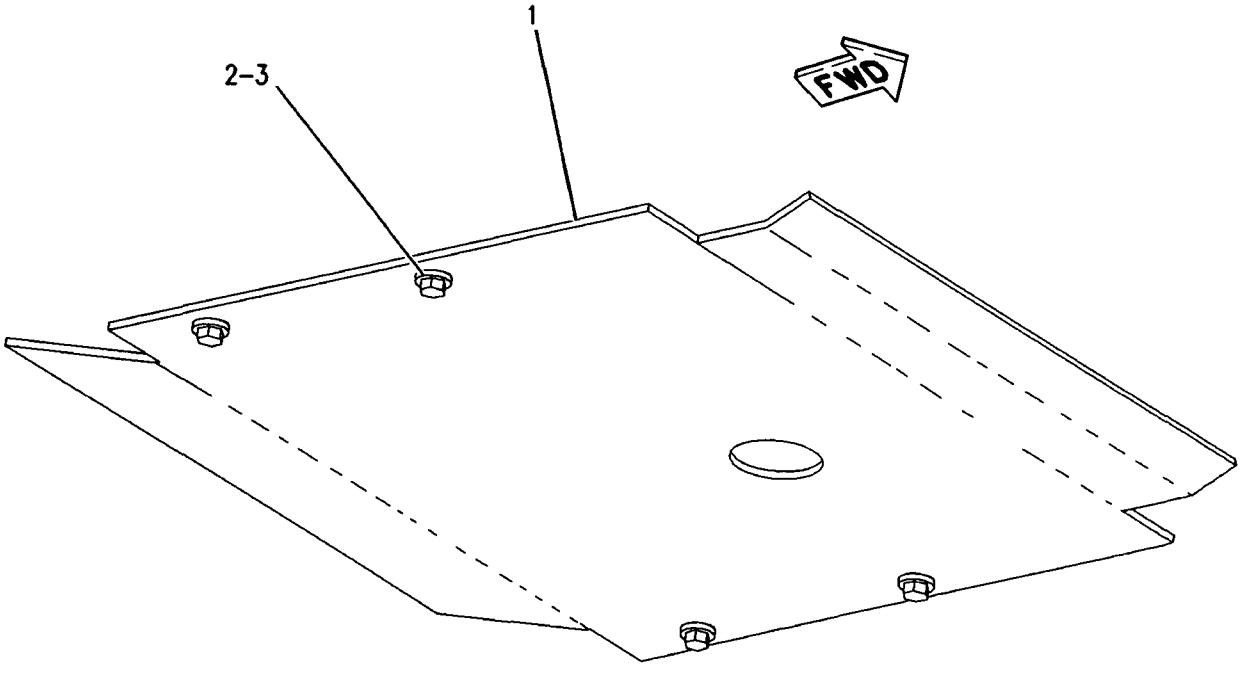

GRAPHIC #1 **<END>** g00489357

247-8558 GUARD GP-POWER TRAIN

S/N: N1A1-UP
PART OF 244-6607 WASTE HANDLING AR
AN ATTACHMENT

SMCS-7153 **i02281592**

NOTE	REF NO	GRAPHIC REF	PART NUMBER	QTY	PART NAME 1 2 3 4 5 6 (PRODUCT LEVEL)	SEE PAGE
	1	1	196-1093	1	BRACKET AS	
	2	1	196-1094	1	BRACKET AS	
	3	1	250-2320	1	PIN AS	
	4	1	250-2321	1	PIN AS	
	5	1	250-2326	1	DOOR AS	
	6	1	3E-9411	4	WASHER-HARD (17.5X38X6-MM THK)	
	7	1	5P-1076	6	WASHER-HARD (13.5X30X4-MM THK)	
M	8	1	8T-4139	6	BOLT (M12X1.75X30-MM)	
M	9	1	8T-4779	4	BOLT (M16X2X35-MM)	

M-METRIC PART

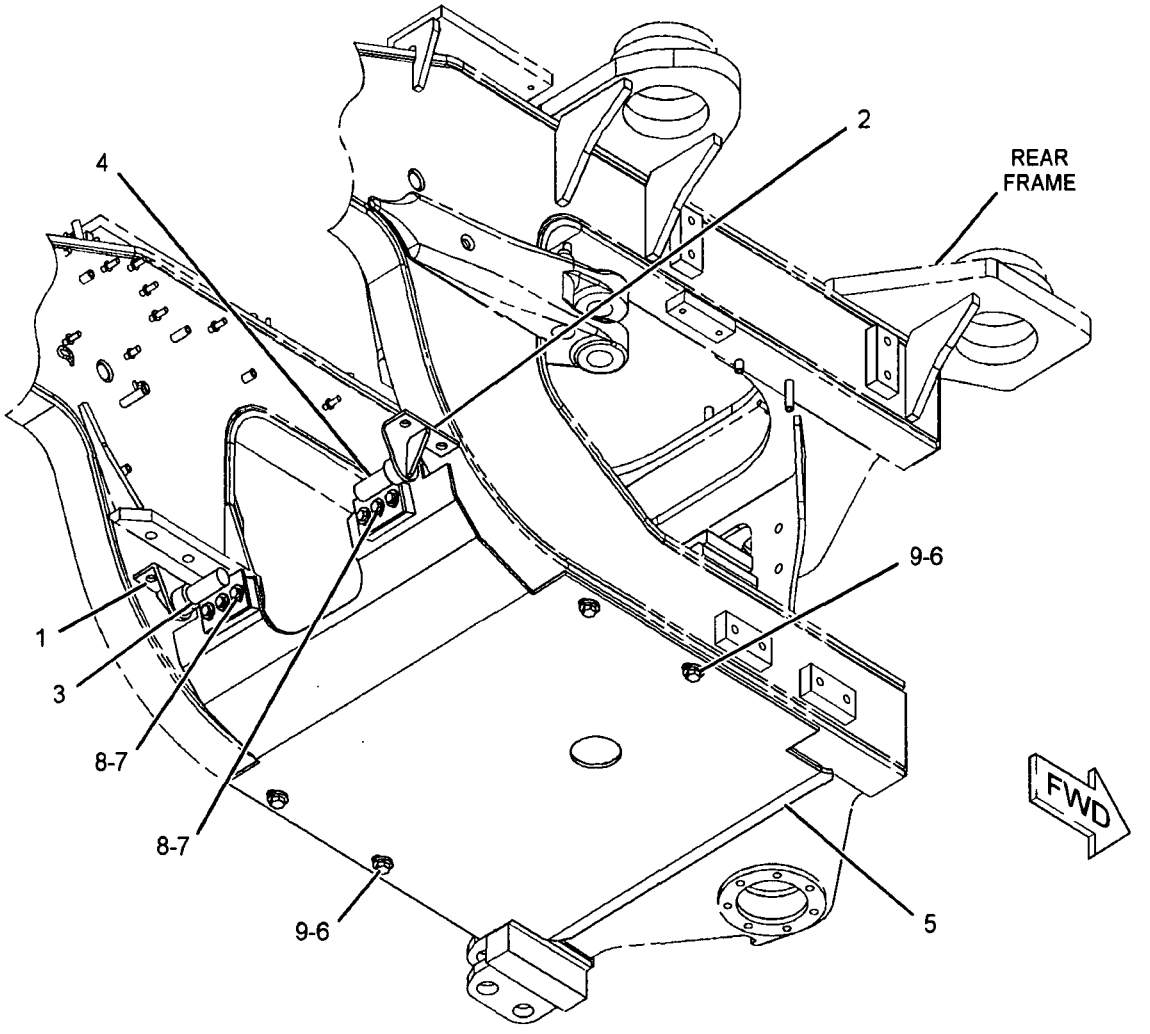

GRAPHIC #1 **<END>** g01134378

251-9758 HARDWARE GP-LOADER FRAME

S/N: N1A1-UP
PART OF 244-6607 WASTE HANDLING AR
AN ATTACHMENT

SMCS-7054, 7553 i02388842

NOTE	REF NO	GRAPHIC REF	PART NUMBER	QTY	PART NAME 1 2 3 4 5 6 (PRODUCT LEVEL)	SEE PAGE
	1	1	*168-5073*	2	BLOCK	

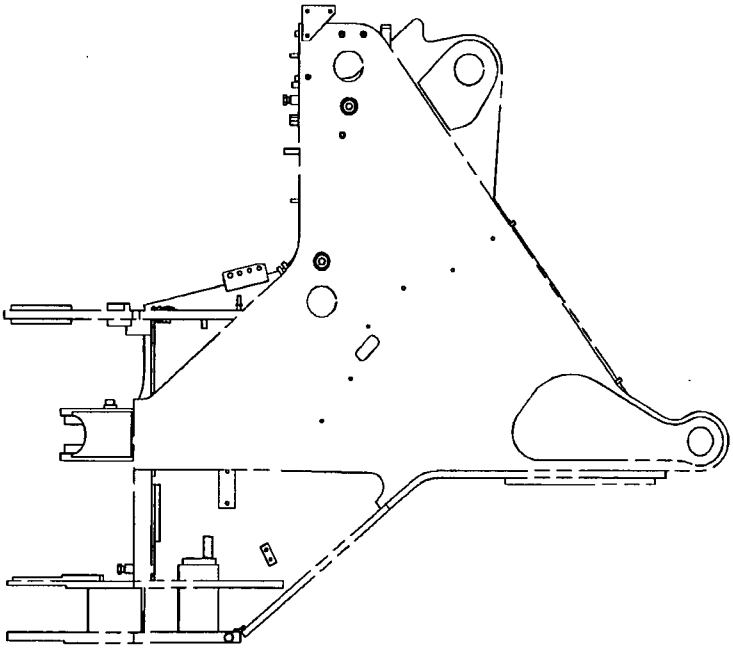

RIGHT SIDE VIEW

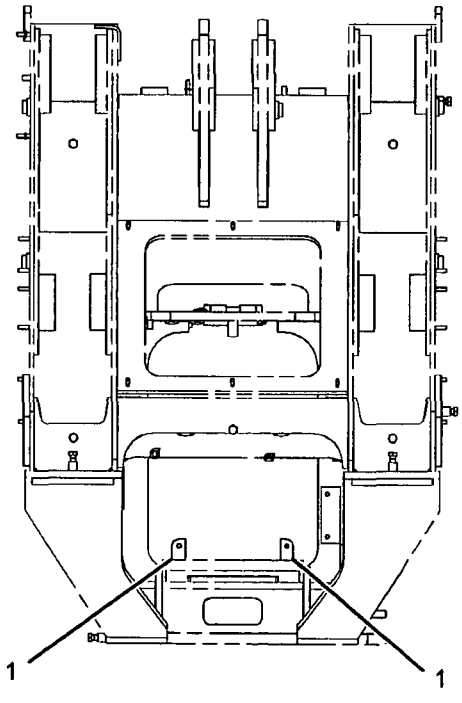

FRONT VIEW

GRAPHIC #1 <END> g01134381

260-1534 HARDWARE GP-LOADER FRAME-

COMMAND CONTROL STEERING

S/N: N1A1-UP

PART OF 244-3922 STEERING AR-COMMAND CONTROL

AN ATTACHMENT

SMCS-7054, 7553 **i02451293**

NOTE	REF NO	GRAPHIC REF	PART NUMBER	QTY	PART NAME 1 2 3 4 5 6 (PRODUCT LEVEL)	SEE PAGE
	1	1	147-0066	2	PLATE	
	2	1	4I-2201	1	BAR	

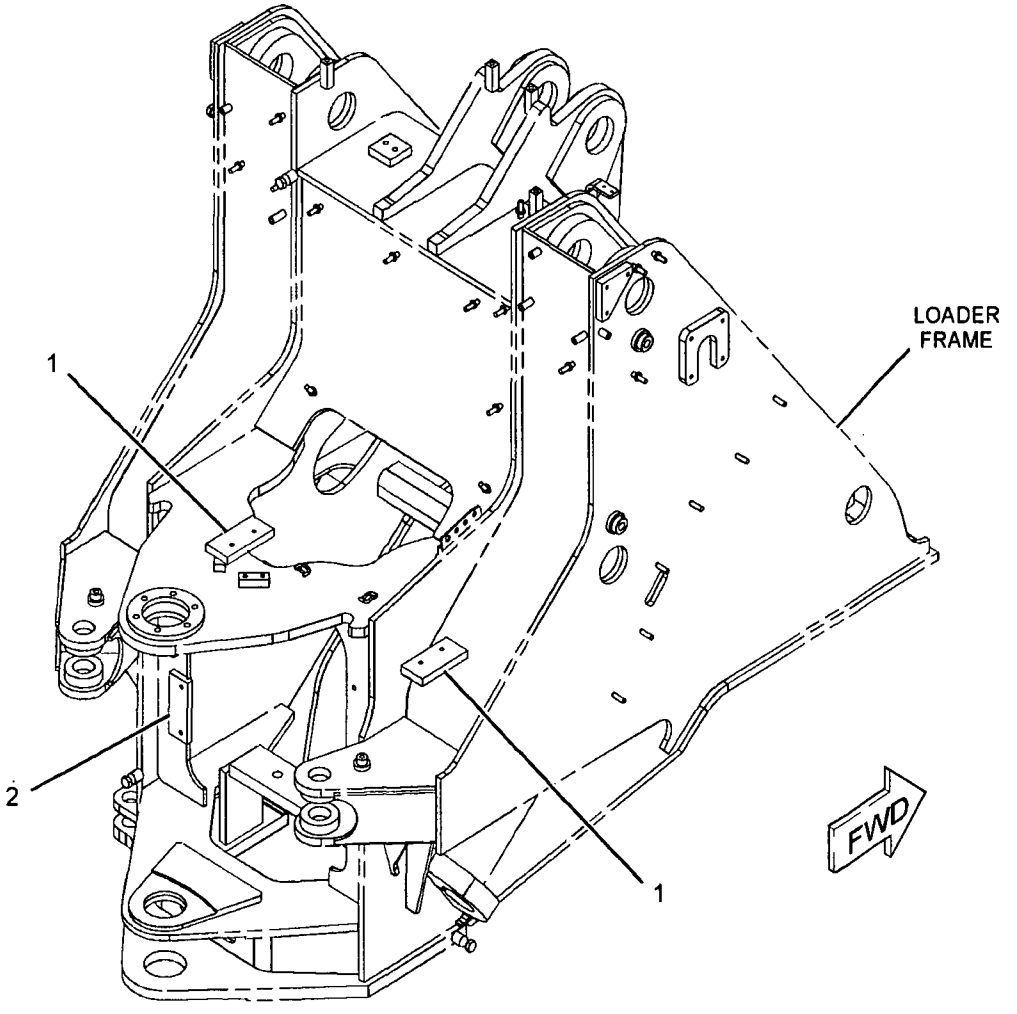

GRAPHIC #1 **<END>** g01133637

265-7929 HARDWARE GP-LOADER FRAME-

AXLE OIL COOLER MOUNTING

S/N: N1A1-UP

PART OF 241-0073 COOLER AR-AXLE OIL

AN ATTACHMENT

SMCS-7054, 7553 i02438874

NOTE	REF NO	GRAPHIC REF	PART NUMBER	QTY	PART NAME 1 2 3 4 5 6 (PRODUCT LEVEL)	SEE PAGE
	1	1	*4I-2201*	1	BAR	
	2	1	*091-1735*	1	BLOCK	

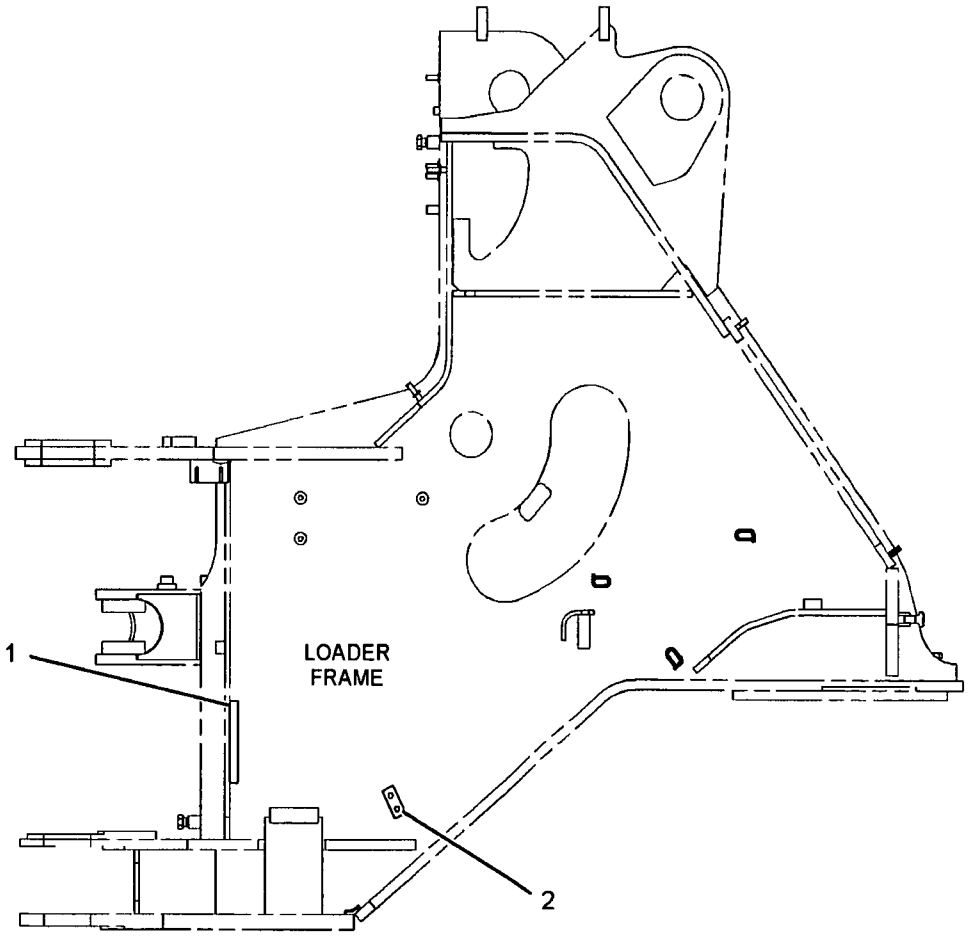

RIGHT SIDE VIEW

GRAPHIC #1 <END> g01202370

260-1531 HARDWARE GP-MOUNTING–SECONDARY STEERING

S/N: N1A1-UP

PART OF 244-5424 STEERING AR-SECONDARY

AN ATTACHMENT

SMCS-7050, 7553 i02443017

NOTE	REF NO	GRAPHIC REF	PART NUMBER	QTY	PART NAME 1 2 3 4 5 6 (PRODUCT LEVEL)	SEE PAGE
	1	1	202-0686	1	BRACKET	
	2	1	*264-1446*	1	ANGLE	

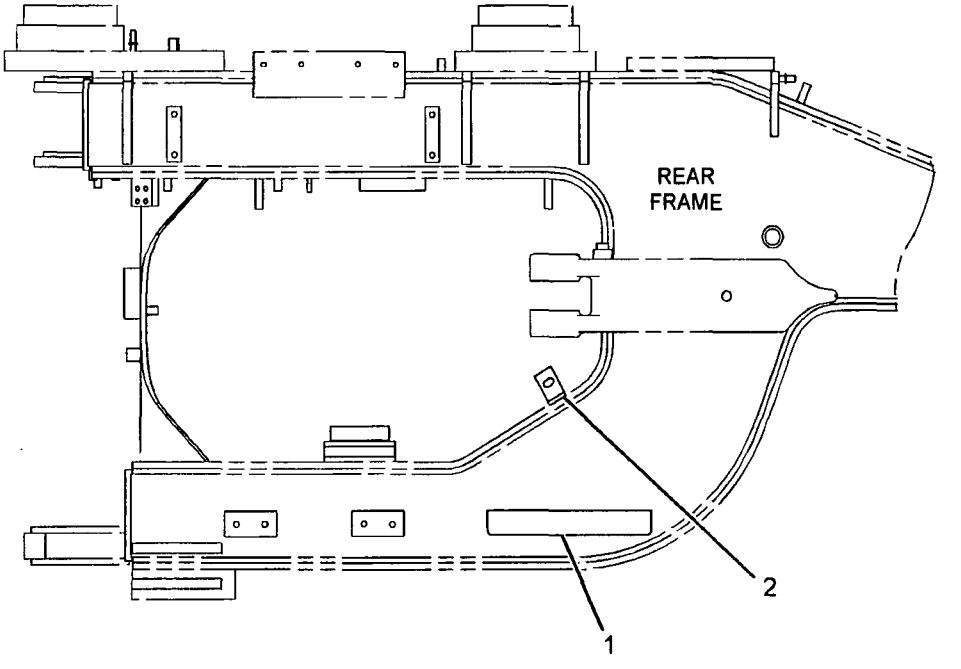

LEFT SIDE VIEW

GRAPHIC #1 <END> g01225925

276-2128 HARDWARE GP-MOUNTING

S/N: N1A1-UP

PART OF 263-0056 FENDER AR-ROADING

AN ATTACHMENT

SMCS-7050, 7553 **i02424406**

NOTE	REF NO	GRAPHIC REF	PART NUMBER	QTY	PART NAME 1 2 3 4 5 6 (PRODUCT LEVEL)	SEE PAGE
	1	1	**277-4551**	2	PLATE AS	
					(EACH INCLUDES)	
		1	**243-4013**	1	BLOCK	
	2	1	*8X-5963*	4	BLOCK	

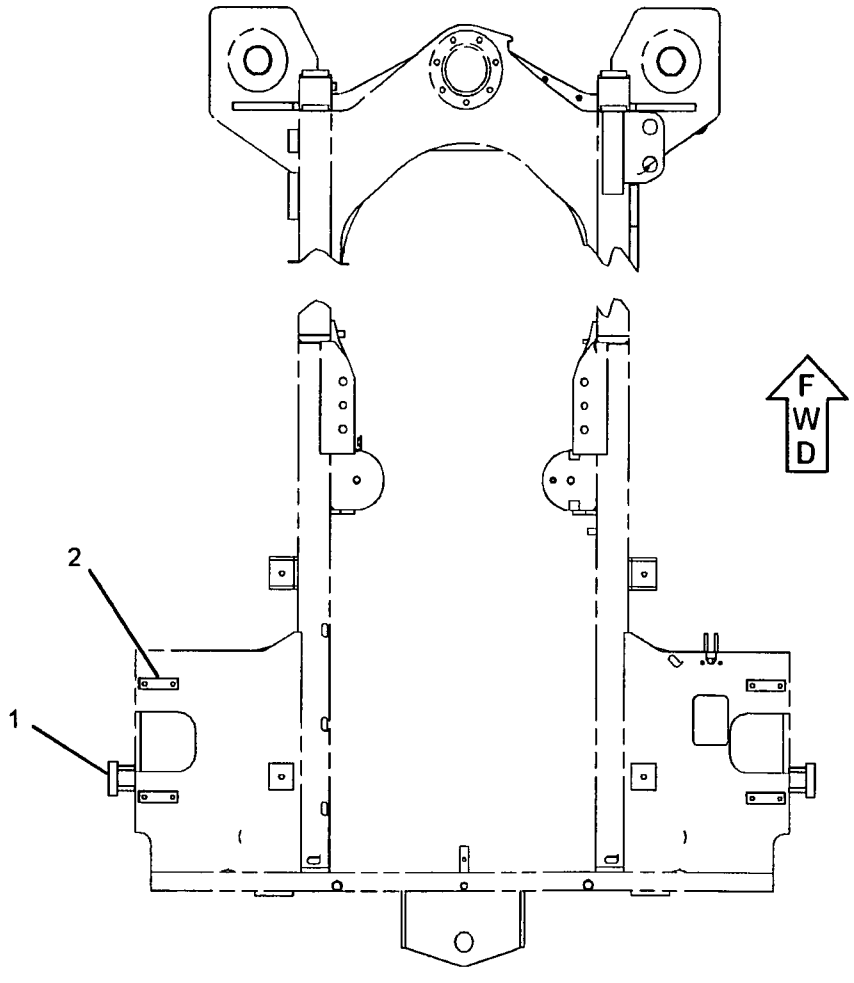

TOP VIEW

GRAPHIC #1

<END>

g01202035

280-3329 HARDWARE GP-MOUNTING

S/N: N1A1-UP
PART OF 244-5611 HYDRAULIC AR-3 VALVE
AN ATTACHMENT

SMCS-7050, 7553 **i02442920**

NOTE	REF NO	GRAPHIC REF	PART NUMBER	QTY	PART NAME 1 2 3 4 5 6 (PRODUCT LEVEL)	SEE PAGE
	1	1	7Y-2522	2	PLATE	

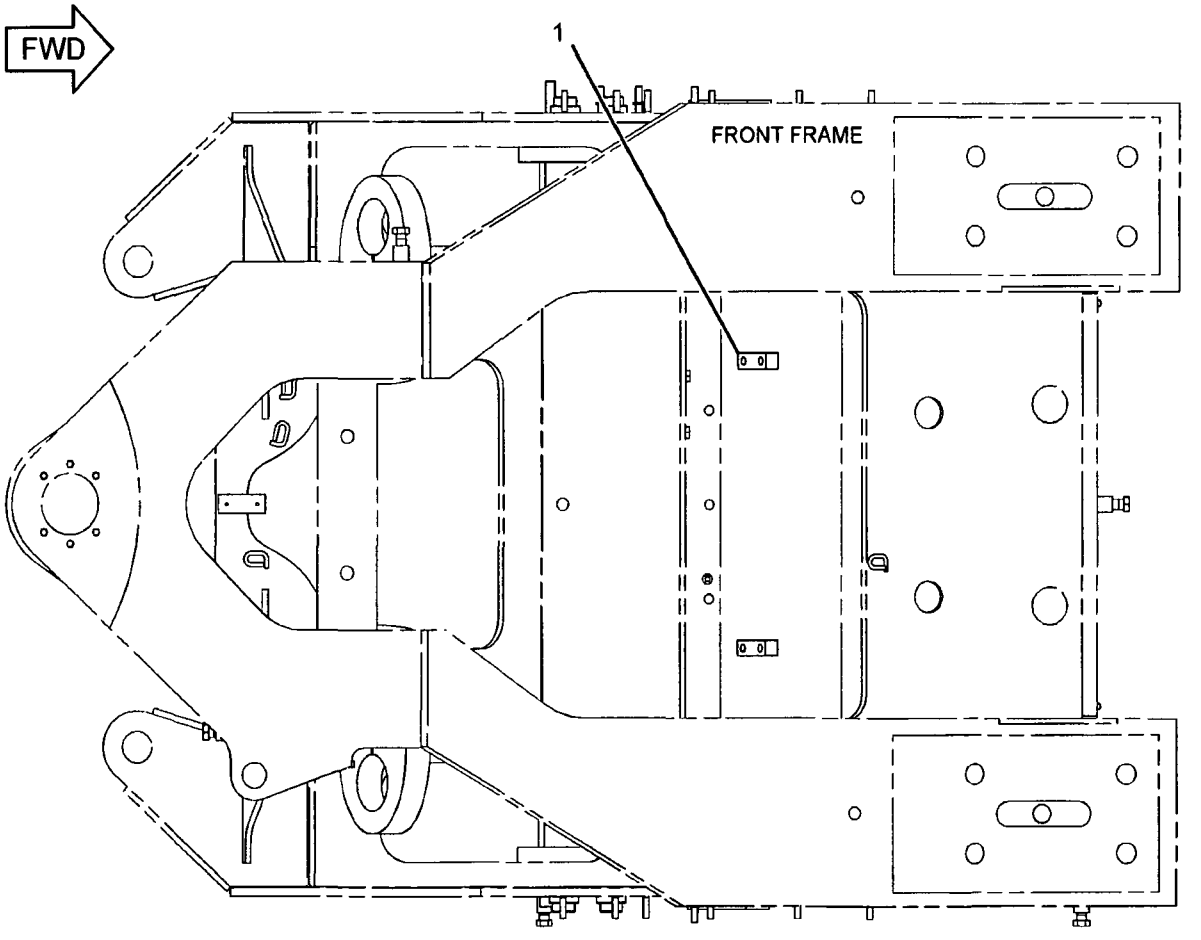

TOP VIEW

GRAPHIC #1 **<END>** g01227360

251-9759 HARDWARE GP-REAR FRAME

S/N: N1A1-UP

PART OF 244-6607 WASTE HANDLING AR

AN ATTACHMENT

SMCS-7051, 7553 i02307461

NOTE	REF NO	GRAPHIC REF	PART NUMBER	QTY	PART NAME 1 2 3 4 5 6 (PRODUCT LEVEL)	SEE PAGE
	1	1	070-0079	1	PLATE AS	
M	2	1	112-9073	16	STUD-WELD (M12X1.75X21.1-MM)	

M-METRIC PART

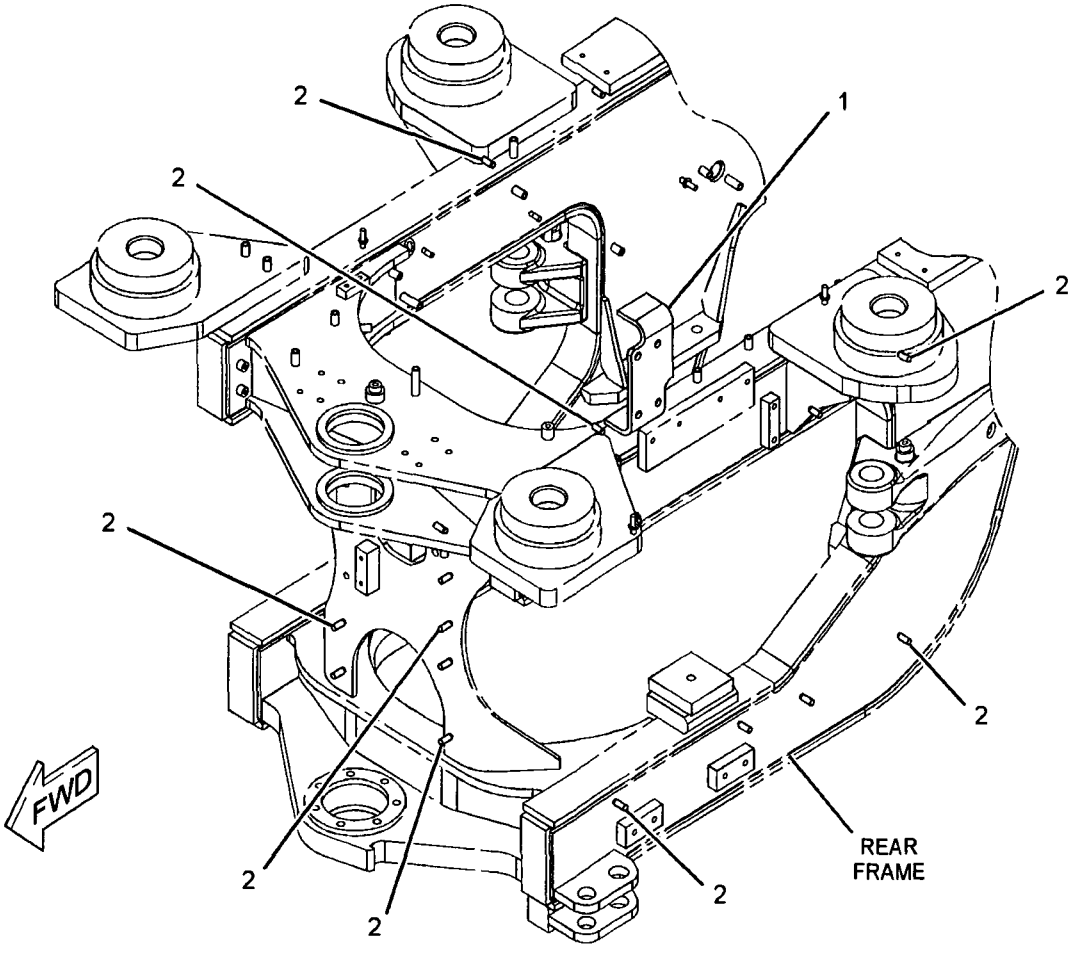

GRAPHIC #1 <END> g01134056

260-1530 HARDWARE GP-REAR FRAME-
AXLE OIL COOLER MOUNTING
S/N: N1A1-UP
PART OF 241-0073 COOLER AR-AXLE OIL
AN ATTACHMENT

SMCS-7051, 7553 **i02438877**

NOTE	REF NO	GRAPHIC REF	PART NUMBER	QTY	PART NAME 1 2 3 4 5 6 (PRODUCT LEVEL)	SEE PAGE
Z	1	1		1	BLOCK	
	2	1	282-3454	2	ANGLE AS	
	3	1	282-3456	1	BRACKET AS	
M	4	1	7X-0752	2	BOSS-WELD (M10X1.5X65-MM OAL)	
Z	5	1		1	BOSS-WELD	
M	6	1	8T-3851	1	BOSS-WELD (M10X1.5X17.5-MM)	
Z	7	1		1	BLOCK	

M-METRIC PART
Z-NOT SERVICED SEPARATELY

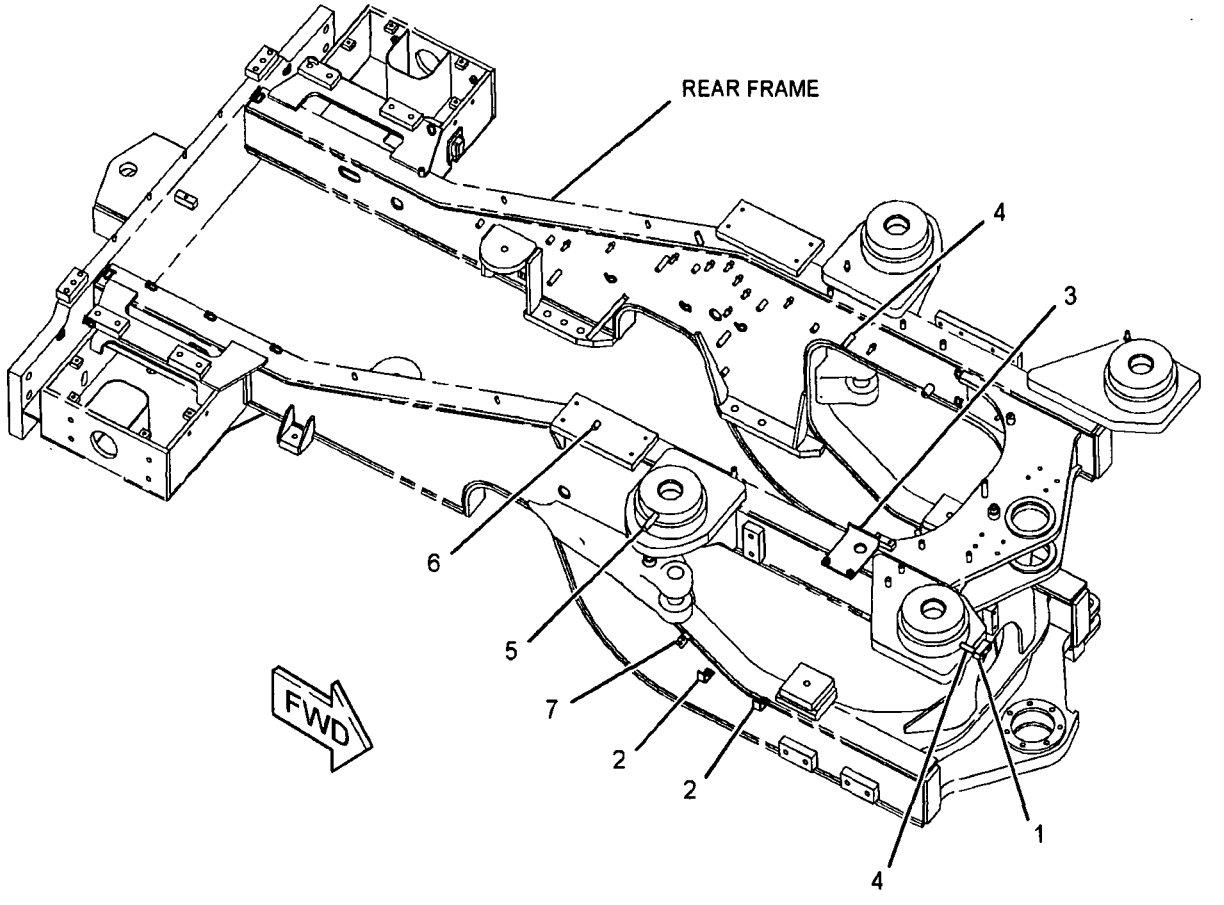

GRAPHIC #1 **<END>** g01226856

260-1533 HARDWARE GP-REAR FRAME

S/N: N1A1-UP

PART OF 262-1085 SUPPRESSION AR-SOUND

AN ATTACHMENT

SMCS-7051, 7553 **i02253549**

NOTE	REF NO	GRAPHIC REF	PART NUMBER	QTY	PART NAME 1 2 3 4 5 6 (PRODUCT LEVEL)	SEE PAGE
M	1	1	**112-9073**	8	STUD-WELD (M12X1.75X21.1-MM)	
	2	1	*141-0008*	4	PLATE	

M-METRIC PART

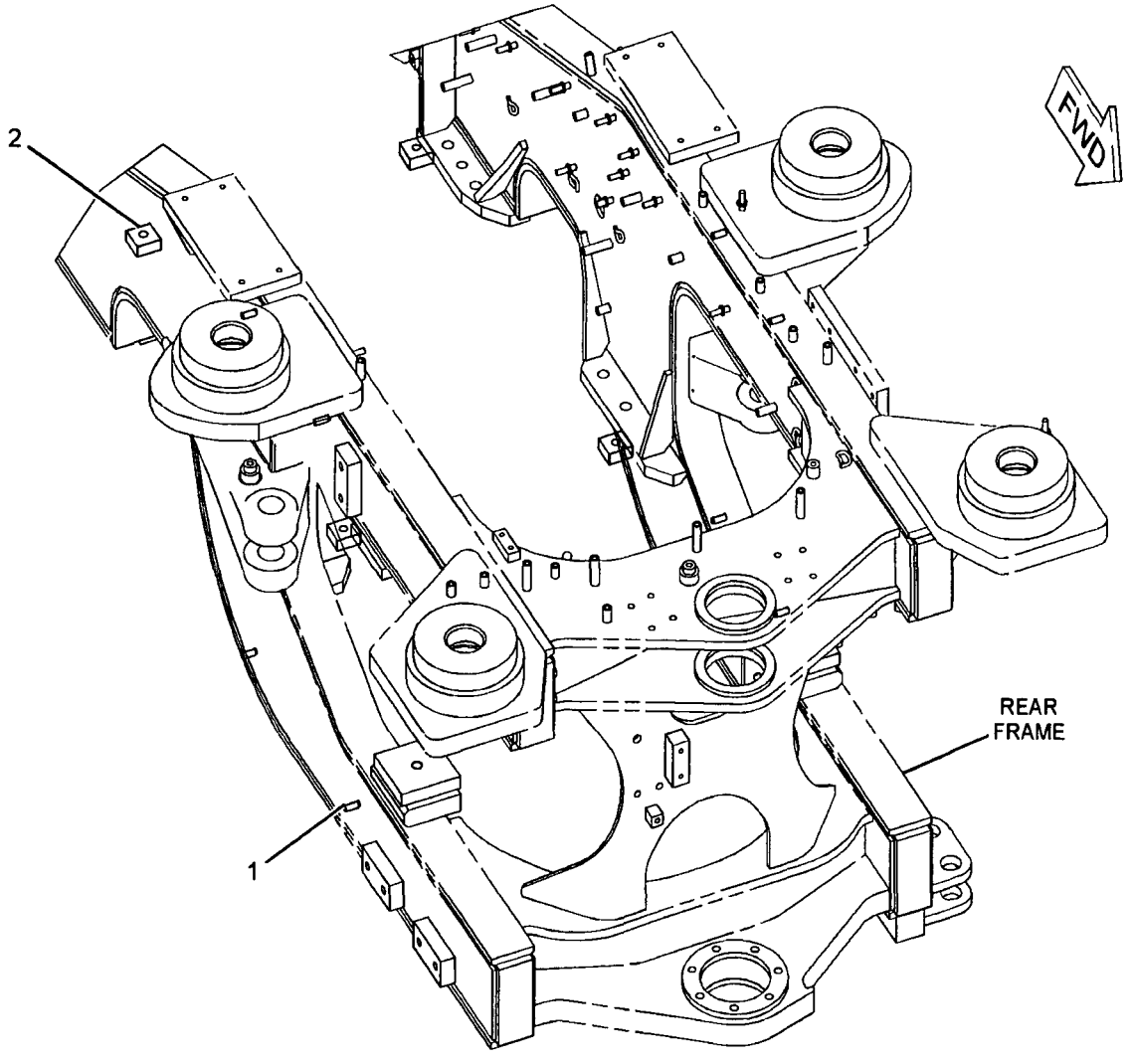

GRAPHIC #1 **<END>** g01135085

276-1187 HINGE GP-ROADING FENDER-RH

S/N: N1A1-UP

PART OF 275-8388 FENDER GP-ROADING

AN ATTACHMENT

SMCS-7252 i02424418

NOTE	REF NO	GRAPHIC REF	PART NUMBER	QTY	PART NAME 1 2 3 4 5 6 (PRODUCT LEVEL)	SEE PAGE
	1	1	3B-4605	1	PIN-COTTER	
	2	1	3B-4629	1	PIN-COTTER	
	3	1	3B-8489	1	FITTING-GREASE	
	4	1	132-1928	1	PIN AS	
	5	1	274-7066	1	ROD AS	
	6	1	276-1188	1	CHANNEL AS	
	7	1	276-2124	1	HINGE AS (RH)	
	8	1	8T-4121	1	WASHER-HARD (11X21X2.5-MM THK)	

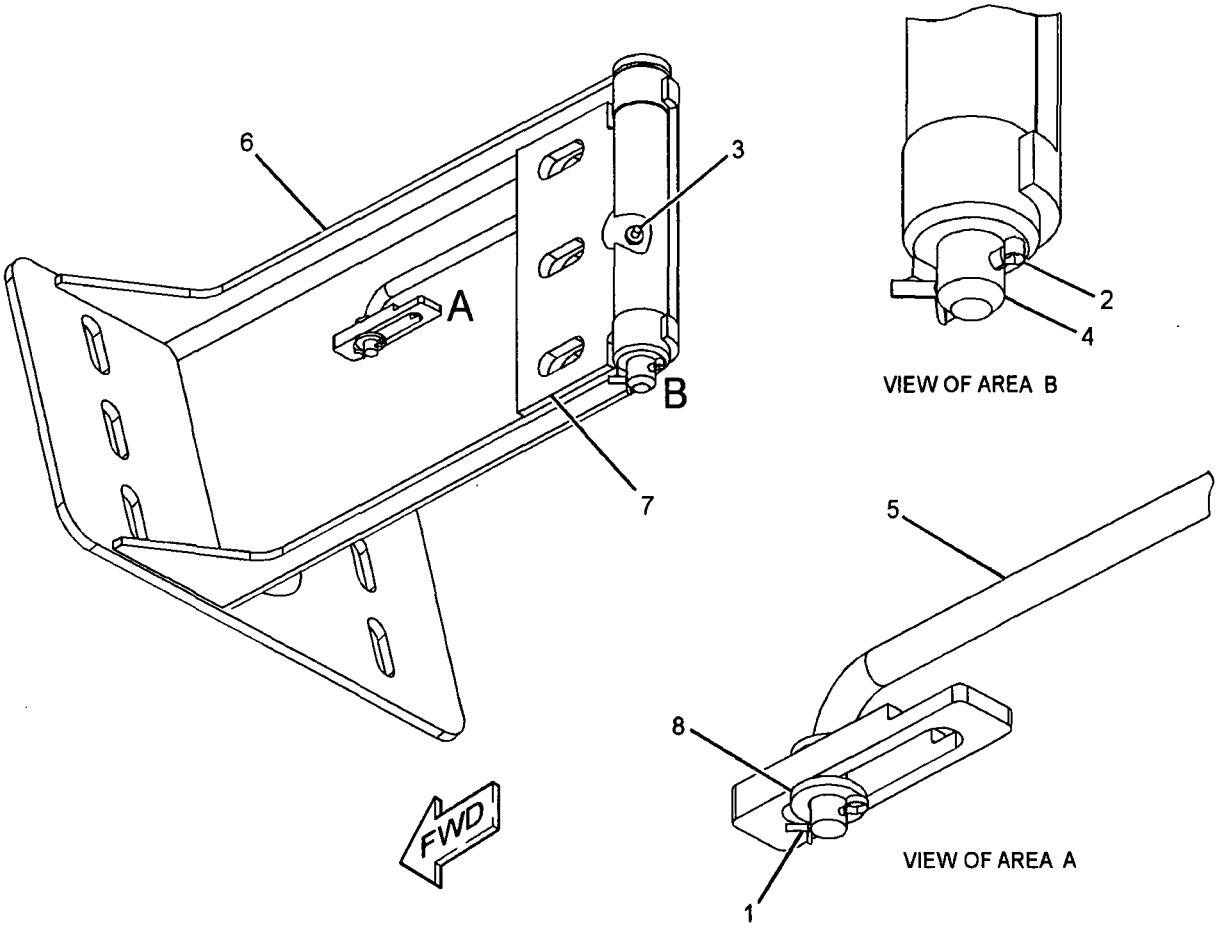

GRAPHIC #1 <END> g01219795

276-1190 HINGE GP-ROADING FENDER–LH

S/N: N1A1-UP

PART OF 275-8388 FENDER GP-ROADING

AN ATTACHMENT

SMCS-7252 **i02424420**

NOTE	REF NO	GRAPHIC REF	PART NUMBER	QTY	PART NAME 1 2 3 4 5 6 (PRODUCT LEVEL)	SEE PAGE
	1	1	3B-4605	1	PIN-COTTER	
	2	1	3B-4629	1	PIN-COTTER	
	3	1	3B-8489	1	FITTING-GREASE	
	4	1	132-1928	1	PIN AS	
	5	1	274-7066	1	ROD AS	
	6	1	276-1191	1	CHANNEL AS	
	7	1	276-2125	1	HINGE AS (LH)	
	8	1	8T-4121	1	WASHER-HARD (11X21X2.5-MM THK)	

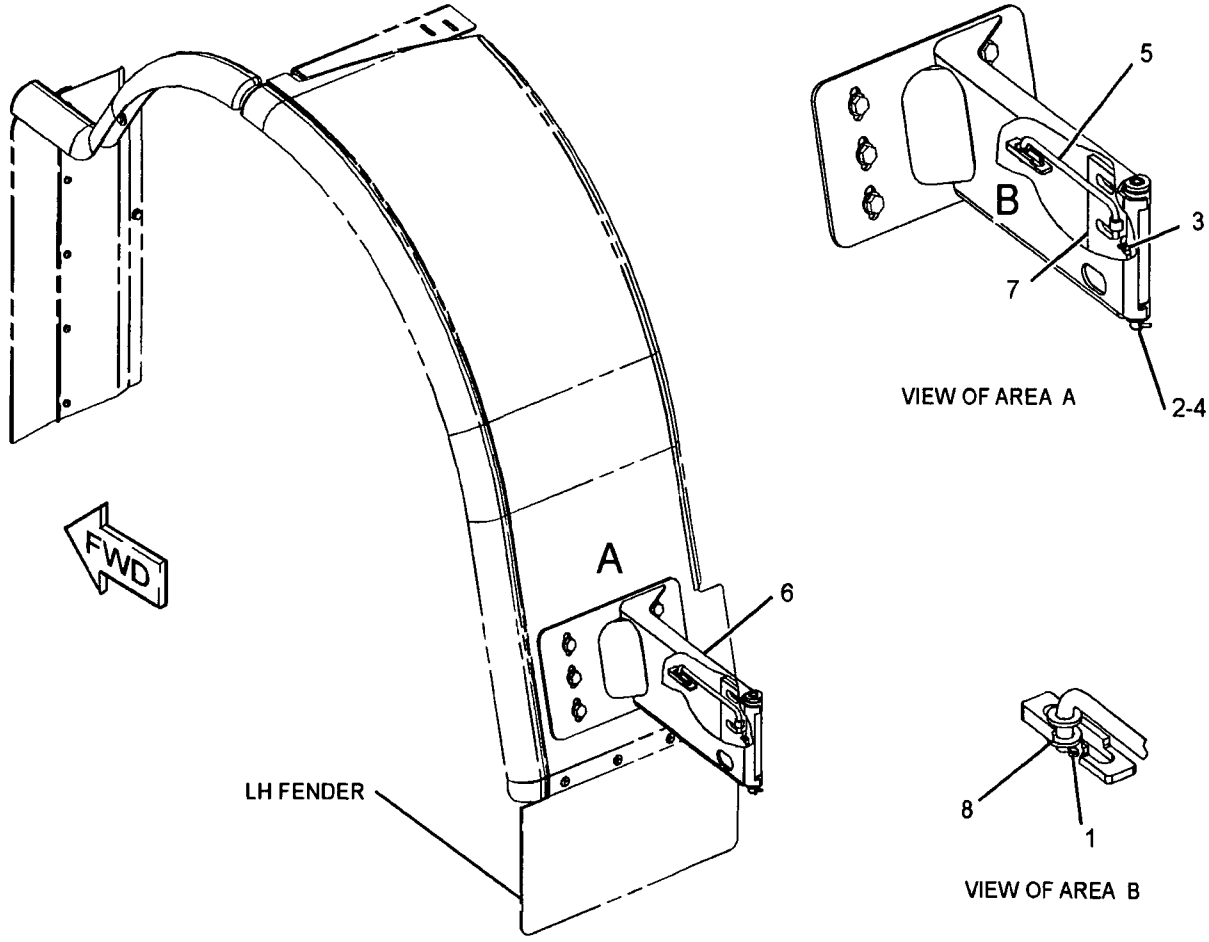

GRAPHIC #1

<END>

g01199017

112-6953 HITCH GP-ARTICULATING

S/N: N1A1-UP

PART OF 237-0234 CHASSIS AR

SMCS-7057, 7100 **i02288036**

NOTE	REF NO	GRAPHIC REF	PART NUMBER	QTY	PART NAME 1 2 3 4 5 6 (PRODUCT LEVEL)	SEE PAGE
	1	1	1B-3925	2	CUP-BEARING	
	2	1	3B-8489	2	FITTING-GREASE	
	3	1	3F-5950	2	CONE-BEARING	
	4	1	3K-2876	2	SEAL-LIP TYPE	
	5	1	5K-0983	2	SEAL-LIP TYPE	
	6	1	7D-8348	2	CUP-BEARING	
	7	1	7D-8349	2	CONE-BEARING	
	8	1	7G-8839	1	SPACER (13.5X57X6-MM THK)	
	9	1	7V-8632	1	SPACER	
	10	1	7V-8633	1	SPACER	
	11	1	118-8267	1	PIN AS	
	12	1	118-8269	2	BEARING	
	13	1	118-8270	1	CAP	
	14	1	118-8271	1	PIN	
	15	1	118-8272	1	CAP	
	16	1	118-8273	1	CAP	
B	17	1	118-8275	1	SHIM PACK (INCLUDES 18-SHIMS)	
B	18	1	118-8276	1	SHIM PACK (INCLUDES 20-SHIMS)	
	19	1	127-6513	1	CAP	
B	20	1	127-6514	1	SHIM PACK (INCLUDES 20-SHIMS)	
	21	1	134-3079	1	PLATE	
M	22	1	7X-2550	7	BOLT (M12X1.75X110-MM)	
M	23	1	8T-4139	1	BOLT (M12X1.75X30-MM)	
M	24	1	8T-4176	6	BOLT (M12X1.75X90-MM)	
M	25	1	8T-4183	6	BOLT (M12X1.75X40-MM)	
	26	1	8T-4223	19	WASHER-HARD (13.5X25.5X3-MM THK)	
M	27	1	106-4175	2	BOLT (M20X2.5X60-MM)	
	28	1	8T-4123	2	WASHER-PLATED (22X35X3.5-MM THK)	

B-USE AS REQUIRED
M-METRIC PART

112-6953 HITCH GP-ARTICULATING (contd.) i02288036

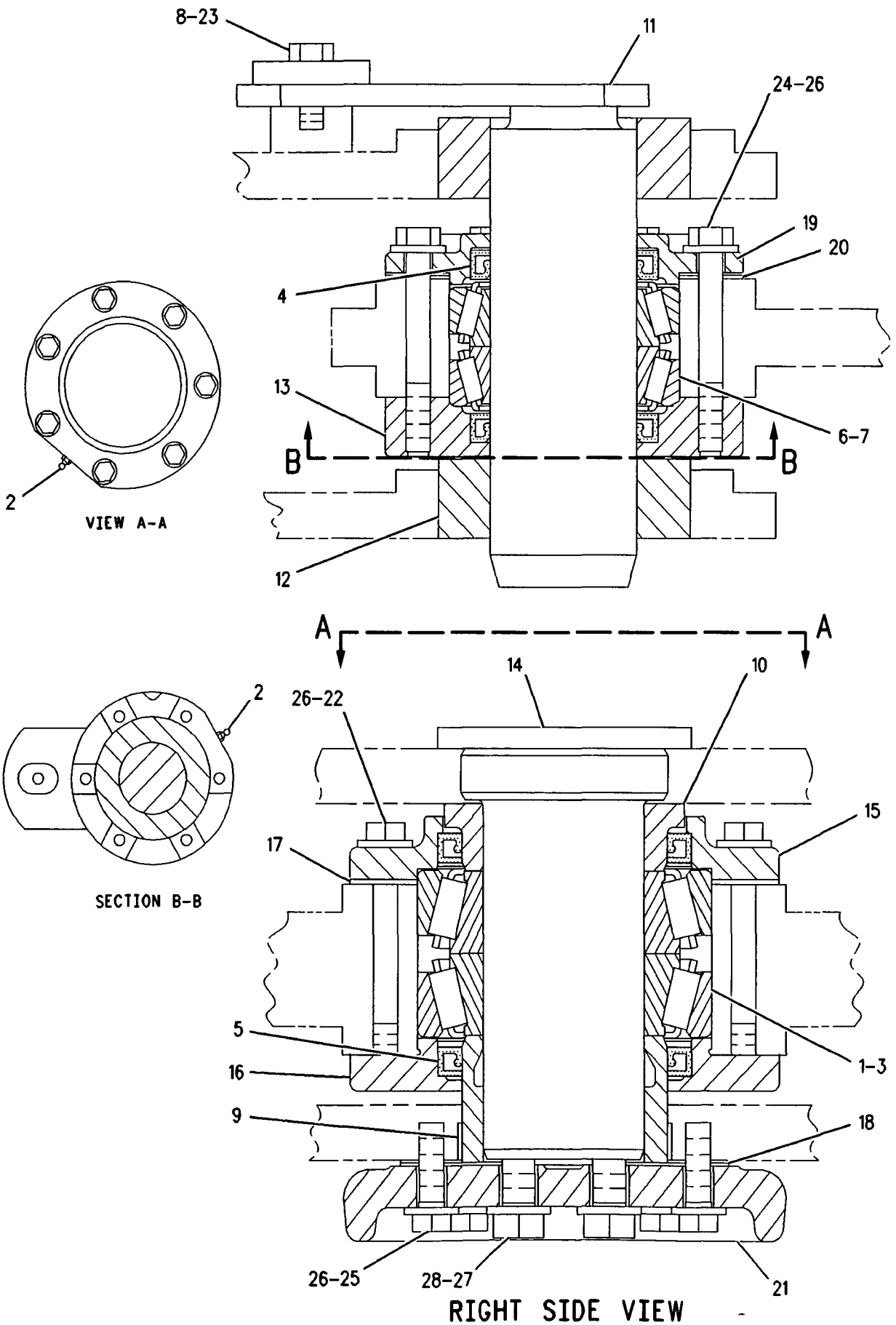

GRAPHIC #1 <END> g00382452

251-1700 HOOD & GUARD GP

S/N: N1A1-UP

PART OF 237-0234 CHASSIS AR

SMCS-7251 **i02460961**

NOTE	REF NO	GRAPHIC REF	PART NUMBER	QTY	PART NAME 1 2 3 4 5 6 (PRODUCT LEVEL)	SEE PAGE
	1	2	**125-7037**	1	INSERT	
Y	2	2	**216-4515**	1	PIPE GP-EXHAUST	92
	3	2	**239-8410**	1	PLATE	
	4	1	**243-1712**	2	BRACKET	
	5	2	**243-1718**	1	GRILL AS-TOP	
	6	1	**243-1722**	1	BRACKET (RH)	
	7	2	**243-1723**	1	BRACKET (LH)	
Y	8	1	**247-4668**	1	DOOR GP-ACCESS (HOOD SIDE, RH)	399
Y	9	1	**247-4670**	1	DOOR GP-ACCESS (HOOD SIDE, LH)	400
	10	1	**248-0706**	2	ROD AS	
					(EACH INCLUDES)	
		1	**6V-5839**	2	WASHER (11X21X2.5-MM THK)	
Y	11	2	*251-1701*	1	PANEL GP-HOOD (TOP)	466
Y	12	1	*251-1705*	1	PANEL GP-HOOD (SIDE, RH)	467
Y	13	2	*251-1708*	1	PANEL GP-HOOD (SIDE, LH)	468
	14	2	**251-1712**	1	TUBE	
	15	1	**251-4755**	1	BRACKET AS (RH)	
	16	2	**251-4756**	1	BRACKET AS (LH)	
	17	2	**251-4760**	1	SUPPORT AS	
Y	18	2	*271-7220*	1	GRILL GP-RADIATOR	417
	19	1	**3B-4611**	2	PIN-COTTER	
	20	1	**4M-7470**	6	GROMMET	
M	21	1	**5C-2890**	4	NUT (M6X1-THD)	
	22	1	**7X-7729**	38	WASHER (11X25X3-MM THK)	
	23	1	**8T-4121**	38	WASHER-HARD (11X21X2.5-MM THK)	
M	24	1	**8T-4133**	20	NUT (M10X1.5 THD)	
M	25	1,2	**8T-4138**	4	BOLT (M6X1X20-MM)	
M	26	1	**8T-4196**	54	BOLT (M10X1.5X35-MM)	
	27	1	**9M-5884**	6	BUMPER	
M	28	2	**9X-2044**	2	SCREW-TRUSS HEAD (M6X1X16-MM)	
	29	1	**9X-8256**	8	WASHER (6.6X12X2-MM THK)	
D	30	1	**6V-6604**		SEAL (0.8-M)	
E	31	1	**126-8472**		SEAL (7.5-CM EACH)	
D	32	1	**5P-6410**		SEAL (0.26-M EACH)	
D	32A	1	**5P-6410**		SEAL (1.27-M EACH)	
E	33	2	**112-9736**		SEAL (147-CM EACH)	
E	34	2	**120-5281**		SEAL (88-CM EACH)	

D-ORDER BY THE METER
E-ORDER BY THE CENTIMETER
M-METRIC PART
Y-SEPARATE ILLUSTRATION

251-1700 HOOD & GUARD GP *(contd.)* i02460961

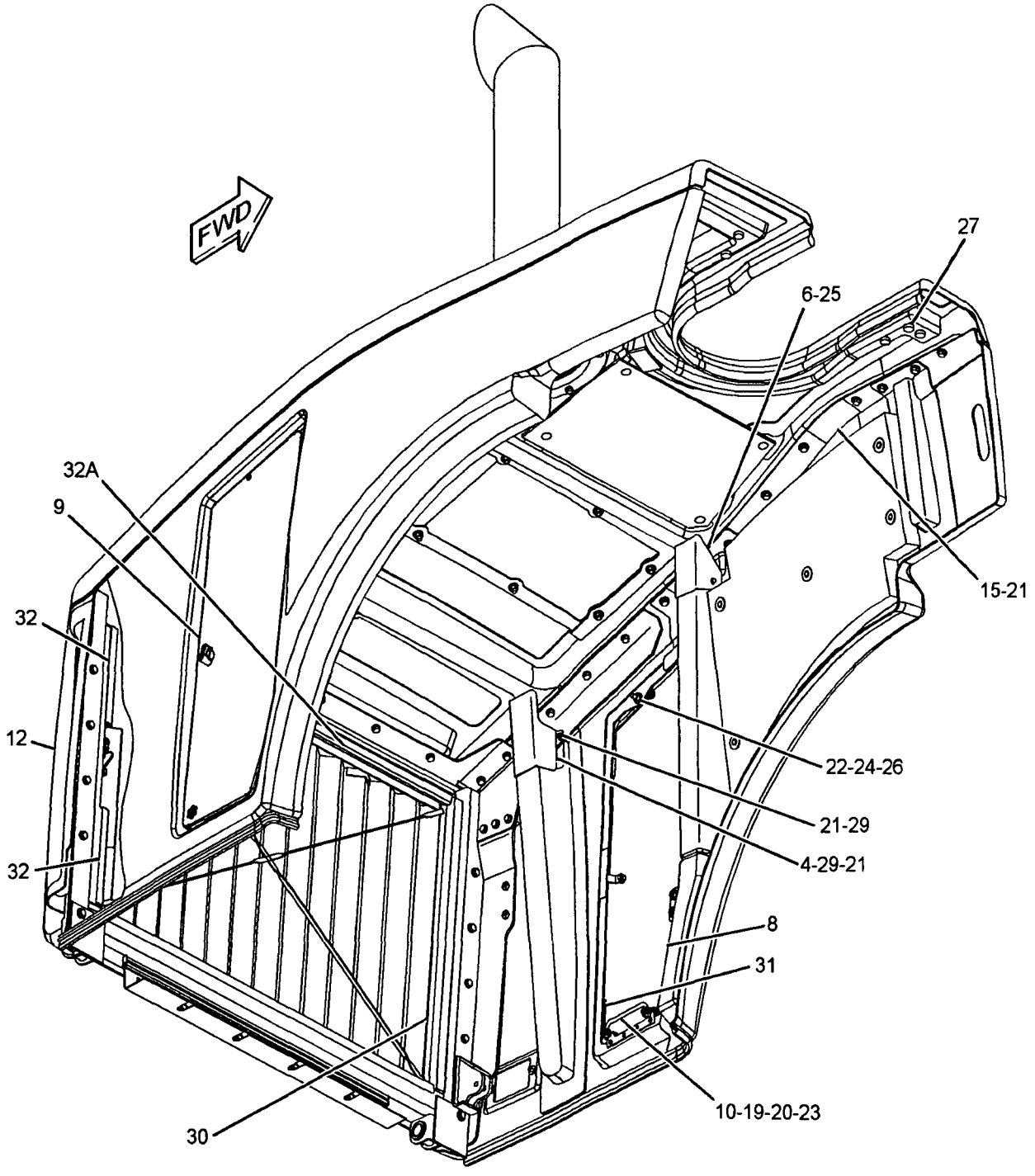

GRAPHIC #1 g01221666

251-1700 HOOD & GUARD GP *(contd.)* i02460961

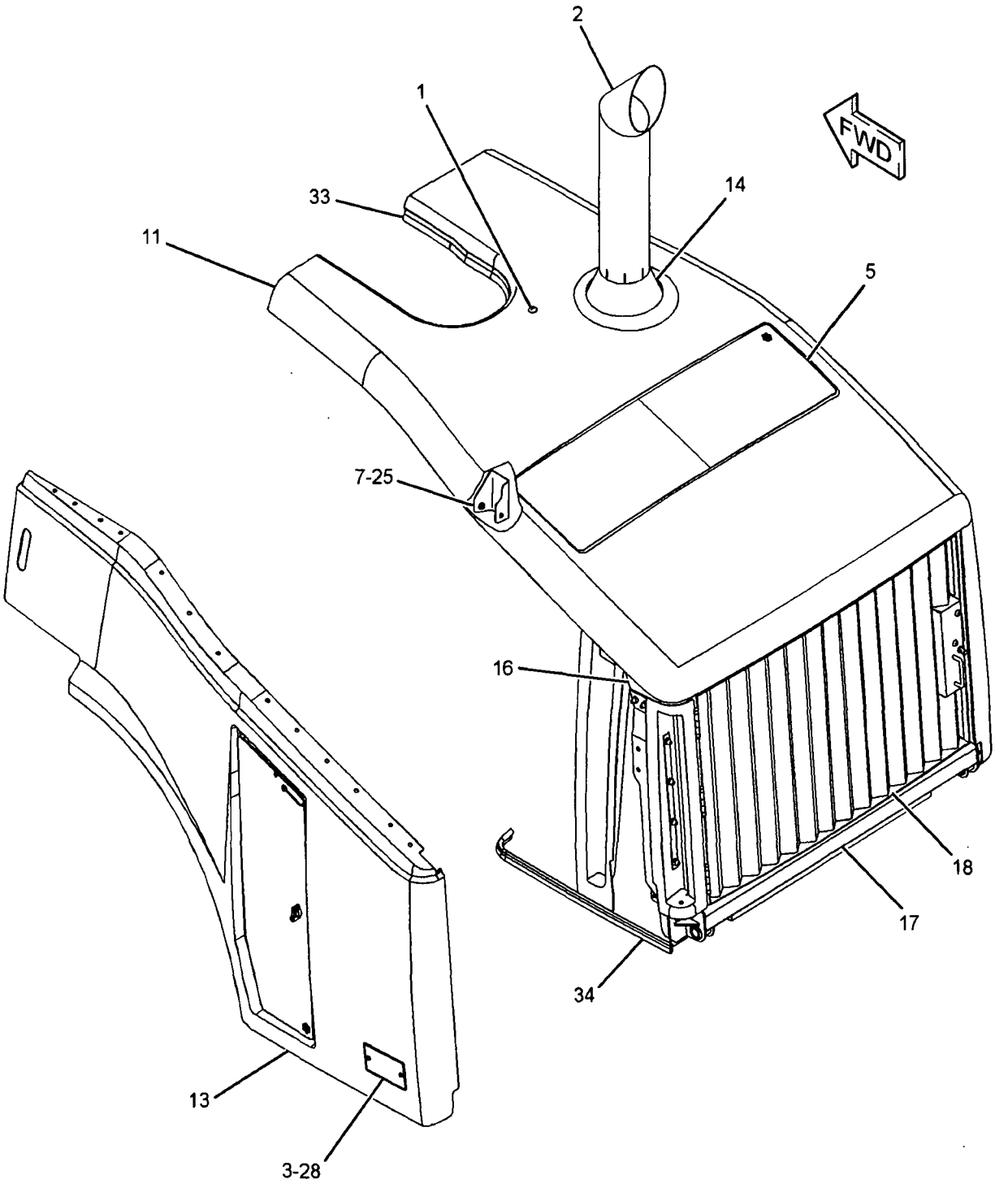

GRAPHIC #2 **<END>** g01221667

237-0430 LADDER GP

S/N: N1A1-UP

PART OF 237-0234 CHASSIS AR

SMCS-7254 i02460966

NOTE	REF NO	GRAPHIC REF	PART NUMBER	QTY	PART NAME 1 2 3 4 5 6 (PRODUCT LEVEL)	SEE PAGE
	1	1	7W-8106	32	SPACER (15-MM THK)	
	2	1	234-1530	4	STEP AS	
	3	1	234-3545	16	PLATE	
	4	1	234-5107	8	BELT-STEP	
	5	1	234-5110	2	PLATE	
	6	1	245-3834	1	HANDHOLD AS (LH)	
	7	1	245-3835	1	HANDHOLD AS (RH)	
	8	1	245-3852	1	HANDHOLD AS (LH)	
	9	1	245-3853	1	HANDHOLD AS (RH)	
	10	1	246-6727	4	BRACKET AS	
	11	1	246-7934	1	LADDER AS (LH)	
		1	234-1530	1	STEP AS	
M		1	8T-3490	4	NUT-WELD (M10X1.5-THD)	
	12	1	246-7935	1	LADDER AS (RH)	
M		1	8T-3490	4	NUT-WELD (M10X1.5-THD)	
	13	1	246-7936	1	BRACKET AS	
	14	1	5P-1076	8	WASHER-HARD (13.5X30X4-MM THK)	
	15	1	8T-4121	56	WASHER-HARD (11X21X2.5-MM THK)	
M	16	1	8T-4133	4	NUT (M10X1.5 THD)	
M	17	1	8T-4183	8	BOLT (M12X1.75X40-MM)	
M	18	1	8T-4186	32	BOLT (M10X1.5X40-MM)	
M	19	1	8T-4195	20	BOLT (M10X1.5X30-MM)	
	20	1	8T-4223	12	WASHER-HARD (13.5X25.5X3-MM THK)	
M	21	1	8T-4139	12	BOLT (M12X1.75X30-MM)	

M-METRIC PART

237-0430 **LADDER GP** *(contd.)* **i02460966**

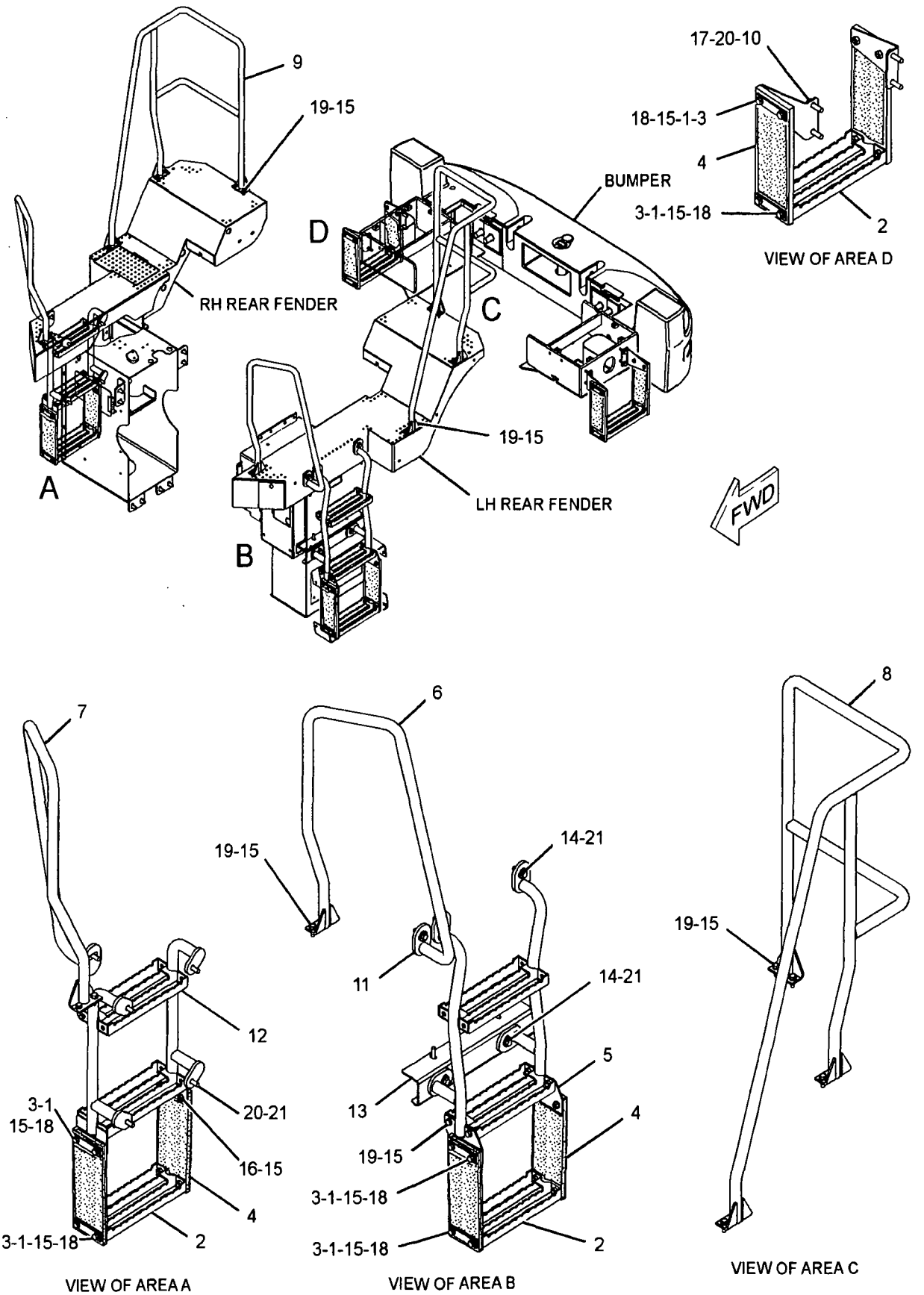

GRAPHIC #1 **<END>** g01220630

281-0626 LINES GP-AUTOMATIC LUBRICATION-

CENTRAL STRUCTURE

S/N: N1A1-UP

PART OF 250-0337 LUBRICATION AR-AUTOMATIC

AN ATTACHMENT

SMCS-7510, 7540 i02429873

NOTE	REF NO	GRAPHIC REF	PART NUMBER	QTY	PART NAME 1 2 3 4 5 6 (PRODUCT LEVEL)	SEE PAGE
	1	1,2	3S-2093	4	STRAP-CABLE	
	2	2	6K-0806	1	STRAP-CABLE	
	3	1	091-7124	1	SPACER (11X19X58-MM THK)	
	4	1	114-9325	1	CLAMP-DOUBLE	
	5	1,2	198-3897	3	SPACER (11X20X25-MM THK)	
	6	1	220-1581	2	HOSE AS	
	7	1,2	268-6372	2	BRACKET AS	
					(EACH INCLUDES)	
M		1,2	8T-3490	1	NUT-WELD (M10X1.5-THD)	
	8	2	282-0027	2	HOSE AS	
M	9	2	7X-2545	1	BOLT (M10X1.5X150-MM)	
M	10	1	8C-8451	1	BOLT (M6X1X40-MM)	
M	11	1	8T-0644	1	BOLT (M10X1.5X90-MM)	
	12	1,2	8T-4121	15	WASHER-HARD (11X21X2.5-MM THK)	
M	13	1,2	8T-4136	11	BOLT (M10X1.5X25-MM)	
M	14	1	8T-4185	2	BOLT (M10X1.5X50-MM)	
	15	1,2	9M-4995	15	CLIP	
E	16	1	206-2722		GUARD (55-CM)	

E-ORDER BY THE CENTIMETER
M-METRIC PART

281-0626 LINES GP-AUTOMATIC LUBRICATION (contd.) i02429873

REFER TO ALL ILLUSTRATIONS OF THIS GROUP FOR AUXILIARY VIEWS

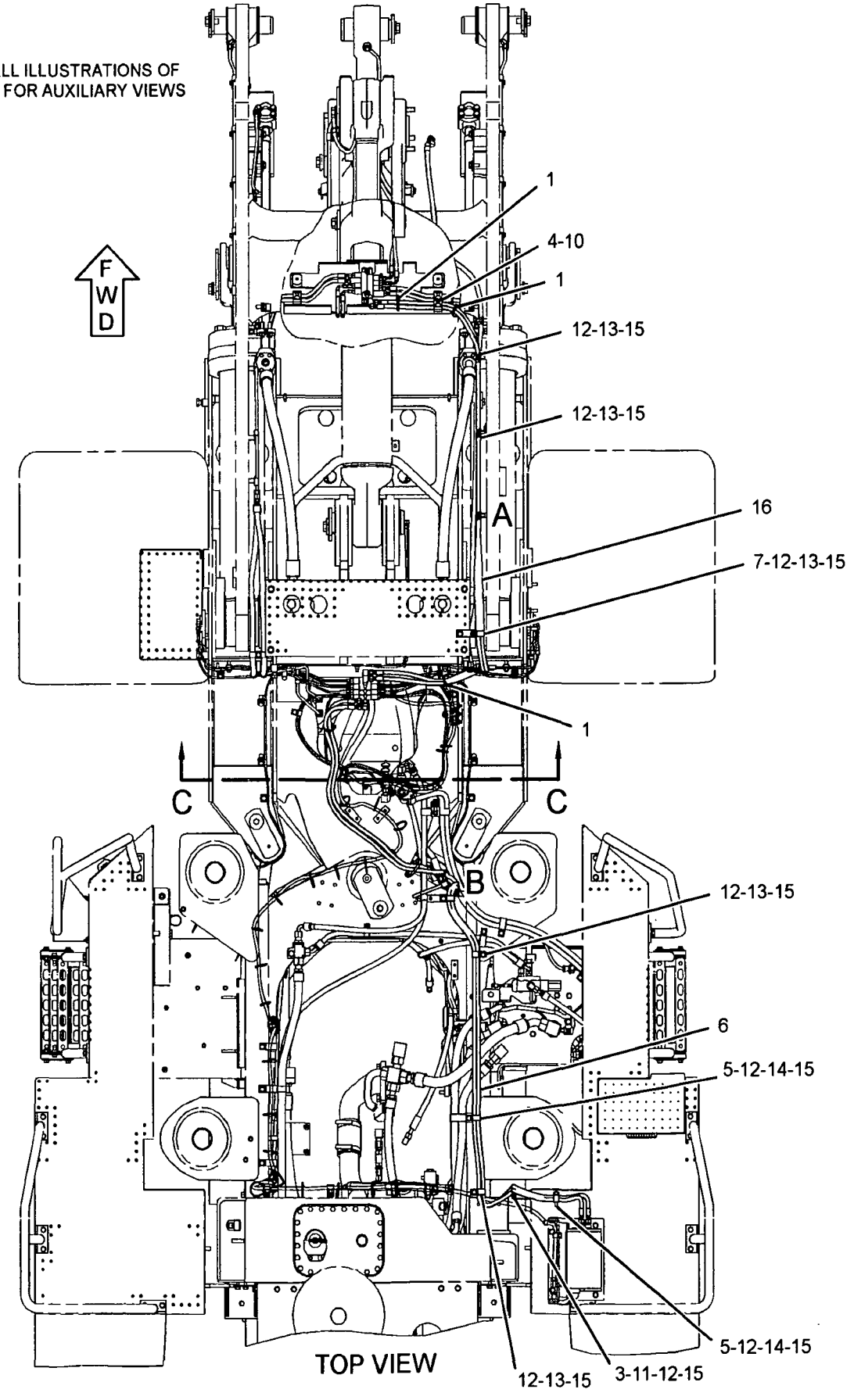

GRAPHIC #1 g01211355

281-0626 LINES GP-AUTOMATIC LUBRICATION (contd.) i02429873

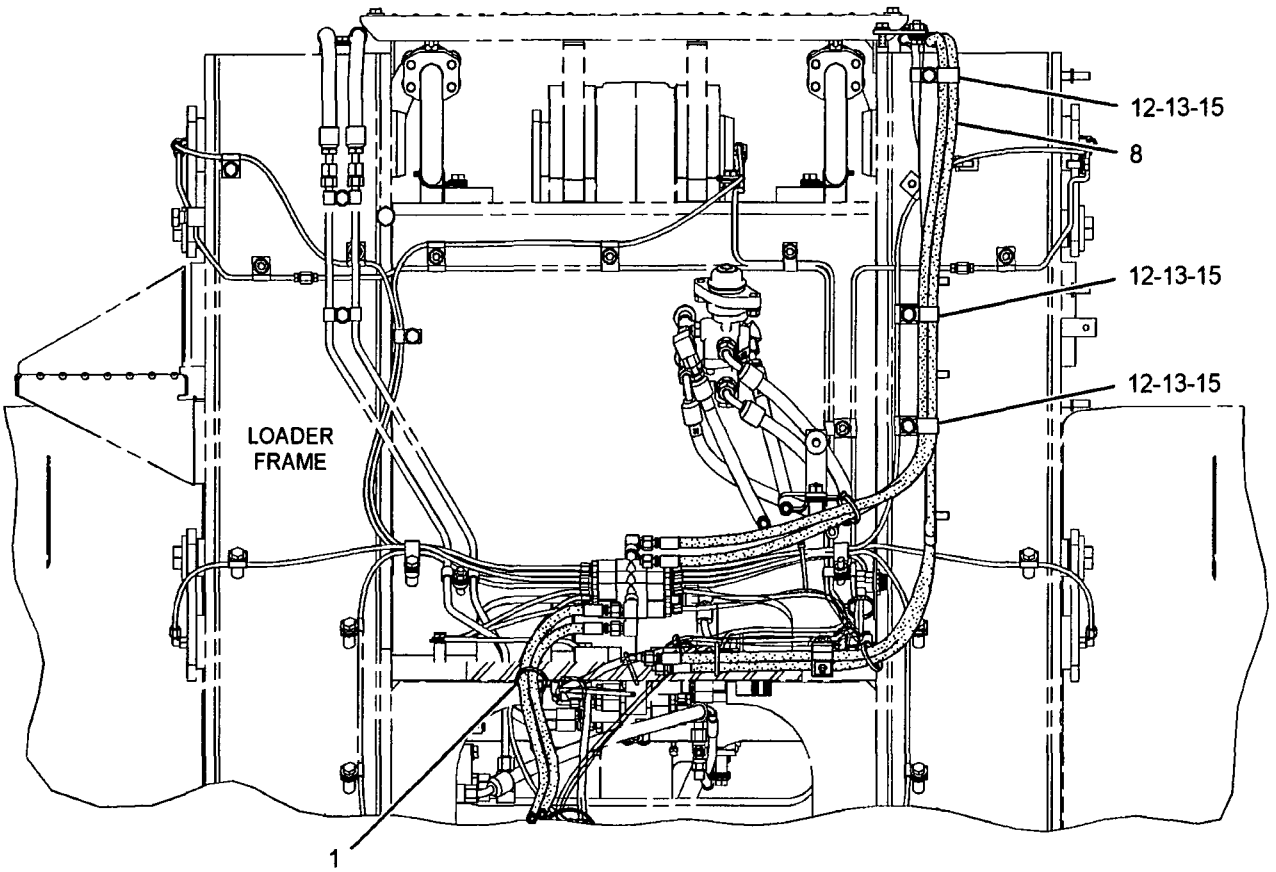

SECTION C-C

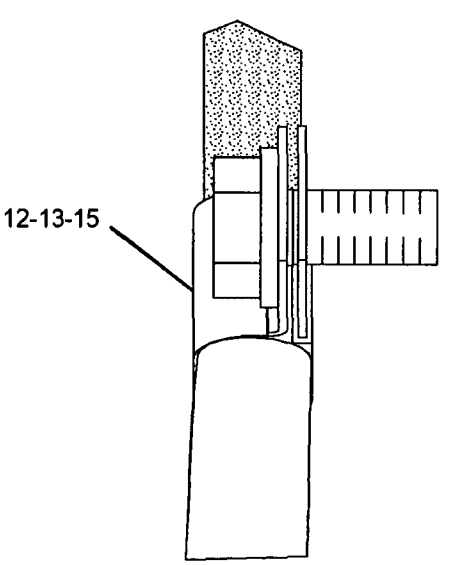

VIEW OF AREA A

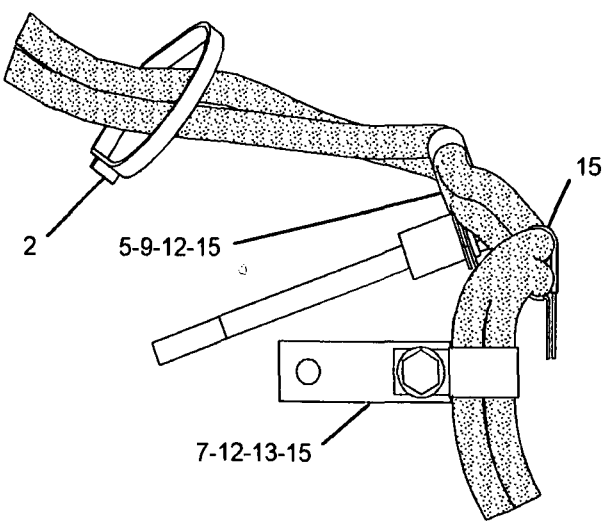

VIEW OF AREA B

GRAPHIC #2 **<END>** g01211357

281-0628 LINES GP-AUTOMATIC LUBRICATION-

LOADER FRAME, FRONT

S/N: N1A1-UP

PART OF 250-0337 LUBRICATION AR-AUTOMATIC

AN ATTACHMENT

SMCS-7510, 7540 **i02429874**

NOTE	REF NO	GRAPHIC REF	PART NUMBER	QTY	PART NAME 1 2 3 4 5 6 (PRODUCT LEVEL)	SEE PAGE
	1	1	**3S-2093**	3	STRAP-CABLE	
	2	1	**7F-5345**	1	PLATE	
	3	1	**177-3475**	5	CONNECTOR (REDUCER)	
	4	1	**177-3477**	1	ADAPTER	
	5	1	**177-3484**	2	BOLT	
	6	1	**177-3489**	1	COUPLING	
	7	1	**177-3490**	2	ELBOW	
	8	1	**178-2723**	2	ELBOW	
	9	1	**192-5918**	2	BRACKET AS	
	10	1	**251-2138**	2	ELBOW AS	
	11	1	**251-2139**	10	BRACKET	
	12	1	**251-6079**	2	CLAMP AS	
	13	1	**251-7294**	2	BUSHING	
	14	1	**253-9474**	1	TUBE AS	
	15	1	**253-9476**	1	TUBE AS	
	16	1	**253-9477**	1	TUBE AS	
	17	1	**253-9478**	1	TUBE AS	
	18	1	**256-4884**	1	BRACKET	
	19	1	**278-2078**	1	ELBOW	
	20	1	**281-0629**	1	BRACKET AS	
M		1	**8T-3490**	1	NUT-WELD (M10X1.5-THD)	
Y	21	1	*281-0630*	1	VALVE & LINES GP-LUBRICATION	486
	22	1	**4M-8973**	1	ELBOW	
	23	1	**5M-5687**	2	CLIP	
	24	1	**5P-9299**	15	CLIP	
M	25	1	**6V-7744**	2	LOCKNUT (M10X1.15-THD)	
	26	1	**7X-7729**	4	WASHER (11X25X3-MM THK)	
	27	1	**8J-8332**	1	CLIP	
	28	1	**8T-4121**	10	WASHER-HARD (11X21X2.5-MM THK)	
M	29	1	**8T-4136**	12	BOLT (M10X1.5X25-MM)	
M	30	1	**8T-4195**	2	BOLT (M10X1.5X30-MM)	
M	31	1	**8T-4200**	10	BOLT (M8X1.25X16-MM)	
	32	1	**8T-4224**	12	WASHER-HARD (8.8X16X2-MM THK)	
M	33	1	**8T-4908**	2	BOLT (M8X1.25X25-MM)	
M	34	1	**8T-4970**	2	BOLT (M6X1X14-MM)	
	35	1	**9X-8256**	2	WASHER (6.6X12X2-MM THK)	

M-METRIC PART
Y-SEPARATE ILLUSTRATION

281-0628 LINES GP-AUTOMATIC LUBRICATION (contd.) i02429874

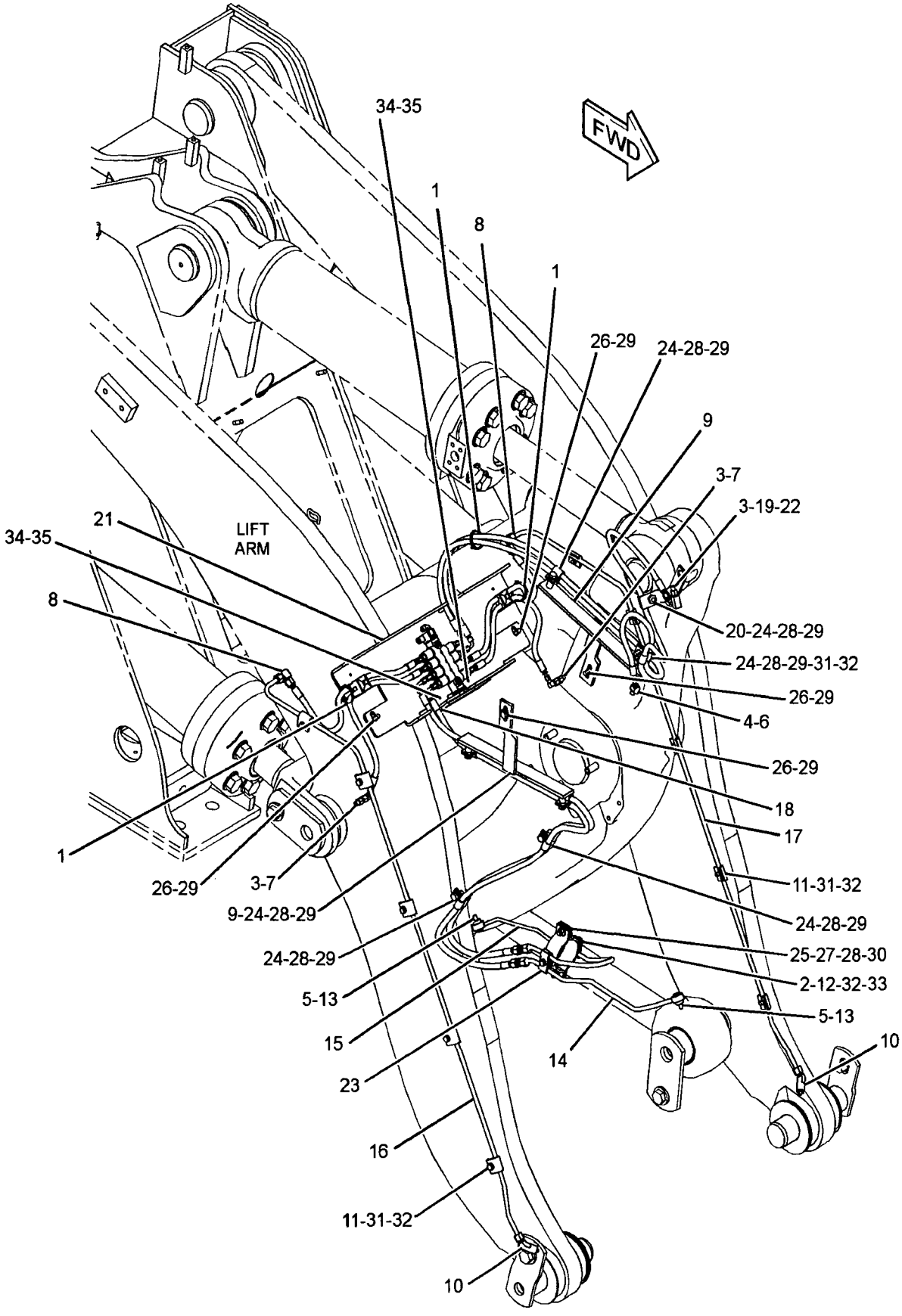

GRAPHIC #1 <END> g01223166

281-0634 LINES GP-AUTOMATIC LUBRICATION-
ARTICULATING HITCH, LOADER FRAME, REAR
S/N: N1A1-UP

PART OF 250-0337, 264-1082 LUBRICATION AR-AUTOMATIC

AN ATTACHMENT

SMCS-7510, 7540 **i02429849**

NOTE	REF NO	GRAPHIC REF	PART NUMBER	QTY	PART NAME 1 2 3 4 5 6 (PRODUCT LEVEL)	SEE PAGE
	1	2	**3B-8489**	6	FITTING-GREASE	
	2	2	**3S-2093**	6	STRAP-CABLE	
	3	2	**6K-0806**	1	STRAP-CABLE	
	4	2	**6W-5458**	1	SPACER (0.406X0.75X0.5-IN THK)	
	5	2	**177-3463**	6	COUPLING	
	6	2	**177-3464**	7	ELBOW (90-DEG)	
	7	1	**177-3465**	1	COUPLING	
	8	2	**177-3466**	4	CONNECTOR	
	9	2	**177-3468**	1	ELBOW (90-DEG)	
	10	2	**177-3475**	5	CONNECTOR (REDUCER)	
	11	2	**250-0241**	6	CONNECTOR (TEE)	
	12	2	**276-8069**	1	PLATE	
	13	2	**276-8173**	4	ELBOW	
	14	1	**281-0635**	1	TUBE AS	
Y	15	2	*281-0636*	1	VALVE GP-LUBE DISTRIBUTION	490
	16	1,2	**2B-2404**	22	CLIP	
	17	2	**5K-2298**	3	CLIP	
	18	1,2	**5P-9299**	2	CLIP	
	19	1,2	**7X-7729**	23	WASHER (11X25X3-MM THK)	
	20	2	**8M-2773**	2	CLIP	
	21	2	**8T-4121**	6	WASHER-HARD (11X21X2.5-MM THK)	
M	22	1,2	**8T-4133**	3	NUT (M10X1.5 THD)	
M	23	2	**8T-4136**	15	BOLT (M10X1.5X25-MM)	
M	24	2	**8T-4186**	1	BOLT (M10X1.5X40-MM)	
M	25	2	**8T-4191**	1	BOLT (M10X1.5X16-MM)	

M-METRIC PART
Y-SEPARATE ILLUSTRATION

281-0634 LINES GP-AUTOMATIC LUBRICATION (contd.) i02429849

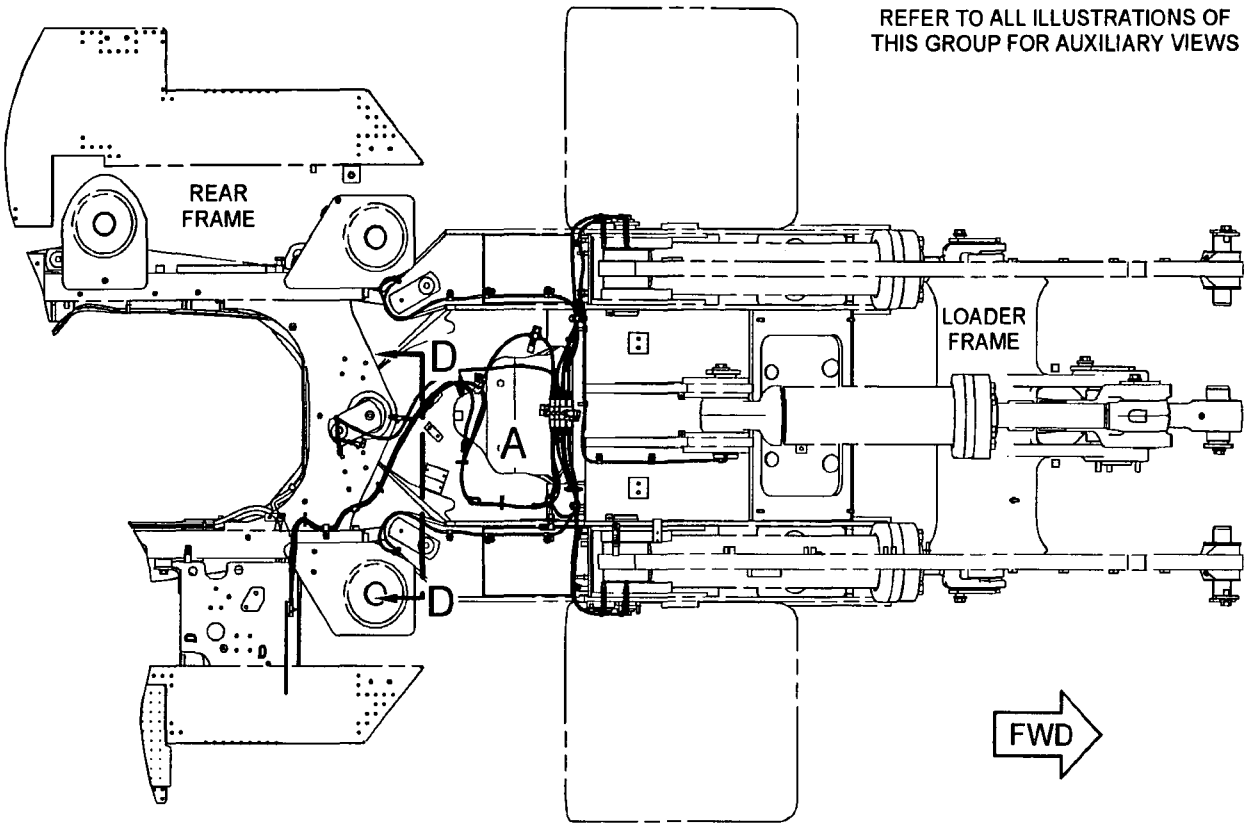

TOP VIEW

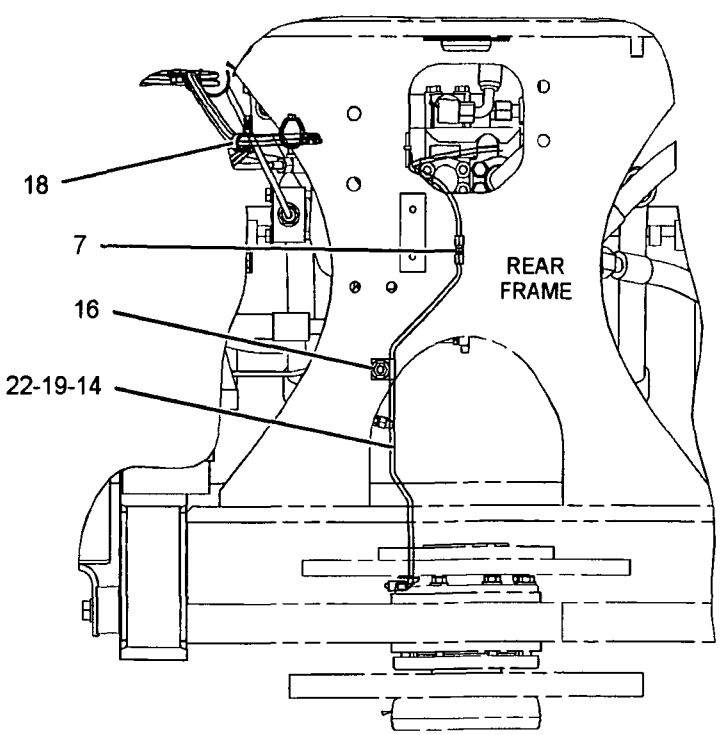

SECTION D-D

GRAPHIC #1 g01222912

281-0634 LINES GP-AUTOMATIC LUBRICATION (contd.) i02429849

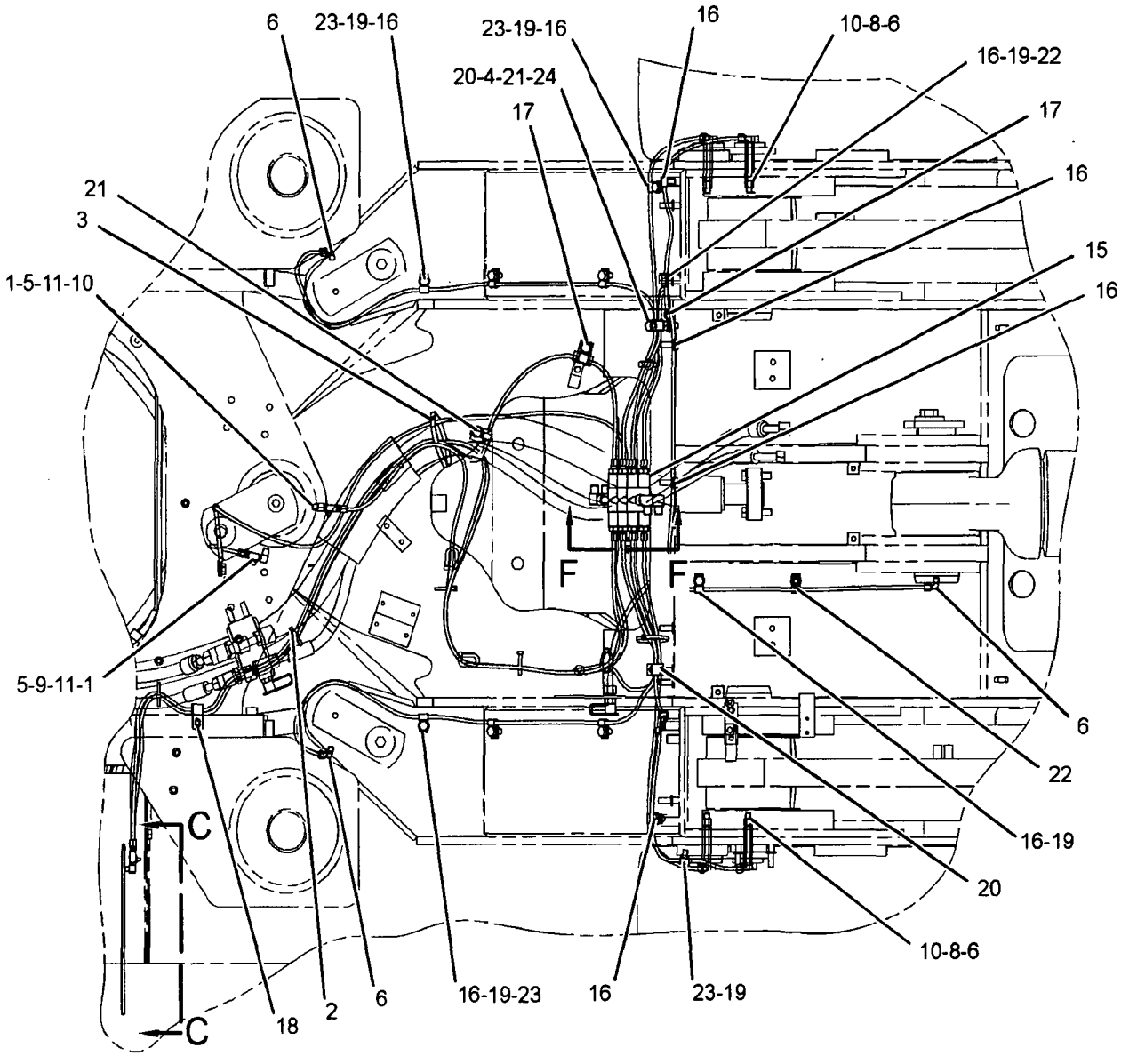

VIEW OF AREA A

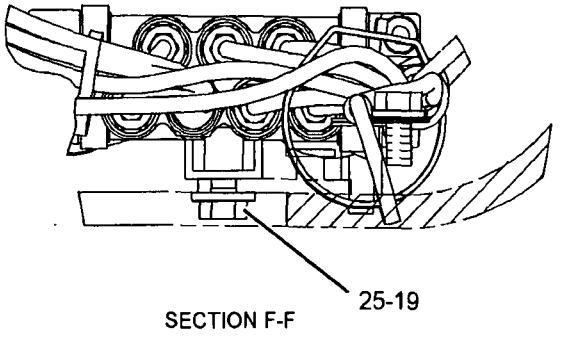

SECTION F-F

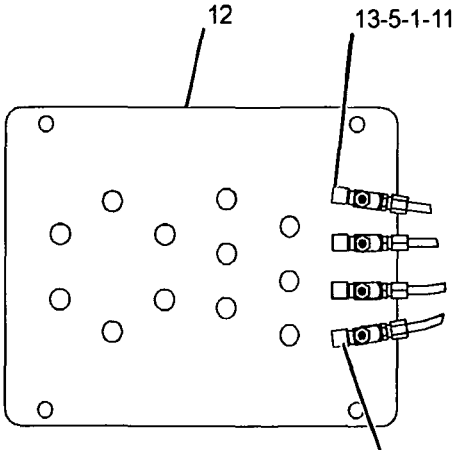

VIEW C-C

GRAPHIC #2 **<END>** g01225047

237-0433 LINES GP-GREASE

S/N: N1A1-UP

PART OF 237-0234 CHASSIS AR

SMCS-7510 **i02437668**

NOTE	REF NO	GRAPHIC REF	PART NUMBER	QTY	PART NAME 1 2 3 4 5 6 (PRODUCT LEVEL)	SEE PAGE
	1	1	4H-1225	2	WASHER (11X22X6-MM THK)	
	2	1	5B-0935	7	FITTING-GREASE	
	3	1	5K-9242	2	UNION-FLARED	
	4	1	5K-9243	5	ELBOW-FLARED	
	5	1	5K-9979	2	CONNECTOR	
	6	1	5P-5461	7	NUT (1/8-27-THD)	
	7	1	5P-5463	7	ADAPTER-LUBRICATION	
	8	1	6L-3616	1	CONNECTOR	
	9	1	9S-7712	2	ELBOW-FLARED	
	10	1	111-4839	6	STRAP	
	11	1	201-5267	1	TUBE AS	
	12	1	201-8143	1	TUBE AS	
	13	1	244-8730	1	TUBE AS	
	14	1	244-8731	1	TUBE AS	
	15	1	244-8732	1	TUBE AS	
	16	1	256-7884	1	HOSE AS	
	17	1	256-7885	1	HOSE AS	
	18	1	256-7886	1	HOSE AS	
	19	1	256-7887	1	HOSE AS	
	20	1	260-3820	1	TUBE AS	
	21	1	260-3821	1	TUBE AS	
	22	1	111-4838	6	CLIP	
	23	1	2B-2404	10	CLIP	
	24	1	3B-6552	4	ELBOW	
	25	1	5K-2298	3	CLIP	
	26	1	5P-9297	2	CLIP	
	27	1	8T-4121	16	WASHER-HARD (11X21X2.5-MM THK)	
M	28	1	8T-4133	16	NUT (M10X1.5 THD)	
	29	1	9S-1812	2	FITTING (NIPPLE-PIPE)	

M-METRIC PART

237-0433 **LINES GP-GREASE** *(contd.)* **i02437668**

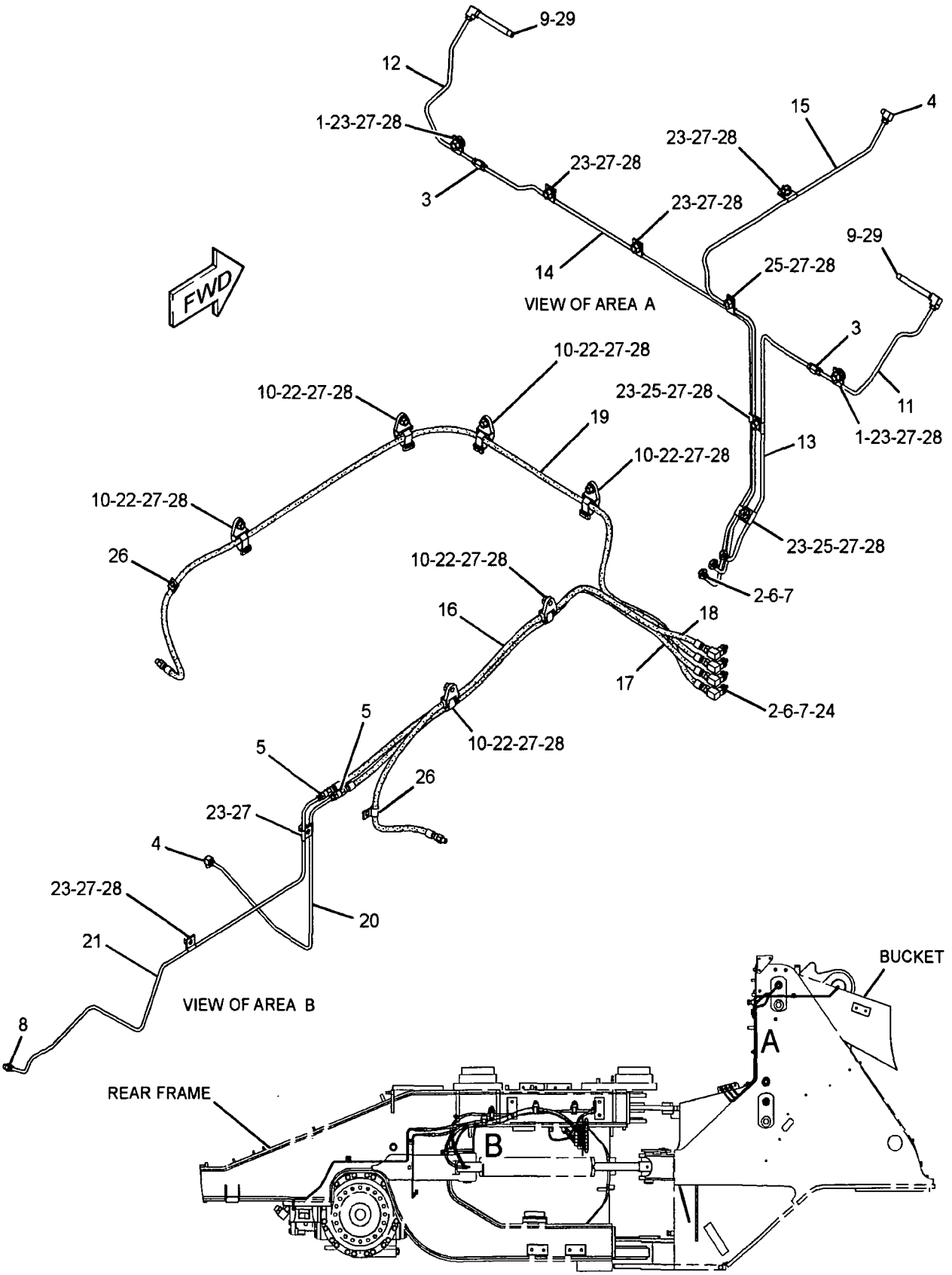

RIGHT SIDE VIEW

GRAPHIC #1 **<END>** g01225017

269-2010 LINES GP-LUBRICATION–REAR FRAME, LIFT ARMS

S/N: N1A1-UP

PART OF 264-1082 LUBRICATION AR-AUTOMATIC

AN ATTACHMENT

SMCS-7510, 7540 i02428707

NOTE	REF NO	GRAPHIC REF	PART NUMBER	QTY	PART NAME 1 2 3 4 5 6 (PRODUCT LEVEL)	SEE PAGE
	1	1	3S-2093	4	STRAP-CABLE	
	2	1	6K-0806	1	STRAP-CABLE	
	3	1	091-7124	1	SPACER (11X19X58-MM THK)	
	4	1	114-9325	1	CLAMP-DOUBLE	
	5	1	178-2776	2	HOSE	
	6	1	198-3897	3	SPACER (11X20X25-MM THK)	
	7	1	220-1581	2	HOSE AS	
	8	1	268-6372	2	BRACKET AS	
					(EACH INCLUDES)	
M		1	8T-3490	1	NUT-WELD (M10X1.5-THD)	
		1	268-6373	1	PLATE	
M	9	1	7X-2545	1	BOLT (M10X1.5X150-MM)	
M	10	1	8C-8451	1	BOLT (M6X1X40-MM)	
M	11	1	8T-0644	1	BOLT (M10X1.5X90-MM)	
	12	1	8T-4121	15	WASHER-HARD (11X21X2.5-MM THK)	
M	13	1	8T-4136	11	BOLT (M10X1.5X25-MM)	
M	14	1	8T-4185	2	BOLT (M10X1.5X50-MM)	
	15	1	9M-4995	15	CLIP	
E	16	1	206-2722		GUARD (55-CM)	

E-ORDER BY THE CENTIMETER
M-METRIC PART

269-2010 LINES GP-LUBRICATION (contd.) i02428707

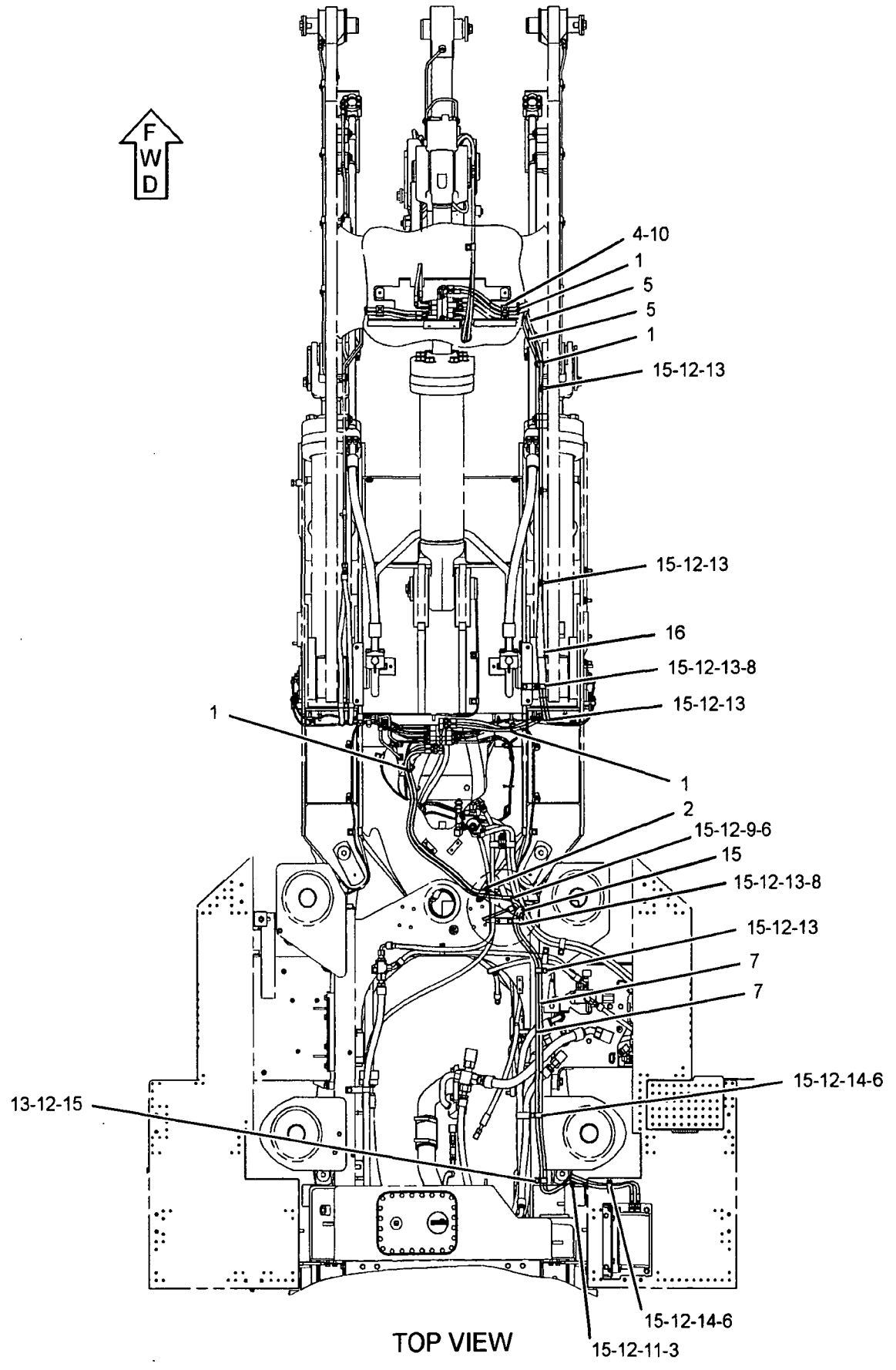

TOP VIEW

GRAPHIC #1

<END>

g01222833

112-6973 LINK GP-STEERING FRAME LOCK

S/N: N1A1-UP

PART OF 237-0234 CHASSIS AR

SMCS-7506 i00754417

NOTE	REF NO	GRAPHIC REF	PART NUMBER	QTY	PART NAME 1 2 3 4 5 6 (PRODUCT LEVEL)	SEE PAGE
	1	1	5V-6380	2	PIN	
	2	1	8D-3791	2	PIN	
	3	1	127-1579	1	LINK	

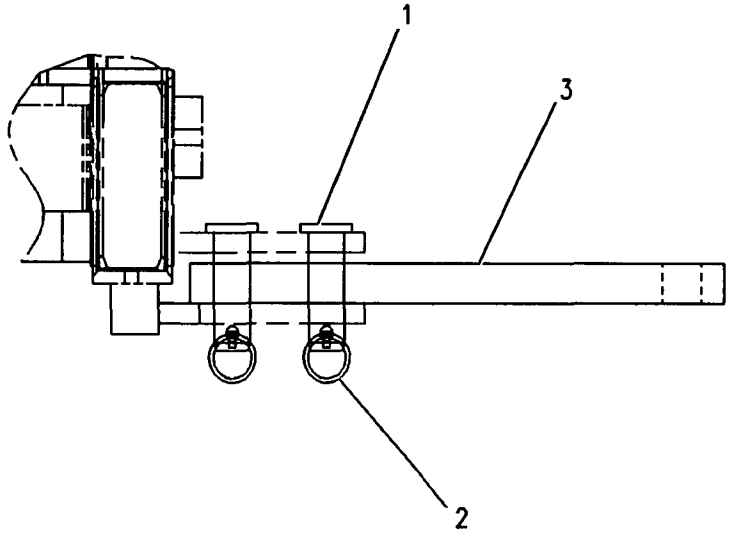

GRAPHIC #1

<END>

g00262252

250-0337 LUBRICATION AR-AUTOMATIC

S/N: N1A1-UP

CANNOT BE USED WITH 244-3375–PAGE 715, 244-3396–PAGE 715

AN ATTACHMENT

SMCS-7540 **i02429854**

NOTE	REF NO	GRAPHIC REF	PART NUMBER	QTY	PART NAME 1 2 3 4 5 6 (PRODUCT LEVEL)	SEE PAGE
Y	1	1	*170-8983*	1	BOSS GP-LEVER	706
Y	2	1	*277-5334*	1	MODULE GP-DISPLAY (AUTOMATIC LUBRICATION SYSTEM)	868
Y	3	1	*281-0622*	1	PUMP & MTG GP-LUBRICATION	471
Y	4	1	*281-0626*	1	LINES GP-AUTOMATIC LUBRICATION (CENTRAL STRUCTURE)	448
Y	5	1	*281-0628*	1	LINES GP-AUTOMATIC LUBRICATION (LOADER FRAME, FRONT)	451
Y	6	1	*281-0634*	1	LINES GP-AUTOMATIC LUBRICATION (ART HITCH, LOADER FRAME, REAR)	453
Y	7	1	*281-0639*	1	BOSS GP-LIFT ARM	709
Y	8	1	*281-0640*	1	BOSS GP-REAR FRAME	
Y	9	1	*281-0642*	1	PIN GP	790
Y	10	1	*281-8137*	1	BOSS GP-REAR FRAME	386
Y	11	1	*281-8741*	1	WIRING GP-LUBRICATION	236

Y-SEPARATE ILLUSTRATION

250-0337 LUBRICATION AR-AUTOMATIC (contd.) i02429854

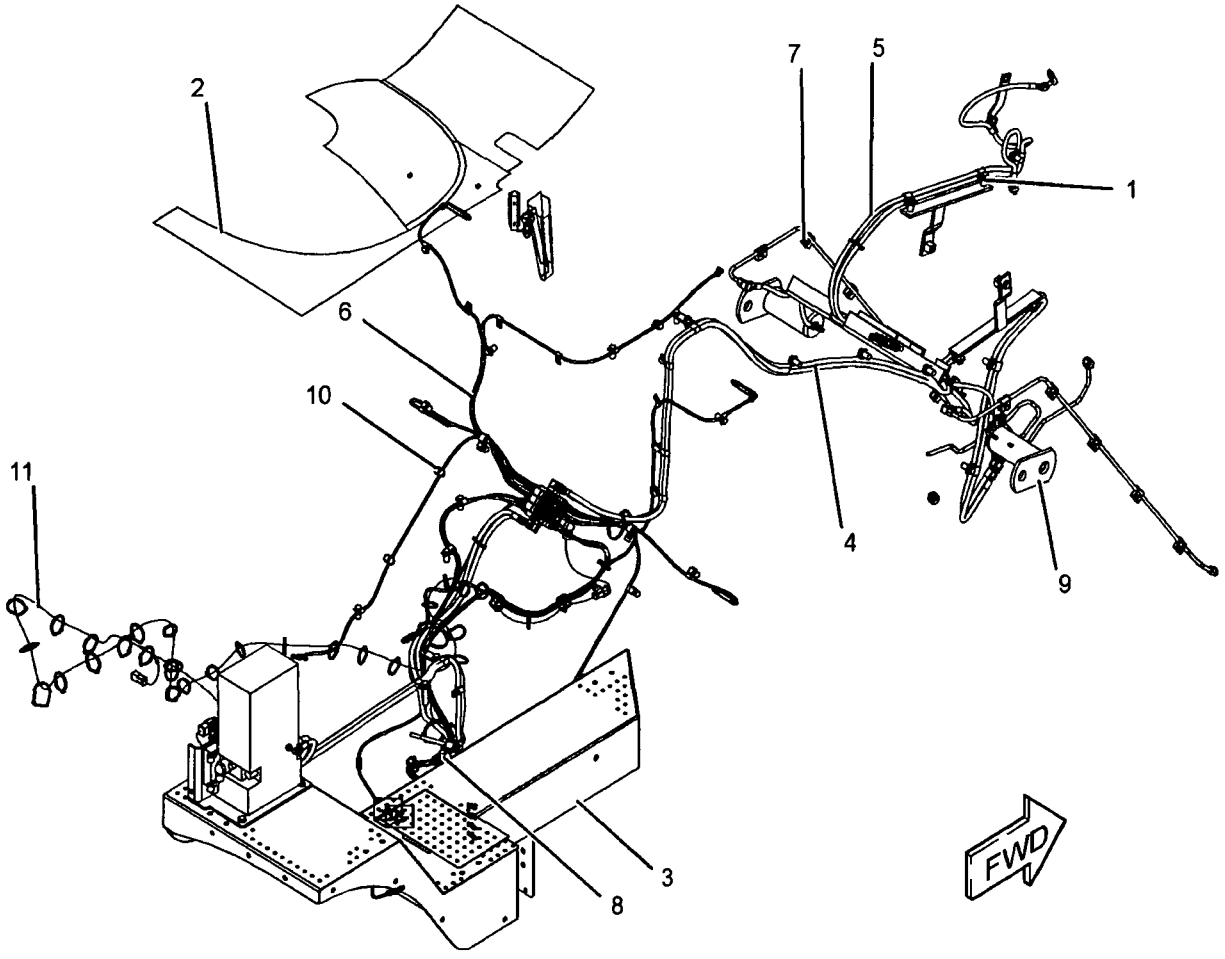

GRAPHIC #1 <END> g01227385

264-1082 LUBRICATION AR-AUTOMATIC

S/N: N1A1-UP

FOR USE WITH 244-2665–PAGE 715

AN ATTACHMENT

SMCS-7540 **i02429774**

NOTE	REF NO	GRAPHIC REF	PART NUMBER	QTY	PART NAME 1 2 3 4 5 6 (PRODUCT LEVEL)	SEE PAGE
Y	1	1	*192-6118*	1	BOSS GP-LEVER	707
Y	2	1	*269-1883*	1	BOSS GP-LIFT ARM	708
Y	3	1	*269-2010*	1	LINES GP-LUBRICATION (REAR FRAME, LIFT ARMS)	458
Y	4	1	*269-2011*	1	LINES GP-AUTOMATIC LUBRICATION	
Y	5	1	*277-5334*	1	MODULE GP-DISPLAY (AUTOMATIC LUBRICATION SYSTEM)	868
Y	6	1	*281-0622*	1	PUMP & MTG GP-LUBRICATION	471
Y	7	1	*281-0634*	1	LINES GP-AUTOMATIC LUBRICATION (ART HITCH, LOADER FRAME, REAR)	453
Y	8	1	*281-0640*	1	BOSS GP-REAR FRAME	
Y	9	1	*281-8137*	1	BOSS GP-REAR FRAME	386
Y	10	1	*281-8741*	1	WIRING GP-LUBRICATION	236
Y	11	1	*282-6964*	1	LINK GP-BUCKET	716

Y-SEPARATE ILLUSTRATION

264-1082 LUBRICATION AR-AUTOMATIC *(contd.)* i02429774

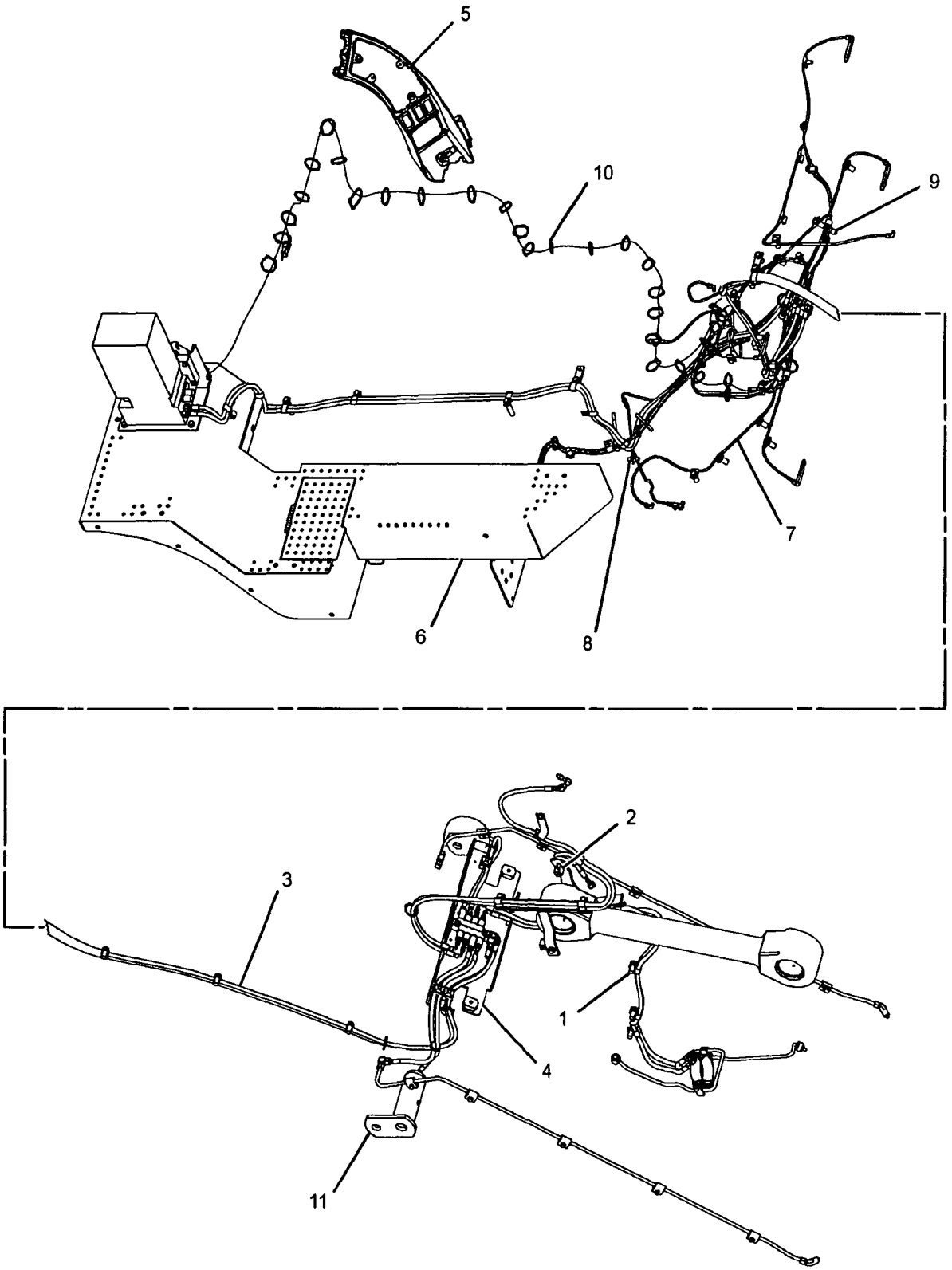

GRAPHIC #1 **<END>** g01224951

267-4971 MOUNTING GP-REGISTRATION

S/N: N1A1-UP

PART OF 250-0705, 250-0706 CONVERSION AR-ROADING AN ATTACHMENT

SMCS-1429, 7050 i02424923

NOTE	REF NO	GRAPHIC REF	PART NUMBER	QTY	PART NAME 1 2 3 4 5 6 (PRODUCT LEVEL)	SEE PAGE
	1	1	125-4439	2	LAMP AS (24-VOLT, 5-WATT)	
					(EACH INCLUDES)	
		1	263-2541	1	LAMP (24-VOLT, 5-WATTS)	
	2	1	275-9727	1	SHEET AS	
	3	1	275-9728	1	PLATE	
	4	1	8T-4121	2	WASHER-HARD (11X21X2.5-MM THK)	
M	5	1	8T-4133	2	NUT (M10X1.5 THD)	

M-METRIC PART

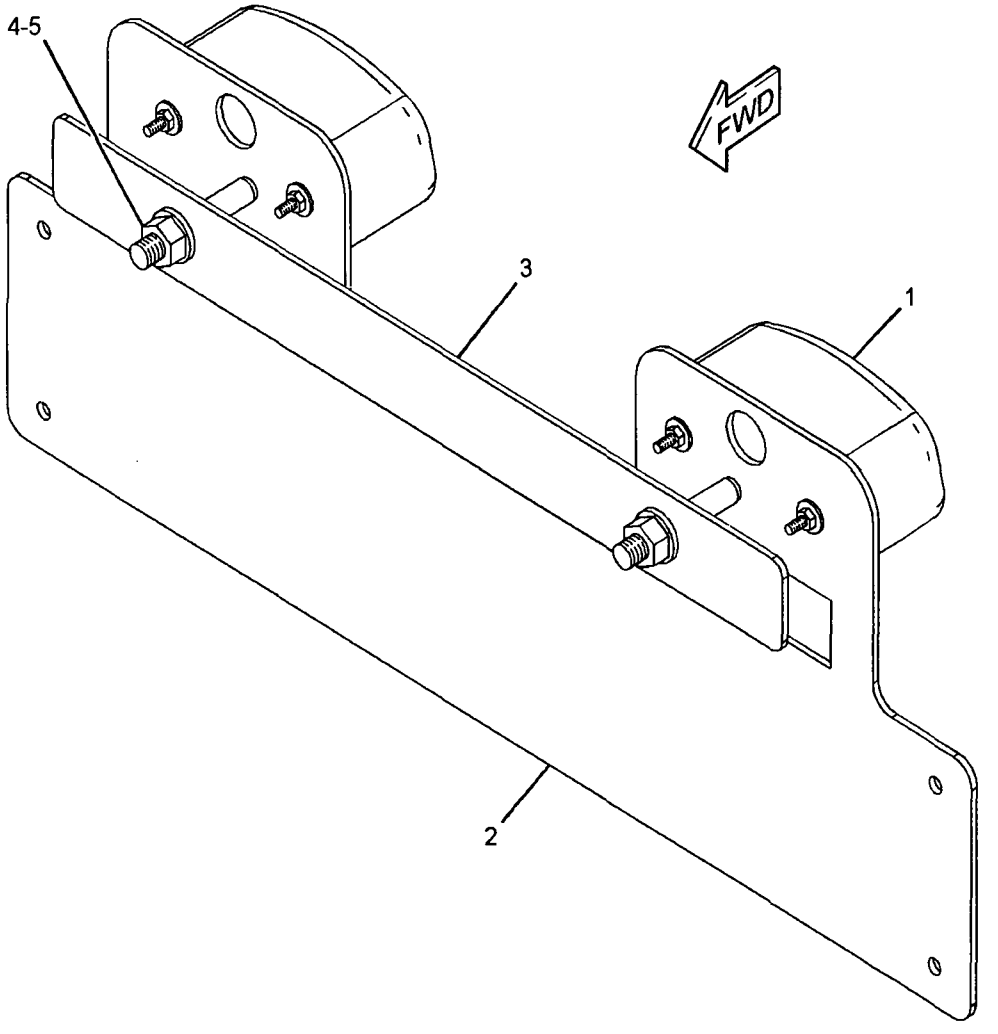

GRAPHIC #1 <END> g01210187

251-1701 PANEL GP-HOOD-TOP

S/N: N1A1-UP

PART OF 251-1700 HOOD & GUARD GP

SMCS-7251 **i02250442**

NOTE	REF NO	GRAPHIC REF	PART NUMBER	QTY	PART NAME 1 2 3 4 5 6 (PRODUCT LEVEL)	SEE PAGE
	1	1	224-9392	4	FASTENER-SINGLE HEAD	
	2	1	246-1888	1	INSULATION	
	3	1	251-1702	1	PANEL AS (TOP)	

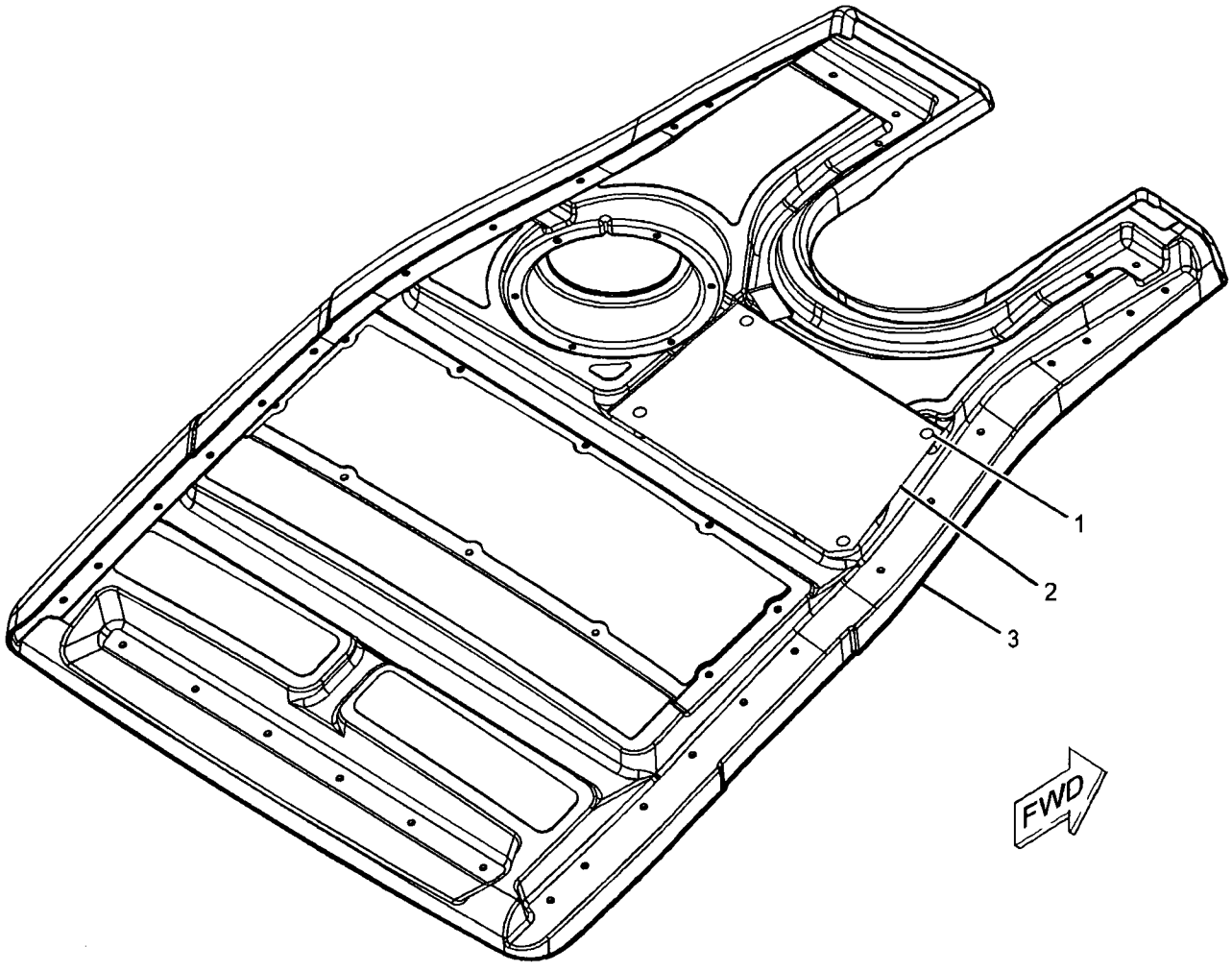

GRAPHIC #1

<END>

g01133281

251-1705 PANEL GP-HOOD-SIDE, RH

S/N: N1A1-UP

PART OF 251-1700 HOOD & GUARD GP

SMCS-7251 **i02437664**

NOTE	REF NO	GRAPHIC REF	PART NUMBER	QTY	PART NAME 1 2 3 4 5 6 (PRODUCT LEVEL)	SEE PAGE
	1	1	148-8240	5	CLIP	
	2	1	246-1890	1	INSULATION	
	3	1	251-1706	1	PANEL AS (RH)	
	4	1	7X-0603	5	WASHER-HARD (9.9X35X2.5-MM THK)	

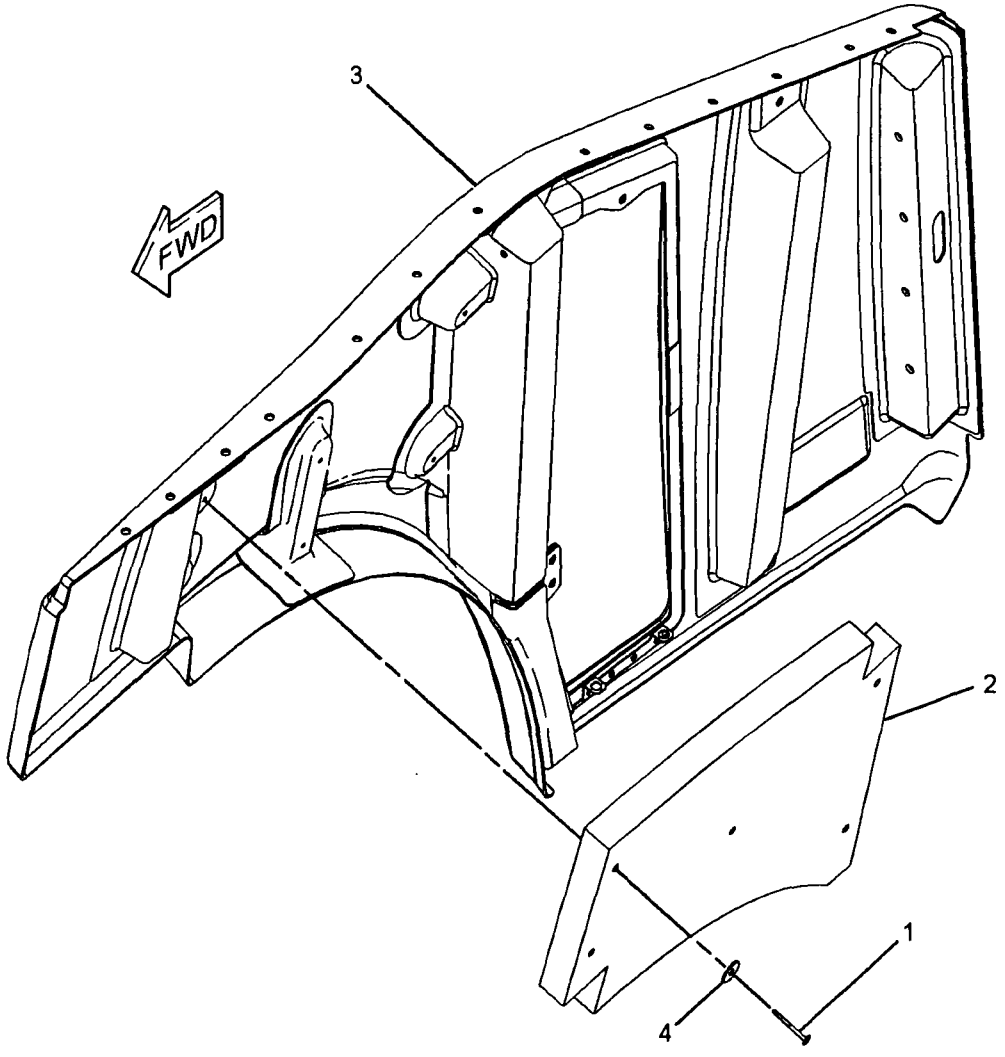

GRAPHIC #1 **<END>** g01227562

251-1708 PANEL GP-HOOD-SIDE, LH

S/N: N1A1-UP

PART OF 251-1700 HOOD & GUARD GP

SMCS-7251 **i02250438**

NOTE	REF NO	GRAPHIC REF	PART NUMBER	QTY	PART NAME 1 2 3 4 5 6 (PRODUCT LEVEL)	SEE PAGE
	1	1	148-8240	5	CLIP	
	2	1	246-1889	1	INSULATION	
	3	1	251-1709	1	PANEL AS (LH)	
	4	1	7X-0603	5	WASHER-HARD (9.9X35X2.5-MM THK)	

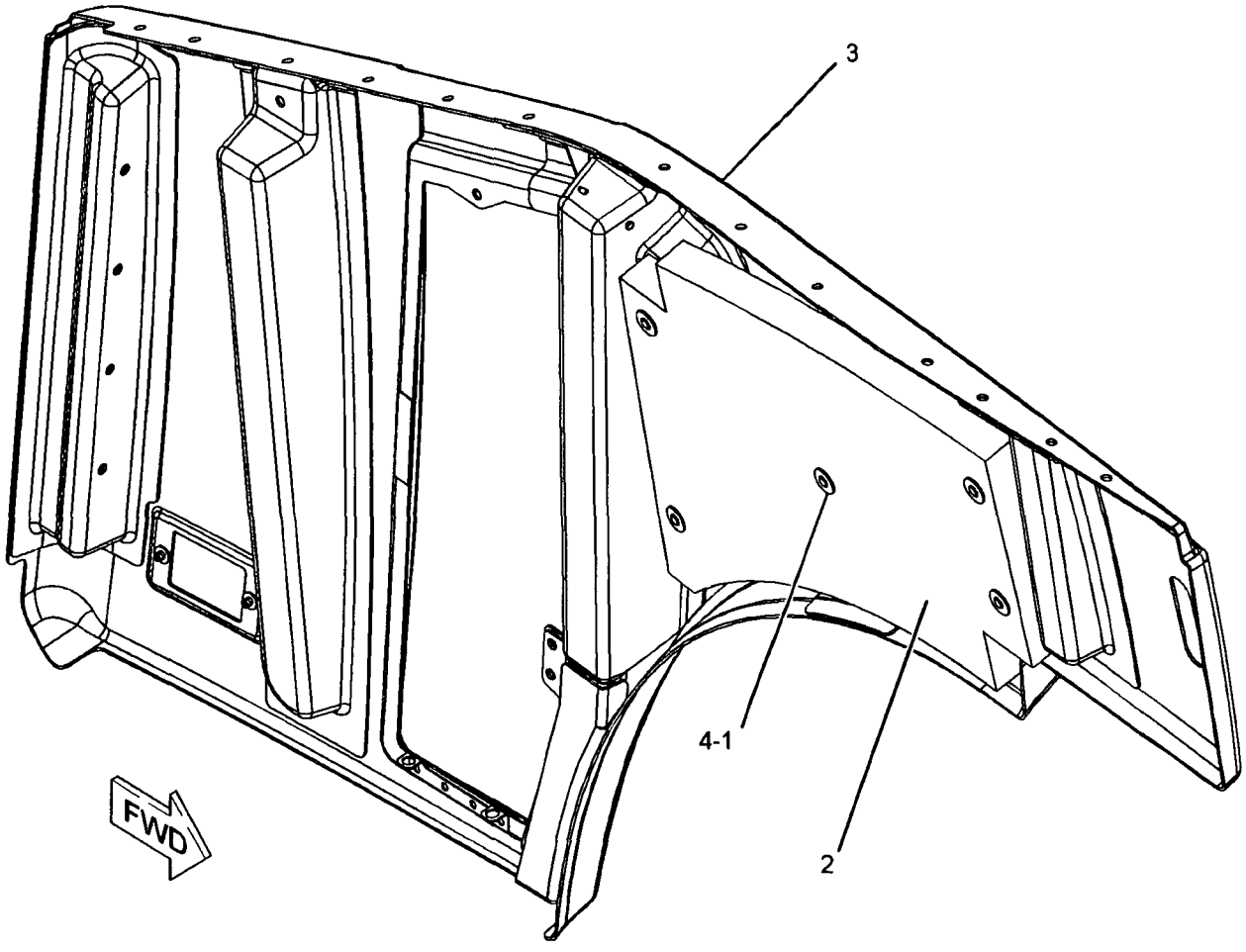

GRAPHIC #1 **<END>** g01133013

245-4083 PANEL GP-SIDE

S/N: N1A1-UP

PART OF 237-0234 CHASSIS AR

SMCS-7267 **i02437663**

NOTE	REF NO	GRAPHIC REF	PART NUMBER	QTY	PART NAME 1 2 3 4 5 6 (PRODUCT LEVEL)	SEE PAGE
	1	1	4E-1384	4	BUMPER-CONICAL	
	2	1	245-4094	1	INSULATION	
	3	1	253-2538	1	PANEL-OUTER (LH)	
	4	1	253-2539	1	PANEL-OUTER (RH)	
	5	1	253-2540	1	PLATE AS (LH)	
	6	1	253-2541	1	PLATE AS (RH)	
	7	1	253-2547	1	SUPPORT AS (RH)	
	8	1	253-2548	1	SUPPORT AS (LH)	
	9	1	253-2550	1	PLATE AS	
	10	1	253-2553	1	PLATE AS	
	11	1	253-2555	1	PLATE AS-SUPPORT	
	12	1	253-2556	1	PLATE AS-SUPPORT	
M	13	1	5C-7261	4	NUT (M8X1.25-THD)	
	14	1	7X-0589	4	WASHER-HARD (12X28.5X5-MM THK)	
	15	1	7X-7729	36	WASHER (11X25X3-MM THK)	
M	16	1	8T-0389	14	LOCKNUT (M10X1.15-THD)	
M	17	1	8T-4133	4	NUT (M10X1.5 THD)	
M	18	1	8T-4183	6	BOLT (M12X1.75X40-MM)	
M	19	1	8T-4186	4	BOLT (M10X1.5X40-MM)	
M	20	1	8T-4195	18	BOLT (M10X1.5X30-MM)	
	21	1	8T-4223	6	WASHER-HARD (13.5X25.5X3-MM THK)	
D	23	1	5P-7483		SEAL (0.1-M EACH)	
E	24	1	167-0608		SEAL (27.5-CM EACH)	
E	24A	1	167-0608		SEAL (9.5-CM EACH)	
E	25	1	246-0435		SEAL (132-CM EACH)	

D-ORDER BY THE METER
E-ORDER BY THE CENTIMETER
M-METRIC PART

245-4083 PANEL GP-SIDE *(contd.)* i02437663

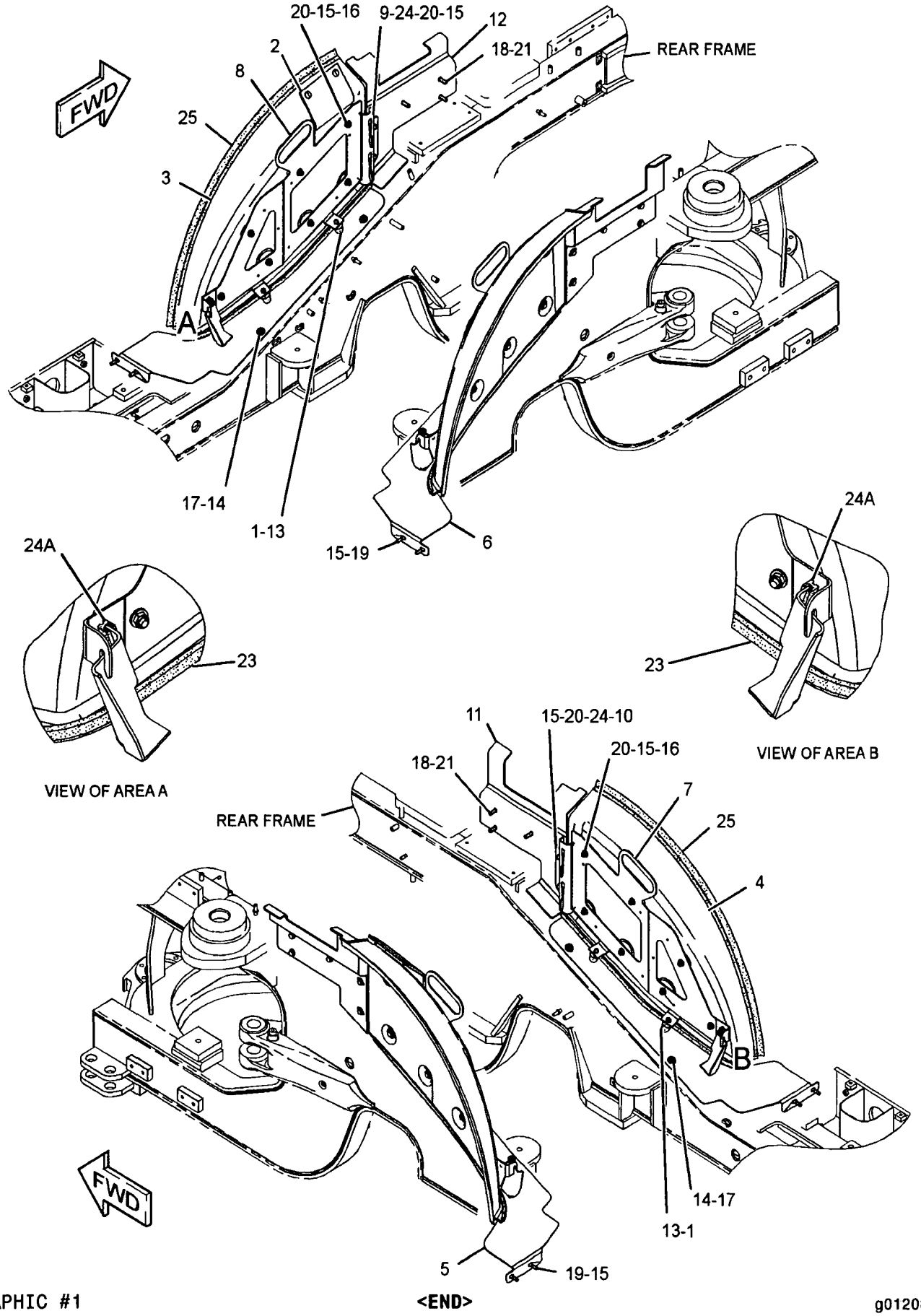

GRAPHIC #1

<END>

g01208167

281-0622 PUMP & MTG GP-LUBRICATION

S/N: N1A1-UP

PART OF 250-0337, 264-1082 LUBRICATION AR-AUTOMATIC AN ATTACHMENT

SMCS-7540 i02429805

NOTE	REF NO	GRAPHIC REF	PART NUMBER	QTY	PART NAME 1 2 3 4 5 6 (PRODUCT LEVEL)	SEE PAGE
Y	1	1	184-0704	1	PUMP GP-LUBRICATION (DOUBLE)	473
	2	1	276-3899	1	SUPPORT AS-PUMP	
	3	1	281-0623	1	FENDER AS-RH	
	4	1	8T-4121	4	WASHER-HARD (11X21X2.5-MM THK)	
M	5	1	8T-4195	4	BOLT (M10X1.5X30-MM)	
	6	1	8T-4224	4	WASHER-HARD (8.8X16X2-MM THK)	
M	7	1	8T-6912	4	BOLT (M8X1.25X50-MM)	

M-METRIC PART
Y-SEPARATE ILLUSTRATION

281-0622 PUMP & MTG GP-LUBRICATION (contd.) i02429805

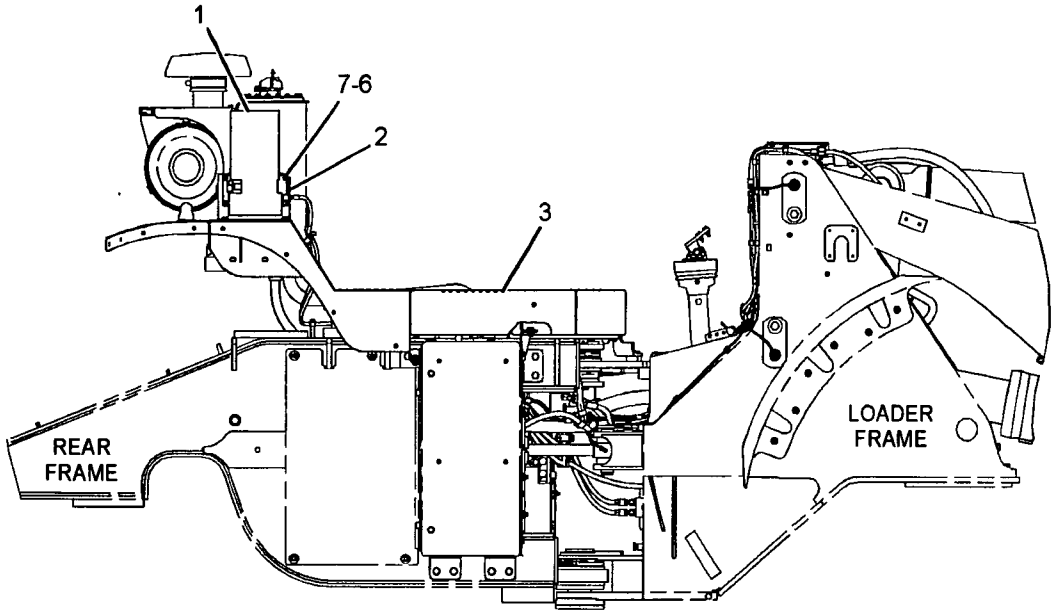

RIGHT SIDE VIEW

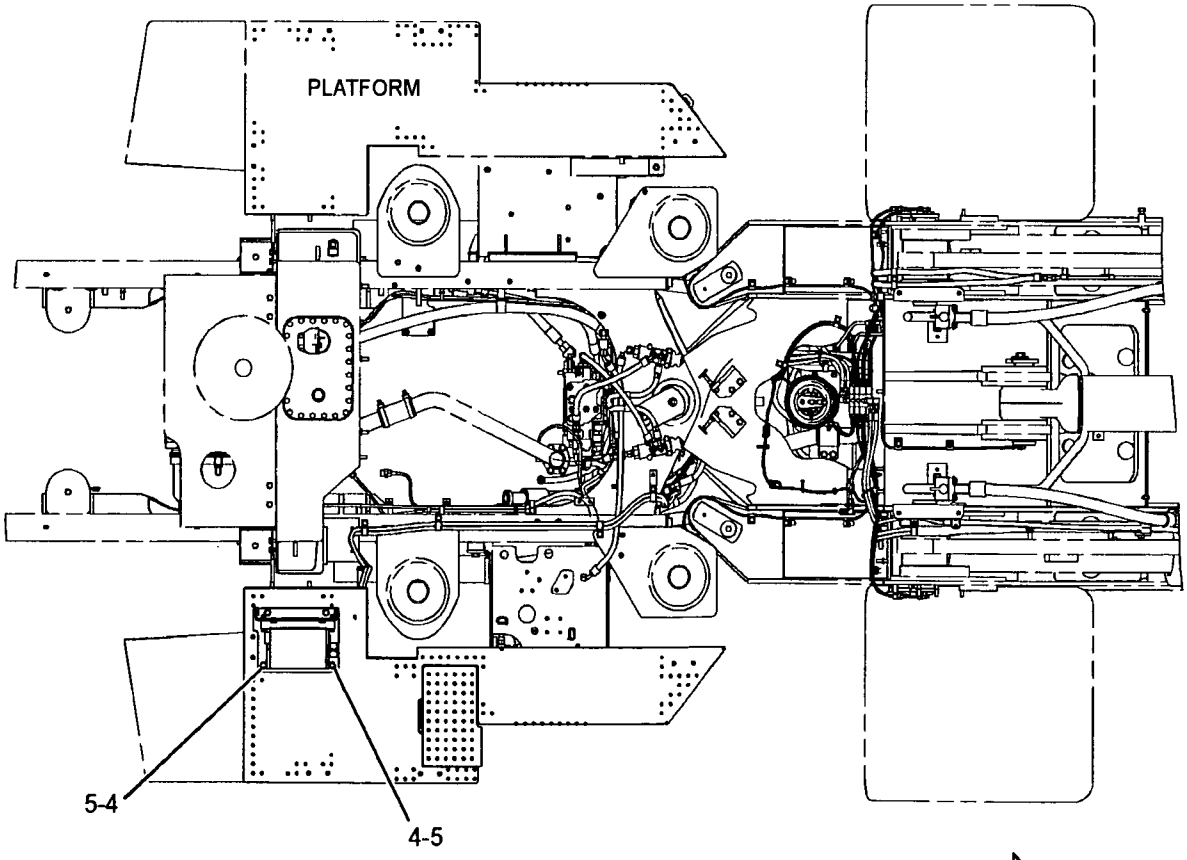

TOP VIEW

FWD

GRAPHIC #1 **<END>** g01222504

184-0704 PUMP GP-LUBRICATION–DOUBLE

S/N: N1A1-UP
4-LITER
PART OF 281-0622 PUMP & MTG GP-LUBRICATION
AN ATTACHMENT

SMCS-7516, 7540 i02127329

NOTE	PART NUMBER	QTY	PART NAME 1 2 3 4 5 6 (PRODUCT LEVEL)	SEE PAGE
	196-1055	1	BRACKET	
	196-1060	1	CAP	
	196-1074	1	CIRCUIT BOARD AS	
	196-1075	4	CLIP	
	196-1077	1	COIL AS	
	196-1070	2	CONNECTOR	
	196-1063	1	COUPLING	
	251-3564	1	COUPLING	
	196-1061	1	COUPLING	
	196-1064	1	COVER	
	196-1047	1	COVER GP	
	196-1053	1	COVER GP	
	196-1062	1	FILTER AS-GREASE	
	254-8502	1	FITTING-GREASE	
	254-8503	1	FITTING-GREASE	
	196-1052	1	GASKET GP	
	196-1049	1	GUIDE ROD	
	196-1066	1	HARNESS AS-CONTROL (AUTOMATIC LUBRICATION)	
	196-1079	1	HARNESS AS-PUMP (AUTOMATIC LUBRICATION)	
	196-1069	1	HARNESS AS-SWITCH (LEVEL)	
	196-1046	1	LOCK GP	
	254-8501	1	MOTOR GP-ELECTRIC (24-VOLT, AUTOMATIC LUBRICATION)	
	196-1051	1	PLATE AS	
	196-1068	1	PLUG GP	
	196-1078	1	RING	
	196-1054	1	SEAL	
	196-1048	1	SEAL-O-RING	
	196-1056	1	SEAL-O-RING	
	196-1071	2	SEAL-O-RING	
	196-1072	2	SEAL-O-RING	
	196-1073	2	SEAL-O-RING	
	196-1065	1	SWITCH AS (AUTOMATIC LUBRICATION TEST)	
	196-1067	1	SWITCH AS-LEVEL (GREASE)	
	196-1050	1	TANK AS-LUBRICATION	
	196-1076	1	VALVE AS	

<END>

237-0445 SHIELD GP-ENGINE COMPARTMENT

S/N: N1A1-UP

PART OF 237-0234 CHASSIS AR

SMCS-7154, 7263 i02433803

NOTE	REF NO	GRAPHIC REF	PART NUMBER	QTY	PART NAME 1 2 3 4 5 6 (PRODUCT LEVEL)	SEE PAGE
	1	1	134-5330	1	GROMMET	
	2	1	260-4698	1	GROMMET	
	3	1	262-0262	1	SHIELD	
	4	1	262-0263	1	HANDHOLD AS	
	5	1	262-0264	1	HANDHOLD AS	
	6	1	262-0265	1	BAFFLE	
	7	1	262-0266	1	STRIP	
	8	1	142-2624	1	GROMMET	
	9	1	190-1125	1	GROMMET	
	10	1	1M-4543	2	GROMMET	
	11	1	5P-1076	4	WASHER-HARD (13.5X30X4-MM THK)	
	12	1	6P-0699	1	GROMMET	
	13	1	7X-7729	4	WASHER (11X25X3-MM THK)	
M	14	1	8T-4133	7	NUT (M10X1.5 THD)	
M	15	1	8T-4183	4	BOLT (M12X1.75X40-MM)	
M	16	1	8T-4186	4	BOLT (M10X1.5X40-MM)	
M	17	1	8T-4195	3	BOLT (M10X1.5X30-MM)	
	18	1	8T-4226	7	WASHER-PLATED (10.5X45X3-MM THK)	
D	19	1	5P-7211		SEAL (0.75-M)	
D	19A	1	5P-7211		SEAL (0.31-M)	
E	20	1	112-9736		SEAL (124.5-CM EACH)	
E	20A	1	112-9736		SEAL (115-CM)	

D-ORDER BY THE METER
E-ORDER BY THE CENTIMETER
M-METRIC PART

237-0445 SHIELD GP-ENGINE COMPARTMENT (contd.) i02433803

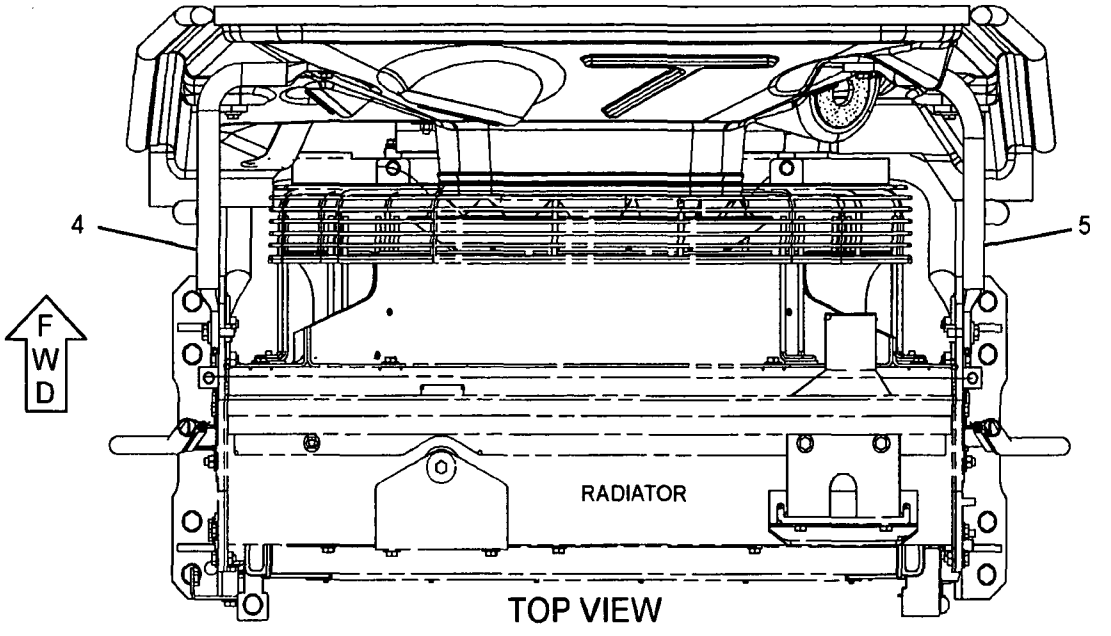

TOP VIEW

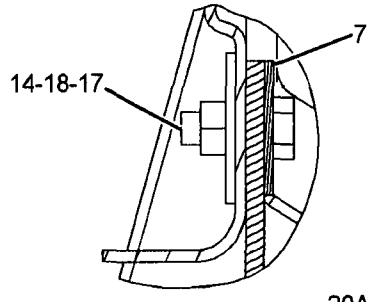

SECTION B-B

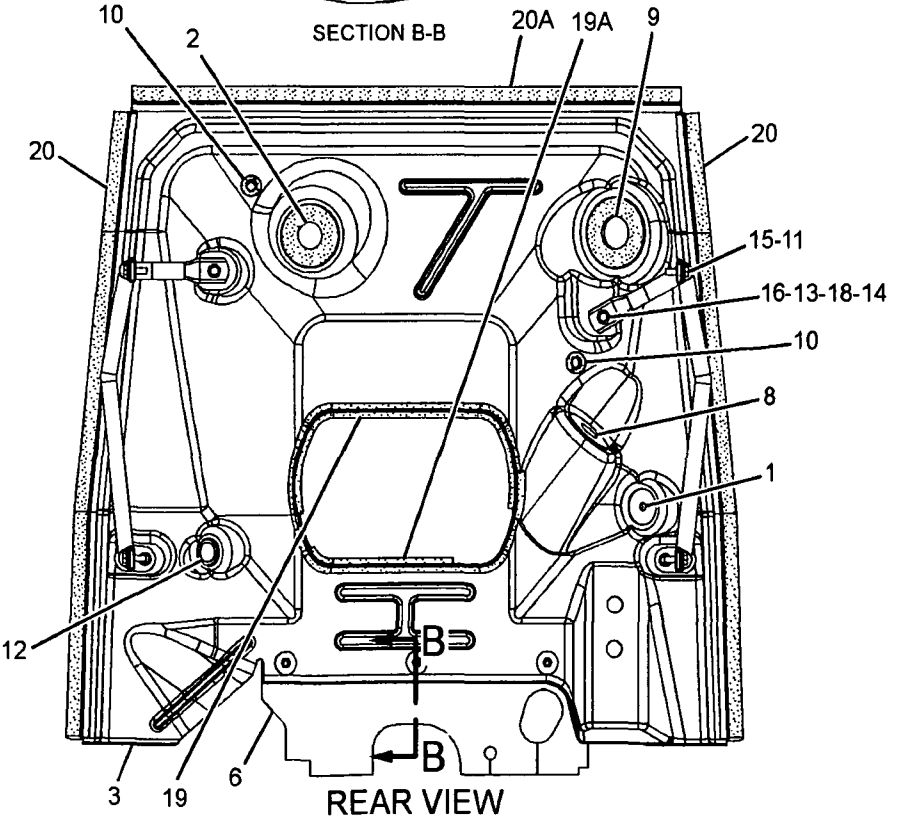

REAR VIEW

GRAPHIC #1

<END>

g01227725

FRAME AND BODY

251-9760 STEP GP

S/N: N1A1-UP

PART OF 244-6607 WASTE HANDLING AR

AN ATTACHMENT

SMCS-7254 **i02389555**

NOTE	REF NO	GRAPHIC REF	PART NUMBER	QTY	PART NAME 1 2 3 4 5 6 (PRODUCT LEVEL)	SEE PAGE
	1	1	**234-1530**	1	STEP AS	
M		1	**8T-3490**	4	NUT-WELD (M10X1.5-THD)	
	2	1	**274-6580**	6	SPACER (13.5X22.2X60-MM THK)	
	3	1	**276-4188**	3	CABLE AS	
		1	**9V-1899**	4	COLLAR	
	4	1	**276-4191**	2	BRACKET AS.(RH)	
	5	1	**276-4194**	2	BRACKET AS	
	6	1	**276-4196**	1	LADDER AS (RH)	
		1	**234-1530**	1	STEP AS	
M		1	**8T-3490**	4	NUT-WELD (M10X1.5-THD)	
	7	1	**276-4197**	1	BRACKET AS	
	8	1	**276-4199**	1	BRACKET AS	
	9	1	**276-4217**	2	SUPPORT-STEP	
	10	1	**276-4218**	2	ANGLE	
	11	1	**7D-1649**	12	WASHER-HARD (13.5X32X5-MM THK)	
	12	1	**8T-4121**	8	WASHER-HARD (11X21X2.5-MM THK)	
M	13	1	**8T-4136**	4	BOLT (M10X1.5X25-MM)	
M	14	1	**8T-4139**	8	BOLT (M12X1.75X30-MM)	
M	15	1	**8T-4176**	6	BOLT (M12X1.75X90-MM)	
M	16	1	**8T-4195**	4	BOLT (M10X1.5X30-MM)	
	17	1	**8T-4223**	8	WASHER-HARD (13.5X25.5X3-MM THK)	
M	18	1	**8T-4244**	6	NUT (M12X1.75-THD)	

M-METRIC PART

251-9760 **STEP GP** *(contd.)* **i02389555**

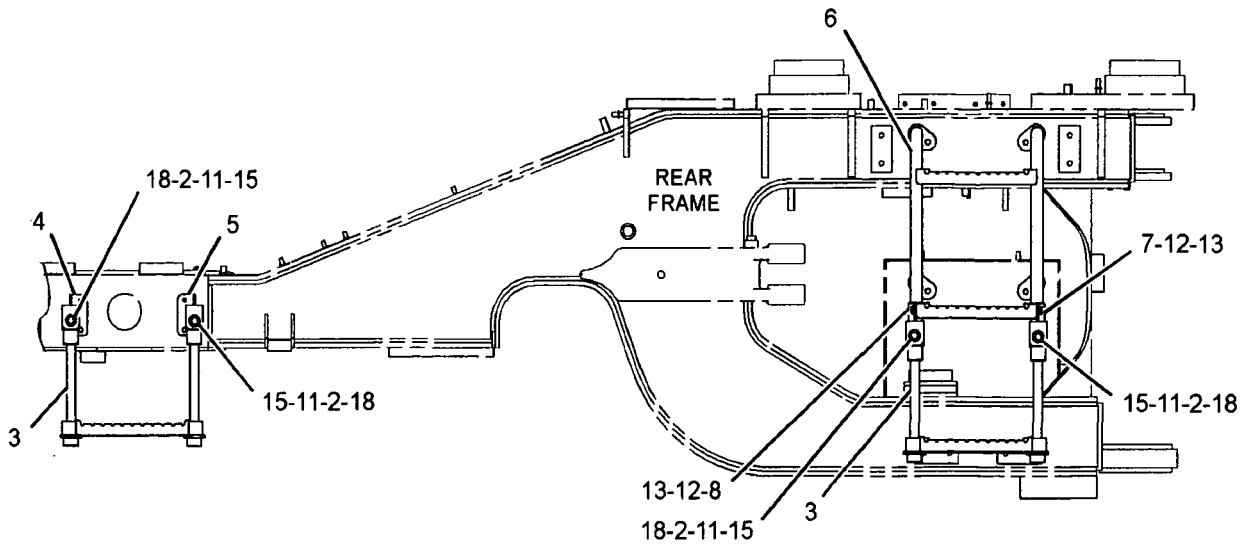

RIGHT SIDE VIEW

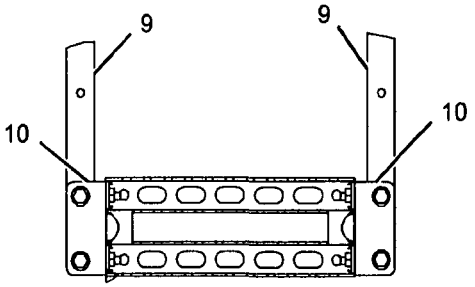

SECTION A-A

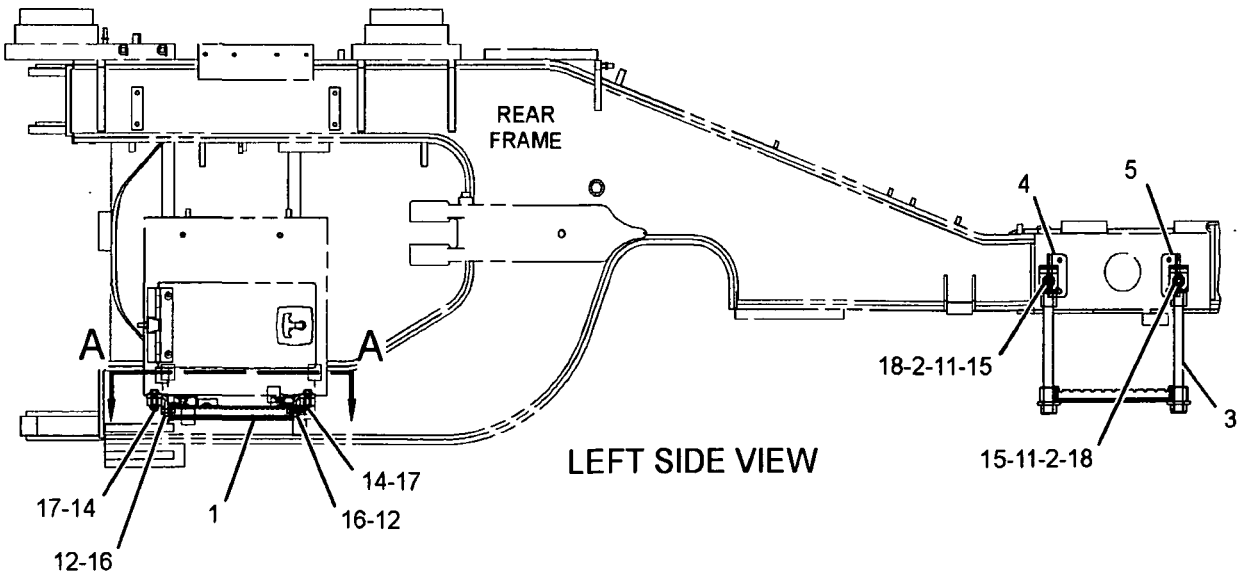

LEFT SIDE VIEW

GRAPHIC #1 **<END>** g01199041

237-0447 SUPPORT GP-AIR INLET

S/N: N1A1-UP

PART OF 237-0234 CHASSIS AR

SMCS-1087 i02226755

NOTE	REF NO	GRAPHIC REF	PART NUMBER	QTY	PART NAME 1 2 3 4 5 6 (PRODUCT LEVEL)	SEE PAGE
	1	1	243-5828	1	BRACKET AS	
M		1	9R-2640	1	BOSS (M12X1.75X25-MM)	
M		1	8T-3612	4	NUT-WELD (M8X1.25-THD)	
	2	1	257-5064	2	PLATE	
	3	1	8T-4121	14	WASHER-HARD (11X21X2.5-MM THK)	
M	4	1	8T-4133	4	NUT (M10X1.5 THD)	
M	5	1	8T-4136	9	BOLT (M10X1.5X25-MM)	
M	6	1	8T-4196	1	BOLT (M10X1.5X35-MM)	
D	7	1	5P-7211	2	SEAL (0.45-M EACH)	

D-ORDER BY THE METER
M-METRIC PART

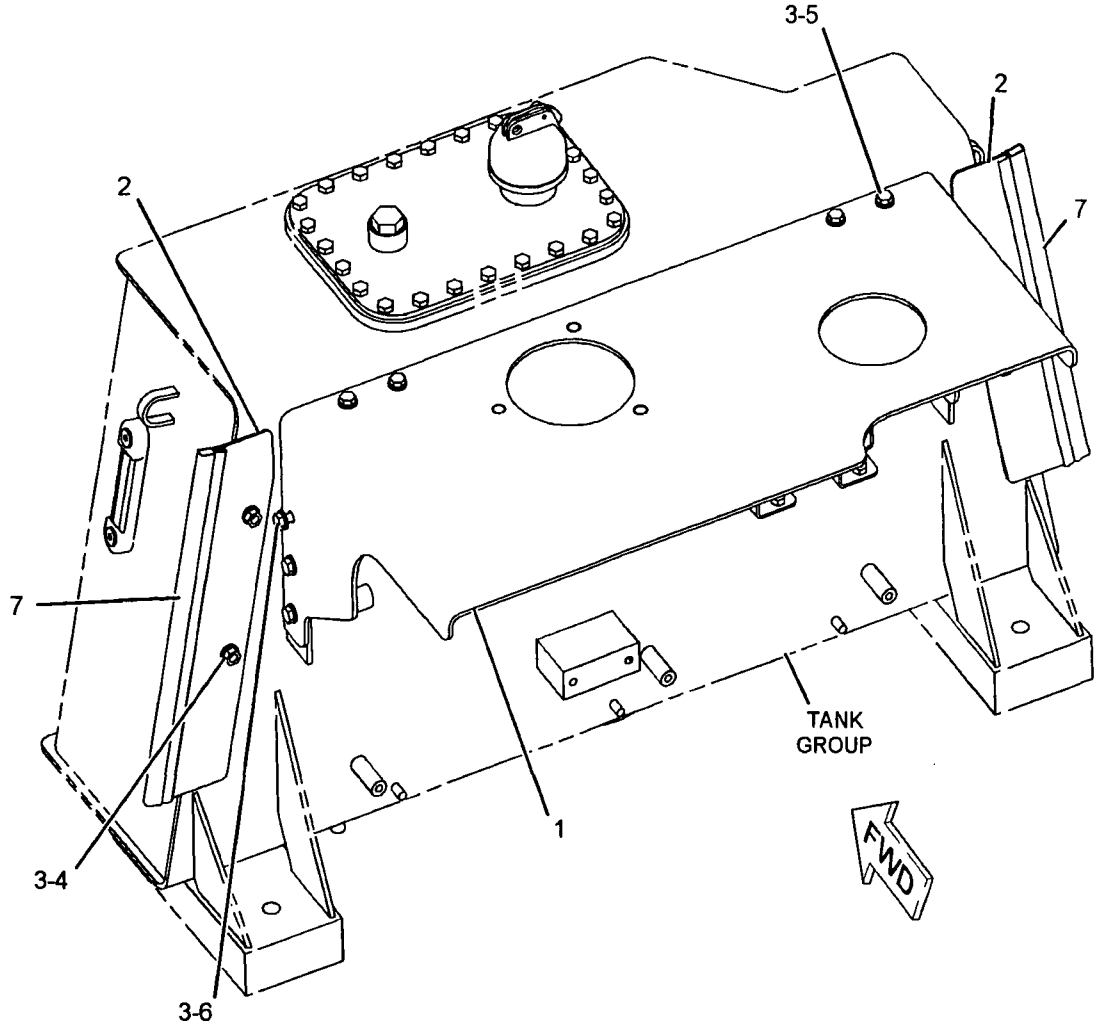

GRAPHIC #1

<END>

g01123884

200-0008 SUPPORT GP-VALVE & FILTER–SERVICE CENTER

S/N: N1A1-UP

PART OF 237-0234 CHASSIS AR

SMCS-4263, 5068 **i02437656**

NOTE	REF NO	GRAPHIC REF	PART NUMBER	QTY	PART NAME 1 2 3 4 5 6 (PRODUCT LEVEL)	SEE PAGE
	1	1	**2G-1388**	1	LATCH	
	2	1	**3B-4611**	1	PIN-COTTER	
	3	1	**245-6175**	1	ROD AS	
	4	1	**246-4365**	1	ENCLOSURE AS-SERVICE CENTER	
	5	1	**246-4366**	1	DOOR AS-ACCESS (HYD FILTER, BRAKE ACCUMULATOR)	
	6	1	**246-4374**	1	DOOR GP-ACCESS (REMOTE PRESSURE TAPS)	
		1	**8R-2566**	1	HINGE	
M		1	**8T-3490**	2	NUT-WELD (M10X1.5-THD)	
M	7	1	**7X-2553**	8	BOLT (M16X2X40-MM)	
	8	1	**8T-4121**	10	WASHER-HARD (11X21X2.5-MM THK)	
M	9	1	**8T-4133**	2	NUT (M10X1.5 THD)	
M	10	1	**8T-4136**	9	BOLT (M10X1.5X25-MM)	
M	11	1	**8T-4139**	2	BOLT (M12X1.75X30-MM)	
	12	1	**8T-4223**	2	WASHER-HARD (13.5X25.5X3-MM THK)	
	13	1	**9X-8257**	8	WASHER (17.5X30X3.5-MM THK)	

M-METRIC PART

200-0008 **SUPPORT GP-VALVE & FILTER** *(contd.)* **i02437656**

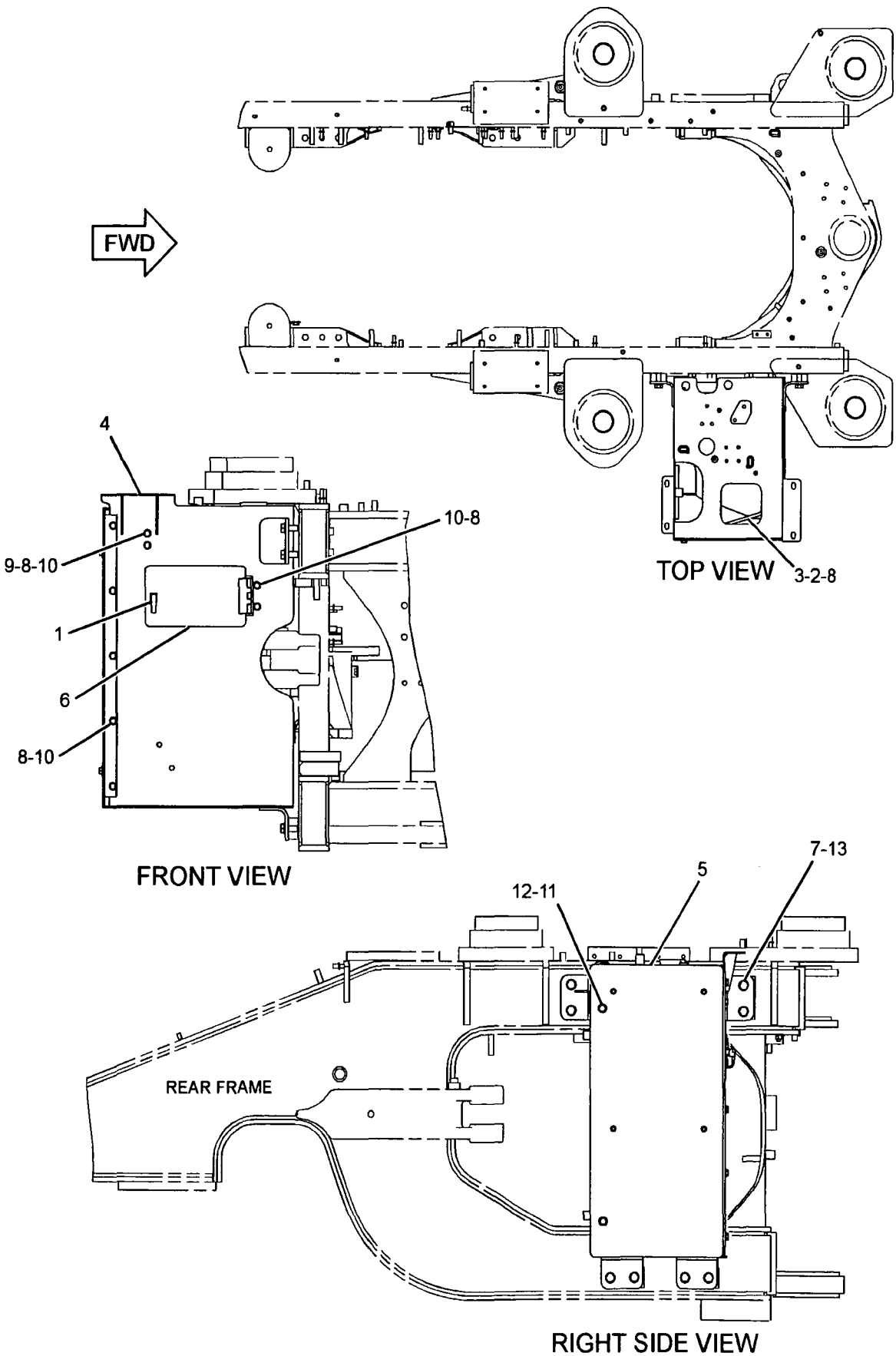

GRAPHIC #1 **<END>** g01220642

262-1085 SUPPRESSION AR-SOUND

S/N: N1A1-UP
PART OF 249-8107 CONVERSION AR-CERTIFICATION
AN ATTACHMENT

SMCS-7261 **i02444643**

NOTE	PART NUMBER	QTY	PART NAME 1 2 3 4 5 6 (PRODUCT LEVEL)	SEE PAGE
Y	266-6594	1	FLOOR GP-SOUND SUPPRESSION	825
Y	260-1533	1	HARDWARE GP-REAR FRAME	438
Y	246-5231	1	SUPPRESSION GP-CAB SOUND (CAB REAR, CAB ROOF)	920
Y	240-8637	1	SUPPRESSION GP-SOUND (REAR FRAME)	482

Y-SEPARATE ILLUSTRATION

<END>

240-8637 SUPPRESSION GP-SOUND–REAR FRAME

S/N: N1A1-UP

PART OF 262-1085 SUPPRESSION AR-SOUND

AN ATTACHMENT

SMCS-7076, 7261 i02444682

NOTE	REF NO	GRAPHIC REF	PART NUMBER	QTY	PART NAME 1 2 3 4 5 6 (PRODUCT LEVEL)	SEE PAGE
	1	1	131-8641	1	INSULATION	
	2	1	131-8642	1	INSULATION	
	3	1	133-1644	14	FASTENER	
	4	1	140-6194	1	INSULATION	
	5	1	140-6197	1	INSULATION	
	6	1	140-8101	1	INSULATION	
	7	1	151-2171	1	INSULATION	
	8	1	195-5826	1	INSULATION	
	9	1	202-0669	1	INSULATION	
	10	2	246-1177	1	INSULATION	
	11	2	246-1184	1	INSULATION AS	
	12	1,2	246-1187	1	BRACKET AS	
		1,2	7Y-8763	3	BOSS (M10X1.5X25-MM)	
	13	2	246-1884	1	INSULATION	
	14	1	246-1891	1	INSULATION	
	15	1	246-1892	1	INSULATION	
	16	1	246-2392	1	COVER AS (LH)	
	17	1	246-2393	1	COVER AS (RH)	
	18	2	246-2943	1	SHEET	
	19	1	246-4619	1	INSULATION	
	20	2	246-8907	1	INSULATION	
	21	2	246-9863	1	INSULATION	
	22	2	246-9864	1	INSULATION	
	23	2	246-9866	1	INSULATION	
	24	2	247-2699	1	BRACKET AS (LH)	
		2	9R-2821	5	BOSS (M10X15-MM)	
	25	2	247-2700	1	BRACKET AS (RH)	
		2	9R-2821	4	BOSS (M10X15-MM)	
	26	1	261-8716	1	INSULATION	
	27	1	115-6433	9	WASHER (11X50X6-MM THK)	
	28	1	4Y-3046	8	WASHER (13.5X38X3-MM THK)	
	29	1	7X-0603	14	WASHER-HARD (9.9X35X2.5-MM THK)	
M	30	1	7X-2552	4	BOLT (M16X2X30-MM)	
	31	2	7X-7729	3	WASHER (11X25X3-MM THK)	
M	32	2	8T-4133	3	NUT (M10X1.5 THD)	
M	33	1	8T-4136	9	BOLT (M10X1.5X25-MM)	
M	34	2	8T-4195	3	BOLT (M10X1.5X30-MM)	
	35	1,2	8T-4226	3	WASHER-PLATED (10.5X45X3-MM THK)	
M	36	1	8T-4244	8	NUT (M12X1.75-THD)	
	37	1	9X-8257	4	WASHER (17.5X30X3.5-MM THK)	
D	38	1	5P-7211		SEAL (3.03-M EACH)	
D	38A	1	5P-7211		SEAL (7.91-M)	

D-ORDER BY THE METER
M-METRIC PART

240-8637 **SUPPRESSION GP-SOUND** *(contd.)* **i02444682**

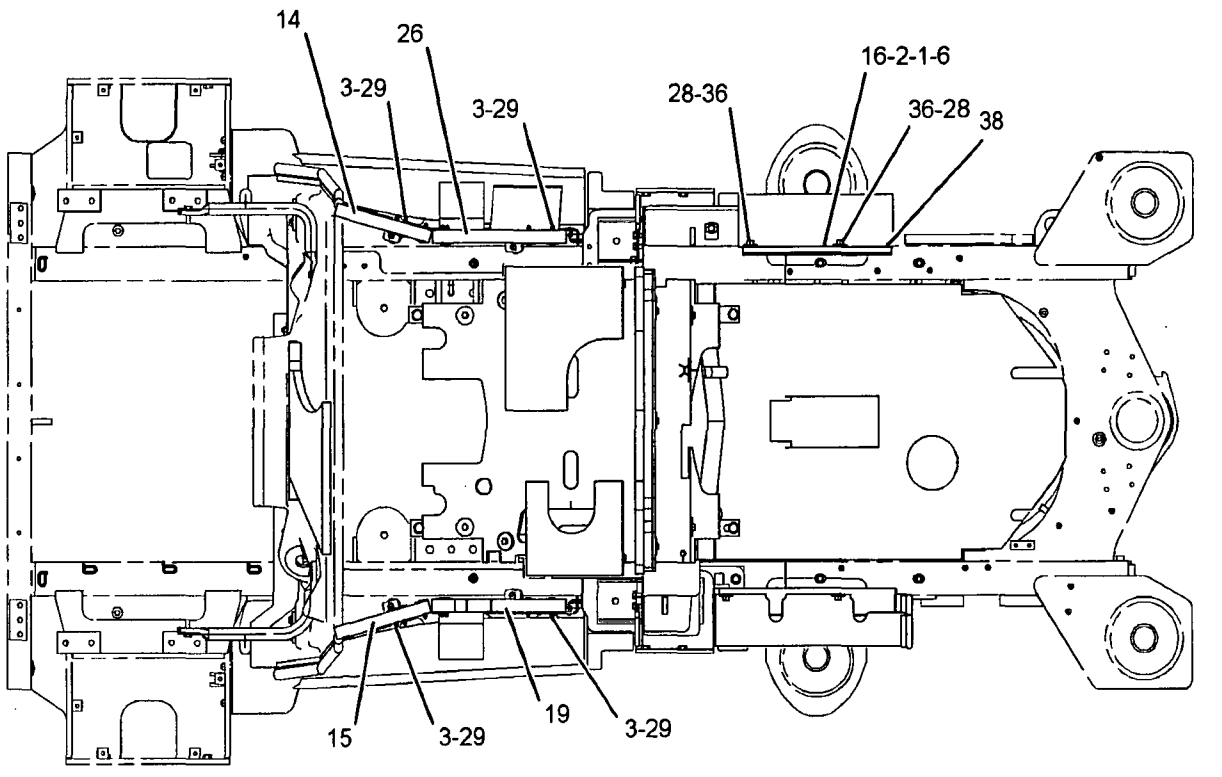

TOP VIEW

REFER TO ALL ILLUSTRATIONS OF THIS GROUP FOR AUXILIARY VIEWS

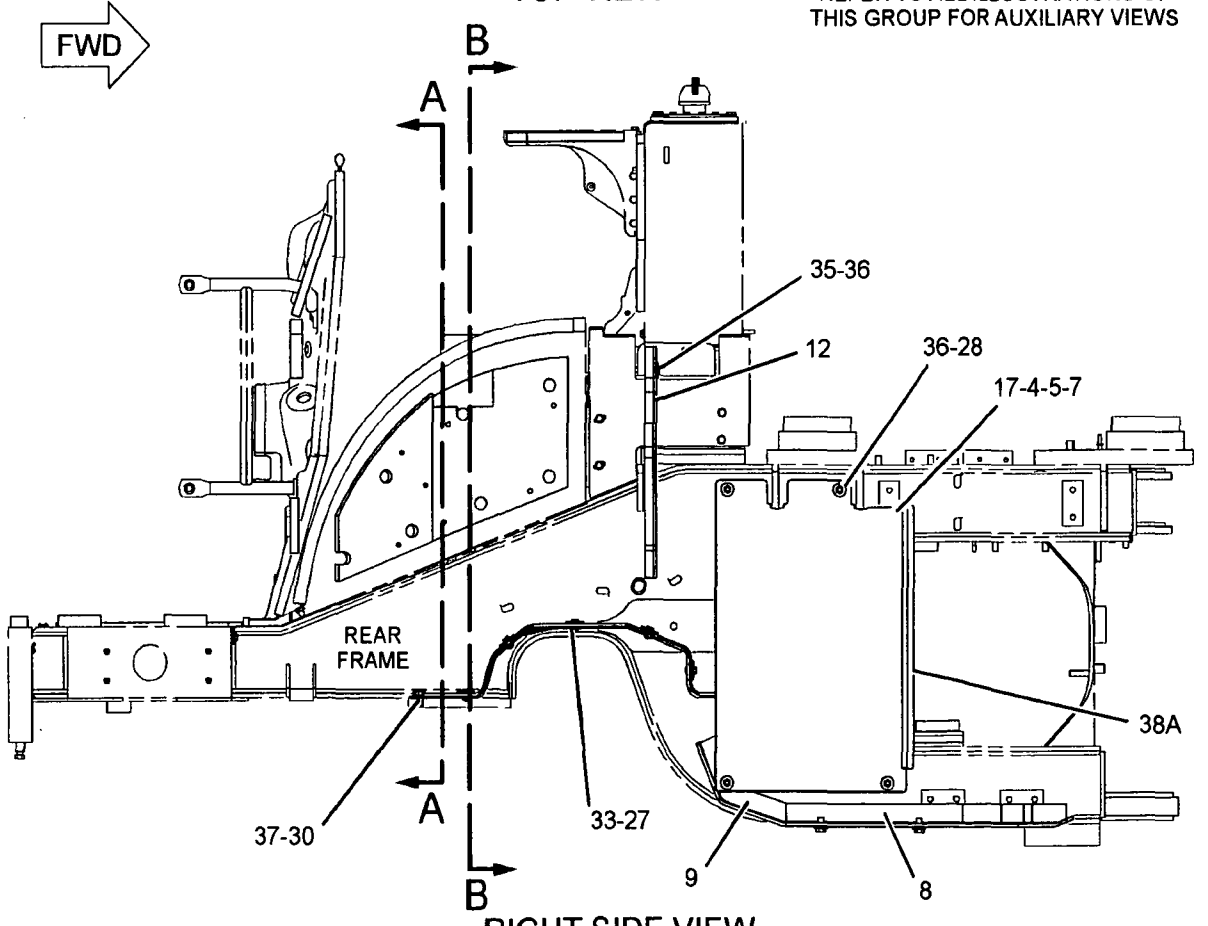

RIGHT SIDE VIEW

GRAPHIC #1 g01228626

240-8637 SUPPRESSION GP-SOUND (contd.) i02444682

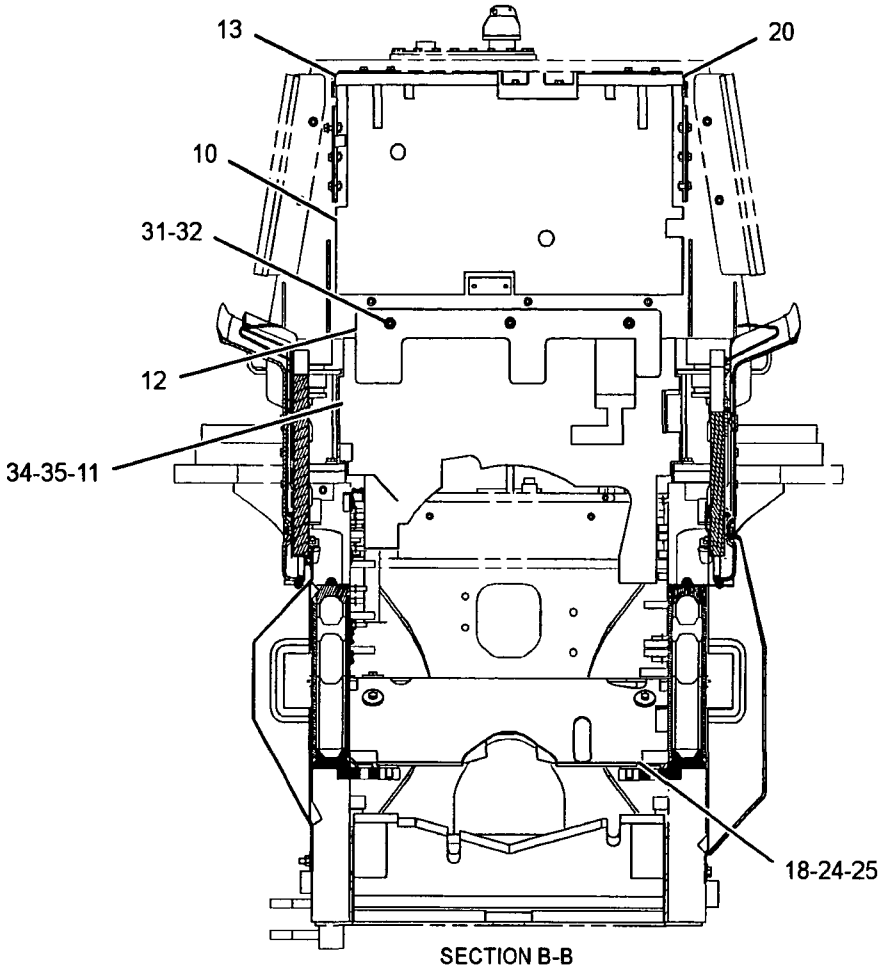

SECTION B-B

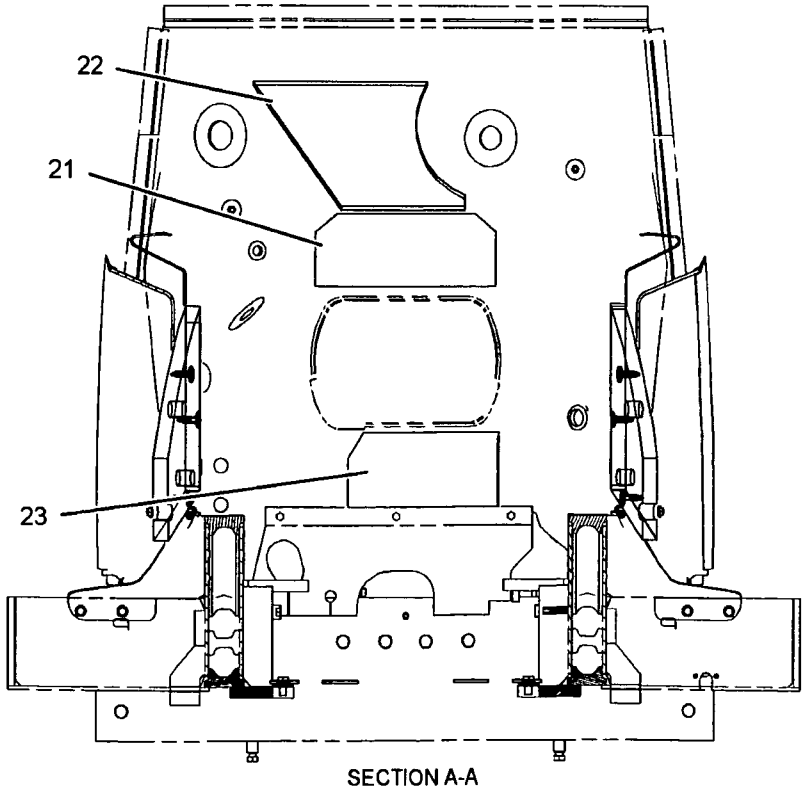

SECTION A-A

GRAPHIC #2

<END>

g01228624

237-0969 TILT GP-HOOD

S/N: N1A1-UP
PART OF 237-0235 ELECTRICAL AR
ALSO AN ATTACHMENT

SMCS-1427, 7251 i02437654

NOTE	REF NO	GRAPHIC REF	PART NUMBER	QTY	PART NAME 1 2 3 4 5 6 (PRODUCT LEVEL)	SEE PAGE
	1	1	6S-6646	2	PIN-COTTER	
	2	1	280-7078	1	PIN AS (RH)	
	3	1	280-7076	1	PIN AS (LH)	
	5	1	209-2625	1	COVER	
	6	1	209-2626	1	COVER	
	7	1	209-2629	1	COVER	
Y	8	1	262-4914	1	ACTUATOR GP-HOOD TILT	380
	10	1	6W-5752	2	PIN	
	11	1	8T-4121	8	WASHER-HARD (11X21X2.5-MM THK)	
M	12	1	8T-4137	8	BOLT (M10X1.5X20-MM)	
M	13	1	8T-4138	2	BOLT (M6X1X20-MM)	
M	14	1	8T-4193	6	BOLT (M16X2X50-MM)	
M	16	1	8T-4971	2	BOLT (M6X1X30-MM)	
	17	1	7X-0599	1	WASHER-HARD (13X20X2-MM THK)	
	18	1	9X-8256	4	WASHER (6.6X12X2-MM THK)	
	19	1	9X-8257	6	WASHER (17.5X30X3.5-MM THK)	

M-METRIC PART
Y-SEPARATE ILLUSTRATION

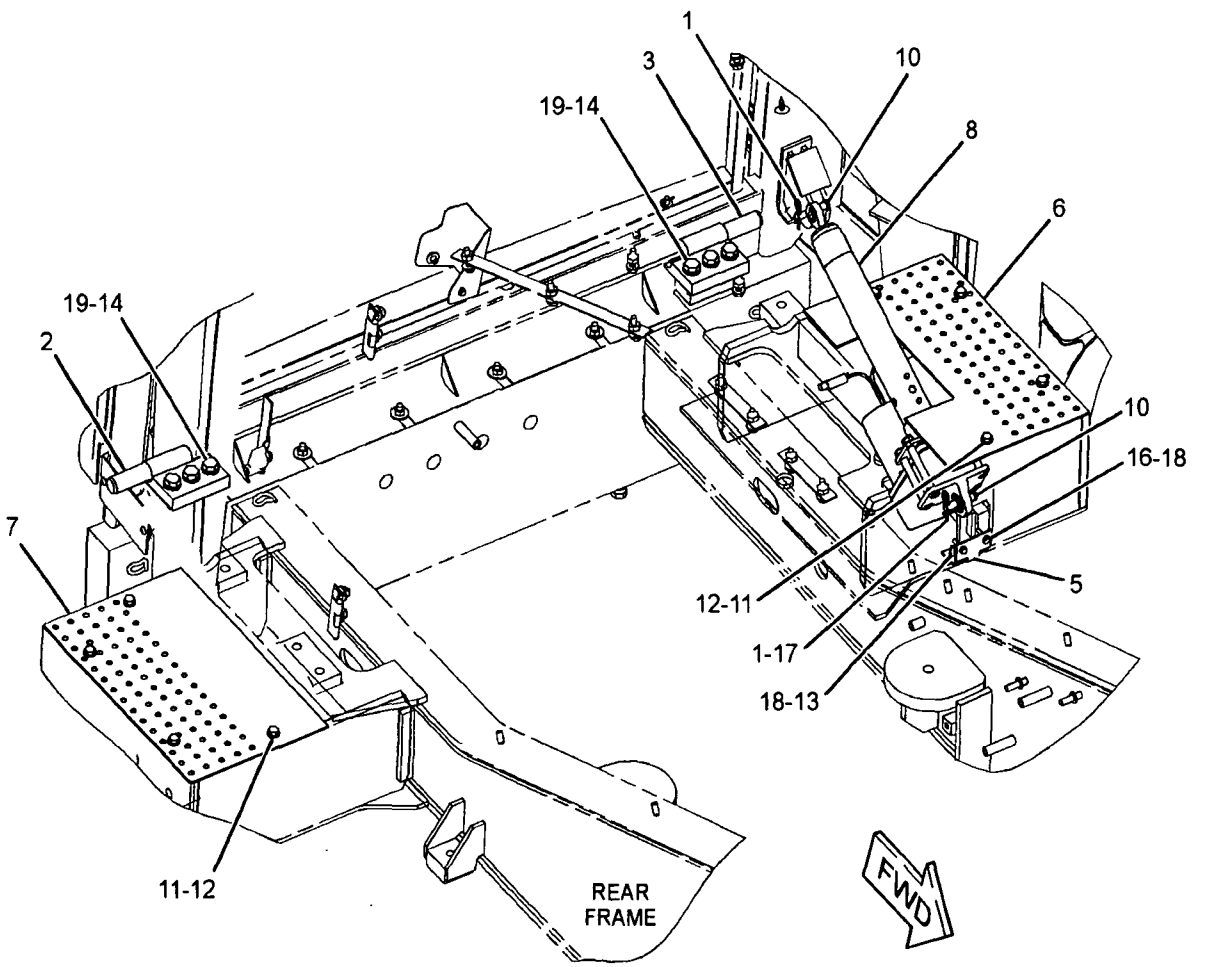

GRAPHIC #1 <END> g01227665

281-0630 VALVE & LINES GP-LUBRICATION

S/N: N1A1-UP

PART OF 281-0628 LINES GP-AUTOMATIC LUBRICATION AN ATTACHMENT

SMCS-7540 i02429925

NOTE	REF NO	GRAPHIC REF	PART NUMBER	QTY	PART NAME 1 2 3 4 5 6 (PRODUCT LEVEL)	SEE PAGE
	1	1	178-2722	2	COUPLING-STRAIGHT	
	2	1	178-2769	2	HOSE	
	3	1	178-2774	2	HOSE	
	4	1	192-6057	1	HOSE AS	
	5	1	192-6058	1	HOSE AS	
Y	6	1	262-4834	1	VALVE GP-LUBE DISTRIBUTION (FRONT, 8-INJECTOR)	489
	7	1	262-5227	2	HOSE AS	
	8	1	281-0632	1	BRACKET-MOUNTING	
	9	1	095-0827	2	LOCKWASHER	
M	10	1	8T-8442	2	BOLT-SOCKET HEAD (M6X1X30-MM)	
	11	1	114-9325	2	CLAMP-DOUBLE	
M	12	1	8C-8451	2	BOLT (M6X1X40-MM)	
E	13	1	252-8211		SLEEVE (34-CM EACH)	
E	13A	1	252-8211		SLEEVE (30-CM EACH)	
E	13B	1	252-8211		SLEEVE (33-CM EACH)	

E-ORDER BY THE CENTIMETER
M-METRIC PART
Y-SEPARATE ILLUSTRATION

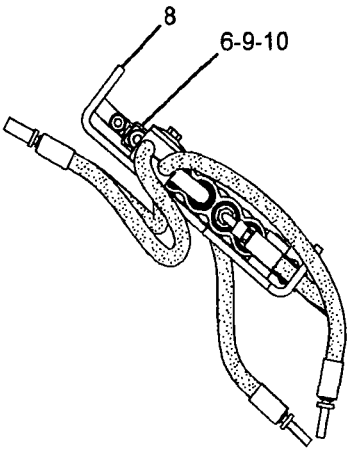

VIEW OF AREA A

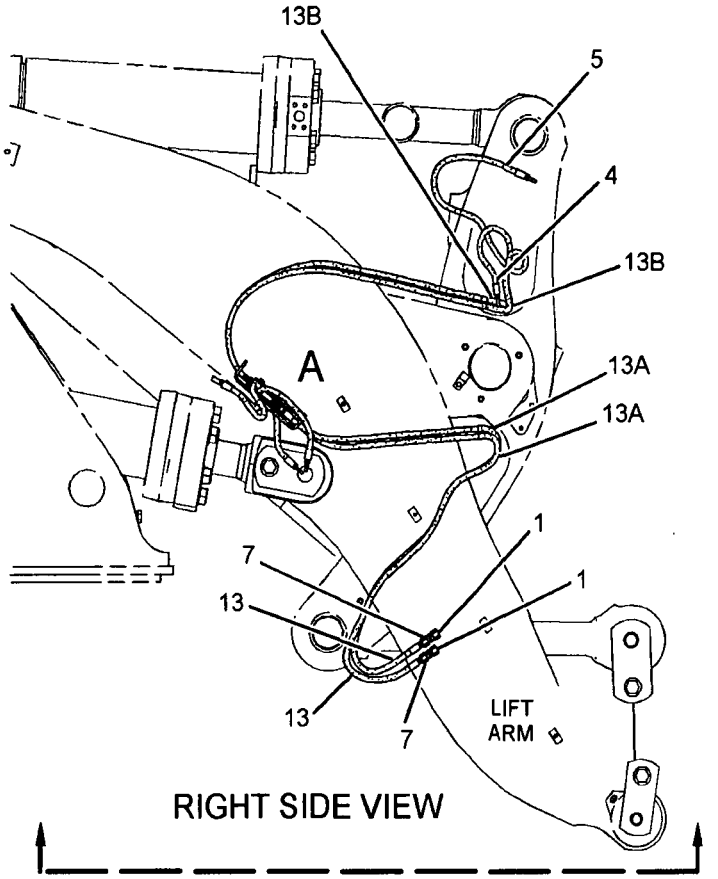

RIGHT SIDE VIEW

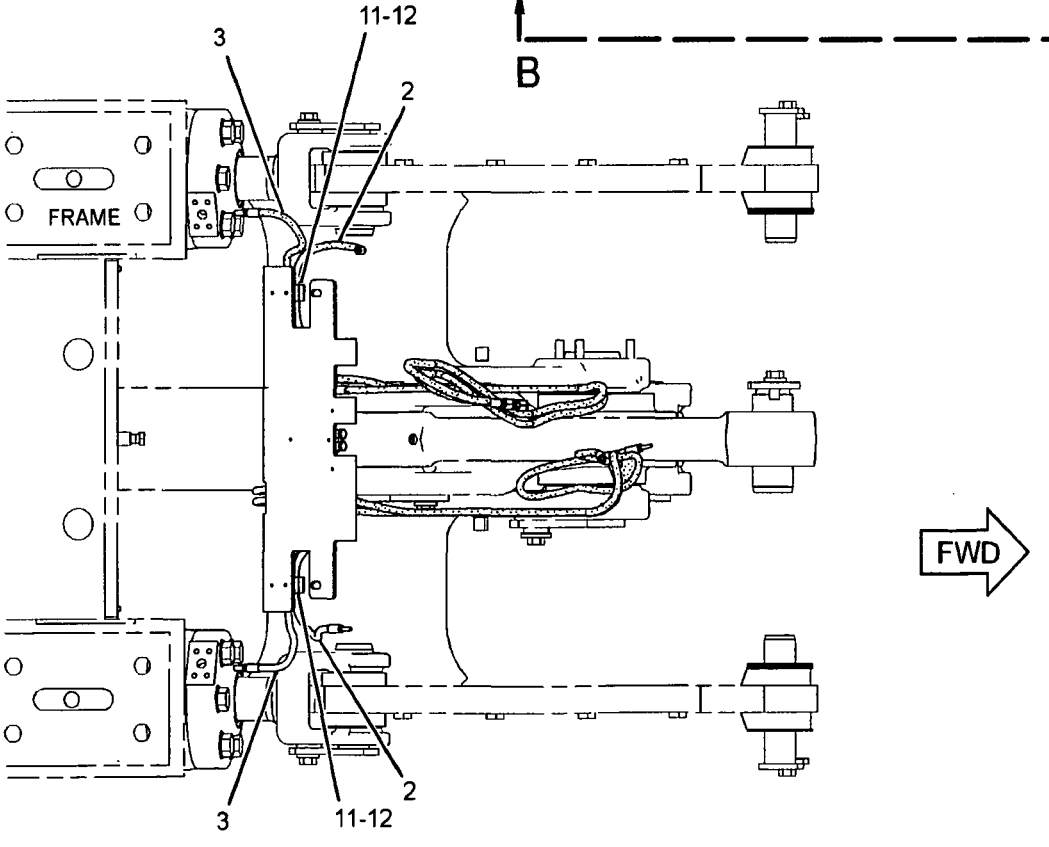

VIEW B-B

GRAPHIC #1 **<END>** g01222710

253-9498 VALVE GP-LUBE DISTRIBUTION

S/N: N1A1-UP

PART OF 281-0636 VALVE GP-LUBE DISTRIBUTION

AN ATTACHMENT

SMCS-7540 **i02275076**

NOTE	REF NO	GRAPHIC REF	PART NUMBER	QTY	PART NAME 1 2 3 4 5 6 (PRODUCT LEVEL)	SEE PAGE
	1	1	177-3516	6	INJECTOR-GREASE	
	2	1	177-3517	2	INJECTOR-GREASE	
	3	1	177-3518	3	INJECTOR-GREASE	
	4	1	177-3519	1	SWITCH-PRESSURE (AUTOLUBE ACTUATION)	
	5	1	177-3520	1	VALVE	
	6	1	178-2737	4	COUPLING	
	7	1	178-2740	2	INJECTOR	
	8	1	260-5764	1	BLOCK	

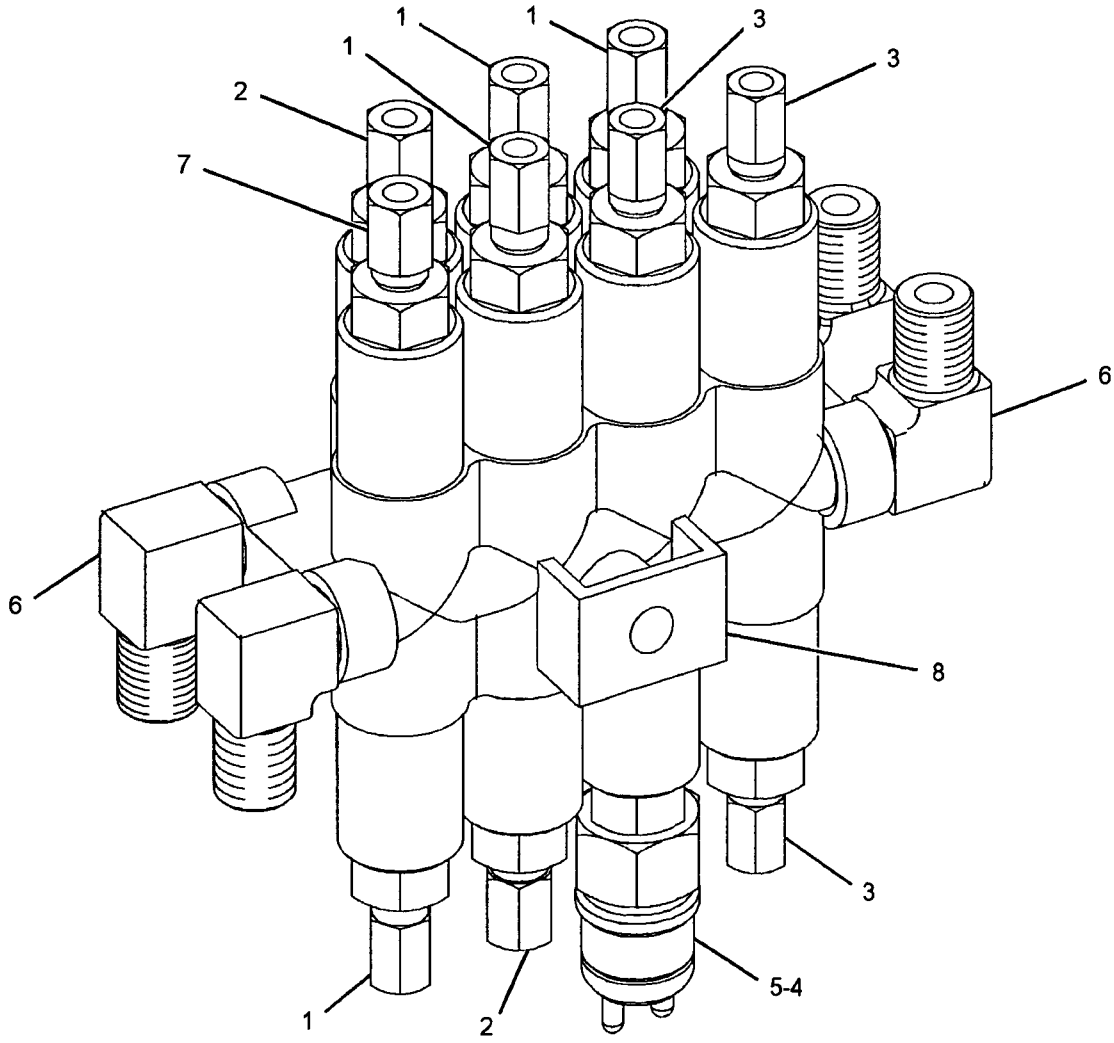

GRAPHIC #1

<END>

g01221490

262-4834 VALVE GP-LUBE DISTRIBUTION-FRONT

S/N: N1A1-UP

PART OF 281-0630 VALVE & LINES GP-LUBRICATION

AN ATTACHMENT

SMCS-7540 **i02246476**

NOTE	REF NO	GRAPHIC REF	PART NUMBER	QTY	PART NAME 1 2 3 4 5 6 (PRODUCT LEVEL)	SEE PAGE
	1	1	177-3517	1	INJECTOR-GREASE	
	2	1	177-3518	2	INJECTOR-GREASE	
	3	1	178-2737	1	COUPLING	
	4	1	178-2740	2	INJECTOR	
	5	1	178-2746	1	INJECTOR	
	6	1	179-1660	2	PLUG	
	7	1	179-1661	1	COUPLING	
	8	1	192-5987	2	GASKET	
	9	1	192-6036	2	CONNECTOR	
	10	1	192-6212	2	INJECTOR	
	11	1	248-7538	1	BLOCK-HYDRAULIC	
	12	1	253-9795	1	ELBOW	

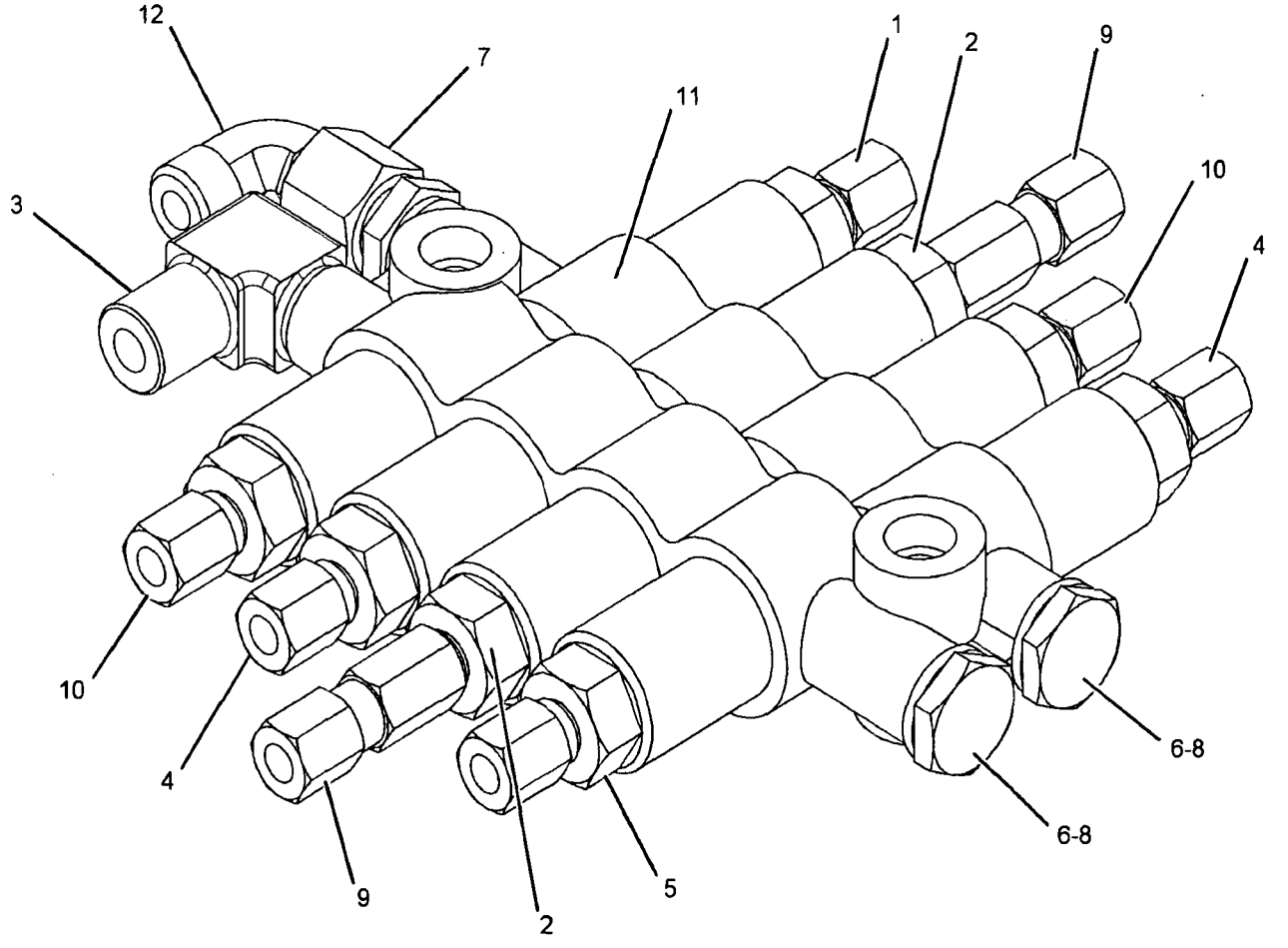

GRAPHIC #1 **<END>** g01132378

281-0636 VALVE GP-LUBE DISTRIBUTION

S/N: N1A1-UP

PART OF 281-0634 LINES GP-AUTOMATIC LUBRICATION AN ATTACHMENT

SMCS-7540 **i02429929**

NOTE	REF NO	GRAPHIC REF	PART NUMBER	QTY	PART NAME 1 2 3 4 5 6 (PRODUCT LEVEL)	SEE PAGE
Y	1	1	**253-9498**	1	VALVE GP-LUBE DISTRIBUTION	488
	2	1	**161-9031**		TUBE (410-CM)	
	3	1	**161-9030**		TUBE (1093-CM)	

Y-SEPARATE ILLUSTRATION

281-0636 **VALVE GP-LUBE DISTRIBUTION** *(contd.)* **i02429929**

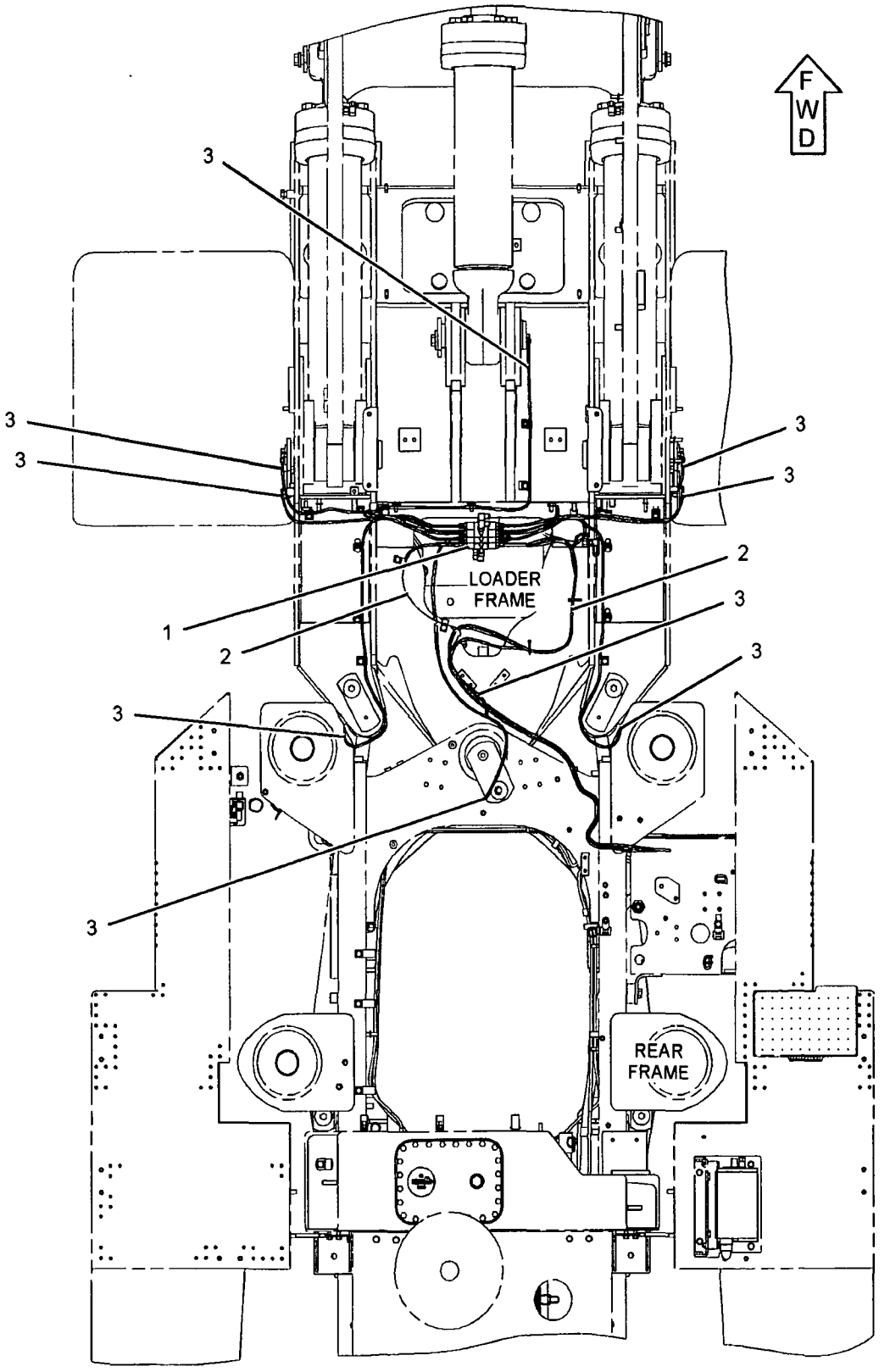

TOP VIEW

GRAPHIC #1 **<END>** g01222801

PART NUMBER INDEX

Part	Page
0	
0S-0175	827
	829
0S-1614	895
0T-0244	904
	909
1	
1A-2223	339
	340
1A-2812	511
1A-8096	559
1A-9579	600
	604
1B-0676	408
1B-2578	854
1B-3925	441
1B-8702	546
1B-8705	9
	17
	511
	527
1D-4675	795
1D-5117	127
1F-5151	287
	289
1G-8878	308
1H-0974	346
1H-3244	122
1H-3338	215
1H-8296	922
	924
1H-8306	118
1H-8720	316
	321
1H-9696	316
	321
1J-2860	309
	311
	313
1J-4757	309
	311
	313
1J-8387	349
1J-9671	492
	493
	526
	559
1K-6872	806
1K-6985	514
1K-8850	402
1L-5072	297
	645
1M-3150	340
1M-3151	340
1M-4543	474
1M-6119	126
1M-6120	126
1M-6718	552
1M-8649	340
1M-9351	377
1N-5999	25
1P-1413	412
1P-2251	559
1P-2807	945
1P-3703	333
	520
	527
	623
	627
1P-3704	520
	527
	616
	625
	627
	664
	694
1P-3705	612
	616
	623
	625
	627
	631
	664
	666
	668
	670
	673
	694
1P-4278	70
	105
1P-4577	516
1P-4578	621
	645
1P-4579	616
	645
1P-4582	520
	527
1P-4584	520
	527
	645
1P-4585	645
1P-5767	616
	627
1P-6356	847
1P-6872	534
1P-7009	847
1R-0762	98
1R-0770	100
1R-1807	59
1S-0994	263
	267
	527
	616
1S-2563	60
1S-3743	370
1S-6420	527
1S-7251	126
	182
	209
	276
1S-7252	209
	276
1T-0043	367
1T-0936	538
1T-1621	370
1T-1622	370
1T-1639	367
1U-2218	587
1U-2827	677
1U-3142	559
1U-8846	11
	37
	38
	52
	86
	87
	324
	326
1U-9053	253
	263
1V-6274	519
1V-6275	519
1V-6276	519
1V-6277	519
1V-6341	316
	321
	367
1V-6755	896
1W-2431	89
1W-2715	24
1W-8407	22
2	
2A-1162	37
2A-2677	244
	276
2A-4429	24
2B-2404	453
	456
2B-9373	346
2C-9259	738
	742
	748
	749
	751
	753
	756
	772
	773
2D-2443	350
	351
2D-2508	379
2D-2509	379
2D-2511	349
	350
	351
	▶379
2D-4202	645
2D-4867	711
	713
2D-6416	823
	824
2D-6642	41
2D-9454	309
	311
	313
2D-9455	309
	311
	313
2G-1388	479
2G-9524	827
	829
2H-1855	213
2H-3088	309
	313
	315
	320
2H-3920	136
	138
	241
	244
2H-3922	214
2H-3927	316
	321
2H-3931	616
2H-6338	616
2J-3506	755
	757
	758
	762
	763
	764
	766
	774
	775
	776
	777
2J-3507	782
	785
2J-7686	585
	588
2J-7761	297
	645
2K-0715	326
2K-4821	122
	636
2K-4973	795
	922
	924
2K-8199	303
2K-9111	895
2M-0849	316
	321
	806
2M-4004	254
2M-4453	76
2M-6471	20
2M-9780	20
	25
	59
	69
	74
	111
	113
	329
	377
	516

▶ PRIMARY REFERENCE

PART NUMBER INDEX

Part	Page
	548
	549
	553
	554
	556
	619
	620
	621
	629
	663
	664
	666
	668
	670
	673
	676
	851
2N-2258	896
2N-2658	287
	289
2N-7007	315
	320
2P-1293	602
	616
	621
2P-1373	324
	326
2P-2537	59
2P-2975	182
2P-8421	554
2P-8986	315
	320
2P-8987	315
	320
2Q-4181	▶382
	383
2S-2053	8
2S-2160	511
2S-2596	551
	554
	556
2S-4078	328
	329
	619
	664
	666
	668
	670
	673
	694
2S-4663	377
2S-5835	377
2S-6408	367
2T-3360	509
	541
2V-3216	932
2V-3726	885
2V-7859	511
2W-0027	47
2W-6544	11
2W-6546	10
2W-7213	20
2W-7381	27
2W-7940	127
2W-8147	17
2Y-5829	54
	129

3

Part	Page
3A-3692	333
3B-0551	324
	326
3B-2062	408
	417
3B-4501	800
3B-4506	854
3B-4512	498
3B-4605	439
	440
3B-4607	503
3B-4611	443
	479
3B-4615	408
	417
3B-4617	383
	494
3B-4629	439
	440
3B-4631	788
3B-4640	503
3B-6552	456
3B-8489	356
	357
	439
	440
	441
	453
	513
	711
	713
3B-8491	711
	713
3D-0053	636
3D-2239	379
3D-2824	37
	48
	52
	69
	70
	74
	76
	118
	212
	306
	328
	337
	503
	516
	520
	526
	527
	554
	556
	560
	615
	616
	619
	620
3D-4603	554
3D-8317	377
3E-2310	527
3E-2332	188
3E-2345	615
3E-3365	121
	149
	160
	163
	200
	202
	212
	218
	232
	241
	308
	382
3E-3368	192
	193
3E-3371	136
	151
	161
	190
	191
	242
	253
	276
3E-3377	253
3E-3383	156
	158
	224
	242
	813
	869
	870
3E-3389	241
3E-3805	815
	816
3E-4051	847
3E-4052	847
3E-4057	847
3E-4058	847
3E-4302	534
3E-4312	806
3E-4315	356
	373
	374
3E-4352	188
	206
3E-4353	315
	320
3E-4883	44
3E-5169	253
3E-5180	292
3E-5239	240
	241
	260
	270
	276
3E-5464	800
3E-6328	▶121
	241
3E-6389	▶151
	241
3E-6466	▶160
	174
3E-6602	935
3E-6769	254
3E-6771	666
	668
	670
	673
3E-6799	370
3E-6909	254
3E-7417	534
3E-7852	210
3E-7853	210
3E-7855	210
3E-7857	210
3E-7858	210
3E-7860	210
3E-7861	210
3E-8017	96
3E-8025	554
	556
3E-8048	190
3E-8082	821
3E-8320	126
3E-9411	427
	428
	429
3E-9412	53
	107
3E-9854	260
3F-0379	210
3F-2617	859
	860
	861
	862
3F-5950	441
3F-9556	122
	216
3G-3726	546
3G-7624	583
	584
3G-8779	585
	587
	711
3H-0442	629
	697
3H-2652	316
	321
3H-5552	20
3H-7654	53
3J-0634	315
	320
3J-1907	25
	64
	70
	72
	76
	85

▶ PRIMARY REFERENCE

PART NUMBER INDEX

Part	Page	Part	Page	Part	Page	Part	Page
	87		941		633		864
	97	3J-4407	559		639		866
	103	3J-4818	922		642		871
	111		924		662		932
	113	3J-7354	37		664	3S-6049	126
	185		52		693	3S-6050	126
	207		59		694	3S-7608	74
	254		70		696	3S-8109	339
	263		72		701	3S-8664	276
	293		103		851	3T-0849	537
	308		188		938	3T-2662	254
	316		308	3K-1432	340		282
	321		492	3K-2876	441	3T-4509	842
	328		493	3K-3257	209	3T-7584	340
	367		503	3K-4897	912	3T-9958	367
	376		520	3K-6060	854	3T-9960	339
	377		526	3K-6113	595	3V-0046	600
	502		554	3K-8460	188		604
	503		556	3K-9770	718	3V-0905	301
	516		590		774	3V-0906	301
	519		619		784	3V-0908	301
	520		631	3L-6513	263	3V-2333	702
	525		642	3P-1156	62		704
	526		666		64		711
	527		668		67	3V-2431	106
	546		670	3P-1932	59	3V-3263	932
	552		673	3P-2404	621	3V-7476	821
	554		680	3P-3441	339	3Y-2888	207
	556		682	3P-3839	254		
	559		684	3P-7019	340		
	590		686	3P-7898	346	**4**	
	595		687	3P-9900	922		
	605		691		924	4B-2049	244
	608		697	3R-2360	621	4B-4158	682
	610	3J-7479	551	3R-9322	254	4B-4274	142
	612	3J-9449	587	3S-2093	97		388
	615	3K-0158	326		105		392
	616	3K-0159	326		126		800
	619	3K-0360	28		131		834
	620		49		149		881
	621		72		167		883
	625		74		169	4B-4278	922
	627		76		178		924
	629		97		181	4B-4280	554
	631		113		238	4B-9782	304
	633		188		241		305
	634		238		243		554
	639		263		261		556
	647		276		263		559
	650		295		276	4B-9784	553
	653		516		291	4B-9880	377
	656		519		293	4C-9612	10
	657		520		448		46
	659		526		451	4D-2886	304
	664		534		453		305
	666		544		458	4D-7388	244
	668		545		501		521
	670		546		511		527
	673		550		800		616
	678		554		834	4D-7735	129
	690		556		838	4D-7786	621
	694		616		856	4D-7794	186
	698		620		857		238
	851		629		861		270
	938		631		862		503

PART NUMBER INDEX

Part	Page
	605
4D-8123	282
4D-9517	127
	267
	511
4E-0684	385
4E-1384	78
	408
	469
	811
	827
	829
	935
4E-2229	136
	138
4E-2853	816
4E-3196	711
	713
4E-3273	352
	354
4E-3896	309
	311
	313
4E-3897	309
	311
	313
4E-4029	309
	311
	313
4E-4030	309
	311
	313
4E-4031	309
	311
	313
4E-5985	352
	354
4E-6523	912
4E-6986	353
	355
4E-8329	124
4E-8534	324
	326
4E-8722	565
	567
	569
	571
	885
	912
4E-8958	495
4E-9173	912
4E-9174	912
4E-9324	356
	373
	374
4E-9664	495
	496
4E-9667	500
4E-9668	500
4F-0186	316
	321
4F-2294	217
4F-4042	782
	785
4F-4097	293
4F-4879	910
4F-5695	23
4F-7827	755
	757
	758
	762
	763
	764
	766
	774
	775
	776
	777
4F-7952	554
4F-9653	106
4H-1225	267
	456
	605
4H-4737	339
4H-6520	324
	326
4H-7655	329
4I-1022	639
4I-2201	431
	432
4I-3038	885
4I-3398	412
4I-6289	702
4I-7889	78
	516
	853
4J-0519	551
4J-0520	306
	516
	521
	527
	556
	625
4J-0522	601
	602
	612
	621
	625
4J-0524	527
	616
	631
	664
	666
	668
	670
	673
	694
4J-0525	76
4J-0527	521
	527
4J-5267	521
	527
	623
4J-5268	690
4J-5309	546
4J-5351	690
4J-5477	103
	502
	516
	520
	526
	608
	610
	620
	647
	650
	653
	656
	659
	788
	938
	941
4J-7533	377
	508
	629
	631
	633
	664
	694
4J-8996	673
4J-9224	514
4J-9535	631
	664
	666
	668
	670
	673
	694
4K-0684	774
	784
4K-1388	559
4K-1540	494
4K-2039	701
4K-7908	415
4K-8302	847
4K-8864	127
	236
	254
4K-9429	800
	834
	880
4L-6454	806
	907
4M-1831	210
4M-2381	377
4M-6425	895
4M-7470	443
	827
	829
4M-8973	451
4N-9170	263
4P-5918	11
	87
	261
4P-7428	293
4P-7581	11
	244
	291
4P-7582	263
4P-8134	254
	261
4P-8525	241
4P-8681	945
4Q-1677	▶947
4R-9999	51
4S-1962	74
	254
	383
	527
	847
4S-5824	340
4S-8537	339
4S-8541	370
4S-8598	315
	320
4S-8603	315
	320
4T-0925	552
4T-0928	552
4T-1860	▶552
	554
4T-3015	784
4T-4942	693
4T-5070	552
4T-5071	552
4T-5072	690
4T-6907	514
4T-7571	693
4T-7581	▶693
	694
4T-8054	514
4T-8101	782
4T-9123	784
4T-9124	784
4T-9905	553
4V-0301	412
4V-1939	279
	280
4V-4164	241
4V-5099	326
4V-7081	354
4V-7099	713
4V-7785	402
4V-8256	795
4V-8520	713
	716
4V-8577	922
	924
4V-8674	702
	704
	711
4V-8688	711
4V-9798	525
4V-9799	525
4W-1413	946
4W-2026	12
4W-2232	62
4W-3462	6
	▶10
4Y-3046	419
	482
4Y-9652	11
5A-3604	666
	668
	670
	673

5

▶ PRIMARY REFERENCE

PART NUMBER INDEX

Part	Page
5B-0935	456
5B-1866	54
5B-5492	206
5B-9192	837
5C-2874	837
5C-2890	172
	174
	180
	215
	443
	501
	816
	881
	883
	885
	922
	924
5C-7261	11
	60
	70
	78
	98
	127
	154
	155
	182
	183
	186
	207
	244
	263
	408
	469
	541
	811
	816
	827
	829
	842
	847
	853
	896
	912
5C-8312	226
	244
	392
5C-8917	840
5C-9553	131
	402
	800
	832
	834
	871
	927
	932
5D-0718	329
	616
	621
5D-1026	63
	74
	295
	851
5D-1242	498
5D-1911	645
5D-2651	619
5D-7927	645
5F-0304	37
5F-1678	367
5F-3106	546
5F-3144	315
	320
5F-9035	560
5F-9144	590
5G-6505	127
5G-6973	708
	709
5G-7020	521
	527
5G-7021	521
	527
5G-8871	896
5H-3193	556
5H-3701	324
	326
5H-4020	612
5H-8853	113
5I-4376	185
5I-8304	126
5J-2974	304
	305
	556
	690
5J-3488	583
	584
5K-0983	441
5K-1568	304
	305
5K-2298	453
	456
5K-2697	329
5K-3294	383
5K-5338	503
	605
5K-9065	370
5K-9090	306
	328
	329
	333
	520
	526
	615
	616
	619
	694
5K-9242	456
5K-9243	456
5K-9979	456
5L-2931	340
5L-2952	58
5L-4141	546
5L-4507	254
5L-7200	226
	228
5M-2057	677
5M-5687	451
5M-6668	254
	282
5P-0372	417
5P-0537	163
5P-0746	276
5P-0747	126
	209
	276
5P-0761	126
	276
5P-0767	63
	74
	295
	851
	853
5P-1075	388
5P-1076	78
	387
	402
	408
	419
	424
	429
	446
	474
	533
	616
	638
	647
	650
	653
	656
	659
	827
	829
	891
	935
5P-1175	945
5P-1230	70
5P-1251	70
5P-1262	70
5P-1291	304
	305
5P-1293	519
	525
5P-1404	111
	113
5P-1442	70
5P-2199	548
	549
5P-2566	124
5P-2569	546
5P-3119	324
	326
5P-3131	339
5P-3779	493
5P-3928	845
5P-3929	847
5P-3930	340
5P-3948	847
5P-4106	845
5P-4115	800
	834
5P-4116	70
	244
	621
	821
	842
	851
5P-4295	647
	650
	653
	656
	660
5P-4423	922
	924
5P-4484	324
	326
5P-5461	456
5P-5463	456
5P-5623	233
5P-5624	213
	242
5P-5637	918
5P-5677	149
5P-5923	847
5P-5927	842
5P-6008	253
5P-6010	922
	924
5P-6120	896
5P-6313	207
5P-6314	207
5P-6410	443
5P-6414	370
5P-6442	70
5P-6719	690
5P-6724	502
5P-6872	854
5P-6879	859
	860
5P-6944	97
5P-7084	304
	305
5P-7211	419
	474
	478
	482
5P-7464	267
5P-7465	267
5P-7468	329
5P-7469	329
5P-7483	469
5P-7803	815
	816
5P-7814	188
5P-7957	880
5P-7958	1
	842
	885
5P-7970	58
	113
	206
5P-8066	64
5P-8136	718
5P-8196	59
5P-8215	546
5P-8245	12
	30
	34
	298
	302
	340
	367
5P-8247	19

▶ PRIMARY REFERENCE

PART NUMBER INDEX

Part	Page
	122
	238
	324
	326
5P-8248	755
	757
	758
	762
	763
	764
	766
	774
	775
	776
	777
5P-8250	583
	584
	587
5P-8309	79
	881
	883
5P-8334	356
	373
	374
5P-8347	72
	133
5P-8444	329
5P-8500	1
	297
5P-8502	297
5P-8837	392
5P-8874	516
5P-9085	238
	266
	267
	276
	282
	293
5P-9132	813
5P-9262	691
5P-9297	270
	276
	456
	608
	610
5P-9299	70
	127
	451
	453
5P-9436	69
5S-4246	541
5S-7349	122
	210
	213
5S-7383	895
5T-5682	350
	351
5V-0353	711
	713
5V-0354	711
	713
5V-1386	711
5V-1496	905
5V-1508	711
5V-1511	711
	713
5V-1628	362
5V-1874	702
	704
	711
5V-1882	711
	713
5V-6152	267
5V-6153	267
5V-6380	460
5V-8780	78

6

Part	Page
6A-5591	315
	320
6B-2781	383
6C-1496	855
6C-1608	359
	363
6C-1618	358
6C-2356	336
6C-2791	358
	362
6C-3678	827
	829
6C-3679	827
	829
6C-3681	388
6C-5304	324
	326
6C-5575	388
6C-5712	388
	392
6C-5736	388
	392
6C-7224	388
6C-7227	388
6C-7319	392
6C-7320	392
6C-7368	358
	363
6C-7460	392
6C-7476	392
6C-7485	392
6C-7589	392
6C-7590	392
6C-7591	392
6C-7607	392
6C-7608	392
6C-7875	388
6C-8352	336
6C-8353	336
6C-8882	359
6C-9475	359
6D-1641	244
	521
	851
	853
6D-3479	236
6D-4244	254
	516
	521
	621
6D-4246	293
	521
	527
	605
	616
	621
	678
	847
6D-4636	263
6D-6146	244
6D-8305	503
6E-0198	546
6E-0381	544
	545
	629
	662
6E-0410	548
	549
6E-1835	693
6E-3268	691
6E-3269	691
6E-3272	691
6E-3273	691
6E-3274	691
6E-3275	691
6E-3276	691
6E-4224	534
6E-4753	550
6E-5066	538
	629
	631
	633
6E-5397	556
6E-6527	691
6E-6528	691
6E-6536	691
6E-6537	691
6E-6538	691
6E-6539	691
6E-6540	691
6E-6571	534
	▶537
6E-6594	534
6E-6596	534
6E-6597	534
6E-6599	534
6E-6600	534
6E-6601	534
6E-6602	534
6E-6604	537
6E-6605	537
6F-0253	136
	138
	242
	243
6F-3930	379
6F-5188	304
	305
6F-6673	340
6F-7045	214
6F-7062	48
	693
6H-5139	304
	305
6H-9361	645
6I-1418	241
6I-8497	315
	320
6J-2680	521
	527
6J-3134	546
	631
	664
	666
	668
	670
	673
	694
6J-4568	560
6J-6439	693
6J-6506	556
6J-6516	554
	556
6J-6517	556
6K-0806	448
	453
	458
6K-2430	326
6L-1698	847
6L-2609	58
6L-3616	456
6L-8617	82
6M-5062	701
6N-6984	519
6N-7523	261
6N-8744	502
	519
6P-0593	511
6P-0699	474
6P-2233	339
6P-4467	78
6P-7742	340
6P-7743	340
6P-7772	339
6P-7773	339
6P-7968	339
6P-7983	339
6P-7985	339
6P-8003	340
6P-8005	340
6R-7653	565
	567
	569
	571
6S-6646	485
	827
	829
6T-3631	230
	253
	282
6T-3632	230
	253
	282
6T-3633	230
	253
	282
6T-3643	240
6T-3644	254
	255
6T-6052	556

▶ PRIMARY REFERENCE

PART NUMBER INDEX

Part	Page
6T-6080	635
6T-6708	800
	834
6T-7061	315
	320
6V-0357	664
6V-0400	627
6V-0484	111
	113
	293
	367
	377
	516
6V-0834	340
6V-0835	340
6V-0852	185
	293
	308
	316
	321
	367
	377
	502
	519
	527
	612
	616
	619
	625
	627
	647
	650
	653
	656
	659
	938
	941
6V-1355	70
6V-1438	74
6V-1586	339
6V-1649	340
6V-1668	800
	834
6V-1720	316
	321
6V-1722	74
6V-1820	129
	316
	321
	367
	370
6V-1875	616
6V-1889	74
	78
	244
	329
	503
	516
	616
	621
	847
	941
6V-1949	560
6V-1970	1
6V-2317	11
	31
	59
	206
	261
6V-2686	207
6V-2687	244
	806
6V-2803	417
6V-3265	60
	244
	263
	501
	932
6V-3319	595
6V-3505	548
6V-3531	326
6V-3538	10
	22
6V-3668	421
6V-3822	98
	315
	320
6V-3834	534
6V-3907	639
6V-3918	38
	46
	77
6V-3938	226
6V-3940	9
	10
	47
	62
	69
	72
	188
	377
6V-3960	344
6V-3965	185
	308
	316
	321
	367
	376
	377
	503
	520
	527
	612
	616
	621
	625
	627
	647
	650
	653
	656
	659
6V-3987	565
	567
	569
	571
6V-4248	315
	320
6V-4249	29
6V-4356	847
6V-4357	847
6V-4369	800
	834
6V-4589	218
6V-4604	399
	400
6V-4876	26
6V-5048	25
	97
	188
	195
	196
6V-5049	97
	98
	117
	188
	194
	699
6V-5142	676
6V-5192	206
6V-5217	38
6V-5218	377
6V-5223	72
6V-5586	552
6V-5645	244
6V-5657	585
	588
6V-5683	509
	511
6V-5686	315
	320
	324
	326
6V-5696	12
	53
	316
	321
	340
	367
6V-5815	65
6V-5834	180
6V-5839	26
	58
	60
	65
	98
	107
	129
	346
	367
	370
	443
	827
	829
6V-5842	37
	367
6V-5843	35
	546
6V-6210	932
6V-6317	58
	60
	315
	320
6V-6604	443
6V-6609	204
6V-6715	149
6V-6889	98
6V-7238	28
	295
	851
6V-7357	404
	408
	800
	834
6V-7419	932
6V-7420	74
	851
6V-7636	816
6V-7646	905
6V-7673	370
6V-7687	593
	594
6V-7697	388
	392
6V-7732	324
	326
6V-7744	451
	593
	594
	645
6V-7981	107
	346
6V-8004	534
6V-8076	502
6V-8116	546
6V-8128	370
6V-8149	12
	315
	320
6V-8182	498
6V-8185	816
6V-8186	216
6V-8187	254
6V-8188	124
	127
	210
	424
6V-8189	122
6V-8197	316
	321
6V-8214	534
6V-8225	163
	804
	805
6V-8237	514
	585
	588
6V-8336	30
6V-8337	534
6V-8352	691
6V-8360	718
6V-8362	213
6V-8369	241
6V-8376	254
	255
	282
6V-8378	210
	216
6V-8397	64
	97

▶ PRIMARY REFERENCE

PART NUMBER INDEX

Part	Page
	103
	111
	113
	185
	328
	502
	503
	519
	520
	525
	526
	527
	605
	608
	610
	615
	616
	619
	620
	647
	650
	653
	656
	659
	678
6V-8398	329
	503
	516
	519
	520
	521
	526
	527
	605
	616
	620
	647
	650
	653
	656
	659
	698
6V-8467	636
6V-8625	516
	520
6V-8626	516
6V-8627	520
	526
	938
6V-8628	103
6V-8634	526
6V-8635	328
	694
6V-8636	64
	97
	103
	106
	111
	113
	502
	519
	526
	605
	610
	615
6V-8637	516
	615
	620
6V-8639	520
6V-8640	619
6V-8641	516
	941
6V-8675	340
6V-8715	111
	113
6V-8722	516
	620
6V-8723	97
6V-8724	64
	97
	103
	328
	503
	520
	526
	605
	616
	620
	647
	650
	653
	656
	659
	678
6V-8774	527
6V-8781	503
	605
	647
	650
	653
	656
	659
	678
6V-8782	526
6V-8784	503
	616
6V-8789	329
6V-8928	842
6V-8934	608
	610
	620
6V-8936	605
6V-8949	388
6V-8983	620
6V-8987	616
6V-8988	616
6V-8997	616
	620
6V-9001	526
	608
	610
6V-9004	520
	527
	620
6V-9007	520
	526
6V-9008	333
6V-9023	126
	206
	263
6V-9027	40
6V-9161	503
6V-9168	616
6V-9169	503
	616
6V-9170	621
6V-9182	620
6V-9189	129
	152
	153
6V-9200	503
6V-9327	912
6V-9350	621
6V-9489	503
6V-9497	541
6V-9501	165
6V-9632	165
	240
	254
	270
	426
	525
	800
	834
	883
	912
6V-9671	190
6V-9672	392
6V-9673	244
6V-9746	328
	329
	337
	503
	516
	520
	526
	527
	601
	602
	615
	616
	619
	620
	621
6V-9828	608
	610
	788
6V-9829	647
	650
	653
	656
	659
	678
6V-9832	503
6V-9836	503
	520
	527
6V-9837	520
	527
6V-9838	620
6V-9846	620
6V-9849	788
	938
	941
6V-9850	111
	113
	503
	526
	605
	620
	647
	650
	653
	656
	659
6V-9851	520
6V-9852	620
6V-9853	516
	616
	620
6V-9854	615
6V-9872	526
	619
6V-9873	527
	616
6V-9875	328
	619
6V-9876	97
6V-9877	516
6W-1638	309
	311
	313
6W-2888	602
6W-2890	602
6W-3468	748
	749
6W-4126	356
	373
	374
6W-5458	453
6W-5752	485
6W-5817	408
	417
6W-5818	417
6W-6005	126
6Y-1085	370
6Y-1087	370
6Y-2084	287
	289
6Y-2109	339
6Y-2538	324
	326
6Y-2539	309
	311
	313
6Y-2540	309
	311
	313
6Y-3149	370
6Y-3151	370
6Y-4859	370
6Y-5352	339
6Y-5952	339
6Y-7879	339
6Y-7880	339

▶ PRIMARY REFERENCE

PART NUMBER INDEX

Part	Page
6Y-7881	339
6Y-8030	340
6Y-9713	339
7	
7B-3028	315
	320
7B-3039	677
7B-3557	546
7B-7515	340
7B-8194	559
7C-1493	59
7C-1770	6
	▶52
7C-2475	6
	▶62
7C-4354	255
7C-5403	62
7C-6921	388
7C-6976	47
7C-6977	47
7C-7431	96
7C-7980	17
7D-1553	941
7D-1649	476
7D-4092	329
7D-5252	379
7D-7233	58
	255
	306
	329
	516
	617
7D-7469	349
	350
	351
7D-8348	441
7D-8349	441
7D-9014	638
7E-0519	6
	▶34
7E-0759	72
7E-2968	19
7E-3870	91
7E-6794	41
7E-7779	24
7F-5345	451
7F-8607	847
7F-9571	498
7F-9572	498
7F-9578	498
7F-9579	498
7G-0437	339
7G-3710	340
7G-3711	339
7G-5444	339
7G-5569	340
7G-5572	340
7G-5593	340
7G-5594	340
7G-5614	339
7G-5675	340
7G-5730	339
7G-6061	340
7G-6062	340
7G-6945	339
7G-6952	340
7G-7053	888
7G-8121	339
7G-8430	370
7G-8839	441
	513
7H-1447	645
7I-0008	527
7I-0009	528
7I-1024	938
7I-4078	502
7J-0204	25
	263
	293
	595
	664
	694
7J-4321	556
7J-5311	563
7J-5544	295
7J-9108	516
	619
	620
	621
	664
7J-9885	514
7J-9933	664
	693
7K-1181	74
	103
	129
	131
	234
	236
	238
	241
	253
	259
	260
	263
	267
	270
	276
	282
	291
	328
	388
	392
	569
	571
	619
	847
	932
	941
7K-1401	617
7K-1402	617
7K-3176	845
7K-3304	845
7K-5634	297
7K-5636	▶297
	947
7K-6536	827
	829
7K-9205	711
	713
7K-9209	711
	713
7K-9210	580
	581
	582
	711
	713
7K-9211	578
	579
	580
	581
	582
7K-9212	711
	713
7K-9218	711
	713
7L-2894	210
7L-8170	795
7L-9061	218
	534
7M-5130	554
7M-8485	70
	118
	303
	315
	320
	324
	326
	328
	329
	333
	337
	546
	551
	620
	664
	673
	694
7N-0296	207
7N-0718	126
	▶214
7N-2059	207
7N-5274	126
7N-5683	22
7N-5876	241
7N-9801	232
7N-9943	151
7S-0530	503
7S-2962	315
	320
7S-4534	339
7S-6369	87
7S-8158	315
	320
7S-8554	315
	320
7T-0020	151
7T-1099	242
	254
	412
	415
	896
7T-1285	912
7T-3343	339
7T-3451	340
7T-3454	210
7T-3456	210
7T-4532	340
7T-5960	809
7T-5961	774
7T-5962	774
7T-5963	774
7T-5964	774
7T-6799	241
7T-8272	534
7T-8273	534
7V-0445	912
7V-2882	704
	705
7V-3791	311
7V-5515	502
7V-8632	441
7V-8633	441
7W-3871	11
7W-3872	11
7W-5095	34
7W-5340	62
7W-7381	647
	654
	657
7W-8106	446
7W-9737	66
7W-9738	66
7W-9740	66
7W-9930	66
7X-0338	124
7X-0510	44
7X-0515	78
7X-0562	210
7X-0578	408
7X-0579	83
7X-0589	402
	469
	831
7X-0591	645
7X-0593	876
7X-0599	485
	617
7X-0603	467
	468
	482
7X-0605	91
7X-0607	118
7X-0608	795
7X-0618	421
7X-0622	315
	320
7X-0750	415
7X-0752	412
	437
	711
7X-0818	183
	186
	244
7X-0873	619
7X-1448	70

▶ PRIMARY REFERENCE

PART NUMBER INDEX

Part	Page
7X-1550	664
7X-1950	210
7X-1952	210
7X-2459	502
	619
7X-2533	149
7X-2537	83
	821
7X-2538	810
7X-2543	521
	528
	617
	621
7X-2545	448
	458
	909
7X-2546	78
7X-2550	441
	516
7X-2552	74
	408
	427
	428
	482
	647
	654
	657
7X-2553	79
	479
	650
7X-2554	118
7X-2555	827
	829
7X-2563	44
	638
7X-2564	352
	354
7X-2586	396
	397
7X-2618	503
7X-2619	511
7X-2622	44
7X-3165	621
7X-3229	945
7X-3310	912
7X-3344	34
7X-3373	210
7X-3392	595
	601
	625
7X-4776	550
	663
	699
7X-6041	821
7X-6222	293
7X-6315	140
	144
7X-7608	339
7X-7644	945
7X-7662	183
	186
7X-7729	70
	79
	91
	186
	233
	295
	388
	404
	407
	409
	417
	443
	451
	453
	469
	474
	482
	533
	593
	594
	621
	638
	811
	891
7X-7877	393
7X-7893	615
7Y-1976	70
7Y-2522	435
	585
	587
7Y-3173	228
7Y-4215	639
7Y-4538	627
7Y-4944	639
7Y-5074	938
7Y-5458	224
7Y-5464	224
7Y-7256	885
7Y-8763	482

8

Part	Page
8B-6342	324
	326
8B-6343	324
	326
8B-9294	387
8C-0563	23
8C-0596	263
8C-3056	126
8C-3085	552
8C-3091	10
8C-3095	149
8C-3097	550
8C-3132	548
8C-3205	521
	528
	623
8C-3206	306
	521
	528
	554
	556
	625
	645
8C-3210	118
8C-3309	502
8C-3312	638
8C-3370	616
8C-3445	59
8C-3446	59
	308
	590
8C-3447	308
8C-3451	590
8C-5172	118
8C-5346	945
8C-5607	131
	149
8C-5608	131
	149
8C-6354	241
8C-6358	127
8C-6712	590
8C-6738	928
	930
8C-6855	44
8C-7581	800
	834
8C-8422	118
8C-8451	131
	448
	458
	486
8C-8762	328
	619
8C-8988	503
	526
8D-2714	339
8D-3791	460
8D-6542	842
8E-1143	377
8E-1666	339
8E-5247	370
8E-5300	719
	720
	721
	723
	724
	725
	728
	729
	731
	732
	733
	734
8E-5301	719
	720
	721
	723
	724
	725
	728
	729
	731
	732
	733
	734
8E-6539	370
8E-6648	370
8E-7475	367
8E-7476	340
8E-8297	339
8E-8299	339
8E-9571	11
8E-9893	377
8F-0212	315
	320
8F-1434	210
	216
8F-9206	554
	556
	847
8G-3341	502
8G-6035	827
	829
8H-2046	57
8H-5244	54
8H-5303	214
8H-5306	214
8H-7521	315
	320
8J-0426	329
8J-1552	559
8J-1553	525
	▶559
8J-2933	718
8J-6815	556
8J-6875	525
	▶553
8J-8332	451
8J-8782	677
8J-8783	677
8K-4691	625
8L-2786	59
	97
	203
	699
8L-8413	126
	922
	924
	946
8M-2769	74
8M-2770	103
	127
	267
	276
8M-2772	129
	255
	392
8M-2773	453
	503
	528
8M-5253	377
8M-5860	23
8M-7160	315
	320
8M-7758	821
8M-8489	346
8N-0869	126
	276
8N-1532	243
8N-1533	253
8N-1535	243
	253
8N-1540	380
8N-1541	380
8N-1725	126

▶ PRIMARY REFERENCE

PART NUMBER INDEX

Part	Page
8N-2622	226
	228
8P-1722	315
	320
8P-1812	346
8P-3251	315
	320
8P-7857	370
8P-7858	370
8P-8950	340
8P-9723	339
8P-9770	751
	753
8R-1496	619
8R-1888	287
	289
8R-1893	287
	289
8R-2566	479
8R-2918	509
8R-3695	565
	567
	569
	571
	842
8R-4568	287
	289
8R-4571	287
	289
8R-5144	328
8R-8088	636
8R-9207	287
	289
8R-9215	309
	311
	313
8R-9440	302
8R-9830	301
8R-9831	301
8R-9832	301
8R-9833	▶301
	302
8R-9843	748
	751
8S-0023	612
	625
8S-0024	612
	625
8S-0527	339
8S-0768	293
8S-2225	495
8S-2634	182
8S-3020	126
8S-3426	340
8S-6365	367
8S-7583	255
8S-7803	806
8T-0078	520
	527
8T-0100	31
	33
	53
	293
8T-0106	339
8T-0164	647
	650
	653
	656
	659
8T-0226	37
8T-0249	616
8T-0255	178
8T-0271	344
8T-0273	595
8T-0276	59
8T-0282	421
8T-0285	605
	608
	610
	678
8T-0288	142
	226
	228
8T-0293	48
8T-0299	238
8T-0318	896
8T-0328	210
	226
	228
	838
	905
8T-0336	324
	326
8T-0337	244
	838
8T-0358	315
	320
8T-0372	309
	313
	353
	355
	367
	534
8T-0375	315
	320
8T-0389	127
	156
	158
	402
	404
	407
	409
	469
8T-0644	76
	448
	458
8T-0667	585
	588
8T-0722	677
8T-0741	503
8T-1158	631
8T-1159	106
	509
	511
	595
8T-1685	337
8T-1779	647
	650
	653
	656
	659
8T-1788	585
	588
8T-1791	587
8T-1889	521
	528
	623
	855
	856
	857
	859
	860
	861
	862
8T-1890	521
	528
	623
	855
	856
	857
	859
	860
	861
	862
8T-2275	645
8T-2556	619
8T-2561	425
	636
	847
8T-2893	78
8T-2899	496
8T-2925	287
	289
8T-2947	131
8T-3282	26
	326
8T-3298	677
8T-3490	78
	103
	126
	242
	260
	276
	388
	392
	402
	408
	412
	415
	419
	421
	423
	446
	448
	451
	458
	476
	479
	509
	525
	608
	847
	851
	871
	896
	912
	941
8T-3519	127
8T-3597	424
	635
	935
8T-3612	242
	478
	616
8T-3635	896
8T-3647	124
8T-3653	44
8T-3666	27
8T-3734	412
	702
8T-3844	165
	853
8T-3851	386
	412
	437
	608
	635
	704
	705
	706
	707
	708
	709
8T-3985	409
8T-4121	42
	44
	50
	70
	74
	79
	88
	91
	93
	94
	98
	103
	111
	113
	118
	124
	127
	131
	152
	153
	166
	167
	169
	172
	174
	176
	178
	180
	182
	183
	186
	207
	209
	226
	236
	238

▶ PRIMARY REFERENCE

PART NUMBER INDEX

Part	Page	Part	Page	Part	Page	Part	Page
	244		650		180		329
	255		654		183		337
	260		657		233		383
	263		660		238		388
	267		678		244		404
	276		825		255		409
	279		827		263		417
	280		829		267		448
	291		836		279		451
	304		837		280		453
	305		842		306		458
	306		847		329		476
	329		851		380		478
	333		853		383		479
	336		855		388		482
	337		856		392		494
	344		857		406		503
	380		859		409		509
	383		860		417		516
	387		861		419		533
	388		862		425		551
	392		891		443		605
	402		896		446		621
	406		932		453		623
	417		935		456		638
	419		938		465		639
	421		941		469		847
	423	8T-4122	178		474		851
	439		409		478		896
	440		621		479		912
	443		636		482		932
	446		648		494		935
	448		651		503		938
	451		654		521		941
	453		657		528	8T-4137	43
	456		660		595		70
	458		876		605		74
	465	8T-4123	44		617		79
	471		336		621		91
	476		352		855		98
	478		354		856		111
	479		441		857		113
	485		635		859		124
	494	8T-4131	336		860		127
	501		352		861		174
	503		354		862		178
	509		595		896		182
	511	8T-4132	79		938		183
	516		621	8T-4136	42		186
	521		680		70		236
	528		682		74		238
	551		684		79		244
	554		686		93		255
	556		687		94		263
	563	8T-4133	74		118		267
	605		79		127		276
	608		93		172		291
	610		94		174		295
	617		124		176		306
	621		127		186		329
	623		131		238		336
	625		166		244		380
	636		167		260		387
	645		169		263		388
	648		178		306		392

PART NUMBER INDEX

Part	Page
	409
	419
	485
	501
	521
	528
	605
	608
	610
	617
	621
	636
	678
	811
	823
	824
	836
	837
	842
	847
	891
	896
	932
8T-4138	131
	174
	244
	426
	443
	485
	569
	571
	912
	932
8T-4139	267
	402
	419
	429
	441
	446
	476
	479
	503
	513
	528
	605
	612
	625
	627
	636
	827
	829
	847
	891
	935
8T-4140	639
8T-4167	788
8T-4170	336
8T-4171	244
	276
	864
	866
8T-4172	50
	521
	528
	605
	648
	651
	654
	657
	660
8T-4176	441
	476
8T-4177	87
8T-4179	528
8T-4182	392
8T-4183	383
	406
	441
	446
	469
	474
	593
	594
	601
	612
	617
	625
	627
	635
	638
	648
	651
	654
	657
	660
	831
8T-4184	521
	528
	602
	645
8T-4185	98
	304
	305
	448
	458
	503
	509
	511
	516
	528
	546
	623
8T-4186	79
	244
	276
	329
	421
	446
	453
	469
	474
	516
	621
	625
8T-4189	127
	152
	153
	186
	207
	816
8T-4191	207
	209
	255
	392
	409
	453
	511
	935
8T-4192	127
	407
	409
	612
	617
	625
	648
	651
	654
	657
	660
	831
	935
8T-4193	485
	617
	645
	876
8T-4194	617
	627
	847
8T-4195	43
	44
	74
	79
	88
	103
	124
	166
	167
	169
	180
	186
	207
	267
	304
	305
	306
	329
	402
	446
	451
	469
	471
	474
	476
	482
	511
	521
	528
	546
	563
	621
	636
	811
	831
	842
	847
	851
	855
	856
	857
	859
	860
	861
	862
8T-4196	79
	91
	98
	124
	127
	276
	306
	333
	344
	423
	443
	478
	503
	516
	521
	528
	546
	554
	556
	593
	594
	621
	623
	645
8T-4198	521
	528
8T-4199	244
8T-4200	60
	228
	263
	451
8T-4201	645
8T-4205	122
	174
	210
	213
	228
	240
	244
	254
	344
	426
	511
	565
	567
	569
	571
	800
	832
	834
	871
	885
	905
	912
	932
8T-4219	412
8T-4222	504

► **PRIMARY REFERENCE**

PART NUMBER INDEX

Part	Page
	521
8T-4223	3
	88
	124
	127
	178
	183
	244
	267
	276
	329
	383
	392
	406
	407
	409
	441
	446
	469
	476
	479
	494
	501
	504
	517
	521
	528
	533
	593
	594
	602
	605
	612
	617
	623
	625
	627
	636
	638
	645
	648
	651
	654
	657
	660
	831
	847
8T-4224	11
	14
	16
	60
	64
	98
	122
	124
	127
	129
	154
	155
	182
	183
	186
	207
	244
	260
	263
	451
	471
	499
	504
	554
	810
	816
	847
	853
	860
	861
	862
	889
	895
	912
8T-4226	79
	98
	127
	474
	482
	521
	621
8T-4244	91
	244
	276
	407
	419
	476
	482
	494
	501
	521
	528
	533
	638
	859
8T-4648	627
	636
8T-4742	816
8T-4750	534
8T-4779	429
	621
	659
8T-4780	711
	713
8T-4896	677
	909
8T-4908	451
	889
8T-4910	91
	387
	612
	617
	623
	625
8T-4935	172
	174
	176
	412
8T-4956	79
	183
	424
	533
	617
	625
	627
	645
8T-4968	408
8T-4970	240
	244
	255
	270
	451
	565
	567
	569
	571
8T-4971	79
	180
	183
	186
	485
	816
	832
8T-4983	70
8T-4984	519
	525
8T-4985	617
8T-5001	298
	302
8T-5005	79
	156
	158
	388
	517
	528
	554
	556
	625
8T-5035	345
8T-5039	534
8T-5041	3
	392
8T-5043	526
8T-5389	329
8T-5400	932
8T-5414	315
	320
8T-5436	521
	528
8T-5439	352
	354
	711
	713
8T-5460	711
	713
8T-5677	253
8T-6381	44
	635
8T-6430	713
8T-6462	254
8T-6466	79
	333
	521
	528
	556
	621
	623
	636
	847
	853
8T-6594	409
8T-6624	876
8T-6631	800
8T-6663	616
	620
8T-6684	306
	328
	520
	526
8T-6745	583
	584
	585
	588
8T-6842	842
8T-6850	308
8T-6868	627
8T-6869	111
	113
	621
8T-6870	244
8T-6907	615
8T-6912	155
	471
	851
8T-6974	267
8T-7044	90
8T-7352	111
	113
8T-7501	412
	593
	594
8T-7525	642
8T-7546	520
8T-7547	64
	182
8T-7566	879
8T-7568	587
8T-7876	534
8T-7934	124
8T-7950	26
8T-7970	615
8T-7971	635
8T-8442	53
	486
	691
8T-8569	210
8T-8641	806
8T-8729	151
	156
	160
	200
	202
	541
	813
	869
	870
	874
8T-8737	97
	142
	156
	158
	181
	224

► **PRIMARY REFERENCE**

PART NUMBER INDEX

Part	Page
	241
	242
	261
	574
	576
	874
	875
8T-8827	126
8T-8874	242
8T-8899	520
	527
	621
8T-8902	519
	615
	647
	650
	653
	656
	659
8T-8987	329
8T-9005	821
	842
8T-9023	520
	527
8T-9079	718
	774
	784
8T-9082	905
8T-9371	922
	924
8T-9515	299
	300
	642
8T-9597	642
8T-9655	111
	113
	133
	134
	241
8T-9834	243
8T-9884	210
8V-1412	356
	357
8V-7162	399
	400
8W-8673	498
8W-8674	498
8W-9602	349
8X-0674	635
8X-5147	415
8X-5804	241
8X-5963	434
8Y-4501	816
8Y-5746	912
8Y-5910	806
8Y-5913	806
8Y-5914	806
8Y-6277	905
8Y-6333	912
8Y-6338	816
8Y-6364	297
8Y-6388	821
8Y-8387	525
8Y-8388	528
8Y-9603	209

9

Part	Page
9B-0453	501
9B-7233	213
	226
	228
	254
	255
	282
9C-0093	711
	713
9C-2230	359
9C-4935	704
	705
9C-4937	316
	321
9C-5853	311
9C-6016	298
9C-6021	324
	326
9C-6041	324
	326
9C-6327	324
	326
9C-6809	412
	415
9C-7725	287
9C-7727	287
	289
9C-7863	415
	702
	705
	711
9C-7907	711
	713
9C-8287	309
	311
	313
9C-8418	287
	289
9C-8419	324
	326
9C-8420	287
9C-8421	324
	326
9C-9159	357
	375
9C-9191	326
9C-9193	324
9C-9194	326
9C-9458	501
	932
9C-9537	287
	289
9F-5644	214
9F-6188	502
9F-6189	502
9F-8125	241
9G-1231	339
9G-1234	339
9G-1491	340
9G-1950	800
	834
9G-2673	868
9G-3695	253

Part	Page
	292
9G-5315	324
	326
9G-5828	339
9G-6257	315
	320
9G-6258	315
	320
9G-7411	346
9G-7412	346
9G-7683	340
9H-1024	316
	321
9H-5546	340
9H-5604	339
9H-6454	645
9J-0477	559
9J-0705	699
9J-3866	519
	525
9J-4164	583
	584
9J-5550	585
	588
9J-7031	677
9J-7099	585
	588
9J-9821	556
9K-0443	361
9K-7951	379
9K-9731	713
9L-4244	89
9L-6074	388
	393
9L-6770	122
9M-0164	304
	305
9M-1328	514
9M-1503	339
9M-1974	10
	11
	38
	46
	53
	58
	59
	60
	62
	69
	72
	77
	87
	98
	113
	133
	134
	206
	261
	293
	377
	556
	693
	795
9M-2110	377
9M-2904	8

Part	Page
9M-4335	287
	289
9M-4972	244
	845
9M-4995	448
	458
9M-5024	345
9M-5137	498
9M-5138	498
9M-5139	498
9M-5140	498
9M-5870	244
9M-5884	443
9M-6803	895
9M-7394	297
	645
9M-8406	103
	127
	167
	226
	228
	238
	279
	280
	845
	847
9N-0869	33
	57
	111
	113
	133
	134
	244
9N-1756	697
9N-4460	339
9P-4898	615
9P-5558	340
9R-2060	408
9R-2640	412
	415
	478
9R-2821	482
	533
9R-3845	415
9R-5008	388
9S-1812	456
9S-2396	124
9S-4167	97
9S-4181	324
	326
	554
9S-4182	37
	72
	554
9S-4183	37
	556
	639
9S-4185	72
	76
	97
	534
	546
	556
	639
	664

▶ PRIMARY REFERENCE

PART NUMBER INDEX

Part	Page
9S-4190	69
9S-4191	76
	85
	97
	188
	546
	634
	664
9S-6154	556
9S-6155	559
9S-7712	456
9S-8001	377
	508
	629
	631
	633
	664
	694
9S-8002	25
	188
	554
	556
	631
	642
	666
	668
	670
	673
	680
	682
	684
	686
	687
	691
9S-8004	25
	72
	87
	98
	107
	595
	629
	631
	633
	639
	664
	666
	668
	670
	673
	694
9S-8005	49
	72
	631
	633
	639
	642
	664
	694
9S-8006	20
	25
	111
	113
	377
	554
	556
	666
	670
9S-8007	595
9S-8008	48
	76
9S-9334	23
	25
	118
	324
	326
	664
	694
9T-1633	534
9T-1636	534
9T-1652	534
9T-1699	534
9T-1710	534
9T-2197	534
9T-7220	556
9T-7692	664
9T-7754	537
9T-7755	537
9T-7756	537
9T-7757	537
9T-7759	537
9T-7761	537
9T-8556	178
9T-8672	556
9T-8761	690
9T-9226	645
9T-9227	645
9T-9963	690
9U-0512	876
9U-0830	837
9U-0952	912
9U-0953	912
9U-0954	912
9U-0955	912
9U-0958	912
9U-1912	309
	311
	313
9U-1913	309
	311
	313
9U-2331	838
9U-3925	912
9U-3926	912
9U-3927	912
9U-4431	838
9U-8263	838
9U-8668	377
9U-8669	377
9V-1820	399
	400
9V-1899	476
9V-2429	309
	313
9V-2899	748
	749
	751
	753
9W-0517	340
9W-0518	340
9W-0519	340
9W-0852	241
	242
	253
	382
	800
	834
9W-1441	241
9W-1442	241
9W-1446	241
9W-2238	774
9W-6747	755
	757
	758
	762
	763
	764
	766
	774
	775
	776
	777
9W-7783	664
	666
	668
	670
	673
	694
9W-9930	44
9X-0145	243
9X-0262	188
9X-1046	244
	885
9X-1054	240
	243
	270
	276
9X-1386	234
9X-1813	190
	192
	193
	198
	200
	212
	215
	218
	233
	276
	308
	590
9X-2027	324
	326
	528
	912
9X-2038	228
	565
	567
	569
	571
	912
9X-2040	407
	417
	832
	842
	871
9X-2041	409
9X-2042	228
	816
	842
	896
9X-2043	821
9X-2044	172
	174
	176
	443
	565
	567
	569
	571
	821
	881
	883
	885
	896
	912
9X-2045	565
	567
	569
	571
	821
	842
	876
	881
	883
9X-2046	131
	842
	881
	883
9X-2075	421
9X-2097	11
9X-2098	59
9X-2099	31
	64
9X-2297	605
9X-2305	66
9X-2480	244
	279
	280
	528
9X-2488	853
9X-2532	928
	930
9X-2533	928
	930
9X-2615	338
9X-2616	912
9X-2619	309
	311
	313
9X-2620	309
	311
	313
9X-3066	160
9X-3401	190
9X-3463	154
	155
9X-3465	156
	158
9X-4244	154

▶ PRIMARY REFERENCE

PART NUMBER INDEX

Part	Page
	155
	156
	158
9X-4271	210
9X-4492	162
9X-4493	156
	158
	160
	162
9X-4609	293
9X-4821	210
9X-4824	210
9X-4825	210
9X-5699	126
9X-6155	816
9X-6165	131
	149
	244
	404
	409
	842
	853
9X-6395	693
9X-6493	309
	311
	313
	324
	326
9X-6772	131
	243
	253
9X-7373	801
	834
9X-7378	234
	809
9X-7380	847
9X-7381	845
	847
9X-7382	845
	847
9X-7383	845
	847
9X-7384	845
	847
9X-7385	809
9X-7680	691
9X-7712	23
	25
9X-7849	163
9X-8116	799
9X-8256	79
	118
	131
	165
	172
	174
	180
	183
	186
	244
	255
	267
	270
	279
	280
9X-8257	74
	79
	118
	263
	479
	482
	485
	504
	617
	680
	682
	684
	686
	687
	788
	827
	829
9X-8258	336
	396
	397
9X-8267	276
9X-8268	316
	321
	367
9X-8279	424
9X-8402	938
9X-8873	806
9X-8896	583
	584
	587
9X-8916	19
9X-8917	541
9X-8937	388
	392
9X-9865	156
	158
9Y-9236	70
	0
004-9040	534
006-8663	534
009-2069	537
009-3101	495
	496
	500
011-7960	838
012-0380	215
027-1287	357
	375
030-0060	309
	311
	313
030-0061	309
	311
	313
030-1712	126
	206
	263
033-5879	699
033-6027	56
033-6033	699
033-6034	691
033-6036	534
033-8248	127
	254
	270
035-3360	339
036-9823	210
054-7915	79
061-9455	58
064-3843	370
067-2551	97
068-9526	59
070-0079	436
070-0384	5
070-0385	5
077-3241	303
082-2817	284
	285
	947
086-9286	600
	604
090-8247	412
	605
091-0081	328
091-1735	432
091-1745	502
091-7124	448
	458
092-9741	408
094-1875	639
094-1883	513
	639
095-0673	324
	326
	639
095-0827	486
095-0843	905
095-0888	534
095-0919	546
095-0946	639
095-1750	664
	696
095-1751	664
	676
095-1785	595
095-1787	595
095-1788	595
096-0067	837
096-0194	634
096-3044	666
	670
	673
	694
096-3781	417
096-4389	639
096-5962	821
096-6166	226
	287
	289
	392
	605
	608
	610
	678
096-6467	711
	713
096-9278	165
097-4896	502
098-8968	241
099-3047	642
099-3649	14
	16
	499
	502
	912
099-8232	666
	670
	673
	694
	1
100-3245	156
	158
100-3248	156
	158
100-3250	156
	158
100-3251	156
	158
100-3253	156
	158
100-3254	156
	158
100-3255	156
	158
100-3320	261
100-6551	37
100-7870	851
100-8010	551
100-8011	551
100-8203	534
100-8252	534
101-0003	924
101-2867	895
101-3128	133
	134
101-3846	502
101-9161	292
102-5846	407
102-5849	407
102-8801	131
	243
	253
	261
	276
	292
	541
	800
	834

▶ PRIMARY REFERENCE

PART NUMBER INDEX

Part	Page	Part	Page	Part	Page	Part	Page
102-8802	118		573		138	110-7454	340
	121	102-8805	142		▶224	110-7455	339
	149		156	106-0210	224	110-7524	896
	160		158	106-0827	145	110-7618	11
	162		224	106-1774	502	110-7886	241
	163		226		▶508	110-7887	241
	169		228	106-4155	253	111-0687	896
	180		241		267	111-1316	896
	200		242	106-4175	441	111-2416	261
	202		243	106-4619	736	111-3200	377
	212		253		738	111-4013	172
	215		282		740		174
	216		574		742		176
	218		576	106-7149	210	111-4275	8
	232		869	107-0071	554		▶209
	233		870	107-1161	815	111-4627	926
	234		871	107-1964	136	111-4836	938
	236		874		138	111-4838	243
	238		875		885		456
	243	102-8806	97	107-2111	276	111-4839	241
	244		181	107-3157	876		456
	253		236	107-3786	541	111-7092	70
	261		241	107-4393	845	111-7775	525
	263		243	107-4394	845		▶543
	266		541	107-4395	845	111-8614	356
	267	102-9542	353	107-4396	845	112-0723	▶285
	270		355	107-4397	847		343
	308	102-9863	210	107-4399	847	112-0724	285
	382	103-1122	815	107-4600	896		286
	388	103-1712	315	107-4602	896		▶326
	392	103-2007	285	107-4749	279	112-0738	284
	590		▶299		280		285
	675	103-2529	105	107-7694	9		▶309
	800	103-4816	388	107-7708	17	112-0739	313
	809	103-5526	241	108-1786	388	112-0742	309
	834		▶813	108-3320	241	112-0757	284
	856	103-5796	396	108-5471	816		285
	857		397	109-1145	70		286
	861	104-2091	821	109-3207	101		▶287
	862	104-3351	299		102	112-0759	287
	922		300	109-4731	326		289
	924	104-3353	299	109-5008	816	112-0762	287
102-8803	97		300		896		289
	136	104-3354	299	109-6502	388	112-0764	326
	138		300	109-8203	388	112-0765	326
	151	104-3355	299		▶854	112-0778	285
	161		300	109-8895	284		286
	162	104-3356	299		285		▶311
	190	104-3357	299		947	112-0782	309
	191	104-3358	299	110-2023	412	112-1817	605
	213		300		702		608
	230	104-3359	299		711		610
	242		300	110-3731	388		678
	243	105-1797	261	110-6109	136		▶689
	253	105-2145	691		138	112-2014	511
	261	105-3477	509		241	112-5344	78
	263		511	110-6393	798	112-6174	241
	267	105-4177	502	110-6844	253	112-6319	412
	276	105-4849	▶156		263	112-6646	569
	279		176	110-6845	253		571
102-8804	236	105-4850	▶158		263	112-6953	1
	241		176	110-7450	339		▶441
	242	105-6117	496	110-7452	340	112-6956	1
	243	105-7704	188	110-7453	316		▶513
	253	106-0107	136		321	112-6973	1

▶ PRIMARY REFERENCE

PART NUMBER INDEX

Part	Page
	▶460
112-7847	339
112-8971	353
	355
112-9073	436
	438
112-9714	541
112-9715	541
112-9716	511
112-9736	79
	443
	474
112-9783	938
112-9861	689
113-0580	253
	267
113-1635	388
113-6069	35
113-7634	388
113-7752	495
	496
114-1267	▶548
	554
114-3469	809
114-5309	511
114-5312	511
114-5333	234
114-9036	340
114-9040	339
114-9224	328
114-9252	896
114-9325	448
	458
	486
114-9491	500
115-0532	339
115-1326	315
	320
115-1648	343
	▶352
115-1650	352
	354
	▶373
115-1651	352
	▶356
115-1652	352
	▶353
115-1653	353
115-1654	353
	▶374
115-2014	511
115-2021	367
115-2023	370
115-2073	854
115-2247	495
	496
115-4072	35
115-4120	51
115-4210	6
	▶51
115-4219	35
115-4783	316
	321
115-5669	397
115-5774	388
115-5777	388
115-6433	482
115-6901	554
115-9976	554
115-9978	554
116-0080	126
116-2659	93
	94
116-4556	6
	▶30
116-8666	8
	▶44
117-0986	412
117-1410	807
	808
117-1559	380
117-1801	287
	289
117-1803	287
	289
117-2311	242
117-3643	7
	▶67
117-4473	821
117-4486	795
117-4492	795
117-5208	615
117-5268	532
117-6056	511
117-7798	502
117-7799	502
117-8131	876
117-8801	638
117-8929	821
118-1727	6
	▶12
118-2073	6
	▶28
118-2943	541
118-4264	340
118-6878	263
118-8078	511
118-8267	441
118-8269	441
118-8270	441
118-8271	441
118-8272	441
118-8273	441
118-8275	441
118-8276	441
118-9517	847
118-9573	209
119-0281	399
	400
119-0781	807
	808
119-0959	691
119-2921	51
119-3075	72
119-3312	362
119-3662	190
119-4167	328
119-5708	60
	113
119-7463	358
	363
120-4394	642
120-5281	443
120-9027	152
	153
121-0628	546
121-3307	78
121-8038	242
121-8039	213
121-9300	▶291
	807
122-1671	501
122-2222	185
122-2340	519
122-4026	91
122-4233	380
122-6660	346
122-8353	304
	305
122-8705	131
	166
	178
123-0707	226
123-2896	242
123-3827	832
123-4003	324
	326
123-4371	926
123-4511	87
123-5798	698
123-5799	698
123-6713	509
	511
123-9431	888
123-9694	136
	138
123-9814	328
124-0065	509
	511
124-0687	147
124-0786	541
124-1479	267
	270
124-1555	639
124-2456	945
124-2541	392
124-3019	78
	103
	847
124-3637	932
124-4131	392
124-8635	525
	▶554
125-1302	▶215
	253
125-2871	295
125-3295	496
125-3375	315
	320
125-3376	315
	320
125-4439	465
125-7037	443
125-7876	126
	182
125-8810	357
	375
125-9774	525
126-1052	896
126-1757	13
126-1766	243
126-2743	183
126-5011	261
126-5466	72
126-5484	554
126-6872	525
126-7574	140
	144
126-7698	343
	▶494
126-7710	2
	▶427
126-7730	494
126-7757	44
126-7845	▶285
126-7846	▶286
126-8472	443
126-8473	556
127-0366	619
127-1579	460
127-1960	298
127-4540	242
127-5091	326
127-5483	263
127-5484	253
127-6371	711
127-6513	441
127-6514	441
127-8889	593
	594
127-9133	92
127-9323	276
128-0678	▶338
	343
128-0745	286
	▶302
128-0912	360
128-0913	360
128-1008	44
128-1026	896
128-2596	842
128-8617	885
128-9599	721
128-9600	723
	731
128-9601	724
	732
	736
128-9602	725
	733
	738
129-2380	370
129-3032	736
	738
	740
	742
	748
	749
	751
	753

▶ PRIMARY REFERENCE

PART NUMBER INDEX

Part	Page
129-3178	408
	800
	834
129-3180	88
	178
129-5096	124
129-6329	315
	320
129-7163	253
	380
129-7164	253
	380
129-7184	885
129-7853	639
129-7921	639
129-7925	639
129-7927	639
129-7979	639
129-8090	494
129-8222	▶549
	554
	556
130-3069	▶757
130-3070	▶757
130-3071	▶757
130-3075	▶758
130-3280	93
	94
130-5202	337
130-5300	172
	174
	176
	178
	180
	183
	186
	207
	236
	238
	254
	260
	263
	267
	276
	282
	293
	800
	834
	856
	857
	861
	862
130-5301	97
	111
	113
	276
130-5543	719
	720
	721
130-5553	719
130-6692	519
	525
130-8285	▶755
130-8286	▶755
130-8287	▶755
130-8288	▶774
130-9811	203
	204
	238
	253
131-0030	427
131-0749	698
131-2633	▶926
131-2777	348
	▶349
	361
	362
	363
131-2778	349
131-3987	868
131-5879	417
131-8641	482
131-8642	482
132-0338	795
132-1448	147
132-1924	408
132-1928	439
	440
132-1929	408
132-1953	720
132-2155	88
132-4354	853
132-4907	587
132-5258	▶550
	554
	556
132-5789	97
	167
	169
	234
	243
	254
	263
132-6964	412
132-7370	70
132-7551	127
	519
	526
133-1618	876
133-1644	482
133-4995	26
133-5200	360
	364
133-5545	629
133-6299	415
133-6379	53
133-6517	147
133-6578	642
133-9012	800
	834
133-9379	127
	240
134-0165	501
134-1374	291
134-1815	360
134-2540	243
134-3079	441
134-3988	97
134-4126	140
	144
134-4483	24
134-5330	474
134-7258	945
134-9569	226
	228
135-0378	947
135-0426	▶161
	172
135-1708	304
	305
135-2543	206
135-4557	525
135-5038	519
	525
135-5975	261
135-6259	89
135-6337	361
135-7470	546
135-7471	546
135-7474	546
135-7475	546
135-7477	546
135-7478	546
135-7479	546
135-7482	546
135-7483	546
135-8280	821
135-9819	12
136-0207	847
136-0822	13
136-1543	880
136-1544	795
136-1711	513
136-3188	804
	805
136-3190	805
136-3195	804
136-3845	156
136-3846	158
136-3848	156
	158
136-4183	35
136-6545	298
136-6550	298
136-6551	298
136-6811	620
136-9029	634
136-9030	634
136-9351	896
136-9371	711
	713
136-9380	711
	713
137-1392	284
	285
	▶298
137-2170	928
	930
137-4548	370
137-4549	367
137-6715	24
137-6717	54
137-6718	24
137-6841	912
137-7581	546
138-1509	315
	320
138-1510	315
	320
138-1645	287
	289
138-2373	▶348
	358
	359
	360
	361
	362
	363
	364
	365
	366
138-2795	▶358
138-2796	▶358
138-2917	▶358
138-3252	26
138-3816	354
138-6814	404
	408
138-6819	404
	408
138-7198	54
138-7662	▶358
138-7663	▶359
138-7664	▶359
138-7665	▶359
138-7666	▶359
138-7668	▶360
138-8402	54
138-8403	54
138-8580	719
138-8616	732
138-9868	54
139-0033	731
139-0035	733
139-2546	▶759
139-2547	▶723
	759
139-3510	▶760
139-3511	▶724
	760
139-3514	▶761
139-3515	▶725
	761
139-4081	▶41
	53
139-4084	41
139-6146	▶360
139-6148	▶360
139-6149	▶360
139-6150	▶361
139-9229	759
	760
	761
	765
	▶782
139-9230	782
139-9279	▶785
139-9476	41
140-2961	888
140-2962	888

▶ PRIMARY REFERENCE

PART NUMBER INDEX

Part	Page
140-2963	888
140-4788	816
140-5945	565
	567
140-6188	24
140-6194	482
140-6197	482
140-7601	785
140-8101	482
140-8314	361
140-8824	723
	724
	725
	736
	738
	740
	742
140-8825	723
	724
	736
	738
	740
	742
140-8885	534
140-9153	736
	738
	740
	742
140-9670	24
141-0008	438
141-0752	370
141-1236	370
141-1774	583
	584
141-2597	516
	▶551
141-3874	408
141-3889	407
	408
141-3890	407
	408
141-4847	719
	720
	721
	723
	724
	725
	728
	729
	730
	731
	732
	733
	734
141-6968	599
141-7687	519
141-8061	244
141-8091	▶762
141-8092	▶763
141-8095	▶726
	763
141-8096	▶727
	762
141-8097	▶764
141-8098	726
	▶728
	764
141-8124	▶765
141-8125	▶729
	765
141-8275	97
141-8754	719
141-8763	733
141-8765	731
141-8802	▶509
	807
141-8803	509
141-8807	519
141-8808	509
141-8811	509
141-8823	748
	749
141-8830	748
	749
	751
	753
141-9042	728
	730
	731
	732
	733
141-9043	728
	730
	731
	732
	733
141-9044	728
	730
	731
	732
	733
141-9045	728
	730
	731
	732
	733
141-9046	748
	749
	751
	753
141-9047	748
	749
	751
	753
141-9048	748
	749
	751
	753
141-9049	748
	749
	751
	753
141-9052	728
	730
	731
	732
	733
141-9053	728
	730
	731
	732
	733
141-9393	▶719
	755
141-9394	▶720
	755
141-9395	▶721
	755
141-9396	▶730
	757
141-9397	▶731
	757
141-9398	▶732
	757
	766
141-9399	727
	▶733
	758
141-9400	▶748
	774
141-9784	800
	834
142-1657	941
142-2624	474
142-4000	519
	▶556
142-5905	▶361
142-7289	26
142-8545	263
143-0001	296
	▶421
143-0003	421
143-0004	421
143-1288	795
	806
	905
	907
143-2529	525
143-4642	339
143-4654	57
143-8302	546
143-9392	133
	134
144-0195	932
144-0331	574
	576
144-0832	591
144-0896	509
144-1636	224
144-3679	392
144-4465	285
	▶300
144-4468	300
144-4470	300
144-4613	78
	207
	502
	847
144-5611	40
144-8299	367
145-0050	336
145-0162	17
145-0164	17
145-0168	17
145-0170	17
145-0326	922
	924
145-2901	40
145-4490	719
	720
	721
145-4491	719
	720
	721
145-4492	719
	720
	721
145-4493	719
	720
	721
145-4494	719
	720
	721
145-4495	719
	720
	721
145-6669	94
145-6929	▶162
	174
	176
145-7028	▶202
	263
	293
145-7376	54
145-7385	54
145-7390	24
145-8867	509
	540
146-0112	519
	525
146-0240	253
146-0719	546
146-0720	546
146-1892	496
146-3728	699
146-3793	509
146-4055	236
146-4073	236
146-5776	525
146-6371	821
146-6581	519
	525
146-6747	945
146-7571	519
	▶560
146-9037	519
147-0066	431
147-0385	260
	267
147-0926	742
147-1052	728
147-1053	728
	729
	740
147-1445	243
147-1446	243
147-1790	525
	▶546
147-5088	77
147-8211	24

▶ PRIMARY REFERENCE

PART NUMBER INDEX

Part	Page
147-8214	24
147-8218	23
147-8220	24
147-8446	728
148-1928	293
148-2903	101
	102
148-3587	945
148-3626	821
148-3695	728
148-7027	113
148-7244	▶775
148-7245	▶749
	775
148-7383	298
148-8240	467
	468
148-8307	516
148-8313	97
148-8318	526
148-8319	111
	113
148-8322	619
148-8323	328
	619
148-8325	516
	941
148-8326	526
	619
148-8327	516
	615
	620
148-8332	526
148-8335	328
	694
148-8336	97
	103
	111
	113
	502
	519
	526
	605
	610
	615
	647
	650
	653
	656
	659
148-8340	519
148-8347	520
	526
	620
148-8351	788
	938
	941
148-8352	615
148-8353	526
	608
	610
148-8357	333
	615
148-8359	516
148-8360	620
148-8361	502
148-8362	306
	328
	520
	526
148-8363	97
	113
148-8364	516
	520
148-8366	616
148-8367	111
	113
	503
	526
	605
	620
	647
	650
	653
	656
	659
148-8368	520
	526
	938
148-8369	103
148-8370	520
148-8371	503
	526
148-8374	97
148-8376	620
148-8378	97
	103
	328
	503
	520
	526
	605
	616
	620
	647
	650
	653
	656
	659
	678
148-8380	616
148-8390	516
148-8391	329
148-8392	516
	616
	620
148-8393	620
148-8395	72
	631
	633
	664
	694
148-8406	664
	694
148-8407	76
148-8408	556
148-8409	76
148-8410	69
148-8411	72
	97
	556
	664
148-8413	608
	610
	620
148-8415	605
148-8424	519
	615
	647
	650
	653
	656
	659
148-8428	526
148-8430	619
148-8433	503
	520
	526
148-8435	503
	605
	647
	650
	653
	656
	659
	678
148-8439	527
148-8442	337
148-8443	502
	619
148-8444	520
	527
148-8446	620
148-8454	329
148-8455	616
	620
148-8942	749
	753
148-9359	664
	666
	668
	670
	673
	694
149-0668	228
149-0774	540
149-2612	253
149-2906	509
	540
149-2907	509
	540
149-4609	723
	724
	725
	729
	736
	738
	740
	742
149-5240	101
	102
149-9112	287
	289
149-9114	287
	289
149-9129	127
	263
150-1818	723
	724
	725
	729
	736
	738
	740
	742
150-1819	723
	724
	725
	729
	736
	738
	740
	742
150-1820	723
	724
	725
	729
	736
	738
	740
	742
150-1821	723
	724
	725
	729
	736
	738
	740
	742
150-1822	723
	724
	725
	729
	736
	738
	740
	742
150-3032	328
	619
150-3033	647
	650
	653
	656
	659
150-3065	111
	113
	516
150-3378	634
150-4027	527
150-4033	620
150-4043	527
	616
150-4044	647
	650
	653
	656
	659
150-4046	111
	113
150-4048	516

▶ PRIMARY REFERENCE

PART NUMBER INDEX

Part	Page
	620
150-4651	287
	289
150-5430	602
150-5782	639
150-6255	546
150-7834	724
	736
150-7843	736
150-8015	928
	930
150-8142	736
150-8657	724
	736
150-8658	724
	736
150-8896	756
	767
	772
	773
150-9253	▶361
151-0160	▶361
151-2171	482
151-2898	40
151-2900	40
	50
	124
151-4506	328
151-4507	328
151-4809	298
151-5711	337
151-5715	821
151-6980	541
151-6981	541
151-6982	541
151-6984	541
151-6985	541
151-6986	541
151-8754	152
	153
152-1684	837
152-2788	541
152-2791	541
152-2794	541
152-3411	647
	650
	653
	656
	659
152-6432	541
153-0066	366
153-1036	27
153-1185	357
	375
153-2836	704
	705
153-2837	704
	705
153-2995	619
153-3495	328
153-3568	541
153-3715	428
153-3945	226
153-5043	202
153-6237	520
	527
	620
153-6244	329
153-6245	620
153-6248	616
	620
153-6273	496
153-8002	541
153-8003	541
153-8004	541
153-8467	54
153-8470	54
153-8623	595
153-9300	541
153-9301	541
154-0896	42
154-2883	525
	▶538
154-4133	699
154-4198	725
	738
154-4202	725
	738
154-4206	725
	738
154-4207	725
	738
154-4208	742
154-4275	723
154-4276	723
154-4280	738
154-4281	738
154-4286	729
	740
154-4287	742
154-4289	729
	740
154-4290	729
	740
154-4293	740
154-4294	740
154-4301	742
154-4304	742
154-4305	742
154-4563	226
	228
154-5232	938
154-7443	242
	▶814
154-8262	228
154-9023	70
154-9508	896
155-0755	881
	883
155-1634	315
	320
155-2255	131
	242
	243
	253
	254
	261
	273
	274
	275
	388
	392
	569
	571
155-2260	192
	193
	197
	198
	242
	243
	254
	259
	261
	263
	267
	276
	279
	280
	569
	571
155-2262	292
155-2265	236
	242
	243
	261
	541
	569
	571
155-2270	97
	167
	169
	178
	217
	236
	238
	240
	242
	243
	254
	259
	261
	263
	266
	267
	270
	273
	274
	276
	282
	293
	496
	569
	571
	800
	834
	864
	866
155-2271	242
	243
	254
	270
	292
155-2274	243
	254
	275
	282
	388
	392
	569
	571
	871
155-2276	197
	198
155-3624	72
155-3677	113
155-4098	885
155-5510	328
155-5600	▶354
	717
155-5602	313
155-5604	354
	▶355
155-5605	355
	▶375
155-5606	355
155-5607	354
	▶357
155-5609	320
155-5789	▶874
	932
155-6526	511
155-6647	315
	320
155-6648	315
	320
155-7321	74
155-7329	113
155-9116	644
155-9117	644
155-9125	642
155-9127	642
155-9133	642
156-0549	511
	▶540
156-1137	296
	▶428
156-1151	311
156-4315	540
156-5545	795
156-5892	238
156-6124	▶362
156-6175	131
	234
	243
	569
	571
157-0340	284
	▶313
157-0670	70
157-1364	282
157-3491	538
157-5547	315
	320
158-0851	70
158-1202	388
	392
158-3028	587
158-6634	253
158-7864	945
158-9956	629

▶ PRIMARY REFERENCE

PART NUMBER INDEX

Part	Page
	631
	▶662
159-0268	711
	713
159-0269	711
	713
159-0303	6
	▶48
159-4838	358
	359
	361
	362
	364
	365
	366
159-4839	▶362
159-7342	388
	392
159-8035	779
	944
159-8036	779
	944
159-8049	182
159-8050	182
159-8329	516
159-9322	243
	254
	263
160-0089	546
160-0397	▶362
160-5131	72
160-6365	888
160-6366	888
160-7627	519
160-7689	131
	254
	263
160-8230	34
160-8500	183
	186
160-9925	842
161-1702	619
161-1703	194
161-1704	196
161-1705	195
161-3415	842
161-4130	779
161-6149	629
	663
	696
161-6154	544
	545
	629
	662
161-6161	629
	696
161-9030	490
161-9031	490
161-9916	74
	851
162-0177	72
	97
	631
	633
	664
	666
	668
	670
	673
	694
162-6448	664
	694
162-6560	546
162-6816	788
162-7039	3
162-7209	585
	588
162-8068	6
	▶49
162-8352	328
162-9728	502
163-0324	513
	▶514
163-0325	514
163-0326	514
163-0327	514
163-0329	514
163-0872	▶809
	810
163-1135	922
	924
163-1149	806
163-2151	947
163-2478	24
163-3343	601
	602
163-3949	362
163-3954	▶362
163-4753	▶779
164-0210	57
164-1234	922
	924
164-1270	922
164-2108	376
164-3018	284
	▶289
164-3071	289
164-3651	293
164-3652	263
164-4146	895
164-4180	664
164-4531	795
164-4883	879
164-5567	185
	503
	520
	527
	612
	616
	621
	625
	627
	647
	650
	653
	656
	659
164-5574	503
	616
164-5580	503
164-5598	329
164-5606	520
	527
164-5619	111
	113
	556
	666
	668
	670
	673
164-6476	289
164-6860	621
164-6871	185
164-7556	154
	155
164-7577	▶212
	253
164-7908	520
164-9869	605
165-2273	295
	851
165-4446	7
	▶38
165-4557	6
	▶27
165-5970	111
	113
	▶230
165-6365	647
	650
	653
	656
	659
165-7014	502
165-9104	885
166-0599	183
166-1776	13
166-1781	13
166-2905	46
166-6358	50
	124
166-6928	242
	▶869
167-0608	469
167-1802	534
167-2191	514
167-2209	583
	584
	585
	588
167-2211	587
167-2300	514
167-2320	583
	584
	585
	588
167-2324	587
167-8121	27
167-9524	376
168-1968	525
168-2166	380
168-3504	642
168-5073	430
168-5223	367
	▶370
168-7861	642
168-8772	838
168-8976	8
	▶63
169-0417	183
	186
	▶190
169-0418	190
169-1616	676
169-1617	676
169-2932	615
169-3104	101
	102
169-3923	788
169-5861	188
169-7380	922
	924
169-7394	616
169-8586	101
	102
169-8598	101
	102
170-0965	74
170-1112	795
170-1114	795
170-1115	795
170-1821	242
170-3447	845
170-3448	845
170-4735	938
	941
170-5121	788
170-7709	816
170-8590	895
170-8983	461
	▶706
171-1230	905
	907
171-1413	370
171-1653	541
171-2206	254
171-2210	254
171-2211	254
171-2212	254
171-3716	380
171-5349	200
171-6682	905
171-6718	188
171-6723	520
	527
	621
171-6728	616
171-8085	▶363
171-8881	808
	▶881
171-8888	807
	808
	▶821
172-1482	190
172-1483	190
172-2416	905
172-3511	136
	138
	242
	243

▶ PRIMARY REFERENCE

PART NUMBER INDEX

Part	Page
172-4001	795
172-4211	124
172-4871	253
172-5754	6
	▶50
172-6251	402
172-6252	402
172-6298	90
172-9200	226
	228
173-0566	303
173-1028	▶795
	905
173-1498	50
	124
173-2052	880
173-2118	876
173-2142	896
173-2143	896
173-2144	896
173-2148	881
	883
173-2173	881
173-2185	842
173-2187	842
173-2200	838
173-2205	885
173-2206	885
173-2219	806
173-2234	242
173-3427	639
173-3428	639
173-3993	631
	633
	664
	694
173-5549	54
173-5787	910
173-7035	910
173-7225	503
173-9779	514
174-0503	243
	263
174-2407	876
	920
174-3086	417
174-3091	574
	576
174-3624	807
	808
	▶909
174-4301	912
174-4312	253
174-5415	93
	94
174-5907	98
174-7350	388
174-7351	388
174-7875	836
174-8663	417
174-9169	207
174-9570	▶100
	120
174-9603	293
175-3244	263
175-3265	881
	883
175-4291	154
	155
175-4292	154
	155
175-4966	303
175-7898	514
176-2444	364
	365
	▶385
176-7078	546
176-9273	339
176-9369	543
	▶544
176-9371	543
	▶545
177-0581	88
177-1052	77
177-1058	77
177-1570	935
177-1860	895
177-1862	895
177-1863	905
177-3005	601
177-3463	453
177-3464	453
177-3465	453
177-3466	453
177-3468	453
177-3475	451
	453
177-3477	451
177-3484	451
177-3489	451
177-3490	451
177-3516	488
177-3517	488
	489
177-3518	488
	489
177-3519	488
177-3520	488
177-4495	821
177-4930	880
177-4935	▶895
	905
177-4937	909
177-6696	800
177-6704	800
	834
177-6716	800
	834
177-6727	800
	834
177-6732	800
	834
177-7582	541
177-9953	▶122
	124
178-0603	▶905
	907
178-0604	▶879
	905
178-0605	879
	▶880
178-0607	895
178-0608	895
178-0609	895
178-2357	116
178-2722	486
178-2723	451
178-2737	488
	489
178-2740	488
	489
178-2746	489
178-2769	486
178-2774	486
178-2776	458
178-3620	253
178-4323	842
178-7907	880
178-7913	▶907
	910
178-9983	574
	576
179-1660	489
179-1661	489
179-4324	380
179-4682	800
	834
179-4683	800
	834
179-7000	183
179-8128	116
179-9348	111
	113
179-9392	885
180-0156	143
	▶183
180-0157	143
	▶186
180-3730	118
180-3994	500
180-8585	605
	▶675
180-9068	675
180-9069	675
180-9286	615
180-9340	192
	193
	197
180-9617	907
183-2546	▶363
183-2931	77
183-3399	106
183-3406	97
	188
183-4365	54
183-6845	6
	▶90
183-6854	90
183-6856	90
183-6967	532
183-6970	532
183-6971	532
183-7263	188
	556
	631
	666
	668
	670
	673
	680
	682
	684
	686
	687
183-7595	629
	▶699
183-9044	788
184-0704	471
	▶473
184-2298	905
184-2299	905
184-3409	699
184-6259	408
184-6260	408
185-1445	912
185-2271	520
	527
185-2638	122
185-2639	122
185-2643	122
185-2644	122
185-2645	122
185-2647	122
185-2648	122
185-2650	122
185-2651	122
185-2653	122
185-2654	122
185-2655	122
185-2658	122
185-4778	800
	834
185-4780	800
	834
185-4782	800
	834
185-4783	800
	834
185-4785	800
	834
185-6250	938
	941
185-6335	242
185-7522	815
	▶928
185-7523	816
	▶930
185-7524	928
	930
185-7525	928
	930
185-7529	928
185-7531	930
185-7533	815
185-7534	▶815
	819
	820
185-7538	815
185-9356	31
186-2517	339

▶ PRIMARY REFERENCE

PART NUMBER INDEX

Part	Page
186-2522	▶339
	372
186-3221	282
186-3402	339
186-3735	118
	121
	136
	138
	142
	149
	158
	161
	162
	163
	191
	212
	215
	216
	218
	230
	232
	233
	234
	241
	242
	253
	276
	282
	292
	308
	574
	576
	590
	675
	856
	857
	861
	862
	875
186-3736	217
	292
186-5107	922
	924
186-6189	847
187-0541	696
187-0661	945
187-1469	816
187-4161	896
187-5127	928
	930
187-5128	928
	930
187-5495	616
187-6279	6
	▶64
187-6294	64
187-7331	118
187-7719	800
	834
187-8191	699
187-8595	67
188-0422	▶363
188-1616	169
188-2008	615
188-2586	895
188-5046	315
	320
188-5149	315
	320
188-5175	896
188-5177	896
188-6253	243
188-6364	525
188-7497	▶495
	500
188-7690	800
	834
188-8044	945
188-8844	118
188-9302	407
188-9305	407
188-9820	▶806
	907
189-0107	781
189-0109	788
189-0603	407
189-2076	885
189-2077	565
	567
189-2078	565
	567
189-2079	565
	567
	569
	571
189-2512	885
189-3158	226
	228
	254
189-4680	800
189-4682	800
	834
189-5433	6
	▶59
189-5594	78
189-5604	276
189-8622	▶875
	932
189-8772	90
189-8777	66
189-8779	▶85
	86
189-8780	6
	▶86
189-8846	541
189-9304	541
189-9763	595
	639
190-0643	50
190-1125	474
190-5497	842
190-5583	525
190-5584	525
190-6728	1
	▶711
190-7673	595
190-7674	595
190-8494	336
191-0461	7
	▶106
191-0522	56
191-0523	▶56
	106
191-0629	704
	711
191-0631	711
191-1782	111
	113
191-1830	315
191-1831	320
191-2933	910
	▶922
191-3678	636
191-5213	58
191-5282	807
	▶883
191-5285	527
191-7582	642
191-7583	642
191-7699	58
	260
191-8567	▶876
	878
191-8720	370
191-8921	804
	805
191-9253	190
192-0573	639
192-1563	▶40
	344
	810
192-1954	242
	883
192-2175	909
192-2820	800
	834
192-2822	800
	832
	834
192-2823	800
	834
192-2981	7
	▶65
192-4263	328
192-4264	328
192-5017	851
192-5856	781
192-5880	781
192-5881	788
192-5884	788
192-5897	788
192-5918	451
192-5944	788
192-5987	489
192-6036	489
192-6057	486
192-6058	486
192-6118	463
	▶707
192-6212	489
192-7049	807
	808
	▶870
192-7752	922
	924
192-7755	922
	924
192-7760	922
	924
192-7767	922
	924
192-7783	922
	924
192-7787	922
	924
192-7790	922
	924
192-7795	922
	924
192-7799	922
	924
192-7805	922
	924
192-7810	922
	924
192-7812	922
	924
192-7820	922
	924
192-7822	922
	924
192-7848	922
192-9121	324
192-9128	326
193-0042	541
193-0702	800
	834
193-1034	74
193-1036	691
193-1664	690
193-1665	633
	▶690
193-1736	639
193-2200	315
	320
193-2550	▶200
	315
	320
	367
193-7307	834
193-8520	▶780
194-1723	▶663
	664
	694
194-2174	780
	▶781
194-2175	781
194-4411	370
194-5226	198
194-5227	198
194-5278	78
194-6722	▶192
	263
194-6725	97
	▶193
194-9472	642
194-9473	642
194-9474	642
194-9478	644
194-9479	644

▶ PRIMARY REFERENCE

PART NUMBER INDEX

Part	Page
194-9480	644
194-9481	644
194-9632	634
195-0321	47
195-2187	501
195-3265	▶604
195-5826	482
195-5950	541
195-5951	541
195-9045	781
	▶788
196-0052	821
196-0436	876
196-1046	473
196-1047	473
196-1048	473
196-1049	473
196-1050	473
196-1051	473
196-1052	473
196-1053	473
196-1054	473
196-1055	473
196-1056	473
196-1060	473
196-1061	473
196-1062	473
196-1063	473
196-1064	473
196-1065	473
196-1066	473
196-1067	473
196-1068	473
196-1069	473
196-1070	473
196-1071	473
196-1072	473
196-1073	473
196-1074	473
196-1075	473
196-1076	473
196-1077	473
196-1078	473
196-1079	473
196-1093	429
196-1094	429
196-2647	▶766
196-2778	386
196-8488	356
196-8490	357
196-9519	17
197-0416	87
197-1397	800
	834
197-1398	800
	834
197-1399	800
	834
197-1400	800
	834
197-2027	842
197-2072	842
197-3295	601
	612
	625
197-4859	937
197-5210	6
	▶37
197-5470	876
197-6474	▶855
197-6475	164
	▶213
197-7565	243
197-7996	353
	355
197-8391	188
	▶203
197-8392	188
	▶204
197-8393	188
	▶194
197-8394	188
	▶195
197-9353	47
197-9371	47
197-9372	47
197-9386	47
197-9580	77
197-9581	77
198-2713	261
198-2714	6
	▶261
198-3897	448
	458
198-4775	243
	569
	571
198-4777	621
198-5351	642
198-5389	149
198-6189	▶767
198-6191	▶756
198-6570	242
198-6571	242
198-7248	▶303
198-7651	619
198-8769	912
198-8772	821
198-8774	885
198-9096	392
198-9098	392
198-9099	392
199-2090	5
199-4064	183
199-7499	800
	834
199-7891	122
199-8436	122
199-8532	779
199-9641	885
199-9741	751
	753
200-0008	1
	▶479
200-0727	885
200-0728	912
200-0729	912
200-0731	885
200-1315	315
	320
	▶498
200-1316	498
200-2217	496
200-2218	496
200-2219	496
200-2220	496
200-2221	496
200-2258	69
200-2371	700
200-4257	615
200-4495	35
200-4497	65
	▶66
200-4516	46
200-5951	881
	883
200-5952	881
	883
200-6206	868
	881
	883
200-6282	629
	676
200-7138	93
200-8064	136
200-8152	885
200-8153	885
200-8154	885
200-8895	855
	857
200-8896	855
	856
201-0115	734
	744
	746
201-0212	291
	▶292
201-1531	136
	138
201-2733	885
201-5267	456
201-5555	226
	228
201-5563	567
201-6775	406
201-6776	406
201-6780	406
201-6781	406
201-6850	6
	▶46
201-7889	600
201-8143	456
201-8254	▶600
201-8428	276
201-8616	▶888
	889
201-9774	59
202-0669	482
202-0671	689
202-0673	689
202-0674	689
202-0686	433
202-0687	533
202-1327	800
	834
202-2005	377
202-2006	377
202-4797	415
202-4798	415
202-6450	788
202-6612	155
202-6614	154
	155
202-7778	734
	744
202-7781	734
	744
202-7783	734
	744
202-7789	734
	744
202-7792	744
	746
202-7793	744
202-7794	744
	746
202-7796	734
	744
202-7797	744
	746
202-7825	734
	744
202-7826	744
	746
	788
202-7935	88
202-8649	856
	857
	861
	862
202-8846	▶734
	767
202-8847	734
202-8848	734
202-8928	516
202-8933	293
	▶377
203-0328	912
203-2287	306
203-3768	90
203-3940	201
203-6093	77
203-6470	380
203-6473	380
203-7703	910
203-8906	756
203-8909	746
203-8912	746
203-8913	746
203-8920	746
203-8923	746
203-8924	746
203-8928	746
203-9782	363
203-9784	▶363
203-9976	744

▶ PRIMARY REFERENCE

PART NUMBER INDEX

Part	Page
	746
203-9991	912
204-6132	896
204-7662	780
	▶944
204-7949	▶191
	888
205-0826	149
205-0926	816
205-1280	106
205-1320	35
205-1321	7
	▶35
205-3582	495
205-5412	364
205-6029	380
205-6388	904
	909
205-7299	182
	276
205-8212	912
205-8257	149
206-1345	261
206-1990	809
206-2722	448
	458
206-5162	149
206-5203	149
206-5823	875
206-6305	937
206-6876	97
	111
	113
206-8784	210
206-9271	350
206-9278	348
	▶350
	364
207-0697	642
	▶691
207-1517	209
	▶210
207-1759	807
	808
	▶889
208-0039	32
208-3703	888
208-3906	715
208-3908	186
208-5022	928
	930
208-6055	88
208-7472	350
208-7473	351
209-0381	242
209-0499	494
209-0516	937
209-0746	821
209-2625	485
209-2626	485
209-2629	485
209-3750	909
209-4573	70
209-4579	88
209-4600	6
	▶76
209-5018	896
209-5528	78
209-5582	216
209-6477	88
209-6638	152
	153
209-7659	111
210-1254	896
210-1747	188
	▶196
210-3321	11
	31
	206
210-5551	842
210-5590	7
	▶17
210-5682	186
210-5683	186
210-6783	912
210-7722	90
210-8422	▶152
	167
210-8423	▶153
	167
211-0667	842
211-1167	932
211-2101	43
211-2109	881
	883
211-2126	881
	883
211-3287	593
	594
211-5004	593
	594
211-5006	593
	594
211-5358	922
	924
211-6947	▶592
211-9120	7
	▶13
211-9288	717
211-9294	922
	924
211-9856	928
	930
212-0061	700
212-3652	7
	▶47
212-3657	111
	113
	▶120
212-3706	106
212-4287	6
	▶32
212-4288	9
212-4289	7
	▶9
212-4893	17
212-6854	380
212-6934	70
212-7042	800
212-7753	421
212-7754	421
212-7779	924
213-0364	186
213-1365	326
213-1369	326
213-3193	47
213-3781	704
	705
213-5170	924
213-7276	▶145
213-7489	574
	576
213-8773	▶492
	502
213-9100	233
214-0113	135
	141
214-3616	183
	186
214-3617	183
	186
214-4141	5
	▶424
214-4142	424
214-4143	424
214-4208	243
214-6154	324
214-6156	284
	285
	▶324
214-6161	▶284
	717
214-6162	▶336
	343
214-7567	199
214-7568	64
	106
	107
	188
214-7634	▶804
	932
214-7635	▶805
	932
214-9186	896
214-9398	▶284
	343
214-9402	▶285
214-9453	226
214-9454	226
214-9468	519
215-1182	893
215-3013	344
215-3014	344
215-3015	344
215-3687	502
215-6672	163
215-6673	163
215-6674	163
215-6981	43
215-6982	6
	▶43
215-9962	595
216-4515	▶92
	443
216-4531	876
216-5586	20
216-7752	593
	594
216-7790	126
	182
216-7888	881
	883
216-8318	592
	▶593
216-8319	592
	▶594
216-8344	881
	883
217-0733	935
217-3031	344
217-3681	298
217-5213	23
217-5287	94
217-5701	14
	15
217-6280	▶147
217-6284	147
217-8166	226
	228
217-8339	120
217-9049	905
217-9060	70
218-0404	149
218-0481	343
218-0652	541
218-0653	541
218-0654	511
	▶541
218-0859	6
	▶29
218-0861	905
218-4935	234
	259
218-6618	525
218-6862	527
219-0305	945
219-0314	83
	89
219-3309	53
219-5844	▶23
	24
219-5846	▶24
	25
219-5847	▶25
	26
219-5849	7
	▶26
219-6314	149
219-6485	▶154
	172
	174
219-6487	▶155
	166
	169
219-6607	149
219-7619	▶511
	808
219-8094	909
	▶910
219-9526	222

▶ PRIMARY REFERENCE

PART NUMBER INDEX

Part	Page
	223
219-9535	222
	223
220-0814	615
220-1428	519
	525
220-1581	448
	458
220-2612	408
220-3681	284
	285
	947
220-3773	284
	285
	947
220-3933	509
220-3995	519
	525
220-4868	392
220-7924	284
	285
	947
220-7925	284
	285
	286
	▶947
220-8678	100
220-9081	791
220-9089	793
220-9090	783
	791
	792
	793
	794
220-9091	792
220-9099	794
221-3416	185
	▶197
221-3494	64
	106
221-4480	▶19
	20
221-4481	▶20
	22
221-4482	7
	▶22
221-6803	868
221-6883	▶601
221-7607	601
221-9240	527
222-1087	718
222-1088	718
222-1089	718
222-1094	751
	753
222-1095	751
	753
222-1096	751
	753
222-1185	54
222-1186	54
222-2277	94
222-3686	842
222-3687	842
222-5151	935
222-5893	11
222-5900	7
	▶107
222-5915	72
222-5917	261
222-5946	6
	▶57
222-5952	6
	▶14
222-5958	7
	▶109
222-9151	605
223-1341	664
223-3383	927
223-3917	▶493
223-3924	315
	320
223-3925	315
	320
223-4296	131
223-7577	206
	▶216
224-3247	9
224-4536	▶198
	199
224-5132	492
	493
224-5152	492
	493
224-5699	588
224-5700	588
224-6638	47
224-7135	631
224-9392	466
	823
	824
	825
224-9871	593
	594
224-9872	593
	594
225-0300	631
	▶700
225-0312	945
225-0313	946
225-1461	60
225-3285	583
	584
	585
	588
225-3286	587
225-3755	816
225-4118	590
225-4256	946
225-4257	945
225-4456	595
225-4607	595
225-9422	823
225-9423	823
225-9578	823
	824
225-9579	823
	824
225-9611	633
226-0291	78
226-0321	78
226-1240	945
226-1242	946
226-1274	945
226-1275	946
226-4192	638
226-6039	77
226-6051	77
226-9622	376
227-1200	23
227-4002	261
227-4094	5
	▶423
227-4299	76
	▶77
227-4301	77
227-4339	713
227-4340	713
227-4342	713
	716
227-4343	713
227-5480	17
227-5904	107
	116
227-5942	72
227-6744	308
227-7391	946
227-7392	804
	805
227-8305	713
228-0418	287
	289
228-1795	514
228-2615	946
228-2616	946
228-3621	29
228-4428	919
228-4709	64
228-5847	509
228-6089	243
228-9697	698
229-1494	907
229-2704	131
	832
229-5153	17
229-5154	17
229-5155	17
229-5156	17
229-6625	304
229-7084	736
	738
	740
	742
	744
	746
229-7534	417
229-8198	32
229-8844	33
229-8851	206
229-8870	117
229-9969	152
	153
229-9972	152
	153
229-9974	152
	153
230-1341	148
230-4013	243
230-4015	70
230-4176	519
230-5771	276
230-7058	608
	610
230-7640	496
230-7839	▶364
231-3539	514
231-4156	364
231-4157	▶364
231-4476	126
232-0082	783
232-0343	97
	▶117
232-0928	423
232-0929	423
232-0931	423
232-1335	918
232-1336	918
232-1337	918
232-1338	918
232-1374	111
	113
232-1376	111
	113
232-1394	807
	808
	▶842
232-1396	807
	808
	▶916
232-1397	807
	808
	▶823
	▶824
232-1684	916
232-1685	916
232-1686	916
232-1687	916
232-1688	918
232-1712	916
232-1754	53
232-2964	896
232-3717	7
	▶53
232-6401	604
232-7635	▶713
	715
232-7637	▶702
	705
	713
232-7638	702
233-0891	134
233-0915	916
233-0916	916
233-4463	399
	400
233-4466	399
	400
233-5036	842
233-6306	642
233-6745	879

▶ PRIMARY REFERENCE

PART NUMBER INDEX

Part	Page
233-7654	59
233-7655	67
233-7676	▶918
	920
234-1360	842
234-1530	446
	476
234-3075	713
234-3545	446
234-4845	666
	668
234-4846	666
	668
234-4851	666
	668
	670
	673
234-4869	673
234-4870	673
234-5001	670
234-5106	408
234-5107	446
234-5110	446
234-5925	242
234-9553	807
	808
	▶919
234-9571	919
234-9572	919
235-1422	4
	▶6
235-1423	6
	▶7
235-1498	670
235-2710	▶602
235-2712	602
235-3595	97
235-3596	97
235-3937	▶163
	178
235-5275	143
	▶172
235-5276	164
	165
	▶174
235-5279	▶164
235-5506	242
235-5527	54
235-5528	53
	▶54
235-6157	694
235-6163	631
235-8200	6
	▶181
235-8398	602
235-8559	▶166
	807
	808
235-8560	▶167
235-9651	109
	110
235-9822	78
236-0424	602
236-1068	920
236-1069	920
236-4608	243
236-4609	243
236-4610	243
236-4611	243
236-4612	221
236-4615	225
236-4616	226
	228
236-4619	243
236-4620	136
	138
236-4621	136
	138
236-4622	243
236-4623	220
236-4630	864
	866
236-4631	242
236-4970	▶856
	864
236-4971	▶857
	864
236-5898	920
236-6207	864
	866
236-6220	188
	▶199
236-6221	188
	▶201
236-6253	932
236-6919	639
236-7019	▶904
	909
236-7230	946
236-7773	167
236-7775	178
236-8722	242
236-8896	823
	824
236-8995	143
	▶146
236-9039	1
	▶927
236-9773	166
236-9774	166
236-9775	167
236-9776	167
236-9832	666
	668
	670
	673
236-9939	417
236-9993	242
237-0226	89
237-0231	▶4
237-0233	▶233
237-0234	▶1
	4
237-0235	4
	▶143
237-0238	4
	▶598
237-0240	4
	▶343
237-0268	598
	▶615
237-0269	▶598
237-0421	1
	▶502
237-0422	1
	▶396
237-0423	1
	▶387
237-0424	1
	▶402
237-0425	1
	▶415
237-0426	1
	▶412
237-0428	1
	▶425
237-0430	1
	▶446
237-0431	1
	▶88
237-0432	1
	▶103
237-0433	1
	▶456
237-0434	1
	▶851
237-0435	1
	▶619
237-0436	1
	▶519
237-0437	▶525
	539
237-0438	1
	▶333
237-0439	1
	▶70
237-0440	1
	▶945
237-0443	1
	▶78
237-0445	1
	▶474
237-0447	1
	▶478
237-0948	▶578
	598
237-0949	▶579
	598
237-0950	▶580
	598
237-0951	598
	▶623
237-0952	598
	▶625
237-0954	598
	▶636
237-0960	598
	▶635
237-0961	598
	▶647
237-0962	143
	▶145
237-0965	143
	▶145
237-0969	143
237-1012	▶485
	4
	▶178
	392
237-2742	598
	▶645
237-2743	645
237-3943	922
	924
237-3970	▶797
	922
	924
237-3995	4
	▶8
237-4847	8
	▶124
237-4848	8
	▶83
237-4850	8
	▶89
237-4851	8
	▶105
237-4853	8
	▶91
237-4857	798
	▶810
237-4932	598
	▶650
237-4948	▶397
	398
	715
	717
237-5114	▶304
	343
237-5176	72
237-5220	525
237-6256	946
237-6257	946
237-7262	178
237-8186	343
	▶372
237-8187	▶372
	717
237-9308	97
237-9736	178
237-9821	6
	▶69
237-9822	6
	▶42
237-9823	6
	▶97
237-9836	6
	▶58
237-9878	532
238-0371	6
	▶11
238-0373	6
	▶31
238-1074	124
238-1112	97
238-1795	686
238-1796	680
	684
	687
238-2658	608

▶ PRIMARY REFERENCE

PART NUMBER INDEX

Part	Page	Part	Page	Part	Page	Part	Page
238-2659	608	240-0363	831	241-3400	▶101	242-6804	639
238-2706	47	240-4542	▶827		109	242-8263	896
238-2720	47	240-4548	827	241-4039	▶786	242-8414	328
238-4436	598	240-4551	827	241-4040	786	242-8415	328
	599	240-4552	827	241-4041	786	242-8416	328
	▶612	240-4557	827		787	242-8417	328
238-4802	6		829	241-4054	▶787	242-8418	328
	▶72	240-4630	827	241-4055	787	242-8419	328
238-4803	6		829	241-4056	786	242-8421	242
	▶111	240-4695	664		787	242-8559	845
	▶113	240-4696	673	241-4194	207	242-9371	845
238-4804	8	240-5150	1	241-4960	32	242-9372	845
238-4805	8		▶118	241-5688	267	242-9416	799
238-4808	6	240-5151	118	241-6185	69		▶845
	▶188	240-7356	697	241-6209	615	242-9820	328
238-9842	666	240-8245	625	241-6215	502	243-0083	564
	668	240-8246	625	241-6254	873		▶653
	670	240-8248	625	241-6978	827	243-0086	564
	673	240-8249	625		829		▶656
238-9843	694	240-8250	625	241-7602	6	243-0570	502
238-9844	694	240-8253	612		▶133	243-1076	4
239-0583	10	240-8254	612	241-7854	425		▶878
239-0618	629	240-8255	612	241-8368	▶217	243-1078	539
239-0621	629	240-8637	481		254		▶878
239-1134	207		▶482	241-8489	945	243-1080	▶807
	▶232	241-0073	▶296	241-8650	▶829		878
239-2214	610	241-0077	296	241-8651	827	243-1081	▶808
239-2215	610		▶328		829		878
239-4849	▶563	241-0078	▶74	241-8652	827	243-1083	807
	564		296		829		808
	599	241-0080	296	241-8692	▶345		▶896
239-4850	135		▶344		372	243-1088	798
	141	241-0086	328	241-8693	345		▶799
	▶185	241-0087	328		▶346	243-1089	▶565
	873	241-0088	328	241-8694	346		807
239-5195	629	241-0089	328	241-9022	▶367		808
239-6135	89	241-0091	328		372	243-1090	807
239-6336	631	241-0092	328	241-9023	367		808
239-6986	946	241-0638	143	241-9299	▶534		▶912
239-8410	443		▶238		638	243-1092	807
239-9840	78	241-0639	▶126	242-0718	829		808
239-9841	78		143	242-0719	829		▶832
239-9843	78	241-0640	143	242-0720	829	243-1093	832
239-9845	78		▶263	242-1307	619		▶853
239-9848	78	241-0641	143		▶629	243-1113	896
239-9851	78		▶267	242-1689	415	243-1712	443
239-9852	78	241-0642	143	242-1690	415	243-1718	443
239-9853	78		▶253	242-2411	14	243-1722	443
239-9854	78	241-0643	▶276		▶15	243-1723	443
239-9856	78		539		16	243-1938	▶231
239-9857	78	241-0645	▶182	242-2445	847	243-1939	135
239-9862	78	241-1485	623	242-3210	295		▶136
239-9863	78	241-1495	623	242-3864	59		141
239-9864	78	241-1504	623	242-4270	580	243-1940	▶567
239-9867	78	241-1512	623		▶585		598
239-9870	78	241-1541	623	242-4271	579		599
239-9876	78	241-2443	619		▶583	243-1941	▶569
239-9877	78	241-2451	619	242-4272	578	243-1944	▶831
239-9880	78	241-2628	647		▶584		890
239-9881	78		650	242-4339	82	243-1945	▶148
239-9883	78		653	242-4340	70	243-1946	▶571
239-9884	70		656		▶82	243-2289	78
239-9887	88		659	242-6099	242	243-2372	70
239-9954	131	241-2921	1	242-6801	639	243-2373	70
	▶140		▶295	242-6803	639	243-2374	70

▶ PRIMARY REFERENCE

PART NUMBER INDEX

Part	Page	Part	Page	Part	Page	Part	Page
243-2532	615	244-3168	133	244-8730	456		▶587
243-3166	565		134	244-8731	456	245-7491	581
	567	244-3253	▶135	244-8732	456		▶588
	▶573	244-3274	502	244-8782	858	245-7493	583
243-3416	78		519		▶859		584
243-3696	636	244-3288	502	244-8783	858	245-7494	583
243-3720	615	244-3289	502		▶860		584
243-3750	927	244-3290	502	244-8785	859	245-7495	583
243-3763	842	244-3375	▶715		862		584
243-4013	434	244-3396	▶715	244-8786	860	245-7500	583
243-4369	896	244-3442	▶564		861		584
243-4371	896	244-3443	▶564	244-8839	811	245-7576	627
243-4626	616	244-3599	2	244-8840	68	245-7608	▶351
243-4673	619		▶165	245-0766	811	245-7612	351
243-4786	615	244-3712	188	245-1663	519	245-7649	571
243-4787	615	244-3922	▶539	245-1664	519		▶574
243-4788	615	244-4478	▶873	245-1666	519	245-7650	569
243-4860	842	244-4486	16		525		▶576
243-5063	78	244-4500	33	245-2975	▶561	245-7727	402
243-5553	896	244-4978	798		647	245-8175	519
243-5554	896		▶811		650		525
243-5555	896	244-5419	798		653	245-8335	569
243-5556	896		▶847		656		571
243-5745	88	244-5421	▶717		659	245-8355	629
243-5746	88	244-5424	2	245-3259	38	245-8818	▶861
243-5828	478		▶539	245-3834	446		866
243-5856	402	244-5427	78	245-3835	446	245-8819	▶862
243-5857	402	244-5526	598	245-3842	935		866
243-6467	619		▶938	245-3850	935	245-9790	585
243-6468	619	244-5548	▶581	245-3852	446		588
243-6512	619		715	245-3853	446	245-9791	585
243-6531	615	244-5575	715	245-3862	639		588
243-6533	525	244-5583	599	245-3866	598	245-9890	78
	615		▶659		▶678	246-0435	409
243-6535	525	244-5585	▶941	245-3867	678		469
	615	244-5586	▶582	245-3868	678	246-0511	78
243-6537	615		599	245-4083	1	246-0535	629
243-6623	▶798	244-5588	599		▶469	246-0578	242
243-6711	619		▶627	245-4094	469	246-0616	78
243-7258	619	244-5611	▶599	245-4333	896	246-0843	▶364
244-0357	83		717	245-4630	201	246-0844	364
	▶84	244-5617	▶516	245-4659	118	246-1177	482
244-0405	645		539	245-5942	677	246-1184	482
244-0420	645	244-5623	519	245-5943	615	246-1187	482
244-1031	▶590		525		▶677	246-1479	118
	619	244-5624	519	245-6175	479	246-1576	▶348
244-1426	619		525	245-6185	890		364
244-2119	853	244-5625	519		▶891	246-1579	348
244-2125	845		525	245-6375	84		▶351
244-2339	▶306	244-6524	▶260	245-6376	84	246-1584	▶364
	343		296	245-6447	565	246-1696	126
244-2360	853	244-6601	▶93		567	246-1697	126
244-2539	827	244-6602	69		569	246-1698	126
	829	244-6603	▶94		571	246-1708	621
244-2662	▶778	244-6604	97	245-6458	807	246-1715	126
244-2665	▶715	244-6605	97		808	246-1777	83
244-2736	▶858	244-6606	111		▶885	246-1883	89
	890	244-6607	▶5	245-6566	▶562	246-1884	482
244-2747	▶501	244-6625	605	245-6795	85	246-1888	466
	807		647	245-6796	16	246-1889	468
	808		650	245-7434	242	246-1890	467
244-2786	▶837		653		243	246-1891	482
	878		656	245-7438	595	246-1892	482
244-3114	293		659	245-7456	636	246-2052	563
	▶376	244-7595	103	245-7487	582	246-2054	598

▶ PRIMARY REFERENCE

PART NUMBER INDEX

Part	Page	Part	Page	Part	Page	Part	Page
	▶638	246-7274	847	247-5513	619	248-0869	525
246-2099	638	246-7276	847	247-5572	619	248-0873	525
246-2392	419	246-7934	446	247-5577	605	248-1545	254
	482	246-7935	446	247-5578	605	248-2079	912
246-2393	419	246-7936	446	247-5579	605	248-2586	525
	482	246-8110	387	247-5585	605	248-2587	525
246-2641	947	246-8888	615	247-5586	605	248-2589	525
246-2642	231	246-8889	615	247-7569	254	248-3317	585
246-2887	638	246-8907	482	247-7601	▶664		588
246-2896	583	246-9345	6		686	248-3318	585
	584		▶134		687	248-5081	219
246-2899	583	246-9353	181	247-7830	▶293		222
	584	246-9371	243		372		223
246-2931	6	246-9863	482	247-8238	402	248-5249	920
	▶87	246-9864	482	247-8239	402	248-5250	920
246-2943	482	246-9866	482	247-8474	238	248-6189	920
246-3231	853	247-0126	402	247-8475	238	248-6190	920
246-3290	172	247-0261	118	247-8557	5	248-6193	911
246-3295	174	247-0829	7		▶419	248-6818	935
	176	247-1086	263	247-8558	5	248-6820	935
246-3296	174	247-1447	941		▶429	248-7465	519
246-4225	415	247-1448	941	247-8559	5	248-7466	519
246-4236	415	247-1449	941		▶384	248-7467	519
246-4237	415	247-1450	941	247-8560	5	248-7538	489
246-4365	479	247-1451	941		▶406	248-7613	1
246-4366	479	247-1452	941	247-8561	5		▶404
246-4374	479	247-1639	823		▶383	248-9953	595
246-4488	253	247-1852	▶816	247-8632	633	248-9954	595
246-4489	253		820	247-8669	668	248-9955	595
246-4611	83	247-1853	816	247-8920	595	248-9956	595
246-4612	84	247-1855	816	247-9760	146	249-0150	14
246-4614	84		▶840	247-9761	146	249-0368	650
246-4615	84	247-1859	816	247-9858	▶937		656
246-4619	482	247-1860	896		945		659
246-4770	502	247-1862	816	247-9865	619	249-0787	647
246-4771	502	247-1863	842	247-9876	▶946		653
246-4772	502	247-1865	840	247-9897	615	249-1750	306
246-4774	502	247-1869	816	247-9906	619		▶308
246-4777	502	247-1870	816	247-9915	605	249-2334	▶591
246-4791	2	247-1909	5	247-9989	126		615
	▶947		▶935	248-0005	145	249-2503	525
246-5083	14	247-2699	482	248-0006	145	249-2504	525
	16	247-2700	482	248-0015	145	249-2506	525
246-5105	563	247-4184	565	248-0016	145	249-2763	243
246-5124	304		567	248-0072	126	249-2775	136
246-5135	516	247-4255	417	248-0220	276		138
246-5136	516	247-4285	154	248-0221	276	249-5227	629
246-5231	481	247-4389	263	248-0334	502		▶696
	▶920	247-4481	664	248-0335	502	249-5602	219
246-5423	315	247-4506	253	248-0369	6		222
	320	247-4593	502		▶60		223
246-5459	242	247-4594	502	248-0402	519		243
246-5613	587	247-4596	519		525	249-6463	282
246-5614	587		525	248-0403	519	249-8107	▶2
246-5616	587	247-4668	▶399		525	249-8173	▶315
246-5621	587		443	248-0414	164		372
246-6152	78	247-4669	399		▶176	249-8175	▶320
	▶634	247-4670	▶400	248-0420	143		372
246-6196	182		443		▶836	249-9223	6
246-6291	148	247-4671	400	248-0639	▶533		▶206
	▶149	247-4865	293		539	250-0155	103
246-6296	124	247-4969	565	248-0706	443	250-0241	453
246-6727	446		567	248-0824	935	250-0337	▶461
246-7272	847		569	248-0827	935	250-0705	▶388
246-7273	847		571	248-0867	525	250-0706	▶392

▶ PRIMARY REFERENCE

PART NUMBER INDEX

Part	Page	Part	Page	Part	Page	Part	Page
250-0787	519	251-9750	419	253-9498	▶488	256-7206	847
	525	251-9751	419		490	256-7280	664
250-0841	▶95	251-9752	419	253-9521	842	256-7485	639
	96	251-9754	5	253-9795	489	256-7822	567
250-1441	337		▶305	254-0004	412		571
250-2320	429	251-9755	305	254-1425	97	256-7884	456
250-2321	429	251-9757	305	254-1519	540	256-7885	456
250-2322	383	251-9758	5	254-3571	625	256-7886	456
250-2326	429		▶430		627	256-7887	456
250-3895	851	251-9759	5	254-4108	638	256-7890	938
250-3920	891		▶436		▶639	256-7891	938
250-3924	891	251-9760	5	254-4357	107	256-7892	938
250-4628	879		▶476		▶116	256-7893	938
250-7531	666	251-9885	831	254-5068	768	256-7894	938
	668	251-9886	831		769	256-7895	938
	670	252-0737	694		770	256-8768	911
	673	252-1631	559		771		▶924
250-8276	▶911	252-5874	945		▶793	256-9997	629
250-8327	68	252-5917	▶221	254-5069	▶791	257-0267	666
250-9308	840		564	254-5072	▶794		668
250-9309	840		599	254-5073	▶792		670
250-9310	840	252-5920	164	254-5146	636		673
250-9311	840		▶226		▶642		▶701
250-9312	840	252-5924	▶225	254-5525	▶164	257-0499	635
251-1082	138		539	254-5789	631	257-0500	635
251-1197	243	252-5925	▶219	254-6549	639	257-1766	▶718
251-1700	1		715	254-6555	639	257-2008	807
	▶443		778	254-7032	621		808
251-1701	443	252-8211	486	254-8501	473		▶838
	▶466	252-9256	629	254-8502	473	257-2016	807
251-1702	466		▶676	254-8503	473		808
251-1705	443	253-0010	526	254-9139	576		▶932
	▶467	253-0272	668	254-9140	574	257-2197	932
251-1706	467	253-0575	912	254-9146	912	257-3227	847
251-1708	443	253-0861	937	254-9147	912	257-5064	478
	▶468	253-2111	254	254-9149	569	257-8471	521
251-1709	468	253-2538	469	254-9150	571	258-0733	207
251-1712	443	253-2539	469	255-3613	615	258-0883	97
251-2008	333	253-2540	469	255-3686	315		▶218
251-2009	333	253-2541	469		320	258-2403	7
251-2010	333	253-2547	469	255-4367	896		▶96
251-2011	333	253-2548	469	255-4368	871	258-6598	612
251-2138	451	253-2550	469	255-4369	131	258-7370	859
251-2139	451	253-2553	469	255-4370	178		860
251-3104	708	253-2555	469	255-4371	178		861
	709	253-2556	469	255-4954	91		862
251-3564	473	253-2673	590	255-5284	134	258-7484	129
251-4160	129	253-3471	135	255-5285	133	258-7623	896
251-4243	871		▶138	255-8545	509	258-7624	896
251-4282	885	253-3555	384	256-0083	639	258-8372	903
251-4283	885	253-3945	▶282	256-0854	938	258-8723	6
251-4284	885		383	256-2866	666		▶33
251-4339	167	253-3951	164	256-3363	▶666	258-8783	526
251-4755	443		165		680	258-8784	627
251-4756	443		▶228	256-3643	659	258-8785	627
251-4760	443	253-4025	664		▶680	258-8786	627
251-5872	916	253-4026	680	256-4362	664	258-8787	627
251-6079	451		682	256-4363	664	259-1502	647
251-6351	328		684	256-4552	664		650
251-7294	451		▶694	256-4884	451		653
251-8248	871	253-4531	810	256-5068	▶131		656
251-9340	93	253-9474	451		148		659
251-9739	419	253-9476	451	256-5310	78	259-1970	650
251-9742	419	253-9477	451	256-6628	68		656
251-9746	419	253-9478	451	256-7205	847		659

▶ PRIMARY REFERENCE

PART NUMBER INDEX

Part	Page
259-1971	647
	650
	653
	656
	659
259-1998	▶864
259-1999	▶866
	890
259-2092	647
	653
259-4397	142
259-4399	142
259-5501	644
259-5502	644
259-5503	644
259-5504	642
	▶644
259-5507	642
259-5509	642
259-5588	165
259-6893	842
259-7060	534
260-0149	605
260-0411	534
260-0955	180
260-1059	165
260-1060	165
260-1321	165
260-1530	296
	▶437
260-1531	▶433
	539
260-1533	▶438
	481
260-1534	▶431
	539
260-3053	666
	668
	670
	673
260-3055	666
	668
	670
	673
260-3056	670
260-3057	670
260-3058	666
	668
	670
	673
260-3820	456
260-3821	456
260-3840	938
260-4693	▶819
260-4698	474
260-4861	97
260-5764	488
260-5786	▶68
260-6465	337
260-6736	668
260-7765	▶164
260-8590	664
	666
	668
	670
	673
	694
	▶697
260-8636	645
260-9584	296
	▶337
260-9602	243
260-9984	176
260-9985	176
261-0017	▶668
	680
	684
	687
261-0018	▶670
	682
	684
	686
	687
261-0019	▶673
	680
	682
	684
	686
	687
261-0424	678
261-0441	91
261-0471	945
261-2332	172
261-2333	172
261-3222	142
261-3224	142
261-3226	▶142
	871
261-3682	653
	▶682
261-3683	656
	▶684
261-3721	6
	▶16
261-3802	205
	▶207
261-4171	647
	▶686
261-4172	650
	▶687
261-4405	174
261-4406	174
261-4884	174
261-5636	937
261-5637	937
261-5689	60
261-5690	60
261-6639	91
261-6683	937
261-6684	937
261-8531	89
261-8716	482
262-0262	474
262-0263	474
262-0264	474
262-0265	474
262-0266	474
262-1085	2
	▶481
262-1379	5
	▶426
262-1380	426
262-1381	426
262-1383	426
262-1408	243
262-2043	▶144
	148
262-4561	124
262-4834	486
	▶489
262-4914	▶380
	485
262-4917	380
262-4918	380
262-5227	486
262-5236	565
262-5237	567
262-5238	569
	571
262-5239	565
	567
	569
	571
262-5240	565
	567
262-5265	666
	670
	673
	694
262-7399	▶768
262-7400	▶736
	768
262-7402	▶769
262-7403	▶770
262-7404	▶771
262-7405	▶776
262-7406	▶777
262-7414	▶738
	769
262-7415	▶740
	770
262-7416	▶742
	771
262-7417	▶751
	776
262-7418	▶753
	777
262-9154	871
262-9762	5
262-9949	▶220
263-0056	▶401
263-1202	595
263-1203	595
263-1230	180
263-1493	243
263-1774	207
263-1995	569
	571
263-2166	871
263-2541	465
263-3322	▶148
263-4133	▶222
263-4134	▶223
263-4978	627
263-5255	▶135
263-6322	▶365
263-6323	365
263-6353	▶205
263-6667	205
	▶266
263-6668	266
263-6703	516
263-7063	4
263-7121	▶365
263-7474	639
263-7545	785
263-7910	365
263-8008	▶407
263-8948	131
263-9088	131
	▶894
263-9321	▶365
263-9322	365
263-9574	126
263-9742	516
264-0551	148
264-1082	▶463
264-1135	▶240
	903
264-1136	240
264-1379	365
264-1446	433
264-3637	91
264-4872	131
264-7671	131
264-7757	293
265-5039	180
265-5044	▶180
	903
265-5046	4
	▶903
265-6681	417
265-6695	▶499
	807
	808
265-6696	571
265-7605	396
265-7606	396
265-7607	397
265-7929	296
	▶432
265-8171	136
	138
265-9525	▶365
265-9642	144
265-9643	144
266-2090	716
266-6590	825
266-6591	825
266-6592	825
266-6593	825
266-6594	481
	▶825
266-6631	825
266-6632	825
266-6633	825
266-7230	282
266-7476	▶890
266-7477	4
	▶890

▶ PRIMARY REFERENCE

PART NUMBER INDEX

Part	Page
266-7478	▶3
266-8944	825
266-9861	396
267-2809	162
267-3506	338
267-4603	894
267-4971	388
	392
	▶465
267-5222	496
268-1166	3
268-1169	▶366
268-1264	3
268-1497	70
268-1835	▶102
	110
268-1839	7
	▶110
268-4422	129
268-5232	129
268-6372	448
	458
268-6373	458
268-8792	800
	834
269-0671	▶4
269-1883	463
	▶708
269-2010	▶458
	463
269-2011	463
269-5245	270
269-5247	165
	▶270
269-6606	165
269-6608	4
	▶165
269-8066	3
	392
269-9398	▶631
	680
	682
	684
	686
	687
270-1768	694
270-3388	▶820
	896
270-5320	100
270-8937	595
271-0263	499
	▶500
271-0264	▶496
	500
271-2417	16
271-3952	254
271-4010	143
	▶279
271-4011	279
271-4016	143
	▶273
271-4017	273
271-4024	▶234
	798
271-4026	▶259
271-4027	259
271-4028	164
	165
	▶274
271-4029	274
271-4030	274
271-4037	164
	▶275
271-4038	275
271-4039	275
271-4957	404
	408
271-4958	404
	408
271-6472	891
271-7219	388
	392
	417
271-7220	▶417
	443
271-9248	▶633
	680
	682
	684
	686
	687
272-0145	623
272-0146	623
272-0147	623
272-0148	623
272-0149	623
272-0151	623
272-0153	623
272-0154	623
272-0155	623
272-0156	623
272-0181	▶68
272-1408	783
272-1423	▶783
272-1956	90
272-2905	392
272-2915	388
	392
272-2916	388
	392
272-4867	388
	392
272-4868	388
	392
272-5556	404
	408
272-5672	639
272-5749	388
	392
272-6174	595
272-6537	126
272-6674	842
272-7003	666
	670
273-1751	526
	615
273-1888	627
273-2554	404
	408
273-2638	502
273-2934	748
	751
273-3022	748
	749
	751
	753
273-3023	748
	749
	751
	753
273-3241	615
273-3592	392
273-3761	▶784
273-3765	751
	753
273-3958	615
273-5464	595
273-6356	▶893
273-9693	615
274-1262	639
274-5872	615
274-6580	476
274-7053	408
274-7066	439
	440
274-7407	70
275-0023	▶280
	715
275-0025	280
275-0494	751
	753
275-0495	751
	753
275-0571	402
275-0572	402
275-4024	254
275-5635	387
275-6101	▶605
	715
	778
275-8294	825
275-8297	825
275-8299	825
275-8301	825
275-8302	825
275-8303	825
275-8304	825
275-8305	825
275-8388	401
	▶408
275-8544	▶532
	533
275-8815	716
	790
275-8880	615
275-8903	78
275-9727	465
275-9728	465
275-9774	388
	392
275-9916	254
275-9955	328
276-0031	131
276-0730	412
276-1187	408
	▶439
276-1188	439
276-1190	408
	▶440
276-1191	440
276-1193	408
276-1201	408
276-1202	408
276-1205	408
276-1211	408
276-1212	408
276-1413	404
	408
276-1414	404
	408
276-1415	404
276-1416	404
276-1417	408
276-1418	408
276-2124	439
276-2125	440
276-2128	401
	▶434
276-2129	408
276-2563	▶608
	778
276-2567	608
276-2602	605
276-3071	▶610
	715
276-3073	610
276-3899	471
276-3964	832
	▶834
276-3965	799
	▶800
276-4044	306
276-4045	306
276-4188	476
276-4191	476
276-4194	476
276-4196	476
276-4197	476
276-4199	476
276-4217	476
276-4218	476
276-5187	▶772
276-5188	▶773
276-5193	▶744
	772
276-5194	▶746
	773
276-5386	113
276-5414	▶398
276-5695	619
276-5698	619
276-7533	344
276-8069	453
276-8173	453
276-9072	647
	650
	653
	656

▶ PRIMARY REFERENCE

PART NUMBER INDEX

Part	Page	Part	Page	Part	Page	Part	Page
	659		463				
	▶698		▶471				
277-0731	532	281-0623	471				
277-2545	595	281-0626	▶448				
277-2548	595		461				
277-2550	595	281-0628	▶451				
277-2935	306		461				
277-2936	306	281-0629	451				
277-2941	306	281-0630	451				
277-4547	408		▶486				
277-4548	408	281-0632	486				
277-4549	408	281-0634	▶453				
277-4551	434		461				
277-5334	461		463				
	463	281-0635	453				
	▶868	281-0636	453				
277-6155	868		▶490				
277-6203	816	281-0639	461				
277-6204	816		▶709				
277-7570	574	281-0640	461				
	576		463				
277-8271	236	281-0642	461				
277-8272	236		▶790				
277-8628	79	281-8137	▶386				
277-9418	388		461				
278-0123	871		463				
278-0647	816	281-8741	▶236				
278-2076	708		461				
	709		463				
278-2078	451	281-8742	236				
278-2656	78	281-8871	130				
278-4400	847		▶871				
278-8965	573	281-8872	▶129				
278-8967	573		130				
278-8970	573	281-8875	4				
278-8974	573		▶130				
279-3440	598	282-0027	448				
	599	282-3454	437				
	▶704	282-3456	437				
	778	282-6443	▶141				
279-3561	▶705	282-6661	516				
	715	282-6964	463				
279-6141	328		▶716				
279-6143	328	283-0660	94				
279-6641	574	283-4380	408				
	576	283-4381	408				
279-8860	619	284-1010	666				
280-0440	574		668				
	576		673				
280-1436	169	284-1011	666				
280-1437	169		668				
280-1456	▶169		673				
280-2748	47	284-1017	666				
280-2812	539		668				
280-3051	▶599		673				
280-3329	▶435	284-1018	666				
	599		668				
280-4118	▶241		673				
	807	284-1239	595				
	808	284-8631	▶595				
280-4119	243		639				
280-7000	825						
280-7076	485						
280-7078	485						
281-0622	461						

▶ PRIMARY REFERENCE

MEMORANDA

CATERPILLAR®

© 2005 Caterpillar
All Rights Reserved

Printed in U.S.A.

CATERPILLAR®

© 2005 Caterpillar
All Rights Reserved

Printed in Belgium