SEBP5785-15
January 2015

VOLUME I
Pages 1-630

RUTHZIL TRATOR COMERCIAL DE PEÇAS LTDA 11 97083-6812 ROLANDO

Parts Manual

950H Wheel Loader

JLX1-Up (Machine)
KHX1-Up (Engine)
TX71-Up (Engine)
BYY1-Up (Transmission)
BYZ1-Up (Transmission)
KYM1-Up (Transmission)
KYN1-Up (Transmission)
W2W1-Up (Transmission)
W2X1-Up (Transmission)
4AT1-Up (Torque Converter)

Powered By C7.2 Engine
This Parts Manual is also available in pdf Format on CD

Product and Dealer Information

Note: For product identification plate locations, see the section “Product Identification Information” in the Operation and Maintenance Manual.

Delivery Date: _____

Product Information

Model: _____

Product Identification Number: _____

Engine Serial Number: _____

Transmission Serial Number: _____

Generator Serial Number: _____

Attachment Serial Numbers: _____

Attachment Information: _____

Customer Equipment Number: _____

Dealer Equipment Number: _____

Dealer Information

Name: _____ Branch: _____

Address: _____

_____

_____

	Dealer Contact	Phone Number	Hours
Sales:	_____	_____	_____
Parts:	_____	_____	_____
Service:	_____	_____	_____

MEMORANDA

TABLE OF CONTENTS

NAME	PAGE
GENERAL INFORMATION	**A6**
REPAIR ALTERNATIVES	**A9**
SUPPLEMENTAL COOLANT ADDITIVES	A10
MAINTENANCE PARTS	**A11**
INDEX	**A16**
MACHINE ARRANGEMENT	**1**
CHASSIS AR	1
COMMON AR	2
CONFIGURATION AR	2
CONVERSION AR-MACHINE	4
DISTRIBUTION AR	7
OPTION AR-CAB	8
OPTION AR-COLD WEATHER	8
OPTION AR-LIGHTING	9
OPTION AR-PRECLEANER	9
OPTION AR-REGIONAL	10
ENGINE ARRANGEMENT	**11**
ENGINE AR	11
ENGINE AR-COMPLETE	12
ENGINE AR-CORE	16
INSTALLATION AR-ENGINE	17
BASIC ENGINE	**18**
CAMSHAFT GP	18
CARRIER GP-SEAL	19
COVER GP-CYLINDER BLOCK	20
COVER GP-FRONT HOUSING	22
COVER GP-VALVE MECHANISM	24
CRANKSHAFT GP	25
CYLINDER BLOCK GP	27
CYLINDER HEAD AS	31
CYLINDER HEAD GP	33
DAMPER & PULLEY GP	39
DRAIN GP-ENGINE OIL	40
DRIVE GP-ACCESSORY	41
FASTENER GP-CYLINDER HEAD	42
FASTENER GP-DAMPER & PULLEY	43
FASTENER GP-FRONT COVER	44
FASTENER GP-FRONT HOUSING	45
FLYWHEEL GP	47
GEAR GP-FRONT	48
HOUSING GP-FLYWHEEL	49
HOUSING GP-FRONT	50
IDLER GP-BELT	51
KIT-CYLINDER HEAD GASKET	52
KIT-ENGINE GASKET	53
KIT-FRONT COVER GASKET	54
KIT-REAR COVER GASKET	55
LIFTER GP-VALVE	56
LIFTING GP-ENGINE	57
MOUNTING GP-ALTERNATOR	58
MOUNTING GP-ENGINE & XMSN	59
MOUNTING GP-STARTING MOTOR	60
PAN GP-OIL	61
PISTON & ROD GP	62
PLUG GP-CYLINDER BLOCK	63
PLUG GP-ENGINE	64
PULLEY GP-IDLER	65
ROCKER ARM GP	67
SEAL GP-CRANKSHAFT	69
VALVE MECHANISM GP	70
LUBRICATION SYSTEM	**75**
ADAPTER GP-OIL LINE	75
BREATHER GP	76
FILLER GP-ENGINE OIL	77
FILTER GP-ENGINE OIL	78
FUMES DISPOSAL GP	79
LINES GP-ENGINE OIL	81
LINES GP-ENGINE OIL DRAIN	82
LINES GP-TURBOCHARGER OIL	83
PUMP GP-ENGINE OIL	85
COOLING SYSTEM	**87**
COOLER GP-ENGINE OIL	87
COOLING AR-HIGH AMBIENT TEMP	88
COOLING GP-SUPPLEMENTAL	94
ELBOW GP-WATER	96
FRAME GP-RADIATOR	97
GUARD GP-FAN	98
LINES GP-WATER	99
PUMP GP-WATER	112
RADIATOR & FAN GP	115
AIR INLET AND EXHAUST SYSTEM	**118**
AIR CLEANER GP	118
COVER GP-AIR INLET	120
ELBOW GP-AIR INLET	122
FASTENER GP-INLET MANIFOLD	124
LINES GP-AFTERCOOLER AIR	125
LINES GP-AIR	127
MANIFOLD GP-EXHAUST	129
MOUNTING GP-MUFFLER	130
MUFFLER GP	132
PRECLEANER GP	135
TURBOCHARGER GP	137
FUEL SYSTEM	**139**
BASE GP-FUEL FILTER	139
FILTER & LINES GP-FUEL	140
FILTER GP-FUEL	143
FILTER GP-WATER SEP & FUEL	145
INJECTOR GP-FUEL	146
KIT-FUEL SYSTEM GASKET	149
LINES GP-FUEL	150

TABLE OF CONTENTS

NAME	PAGE
LINES GP-FUEL DRAIN	154
LINES GP-INJECTOR HYD PUMP	155
PUMP & MTG GP-UNIT INJ HYD	157
PUMP GP-FUEL INJECTION	159
PUMP GP-FUEL PRM & PRIM FILTER	162
PUMP GP-FUEL PRM & WATER SEP	165
PUMP GP-FUEL TRANSFER	166
PUMP GP-UNIT INJECTOR HYD	167
REGULATOR GP-FUEL PRESSURE	169
TANK & MTG GP-FUEL	170
TANK GP-FUEL	171
ELECTRICAL AND STARTING SYSTEM	173
ALARM GP	173
ALTERNATOR GP-CHARGING	175
BATTERY & WIRING GP	177
BLOCK GP-JUNCTION	180
CAMERA AR	181
CIRCUIT BREAKER GP	184
CONTROL & MTG GP-ENGINE ELEK	185
CONTROL AR-AUTODIG	187
CONTROL GP-AUTODIG	190
CONTROL GP-ENGINE ELECTRONIC	191
CONTROL GP-UNPROGRAMMED	192
COVER GP-STARTING MOTOR	194
ELECTRICAL AR	195
ELECTRONICS GP-COMMUNICATION	195
ELECTRONICS GP-IMPLEMENT	196
ELECTRONICS GP-MONITOR	196
ELECTRONICS GP-POWER TRAIN	197
FASTENER GP-WIRING HARNESS	198
GUARD GP-ALTERNATOR	199
HARNESS AS-CAB	200
HARNESS AS-CHASSIS	202
HARNESS AS-CONTROL	206
HARNESS AS-ENGINE	207
HARNESS AS-FRONT	210
HARNESS AS-LIGHTING	210
HARNESS AS-RADIO	212
HARNESS AS-SOLENOID	213
HARNESS AS-SWITCH	214
HARNESS AS-WIRING	214
HEATER GP-JACKET WATER	216
INSTALLATION AR-COMMUNICATION	218
INSTALLATION AR-SECURITY	219
INSTALLATION GP-COMMUNICATION	220
INSTALLATION GP-SECURITY	226
LAMP GP-DOME	228
LAMP GP-FLOOD	229
LAMP GP-HEAD & SIGNAL	237
LAMP GP-STOP & TAIL	244
LIGHTING GP-FLOOD	246
LIGHTING GP-ROADING	257
LIGHTING GP-WARNING BEACON	261
PANEL GP-CIRCUIT BREAKER	263
PROTECTION GP-WIRING	269
RADIO GP-COMMUNICATION	270
RELAY GP	271
SENSOR & MTG GP-LIFT POSITION	272
SENSOR & MTG GP-PRESSURE	275
SENSOR & MTG GP-TILT POSITION	276
SENSOR GP-ENGINE	278
SENSOR GP-POSITION	282
SENSOR GP-PRESSURE	284
SENSOR GP-SPEED	291
SENSOR GP-TEMPERATURE	294
STARTING AID AR-ETHER	297
STARTING AID GP	298
STARTING AID GP-ETHER	299
STARTING MOTOR GP-ELECTRIC	301
SWITCH GP-DISCONNECT	306
SWITCH GP-MAGNETIC	307
SWITCH GP-PRESSURE	311
SWITCH GP-QUICK COUPLER	313
SWITCH GP-RIDE CONTROL	314
SWITCH GP-ROCKER	315
SWITCH GP-ROTARY	316
SWITCH GP-SECONDARY STEERING	317
SWITCH GP-SIGNAL	318
SWITCH GP-WIPER	322
VALVE GP-ETHER STARTING	323
WARNING GP-BACKUP	324
WIRING GP-AUTOLUBE CONTROL	325
WIRING GP-AXLE TEMPERATURE	327
WIRING GP-CAB	329
WIRING GP-CHASSIS	338
WIRING GP-CONTROL	348
WIRING GP-ELECTRIC CLUTCH	354
WIRING GP-ELECTROHYDRAULIC	355
WIRING GP-ELECTRONIC CONTROL	356
WIRING GP-ENGINE	357
WIRING GP-ETHER STARTING AID	367
WIRING GP-FRONT	368
WIRING GP-LIGHTING	370
WIRING GP-MONITOR	372
WIRING GP-PROTECTION	374
WIRING GP-SECONDARY STEERING	376
WIRING GP-SENSOR	379
WIRING GP-STEERING	383
POWER TRAIN	**384**

TABLE OF CONTENTS

NAME	PAGE
AXLE AR-FIXED	384
AXLE AR-FIXED & OSCILLATING	386
AXLE AR-OSCILLATING	389
BRAKE & PLANETARY GP	392
CONTROL GP-TRANSMISSION HYD	396
COOLER & MTG GP-TRANSMISSION	398
COOLER AR-AXLE OIL	399
DIFFERENTIAL GP	401
DIFFERENTIAL GP-LIMITED SLIP	402
DRAIN GP-ECOLOGY	404
FILLER GP-POWER TRAIN OIL	406
FILTER & LINES GP-TRANSMISSION	410
FILTER GP-OIL	411
GAUGE GP-OIL LEVEL (DIPSTICK)	412
GEAR GP-BEVEL & PINION	414
GEAR GP-OUTPUT TRANSFER	420
HOUSING GP-AXLE	429
HOUSING GP-FIXED AXLE	443
HOUSING GP-OSCILLATING AXLE	445
LINES GP-AXLE OIL COOLER	447
LINES GP-TORQUE CONV COOLER	455
MOTOR GP-GEAR	458
MOUNTING GP-AXLE	459
MOUNTING GP-AXLE OIL COOLER	460
MOUNTING GP-RIM	461
PLANETARY GP-TRANSMISSION	462
POWER TRAIN AR	469
PUMP & MTG GP-AXLE OIL COOLER	470
PUMP GP-TRANSMISSION	472
RIM AR	475
RIM GP-DEMOUNTABLE	476
SHAFT GP-DRIVE	479
SLIP JOINT GP	484
SPIDER & BEARING GP	486
TIRE & RIM AR	487
TORQUE CONVERTER & HOUSING GP	489
TORQUE CONVERTER GP	491
TRANSMISSION AR	493
UNIVERSAL JOINT GP	494
VALVE GP-MODULATING	495
VALVE GP-RELIEF	498
VALVE GP-TIRE	500
FRAME AND BODY	**501**
ACTUATOR GP-POWER	501
BLOCK GP-AXLE OSC LIMITER	502
BOSS GP-LOADER FRAME	503
BOSS GP-REAR FRAME	505
BOX GP-BATTERY	506
CONVERSION GP-ROADING	507
COUNTERWEIGHT & MOUNTING GP	509
COUNTERWEIGHT GP	510
DEFLECTOR GP-FENDER	514
DOOR GP-ACCESS	515
ENCLOSURE AS-HYDRAULIC TANK	517
ENCLOSURE GP-SERVICE CENTER	518
EXTENSION GP-FENDER	519
FASTENER GP-COVER	521
FENDER AR-ROADING	525
FENDER GP	526
FENDER GP-ROADING	531
FRAME AS-LOADER	535
FRAME AS-REAR	539
GRILL GP-RADIATOR	541
GUARD GP-AXLE	543
GUARD GP-AXLE OIL COOLER	544
GUARD GP-FRONT	545
GUARD GP-POWER TRAIN	547
HANDRAIL GP	549
HARDWARE GP-LOADER FRAME	550
HARDWARE GP-REAR FRAME	552
HINGE GP-ROADING FENDER	555
HITCH GP-ARTICULATING	557
HOOD & GUARD GP	559
LADDER GP	563
LINES GP-CENTRAL LUBRICATION	569
LINES GP-FRONT LUBRICATION	572
LINES GP-GREASE	581
LINES GP-REAR LUBRICATION	585
LINK GP-STEERING FRAME LOCK	590
LUBRICATION AR-AUTOMATIC	591
MOUNTING GP-BRACKET	593
MOUNTING GP-REGISTRATION	594
PANEL GP-HOOD	595
PANEL GP-SIDE	598
PLATFORM GP-SERVICE	602
PUMP & MTG GP-LUBRICATION	603
PUMP GP-LUBRICATION	605
SHIELD GP-ENGINE COMPARTMENT	607
STEP GP	611
SUPPORT GP-AIR INLET	614
SUPPORT GP-HOOD	615
SUPPORT GP-VALVE & FILTER	616
SUPPRESSION AR-SOUND	618
SUPPRESSION GP-SOUND	619
TILT GP-HOOD	622
VALVE & LINES GP-LUBRICATION	623
VALVE GP-LUBE DISTRIBUTION	625
BRAKING SYSTEM	**631**
ACCUMULATOR GP-HYDRAULIC	631
ACTUATOR GP-PARKING BRAKE	633
BRAKE GP-PARKING	634

TABLE OF CONTENTS

NAME	PAGE
CONTROL GP-FOOT BRAKE	636
CONTROL GP-PARKING BRAKE	638
CONTROL GP-SERVICE BRAKE	640
VALVE GP-BRAKE CONTROL	643
STEERING SYSTEM	**646**
CYLINDER & MTG GP-STEERING	646
CYLINDER GP-STEERING	647
LINES GP-SECONDARY STEERING	649
LINES GP-STEERING	651
MANIFOLD GP-CONTROL	669
PUMP & MOTOR GP-SEC STEERING	671
PUMP & MTG GP-METERING	672
PUMP & MTG GP-SECONDARY STEER	674
PUMP & MTG GP-STEERING	675
PUMP GP-PISTON	676
ROTATING GP-PUMP	683
SCREEN GP-CASE DRAIN	685
STEERING AR	686
STEERING AR-SECONDARY	686
STEERING COLUMN GP	687
STEERING COLUMN GP-ADJUSTABLE	688
STEERING WHEEL GP	689
VALVE GP-CHECK	691
VALVE GP-PILOT	694
VALVE GP-PRESSURE REDUCING	696
VALVE GP-PUMP CONTROL	697
VALVE GP-RELIEF	700
VALVE GP-SECONDARY STEERING	702
VALVE GP-SHUTTLE	703
VALVE GP-STEERING	705
VALVE GP-STEERING NEUTRALIZER	710
HYDRAULIC SYSTEM	**712**
ACCUMULATOR GP-PILOT OIL	712
ACCUMULATOR GP-RIDE CONTROL	714
CONTROL AR-FAN	716
CONTROL AR-HIGH LIFT	718
CONTROL AR-RIDE	719
CONVERSION GP-CONTROL VALVE	720
CYLINDER & SEAL GP-LIFT	722
CYLINDER & SEAL GP-TILT	724
CYLINDER GP-COUPLER	727
CYLINDER GP-LIFT	729
CYLINDER GP-TILT	731
FILTER GP-OIL	734
GUARD GP-LIFT CYLINDER	735
HYDRAULIC AR	738
LINES GP-COUPLER	739
LINES GP-FRONT	748
LINES GP-HYD FAN DR & OIL CLR	752
LINES GP-HYDRAULIC	762
LINES GP-HYDRAULIC FAN	770
LINES GP-LIFT CYLINDER	775
LINES GP-RIDE CONTROL	777
LINES GP-TILT CYLINDER	778
MANIFOLD GP-CONTROL	782
MANIFOLD GP-VALVE	787
MOUNTING GP-HYDRAULIC TANK	789
PUMP & MOUNTING GP-AIR	790
PUMP & MTG GP-BRAKE & HYD FAN	792
PUMP GP-PISTON	794
ROTATING GP-PUMP	796
TANK GP-HYDRAULIC	797
VALVE & MTG GP-HYDRAULIC	799
VALVE & MTG GP-LOG LOADER	801
VALVE & MTG GP-MAIN CONTROL	804
VALVE GP-BANK 2	819
VALVE GP-CHECK	820
VALVE GP-CHECK & RELIEF	826
VALVE GP-CONTROL	827
VALVE GP-DIVERTER	848
VALVE GP-LOWERING CONTROL	850
VALVE GP-MAIN CONTROL	852
VALVE GP-PUMP CONTROL	876
VALVE GP-RELIEF	878
VALVE GP-SHUTTLE	880
VALVE GP-SOLENOID	881
VALVE GP-UNLOADING	885
IMPLEMENTS	**886**
ARM AS-LIFT	886
ARM GP-LIFT	890
BOSS GP-LIFT ARM	893
CONTROL GP-BUCKET	895
LINK AS-TILT	906
LINK GP-TILT	907
LINKAGE GP-BUCKET	909
LOGGING AR	914
OPERATOR STATION	**915**
ADJUSTER GP-SEAT	915
AIR CONDITIONER GP	917
ARM GP-WINDOW WIPER	925
ARMREST GP	926
CAB AR	927
CAB AR-ENCLOSED ROPS	928
CAB GP-ENCLOSED ROPS	929
COMPRESSOR GP-REFRIGERANT	939
CONDENSER & MTG GP-REFRIGERANT	944
CONTROL & MTG GP-ELHYD	948
CONTROL GP-HANDLE	964
CONTROL GP-JOYSTICK	967

TABLE OF CONTENTS

NAME	PAGE
CONTROL GP-STEERING	973
CONTROL GP-TRANSMISSION	979
CONTROL GP-UNPRGMED MONITOR	981
DISPLAY GP-CAMERA	982
DOOR GP-ACCESS	985
DOOR GP-CAB	986
DUCT & FILTER GP-CAB AIR	988
FLOOR GP-SOUND SUPPRESSION	990
GUARD GP-WINDOW	992
HEATER & AIR CONDITIONER GP	994
HORN GP-ELECTRIC	995
INSTALLATION GP-CONTROLS	996
INSTALLATION GP-RADIO	998
KIT-SHOCK ABSORBER	1001
LATCH GP-CAB DOOR & WINDOW	1002
LINER GP-CAB	1004
LINES GP-AIR CONDITIONER	1008
LINES GP-CAB HEATER	1014
LITERATURE GP	1019
MIRROR GP-REAR VIEW	1020
MODULE GP-DISPLAY	1032
MONITOR & MOUNTING GP	1033
MONITOR AR-PAYLOAD	1035
MONITOR GP-PAYLOAD	1036
MOTOR GP-WINDOW WIPER	1044
MOUNTING GP-CAB	1047
MOUNTING GP-MONITOR	1052
OPERATOR AR	1053
OPERATOR GP	1054
PAN GP-SEAT	1055
PANEL GP-INSTRUMENT	1057
BASE GP-FOOT BRAKE	1061
PEDAL GP-BRAKE	1062
PEDAL GP-GOVERNOR	1064
PLATFORM AR	1066
PRINTER GP-COMPUTER	1067
RADIO GP	1069
SEALING GP-GLASS	1069
SEAT GP	1070
SEAT GP-SUSPENSION	1072
SHROUD GP-CAB	1077
SUPPRESSION AR-SOUND	1078
SUPPRESSION GP-CAB SOUND	1079
SUPPRESSION GP-SOUND	1082
SUSPENSION GP-SEAT	1089
TANK GP-WINDOW WASHER	1092
VISOR GP-CAB	1093
WASHER GP-WINDOW	1094
WINDOW GP-CAB	1095
WIPER GP-WINDOW	1104
WORK TOOLS	**1110**
ADAPTER GP-TIP	1110
ARM GP-MATERIAL HANDLING	1111
BUCKET AS-GENERAL PURPOSE	1112
BUCKET AS-MATERIAL HANDLING	1128
BUCKET AS-ROCK	1139
BUCKET AS-UTILITY	1146
BUCKET GP-GENERAL PURPOSE	1147
BUCKET GP-MATERIAL HANDLING	1156
BUCKET GP-ROCK	1163
BUCKET GP-UTILITY	1167
CARRIAGE GP-FORK	1168
CONTROL AR-QUICK COUPLER	1172
COUPLER GP-QUICK	1173
EDGE AS-CUTTING	1175
EDGE GP-CUTTING	1176
EDGE GP-SEGMENT	1179
FORK GP-PALLET	1180
PIN GP-FORK	1184
PROTECTOR GP-LINKAGE	1185
PROTECTOR GP-SIDE BAR	1186
TINE GP	1187
TIP GP-ABRASION	1191
TIP GP-EXTRA-DUTY	1192
TIP GP-GENERAL PURPOSE	1194
TIP GP-HEAVY PENETRATION	1195
TIP GP-PENETRATION	1196
SERVICE EQUIPMENT AND SUPPLIES	**1198**
BOX GP-SERVICE CENTER	1198
BOX GP-TOOL	1202
CERTIFICATION AR	1204
FILM GP	1205
KIT-GASKET	1207
LINES GP-DIAGNOSTIC	1210
PLATE & FILM GP	1214
PART NUMBER INDEX	**B1**

1. MACHINE IDENTIFICATION

Cat machines are identified by Product Identification Numbers (PIN). Some components included in a machine may be identified by Serial Numbers (S/N). Typical components that will be serialized include engines, transmissions, bulldozers, and rippers. The machine and engine are further identified by arrangement numbers and in some cases modification numbers. These numbers are shown on the product identification plate(s) and on the master plate in the operator's compartment.

Cat dealers need all of these numbers to determine accurate parts identification.

Effective First Quarter 2001 the Cat Product Identification Number (PIN) changed from 8 to 17 characters. In an effort to provide uniform equipment identification, Caterpillar and other construction equipment manufacturers are moving to comply with the latest version of the product identification numbering standard. Non-road machine PINs are defined by ISO 10261. The new PIN format will apply to all Cat machines and generator sets. The PIN plates and frame marking will display the 17 character PIN. The new format will look like the following:

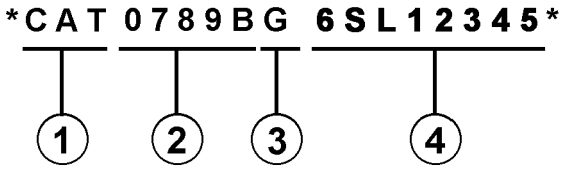

Where:

1. Caterpillar's World Manufacturing Code (characters 1-3)

2. Machine Descriptor (characters 4-8)

3. Check Character (character 9)

4. Machine Indicator Section (MIS) or Product Sequence Number (characters 10-17). These were previously referred to as the Serial Number.

Machines and generator sets produced before First Quarter 2001 will maintain their 8 character PIN format.

Components such as engines, transmissions, axles, etc. and work tools will continue to use an 8 character Serial Number (S/N).

2. ORDERING PARTS

⚠ WARNING

When replacement parts are required for this product Caterpillar recommends using Caterpillar replacement parts or parts with equivalent specifications including, but not limited to, physical dimensions, type, strength and material.

Failure to heed this warning can lead to premature failures, product damage, personal injury or death.

Quality Cat replacement parts are available from Cat dealers throughout the world. Their parts inventories are up to date and include all parts normally required to protect your investment in Cat machines. Dealers may offer repair kits or remanufactured parts to allow selection of the most effective repair alternative for a particular situation. When ordering parts, your order should specify the quantity, part number, part name, and the serial number/product identification number of the machine for which the parts are needed.

3. PARTS MANUAL ORGANIZATION

Product information in this manual is presented as "information elements" that represent all of the components for the specific model. Engine Arrangement and Seat Group are examples of information elements. The information elements are organized alphabetically by part name and secondarily by part number within each major section of the manual.

4. TABLE OF CONTENTS

A table of contents (TOC) is found at the beginning of the manual. The TOC lists each section of the manual with a complete list of all information elements organized as they appear in the manual. Page numbers are provided for quick reference to detailed parts identification illustrations and serviceable consist lists.

5. MAINTENANCE PARTS INDEX

The Maintenance Parts Index, located near the beginning of the manual, references most frequently used maintenance part numbers, providing description, quantity, usage and page number. This information is organized alphabetically by part description.

6. INDEX

The index located near the front of the manual is an alphabetical listing of all information elements included in the manual. Page numbers are provided for quick reference to detailed parts identification illustrations and serviceable consist lists.

7. PART NUMBER INDEX

A numerical index listing all part numbers and the corresponding page number(s) appears at the back of the manual.

8. CAPTIONS

Captions located at the beginning of each information element identify the part number and part name along with additional descriptive information. PIN and S/N information found in each caption should be used to select correct information for a specific machine. Field replacement options, identification of optional attachment components, and where used ("part of") information is also provided.

The first line of a caption is shown in larger type font to indicate the beginning of an information element. Captions for additional pages that may be required to illustrate an information element will be shown in standard type font and will include the term *(contd.)* .

9. NON-SERVICED PARTS

In some instances it is necessary to display non-serviced parts that are a link to a lower level serviceable consist lists. These non-serviced part numbers are shown in *italic* type indicating that they are not available.

10. PARTS LIST REFERENCE NUMBERS

Numbers shown in the Ref No column correspond to numbers used in the associated graphic(s). An alphabetic suffix may be added to a reference number to identify lower level consist items. Numbers shown in the Graphic Ref column refer to the graphic number identifier displayed in the lower left corner of each illustration. The Graphic Ref number may be used in combination with the item Ref No to determine the correct part number. There may be intentional omission of a Ref No in a consist list as information is updated to reflect the latest serviceable part numbers.

11. INDENTED PART NAMES

When a part name is indented in a parts list, it is part of (included in) the group or assembly under which it is indented.

12. ILLUSTRATION REFERENCE LETTERS

When necessary, illustrations contain reference letters (A, B, C etc.) that are intended to track lines and harnesses from one point to another. They are also used to show where to reconnect illustrations that have been separated.

13. ABBREVIATIONS AND SYMBOLS

O.D. – Outside Diameter
I.D. – Inside Diameter
A – Not Part Of This Group
B – Use As Required
C – Change From Previous Type
D – Order By The Meter
E – Order By The Centimeter
F – Not Shown
G – Order By The Inch
I – Refer To Hydraulic Information System
M – Metric Part
R – Remfg Part May Be Available
Y – Separate Illustration
Z – Not Serviced Separately

14. DESCRIPTION OF TYPE CHANGES

Type - A type is defined as any configuration change that requires an additional Information Element for an Arrangement, Group, or Assembly. If serial number breaks for types are not available, a type # (Type 1, Type 2, etc.) will be displayed in the caption. These "type" changes are identified with a "C" note (change from previous type) in the Parts List. Only the "types" that apply to this Parts Manual will be included. Additional types may exist causing "C" notes to appear on an Information Element when no other types are shown.

15.<END>

This symbol indicates the end of an information element.

NOTE:

Continuing improvement and advancement of product design may cause changes to your machine which may not be included in this publication. Whenever a question arises regarding your Cat product or this publication, please consult your Cat dealer for the latest available information.

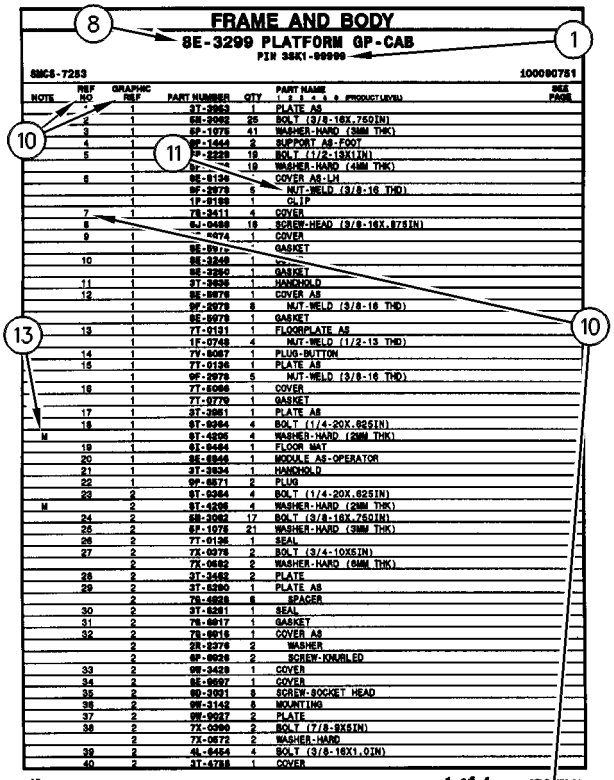

FRAME AND BODY

8E-3299 PLATFORM GP-CAB

PIN 38K1-00999

SMCS-7283 100090751

NOTE	REF NO	GRAPHIC REF	PART NUMBER	QTY	PART NAME 1 2 3 4 5 6 (PRODUCT LEVEL)	SEE PAGE
	1	1	3T-3963	1	PLATE AS	
	2	1	6M-3982	25	BOLT (3/8-16X.75DIN)	
	3	1	5P-1078	41	WASHER-HARD (3MM THK)	
	4	1	8E-1444	2	SUPPORT AS-FOOT	
	5	1	7P-2229	18	BOLT (1/2-13X1IN)	
		1	5P-[illegible]	18	WASHER-HARD (4MM THK)	
	6	1	8E-8136	1	COVER AS-LH	
		1	8F-2979	6	NUT-WELD (3/8-16 THD)	
		1	1F-8188	1	CLIP	
	7	1	7S-3411	4	COVER	
	8		6J-0488	18	SCREW-HEAD (3/8-16X.875IN)	
	9	1	[illegible]-0474	1	COVER	
		1	8E-8[illegible]	1	GASKET	
	10	1	8E-3249	1	[illegible]	
		1	8E-3250	1	GASKET	
	11	1	3T-3935	1	HANDHOLD	
	12	1	8E-8078	1	COVER AS	
		1	8F-2979	6	NUT-WELD (3/8-16 THD)	
		1	8E-8079	1	GASKET	
	13	1	7T-0131	1	FLOORPLATE AS	
		1	1F-0748	4	NUT-WELD (1/2-13 THD)	
	14	1	7V-8067	1	PLUG-BUTTON	
	15	1	7T-0136	1	PLATE AS	
		1	8F-2979	5	NUT-WELD (3/8-16 THD)	
	16	1	7T-8068	1	COVER	
		1	7T-0779	1	GASKET	
	17	1	3T-3951	1	PLATE AS	
	18	1	6T-9364	4	BOLT (1/4-20X.625IN)	
M		1	6T-4206	4	WASHER-HARD (2MM THK)	
	19	1	6T-8464	1	FLOOR MAT	
	20	1	8E-8948	1	MODULE AS-OPERATOR	
	21	1	3T-3934	1	HANDHOLD	
	22	1	9F-8571	2	PLUG	
	23	2	6T-9364	4	BOLT (1/4-20X.625IN)	
M		2	6T-4206	4	WASHER-HARD (2MM THK)	
	24	2	6M-3982	17	BOLT (3/8-16X.75DIN)	
	25	2	5P-1078	21	WASHER-HARD (3MM THK)	
	26	2	7T-0136	1	SEAL	
	27	2	7X-0378	2	BOLT (3/4-10X5IN)	
		2	7X-0682	2	WASHER-HARD (6MM THK)	
	28	2	3T-3462	2	PLATE	
	29	2	3T-8280	1	PLATE AS	
		2	7S-4828	6	SPACER	
	30	2	3T-8281	1	SEAL	
	31	2	7S-8817	1	GASKET	
	32	2	7S-8816	1	COVER AS	
		2	2S-2376	2	WASHER	
		2	6P-8626	2	SCREW-KNURLED	
	33	2	9W-3429	1	COVER	
	34	2	8E-8697	1	COVER	
	35	2	9D-3931	8	SCREW-SOCKET HEAD	
	36	2	9W-3142	8	MOUNTING	
	37	2	9W-9927	2	PLATE	
	38	2	7X-0290	2	BOLT (7/8-9X5IN)	
		2	7X-0572	2	WASHER-HARD	
	39	2	4L-6454	4	BOLT (3/8-16X1.0IN)	
	40	2	3T-4788	1	COVER	

12 FRAME AND BODY 1 of 4 SELP[illegible]70-01

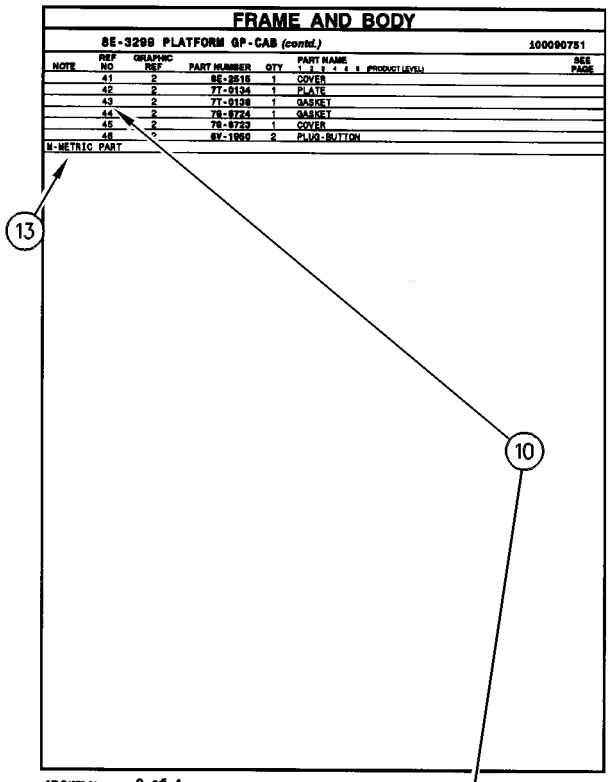

FRAME AND BODY

8E-3299 PLATFORM GP-CAB (contd.) 100090751

NOTE	REF NO	GRAPHIC REF	PART NUMBER	QTY	PART NAME 1 2 3 4 5 6 (PRODUCT LEVEL)	SEE PAGE
	41	2	8E-2516	1	COVER	
	42	2	7T-0134	1	PLATE	
	43	2	7T-0138	1	GASKET	
	44	2	7S-8724	1	GASKET	
	45	2	7S-8723	1	COVER	
	46	2	6V-1960	2	PLUG-BUTTON	

M-METRIC PART

SELP4570-01 2 of 4 FRAME AND BODY 13

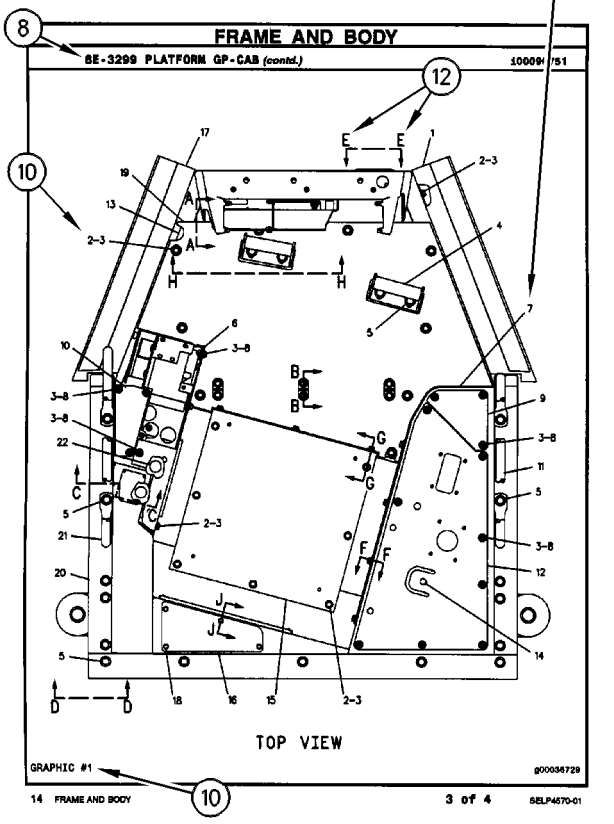

FRAME AND BODY

8E-3299 PLATFORM GP-CAB (contd.) 100090751

TOP VIEW

GRAPHIC #1 g00036729

14 FRAME AND BODY 3 of 4 SELP4570-01

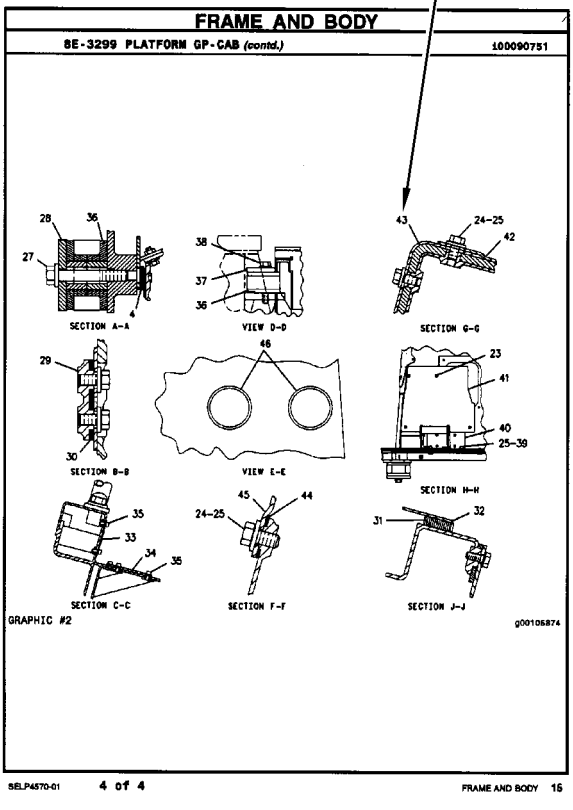

FRAME AND BODY

8E-3299 PLATFORM GP-CAB (contd.) 100090751

SECTION A-A

VIEW D-D

SECTION G-G

SECTION B-B

VIEW E-E

SECTION H-H

SECTION C-C

SECTION F-F

SECTION J-J

GRAPHIC #2 g00105874

SELP4570-01 4 of 4 FRAME AND BODY 15

REMANUFACTURED COMPONENTS

As an option when making repairs consider Cat Remanufactured Components. Components that are available through the Cat Remanufactured Program are identified three ways in the parts book:

- with the letter R in the note field of the parts list
- with an R* at the beginning of the first line of the caption
- with an *R at the end of the first line of the caption

Typical components included in the Remanufacturing Program include:

ALTERNATORS
CONNECTING RODS
CRANKSHAFTS - UNDERSIZE
CRANKSHAFTS - UPGRADE TO NEW
CYLINDER HEADS
ELECTRONIC CONTROL MODULES (ECM)
ELECTRONIC SENSORS
FUEL INJECTORS
FUEL NOZZLES
FUEL PUMPS
GOVERNORS
OIL PUMPS
PISTONS
SHORT BLOCKS
STARTERS
TURBOCHARGERS - COMPLETE
TURBOCHARGER CARTRIDGES
WATER PUMPS

Cat Remanufactured engines for many engine arrangements are also available.

SUPPLEMENTAL COOLANT ADDITIVES

CUSTOMER BENEFITS:

Protects against cavitation, foam, erosion, corrosion, and scale buildup in cooling systems.

- Provides measured coolant conditioner.

DESCRIPTION:

Additives deplete from the coolant with normal operation. For this reason, Supplemental Coolant Additives (SCA) must be added to all heavy duty coolants at regular intervals. In addition, when not using a fully formulated, pre-charged antifreeze, like Cat DEAC, an initial charge of SCA must be added to the cooling system. The amount of SCA added to the system is dependent on the capacity of the system.

The SCA for initial fill is provided as a liquid. SCA's for maintenance intervals are available in liquid form and as a spin-on element. (No Spin-on available for 3600 Family of Engines)

NOTE:

The amount of SCA added at initial fill is not the same as the amount added at maintenance intervals.

The coolant additive elements can be used with any ethylene or propylene glycol type antifreeze which meets ASTM D4985 or ASTM D5345 Specifications.

NOTE:

For use with standard heavy duty coolant only, not for use with Extended Life Coolant.

PARTS NEEDED:

Cooling System Capacity		Liquid SCA at Initial Fill	Liquid SCA at Maintenance*	Spin-on SCA Maintenance Element*
Liters	Gallons			
22-30	(6-8)	3P-2044 (1)	6V-3542 (1)	111-2370 (1)
30-38	(8-10)	3P-2044 (1) 6V-3542 (1)	111-2372 (1)	111-2369 (1)
38-49	(10-13)	3P-2044 (1) 8T-1589 (1)	111-2372 (1)	111-2369 (1)
49-64	(13-17)	3P-2044 (2)	8T-1589 (1)	9N-3368 (1)
64-83	(17-22)	3P-2044 (2) 8T-1589 (1)	111-2372 (1) 6V-3542 (1)	111-2371 (1)
83-114	(22-30)	3P-2044 (3) 8T-1589 (1)	3P-2044 (1)	9N-3718 (1)
114-163	(30-43)	3P-2044 (5)	3P-2044 (1) 6V-3542 (1)	111-2371 (2)
163-242	(43-64)	3P-2044 (8)	3P-2044 (2)	9N-3718 (2)

** Normal maintenance period is 250 hrs. See your Operation and Maintenance Manual for complete coolant maintenance instructions.*

( ) Indicates quantity required.

MAINTENANCE PARTS

DESCRIPTION	PART NUMBER	QTY	WHERE USED	PAGE
AIR INLET AND EXHAUST SYSTEM				
FILTER ELEMENT AS-AIR (SECONDARY)	245-6376	1	AIR CLEANER GP	119
FILTER ELEMENT-AIR (PRIMARY)	245-6375	1	AIR CLEANER GP	119
BASIC ENGINE				
BELT-SERPENTINE	253-4531	1	DRIVE GP-ACCESSORY	41
BREATHER AS (CRANKCASE)	9Y-2988	1	COVER GP-VALVE MECHANISM	24
CAP AS-ENGINE OIL FILLER	227-4531	1	COVER GP-VALVE MECHANISM	24
GASKET (WATER REGULATOR HOUSING)	222-5915	1	KIT-CYLINDER HEAD GASKET	52
SEAL-VALVE COVER	272-0388	1	COVER GP-VALVE MECHANISM	24
		1	KIT-CYLINDER HEAD GASKET	52
BRAKING SYSTEM				
CAP (GAS VALVE)	224-5132	1	ACCUMULATOR GP-HYDRAULIC	631
		1	ACCUMULATOR GP-HYDRAULIC	632
COOLING SYSTEM				
CAP AS-RADIATOR (7-PSI)	032-1464	1	LINES GP-WATER	105
GASKET (TEMPERATURE REGULATOR HOUSING)	222-5915	1	LINES GP-WATER	99
REGULATOR-WATER TEMPERATURE (94-DEG C) (COOLANT)	119-3075	2	LINES GP-WATER	99
ELECTRICAL AND STARTING SYSTEM				
CIRCUIT BREAKER AS (20-AMPERE)	288-3687	1	PANEL GP-CIRCUIT BREAKER	263
		1	PANEL GP-CIRCUIT BREAKER	266
CIRCUIT BREAKER AS (30-AMPERE)	139-4724	1	PANEL GP-CIRCUIT BREAKER	263
		1	PANEL GP-CIRCUIT BREAKER	266
CIRCUIT BREAKER AS (50-AMPERE)	171-2206	1	PANEL GP-CIRCUIT BREAKER	263
CIRCUIT BREAKER AS (80-AMPERE)	171-2210	1	PANEL GP-CIRCUIT BREAKER	263
		1	PANEL GP-CIRCUIT BREAKER	266
CIRCUIT BREAKER AS (90-AMPERE)	171-2211	1	PANEL GP-CIRCUIT BREAKER	263
		1	PANEL GP-CIRCUIT BREAKER	266
CIRCUIT BREAKER GP (15-AMPERE)	248-3288	1	PANEL GP-CIRCUIT BREAKER	263
		1	PANEL GP-CIRCUIT BREAKER	266
ELEMENT AS-JACKET WATER HEATER (240-VOLT, 1000-WATT)	124-0687	1	HEATER GP-JACKET WATER	217
FILTER (ETHER START)	358-4889	1	VALVE GP-ETHER STARTING	323
FLASHER AS (24-VOLT)	217-8166	1	SWITCH GP-SIGNAL	318
		1	SWITCH GP-SIGNAL	320
FUSE (10-AMPERE)	9W-1442	24	WIRING GP-CAB	331
FUSE (15-AMPERE)	9W-1441	7	WIRING GP-CAB	331
FUSE (20-AMPERE)	9W-1446	1	WIRING GP-CAB	331
HOLD-DOWN-BATTERY	153-6281	1	BATTERY & WIRING GP	177

MAINTENANCE PARTS

DESCRIPTION	PART NUMBER	QTY	WHERE USED	PAGE
KEY (BATTERY DISCONNECT)	8H-5306	1	SWITCH GP-DISCONNECT	306
LAMP (24-VOLT, 21-WATT)	9X-4493	1	LAMP GP-STOP & TAIL	245
		1	LIGHTING GP-ROADING	257
LAMP (24-VOLT, 21-WATT) (STOP, TAIL)	9X-4493	1	LAMP GP-STOP & TAIL	244
LAMP (24-VOLT, 5-WATT)	130-3515	1	LAMP GP-FLOOD	231
		1	LAMP GP-FLOOD	233
		1	LAMP GP-HEAD & SIGNAL	241
		1	LAMP GP-HEAD & SIGNAL	242
LAMP (24-VOLT, 5-WATT) (FLOODLIGHT)	130-3515	1	LAMP GP-HEAD & SIGNAL	237
		1	LAMP GP-HEAD & SIGNAL	238
		1	LAMP GP-HEAD & SIGNAL	239
		1	LAMP GP-HEAD & SIGNAL	240
LAMP (24-VOLT, 5-WATT) (POSITION)	130-3515	1	LAMP GP-HEAD & SIGNAL	243
LAMP (24-VOLT, 75/70-WATT)	9X-3465	1	LAMP GP-HEAD & SIGNAL	241
		1	LAMP GP-HEAD & SIGNAL	242
LAMP (24-VOLT, 75/70-WATT) (HIGH, LOW BEAM)	9X-3465	1	LAMP GP-HEAD & SIGNAL	237
		1	LAMP GP-HEAD & SIGNAL	238
		1	LAMP GP-HEAD & SIGNAL	239
		1	LAMP GP-HEAD & SIGNAL	240
		1	LAMP GP-HEAD & SIGNAL	243
LAMP (24-VOLT, HID)	290-8160	1	LAMP GP-FLOOD	235
		1	LAMP GP-FLOOD	236
LAMP (24-VOLT) (DOME LIGHT)	7N-9943	1	LAMP GP-DOME	228
LAMP GP-FLOOD (24-VOLT)	219-6485	2	LIGHTING GP-FLOOD	248
LAMP-FLOOD (24-VOLT, 5-WATT)	9X-4492	1	LAMP GP-STOP & TAIL	245
		1	LIGHTING GP-ROADING	257
LAMP-FLOOD (24-VOLT, 5-WATT) (STOP, TAIL)	9X-4492	1	LAMP GP-STOP & TAIL	244
LAMP-HALOGEN (24-VOLT, 70-WATT)	351-9918	1	LAMP GP-FLOOD	229
		1	LAMP GP-FLOOD	230
		1	LAMP GP-FLOOD	234
	9X-3463	1	LAMP GP-FLOOD	231
		1	LAMP GP-FLOOD	233
LAMP-HALOGEN (24-VOLT, 70-WATT) (FLOODLIGHT)	351-9918	1	LAMP GP-FLOOD	232
LAMP-TURN SIGNAL (24-VOLT, 21-WATT)	242-0588	1	LAMP GP-FLOOD	231
		1	LAMP GP-FLOOD	232
		1	LAMP GP-FLOOD	233
		1	LAMP GP-FLOOD	234
		1	LAMP GP-HEAD & SIGNAL	241
		1	LAMP GP-HEAD & SIGNAL	242
LAMP-TURN SIGNAL (24-VOLT, 21-WATT) (TURN SIGNAL)	242-0588	1	LAMP GP-HEAD & SIGNAL	237
		1	LAMP GP-HEAD & SIGNAL	238
		1	LAMP GP-HEAD & SIGNAL	239
		1	LAMP GP-HEAD & SIGNAL	240
		1	LAMP GP-HEAD & SIGNAL	243
PLUG-SEAL	8T-8737	1	LAMP GP-HEAD & SIGNAL	243

MAINTENANCE PARTS

DESCRIPTION	PART NUMBER	QTY	WHERE USED	PAGE
RELAY (ALARM)	4Y-6135	1	LIGHTING GP-ROADING	257
FRAME AND BODY				
FILTER AS-GREASE	196-1062	1	PUMP GP-LUBRICATION	605
LAMP (24-VOLT, 5-WATT)	263-2541	1	MOUNTING GP-REGISTRATION	594
LAMP AS (24-VOLT, 5-WATT)	125-4439	2	MOUNTING GP-REGISTRATION	594
FUEL SYSTEM				
CAP AS-FUEL (DEBRIS BOOT)	338-0912	1	TANK GP-FUEL	171
CAP-FUEL	284-9039	1	TANK GP-FUEL	171
FILTER AS-WATER SEP & FUEL (PRIMARY)	326-1644	1	FILTER GP-WATER SEP & FUEL	145
FILTER-FUEL (ADVANCED EFFICIENCY)	1R-0749	2	BASE GP-FUEL FILTER	139
FILTER-FUEL (ADVANCED EFFICIENCY) (SECONDARY)	1R-0762	1	FILTER & LINES GP-FUEL	140
STRAINER-FUEL (FILLER NECK SCREEN)	180-3730	1	TANK GP-FUEL	171
HYDRAULIC SYSTEM				
BREATHER (AIR/HYDRAULIC CYLINDER)	4H-6112	1	LINES GP-HYDRAULIC FAN	772
BREATHER (HYDRAULIC TANK)	258-2829	1	LINES GP-HYDRAULIC	762
		1	LINES GP-HYDRAULIC	766
CAP-FILLER (HYDRAULIC OIL)	7H-1447	1	TANK GP-HYDRAULIC	797
FILTER-OIL (ULTRA HIGH EFFICIENCY)	126-1818	1	FILTER GP-OIL	734
KEY	155-9133	1	PUMP GP-PISTON	794
SCREEN	299-7997	1	TANK GP-HYDRAULIC	797
	6E-5066	1	MANIFOLD GP-CONTROL	782
SCREEN AS	376-9067	2	TANK GP-HYDRAULIC	797
SCREEN AS (HYDRAULIC)	382-1511	1	LINES GP-HYDRAULIC	762
		1	LINES GP-HYDRAULIC	766
STRAINER AS-OIL	5D-7927	1	TANK GP-HYDRAULIC	797
LUBRICATION SYSTEM				
BREATHER (CRANKCASE)	164-0210	1	BREATHER GP	76
CAP AS-FILLER (ENGINE OIL)	5L-2952	1	FILLER GP-ENGINE OIL	77
FILTER AS-ENGINE OIL (ADVANCED EFFICIENCY)	1R-1807	1	FILTER GP-ENGINE OIL	78
HOSE-FUMES DISPOSAL	369-9203	1	FUMES DISPOSAL GP	80
OPERATOR STATION				
BELT-SERPENTINE	253-4531	1	COMPRESSOR GP-REFRIGERANT	940
BLADE AS-WIPER (400-MM)	6V-5851	1	WIPER GP-WINDOW	1104
		1	WIPER GP-WINDOW	1107
BLADE AS-WIPER (700-MM)	6V-7419	1	WIPER GP-WINDOW	1104
		1	WIPER GP-WINDOW	1107
CAP-VENTED (VENTED)	388-9379	1	TANK GP-WINDOW WASHER	1092

MAINTENANCE PARTS

DESCRIPTION	PART NUMBER	QTY	WHERE USED	PAGE
DRYER AS-REFRIGERANT (IN-LINE)	257-3226	1	LINES GP-AIR CONDITIONER	1010
ELEMENT AS-HEATER	198-6571	1	OPERATOR GP	1054
FILTER ELEMENT-CAB AIR (STANDARD EFFICIENCY)	7X-6041	2	DUCT & FILTER GP-CAB AIR	988
FILTER ELEMENT-CAB AIR (ULTRA HIGH EFFICIENCY)	175-2834	2	DUCT & FILTER GP-CAB AIR	988
FUSE (15-AMPERE)	133-9012	1	AIR CONDITIONER GP	917
		1	AIR CONDITIONER GP	921
GASKET	107-4396	1	LINES GP-AIR CONDITIONER	1008
SEAT BELT (2-IN)	206-1749	1	SEAT GP-SUSPENSION	1072
POWER TRAIN				
BELT-SERPENTINE	215-3015	1	PUMP & MTG GP-AXLE OIL COOLER	470
BREATHER AS	9G-5127	1	FILLER GP-POWER TRAIN OIL	406
BREATHER AS (POWER TRAIN OIL)	9G-5127	1	FILLER GP-POWER TRAIN OIL	408
CAP-DUST (TRANSMISSION OIL)	8C-3447	1	FILTER GP-OIL	411
CAP-FILLER (POWER TRAIN)	5K-1568	1	FILLER GP-POWER TRAIN OIL	406
		1	FILLER GP-POWER TRAIN OIL	408
FILTER ELEMENT-OIL (ADVANCED EFFICIENCY)	341-6643	1	FILTER GP-OIL	411
FILTER-MAGNETIC (AXLE OIL COOLER)	251-6351	2	LINES GP-AXLE OIL COOLER	447
		2	LINES GP-AXLE OIL COOLER	451
PLUG (TRANSMISSION OIL DRAIN)	138-1510	1	DRAIN GP-ECOLOGY	404
PLUG AS-MAGNETIC	165-4929	1	HOUSING GP-AXLE	429
		1	HOUSING GP-AXLE	432
		1	HOUSING GP-AXLE	434
		1	HOUSING GP-AXLE	437
		1	HOUSING GP-AXLE	439
		1	HOUSING GP-AXLE	441
PLUG-DRAIN	175-4966	1	DRAIN GP-ECOLOGY	405
PLUG-DRAIN (AXLE HOUSING)	175-4966	1	HOUSING GP-AXLE	429
		1	HOUSING GP-AXLE	432
		1	HOUSING GP-AXLE	434
		1	HOUSING GP-AXLE	437
		1	HOUSING GP-AXLE	439
		1	HOUSING GP-AXLE	441
PLUG-MAGNETIC	5P-4484	1	HOUSING GP-AXLE	429
		1	HOUSING GP-AXLE	432
		1	HOUSING GP-AXLE	434
		1	HOUSING GP-AXLE	437
		1	HOUSING GP-AXLE	439
		1	HOUSING GP-AXLE	441
		1	HOUSING GP-FIXED AXLE	443
		1	HOUSING GP-OSCILLATING AXLE	445
		1	LINES GP-AXLE OIL COOLER	452
SCREEN-SUCTION	4S-8598	1	GEAR GP-OUTPUT TRANSFER	420
		1	GEAR GP-OUTPUT TRANSFER	425

MAINTENANCE PARTS

DESCRIPTION	PART NUMBER	QTY	WHERE USED	PAGE
STEERING SYSTEM				
SCREEN	6E-5066	1	MANIFOLD GP-CONTROL	669
		2	SCREEN GP-CASE DRAIN	685

INDEX

NAME PAGE

A

ACCUMULATOR GP-HYDRAULIC–CHARGED . . . 631
ACCUMULATOR GP-HYDRAULIC–UNCHARGED 632
ACCUMULATOR GP-PILOT OIL–CHARGED 712
ACCUMULATOR GP-PILOT OIL–UNCHARGED 713
ACCUMULATOR GP-RIDE CONTROL–CHARGED 714
ACCUMULATOR GP-RIDE CONTROL–UNCHARGED 715
ACCUMULATOR-REFRIGERANT 1010
ACTUATOR GP-PARKING BRAKE 633
ACTUATOR GP-POWER 501
ADAPTER GP-OIL LINE–FUEL INJECTION PUMP 75
ADAPTER GP-TIP 1110
ADJUSTER GP-CONTROL 948
950
952
954
956
958
960
962
ADJUSTER GP-SEAT 915
1073
AIR CLEANER GP 118
119
AIR CONDITIONER GP 917
921
ALARM GP 173
174
ALTERNATOR GP-CHARGING 175
ARM AS-LIFT 886
887
888
889
ARM GP-LIFT 892
ARM GP-LIFT–HIGH LIFT MACHINES. 890
891
ARM GP-MATERIAL HANDLING 1111
ARM GP-WINDOW WIPER (FRONT). 1104
1107
ARM GP-WINDOW WIPER–FRONT 925
ARMREST GP 926
ARMREST GP (LH). 1070
AXLE AR-FIXED & OSCILLATING 386
387
389
AXLE AR-FIXED & OSCILLATING–LIMITED SLIP AXLES. 387
388
389
AXLE AR-FIXED & OSCILLATING–LIMITED SLIP DIFFERENTIAL 388
AXLE AR-FIXED & OSCILLATING–LIMITED SLIP DIFFERENTIALS. 388

NAME PAGE

AXLE AR-FIXED & OSCILLATING–OPEN. 386
387
AXLE AR-FIXED & OSCILLATING–STANDARD DIFFERENTIALS. 387
AXLE AR-FIXED–FRONT 384
AXLE AR-FIXED–FRONT, LIMITED SLIP DIFFERENTIAL 385
AXLE AR-FIXED–FRONT, STANDARD DIFFERENTIAL 384
AXLE AR-FIXED–FRONT, WITH LIMITED SLIP DIFFERENTIAL 385
AXLE AR-FIXED–LIMITED SLIP DIFFERENTIAL 386
AXLE AR-FIXED–LIMITED SLIP DIFFERENTIALS. 385
AXLE AR-FIXED–STANDARD, W/ECOLOGY DRAIN 384
AXLE AR-OSCILLATING 390
391
AXLE AR-OSCILLATING–LIMITED SLIP DIFFERENTIAL 391
AXLE AR-OSCILLATING–REAR 389
AXLE AR-OSCILLATING–REAR, LIMITED SLIP DIFFERENTIAL 390
AXLE AR-OSCILLATING–REAR, STANDARD DIFFERENTIAL 389
AXLE AR-OSCILLATING–STANDARD, W/ECOLOGY DRAIN 390

B

BASE GP-FOOT BRAKE–PEDAL, RH 1061
BASE GP-FUEL FILTER 139
BASE GP-VALVE COVER. 24
BATTERY & WIRING GP 177
179
195
BATTERY GP (12-VOLT, MAINTENANCE FREE, WET) 177
BEARING GP-MAIN. 25
BELT-SERPENTINE. 41
470
940
BLADE AS-WIPER (400-MM) 1104
1107
BLADE AS-WIPER (700-MM) 1104
1107
BLOCK GP-AXLE OSC LIMITER. 502
BLOCK GP-JUNCTION. 180
BOSS GP-LIFT ARM. 3
893
894
BOSS GP-LOADER FRAME 503
BOSS GP-REAR FRAME 505
BOX GP-BATTERY 1
506
BOX GP-SERVICE CENTER 1198
1200
BOX GP-TOOL 1202
BRACKET GP-MOUNTING (PRINTER) 1067

INDEX

NAME	PAGE
BRAKE & PLANETARY GP	392, 394
BRAKE GP-PARKING	420, 425, 634
BREATHER (AIR/HYDRAULIC CYLINDER)	772
BREATHER (CRANKCASE)	76
BREATHER (HYDRAULIC TANK)	762, 766
BREATHER AS	406
BREATHER AS (CRANKCASE)	24
BREATHER AS (POWER TRAIN OIL)	408
BREATHER GP	76
BUCKET AS-GENERAL PURPOSE	1112, 1113, 1115, 1117, 1119, 1121, 1122, 1123, 1125, 1127
BUCKET AS-MATERIAL HANDLING	1128, 1130, 1132, 1134, 1135, 1137, 1138
BUCKET AS-ROCK	1139, 1140, 1142, 1144
BUCKET AS-UTILITY	1146
BUCKET GP-GENERAL PURPOSE	1147, 1148, 1149, 1150, 1151, 1152, 1153, 1154, 1155
BUCKET GP-MATERIAL HANDLING	1156, 1157, 1158, 1159, 1160, 1161, 1162
BUCKET GP-ROCK	1163, 1164, 1165, 1166
BUCKET GP-UTILITY	1167

C

NAME	PAGE
CAB AR	927
CAB AR-ENCLOSED ROPS	928
CAB GP-ENCLOSED ROPS	929, 934
CAMERA AR	181, 183
CAMERA GP (115-DEG, COLOR)	181
CAMSHAFT GP	18
CAP (GAS VALVE)	631, 632
CAP AS-ENGINE OIL FILLER	24
CAP AS-FILLER (ENGINE OIL)	77
CAP AS-FUEL (DEBRIS BOOT)	171
CAP AS-RADIATOR (7-PSI)	105
CAP-DUST (TRANSMISSION OIL)	411
CAP-FILLER (HYDRAULIC OIL)	797
CAP-FILLER (POWER TRAIN)	406, 408
CAP-FUEL	171
CAP-VENTED (VENTED)	1092
CARRIAGE GP-FORK–96-IN	1168, 1169
CARRIAGE GP-FORK–HOOK-ON	1170
CARRIER GP-SEAL	19
CERTIFICATION AR	1204
CHASSIS AR	1
CIRCUIT BREAKER AS (20-AMPERE)	263, 266
CIRCUIT BREAKER AS (30-AMPERE)	263, 266
CIRCUIT BREAKER AS (50-AMPERE)	263
CIRCUIT BREAKER AS (80-AMPERE)	263, 266
CIRCUIT BREAKER AS (90-AMPERE)	263, 266
CIRCUIT BREAKER GP (15-AMPERE)	263, 266
CIRCUIT BREAKER GP–AUTOMATIC RESET	184
CLAMP	982, 1033
CLUTCH GP-ELECTRIC (AXLE OIL COOLER PUMP)	470
COMMON AR	2
COMPRESSOR GP-REFRIGERANT	939, 940, 941, 942, 943
CONDENSER & MTG GP-REFRIGERANT	944, 946
CONFIGURATION AR	2, 3
CONNECTOR GP-ELECTRONIC	983
CONTROL & MTG GP-ELHYD	948, 950, 952, 954, 956, 962
CONTROL & MTG GP-ELHYD–IMPLEMENT	958, 960

INDEX

NAME	PAGE
CONTROL & MTG GP-ENGINE ELEK	185, 186
CONTROL AR-AUTODIG	187, 188
CONTROL AR-FAN	716, 717
CONTROL AR-HIGH LIFT	718, 719
CONTROL AR-HIGH LIFT–2-VALVE HYDRAULICS	718
CONTROL AR-QUICK COUPLER	1172
CONTROL AR-RIDE	719
CONTROL GP-AUTODIG	190
CONTROL GP-BUCKET	718, 895, 901, 903
CONTROL GP-BUCKET–HIGH LIFT MACHINES	898
CONTROL GP-ENGINE ELECTRONIC	191
CONTROL GP-FOOT BRAKE	636, 637
CONTROL GP-HANDLE	965
CONTROL GP-HANDLE (LIFT, TILT, AUX, DOWNSHIFT SW)	971
CONTROL GP-HANDLE (LIFT, TILT, AUX, FNR, DNSFT)	969
CONTROL GP-HANDLE (LIFT, TILT, FNR, DOWNSHIFT)	967
CONTROL GP-HANDLE (PILOT CONTROL)	348
CONTROL GP-HANDLE (PILOT CONTROL)	350, 720
CONTROL GP-HANDLE (PILOT CONTROL)	952
CONTROL GP-HANDLE (PILOT CONTROL)	954
CONTROL GP-HANDLE–BUCKET	964
CONTROL GP-HANDLE–LIFT, TILT, AUXILIARY, DOWNSHIFT SWITCH	966
CONTROL GP-JOYSTICK	967, 969, 970, 971
CONTROL GP-PARKING BRAKE	638
CONTROL GP-SERVICE BRAKE	640, 738
CONTROL GP-STEERING	977
CONTROL GP-STEERING–COMMAND CONTROL STEERING	973, 975
CONTROL GP-TRANSMISSION	979, 980
CONTROL GP-TRANSMISSION HYD	396
CONTROL GP-UNPRGMED MONITOR–MESSENGER	981
CONTROL GP-UNPROGRAMMED	332, 1042
CONTROL GP-UNPROGRAMMED (MACHINE)	1036, 1039
CONTROL GP-UNPROGRAMMED (PRODUCT LINK 300)	195
CONTROL GP-UNPROGRAMMED (PRODUCT LINK 522)	222
CONTROL GP-UNPROGRAMMED–PRODUCT LINK 522	192, 193
CONVERSION AR-MACHINE	4, 5, 6, 7
CONVERSION GP-CONTROL VALVE	720
CONVERSION GP-ROADING	507
COOLANT HEATER LINES	1014, 1016, 1018
COOLER & MTG GP-TRANSMISSION	398
COOLER AR-AXLE OIL	399, 400
COOLER GP-ENGINE OIL	87
COOLING AR-HIGH AMBIENT TEMP	88
COOLING AR-HIGH AMBIENT TEMP–WITH ANTI-CORROSION PROTECTION	89, 91
COOLING GP-SUPPLEMENTAL	94
CORE AS-AFTERCOOLER	115
CORE AS-AXLE OIL COOLER	460
CORE AS-CONDENSER	89
CORE AS-CONDENSER (REFRIGERANT)	88, 944
CORE AS-ENGINE OIL COOLER	87
CORE AS-HYDRAULIC OIL COOLER	89
CORE AS-OIL COOLER	91
CORE AS-OIL COOLER (HYDRAULIC)	88, 115
CORE AS-OIL COOLER (WITH ANTI-CORROSION PROTECTION)	89
CORE AS-RADIATOR	89, 115
CORE AS-RADIATOR (COOLANT)	88
CORE AS-RADIATOR (WITH ANTI-CORROSION PROTECTION)	89, 91
COUNTERWEIGHT & MOUNTING GP	509
COUNTERWEIGHT GP	510, 511, 512, 513
COUPLER GP-QUICK	1173
COVER GP (LUBRICATION PUMP)	605
COVER GP (LUBRICATION TANK)	605
COVER GP-AIR INLET–STARTING AID HEATER	120, 121
COVER GP-CYLINDER BLOCK	20
COVER GP-FRONT HOUSING	22, 23
COVER GP-STARTING MOTOR	194
COVER GP-VALVE MECHANISM	24
CRANKSHAFT GP	25
CYLINDER & MTG GP-STEERING	646
CYLINDER & SEAL GP-LIFT (LH)	738

INDEX

NAME PAGE

CYLINDER & SEAL GP-LIFT (RH) 738
CYLINDER & SEAL GP-LIFT–LH 722
CYLINDER & SEAL GP-LIFT–RH 723
CYLINDER & SEAL GP-TILT 724
CYLINDER & SEAL GP-TILT–HIGH LIFT MACHINES 725
CYLINDER & SEAL GP-TILT–LOGGING 726
CYLINDER BLOCK GP 27
28
29
CYLINDER GP-COUPLER 727
728
CYLINDER GP-LIFT 723
729
730
CYLINDER GP-LIFT (LH) 722
CYLINDER GP-STEERING 647
CYLINDER GP-TILT 731
733
CYLINDER GP-TILT–HIGH LIFT MACHINES 732
CYLINDER HEAD AS 31
32
CYLINDER HEAD GP 33
34
35
37
38

D

DAMPER & PULLEY GP 39
DEFLECTOR GP-FENDER 514
DIFFERENTIAL GP 401
DIFFERENTIAL GP-LIMITED SLIP 402
403
DISPLAY GP-CAMERA 983
DISPLAY GP-CAMERA–WORK AREA VISUAL SYSTEM 982
DISTRIBUTION AR 7
8
DOOR GP-ACCESS 985
DOOR GP-ACCESS (REMOTE PRESSURE TAPS) 518
1198
1200
DOOR GP-ACCESS–HOOD, LH 515
DOOR GP-ACCESS–HOOD, RH 516
DOOR GP-CAB 986
DRAIN GP-ECOLOGY–POWER TRAIN 405
DRAIN GP-ECOLOGY–POWER TRAIN OIL 404
DRAIN GP-ENGINE OIL 40
DRIVE GP-ACCESSORY 41
DRYER AS-REFRIGERANT (IN-LINE) 1010
DUCT & FILTER GP-CAB AIR 988

E

EDGE AS-CUTTING 1175
EDGE GP-CUTTING 1176
1177
1178
EDGE GP-SEGMENT 1179
ELBOW GP-AIR INLET 122
123
ELBOW GP-WATER 96
ELECTRICAL AR 195
ELECTRONICS GP-COMMUNICATION 196
ELECTRONICS GP-COMMUNICATION–PRODUCT LINK 300 195
ELECTRONICS GP-ENGINE RATINGS 11
ELECTRONICS GP-IMPLEMENT 196
ELECTRONICS GP-MONITOR 195
196
ELECTRONICS GP-POWER TRAIN 195
197
ELEMENT AS-HEATER 1054
ELEMENT AS-JACKET WATER HEATER (240-VOLT, 1000-WATT) 217
ENCLOSURE AS-HYDRAULIC TANK 517
1198
ENCLOSURE GP-SERVICE CENTER 518
ENGINE AR 11
ENGINE AR-COMPLETE 12
13
15
ENGINE AR-CORE 16
17
EXTENSION GP-BACKREST 1070
EXTENSION GP-FENDER 10
519
520

F

FASTENER GP-COVER 521
523
FASTENER GP-CYLINDER HEAD 37
42
FASTENER GP-DAMPER & PULLEY 43
FASTENER GP-FRONT COVER 44
FASTENER GP-FRONT HOUSING 45
46
FASTENER GP-INLET MANIFOLD 124
FASTENER GP-WIRING HARNESS–TRANSMISSION 198
FENDER AR-ROADING 525
FENDER GP 526
528
529
530
FENDER GP (LH) 526
FENDER GP (RH) 526
FENDER GP-ROADING 525
531
FENDER GP–RH 527
FILLER GP-ENGINE OIL 77

INDEX

NAME	PAGE
FILLER GP-POWER TRAIN OIL	406, 408, 738
FILM	962
FILM GP	1205, 1206
FILM-CONTROL	188, 958, 1059, 1060
FILM-CONTROL (JOYSTICK)	960
FILM-IDENTIFICATION (12-VOLT)	1054, 1057
FILM-IDENTIFICATION (AUTODIG)	188, 190
FILM-IDENTIFICATION (AUXILIARY HYDRAULIC)	721, 952, 954
FILM-IDENTIFICATION (CAT)	193
FILM-IDENTIFICATION (CATERPILLAR, REAR CAB)	521, 523
FILM-IDENTIFICATION (DUMP, TILT BACK)	721, 948, 950, 952, 954
FILM-IDENTIFICATION (ENGINE SHUTDOWN)	1057
FILM-IDENTIFICATION (FUSE PANEL)	263, 266, 1004
FILM-IDENTIFICATION (HORN, TRANSMISSION DIRECTION)	721, 948, 950, 952, 954
FILM-IDENTIFICATION (HORN)	962
FILM-IDENTIFICATION (HYDRAULIC ACCUMULATOR)	712, 713
FILM-IDENTIFICATION (IGNITION SWITCH)	226
FILM-IDENTIFICATION (LIFT, FLOAT, LOWER)	721, 948, 950, 952, 954
FILM-IDENTIFICATION (LIGHTS)	1057
FILM-IDENTIFICATION (PAYLOAD STORE)	1036, 1039, 1042
FILM-INFORMATION (24-VOLT HEATER)	922
FILM-INFORMATION (24-VOLT)	1215
FILM-INFORMATION (CONTROL PANEL)	190
FILM-INFORMATION (HYD ACCUMULATOR, READ OMM)	714, 715
FILM-INFORMATION (INPUT/OUTPUT)	1057
FILM-INFORMATION (JOYSTICK CONTROL)	956
FILM-INFORMATION (PRODUCT LINK, READ OMM)	218
FILM-INFORMATION (SECURITY SYSTEM)	226
FILM-INSTRUCTION (ALTERNATE EXIT, READ OMM)	1042
FILM-INSTRUCTION (ENGINE START)	1057
FILM-INSTRUCTION (EXIT)	1004
FILM-INSTRUCTION (MACHINE SECURITY, CONSOLE)	226
FILM-INSTRUCTION (MAINTENANCE)	721, 948, 950, 952, 954
FILM-INSTRUCTION (NO STEP)	10, 520
FILM-INSTRUCTION (SEAT ADJUSTMENT)	1089
FILM-WARNING (CRUSH HAZARD, STAY BACK, U.S.)	1214
FILM-WARNING (CRUSH HAZARD, STAY BACK)	1111
FILM-WARNING (DO NOT LIFT, READ OMM)	1148, 1149, 1150, 1151, 1152, 1153, 1154, 1155, 1159, 1160, 1161, 1162
FILM-WARNING (EXPLOSION, RADIO PRODUCT LINK)	218
FILM-WARNING (FLYING DEBRIS, STAY BACK, INTL) (RH, LH)	716, 717
FILM-WARNING (HAND CRUSH HAZARD, READ OMM)	1173
FILM-WARNING (HIGH PRESSURE, READ OMM, INTL)	777
FILM-WARNING (HIGH PRESSURE, READ OMM)	631
FILM-WARNING (HOT FLUID UNDER PRESSURE, U.S.)	1214
FILM-WARNING (NO WELD, NO DRILL, READ OMM)	1216
FILM-WARNING (READ OMM)	1111
FILTER (ETHER START)	323
FILTER & LINES GP-FUEL	140
FILTER & LINES GP-TRANSMISSION	410, 738
FILTER AS-ENGINE OIL (ADVANCED EFFICIENCY)	78
FILTER AS-GREASE	605

INDEX

NAME PAGE

FILTER AS-WATER SEP & FUEL (PRIMARY) . . . 145
FILTER ELEMENT AS-AIR (SECONDARY) . . . 119
FILTER ELEMENT-AIR (PRIMARY) . . . 119
FILTER ELEMENT-CAB AIR (STANDARD EFFICIENCY) . . . 988
FILTER ELEMENT-CAB AIR (ULTRA HIGH EFFICIENCY) . . . 988
FILTER ELEMENT-OIL (ADVANCED EFFICIENCY) . . . 411
FILTER GP-ENGINE OIL . . . 78
FILTER GP-FUEL . . . 143
FILTER GP-OIL . . . 411
FILTER GP-OIL (BASIC) . . . 753 758
FILTER GP-OIL–HYDRAULIC . . . 734
FILTER GP-WATER SEP & FUEL . . . 145
FILTER-FUEL (ADVANCED EFFICIENCY) . . . 139
FILTER-FUEL (ADVANCED EFFICIENCY) (SECONDARY) . . . 140
FILTER-MAGNETIC (AXLE OIL COOLER) . . . 447 451
FILTER-OIL (ULTRA HIGH EFFICIENCY) . . . 734
FITTING GP . . . 103 105
FLASHER AS (24-VOLT) . . . 318 320
FLOOR GP-SOUND SUPPRESSION–CAB . . . 990
FLOOR MAT . . . 1006
FLYWHEEL GP . . . 47
FORK GP-PALLET . . . 1180 1181 1182 1183
FRAME AS-LOADER . . . 535 537
FRAME AS-REAR . . . 539
FRAME GP-RADIATOR . . . 97
FUMES DISPOSAL GP . . . 79 80
FUSE (10-AMPERE) . . . 331
FUSE (15-AMPERE) . . . 331 917 921
FUSE (20-AMPERE) . . . 331

G

GASKET . . . 1008
GASKET (TEMPERATURE REGULATOR HOUSING) . . . 99
GASKET (WATER REGULATOR HOUSING) . . . 52
GAUGE AS-OIL LEVEL . . . 408
GAUGE AS-OIL LEVEL (DIPSTICK) . . . 429 432 434 439
GAUGE AS-OIL LEVEL (DIPSTICK) (AXLE) . . . 437 441 443 445
GAUGE AS-OIL LEVEL (DIPSTICK) (ENGINE) . . . 412
GAUGE AS-OIL LEVEL (POWER TRAIN OIL) . . . 406
GAUGE GP-OIL LEVEL (DIPSTICK) (ENGINE) . . . 413
GAUGE GP-OIL LEVEL (DIPSTICK)–ENGINE . . . 412 413
GAUGE-LIQUID LEVEL (SIGHT GLASS) . . . 797
GAUGE-SIGHT . . . 103
GAUGE-SIGHT (WATER TANK) . . . 105
GEAR GP-BEVEL & PINION . . . 414
GEAR GP-BEVEL & PINION–FIXED AXLE . . . 418
GEAR GP-BEVEL & PINION–OSCILLATING AXLE . . . 416
GEAR GP-FRONT . . . 48
GEAR GP-OUTPUT TRANSFER . . . 420 425
GRILL GP-RADIATOR . . . 541
GUARD GP-ALTERNATOR . . . 199
GUARD GP-AXLE . . . 387 543
GUARD GP-AXLE OIL COOLER . . . 544
GUARD GP-FAN . . . 98
GUARD GP-FRONT . . . 545 546
GUARD GP-LIFT CYLINDER . . . 735
GUARD GP-LIFT CYLINDER–LH . . . 736
GUARD GP-LIFT CYLINDER–RH . . . 737
GUARD GP-POWER TRAIN . . . 547
GUARD GP-POWER TRAIN–AXLE OIL COOLER . . . 548
GUARD GP-WINDOW–FRONT . . . 992

H

HAMMER GP (CAB WINDOW) . . . 1004
HANDRAIL GP . . . 549
HARDWARE GP-LOADER FRAME . . . 399 400 550 551 719
HARDWARE GP-REAR FRAME . . . 552 553 554
HARDWARE GP-REAR FRAME (AXLE OIL COOLER MOUNTING) . . . 399 400
HARNESS AS-BRAKE (STOP LIGHT) . . . 1062
HARNESS AS-CAB . . . 200
HARNESS AS-CAB (VARIABLE PITCH FAN) . . . 329 337

INDEX

NAME	PAGE
HARNESS AS-CHASSIS	202, 204, 263, 342, 372
HARNESS AS-CHASSIS (VARIABLE PITCH FAN)	338, 340, 346
HARNESS AS-CONTROL	206, 207, 222
HARNESS AS-CONTROL (AUTOMATIC LUBRICATION)	605
HARNESS AS-CONTROL (HEATED MIRRORS)	1028
HARNESS AS-ENGINE	207, 208, 209
HARNESS AS-ENGINE (FUEL INJECTION)	357
HARNESS AS-FRONT	210
HARNESS AS-HEATER & AIR COND	917, 921
HARNESS AS-LIGHTING	210, 211, 212, 246, 248, 251, 370
HARNESS AS-LIGHTING (CAB FLOODLIGHTS)	331
HARNESS AS-LIGHTING (REAR)	248
HARNESS AS-LIGHTING (STOP, TAIL)	257
HARNESS AS-LIGHTING (TURN SIGNAL)	257, 318, 320
HARNESS AS-LIGHTING (WARNING BEACON)	261
HARNESS AS-MONITOR	983
HARNESS AS-PUMP (JUMPER)	325, 374
HARNESS AS-PUMP (LUBRICATION, REAR FRAME)	325, 374
HARNESS AS-RADIO	212, 213
HARNESS AS-REAR LIGHTING (REGISTRATION PLATE)	257
HARNESS AS-SENSOR	381
HARNESS AS-SENSOR (AXLE OIL COOLER TEMPERATURE)	327
HARNESS AS-SENSOR (AXLE, REAR)	327
HARNESS AS-SOLENOID	213, 352
HARNESS AS-STARTING AID (ETHER)	367
HARNESS AS-STEERING (COLUMN, WHEEL)	689
HARNESS AS-STEERING (SECONDARY)	376
HARNESS AS-SWITCH	214, 355
HARNESS AS-SWITCH (LUBRICATION PRESSURE)	325, 374
HARNESS AS-SWITCH (TRANSMISSION CONTROL)	689
HARNESS AS-TRANSMISSION	396
HARNESS AS-VALVE (SEAT AIR COMPRESSOR)	1089
HARNESS AS-WIRING	214, 215, 356
HARNESS AS-WIRING (COMMUNICATION)	1067
HARNESS AS-WIRING (FUEL PRESSURE) (SENSOR)	140
HARNESS AS-WIRING (PRINTER)	1067
HEATER & AIR CONDITIONER GP	994
HEATER GP-JACKET WATER	216, 217
HINGE GP-ROADING FENDER–LH	555
HINGE GP-ROADING FENDER–RH	556
HITCH GP-ARTICULATING	557
HOLD-DOWN-BATTERY	177
HOOD & GUARD GP	559
HORN GP-ELECTRIC	995
HOSE-FUMES DISPOSAL	80
HOUSING GP-AXLE	432, 439, 441
HOUSING GP-AXLE–FRONT	429, 434
HOUSING GP-AXLE–REAR	437
HOUSING GP-FIXED AXLE	443
HOUSING GP-FLYWHEEL	49
HOUSING GP-FRONT	50
HOUSING GP-OSCILLATING AXLE	445
HYDRAULIC AR	738
HYDRAULIC AR–3-VALVE, LOGGING	738

I

NAME	PAGE
IDLER GP-BELT	51
INJECTOR GP-FUEL	146, 147, 148
INSTALLATION AR-COMMUNICATION	218
INSTALLATION AR-COMMUNICATION–PRODUCT LINK 321SR	218
INSTALLATION AR-ENGINE	17
INSTALLATION AR-SECURITY	219
INSTALLATION GP-COMMUNICATION	222, 224
INSTALLATION GP-COMMUNICATION–PRODUCT LINK	220
INSTALLATION GP-CONTROLS	996
INSTALLATION GP-RADIO	998, 999
INSTALLATION GP-SECURITY	226

INDEX

NAME PAGE

K

KEY 794
KEY (BATTERY DISCONNECT) 306
KIT-CYLINDER HEAD GASKET. 52
KIT-ENGINE GASKET. 53
KIT-FRONT COVER GASKET 54
KIT-FUEL SYSTEM GASKET–SINGLE FUEL INJECTOR 149
KIT-GASKET 1207
KIT-GASKET–OIL COOLER, LINES 1209
KIT-GASKET–TURBOCHARGER 1208
KIT-REAR COVER GASKET. 55
KIT-RECEPTACLE (2-PIN). 226
KIT-SHOCK ABSORBER 1001

L

LADDER GP 563 565
LADDER GP–REAR. 567
LAMP (24-VOLT, 21-WATT) 245 257
LAMP (24-VOLT, 21-WATT) (STOP, TAIL). 244
LAMP (24-VOLT, 5-WATT) 231 233 241 242 594
LAMP (24-VOLT, 5-WATT) (FLOODLIGHT) 237 238 239 240
LAMP (24-VOLT, 5-WATT) (POSITION). 243
LAMP (24-VOLT, 75/70-WATT). 241 242
LAMP (24-VOLT, 75/70-WATT) (HIGH, LOW BEAM). 237 238 239 240 243
LAMP (24-VOLT, HID) 235 236
LAMP (24-VOLT) (DOME LIGHT) 228
LAMP AS (24-VOLT, 5-WATT). 594
LAMP GP-BACKUP (REAR) 257
LAMP GP-DOME 228
LAMP GP-FLOOD 229 230 231 232 233 234
LAMP GP-FLOOD (24-VOLT). 248
LAMP GP-FLOOD–24-VOLT, 35-WATT, HID 236
LAMP GP-FLOOD–HID. 235
LAMP GP-HEAD & SIGNAL 241 242 243
LAMP GP-HEAD & SIGNAL (24-VOLT). 257
LAMP GP-HEAD & SIGNAL–LH 239 240
LAMP GP-HEAD & SIGNAL–RH 237 238
LAMP GP-REAR. 257
LAMP GP-SIGNAL. 257
LAMP GP-STOP & TAIL 244
LAMP GP-STOP & TAIL (24-VOLT). 253
LAMP GP-STOP & TAIL–24-VOLT 245
LAMP GP-WARNING BEACON 261
LAMP-FLOOD (24-VOLT, 5-WATT). 245 257
LAMP-FLOOD (24-VOLT, 5-WATT) (STOP, TAIL) 244
LAMP-HALOGEN (24-VOLT, 70-WATT). 229 230 231 233 234
LAMP-HALOGEN (24-VOLT, 70-WATT) (FLOODLIGHT) 232
LAMP-TURN SIGNAL (24-VOLT, 21-WATT). 231 232 233 234 241 242
LAMP-TURN SIGNAL (24-VOLT, 21-WATT) (TURN SIGNAL) 237 238 239 240 243
LATCH GP-CAB DOOR & WINDOW. 1002
LIFTER GP-VALVE 56
LIFTING GP-ENGINE 57
LIGHTER GP (12-VOLT) 1054
LIGHTING GP-FLOOD 195 250 251 253 255
LIGHTING GP-FLOOD–CAB FRONT, REAR 248
LIGHTING GP-FLOOD–HID, CAB FRONT, REAR. 246
LIGHTING GP-ROADING. 257 260
LIGHTING GP-WARNING BEACON 261
LINER GP-CAB. 1004 1006
LINES GP-AFTERCOOLER AIR. 125 126
LINES GP-AIR 127 128
LINES GP-AIR CONDITIONER. 1 1008 1010
LINES GP-AXLE OIL COOLER 399 447 451

INDEX

NAME PAGE

LINES GP-CAB HEATER. 1014
1016
1018
LINES GP-CENTRAL LUBRICATION 569
571
LINES GP-COUPLER 742
LINES GP-COUPLER–FRONT 739
741
LINES GP-COUPLER–REAR. 743
LINES GP-COUPLER–STANDARD LIFT MACHINES. 745
LINES GP-DIAGNOSTIC 738
1210
1212
LINES GP-ENGINE OIL 81
LINES GP-ENGINE OIL DRAIN. 82
LINES GP-FRONT 3
748
750
LINES GP-FRONT (HIGH LIFT). 718
LINES GP-FRONT LUBRICATION. 572
574
577
LINES GP-FUEL. 1
150
152
LINES GP-FUEL DRAIN. 154
LINES GP-GREASE 581
LINES GP-HYD FAN DR & OIL CLR 738
752
757
LINES GP-HYDRAULIC 738
762
766
LINES GP-HYDRAULIC FAN 770
LINES GP-HYDRAULIC FAN–VARIABLE PITCH FAN 772
LINES GP-INJECTOR HYD PUMP 155
156
LINES GP-LIFT CYLINDER. 738
775
LINES GP-REAR LUBRICATION 585
587
LINES GP-RIDE CONTROL 719
777
LINES GP-SECONDARY STEERING 649
LINES GP-STEERING. 651
657
661
665
738
LINES GP-TILT CYLINDER. 738
778
LINES GP-TILT CYLINDER–LOGGING 780
LINES GP-TORQUE CONV COOLER 455
LINES GP-TURBOCHARGER OIL. 83
LINES GP-WATER. 103
105
108
110

NAME PAGE

LINES GP-WATER (RADIATOR) 1
LINES GP-WATER–AXLE OIL COOLER 101
LINES GP-WATER–ENGINE 99
LINK AS-TILT–HIGH LIFT MACHINES. 906
LINK GP-STEERING FRAME LOCK. 590
LINK GP-TILT 907
LINK GP-TILT–HIGH LIFT MACHINES. 908
LINKAGE GP-BUCKET 909
910
911
912
913
LITERATURE GP 1019
LITERATURE GP (MACHINE) 1
LOGGING AR 914
LUBRICATION AR-AUTOMATIC. 591
592
LUBRICATION AR-AUTOMATIC–HIGH LIFT MACHINES. 591

M

MANIFOLD GP-CONTROL. 669
782
783
785
852
856
868
MANIFOLD GP-EXHAUST 129
MANIFOLD GP-RIDE CONTROL 783
MANIFOLD GP-VALVE 787
788
MIRROR GP-REAR VIEW 1030
1031
MIRROR GP-REAR VIEW–EXTERIOR. 1021
1029
MIRROR GP-REAR VIEW–EXTERIOR, HEATED 1026
1028
MIRROR GP-REAR VIEW–EXTERIOR, HEATED, LH. 1025
MIRROR GP-REAR VIEW–EXTERIOR, HEATED, RH 1024
MIRROR GP-REAR VIEW–EXTERIOR, LH. 1023
MIRROR GP-REAR VIEW–EXTERIOR, RH 1022
MIRROR GP-REAR VIEW–INTERIOR 1020
MODULE GP-DISPLAY (AUTOMATIC LUBRICATION SYSTEM). 1032
MODULE GP-DISPLAY (GAUGE CLUSTER). . . . 332
MODULE GP-DISPLAY (WORK AREA VISUAL SYSTEM) 982
MODULE GP-DISPLAY–AUTOMATIC LUBRICATION SYSTEM 1032
MODULE GP-INTERFACE (KEY) 226
MONITOR & MOUNTING GP. 1033
MONITOR AR-PAYLOAD 1035
MONITOR GP-PAYLOAD. 1036
1039
1042

INDEX

NAME PAGE

MOTOR GP-ELEC HYD PUMP (SECONDARY STEERING) . . . 671
MOTOR GP-GEAR–HYDRAULIC FAN . . . 458
MOTOR GP-WINDOW WIPER . . . 1044 1045 1046
MOTOR GP-WINDOW WIPER (24-VOLT, 2-SPEED) (DOOR, RH) . . . 1045
MOUNTING GP-ALTERNATOR . . . 58
MOUNTING GP-AXLE . . . 459
MOUNTING GP-AXLE OIL COOLER . . . 460
MOUNTING GP-BRACKET–GREASE GUN . . . 593
MOUNTING GP-CAB . . . 1047 1048 1049 1050 1051
MOUNTING GP-DISPLAY (WORK AREA VISUAL SYSTEM) . . . 982 1033 1052
MOUNTING GP-ENGINE & XMSN . . . 59
MOUNTING GP-HYDRAULIC TANK . . . 789
MOUNTING GP-LICENSE PLATE . . . 594
MOUNTING GP-MONITOR–PAYLOAD . . . 1052
MOUNTING GP-MUFFLER . . . 130
MOUNTING GP-REGISTRATION . . . 594
MOUNTING GP-REGISTRATION (REGISTRATION PLATE) . . . 257
MOUNTING GP-RIM . . . 461
MOUNTING GP-STARTING MOTOR–24-VOLT, RH . . . 60
MUFFLER GP . . . 132 133 134

O

OPERATOR AR . . . 1053
OPERATOR GP . . . 1054
OPTION AR-CAB . . . 8
OPTION AR-COLD WEATHER . . . 8
OPTION AR-LIGHTING . . . 9
OPTION AR-PRECLEANER . . . 9
OPTION AR-REGIONAL . . . 10
ORIFICE AS-AIR CONDITIONER . . . 1010

P

PAN GP-OIL . . . 61
PAN GP-SEAT . . . 1055 1070
PANEL GP-CIRCUIT BREAKER . . . 263 266
PANEL GP-HOOD–SIDE, LH . . . 597
PANEL GP-HOOD–SIDE, RH . . . 596
PANEL GP-HOOD–TOP . . . 595
PANEL GP-INSTRUMENT . . . 1057 1059 1060
PANEL GP-SIDE . . . 598 600
PEDAL GP-BRAKE–PEDAL, LH . . . 1062
PEDAL GP-GOVERNOR . . . 1064 1065
PIN GP-FORK–ANTI-SWING . . . 1184
PISTON & ROD GP . . . 62
PLANETARY GP-TRANSMISSION . . . 462
PLATE & FILM GP . . . 1214 1215 1217
PLATE & FILM GP (ENGINE INFORMATION) . . . 1204
PLATE AS . . . 525
PLATE-IDENTIFICATION (CAT) . . . 1128 1130 1140 1142 1144
PLATE-INSTRUCTION (HOOD TILT) . . . 342
PLATE-SERIAL NUMBER (TRANSMISSION) . . . 421 426
PLATFORM AR . . . 1066
PLATFORM GP-SERVICE . . . 602
PLUG (TRANSMISSION OIL DRAIN) . . . 404
PLUG AS-MAGNETIC . . . 429 432 434 437 439 441
PLUG GP-CYLINDER BLOCK . . . 63
PLUG GP-ENGINE . . . 64
PLUG-DRAIN . . . 405
PLUG-DRAIN (AXLE HOUSING) . . . 429 432 434 437 439 441
PLUG-MAGNETIC . . . 429 432 434 437 439 441 443 445 452
PLUG-SEAL . . . 243
POTENTIOMETER AS (TEMPERATURE CONTROL) . . . 332
POWER TRAIN AR . . . 469
PRECLEANER GP . . . 4 135 136
PRINTER GP-COMPUTER . . . 1067
PROTECTION GP-WIRING . . . 269

INDEX

NAME PAGE

PROTECTOR GP-LINKAGE 1185
PROTECTOR GP-SIDE BAR 1186
PULLEY GP-IDLER 66
PULLEY GP-IDLER–BELT TENSIONER 65
PUMP & MOTOR GP-SEC STEERING 671
PUMP & MOUNTING GP-AIR 772
PUMP & MOUNTING GP-AIR–VARIABLE PITCH FAN 790
791
PUMP & MTG GP-AXLE OIL COOLER 470
PUMP & MTG GP-BRAKE & HYD FAN 792
PUMP & MTG GP-LUBRICATION 603
604
PUMP & MTG GP-METERING 672
PUMP & MTG GP-SECONDARY STEER 674
PUMP & MTG GP-STEERING 675
738
PUMP & MTG GP-UNIT INJ HYD 157
158
PUMP AS-AIR (VARIABLE PITCH FAN) 790
PUMP GP-AIR 770
PUMP GP-ENGINE OIL 85
86
PUMP GP-FUEL INJECTION 159
160
161
PUMP GP-FUEL PRM & PRIM FILTER 162
PUMP GP-FUEL PRM & WATER SEP–ELECTRIC 165
PUMP GP-FUEL TRANSFER 166
PUMP GP-GEAR (AXLE OIL COOLER) 470
PUMP GP-GEAR (SECONDARY STEERING) . . . 671
PUMP GP-LUBRICATION–AUTOMATIC LUBRICATION CONTROL 605
PUMP GP-METERING (HMU) 672
PUMP GP-PISTON 679
681
794
PUMP GP-PISTON (IMPLEMENT) 676
PUMP GP-PISTON (STEERING) 676
PUMP GP-PISTON–IMPLEMENT 677
PUMP GP-PISTON–IMPLEMENT, STEERING . . . 676
PUMP GP-TRANSMISSION 472
473
PUMP GP-UNIT INJECTOR HYD 158
167
PUMP GP-WATER 112
113
114

R

RADIATOR & FAN GP 1
115
RADIO GP (AM/FM/USB/BLUETOOTH) 1069
RADIO GP-COMMUNICATION–PRODUCT LINK 121SR 270
RADIO GP–AM/FM CD PLAYER 1069
RADIO GP–AM/FM/WB CD PLAYER 1069
REGULATOR GP-FUEL PRESSURE 169
REGULATOR-WATER TEMPERATURE (94-DEG C) (COOLANT) 99
RELAY (ALARM) 257
RELAY (SECONDARY STEERING MOTOR) 671
RELAY AS (24-VOLT) 263
266
271
331
376
1028
RELAY AS (24-VOLT) (VARIABLE PITCH FAN) 329
337
RELAY GP 271
RIM AR 475
RIM GP-DEMOUNTABLE 476
477
478
ROCKER ARM GP (EXHAUST) 72
ROCKER ARM GP (INTAKE) 72
ROCKER ARM GP–EXHAUST 67
ROCKER ARM GP–INLET 68
ROTATING GP-PUMP 683
684
796

S

SCREEN 669
685
782
797
SCREEN AS 797
SCREEN AS (HYDRAULIC) 762
766
SCREEN GP-CASE DRAIN–STEERING PILOT 685
SCREEN GP-MAGNETIC 420
425
SCREEN-SUCTION 420
425
SEAL GP-CRANKSHAFT 69
SEAL GP-CRANKSHAFT (CLOCKWISE ROTATION) 55
SEAL GP-CRANKSHAFT (REAR) 69
SEAL GP-DUO-CONE 429
432
434
437
439
441
443
445
SEAL-CRANKSHAFT 69
SEAL-CRANKSHAFT (FRONT) 54
SEAL-VALVE COVER 24
52
SEALING GP-GLASS 1069
SEAT BELT (2-IN) 1072
SEAT GP 1070

INDEX

NAME PAGE

SEAT GP (CLOTH) 1073
SEAT GP-SUSPENSION 1072
1075
1076
SEAT GP-SUSPENSION (24-VOLT, CLOTH, HEATED) 1072
SEAT GP-SUSPENSION–24-VOLT, CLOTH, HEATED 1073
SEGMENT-EDGE 1179
SENDER AS-FUEL LEVEL (TANK) 171
SENSOR & MTG GP-LIFT POSITION 195
272
SENSOR & MTG GP-PRESSURE (LIFT CYLINDER OIL) 187
1035
SENSOR & MTG GP-PRESSURE–LIFT CYLINDER OIL 275
SENSOR & MTG GP-TILT POSITION 195
276
SENSOR AS-LIQUID LEVEL (GREASE) 605
SENSOR AS-TEMPERATURE (AXLE OIL) 342
SENSOR AS-TEMPERATURE (FRONT AXLE OIL) 327
SENSOR AS-TEMPERATURE (REAR AXLE OIL) 327
SENSOR GP-ENGINE 278
280
SENSOR GP-ENGINE (ELECTRONIC) 12
17
SENSOR GP-POSITION (ROTARY) 276
SENSOR GP-POSITION (ROTARY) (BRAKE PEDAL) 1062
SENSOR GP-POSITION (ROTARY) (LIFT) 272
SENSOR GP-POSITION (ROTARY) (THROTTLE) 1064
SENSOR GP-POSITION–ROTARY 282
283
SENSOR GP-PRESSURE 280
284
285
286
287
288
289
290
SENSOR GP-PRESSURE (ATMOSPHERIC) 278
280
SENSOR GP-PRESSURE (BOOST) 278
SENSOR GP-PRESSURE (ENGINE OIL) 278
SENSOR GP-PRESSURE (FUEL FILTER) 139
SENSOR GP-PRESSURE (FUEL) 140
SENSOR GP-PRESSURE (RAIL) 278
280
SENSOR GP-PRESSURE (TURBOCHARGER INLET) 359
363
SENSOR GP-SPEED 292
SENSOR GP-SPEED (MAGNETIC, HIGH OUTPUT) 489
SENSOR GP-SPEED (MAGNETIC, HIGH OUTPUT) (TRANSMISSION OUTPUT 1) 420
425
SENSOR GP-SPEED (MAGNETIC, HIGH OUTPUT) (TRANSMISSION OUTPUT 2) 420
425
SENSOR GP-SPEED–MAGNETIC, HIGH OUTPUT 291
293
SENSOR GP-TEMPERATURE 294
295
296
SENSOR GP-TEMPERATURE (AIR INLET) 280
SENSOR GP-TEMPERATURE (COOLANT) 278
280
SENSOR GP-TEMPERATURE (TRANSMISSION OIL) 396
SENSOR-TEMPERATURE 295
296
SENSOR-TEMPERATURE (TORQUE CONVERTER OIL) 359
363
SERVICE GP-COMMUNICATION (PRODUCT LINK 300) 195
SHAFT GP-DRIVE 479
481
482
483
SHIELD GP-ENGINE COMPARTMENT 1
94
607
609
SHROUD GP-CAB 1077
SLIP JOINT GP 484
485
SOFTWARE GP-COMMUNICATION 195
SOFTWARE GP-COMMUNICATION (PRODUCT LINK 121SR) 270
SOFTWARE GP-COMMUNICATION (PRODUCT LINK 300) 195
SOFTWARE GP-COMMUNICATION (PRODUCT LINK 522, CHINA) 218
SOFTWARE GP-COMMUNICATION (PRODUCT LINK 522) 196
SOFTWARE GP-ELECTRONIC 193
SOFTWARE GP-ELECTRONIC (PRODUCT LINK 522) 192
SOFTWARE GP-IMPLEMENT 196
SOFTWARE GP-MONITOR 196
SOFTWARE GP-POWER TRAIN 197
469
SPIDER & BEARING GP 482
484
486
494
STARTING AID AR-ETHER 297
STARTING AID GP-ETHER 299
STARTING AID GP–WIRING 298

INDEX

NAME	PAGE
STARTING MOTOR GP-ELECTRIC	301, 303, 304, 305
STEERING AR	686
STEERING AR-SECONDARY	686
STEERING COLUMN GP	687
STEERING COLUMN GP-ADJUSTABLE	688
STEERING WHEEL GP	689
STEP GP	611, 612
STEP GP–RH	613
STRAINER AS-OIL	797
STRAINER-FUEL (FILLER NECK SCREEN)	171
SUN VISOR	1093
SUPPORT GP-AIR INLET	614
SUPPORT GP-HOOD	615
SUPPORT GP-VALVE & FILTER	616, 617
SUPPORT GP-VALVE & FILTER (SERVICE CENTER)	1
SUPPRESSION AR-SOUND	618, 1078
SUPPRESSION GP-CAB SOUND–AIR CONDITIONER, HEATER	1079
SUPPRESSION GP-CAB SOUND–CAB REAR, CAB ROOF	1080
SUPPRESSION GP-SOUND	619, 1085, 1087, 1088
SUPPRESSION GP-SOUND (REAR WINDOW)	618
SUPPRESSION GP-SOUND–REAR FRAME	1082
SUSPENSION GP-SEAT	1089
SUSPENSION GP-SEAT (AIR, HEATED)	1073
SWITCH AS-LIMIT (NORMALLY CLOSED) (STOP LIGHT)	1062
SWITCH AS-PRESSURE (AIR CONDITIONER)	359, 363
SWITCH AS-PRESSURE (ENGINE OIL COOLER)	359, 363
SWITCH AS-PRESSURE (PARKING BRAKE OIL)	342
SWITCH AS-PRESSURE (PRIMARY STEERING)	376
SWITCH AS-PRESSURE (SECONDARY STEERING)	376
SWITCH AS-PUSH BUTTON (AUTODIG TRIGGER)	188, 190
SWITCH AS-PUSH BUTTON (AUTOMATIC LUBRICATION PUMP)	605
SWITCH AS-PUSH BUTTON (DOWNSHIFT)	348, 350, 689
SWITCH AS-PUSH BUTTON (HORN)	348, 350, 962
SWITCH AS-PUSH BUTTON (PAYLOAD STORE)	1036, 1039, 1042
SWITCH AS-PUSH BUTTON (UPSHIFT)	689
SWITCH AS-ROCKER (24-VOLT)	251, 952, 954, 958, 962, 1052
SWITCH AS-ROCKER (24-VOLT) (AUTO REVERSING FAN)	315
SWITCH AS-ROCKER (24-VOLT) (FINE MODULATION)	348, 350, 355
SWITCH AS-ROCKER (24-VOLT) (FRONT, REAR FLOODLIGHTS)	246
SWITCH AS-ROCKER (24-VOLT) (IMPLEMENT LOCKOUT)	348, 350
SWITCH AS-ROCKER (24-VOLT) (PAYLOAD ZERO, REWEIGH)	1033
SWITCH AS-ROCKER (24-VOLT) (QUICK COUPLER)	313
SWITCH AS-ROCKER (24-VOLT) (THIRD FUNCTION SELECT)	721
SWITCH AS-ROCKER (AIR CONDITIONER, HEATER) (AIR CONDITIONER, HEATER)	332
SWITCH AS-ROCKER (AUTODIG KICKOUT SET)	188, 190
SWITCH AS-ROCKER (AUTODIG OPERATING MODE)	188, 190
SWITCH AS-ROCKER (FAN BLOWER SPEED)	332
SWITCH AS-ROCKER (FORWARD, NEUTRAL, REVERSE)	948, 950, 952, 954
SWITCH AS-ROCKER (HAZARD)	318, 320
SWITCH AS-ROCKER (HEATED MIRRORS)	1028
SWITCH AS-ROCKER (HIGH BEAM, LOW BEAM)	258
SWITCH AS-ROCKER (IMPLEMENT LOCKOUT)	355
SWITCH AS-ROCKER (LAMP)	260
SWITCH AS-ROCKER (LIFT, TILT KICKOUT)	332
SWITCH AS-ROCKER (MODE SELECT)	332
SWITCH AS-ROCKER (RIDE CONTROL)	314
SWITCH AS-ROCKER (SECONDARY STEERING)	317
SWITCH AS-ROCKER (TRANSMISSION DIRECTION)	689
SWITCH AS-ROCKER (TRANSMISSION NEUT OVERRIDE)	332

INDEX

NAME PAGE

SWITCH AS-ROCKER (WARNING BEACON) . . . 261
SWITCH AS-ROTARY 1060
SWITCH AS-ROTARY (24-VOLT, 5-POSITION) (RUNNING LIGHTS) 331
SWITCH AS-ROTARY (24-VOLT) 331
SWITCH AS-ROTARY (WIPER, WASHER) 331
SWITCH AS-START (KEY) 331
SWITCH AS-TOGGLE (HOOD TILT ACTUATOR) 342
SWITCH AS-TOGGLE (ON, OFF) 162
SWITCH AS-TURN SIGNAL 318 320
SWITCH GP-DISCONNECT (BATTERY) 177
SWITCH GP-DISCONNECT–BATTERY 306
SWITCH GP-MAGNETIC 307 308 309 310
SWITCH GP-MAGNETIC (24-VOLT) (START RELAY) 263
SWITCH GP-PRESSURE 311 312
SWITCH GP-PRESSURE (FILTER OIL) 411
SWITCH GP-PRESSURE (STEERING CHARGE) 734
SWITCH GP-QUICK COUPLER 313
SWITCH GP-RIDE CONTROL 314 719
SWITCH GP-ROCKER 315
SWITCH GP-ROCKER (THIRD FUNCTION SELECT) 952 954 958 962
SWITCH GP-ROTARY 316
SWITCH GP-ROTARY (AUTODIG MODE) 188
SWITCH GP-SECONDARY STEERING 317
SWITCH GP-SIGNAL–TURN 318 320
SWITCH GP-TOGGLE (ENGINE SHUTDOWN) 263 266
SWITCH GP-TOGGLE (FUEL FILTER) 143
SWITCH GP-TOGGLE (FUEL PRIMING) 162
SWITCH GP-WIPER–CAB 322
SWITCH-PRESSURE (AUTOLUBE ACTUATION) 627
SWITCH-TEMPERATURE (HVAC) 917 921

T

TANK & MTG GP-FUEL 1 170
TANK GP-COOLANT 103 105
TANK GP-FUEL 171
TANK GP-HYDRAULIC 738 797
TANK GP-WINDOW WASHER–2-PUMP 1092
TILT GP-HOOD 1 622
TINE GP 1187 1188 1189 1190
TIP GP-ABRASION–HEAVY-DUTY 1191
TIP GP-EXTRA-DUTY 1192 1193
TIP GP-GENERAL PURPOSE 1194
TIP GP-HEAVY PENETRATION 1195
TIP GP-PENETRATION 1196 1197
TIRE & RIM AR 487 488
TORQUE CONVERTER & HOUSING GP 489
TORQUE CONVERTER GP 491
TRANSMISSION AR 493
TURBOCHARGER GP 137 138

U

UNIVERSAL JOINT GP 494

V

VALVE & LINES GP-LUBRICATION 623
VALVE & MTG GP-HYDRAULIC 799
VALVE & MTG GP-LOG LOADER–LOGGING . . . 801
VALVE & MTG GP-MAIN CONTROL 738 804 807 810 813 816
VALVE AS-PRESSURE RELIEF (REFRIGERANT COMPRESSOR) 939 942
VALVE AS-SHUTOFF 40
VALVE GP 694 826
VALVE GP-BANK 2 819
VALVE GP-BRAKE CONTROL 644
VALVE GP-BRAKE CONTROL (PARKING) 640
VALVE GP-BRAKE CONTROL (SERVICE) 644
VALVE GP-BRAKE CONTROL–PARKING 643
VALVE GP-CHECK 669 691 692 693 820 821 822 823 831 868 872

INDEX

NAME	PAGE
VALVE GP-CHECK (AUTOMATIC LUBRICATION LINE)	585
VALVE GP-CHECK (BACK PRESSURE)	762
	766
VALVE GP-CHECK (BRAKE, HYDRAULIC FAN)	782
VALVE GP-CHECK (HYDRAULIC OIL COOLER BYPASS)	752
	757
VALVE GP-CHECK (LOAD SIGNAL)	844
	857
	861
	865
VALVE GP-CHECK (PILOT OPERATED)	827
	831
	852
	856
	860
	868
	872
VALVE GP-CHECK (PILOT OPERATED) (QUICK COUPLER)	727
	728
VALVE GP-CHECK & RELIEF	826
VALVE GP-CHECK–PILOT OPERATED	824
	825
VALVE GP-CONTROL	827
	831
	835
	839
	841
	843
VALVE GP-CONTROL (RIDE CONTROL)	785
VALVE GP-DIVERTER	669
	743
	745
	848
	849
VALVE GP-DIVERTER (BRAKE ACCUMULATOR)	782
VALVE GP-ETHER STARTING	323
VALVE GP-FLUID SAMPLING	754
	759
VALVE GP-LOWERING CONTROL	738
VALVE GP-LOWERING CONTROL–LIFT ARM	850
VALVE GP-LUBE DISTRIBUTION	585
	587
	627
	629
	630
VALVE GP-LUBE DISTRIBUTION (FRONT, 8-INJECTOR)	629
VALVE GP-LUBE DISTRIBUTION–8-INJECTOR	625
VALVE GP-LUBE DISTRIBUTION–FRONT, 8-INJECTOR	626
VALVE GP-MAIN CONTROL	852
	856
	860
	864
	868
	872
VALVE GP-MAKEUP	843
	852
	856
	860
	864
VALVE GP-MAKEUP (BUCKET LIFT)	827
	831
	835
	868
	872
VALVE GP-MODULATING	495
	496
	497
VALVE GP-PILOT–COMMAND CONTROL STEERING	694
VALVE GP-PRESSURE REDUCING	696
	799
	801
	804
	808
	811
	814
	817
VALVE GP-PRIORITY	669
	782
VALVE GP-PUMP CONTROL	699
VALVE GP-PUMP CONTROL–FLOW COMPENSATOR	698
VALVE GP-PUMP CONTROL–PRESSURE, FLOW COMPENSATOR	697
	876
VALVE GP-RELIEF	783
	785
	827
	835
	839
	852
	856
	860
	864
	868
	872
	878
	879
VALVE GP-RELIEF (HYDRAULIC TANK)	669
VALVE GP-RELIEF (LINE, TILT CYLINDER HEAD END)	868
	872
VALVE GP-RELIEF (LOAD SIGNAL)	831
	844
VALVE GP-RELIEF (MARGIN)	831
	844
VALVE GP-RELIEF (PILOT OPERATED HYDRAULIC)	868
	872

INDEX

NAME PAGE

VALVE GP-RELIEF (PILOT OPERATED) 785
VALVE GP-RELIEF (TILT CONTROL) 827
831
835
843
VALVE GP-RELIEF (TILT RELIEF) 868
872
VALVE GP-RELIEF (TILT) 831
844
VALVE GP-RELIEF–PUMP BACKUP 701
VALVE GP-RELIEF–STEERING CYLINDER CROSSOVER 700
VALVE GP-RELIEF–TRANSMISSION HYDRAULIC CONTROL 498
VALVE GP-SECONDARY STEERING 702
VALVE GP-SELECTOR (STEERING) 707
VALVE GP-SHUTOFF (RADIATOR DRAIN) 398
VALVE GP-SHUTOFF (RETURN MANIFOLD) 1014
VALVE GP-SHUTTLE 703
787
880
VALVE GP-SHUTTLE (BRAKE ACCUMULATOR) 669
782
VALVE GP-SHUTTLE (BRAKE, HYDRAULIC FAN) 669
VALVE GP-SHUTTLE (HYDRAULIC FAN) 782
VALVE GP-SHUTTLE (PILOT OIL) 788
VALVE GP-SHUTTLE–PILOT SUPPLY 704
VALVE GP-SOLENOID 772
881
882
883
884
VALVE GP-SOLENOID (24-VOLT) 669
782
827
835
839
852
856
860
864
VALVE GP-SOLENOID (24-VOLT) (LIFT, HEAD END) 831
VALVE GP-SOLENOID (24-VOLT) (LIFT, ROD END) 831
VALVE GP-SOLENOID (24-VOLT) (LIFT) 843
VALVE GP-SOLENOID (24-VOLT) (LOWER) 843
VALVE GP-SOLENOID (24-VOLT) (PILOT ON, OFF) 831
843
VALVE GP-SOLENOID (24-VOLT) (PILOT PROPORTIONING) 868
872
VALVE GP-SOLENOID (24-VOLT) (PUMP) 868
872
VALVE GP-SOLENOID (24-VOLT) (RIDE CONTROL) 843
VALVE GP-SOLENOID (24-VOLT) (TILT BACK) 843
VALVE GP-SOLENOID (24-VOLT) (TILT DUMP) 843
VALVE GP-SOLENOID (24-VOLT) (TILT, HEAD END) 831
VALVE GP-SOLENOID (24-VOLT) (TILT, ROD END) 831
VALVE GP-SOLENOID (24-VOLT) (TRACTION CONTROL SYSTEM) 868
872
VALVE GP-STEERING 705
VALVE GP-STEERING NEUTRALIZER 710
711
VALVE GP-STEERING–HMU STEERING 707
VALVE GP-TIRE 500
VALVE GP-UNLOADING 782
VALVE GP-UNLOADING–DIRECT OPERATED 885
VALVE MECHANISM GP 70
71
72
74
VALVE-DIVERTER (QUICK COUPLER) 849
VALVE-SOLENOID 849
VISOR GP-CAB 1093

W

WARNING GP-BACKUP 324
WASHER GP-WINDOW 1094
WATER SEP & FUEL PRM PUMP GP 165
WINDOW GP-CAB 1100
1102
WINDOW GP-CAB–LH 1095
WINDOW GP-CAB–LH, DOOR 1099
WINDOW GP-CAB–SLIDING WINDOW, LH DOOR 1097
1098
WIPER GP-WINDOW 1104
1107
WIRING GP-AUTOLUBE CONTROL 325
WIRING GP-AXLE TEMPERATURE–OIL 327
WIRING GP-CAB 331
WIRING GP-CAB–VARIABLE PITCH FAN 329
337
WIRING GP-CHASSIS 195
342
346
WIRING GP-CHASSIS–VARIABLE PITCH FAN 338
340
WIRING GP-CONTROL 348
350
352
WIRING GP-ELECTRIC CLUTCH–AXLE OIL COOLER PUMP 354
WIRING GP-ELECTROHYDRAULIC 355
WIRING GP-ELECTRONIC CONTROL–FUEL 356

INDEX

NAME	PAGE
WIRING GP-ENGINE	195
	357
	359
	363
WIRING GP-ETHER STARTING AID	367
WIRING GP-FRONT	195
	368
WIRING GP-LIGHTING	370
	371
WIRING GP-MONITOR	372
WIRING GP-PROTECTION	374
WIRING GP-SECONDARY STEERING	376
WIRING GP-SENSOR–TILT POSITION	379
	381
WIRING GP-STEERING	383

MACHINE ARRANGEMENT

373-8237 CHASSIS AR

S/N: JLX1-UP

PART OF 373-8236 COMMON AR

SMCS-7000 **i05668748**

NOTE	PART NUMBER	QTY	PART NAME 1 2 3 4 5 6 (PRODUCT LEVEL)	SEE PAGE
Y	*382-8820*	1	BOX GP-BATTERY	506
Y	*244-4978*	1	CONDENSER & MTG GP-REFRIGERANT	944
			S/N: JLX1-432	
Y	*397-8260*	1	CONDENSER & MTG GP-REFRIGERANT	946
			S/N: JLX433-UP	
Y	*190-6728*	1	CONTROL GP-BUCKET	895
Y	*241-2921*	1	COOLER & MTG GP-TRANSMISSION	398
Y	*375-8109*	1	COUNTERWEIGHT GP	512
Y	*112-6956*	1	CYLINDER & MTG GP-STEERING	646
Y	*370-0441*	1	FENDER GP	526
Y	*374-5372*	1	DEFLECTOR GP-FENDER	514
Y	**374-4981**	1	FRAME AS-REAR	539
Y	**374-4982**	1	FRAME AS-LOADER	535
Y	*371-6728*	1	GUARD GP-FRONT	545
Y	*112-6953*	1	HITCH GP-ARTICULATING	557
Y	*292-6000*	1	HOOD & GUARD GP	559
Y	*372-4849*	1	LADDER GP	563
Y	*237-0431*	1	LINES GP-AFTERCOOLER AIR (AIR-TO-AIR AFTERCOOLER)	125
			S/N: JLX1-115	
Y	*393-7628*	1	LINES GP-AFTERCOOLER AIR (AIR-TO-AIR AFTERCOOLER)	126
			S/N: JLX116-UP	
Y	*377-3177*	1	LINES GP-AIR CONDITIONER	1010
Y	*237-0434*	1	LINES GP-CAB HEATER	1014
Y	*378-7380*	1	LINES GP-FUEL	150
Y	*362-5004*	1	LINES GP-WATER (RADIATOR)	103
Y	*112-6973*	1	LINK GP-STEERING FRAME LOCK	590
Y	*6V-1970*	1	LITERATURE GP (MACHINE)	1019
Y	*374-5370*	1	PANEL GP-SIDE	600
Y	*373-8279*	1	PLATE & FILM GP	1215
Y	*377-4468*	1	RADIATOR & FAN GP	115
Y	*382-5732*	1	SHIELD GP-ENGINE COMPARTMENT	609
Y	*237-0447*	1	SUPPORT GP-AIR INLET	614
Y	*382-6648*	1	SUPPORT GP-VALVE & FILTER (SERVICE CENTER)	616
Y	*374-5369*	1	TANK & MTG GP-FUEL	170
Y	*374-5373*	1	TILT GP-HOOD	622
Y	*236-9039*	1	WASHER GP-WINDOW	1094

Y - SEPARATE ILLUSTRATION

<END>

MACHINE ARRANGEMENT

373-8236 COMMON AR

S/N: JLX1-UP

SMCS-7000 **i05251490**

NOTE	PART NUMBER	QTY	PART NAME 1 2 3 4 5 6 (PRODUCT LEVEL)	SEE PAGE
Y	*373-8237*	1	CHASSIS AR	1
Y	*372-2873*	1	ELECTRICAL AR	195
Y	**338-9076**	1	ENGINE AR-COMPLETE	12
			S/N: JLX1-115	
Y	**387-1975**	1	ENGINE AR-COMPLETE	13
			S/N: JLX116-UP	
Y	*372-2874*	1	HYDRAULIC AR	738
Y	*374-4868*	1	INSTALLATION AR-ENGINE	17
Y	*370-8320*	1	OPERATOR AR	1053
Y	*372-2875*	1	POWER TRAIN AR	469

Y - SEPARATE ILLUSTRATION

<END>

357-1276 CONFIGURATION AR

S/N: JLX1-UP

SMCS-7000 **i04804081**

NOTE	PART NUMBER	QTY	PART NAME 1 2 3 4 5 6 (PRODUCT LEVEL)	SEE PAGE
Y	*358-9586*	1	AXLE AR-FIXED (LIMITED SLIP DIFFERENTIAL)	386
Y	*331-4015*	1	AXLE AR-OSCILLATING (LIMITED SLIP DIFFERENTIAL)	391
Y	*370-2229*	1	GUARD GP-AXLE	543

Y - SEPARATE ILLUSTRATION

<END>

373-8256 CONFIGURATION AR

S/N: JLX1-UP

SMCS-7000 **i04773064**

NOTE	PART NUMBER	QTY	PART NAME 1 2 3 4 5 6 (PRODUCT LEVEL)	SEE PAGE
Y	*280-1456*	1	LIGHTING GP-FLOOD (CAB FRONT, REAR)	248
Y	*376-4753*	1	LIGHTING GP-WARNING BEACON	261

Y - SEPARATE ILLUSTRATION

<END>

MACHINE ARRANGEMENT

375-8104 CONFIGURATION AR

S/N: JLX1-UP

SMCS-7000 **i05550956**

NOTE	PART NUMBER	QTY	PART NAME 1 2 3 4 5 6 (PRODUCT LEVEL)	SEE PAGE
Y	**279-3440**	1	ARM AS-LIFT	887
			S/N: JLX224-UP	
Y	*371-4488*	1	CONTROL & MTG GP-ELHYD	952
Y	*373-8265*	1	LINES GP-FRONT	748
Y	*373-8280*	1	LINES GP-RIDE CONTROL	777
Y	*252-5917*	1	SWITCH GP-RIDE CONTROL	314
Y	*373-9960*	1	VALVE & MTG GP-MAIN CONTROL	807
Y	*375-5760*	1	WIRING GP-CONTROL	352
	382-2533	1	BOSS GP-LIFT ARM	
M	**106-0421**	4	BOSS-THREADED (M12X1.75-THD)	
	373-8255	1	HARDWARE GP-LOADER FRAME	
			S/N: JLX1-223	
	125-9738	2	BLOCK	

M - METRIC PART
Y - SEPARATE ILLUSTRATION

<END>

390-7296 CONFIGURATION AR

S/N: JLX1-UP

PART OF 390-7295 DISTRIBUTION AR

SMCS-7000 **i05236681**

NOTE	PART NUMBER	QTY	PART NAME 1 2 3 4 5 6 (PRODUCT LEVEL)	SEE PAGE
Y	*390-7297*	1	COUNTERWEIGHT GP	513
Y	*391-6273*	1	GUARD GP-LIFT CYLINDER	735
Y	*126-7710*	1	GUARD GP-POWER TRAIN	547

Y - SEPARATE ILLUSTRATION

<END>

391-6270 CONFIGURATION AR

S/N: JLX1-UP

PART OF 391-6268 CONVERSION AR-MACHINE

SMCS-7000 **i05236764**

NOTE	PART NUMBER	QTY	PART NAME 1 2 3 4 5 6 (PRODUCT LEVEL)	SEE PAGE
Y	*155-5600*	1	SHAFT GP-DRIVE	481
Y	**268-6506**	1	TRANSMISSION AR	493

Y - SEPARATE ILLUSTRATION

<END>

MACHINE ARRANGEMENT

368-8481 CONVERSION AR-MACHINE

S/N: JLX1-UP

PART OF 373-8238 DISTRIBUTION AR

SMCS-7000 **i05227922**

NOTE	PART NUMBER	QTY	PART NAME 1 2 3 4 5 6 (PRODUCT LEVEL)	SEE PAGE
Y	*368-8475*	1	COOLING AR-HIGH AMBIENT TEMP (WITH AIR CONDITIONER)	88
Y	*126-7710*	1	GUARD GP-POWER TRAIN (TRANSMISSION)	547
Y	*386-0130*	1	OPTION AR-REGIONAL	10
Y	*244-6601*	1	PRECLEANER GP	135

Y - SEPARATE ILLUSTRATION

<END>

373-8240 CONVERSION AR-MACHINE

S/N: JLX1-UP

SMCS-7000 **i05230491**

NOTE	PART NUMBER	QTY	PART NAME 1 2 3 4 5 6 (PRODUCT LEVEL)	SEE PAGE
Y	*368-8475*	1	COOLING AR-HIGH AMBIENT TEMP (WITH AIR CONDITIONER)	88
Y	*263-3322*	1	INSTALLATION AR-COMMUNICATION (PRODUCT LINK 300, INTL)	218
			—OR—	
Y	*386-0130*	1	OPTION AR-REGIONAL	10
Y	*374-5375*	1	SUPPRESSION GP-SOUND	1087

Y - SEPARATE ILLUSTRATION

<END>

373-8242 CONVERSION AR-MACHINE

S/N: JLX1-UP

SMCS-7000 **i04670309**

NOTE	PART NUMBER	QTY	PART NAME 1 2 3 4 5 6 (PRODUCT LEVEL)	SEE PAGE
Y	*373-8289*	1	CONVERSION AR-MACHINE	6
Y	*368-8475*	1	COOLING AR-HIGH AMBIENT TEMP	88
Y	*374-5375*	1	SUPPRESSION GP-SOUND	1087

Y - SEPARATE ILLUSTRATION

<END>

MACHINE ARRANGEMENT

373-8287 CONVERSION AR-MACHINE

S/N: JLX1-UP

SMCS-7000 **i05285773**

NOTE	PART NUMBER	QTY	PART NAME 1 2 3 4 5 6 (PRODUCT LEVEL)	SEE PAGE
Y	*375-3121*	1	CAMERA AR	183
Y	*126-7710*	1	GUARD GP-POWER TRAIN (TRANSMISSION)	547
Y	*263-3322*	1	INSTALLATION AR-COMMUNICATION (PRODUCT LINK 300, INTL)	218
Y	**352-1587**	1	MANIFOLD GP-CONTROL (BRAKE, HYDRAULIC FAN)	669
Y	*371-4460*	1	OPERATOR GP	1054
Y	*386-0130*	1	OPTION AR-REGIONAL	10
Y	*244-6601*	1	PRECLEANER GP	135
Y	*373-8267*	1	STEERING AR-SECONDARY	686
Y	*262-1085*	1	SUPPRESSION AR-SOUND	1078
			—OR—	
Y	*391-6269*	1	SUPPRESSION AR-SOUND	618

Y - SEPARATE ILLUSTRATION

<END>

MACHINE ARRANGEMENT

373-8289 CONVERSION AR-MACHINE

S/N: JLX1-UP

PART OF 373-8242 CONVERSION AR-MACHINE

SMCS-7000 **i05255534**

NOTE	REF NO	GRAPHIC REF	PART NUMBER	QTY	PART NAME 1 2 3 4 5 6 (PRODUCT LEVEL)	SEE PAGE
Y	1	1	*315-1977*	1	WIRING GP-LIGHTING (SWITCH)	370
Y	2	1	*375-2472*	1	LIGHTING GP-ROADING	257
Y	3	1	*399-4259*	1	CONVERSION GP-ROADING (INDIA)	507
Y	4	1	*417-2687*	1	COUNTERWEIGHT & MOUNTING GP	509

Y - SEPARATE ILLUSTRATION

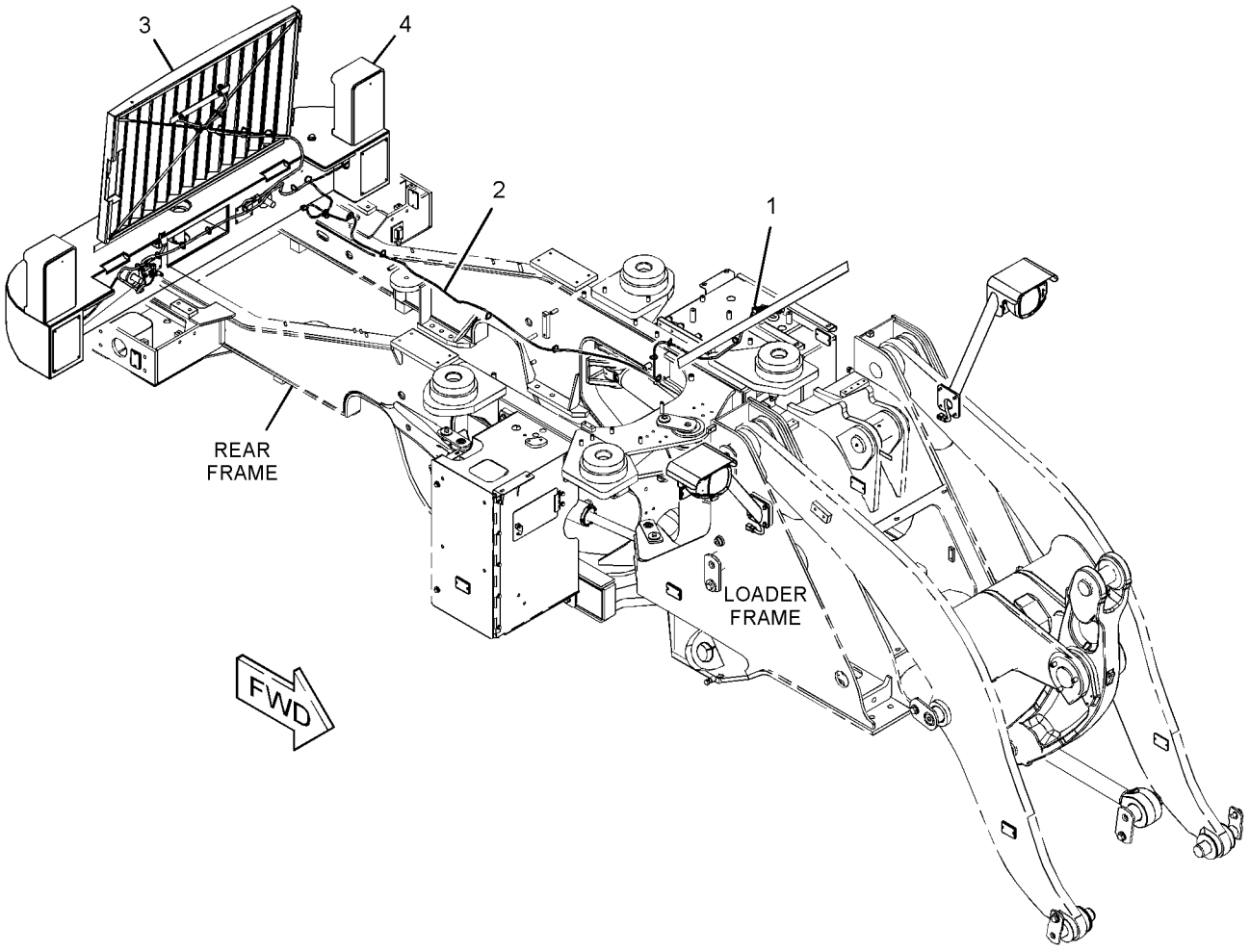

GRAPHIC #1 **<END>** g03374262

MACHINE ARRANGEMENT

391-6268 CONVERSION AR-MACHINE

S/N: JLX1-UP

PART OF 390-7294, 390-7295 DISTRIBUTION AR

SMCS-7000 **i05236756**

NOTE	PART NUMBER	QTY	PART NAME 1 2 3 4 5 6 (PRODUCT LEVEL)	SEE PAGE
Y	*391-6270*	1	CONFIGURATION AR	3
Y	*386-0130*	1	OPTION AR-REGIONAL	10
Y	*374-5375*	1	SUPPRESSION GP-SOUND	1087

Y - SEPARATE ILLUSTRATION

<END>

442-8389 CONVERSION AR-MACHINE

S/N: JLX1-UP

SMCS-7000 **i05924799**

NOTE	PART NUMBER	QTY	PART NAME 1 2 3 4 5 6 (PRODUCT LEVEL)	SEE PAGE
Y	*276-5414*	1	COUNTERWEIGHT GP	511
Y	**387-1976**	1	ENGINE AR-COMPLETE	15

Y - SEPARATE ILLUSTRATION

<END>

373-8238 DISTRIBUTION AR

S/N: JLX1-UP

SMCS-7000 **i05252983**

NOTE	PART NUMBER	QTY	PART NAME 1 2 3 4 5 6 (PRODUCT LEVEL)	SEE PAGE
Y	*357-1251*	1	AXLE AR-FIXED & OSCILLATING (OPEN)	386
Y	*368-8481*	1	CONVERSION AR-MACHINE	4
Y	*371-4460*	1	OPERATOR GP	1054
Y	*386-0130*	1	OPTION AR-REGIONAL	10

Y - SEPARATE ILLUSTRATION

<END>

390-7294 DISTRIBUTION AR

S/N: JLX1-UP

SMCS-7000 **i05247231**

NOTE	PART NUMBER	QTY	PART NAME 1 2 3 4 5 6 (PRODUCT LEVEL)	SEE PAGE
Y	*357-1264*	1	AXLE AR-FIXED & OSCILLATING (OPEN)	386
Y	*391-6268*	1	CONVERSION AR-MACHINE	7
Y	*368-8475*	1	COOLING AR-HIGH AMBIENT TEMP (WITH AIR CONDITIONER)	88
Y	*126-7710*	1	GUARD GP-POWER TRAIN (TRANSMISSION)	547
Y	*334-0438*	1	OPTION AR-COLD WEATHER	8

Y - SEPARATE ILLUSTRATION

<END>

MACHINE ARRANGEMENT

390-7295 DISTRIBUTION AR

S/N: JLX1-UP

SMCS-7000 **i05236609**

NOTE	PART NUMBER	QTY	PART NAME 1 2 3 4 5 6 (PRODUCT LEVEL)	SEE PAGE
Y	*357-1265*	1	AXLE AR-FIXED & OSCILLATING (OPEN)	386
Y	*390-7296*	1	CONFIGURATION AR (COUNTERWEIGHT, GUARDS)	3
Y	*373-5882*	1	CONTROL & MTG GP-ELHYD (IMPLEMENT)	960
Y	*391-6268*	1	CONVERSION AR-MACHINE	7
Y	*368-8475*	1	COOLING AR-HIGH AMBIENT TEMP (WITH AIR CONDITIONER)	88
Y	*263-3322*	1	INSTALLATION AR-COMMUNICATION (PRODUCT LINK 300, INTL)	218
Y	*334-0438*	1	OPTION AR-COLD WEATHER	8
Y	*244-6601*	1	PRECLEANER GP	135

Y - SEPARATE ILLUSTRATION

<END>

373-8254 OPTION AR-CAB

S/N: JLX1-UP

SMCS-7000, 7301 **i05550954**

NOTE	PART NUMBER	QTY	PART NAME 1 2 3 4 5 6 (PRODUCT LEVEL)	SEE PAGE
Y	*259-1999*	1	MIRROR GP-REAR VIEW (EXTERIOR, HEATED)	1026
Y	*376-4022*	1	SEAT GP-SUSPENSION (HEATED, 24-VOLT)	1075

Y - SEPARATE ILLUSTRATION

<END>

334-0437 OPTION AR-COLD WEATHER

S/N: JLX1-UP

CANNOT BE USED WITH 334-0438—PAGE: 8

SMCS-7000 **i05374136**

NOTE	PART NUMBER	QTY	PART NAME 1 2 3 4 5 6 (PRODUCT LEVEL)	SEE PAGE
Y	*9X-3294*	1	HEATER GP-JACKET WATER	216
Y	*263-6353*	1	STARTING AID AR-ETHER	297

Y - SEPARATE ILLUSTRATION

<END>

334-0438 OPTION AR-COLD WEATHER

S/N: JLX1-UP

CANNOT BE USED WITH 334-0437—PAGE: 8

PART OF 390-7294, 390-7295 DISTRIBUTION AR

SMCS-7000 **i04375551**

NOTE	PART NUMBER	QTY	PART NAME 1 2 3 4 5 6 (PRODUCT LEVEL)	SEE PAGE
Y	*217-6280*	1	HEATER GP-JACKET WATER	217
Y	*263-6353*	1	STARTING AID AR-ETHER	297

Y - SEPARATE ILLUSTRATION

<END>

MACHINE ARRANGEMENT

373-8257 OPTION AR-LIGHTING

S/N: JLX1-UP

SMCS-7000 **i05374570**

NOTE	PART NUMBER	QTY	PART NAME 1 2 3 4 5 6 (PRODUCT LEVEL)	SEE PAGE
Y	*235-8560*	1	LIGHTING GP-FLOOD (HID, CAB FRONT, REAR)	246
			S/N: JLX1-242	
Y	*373-5933*	1	LIGHTING GP-FLOOD (HID, CAB FRONT, REAR)	251
			S/N: JLX243-UP	
Y	*376-4753*	1	LIGHTING GP-WARNING BEACON	261

Y - SEPARATE ILLUSTRATION

<END>

334-0440 OPTION AR-PRECLEANER

S/N: JLX1-UP

CANNOT BE USED WITH 198-7248—PAGE: 405

SMCS-7000 **i04375573**

NOTE	PART NUMBER	QTY	PART NAME 1 2 3 4 5 6 (PRODUCT LEVEL)	SEE PAGE
Y	*198-7248*	1	DRAIN GP-ECOLOGY (POWER TRAIN)	405
Y	*244-6601*	1	PRECLEANER GP	135

Y - SEPARATE ILLUSTRATION

<END>

MACHINE ARRANGEMENT

386-0130 OPTION AR-REGIONAL

S/N: JLX1-UP

PART OF 368-8481, 373-8240, 373-8287, 391-6268 CONVERSION AR-MACHINE, 373-8238 DISTRIBUTION AR

SMCS-7000 **i04773934**

NOTE	REF NO	GRAPHIC REF	PART NUMBER	QTY	PART NAME 1 2 3 4 5 6 (PRODUCT LEVEL)	SEE PAGE
	1	1	**124-2456**	2	FILM-INSTRUCTION (NO STEP)	
Y	2	1	*382-8821*	1	BOX GP-TOOL	1202
	3	1	*387-2082*	1	EXTENSION GP-FENDER	
		1	**5D-6912**	5	DIODE-RECTIFIER	
		1	**111-1562**	1	RECEPTACLE AS	
		1	**111-1574**	1	SEAL-RECEPTACLE	
Y	4	1	*387-2083*	1	STEP GP	613

Y - SEPARATE ILLUSTRATION

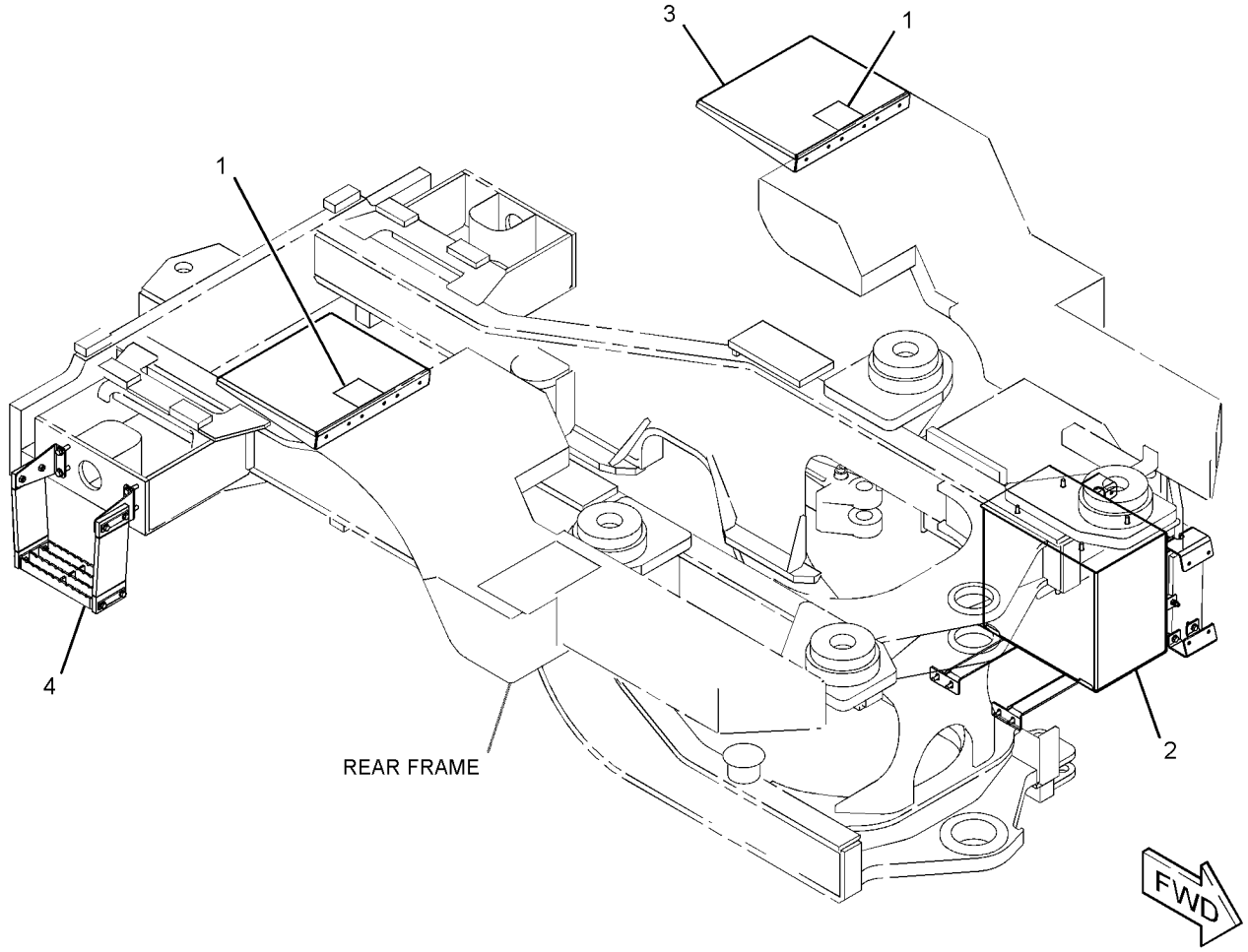

GRAPHIC #1 **<END>** g02879559

ENGINE ARRANGEMENT

396-7308 ENGINE AR

S/N: KHX1-UP

PART OF 387-1975 ENGINE AR-COMPLETE

SMCS-1000 **i04895527**

NOTE	PART NUMBER	QTY	PART NAME 1 2 3 4 5 6 (PRODUCT LEVEL)	SEE PAGE
Y	*397-1168*	1	ENGINE AR-CORE	17
Y	*397-3975*	1	PLATE & FILM GP	1217
	247-0829	1	ELECTRONICS GP-ENGINE RATINGS	

Y - SEPARATE ILLUSTRATION

<END>

396-7309 ENGINE AR

S/N: KHX1-UP

PART OF 387-1976 ENGINE AR-COMPLETE

SMCS-1000 **i04896083**

NOTE	PART NUMBER	QTY	PART NAME 1 2 3 4 5 6 (PRODUCT LEVEL)	SEE PAGE
Y	*397-1168*	1	ENGINE AR-CORE	17
Y	*397-3975*	1	PLATE & FILM GP	1217
	247-0831	1	ELECTRONICS GP-ENGINE RATINGS	

Y - SEPARATE ILLUSTRATION

<END>

ENGINE ARRANGEMENT

338-9076 ENGINE AR-COMPLETE*R

S/N: KHX1-UP
163 BRAKE KW (218 BHP) AT 1800 RPM
PART OF 373-8236 COMMON AR

SMCS-1000 **i05221991**

NOTE	PART NUMBER	QTY	PART NAME 1 2 3 4 5 6 (PRODUCT LEVEL)	SEE PAGE
Y	*241-0573*	1	BREATHER GP	76
Y	*4W-3462*	1	CARRIER GP-SEAL	19
Y	*279-0498*	1	CONTROL & MTG GP-ENGINE ELEK	186
Y	*189-8780*	1	COVER GP-AIR INLET	120
Y	*257-9145*	1	COVER GP-CYLINDER BLOCK	20
Y	*118-1727*	1	COVER GP-FRONT HOUSING (ACCESSORY DRIVE)	22
Y	*252-2328*	1	COVER GP-VALVE MECHANISM	
			S/N: KHX1-34635	
Y	*369-8134*	1	COVER GP-VALVE MECHANISM	24
			S/N: KHX34636-UP	
Y	*165-4557*	1	DAMPER & PULLEY GP	39
Y	*118-2073*	1	DRAIN GP-ENGINE OIL	40
Y	*246-2931*	1	ELBOW GP-AIR INLET	122
Y	*237-9821*	1	ELBOW GP-WATER	96
YR	*235-1423*	1	ENGINE AR-CORE	16
Y	*258-8723*	1	FASTENER GP-CYLINDER HEAD	42
Y	*218-0859*	1	FASTENER GP-DAMPER & PULLEY	43
Y	*116-4556*	1	FASTENER GP-FRONT HOUSING	45
Y	*238-0373*	1	FASTENER GP-FRONT COVER	44
Y	*237-9836*	1	FILLER GP-ENGINE OIL	77
Y	*237-9823*	1	FILTER & LINES GP-FUEL (SECONDARY)	140
Y	*189-5433*	1	FILTER GP-ENGINE OIL	78
Y	*7E-0519*	1	FLYWHEEL GP	47
Y	*297-6462*	1	FUMES DISPOSAL GP	
			S/N: KHX1-34635	
Y	*369-9201*	1	FUMES DISPOSAL GP	80
			S/N: KHX34636-UP	
Y	*308-0948*	1	GAUGE GP-OIL LEVEL (DIPSTICK) (ENGINE)	412
Y	*197-5210*	1	HOUSING GP-FLYWHEEL	49
Y	*237-9822*	1	LIFTING GP-ENGINE	57
Y	*7C-2475*	1	LINES GP-ENGINE OIL	81
Y	*187-6279*	1	LINES GP-TURBOCHARGER OIL	83
Y	*238-4802*	1	LINES GP-WATER (ENGINE)	99
Y	*183-6845*	1	MANIFOLD GP-EXHAUST (DRY)	129
Y	*215-6982*	1	MOUNTING GP-ALTERNATOR	58
Y	*201-6850*	1	PAN GP-OIL	61
Y	*159-0303*	1	PLUG GP-CYLINDER BLOCK (COOLANT CONDITIONER)	63
Y	*162-8068*	1	PLUG GP-ENGINE	64
Y	*172-5754*	1	PULLEY GP-IDLER (BELT TENSIONER)	65
Y	*238-4803*	1	PUMP GP-FUEL PRM & PRIM FILTER	
			S/N: KHX1-47293	
Y	*397-2535*	1	PUMP GP-FUEL PRM & PRIM FILTER	162
			S/N: KHX47294-UP	
Y	*209-4600*	1	PUMP GP-WATER	112
Y	*115-4210*	1	SEAL GP-CRANKSHAFT	69
Y	*330-6039*	1	SENSOR GP-ENGINE (ELECTRONIC)	278
Y	*249-9223*	1	STARTING AID GP (WIRING)	298
Y	*330-6022*	1	WIRING GP-ENGINE	357
			PLEASE USE THE GASKET KIT LINK IN SIS OR CONTACT YOUR LOCAL DEALER FOR THE LATEST GASKET KIT INFORMATION	

R - REMFG PART MAY BE AVAILABLE
Y - SEPARATE ILLUSTRATION

<END>

ENGINE ARRANGEMENT

387-1975 ENGINE AR-COMPLETE

S/N: KHX48114-UP

PART OF 373-8236 COMMON AR

SMCS-1000 **i05858514**

NOTE	PART NUMBER	QTY	PART NAME 1 2 3 4 5 6 (PRODUCT LEVEL)	SEE PAGE
Y	*241-0573*	1	BREATHER GP	76
Y	*4W-3462*	1	CARRIER GP-SEAL	19
Y	*393-0904*	1	COMPRESSOR GP-REFRIGERANT	941
			S/N: KHX48114-54030	
Y	**246-9345**	1	CONTROL & MTG GP-ENGINE ELEK	185
Y	*117-3643*	1	COOLER GP-ENGINE OIL	87
			S/N: KHX54031-UP	
Y	*341-8249*	1	COVER GP-STARTING MOTOR	194
			S/N: KHX50047-UP	
Y	*189-8780*	1	COVER GP-AIR INLET	120
Y	*257-9145*	1	COVER GP-CYLINDER BLOCK	20
Y	*118-1727*	1	COVER GP-FRONT HOUSING (ACCESSORY DRIVE)	22
Y	*211-9120*	1	COVER GP-FRONT HOUSING	23
Y	*369-8134*	1	COVER GP-VALVE MECHANISM	24
Y	*165-4557*	1	DAMPER & PULLEY GP	39
Y	*118-2073*	1	DRAIN GP-ENGINE OIL	40
Y	*246-2931*	1	ELBOW GP-AIR INLET	122
			S/N: KHX48114-60213	
Y	*450-3092*	1	ELBOW GP-AIR INLET	123
			S/N: KHX60214-UP	
Y	*237-9821*	1	ELBOW GP-WATER	96
Y	*396-7308*	1	ENGINE AR	11
Y	*258-8723*	1	FASTENER GP-CYLINDER HEAD	42
Y	*218-0859*	1	FASTENER GP-DAMPER & PULLEY	43
Y	*116-4556*	1	FASTENER GP-FRONT HOUSING	45
Y	*396-2232*	1	FASTENER GP-FRONT HOUSING	46
Y	*392-7923*	1	FASTENER GP-INLET MANIFOLD	124
Y	*237-9836*	1	FILLER GP-ENGINE OIL	77
Y	*189-5433*	1	FILTER GP-ENGINE OIL	78
Y	*396-3623*	1	FILTER GP-FUEL	143
Y	*7E-0519*	1	FLYWHEEL GP	47
Y	*369-9201*	1	FUMES DISPOSAL GP	80
Y	*308-0948*	1	GAUGE GP-OIL LEVEL (DIPSTICK) (ENGINE)	412
Y	*197-5210*	1	HOUSING GP-FLYWHEEL	49
Y	*165-4446*	1	HOUSING GP-FRONT	50
Y	*237-9822*	1	LIFTING GP-ENGINE	57
Y	*7C-2475*	1	LINES GP-ENGINE OIL	81
Y	*392-7951*	1	LINES GP-FUEL	152
Y	*396-8415*	1	LINES GP-INJECTOR HYD PUMP	156
			S/N: KHX48114-54030	
Y	*187-6279*	1	LINES GP-TURBOCHARGER OIL	83
Y	*238-4802*	1	LINES GP-WATER (ENGINE)	99
Y	*183-6845*	1	MANIFOLD GP-EXHAUST (DRY)	129
Y	*215-6982*	1	MOUNTING GP-ALTERNATOR	58
Y	*392-9270*	1	MOUNTING GP-MUFFLER	130
Y	*392-9252*	1	MOUNTING GP-STARTING MOTOR	60
			S/N: KHX48114-50046	
Y	*201-6850*	1	PAN GP-OIL	61
Y	*159-0303*	1	PLUG GP-CYLINDER BLOCK (COOLANT CONDITIONER)	63
Y	*162-8068*	1	PLUG GP-ENGINE	64
Y	*393-3590*	1	PROTECTION GP-WIRING	269
Y	*172-5754*	1	PULLEY GP-IDLER (BELT TENSIONER)	65
Y	*444-1143*	1	PULLEY GP-IDLER	66
			S/N: KHX54031-UP	
Y	*115-4210*	1	SEAL GP-CRANKSHAFT	69
Y	*258-2403*	1	TURBOCHARGER GP	138
Y	*396-4980*	1	WIRING GP-ELECTRONIC CONTROL	356
Y	*330-6022*	1	WIRING GP-ENGINE	357

387-1975 **ENGINE AR-COMPLETE (*contd.*)** **i05858514**

NOTE	PART NUMBER	QTY	PART NAME 1 2 3 4 5 6 (PRODUCT LEVEL)	SEE PAGE
			PLEASE USE THE GASKET KIT LINK IN SIS OR CONTACT YOUR LOCAL DEALER FOR THE LATEST GASKET KIT INFORMATION	
Y - SEPARATE ILLUSTRATION				

<END>

387-1976 ENGINE AR-COMPLETE

S/N: TX7115-UP; KHX50047-UP

PART OF 442-8389 CONVERSION AR-MACHINE

SMCS-1000 **i05939333**

NOTE	PART NUMBER	QTY	PART NAME 1 2 3 4 5 6 (PRODUCT LEVEL)	SEE PAGE
Y	*241-0573*	1	BREATHER GP (CRANKCASE)	76
Y	*4W-3462*	1	CARRIER GP-SEAL	19
Y	*393-0904*	1	COMPRESSOR GP-REFRIGERANT	941
			S/N: KHX50047-54032	
Y	*444-1143*	1	PULLEY GP-IDLER	66
			S/N: KHX54033-UP ; TX7115-UP	
Y	**246-9345**	1	CONTROL & MTG GP-ENGINE ELEK	185
Y	*341-8249*	1	COVER GP-STARTING MOTOR	194
			S/N: KHX50047-UP	
Y	*189-8780*	1	COVER GP-AIR INLET	120
Y	*257-9145*	1	COVER GP-CYLINDER BLOCK	20
Y	*118-1727*	1	COVER GP-FRONT HOUSING (ACCESSORY DRIVE)	22
Y	*211-9120*	1	COVER GP-FRONT HOUSING	23
Y	*369-8134*	1	COVER GP-VALVE MECHANISM	24
Y	*165-4557*	1	DAMPER & PULLEY GP	39
Y	*118-2073*	1	DRAIN GP-ENGINE OIL	40
Y	*246-2931*	1	ELBOW GP-AIR INLET	122
			S/N: KHX50047-60257 ; TX7115-99999	
Y	*450-3092*	1	ELBOW GP-AIR INLET	123
			S/N: KHX60258-UP ; TX7115-UP	
Y	*237-9821*	1	ELBOW GP-WATER	96
Y	*396-7309*	1	ENGINE AR	11
Y	*258-8723*	1	FASTENER GP-CYLINDER HEAD	42
Y	*218-0859*	1	FASTENER GP-DAMPER & PULLEY	43
Y	*116-4556*	1	FASTENER GP-FRONT HOUSING	45
Y	*396-2232*	1	FASTENER GP-FRONT HOUSING	46
Y	*392-7923*	1	FASTENER GP-INLET MANIFOLD	124
Y	*237-9836*	1	FILLER GP-ENGINE OIL	77
Y	*189-5433*	1	FILTER GP-ENGINE OIL	78
Y	*396-3623*	1	FILTER GP-FUEL	143
Y	*7E-0519*	1	FLYWHEEL GP	47
Y	*369-9201*	1	FUMES DISPOSAL GP	80
Y	*308-0948*	1	GAUGE GP-OIL LEVEL (DIPSTICK) (ENGINE)	412
Y	*197-5210*	1	HOUSING GP-FLYWHEEL	49
Y	*165-4446*	1	HOUSING GP-FRONT	50
Y	*237-9822*	1	LIFTING GP-ENGINE	57
Y	*7C-2475*	1	LINES GP-ENGINE OIL	81
Y	*392-7951*	1	LINES GP-FUEL	152
Y	*396-8415*	1	LINES GP-INJECTOR HYD PUMP	156
			S/N: KHX50047-54032	
Y	*187-6279*	1	LINES GP-TURBOCHARGER OIL	83
Y	*238-4802*	1	LINES GP-WATER (ENGINE)	99
Y	*183-6845*	1	MANIFOLD GP-EXHAUST (DRY)	129
Y	*215-6982*	1	MOUNTING GP-ALTERNATOR	58
Y	*392-9270*	1	MOUNTING GP-MUFFLER	130
Y	*201-6850*	1	PAN GP-OIL	61
Y	*159-0303*	1	PLUG GP-CYLINDER BLOCK (COOLANT CONDITIONER)	63
Y	*162-8068*	1	PLUG GP-ENGINE	64
Y	*393-3590*	1	PROTECTION GP-WIRING	269
Y	*172-5754*	1	PULLEY GP-IDLER (BELT TENSIONER)	65
Y	*115-4210*	1	SEAL GP-CRANKSHAFT	69
Y	*258-2403*	1	TURBOCHARGER GP	138
Y	*396-4980*	1	WIRING GP-ELECTRONIC CONTROL	356
Y	*330-6022*	1	WIRING GP-ENGINE	357

387-1976 **ENGINE AR-COMPLETE (*contd.*)** **i05939333**

NOTE	PART NUMBER	QTY	PART NAME 1 2 3 4 5 6 (PRODUCT LEVEL)	SEE PAGE
Y - SEPARATE ILLUSTRATION				

<END>

235-1423 ENGINE AR-CORE

S/N: KHX1-UP

PART OF 338-9076 ENGINE AR-COMPLETE

SMCS-1000 **i05301921**

NOTE	PART NUMBER	QTY	PART NAME 1 2 3 4 5 6 (PRODUCT LEVEL)	SEE PAGE
Y	*212-4289*	1	CAMSHAFT GP	18
Y	*117-3643*	1	COOLER GP-ENGINE OIL	87
Y	*211-9120*	1	COVER GP-FRONT HOUSING	23
Y	*210-5590*	1	CRANKSHAFT GP	25
Y	*221-4482*	1	CYLINDER BLOCK GP	27
Y	*219-5849*	1	CYLINDER HEAD GP	37
Y	*205-1321*	1	GEAR GP-FRONT	48
Y	*165-4446*	1	HOUSING GP-FRONT	50
Y	*381-8868*	1	LINES GP-INJECTOR HYD PUMP	155
			—OR—	
Y	*396-8415*	1	LINES GP-INJECTOR HYD PUMP	156
YR	*212-3652*	6	PISTON & ROD GP	62
Y	*222-5900*	1	PUMP & MTG GP-UNIT INJ HYD	157
			—OR—	
Y	*387-8538*	1	PUMP & MTG GP-UNIT INJ HYD	158
Y	*192-2981*	1	PUMP GP-ENGINE OIL	85
Y	*268-1839*	6	PUMP GP-FUEL INJECTION	159
Y	*258-2403*	1	TURBOCHARGER GP	138
Y	*232-3717*	1	VALVE MECHANISM GP	70
	247-0829	1	ELECTRONICS GP-ENGINE RATINGS	

R - REMFG PART MAY BE AVAILABLE
Y - SEPARATE ILLUSTRATION

<END>

ENGINE ARRANGEMENT

397-1168 ENGINE AR-CORE

S/N: KHX1-UP

PART OF 396-7308, 396-7309 ENGINE AR

SMCS-1000 **i05840484**

NOTE	PART NUMBER	QTY	PART NAME 1 2 3 4 5 6 (PRODUCT LEVEL)	SEE PAGE
Y	*212-4289*	1	CAMSHAFT GP	18
Y	*117-3643*	1	COOLER GP-ENGINE OIL	87
			—OR—	
Y	*396-8415*	1	LINES GP-INJECTOR HYD PUMP	156
Y	*210-5590*	1	CRANKSHAFT GP	25
Y	*221-4482*	1	CYLINDER BLOCK GP	27
Y	*219-5849*	1	CYLINDER HEAD GP	37
Y	*205-1321*	1	GEAR GP-FRONT	48
YR	*212-3652*	6	PISTON & ROD GP	62
Y	*387-8538*	1	PUMP & MTG GP-UNIT INJ HYD	158
Y	*192-2981*	1	PUMP GP-ENGINE OIL	85
Y	*268-1839*	6	PUMP GP-FUEL INJECTION	159
Y	*209-4600*	1	PUMP GP-WATER	112
Y	*330-6039*	1	SENSOR GP-ENGINE (ELECTRONIC)	278
Y	*232-3717*	1	VALVE MECHANISM GP	70

R - REMFG PART MAY BE AVAILABLE
Y - SEPARATE ILLUSTRATION

<END>

374-4868 INSTALLATION AR-ENGINE

S/N: JLX1-UP

PART OF 373-8236 COMMON AR

SMCS-1000 **i05571389**

NOTE	PART NUMBER	QTY	PART NAME 1 2 3 4 5 6 (PRODUCT LEVEL)	SEE PAGE
Y	*237-4848*	1	AIR CLEANER GP	118
Y	*377-6862*	1	ALTERNATOR GP-CHARGING	175
Y	*237-4857*	1	COMPRESSOR GP-REFRIGERANT	940
			S/N: JLX1-342	
Y	*441-6281*	1	COMPRESSOR GP-REFRIGERANT	943
			S/N: JLX343-UP	
Y	*386-6955*	1	DRIVE GP-ACCESSORY	41
			S/N: JLX116-UP	
Y	*238-4804*	1	FUMES DISPOSAL GP	79
Y	*364-0881*	1	LINES GP-AIR	127
			S/N: JLX1-115	
Y	*391-9256*	1	LINES GP-AIR	128
			S/N: JLX116-UP	
Y	*168-8976*	1	LINES GP-ENGINE OIL DRAIN	82
Y	*237-4851*	1	LINES GP-FUEL DRAIN	154
			S/N: JLX1-115	
Y	*378-6952*	1	MOUNTING GP-ENGINE & XMSN	59
Y	*378-7381*	1	MUFFLER GP	133
			—OR—	
Y	*237-4853*	1	MUFFLER GP	132
Y	*373-7172*	1	STARTING MOTOR GP-ELECTRIC (24-VOLT)	303

Y - SEPARATE ILLUSTRATION

<END>

212-4289 CAMSHAFT GP

S/N: KHX1-UP

PART OF 235-1423, 397-1168 ENGINE AR-CORE

SMCS-1210, 1211, 1212 **i02215726**

NOTE	REF NO	GRAPHIC REF	PART NUMBER	QTY	PART NAME 1 2 3 4 5 6 (PRODUCT LEVEL)	SEE PAGE
	1	1	**107-7694**	1	PLATE-THRUST	
R	2	1	**212-4288**	1	CAMSHAFT AS	
	2A	1	**1B-8705**	1	KEY-WOODRUFF	
	2B	1	**224-3247**	1	GEAR (100-TEETH)	
M	3	1	**6V-3940**	2	BOLT (M8X1.25X25-MM)	

M - METRIC PART
R - REMFG PART MAY BE AVAILABLE

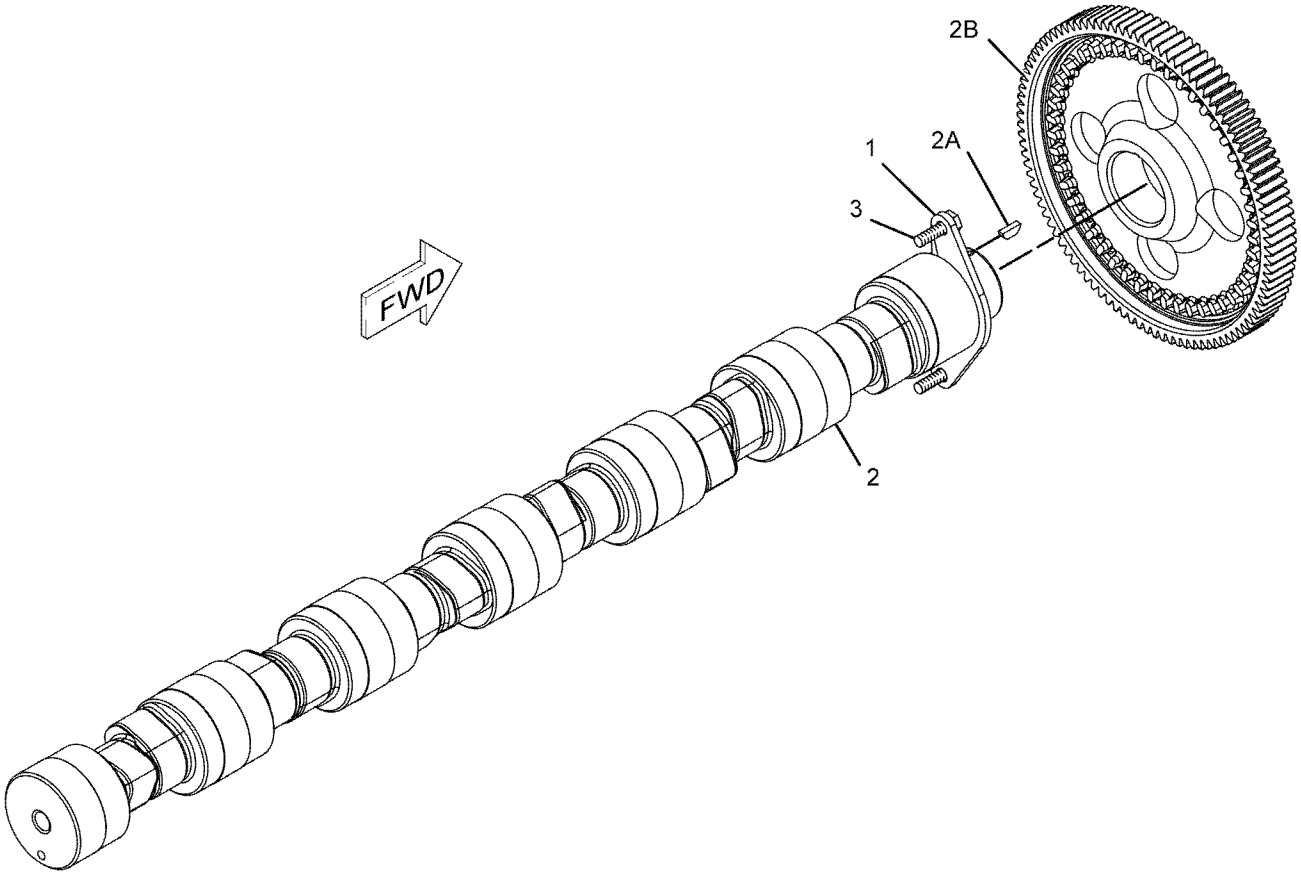

GRAPHIC #1 **<END>** g01099239

4W-3462 CARRIER GP-SEAL

S/N: KHX1-UP

PART OF 338-9076, 387-1975, 387-1976 ENGINE AR-COMPLETE

SMCS-1160, 1161 **i04630426**

NOTE	REF NO	GRAPHIC REF	PART NUMBER	QTY	PART NAME 1 2 3 4 5 6 (PRODUCT LEVEL)	SEE PAGE
	1	1	**2W-6546**	1	COVER	
	2	1	**247-1876**	1	SEAL	
	3	1	**239-0583**	1	GASKET	
	4	1	**6V-3538**	2	DOWEL	
M	5	1	**6V-3940**	8	BOLT (M8X1.25X25-MM)	
	6	1	**9M-1974**	8	WASHER-HARD (8.8X16X2-MM THK)	
BF		1	**4C-9612**		SEALANT-SILICONE	

B - USE AS REQUIRED
F - NOT SHOWN
M - METRIC PART

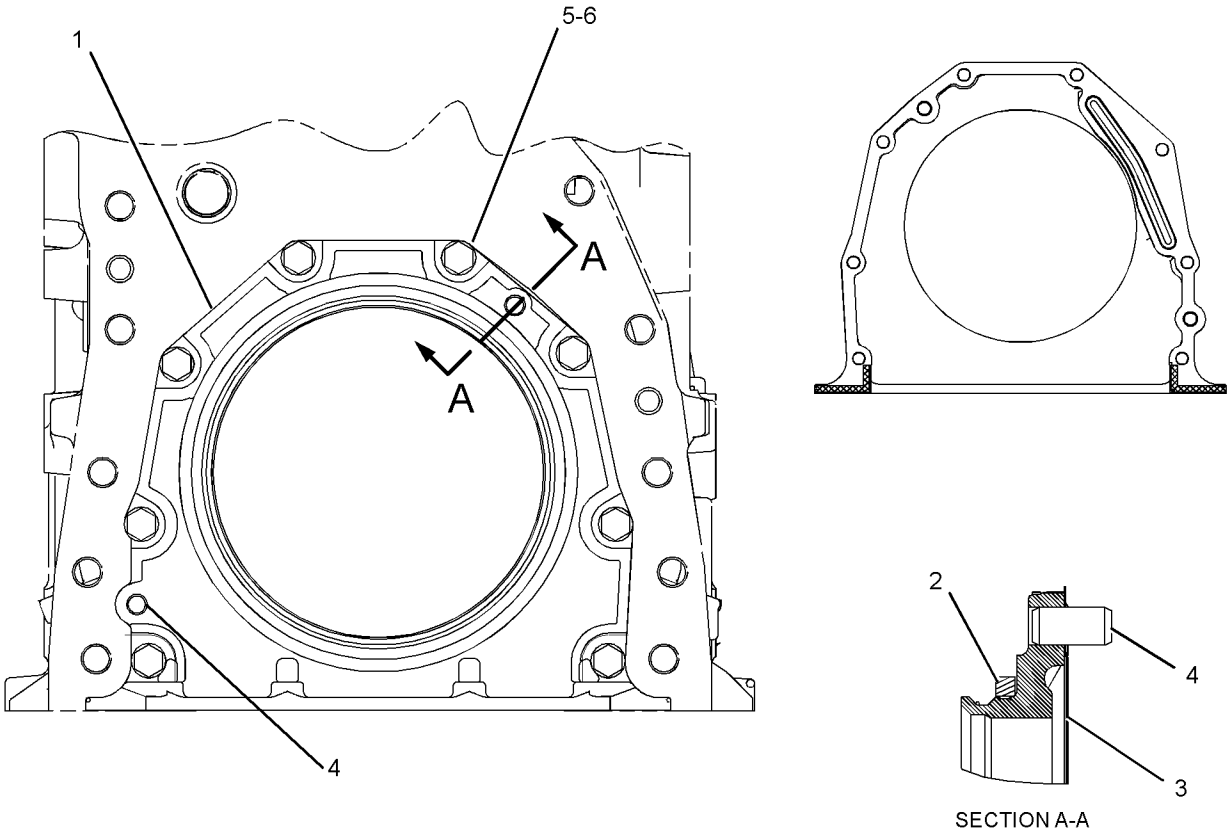

GRAPHIC #1 **<END>** g02774700

257-9145 COVER GP-CYLINDER BLOCK

S/N: KHX1-UP

PART OF 338-9076, 387-1975, 387-1976 ENGINE AR-COMPLETE

SMCS-1201 **i05968302**

NOTE	REF NO	GRAPHIC REF	PART NUMBER	QTY	PART NAME 1 2 3 4 5 6 (PRODUCT LEVEL)	SEE PAGE
	1	1	**2W-6544**	1	COVER	
	2	1	**4P-5918**	3	CLIP	
	3	1	**342-4977**	2	COVER-SIDE	
	4	1	**7W-3872**	6	SLEEVE (MARKED X)	
M	5	1	**9X-2099**	1	STUD (M8X1.25X52.75-MM)	
M	6	1	**110-7618**	3	BOLT AS	
	7	1	**457-7389**	1	COVER-SIDE (BREATHER)	
M	8	1	**5C-7261**	3	NUT (M8X1.25-THD)	
	9	1	**8T-4224**	1	WASHER-HARD (8.8X16X2-MM THK)	
	10	1	**9M-1974**	24	WASHER-HARD (8.8X16X2-MM THK)	
	11	1	**4Y-9652**	2	GASKET (SIDE COVER)	
	12	1	**371-3481**	1	GASKET (BREATHER)	
	13	1	**210-3321**	3	STUD (M8X1.25-THD)	
M	14	1	**6V-2317**	20	BOLT (M8X1.25X30-MM)	
	16	1	**371-1607**	1	PLATE	
M	17	1	**150-4086**	2	SCREW (M4X0.7X16-MM)	
M	18	1	**216-7352**	1	SCREW-TRUSS HEAD (M8X1.25X30-MM)	
BF			**1U-8846**		SEALANT-GASKET	

B - USE AS REQUIRED
F - NOT SHOWN
M - METRIC PART

257-9145 **COVER GP-CYLINDER BLOCK (*contd.*)** **i05968302**

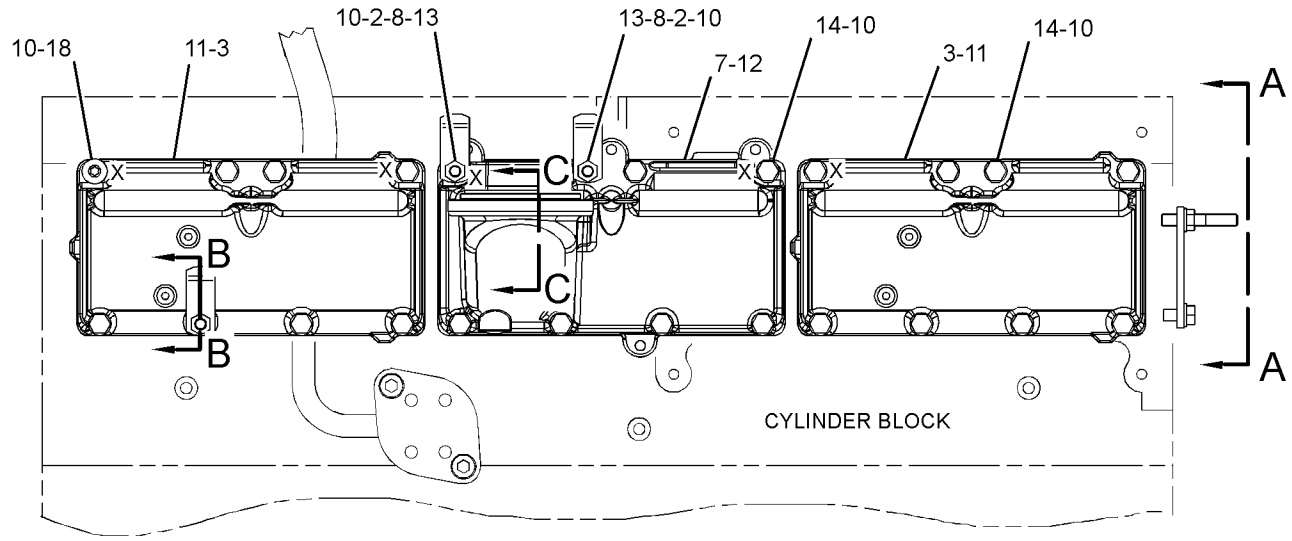

LEFT SIDE VIEW OF ENGINE

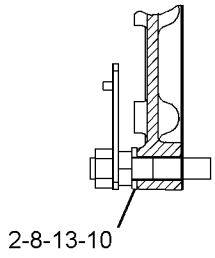

SECTION B-B

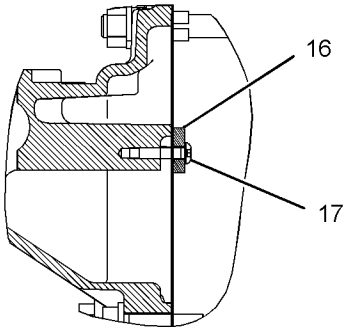

SECTION C-C

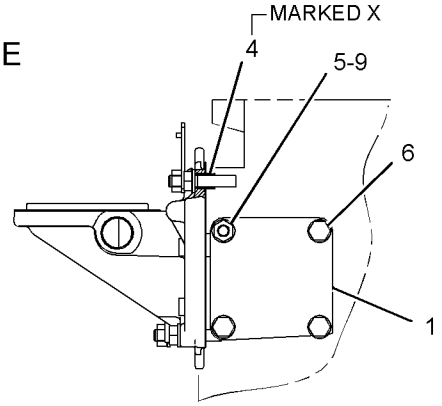

VIEW A-A

GRAPHIC #1

<END>

g03349786

118-1727 COVER GP-FRONT HOUSING

S/N: KHX1-UP

PART OF 338-9076, 387-1975, 387-1976 ENGINE AR-COMPLETE

SMCS-1151, 1166 **i05854262**

NOTE	REF NO	GRAPHIC REF	PART NUMBER	QTY	PART NAME 1 2 3 4 5 6 (PRODUCT LEVEL)	SEE PAGE
	1	1	**5P-8245**	4	WASHER-HARD (13.5X25.5X3-MM THK)	
M	2	1	**6V-5696**	2	BOLT (M12X1.75X80-MM)	
	3	1	**4W-2026**	1	COVER	
	4	1	**135-9819**	1	SEAL-INTEGRAL	
M	5	1	**6V-8149**	2	NUT (M12X1.75-THD)	

M - METRIC PART

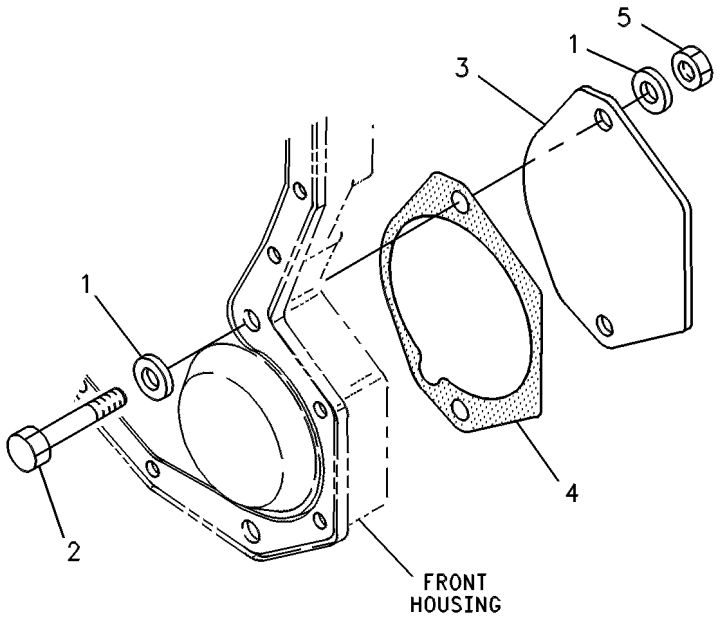

GRAPHIC #1 **<END>** g00245495

211-9120 COVER GP-FRONT HOUSING

S/N: KHX1-UP

PART OF 387-1975, 387-1976 ENGINE AR-COMPLETE, 235-1423 ENGINE AR-CORE

SMCS-1151, 1166 **i01696333**

NOTE	REF NO	GRAPHIC REF	PART NUMBER	QTY	PART NAME 1 2 3 4 5 6 (PRODUCT LEVEL)	SEE PAGE
	1	1	**166-1776**	1	COVER AS-FRONT	
	1A	1	**126-1757**	2	WASHER	
	1B	1	**136-0822**	2	STUD	
	2	1	**166-1781**	1	GASKET	

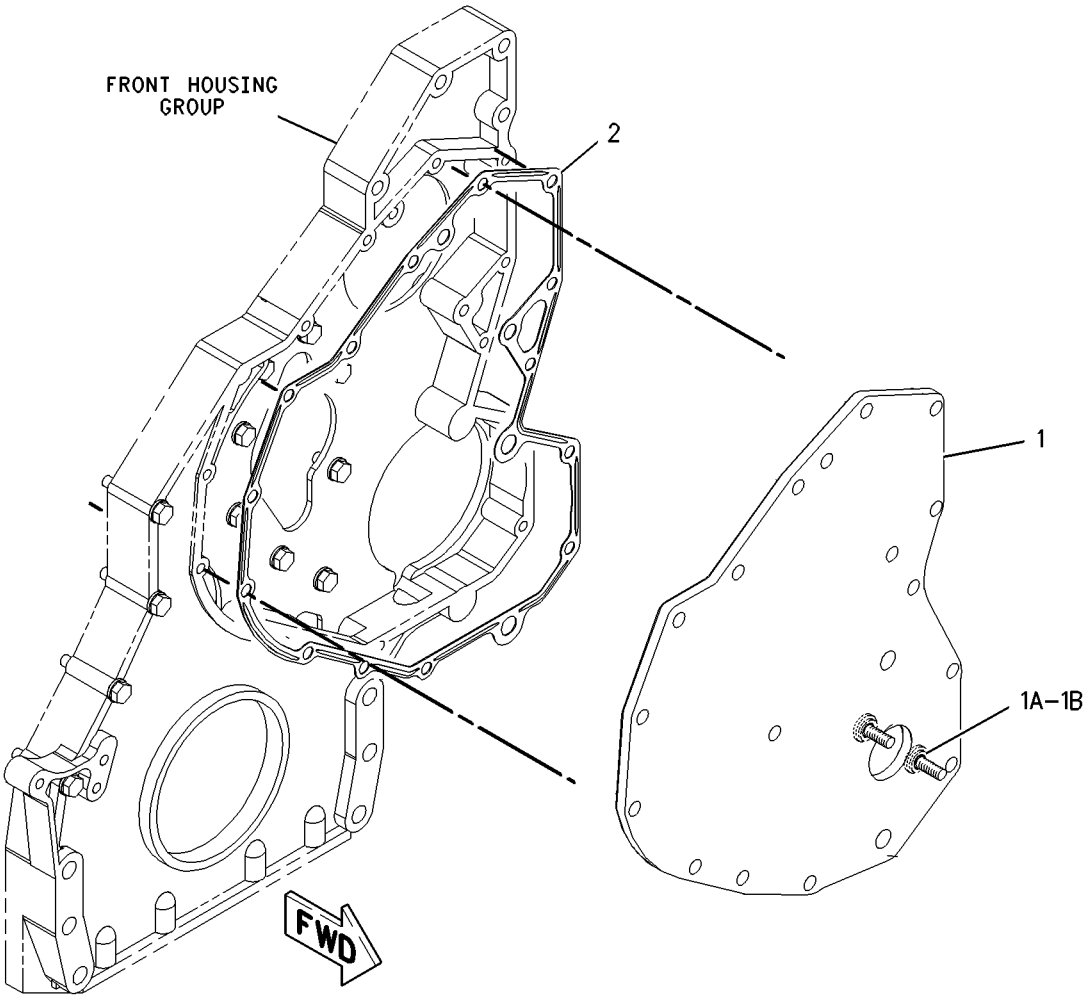

GRAPHIC #1 **<END>** g00873836

369-8134 COVER GP-VALVE MECHANISM

S/N: KHX1-UP
DUAL FILL
PART OF 338-9076, 387-1975, 387-1976 ENGINE AR-COMPLETE

SMCS-1107 **i04527542**

NOTE	REF NO	GRAPHIC REF	PART NUMBER	QTY	PART NAME 1 2 3 4 5 6 (PRODUCT LEVEL)	SEE PAGE
	1	1	**2N-8109**	1	CLAMP	
	2	1	**9Y-2988**	1	BREATHER AS (CRANKCASE)	
	3	1	**227-4531**	1	CAP AS-ENGINE OIL FILLER	
	3A	1	**7F-8268**	1	SEAL-O-RING	
	4	1	**273-2838**	13	SLEEVE-SPACER	
	5	1	**288-9179**	1	COVER GP-VALVE MECHANISM	
	5A	1	**272-0388**	1	SEAL-VALVE COVER	
	6	1	**310-9247**	1	BASE GP-VALVE COVER	
	6A	1	**304-4924**	1	SEAL AS	
	7	1	**365-5169**	1	ADAPTER	
	8	1	**061-9456**	1	SEAL-O-RING	
M	9	1	**099-3649**	13	BOLT (M8X1.25X40-MM)	
	10	1	**6V-3831**	1	SEAL-O-RING	
	11	1	**8T-4224**	13	WASHER-HARD (8.8X16X2-MM THK)	

M - METRIC PART

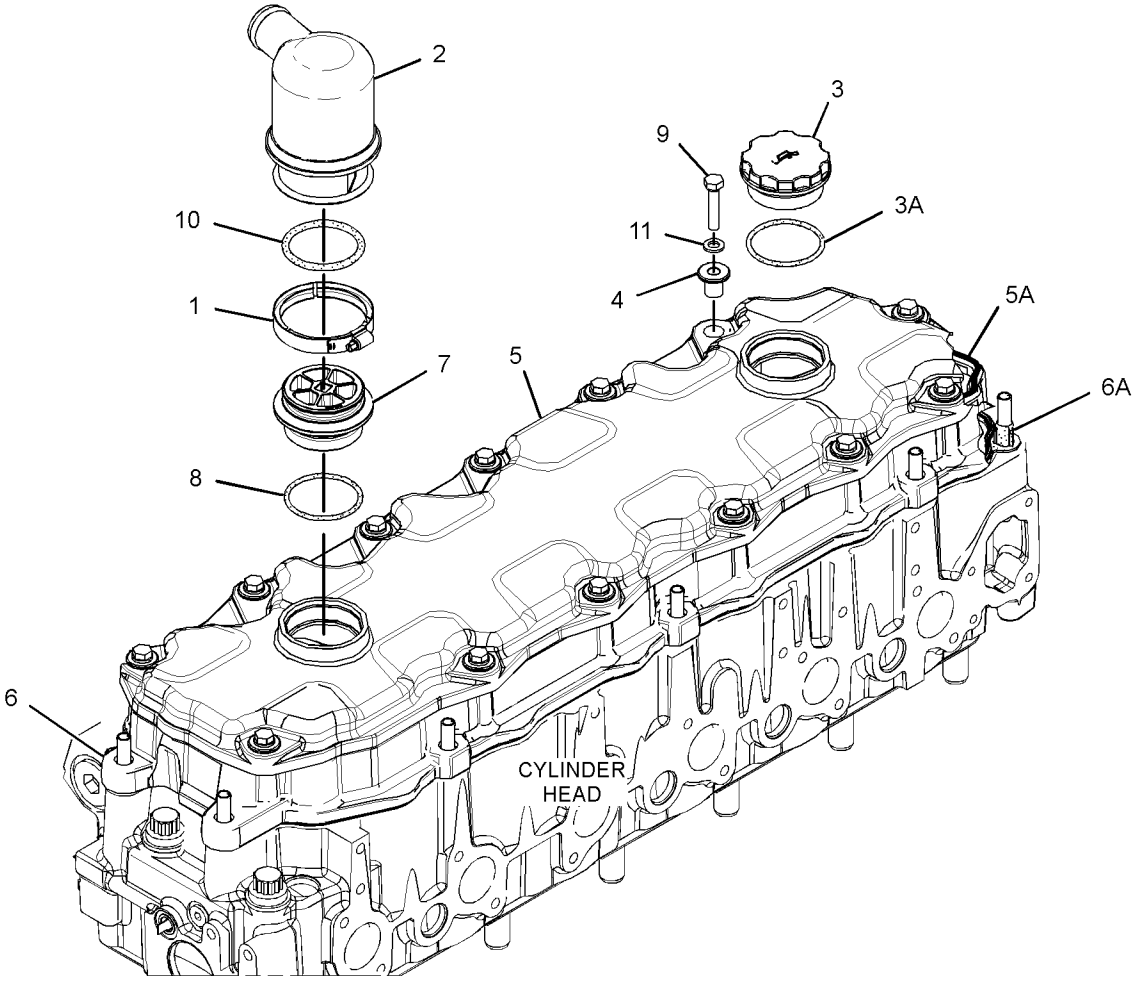

GRAPHIC #1 **<END>** g02555656

210-5590 CRANKSHAFT GP

S/N: KHX1-UP

PART OF 235-1423, 397-1168 ENGINE AR-CORE

SMCS-1202 **i03571590**

NOTE	REF NO	GRAPHIC REF	PART NUMBER	QTY	PART NAME 1 2 3 4 5 6 (PRODUCT LEVEL)	SEE PAGE
	1	1	**271-5658**	1	CRANKSHAFT AS	
	1A	1	**1B-8705**	1	KEY-WOODRUFF	
	1B	1	**2W-8147**	1	GEAR (50-TEETH)	
J	2	1	**212-4893**	1	BEARING-THRUST (STANDARD)	
AB		1	**229-5153**		BEARING-THRUST (0.25-MM US)	
AB		1	**229-5154**		BEARING-THRUST (0.5-MM US)	
AB		1	**229-5155**		BEARING-THRUST (0.5-MM OS)	
AB		1	**229-5156**		BEARING-THRUST (0.5-MM OS, 0.5-MM US)	
J	3	1	**107-7708**	6	BEARING-MAIN (STANDARD)	
AB		1	**145-0168**		BEARING-MAIN (0.5-MM OS)	
AB		1	**145-0170**		BEARING-MAIN (0.5-MM OS, 0.5-MM US)	
AB		1	**145-0162**		BEARING-MAIN (0.25-MM US)	
AB		1	**145-0164**		BEARING-MAIN (0.5-MM US)	
ABF		1	**7C-7980**	1	SLEEVE-OIL SEAL	
					(THIS WEAR SLEEVE IS USED ONLY TO SALVAGE (REPAIR) THE REAR SEAL SURFACE OF THE CRANKSHAFT)	
					AVAILABLE REPAIR KIT(S):	
AJ			**196-9519**		BEARING GP-MAIN	

A - NOT PART OF THIS GROUP
B - USE AS REQUIRED
F - NOT SHOWN
J - KIT MARKED J SERVICES PARTS MARKED J

210-5590 **CRANKSHAFT GP (*contd.*)** **i03571590**

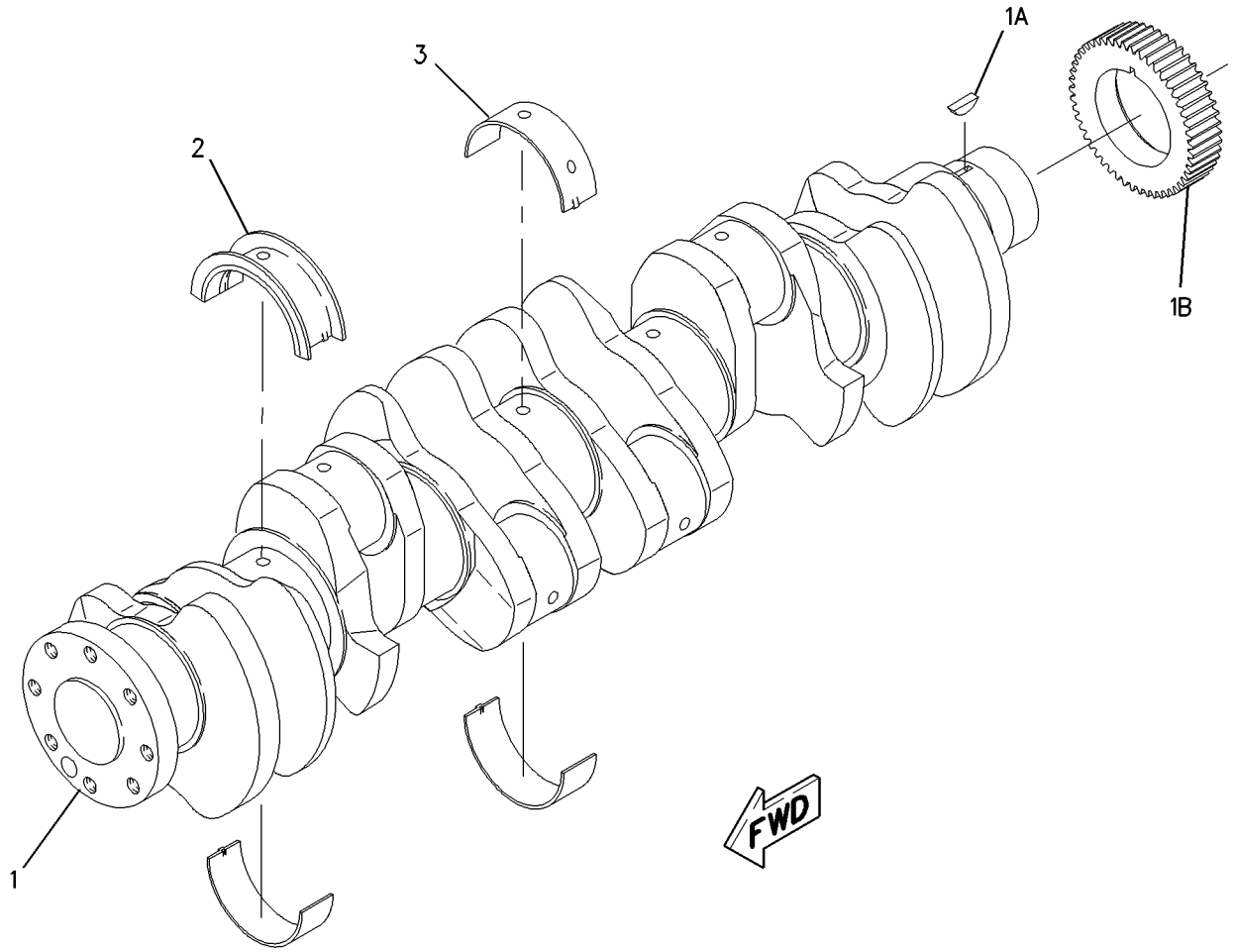

GRAPHIC #1 **<END>** g00977492

221-4482 CYLINDER BLOCK GP

S/N: KHX1-UP

PART OF 235-1423, 397-1168 ENGINE AR-CORE

SMCS-1201 **i05329754**

NOTE	REF NO	GRAPHIC REF	PART NUMBER	QTY	PART NAME 1 2 3 4 5 6 (PRODUCT LEVEL)	SEE PAGE
CYR	1	1	**305-8141**	1	CYLINDER BLOCK GP	29
	2	1	**7N-5683**	2	DOWEL	
	3	1	**1W-8407**	2	SLEEVE	
	4	1	**6V-3538**	2	DOWEL	

C - CHANGE FROM PREVIOUS TYPE
R - REMFG PART MAY BE AVAILABLE
Y - SEPARATE ILLUSTRATION

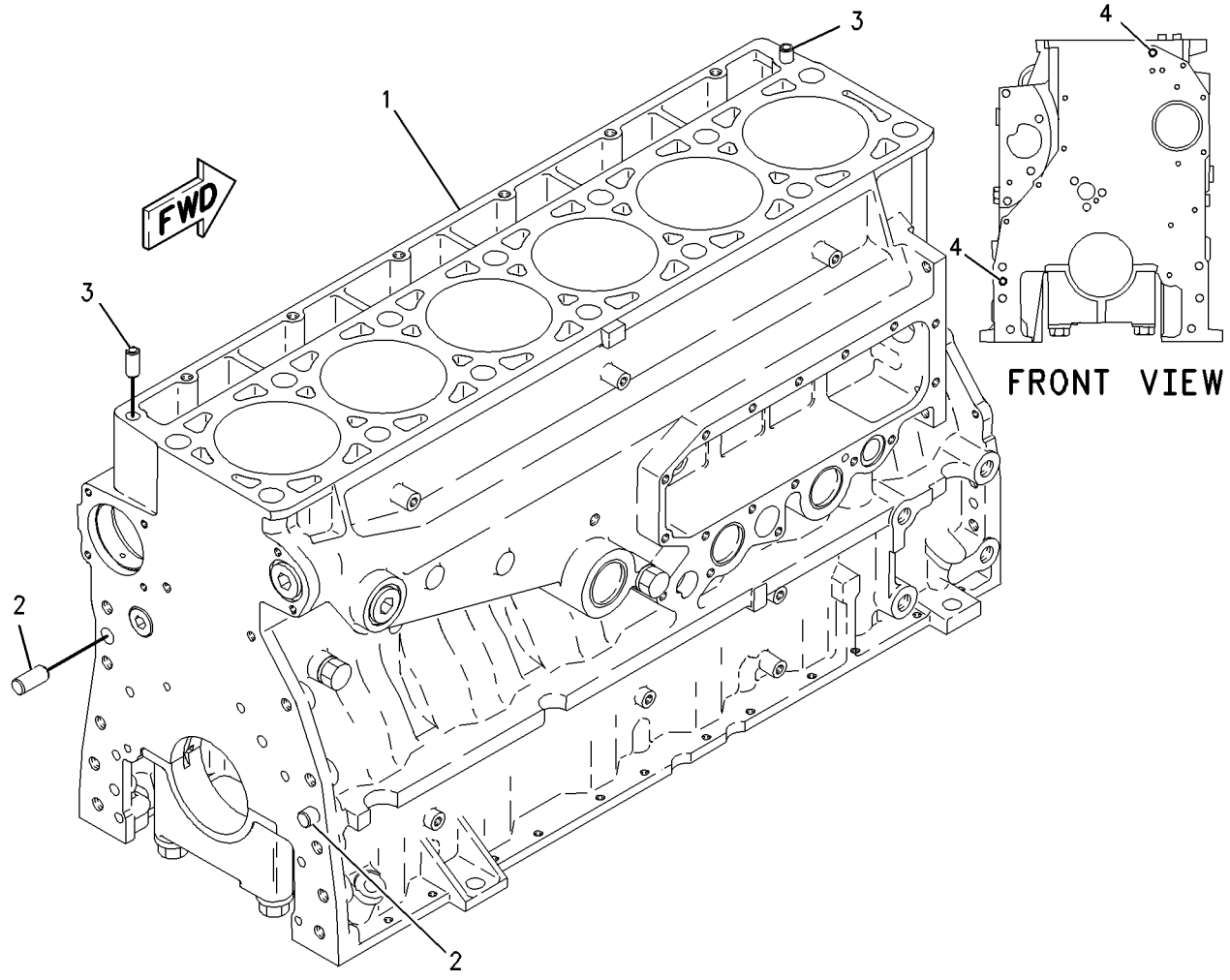

GRAPHIC #1 **<END>** g00800849

263-3774 CYLINDER BLOCK GP

S/N: KHX1-UP

PART OF 305-8141 CYLINDER BLOCK GP

SMCS-1201 **i02696326**

NOTE	REF NO	GRAPHIC REF	PART NUMBER	QTY	PART NAME 1 2 3 4 5 6 (PRODUCT LEVEL)	SEE PAGE
	1	1	**7E-2968**	7	CAP-CRANKSHAFT BEARING	
M	2	1	**9X-8916**	14	BOLT (M16X2X140-MM)	
	3	1	**5P-8247**	14	WASHER-HARD (17X32X3.5-MM THK)	

M - METRIC PART

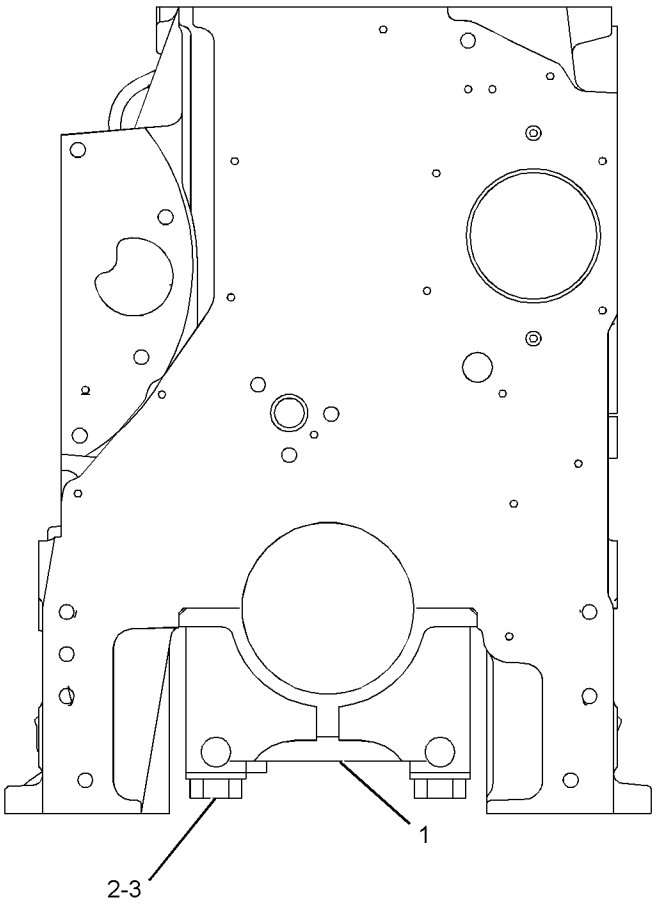

FRONT VIEW

GRAPHIC #1 **<END>** g01352581

305-8141 CYLINDER BLOCK GP*R

S/N: KHX1-UP

PART OF 221-4482 CYLINDER BLOCK GP

SMCS-1201 **i05475276**

NOTE	REF NO	GRAPHIC REF	PART NUMBER	QTY	PART NAME 1 2 3 4 5 6 (PRODUCT LEVEL)	SEE PAGE
Y	1	1	*263-3774*	1	CYLINDER BLOCK GP	28
	2	1	**2M-6471**	2	PLUG-CUP	
	3	1	**3H-5552**	1	PLUG-CUP	
	4	1	*309-5131*	1	PLUG AS	
		1	**9S-8006**	1	PLUG	
		1	**238-5081**	1	SEAL-O-RING	
	5	1	**2W-7213**	6	BUSHING (CAMSHAFT)	
	6	1	**216-5586**	1	BUSHING (CAMSHAFT)	
ABF			**107-7604**		SLEEVE-CYLINDER	
					(FOR SALVAGE OF CYLINDER BORE IN BLOCK.	
ABFN			**6I-4361**		INSERT-LINER SEAT (0.772-MM THK)	
ABFN			**9Y-3368**		INSERT-LINER SEAT (0.822-MM THK)	
ABFN			**6I-4362**		INSERT-LINER SEAT (0.872-MM THK)	
ABFN			**6I-4363**		INSERT-LINER SEAT (1.555-MM THK)	
ABFN			**2W-3815**		INSERT-LINER SEAT (1.605-MM THK)	
ABFN			**6I-4364**		INSERT-LINER SEAT (1.655-MM THK)	
ABFN			**6I-4365**		INSERT-LINER SEAT (2.66-MM THK)	
ABFN			**5N-0093**		INSERT-LINER SEAT (2.71-MM THK)	
ABFN			**6I-4366**		INSERT-LINER SEAT (2.76-MM THK)	
ABFN			**101-0524**		INSERT-LINER SEAT (5.16-MM THK)	
ABFN			**101-0523**		INSERT-LINER SEAT (5.21-MM THK)	
ABFN			**101-0525**		INSERT-LINER SEAT (5.26-MM THK)	

A - NOT PART OF THIS GROUP
B - USE AS REQUIRED
F - NOT SHOWN
N - FOR SALVAGE OF DAMAGED LIFER BORES IN CLYLINDER BLOCK REFER TO SEBF8076 IN SIS WEB
Y - SEPARATE ILLUSTRATION

305-8141 **CYLINDER BLOCK GP (*contd.*)** **i05475276**

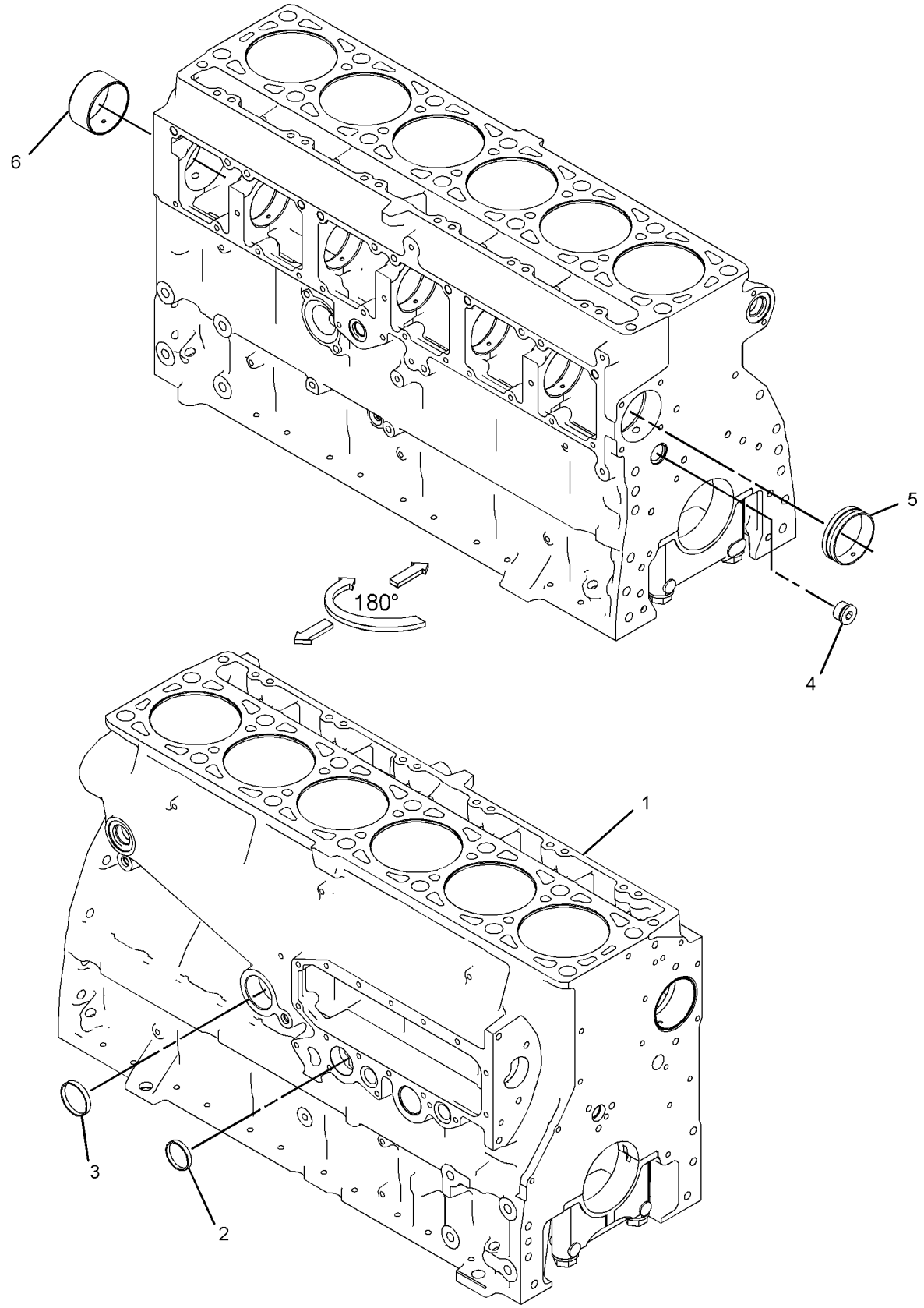

GRAPHIC #1 **<END>** g03408535

219-5844 CYLINDER HEAD AS

S/N: KHX1-UP

PART OF 219-5846 CYLINDER HEAD GP

SMCS-1100, 1101

i02215799

NOTE	REF NO	GRAPHIC REF	PART NUMBER	QTY	PART NAME 1 2 3 4 5 6 (PRODUCT LEVEL)	SEE PAGE
	2	1	**8M-5860**	12	PLUG-CUP	
	3	1	**4F-5695**	2	PLUG-CUP	
	4	1	**227-1200**	6	SLEEVE-INJECTOR	
	5	1	**217-5213**	12	INSERT-VALVE SEAT (INLET)	
	6	1	**147-8218**	6	INSERT-VALVE SEAT (EXHAUST)	
	7	1	**8C-0563**	12	SEAL-O-RING	
	8	1	**9S-9334**	1	PLUG-O-RING	
	9	1	**9X-7712**	1	SEAL-O-RING	

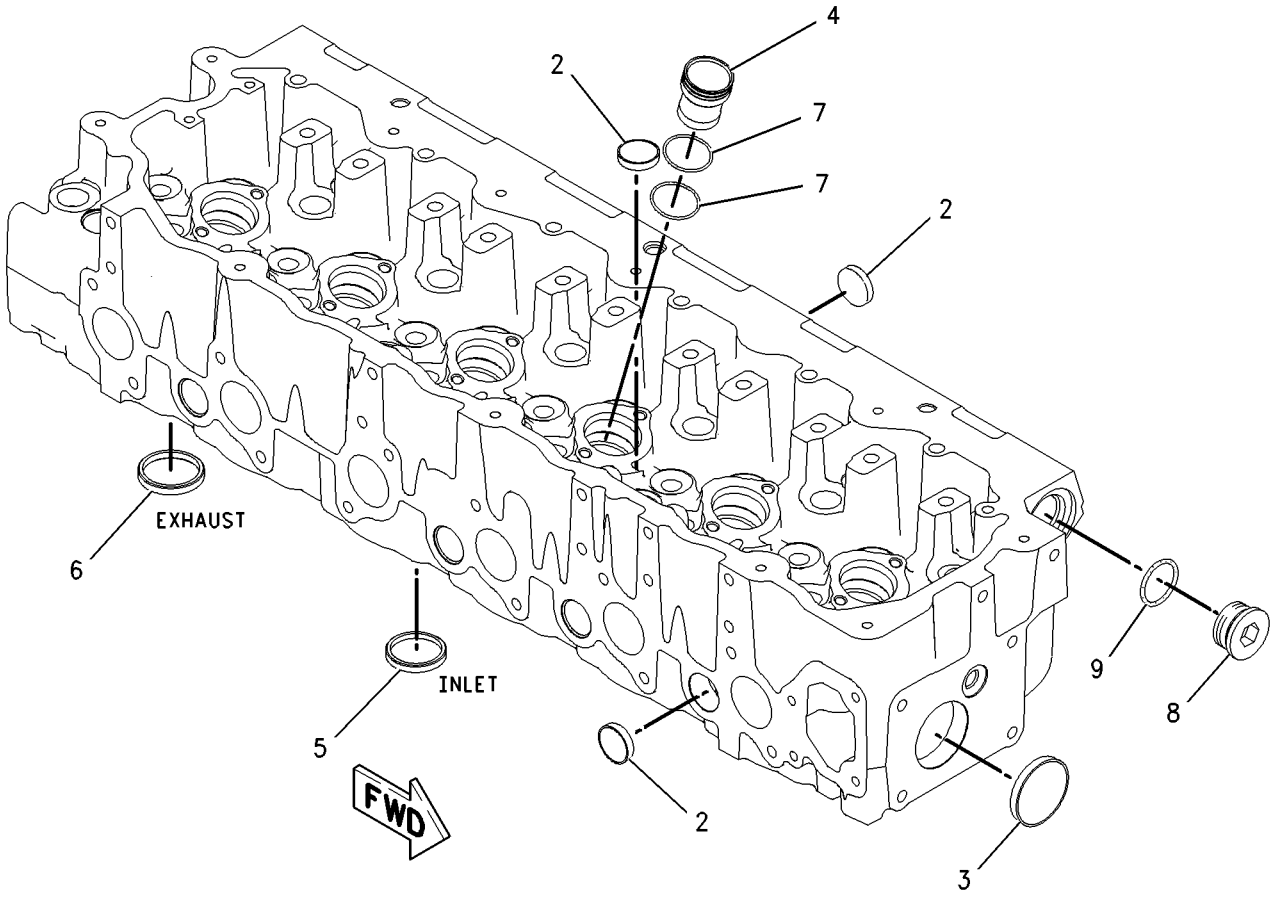

GRAPHIC #1

<END>

g00948980

314-4184 CYLINDER HEAD AS

S/N: KHX1-UP

PART OF 300-9550 CYLINDER HEAD GP

SMCS-1100, 1101 **i03680863**

NOTE	REF NO	GRAPHIC REF	PART NUMBER	QTY	PART NAME 1 2 3 4 5 6 (PRODUCT LEVEL)	SEE PAGE
	1	1	**310-7257**	6	SEAL-O-RING	
	2	1	**8M-5860**	12	PLUG-CUP	
	3	1	**4F-5695**	2	PLUG-CUP	
	4	1	**227-1200**	6	SLEEVE-INJECTOR	
	5	1	**232-1285**	6	INSERT-VALVE SEAT (STANDARD) (EXHAUST)	
AB		1	**319-3822**		SEAT-VALVE (0.13-MM OS OD, EXHAUST)	
AB		1	**319-3823**		SEAT-VALVE (0.25-MM OS OD, EXHAUST)	
AB		1	**319-3824**		SEAT-VALVE (0.51-MM OS OD, EXHAUST)	
	6	1	**264-6157**	12	INSERT-VALVE SEAT (STANDARD) (INLET)	
AB		1	**319-3819**		SEAT-VALVE (0.13-MM OS OD, INLET)	
AB		1	**319-3820**		SEAT-VALVE (0.25-MM OS OD, INLET)	
AB		1	**319-3821**		SEAT-VALVE (0.51-MM OS OD, INLET)	
	7	1	**310-7255**	6	SEAL-O-RING	

A - NOT PART OF THIS GROUP
B - USE AS REQUIRED

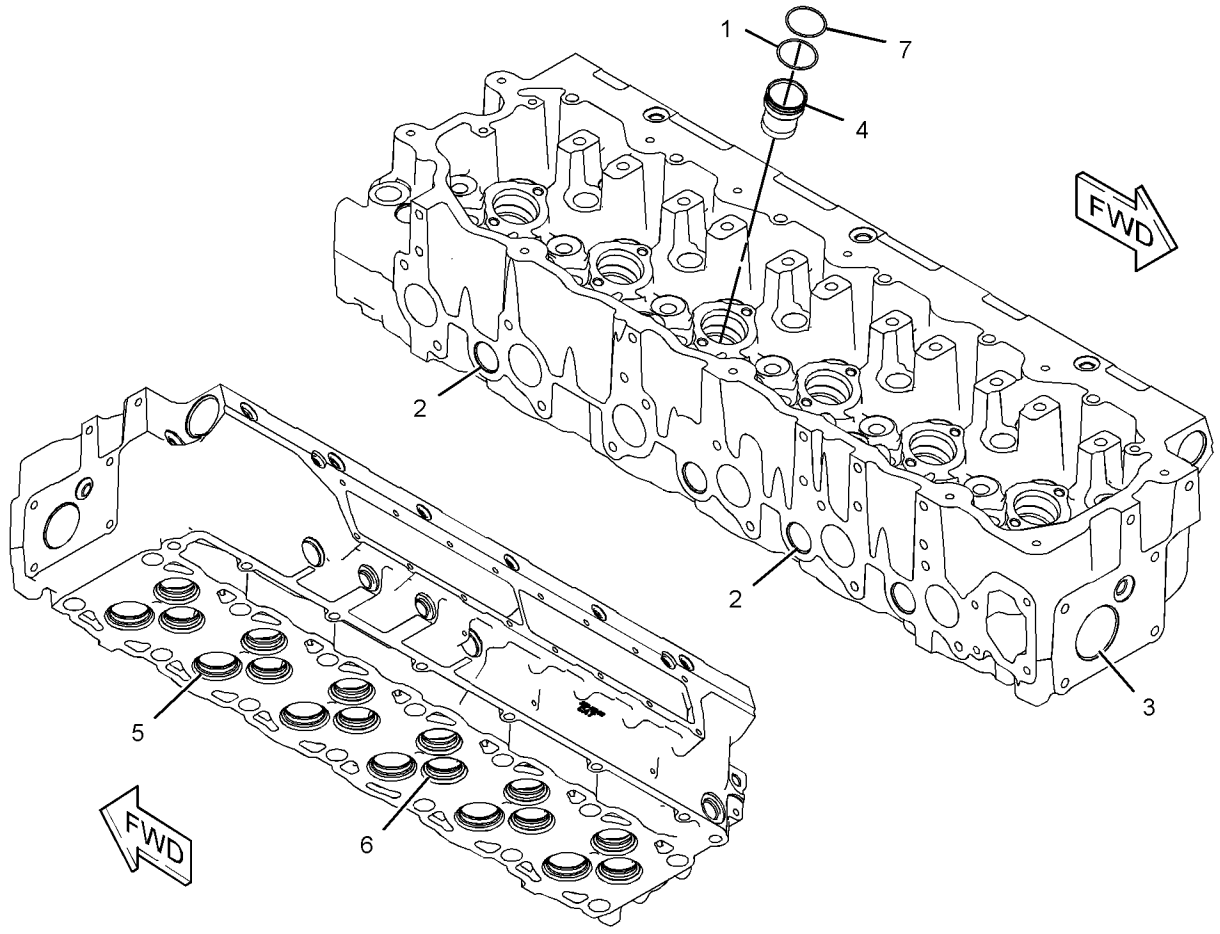

GRAPHIC #1 **<END>** g01581175

219-5846 CYLINDER HEAD GP*R

S/N: KHX1-UP

PART OF 219-5847 CYLINDER HEAD GP

SMCS-1100 **i02215801**

NOTE	REF NO	GRAPHIC REF	PART NUMBER	QTY	PART NAME 1 2 3 4 5 6 (PRODUCT LEVEL)	SEE PAGE
Y	1	1	*219-5844*	1	CYLINDER HEAD AS	31
	2	1	**145-7390**	12	VALVE-INLET	
	3	1	**147-8211**	6	VALVE-EXHAUST	
	4	1	**1W-2715**	24	LOCK-RETAINER	
	5	1	**7E-7779**	12	RETAINER-SPRING	
	6	1	**147-8214**	12	SEAL-VALVE STEM	
	7	1	**140-9670**	12	GUIDE-VALVE	
	8	1	**137-6718**	6	SPRING-VALVE	
	9	1	**140-6188**	12	SPRING-VALVE	
	10	1	**2A-4429**	12	LOCK-RETAINER	
	11	1	**134-4483**	6	RETAINER-SPRING	
	12	1	**147-8220**	6	GUIDE-VALVE	
	13	1	**163-2478**	6	SEAL-VALVE STEM	
	14	1	**137-6715**	6	SEAT-VALVE SPRING	

Y - SEPARATE ILLUSTRATION

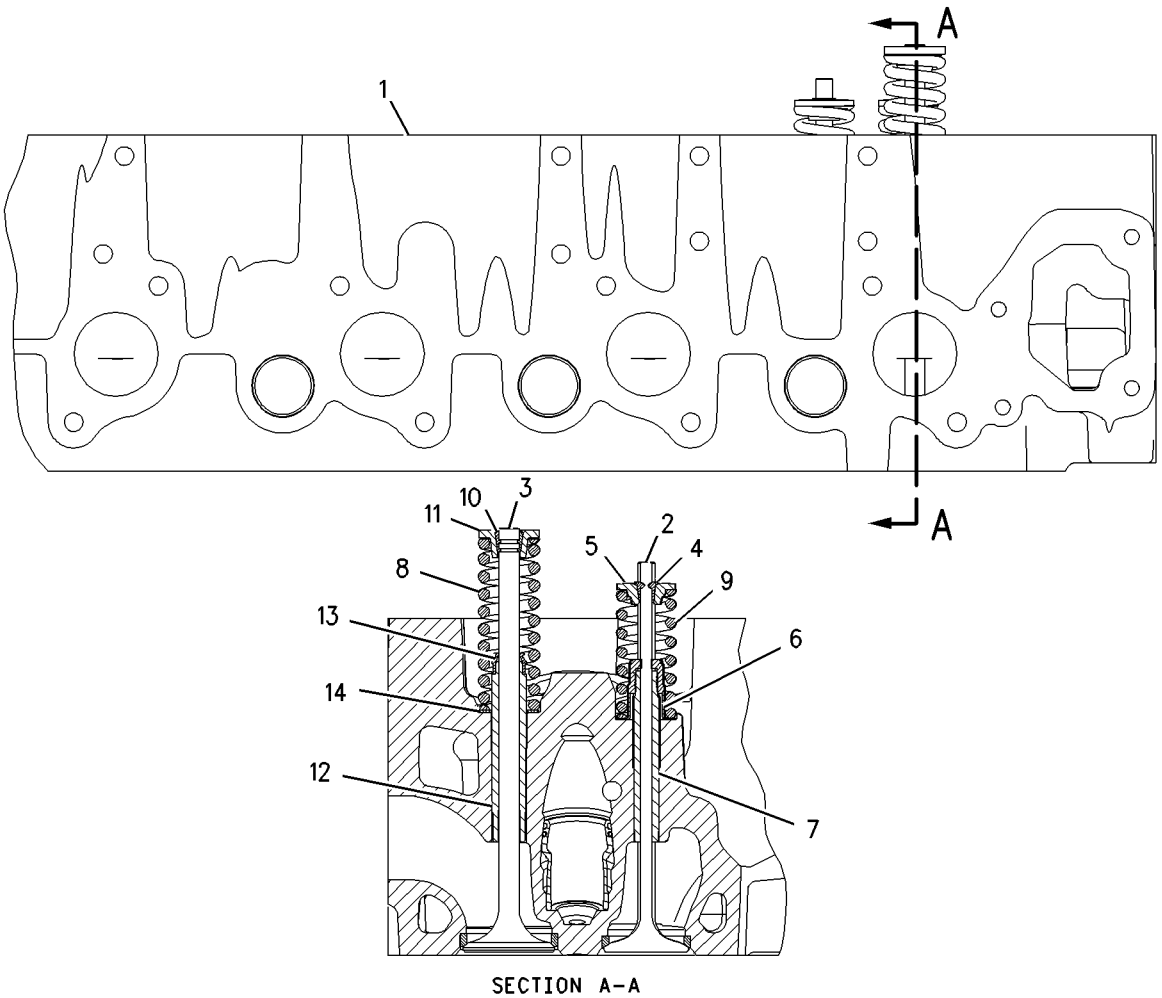

SECTION A-A

GRAPHIC #1 **<END>** g00947786

219-5847 CYLINDER HEAD GP*R

S/N: KHX1-UP

PART OF 219-5849 CYLINDER HEAD GP

TYPE 1

SMCS-1100 **i02215791**

NOTE	REF NO	GRAPHIC REF	PART NUMBER	QTY	PART NAME 1 2 3 4 5 6 (PRODUCT LEVEL)	SEE PAGE
YR	1	1	**219-5846**	1	CYLINDER HEAD GP	33
	2	1	**1N-5999**	2	PLUG-O-RING	
	3	1	**2M-9780**	1	SEAL-O-RING	
	4	1	**3J-1907**	2	SEAL-O-RING	
	5	1	**6V-5048**	6	SEAL-O-RING	
	6	1	**7J-0204**	2	SEAL-O-RING	
	7	1	**9S-8002**	6	PLUG	
	8	1	**9S-8004**	2	PLUG	
	9	1	**9S-8006**	1	PLUG	
	10	1	**9S-9334**	1	PLUG-O-RING	
	11	1	**9X-7712**	1	SEAL-O-RING	

R - REMFG PART MAY BE AVAILABLE
Y - SEPARATE ILLUSTRATION

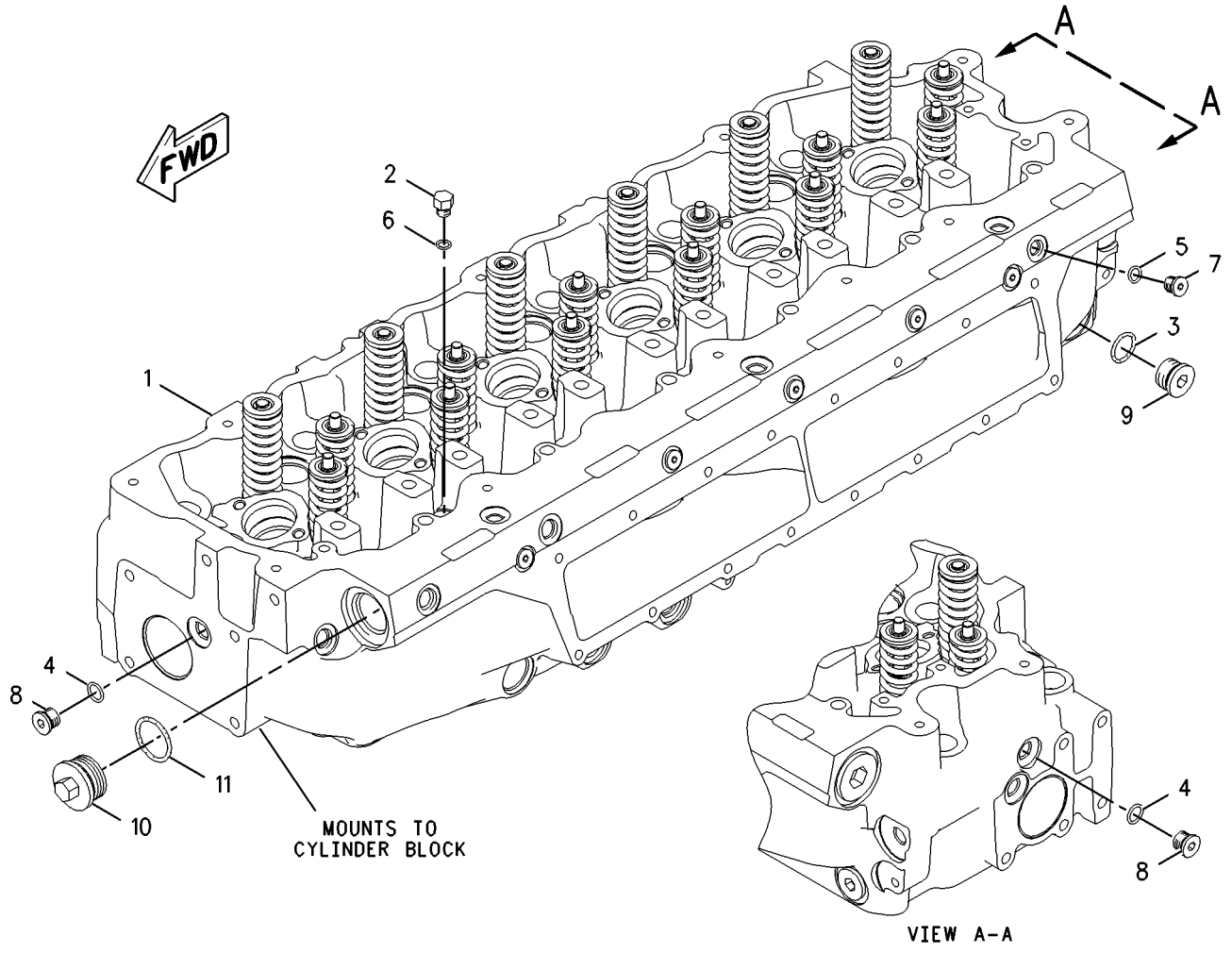

GRAPHIC #1 **<END>** g00947578

219-5847 CYLINDER HEAD GP*R

S/N: KHX1-UP

PART OF 219-5849 CYLINDER HEAD GP

TYPE 2

SMCS-1100 **i05436563**

NOTE	REF NO	GRAPHIC REF	PART NUMBER	QTY	PART NAME 1 2 3 4 5 6 (PRODUCT LEVEL)	SEE PAGE
CYR	1	1	**300-9550**	1	CYLINDER HEAD GP	38
	2	1	*439-1965*	2	PLUG AS	
					(EACH INCLUDES)	
	2A	1	**238-5079**	1	SEAL-O-RING	
		1	**360-3689**	1	PLUG-O-RING	
	5	1	*389-3728*	2	PLUG AS	
					(EACH INCLUDES)	
	5A	1	**238-5084**	1	SEAL-O-RING	
		1	**360-3684**	1	PLUG-O-RING	
	6	1	*396-0404*	1	PLUG AS	
	6A	1	**6V-3251**	1	SEAL-O-RING	
		1	**360-3681**	1	PLUG	
	7	1	*396-0393*	6	PLUG AS	
					(EACH INCLUDES)	
	7A	1	**214-7566**	1	SEAL-O-RING	
		1	**360-3677**	1	PLUG	
	8	1	*396-0403*	2	PLUG AS	
					(EACH INCLUDES)	
	8A	1	**6V-3250**	1	SEAL-O-RING	
		1	**360-3679**	1	PLUG-CONNECTOR	

C - CHANGE FROM PREVIOUS TYPE
R - REMFG PART MAY BE AVAILABLE
Y - SEPARATE ILLUSTRATION

219-5847 **CYLINDER HEAD GP (*contd.*)** **i05436563**

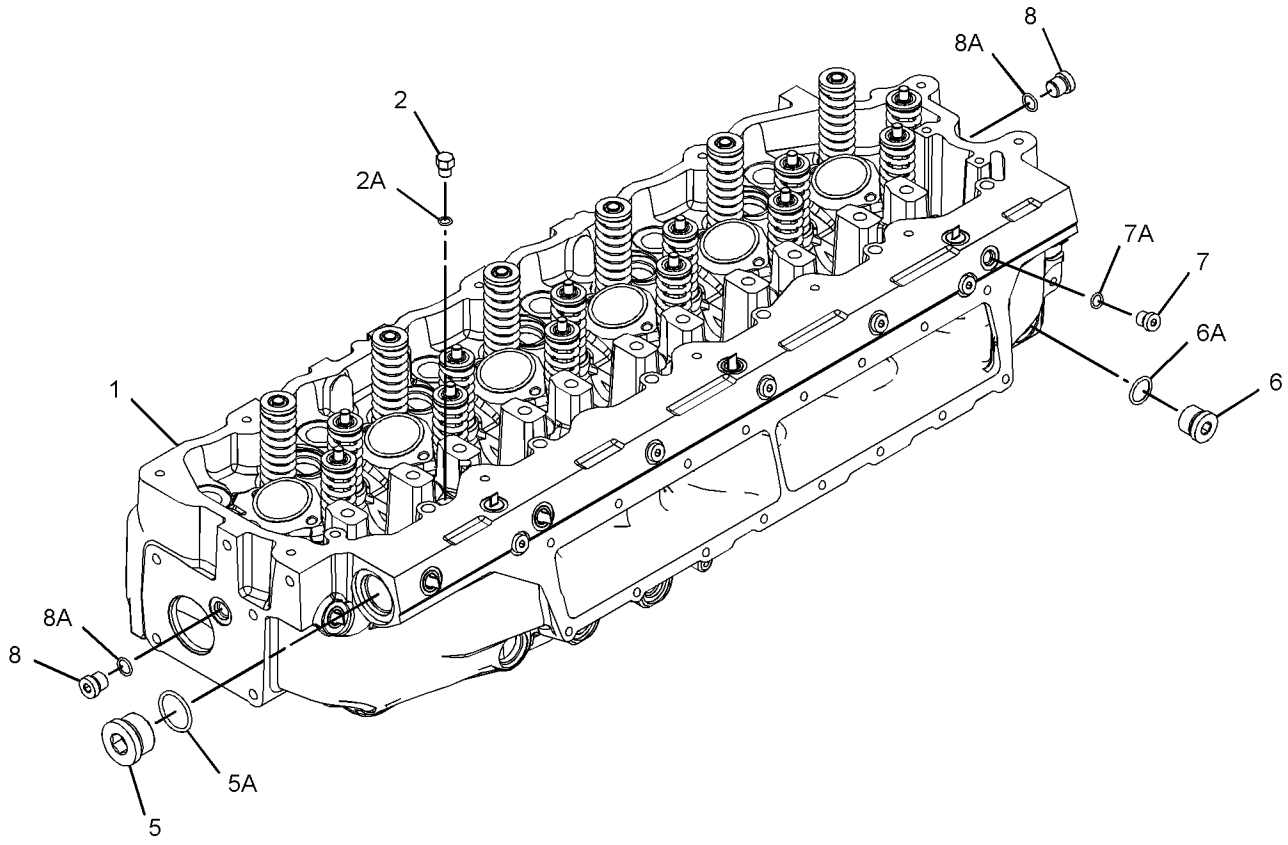

GRAPHIC #1 **<END>** g03436039

219-5849 CYLINDER HEAD GP

S/N: KHX1-UP

PART OF 235-1423, 397-1168 ENGINE AR-CORE

SMCS-1100 **i05329698**

NOTE	REF NO	GRAPHIC REF	PART NUMBER	QTY	PART NAME 1 2 3 4 5 6 (PRODUCT LEVEL)	SEE PAGE
YR	1	1	*219-5847*	1	CYLINDER HEAD GP	34
	2	1	**133-4995**	1	GASKET AS-CYLINDER HEAD	
	3	1	*142-7289*	14	FASTENER GP-CYLINDER HEAD	
					(EACH INCLUDES)	
		1	**138-3252**	1	BOLT-12 POINT HEAD	
		1	**8T-3282**	1	WASHER-HARD (22X35X3.5-MM THK)	
M	4	1	**8T-7950**	6	BOLT (M10X1.5X180-MM)	
	5	1	**6V-5839**	6	WASHER (11X21X2.5-MM THK)	

M - METRIC PART
R - REMFG PART MAY BE AVAILABLE
Y - SEPARATE ILLUSTRATION

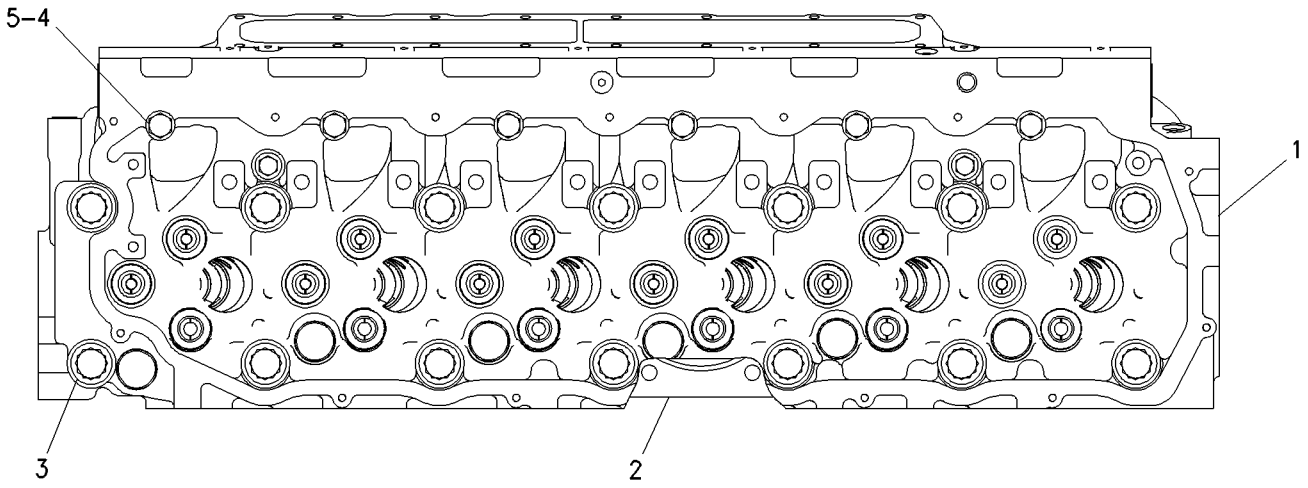

TOP VIEW

GRAPHIC #1 **<END>** g00760746

300-9550 CYLINDER HEAD GP*R

S/N: KHX1-UP

PART OF 219-5847 CYLINDER HEAD GP

SMCS-1100 **i03680866**

NOTE	REF NO	GRAPHIC REF	PART NUMBER	QTY	PART NAME 1 2 3 4 5 6 (PRODUCT LEVEL)	SEE PAGE
	1	1	**1W-2715**	24	LOCK-RETAINER	
	2	1	**2A-4429**	12	LOCK-RETAINER	
	3	1	**137-6715**	6	SEAT-VALVE SPRING	
	4	1	**137-6718**	6	SPRING-VALVE (EXHAUST)	
	5	1	**140-6188**	12	SPRING-VALVE (INLET)	
	6	1	**147-8214**	12	SEAL-VALVE STEM (INLET)	
	7	1	**147-8220**	6	GUIDE-VALVE (STANDARD)	
AB		1	**187-8278**		GUIDE-VALVE (0.13-MM OS OD)	
AB		1	**187-8279**		GUIDE-VALVE (0.51-MM OS OD)	
	8	1	**163-2478**	6	SEAL-VALVE STEM (EXHAUST)	
	9	1	**252-7801**	12	VALVE-INLET	
Y	10	1	*314-4184*	1	CYLINDER HEAD AS	32
	11	1	**134-4483**	6	RETAINER-SPRING	
	12	1	**140-9670**	12	GUIDE-VALVE (STANDARD)	
AB		1	**187-8280**		GUIDE-VALVE (0.13-MM OS OD)	
AB		1	**187-8281**		GUIDE-VALVE (0.51-MM OS OD)	
	13	1	**147-8211**	6	VALVE-EXHAUST	
	14	1	**7E-7779**	12	RETAINER-SPRING	

A - NOT PART OF THIS GROUP
B - USE AS REQUIRED
Y - SEPARATE ILLUSTRATION

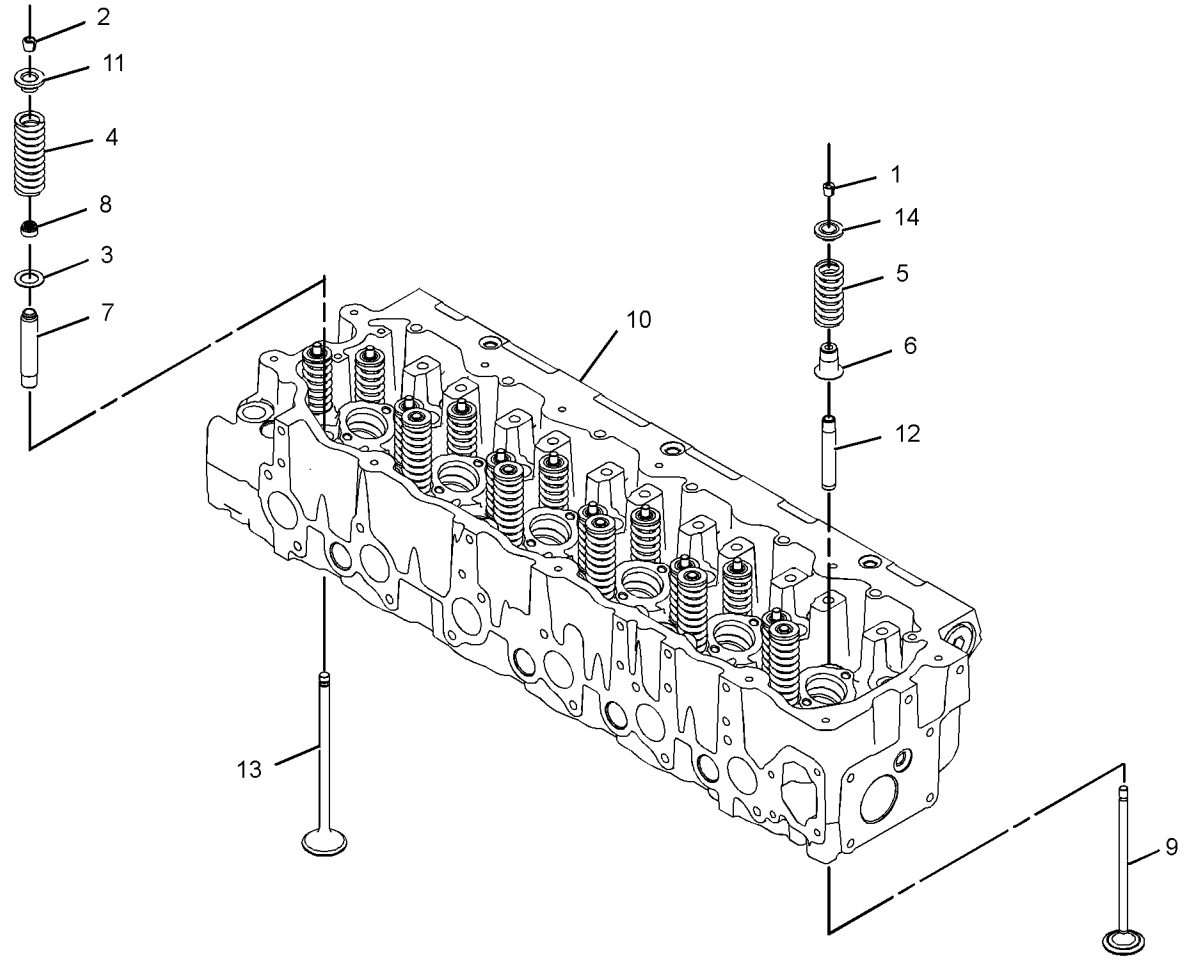

GRAPHIC #1 **<END>** g01384206

165-4557 DAMPER & PULLEY GP

S/N: KHX1-UP

PART OF 338-9076, 387-1975, 387-1976 ENGINE AR-COMPLETE

SMCS-1205 **i01743128**

NOTE	REF NO	GRAPHIC REF	PART NUMBER	QTY	PART NAME 1 2 3 4 5 6 (PRODUCT LEVEL)	SEE PAGE
	1	1	**2W-7381**	1	PLATE-CLAMP	
	2	1	**167-8121**	1	DAMPER AS	
	3	1	**153-1036**	1	PULLEY-CRANKSHAFT (8 GROOVE)	
M	4	1	**8T-3666**	4	BOLT (M14X2X60-MM)	

M - METRIC PART

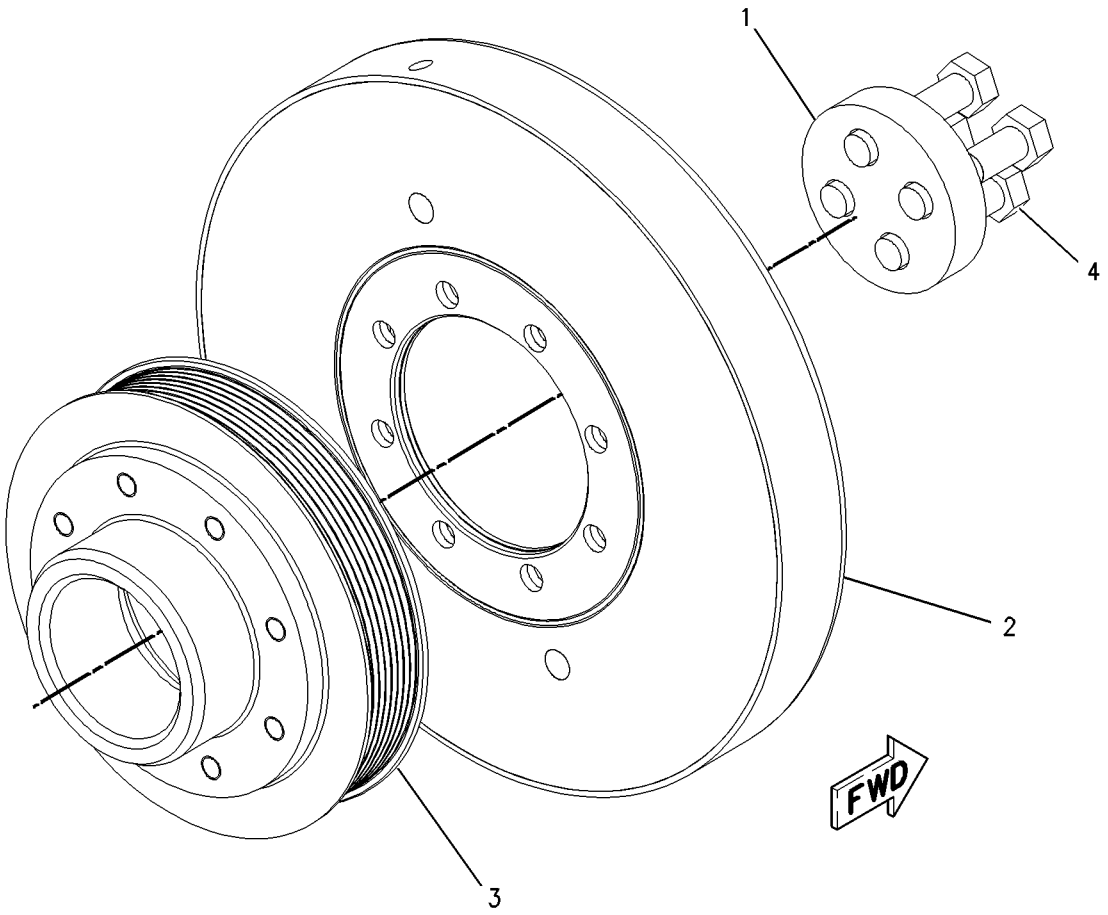

GRAPHIC #1 **<END>** g00836513

118-2073 DRAIN GP-ENGINE OIL

S/N: KHX1-UP

PART OF 338-9076, 387-1975, 387-1976 ENGINE AR-COMPLETE

SMCS-1302 **i04801615**

NOTE	REF NO	GRAPHIC REF	PART NUMBER	QTY	PART NAME 1 2 3 4 5 6 (PRODUCT LEVEL)	SEE PAGE
	1	1	*351-0283*	1	VALVE AS-SHUTOFF	
		1	**6V-7238**	1	VALVE-SHUTOFF	
		1	**238-5080**	1	SEAL-O-RING	

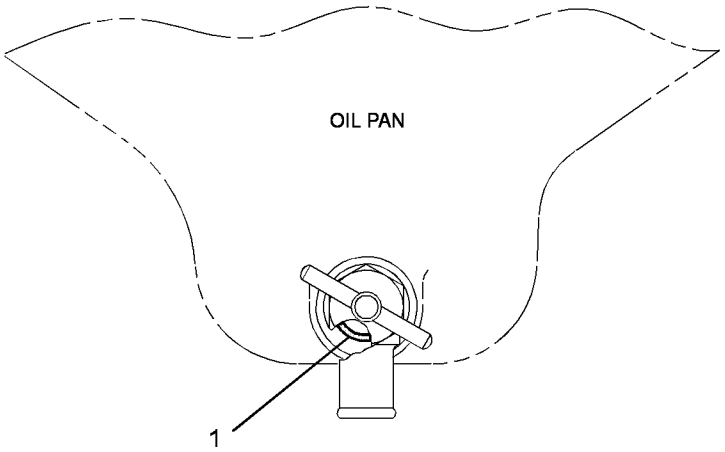

GRAPHIC #1 **<END>** g02929959

386-6955 DRIVE GP-ACCESSORY

S/N: JLX116-UP

PART OF 374-4868 INSTALLATION AR-ENGINE

SMCS-1207 **i05571332**

NOTE	REF NO	GRAPHIC REF	PART NUMBER	QTY	PART NAME 1 2 3 4 5 6 (PRODUCT LEVEL)	SEE PAGE
	1	1	**253-4531**	1	BELT-SERPENTINE	

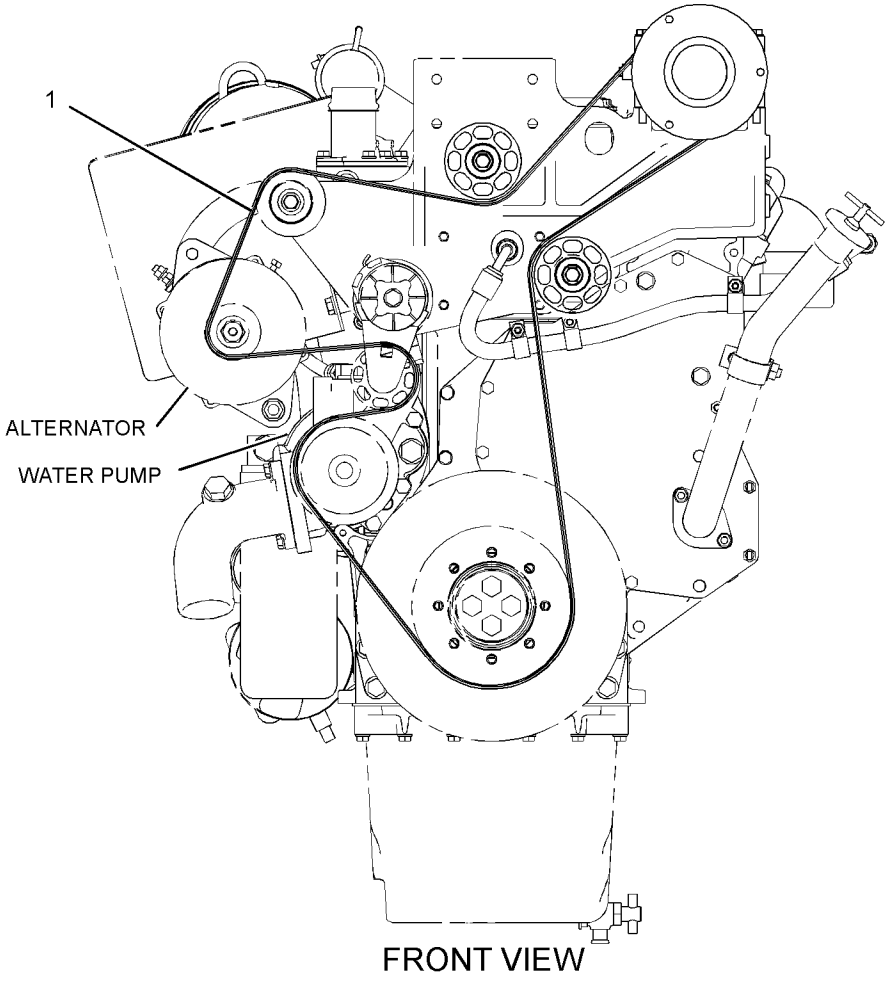

GRAPHIC #1 **<END>** g03531497

258-8723 FASTENER GP-CYLINDER HEAD

S/N: KHX1-UP

PART OF 338-9076, 387-1975, 387-1976 ENGINE AR-COMPLETE

SMCS-1100 **i02310961**

NOTE	REF NO	GRAPHIC REF	PART NUMBER	QTY	PART NAME 1 2 3 4 5 6 (PRODUCT LEVEL)	SEE PAGE
	1	1	**229-8844**	3	CLIP	
	2	1	**244-4500**	11	SPRING	
M	3	1	**8T-0100**	11	BOLT (M8X1.25X60-MM)	
	4	1	**9N-0869**	11	WASHER-HARD (8.8X25.5X2-MM THK)	

M - METRIC PART

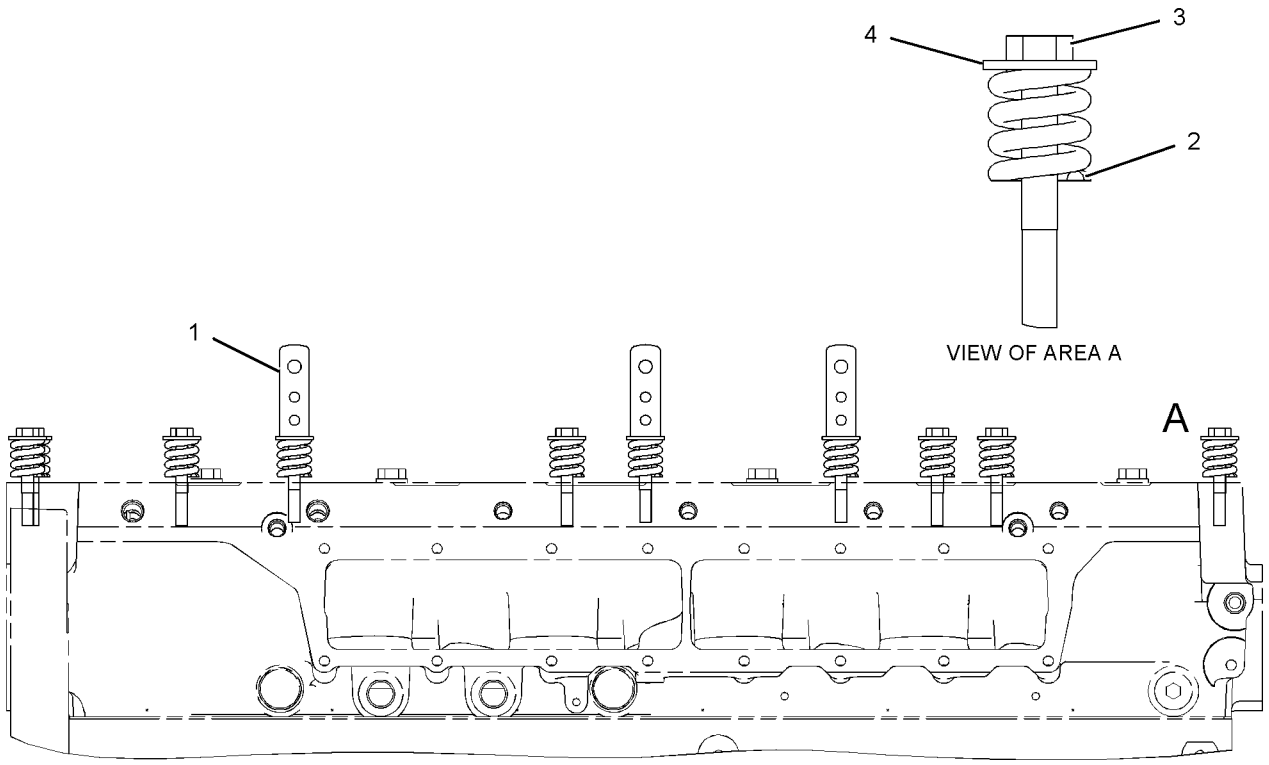

RIGHT SIDE VIEW

GRAPHIC #1 **<END>** g01125046

218-0859 FASTENER GP-DAMPER & PULLEY

S/N: KHX1-UP

PART OF 338-9076, 387-1975, 387-1976 ENGINE AR-COMPLETE

SMCS-1205, 7553 **i02214637**

NOTE	REF NO	GRAPHIC REF	PART NUMBER	QTY	PART NAME 1 2 3 4 5 6 (PRODUCT LEVEL)	SEE PAGE
	1	1	**228-3621**	1	SPACER (101.5X167X8-MM THK)	
M	2	1	**6V-4249**	8	BOLT (M10X1.5X50-MM)	

M - METRIC PART

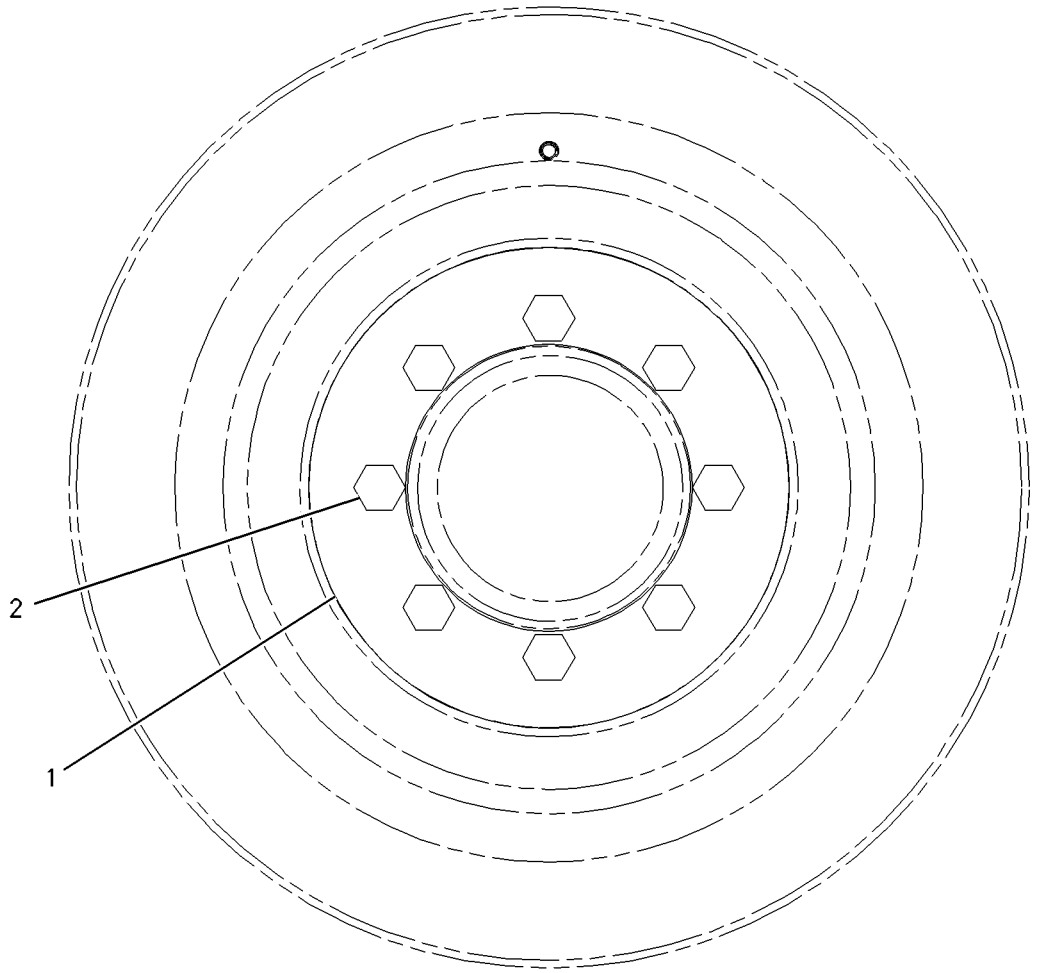

FRONT VIEW

GRAPHIC #1 **<END>** g00919524

238-0373 FASTENER GP-FRONT COVER

S/N: KHX1-UP

PART OF 338-9076 ENGINE AR-COMPLETE

SMCS-1151, 1166

i02215537

NOTE	REF NO	GRAPHIC REF	PART NUMBER	QTY	PART NAME 1 2 3 4 5 6 (PRODUCT LEVEL)	SEE PAGE
M	1	1	**9X-2099**	5	STUD (M8X1.25X52.75-MM) (MARKED Y)	
M	2	1	**185-9356**	1	STUD (M8X1.25-THD)	
	3	1	**210-3321**	1	STUD (M8X1.25-THD)	
M	4	1	**6V-2317**	6	BOLT (M8X1.25X30-MM) (MARKED X)	
M	5	1	**8T-0100**	1	BOLT (M8X1.25X60-MM)	

M - METRIC PART

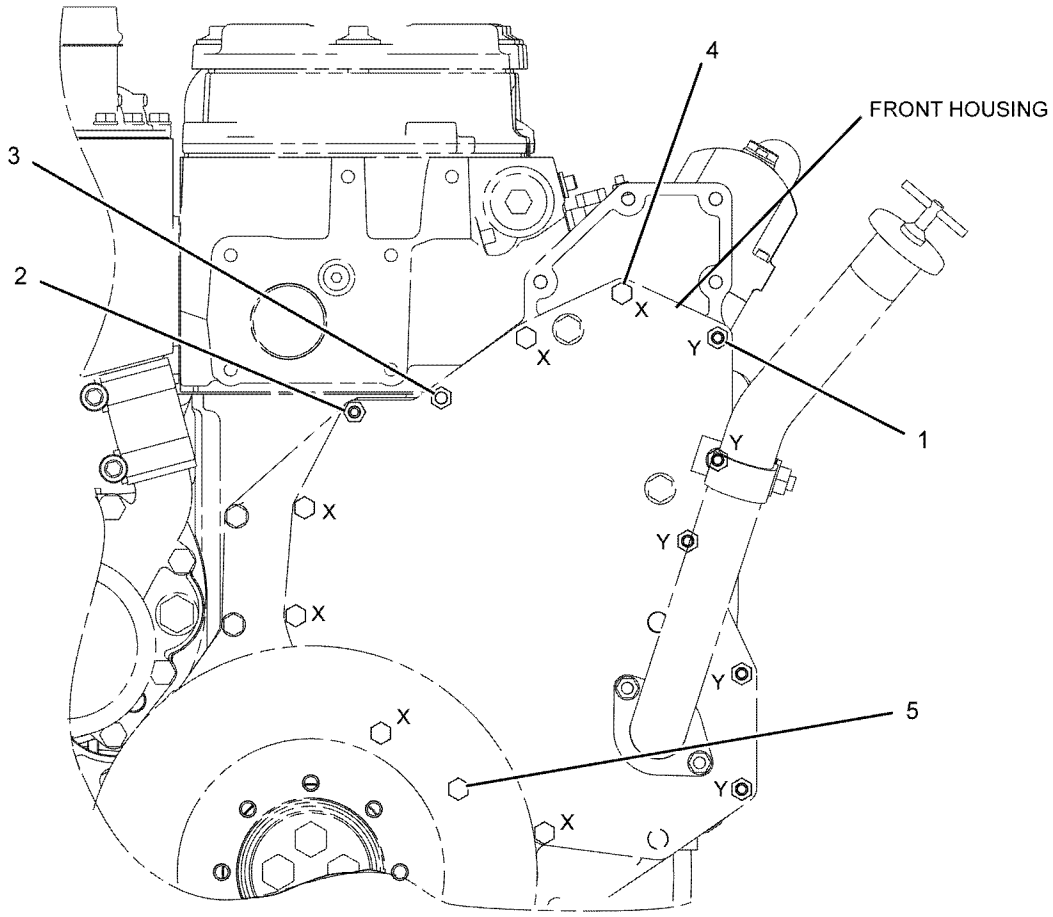

FRONT VIEW

GRAPHIC #1

<END>

g01119959

116-4556 FASTENER GP-FRONT HOUSING

S/N: KHX1-UP

PART OF 338-9076, 387-1975, 387-1976 ENGINE AR-COMPLETE

SMCS-1151, 1162 **i01487429**

NOTE	REF NO	GRAPHIC REF	PART NUMBER	QTY	PART NAME 1 2 3 4 5 6 (PRODUCT LEVEL)	SEE PAGE
M	1	1	**6V-8336**	6	BOLT (M12X1.75X70-MM)	
		1	**5P-8245**	6	WASHER-HARD (13.5X25.5X3-MM THK)	

M - METRIC PART

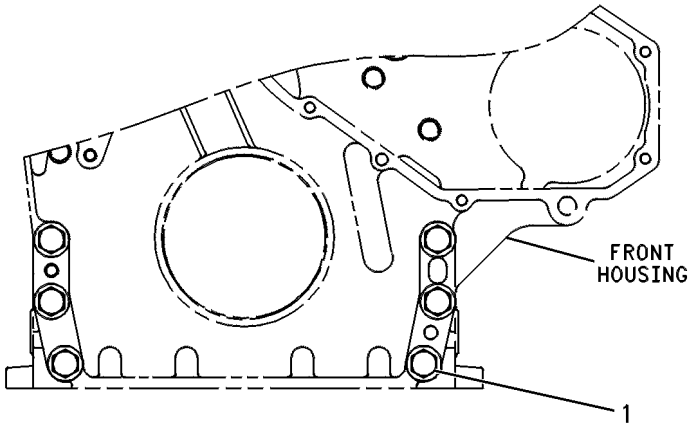

FRONT VIEW

GRAPHIC #1 **<END>** g00244671

396-2232 FASTENER GP-FRONT HOUSING

S/N: KHX1-UP

PART OF 387-1975, 387-1976 ENGINE AR-COMPLETE

SMCS-1151, 1162 **i04895510**

NOTE	REF NO	GRAPHIC REF	PART NUMBER	QTY	PART NAME 1 2 3 4 5 6 (PRODUCT LEVEL)	SEE PAGE
M	1	1	**9X-2099**	5	STUD (M8X1.25X52.75-MM)	
M	2	1	**185-9356**	1	STUD (M8X1.25-THD)	
M	3	1	**241-0542**	1	STUD (M8X1.25X30-MM)	
M	4	1	**6V-2317**	6	BOLT (M8X1.25X30-MM)	
M	5	1	**8T-0100**	1	BOLT (M8X1.25X60-MM)	

M - METRIC PART

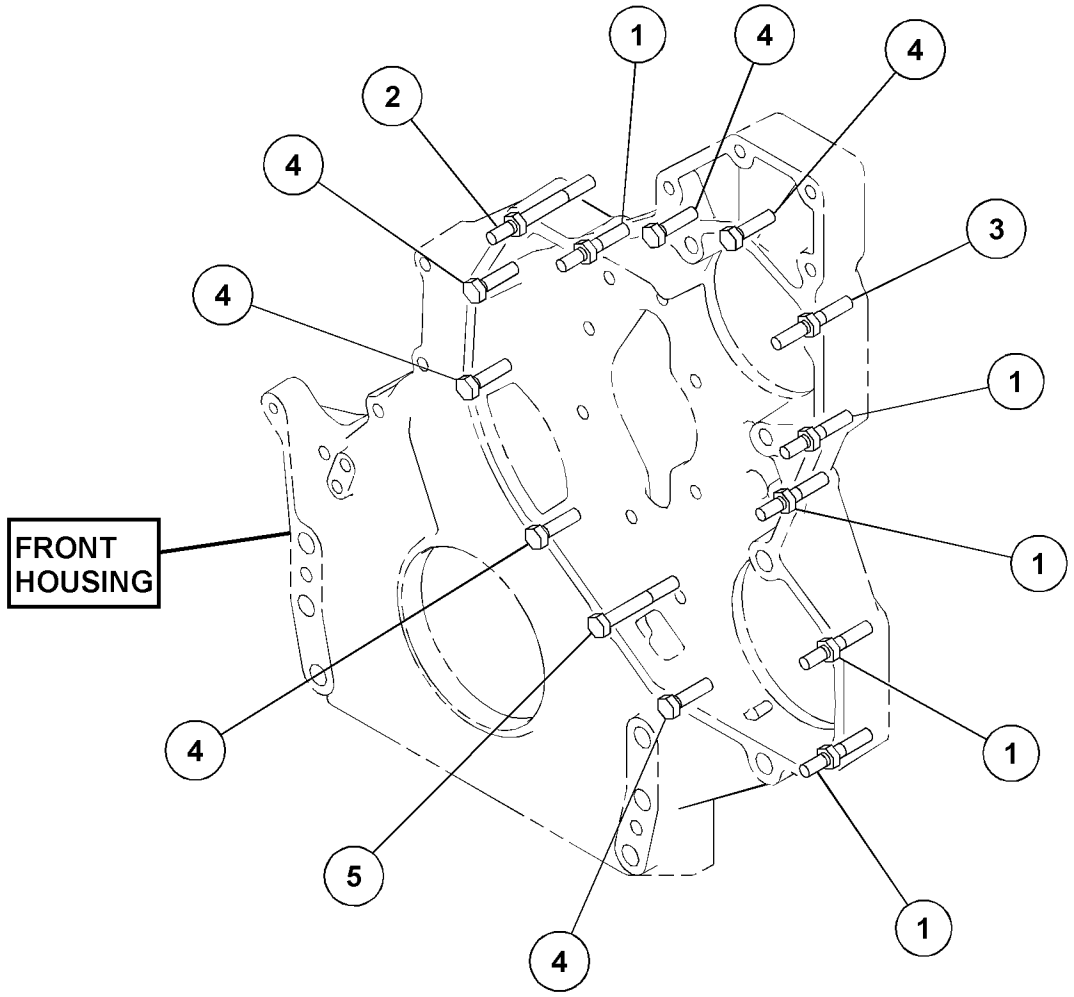

GRAPHIC #1 **<END>** g03095638

7E-0519 FLYWHEEL GP

S/N: KHX1-UP

PART OF 338-9076, 387-1975, 387-1976 ENGINE AR-COMPLETE

SMCS-1156 **i01451562**

NOTE	REF NO	GRAPHIC REF	PART NUMBER	QTY	PART NAME 1 2 3 4 5 6 (PRODUCT LEVEL)	SEE PAGE
	1	1	**160-8230**	1	FLYWHEEL AS	
		1	**7W-5095**	1	GEAR-FLYWHEEL (134-TEETH)	
	2	1	**5P-8245**	8	WASHER-HARD (13.5X25.5X3-MM THK)	
M	3	1	**6V-8197**	8	BOLT (M12X1.75X40-MM)	

M - METRIC PART

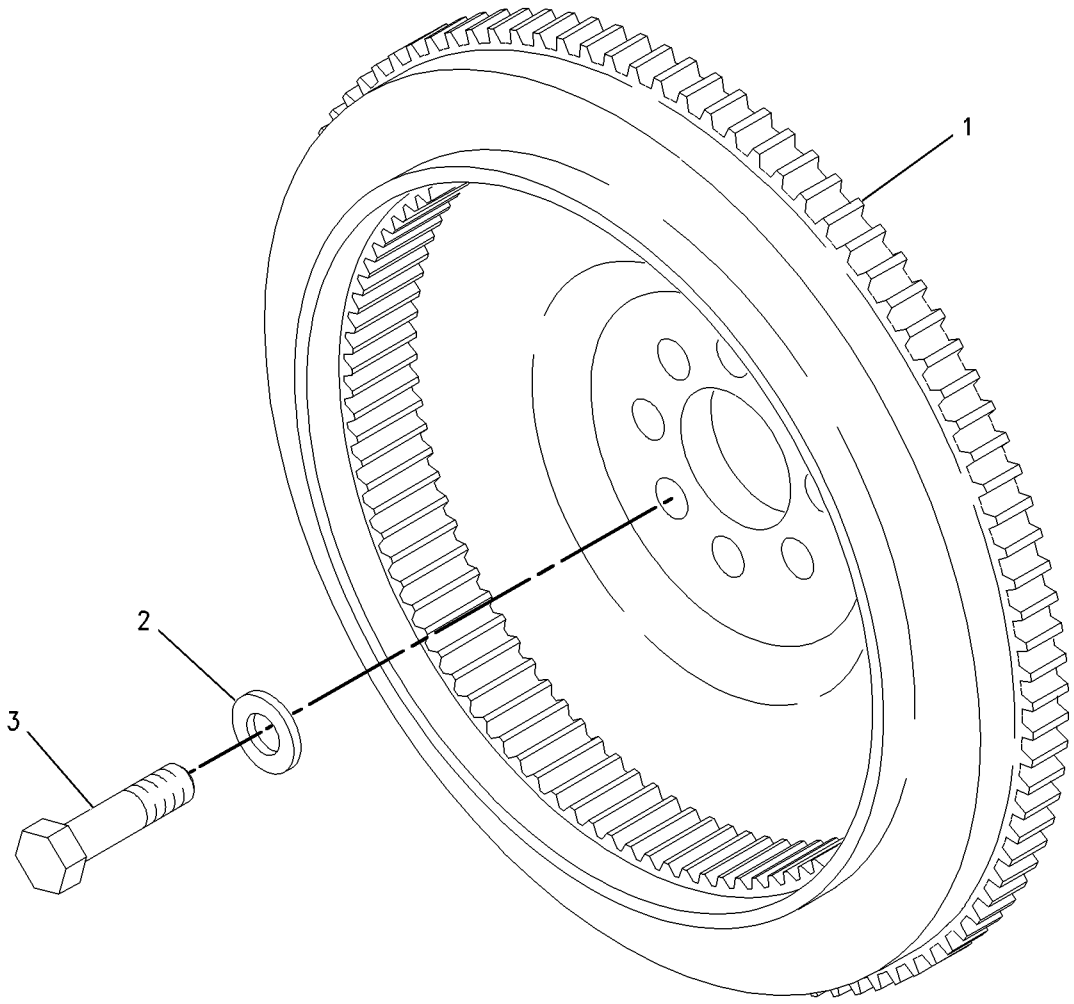

GRAPHIC #1 **<END>** g00759563

205-1321 GEAR GP-FRONT

S/N: KHX1-UP

PART OF 235-1423, 397-1168 ENGINE AR-CORE

SMCS-1151, 1162, 1206 **i01696307**

NOTE	REF NO	GRAPHIC REF	PART NUMBER	QTY	PART NAME 1 2 3 4 5 6 (PRODUCT LEVEL)	SEE PAGE
	1	1	**113-6069**	1	PLATE-THRUST	
	2	1	**115-4219**	1	PLATE-RETAINING	
	3	1	**200-4495**	1	SHAFT-IDLER	
	4	1	**205-1320**	1	GEAR AS-IDLER (50 TEETH)	
	4A	1	**115-4072**	1	BEARING	
M	5	1	**136-4183**	1	BOLT-12 POINT HEAD (M10X1.5X30MM)	
M	6	1	**6V-5843**	2	BOLT (M10X1.50X45MM)	

M - METRIC PART

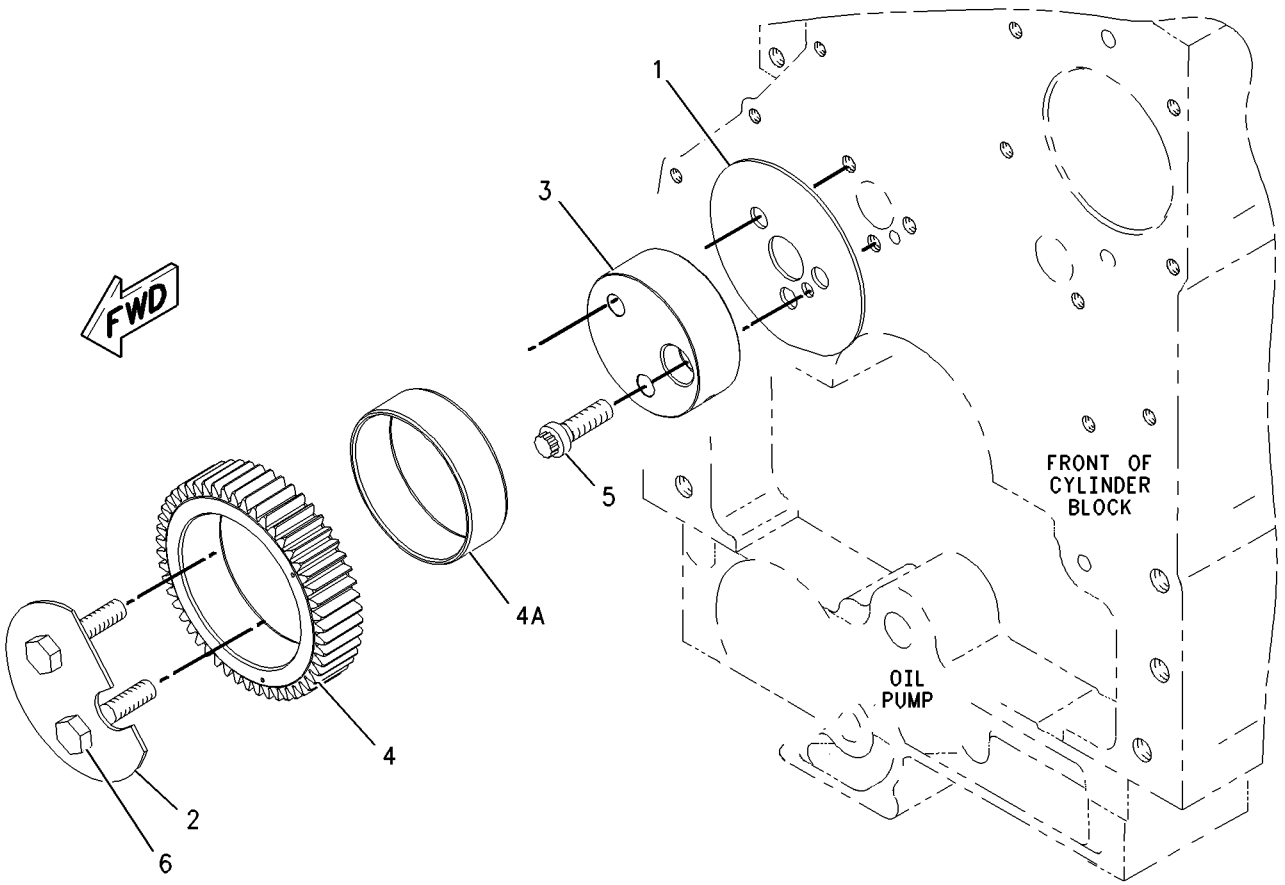

GRAPHIC #1 **<END>** g00873940

197-5210 HOUSING GP-FLYWHEEL

S/N: KHX1-UP

PART OF 338-9076, 387-1975, 387-1976 ENGINE AR-COMPLETE

SMCS-1157 **i05327524**

NOTE	REF NO	GRAPHIC REF	PART NUMBER	QTY	PART NAME 1 2 3 4 5 6 (PRODUCT LEVEL)	SEE PAGE
	1	1	**5F-0304**	1	PLUG	
	2	1	**100-6551**	1	HOUSING-FLYWHEEL	
	4	1	**2A-1162**	1	GASKET	
	5	1	*389-3709*	1	PLUG AS	
	5A	1	**238-5082**	1	SEAL-O-RING	
		1	**360-3682**	1	PLUG-O-RING	
	6	1	*396-0393*	1	PLUG AS	
	6A	1	**214-7566**	1	SEAL-O-RING	
		1	**360-3677**	1	PLUG	
M	7	1	**6V-5842**	2	BOLT (M10X1.5X40-MM)	
M	9	1	**8T-0226**	10	BOLT (M14X2X45-MM)	
BF			**1U-8846**		SEALANT-GASKET	

B - USE AS REQUIRED
F - NOT SHOWN
M - METRIC PART

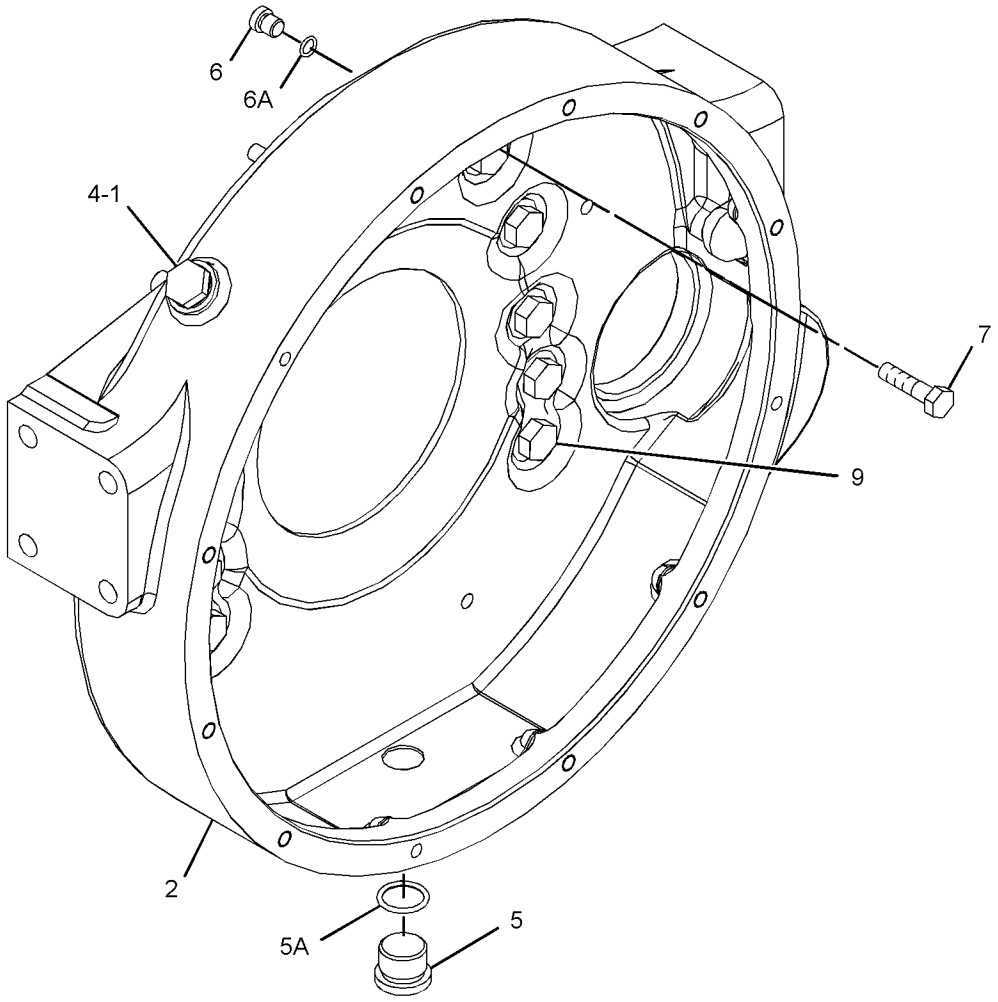

GRAPHIC #1 **<END>** g03379060

165-4446 HOUSING GP-FRONT

S/N: KHX1-UP

PART OF 387-1975, 387-1976 ENGINE AR-COMPLETE, 235-1423 ENGINE AR-CORE

SMCS-1151, 1162, 1206 **i03529802**

NOTE	REF NO	GRAPHIC REF	PART NUMBER	QTY	PART NAME 1 2 3 4 5 6 (PRODUCT LEVEL)	SEE PAGE
C	1	1	**245-3259**	1	HOUSING-FRONT	
M	2	1	**6V-3918**	4	BOLT (M8X1.25X50-MM)	
M	3	1	**6V-5217**	8	BOLT (M8X1.25X20-MM)	
	4	1	**9M-1974**	12	WASHER-HARD (8.8X16X2-MM THK)	
B	5	1	**1U-8846**		SEALANT-GASKET	

B - USE AS REQUIRED
C - CHANGE FROM PREVIOUS TYPE
M - METRIC PART

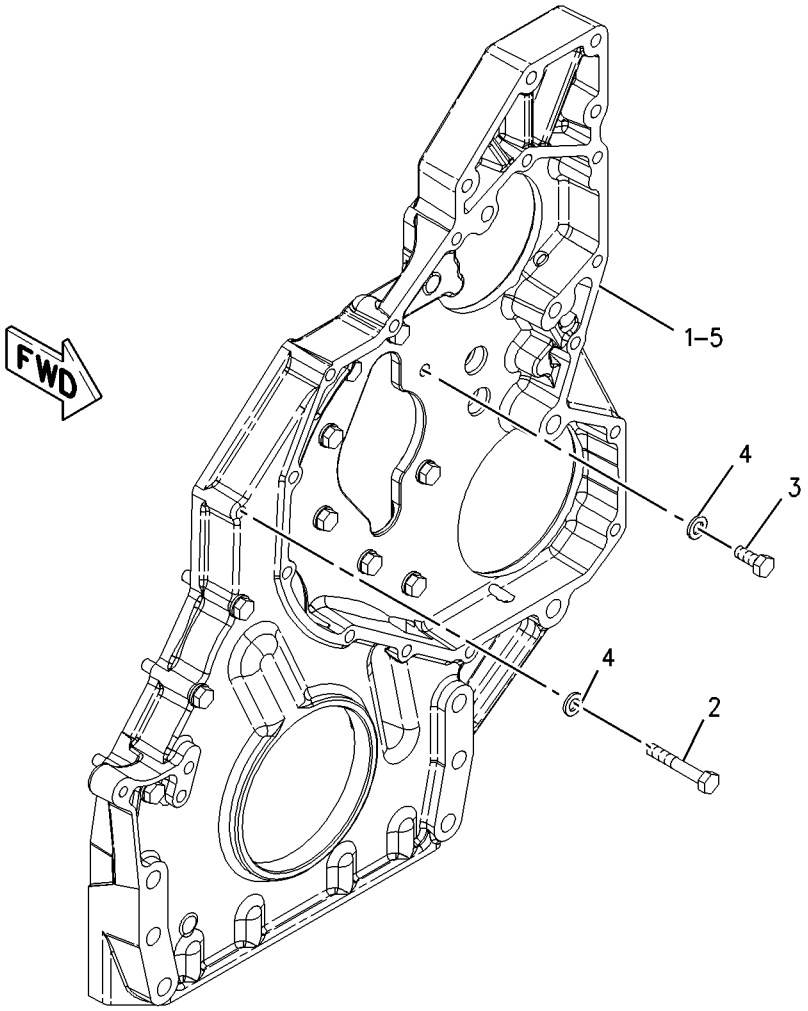

GRAPHIC #1 **<END>** g01005394

192-1563 IDLER GP-BELT

S/N: JLX1-342; KHX1-UP

PART OF 237-4857, 393-0904 COMPRESSOR GP-REFRIGERANT, 444-1143 PULLEY GP-IDLER

SMCS-1358, 1365, 1397, 1802 **i02046131**

NOTE	REF NO	GRAPHIC REF	PART NUMBER	QTY	PART NAME 1 2 3 4 5 6 (PRODUCT LEVEL)	SEE PAGE
	1	1	**151-2898**	1	SPACER (10.4X38.1X20-MM THK)	
	2	1	**144-5611**	1	PULLEY AS-IDLER	
	3	1	**145-2901**	1	COVER-DUST	
M	4	1	**151-2900**	1	BOLT (M10X1.5X54.25-MM)	
	5	1	**6V-9027**	1	SEAL-O-RING	

M - METRIC PART

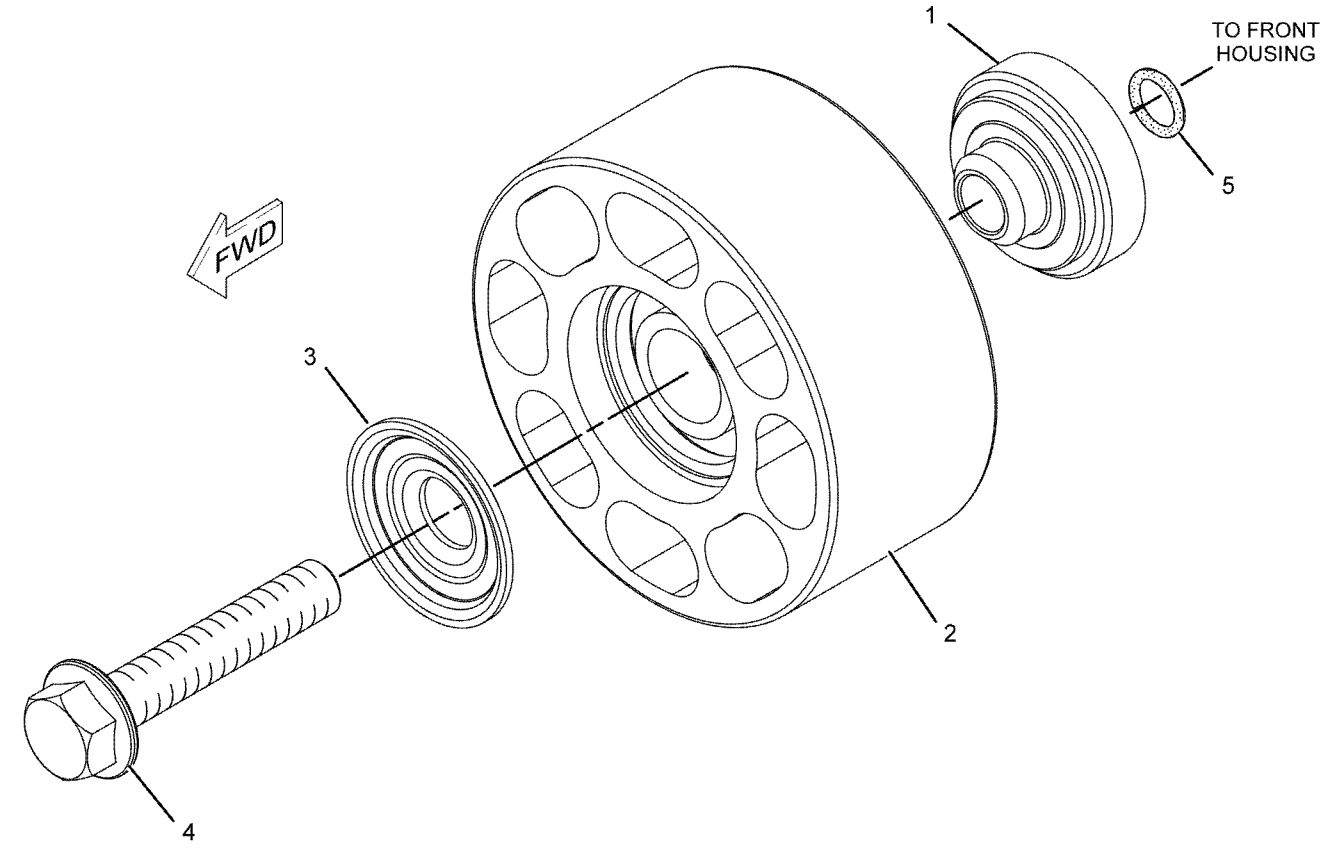

GRAPHIC #1 **<END>** g01051933

455-1900 KIT-CYLINDER HEAD GASKET

S/N: JLX1-UP

KIT CONTAINS GASKETS, SEALS, AND BENDABLE LOCKS TO REBUILD AND REISTALL A CYLINDER HEAD. KIT INCLUDES THE TURBO GASKETS.. KIT DOES NOT INCLUDE THE FUEL INJECTOR SEALS. ORDER A SINGLE INJECTOR SEAL KIT AS NEEDED.. FOR IN-LINE 4 AND 6 CYLINDER ENGINES WITH ONE CYLINDER HEAD ONLY. KIT INCLUDES TURBO MOUNTING HARDWARE.

SMCS-1124 **i05743726**

NOTE	PART NUMBER	QTY	PART NAME 1 2 3 4 5 6 (PRODUCT LEVEL)	SEE PAGE
	7C-7431	1	GASKET	
	126-5466	1	GASKET	
	197-8419	1	GASKET	
	222-5915	1	GASKET (WATER REGULATOR HOUSING)	
	272-1956	6	GASKET (EXHAUST MANIFOLD)	
	133-4995	1	GASKET AS-CYLINDER HEAD	
M	**3E-8017**	4	LOCKNUT (M10X1.5-THD)	
	304-4924	1	SEAL AS (VALVE MECHANISM BASE)	
	2M-9780	2	SEAL-O-RING	
	3J-1907	3	SEAL-O-RING	
	3K-0360	2	SEAL-O-RING	
	6V-3250	2	SEAL-O-RING	
	6V-3251	1	SEAL-O-RING	
	6V-3831	1	SEAL-O-RING	
	6V-6609	2	SEAL-O-RING	
	6V-8397	3	SEAL-O-RING	
	8L-2786	1	SEAL-O-RING	
	061-9456	1	SEAL-O-RING	
	214-7566	8	SEAL-O-RING	
	214-7567	2	SEAL-O-RING	
	214-7568	11	SEAL-O-RING	
	228-7089	5	SEAL-O-RING	
	238-5079	2	SEAL-O-RING	
	238-5080	1	SEAL-O-RING	
	238-5081	5	SEAL-O-RING	
	238-5084	2	SEAL-O-RING	
	272-0388	1	SEAL-VALVE COVER	
	418-6781	4	STUD-TAPERLOCK (M10X1.5X40-MM)	
			FOR A LIST OF RELATED PARTS THAT REQUIRED FOR THE ENGINE REBUILD TO THE KIT CONSIST, PLEASE VISIT	
			HTTP://DEALER.CAT.COM/RELATED	

M - METRIC PART

<END>

450-2550 KIT-ENGINE GASKET

S/N: JLX1-UP

KIT CONTAINS THE GASKETS AND SEALS TO REINSTALL WATER PUMP AND ATTACHING LINES.
FIELD REPLACEMENT ORDER 271-2910—PAGE: 1207

SMCS-1000, 7555 **i05822863**

NOTE	PART NUMBER	QTY	PART NAME 1 2 3 4 5 6 (PRODUCT LEVEL)	SEE PAGE
	200-2258	1	GASKET	
	147-0182	1	SEAL-O-RING	
	384-9992	1	SEAL-O-RING	
			FOR A LIST OF RELATED PARTS THAT MAY BE REQUIRED FOR THE ENGINE REBUILD TO THE KIT CONSIST, PLEASE VISIT	
			HTTP://DEALER.CAT.COM/RELATED	
			<END>	

455-1898 KIT-ENGINE GASKET

S/N: JLX1-UP

KIT CONTAINS GASKETS, SEALS, AND BENDABLE LOCKS TO REINSTALL THE OIL PAN, INTERNAL OIL PUMP, AND BLOCK COVERS.
FOR USE WITH 338-9076—PAGE: 12

SMCS-1000, 7555 **i05750566**

NOTE	PART NUMBER	QTY	PART NAME 1 2 3 4 5 6 (PRODUCT LEVEL)	SEE PAGE
	4Y-9652	2	GASKET (SIDE COVER)	
	7W-5340	1	GASKET	
	371-3481	1	GASKET	
	166-2905	1	SEAL-INTEGRAL	
	3K-0360	2	SEAL-O-RING	
	3P-1156	2	SEAL-O-RING	
	4F-9653	1	SEAL-O-RING	
	5H-8853	1	SEAL-O-RING	
	6V-5063	2	SEAL-O-RING	
	210-9246	1	SEAL-O-RING	
	214-7566	2	SEAL-O-RING	
	214-7568	1	SEAL-O-RING	
	228-7088	1	SEAL-O-RING	
	238-5080	2	SEAL-O-RING	
	238-5081	2	SEAL-O-RING	
			FOR A LIST OF RELATED PARTS THAT REQUIRED FOR THE ENGINE REBUILD TO THE KIT CONSIST, PLEASE VISIT	
			HTTP://DEALER.CAT.COM/RELATED	
			<END>	

456-1664 KIT-FRONT COVER GASKET

S/N: JLX1-UP

KIT CONTAINS GASKETS, SEALS, AND BENDABLE LOCKS TO REINSTALL THE FRONT COVER. KIT DOES NOT INCLUDE THE OIL PAN GASKET.

FOR USE WITH 338-9076—PAGE: 12

SMCS-1000, 7555 **i05987134**

NOTE	REF NO	GRAPHIC REF	PART NUMBER	QTY	PART NAME 1 2 3 4 5 6 (PRODUCT LEVEL)	SEE PAGE
	1	1	**4R-9999**	1	EXCLUDER-CRANKSHAFT SEAL	
	2	1	**166-1781**	1	GASKET (FRONT COVER, HOUSING)	
	3	1	**245-7339**	1	SEAL-CRANKSHAFT (FRONT)	
	4	1	**135-9819**	1	SEAL-INTEGRAL	
	5	1	**3J-1907**	3	SEAL-O-RING	
	6	1	**3K-0360**	1	SEAL-O-RING	
	7	1	**6V-8397**	2	SEAL-O-RING	
	8	1	**061-9455**	1	SEAL-O-RING	
	9	1	**227-5904**	1	SEAL-O-RING	
	10	1	**228-4947**	2	SEAL-O-RING	
	11	1	**126-1757**	2	WASHER (10.85X19.3X1.27-MM THK)	
					FOR A LIST OF RELATED PARTS THAT MAY BE REQUIRED FOR THE ENGINE REBUILD TO THE KIT CONSIST, PLEASE VISIT	
					HTTP://DEALER.CAT.COM/RELATED	

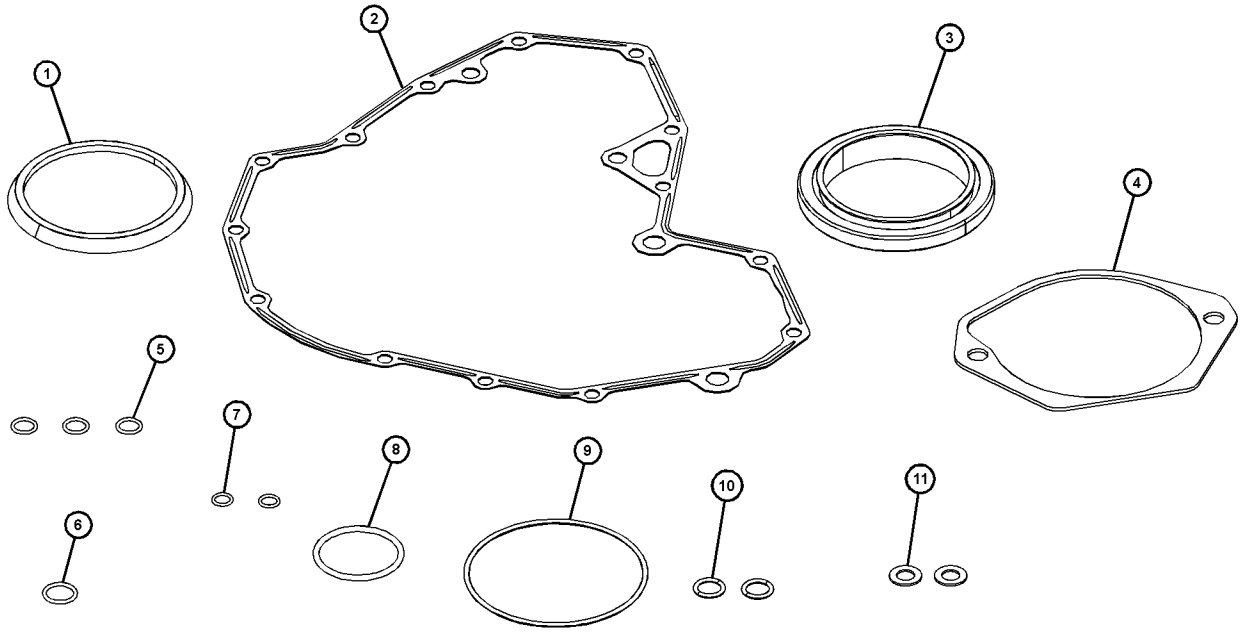

GRAPHIC #1 **<END>** g03759037

455-1109 KIT-REAR COVER GASKET

S/N: JLX1-UP

KIT CONTAINS GASKETS, SEALS, AND BENDABLE LOCKS TO REINSTALL THE REAR COVER.. KIT DOES NOT INCLUDE THE OIL PAN GASKET

FOR USE WITH 338-9076—PAGE: 12

SMCS-7555 **i05958310**

NOTE	REF NO	GRAPHIC REF	PART NUMBER	QTY	PART NAME 1 2 3 4 5 6 (PRODUCT LEVEL)	SEE PAGE
	1	1	**2A-1162**	1	GASKET (DRAIN PLUG)	
	2	1	**3K-3257**	1	GASKET	
	3	1	**7L-2894**	1	GASKET	
	4	1	**239-0583**	1	GASKET	
	5	1	**2P-1294**	1	PLUG-SEAL	
	6	1	**247-1876**	1	SEAL	
	7	1	**222-3910**	1	SEAL GP-CRANKSHAFT (CLOCKWISE ROTATION)	
	8	1	**214-7566**	2	SEAL-O-RING	
	9	1	**238-5082**	2	SEAL-O-RING	
					FOR A LIST OF RELATED PARTS THAT REQUIRED FOR THE ENGINE REBUILD TO THE KIT CONSIST, PLEASE VISIT	
					HTTP://DEALER.CAT.COM/RELATED	

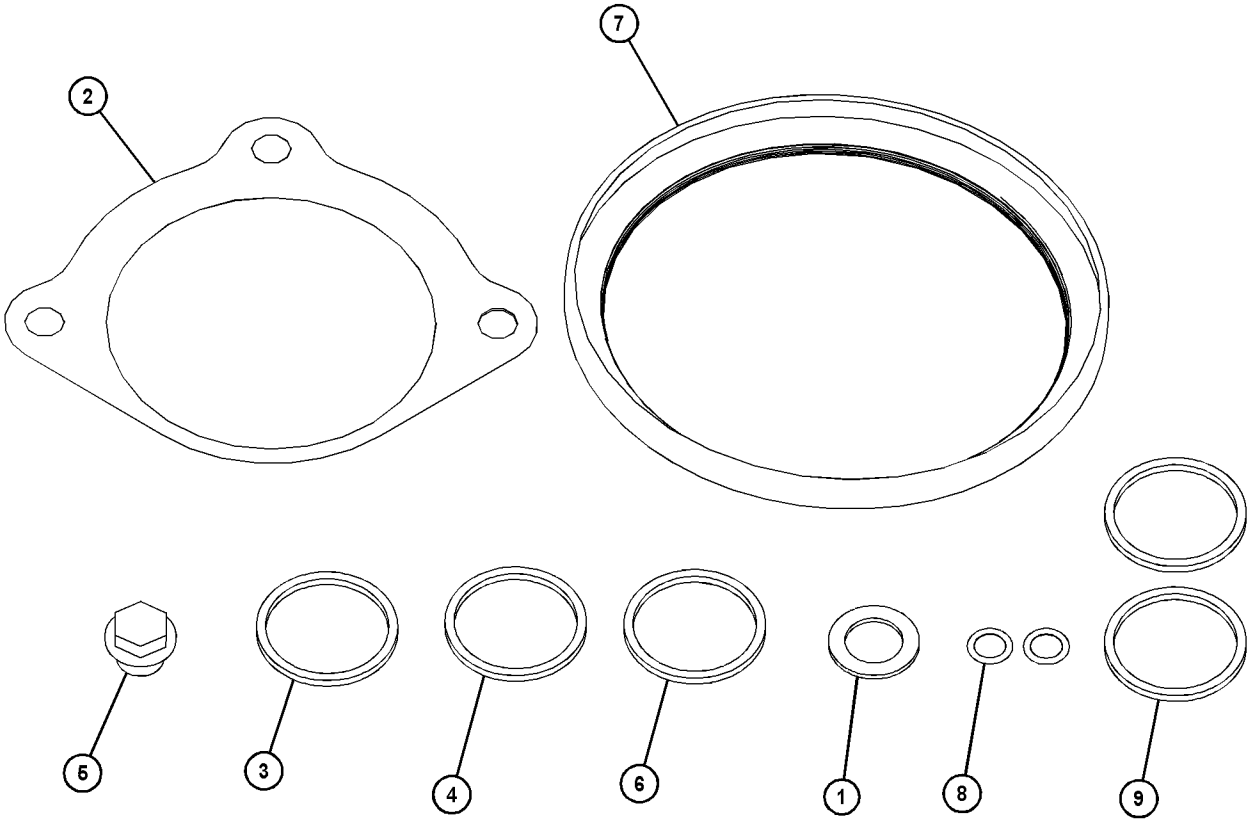

GRAPHIC #1 **<END>** g03739662

139-4081 LIFTER GP-VALVE

S/N: KHX1-UP

PART OF 232-3717 VALVE MECHANISM GP

SMCS-1209 **i01615435**

NOTE	REF NO	GRAPHIC REF	PART NUMBER	QTY	PART NAME 1 2 3 4 5 6 (PRODUCT LEVEL)	SEE PAGE
	1	1	**139-9476**	1	SHAFT AS-LIFTER	
		1	**2D-6642**	2	BALL	
	2	1	**7E-6794**	4	ARM AS-LIFTER	
	3	1	**139-4084**	2	SPACER	

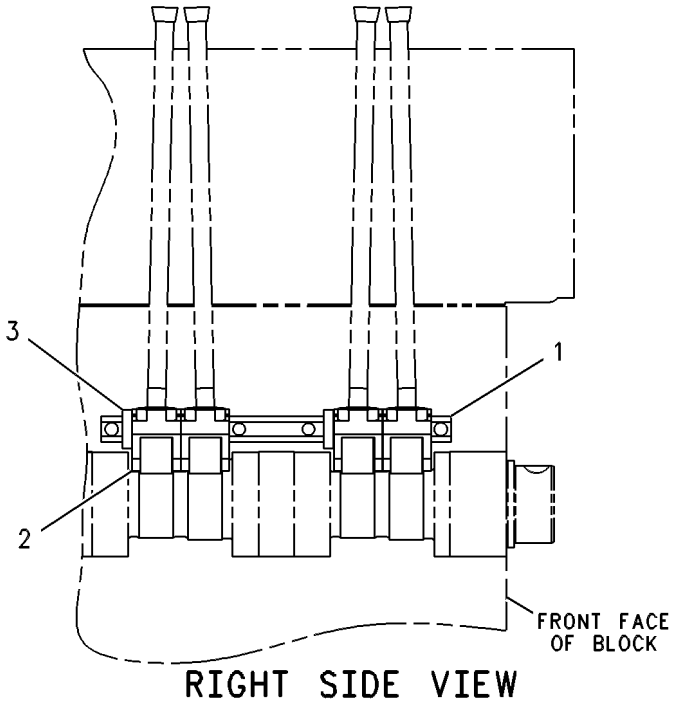

RIGHT SIDE VIEW

GRAPHIC #1 **<END>** g00288708

237-9822 LIFTING GP-ENGINE

S/N: KHX1-UP

PART OF 338-9076, 387-1975, 387-1976 ENGINE AR-COMPLETE

SMCS-1122 **i05334099**

NOTE	REF NO	GRAPHIC REF	PART NUMBER	QTY	PART NAME 1 2 3 4 5 6 (PRODUCT LEVEL)	SEE PAGE
	1	1	**154-0896**	1	PLATE-LIFTING	
	2	1	**6V-5839**	4	WASHER (11X21X2.5-MM THK)	
M	3	1	**6V-4248**	4	BOLT (M10X1.5X25-MM)	

M - METRIC PART

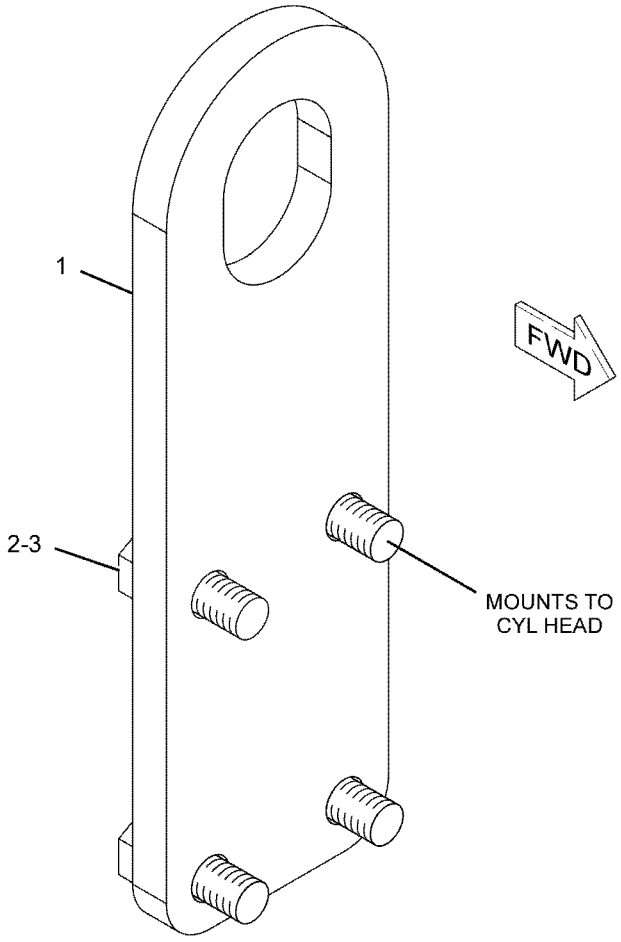

GRAPHIC #1 **<END>** g01118450

215-6982 MOUNTING GP-ALTERNATOR

S/N: KHX1-UP

PART OF 338-9076, 387-1975, 387-1976 ENGINE AR-COMPLETE

SMCS-1154, 1405 **i02214632**

NOTE	REF NO	GRAPHIC REF	PART NUMBER	QTY	PART NAME 1 2 3 4 5 6 (PRODUCT LEVEL)	SEE PAGE
	1	1	**211-2101**	2	SLEEVE	
	2	1	**215-6981**	1	BRACKET-MOUNTING	
M	3	1	**8T-4137**	1	BOLT (M10X1.5X20-MM)	
M	4	1	**8T-4195**	2	BOLT (M10X1.5X30-MM)	

M - METRIC PART

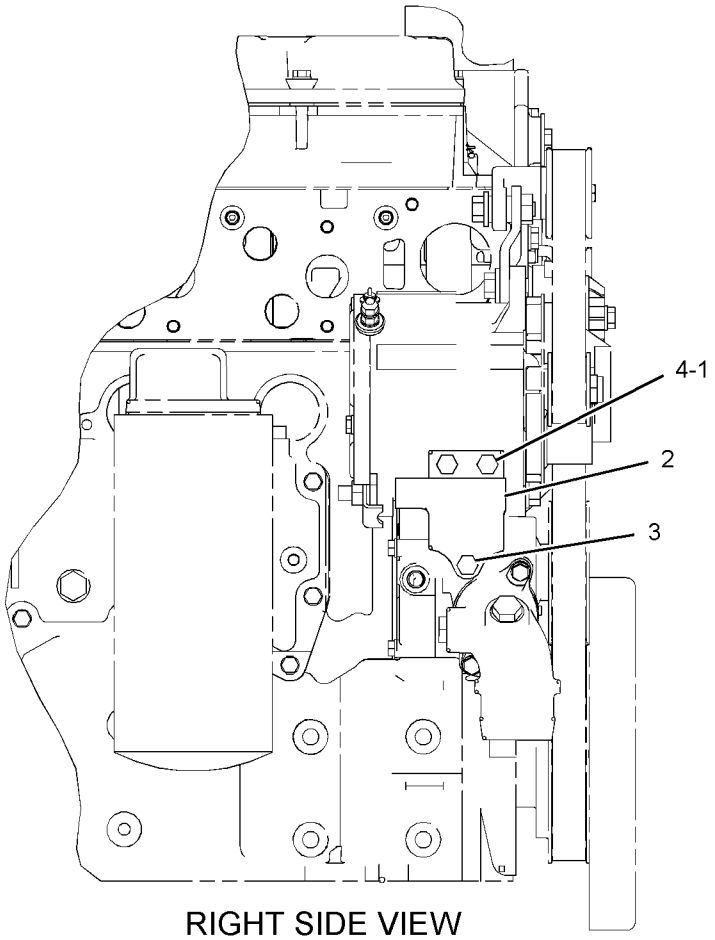

RIGHT SIDE VIEW

GRAPHIC #1 **<END>** g01108789

378-6952 MOUNTING GP-ENGINE & XMSN

S/N: JLX1-UP

PART OF 374-4868 INSTALLATION AR-ENGINE

SMCS-1152, 1154, 3082 **i04760141**

NOTE	REF NO	GRAPHIC REF	PART NUMBER	QTY	PART NAME 1 2 3 4 5 6 (PRODUCT LEVEL)	SEE PAGE
	1	1	**3E-4883**	4	SLEEVE	
	2	1	**7X-2622**	4	WASHER (22X115X10-MM THK)	
M	3	1	**8C-6855**	4	BOLT (M14X2X45-MM)	
M	4	1	**8T-3653**	4	BOLT (M14X2X80-MM)	
	5	1	**9W-9930**	4	MOUNT AS	
	6	1	**126-7757**	2	BRACKET AS	
	7	1	**128-1008**	2	SUPPORT	
	8	1	**7X-0510**	8	WASHER-HARD (15.5X29X3-MM THK)	
M	9	1	**7X-2563**	8	BOLT (M20X2.5X60-MM)	
M	10	1	**8C-8478**	4	BOLT (M20X2.5X140-MM)	
	11	1	**8T-4121**	11	WASHER-HARD (11X21X2.5-MM THK)	
	12	1	**8T-4123**	8	WASHER (3.62X5.75X0.375-MM THK)	
M	13	1	**8T-4195**	11	BOLT (M10X1.5X30-MM)	
	14	1	**8T-5439**	4	WASHER-HARD (21.5X45X6-MM THK)	

M - METRIC PART

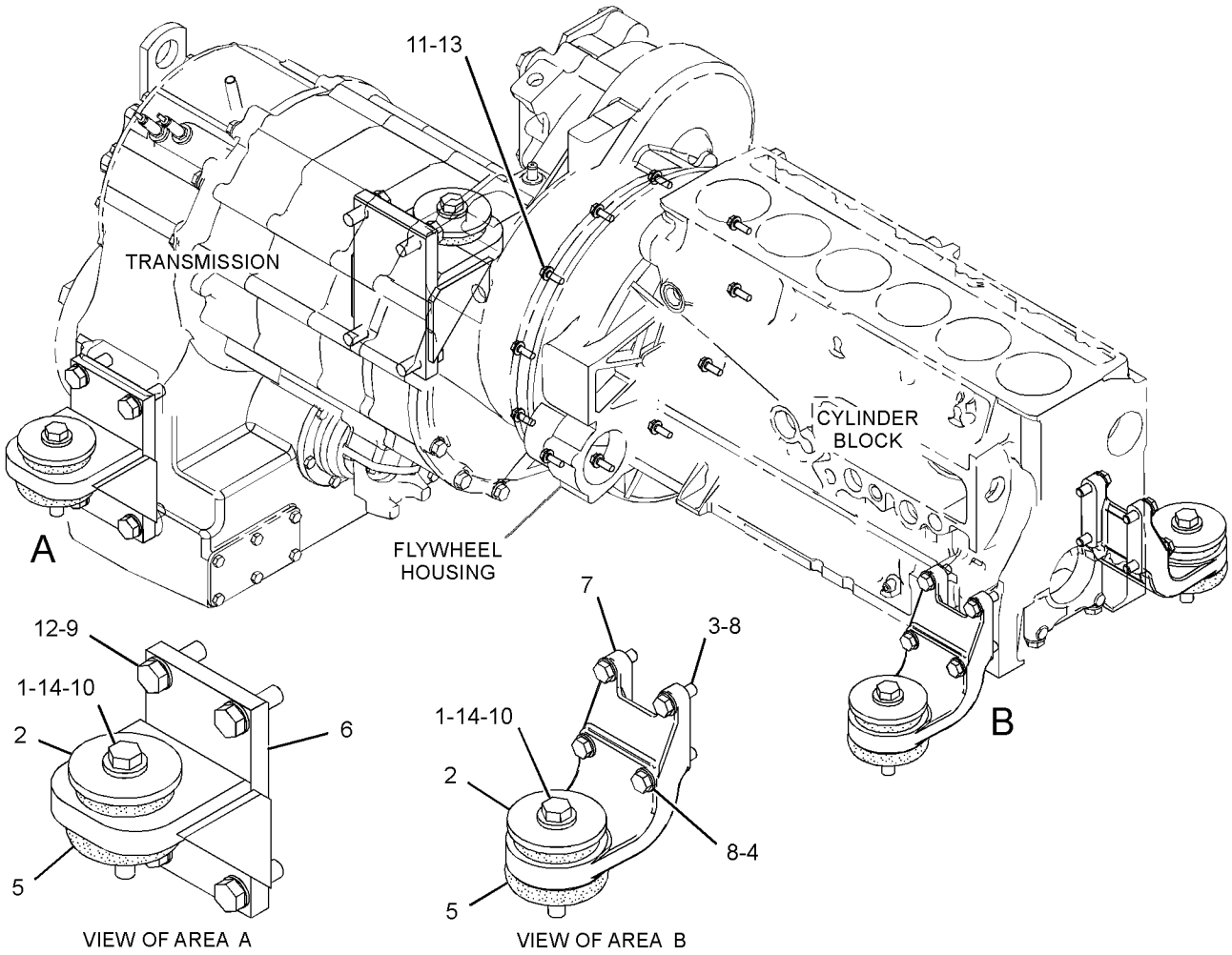

GRAPHIC #1

<END>

g02859421

392-9252 MOUNTING GP-STARTING MOTOR–24-VOLT, RH

S/N: KHX1-UP

PART OF 387-1975 ENGINE AR-COMPLETE

SMCS-1453 **i04895495**

NOTE	REF NO	GRAPHIC REF	PART NUMBER	QTY	PART NAME 1 2 3 4 5 6 (PRODUCT LEVEL)	SEE PAGE
	1	1	**3K-3257**	1	GASKET	
	2	1	**183-1025**	1	STRAP AS	
M	3	1	**8T-4133**	1	NUT (M10X1.5-THD)	
M	4	1	**101-3129**	1	STUD (M10X1.5-THD)	
M	5	1	**118-9573**	3	BOLT-12 POINT HEAD (M10X1.5X35-MM)	
YR	6	1	**207-1551**	1	STARTING MOTOR GP-ELECTRIC	301
	7	1	**7P-1695**	3	WASHER (10.5X19X3-MM THK)	

M - METRIC PART
R - REMFG PART MAY BE AVAILABLE
Y - SEPARATE ILLUSTRATION

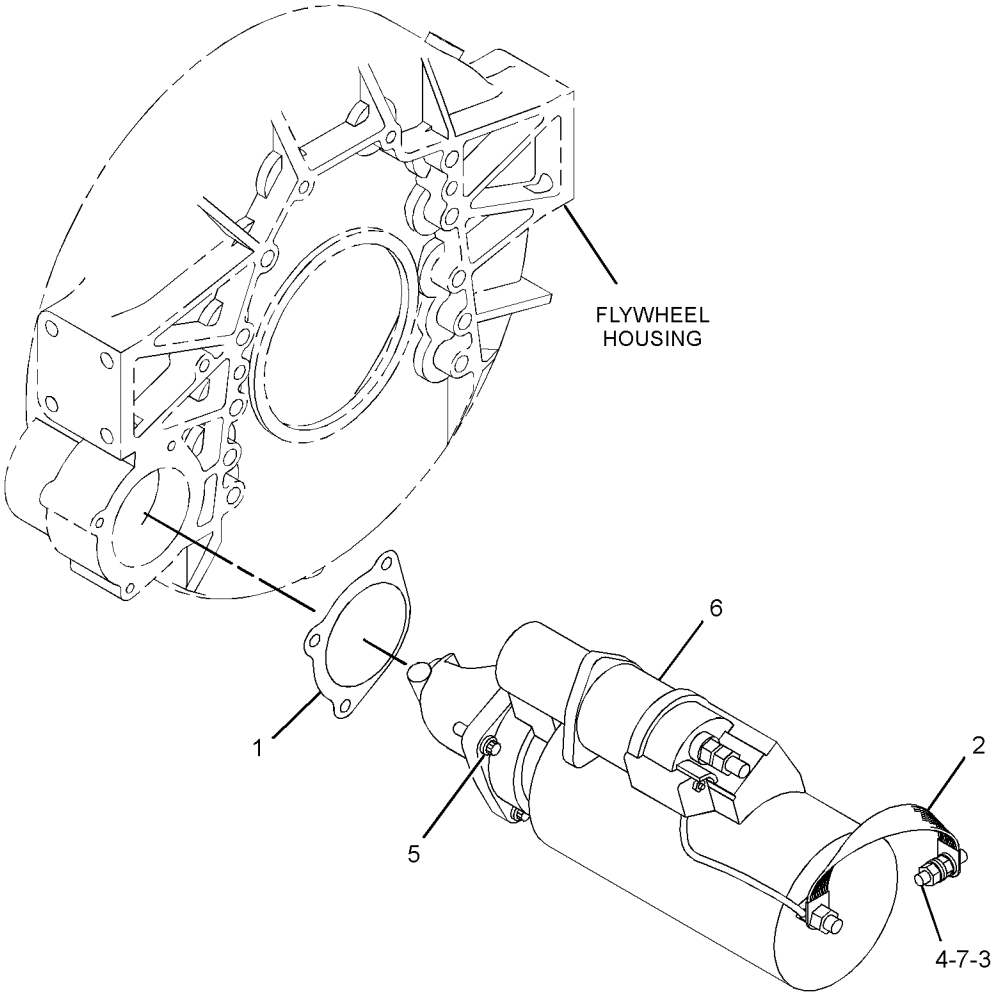

GRAPHIC #1 **<END>** g03097899

201-6850 PAN GP-OIL

S/N: KHX1-UP
PAN CAPACITY - 28L
PART OF 338-9076, 387-1975, 387-1976 ENGINE AR-COMPLETE

SMCS-1302 **i02048996**

NOTE	REF NO	GRAPHIC REF	PART NUMBER	QTY	PART NAME 1 2 3 4 5 6 (PRODUCT LEVEL)	SEE PAGE
	1	1	**166-2905**	1	SEAL-INTEGRAL	
	2	1	**200-4516**	1	PAN-OIL	
M	3	1	**6V-3918**	36	BOLT (M8X1.25X50-MM)	
	4	1	**9M-1974**	36	WASHER-HARD (8.8X16X2-MM THK)	
B	5	1	**4C-9612**		SEALANT-SILICONE	

B - USE AS REQUIRED
M - METRIC PART

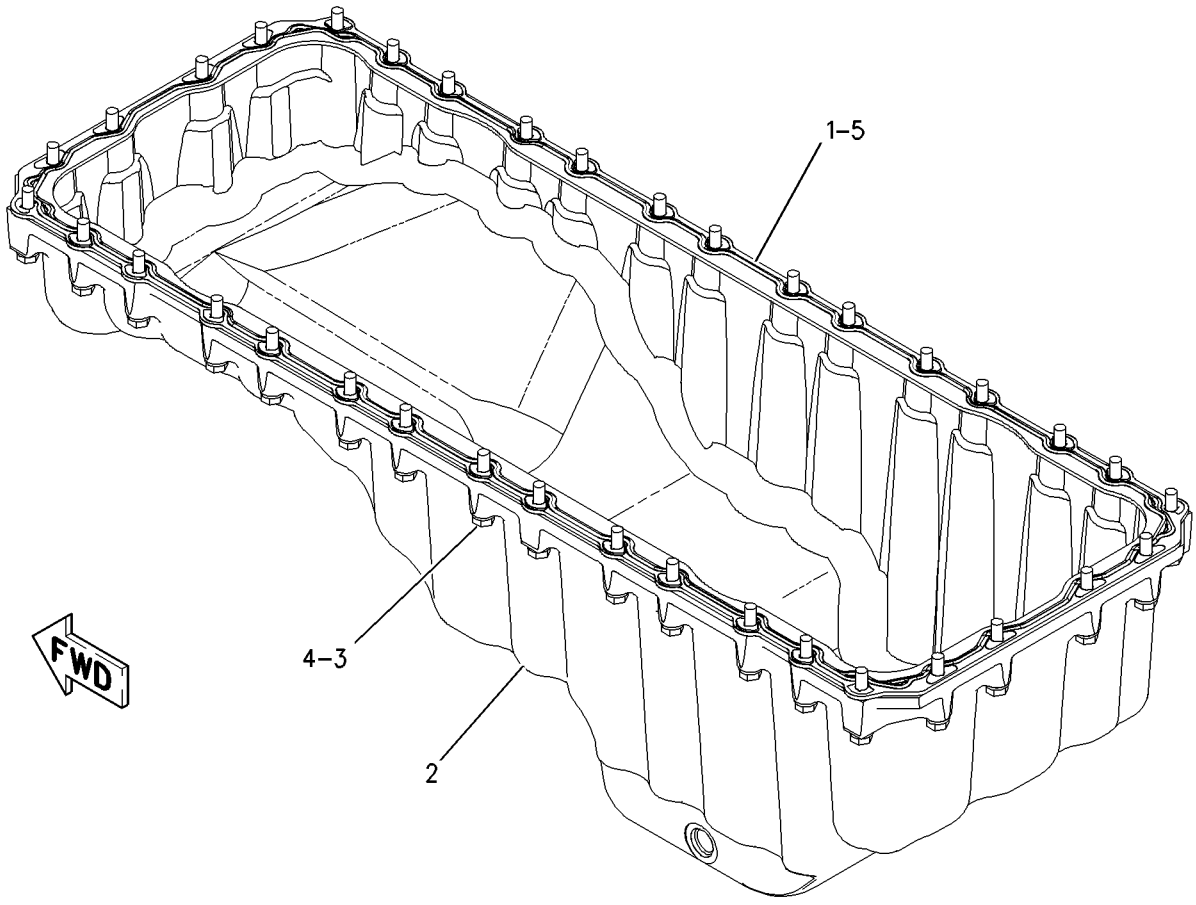

GRAPHIC #1 **<END>** g01001517

212-3652 PISTON & ROD GP*R

S/N: KHX1-UP
16.5:1 COMPRESSION RATIO
PART OF 235-1423, 397-1168 ENGINE AR-CORE

SMCS-1225 **i02421065**

NOTE	REF NO	GRAPHIC REF	PART NUMBER	QTY	PART NAME 1 2 3 4 5 6 (PRODUCT LEVEL)	SEE PAGE
R	1	1	**213-3193**	1	ROD AS-CONNECTING (NON-DRILLED)	
	1A	1	**2W-0027**	1	BEARING (EYE END)	
	1B	1	**195-0321**	2	BOLT	
	2	1	**224-6638**	1	BEARING-CONNECTING ROD (STANDARD)	
AB		1	**7C-6976**		BEARING-CONNECTING ROD (0.25-MM US)	
AB		1	**7C-6977**		BEARING-CONNECTING ROD (0.5-MM US)	
	3	1	**238-2706**	1	RING-PISTON (OIL)	
	4	1	**197-9353**	1	RING-PISTON (INTERMEDIATE)	
	5	1	**197-9386**	1	RING-PISTON (TOP)	
	6	1	**197-9371**	1	PIN-PISTON	
	7	1	**280-2748**	1	TUBE AS-OIL JET	
R	8	1	**238-2720**	1	BODY AS-PISTON	
M	9	1	**6V-3940**	1	BOLT (M8X1.25X25-MM)	
	10	1	**197-9372**	2	RETAINER-PIN	

A - NOT PART OF THIS GROUP
B - USE AS REQUIRED
M - METRIC PART
R - REMFG PART MAY BE AVAILABLE

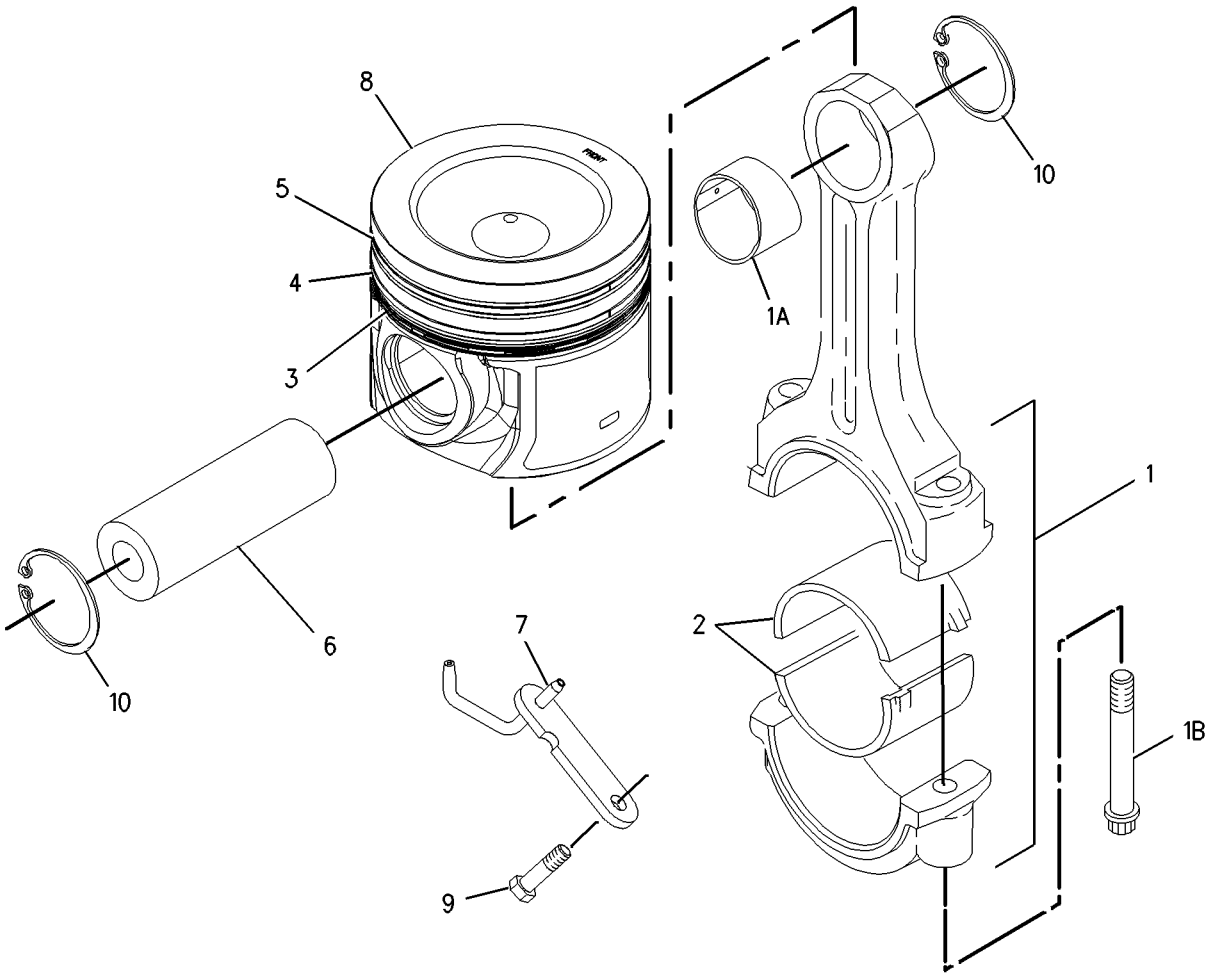

GRAPHIC #1 **<END>** g00903037

159-0303 PLUG GP-CYLINDER BLOCK

S/N: KHX1-UP

PART OF 338-9076, 387-1975, 387-1976 ENGINE AR-COMPLETE

SMCS-1201 **i05287891**

NOTE	REF NO	GRAPHIC REF	PART NUMBER	QTY	PART NAME 1 2 3 4 5 6 (PRODUCT LEVEL)	SEE PAGE
M	1	1	**8T-0293**	1	BOLT (M12X1.75X20-MM)	
	2	1	**6F-7062**	1	WASHER (12.7X19.05X1.83-MM THK)	
	3	1	*398-5612*	2	PLUG AS	
					(EACH INCLUDES)	
		1	**6V-5063**	1	SEAL-O-RING	
		1	**9S-8008**	1	PLUG	

M - METRIC PART

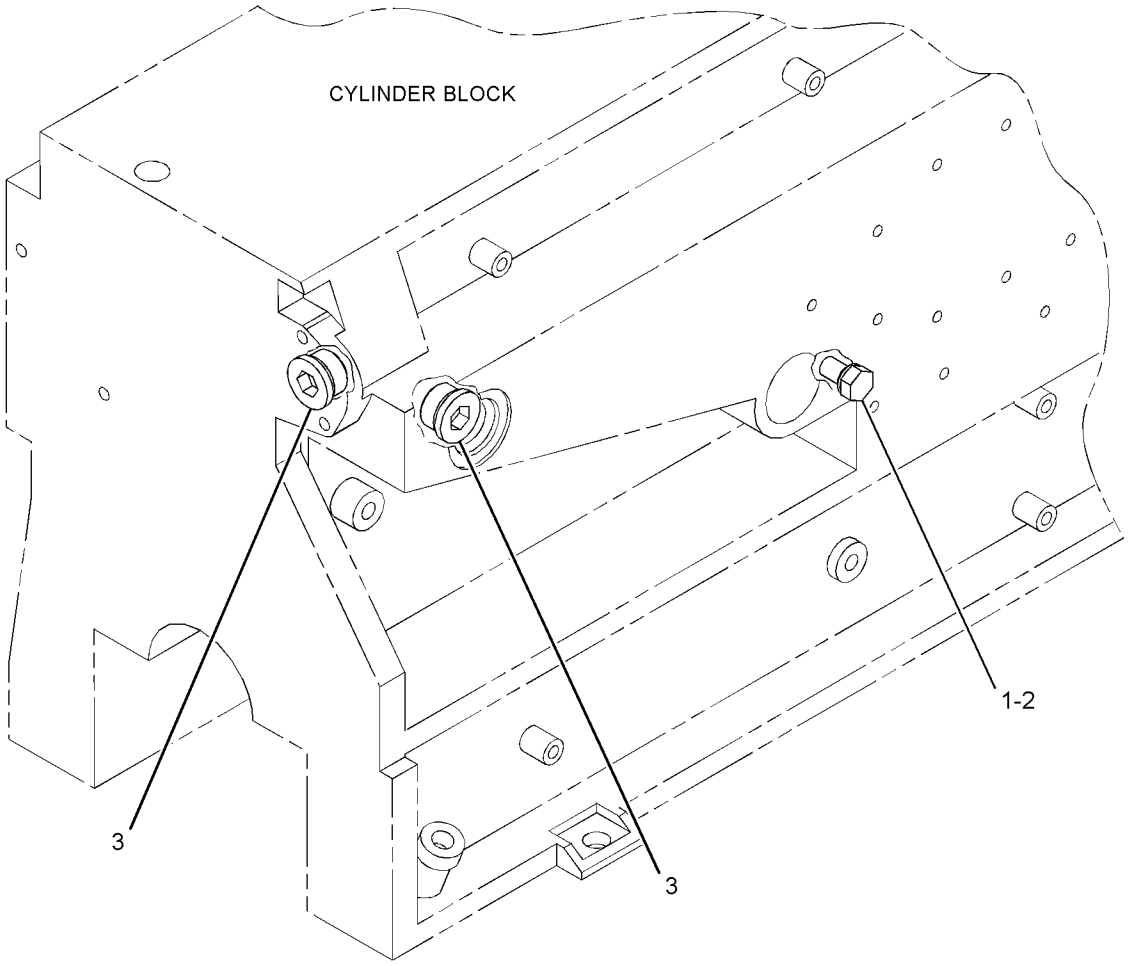

GRAPHIC #1 **<END>** g02925198

162-8068 PLUG GP-ENGINE

S/N: KHX1-UP

PART OF 338-9076, 387-1975, 387-1976 ENGINE AR-COMPLETE

SMCS-1000 **i05287928**

NOTE	REF NO	GRAPHIC REF	PART NUMBER	QTY	PART NAME 1 2 3 4 5 6 (PRODUCT LEVEL)	SEE PAGE
	1	1	*396-0405*	1	PLUG AS	
		1	**6V-6609**	1	SEAL-O-RING	
		1	**360-3680**	1	PLUG	

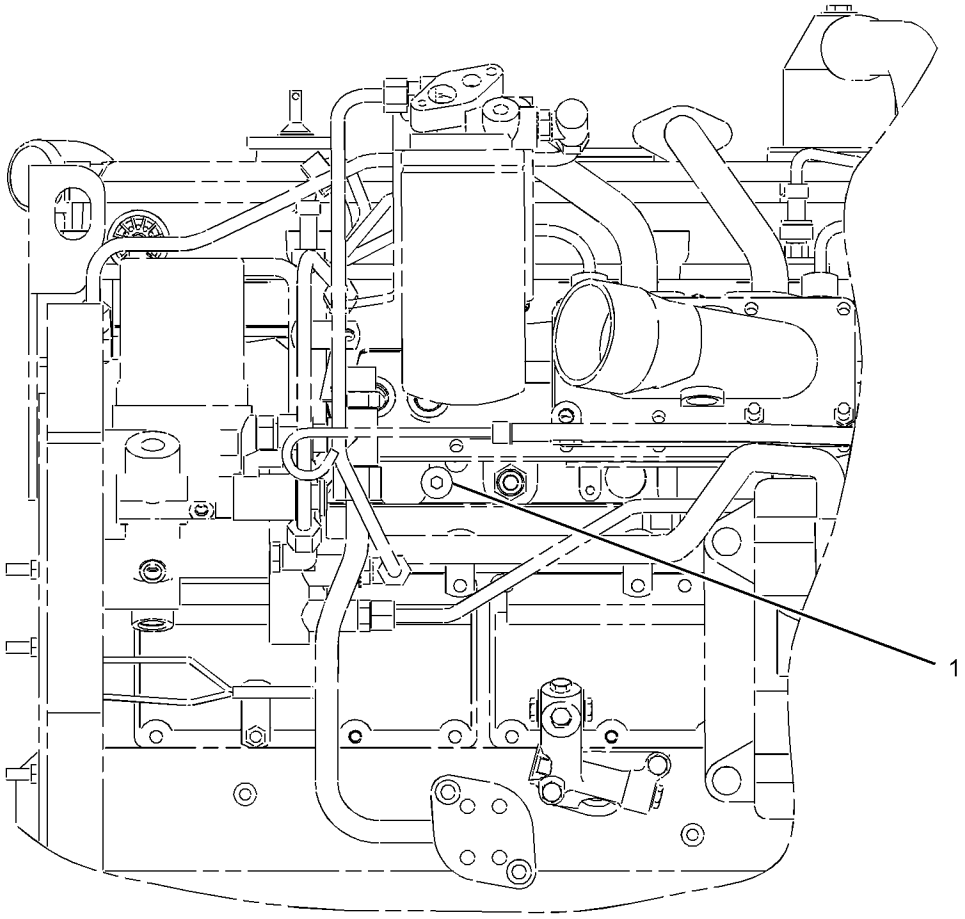

LEFT SIDE VIEW

GRAPHIC #1 **<END>** g01457732

172-5754 PULLEY GP-IDLER–BELT TENSIONER

S/N: KHX1-UP

PART OF 338-9076, 387-1975, 387-1976 ENGINE AR-COMPLETE

SMCS-1358 **i02056001**

NOTE	REF NO	GRAPHIC REF	PART NUMBER	QTY	PART NAME 1 2 3 4 5 6 (PRODUCT LEVEL)	SEE PAGE
	1	1	**173-1498**	1	PULLEY AS-IDLER (8-GROOVE)	
	1A	1	**166-6358**	1	COVER-DUST	
M	1B	1	**151-2900**	1	BOLT (M10X1.5X54.25-MM)	
	2	1	**190-0643**	1	BELT TENSIONER (IDLER PULLEY)	
	3	1	**8T-4121**	1	WASHER-HARD (11X21X2.5-MM THK)	
M	4	1	**8T-4172**	1	BOLT (M10X1.5X80-MM)	

M - METRIC PART

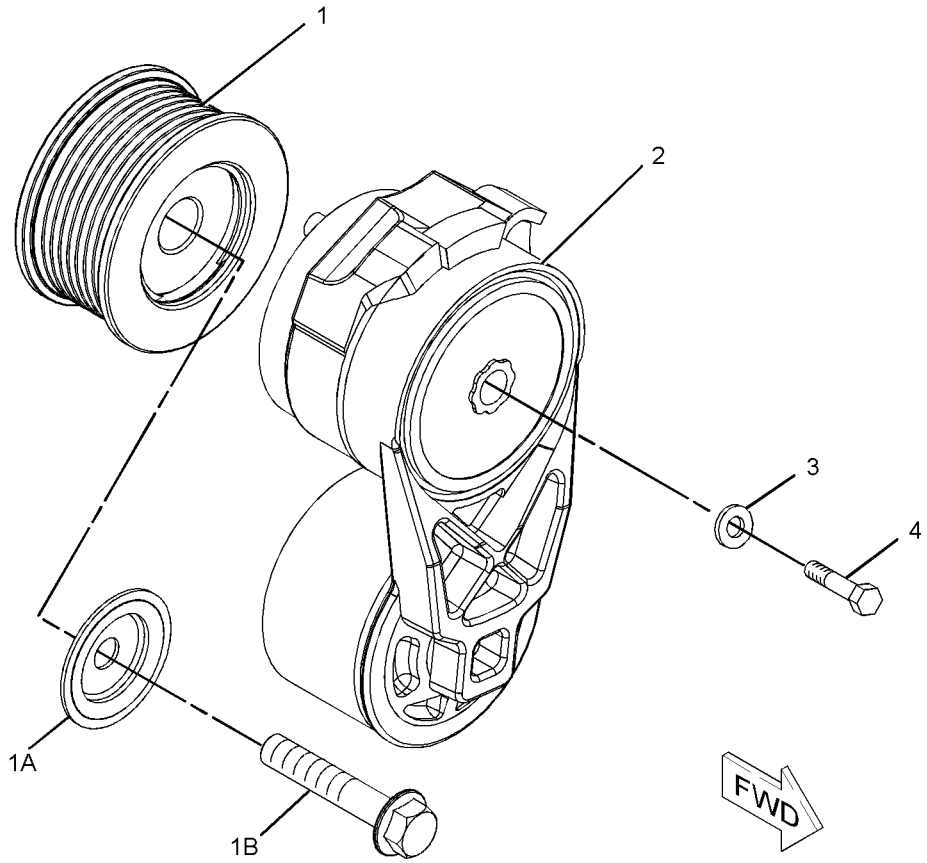

GRAPHIC #1 **<END>** g01060759

444-1143 PULLEY GP-IDLER

S/N: KHX54031-UP

PART OF 387-1975, 387-1976 ENGINE AR-COMPLETE

SMCS-1358 **i05844995**

NOTE	REF NO	GRAPHIC REF	PART NUMBER	QTY	PART NAME 1 2 3 4 5 6 (PRODUCT LEVEL)	SEE PAGE
Y	1	1	**192-1563**	2	IDLER GP-BELT (ALTERNATOR, REFRIGERANT COMPR)	51

Y - SEPARATE ILLUSTRATION

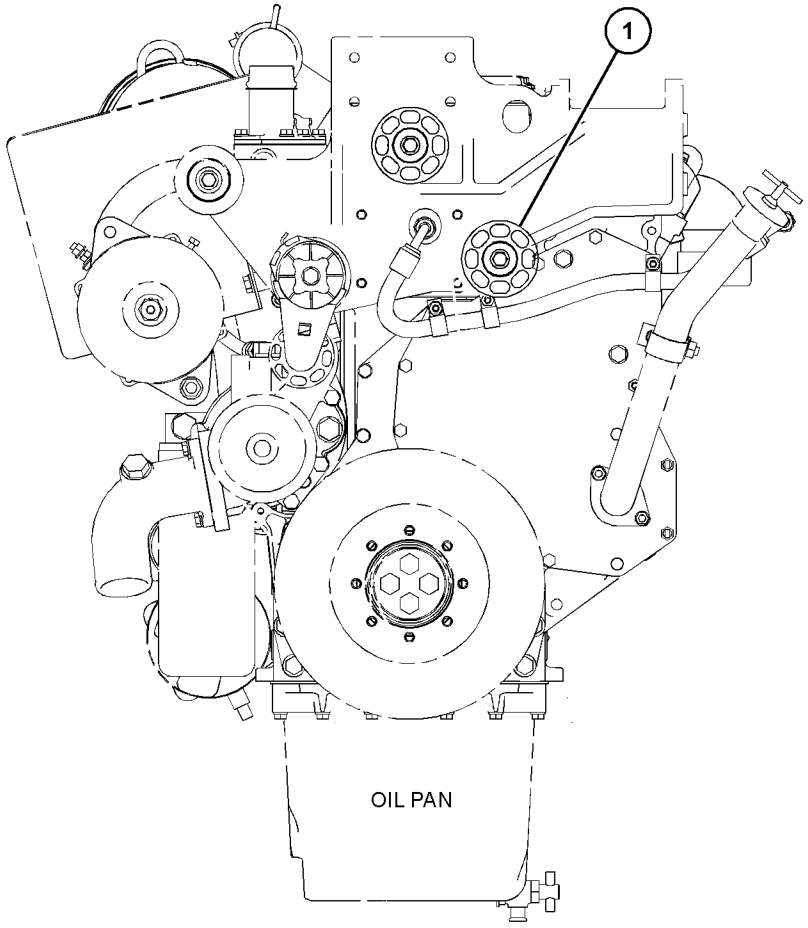

FRONT VIEW
OF ENGINE

GRAPHIC #1

<END>

g03698863

256-3831 ROCKER ARM GP–EXHAUST

S/N: KHX1-UP

PART OF 256-3830 VALVE MECHANISM GP

SMCS-1123 **i02598465**

NOTE	REF NO	GRAPHIC REF	PART NUMBER	QTY	PART NAME 1 2 3 4 5 6 (PRODUCT LEVEL)	SEE PAGE
R	1	1	**256-3832**	1	ROCKER ARM AS (EXHAUST)	
M	2	1	**260-7524**	1	SCREW-VALVE ADJUSTMENT (M10X1.5-THD)	
M	3	1	**2Y-5829**	1	NUT (M10X1.5-THD)	

M - METRIC PART
R - REMFG PART MAY BE AVAILABLE

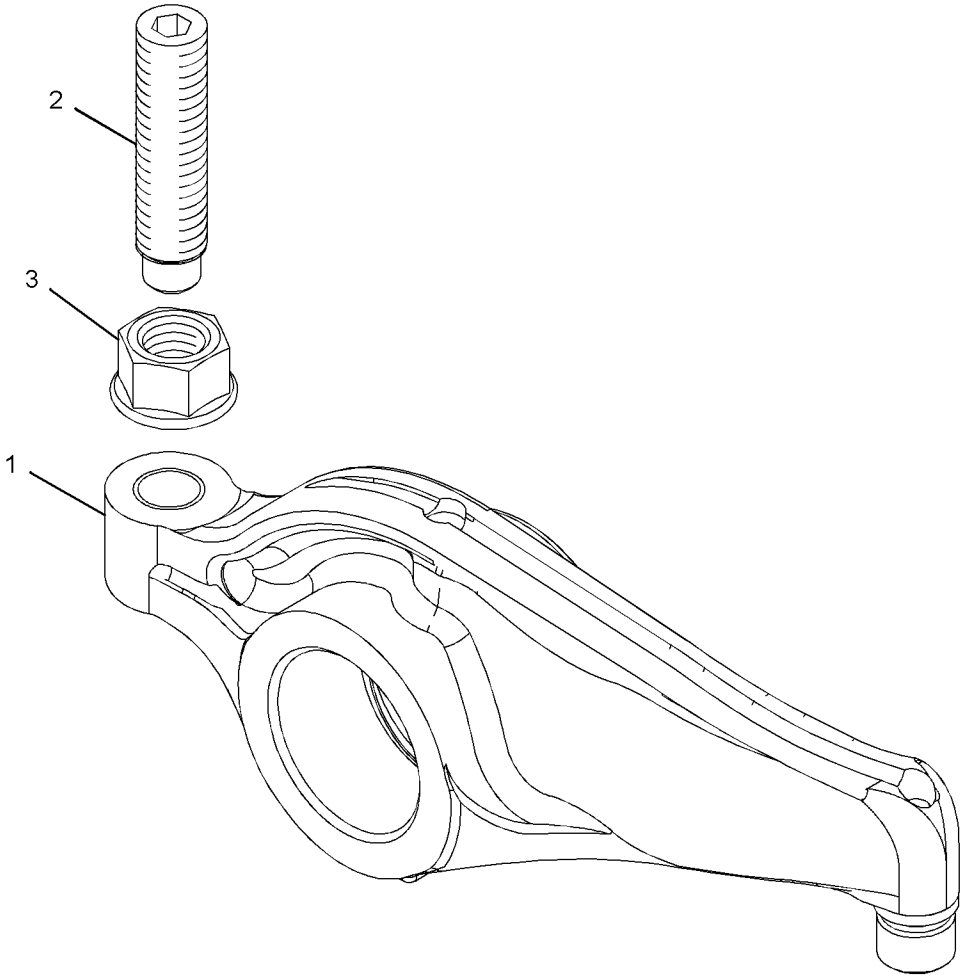

GRAPHIC #1 **<END>** g01293346

256-3834 ROCKER ARM GP–INLET

S/N: KHX1-UP

PART OF 256-3830 VALVE MECHANISM GP

SMCS-1123 **i02598550**

NOTE	REF NO	GRAPHIC REF	PART NUMBER	QTY	PART NAME 1 2 3 4 5 6 (PRODUCT LEVEL)	SEE PAGE
M	1	1	**260-7524**	1	SCREW-VALVE ADJUSTMENT (M10X1.5-THD)	
R	2	1	**256-3835**	1	ROCKER ARM AS (INLET)	
M	3	1	**2Y-5829**	1	NUT (M10X1.5-THD)	

M - METRIC PART
R - REMFG PART MAY BE AVAILABLE

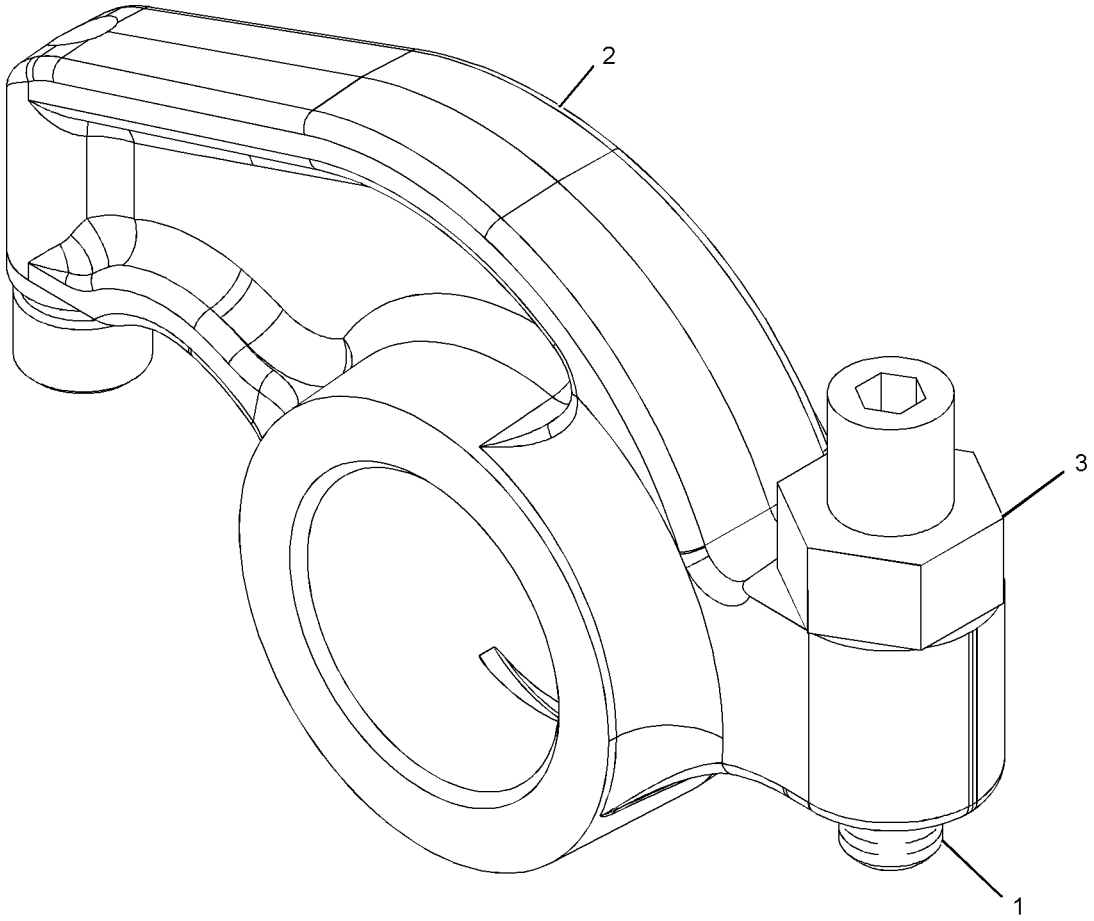

GRAPHIC #1 **<END>** g01056688

115-4210 SEAL GP-CRANKSHAFT

S/N: KHX1-UP

PART OF 338-9076, 387-1975, 387-1976 ENGINE AR-COMPLETE

SMCS-1160, 1161 **i02891232**

NOTE	REF NO	GRAPHIC REF	PART NUMBER	QTY	PART NAME 1 2 3 4 5 6 (PRODUCT LEVEL)	SEE PAGE
	1	1	**222-3910**	1	SEAL GP-CRANKSHAFT (REAR)	
	2	1	**245-7339**	1	SEAL-CRANKSHAFT	
	3	1	**4R-9999**	1	EXCLUDER-CRANKSHAFT SEAL	

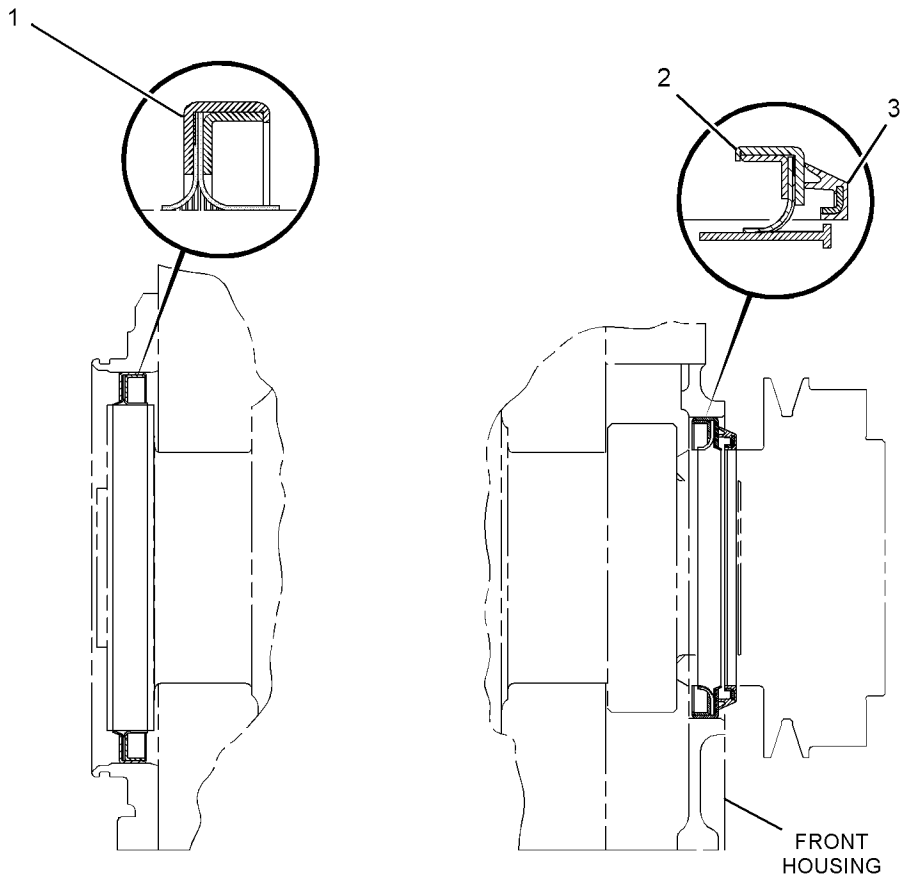

GRAPHIC #1 **<END>** g01439892

232-3717 VALVE MECHANISM GP

S/N: KHX1-UP

PART OF 235-1423, 397-1168 ENGINE AR-CORE

TYPE 1

SMCS-1102, 1121, 1123

i05351176

NOTE	REF NO	GRAPHIC REF	PART NUMBER	QTY	PART NAME 1 2 3 4 5 6 (PRODUCT LEVEL)	SEE PAGE
C	1	1	**264-6156**	12	ROD-VALVE PUSH	
	2	1	**219-3309**	6	BRIDGE-VALVE	
Y	3	1	*139-4081*	3	LIFTER GP-VALVE	56
M	4	1	**8T-8442**	12	BOLT-SOCKET HEAD (M6X1X30-MM)	
	5	1	**3E-9412**	6	DOWEL	
CY	6	1	**256-3830**	1	VALVE MECHANISM GP	74
M	7	1	**6V-5696**	11	BOLT (M12X1.75X80-MM)	
	8	1	**9M-1974**	2	WASHER-HARD (8.8X16X2-MM THK)	
	9	1	**3H-7654**	9	WASHER-HARD (13.5X22.5X3-MM THK)	
M	10	1	**8T-0100**	2	BOLT (M8X1.25X60-MM)	
	11	1	**232-1754**	1	CLIP	

C - CHANGE FROM PREVIOUS TYPE
M - METRIC PART
Y - SEPARATE ILLUSTRATION

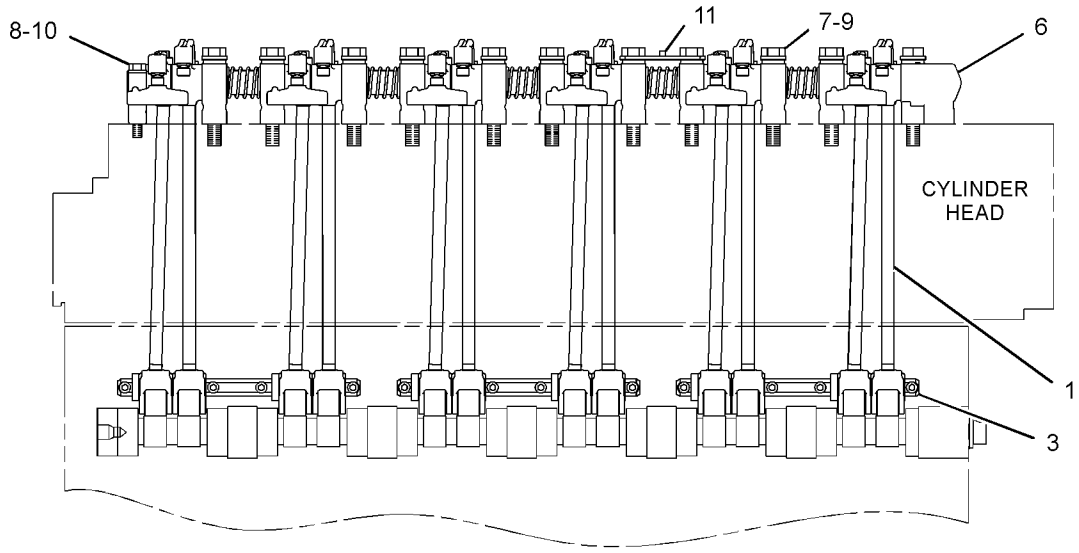

RIGHT SIDE VIEW

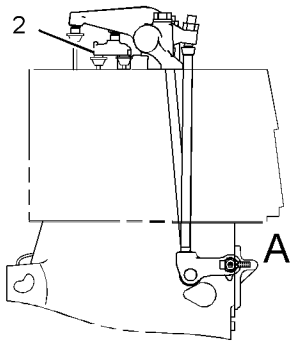

FRONT VIEW

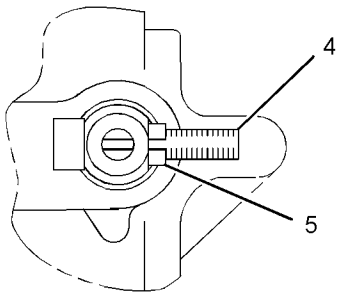

VIEW OF AREA A

GRAPHIC #1

<END>

g01279672

232-3717 VALVE MECHANISM GP

S/N: KHX1-UP
PART OF 397-1168 ENGINE AR-CORE
TYPE 2

SMCS-1102, 1121, 1123

i03534860

NOTE	REF NO	GRAPHIC REF	PART NUMBER	QTY	PART NAME 1 2 3 4 5 6 (PRODUCT LEVEL)	SEE PAGE
	1	1	**133-6379**	12	ROD-VALVE PUSH	
	2	1	**219-3309**	6	BRIDGE-VALVE	
Y	3	1	*139-4081*	3	LIFTER GP-VALVE	56
M	4	1	**8T-8442**	12	BOLT-SOCKET HEAD (M6X1X30-MM)	
	5	1	**3E-9412**	6	DOWEL	
CY	6	1	*235-5528*	1	VALVE MECHANISM GP	72
M	7	1	**6V-5696**	11	BOLT (M12X1.75X80-MM)	
	8	1	**9M-1974**	2	WASHER-HARD (8.8X16X2-MM THK)	
C	9	1	**3H-7654**	9	WASHER-HARD (13.5X22.5X3.0-MM THK)	
M	10	1	**8T-0100**	2	BOLT (M8X1.25X60-MM)	
	11	1	**232-1754**	1	CLIP	

C - CHANGE FROM PREVIOUS TYPE
M - METRIC PART
Y - SEPARATE ILLUSTRATION

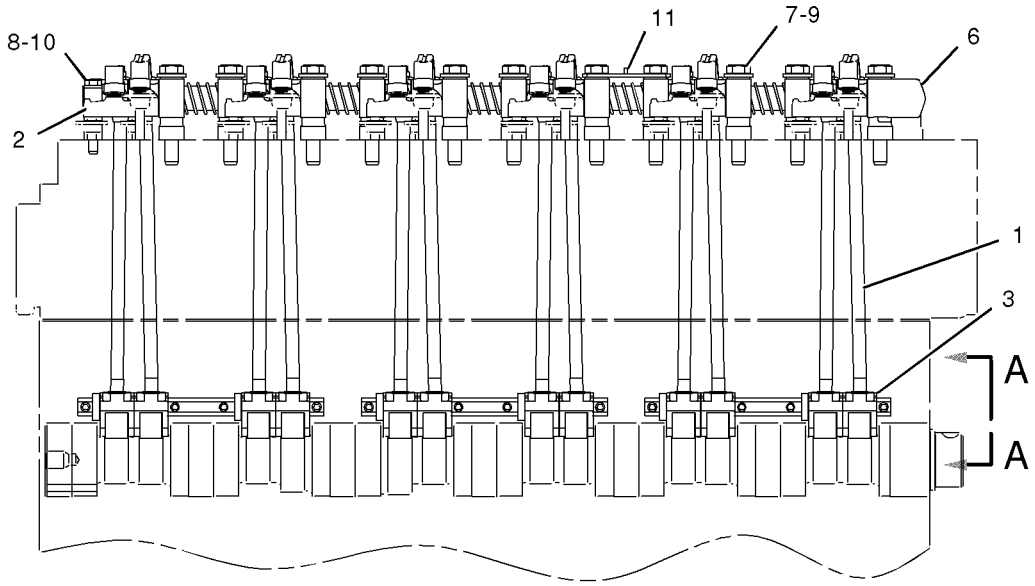

RIGHT SIDE VIEW

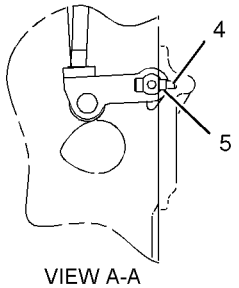

VIEW A-A

GRAPHIC #1

<END>

g01028897

235-5528 VALVE MECHANISM GP

S/N: KHX1-UP

PART OF 232-3717 VALVE MECHANISM GP

SMCS-1102, 1121, 1123 **i02215718**

NOTE	REF NO	GRAPHIC REF	PART NUMBER	QTY	PART NAME 1 2 3 4 5 6 (PRODUCT LEVEL)	SEE PAGE
	1	1	**137-6717**	5	SPRING	
	2	1	*222-1185*	6	ROCKER ARM GP (INTAKE)	
					(EACH INCLUDES)	
M	2A	1	**2Y-5829**	1	NUT (M10X1.5-THD)	
M		1	**183-4365**	1	SCREW-ADJUSTMENT (M10X1.5-THD)	
R	2B	1	**153-8467**	1	ROCKER ARM AS	
	2C	1	**173-5549**	1	SEAL-O-RING	
	2D	1	**145-7376**	1	INSERT	
	2E	1	**145-7385**	1	SOCKET	
	3	1	**138-8403**	1	STAND	
	4	1	*222-1186*	6	ROCKER ARM GP (EXHAUST)	
					(EACH INCLUDES)	
M	4A	1	**2Y-5829**	1	NUT (M10X1.5-THD)	
M		1	**183-4365**	1	SCREW-ADJUSTMENT (M10X1.5-THD)	
R	4B	1	**153-8470**	1	ROCKER ARM AS	
	4C	1	**173-5549**	1	SEAL-O-RING	
	4D	1	**145-7376**	1	INSERT	
	4E	1	**145-7385**	1	SOCKET	
	5	1	**235-5527**	10	STAND	
	6	1	**138-8402**	1	STAND (END)	
	7	1	**138-9868**	1	RING-RETAINING	
	8	1	**8H-5244**	1	DOWEL	
	9	1	**138-7198**	1	SHAFT AS	
		1	**5B-1866**	1	PLUG-CUP	

M - METRIC PART
R - REMFG PART MAY BE AVAILABLE

235-5528 **VALVE MECHANISM GP (*contd.*)** **i02215718**

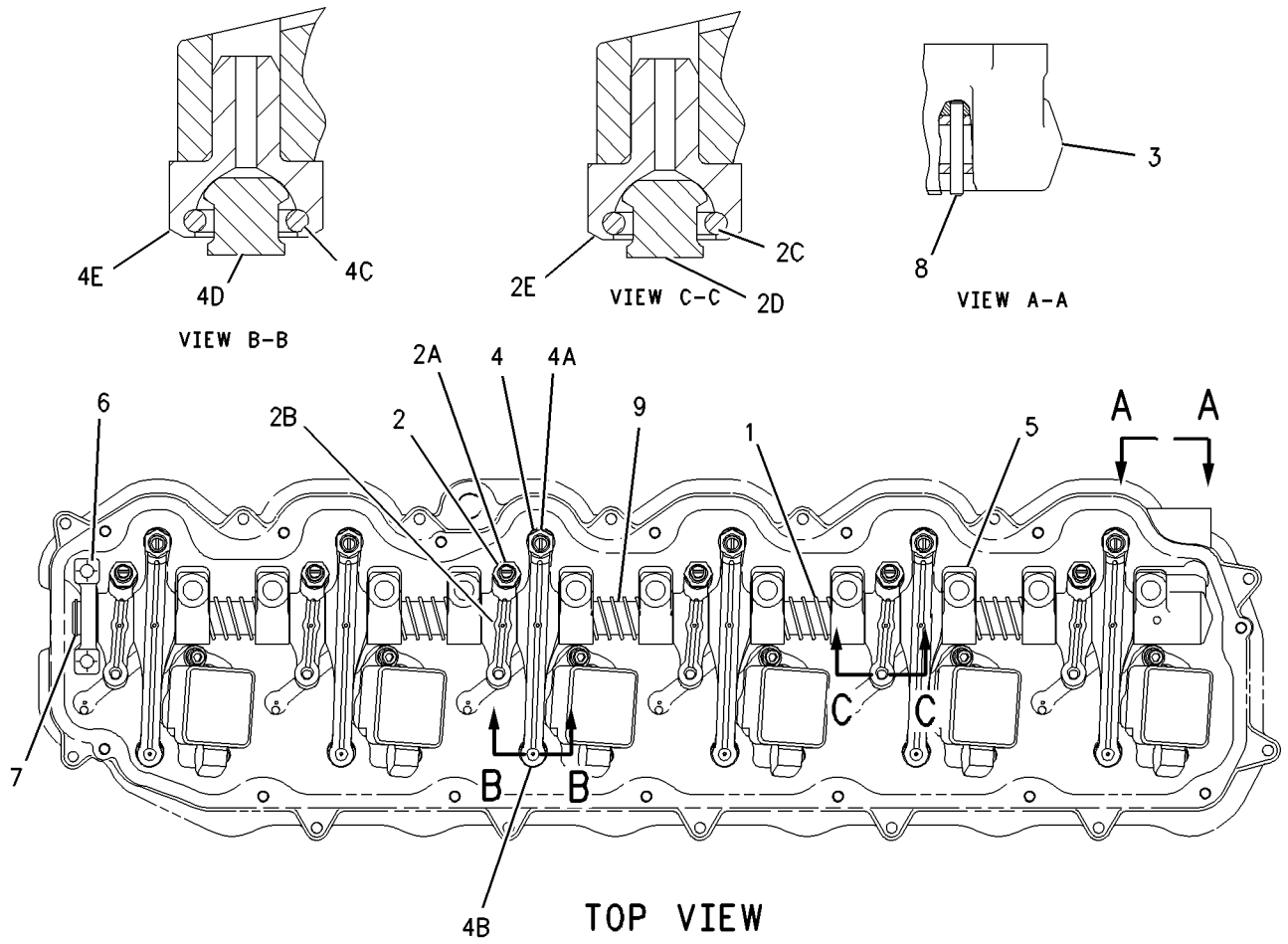

GRAPHIC #1 **<END>** g00901133

256-3830 VALVE MECHANISM GP

S/N: KHX1-UP

PART OF 232-3717 VALVE MECHANISM GP

SMCS-1102, 1121, 1123 **i02597721**

NOTE	REF NO	GRAPHIC REF	PART NUMBER	QTY	PART NAME 1 2 3 4 5 6 (PRODUCT LEVEL)	SEE PAGE
	1	1	**137-6717**	5	SPRING	
Y	2	1	*256-3834*	6	ROCKER ARM GP (INLET)	68
	3	1	**138-8403**	1	STAND	
Y	4	1	*256-3831*	6	ROCKER ARM GP (EXHAUST)	67
	5	1	**235-5527**	10	STAND	
	6	1	**138-8402**	1	STAND	
	7	1	**138-9868**	1	RING-RETAINING	
	8	1	**8H-5244**	1	DOWEL	
	9	1	**138-7198**	1	SHAFT AS	
	9A	1	**5B-1866**	1	PLUG-CUP	

Y - SEPARATE ILLUSTRATION

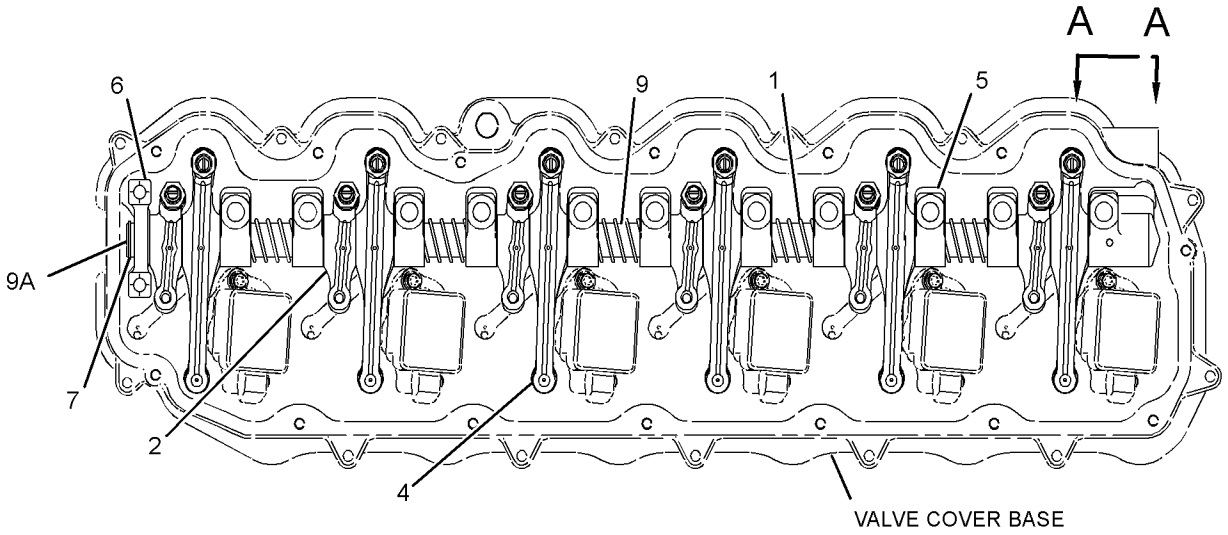

TOP VIEW OF ENGINE

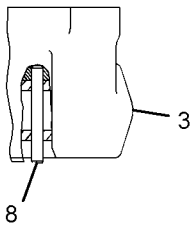

VIEW A-A

GRAPHIC #1 **<END>** g01300505

191-0523 ADAPTER GP-OIL LINE—FUEL INJECTION PUMP

S/N: KHX1-UP

PART OF 381-8868, 396-8415 LINES GP-INJECTOR HYD PUMP

SMCS-1307 **i03363386**

NOTE	REF NO	GRAPHIC REF	PART NUMBER	QTY	PART NAME 1 2 3 4 5 6 (PRODUCT LEVEL)	SEE PAGE
	1	1	**191-0522**	1	ADAPTER	
	2	1	**033-6027**	1	SEAL-O-RING	

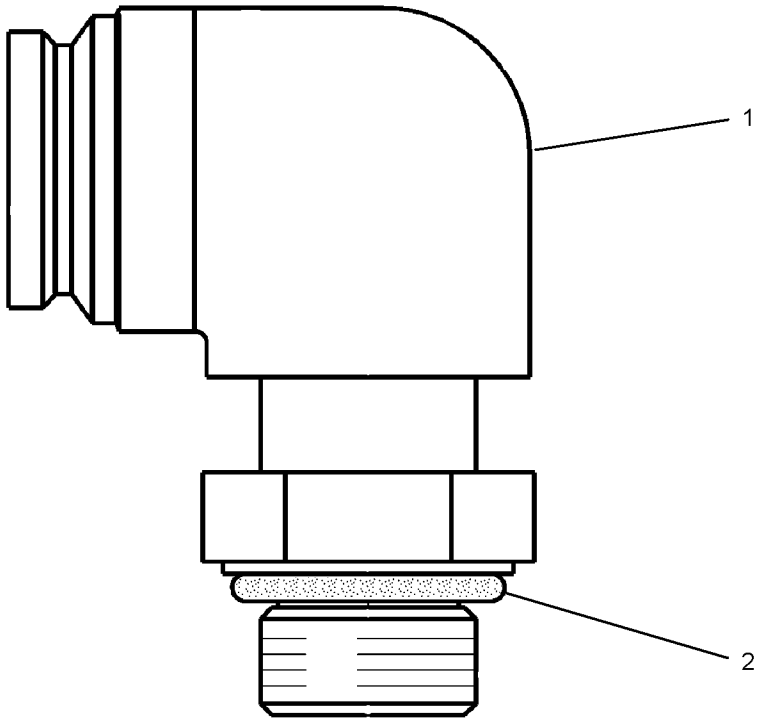

GRAPHIC #1 **<END>** g01735676

241-0573 BREATHER GP

S/N: KHX1-UP

PART OF 338-9076, 387-1975, 387-1976 ENGINE AR-COMPLETE

SMCS-1317 **i03084980**

NOTE	REF NO	GRAPHIC REF	PART NUMBER	QTY	PART NAME 1 2 3 4 5 6 (PRODUCT LEVEL)	SEE PAGE
	1	1	**164-0210**	1	BREATHER (CRANKCASE)	
M	2	1	**143-4654**	1	BOLT (M8X1.25X105-MM)	
	3	1	**8H-2046**	1	SEAL-O-RING (CRANKCASE BREATHER)	
	4	1	**5N-4185**	1	WASHER-SPECIAL	

M - METRIC PART

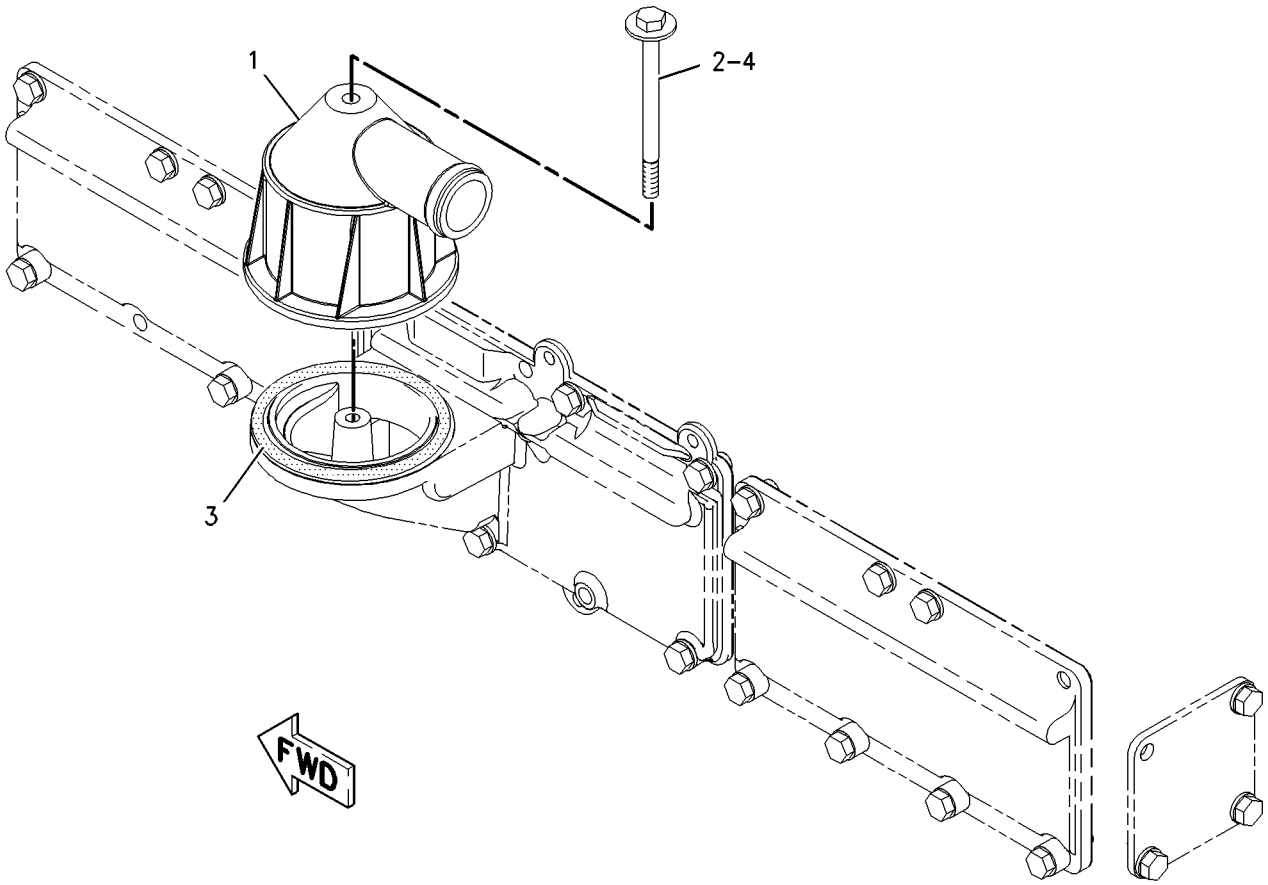

GRAPHIC #1 **<END>** g00947923

237-9836 FILLER GP-ENGINE OIL

S/N: KHX1-UP

PART OF 338-9076, 387-1975, 387-1976 ENGINE AR-COMPLETE

SMCS-1316 **i03634103**

NOTE	REF NO	GRAPHIC REF	PART NUMBER	QTY	PART NAME 1 2 3 4 5 6 (PRODUCT LEVEL)	SEE PAGE
	1	1	**5L-2952**	1	CAP AS-FILLER (ENGINE OIL)	
		1	**6L-2609**	1	SEAL-RUBBER	
	2	1	**191-5213**	1	TUBE AS	
	3	1	**344-3340**	1	BRACKET AS	
M		1	**8T-3490**	1	NUT-WELD (M10X1.5-THD)	
	4	1	**061-9455**	1	SEAL-O-RING	
M	5	1	**5P-7970**	3	NUT (M8X1.25-THD)	
	6	1	**6V-5839**	1	WASHER (11X21X2.5-MM THK)	
M	7	1	**6V-6317**	1	BOLT (M10X1.5X20-MM)	
	8	1	**7D-7233**	1	CLIP	
	9	1	**9M-1974**	4	WASHER-HARD (8.8X16X2-MM THK)	

M - METRIC PART

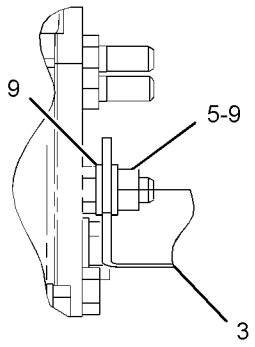

VIEW A-A

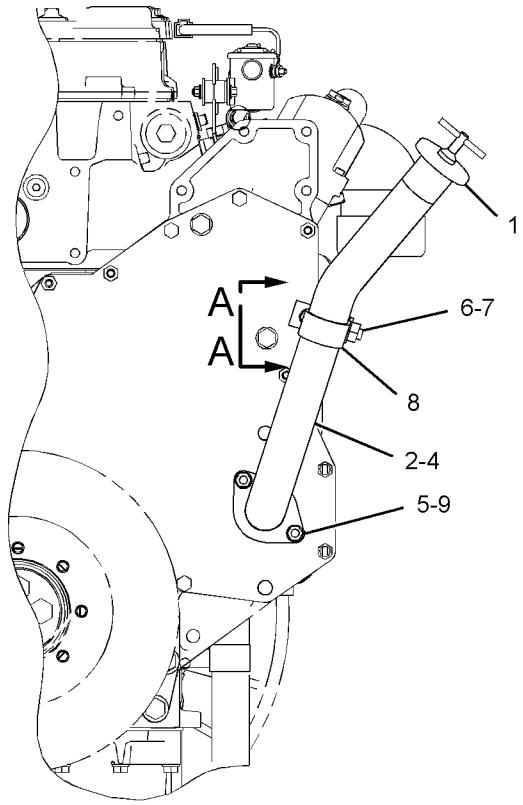

FRONT VIEW

GRAPHIC #1 **<END>** g01118435

189-5433 FILTER GP-ENGINE OIL

S/N: KHX1-UP

PART OF 338-9076, 387-1975, 387-1976 ENGINE AR-COMPLETE

SMCS-1306, 1308 **i03288044**

NOTE	REF NO	GRAPHIC REF	PART NUMBER	QTY	PART NAME 1 2 3 4 5 6 (PRODUCT LEVEL)	SEE PAGE
	1	1	**7C-1493**	2	VALVE AS-BYPASS (ENGINE OIL FILTER)	
	2	1	**8C-3445**	1	CAP-DUST	
	3	1	**206-6875**	2	CAP-TUBE	
	4	1	**260-7759**	1	BASE AS-OIL FILTER	
	4A	1	**2P-2537**	1	STUD-HOLLOW	
	5	1	**1R-1807**	1	FILTER AS-ENGINE OIL (ADVANCED EFFICIENCY)	
	6	1	**2M-9780**	2	SEAL-O-RING	
	7	1	**214-7566**	1	SEAL-O-RING	
	8	1	**5P-9617**	1	ADAPTER	
M	9	1	**5P-8196**	2	PLUG	
M	10	1	**6V-2317**	10	BOLT (M8X1.25X30-MM)	
	11	1	**300-7933**	1	GASKET	
	12	1	**8C-3446**	1	VALVE-SAMPLING (ENGINE OIL)	
	13	1	**214-7568**	1	SEAL-O-RING	
M	14	1	**8T-0276**	3	BOLT (M8X1.25X45-MM)	
	15	1	**242-3864**	2	SPRING	
	16	1	**9M-1974**	15	WASHER-HARD (8.8X16X2-MM THK)	
M	17	1	**9X-2098**	2	STUD-TAPERLOCK (BOLT)	

M - METRIC PART

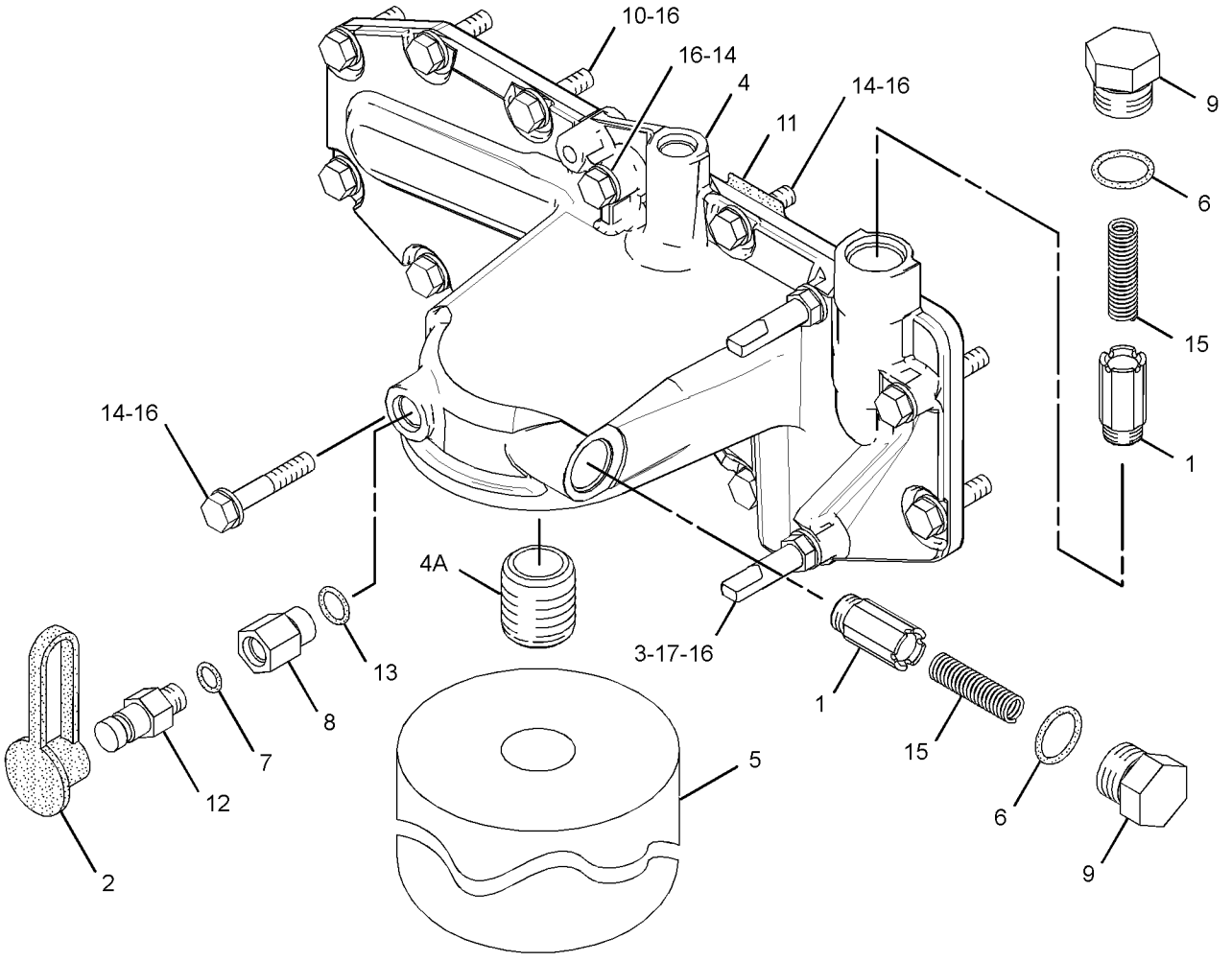

GRAPHIC #1 **<END>** g01626939

238-4804 FUMES DISPOSAL GP

S/N: JLX1-UP

PART OF 374-4868 INSTALLATION AR-ENGINE

SMCS-1317 **i03442881**

NOTE	REF NO	GRAPHIC REF	PART NUMBER	QTY	PART NAME 1 2 3 4 5 6 (PRODUCT LEVEL)	SEE PAGE
	1	1	**9M-2904**	1	CLAMP-HOSE	
	2	1	**125-8534**	1	PLATE AS	
	3	1	**328-8325**	1	HOSE-DISPOSAL	
	4	1	**4D-7388**	1	CLIP	
	5	1	**8T-4121**	1	WASHER-HARD (11X21X2.5-MM THK)	
M	6	1	**8T-4137**	1	BOLT (M10X1.5X20-MM)	

M - METRIC PART

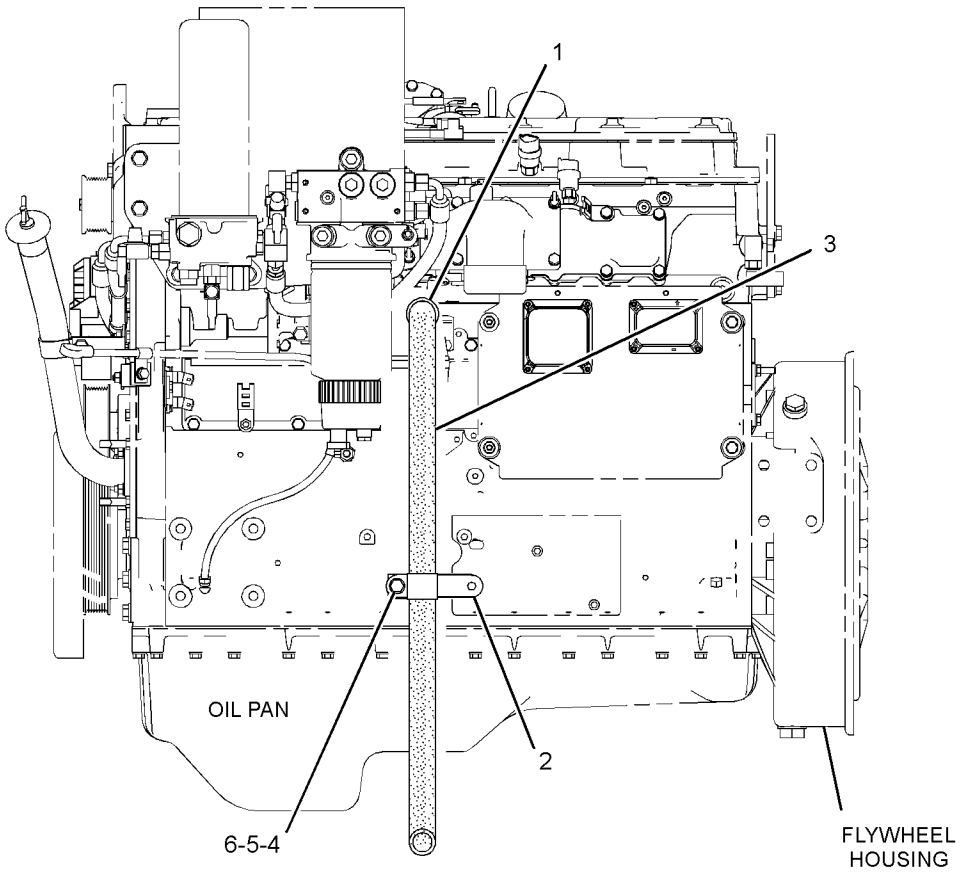

LEFT SIDE VIEW OF ENGINE

GRAPHIC #1 **<END>** g01818196

369-9201 FUMES DISPOSAL GP

S/N: KHX1-UP

PART OF 338-9076, 387-1975, 387-1976 ENGINE AR-COMPLETE

SMCS-1317 **i05817223**

NOTE	REF NO	GRAPHIC REF	PART NUMBER	QTY	PART NAME 1 2 3 4 5 6 (PRODUCT LEVEL)	SEE PAGE
	1	1	**4P-5918**	1	CLIP	
	2	1	*439-1825*	1	ELBOW AS	
		1	**238-5081**	1	SEAL-O-RING	
		1	**249-6673**	1	ELBOW	
	3	1	**297-3218**	1	CLIP	
	4	1	**369-9203**	1	HOSE-FUMES DISPOSAL	
	5	1	**339-8924**	1	TUBE AS	
	6	1	*439-1826*	2	CONNECTOR AS	
					(EACH INCLUDES)	
		1	**6V-8647**	1	CONNECTOR	
		1	**214-7566**	1	SEAL-O-RING	
		1	**228-7088**	1	SEAL-O-RING	
	7	1	**284-3502**	1	CLAMP-BAND	
	8	1	**3S-2093**	2	STRAP-CABLE	
M	9	1	**5P-7970**	2	NUT (M8X1.25-THD)	
	10	1	**8T-1117**	1	CLAMP-HOSE	
	11	1	**9M-1974**	2	WASHER-HARD (8.8X16X2-MM THK)	

M - METRIC PART

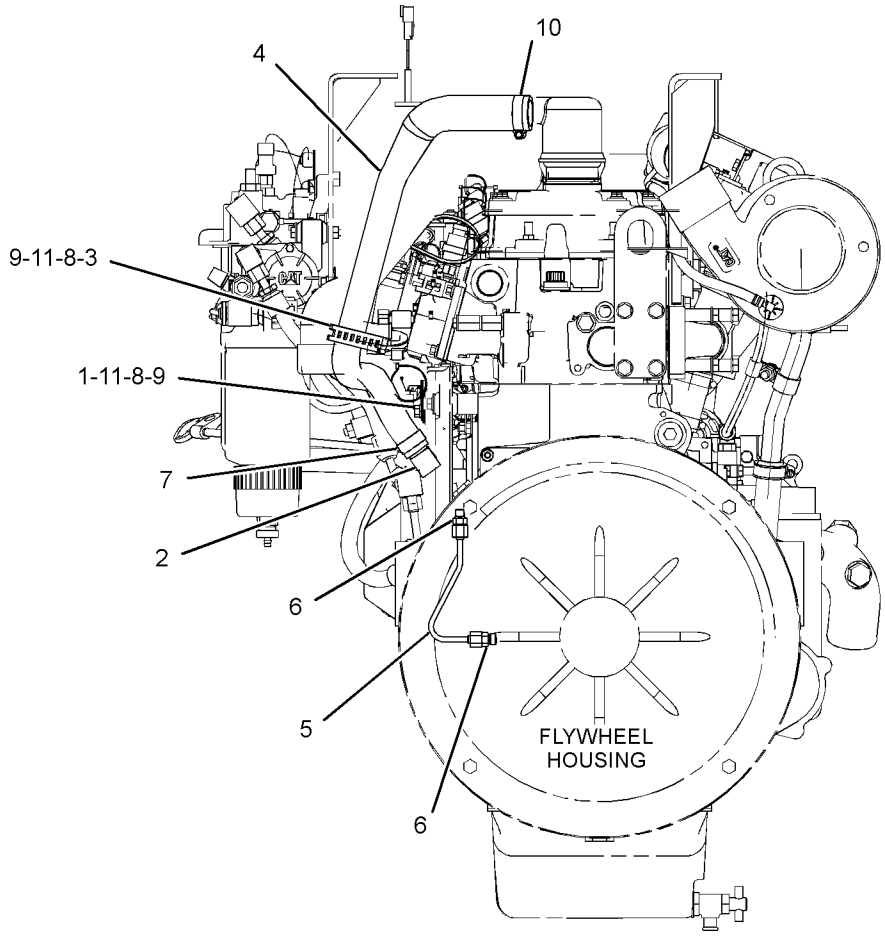

REAR VIEW OF ENGINE

GRAPHIC #1 **<END>** g03378897

7C-2475 LINES GP-ENGINE OIL

S/N: KHX1-UP

PART OF 338-9076, 387-1975, 387-1976 ENGINE AR-COMPLETE

SMCS-1307 **i05976136**

NOTE	REF NO	GRAPHIC REF	PART NUMBER	QTY	PART NAME 1 2 3 4 5 6 (PRODUCT LEVEL)	SEE PAGE
	1	1	**7C-5403**	1	TUBE AS	
	2	1	**7W-5340**	1	GASKET	
	3	1	**9M-1974**	2	WASHER-HARD (8.8X16X2-MM THK)	
M	4	1	**6V-3940**	4	BOLT (M8X1.25X25-MM)	
	5	1	**4W-2232**	1	ELBOW-OUTLET	
	6	1	**3P-1156**	2	SEAL-O-RING	

M - METRIC PART

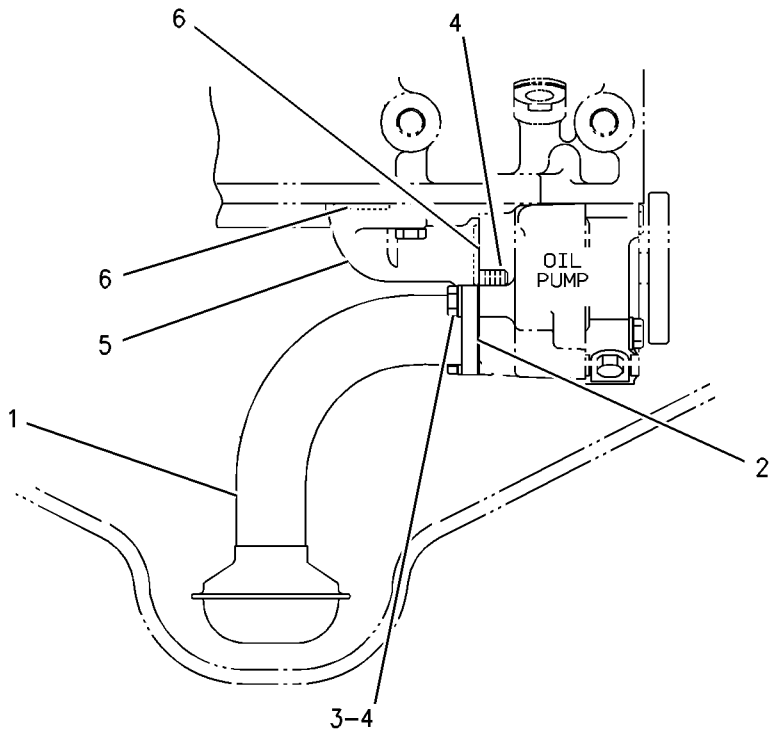

RIGHT SIDE VIEW

GRAPHIC #1 **<END>** g00891413

168-8976 LINES GP-ENGINE OIL DRAIN

S/N: JLX1-UP

PART OF 374-4868 INSTALLATION AR-ENGINE

SMCS-1307 **i01190829**

NOTE	PART NUMBER	QTY	PART NAME 1 2 3 4 5 6 (PRODUCT LEVEL)	SEE PAGE
	5D-1026	1	CLAMP-BAND	
BE	**5P-0767**		HOSE	

B - USE AS REQUIRED
E - ORDER BY THE CENTIMETER

<END>

187-6279 LINES GP-TURBOCHARGER OIL

S/N: KHX1-UP

PART OF 338-9076, 387-1975, 387-1976 ENGINE AR-COMPLETE

SMCS-1052, 1307 **i05329677**

NOTE	REF NO	GRAPHIC REF	PART NUMBER	QTY	PART NAME 1 2 3 4 5 6 (PRODUCT LEVEL)	SEE PAGE
	1	1	*183-3399*	1	CONNECTOR AS	
		1	**6V-8636**	1	CONNECTOR	
		1	**214-7568**	1	SEAL-O-RING (11.89MM ID)	
		1	**221-3494**	1	SEAL-O-RING (12.83MM OD)	
C	2	1	**246-6036**	1	HOSE	
	3	1	**187-6294**	1	HOSE AS-OIL SUPPLY	
	4	1	*250-1424*	1	ELBOW AS	
		1	**6V-8724**	1	ELBOW	
		1	**214-7568**	1	SEAL-O-RING (11.89MM ID)	
		1	**228-7089**	1	SEAL-O-RING (12.83MM OD)	
C	5	1	**197-8419**	1	GASKET (21.82MM ID)	
C	6	1	**210-9246**	1	SEAL-O-RING (32.92MM ID)	
M	7	1	**9X-2099**	2	STUD (M8X1.25X52.75-MM)	
	8	1	**8T-4224**	2	WASHER-HARD (8.8X16X2-MM THK)	
CM	9	1	**6V-5218**	2	BOLT (M8X1.25X35-MM)	
C	10	1	**260-8630**	1	TUBE AS-DRAIN	
C	11	1	**260-8631**	1	TUBE AS-DRAIN	
C	12	1	**284-3502**	2	CLAMP-BAND	
M	13	1	**2Y-5829**	1	NUT (M10X1.5-THD)	
M	14	1	**6V-4248**	1	BOLT (M10X1.5X25-MM)	
	15	1	**6V-5839**	2	WASHER (11X21X2.5-MM THK)	
	16	1	**7S-0530**	1	CLIP	
	17	1	**033-8248**	1	CLIP	
	18	1	**9M-1974**	2	WASHER-HARD (8.8X16X2-MM THK)	

C - CHANGE FROM PREVIOUS TYPE
M - METRIC PART

187-6279 **LINES GP-TURBOCHARGER OIL (*contd.*)** **i05329677**

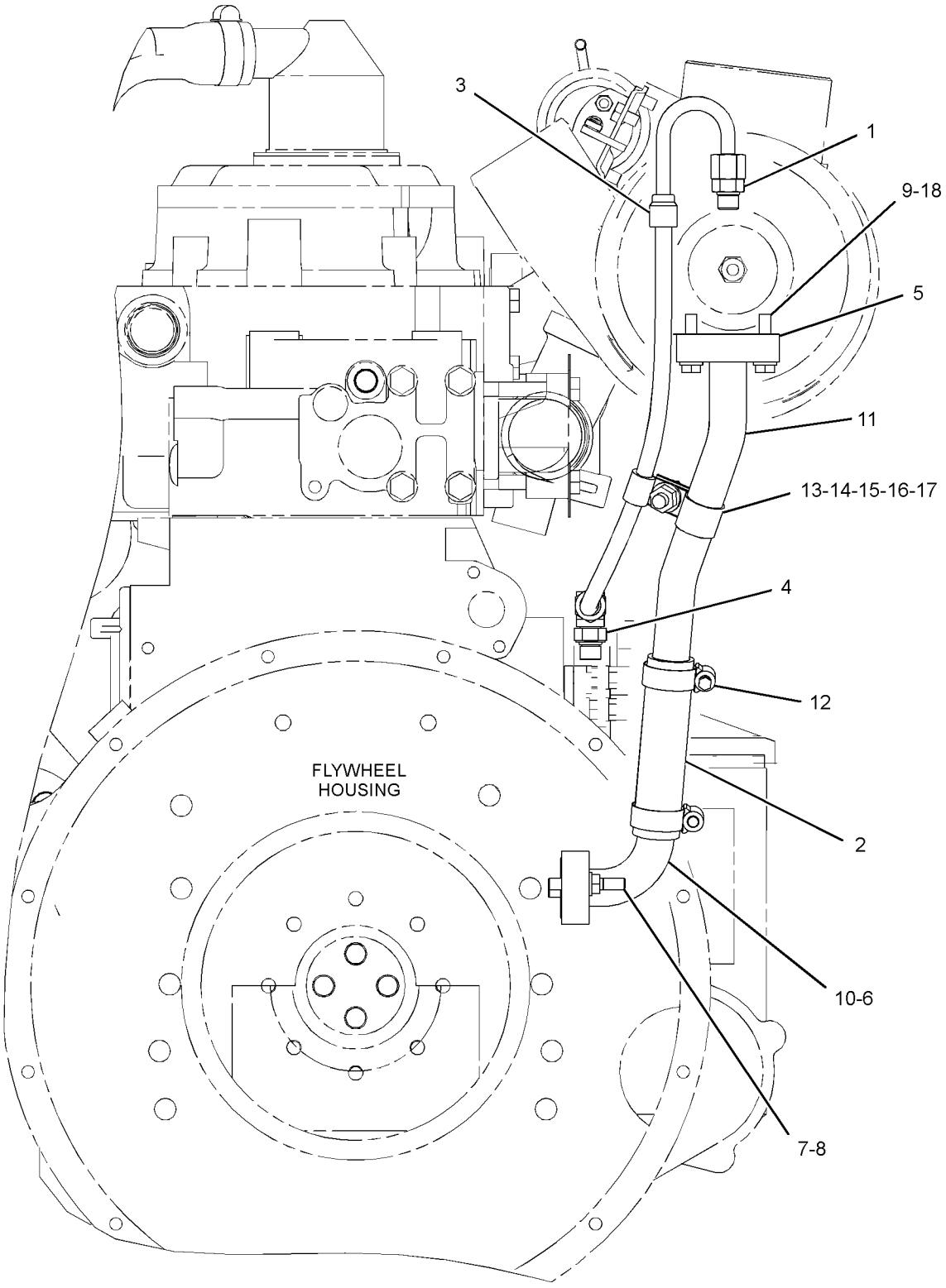

REAR VIEW OF ENGINE

GRAPHIC #1 **<END>** g03377931

192-2981 PUMP GP-ENGINE OIL

S/N: KHX1-UP

PART OF 235-1423, 397-1168 ENGINE AR-CORE

SMCS-1304, 1315

i05976509

NOTE	REF NO	GRAPHIC REF	PART NUMBER	QTY	PART NAME 1 2 3 4 5 6 (PRODUCT LEVEL)	SEE PAGE
Y	1	1	*200-4497*	1	PUMP GP-ENGINE OIL	86
M	2	1	**6V-5815**	2	BOLT (M10X1.5X75-MM)	
	3	1	**6V-5839**	2	WASHER (11X21X2.5-MM THK)	

M - METRIC PART
Y - SEPARATE ILLUSTRATION

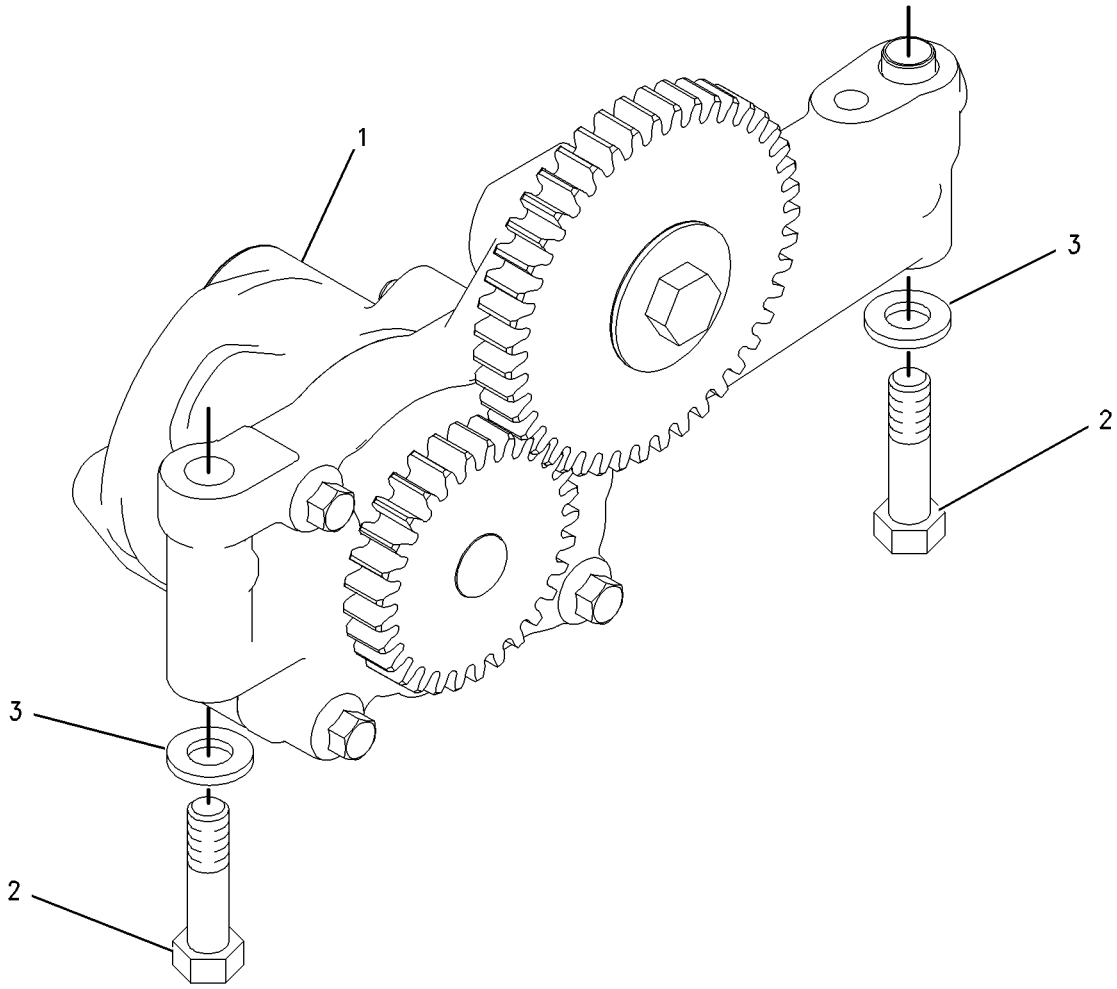

GRAPHIC #1 **<END>** g00775811

200-4497 PUMP GP-ENGINE OIL

S/N: KHX1-UP

PART OF 192-2981 PUMP GP-ENGINE OIL

SMCS-1304, 1315 **i02120062**

NOTE	REF NO	GRAPHIC REF	PART NUMBER	QTY	PART NAME 1 2 3 4 5 6 (PRODUCT LEVEL)	SEE PAGE
	1	1	**7W-9737**	1	SHAFT	
	2	1	**7W-9738**	1	WASHER (10.5X38X1.6-MM THK)	
	3	1	**7W-9740**	1	GEAR AS-IDLER (43-TEETH)	
	3A	1	**7W-9930**	1	BEARING-SLEEVE	
M	4	1	**9X-2305**	1	BOLT-LOCKING (M10X1.5X50-MM)	
	5	1	**189-8777**	1	PUMP GP-ENGINE OIL	

M - METRIC PART

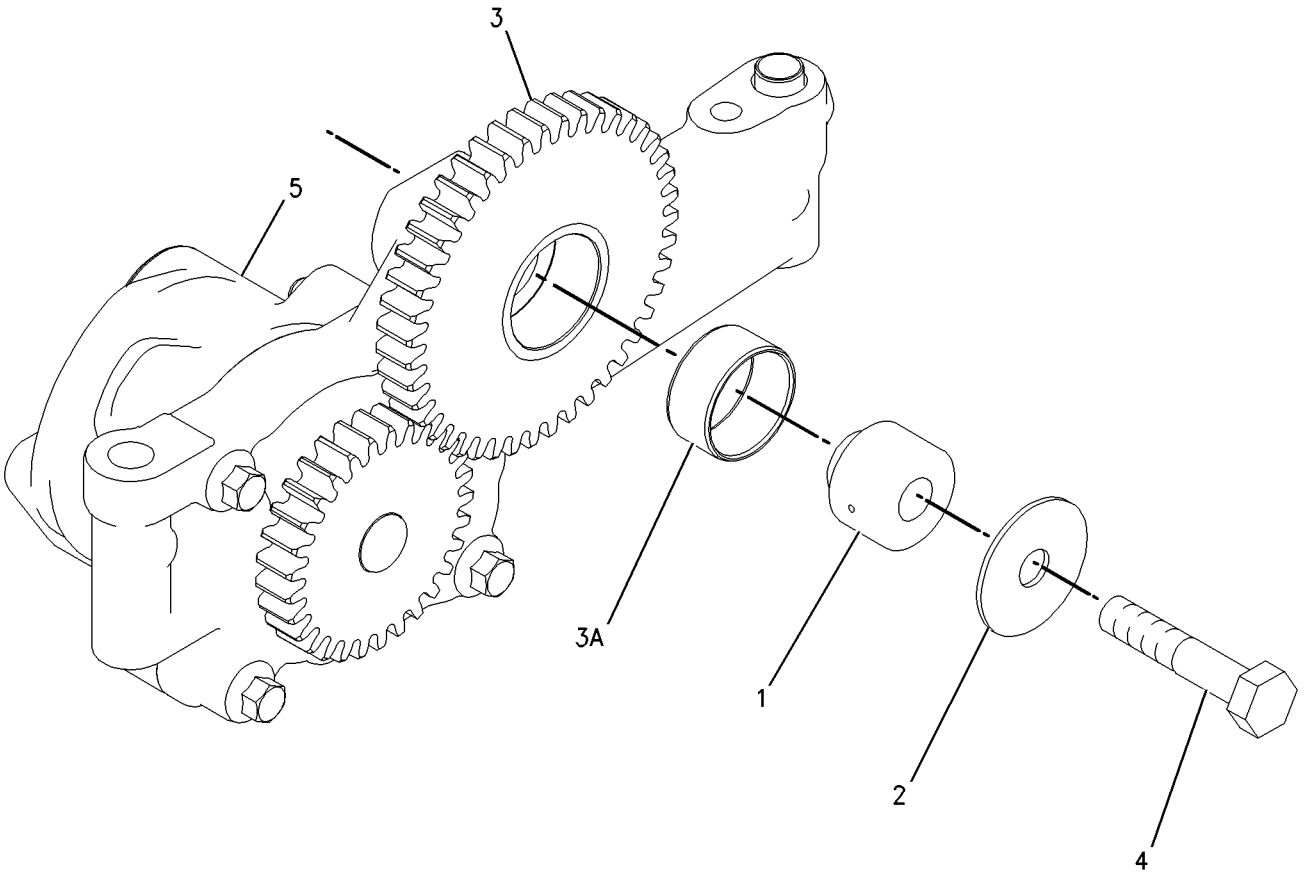

GRAPHIC #1 **<END>** g00775788

117-3643 COOLER GP-ENGINE OIL

S/N: KHX1-UP

PART OF 387-1975 ENGINE AR-COMPLETE, 235-1423, 397-1168 ENGINE AR-CORE

SMCS-1378 **i02835867**

NOTE	REF NO	GRAPHIC REF	PART NUMBER	QTY	PART NAME 1 2 3 4 5 6 (PRODUCT LEVEL)	SEE PAGE
R	1	1	**267-4743**	1	CORE AS-ENGINE OIL COOLER	
	2	1	**233-7655**	1	GASKET	
	3	1	**3P-1156**	2	SEAL-O-RING	

R - REMFG PART MAY BE AVAILABLE

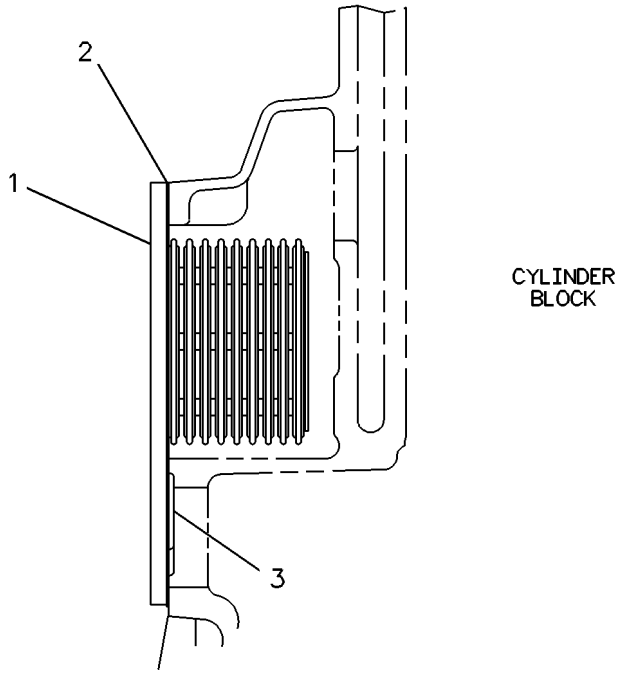

GRAPHIC #1 **<END>** g00117316

368-8475 COOLING AR-HIGH AMBIENT TEMP

S/N: JLX1-UP

PART OF 368-8481, 373-8240, 373-8242 CONVERSION AR-MACHINE, 390-7294, 390-7295 DISTRIBUTION AR

SMCS-1350, 1353, 1386, 1387, 5057

i06034270

NOTE	PART NUMBER	QTY	PART NAME 1 2 3 4 5 6 (PRODUCT LEVEL)	SEE PAGE
	244-8840	1	CORE AS-CONDENSER (REFRIGERANT)	
	350-7490	1	CORE AS-OIL COOLER (HYDRAULIC)	
	350-7475	1	CORE AS-RADIATOR (COOLANT)	

<END>

460-3203 COOLING AR-HIGH AMBIENT TEMP—WITH ANTI-CORROSION PROTECTION

S/N: JLX1-UP

CUSTOM

FOR USE WITH 423-5582 PROTECTION AR-CORROSION, 440-6145 PROTECTION AR-CORROSION

SMCS-1350, 1353, 1386, 1387, 5057

i05920047

NOTE	REF NO	GRAPHIC REF	PART NUMBER	QTY	PART NAME 1 2 3 4 5 6 (PRODUCT LEVEL)	SEE PAGE
	1	1	**460-3205**	1	CORE AS-CONDENSER (WITH ANTI-CORROSION PROTECTION)	
	2	1	**460-3206**	1	CORE AS-OIL COOLER (WITH ANTI-CORROSION PROTECTION)	
	3	1	**460-3208**	1	CORE AS-RADIATOR (WITH ANTI-CORROSION PROTECTION)	
					****ATTACHMENT REMOVALS****	
FJ			**430-7988**	1	CORE AS-CONDENSER	
FJ			**430-7991**	1	CORE AS-HYDRAULIC OIL COOLER	
FJ			**430-7994**	1	CORE AS-RADIATOR	

F - NOT SHOWN
J - PART OF STANDARD RADIATOR AND FAN GP

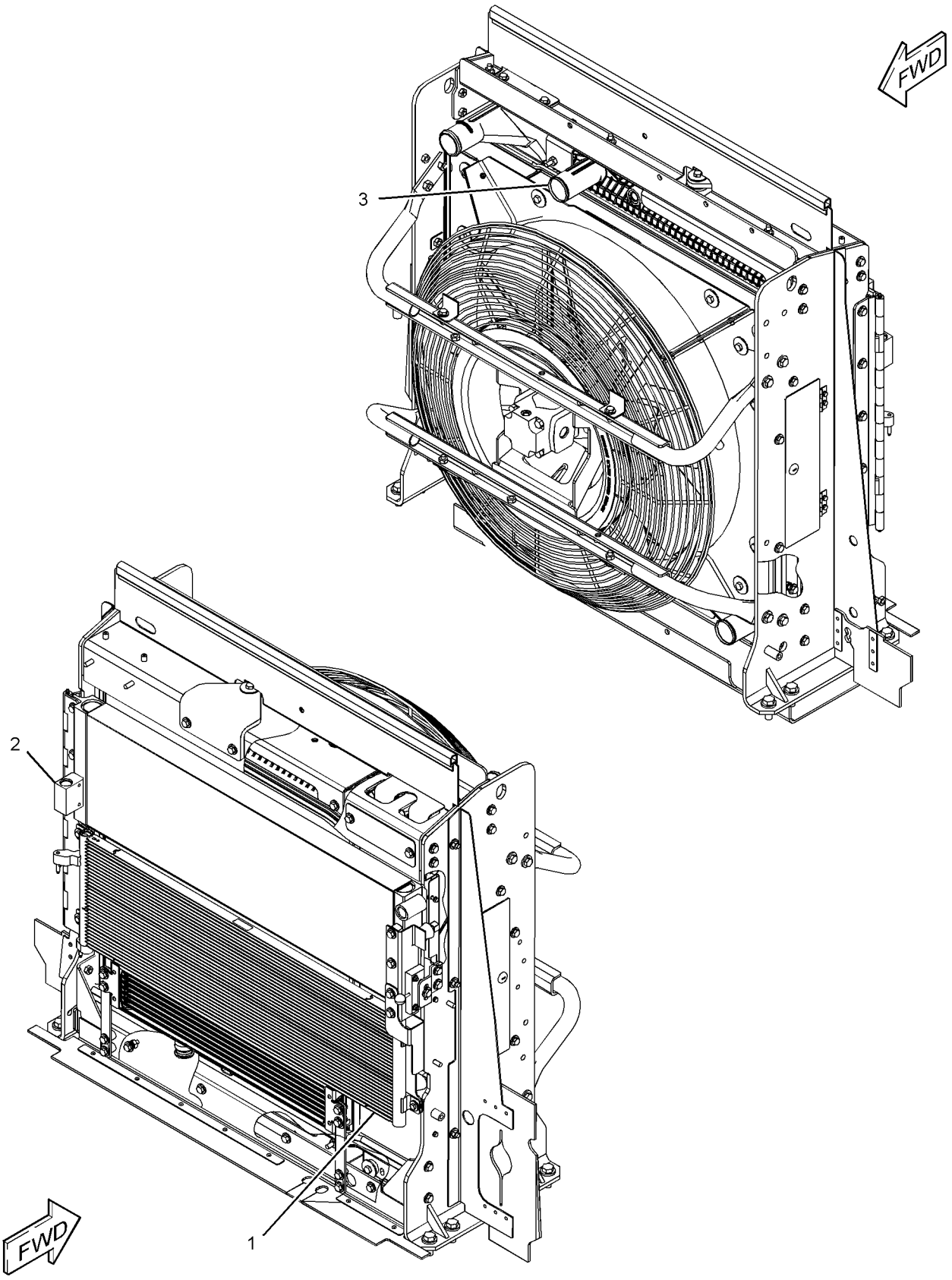

GRAPHIC #1

<END>

g03695888

460-7278 COOLING AR-HIGH AMBIENT TEMP—WITH ANTI-CORROSION PROTECTION

S/N: JLX1-UP
CUSTOM

SMCS-1350, 1353, 1386, 1387, 5057 **i05918810**

NOTE	REF NO	GRAPHIC REF	PART NUMBER	QTY	PART NAME 1 2 3 4 5 6 (PRODUCT LEVEL)	SEE PAGE
	1	1	*460-7279*	1	CORE AS-OIL COOLER (WITH ANTI-CORROSION PROTECTION)	
	2	2	*460-7280*	1	CORE AS-RADIATOR (WITH ANTI-CORROSION PROTECTION)	
					****ATTACHMENT REMOVAL****	
FJ			**371-6715**	1	CORE AS-OIL COOLER	
FJ			**371-6716**	1	CORE AS-RADIATOR	

F - NOT SHOWN
J - PART OF STANDARD RADIATOR & FAN GP

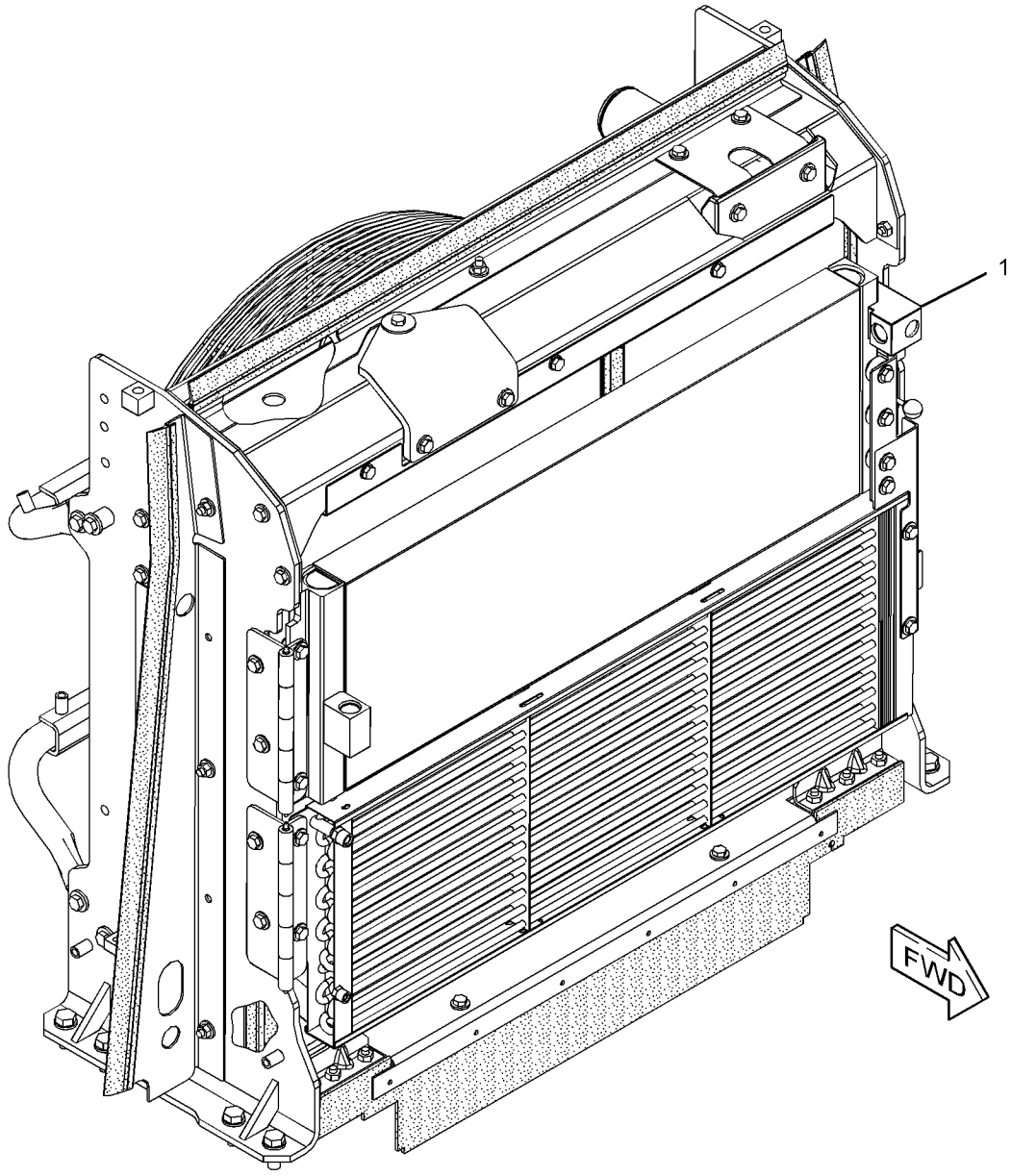

GRAPHIC #1 g03695814

460-7278 **COOLING AR-HIGH AMBIENT TEMP (*contd.*)** **i05918810**

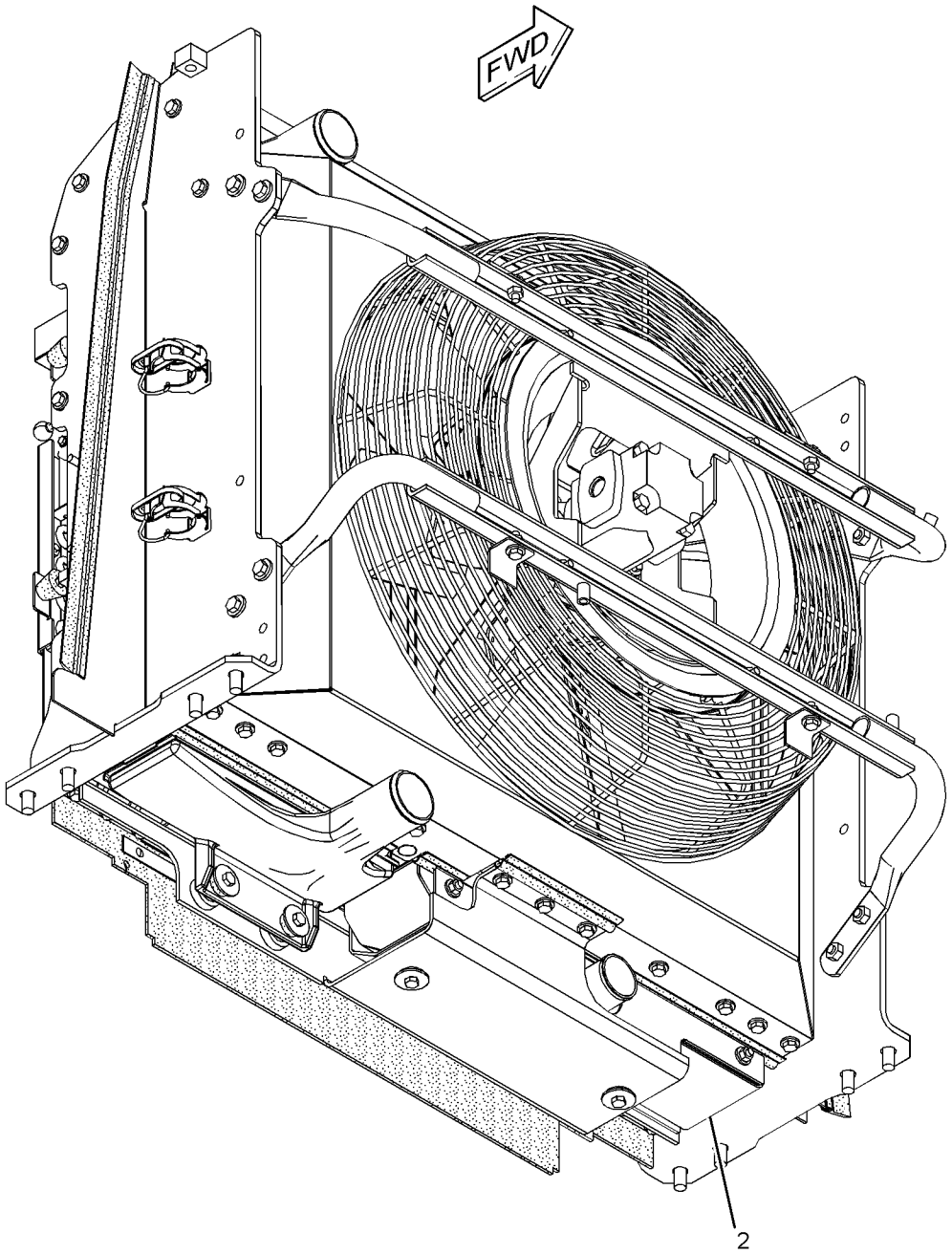

GRAPHIC #2 **<END>** g03695828

378-7472 COOLING GP-SUPPLEMENTAL

S/N: JLX1-UP
VARIABLE PITCH FAN
PART OF 383-6027 CONTROL AR-FAN

SMCS-1353 **i05783299**

NOTE	REF NO	GRAPHIC REF	PART NUMBER	QTY	PART NAME 1 2 3 4 5 6 (PRODUCT LEVEL)	SEE PAGE
J	1	1	**307-7313**	1	FAN AS	
Y	2	1	*307-7317*	1	SHIELD GP-ENGINE COMPARTMENT	607
	3	1	**447-1484**	1	FLANGE	
	4	1	**378-7473**	1	SUPPORT AS	
		1	**5G-6973**	1	LUG	
M		1	**8T-3490**	8	NUT-WELD (M10X1.5-THD)	
M		1	**8T-3597**	12	NUT-WELD (M12X1.75-THD)	
M		1	**8T-3851**	1	BOSS-WELD (M10X1.5X17.5-MM)	
	5	1	**378-7474**	1	GUARD AS-FAN	
M		1	**8T-3490**	1	NUT-WELD (M10X1.5-THD)	
E	6	1	**312-6458**		TAPE-REFLECTIVE (8-CM)	
	7	1	**7X-7729**	4	WASHER (11X25X3-MM THK)	
M	8	1	**8T-1160**	6	BOLT-SOCKET HEAD (M10X1.5X50-MM)	
M	9	1	**8T-4195**	4	BOLT (M10X1.5X30-MM)	
	10	1	**8T-4224**	6	WASHER-HARD (8.8X16X2-MM THK)	
M	11	1	**8T-4908**	6	BOLT (M8X1.25X25-MM)	
					AVAILABLE REPAIR KIT(S):	
J			**324-7871**	1	KIT-FAN BLADE (SERVICE REPLACEMENT)	
					(KIT INCLUDES 3 FAN BLADES)	

E - ORDER BY THE CENTIMETER
J - KIT MARKED J SERVICES PART MARKED J
M - METRIC PART
Y - SEPARATE ILLUSTRATION

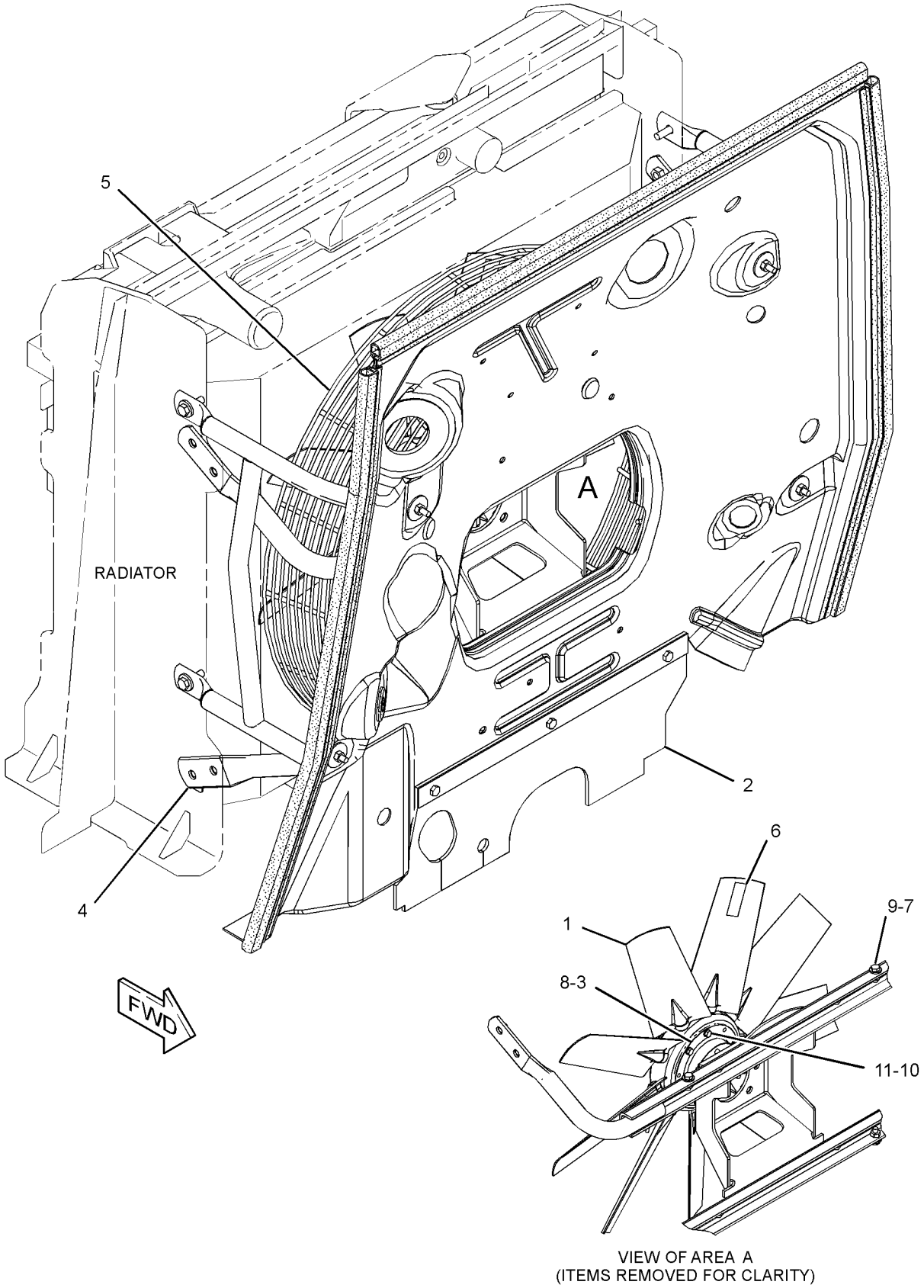

VIEW OF AREA A
(ITEMS REMOVED FOR CLARITY)

GRAPHIC #1 **<END>** g02883218

237-9821 ELBOW GP-WATER

S/N: KHX1-UP

PART OF 338-9076, 387-1975, 387-1976 ENGINE AR-COMPLETE

SMCS-1380 **i05331128**

NOTE	REF NO	GRAPHIC REF	PART NUMBER	QTY	PART NAME 1 2 3 4 5 6 (PRODUCT LEVEL)	SEE PAGE
	1	1	**200-2258**	1	GASKET	
	2	1	**244-6602**	1	ELBOW	
	3	1	*396-0404*	2	PLUG AS	
					(EACH INCLUDES)	
	3A	1	**6V-3251**	1	SEAL-O-RING	
		1	**360-3681**	1	PLUG	
	4	1	*398-5612*	1	PLUG AS	
	4A	1	**6V-5063**	2	SEAL-O-RING	
		1	**360-3682**	2	PLUG-O-RING	
M	5	1	**6V-3940**	2	BOLT (M8X1.25X25-MM)	
	6	1	**9M-1974**	2	WASHER-HARD (8.8X16X2-MM THK)	

M - METRIC PART

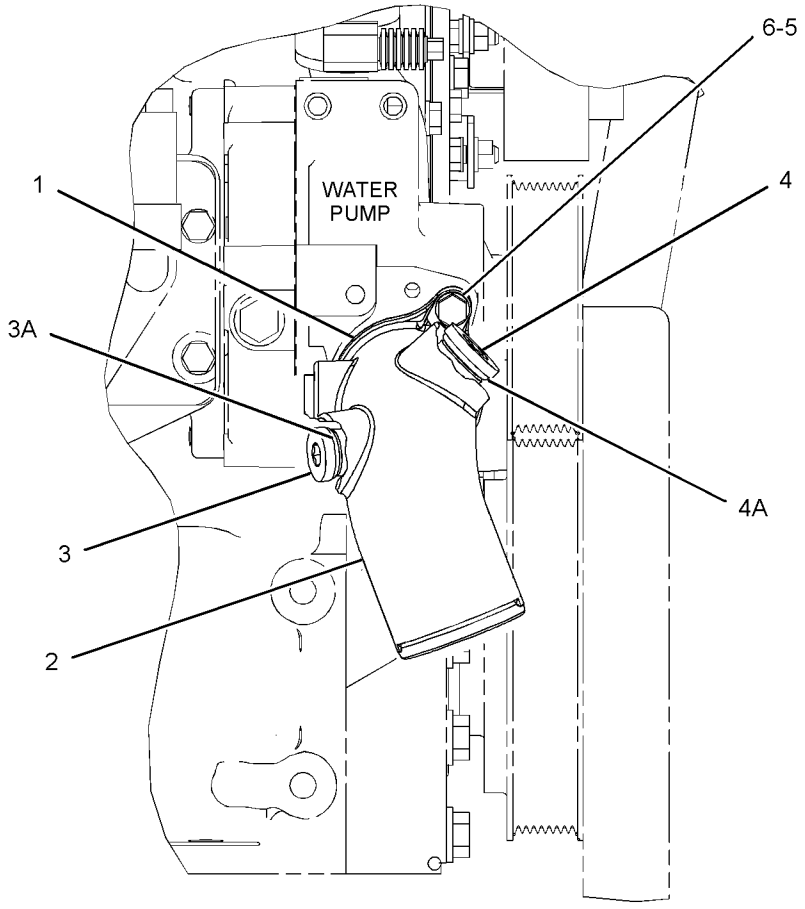

RIGHT SIDE VIEW OF ENGINE

GRAPHIC #1 **<END>** g03380683

377-2024 FRAME GP-RADIATOR

S/N: JLX1-UP

PART OF 377-4468 RADIATOR & FAN GP

SMCS-1353, 7272

i04758553

NOTE	REF NO	GRAPHIC REF	PART NUMBER	QTY	PART NAME 1 2 3 4 5 6 (PRODUCT LEVEL)	SEE PAGE
	1	1	**239-9848**	1	BRACKET AS	
	2	1	**239-9857**	1	BAFFLE AS	
		1	**6V-1634**	6	RIVET-POP	
	3	1	**239-9870**	1	BRACKET AS	
	4	1	**275-8903**	1	BRACKET	
	5	1	**349-8243**	1	BRACKET AS	
	6	1	**349-8245**	1	BRACKET AS	
	7	1	**377-2010**	1	ANGLE AS	
	8	1	**377-2025**	1	SUPPORT AS	
	9	1	**377-2026**	1	SUPPORT AS	
	10	1	**377-2027**	1	BRACKET AS	
	11	1	**383-0135**	1	SHROUD AS	

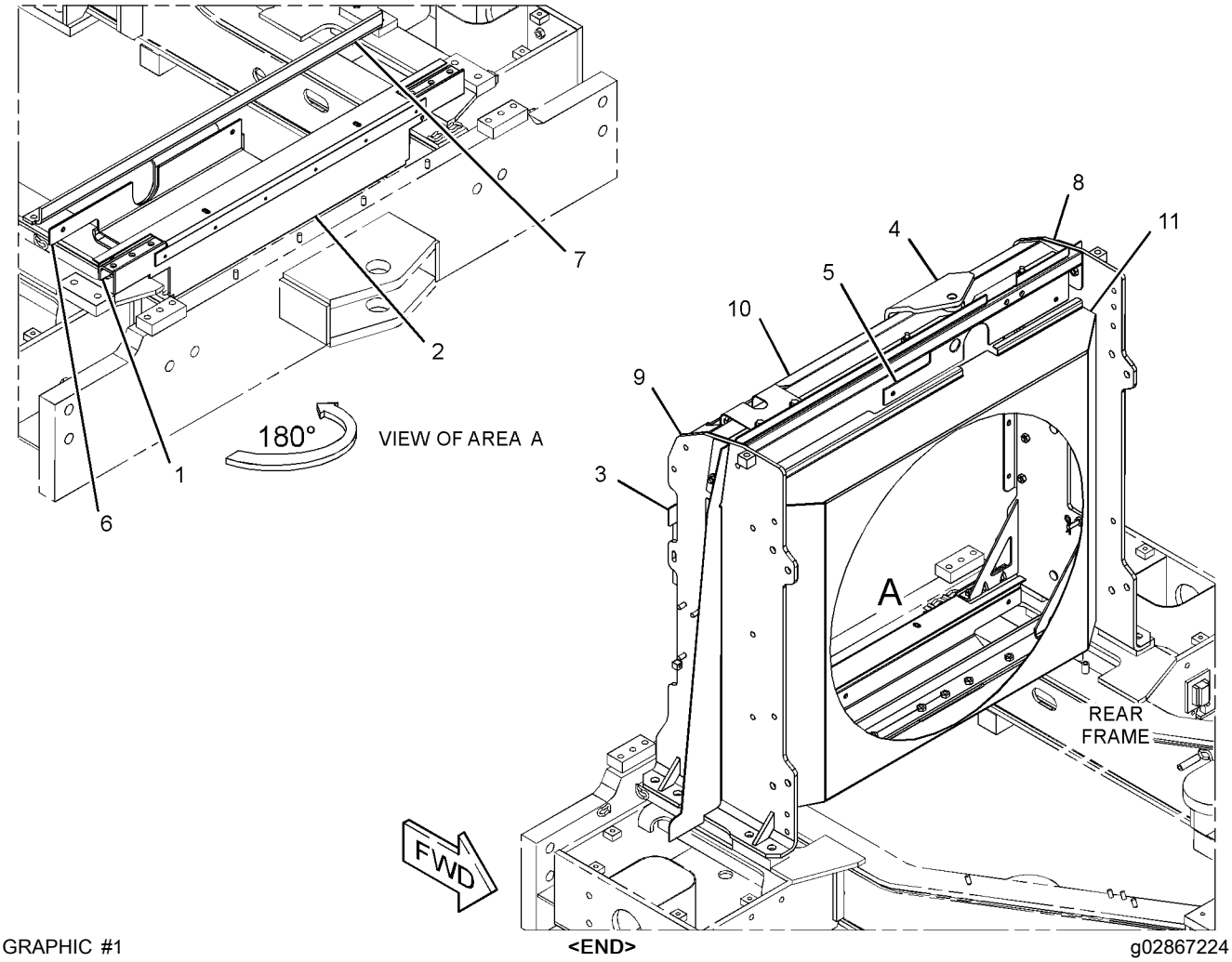

GRAPHIC #1

<END>

g02867224

377-2028 GUARD GP-FAN

S/N: JLX1-UP

PART OF 377-4468 RADIATOR & FAN GP

SMCS-1360 **i04758632**

NOTE	REF NO	GRAPHIC REF	PART NUMBER	QTY	PART NAME 1 2 3 4 5 6 (PRODUCT LEVEL)	SEE PAGE
	1	1	**376-2010**	1	GUARD AS-FAN	
	2	1	**377-2007**	1	SUPPORT AS-MOTOR	

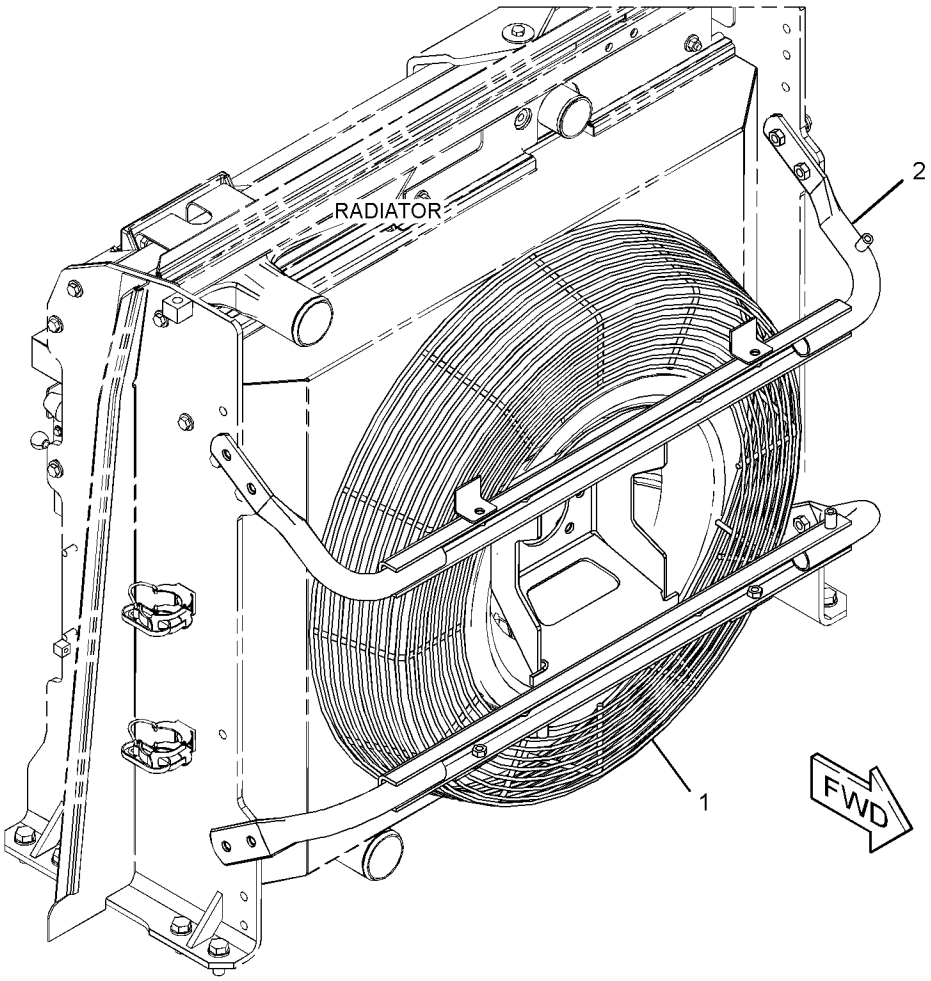

GRAPHIC #1 **<END>** g02865677

238-4802 LINES GP-WATER—ENGINE

S/N: KHX1-UP

PART OF 338-9076, 387-1975, 387-1976 ENGINE AR-COMPLETE

SMCS-1380 **i05351914**

NOTE	REF NO	GRAPHIC REF	PART NUMBER	QTY	PART NAME 1 2 3 4 5 6 (PRODUCT LEVEL)	SEE PAGE
	1	1	**7E-0759**	1	HOSE	
	3	1	**347-3148**	2	CLAMP-BAND	
	4	1	**119-3075**	2	REGULATOR-WATER TEMPERATURE (94-DEG C) (COOLANT)	
	5	1	**126-5466**	1	GASKET	
	6	1	**222-5915**	1	GASKET (TEMPERATURE REGULATOR HOUSING)	
	7	1	**160-5131**	1	PIPE (OUTLET)	
	8	1	**227-5942**	1	HOUSING-WATER REGULATOR	
	10	1	*396-0405*	4	PLUG AS	
					(EACH INCLUDES)	
	10A	1	**6V-6609**	1	SEAL-O-RING	
		1	**360-3680**	1	PLUG	
	11	1	*398-5598*	1	PLUG AS	
	11A	1	**6V-9027**	1	SEAL-O-RING	
		1	**360-3677**	1	PLUG	
	12	1	*396-0403*	1	PLUG AS	
	12A	1	**6V-3250**	1	SEAL-O-RING	
		1	**360-3679**	1	PLUG-CONNECTOR	
M	13	1	**5P-8347**	2	BOLT (M8X1.25X70-MM)	
M	14	1	**6V-3940**	6	BOLT (M8X1.25X25-MM)	
M	15	1	**6V-5223**	1	BOLT (M8X1.25X100-MM)	
	16	1	**9M-1974**	6	WASHER-HARD (8.8X16X2-MM THK)	

M - METRIC PART

238-4802 **LINES GP-WATER (*contd.*)** **i05351914**

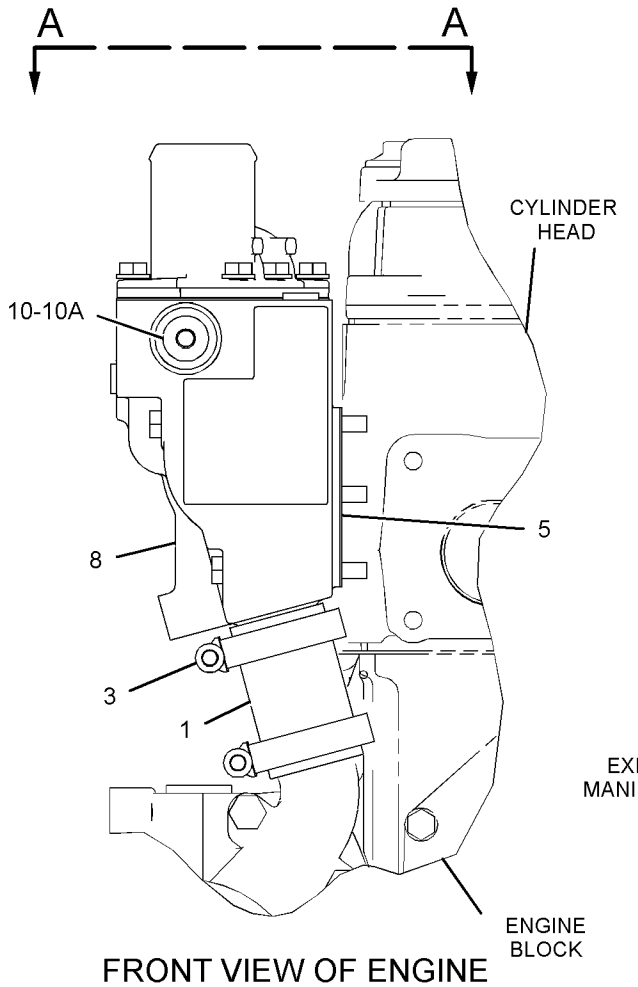

FRONT VIEW OF ENGINE

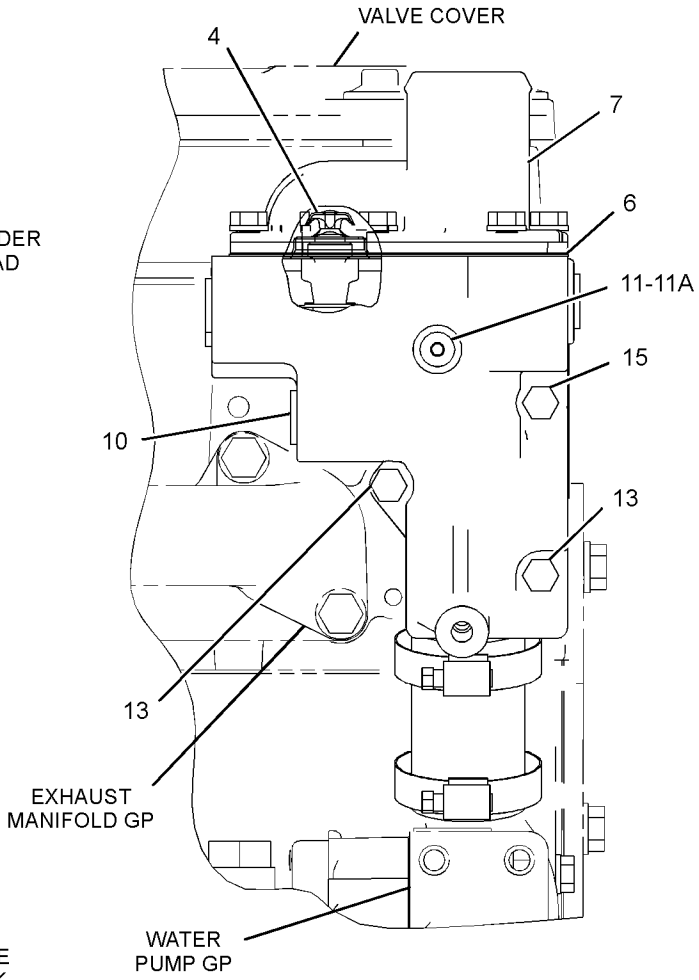

RIGHT SIDE VIEW OF ENGINE

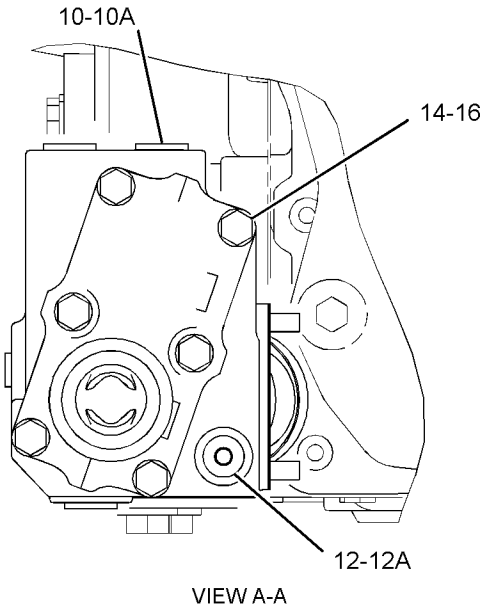

VIEW A-A

GRAPHIC #1 **<END>** g03396379

241-0078 LINES GP-WATER—AXLE OIL COOLER

S/N: JLX1-249

PART OF 383-6023 COOLER AR-AXLE OIL

SMCS-1380 **i04400920**

NOTE	REF NO	GRAPHIC REF	PART NUMBER	QTY	PART NAME 1 2 3 4 5 6 (PRODUCT LEVEL)	SEE PAGE
	1	1	**5D-1026**	4	CLAMP-BAND	
	2	1	**7K-1181**	3	STRAP-CABLE	
	3	1	**4S-1962**	4	CLIP	
	4	1	*161-9916*	1	ADAPTER AS	
		1	**2M-9780**	1	SEAL-O-RING	
		1	**6V-7420**	1	ADAPTER	
	5	1	*170-0965*	2	CONNECTOR AS	
					(EACH INCLUDES)	
		1	**3K-0360**	1	SEAL-O-RING	
		1	**6V-1438**	1	CONNECTOR	
	6	1	**193-1034**	1	BRACKET AS	
	7	1	*155-7321*	1	ADAPTER AS	
		1	**3D-2824**	1	SEAL-O-RING	
		1	**6V-1722**	1	ADAPTER	
	8	1	**3S-7608**	1	CLIP	
	9	1	**6V-1889**	1	CLIP	
M	10	1	**7X-2552**	1	BOLT (M16X2X30-MM)	
	11	1	**8M-2769**	1	CLIP	
	12	1	**8T-4121**	9	WASHER-HARD (11X21X2.5-MM THK)	
M	13	1	**8T-4133**	4	NUT (M10X1.5-THD)	
M	14	1	**8T-4136**	3	BOLT (M10X1.5X25-MM)	
M	15	1	**8T-4137**	1	BOLT (M10X1.5X20-MM)	
M	16	1	**8T-4195**	1	BOLT (M10X1.5X30-MM)	
	17	1	**9X-8257**	1	WASHER (17.5X30X3.5-MM THK)	
E	18	1	**5P-0767**		HOSE (252-CM)	
E	18A	1	**5P-0767**		HOSE (149-CM)	
	19	1	**7S-0530**	1	CLIP	
	20	1	**4D-7388**	1	CLIP	

E - ORDER BY THE CENTIMETER
M - METRIC PART

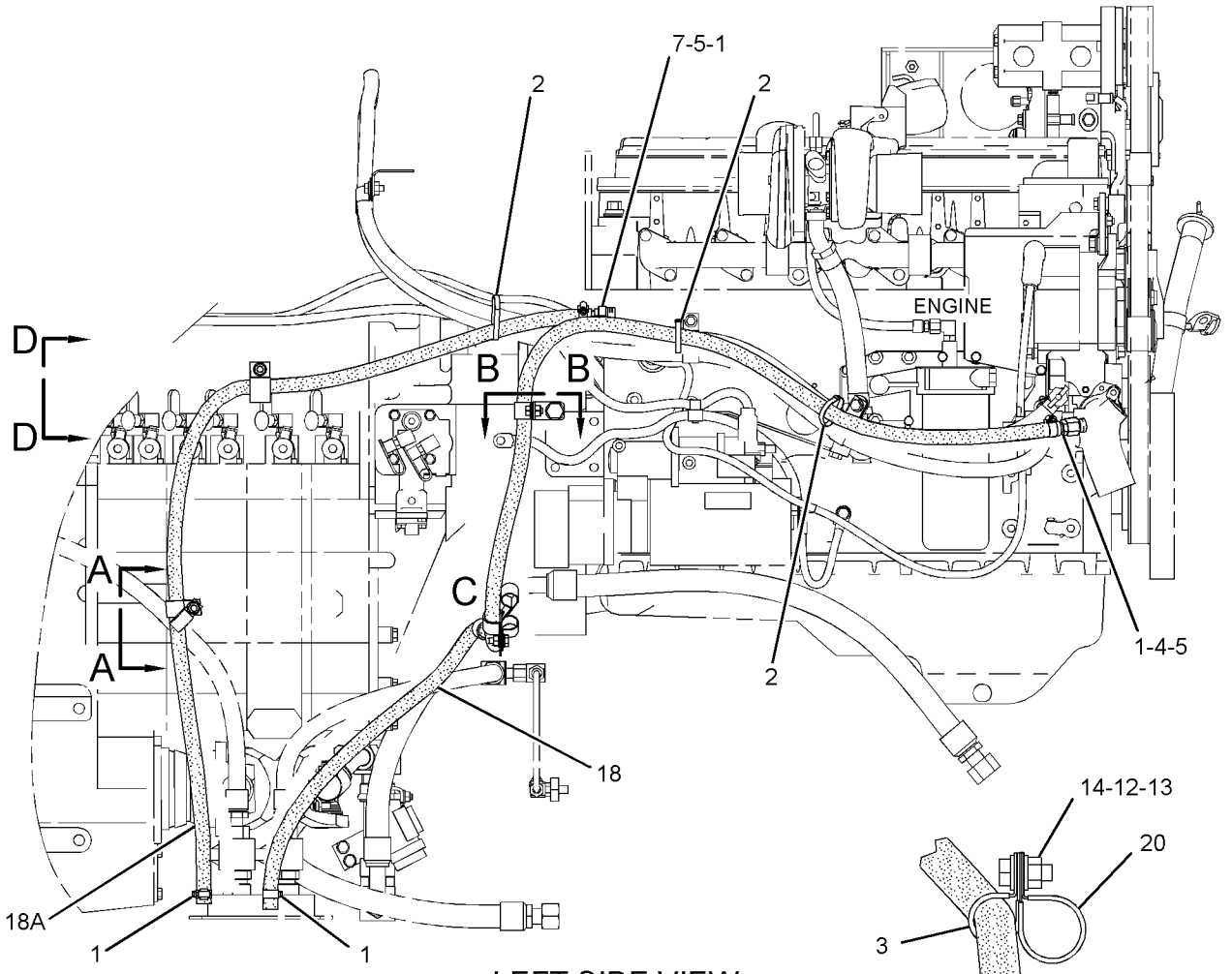

LEFT SIDE VIEW

VIEW D-D

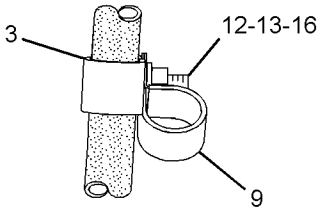

VIEW A-A

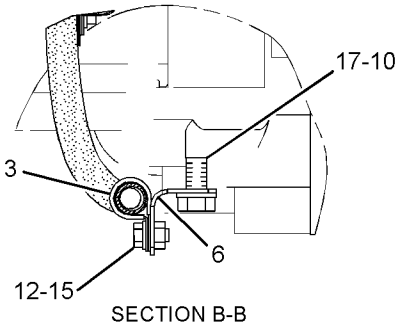

SECTION B-B

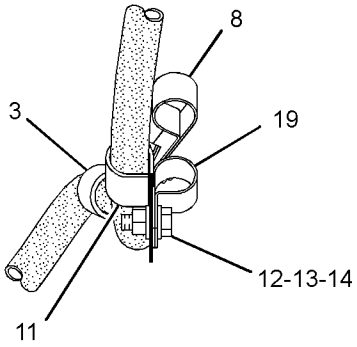

VIEW OF AREA C

GRAPHIC #1 **<END>** g02698637

362-5004 LINES GP-WATER

S/N: JLX1-492

PART OF 373-8237 CHASSIS AR

SMCS-1380 **i05115770**

NOTE	REF NO	GRAPHIC REF	PART NUMBER	QTY	PART NAME 1 2 3 4 5 6 (PRODUCT LEVEL)	SEE PAGE
	1	1	**1P-4278**	2	CLAMP-HOSE	
	2	1	**5P-4566**	1	ELBOW	
	3	1	**6S-8620**	4	CLAMP-HOSE	
	4	1	**7X-1443**	10	PROTECTOR	
	5	1	**8T-4983**	2	CLAMP-HOSE	
E	6	1	**7Y-1976**		HOSE-WATER (223-CM)	
	8	1	*9U-6998*	1	FITTING GP	
		1	**3D-2824**	1	SEAL-O-RING	
		1	**3E-4041**	1	ELBOW	
	9	1	**9Y-9236**	1	GAUGE-SIGHT	
	10	1	**111-7092**	1	HOSE	
	11	1	**132-7370**	1	HOSE	
	12	1	**157-0670**	1	CAP-DUST	
	13	1	*188-3034*	2	ELBOW AS	
					(EACH INCLUDES)	
		1	**3J-7354**	1	SEAL-O-RING	
		1	**6V-1355**	1	ELBOW	
	15	1	*217-9060*	1	VALVE AS-FLUID SAMPLING	
		1	**3J-7354**	1	SEAL-O-RING	
		1	**154-9023**	1	VALVE-SAMPLING	
	16	1	**239-9884**	1	TUBE AS	
	17	1	**243-2372**	1	HOSE	
	18	1	**243-2373**	1	HOSE	
	19	1	**243-2374**	1	TUBE AS	
	20	1	**260-4698**	1	GROMMET	
	21	1	*364-8431*	1	TANK GP-COOLANT	
		1	**364-8430**		TANK AS-WATER	
	23	1	**133-3260**	1	SPACER (11X19X10-MM THK)	
	24	1	**1M-4543**	1	GROMMET	
	25	1	**212-6933**	1	CLAMP	
	26	1	**212-6934**	2	CLAMP	
	27	1	**268-4045**	2	CONNECTOR	
	28	1	**324-3210**	7	CLAMP	
	29	1	**3J-1907**	3	SEAL-O-RING	
C	30	1	**4D-9517**	3	CLIP	
	31	1	**5P-1046**	1	CONNECTOR	
	33	1	**6P-0699**	1	GROMMET	
	34	1	**6V-2235**	1	CLIP	
C	36	1	**7D-7233**	2	CLIP	
	37	1	**7M-8485**	1	SEAL-O-RING	
	38	1	**7X-7729**	2	WASHER (11X25X3-MM THK)	
	39	1	**8M-2770**	1	CLIP	
C	40	1	**8T-4121**	5	WASHER-HARD (11X21X2.5-MM THK)	
CM	41	1	**8T-4133**	2	NUT (M10X1.5-THD)	
M	42	1	**8T-4136**	2	BOLT (M10X1.5X25-MM)	
CM	44	1	**8T-4195**	2	BOLT (M10X1.5X30-MM)	
M	45	1	**8T-4196**	1	BOLT (M10X1.5X35-MM)	
E	47	1	**5P-1442**		HOSE (35-CM)	
E	48	1	**5P-6442**		HOSE (65-CM)	
E	48A	1	**5P-6442**		HOSE (52-CM)	
E	49	1	**5P-1251**		HOSE (99-CM)	
CM	50	1	**8T-4137**	1	BOLT (M10X1.5X20-MM)	
C	51	1	**7K-1181**	2	STRAP-CABLE	

C - CHANGE FROM PREVIOUS TYPE
E - ORDER BY THE CENTIMETER
M - METRIC PART

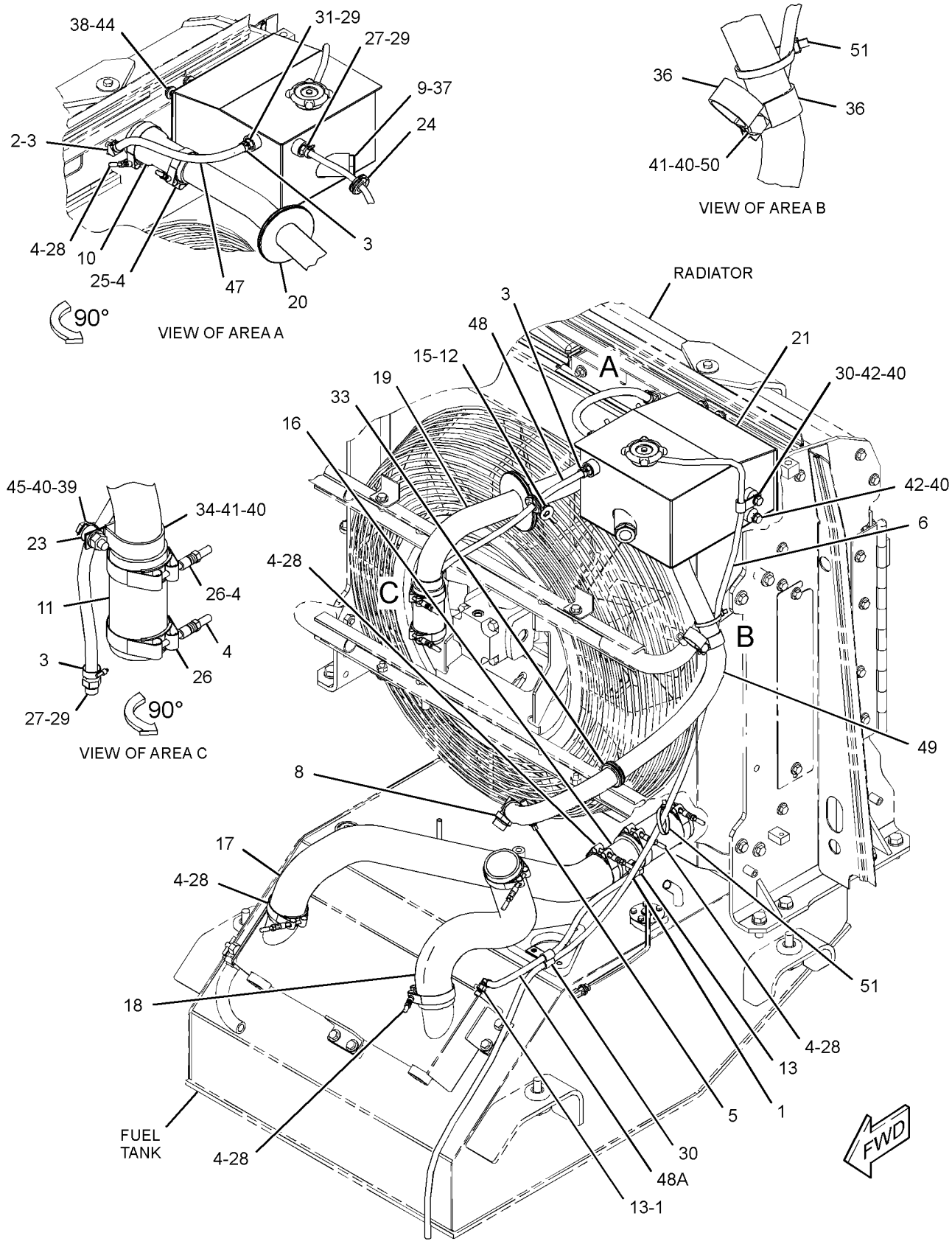

GRAPHIC #1 **<END>** g03346032

362-5004 LINES GP-WATER

S/N: JLX493-UP

PART OF 373-8237 CHASSIS AR

SMCS-1380 **i05906462**

NOTE	REF NO	GRAPHIC REF	PART NUMBER	QTY	PART NAME 1 2 3 4 5 6 (PRODUCT LEVEL)	SEE PAGE
	1	1	**1P-4278**	2	CLAMP-HOSE	
	2	1	**5P-4566**	1	ELBOW	
	3	1	**6S-8620**	4	CLAMP-HOSE	
	4	1	**7X-1443**	10	PROTECTOR	
	5	1	**8T-4983**	2	CLAMP-HOSE	
E	6	1	**7Y-1976**		HOSE-WATER (223-CM)	
	8	1	*9U-6998*	1	FITTING GP	
		1	**3D-2824**	1	SEAL-O-RING	
		1	**3E-4041**	1	ELBOW	
	9	1	**9Y-9236**	1	GAUGE-SIGHT (WATER TANK)	
	10	1	**111-7092**	1	HOSE	
	11	1	**132-7370**	1	HOSE	
	12	1	**157-0670**	1	CAP-DUST	
	13	1	*188-3034*	2	ELBOW AS	
					(EACH INCLUDES)	
		1	**3J-7354**	1	SEAL-O-RING	
		1	**6V-1355**	1	ELBOW	
	15	1	*217-9060*	1	VALVE AS-FLUID SAMPLING	
		1	**3J-7354**	1	SEAL-O-RING	
		1	**154-9023**	1	VALVE-SAMPLING	
	16	1	**239-9884**	1	TUBE AS	
	17	1	**243-2372**	1	HOSE	
	18	1	**243-2373**	1	HOSE	
	19	1	**243-2374**	1	TUBE AS	
	20	1	**260-4698**	1	GROMMET	
C	21	1	*450-2761*	1	TANK GP-COOLANT	
		1	**032-1464**	1	CAP AS-RADIATOR (7-PSI)	
		1	**450-2762**	1	TANK AS-COOLANT	
		1	**5J-3306**	1	FITTING (9/16-18-THD)	
		1	**8N-8846**	1	NECK-FILLER	
C	23	1	**091-0081**	1	SPACER (10.5X20X10-MM THK)	
	24	1	**1M-4543**	1	GROMMET	
	25	1	**212-6933**	1	CLAMP	
	26	1	**212-6934**	2	CLAMP	
	27	1	**268-4045**	2	CONNECTOR	
	28	1	**324-3210**	7	CLAMP	
C	29	1	**3J-1907**	2	SEAL-O-RING	
	30	1	**4D-9517**	3	CLIP	
	33	1	**6P-0699**	1	GROMMET	
C	34	1	**6V-2235**	2	CLIP	
	36	1	**7D-7233**	2	CLIP	
	37	1	**7M-8485**	1	SEAL-O-RING	
	38	1	**7X-7729**	2	WASHER (11X25X3-MM THK)	
	39	1	**8M-2770**	1	CLIP	
C	40	1	**8T-4121**	7	WASHER-HARD (11X21X2.5-MM THK)	
CM	41	1	**344-5675**	3	NUT (M10X1.5-THD)	
CM	42	1	**8T-4136**	3	BOLT (M10X1.5X25-MM)	
M	44	1	**8T-4195**	2	BOLT (M10X1.5X30-MM)	
M	45	1	**8T-4196**	1	BOLT (M10X1.5X35-MM)	
CE	47	1	**5P-1442**		HOSE (46-CM)	
E	48	1	**5P-6442**		HOSE (65-CM)	
E	48A	1	**5P-6442**		HOSE (52-CM)	
E	49	1	**5P-1251**		HOSE (99-CM)	
M	50	1	**8T-4137**	1	BOLT (M10X1.5X20-MM)	
	51	1	**7K-1181**	2	STRAP-CABLE	
C	52	1	*150-3024*	1	ELBOW AS	
		1	**3J-1907**	1	SEAL-O-RING	

362-5004 **LINES GP-WATER (*contd.*)** **i05906462**

NOTE	REF NO	GRAPHIC REF	PART NUMBER	QTY	PART NAME 1 2 3 4 5 6 (PRODUCT LEVEL)	SEE PAGE
		1	**5P-4924**	1	ELBOW	
C	53	1	**9M-8406**	1	CLIP	

C - CHANGE FROM PREVIOUS TYPE
E - ORDER BY THE CENTIMETER
M - METRIC PART

362-5004 **LINES GP-WATER (*contd.*)** **i05906462**

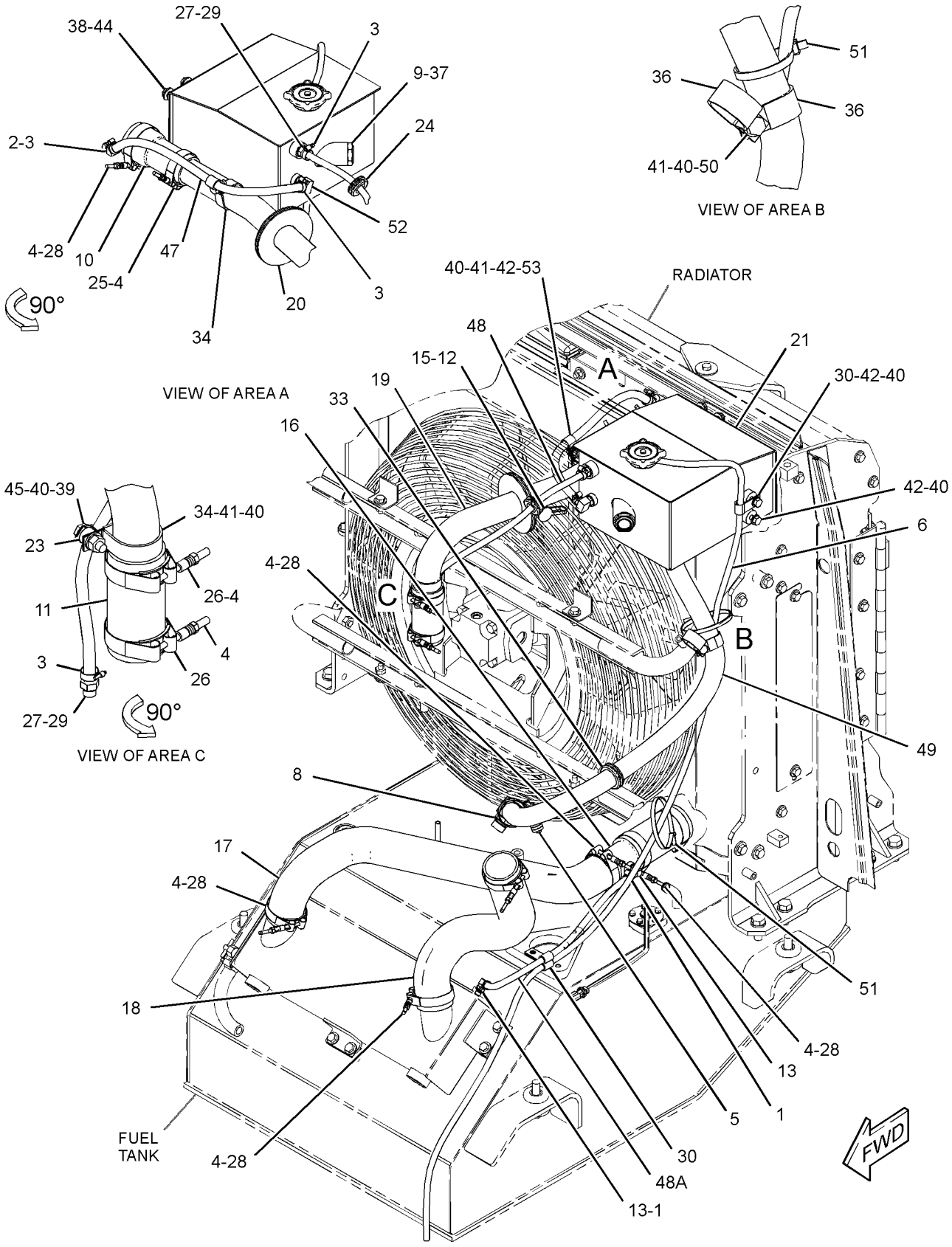

GRAPHIC #1 **<END>** g03720823

392-8676 LINES GP-WATER

S/N: JLX250-UP

PART OF 383-6023 COOLER AR-AXLE OIL

SMCS-1380 **i05374916**

NOTE	REF NO	GRAPHIC REF	PART NUMBER	QTY	PART NAME 1 2 3 4 5 6 (PRODUCT LEVEL)	SEE PAGE
	1	1	**5D-1026**	4	CLAMP-BAND	
	2	1	**7K-1181**	3	STRAP-CABLE	
	3	1	*161-9916*	1	ADAPTER AS	
		1	**2M-9780**	1	SEAL-O-RING	
		1	**6V-7420**	1	ADAPTER	
	4	1	*170-0965*	2	CONNECTOR AS	
					(EACH INCLUDES)	
		1	**3K-0360**	1	SEAL-O-RING	
		1	**6V-1438**	1	CONNECTOR	
	5	1	**193-1034**	1	BRACKET AS	
	6	1	**067-3045**	1	CLIP	
	7	1	*155-7321*	1	ADAPTER AS	
		1	**3D-2824**	1	SEAL-O-RING	
		1	**6V-1722**	1	ADAPTER-O-RING	
	8	1	**3S-7608**	1	CLIP	
	9	1	**6D-4244**	5	CLIP	
	10	1	**6V-1889**	1	CLIP	
	11	1	**7S-0530**	1	CLIP	
M	12	1	**7X-2552**	1	BOLT (M16X2X30-MM)	
	13	1	**8T-4121**	9	WASHER-HARD (11X21X2.5-MM THK)	
M	14	1	**8T-4133**	4	NUT (M10X1.5-THD)	
M	15	1	**8T-4136**	3	BOLT (M10X1.5X25-MM)	
M	16	1	**8T-4137**	1	BOLT (M10X1.5X20-MM)	
M	17	1	**8T-4195**	1	BOLT (M10X1.5X30-MM)	
	18	1	**9X-8257**	1	WASHER (17.5X30X3.5-MM THK)	
E	19	1	**5P-0767**		HOSE (254-CM)	
E	19A	1	**5P-0767**		HOSE (148.1-CM)	

E - ORDER BY THE CENTIMETER
M - METRIC PART

392-8676 **LINES GP-WATER (*contd.*)** **i05374916**

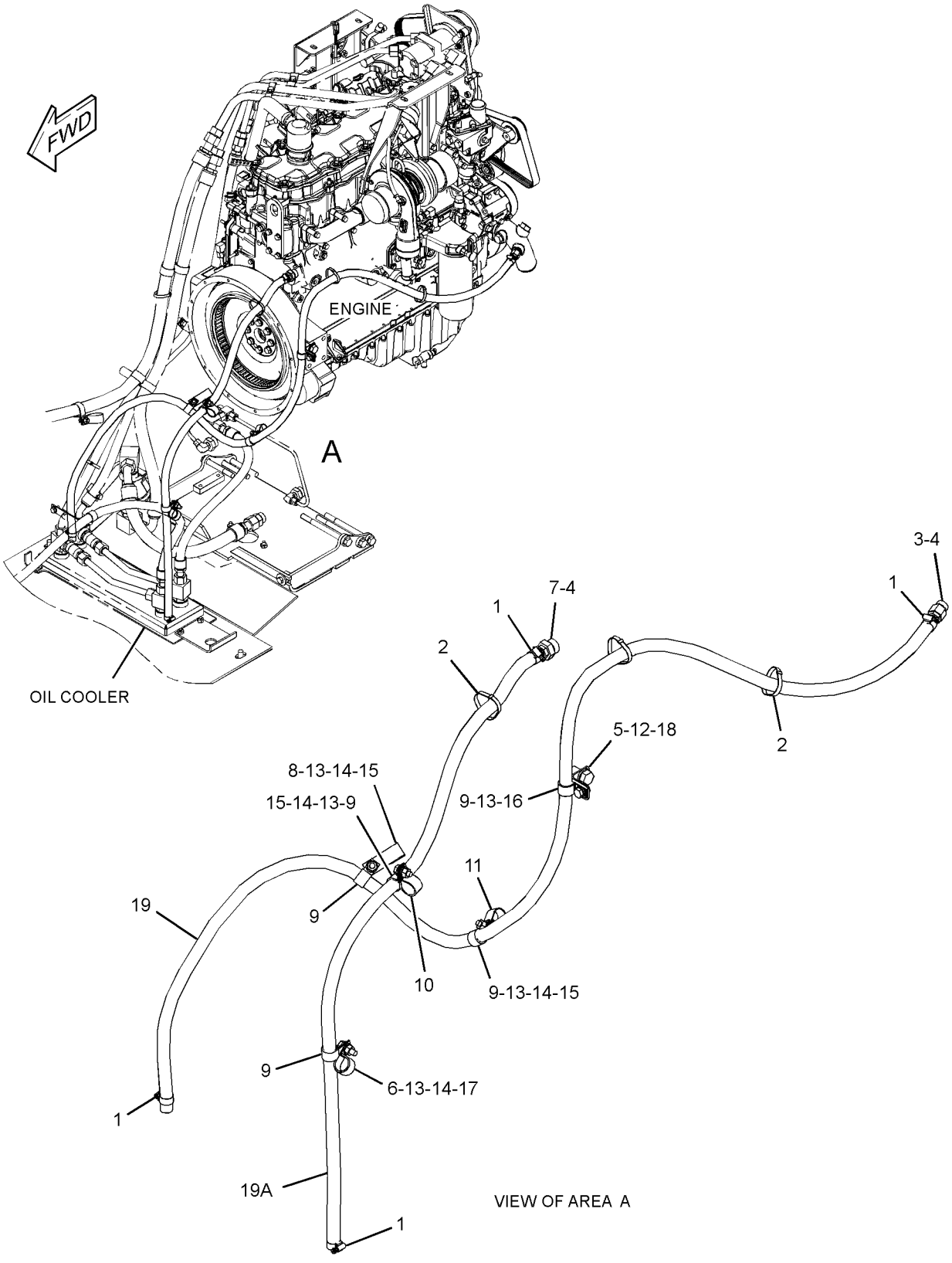

GRAPHIC #1 **<END>** g03378586

426-3492 LINES GP-WATER

S/N: JLX1-UP
CUSTOM
PART OF 419-9847 COOLER AR-AXLE OIL

SMCS-1380 **i05837641**

NOTE	REF NO	GRAPHIC REF	PART NUMBER	QTY	PART NAME 1 2 3 4 5 6 (PRODUCT LEVEL)	SEE PAGE
	1	1	**5D-1026**	4	CLAMP-BAND	
	2	1	*161-9916*	1	ADAPTER AS	
		1	**2M-9780**	1	SEAL-O-RING	
		1	**6V-7420**	1	ADAPTER	
	3	1	*170-0965*	2	CONNECTOR AS	
					(EACH INCLUDES)	
		1	**3K-0360**	1	SEAL-O-RING	
		1	**6V-1438**	1	CONNECTOR	
	4	1	**193-1034**	1	BRACKET AS	
	5	1	**370-9488**	7	STRAP-CABLE	
	6	1	**067-3045**	1	CLIP	
	7	1	*155-7321*	1	ADAPTER AS	
		1	**3D-2824**	1	SEAL-O-RING	
		1	**6V-1722**	1	ADAPTER	
	8	1	**3S-7608**	1	CLIP	
	9	1	**5P-7854**	5	CLIP	
	10	1	**6V-1889**	1	CLIP	
	11	1	**7S-0530**	1	CLIP	
M	12	1	**7X-2552**	1	BOLT (M16X2X30-MM)	
	13	1	**8T-4121**	9	WASHER-HARD (11X21X2.5-MM THK)	
M	14	1	**8T-4133**	4	NUT (M10X1.5-THD)	
M	15	1	**8T-4136**	3	BOLT (M10X1.5X25-MM)	
M	16	1	**8T-4137**	1	BOLT (M10X1.5X20-MM)	
M	17	1	**8T-4195**	1	BOLT (M10X1.5X30-MM)	
	18	1	**9X-8257**	1	WASHER (17.5X30X3.5-MM THK)	
E	19	1	**5P-0767**		HOSE (148.1-CM)	
E	19A	1	**5P-0767**		HOSE (254-CM)	
E	20	1	**2Q-0604**		INSULATION (155-CM)	
E	20A	1	**2Q-0604**		INSULATION (265-CM)	
					****STANDARD REMOVAL****	
FH			**148-8409**	1	PLUG AS	
FJ			**148-8410**	1	PLUG AS	

E - ORDER BY THE CENTIMETER
F - NOT SHOWN
H - PART OF STANDARD PLUG GP-CYLINDER BLOCK
J - PART OF ELBOW GP-WATER
M - METRIC PART

426-3492 **LINES GP-WATER (*contd.*)** **i05837641**

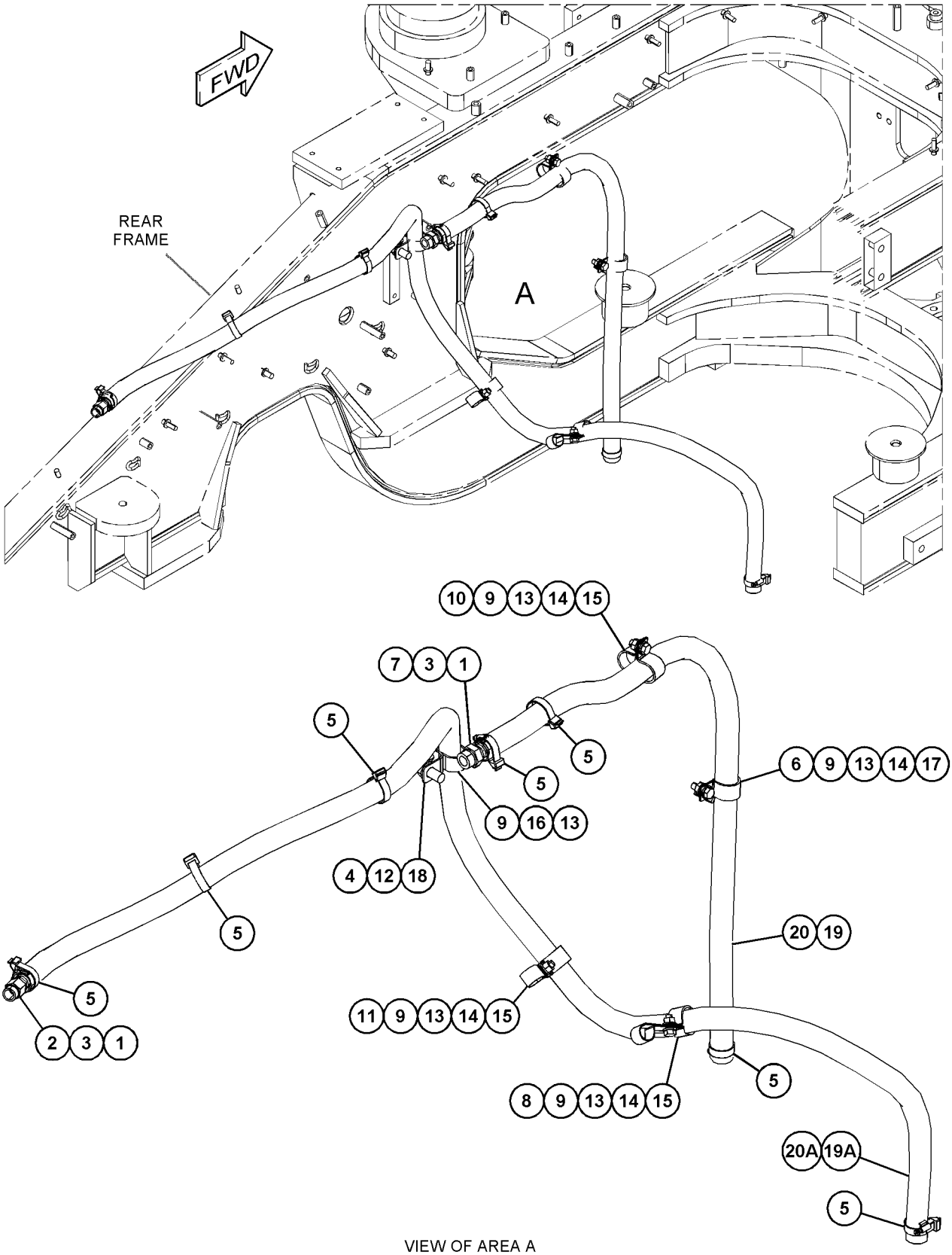

VIEW OF AREA A

GRAPHIC #1 **<END>** g03724344

209-4600 PUMP GP-WATER

S/N: KHX1-UP

PART OF 338-9076 ENGINE AR-COMPLETE, 397-1168 ENGINE AR-CORE

SMCS-1361 **i05330402**

NOTE	REF NO	GRAPHIC REF	PART NUMBER	QTY	PART NAME 1 2 3 4 5 6 (PRODUCT LEVEL)	SEE PAGE
CYR	1	1	**352-2109**	1	PUMP GP-WATER (COOLANT)	114
	2	1	*396-0403*	1	PLUG AS	
		1	**6V-3250**	1	SEAL-O-RING	
		1	**360-3679**	1	PLUG-CONNECTOR	
	3	1	*398-5612*	1	PLUG AS	
		1	**6V-5063**	1	SEAL-O-RING	
		1	**360-3682**	1	PLUG-O-RING (WATER LINES GROUP)	
	4	1	**147-0182**	1	SEAL-O-RING	
	5	1	**384-9992**	1	SEAL-O-RING	
M	6	1	**8T-0644**	4	BOLT (M10X1.5X90-MM)	
	7	1	*396-0405*	1	PLUG AS	
		1	**6V-6609**	1	SEAL-O-RING	
		1	**360-3680**	1	PLUG	

C - CHANGE FROM PREVIOUS TYPE
M - METRIC PART
R - REMFG PART MAY BE AVAILABLE
Y - SEPARATE ILLUSTRATION

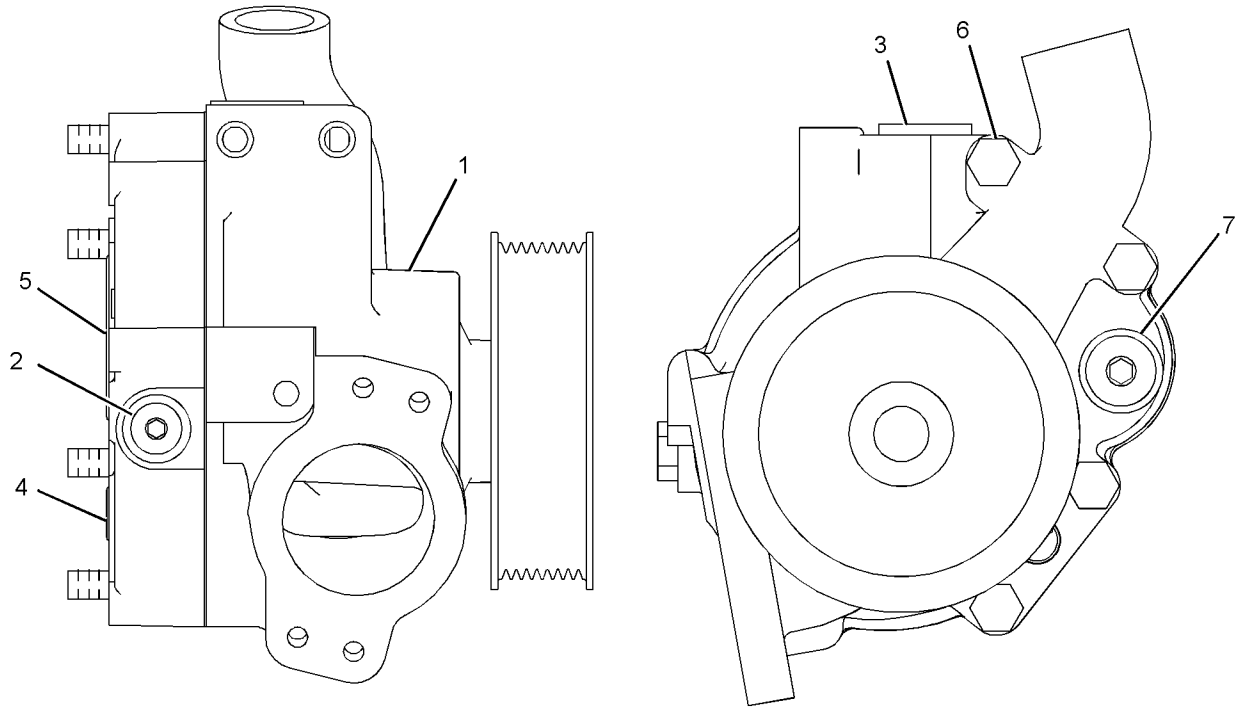

RIGHT SIDE VIEW FRONT VIEW

GRAPHIC #1 **<END>** g03300940

352-2081 PUMP GP-WATER

S/N: KHX1-UP

PART OF 352-2109 PUMP GP-WATER

SMCS-1361 **i05242412**

NOTE	REF NO	GRAPHIC REF	PART NUMBER	QTY	PART NAME 1 2 3 4 5 6 (PRODUCT LEVEL)	SEE PAGE
	1	1	**397-1832**	1	SHAFT AS	
	2	1	**177-1058**	1	PLUG	
	3	1	**197-9581**	1	PULLEY (8-GROOVE)	
	4	1	**226-6039**	1	IMPELLER	
	5	1	**350-5417**	1	SEAL-WATER PUMP	

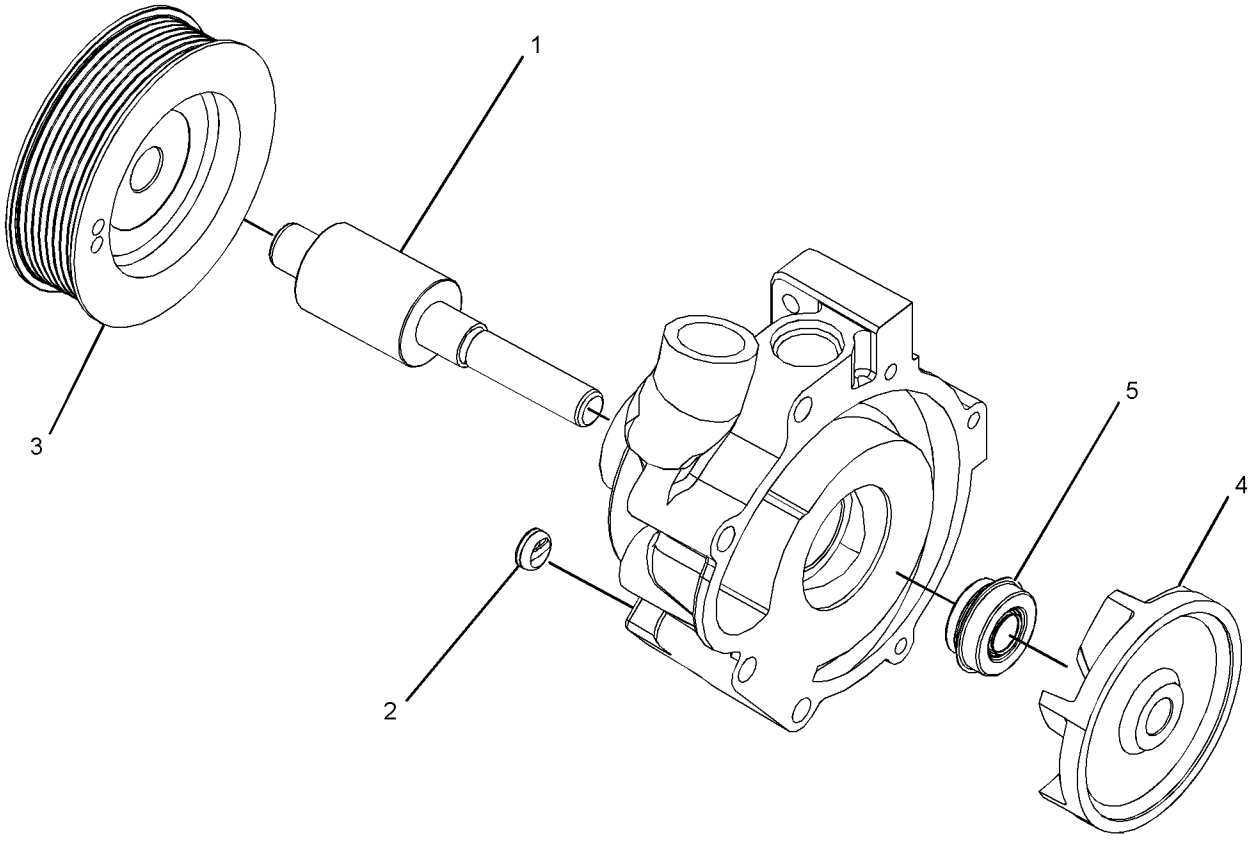

GRAPHIC #1 **<END>** g02730715

352-2109 PUMP GP-WATER*R

S/N: KHX1-UP

PART OF 209-4600 PUMP GP-WATER

SMCS-1361 **i05956848**

NOTE	REF NO	GRAPHIC REF	PART NUMBER	QTY	PART NAME 1 2 3 4 5 6 (PRODUCT LEVEL)	SEE PAGE
Y	1	1	*352-2081*	1	PUMP GP-WATER	113
	2	1	**226-6051**	1	COVER	
	3	1	**448-0607**	1	GASKET	
	4	1	**6I-4793**	3	BOLT (M8X1.25X50-MM)	

Y - SEPARATE ILLUSTRATION

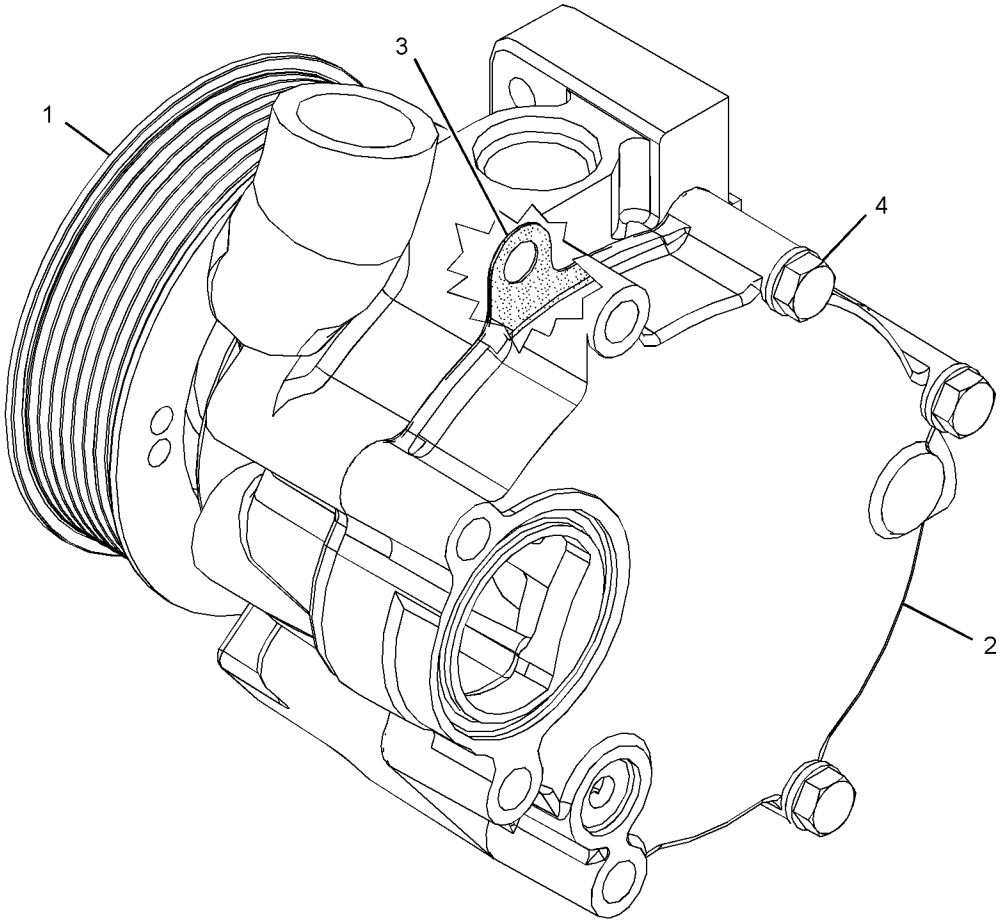

GRAPHIC #1 **<END>** g02726733

377-4468 RADIATOR & FAN GP

S/N: JLX1-UP

PART OF 373-8237 CHASSIS AR

SMCS-1353, 1356 **i05768037**

NOTE	REF NO	GRAPHIC REF	PART NUMBER	QTY	PART NAME 1 2 3 4 5 6 (PRODUCT LEVEL)	SEE PAGE
	1	2	**4E-1384**	1	BUMPER-CONICAL	
	2	2	**5V-8780**	1	KNOB	
	3	2	**112-5344**	1	LATCH AS-DOOR	
	4	1	**121-3307**	2	MOUNT AS-RESILIENT (RUBBER)	
	5	1	**122-4026**	1	SPACER (13X25X25-MM THK)	
	6	2	**209-5528**	1	STRIKER	
	7	2	**235-9822**	1	CONE	
	8	1	**243-2289**	2	MOUNT AS (RUBBER)	
	9	2	**243-3416**	1	ADAPTER	
	10	2	**445-1714**	1	SPACER (50.5X127X12-MM THK)	
	11	2	**246-0616**	1	SPIDER AS-FAN (8-BLADE)	
Y	12	2	**246-6152**	1	MOTOR GP-GEAR (HYDRAULIC FAN)	458
	13	2	**277-8628**	2	MOUNT	
Y	14	2	*290-7202*	1	MOUNTING GP-BRACKET (GREASE GUN)	593
	15	1	**349-8238**	1	CORE AS-RADIATOR	
	16	1	**349-8239**	1	CORE AS-AFTERCOOLER	
	17	2	**349-8241**	1	CORE AS-OIL COOLER (HYDRAULIC)	
Y	18	1	*377-2024*	1	FRAME GP-RADIATOR	97
Y	19	1	*377-2028*	1	GUARD GP-FAN (WITH SUPPORT)	98
	20	2	**380-1619**	1	DEFLECTOR	
M	21	2	**5C-7261**	1	NUT (M8X1.25-THD)	
	22	1,2	**5P-1076**	10	WASHER-HARD (13.5X30X4-MM THK)	
	23	2	**7X-0515**	1	WASHER-HARD (17X35X5-MM THK)	
M	24	1	**7X-2546**	4	BOLT (M10X1.5X180-MM)	
M	25	1	**7X-2553**	8	BOLT (M16X2X40-MM)	
	26	1,2	**7X-7729**	70	WASHER (11X25X3-MM THK)	
M	27	2	**8T-4132**	1	NUT (M16X2-THD)	
M	28	1,2	**344-5675**	6	NUT (M10X1.5-THD)	
M	29	2	**8T-4137**	3	BOLT (M10X1.5X20-MM)	
M	30	2	**8T-4186**	7	BOLT (M10X1.5X40-MM)	
M	31	1,2	**8T-4195**	43	BOLT (M10X1.5X30-MM)	
M	32	1,2	**8T-4196**	10	BOLT (M10X1.5X35-MM)	
	33	1,2	**8T-4226**	5	WASHER-PLATED (10.5X45X3-MM THK)	
M	34	1	**8T-4910**	1	BOLT (M12X1.75X60-MM)	
M	35	2	**8T-4956**	9	BOLT (M12X1.75X35-MM)	
M	36	2	**8T-4971**	4	BOLT (M6X1X30-MM)	
M	37	1	**8T-6466**	2	BOLT (M10X1.5X60-MM)	
	38	2	**9X-8256**	4	WASHER (6.6X12X2-MM THK)	
	39	1	**9X-8257**	8	WASHER (17.5X30X3.5-MM THK)	
D	40	1	**5P-8309**		SEAL (0.1-M)	
D	40A	1	**5P-8309**		SEAL (0.3-M EACH)	
D	40B	1	**5P-8309**		SEAL (0.5-M EACH)	
D	40C	2	**5P-8309**		SEAL (0.9-M EACH)	
E	41	1	**296-8592**		SEAL (101-CM)	
E	41A	2	**296-8592**		SEAL (102-CM)	
E	41B	1	**296-8592**		SEAL (111-CM)	
B	42	2	**312-6458**		TAPE-REFLECTIVE	
	43	2	**239-9867**	1	HINGE AS	

B - USE AS REQUIRED
D - ORDER BY THE METER
E - ORDER BY THE CENTIMETER
M - METRIC PART
Y - SEPARATE ILLUSTRATION

377-4468 **RADIATOR & FAN GP (*contd.*)** **i05768037**

REFER TO ALL ILLUSTRATIONS OF
THIS GROUP FOR AUXILIARY VIEWS

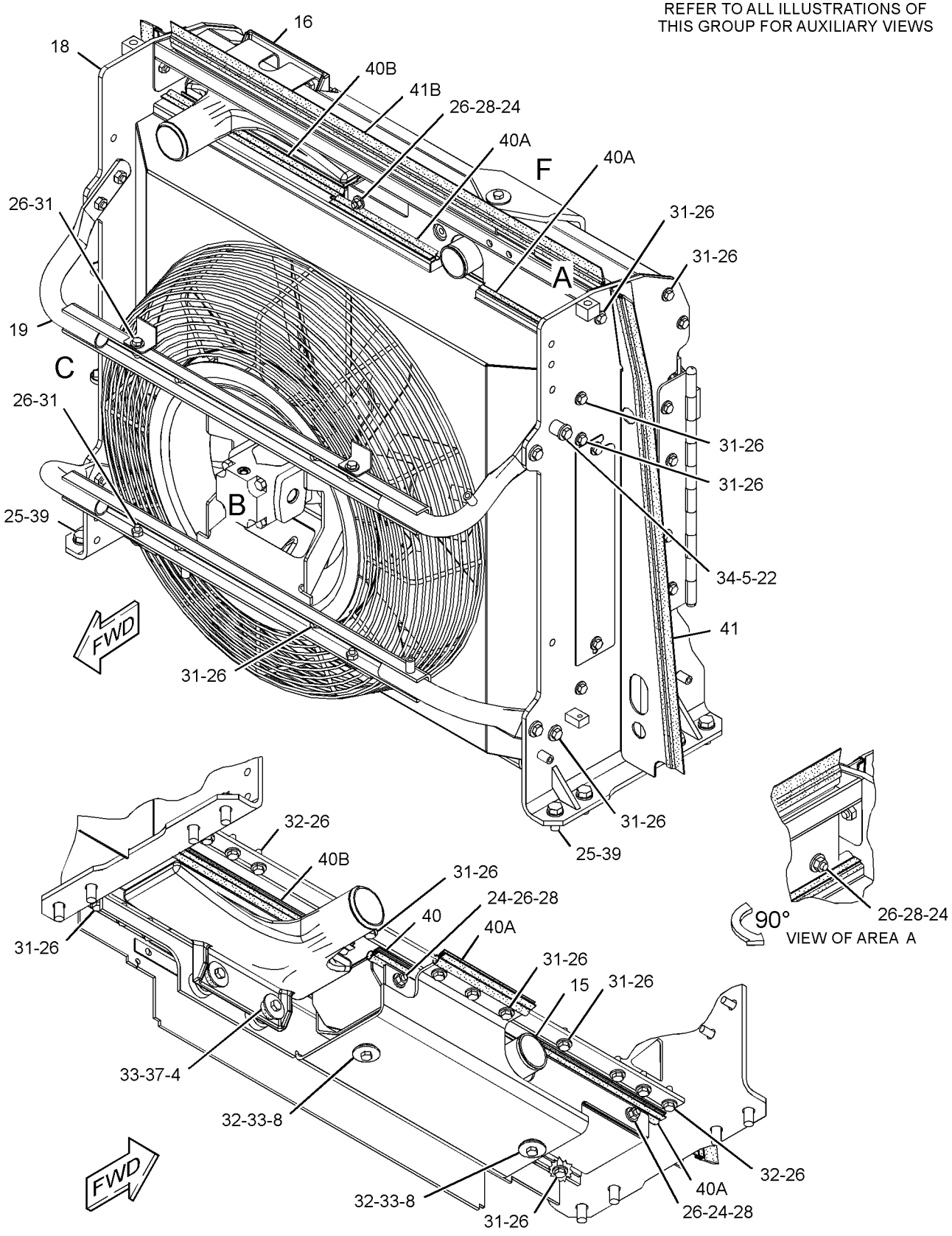

GRAPHIC #1 g03346730

377-4468 **RADIATOR & FAN GP (*contd.*)** **i05768037**

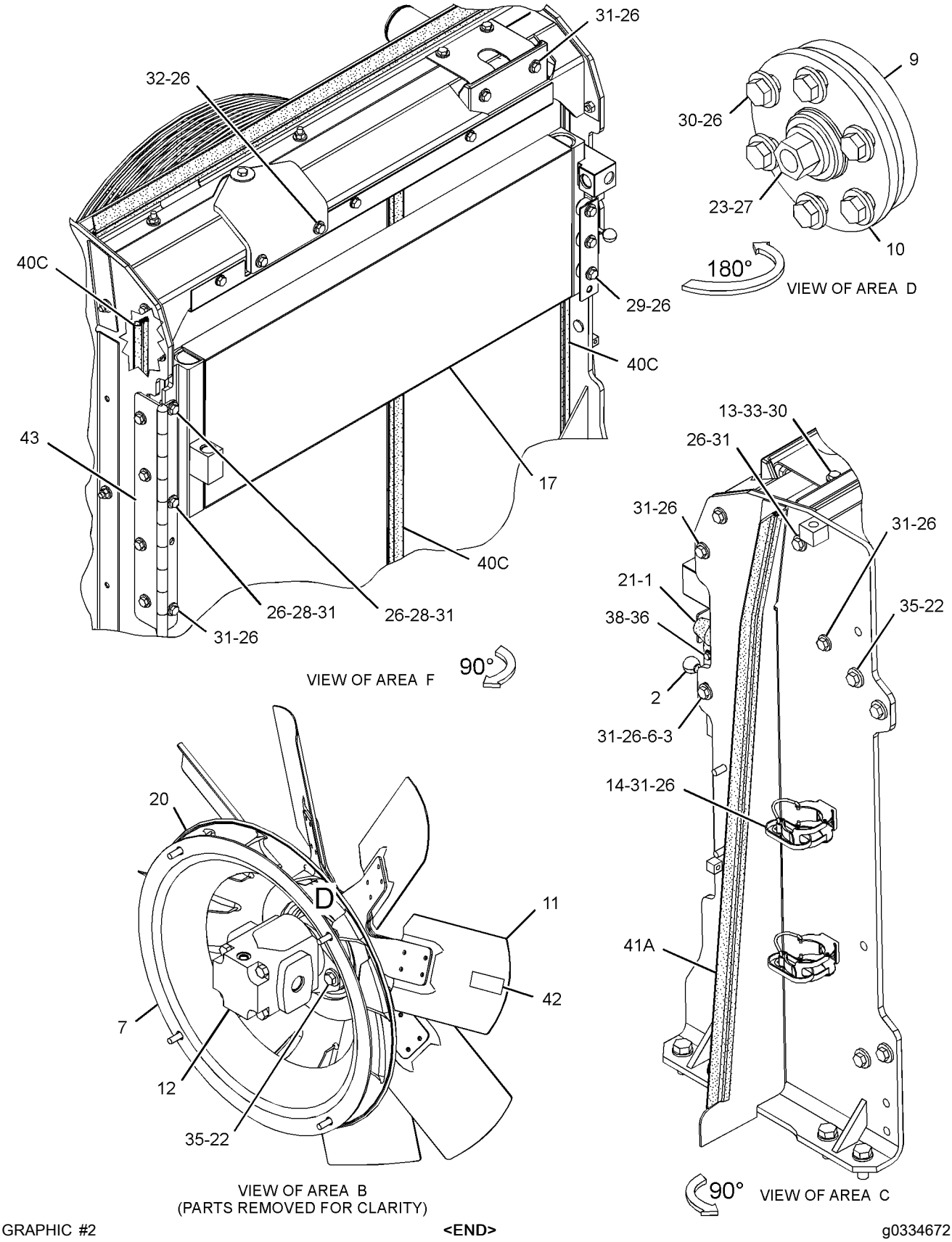

GRAPHIC #2 **<END>** g03346721

AIR INLET AND EXHAUST SYSTEM

237-4848 AIR CLEANER GP

S/N: JLX1-UP

PART OF 374-4868 INSTALLATION AR-ENGINE

SMCS-1051, 1054 **i02561671**

NOTE	REF NO	GRAPHIC REF	PART NUMBER	QTY	PART NAME 1 2 3 4 5 6 (PRODUCT LEVEL)	SEE PAGE
Y	1	1	**244-0357**	1	AIR CLEANER GP	119
	2	1	**246-1777**	1	PIPE-EXTENSION	
	3	1	**246-4611**	1	CAP AS-AIR CLEANER	
	4	1	**219-0314**	1	CLAMP	
	5	1	**7X-0579**	4	WASHER-HARD (8.8X25.5X2-MM THK)	
M	6	1	**7X-2537**	4	BOLT (M8X1.25X35-MM)	
	7	1	**7K-1181**	1	STRAP-CABLE	

M - METRIC PART
Y - SEPARATE ILLUSTRATION

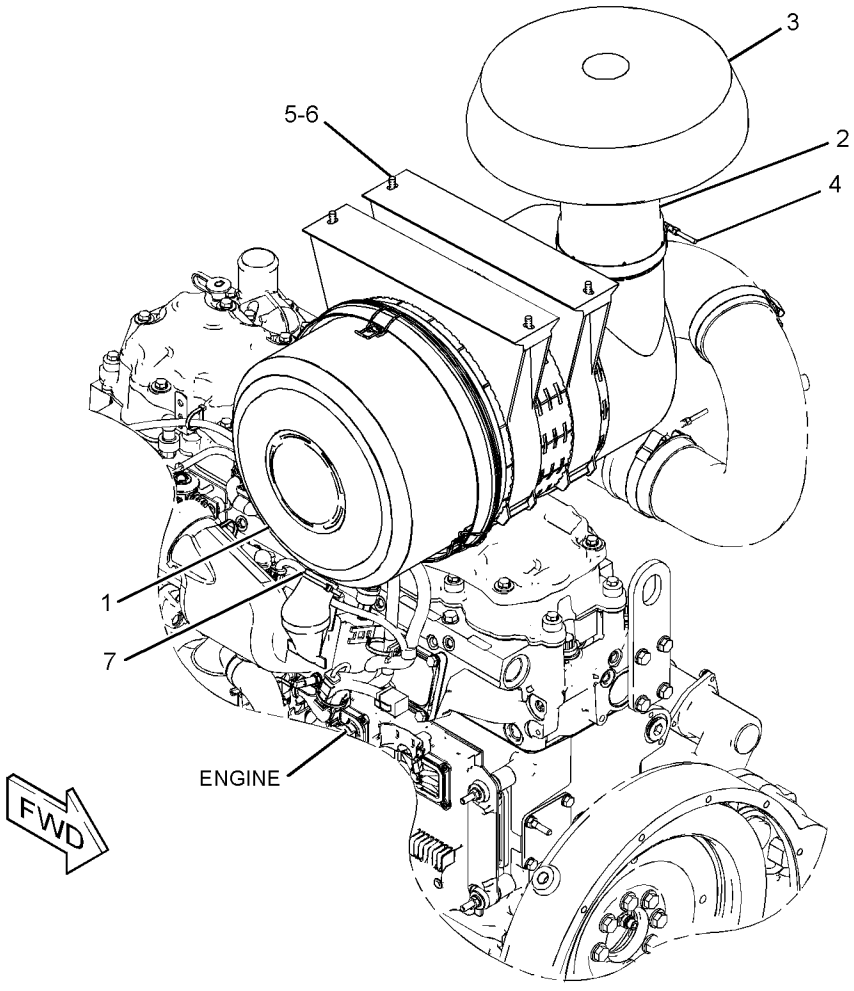

GRAPHIC #1 **<END>** g01289456

244-0357 AIR CLEANER GP

S/N: JLX1-UP

PART OF 237-4848 AIR CLEANER GP

SMCS-1051, 1054 **i02219134**

NOTE	REF NO	GRAPHIC REF	PART NUMBER	QTY	PART NAME 1 2 3 4 5 6 (PRODUCT LEVEL)	SEE PAGE
	1	1	**245-6375**	1	FILTER ELEMENT-AIR (PRIMARY)	
	2	1	**245-6376**	1	FILTER ELEMENT AS-AIR (SECONDARY)	
	3	1	**246-4612**	1	VALVE-AIR CLEANER DUST	
	4	1	**246-4614**	1	COVER AS	
	5	1	**246-4615**	2	BRACKET AS	

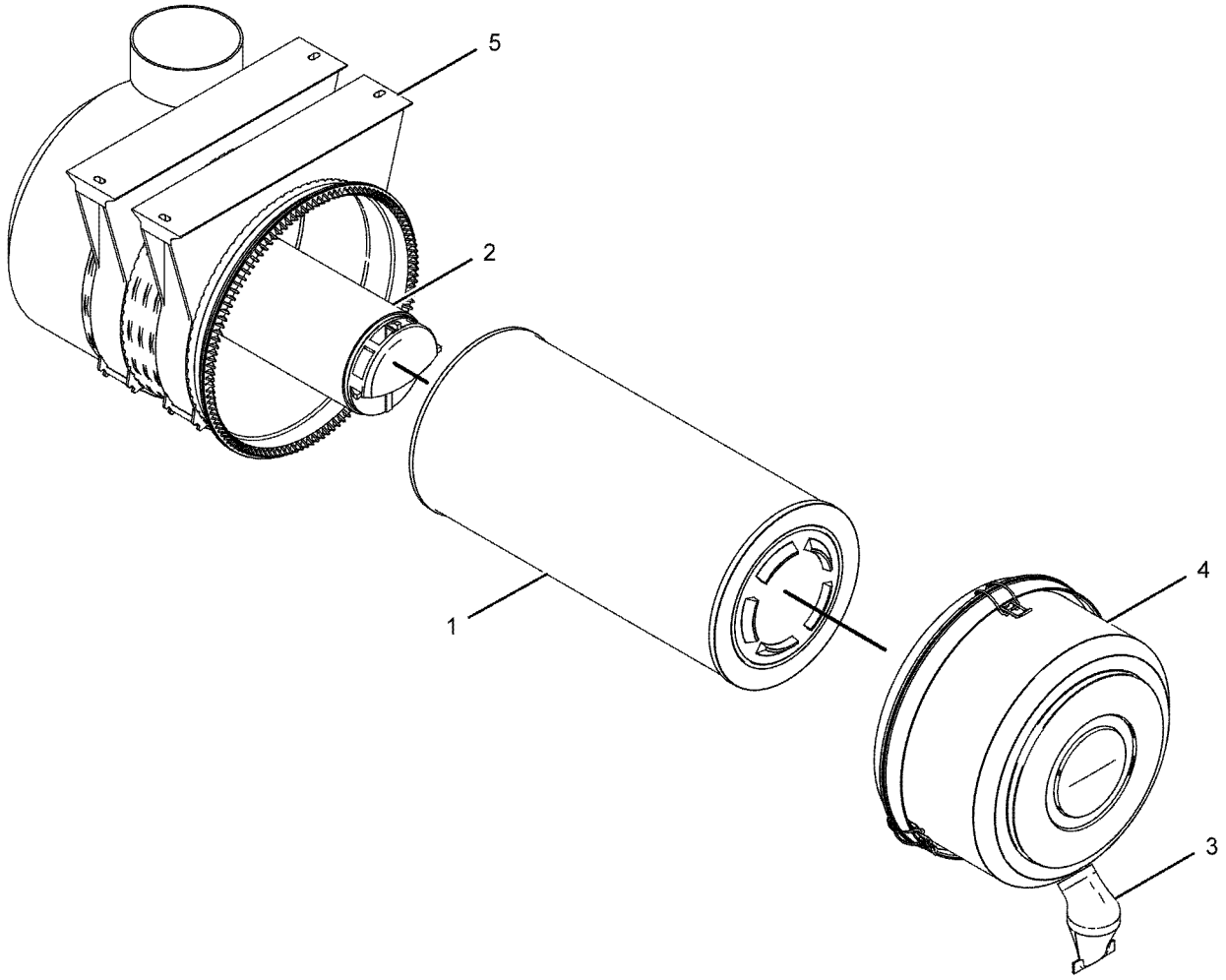

GRAPHIC #1 **<END>** g01102727

189-8780 COVER GP-AIR INLET—STARTING AID HEATER

S/N: KHX1-UP

PART OF 338-9076, 387-1975, 387-1976 ENGINE AR-COMPLETE

SMCS-1087 **i02674840**

NOTE	REF NO	GRAPHIC REF	PART NUMBER	QTY	PART NAME 1 2 3 4 5 6 (PRODUCT LEVEL)	SEE PAGE
CY	1	1	**294-7675**	1	COVER GP-AIR INLET (STARTING AID HEATER)	121
B	2	1	**1U-8846**		SEALANT-GASKET	

B - USE AS REQUIRED
C - CHANGE FROM PREVIOUS TYPE
Y - SEPARATE ILLUSTRATION

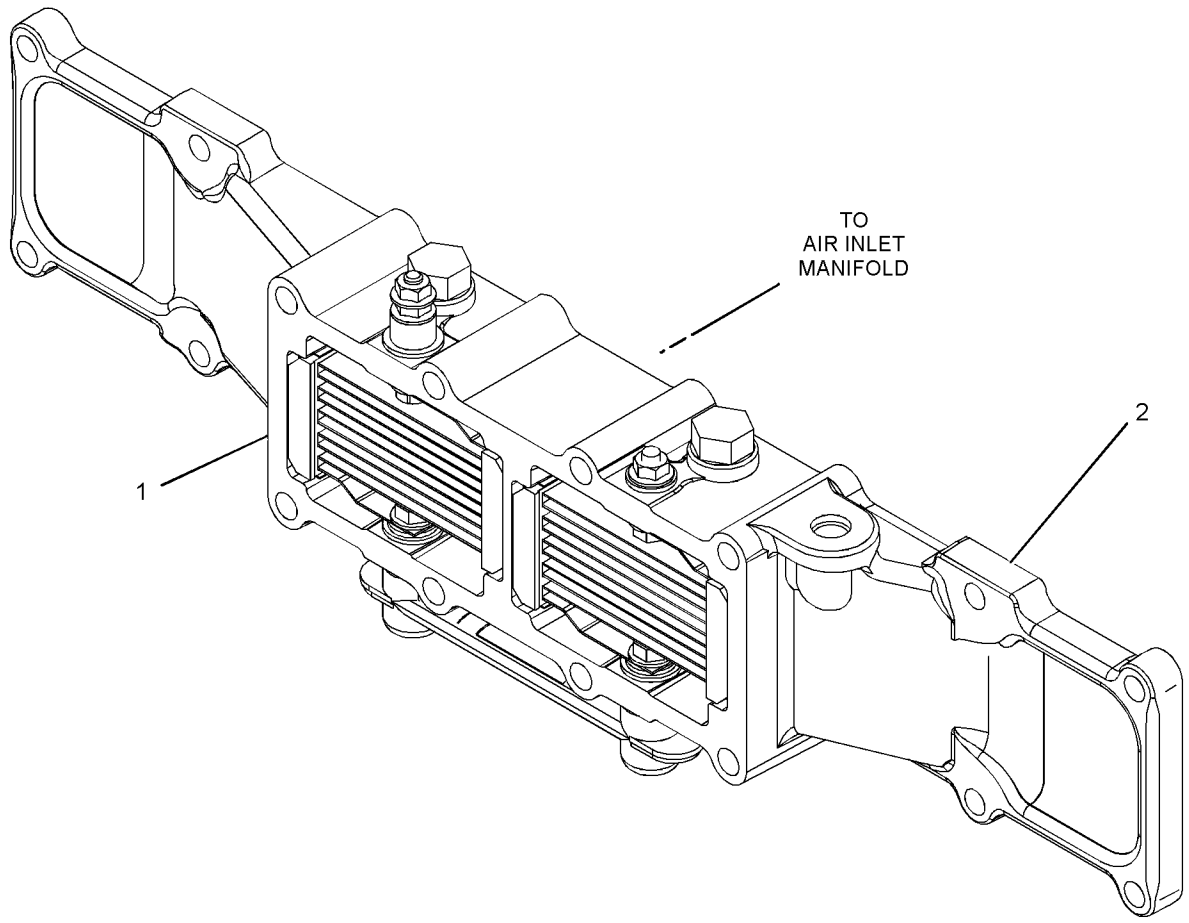

GRAPHIC #1 **<END>** g01350757

294-7675 COVER GP-AIR INLET—STARTING AID HEATER

S/N: KHX1-UP

PART OF 189-8780 COVER GP-AIR INLET

SMCS-1087 **i05325064**

NOTE	REF NO	GRAPHIC REF	PART NUMBER	QTY	PART NAME 1 2 3 4 5 6 (PRODUCT LEVEL)	SEE PAGE
	1	1	*389-3708*	2	PLUG AS	
					(EACH INCLUDES)	
		1	**214-7568**	1	SEAL-O-RING	
		1	**360-3679**	1	PLUG-CONNECTOR	
	2	1	**245-6795**	1	INSULATOR	

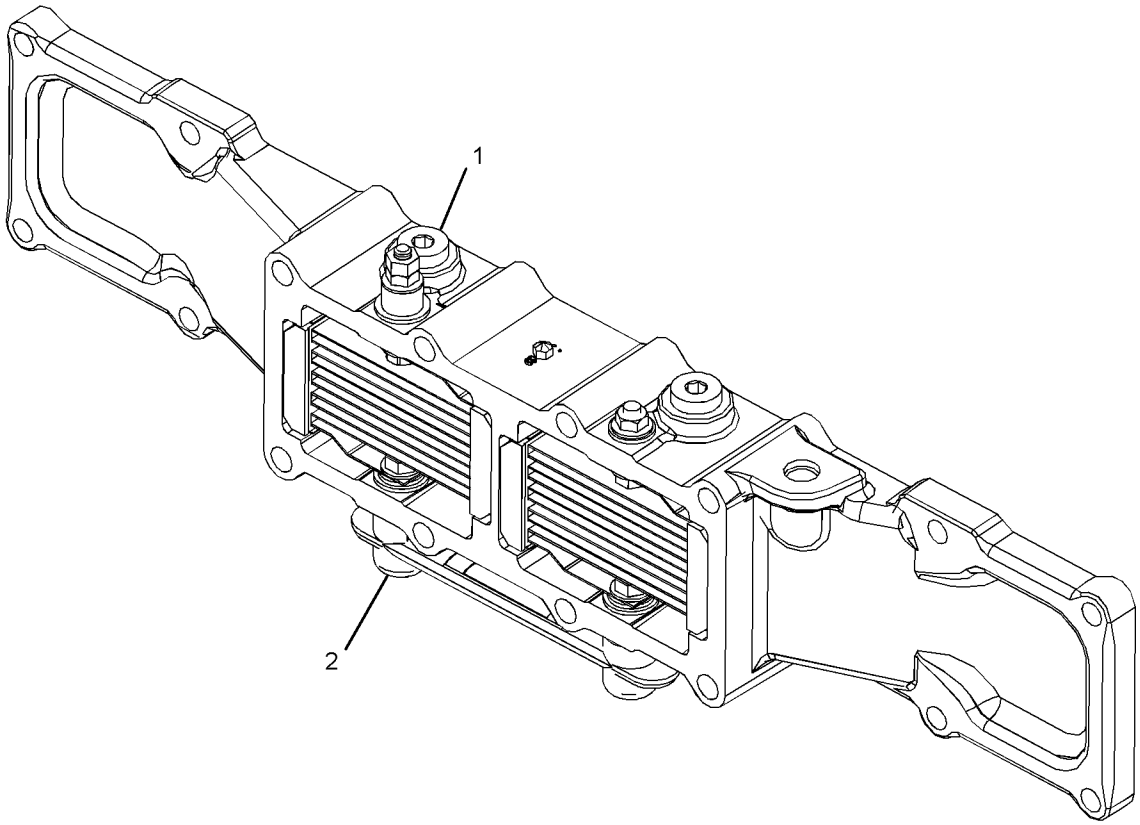

GRAPHIC #1 **<END>** g03375228

246-2931 ELBOW GP-AIR INLET

S/N: KHX1-UP

PART OF 338-9076, 387-1975, 387-1976 ENGINE AR-COMPLETE

SMCS-1087 **i05784174**

NOTE	REF NO	GRAPHIC REF	PART NUMBER	QTY	PART NAME 1 2 3 4 5 6 (PRODUCT LEVEL)	SEE PAGE
	1	1	**4P-5918**	1	CLIP	
	2	1	**7S-6369**	1	WASHER (0.344X0.75X0.188-IN THK)	
M	3	1	**123-4511**	4	STUD (M8X1.25-THD)	
	4	1	**197-0416**	1	ELBOW	
	5	1	*389-3708*	1	PLUG AS	
		1	**214-7568**	1	SEAL-O-RING	
		1	**360-3679**	1	PLUG-CONNECTOR	
M	6	1	**8T-0292**	4	BOLT (M8X1.25X90-MM)	
	7	1	**9M-1974**	7	WASHER-HARD (8.8X16X2-MM THK)	
BF			**1U-8846**		SEALANT-GASKET	

B - USE AS REQUIRED
F - NOT SHOWN
M - METRIC PART

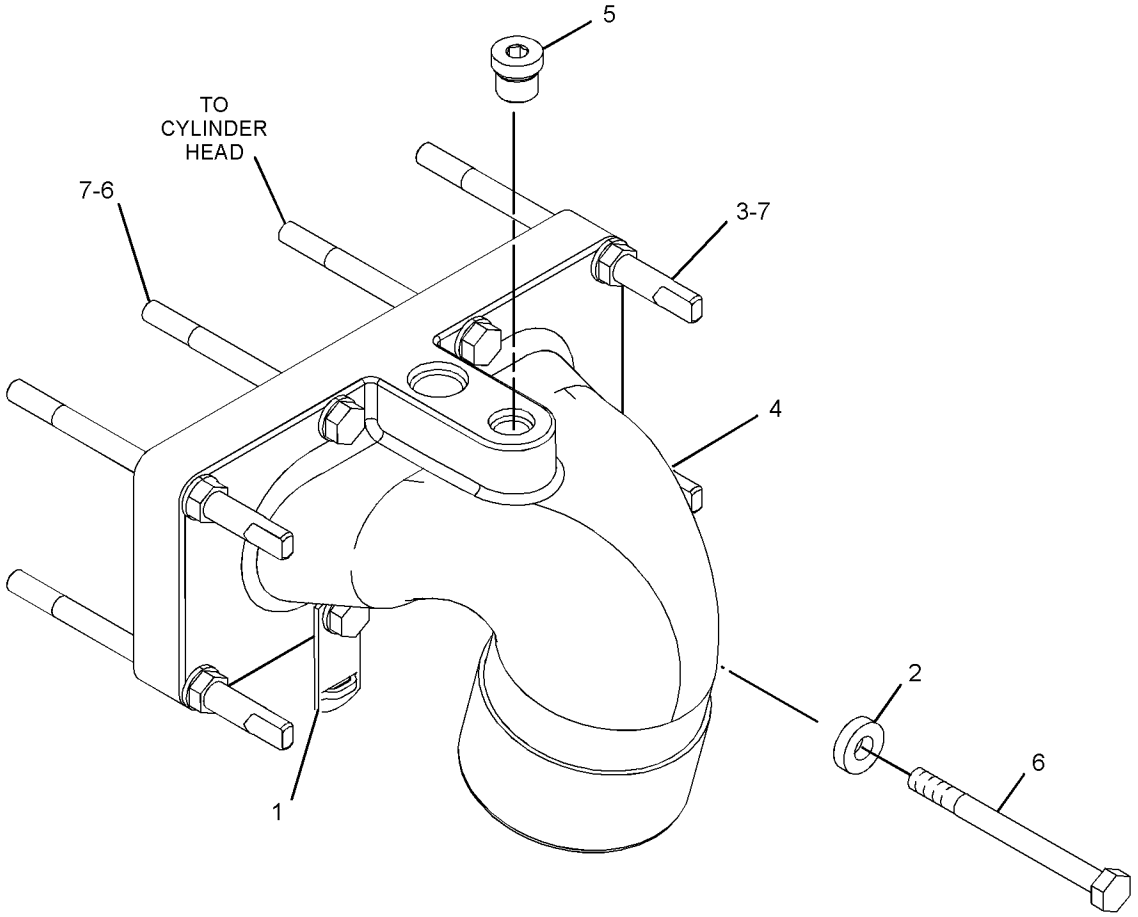

GRAPHIC #1 **<END>** g03393671

450-3092 ELBOW GP-AIR INLET

S/N: TX7115-UP; KHX60214-UP

PART OF 387-1975, 387-1976 ENGINE AR-COMPLETE

SMCS-1087 **i05780366**

NOTE	REF NO	GRAPHIC REF	PART NUMBER	QTY	PART NAME 1 2 3 4 5 6 (PRODUCT LEVEL)	SEE PAGE
	1	1	**4P-5918**	1	CLIP	
	2	1	**197-0416**	1	ELBOW	
	3	1	*389-3708*	1	PLUG AS	
		1	**214-7568**	1	SEAL-O-RING	
		1	**360-3679**	1	PLUG-CONNECTOR	
M	4	1	**123-4511**	4	STUD (M8X1.25-THD)	
	5	1	**7S-6369**	1	WASHER (0.344X0.75X0.188-IN THK)	
M	6	1	**8T-0292**	4	BOLT (M8X1.25X90-MM)	
	7	1	**9M-1974**	7	WASHER-HARD (8.8X16X2-MM THK)	
B	8	1	**1U-8846**		SEALANT-GASKET	

B - USE AS REQUIRED
M - METRIC PART

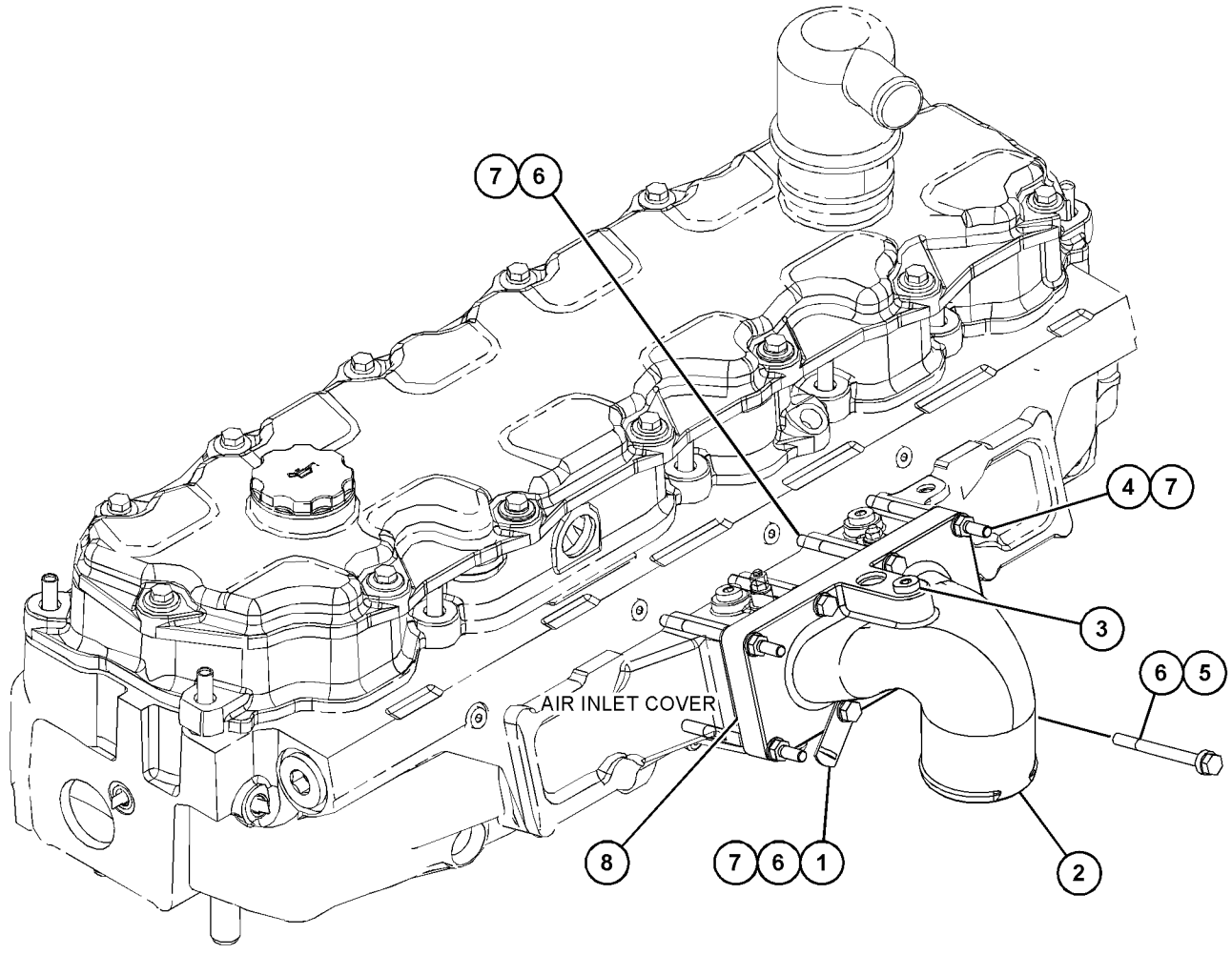

GRAPHIC #1 **<END>** g03709812

392-7923 FASTENER GP-INLET MANIFOLD

S/N: KHX1-UP

PART OF 387-1975, 387-1976 ENGINE AR-COMPLETE

SMCS-1058 **i04895491**

NOTE	REF NO	GRAPHIC REF	PART NUMBER	QTY	PART NAME 1 2 3 4 5 6 (PRODUCT LEVEL)	SEE PAGE
M	1	1	**208-9282**	6	BOLT (M8X1.25X25-MM)	
M	2	1	**6V-5192**	1	BOLT-SOCKET HEAD (M8X1.25X30-MM)	
	3	1	**9M-1974**	1	WASHER-HARD (8.8X16X2-MM THK)	

M - METRIC PART

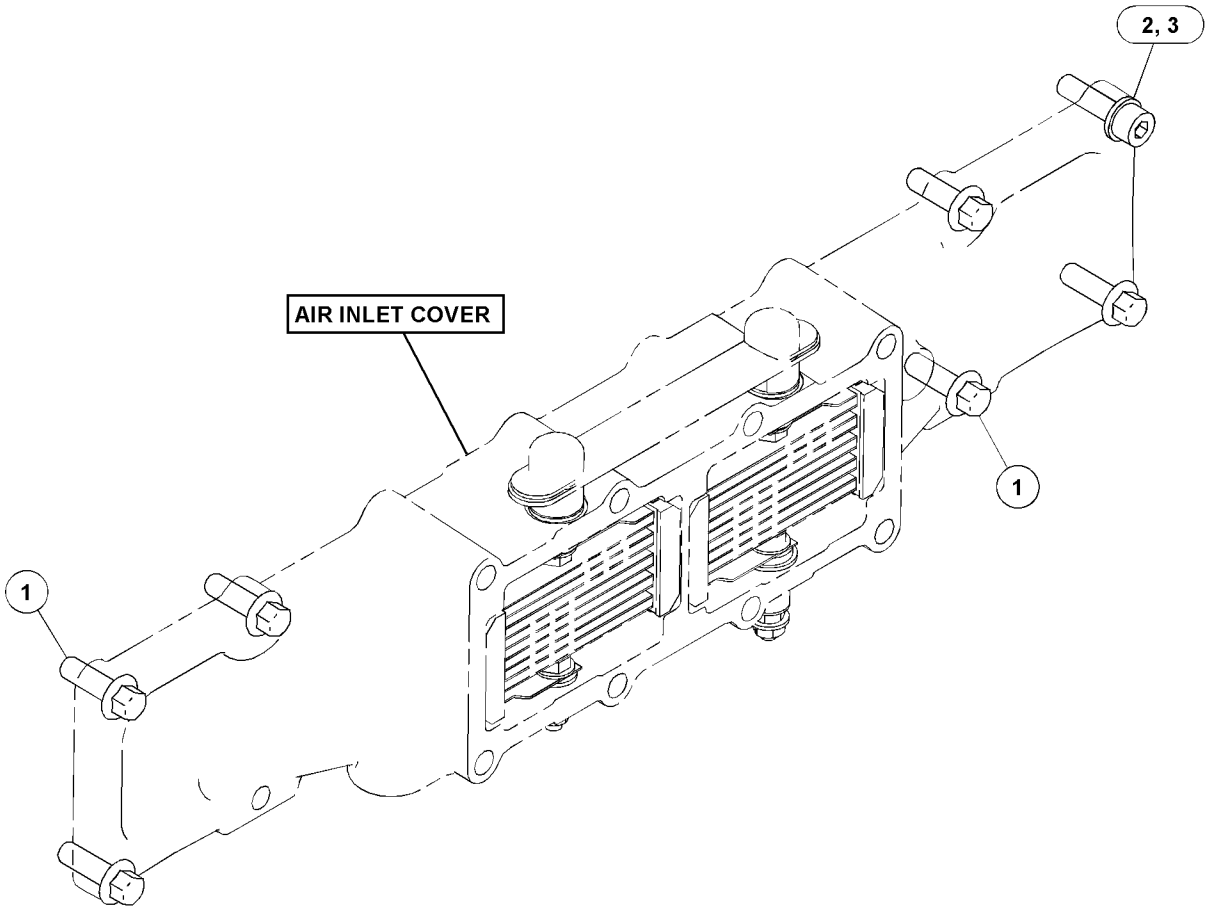

GRAPHIC #1 **<END>** g03097917

237-0431 LINES GP-AFTERCOOLER AIR

S/N: JLX1-115
AIR TO AIR AFTERCOOLER
PART OF 373-8237 CHASSIS AR

SMCS-1063, 1071 **i04544874**

NOTE	REF NO	GRAPHIC REF	PART NUMBER	QTY	PART NAME 1 2 3 4 5 6 (PRODUCT LEVEL)	SEE PAGE
	1	1	**177-0581**	1	HOSE	
	2	1	**202-7935**	1	HOSE	
	3	1	**209-6477**	2	HOSE	
	4	1	**209-4579**	4	CLAMP	
	5	1	**243-5746**	1	TUBE	
	6	1	**284-8971**	1	TUBE	
	7	1	**284-8972**	1	BRACKET	
M	8	1	**129-3180**	2	LOCKNUT (M12X1.75-THD)	
	9	1	**132-2155**	1	U-BOLT	
	10	1	**208-6055**	4	CLAMP	
	11	1	**8T-4121**	2	WASHER-HARD (11X21X2.5-MM THK)	
M	12	1	**8T-4195**	2	BOLT (M10X1.5X30-MM)	
	13	1	**8T-4223**	2	WASHER-HARD (13.5X25.5X3-MM THK)	
	14	1	**7X-1443**	8	PROTECTOR	

M - METRIC PART

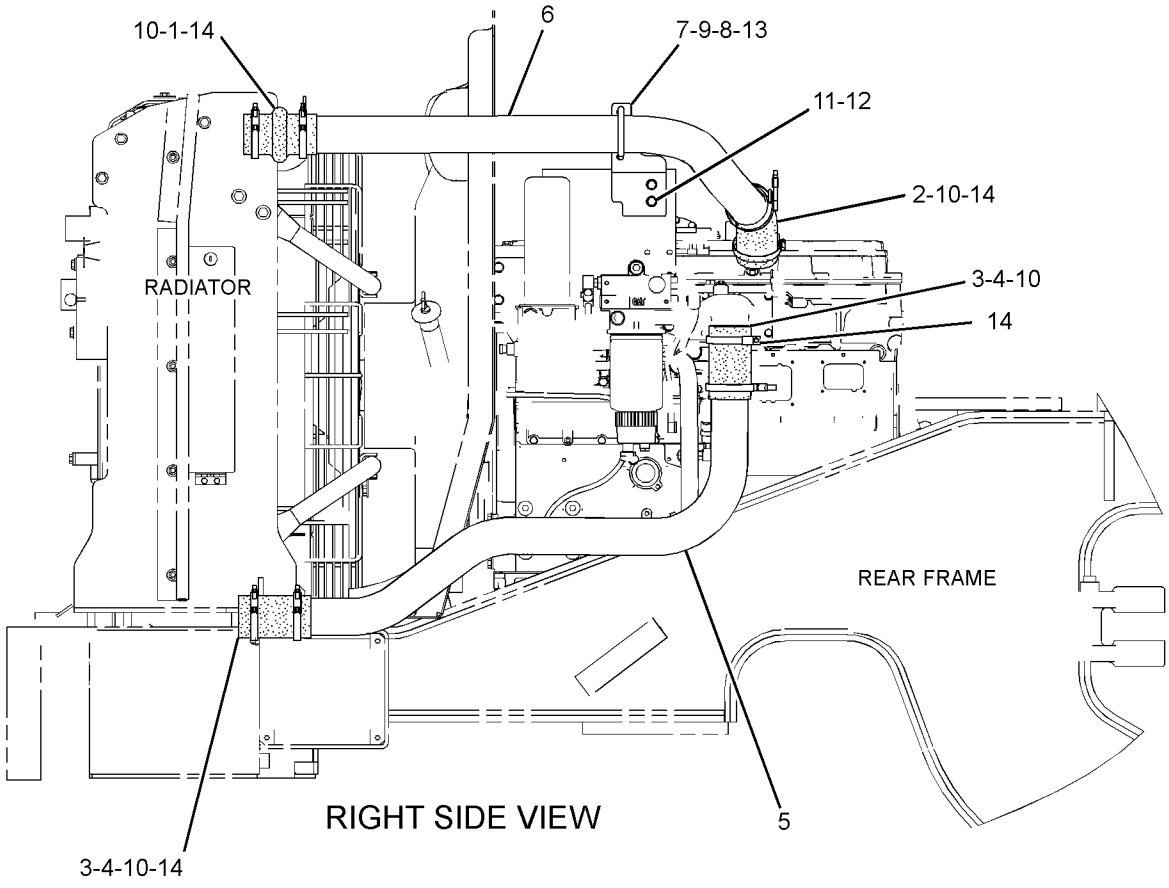

GRAPHIC #1 **<END>** g02723051

AIR INLET AND EXHAUST SYSTEM

393-7628 LINES GP-AFTERCOOLER AIR

S/N: JLX116-UP

PART OF 373-8237 CHASSIS AR

SMCS-1063, 1071 **i05280619**

NOTE	REF NO	GRAPHIC REF	PART NUMBER	QTY	PART NAME 1 2 3 4 5 6 (PRODUCT LEVEL)	SEE PAGE
	1	1	**177-0581**	1	HOSE	
	2	1	**202-7935**	1	HOSE	
	3	1	**209-6477**	2	HOSE	
	4	1	**209-4579**	4	CLAMP	
	5	1	**243-5746**	1	TUBE	
	6	1	**284-8971**	1	TUBE	
	7	1	**394-7274**	1	BRACKET	
M	8	1	**129-3180**	2	LOCKNUT (M12X1.75-THD)	
	9	1	**132-2155**	1	U-BOLT	
	10	1	**208-6055**	4	CLAMP	
	11	1	**8T-4121**	3	WASHER-HARD (11X21X2.5-MM THK)	
M	12	1	**8T-4195**	3	BOLT (M10X1.5X30-MM)	
	13	1	**8T-4223**	2	WASHER-HARD (13.5X25.5X3-MM THK)	
	14	1	**7X-1443**	8	PROTECTOR	

M - METRIC PART

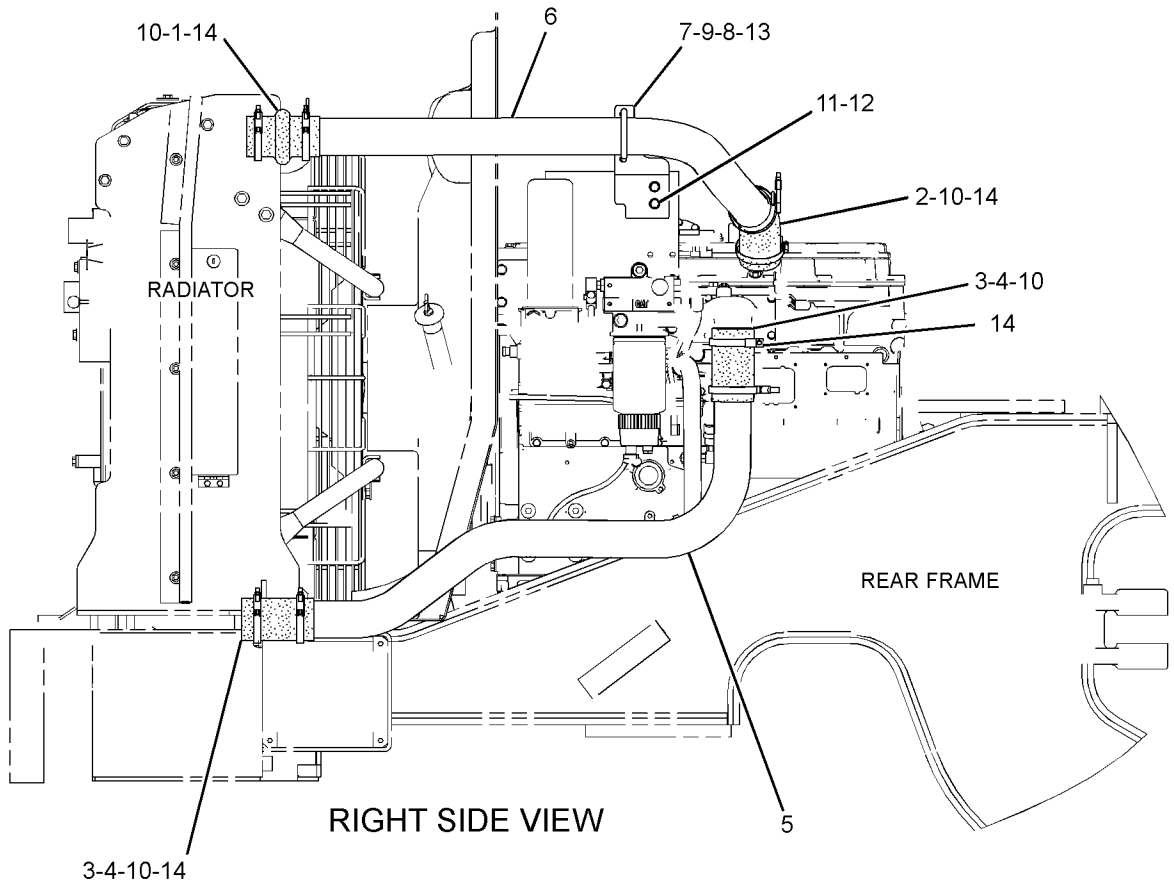

GRAPHIC #1 **<END>** g02723051

AIR INLET AND EXHAUST SYSTEM

364-0881 LINES GP-AIR

S/N: JLX1-115

PART OF 374-4868 INSTALLATION AR-ENGINE

SMCS-1071 **i04401710**

NOTE	REF NO	GRAPHIC REF	PART NUMBER	QTY	PART NAME 1 2 3 4 5 6 (PRODUCT LEVEL)	SEE PAGE
	1	1	**1W-2431**	1	CLAMP - BAND	
	2	1	**206-6875**	1	CAP - TUBE	
	3	1	**261-8531**	1	TUBE	
	4	1	**364-5378**	1	HOSE AS	
	5	1	**346-4788**	1	CLAMP - BAND	
	6	1	**346-4792**	1	CLAMP - BAND	

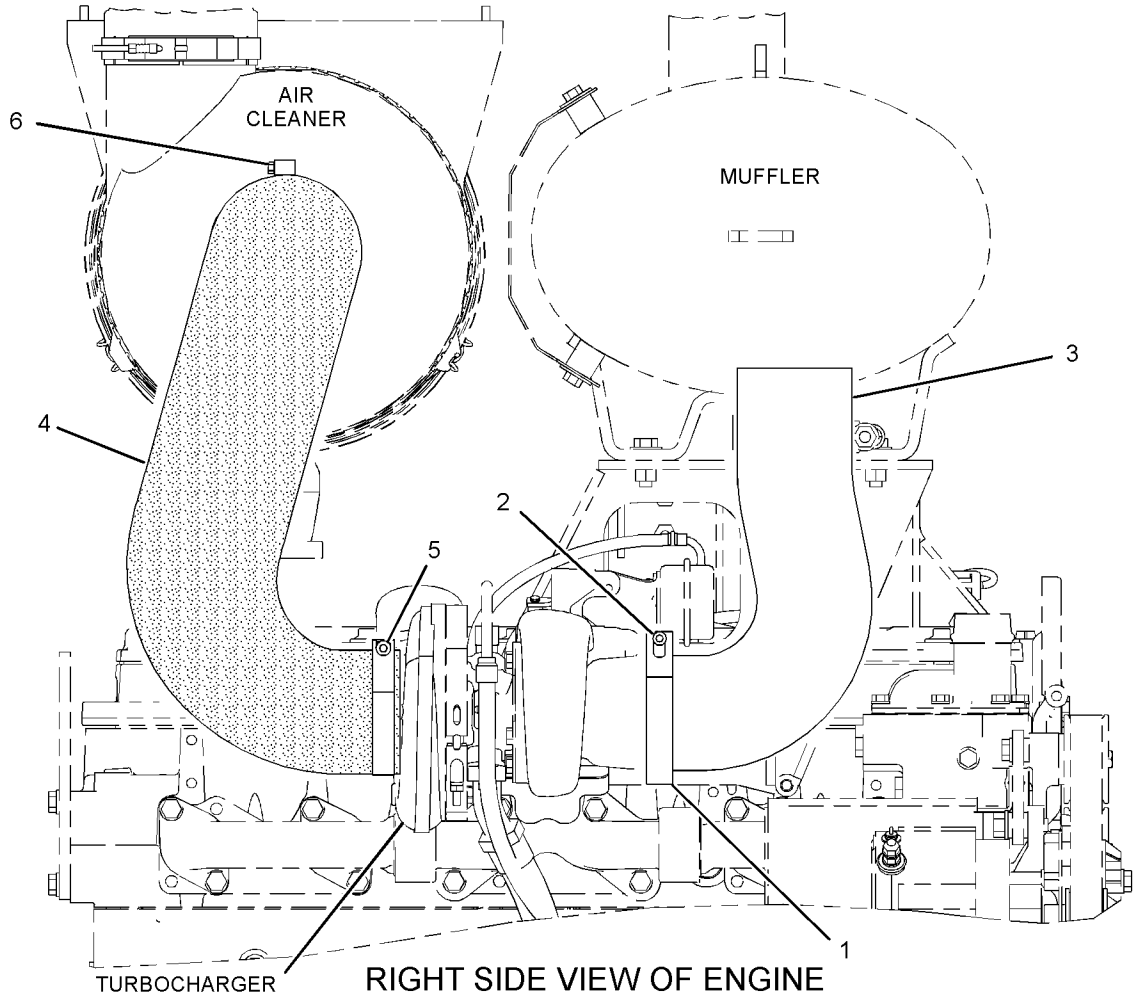

RIGHT SIDE VIEW OF ENGINE

GRAPHIC #1 **<END>** g02609576

AIR INLET AND EXHAUST SYSTEM

391-9256 LINES GP-AIR

S/N: JLX116-UP

PART OF 374-4868 INSTALLATION AR-ENGINE

SMCS-1071 **i05569192**

NOTE	REF NO	GRAPHIC REF	PART NUMBER	QTY	PART NAME 1 2 3 4 5 6 (PRODUCT LEVEL)	SEE PAGE
	1	1	**1W-2431**	1	CLAMP - BAND	
	2	1	**206-6875**	1	CAP - TUBE	
	3	1	**337-7325**	1	CLAMP - BAND	
	4	1	**364-5378**	1	HOSE AS	
	5	1	**390-4282**	1	TUBE AS	
	6	1	**346-4788**	1	CLAMP - BAND	
	7	1	**346-4792**	1	CLAMP - BAND	

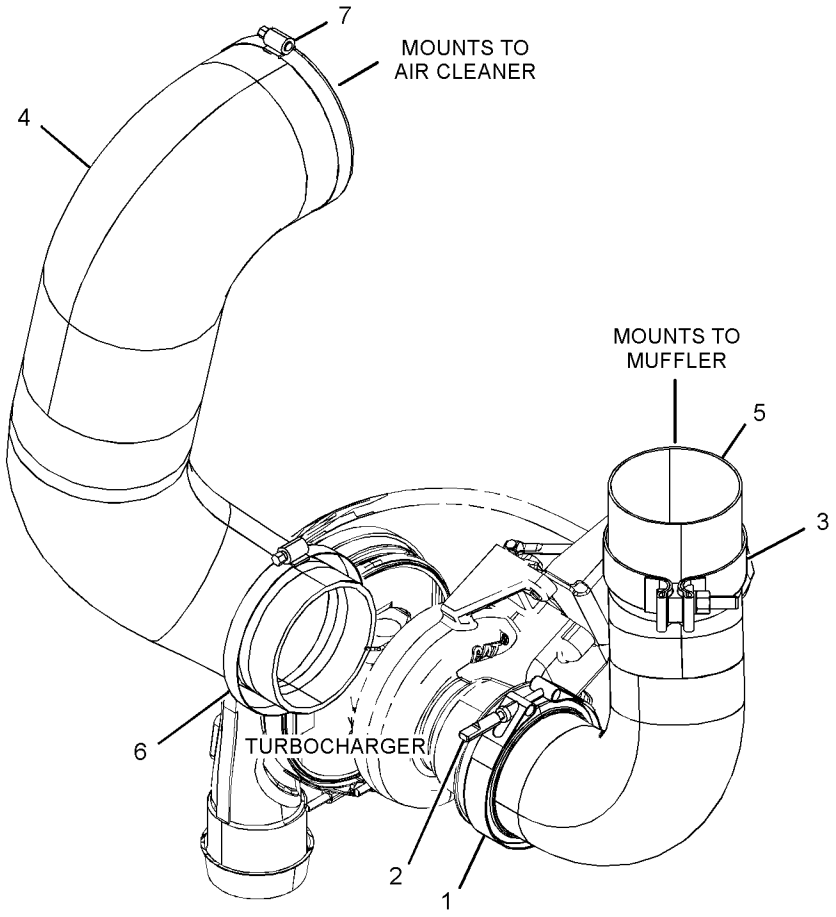

GRAPHIC #1 **<END>** g03619901

183-6845 MANIFOLD GP-EXHAUST

S/N: KHX1-UP

PART OF 338-9076, 387-1975, 387-1976 ENGINE AR-COMPLETE

SMCS-1059 **i02419842**

NOTE	REF NO	GRAPHIC REF	PART NUMBER	QTY	PART NAME 1 2 3 4 5 6 (PRODUCT LEVEL)	SEE PAGE
M	1	1	**8T-7044**	4	STUD-TAPERLOCK (M10X1.5X40-MM)	
	2	1	**272-1956**	6	GASKET	
M	3	1	**172-6298**	8	BOLT-FLANGE HEAD (M10)	
	4	1	**183-6854**	1	MANIFOLD-EXHAUST (CENTER)	
	5	1	**183-6856**	2	MANIFOLD-EXHAUST (END)	
	6	1	**189-8772**	8	SPACER (11X16X35-MM THK)	
	7	1	**203-3768**	4	SPACER (11X16X60-MM THK)	
	8	1	**210-7722**	4	BOLT-FLANGE HEAD (M10)	

M - METRIC PART

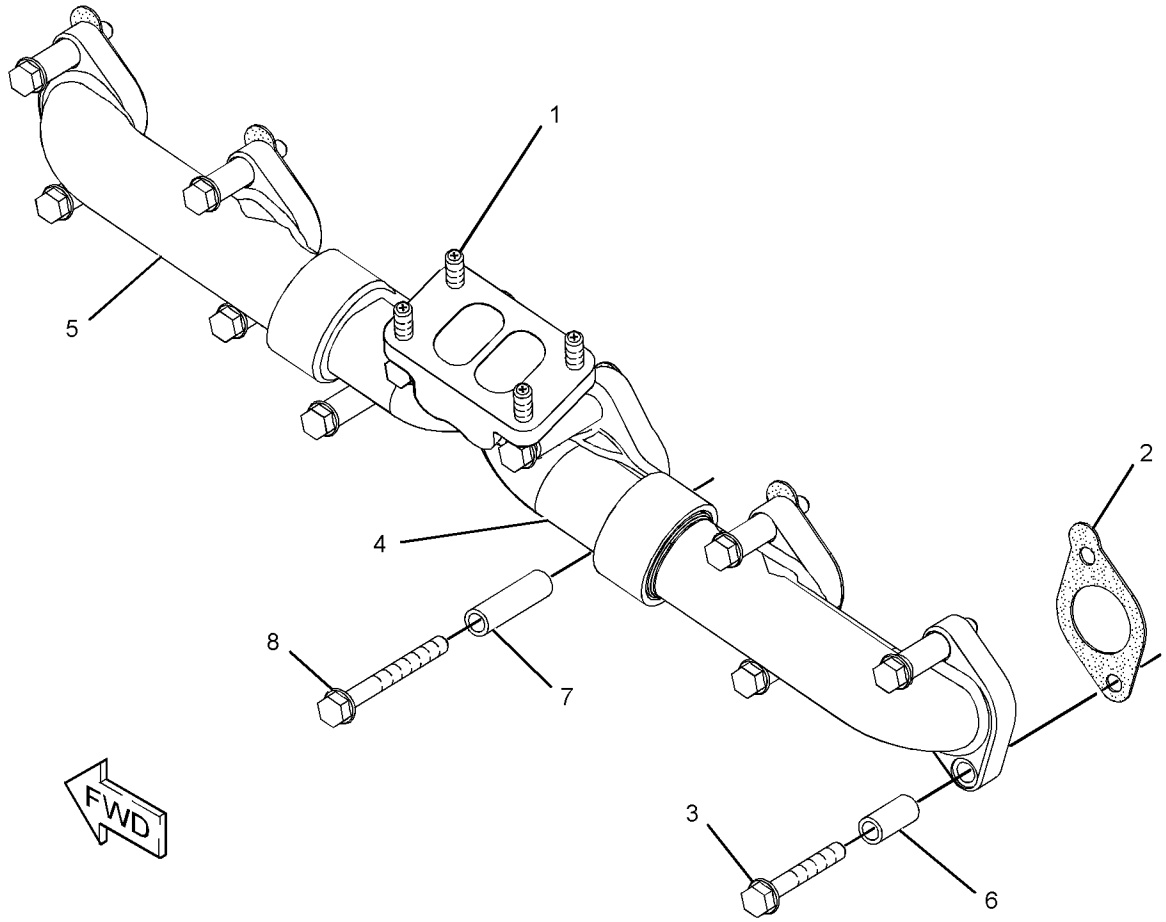

GRAPHIC #1 **<END>** g01211596

392-9270 MOUNTING GP-MUFFLER

S/N: KHX1-UP

PART OF 387-1975, 387-1976 ENGINE AR-COMPLETE

SMCS-1062 **i04895502**

NOTE	REF NO	GRAPHIC REF	PART NUMBER	QTY	PART NAME 1 2 3 4 5 6 (PRODUCT LEVEL)	SEE PAGE
	1	1	**238-1112**	1	BRACKET	
	2	1	**361-7636**	1	BRACKET	
	3	1	**387-1956**	1	BRACKET	
	4	1	**3E-4352**	2	WASHER-HARD (8.8X20.5X2.5-MM THK)	
M	5	1	**5P-7970**	2	NUT (M8X1.25-THD)	
M	6	1	**6V-3822**	2	BOLT (M10X1.5X35-MM)	
M	7	1	**6V-4249**	5	BOLT (M10X1.5X50-MM)	
	8	1	**6V-5839**	7	WASHER (11X21X2.5-MM THK)	
	9	1	**8T-4121**	4	WASHER-HARD (11X21X2.5-MM THK)	
M	10	1	**8T-4196**	4	BOLT (M10X1.5X35-MM)	

M - METRIC PART

392-9270 **MOUNTING GP-MUFFLER (*contd.*)** **i04895502**

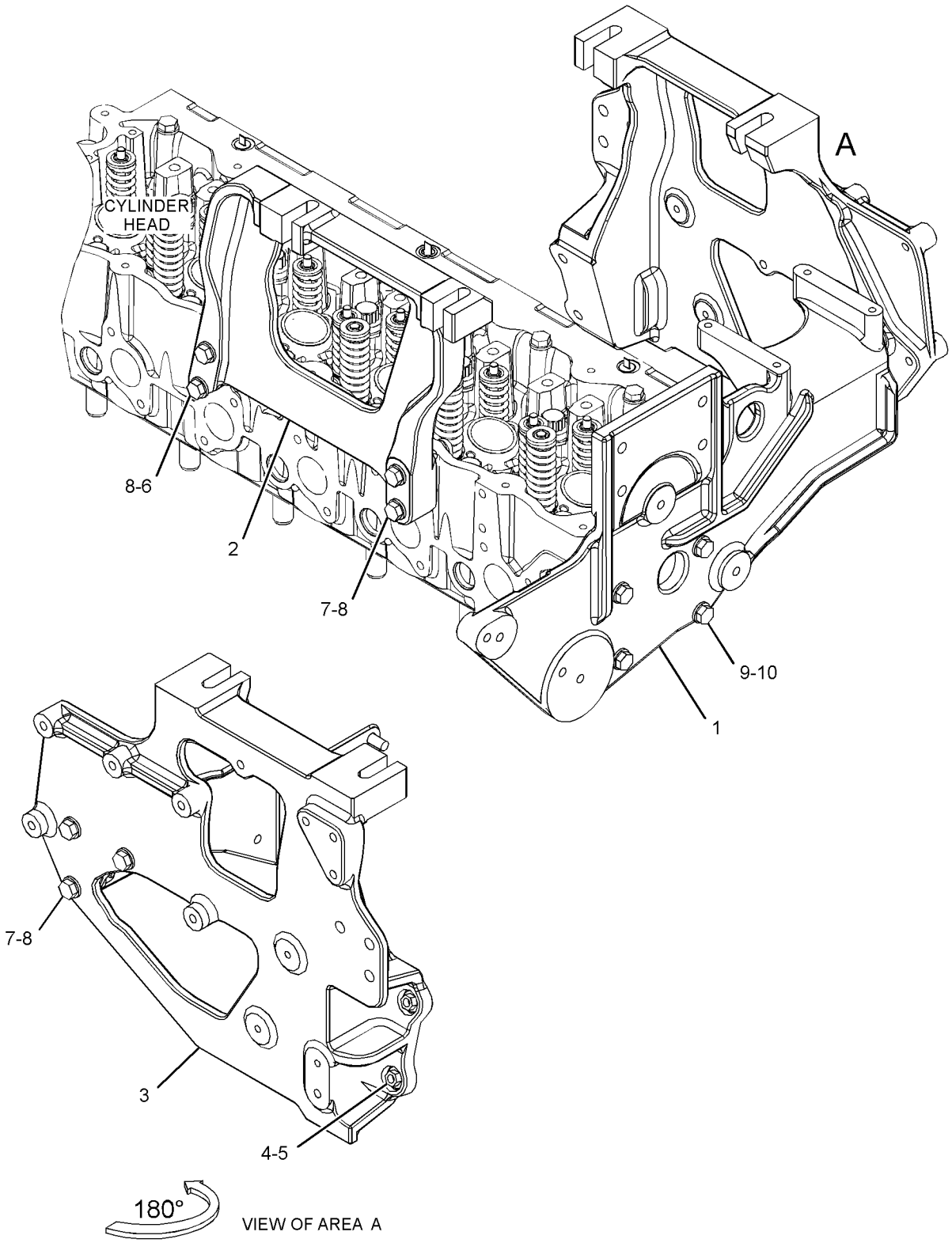

GRAPHIC #1 **<END>** g03098196

237-4853 MUFFLER GP

S/N: JLX1-115

PART OF 374-4868 INSTALLATION AR-ENGINE

SMCS-1062 **i03679026**

NOTE	REF NO	GRAPHIC REF	PART NUMBER	QTY	PART NAME 1 2 3 4 5 6 (PRODUCT LEVEL)	SEE PAGE
	1	1	**309-6898**	1	SHIELD-HEAT	
	2	1	**261-6639**	1	MUFFLER AS	
		1	**7E-3870**	1	CLAMP-MUFFLER	
	3	1	**310-7300**	1	CLIP	
	4	1	**122-4026**	4	SPACER (13X25X25-MM THK)	
	5	1	**7X-0605**	8	WASHER-HARD (13X28X1.6-MM THK)	
	6	1	**7X-7729**	6	WASHER (11X25X3-MM THK)	
M	7	1	**8T-4137**	6	BOLT (M10X1.5X20-MM)	
M	8	1	**8T-4244**	4	NUT (M12X1.75-THD)	
M	9	1	**8T-4910**	4	BOLT (M12X1.75X60-MM)	
BE	10	1	**258-4524**		SLEEVE (37-CM)	

B - USE AS REQUIRED
E - ORDER BY THE CENTIMETER
M - METRIC PART

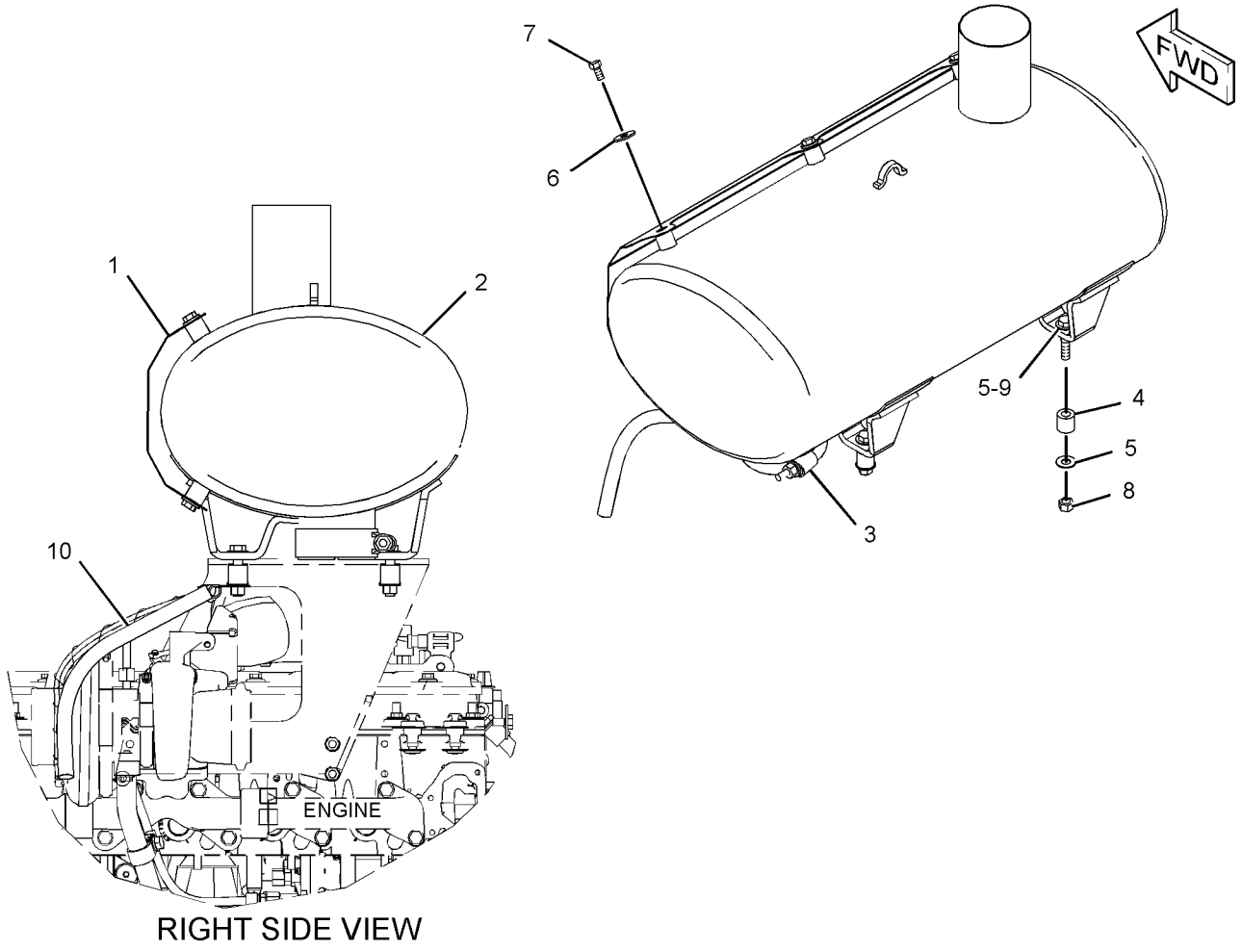

RIGHT SIDE VIEW

GRAPHIC #1 **<END>** g01561014

378-7381 MUFFLER GP

S/N: JLX1-UP

PART OF 374-4868 INSTALLATION AR-ENGINE

SMCS-1062 **i04763318**

NOTE	REF NO	GRAPHIC REF	PART NUMBER	QTY	PART NAME 1 2 3 4 5 6 (PRODUCT LEVEL)	SEE PAGE
	1	1	**360-2691**	1	MUFFLER AS	
	2	1	**382-7167**	1	SHIELD-HEAT	
	3	1	**122-4026**	4	SPACER (13X25X25-MM THK)	
	4	1	**310-7300**	1	CLIP	
	5	1	**7E-3870**	1	CLAMP-MUFFLER	
	6	1	**7X-0605**	8	WASHER-HARD (13X28X1.6-MM THK)	
	7	1	**7X-7729**	6	WASHER (11X25X3-MM THK)	
M	8	1	**8T-4137**	6	BOLT (M10X1.5X20-MM)	
M	9	1	**8T-4244**	4	NUT (M12X1.75-THD)	
M	10	1	**8T-4910**	4	BOLT (M12X1.75X60-MM)	
E	11	1	**258-4524**		SLEEVE (37-CM)	

E - ORDER BY THE CENTIMETER
M - METRIC PART

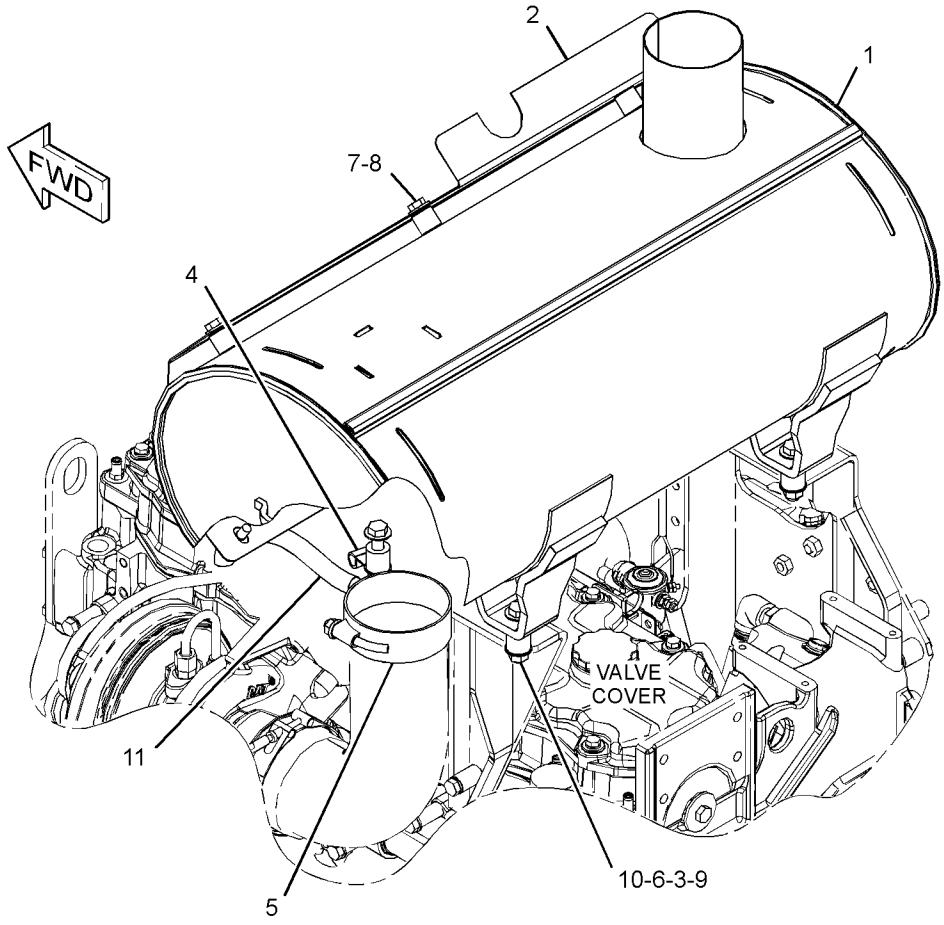

GRAPHIC #1 **<END>** g02867256

378-7381 MUFFLER GP

S/N: JLX116-UP

PART OF 374-4868 INSTALLATION AR-ENGINE

SMCS-1062 **i05278151**

NOTE	REF NO	GRAPHIC REF	PART NUMBER	QTY	PART NAME 1 2 3 4 5 6 (PRODUCT LEVEL)	SEE PAGE
	1	1	**360-2691**	1	MUFFLER AS	
	2	1	**382-7167**	1	SHIELD-HEAT	
E	3	1	**258-4524**		SLEEVE (37-CM)	
M	4	1	**8T-4910**	4	BOLT (M12X1.75X60-MM)	
C	5	1	**5P-1076**	4	WASHER-HARD (13.5X30X4-MM THK)	
C	6	1	**7X-0605**	4	WASHER-HARD (13X28X1.6-MM THK)	
	7	1	**7X-7729**	6	WASHER (11X25X3-MM THK)	
M	8	1	**8T-4137**	6	BOLT (M10X1.5X20-MM)	
CM	9	1	**329-3356**	4	NUT (M12X1.75-THD)	

C - CHANGE FROM PREVIOUS TYPE
E - ORDER BY THE CENTIMETER
M - METRIC PART

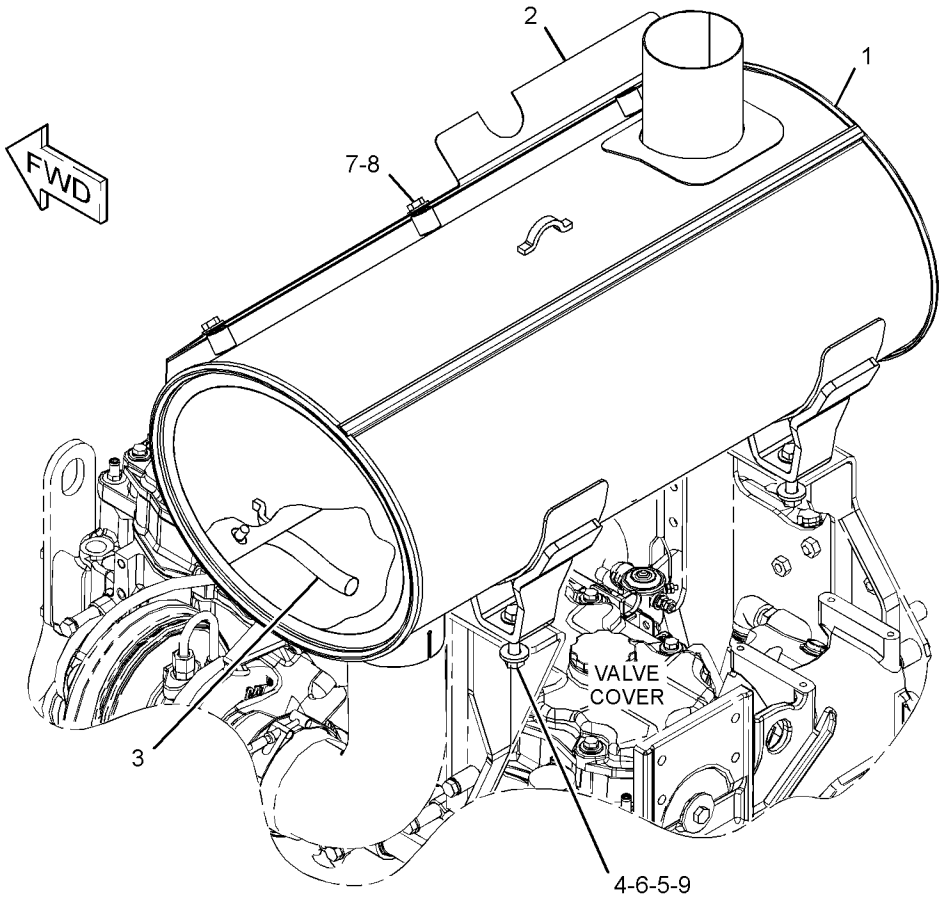

GRAPHIC #1 **<END>** g03375670

244-6601 PRECLEANER GP

S/N: JLX1-UP

PART OF 368-8481, 373-8287 CONVERSION AR-MACHINE, 390-7295 DISTRIBUTION AR, 334-0440 OPTION AR-PRECLEANER

SMCS-1055 **i04802898**

NOTE	REF NO	GRAPHIC REF	PART NUMBER	QTY	PART NAME 1 2 3 4 5 6 (PRODUCT LEVEL)	SEE PAGE
	1	1	**200-7138**	1	PRECLEANER AS	
	2	1	**283-0660**	1	PIPE-EXTENSION	

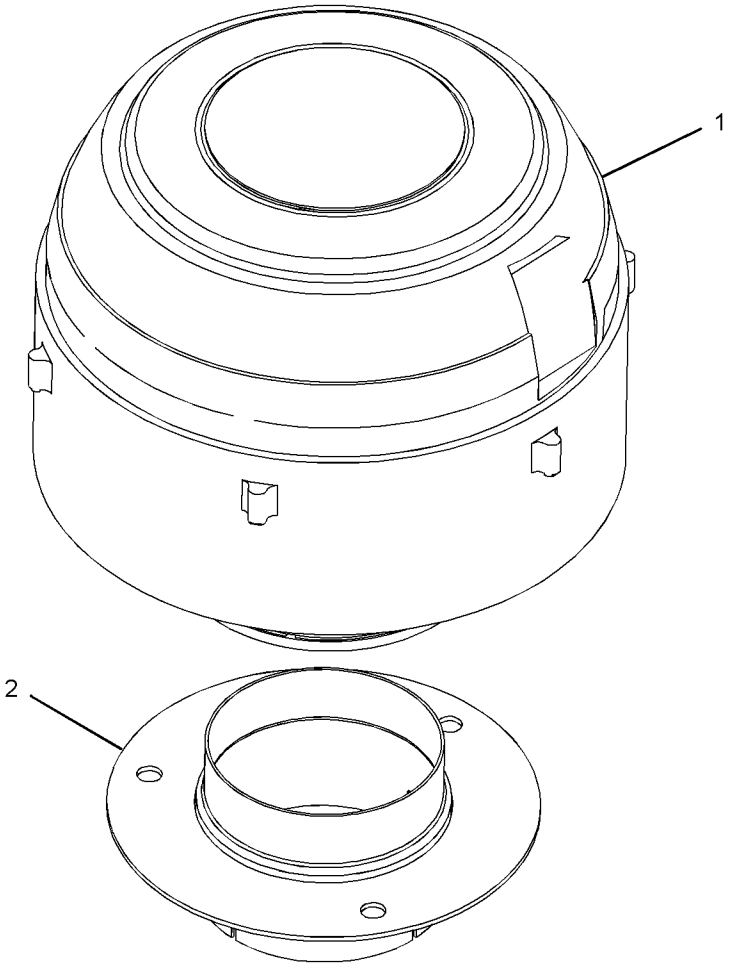

GRAPHIC #1 **<END>** g02936576

244-6603 PRECLEANER GP

S/N: JLX1-UP

SMCS-1055 **i02571433**

NOTE	REF NO	GRAPHIC REF	PART NUMBER	QTY	PART NAME 1 2 3 4 5 6 (PRODUCT LEVEL)	SEE PAGE
	1	1	*217-5288*	1	PRECLEANER GP	
		1	**153-1277**	1	KIT-SCREEN (PRECLEANER)	
		1	**130-3280**	1	PRECLEANER AS	
		1	**174-5415**	1	CLAMP	
		1	**3L-2221**	1	PIPE-EXTENSION	
M		1	**7X-3332**	6	SCREW-HEX FLANGE (M4X0.7X8-MM)	
		1	**116-2659**	2	DAMPER	
	2	1	**283-0660**	1	PIPE-EXTENSION	
	3	1	**222-2277**	1	CLAMP	
	4	1	**8T-4121**	6	WASHER-HARD (11X21X2.5-MM THK)	
M	5	1	**8T-4136**	3	BOLT (M10X1.5X25-MM)	
M	6	1	**8T-4133**	3	NUT (M10X1.5-THD)	

M - METRIC PART

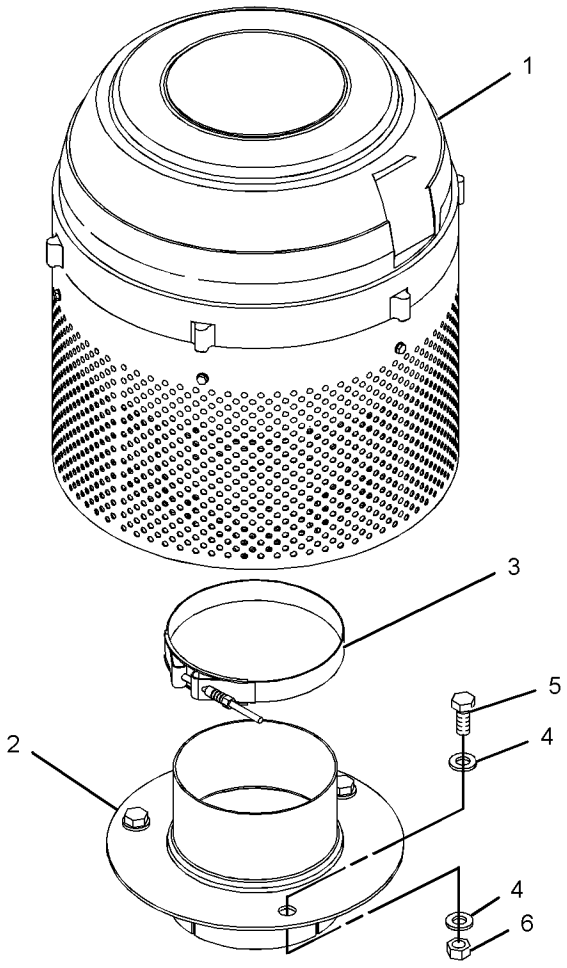

GRAPHIC #1 **<END>** g01218886

250-0841 TURBOCHARGER GP*R

S/N: KHX1-UP

PART OF 258-2403 TURBOCHARGER GP

SMCS-1052, 1053

i05781470

NOTE	REF NO	GRAPHIC REF	PART NUMBER	QTY	PART NAME 1 2 3 4 5 6 (PRODUCT LEVEL)	SEE PAGE
	1	1	**137-1602**	1	CLAMP AS (TURBINE)	
		1	**7M-9918**	1	LOCKNUT (1/4-28-THD)	
	2	1	**158-6072**	1	CLAMP AS (COMPRESSOR)	
	3	1	**161-6963**	2	CLAMP	
R	4	1	**261-9287**	1	CARTRIDGE GP-TURBOCHARGER	
	5	1	**5P-4536**	1	ELBOW	
E	6	1	**242-3360**		HOSE (44-CM)	

E - ORDER BY THE CENTIMETER
R - REMFG PART MAY BE AVAILABLE

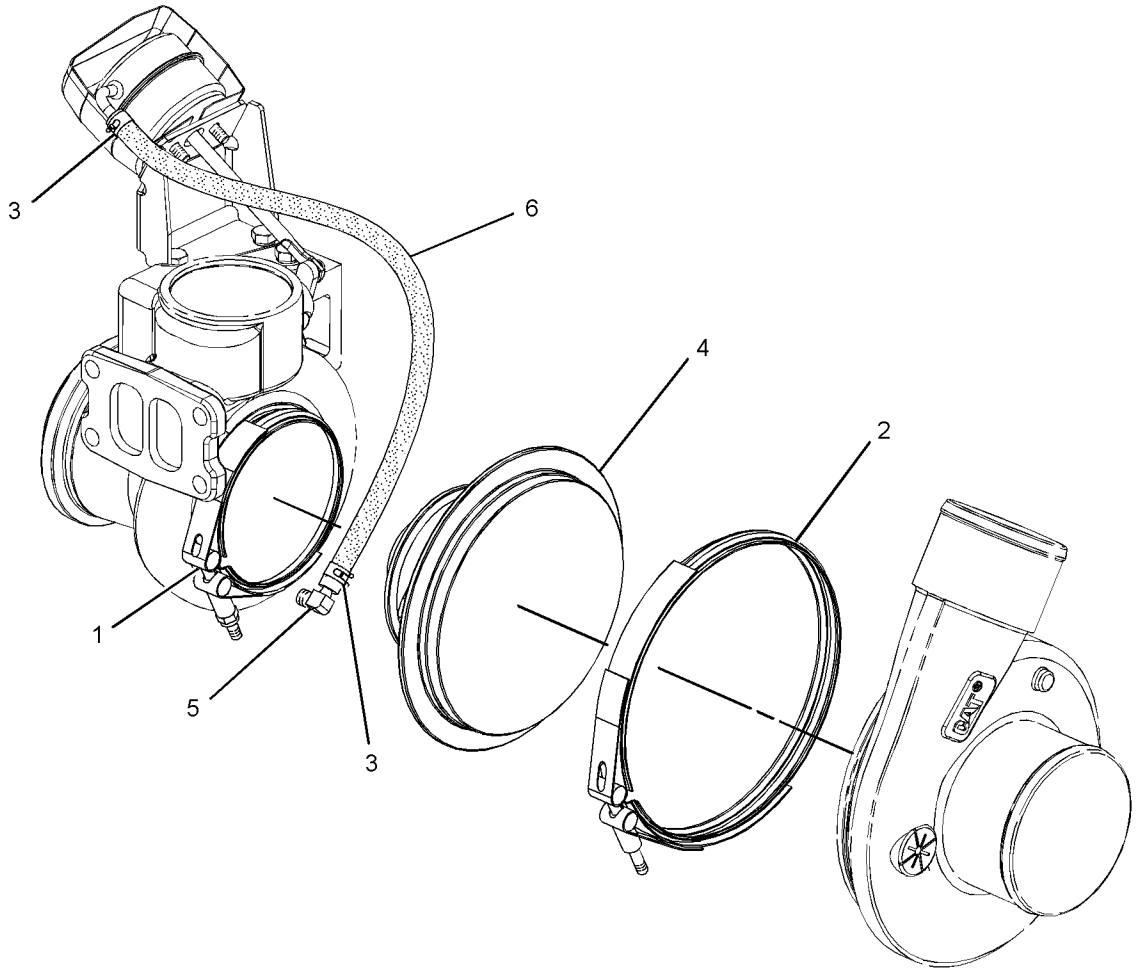

GRAPHIC #1

<END>

g01370583

258-2403 TURBOCHARGER GP

S/N: KHX1-UP

PART OF 387-1975, 387-1976 ENGINE AR-COMPLETE, 235-1423 ENGINE AR-CORE

SMCS-1052, 1053 **i03013756**

NOTE	REF NO	GRAPHIC REF	PART NUMBER	QTY	PART NAME 1 2 3 4 5 6 (PRODUCT LEVEL)	SEE PAGE
	1	1	**7C-7431**	1	GASKET	
Y	2	1	**250-0841**	1	TURBOCHARGER GP	137
M	3	1	**3E-8017**	4	LOCKNUT (M10X1.5-THD)	

M - METRIC PART
Y - SEPARATE ILLUSTRATION

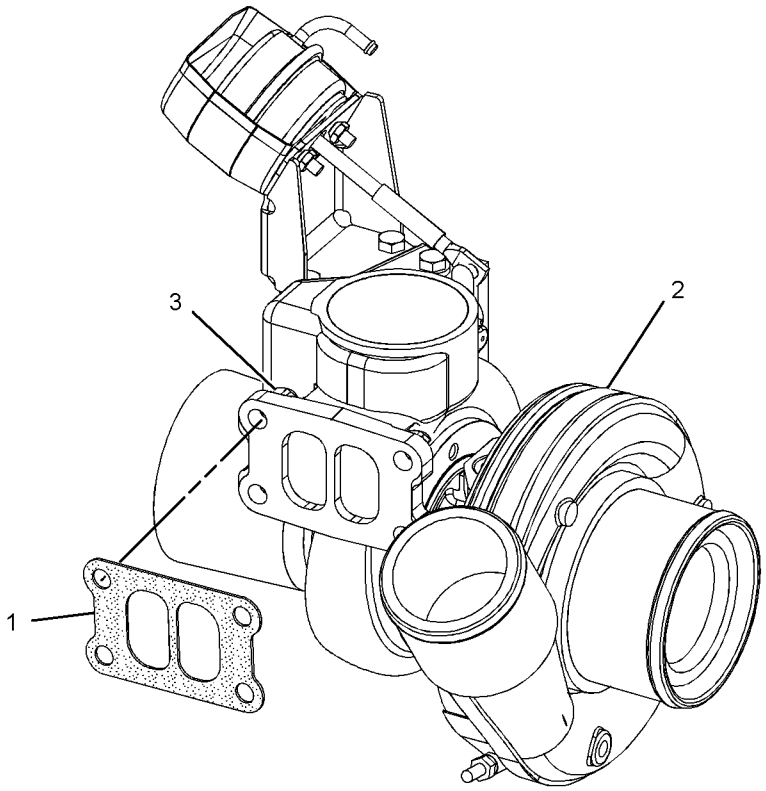

GRAPHIC #1 **<END>** g01118532

395-0327 BASE GP-FUEL FILTER

S/N: KHX1-UP

PART OF 396-3623 FILTER GP-FUEL

SMCS-1262 **i05294936**

NOTE	REF NO	GRAPHIC REF	PART NUMBER	QTY	PART NAME 1 2 3 4 5 6 (PRODUCT LEVEL)	SEE PAGE
	1	1	**1R-0749**	2	FILTER-FUEL (ADVANCED EFFICIENCY)	
	2	1	**274-6719**	1	SENSOR GP-PRESSURE (FUEL FILTER)	
Y	3	1	**275-1253**	1	SWITCH GP-PRESSURE (FUEL FILTER)	312
	4	1	**389-1072**	1	BASE AS-FUEL FILTER	
		1	**9S-4167**	2	STUD-HOLLOW (1-14X1.47-IN)	
	5	1	*398-5596*	1	PLUG AS	
		1	**360-3680**	1	PLUG	
		1	**238-5080**	1	SEAL-O-RING	
	6	1	*321-8642*	2	PLUG AS	
					(EACH INCLUDES)	
		1	**9S-8003**	1	PLUG	
		1	**214-7567**	1	SEAL-O-RING	
	7	1	*235-3596*	1	ADAPTER AS	
		1	**214-7566**	1	SEAL-O-RING	
		1	**235-3595**	1	ADAPTER	
		1	**238-5080**	1	SEAL-O-RING	
	8	1	*389-3708*	1	PLUG AS	
		1	**360-3679**	1	PLUG-CONNECTOR	
		1	**214-7568**	1	SEAL-O-RING	

Y - SEPARATE ILLUSTRATION

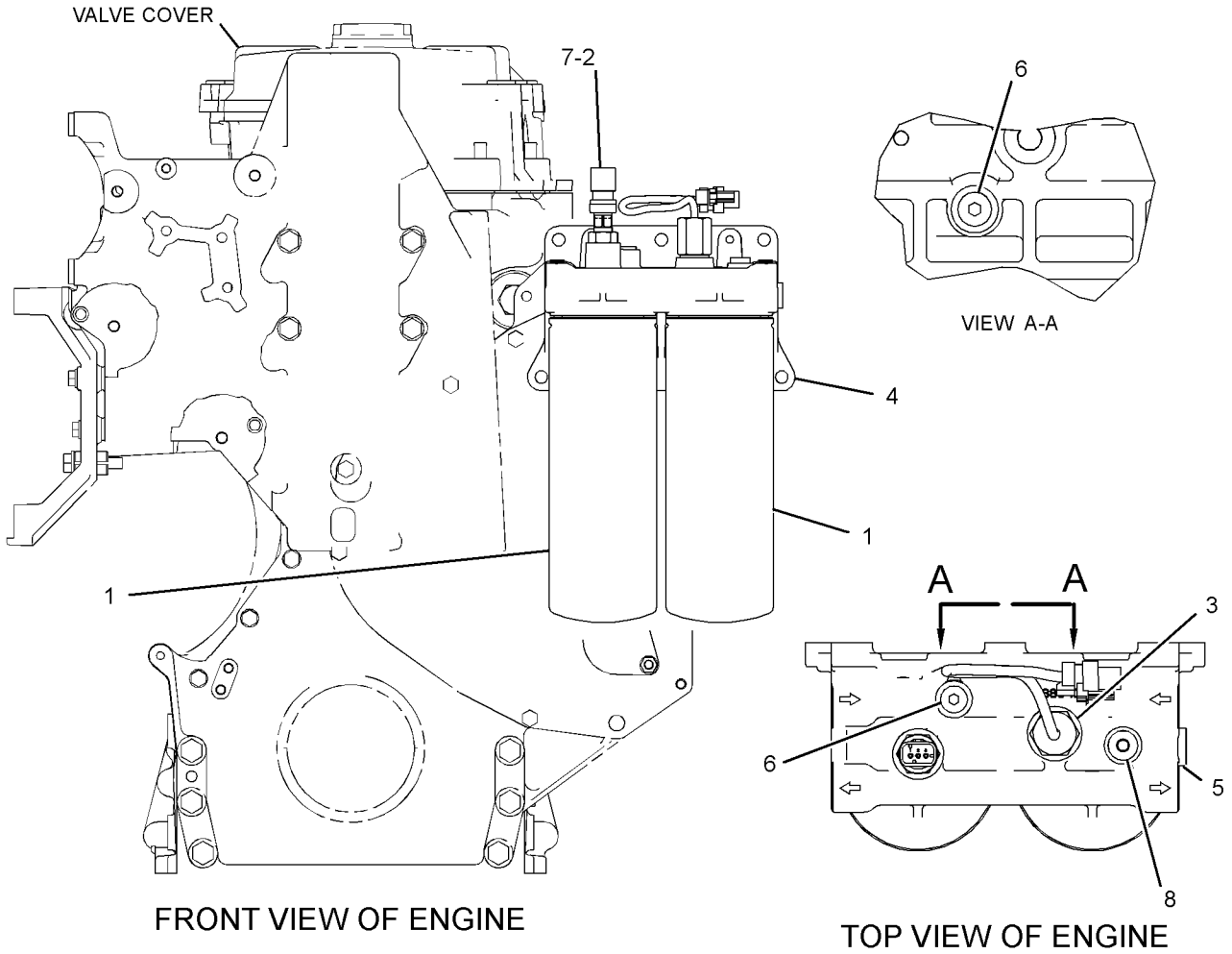

GRAPHIC #1 **<END>** g03386179

237-9823 FILTER & LINES GP-FUEL

S/N: KHX1-UP

PART OF 338-9076 ENGINE AR-COMPLETE

SMCS-1261, 1274 **i02374963**

NOTE	REF NO	GRAPHIC REF	PART NUMBER	QTY	PART NAME 1 2 3 4 5 6 (PRODUCT LEVEL)	SEE PAGE
	1	1	**3S-2093**	3	STRAP-CABLE	
	2	1	*183-3406*	1	PLUG AS	
		1	**6V-5049**	1	SEAL-O-RING	
		1	**9S-4191**	1	PLUG	
Y	3	1	**194-6725**	1	SENSOR GP-PRESSURE (FUEL)	285
	4	1	**206-6876**	1	CAP-TUBE	
Y	5	1	*232-0343*	1	REGULATOR GP-FUEL PRESSURE	169
	6	1	**235-3596**	1	ADAPTER AS	
		1	**6V-5048**	2	SEAL-O-RING	
		1	**8L-2786**	2	SEAL-O-RING	
		1	**235-3595**	2	ADAPTER	
	7	1	**237-9308**	1	BASE AS-FUEL FILTER	
		1	**9S-4167**	1	STUD-HOLLOW (1-14X1.47-IN)	
	8	1	**238-1112**	1	BRACKET	
I	9	1	**244-6604**	1	HOSE AS	
I	10	1	**244-6605**	1	HOSE AS	
	11	1	**254-1425**	1	BRACKET AS	
Y	12	1	**258-0883**	1	SWITCH GP-PRESSURE (FUEL)	311
	13	1	**260-4861**	1	HARNESS AS-WIRING (FUEL PRESSURE) (SENSOR)	
		1	**102-8803**	1	KIT-RECEPTACLE (3-PIN)	
					(INCLUDES RECEPTACLE AS AND WEDGE)	
		1	**102-8806**	1	KIT-RECEPTACLE (8-PIN)	
					(INCLUDES RECEPTACLE AS AND WEDGE)	
		1	**8T-8737**	3	PLUG-SEAL	
		1	**155-2270**	1	KIT-CONNECTING PLUG (2-PIN)	
					(INCLUDES PLUG AS AND WEDGE)	
	14	1	**067-2551**	1	CLIP	
	15	1	**130-5301**	1	CLIP	
	16	1	**132-5789**	1	CLIP	
	17	1	**134-3988**	3	CLIP	
	18	1	**141-8275**	1	VALVE-DRAIN (FUEL FILTER BASE)	
	19	1	*148-8313*	1	ADAPTER AS	
		1	**3K-0360**	1	SEAL-O-RING	
		1	**5P-6944**	1	ADAPTER	
	20	1	*148-8336*	1	CONNECTOR AS	
		1	**3J-1907**	1	SEAL-O-RING	
		1	**6V-8397**	1	SEAL-O-RING	
		1	**6V-8636**	1	CONNECTOR	
	21	1	*148-8363*	1	ELBOW AS	
		1	**3K-0360**	1	SEAL-O-RING	
		1	**6V-8397**	1	SEAL-O-RING	
		1	**6V-9876**	1	ELBOW	
	22	1	*148-8374*	1	ELBOW AS	
		1	**3K-0360**	1	SEAL-O-RING	
		1	**6V-8397**	1	SEAL-O-RING	
		1	**6V-8723**	1	ELBOW	
	23	1	*148-8378*	1	ELBOW AS	
		1	**3J-1907**	1	SEAL-O-RING	
		1	**6V-8397**	1	SEAL-O-RING	
		1	**6V-8724**	1	ELBOW	
	24	1	*148-8411*	2	PLUG AS	
					(EACH INCLUDES)	
		1	**3K-0360**	1	SEAL-O-RING	
		1	**9S-4185**	1	PLUG	
	25	1	*162-0177*	1	PLUG AS	
		1	**3J-1907**	1	SEAL-O-RING	
		1	**9S-8004**	1	PLUG	
	26	1	**174-5907**	1	CLIP	
	27	1	**1R-0762**	1	FILTER-FUEL (ADVANCED EFFICIENCY) (SECONDARY)	

237-9823 **FILTER & LINES GP-FUEL (*contd.*)** **i02374963**

NOTE	REF NO	GRAPHIC REF	PART NUMBER	QTY	PART NAME 1 2 3 4 5 6 (PRODUCT LEVEL)	SEE PAGE
M	28	1	**5C-7261**	3	NUT (M8X1.25-THD)	
M	29	1	**6V-3822**	2	BOLT (M10X1.5X35-MM)	
	30	1	**6V-5049**	1	SEAL-O-RING	
	31	1	**6V-5839**	7	WASHER (11X21X2.5-MM THK)	
M	32	1	**6V-6889**	2	NUT (M8X1.25-THD)	
M	33	1	**8T-4137**	3	BOLT (M10X1.5X20-MM)	
M	34	1	**8T-4185**	3	BOLT (M10X1.5X50-MM)	
	35	1	**8T-4224**	4	WASHER-HARD (8.8X16X2-MM THK)	
	36	1	**8T-4226**	1	WASHER-PLATED (10.5X45X3-MM THK)	
	37	1	**9M-1974**	2	WASHER-HARD (8.8X16X2-MM THK)	
	38	1	**8T-4121**	4	WASHER-HARD (11X21X2.5-MM THK)	
M	39	1	**8T-4196**	4	BOLT (M10X1.5X35-MM)	

I - REFER TO HYDRAULIC INFORMATION SYSTEM
M - METRIC PART
Y - SEPARATE ILLUSTRATION

237-9823 **FILTER & LINES GP-FUEL (*contd.*)** **i02374963**

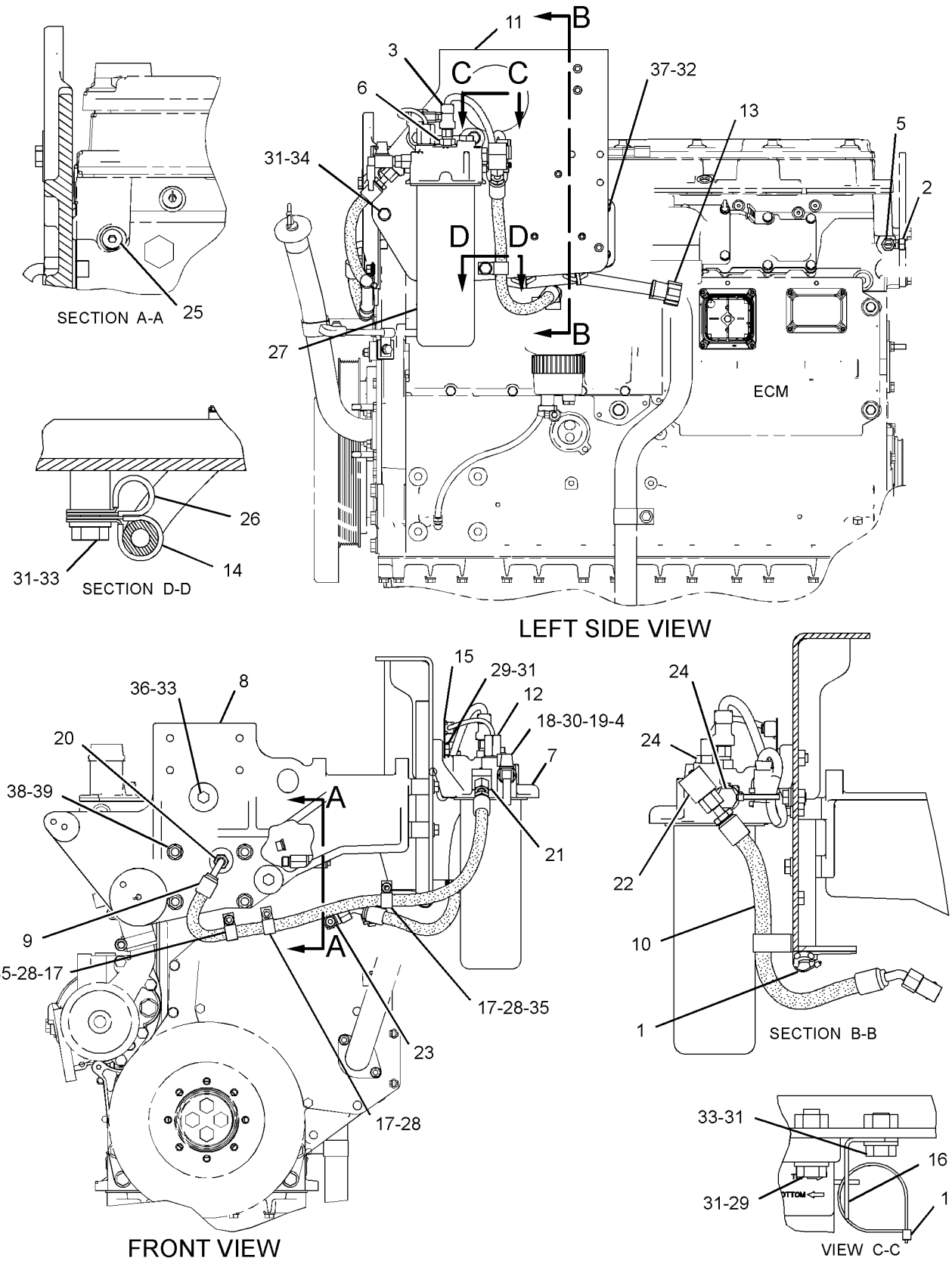

GRAPHIC #1 **<END>** g01224932

396-3623 FILTER GP-FUEL

S/N: KHX1-UP

PART OF 387-1975, 387-1976 ENGINE AR-COMPLETE

SMCS-1261 **i05120174**

NOTE	REF NO	GRAPHIC REF	PART NUMBER	QTY	PART NAME 1 2 3 4 5 6 (PRODUCT LEVEL)	SEE PAGE
	1	1	**8T-9655**	8	MOUNT-ISOLATION	
	3	1	**191-1782**	1	SPACER (8.5X12.7X38.2-MM THK)	
Y	4	1	**212-3657**	1	PUMP GP-FUEL PRM & WATER SEP (ELECTRIC)	165
	5	1	**232-1374**	1	BRACKET	
	6	1	**232-1376**	2	SPACER (8.5X12.7X139.1-MM THK)	
	7	1	**260-5864**	1	SWITCH GP-TOGGLE (FUEL FILTER)	
		1	**102-8803**	1	KIT-RECEPTACLE (3-PIN)	
					(INCLUDES RECEPTACLE AS & WEDGE)	
		1	**8T-8729**	3	PIN-CONNECTOR (16-GA TO 18-GA)	
	8	1	**305-3684**	1	PLATE-IDENTIFICATION (FUEL PRIMING PUMP ON, OFF)	
	9	1	**311-4919**	1	PLATE AS	
M		1	**8T-3612**	1	NUT-WELD (M8X1.25-THD)	
Y	10	1	*395-0327*	1	BASE GP-FUEL FILTER	139
	11	1	**130-5301**	1	CLIP	
M	12	1	**176-9237**	1	BOLT-SPECIAL	
M	13	1	**3E-8005**	2	BOLT (M8X1.25X160-MM)	
M	15	1	**6V-3822**	4	BOLT (M10X1.5X35-MM)	
	16	1	**6V-5839**	8	WASHER (11X21X2.5-MM THK)	
M	17	1	**6V-6317**	1	BOLT (M10X1.5X20-MM)	
	18	1	**7X-7739**	5	WASHER (9.7X25.4 X4-MM THK)	
M	19	1	**8T-0100**	1	BOLT (M8X1.25X60-MM)	

M - METRIC PART
Y - SEPARATE ILLUSTRATION

396-3623 **FILTER GP-FUEL (*contd.*)** **i05120174**

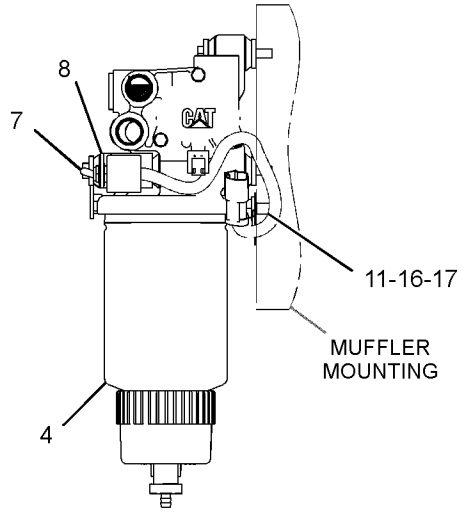

VIEW A-A

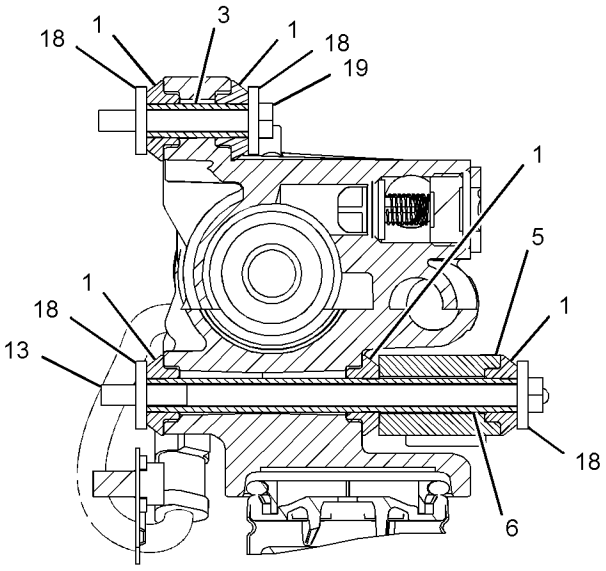

SECTION B-B

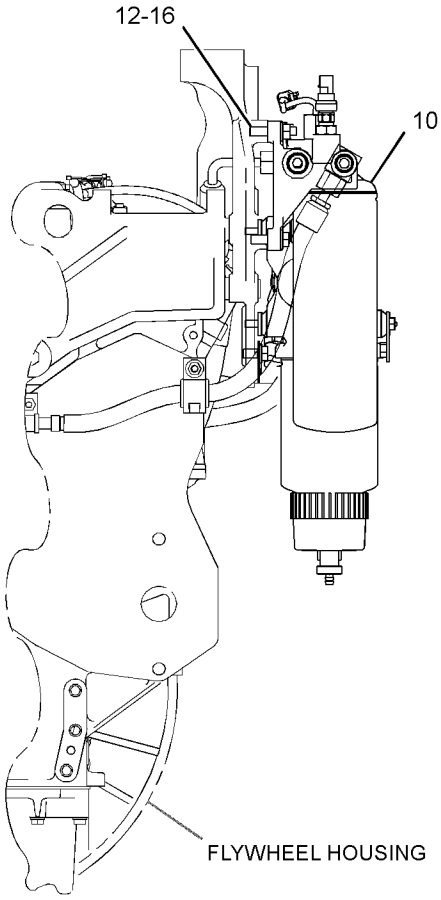

FRONT VIEW OF ENGINE

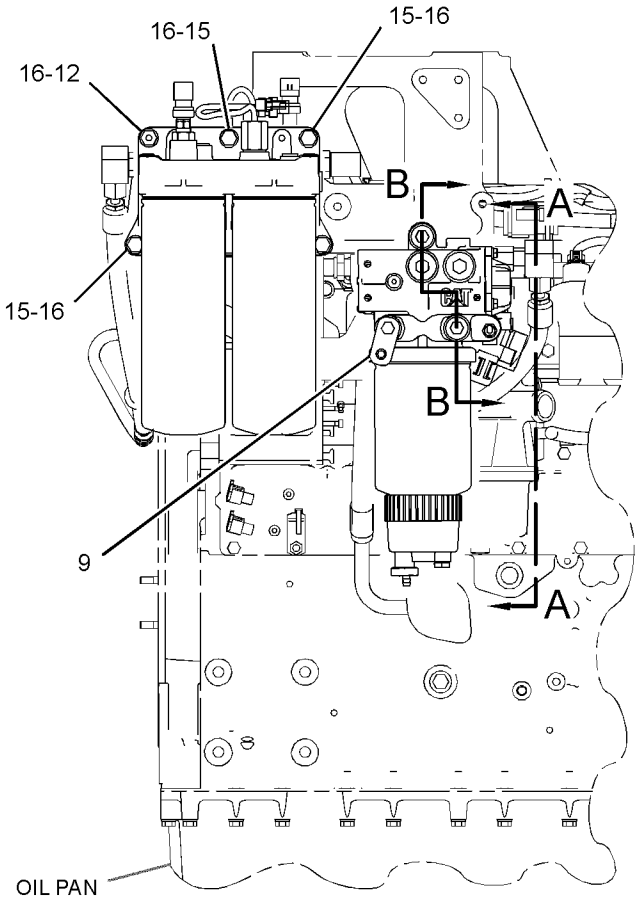

LEFT SIDE VIEW OF ENGINE

GRAPHIC #1 **<END>** g03324715

174-9570 FILTER GP-WATER SEP & FUEL

S/N: KHX1-UP

PART OF 212-3657 PUMP GP-FUEL PRM & WATER SEP

SMCS-1260, 1261, 1263

i05523178

NOTE	REF NO	GRAPHIC REF	PART NUMBER	QTY	PART NAME 1 2 3 4 5 6 (PRODUCT LEVEL)	SEE PAGE
	1	1	**326-1644**	1	FILTER AS-WATER SEP & FUEL (PRIMARY)	
	1A	1	**220-8678**	1	SEAL-RING (FUEL, WATER SEPARATOR)	
	2	1	**343-5527**	1	BOWL AS	
BJ	2A	1	**3J-1907**	1	SEAL-O-RING	
	2B	1	**5F-9144**	1	SEAL-O-RING	
	2C	1	**8F-7219**	1	SEAL-O-RING	
BJ	2D	1	**9S-8004**	1	PLUG (DRAIN)	

B - USE AS REQUIRED
J - PARTS MARKED J ARE USED WITH BOWL ASSEMBLY THAT IS NOT ONE PIECE.

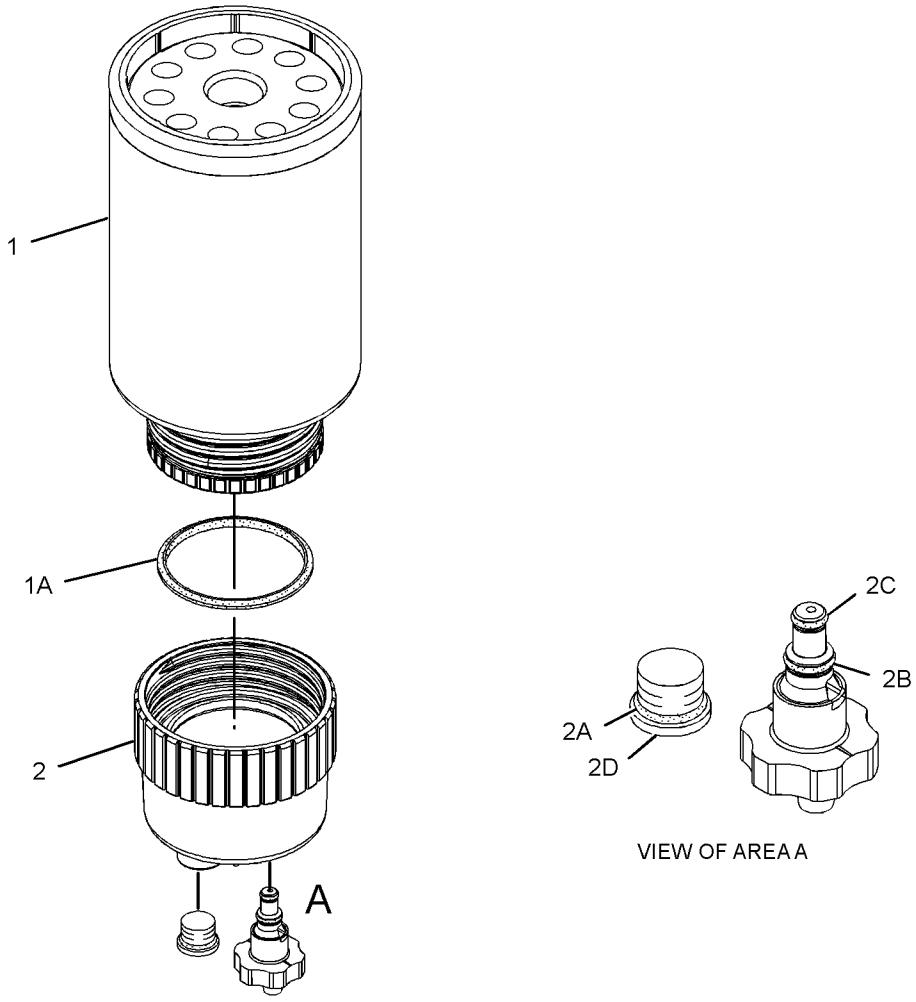

GRAPHIC #1

<END>

g01960053

268-1835 INJECTOR GP-FUEL

S/N: KHX1-UP

PART OF 268-1839 PUMP GP-FUEL INJECTION

SMCS-1251, 1254, 1290, 1713 **i02451153**

NOTE	REF NO	GRAPHIC REF	PART NUMBER	QTY	PART NAME 1 2 3 4 5 6 (PRODUCT LEVEL)	SEE PAGE
	1	1	**149-5240**	1	RING-BACKUP	
	2	1	**169-3104**	1	RING-BACKUP	
	3	1	**169-8598**	1	SEAL-O-RING	
	5	1	**109-3207**	1	SEAL-O-RING	
	6	1	**148-2903**	1	SEAL-O-RING	
	7	1	**169-8586**	1	RING-BACKUP	

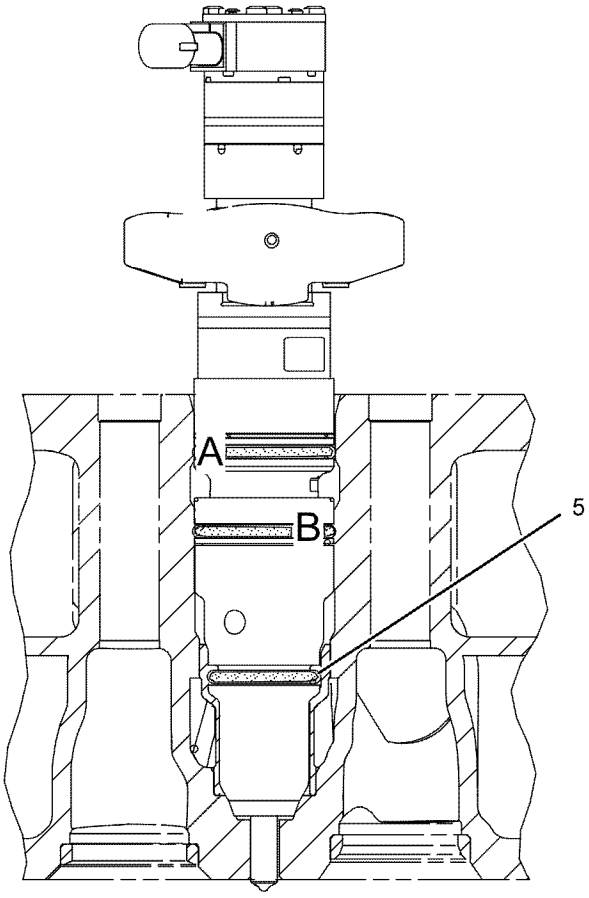

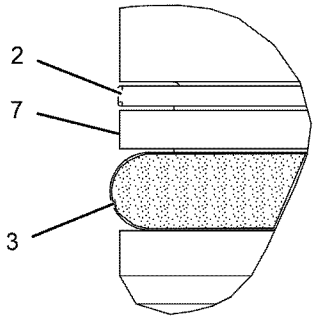

VIEW OF AREA A

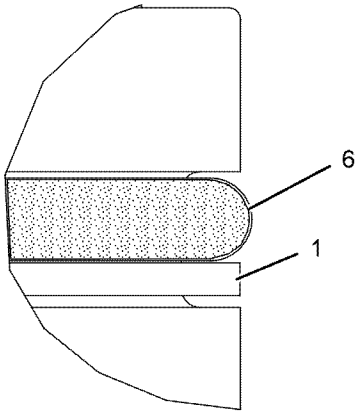

VIEW OF AREA B

GRAPHIC #1 **<END>** g01032697

328-2585 INJECTOR GP-FUEL*R

S/N: KHX1-UP

PART OF 268-1839 PUMP GP-FUEL INJECTION

SMCS-1251, 1254, 1290, 1713

i03293520

NOTE	REF NO	GRAPHIC REF	PART NUMBER	QTY	PART NAME 1 2 3 4 5 6 (PRODUCT LEVEL)	SEE PAGE
	1	1	**149-5240**	1	RING-BACKUP	
	2	1	*263-8218*	1	INJECTOR GP-FUEL	
	3	1	**293-0730**	1	RING-BACKUP	
	4	1	**109-3207**	1	SEAL-O-RING	
	5	1	**148-2903**	2	SEAL-O-RING (FUEL SYSTEM)	

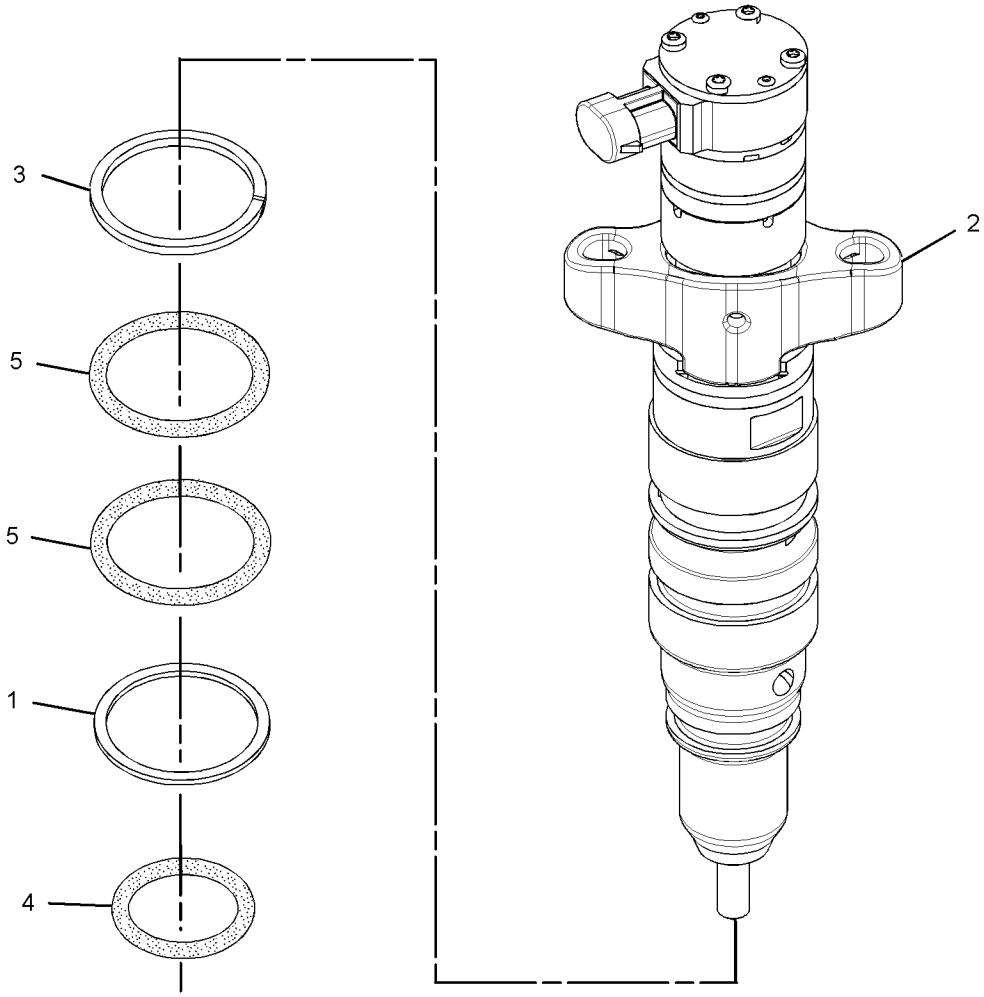

GRAPHIC #1

<END>

g01684557

387-9427 INJECTOR GP-FUEL*R

S/N: KHX1-UP

PART OF 268-1839 PUMP GP-FUEL INJECTION

SMCS-1251, 1254, 1290, 1713 **i05237013**

NOTE	REF NO	GRAPHIC REF	PART NUMBER	QTY	PART NAME 1 2 3 4 5 6 (PRODUCT LEVEL)	SEE PAGE
	1	1	**148-2903**	2	SEAL-O-RING	
	2	1	**109-3207**	1	SEAL-O-RING	
	3	1	**149-5240**	1	RING-BACKUP	
	4	1	**293-0730**	1	RING-BACKUP	

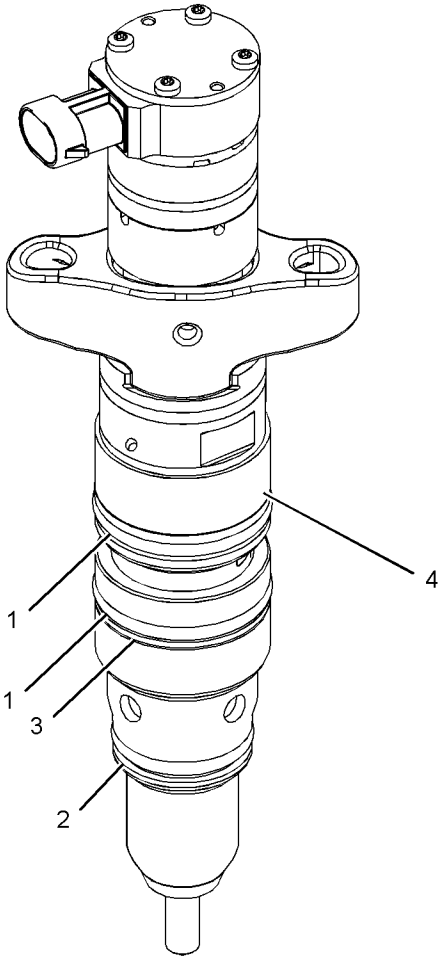

GRAPHIC #1 **<END>** g03341832

297-4841 KIT-FUEL SYSTEM GASKET—SINGLE FUEL INJECTOR

S/N: JLX1-UP

FOR USE WITH 338-9076—PAGE: 12

SMCS-1250, 7555

i05843106

NOTE	PART NUMBER	QTY	PART NAME 1 2 3 4 5 6 (PRODUCT LEVEL)	SEE PAGE
	149-5240	1	RING-BACKUP	
	293-0730	1	RING-BACKUP	
	109-3207	1	SEAL-O-RING	
	148-2903	2	SEAL-O-RING	

<END>

378-7380 LINES GP-FUEL

S/N: JLX1-UP

PART OF 373-8237 CHASSIS AR

SMCS-1274 **i05917020**

NOTE	REF NO	GRAPHIC REF	PART NUMBER	QTY	PART NAME 1 2 3 4 5 6 (PRODUCT LEVEL)	SEE PAGE
	1	1	**5P-4961**	2	CLAMP-HOSE	
	2	1	**192-5017**	1	BRACKET AS	
	3	1	**197-6453**	1	BRACKET AS	
	4	1	**302-3908**	1	SPACER (11X20X30-MM THK)	
	5	1	**379-5207**	1	HOSE AS	
	6	1	**379-5208**	1	HOSE AS	
	7	1	**379-5209**	1	BRACKET AS	
	8	1	**7D-7233**	1	CLIP	
	9	1	*148-8336*	1	CONNECTOR AS	
		1	**6V-8636**	1	CONNECTOR	
		1	**3J-1907**	1	SEAL-O-RING	
		1	**6V-8397**	1	SEAL-O-RING	
	10	1	**9M-8406**	3	CLIP	
	11	1	**5K-8451**	2	CLIP	
	12	1	**6V-8397**	1	SEAL-O-RING	
	13	1	**8T-4121**	5	WASHER-HARD (11X21X2.5-MM THK)	
M	14	1	**344-5675**	1	NUT (M10X1.5-THD)	
M	15	1	**8T-4137**	2	BOLT (M10X1.5X20-MM)	
M	16	1	**8T-4136**	1	BOLT (M10X1.5X25-MM)	
M	17	1	**8T-6466**	1	BOLT (M10X1.5X60-MM)	
	18	1	**1P-4278**	1	CLAMP-HOSE	
E	19	1	**8C-6959**		HOSE (38.5-CM)	

E - ORDER BY THE CENTIMETER
M - METRIC PART

378-7380 **LINES GP-FUEL (*contd.*)** **i05917020**

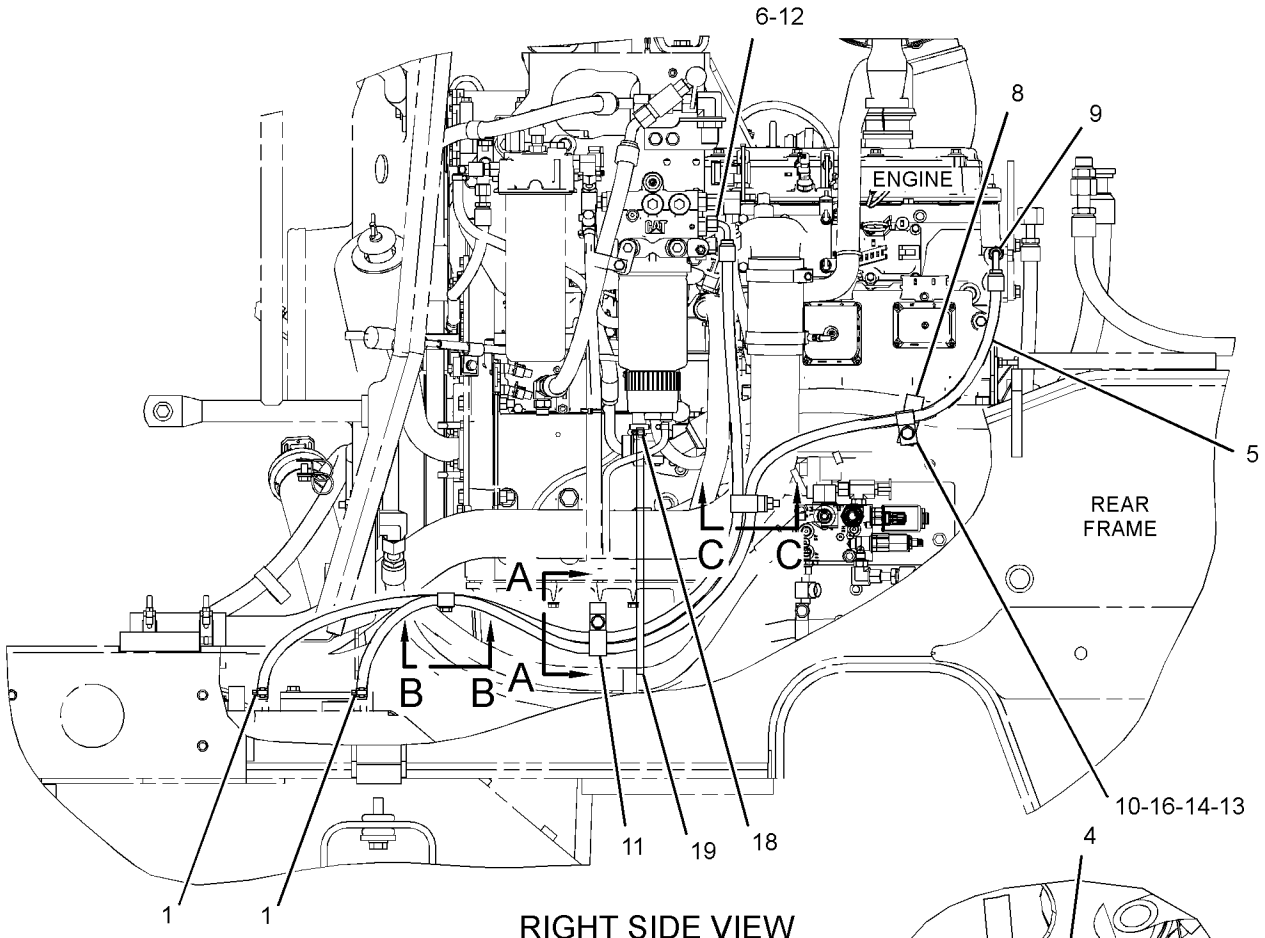

RIGHT SIDE VIEW

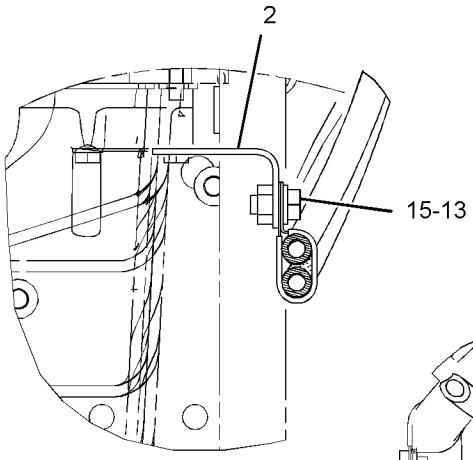

SECTION A-A

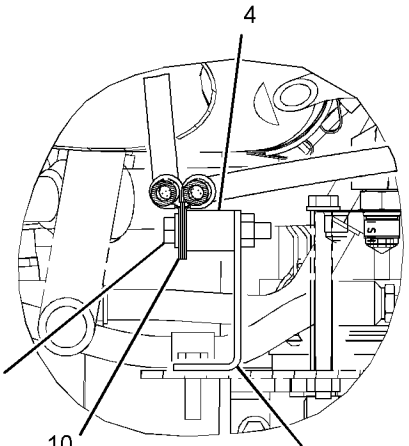

SECTION C-C

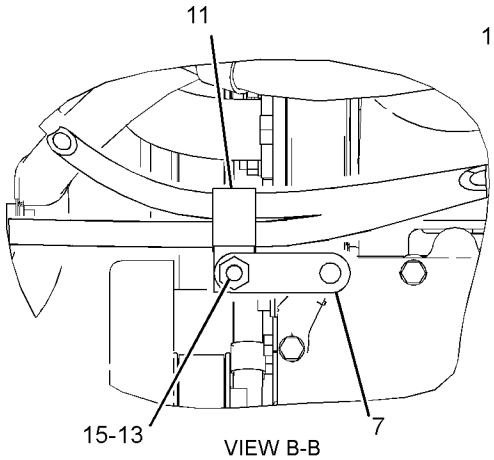

VIEW B-B

GRAPHIC #1

<END>

g03371813

392-7951 LINES GP-FUEL

S/N: KHX1-UP

PART OF 387-1975, 387-1976 ENGINE AR-COMPLETE

SMCS-1274 **i05464334**

NOTE	REF NO	GRAPHIC REF	PART NUMBER	QTY	PART NAME 1 2 3 4 5 6 (PRODUCT LEVEL)	SEE PAGE
Y	1	1	*232-0343*	1	REGULATOR GP-FUEL PRESSURE	169
	2	1	*250-1424*	1	ELBOW AS	
		1	**6V-8724**	1	ELBOW	
		1	**214-7568**	1	SEAL-O-RING	
		1	**228-7089**	1	SEAL-O-RING	
	3	1	**391-6317**	1	HOSE AS	
	4	1	**391-6318**	1	HOSE AS	
	5	1	**391-6319**	1	HOSE AS	
	6	1	*396-0386*	1	CONNECTOR AS	
		1	**214-7568**	1	SEAL-O-RING	
		1	**228-7089**	1	SEAL-O-RING	
		1	**396-0385**	1	CONNECTOR	
	7	1	*370-6297*	1	CONNECTOR AS	
		1	**6V-8715**	1	CONNECTOR	
		1	**228-7089**	1	SEAL-O-RING	
		1	**238-5081**	1	SEAL-O-RING	
	8	1	*389-3708*	2	PLUG AS	
					(EACH INCLUDES)	
		1	**214-7568**	1	SEAL-O-RING	
		1	**360-3679**	1	PLUG-CONNECTOR	
	9	1	*397-1829*	1	PLUG AS	
		1	**1P-1670**	1	PLUG-SEAL	
		1	**214-7568**	1	SEAL-O-RING	
	11	1	*260-9219*	1	CONNECTOR AS	
		1	**6V-8638**	1	CONNECTOR	
		1	**228-7090**	1	SEAL-O-RING	
		1	**238-5081**	1	SEAL-O-RING	
	12	1	*398-5596*	1	PLUG AS	
		1	**238-5080**	1	SEAL-O-RING	
		1	**360-3680**	1	PLUG	
	13	1	*398-5601*	3	PLUG AS	
					(EACH INCLUDES)	
		1	**238-5081**	1	SEAL-O-RING	
		1	**360-3681**	1	PLUG	
	14	1	*319-6225*	1	ELBOW AS	
		1	**6V-8625**	1	ELBOW	
		1	**228-7090**	1	SEAL-O-RING	
		1	**238-5080**	1	SEAL-O-RING	
	15	1	*319-6228*	1	ELBOW AS	
		1	**6V-8721**	1	ELBOW	
		1	**228-7090**	1	SEAL-O-RING	
		1	**238-5081**	1	SEAL-O-RING	
	16	1	*319-6240*	1	CONNECTOR AS	
		1	**6V-9873**	1	CONNECTOR	
		1	**214-7568**	1	SEAL-O-RING	
		1	**228-7090**	1	SEAL-O-RING	
	17	1	**349-1209**	2	CLIP	
	18	1	**353-7953**	1	GROMMET	
	19	1	**3E-4352**	2	WASHER-HARD (8.8X20.5X2.5-MM THK)	
M	20	1	**5P-7970**	3	NUT (M8X1.25-THD)	
	22	1	*319-6227*	1	ELBOW AS	
		1	**6V-9851**	1	ELBOW	
		1	**228-7090**	1	SEAL-O-RING	
	23	1	**8T-1889**	1	CLIP (SLOT)	
	24	1	**8T-1890**	1	CLIP (TAB)	
	25	1	**9M-1974**	2	WASHER-HARD (8.8X16X2-MM THK)	

M - METRIC PART
Y - SEPARATE ILLUSTRATION

392-7951 **LINES GP-FUEL (*contd.*)** **i05464334**

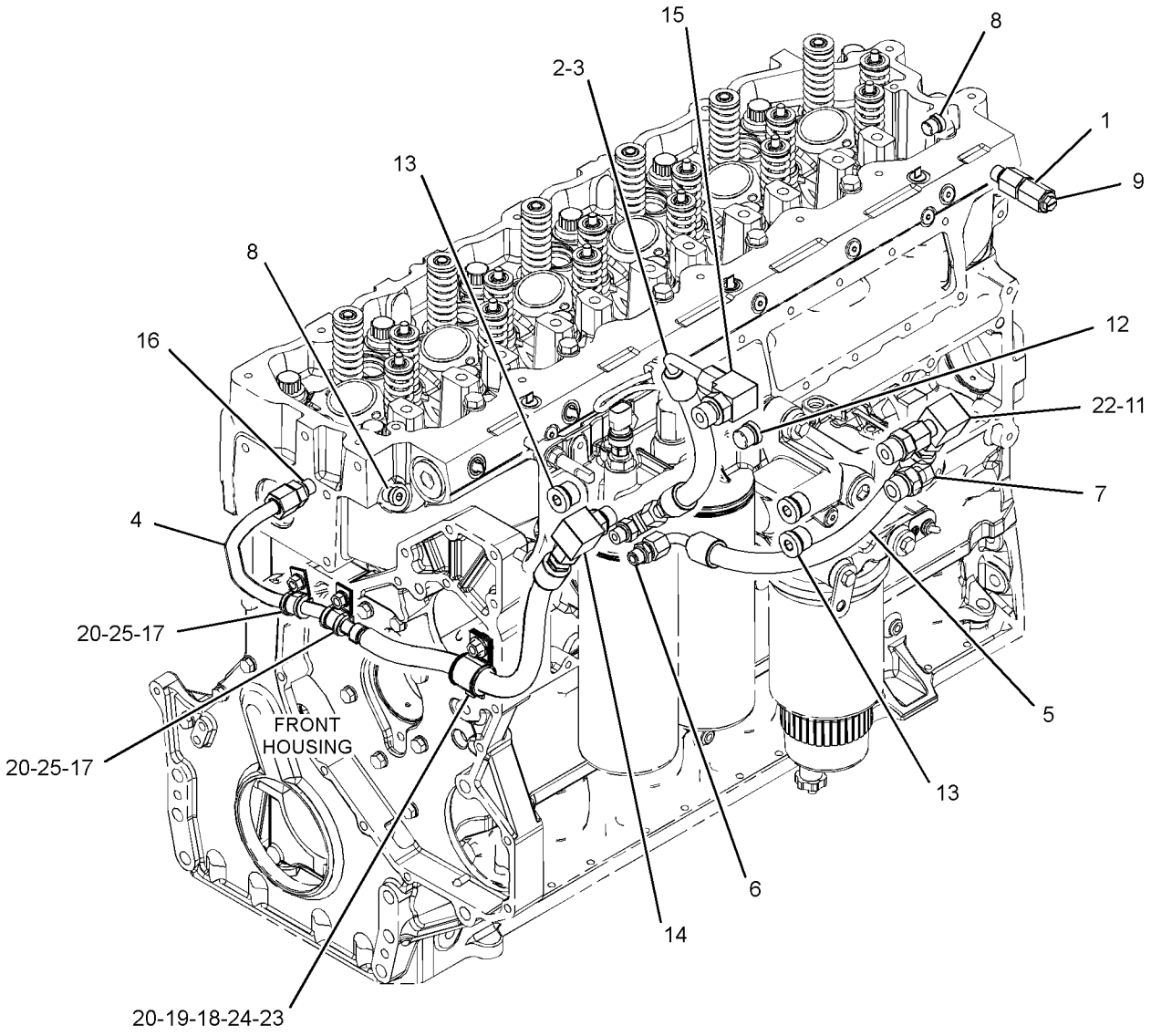

GRAPHIC #1 **<END>** g03647857

237-4851 LINES GP-FUEL DRAIN

S/N: JLX1-115

PART OF 374-4868 INSTALLATION AR-ENGINE

SMCS-1274 **i03567606**

NOTE	REF NO	GRAPHIC REF	PART NUMBER	QTY	PART NAME 1 2 3 4 5 6 (PRODUCT LEVEL)	SEE PAGE
	1	1	**3S-2093**	3	STRAP-CABLE	
	2	1	**1P-4278**	2	CLAMP-HOSE	
E	3	1	**103-2529**		HOSE (70-CM)	
E	3A	1	**103-2529**		HOSE (91.5-CM)	
E	4	1	**8C-6959**		HOSE (44-CM)	

E - ORDER BY THE CENTIMETER

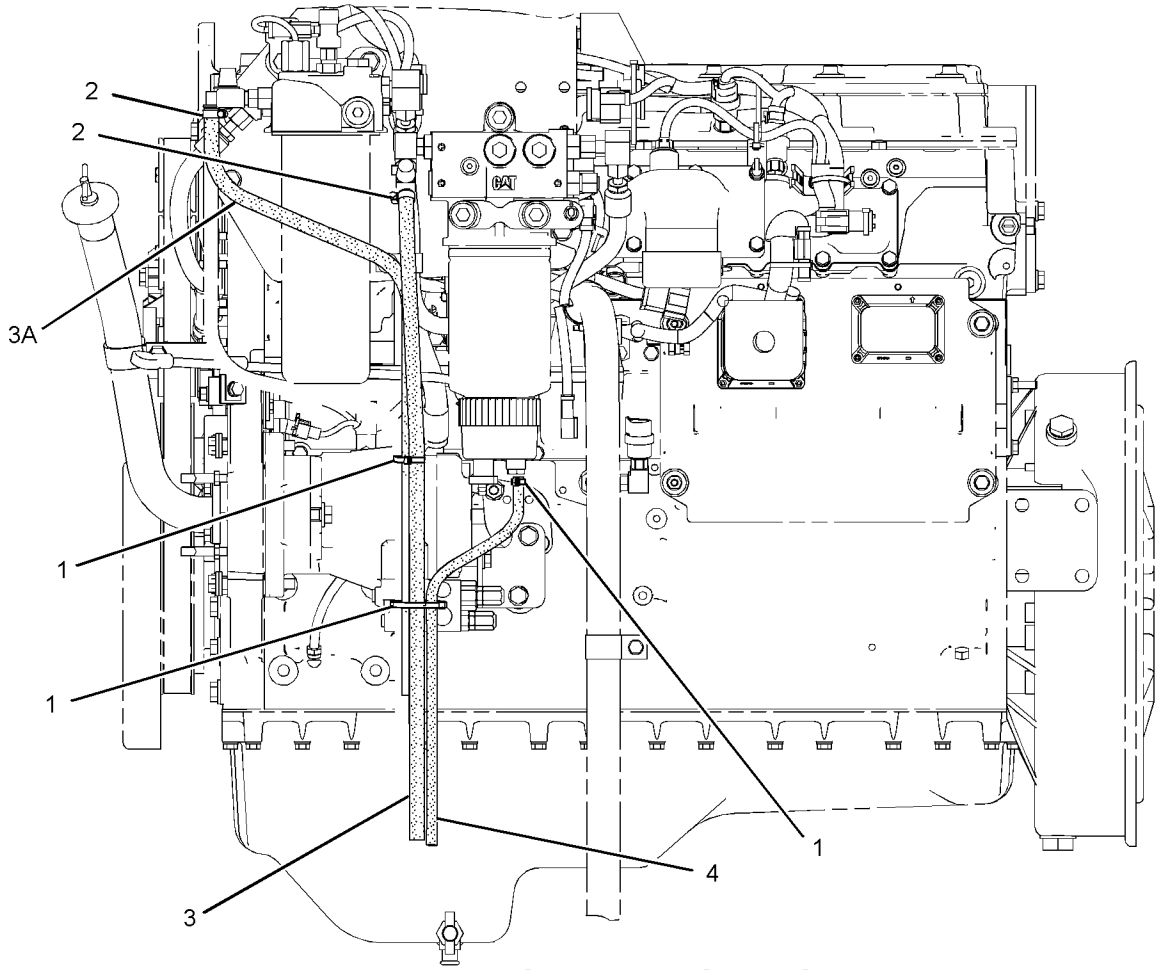

LEFT SIDE VIEW OF ENGINE

GRAPHIC #1 **<END>** g01915494

381-8868 LINES GP-INJECTOR HYD PUMP

S/N: KHX1-46923

PART OF 235-1423 ENGINE AR-CORE

SMCS-1714 **i04528645**

NOTE	REF NO	GRAPHIC REF	PART NUMBER	QTY	PART NAME 1 2 3 4 5 6 (PRODUCT LEVEL)	SEE PAGE
	1	1	**6V-9873**	2	CONNECTOR	
		1	**214-7568**	2	SEAL-O-RING	
		1	**228-7090**	2	SEAL-O-RING	
Y	2	1	*191-0523*	1	ADAPTER GP-OIL LINE	75
	3	1	**205-1280**	1	HOSE AS	
	4	1	**378-4616**	1	TUBE AS	
	5	1	**3V-2431**	2	WASHER (10.2X16X2-MM THK)	
	6	1	**4F-9653**	1	SEAL-O-RING	
M	7	1	**8T-1159**	2	BOLT-SOCKET HEAD (M10X1.5X25-MM)	

M - METRIC PART
Y - SEPARATE ILLUSTRATION

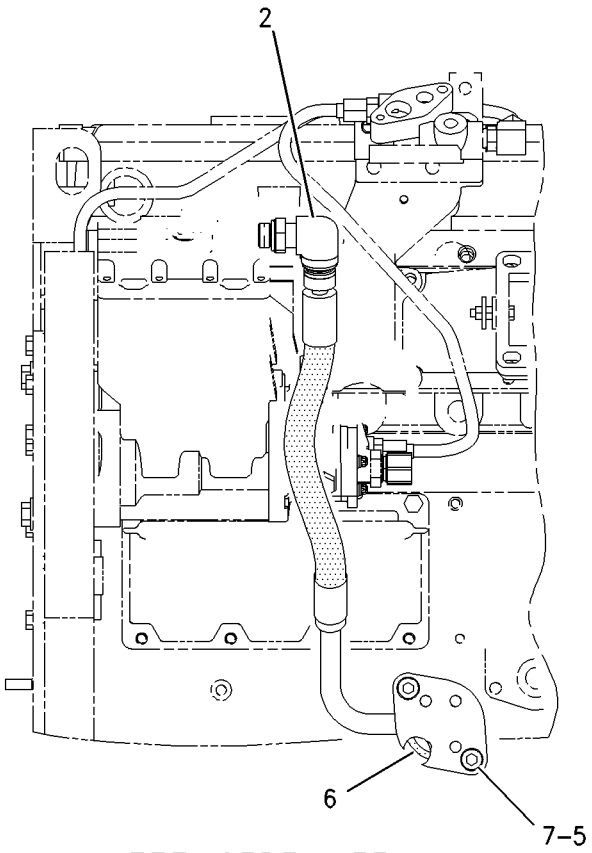

LEFT SIDE VIEW

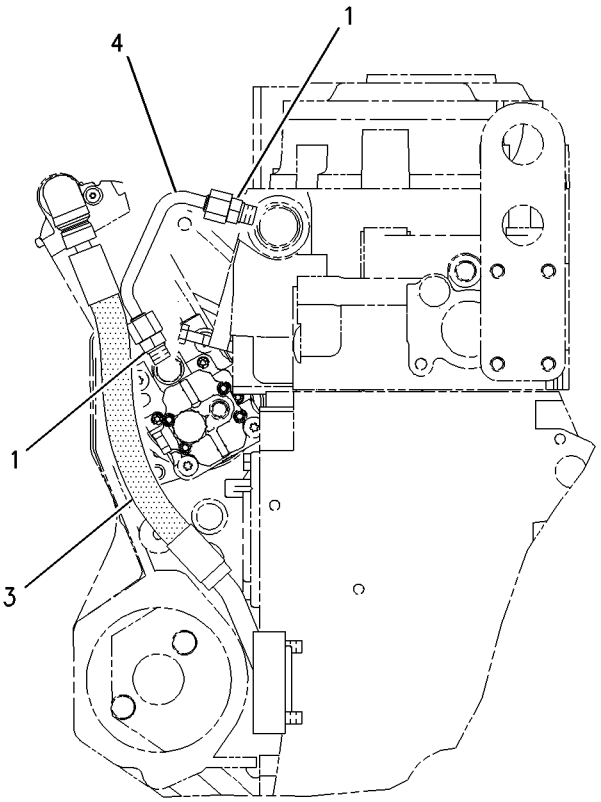

REAR VIEW

GRAPHIC #1 **<END>** g00881566

396-8415 LINES GP-INJECTOR HYD PUMP

S/N: KHX1-UP

PART OF 387-1975, 387-1976 ENGINE AR-COMPLETE, 235-1423, 397-1168 ENGINE AR-CORE

SMCS-1714 **i04939509**

NOTE	REF NO	GRAPHIC REF	PART NUMBER	QTY	PART NAME 1 2 3 4 5 6 (PRODUCT LEVEL)	SEE PAGE
Y	1	1	*191-0523*	1	ADAPTER GP-OIL LINE	75
	2	1	**205-1280**	1	HOSE AS	
	3	1	**387-7149**	1	TUBE AS	
	4	1	*183-3399*	2	CONNECTOR AS	
					(EACH INCLUDES)	
		1	**6V-8636**	1	CONNECTOR	
		1	**214-7568**	1	SEAL-O-RING	
		1	**228-7089**	1	SEAL-O-RING	
	5	1	**3V-2431**	2	WASHER (10.2X16X2-MM THK)	
	6	1	**4F-9653**	1	SEAL-O-RING	
M	7	1	**8T-1159**	2	BOLT-SOCKET HEAD (M10X1.5X25-MM)	

M - METRIC PART
Y - SEPARATE ILLUSTRATION

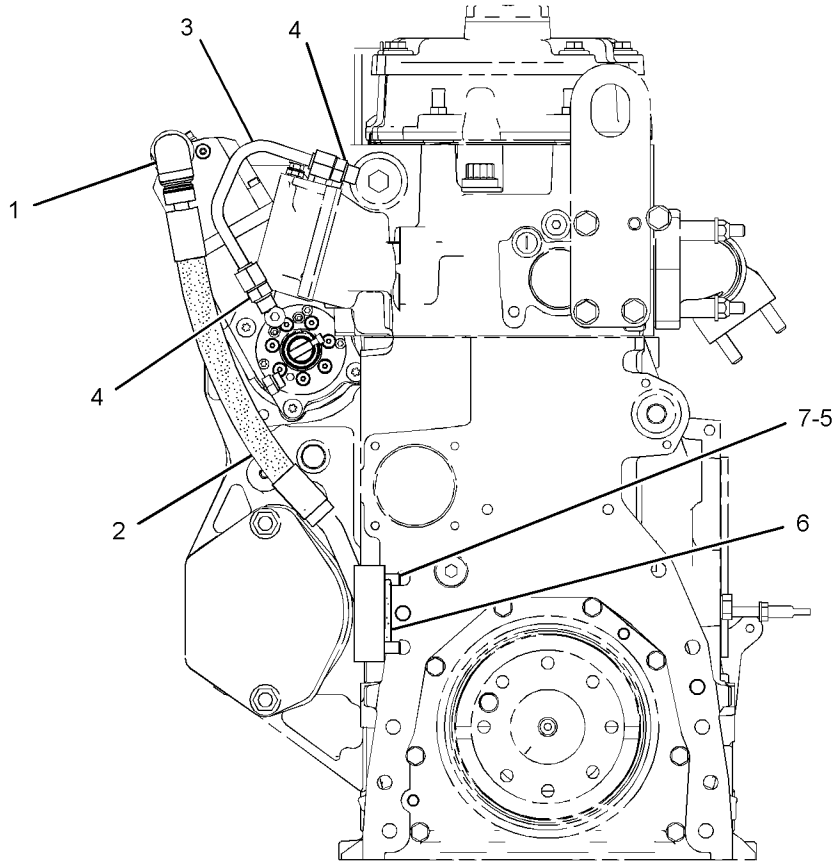

REAR VIEW OF ENGINE

GRAPHIC #1 **<END>** g03076817

222-5900 PUMP & MTG GP-UNIT INJ HYD

S/N: KHX1-46923

PART OF 235-1423 ENGINE AR-CORE

SMCS-1714 **i05841776**

NOTE	REF NO	GRAPHIC REF	PART NUMBER	QTY	PART NAME 1 2 3 4 5 6 (PRODUCT LEVEL)	SEE PAGE
	1	1	**227-5904**	1	SEAL-O-RING	
YR	2	1	**319-0677**	1	PUMP GP-UNIT INJECTOR HYD	167
					(BEFORE ORDERING THIS PUMP, SEE SERVICE LETTER SEPD1743)	
C	3	1	*389-3708*	2	PLUG AS	
					(EACH INCLUDES)	
		1	**214-7568**	1	SEAL-O-RING	
		1	**360-3679**	1	PLUG-CONNECTOR	
	4	1	**3E-9412**	1	DOWEL	
	5	1	**6V-5839**	2	WASHER (11X21X2.5-MM THK)	
M	6	1	**6V-7981**	2	BOLT (M10X1.5X70-MM)	

C - CHANGE FROM PREVIOUS TYPE
M - METRIC PART
R - REMFG PART MAY BE AVAILABLE
Y - SEPARATE ILLUSTRATION

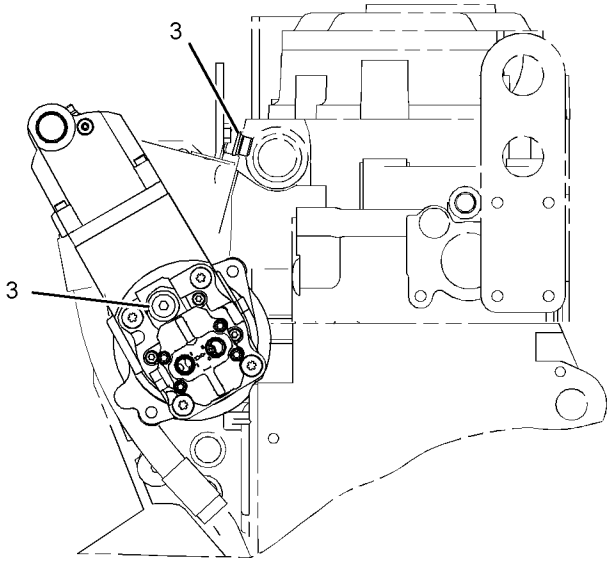

REAR VIEW OF ENGINE

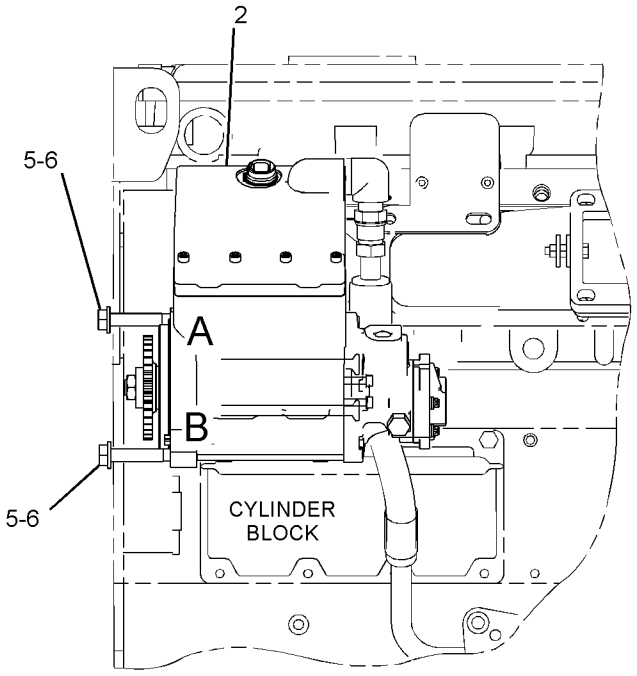

LEFT SIDE VIEW OF ENGINE

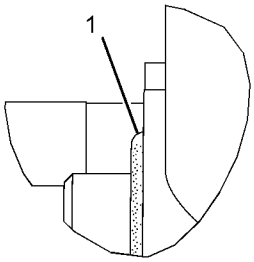

VIEW OF AREA A

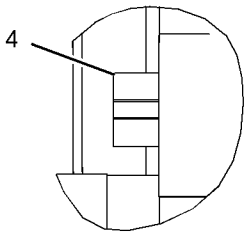

VIEW OF AREA B

GRAPHIC #1

<END>

g01686753

387-8538 PUMP & MTG GP-UNIT INJ HYD

S/N: JLX1-UP; KHX1-UP
FOR USE WITH REHS8178
PART OF 235-1423, 397-1168 ENGINE AR-CORE

SMCS-1714 **i05523455**

NOTE	REF NO	GRAPHIC REF	PART NUMBER	QTY	PART NAME 1 2 3 4 5 6 (PRODUCT LEVEL)	SEE PAGE
	1	1	*389-3708*	2	PLUG AS	
					(EACH INCLUDES)	
		1	**214-7568**	1	SEAL-O-RING	
		1	**360-3679**	1	PLUG-CONNECTOR	
R	2	1	**384-0677**	1	PUMP GP-UNIT INJECTOR HYD	
	3	1	**227-5904**	1	SEAL-O-RING	
	4	1	**6V-5839**	2	WASHER (11X21X2.5-MM THK)	
M	5	1	**6V-7981**	2	BOLT (M10X1.5X70-MM)	

M - METRIC PART
R - REMFG PART MAY BE AVAILABLE

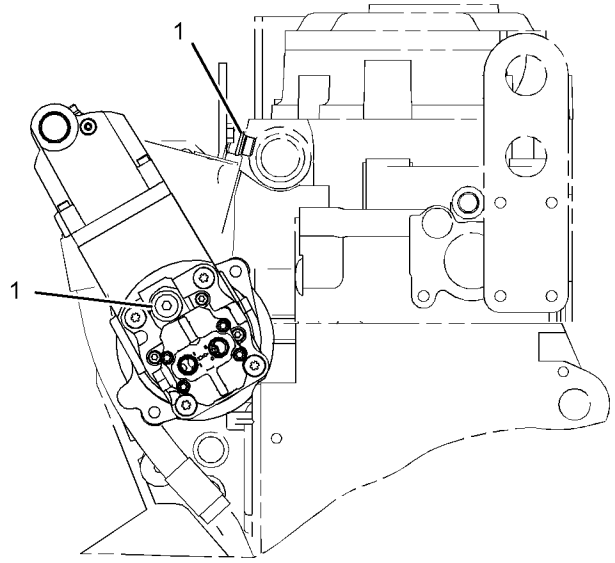

REAR VIEW OF ENGINE

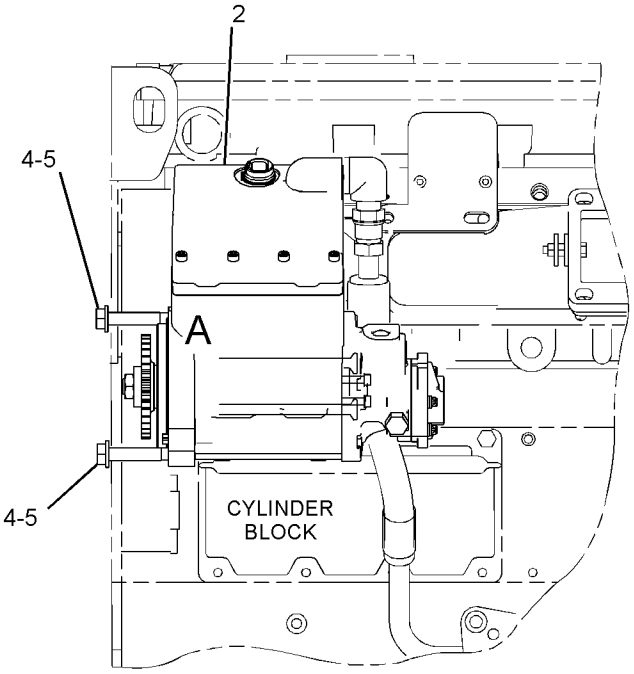

LEFT SIDE VIEW OF ENGINE

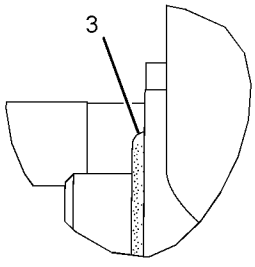

VIEW OF AREA A

GRAPHIC #1 **<END>** g03076696

268-1839 PUMP GP-FUEL INJECTION

S/N: KHX1-UP
PART OF 235-1423 ENGINE AR-CORE
TYPE 1

SMCS-1251, 1290

i03293388

NOTE	REF NO	GRAPHIC REF	PART NUMBER	QTY	PART NAME 1 2 3 4 5 6 (PRODUCT LEVEL)	SEE PAGE
	1	1	**235-9651**	2	BOLT-SOCKET HEAD (M8X1.25X65-MM)	
YR	2	1	**328-2585**	1	INJECTOR GP-FUEL	147

R - REMFG PART MAY BE AVAILABLE
Y - SEPARATE ILLUSTRATION

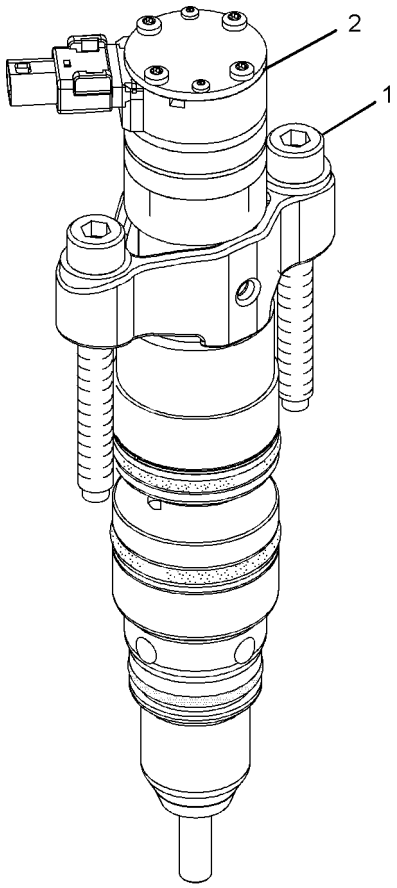

ISOMETRIC VIEW

GRAPHIC #1

<END>

g01038652

268-1839 PUMP GP-FUEL INJECTION

S/N: KHX1-UP
PART OF 235-1423, 397-1168 ENGINE AR-CORE
TYPE 2

SMCS-1251, 1290

i05236754

NOTE	REF NO	GRAPHIC REF	PART NUMBER	QTY	PART NAME 1 2 3 4 5 6 (PRODUCT LEVEL)	SEE PAGE
	1	1	**235-9651**	2	BOLT-SOCKET HEAD (M8X1.25X65-MM)	
CYR	2	1	**387-9427**	1	INJECTOR GP-FUEL	148

C - CHANGE FROM PREVIOUS TYPE
R - REMFG PART MAY BE AVAILABLE
Y - SEPARATE ILLUSTRATION

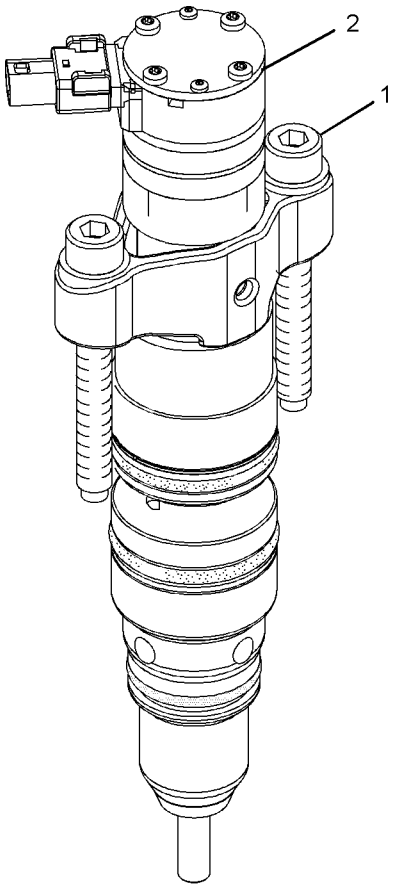

ISOMETRIC VIEW

GRAPHIC #1

<END>

g01038652

268-1839 PUMP GP-FUEL INJECTION

S/N: KHX1-UP
PART OF 397-1168 ENGINE AR-CORE
TYPE 3

SMCS-1251, 1290 **i02451142**

NOTE	REF NO	GRAPHIC REF	PART NUMBER	QTY	PART NAME 1 2 3 4 5 6 (PRODUCT LEVEL)	SEE PAGE
	1	1	**235-9651**	2	BOLT-SOCKET HEAD (M8X1.25X65-MM)	
Y	2	1	**268-1835**	1	INJECTOR GP-FUEL	146

Y - SEPARATE ILLUSTRATION

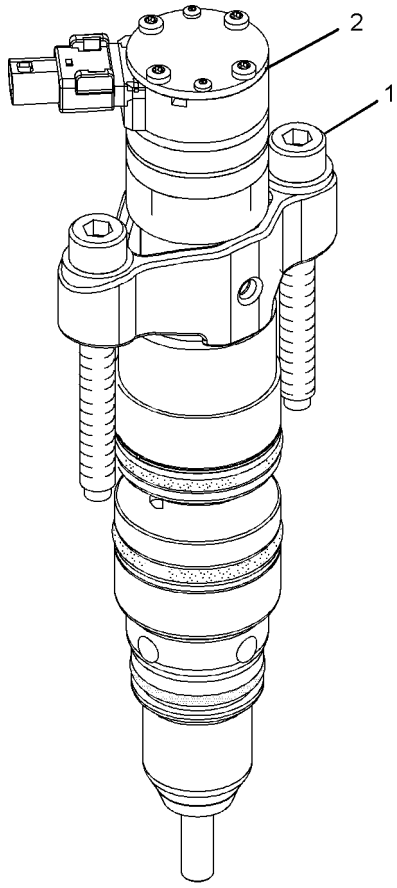

ISOMETRIC VIEW

GRAPHIC #1 **<END>** g01038652

397-2535 PUMP GP-FUEL PRM & PRIM FILTER

S/N: KHX1-UP

PART OF 338-9076 ENGINE AR-COMPLETE

SMCS-1258, 1260 **i05801060**

NOTE	REF NO	GRAPHIC REF	PART NUMBER	QTY	PART NAME 1 2 3 4 5 6 (PRODUCT LEVEL)	SEE PAGE
I	1	1	**155-3677**	1	HOSE AS	
	2	1	**179-9348**	1	VALVE-DRAIN	
	3	1	**191-1782**	1	SPACER (8.5X12.7X38.2-MM THK)	
	4	1	**206-6876**	1	CAP-TUBE	
Y	5	1	**212-3657**	1	PUMP GP-FUEL PRM & WATER SEP (ELECTRIC)	165
	6	1	**232-1374**	1	BRACKET	
	7	1	**232-1376**	2	SPACER (8.5X12.7X139.1-MM THK)	
	8	1	**260-5864**	1	SWITCH GP-TOGGLE (FUEL PRIMING)	
		1	**102-8803**	1	KIT-RECEPTACLE (3-PIN)	
					(INCLUDES RECEPTACLE AS & WEDGE)	
		1	**8T-8729**	3	PIN-CONNECTOR (16-GA TO 18-GA)	
E		1	**112-4550**		SLEEVE (21-CM)	
		1	**271-2180**	1	SWITCH AS-TOGGLE (ON, OFF)	
		1	**6T-3631**	2	NUT-HEX (15/32-32-THD)	
		1	**6T-3632**	1	LOCKWASHER	
		1	**6T-3633**	1	RING-LOCKING	
	9	1	**276-5386**	1	TUBE AS	
I	10	1	**304-0492**	1	HOSE AS	
	11	1	**305-3684**	1	PLATE-IDENTIFICATION (FUEL PRIMING PUMP ON, OFF)	
	12	1	**311-4919**	1	PLATE AS	
	13	1	*370-6297*	2	CONNECTOR AS	
					(EACH INCLUDES)	
		1	**6V-8715**	1	CONNECTOR	
		1	**228-7089**	1	SEAL-O-RING	
		1	**238-5081**	1	SEAL-O-RING	
	14	1	*396-0386*	1	CONNECTOR AS	
		1	**214-7568**	1	SEAL-O-RING	
		1	**228-7089**	1	SEAL-O-RING	
		1	**396-0385**	1	CONNECTOR	
	15	1	**119-5708**	1	CLIP	
	16	1	**130-5301**	1	CLIP	
	17	1	**228-7089**	1	SEAL-O-RING	
	18	1	*297-7976*	1	ELBOW AS	
		1	**6V-9850**	1	ELBOW	
		1	**228-7089**	1	SEAL-O-RING	
	19	1	*398-5601*	1	PLUG AS	
		1	**360-3681**	1	PLUG	
		1	**238-5081**	1	SEAL-O-RING	
	20	1	*319-6224*	1	ADAPTER AS	
		1	**6V-9876**	1	ELBOW	
		1	**228-7089**	1	SEAL-O-RING	
		1	**238-5080**	1	SEAL-O-RING	
	21	1	*321-8657*	1	ELBOW AS	
		1	**6V-8076**	1	ELBOW	
		1	**214-7568**	1	SEAL-O-RING	
	22	1	*329-5459*	1	ADAPTER AS	
		1	**5P-1404**	1	ADAPTER	
		1	**238-5081**	1	SEAL-O-RING	
	23	1	*329-5511*	1	ELBOW AS	
		1	**6V-8723**	1	ELBOW	
		1	**228-7089**	1	SEAL-O-RING	
		1	**238-5080**	1	SEAL-O-RING	
M	24	1	**3E-8005**	2	BOLT (M8X1.25X160-MM)	
M	25	1	**5P-7970**	1	NUT (M8X1.25-THD)	
	26	1	**7X-0613**	1	WASHER-HARD (8.8X25.5X5-MM THK)	
	27	1	**7X-7729**	1	WASHER (11X25X3-MM THK)	
M	28	1	**8T-0100**	1	BOLT (M8X1.25X60-MM)	
M	29	1	**8T-4137**	1	BOLT (M10X1.5X20-MM)	

397-2535 **PUMP GP-FUEL PRM & PRIM FILTER (*contd.*)** **i05801060**

NOTE	REF NO	GRAPHIC REF	PART NUMBER	QTY	PART NAME 1 2 3 4 5 6 (PRODUCT LEVEL)	SEE PAGE
	30	1	**8T-9655**	8	MOUNT-ISOLATION	
	31	1	**9M-1974**	1	WASHER-HARD (8.8X16X2-MM THK)	
	32	1	**9N-0869**	5	WASHER-HARD (8.8X25.5X2-MM THK)	

E - ORDER BY THE CENTIMETER
I - REFER TO HYDRAULIC INFORMATION SYSTEM
M - METRIC PART
Y - SEPARATE ILLUSTRATION

397-2535 **PUMP GP-FUEL PRM & PRIM FILTER (*contd.*)** **i05801060**

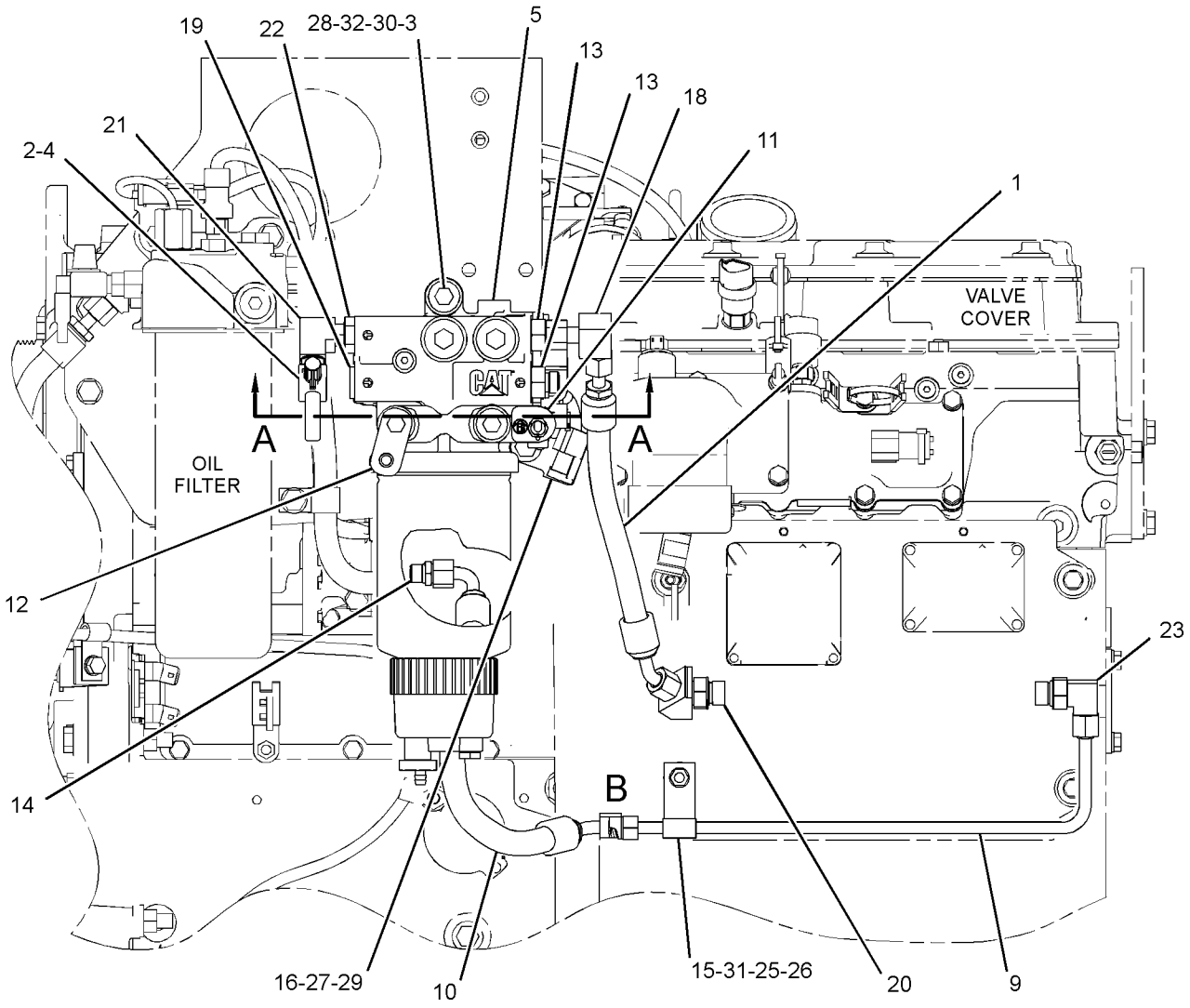

LEFT SIDE VIEW OF ENGINE

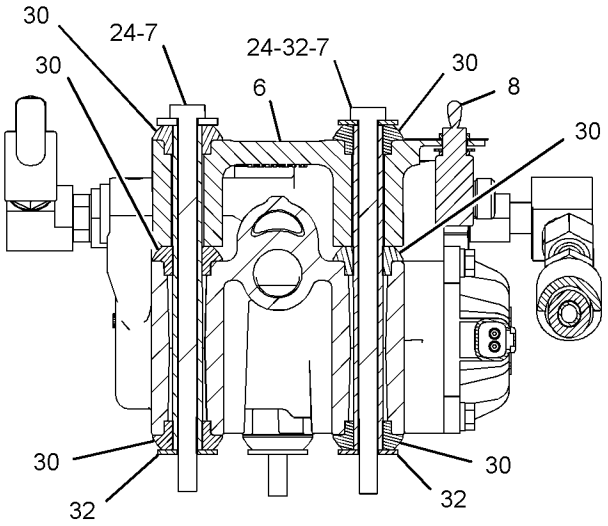

SECTION A-A

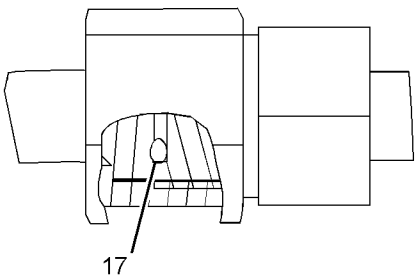

VIEW OF AREA B

GRAPHIC #1 **<END>** g03343623

212-3657 PUMP GP-FUEL PRM & WATER SEP–ELECTRIC

S/N: KHX1-UP

PART OF 396-3623 FILTER GP-FUEL, 397-2535 PUMP GP-FUEL PRM & PRIM FILTER

SMCS-1258, 1261, 1263 **i02259296**

NOTE	REF NO	GRAPHIC REF	PART NUMBER	QTY	PART NAME 1 2 3 4 5 6 (PRODUCT LEVEL)	SEE PAGE
Y	1	1	*174-9570*	1	FILTER GP-WATER SEP & FUEL	145
	2	1	**217-8339**	1	PUMP AS-FUEL PRIMING (24-VOLT)	

Y - SEPARATE ILLUSTRATION

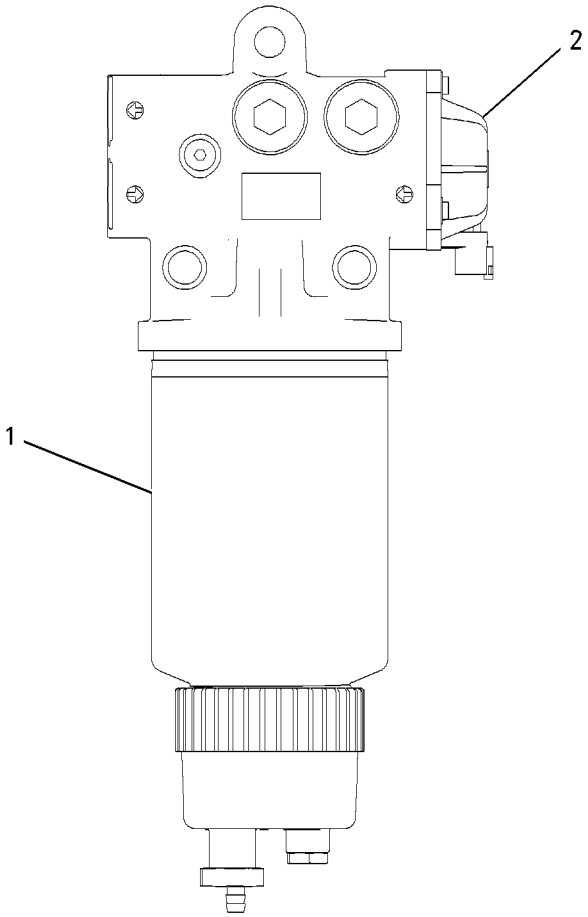

GRAPHIC #1 **<END>** g00875466

318-6357 PUMP GP-FUEL TRANSFER

S/N: KHX1-47127

PART OF 319-0677 PUMP GP-UNIT INJECTOR HYD

SMCS-1256 **i05804967**

NOTE	REF NO	GRAPHIC REF	PART NUMBER	QTY	PART NAME 1 2 3 4 5 6 (PRODUCT LEVEL)	SEE PAGE
	1	1	**214-7567**	1	SEAL-O-RING	
	2	1	**7S-5005**	1	DOWEL	
	3	1	**8C-3079**	1	SEAL-O-RING	
					AVAILABLE REPAIR KIT(S):	
			326-1006	1	KIT-FUEL TRANSFER PUMP	
					(INCLUDES PUMP, BOLT, SCREW, AND SEALS)	

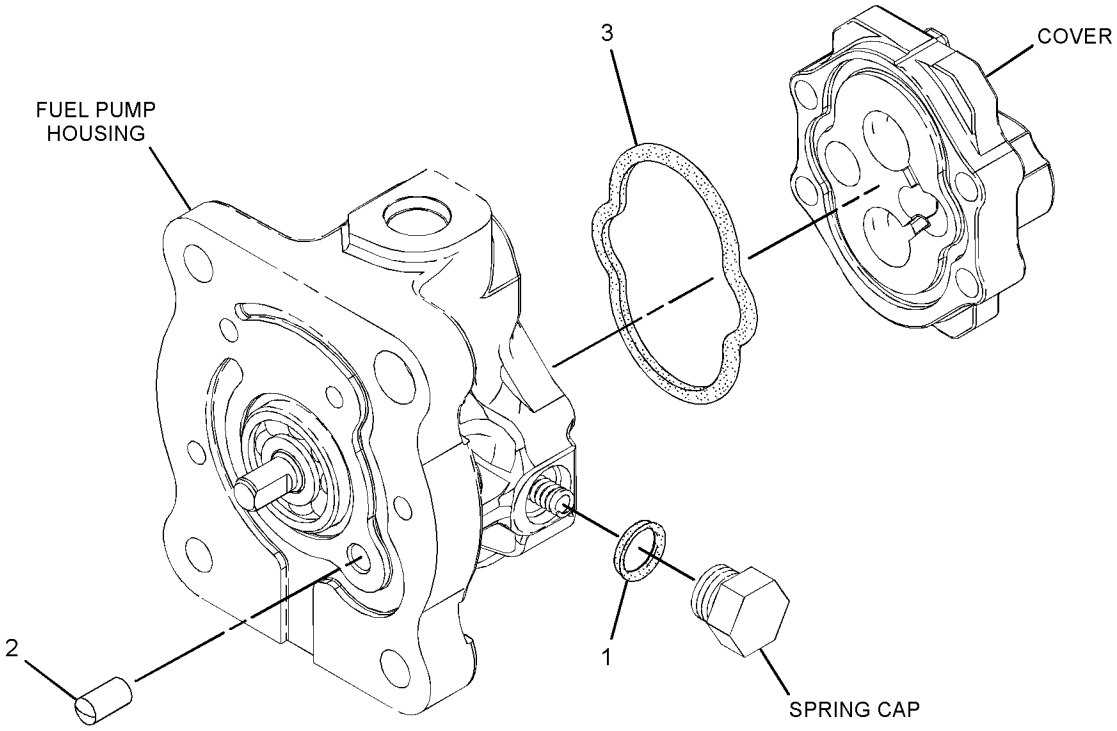

GRAPHIC #1 **<END>** g01579060

319-0677 PUMP GP-UNIT INJECTOR HYD*R

S/N: KHX1-46923

PART OF 222-5900 PUMP & MTG GP-UNIT INJ HYD

SMCS-1714 **i05803974**

NOTE	REF NO	GRAPHIC REF	PART NUMBER	QTY	PART NAME 1 2 3 4 5 6 (PRODUCT LEVEL)	SEE PAGE
	1	1	**313-4620**	3	SCREW-PAN HEAD (M5X0.8X25-MM)	
Y	2	1	**318-6357**	1	PUMP GP-FUEL TRANSFER	166
	3	1	**179-8128**	1	SEAL-O-RING (FUEL SYSTEM)	
	4	1	**262-0284**	1	RING-RETAINING	
M	5	1	**228-5897**	4	BOLT-TORX (M8X1.25X136.7-MM)	
	6	1	**239-2402**	4	SEAL-O-RING	
	7	1	**1F-7960**	1	WASHER (13.5X32X6-MM THK)	
	8	1	**1N-8062**	1	BEARING AS-NEEDLE	
M	9	1	**5C-2890**	1	NUT (M6X1-THD)	
	10	1	**8C-6711**	1	NUT-RETAINER (1/2-20-THD)	
	11	1	**9X-8267**	1	WASHER (6.6X12X2-MM THK)	
	12	1	**153-7036**	1	SPOOL	
	13	1	**260-5716**	1	SPOOL	

M - METRIC PART
Y - SEPARATE ILLUSTRATION

319-0677 **PUMP GP-UNIT INJECTOR HYD (*contd.*)** **i05803974**

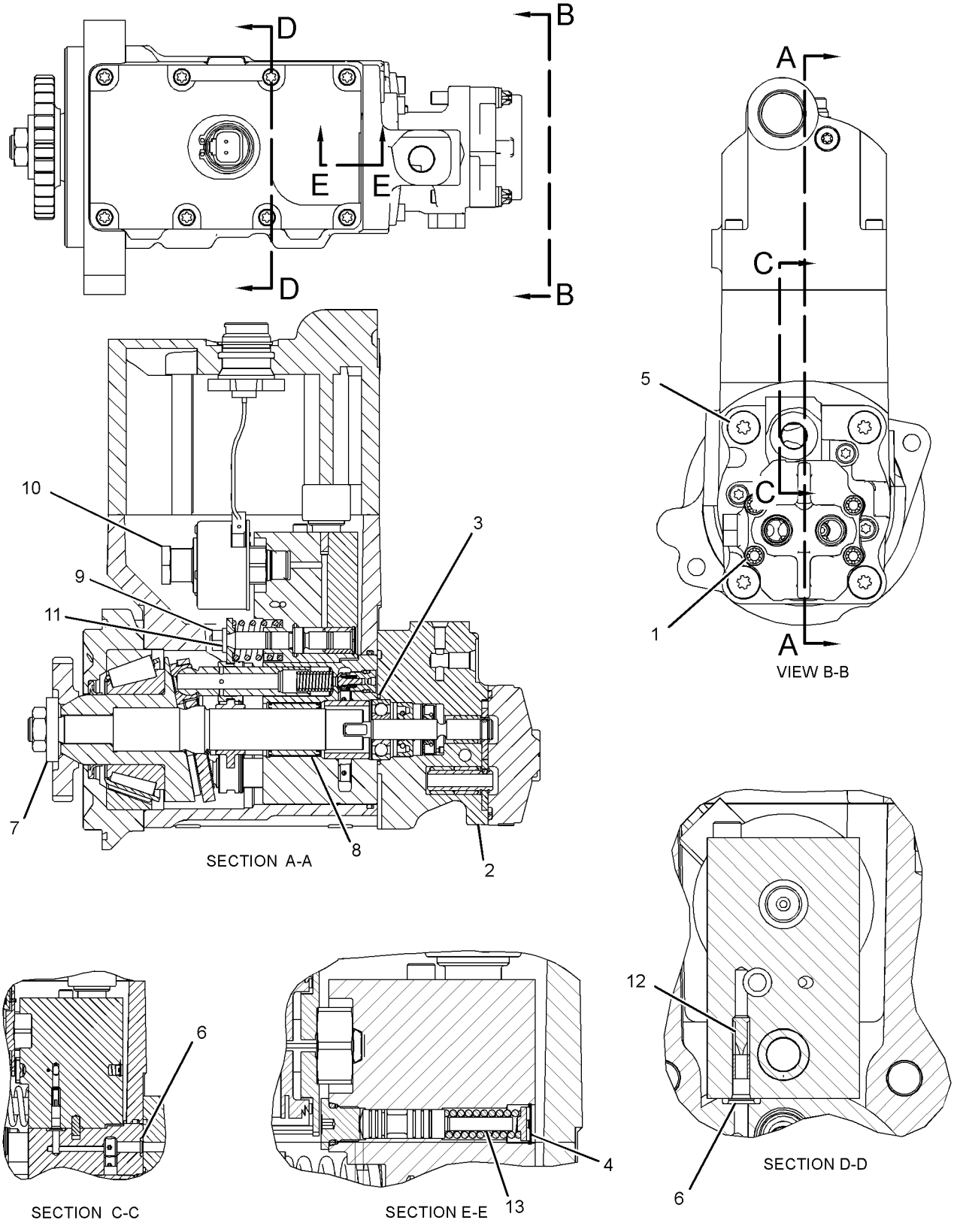

GRAPHIC #1 **<END>** g02039530

232-0343 REGULATOR GP-FUEL PRESSURE

S/N: KHX1-UP

PART OF 237-9823 FILTER & LINES GP-FUEL, 392-7951 LINES GP-FUEL

SMCS-1715 **i04482870**

NOTE	REF NO	GRAPHIC REF	PART NUMBER	QTY	PART NAME 1 2 3 4 5 6 (PRODUCT LEVEL)	SEE PAGE
	1	1	**214-7568**	1	SEAL-O-RING	
	2	1	**369-6662**	1	REGULATOR AS (FUEL PRESSURE)	

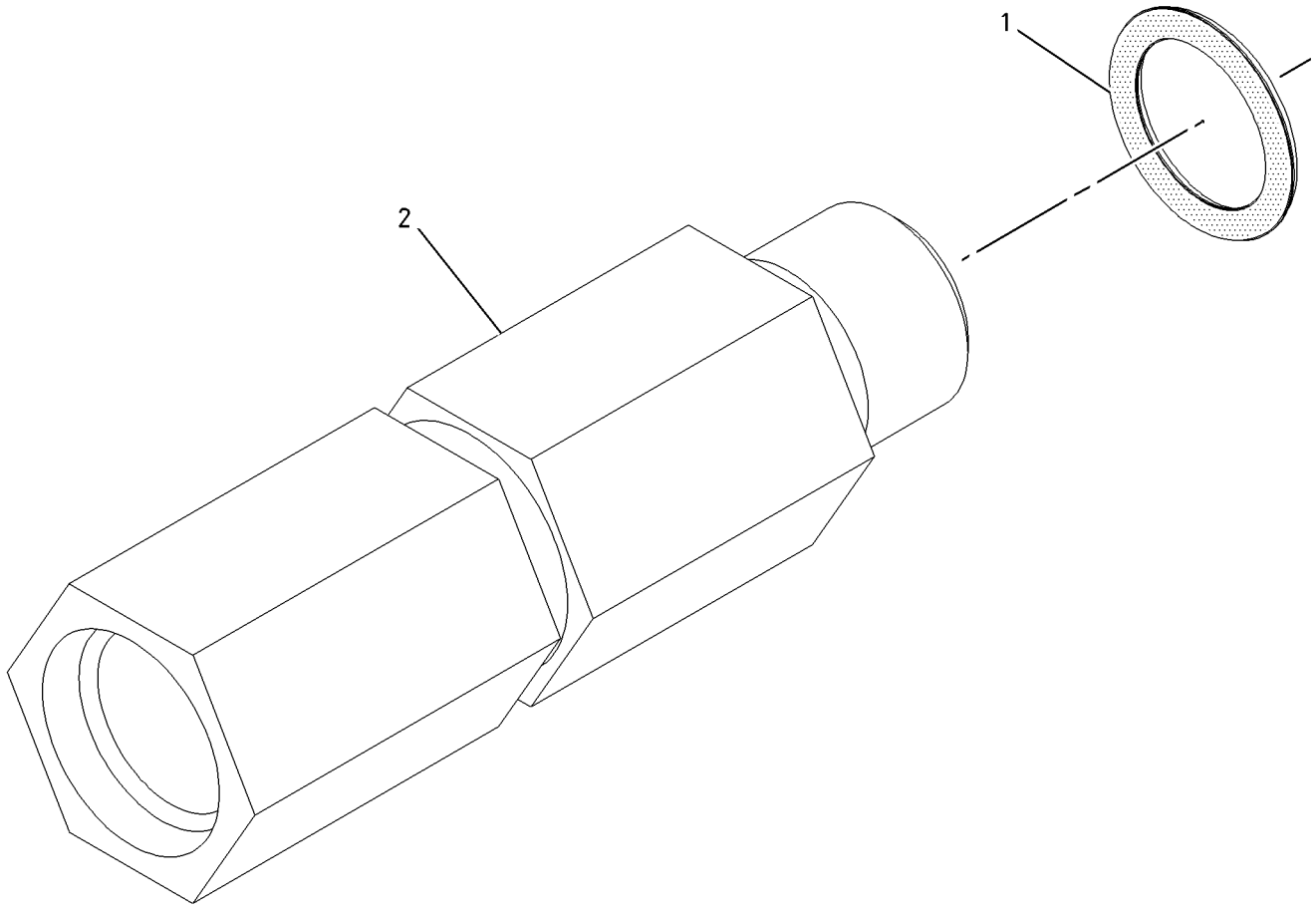

GRAPHIC #1 **<END>** g01004480

374-5369 TANK & MTG GP-FUEL

S/N: JLX1-UP

PART OF 373-8237 CHASSIS AR

SMCS-1273 **i04758098**

NOTE	REF NO	GRAPHIC REF	PART NUMBER	QTY	PART NAME 1 2 3 4 5 6 (PRODUCT LEVEL)	SEE PAGE
	1	1	**187-7331**	8	MOUNT-RUBBER	
Y	2	1	*372-4677*	1	TANK GP-FUEL	171
	3	1	**7X-0607**	4	WASHER-HARD (20X55X8-MM THK)	
M	4	1	**7X-2554**	4	BOLT (M16X2X70-MM)	
	5	1	**9X-8257**	4	WASHER (17.5X30X3.5-MM THK)	

M - METRIC PART
Y - SEPARATE ILLUSTRATION

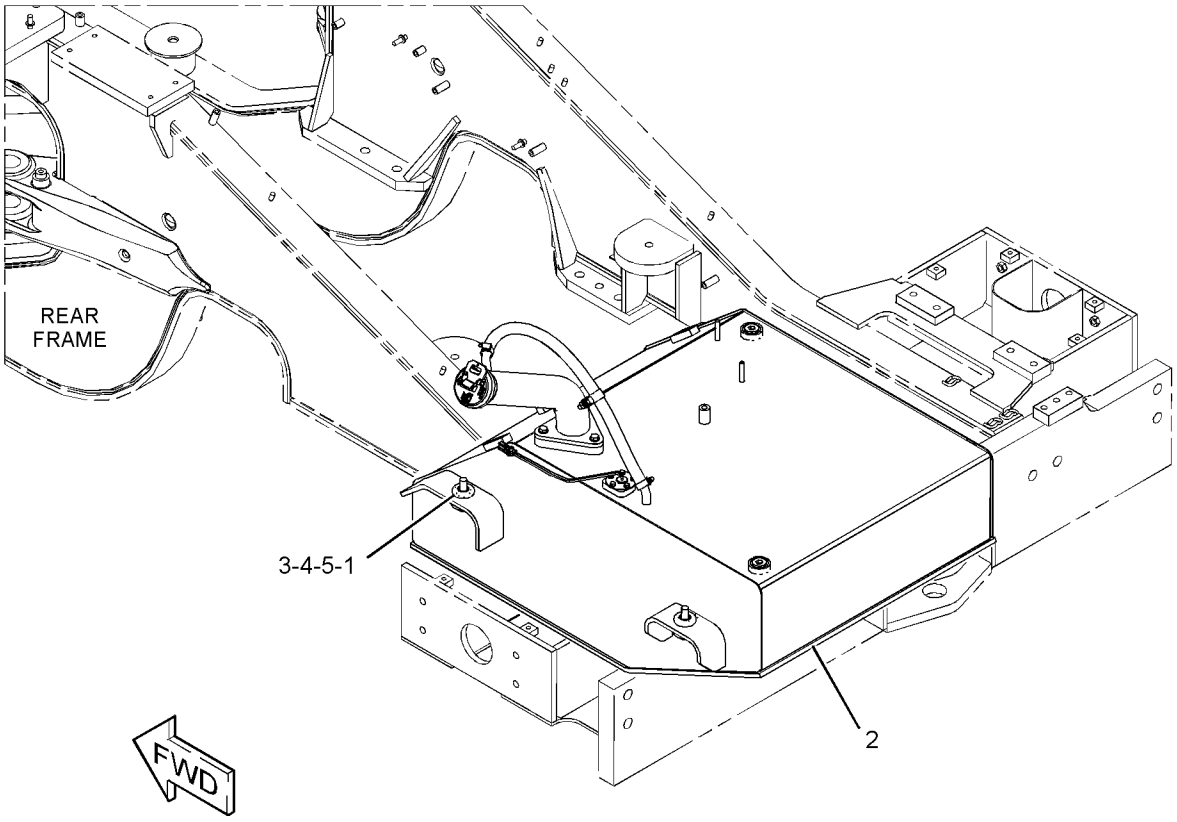

GRAPHIC #1 **<END>** g02865837

372-4677 TANK GP-FUEL

S/N: JLX1-UP

PART OF 374-5369 TANK & MTG GP-FUEL

SMCS-1273 **i05082874**

NOTE	REF NO	GRAPHIC REF	PART NUMBER	QTY	PART NAME 1 2 3 4 5 6 (PRODUCT LEVEL)	SEE PAGE
	1	1	**7K-1181**	1	STRAP-CABLE	
	2	1	**180-3730**	1	STRAINER-FUEL (FILLER NECK SCREEN)	
	3	1	*315-9859*	1	PLUG AS	
		1	**9S-8008**	1	PLUG	
		1	**238-5082**	1	SEAL-O-RING	
	4	1	**322-7452**	1	SENDER AS-FUEL LEVEL (TANK)	
		1	**102-8802**	1	KIT-RECEPTACLE (2-PIN)	
					(INCLUDES RECEPTACLE AS & WEDGE)	
		1	**8T-8729**	2	PIN-CONNECTOR (16-GA TO 18-GA)	
J	5	1	**338-0912**	1	CAP AS-FUEL (DEBRIS BOOT)	
		1	**284-9039**	1	CAP-FUEL	
		1	**355-8947**	1	BOOT-FUEL CAP	
	6	1	**372-4679**	1	TANK AS	
	7	1	**376-6504**	1	TUBE AS	
	8	1	**124-6258**	2	CLAMP-HOSE	
	9	1	**3D-2824**	2	SEAL-O-RING	
	10	1	**7C-4354**	2	CLIP	
M	11	1	**8C-3210**	5	BOLT (M6X1X16-MM)	
	12	1	**8C-5172**	1	SEAL-RECTANGULAR	
	13	1	**8T-4121**	5	WASHER-HARD (11X21X2.5-MM THK)	
M	14	1	**8T-4133**	1	NUT (M10X1.5-THD)	
M	15	1	**8T-4136**	3	BOLT (M10X1.5X25-MM)	
M	16	1	**8T-4195**	1	BOLT (M10X1.5X30-MM)	
	17	1	**9S-8008**	2	PLUG	
	18	1	**9X-8256**	5	WASHER (6.6X12X2-MM THK)	
E	19	1	**136-1955**		HOSE (63-CM)	
B	20	1	**1U-8846**		SEALANT-GASKET	

B - USE AS REQUIRED
E - ORDER BY THE CENTIMETER
J - REQUIRES CORPORATE KEY
M - METRIC PART

372-4677 **TANK GP-FUEL (*contd.*)** **i05082874**

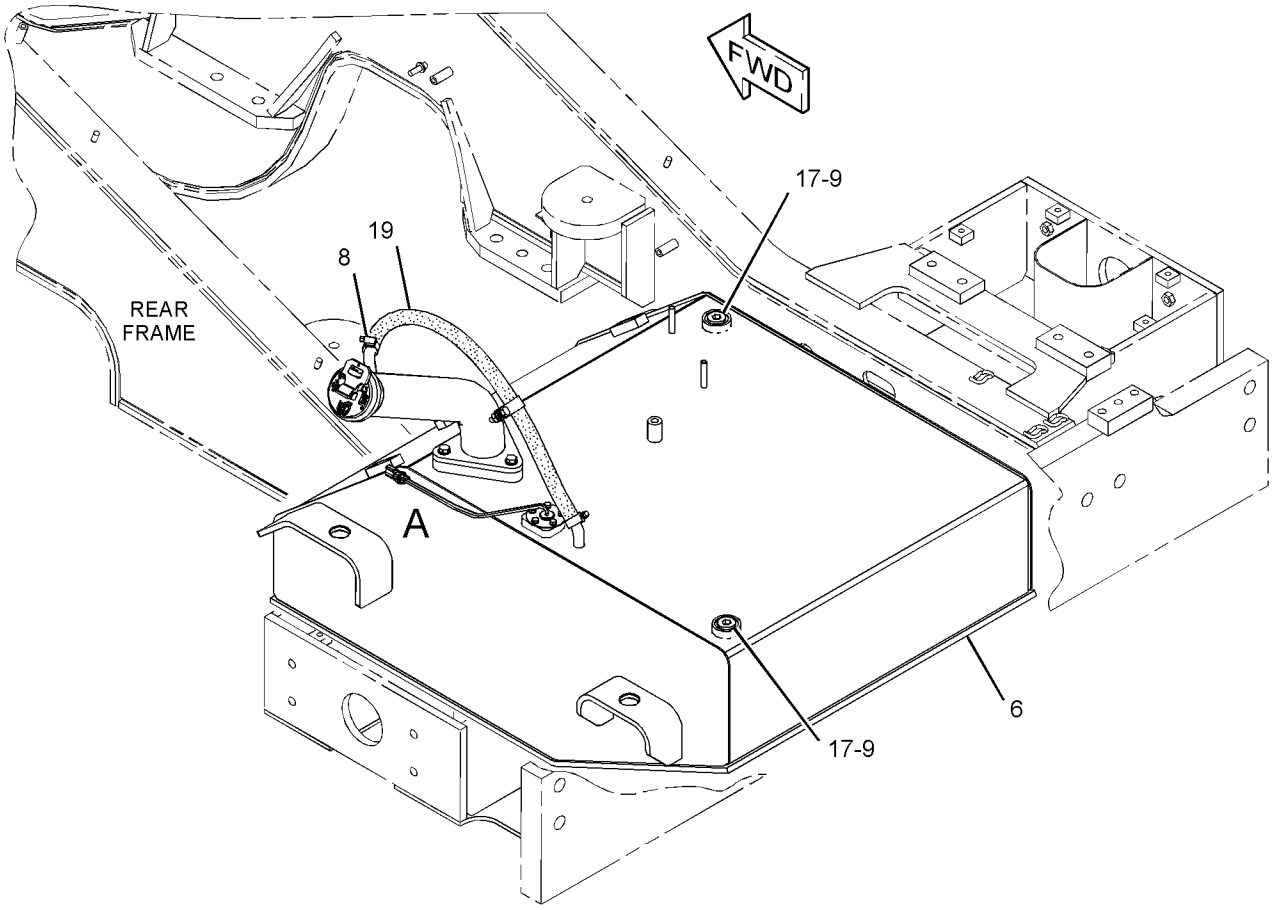

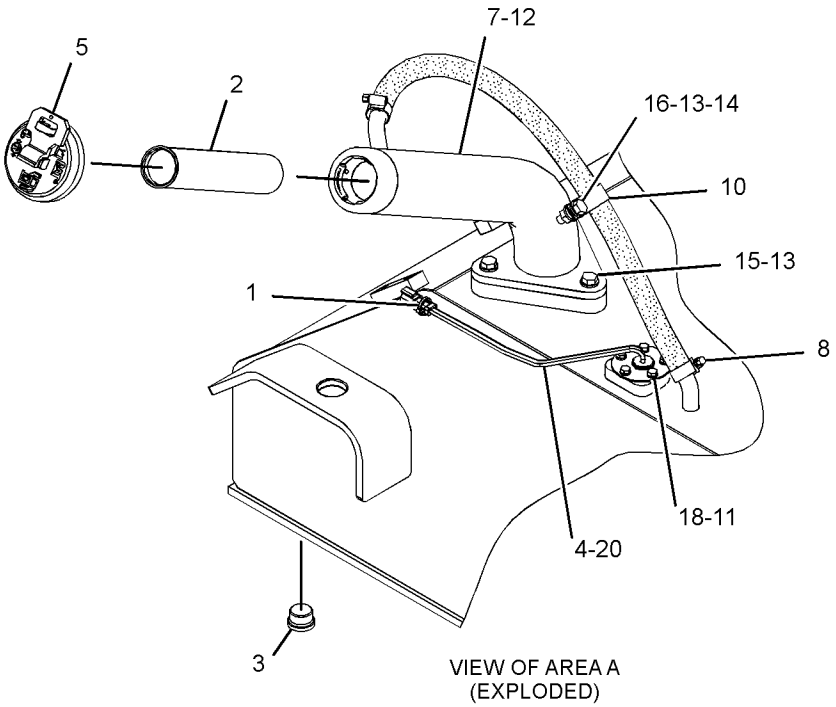

VIEW OF AREA A
(EXPLODED)

GRAPHIC #1 **<END>** g02891938

3E-6328 ALARM GP

S/N: JLX1-UP
24-VOLT
PART OF 375-5761 WIRING GP-CAB

SMCS-7400, 7402, 7407 **i02942905**

NOTE	REF NO	GRAPHIC REF	PART NUMBER	QTY	PART NAME 1 2 3 4 5 6 (PRODUCT LEVEL)	SEE PAGE
	1	1	**102-8802**	1	KIT-RECEPTACLE (2-PIN)	
					(INCLUDES RECEPTACLE AS & WEDGE)	
	2	1	**186-3735**	2	PIN-CONNECTOR (16-GA TO 18-GA)	

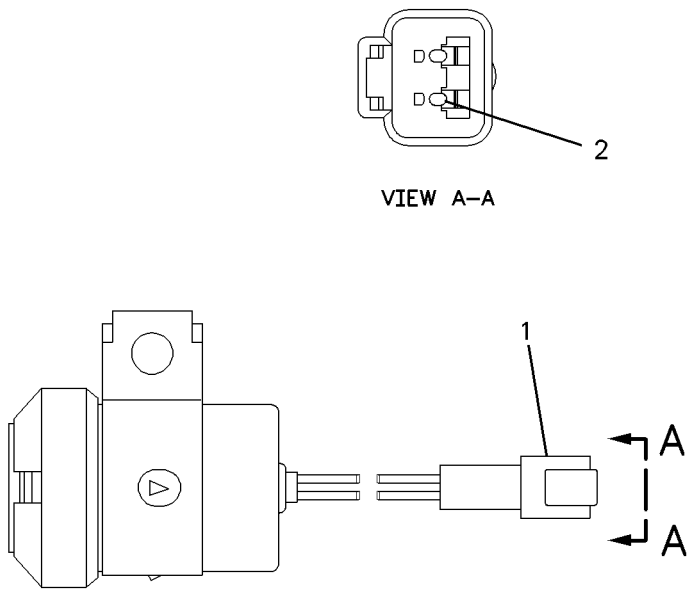

GRAPHIC #1 **<END>** g00697818

132-1829 ALARM GP

S/N: JLX1-UP
24-VOLT
PART OF 252-5925 SWITCH GP-QUICK COUPLER

SMCS-7400, 7402, 7407 **i03601165**

NOTE	REF NO	GRAPHIC REF	PART NUMBER	QTY	PART NAME 1 2 3 4 5 6 (PRODUCT LEVEL)	SEE PAGE
	1	1	**102-8802**	1	KIT-RECEPTACLE (2-PIN)	
					(INCLUDES RECEPTACLE AS & WEDGE)	
	2	1	**186-3735**	2	PIN-CONNECTOR (16-GA TO 18-GA)	

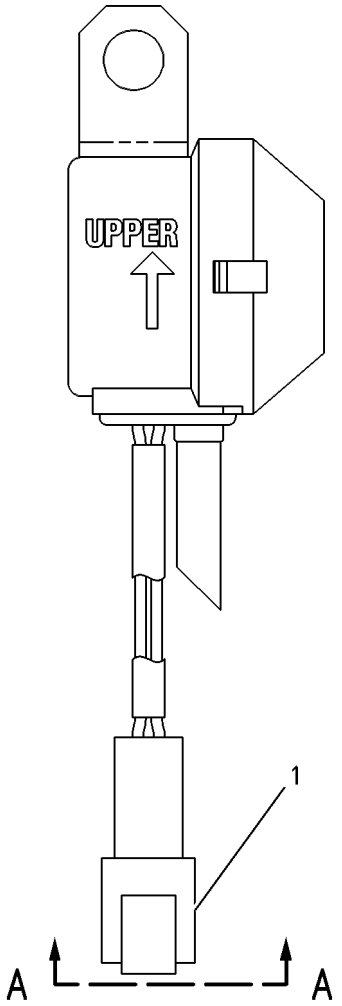

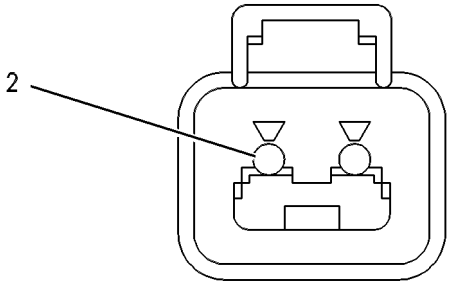

VIEW A-A

GRAPHIC #1 **<END>** g00272185

377-6862 ALTERNATOR GP-CHARGING

S/N: JLX1-UP

PART OF 374-4868 INSTALLATION AR-ENGINE

SMCS-1405 **i04759820**

NOTE	REF NO	GRAPHIC REF	PART NUMBER	QTY	PART NAME 1 2 3 4 5 6 (PRODUCT LEVEL)	SEE PAGE
	1	1	**4E-8329**	1	SPACER (10.5X16.545X34-MM THK)	
	2	1	**129-5096**	1	PULLEY-ALTERNATOR (8-GROOVE)	
	3	1	**172-4211**	1	SPACER (10.5X22X50.8-MM THK)	
	4	1	**222-4866**	1	BRACKET	
	5	1	**262-4561**	1	SHIELD AS-HEAT	
	6	1	**366-2756**	1	ALTERNATOR GP-CHARGING	
	7	1	**5P-2566**	1	BOLT (1/2-13X1.5-IN)	
	8	1	**6V-8188**	1	NUT (1/2-13-THD)	
	9	1	**7X-0339**	1	BOLT (1/2-13X6.25-IN)	
M	10	1	**8T-3647**	2	BOLT (M8X1.25X80-MM)	
	11	1	**8T-4121**	3	WASHER-HARD (11X21X2.5-MM THK)	
M	12	1	**8T-4133**	1	NUT (M10X1.5-THD)	
M	13	1	**8T-4137**	1	BOLT (M10X1.5X20-MM)	
M	14	1	**8T-4195**	1	BOLT (M10X1.5X30-MM)	
M	15	1	**8T-4196**	1	BOLT (M10X1.5X35-MM)	
	16	1	**8T-4223**	4	WASHER-HARD (13.5X25.5X3-MM THK)	
	17	1	**8T-4224**	2	WASHER-HARD (8.8X16X2-MM THK)	
	18	1	**8T-7934**	2	WASHER-HARD (11X21X5-MM THK)	
	19	1	**9S-2396**	1	BUSHING-TERMINAL	

M - METRIC PART

377-6862 **ALTERNATOR GP-CHARGING (*contd.*)** **i04759820**

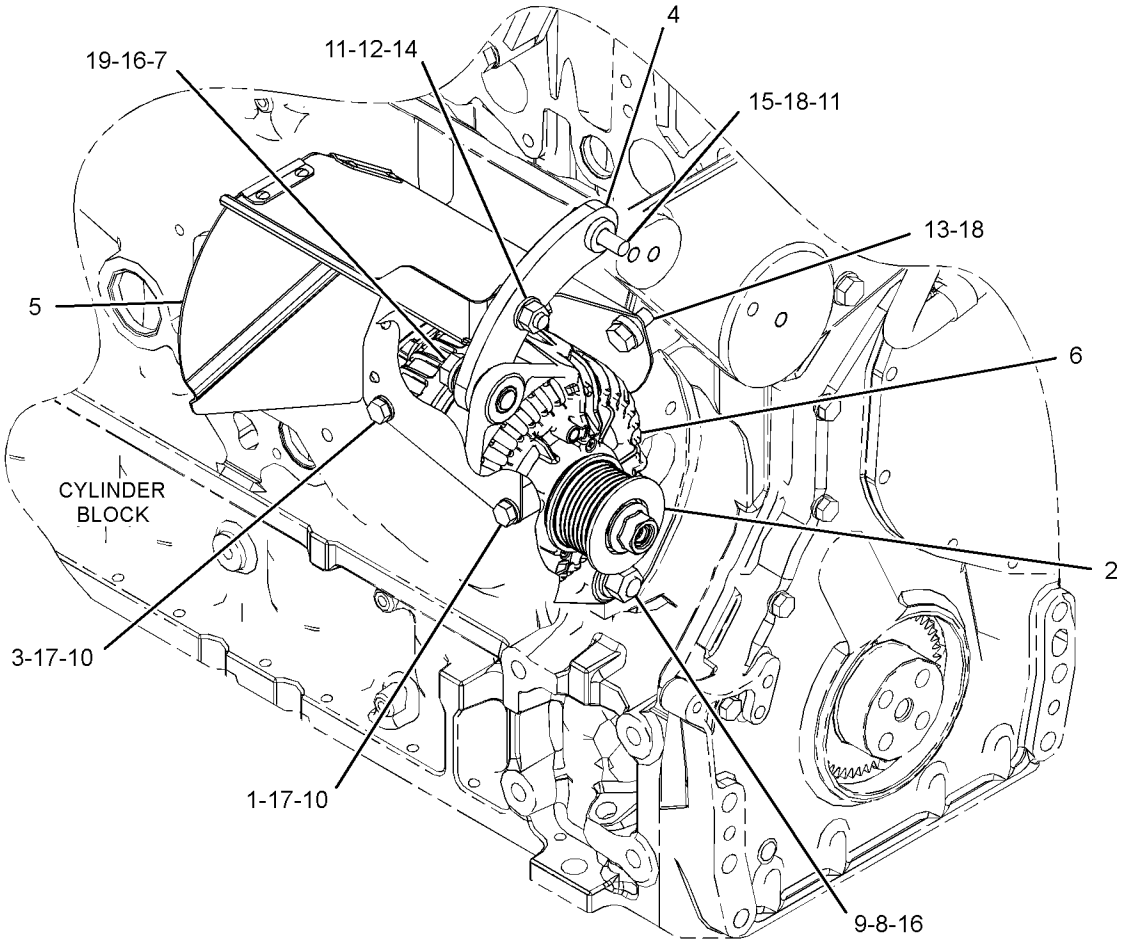

GRAPHIC #1 **<END>** g02860684

372-4888 BATTERY & WIRING GP

S/N: JLX1-UP

PART OF 372-2873 ELECTRICAL AR

SMCS-1401, 1402, 1408 **i05919192**

NOTE	REF NO	GRAPHIC REF	PART NUMBER	QTY	PART NAME 1 2 3 4 5 6 (PRODUCT LEVEL)	SEE PAGE
	1	1	**3E-8320**	1	PLATE-INSTRUCTION (BATTERY)	
	2	1	**3S-2093**	8	STRAP-CABLE	
	3	1	**447-3258**	1	CABLE AS	
E		1	**5P-0761**		CABLE (00-GA, RED) (14-CM)	
		1	**1M-6119**	2	BOLT (5/16-18X1.375-IN)	
		1	**1M-6120**	2	NUT (5/16-18-THD)	
		1	**8T-9757**	1	TERMINAL AS-BATTERY (NEGATIVE)	
		1	**9G-0003**	1	COVER AS-TERMINAL (BLACK)	
		1	**9G-0004**	1	COVER AS-TERMINAL (RED)	
	4	1	**124-3019**	1	BRACKET AS	
M		1	**8T-3490**	1	NUT-WELD (M10X1.5-THD)	
	5	1	**134-2636**	1	BRACKET AS	
M		1	**8T-3490**	1	NUT-WELD (M10X1.5-THD)	
	6	1	**153-5710**	2	BATTERY GP (12-VOLT, MAINTENANCE FREE, WET)	
	7	1	**153-6281**	1	HOLD-DOWN-BATTERY	
	8	1	**315-5390**	2	NUT (M40X1.5-THD)	
Y	9	1	*322-3305*	1	BLOCK GP-JUNCTION (BATTERY)	180
	10	1	**324-0680**	1	CABLE AS	
	11	1	**324-0681**	1	CABLE AS	
	12	1	**324-0682**	1	CABLE AS	
		1	**8N-0869**	1	COVER-TERMINAL (RED)	
	13	1	**324-0683**	1	CABLE AS	
		1	**8N-0869**	1	COVER-TERMINAL (RED)	
	14	1	**324-0684**	1	CABLE AS	
	15	1	**325-9438**	2	GROMMET AS	
	16	1	**108-2949**	2	ROD	
	17	1	**132-7551**	1	SPACER (11X19X6-MM THK)	
	18	1	**1S-0994**	11	CLIP	
	19	1	**2V-1771**	11	GROMMET	
	20	1	**2W-7940**	1	BRACKET	
Y	21	1	**7N-0718**	1	SWITCH GP-DISCONNECT (BATTERY)	306
	22	1	**7X-7729**	2	WASHER (11X25X3-MM THK)	
M	23	1	**8T-0389**	2	LOCKNUT (M10X1.5-THD)	
	24	1	**8T-4121**	11	WASHER-HARD (11X21X2.5-MM THK)	
M	25	1	**8T-4133**	3	NUT (M10X1.5-THD)	
M	26	1	**8T-4137**	8	BOLT (M10X1.5X20-MM)	
M	27	1	**8T-4192**	3	BOLT (M12X1.75X25-MM)	
M	29	1	**8T-4196**	1	BOLT (M10X1.5X35-MM)	
	30	1	**8T-4223**	5	WASHER-HARD (13.5X25.5X3-MM THK)	
M	31	1	**8T-4244**	2	NUT (M12X1.75-THD)	
	32	1	**290-6516**	1	RECEPTACLE AS	
	33	1	**9R-5383**	1	BOSS (11X25X20-MM THK)	
M	34	1	**8T-7547**	1	BOLT (M8X1.25X30-MM)	
	35	1	**8T-4224**	8	WASHER-HARD (8.8X16X2-MM THK)	
M	36	1	**8T-4185**	1	BOLT (M10X1.5X50-MM)	
	37	1	**8S-2634**	1	COVER AS	
M	38	1	**5C-7261**	4	NUT (M8X1.25-THD)	
	39	1	**4H-1225**	4	WASHER (11X22X6-MM THK)	

E - ORDER BY THE CENTIMETER
M - METRIC PART
Y - SEPARATE ILLUSTRATION

372-4888 **BATTERY & WIRING GP (*contd.*)** **i05919192**

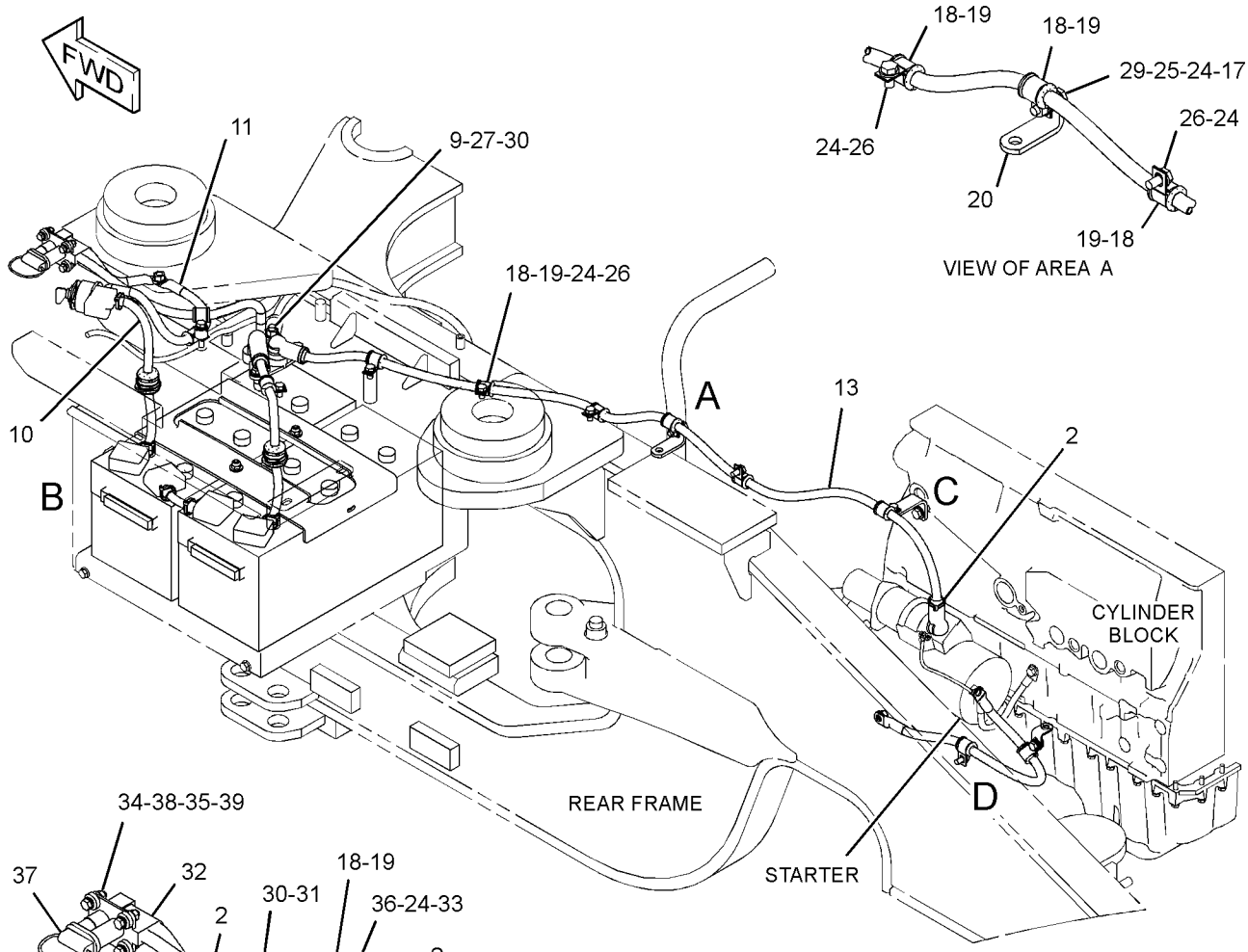

VIEW OF AREA A

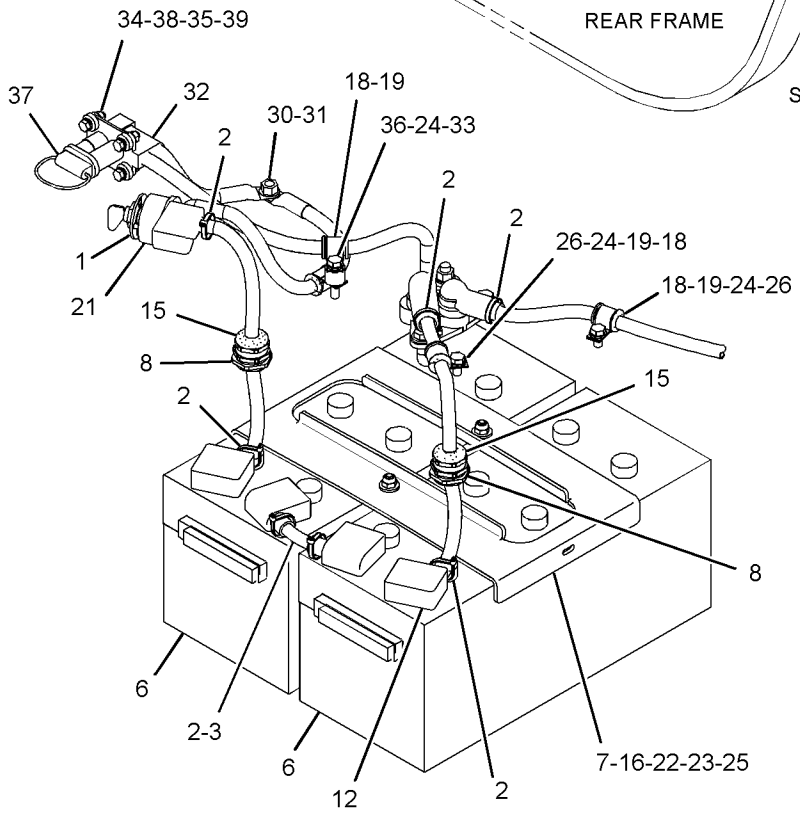

VIEW OF AREA B

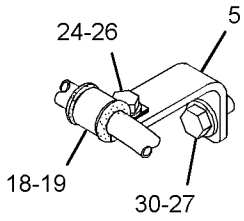

VIEW OF AREA C

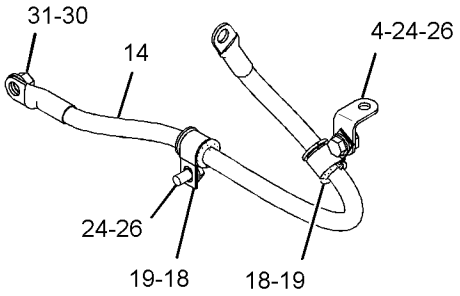

VIEW OF AREA D

GRAPHIC #1 **<END>** g03369964

375-8108 BATTERY & WIRING GP

S/N: JLX1-UP

JUMP START

SMCS-1401, 1402, 1408 **i04869849**

NOTE	REF NO	GRAPHIC REF	PART NUMBER	QTY	PART NAME 1 2 3 4 5 6 (PRODUCT LEVEL)	SEE PAGE
	1	1	**290-6516**	1	RECEPTACLE AS	
		1	**9X-9825**	1	TERMINAL-CABLE (00-GA, 1/2-IN SCREW)	
E		1	**351-9309**		TUBE-HEAT SHRINK (5-CM)	
	2	1	**1S-0994**	1	CLIP	
	3	1	**2V-1771**	1	GROMMET	
M	4	1	**5C-7261**	4	NUT (M8X1.25-THD)	
	5	1	**8S-2634**	1	COVER AS	
M	6	1	**8T-4185**	1	BOLT (M10X1.5X50-MM)	
	7	1	**8T-4224**	8	WASHER-HARD (8.8X16X2-MM THK)	
M	8	1	**8T-7547**	4	BOLT (M8X1.25X30-MM)	
	9	1	**9R-5383**	1	BOSS (11X25X20-MM THK)	

E - ORDER BY THE CENTIMETER
M - METRIC PART

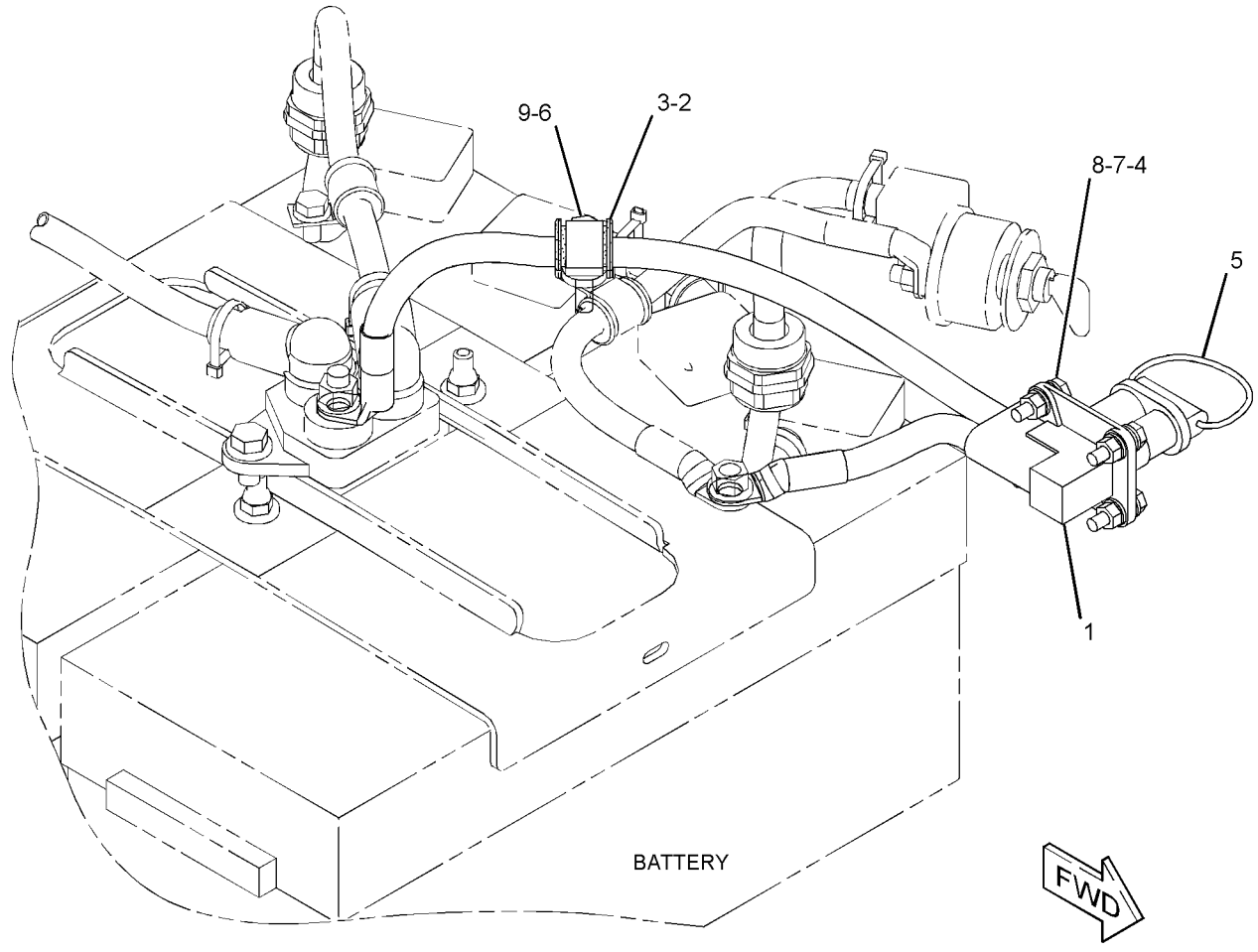

GRAPHIC #1 **<END>** g02886003

322-3305 BLOCK GP-JUNCTION

S/N: JLX1-UP

PART OF 372-4888 BATTERY & WIRING GP

SMCS-1408, 7426 **i05737035**

NOTE	REF NO	GRAPHIC REF	PART NUMBER	QTY	PART NAME 1 2 3 4 5 6 (PRODUCT LEVEL)	SEE PAGE
	1	1	**5G-6505**	3	WASHER (25X38X14-MM THK)	
	2	1	**8C-6358**	1	BLOCK AS-JUNCTION (BATTERY)	
	2A	1	**7F-0560**	6	WASHER (0.516X0.938X0.101-IN THK)	
	2B	1	**8T-3518**	6	NUT-FULL (1/2-13-THD)	

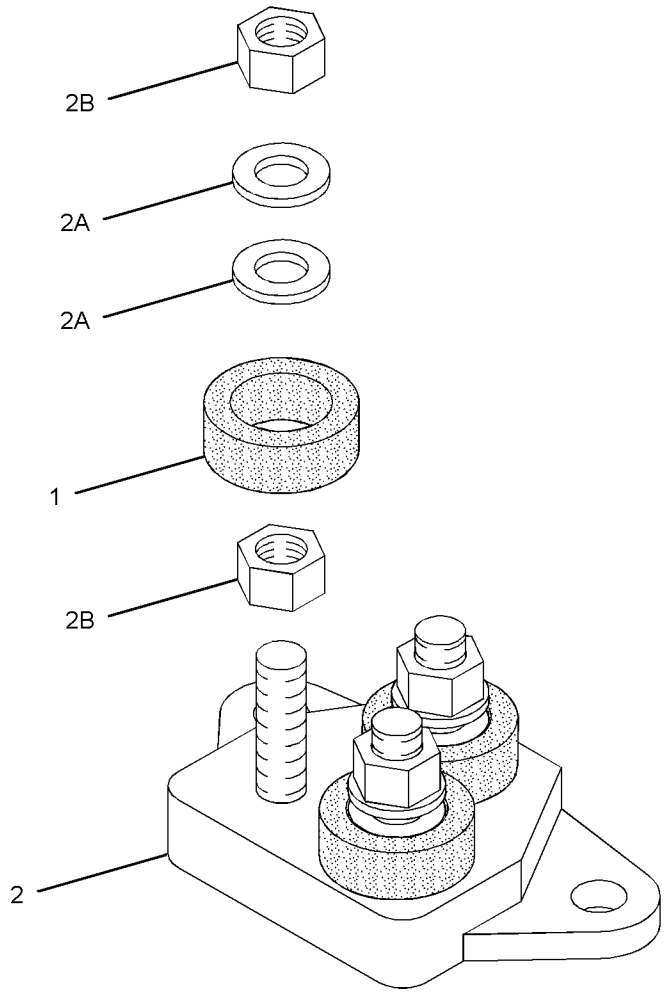

GRAPHIC #1

<END>

g03664766

281-8872 CAMERA AR

S/N: JLX1-UP

PART OF 375-3121 CAMERA AR

SMCS-7348 **i04959674**

NOTE	REF NO	GRAPHIC REF	PART NUMBER	QTY	PART NAME 1 2 3 4 5 6 (PRODUCT LEVEL)	SEE PAGE
	1	1	**7K-1181**	15	STRAP-CABLE	
	2	1	**347-1668**	1	CAMERA GP (115-DEG, COLOR)	
		1	**251-4162**	1	KIT-BRACKET (CAMERA)	
					(INCLUDES BRACKET, BOLTS, LOCK NUTS, SOCKET BOLTS, GASKET & ALLEN KEY)	
	3	1	**258-7484**	1	BRACKET AS	
	4	1	*268-4421*	1	PANEL GP-TOP	
		1	**224-9392**	4	FASTENER-SINGLE HEAD	
		1	**246-1888**	1	INSULATION	
	5	1	**268-8643**	1	CABLE AS	
	6	1	**132-5789**	6	CLIP	
M	7	1	**131-3540**	4	LOCKNUT (M8X1.25-THD)	
	8	1	**8M-2772**	4	CLIP	
	9	1	**5P-4116**	4	WASHER-HARD (8.8X20.5X2-MM THK)	

M - METRIC PART

281-8872 **CAMERA AR (*contd.*)** **i04959674**

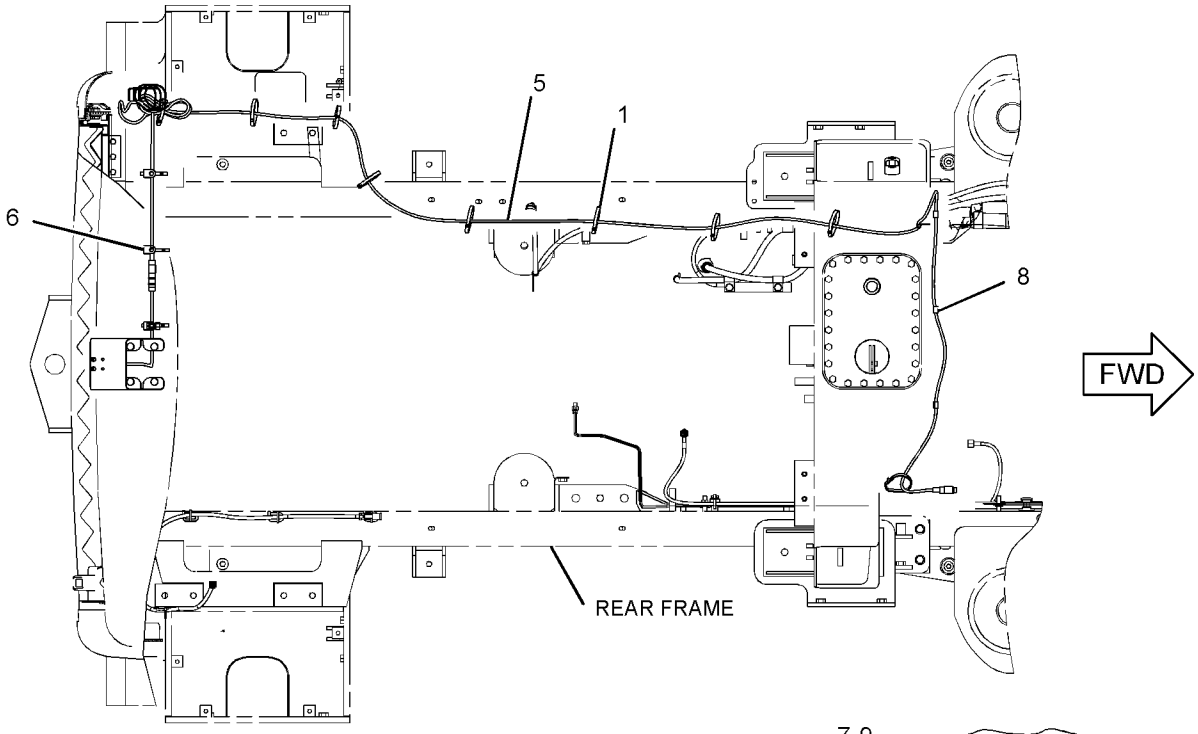

TOP VIEW

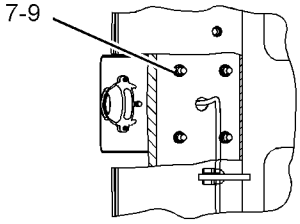

SECTION A-A

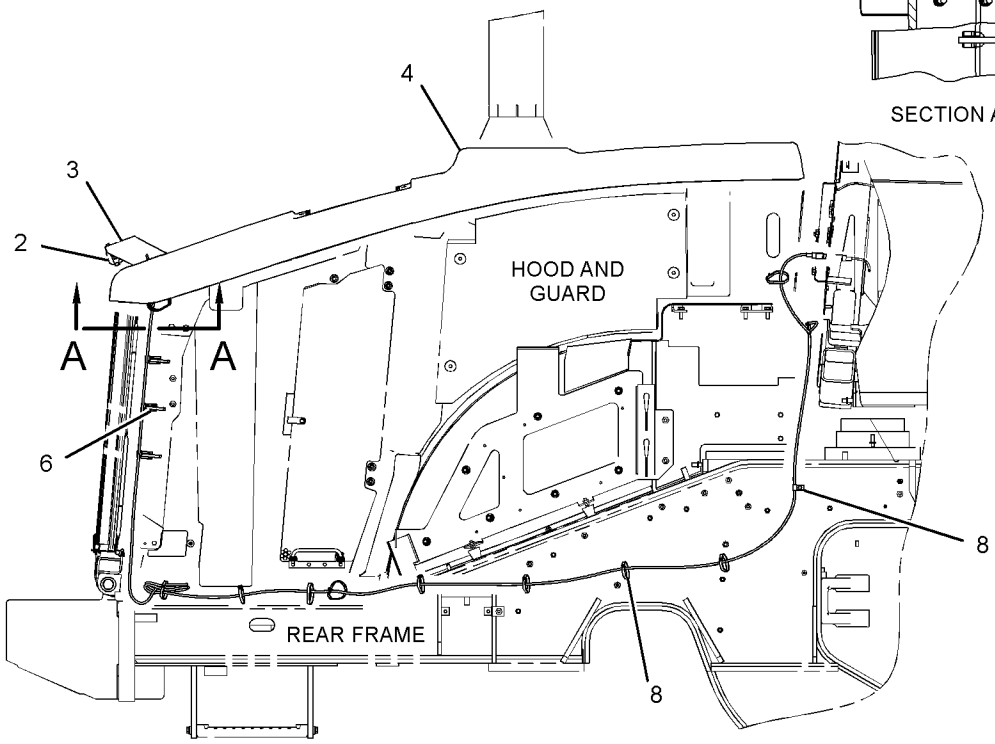

RIGHT SIDE VIEW

GRAPHIC #1 **<END>** g01819754

375-3121 CAMERA AR

S/N: JLX1-UP

PART OF 373-8287 CONVERSION AR-MACHINE

SMCS-7348 **i04774858**

NOTE	PART NUMBER	QTY	PART NAME 1 2 3 4 5 6 (PRODUCT LEVEL)	SEE PAGE
Y	*281-8872*	1	CAMERA AR	181
Y	*373-8274*	1	DISPLAY GP-CAMERA	983

Y - SEPARATE ILLUSTRATION

<END>

248-3288 CIRCUIT BREAKER GP–AUTOMATIC RESET

S/N: JLX1-UP

15-AMPERE

PART OF 372-4876 PANEL GP-CIRCUIT BREAKER

SMCS-1420 **i04660281**

NOTE	REF NO	GRAPHIC REF	PART NUMBER	QTY	PART NAME 1 2 3 4 5 6 (PRODUCT LEVEL)	SEE PAGE
	1	1	**6V-8378**	2	NUT (10-32-THD)	
	2	1	**8F-1434**	2	LOCKWASHER	
	3	1	**8T-0328**	2	WASHER-HARD (5.5X10X1-MM THK)	

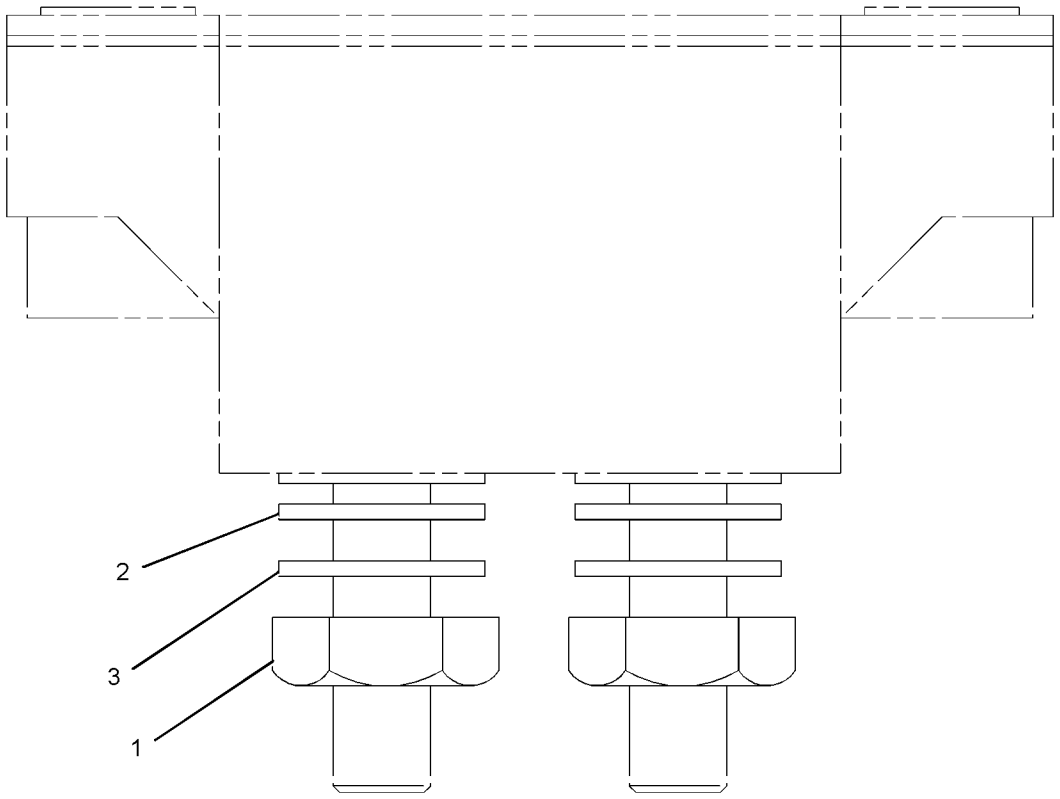

GRAPHIC #1 **<END>** g01321358

246-9345 CONTROL & MTG GP-ENGINE ELEK

S/N: KHX1-UP

PART OF 387-1975, 387-1976 ENGINE AR-COMPLETE

SMCS-1901, 7620 **i05329631**

NOTE	REF NO	GRAPHIC REF	PART NUMBER	QTY	PART NAME 1 2 3 4 5 6 (PRODUCT LEVEL)	SEE PAGE
	1	1	**8T-9655**	8	MOUNT-ISOLATION	
	2	1	**101-3128**	4	SPACER-SPECIAL (12.7X26X28.7-MM THK)	
M	3	1	**143-9392**	4	STUD (M8X1.25-THD)	
Y	4	1	*226-7473*	1	CONTROL GP-ENGINE ELECTRONIC	191
	5	1	**206-6875**	4	CAP-TUBE	
	6	1	**244-3168**	1	BRACKET AS (HARNESS)	
M		1	**232-1693**	1	BOLT-FLANGE HEAD (M6X1X35-MM)	
	7	1	**233-0891**	1	BRACKET AS (HARNESS)	
M		1	**232-1693**	1	BOLT-FLANGE HEAD (M6X1X35-MM)	
	8	1	**9M-1974**	4	WASHER-HARD (8.8X16X2-MM THK)	
	9	1	**9N-0869**	4	WASHER-HARD (8.8X25.5X2-MM THK)	

M - METRIC PART
Y - SEPARATE ILLUSTRATION

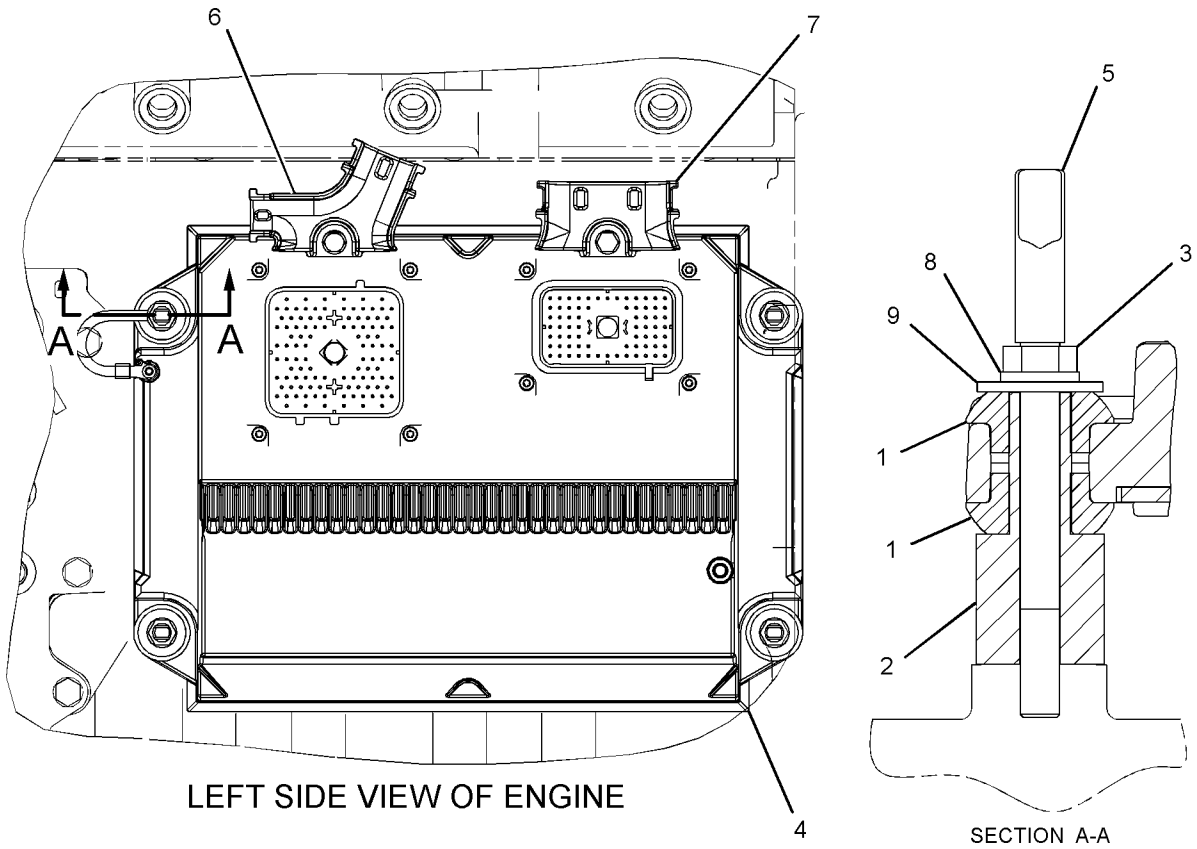

GRAPHIC #1 **<END>** g03378238

279-0498 CONTROL & MTG GP-ENGINE ELEK

S/N: KHX1-UP
ADEM IV, FUEL COOLED
PART OF 338-9076 ENGINE AR-COMPLETE

SMCS-1901, 7620 **i04801491**

NOTE	REF NO	GRAPHIC REF	PART NUMBER	QTY	PART NAME 1 2 3 4 5 6 (PRODUCT LEVEL)	SEE PAGE
	1	1	**8T-9655**	8	MOUNT-ISOLATION	
	2	1	**101-3128**	4	SPACER-SPECIAL	
M	3	1	**143-9392**	3	STUD (M8X1.25-THD)	
	4	1	**9N-0869**	4	WASHER-HARD (8.8X25.5X2-MM THK)	
	5	1	**244-3168**	1	BRACKET AS	
M		1	**232-1693**	1	BOLT-FLANGE HEAD (M6X1X35-MM)	
	6	1	**372-2906**	1	CONTROL GP-UNPROGRAMMED (ENGINE)	
	7	1	**233-0891**	1	BRACKET AS	
M		1	**232-1693**	1	BOLT-FLANGE HEAD (M6X1X35-MM)	
M	8	1	**5P-8347**	1	BOLT (M8X1.25X70-MM)	
	9	1	**9M-1974**	4	WASHER-HARD (8.8X16X2-MM THK)	

M - METRIC PART

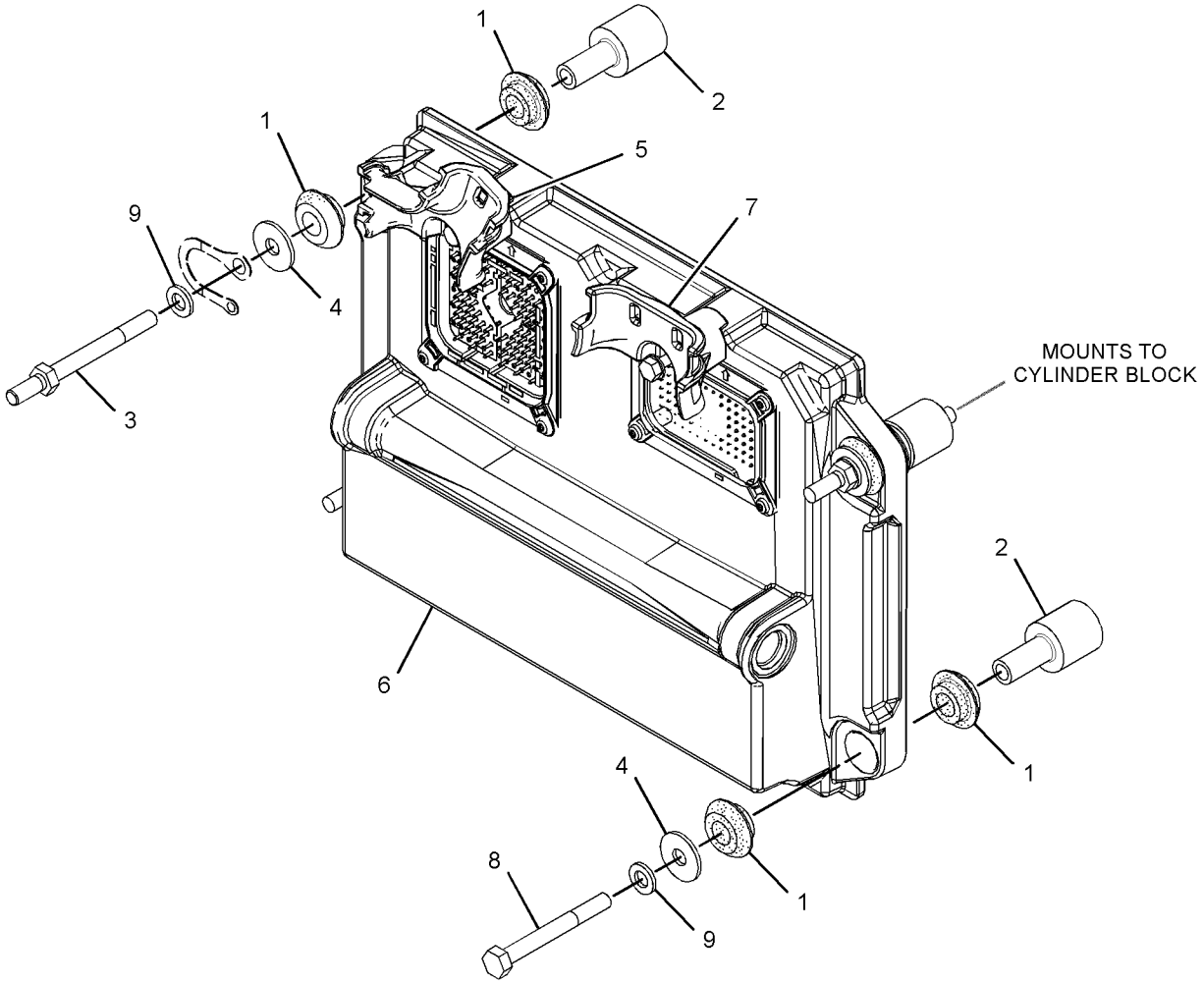

GRAPHIC #1 **<END>** g02925117

375-6399 CONTROL AR-AUTODIG

S/N: JLX1-UP

CANNOT BE USED WITH 375-6401—PAGE: 187, 373-8243—PAGE: 686, 373-5880—PAGE: 956, 373-5881—PAGE: 958, 373-8291—PAGE: 1172, 373-8292—PAGE: 196

SMCS-5741 **i05239875**

NOTE	PART NUMBER	QTY	PART NAME 1 2 3 4 5 6 (PRODUCT LEVEL)	SEE PAGE
Y	*377-3272*	1	CONTROL AR-AUTODIG	188
Y	*239-4850*	1	SENSOR & MTG GP-PRESSURE (LIFT CYLINDER OIL)	275
J	*214-0113*	1	CONFIGURATION-PREMIUM	

J - DLR INSTALL CONFIG: SEE IRM: EES03-01
Y - SEPARATE ILLUSTRATION

<END>

375-6401 CONTROL AR-AUTODIG

S/N: JLX1-UP

SMCS-5741 **i05253390**

NOTE	PART NUMBER	QTY	PART NAME 1 2 3 4 5 6 (PRODUCT LEVEL)	SEE PAGE
Y	*377-3273*	1	CONTROL GP-AUTODIG	190
Y	*239-4850*	1	SENSOR & MTG GP-PRESSURE (LIFT CYLINDER OIL)	275
J	*214-0113*	1	CONFIGURATION-PREMIUM	

J - DLR INSTALL CONFIG:SEE IRM:EES03-01
Y - SEPARATE ILLUSTRATION

<END>

377-3272 CONTROL AR-AUTODIG

S/N: JLX1-UP

PART OF 375-6399 CONTROL AR-AUTODIG

SMCS-5741 **i04869755**

NOTE	REF NO	GRAPHIC REF	PART NUMBER	QTY	PART NAME 1 2 3 4 5 6 (PRODUCT LEVEL)	SEE PAGE
	1	1	**4E-2229**	1	DAMPER AS-ALARM	
Y	2	1	**106-0107**	1	SWITCH GP-ROTARY (AUTODIG MODE)	316
	3	1	**110-6109**	1	KNOB-CONTROL (AUTODIG MODE)	
	4	1	**123-9694**	1	HORN	
	5	1	**201-1531**	1	FILM-IDENTIFICATION (AUTODIG)	
	6	1	**236-4620**	1	SWITCH AS-ROCKER (AUTODIG OPERATING MODE)	
	7	1	**236-4621**	1	SWITCH AS-ROCKER (AUTODIG KICKOUT SET)	
	8	1	**265-8171**	1	SWITCH AS-PUSH BUTTON (AUTODIG TRIGGER)	
	9	1	**381-1713**	1	FILM-CONTROL	

Y - SEPARATE ILLUSTRATION

377-3272 **CONTROL AR-AUTODIG (*contd.*)** **i04869755**

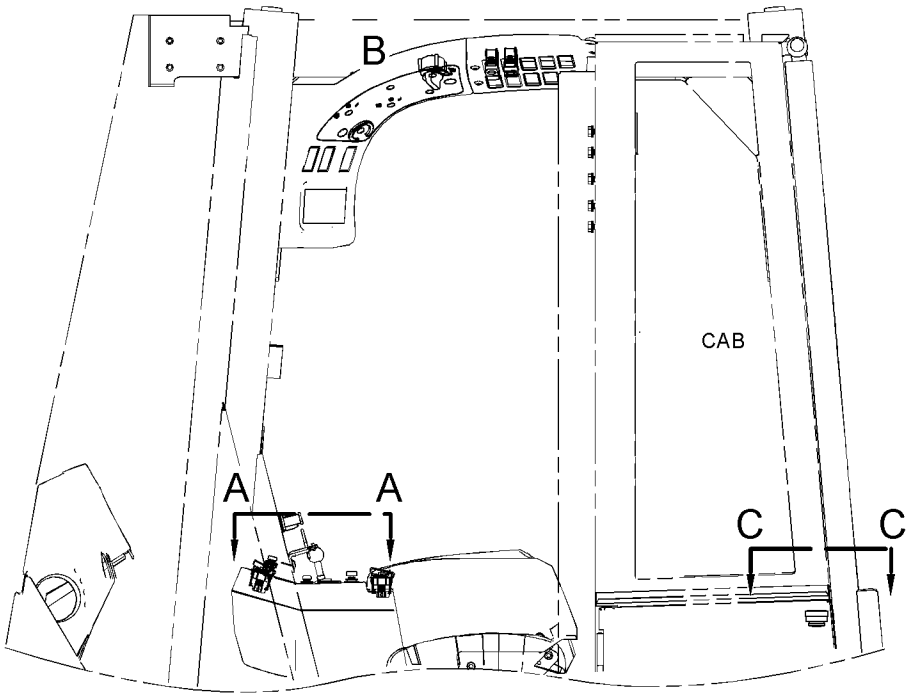

LEFT SIDE VIEW

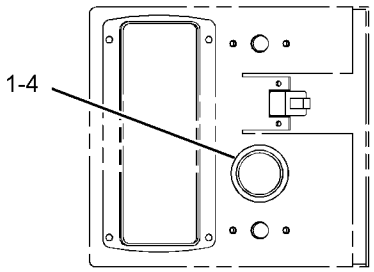

VIEW C-C

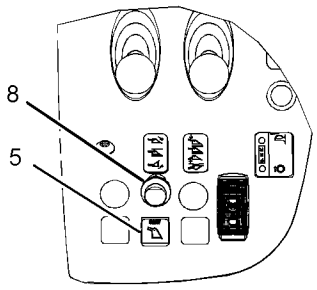

VIEW A-A

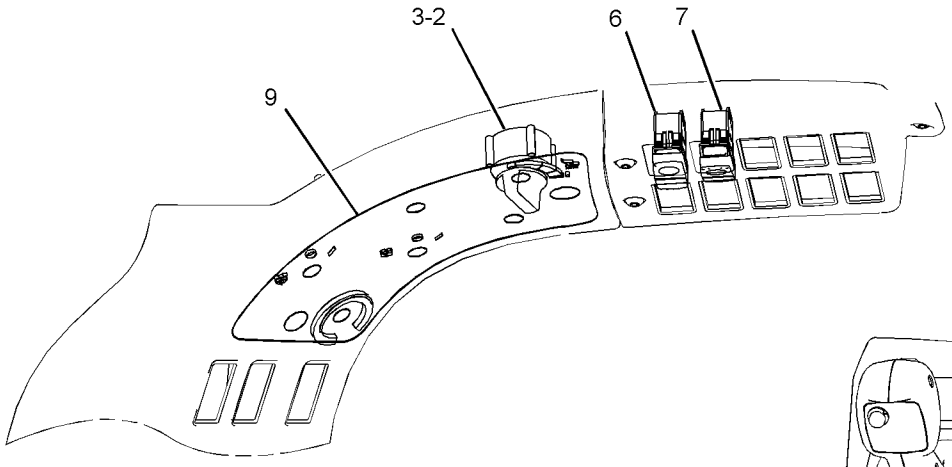

VIEW OF AREA B

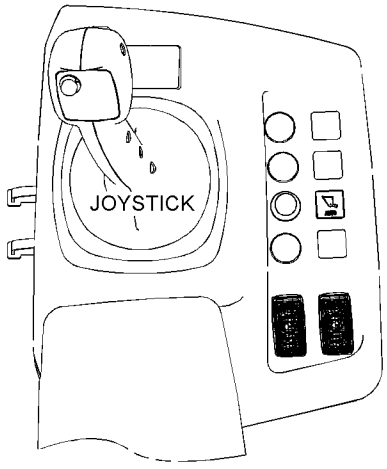

(OPTIONAL DESIGN)

GRAPHIC #1 **<END>** g02887591

377-3273 CONTROL GP-AUTODIG

S/N: JLX1-UP

PART OF 375-6401 CONTROL AR-AUTODIG

SMCS-5741 **i05253424**

NOTE	REF NO	GRAPHIC REF	PART NUMBER	QTY	PART NAME 1 2 3 4 5 6 (PRODUCT LEVEL)	SEE PAGE
	1	1	**4E-2229**	1	DAMPER AS-ALARM	
Y	2	1	**106-0107**	1	SWITCH GP-ROTARY (AUTODIG MATERIAL SELECT)	316
	3	1	**110-6109**	1	KNOB-CONTROL (AUTODIG MODE)	
	4	1	**123-9694**	1	HORN	
	5	1	**201-1531**	1	FILM-IDENTIFICATION (AUTODIG)	
	6	1	**236-4620**	1	SWITCH AS-ROCKER (AUTODIG OPERATING MODE)	
	7	1	**236-4621**	1	SWITCH AS-ROCKER (AUTODIG KICKOUT SET)	
	8	1	**265-8171**	1	SWITCH AS-PUSH BUTTON (AUTODIG TRIGGER)	
		1	**102-8803**	1	KIT-RECEPTACLE (3-PIN)	
					(INCLUDES RECEPTACLE AS AND WEDGE)	
		1	**6F-0253**	1	LOCKWASHER	
		1	**8T-8729**	3	PIN-CONNECTOR (16-GA TO 18-GA)	
		1	**172-3511**	1	NUT (5/8-24-THD)	
	9	1	**2H-3920**	1	LOCKWASHER	
B	10	1	**381-1714**	1	FILM-INFORMATION (CONTROL PANEL)	

B - USE AS REQUIRED
Y - SEPARATE ILLUSTRATION

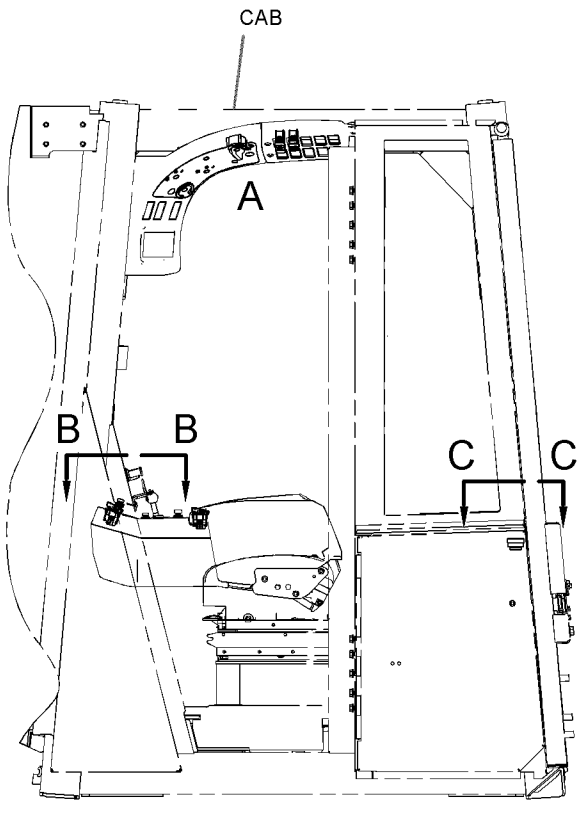

LEFT SIDE VIEW

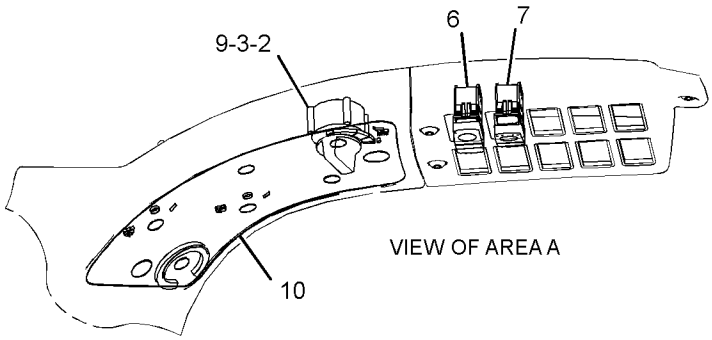

VIEW OF AREA A

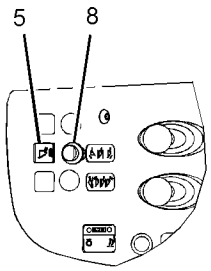

VIEW B-B

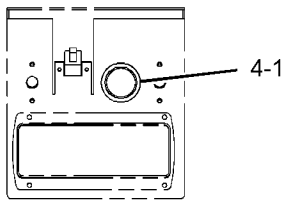

VIEW C-C

GRAPHIC #1 **<END>** g03368285

226-7473 CONTROL GP-ENGINE ELECTRONIC

S/N: KHX1-UP

PART OF 246-9345 CONTROL & MTG GP-ENGINE ELEK

SMCS-1901 **i04453658**

NOTE	REF NO	GRAPHIC REF	PART NUMBER	QTY	PART NAME 1 2 3 4 5 6 (PRODUCT LEVEL)	SEE PAGE
	1	1	**372-2905**	1	CONTROL GP-ELECTRONIC (ENGINE)	

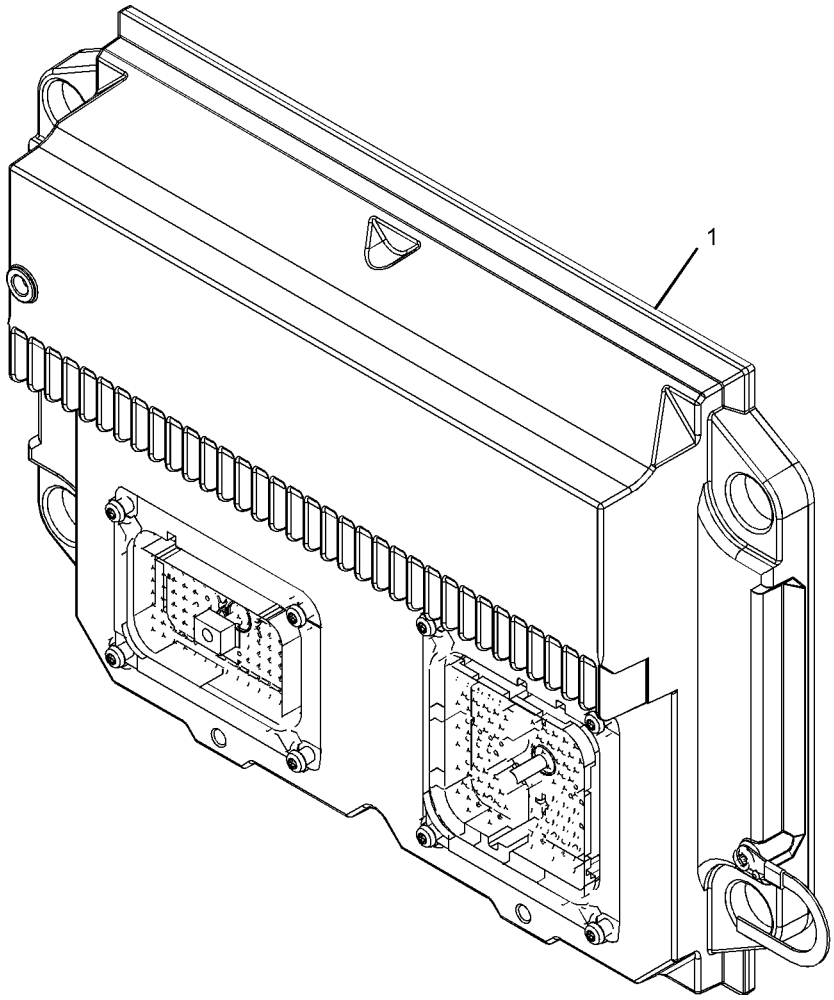

GRAPHIC #1 **<END>** g01101798

351-8490 CONTROL GP-UNPROGRAMMED–PRODUCT LINK 522

S/N: JLX1-UP
WITH SIMS CARD
PART OF 375-9530 INSTALLATION GP-COMMUNICATION

SMCS-7610 **i05807724**

NOTE	REF NO	GRAPHIC REF	PART NUMBER	QTY	PART NAME 1 2 3 4 5 6 (PRODUCT LEVEL)	SEE PAGE
	1	1	**346-7763**	1	COVER AS	
	2	1	**351-8488**	1	CARD-MEMORY (SUBSCRIBER IDENTITY MODULE)	
	3	1	**7X-6315**	1	STRAP AS-GROUND	
M	4	1	**342-9022**	4	SCREW-PAN HEAD (M2.5X0.45X8-MM)	
	5	1	**342-9290**	1	SCREW-PAN HEAD (M4X0.7-THD)	
	6	1	**134-4126**	1	WASHER (4.52X8.28X0.76-MM THK)	
F			**449-6277**	1	SOFTWARE GP-ELECTRONIC (PRODUCT LINK 522)	

F - NOT SHOWN
M - METRIC PART

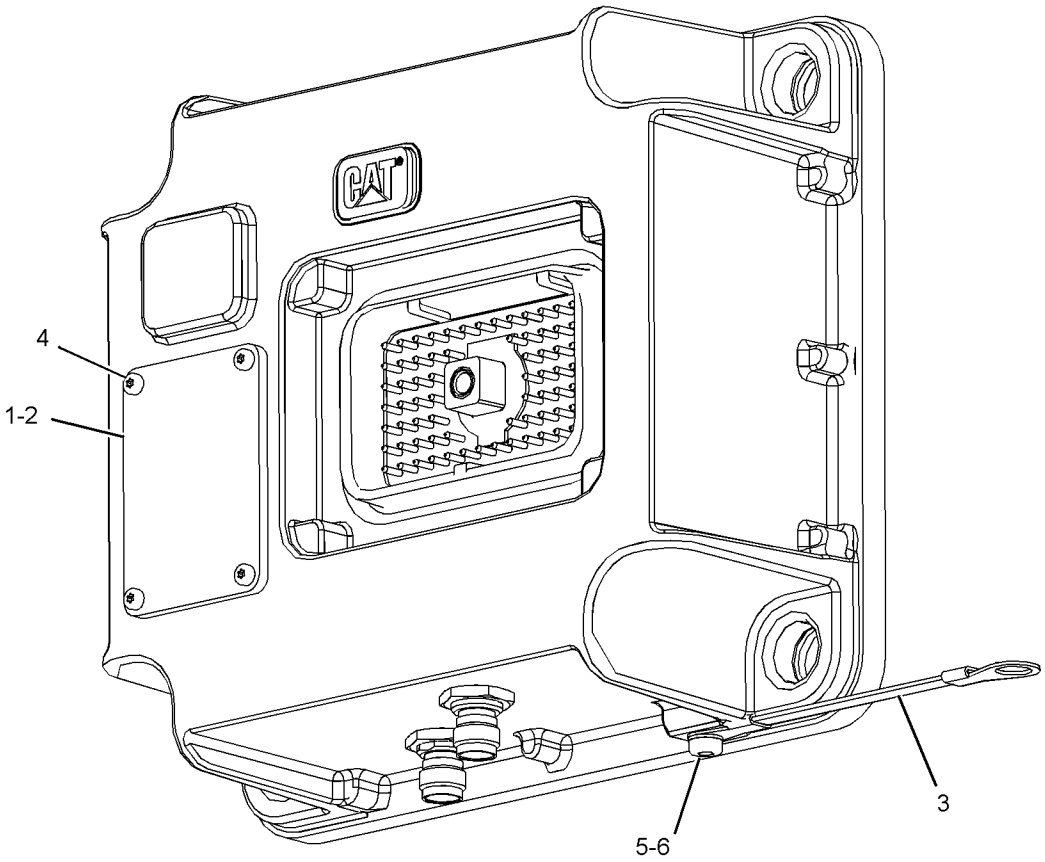

GRAPHIC #1 **<END>** g02330133

372-4531 CONTROL GP-UNPROGRAMMED–PRODUCT LINK 522

S/N: JLX1-UP
WITH SIMS CARD, CHINA, G3
PART OF 377-1478 INSTALLATION GP-COMMUNICATION

SMCS-7610 **i05741956**

NOTE	REF NO	GRAPHIC REF	PART NUMBER	QTY	PART NAME 1 2 3 4 5 6 (PRODUCT LEVEL)	SEE PAGE
	1	1	**346-7763**	1	COVER AS	
	2	1	**372-4532**	1	CARD-MEMORY (SUBSCRIBER IDENTITY MODULE)	
	3	1	**7X-6315**	1	STRAP AS-GROUND	
M	4	1	**342-9022**	4	SCREW-PAN HEAD (M2.5X0.45X8-MM)	
	5	1	**342-9290**	1	SCREW-PAN HEAD (M4X0.7-THD)	
	6	1	**134-4126**	1	WASHER (4.52X8.28X0.76-MM THK)	
	7	1	**276-4053**	1	FILM-IDENTIFICATION (CAT)	
F			**449-6277**	1	SOFTWARE GP-ELECTRONIC	

F - NOT SHOWN
M - METRIC PART

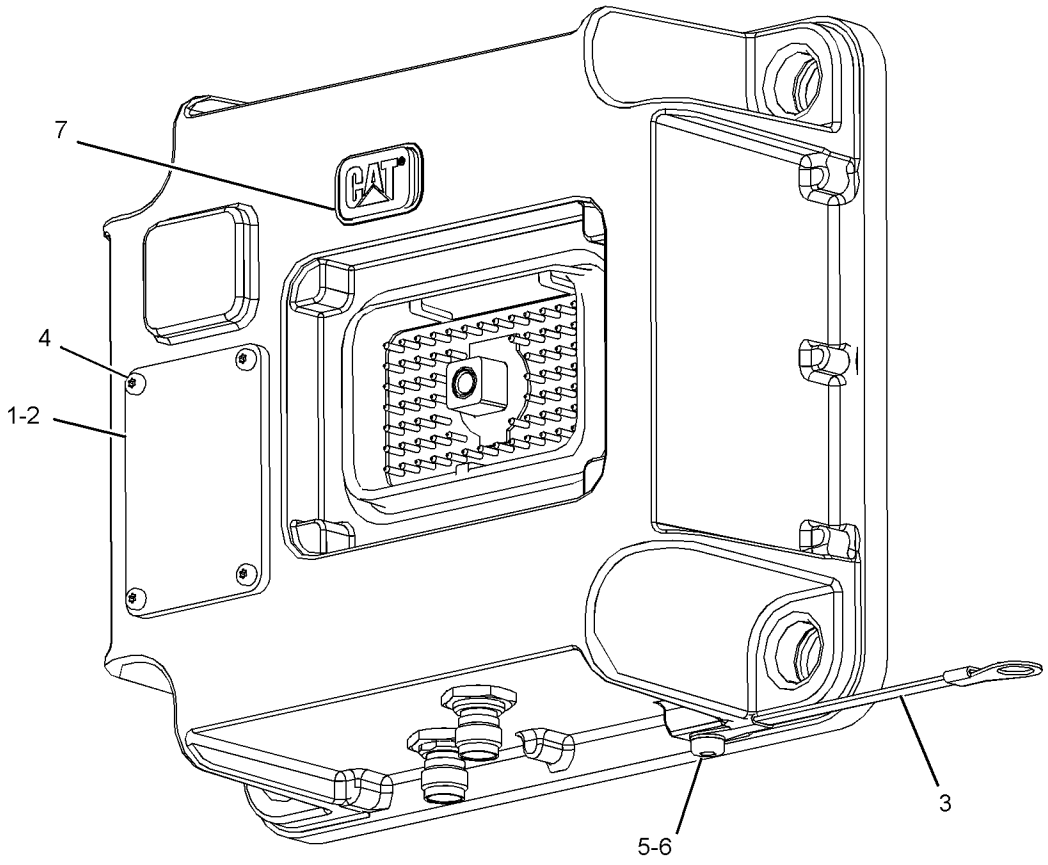

GRAPHIC #1 **<END>** g03009457

341-8249 COVER GP-STARTING MOTOR

S/N: KHX54031-UP

PART OF 387-1975, 387-1976 ENGINE AR-COMPLETE

SMCS-1451, 1453 **i05527235**

NOTE	REF NO	GRAPHIC REF	PART NUMBER	QTY	PART NAME 1 2 3 4 5 6 (PRODUCT LEVEL)	SEE PAGE
	1	1	**331-5262**	1	COVER-PAD	

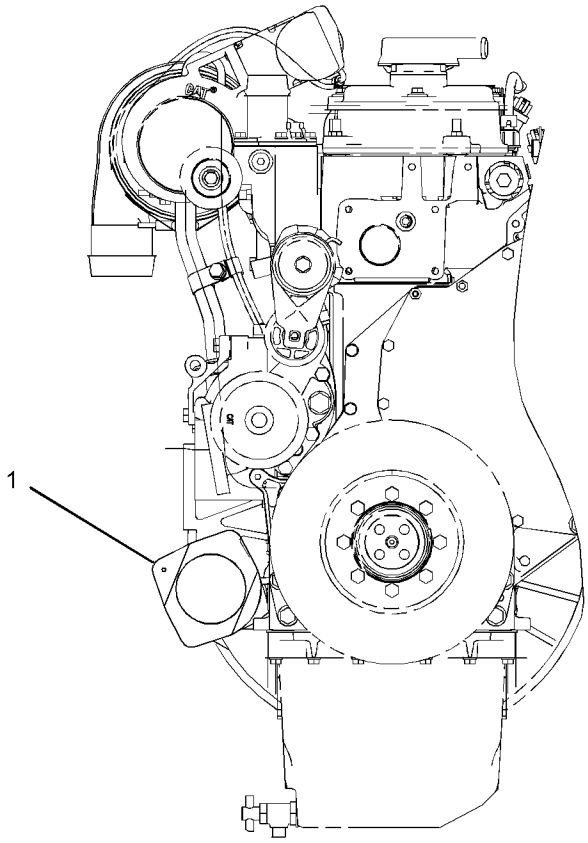

FRONT VIEW OF ENGINE

GRAPHIC #1 **<END>** g03076639

372-2873 ELECTRICAL AR

S/N: JLX1-UP

PART OF 373-8236 COMMON AR

SMCS-1408, 1429, 7402, 7406 **i04730985**

NOTE	PART NUMBER	QTY	PART NAME 1 2 3 4 5 6 (PRODUCT LEVEL)	SEE PAGE
Y	*372-4888*	1	BATTERY & WIRING GP	177
Y	*373-8284*	1	ELECTRONICS GP-IMPLEMENT	196
Y	*373-8283*	1	ELECTRONICS GP-MONITOR	196
Y	*373-8282*	1	ELECTRONICS GP-POWER TRAIN	197
Y	*248-0420*	1	HORN GP-ELECTRIC	995
Y	*373-8285*	1	LIGHTING GP-FLOOD	253
Y	*180-0156*	1	SENSOR & MTG GP-LIFT POSITION	272
Y	*303-2243*	1	SENSOR & MTG GP-TILT POSITION	276
Y	*237-0233*	1	WARNING GP-BACKUP	324
Y	*241-0638*	1	WIRING GP-AXLE TEMPERATURE (OIL)	327
Y	*372-4889*	1	WIRING GP-CHASSIS	342
Y	*372-4872*	1	WIRING GP-ENGINE	359
Y	*372-4885*	1	WIRING GP-FRONT	368
Y	*373-0494*	1	WIRING GP-LIGHTING (ROADING)	371
Y	*271-4010*	1	WIRING GP-SENSOR (TILT POSITION)	379

Y - SEPARATE ILLUSTRATION

<END>

262-1421 ELECTRONICS GP-COMMUNICATION—PRODUCT LINK 300

S/N: JLX1-UP

PART OF 320-9997 INSTALLATION GP-COMMUNICATION

SMCS-7606, 7610, 7620 **i05496034**

NOTE	PART NUMBER	QTY	PART NAME 1 2 3 4 5 6 (PRODUCT LEVEL)	SEE PAGE
	285-1133		CONTROL GP-UNPROGRAMMED (PRODUCT LINK 300)	
	7X-6315	1	STRAP AS-GROUND	
	101-0852	1	SCREW-PAN HEAD (8-32X0.375-IN)	
	134-4126	1	WASHER (4.52X8.28X0.76-MM THK)	
	445-2631	1	SOFTWARE GP-COMMUNICATION	

<END>

262-2043 ELECTRONICS GP-COMMUNICATION—PRODUCT LINK 300

S/N: JLX1-UP

PART OF 263-3322 INSTALLATION AR-COMMUNICATION

SMCS-7606, 7610, 7620 **i05499261**

NOTE	PART NUMBER	QTY	PART NAME 1 2 3 4 5 6 (PRODUCT LEVEL)	SEE PAGE
	434-5158	1	SOFTWARE GP-COMMUNICATION (PRODUCT LINK 300)	
			—OR—	
	386-3993	1	SERVICE GP-COMMUNICATION (PRODUCT LINK 300)	
			(OPTIONAL SERVICE REPLACEMENT)(INCLUDES CONTROL GP & SOFTWARE)	
	7X-6315	1	STRAP AS-GROUND	
	101-0852	1	SCREW-PAN HEAD (8-32X0.375-IN)	
	134-4126	1	WASHER (4.52X8.28X0.76-MM THK)	

<END>

373-8292 ELECTRONICS GP-COMMUNICATION

S/N: JLX1-UP

PART OF 375-8101 INSTALLATION AR-COMMUNICATION

SMCS-7606, 7610, 7620 **i05665393**

NOTE	PART NUMBER	QTY	PART NAME 1 2 3 4 5 6 (PRODUCT LEVEL)	SEE PAGE
	442-6441	1	SOFTWARE GP-COMMUNICATION (PRODUCT LINK 522)	

<END>

373-8284 ELECTRONICS GP-IMPLEMENT

S/N: JLX1-UP

PART OF 372-2873 ELECTRICAL AR

SMCS-5701, 7610, 7620 **i04680543**

NOTE	PART NUMBER	QTY	PART NAME 1 2 3 4 5 6 (PRODUCT LEVEL)	SEE PAGE
	384-1647	1	SOFTWARE GP-IMPLEMENT	

<END>

330-5363 ELECTRONICS GP-MONITOR

S/N: JLX1-UP

PART OF 328-6130, 392-5606 MONITOR AR-PAYLOAD

SMCS-7490, 7494, 7601, 7603, 7610, 7620 **i05757961**

NOTE	PART NUMBER	QTY	PART NAME 1 2 3 4 5 6 (PRODUCT LEVEL)	SEE PAGE
	449-9227	1	SOFTWARE GP-MONITOR	

<END>

330-5364 ELECTRONICS GP-MONITOR

S/N: JLX1-UP

FOR USE WITH 328-6130—PAGE: 1035

SMCS-7490, 7494, 7601, 7603, 7610, 7620 **i03629198**

NOTE	PART NUMBER	QTY	PART NAME 1 2 3 4 5 6 (PRODUCT LEVEL)	SEE PAGE
	326-4287	1	SOFTWARE GP-MONITOR (PAYLOAD CONTROL SYSTEM)	
			-OR-	
	326-4288	1	SERVICE GP-MONITOR	
			(OPTIONAL SERVICE REPLACEMENT)(INCLUDES CONTROL GP & SOFTWARE)	

<END>

373-8283 ELECTRONICS GP-MONITOR

S/N: JLX1-UP

PART OF 372-2873 ELECTRICAL AR

SMCS-7490, 7494, 7601, 7603, 7610, 7620 **i05545656**

NOTE	PART NUMBER	QTY	PART NAME 1 2 3 4 5 6 (PRODUCT LEVEL)	SEE PAGE
	441-0402	1	SOFTWARE GP-MONITOR	

<END>

373-8282 ELECTRONICS GP-POWER TRAIN

S/N: JLX1-UP

PART OF 372-2873 ELECTRICAL AR

SMCS-4800, 4808, 7610, 7620 **i05926735**

NOTE	PART NUMBER	QTY	PART NAME 1 2 3 4 5 6 (PRODUCT LEVEL)	SEE PAGE
	456-5558	1	SOFTWARE GP-POWER TRAIN	

<END>

324-0703 FASTENER GP-WIRING HARNESS—TRANSMISSION

S/N: JLX1-UP

PART OF 372-4889 WIRING GP-CHASSIS

SMCS-1408, 7553 **i04102382**

NOTE	REF NO	GRAPHIC REF	PART NUMBER	QTY	PART NAME 1 2 3 4 5 6 (PRODUCT LEVEL)	SEE PAGE
	1	1	**7K-1181**	1	STRAP-CABLE	
	2	1	**154-6626**	1	BRACKET AS	
M		1	**8T-3490**	1	NUT-WELD (M10X1.5-THD)	
	3	1	**193-3973**	1	STRAP-CABLE	
	4	1	**204-8000**	1	MOUNTING-CABLE TIE	
	5	1	**4P-7581**	1	CLIP	
	6	1	**8T-4121**	5	WASHER-HARD (11X21X2.5-MM THK)	
M	7	1	**8T-4136**	3	BOLT (M10X1.5X25-MM)	
M	8	1	**8T-4137**	1	BOLT (M10X1.5X20-MM)	
M	9	1	**8T-4186**	1	BOLT (M10X1.5X40-MM)	
	10	1	**9M-8406**	4	CLIP	

M - METRIC PART

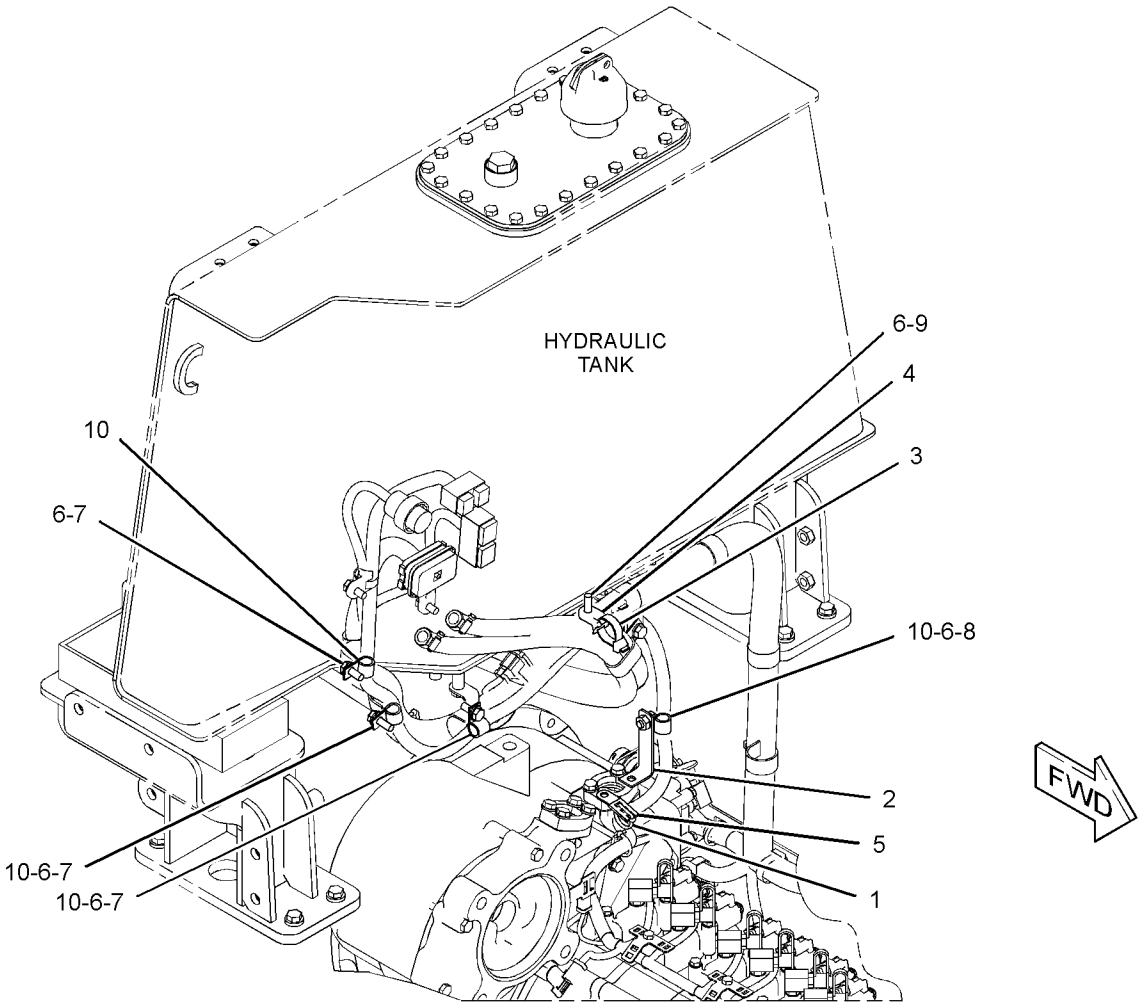

GRAPHIC #1 **<END>** g02159447

358-4872 GUARD GP-ALTERNATOR

S/N: JLX1-UP

PART OF 375-3118 LOGGING AR

SMCS-1405, 7168 **i05229151**

NOTE	REF NO	GRAPHIC REF	PART NUMBER	QTY	PART NAME 1 2 3 4 5 6 (PRODUCT LEVEL)	SEE PAGE
	1	1	**362-1181**	1	GUARD-ALTERNATOR	
	2	1	**362-1182**	1	GUARD-ALTERNATOR	
M	3	1	**153-9301**	4	BOLT-SOCKET HEAD (M4X0.7X10-MM)	
M	4	1	**8T-4181**	3	BOLT (M6X1X20-MM)	
	5	1	**9X-8256**	3	WASHER (6.6X12X2-MM THK)	

M - METRIC PART

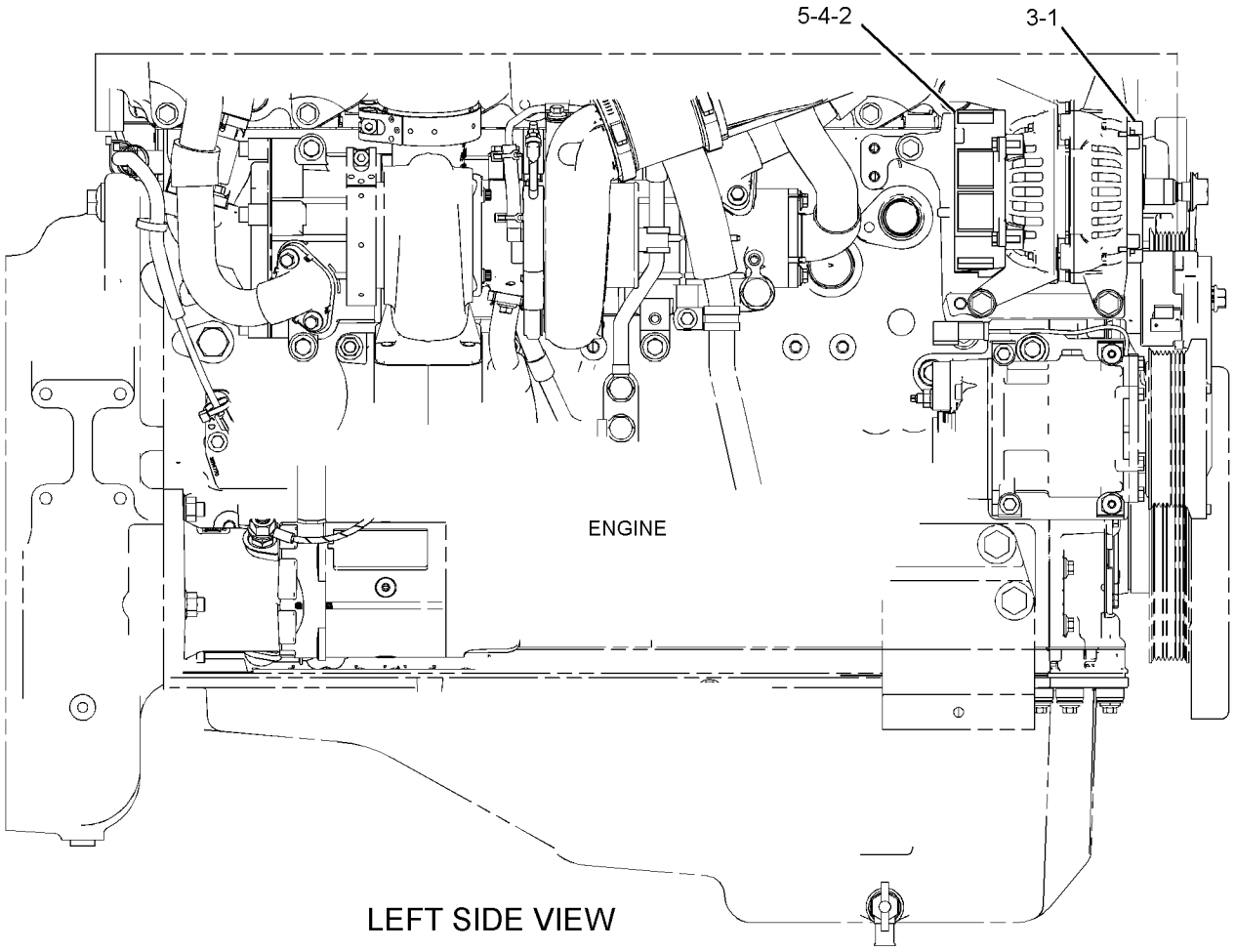

LEFT SIDE VIEW

GRAPHIC #1 **<END>** g02625521

372-4873 HARNESS AS-CAB

S/N: JLX1-UP

PART OF 375-5761 WIRING GP-CAB

SMCS-1408 **i04791115**

NOTE	PART NUMBER	QTY	PART NAME 1 2 3 4 5 6 (PRODUCT LEVEL)	SEE PAGE
	102-8802	1	KIT-RECEPTACLE (2-PIN)	
	102-8804	1	KIT-RECEPTACLE (4-PIN)	
	102-8801	1	KIT-RECEPTACLE (12-PIN)	
			(EACH RECEPTACLE KIT INCLUDES RECEPTACLE AS & WEDGE)	
	3S-2093	8	STRAP-CABLE	
	6V-0491	4	TERMINAL-BLADE (14-GA TO 18-GA)	
D	**6V-5817**		CONDUIT-FLEXIBLE (26.1-MM ID, SPLIT) (5-M)	
	7G-7917	1	PLUG-SEAL	
	7G-7918	1	PLUG-SEAL	
	7G-7919	1	PLUG-SEAL	
	8N-1532	1	RECEPTACLE AS-CONNECTOR (6-PIN)	
	8N-1536	1	NUT (1-5/8-18-THD)	
	8N-1535	1	BELL AS-END	
	8N-1537	1	LOCKWASHER	
	8N-1540	2	PIN-CONNECTOR (12-GA TO 14-GA)	
	8N-1542	1	PIN-CONNECTOR (10-GA)	
	8N-1548	1	PIN-CONNECTOR (4-GA)	
	8T-8737	227	PLUG-SEAL	
	9R-9806	3	TERMINAL-BLADE (18-GA TO 20-GA)	
	9W-2033	28	TERMINAL-BLADE (14-GA TO 16-GA)	
	9X-0145	1	RECEPTACLE AS-CONNECTOR (24-PIN)	
	9X-1054	3	PLUG AS-CONNECTOR (4-PIN)	
	9X-1056	12	TERMINAL-RECEPTACLE (14-GA TO 16-GA)	
	9X-6772	1	STRAP-CABLE	
	100-5041	8	TERMINAL-RECEPTACLE (18-GA TO 20-GA)	
E	**119-3662**		TUBE-HEAT SHRINK (10.85-MM DIA) (4-CM)	
	123-7615	2	CONNECTOR	
E	**125-7874**		TUBE-HEAT SHRINK (5.72-MM DIA) (350-CM)	
E	**125-7875**		TUBE-HEAT SHRINK (7.44-MM DIA) (100-CM)	
	9X-3402	314	SOCKET-CONNECTOR (16-GA TO 18-GA)	
			—OR—	
	126-1768	314	SOCKET-CONNECTOR (14-GA TO 16-GA)	
	126-1774	4	COVER-CONNECTOR	
	9G-4343	1	TERMINAL-RING (4-GA, 1/4-IN SCREW)	
	2L-8066	3	TERMINAL-RING (10-GA TO 12-GA, NO. 10 SCREW)	
	2L-8067	2	TERMINAL-RING (10-GA TO 12-GA, 1/4-IN SCREW)	
	2L-8071	1	TERMINAL-RING (10-GA TO 12-GA, 1/2-IN SCREW)	
	2L-8076	6	TERMINAL-RING (14-GA TO 16-GA, NO. 10 SCREW)	
	5P-2766	2	TERMINAL-RING (18-GA TO 22-GA, NO. 6 SCREW)	
	5P-4571	2	TERMINAL-BLADE (14-GA TO 16-GA)	
	2L-8054	1	TERMINAL-RING (6-GA, 1/2-IN SCREW)	
			—OR—	
	2L-8061	1	TERMINAL-RING (8-GA, 1/2-IN SCREW)	
	2L-8071	2	TERMINAL-RING (10-GA TO 12-GA, 1/2-IN SCREW)	
	2L-8078	2	TERMINAL-RING (14-GA TO 16-GA, 5/16-IN SCREW)	
	2L-8081	4	TERMINAL-RING (14-GA TO 16-GA, 1/2-IN SCREW)	
	9X-3401	113	PIN-CONNECTOR (16-GA TO 18-GA)	
			—OR—	
	126-1767	113	PIN-CONNECTOR (14-GA TO 16-GA)	
	147-1445	2	PLUG AS-CONNECTOR (70-PIN)	
			(EACH INCLUDES)	
	159-9322	1	SEAL-O-RING	
	147-1446	2	PLUG AS-CONNECTOR (70-PIN)	
			(EACH INCLUDES)	
	159-9322	1	SEAL-O-RING	
	155-2255	6	KIT-CONNECTING PLUG (12-PIN)	

372-4873 **HARNESS AS-CAB (*contd.*)** **i04791115**

NOTE	PART NUMBER	QTY	PART NAME 1 2 3 4 5 6 (PRODUCT LEVEL)	SEE PAGE
			(EACH INCLUDES PLUG AS, WEDGE, & INTERFACE SEAL)	
	155-2259	4	WEDGE-PLUG LOCK (8-PIN)	
	155-2270	5	KIT-CONNECTING PLUG (2-PIN)	
	155-2271	4	KIT-CONNECTING PLUG (4-PIN)	
	155-2274	11	KIT-CONNECTING PLUG (6-PIN)	
	155-2265	4	KIT-CONNECTING PLUG (8-PIN)	
	174-0503	1	KIT-CONNECTING PLUG (3-PIN)	
	155-2260	5	KIT-CONNECTING PLUG (3-PIN)	
			(EACH INCLUDES PLUG AS, WEDGE, & INTERFACE SEAL)	
B	**1P-0810**		TAPE-ELECTRICAL	
	183-5785	1	RECEPTACLE AS (40-PIN)	
E	**185-1861**		SEAL-WIRE (101-CM)	
	188-6253	1	BLOCK AS-FUSE	
	1H-3244	2	LOCKWASHER	
	6V-8185	2	NUT (1/4-20-THD)	
	8T-4205	2	WASHER-HARD (7.2X14.5X2-MM THK)	
	151-1398	4	KIT-TERMINAL (LOCK)	
	199-6592	1	BLOCK AS	
	1H-3244	2	LOCKWASHER	
	6V-8185	2	NUT (1/4-20-THD)	
	8T-4205	2	WASHER-HARD (7.2X14.5X2-MM THK)	
	188-6254	1	COVER	
	200-8789	1	SEAL	
	202-5397	69	PLUG	
	235-4123	77	TERMINAL (18-GA TO 20-GA)	
	214-4208	1	RECEPTACLE AS-CONNECTOR (70-PIN)	
	245-7434	17	KIT-CONNECTING PLUG (10-PIN)	
			(EACH INCLUDES PLUG AS, WEDGE, & INTERFACE SEAL)	
	230-4013	1	PLUG AS-CONNECTOR (3-PIN)	
	264-7030	1	SEAL-CONNECTOR	
	246-9371	2	COVER-RELAY	
	274-3774	4	CAP-CONNECTOR	
	274-3775	1	CAP-CONNECTOR	
	274-3776	2	CAP-SEAL	
	274-3777	4	CAP-CONNECTOR	
	274-3778	1	CAP-SEAL	
	274-3779	2	CAP-SEAL	
B	**329-3734**		TAPE-ELECTRICAL	
	340-2566	16	PLUG-SEAL	

B - USE AS REQUIRED
D - ORDER BY THE METER
E - ORDER BY THE CENTIMETER

<END>

421-4977 HARNESS AS-CHASSIS

S/N: JLX1-354

PART OF 372-4876 PANEL GP-CIRCUIT BREAKER

SMCS-1408 **i05239528**

NOTE	PART NUMBER	QTY	PART NAME 1 2 3 4 5 6 (PRODUCT LEVEL)	SEE PAGE
	102-8802	6	KIT-RECEPTACLE (2-PIN)	
	102-8804	1	KIT-RECEPTACLE (4-PIN)	
	102-8801	2	KIT-RECEPTACLE (12-PIN)	
			(EACH RECEPTACLE KIT INCLUDES RECEPTACLE AS & WEDGE)	
	3L-6513	2	TERMINAL-RING (1-GA TO 2-GA, 1/2-IN SCREW)	
	8N-1533	1	PLUG AS-CONNECTOR (7-PIN)	
	8N-1535	2	BELL AS-END	
	8N-1540	1	PIN-CONNECTOR (12-GA TO 14-GA)	
	8N-1541	3	SOCKET-CONNECTOR (12-GA TO 14-GA)	
	8N-1543	1	SOCKET-CONNECTOR (10-GA)	
	8N-1548	1	PIN-CONNECTOR (4-GA)	
	8N-1549	1	SOCKET-CONNECTOR (4-GA)	
	8T-8737	74	PLUG-SEAL	
	8T-8827	1	BOOT (RED)	
	7K-1181	1	STRAP-CABLE	
	113-0580	1	RECEPTACLE AS-CONNECTOR (40-PIN)	
	106-4155	1	KIT-RETAINING BOLT	
			(BOLT KIT INCLUDES BOLT , RING & SEAL)	
E	**114-8843**		SLEEVE-PLASTIC (45-CM)	
E	**119-3662**		TUBE-HEAT SHRINK (10.85-MM DIA) (13-CM)	
E	**125-7874**		TUBE-HEAT SHRINK (5.72-MM DIA) (40-CM)	
E	**125-7875**		TUBE-HEAT SHRINK (7.44-MM DIA) (20-CM)	
	9X-3402	138	SOCKET-CONNECTOR (16-GA TO 18-GA)	
			—OR—	
	126-1768	138	SOCKET-CONNECTOR (14-GA TO 16-GA)	
	126-1767	9	PIN-CONNECTOR (14-GA TO 16-GA)	
	126-1768	12	SOCKET-CONNECTOR (14-GA TO 16-GA)	
	129-7163	1	PLUG AS-CONNECTOR (1-PIN)	
	129-7164	1	RECEPTACLE AS-CONNECTOR (1-PIN)	
	5P-3454	1	TERMINAL-RING (4-GA, 5/16-IN SCREW)	
	2L-8071	2	TERMINAL-RING (10-GA TO 12-GA, 1/2-IN SCREW)	
	2L-8081	1	TERMINAL-RING (14-GA TO 16-GA, 1/2-IN SCREW)	
	9X-3401	51	PIN-CONNECTOR (16-GA TO 18-GA)	
			—OR—	
	126-1767	51	PIN-CONNECTOR (14-GA TO 16-GA)	
	155-2255	1	KIT-CONNECTING PLUG (12-PIN)	
			(PLUG KIT INCLUDES PLUG AS , WEDGE, & INTERFACE SEAL)	
	155-2260	3	KIT-CONNECTING PLUG (3-PIN)	
			(EACH PLUG KIT INCLUDES PLUG AS, WEDGES, & INTERFACE SEAL)	
	155-2270	11	KIT-CONNECTING PLUG (2-PIN)	
	155-2271	2	KIT-CONNECTING PLUG (4-PIN)	
	155-2274	1	KIT-CONNECTING PLUG (6-PIN)	
			(EACH PLUG KIT INCLUDES PLUG AS, WEDGE & INTERFACE SEAL)	
	160-7689	1	PLUG AS-CONNECTOR (70-PIN)	
	159-9322	1	SEAL-O-RING	
	1P-0810	1	TAPE-ELECTRICAL	
	183-5784	1	PLUG AS-CONNECTOR (40-PIN)	
	3E-4367	1	RING-RETAINING	
M	**3E-8557**	1	BOLT (M5X0.8X39.37-MM)	
	9X-3490	2	SEAL-CONNECTOR (40-PIN)	
	188-6210	1	RECEPTACLE AS-CONNECTOR (1-PIN)	
	211-0052	2	NUT (1-11/16-18-THD)	
	2L-8049	1	TERMINAL-RING (6-GA, NO. 10 SCREW)	

421-4977 **HARNESS AS-CHASSIS (*contd.*)** **i05239528**

NOTE	PART NUMBER	QTY	PART NAME 1 2 3 4 5 6 (PRODUCT LEVEL)	SEE PAGE
			—OR—	
	2L-8057	1	TERMINAL-RING (8-GA, NO. 10 SCREW)	
	276-1151	1	PIN-CONNECTOR (8-GA TO 10-GA)	
	278-1438	1	TERMINAL-RING	
	284-8481	1	TERMINAL AS-RING	
E	**289-5150**		SLEEVE (36-CM)	
E	**289-5151**		SLEEVE (40-CM)	
	295-8961	1	RECEPTACLE AS (18-PIN)	
	310-0674	2	LOCKWASHER	
E	**317-1204**		SLEEVE (104-CM)	
	319-8101	1	RECEPTACLE-CONNECTOR	
E	**337-7979**		SLEEVE (152-CM)	
	346-0305	1	BOOT	

E - ORDER BY THE CENTIMETER
M - METRIC PART

<END>

438-6425 HARNESS AS-CHASSIS

S/N: JLX355-UP

PART OF 372-4876 PANEL GP-CIRCUIT BREAKER

SMCS-1408 **i05955663**

NOTE	PART NUMBER	QTY	PART NAME 1 2 3 4 5 6 (PRODUCT LEVEL)	SEE PAGE
	102-8802	1	KIT-RECEPTACLE (2-PIN)	
	102-8801	1	KIT-RECEPTACLE (12-PIN)	
			(EACH RECEPTACLE KIT INCLUDES RECEPTACLE AS & WEDGE)	
	7G-7917	1	PLUG-SEAL	
	7G-7918	1	PLUG-SEAL	
	7G-7919	2	PLUG-SEAL	
	7T-0093	3	PIN-CONNECTOR (12-GA TO 14-GA)	
	3L-6513	1	TERMINAL-RING (1-GA TO 2-GA, 1/2-IN SCREW)	
E	**8C-3056**		CABLE (2-GA, RED) (169-CM)	
	8N-1533	1	PLUG AS-CONNECTOR (7-PIN)	
	8N-1535	2	BELL AS-END	
	8N-1540	1	PIN-CONNECTOR (12-GA TO 14-GA)	
	8N-1541	3	SOCKET-CONNECTOR (12-GA TO 14-GA)	
	8N-1543	1	SOCKET-CONNECTOR (10-GA)	
	8N-1548	1	PIN-CONNECTOR (4-GA)	
	8N-1549	1	SOCKET-CONNECTOR (4-GA)	
	8T-8737	46	PLUG-SEAL	
	8T-8827	1	BOOT (RED)	
	7K-1181	1	STRAP-CABLE	
	113-0580	1	RECEPTACLE AS-CONNECTOR (40-PIN)	
	106-4155	1	KIT-RETAINING BOLT	
			(INCLUDES BOLT, RING, & SEALS)	
E	**114-8843**		SLEEVE-PLASTIC (40-CM)	
E	**119-3662**		TUBE-HEAT SHRINK (10.85-MM DIA) (13-CM)	
E	**125-7874**		TUBE-HEAT SHRINK (5.72-MM DIA) (35-CM)	
E	**125-7875**		TUBE-HEAT SHRINK (7.44-MM DIA) (20-CM)	
	9X-3402	136	SOCKET-CONNECTOR (16-GA TO 18-GA)	
			—OR—	
	126-1768	136	SOCKET-CONNECTOR (14-GA TO 16-GA)	
	126-1767	9	PIN-CONNECTOR (14-GA TO 16-GA)	
	126-1768	12	SOCKET-CONNECTOR (14-GA TO 16-GA)	
	129-7163	1	PLUG AS-CONNECTOR (1-PIN)	
	129-7164	1	RECEPTACLE AS-CONNECTOR (1-PIN)	
	5P-3454	1	TERMINAL-RING (4-GA, 5/16-IN SCREW)	
	2L-8071	2	TERMINAL-RING (10-GA TO 12-GA, 1/2-IN SCREW)	
	2L-8081	1	TERMINAL-RING (14-GA TO 16-GA, 1/2-IN SCREW)	
	9X-3401	51	PIN-CONNECTOR (16-GA TO 18-GA)	
			—OR—	
	126-1767	51	PIN-CONNECTOR (14-GA TO 16-GA)	
	155-2255	1	KIT-CONNECTING PLUG (12-PIN)	
	155-2270	9	KIT-CONNECTING PLUG (2-PIN)	
	155-2271	2	KIT-CONNECTING PLUG (4-PIN)	
	155-2274	1	KIT-CONNECTING PLUG (6-PIN)	
			(EACH PLUG KIT INCLUDES PLUG AS, WEDGE, & INTERFACE SEAL)	
	155-2260	3	KIT-CONNECTING PLUG (3-PIN)	
			(EACH INCLUDES PLUG AS, WEDGES, & INTERFACE SEAL)	
	160-7689	1	PLUG AS-CONNECTOR (70-PIN)	
	159-9322	1	SEAL-O-RING	
	183-5784	1	PLUG AS-CONNECTOR (40-PIN)	
	3E-4367	1	RING-RETAINING	
M	**3E-8557**	1	BOLT (M5X0.8X39.37-MM)	
	9X-3490	2	SEAL-CONNECTOR (40-PIN)	
	188-6210	1	RECEPTACLE AS-CONNECTOR (1-PIN)	
	211-0052	2	NUT (1-11/16-18-THD)	

438-6425 **HARNESS AS-CHASSIS (*contd.*)** **i05955663**

NOTE	PART NUMBER	QTY	PART NAME 1 2 3 4 5 6 (PRODUCT LEVEL)	SEE PAGE
	2L-8049	1	TERMINAL-RING (6-GA, NO. 10 SCREW)	
			—OR—	
	2L-8057	1	TERMINAL-RING (8-GA, NO. 10 SCREW)	
	274-3774	2	CAP-CONNECTOR	
	278-1439	1	TERMINAL AS-RING	
E	**125-7876**		TUBE-HEAT SHRINK (17.78-MM DIA) (4-CM)	
	278-1438	1	TERMINAL-RING	
	284-8481	1	TERMINAL AS-RING	
E	**119-3662**		TUBE-HEAT SHRINK (10.85-MM DIA) (4-CM)	
	285-5600	2	TERMINAL AS-RING	
			(EACH INCLUDES)	
E	**125-7874**		TUBE-HEAT SHRINK (5.72-MM DIA) (4-CM)	
E	**289-5150**		SLEEVE (36-CM)	
E	**289-5151**		SLEEVE (40-CM)	
	295-8961	1	RECEPTACLE AS (18-PIN)	
	310-0674	2	LOCKWASHER	
E	**317-1204**		SLEEVE (104-CM)	
	319-8101	1	RECEPTACLE-CONNECTOR	
E	**337-7979**		SLEEVE (152-CM)	
	346-0305	1	BOOT	
	374-7465	1	CAP-SEAL	
	374-7468	1	CAP-SEAL	

E - ORDER BY THE CENTIMETER
M - METRIC PART

<END>

276-0031 HARNESS AS-CONTROL

S/N: JLX1-UP

PART OF 320-9997, 375-9530, 377-1478 INSTALLATION GP-COMMUNICATION

SMCS-1408 **i04712129**

NOTE	PART NUMBER	QTY	PART NAME 1 2 3 4 5 6 (PRODUCT LEVEL)	SEE PAGE
	102-8801	1	KIT-RECEPTACLE (12-PIN)	
			(INCLUDES RECEPTACLE AS & WEDGE)	
	8T-8737	58	PLUG-SEAL	
	9X-6772	2	STRAP-CABLE	
D	**125-7874**		TUBE-HEAT SHRINK (5.72-MM DIA) (20-CM)	
	9X-3402	25	SOCKET-CONNECTOR (16-GA TO 18-GA)	
			—OR—	
	126-1768	25	SOCKET-CONNECTOR (14-GA TO 16-GA)	
	126-1774	1	COVER-CONNECTOR	
	131-1504	1	TERMINAL AS	
	2L-8077	1	TERMINAL-RING (14-GA TO 16-GA, 1/4-IN SCREW)	
D	**125-7874**		TUBE-HEAT SHRINK (5.72-MM DIA) (3-CM)	
	9X-3401	11	PIN-CONNECTOR (16-GA TO 18-GA)	
			—OR—	
	126-1767	11	PIN-CONNECTOR (14-GA TO 16-GA)	
	155-2255	1	KIT-CONNECTING PLUG (12-PIN)	
			(INCLUDES PLUG AS, WEDGE, & INTERFACE SEAL)	
	160-7690	1	PLUG AS-CONNECTOR (70-PIN)	
	159-9322	1	SEAL-O-RING	

D - ORDER BY THE METER

<END>

372-4845 HARNESS AS-CONTROL

S/N: JLX1-UP

PART OF 372-4890 WIRING GP-CONTROL

SMCS-1408 **i05737368**

NOTE	PART NUMBER	QTY	PART NAME 1 2 3 4 5 6 (PRODUCT LEVEL)	SEE PAGE
	274-3775	1	CAP-CONNECTOR	
	274-3776	1	CAP-SEAL	
	155-2255	1	KIT-CONNECTING PLUG (12-PIN)	
	155-2270	2	KIT-CONNECTING PLUG (2-PIN)	
	155-2271	8	KIT-CONNECTING PLUG (4-PIN)	
	155-2260	2	KIT-CONNECTING PLUG (3-PIN)	
	245-7434	2	KIT-CONNECTING PLUG (10-PIN)	
			(EACH KIT INCLUDES PLUG AS, WEDGE & INTERFACE SEAL)	
	102-8803	1	KIT-RECEPTACLE (3-PIN)	
	102-8801	2	KIT-RECEPTACLE (12-PIN)	
			(EACH INCLUDES RECEPTACLE AS & WEDGE)	
	9X-3401	13	PIN-CONNECTOR (16-GA TO 18-GA)	
			—OR—	
	126-1767	13	PIN-CONNECTOR (14-GA TO 16-GA)	
	202-5397	8	PLUG	
	8T-8737	9	PLUG-SEAL	
	185-1861	12	SEAL-WIRE	
E	**307-2338**		SLEEVE (76-CM)	
	9X-3402	26	SOCKET-CONNECTOR (16-GA TO 18-GA)	
			—OR—	
	126-1768	26	SOCKET-CONNECTOR (14-GA TO 16-GA)	
B	**1P-0810**		TAPE-ELECTRICAL	
	204-1297	12	TERMINAL AS-BLADE (18-GA TO 20-GA)	
			(EACH INCLUDES)	
	235-4123	1	TERMINAL (18-GA TO 20-GA)	
E	**125-7874**		TUBE-HEAT SHRINK (5.72-MM DIA) (15-CM)	
E	**125-7875**		TUBE-HEAT SHRINK (7.44-MM DIA) (10-CM)	

B - USE AS REQUIRED
E - ORDER BY THE CENTIMETER

<END>

222-5917 HARNESS AS-ENGINE

S/N: KHX1-UP

PART OF 330-6022 WIRING GP-ENGINE

SMCS-1408 **i05952456**

NOTE	PART NUMBER	QTY	PART NAME 1 2 3 4 5 6 (PRODUCT LEVEL)	SEE PAGE
	135-5975	1	GROMMET-WIRING	
	316-8226	1	BOLT-SPECIAL	
	155-2255	1	KIT-CONNECTING PLUG (12-PIN)	
			(INCLUDES PLUG AS AND WEDGE)	
	6N-7523	1	WASHER (6.48X11.9X1.57-MM THK)	
	155-2258	1	WEDGE-PLUG LOCK (12-PIN)	
	194-5226	12	WIRE AS (16-GA)	
			—OR—	
	194-5227	12	WIRE AS (14-GA)	

<END>

421-4975 HARNESS AS-ENGINE

S/N: JLX1-354

PART OF 372-4872 WIRING GP-ENGINE

SMCS-1408 **i05432742**

NOTE	PART NUMBER	QTY	PART NAME 1 2 3 4 5 6 (PRODUCT LEVEL)	SEE PAGE
	274-3780	1	CAP-SEAL	
	126-1774	1	COVER-CONNECTOR	
	126-1768	12	SOCKET-CONNECTOR (14-GA TO 16-GA)	
	174-0503	1	KIT-CONNECTING PLUG (3-PIN)	
	155-2260	5	KIT-CONNECTING PLUG (3-PIN)	
	155-2270	11	KIT-CONNECTING PLUG (2-PIN)	
			(EACH PLUG KIT INCLUDES PLUG AS, WEDGE, & INTERFACE SEAL)	
	102-8802	3	KIT-RECEPTACLE (2-PIN)	
	102-8803	1	KIT-RECEPTACLE (3-PIN)	
			(EACH RECEPTACLE KIT INCLUDES RECEPTACLE AS & WEDGE)	
	9X-3401	20	PIN-CONNECTOR (16-GA TO 18-GA)	
			—OR—	
	126-1767	20	PIN-CONNECTOR (14-GA TO 16-GA)	
	127-5483	1	PLUG AS-CONNECTOR (1-PIN)	
	160-7689	1	PLUG AS-CONNECTOR (70-PIN)	
	230-4011	1	PLUG AS-CONNECTOR (2-PIN)	
	240-7874	1	PLUG AS-CONNECTOR (2-PIN)	
	319-8100	1	PLUG-CONNECTOR	
	8T-8737	54	PLUG-SEAL	
	7T-0094	3	SOCKET-CONNECTOR (12-GA TO 14-GA)	
	8N-1549	1	SOCKET-CONNECTOR (4-GA)	
	9X-3402	55	SOCKET-CONNECTOR (16-GA TO 18-GA)	
			—OR—	
	126-1768	55	SOCKET-CONNECTOR (14-GA TO 16-GA)	
	204-6195	1	SOCKET-CONNECTOR (10-GA)	
	3S-2093	2	STRAP-CABLE	
	5P-3454	1	TERMINAL-RING (4-GA, 5/16-IN SCREW)	
	7N-9017	1	TERMINAL-RING (18-GA TO 22-GA, NO. 10 SCREW)	
	2L-8049	1	TERMINAL-RING (6-GA, NO. 10 SCREW)	
			—OR—	
	2L-8057	1	TERMINAL-RING (8-GA, NO. 10 SCREW)	
E	**119-3662**		TUBE-HEAT SHRINK (10.85-MM DIA) (13-CM)	
E	**125-7874**		TUBE-HEAT SHRINK (5.72-MM DIA) (15-CM)	
E	**125-7875**		TUBE-HEAT SHRINK (7.44-MM DIA) (10-CM)	

E - ORDER BY THE CENTIMETER

<END>

438-6426 HARNESS AS-ENGINE

S/N: JLX355-UP

PART OF 372-4872 WIRING GP-ENGINE

SMCS-1408 **i05798301**

NOTE	PART NUMBER	QTY	PART NAME 1 2 3 4 5 6 (PRODUCT LEVEL)	SEE PAGE
	135-2543	1	BOOT (RED)	
	274-3780	1	CAP-SEAL	
	126-1774	1	COVER-CONNECTOR	
	155-2270	7	KIT-CONNECTING PLUG (2-PIN)	
	155-2260	3	KIT-CONNECTING PLUG (3-PIN)	
			(EACH PLUG KIT INCLUDES PLUG AS, WEDGE, & INTERFACE SEAL)	
	102-8802	3	KIT-RECEPTACLE (2-PIN)	
			(EACH INCLUDES RECEPTACLE AS & WEDGE)	
	102-8803	1	KIT-RECEPTACLE (3-PIN)	
			(INCLUDES RECEPTACLE AS & WEDGE)	
	9X-3401	22	PIN-CONNECTOR (16-GA TO 18-GA)	
			—OR—	
	126-1767	22	PIN-CONNECTOR (14-GA TO 16-GA)	
	127-5483	1	PLUG AS-CONNECTOR (1-PIN)	
	160-7689	1	PLUG AS-CONNECTOR (70-PIN)	
	159-9322	1	SEAL-O-RING	
	230-4011	2	PLUG AS-CONNECTOR (2-PIN)	
			(EACH INCLUDES)	
	455-0704	1	SEAL-CONNECTOR	
	240-7874	1	PLUG AS-CONNECTOR (2-PIN)	
	455-0704	1	SEAL-CONNECTOR	
	319-8100	1	PLUG-CONNECTOR	
	8T-8737	52	PLUG-SEAL	
	7T-0094	3	SOCKET-CONNECTOR (12-GA TO 14-GA)	
	8N-1549	1	SOCKET-CONNECTOR (4-GA)	
	9X-3402	57	SOCKET-CONNECTOR (16-GA TO 18-GA)	
			—OR—	
	126-1768	57	SOCKET-CONNECTOR (14-GA TO 16-GA)	
	3S-2093	2	STRAP-CABLE	
	5P-3454	1	TERMINAL-RING (4-GA, 5/16-IN SCREW)	
	7N-9017	1	TERMINAL-RING (18-GA TO 22-GA, NO. 10 SCREW)	
	126-1768	12	SOCKET-CONNECTOR (14-GA TO 16-GA)	
E	**119-3662**		TUBE-HEAT SHRINK (10.85-MM DIA) (13-CM)	
E	**125-7874**		TUBE-HEAT SHRINK (5.72-MM DIA) (15-CM)	
E	**125-7875**		TUBE-HEAT SHRINK (7.44-MM DIA) (10-CM)	

E - ORDER BY THE CENTIMETER

<END>

372-4875 HARNESS AS-FRONT

S/N: JLX1-UP

PART OF 372-4885 WIRING GP-FRONT

SMCS-1408 **i04733012**

NOTE	PART NUMBER	QTY	PART NAME 1 2 3 4 5 6 (PRODUCT LEVEL)	SEE PAGE
	102-8802	2	KIT-RECEPTACLE (2-PIN)	
	102-8803	1	KIT-RECEPTACLE (3-PIN)	
			(EACH INCLUDES RECEPTACLE AS & WEDGE)	
	110-6845	1	PLUG AS-CONNECTOR (40-PIN)	
E	**5P-1506**		HOSE (69-CM)	
	7K-1181	2	STRAP-CABLE	
	8T-8737	11	PLUG-SEAL	
E	**9X-8243**		TUBE-HEAT SHRINK (39.9-MM DIA) (1-CM)	
E	**114-8843**		SLEEVE-PLASTIC (300-CM)	
E	**114-8845**		SLEEVE-PLASTIC (60-CM)	
E	**119-3662**		TUBE-HEAT SHRINK (10.85-MM DIA) (7-CM)	
E	**125-7874**		TUBE-HEAT SHRINK (5.72-MM DIA) (20-CM)	
E	**125-7875**		TUBE-HEAT SHRINK (7.44-MM DIA) (10-CM)	
	9X-3402	64	SOCKET-CONNECTOR (16-GA TO 18-GA)	
			—OR—	
	126-1768	64	SOCKET-CONNECTOR (14-GA TO 16-GA)	
	126-1768	10	SOCKET-CONNECTOR (14-GA TO 16-GA)	
	9X-3401	5	PIN-CONNECTOR (16-GA TO 18-GA)	
			—OR—	
	126-1767	5	PIN-CONNECTOR (14-GA TO 16-GA)	
	155-2270	19	KIT-CONNECTING PLUG (2-PIN)	
	155-2271	2	KIT-CONNECTING PLUG (4-PIN)	
	155-2274	3	KIT-CONNECTING PLUG (6-PIN)	
	155-2260	4	KIT-CONNECTING PLUG (3-PIN)	
			(EACH PLUG KIT INCLUDES PLUG AS, WEDGE, & INTERFACE SEAL)	
	274-3774	4	CAP-CONNECTOR	
	274-3776	1	CAP-SEAL	
	346-0305	1	BOOT	

E - ORDER BY THE CENTIMETER

<END>

373-0495 HARNESS AS-LIGHTING

S/N: JLX1-UP

PART OF 373-0494 WIRING GP-LIGHTING

SMCS-1408 **i04734189**

NOTE	PART NUMBER	QTY	PART NAME 1 2 3 4 5 6 (PRODUCT LEVEL)	SEE PAGE
	155-2274	2	KIT-CONNECTING PLUG (6-PIN)	
			(EACH INCLUDES PLUG AS, WEDGE, & INTERFACE SEAL)	
	102-8805	1	KIT-RECEPTACLE (6-PIN)	
			(INCLUDES RECEPTACLE AS & WEDGE)	
	9X-3401	5	PIN-CONNECTOR (16-GA TO 18-GA)	
			—OR—	
	126-1767	5	PIN-CONNECTOR (14-GA TO 16-GA)	
	8T-8737	2	PLUG-SEAL	
E	**114-8843**		SLEEVE-PLASTIC (40-CM)	
	9X-3402	5	SOCKET-CONNECTOR (16-GA TO 18-GA)	
			—OR—	
	126-1768	5	SOCKET-CONNECTOR (14-GA TO 16-GA)	

E - ORDER BY THE CENTIMETER

<END>

373-0496 HARNESS AS-LIGHTING

S/N: JLX1-UP

PART OF 373-0494 WIRING GP-LIGHTING

SMCS-1408 **i04734250**

NOTE	PART NUMBER	QTY	PART NAME 1 2 3 4 5 6 (PRODUCT LEVEL)	SEE PAGE
	155-2274	2	KIT-CONNECTING PLUG (6-PIN)	
			(EACH INCLUDES PLUG AS, WEDGE, & INTERFACE SEAL)	
	102-8805	1	KIT-RECEPTACLE (6-PIN)	
			(INCLUDES RECEPTACLE AS & WEDGE)	
	9X-3401	5	PIN-CONNECTOR (16-GA TO 18-GA)	
			—OR—	
	126-1767	5	PIN-CONNECTOR (14-GA TO 16-GA)	
	8T-8737	2	PLUG-SEAL	
E	**114-8843**		SLEEVE-PLASTIC (40-CM)	
	9X-3402	5	SOCKET-CONNECTOR (16-GA TO 18-GA)	
			—OR—	
	126-1768	5	SOCKET-CONNECTOR (14-GA TO 16-GA)	

E - ORDER BY THE CENTIMETER

<END>

376-3342 HARNESS AS-LIGHTING

S/N: JLX1-UP

PART OF 375-2472, 375-8099 LIGHTING GP-ROADING

SMCS-1408 **i04774825**

NOTE	PART NUMBER	QTY	PART NAME 1 2 3 4 5 6 (PRODUCT LEVEL)	SEE PAGE
	102-8801	1	KIT-RECEPTACLE (12-PIN)	
			(KIT INCLUDES RECEPTACLE AS & WEDGE)	
	245-7434	1	KIT-CONNECTING PLUG (10-PIN)	
			(KIT INCLUDES WIRE AS & PLUGS)	
	8T-8737	2	PLUG-SEAL	
	9X-3401	10	PIN-CONNECTOR (16-GA TO 18-GA)	
			—OR—	
	126-1767	10	PIN-CONNECTOR (14-GA TO 16-GA)	
	185-1861	10	SEAL-WIRE	
	204-1297	10	TERMINAL AS-BLADE (18-GA TO 20-GA)	
			(EACH INCLUDES)	
	235-4123		TERMINAL (18-GA TO 20-GA)	

<END>

418-4361 HARNESS AS-LIGHTING

S/N: JLX1-UP
BACKUP ALARM, LIGHTS
PART OF 375-2472 LIGHTING GP-ROADING

SMCS-1408 **i05308433**

NOTE	PART NUMBER	QTY	PART NAME 1 2 3 4 5 6 (PRODUCT LEVEL)	SEE PAGE
	102-8802	1	KIT-RECEPTACLE (2-PIN)	
	102-8803	1	KIT-RECEPTACLE (3-PIN)	
			(EACH RECEPTACLE KIT INCLUDES RECEPTACLE AS & WEDGE)	
	5A-3646	2	TERMINAL-BULLET	
E	**125-7874**		TUBE-HEAT SHRINK (5.72-MM DIA) (20-CM)	
	9X-3402	5	SOCKET-CONNECTOR (16-GA TO 18-GA)	
			—OR—	
	126-1768	5	SOCKET-CONNECTOR (14-GA TO 16-GA)	
	9X-3401	5	PIN-CONNECTOR (16-GA TO 18-GA)	
			—OR—	
	126-1767	5	PIN-CONNECTOR (14-GA TO 16-GA)	
	155-2260	1	KIT-CONNECTING PLUG (3-PIN)	
	155-2270	1	KIT-CONNECTING PLUG (2-PIN)	
			(EACH PLUG KIT INCLUDES PLUG AS ,WEDGE & INTERFACE SEAL)	

E - ORDER BY THE CENTIMETER

<END>

200-5728 HARNESS AS-RADIO

S/N: JLX1-UP
4 FLANGE
PART OF 248-4152 RADIO GP

SMCS-1408 **i05716252**

NOTE	PART NUMBER	QTY	PART NAME 1 2 3 4 5 6 (PRODUCT LEVEL)	SEE PAGE
	172-8037	1	CONNECTOR (RADIO)	
	160-3518	1	KIT-RECEPTACLE (8-PIN)	
			(INCLUDES RECEPTACLE AS & WEDGE)	
	8T-8729	7	PIN-CONNECTOR (16-GA TO 18-GA)	
	8T-8737	1	PLUG-SEAL	
	172-8039	11	TERMINAL (RADIO)	

<END>

236-7772 HARNESS AS-RADIO

S/N: JLX1-UP

PART OF 373-5888 INSTALLATION GP-RADIO

SMCS-1408 **i04725669**

NOTE	PART NUMBER	QTY	PART NAME 1 2 3 4 5 6 (PRODUCT LEVEL)	SEE PAGE
	155-2271	4	KIT-CONNECTING PLUG (4-PIN)	
	155-2274	2	KIT-CONNECTING PLUG (6-PIN)	
			(EACH INCLUDES PLUG AS, WEDGE, & INTERFACE SEAL)	
	102-8804	3	KIT-RECEPTACLE (4-PIN)	
			(EACH INCLUDES RECEPTACLE AS & WEDGE)	
	8T-8729	3	PIN-CONNECTOR (16-GA TO 18-GA)	
	8T-8737	13	PLUG-SEAL	
	8T-8730	10	SOCKET-CONNECTOR (16-GA TO 18-GA)	
E	**125-7874**		TUBE-HEAT SHRINK (5.72-MM DIA) (15-CM)	

E - ORDER BY THE CENTIMETER

<END>

375-5762 HARNESS AS-SOLENOID

S/N: JLX1-UP

PART OF 443-5778 CONVERSION GP-CONTROL VALVE

SMCS-1408 **i05834438**

NOTE	PART NUMBER	QTY	PART NAME 1 2 3 4 5 6 (PRODUCT LEVEL)	SEE PAGE
	102-8804	1	KIT-RECEPTACLE (4-PIN)	
			(INCLUDES RECEPTACLE AS & WEDGE)	
E	**114-8843**		SLEEVE-PLASTIC (60-CM)	
	9X-3402	4	SOCKET-CONNECTOR (16-GA TO 18-GA)	
			—OR—	
	126-1768	4	SOCKET-CONNECTOR (14-GA TO 16-GA)	
	9X-3401	4	PIN-CONNECTOR (16-GA TO 18-GA)	
			—OR—	
	126-1767	4	PIN-CONNECTOR (14-GA TO 16-GA)	
	155-2270	2	KIT-CONNECTING PLUG (2-PIN)	
			(EACH INCLUDES PLUG AS, WEDGE & INTERFACE SEAL)	

E - ORDER BY THE CENTIMETER

<END>

373-0497 HARNESS AS-SWITCH

S/N: JLX1-UP

PART OF 375-5759 WIRING GP-ELECTROHYDRAULIC

SMCS-1408 **i05663142**

NOTE	PART NUMBER	QTY	PART NAME 1 2 3 4 5 6 (PRODUCT LEVEL)	SEE PAGE
	102-8801	1	KIT-RECEPTACLE (12-PIN)	
			(INCLUDES RECEPTACLE AS & WEDGE)	
	8T-8737	6	PLUG-SEAL	
E	**125-7874**		TUBE-HEAT SHRINK (5.72-MM DIA) (10-CM)	
E	**125-7875**		TUBE-HEAT SHRINK (7.44-MM DIA) (20-CM)	
	9X-3402	32	SOCKET-CONNECTOR (16-GA TO 18-GA)	
			—OR—	
	126-1768	32	SOCKET-CONNECTOR (14-GA TO 16-GA)	
	9X-3401	11	PIN-CONNECTOR (16-GA TO 18-GA)	
			—OR—	
	126-1767	11	PIN-CONNECTOR (14-GA TO 16-GA)	
	155-2255	1	KIT-CONNECTING PLUG (12-PIN)	
			(INCLUDES PLUG AS, WEDGE & INTERFACE SEAL)	
	155-2260	1	KIT-CONNECTING PLUG (3-PIN)	
			(INCLUDES PLUG AS, WEDGES & INTERFACE SEAL)	
	155-2270	2	KIT-CONNECTING PLUG (2-PIN)	
			(EACH INCLUDES PLUG AS, WEDGE & INTERFACE SEAL)	
	155-2274	1	KIT-CONNECTING PLUG (6-PIN)	
			(INCLUDES PLUG AS, WEDGE & INTERFACE SEAL)	
	174-0503	1	KIT-CONNECTING PLUG (3-PIN)	
			(INCLUDES PLUG AS, WEDGES & INTERFACE SEAL)	
	1P-0810	1	TAPE-ELECTRICAL	
	185-1861	12	SEAL-WIRE	
	202-5397	8	PLUG	
	204-1297	12	TERMINAL AS-BLADE (18-GA TO 20-GA)	
	235-4123	1	TERMINAL (18-GA TO 20-GA)	
	245-7434	1	KIT-CONNECTING PLUG (10-PIN)	
			(INCLUDES WIRE AS & PLUGS)	
E	**307-2338**		SLEEVE (77-CM)	

E - ORDER BY THE CENTIMETER

<END>

260-9602 HARNESS AS-WIRING

S/N: JLX1-UP

PART OF 375-5761 WIRING GP-CAB

SMCS-1408 **i04790830**

NOTE	PART NUMBER	QTY	PART NAME 1 2 3 4 5 6 (PRODUCT LEVEL)	SEE PAGE
	102-8805	1	KIT-RECEPTACLE (6-PIN)	
			(INCLUDES RECEPTACLE AS & WEDGE)	
	8T-8737	3	PLUG-SEAL	
	9W-1951	1	RECEPTACLE-CONNECTOR (9-PIN)	
	9X-3401	12	PIN-CONNECTOR (16-GA TO 18-GA)	
			—OR—	
	126-1767	12	PIN-CONNECTOR (14-GA TO 16-GA)	
B	**1P-0810**		TAPE-ELECTRICAL	

B - USE AS REQUIRED

<END>

381-2499 HARNESS AS-WIRING

S/N: KHX1-UP

PART OF 330-6022 WIRING GP-ENGINE

SMCS-1408 **i05965164**

NOTE	PART NUMBER	QTY	PART NAME 1 2 3 4 5 6 (PRODUCT LEVEL)	SEE PAGE
	211-6807	1	COVER-CONNECTOR	
	155-2270	6	KIT-CONNECTING PLUG (2-PIN)	
	155-2265	1	KIT-CONNECTING PLUG (8-PIN)	
			(EACH KIT INCLUDES PLUS AS, WEDGE, & INTERFACE SEAL)	
	102-8801	1	KIT-RECEPTACLE (12-PIN)	
			(INCLUDES RECEPTACLE AS AND WEDGE)	
	9X-3401	12	PIN-CONNECTOR (16-GA TO 18-GA)	
			—OR—	
	126-1767	12	PIN-CONNECTOR (14-GA TO 16-GA)	
	160-8124	1	PLUG AS (2-PIN)	
	8T-8737	2	PLUG-SEAL	
	100-3320	1	PLUG AS-CONNECTOR (2-PIN)	
	126-5011	1	SEAL-CONNECTOR	
	111-2416	1	PLUG AS-CONNECTOR (2-PIN)	
	126-5011	1	SEAL-CONNECTOR	
	230-4011	2	PLUG AS-CONNECTOR (2-PIN)	
			(EACH INCLUDES)	
	264-7029	1	SEAL-CONNECTOR	
	230-4013	1	PLUG AS-CONNECTOR (3-PIN)	
	264-7030	1	SEAL-CONNECTOR	
	237-0227	3	PLUG AS-CONNECTOR (3-PIN)	
			(EACH INCLUDES)	
	264-7030	1	SEAL-CONNECTOR	
	264-5732	1	PLUG AS-CONNECTOR (120-PIN)	
	288-7324	1	SEAL-CONNECTOR	
	8T-8737	85	PLUG-SEAL	
E	**289-5150**		SLEEVE (31-CM)	
	9X-3402	65	SOCKET-CONNECTOR (16-GA TO 18-GA)	
			—OR—	
	126-1768	65	SOCKET-CONNECTOR (14-GA TO 16-GA)	
	7K-1181	3	STRAP-CABLE	
E	**329-3734**		TAPE-ELECTRICAL (16-CM)	
	1P-0810	1	TAPE-ELECTRICAL	
	305-5362	4	TERMINAL AS (18-GA)	
E	**125-7874**		TUBE-HEAT SHRINK (5.72-MM DIA) (30-CM)	

E - ORDER BY THE CENTIMETER

<END>

9X-3294 HEATER GP-JACKET WATER

S/N: JLX1-UP
120-VOLT, 1000-WATT
PART OF 334-0437 OPTION AR-COLD WEATHER

SMCS-1383 **i02942014**

NOTE	REF NO	GRAPHIC REF	PART NUMBER	QTY	PART NAME 1 2 3 4 5 6 (PRODUCT LEVEL)	SEE PAGE
	1	1	**246-8631**	1	CORD AS-HEATER	
	2	1	**246-8628**	1	ELEMENT AS-JACKET WATER HEATER (120-VOLT, 1000-WATT)	
	2A	1	**5F-9657**	1	SEAL-O-RING	
	3	1	**6N-1604**	1	CAP AS-DUST	

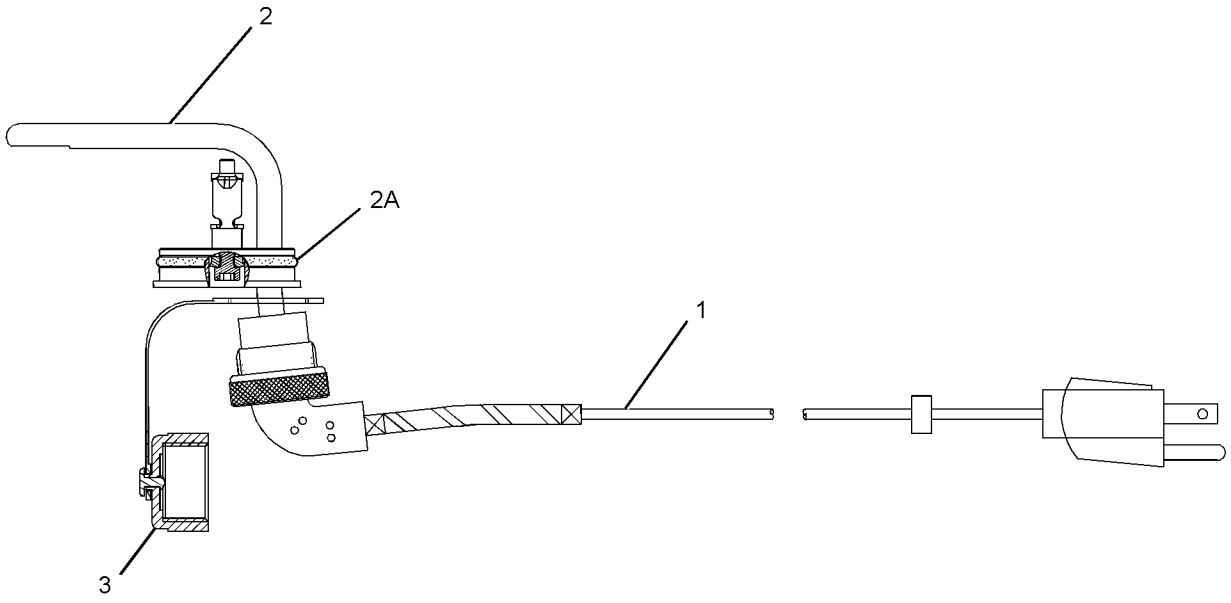

GRAPHIC #1 **<END>** g01225799

217-6280 HEATER GP-JACKET WATER

S/N: JLX1-UP
(240-VOLT, 1000 WATT)
PART OF 334-0438 OPTION AR-COLD WEATHER

SMCS-1383 **i03736717**

NOTE	REF NO	GRAPHIC REF	PART NUMBER	QTY	PART NAME 1 2 3 4 5 6 (PRODUCT LEVEL)	SEE PAGE
	1	1	**217-6284**	1	CORD AS-HEATER	
	2	1	**124-0687**	1	ELEMENT AS-JACKET WATER HEATER (240-VOLT, 1000-WATT)	
	3	1	**132-1448**	1	KIT-SEAL	
	4	1	**133-6517**	1	CAP AS-DUST	

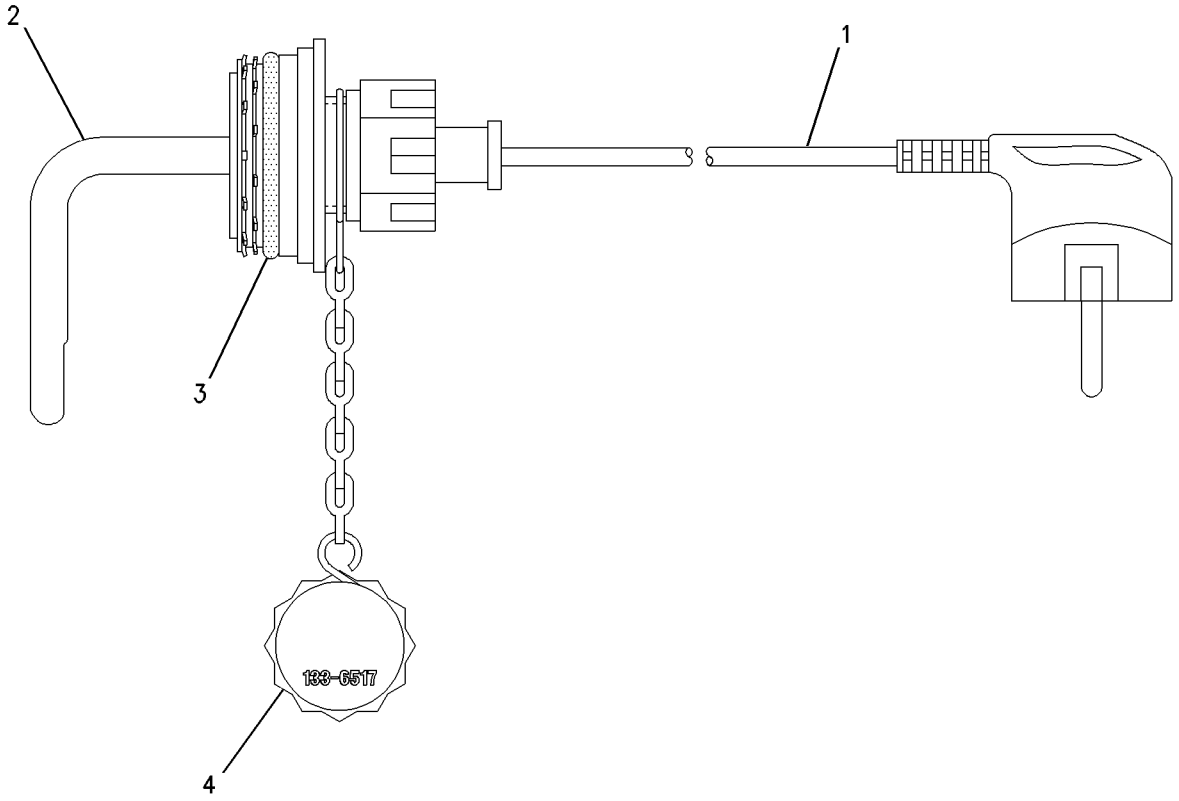

GRAPHIC #1 **<END>** g00898970

263-3322 INSTALLATION AR-COMMUNICATION—PRODUCT LINK

321SR

S/N: JLX1-UP

PART OF 373-8240, 373-8287 CONVERSION AR-MACHINE, 390-7295 DISTRIBUTION AR

SMCS-7606 **i04660212**

NOTE	PART NUMBER	QTY	PART NAME 1 2 3 4 5 6 (PRODUCT LEVEL)	SEE PAGE
Y	*262-2043*	1	ELECTRONICS GP-COMMUNICATION (PRODUCT LINK 300)	195
Y	*320-9997*	1	INSTALLATION GP-COMMUNICATION (PRODUCT LINK)	220
	307-0047	1	FILM-INFORMATION (PRODUCT LINK, READ OMM)	
			(INSIDE CAB ON LEFT FRONT METAL POST BELOW FILM-WARN LINK)	
	274-4284	1	FILM-WARNING (EXPLOSION, RADIO PRODUCT LINK)	
			(INSIDE CAB ON LEFT FRONT METAL POST 820-MM ABOVE CAB FLOOR TO BOTTOM OF FILM)	
Y - SEPARATE ILLUSTRATION				

<END>

375-8101 INSTALLATION AR-COMMUNICATION

S/N: JLX1-UP

SMCS-7606 **i04903930**

NOTE	PART NUMBER	QTY	PART NAME 1 2 3 4 5 6 (PRODUCT LEVEL)	SEE PAGE
Y	*373-8292*	1	ELECTRONICS GP-COMMUNICATION	196
Y	*375-9530*	1	INSTALLATION GP-COMMUNICATION (PRODUCT LINK)	222
	307-0047	1	FILM-INFORMATION (PRODUCT LINK, READ OMM)	
			(INSIDE CAB ON LEFT FRONT METAL POST BELOW FILM-WARN LINK)	
	274-4284	1	FILM-WARNING (EXPLOSION, RADIO PRODUCT LINK)	
			(INSIDE CAB ON LEFT FRONT METAL POST ("A" POST) 820-MM ABOVE CAB FLOOR TO BOTTOM OF FILM)	
Y - SEPARATE ILLUSTRATION				

<END>

375-8102 INSTALLATION AR-COMMUNICATION

S/N: JLX1-UP

SMCS-7606 **i04683133**

NOTE	PART NUMBER	QTY	PART NAME 1 2 3 4 5 6 (PRODUCT LEVEL)	SEE PAGE
Y	*377-1478*	1	INSTALLATION GP-COMMUNICATION	224
	375-7128	1	SOFTWARE GP-COMMUNICATION (PRODUCT LINK 522, CHINA)	
	307-0047	1	FILM-INFORMATION (PRODUCT LINK, READ OMM)	
	274-4284	1	FILM-WARNING (EXPLOSION, RADIO PRODUCT LINK)	
Y - SEPARATE ILLUSTRATION				

<END>

243-1945 INSTALLATION AR-SECURITY

S/N: JLX1-UP

SMCS-7631 **i04373850**

NOTE	PART NUMBER	QTY	PART NAME 1 2 3 4 5 6 (PRODUCT LEVEL)	SEE PAGE
Y	*246-6291*	1	INSTALLATION GP-SECURITY	226
	264-0551	1	CONFIGURATION-PREMIUM	

Y - SEPARATE ILLUSTRATION

<END>

320-9997 INSTALLATION GP-COMMUNICATION—PRODUCT LINK

S/N: JLX1-UP

PART OF 263-3322 INSTALLATION AR-COMMUNICATION

SMCS-7606 **i05389622**

NOTE	REF NO	GRAPHIC REF	PART NUMBER	QTY	PART NAME 1 2 3 4 5 6 (PRODUCT LEVEL)	SEE PAGE
	1	1	**3S-2093**	3	STRAP-CABLE	
	2	1	**7K-1181**	9	STRAP-CABLE	
	3	1	**8C-5607**	8	MOUNT-ISOLATION	
	4	1	**8C-5608**	4	SPACER (6.5X9.5X25.4-MM THK)	
CM	5	1	**9X-2480**	4	BOLT (M6X1X45-MM)	
Y	6	1	**262-1421**	1	ELECTRONICS GP-COMMUNICATION (PRODUCT LINK 300)	195
	7	1	**255-4369**	1	GROMMET	
Y	8	1	**336-3545**	1	RADIO GP-COMMUNICATION (PRODUCT LINK 121SR)	270
Y	10	1	**276-0031**	1	HARNESS AS-CONTROL (PRODUCT LINK)	206
	11	1	**318-9628**	1	PLATE	
	12	1	**156-6175**	2	CLIP	
	13	1	**310-2393**	1	ANTENNA AS (450-CM)	
		1	**355-0598**	1	NUT-SPECIAL	
		1	**301-0589**	1	ANTENNA (FLEXIBLE)	
	14	1	**4D-8123**	1	CLIP	
	18	1	**8T-4121**	4	WASHER-HARD (11X21X2.5-MM THK)	
M	19	1	**8T-4133**	2	NUT (M10X1.5-THD)	
M	20	1	**8T-4136**	2	BOLT (M10X1.5X25-MM)	
M	21	1	**8T-4138**	4	BOLT (M6X1X20-MM)	
	23	1	**9X-6165**	4	WASHER (6.5X22X2.5-MM THK)	
	24	1	**9X-8256**	6	WASHER (6.6X12X2-MM THK)	

C - CHANGE FROM PREVIOUS TYPE
M - METRIC PART
Y - SEPARATE ILLUSTRATION

320-9997 **INSTALLATION GP-COMMUNICATION (*contd.*)** **i05389622**

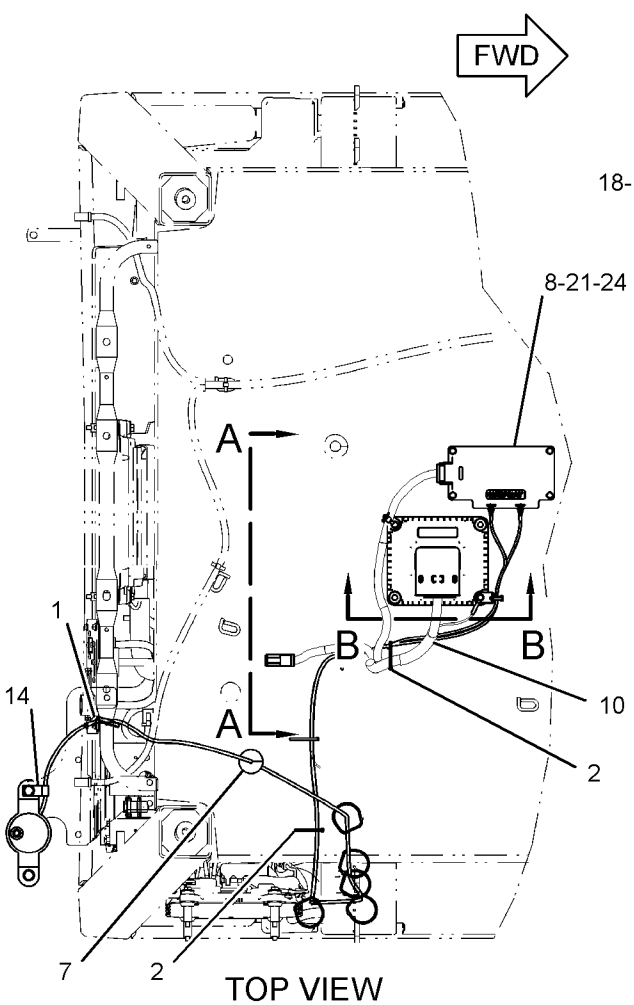

TOP VIEW

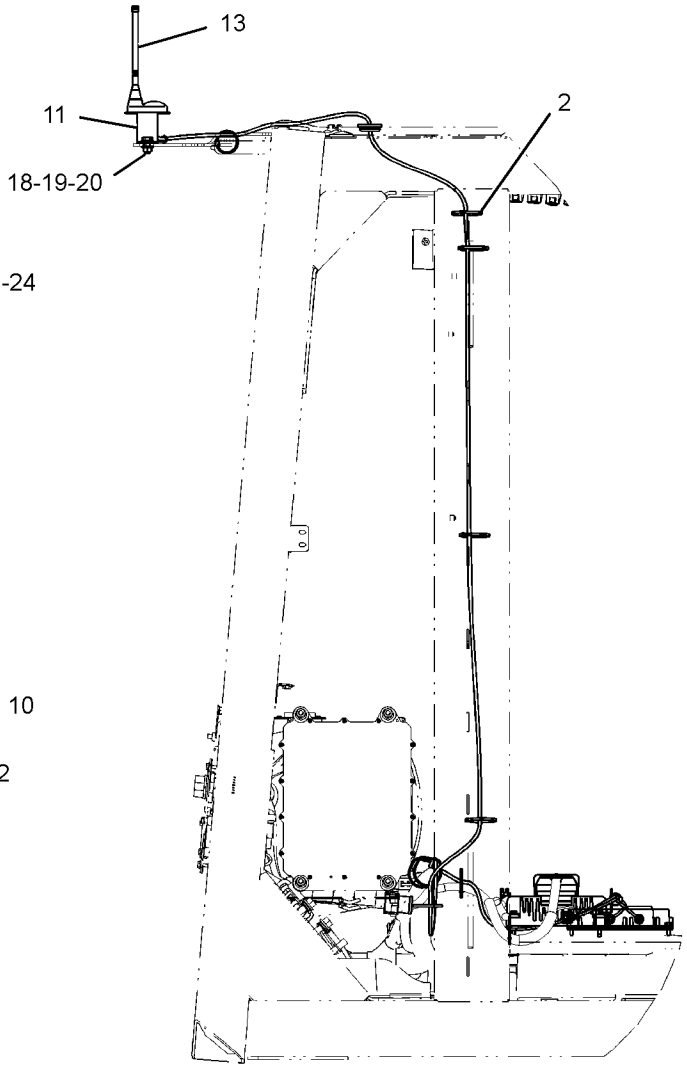

RIGHT SIDE VIEW

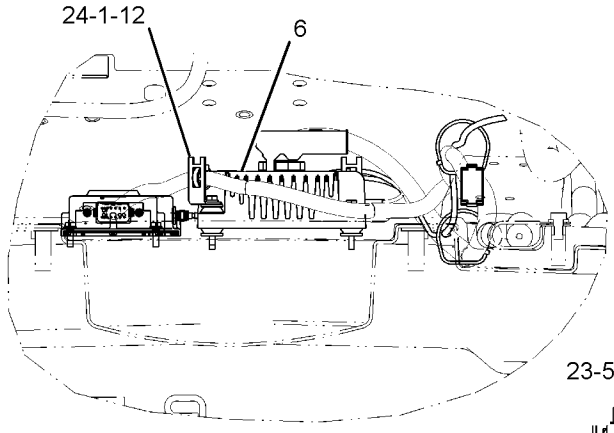

VIEW A-A

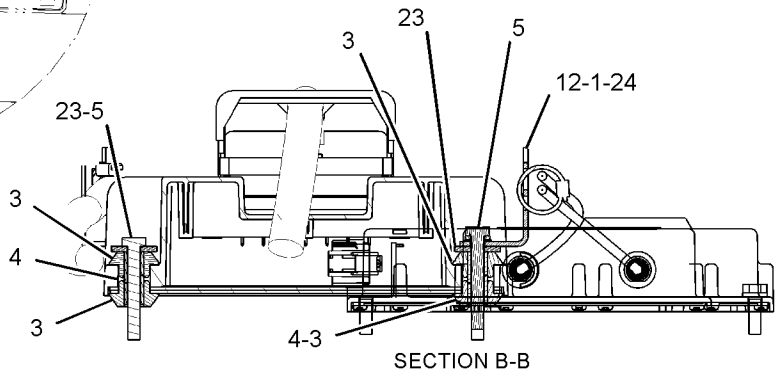

SECTION B-B

GRAPHIC #1 **<END>** g03661086

375-9530 INSTALLATION GP-COMMUNICATION

S/N: JLX1-UP

PART OF 375-8101 INSTALLATION AR-COMMUNICATION

SMCS-7606 **i04903923**

NOTE	REF NO	GRAPHIC REF	PART NUMBER	QTY	PART NAME 1 2 3 4 5 6 (PRODUCT LEVEL)	SEE PAGE
	1	1	**3S-2093**	3	STRAP-CABLE	
	2	1	**7K-1181**	9	STRAP-CABLE	
	3	1	**8C-5607**	8	MOUNT-ISOLATION	
	4	1	**8C-5608**	4	SPACER (6.5X9.5X25.4-MM THK)	
	5	1	**236-6253**	1	GROMMET	
	6	1	**274-3779**	1	CAP-SEAL	
Y	7	1	**276-0031**	1	HARNESS AS-CONTROL	206
	8	1	**318-9628**	1	PLATE	
	9	1	**346-9376**	1	ANTENNA AS	
		1	**355-1213**	1	PLUG	
		1	**361-1045**	1	NUT-SPECIAL (5/8-18-THD)	
	10	1	**351-3454**	1	CABLE AS	
D		1	**125-7876**		TUBE-HEAT SHRINK (17.78-MM DIA) (5-CM)	
D		1	**289-3195**		CONDUIT (325-CM)	
	11	1	**351-3455**	1	CABLE AS	
D		1	**125-7876**		TUBE-HEAT SHRINK (17.78-MM DIA) (5-CM)	
D		1	**289-3195**		CONDUIT (277-CM)	
Y	12	1	**351-8490**	1	CONTROL GP-UNPROGRAMMED (PRODUCT LINK 522)	192
	13	1	**156-6175**	2	CLIP	
	14	1	**4D-8123**	1	CLIP	
	15	1	**8T-4121**	4	WASHER-HARD (11X21X2.5-MM THK)	
M	16	1	**8T-4133**	2	NUT (M10X1.5-THD)	
M	17	1	**8T-4136**	2	BOLT (M10X1.5X25-MM)	
M	18	1	**8T-4138**	1	BOLT (M6X1X20-MM)	
M	19	1	**9X-2480**	4	BOLT (M6X1X45-MM)	
	20	1	**9X-6165**	8	WASHER (6.5X22X2.5-MM THK)	
	21	1	**9X-8256**	3	WASHER (6.6X12X2-MM THK)	

D - ORDER BY THE METER
M - METRIC PART
Y - SEPARATE ILLUSTRATION

375-9530 **INSTALLATION GP-COMMUNICATION (*contd.*)** **i04903923**

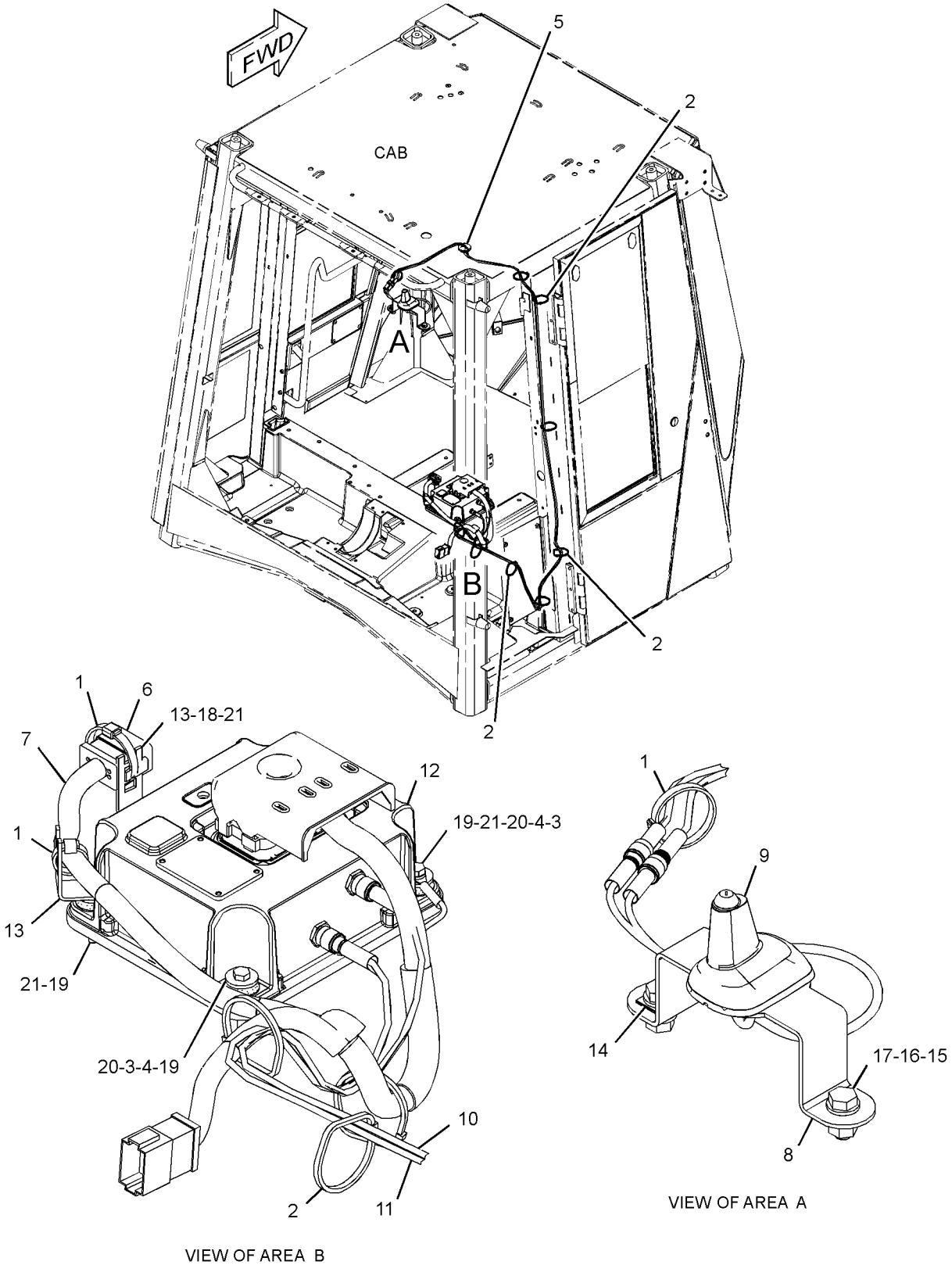

GRAPHIC #1 **<END>** g02794231

377-1478 INSTALLATION GP-COMMUNICATION

S/N: JLX1-UP

PART OF 375-8102 INSTALLATION AR-COMMUNICATION

SMCS-7606 **i04712050**

NOTE	REF NO	GRAPHIC REF	PART NUMBER	QTY	PART NAME 1 2 3 4 5 6 (PRODUCT LEVEL)	SEE PAGE
	1	1	**3S-2093**	3	STRAP-CABLE	
	2	1	**7K-1181**	9	STRAP-CABLE	
	3	1	**8C-5607**	8	MOUNT-ISOLATION	
	4	1	**8C-5608**	4	SPACER (6.5X9.5X25.4-MM THK)	
	5	1	**236-6253**	1	GROMMET	
	6	1	**274-3779**	1	CAP-SEAL	
Y	7	1	**276-0031**	1	HARNESS AS-CONTROL	206
	8	1	**318-9628**	1	PLATE	
	9	1	**346-9376**	1	ANTENNA AS (50-CM)	
		1	**355-1213**	1	PLUG	
		1	**361-1045**	1	NUT-SPECIAL (5/8-18-THD)	
	10	1	**351-3454**	1	CABLE AS	
D		1	**125-7876**		TUBE-HEAT SHRINK (17.78-MM DIA) (5-CM)	
D		1	**289-3195**		CONDUIT (325-CM)	
	11	1	**351-3455**	1	CABLE AS	
D		1	**125-7876**		TUBE-HEAT SHRINK (17.78-MM DIA) (5-CM)	
D		1	**289-3195**		CONDUIT (277-CM)	
Y	12	1	**372-4531**	1	CONTROL GP-COMMUNICATION (PRODUCT LINK 522)	193
	13	1	**156-6175**	2	CLIP	
	14	1	**4D-8123**	1	CLIP	
	15	1	**8T-4121**	4	WASHER-HARD (11X21X2.5-MM THK)	
M	16	1	**8T-4133**	2	NUT (M10X1.5-THD)	
M	17	1	**8T-4136**	2	BOLT (M10X1.5X25-MM)	
M	18	1	**8T-4138**	1	BOLT (M6X1X20-MM)	
M	19	1	**9X-2480**	4	BOLT (M6X1X45-MM)	
	20	1	**9X-6165**	8	WASHER (6.5X22X2.5-MM THK)	
	21	1	**9X-8256**	3	WASHER (6.6X12X2-MM THK)	

D - ORDER BY THE METER
M - METRIC PART
Y - SEPARATE ILLUSTRATION

377-1478 **INSTALLATION GP-COMMUNICATION (*contd.*)** **i04712050**

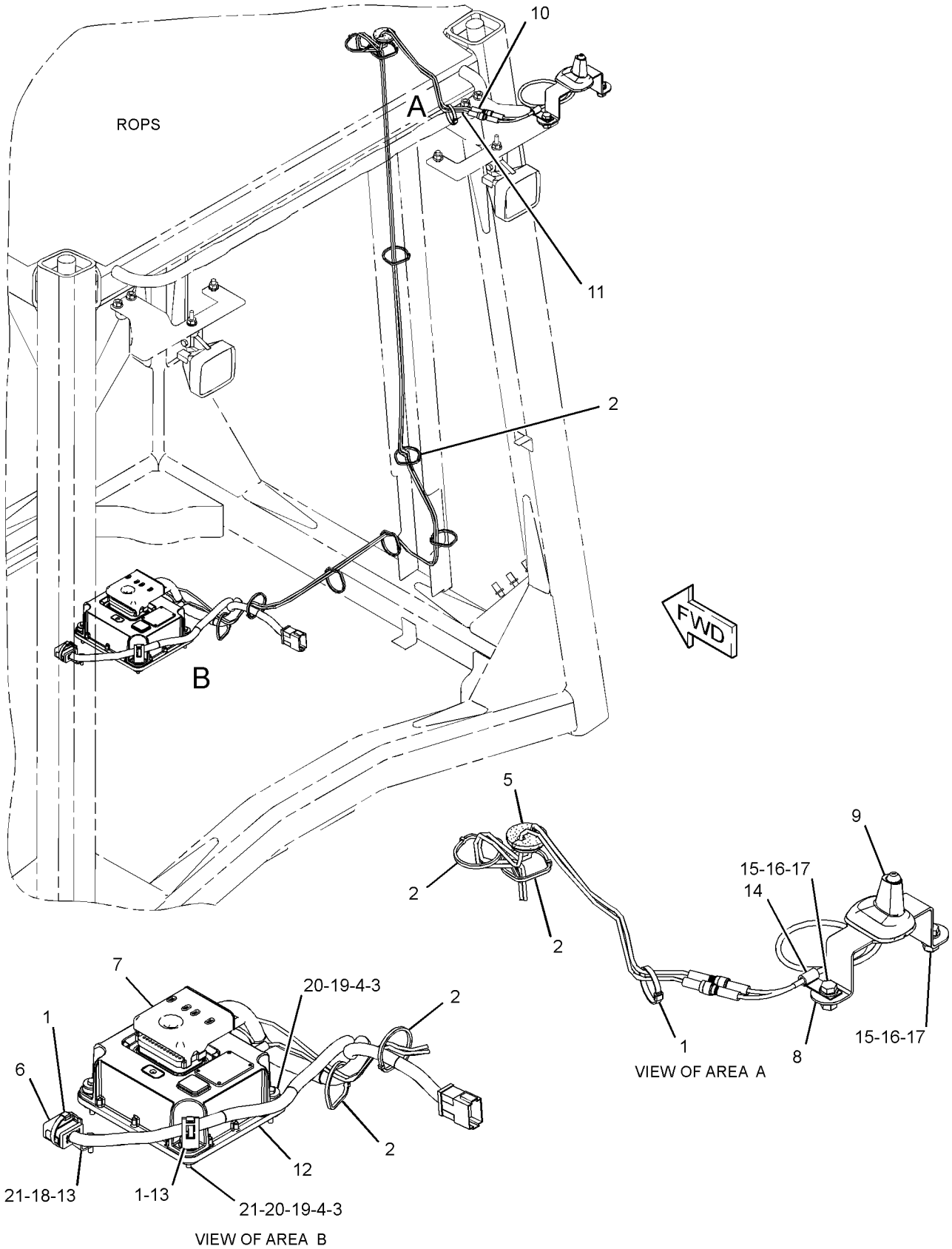

GRAPHIC #1 **<END>** g02794157

246-6291 INSTALLATION GP-SECURITY

S/N: JLX1-UP

PART OF 243-1945 INSTALLATION AR-SECURITY

SMCS-7631 **i03021281**

NOTE	REF NO	GRAPHIC REF	PART NUMBER	QTY	PART NAME 1 2 3 4 5 6 (PRODUCT LEVEL)	SEE PAGE
	1	1	**3S-2093**	4	STRAP-CABLE	
	2	1	**8C-5607**	4	MOUNT-ISOLATION	
	3	1	**8C-5608**	2	SPACER (6.5X9.5X25.4-MM THK)	
	4	1	**198-5389**	1	FILM-IDENTIFICATION (IGNITION SWITCH)	
	5	1	**205-0826**	1	FILM-INSTRUCTION (MACHINE SECURITY, CONSOLE)	
	6	1	**206-5162**	2	KEY AS-ELECTRONIC (SECURITY)	
	7	1	*206-5203*	1	COIL AS (EXCITER)	
		1	**102-8802**	1	KIT-RECEPTACLE (2-PIN)	
					(INCLUDES RECEPTACLE AS & WEDGE)	
		1	**198-5389**	1	FILM-IDENTIFICATION (IGNITION SWITCH)	
		1	**205-8257**	1	COIL AS (EXCITER)	
D		1	**5P-5677**		WIRE (18-GA, BLACK) (0.4-M)	
		1	**186-3735**	2	PIN-CONNECTOR (16-GA TO 18-GA)	
	8	1	**218-0404**	1	MODULE GP-INTERFACE (KEY)	
		1	**6V-6715**	1	SCREW-PAN HEAD (4-20X0.25-IN)	
		1	**8C-3095**	1	SEAL-O-RING	
	9	1	**219-6314**	2	KEY RING (IDENTIFICATION)	
	10	1	**219-6607**	2	FILM-INFORMATION (SECURITY SYSTEM)	
	11	1	**9X-6165**	2	WASHER (6.5X22X2.5-MM THK)	
M	12	1	**7X-2533**	2	BOLT (M6X1X35-MM)	
	13	1	**213-2323**	1	PLATE AS	

D - ORDER BY THE METER
M - METRIC PART

246-6291 **INSTALLATION GP-SECURITY (*contd.*)** **i03021281**

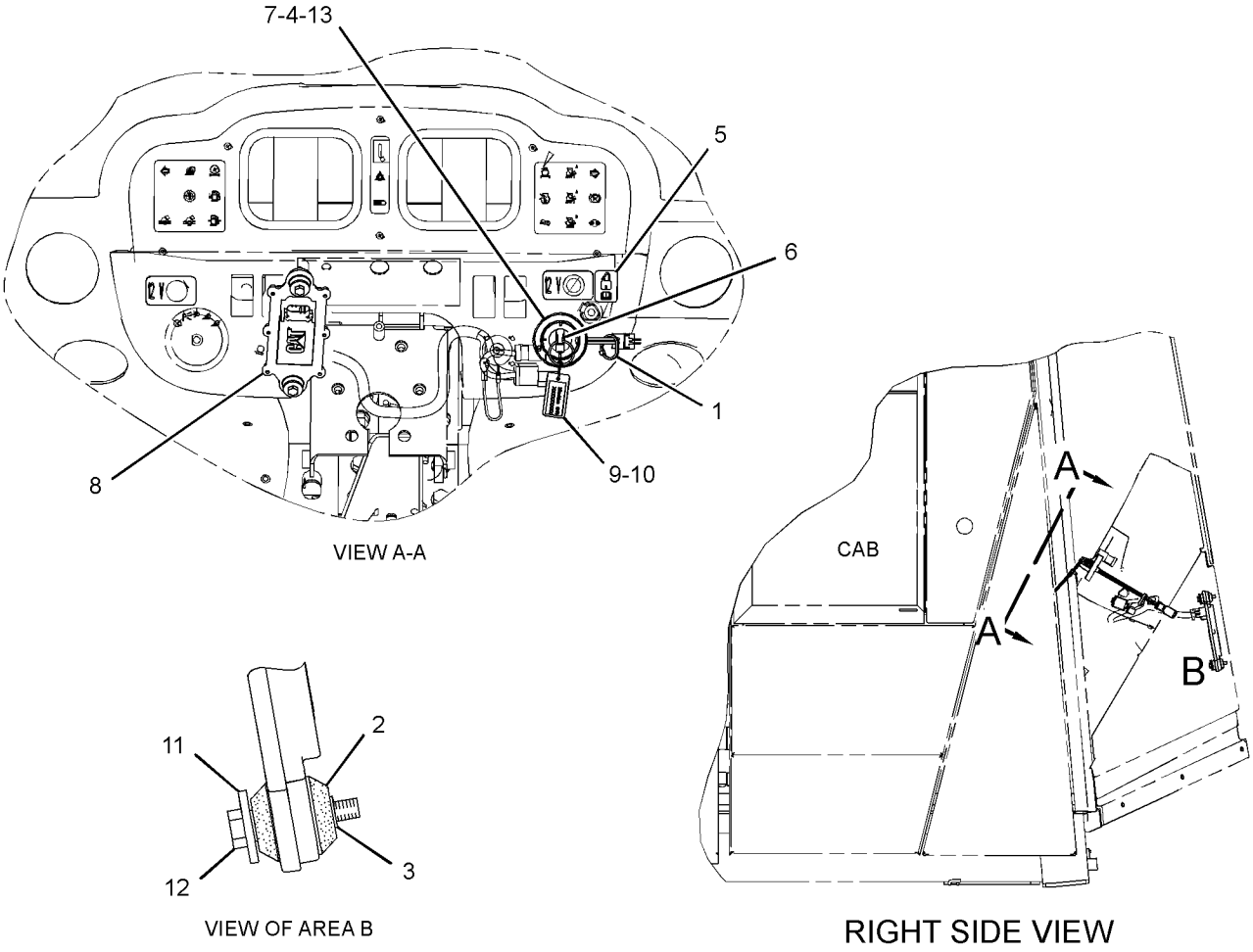

GRAPHIC #1 **<END>** g01534696

3E-6389 LAMP GP-DOME

S/N: JLX1-UP
24-VOLT, WITH SWITCH
PART OF 375-5761 WIRING GP-CAB

SMCS-1433 **i04953733**

NOTE	REF NO	GRAPHIC REF	PART NUMBER	QTY	PART NAME 1 2 3 4 5 6 (PRODUCT LEVEL)	SEE PAGE
	1	1	**7N-9943**	1	LAMP (24-VOLT) (DOME LIGHT)	
	2	1	**102-8803**	1	KIT-RECEPTACLE (3-PIN)	
					(INCLUDES RECEPTACLE AS & WEDGE)	
	3	1	**8T-8729**	3	PIN-CONNECTOR (16-GA TO 18-GA)	
	4	1	**7T-0020**	1	LENS-DOME LAMP	

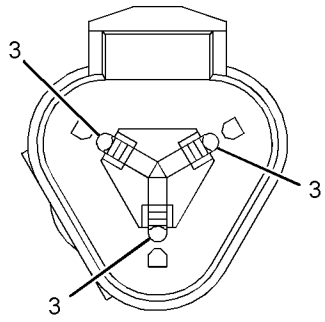

VIEW A-A

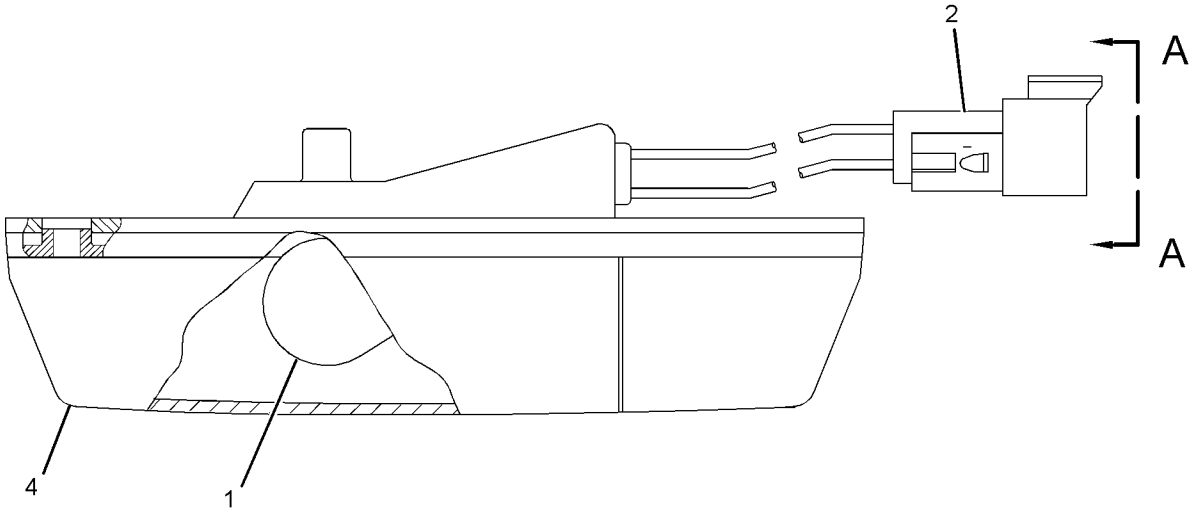

GRAPHIC #1 **<END>** g02646562

219-6485 LAMP GP-FLOOD

S/N: JLX1-UP
24-VOLT
PART OF 280-1456 LIGHTING GP-FLOOD

SMCS-1434 **i04303035**

NOTE	REF NO	GRAPHIC REF	PART NUMBER	QTY	PART NAME 1 2 3 4 5 6 (PRODUCT LEVEL)	SEE PAGE
	1	1	**351-9918**	1	LAMP-HALOGEN (24-VOLT, 70-WATT)	
	2	1	**9X-4244**	2	SCREW-SPECIAL (M4X1.79X25-MM)	
	3	1	**175-4291**	1	BRACKET AS	
	4	1	**202-6614**	1	LENS AS (FLOODLIGHT)	
	5	1	**175-4292**	1	BODY AS	
	6	1	**164-7556**	1	BRACKET (LAMP RETAINING)	
	7	1	**247-4285**	1	BOLT (M8X1.25X50-MM)	
M	8	1	**6V-9189**	1	LOCKNUT (M8X1.25-THD)	
	9	1	**8T-4224**	2	WASHER-HARD (8.8X16X2-MM THK)	

M - METRIC PART

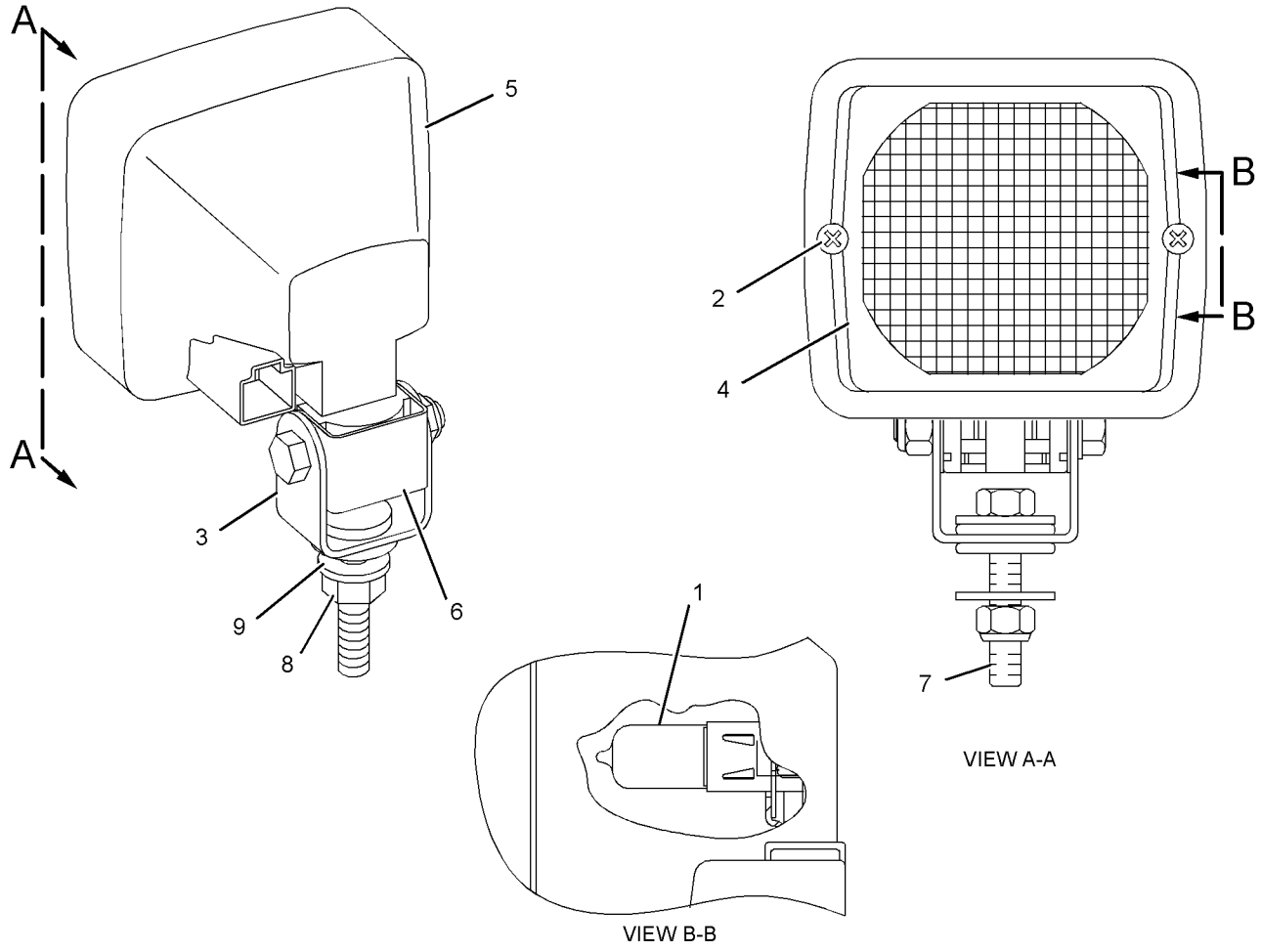

GRAPHIC #1

<END>

g02075738

219-6487 LAMP GP-FLOOD

S/N: JLX1-UP
24-VOLT, 70-WATT
PART OF 280-1456, 373-0498 LIGHTING GP-FLOOD

SMCS-1434 **i04461956**

NOTE	REF NO	GRAPHIC REF	PART NUMBER	QTY	PART NAME 1 2 3 4 5 6 (PRODUCT LEVEL)	SEE PAGE
	1	1	**351-9918**	1	LAMP-HALOGEN (24-VOLT, 70-WATT)	
M	2	1	**8T-6912**	1	BOLT (M8X1.25X50-MM)	
M	3	1	**6V-9189**	1	LOCKNUT (M8X1.25-THD)	
	4	1	**8T-4224**	2	WASHER-HARD (8.8X16X2-MM THK)	
	5	1	**9X-4244**	2	SCREW-SPECIAL (M4X1.79X25-MM)	
	6	1	**202-6614**	1	LENS AS (FLOODLIGHT)	
	7	1	**175-4292**	1	BODY AS	
	8	1	**164-7556**	1	BRACKET (LAMP RETAINING)	
	9	1	**175-4291**	1	BRACKET AS	

M - METRIC PART

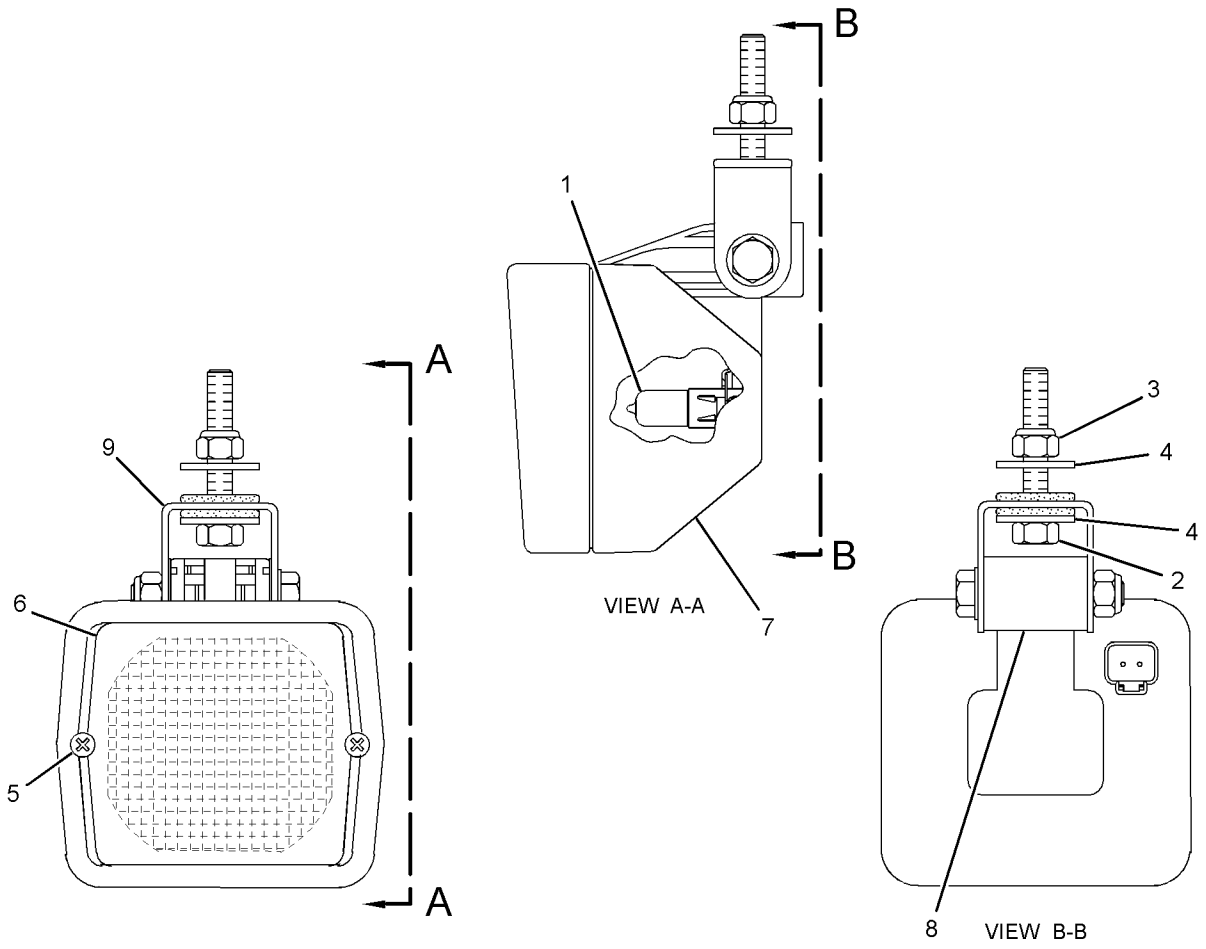

GRAPHIC #1 **<END>** g01453913

302-0406 LAMP GP-FLOOD

S/N: JLX1-UP
24-VOLT
PART OF 373-8285 LIGHTING GP-FLOOD
TYPE 1

SMCS-1434 **i03045561**

NOTE	REF NO	GRAPHIC REF	PART NUMBER	QTY	PART NAME 1 2 3 4 5 6 (PRODUCT LEVEL)	SEE PAGE
	1	1	**319-7603**	1	BODY AS	
	2	1	**228-6054**	1	BEZEL	
	3	1	**319-8209**	1	LENS	
	4	1	**228-6052**	1	LENS AS (TURN SIGNAL)	
	5	1	**228-6056**	6	SCREW (4-32X1.26-IN)	
	6	1	**9X-3463**	1	LAMP-HALOGEN (24-VOLT, 70-WATT)	
	7	1	**130-3515**	1	LAMP (24-VOLT, 5-WATT)	
	8	1	**242-0588**	1	LAMP-TURN SIGNAL (24-VOLT, 21-WATT)	
M	9	1	**8T-0389**	1	LOCKNUT (M10X1.5-THD)	
	10	1	**100-3253**	1	SPACER (SPHERICAL)	
	11	1	**100-3254**	1	SPACER (SPHERICAL)	
	12	1	**100-3255**	1	WASHER (SPHERICAL)	
	13	1	**102-8805**	1	KIT-RECEPTACLE (6-PIN)	
					(INCLUDES RECEPTACLE AS & WEDGE)	
	14	1	**186-3735**	5	PIN-CONNECTOR (16-GA TO 18-GA)	
	15	1	**8T-8737**	1	PLUG-SEAL	

M - METRIC PART

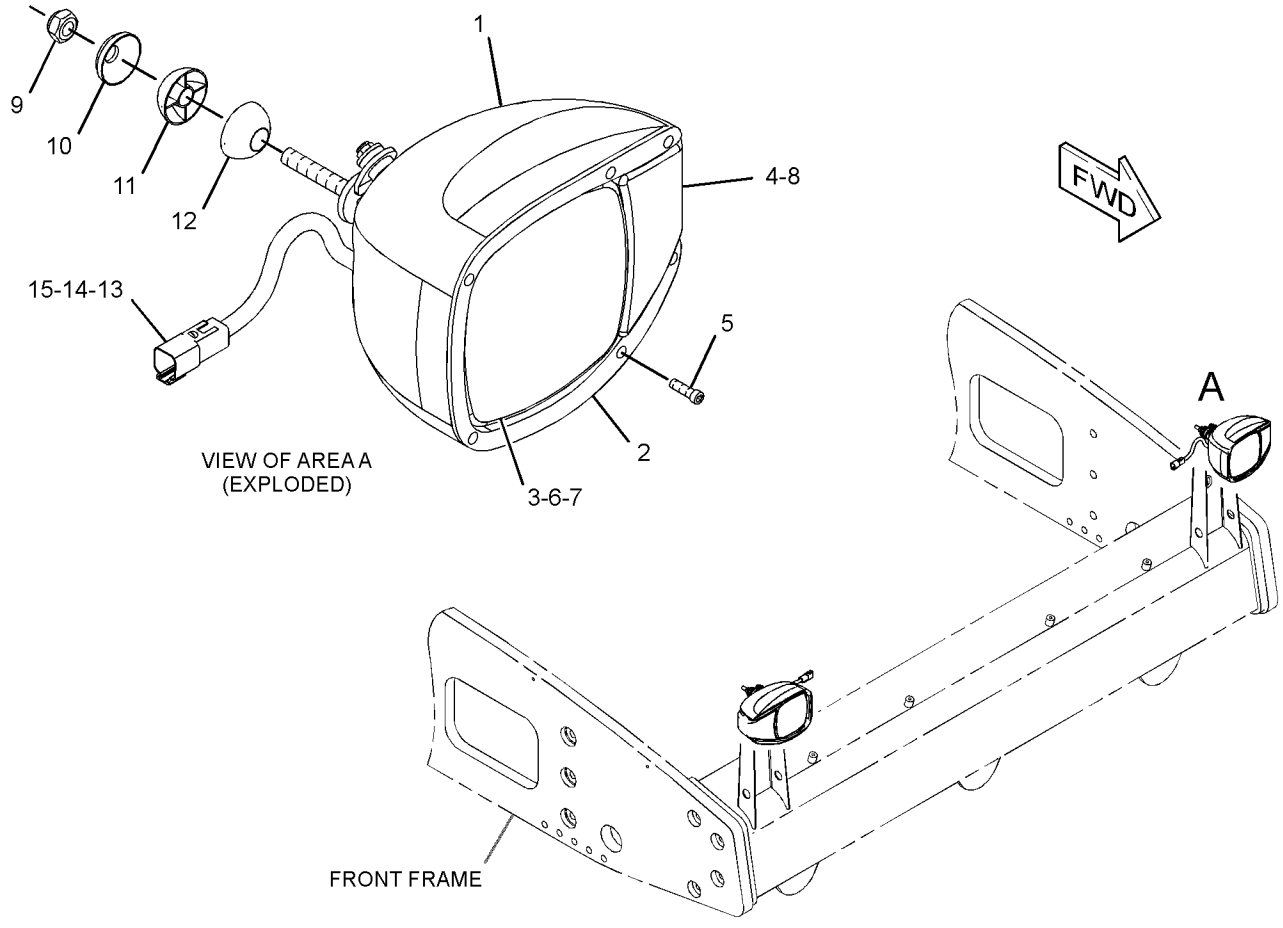

GRAPHIC #1 **<END>** g01561370

302-0406 LAMP GP-FLOOD

S/N: JLX1-UP
24-VOLT
PART OF 373-8285 LIGHTING GP-FLOOD
TYPE 2

SMCS-1434 **i05922189**

NOTE	REF NO	GRAPHIC REF	PART NUMBER	QTY	PART NAME 1 2 3 4 5 6 (PRODUCT LEVEL)	SEE PAGE
	1	1	**8T-8737**	1	PLUG-SEAL	
	2	1	**228-6054**	1	BEZEL	
	3	1	**319-8209**	1	LENS (FLOOD)	
	4	1	**228-6052**	1	LENS AS (TURN SIGNAL)	
	5	1	**228-6056**	6	SCREW (4-32X1.26-IN)	
C	6	1	**351-9918**	1	LAMP-HALOGEN (24-VOLT, 70-WATT) (FLOODLIGHT)	
C	7	1	**8T-8729**	5	PIN-CONNECTOR (16-GA TO 18-GA)	
	8	1	**242-0588**	1	LAMP-TURN SIGNAL (24-VOLT, 21-WATT)	
M	9	1	**8T-0389**	1	LOCKNUT (M10X1.5-THD)	
	10	1	**100-3253**	1	SPACER (SPHERICAL)	
	11	1	**100-3254**	1	SPACER (SPHERICAL)	
	12	1	**100-3255**	1	WASHER (SPHERICAL)	
	13	1	**102-8805**	1	KIT-RECEPTACLE (6-PIN)	
					(INCLUDES RECEPTACLE AS & WEDGE)	

C - CHANGE FROM PREVIOUS TYPE
M - METRIC PART

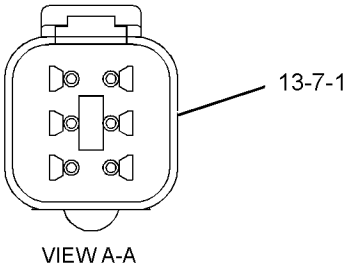

VIEW A-A

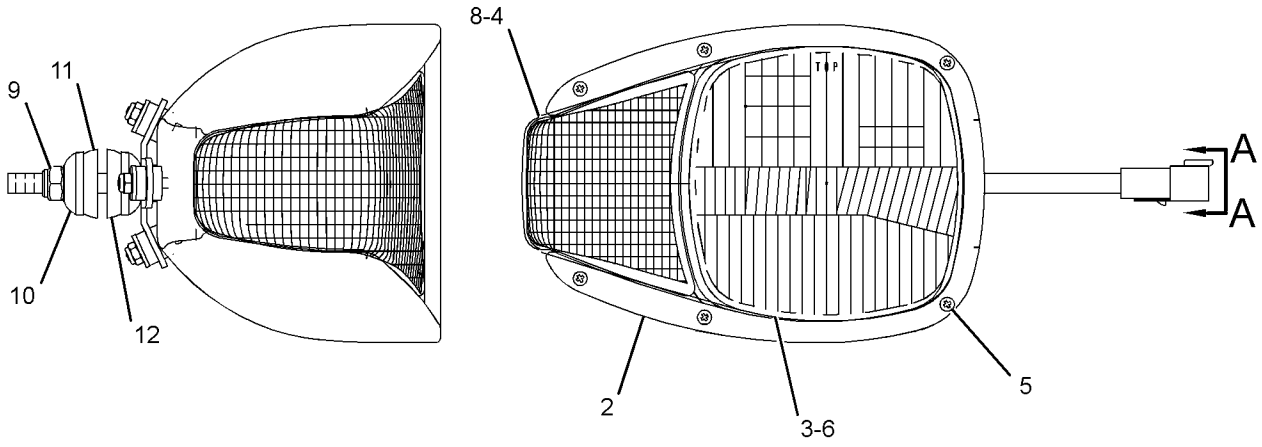

RIGHT SIDE VIEW FRONT VIEW

GRAPHIC #1 **<END>** g03728987

302-0408 LAMP GP-FLOOD

S/N: JLX1-591
24-VOLT
PART OF 373-8285 LIGHTING GP-FLOOD

SMCS-1434 **i03045552**

NOTE	REF NO	GRAPHIC REF	PART NUMBER	QTY	PART NAME 1 2 3 4 5 6 (PRODUCT LEVEL)	SEE PAGE
	1	1	**319-7603**	1	BODY AS	
	2	1	**228-6054**	1	BEZEL	
	3	1	**319-8209**	1	LENS	
	4	1	**228-6052**	1	LENS AS (TURN SIGNAL)	
	5	1	**228-6056**	6	SCREW (4-32X1.26-IN)	
	6	1	**9X-3463**	1	LAMP-HALOGEN (24-VOLT, 70-WATT)	
	7	1	**130-3515**	1	LAMP (24-VOLT, 5-WATT)	
	8	1	**242-0588**	1	LAMP-TURN SIGNAL (24-VOLT, 21-WATT)	
M	9	1	**8T-0389**	1	LOCKNUT (M10X1.5-THD)	
	10	1	**100-3253**	1	SPACER (SPHERICAL)	
	11	1	**100-3254**	1	SPACER (SPHERICAL)	
	12	1	**100-3255**	1	WASHER (SPHERICAL)	
	13	1	**102-8805**	1	KIT-RECEPTACLE (6-PIN)	
					(INCLUDES RECEPTACLE AS & WEDGE)	
	14	1	**186-3735**	5	PIN-CONNECTOR (16-GA TO 18-GA)	
	15	1	**8T-8737**	1	PLUG-SEAL	

M - METRIC PART

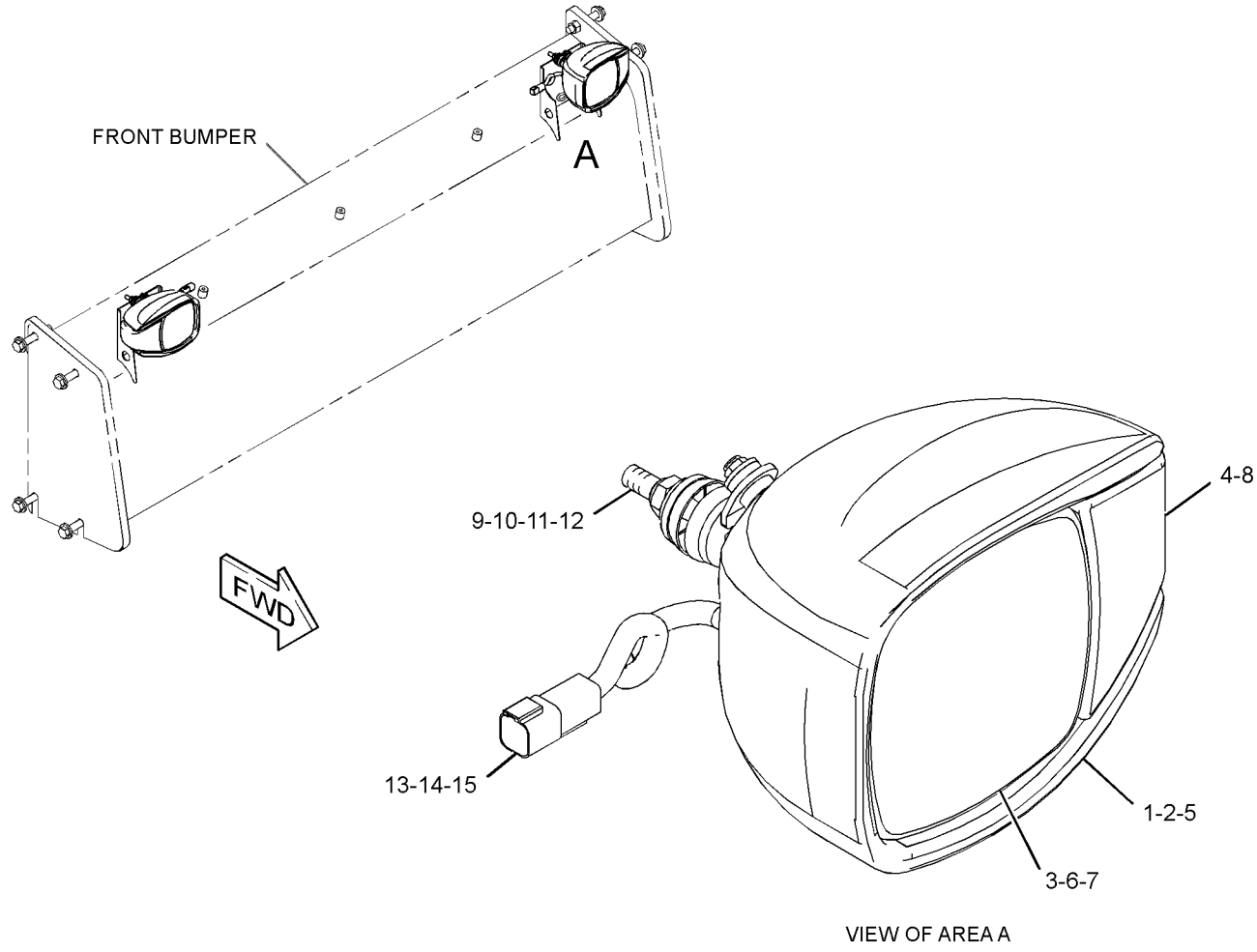

VIEW OF AREA A

GRAPHIC #1 **<END>** g01561139

302-0408 LAMP GP-FLOOD

S/N: JLX592-UP
24-VOLT
PART OF 373-8285 LIGHTING GP-FLOOD

SMCS-1434 **i05959028**

NOTE	REF NO	GRAPHIC REF	PART NUMBER	QTY	PART NAME 1 2 3 4 5 6 (PRODUCT LEVEL)	SEE PAGE
	1	1	**8T-8737**	1	PLUG-SEAL	
	2	1	**228-6054**	1	BEZEL	
	3	1	**319-8209**	1	LENS	
	4	1	**228-6052**	1	LENS AS (TURN SIGNAL)	
	5	1	**228-6056**	6	SCREW (4-32X1.26-IN)	
C	6	1	**351-9918**	1	LAMP-HALOGEN (24-VOLT, 70-WATT)	
C	7	1	**8T-8729**	5	PIN-CONNECTOR (16-GA TO 18-GA)	
	8	1	**242-0588**	1	LAMP-TURN SIGNAL (24-VOLT, 21-WATT)	
M	9	1	**8T-0389**	1	LOCKNUT (M10X1.5-THD)	
	10	1	**100-3253**	1	SPACER (SPHERICAL)	
	11	1	**100-3254**	1	SPACER (SPHERICAL)	
	12	1	**100-3255**	1	WASHER (SPHERICAL)	
	13	1	**102-8805**	1	KIT-RECEPTACLE (6-PIN)	
					(INCLUDES RECEPTACLE AS & WEDGE)	

C - CHANGE FROM PREVIOUS TYPE
M - METRIC PART

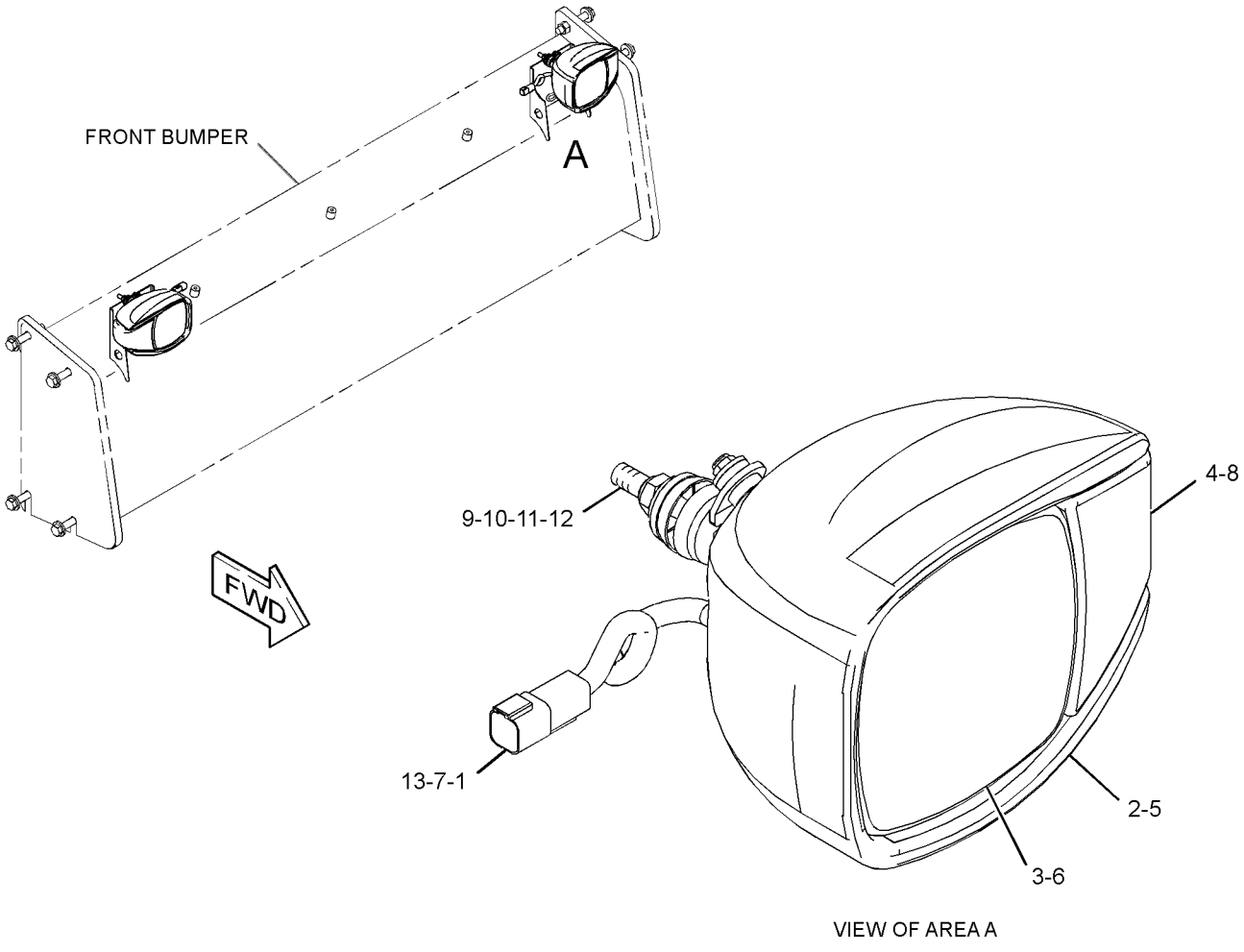

VIEW OF AREA A

GRAPHIC #1 **<END>** g03740948

332-9402 LAMP GP-FLOOD–HID

S/N: JLX1-UP
24-VOLT, 35-WATT
PART OF 235-8560, 373-5933 LIGHTING GP-FLOOD

SMCS-1434 **i05389619**

NOTE	REF NO	GRAPHIC REF	PART NUMBER	QTY	PART NAME 1 2 3 4 5 6 (PRODUCT LEVEL)	SEE PAGE
	1	1	**360-0187**	1	LENS AS	
	2	1	**290-8160**	1	LAMP (24-VOLT, HID)	
M	3	1	**8T-4195**	1	BOLT (M10X1.5X30-MM)	
	4	1	**8T-4121**	1	WASHER-HARD (11X21X2.5-MM THK)	
	5	1	**228-6056**	4	SCREW (4-32X1.26-IN)	
M	6	1	**6V-9804**	1	BOLT (M8X1.25X75-MM)	
M	7	1	**6V-9189**	1	LOCKNUT (M8X1.25-THD)	
	8	1	**364-2657**	1	BRACKET-HOUSING	
	9	1	**229-9974**	1	BEZEL	
	10	1	**319-7384**	1	BALLAST AS (24-VOLT, 35-WATT, HID)	
M	11	1	**8T-0389**	1	LOCKNUT (M10X1.5-THD)	

M - METRIC PART

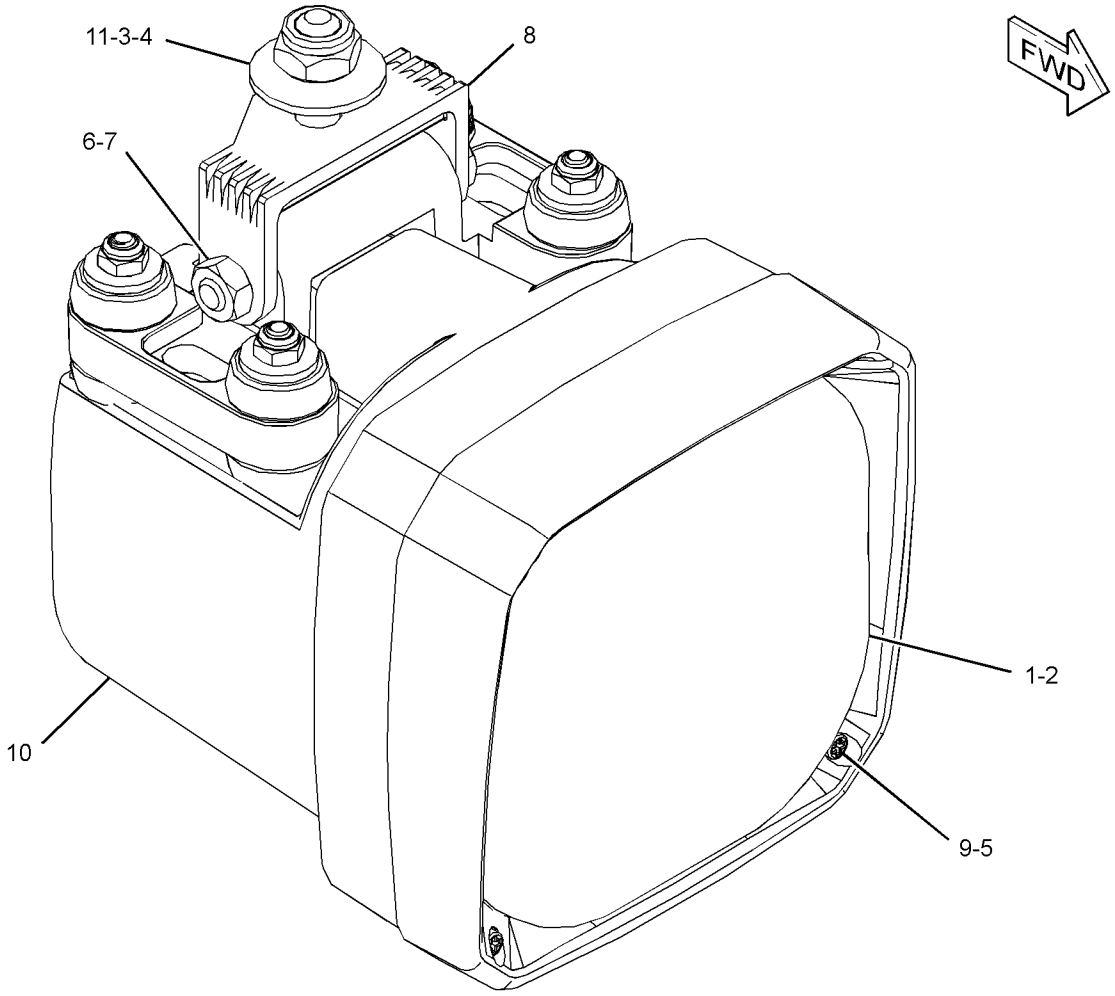

GRAPHIC #1 **<END>** g03102537

347-9427 LAMP GP-FLOOD–24-VOLT, 35-WATT, HID

S/N: JLX1-UP

PART OF 235-8560, 373-5933 LIGHTING GP-FLOOD

SMCS-1434 **i05467075**

NOTE	REF NO	GRAPHIC REF	PART NUMBER	QTY	PART NAME 1 2 3 4 5 6 (PRODUCT LEVEL)	SEE PAGE
	1	1	**360-0187**	1	LENS AS	
	2	1	**290-8160**	1	LAMP (24-VOLT, HID)	
M	3	1	**8T-4195**	1	BOLT (M10X1.5X30-MM)	
	4	1	**8T-4121**	1	WASHER-HARD (11X21X2.5-MM THK)	
	5	1	**228-6056**	4	SCREW (4-32X1.26-IN)	
M	6	1	**6V-9804**	1	BOLT (M8X1.25X75-MM)	
M	7	1	**6V-9189**	1	LOCKNUT (M8X1.25-THD)	
	8	1	**364-2657**	1	BRACKET-HOUSING	
	9	1	**229-9974**	1	BEZEL	
	10	1	**319-7384**	1	BALLAST AS (24-VOLT, 35-WATT, HID)	
M	11	1	**8T-0389**	1	LOCKNUT (M10X1.5-THD)	

M - METRIC PART

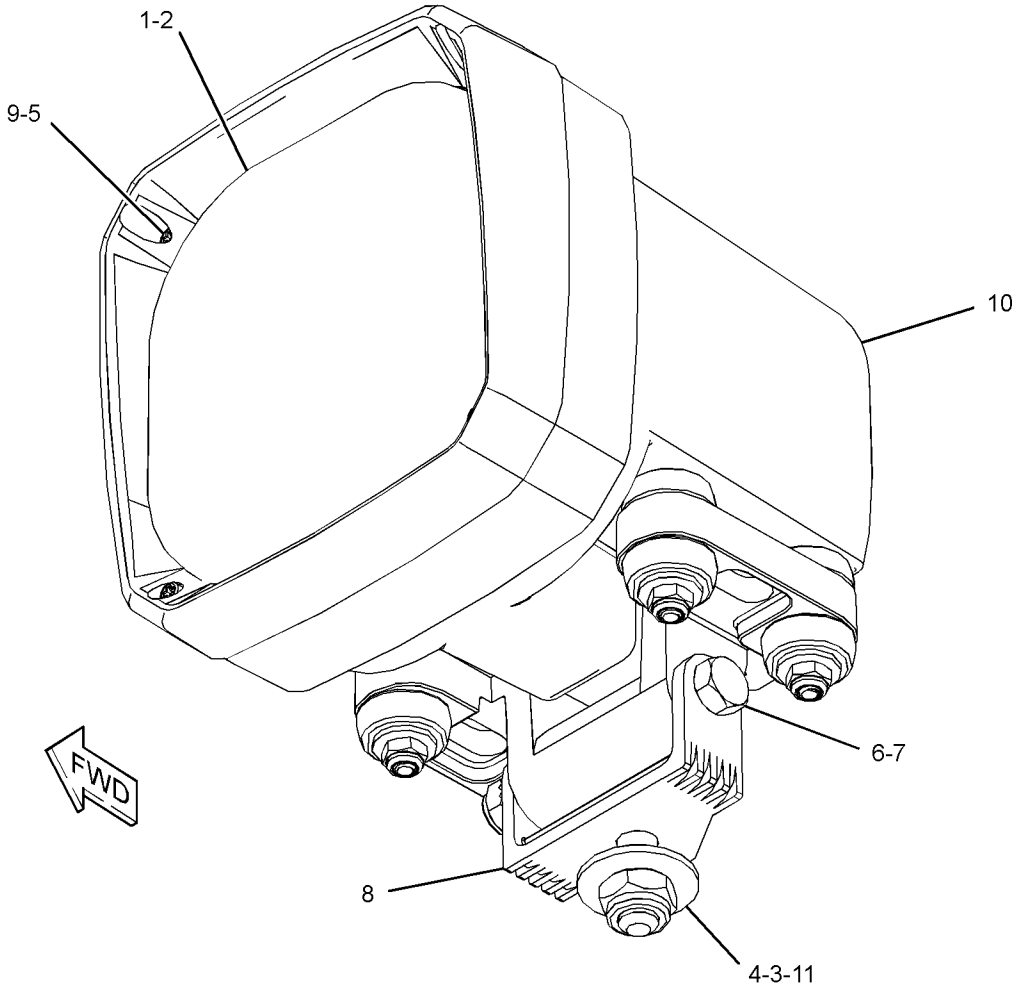

GRAPHIC #1 **<END>** g03102496

344-3455 LAMP GP-HEAD & SIGNAL–RH

S/N: JLX1-UP
24-VOLT
PART OF 375-8099 LIGHTING GP-ROADING
TYPE 1

SMCS-1429, 1430 **i05909871**

NOTE	REF NO	GRAPHIC REF	PART NUMBER	QTY	PART NAME 1 2 3 4 5 6 (PRODUCT LEVEL)	SEE PAGE
	1	1	**320-1515**	1	BODY AS	
	2	1	**228-6054**	1	BEZEL	
	3	1	**348-7240**	1	LENS AS (HEADLIGHT)	
	4	1	**228-6052**	1	LENS AS (TURN SIGNAL)	
	5	1	**228-6056**	6	SCREW (4-32X1.26-IN)	
	6	1	**9X-3465**	1	LAMP (24-VOLT, 75/70-WATT) (HIGH, LOW BEAM)	
	7	1	**130-3515**	1	LAMP (24-VOLT, 5-WATT) (FLOODLIGHT)	
	8	1	**242-0588**	1	LAMP-TURN SIGNAL (24-VOLT, 21-WATT) (TURN SIGNAL)	
M	9	1	**8T-0389**	1	LOCKNUT (M10X1.5-THD)	
	10	1	**100-3253**	1	SPACER (SPHERICAL)	
	11	1	**100-3254**	1	SPACER (SPHERICAL)	
	12	1	**100-3255**	2	WASHER (SPHERICAL)	
	13	1	**102-8805**	1	KIT-RECEPTACLE (6-PIN)	
					(INCLUDES RECEPTACLE AS & WEDGE)	
	14	1	**8T-8729**	5	PIN-CONNECTOR (16-GA TO 18-GA)	
	15	1	**8T-8737**	1	PLUG-SEAL	

M - METRIC PART

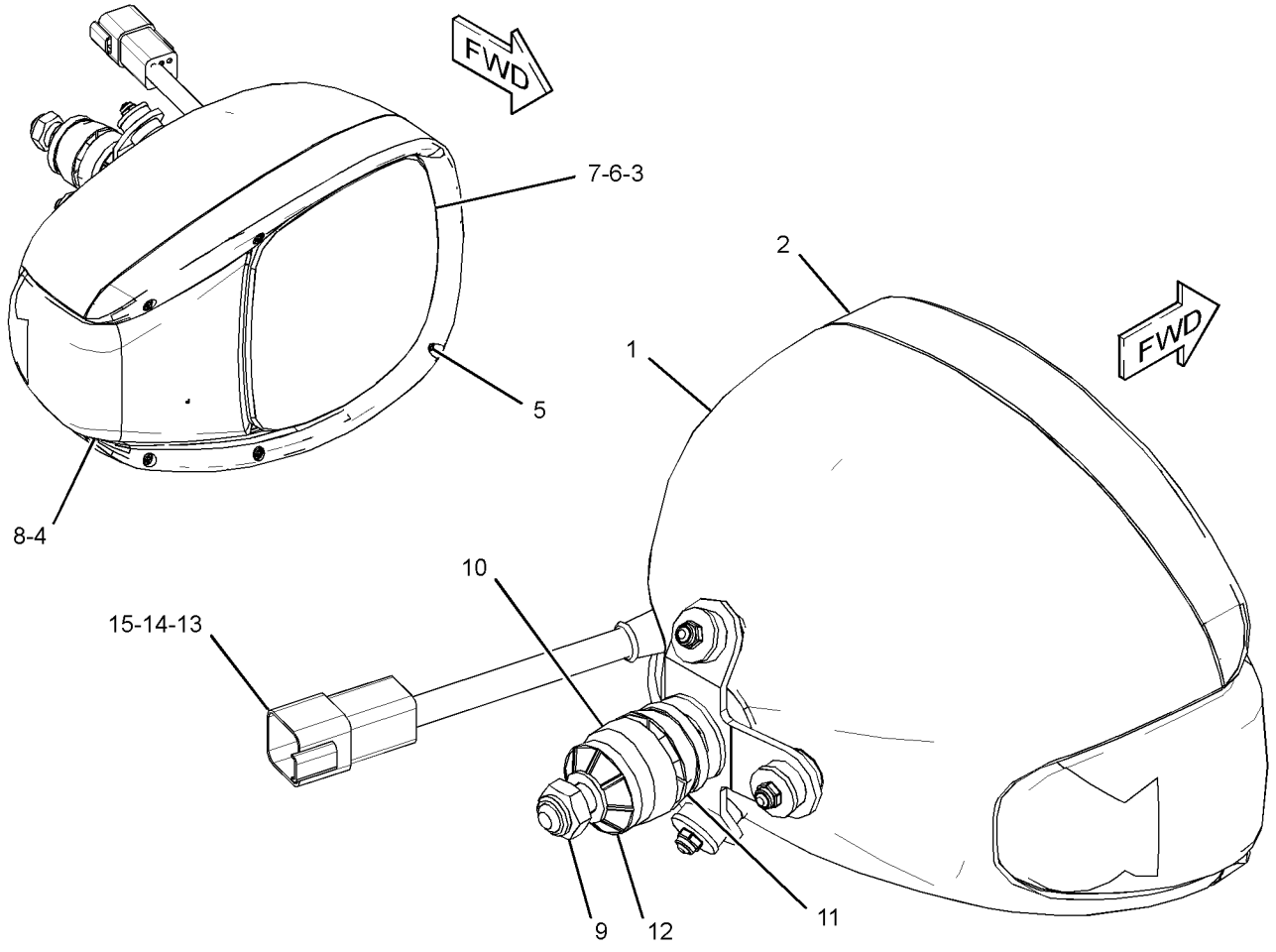

GRAPHIC #1 **<END>** g02098593

344-3455 LAMP GP-HEAD & SIGNAL–RH

S/N: JLX1-UP
24-VOLT
PART OF 375-8099 LIGHTING GP-ROADING
TYPE 2

SMCS-1429, 1430 **i05909872**

NOTE	REF NO	GRAPHIC REF	PART NUMBER	QTY	PART NAME 1 2 3 4 5 6 (PRODUCT LEVEL)	SEE PAGE
	1	1	**8T-8737**	1	PLUG-SEAL	
	2	1	**228-6054**	1	BEZEL	
	3	1	**444-6523**	1	LENS AS (HEADLIGHT)	
	4	1	**228-6052**	1	LENS AS (TURN SIGNAL)	
	5	1	**228-6056**	6	SCREW (4-32X1.26-IN)	
	6	1	**9X-3465**	1	LAMP (24-VOLT, 75/70-WATT) (HIGH, LOW BEAM)	
	7	1	**130-3515**	1	LAMP (24-VOLT, 5-WATT) (FLOODLIGHT)	
	8	1	**242-0588**	1	LAMP-TURN SIGNAL (24-VOLT, 21-WATT) (TURN SIGNAL)	
M	9	1	**8T-0389**	1	LOCKNUT (M10X1.5-THD)	
	10	1	**100-3253**	1	SPACER (SPHERICAL)	
	11	1	**100-3254**	1	SPACER (SPHERICAL)	
	12	1	**100-3255**	2	WASHER (SPHERICAL)	
	13	1	**102-8805**	1	KIT-RECEPTACLE (6-PIN)	
					(INCLUDES RECEPTACLE AS & WEDGE)	
	14	1	**8T-8729**	5	PIN-CONNECTOR (16-GA TO 18-GA)	

M - METRIC PART

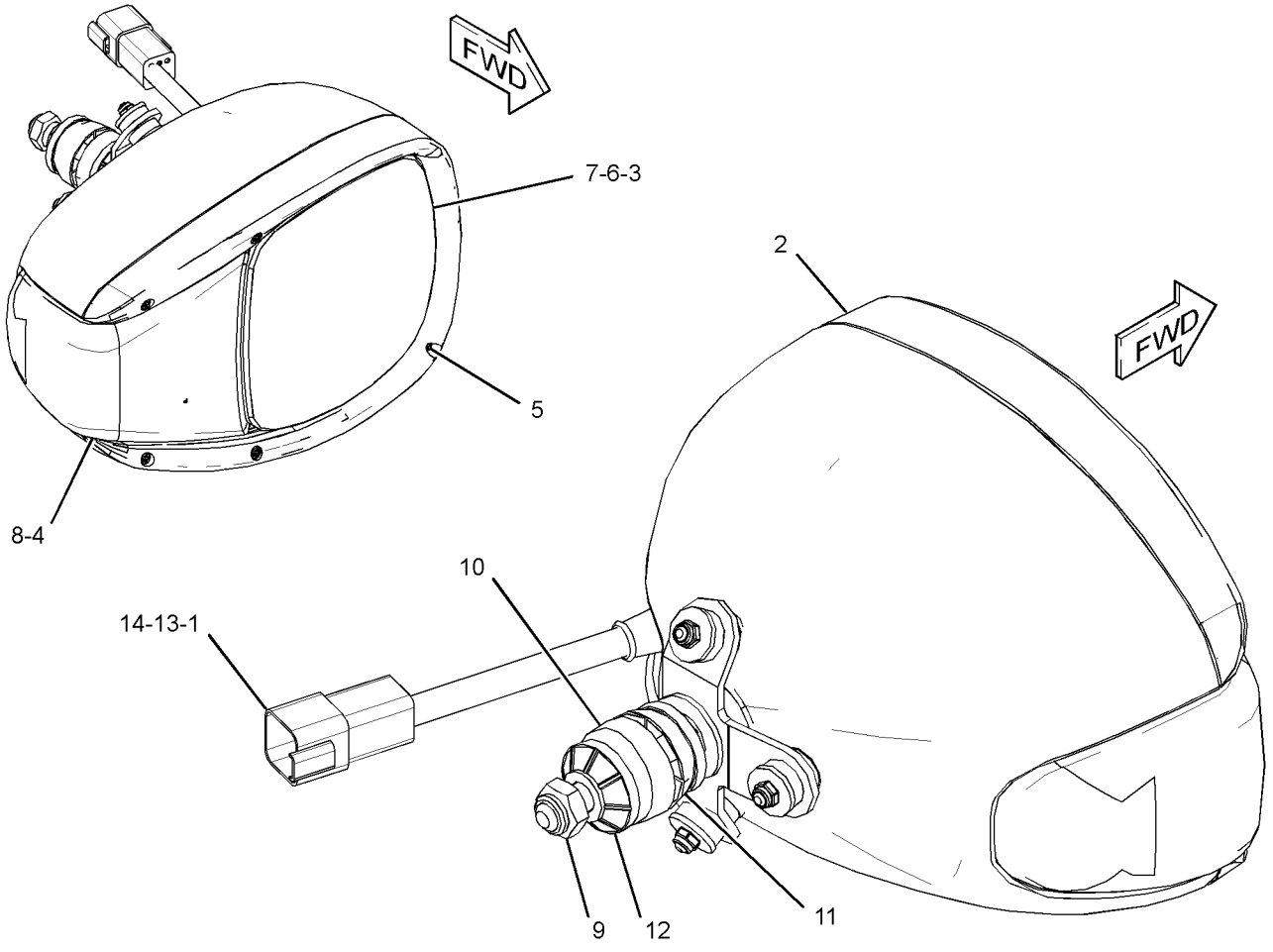

GRAPHIC #1 **<END>** g03681817

344-3456 LAMP GP-HEAD & SIGNAL–LH

S/N: JLX1-UP
PART OF 375-8099 LIGHTING GP-ROADING
TYPE 1

SMCS-1429, 1430 **i04026173**

NOTE	REF NO	GRAPHIC REF	PART NUMBER	QTY	PART NAME 1 2 3 4 5 6 (PRODUCT LEVEL)	SEE PAGE
	1	1	**320-1515**	1	BODY AS	
	2	1	**228-6054**	1	BEZEL	
	3	1	**348-7240**	1	LENS AS (HEADLIGHT)	
	4	1	**228-6052**	1	LENS AS (TURN SIGNAL)	
	5	1	**228-6056**	6	SCREW (4-32X1.26-IN)	
	6	1	**9X-3465**	1	LAMP (24-VOLT, 75/70-WATT) (HIGH, LOW BEAM)	
	7	1	**130-3515**	1	LAMP (24-VOLT, 5-WATT) (FLOODLIGHT)	
	8	1	**242-0588**	1	LAMP-TURN SIGNAL (24-VOLT, 21-WATT) (TURN SIGNAL)	
M	9	1	**8T-0389**	1	LOCKNUT (M10X1.5-THD)	
	10	1	**100-3253**	1	SPACER (SPHERICAL)	
	11	1	**100-3254**	1	SPACER (SPHERICAL)	
	12	1	**100-3255**	2	WASHER (SPHERICAL)	
	13	1	**102-8805**	1	KIT-RECEPTACLE (6-PIN)	
					(INCLUDES RECEPTACLE AS & WEDGE)	
	14	1	**8T-8729**	5	PIN-CONNECTOR (16-GA TO 18-GA)	
	15	1	**8T-8737**	1	PLUG-SEAL	

M - METRIC PART

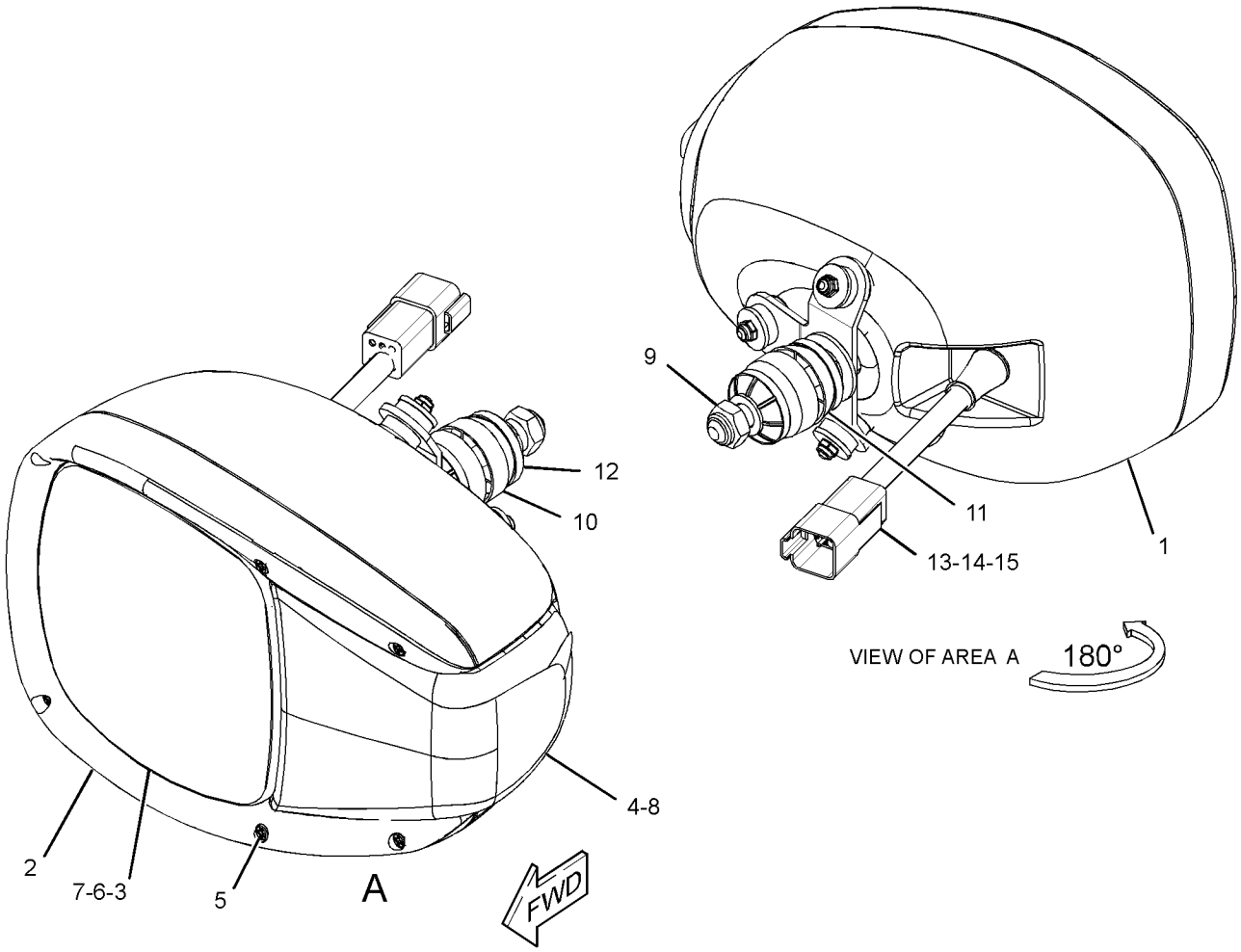

GRAPHIC #1 **<END>** g02079773

344-3456 LAMP GP-HEAD & SIGNAL–LH

S/N: JLX1-UP
PART OF 375-8099 LIGHTING GP-ROADING
TYPE 2

SMCS-1429, 1430 **i05841594**

NOTE	REF NO	GRAPHIC REF	PART NUMBER	QTY	PART NAME 1 2 3 4 5 6 (PRODUCT LEVEL)	SEE PAGE
	1	1	**8T-8737**	1	PLUG-SEAL	
	2	1	**228-6054**	1	BEZEL	
	3	1	**444-6523**	1	LENS AS (HEADLIGHT)	
	4	1	**228-6052**	1	LENS AS (TURN SIGNAL)	
	5	1	**228-6056**	6	SCREW (4-32X1.26-IN)	
	6	1	**9X-3465**	1	LAMP (24-VOLT, 75/70-WATT) (HIGH, LOW BEAM)	
	7	1	**130-3515**	1	LAMP (24-VOLT, 5-WATT) (FLOODLIGHT)	
	8	1	**242-0588**	1	LAMP-TURN SIGNAL (24-VOLT, 21-WATT) (TURN SIGNAL)	
M	9	1	**8T-0389**	1	LOCKNUT (M10X1.5-THD)	
	10	1	**100-3253**	1	SPACER (SPHERICAL)	
	11	1	**100-3254**	1	SPACER (SPHERICAL)	
	12	1	**100-3255**	2	WASHER (SPHERICAL)	
	13	1	**102-8805**	1	KIT-RECEPTACLE (6-PIN)	
					(INCLUDES RECEPTACLE AS & WEDGE)	
	14	1	**8T-8729**	5	PIN-CONNECTOR (16-GA TO 18-GA)	

M - METRIC PART

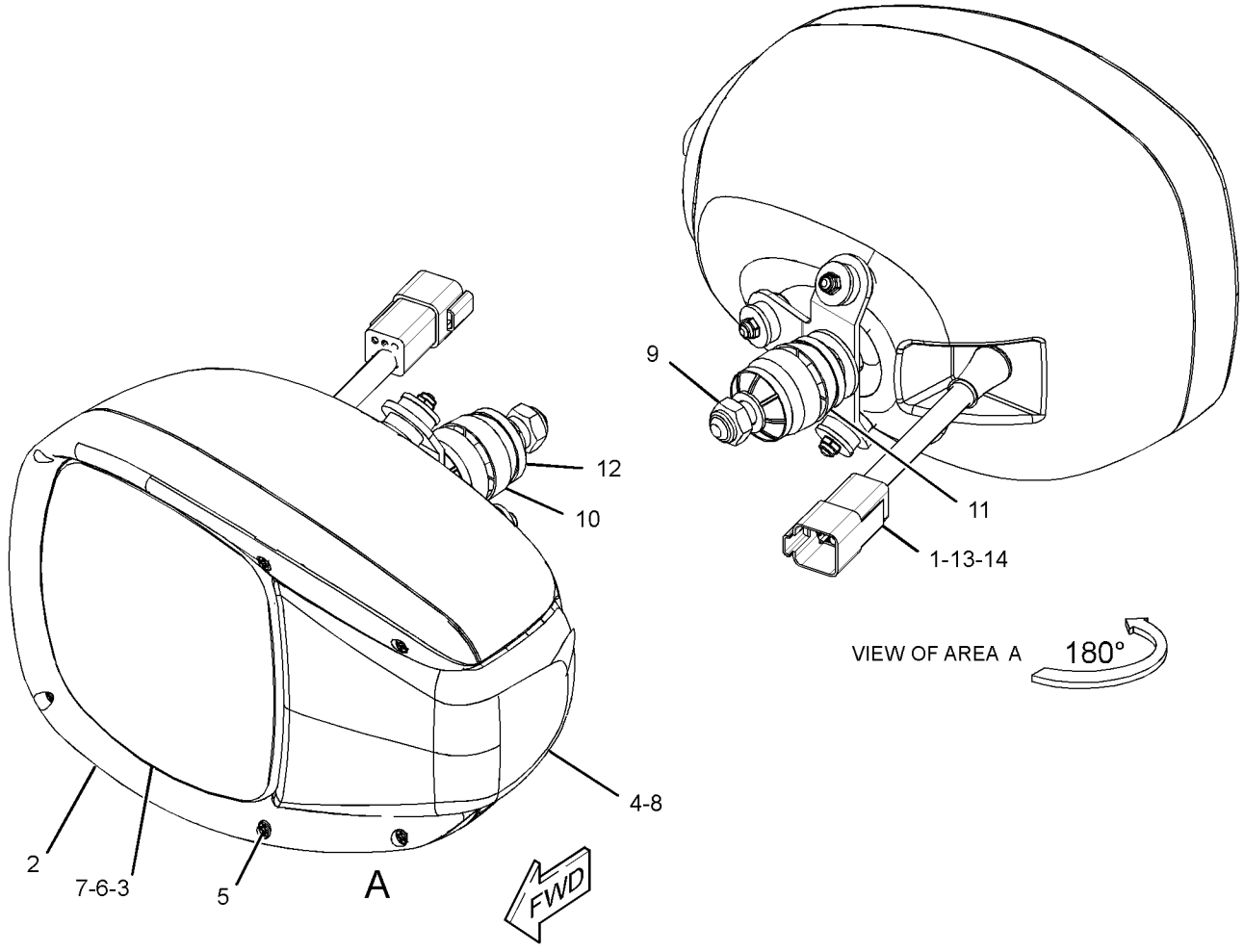

GRAPHIC #1 **<END>** g03681831

344-3457 LAMP GP-HEAD & SIGNAL

S/N: JLX1-UP
24-VOLT
PART OF 375-2472 LIGHTING GP-ROADING

SMCS-1429, 1430 **i04037212**

NOTE	REF NO	GRAPHIC REF	PART NUMBER	QTY	PART NAME 1 2 3 4 5 6 (PRODUCT LEVEL)	SEE PAGE
	1	1	**320-1515**	1	BODY AS	
	2	1	**228-6054**	1	BEZEL	
	3	1	**348-7490**	1	LENS AS (HEADLIGHT)	
	4	1	**228-6052**	1	LENS AS (TURN SIGNAL)	
	5	1	**228-6056**	6	SCREW (4-32X1.26-IN)	
	6	1	**9X-3465**	1	LAMP (24-VOLT, 75/70-WATT)	
	7	1	**130-3515**	1	LAMP (24-VOLT, 5-WATT)	
	8	1	**242-0588**	1	LAMP-TURN SIGNAL (24-VOLT, 21-WATT)	
M	9	1	**8T-0389**	1	LOCKNUT (M10X1.5-THD)	
	10	1	**100-3253**	1	SPACER (SPHERICAL)	
	11	1	**100-3254**	1	SPACER (SPHERICAL)	
	12	1	**100-3255**	2	WASHER (SPHERICAL)	
	13	1	**102-8805**	1	KIT-RECEPTACLE (6-PIN)	
					(INCLUDES RECEPTACLE AS & WEDGE)	
	14	1	**8T-8729**	5	PIN-CONNECTOR (16-GA TO 18-GA)	
	15	1	**8T-8737**	1	PLUG-SEAL	

M - METRIC PART

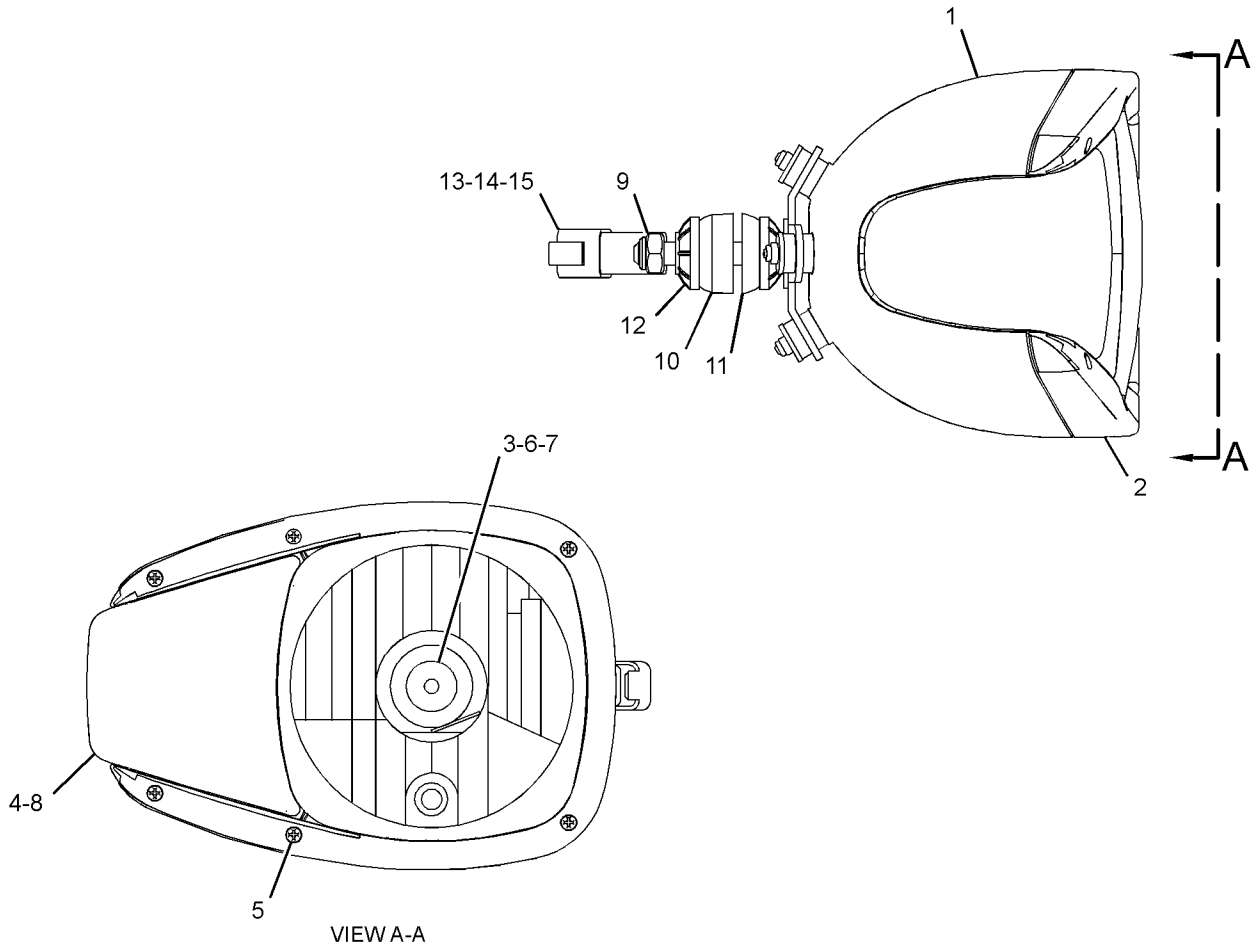

GRAPHIC #1 **<END>** g02057874

344-3458 LAMP GP-HEAD & SIGNAL

S/N: JLX1-UP
24-VOLT
PART OF 375-2472 LIGHTING GP-ROADING
TYPE 1

SMCS-1429, 1430 **i04041645**

NOTE	REF NO	GRAPHIC REF	PART NUMBER	QTY	PART NAME 1 2 3 4 5 6 (PRODUCT LEVEL)	SEE PAGE
	1	1	**320-1515**	1	BODY AS	
	2	1	**228-6054**	1	BEZEL	
	3	1	**348-7490**	1	LENS AS (HEADLIGHT)	
	4	1	**228-6052**	1	LENS AS (TURN SIGNAL)	
	5	1	**228-6056**	6	SCREW (4-32X1.26-IN)	
	6	1	**9X-3465**	1	LAMP (24-VOLT, 75/70-WATT)	
	7	1	**130-3515**	1	LAMP (24-VOLT, 5-WATT)	
	8	1	**242-0588**	1	LAMP-TURN SIGNAL (24-VOLT, 21-WATT)	
M	9	1	**8T-0389**	1	LOCKNUT (M10X1.5-THD)	
	10	1	**100-3253**	1	SPACER (SPHERICAL)	
	11	1	**100-3254**	1	SPACER (SPHERICAL)	
	12	1	**100-3255**	2	WASHER (SPHERICAL)	
	13	1	**102-8805**	1	KIT-RECEPTACLE (6-PIN)	
					(INCLUDES RECEPTACLE AS & WEDGE)	
	14	1	**8T-8729**	5	PIN-CONNECTOR (16-GA TO 18-GA)	
	15	1	**8T-8737**	1	PLUG-SEAL	

M - METRIC PART

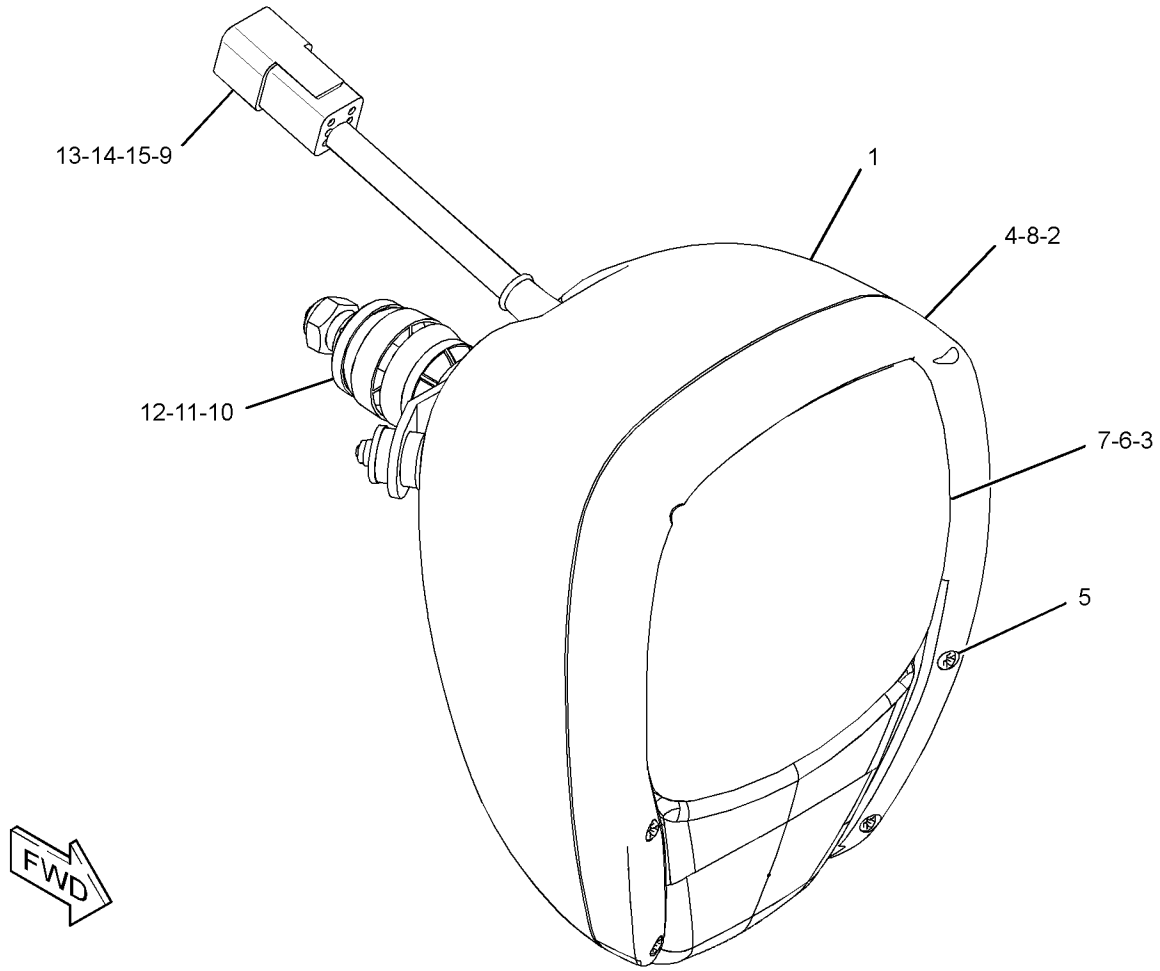

GRAPHIC #1 **<END>** g02169899

344-3458 LAMP GP-HEAD & SIGNAL

S/N: JLX1-UP
24-VOLT
PART OF 375-2472 LIGHTING GP-ROADING
TYPE 2

SMCS-1429, 1430 **i05920048**

NOTE	REF NO	GRAPHIC REF	PART NUMBER	QTY	PART NAME 1 2 3 4 5 6 (PRODUCT LEVEL)	SEE PAGE
	1	1	**8T-8737**	1	PLUG-SEAL	
	2	1	**228-6054**	1	BEZEL	
C	3	1	**444-6524**	1	LENS AS (HEADLIGHT)	
	4	1	**228-6052**	1	LENS AS (TURN SIGNAL)	
	5	1	**228-6056**	6	SCREW (4-32X1.26-IN)	
	6	1	**9X-3465**	1	LAMP (24-VOLT, 75/70-WATT) (HIGH, LOW BEAM)	
	7	1	**130-3515**	1	LAMP (24-VOLT, 5-WATT) (POSITION)	
	8	1	**242-0588**	1	LAMP-TURN SIGNAL (24-VOLT, 21-WATT) (TURN SIGNAL)	
M	9	1	**8T-0389**	1	LOCKNUT (M10X1.5-THD)	
	10	1	**100-3253**	1	SPACER (SPHERICAL)	
	11	1	**100-3254**	1	SPACER (SPHERICAL)	
	12	1	**100-3255**	2	WASHER (SPHERICAL)	
	13	1	**102-8805**	1	KIT-RECEPTACLE (6-PIN)	
					(INCLUDES RECEPTACLE AS & WEDGE)	
	14	1	**8T-8729**	5	PIN-CONNECTOR (16-GA TO 18-GA)	

C - CHANGE FROM PREVIOUS TYPE
M - METRIC PART

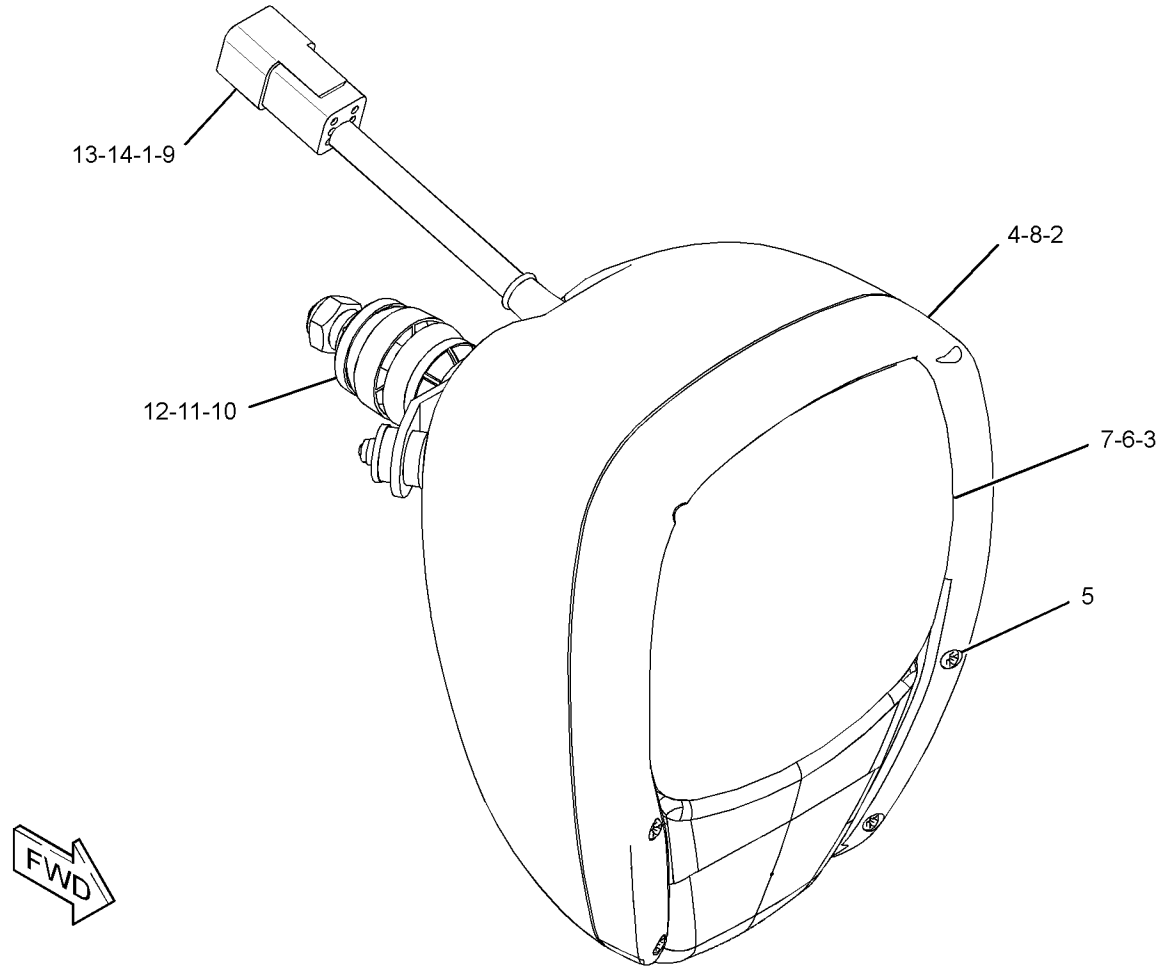

GRAPHIC #1 **<END>** g03485583

145-6929 LAMP GP-STOP & TAIL

S/N: JLX1-547
24-VOLT
PART OF 373-8285 LIGHTING GP-FLOOD

SMCS-1432 **i04946980**

NOTE	REF NO	GRAPHIC REF	PART NUMBER	QTY	PART NAME 1 2 3 4 5 6 (PRODUCT LEVEL)	SEE PAGE
	1	1	**9X-4493**	1	LAMP (24-VOLT, 21-WATT) (STOP, TAIL)	
	2	1	**9X-4492**	1	LAMP-FLOOD (24-VOLT, 5-WATT) (STOP, TAIL)	
	3	1	**102-8802**	1	KIT-RECEPTACLE (2-PIN)	
	4	1	**102-8803**	1	KIT-RECEPTACLE (3-PIN)	
					(EACH RECEPTACLE KIT INCLUDES RECEPTACLE AS & WEDGE)	
M	5	1	**5C-2890**	2	NUT (M6X1-THD)	
	6	1	**1H-3244**	2	LOCKWASHER	
	7	1	**8T-8729**	5	PIN-CONNECTOR (16-GA TO 18-GA)	
	8	1	**363-8597**	1	LENS (STOP, TAIL, TURN)	

M - METRIC PART

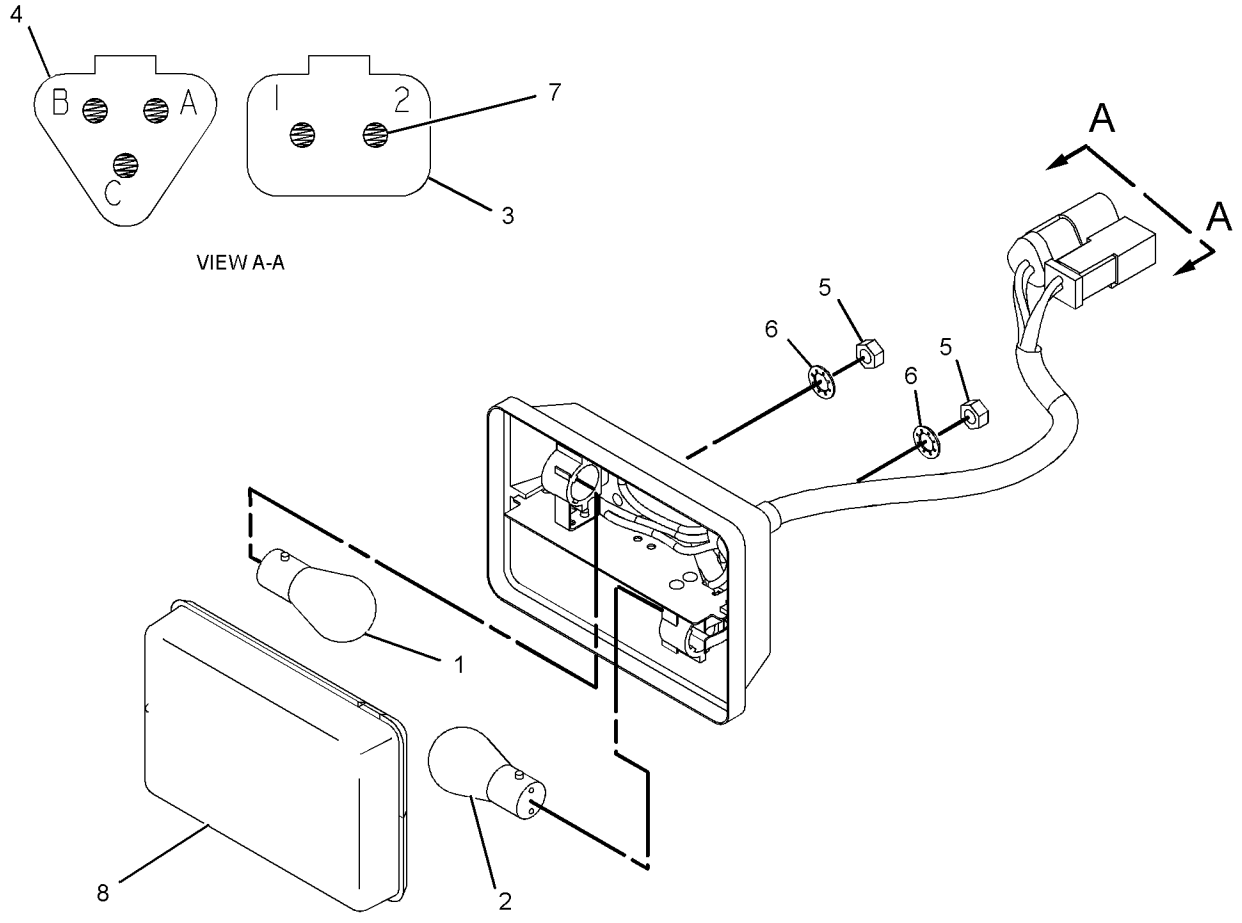

GRAPHIC #1 **<END>** g01344656

415-1086 LAMP GP-STOP & TAIL–24-VOLT

S/N: JLX548-UP

PART OF 373-8285 LIGHTING GP-FLOOD

SMCS-1432 **i05935736**

NOTE	REF NO	GRAPHIC REF	PART NUMBER	QTY	PART NAME 1 2 3 4 5 6 (PRODUCT LEVEL)	SEE PAGE
	1	1	**9X-4493**	1	LAMP (24-VOLT, 21-WATT)	
	2	1	**9X-4492**	1	LAMP-FLOOD (24-VOLT, 5-WATT)	
	3	1	**102-8802**	1	KIT-RECEPTACLE (2-PIN)	
	4	1	**102-8803**	1	KIT-RECEPTACLE (3-PIN)	
					(EACH RECEPTACLE KIT INCLUDES RECEPTACLE AS & WEDGE)	
M	5	1	**5C-2890**	2	NUT (M6X1-THD)	
	6	1	**1H-3244**	2	LOCKWASHER	
	7	1	**8T-8729**	5	PIN-CONNECTOR (16-GA TO 18-GA)	
	8	1	**426-5377**	1	LAMP (STOP, TAIL, TURN)	

M - METRIC PART

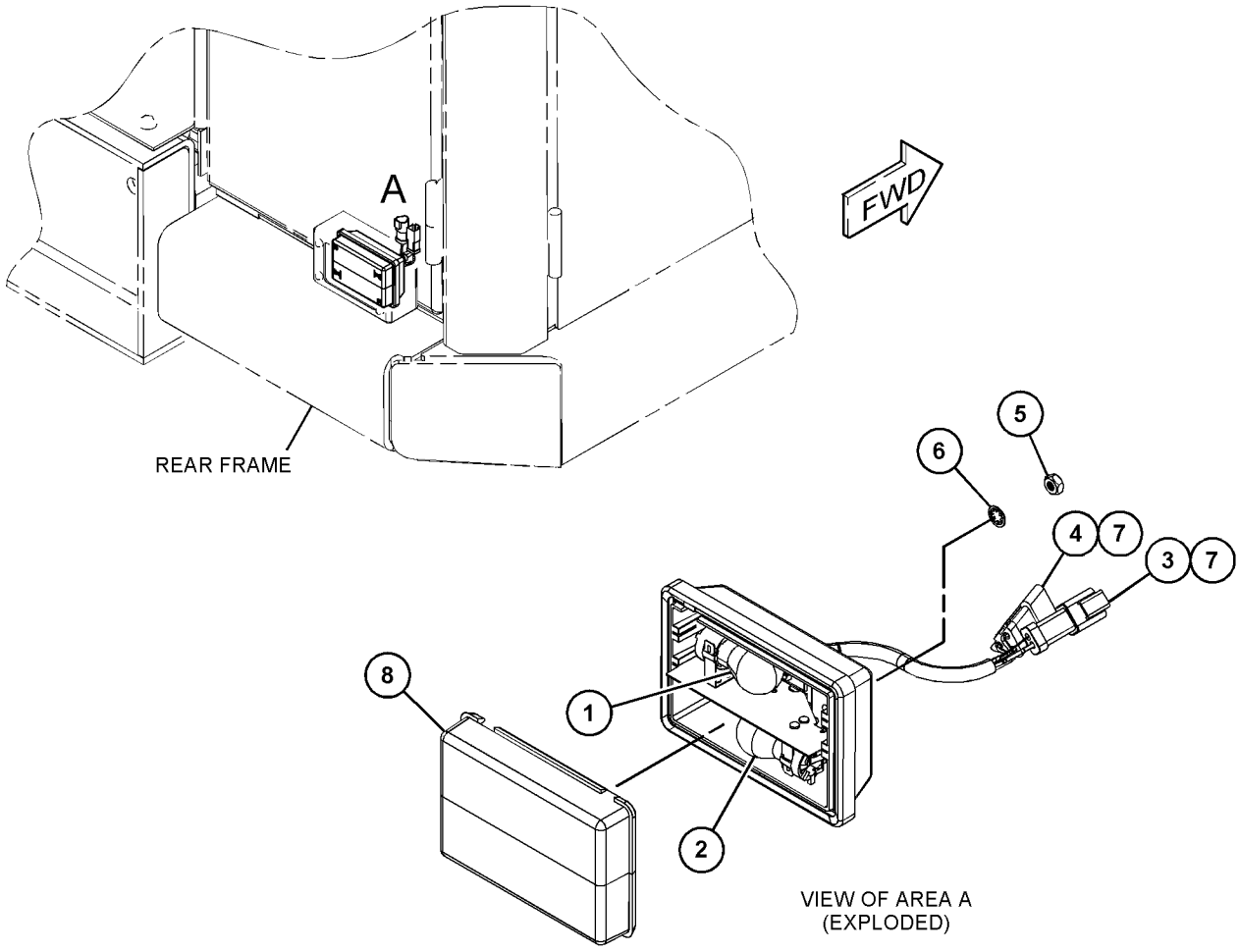

GRAPHIC #1 **<END>** g03478278

235-8560 LIGHTING GP-FLOOD—HID, CAB FRONT, REAR

S/N: JLX1-242

PART OF 373-8257 OPTION AR-LIGHTING

SMCS-1434 **i04579449**

NOTE	REF NO	GRAPHIC REF	PART NUMBER	QTY	PART NAME 1 2 3 4 5 6 (PRODUCT LEVEL)	SEE PAGE
	1	1	**251-4339**	1	SWITCH AS-ROCKER (24-VOLT) (FRONT, REAR FLOODLIGHTS)	
C	2	1	**3S-2093**	6	STRAP-CABLE	
C	3	1	**7K-1181**	2	STRAP-CABLE	
	4	1	**236-7773**	1	HARNESS AS-LIGHTING	
		1	**155-2270**	16	KIT-CONNECTING PLUG (2-PIN)	
					(KIT INCLUDES PLUG AS, WEDGE, & INTERFACE SEAL)	
		1	**9W-0844**	16	SOCKET-CONNECTOR (14-GA TO 16-GA)	
		1	*131-1495*	8	TERMINAL AS-RING	
					(EACH INCLUDES)	
		1	**2L-8066**	1	TERMINAL-RING (10-GA TO 12-GA, NO. 10 SCREW)	
	5	1	**236-9775**	1	BRACKET AS (LH)	
	6	1	**236-9776**	1	BRACKET AS (RH)	
CY	7	1	**332-9402**	2	LAMP GP-FLOOD (24-VOLT, 35-WATT, HID) (HIGH INTENSITY DISCHARGE, REAR)	235
CY	8	1	**347-9427**	2	LAMP GP-FLOOD (24-VOLT, 35-WATT, HID) (HIGH INTENSITY DISCHARGE, FR)	236
C	9	1	**8T-4121**	4	WASHER-HARD (11X21X2.5-MM THK)	
M	10	1	**8T-4133**	2	NUT (M10X1.5-THD)	
CM	11	1	**8T-4195**	2	BOLT (M10X1.5X30-MM)	

C - CHANGE FROM PREVIOUS TYPE
M - METRIC PART
Y - SEPARATE ILLUSTRATION

235-8560 **LIGHTING GP-FLOOD (*contd.*)** **i04579449**

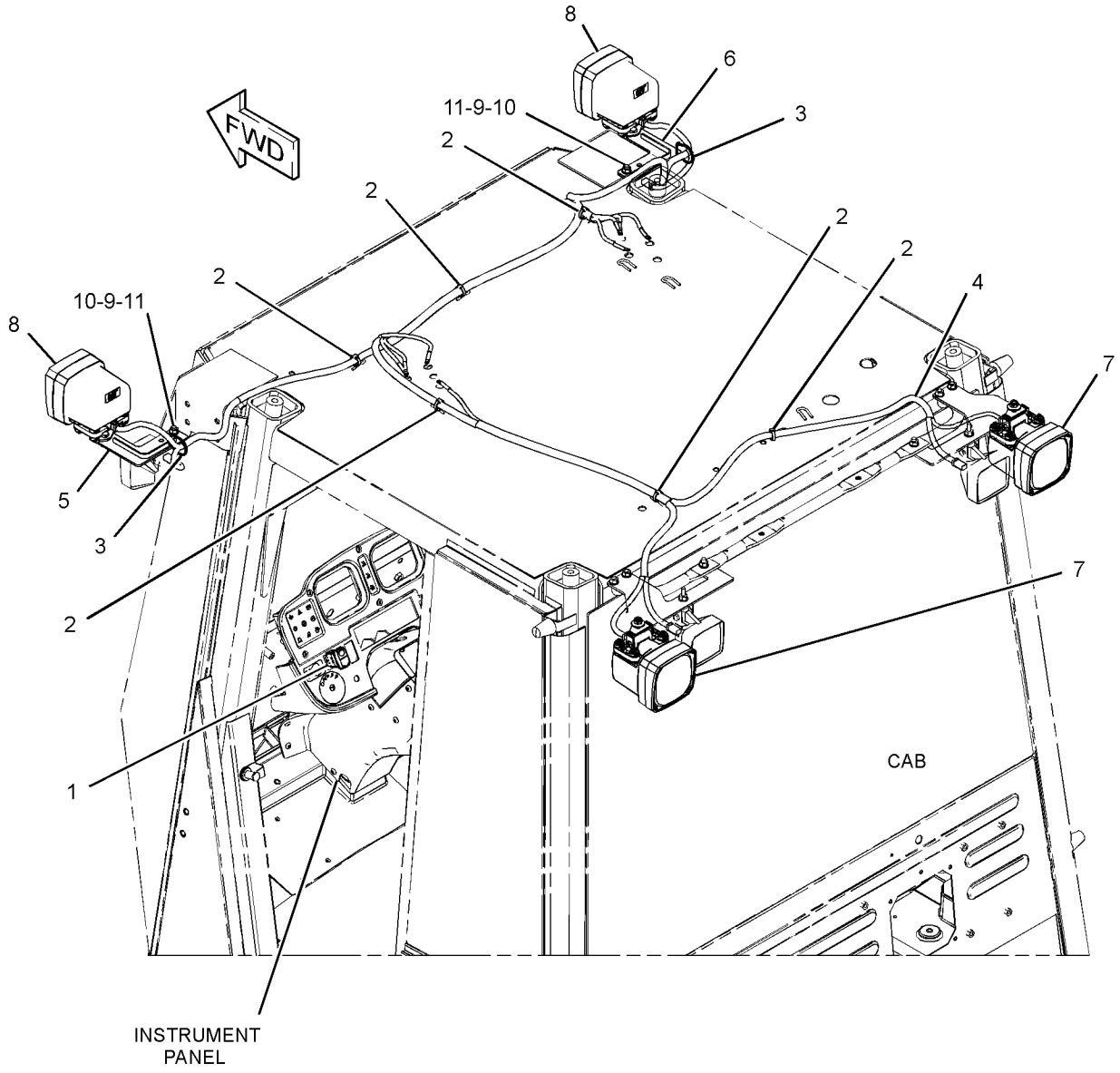

GRAPHIC #1 **<END>** g02748696

280-1456 LIGHTING GP-FLOOD—CAB FRONT, REAR

S/N: JLX1-UP

PART OF 373-8256 CONFIGURATION AR

SMCS-1434 **i04373879**

NOTE	REF NO	GRAPHIC REF	PART NUMBER	QTY	PART NAME 1 2 3 4 5 6 (PRODUCT LEVEL)	SEE PAGE
	1	1	**3S-2093**	2	STRAP-CABLE	
	2	1	**188-1616**	2	PLATE	
Y	3	1	**219-6487**	2	LAMP GP-FLOOD (24-VOLT, 70-WATT)	230
	4	1	**280-1436**	2	HARNESS AS-LIGHTING	
					(EACH INCLUDES)	
		1	**9X-3402**	4	SOCKET-CONNECTOR (16-GA TO 18-GA)	
					—OR—	
		1	**126-1768**	4	SOCKET-CONNECTOR (14-GA TO 16-GA)	
		1	**9X-3401**	2	PIN-CONNECTOR (16-GA TO 18-GA)	
					—OR—	
		1	**126-1767**	2	PIN-CONNECTOR (14-GA TO 16-GA)	
E		1	**125-7875**		TUBE-HEAT SHRINK (7.44-MM DIA) (10-CM)	
		1	**102-8802**	1	KIT-RECEPTACLE (2-PIN)	
					(INCLUDES RECEPTACLE AS & WEDGE)	
		1	**155-2270**	2	KIT-CONNECTING PLUG (2-PIN)	
					(EACH INCLUDES PLUG AS, WEDGE, & INTERFACE SEAL)	
	5	1	**280-1437**	2	HARNESS AS-LIGHTING (REAR)	
					(EACH INCLUDES)	
		1	**9X-3402**	4	SOCKET-CONNECTOR (16-GA TO 18-GA)	
					—OR—	
		1	**126-1768**	4	SOCKET-CONNECTOR (14-GA TO 16-GA)	
		1	**9X-3401**	2	PIN-CONNECTOR (16-GA TO 18-GA)	
					—OR—	
		1	**126-1767**	2	PIN-CONNECTOR (14-GA TO 16-GA)	
E		1	**125-7875**		TUBE-HEAT SHRINK (7.44-MM DIA) (10-CM)	
		1	**102-8802**	1	KIT-RECEPTACLE (2-PIN)	
					(INCLUDES RECEPTACLE AS & WEDGE)	
		1	**155-2270**	2	KIT-CONNECTING PLUG (2-PIN)	
					(EACH INCLUDES PLUG AS, WEDGE, & INTERFACE SEAL)	
	6	1	**7K-1181**	2	STRAP-CABLE	
M	7	1	**8T-4195**	2	BOLT (M10X1.5X30-MM)	
Y	8	1	**219-6485**	2	LAMP GP-FLOOD (24-VOLT)	229
	9	1	**8T-4121**	4	WASHER-HARD (11X21X2.5-MM THK)	
M	10	1	**8T-4133**	2	NUT (M10X1.5-THD)	

E - ORDER BY THE CENTIMETER
M - METRIC PART
Y - SEPARATE ILLUSTRATION

280-1456 **LIGHTING GP-FLOOD (*contd.*)** **i04373879**

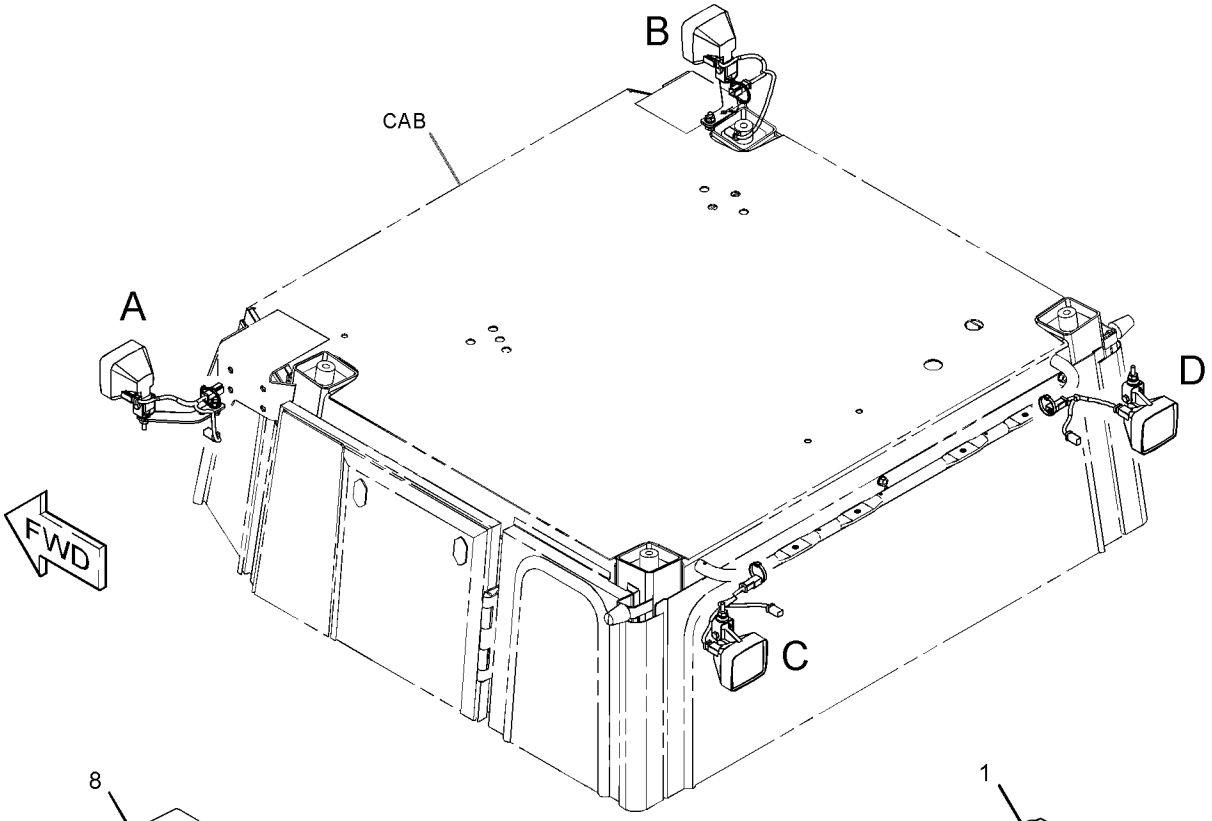

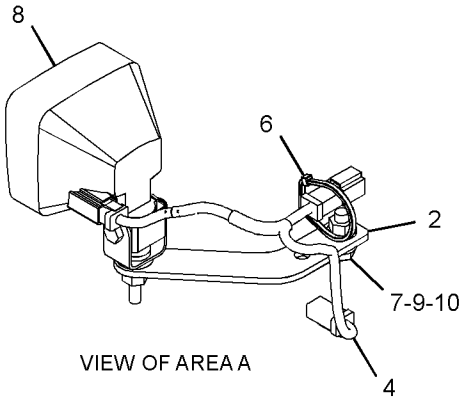

VIEW OF AREA A

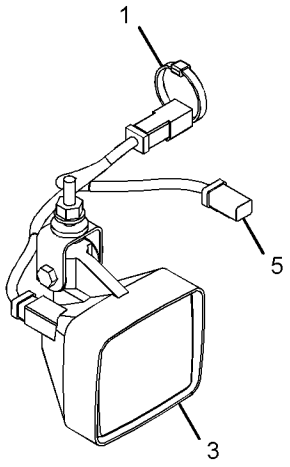

VIEW OF AREA C

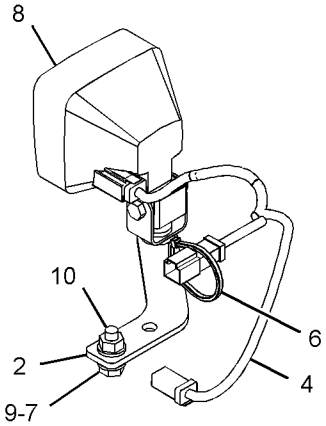

VIEW OF AREA B

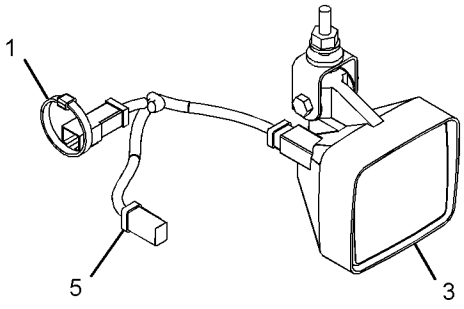

VIEW OF AREA D

GRAPHIC #1 **<END>** g02175702

373-0498 LIGHTING GP-FLOOD

S/N: JLX1-UP

PART OF 373-5885 CAB AR, 373-5884 CAB AR-ENCLOSED ROPS

SMCS-1434 **i04716360**

NOTE	REF NO	GRAPHIC REF	PART NUMBER	QTY	PART NAME 1 2 3 4 5 6 (PRODUCT LEVEL)	SEE PAGE
Y	1	1	**219-6487**	4	LAMP GP-FLOOD (24-VOLT, 70-WATT)	230

Y - SEPARATE ILLUSTRATION

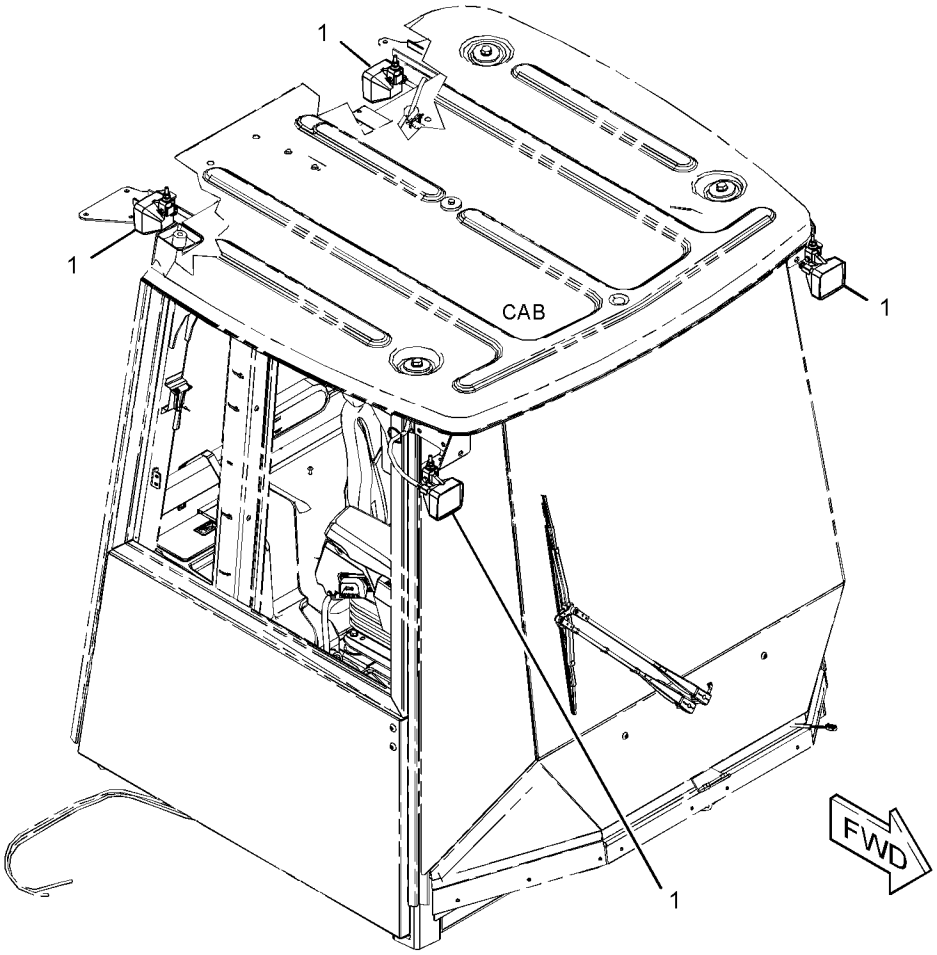

GRAPHIC #1 **<END>** g02830836

373-5933 LIGHTING GP-FLOOD

S/N: JLX243-UP

PART OF 373-8257 OPTION AR-LIGHTING

SMCS-1434 **i04774882**

NOTE	REF NO	GRAPHIC REF	PART NUMBER	QTY	PART NAME 1 2 3 4 5 6 (PRODUCT LEVEL)	SEE PAGE
	1	1	**251-4339**	1	SWITCH AS-ROCKER (24-VOLT)	
	2	1	**3S-2093**	6	STRAP-CABLE	
	3	1	**7K-1181**	2	STRAP-CABLE	
	4	1	**236-7773**	1	HARNESS AS-LIGHTING	
		1	**9W-0844**	16	SOCKET-CONNECTOR (14-GA TO 16-GA)	
		1	**2L-8066**	8	TERMINAL-RING (10-GA TO 12-GA, NO. 10 SCREW)	
		1	**155-2270**	8	KIT-CONNECTING PLUG (2-PIN)	
					(EACH INCLUDES PLUG AS, WEDGE & INTERFACE SEAL)	
	5	1	**236-9775**	1	BRACKET AS (LH)	
	6	1	**236-9776**	1	BRACKET AS (RH)	
Y	7	1	**332-9402**	2	LAMP GP-FLOOD (24-VOLT, 35-WATT, HID)	235
Y	8	1	**347-9427**	2	LAMP GP-FLOOD (24-VOLT, 35-WATT, HID)	236
	9	1	**8T-4121**	4	WASHER-HARD (11X21X2.5-MM THK)	
M	10	1	**8T-4133**	2	NUT (M10X1.5-THD)	
M	11	1	**8T-4195**	2	BOLT (M10X1.5X30-MM)	

M - METRIC PART
Y - SEPARATE ILLUSTRATION

373-5933 **LIGHTING GP-FLOOD (*contd.*)** **i04774882**

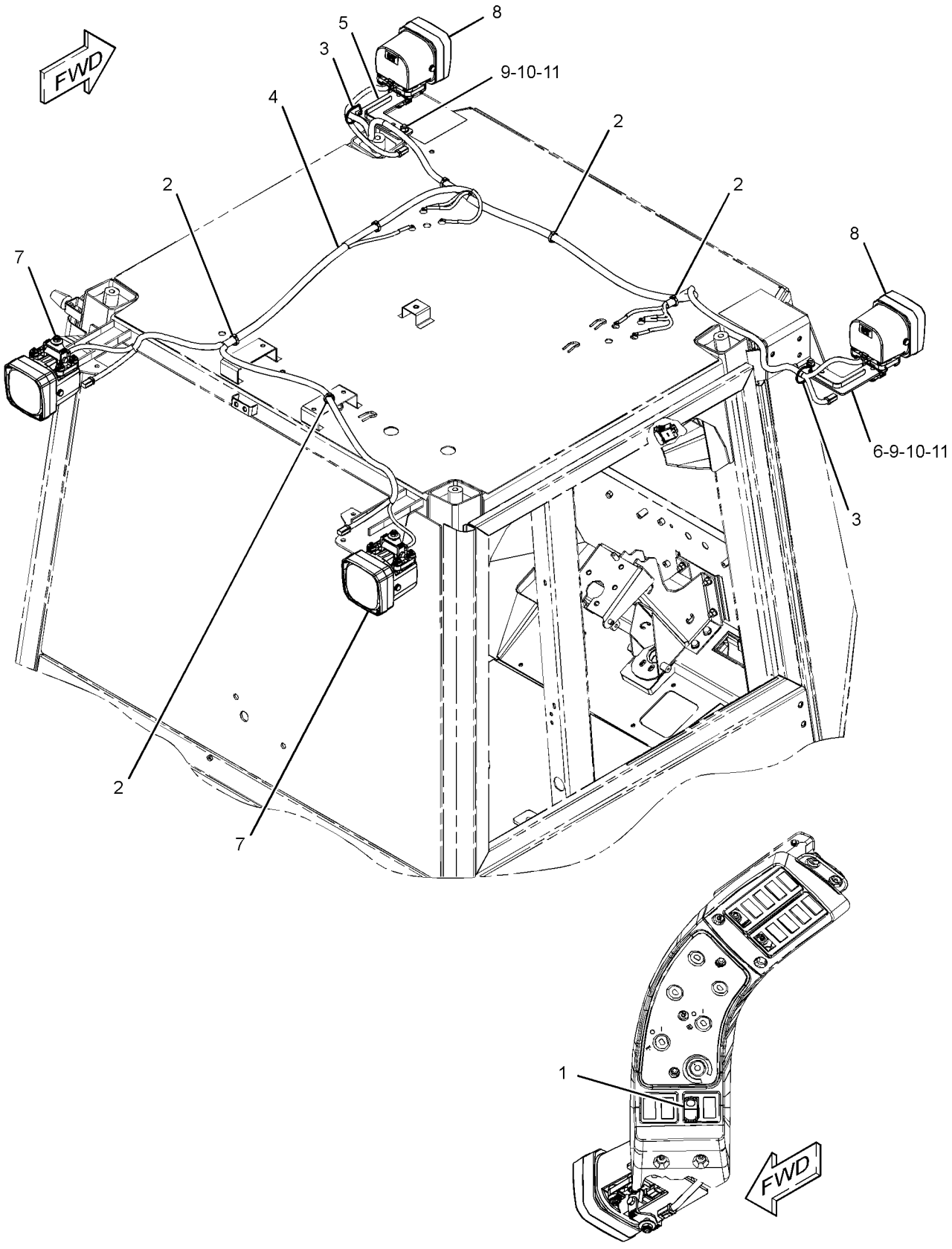

GRAPHIC #1 **<END>** g02886399

373-8285 LIGHTING GP-FLOOD

S/N: JLX1-547

PART OF 372-2873 ELECTRICAL AR

SMCS-1434 **i04734452**

NOTE	REF NO	GRAPHIC REF	PART NUMBER	QTY	PART NAME 1 2 3 4 5 6 (PRODUCT LEVEL)	SEE PAGE
Y	1	1	**145-6929**	2	LAMP GP-STOP & TAIL (24-VOLT)	244
	2	1	**246-3295**	2	PLATE AS	
					(EACH INCLUDES)	
M		1	**8T-4935**	1	BOSS-WELD (M10X1.5X45-MM)	
Y	3	1	**302-0406**	1	LAMP GP-FLOOD (24-VOLT)	231
Y	4	1	**302-0408**	1	LAMP GP-FLOOD (24-VOLT)	233
	5	1	**313-9312**	1	BRACKET AS (RH)	
	6	1	**314-2532**	1	BRACKET AS (LH)	
	7	1	**117-9409**	2	GROMMET	
	8	1	**130-5300**	4	CLIP	
	9	1	**8T-4121**	10	WASHER-HARD (11X21X2.5-MM THK)	
M	10	1	**8T-4136**	8	BOLT (M10X1.5X25-MM)	
M	11	1	**8T-4137**	2	BOLT (M10X1.5X20-MM)	
M	12	1	**9X-2044**	8	SCREW-TRUSS HEAD (M6X1X16-MM)	

M - METRIC PART
Y - SEPARATE ILLUSTRATION

373-8285 **LIGHTING GP-FLOOD (*contd.*)** **i04734452**

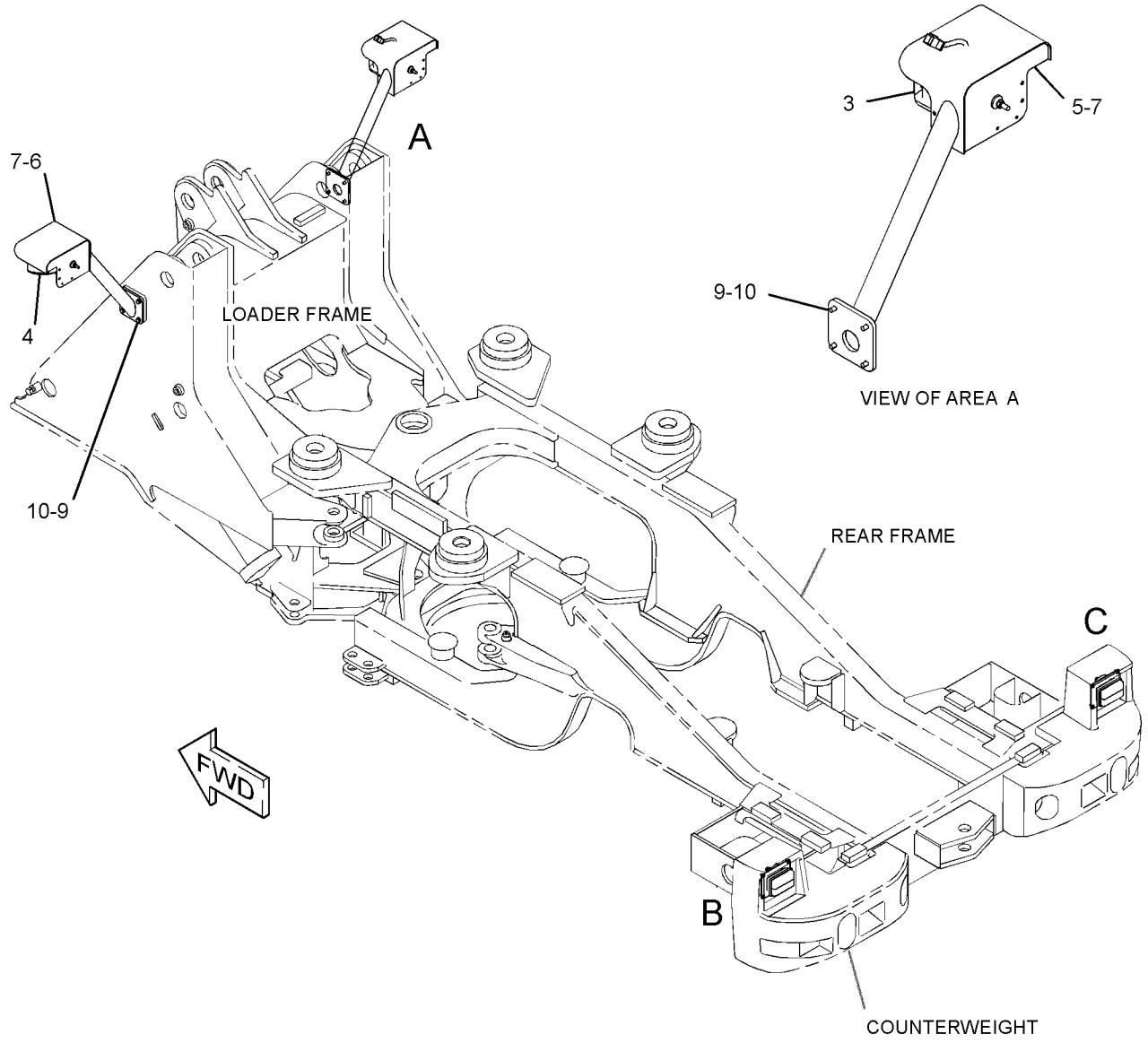

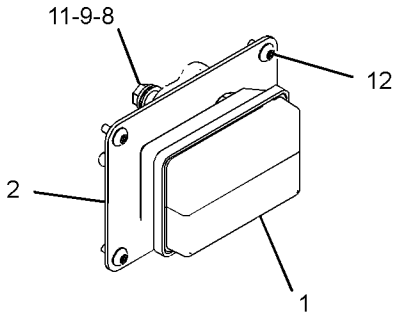

VIEW OF AREA B

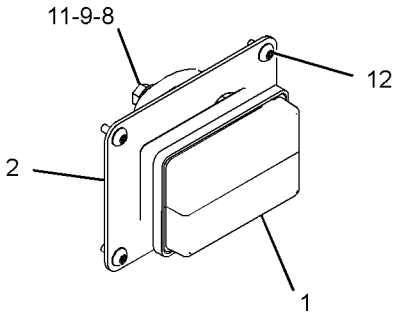

VIEW OF AREA C

GRAPHIC #1 **<END>** g02842157

373-8285 LIGHTING GP-FLOOD

S/N: JLX548-UP

PART OF 372-2873 ELECTRICAL AR

SMCS-1434 **i05935376**

NOTE	REF NO	GRAPHIC REF	PART NUMBER	QTY	PART NAME 1 2 3 4 5 6 (PRODUCT LEVEL)	SEE PAGE
CY	1	1	**415-1086**	2	LAMP GP-STOP & TAIL (24-VOLT)	245
	2	1	**246-3295**	2	PLATE AS	
					(EACH INCLUDES)	
M		1	**8T-4935**	1	BOSS-WELD (M10X1.5X45-MM)	
Y	3	1	**302-0406**	1	LAMP GP-FLOOD (24-VOLT)	231
Y	4	1	**302-0408**	1	LAMP GP-FLOOD (24-VOLT)	233
	5	1	**313-9312**	1	BRACKET AS (RH)	
	6	1	**314-2532**	1	BRACKET AS (LH)	
	7	1	**117-9409**	2	GROMMET	
	8	1	**130-5300**	4	CLIP	
	9	1	**8T-4121**	10	WASHER-HARD (11X21X2.5-MM THK)	
M	10	1	**8T-4136**	8	BOLT (M10X1.5X25-MM)	
M	11	1	**8T-4137**	2	BOLT (M10X1.5X20-MM)	
M	12	1	**9X-2044**	8	SCREW-TRUSS HEAD (M6X1X16-MM)	

C - CHANGE FROM PREVIOUS TYPE
M - METRIC PART
Y - SEPARATE ILLUSTRATION

373-8285 **LIGHTING GP-FLOOD (*contd.*)** **i05935376**

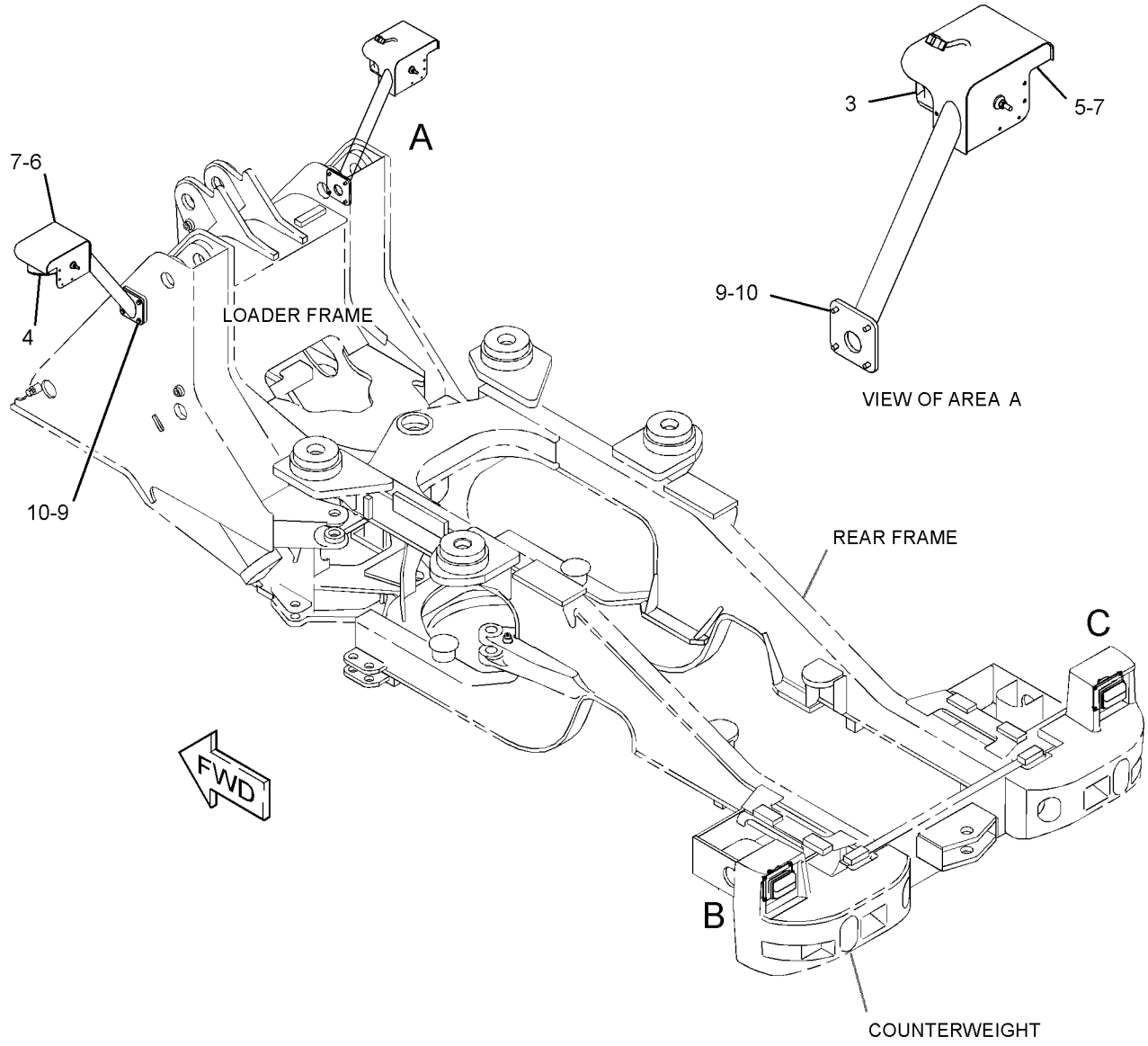

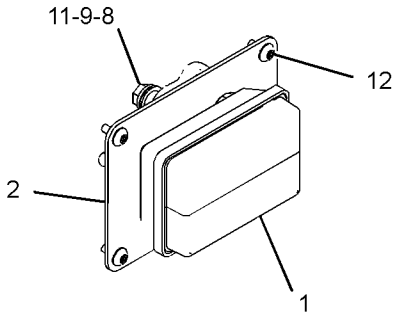

VIEW OF AREA B

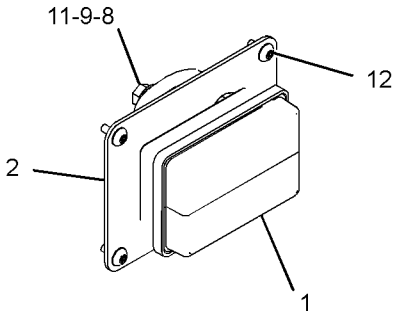

VIEW OF AREA C

GRAPHIC #1 **<END>** g02842157

375-2472 LIGHTING GP-ROADING

S/N: JLX1-UP

PART OF 373-8289 CONVERSION AR-MACHINE

SMCS-1429 **i05747806**

NOTE	REF NO	GRAPHIC REF	PART NUMBER	QTY	PART NAME 1 2 3 4 5 6 (PRODUCT LEVEL)	SEE PAGE
	1	2	**7K-1181**	27	STRAP-CABLE	
	2	2	**266-2830**	2	HARNESS AS-LIGHTING (STOP, TAIL)	
		2	**102-8803**	1	KIT-RECEPTACLE (3-PIN)	
					(INCLUDES RECEPTACLES AS & WEDGE)	
		2	**3E-3371**	1	WEDGE-RECEPTACLE LOCK (3-PIN)	
		2	**7Y-3951**	3	TERMINAL-BLADE (14-GA)	
		2	**7Y-3954**	1	CONNECTOR-PLUG (3-PIN)	
		2	**8T-8729**	3	PIN-CONNECTOR (16-GA TO 18-GA)	
	3	2	**266-2831**	2	HARNESS AS-LIGHTING (TURN SIGNAL)	
		2	**102-8802**	1	KIT-RECEPTACLE (2-PIN)	
					(INCLUDES RECEPTACLE AS & WEDGE)	
		2	**5A-3646**	1	TERMINAL-BULLET	
		2	**5A-3647**	1	TERMINAL-BULLET	
		2	**8T-8729**	2	PIN-CONNECTOR (16-GA TO 18-GA)	
Y	4	2	*267-4971*	1	MOUNTING GP-REGISTRATION (REGISTRATION PLATE)	594
	5	1	**272-5749**	1	HARNESS AS-REAR LIGHTING (REGISTRATION PLATE)	
		1	**102-8802**	1	KIT-RECEPTACLE (2-PIN)	
					(INCLUDES RECEPTACLE AS & WEDGE)	
E		1	**114-8843**		SLEEVE-PLASTIC (30-CM)	
E		1	**125-7874**		TUBE-HEAT SHRINK (5.72-MM DIA) (10-CM)	
		1	**2L-8076**	2	TERMINAL-RING (14-GA TO 16-GA, NO. 10 SCREW)	
		1	**9X-3401**	2	PIN-CONNECTOR (16-GA TO 18-GA)	
					—OR—	
		1	**126-1767**	2	PIN-CONNECTOR (14-GA TO 16-GA)	
	6	2	**284-5702**	2	WIRE AS	
	7	2	**313-9312**	1	BRACKET AS (RH)	
	8	2	**314-2532**	1	BRACKET AS (LH)	
	9	2	**338-5716**	2	LAMP GP-BACKUP (REAR)	
					(EACH INCLUDES)	
		2	**9X-4493**	1	LAMP (24-VOLT, 21-WATT)	
		2	**257-3736**	2	SCREW (M5X0.8X25-MM)	
		2	**304-7167**	1	LENS	
		2	**304-7168**	1	GASKET	
	10	2	**338-5719**	2	LAMP GP-REAR	
					(EACH INCLUDES)	
		2	**257-3736**	2	SCREW (M5X0.8X25-MM)	
		2	**9X-4492**	1	LAMP-FLOOD (24-VOLT, 5-WATT)	
	11	2	*338-5720*	2	LAMP GP-SIGNAL	
					(EACH INCLUDES)	
		2	**257-3736**	2	SCREW (M5X0.8X25-MM)	
		2	**9X-4493**	1	LAMP (24-VOLT, 21-WATT)	
Y	12	2	**344-3457**	1	LAMP GP-HEAD & SIGNAL (24-VOLT)	241
Y	13	2	**344-3458**	1	LAMP GP-HEAD & SIGNAL (24-VOLT)	242
Y	14	2	*373-0494*	1	WIRING GP-LIGHTING (ROADING)	371
	15	2	**417-2685**	2	PLATE AS	
Y	16	1	**418-4361**	1	HARNESS AS-LIGHTING (BACKUP ALARM, LIGHTS)	212
	17	2	**126-8052**	1	BRACKET-RELAY	
	18	2	**3P-9554**	2	GROMMET	
	19	2	**4P-8134**	1	CLIP	
	20	2	**4Y-6135**	1	RELAY (ALARM)	
M	21	2	**5C-2890**	1	NUT (M6X1-THD)	
	22	2	**8T-4121**	9	WASHER-HARD (11X21X2.5-MM THK)	
M	23	2	**8T-4133**	1	NUT (M10X1.5-THD)	
M	24	2	**8T-4136**	8	BOLT (M10X1.5X25-MM)	
M	25	2	**8T-4138**	3	BOLT (M6X1X20-MM)	
	26	2	**8T-4205**	3	WASHER-HARD (7.2X14.5X2-MM THK)	

375-2472 **LIGHTING GP-ROADING (*contd.*)** **i05747806**

NOTE	REF NO	GRAPHIC REF	PART NUMBER	QTY	PART NAME 1 2 3 4 5 6 (PRODUCT LEVEL)	SEE PAGE
	27	2	**9R-5616**	1	PLUG	
	28	2	**9X-2038**	8	WASHER (7X19X2-MM THK)	
M	29	2	**9X-2044**	8	SCREW-TRUSS HEAD (M6X1X16-MM)	
	30	2	**369-4096**	1	SWITCH AS-ROCKER (HIGH BEAM, LOW BEAM)	
Y	31	2	**376-3342**	1	HARNESS AS-LIGHTING (MAIN)	211

E - ORDER BY THE CENTIMETER
M - METRIC PART
Y - SEPARATE ILLUSTRATION

REFER TO ALL ILLUSTRATIONS OF THIS GROUP FOR AUXILIARY VIEWS

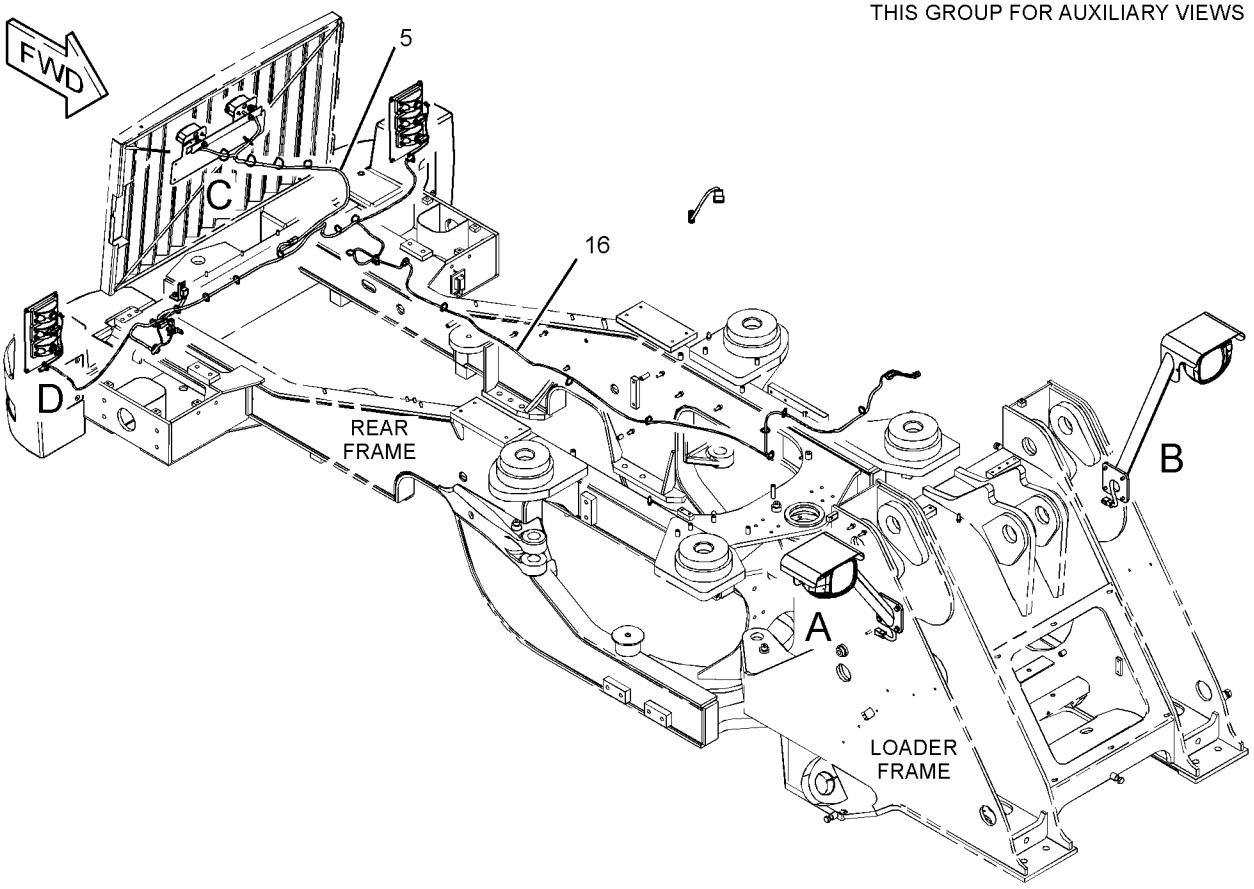

GRAPHIC #1 g03673044

375-2472 **LIGHTING GP-ROADING (*contd.*)** **i05747806**

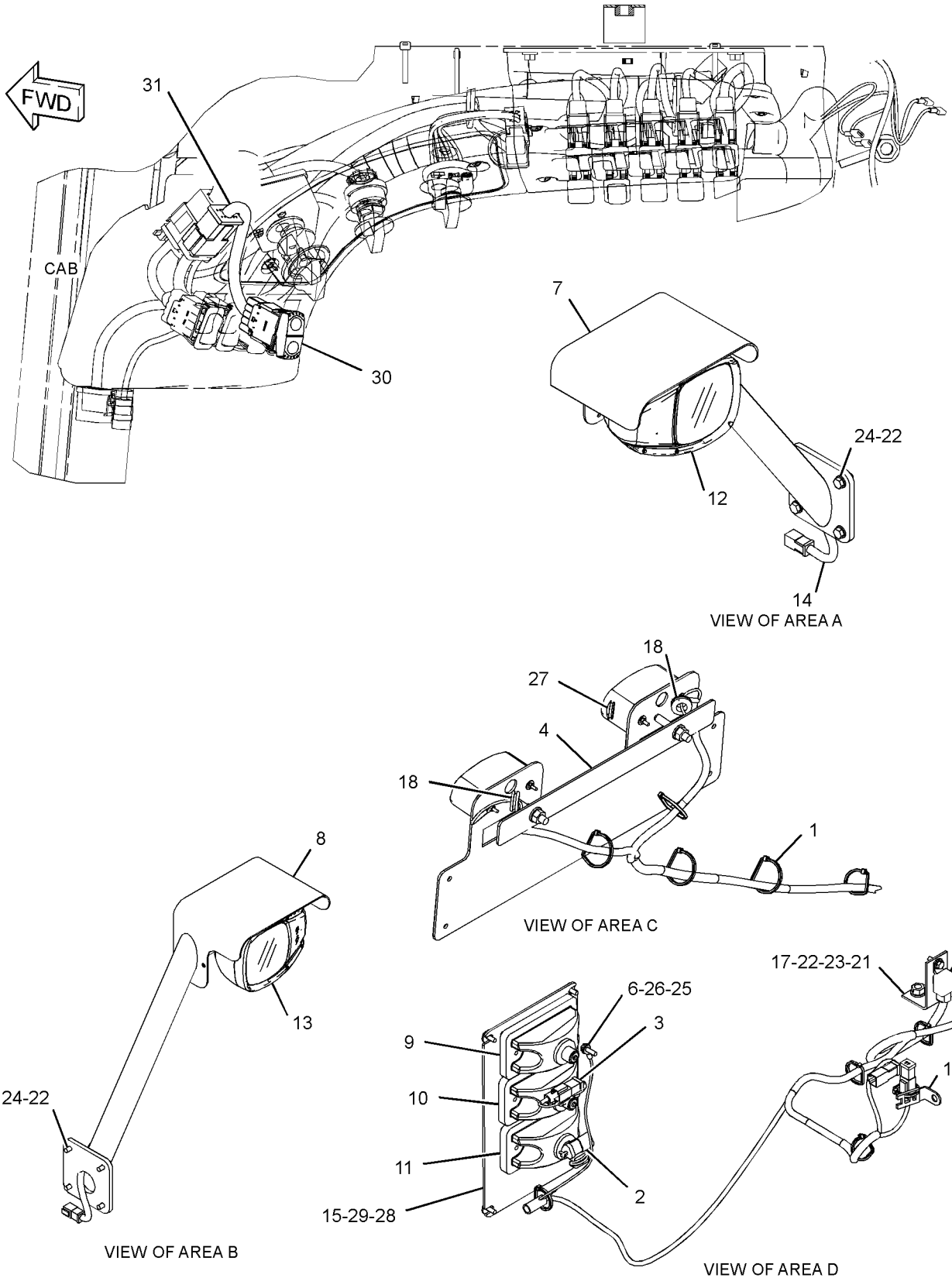

GRAPHIC #2 **<END>** g03670264

375-8099 LIGHTING GP-ROADING

S/N: JLX1-UP

SMCS-1429 **i04774839**

NOTE	REF NO	GRAPHIC REF	PART NUMBER	QTY	PART NAME 1 2 3 4 5 6 (PRODUCT LEVEL)	SEE PAGE
Y	1	1	**344-3455**	1	LAMP GP-HEAD & SIGNAL	237
Y	2	1	**344-3456**	1	LAMP GP-HEAD & SIGNAL	239
	3	1	**369-4096**	1	SWITCH AS-ROCKER (LAMP)	
Y	4	1	**376-3342**	1	HARNESS AS-LIGHTING	211

Y - SEPARATE ILLUSTRATION

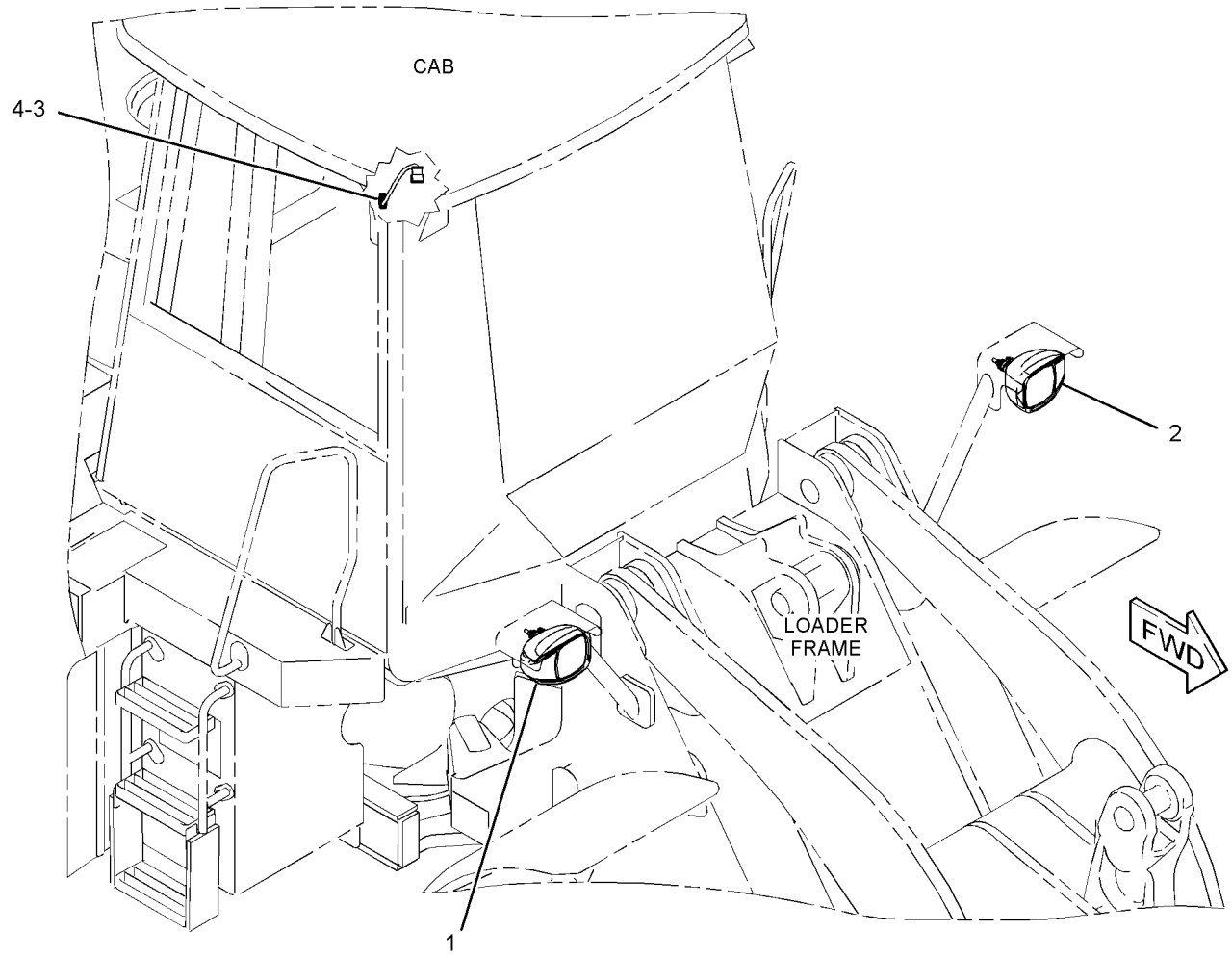

GRAPHIC #1 **<END>** g02877896

376-4753 LIGHTING GP-WARNING BEACON

S/N: JLX1-UP

PART OF 373-8256 CONFIGURATION AR, 373-8257 OPTION AR-LIGHTING

SMCS-1431 **i05389502**

NOTE	REF NO	GRAPHIC REF	PART NUMBER	QTY	PART NAME 1 2 3 4 5 6 (PRODUCT LEVEL)	SEE PAGE
	1	1,2	**3S-2093**	3	STRAP-CABLE	
	2	1	**236-7775**	1	HARNESS AS-LIGHTING (WARNING BEACON)	
		1	**9W-0844**	2	SOCKET-CONNECTOR (14-GA TO 16-GA)	
		1	**2L-8076**	2	TERMINAL-RING (14-GA TO 16-GA, NO. 10 SCREW)	
		1	**155-2270**	1	KIT-CONNECTING PLUG (2-PIN)	
					(INCLUDES PLUG AS, WEDGE, & INTERFACE SEAL)	
	3	2	**237-9736**	1	SWITCH AS-ROCKER (WARNING BEACON)	
	4	2	**275-8737**	1	LAMP GP-WARNING BEACON	
		2	**8T-8729**	2	PIN-CONNECTOR (16-GA TO 18-GA)	
		2	**102-8802**	1	KIT-RECEPTACLE (2-PIN)	
					(INCLUDES RECEPTACLE AS & WEDGE)	
	5	2	**377-2971**	1	BRACKET	
	6	2	**130-5300**	1	CLIP	
	7	2	**4P-7581**	1	CLIP	
	8	1	**191-0348**	1	GROMMET	

REFER TO ALL ILLUSTRATIONS OF THIS GROUP FOR AUXILIARY VIEWS

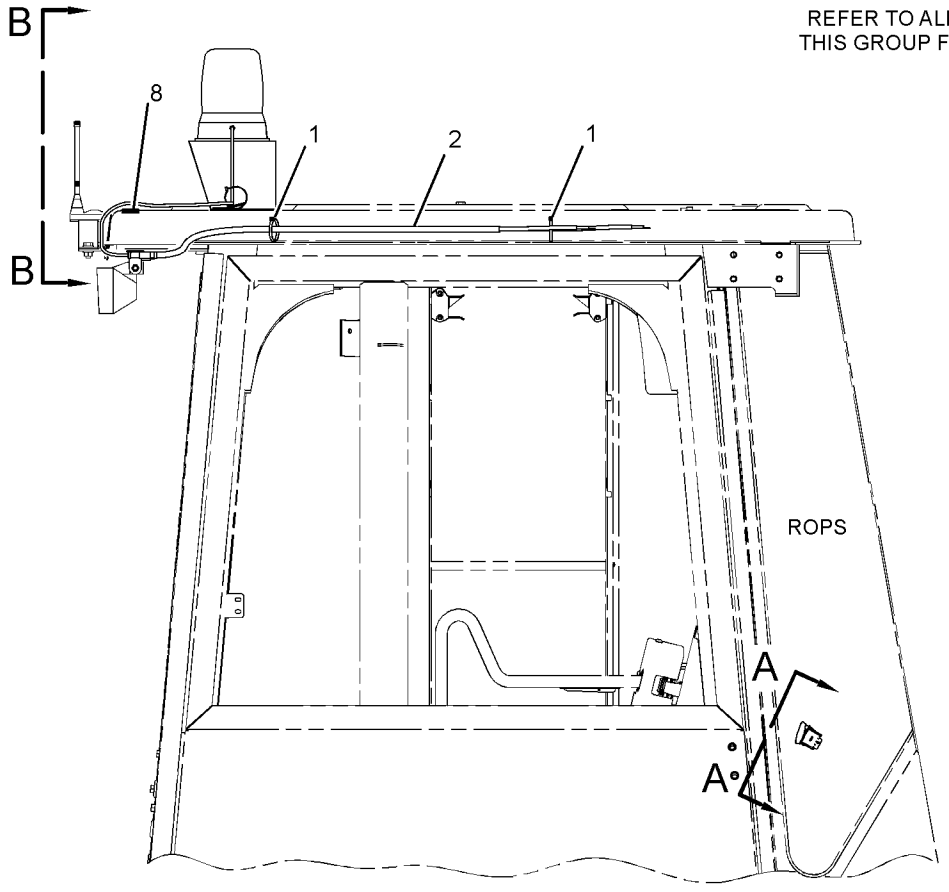

RIGHT SIDE VIEW

GRAPHIC #1 g03368165

376-4753 **LIGHTING GP-WARNING BEACON (*contd.*)** **i05389502**

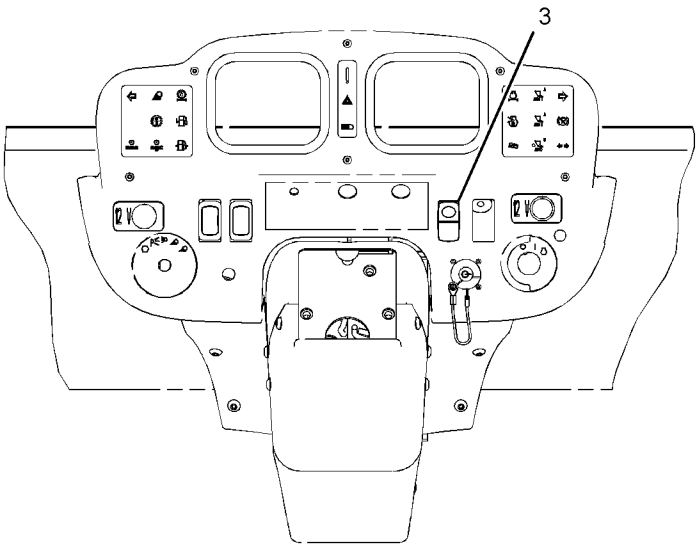

VIEW A-A

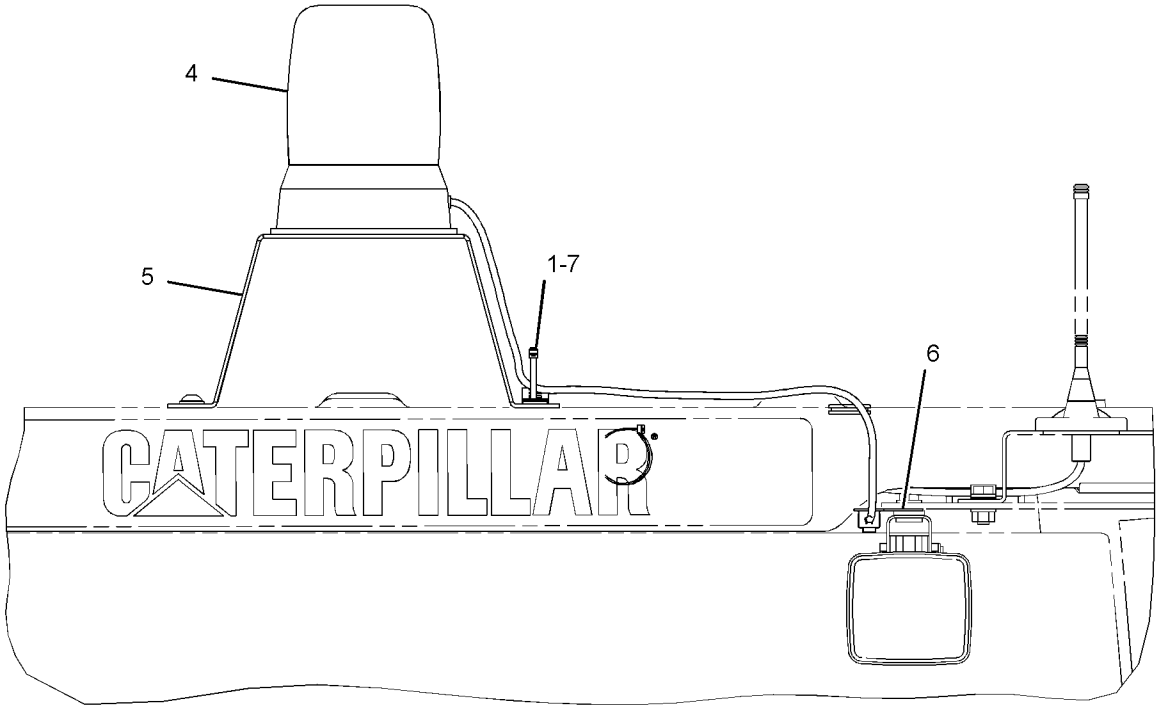

VIEW B-B

GRAPHIC #2 **<END>** g03368166

372-4876 PANEL GP-CIRCUIT BREAKER

S/N: JLX1-354

PART OF 372-4889 WIRING GP-CHASSIS

SMCS-1417, 1420 **i05532070**

NOTE	REF NO	GRAPHIC REF	PART NUMBER	QTY	PART NAME 1 2 3 4 5 6 (PRODUCT LEVEL)	SEE PAGE
	1	2	**3E-5169**	1	GUARD-SWITCH	
	2	2	**3S-2093**	9	STRAP-CABLE	
	3	2	**7U-4891**	6	SCREW (10-32X1-IN)	
Y	4	2	**125-1302**	1	SWITCH GP-MAGNETIC (24-VOLT) (START RELAY)	307
	5	2	**149-2612**	1	RELAY AS (24-VOLT)	
		2	**8T-8729**	2	PIN-CONNECTOR (16-GA TO 18-GA)	
		2	**9W-0852**	4	PIN-CONNECTOR (14-GA TO 16-GA)	
		2	**102-8805**	1	KIT-RECEPTACLE (6-PIN)	
					(INCLUDES RECEPTACLE AS & WEDGE)	
	6	2	**171-2206**	1	CIRCUIT BREAKER AS (50-AMPERE)	
		2	**8T-0122**	2	NUT-FULL (1/4-28-THD)	
		2	**4E-5724**	2	WASHER (7X12X1-MM THK)	
		2	**253-2111**	2	LOCKWASHER	
	7	2	**171-2210**	1	CIRCUIT BREAKER AS (80-AMPERE)	
		2	**8T-0122**	2	NUT-FULL (1/4-28-THD)	
		2	**4E-5724**	2	WASHER (7X12X1-MM THK)	
		2	**253-2111**	2	LOCKWASHER	
	8	2	**171-2211**	1	CIRCUIT BREAKER AS (90-AMPERE)	
		2	**8T-0122**	2	NUT-FULL (1/4-28-THD)	
		2	**4E-5724**	2	WASHER (7X12X1-MM THK)	
		2	**253-2111**	2	LOCKWASHER	
	9	2	**184-6636**	1	PLATE-INFORMATION (ENGINE SHUTOFF)	
	10	2	**193-3973**	2	STRAP-CABLE	
	11	2	**218-4935**	1	SUPPRESSOR-ARC	
	12	2	**301-2979**	1	SWITCH GP-TOGGLE (ENGINE SHUTDOWN)	
	13	2	**399-9327**	1	PANEL AS	
Y	14	1	**421-4977**	1	HARNESS AS-CHASSIS	202
	15	2	**324-0693**	1	WIRE AS	
	16	2	**324-0694**	1	CABLE AS	
D		2	**6V-2369**		CABLE (4-GA, BLACK) (1-M)	
		2	**5P-3454**	1	TERMINAL-RING (4-GA, 5/16-IN SCREW)	
		2	**284-8481**	1	TERMINAL AS-RING	
	17	2	**324-0699**	1	PLATE	
	18	2	**324-0700**	1	FILM-IDENTIFICATION (FUSE PANEL)	
	19	2	**132-5789**	1	CLIP (LADDER)	
	20	2	**139-4724**	1	CIRCUIT BREAKER AS (30-AMPERE)	
		2	**6V-8378**	2	NUT (10-32-THD)	
		2	**8F-1434**	2	LOCKWASHER	
		2	**8T-0328**	2	WASHER-HARD (5.5X10X1-MM THK)	
Y	21	2	**241-8368**	1	SWITCH GP-MAGNETIC (24-VOLT) (MAIN RELAY)	309
Y	22	2	**248-3288**	1	CIRCUIT BREAKER GP (15-AMPERE)	184
	23	2	**288-3687**	1	CIRCUIT BREAKER AS (20-AMPERE)	
		2	**6V-8378**	2	NUT (10-32-THD)	
		2	**8F-1434**	2	LOCKWASHER	
		2	**8T-0328**	2	WASHER-HARD (5.5X10X1-MM THK)	
	24	2	**4B-4274**	6	WASHER (5.5X13X1.2-MM THK)	
	25	2	**4B-4863**	6	WASHER (4.7X11X1.2-MM THK)	
M	26	2	**6V-7744**	1	LOCKNUT (M10X1.5-THD)	
	27	2	**7U-4892**	6	SCREW (8-32X0.75-IN)	
	28	2	**7X-0620**	3	WASHER-HARD (5.5X13X1.6-MM THK)	
	29	2	**7X-3393**	2	WASHER-HARD (8.3X19X1.83-MM THK)	
	30	2	**8T-4121**	3	WASHER-HARD (11X21X2.5-MM THK)	
M	31	2	**8T-4136**	1	BOLT (M10X1.5X25-MM)	
M	32	2	**8T-4137**	1	BOLT (M10X1.5X20-MM)	
M	33	1,2	**8T-4138**	4	BOLT (M6X1X20-MM)	
	34	1,2	**8T-4205**	12	WASHER-HARD (7.2X14.5X2-MM THK)	
M	35	2	**8T-4970**	8	BOLT (M6X1X14-MM)	

372-4876 **PANEL GP-CIRCUIT BREAKER (*contd.*)** **i05532070**

NOTE	REF NO	GRAPHIC REF	PART NUMBER	QTY	PART NAME 1 2 3 4 5 6 (PRODUCT LEVEL)	SEE PAGE
	36	1	**399-9329**	1	BRACKET AS	
M		1	**6V-9632**	1	NUT-WELD (M6X1-THD)	
	37	2	**392-0267**	1	CABLE AS	
		1	**5P-3454**	1	TERMINAL-RING (4-GA, 5/16-IN SCREW)	
		1	**9G-4343**	1	TERMINAL-RING (4-GA, 1/4-IN SCREW)	
Y	38	2	**209-5582**	1	SWITCH GP-MAGNETIC (24-VOLT)	308
M	39	2	**6V-9632**	1	NUT-WELD (M6X1-THD)	

D - ORDER BY THE METER
M - METRIC PART
Y - SEPARATE ILLUSTRATION

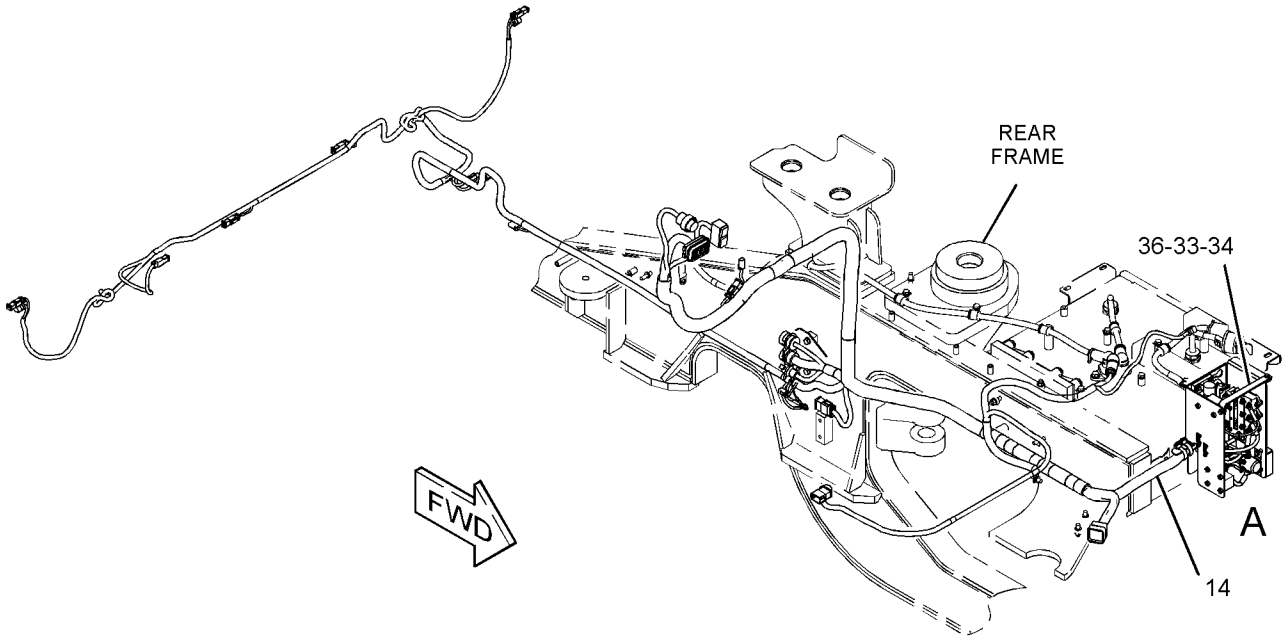

REFER TO ALL ILLUSTRATIONS OF
THIS GROUP FOR AUXILIARY VIEWS

GRAPHIC #1 g03369384

372-4876 **PANEL GP-CIRCUIT BREAKER (*contd.*)** **i05532070**

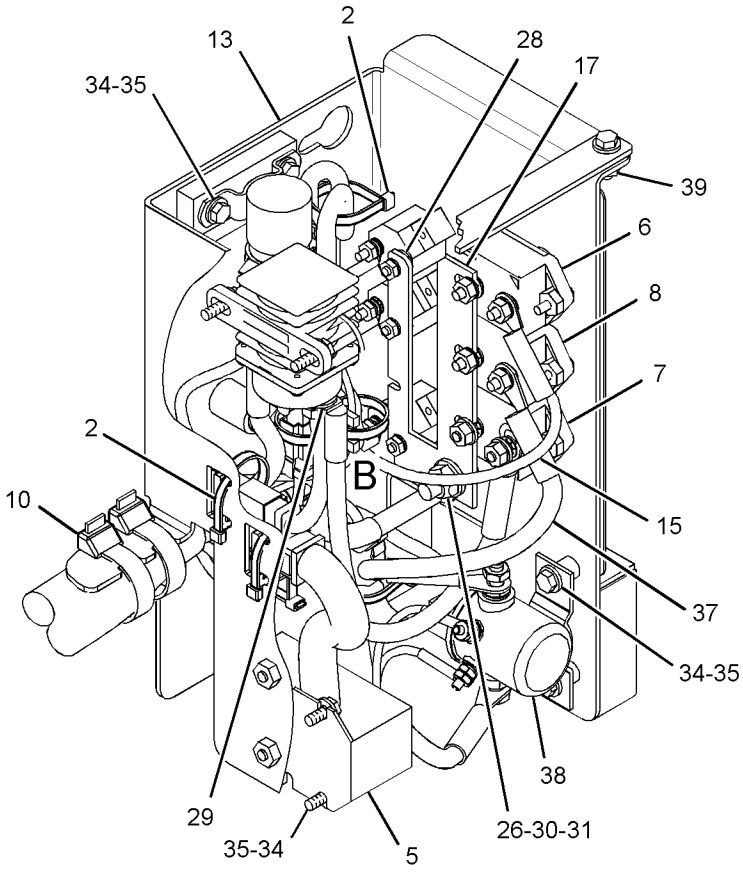

VIEW OF AREA A

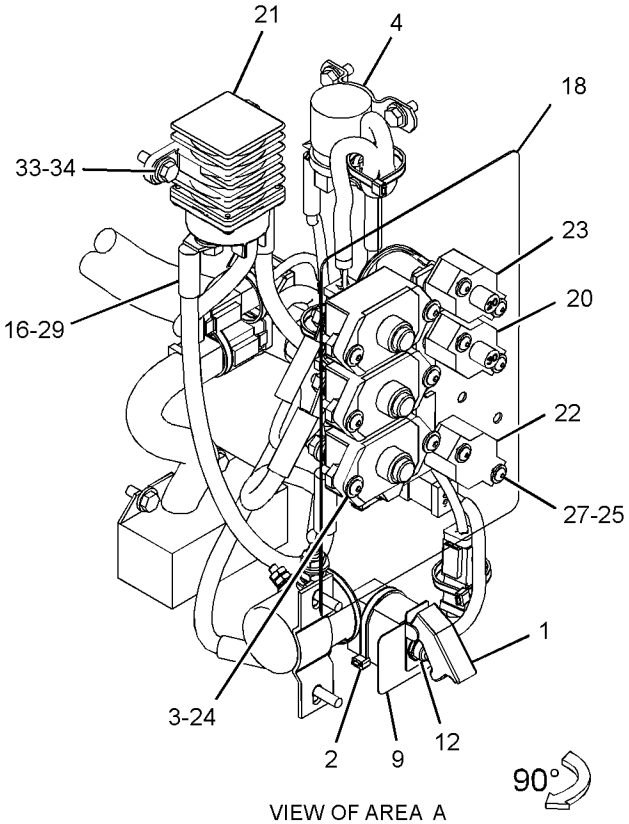

VIEW OF AREA A
(PARTS REMOVED FOR CLARITY)

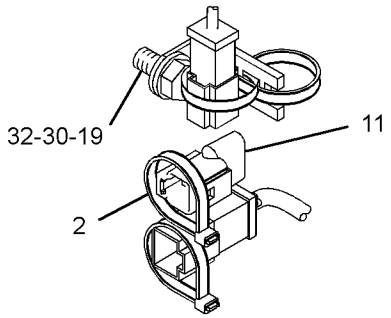

VIEW OF AREA B
(PARTS REMOVED FOR CLARITY)

GRAPHIC #2 **<END>** g03690670

372-4876 PANEL GP-CIRCUIT BREAKER

S/N: JLX355-UP

PART OF 372-4889 WIRING GP-CHASSIS

SMCS-1417, 1420 **i05955620**

NOTE	REF NO	GRAPHIC REF	PART NUMBER	QTY	PART NAME 1 2 3 4 5 6 (PRODUCT LEVEL)	SEE PAGE
	1	2	**3E-5169**	1	GUARD-SWITCH	
C	2	2	**3S-2093**	7	STRAP-CABLE	
C	3	2	**7U-4891**	4	SCREW (10-32X1-IN)	
	5	2	**149-2612**	1	RELAY AS (24-VOLT)	
		2	**8T-8729**	2	PIN-CONNECTOR (16-GA TO 18-GA)	
		2	**9W-0852**	4	PIN-CONNECTOR (14-GA TO 16-GA)	
		2	**102-8805**	1	KIT-RECEPTACLE (6-PIN)	
					(INCLUDES RECEPTACLE AS & WEDGE)	
	7	2	**171-2210**	1	CIRCUIT BREAKER AS (80-AMPERE)	
		2	**8T-0122**	2	NUT-FULL (1/4-28-THD)	
		2	**4E-5724**	2	WASHER (7X12X1-MM THK)	
		2	**1H-3244**	2	LOCKWASHER	
	8	2	**171-2211**	1	CIRCUIT BREAKER AS (90-AMPERE)	
		2	**8T-0122**	2	NUT-FULL (1/4-28-THD)	
		2	**4E-5724**	2	WASHER (7X12X1-MM THK)	
		2	**1H-3244**	2	LOCKWASHER	
	9	2	**184-6636**	1	PLATE-INFORMATION (ENGINE SHUTOFF)	
	10	2	**204-2281**	2	STRAP-CABLE	
	12	2	**301-2979**	1	SWITCH GP-TOGGLE (ENGINE SHUTDOWN)	
	13	2	**399-9327**	1	PANEL AS	
CY	14	1	**438-6425**	1	HARNESS AS-CHASSIS	204
	16	2	**324-0694**	1	CABLE AS	
D		2	**6V-2369**		CABLE (4-GA, BLACK) (0.4-M)	
		2	**9G-4343**	1	TERMINAL-RING (4-GA, 1/4-IN SCREW)	
		2	**284-8481**	1	TERMINAL AS-RING	
E		2	**119-3662**		TUBE-HEAT SHRINK (10.85-MM DIA) (4-CM)	
	17	2	**324-0699**	1	PLATE	
C	18	2	**444-2026**	1	FILM-IDENTIFICATION (FUSE PANEL)	
	19	2	**132-5789**	1	CLIP (LADDER)	
	20	2	**139-4724**	1	CIRCUIT BREAKER AS (30-AMPERE)	
		2	**6V-8378**	2	NUT (10-32-THD)	
		2	**8F-1434**	2	LOCKWASHER	
		2	**8T-0328**	2	WASHER-HARD (5.5X10X1-MM THK)	
Y	21	2	**241-8368**	1	SWITCH GP-MAGNETIC (24-VOLT) (MAIN RELAY)	309
Y	22	2	**248-3288**	1	CIRCUIT BREAKER GP (15-AMPERE)	184
	23	2	**288-3687**	1	CIRCUIT BREAKER AS (20-AMPERE)	
		2	**6V-8378**	2	NUT (10-32-THD)	
		2	**8F-1434**	2	LOCKWASHER	
		2	**8T-0328**	2	WASHER-HARD (5.5X10X1-MM THK)	
C	24	2	**4B-4274**	4	WASHER (5.5X13X1.2-MM THK)	
	25	2	**4B-4863**	6	WASHER (4.7X11X1.2-MM THK)	
M	26	2	**6V-7744**	1	LOCKNUT (M10X1.5-THD)	
	27	2	**7U-4892**	6	SCREW (8-32X0.75-IN)	
	28	2	**7X-0620**	3	WASHER-HARD (5.5X13X1.6-MM THK)	
	29	2	**7X-3393**	2	WASHER-HARD (8.3X19X1.83-MM THK)	
	30	2	**8T-4121**	3	WASHER-HARD (11X21X2.5-MM THK)	
M	31	2	**8T-4136**	1	BOLT (M10X1.5X25-MM)	
M	32	2	**8T-4137**	1	BOLT (M10X1.5X20-MM)	
M	33	1,2	**8T-4138**	4	BOLT (M6X1X20-MM)	
C	34	1,2	**8T-4205**	10	WASHER-HARD (7.2X14.5X2-MM THK)	
CM	35	2	**8T-4970**	6	BOLT (M6X1X14-MM)	
	36	1	**399-9329**	1	BRACKET AS	
M		1	**6V-9632**	1	NUT-WELD (M6X1-THD)	
	37	2	**392-0267**	1	CABLE AS	
		2	**5P-3454**	1	TERMINAL-RING (4-GA, 5/16-IN SCREW)	
		2	**9G-4343**	1	TERMINAL-RING (4-GA, 1/4-IN SCREW)	

372-4876 **PANEL GP-CIRCUIT BREAKER (*contd.*)** **i05955620**

NOTE	REF NO	GRAPHIC REF	PART NUMBER	QTY	PART NAME 1 2 3 4 5 6 (PRODUCT LEVEL)	SEE PAGE
Y	38	2	**209-5582**	1	SWITCH GP-MAGNETIC (24-VOLT)	308
M	39	2	**6V-9632**	1	NUT-WELD (M6X1-THD)	

C - CHANGE FROM PREVIOUS TYPE
D - ORDER BY THE METER
E - ORDER BY THE CENTIMETER
M - METRIC PART
Y - SEPARATE ILLUSTRATION

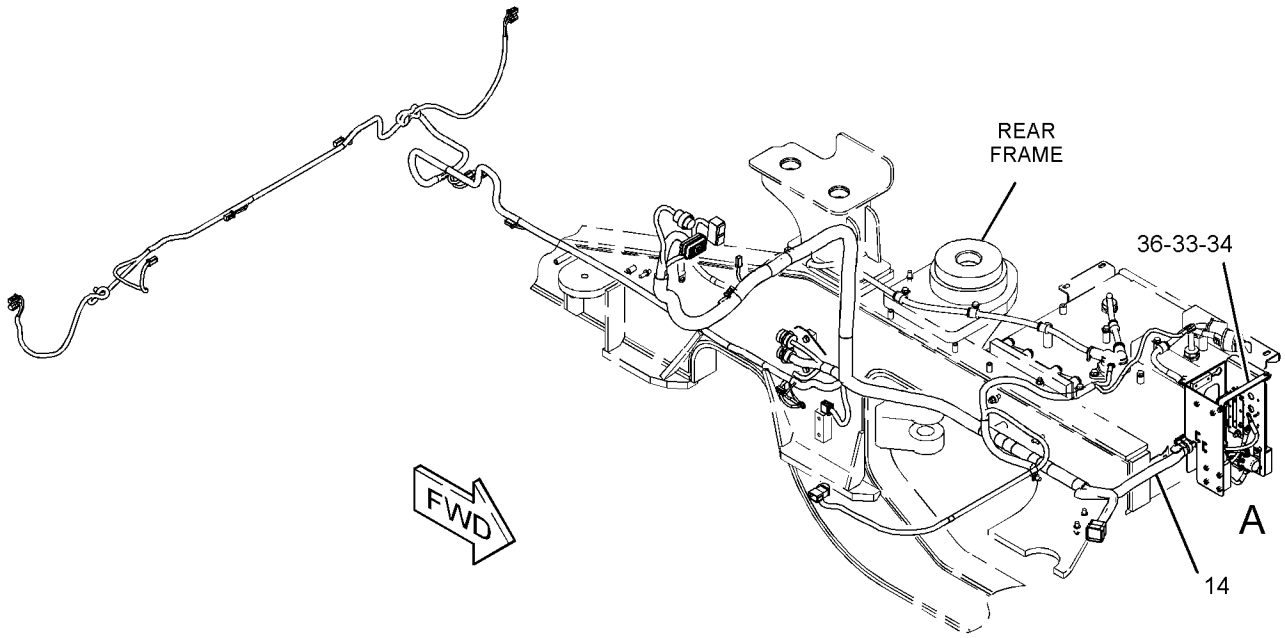

REFER TO ALL ILLUSTRATIONS OF
THIS GROUP FOR AUXILIARY VIEWS

GRAPHIC #1 g03749950

372-4876 **PANEL GP-CIRCUIT BREAKER (*contd.*)** **i05955620**

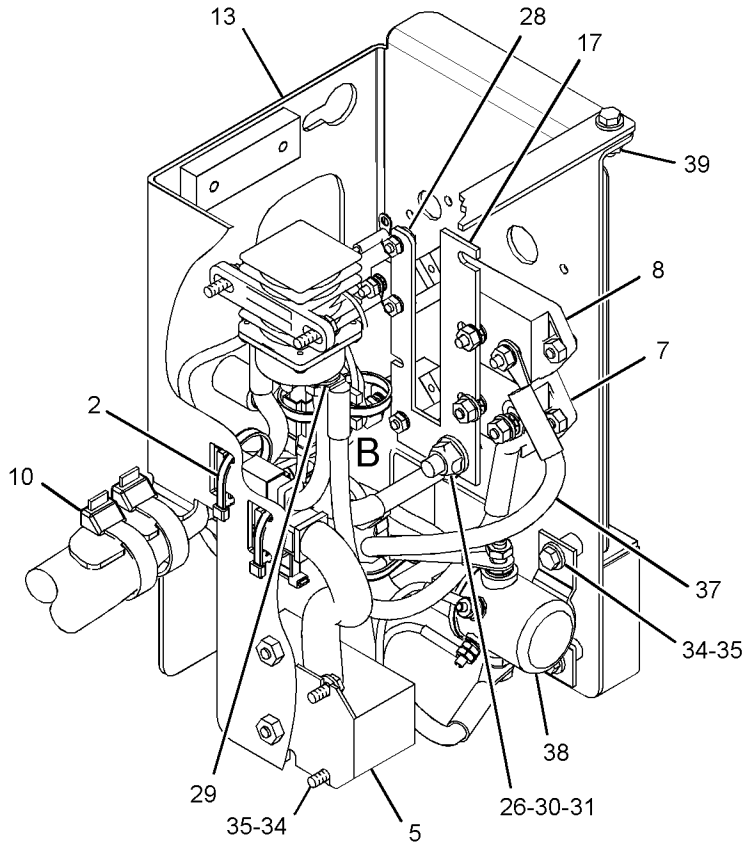

VIEW OF AREA A

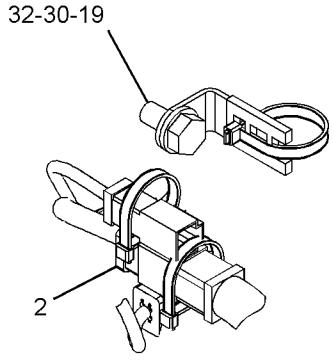

VIEW OF AREA B
(PARTS REMOVED FOR CLARITY)

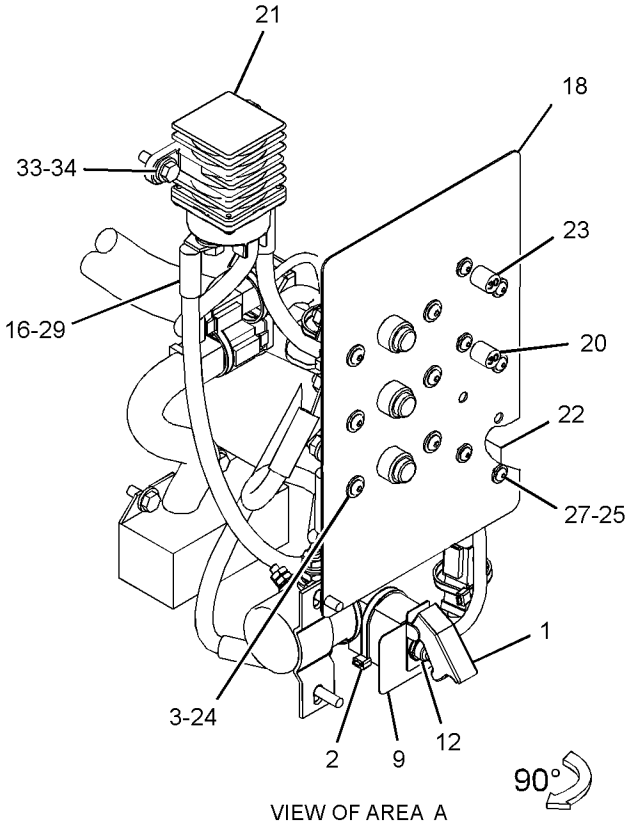

VIEW OF AREA A
(PARTS REMOVED FOR CLARITY)

GRAPHIC #2 **<END>** g03749949

393-3590 PROTECTION GP-WIRING

S/N: KHX1-UP
HEATER SWITCH
PART OF 387-1975, 387-1976 ENGINE AR-COMPLETE

SMCS-7553 **i04895508**

NOTE	REF NO	GRAPHIC REF	PART NUMBER	QTY	PART NAME 1 2 3 4 5 6 (PRODUCT LEVEL)	SEE PAGE
	1	1	**3S-2093**	1	STRAP-CABLE	
	2	1	**160-8124**	1	PLUG AS (2-PIN)	
		1	**102-8802**	1	KIT-RECEPTACLE (2-PIN)	
					(INCLUDES RECEPTACLE AS & WEDGE)	
		1	**8T-8737**	2	PLUG-SEAL	

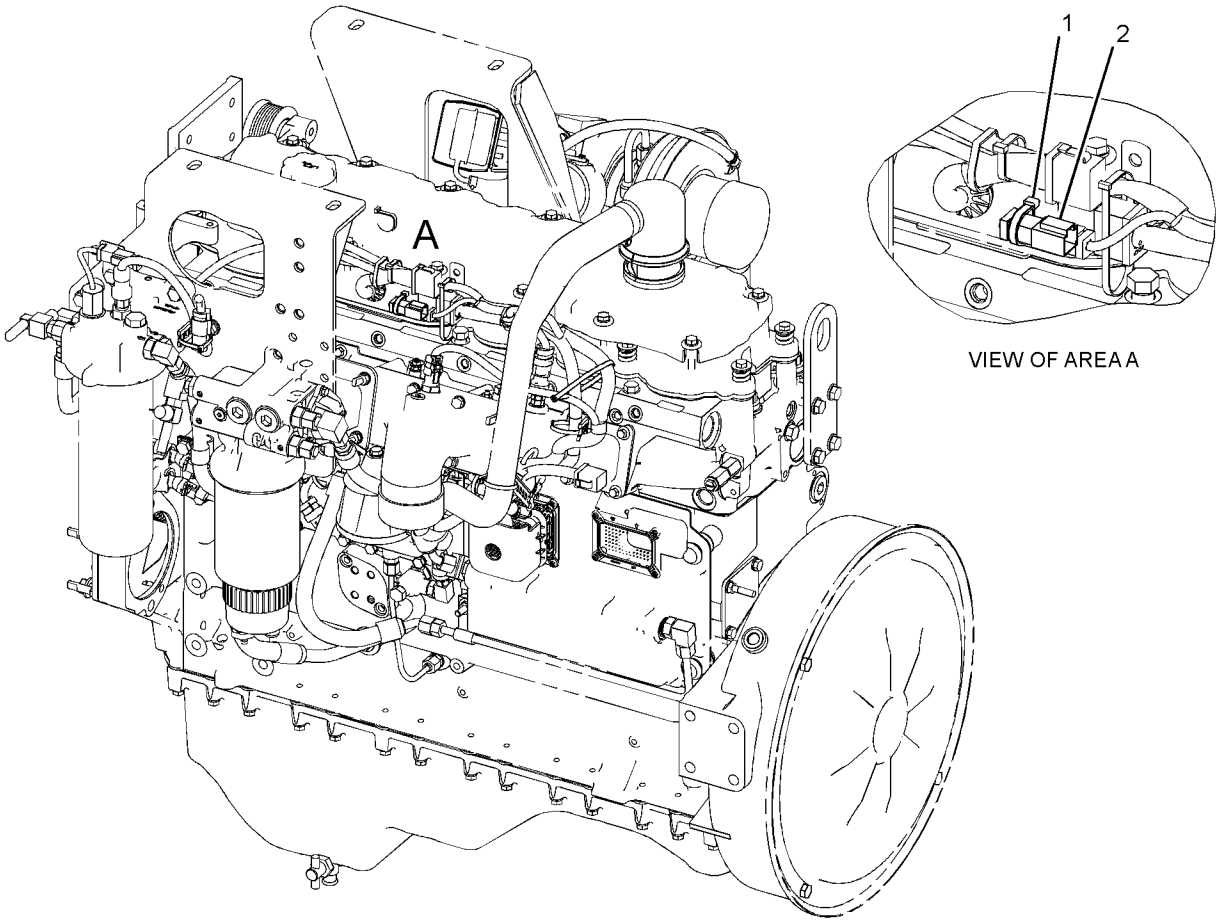

GRAPHIC #1 **<END>** g03060716

336-3545 RADIO GP-COMMUNICATION–PRODUCT LINK 121SR

S/N: JLX1-UP

PART OF 320-9997 INSTALLATION GP-COMMUNICATION

SMCS-733T **i05518337**

NOTE	PART NUMBER	QTY	PART NAME 1 2 3 4 5 6 (PRODUCT LEVEL)	SEE PAGE
	434-1356	1	SOFTWARE GP-COMMUNICATION (PRODUCT LINK 121SR)	

<END>

335-2608 RELAY GP

S/N: JLX1-UP

PART OF 244-6524 WIRING GP-ELECTRIC CLUTCH

SMCS-1422, 4493 **i03874950**

NOTE	REF NO	GRAPHIC REF	PART NUMBER	QTY	PART NAME 1 2 3 4 5 6 (PRODUCT LEVEL)	SEE PAGE
	1	1	**3E-5239**	1	RELAY AS (24-VOLT)	
M	2	1	**8T-4171**	1	BOLT (M6X1X12-MM)	
	3	1	**9X-8256**	1	WASHER (6.6X12X2-MM THK)	

M - METRIC PART

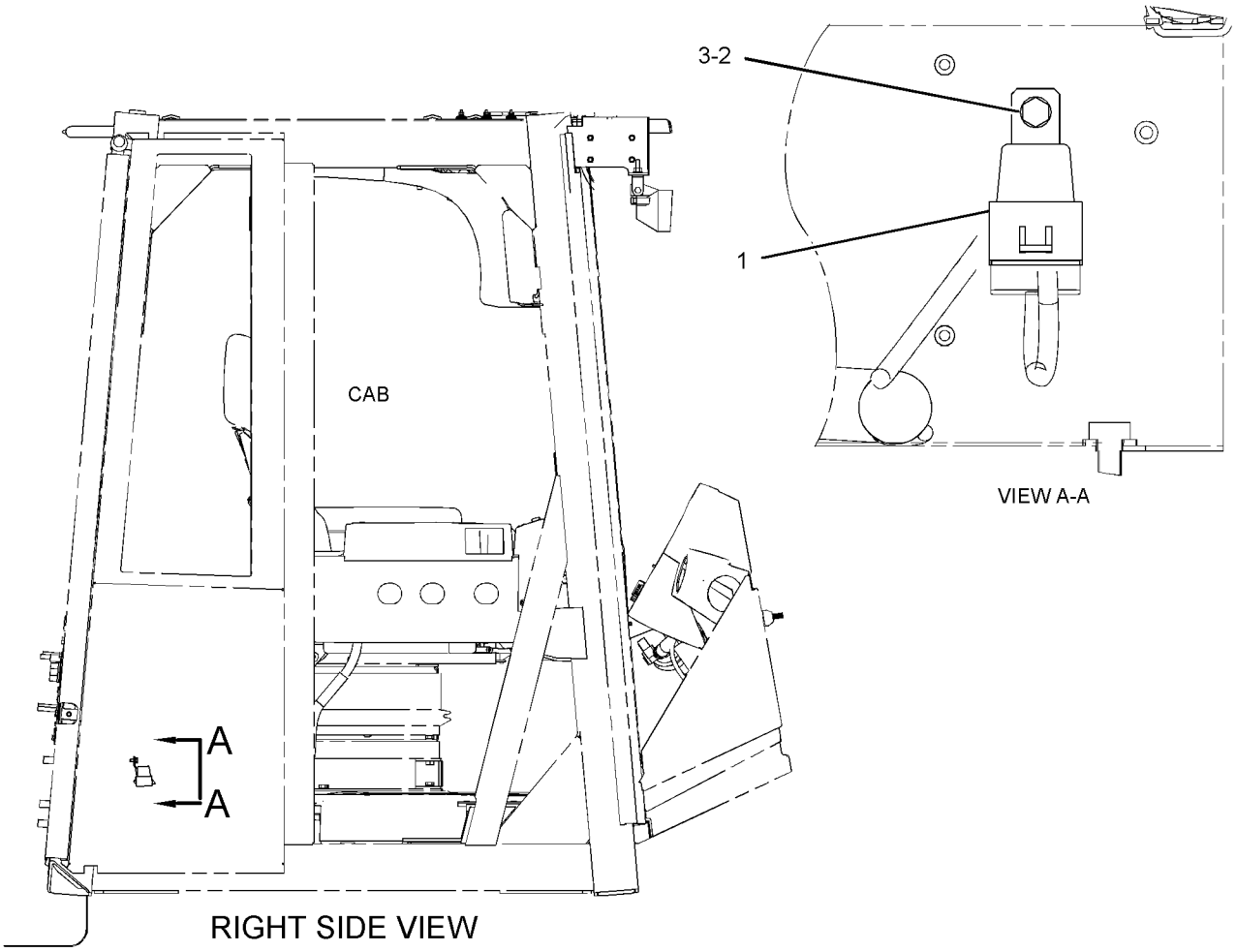

GRAPHIC #1 **<END>** g02107816

180-0156 SENSOR & MTG GP-LIFT POSITION

S/N: JLX1-UP

PART OF 372-2873 ELECTRICAL AR

SMCS-5736 **i04626316**

NOTE	REF NO	GRAPHIC REF	PART NUMBER	QTY	PART NAME 1 2 3 4 5 6 (PRODUCT LEVEL)	SEE PAGE
	1	1	**091-0081**	3	SPACER (10.5X20X10-MM THK)	
	2	2	**166-0599**	1	ROD	
CY	3	1	**266-2337**	1	SENSOR GP-POSITION (ROTARY) (LIFT)	283
	4	1	**179-7000**	1	ARM	
	5	1	**199-4064**	1	BRACKET AS	
M		1	**8T-3490**	1	NUT-WELD (M10X1.5-THD)	
	6	1	**214-3616**	1	PLATE	
	7	1	**214-3617**	1	PLATE	
	8	2	**130-5300**	1	CLIP	
M	9	2	**160-8500**	4	NUT (M8X1.25-THD)	
M	10	1	**5C-7261**	5	NUT (M8X1.25-THD)	
M	11	1	**7X-0818**	5	BOLT (M8X1.25X45-MM)	
	12	2	**7X-7662**	2	ROD END	
	13	1,2	**8T-4121**	4	WASHER-HARD (11X21X2.5-MM THK)	
M	14	1	**8T-4133**	3	NUT (M10X1.5-THD)	
M	15	2	**8T-4137**	1	BOLT (M10X1.5X20-MM)	
	16	1	**8T-4223**	2	WASHER-HARD (13.5X25.5X3-MM THK)	
	17	1	**8T-4224**	10	WASHER-HARD (8.8X16X2-MM THK)	
M	18	1	**8T-4956**	2	BOLT (M12X1.75X35-MM)	
M	19	1	**8T-4971**	2	BOLT (M6X1X30-MM)	
	20	1	**9X-8256**	2	WASHER (6.6X12X2-MM THK)	

C - CHANGE FROM PREVIOUS TYPE
M - METRIC PART
Y - SEPARATE ILLUSTRATION

180-0156 **SENSOR & MTG GP-LIFT POSITION (*contd.*)** **i04626316**

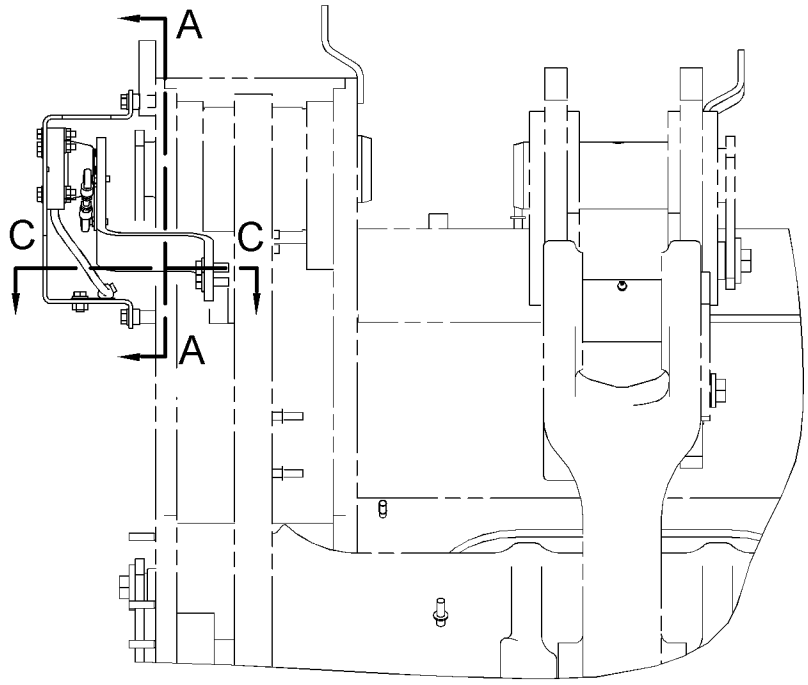

FRONT VIEW

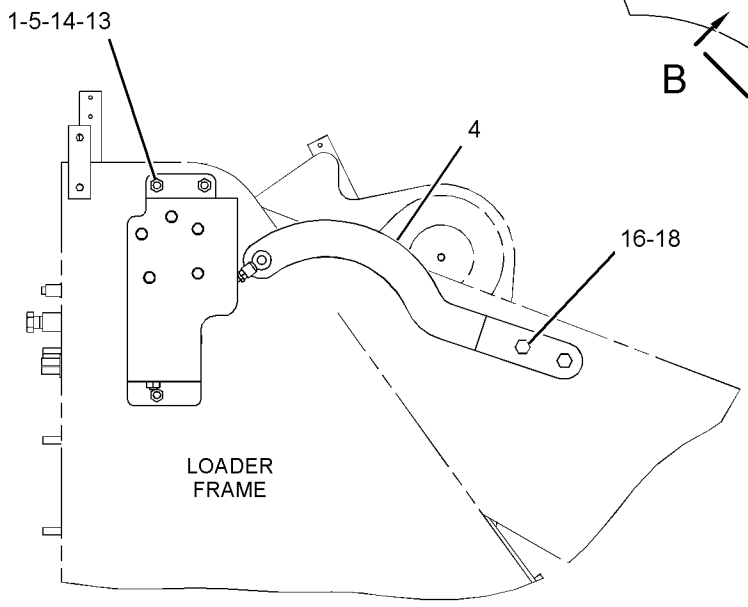

RIGHT SIDE VIEW

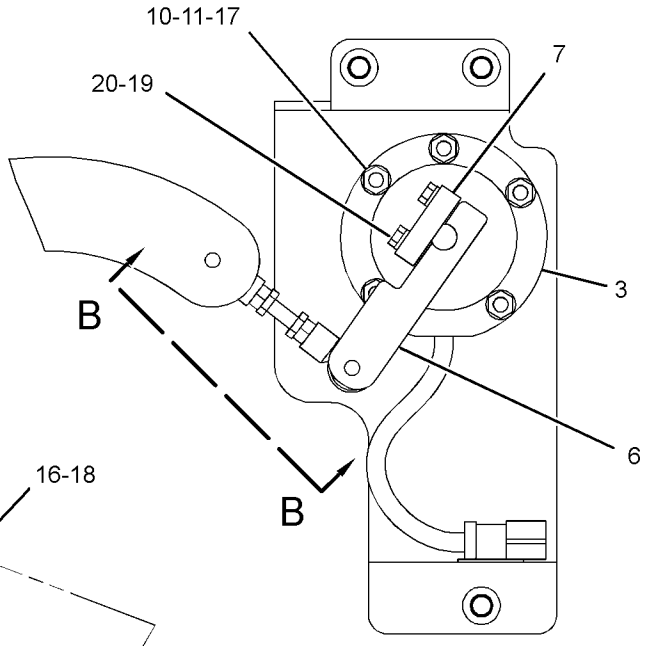

SECTION A-A

REFER TO ALL ILLUSTRATIONS OF THIS GROUP FOR AUXILIARY VIEWS

GRAPHIC #1

g01282816

180-0156 **SENSOR & MTG GP-LIFT POSITION (*contd.*)** **i04626316**

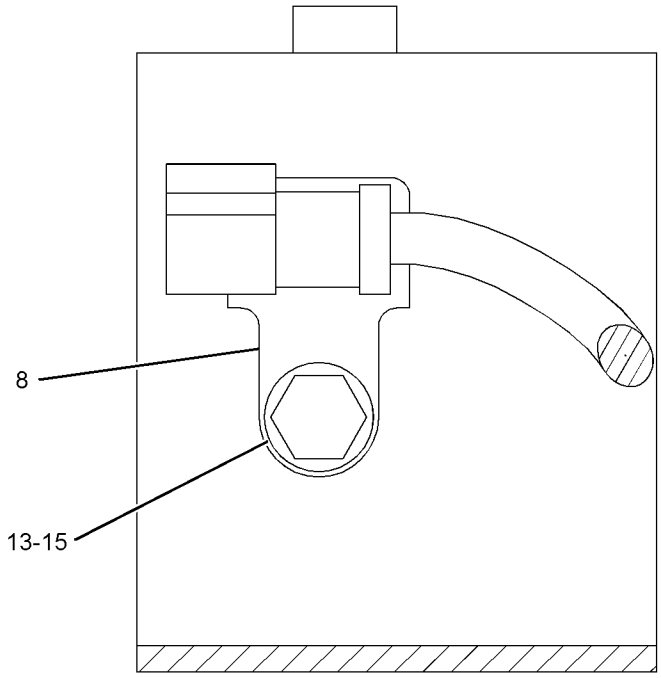

SECTION C-C

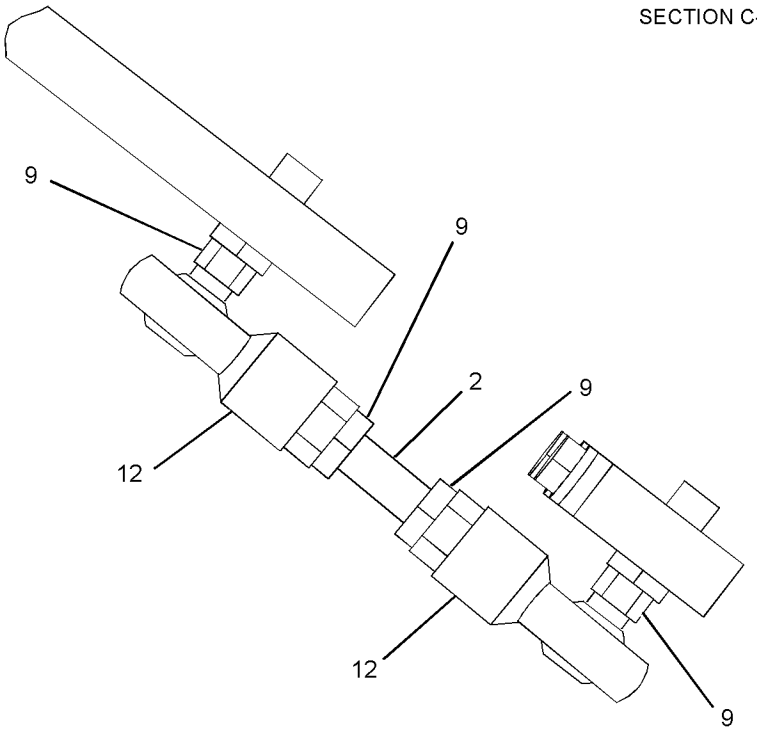

VIEW B-B

GRAPHIC #2 **<END>** g02796044

239-4850 SENSOR & MTG GP-PRESSURE–LIFT CYLINDER OIL

S/N: JLX1-UP

PART OF 375-6399, 375-6401 CONTROL AR-AUTODIG, 328-6130, 392-5606 MONITOR AR-PAYLOAD

SMCS-1439, 1923 **i02449344**

NOTE	REF NO	GRAPHIC REF	PART NUMBER	QTY	PART NAME 1 2 3 4 5 6 (PRODUCT LEVEL)	SEE PAGE
	1	1	**5I-4376**	1	FITTING	
	2	1	**6V-0852**	1	CAP-DUST	
	3	1	**164-6871**	1	ADAPTER AS	
		1	**6V-8397**	1	SEAL-O-RING	
Y	4	1	**221-3416**	1	SENSOR GP-PRESSURE (LIFT CYLINDER OIL)	286
	5	1	*164-5567*	1	COUPLER AS-QUICK DISCONNECT (MALE)	
		1	**3J-1907**	1	SEAL-O-RING	
		1	**6V-3965**	1	FITTING (QUICK DISCONNECT)	
	6	1	**3J-1907**	1	SEAL-O-RING	

Y - SEPARATE ILLUSTRATION

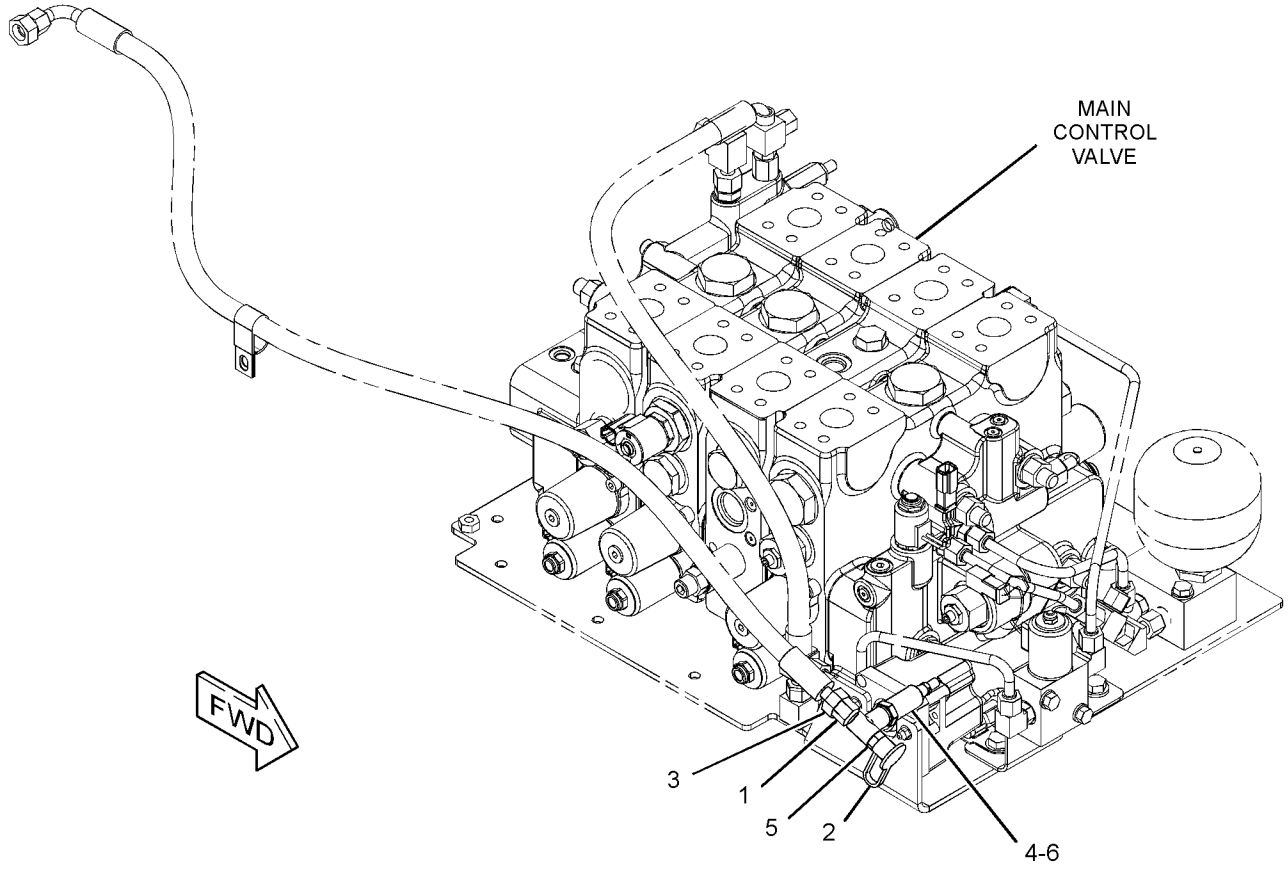

GRAPHIC #1 **<END>** g01198997

303-2243 SENSOR & MTG GP-TILT POSITION

S/N: JLX1-UP

PART OF 372-2873 ELECTRICAL AR

SMCS-5736 **i05225912**

NOTE	REF NO	GRAPHIC REF	PART NUMBER	QTY	PART NAME 1 2 3 4 5 6 (PRODUCT LEVEL)	SEE PAGE
	1	1	**123-3202**	1	STRAP-CABLE	
	2	1	**3J-1877**	1	SPACER (1.46-IN LG)	
Y	3	1	**266-2337**	1	SENSOR GP-POSITION (ROTARY)	283
	4	1	**249-4134**	1	PLATE	
	5	1	**329-5087**	1	COVER	
	6	1	**269-7250**	1	PLATE	
	7	1	**275-0529**	1	BRACKET AS	
M		1	**8T-3612**	5	NUT-WELD (M8X1.25-THD)	
M		1	**8T-3490**	5	NUT-WELD (M10X1.5-THD)	
C	8	1	**353-5192**	1	BRACKET	
	9	1	**4D-7794**	1	CLIP	
	10	1	**7X-7729**	4	WASHER (11X25X3-MM THK)	
CM	11	1	**136-4184**	5	BOLT-SOCKET HEAD (M8X1.25X40-MM)	
M	12	1	**101-7396**	1	BOLT-SOCKET HEAD (M10X1.5X50-MM)	
	13	1	**8T-4121**	5	WASHER-HARD (11X21X2.5-MM THK)	
M	14	1	**8T-4136**	4	BOLT (M10X1.5X25-MM)	
M	15	1	**8T-4195**	5	BOLT (M10X1.5X30-MM)	
	16	1	**8T-4224**	5	WASHER-HARD (8.8X16X2-MM THK)	
M	17	1	**8T-4971**	2	BOLT (M6X1X30-MM)	
	18	1	**9X-8256**	2	WASHER (6.6X12X2-MM THK)	

C - CHANGE FROM PREVIOUS TYPE
M - METRIC PART
Y - SEPARATE ILLUSTRATION

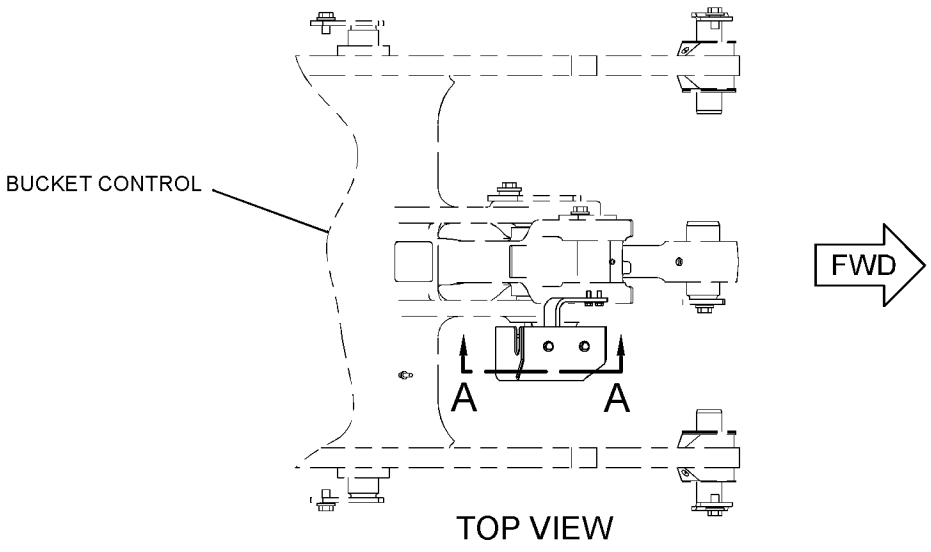

TOP VIEW

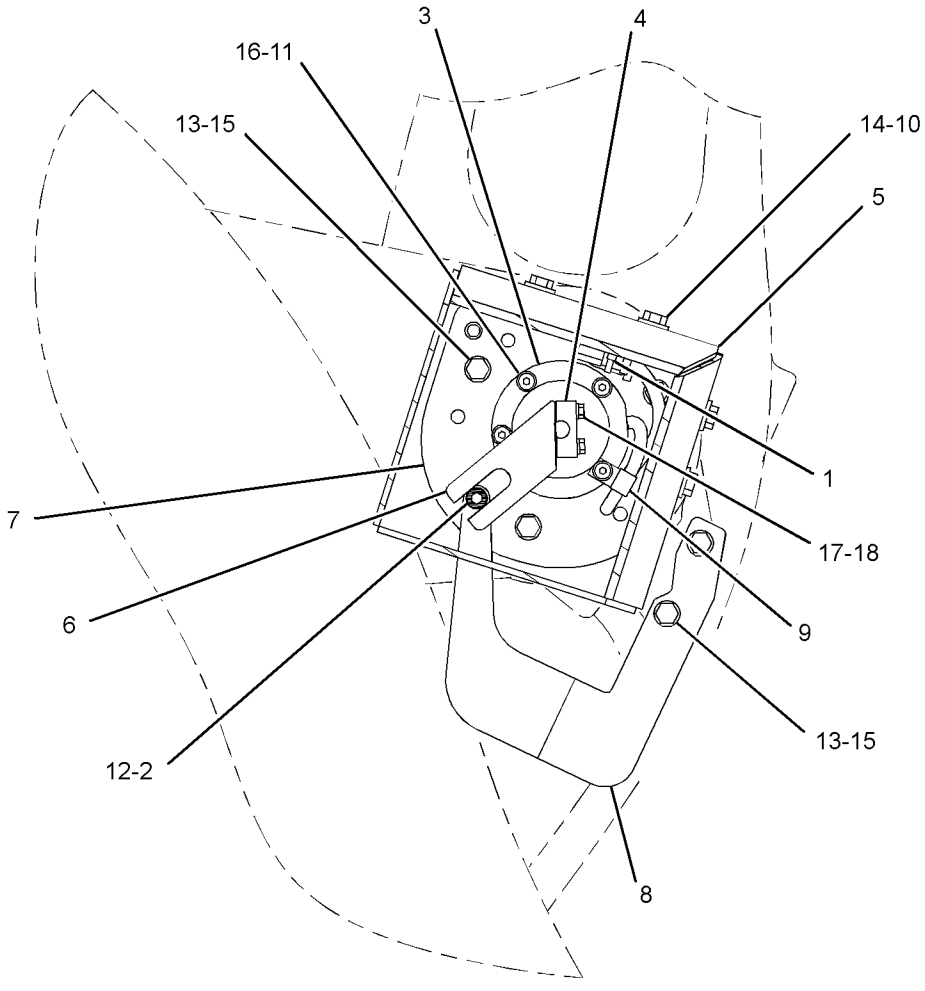

SECTION A-A

GRAPHIC #1 **<END>** g02637857

330-6039 SENSOR GP-ENGINE

S/N: KHX1-UP

PART OF 338-9076 ENGINE AR-COMPLETE, 397-1168 ENGINE AR-CORE

TYPE 1

SMCS-1718, 1906, 1907, 1912, 1917, 1923, 1924, 1928, 1929, 7400

i04041855

NOTE	REF NO	GRAPHIC REF	PART NUMBER	QTY	PART NAME 1 2 3 4 5 6 (PRODUCT LEVEL)	SEE PAGE
	1	1	**3E-2332**	1	ELBOW	
	2	1	**9X-0262**	1	ADAPTER	
	3	1	*171-6718*	1	TEE AS	
	3A	1	**3K-0360**	1	SEAL-O-RING	
			105-7704	1	TEE	
Y	4	1	*234-5013*	1	SENSOR GP-TEMPERATURE (AIR INLET)	296
Y	5	1	*234-5012*	1	SENSOR GP-TEMPERATURE (COOLANT)	295
Y	6	1	*303-3357*	1	SENSOR GP-PRESSURE (ATMOSPHERIC)	290
Y	7	1	*276-9067*	1	SENSOR GP-PRESSURE (ENGINE OIL)	289
Y	8	1	*266-8650*	1	SENSOR GP-PRESSURE (BOOST)	287
Y	9	1	*267-1402*	1	SENSOR GP-PRESSURE (RAIL)	288
Y	10	1	*236-6221*	1	SENSOR GP-SPEED (ENGINE TIMING)	292
	11	1	*244-3712*	1	PLUG AS	
	11A	1	**214-7568**	1	SEAL-O-RING	
			9S-4191	1	PLUG	
	12	1	*169-5861*	1	PLUG AS	
	12A	1	**5P-7814**	1	SEAL-O-RING	
			3K-8460	1	PLUG	
	13	1	*183-3406*	1	PLUG AS	
	13A	1	**214-7568**	1	SEAL-O-RING	
			9S-4191	1	PLUG	
	14	1	*183-7263*	1	PLUG AS	
	14A	1	**3J-7354**	1	SEAL-O-RING	
			9S-8002	1	PLUG	
	15	1	**3E-4352**	1	WASHER-HARD (8.8X20.5X2.5-MM THK)	
M	16	1	**6V-3940**	1	BOLT (M8X1.25X25-MM)	
	17	1	**6V-5048**	1	SEAL-O-RING	
	18	1	**214-7568**	1	SEAL-O-RING	

M - METRIC PART
Y - SEPARATE ILLUSTRATION

330-6039 **SENSOR GP-ENGINE (*contd.*)** **i04041855**

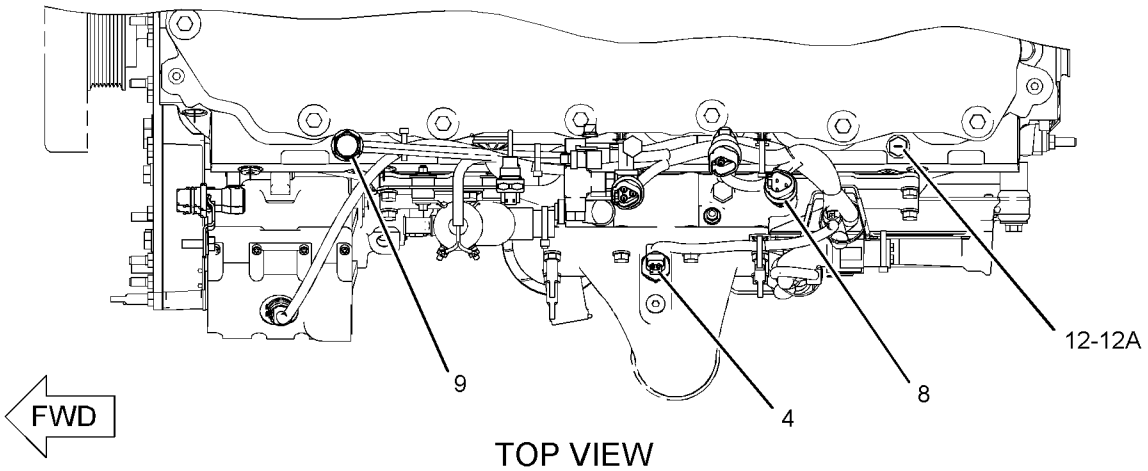

TOP VIEW

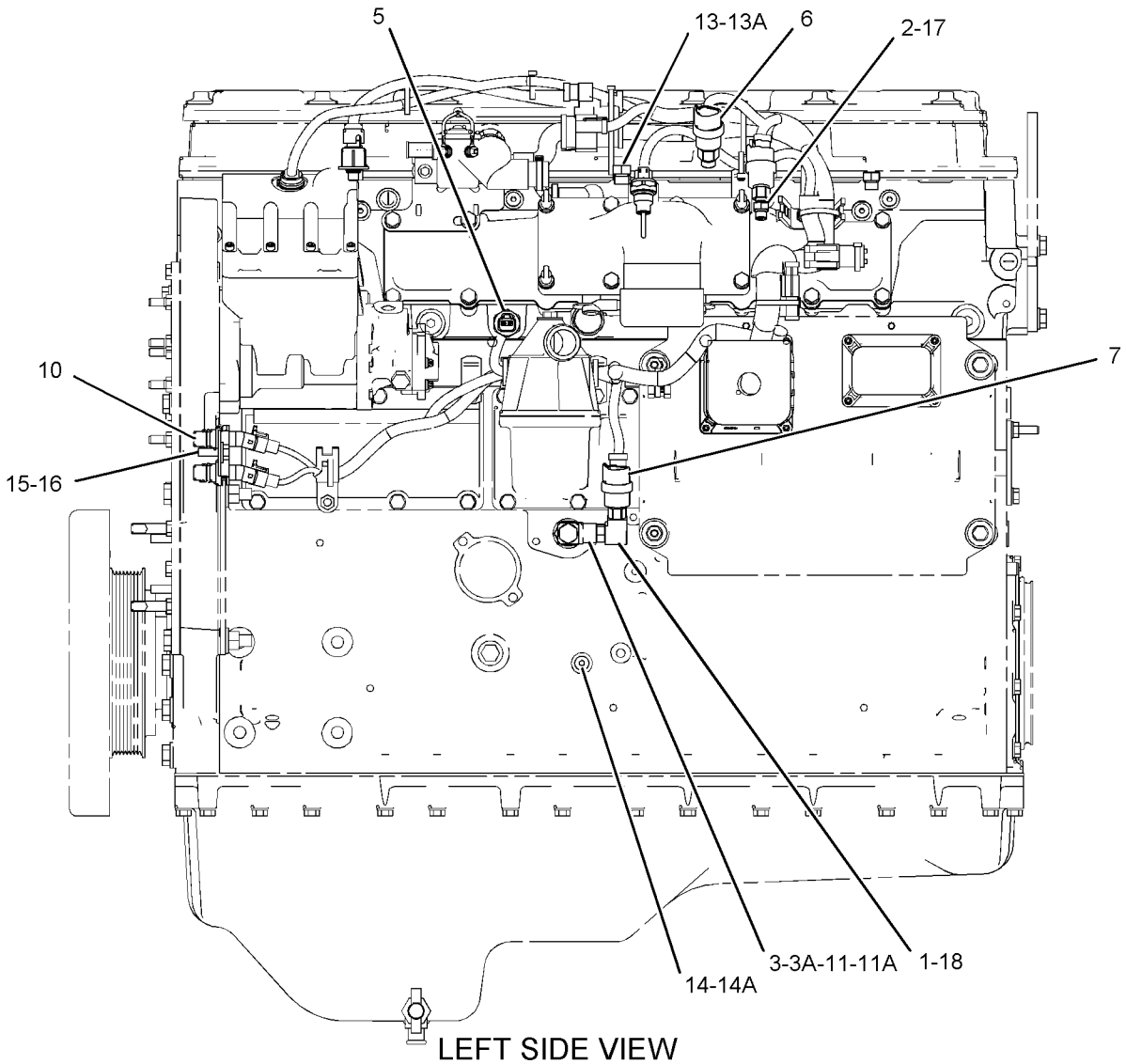

LEFT SIDE VIEW

GRAPHIC #1 **<END>** g01118746

330-6039 SENSOR GP-ENGINE

S/N: KHX1-UP
PART OF 397-1168 ENGINE AR-CORE
TYPE 2

SMCS-1718, 1906, 1907, 1912, 1917, 1923, 1924, 1928, 1929, 7400

i05858920

NOTE	REF NO	GRAPHIC REF	PART NUMBER	QTY	PART NAME 1 2 3 4 5 6 (PRODUCT LEVEL)	SEE PAGE
Y	1	1	*234-5012*	1	SENSOR GP-TEMPERATURE (COOLANT)	295
Y	2	1	*234-5013*	1	SENSOR GP-TEMPERATURE (AIR INLET)	296
Y	3	1	*236-6221*	1	SENSOR GP-SPEED (ENGINE TIMING)	292
Y	4	1	*267-1402*	1	SENSOR GP-PRESSURE (RAIL)	288
C	5	1	**274-6719**	1	SENSOR GP-PRESSURE	
C	6	1	**276-6793**	1	SENSOR GP-PRESSURE	
Y	7	1	*303-3357*	1	SENSOR GP-PRESSURE (ATMOSPHERIC)	290
C	8	1	*357-4585*	1	ELBOW AS	
		1	**214-7566**	1	SEAL-O-RING	
		1	**3E-2332**	1	ELBOW	
		1	**214-7568**	1	SEAL-O-RING	
C	9	1	*371-7186*	1	PLUG AS	
		1	**214-7567**	1	SEAL-O-RING	
		1	**360-3678**	1	PLUG-O-RING	
C	10	1	*389-3708*	1	PLUG AS	
		1	**214-7568**	1	SEAL-O-RING	
		1	**360-3679**	1	PLUG-CONNECTOR	
C	11	1	*396-0393*	1	PLUG AS	
		1	**214-7566**	1	SEAL-O-RING	
		1	**360-3677**	1	PLUG	
C	12	1	*398-5597*	1	PLUG AS	
		1	**214-7568**	1	SEAL-O-RING	
		1	**360-3692**	1	PLUG	
C	13	1	*330-9765*	1	TEE AS	
		1	**105-7704**	1	TEE	
		1	**238-5080**	1	SEAL-O-RING	
C	14	1	*353-5112*	1	ADAPTER AS	
		1	**9X-0262**	1	ADAPTER	
		1	**214-7566**	2	SEAL-O-RING	
	15	1	**3E-4352**	1	WASHER-HARD (8.8X20.5X2.5-MM THK)	
M	16	1	**6V-3940**	1	BOLT (M8X1.25X25-MM)	

C - CHANGE FROM PREVIOUS TYPE
M - METRIC PART
Y - SEPARATE ILLUSTRATION

330-6039 **SENSOR GP-ENGINE (*contd.*)** **i05858920**

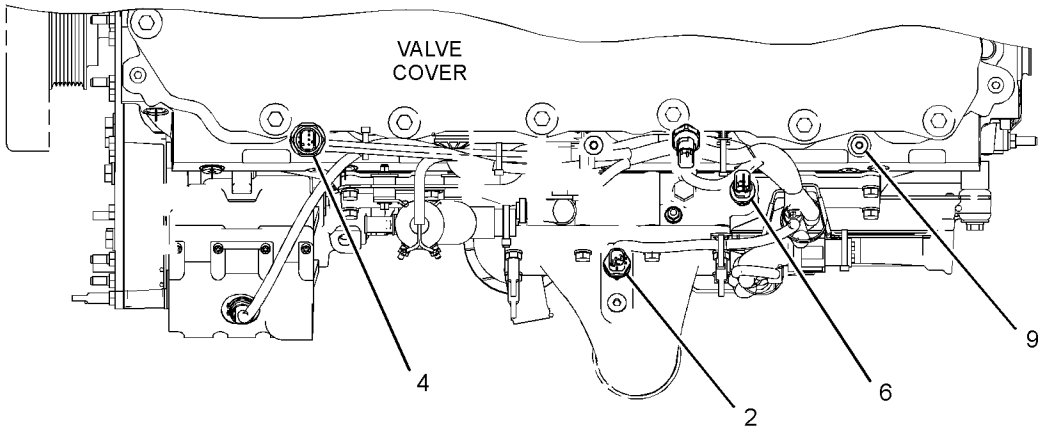

TOP VIEW OF ENGINE

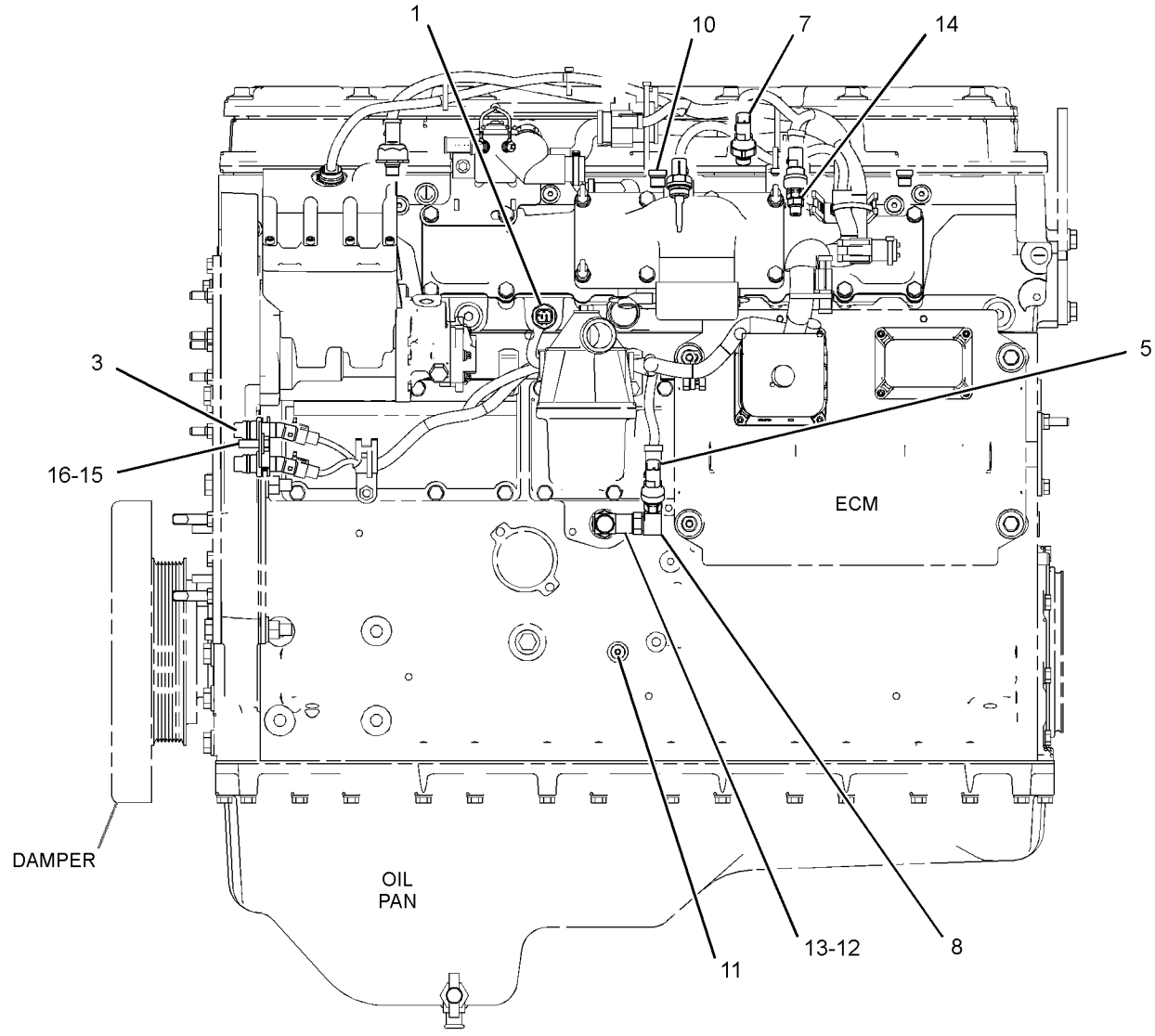

LEFT SIDE VIEW OF ENGINE

GRAPHIC #1 **<END>** g03566029

266-1466 SENSOR GP-POSITION—ROTARY

S/N: JLX1-UP

PART OF 201-8616 PEDAL GP-GOVERNOR

SMCS-4269, 5702, 5736, 5737, 7494 **i03080720**

NOTE	REF NO	GRAPHIC REF	PART NUMBER	QTY	PART NAME 1 2 3 4 5 6 (PRODUCT LEVEL)	SEE PAGE
	1	1	**9X-3401**	3	PIN-CONNECTOR (16-GA TO 18-GA)	
					—OR—	
		1	**126-1767**	3	PIN-CONNECTOR (14-GA TO 16-GA)	
	2	1	**102-8803**	1	KIT-RECEPTACLE (3-PIN)	
					(INCLUDES RECEPTACLE AS & WEDGE)	

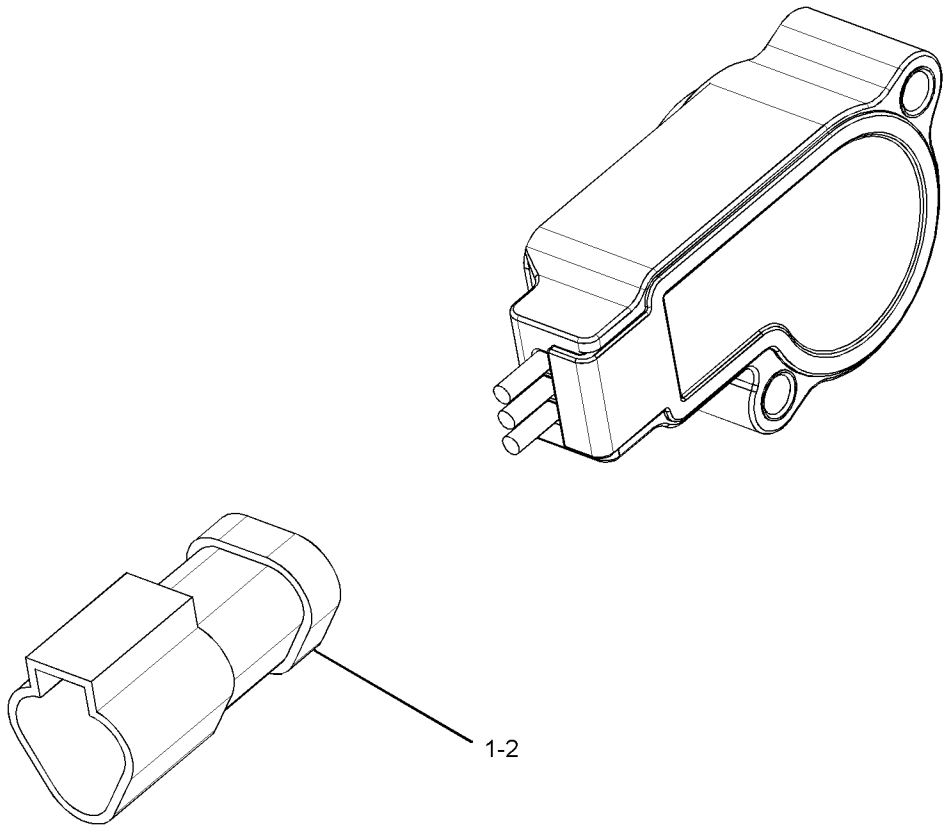

GRAPHIC #1 **<END>** g01583458

266-2337 SENSOR GP-POSITION–ROTARY

S/N: JLX1-UP

PART OF 180-0156 SENSOR & MTG GP-LIFT POSITION, 303-2243 SENSOR & MTG GP-TILT POSITION

SMCS-4269, 5702, 5736, 5737, 7494

i03753238

NOTE	REF NO	GRAPHIC REF	PART NUMBER	QTY	PART NAME 1 2 3 4 5 6 (PRODUCT LEVEL)	SEE PAGE
	1	1	**102-8803**	1	KIT-RECEPTACLE (3-PIN)	
					(INCLUDES RECEPTACLE AS & WEDGE)	
	2	1	**9X-3401**	3	PIN-CONNECTOR (16-GA TO 18-GA)	
					–OR–	
		1	**126-1767**	3	PIN-CONNECTOR (14-GA TO 16-GA)	
E	3	1	**9X-1813**		SLEEVE (17-CM)	

E - ORDER BY THE CENTIMETER

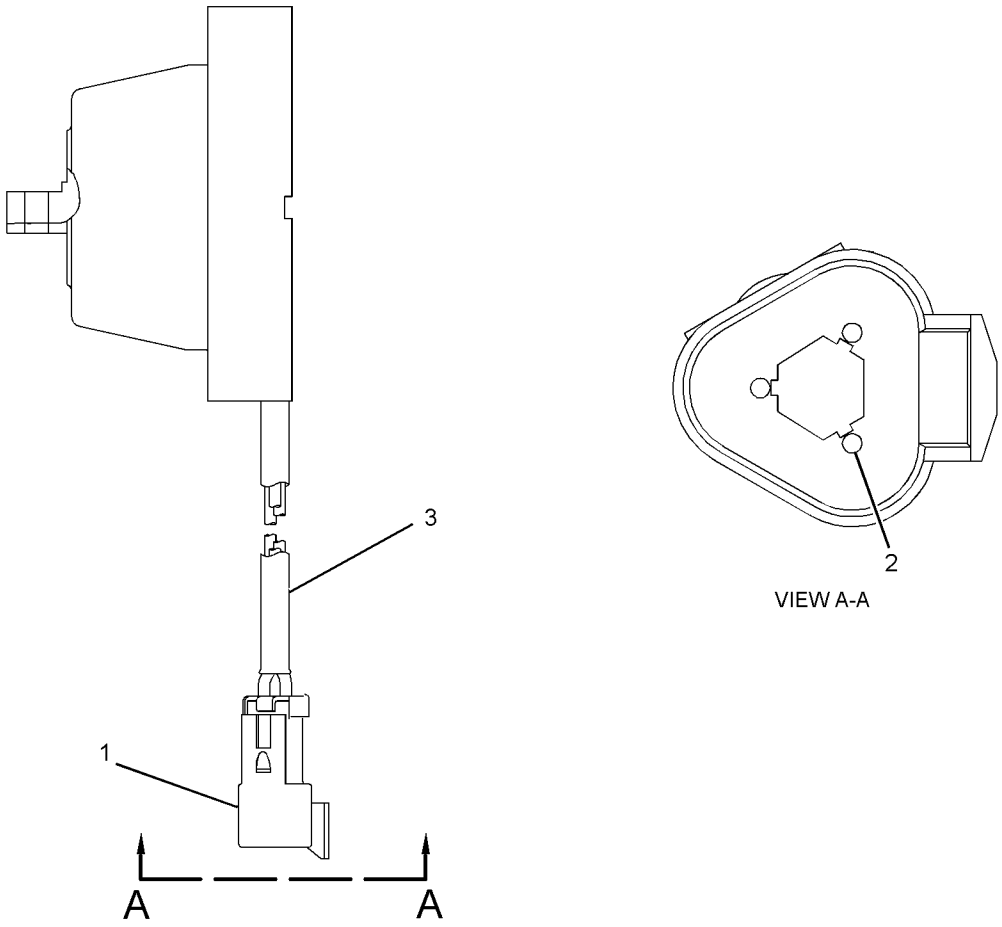

GRAPHIC #1

<END>

g01954240

194-6722 SENSOR GP-PRESSURE

S/N: JLX1-UP

OPTIONAL FIELD REPLACEMENT ORDER 274-6717 SENSOR-PRESSURE

PART OF 372-4872 WIRING GP-ENGINE

SMCS-1408, 1925, 7494 **i05962657**

NOTE	REF NO	GRAPHIC REF	PART NUMBER	QTY	PART NAME 1 2 3 4 5 6 (PRODUCT LEVEL)	SEE PAGE
E	1	1	**9X-1813**		SLEEVE (34-CM)	
	2	1	**155-2260**	1	KIT-CONNECTING PLUG (3-PIN)	
					(INCLUDES PLUG AS, WEDGE & INTERFACE SEAL)	
	3	1	**194-5226**	3	WIRE AS (16-GA)	
					—OR—	
		1	**194-5227**	3	WIRE AS (14-GA)	
E - ORDER BY THE CENTIMETER						

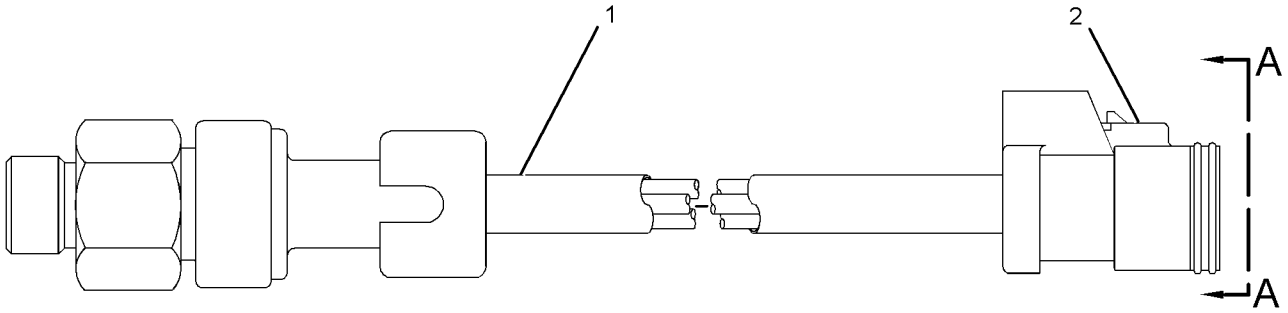

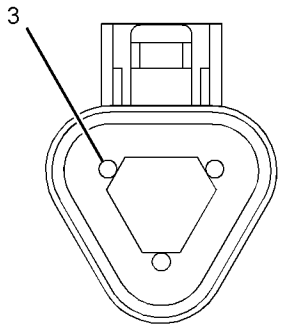

VIEW A-A

GRAPHIC #1 **<END>** g01991395

194-6725 SENSOR GP-PRESSURE

S/N: KHX1-UP

PART OF 237-9823 FILTER & LINES GP-FUEL

SMCS-1408, 1925, 7494 **i05951710**

NOTE	REF NO	GRAPHIC REF	PART NUMBER	QTY	PART NAME 1 2 3 4 5 6 (PRODUCT LEVEL)	SEE PAGE
E	1	1	**9X-1813**		SLEEVE (34-CM)	
	2	1	**155-2260**	1	KIT-CONNECTING PLUG (3-PIN)	
					(INCLUDES PLUG AS, WEDGE & INTERFACE SEAL)	
	3	1	**194-5226**	3	WIRE AS (16-GA)	
					–OR–	
		1	**194-5227**	3	WIRE AS (14-GA)	

E - ORDER BY THE CENTIMETER

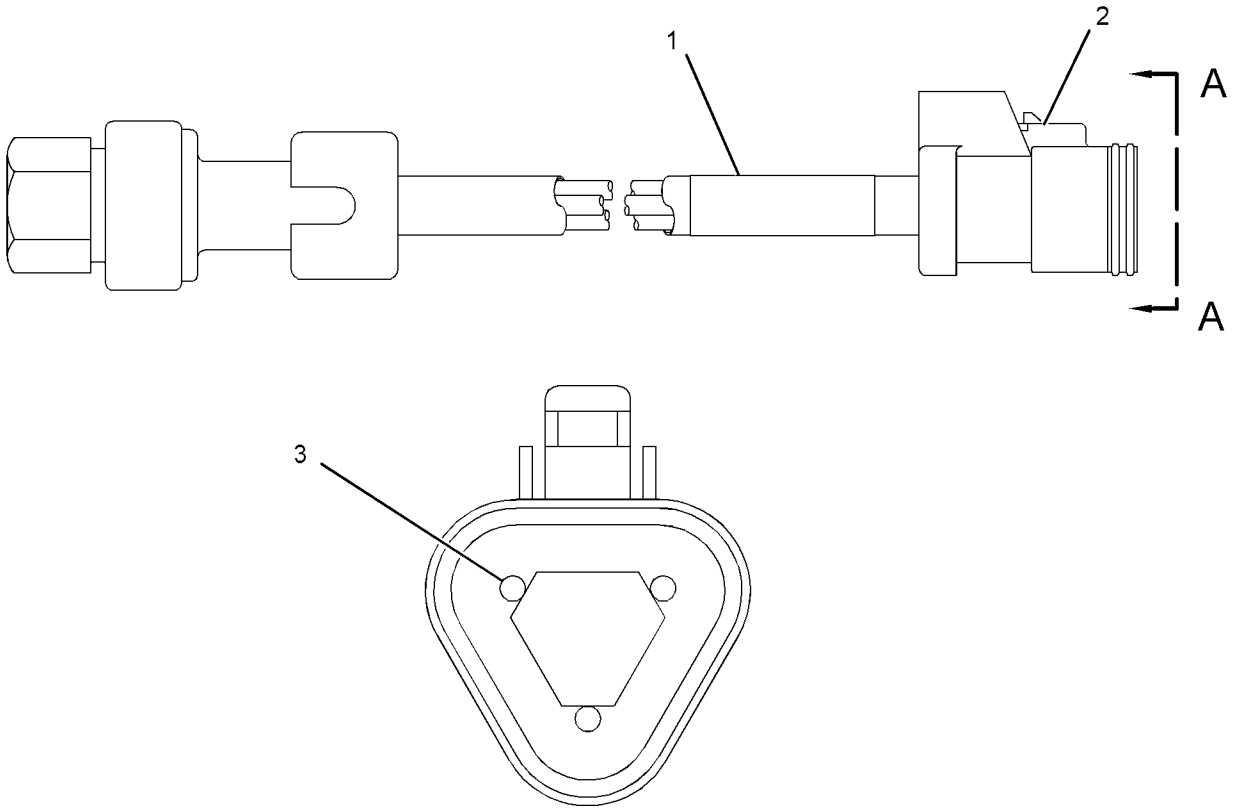

VIEW A-A

GRAPHIC #1 **<END>** g01662003

221-3416 SENSOR GP-PRESSURE

S/N: JLX1-UP

PART OF 239-4850 SENSOR & MTG GP-PRESSURE

SMCS-1408, 1925, 7494 **i05820723**

NOTE	REF NO	GRAPHIC REF	PART NUMBER	QTY	PART NAME 1 2 3 4 5 6 (PRODUCT LEVEL)	SEE PAGE
	1	1	**155-2260**	1	KIT-CONNECTING PLUG (3-PIN)	
					(INCLUDES PLUG AS AND WEDGE)	
	2	1	**180-9340**	3	SOCKET-CONNECTOR (14-GA TO 18-GA)	
	3	1	**155-2276**	1	WEDGE-PLUG LOCK (3-PIN)	

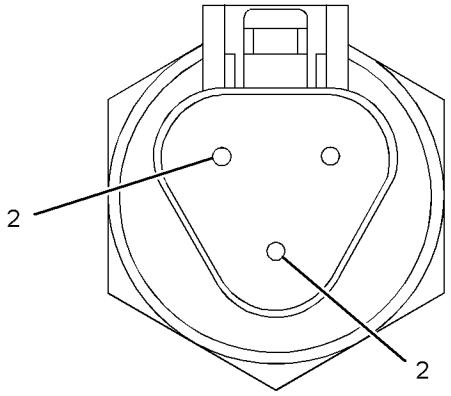

VIEW A-A

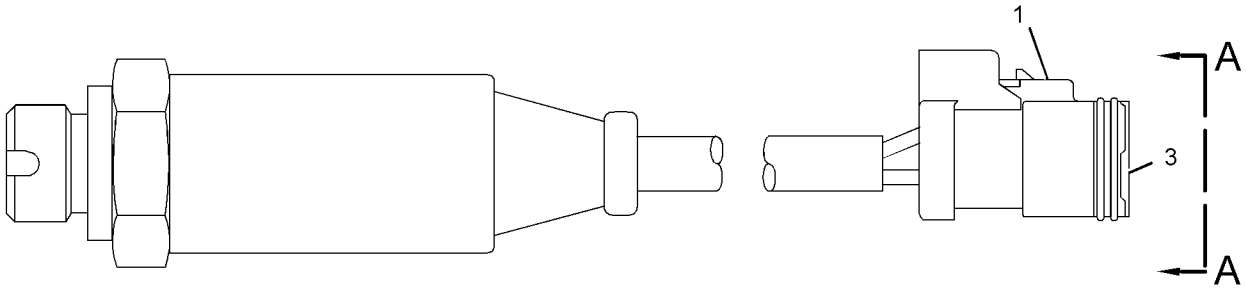

GRAPHIC #1 **<END>** g01175734

266-8650 SENSOR GP-PRESSURE

S/N: KHX1-UP
AMPSEAL CONNECTOR
PART OF 330-6039 SENSOR GP-ENGINE

SMCS-1408, 1925, 7494

i03784310

NOTE	REF NO	GRAPHIC REF	PART NUMBER	QTY	PART NAME 1 2 3 4 5 6 (PRODUCT LEVEL)	SEE PAGE
	1	1	**276-6793**	1	SENSOR GP-PRESSURE	
	2	1	**214-7566**	1	SEAL-O-RING	

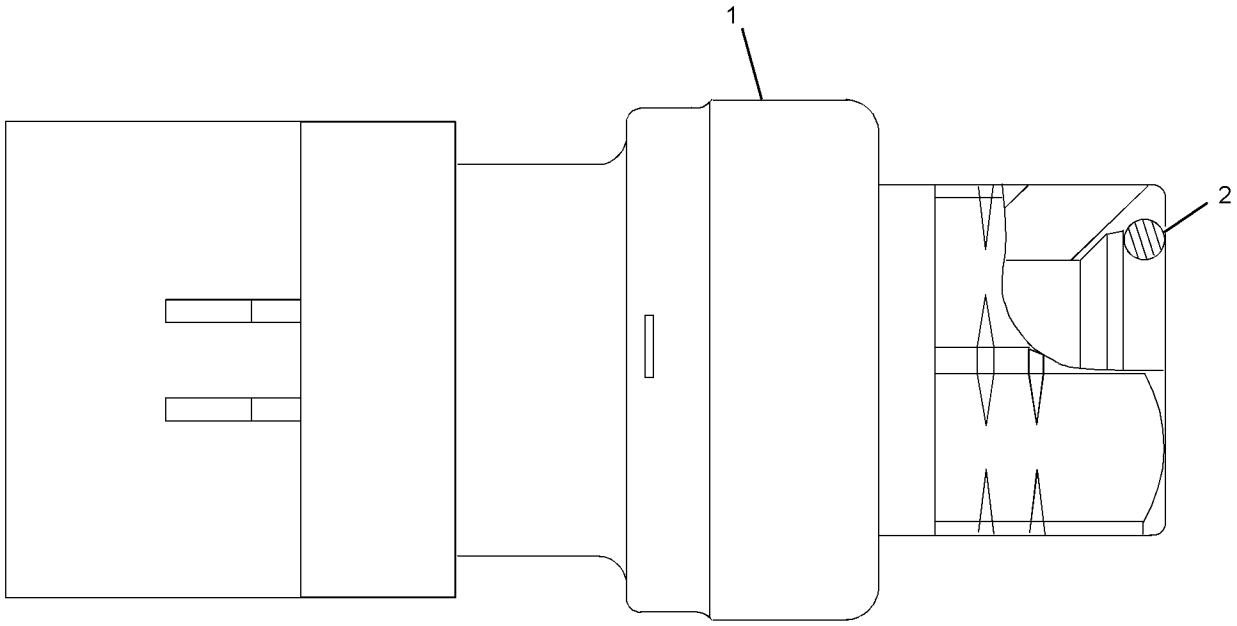

GRAPHIC #1

<END>

g01164254

267-1402 SENSOR GP-PRESSURE

S/N: KHX1-UP
AMPSEAL CONNECTOR
PART OF 330-6039 SENSOR GP-ENGINE

SMCS-1408, 1925, 7494 **i03565217**

NOTE	REF NO	GRAPHIC REF	PART NUMBER	QTY	PART NAME 1 2 3 4 5 6 (PRODUCT LEVEL)	SEE PAGE
	1	1	**214-7567**	1	SEAL-O-RING	
	2	1	**248-2169**	1	SENSOR GP-PRESSURE	

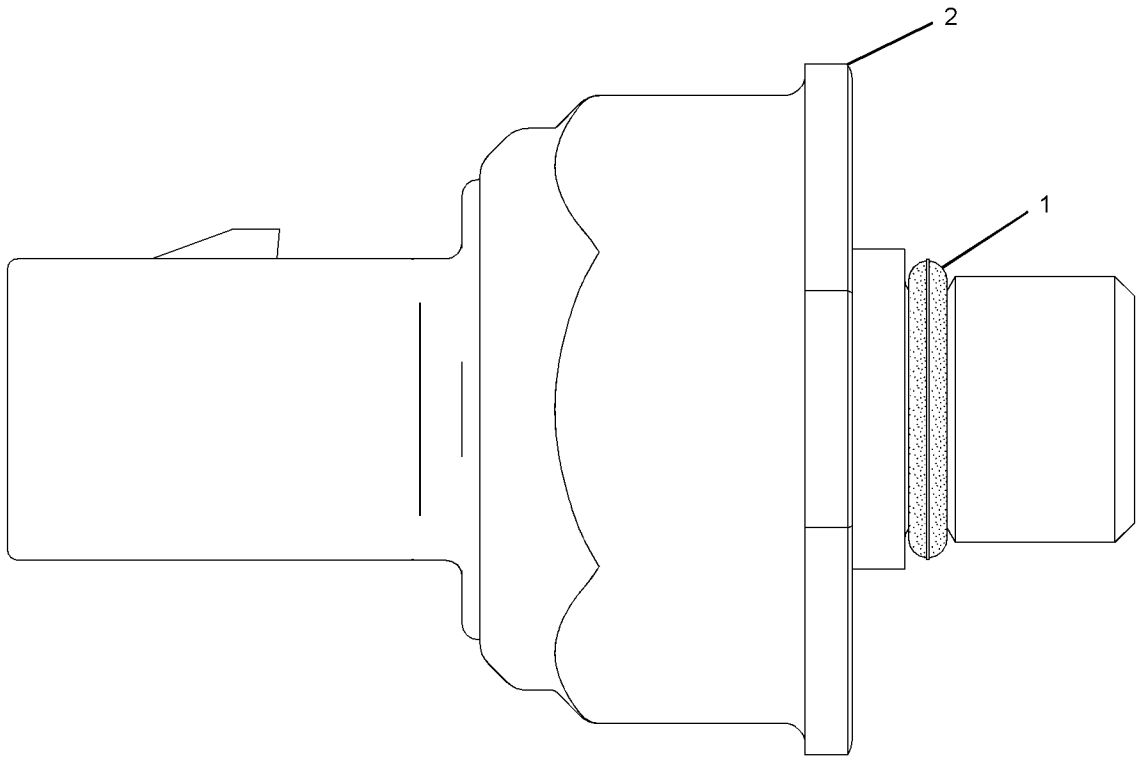

GRAPHIC #1 **<END>** g01164283

276-9067 SENSOR GP-PRESSURE

S/N: KHX1-UP
AMPSEAL CONNECTOR
PART OF 330-6039 SENSOR GP-ENGINE

SMCS-1408, 1925, 7494 **i03920337**

NOTE	REF NO	GRAPHIC REF	PART NUMBER	QTY	PART NAME 1 2 3 4 5 6 (PRODUCT LEVEL)	SEE PAGE
	1	1	**274-6719**	1	SENSOR GP-PRESSURE	
		1	**3J-7354**	1	SEAL-O-RING	
		1	**237-0227**	1	PLUG AS-CONNECTOR (3-PIN)	
	2	1	**214-7566**	1	SEAL-O-RING	

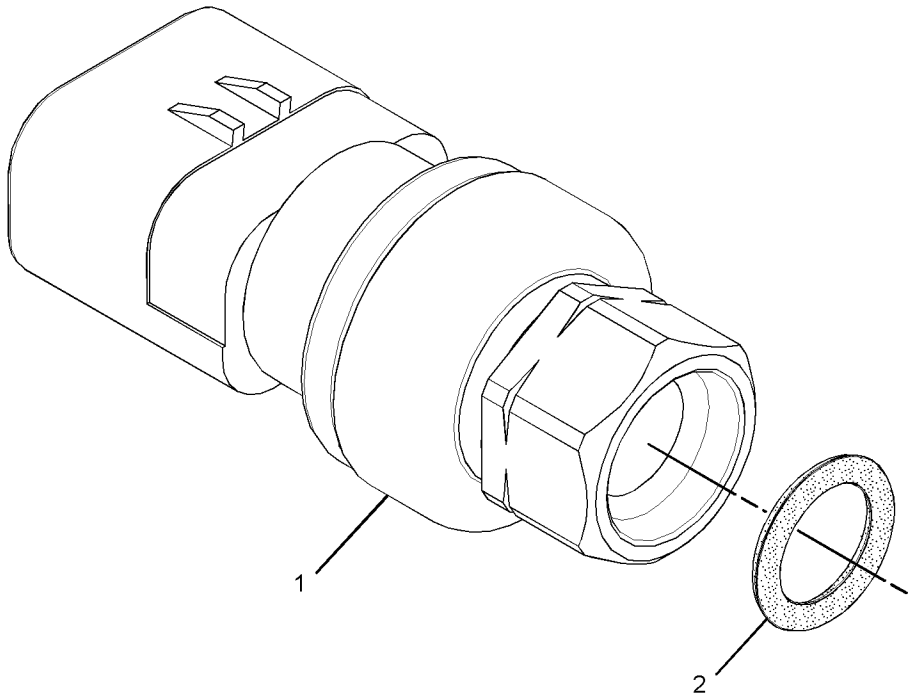

GRAPHIC #1 **<END>** g01994176

303-3357 SENSOR GP-PRESSURE

S/N: KHX1-UP

PART OF 330-6039 SENSOR GP-ENGINE

SMCS-1408, 1925, 7494 **i05020732**

NOTE	REF NO	GRAPHIC REF	PART NUMBER	QTY	PART NAME 1 2 3 4 5 6 (PRODUCT LEVEL)	SEE PAGE
	1	1	**296-8060**	1	SENSOR GP-PRESSURE	
	2	1	**214-7568**	1	SEAL-O-RING	

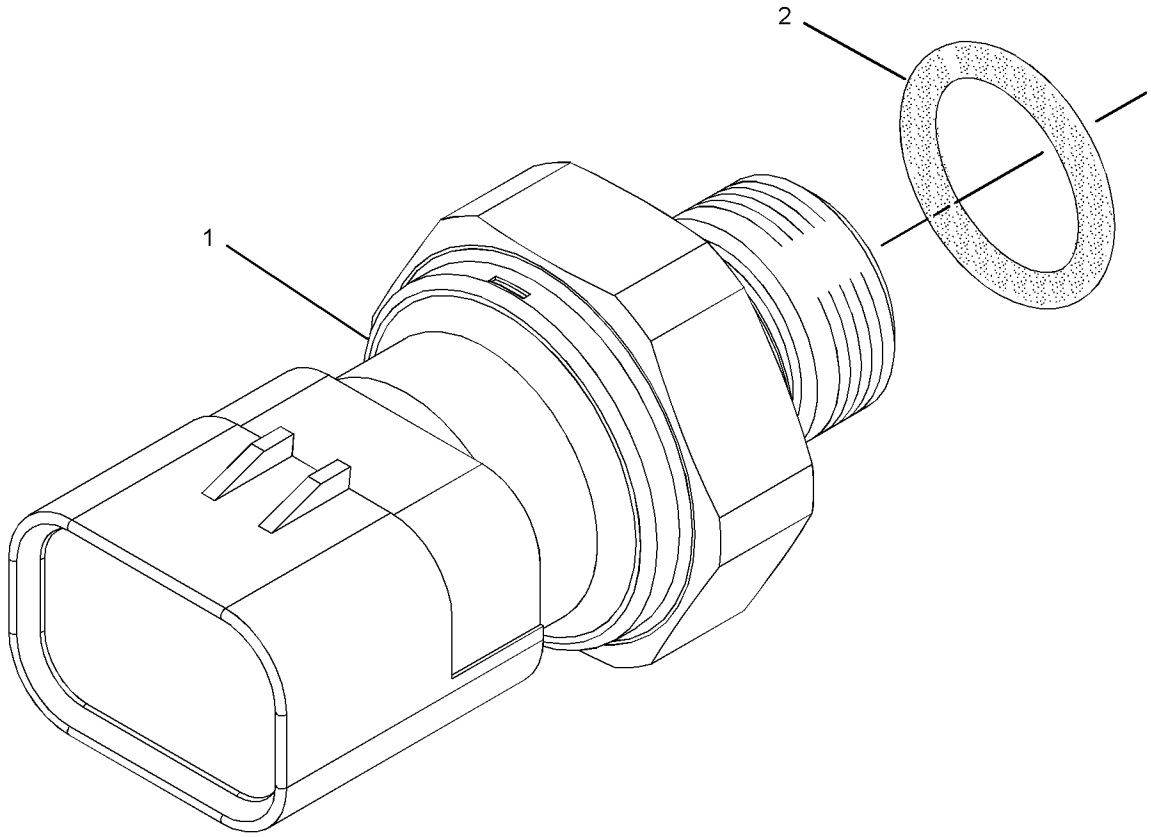

GRAPHIC #1 **<END>** g01331369

193-2550 SENSOR GP-SPEED—MAGNETIC, HIGH OUTPUT

S/N: KYM1-UP; KYN1-UP; W2W1-UP; W2X1-UP; BYY1-UP; BYZ1-UP
FIELD REPLACEMENT ORDER 318-1178—PAGE: 293
PART OF 249-8173, 249-8175 GEAR GP-OUTPUT TRANSFER

SMCS-1907, 1912, 3175, 4803, 7493 **i04747951**

NOTE	REF NO	GRAPHIC REF	PART NUMBER	QTY	PART NAME 1 2 3 4 5 6 (PRODUCT LEVEL)	SEE PAGE
	1	1	**171-5349**	1	STRAP-MARKER	
	2	1	**102-8802**	1	KIT-RECEPTACLE (2-PIN)	
					(INCLUDES RECEPTACLE AS & WEDGE)	
	3	1	**9X-3401**	2	PIN-CONNECTOR (16-GA TO 18-GA)	
E	4	1	**9X-1813**		SLEEVE (14-CM)	

E - ORDER BY THE CENTIMETER

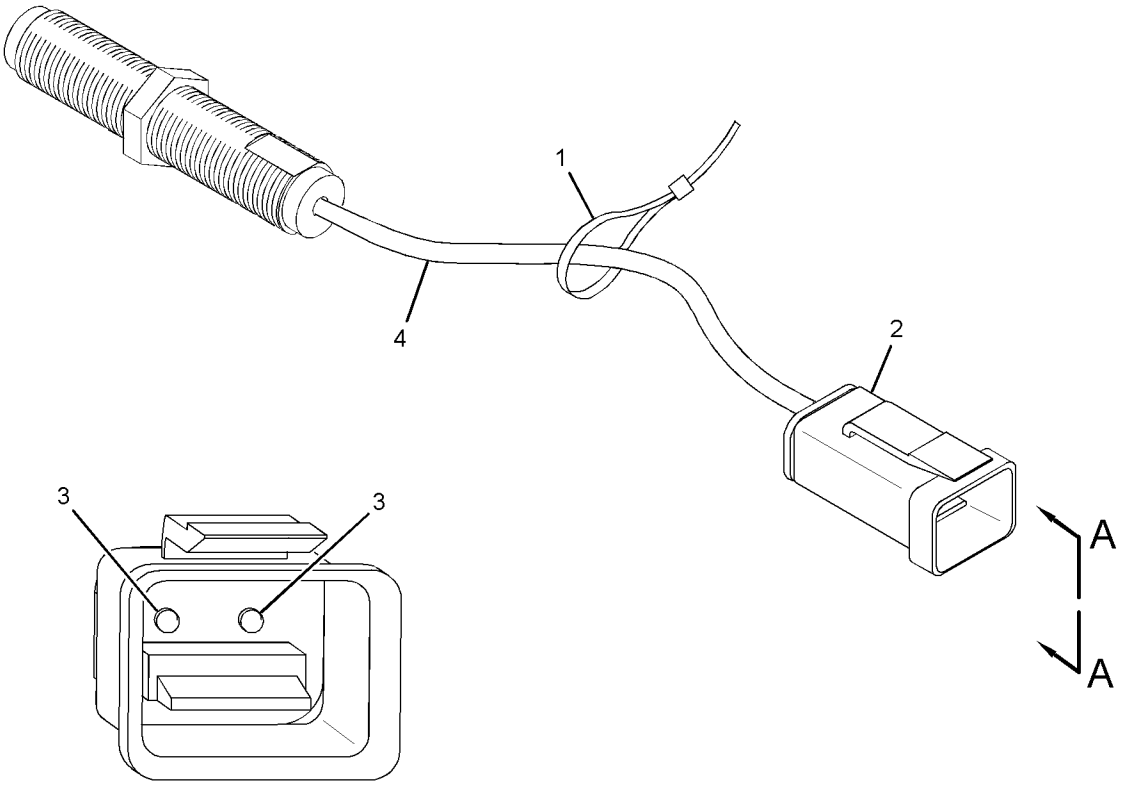

VIEW A-A

GRAPHIC #1 **<END>** g01454055

236-6221 SENSOR GP-SPEED

S/N: KHX1-UP

PART OF 330-6039 SENSOR GP-ENGINE

SMCS-1907, 1912, 3175, 4803, 7493 **i04565632**

NOTE	REF NO	GRAPHIC REF	PART NUMBER	QTY	PART NAME 1 2 3 4 5 6 (PRODUCT LEVEL)	SEE PAGE
	1	1	**228-4947**	2	SEAL-O-RING	
	2	1	**245-4630**	1	SENSOR GP-SPEED	

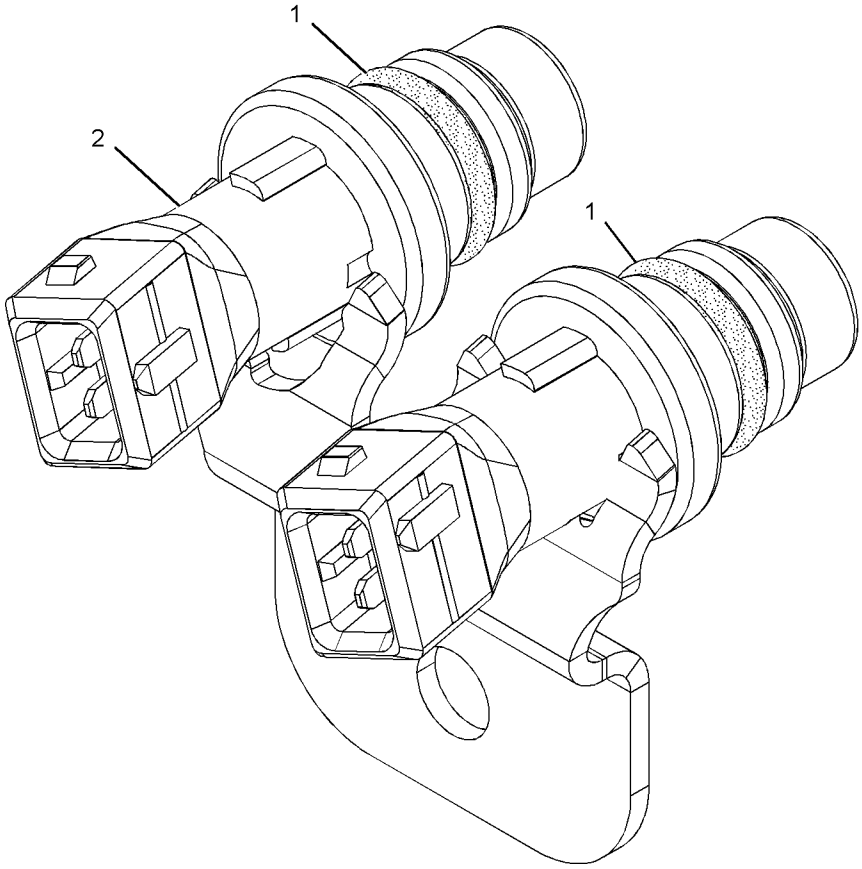

GRAPHIC #1 **<END>** g01013894

318-1178 SENSOR GP-SPEED—MAGNETIC, HIGH OUTPUT

S/N: KYM1-UP; KYN1-UP; W2W1-UP; W2X1-UP; BYY1-UP; BYZ1-UP
FIELD REPLACEMENT FOR 193-2550—PAGE: 291
PART OF 268-6472 TORQUE CONVERTER & HOUSING GP

SMCS-1907, 1912, 3175, 4803, 7493 **i04748009**

NOTE	REF NO	GRAPHIC REF	PART NUMBER	QTY	PART NAME 1 2 3 4 5 6 (PRODUCT LEVEL)	SEE PAGE
	1	1	**171-5349**	1	STRAP-MARKER	
	2	1	**102-8802**	1	KIT-RECEPTACLE (2-PIN)	
					(INCLUDES RECEPTACLE AS & WEDGE)	
	3	1	**9X-3401**	2	PIN-CONNECTOR (16-GA TO 18-GA)	
E	4	1	**9X-1813**		SLEEVE (14-CM)	

E - ORDER BY THE CENTIMETER

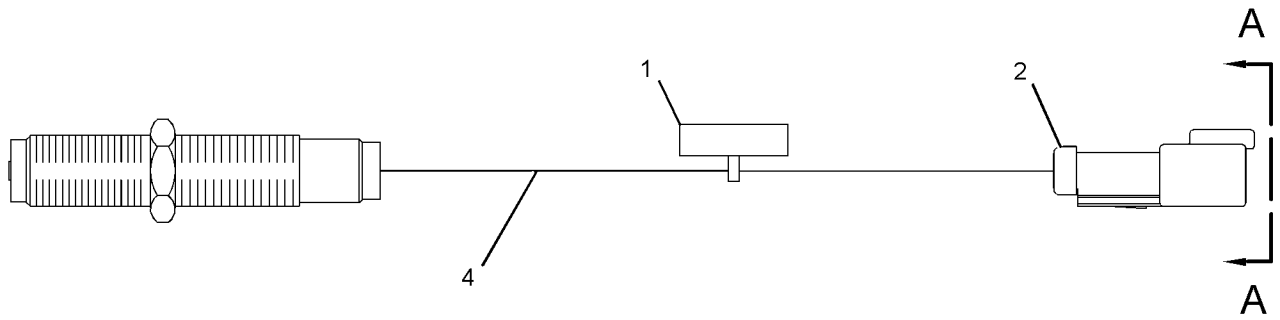

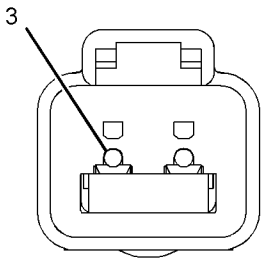

VIEW A-A

GRAPHIC #1 **<END>** g01490456

145-7028 SENSOR GP-TEMPERATURE

S/N: KYM1-UP; KYN1-UP; W2W1-UP; W2X1-UP; BYY1-UP; BYZ1-UP
PART OF 247-7830 CONTROL GP-TRANSMISSION HYD

SMCS-1408, 1906, 1919, 1921, 1922, 1928, 1929, 301T, 3194, 429T, 509T

i01828633

NOTE	REF NO	GRAPHIC REF	PART NUMBER	QTY	PART NAME 1 2 3 4 5 6 (PRODUCT LEVEL)	SEE PAGE
	1	1	**102-8802**	1	KIT-RECEPTACLE (2-PIN)	
					(INCLUDES RECEPTACLE AS & WEDGE)	
BJ	2	1	**153-5043**		SLEEVE	
	3	1	**8T-8729**	2	PIN-CONNECTOR (16-GA TO 18-GA)	
	4	1	**3E-3365**	1	WEDGE-RECEPTACLE LOCK (2-PIN)	

B - USE AS REQUIRED
J - ORDER BY THE DECIMETER

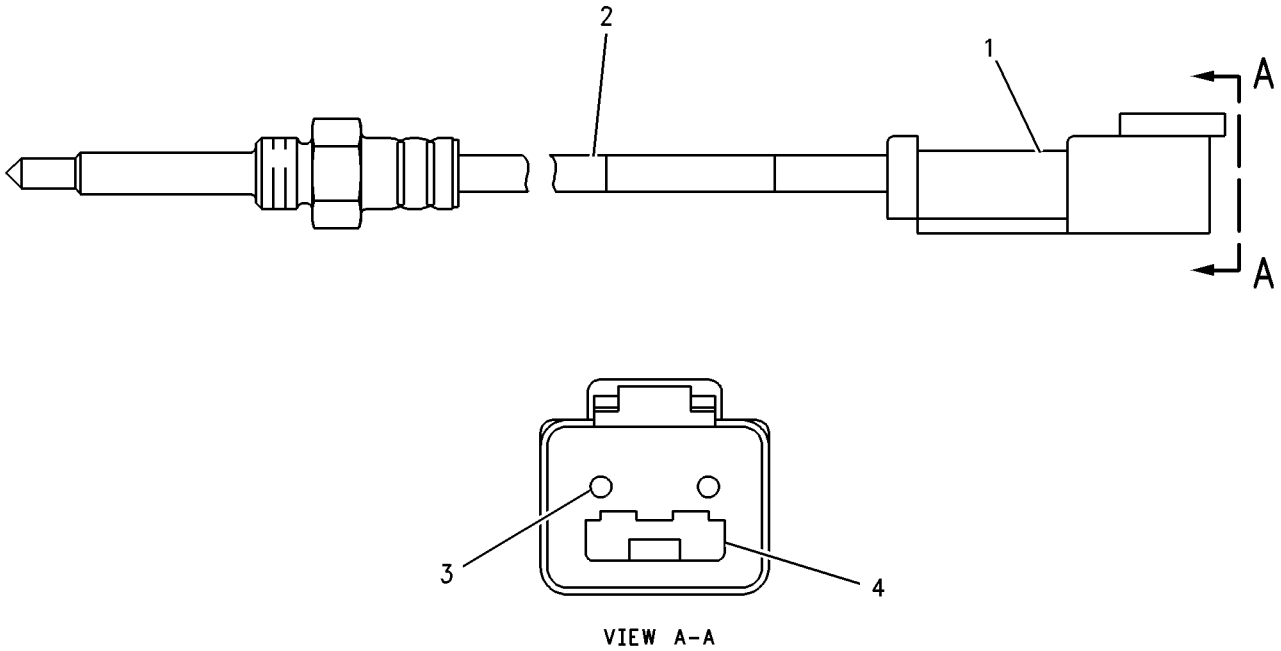

VIEW A-A

GRAPHIC #1 **<END>** g00917620

234-5012 SENSOR GP-TEMPERATURE

S/N: KHX1-UP
AMPSEAL CONNECTOR
PART OF 330-6039 SENSOR GP-ENGINE

SMCS-1408, 1906, 1919, 1921, 1922, 1928, 1929, 301T, 3194, 429T, 509T

i03565212

NOTE	REF NO	GRAPHIC REF	PART NUMBER	QTY	PART NAME 1 2 3 4 5 6 (PRODUCT LEVEL)	SEE PAGE
	1	1	**256-6453**	1	SENSOR-TEMPERATURE	
	2	1	**6V-6609**	1	SEAL-O-RING	

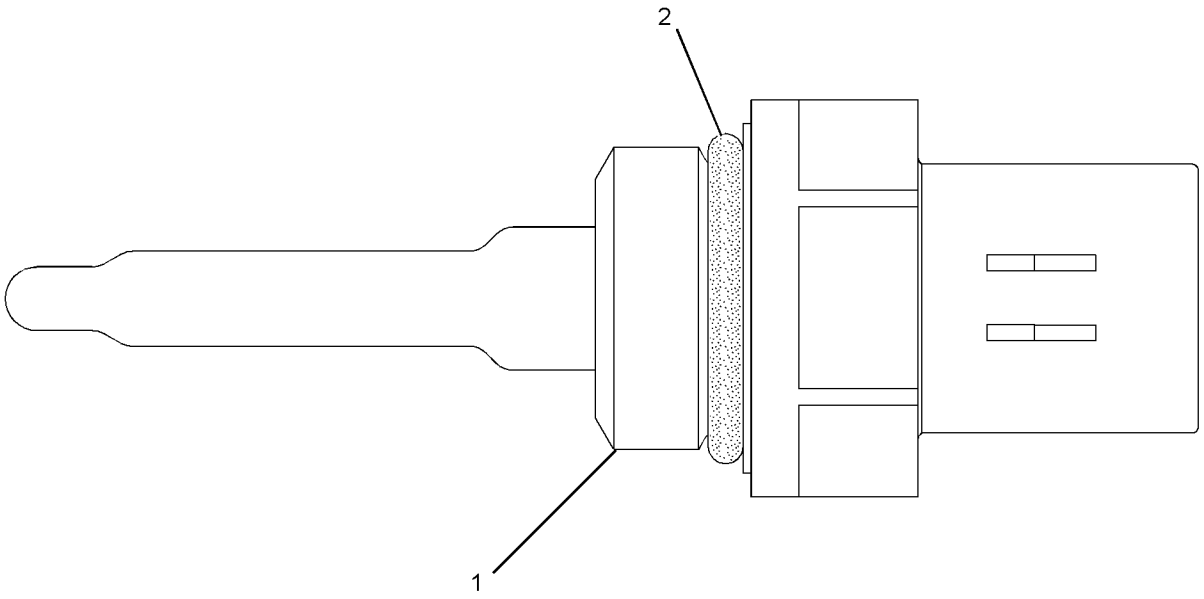

GRAPHIC #1

<END>

g01164284

234-5013 SENSOR GP-TEMPERATURE

S/N: KHX1-UP
AMPSEAL CONNECTOR
PART OF 330-6039 SENSOR GP-ENGINE

SMCS-1408, 1906, 1919, 1921, 1922, 1928, 1929, 301T, 3194, 429T, 509T

i03645027

NOTE	REF NO	GRAPHIC REF	PART NUMBER	QTY	PART NAME 1 2 3 4 5 6 (PRODUCT LEVEL)	SEE PAGE
	1	1	**256-6453**	1	SENSOR-TEMPERATURE	
	2	1	**238-5080**	1	SEAL-O-RING	

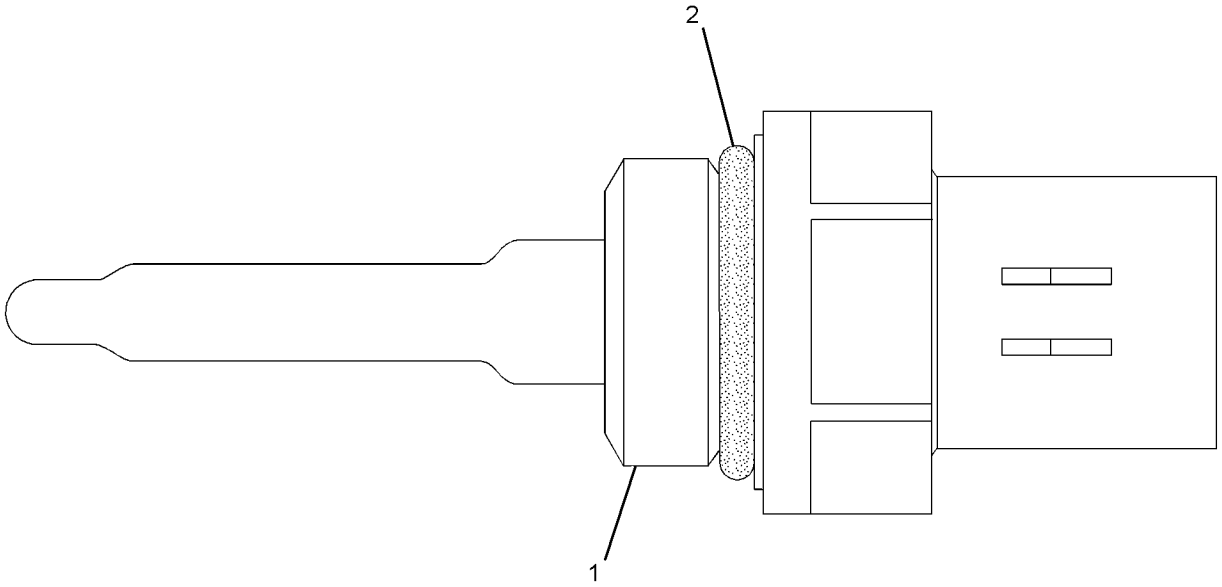

GRAPHIC #1

<END>

g01164268

263-6353 STARTING AID AR-ETHER

S/N: JLX1-UP

PART OF 334-0437, 334-0438 OPTION AR-COLD WEATHER

SMCS-1456 **i03646333**

NOTE	PART NUMBER	QTY	PART NAME 1 2 3 4 5 6 (PRODUCT LEVEL)	SEE PAGE
Y	*261-3802*	1	STARTING AID GP-ETHER	299
Y	*324-0678*	1	WIRING GP-ETHER STARTING AID	367

Y - SEPARATE ILLUSTRATION

<END>

249-9223 STARTING AID GP–WIRING

S/N: KHX1-UP

24-VOLT

PART OF 338-9076 ENGINE AR-COMPLETE

SMCS-1090 **i05875562**

NOTE	REF NO	GRAPHIC REF	PART NUMBER	QTY	PART NAME 1 2 3 4 5 6 (PRODUCT LEVEL)	SEE PAGE
Y	1	1	**398-0940**	1	SWITCH GP-MAGNETIC (24-VOLT) (AIR INLET HEATER RELAY)	310
	2	1	**229-8851**	1	CABLE AS	
E		1	**125-7876**		TUBE-HEAT SHRINK (17.78-MM DIA) (4-CM)	
		1	**308-8161**	1	COVER-TERMINAL	
		1	**316-5240**	1	COVER-TERMINAL	
	3	1	**283-1224**	1	BRACKET AS	
	4	1	**208-9277**	2	BOLT-FLANGE HEAD (M6X1X20-MM)	
M	5	1	**208-9282**	4	BOLT (M8X1.25X25-MM)	
M	6	1	**208-9283**	2	BOLT-FLANGE HEAD (M8X1.25X30-MM)	
M	7	1	**6V-5192**	1	BOLT-SOCKET HEAD (M8X1.25X30-MM)	
	8	1	**9M-1974**	1	WASHER-HARD (8.8X16X2-MM THK)	
	9	1	**3S-2093**	1	STRAP-CABLE	

E - ORDER BY THE CENTIMETER
M - METRIC PART
Y - SEPARATE ILLUSTRATION

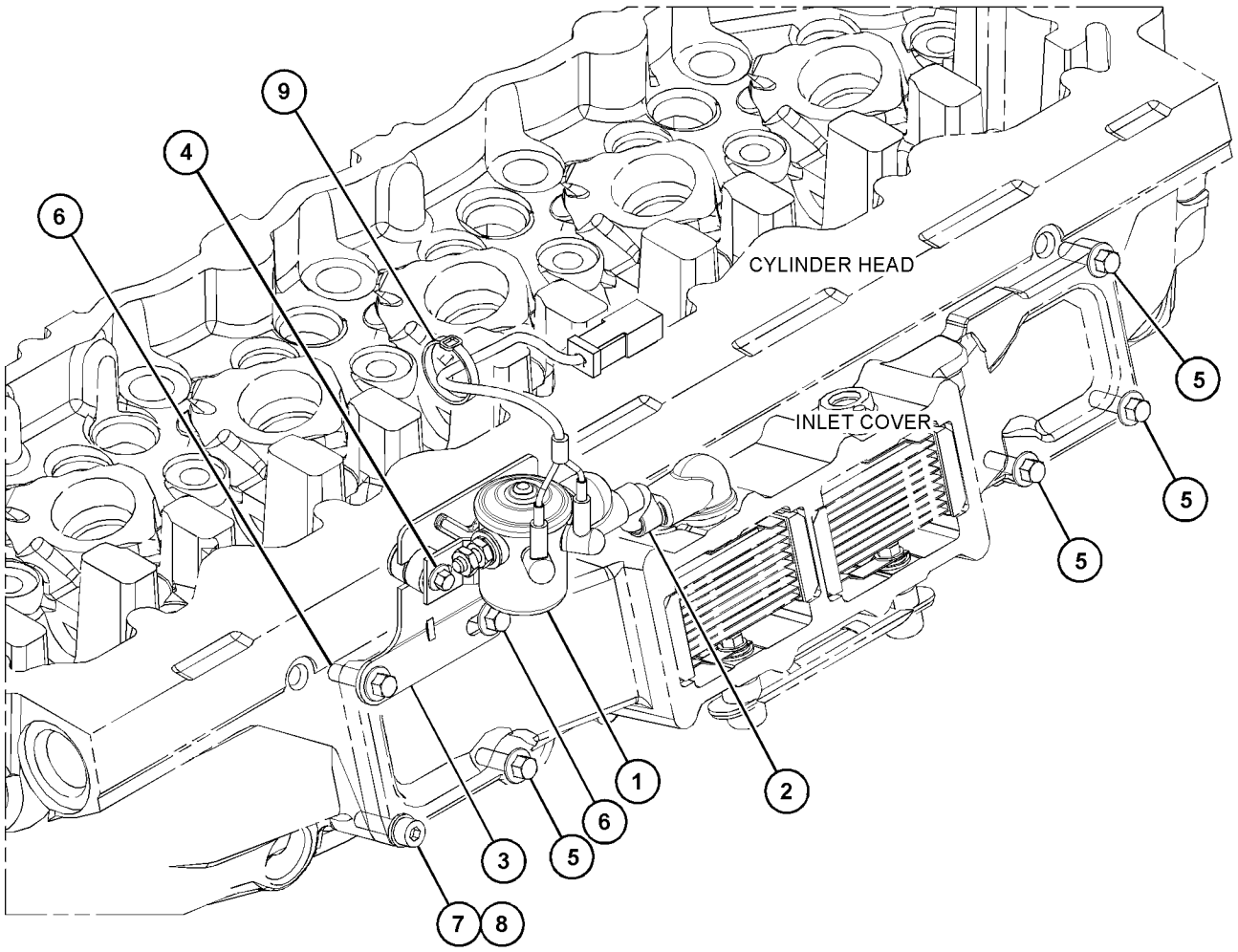

GRAPHIC #1 **<END>** g03715885

261-3802 STARTING AID GP-ETHER

S/N: JLX1-UP

PART OF 263-6353 STARTING AID AR-ETHER

SMCS-1456 **i05098715**

NOTE	REF NO	GRAPHIC REF	PART NUMBER	QTY	PART NAME 1 2 3 4 5 6 (PRODUCT LEVEL)	SEE PAGE
	1	1	**3Y-2888**	1	CONNECTOR	
	4	1	**7N-2059**	1	CLAMP AS	
Y	7	1	**239-1134**	1	VALVE GP-ETHER STARTING (24-VOLT)	323
	8	1	**241-4194**	1	FITTING AS (CONTROL)	
C		1	**236-4545**	1	NUT-SLEEVE (5/16-24-THD)	
	9	1	**258-0733**	1	ATOMIZER AS	
C		1	**236-4545**	1	NUT-SLEEVE (5/16-24-THD)	
	10	1	**263-1774**	1	PLATE AS	
	11	1	**130-5300**	1	CLIP	
	12	1	**3J-1907**	1	SEAL-O-RING	
	15	1	**6V-2686**	5	CLIP	
C	16	1	**8T-4121**	5	WASHER-HARD (11X21X2.5-MM THK)	
M	18	1	**8T-4189**	4	BOLT (M8X1.25X20-MM)	
CM	19	1	**8T-4191**	2	BOLT (M10X1.5X16-MM)	
CM	20	1	**8T-4195**	3	BOLT (M10X1.5X30-MM)	
C	21	1	**8T-4224**	4	WASHER-HARD (8.8X16X2-MM THK)	
CE	22	1	**174-9169**		TUBE (153-CM)	
A			**7N-0296**	1	CYLINDER AS-ETHER	
					(MUST BE PROCURED LOCALLY FROM YOUR CATERPILLAR DEALER)	

A - NOT PART OF THIS GROUP
C - CHANGE FROM PREVIOUS TYPE
E - ORDER BY THE CENTIMETER
M - METRIC PART
Y - SEPARATE ILLUSTRATION

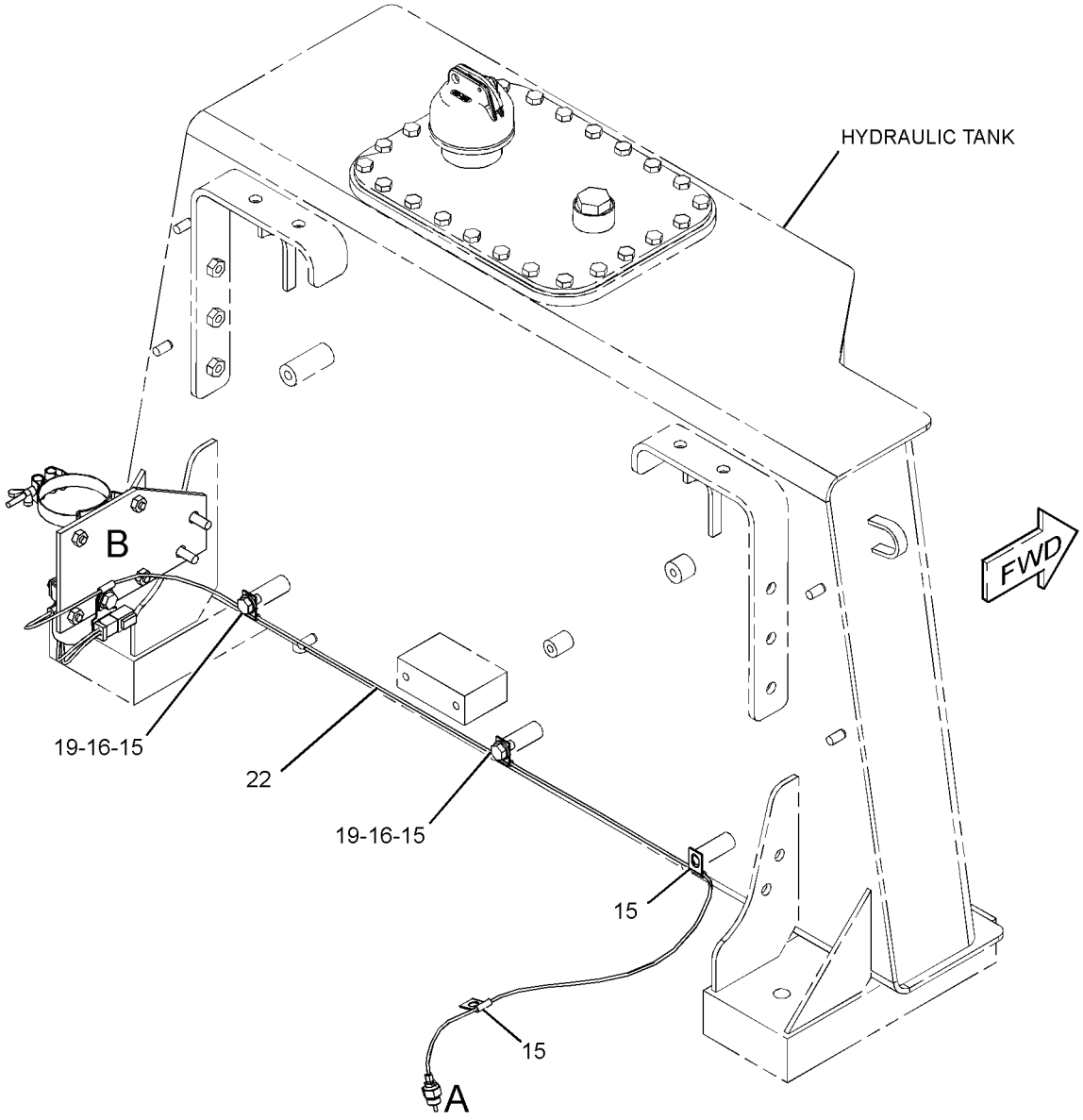

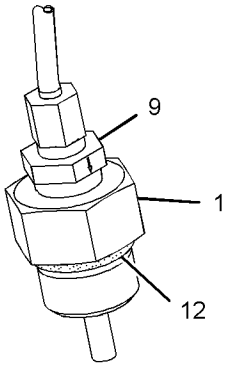

VIEW OF AREA A

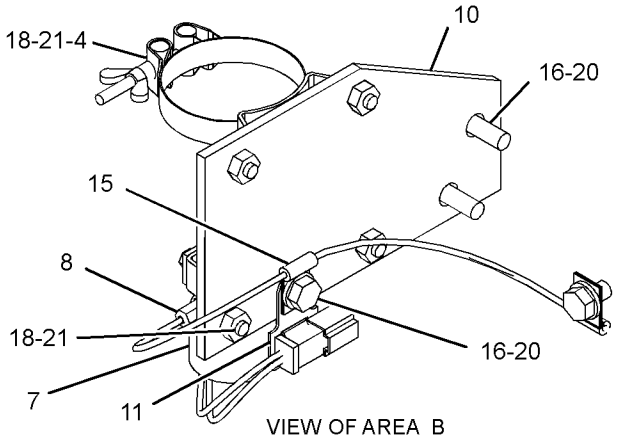

VIEW OF AREA B

GRAPHIC #1

<END>

g03033338

207-1551 STARTING MOTOR GP-ELECTRIC*R

S/N: JLX1-354; KHX1-UP

PART OF 392-9252 MOUNTING GP-STARTING MOTOR, 373-7172 STARTING MOTOR GP-ELECTRIC

SMCS-1453 **i04838672**

NOTE	REF NO	GRAPHIC REF	PART NUMBER	QTY	PART NAME 1 2 3 4 5 6 (PRODUCT LEVEL)	SEE PAGE
	1	1	**9F-2247**	1	PLUG-PIPE	
	2	1	**7T-3279**	1	HOUSING AS	
	3	1	**8T-8566**	1	TERMINAL AS	
	4	1	**6V-8188**	4	NUT (1/2-13-THD)	
	5	1	**7X-0562**	4	WASHER-HARD (13.5X19X0.8-MM THK)	
	6	1	**3T-3422**	1	WIRE AS	
	7	1	**7T-3278**	1	HOLDER AS-BRUSH	
	8	1	**7T-3277**	1	COIL AS-FIELD	
	9	1	**7T-3454**	1	INSULATOR	
	11	1	**7T-3451**	1	KIT-INSULATOR (STARTING MOTOR)	
	12	1	**8T-8569**	1	INSULATOR-TERMINAL	
	13	1	**5S-7349**	4	BOLT (1/4-20X0.5-IN)	
	14	1	**8T-4205**	4	WASHER-HARD (7.2X14.5X2-MM THK)	
	15	1	**8H-1141**	4	SHOE-POLE	
C	16	1	**3R-8797**	8	SCREW & WASHER AS (3/8-24X0.72-IN)	
	17	1	**7T-3276**	1	ARMATURE AS (24-VOLT)	
	18	1	**105-9702**	1	HOUSING AS	
	19	1	**4M-1831**	1	PLUG-LEVER HOUSING	
	20	1	**7L-2894**	1	GASKET	
C	21	1	**0S-1597**	5	BOLT (1/4-28X1-IN)	
	22	1	**6N-3827**	1	DRIVE AS-MOTOR	
	23	1	**9X-9510**	1	HOUSING AS	
	24	1	**7X-3373**	6	BOLT (5/16-18X0.88-IN)	
C	25	1	**376-4353**	1	KIT-SOLENOID (24-VOLT)	
					(INCLUDES NUTS, BOLT, CONNECTOR, AND COVER)	
	26	1	**6V-8378**	3	NUT (10-32-THD)	
	27	1	**8F-1434**	2	LOCKWASHER	
	28	1	**8T-0328**	3	WASHER-HARD (5.5X10X1-MM THK)	
	29	1	**9X-4824**	1	COVER-STARTING MOTOR	
	30	1	**7T-3268**	1	KIT-LEVER (STARTING MOTOR)	
					(INCLUDES LEVER AS, SHAFT AS, GASKET, SEALS, RINGS, STOP & NUT)	
	31	1	**8C-3655**	1	KIT-BRUSH (STARTING MOTOR)	
					(INCLUDES BRUSHES, SEAL, SCREWS & SPRINGS)	
	32	1	**8T-9884**	1	KIT-INSULATOR (STARTING MOTOR)	
					(INCLUDES INSULATORS & BUSHING)	
	33	1	**9F-2547**	1	WICK	
					AVAILABLE REPAIR KIT(S):	
			7T-3267	1	KIT-BUSHING (STARTING MOTOR)	
					(INCLUDES BUSHINGS, WICKS, CUPS, SEALS, GASKET, WASHERS, SPACER, NUT, & SCREW ASSEMBLIES)	

C - CHANGE FROM PREVIOUS TYPE

207-1551 **STARTING MOTOR GP-ELECTRIC (*contd.*)** **i04838672**

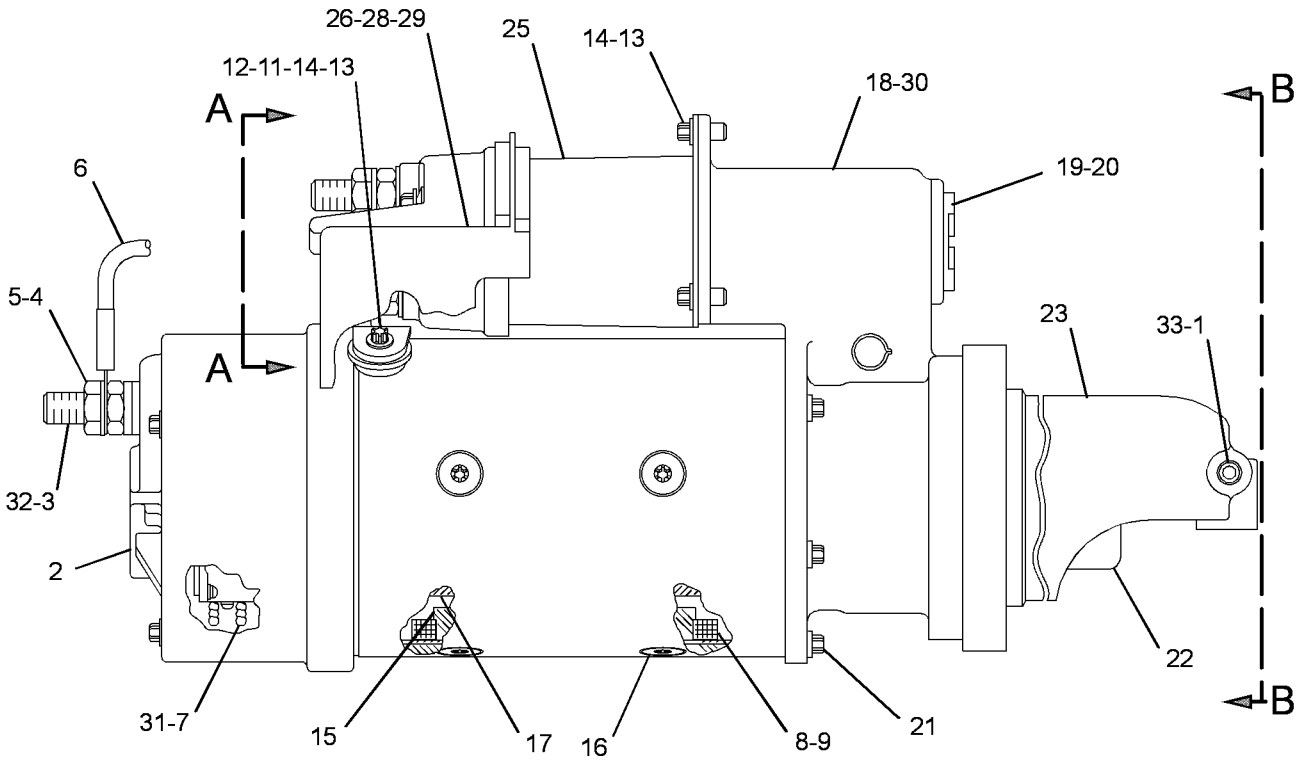

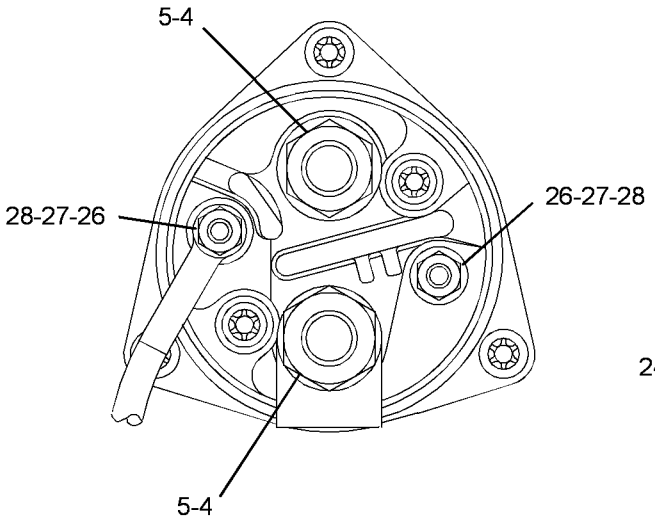

VIEW A-A

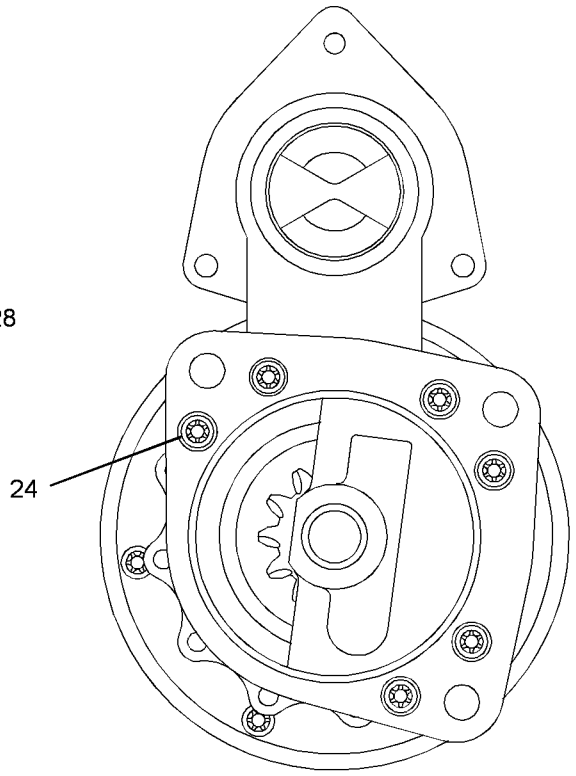

VIEW B-B

GRAPHIC #1 **<END>** g02974059

373-7172 STARTING MOTOR GP-ELECTRIC

S/N: JLX1-354

PART OF 374-4868 INSTALLATION AR-ENGINE

SMCS-1453 **i05347404**

NOTE	REF NO	GRAPHIC REF	PART NUMBER	QTY	PART NAME 1 2 3 4 5 6 (PRODUCT LEVEL)	SEE PAGE
	1	1	**3K-3257**	1	GASKET	
	2	1	**183-1025**	1	STRAP AS	
M	3	1	**118-9573**	3	BOLT-12 POINT HEAD (M10X1.5X35-MM)	
YR	4	1	**207-1551**	1	STARTING MOTOR GP-ELECTRIC (COLD WEATHER)	301
	5	1	**8T-4121**	3	WASHER-HARD (11X21X2.5-MM THK)	
M	6	1	**8T-4191**	1	BOLT (M10X1.5X16-MM)	
	7	1	**7P-1695**	1	WASHER (10.5X19X3-MM THK)	

M - METRIC PART
R - REMFG PART MAY BE AVAILABLE
Y - SEPARATE ILLUSTRATION

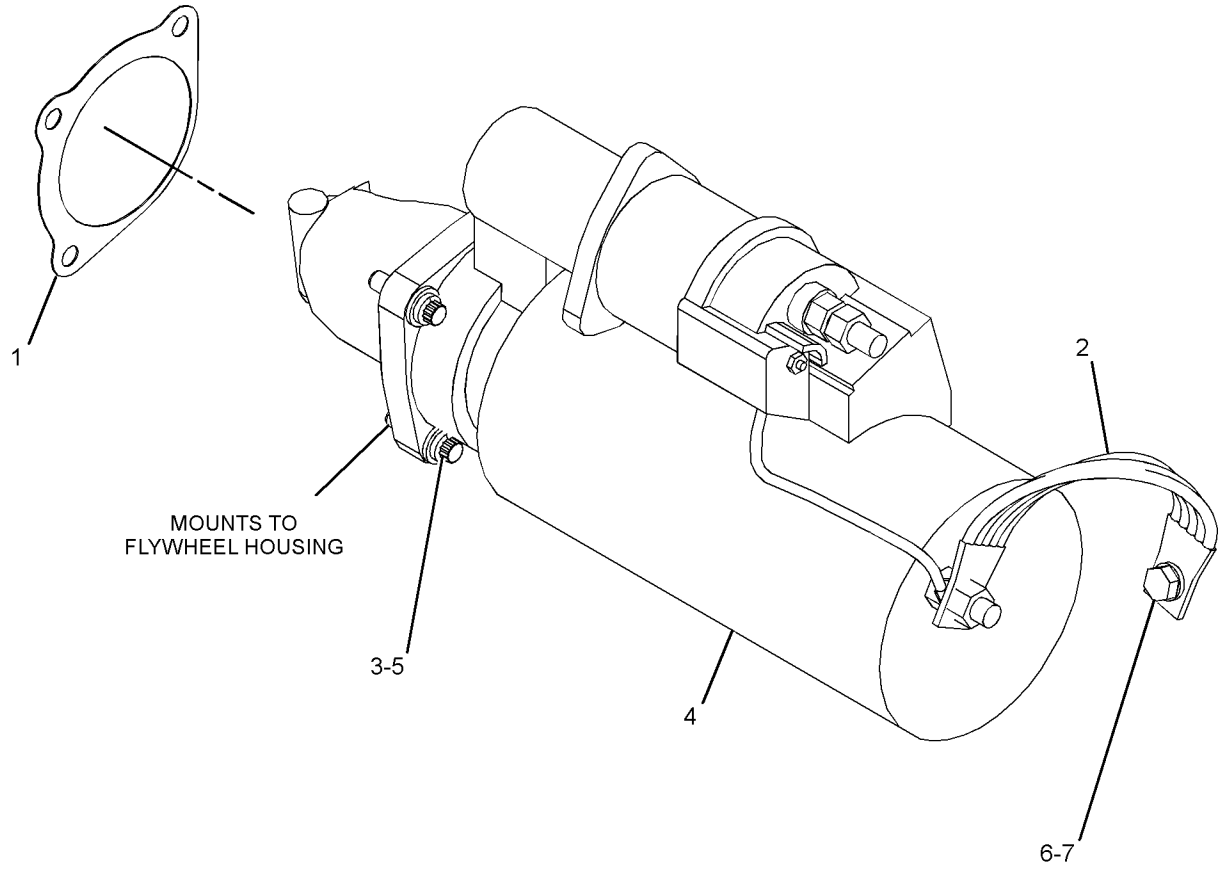

GRAPHIC #1 **<END>** g03390197

373-7172 STARTING MOTOR GP-ELECTRIC

S/N: JLX355-UP

PART OF 374-4868 INSTALLATION AR-ENGINE

SMCS-1453 **i05573190**

NOTE	REF NO	GRAPHIC REF	PART NUMBER	QTY	PART NAME 1 2 3 4 5 6 (PRODUCT LEVEL)	SEE PAGE
	1	1	**3K-3257**	1	GASKET	
	2	1	**183-1025**	1	STRAP AS	
M	3	1	**118-9573**	3	BOLT-12 POINT HEAD (M10X1.5X35-MM)	
CY	4	1	**390-0787**	1	STARTING MOTOR GP-ELECTRIC (COLD WEATHER)	305
	5	1	**8T-4121**	3	WASHER-HARD (11X21X2.5-MM THK)	
M	6	1	**8T-4191**	1	BOLT (M10X1.5X16-MM)	
	7	1	**7P-1695**	1	WASHER (10.5X19X3-MM THK)	

C - CHANGE FROM PREVIOUS TYPE
M - METRIC PART
Y - SEPARATE ILLUSTRATION

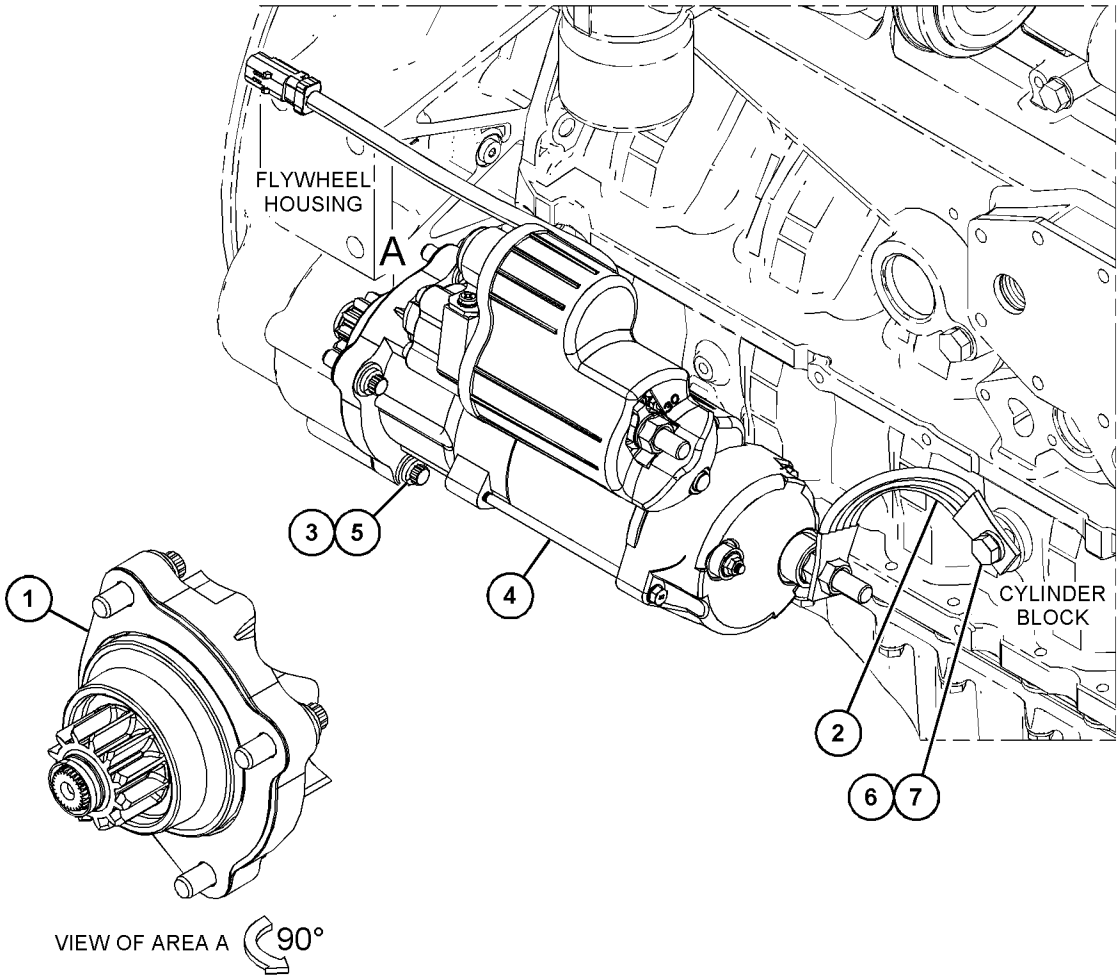

GRAPHIC #1 **<END>** g03535021

390-0787 STARTING MOTOR GP-ELECTRIC

S/N: JLX355-UP

PART OF 373-7172 STARTING MOTOR GP-ELECTRIC

SMCS-1453 **i05882840**

NOTE	REF NO	GRAPHIC REF	PART NUMBER	QTY	PART NAME 1 2 3 4 5 6 (PRODUCT LEVEL)	SEE PAGE
	1	1	**230-4012**	1	RECEPTACLE AS-CONNECTOR (2-PIN)	

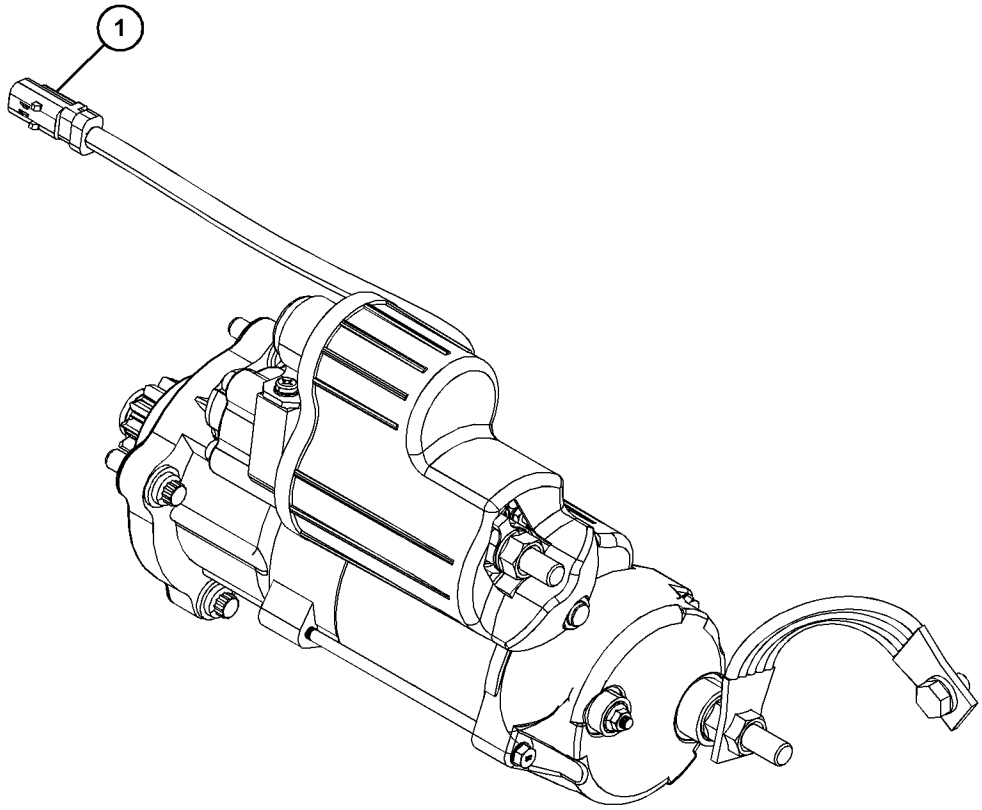

GRAPHIC #1 **<END>** g03535237

7N-0718 SWITCH GP-DISCONNECT–BATTERY

S/N: JLX1-UP
12-VOLT
PART OF 372-4888 BATTERY & WIRING GP

SMCS-1411 **i02587657**

NOTE	REF NO	GRAPHIC REF	PART NUMBER	QTY	PART NAME 1 2 3 4 5 6 (PRODUCT LEVEL)	SEE PAGE
	1	1	**8H-5306**	1	KEY (BATTERY DISCONNECT)	
	2	1	**8H-5303**	1	NUT (3/4-16-THD)	
	3	1	**2H-3922**	2	LOCKWASHER	
	4	1	**9F-5644**	2	LOCKWASHER	
	5	1	**6F-7045**	2	NUT-FULL (3/8-24-THD)	

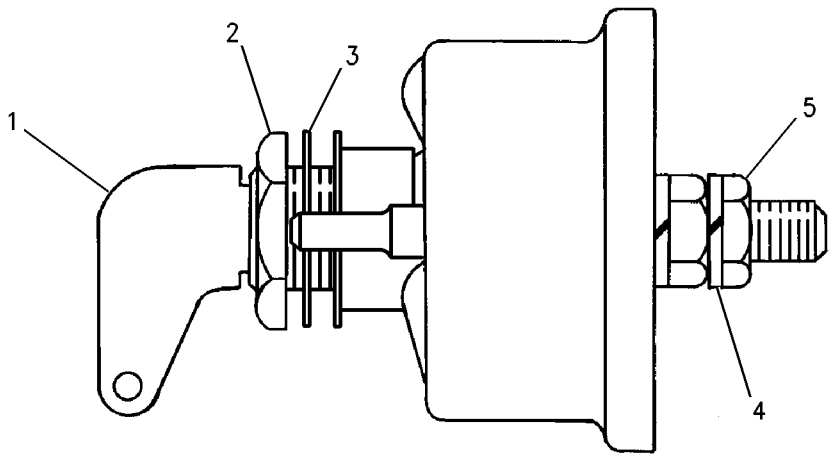

GRAPHIC #1 **<END>** g00715584

125-1302 SWITCH GP-MAGNETIC

S/N: JLX1-UP
24-VOLT
PART OF 372-4876 PANEL GP-CIRCUIT BREAKER

SMCS-7499 **i03546076**

NOTE	REF NO	GRAPHIC REF	PART NUMBER	QTY	PART NAME 1 2 3 4 5 6 (PRODUCT LEVEL)	SEE PAGE
	1	1	**102-8802**	1	KIT-RECEPTACLE (2-PIN)	
					(INCLUDES RECEPTACLE AS & WEDGE)	
	2	1	**186-3735**	2	PIN-CONNECTOR (16-GA TO 18-GA)	
	3	1	**1H-3338**	2	LOCKWASHER (EXTERNAL TOOTH)	
	4	1	**012-0380**	2	LOCKWASHER (SPLIT)	
M	5	1	**5C-2890**	2	NUT (M6X1-THD)	
BE	6	1	**9X-1813**		SLEEVE	

B - USE AS REQUIRED
E - ORDER BY THE CENTIMETER
M - METRIC PART

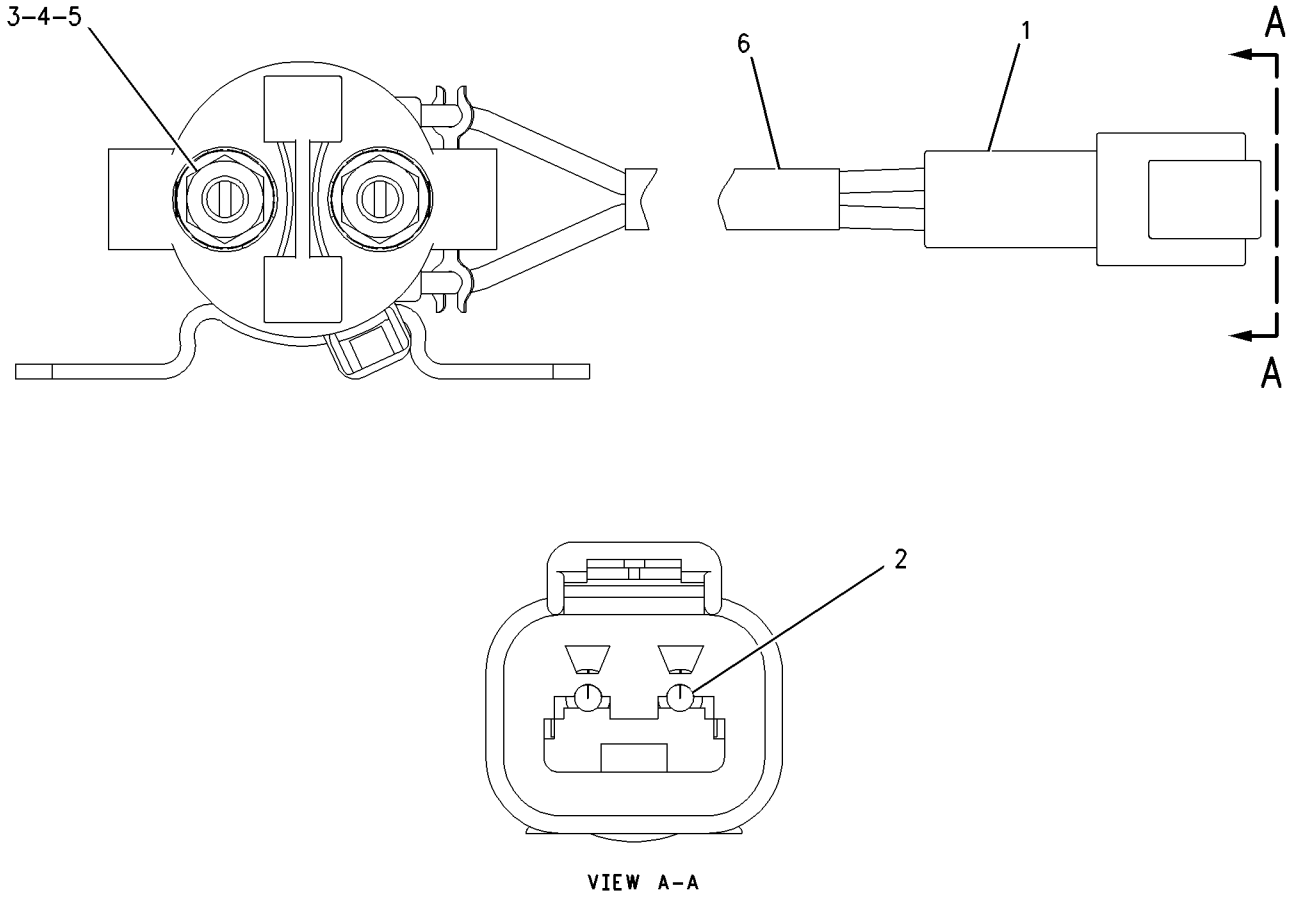

GRAPHIC #1 **<END>** g00987986

209-5582 SWITCH GP-MAGNETIC

S/N: JLX1-UP

PART OF 372-4876 PANEL GP-CIRCUIT BREAKER

SMCS-7499 **i05499598**

NOTE	REF NO	GRAPHIC REF	PART NUMBER	QTY	PART NAME 1 2 3 4 5 6 (PRODUCT LEVEL)	SEE PAGE
	1	1	**102-8802**	1	KIT-RECEPTACLE (2-PIN)	
					(INCLUDES RECEPTACLE AS & WEDGE)	
	2	1	**8T-8729**	2	PIN-CONNECTOR (16-GA TO 18-GA)	
	3	1	**3F-9556**	2	LOCKWASHER	
	4	1	**6V-8186**	2	NUT-FULL (5/16-24-THD)	
	5	1	**6V-8378**	2	NUT (10-32-THD)	
	6	1	**8F-1434**	2	LOCKWASHER	

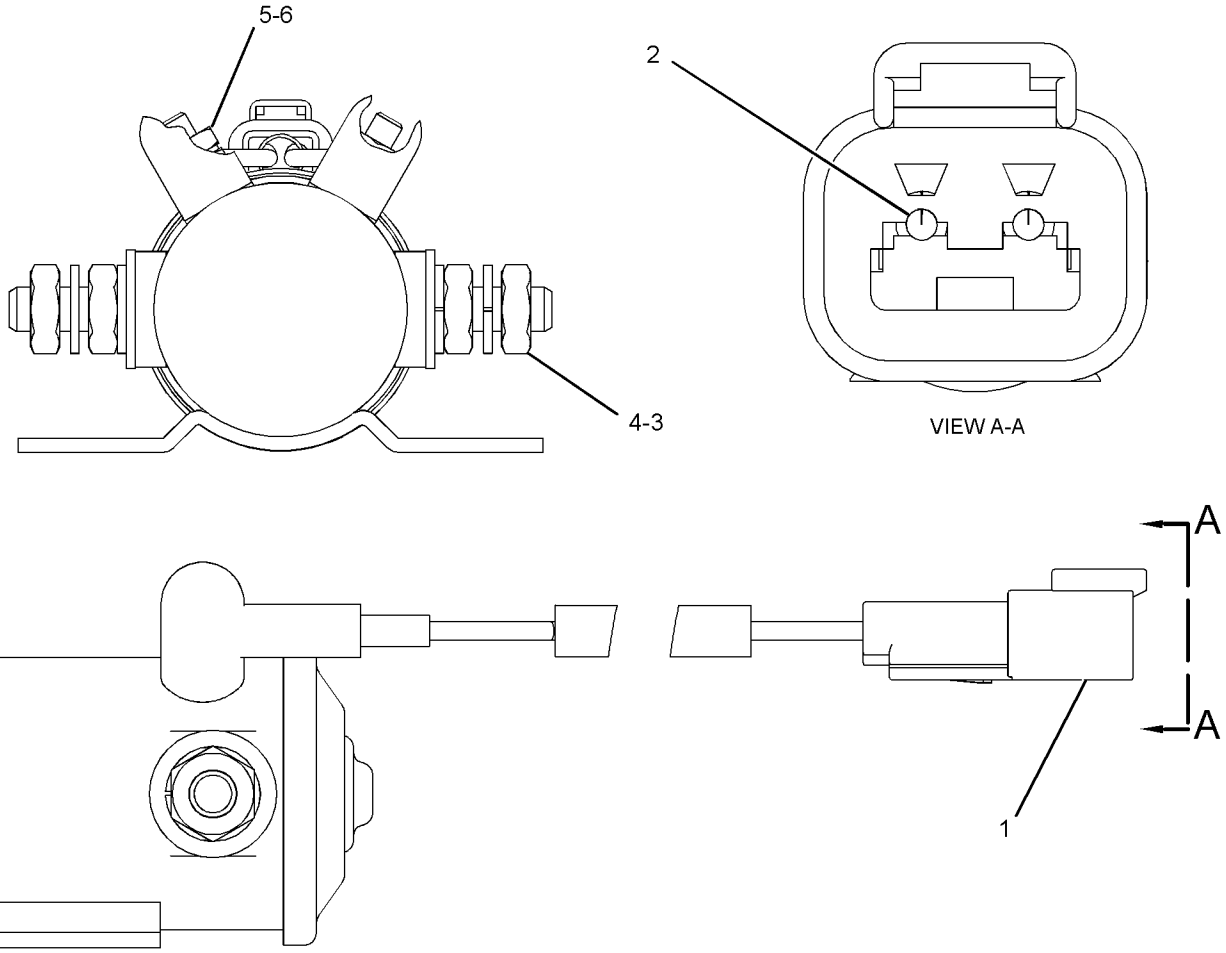

GRAPHIC #1 **<END>** g01279452

241-8368 SWITCH GP-MAGNETIC

S/N: JLX1-UP
24-VOLT
PART OF 372-4876 PANEL GP-CIRCUIT BREAKER

SMCS-7499 **i05456664**

NOTE	REF NO	GRAPHIC REF	PART NUMBER	QTY	PART NAME 1 2 3 4 5 6 (PRODUCT LEVEL)	SEE PAGE
	1	1	**155-2270**	1	KIT-CONNECTING PLUG (2-PIN)	
					(INCLUDES PLUG AS, WEDGE & INTERFACE SEAL)	
	2	1	**4F-2294**	2	NUT-JAM (5/16-24-THD)	
	3	1	**8T-8730**	2	SOCKET-CONNECTOR (16-GA TO 18-GA)	

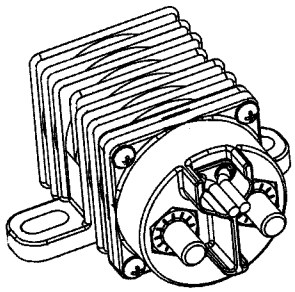

ISOMETRIC VIEW

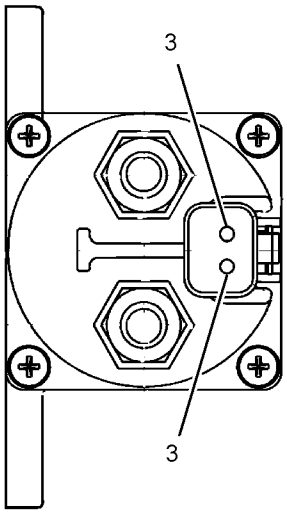

VIEW A-A

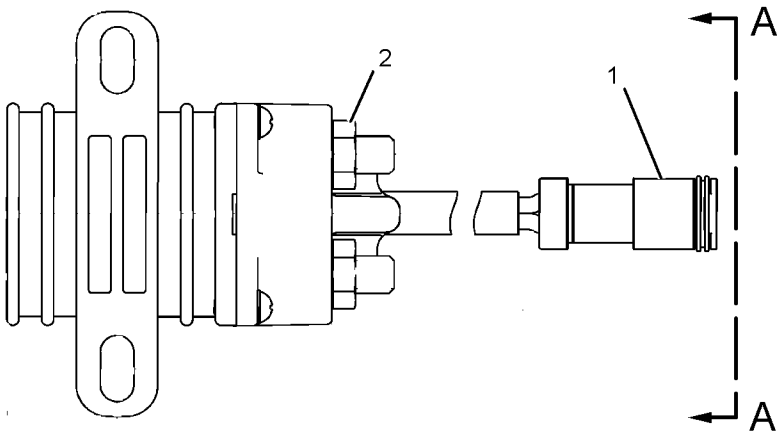

GRAPHIC #1 **<END>** g01077362

398-0940 SWITCH GP-MAGNETIC

S/N: KHX1-UP
24-VOLT
PART OF 249-9223 STARTING AID GP

SMCS-7499 **i05962798**

NOTE	REF NO	GRAPHIC REF	PART NUMBER	QTY	PART NAME 1 2 3 4 5 6 (PRODUCT LEVEL)	SEE PAGE
	1	1	**102-8802**	1	KIT-RECEPTACLE (2-PIN)	
					(INCLUDES RECEPTACLE AS & WEDGE)	
	2	1	**8T-8729**	2	PIN-CONNECTOR (16-GA TO 18-GA)	
	3	1	**3F-9556**	2	LOCKWASHER	
	4	1	**6V-8186**	2	NUT-FULL (5/16-24-THD)	
	5	1	**6V-8378**	2	NUT (10-32-THD)	
	6	1	**8F-1434**	2	LOCKWASHER	

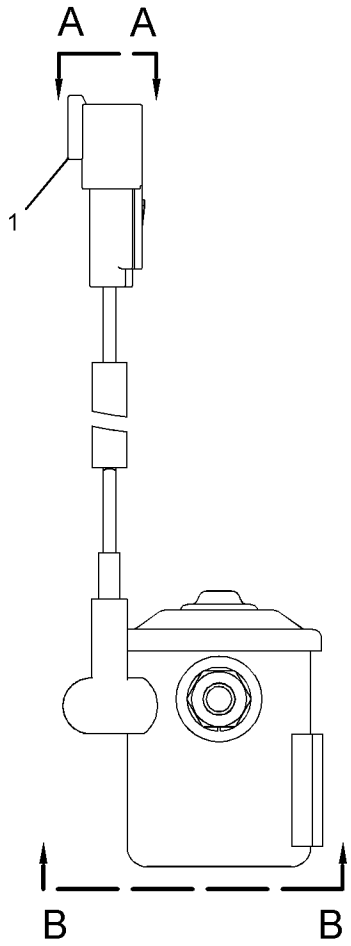

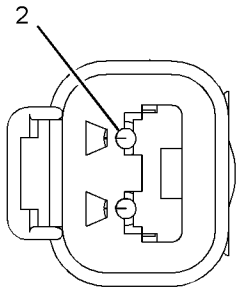

VIEW A-A

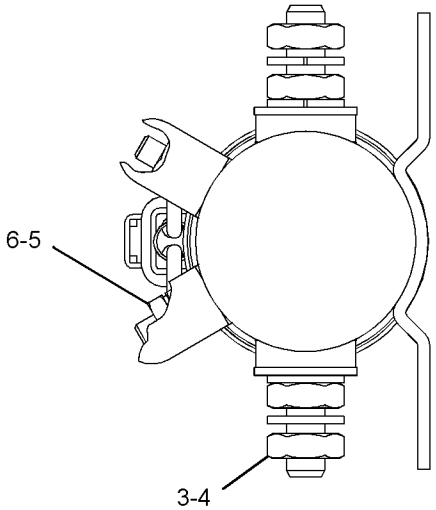

VIEW B-B

GRAPHIC #1 **<END>** g03351877

258-0883 SWITCH GP-PRESSURE

S/N: KHX1-UP

PART OF 237-9823 FILTER & LINES GP-FUEL

SMCS-1435 **i05424435**

NOTE	REF NO	GRAPHIC REF	PART NUMBER	QTY	PART NAME 1 2 3 4 5 6 (PRODUCT LEVEL)	SEE PAGE
	1	1	**102-8802**	1	KIT-RECEPTACLE (2-PIN)	
					(INCLUDES RECEPTACLE AS & WEDGE)	
	2	1	**9X-7737**	1	SEAL-O-RING	
	3	1	**8T-8729**	2	PIN-CONNECTOR (16-GA TO 18-GA)	
E	4	1	**9X-1813**		SLEEVE (14-CM)	
	5	1	**6V-4589**	1	SEAL-O-RING	

E - ORDER BY THE CENTIMETER

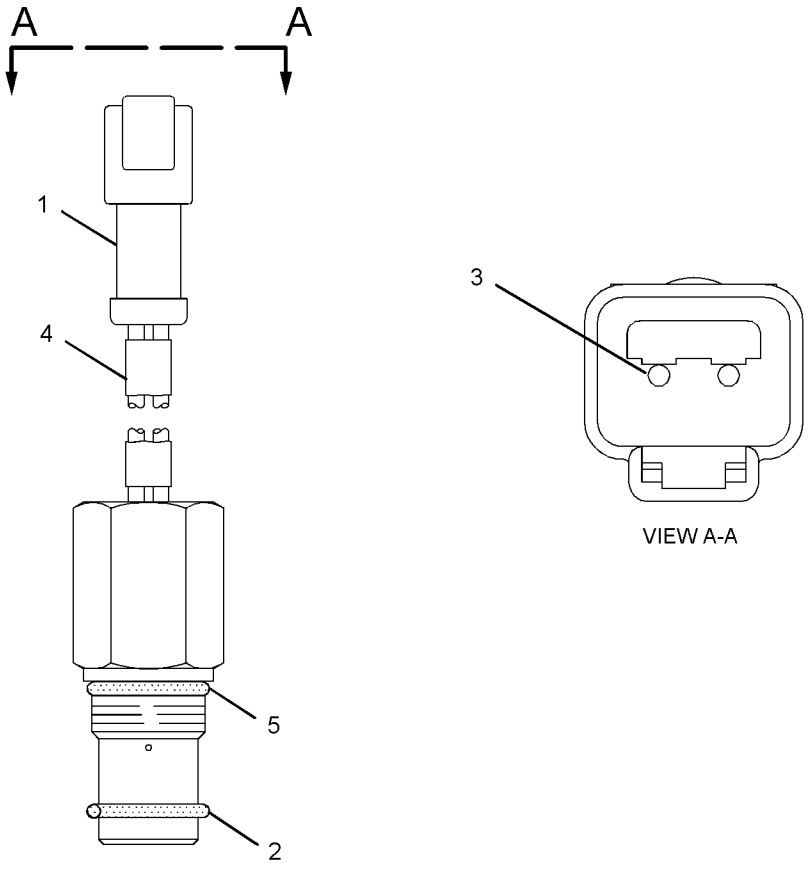

GRAPHIC #1 **<END>** g01960393

275-1253 SWITCH GP-PRESSURE

S/N: KHX1-UP

PART OF 395-0327 BASE GP-FUEL FILTER

SMCS-1435 **i03525026**

NOTE	REF NO	GRAPHIC REF	PART NUMBER	QTY	PART NAME 1 2 3 4 5 6 (PRODUCT LEVEL)	SEE PAGE
	1	1	**230-4011**	1	PLUG AS-CONNECTOR (2-PIN)	
		1	**264-7029**	1	SEAL-CONNECTOR	
E	2	1	**9X-1813**		SLEEVE (14-CM)	
	3	1	**6V-4589**	1	SEAL-O-RING	
	4	1	**9X-7737**	1	SEAL-O-RING	
	5	1	**9X-3401**	2	PIN-CONNECTOR (16-GA TO 18-GA)	

E - ORDER BY THE CENTIMETER

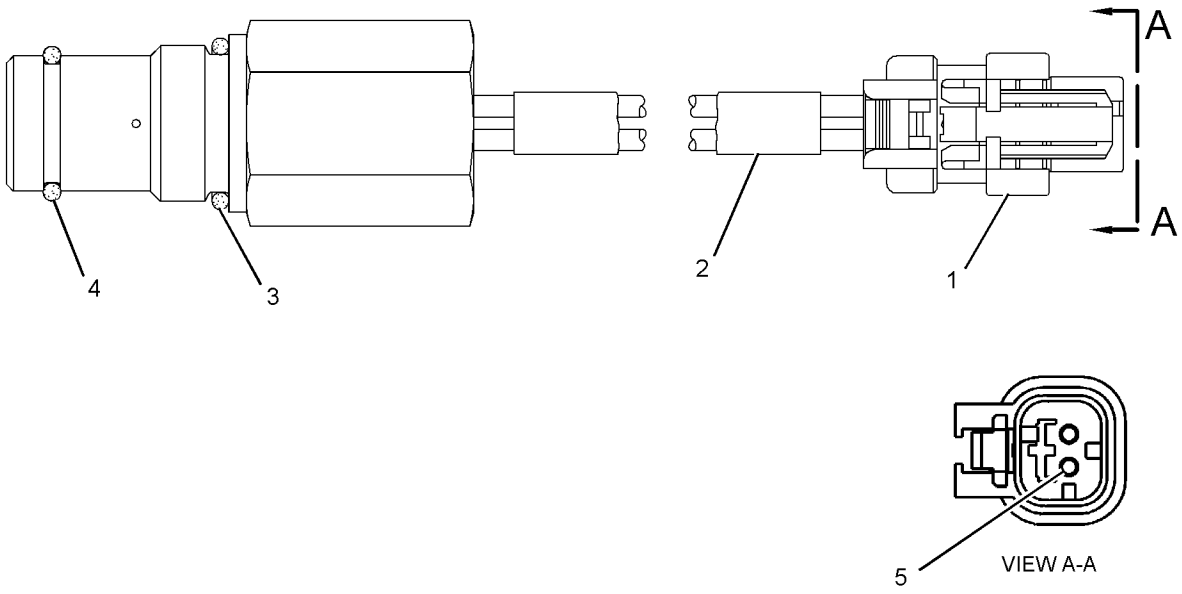

GRAPHIC #1 **<END>** g01238534

252-5925 SWITCH GP-QUICK COUPLER

S/N: JLX1-UP

PART OF 373-8263 CONTROL AR-HIGH LIFT, 373-8291, 383-6030 CONTROL AR-QUICK COUPLER, 444-6448 LINES GP-COUPLER

SMCS-6129, 7332 **i03279083**

NOTE	REF NO	GRAPHIC REF	PART NUMBER	QTY	PART NAME 1 2 3 4 5 6 (PRODUCT LEVEL)	SEE PAGE
	1	1	**3S-2093**	1	STRAP-CABLE	
	2	1	**7K-1181**	1	STRAP-CABLE	
Y	3	1	**132-1829**	1	ALARM GP (24-VOLT) (ACTION)	174
	4	1	**280-4244**	1	SWITCH AS-ROCKER (24-VOLT) (QUICK COUPLER)	

Y - SEPARATE ILLUSTRATION

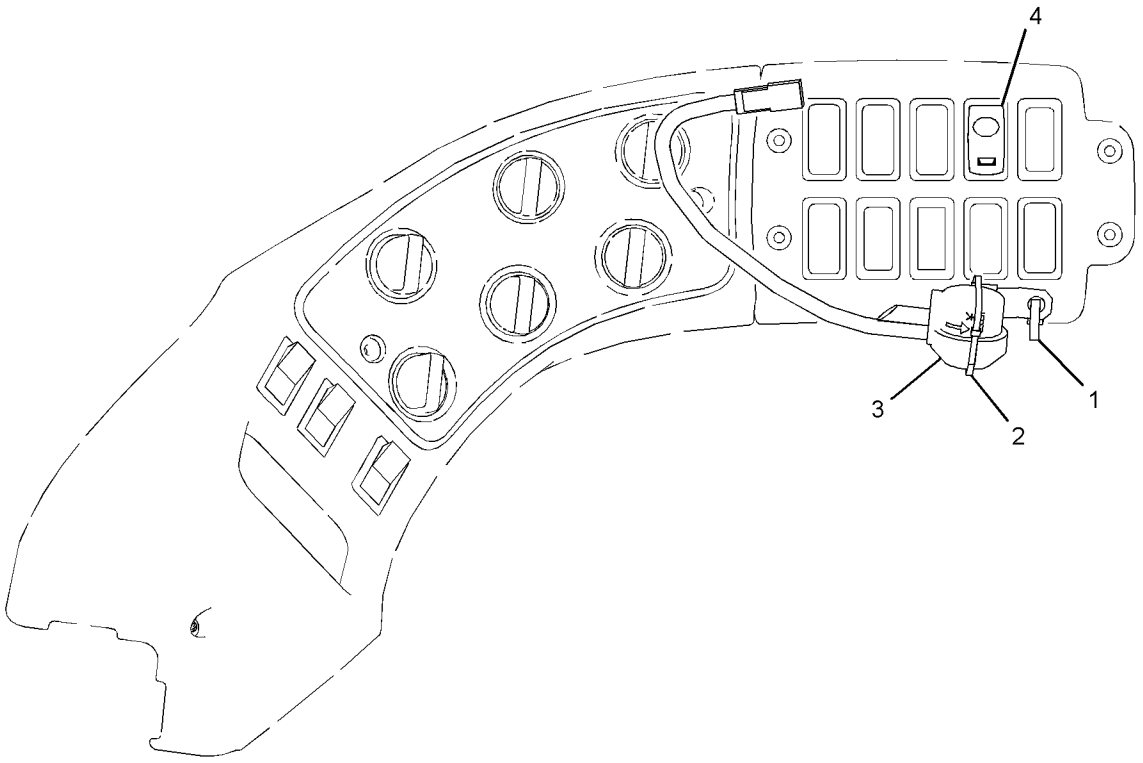

GRAPHIC #1 **<END>** g01576639

252-5917 SWITCH GP-RIDE CONTROL

S/N: JLX1-UP

PART OF 375-8104 CONFIGURATION AR, 373-8290 CONTROL AR-RIDE

SMCS-7332 **i02305803**

NOTE	REF NO	GRAPHIC REF	PART NUMBER	QTY	PART NAME 1 2 3 4 5 6 (PRODUCT LEVEL)	SEE PAGE
	1	1	**236-4612**	1	SWITCH AS-ROCKER (RIDE CONTROL)	

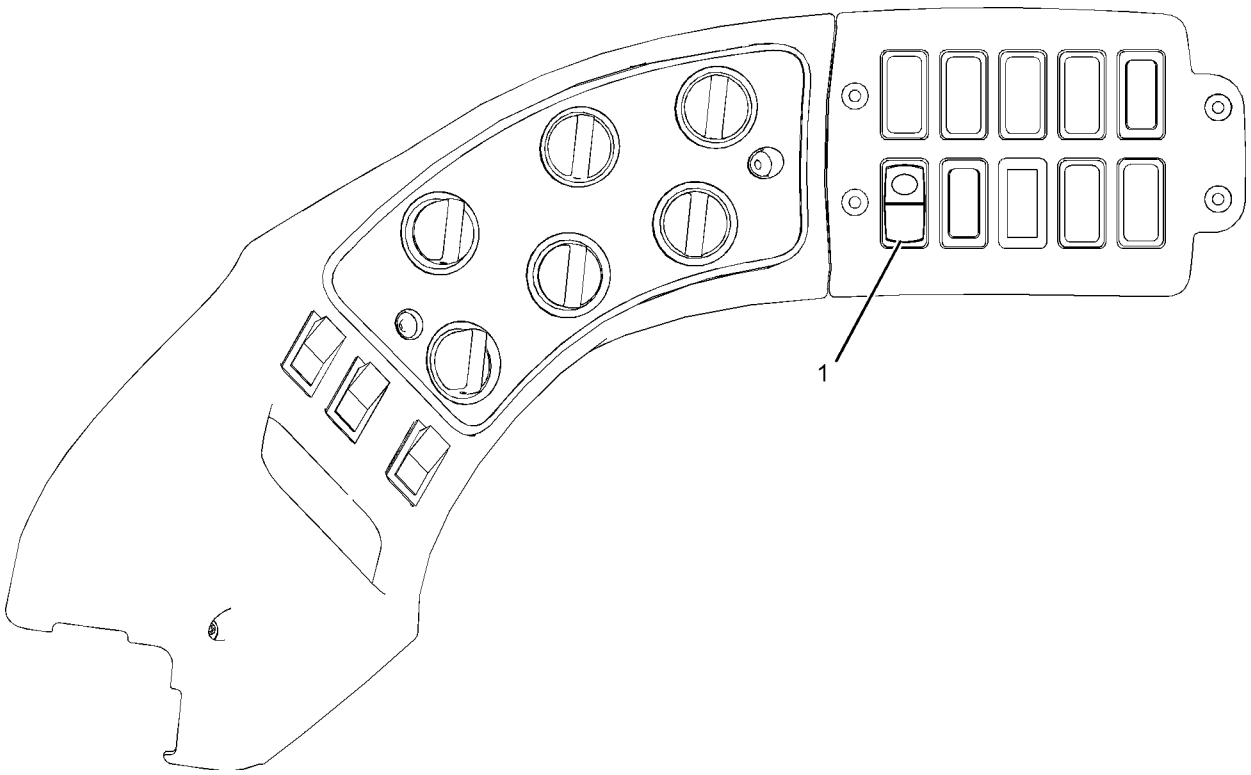

GRAPHIC #1 **<END>** g01080120

262-9949 SWITCH GP-ROCKER

S/N: JLX1-UP

PART OF 306-5348, 380-7177 WIRING GP-CAB

SMCS-7332 **i02251383**

NOTE	REF NO	GRAPHIC REF	PART NUMBER	QTY	PART NAME 1 2 3 4 5 6 (PRODUCT LEVEL)	SEE PAGE
	1	1	**236-4623**	1	SWITCH AS-ROCKER (24-VOLT) (AUTO REVERSING FAN)	

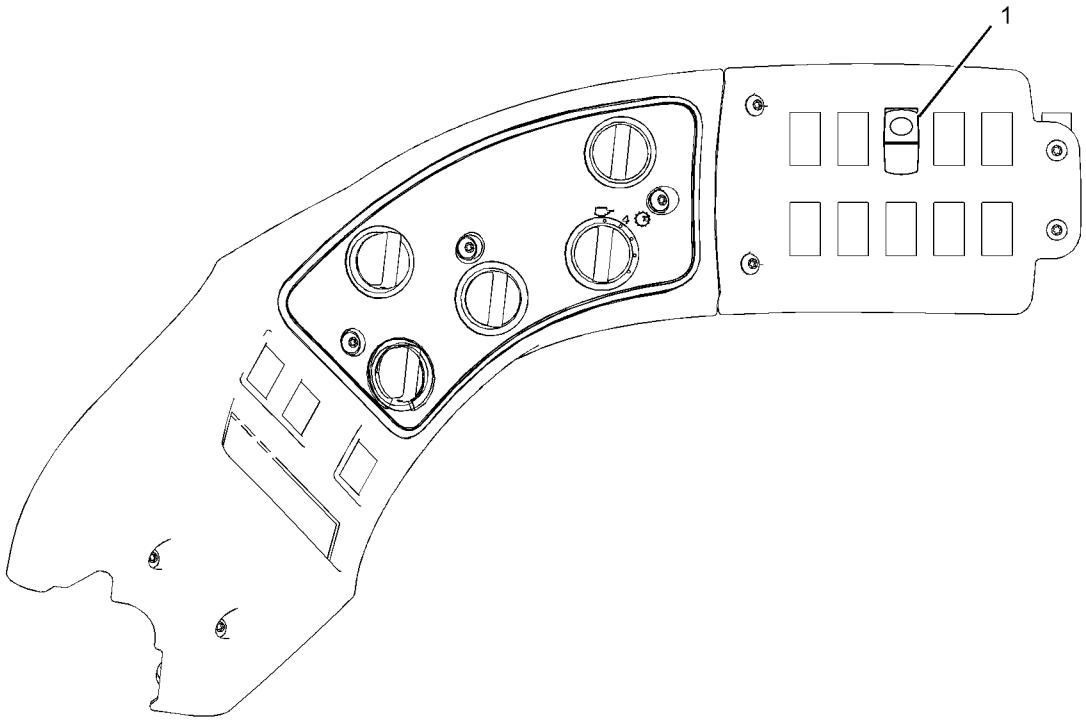

LEFT SIDE VIEW

GRAPHIC #1 **<END>** g01116598

106-0107 SWITCH GP-ROTARY

S/N: JLX1-UP

PART OF 377-3272 CONTROL AR-AUTODIG, 377-3273 CONTROL GP-AUTODIG

SMCS-7332 **i02305918**

NOTE	REF NO	GRAPHIC REF	PART NUMBER	QTY	PART NAME 1 2 3 4 5 6 (PRODUCT LEVEL)	SEE PAGE
	1	1	**102-8805**	1	KIT-RECEPTACLE (6-PIN)	
					(INCLUDES RECEPTACLE AS & WEDGE)	
	2	1	**3E-3383**	1	WEDGE-RECEPTACLE LOCK (6-PIN)	
	3	1	**8T-8737**	1	PLUG-SEAL	
	4	1	**144-1636**	5	PIN-CONNECTOR (14-GA TO 18-GA)	
M	5	1	**7Y-5458**	1	NUT (M12X1-THD)	
	6	1	**7Y-5464**	1	WASHER (12.2X15.4X0.5-MM THK)	
	7	1	**106-0210**	1	SEAL	

M - METRIC PART

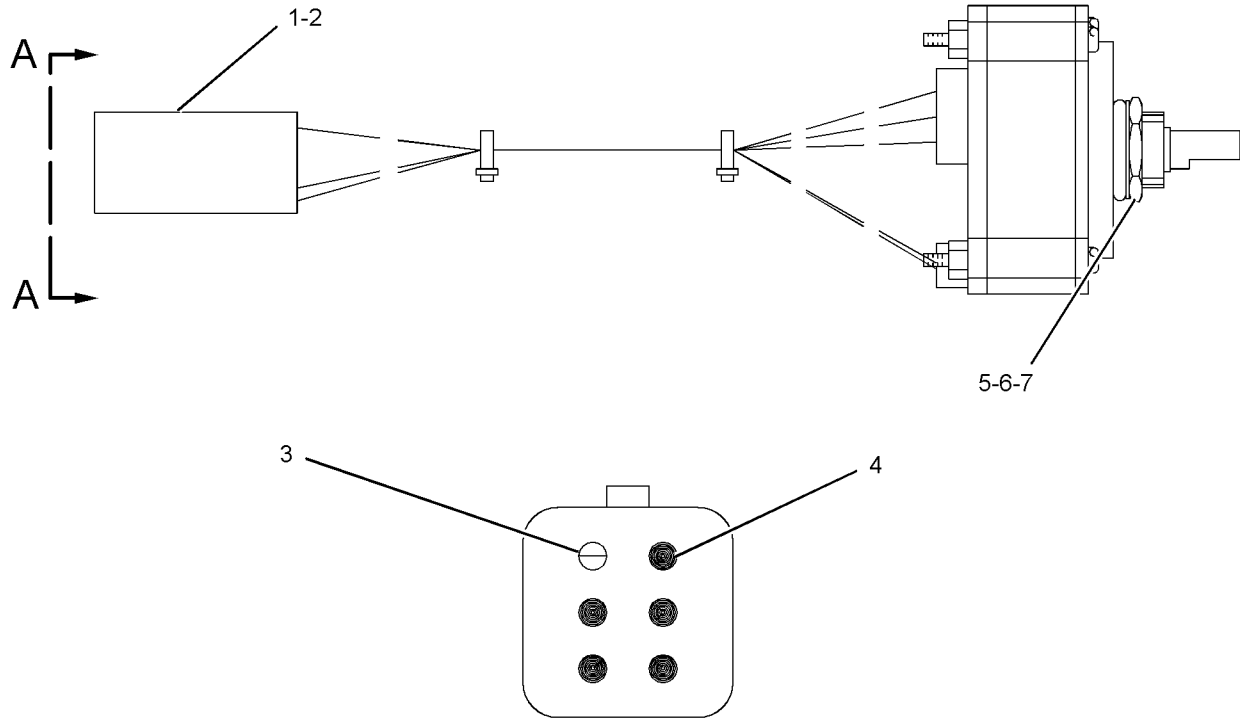

VIEW A-A

GRAPHIC #1 **<END>** g01098706

252-5924 SWITCH GP-SECONDARY STEERING

S/N: JLX1-UP

PART OF 373-8267 STEERING AR-SECONDARY

SMCS-7332 **i02307749**

NOTE	REF NO	GRAPHIC REF	PART NUMBER	QTY	PART NAME 1 2 3 4 5 6 (PRODUCT LEVEL)	SEE PAGE
	1	1	**236-4615**	1	SWITCH AS-ROCKER (SECONDARY STEERING)	

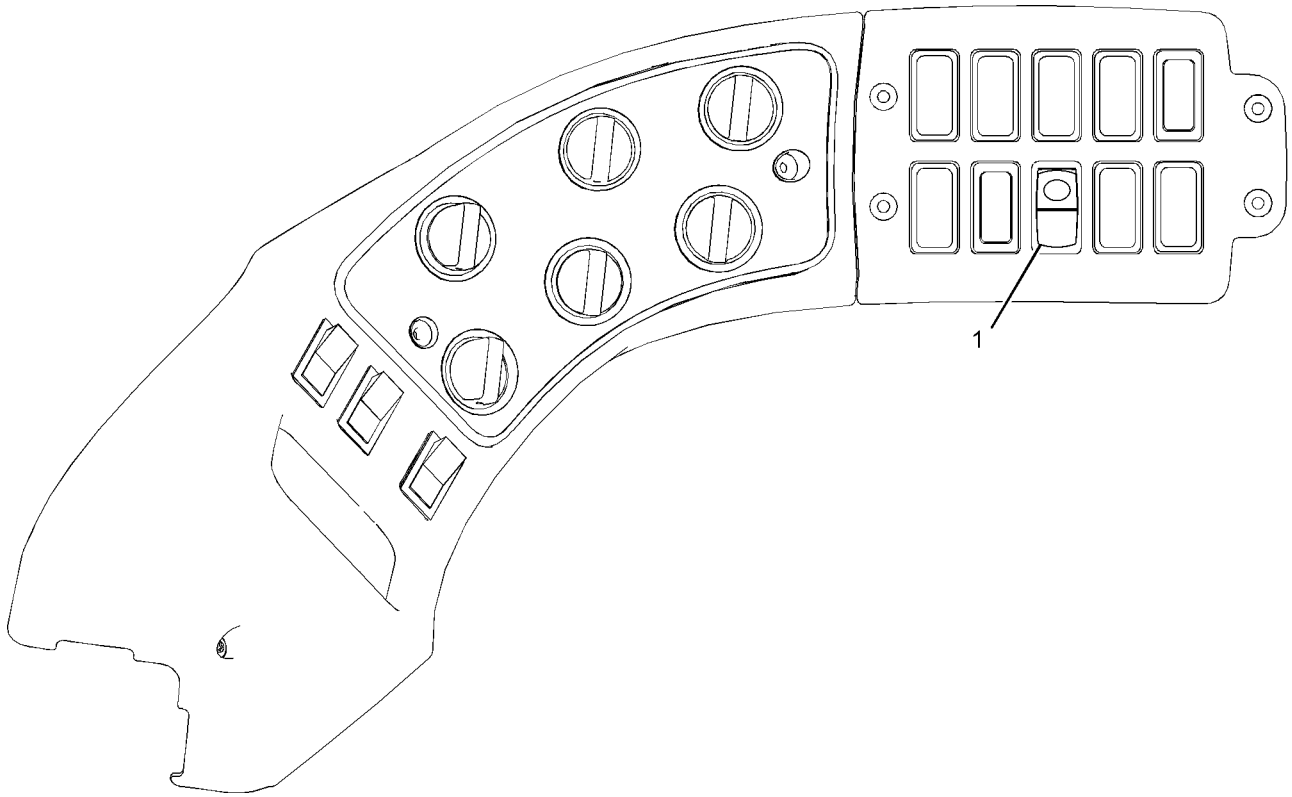

GRAPHIC #1 **<END>** g01079142

252-5920 SWITCH GP-SIGNAL–TURN

S/N: JLX1-UP

PART OF 373-5885 CAB AR

SMCS-7332 **i03008556**

NOTE	REF NO	GRAPHIC REF	PART NUMBER	QTY	PART NAME 1 2 3 4 5 6 (PRODUCT LEVEL)	SEE PAGE
	1	1	**8N-2622**	1	LEVER (TURN SIGNAL SWITCH)	
	2	1	**134-9569**	1	SWITCH AS-TURN SIGNAL	
		1	**5L-7200**	1	SCREW (8-32X0.375-IN)	
		1	**9B-7233**	1	LOCKWASHER	
	3	1	**153-3945**	1	COVER AS (RH)	
	4	1	**154-4563**	1	HARNESS AS-LIGHTING (TURN SIGNAL)	
	5	1	**172-9200**	1	SUPPRESSOR-ARC	
	6	1	**201-5555**	1	PLATE-INSTRUCTION (TURN SIGNAL)	
	7	1	**214-9453**	1	BOOT	
	8	1	**214-9454**	1	BRACKET AS	
	9	1	**217-8166**	1	FLASHER AS (24-VOLT)	
	10	1	**236-4616**	1	SWITCH AS-ROCKER (HAZARD)	
	11	1	**096-6166**	3	WASHER-HARD (4.5X9X1-MM THK)	
M	12	1	**123-0707**	3	SCREW-HEX SOCKET (M4X0.7X20-MM)	
	13	1	**189-3158**	1	SUPPRESSOR-ARC	
M	14	1	**5C-8312**	3	NUT (M4X0.7-THD)	
M	15	1	**6V-3938**	2	BOLT (M10X1.5X20-MM)	
M	16	1	**8T-0288**	2	BOLT (M5X0.8X12-MM)	
	17	1	**8T-0328**	2	WASHER-HARD (5.5X10X1-MM THK)	
	18	1	**8T-4121**	6	WASHER-HARD (11X21X2.5-MM THK)	
	19	1	**9M-8406**	1	CLIP	

M - METRIC PART

252-5920 **SWITCH GP-SIGNAL (*contd.*)** **i03008556**

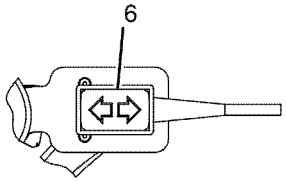

VIEW G-G

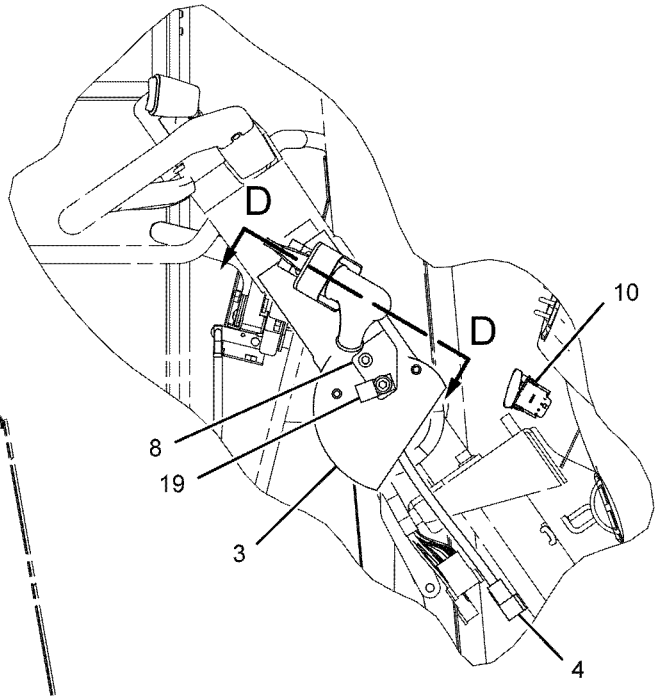

VIEW OF AREA A

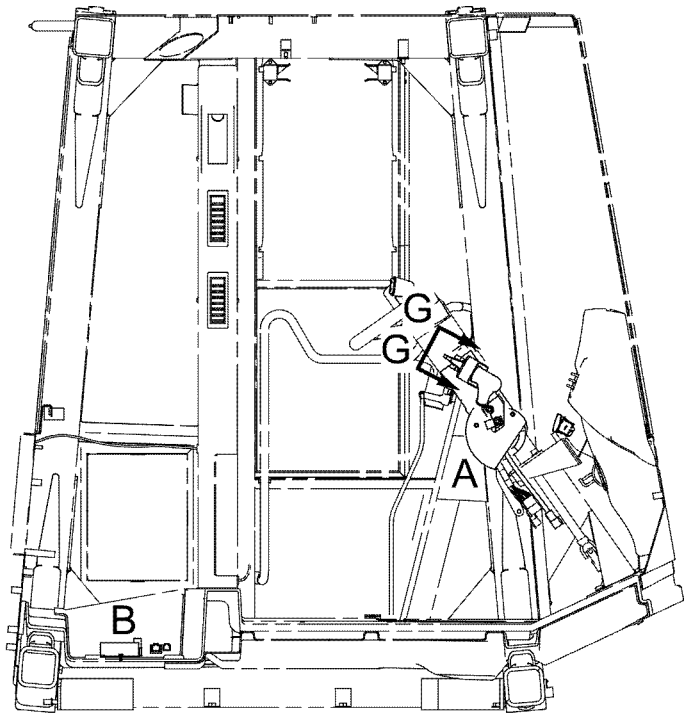

RIGHT SIDE VIEW

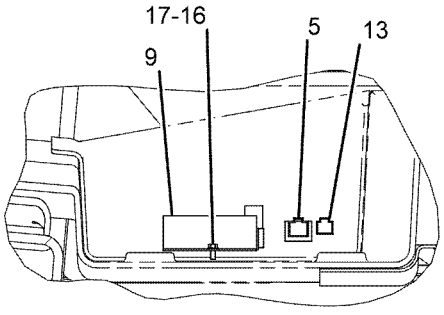

VIEW OF AREA B

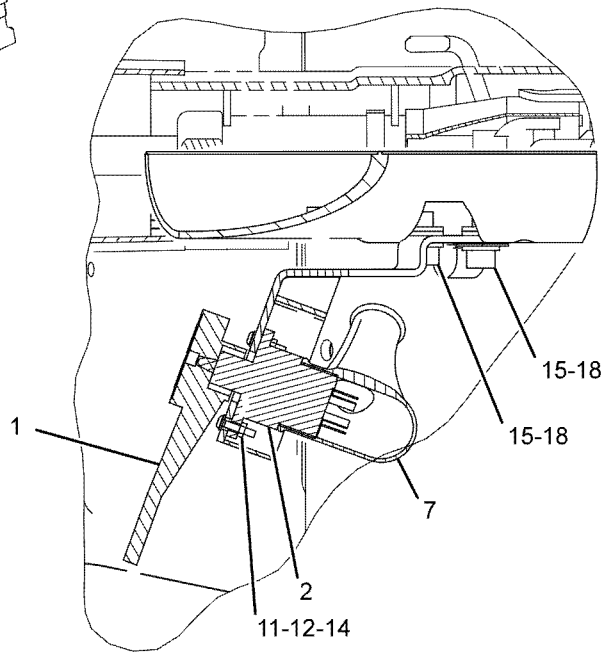

SECTION D-D

GRAPHIC #1 **<END>** g01116771

253-3951 SWITCH GP-SIGNAL–TURN

S/N: JLX1-UP

PART OF 373-5885 CAB AR, 373-5884 CAB AR-ENCLOSED ROPS

SMCS-7332 **i04314398**

NOTE	REF NO	GRAPHIC REF	PART NUMBER	QTY	PART NAME 1 2 3 4 5 6 (PRODUCT LEVEL)	SEE PAGE
	1	1	**8N-2622**	1	LEVER (TURN SIGNAL SWITCH)	
	2	1	**134-9569**	1	SWITCH AS-TURN SIGNAL	
		1	**5L-7200**	1	SCREW (8-32X0.375-IN)	
		1	**9B-7233**	1	LOCKWASHER	
	3	1	**149-0668**	1	COVER	
	4	1	**154-4563**	1	HARNESS AS-LIGHTING (TURN SIGNAL)	
		1	**102-8805**	1	KIT-RECEPTACLE (6-PIN)	
					(INLUDES RECEPTACLE AS & WEDGE)	
	5	1	**154-8262**	1	BRACKET AS	
	6	1	**172-9200**	1	SUPPRESSOR-ARC	
	7	1	**201-5555**	1	PLATE-INSTRUCTION (TURN SIGNAL)	
	8	1	**217-8166**	1	FLASHER AS (24-VOLT)	
	9	1	**236-4616**	1	SWITCH AS-ROCKER (HAZARD)	
	10	1	**189-3158**	1	SUPPRESSOR-ARC	
M	11	1	**7Y-3173**	3	SCREW-BUTTON HEAD (M4X0.7X12-MM)	
M	12	1	**8T-0288**	2	BOLT (M5X0.8X12-MM)	
	13	1	**8T-0328**	2	WASHER-HARD (5.5X10X1-MM THK)	
M	14	1	**8T-4200**	2	BOLT (M8X1.25X16-MM)	
	15	1	**8T-4224**	2	WASHER-HARD (8.8X16X2-MM THK)	
	17	1	**9X-2038**	4	WASHER (7X19X2-MM THK)	
M	18	1	**9X-2042**	4	SCREW-TRUSS HEAD (M6X1X12-MM)	
	19	1	**214-9453**	1	BOOT	

M - METRIC PART

253-3951 **SWITCH GP-SIGNAL (*contd.*)** **i04314398**

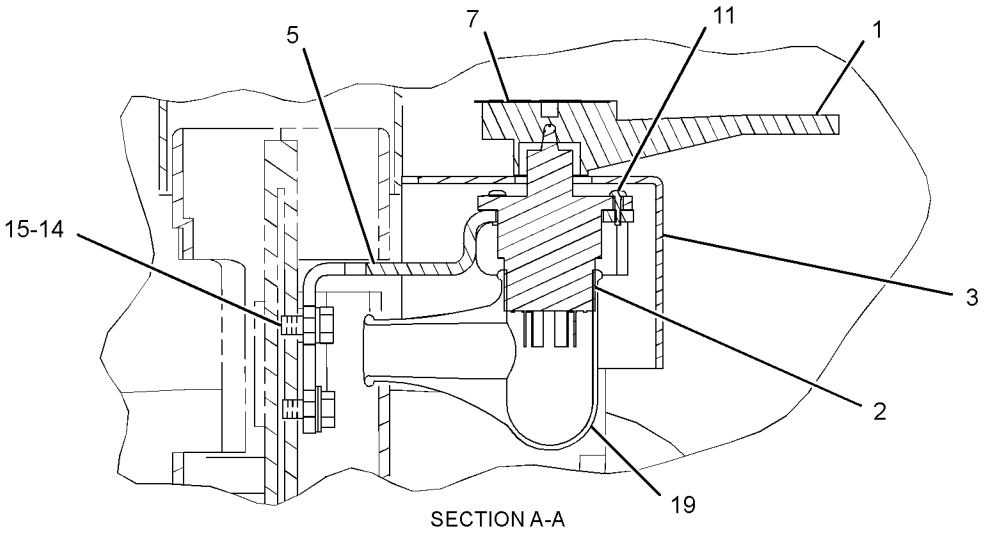

SECTION A-A

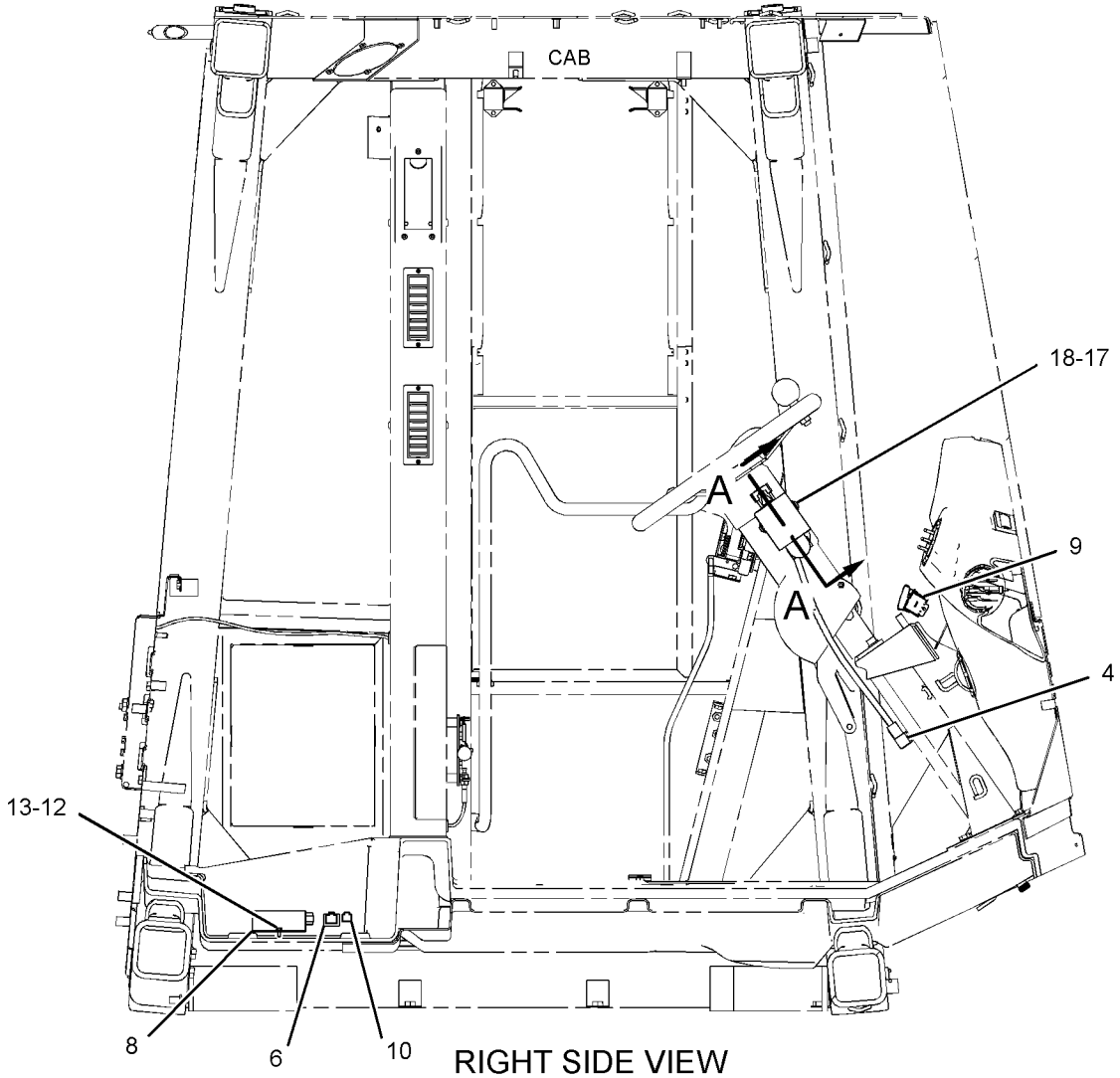

RIGHT SIDE VIEW

GRAPHIC #1

<END>

g02477831

275-7741 SWITCH GP-WIPER–CAB

S/N: JLX1-UP
24-VOLT, INTERMITTENT
PART OF 375-5761 WIRING GP-CAB

SMCS-7332 **i02992478**

NOTE	REF NO	GRAPHIC REF	PART NUMBER	QTY	PART NAME 1 2 3 4 5 6 (PRODUCT LEVEL)	SEE PAGE
	1	1	**6V-8369**	1	NUT (7/16-28-THD)	
	2	1	**2H-3920**	1	LOCKWASHER	
	3	1	**8T-8737**	2	PLUG-SEAL	
	4	1	**186-3735**	6	PIN-CONNECTOR (16-GA TO 18-GA)	
	5	1	**102-8806**	1	KIT-RECEPTACLE (8-PIN)	
					(INCLUDES RECEPTACLE AS & WEDGE)	

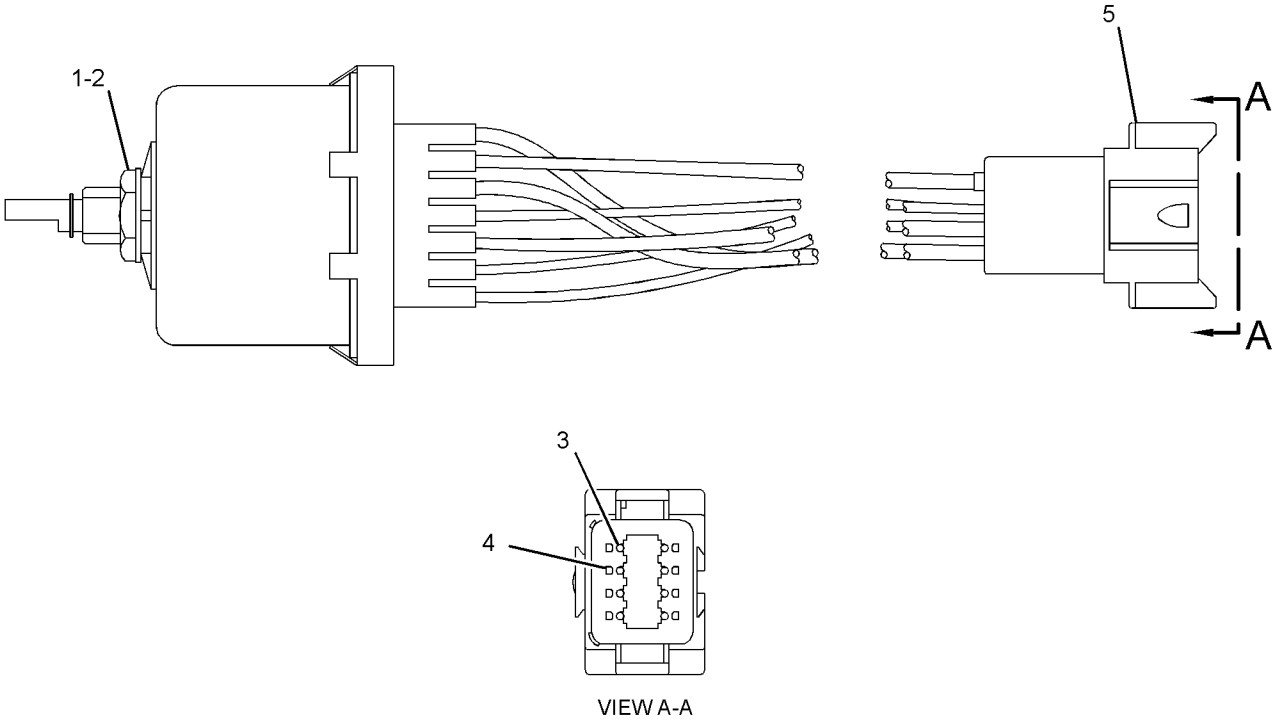

GRAPHIC #1 **<END>** g01445891

239-1134 VALVE GP-ETHER STARTING

S/N: JLX1-UP
24-VOLT, CONTINUOUS
PART OF 261-3802 STARTING AID GP-ETHER

SMCS-1456 **i03907816**

NOTE	REF NO	GRAPHIC REF	PART NUMBER	QTY	PART NAME 1 2 3 4 5 6 (PRODUCT LEVEL)	SEE PAGE
	1	1	**7N-9801**	1	GASKET	
	2	1	**102-8802**	1	KIT-RECEPTACLE (2-PIN)	
					(INCLUDES RECEPTACLE AS & WEDGE)	
	3	1	**8T-8729**	2	PIN-CONNECTOR (16-GA TO 18-GA)	
	4	1	**358-4889**	1	FILTER (ETHER START)	

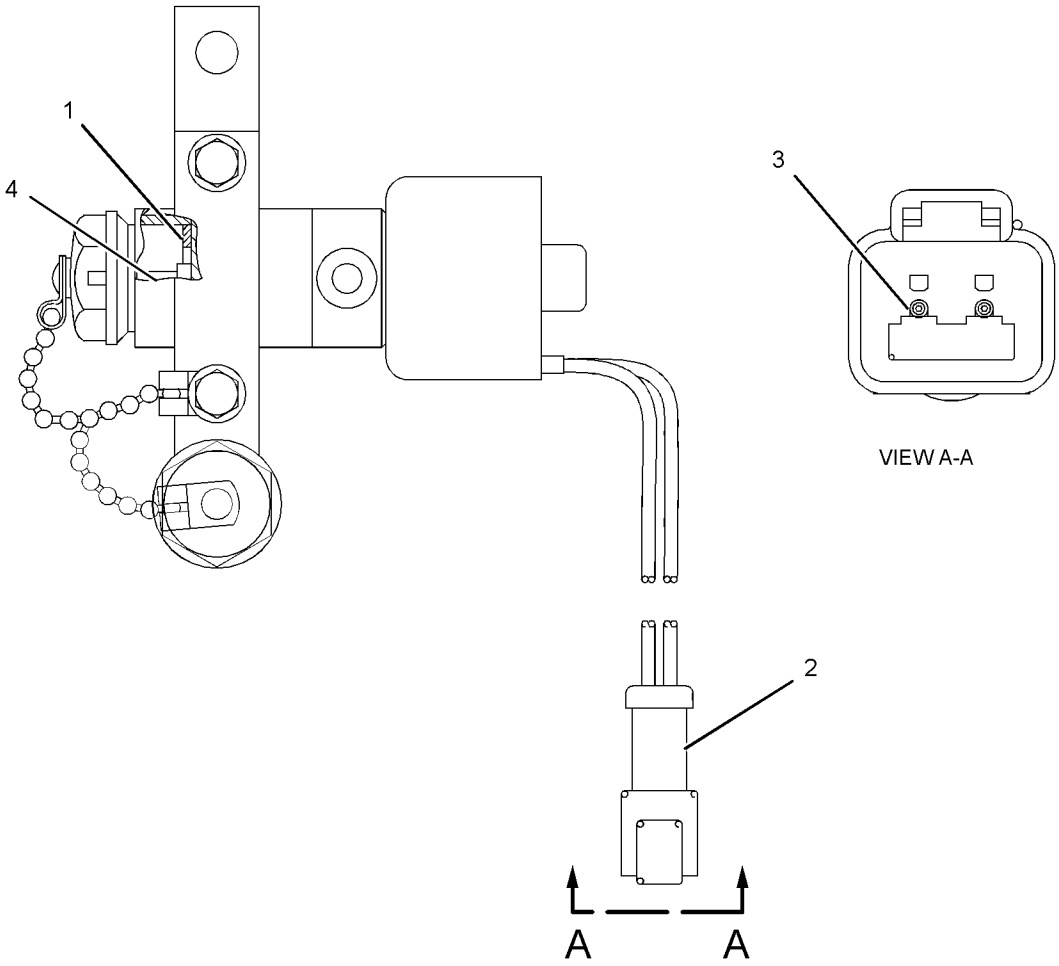

GRAPHIC #1 **<END>** g02138138

237-0233 WARNING GP-BACKUP

S/N: JLX1-UP

PART OF 372-2873 ELECTRICAL AR

SMCS-7406 **i06031534**

NOTE	REF NO	GRAPHIC REF	PART NUMBER	QTY	PART NAME 1 2 3 4 5 6 (PRODUCT LEVEL)	SEE PAGE
	1	1	**213-9100**	1	ALARM AS (BACKUP)	
		1	**102-8802**	1	KIT-RECEPTACLE (2-PIN)	
					(INCLUDES RECEPTACLE AS AND WEDGE)	
		1	**8T-8729**	2	PIN-CONNECTOR (16-GA TO 18-GA)	
E		1	**9X-1813**		SLEEVE (29-CM)	
	2	1	**7X-7729**	3	WASHER (11X25X3-MM THK)	
M	3	1	**8T-4133**	3	NUT (M10X1.5-THD)	

E - ORDER BY THE CENTIMETER
M - METRIC PART

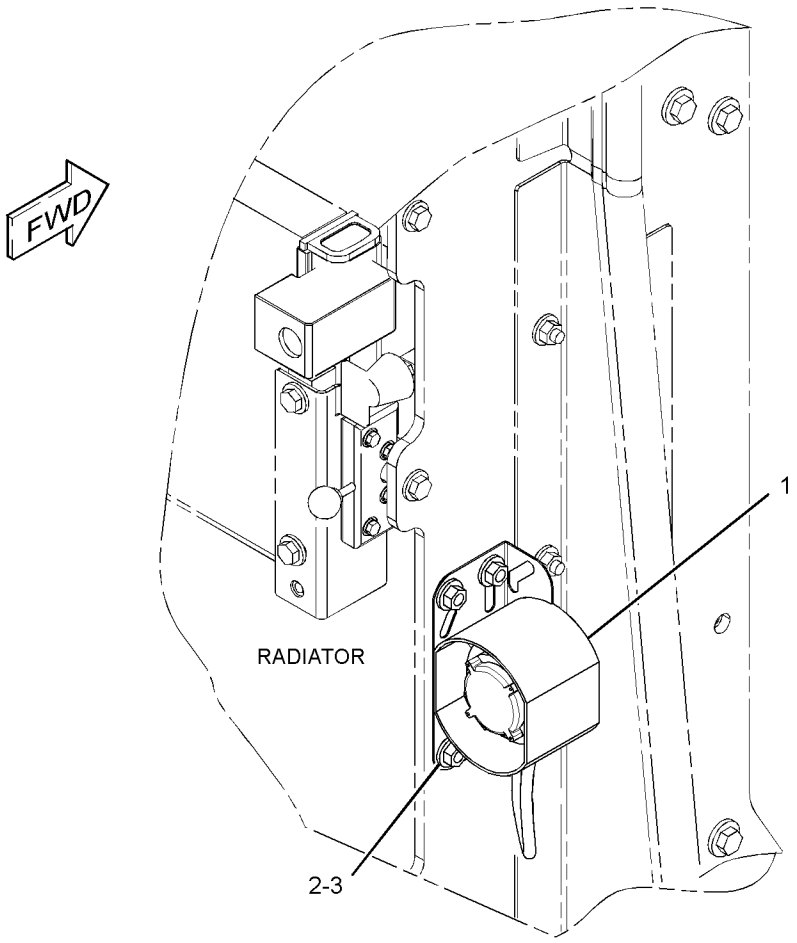

GRAPHIC #1 **<END>** g03782114

281-8741 WIRING GP-AUTOLUBE CONTROL

S/N: JLX1-UP

PART OF 373-8269, 373-8294, 386-0131 LUBRICATION AR-AUTOMATIC

SMCS-1408, 7540 **i05667850**

NOTE	REF NO	GRAPHIC REF	PART NUMBER	QTY	PART NAME 1 2 3 4 5 6 (PRODUCT LEVEL)	SEE PAGE
	1	1	**277-8271**	1	HARNESS AS-PUMP (JUMPER)	
		1	**102-8806**	1	KIT-RECEPTACLE (8-PIN)	
					(INCLUDES RECEPTACLE AS & WEDGE)	
		1	**8T-8729**	14	PIN-CONNECTOR (16-GA TO 18-GA)	
		1	**8T-8737**	2	PLUG-SEAL	
E		1	**114-8844**		SLEEVE-PLASTIC (20-CM)	
		1	**146-4055**	1	RECEPTACLE AS	
	2	1	**277-8272**	1	HARNESS AS-SWITCH (LUBRICATION PRESSURE)	
		1	**102-8802**	1	KIT-RECEPTACLE (2-PIN)	
					(INCLUDES RECEPTACLE AS & WEDGE)	
		1	**8T-8729**	4	PIN-CONNECTOR (16-GA TO 18-GA)	
E		1	**114-8843**		SLEEVE-PLASTIC (20-CM)	
		1	**146-4073**	1	RECEPTACLE AS	
	3	1	**281-8742**	1	HARNESS AS-PUMP (LUBRICATION, REAR FRAME)	
		1	**102-8804**	1	KIT-RECEPTACLE (4-PIN)	
					(INCLUDES RECEPTACLE AS & WEDGE)	
		1	**8T-8729**	3	PIN-CONNECTOR (16-GA TO 18-GA)	
		1	**8T-8730**	8	SOCKET-CONNECTOR (16-GA TO 18-GA)	
		1	**8T-8737**	3	PLUG-SEAL	
E		1	**114-8843**		SLEEVE-PLASTIC (40-CM)	
E		1	**114-8844**		SLEEVE-PLASTIC (20-CM)	
E		1	**125-7874**		TUBE-HEAT SHRINK (5.72-MM DIA) (5-CM)	
		1	**155-2265**	1	KIT-CONNECTING PLUG (8-PIN)	
		1	**155-2270**	1	KIT-CONNECTING PLUG (2-PIN)	
					(EACH KIT INCLUDES PLUG AS, WEDGE & INTERFACE SEAL)	
	4	1	**7K-1181**	37	STRAP-CABLE	
	5	1	**4K-8864**	1	CLIP	
	6	1	**4P-7581**	1	CLIP	
	7	1	**5P-9299**	2	CLIP	
	8	1	**8T-4121**	3	WASHER-HARD (11X21X2.5-MM THK)	
M	9	1	**8T-4137**	3	BOLT (M10X1.5X20-MM)	

E - ORDER BY THE CENTIMETER
M - METRIC PART

281-8741 **WIRING GP-AUTOLUBE CONTROL (*contd.*)** **i05667850**

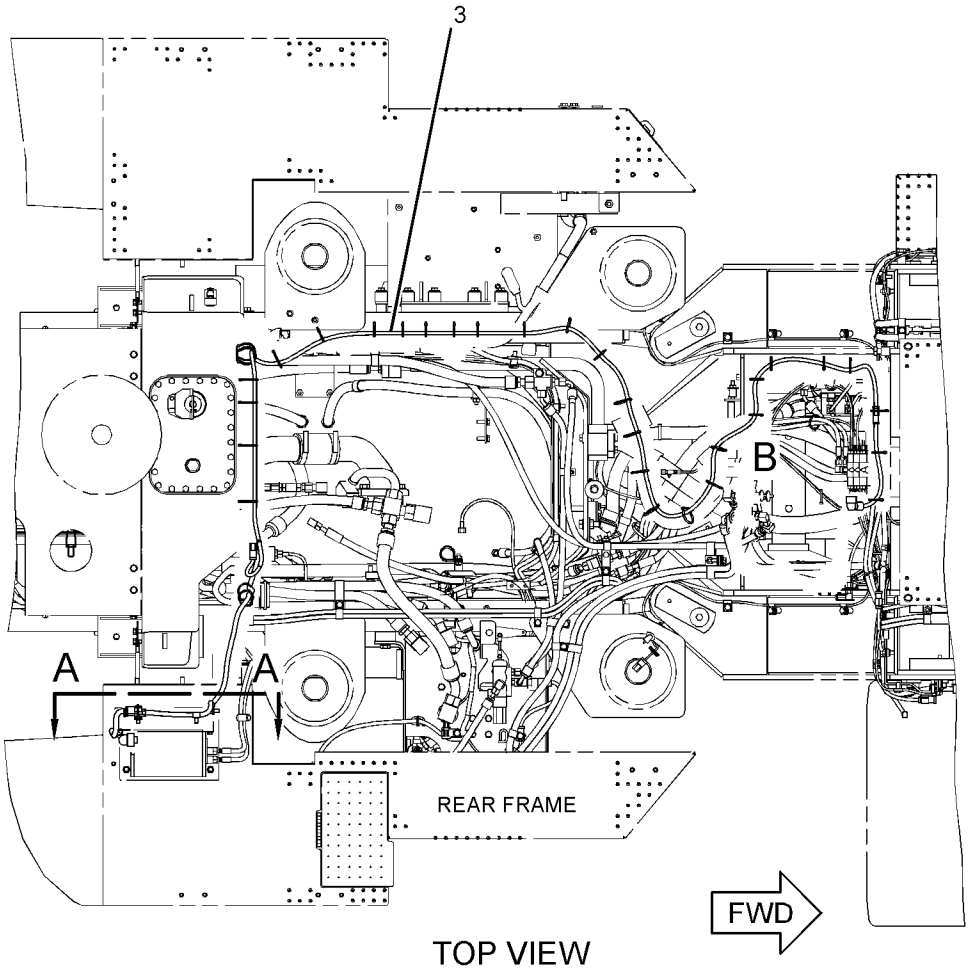

TOP VIEW

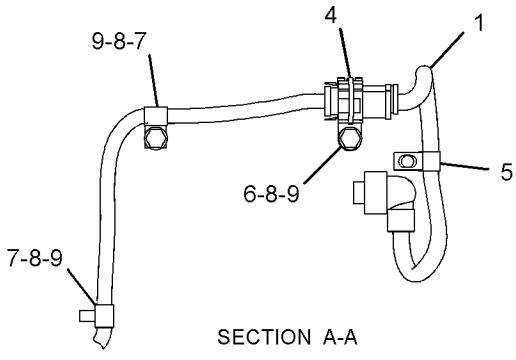

SECTION A-A

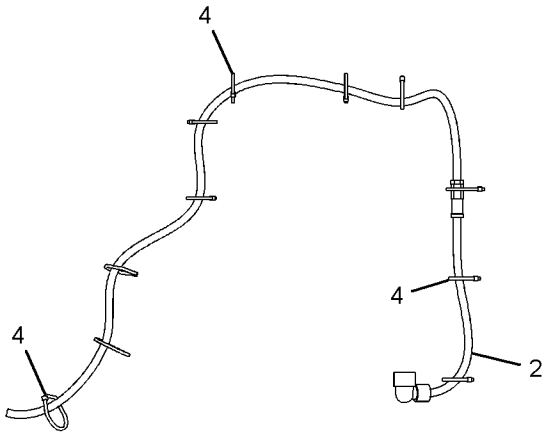

VIEW OF AREA B

GRAPHIC #1 **<END>** g02175446

241-0638 WIRING GP-AXLE TEMPERATURE–OIL

S/N: JLX1-UP

PART OF 372-2873 ELECTRICAL AR

SMCS-1408, 3278, 429T **i03194081**

NOTE	REF NO	GRAPHIC REF	PART NUMBER	QTY	PART NAME 1 2 3 4 5 6 (PRODUCT LEVEL)	SEE PAGE
	1	1	**3S-2093**	2	STRAP-CABLE	
	2	1	**7K-1181**	1	STRAP-CABLE	
C	3	1	**264-4297**	1	SENSOR AS-TEMPERATURE (FRONT AXLE OIL)	
C	3A	1	**264-4297**	1	SENSOR AS-TEMPERATURE (REAR AXLE OIL)	
					(EACH SENSOR GP INCLUDES)	
		1	**137-6645**	1	PAD-CONNECTOR (CONNECTOR)	
C	4	1	**329-1428**	2	BRACKET	
	5	1	**247-8474**	1	HARNESS AS-SENSOR (AXLE, REAR)	
	6	1	**247-8475**	1	HARNESS AS-SENSOR (AXLE OIL COOLER TEMPERATURE)	
	7	1	**3K-0360**	2	SEAL-O-RING	
	9	1	**5P-8247**	4	WASHER-HARD (17X32X3.5-MM THK)	
	10	1	**5P-9085**	4	CLIP	
CM	11	1	**7X-2552**	4	BOLT (M16X2X30-MM)	
C	12	1	**8T-4121**	6	WASHER-HARD (11X21X2.5-MM THK)	
M	14	1	**8T-4136**	1	BOLT (M10X1.5X25-MM)	
CM	15	1	**8T-4137**	5	BOLT (M10X1.5X20-MM)	
	16	1	**9M-8406**	2	CLIP	
	17	1	**130-5300**	1	CLIP	

C - CHANGE FROM PREVIOUS TYPE
M - METRIC PART

241-0638 **WIRING GP-AXLE TEMPERATURE (*contd.*)** **i03194081**

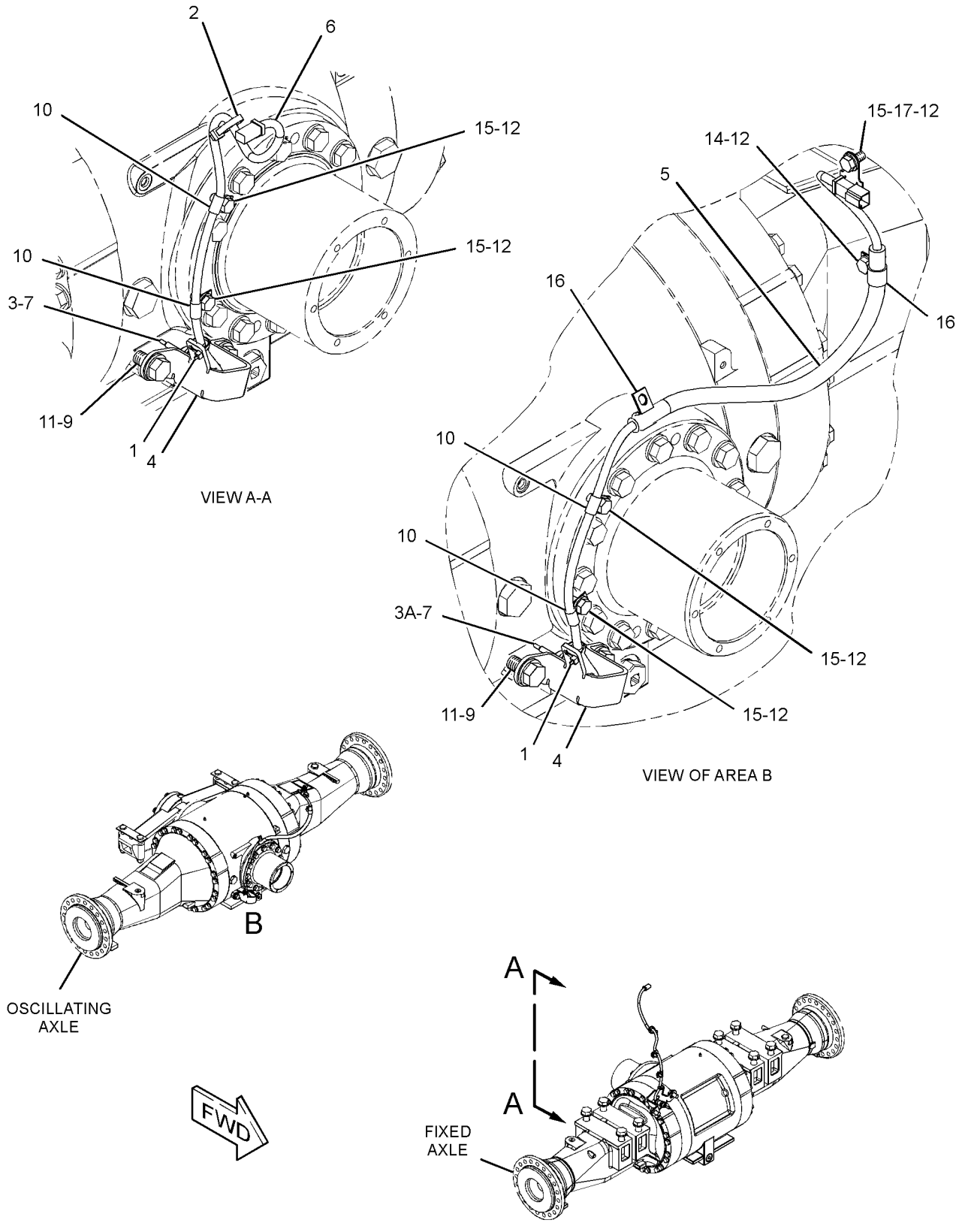

GRAPHIC #1 **<END>** g01622410

306-5348 WIRING GP-CAB—VARIABLE PITCH FAN

S/N: JLX1-223

PART OF 383-6027 CONTROL AR-FAN

SMCS-1408, 7301

i03257639

NOTE	REF NO	GRAPHIC REF	PART NUMBER	QTY	PART NAME 1 2 3 4 5 6 (PRODUCT LEVEL)	SEE PAGE
	1	1	**3E-5239**	1	RELAY AS (24-VOLT) (VARIABLE PITCH FAN)	
Y	2	1	*262-9949*	1	SWITCH GP-ROCKER (VARIABLE PITCH FAN)	315
	3	1	**306-5350**	1	HARNESS AS-CAB (VARIABLE PITCH FAN)	
M	4	1	**5C-9553**	1	BOLT (M6X1X16-MM)	
B	5	1	**7K-1181**	8	STRAP-CABLE	

B - USE AS REQUIRED
M - METRIC PART
Y - SEPARATE ILLUSTRATION

306-5348 **WIRING GP-CAB (*contd.*)** **i03257639**

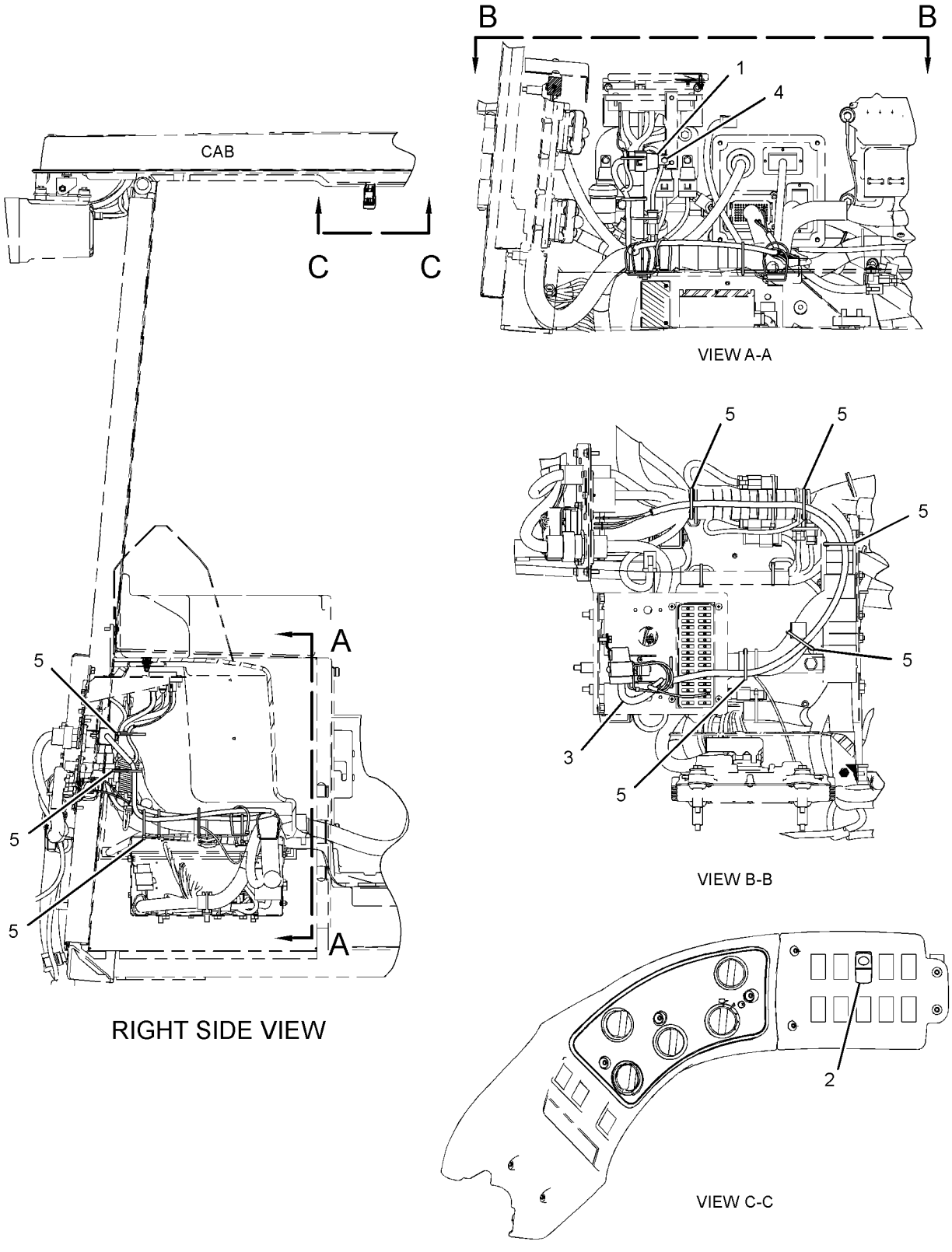

GRAPHIC #1 **<END>** g01571956

375-5761 WIRING GP-CAB

S/N: JLX1-UP

PART OF 373-5885 CAB AR, 373-5884 CAB AR-ENCLOSED ROPS

SMCS-1408, 7301 **i05555351**

NOTE	REF NO	GRAPHIC REF	PART NUMBER	QTY	PART NAME 1 2 3 4 5 6 (PRODUCT LEVEL)	SEE PAGE
	1	3	**3E-5239**	3	RELAY AS (24-VOLT)	
Y	2	3	**3E-6328**	1	ALARM GP (24-VOLT) (ACTION)	173
Y	3	1	**3E-6389**	1	LAMP GP-DOME (24-VOLT)	228
	4	2,3	**4P-8525**	11	SPACER (9X16X30-MM THK)	
	5	2	**4V-4164**	16	BUSHING-TERMINAL	
	6	2	**6I-1418**	8	SPACER (8.2X12.7X28.7-MM THK)	
	7	2	**6V-8369**	1	NUT (7/16-28-THD)	
	8	1,2,3	**7K-1181**	49	STRAP-CABLE	
	9	2	**7U-4891**	4	SCREW (10-32X1-IN)	
	10	1	**8C-6354**	1	CAP-RECEPTACLE (ET CONNECTOR)	
	11	2	**8T-9655**	16	MOUNT-ISOLATION	
	12	1	**8X-5804**	1	STRAP AS-GROUND	
	13	2	**096-0192**	16	LOCKWASHER (EXTERNAL TOOTH)	
	14	3	**9W-1441**	7	FUSE (15-AMPERE)	
	15	3	**9W-1442**	24	FUSE (10-AMPERE)	
	16	3	**9W-1446**	1	FUSE (20-AMPERE)	
	17	2	**098-8968**	16	WASHER (5X16X1.2-MM THK)	
	18	1	**108-3320**	1	SWITCH AS-ROTARY (24-VOLT, 5-POSITION) (RUNNING LIGHTS)	
		1	**9W-0852**	8	PIN-CONNECTOR (14-GA TO 16-GA)	
		1	**102-8806**	1	KIT-RECEPTACLE (8-PIN)	
					(INCLUDES RECEPTACLE AS & WEDGE)	
	19	2	**110-6109**	1	KNOB-CONTROL (FRONT WIPER)	
	19A	2	**110-6109**	1	KNOB-CONTROL (TEMPERATURE SELECT)	
	19B	2	**110-6109**	1	KNOB-CONTROL (REAR WIPER)	
	19C	2	**110-6109**	1	KNOB-CONTROL (VARIABLE SHIFT CONTROL)	
	19D	1	**110-6109**	1	KNOB-CONTROL (LAMP)	
	20	1	**110-7887**	1	SWITCH AS-START (KEY)	
		1	**7T-6799**	1	NUT-MOUNTING (1-32-THD)	
		1	**8T-8729**	4	PIN-CONNECTOR (16-GA TO 18-GA)	
		1	**102-8804**	1	KIT-RECEPTACLE (4-PIN)	
					(INCLUDES RECEPTACLE AS & WEDGE)	
	21	1	**117-2311**	1	SOCKET-AUXILIARY POWER (12-VOLT)	
	22	3	**123-2896**	1	GASKET	
	23	2	**132-7084**	1	SWITCH AS-ROTARY (WIPER, WASHER)	
		2	**2H-3920**	1	LOCKWASHER	
		2	**6V-8369**	1	NUT (7/16-28-THD)	
		2	**8T-8729**	6	PIN-CONNECTOR (16-GA TO 18-GA)	
		2	**102-8805**	1	KIT-RECEPTACLE (6-PIN)	
					(INCLUDES RECEPTACLE AS & WEDGE)	
	24	1	**155-2271**	1	KIT-CONNECTING PLUG (4-PIN)	
					(INCLUDES PLUG AS, WEDGE, & INTERFACE SEAL)	
	25	1	**172-9200**	1	SUPPRESSOR-ARC	
	26	2	**173-2234**	1	PLATE AS	
	27	2	**185-6335**	1	SWITCH AS-ROTARY (24-VOLT)	
		2	**8T-8737**	2	PLUG-SEAL	
		2	**9W-0852**	4	PIN-CONNECTOR (14-GA TO 16-GA)	
		2	**102-8805**	1	KIT-RECEPTACLE (6-PIN)	
					(INCLUDES RECEPTACLE AS & WEDGE)	
	28	2	**204-2281**	2	STRAP-CABLE	
	29	2	**204-8000**	2	MOUNTING-CABLE TIE	
	30	2	**234-5925**	1	GASKET	
	31	1	**235-5506**	1	HARNESS AS-LIGHTING (CAB FLOODLIGHTS)	
		1	**9X-3402**	8	SOCKET-CONNECTOR (16-GA TO 18-GA)	
					—OR—	
		1	**126-1768**	8	SOCKET-CONNECTOR (14-GA TO 16-GA)	

375-5761 **WIRING GP-CAB (*contd.*)** **i05555351**

NOTE	REF NO	GRAPHIC REF	PART NUMBER	QTY	PART NAME 1 2 3 4 5 6 (PRODUCT LEVEL)	SEE PAGE
		1	**2L-8066**	4	TERMINAL-RING (10-GA TO 12-GA, NO. 10 SCREW)	
		1	**155-2270**	4	KIT-CONNECTING PLUG (2-PIN)	
					(EACH PLUG KIT INCLUDES PLUG AS, WEDGE, & INTERFACE SEAL)	
	32	1	**236-4631**	4	BEZEL	
	33	3	**246-5459**	1	PLATE	
Y	34	1	**260-9602**	1	HARNESS AS-WIRING (SERVICE TOOL)	214
Y	35	2	**275-7741**	1	SWITCH GP-WIPER (24-VOLT)	322
	36	3	**340-7161**	1	CONVERTER-POWER (24-VOLT TO 12-VOLT)	
	37	2	**370-8337**	1	PLATE AS	
Y	38	1	**372-4873**	1	HARNESS AS-CAB	200
L	39	2	**372-4874**	1	RECEPTACLE AS	
		2	**8T-8737**	8	PLUG-SEAL	
		2	**9X-3401**	4	PIN-CONNECTOR (16-GA TO 18-GA)	
					—OR—	
		2	**126-1767**	4	PIN-CONNECTOR (14-GA TO 16-GA)	
	40	1	**375-5750**	1	MODULE GP-DISPLAY (GAUGE CLUSTER)	
	43	2	**132-5789**	2	CLIP	
	44	1	**134-2540**	1	RECEPTACLE AS-CONNECTOR (3-PIN)	
	46	1	**156-6175**	1	CLIP	
	47	1,2	**228-6089**	12	PLUG (ROCKER SWITCH)	
	48	1	**236-4608**	1	SWITCH AS-ROCKER (MODE SELECT)	
	49	2	**236-4609**	1	SWITCH AS-ROCKER (TRANSMISSION NEUT OVERRIDE)	
	50	2	**236-4610**	1	SWITCH AS-ROCKER (AIR CONDITIONER, HEATER) (AIR CONDITIONER, HEATER)	
	51	2	**236-4611**	1	SWITCH AS-ROCKER (FAN BLOWER SPEED)	
	52	2	**236-4619**	1	SWITCH AS-ROCKER (LIFT, TILT KICKOUT)	
	53	3	**242-8421**	1	PLATE AS	
J	54	2	**291-2165**	1	POTENTIOMETER AS (TEMPERATURE CONTROL)	
		2	**186-3735**	1	PIN-CONNECTOR (16-GA TO 18-GA)	
		2	**236-8722**	1	WASHER (10.5X22.2X1.6-MM THK)	
	55	2	**2H-3920**	4	LOCKWASHER	
R	56	2	**304-5687**	1	CONTROL GP-UNPROGRAMMED	
R	57	2	**304-5691**	1	CONTROL GP-UNPROGRAMMED	
	58	1,2	**3S-2093**	23	STRAP-CABLE	
	59	2	**4B-2049**	16	NUT (10-32-THD)	
	60	1,2,3	**4P-7581**	3	CLIP	
M	61	2	**5C-7261**	2	NUT (M8X1.25-THD)	
	62	2	**5P-8524**	1	GROMMET	
	64	2	**6D-6146**	8	SCREW-MACHINE (10-32X1.25-IN)	
	65	2	**6V-1889**	1	CLIP	
	66	3	**6V-2687**	8	SCREW-PAN HEAD (10-24X1-IN)	
M	67	3	**7X-0818**	3	BOLT (M8X1.25X45-MM)	
	69	2,3	**8T-4121**	7	WASHER-HARD (11X21X2.5-MM THK)	
M	70	3	**8T-4136**	1	BOLT (M10X1.5X25-MM)	
M	71	2	**8T-4137**	5	BOLT (M10X1.5X20-MM)	
M	72	3	**8T-4138**	8	BOLT (M6X1X20-MM)	
M	73	2	**8T-4171**	2	BOLT (M6X1X12-MM)	
M	74	2	**8T-4195**	1	BOLT (M10X1.5X30-MM)	
	75	3	**8T-4205**	7	WASHER-HARD (7.2X14.5X2-MM THK)	
	76	1	**4B-4280**	5	WASHER (13.5X27X2.5-MM THK)	
	77	2	**8T-4224**	2	WASHER-HARD (8.8X16X2-MM THK)	
M	78	1	**8T-4244**	5	NUT (M12X1.75-THD)	
M	79	3	**8T-4753**	2	SCREW (M5X0.8X20-MM)	
M	80	1,3	**8T-4970**	5	BOLT (M6X1X14-MM)	
M	81	2	**8T-6870**	8	BOLT (M8X1.25X70-MM)	
	82	2	**9M-5870**	8	GROMMET	
	83	2,3	**9N-0869**	11	WASHER-HARD (8.8X25.5X2-MM THK)	
M	84	1	**9X-1046**	3	SCREW (M4X0.7X18-MM)	
	85	1	**9X-6165**	1	WASHER (6.5X22X2.5-MM THK)	
	86	1,2,3	**9X-8256**	7	WASHER (6.6X12X2-MM THK)	

375-5761 **WIRING GP-CAB (*contd.*)** **i05555351**

NOTE	REF NO	GRAPHIC REF	PART NUMBER	QTY	PART NAME 1 2 3 4 5 6 (PRODUCT LEVEL)	SEE PAGE
	87	2	**320-9861**	1	GASKET	
	88	2	**311-2813**	1	SEAL	
	89	2	**225-6827**	1	GASKET	
	90	3	**189-3158**	1	SUPPRESSOR-ARC	
					AVAILABLE REPAIR KIT(S):	
J			**102-8803**	1	KIT-RECEPTACLE (3-PIN)	
L			**102-8801**	1	KIT-RECEPTACLE (12-PIN)	
					(EACH RECEPTACLE KIT INCLUDES RECEPTACLE AS & WEDGE)	

J - KIT MARKED J SERVICES PART MARKED J
L - KIT MARKED L SERVICES PART MARKED L
M - METRIC PART
R - REMFG PART MAY BE AVAILABLE
Y - SEPARATE ILLUSTRATION

375-5761 **WIRING GP-CAB (*contd.*)** **i05555351**

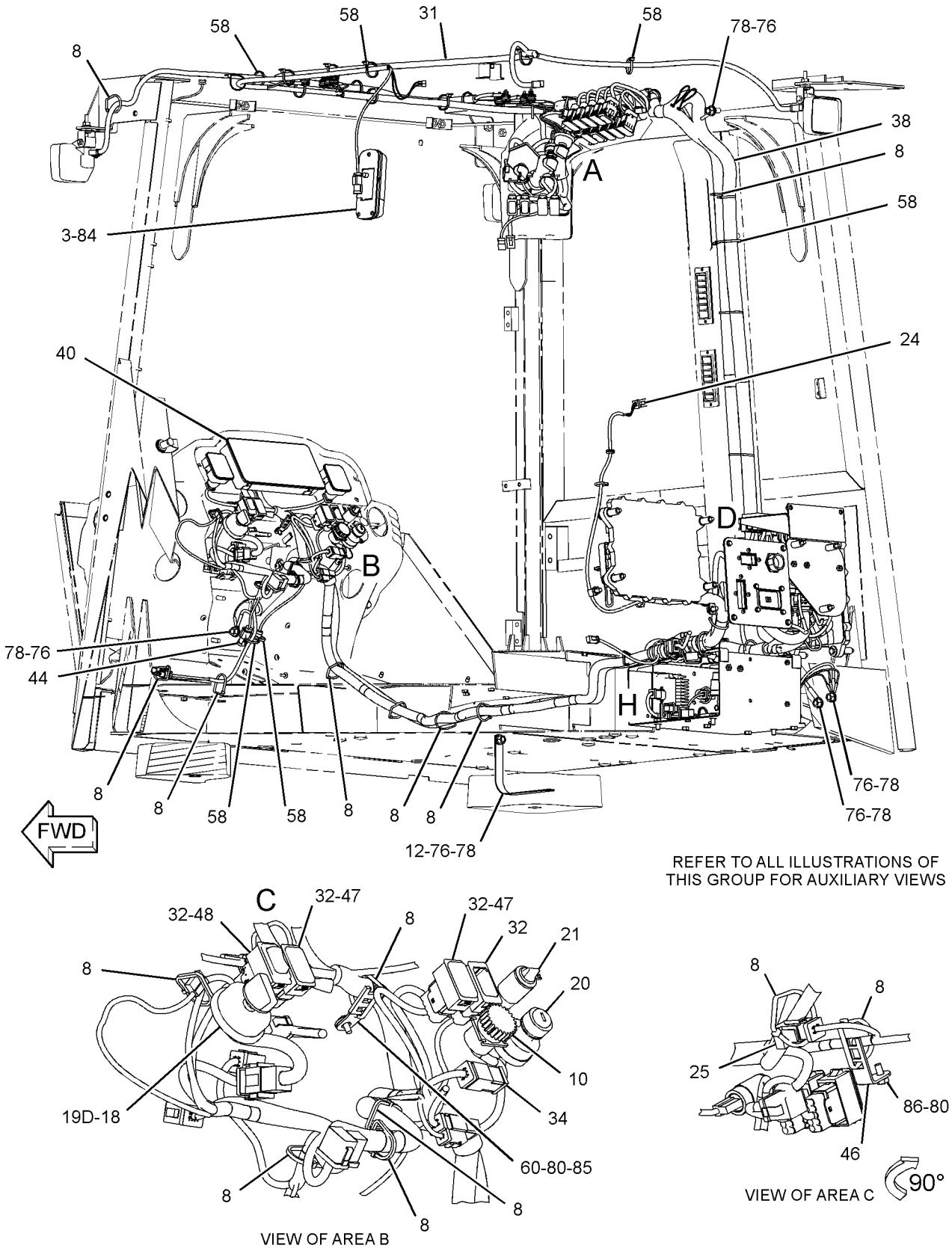

GRAPHIC #1 g03377710

375-5761 **WIRING GP-CAB (*contd.*)** **i05555351**

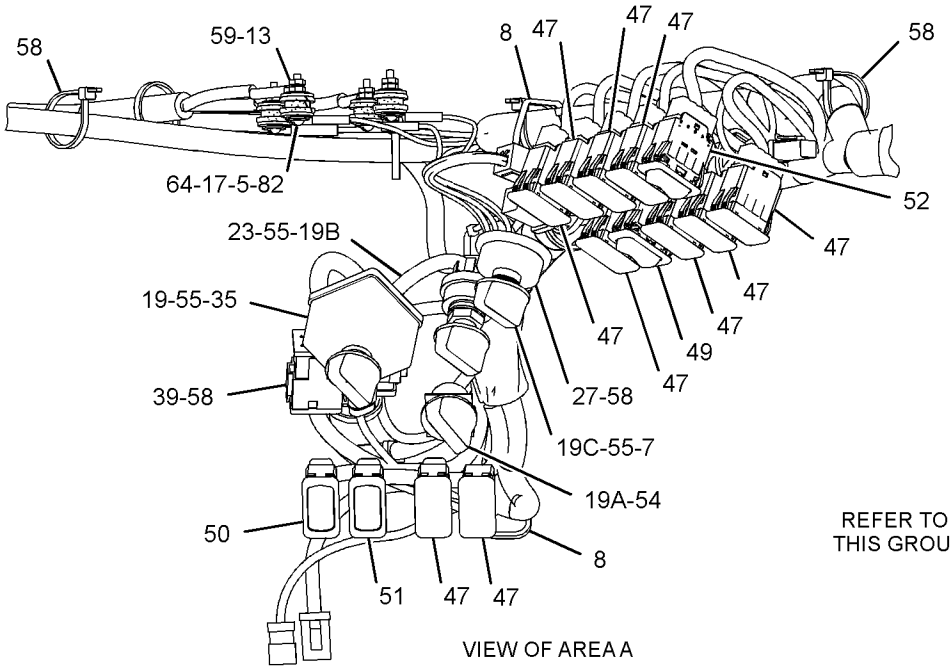

VIEW OF AREA A

REFER TO ALL ILLUSTRATIONS OF THIS GROUP FOR AUXILIARY VIEWS

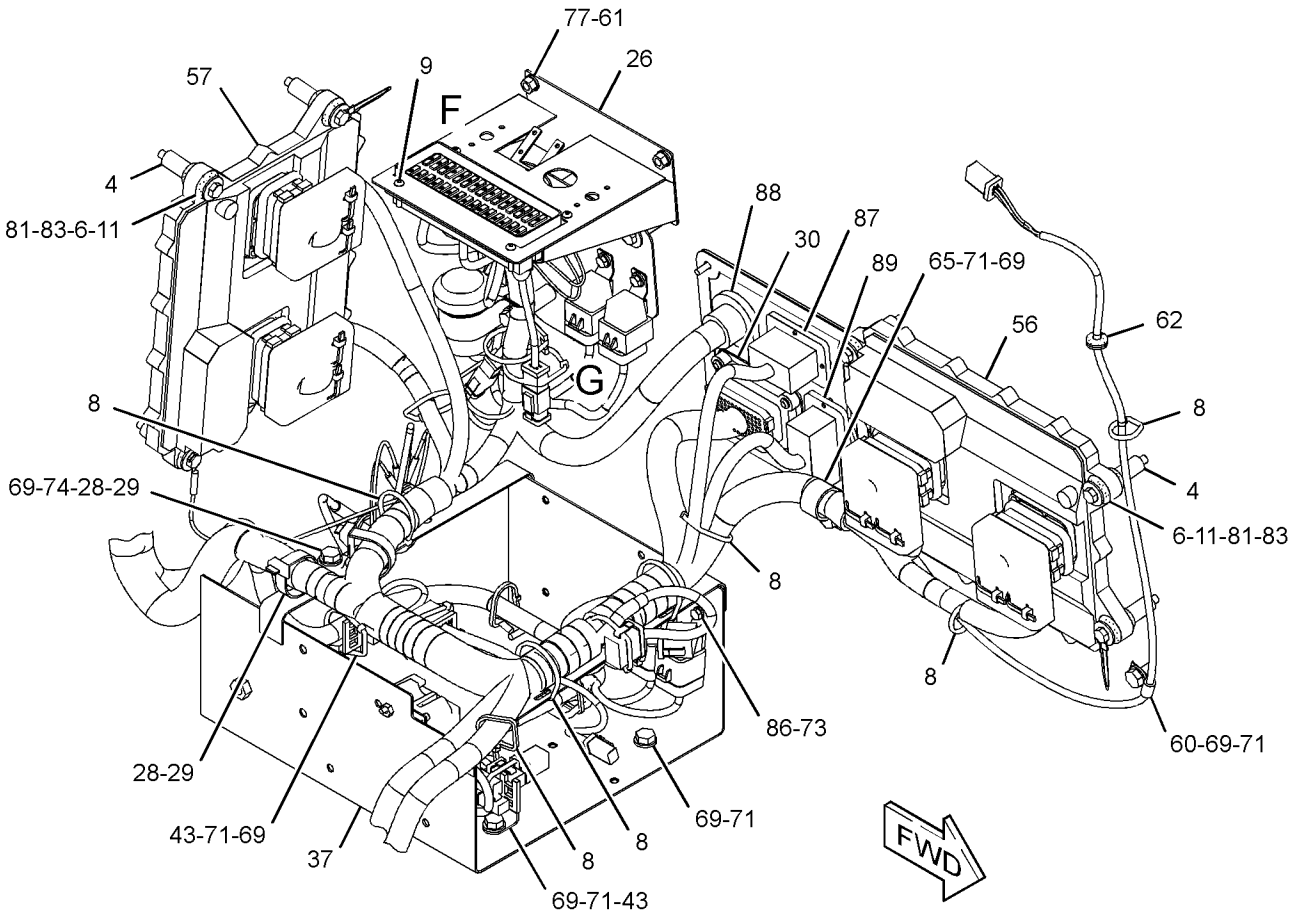

GRAPHIC #2 g03698141

375-5761 **WIRING GP-CAB (*contd.*)** **i05555351**

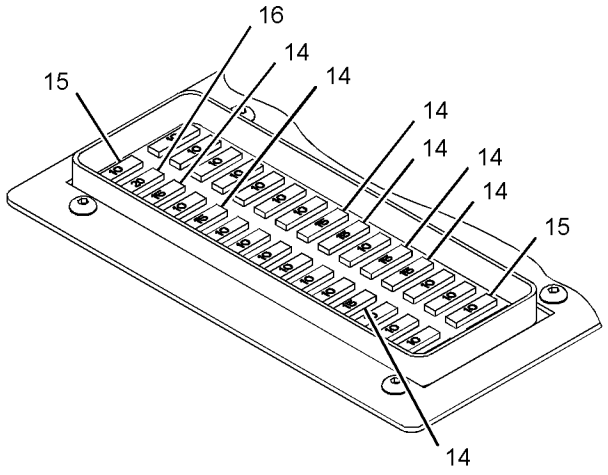

VIEW OF AREA F

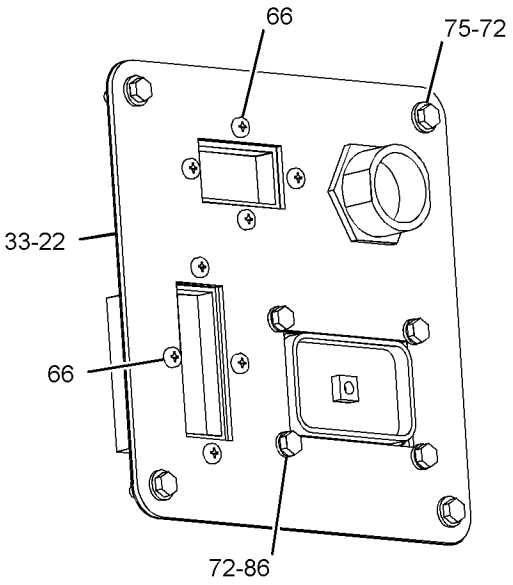

VIEW OF AREA D

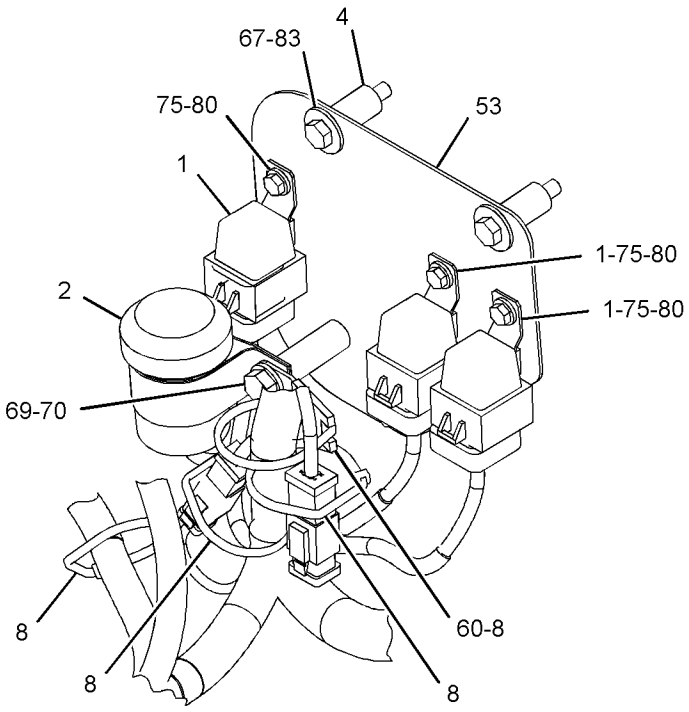

VIEW OF AREA G

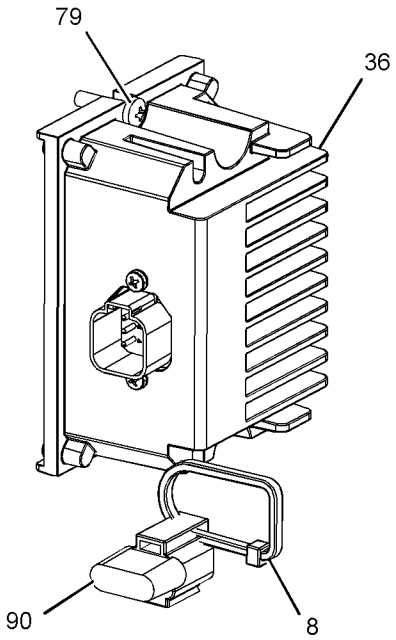

VIEW OF AREA H

GRAPHIC #3 **<END>** g03377712

380-7177 WIRING GP-CAB—VARIABLE PITCH FAN

S/N: JLX224-UP
CUSTOM
PART OF 383-6027 CONTROL AR-FAN

SMCS-1408, 7301 **i05240263**

NOTE	REF NO	GRAPHIC REF	PART NUMBER	QTY	PART NAME 1 2 3 4 5 6 (PRODUCT LEVEL)	SEE PAGE
	1	1	**3E-5239**	1	RELAY AS (24-VOLT) (VARIABLE PITCH FAN)	
Y	2	1	*262-9949*	1	SWITCH GP-ROCKER (VARIABLE PITCH FAN)	315
	3	1	**306-5350**	1	HARNESS AS-CAB (VARIABLE PITCH FAN)	
E		1	**114-8843**		SLEEVE-PLASTIC (40-CM)	
		1	**126-1767**	1	PIN-CONNECTOR (14-GA TO 16-GA)	
		1	**9X-3401**	1	PIN-CONNECTOR (16-GA TO 18-GA)	
		1	**8T-8737**	1	PLUG-SEAL	
		1	**9W-2032**	1	TERMINAL-BLADE (10-GA TO 12-GA)	
		1	**9X-1054**	1	PLUG AS-CONNECTOR (4-PIN)	
		1	**100-5041**	4	TERMINAL-RECEPTACLE (18-GA TO 20-GA)	
M	4	1	**5C-9553**	1	BOLT (M6X1X16-MM)	
B	5	1	**7K-1181**	8	STRAP-CABLE	

B - USE AS REQUIRED
E - ORDER BY THE CENTIMETER
M - METRIC PART
Y - SEPARATE ILLUSTRATION

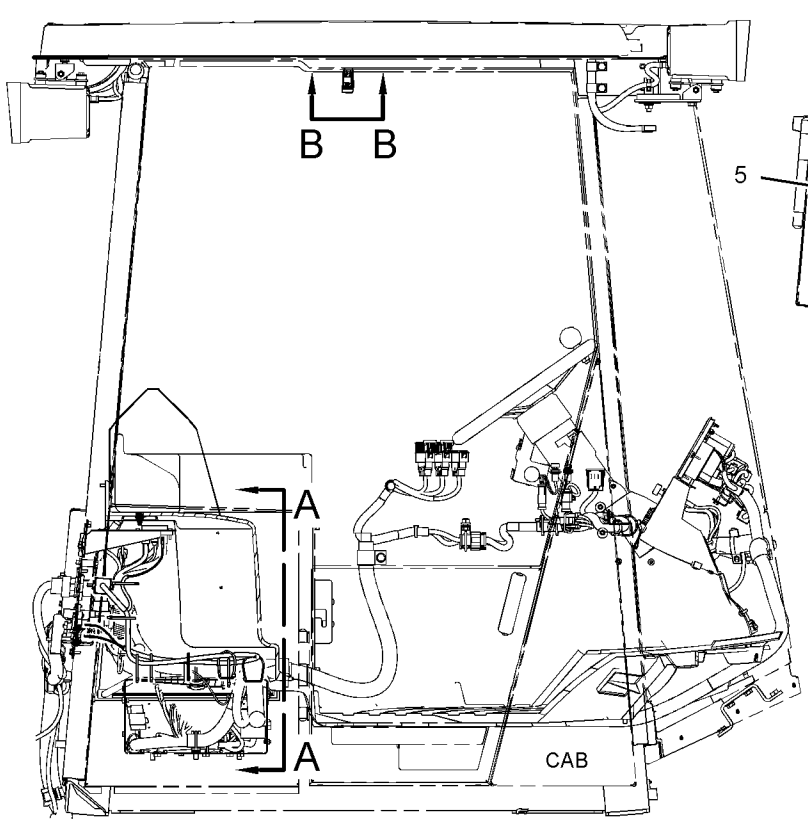

RIGHT SIDE VIEW

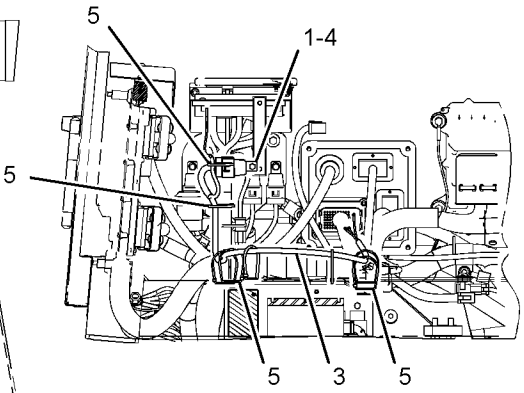

VIEW A-A

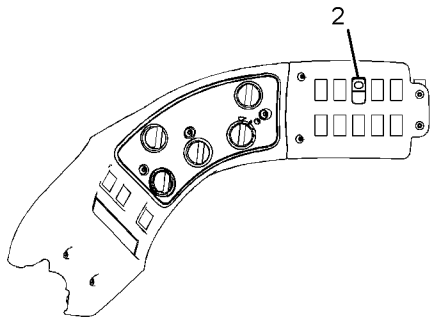

VIEW B-B

GRAPHIC #1 **<END>** g03343691

306-5349 WIRING GP-CHASSIS—VARIABLE PITCH FAN

S/N: JLX1-223
PART OF 383-6027 CONTROL AR-FAN
TYPE 1

SMCS-1408 **i05066433**

NOTE	REF NO	GRAPHIC REF	PART NUMBER	QTY	PART NAME 1 2 3 4 5 6 (PRODUCT LEVEL)	SEE PAGE
B	1	1	**7K-1181**	24	STRAP-CABLE	
	2	1	**306-5352**	1	HARNESS AS-CHASSIS (VARIABLE PITCH FAN)	
		1	**102-8802**	1	KIT-RECEPTACLE (2-PIN)	
					(INCLUDES RECEPTACLE AS & WEDGE)	
		1	**114-8843**		SLEEVE-PLASTIC (80-CM)	
		1	**125-7874**		TUBE-HEAT SHRINK (5.72-MM DIA) (10-CM)	
		1	**9X-3402**	7	SOCKET-CONNECTOR (16-GA TO 18-GA)	
					—OR—	
		1	**126-1768**	7	SOCKET-CONNECTOR (14-GA TO 16-GA)	
		1	**2L-8054**	1	TERMINAL-RING (6-GA, 1/2-IN SCREW)	
					—OR—	
		1	**2L-8061**	1	TERMINAL-RING (8-GA, 1/2-IN SCREW)	
		1	**9X-3401**	2	PIN-CONNECTOR (16-GA TO 18-GA)	
					—OR—	
		1	**126-1767**	2	PIN-CONNECTOR (14-GA TO 16-GA)	
		1	**155-2270**	2	KIT-CONNECTING PLUG (2-PIN)	
					(EACH KIT INCLUDES PLUG AS, WEDGE & INTERFACE SEAL)	
	3	1	**352-3964**	1	CLIP	
	4	1	**322-0931**	1	BRACKET AS	
M		1	**8T-3490**	1	NUT-WELD (M10X1.5-THD)	
	6	1	**269-7678**	1	CLIP	
	7	1	**132-5789**	1	CLIP	
M	8	1	**8T-4137**	3	BOLT (M10X1.5X20-MM)	
	9	1	**8T-4121**	3	WASHER-HARD (11X21X2.5-MM THK)	
	10	1	**3S-2093**	5	STRAP-CABLE	

B - USE AS REQUIRED
M - METRIC PART

306-5349 **WIRING GP-CHASSIS (*contd.*)** **i05066433**

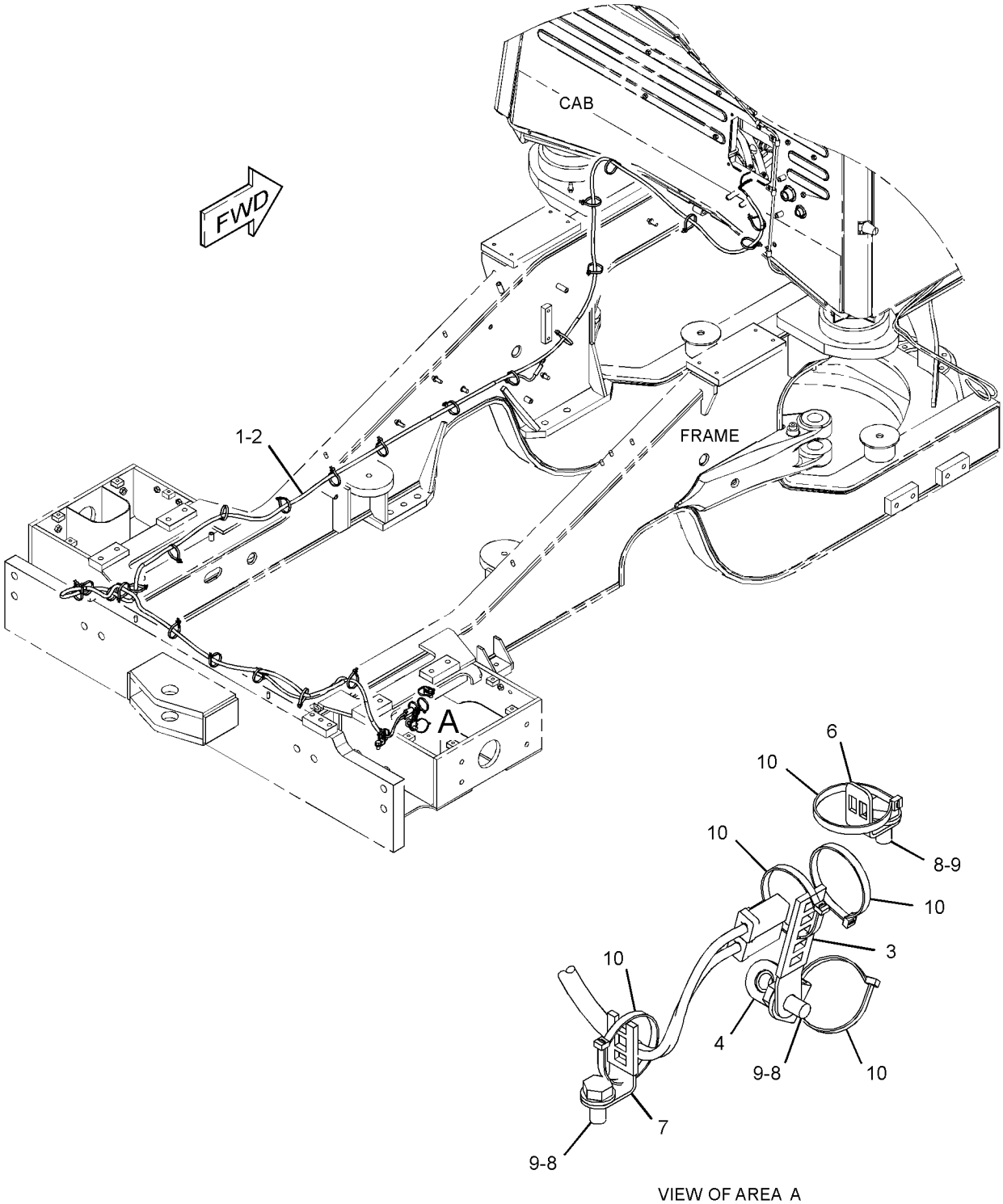

VIEW OF AREA A

GRAPHIC #1 **<END>** g03234438

306-5349 WIRING GP-CHASSIS—VARIABLE PITCH FAN

S/N: JLX1-223
PART OF 383-6027 CONTROL AR-FAN
TYPE 2

SMCS-1408 **i05320627**

NOTE	REF NO	GRAPHIC REF	PART NUMBER	QTY	PART NAME 1 2 3 4 5 6 (PRODUCT LEVEL)	SEE PAGE
B	1	1	**7K-1181**	24	STRAP-CABLE	
	2	1	**306-5352**	1	HARNESS AS-CHASSIS (VARIABLE PITCH FAN)	
		1	**102-8802**	1	KIT-RECEPTACLE (2-PIN)	
					(INCLUDES RECEPTACLE AS & WEDGE)	
		1	**114-8843**		SLEEVE-PLASTIC (80-CM)	
		1	**125-7874**		TUBE-HEAT SHRINK (5.72-MM DIA) (10-CM)	
		1	**9X-3402**	7	SOCKET-CONNECTOR (16-GA TO 18-GA)	
					—OR—	
		1	**126-1768**	7	SOCKET-CONNECTOR (14-GA TO 16-GA)	
		1	**2L-8054**	1	TERMINAL-RING (6-GA, 1/2-IN SCREW)	
					—OR—	
		1	**2L-8061**	1	TERMINAL-RING (8-GA, 1/2-IN SCREW)	
		1	**9X-3401**	2	PIN-CONNECTOR (16-GA TO 18-GA)	
					—OR—	
		1	**126-1767**	2	PIN-CONNECTOR (14-GA TO 16-GA)	
		1	**155-2270**	2	KIT-CONNECTING PLUG (2-PIN)	
					(EACH KIT INCLUDES PLUG AS, WEDGE & INTERFACE SEAL)	
	3	1	**352-3964**	1	CLIP	
	4	1	**322-0931**	1	BRACKET AS	
M		1	**8T-3490**	1	NUT-WELD (M10X1.5-THD)	
C	5	1	**3S-2093**	4	STRAP-CABLE	
	6	1	**269-7678**	1	CLIP	
C	7	1	**8T-4121**	2	WASHER-HARD (11X21X2.5-MM THK)	
CM	8	1	**8T-4137**	2	BOLT (M10X1.5X20-MM)	

B - USE AS REQUIRED
C - CHANGE FROM PREVIOUS TYPE
M - METRIC PART

306-5349 **WIRING GP-CHASSIS (*contd.*)** **i05320627**

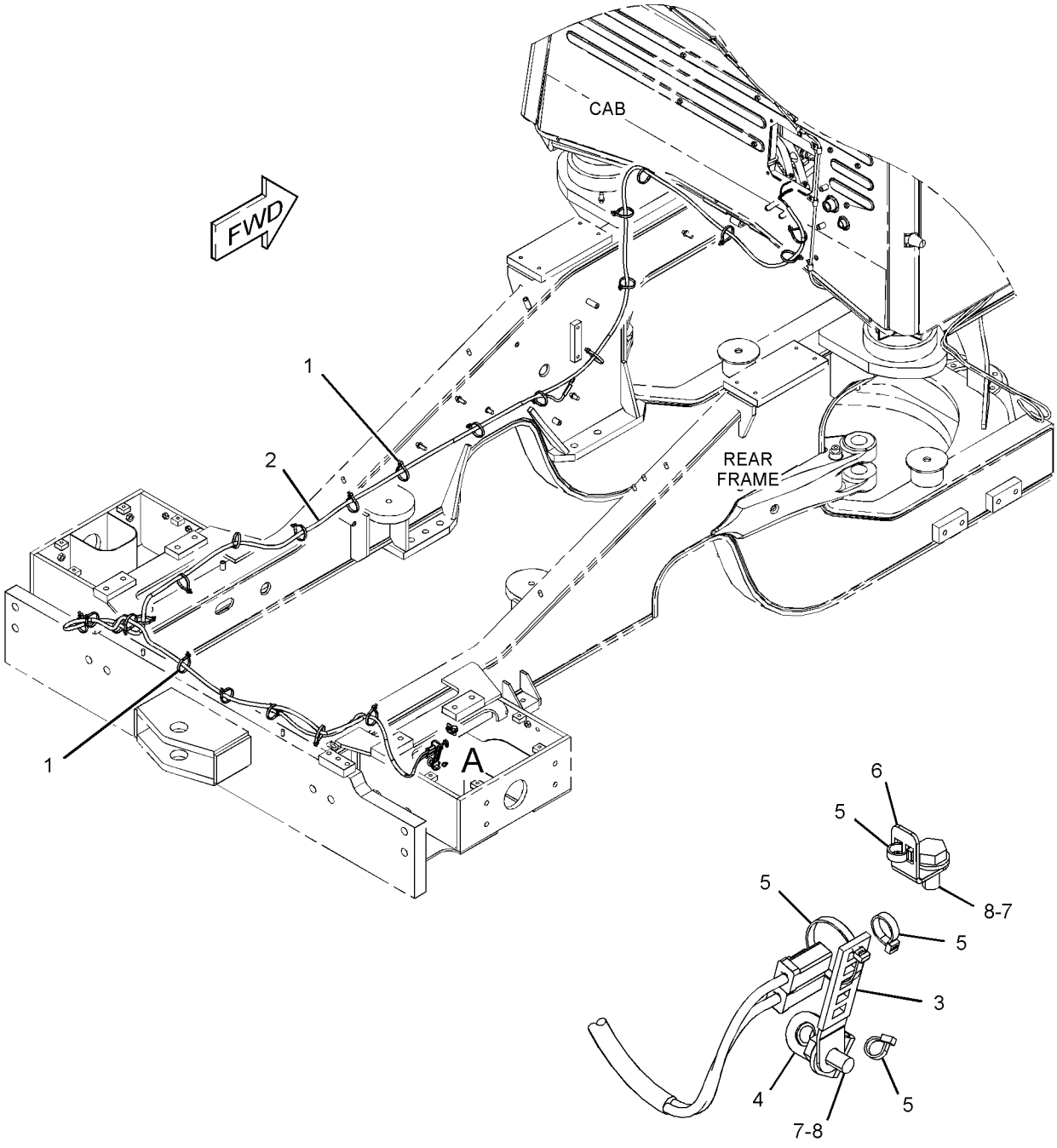

VIEW OF AREA A

GRAPHIC #1 **<END>** g03372314

372-4889 WIRING GP-CHASSIS

S/N: JLX1-UP

PART OF 372-2873 ELECTRICAL AR

SMCS-1408 **i05955602**

NOTE	REF NO	GRAPHIC REF	PART NUMBER	QTY	PART NAME 1 2 3 4 5 6 (PRODUCT LEVEL)	SEE PAGE
	1	2	**3S-2093**	1	STRAP-CABLE	
	2	1,2	**7K-1181**	58	STRAP-CABLE	
	3	2	**116-8247**	1	PLATE-INSTRUCTION (HOOD TILT)	
	4	1	**118-6365**	1	PLATE AS	
		1	**6V-6716**	2	RIVET-TRUSS HEAD	
	5	2	**124-3019**	1	BRACKET AS	
M		2	**8T-3490**	1	NUT-WELD (M10X1.5-THD)	
	6	1	**154-6626**	1	BRACKET AS	
	7	2	**193-3973**	10	STRAP-CABLE	
	8	2	**204-8000**	3	MOUNTING-CABLE TIE	
	9	2	**264-4297**	1	SENSOR AS-TEMPERATURE (AXLE OIL)	
		2	**137-6645**	1	PAD-CONNECTOR	
	10	2	**301-2980**	1	SWITCH AS-TOGGLE (HOOD TILT ACTUATOR)	
		2	**102-8803**	1	KIT-RECEPTACLE (3-PIN)	
					(INCLUDES RECEPTACLE AS & WEDGE)	
		2	**8T-8729**	3	PIN-CONNECTOR (16-GA TO 18-GA)	
	11	1	**324-0689**	1	BRACKET	
	12	1	**324-0691**	1	HARNESS AS-CHASSIS	
		1	**8T-8737**	3	PLUG-SEAL	
E		1	**114-8843**		SLEEVE-PLASTIC (20-CM)	
E		1	**114-8845**		SLEEVE-PLASTIC (80-CM)	
E		1	**125-7874**		TUBE-HEAT SHRINK (5.72-MM DIA) (10-CM)	
		1	**9X-3402**	20	SOCKET-CONNECTOR (16-GA TO 18-GA)	
					—OR—	
		1	**126-1768**	20	SOCKET-CONNECTOR (14-GA TO 16-GA)	
		1	**155-2255**	1	KIT-CONNECTING PLUG (12-PIN)	
		1	**155-2270**	4	KIT-CONNECTING PLUG (2-PIN)	
					(EACH KIT INCLUDES PLUG AS, WEDGE & INTERFACE SEAL)	
		1	**155-2260**	1	KIT-CONNECTING PLUG (3-PIN)	
					(INCLUDES PLUG AS, WEDGES & INTERFACE SEAL)	
Y	13	1	*324-0703*	1	FASTENER GP-WIRING HARNESS (TRANSMISSION)	198
	14	2	**327-4608**	1	SWITCH AS-PRESSURE (PARKING BRAKE OIL)	
		2	**102-8803**	1	KIT-RECEPTACLE (3-PIN)	
					(INCLUDES RECEPTACLE AS & WEDGE)	
		2	**8T-8729**	3	PIN-CONNECTOR (16-GA TO 18-GA)	
E		2	**9X-1813**		SLEEVE (28-CM)	
Y	15	1	*372-4876*	1	PANEL GP-CIRCUIT BREAKER	263
	16	1,2	**033-8248**	4	CLIP	
	17	1,2	**130-5300**	6	CLIP	
	18	1,2	**132-5789**	2	CLIP	
	19	2	**139-1398**	2	CLIP	
	20	2	**3E-6769**	1	SEAL-O-RING	
	21	2	**3J-1907**	1	SEAL-O-RING	
	22	2	**3P-3839**	1	GROMMET	
	24	1,2	**4P-7581**	17	CLIP	
	25	2	**7D-7233**	4	CLIP	
	26	2	**8S-7583**	1	GROMMET	
	27	1,2	**8T-4121**	32	WASHER-HARD (11X21X2.5-MM THK)	
M	28	1,2	**8T-4133**	7	NUT (M10X1.5-THD)	
M	29	1,2	**8T-4136**	8	BOLT (M10X1.5X25-MM)	
M	30	1,2	**8T-4137**	16	BOLT (M10X1.5X20-MM)	
M	31	2	**8T-4138**	2	BOLT (M6X1X20-MM)	
M	32	2	**8T-4195**	1	BOLT (M10X1.5X30-MM)	
	33	2	**8T-4223**	1	WASHER-HARD (13.5X25.5X3-MM THK)	
M	34	2	**8T-4244**	1	NUT (M12X1.75-THD)	
	35	2	**9X-8256**	2	WASHER (6.6X12X2-MM THK)	

372-4889 **WIRING GP-CHASSIS (*contd.*)** **i05955602**

NOTE	REF NO	GRAPHIC REF	PART NUMBER	QTY	PART NAME 1 2 3 4 5 6 (PRODUCT LEVEL)	SEE PAGE
E - ORDER BY THE CENTIMETER						
M - METRIC PART						
Y - SEPARATE ILLUSTRATION						

REFER TO ALL ILLUSTRATIONS OF
THIS GROUP FOR AUXILIARY VIEWS

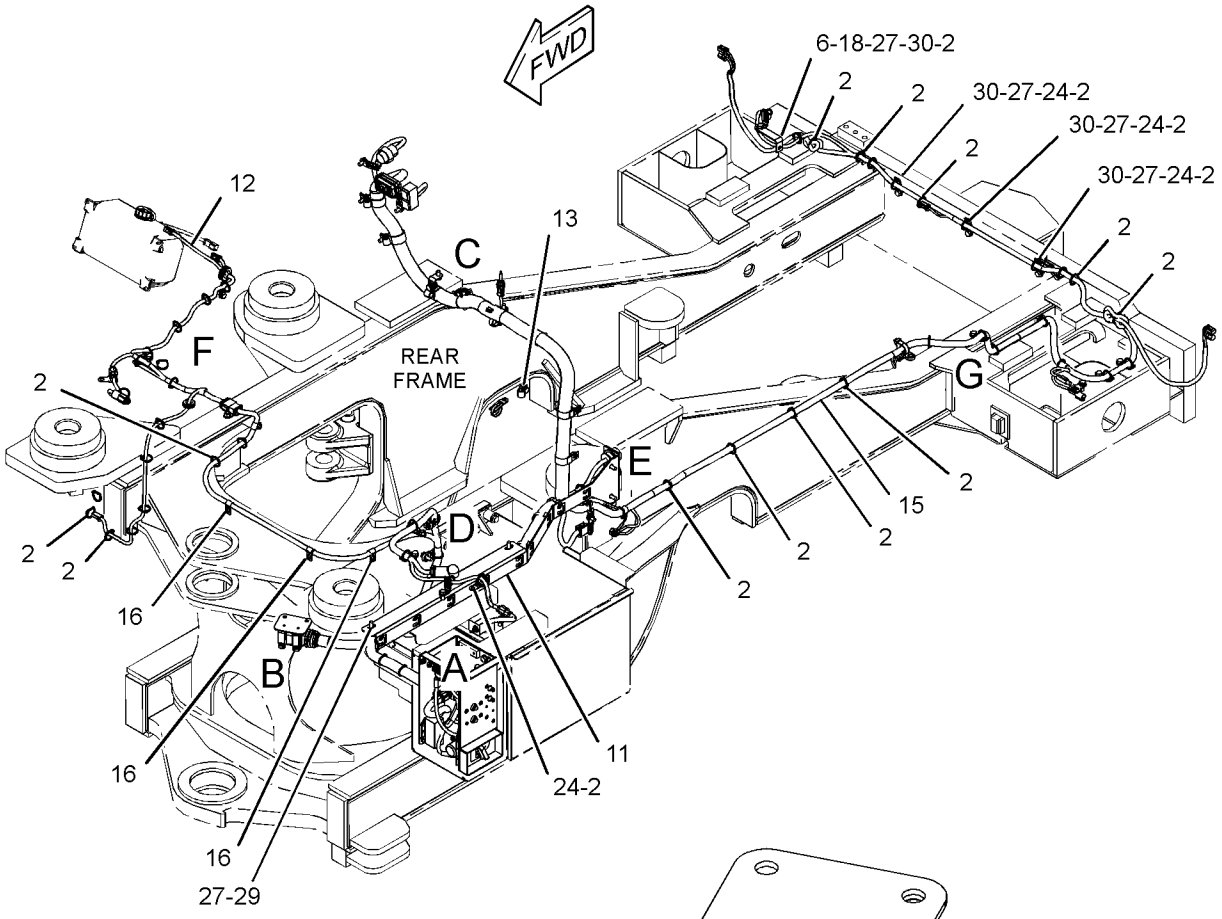

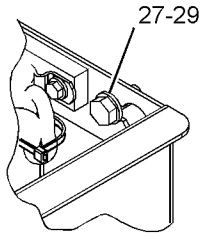

VIEW OF AREA A

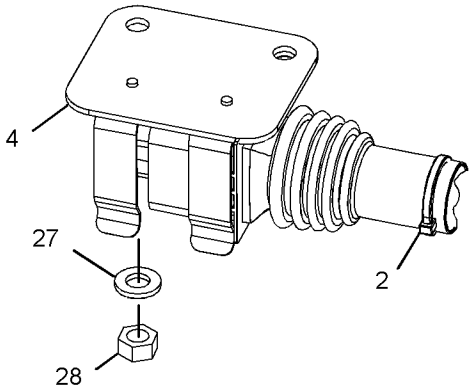

VIEW OF AREA B
(EXPLODED)

GRAPHIC #1 g03741231

372-4889 **WIRING GP-CHASSIS (*contd.*)** **i05955602**

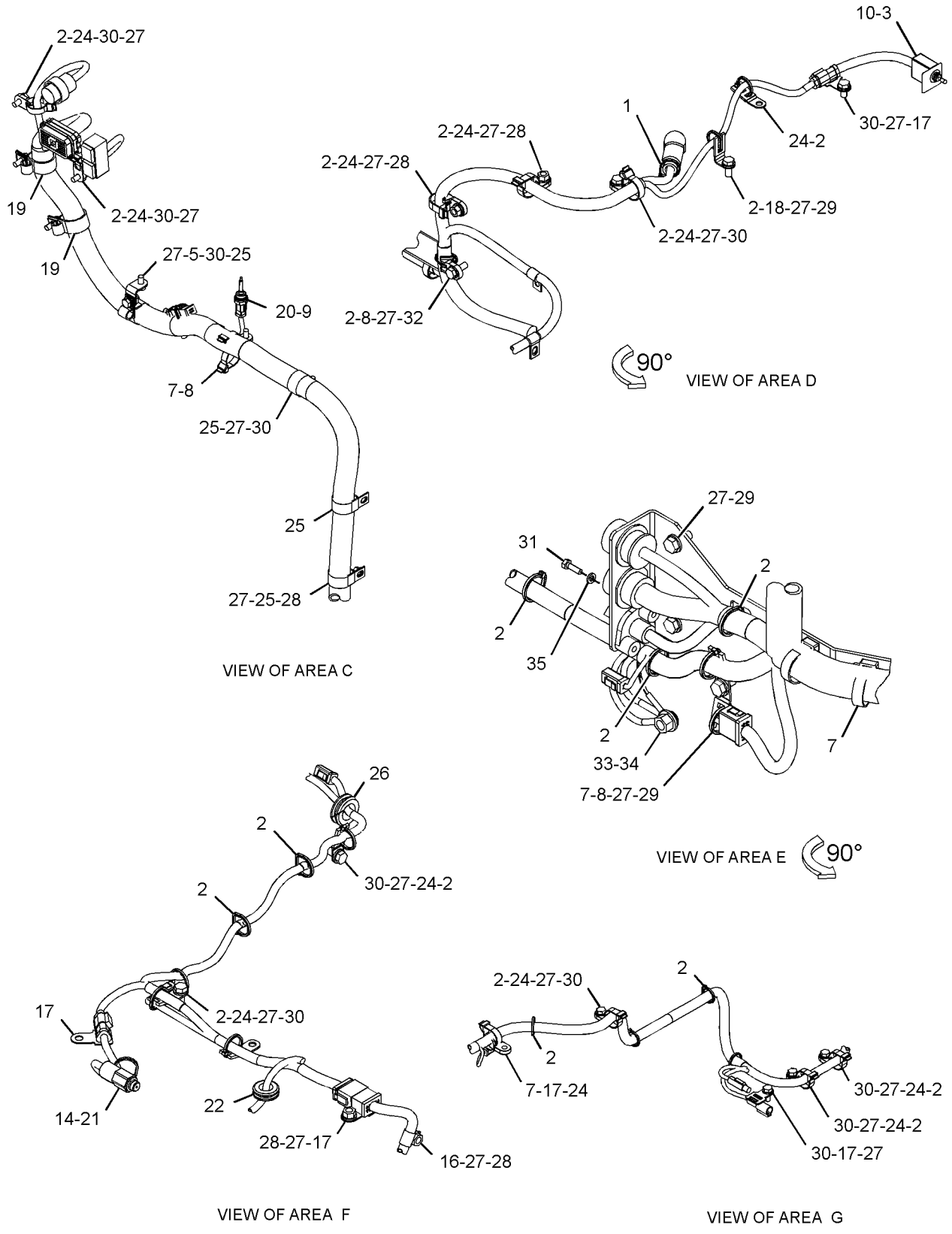

GRAPHIC #2 **<END>** g03741232

380-7178 WIRING GP-CHASSIS

S/N: JLX224-UP

PART OF 383-6027 CONTROL AR-FAN

SMCS-1408 **i05354656**

NOTE	REF NO	GRAPHIC REF	PART NUMBER	QTY	PART NAME 1 2 3 4 5 6 (PRODUCT LEVEL)	SEE PAGE
	1	1	**269-7678**	1	CLIP	
	2	1	**306-5352**	1	HARNESS AS-CHASSIS (VARIABLE PITCH FAN)	
		1	**102-8802**	1	KIT-RECEPTACLE (2-PIN)	
					(INCLUDES RECEPTACLE AS & WEDGE)	
E		1	**114-8843**		SLEEVE-PLASTIC (80-CM)	
E		1	**125-7874**		TUBE-HEAT SHRINK (5.72-MM DIA) (10-CM)	
		1	**9X-3402**	7	SOCKET-CONNECTOR (16-GA TO 18-GA)	
					—OR—	
		1	**126-1768**	7	SOCKET-CONNECTOR (14-GA TO 16-GA)	
		1	**2L-8054**	1	TERMINAL-RING (6-GA, 1/2-IN SCREW)	
					—OR—	
		1	**2L-8061**	1	TERMINAL-RING (8-GA, 1/2-IN SCREW)	
		1	**9X-3401**	2	PIN-CONNECTOR (16-GA TO 18-GA)	
					—OR—	
		1	**126-1767**	2	PIN-CONNECTOR (14-GA TO 16-GA)	
		1	**155-2270**	2	KIT-CONNECTING PLUG (2-PIN)	
					(EACH INCLUDES PLUG AS, WEDGE & INTERFACE SEAL)	
	3	1	**322-0931**	1	BRACKET AS	
M	4	1	**8T-4137**	2	BOLT (M10X1.5X20-MM)	
	5	1	**352-3964**	1	CLIP	
	6	1	**3S-2093**	4	STRAP-CABLE	
B	7	1	**7K-1181**	24	STRAP-CABLE	
	8	1	**8T-4121**	2	WASHER-HARD (11X21X2.5-MM THK)	

B - USE AS REQUIRED
E - ORDER BY THE CENTIMETER
M - METRIC PART

380-7178 **WIRING GP-CHASSIS (*contd.*)** **i05354656**

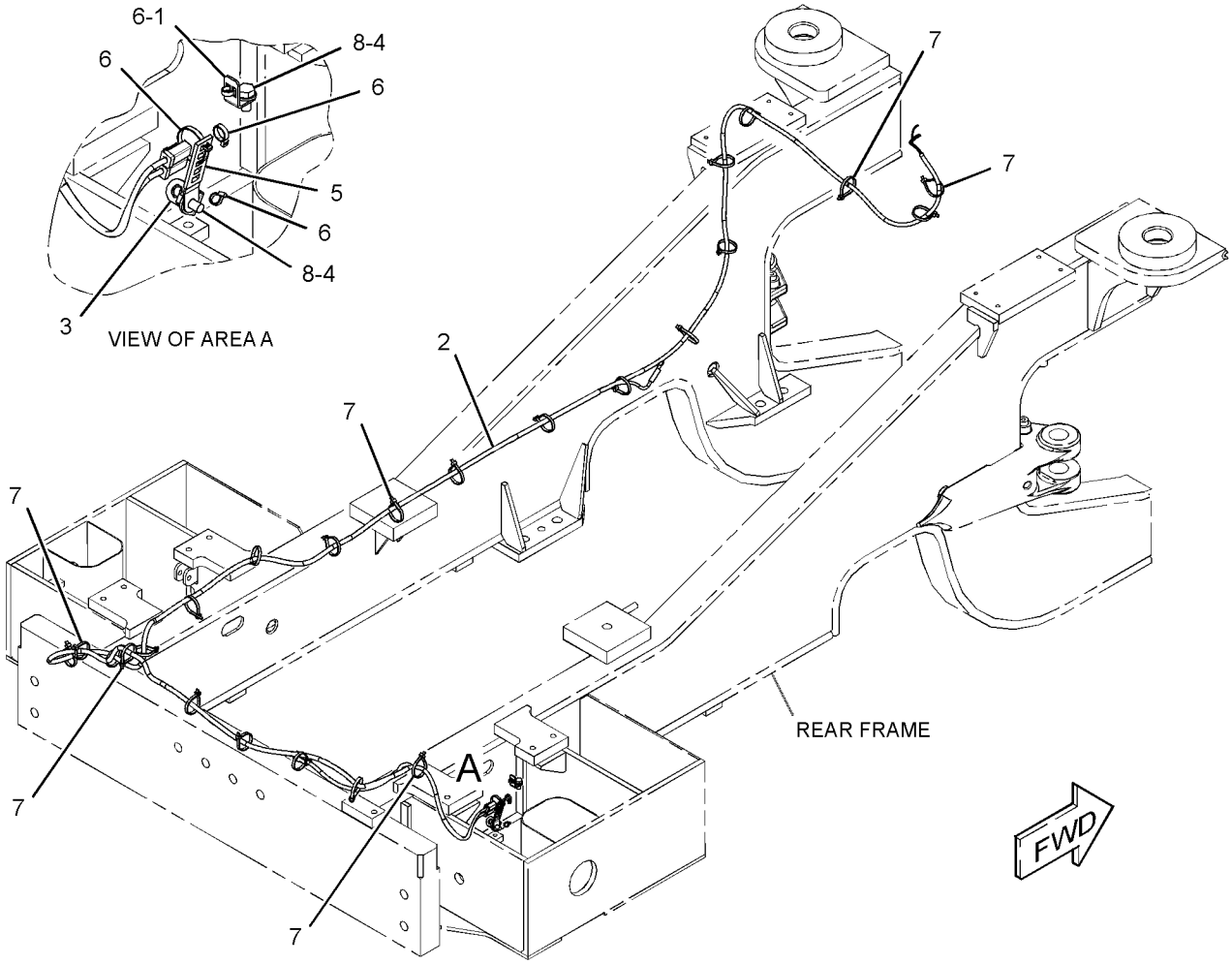

GRAPHIC #1 **<END>** g03112136

372-4890 WIRING GP-CONTROL

S/N: JLX1-282

PART OF 371-4487, 371-4488 CONTROL & MTG GP-ELHYD

SMCS-1408 **i04723621**

NOTE	REF NO	GRAPHIC REF	PART NUMBER	QTY	PART NAME 1 2 3 4 5 6 (PRODUCT LEVEL)	SEE PAGE
	1	1	**102-8802**	1	KIT-RECEPTACLE (2-PIN)	
					(EACH INCLUDES RECEPTACLE AS & WEDGE)	
	2	1	**7K-1181**	7	STRAP-CABLE	
	3	1	**170-1821**	1	SWITCH AS-PUSH BUTTON (HORN)	
		1	**6F-0253**	1	LOCKWASHER	
		1	**8T-8729**	2	PIN-CONNECTOR (16-GA TO 18-GA)	
		1	**172-3511**	1	NUT (5/8-24-THD)	
	4	1	**263-1493**	1	SWITCH AS-PUSH BUTTON (DOWNSHIFT)	
		1	**6F-0253**	1	LOCKWASHER	
		1	**9X-3402**	3	SOCKET-CONNECTOR (16-GA TO 18-GA)	
					—OR—	
		1	**126-1768**	3	SOCKET-CONNECTOR (14-GA TO 16-GA)	
		1	**155-2260**	2	KIT-CONNECTING PLUG (3-PIN)	
					(EACH INCLUDES PLUG AS, WEDGE, & INTERFACE SEAL)	
		1	**172-3511**	1	NUT (5/8-24-THD)	
	5	1	**284-3623**	1	SWITCH AS-ROCKER (24-VOLT) (IMPLEMENT LOCKOUT)	
	6	1	**284-3624**	1	SWITCH AS-ROCKER (24-VOLT) (FINE MODULATION)	
Y	7	1	**307-4671**	2	CONTROL GP-HANDLE (PILOT CONTROL)	964
Y	8	1	**372-4845**	1	HARNESS AS-CONTROL	207
	9	1	**096-4840**	1	CLIP	
	10	1	**156-6175**	1	CLIP	
	11	1	**245-8842**	1	CLIP	
M	13	1	**5C-2890**	1	NUT (M6X1-THD)	
M	14	1	**6V-7357**	1	BOLT (M6X1X25-MM)	
	15	1	**8R-3695**	3	GROMMET	
	16	1	**8T-4205**	2	WASHER-HARD (7.2X14.5X2-MM THK)	
M	17	1	**9X-2043**	1	SCREW-TRUSS HEAD (M6X1X14-MM)	
M	18	1	**9X-2044**	8	SCREW-TRUSS HEAD (M6X1X16-MM)	
	19	1	**9X-6165**	1	WASHER (6.5X22X2.5-MM THK)	

M - METRIC PART
Y - SEPARATE ILLUSTRATION

372-4890 **WIRING GP-CONTROL (*contd.*)** **i04723621**

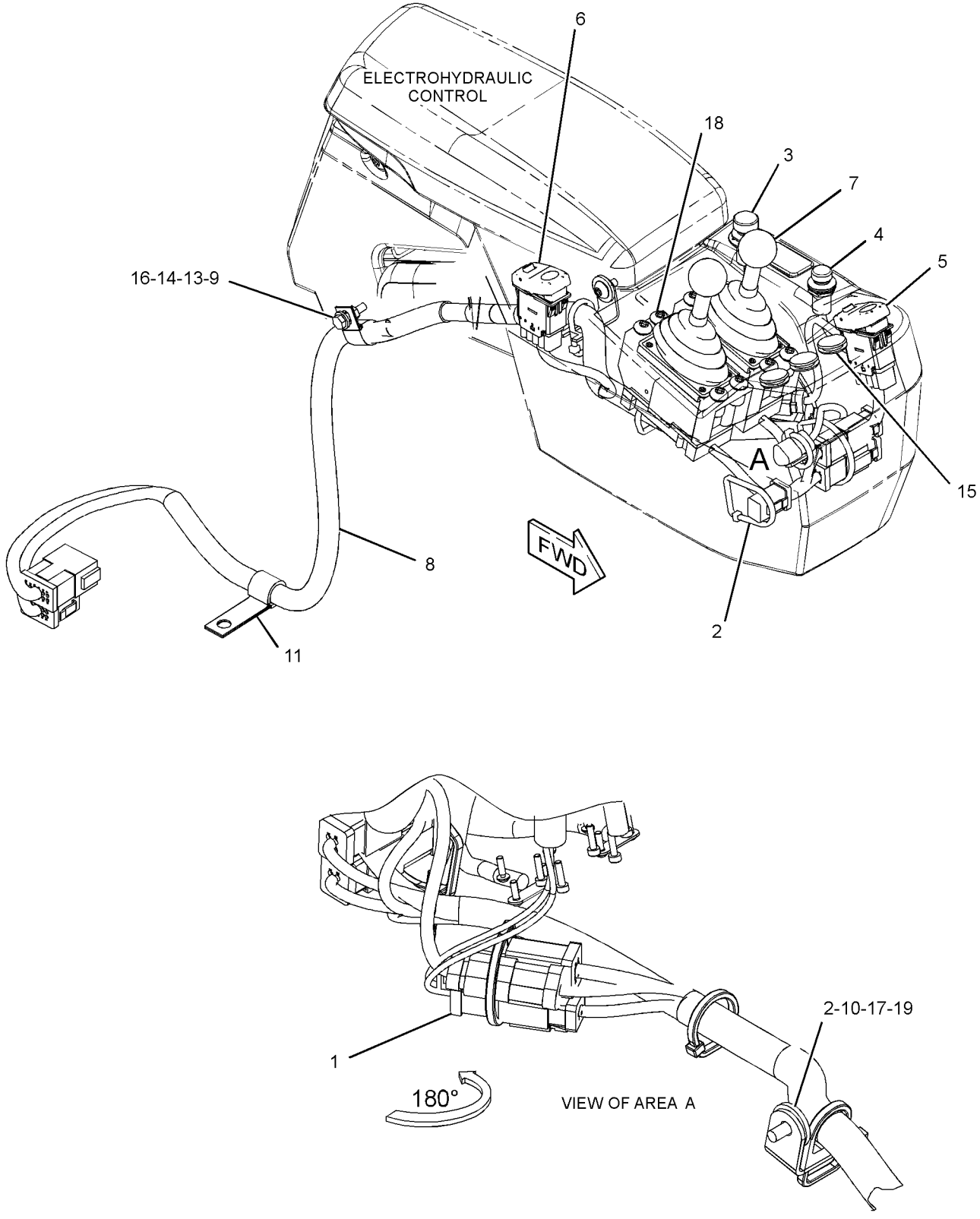

GRAPHIC #1 **<END>** g02843697

372-4890 WIRING GP-CONTROL

S/N: JLX1-283

PART OF 371-4487, 371-4488 CONTROL & MTG GP-ELHYD

SMCS-1408 **i05658611**

NOTE	REF NO	GRAPHIC REF	PART NUMBER	QTY	PART NAME 1 2 3 4 5 6 (PRODUCT LEVEL)	SEE PAGE
	1	1	**102-8802**	1	KIT-RECEPTACLE (2-PIN)	
					(INCLUDES RECEPTACLE AS & WEDGE)	
	2	1	**7K-1181**	7	STRAP-CABLE	
	3	1	**170-1821**	1	SWITCH AS-PUSH BUTTON (HORN)	
		1	**6F-0253**	1	LOCKWASHER	
		1	**8T-8729**	2	PIN-CONNECTOR (16-GA TO 18-GA)	
		1	**172-3511**	1	NUT (5/8-24-THD)	
	4	1	**263-1493**	1	SWITCH AS-PUSH BUTTON (DOWNSHIFT)	
		1	**6F-0253**	1	LOCKWASHER	
		1	**9X-3402**	3	SOCKET-CONNECTOR (16-GA TO 18-GA)	
					—OR—	
		1	**126-1768**	3	SOCKET-CONNECTOR (14-GA TO 16-GA)	
		1	**155-2260**	1	KIT-CONNECTING PLUG (3-PIN)	
					(INCLUDES PLUG AS, WEDGE, & INTERFACE SEAL)	
		1	**172-3511**	1	NUT (5/8-24-THD)	
	5	1	**284-3623**	1	SWITCH AS-ROCKER (24-VOLT) (IMPLEMENT LOCKOUT)	
	6	1	**284-3624**	1	SWITCH AS-ROCKER (24-VOLT) (FINE MODULATION)	
C	7	1	**361-6015**	2	CONTROL GP-HANDLE (PILOT CONTROL)	
					(EACH INCLUDES)	
		1	**151-9274**	1	KIT-RECEPTACLE (4-PIN)	
					(INCLUDES RECEPTACLE AS & WEDGE)	
Y	8	1	**372-4845**	1	HARNESS AS-CONTROL	207
	9	1	**096-4840**	1	CLIP	
	10	1	**156-6175**	1	CLIP (LADDER)	
	11	1	**245-8842**	1	CLIP (LOOP)	
M	13	1	**5C-2890**	1	NUT (M6X1-THD)	
M	14	1	**6V-7357**	1	BOLT (M6X1X25-MM)	
	15	1	**8R-3695**	3	GROMMET	
	16	1	**8T-4205**	2	WASHER-HARD (7.2X14.5X2-MM THK)	
M	17	1	**9X-2043**	1	SCREW-TRUSS HEAD (M6X1X14-MM)	
M	18	1	**9X-2044**	8	SCREW-TRUSS HEAD (M6X1X16-MM)	
	19	1	**9X-6165**	1	WASHER (6.5X22X2.5-MM THK)	

C - CHANGE FROM PREVIOUS TYPE
M - METRIC PART
Y - SEPARATE ILLUSTRATION

372-4890 **WIRING GP-CONTROL (*contd.*)** **i05658611**

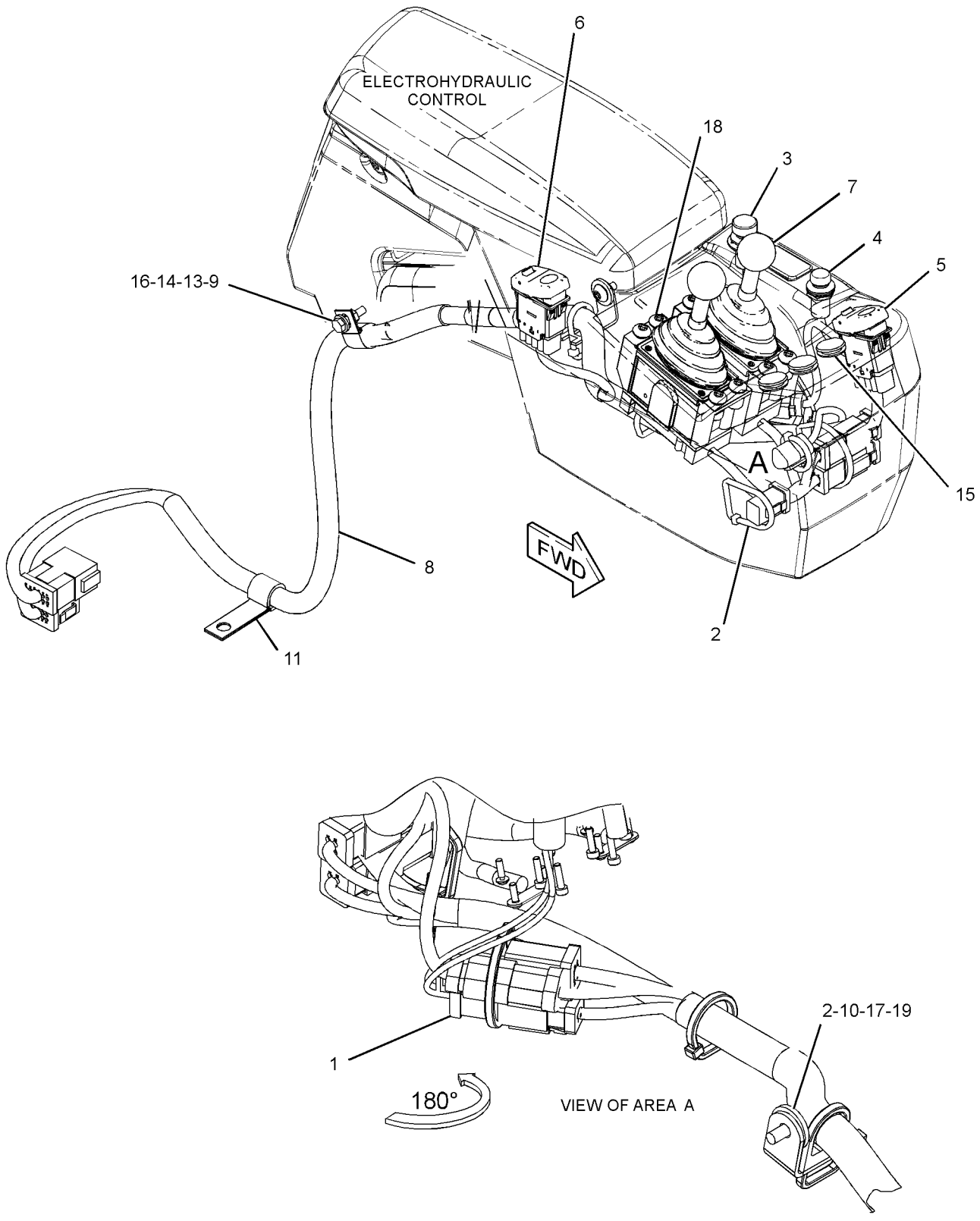

GRAPHIC #1 **<END>** g03659702

375-5760 WIRING GP-CONTROL

S/N: JLX1-UP
THIRD FUNCTION
PART OF 375-8104 CONFIGURATION AR

SMCS-1408 **i04774850**

NOTE	REF NO	GRAPHIC REF	PART NUMBER	QTY	PART NAME 1 2 3 4 5 6 (PRODUCT LEVEL)	SEE PAGE
	1	1	**7K-1181**	10	STRAP-CABLE	
	2	1	**375-5762**	1	HARNESS AS-SOLENOID	
		1	**102-8804**	1	KIT-RECEPTACLE (4-PIN)	
					(KIT INCLUDES RECEPTACLE AS & WEDGE)	
		1	**155-2270**	2	KIT-CONNECTING PLUG (2-PIN)	
					(EACH KIT INCLUDES PLUG AS, WEDGE, & INTERFACE SEAL)	
E		1	**114-8843**		SLEEVE-PLASTIC (60-CM)	
		1	**9X-3402**	4	SOCKET-CONNECTOR (16-GA TO 18-GA)	
					—OR—	
		1	**126-1768**	4	SOCKET-CONNECTOR (14-GA TO 16-GA)	
		1	**9X-3401**	4	PIN-CONNECTOR (16-GA TO 18-GA)	
					—OR—	
		1	**126-1767**	4	PIN-CONNECTOR (14-GA TO 16-GA)	
	3	1	**130-5300**	1	CLIP	
	4	1	**277-1873**	2	CLIP (LADDER)	
	5	1	**4P-7429**	2	CLIP (LADDER)	
	6	1	**4P-8134**	1	CLIP (LADDER)	
	7	1	**8T-4121**	3	WASHER-HARD (11X21X2.5-MM THK)	
M	8	1	**8T-4137**	3	BOLT (M10X1.5X20-MM)	

E - ORDER BY THE CENTIMETER
M - METRIC PART

375-5760 **WIRING GP-CONTROL (*contd.*)** **i04774850**

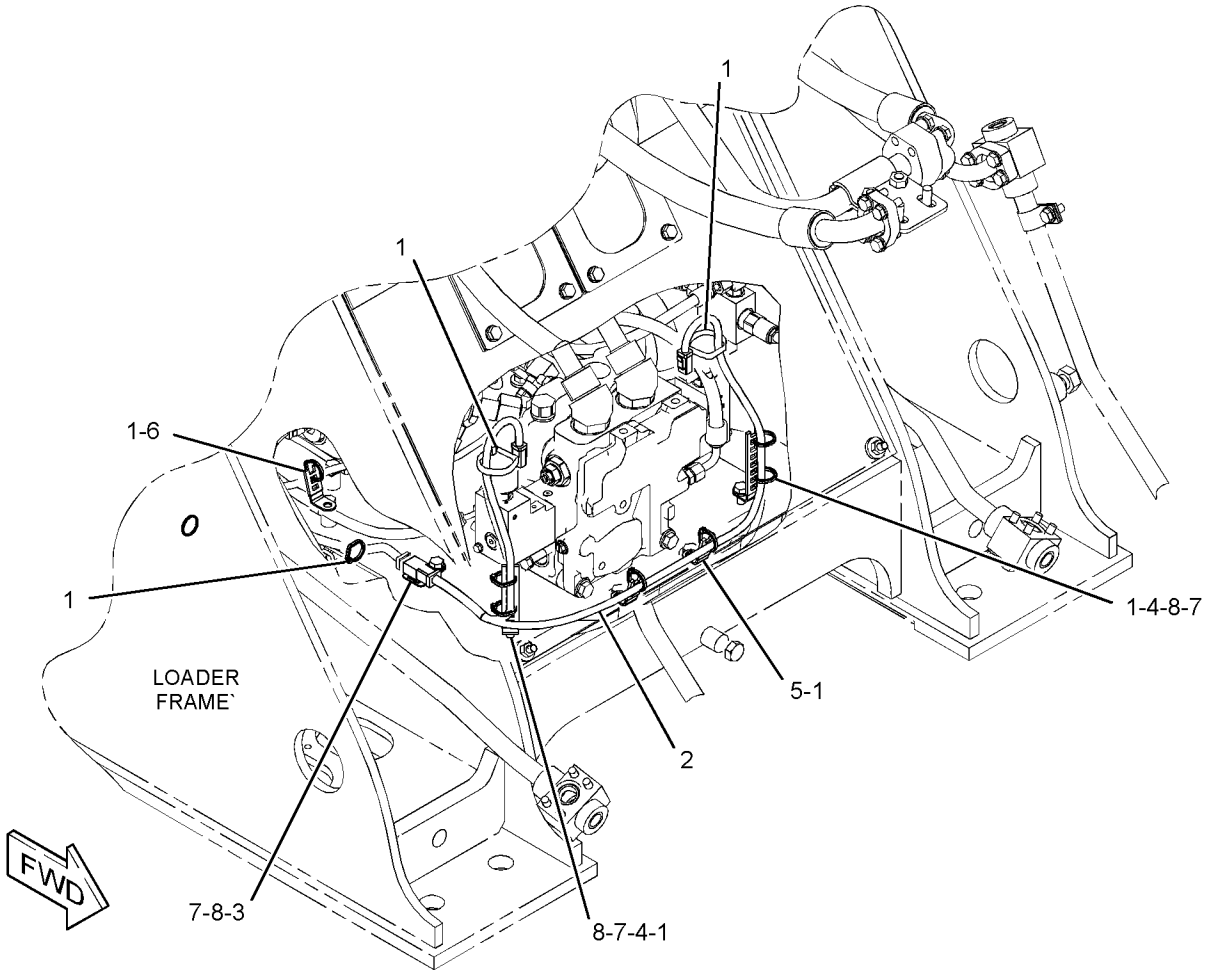

GRAPHIC #1 **<END>** g02884816

244-6524 WIRING GP-ELECTRIC CLUTCH—AXLE OIL COOLER PUMP

S/N: JLX1-UP

PART OF 383-6023, 419-9847 COOLER AR-AXLE OIL

SMCS-1634 **i03874945**

NOTE	REF NO	GRAPHIC REF	PART NUMBER	QTY	PART NAME 1 2 3 4 5 6 (PRODUCT LEVEL)	SEE PAGE
CY	1	1	*335-2608*	1	RELAY GP (AXLE OIL COOLER)	271
	2	1	**147-0385**	1	CLIP	

C - CHANGE FROM PREVIOUS TYPE
Y - SEPARATE ILLUSTRATION

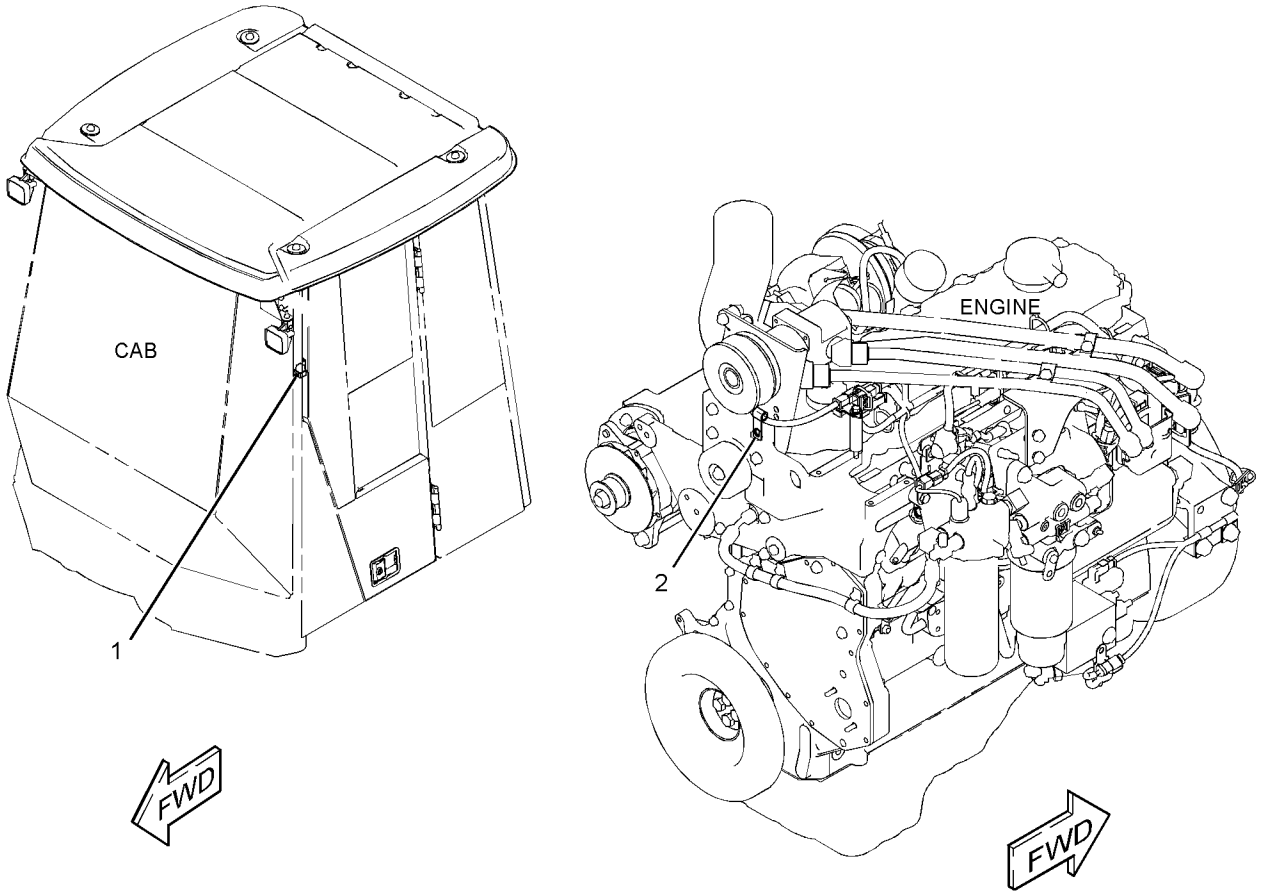

GRAPHIC #1 **<END>** g01941473

375-5759 WIRING GP-ELECTROHYDRAULIC

S/N: JLX1-UP

PART OF 373-5880, 373-5881, 373-5882, 373-5883 CONTROL & MTG GP-ELHYD

SMCS-5734 **i04773474**

NOTE	REF NO	GRAPHIC REF	PART NUMBER	QTY	PART NAME 1 2 3 4 5 6 (PRODUCT LEVEL)	SEE PAGE
	1	1	**218-4935**	1	SUPPRESSOR-ARC	
	2	1	**284-3623**	1	SWITCH AS-ROCKER (IMPLEMENT LOCKOUT)	
	3	1	**284-3624**	1	SWITCH AS-ROCKER (24-VOLT) (FINE MODULATION)	
Y	4	1	**373-0497**	1	HARNESS AS-SWITCH	214
	5	1	**096-4840**	1	CLIP	
	6	1	**156-6175**	1	CLIP	
	7	1	**245-8842**	1	CLIP	
M	8	1	**5C-2890**	1	NUT (M6X1-THD)	
M	9	1	**6V-7357**	1	BOLT (M6X1X25-MM)	
	10	1	**7K-1181**	7	STRAP-CABLE	
	11	1	**8R-3695**	3	GROMMET	
	12	1	**8T-4205**	2	WASHER-HARD (7.2X14.5X2-MM THK)	
M	13	1	**9X-2043**	1	SCREW-TRUSS HEAD (M6X1X14-MM)	
	14	1	**9X-6165**	1	WASHER (6.5X22X2.5-MM THK)	

M - METRIC PART
Y - SEPARATE ILLUSTRATION

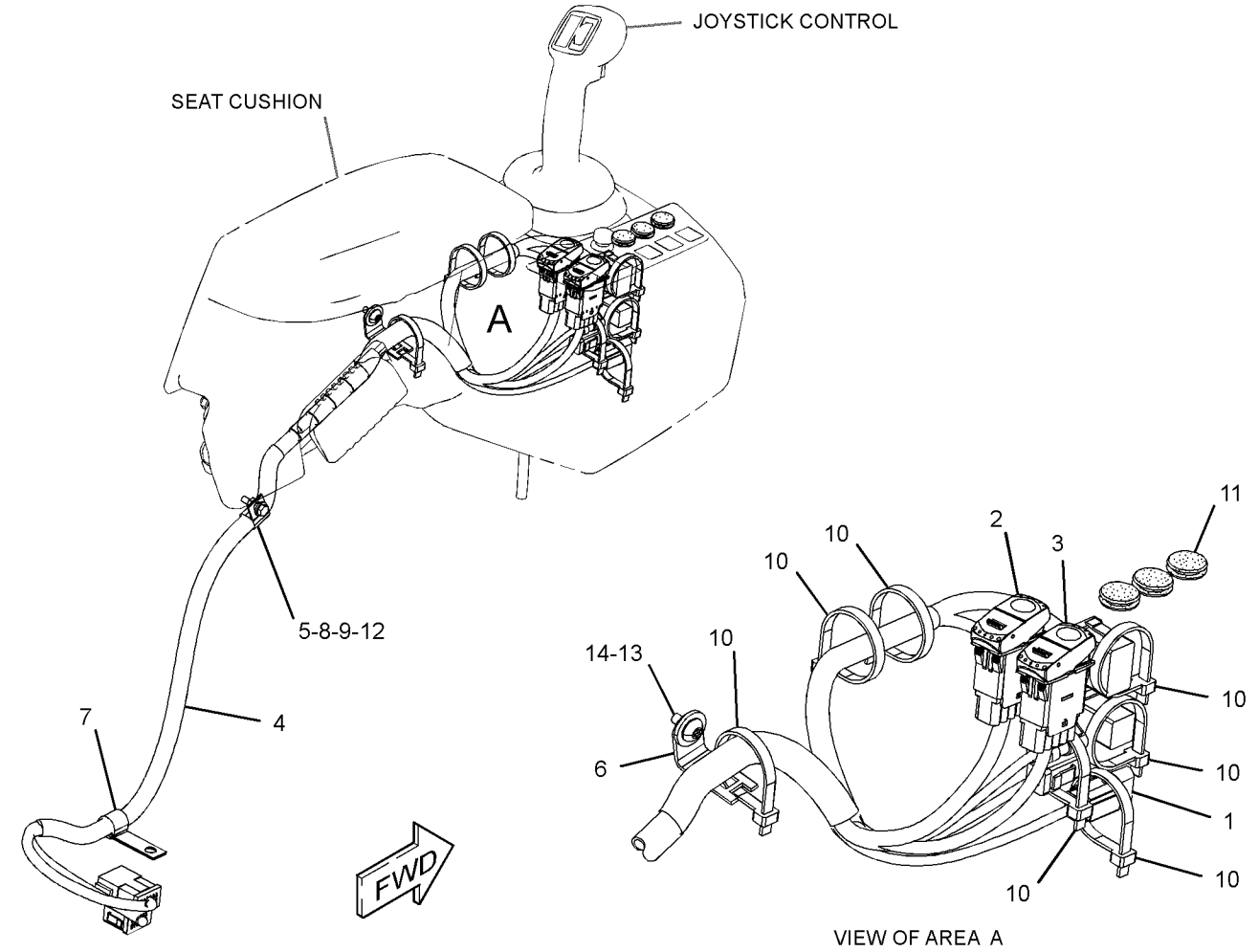

GRAPHIC #1

<END>

g02877681

396-4980 WIRING GP-ELECTRONIC CONTROL–FUEL

S/N: KHX1-UP

PART OF 387-1975, 387-1976 ENGINE AR-COMPLETE

SMCS-1408 **i04895516**

NOTE	REF NO	GRAPHIC REF	PART NUMBER	QTY	PART NAME 1 2 3 4 5 6 (PRODUCT LEVEL)	SEE PAGE
	1	1	**3S-2093**	3	STRAP-CABLE	
	2	1	**7K-1181**	3	STRAP-CABLE	
	3	1	**391-6313**	1	HARNESS AS-WIRING	
		1	**9X-3401**	7	PIN-CONNECTOR (16-GA TO 18-GA)	
					–OR–	
		1	**126-1767**	7	PIN-CONNECTOR (14-GA TO 16-GA)	
		1	**237-0227**	1	PLUG AS-CONNECTOR (3-PIN)	
		1	**264-7030**	1	SEAL-CONNECTOR	
		1	**8T-8737**	3	PLUG-SEAL	
		1	**102-8806**	1	KIT-RECEPTACLE (8-PIN)	
		1	**230-4012**	1	RECEPTACLE AS-CONNECTOR (2-PIN)	
E		1	**329-0419**		SLEEVE (8-CM)	
		1	**9X-3402**	3	SOCKET-CONNECTOR (16-GA TO 18-GA)	
					–OR–	
		1	**126-1768**	3	SOCKET-CONNECTOR (14-GA TO 16-GA)	
B		1	**1P-0810**		TAPE-ELECTRICAL	
	4	1	**4P-7581**	3	CLIP	
	5	1	**6V-5839**	1	WASHER (11X21X2.5-MM THK)	
M	6	1	**6V-6317**	1	BOLT (M10X1.5X20-MM)	

B - USE AS REQUIRED
E - ORDER BY THE CENTIMETER
M - METRIC PART

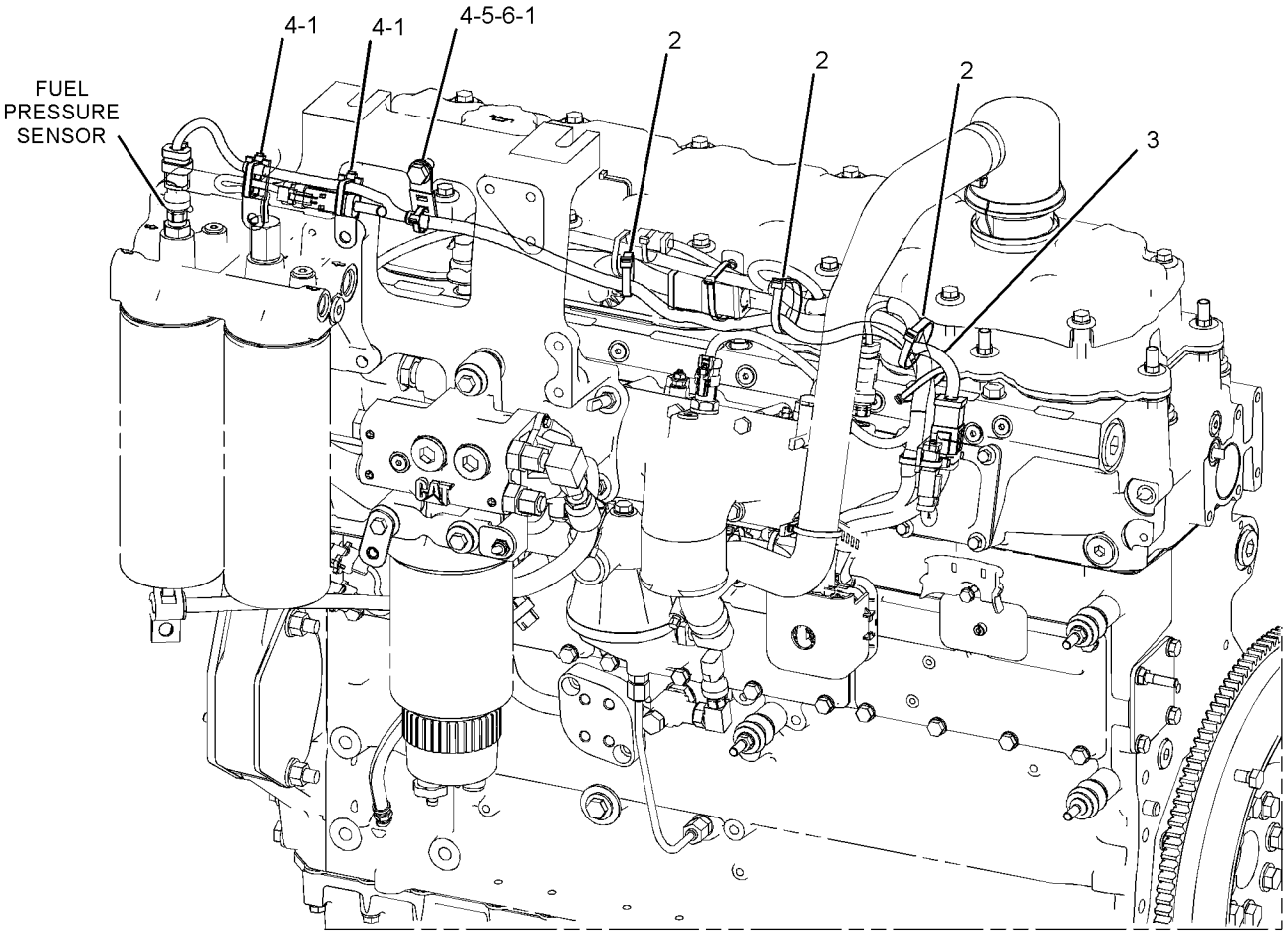

GRAPHIC #1 **<END>** g03201064

330-6022 WIRING GP-ENGINE

S/N: KHX1-UP

PART OF 338-9076, 387-1975, 387-1976 ENGINE AR-COMPLETE

SMCS-1403, 1408 **i05892119**

NOTE	REF NO	GRAPHIC REF	PART NUMBER	QTY	PART NAME 1 2 3 4 5 6 (PRODUCT LEVEL)	SEE PAGE
	1	1	**3S-2093**	14	STRAP-CABLE	
	2	1	**4P-5918**	1	CLIP	
	3	1	**206-1345**	7	STRAP-CABLE	
Y	4	1	**222-5917**	1	HARNESS AS-ENGINE (FUEL INJECTION)	207
Y	5	1	**381-2499**	1	HARNESS AS-WIRING (SENSOR)	215
	6	1	**352-3966**	1	CLIP (LADDER)	
	7	1	**4P-8134**	1	CLIP (LADDER)	
M	8	1	**5P-7970**	1	NUT (M8X1.25-THD)	
	9	1	**6K-0806**	2	STRAP-CABLE	
M	10	1	**6V-2317**	1	BOLT (M8X1.25X30-MM)	
	11	1	**9M-1974**	1	WASHER-HARD (8.8X16X2-MM THK)	
J	12	1	**5P-4116**	1	WASHER-HARD (8.8X20.5X2-MM THK)	
JM	13	1	**6V-5217**	1	BOLT (M8X1.25X20-MM)	
J	14	1	**7X-7729**	1	WASHER (11X25X3-MM THK)	
JM	15	1	**8T-4191**	1	BOLT (M10X1.5X16-MM)	
J	16	1	**113-8690**	1	WASHER (11.1X37.9X3.3-MM THK)	
J	17	1	**156-9890**	1	WASHER (9X30X4-MM THK)	

J - SHIPPING & STORAGE
M - METRIC PART
Y - SEPARATE ILLUSTRATION

330-6022 **WIRING GP-ENGINE (*contd.*)** **i05892119**

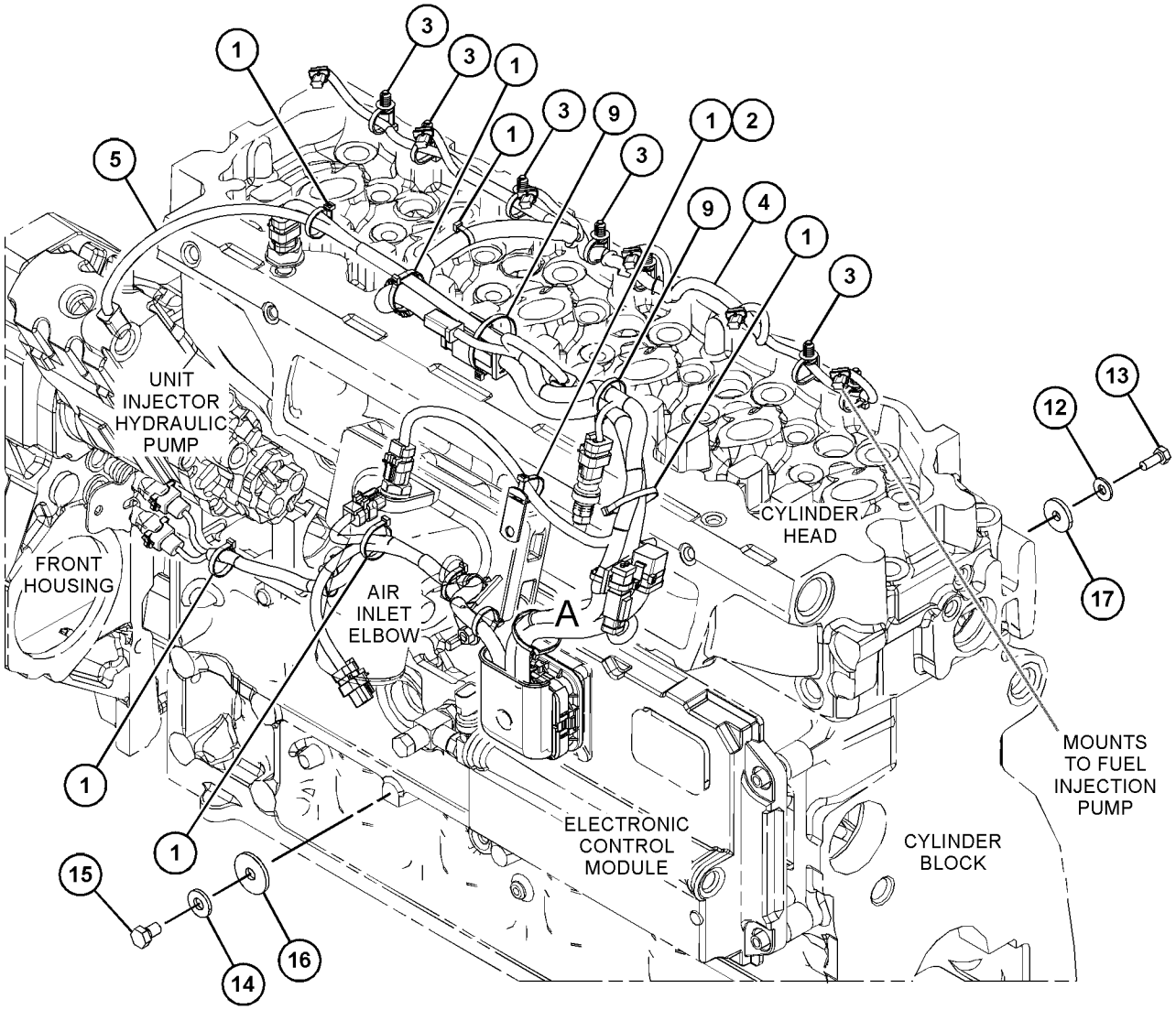

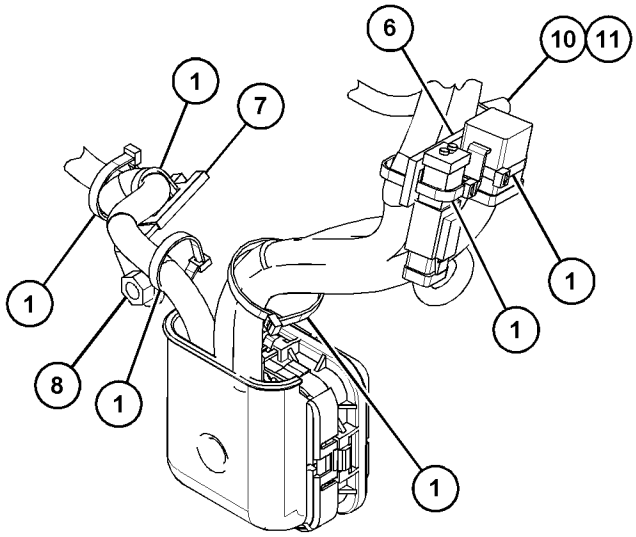

VIEW OF AREA A

GRAPHIC #1 **<END>** g03716294

372-4872 WIRING GP-ENGINE

S/N: JLX1-354

PART OF 372-2873 ELECTRICAL AR

SMCS-1403, 1408 **i05816770**

NOTE	REF NO	GRAPHIC REF	PART NUMBER	QTY	PART NAME 1 2 3 4 5 6 (PRODUCT LEVEL)	SEE PAGE
	1	1,2	**3S-2093**	8	STRAP-CABLE	
	3	1,2	**7K-1181**	19	STRAP-CABLE	
	4	2	**154-6626**	1	BRACKET AS	
	5	1	**175-3244**	1	SWITCH AS-PRESSURE (ENGINE OIL COOLER)	
		1	**102-8803**	1	KIT-RECEPTACLE (3-PIN)	
					(INCLUDES RECEPTACLE AS & WEDGE)	
D		1	**8T-5677**		SLEEVE (0.6-M)	
		1	**8T-8729**	3	PIN-CONNECTOR (16-GA TO 18-GA)	
		1	**314-2405**	1	SWITCH AS-PRESSURE (ENGINE OIL COOLER)	
		1	**317-7595**	1	SNUBBER	
Y	6	1	**194-6722**	1	SENSOR GP-PRESSURE (TURBOCHARGER INLET)	284
	7	1	**218-4935**	1	SUPPRESSOR-ARC	
	8	1	**256-6453**	1	SENSOR-TEMPERATURE (TORQUE CONVERTER OIL)	
	9	2	**272-6537**	1	BRACKET AS	
M		2	**8T-3490**	3	NUT-WELD (M10X1.5-THD)	
	10	2	**324-0697**	1	BRACKET AS	
M		2	**8T-3490**	2	NUT-WELD (M10X1.5-THD)	
	11	2	**324-0698**	1	BRACKET AS	
	12	1	**355-3148**	1	SWITCH AS-PRESSURE (AIR CONDITIONER)	
		1	**102-8802**	1	KIT-RECEPTACLE (2-PIN)	
					(INCLUDES RECEPTACLE AS & WEDGE)	
		1	**8T-8729**	2	PIN-CONNECTOR (16-GA TO 18-GA)	
	13	2	**372-4867**	1	CABLE AS	
		2	**3L-6513**	1	TERMINAL-RING (1-GA TO 2-GA, 1/2-IN SCREW)	
E		2	**8C-3056**		CABLE (2-GA, RED) (58-CM)	
B		2	**1P-0810**		TAPE-ELECTRICAL	
		2	**299-6082**	1	COVER-TERMINAL (RED)	
	14	2	**372-4870**	1	CABLE AS	
E		2	**8C-0596**		CABLE (2-GA) (64-CM)	
		2	**030-1712**	1	TERMINAL-RING (2-GA, 1/4-IN SCREW)	
		2	*291-6819*	1	TERMINAL AS-RING	
E		2	**125-7876**		TUBE-HEAT SHRINK (17.78-MM DIA) (4-CM)	
Y	15	1	**421-4975**	1	HARNESS AS-ENGINE	208
	16	2	**033-8248**	2	CLIP	
	17	2	**124-1479**	3	CLIP	
	18	1	**125-8797**	2	CLIP	
	19	1,2	**130-5300**	5	CLIP	
	20	1	**132-5789**	2	CLIP	
	21	2	**134-2540**	1	RECEPTACLE AS-CONNECTOR (3-PIN)	
M	22	1	**142-8545**	3	BOLT (M16X2X20-MM)	
	23	2	**147-0385**	1	CLIP	
	24	2	**149-9129**	1	CLIP	
	25	2	**204-2281**	3	STRAP-CABLE	
	26	1	**3J-1907**	2	SEAL-O-RING	
	27	1	**3K-0360**	1	SEAL-O-RING	
	28	1,2	**4P-7581**	2	CLIP	
	29	1	**4P-7582**	2	CLIP	
	30	2	**4P-8134**	2	CLIP	
	31	2	**4S-1962**	2	CLIP	
M	32	2	**5C-7261**	3	NUT (M8X1.25-THD)	
	33	2	**5P-4116**	2	WASHER-HARD (8.8X20.5X2-MM THK)	
	34	2	**8T-4121**	7	WASHER-HARD (11X21X2.5-MM THK)	
M	35	2	**8T-4136**	1	BOLT (M10X1.5X25-MM)	
M	36	2	**8T-4137**	6	BOLT (M10X1.5X20-MM)	
M	37	2	**8T-4189**	1	BOLT (M8X1.25X20-MM)	
M	38	2	**8T-4200**	2	BOLT (M8X1.25X16-MM)	
	39	2	**8T-4224**	5	WASHER-HARD (8.8X16X2-MM THK)	

372-4872 **WIRING GP-ENGINE (*contd.*)** **i05816770**

NOTE	REF NO	GRAPHIC REF	PART NUMBER	QTY	PART NAME 1 2 3 4 5 6 (PRODUCT LEVEL)	SEE PAGE
	40	1	**9X-7378**	1	SEAL-O-RING	
	41	1	**9X-8257**	3	WASHER (17.5X30X3.5-MM THK)	
	42	2	**096-4839**	3	CLIP	
	43	2	**9X-8256**	3	WASHER (6.6X12X2-MM THK)	
M	44	2	**8T-4181**	3	BOLT (M6X1X20-MM)	

B - USE AS REQUIRED
D - ORDER BY THE METER
E - ORDER BY THE CENTIMETER
M - METRIC PART
Y - SEPARATE ILLUSTRATION

372-4872 **WIRING GP-ENGINE (*contd.*)** **i05816770**

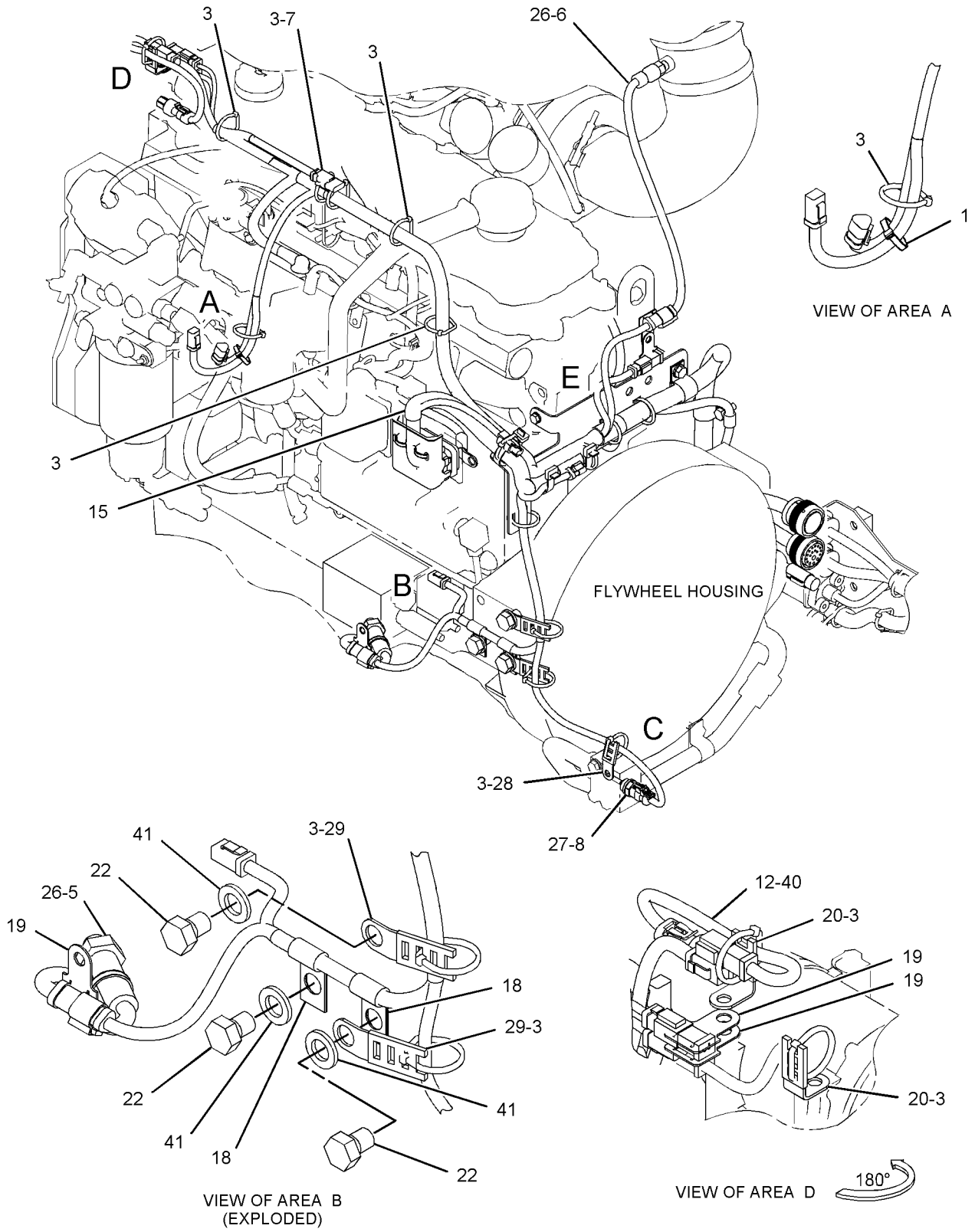

REFER TO ALL ILLUSTRATIONS OF THIS GROUP FOR AUXILIARY VIEWS

GRAPHIC #1

g03645709

372-4872 **WIRING GP-ENGINE (*contd.*)** **i05816770**

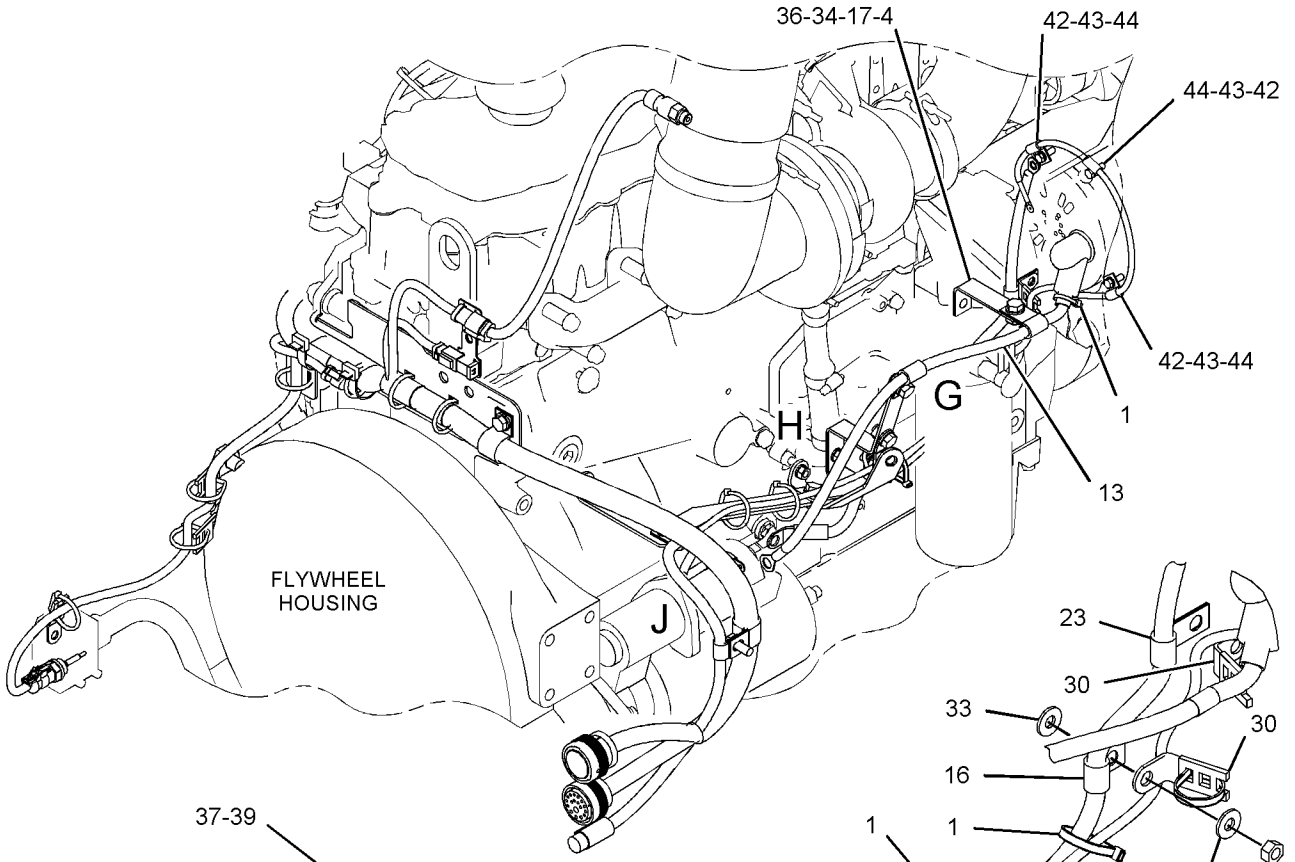

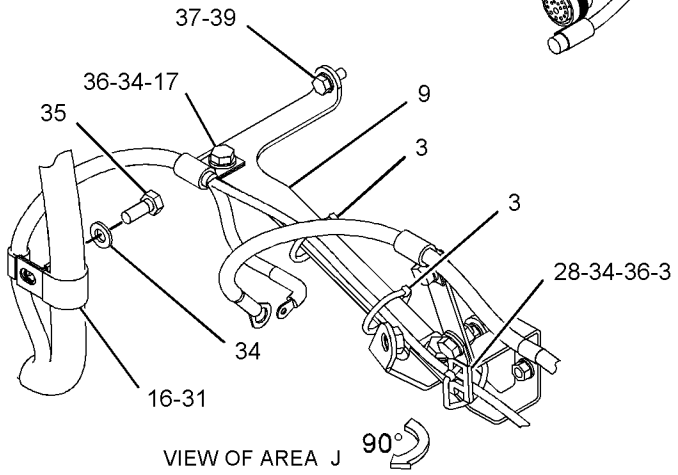

VIEW OF AREA J

VIEW OF AREA G
(ITEMS REMOVED FOR CLARITY)

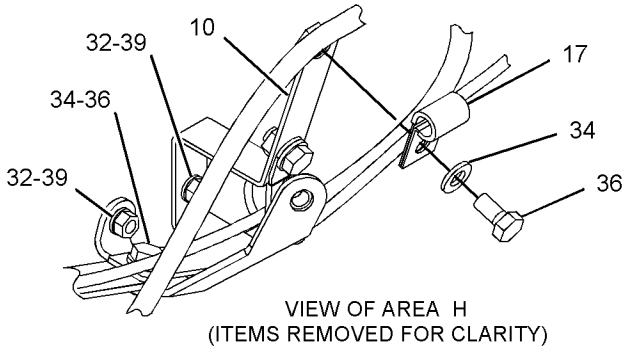

VIEW OF AREA H
(ITEMS REMOVED FOR CLARITY)

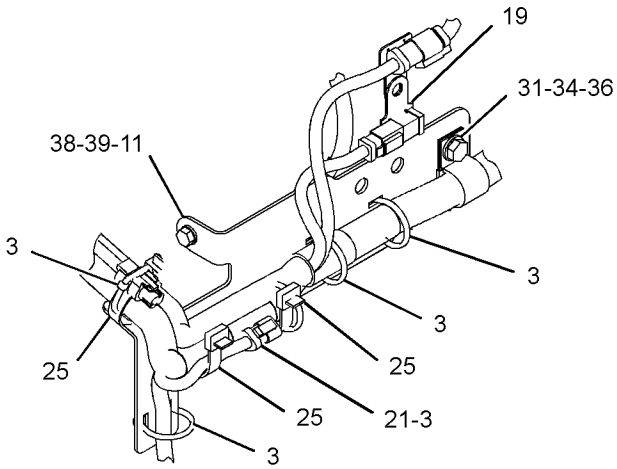

VIEW OF AREA E

GRAPHIC #2 **<END>** g03381227

372-4872 WIRING GP-ENGINE

S/N: JLX355-UP

PART OF 372-2873 ELECTRICAL AR

SMCS-1403, 1408 **i05922007**

NOTE	REF NO	GRAPHIC REF	PART NUMBER	QTY	PART NAME 1 2 3 4 5 6 (PRODUCT LEVEL)	SEE PAGE
C	1	1,2	**3S-2093**	8	STRAP-CABLE	
C	2	2	**0L-2072**	1	CLIP	
C	3	1,2	**7K-1181**	20	STRAP-CABLE	
	4	2	**154-6626**	1	BRACKET AS	
	5	1	**175-3244**	1	SWITCH AS-PRESSURE (ENGINE OIL COOLER)	
		1	**102-8803**	1	KIT-RECEPTACLE (3-PIN)	
					(INCLUDES RECEPTACLE AS & WEDGE)	
D		1	**8T-5677**		SLEEVE (0.6-M)	
		1	**8T-8729**	3	PIN-CONNECTOR (16-GA TO 18-GA)	
		1	**314-2405**	1	SWITCH AS-PRESSURE (ENGINE OIL COOLER)	
		1	**317-7595**	1	SNUBBER	
Y	6	1	**194-6722**	1	SENSOR GP-PRESSURE (TURBOCHARGER INLET)	284
	7	1	**218-4935**	1	SUPPRESSOR-ARC	
	8	1	**256-6453**	1	SENSOR-TEMPERATURE (TORQUE CONVERTER OIL)	
	9	2	**272-6537**	1	BRACKET AS	
M		2	**8T-3490**	3	NUT-WELD (M10X1.5-THD)	
	10	2	**324-0697**	1	BRACKET AS	
M		2	**8T-3490**	2	NUT-WELD (M10X1.5-THD)	
	11	2	**324-0698**	1	BRACKET AS	
	12	1	**355-3148**	1	SWITCH AS-PRESSURE (AIR CONDITIONER)	
		1	**102-8802**	1	KIT-RECEPTACLE (2-PIN)	
					(INCLUDES RECEPTACLE AS & WEDGE)	
		1	**8T-8729**	2	PIN-CONNECTOR (16-GA TO 18-GA)	
	13	2	**372-4867**	1	CABLE AS	
		2	**3L-6513**	1	TERMINAL-RING (1-GA TO 2-GA, 1/2-IN SCREW)	
E		2	**8C-3056**		CABLE (2-GA, RED) (58-CM)	
B		2	**1P-0810**		TAPE-ELECTRICAL	
		2	**299-6082**	1	COVER-TERMINAL (RED)	
	14	2	**372-4870**	1	CABLE AS	
E		2	**8C-0596**		CABLE (2-GA) (64-CM)	
		2	**030-1712**	1	TERMINAL-RING (2-GA, 1/4-IN SCREW)	
		2	*291-6819*	1	TERMINAL AS-RING	
E		2	**125-7876**		TUBE-HEAT SHRINK (17.78-MM DIA) (4-CM)	
CY	15	1	**438-6426**	1	HARNESS AS-ENGINE	209
	16	2	**033-8248**	2	CLIP	
C	17	2	**124-1479**	2	CLIP	
	18	1	**125-8797**	2	CLIP	
	19	1,2	**130-5300**	5	CLIP	
	20	1	**132-5789**	2	CLIP	
	21	2	**134-2540**	1	RECEPTACLE AS-CONNECTOR (3-PIN)	
M	22	1	**142-8545**	3	BOLT (M16X2X20-MM)	
	23	2	**147-0385**	1	CLIP	
	24	2	**149-9129**	1	CLIP	
	25	2	**204-2281**	3	STRAP-CABLE	
	26	1	**3J-1907**	2	SEAL-O-RING	
	27	1	**3K-0360**	1	SEAL-O-RING	
C	28	1,2	**4P-7581**	3	CLIP	
	29	1	**4P-7582**	2	CLIP	
	30	2	**4P-8134**	2	CLIP	
	31	2	**4S-1962**	2	CLIP	
M	32	2	**5C-7261**	3	NUT (M8X1.25-THD)	
	33	2	**5P-4116**	2	WASHER-HARD (8.8X20.5X2-MM THK)	
	34	2	**8T-4121**	7	WASHER-HARD (11X21X2.5-MM THK)	
M	35	2	**8T-4136**	2	BOLT (M10X1.5X25-MM)	
M	36	2	**8T-4137**	5	BOLT (M10X1.5X20-MM)	
M	37	2	**8T-4189**	1	BOLT (M8X1.25X20-MM)	
M	38	2	**8T-4200**	2	BOLT (M8X1.25X16-MM)	

372-4872 **WIRING GP-ENGINE (*contd.*)** **i05922007**

NOTE	REF NO	GRAPHIC REF	PART NUMBER	QTY	PART NAME 1 2 3 4 5 6 (PRODUCT LEVEL)	SEE PAGE
	39	2	**8T-4224**	5	WASHER-HARD (8.8X16X2-MM THK)	
	40	1	**9X-7378**	1	SEAL-O-RING	
	41	1	**9X-8257**	3	WASHER (17.5X30X3.5-MM THK)	
	42	2	**8M-2771**	3	CLIP	
	43	2	**9X-8256**	3	WASHER (6.6X12X2-MM THK)	
M	44	2	**8T-4181**	3	BOLT (M6X1X20-MM)	
	45	2	**352-3964**	1	CLIP	

B - USE AS REQUIRED
C - CHANGE FROM PREVIOUS TYPE
D - ORDER BY THE METER
E - ORDER BY THE CENTIMETER
M - METRIC PART
Y - SEPARATE ILLUSTRATION

372-4872 **WIRING GP-ENGINE (*contd.*)** **i05922007**

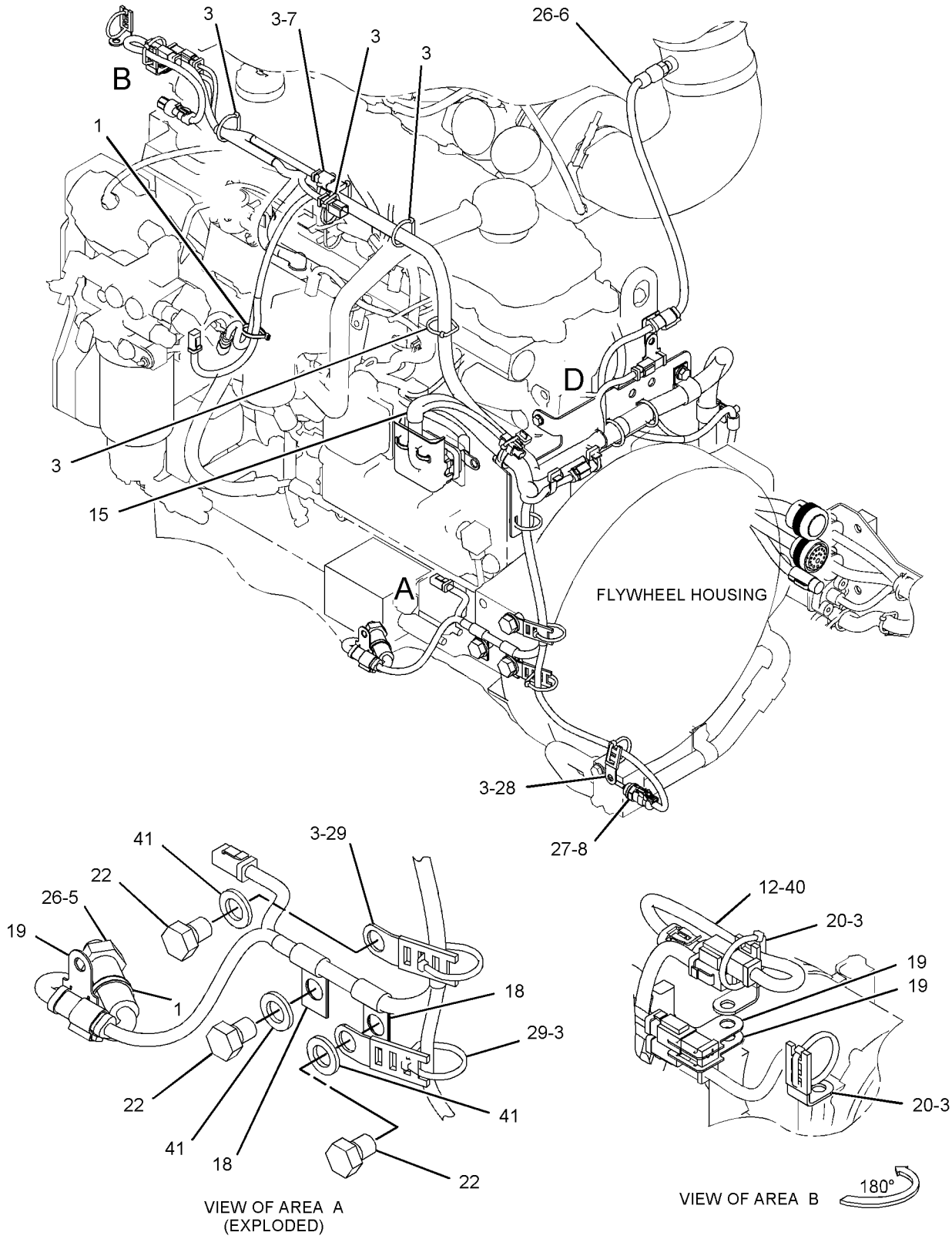

REFER TO ALL ILLUSTRATIONS OF
THIS GROUP FOR AUXILIARY VIEWS

GRAPHIC #1

g03705287

372-4872 **WIRING GP-ENGINE (*contd.*)** **i05922007**

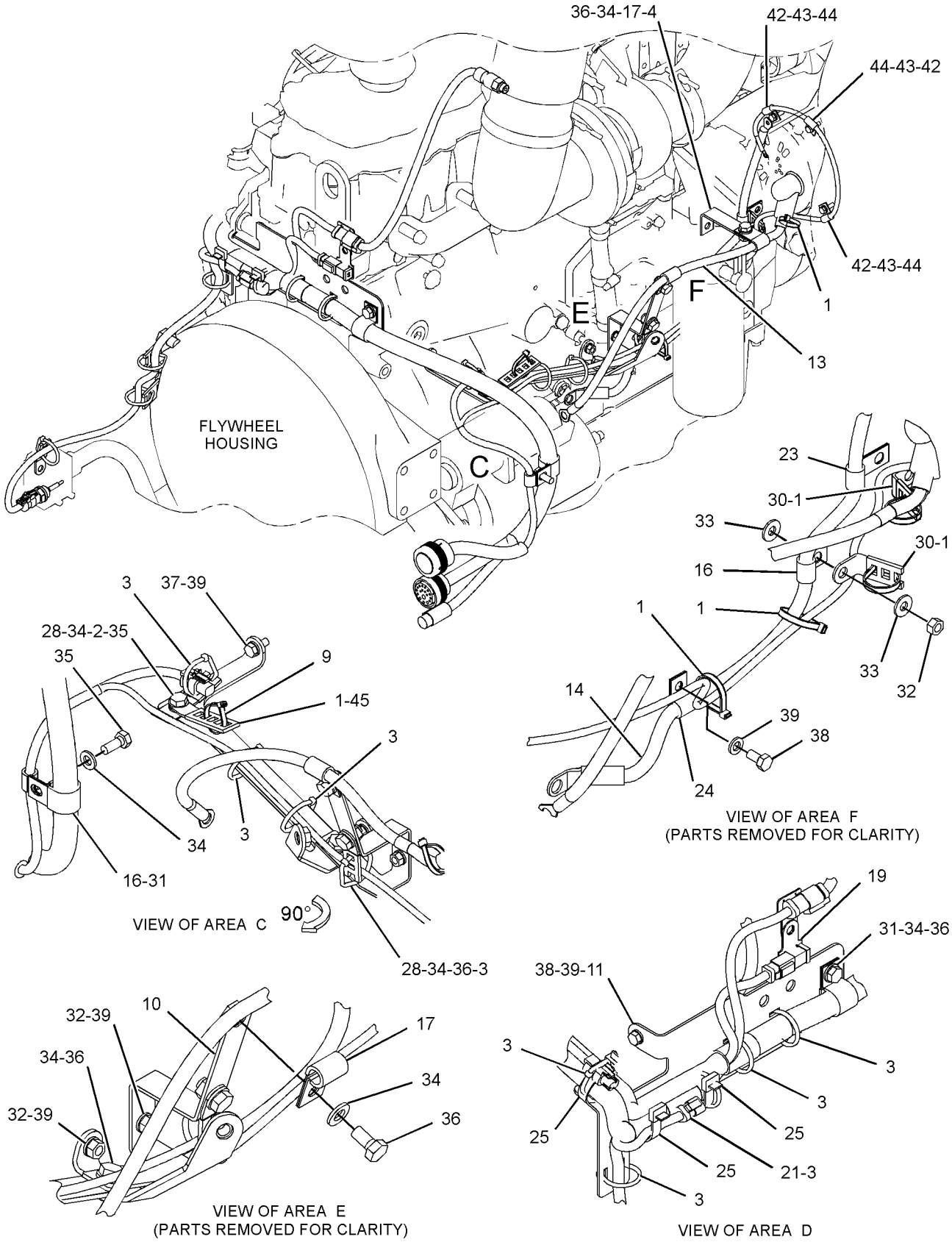

GRAPHIC #2 **<END>** g03705288

324-0678 WIRING GP-ETHER STARTING AID

S/N: JLX1-UP

PART OF 263-6353 STARTING AID AR-ETHER

SMCS-1408, 1456 **i04112514**

NOTE	REF NO	GRAPHIC REF	PART NUMBER	QTY	PART NAME 1 2 3 4 5 6 (PRODUCT LEVEL)	SEE PAGE
	1	1	**3S-2093**	1	STRAP-CABLE	
	2	1	**324-0677**	1	HARNESS AS-STARTING AID (ETHER)	
		1	**102-8802**	2	KIT-RECEPTACLE (2-PIN)	
					(EACH KIT INCLUDES A RECEPTACLE AS & WEDGE)	
E		1	**114-8843**		SLEEVE-PLASTIC (20-CM)	
		1	**9X-3402**	1	SOCKET-CONNECTOR (16-GA TO 18-GA)	
					-OR-	
		1	**126-1768**	1	SOCKET-CONNECTOR (14-GA TO 16-GA)	
		1	**9X-3401**	1	PIN-CONNECTOR (16-GA TO 18-GA)	
					-OR-	
		1	**126-1767**	1	PIN-CONNECTOR (14-GA TO 16-GA)	
		1	**155-2270**	3	KIT-CONNECTING PLUG (2-PIN)	
					(EACH KIT INCLUDES A PLUG ASSEMBLY AND WEDGE)	
	3	1	**4P-7581**	1	CLIP	
	4	1	**5P-9085**	1	CLIP	

E - ORDER BY THE CENTIMETER

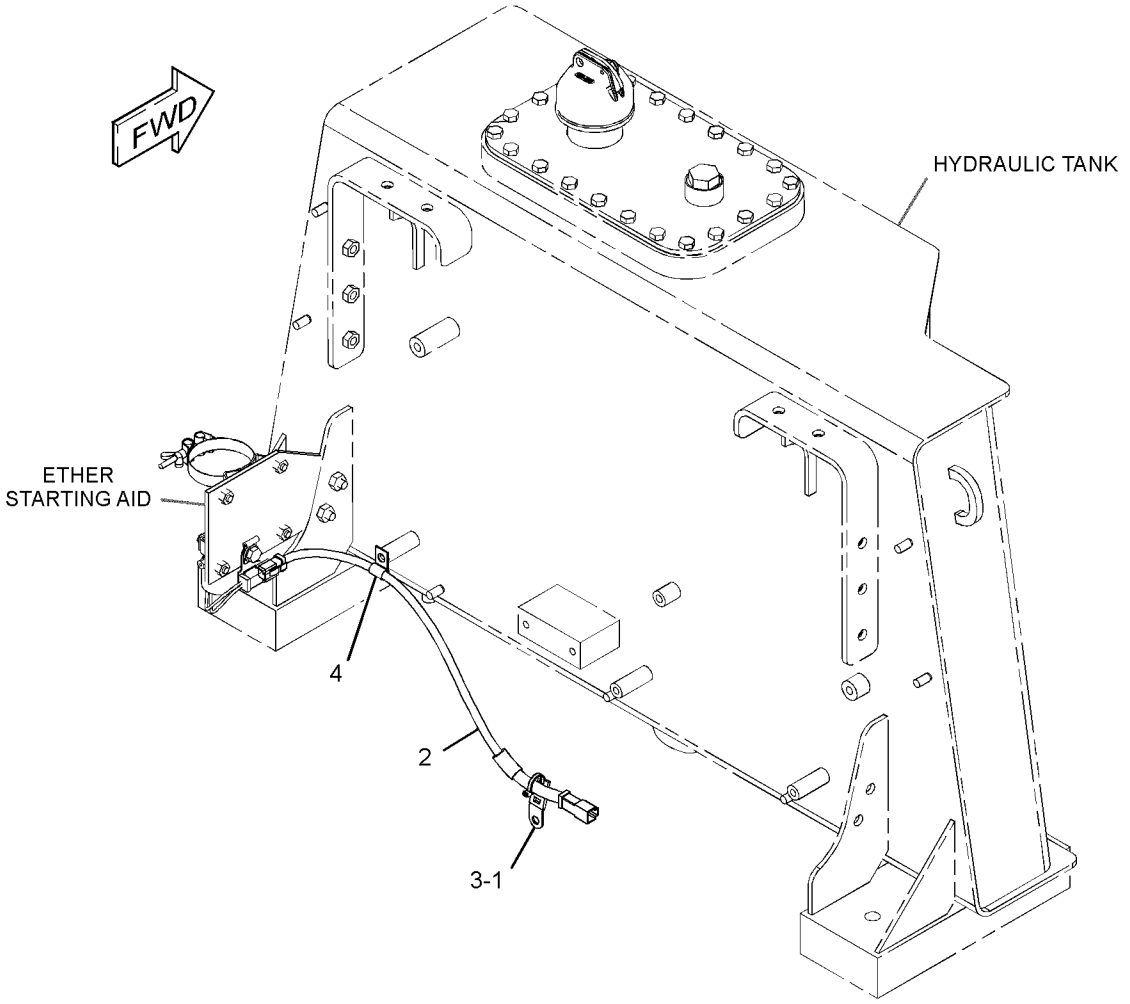

GRAPHIC #1 **<END>** g02118574

372-4885 WIRING GP-FRONT

S/N: JLX1-UP

PART OF 372-2873 ELECTRICAL AR

SMCS-1408, 5734 **i05241651**

NOTE	REF NO	GRAPHIC REF	PART NUMBER	QTY	PART NAME 1 2 3 4 5 6 (PRODUCT LEVEL)	SEE PAGE
	1	1	**3S-2093**	3	STRAP-CABLE	
	2	1	**5V-6152**	2	CLAMP	
	3	1	**5V-6153**	1	PLATE-COVER	
	4	1	**7K-1181**	36	STRAP-CABLE	
Y	5	1	**372-4875**	1	HARNESS AS-FRONT	210
	6	1	**130-5300**	4	CLIP	
	7	1	**132-5789**	1	CLIP	
	8	1	**4P-7429**	2	CLIP	
	9	1	**4P-7581**	17	CLIP	
	10	1	**4S-5719**	2	SPACER (10.31X25X12.7-MM THK)	
	11	1	**5P-7464**	1	CLIP (SLOT)	
	12	1	**5P-7465**	1	CLIP (TAB)	
	13	1	**8T-4121**	21	WASHER-HARD (11X21X2.5-MM THK)	
M	14	1	**8T-4133**	2	NUT (M10X1.5-THD)	
M	15	1	**8T-4136**	1	BOLT (M10X1.5X25-MM)	
M	16	1	**8T-4137**	18	BOLT (M10X1.5X20-MM)	
M	17	1	**8T-4139**	1	BOLT (M12X1.75X30-MM)	
	18	1	**8T-4223**	1	WASHER-HARD (13.5X25.5X3-MM THK)	
M	19	1	**8T-6974**	2	BOLT (M6X1X80-MM)	
	20	1	**9X-8256**	2	WASHER (6.6X12X2-MM THK)	

M - METRIC PART
Y - SEPARATE ILLUSTRATION

372-4885 **WIRING GP-FRONT (*contd.*)** **i05241651**

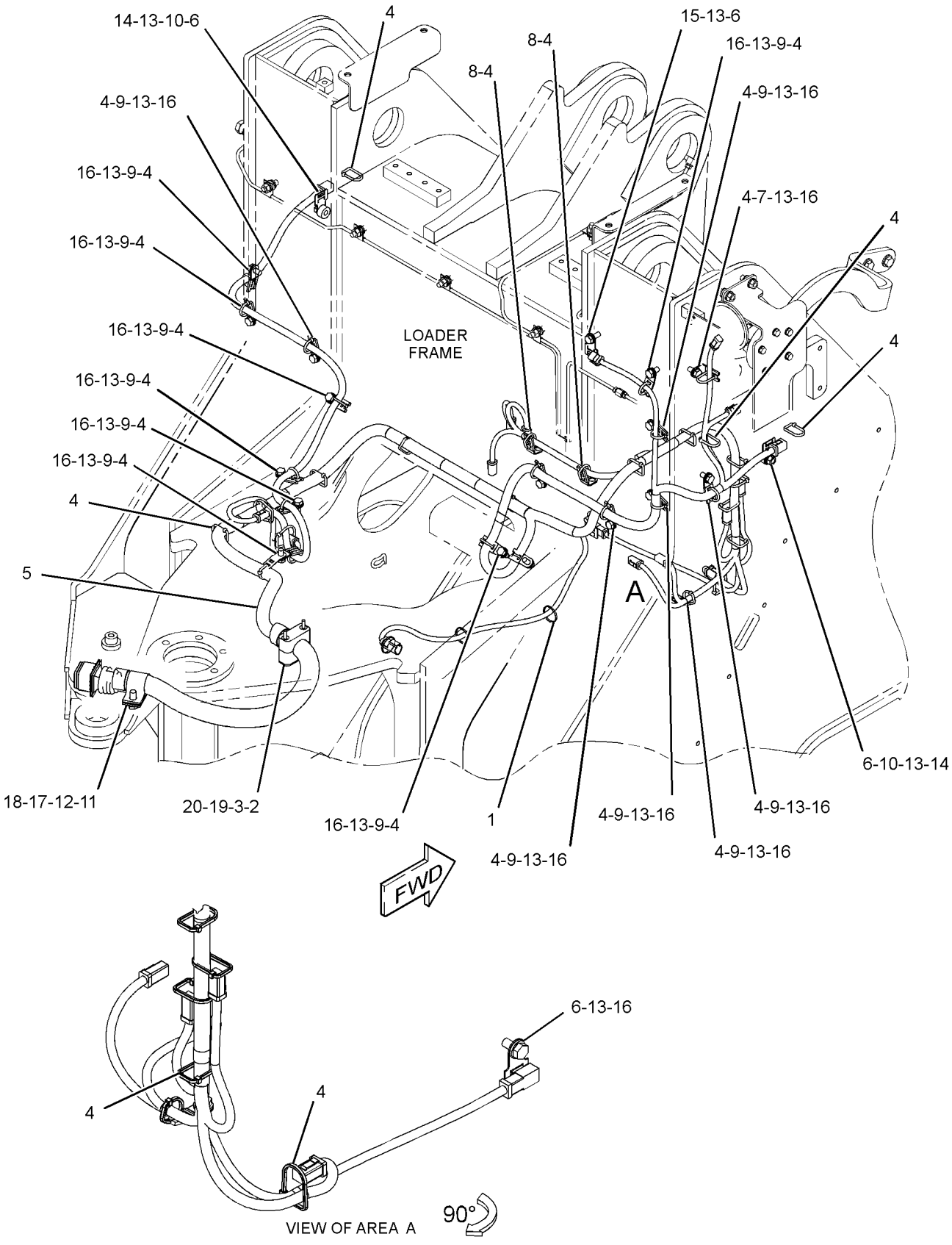

GRAPHIC #1

<END>

g03343669

315-1977 WIRING GP-LIGHTING

S/N: JLX1-UP

PART OF 373-8289 CONVERSION AR-MACHINE

SMCS-1408, 1429 **i04768763**

NOTE	REF NO	GRAPHIC REF	PART NUMBER	QTY	PART NAME 1 2 3 4 5 6 (PRODUCT LEVEL)	SEE PAGE
	1	1	**7K-1181**	1	STRAP-CABLE	
	2	1	**315-1978**	1	HARNESS AS-LIGHTING	
		1	**102-8806**	1	KIT-RECEPTACLE (8-PIN)	
					(INCLUDES RECEPTACLE AS & WEDGE)	
		1	**8T-8737**	1	PLUG-SEAL	
E		1	**125-7874**		TUBE-HEAT SHRINK (5.72-MM DIA) (5-CM)	
		1	**9X-3402**	5	SOCKET-CONNECTOR (16-GA TO 18-GA)	
					–OR–	
		1	**126-1768**	5	SOCKET-CONNECTOR (14-GA TO 16-GA)	
		1	**126-1767**	2	PIN-CONNECTOR (14-GA TO 16-GA)	
		1	**126-1768**	2	SOCKET-CONNECTOR (14-GA TO 16-GA)	
		1	**9X-3401**	6	PIN-CONNECTOR (16-GA TO 18-GA)	
					–OR–	
		1	**126-1767**	6	PIN-CONNECTOR (14-GA TO 16-GA)	
		1	**155-2265**	1	KIT-CONNECTING PLUG (8-PIN)	
					(INCLUDES PLUS AS & WEDGE)	

E - ORDER BY THE CENTIMETER

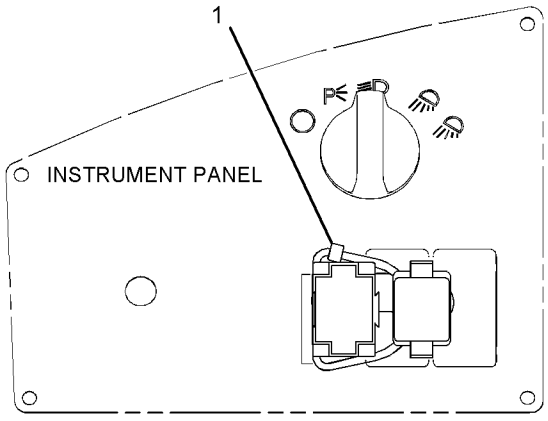

REAR VIEW
(910GII ~ 938GII)

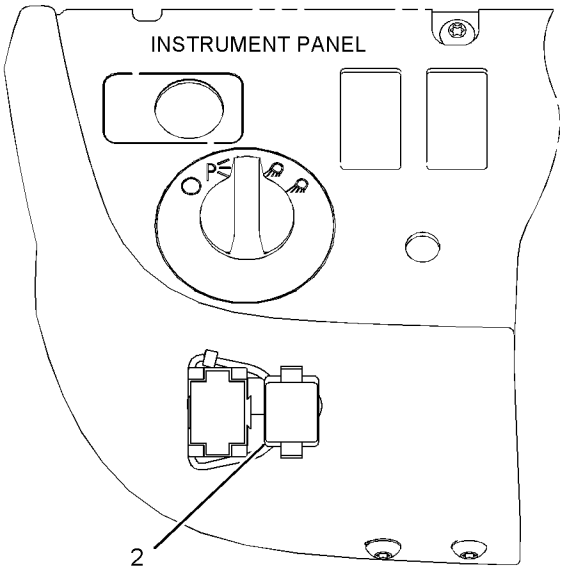

REAR VIEW
(950H ~ 980H)

GRAPHIC #1 **<END>** g02868879

373-0494 WIRING GP-LIGHTING

S/N: JLX1-UP

PART OF 372-2873 ELECTRICAL AR, 375-2472 LIGHTING GP-ROADING

SMCS-1408, 1429 **i04733869**

NOTE	REF NO	GRAPHIC REF	PART NUMBER	QTY	PART NAME 1 2 3 4 5 6 (PRODUCT LEVEL)	SEE PAGE
Y	1	1	**373-0495**	1	HARNESS AS-LIGHTING	210
Y	2	1	**373-0496**	1	HARNESS AS-LIGHTING	211

Y - SEPARATE ILLUSTRATION

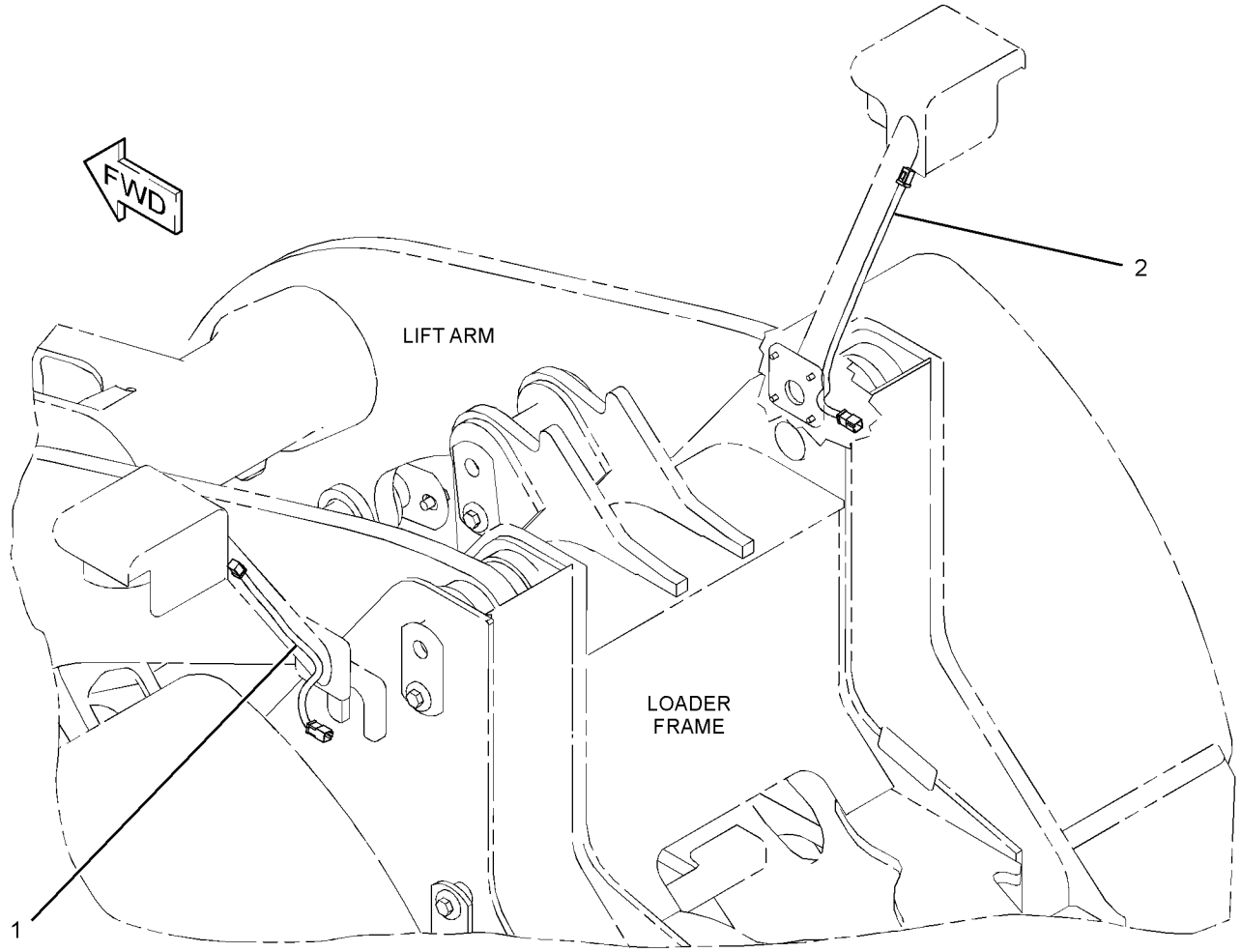

GRAPHIC #1 **<END>** g02846237

315-3591 WIRING GP-MONITOR

S/N: JLX1-UP

PART OF 309-3585, 391-4223 MONITOR GP-PAYLOAD

SMCS-1408, 7490, 7494 **i03637929**

NOTE	REF NO	GRAPHIC REF	PART NUMBER	QTY	PART NAME 1 2 3 4 5 6 (PRODUCT LEVEL)	SEE PAGE
	1	1	**3S-2093**	3	STRAP-CABLE	
	2	1	**7K-1181**	23	STRAP-CABLE	
	3	1	**288-1401**	1	BRACKET	
	4	1	**317-5591**	1	HARNESS AS-CHASSIS	
		1	**126-1774**	2	COVER-CONNECTOR	
		1	**9X-3401**	10	PIN-CONNECTOR (16-GA TO 18-GA)	
					-OR-	
		1	**126-1767**	10	PIN-CONNECTOR (14-GA TO 16-GA)	
		1	**147-1445**	1	PLUG AS-CONNECTOR (70-PIN)	
		1	**147-1446**	1	PLUG AS-CONNECTOR (70-PIN)	
					(EACH PLUG AS INCLUDES)	
		1	**159-9322**	1	SEAL-O-RING	
		1	**155-2265**	1	KIT-CONNECTING PLUG (8-PIN)	
		1	**155-2274**	1	KIT-CONNECTING PLUG (6-PIN)	
		1	**174-0503**	1	KIT-CONNECTING PLUG (3-PIN)	
					(EACH PLUG KIT INCLUDES PLUG AS, WEDGE & INTERFACE SEAL)	
		1	**245-7434**	1	KIT-CONNECTING PLUG (10-PIN)	
					(INCLUDES PLUGS & WIRE AS)	
		1	**8T-8737**	141	PLUG-SEAL	
		1	**102-8803**	1	KIT-RECEPTACLE (3-PIN)	
		1	**102-8805**	1	KIT-RECEPTACLE (6-PIN)	
		1	**102-8801**	1	KIT-RECEPTACLE (12-PIN)	
					(EACH RECEPTACLE KIT INCLUDES RECEPTACLE AS & WEDGE)	
		1	**185-1860**	7	SEAL-WIRE	
		1	**9X-3402**	27	SOCKET-CONNECTOR (16-GA TO 18-GA)	
					-OR-	
		1	**126-1768**	27	SOCKET-CONNECTOR (14-GA TO 16-GA)	
		1	**9X-6772**	4	STRAP-CABLE	
B		1	**1P-0810**		TAPE-ELECTRICAL	
		1	**235-4123**	7	TERMINAL (18-GA TO 20-GA)	
E		1	**119-3662**		TUBE-HEAT SHRINK (10.85-MM DIA) (7-CM)	
E		1	**125-7874**		TUBE-HEAT SHRINK (5.72-MM DIA) (25-CM)	
E		1	**125-7875**		TUBE-HEAT SHRINK (7.44-MM DIA) (10-CM)	
	5	1	**130-5300**	1	CLIP	
	6	1	**134-2540**	1	RECEPTACLE AS-CONNECTOR (3-PIN)	
	7	1	**205-7299**	1	CLIP	

B - USE AS REQUIRED
E - ORDER BY THE CENTIMETER

315-3591 **WIRING GP-MONITOR (*contd.*)** **i03637929**

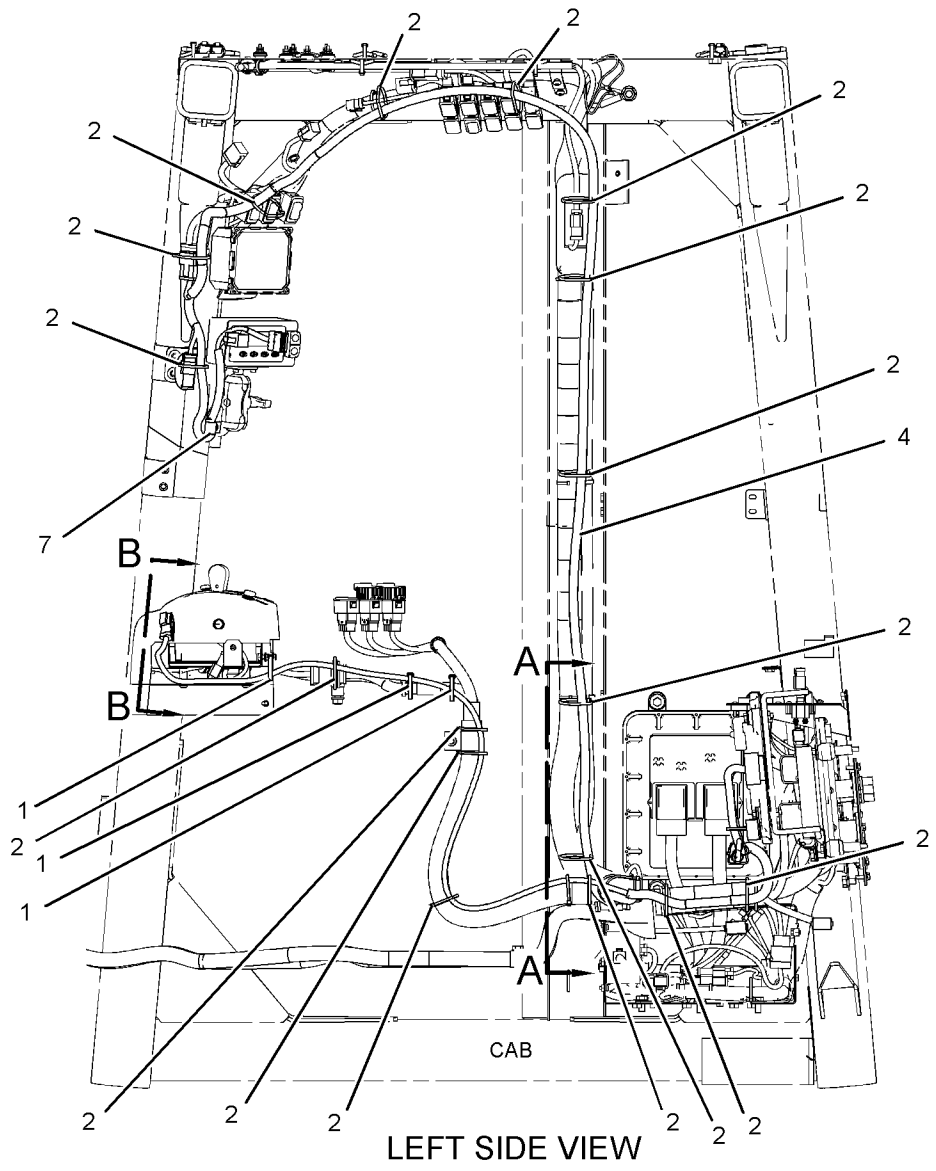

LEFT SIDE VIEW

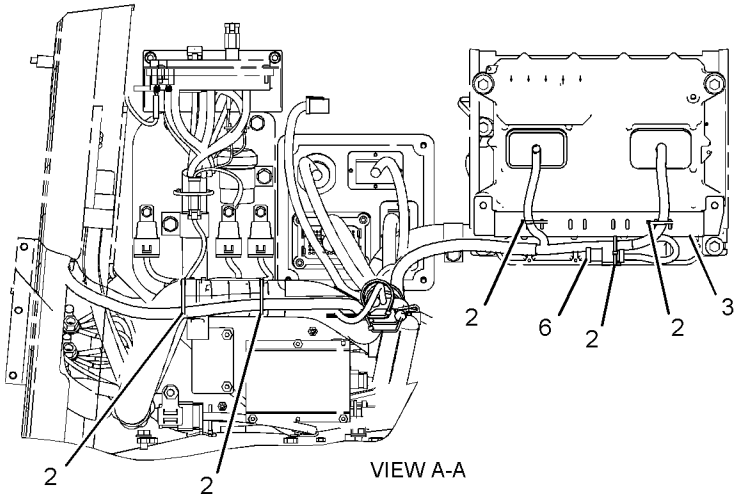

VIEW A-A

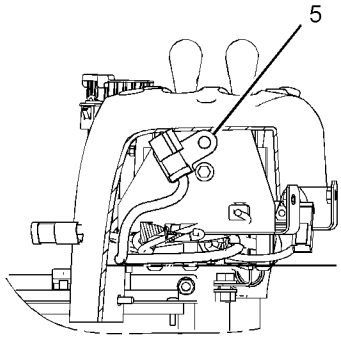

VIEW B-B

GRAPHIC #1 **<END>** g01886504

425-6514 WIRING GP-PROTECTION

S/N: JLX1-UP

CUSTOM

PART OF 419-9845 LUBRICATION AR-AUTOMATIC

SMCS-1408 **i05920049**

NOTE	REF NO	GRAPHIC REF	PART NUMBER	QTY	PART NAME 1 2 3 4 5 6 (PRODUCT LEVEL)	SEE PAGE
	1	1	**7K-1181**	36	STRAP-CABLE	
	2	1	**277-8271**	1	HARNESS AS-PUMP (JUMPER)	
		1	**102-8806**	1	KIT-RECEPTACLE (8-PIN)	
					(INCLUDES RECEPTACLE AS & WEDGE)	
		1	**8T-8729**	14	PIN-CONNECTOR (16-GA TO 18-GA)	
		1	**8T-8737**	2	PLUG-SEAL	
E		1	**114-8844**		SLEEVE-PLASTIC (20-CM)	
		1	**146-4055**	1	RECEPTACLE AS	
	3	1	**277-8272**	1	HARNESS AS-SWITCH (LUBRICATION PRESSURE)	
		1	**102-8802**	1	KIT-RECEPTACLE (2-PIN)	
					(INCLUDES RECEPTACLE AS & WEDGE)	
		1	**8T-8729**	4	PIN-CONNECTOR (16-GA TO 18-GA)	
E		1	**114-8843**		SLEEVE-PLASTIC (20-CM)	
		1	**146-4073**	1	RECEPTACLE AS	
	4	1	**281-8742**	1	HARNESS AS-PUMP (LUBRICATION, REAR FRAME)	
		1	**102-8804**	1	KIT-RECEPTACLE (4-PIN)	
					(INCLUDES RECEPTACLE AS & WEDGE)	
		1	**8T-8729**	3	PIN-CONNECTOR (16-GA TO 18-GA)	
		1	**8T-8730**	8	SOCKET-CONNECTOR (16-GA TO 18-GA)	
		1	**8T-8737**	3	PLUG-SEAL	
E		1	**114-8843**		SLEEVE-PLASTIC (40-CM)	
E		1	**114-8844**		SLEEVE-PLASTIC (20-CM)	
E		1	**125-7874**		TUBE-HEAT SHRINK (5.72-MM DIA) (5-CM)	
		1	**155-2265**	1	KIT-CONNECTING PLUG (8-PIN)	
		1	**155-2270**	1	KIT-CONNECTING PLUG (2-PIN)	
					(EACH KIT INCLUDES PLUG AS, WEDGE & INTERFACE SEAL)	
	5	1	**370-9488**	4	STRAP-CABLE	
	6	1	**149-9129**	2	CLIP	
	7	1	**4K-8864**	1	CLIP	
	8	1	**4P-7581**	1	CLIP	
	9	1	**8T-4121**	3	WASHER-HARD (11X21X2.5-MM THK)	
M	10	1	**8T-4137**	3	BOLT (M10X1.5X20-MM)	
E	11	1	**193-6911**		INSULATION (50-CM)	
E	11A	1	**193-6911**		INSULATION (300-CM)	

E - ORDER BY THE CENTIMETER
M - METRIC PART

425-6514 **WIRING GP-PROTECTION (*contd.*)** **i05920049**

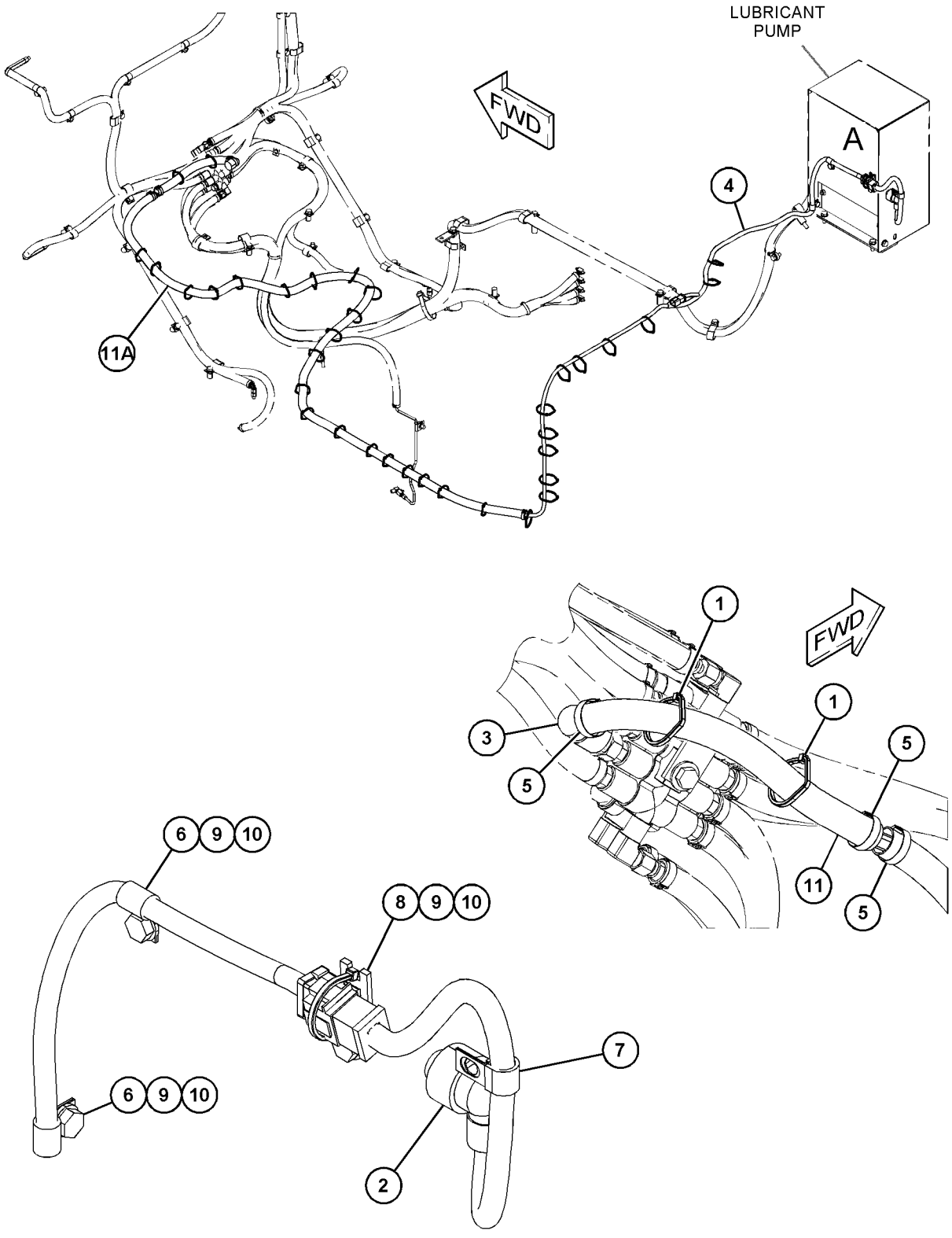

VIEW OF AREA A

GRAPHIC #1 **<END>** g03725020

324-0674 WIRING GP-SECONDARY STEERING

S/N: JLX1-UP

PART OF 373-8267 STEERING AR-SECONDARY

SMCS-1408, 4334 **i04736054**

NOTE	REF NO	GRAPHIC REF	PART NUMBER	QTY	PART NAME 1 2 3 4 5 6 (PRODUCT LEVEL)	SEE PAGE
	1	1	**3E-5239**	1	RELAY AS (24-VOLT)	
	2	1	**3S-2093**	6	STRAP-CABLE	
	3	1	**127-9323**	1	BRACKET AS	
M		1	**8T-3490**	1	NUT-WELD (M10X1.5-THD)	
	4	1	**201-8428**	1	BRACKET AS	
	5	1	**297-7294**	1	CABLE AS	
E		1	**5P-0747**		CABLE (00-GA, BLACK) (31-CM)	
		1	**1S-7251**	1	TERMINAL-CABLE (00-GA, 1/2-IN SCREW)	
		1	**1S-7252**	1	TERMINAL-CABLE (00-GA, 3/8-IN SCREW)	
	6	1	**367-9074**	1	SWITCH AS-PRESSURE (PRIMARY STEERING)	
	6A	1	**367-9074**	1	SWITCH AS-PRESSURE (SECONDARY STEERING)	
					(EACH SWITCH AS INCLUDES)	
		1	**102-8803**	1	KIT-RECEPTACLE (3-PIN)	
					(INCLUDES RECEPTACLE AS & WEDGE)	
		1	**8T-8729**	3	PIN-CONNECTOR (16-GA TO 18-GA)	
E		1	**9X-1813**		SLEEVE (28-CM)	
	7	1	**324-0675**	1	CABLE AS	
E		1	**159-8049**		CABLE (00-GA, RED) (186-CM)	
		1	**8N-0869**	1	COVER-TERMINAL (RED)	
		1	**1S-7252**	1	TERMINAL-CABLE (00-GA, 3/8-IN SCREW)	
		1	*311-6112*	1	TERMINAL AS-BATTERY	
E		1	**351-9309**		TUBE-HEAT SHRINK (32-MM DIA) (4-CM)	
		1	**1S-7251**	1	TERMINAL-CABLE (00-GA, 1/2-IN SCREW)	
E		1	**351-9309**		TUBE-HEAT SHRINK (32-MM DIA) (4-CM)	
	8	1	**324-0676**	1	HARNESS AS-STEERING (SECONDARY)	
		1	**155-2270**	1	KIT-CONNECTING PLUG (2-PIN)	
		1	**155-2260**	2	KIT-CONNECTING PLUG (3-PIN)	
					(EACH PLUG KIT INCLUDES PLUG AS, WEDGE & INTERFACE SEAL)	
		1	**102-8801**	1	KIT-RECEPTACLE (12-PIN)	
					(INCLUDES RECEPTACLE AS & WEDGE)	
		1	**9X-3401**	9	PIN-CONNECTOR (16-GA TO 18-GA)	
					—OR—	
		1	**126-1767**	9	PIN-CONNECTOR (14-GA TO 16-GA)	
		1	**8T-8737**	3	PLUG-SEAL	
		1	**9X-1054**	1	PLUG AS-CONNECTOR (4-PIN)	
		1	**9X-3402**	8	SOCKET-CONNECTOR (16-GA TO 18-GA)	
					—OR—	
		1	**126-1768**	8	SOCKET-CONNECTOR (14-GA TO 16-GA)	
		1	**218-4935**	1	SUPPRESSOR-ARC	
		1	*131-1506*	1	TERMINAL AS	
		1	**2L-8079**	1	TERMINAL-RING (14-GA TO 16-GA, 3/8-IN SCREW)	
E		1	**125-7874**		TUBE-HEAT SHRINK (5.72-MM DIA) (3-CM)	
		1	*130-6789*	2	TERMINAL AS-BLADE	
					(EACH INCLUDES)	
D		1	**6V-2689**		TUBE-HEAT SHRINK (6.35-MM DIA) (0.1-M)	
		1	**5P-4571**	1	TERMINAL-BLADE (14-GA TO 16-GA)	
					—OR—	
		1	**7N-7221**	1	TERMINAL-BLADE (18-GA TO 22-GA)	
		1	**9X-1055**	2	TERMINAL-RECEPTACLE (12-GA)	
		1	**100-5041**	2	TERMINAL-RECEPTACLE (18-GA TO 20-GA)	
E		1	**125-7874**		TUBE-HEAT SHRINK (5.72-MM DIA) (5-CM)	
E		1	**125-7875**		TUBE-HEAT SHRINK (7.44-MM DIA) (5-CM)	
	9	1	**130-5300**	2	CLIP	
	10	1	**130-5301**	1	CLIP	
	11	1	**132-5789**	1	CLIP	

324-0674 **WIRING GP-SECONDARY STEERING (*contd.*)** **i04736054**

NOTE	REF NO	GRAPHIC REF	PART NUMBER	QTY	PART NAME 1 2 3 4 5 6 (PRODUCT LEVEL)	SEE PAGE
	12	1	**204-8000**	2	MOUNTING-CABLE TIE	
	13	1	**205-7299**	7	CLIP	
	14	1	**2A-2677**	2	SPACER (10.7X17.14X19.05-MM THK)	
	15	1	**5P-9085**	1	CLIP	
	16	1	**5P-9297**	1	CLIP	
	17	1	**8T-4121**	11	WASHER-HARD (11X21X2.5-MM THK)	
M	18	1	**8T-4133**	4	NUT (M10X1.5-THD)	
M	19	1	**8T-4137**	5	BOLT (M10X1.5X20-MM)	
M	20	1	**8T-4171**	1	BOLT (M6X1X12-MM)	
M	21	1	**8T-4186**	1	BOLT (M10X1.5X40-MM)	
M	22	1	**8T-4196**	1	BOLT (M10X1.5X35-MM)	
	23	1	**8T-4223**	2	WASHER-HARD (13.5X25.5X3-MM THK)	
M	24	1	**8T-4244**	1	NUT (M12X1.75-THD)	
	25	1	**9X-8267**	1	WASHER (6.6X12X2-MM THK)	
	26	1	**3J-1907**	2	SEAL-O-RING	

D - ORDER BY THE METER
E - ORDER BY THE CENTIMETER
M - METRIC PART

324-0674 **WIRING GP-SECONDARY STEERING (*contd.*)** **i04736054**

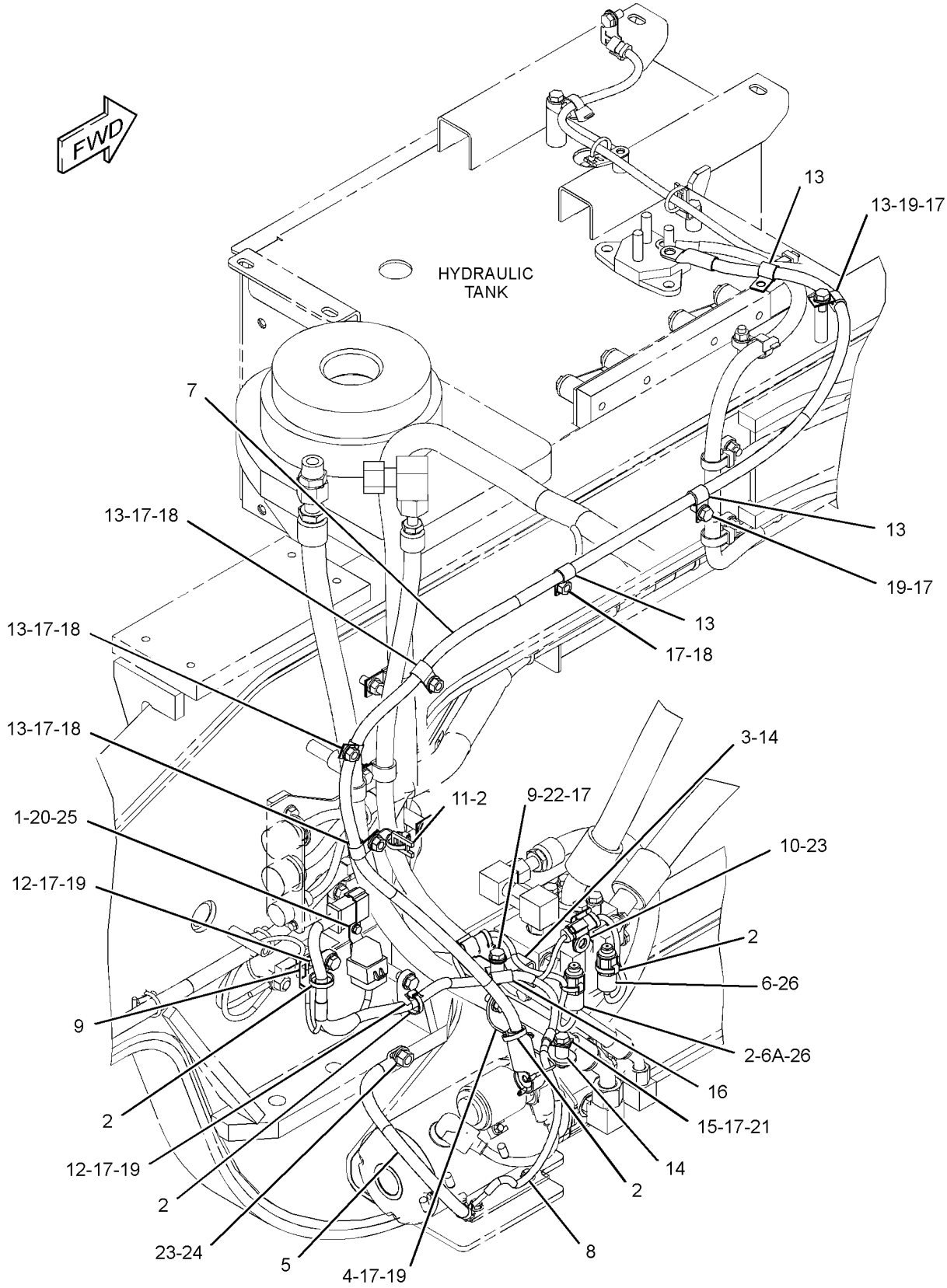

GRAPHIC #1 **<END>** g02475447

271-4010 WIRING GP-SENSOR—TILT POSITION

S/N: JLX1-UP

PART OF 372-2873 ELECTRICAL AR

SMCS-1408 **i04996830**

NOTE	REF NO	GRAPHIC REF	PART NUMBER	QTY	PART NAME 1 2 3 4 5 6 (PRODUCT LEVEL)	SEE PAGE
	1	1	**3S-2093**	1	STRAP-CABLE	
	2	1	**4V-1939**	4	CLAMP	
	3	1	**107-4749**	2	PLATE	
	4	1	**7K-1181**	1	STRAP-CABLE	
	5	1	**271-4011**	1	HARNESS AS-SENSOR	
		1	**155-2260**	1	KIT-CONNECTING PLUG (3-PIN)	
					(INCLUDES PLUG AS & WEDGE)	
		1	**102-8803**	1	KIT-RECEPTACLE (3-PIN)	
					(INCLUDES RECEPTACLE AS & WEDGE)	
		1	**9X-3401**	3	PIN-CONNECTOR (16-GA TO 18-GA)	
					—OR—	
		1	**126-1767**	3	PIN-CONNECTOR (14-GA TO 16-GA)	
E		1	**114-8843**		SLEEVE-PLASTIC (40-CM)	
		1	**9X-3402**	3	SOCKET-CONNECTOR (16-GA TO 18-GA)	
					—OR—	
		1	**126-1768**	3	SOCKET-CONNECTOR (14-GA TO 16-GA)	
B		1	**1P-0810**		TAPE-ELECTRICAL	
E		1	**8T-2225**		TUBE-HEAT SHRINK (25.4-MM DIA) (10-CM)	
	6	1	**4P-7581**	1	CLIP	
	7	1	**8T-4121**	2	WASHER-HARD (11X21X2.5-MM THK)	
M	8	1	**8T-4133**	2	NUT (M10X1.5-THD)	
	9	1	**9X-8256**	4	WASHER (6.6X12X2-MM THK)	
	10	1	**8M-2773**	2	CLIP	
M	11	1	**9X-2480**	4	BOLT (M6X1X45-MM)	

B - USE AS REQUIRED
E - ORDER BY THE CENTIMETER
M - METRIC PART

271-4010 **WIRING GP-SENSOR (*contd.*)** **i04996830**

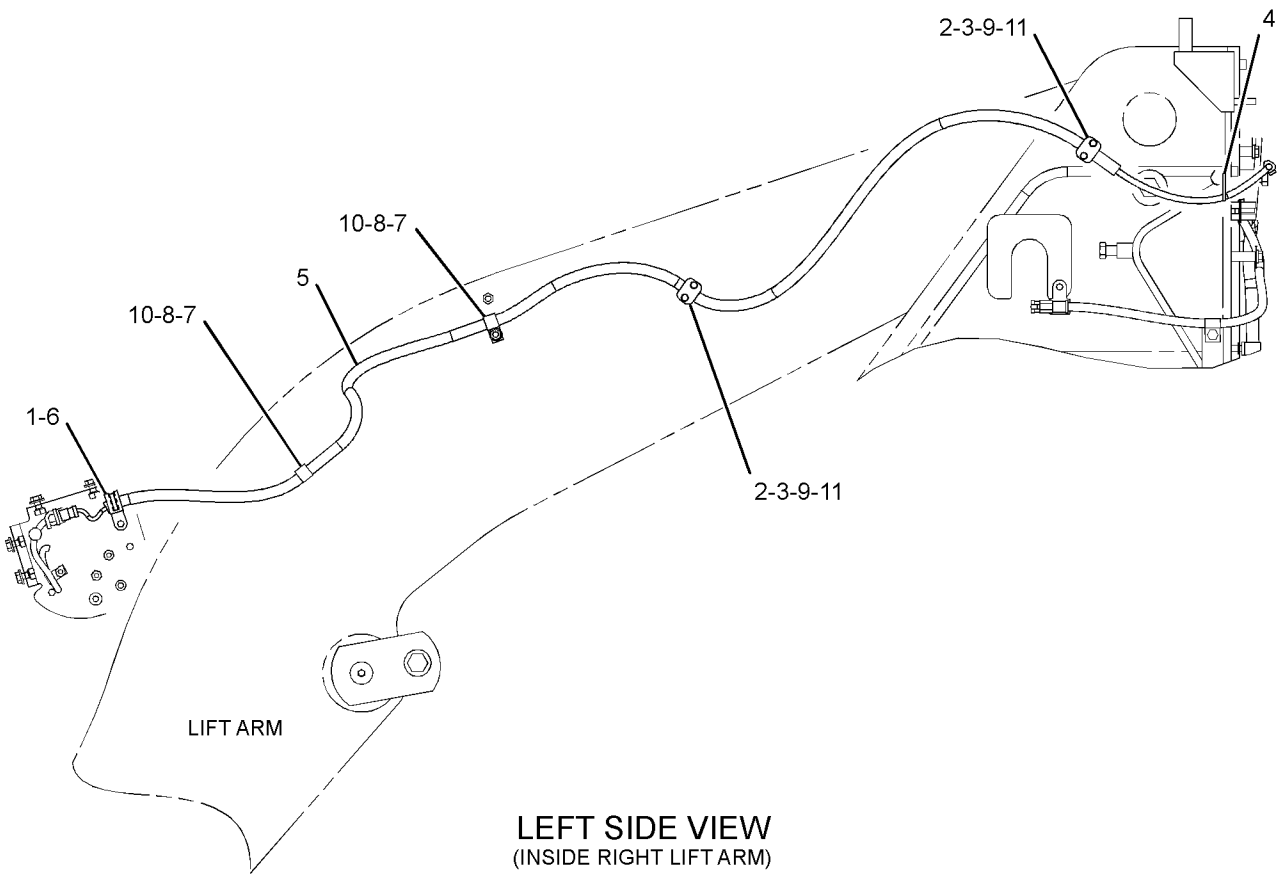

LEFT SIDE VIEW
(INSIDE RIGHT LIFT ARM)

GRAPHIC #1 **<END>** g03196178

275-0023 WIRING GP-SENSOR—TILT POSITION

S/N: JLX1-UP

PART OF 244-3375, 373-8262, 373-8263 CONTROL AR-HIGH LIFT

SMCS-1408 **i03023842**

NOTE	REF NO	GRAPHIC REF	PART NUMBER	QTY	PART NAME 1 2 3 4 5 6 (PRODUCT LEVEL)	SEE PAGE
	1	1	**3S-2093**	1	STRAP-CABLE	
	2	1	**4V-1939**	4	CLAMP	
	3	1	**107-4749**	2	PLATE	
	4	1	**7K-1181**	2	STRAP-CABLE	
	5	1	**275-0025**	1	HARNESS AS-SENSOR	
		1	**155-2260**	1	KIT-CONNECTING PLUG (3-PIN)	
					(INCLUDES PLUG AS & WEDGE)	
	6	1	**4P-7581**	1	CLIP	
	7	1	**8T-4121**	3	WASHER-HARD (11X21X2.5-MM THK)	
M	8	1	**8T-4133**	2	NUT (M10X1.5-THD)	
M	9	1	**8T-4136**	1	BOLT (M10X1.5X25-MM)	
	10	1	**9M-8406**	3	CLIP	
M	11	1	**9X-2480**	4	BOLT (M6X1X45-MM)	
	12	1	**9X-8256**	4	WASHER (6.6X12X2-MM THK)	

M - METRIC PART

275-0023 **WIRING GP-SENSOR (*contd.*)** **i03023842**

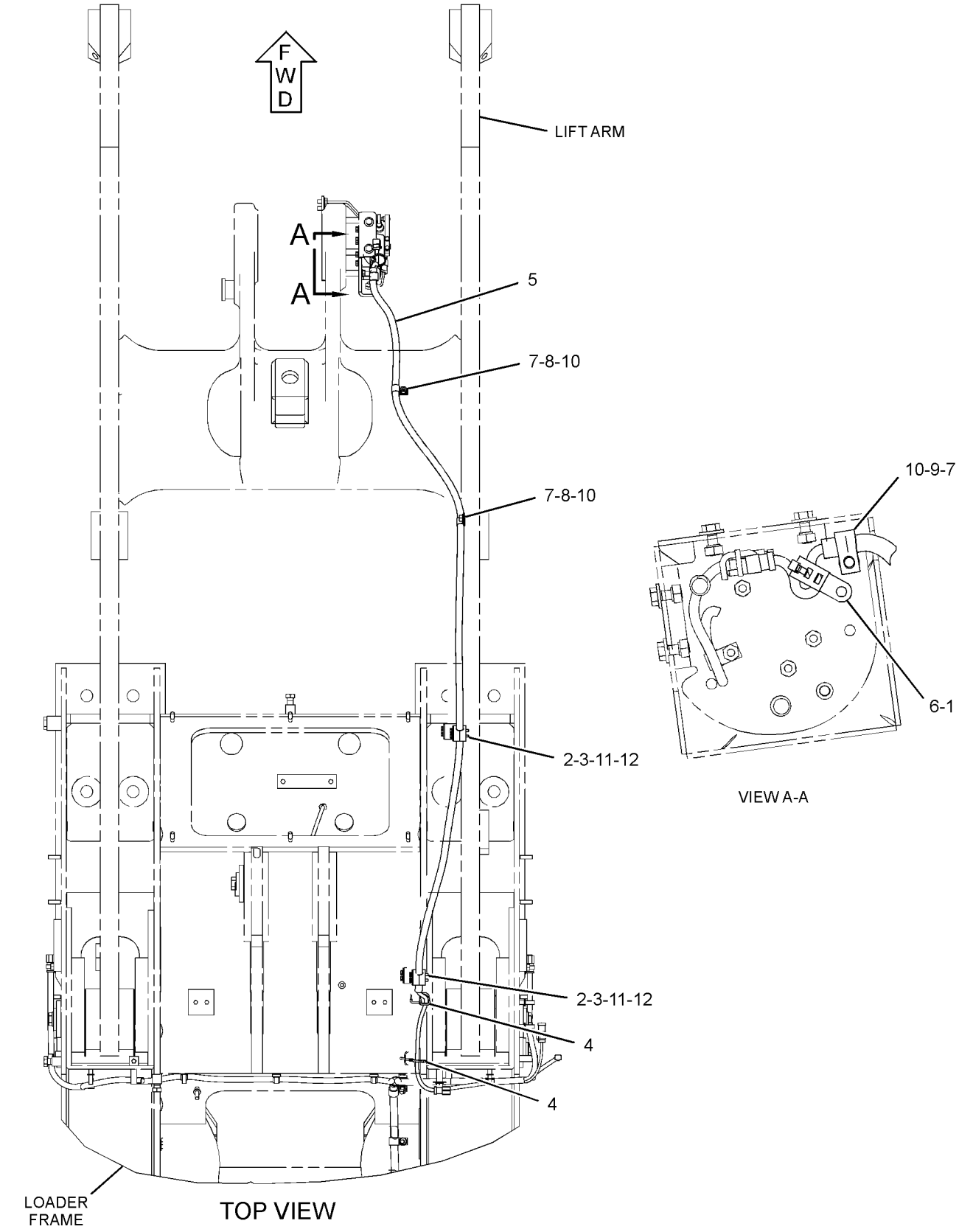

GRAPHIC #1

<END>

g01558953

397-8809 WIRING GP-STEERING

S/N: JLX1-UP

PART OF 219-7619 CONTROL GP-STEERING

SMCS-1408, 4334 **i05354800**

NOTE	REF NO	GRAPHIC REF	PART NUMBER	QTY	PART NAME 1 2 3 4 5 6 (PRODUCT LEVEL)	SEE PAGE
	1	1	**118-8078**	2	CLIP	
Y	2	1	*218-0654*	1	STEERING WHEEL GP (COMMAND CONTROL STEERING)	689
	3	1	**332-5240**	1	CLIP	
	4	1	**3S-2093**	1	STRAP-CABLE	
M	5	1	**7X-2619**	2	BOLT (M6X1X10-MM)	
	6	1	**8T-4121**	1	WASHER-HARD (11X21X2.5-MM THK)	
M	7	1	**8T-4191**	1	BOLT (M10X1.5X16-MM)	
	8	1	**8T-4205**	2	WASHER-HARD (7.2X14.5X2-MM THK)	

M - METRIC PART
Y - SEPARATE ILLUSTRATION

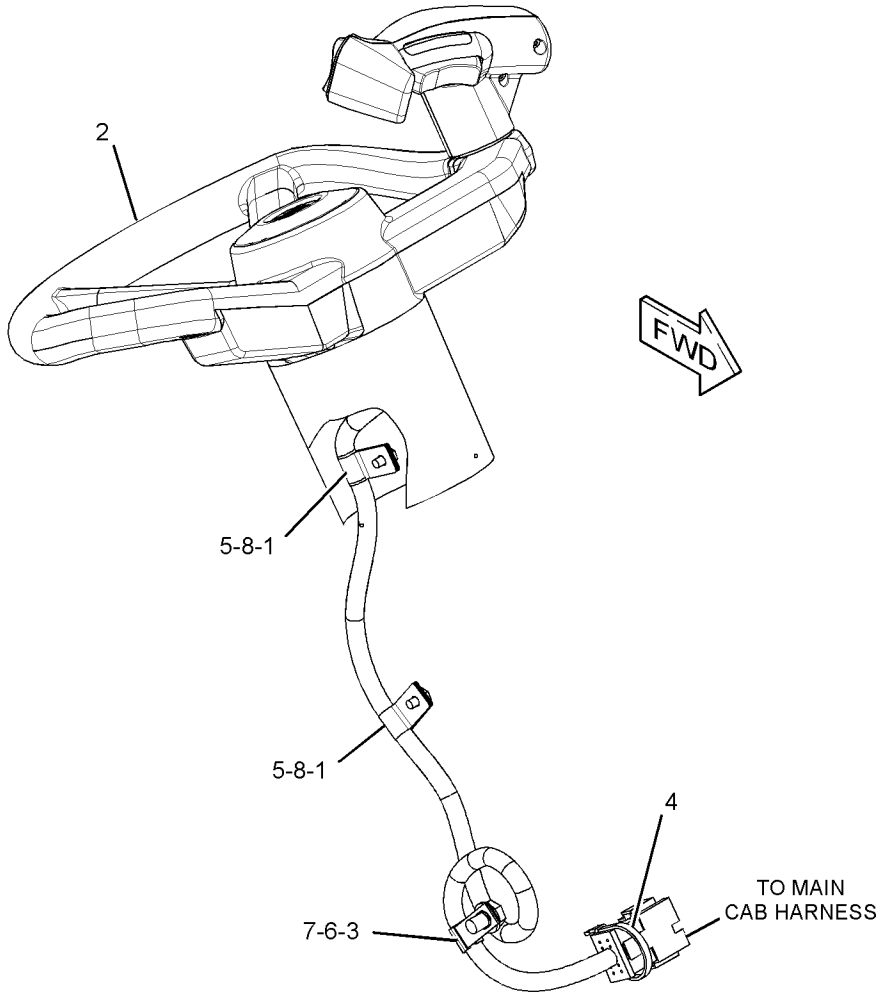

GRAPHIC #1 **<END>** g03403979

214-6161 AXLE AR-FIXED—FRONT, STANDARD DIFFERENTIAL

S/N: JLX1-UP

PART OF 357-1264 AXLE AR-FIXED & OSCILLATING, 375-3118 LOGGING AR

SMCS-3013, 3278 **i05461793**

NOTE	PART NUMBER	QTY	PART NAME 1 2 3 4 5 6 (PRODUCT LEVEL)	SEE PAGE
Y	*164-3018*	2	BRAKE & PLANETARY GP	394
Y	**137-1392**	1	DIFFERENTIAL GP	401
Y	*157-0340*	1	GEAR GP-BEVEL & PINION (FIXED AXLE)	418
Y	*214-6156*	1	HOUSING GP-FIXED AXLE	443

Y - SEPARATE ILLUSTRATION

<END>

214-9398 AXLE AR-FIXED—FRONT, STANDARD DIFFERENTIAL

S/N: JLX1-UP

PART OF 357-1251 AXLE AR-FIXED & OSCILLATING

SMCS-3013, 3278 **i02413296**

NOTE	PART NUMBER	QTY	PART NAME 1 2 3 4 5 6 (PRODUCT LEVEL)	SEE PAGE
Y	*112-0757*	2	BRAKE & PLANETARY GP	392
Y	**137-1392**	1	DIFFERENTIAL GP	401
Y	*112-0738*	1	GEAR GP-BEVEL & PINION	414
Y	*214-6156*	1	HOUSING GP-FIXED AXLE	443

Y - SEPARATE ILLUSTRATION

<END>

358-9581 AXLE AR-FIXED—FRONT

S/N: JLX1-UP

ECOLOGY DRAIN VALVE

PART OF 357-1265, 357-1268 AXLE AR-FIXED & OSCILLATING

SMCS-3013, 3278 **i04889225**

NOTE	PART NUMBER	QTY	PART NAME 1 2 3 4 5 6 (PRODUCT LEVEL)	SEE PAGE
Y	*164-3018*	2	BRAKE & PLANETARY GP	394
Y	**137-1392**	1	DIFFERENTIAL GP	401
Y	*157-0340*	1	GEAR GP-BEVEL & PINION	418
Y	*358-9602*	1	HOUSING GP-AXLE	429

Y - SEPARATE ILLUSTRATION

<END>

358-9582 AXLE AR-FIXED—STANDARD, W/ECOLOGY DRAIN

S/N: JLX1-UP

PART OF 357-1266, 357-1269 AXLE AR-FIXED & OSCILLATING

SMCS-3013, 3278 **i04776299**

NOTE	PART NUMBER	QTY	PART NAME 1 2 3 4 5 6 (PRODUCT LEVEL)	SEE PAGE
Y	*164-3018*	2	BRAKE & PLANETARY GP	394
Y	**137-1392**	1	DIFFERENTIAL GP	401
Y	*157-0340*	1	GEAR GP-BEVEL & PINION	418
Y	*358-9603*	1	HOUSING GP-AXLE	432

Y - SEPARATE ILLUSTRATION

<END>

358-9583 AXLE AR-FIXED—FRONT, WITH LIMITED SLIP DIFFERENTIAL

S/N: JLX1-UP

PART OF 357-1267, 357-1270 AXLE AR-FIXED & OSCILLATING

SMCS-3013, 3278 **i04776322**

NOTE	PART NUMBER	QTY	PART NAME 1 2 3 4 5 6 (PRODUCT LEVEL)	SEE PAGE
Y	*164-3018*	2	BRAKE & PLANETARY GP	394
Y	**137-1392**	1	DIFFERENTIAL GP	401
Y	*157-0340*	1	GEAR GP-BEVEL & PINION	418
Y	*358-9604*	1	HOUSING GP-AXLE	434

Y - SEPARATE ILLUSTRATION

<END>

358-9584 AXLE AR-FIXED—FRONT, LIMITED SLIP DIFFERENTIAL

S/N: JLX1-UP

ECOLOGY DRAIN VALVE

PART OF 357-1271, 357-1274 AXLE AR-FIXED & OSCILLATING

SMCS-3013, 3278 **i05059591**

NOTE	PART NUMBER	QTY	PART NAME 1 2 3 4 5 6 (PRODUCT LEVEL)	SEE PAGE
Y	*164-3018*	2	BRAKE & PLANETARY GP	394
Y	**144-4465**	1	DIFFERENTIAL GP-LIMITED SLIP	402
			—OR—	
Y	**372-4788**	1	DIFFERENTIAL GP-LIMITED SLIP	403
Y	*157-0340*	1	GEAR GP-BEVEL & PINION	418
Y	*358-9602*	1	HOUSING GP-AXLE	429

Y - SEPARATE ILLUSTRATION

<END>

358-9585 AXLE AR-FIXED—LIMITED SLIP DIFFERENTIALS

S/N: JLX1-UP

PART OF 357-1272, 357-1275 AXLE AR-FIXED & OSCILLATING

SMCS-3013, 3278 **i05385012**

NOTE	PART NUMBER	QTY	PART NAME 1 2 3 4 5 6 (PRODUCT LEVEL)	SEE PAGE
Y	*164-3018*	2	BRAKE & PLANETARY GP	394
Y	**144-4465**	1	DIFFERENTIAL GP-LIMITED SLIP	402
			S/N: JLX1-100	
Y	**372-4788**	1	DIFFERENTIAL GP-LIMITED SLIP	403
			S/N: JLX101-UP	
Y	*157-0340*	1	GEAR GP-BEVEL & PINION	418
Y	*358-9603*	1	HOUSING GP-AXLE	432

Y - SEPARATE ILLUSTRATION

<END>

358-9586 AXLE AR-FIXED—LIMITED SLIP DIFFERENTIAL

S/N: JLX1-UP

PART OF 357-1273 AXLE AR-FIXED & OSCILLATING, 357-1276 CONFIGURATION AR

SMCS-3013, 3278 **i04889411**

NOTE	PART NUMBER	QTY	PART NAME 1 2 3 4 5 6 (PRODUCT LEVEL)	SEE PAGE
Y	*164-3018*	2	BRAKE & PLANETARY GP	394
Y	**372-4788**	1	DIFFERENTIAL GP-LIMITED SLIP	403
Y	*157-0340*	1	GEAR GP-BEVEL & PINION	418
Y	*358-9604*	1	HOUSING GP-AXLE	434

Y - SEPARATE ILLUSTRATION

<END>

357-1251 AXLE AR-FIXED & OSCILLATING

S/N: JLX1-UP

PART OF 373-8238 DISTRIBUTION AR

SMCS-3013, 3278 **i04664190**

NOTE	PART NUMBER	QTY	PART NAME 1 2 3 4 5 6 (PRODUCT LEVEL)	SEE PAGE
Y	*214-9398*	1	AXLE AR-FIXED (FRONT, STANDARD DIFFERENTIAL)	384
Y	*112-0723*	1	AXLE AR-OSCILLATING (REAR, STANDARD DIFFERENTIAL)	389

Y - SEPARATE ILLUSTRATION

<END>

357-1264 AXLE AR-FIXED & OSCILLATING—OPEN

S/N: JLX1-UP

PART OF 390-7294 DISTRIBUTION AR

SMCS-3013, 3278 **i04889148**

NOTE	PART NUMBER	QTY	PART NAME 1 2 3 4 5 6 (PRODUCT LEVEL)	SEE PAGE
Y	*214-6161*	1	AXLE AR-FIXED (FRONT, STANDARD DIFFERENTIAL)	384
Y	*112-0723*	1	AXLE AR-OSCILLATING (REAR, STANDARD DIFFERENTIAL)	389

Y - SEPARATE ILLUSTRATION

<END>

357-1265 AXLE AR-FIXED & OSCILLATING—OPEN

S/N: JLX1-UP

PART OF 390-7295 DISTRIBUTION AR

SMCS-3013, 3278 **i04889178**

NOTE	PART NUMBER	QTY	PART NAME 1 2 3 4 5 6 (PRODUCT LEVEL)	SEE PAGE
Y	*358-9581*	1	AXLE AR-FIXED	384
Y	*331-4010*	1	AXLE AR-OSCILLATING	389

Y - SEPARATE ILLUSTRATION

<END>

357-1266 AXLE AR-FIXED & OSCILLATING—STANDARD DIFFERENTIALS

S/N: JLX1-UP

SMCS-3013, 3278 **i05358802**

NOTE	PART NUMBER	QTY	PART NAME 1 2 3 4 5 6 (PRODUCT LEVEL)	SEE PAGE
Y	*358-9582*	1	AXLE AR-FIXED	384
Y	*331-4011*	1	AXLE AR-OSCILLATING	390

Y - SEPARATE ILLUSTRATION

<END>

357-1267 AXLE AR-FIXED & OSCILLATING—OPEN

S/N: JLX1-UP

SMCS-3013, 3278 **i04889261**

NOTE	PART NUMBER	QTY	PART NAME 1 2 3 4 5 6 (PRODUCT LEVEL)	SEE PAGE
Y	*358-9583*	1	AXLE AR-FIXED	385
Y	*331-4012*	1	AXLE AR-OSCILLATING	390
	370-2229	1	GUARD GP-AXLE	
	8T-4121	64	WASHER-HARD (11X21X2.5-MM THK)	
M	**8T-4196**	64	BOLT (M10X1.5X35-MM)	
	232-0928	8	PLATE	
	232-0929	8	PLATE AS	

M - METRIC PART
Y - SEPARATE ILLUSTRATION

<END>

357-1268 AXLE AR-FIXED & OSCILLATING

S/N: JLX1-UP

SMCS-3013, 3278 **i04889289**

NOTE	PART NUMBER	QTY	PART NAME 1 2 3 4 5 6 (PRODUCT LEVEL)	SEE PAGE
Y	*358-9581*	1	AXLE AR-FIXED	384
Y	*331-4013*	1	AXLE AR-OSCILLATING	390

Y - SEPARATE ILLUSTRATION

<END>

357-1269 AXLE AR-FIXED & OSCILLATING—LIMITED SLIP AXLES

S/N: JLX1-UP

SMCS-3013, 3278 **i04776292**

NOTE	PART NUMBER	QTY	PART NAME 1 2 3 4 5 6 (PRODUCT LEVEL)	SEE PAGE
Y	*358-9582*	1	AXLE AR-FIXED	384
Y	*331-4014*	1	AXLE AR-OSCILLATING	391

Y - SEPARATE ILLUSTRATION

<END>

357-1270 AXLE AR-FIXED & OSCILLATING—LIMITED SLIP DIFFERENTIAL

S/N: JLX1-UP

SMCS-3013, 3278 **i04776303**

NOTE	PART NUMBER	QTY	PART NAME 1 2 3 4 5 6 (PRODUCT LEVEL)	SEE PAGE
Y	*358-9583*	1	AXLE AR-FIXED	385
Y	*331-4015*	1	AXLE AR-OSCILLATING	391

Y - SEPARATE ILLUSTRATION

<END>

357-1271 AXLE AR-FIXED & OSCILLATING—LIMITED SLIP AXLES

S/N: JLX1-UP

SMCS-3013, 3278 **i05358850**

NOTE	PART NUMBER	QTY	PART NAME 1 2 3 4 5 6 (PRODUCT LEVEL)	SEE PAGE
Y	*358-9584*	1	AXLE AR-FIXED	385
Y	*331-4010*	1	AXLE AR-OSCILLATING	389

Y - SEPARATE ILLUSTRATION

<END>

357-1272 AXLE AR-FIXED & OSCILLATING—LIMITED SLIP DIFFERENTIALS

S/N: JLX1-UP

SMCS-3013, 3278 **i05358955**

NOTE	PART NUMBER	QTY	PART NAME 1 2 3 4 5 6 (PRODUCT LEVEL)	SEE PAGE
Y	*358-9585*	1	AXLE AR-FIXED	385
Y	*331-4011*	1	AXLE AR-OSCILLATING	390

Y - SEPARATE ILLUSTRATION

<END>

357-1273 AXLE AR-FIXED & OSCILLATING—LIMITED SLIP AXLES

S/N: JLX1-UP

SMCS-3013, 3278 **i04889329**

NOTE	PART NUMBER	QTY	PART NAME 1 2 3 4 5 6 (PRODUCT LEVEL)	SEE PAGE
Y	*358-9586*	1	AXLE AR-FIXED (LIMITED SLIP DIFFERENTIAL)	386
Y	*331-4012*	1	AXLE AR-OSCILLATING	390
Y	*370-2229*	1	GUARD GP-AXLE	543

Y - SEPARATE ILLUSTRATION

<END>

357-1274 AXLE AR-FIXED & OSCILLATING—LIMITED SLIP AXLES

S/N: JLX1-UP

SMCS-3013, 3278 **i05358972**

NOTE	PART NUMBER	QTY	PART NAME 1 2 3 4 5 6 (PRODUCT LEVEL)	SEE PAGE
Y	*358-9584*	1	AXLE AR-FIXED	385
Y	*331-4013*	1	AXLE AR-OSCILLATING	390

Y - SEPARATE ILLUSTRATION

<END>

357-1275 AXLE AR-FIXED & OSCILLATING

S/N: JLX1-UP

SMCS-3013, 3278 **i05359903**

NOTE	PART NUMBER	QTY	PART NAME 1 2 3 4 5 6 (PRODUCT LEVEL)	SEE PAGE
Y	*358-9585*	1	AXLE AR-FIXED	385
Y	*331-4014*	1	AXLE AR-OSCILLATING	391

Y - SEPARATE ILLUSTRATION

<END>

112-0723 AXLE AR-OSCILLATING—REAR, STANDARD DIFFERENTIAL

S/N: JLX1-UP

PART OF 357-1251, 357-1264 AXLE AR-FIXED & OSCILLATING

SMCS-3013, 3278 **i05461797**

NOTE	PART NUMBER	QTY	PART NAME 1 2 3 4 5 6 (PRODUCT LEVEL)	SEE PAGE
Y	*112-0757*	2	BRAKE & PLANETARY GP	392
Y	**137-1392**	1	DIFFERENTIAL GP	401
Y	*112-0778*	1	GEAR GP-BEVEL & PINION (OSCILLATING AXLE)	416
Y	*112-0724*	1	HOUSING GP-OSCILLATING AXLE	445

Y - SEPARATE ILLUSTRATION

<END>

331-4010 AXLE AR-OSCILLATING—REAR

S/N: JLX1-UP

ECOLOGY DRAIN VALVE

PART OF 357-1265, 357-1271 AXLE AR-FIXED & OSCILLATING

SMCS-3013, 3278 **i04740939**

NOTE	PART NUMBER	QTY	PART NAME 1 2 3 4 5 6 (PRODUCT LEVEL)	SEE PAGE
Y	*112-0757*	2	BRAKE & PLANETARY GP	392
Y	**137-1392**	1	DIFFERENTIAL GP	401
Y	*112-0778*	1	GEAR GP-BEVEL & PINION	416
Y	*358-9605*	1	HOUSING GP-AXLE	437

Y - SEPARATE ILLUSTRATION

<END>

331-4011 AXLE AR-OSCILLATING—STANDARD, W/ECOLOGY DRAIN

S/N: JLX1-UP

PART OF 357-1266, 357-1272 AXLE AR-FIXED & OSCILLATING

SMCS-3013, 3278 **i04889254**

NOTE	PART NUMBER	QTY	PART NAME 1 2 3 4 5 6 (PRODUCT LEVEL)	SEE PAGE
Y	*112-0757*	2	BRAKE & PLANETARY GP	392
Y	**137-1392**	1	DIFFERENTIAL GP	401
Y	*112-0778*	1	GEAR GP-BEVEL & PINION	416
Y	*358-9606*	1	HOUSING GP-AXLE	439

Y - SEPARATE ILLUSTRATION

<END>

331-4012 AXLE AR-OSCILLATING

S/N: JLX1-UP

OPEN DIFFERENTIAL, REAR, ECOLOGY DRAIN VALVE

PART OF 357-1267, 357-1273 AXLE AR-FIXED & OSCILLATING

SMCS-3013, 3278 **i04889273**

NOTE	PART NUMBER	QTY	PART NAME 1 2 3 4 5 6 (PRODUCT LEVEL)	SEE PAGE
Y	*112-0757*	2	BRAKE & PLANETARY GP	392
Y	**137-1392**	1	DIFFERENTIAL GP	401
Y	*112-0778*	1	GEAR GP-BEVEL & PINION	416
Y	*358-9607*	1	HOUSING GP-AXLE	441

Y - SEPARATE ILLUSTRATION

<END>

331-4013 AXLE AR-OSCILLATING—REAR, LIMITED SLIP DIFFERENTIAL

S/N: JLX1-UP

ECOLOGY DRAIN VALVE

PART OF 357-1268, 357-1274 AXLE AR-FIXED & OSCILLATING

SMCS-3013, 3278 **i05138470**

NOTE	PART NUMBER	QTY	PART NAME 1 2 3 4 5 6 (PRODUCT LEVEL)	SEE PAGE
Y	*112-0757*	2	BRAKE & PLANETARY GP	392
Y	**372-4788**	1	DIFFERENTIAL GP-LIMITED SLIP	403
Y	*112-0778*	1	GEAR GP-BEVEL & PINION	416
Y	*358-9605*	1	HOUSING GP-AXLE	437

Y - SEPARATE ILLUSTRATION

<END>

331-4014 AXLE AR-OSCILLATING—LIMITED SLIP DIFFERENTIAL

S/N: JLX1-UP

PART OF 357-1269, 357-1275 AXLE AR-FIXED & OSCILLATING

SMCS-3013, 3278 **i05064071**

NOTE	PART NUMBER	QTY	PART NAME 1 2 3 4 5 6 (PRODUCT LEVEL)	SEE PAGE
Y	*112-0757*	2	BRAKE & PLANETARY GP	392
Y	**372-4788**	1	DIFFERENTIAL GP-LIMITED SLIP	403
Y	*112-0778*	1	GEAR GP-BEVEL & PINION	416
Y	*358-9606*	1	HOUSING GP-AXLE	439

Y - SEPARATE ILLUSTRATION

<END>

331-4015 AXLE AR-OSCILLATING

S/N: JLX1-UP

PART OF 357-1270 AXLE AR-FIXED & OSCILLATING, 357-1276 CONFIGURATION AR

SMCS-3013, 3278 **i05330565**

NOTE	PART NUMBER	QTY	PART NAME 1 2 3 4 5 6 (PRODUCT LEVEL)	SEE PAGE
Y	*112-0757*	2	BRAKE & PLANETARY GP	392
Y	**372-4788**	1	DIFFERENTIAL GP-LIMITED SLIP	403
Y	*112-0778*	1	GEAR GP-BEVEL & PINION	416
Y	*358-9607*	1	HOUSING GP-AXLE	441

Y - SEPARATE ILLUSTRATION

<END>

112-0757 BRAKE & PLANETARY GP

S/N: JLX1-UP

PART OF 214-9398 AXLE AR-FIXED, 112-0723, 331-4010, 331-4011, 331-4012, 331-4013, 331-4014, 331-4015 AXLE AR-OSCILLATING

SMCS-4011, 4255

i04874150

NOTE	REF NO	GRAPHIC REF	PART NUMBER	QTY	PART NAME 1 2 3 4 5 6 (PRODUCT LEVEL)	SEE PAGE
	1	1	**8R-4568**	1	PISTON	
	2	1	**8R-9207**	1	SEAL	
	3	1	**293-3609**	3	SPRING	
	4	1	**334-1034**	1	DISC-FRICTION	
	5	1	**9C-8418**	1	PLATE-REACTION	
	6	1	**1F-5151**	3	DOWEL	
	7	1	**164-3071**	3	GEAR-PLANETARY (30-TEETH)	
	8	1	**9C-7727**	3	BUSHING	
	9	1	**9C-9537**	6	WASHER-THRUST	
	10	1	**8T-2925**	3	PIN-SPRING	
	11	1	**8R-1888**	3	SHAFT-PLANETARY	
	12	1	**8R-4571**	1	CARRIER-PLANETARY	
	13	1	**9M-4335**	2	DOWEL-REACTION	
	14	1	**164-6476**	1	GEAR-SUN (18-TEETH)	
	15	1	**149-9112**	1	DOWEL-HOLLOW	
	16	1	**117-1801**	1	DOWEL	
	17	1	**8R-1893**	1	GEAR-RING (81-TEETH)	
	18	1	**2N-2658**	1	BOLT-SOCKET HEAD (8-32X15.88-MM)	
	19	1	**096-6166**	1	WASHER-HARD (4.5X9X1-MM THK)	
	20	1	**112-0759**	1	PLUG	
	21	1	**138-1645**	3	PIN-SPRING	
	22	1	**149-9114**	1	PIN (BRAKE DISC WEAR INDICATOR)	
	23	1	**150-4651**	1	SEAL-O-RING	
	24	1	**325-3780**	1	SEAL	
	25	1	**117-1803**	1	CUP	
	26	1	**325-3781**	1	RING-BACKUP	

112-0757 **BRAKE & PLANETARY GP (*contd.*)** **i04874150**

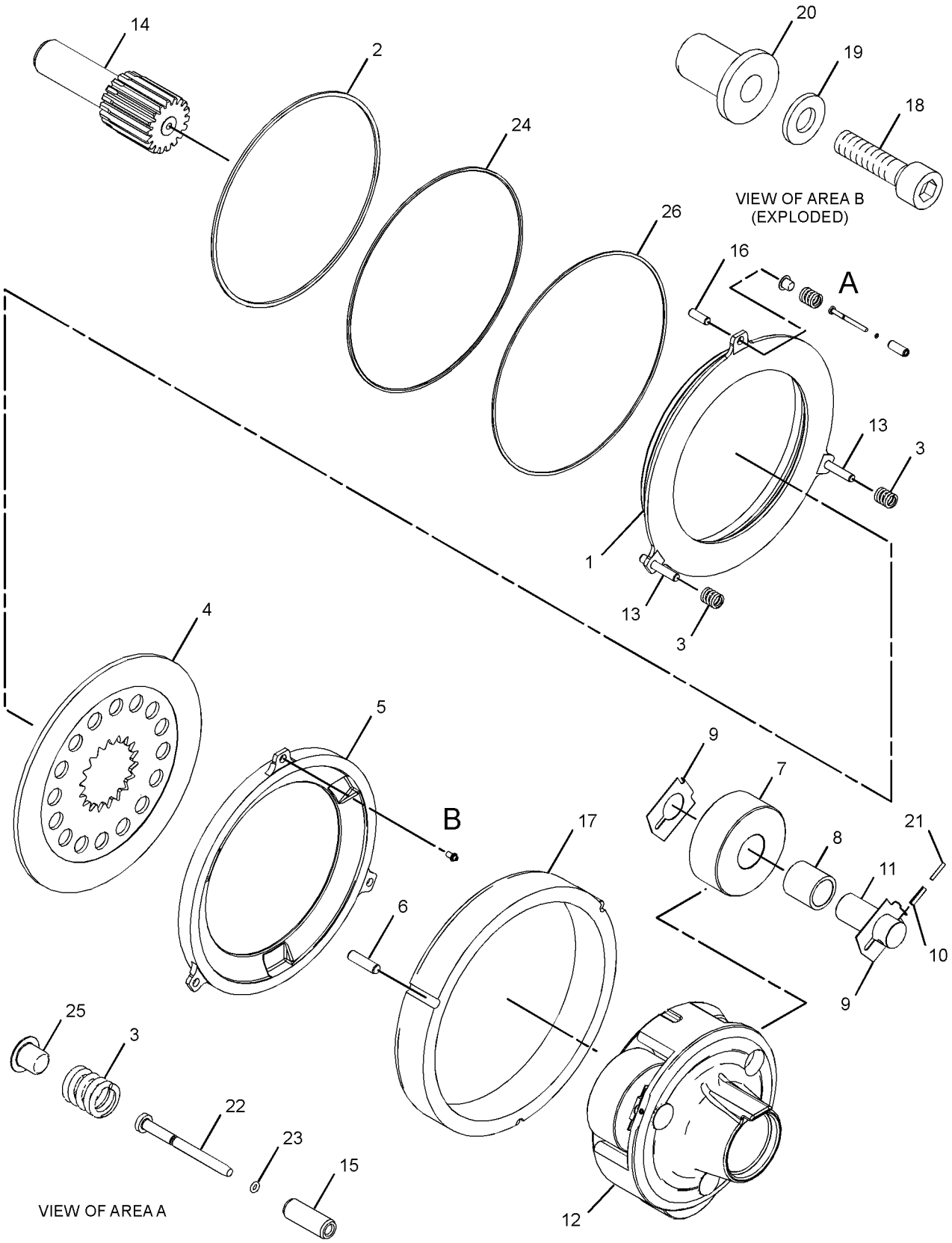

GRAPHIC #1 **<END>** g01951549

164-3018 BRAKE & PLANETARY GP

S/N: JLX1-UP

PART OF 214-6161, 358-9581, 358-9582, 358-9583, 358-9584, 358-9585, 358-9586 AXLE AR-FIXED

SMCS-4011, 4255

i04547627

NOTE	REF NO	GRAPHIC REF	PART NUMBER	QTY	PART NAME 1 2 3 4 5 6 (PRODUCT LEVEL)	SEE PAGE
	1	1	**8R-4568**	1	PISTON	
	2	1	**8R-9207**	1	SEAL	
	3	1	**325-3780**	1	SEAL	
	4	1	**334-1034**	1	DISC-FRICTION	
	5	1	**9C-8418**	1	PLATE-REACTION	
	6	1	**1F-5151**	3	DOWEL	
	7	1	**164-3071**	3	GEAR-PLANETARY (30-TEETH) (30 TEETH)	
	8	1	**9C-7727**	3	BUSHING	
	9	1	**9C-9537**	6	WASHER-THRUST	
	10	1	**8T-2925**	3	PIN-SPRING	
	11	1	**8R-1888**	3	SHAFT-PLANETARY	
	12	1	**8R-4571**	1	CARRIER-PLANETARY	
	13	1	**9M-4335**	2	DOWEL-REACTION	
	14	1	**164-6476**	1	GEAR-SUN (18-TEETH)	
	15	1	**149-9112**	1	DOWEL-HOLLOW	
	16	1	**117-1801**	1	DOWEL	
	17	1	**372-0730**	1	GEAR-RING (81-TEETH)	
	18	1	**2N-2658**	1	BOLT-SOCKET HEAD (8-32X15.88-MM)	
	19	1	**096-6166**	1	WASHER-HARD (4.5X9X1-MM THK)	
	20	1	**112-0759**	1	PLUG	
	21	1	**138-1645**	3	PIN-SPRING	
	22	1	**149-9114**	1	PIN (BRAKE DISC WEAR INDICATOR)	
	23	1	**150-4651**	1	SEAL-O-RING	
	24	1	**293-3609**	3	SPRING	
	25	1	**117-1803**	1	CUP	
	26	1	**325-3781**	1	RING-BACKUP	

164-3018 **BRAKE & PLANETARY GP (*contd.*)** **i04547627**

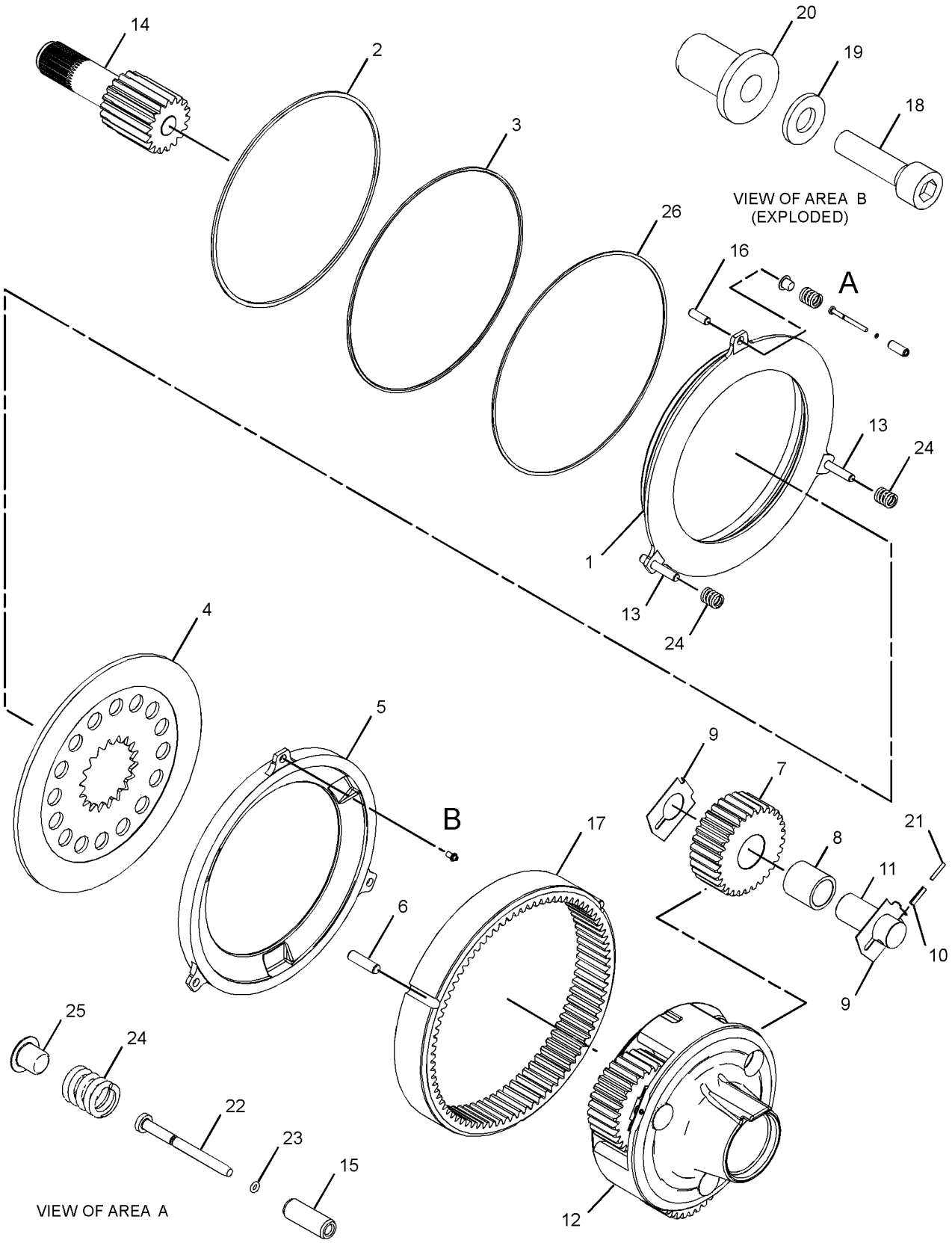

GRAPHIC #1 **<END>** g02905023

247-7830 CONTROL GP-TRANSMISSION HYD

S/N: KYM1-UP; KYN1-UP; W2W1-UP; W2X1-UP; BYY1-UP; BYZ1-UP
PART OF 268-6505, 268-6506 TRANSMISSION AR

SMCS-3073, 3167 **i03870435**

NOTE	REF NO	GRAPHIC REF	PART NUMBER	QTY	PART NAME 1 2 3 4 5 6 (PRODUCT LEVEL)	SEE PAGE
Y	1	1	**202-8933**	1	VALVE GP-RELIEF (TRANSMISSION HYDRAULIC CONTROL)	498
	2	1	**4F-4097**	1	SEAL-O-RING	
Y	3	1	**244-3114**	6	VALVE GP-MODULATING (24-VOLT) (TRANSMISSION CLUTCH)	495
	4	1	**6D-7889**	6	SEAL-O-RING	
M	5	1	**8T-0100**	16	BOLT (M8X1.25X60-MM)	
	6	1	**9M-1974**	13	WASHER-HARD (8.8X16X2-MM THK)	
	7	1	**148-1928**	1	VALVE-RELIEF (TORQUE CONVERTER INLET)	
C	8	1	**324-0685**	1	HARNESS AS-TRANSMISSION	
		1	**155-2270**	10	KIT-CONNECTING PLUG (2-PIN)	
					(EACH INCLUDES PLUG AS, WEDGE & INTERFACE SEAL)	
		1	**7X-6222**	1	PLUG AS-CONNECTOR (24-PIN)	
		1	**3E-4367**	1	RING-RETAINING	
M		1	**3E-8558**	1	BOLT (M5X0.8X39.37-MM)	
		1	**9X-3265**	2	SEAL-CONNECTOR (24-PIN)	
		1	**8T-8737**	7	PLUG-SEAL	
E		1	**114-8843**		SLEEVE-PLASTIC (200-CM)	
					—OR—	
E		1	**114-8845**		SLEEVE-PLASTIC (20-CM)	
		1	**9X-3402**	37	SOCKET-CONNECTOR (16-GA TO 18-GA)	
		1	**126-1768**	37	SOCKET-CONNECTOR (14-GA)	
E		1	**125-7874**		TUBE-HEAT SHRINK (5.72-MM DIA) (10-CM)	
	9	1	**9X-4609**	1	SEAL-O-RING	
	10	1	**5P-9085**	1	CLIP	
	11	1	**130-5300**	3	CLIP	
Y	12	1	**145-7028**	1	SENSOR GP-TEMPERATURE (TRANSMISSION OIL)	294
	14	1	**3S-2093**	10	STRAP-CABLE	
	15	1	**174-9603**	3	PLATE	
	17	1	**6D-4246**	1	CLIP	
	18	1	**4P-7428**	1	CLIP	
	20	1	**7J-0204**	1	SEAL-O-RING	
	21	1	*150-3065*	6	ADAPTER AS	
					(EACH INCLUDES)	
		1	**3J-1907**	1	SEAL-O-RING	
		1	**6V-0484**	1	ADAPTER-O-RING	
	22	1	**4D-7794**	1	CLIP	
	23	1	**124-9402**	1	CLIP AS	
M	24	1	**6V-6317**	1	BOLT (M10X1.5X20-MM)	
	25	1	**6V-5839**	1	WASHER (11X21X2.5-MM THK)	

C - CHANGE FROM PREVIOUS TYPE
E - ORDER BY THE CENTIMETER
M - METRIC PART
Y - SEPARATE ILLUSTRATION

247-7830 **CONTROL GP-TRANSMISSION HYD (*contd.*)** **i03870435**

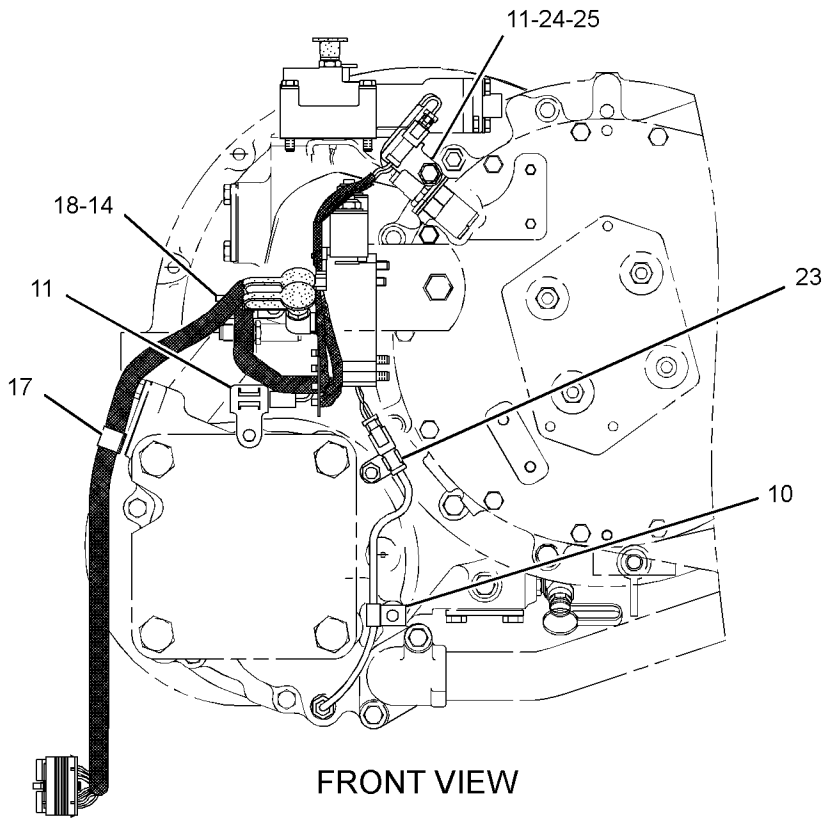

FRONT VIEW

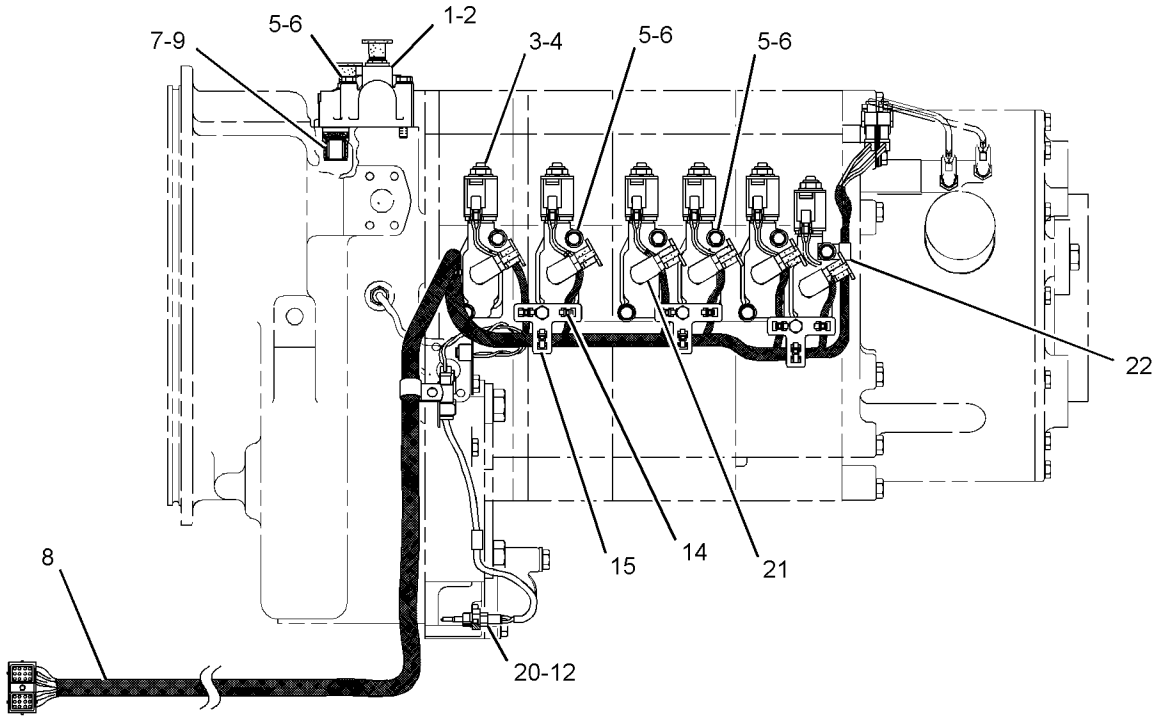

RIGHT SIDE VIEW

GRAPHIC #1 **<END>** g01957754

241-2921 COOLER & MTG GP-TRANSMISSION

S/N: JLX1-UP

PART OF 373-8237 CHASSIS AR

SMCS-1375 **i05129265**

NOTE	REF NO	GRAPHIC REF	PART NUMBER	QTY	PART NAME 1 2 3 4 5 6 (PRODUCT LEVEL)	SEE PAGE
	1	1	**5D-1026**	1	CLAMP-BAND	
	2	1	*165-2273*	1	VALVE GP-SHUTOFF (RADIATOR DRAIN)	
		1	**3K-0360**	1	SEAL-O-RING	
		1	**6V-7238**	1	VALVE-SHUTOFF (RADIATOR DRAIN)	
C	3	1	**342-9836**	1	COOLER AS-TRANSMISSION OIL	
		1	**7J-5544**	1	FITTING (3/4X16-THD)	
	4	1	**7X-7729**	6	WASHER (11X25X3-MM THK)	
M	5	1	**8T-4137**	6	BOLT (M10X1.5X20-MM)	
E	6	1	**5P-0767**		HOSE (18-CM)	

C - CHANGE FROM PREVIOUS TYPE
E - ORDER BY THE CENTIMETER
M - METRIC PART

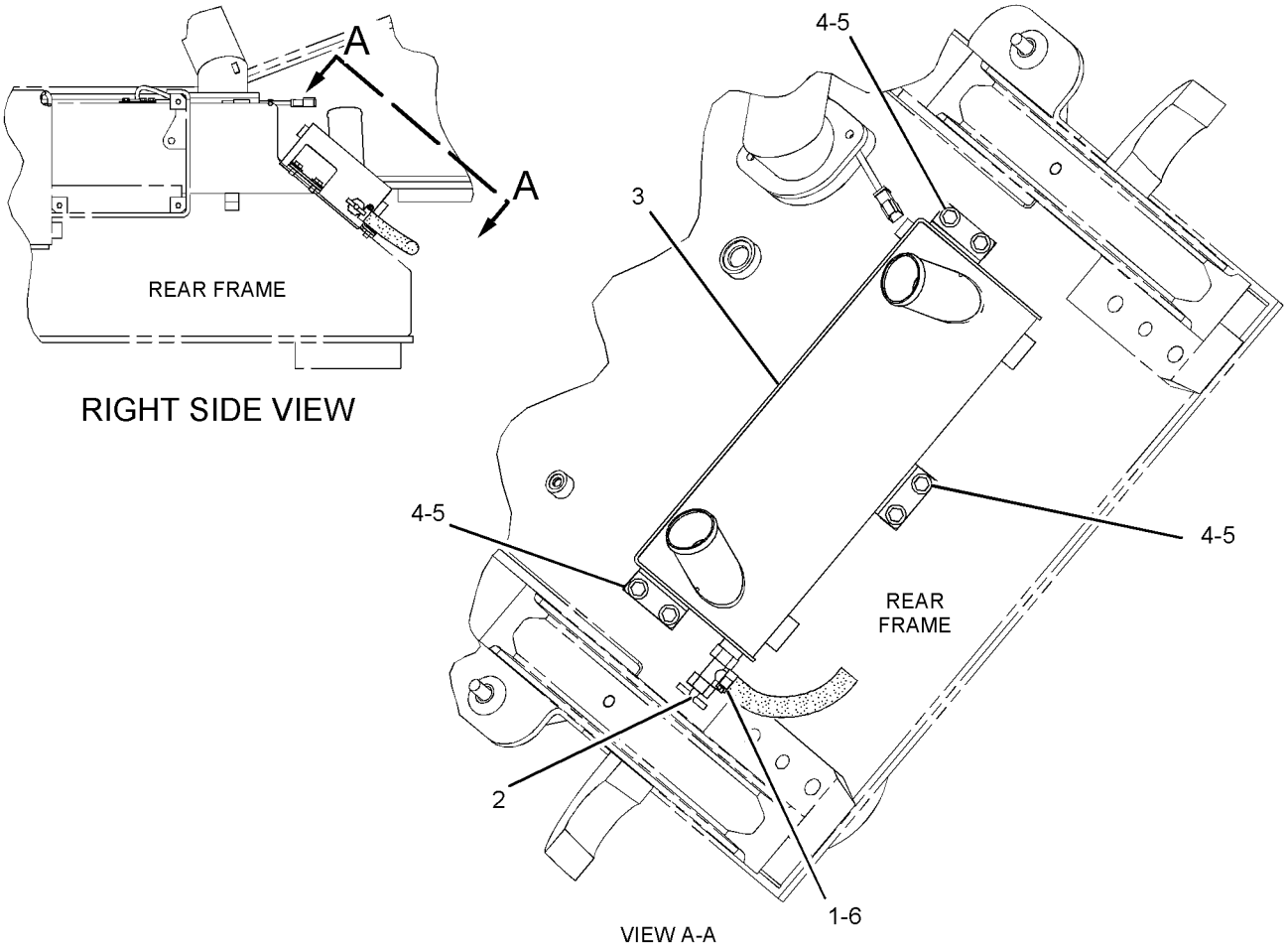

GRAPHIC #1 **<END>** g01119419

383-6023 COOLER AR-AXLE OIL

S/N: JLX1-UP
CONDITIONER

SMCS-1365 **i05374911**

NOTE	PART NUMBER	QTY	PART NAME 1 2 3 4 5 6 (PRODUCT LEVEL)	SEE PAGE
Y	*143-0001*	1	GUARD GP-AXLE OIL COOLER	544
Y	*156-1137*	1	GUARD GP-POWER TRAIN (AXLE OIL COOLER)	548
Y	**382-2521**	1	HARDWARE GP-REAR FRAME (AXLE OIL COOLER MOUNTING)	554
Y	*379-6505*	1	LINES GP-AXLE OIL COOLER	447
Y	*241-0078*	1	LINES GP-WATER (AXLE OIL COOLER)	101
			S/N: JLX1-249	
Y	*392-8676*	1	LINES GP-WATER (AXLE OIL COOLER)	108
			S/N: JLX250-UP	
Y	*260-9584*	1	MOUNTING GP-AXLE OIL COOLER	460
Y	*311-7020*	1	PUMP & MTG GP-AXLE OIL COOLER	470
Y	*244-6524*	1	WIRING GP-ELECTRIC CLUTCH (AXLE OIL COOLER PUMP)	354
	382-2522	1	HARDWARE GP-LOADER FRAME	
	8X-5963	1	BLOCK	
	8X-6780	1	BLOCK	

Y - SEPARATE ILLUSTRATION

<END>

419-9847 COOLER AR-AXLE OIL

S/N: JLX1-UP
CUSTOM

SMCS-1365 **i05836025**

NOTE	REF NO	GRAPHIC REF	PART NUMBER	QTY	PART NAME 1 2 3 4 5 6 (PRODUCT LEVEL)	SEE PAGE
Y	1	1	*426-3492*	1	LINES GP-WATER	110
Y	2	1	*260-9584*	1	MOUNTING GP-AXLE OIL COOLER	460
Y	3	1	*311-7020*	1	PUMP & MTG GP-AXLE OIL COOLER	470
Y	4	1	*382-2521*	1	HARDWARE GP-REAR FRAME (AXLE OIL COOLER MOUNTING)	554
Y	5	1	*382-2522*	1	HARDWARE GP-LOADER FRAME	551
Y	6	1	*426-3491*	1	LINES GP-AXLE OIL COOLER	451
FY			*244-6524*	1	WIRING GP-ELECTRIC CLUTCH (AXLE OIL COOLER PUMP)	354

F - NOT SHOWN
Y - SEPARATE ILLUSTRATION

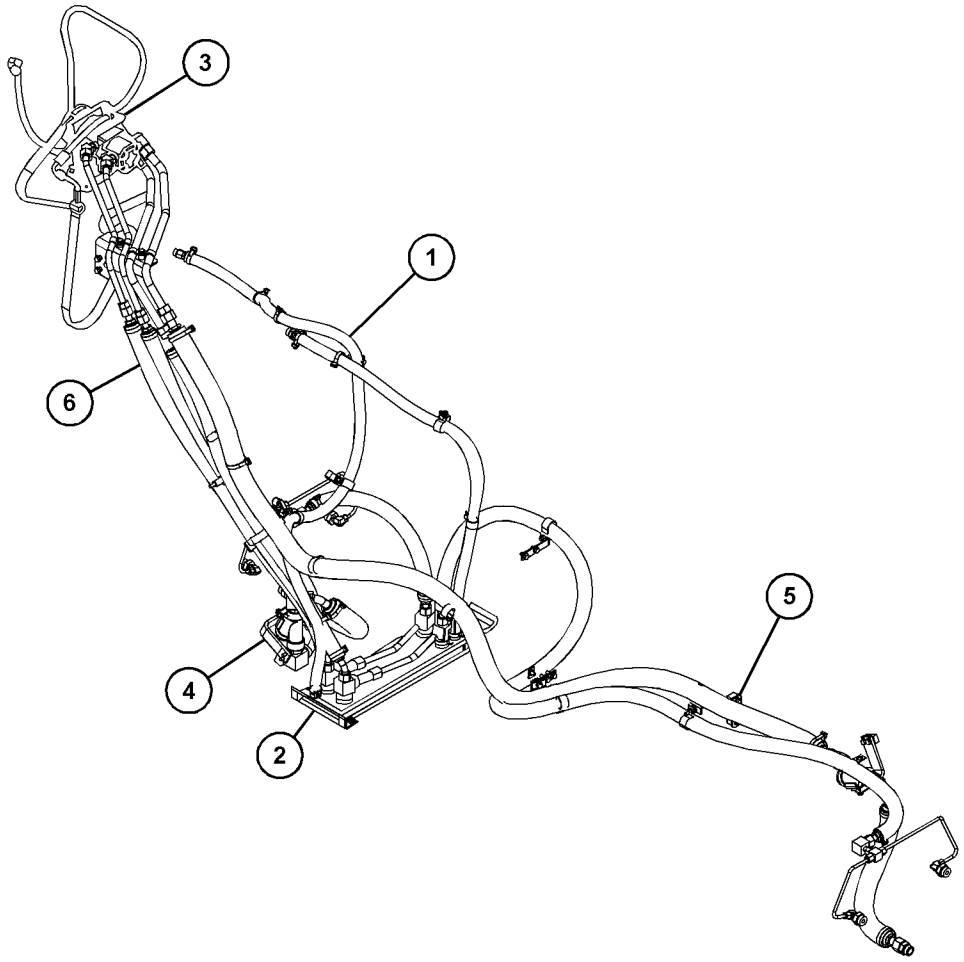

GRAPHIC #1 **<END>** g03724188

137-1392 DIFFERENTIAL GP

S/N: JLX1-UP

PART OF 214-6161, 214-9398, 358-9581, 358-9582, 358-9583 AXLE AR-FIXED, 112-0723, 331-4010, 331-4011, 331-4012 AXLE AR-OSCILLATING

SMCS-3258 **i02299809**

NOTE	REF NO	GRAPHIC REF	PART NUMBER	QTY	PART NAME 1 2 3 4 5 6 (PRODUCT LEVEL)	SEE PAGE
	1	1	**136-6550**	1	CASE AS	
JM	1A	1	**8T-5001**	4	BOLT (M12X1.75X130-MM)	
J	1B	1	**5P-8245**	4	WASHER-HARD (13.5X25.5X3-MM THK)	
	2	1	**148-7383**	2	WASHER-THRUST	
	3	1	**136-6551**	2	GEAR (16-TEETH)	
	4	1	**217-3681**	4	WASHER-THRUST	
	5	1	**136-6545**	1	SPIDER	
	6	1	**151-4809**	4	BEARING-SLEEVE	
	7	1	**9C-6016**	4	PINION-DIFFERENTIAL BEVEL (11-TEETH)	
M	8	1	**127-1960**	8	SCREW-FLAT HEAD (M6X1X16-MM)	

J - PARTS MARKED J ARE FOR SHIPPING & STORAGE ONLY, REMOVE BEFORE INSTALLATION INTO AXLE
M - METRIC PART

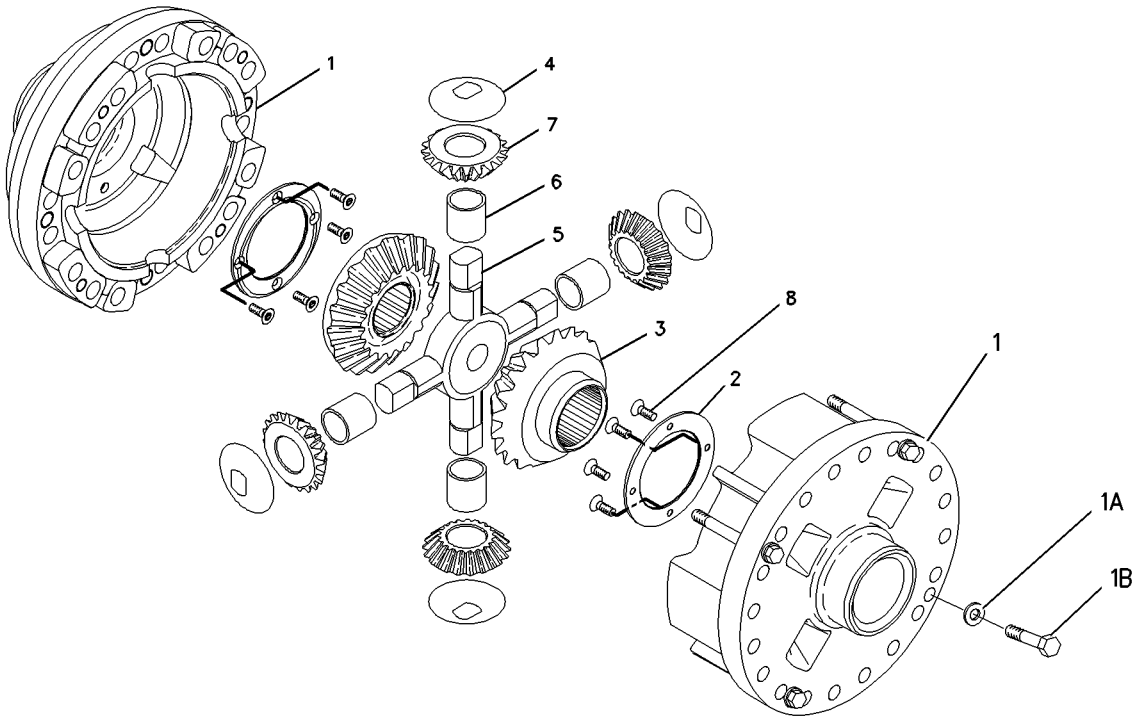

GRAPHIC #1 **<END>** g00857628

144-4465 DIFFERENTIAL GP-LIMITED SLIP

S/N: JLX1-UP

PART OF 358-9585 AXLE AR-FIXED, 331-4015 AXLE AR-OSCILLATING

SMCS-3263 **i04984114**

NOTE	REF NO	GRAPHIC REF	PART NUMBER	QTY	PART NAME 1 2 3 4 5 6 (PRODUCT LEVEL)	SEE PAGE
	1	1	**104-3358**	2	WASHER-THRUST	
	2	1	**104-3355**	2	HOUSING-ACTUATOR	
	3	1	**104-3353**	4	PINION-BEVEL	
	4	1	**104-3354**	2	SHAFT-PINION	
	5	1	**104-3351**	2	GEAR-DIFFERENTIAL	
	6	1	**144-4470**	2	KIT-DISC	
	7	1	**104-3359**	1	CASE AS	
JM	7A	1	**8T-9515**	2	BOLT-SOCKET HEAD (M10X1.5X40-MM)	
	8	1	**144-4468**	2	KIT-DISC	

J - PARTS MARKED J ARE FOR SHIPPING & STORAGE ONLY, REMOVE BEFORE INSTALLATION INTO AXLE
M - METRIC PART

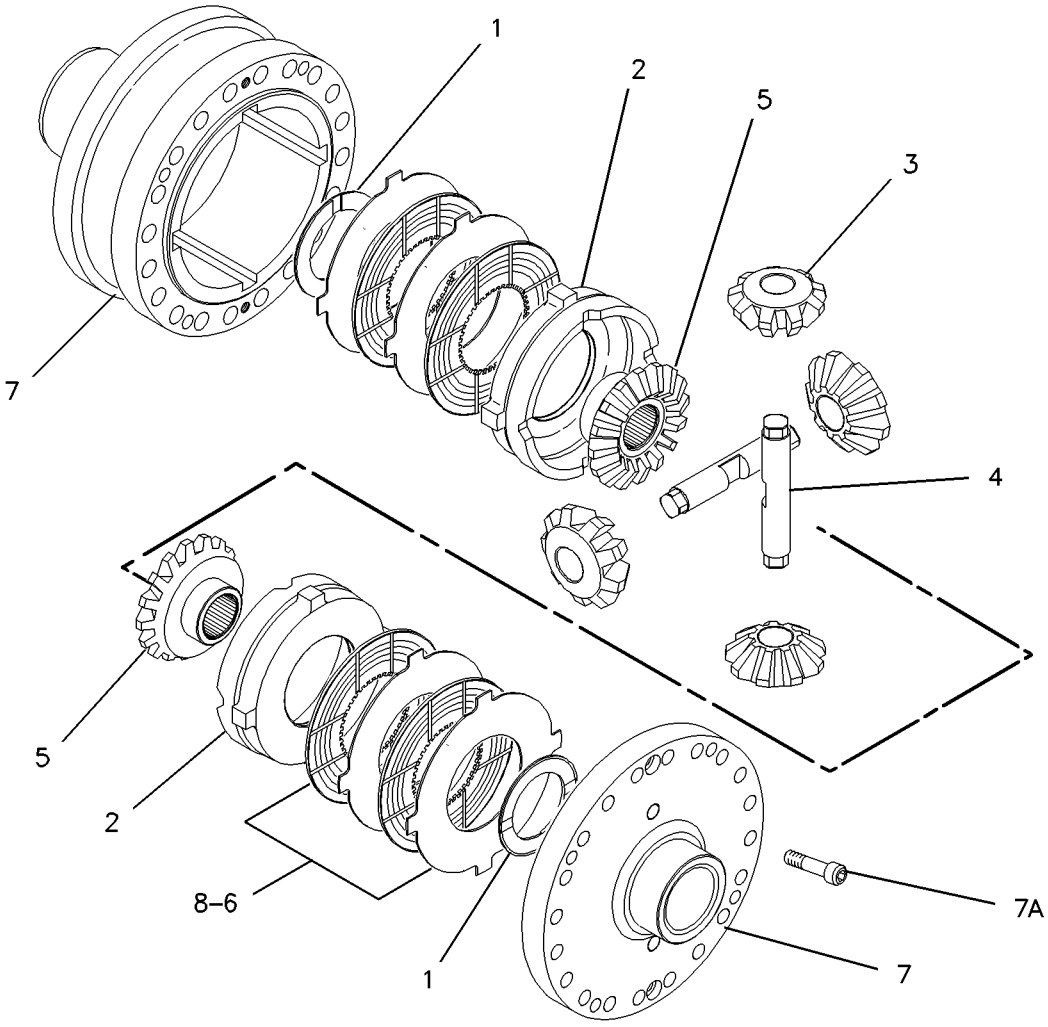

GRAPHIC #1 **<END>** g00857645

372-4788 DIFFERENTIAL GP-LIMITED SLIP

S/N: JLX1-UP

PART OF 358-9584, 358-9585, 358-9586 AXLE AR-FIXED, 331-4013, 331-4014, 331-4015 AXLE AR-OSCILLATING

SMCS-3263 **i04906927**

NOTE	REF NO	GRAPHIC REF	PART NUMBER	QTY	PART NAME 1 2 3 4 5 6 (PRODUCT LEVEL)	SEE PAGE
	1	1	**104-3358**	2	WASHER-THRUST	
	2	1	**372-4785**	2	HOUSING-ACTUATOR	
	3	1	**104-3353**	4	PINION-BEVEL	
	4	1	**372-4784**	2	SHAFT-PINION	
	5	1	**104-3351**	2	GEAR-DIFFERENTIAL (35-TEETH)	
M	6	1	**8T-9515**	2	BOLT-SOCKET HEAD (M10X1.5X40-MM)	
	7	1	**104-3359**	1	CASE AS	
M		1	**8T-9515**	2	BOLT-SOCKET HEAD (M10X1.5X40-MM)	
	8	1	**144-4468**	2	KIT-DISC	
					(EACH KIT INCLUDES DISCS & PLATES)	
	9	1	**144-4470**	2	KIT-DISC	
					(EACH KIT INCLUDES DISCS & PLATES)	

M - METRIC PART

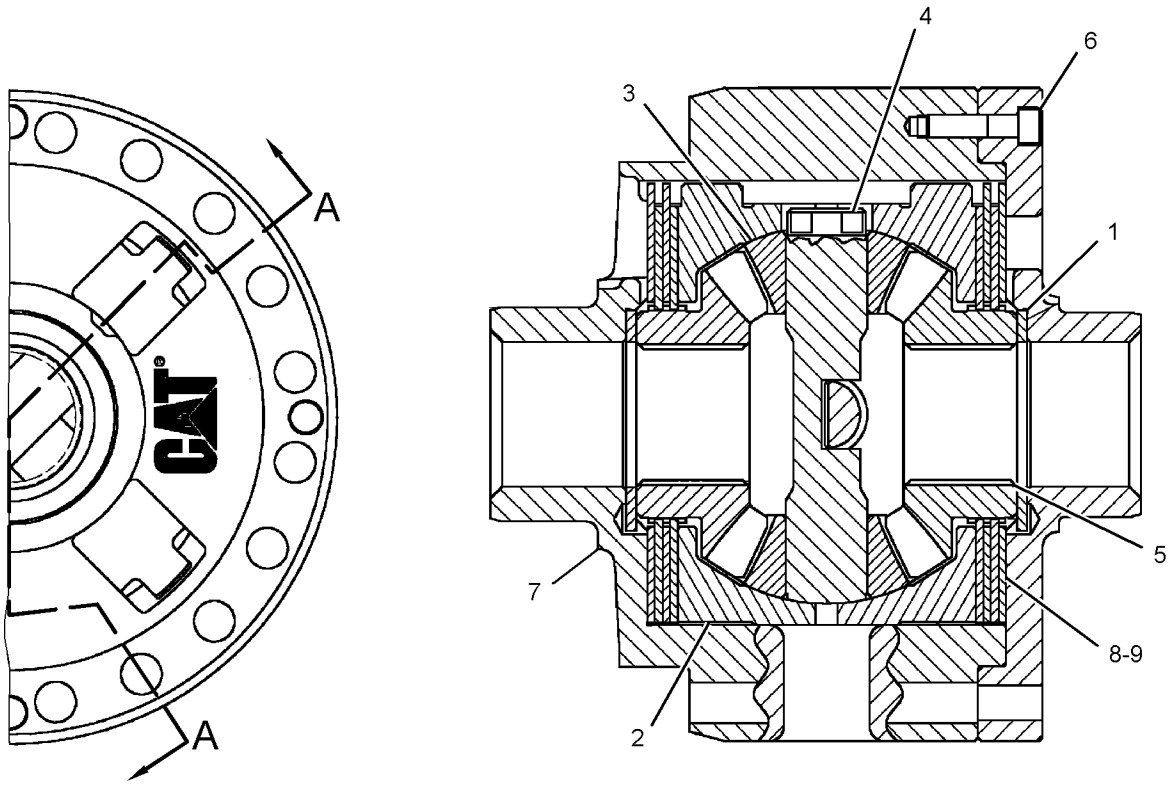

SECTION A-A

GRAPHIC #1 **<END>** g03076537

138-1509 DRAIN GP-ECOLOGY–POWER TRAIN OIL

S/N: KYM1-UP; KYN1-UP; W2W1-UP; W2X1-UP; BYY1-UP; BYZ1-UP
PART OF 249-8173, 249-8175 GEAR GP-OUTPUT TRANSFER

SMCS-3260 **i03539109**

NOTE	REF NO	GRAPHIC REF	PART NUMBER	QTY	PART NAME 1 2 3 4 5 6 (PRODUCT LEVEL)	SEE PAGE
	1	1	**138-1510**	1	PLUG (TRANSMISSION OIL DRAIN)	
	2	1	**192-1023**	1	DRAIN AS	
		1	**077-3241**	1	SEAL-O-RING	
	3	1	**7M-8485**	1	SEAL-O-RING	

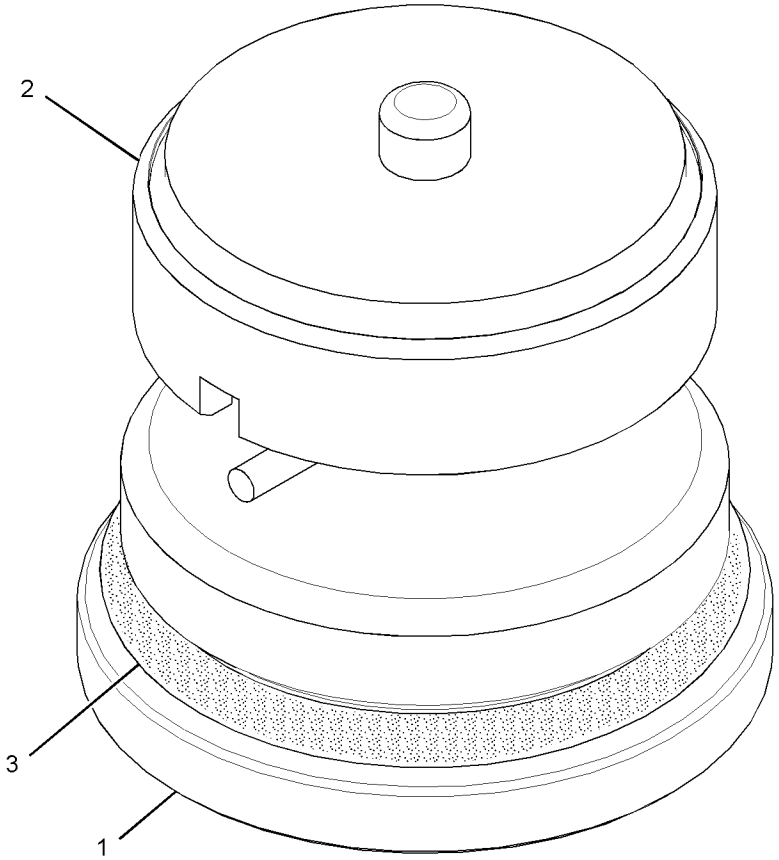

GRAPHIC #1 **<END>** g01298016

198-7248 DRAIN GP-ECOLOGY—POWER TRAIN

S/N: JLX1-UP

PART OF 334-0440 OPTION AR-PRECLEANER

SMCS-3260 **i01814174**

NOTE	REF NO	GRAPHIC REF	PART NUMBER	QTY	PART NAME 1 2 3 4 5 6 (PRODUCT LEVEL)	SEE PAGE
	1	1	**173-0566**	2	DRAIN AS	
					(EACH INCLUDES)	
	1A	1	**2K-8199**	1	SEAL-O-RING	
	1B	1	**077-3241**	1	SEAL-O-RING	
	1C	1	**175-4966**	1	PLUG-DRAIN	
	2	1	**7M-8485**	2	SEAL-O-RING	

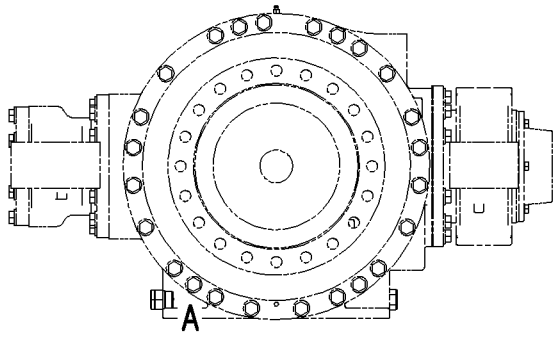

REAR AXLE

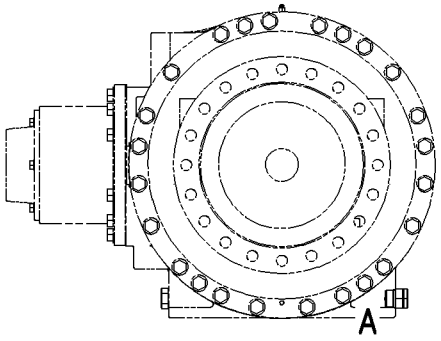

FRONT AXLE

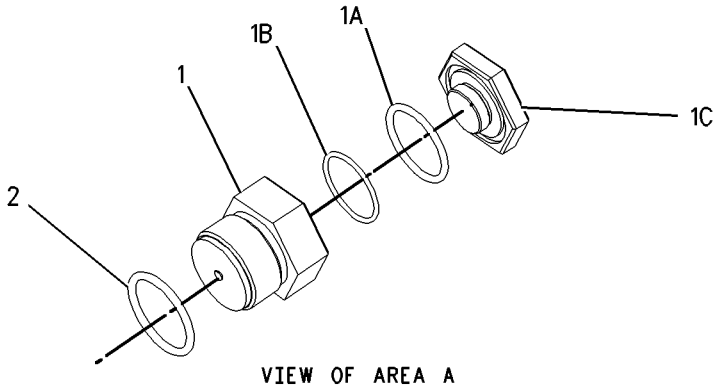

VIEW OF AREA A
COMMON BOTH AXLES

GRAPHIC #1 **<END>** g00886906

325-5254 FILLER GP-POWER TRAIN OIL

S/N: JLX1-UP

PART OF 388-3768 SUPPRESSION GP-SOUND

SMCS-3005, 3081 **i03846775**

NOTE	REF NO	GRAPHIC REF	PART NUMBER	QTY	PART NAME 1 2 3 4 5 6 (PRODUCT LEVEL)	SEE PAGE
	1	1	**4B-9782**	1	BALL	
	2	1	**5K-1568**	1	CAP-FILLER (POWER TRAIN)	
	3	1	**6F-5188**	1	SEAL-RING	
	4	1	**6H-5139**	1	PLATE-PRESSURE	
	5	1	**9G-5127**	1	BREATHER AS	
	6	1	**9M-0164**	2	CLAMP-HOSE	
E	7	1	**5P-1291**		HOSE (21-CM)	
I	8	1	**132-9319**	1	HOSE AS	
	9	1	**135-1708**	1	GAUGE AS-OIL LEVEL (POWER TRAIN OIL)	
		1	**5J-2974**	4	SEAL-O-RING	
		1	**122-8353**	2	BOLT (M12X1.75X46.5-MM)	
	10	1	*169-7395*	1	ADAPTER AS	
		1	**6V-8398**	1	SEAL-O-RING	
		1	**156-6129**	1	ADAPTER	
	11	1	**211-8073**	2	CAP-PROTECTION	
	12	1	**251-9755**	1	TUBE AS	
	13	1	**354-4031**	1	TUBE AS	
	14	1	*165-4925*	1	ELBOW AS	
		1	**2T-2171**	1	ELBOW	
		1	**6V-8398**	1	SEAL-O-RING	
	15	1	**5H-8936**	1	ADAPTER	
	16	1	**5P-7084**	1	SEAL-RECTANGULAR	
	17	1	**6V-9169**	1	NUT (13/16-16-THD)	
	18	1	**7S-8920**	2	CLIP (SLOT)	
	19	1	**7S-8921**		CLIP (TAB)	
	20	1	**8T-4121**	4	WASHER-HARD (11X21X2.5-MM THK)	
	21	1	**8T-4123**	1	WASHER (3.62X5.75X0.375-MM THK)	
M	22	1	**8T-4137**	2	BOLT (M10X1.5X20-MM)	
M	23	1	**8T-4185**	2	BOLT (M10X1.5X50-MM)	

E - ORDER BY THE CENTIMETER
I - REFER TO HYDRAULIC INFORMATION SYSTEM
M - METRIC PART

325-5254 **FILLER GP-POWER TRAIN OIL (*contd.*)** **i03846775**

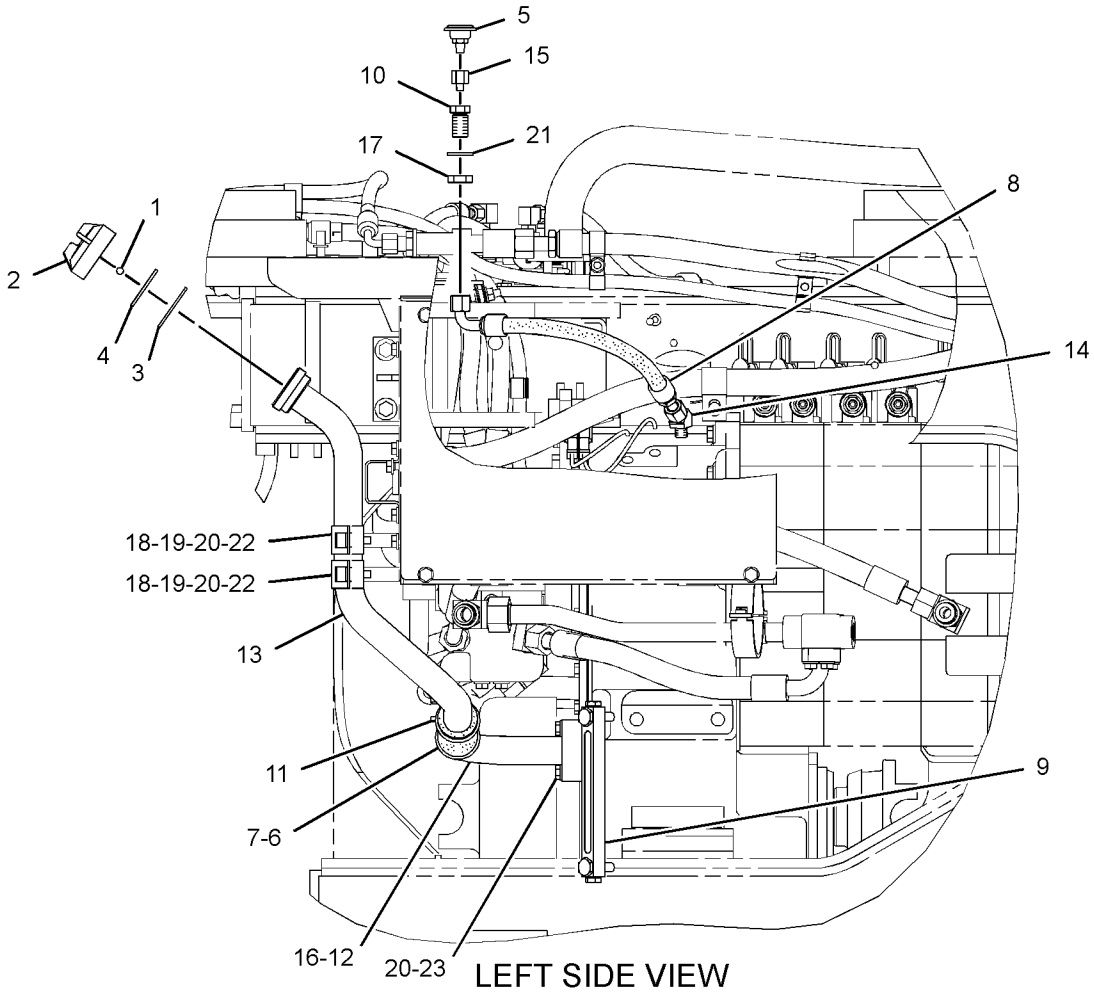

GRAPHIC #1 **<END>** g02119313

325-9488 FILLER GP-POWER TRAIN OIL

S/N: JLX1-UP

PART OF 372-2874 HYDRAULIC AR

SMCS-3005, 3081 **i05115101**

NOTE	REF NO	GRAPHIC REF	PART NUMBER	QTY	PART NAME 1 2 3 4 5 6 (PRODUCT LEVEL)	SEE PAGE
	1	1	**4B-9782**	1	BALL	
	2	1	**5K-1568**	1	CAP-FILLER (POWER TRAIN)	
	3	1	**5P-7084**	1	SEAL-RECTANGULAR	
	4	1	**6F-5188**	1	SEAL-RING	
	5	1	**6H-5139**	1	PLATE-PRESSURE	
	6	1	**9G-5127**	1	BREATHER AS (POWER TRAIN OIL)	
	7	1	**9M-0164**	2	CLAMP-HOSE	
BE	8	1	**5P-1291**		HOSE	
I	9	1	**132-9319**	1	HOSE AS	
	10	1	**135-1708**	1	GAUGE AS-OIL LEVEL	
		1	**5J-2974**	4	SEAL-O-RING	
		1	**122-8353**	2	BOLT (M12X1.75X46.5-MM)	
	11	1	*169-7395*	1	ADAPTER AS	
		1	**6V-8398**	1	SEAL-O-RING	
		1	**156-6129**	1	ADAPTER	
	12	1	**211-8073**	2	CAP-PROTECTION	
	13	1	**229-6625**	1	TUBE AS	
	14	1	**354-4114**	1	TUBE AS	
	15	1	*165-4925*	1	ELBOW AS	
		1	**2T-2171**	1	ELBOW	
		1	**6V-8398**	1	SEAL-O-RING	
	16	1	**7S-8920**	2	CLIP (SLOT)	
	17	1	**5H-8936**	1	ADAPTER	
	18	1	**6V-9169**	1	NUT (13/16-16-THD)	
	19	1	**8T-4121**	4	WASHER-HARD (11X21X2.5-MM THK)	
	20	1	**8T-4123**	1	WASHER (3.62X5.75X0.375-MM THK)	
M	21	1	**8T-4137**	2	BOLT (M10X1.5X20-MM)	
M	22	1	**8T-4185**	2	BOLT (M10X1.5X50-MM)	
	23	1	**7S-8921**	2	CLIP (TAB)	
	24	1	**1L-5072**	1	DOWEL	
	25	1	**2J-7761**	1	RING-RETAINING	
	26	1	**7K-5634**	1	COVER	
	27	1	**9M-7394**	1	LEVER (FILL CAP)	

B - USE AS REQUIRED
E - ORDER BY THE CENTIMETER
I - REFER TO HYDRAULIC INFORMATION SYSTEM
M - METRIC PART

325-9488 **FILLER GP-POWER TRAIN OIL (*contd.*)** **i05115101**

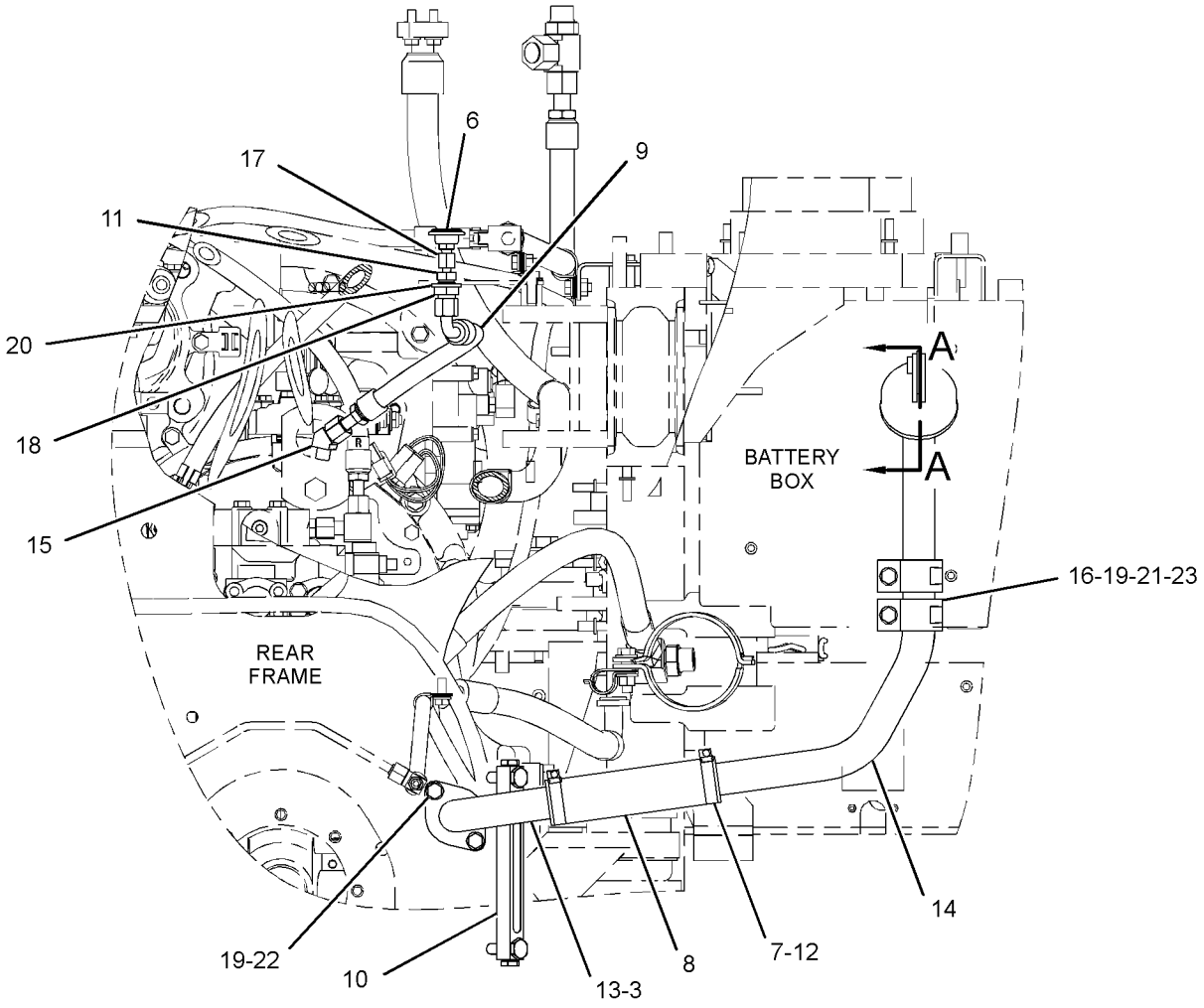

FRONT VIEW

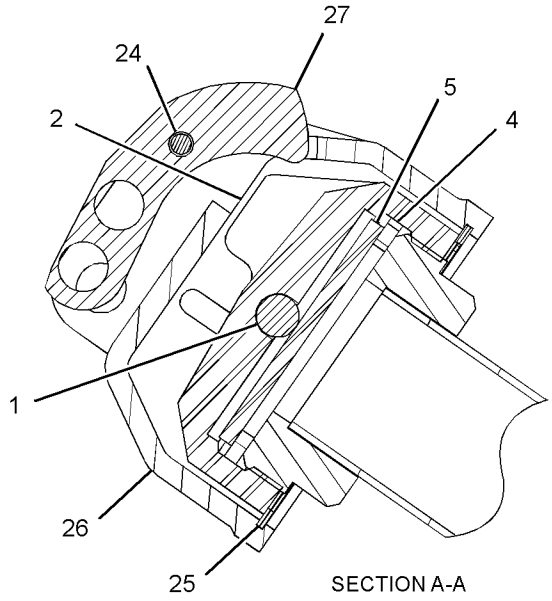

SECTION A-A

GRAPHIC #1 **<END>** g03327681

373-8266 FILTER & LINES GP-TRANSMISSION

S/N: JLX1-UP

PART OF 372-2874 HYDRAULIC AR

SMCS-3067, 3154 **i05555573**

NOTE	REF NO	GRAPHIC REF	PART NUMBER	QTY	PART NAME 1 2 3 4 5 6 (PRODUCT LEVEL)	SEE PAGE
	1	1	**293-8526**	1	BRACKET AS	
Y	2	1	**337-0831**	1	FILTER GP-OIL (POWER TRAIN)	411
	3	1	*148-8362*	2	ELBOW AS	
					(EACH INCLUDES)	
		1	**3D-2824**	1	SEAL-O-RING	
		1	**5K-9090**	1	SEAL-O-RING	
		1	**8T-6684**	1	ELBOW	
	4	1	**380-5766**	1	BRACKET AS	
I	5	1	**380-5770**	1	HOSE AS	
I	6	1	**380-5769**	1	HOSE AS	
	7	1	**4D-7388**	4	CLIP	
	8	1	**4J-0520**	2	SEAL-O-RING	
	9	1	**8C-3206**	4	FLANGE-HALF	
	10	1	**8T-4121**	14	WASHER-HARD (11X21X2.5-MM THK)	
M	11	1	**8T-4136**	1	BOLT (M10X1.5X25-MM)	
M	12	1	**8T-4137**	4	BOLT (M10X1.5X20-MM)	
M	13	1	**8T-4196**	8	BOLT (M10X1.5X35-MM)	
M	14	1	**8T-4195**	1	BOLT (M10X1.5X30-MM)	

I - REFER TO HYDRAULIC INFORMATION SYSTEM
M - METRIC PART
Y - SEPARATE ILLUSTRATION

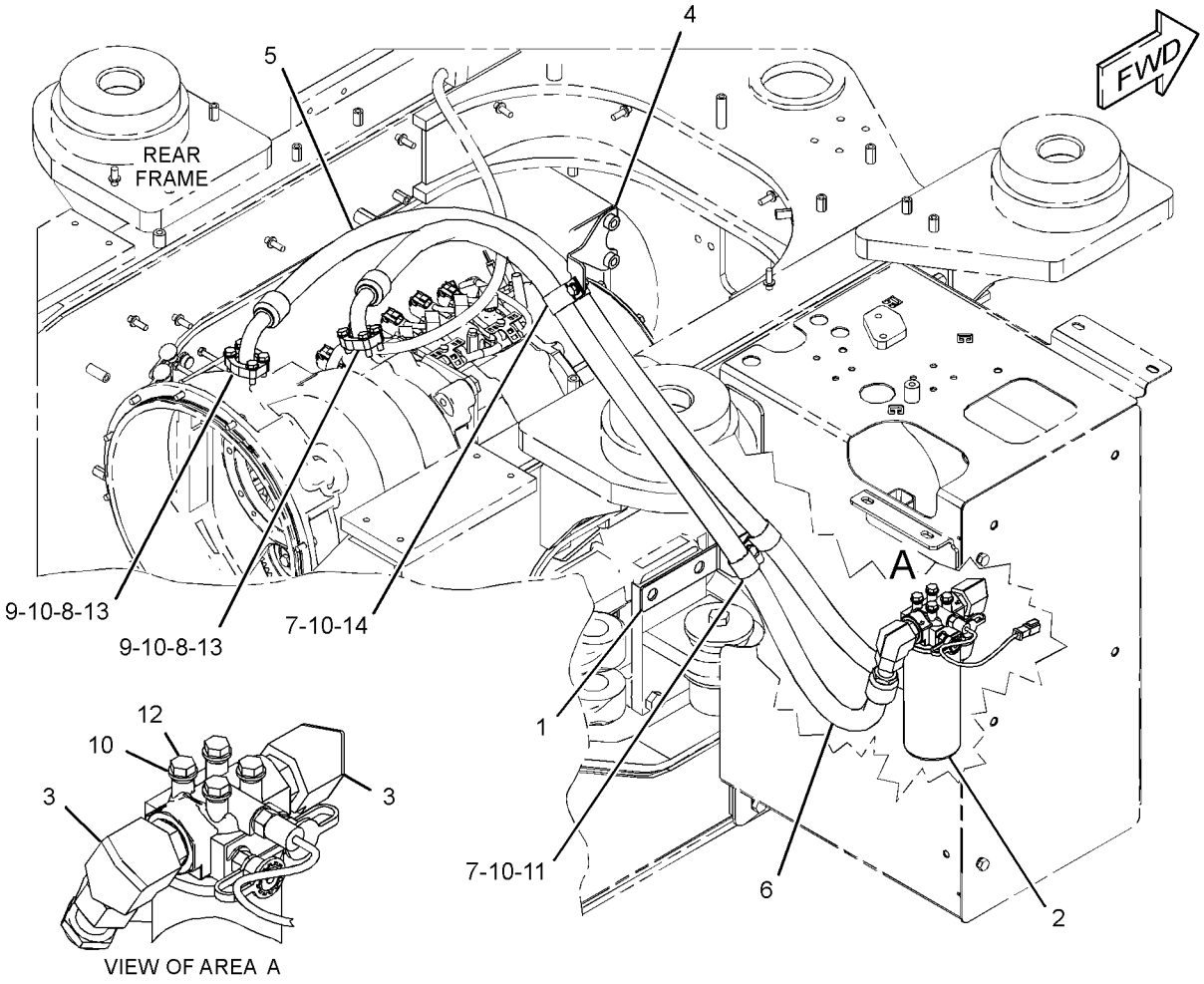

GRAPHIC #1 **<END>** g03371882

337-0831 FILTER GP-OIL

S/N: JLX1-UP

PART OF 373-8266 FILTER & LINES GP-TRANSMISSION

SMCS-3004, 3067 **i03815810**

NOTE	REF NO	GRAPHIC REF	PART NUMBER	QTY	PART NAME 1 2 3 4 5 6 (PRODUCT LEVEL)	SEE PAGE
	1	1	**6V-0852**	1	CAP-DUST	
	2	1	**6V-3965**	1	FITTING (QUICK DISCONNECT)	
	3	1	**8C-3446**	1	VALVE-SAMPLING	
	4	1	**8C-3447**	1	CAP-DUST (TRANSMISSION OIL)	
	5	1	**214-7566**	1	SEAL-O-RING	
	6	1	**214-7568**	2	SEAL-O-RING	
	7	1	**227-6744**	1	SWITCH GP-PRESSURE (FILTER OIL)	
		1	**102-8802**	1	KIT-RECEPTACLE (2-PIN)	
					(INCLUDES RECEPTICAL AS & WEDGE)	
		1	**3J-1907**	1	SEAL-O-RING	
		1	**5F-9144**	1	SEAL-O-RING	
		1	**8T-8729**	2	PIN-CONNECTOR (16-GA TO 18-GA)	
E		1	**9X-1813**		SLEEVE (14-CM)	
	8	1	**283-0266**	1	SEAL-O-RING	
	9	1	**341-6643**	1	FILTER ELEMENT-OIL (ADVANCED EFFICIENCY)	

E - ORDER BY THE CENTIMETER

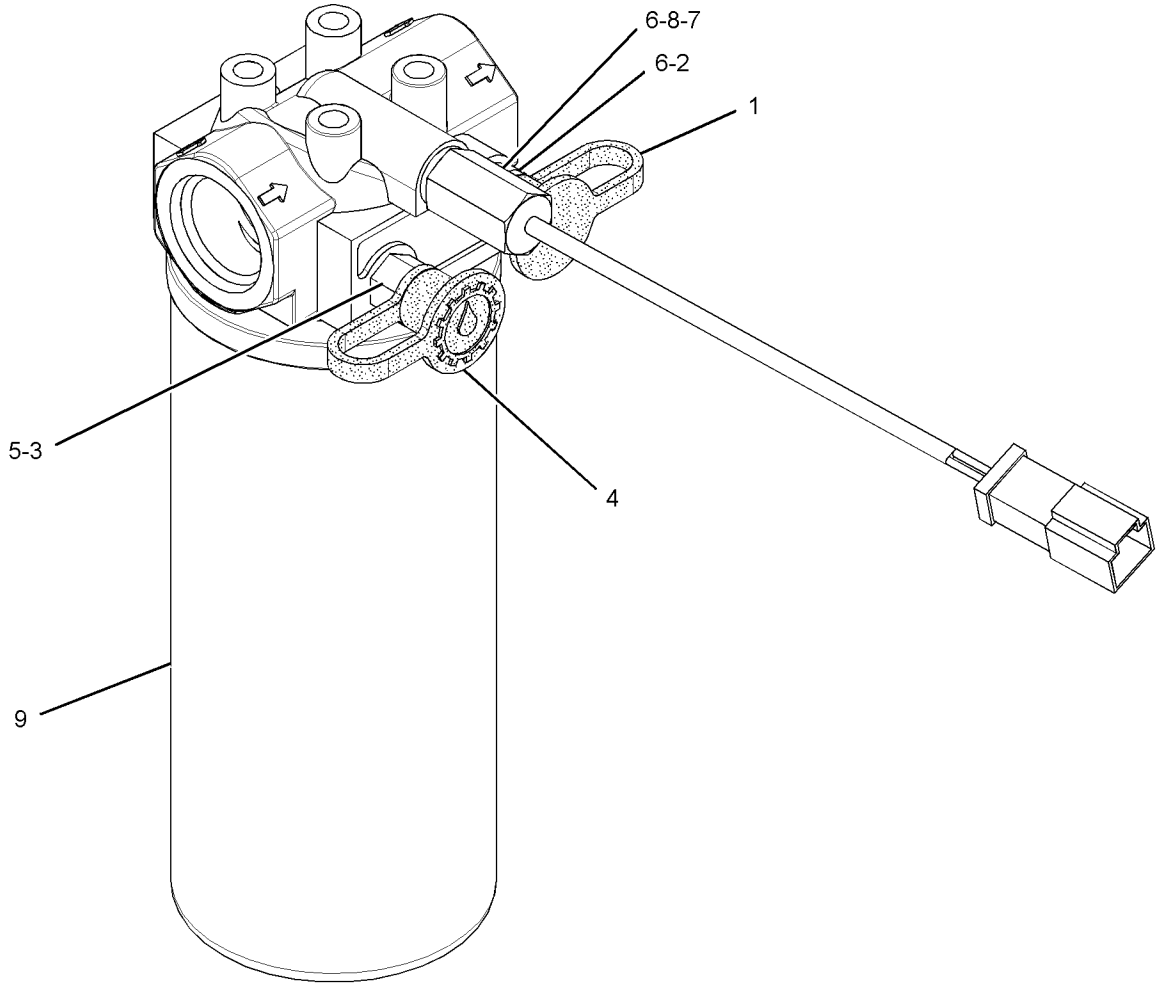

GRAPHIC #1 **<END>** g02132453

308-0948 GAUGE GP-OIL LEVEL (DIPSTICK)—ENGINE

S/N: KHX1-UP

PART OF 338-9076, 387-1975, 387-1976 ENGINE AR-COMPLETE

TYPE 1

SMCS-3081, 3108 **i04482512**

NOTE	REF NO	GRAPHIC REF	PART NUMBER	QTY	PART NAME 1 2 3 4 5 6 (PRODUCT LEVEL)	SEE PAGE
	1	1	**1S-2563**	3	PLUG	
	2	1	**304-0493**	1	BRACKET	
	3	1	**356-5989**	1	TUBE AS-OIL GAUGE	
	4	1	**345-3889**	1	GAUGE AS-OIL LEVEL (DIPSTICK) (ENGINE)	
	4A	1	**112-3132**	1	SEAL-O-RING	
	4B	1	**296-3455**	1	HANDLE	
	5	1	**119-5708**	1	CLIP	
M	6	1	**5C-7261**	2	NUT (M8X1.25-THD)	
	7	1	**6D-3479**	1	CLIP	
	8	1	**6V-5839**	1	WASHER (11X21X2.5-MM THK)	
M	9	1	**6V-6317**	1	BOLT (M10X1.5X20-MM)	
M	10	1	**8T-4189**	1	BOLT (M8X1.25X20-MM)	
	11	1	**8T-4224**	2	WASHER-HARD (8.8X16X2-MM THK)	
	12	1	**9M-1974**	2	WASHER-HARD (8.8X16X2-MM THK)	

M - METRIC PART

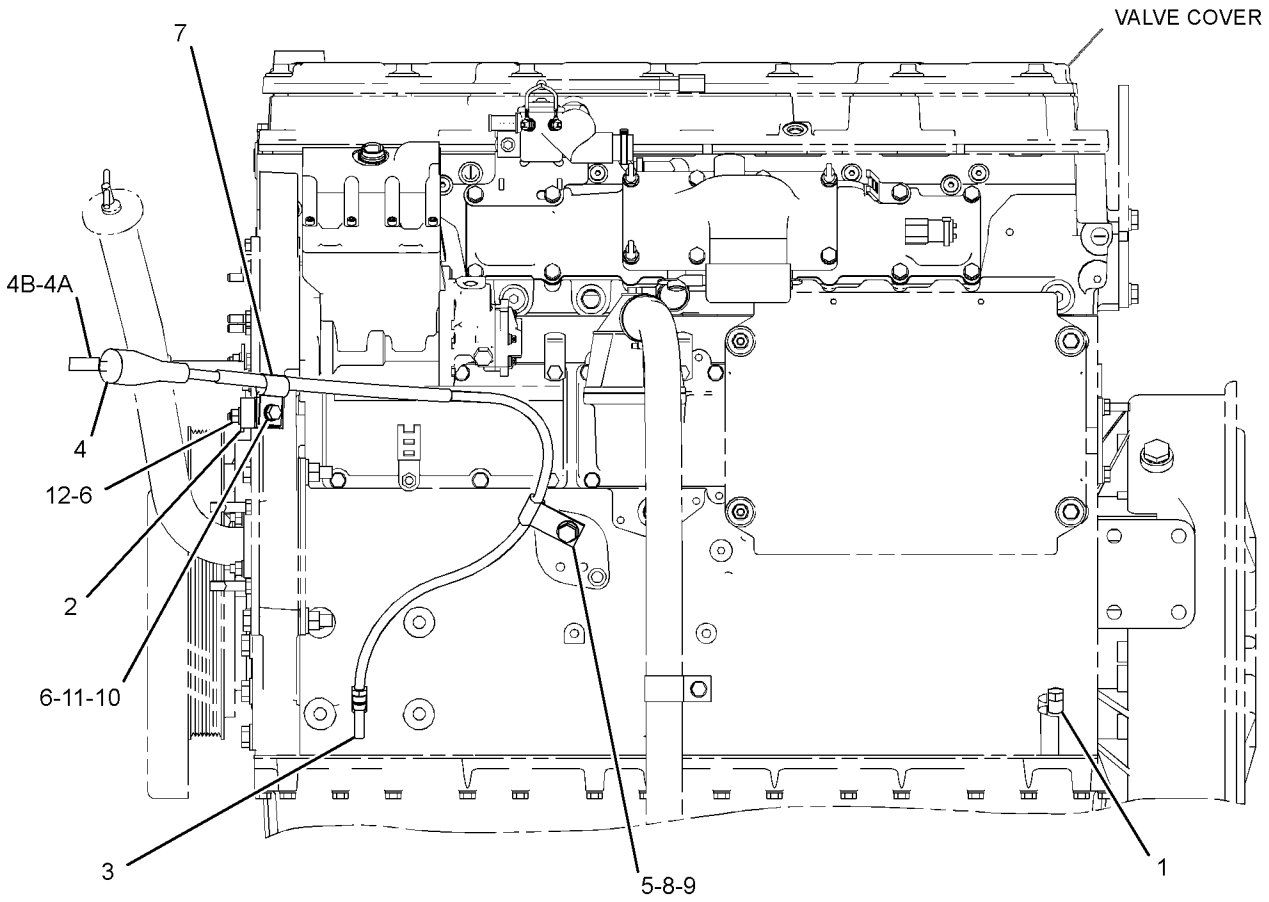

LEFT SIDE VIEW OF ENGINE

GRAPHIC #1 **<END>** g01613577

308-0948 GAUGE GP-OIL LEVEL (DIPSTICK)—ENGINE

S/N: KHX1-UP
PART OF 387-1975, 387-1976 ENGINE AR-COMPLETE
TYPE 2

SMCS-3081, 3108

i05984789

NOTE	REF NO	GRAPHIC REF	PART NUMBER	QTY	PART NAME 1 2 3 4 5 6 (PRODUCT LEVEL)	SEE PAGE
	1	1	**1S-2563**	3	PLUG	
	2	1	**304-0493**	1	BRACKET	
C	3	1	**434-3217**	1	BRACKET AS	
M		1	**8T-3612**	1	NUT-WELD (M8X1.25-THD)	
C	4	1	**432-2314**	1	GAUGE GP-OIL LEVEL (DIPSTICK) (ENGINE)	
C	5	1	**5P-9297**	2	CLIP	
M	6	1	**5C-7261**	2	NUT (M8X1.25-THD)	
CM	7	1	**6V-5217**	3	BOLT (M8X1.25X20-MM)	
	8	1	**9M-1974**	2	WASHER-HARD (8.8X16X2-MM THK)	

C - CHANGE FROM PREVIOUS TYPE
M - METRIC PART

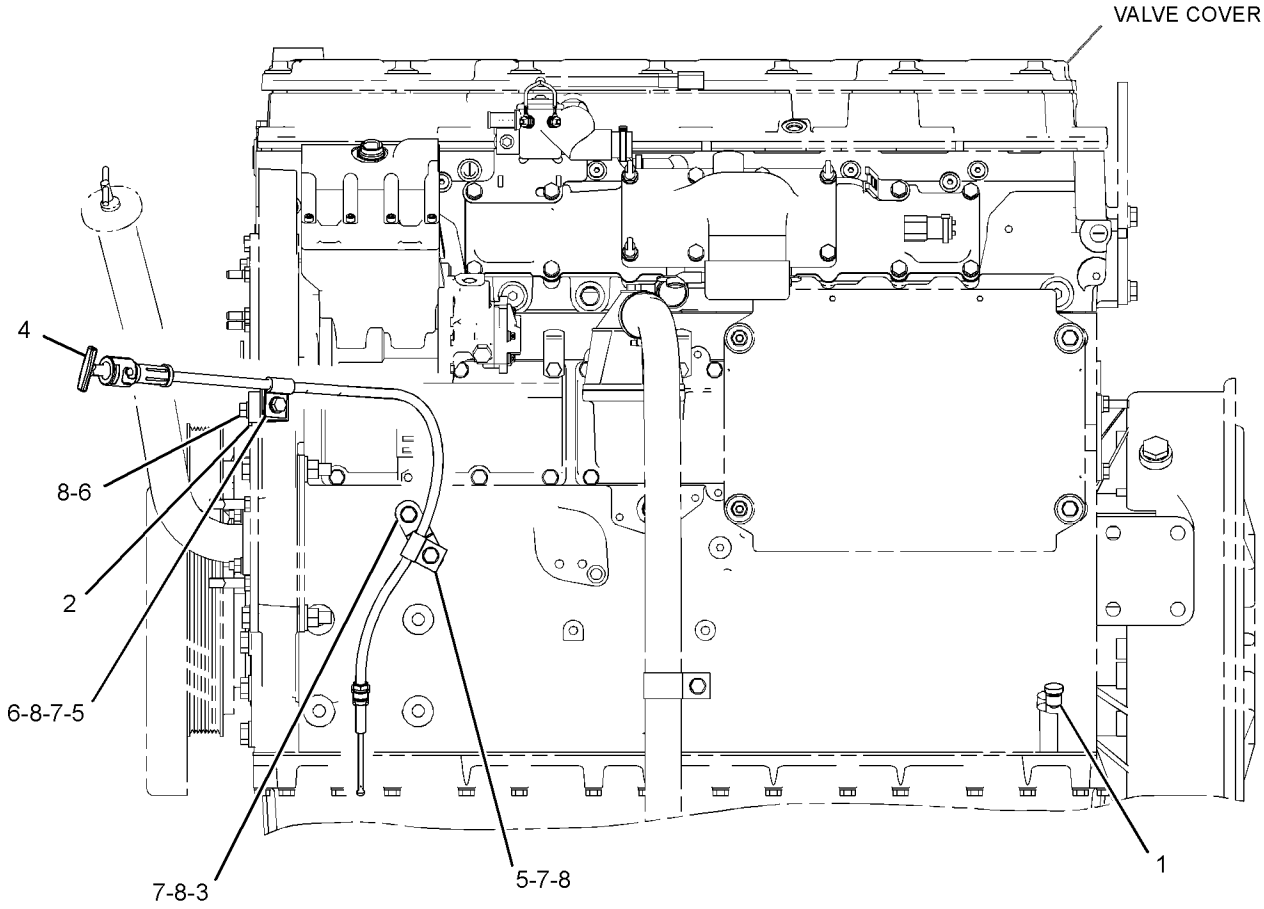

LEFT SIDE VIEW OF ENGINE

GRAPHIC #1

<END>

g03462136

112-0738 GEAR GP-BEVEL & PINION

S/N: JLX1-UP

PART OF 214-9398 AXLE AR-FIXED

SMCS-3254, 3256 **i00799277**

NOTE	REF NO	GRAPHIC REF	PART NUMBER	QTY	PART NAME 1 2 3 4 5 6 (PRODUCT LEVEL)	SEE PAGE
	1	1	**9U-1913**	1	SLEEVE AS	
	2	1	**030-0060**	1	CUP-BEARING	
	3	1	**030-0061**	1	CONE-BEARING	
	4	1	**4E-3897**	2	LOCK	
M	5	1	**4E-3896**	2	BOLT (M6X1X14-MM)	
	6	1	**4E-4031**	2	PIN	
	7	1	**1J-4757**	1	CONE-BEARING	
	8	1	**1J-2860**	1	CUP-BEARING	
	9	1	**2D-9455**	1	CONE-BEARING	
	10	1	**2D-9454**	1	CUP-BEARING (TAPERED ROLLER)	
	11	1	**6W-1638**	1	WASHER (71X95X5-MM THK)	
M	12	1	**9C-8287**	1	LOCKNUT-STAKE (M70X1.5-THD)	
	13	1	**112-0782**	1	YOKE	
M	14	1	**9X-6493**	20	BOLT (M16X2X180-MM)	
	15	1	**9X-2619**	4	PIN-SPRING	
	16	1	**9X-2620**	4	PIN-SPRING	
	17	1	**6Y-2539**	1	CONE-BEARING	
	18	1	**4E-4029**	1	NUT-ADJUSTMENT (M190X2 SPL-THD)	
	19	1	**9U-1912**	1	SLEEVE AS	
	20	1	**6Y-2540**	1	CUP-BEARING	
	21	1	**2H-3088**	1	SEAL-O-RING	
M	22	1	**8T-0372**	1	BOLT (M12X1.75X90-MM)	
	23	1	**9V-2429**	1	RETAINER	
	24	1	**8R-9215**	1	GEAR-BEVEL (44-TEETH)	
	25	1	**112-0742**	1	SHAFT-BEVEL PINION	
	26	1	**4E-4030**	1	NUT-ADJUSTMENT (M160X2-THD)	

M - METRIC PART

112-0738 **GEAR GP-BEVEL & PINION (*contd.*)** **i00799277**

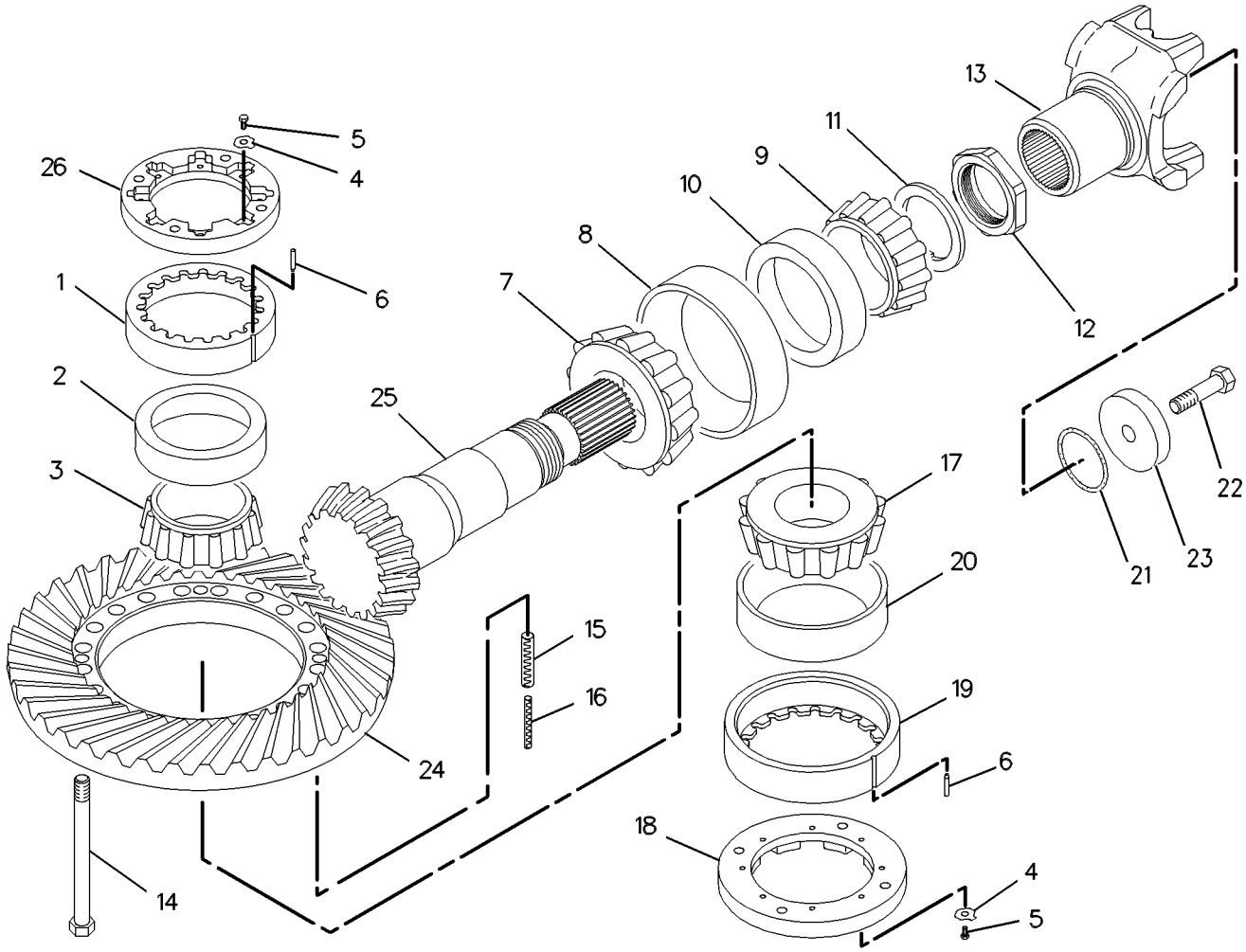

GRAPHIC #1 **<END>** g00381432

112-0778 GEAR GP-BEVEL & PINION—OSCILLATING AXLE

S/N: JLX1-UP

PART OF 112-0723, 331-4010, 331-4011, 331-4012, 331-4013, 331-4014, 331-4015 AXLE AR-OSCILLATING

SMCS-3254, 3256

i01144236

NOTE	REF NO	GRAPHIC REF	PART NUMBER	QTY	PART NAME 1 2 3 4 5 6 (PRODUCT LEVEL)	SEE PAGE
	1	1	**9U-1913**	1	SLEEVE AS	
	2	1	**030-0060**	1	CUP-BEARING	
	3	1	**030-0061**	1	CONE-BEARING	
	4	1	**4E-3897**	2	LOCK	
M	5	1	**4E-3896**	2	BOLT (M6X1X14-MM)	
	6	1	**4E-4031**	2	PIN	
	7	1	**1J-4757**	1	CONE-BEARING	
	8	1	**1J-2860**	1	CUP-BEARING	
	9	1	**2D-9455**	1	CONE-BEARING	
	10	1	**2D-9454**	1	CUP-BEARING (TAPERED ROLLER)	
	11	1	**6W-1638**	1	WASHER (71X95X5-MM THK)	
M	12	1	**9C-8287**	1	LOCKNUT-STAKE (M70X1.5-THD)	
J	13	1	**156-1151**	1	YOKE AS	
	14	1	**7V-3791**	1	GUARD	
	15	1	**9X-2619**	4	PIN-SPRING	
	16	1	**9X-2620**	4	PIN-SPRING	
	17	1	**6Y-2539**	1	CONE-BEARING	
	18	1	**4E-4029**	1	NUT-ADJUSTMENT (M190X2 SPL-THD)	
	19	1	**9U-1912**	1	SLEEVE AS	
	20	1	**6Y-2540**	1	CUP-BEARING	
	21	1	**4E-4030**	1	NUT-ADJUSTMENT (M160X2-THD)	
M	22	1	**9X-6493**	20	BOLT (M16X2X180-MM)	
	23	1	**9C-5853**	1	SHAFT-PINION	
	24	1	**8R-9215**	1	GEAR-BEVEL (44-TEETH)	
					AVAILABLE REPAIR KIT(S):	
J			**156-1153**	1	KIT-SERVICE	

J - KIT MARKED J AVAILABLE FOR PART MARKED J
M - METRIC PART

112-0778 **GEAR GP-BEVEL & PINION (*contd.*)** **i01144236**

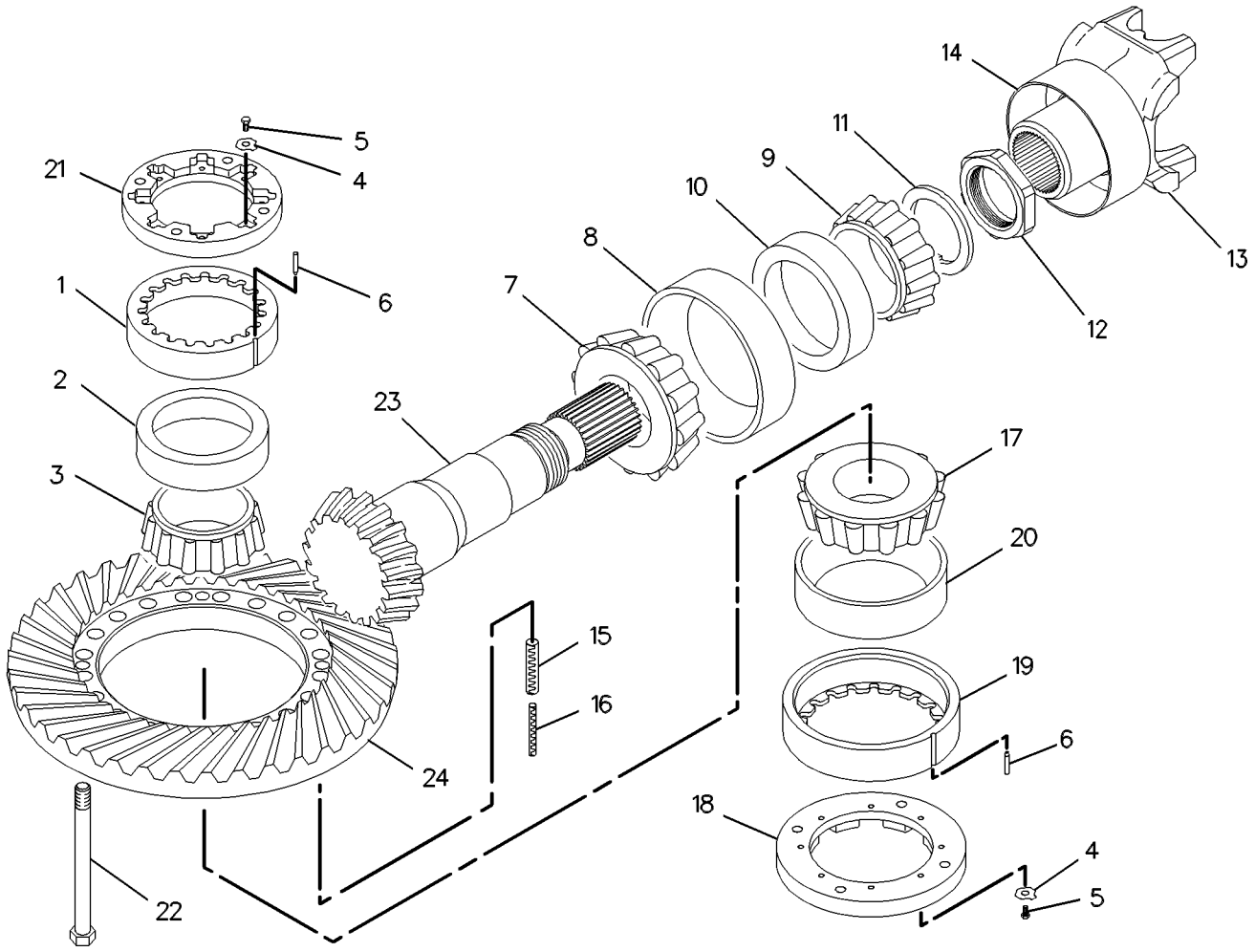

GRAPHIC #1 **<END>** g00606738

157-0340 GEAR GP-BEVEL & PINION—FIXED AXLE

S/N: JLX1-UP

PART OF 214-6161, 358-9581, 358-9582, 358-9583, 358-9584, 358-9585, 358-9586 AXLE AR-FIXED

SMCS-3254, 3256

i00811629

NOTE	REF NO	GRAPHIC REF	PART NUMBER	QTY	PART NAME 1 2 3 4 5 6 (PRODUCT LEVEL)	SEE PAGE
	1	1	**9U-1913**	1	SLEEVE AS	
	2	1	**030-0060**	1	CUP-BEARING	
	3	1	**030-0061**	1	CONE-BEARING	
	4	1	**4E-3897**	2	LOCK	
M	5	1	**4E-3896**	2	BOLT (M6X1X14-MM)	
	6	1	**4E-4031**	2	PIN	
	7	1	**1J-4757**	1	CONE-BEARING	
	8	1	**1J-2860**	1	CUP-BEARING	
	9	1	**2D-9455**	1	CONE-BEARING	
	10	1	**2D-9454**	1	CUP-BEARING (TAPERED ROLLER)	
	11	1	**6W-1638**	1	WASHER (71X95X5-MM THK)	
M	12	1	**9C-8287**	1	LOCKNUT-STAKE (M70X1.5-THD)	
	13	1	**155-5602**	1	YOKE	
	14	1	**8R-9215**	1	GEAR-BEVEL (44-TEETH)	
	15	1	**9X-2619**	4	PIN-SPRING	
	16	1	**9X-2620**	4	PIN-SPRING	
	17	1	**6Y-2539**	1	CONE-BEARING	
	18	1	**4E-4029**	1	NUT-ADJUSTMENT (M190X2 SPL-THD)	
	19	1	**9U-1912**	1	SLEEVE AS	
	20	1	**6Y-2540**	1	CUP-BEARING	
	21	1	**2H-3088**	1	SEAL-O-RING	
M	22	1	**8T-0372**	1	BOLT (M12X1.75X90-MM)	
	23	1	**9V-2429**	1	RETAINER	
	24	1	**112-0742**	1	SHAFT-BEVEL PINION	
	25	1	**4E-4030**	1	NUT-ADJUSTMENT (M160X2-THD)	
M	26	1	**9X-6493**	20	BOLT (M16X2X180-MM)	

M - METRIC PART

157-0340 **GEAR GP-BEVEL & PINION (*contd.*)** **i00811629**

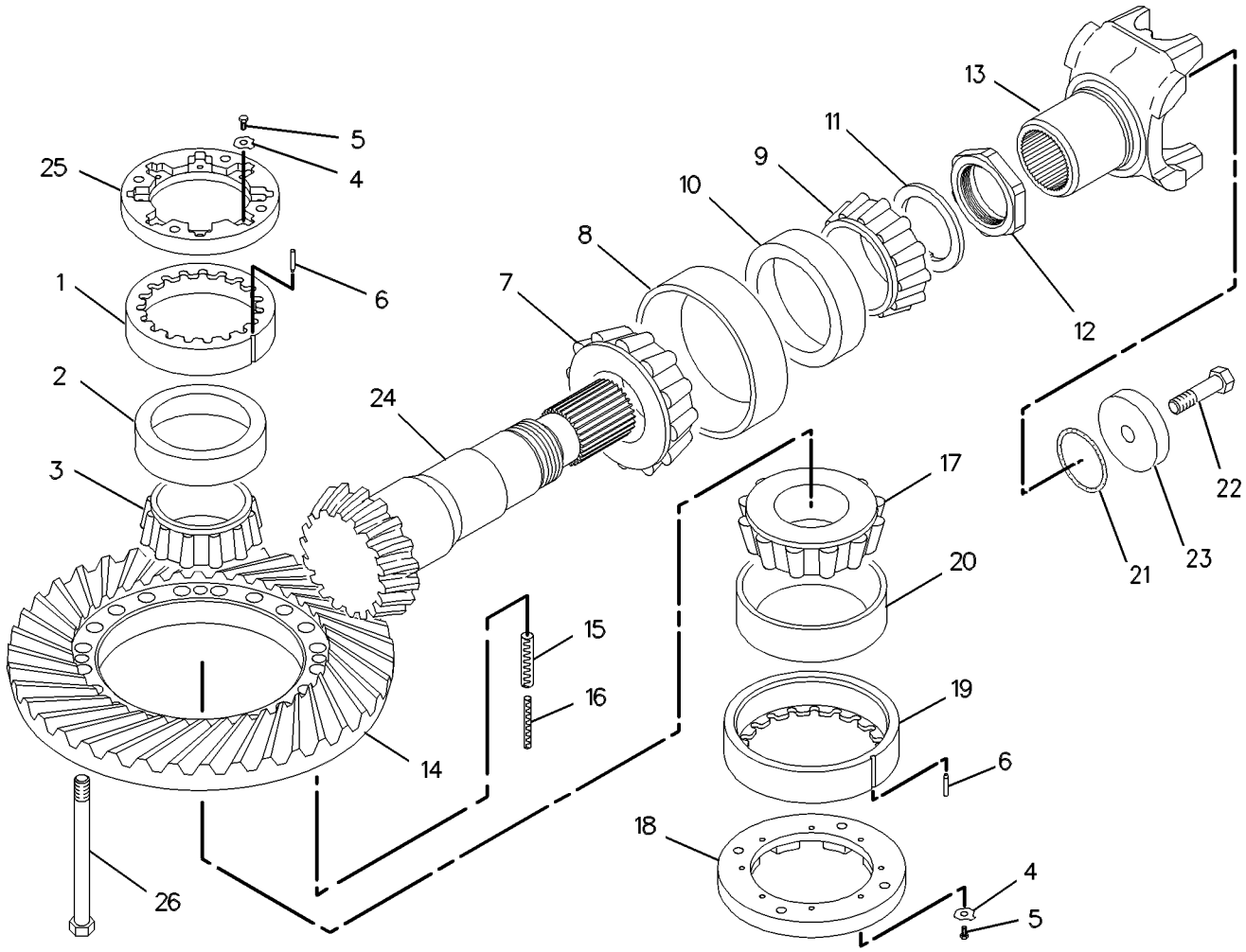

GRAPHIC #1 **<END>** g00386777

249-8173 GEAR GP-OUTPUT TRANSFER

S/N: KYM1-UP; W2W1-UP; BYY1-UP
PART OF 268-6505 TRANSMISSION AR

SMCS-3075, 3159 **i03868791**

NOTE	REF NO	GRAPHIC REF	PART NUMBER	QTY	PART NAME 1 2 3 4 5 6 (PRODUCT LEVEL)	SEE PAGE
	1	1	**326-4237**	1	CASE-TRANSFER	
	2	1	**6T-7061**	1	EYE-LIFTING	
M	3	1,2,3	**6V-4248**	27	BOLT (M10X1.5X25-MM)	
	4	1	**240-8259**	1	SCREEN GP-MAGNETIC	
		3	**8M-7160**	3	MAGNET	
	5	3	**4S-8598**	1	SCREEN-SUCTION	
	6	3	**8P-3251**	1	COVER AS	
		3	**7B-3028**	2	SCREW-DRIVE (NO 4X 3/16-IN)	
		3	**7S-2962**	1	WASHER-SPRING (52.3X82.5X9.1-MM THK)	
	7	3	**8H-7521**	1	SEAL-O-RING	
M	8	2	**8T-0375**	1	BOLT (M16X2X45-MM)	
	9	2	**7S-8554**	1	SEAL-O-RING	
	10	2	**125-3375**	1	GEAR-TRANSFER (68-TEETH)	
	11	2	**155-6648**	2	CONE-BEARING	
	12	2	**155-6647**	2	CUP-BEARING	
	13	2	**265-9465**	1	SHAFT-OUTPUT	
	14	2	**2P-8987**	2	CONE-BEARING	
	15	2	**2P-8986**	2	CUP-BEARING	
	16	2	**223-3925**	1	CAGE-BEARING	
	17	2	**5F-3144**	1	SEAL-O-RING	
M	18	2	**8T-0358**	2	BOLT (M16X2X90-MM)	
Y	19	2	**138-1509**	1	DRAIN GP-ECOLOGY (POWER TRAIN OIL) (TRANSFER CASE)	404
	20	2	**125-3376**	1	GEAR-TRANSFER (74-TEETH)	
	21	3	**9G-6258**	2	COVER-TRANSMISSION	
	22	3	**9G-6257**	2	GASKET-COVER	
M	23	3	**6V-6317**	12	BOLT (M10X1.5X20-MM)	
	24	2	**3J-0634**	1	SEAL-O-RING	
	25	2	**223-3924**	1	CAGE-BEARING	
B	26	2	**6I-8497**	1	SHIM PACK (INCLUDES 12-SHIMS)	
	27	3	**193-2200**	2	SEAL-LIP TYPE	
	28	2	**115-1326**	1	YOKE AS	
		2	**7S-8158**	1	GUARD	
	29	2	**265-3930**	2	RETAINER	
	30	2	**2H-3088**	2	SEAL-O-RING	
	31	1	**3E-4353**	10	WASHER-HARD (11X25X3-MM THK)	
B	32	2	**188-5046**	1	SHIM PACK (INCLUDES 13-SHIMS)	
	33	2	**191-1830**	1	YOKE	
	34	2	**246-5423**	1	COVER	
	35	2	**2N-7007**	1	GASKET	
M	36	1	**6V-8149**	4	NUT (M12X1.75-THD)	
Y	37	3	**193-2550**	1	SENSOR GP-SPEED (MAGNETIC, HIGH OUTPUT) (TRANSMISSION OUTPUT 1)	291
Y	37A	3	**193-2550**	1	SENSOR GP-SPEED (MAGNETIC, HIGH OUTPUT) (TRANSMISSION OUTPUT 2)	291
Y	38	2	**283-9977**	1	BRAKE GP-PARKING	634
M	39	2	**6V-5686**	4	BOLT (M16X2X50-MM)	
	40	2	**103-1712**	1	DRUM	
	41	2	**7X-0622**	8	WASHER (13X24X2.5-MM THK)	
M	42	2	**6A-5591**	8	BOLT (M12X1.75X25-MM)	
	43	1	**129-6329**	1	LEVER	
	44	2	**188-5149**	1	CAGE AS-BEARING	
M		2	**8T-5414**	4	STUD (M12X1.75X50-MM)	
M	45	1	**6V-3822**	1	BOLT (M10X1.5X35-MM)	
	46	1	**115-4783**	1	TUBE AS	
	47	3	**2H-3927**	1	SEAL-O-RING	
	48	1	**1H-9696**	1	SEAL-O-RING	
	49	3	**110-7453**	1	TUBE AS	

249-8173 **GEAR GP-OUTPUT TRANSFER (*contd.*)** **i03868791**

NOTE	REF NO	GRAPHIC REF	PART NUMBER	QTY	PART NAME 1 2 3 4 5 6 (PRODUCT LEVEL)	SEE PAGE
	50	3	**3H-2652**	1	SEAL-O-RING	
M	51	1	**6V-8197**	1	BOLT (M12X1.75X40-MM)	
M	52	1	**6V-5696**	1	BOLT (M12X1.75X80-MM)	
M	53	1	**6V-1820**	10	BOLT (M10X1.5X30-MM)	
	54	3	**1H-8720**	1	SEAL-O-RING	
	55	1	**6V-1720**	1	PLATE-SERIAL NUMBER (TRANSMISSION)	
	56	2	**6V-0852**	1	CAP-DUST	
	57	2	**3J-1907**	1	SEAL-O-RING	
	58	2	**6V-3965**	1	FITTING (QUICK DISCONNECT)	
	59	1	**9X-8268**	2	WASHER (17.5X30X3.5-MM THK)	
	60	1	**1V-6341**	2	SEAL	
	61	2	**9H-1024**	4	WASHER-HARD (17X30X6-MM THK)	
	62	1	**2M-0849**	2	WASHER-HARD (13.5X25.5X5-MM THK)	

B - USE AS REQUIRED
M - METRIC PART
Y - SEPARATE ILLUSTRATION

249-8173 **GEAR GP-OUTPUT TRANSFER (*contd.*)** **i03868791**

REFER TO ALL ILLUSTRATIONS OF
THIS GROUP FOR AUXILIARY VIEWS

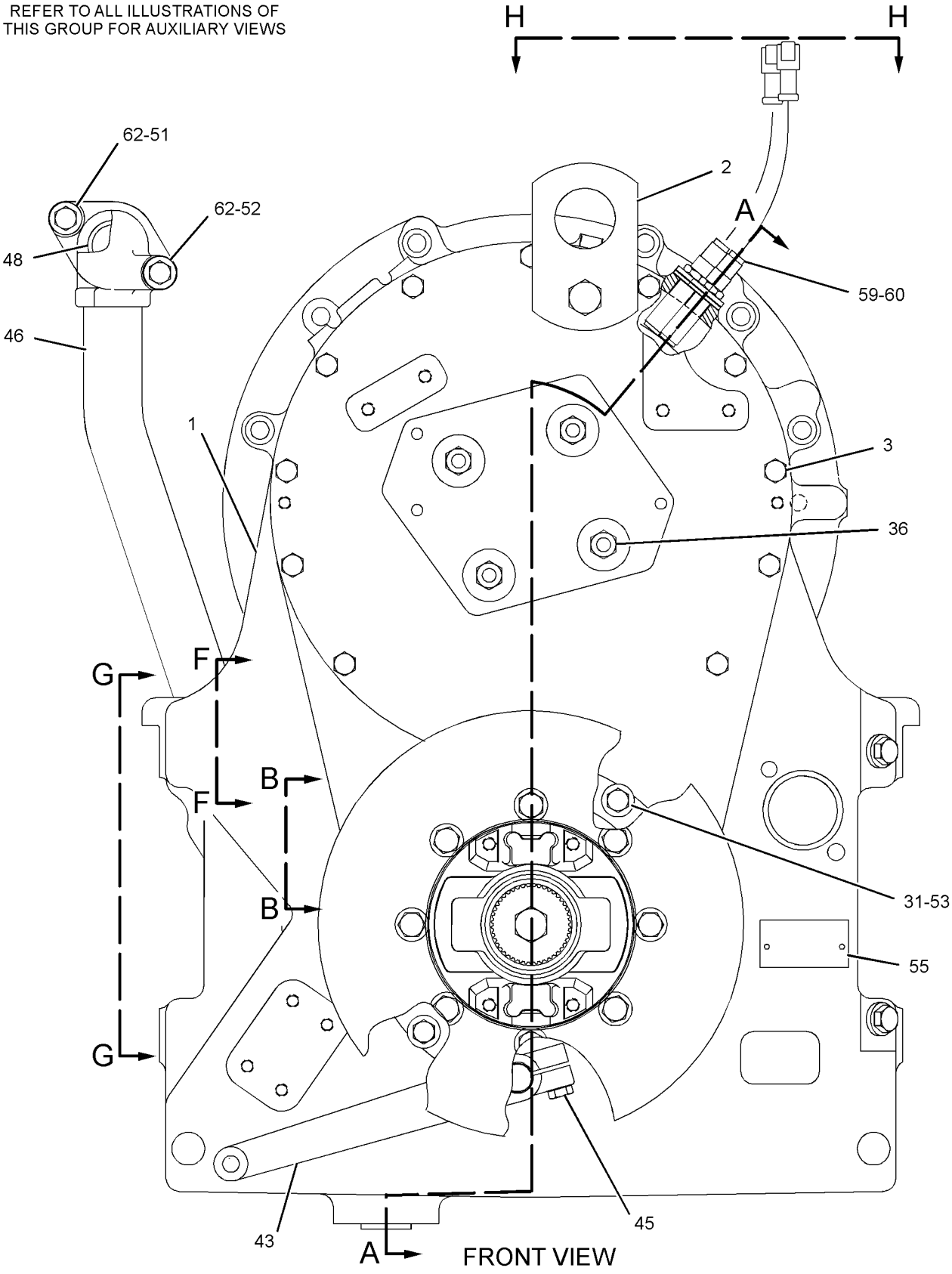

GRAPHIC #1 g01376920

249-8173 **GEAR GP-OUTPUT TRANSFER (*contd.*)** **i03868791**

REFER TO ALL ILLUSTRATIONS OF
THIS GROUP FOR AUXILIARY VIEWS

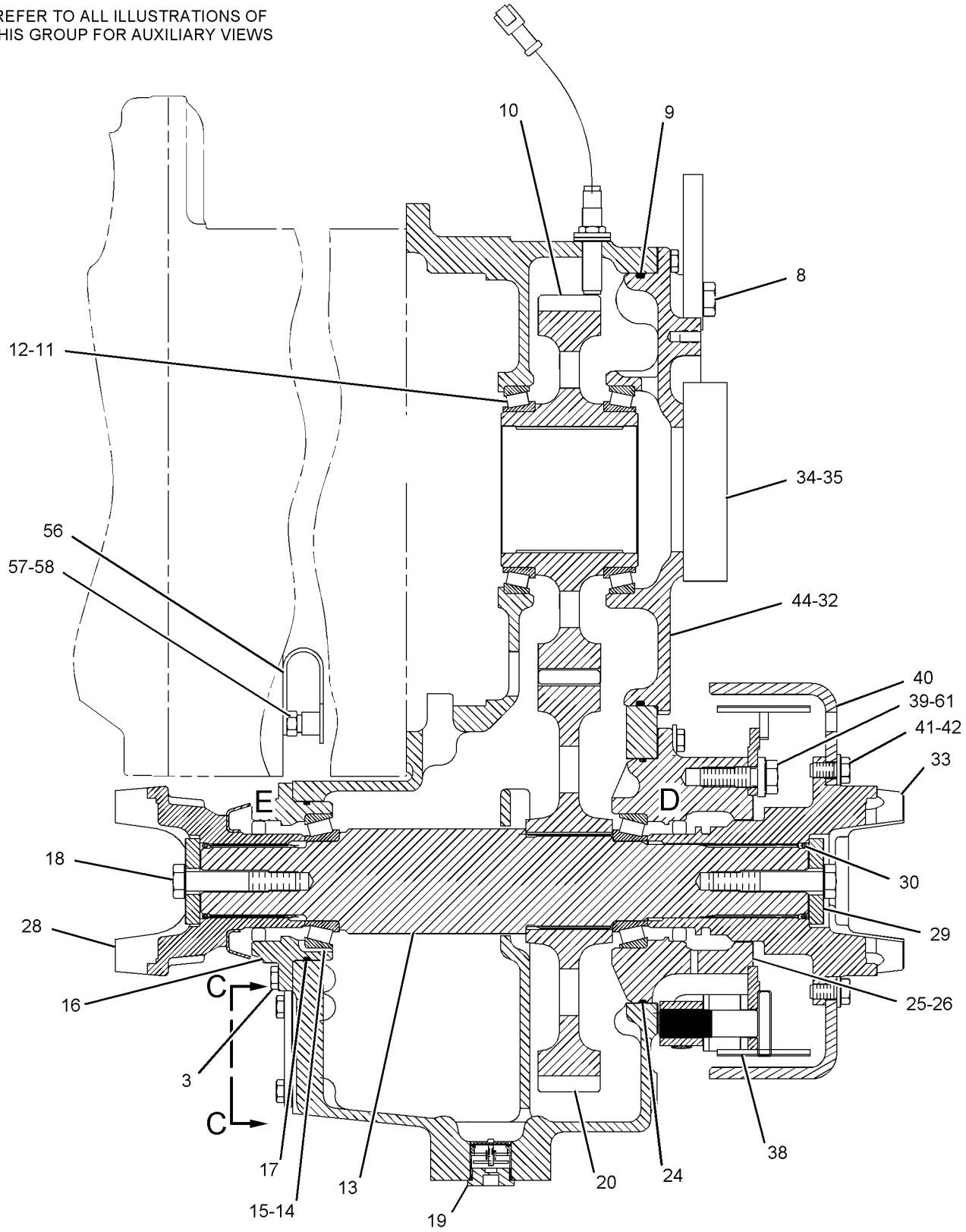

SECTION A-A

GRAPHIC #2

g01136299

249-8173 **GEAR GP-OUTPUT TRANSFER (*contd.*)** **i03868791**

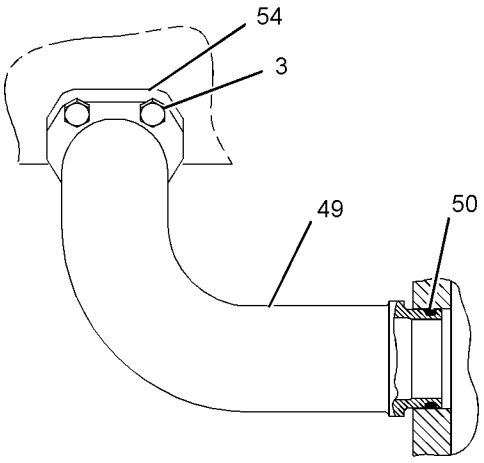

VIEW G-G

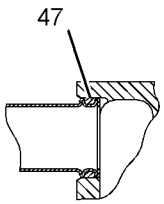

SECTION F-F

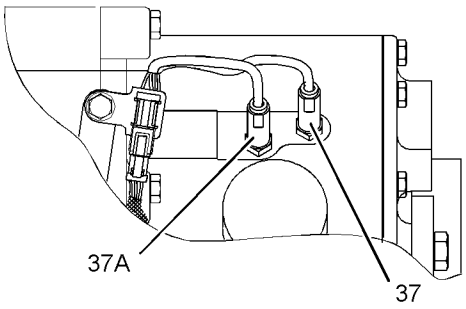

VIEW H-H

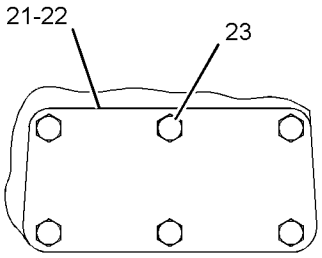

VIEW C-C

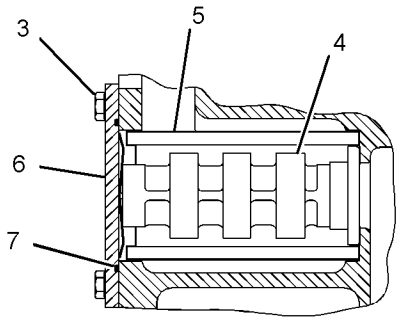

SECTION B-B

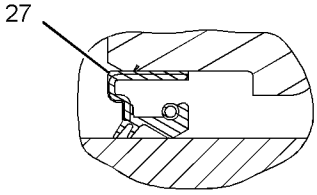

VIEW OF AREA E

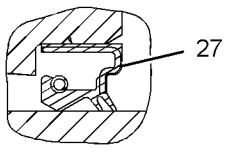

VIEW OF AREA D

GRAPHIC #3 **<END>** g01376921

249-8175 GEAR GP-OUTPUT TRANSFER

S/N: KYN1-UP; W2X1-UP; BYZ1-UP
PART OF 268-6506 TRANSMISSION AR

SMCS-3075, 3159 **i03497083**

NOTE	REF NO	GRAPHIC REF	PART NUMBER	QTY	PART NAME 1 2 3 4 5 6 (PRODUCT LEVEL)	SEE PAGE
	1	1	**326-4237**	1	CASE-TRANSFER	
	2	1	**6T-7061**	1	EYE-LIFTING	
M	3	1,2	**6V-4248**	27	BOLT (M10X1.5X25-MM)	
	4	2	**240-8259**	1	SCREEN GP-MAGNETIC	
		2	**8M-7160**	3	MAGNET	
	5	2	**4S-8598**	1	SCREEN-SUCTION	
	6	2	**8P-3251**	1	COVER AS	
		2	**7B-3028**	2	SCREW-DRIVE (NO 4X 3/16-IN)	
		2	**7S-2962**	1	WASHER-SPRING (52.3X82.5X9.1-MM THK)	
	7	2	**8H-7521**	1	SEAL-O-RING	
M	8	2	**8T-0375**	1	BOLT (M16X2X45-MM)	
	9	2	**7S-8554**	1	SEAL-O-RING	
	10	2	**125-3375**	1	GEAR-TRANSFER (68-TEETH)	
	11	2	**155-6648**	2	CONE-BEARING	
	12	2	**155-6647**	2	CUP-BEARING	
	13	2	**265-9465**	1	SHAFT-OUTPUT	
	14	2	**2P-8987**	2	CONE-BEARING	
	15	2	**2P-8986**	2	CUP-BEARING	
	16	2	**223-3925**	1	CAGE-BEARING	
	17	2	**5F-3144**	1	SEAL-O-RING	
M	18	2	**8T-0358**	2	BOLT (M16X2X90-MM)	
Y	19	2	**138-1509**	1	DRAIN GP-ECOLOGY (POWER TRAIN OIL)	404
	20	2	**125-3376**	1	GEAR-TRANSFER (74-TEETH)	
	21	2	**9G-6258**	2	COVER-TRANSMISSION	
	22	2	**9G-6257**	2	GASKET-COVER	
M	23	2	**6V-6317**	12	BOLT (M10X1.5X20-MM)	
	24	2	**3J-0634**	1	SEAL-O-RING	
	25	2	**223-3924**	1	CAGE-BEARING	
B	26	2	**6I-8497**	1	SHIM PACK (INCLUDES 12-SHIMS)	
	27	2	**193-2200**	2	SEAL-LIP TYPE	
	28	2	**115-1326**	1	YOKE AS	
		2	**7S-8158**	1	GUARD	
	29	2	**265-3930**	2	RETAINER	
	30	2	**2H-3088**	2	SEAL-O-RING	
	31	1	**3E-4353**	10	WASHER-HARD (11X25X3-MM THK)	
	32	2	**188-5149**	1	CAGE AS-BEARING	
M		2	**3E-4319**	4	STUD-TAPERLOCK (M12X1.75X55-MM)	
B	33	2	**188-5046**	1	SHIM PACK (INCLUDES 13-SHIMS)	
	34	2	**246-5423**	1	COVER	
	35	2	**2N-7007**	1	GASKET	
M	36	1	**6V-8149**	4	NUT (M12X1.75-THD)	
Y	37	1	**193-2550**	1	SENSOR GP-SPEED (MAGNETIC, HIGH OUTPUT) (TRANSMISSION OUTPUT 1)	291
Y	37A	1	**193-2550**	1	SENSOR GP-SPEED (MAGNETIC, HIGH OUTPUT) (TRANSMISSION OUTPUT 2)	291
Y	38	2	**283-9977**	1	BRAKE GP-PARKING	634
M	39	2	**6V-5686**	4	BOLT (M16X2X50-MM)	
	40	2	**155-5609**	1	DRUM	
	41	2	**7X-0622**	8	WASHER (13X24X2.5-MM THK)	
M	42	2	**6A-5591**	8	BOLT (M12X1.75X25-MM)	
	43	1	**129-6329**	1	LEVER	
	44	2	**191-1831**	1	YOKE	
M	45	1	**6V-3822**	1	BOLT (M10X1.5X35-MM)	
	46	1	**115-4783**	1	TUBE AS	
	47	2	**2H-3927**	1	SEAL-O-RING	
	48	1	**1H-9696**	1	SEAL-O-RING	
	49	2	**110-7453**	1	TUBE AS	
	50	2	**3H-2652**	1	SEAL-O-RING	
M	52	1	**6V-8197**	1	BOLT (M12X1.75X40-MM)	

249-8175 **GEAR GP-OUTPUT TRANSFER (*contd.*)** **i03497083**

NOTE	REF NO	GRAPHIC REF	PART NUMBER	QTY	PART NAME 1 2 3 4 5 6 (PRODUCT LEVEL)	SEE PAGE
M	53	1	**6V-5696**	1	BOLT (M12X1.75X80-MM)	
M	54	1	**6V-1820**	10	BOLT (M10X1.5X30-MM)	
	55	2	**1H-8720**	1	SEAL-O-RING	
	56	1	**6V-1720**	1	PLATE-SERIAL NUMBER (TRANSMISSION)	
	57	2	**6V-0852**	1	CAP-DUST	
	58	2	**3J-1907**	1	SEAL-O-RING	
	59	2	**6V-3965**	1	FITTING (QUICK DISCONNECT)	
	60	1	**9X-8268**	2	WASHER (17.5X30X3.5-MM THK)	
	61	1	**1V-6341**	2	SEAL	
	62	2	**9H-1024**	4	WASHER-HARD (17X30X6-MM THK)	
	63	1	**2M-0849**	2	WASHER-HARD (13.5X25.5X5-MM THK)	

B - USE AS REQUIRED
M - METRIC PART
Y - SEPARATE ILLUSTRATION

249-8175 **GEAR GP-OUTPUT TRANSFER (*contd.*)** **i03497083**

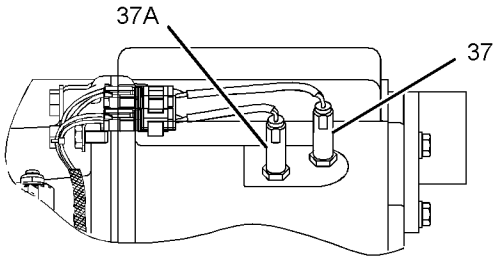

VIEW H-H

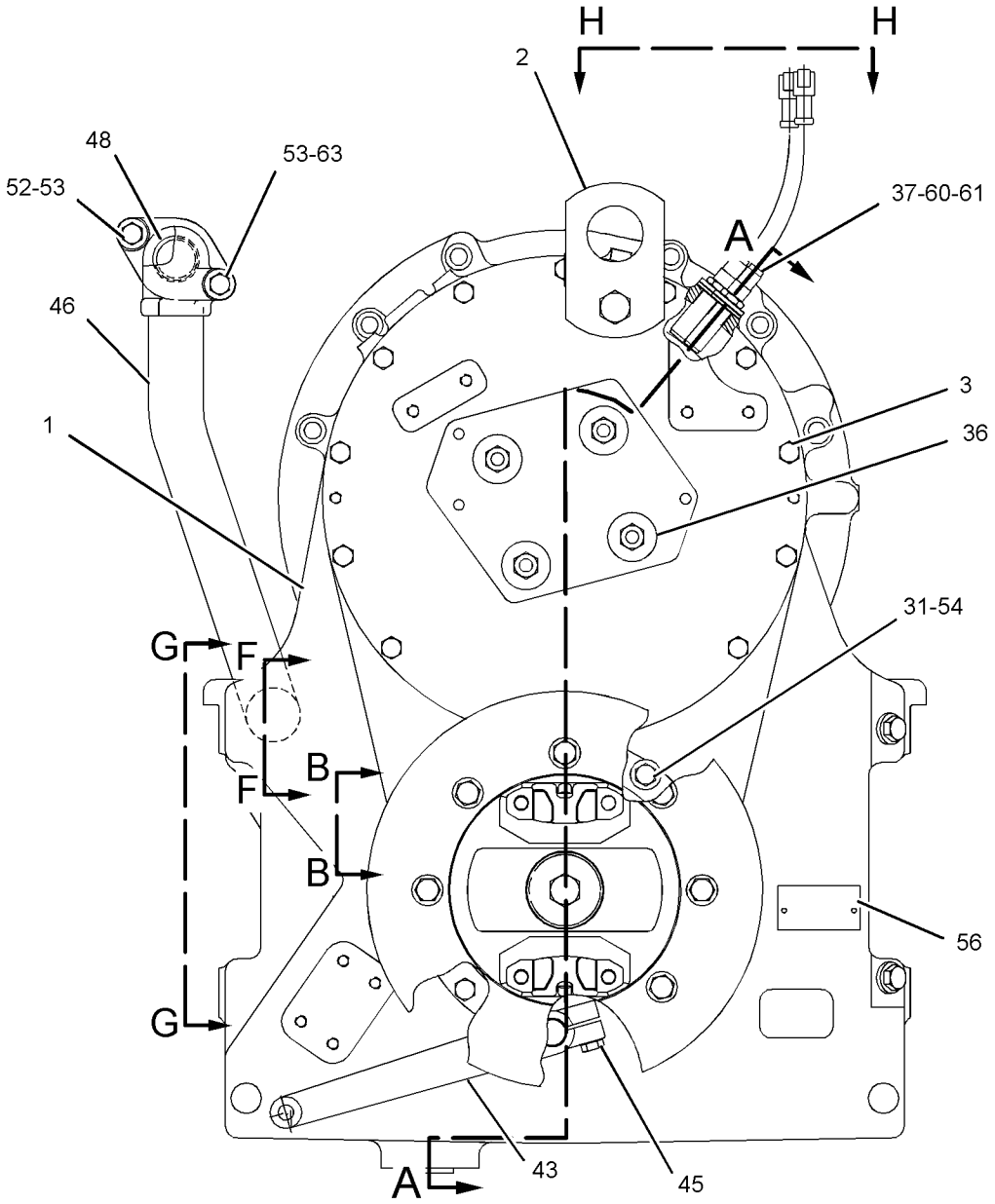

REFER TO ALL ILLUSTRATIONS OF THIS GROUP FOR AUXILIARY VIEWS

FRONT VIEW

GRAPHIC #1

g01376915

249-8175 **GEAR GP-OUTPUT TRANSFER (*contd.*)** **i03497083**

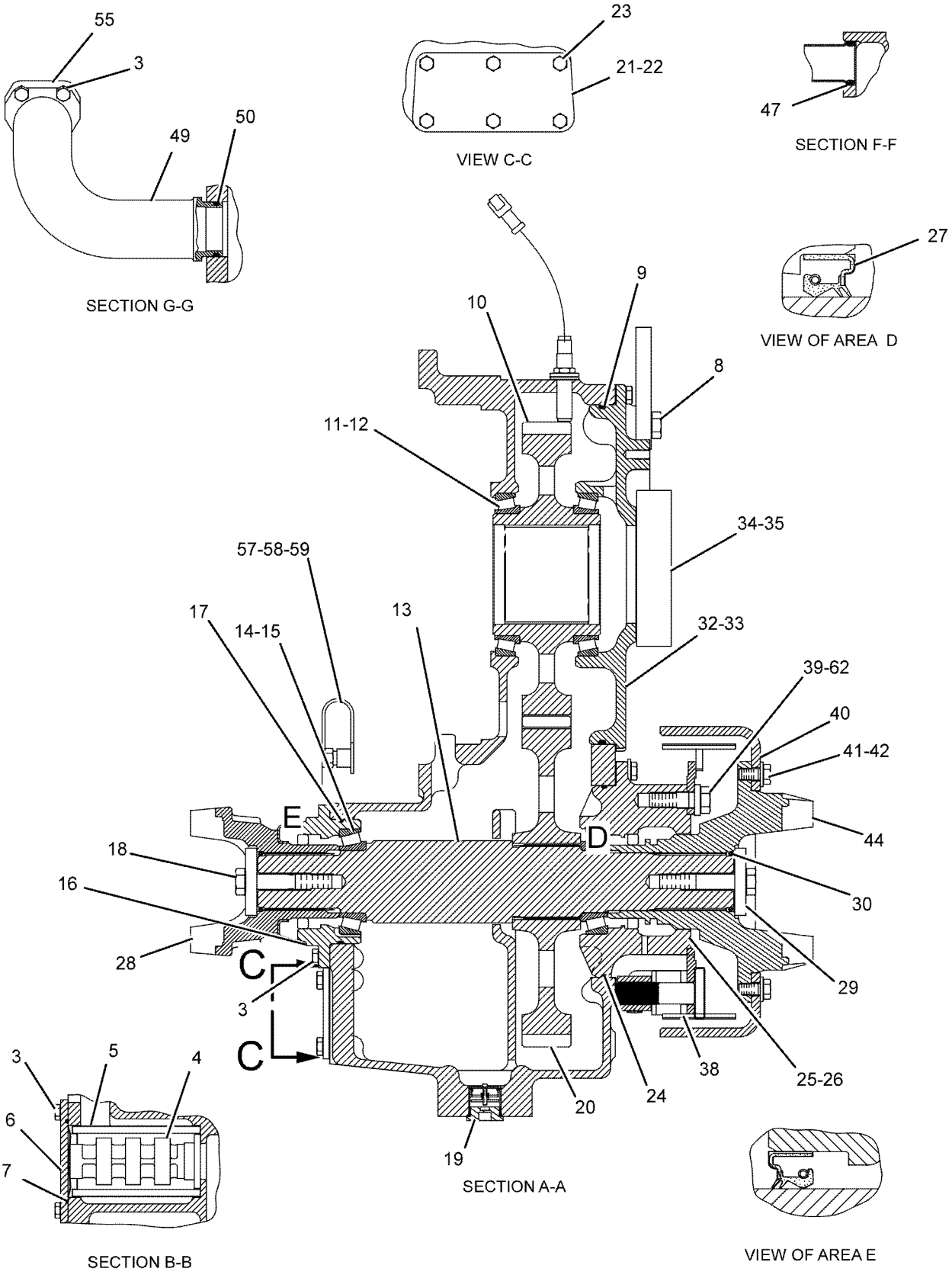

GRAPHIC #2 **<END>** g01128211

358-9602 HOUSING GP-AXLE—FRONT

S/N: JLX1-UP
ECOLOGY DRAIN VALVE
PART OF 358-9581, 358-9584 AXLE AR-FIXED

SMCS-3260, 3278 **i05412716**

NOTE	REF NO	GRAPHIC REF	PART NUMBER	QTY	PART NAME 1 2 3 4 5 6 (PRODUCT LEVEL)	SEE PAGE
	1	1	**4E-8534**	1	RETAINER-SEAL	
	2	1,2	**5H-3701**	2	SCREW-PURGE	
	3	1	**8T-0336**	1	FITTING-PRESSURE RELIEF	
B	4	1	**226-2684**	1	SHIM PACK (INCLUDES 11-SHIMS)	
	5	2	**9C-8421**	2	SHAFT-AXLE	
	6	1	**9C-9194**	1	HOUSING-PINION	
	7	2	**9G-5315**	2	SEAL GP-DUO-CONE	
					(EACH INCLUDES)	
		2	**2M-0344**	2	RING-SEALING	
	8	1	**123-4003**	1	SEAL-LIP TYPE	
	9	1	*165-4929*	1	PLUG AS-MAGNETIC	
		1	**5P-4484**	1	PLUG-MAGNETIC	
		1	**7M-8485**	1	SEAL-O-RING	
	10	2	**173-0566**	1	DRAIN AS	
		1	**2K-8199**	1	SEAL-O-RING	
		1	**5L-4759**	1	SEAL-O-RING	
		1	**175-4966**	1	PLUG-DRAIN (AXLE HOUSING)	
	11	1	**192-9121**	1	HOUSING AS	
	12	1	**372-0715**	2	HOUSING-AXLE	
	13	1	*164-4180*	2	PLUG AS	
					(EACH INCLUDES)	
		1	**7M-8485**	1	SEAL-O-RING	
		1	**9S-4181**	1	PLUG	
	14	2	**2P-1373**	2	CUP-BEARING	
	15	1	**3B-0551**	1	PLUG-PIPE	
	16	1	**4H-6520**	1	SEAL-O-RING	
	17	2	**5P-3119**	2	RING-RETAINING	
	18	1,2	**5P-8247**	58	WASHER-HARD (17X32X3.5-MM THK)	
M	19	1	**6V-5686**	10	BOLT (M16X2X50-MM)	
M	20	1	**6V-7732**	6	BOLT (M10X1.5X25-MM)	
	21	2	**6Y-2538**	2	CONE-BEARING	
	22	2	**7M-8485**	1	SEAL-O-RING	
	23	2	**8B-6342**	2	CONE-BEARING	
	24	2	**8B-6343**	2	CUP-BEARING	
M	25	2	**8T-0649**	24	BOLT (M16X2X110-MM)	
M	26	1	**8T-5002**	24	BOLT (M16X2X180-MM)	
	27	1	**9C-6041**	3	DOWEL	
	28	2	**9C-6327**	1	GAUGE AS-OIL LEVEL (DIPSTICK)	
	29	2	**9C-8419**	2	NUT-BEARING	
	30	1	**9X-2027**	6	WASHER (11X18X2-MM THK)	
B	31	1	**1U-8846**		SEALANT-GASKET	

B - USE AS REQUIRED
M - METRIC PART

358-9602 **HOUSING GP-AXLE (*contd.*)** **i05412716**

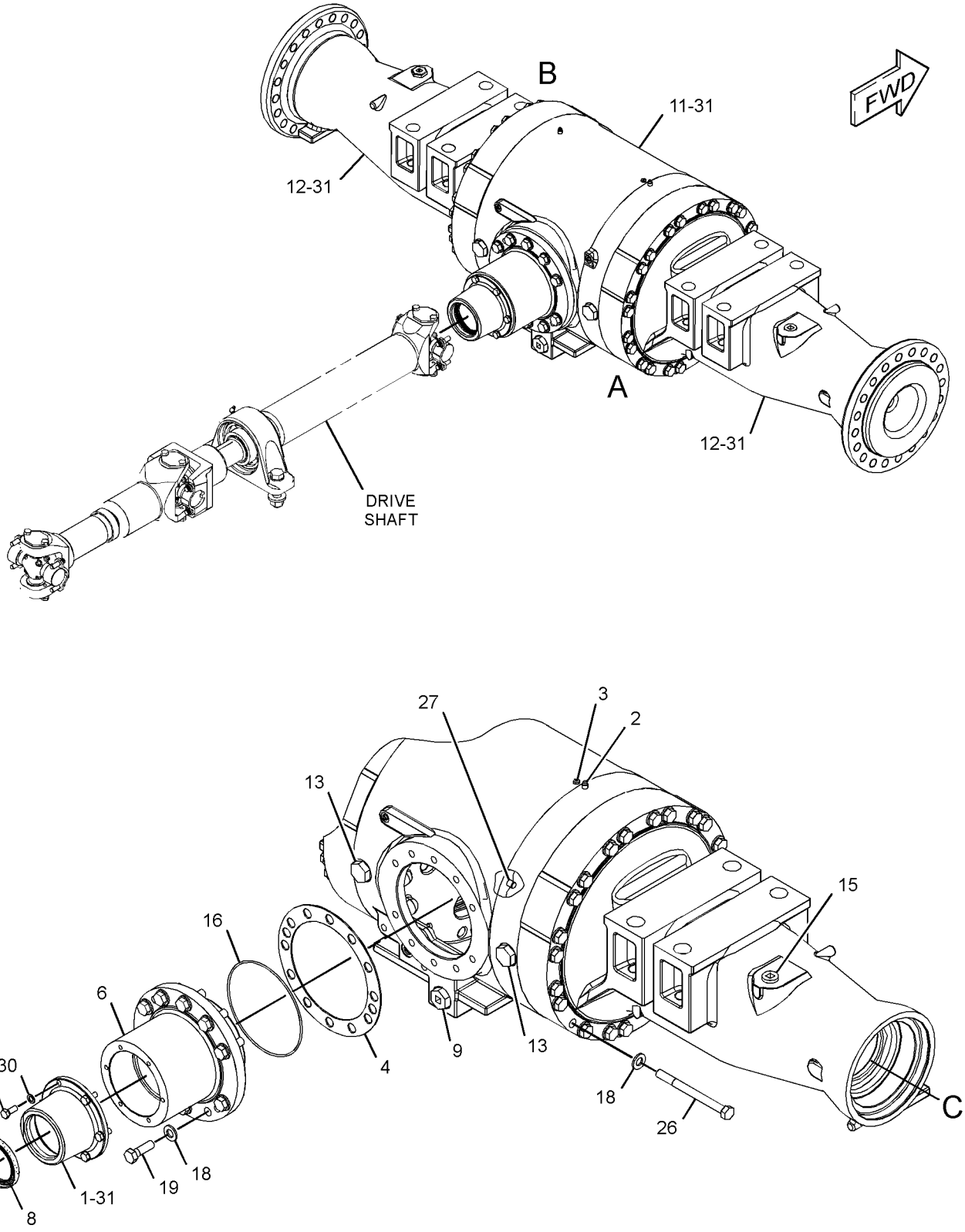

VIEW OF AREA A

GRAPHIC #1 g02627741

358-9602 **HOUSING GP-AXLE (*contd.*)** **i05412716**

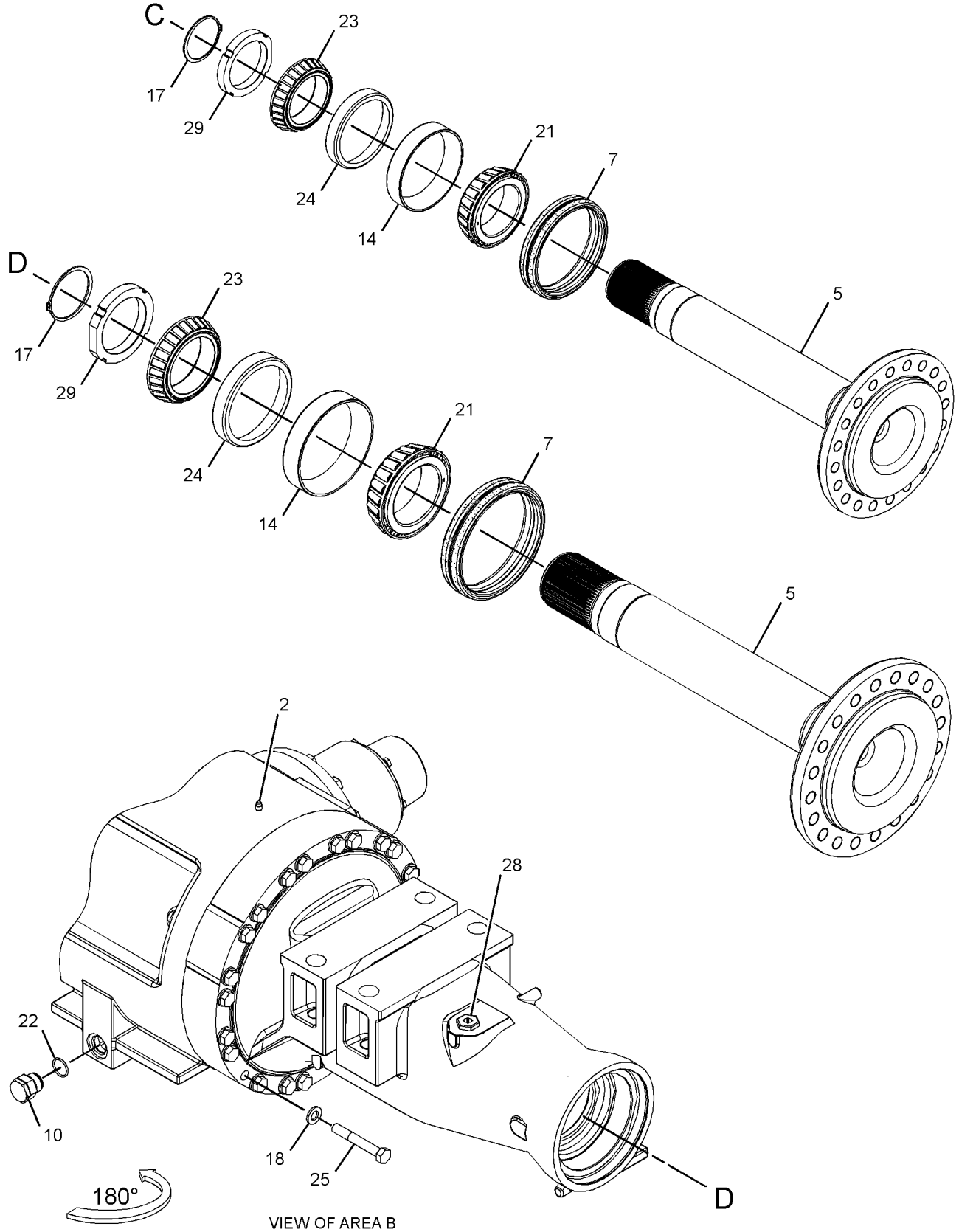

VIEW OF AREA B

GRAPHIC #2 **<END>** g02628958

358-9603 HOUSING GP-AXLE

S/N: JLX1-UP

PART OF 358-9582, 358-9585 AXLE AR-FIXED

SMCS-3260, 3278 **i05413691**

NOTE	REF NO	GRAPHIC REF	PART NUMBER	QTY	PART NAME 1 2 3 4 5 6 (PRODUCT LEVEL)	SEE PAGE
	1	1	**3T-6541**	2	SEAL GP-DUO-CONE	
					(EACH INCLUDES)	
		1	**3N-0759**	2	RING-SEALING	
	2	1	**4E-8534**	1	RETAINER-SEAL	
	3	1	**5H-3701**	2	SCREW-PURGE	
	4	1	**8T-0336**	1	FITTING-PRESSURE RELIEF	
	5	1	**226-2684**	1	SHIM PACK (INCLUDES 11-SHIMS)	
	6	1	**9C-8421**	2	SHAFT-AXLE	
	7	1	**9C-9194**	1	HOUSING-PINION	
	8	1	**123-4003**	1	SEAL-LIP TYPE	
	9	1	*165-4929*	1	PLUG AS-MAGNETIC	
		1	**5P-4484**	1	PLUG-MAGNETIC	
		1	**7M-8485**	1	SEAL-O-RING	
	10	1	**173-0566**	1	DRAIN AS	
		1	**2K-8199**	1	SEAL-O-RING	
		1	**5L-4759**	1	SEAL-O-RING	
		1	**175-4966**	1	PLUG-DRAIN (AXLE HOUSING)	
	11	1	**192-9121**	1	HOUSING AS	
	12	1	**372-0715**	2	HOUSING-AXLE	
	13	1	*164-4180*	2	PLUG AS	
					(EACH INCLUDES)	
		1	**7M-8485**	1	SEAL-O-RING	
		1	**9S-4181**	1	PLUG	
	14	1	**2P-1373**	2	CUP-BEARING	
	15	1	**3B-0551**	1	PLUG-PIPE	
	16	1	**4H-6520**	1	SEAL-O-RING	
	17	1	**5P-3119**	2	RING-RETAINING	
	18	1	**5P-8247**	58	WASHER-HARD (17X32X3.5-MM THK)	
M	19	1	**6V-5686**	10	BOLT (M16X2X50-MM)	
M	20	1	**6V-7732**	6	BOLT (M10X1.5X25-MM)	
	21	1	**6Y-2538**	2	CONE-BEARING	
	22	1	**7M-8485**	1	SEAL-O-RING	
	23	1	**8B-6342**	2	CONE-BEARING	
	24	1	**8B-6343**	2	CUP-BEARING	
M	25	1	**8T-0649**	24	BOLT (M16X2X110-MM)	
M	26	1	**8T-5002**	24	BOLT (M16X2X180-MM)	
	27	1	**9C-6041**	3	DOWEL	
	28	1	**9C-6327**	1	GAUGE AS-OIL LEVEL (DIPSTICK)	
	29	1	**9C-8419**	2	NUT-BEARING	
	30	1	**9X-2027**	6	WASHER (11X18X2-MM THK)	

M - METRIC PART

358-9603 **HOUSING GP-AXLE (*contd.*)** **i05413691**

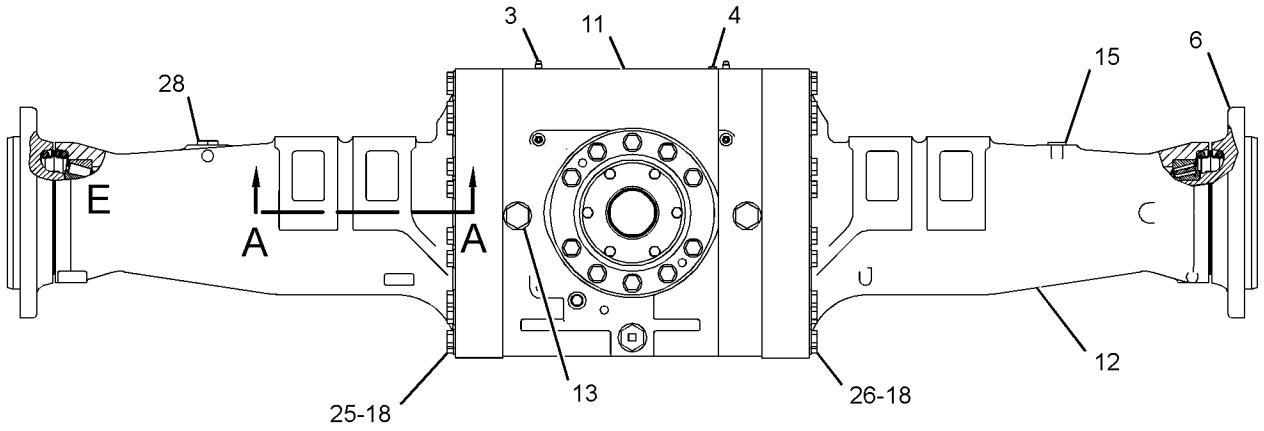

REAR VIEW

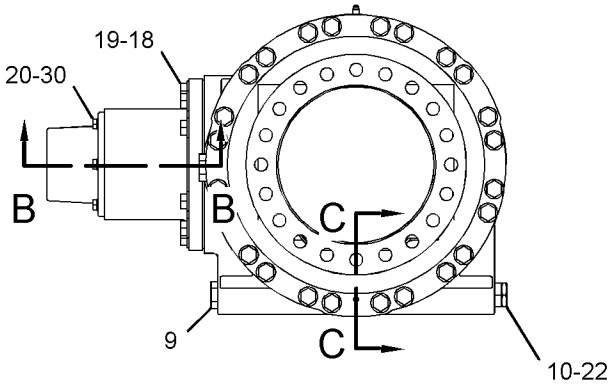

RIGHT SIDE VIEW

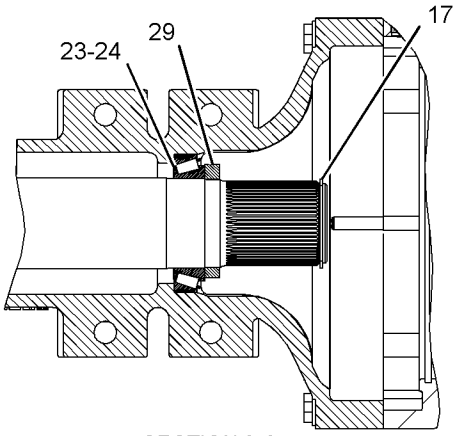

SECTION A-A

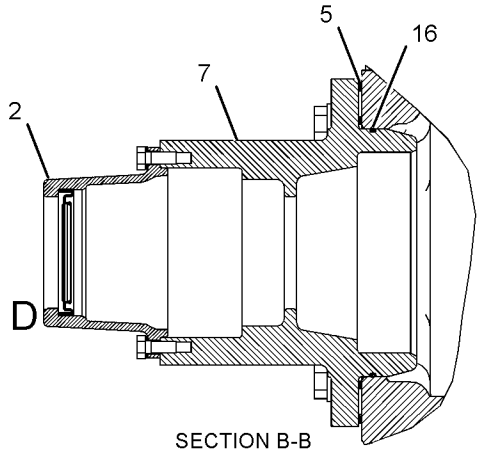

SECTION B-B

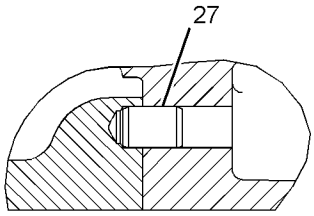

SECTION C-C

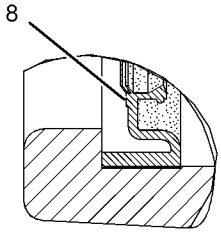

VIEW OF AREA D

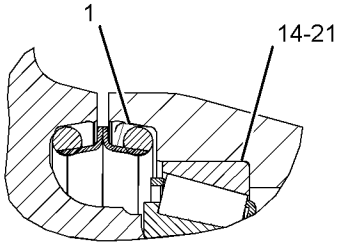

VIEW OF AREA E

GRAPHIC #1 **<END>** g02646566

358-9604 HOUSING GP-AXLE–FRONT

S/N: JLX1-UP
ECOLOGY DRIAN VALVE
PART OF 358-9583, 358-9586 AXLE AR-FIXED

SMCS-3260, 3278 **i05413696**

NOTE	REF NO	GRAPHIC REF	PART NUMBER	QTY	PART NAME 1 2 3 4 5 6 (PRODUCT LEVEL)	SEE PAGE
	1	1	**4E-8534**	1	RETAINER-SEAL	
	2	1,2	**5H-3701**	2	SCREW-PURGE	
	3	1	**8T-0336**	1	FITTING-PRESSURE RELIEF	
B	4	1	**226-2684**	1	SHIM PACK (INCLUDES 11-SHIMS)	
	5	2	**232-0931**	2	SHAFT-AXLE	
	6	1	**9C-9194**	1	HOUSING-PINION	
	7	2	**9G-5315**	2	SEAL GP-DUO-CONE	
					(EACH INCLUDES)	
		2	**2M-0344**	2	RING-SEALING	
	8	1	**123-4003**	1	SEAL-LIP TYPE	
	9	1	**165-4929**	1	PLUG AS-MAGNETIC	
		1	**5P-4484**	1	PLUG-MAGNETIC	
		1	**7M-8485**	1	SEAL-O-RING	
	10	2	**173-0566**	1	DRAIN AS	
		1	**2K-8199**	1	SEAL-O-RING	
		1	**5L-4759**	1	SEAL-O-RING	
		1	**175-4966**	1	PLUG-DRAIN (AXLE HOUSING)	
	11	1	**192-9121**	1	HOUSING AS	
	12	1	**372-0715**	2	HOUSING-AXLE	
	13	1	*164-4180*	2	PLUG AS	
					(EACH INCLUDES)	
		1	**7M-8485**	1	SEAL-O-RING	
		1	**9S-4181**	1	PLUG	
	14	2	**2P-1373**	2	CUP-BEARING	
	15	1	**3B-0551**	1	PLUG-PIPE	
	16	1	**4H-6520**	1	SEAL-O-RING	
	17	2	**5P-3119**	2	RING-RETAINING	
	18	1,2	**5P-8247**	58	WASHER-HARD (17X32X3.5-MM THK)	
M	19	1	**6V-5686**	10	BOLT (M16X2X50-MM)	
M	20	1	**6V-7732**	6	BOLT (M10X1.5X25-MM)	
	21	2	**6Y-2538**	2	CONE-BEARING	
	22	2	**7M-8485**	1	SEAL-O-RING	
	23	2	**8B-6342**	2	CONE-BEARING	
	24	2	**8B-6343**	2	CUP-BEARING	
M	25	2	**8T-0649**	24	BOLT (M16X2X110-MM)	
M	26	1	**8T-5002**	24	BOLT (M16X2X180-MM)	
	27	1	**9C-6041**	3	DOWEL	
	28	2	**9C-6327**	1	GAUGE AS-OIL LEVEL (DIPSTICK)	
	29	2	**9C-8419**	2	NUT-BEARING	
	30	1	**9X-2027**	6	WASHER (11X18X2-MM THK)	
B	31	1	**1U-8846**		SEALANT-GASKET	

B - USE AS REQUIRED
M - METRIC PART

358-9604 **HOUSING GP-AXLE (*contd.*)** **i05413696**

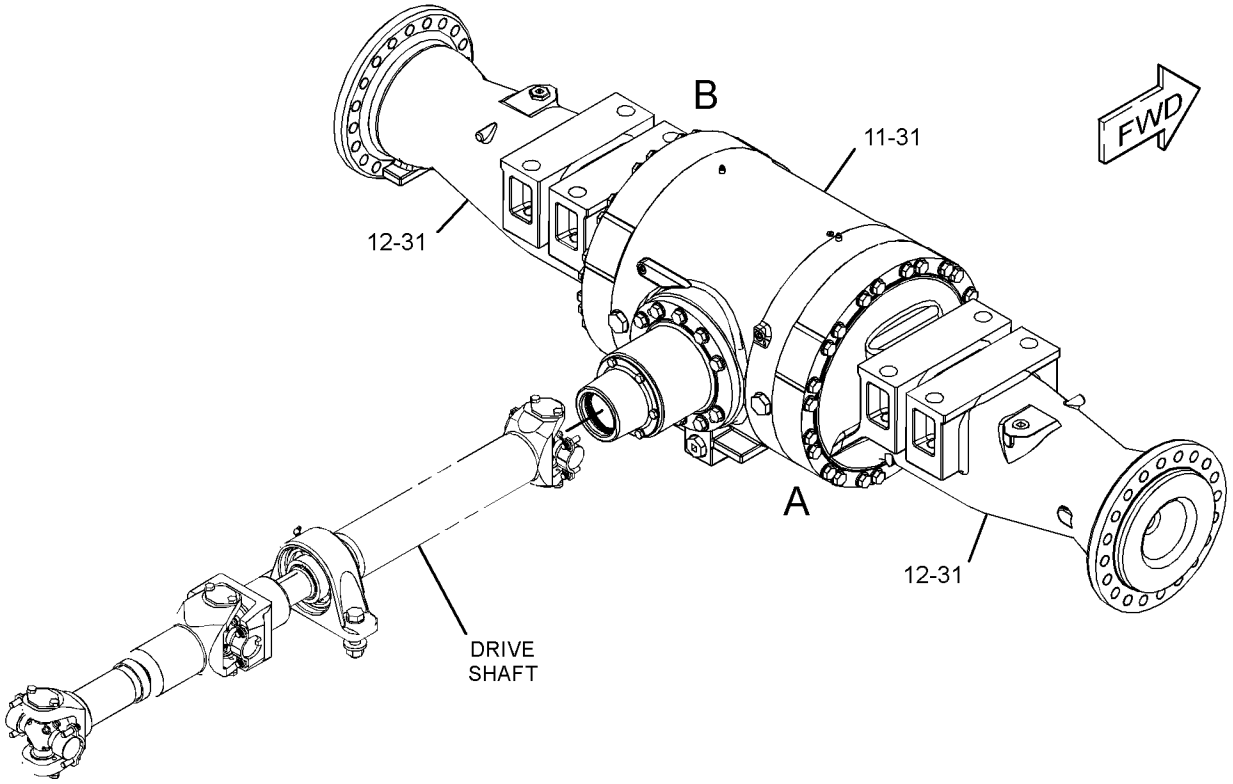

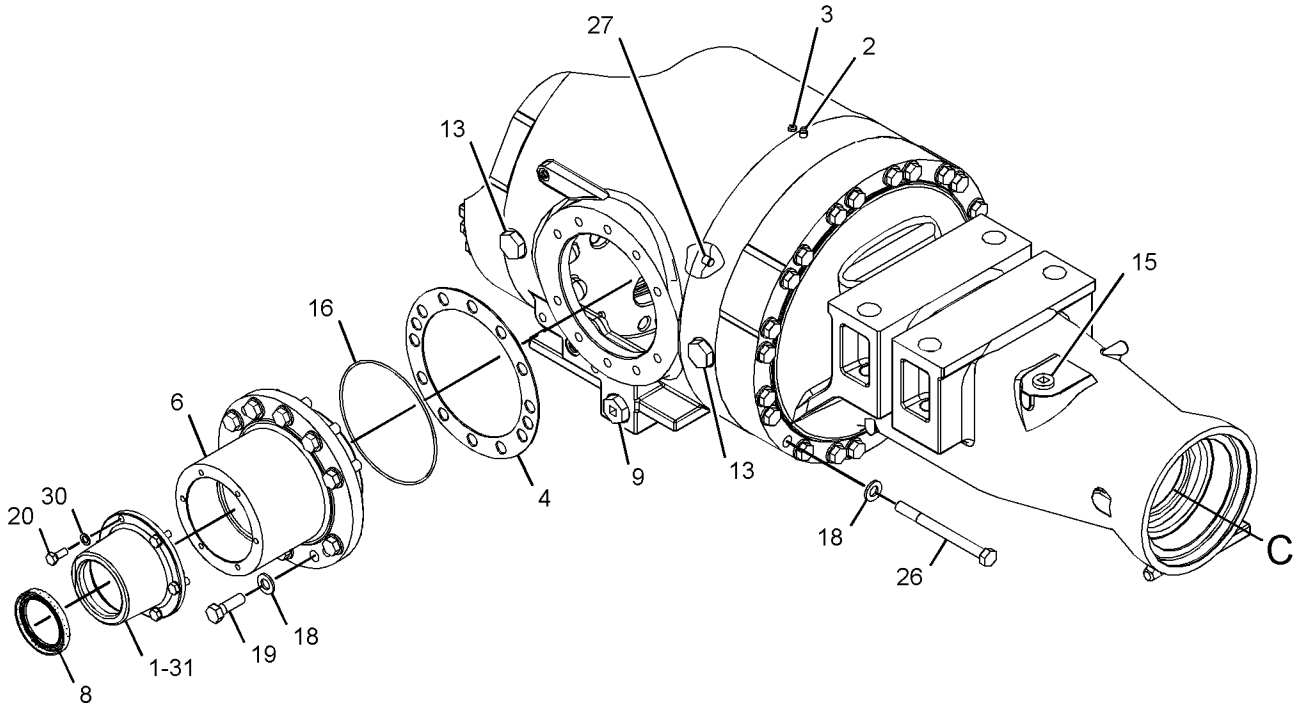

VIEW OF AREA A

GRAPHIC #1 g02627741

358-9604 **HOUSING GP-AXLE (*contd.*)** **i05413696**

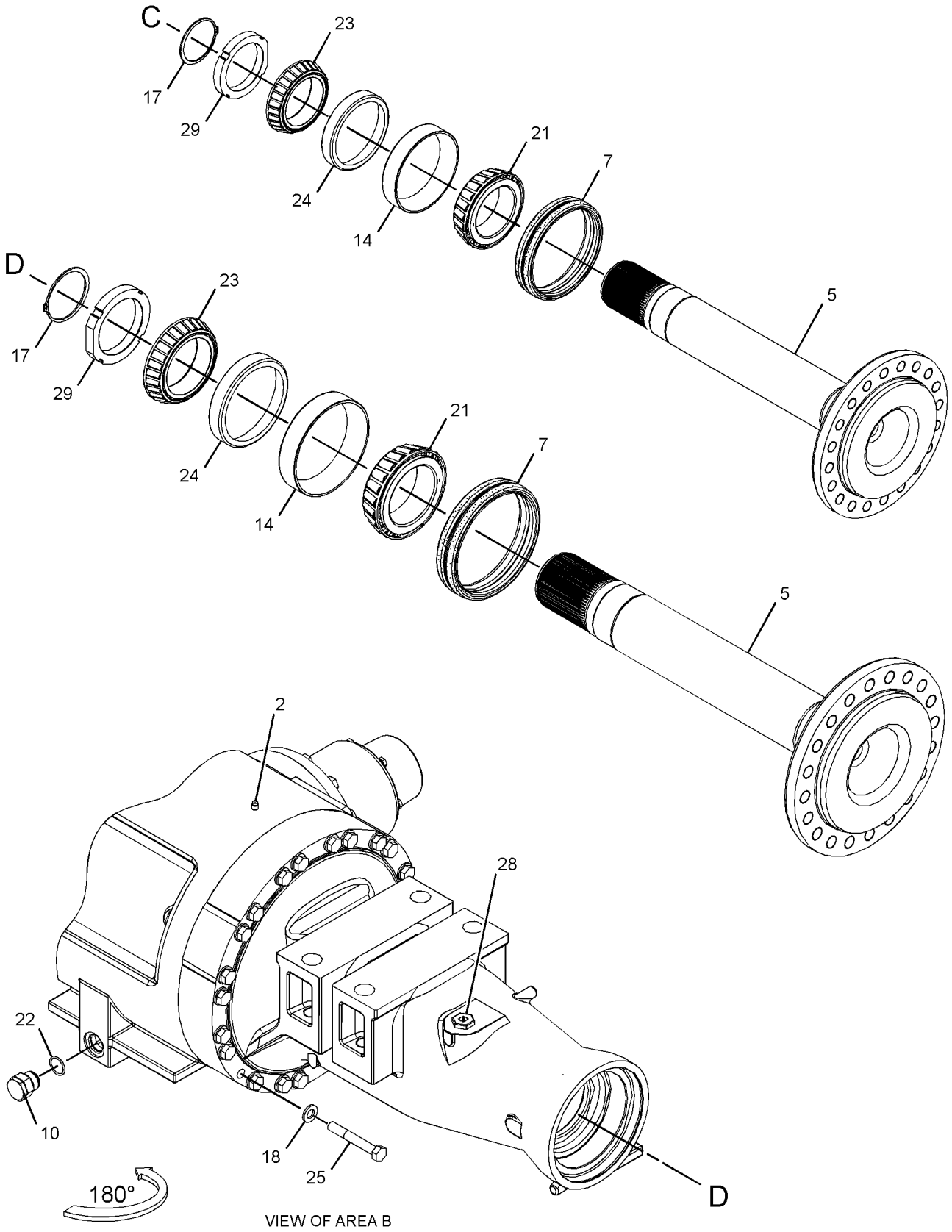

VIEW OF AREA B

GRAPHIC #2 **<END>** g02628958

358-9605 HOUSING GP-AXLE–REAR

S/N: JLX1-UP
ECOLOGY DRAIN VALVE
PART OF 331-4010, 331-4013 AXLE AR-OSCILLATING

SMCS-3260, 3278 **i05413700**

NOTE	REF NO	GRAPHIC REF	PART NUMBER	QTY	PART NAME 1 2 3 4 5 6 (PRODUCT LEVEL)	SEE PAGE
	1	1	**9C-6041**	3	DOWEL	
	2	1	**5H-3701**	2	SCREW-PURGE	
	3	1	**8T-0336**	1	FITTING-PRESSURE RELIEF	
	4	1	*164-4180*	2	PLUG AS	
					(EACH INCLUDES)	
		1	**7M-8485**	1	SEAL-O-RING	
		1	**9S-4181**	1	PLUG	
	5	1	**7M-8485**	1	SEAL-O-RING	
	6	1	**165-4929**	1	PLUG AS-MAGNETIC	
		1	**5P-4484**	1	PLUG-MAGNETIC	
		1	**7M-8485**	1	SEAL-O-RING	
	7	1	**112-0764**	1	SUPPORT-TRUNNION	
	8	1	**5P-8247**	78	WASHER-HARD (17X32X3.5-MM THK)	
M	9	1	**6V-5686**	30	BOLT (M16X2X50-MM)	
	10	1	**112-0765**	1	SUPPORT-TRUNNION	
	11	1	**4V-5099**	1	COVER	
	12	1	**9C-8421**	2	SHAFT-AXLE	
	13	1	**9G-5315**	2	SEAL GP-DUO-CONE	
					(EACH INCLUDES)	
		1	**2M-0344**	2	RING-SEALING	
	14	1	**6Y-2538**	2	CONE-BEARING	
	15	1	**2P-1373**	2	CUP-BEARING	
	16	1	**8B-6342**	2	CONE-BEARING	
	17	1	**8B-6343**	2	CUP-BEARING	
	18	1	**372-0716**	2	HOUSING-AXLE	
B	19	1	**1U-8846**		SEALANT-GASKET	
	20	1	**4H-6520**	1	SEAL-O-RING	
M	21	1	**6V-7732**	6	BOLT (M10X1.5X25-MM)	
	22	1	**9X-2027**	6	WASHER (11X18X2-MM THK)	
	23	1	**4E-8534**	1	RETAINER-SEAL	
	24	1	**9C-9194**	1	HOUSING-PINION	
B	25	1	**226-2684**	1	SHIM PACK (INCLUDES 11-SHIMS)	
	26	1	**5P-3119**	2	RING-RETAINING	
	27	1	**9C-8419**	2	NUT-BEARING	
	28	1	**3B-0551**	1	PLUG-PIPE	
M	29	1	**8T-0649**	24	BOLT (M16X2X110-MM)	
	30	1	**9C-9191**	1	TRUNNION	
	31	1	**2K-0715**	2	WASHER-THRUST (5.03X6.71X0.250-IN THK)	
	32	1	**109-4731**	1	PLATE	
M	33	1	**6V-3531**	4	BOLT (M20X2.5X50-MM)	
	34	1	**8T-3282**	4	WASHER-HARD (22X35X3.5-MM THK)	
	35	1	**213-1370**	1	BUSHING	
	36	1	**192-9128**	1	HOUSING AS-OSCILLATING	
M	37	1	**8T-5002**	24	BOLT (M16X2X180-MM)	
	38	1	**9C-6327**	1	GAUGE AS-OIL LEVEL (DIPSTICK) (AXLE)	
	39	1	**123-4003**	1	SEAL-LIP TYPE	
	40	1	**3K-0159**	1	RING-RETAINING	
	41	1	**213-1365**	1	BUSHING	
	42	1	**3K-0158**	2	SEAL-LIP TYPE	
	43	1	**6K-2430**	1	SEAL-LIP TYPE	
	44	1	**173-0566**	1	DRAIN AS	
		1	**2K-8199**	1	SEAL-O-RING	
		1	**5L-4759**	1	SEAL-O-RING	
		1	**175-4966**	1	PLUG-DRAIN (AXLE HOUSING)	

B - USE AS REQUIRED
M - METRIC PART

358-9605 **HOUSING GP-AXLE (*contd.*)** **i05413700**

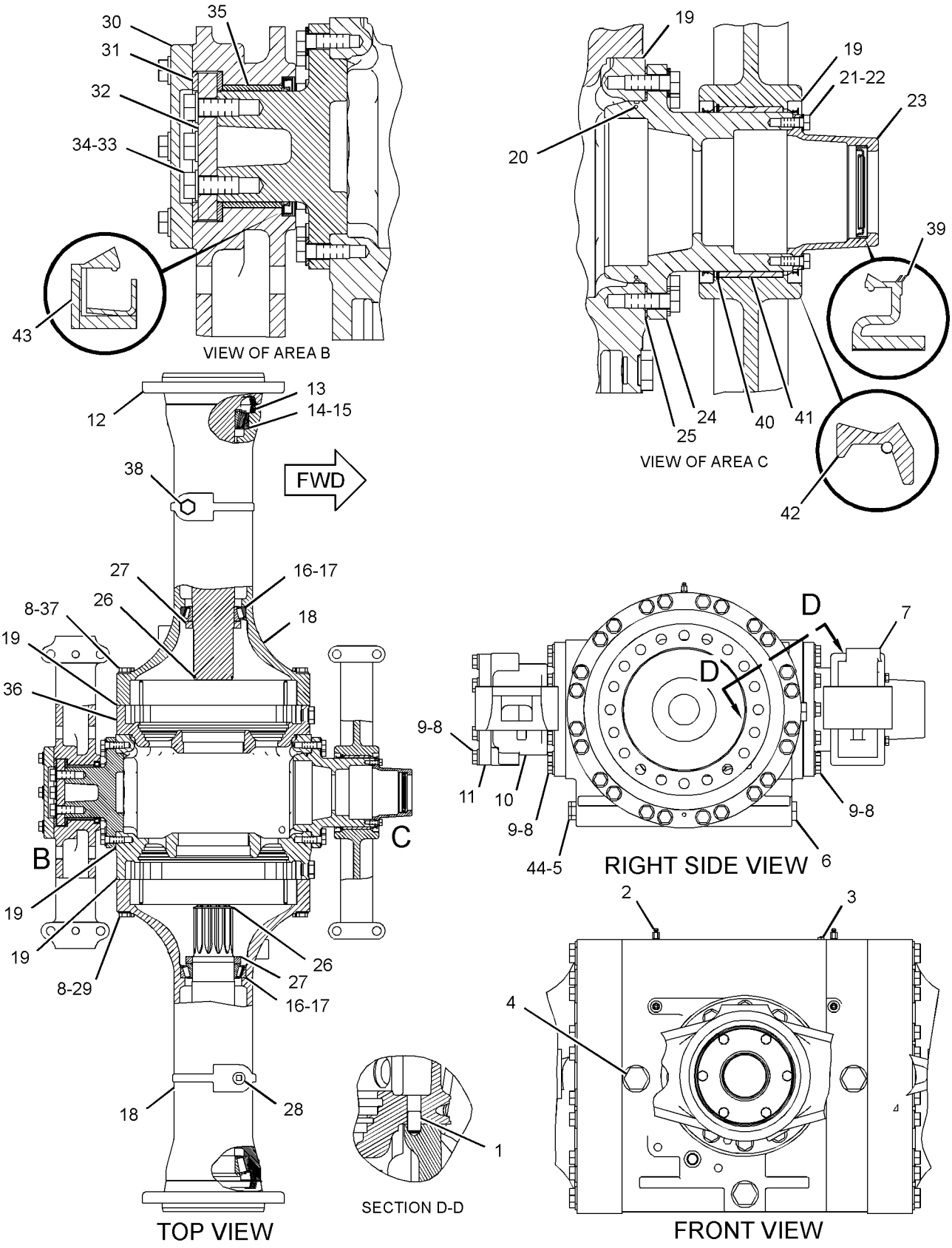

GRAPHIC #1 **<END>** g02712220

358-9606 HOUSING GP-AXLE

S/N: JLX1-UP

PART OF 331-4011, 331-4014 AXLE AR-OSCILLATING

SMCS-3260, 3278 **i05413704**

NOTE	REF NO	GRAPHIC REF	PART NUMBER	QTY	PART NAME 1 2 3 4 5 6 (PRODUCT LEVEL)	SEE PAGE
	1	1	**9C-6041**	3	DOWEL	
	2	1	**5H-3701**	2	SCREW-PURGE	
	3	1	**8T-0336**	1	FITTING-PRESSURE RELIEF	
	4	1	*164-4180*	2	PLUG AS	
					(EACH INCLUDES)	
		1	**7M-8485**	1	SEAL-O-RING	
		1	**9S-4181**	1	PLUG	
	5	1	**7M-8485**	1	SEAL-O-RING	
	6	1	*165-4929*	1	PLUG AS-MAGNETIC	
		1	**5P-4484**	1	PLUG-MAGNETIC	
		1	**7M-8485**	1	SEAL-O-RING	
	7	1	**112-0764**	1	SUPPORT-TRUNNION	
	8	1	**5P-8247**	78	WASHER-HARD (17X32X3.5-MM THK)	
M	9	1	**6V-5686**	30	BOLT (M16X2X50-MM)	
	10	1	**112-0765**	1	SUPPORT-TRUNNION	
	11	1	**4V-5099**	1	COVER	
	12	1	**9C-8421**	2	SHAFT-AXLE	
	13	1	**3T-6541**	2	SEAL GP-DUO-CONE	
					(EACH INCLUDES)	
		1	**3N-0759**	2	RING-SEALING	
	14	1	**6Y-2538**	2	CONE-BEARING	
	15	1	**2P-1373**	2	CUP-BEARING	
	16	1	**8B-6342**	2	CONE-BEARING	
	17	1	**8B-6343**	2	CUP-BEARING	
	18	1	**372-0716**	2	HOUSING-AXLE	
B	19	1	**1U-8846**		SEALANT-GASKET	
	20	1	**4H-6520**	1	SEAL-O-RING	
M	21	1	**6V-7732**	6	BOLT (M10X1.5X25-MM)	
	22	1	**9X-2027**	6	WASHER (11X18X2-MM THK)	
	23	1	**4E-8534**	1	RETAINER-SEAL	
	24	1	**9C-9194**	1	HOUSING-PINION	
B	25	1	**226-2684**	1	SHIM PACK (INCLUDES 11-SHIMS)	
	26	1	**5P-3119**	2	RING-RETAINING	
	27	1	**9C-8419**	2	NUT-BEARING	
	28	1	**3B-0551**	1	PLUG-PIPE	
M	29	1	**8T-0649**	24	BOLT (M16X2X110-MM)	
	30	1	**9C-9191**	1	TRUNNION	
	31	1	**2K-0715**	2	WASHER-THRUST (5.03X6.71X0.250-IN THK)	
	32	1	**109-4731**	1	PLATE	
M	33	1	**6V-3531**	4	BOLT (M20X2.5X50-MM)	
	34	1	**8T-3282**	4	WASHER-HARD (22X35X3.5-MM THK)	
	35	1	**213-1370**	1	BUSHING	
	36	1	**192-9128**	1	HOUSING AS-OSCILLATING	
M	37	1	**8T-5002**	24	BOLT (M16X2X180-MM)	
	38	1	**9C-6327**	1	GAUGE AS-OIL LEVEL (DIPSTICK)	
	39	1	**123-4003**	1	SEAL-LIP TYPE	
	40	1	**3K-0159**	1	RING-RETAINING	
	41	1	**213-1365**	1	BUSHING	
	42	1	**3K-0158**	2	SEAL-LIP TYPE	
	43	1	**6K-2430**	1	SEAL-LIP TYPE	
	44	1	**173-0566**	1	DRAIN AS	
		1	**2K-8199**	1	SEAL-O-RING	
		1	**5L-4759**	1	SEAL-O-RING	
		1	**175-4966**	1	PLUG-DRAIN (AXLE HOUSING)	

B - USE AS REQUIRED
M - METRIC PART

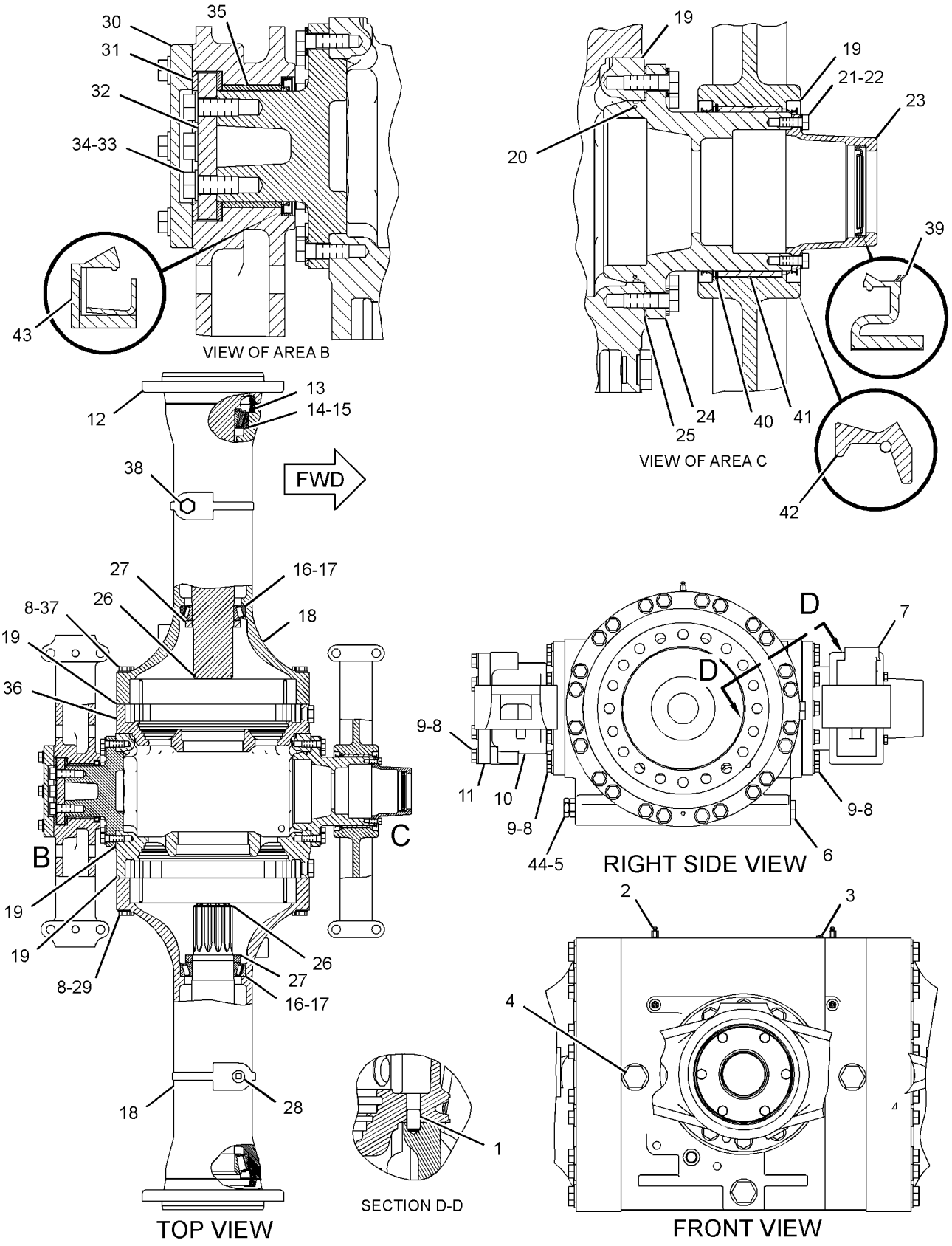

GRAPHIC #1 **<END>** g02642300

358-9607 HOUSING GP-AXLE

S/N: JLX1-UP

PART OF 331-4012, 331-4015 AXLE AR-OSCILLATING

SMCS-3260, 3278 **i05413708**

NOTE	REF NO	GRAPHIC REF	PART NUMBER	QTY	PART NAME 1 2 3 4 5 6 (PRODUCT LEVEL)	SEE PAGE
	1	1	**9C-6041**	3	DOWEL	
	2	1	**5H-3701**	2	SCREW-PURGE	
	3	1	**8T-0336**	1	FITTING-PRESSURE RELIEF	
	4	1	*164-4180*	2	PLUG AS	
					(EACH INCLUDES)	
		1	**9S-4181**	1	PLUG	
		1	**7M-8485**	1	SEAL-O-RING	
	5	1	**7M-8485**	1	SEAL-O-RING	
	6	1	*165-4929*	1	PLUG AS-MAGNETIC	
		1	**5P-4484**	1	PLUG-MAGNETIC	
		1	**7M-8485**	1	SEAL-O-RING	
	7	1	**112-0764**	1	SUPPORT-TRUNNION	
	8	1	**5P-8247**	78	WASHER-HARD (17X32X3.5-MM THK)	
M	9	1	**6V-5686**	30	BOLT (M16X2X50-MM)	
	10	1	**112-0765**	1	SUPPORT-TRUNNION	
	11	1	**4V-5099**	1	COVER	
	12	1	**232-0931**	2	SHAFT-AXLE	
	13	1	**9G-5315**	2	SEAL GP-DUO-CONE	
					(EACH INCLUDES)	
		1	**2M-0344**	2	RING-SEALING	
	14	1	**6Y-2538**	2	CONE-BEARING	
	15	1	**2P-1373**	2	CUP-BEARING	
	16	1	**8B-6342**	2	CONE-BEARING	
	17	1	**8B-6343**	2	CUP-BEARING	
	18	1	**372-0716**	2	HOUSING-AXLE	
B	19	1	**1U-8846**	1	SEALANT-GASKET	
	20	1	**4H-6520**	1	SEAL-O-RING	
M	21	1	**6V-7732**	6	BOLT (M10X1.5X25-MM)	
	22	1	**9X-2027**	6	WASHER (11X18X2-MM THK)	
	23	1	**4E-8534**	1	RETAINER-SEAL	
	24	1	**9C-9194**	1	HOUSING-PINION	
B	25	1	**226-2684**	1	SHIM PACK (INCLUDES 11-SHIMS)	
	26	1	**5P-3119**	2	RING-RETAINING	
	27	1	**9C-8419**	2	NUT-BEARING	
	28	1	**3B-0551**	1	PLUG-PIPE	
M	29	1	**8T-0649**	24	BOLT (M16X2X110-MM)	
	30	1	**9C-9191**	1	TRUNNION	
	31	1	**2K-0715**	2	WASHER-THRUST (5.03X6.71X0.250-IN THK)	
	32	1	**109-4731**	1	PLATE	
M	33	1	**6V-3531**	4	BOLT (M20X2.5X50-MM)	
	34	1	**8T-3282**	4	WASHER-HARD (22X35X3.5-MM THK)	
	35	1	**213-1370**	1	BUSHING	
	36	1	**192-9128**	1	HOUSING AS-OSCILLATING	
M		1	**095-0673**	4	BOLT-SOCKET HEAD (M12X1.75X60-MM)	
M	37	1	**8T-5002**	24	BOLT (M16X2X180-MM)	
	38	1	**9C-6327**	1	GAUGE AS-OIL LEVEL (DIPSTICK) (AXLE)	
	39	1	**123-4003**	1	SEAL-LIP TYPE	
	40	1	**3K-0159**	1	RING-RETAINING	
	41	1	**213-1365**	1	BUSHING	
	42	1	**3K-0158**	2	SEAL-LIP TYPE	
	43	1	**6K-2430**	1	SEAL-LIP TYPE	
	44	1	**173-0566**	1	DRAIN AS	
		1	**2K-8199**	1	SEAL-O-RING	
		1	**5L-4759**	1	SEAL-O-RING	
		1	**175-4966**	1	PLUG-DRAIN (AXLE HOUSING)	

B - USE AS REQUIRED
M - METRIC PART

358-9607 **HOUSING GP-AXLE (*contd.*)** **i05413708**

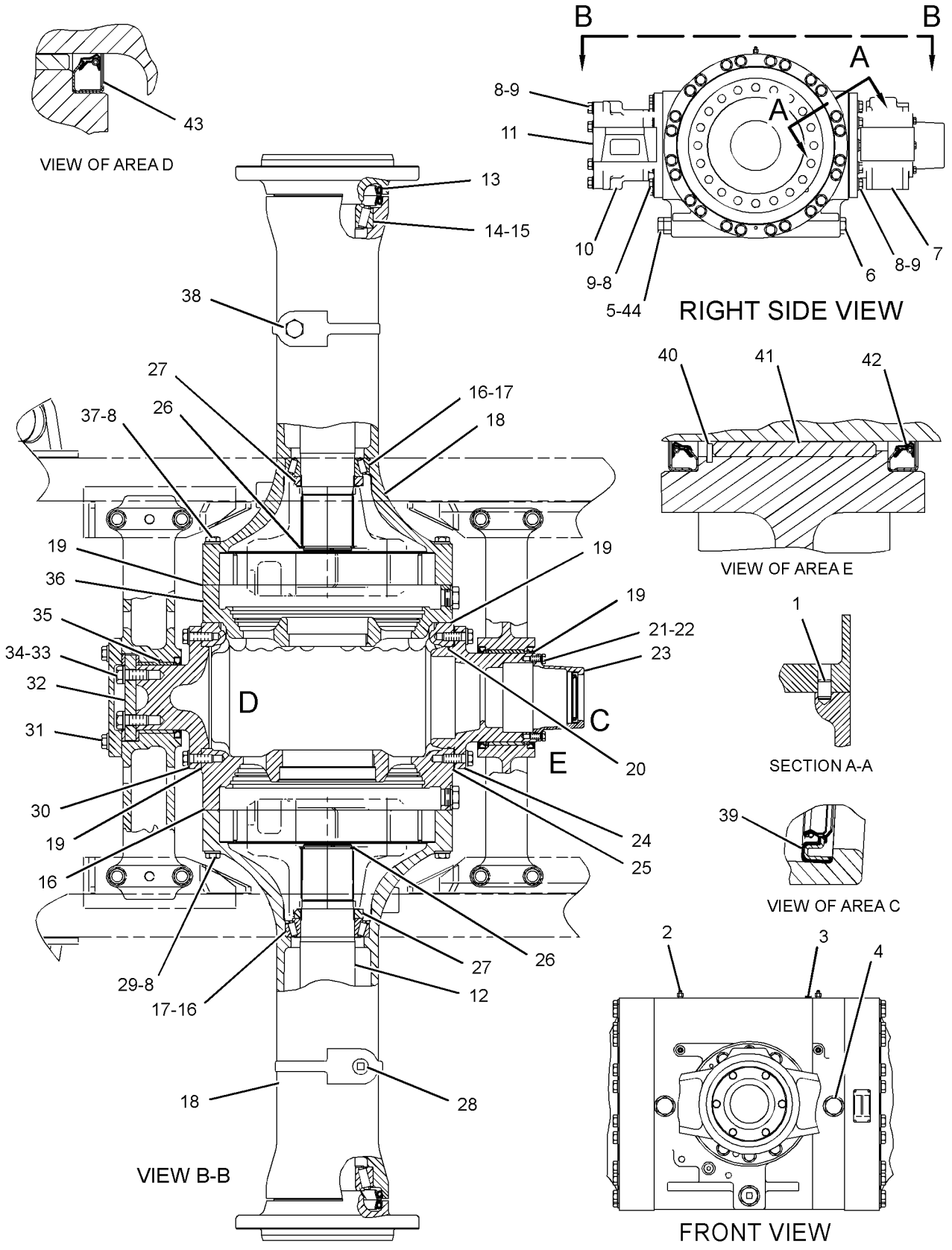

GRAPHIC #1 **<END>** g02577221

214-6156 HOUSING GP-FIXED AXLE

S/N: JLX1-UP

PART OF 214-6161, 214-9398 AXLE AR-FIXED

SMCS-3260 **i04877029**

NOTE	REF NO	GRAPHIC REF	PART NUMBER	QTY	PART NAME 1 2 3 4 5 6 (PRODUCT LEVEL)	SEE PAGE
	1	1	**4E-8534**	1	RETAINER-SEAL	
	2	1	**5H-3701**	2	SCREW-PURGE	
	3	1	**8T-0336**	1	FITTING-PRESSURE RELIEF	
B	4	1	**226-2684**	1	SHIM PACK (INCLUDES 11-SHIMS)	
	5	1	**9C-8421**	2	SHAFT-AXLE	
	6	1	**9C-9194**	1	HOUSING-PINION	
	7	1	**9G-5315**	2	SEAL GP-DUO-CONE	
					(EACH INCLUDES)	
		1	**2M-0344**	2	RING-SEALING	
	10	1	**123-4003**	1	SEAL-LIP TYPE	
	11	1	**192-9121**	1	HOUSING AS	
M		1	**095-0673**	4	BOLT-SOCKET HEAD (M12X1.75X60-MM)	
	12	1	**372-0715**	2	HOUSING-AXLE	
	13	1	**2P-1373**	2	CUP-BEARING	
	14	1	**3B-0551**	1	PLUG-PIPE	
	15	1	**4H-6520**	1	SEAL-O-RING	
	16	1	**5P-3119**	2	RING-RETAINING	
	17	1	**5P-4484**	1	PLUG-MAGNETIC	
	18	1	**5P-8247**	58	WASHER-HARD (17X32X3.5-MM THK)	
M	19	1	**6V-5686**	10	BOLT (M16X2X50-MM)	
M	20	1	**6V-7732**	6	BOLT (M10X1.5X25-MM)	
	21	1	**6Y-2538**	2	CONE-BEARING	
	22	1	**7M-8485**	4	SEAL-O-RING	
	23	1	**8B-6342**	2	CONE-BEARING	
	24	1	**8B-6343**	2	CUP-BEARING	
M	25	1	**8T-0649**	24	BOLT (M16X2X110-MM)	
M	26	1	**8T-5002**	24	BOLT (M16X2X180-MM)	
	27	1	**9C-6041**	3	DOWEL	
	28	1	**9C-6327**	1	GAUGE AS-OIL LEVEL (DIPSTICK) (AXLE)	
	29	1	**9C-8419**	2	NUT-BEARING	
	30	1	**9S-4181**	2	PLUG	
	31	1	**9S-9334**	1	PLUG-O-RING	
	32	1	**9X-2027**	6	WASHER (11X18X2-MM THK)	
B	33	1	**1U-8846**		SEALANT-GASKET (62-ML)	

B - USE AS REQUIRED
M - METRIC PART

214-6156 **HOUSING GP-FIXED AXLE (*contd.*)** **i04877029**

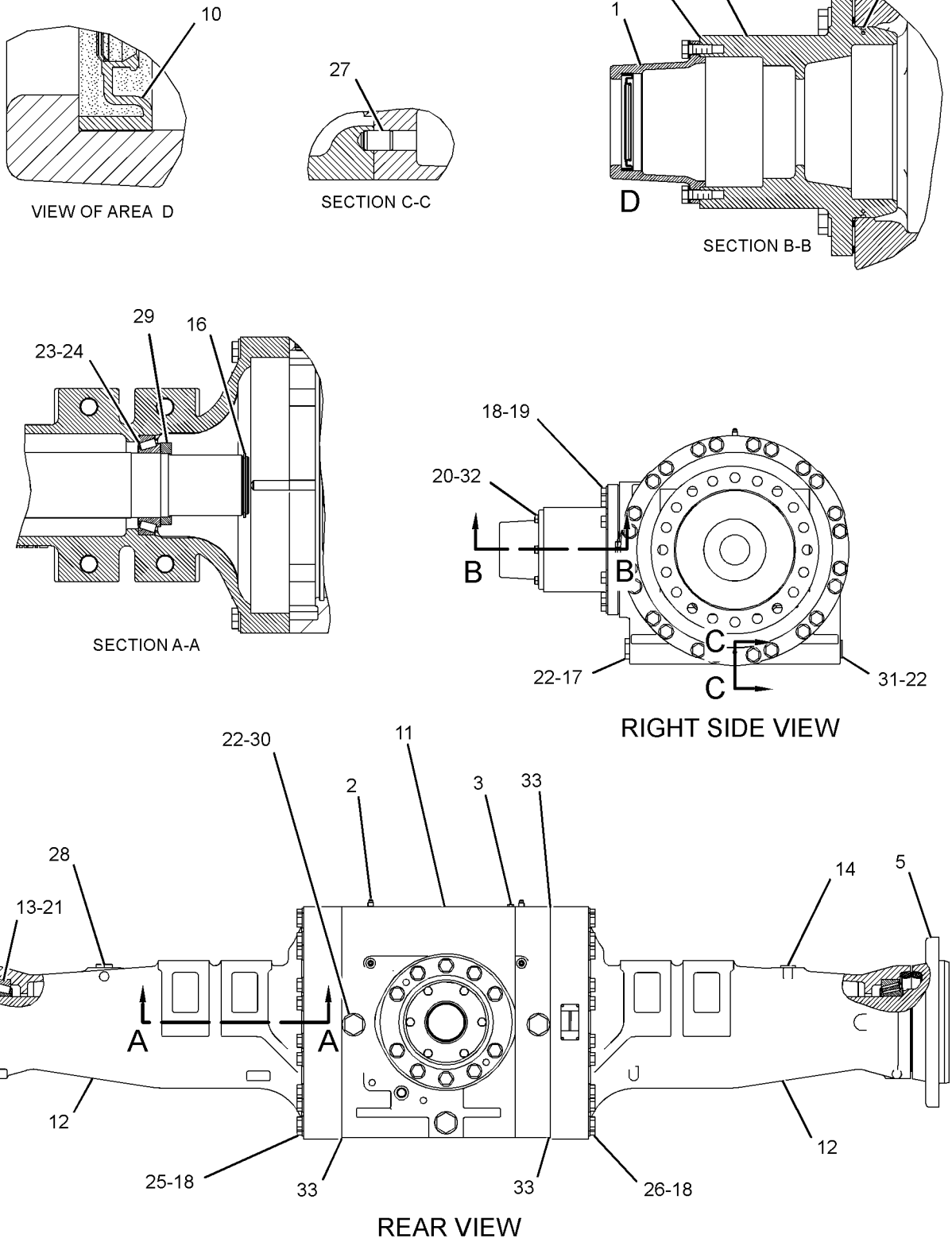

GRAPHIC #1 **<END>** g02789966

112-0724 HOUSING GP-OSCILLATING AXLE

S/N: JLX1-UP

PART OF 112-0723 AXLE AR-OSCILLATING

SMCS-3260, 3268 **i05245650**

NOTE	REF NO	GRAPHIC REF	PART NUMBER	QTY	PART NAME 1 2 3 4 5 6 (PRODUCT LEVEL)	SEE PAGE
	1	1	**9C-6041**	3	DOWEL	
	2	1	**5H-3701**	2	SCREW-PURGE	
	3	1	**8T-0336**	1	FITTING-PRESSURE RELIEF	
	4	1	**9S-4181**	2	PLUG	
C	5	1	**7M-8485**	4	SEAL-O-RING	
	6	1	**5P-4484**	1	PLUG-MAGNETIC	
	7	1	**112-0764**	1	SUPPORT-TRUNNION	
	8	1	**5P-8247**	78	WASHER-HARD (17X32X3.5-MM THK)	
M	9	1	**6V-5686**	30	BOLT (M16X2X50-MM)	
	10	1	**112-0765**	1	SUPPORT-TRUNNION	
	11	1	**4V-5099**	1	COVER	
	12	1	**9C-8421**	2	SHAFT-AXLE	
	13	1	**9G-5315**	2	SEAL GP-DUO-CONE	
					(EACH INCLUDES)	
		1	**2M-0344**	2	RING-SEALING	
	14	1	**6Y-2538**	2	CONE-BEARING	
	15	1	**2P-1373**	2	CUP-BEARING	
	16	1	**8B-6342**	2	CONE-BEARING	
	17	1	**8B-6343**	2	CUP-BEARING	
	18	1	**372-0716**	2	HOUSING-AXLE	
B	19	1	**1U-8846**		SEALANT-GASKET	
	20	1	**4H-6520**	1	SEAL-O-RING	
M	21	1	**6V-7732**	6	BOLT (M10X1.5X25-MM)	
	22	1	**9X-2027**	6	WASHER (11X18X2-MM THK)	
	23	1	**4E-8534**	1	RETAINER-SEAL	
	24	1	**9C-9194**	1	HOUSING-PINION	
B	25	1	**226-2684**	1	SHIM PACK (INCLUDES 11-SHIMS)	
	26	1	**5P-3119**	2	RING-RETAINING	
	27	1	**9C-8419**	2	NUT-BEARING	
	28	1	**3B-0551**	1	PLUG-PIPE	
M	29	1	**8T-0649**	24	BOLT (M16X2X110-MM)	
	30	1	**9C-9191**	1	TRUNNION	
	31	1	**2K-0715**	2	WASHER-THRUST (5.03X6.71X0.250-IN THK)	
	32	1	**109-4731**	1	PLATE	
M	33	1	**6V-3531**	4	BOLT (M20X2.5X50-MM)	
	34	1	**8T-3282**	4	WASHER-HARD (22X35X3.5-MM THK)	
C	35	1	**213-1370**	1	BUSHING	
C	36	1	**192-9128**	1	HOUSING AS-OSCILLATING	
M	37	1	**8T-5002**	24	BOLT (M16X2X180-MM)	
	38	1	**9C-6327**	1	GAUGE AS-OIL LEVEL (DIPSTICK) (AXLE)	
	39	1	**123-4003**	1	SEAL-LIP TYPE	
	40	1	**3K-0159**	1	RING-RETAINING	
C	41	1	**213-1365**	1	BUSHING	
	42	1	**3K-0158**	2	SEAL-LIP TYPE	
	43	1	**6K-2430**	1	SEAL-LIP TYPE	
C	44	1	**9S-9334**	1	PLUG-O-RING	

B - USE AS REQUIRED
C - CHANGE FROM PREVIOUS TYPE
M - METRIC PART

112-0724 **HOUSING GP-OSCILLATING AXLE (*contd.*)** **i05245650**

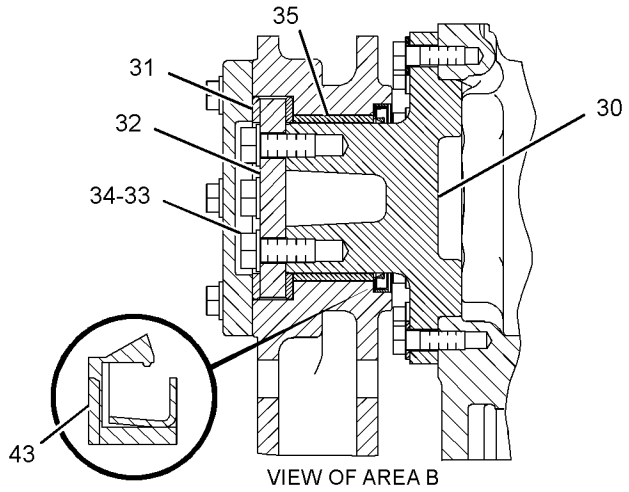

VIEW OF AREA B

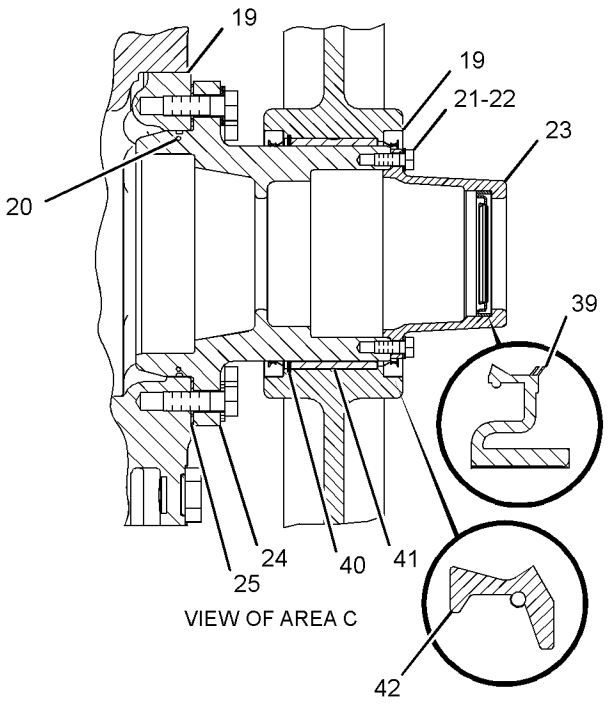

VIEW OF AREA C

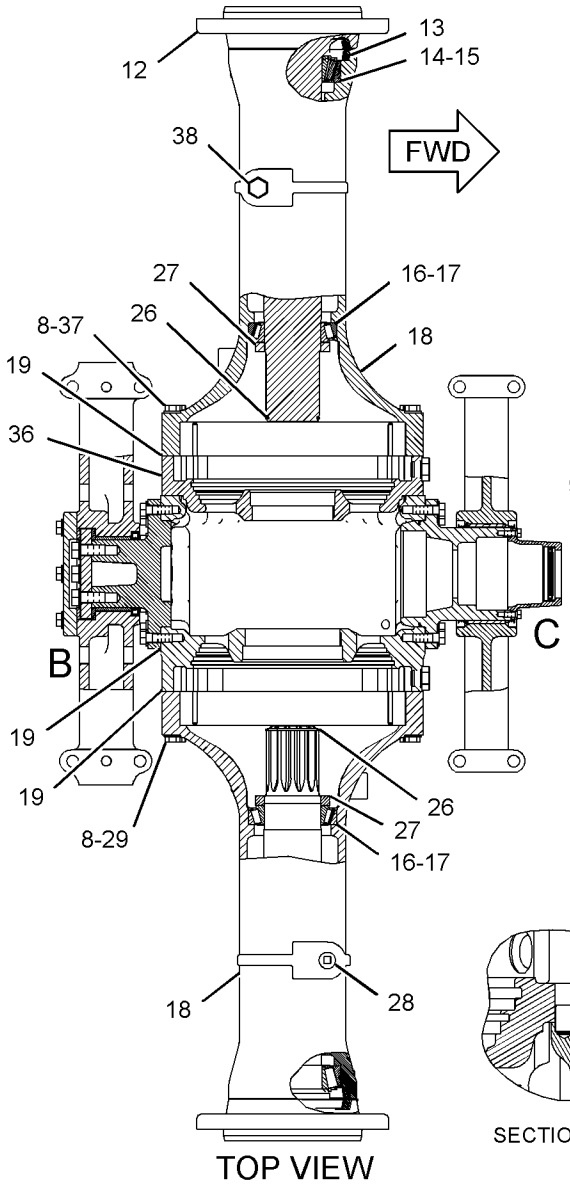

TOP VIEW

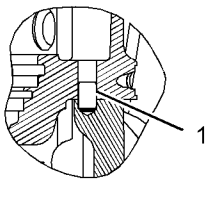

SECTION D-D

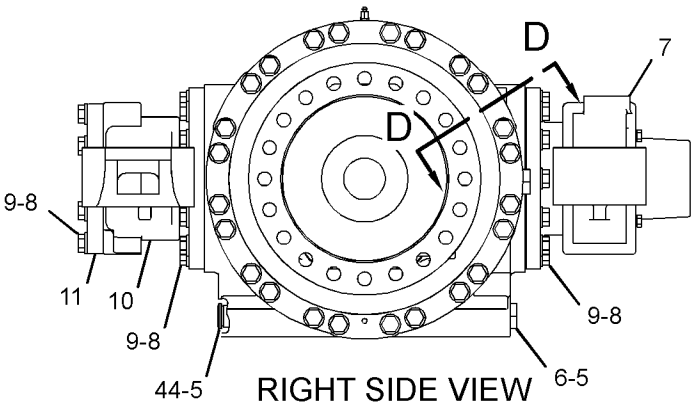

RIGHT SIDE VIEW

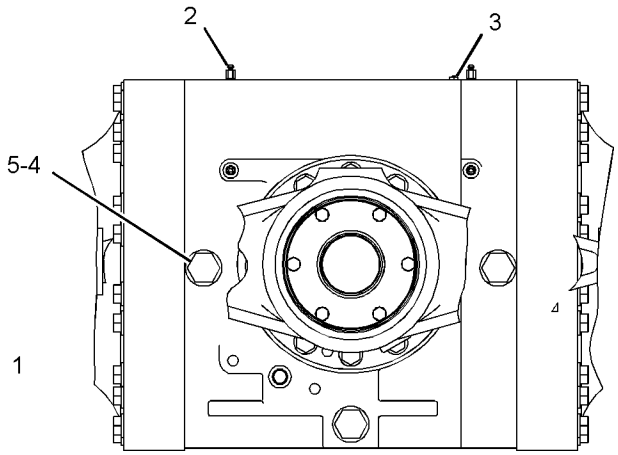

FRONT VIEW

GRAPHIC #1 **<END>** g03344570

379-6505 LINES GP-AXLE OIL COOLER

S/N: JLX1-UP

PART OF 383-6023 COOLER AR-AXLE OIL

SMCS-1365, 3016 **i05342107**

NOTE	REF NO	GRAPHIC REF	PART NUMBER	QTY	PART NAME 1 2 3 4 5 6 (PRODUCT LEVEL)	SEE PAGE
	1	1	**7K-1181**	3	STRAP-CABLE	
	2	2	**8R-5144**	1	WASHER (12X30X9-MM THK)	
	3	1	**091-0081**	1	SPACER (10.5X20X10-MM THK)	
	4	1	**9C-5344**	1	SPACER (10.5X20X18-MM THK)	
	5	1	**130-9984**	2	CLIP	
	6	2	*150-3032*	2	ELBOW AS	
					(EACH INCLUDES)	
		2	**6V-9746**	1	SEAL-O-RING	
		2	**8C-8762**	1	ELBOW	
	7	2	**151-4506**	1	TUBE AS	
	8	2	**151-4507**	1	TUBE AS	
	9	1,2	**162-8352**	2	U-BOLT	
	10	2	**192-4263**	1	TUBE AS	
	11	2	**192-4264**	1	TUBE AS	
I	12	1	**241-0091**	1	HOSE AS	
	13	1	**242-8414**	1	TUBE AS	
	14	1	**242-8415**	1	TUBE AS	
	15	1	**242-8416**	1	TUBE AS	
	16	1	**242-8417**	1	TUBE AS	
	17	1,2	**242-8418**	2	BRACKET AS	
	18	1	**394-8448**	1	BRACKET AS	
	19	1,2	**251-6351**	2	FILTER-MAGNETIC (AXLE OIL COOLER)	
	20	2	**279-6141**	1	BRACKET AS	
M		2	**8T-3490**	1	NUT-WELD (M10X1.5-THD)	
	21	2	**279-6143**	1	BRACKET AS	
M		2	**8T-3490**	1	NUT-WELD (M10X1.5-THD)	
I	22	2	**342-2750**	1	HOSE AS	
	23	2	*357-4380*	2	CONNECTOR AS	
					(EACH INCLUDES)	
		2	**2S-4078**	1	SEAL-O-RING	
		2	**5K-9090**	1	SEAL-O-RING	
		2	**6V-9875**	1	CONNECTOR	
	24	2	*357-4381*	2	CONNECTOR AS	
					(EACH INCLUDES)	
		2	**5K-9090**	1	SEAL-O-RING	
		2	**6V-8635**	1	CONNECTOR	
		2	**7M-8485**	1	SEAL-O-RING	
	25	2	*357-4432*	4	ELBOW AS	
					(EACH INCLUDES)	
		2	**3J-1907**	1	SEAL-O-RING	
		2	**6V-8397**	1	SEAL-O-RING	
		2	**6V-8724**	1	ELBOW	
	26	1	*357-4448*	2	ELBOW AS	
					(EACH INCLUDES)	
		1	**3D-2824**	1	SEAL-O-RING	
		1	**5K-9090**	1	SEAL-O-RING	
		1	**8T-6684**	1	ELBOW	
I	27	1	**379-6498**	2	HOSE AS	
I	28	2	**379-6499**	1	HOSE AS	
I	29	2	**379-6500**	1	HOSE AS	
I	30	2	**379-6501**	1	HOSE AS	
I	31	1	**379-6502**	1	HOSE AS	
	32	2	**379-6504**	1	BRACKET AS	
M		2	**9R-9866**	1	BOSS-THREADED (M10X1.5-THD)	
	33	2	**067-3045**	4	CLIP	
	34	2	**099-3001**	1	CLIP	
	35	1	*148-8391*	2	ELBOW AS	
					(EACH INCLUDES)	

379-6505 **LINES GP-AXLE OIL COOLER (*contd.*)** **i05342107**

NOTE	REF NO	GRAPHIC REF	PART NUMBER	QTY	PART NAME 1 2 3 4 5 6 (PRODUCT LEVEL)	SEE PAGE
		1	**2S-4078**	1	SEAL-O-RING	
		1	**5K-9090**	1	SEAL-O-RING	
		1	**8T-8987**	1	ELBOW	
	36	2	*148-8454*	2	TEE AS	
					(EACH INCLUDES)	
		2	**6V-8398**	3	SEAL-O-RING	
		2	**6V-8789**	1	TEE	
	37	1	*153-6244*	2	ELBOW AS	
					(EACH INCLUDES)	
		1	**2M-9780**	1	SEAL-O-RING	
		1	**6V-9746**	1	SEAL-O-RING	
		1	**8T-5389**	1	ELBOW	
	38	2	*164-5598*	4	PLUG AS	
					(EACH INCLUDES)	
		2	**7M-8485**	1	SEAL-O-RING	
		2	**8J-0426**	1	PLUG	
	39	1	**1S-0833**	1	CLIP	
M	40	2	**227-6715**	1	STUD (M10X1.5X30-MM)	
	41	2	**4D-7388**	1	CLIP (SLOT)	
	42	1	**4H-7655**	1	CLAMP-TUBE	
	43	1	**5K-2697**	1	CLIP	
	44	1	**5K-9090**	2	SEAL-O-RING	
	45	2	**5P-7468**	2	CLIP (SLOT)	
	46	2	**5P-7469**	2	CLIP (TAB)	
	47	2	**5P-8444**	2	GROMMET (37-MM ID)	
	48	1	**6V-9746**	2	SEAL-O-RING	
	49	1	**7D-7233**	7	CLIP (SLOT)	
	50	2	**7X-7729**	1	WASHER (11X25X3-MM THK)	
	51	1,2	**8T-4121**	31	WASHER-HARD (11X21X2.5-MM THK)	
M	52	1,2	**8T-4133**	8	NUT (M10X1.5-THD)	
M	53	1,2	**8T-4136**	8	BOLT (M10X1.5X25-MM)	
M	54	1,2	**8T-4137**	4	BOLT (M10X1.5X20-MM)	
M	55	1	**8T-4182**	1	BOLT (M10X1.5X45-MM)	
M	56	2	**8T-4192**	2	BOLT (M12X1.75X25-MM)	
M	57	1,2	**8T-4195**	7	BOLT (M10X1.5X30-MM)	
M	58	1	**8T-4196**	1	BOLT (M10X1.5X35-MM)	
	59	2	**8T-4223**	2	WASHER-HARD (13.5X25.5X3-MM THK)	
M	60	1	**8T-5005**	1	BOLT (M10X1.5X70-MM)	
	61	1	**9Y-2700**	1	SPACER (11X20X42-MM THK)	

I - REFER TO HYDRAULIC INFORMATION SYSTEM
M - METRIC PART

379-6505 **LINES GP-AXLE OIL COOLER (*contd.*)** **i05342107**

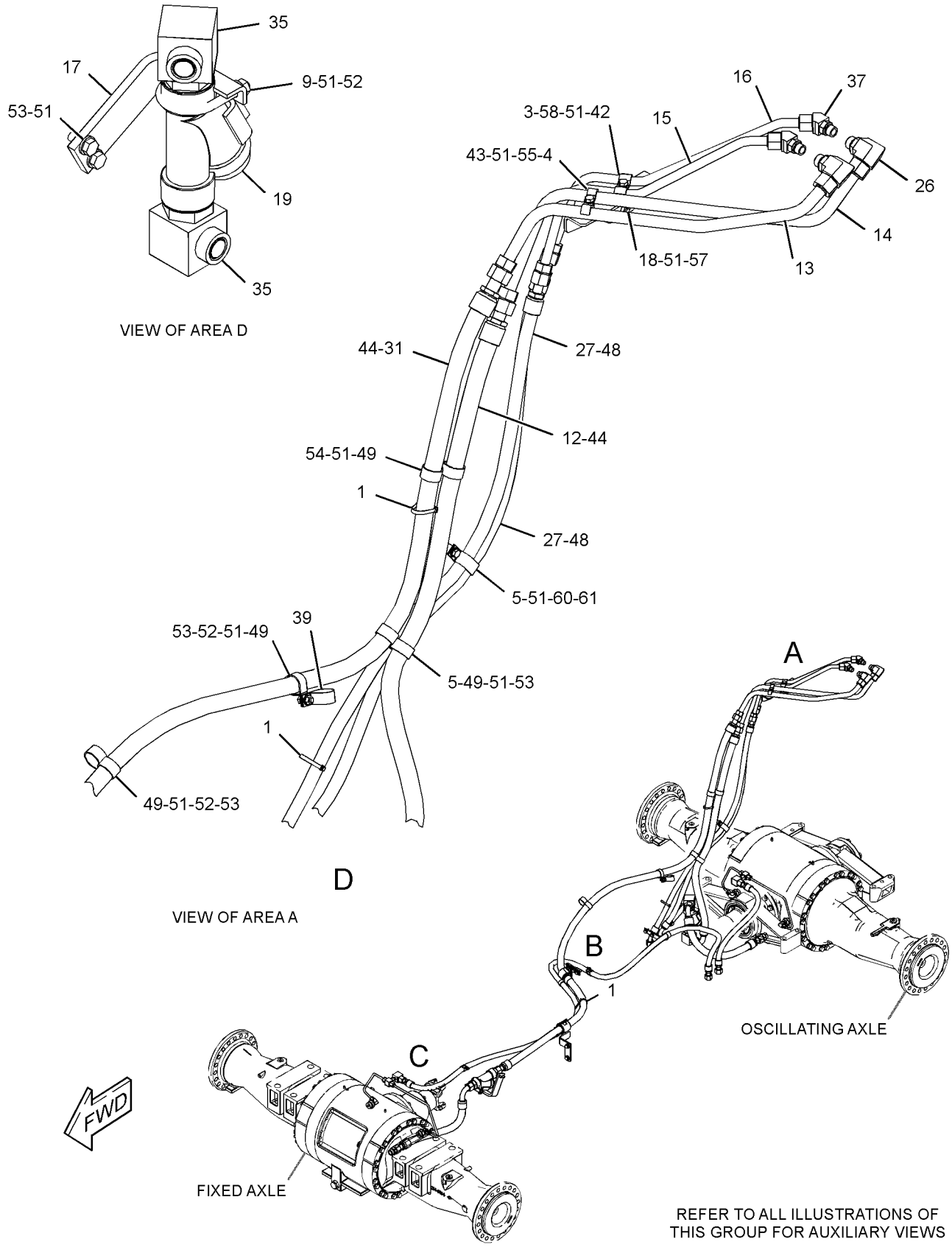

REFER TO ALL ILLUSTRATIONS OF THIS GROUP FOR AUXILIARY VIEWS

GRAPHIC #1

g03431438

379-6505 **LINES GP-AXLE OIL COOLER (*contd.*)** **i05342107**

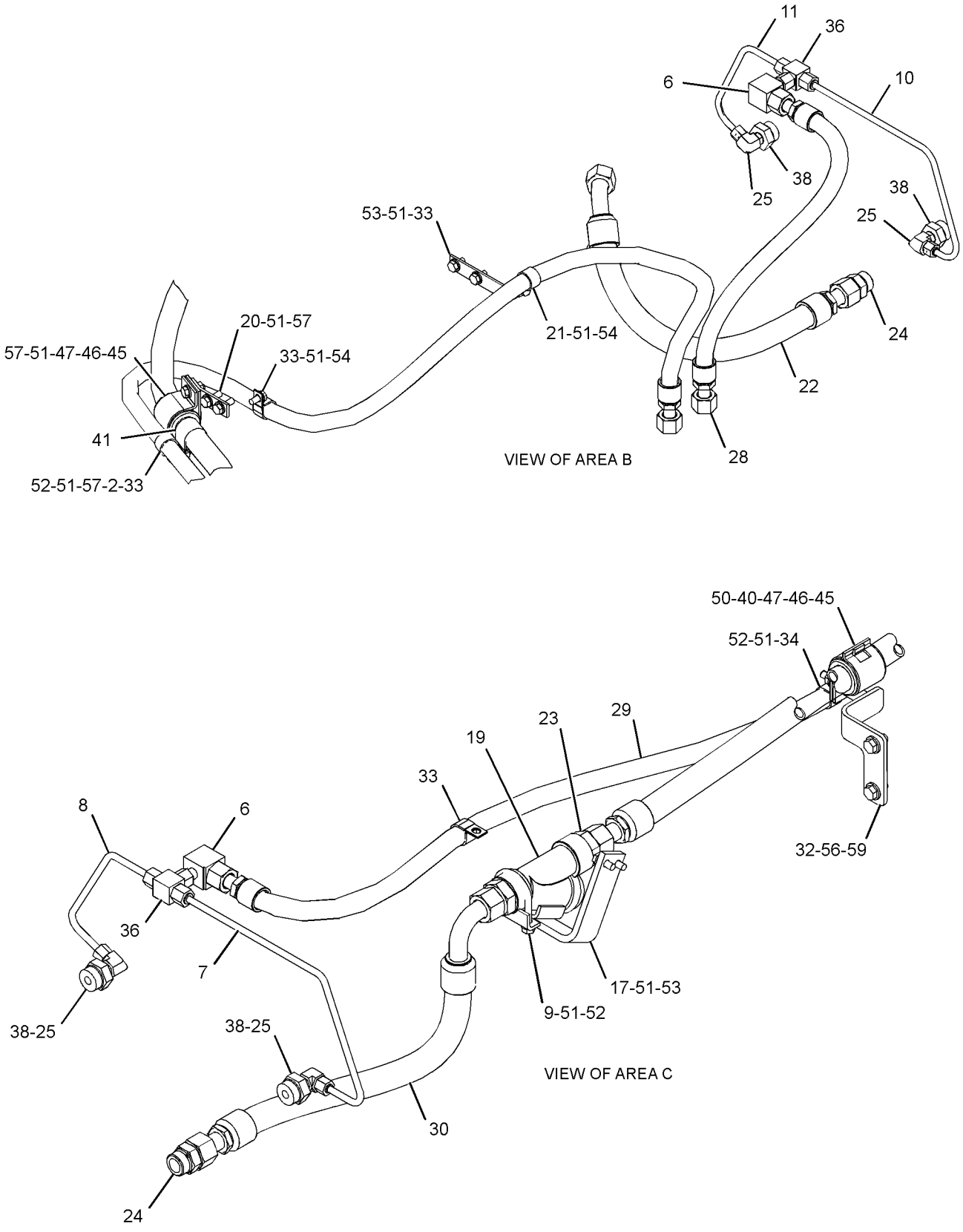

GRAPHIC #2 **<END>** g03431440

426-3491 LINES GP-AXLE OIL COOLER

S/N: JLX1-UP
CUSTOM
PART OF 419-9847 COOLER AR-AXLE OIL

SMCS-1365, 3016

i05837522

NOTE	REF NO	GRAPHIC REF	PART NUMBER	QTY	PART NAME 1 2 3 4 5 6 (PRODUCT LEVEL)	SEE PAGE
	1	2	**8R-5144**	1	WASHER (12X30X9-MM THK)	
	2	1,2	*150-3032*	2	ELBOW AS	
					(EACH INCLUDES)	
		1,2	**6V-9746**	1	SEAL-O-RING	
		1,2	**8C-8762**	1	ELBOW	
	3	2	**151-4506**	1	TUBE AS	
	4	2	**151-4507**	1	TUBE AS	
	5	2	**162-8352**	2	U-BOLT	
	6	1	**192-4263**	1	TUBE AS	
	7	1	**192-4264**	1	TUBE AS	
I	8	1	**241-0091**	1	HOSE AS	
	9	1	**242-8414**	1	TUBE AS	
	10	1	**242-8415**	1	TUBE AS	
	11	1	**242-8416**	1	TUBE AS	
	12	1	**242-8417**	1	TUBE AS	
	13	2	**242-8418**	2	BRACKET AS	
	14	2	**251-6351**	2	FILTER-MAGNETIC (AXLE OIL COOLER)	
	15	2	**279-6141**	1	BRACKET AS	
	16	1	**279-6143**	1	BRACKET AS	
I	17	1	**342-2750**	1	HOSE AS	
	18	2	*357-4380*	2	CONNECTOR AS	
					(EACH INCLUDES)	
		2	**2S-4078**	1	SEAL-O-RING	
		2	**5K-9090**	1	SEAL-O-RING	
		2	**6V-9875**	1	CONNECTOR	
	19	1,2	*357-4381*	2	CONNECTOR AS	
					(EACH INCLUDES)	
		1,2	**5K-9090**	1	SEAL-O-RING	
		1,2	**6V-8635**	1	CONNECTOR	
		1,2	**7M-8485**	1	SEAL-O-RING	
	20	1,2	*357-4432*	4	ELBOW AS	
					(EACH INCLUDES)	
		1,2	**3J-1907**	1	SEAL-O-RING	
		1,2	**6V-8397**	1	SEAL-O-RING	
		1,2	**6V-8724**	1	ELBOW	
	21	1	*357-4448*	2	ELBOW AS	
					(EACH INCLUDES)	
		1	**3D-2824**	1	SEAL-O-RING	
		1	**5K-9090**	1	SEAL-O-RING	
		1	**8T-6684**	1	ELBOW	
	22	1,2	**370-9488**	18	STRAP-CABLE	
I	23	1	**379-6498**	2	HOSE AS	
I	24	1	**379-6499**	1	HOSE AS	
I	25	1	**379-6500**	1	HOSE AS	
I	26	1	**379-6501**	1	HOSE AS	
I	27	1	**379-6502**	1	HOSE AS	
	28	2	**379-6504**	1	BRACKET AS	
	29	1	**394-8448**	1	BRACKET AS	
	30	1,2	**053-0558**	5	CLIP	
	31	1	**091-0081**	1	SPACER (10.5X20X10-MM THK)	
	32	2	*148-8391*	2	ELBOW AS	
					(EACH INCLUDES)	
		2	**2S-4078**	1	SEAL-O-RING	
		2	**5K-9090**	1	SEAL-O-RING	
		2	**8T-8987**	1	ELBOW	
	33	1,2	*148-8454*	2	TEE AS	
					(EACH INCLUDES)	

426-3491 **LINES GP-AXLE OIL COOLER (*contd.*)** **i05837522**

NOTE	REF NO	GRAPHIC REF	PART NUMBER	QTY	PART NAME 1 2 3 4 5 6 (PRODUCT LEVEL)	SEE PAGE
		1,2	**6V-8398**	3	SEAL-O-RING	
		1,2	**6V-8789**	1	TEE	
	34	1	*153-6244*	2	ELBOW AS	
					(EACH INCLUDES)	
		1	**2M-9780**	1	SEAL-O-RING	
		1	**6V-9746**	1	SEAL-O-RING	
		1	**8T-5389**	1	ELBOW	
	35	1,2	*164-5598*	4	PLUG AS	
					(EACH INCLUDES)	
		1,2	**7M-8485**	1	SEAL-O-RING	
		1,2	**8J-0426**	1	PLUG	
	36	1	**1S-0833**	1	CLIP	
	37	1	**203-2287**	2	CLIP	
M	38	2	**227-6715**	1	STUD (M10X1.5X30-MM)	
	39	1	**4H-7655**	1	CLAMP-TUBE	
	40	1	**5K-2697**	1	CLIP	
	41	1	**5K-9090**	2	SEAL-O-RING	
	42	1,2	**5P-2369**	7	CLIP	
	43	2	**5P-7468**	2	CLIP (SLOT)	
	44	2	**5P-7469**	2	CLIP (TAB)	
	45	2	**5P-8444**	2	GROMMET (37-MM ID)	
	46	1	**6V-9746**	2	SEAL-O-RING	
	47	1	**7D-7233**	1	CLIP	
	48	2	**7X-7729**	1	WASHER (11X25X3-MM THK)	
	49	1,2	**8T-4121**	31	WASHER-HARD (11X21X2.5-MM THK)	
M	50	1,2	**8T-4133**	8	NUT (M10X1.5-THD)	
M	51	1,2	**8T-4136**	8	BOLT (M10X1.5X25-MM)	
M	52	1,2	**8T-4137**	4	BOLT (M10X1.5X20-MM)	
M	53	1	**8T-4182**	1	BOLT (M10X1.5X45-MM)	
M	54	2	**8T-4192**	2	BOLT (M12X1.75X25-MM)	
M	55	1,2	**8T-4195**	2	BOLT (M10X1.5X30-MM)	
M	56	1	**8T-4196**	1	BOLT (M10X1.5X35-MM)	
	57	2	**8T-4223**	2	WASHER-HARD (13.5X25.5X3-MM THK)	
M	58	1	**8T-5005**	1	BOLT (M10X1.5X70-MM)	
	59	1	**9C-5344**	1	SPACER (10.5X20X18-MM THK)	
	60	1	**9Y-2700**	1	SPACER (11X20X42-MM THK)	
E	61	1	**2Q-0584**		INSULATION (60-CM EACH)	
E	61A	1	**2Q-0584**		INSULATION (125-CM)	
E	61B	1	**2Q-0584**		INSULATION (335-CM)	
E	62	1	**324-9707**		INSULATION (140-CM EACH)	
E	62A	1	**324-9707**		INSULATION (70-CM)	
E	62B	1	**324-9707**		INSULATION (360-CM)	
					****ATTACHMENT REMOVALS****	
FH			**9S-4181**	2	PLUG	
FH			**7M-8485**	3	SEAL-O-RING	
FH			**5P-4484**	1	PLUG-MAGNETIC	
FJ			**9S-4181**	2	PLUG	
FJ			**7M-8485**	3	SEAL-O-RING	
FJ			**5P-4484**	1	PLUG-MAGNETIC	
FNM			**8T-4181**	1	BOLT (M6X1X20-MM)	
FNM			**8T-4137**	1	BOLT (M10X1.5X20-MM)	

E - ORDER BY THE CENTIMETER
F - NOT SHOWN
H - PART OF STANDARD HOUSING GP-FIXED AXLE
I - REFER TO HYDRAULIC INFORMATION SYSTEM
J - PART OF STANDARD HOUSING GP-OCCILATING AXLE
M - METRIC PART
N - PART OF STANDARD LINES GP-STEERING

426-3491 **LINES GP-AXLE OIL COOLER (*contd.*)** **i05837522**

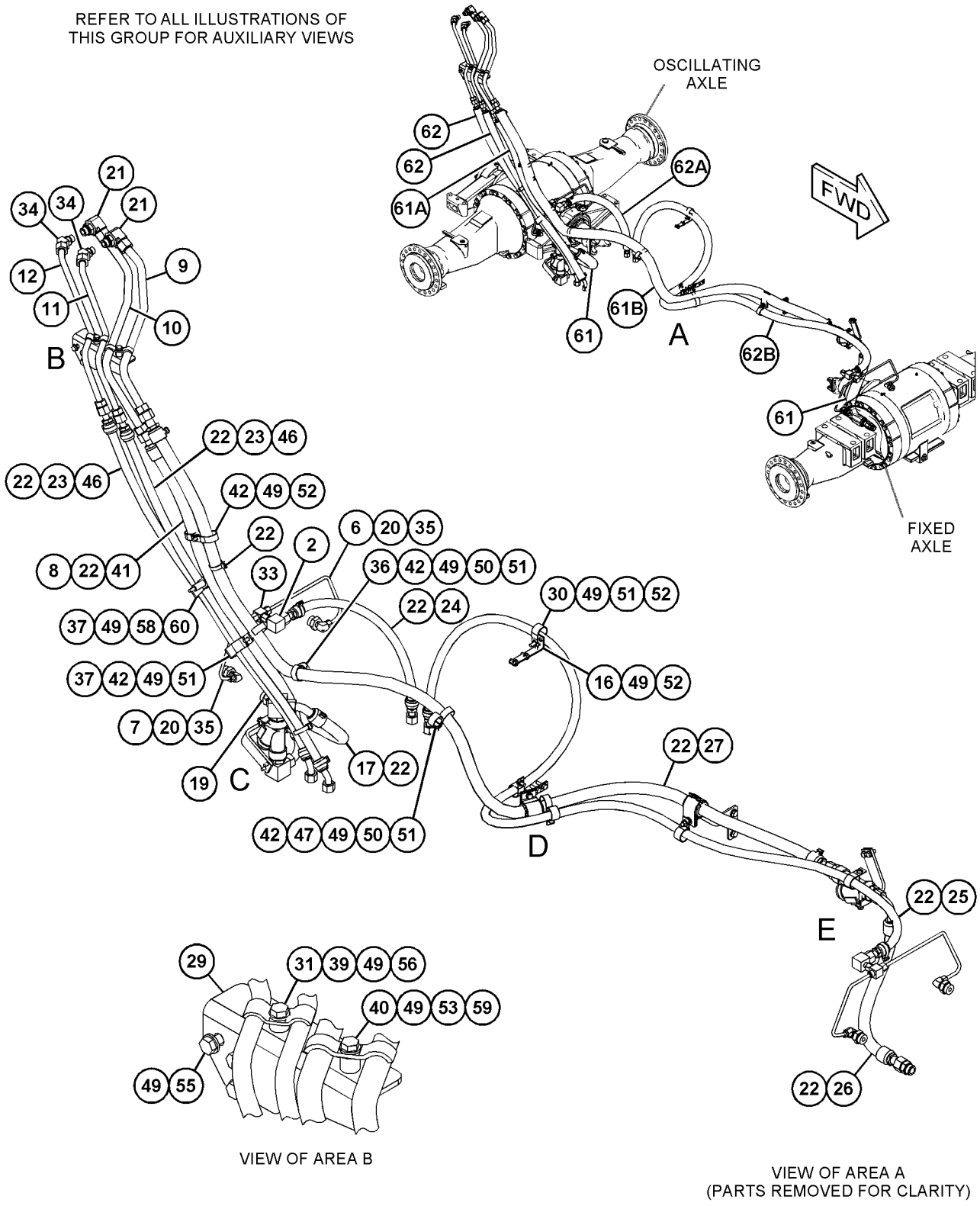

GRAPHIC #1 g03723930

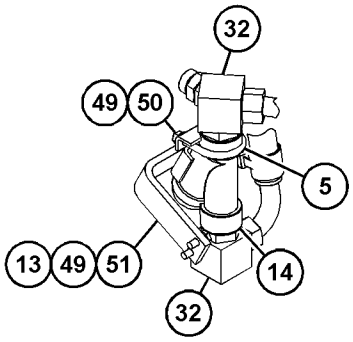

VIEW OF AREA C
(PARTS REMOVED FOR CLARITY)

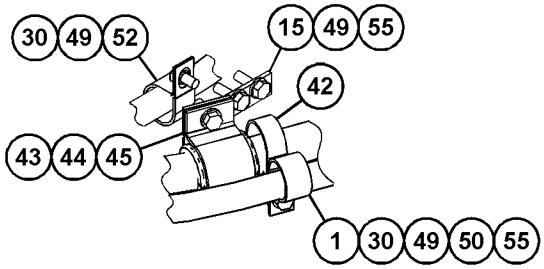

VIEW OF AREA D

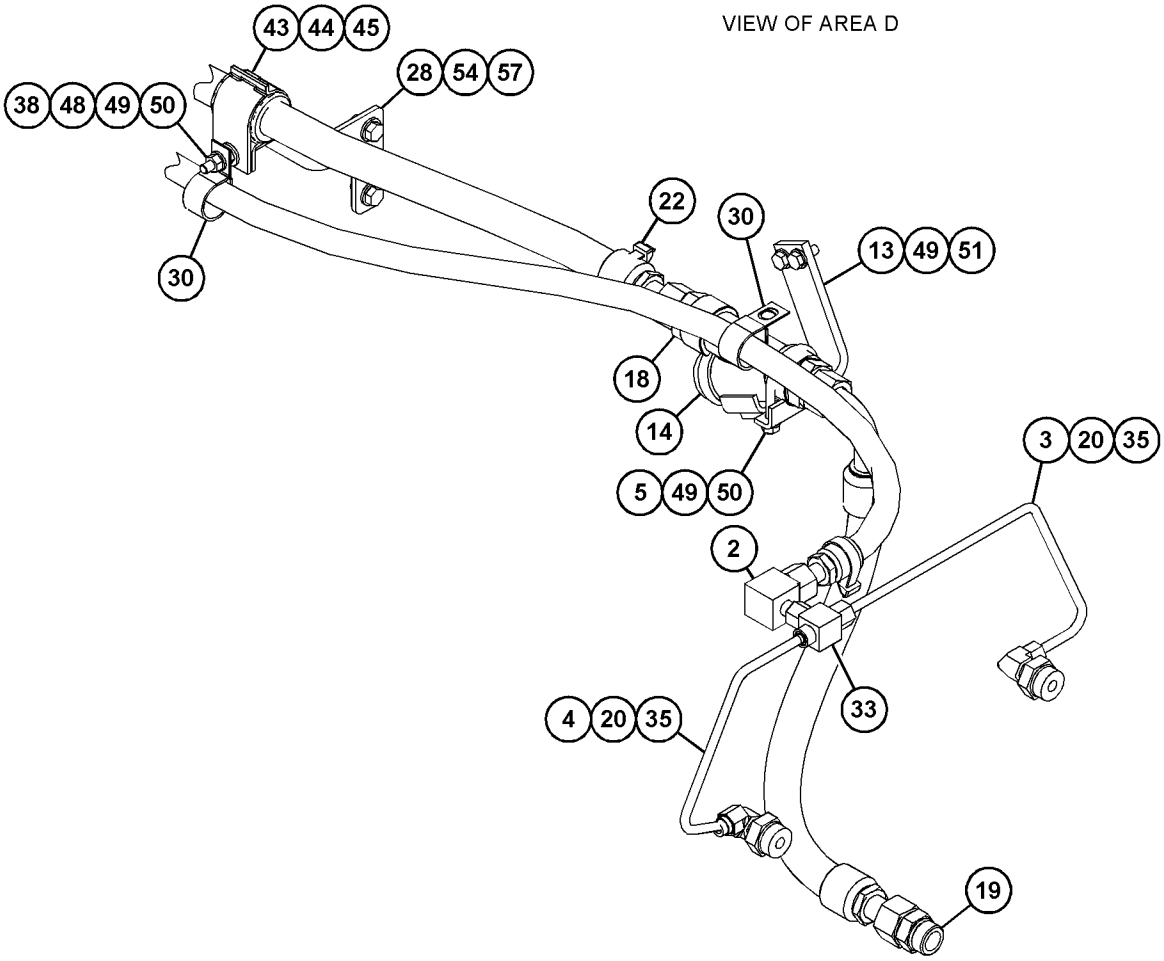

VIEW OF AREA E

GRAPHIC #2 **<END>** g03723931

237-0438 LINES GP-TORQUE CONV COOLER

S/N: JLX1-UP

PART OF 372-2874 HYDRAULIC AR

SMCS-1375, 3016 **i05608690**

NOTE	REF NO	GRAPHIC REF	PART NUMBER	QTY	PART NAME 1 2 3 4 5 6 (PRODUCT LEVEL)	SEE PAGE
	1	2	**251-2009**	1	TUBE AS	
	2	2	**1P-3703**	2	SEAL-RECTANGULAR	
	3	2	**251-2008**	1	TUBE AS	
I	4	1	**251-2010**	1	HOSE AS	
I	5	1	**251-2011**	1	HOSE AS	
	6	2	*148-8357*	2	ELBOW AS	
					(EACH INCLUDES)	
		2	**5K-9090**	1	SEAL-O-RING	
		2	**6V-9008**	1	ELBOW	
		2	**7M-8485**	1	SEAL-O-RING	
	7	2	**3A-3692**	1	CLIP	
	8	1	**5K-9090**	2	SEAL-O-RING	
	9	2	**8T-4121**	9	WASHER-HARD (11X21X2.5-MM THK)	
M	10	2	**8T-6466**	8	BOLT (M10X1.5X60-MM)	
M	11	2	**8T-4196**	1	BOLT (M10X1.5X35-MM)	

I - REFER TO HYDRAULIC INFORMATION SYSTEM
M - METRIC PART

237-0438 **LINES GP-TORQUE CONV COOLER (*contd.*)** **i05608690**

REFER TO ALL ILLUSTRATIONS OF
THIS GROUP FOR AUXILIARY VIEWS

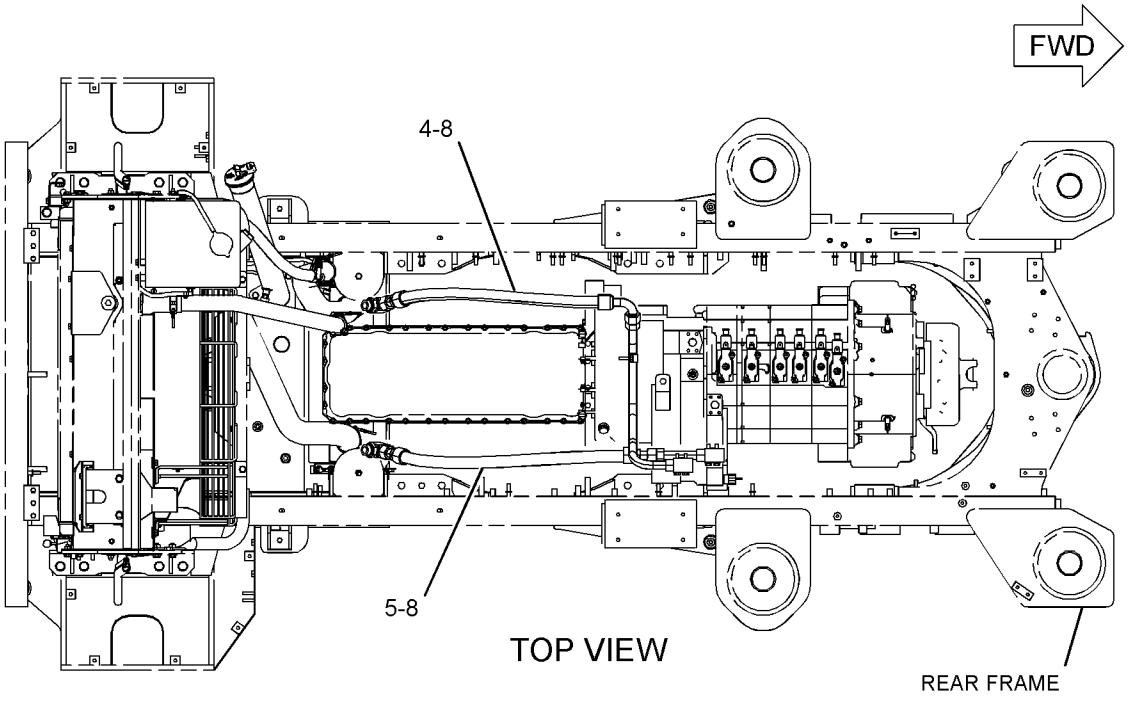

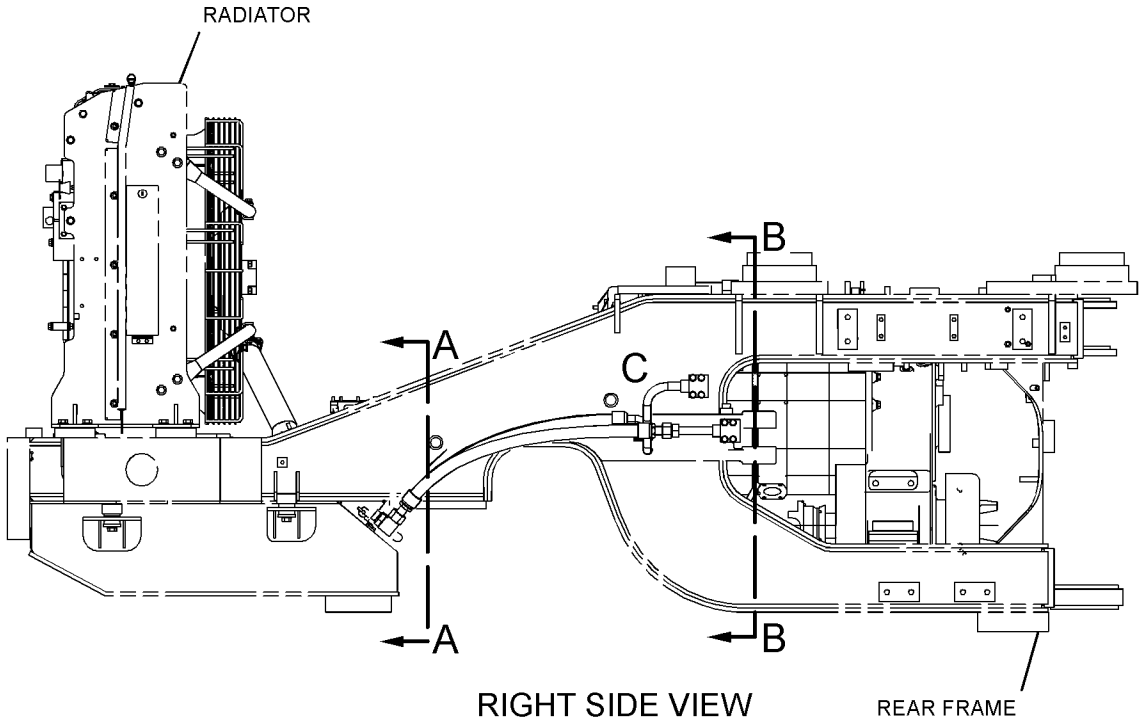

GRAPHIC #1 g03660008

237-0438 **LINES GP-TORQUE CONV COOLER (*contd.*)** **i05608690**

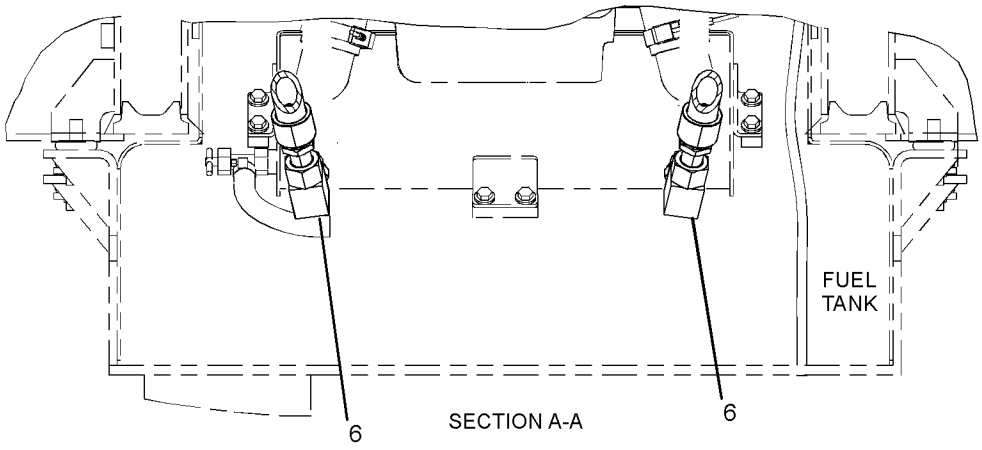

SECTION A-A

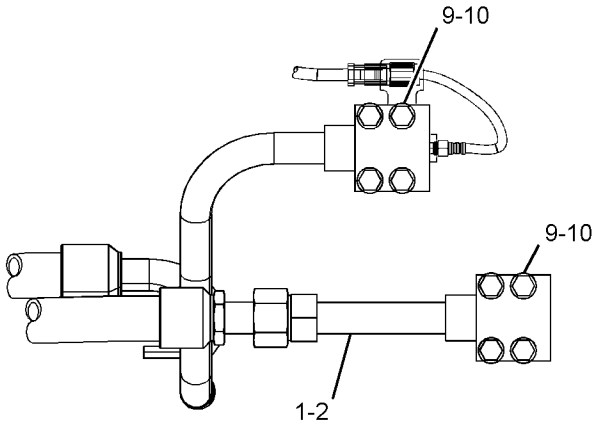

VIEW OF AREA C

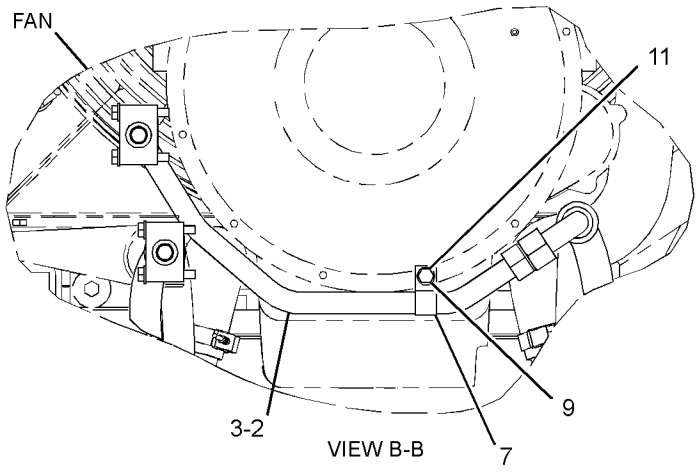

VIEW B-B

GRAPHIC #2 **<END>** g03660006

246-6152 MOTOR GP-GEAR—HYDRAULIC FAN

S/N: JLX1-UP

PART OF 377-4468 RADIATOR & FAN GP

SMCS-5061 **i05028250**

NOTE	REF NO	GRAPHIC REF	PART NUMBER	QTY	PART NAME 1 2 3 4 5 6 (PRODUCT LEVEL)	SEE PAGE
M	1	1	**136-9029**	4	BOLT	
	2	1	**136-9030**	4	WASHER (12.5X18X1.5-MM THK)	
J	3	1	**150-3378**	1	SEAL-SHAFT	
J	4	1	**096-0194**	1	RING-RETAINING	
	5	1	**9S-4191**	1	PLUG	
	6	1	**3J-1907**	1	SEAL-O-RING	
					AVAILABLE REPAIR KIT(S):	
J			**194-9632**	1	KIT-SEAL	
					(INCLUDES SEALS AND RINGS)	

J - KIT MARKED J SERVICES PARTS MARKED J
M - METRIC PART

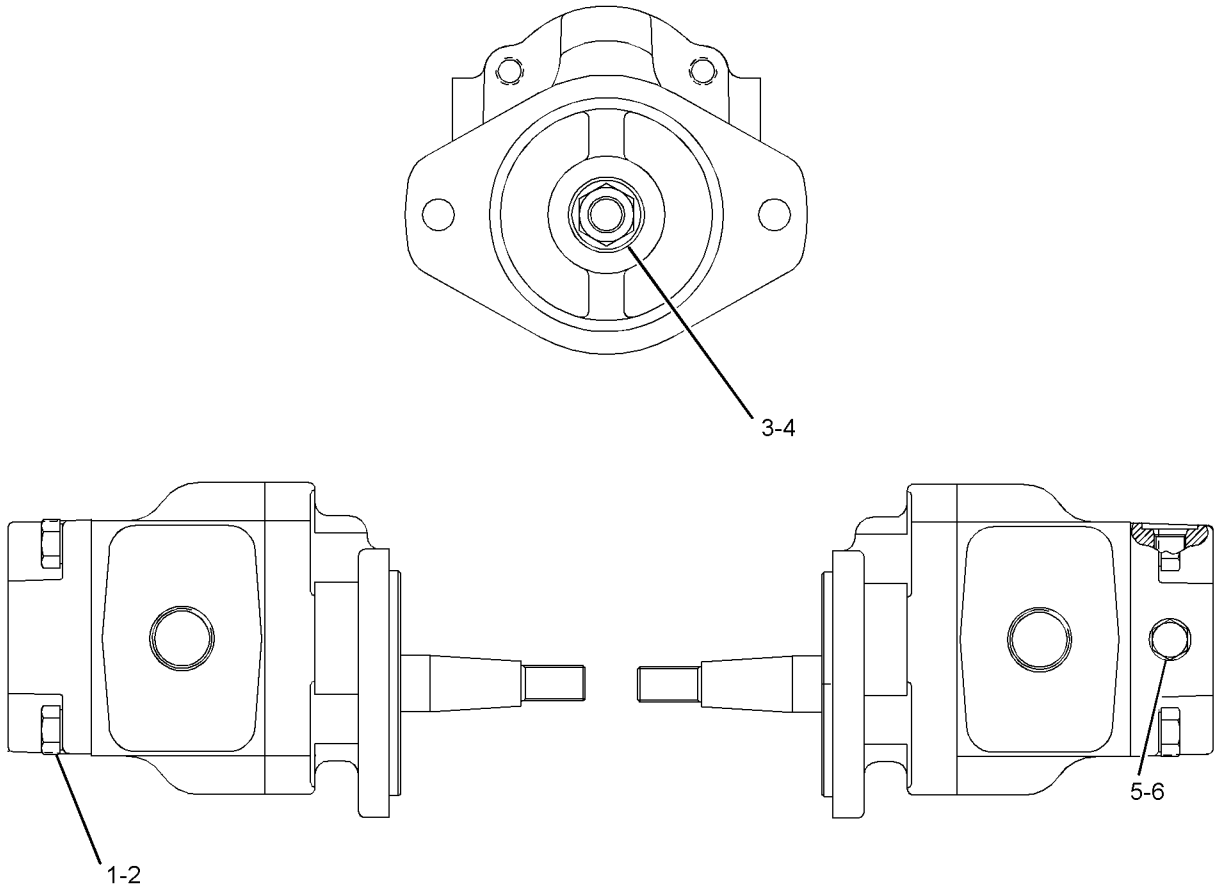

GRAPHIC #1 **<END>** g01136938

214-6162 MOUNTING GP-AXLE

S/N: JLX1-UP

PART OF 372-2875 POWER TRAIN AR

SMCS-3268, 3278 **i03185500**

NOTE	REF NO	GRAPHIC REF	PART NUMBER	QTY	PART NAME 1 2 3 4 5 6 (PRODUCT LEVEL)	SEE PAGE
M	1	1	**163-8682**	8	BOLT (M30X3.5X200-MM)	
	2	1	**3S-7023**	8	WASHER (34X57X6-MM THK)	
	3	1	**6C-2356**	2	DOWEL	
M	4	1	**8T-4170**	8	BOLT (M20X2.5X150-MM)	
	5	1	**8T-4123**	16	WASHER (3.62X5.75X0.375-MM THK)	
M	6	1	**8T-4131**	8	NUT (M20X2.5-THD)	
	7	1	**145-0050**	2	PLATE	
M	8	1	**8T-4137**	4	BOLT (M10X1.5X20-MM)	
	9	1	**8T-4121**	4	WASHER-HARD (11X21X2.5-MM THK)	
	10	1	**6C-8352**	2	PLATE	
	11	1	**6C-8353**	2	PLATE	

M - METRIC PART

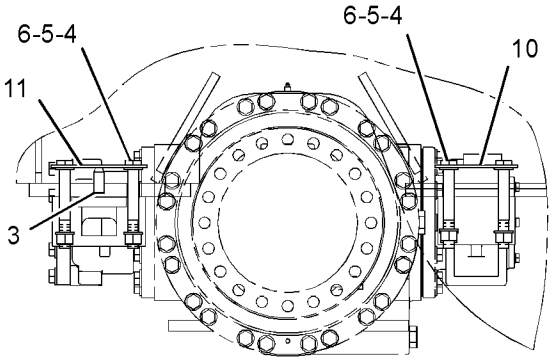

RIGHT SIDE VIEW
(REAR AXLE)

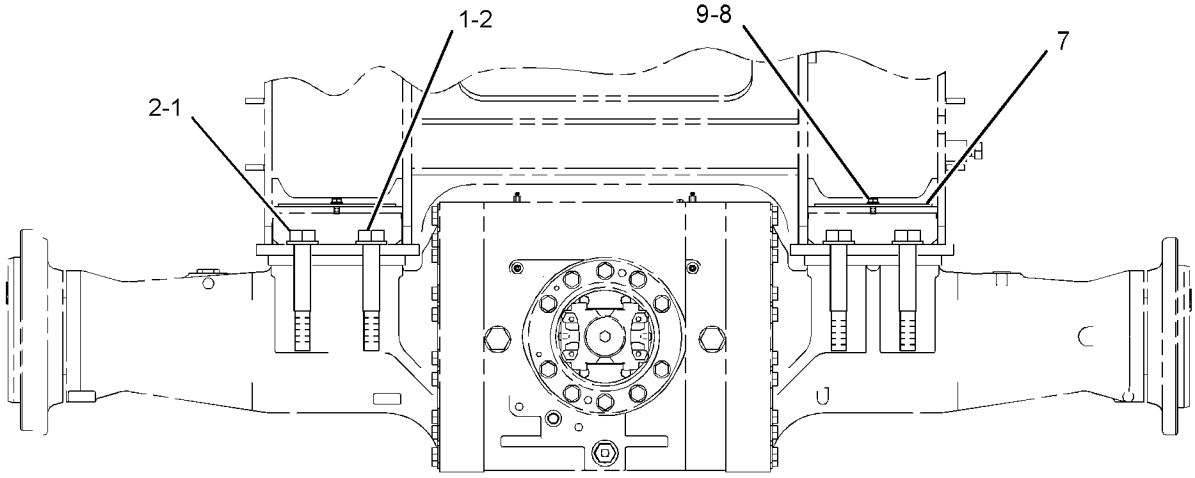

FRONT VIEW

GRAPHIC #1 **<END>** g01890073

260-9584 MOUNTING GP-AXLE OIL COOLER

S/N: JLX1-UP

PART OF 383-6023, 419-9847 COOLER AR-AXLE OIL

SMCS-1365 **i05919194**

NOTE	REF NO	GRAPHIC REF	PART NUMBER	QTY	PART NAME 1 2 3 4 5 6 (PRODUCT LEVEL)	SEE PAGE
	1	1	**130-5202**	2	VALVE GP-CHECK (AXLE OIL COOLER BYPASS)	
					(EACH INCLUDES)	
		1	**3D-2824**	1	SEAL-O-RING	
		1	**6V-9746**	1	SEAL-O-RING	
		1	**4K-1388**	1	SEAL-O-RING	
	2	1	**313-7721**	1	CORE AS-AXLE OIL COOLER	
		1	**1N-5999**	1	PLUG-O-RING	
		1	**7J-0204**	1	SEAL-O-RING	
	3	1	**250-1441**	2	TEE	
	4	1	**260-6465**	2	TUBE AS	
	5	1	*148-8442*	2	TEE AS	
					(EACH INCLUDES)	
		1	**8T-1685**	1	TEE	
		1	**6V-9746**	2	SEAL-O-RING	
		1	**7M-8485**	1	SEAL-O-RING	
M	6	1	**8T-4136**	4	BOLT (M10X1.5X25-MM)	
	7	1	**6V-9746**	2	SEAL-O-RING	
	8	1	**7M-8485**	2	SEAL-O-RING	
	9	1	**8T-4121**	4	WASHER-HARD (11X21X2.5-MM THK)	

M - METRIC PART

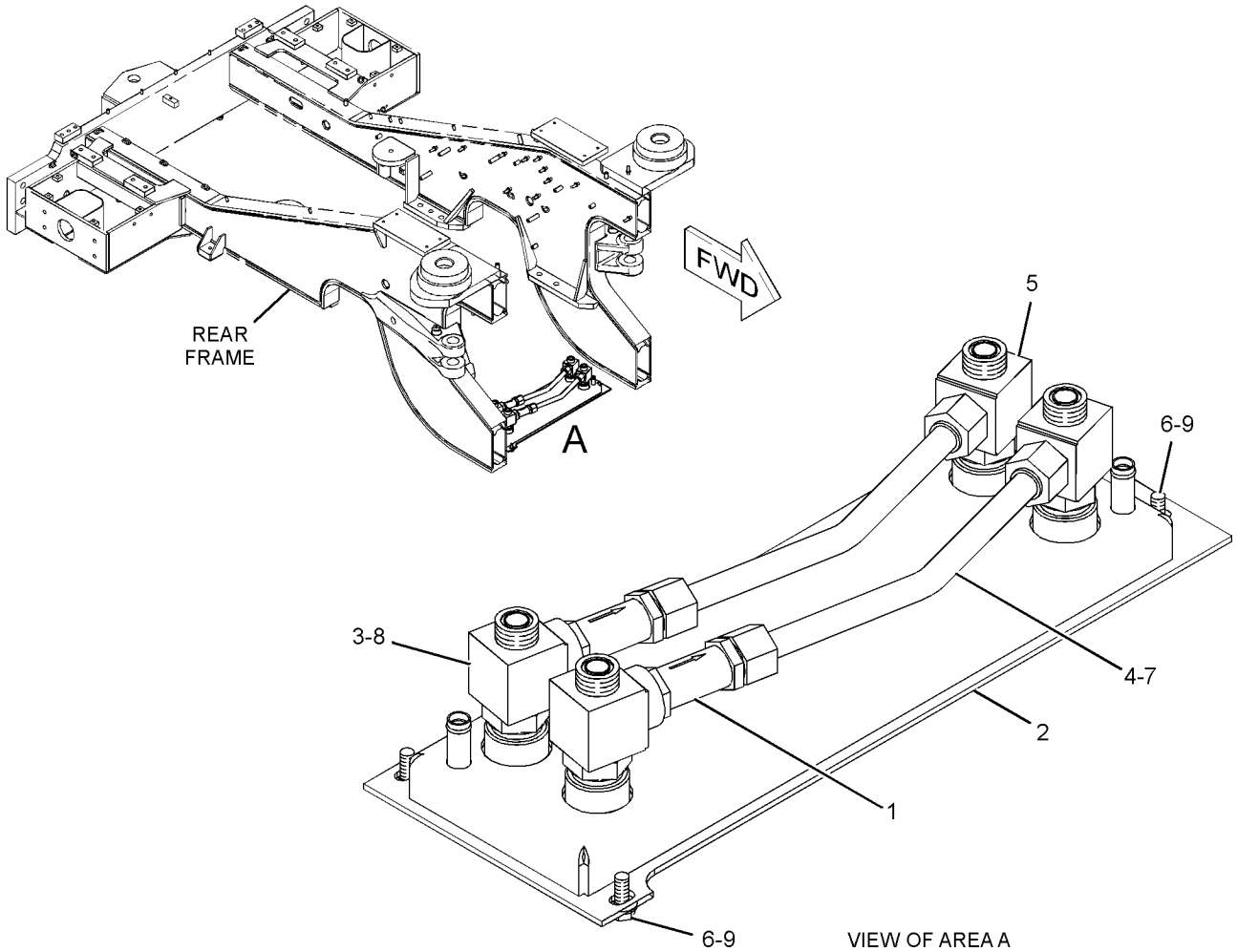

GRAPHIC #1

<END>

g03664215

128-0678 MOUNTING GP-RIM

S/N: JLX1-UP

PART OF 138-2373 RIM AR

SMCS-4202, 4209 **i00681014**

NOTE	PART NUMBER	QTY	PART NAME 1 2 3 4 5 6 (PRODUCT LEVEL)	SEE PAGE
M	**8T-0380**	20	BOLT (M24X3X60MM)	
	6V-8237	20	WASHER (4.0MM THK)	

M - METRIC PART

<END>

297-2513 MOUNTING GP-RIM

S/N: JLX1-UP

PART OF 340-7779 RIM AR

SMCS-4202, 4209 **i04559929**

NOTE	PART NUMBER	QTY	PART NAME 1 2 3 4 5 6 (PRODUCT LEVEL)	SEE PAGE
M	**9X-2615**	80	BOLT (M24X3X60-MM)	
	267-3506	80	WASHER-HARD (26X44X4-MM THK)	

M - METRIC PART

<END>

186-2522 PLANETARY GP-TRANSMISSION

S/N: KYM1-UP; KYN1-UP; W2W1-UP; W2X1-UP; BYY1-UP; BYZ1-UP
PART OF 268-6505, 268-6506 TRANSMISSION AR

SMCS-3160 **i05531993**

NOTE	REF NO	GRAPHIC REF	PART NUMBER	QTY	PART NAME 1 2 3 4 5 6 (PRODUCT LEVEL)	SEE PAGE
	1	5	**114-9036**	1	SHAFT-INPUT	
M	2	5	**6V-5696**	1	BOLT (M12X1.75X80-MM)	
	3	5	**4S-5824**	1	RETAINER	
	4	5	**8E-7476**	1	GEAR-TRANSFER (50-TEETH)	
	5	5	**118-4264**	1	HOUSING AS	
	5A	5	**1A-2223**	2	DOWEL	
	6	5	**3P-7019**	2	SEAL-METAL	
	7	4,5	**3K-1432**	2	RING-METAL SEAL	
	8	4	**9W-0517**	1	CARRIER-PLANETARY	
	9	4	**8P-8950**	2	RING-METAL SEAL	
	10	1,2,3,4	**6P-7773**	5	RING-SEAL	
	11	4	**7G-6061**	1	COUPLING	
	12	5	**5P-8210**	2	SEAL-O-RING	
	13	2,3,4	**6Y-5352**	19	DISC-FRICTION	
R	14	2,3,4	**7G-0437**	20	PLATE-CLUTCH	
	15	4	**7G-5572**	1	GEAR-SUN (29-TEETH)	
C	16	4	**345-3771**	1	PLATE	
	17	4	**9W-0518**	1	CARRIER-RING	
	18	3	**7G-8121**	2	RING-LOCK	
	19	4	**7G-5569**	1	GEAR-RING (83-TEETH)	
	20	3	**379-2185**	2	BALL BEARING	
	21	3	**7G-5593**	1	GEAR-SUN (38-TEETH)	
	22	4	**7G-6062**	1	GEAR-RING (82-TEETH)	
	23	1,2,3,4	**366-8298**	5	PISTON	
	24	3	**5L-2931**	1	RING-RETAINING	
	25	3	**6V-0834**	1	RING-RETAINING	
	26	3	**7G-5594**	1	GEAR-SUN (38-TEETH)	
	27	3	**9G-1491**	1	CARRIER-PLANETARY	
	28	3	**7G-3711**	1	GEAR-RING (82-TEETH)	
	29	3	**6V-0835**	1	RING-RETAINING	
	30	3	**7G-5444**	1	CARRIER-PLANETARY	
	31	2	**6Y-9713**	1	GEAR AS-SUN (44-TEETH)	
	31A	2	**8S-0527**	2	PLUG-CUP	
	32	1,2,3,4	**7G-5675**	5	RING-SEAL	
	33	2	**399-0266**	1	HOUSING	
	34	3	**9M-1503**	1	RING-METAL SEAL	
	35	2	**213-3719**	1	PLATE-REACTION	
	36	2	**6P-7983**	1	RING-RETAINING	
	37	2	**3T-9960**	5	DISC-FRICTION	
	38	2	**6P-7968**	4	PLATE-CLUTCH	
	39	1,2	**061-6711**	3	RING-RETAINING	
	40	2	**9H-5604**	1	RING-RETAINING	
	41	2	**8E-1666**	1	PLATE-RETAINER	
	42	2	**9G-1234**	5	SPRING-DISC	
	43	2	**9N-4460**	1	HOUSING AS-CLUTCH	
	43A	2	**3S-8109**	1	PIN-SPRING	
	43B	2	**4S-8537**	1	DOWEL	
	44	1	**186-3402**	1	HOUSING AS	
	44A	1	**1A-2223**	1	DOWEL	
		1	**115-0532**	1	PLUG-ORIFICE	
	45	1	**6P-7985**	2	RING-SEAL	
	46	1	**7X-7608**	1	RING-RETAINING	
	47	1	**143-4642**	1	BEARING-SPECIAL	
	48	1	**3P-3441**	1	RING-RETAINING	
	49	1	**112-7847**	1	HOUSING	
	50	1	**362-4283**	1	GEAR-RING (86-TEETH)	
	51	1	**6Y-7879**	1	CARRIER-PLANETARY	
	52	1	**6Y-5952**	1	GEAR AS-SUN (42-TEETH)	

186-2522 **PLANETARY GP-TRANSMISSION (*contd.*)** **i05531993**

NOTE	REF NO	GRAPHIC REF	PART NUMBER	QTY	PART NAME 1 2 3 4 5 6 (PRODUCT LEVEL)	SEE PAGE
	52A	1	**6Y-2109**	1	CARRIER-SEAL	
	53	3	**7G-6952**	1	SHAFT AS-OUTPUT	
	53A	3	**8S-3426**	1	DOWEL	
	53B	3	**9G-7683**	2	BUSHING	
	54	3	**6P-2233**	3	GEAR-PLANETARY (20-TEETH)	
	55	3	**5P-3131**	3	BEARING AS-ROLLER	
	56	3	**7G-5614**	3	SHAFT-PLANETARY	
	57	1,3,4	**3S-8109**	15	PIN-SPRING	
	58	3	**8E-8297**	6	DISC-THRUST	
	59	1,5	**294-0877**	15	BOLT-SPECIAL	
	60	4	**9W-0519**	1	DISC-THRUST	
	61	2,3	**363-4541**	8	SPRING	
	62	2	**7G-5730**	1	RING-SEAL	
	63	1	**6V-1586**	1	RING-RETAINING	
	64	2	**6P-7772**	1	RING-SEAL	
	65	2	**176-9273**	1	PISTON	
	66	2	**186-2517**	1	GEAR-RING (82-TEETH)	
	67	1,3,4	**8E-8299**	32	DISC-THRUST	
	68	3	**5P-3930**	8	BEARING AS-ROLLER	
C	69	3	**345-3770**	1	HOUSING-SUPPORT	
	70	3	**6P-8005**	8	GEAR (23-TEETH)	
	71	4	**3T-7584**	4	SPRING	
	72	3	**9P-5558**	1	RING-RETAINING	
	73	3	**6P-7743**	4	SHAFT-PLANETARY	
	74	1,4	**7S-4534**	8	BEARING-CAGED	
	75	5	**7G-3710**	4	ROD	
	76	4	**6P-8003**	4	GEAR (27-TEETH)	
	77	4	**6P-7742**	4	SHAFT-PLANETARY	
	78	5	**1M-8649**	1	RING-RETAINING	
	79	5	**7B-7515**	1	BALL BEARING	
	80	2	**9H-5546**	6	DOWEL	
	81	1	**1M-3151**	6	DOWEL-REACTION	
	82	1	**8P-9723**	1	RING-SEAL	
	83	1,2,3,5	**8D-2714**	6	SEAL-O-RING	
	84	1	**9G-5828**	4	SPRING	
	85	1	**4H-4737**	4	PIN-SPRING	
	86	4	**1M-3150**	6	DOWEL-REACTION	
M	87	5	**6V-8197**	2	BOLT (M12X1.75X40-MM)	
	88	1	**6Y-7880**	4	SHAFT-PLANETARY	
	91	1	**6Y-8030**	1	RING-SEAL	
	92	1	**7T-1285**	4	GEAR-PLANETARY (23-TEETH)	
M	93	1	**8T-0106**	1	BOLT (M12X1.75X100-MM)	
	94	1,5	**235-2496**	15	WASHER-HARD (15.5X26X3-MM THK)	
	95	5	**2M-0849**	2	WASHER-HARD (13.5X25.5X5-MM THK)	
	96	3	**1H-8720**	1	SEAL-O-RING	
	97	3	**237-9062**	1	COVER	
M	98	3	**6V-4248**	4	BOLT (M10X1.5X25-MM)	

C - CHANGE FROM PREVIOUS TYPE
M - METRIC PART
R - REMFG PART MAY BE AVAILABLE

186-2522 **PLANETARY GP-TRANSMISSION (*contd.*)** **i05531993**

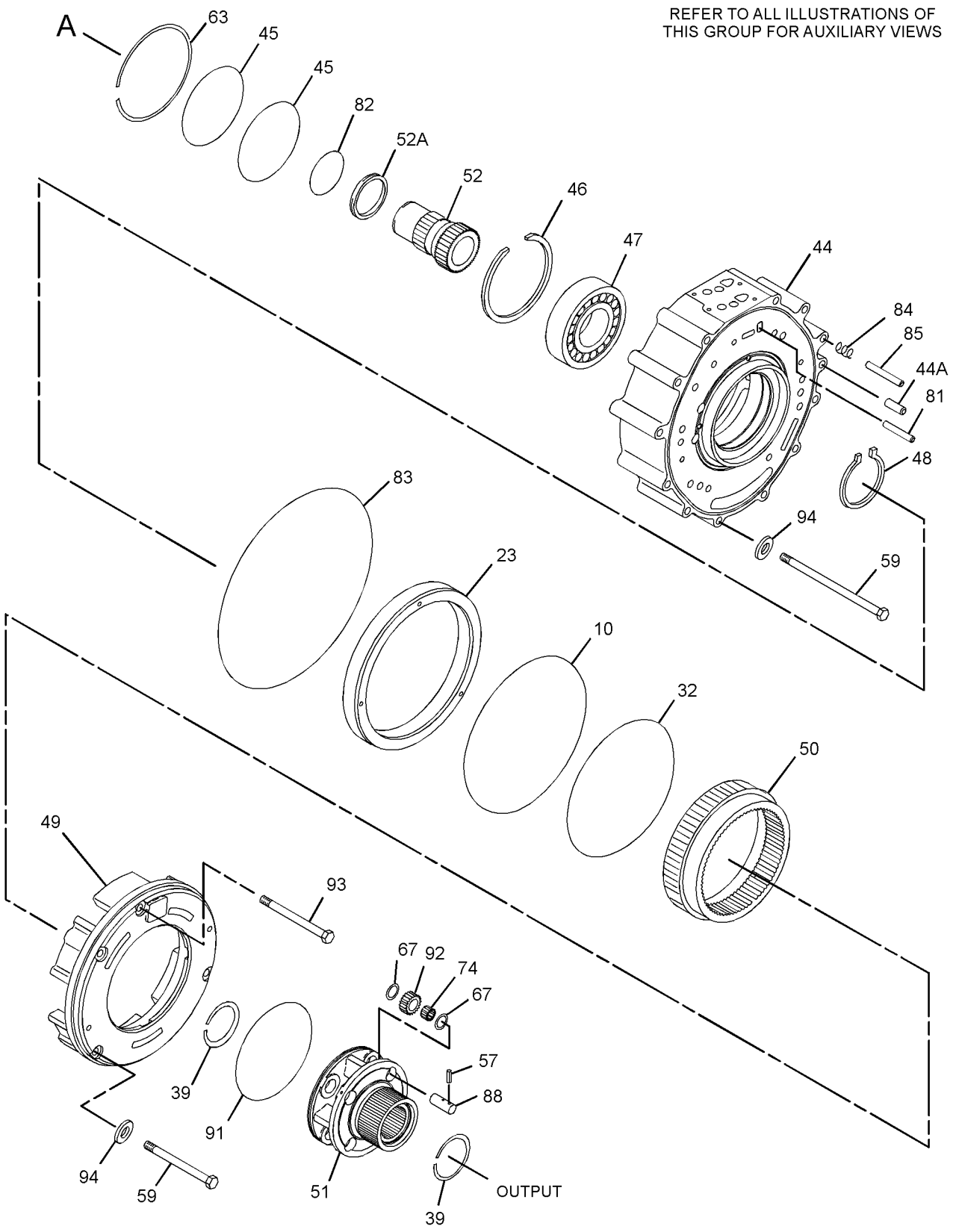

GRAPHIC #1 g02911719

186-2522 **PLANETARY GP-TRANSMISSION (*contd.*)** **i05531993**

REFER TO ALL ILLUSTRATIONS OF
THIS GROUP FOR AUXILIARY VIEWS

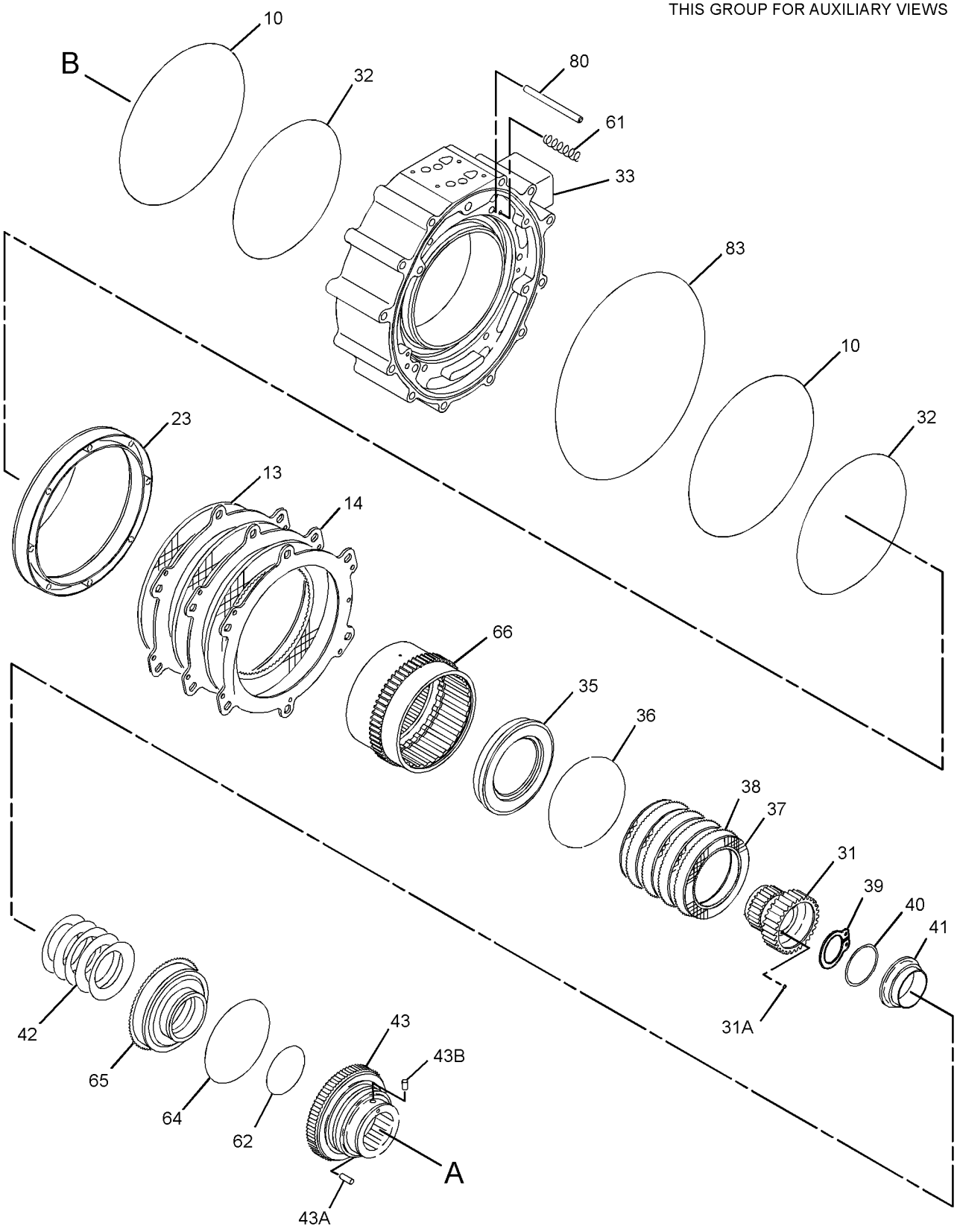

GRAPHIC #2

g01580037

186-2522 **PLANETARY GP-TRANSMISSION (*contd.*)** **i05531993**

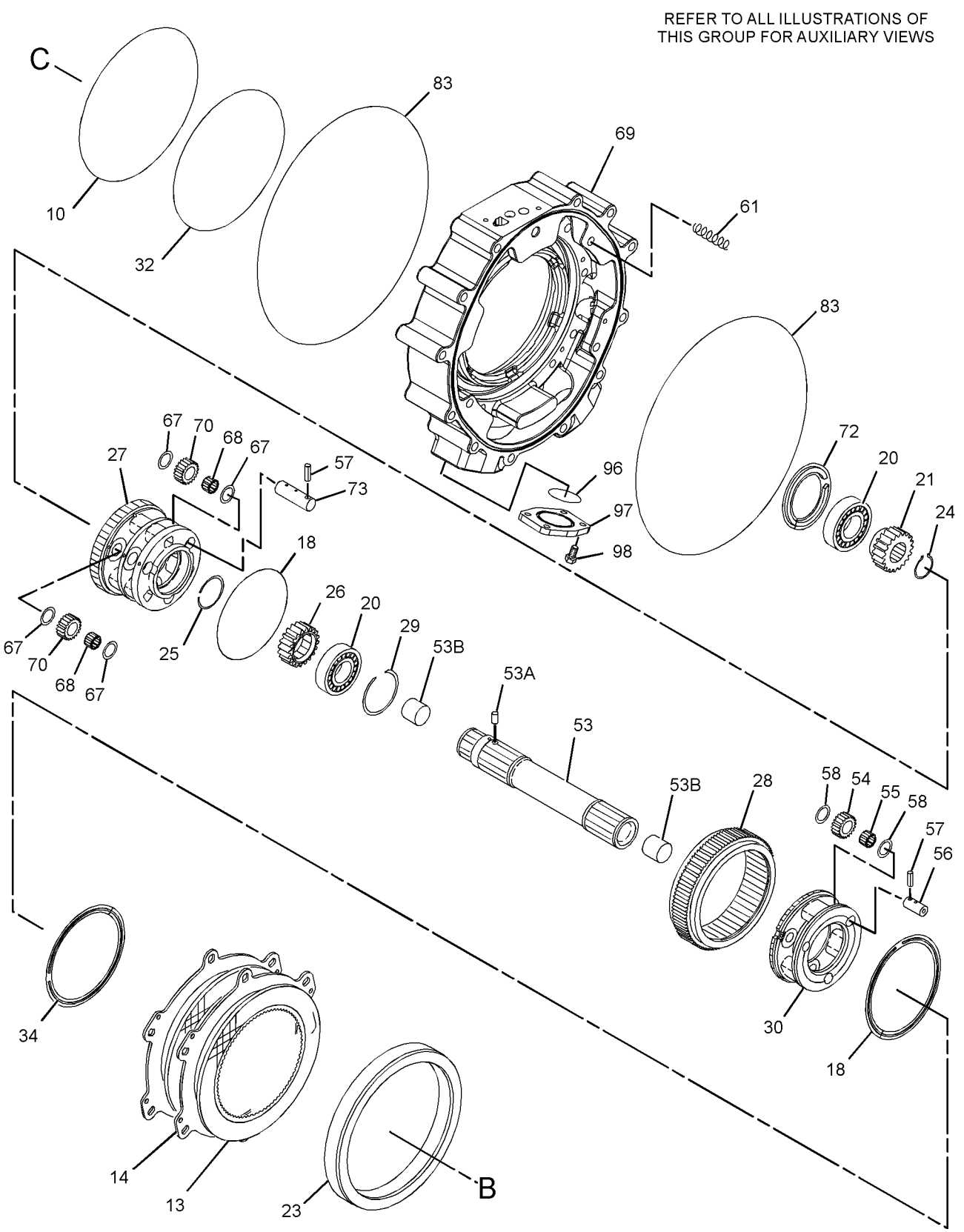

GRAPHIC #3

g01580038

186-2522 **PLANETARY GP-TRANSMISSION (*contd.*)** **i05531993**

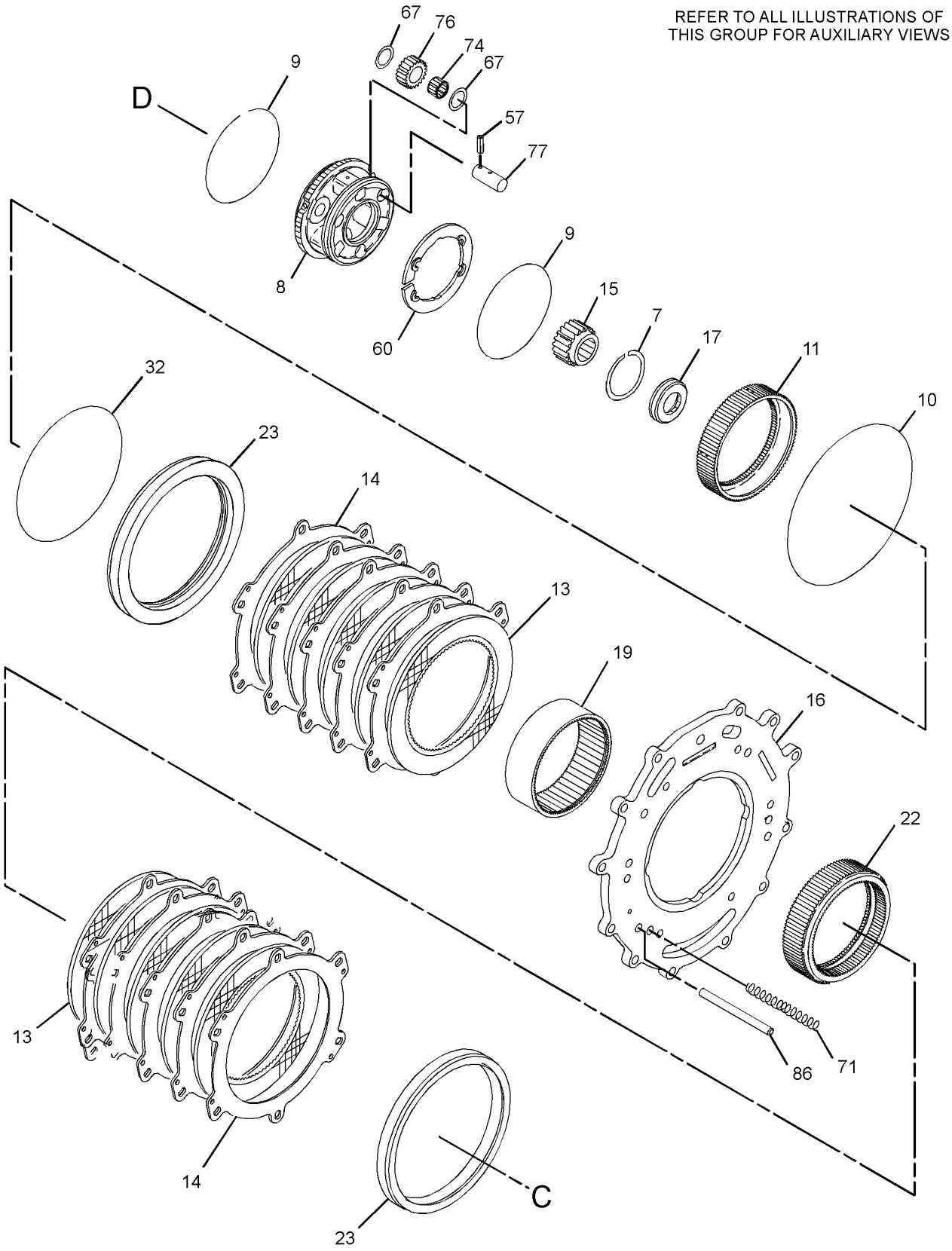

GRAPHIC #4 g01580039

186-2522 **PLANETARY GP-TRANSMISSION (*contd.*)** **i05531993**

REFER TO ALL ILLUSTRATIONS OF
THIS GROUP FOR AUXILIARY VIEWS

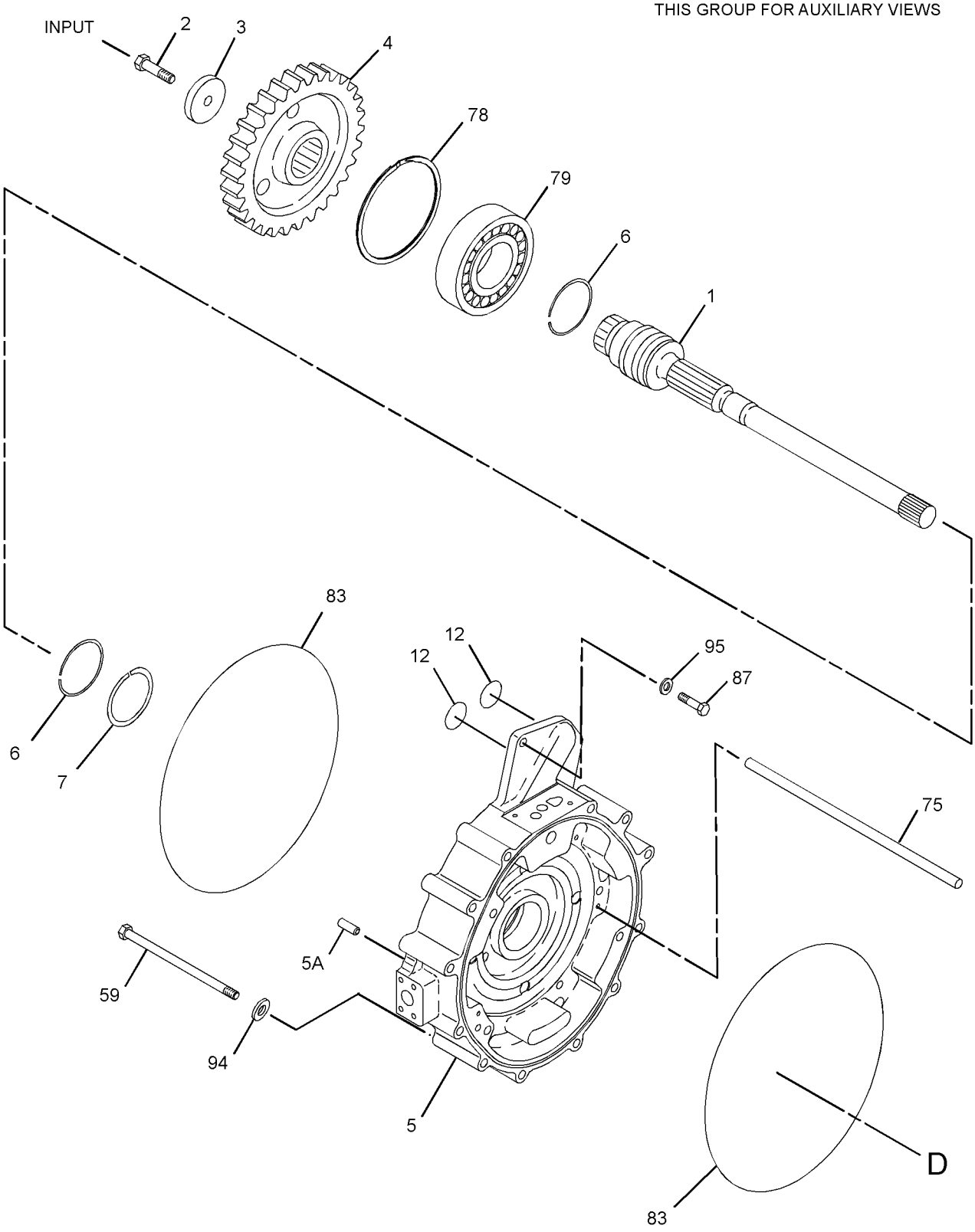

GRAPHIC #5 **<END>** g01580040

372-2875 POWER TRAIN AR

S/N: JLX1-UP

PART OF 373-8236 COMMON AR

SMCS-3000, 4000

i04763607

NOTE	PART NUMBER	QTY	PART NAME 1 2 3 4 5 6 (PRODUCT LEVEL)	SEE PAGE
Y	*126-7698*	1	ACTUATOR GP-PARKING BRAKE	633
Y	*214-6162*	1	MOUNTING GP-AXLE	459
Y	*115-1648*	1	SHAFT GP-DRIVE	479
Y	**268-6505**	1	TRANSMISSION AR	493
	218-0481	1	SOFTWARE GP-POWER TRAIN	

Y - SEPARATE ILLUSTRATION

<END>

311-7020 PUMP & MTG GP-AXLE OIL COOLER

S/N: JLX1-UP

PART OF 383-6023, 419-9847 COOLER AR-AXLE OIL

SMCS-5073 **i05738269**

NOTE	REF NO	GRAPHIC REF	PART NUMBER	QTY	PART NAME 1 2 3 4 5 6 (PRODUCT LEVEL)	SEE PAGE
	1	1	**9X-7381**	1	SEAL-O-RING	
	2	1	**215-3013**	1	PUMP GP-GEAR (AXLE OIL COOLER)	
	3	1	**215-3014**	1	CLUTCH GP-ELECTRIC (AXLE OIL COOLER PUMP)	
	4	1	**215-3015**	1	BELT-SERPENTINE	
	5	1	**276-7533**	1	BRACKET AS	
I	6	1	**301-0359**	1	HOSE AS	
	7	1	**091-9035**	1	SPACER (11X25X20-MM THK)	
	8	1	**118-9517**	1	FITTING AS-AIR CONDITIONER	
		1	**3E-4052**	1	CAP-SEAL (HIGH SIDE CHARGE PORT)	
		1	**3E-4058**	1	VALVE AS (REFRIGERANT, HIGH SIDE)	
M	9	1	**118-9573**	2	BOLT-12 POINT HEAD (M10X1.5X35-MM)	
	10	1	**6D-4246**	1	CLIP	
	11	1	**6V-3960**	1	BOLT (1/4-28X0.875-IN)	
	12	1	**8T-4121**	7	WASHER-HARD (11X21X2.5-MM THK)	
M	13	1	**8T-4182**	1	BOLT (M10X1.5X45-MM)	
M	14	1	**8T-4196**	4	BOLT (M10X1.5X35-MM)	
	15	1	**8T-4205**	1	WASHER-HARD (7.2X14.5X2-MM THK)	

I - REFER TO HYDRAULIC INFORMATION SYSTEM
M - METRIC PART

311-7020 **PUMP & MTG GP-AXLE OIL COOLER (*contd.*)** **i05738269**

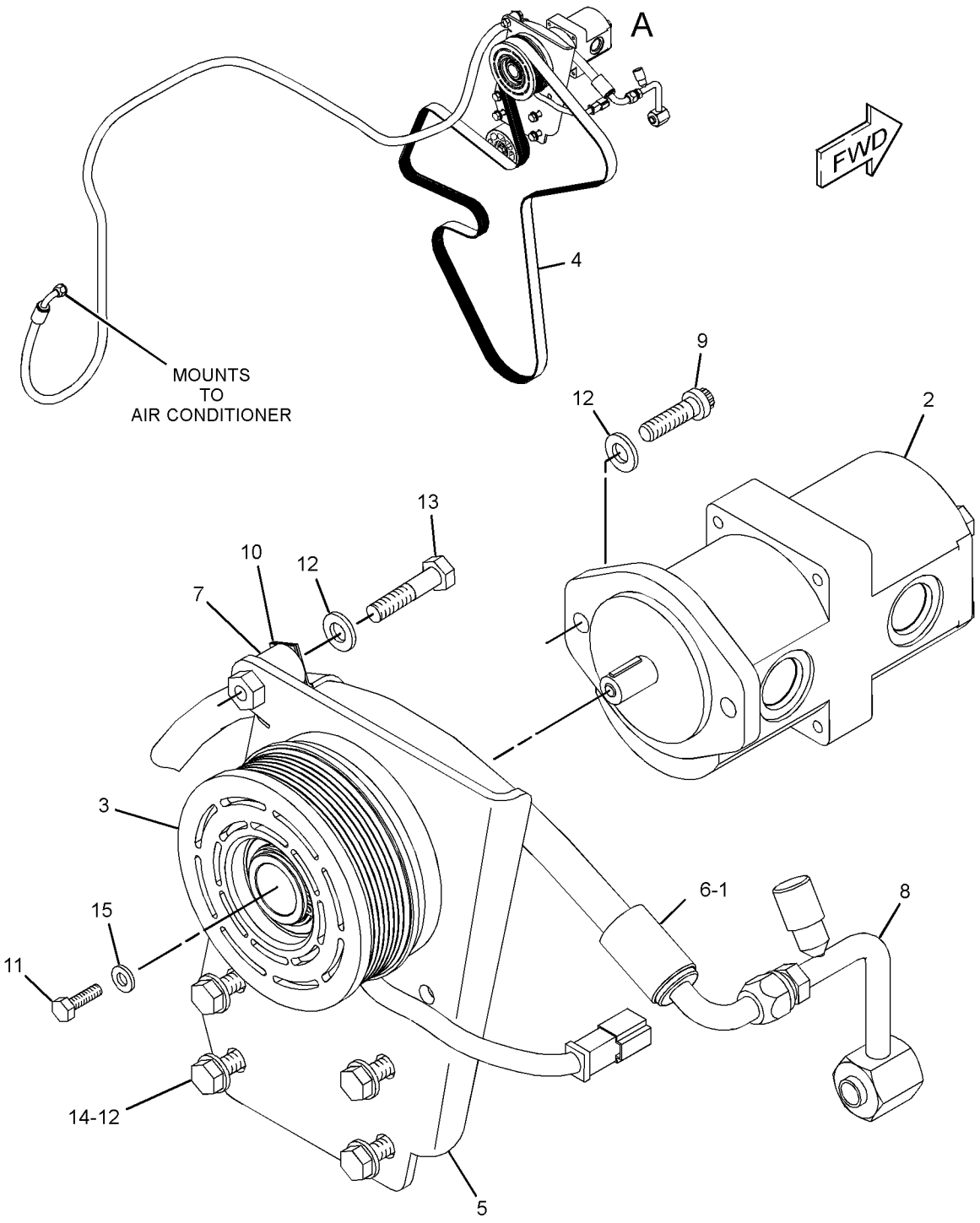

VIEW OF AREA A
(EXPLODED)

GRAPHIC #1 **<END>** g03567156

241-8692 PUMP GP-TRANSMISSION

S/N: KYM1-UP; KYN1-UP; W2W1-UP; W2X1-UP; BYY1-UP; BYZ1-UP
PART OF 268-6505, 268-6506 TRANSMISSION AR

SMCS-3066 **i02248729**

NOTE	REF NO	GRAPHIC REF	PART NUMBER	QTY	PART NAME 1 2 3 4 5 6 (PRODUCT LEVEL)	SEE PAGE
Y	1	1	**241-8693**	1	PUMP GP-TRANSMISSION	473
M	2	1	**8T-5035**	6	BOLT (M10X1.5X65-MM)	
	3	1	**9M-5024**	1	SEAL-O-RING	

M - METRIC PART
Y - SEPARATE ILLUSTRATION

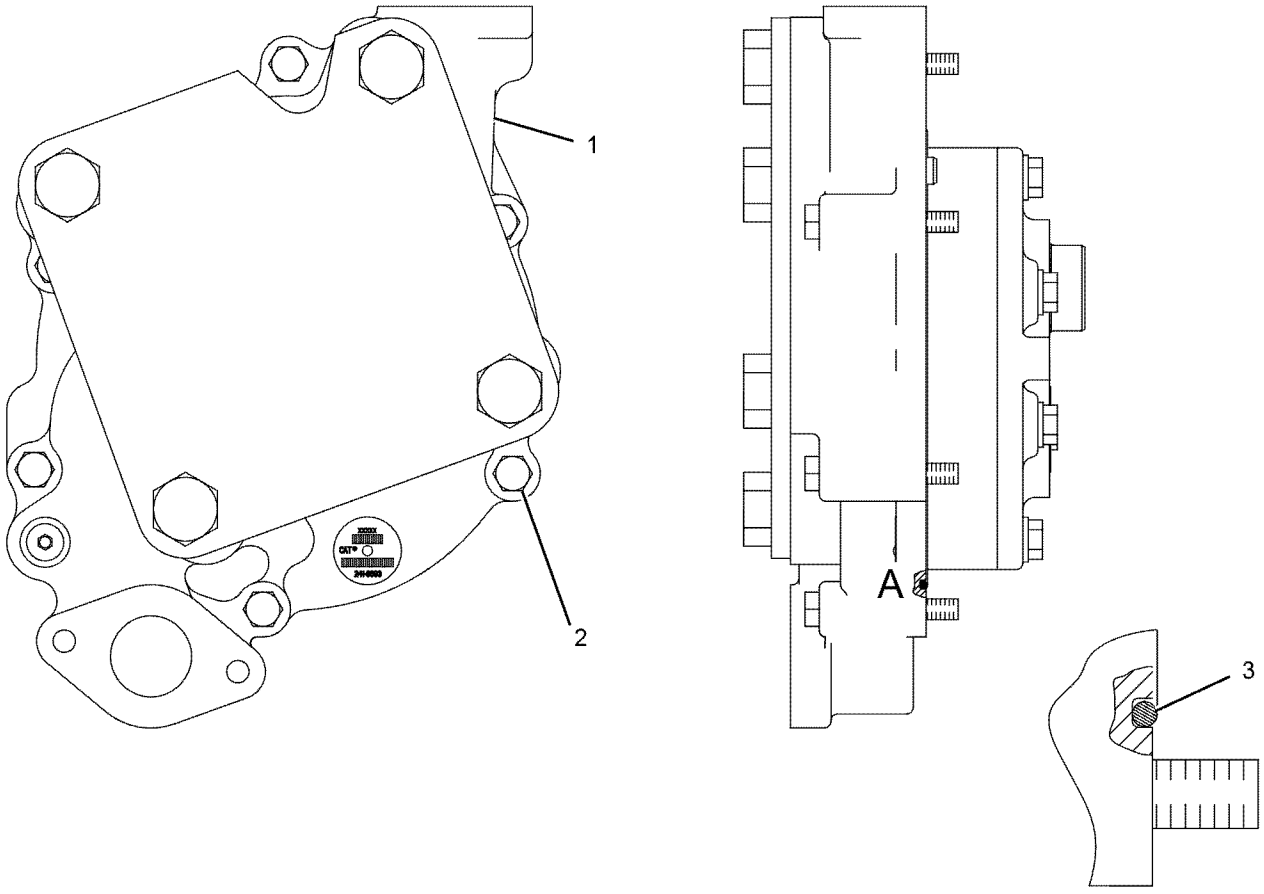

VIEW OF AREA A

GRAPHIC #1 **<END>** g01128148

241-8693 PUMP GP-TRANSMISSION

S/N: KYM1-UP; KYN1-UP; W2W1-UP; W2X1-UP; BYY1-UP; BYZ1-UP

PART OF 241-8692 PUMP GP-TRANSMISSION

SMCS-3066 **i03027661**

NOTE	REF NO	GRAPHIC REF	PART NUMBER	QTY	PART NAME 1 2 3 4 5 6 (PRODUCT LEVEL)	SEE PAGE
M	1	1	**6V-7981**	6	BOLT (M10X1.5X70-MM)	
	2	1	**8P-1812**	1	COVER AS-OIL PUMP	
		1	**3P-7898**	2	BEARING-SLEEVE	
	3	1	**9G-7411**	1	GEAR-OIL PUMP DRIVE (17-TEETH)	
	4	1	**9G-7412**	1	GEAR AS-OIL PUMP (17-TEETH)	
		1	**2B-9373**	1	KEY-WOODRUFF	
	5	1	**122-6660**	1	BODY AS-OIL PUMP	
		1	**8M-8489**	4	DOWEL	
	6	1	**241-8694**	1	BODY AS	
		1	**241-8695**	1	BODY-OIL PUMP	
		1	**1H-0974**	2	DOWEL	
		1	**3P-7898**	2	BEARING-SLEEVE	
	7	1	**6V-5839**	6	WASHER (11X21X2.5-MM THK)	

M - METRIC PART

241-8693 **PUMP GP-TRANSMISSION (*contd.*)** **i03027661**

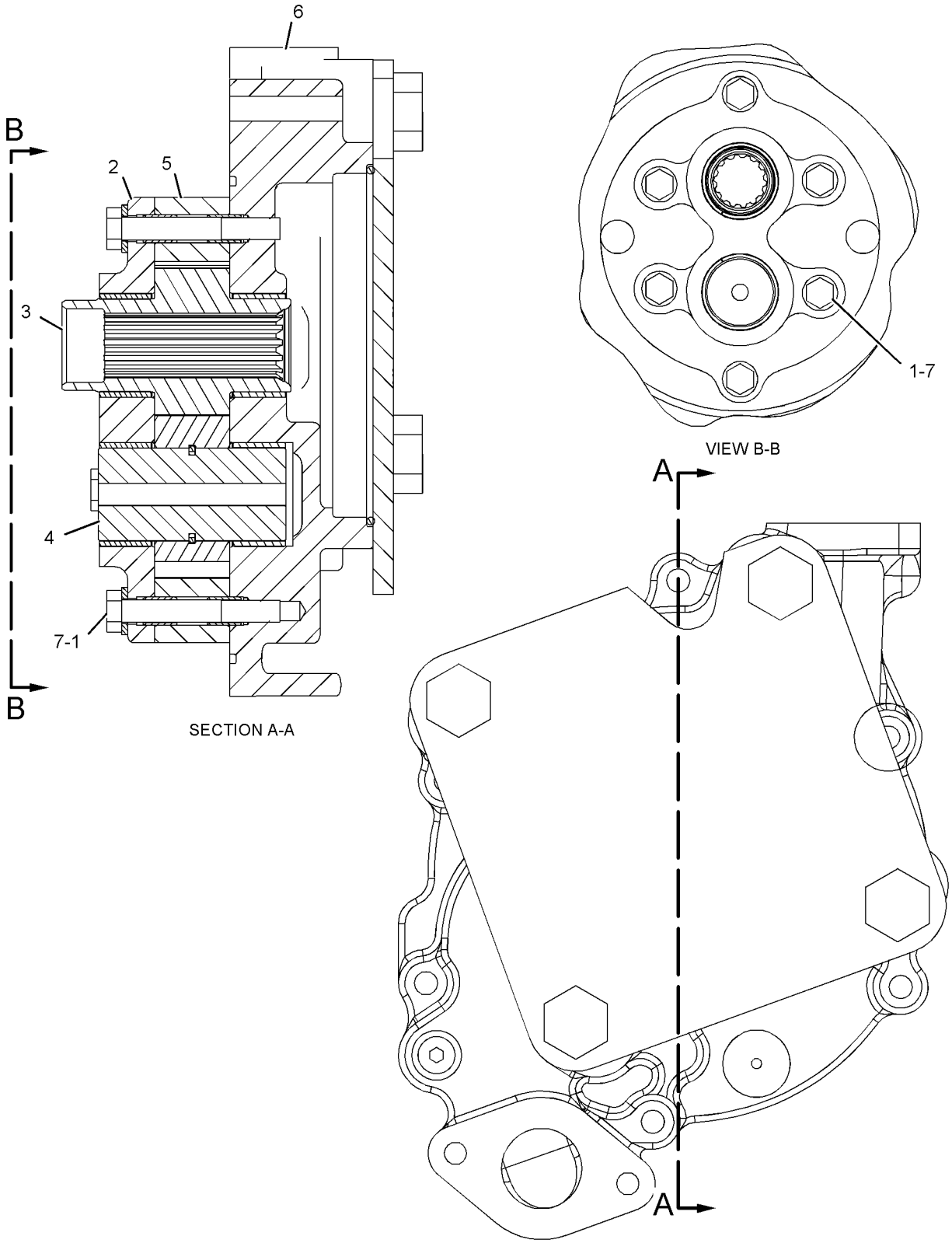

GRAPHIC #1 **<END>** g01128206

138-2373 RIM AR

S/N: JLX1-UP
19.5X25
PART OF 138-2758, 141-0312, 165-0556, 165-6179, 316-3506, 359-1303 TIRE & RIM AR

SMCS-4209 **i05550928**

NOTE	PART NUMBER	QTY	PART NAME 1 2 3 4 5 6 (PRODUCT LEVEL)	SEE PAGE
Y	*128-0678*	1	MOUNTING GP-RIM	461
Y	*206-9278*	4	RIM GP-DEMOUNTABLE	476

Y - SEPARATE ILLUSTRATION

<END>

340-7779 RIM AR

S/N: JLX1-UP
PART OF 358-3080 TIRE & RIM AR

SMCS-4209 **i04804066**

NOTE	PART NUMBER	QTY	PART NAME 1 2 3 4 5 6 (PRODUCT LEVEL)	SEE PAGE
Y	*297-2513*	1	MOUNTING GP-RIM	461
Y	*340-7778*	4	RIM GP-DEMOUNTABLE	478

Y - SEPARATE ILLUSTRATION

<END>

206-9278 RIM GP-DEMOUNTABLE

S/N: JLX1-UP
19.5 X 25-3 PIECE
PART OF 138-2373 RIM AR

SMCS-4209 **i05346478**

NOTE	REF NO	GRAPHIC REF	PART NUMBER	QTY	PART NAME 1 2 3 4 5 6 (PRODUCT LEVEL)	SEE PAGE
Y	1	1	**2D-2511**	1	VALVE GP-TIRE	500
Y	2	1	*330-4095*	1	RIM GP-DEMOUNTABLE	477
	3	1	**2D-2443**	1	SEAL-O-RING	

Y - SEPARATE ILLUSTRATION

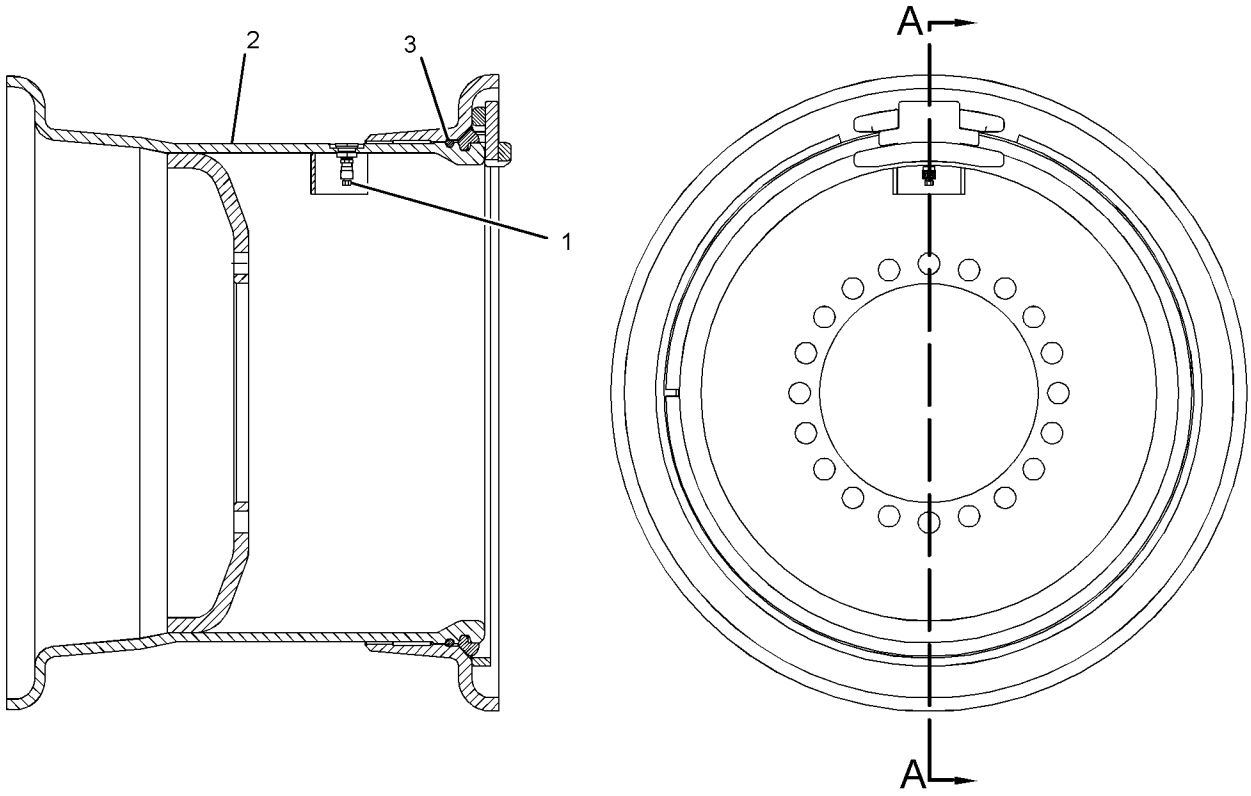

GRAPHIC #1 **<END>** g03403709

330-4095 RIM GP-DEMOUNTABLE

S/N: JLX1-UP
(19.5X25)
PART OF 206-9278, 340-7778 RIM GP-DEMOUNTABLE

SMCS-4209 **i05029942**

NOTE	REF NO	GRAPHIC REF	PART NUMBER	QTY	PART NAME 1 2 3 4 5 6 (PRODUCT LEVEL)	SEE PAGE
	1	1	**5T-5682**	1	DRIVER	
	2	1	**7D-7469**	1	RING-LOCK	
	3	1	**208-7472**	1	FLANGE AS	
	4	1	**330-4092**	1	RIM AS	

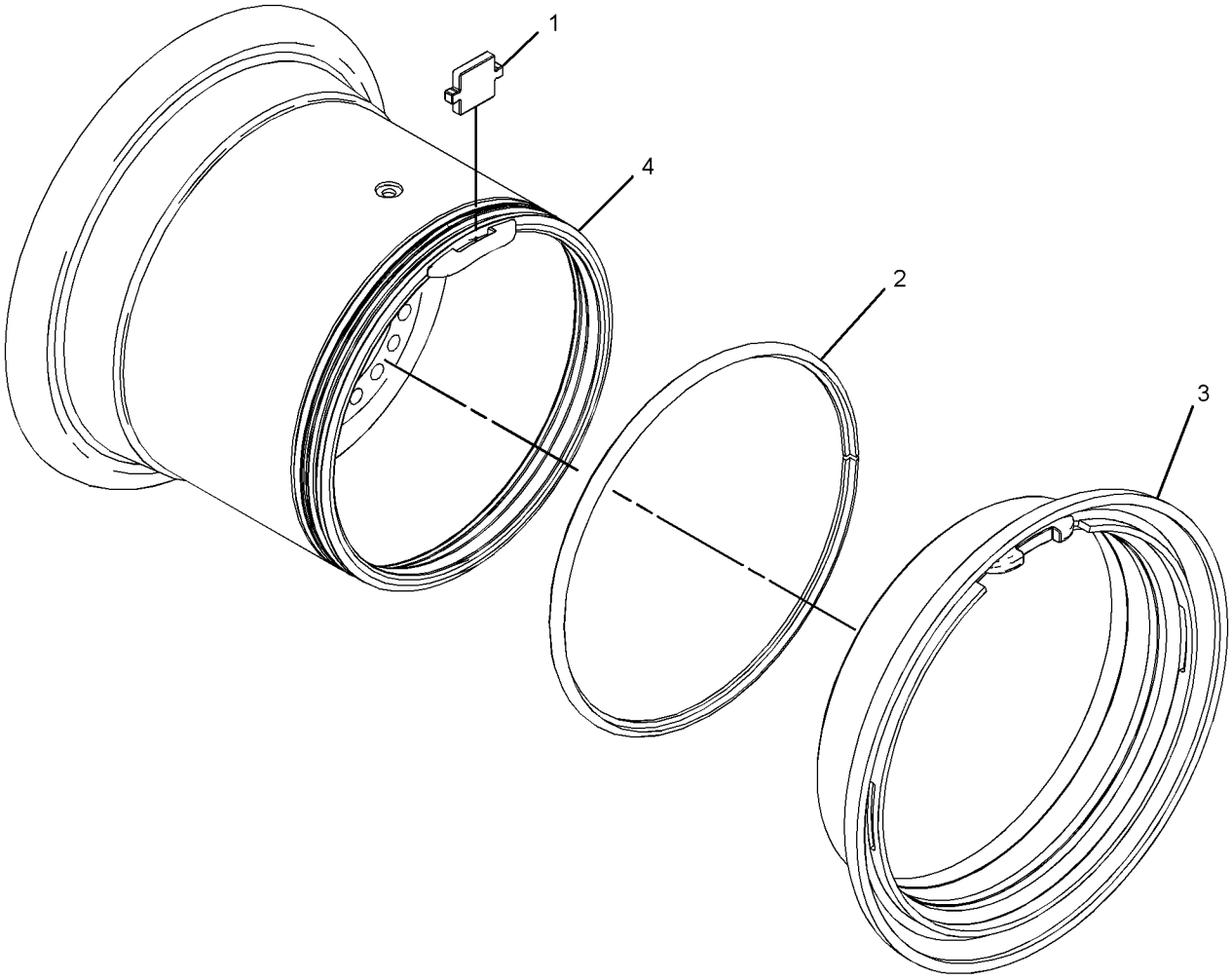

GRAPHIC #1 **<END>** g02616346

340-7778 RIM GP-DEMOUNTABLE

S/N: JLX1-UP

PART OF 340-7779 RIM AR

SMCS-4209 **i04804373**

NOTE	PART NUMBER	QTY	PART NAME 1 2 3 4 5 6 (PRODUCT LEVEL)	SEE PAGE
Y	*330-4095*	1	RIM GP-DEMOUNTABLE	477
Y	**2D-2511**	1	VALVE GP-TIRE	500
	2D-2443	1	SEAL-O-RING	

Y - SEPARATE ILLUSTRATION

<END>

115-1648 SHAFT GP-DRIVE

S/N: JLX1-UP

PART OF 372-2875 POWER TRAIN AR

SMCS-3253 **i04096630**

NOTE	REF NO	GRAPHIC REF	PART NUMBER	QTY	PART NAME 1 2 3 4 5 6 (PRODUCT LEVEL)	SEE PAGE
	1	1	**4E-3273**	10	STRAP	
Y	2	1	**296-4290**	1	SHAFT GP-DRIVE	482
Y	3	1	**115-1650**	1	UNIVERSAL JOINT GP	494
Y	4	1	**115-1651**	1	SLIP JOINT GP	484
M	5	1	**4E-5985**	20	BOLT-12 POINT HEAD (M10X1.25X20-MM)	
M	6	1	**7X-2564**	2	BOLT (M20X2.5X90-MM)	
	7	1	**8T-4123**	2	WASHER (3.62X5.75X0.375-MM THK)	
M	8	1	**8T-4131**	2	NUT (M20X2.5-THD)	
	9	1	**8T-5439**	2	WASHER-HARD (21.5X45X6-MM THK)	

M - METRIC PART
Y - SEPARATE ILLUSTRATION

115-1648 **SHAFT GP-DRIVE (*contd.*)** **i04096630**

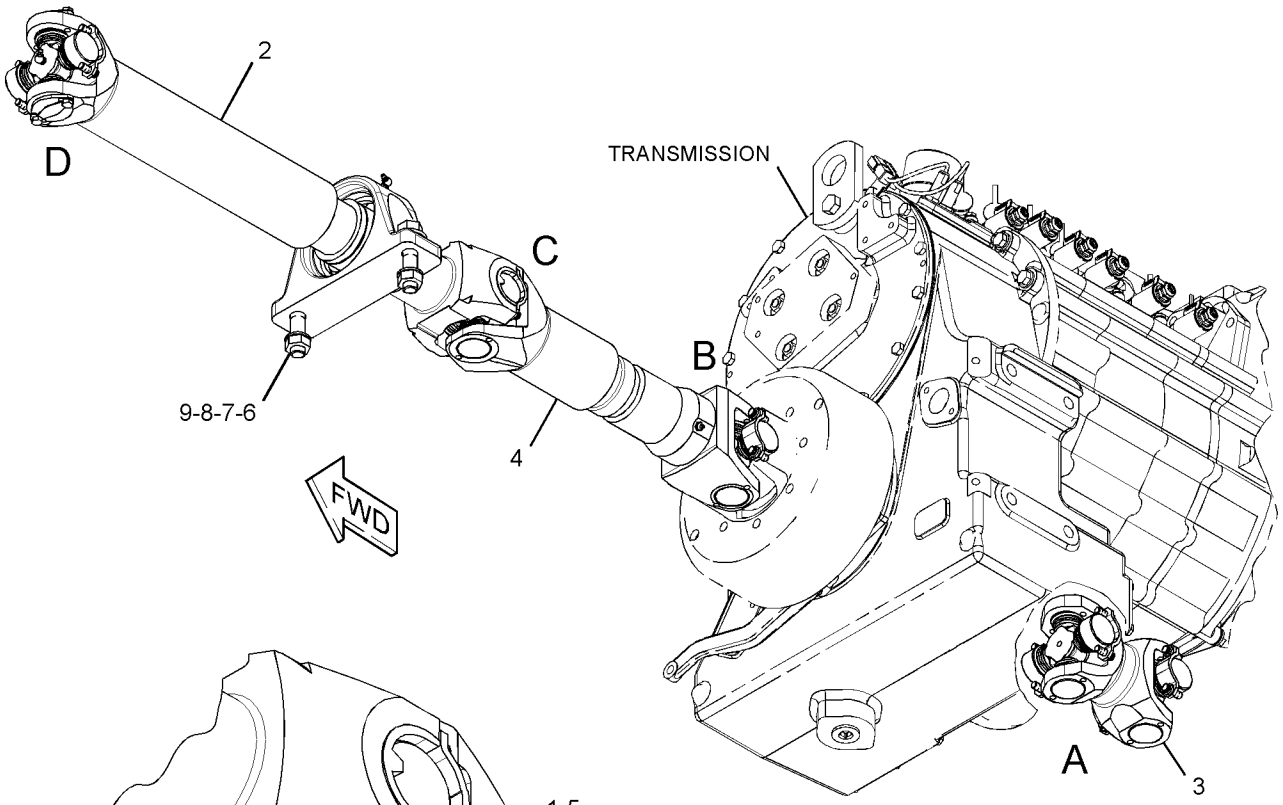

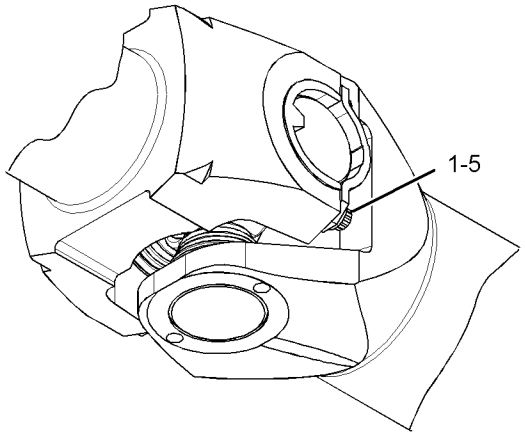

VIEW OF AREA C

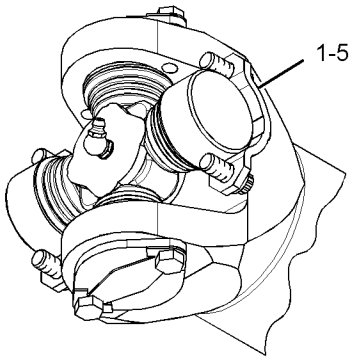

VIEW OF AREA D

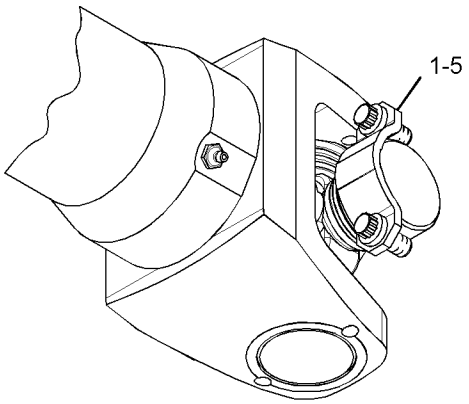

VIEW OF AREA B

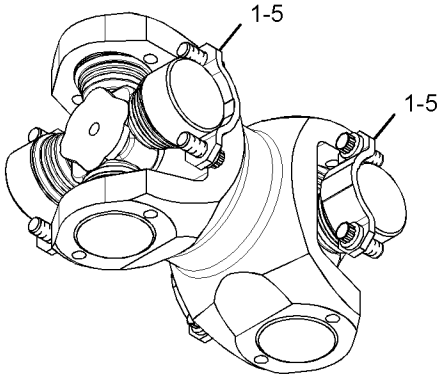

VIEW OF AREA A

GRAPHIC #1 **<END>** g02530137

155-5600 SHAFT GP-DRIVE

S/N: JLX1-UP

PART OF 391-6270 CONFIGURATION AR, 375-3118 LOGGING AR

SMCS-3253 **i04096954**

NOTE	REF NO	GRAPHIC REF	PART NUMBER	QTY	PART NAME 1 2 3 4 5 6 (PRODUCT LEVEL)	SEE PAGE
	1	1	**4E-3273**	4	STRAP	
M	2	1	**4E-5985**	8	BOLT-12 POINT HEAD (M10X1.25X20-MM)	
Y	3	1	**115-1650**	1	UNIVERSAL JOINT GP	494
Y	4	1	**155-5607**	1	SLIP JOINT GP	485
M	5	1	**7X-2564**	2	BOLT (M20X2.5X90-MM)	
	6	1	**8T-4123**	2	WASHER (3.62X5.75X0.375-MM THK)	
M	7	1	**8T-4131**	2	NUT (M20X2.5-THD)	
CY	8	1	*296-4293*	1	SHAFT GP-DRIVE	483
	9	1	**4V-7081**	6	STRAP	
	10	1	**138-3816**	12	BOLT-12 POINT HEAD (M12X1.25X30-MM)	
	11	1	**8T-5439**	2	WASHER-HARD (21.5X45X6-MM THK)	

C - CHANGE FROM PREVIOUS TYPE
M - METRIC PART
Y - SEPARATE ILLUSTRATION

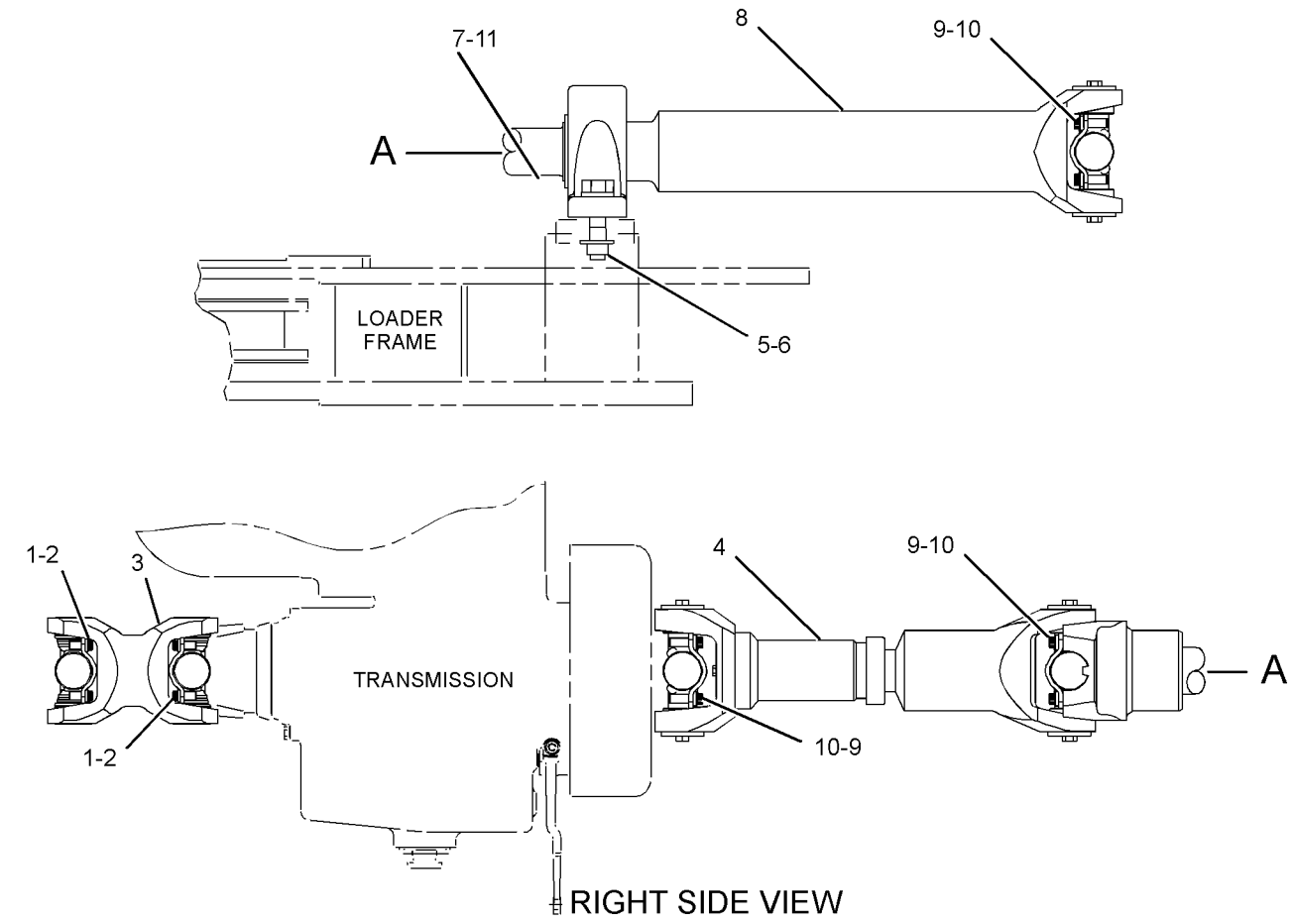

GRAPHIC #1 **<END>** g02521016

296-4290 SHAFT GP-DRIVE

S/N: JLX1-UP

PART OF 115-1648 SHAFT GP-DRIVE

SMCS-3253 **i03865041**

NOTE	REF NO	GRAPHIC REF	PART NUMBER	QTY	PART NAME 1 2 3 4 5 6 (PRODUCT LEVEL)	SEE PAGE
	1	1	**4E-6986**	1	RETAINER	
	2	1	**296-4291**	1	UNIVERSAL JOINT GP	
	2A	1	**4E-9324**	1	SPIDER & BEARING GP	
M	2B	1	**3E-4315**	4	BOLT-LOCKING (M8X1X14-MM)	
	2C	1	**5P-8334**	1	FITTING-HYDRAULIC	
	2D	1	**6W-4126**	2	STRAP-LOCKING	
	3	1	**115-1653**	1	YOKE	
	4	1	**296-4292**	1	BEARING GP-PILLOW BLOCK	
		1	**102-9542**	1	FITTING	
		1	**197-7996**	1	KIT-SETSCREW	
					(INCLUDES SETSCREW-SOCKETS, NUT-HEX, NUT, & SETSCREW-LOCK)	
M	5	1	**8T-0372**	1	BOLT (M12X1.75X90-MM)	

M - METRIC PART

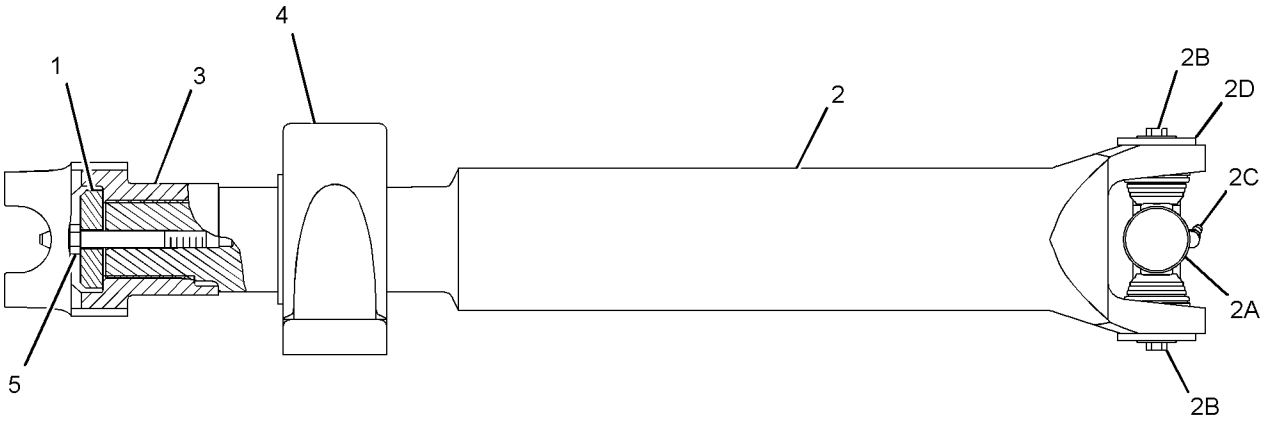

GRAPHIC #1 **<END>** g01429034

296-4293 SHAFT GP-DRIVE

S/N: JLX1-UP

PART OF 155-5600 SHAFT GP-DRIVE

SMCS-3253 **i05227517**

NOTE	REF NO	GRAPHIC REF	PART NUMBER	QTY	PART NAME 1 2 3 4 5 6 (PRODUCT LEVEL)	SEE PAGE
	1	1	**155-5606**	1	YOKE	
	2	1	**296-4294**	1	UNIVERSAL JOINT GP	
	2A	1	**125-8810**	1	SPIDER & BEARING GP	
	2B	1	**9C-9159**	2	PLATE	
	2C	1	**027-1287**	2	FITTING-GREASE	
M	2D	1	**153-1185**	4	BOLT (M10X1.25X16-MM)	
	3	1	**296-4292**	1	BEARING GP-PILLOW BLOCK	
		1	**102-9542**	1	FITTING	
		1	**197-7996**	1	KIT-SETSCREW	
					(INCLUDES SETSCREW-SCOCKETS, SETSCREW-LOCK, NUT & NUT-HEX)	
	4	1	**4E-6986**	1	RETAINER	
M	5	1	**8T-0372**	1	BOLT (M12X1.75X90-MM)	

M - METRIC PART

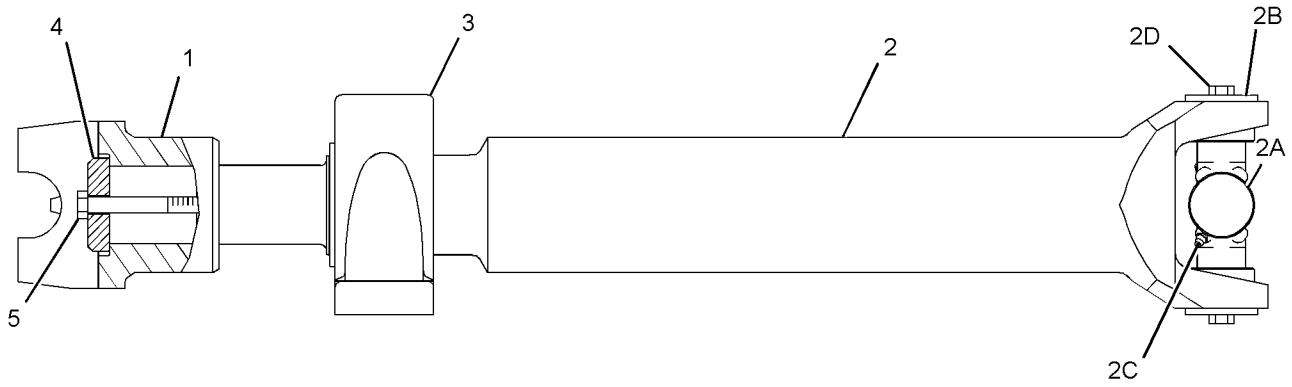

GRAPHIC #1 **<END>** g01430301

115-1651 SLIP JOINT GP

S/N: JLX1-UP

PART OF 115-1648 SHAFT GP-DRIVE

SMCS-3251 **i03732760**

NOTE	REF NO	GRAPHIC REF	PART NUMBER	QTY	PART NAME 1 2 3 4 5 6 (PRODUCT LEVEL)	SEE PAGE
	1	1	**3B-8489**	1	FITTING-GREASE	
	2	1	**4E-9324**	2	SPIDER & BEARING GP	
					(EACH INCLUDES)	
M	3	1	**3E-4315**	4	BOLT-LOCKING (M8X1X14-MM)	
	4	1	**6W-4126**	2	STRAP-LOCKING	
	5	1	**5P-8334**	1	FITTING-HYDRAULIC	
	6	1	**8V-1412**	1	RETAINER	
					-OR-	
		1	**111-8614**	1	RETAINER	
	7	1	**196-8488**	1	CAP-DUST	

M - METRIC PART

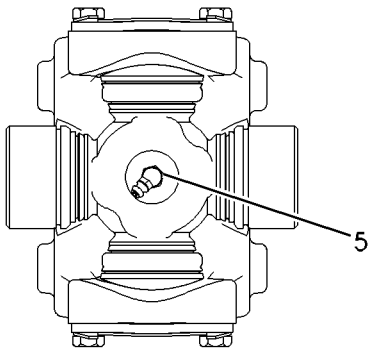

VIEW A-A

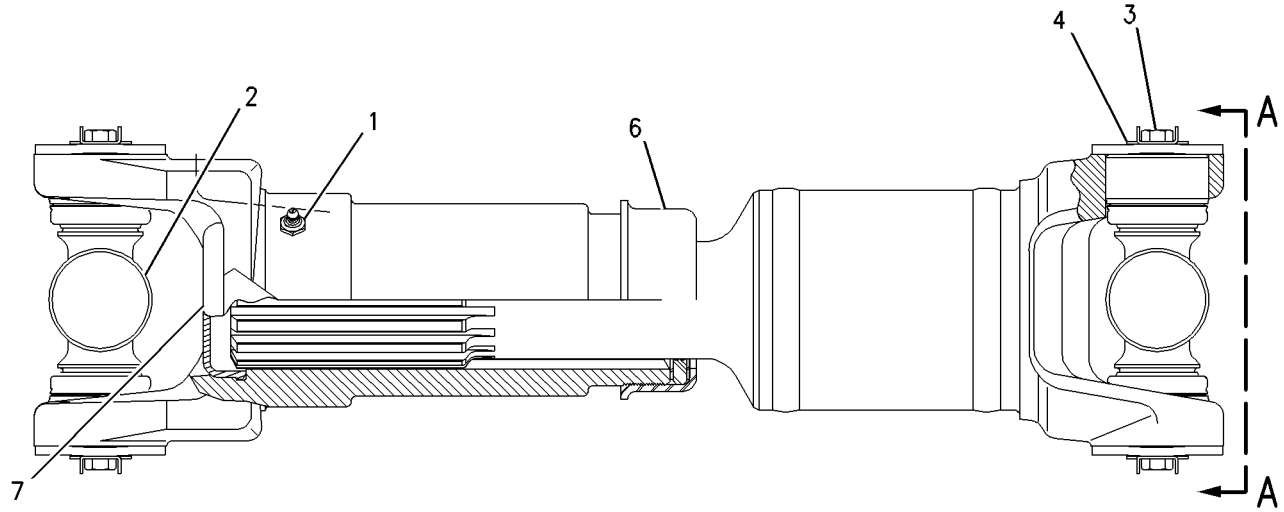

GRAPHIC #1 **<END>** g00985616

155-5607 SLIP JOINT GP

S/N: JLX1-UP

PART OF 155-5600 SHAFT GP-DRIVE

SMCS-3251 **i02119403**

NOTE	REF NO	GRAPHIC REF	PART NUMBER	QTY	PART NAME 1 2 3 4 5 6 (PRODUCT LEVEL)	SEE PAGE
	1	1	**3B-8489**	1	FITTING-GREASE	
Y	2	1	**125-8810**	2	SPIDER & BEARING GP	486
	3	1	**8V-1412**	1	RETAINER	
	4	1	**196-8490**	1	CAP AS-DUST	

Y - SEPARATE ILLUSTRATION

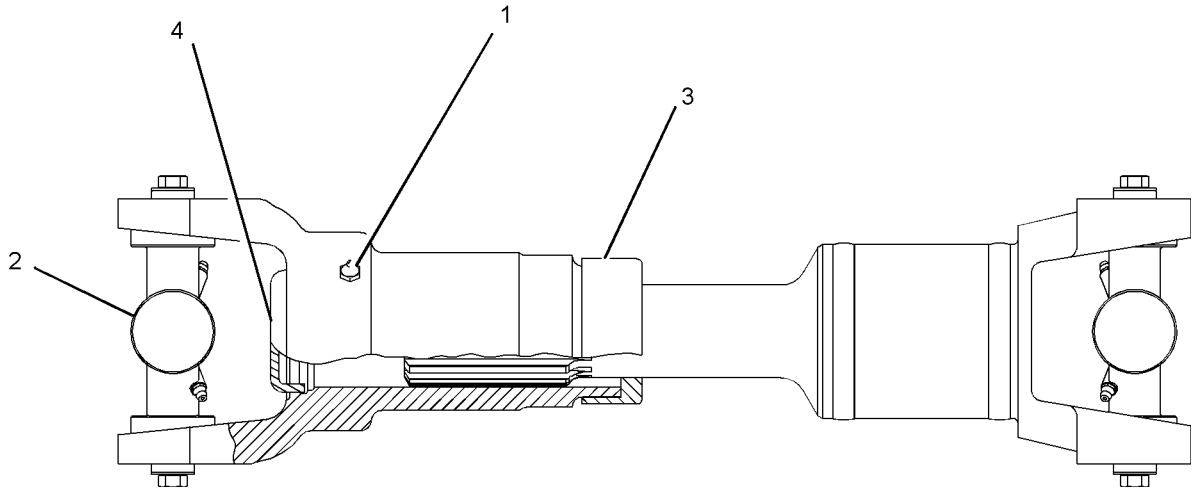

GRAPHIC #1 **<END>** g01015858

125-8810 SPIDER & BEARING GP

S/N: JLX1-UP

PART OF 155-5607 SLIP JOINT GP

SMCS-3251, 3253 **i00811623**

NOTE	REF NO	GRAPHIC REF	PART NUMBER	QTY	PART NAME 1 2 3 4 5 6 (PRODUCT LEVEL)	SEE PAGE
M	1	1	**153-1185**	4	BOLT (M10X1.25X16-MM)	
	2	1	**027-1287**	2	FITTING-GREASE	
	3	1	**9C-9159**	2	PLATE	

M - METRIC PART

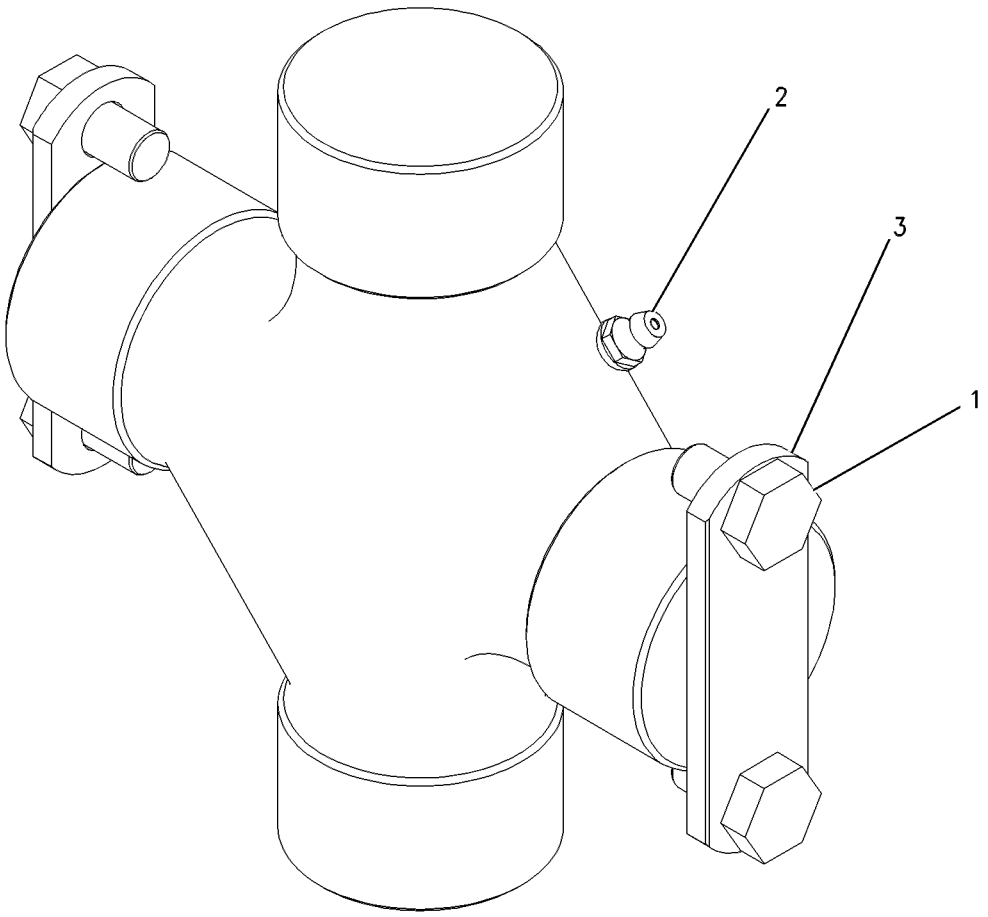

GRAPHIC #1 **<END>** g00389972

138-2758 TIRE & RIM AR

S/N: JLX1-UP

23.5-25 16 PR L-3

SMCS-4202 **i05373527**

NOTE	PART NUMBER	QTY	PART NAME 1 2 3 4 5 6 (PRODUCT LEVEL)	SEE PAGE
Y	*138-2373*	1	RIM AR	475
	127-4732	4	TIRE (23.5-25)	

Y - SEPARATE ILLUSTRATION

<END>

141-0312 TIRE & RIM AR

S/N: JLX1-UP

23.5-25 16 PR L-5

SMCS-4202 **i05757898**

NOTE	PART NUMBER	QTY	PART NAME 1 2 3 4 5 6 (PRODUCT LEVEL)	SEE PAGE
Y	*176-2444*	1	BLOCK GP-AXLE OSC LIMITER	502
Y	*138-2373*	1	RIM AR	475
	9K-0443	4	TIRE (23.5-25)	

Y - SEPARATE ILLUSTRATION

<END>

165-0556 TIRE & RIM AR

S/N: JLX1-UP

SMCS-4202 **i05373591**

NOTE	PART NUMBER	QTY	PART NAME 1 2 3 4 5 6 (PRODUCT LEVEL)	SEE PAGE
Y	*176-2444*	1	BLOCK GP-AXLE OSC LIMITER	502
Y	*138-2373*	1	RIM AR	475
	165-0555	4	TIRE (23.5-R25)	

Y - SEPARATE ILLUSTRATION

<END>

165-6179 TIRE & RIM AR

S/N: JLX1-UP

SMCS-4202 **i05870453**

NOTE	PART NUMBER	QTY	PART NAME 1 2 3 4 5 6 (PRODUCT LEVEL)	SEE PAGE
Y	*138-2373*	1	RIM AR	475
	165-6162	4	TIRE (23.5-R25)	

Y - SEPARATE ILLUSTRATION

<END>

316-3506 TIRE & RIM AR

S/N: JLX1-UP

SMCS-4202 **i05374023**

NOTE	PART NUMBER	QTY	PART NAME 1 2 3 4 5 6 (PRODUCT LEVEL)	SEE PAGE
Y	*176-2444*	1	BLOCK GP-AXLE OSC LIMITER	502
Y	*138-2373*	1	RIM AR	475
	264-1387	4	TIRE (23.5-25)	

Y - SEPARATE ILLUSTRATION

<END>

358-3080 TIRE & RIM AR

S/N: JLX1-UP

23.5-R25

SMCS-4202 **i05119869**

NOTE	PART NUMBER	QTY	PART NAME 1 2 3 4 5 6 (PRODUCT LEVEL)	SEE PAGE
Y	*340-7779*	1	RIM AR	475
	319-7428	4	TIRE (23.5-R25)	

Y - SEPARATE ILLUSTRATION

<END>

359-1303 TIRE & RIM AR

S/N: JLX1-UP

SMCS-4202 **i04034923**

NOTE	PART NUMBER	QTY	PART NAME 1 2 3 4 5 6 (PRODUCT LEVEL)	SEE PAGE
Y	*138-2373*	1	RIM AR	475
	354-1627	4	TIRE (23.5-R25)	

Y - SEPARATE ILLUSTRATION

<END>

268-6472 TORQUE CONVERTER & HOUSING GP

S/N: KYM1-UP; KYN1-UP; W2W1-UP; W2X1-UP; BYY1-UP; BYZ1-UP
PART OF 268-6505, 268-6506 TRANSMISSION AR

SMCS-3101, 3105 **i04749251**

NOTE	REF NO	GRAPHIC REF	PART NUMBER	QTY	PART NAME 1 2 3 4 5 6 (PRODUCT LEVEL)	SEE PAGE
	1	1	**1V-6341**	1	SEAL	
	2	1	**3T-9958**	1	SHAFT	
	3	1	**6V-0852**	1	CAP-DUST	
	4	1	**8E-7475**	1	GEAR-DRIVE (59-TEETH)	
	5	1	**8S-6365**	1	PLUG-CUP	
	6	1	**115-2021**	1	FLANGE-PUMP DRIVE	
Y	7	1	**116-3825**	1	TORQUE CONVERTER GP	491
	8	1	**137-4549**	1	GEAR-PUMP DRIVE (79-TEETH)	
	9	1	**241-9023**	1	HOUSING-TORQUE CONVERTER	
	10	1	**314-2885**	1	CONNECTOR-SPECIAL	
Y	11	1	**318-1178**	1	SENSOR GP-SPEED (MAGNETIC, HIGH OUTPUT)	293
	12	1	**144-8299**	1	SEAL-O-RING	
	13	1	*164-5567*	1	COUPLER AS-QUICK DISCONNECT (MALE)	
		1	**6V-3965**	1	FITTING (QUICK DISCONNECT)	
		1	**214-7568**	1	SEAL-O-RING	
	14	1	**1T-0043**	1	BALL BEARING	
	15	1	**1T-1639**	1	RING	
	16	1	**214-7568**	1	SEAL-O-RING	
	17	1	**2S-6408**	1	WASHER-RETAINING (0.531X3.25X0.438-IN THK)	
	18	1	**5F-1678**	1	SEAL-O-RING	
	19	1	**5P-8245**	1	WASHER-HARD (13.5X25.5X3-MM THK)	
M	20	1	**6V-1820**	6	BOLT (M10X1.5X30-MM)	
M	21	1	**6V-5696**	1	BOLT (M12X1.75X80-MM)	
	22	1	**6V-5839**	14	WASHER (11X21X2.5-MM THK)	
M	23	1	**6V-5842**	8	BOLT (M10X1.5X40-MM)	
M	24	1	**8T-0372**	1	BOLT (M12X1.75X90-MM)	
	25	1	**9X-8268**	1	WASHER (17.5X30X3.5-MM THK)	

M - METRIC PART
Y - SEPARATE ILLUSTRATION

268-6472 **TORQUE CONVERTER & HOUSING GP (*contd.*)** **i04749251**

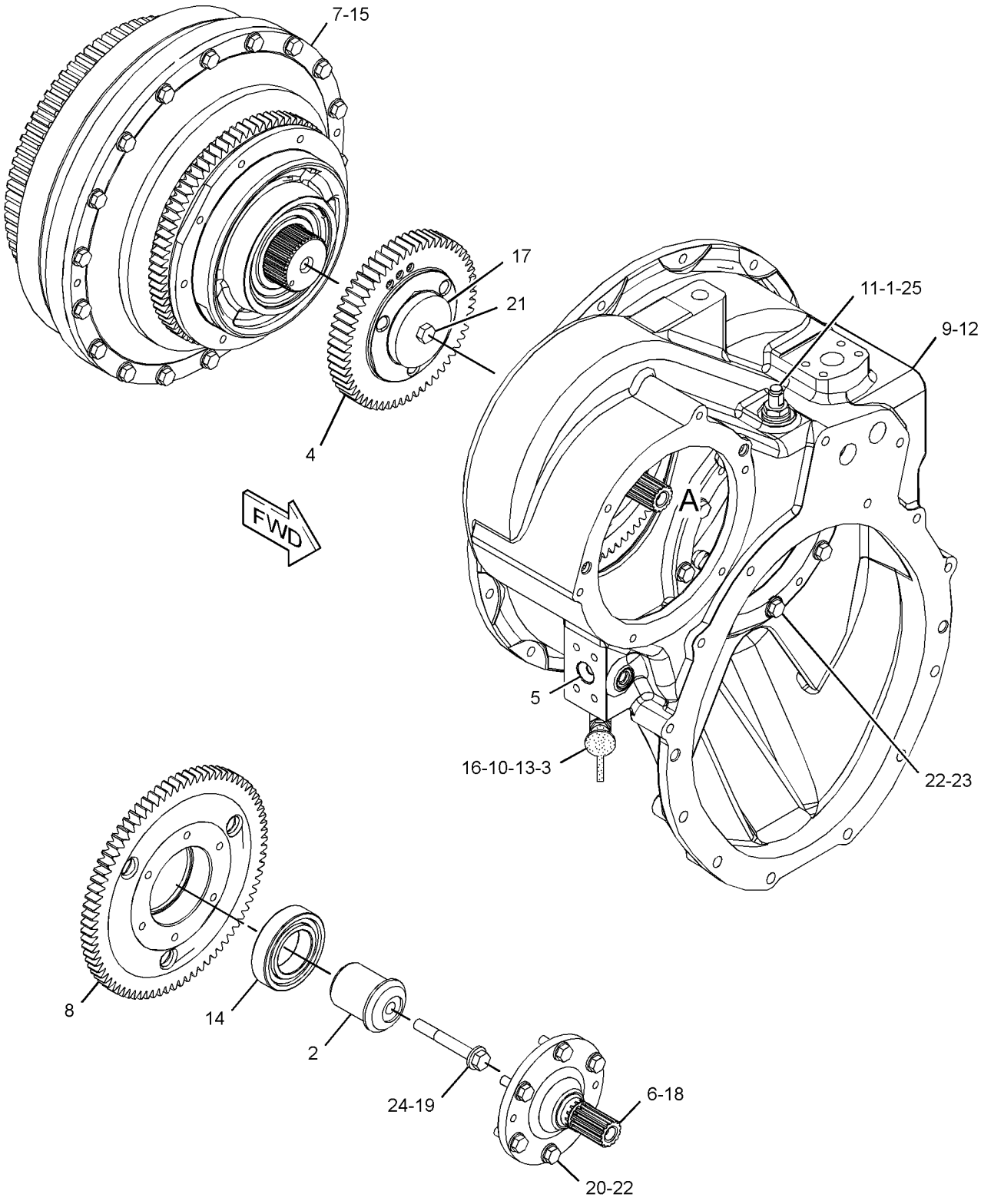

VIEW OF AREA A

GRAPHIC #1 **<END>** g02852897

116-3825 TORQUE CONVERTER GP

S/N: 4AT1-UP

BSC

PART OF 268-6472 TORQUE CONVERTER & HOUSING GP

SMCS-3101 **i00813259**

NOTE	REF NO	GRAPHIC REF	PART NUMBER	QTY	PART NAME 1 2 3 4 5 6 (PRODUCT LEVEL)	SEE PAGE
	1	1	**6Y-4859**	1	HOUSING	
M	2	1	**6V-1820**	34	BOLT (M10X1.5X30-MM)	
	3	1	**6V-5839**	34	WASHER (11X21X2.5-MM THK)	
	4	1	**6Y-1085**	1	IMPELLER-CONVERTER	
	5	1	**137-4548**	1	GEAR-DRIVE (79-TEETH) (82 TEETH)	
	6	1	**1T-1621**	1	RING-SEAL	
	7	1	**6V-8128**	2	RING-RETAINING	
	8	1	**115-2023**	1	SHAFT-OUTPUT	
	9	1	**5P-6414**	3	RING-RETAINING	
	10	1	**1S-3743**	1	BALL BEARING	
	11	1	**1T-1622**	1	RING-SEAL	
M	12	1	**6V-7673**	8	BOLT (M12X1.75X50-MM)	
	13	1	**129-2380**	1	BALL BEARING	
	14	1	**8E-6647**	1	SPACER (64.8X85X11-MM THK)	
	15	1	**6Y-3151**	1	STATOR-CONVERTER	
	16	1	**6Y-3149**	1	TURBINE-CONVERTER	
	17	1	**5K-9065**	1	RING-RETAINING	
	18	1	**6Y-1093**	1	ADAPTER-SPLINED	
	19	1	**3E-6799**	1	SEAL-O-RING	
	20	1	**6Y-1087**	1	COVER-END	
	21	1	**064-3843**	1	RING-SNAP	
	22	1	**8E-6648**	1	SPACER (60.2X80X3-MM THK)	
	23	1	**8E-5247**	1	BALL BEARING	
	24	1	**115-2025**	1	CARRIER AS	
	25	1	**4S-8541**	1	DOWEL	
	26	1	**8E-6539**	1	HUB AS	
	27	1	**4S-8541**	1	DOWEL	

M - METRIC PART

116-3825 **TORQUE CONVERTER GP (*contd.*)** **i00813259**

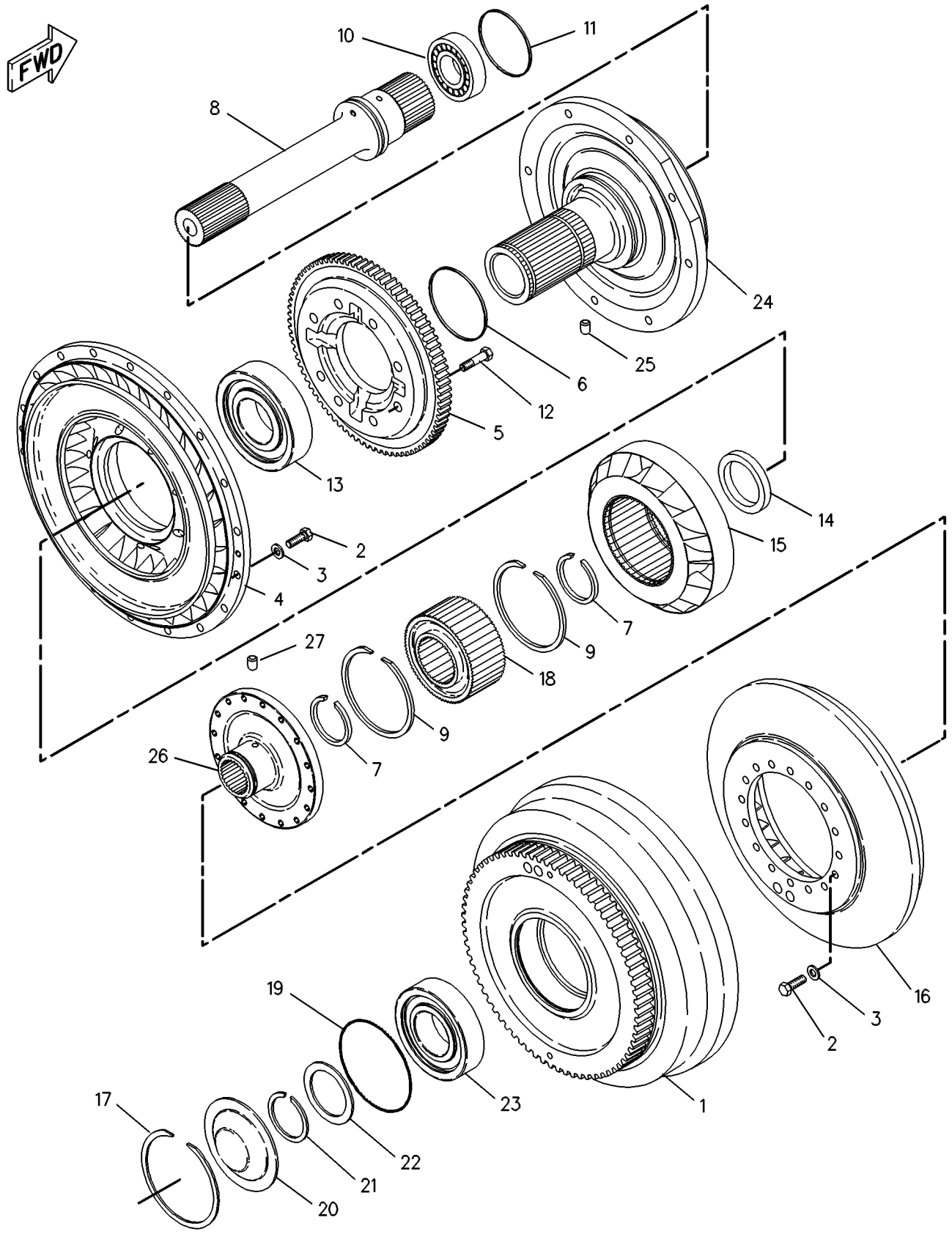

GRAPHIC #1 **<END>** g00261596

268-6505 TRANSMISSION AR

S/N: KYM1-UP; W2W1-UP; BYY1-UP
PART OF 372-2875 POWER TRAIN AR

SMCS-3030 **i04748953**

NOTE	PART NUMBER	QTY	PART NAME 1 2 3 4 5 6 (PRODUCT LEVEL)	SEE PAGE
Y	*247-7830*	1	CONTROL GP-TRANSMISSION HYD	396
Y	*249-8173*	1	GEAR GP-OUTPUT TRANSFER	420
Y	*186-2522*	1	PLANETARY GP-TRANSMISSION	462
Y	*241-8692*	1	PUMP GP-TRANSMISSION	472
Y	*268-6472*	1	TORQUE CONVERTER & HOUSING GP	489

Y - SEPARATE ILLUSTRATION

<END>

268-6506 TRANSMISSION AR

S/N: KYN1-UP; W2X1-UP; BYZ1-UP
PART OF 391-6270 CONFIGURATION AR, 375-3118 LOGGING AR

SMCS-3030 **i04776893**

NOTE	PART NUMBER	QTY	PART NAME 1 2 3 4 5 6 (PRODUCT LEVEL)	SEE PAGE
Y	*247-7830*	1	CONTROL GP-TRANSMISSION HYD	396
Y	*249-8175*	1	GEAR GP-OUTPUT TRANSFER	425
Y	*186-2522*	1	PLANETARY GP-TRANSMISSION	462
Y	*241-8692*	1	PUMP GP-TRANSMISSION	472
Y	*268-6472*	1	TORQUE CONVERTER & HOUSING GP	489

Y - SEPARATE ILLUSTRATION

<END>

115-1650 UNIVERSAL JOINT GP

S/N: JLX1-UP

PART OF 115-1648, 155-5600 SHAFT GP-DRIVE

SMCS-3251, 3253 **i00791619**

NOTE	REF NO	GRAPHIC REF	PART NUMBER	QTY	PART NAME 1 2 3 4 5 6 (PRODUCT LEVEL)	SEE PAGE
	1	1	**4E-9324**	2	SPIDER & BEARING GP	
					(EACH INCLUDES)	
M	2	1	**3E-4315**	4	BOLT-LOCKING (M8X1X14MM)	
	3	1	**6W-4126**	2	STRAP-LOCKING	
	4	1	**5P-8334**	1	FITTING-HYDRAULIC	

M - METRIC PART

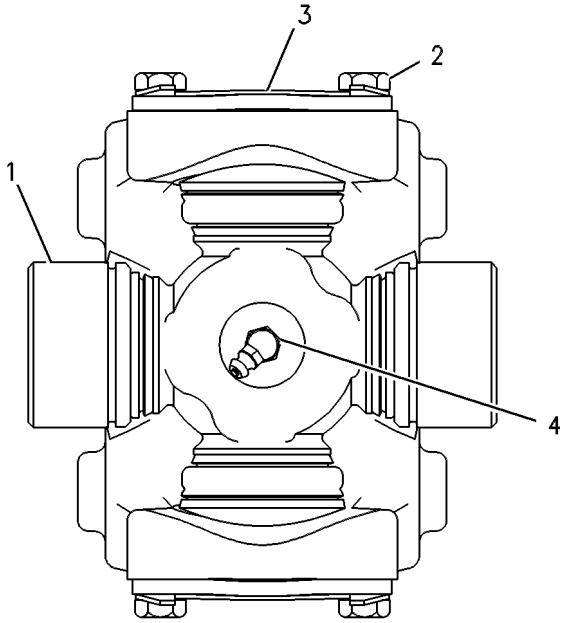

GRAPHIC #1 **<END>** g00269207

244-3114 VALVE GP-MODULATING

S/N: KYM1-UP; KYN1-UP; W2W1-UP; W2X1-UP; BYY1-UP; BYZ1-UP
24-VOLT
PART OF 247-7830 CONTROL GP-TRANSMISSION HYD

SMCS-3139 **i05515974**

NOTE	PART NUMBER	QTY	PART NAME 1 2 3 4 5 6 (PRODUCT LEVEL)	SEE PAGE
Y	*385-4432*	1	VALVE GP-MODULATING (24-VOLT)	496
			—OR—	
Y	*425-6734*	1	VALVE GP-MODULATING (24-VOLT)	497

Y - SEPARATE ILLUSTRATION

<END>

385-4432 VALVE GP-MODULATING

S/N: KYM1-UP; KYN1-UP; W2W1-UP; W2X1-UP; BYY1-UP; BYZ1-UP
24-VOLT
PART OF 244-3114 VALVE GP-MODULATING

SMCS-3139 **i05516050**

NOTE	REF NO	GRAPHIC REF	PART NUMBER	QTY	PART NAME 1 2 3 4 5 6 (PRODUCT LEVEL)	SEE PAGE
	1	1	**6V-3965**	1	FITTING (QUICK DISCONNECT)	
	2	1	**323-9531**	1	COIL AS (24-VOLT)	
	3	1	**214-7568**	1	SEAL-O-RING	
	4	1	**164-2108**	1	WASHER (13.03X25.4X2.38-MM THK)	
	5	1	**218-2373**	1	NUT (1/2-28-THD)	
					PARTS SHOWN IN GRAPHIC(S) WITHOUT A REFERENCE NUMBER ARE NOT SERVICED SEPARATELY	

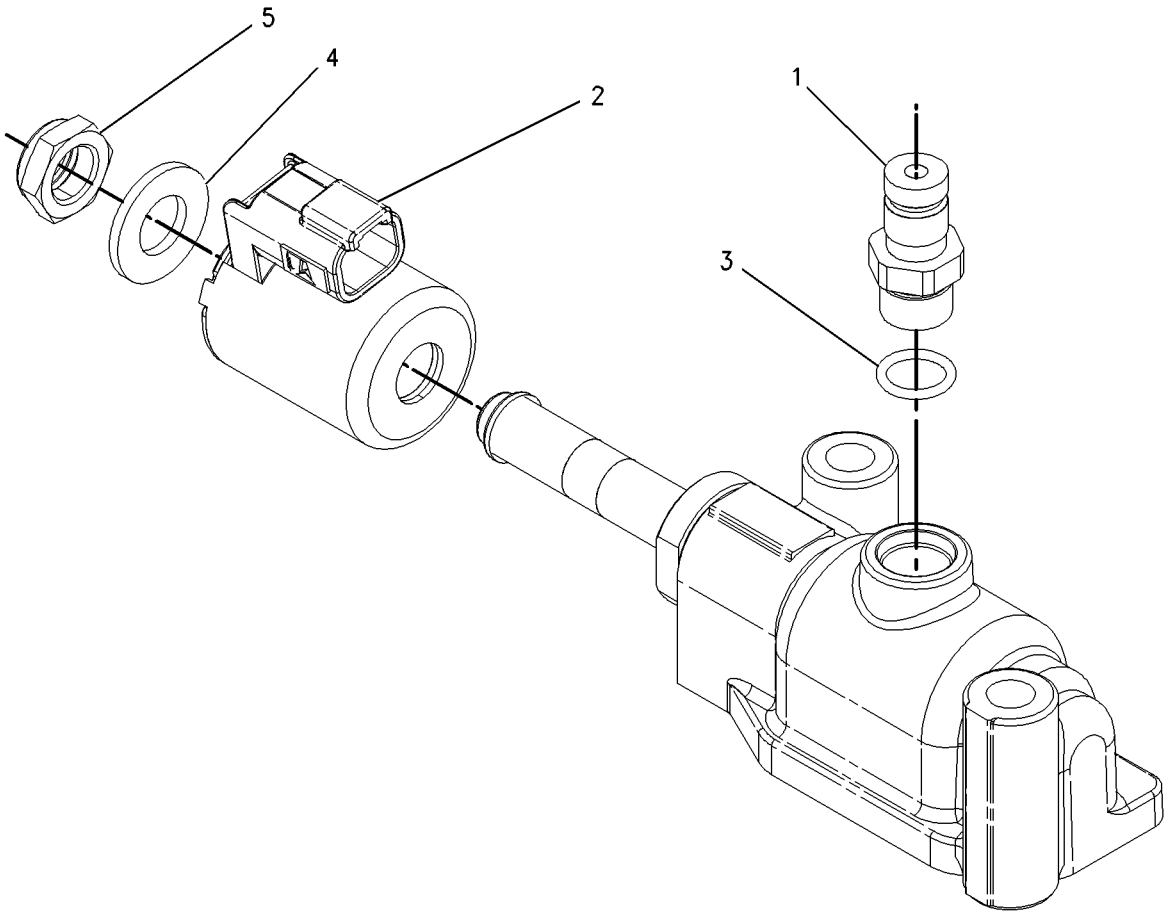

GRAPHIC #1 **<END>** g00919065

425-6734 VALVE GP-MODULATING

S/N: KYM1-UP; KYN1-UP; W2W1-UP; W2X1-UP; BYY1-UP; BYZ1-UP
24-VOLT
PART OF 244-3114 VALVE GP-MODULATING

SMCS-3139 **i05980386**

NOTE	REF NO	GRAPHIC REF	PART NUMBER	QTY	PART NAME 1 2 3 4 5 6 (PRODUCT LEVEL)	SEE PAGE
	1	1	**6V-3965**	1	FITTING (QUICK DISCONNECT)	
	2	1	**323-9531**	1	COIL AS (24-VOLT)	
	3	1	**214-7568**	1	SEAL-O-RING	
	4	1	**164-2108**	1	WASHER (13.03X25.4X2.38-MM THK)	
	5	1	**218-2373**	1	NUT (1/2-28-THD)	
					PARTS SHOWN IN GRAPHIC(S) WITHOUT A REFERENCE NUMBER ARE NOT SERVICED SEPARATELY	

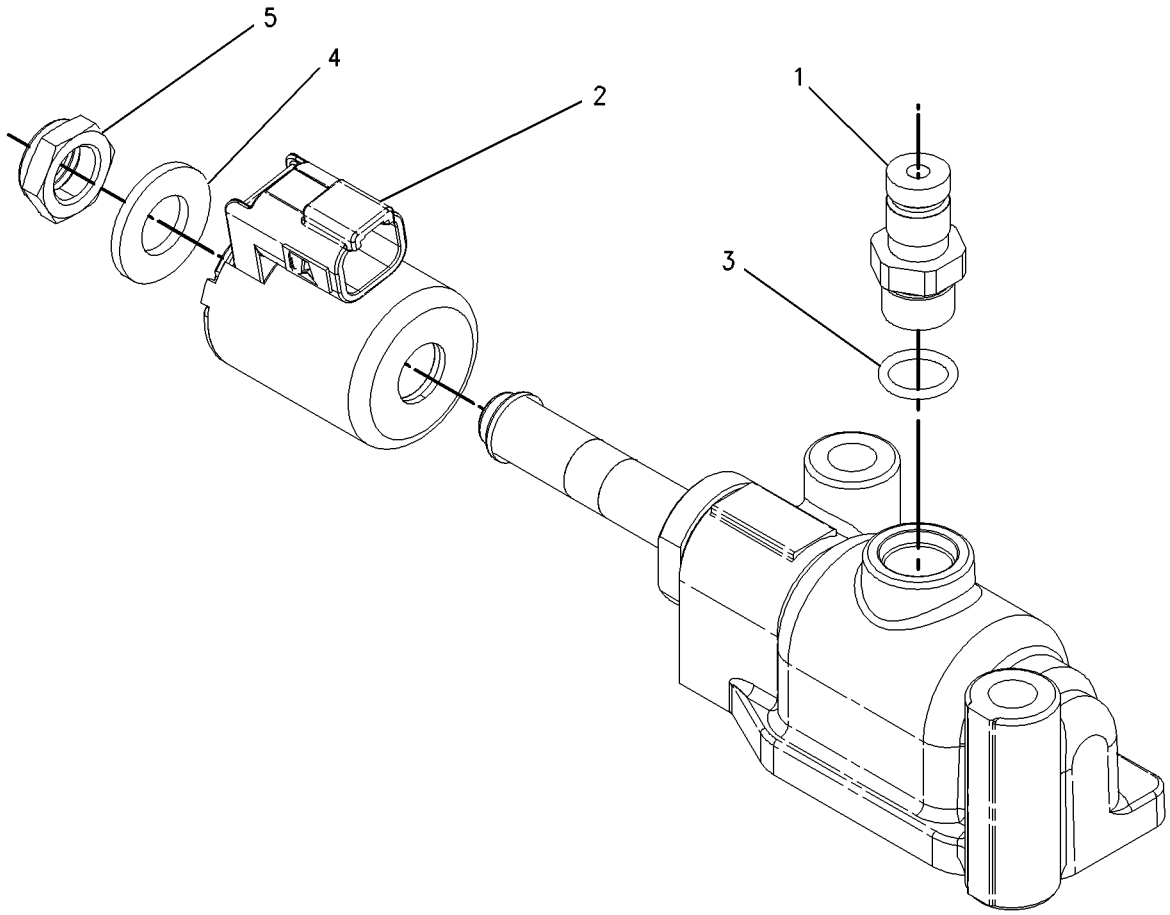

GRAPHIC #1 **<END>** g00919065

202-8933 VALVE GP-RELIEF—TRANSMISSION HYDRAULIC CONTROL

S/N: KYM1-UP; KYN1-UP; W2W1-UP; W2X1-UP; BYY1-UP; BYZ1-UP

PART OF 247-7830 CONTROL GP-TRANSMISSION HYD

SMCS-3133, 3182, 3210, 3213 **i03870399**

NOTE	REF NO	GRAPHIC REF	PART NUMBER	QTY	PART NAME 1 2 3 4 5 6 (PRODUCT LEVEL)	SEE PAGE
	1	1	**2S-4663**	1	SEAL-O-RING	
	2	1	*164-5567*	2	COUPLER AS-QUICK DISCONNECT (MALE)	
					(EACH INCLUDES)	
		1	**3J-1907**	1	SEAL-O-RING	
		1	**6V-3965**	1	FITTING (QUICK DISCONNECT)	
	4	1	**6V-0852**	2	CAP-DUST	
	5	1	**241-6206**	1	PLUG	
	6	1	**2M-9780**	1	SEAL-O-RING	
	7	1	**202-2005**	1	COVER	
	8	1	**9M-2110**	1	COVER-ADJUSTMENT	
	9	1	**9S-8001**	3	PLUG	
	10	1	**4J-7533**	3	SEAL-O-RING	
M	11	1	**6V-5218**	2	BOLT (M8X1.25X35-MM)	
	12	1	**9M-1974**	2	WASHER-HARD (8.8X16X2-MM THK)	
M	13	1	**6V-3940**	2	BOLT (M8X1.25X25-MM)	
	14	1	**8E-1143**	1	SLUG	
	15	1	**9U-8668**	1	SPOOL AS	
		1	**3D-8317**	1	RING-RETAINING	
		1	**4B-9880**	1	BALL	
		1	**4M-2381**	1	SPRING	
		1	**8E-9893**	1	SPOOL-RELIEF	
		1	**9U-8669**	1	RETAINER	
	16	1	**1M-9351**	1	SPRING	
	17	1	**2S-5835**	1	PISTON-LOAD	
	18	1	**202-2006**	1	SCREW-ADJUSTMENT	
	19	1	**8M-5253**	1	SEAL-O-RING	
	20	1	*164-6874*	2	FITTING AS-ELBOW (QUICK DISCONNECT, MALE)	
					(EACH INCLUDES)	
		1	**3J-1907**	1	SEAL-O-RING	
		1	**085-7356**	1	FITTING	
	21	1	**111-3200**	1	BODY	

M - METRIC PART

202-8933 **VALVE GP-RELIEF (*contd.*)** **i03870399**

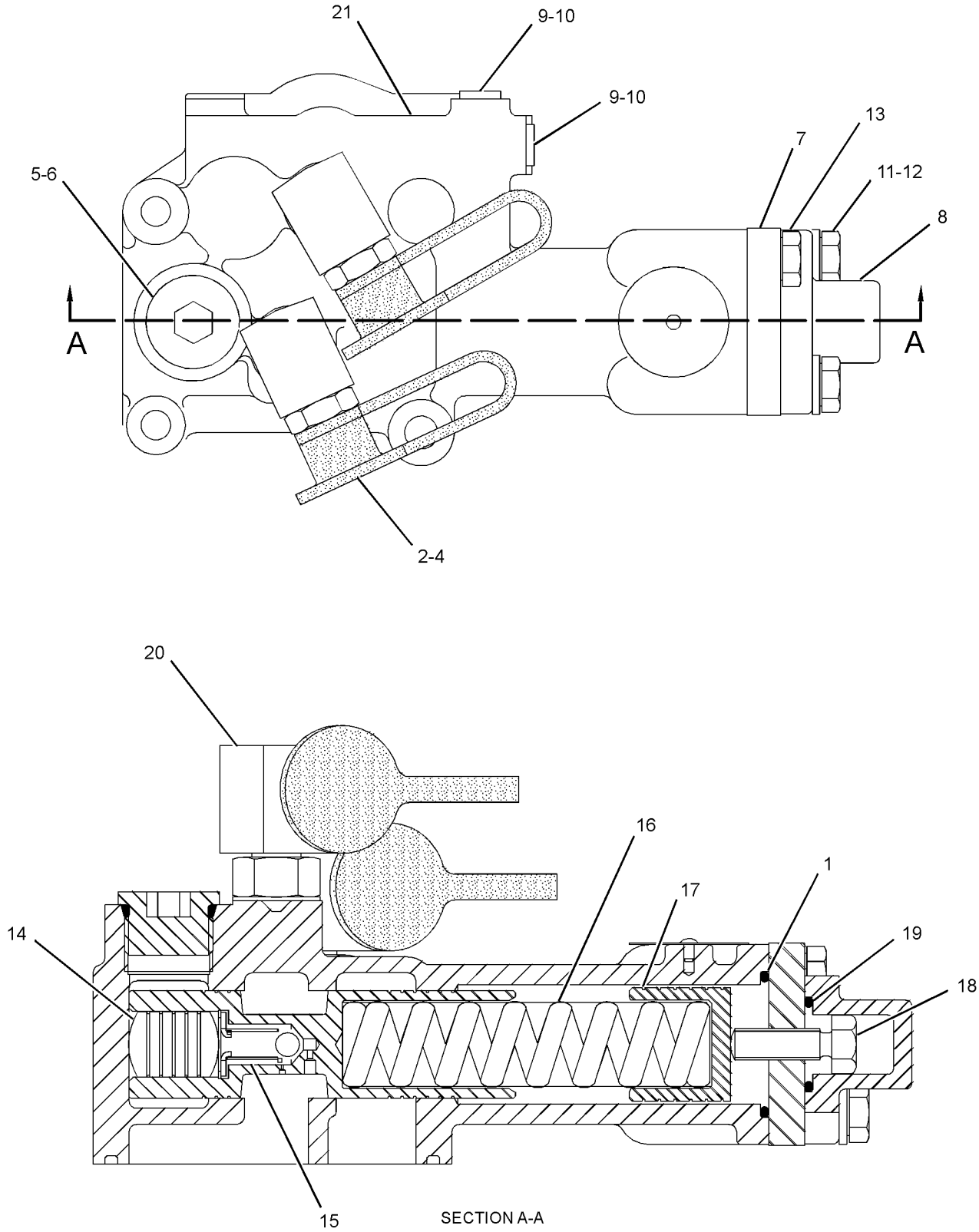

GRAPHIC #1 **<END>** g01192231

2D-2511 VALVE GP-TIRE

S/N: JLX1-UP

PART OF 206-9278, 340-7778 RIM GP-DEMOUNTABLE

SMCS-4203 **i04804719**

NOTE	REF NO	GRAPHIC REF	PART NUMBER	QTY	PART NAME 1 2 3 4 5 6 (PRODUCT LEVEL)	SEE PAGE
	1	1	**3D-2239**	1	VALVE AS-TIRE	
	1A	1	**6F-3930**	1	CORE-VALVE	
	1B	1	**9K-7951**	1	CAP-VALVE (STEM)	
	2	1	**7D-5252**	1	SPUD AS	
	2A	1	**2D-2507**	1	SPUD	
	2B	1	**2D-2508**	1	GROMMET	
	2C	1	**2D-2509**	1	LOCKNUT (11/16-16-THD)	

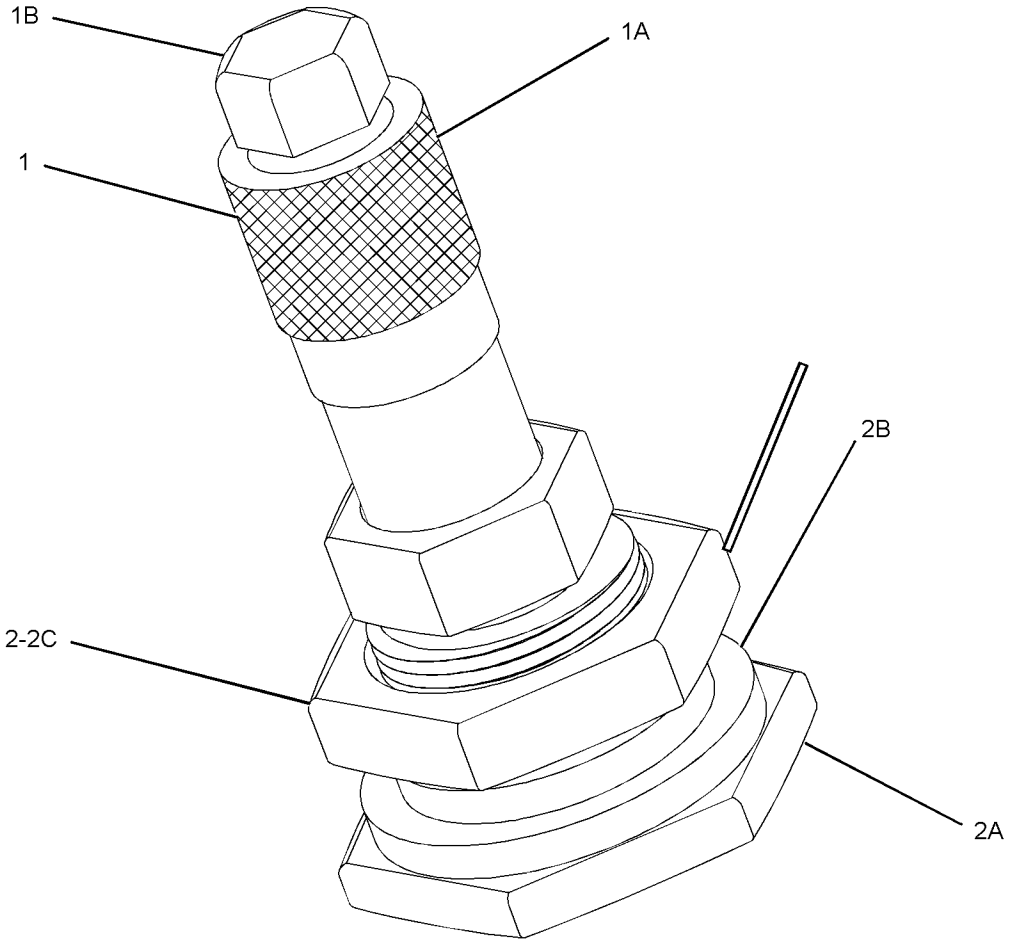

GRAPHIC #1 **<END>** g02345745

305-8958 ACTUATOR GP-POWER

S/N: JLX1-UP

PART OF 374-5373 TILT GP-HOOD

SMCS-1427, 7153, 7275 **i02908744**

NOTE	REF NO	GRAPHIC REF	PART NUMBER	QTY	PART NAME 1 2 3 4 5 6 (PRODUCT LEVEL)	SEE PAGE
	1	1	**117-1559**	1	MOUNT AS	
	2	1	**122-4233**	1	WIPER	
	3	1	**305-8969**	1	POST AS	
	4	1	**305-8966**	1	POWERHEAD AS	
M	5	1	**179-4324**	2	LOCKNUT (M5X0.8-THD)	
	6	1	**168-2166**	1	GASKET-MOTOR (HOOD TILT)	
	7	1	**203-6473**	1	GASKET	
	8	1	**205-6029**	1	MOTOR AS-ELECTRIC (HOOD TILT)	
	9	1	**308-2071**	1	ROD END	
	10	1	**8T-4121**	4	WASHER-HARD (11X21X2.5-MM THK)	
M	11	1	**8T-4133**	4	NUT (M10X1.5-THD)	
M	12	1	**8T-4137**	2	BOLT (M10X1.5X20-MM)	
	13	1	**278-0644**	1	GASKET-COVER	

M - METRIC PART

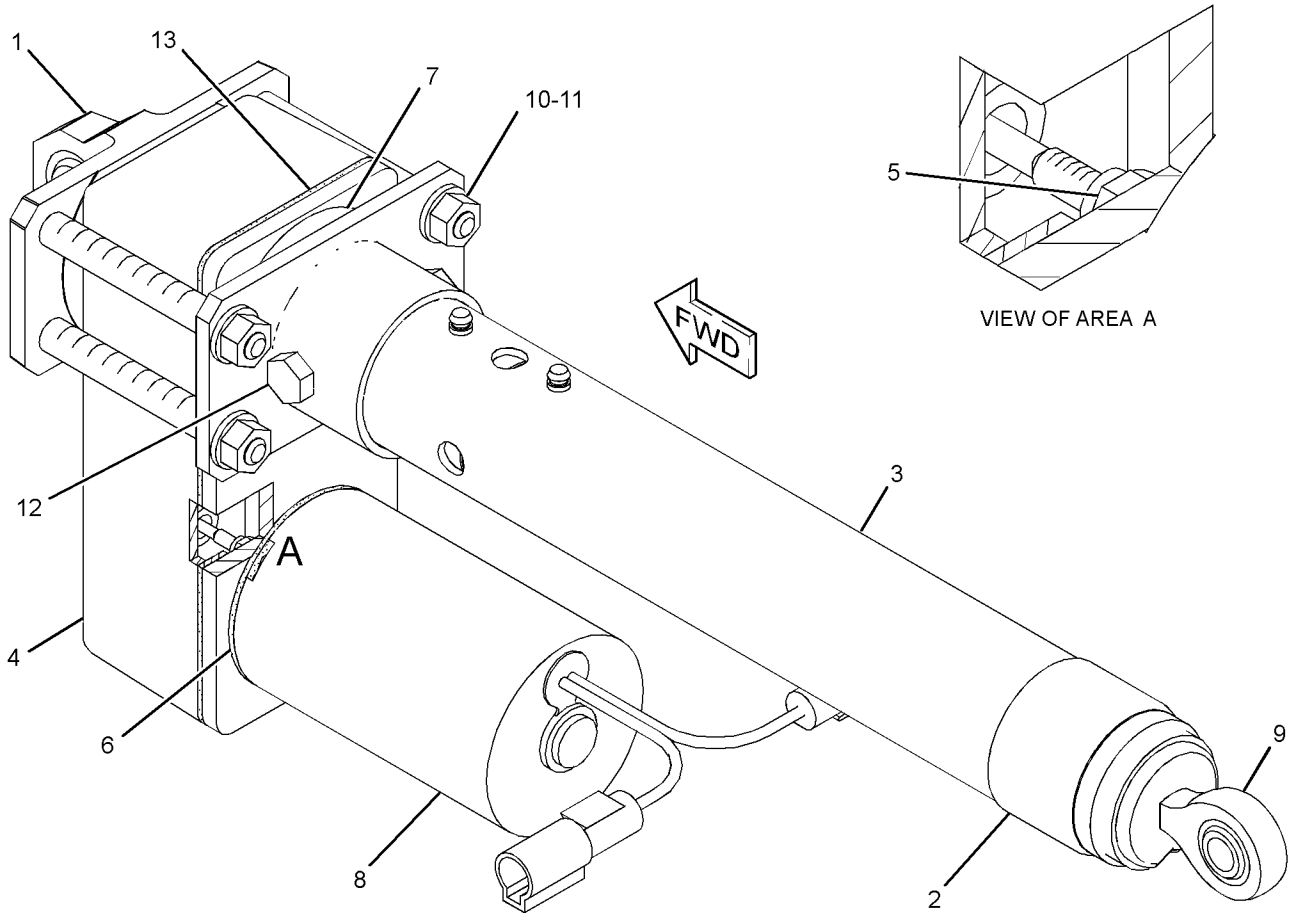

GRAPHIC #1 **<END>** g01447785

176-2444 BLOCK GP-AXLE OSC LIMITER

S/N: JLX1-UP

PART OF 141-0312, 165-0556, 316-3506 TIRE & RIM AR

SMCS-3278, 7051 **i03013596**

NOTE	REF NO	GRAPHIC REF	PART NUMBER	QTY	PART NAME 1 2 3 4 5 6 (PRODUCT LEVEL)	SEE PAGE
	1	1	**314-9350**	2	BLOCK	
	2	1	**314-9351**	2	BLOCK	

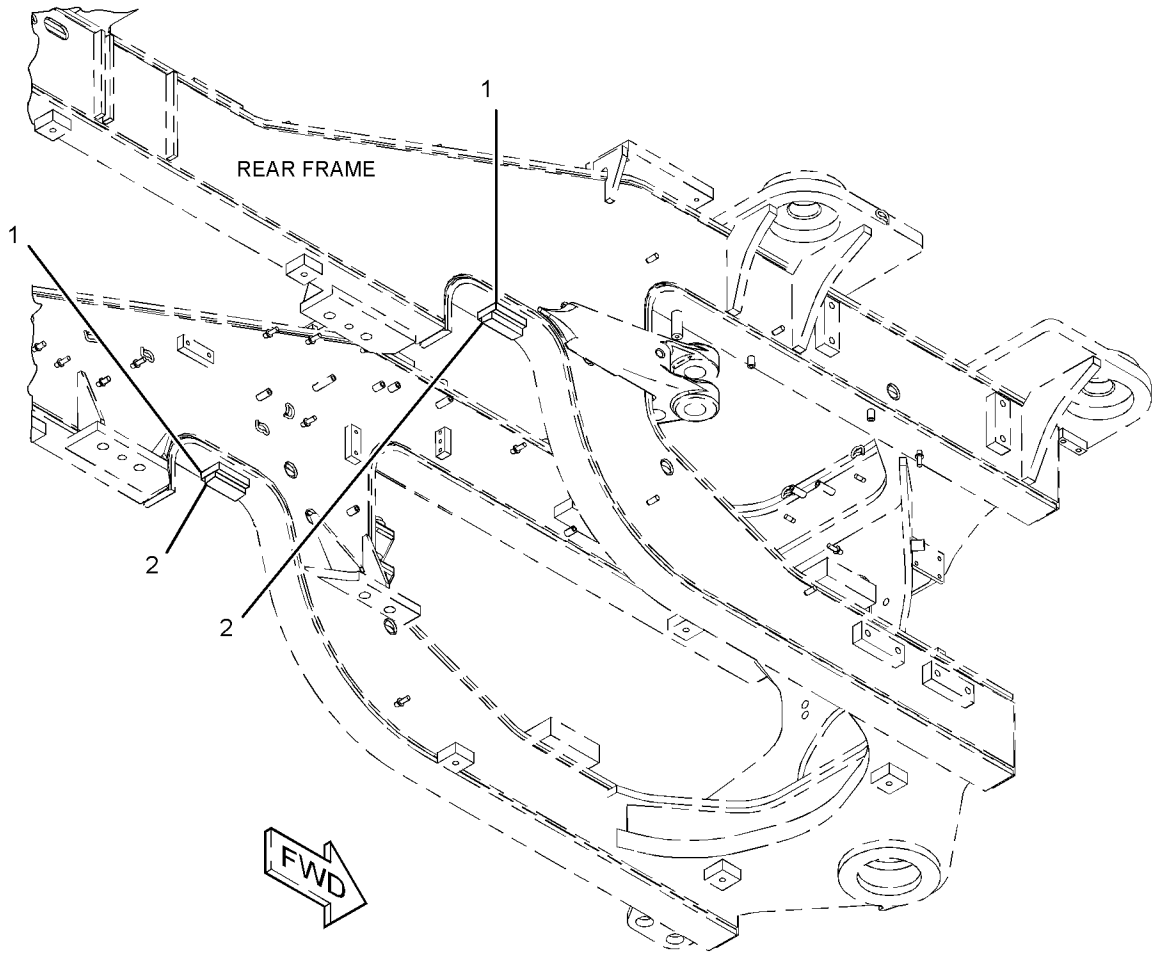

GRAPHIC #1 **<END>** g01533979

392-5599 BOSS GP-LOADER FRAME

S/N: JLX1-UP

PART OF 373-8269, 373-8294, 386-0131, 419-9845 LUBRICATION AR-AUTOMATIC

SMCS-7054 **i04891087**

NOTE	REF NO	GRAPHIC REF	PART NUMBER	QTY	PART NAME 1 2 3 4 5 6 (PRODUCT LEVEL)	SEE PAGE
M	1	1	**9X-8487**	3	BOSS-WELD (M10X1.5X35-MM)	
M	2	1	**110-2023**	2	STUD-WELD (M10X1.5X25-MM)	
M	3	1	**8T-3851**	13	BOSS-WELD (M10X1.5X17.5-MM)	

M - METRIC PART

392-5599 **BOSS GP-LOADER FRAME (*contd.*)** **i04891087**

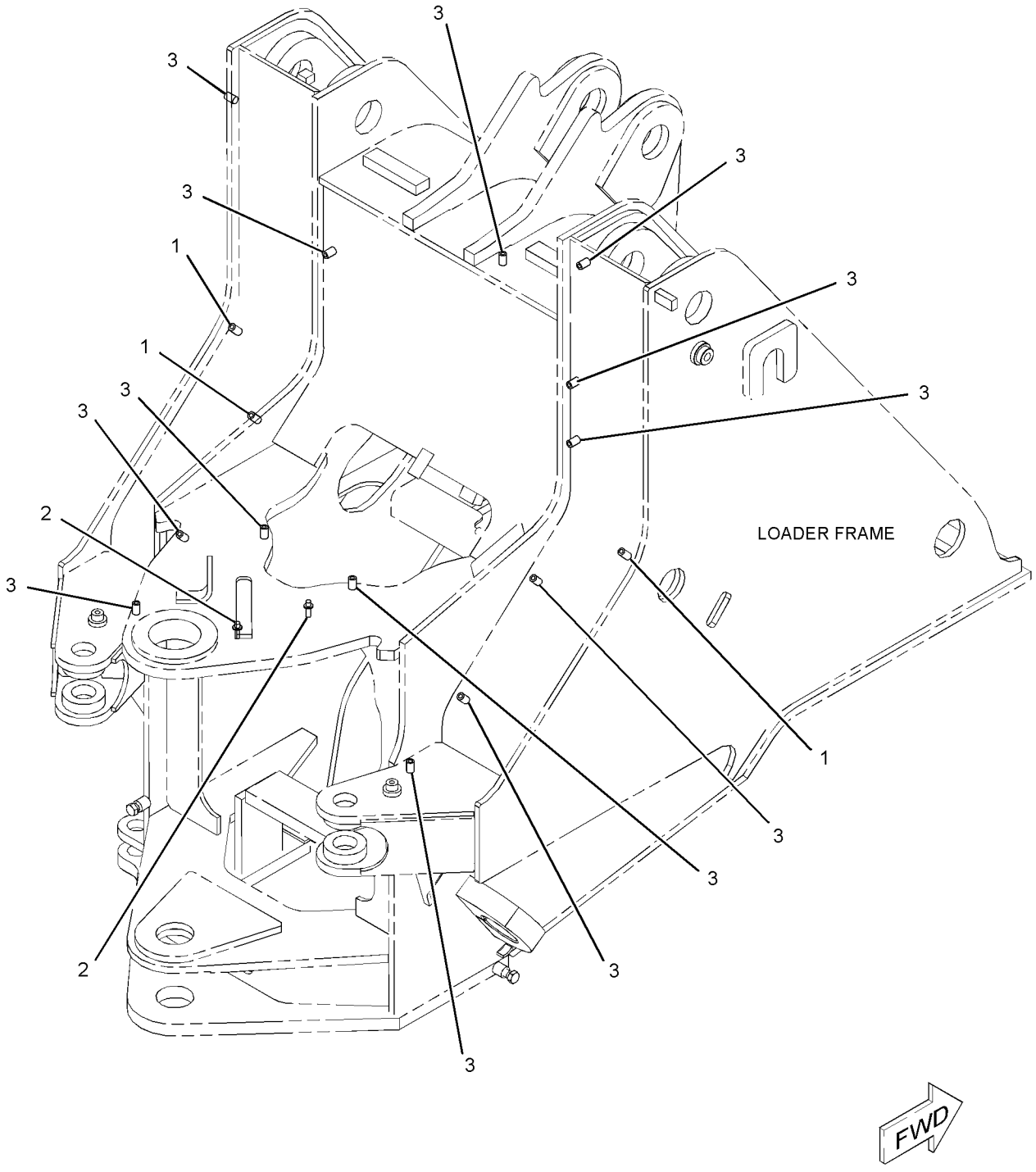

GRAPHIC #1 **<END>** g03087625

392-5598 BOSS GP-REAR FRAME

S/N: JLX1-UP

PART OF 373-8269, 373-8294, 386-0131, 419-9845 LUBRICATION AR-AUTOMATIC

SMCS-7051 **i04891068**

NOTE	REF NO	GRAPHIC REF	PART NUMBER	QTY	PART NAME 1 2 3 4 5 6 (PRODUCT LEVEL)	SEE PAGE
M	1	1	**110-2023**	1	STUD-WELD (M10X1.5X25-MM)	
M	2	1	**7X-0752**	1	BOSS-WELD (M10X1.5X65-MM)	
M	3	1	**8T-3851**	1	BOSS-WELD (M10X1.5X17.5-MM)	
M	4	1	**8Y-4489**	2	BOSS (M10X1.5-THD)	

M - METRIC PART

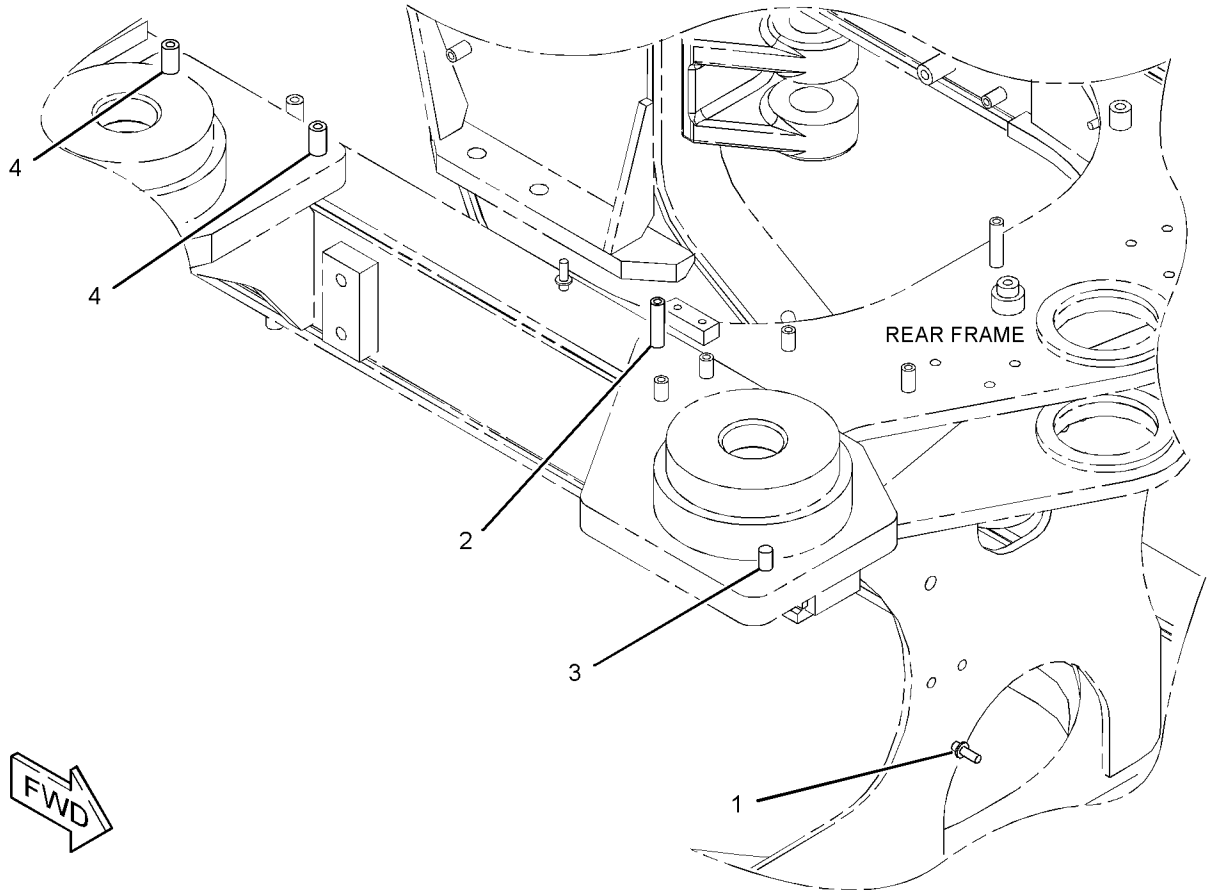

GRAPHIC #1 **<END>** g03090277

382-8820 BOX GP-BATTERY

S/N: JLX1-UP

PART OF 373-8237 CHASSIS AR

SMCS-7257 **i04759261**

NOTE	REF NO	GRAPHIC REF	PART NUMBER	QTY	PART NAME 1 2 3 4 5 6 (PRODUCT LEVEL)	SEE PAGE
	1	1	**119-3450**	8	SPACER (13.5X30X30-MM THK)	
	2	1	**275-0571**	1	CAM-LATCH	
J	3	1	**275-0572**	1	LATCH AS	
	4	1	**275-5635**	1	COVER	
	5	1	**323-8354**	1	PANEL AS	
	6	1	**323-8362**	1	GUARD	
	7	1	**323-8367**	1	BOX AS-BATTERY	
M	8	1	**288-0735**	8	BOLT (M12X1.75X60-MM)	
	9	1	**344-1199**	11	WASHER-HARD (11X21X2.5-MM THK)	
	10	1	**368-5091**	11	WASHER-HARD (13.5X30X4-MM THK)	
	11	1	**368-5081**	8	BOLT (M10X1.5X25-MM)	
E	12	1	**9X-2126**		SEAL (24-CM)	
E	12A	1	**9X-2126**		SEAL (37-CM)	

E - ORDER BY THE CENTIMETER
J - REQUIRES CORPORATE KEY
M - METRIC PART

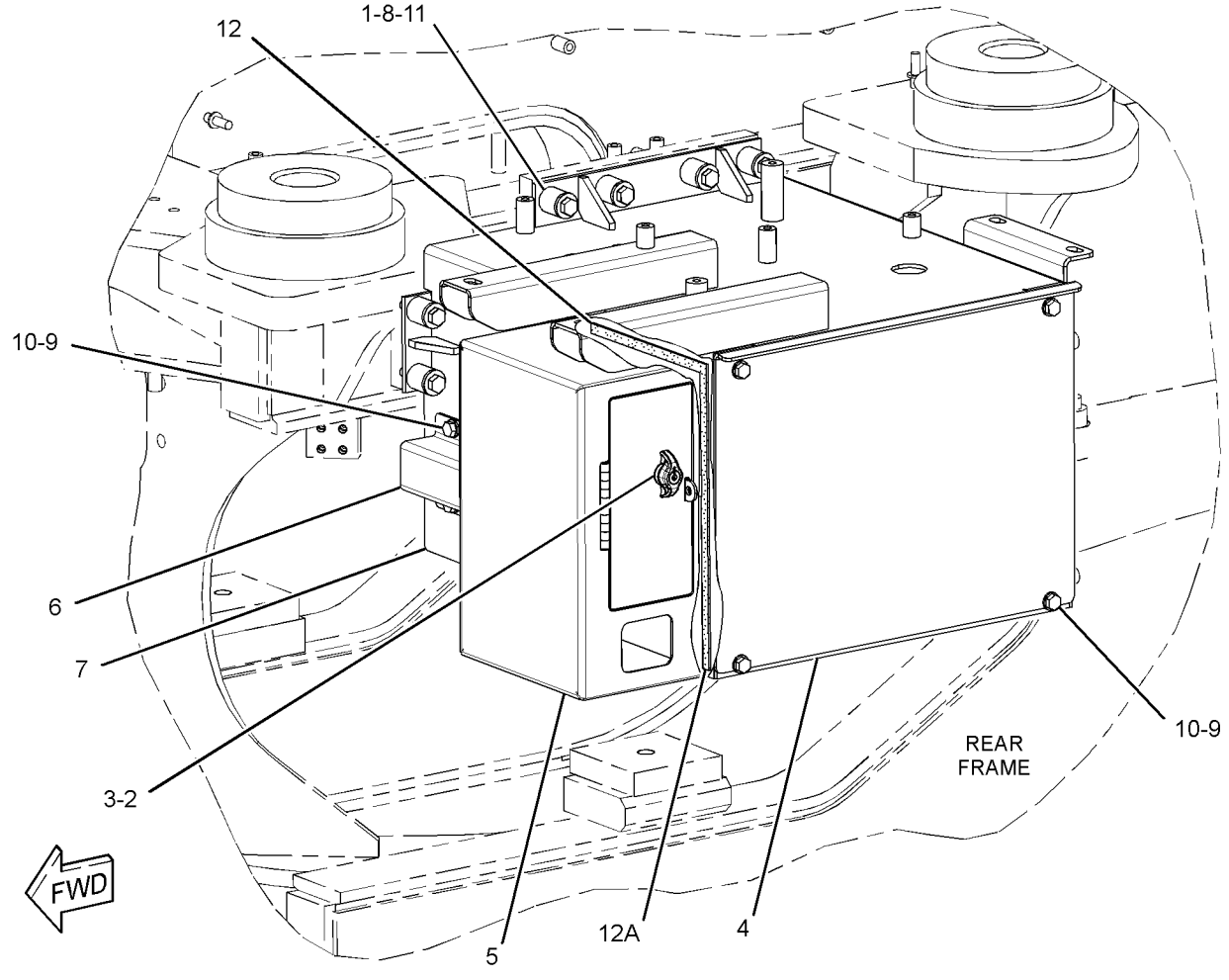

GRAPHIC #1 **<END>** g01883462

399-4259 CONVERSION GP-ROADING

S/N: JLX1-UP

PART OF 373-8289 CONVERSION AR-MACHINE

SMCS-7000 **i05255556**

NOTE	REF NO	GRAPHIC REF	PART NUMBER	QTY	PART NAME 1 2 3 4 5 6 (PRODUCT LEVEL)	SEE PAGE
	1	1	**238-4523**	2	REFLECTOR-RED	
	2	1	**238-4524**	8	REFLECTOR-AMBER	
	3	1	**238-4525**	2	REFLECTOR-WHITE	
	4	1	**275-9774**	1	GRILL AS-REAR	
		1	**271-7219**	1	GRILL AS-RADIATOR (REAR)	
	5	1	**332-6592**	2	PLATE AS	
M	6	1	**5C-9553**	4	BOLT (M6X1X16-MM)	
	7	1	**9X-8256**	4	WASHER (6.6X12X2-MM THK)	
E	8	1	**206-6305**		FILM-STRIPE (RED REFLECTIVE) (129-CM)	

E - ORDER BY THE CENTIMETER
M - METRIC PART

399-4259 **CONVERSION GP-ROADING (*contd.*)** **i05255556**

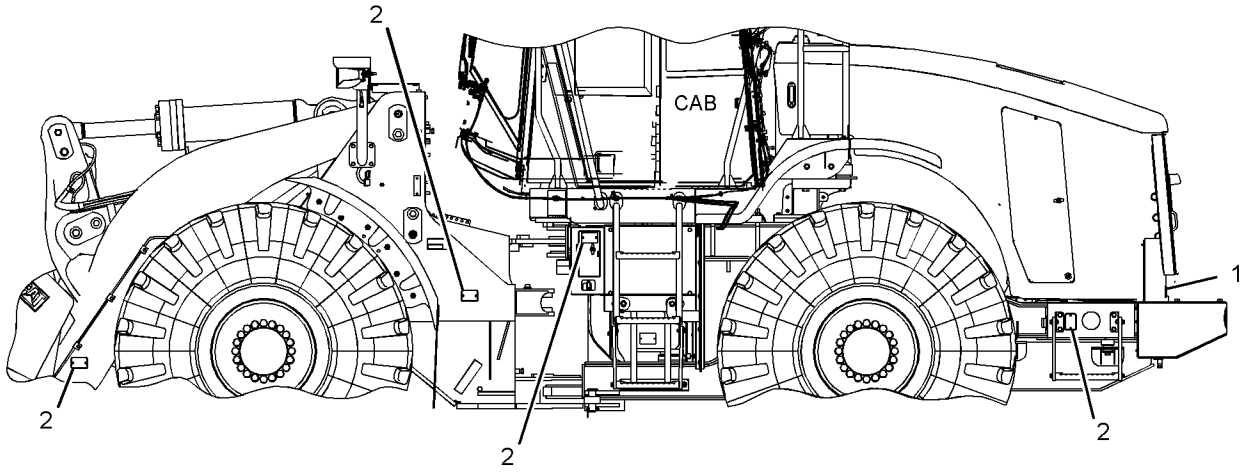

LEFT SIDE VIEW

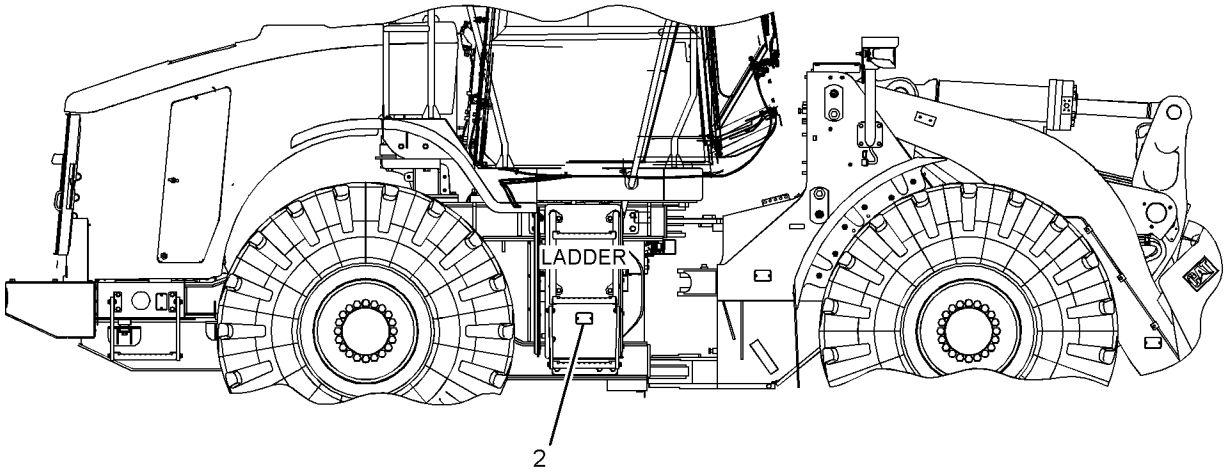

RIGHT SIDE VIEW

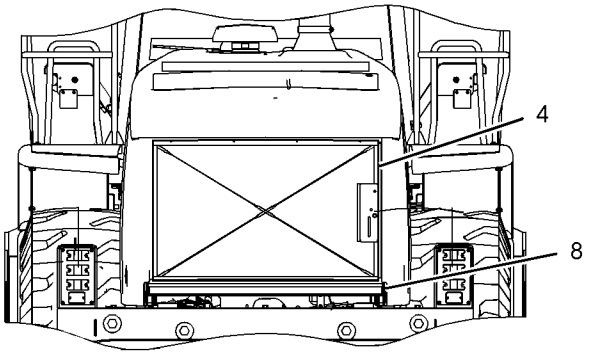

REAR VIEW

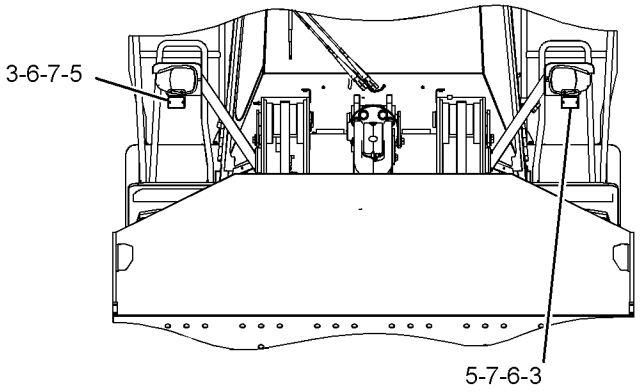

FRONT VIEW

GRAPHIC #1 **<END>** g03430413

417-2687 COUNTERWEIGHT & MOUNTING GP

S/N: JLX1-UP
869-KG (1916-LB)
PART OF 373-8289 CONVERSION AR-MACHINE

SMCS-7056 **i05255542**

NOTE	REF NO	GRAPHIC REF	PART NUMBER	QTY	PART NAME 1 2 3 4 5 6 (PRODUCT LEVEL)	SEE PAGE
	1	1	**162-7120**	1	PIN	
	2	1	**266-9861**	1	PIN	
	3	1	**417-2686**	1	COUNTERWEIGHT AS	
M	4	1	**190-8494**	4	BOLT (M30X3.5X200-MM)	
M	5	1	**8T-4190**	3	BOLT (M16X2X25-MM)	
	6	1	**9X-8257**	3	WASHER (17.5X30X3.5-MM THK)	
	7	1	**9X-8258**	4	WASHER (33X56X6-MM THK)	

M - METRIC PART

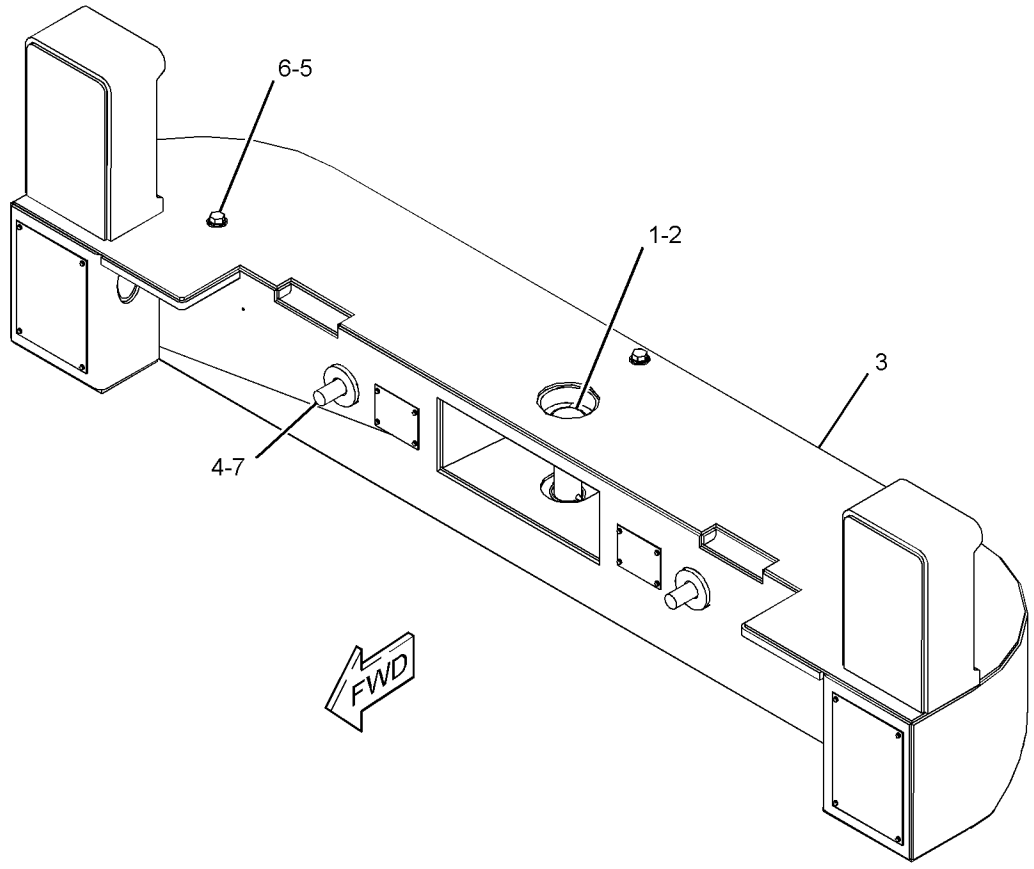

GRAPHIC #1 **<END>** g03373237

237-4948 COUNTERWEIGHT GP

S/N: JLX1-UP

PART OF 244-3375, 373-8262, 373-8263 CONTROL AR-HIGH LIFT, 276-5414, 390-7297 COUNTERWEIGHT GP, 375-3118 LOGGING AR

SMCS-7056 **i02677805**

NOTE	REF NO	GRAPHIC REF	PART NUMBER	QTY	PART NAME 1 2 3 4 5 6 (PRODUCT LEVEL)	SEE PAGE
	1	1	**162-7120**	1	PIN	
	2	1	**115-5669**	1	PIN	
	3	1	**265-7607**	1	COUNTERWEIGHT	
M	4	1	**7X-2586**	8	BOLT (M30X35X180-MM)	
	5	1	**9X-8258**	8	WASHER (33X56X6-MM THK)	

M - METRIC PART

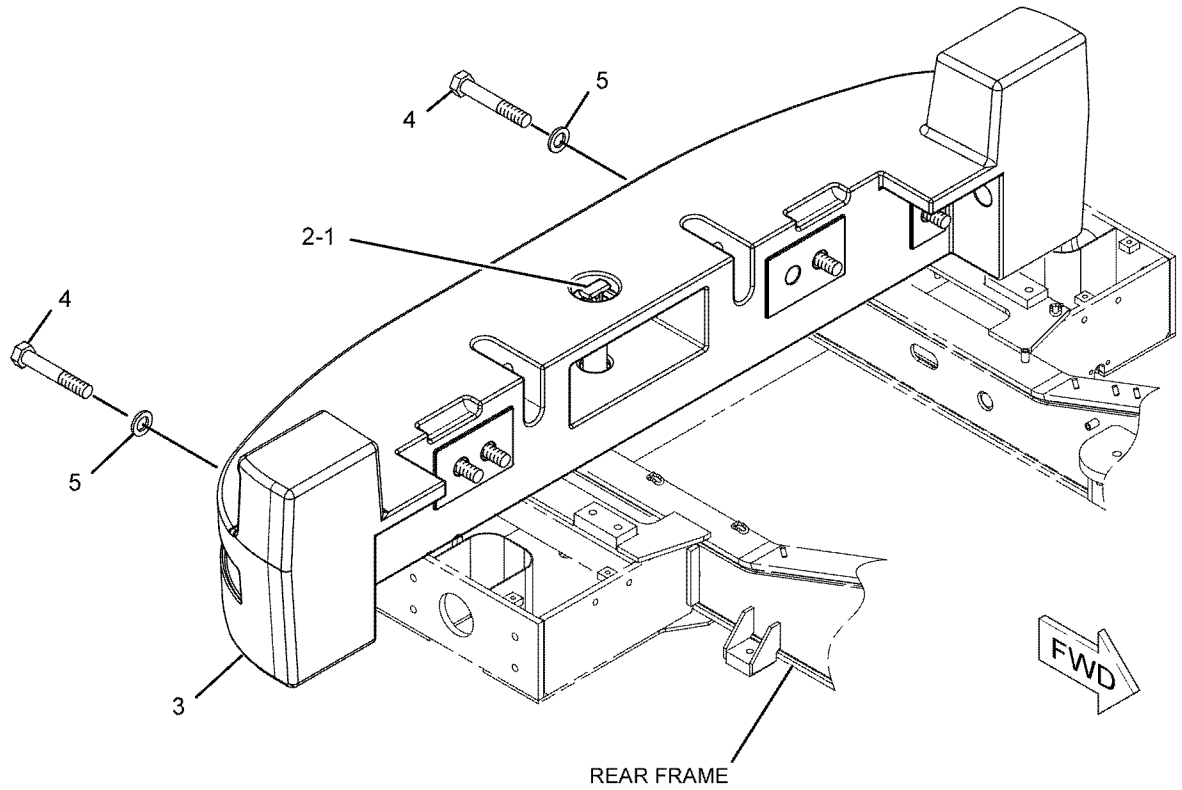

GRAPHIC #1 **<END>** g01133044

276-5414 COUNTERWEIGHT GP

S/N: JLX1-UP

PART OF 442-8389 CONVERSION AR-MACHINE

SMCS-7056 **i05915131**

NOTE	PART NUMBER	QTY	PART NAME 1 2 3 4 5 6 (PRODUCT LEVEL)	SEE PAGE
Y	*237-4948*	1	COUNTERWEIGHT GP	510

Y - SEPARATE ILLUSTRATION

<END>

375-8109 COUNTERWEIGHT GP

S/N: JLX1-UP

PART OF 373-8237 CHASSIS AR

SMCS-7056 **i05245059**

NOTE	REF NO	GRAPHIC REF	PART NUMBER	QTY	PART NAME 1 2 3 4 5 6 (PRODUCT LEVEL)	SEE PAGE
	1	1	**162-7120**	1	PIN	
	2	1	**266-9861**	1	PIN	
	3	1	**374-4980**	1	COUNTERWEIGHT AS	
M	4	1	**8T-4190**	3	BOLT (M16X2X25-MM)	
M	5	1	**190-8494**	4	BOLT (M30X3.5X200-MM)	
	6	1	**9X-8257**	3	WASHER (17.5X30X3.5-MM THK)	
	7	1	**9X-8258**	4	WASHER (33X56X6-MM THK)	

M - METRIC PART

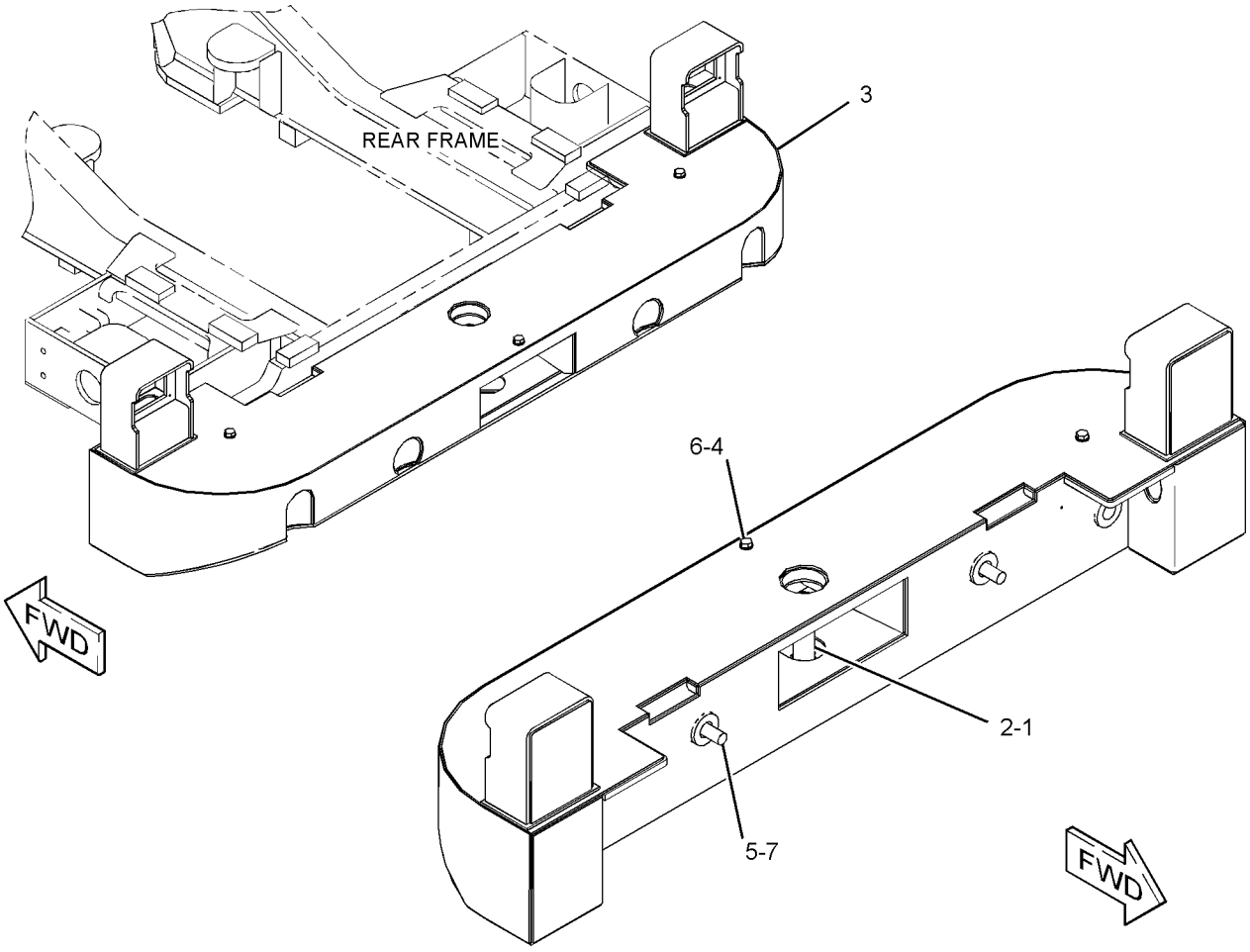

GRAPHIC #1 **<END>** g02883157

390-7297 COUNTERWEIGHT GP

S/N: JLX1-UP

PART OF 390-7296 CONFIGURATION AR

SMCS-7056 **i05236685**

NOTE	PART NUMBER	QTY	PART NAME 1 2 3 4 5 6 (PRODUCT LEVEL)	SEE PAGE
Y	*237-4948*	1	COUNTERWEIGHT GP	510

Y - SEPARATE ILLUSTRATION

<END>

374-5372 DEFLECTOR GP-FENDER

S/N: JLX1-UP

PART OF 373-8237 CHASSIS AR

SMCS-7252 **i05185365**

NOTE	REF NO	GRAPHIC REF	PART NUMBER	QTY	PART NAME 1 2 3 4 5 6 (PRODUCT LEVEL)	SEE PAGE
	1	1	**271-4957**	2	FLAP	
	2	1	**271-4958**	2	STRIP	
	3	1	**272-5556**	1	DEFLECTOR AS (LH)	
	4	1	**273-2554**	1	DEFLECTOR AS (RH)	
M	5	1	**8T-4186**	2	BOLT (M10X1.5X40-MM)	
	6	1	**7X-7729**	4	WASHER (11X25X3-MM THK)	
M	7	1	**6V-7357**	10	BOLT (M6X1X25-MM)	
	8	1	**9X-6165**	10	WASHER (6.5X22X2.5-MM THK)	
M	9	1	**8T-4136**	2	BOLT (M10X1.5X25-MM)	

M - METRIC PART

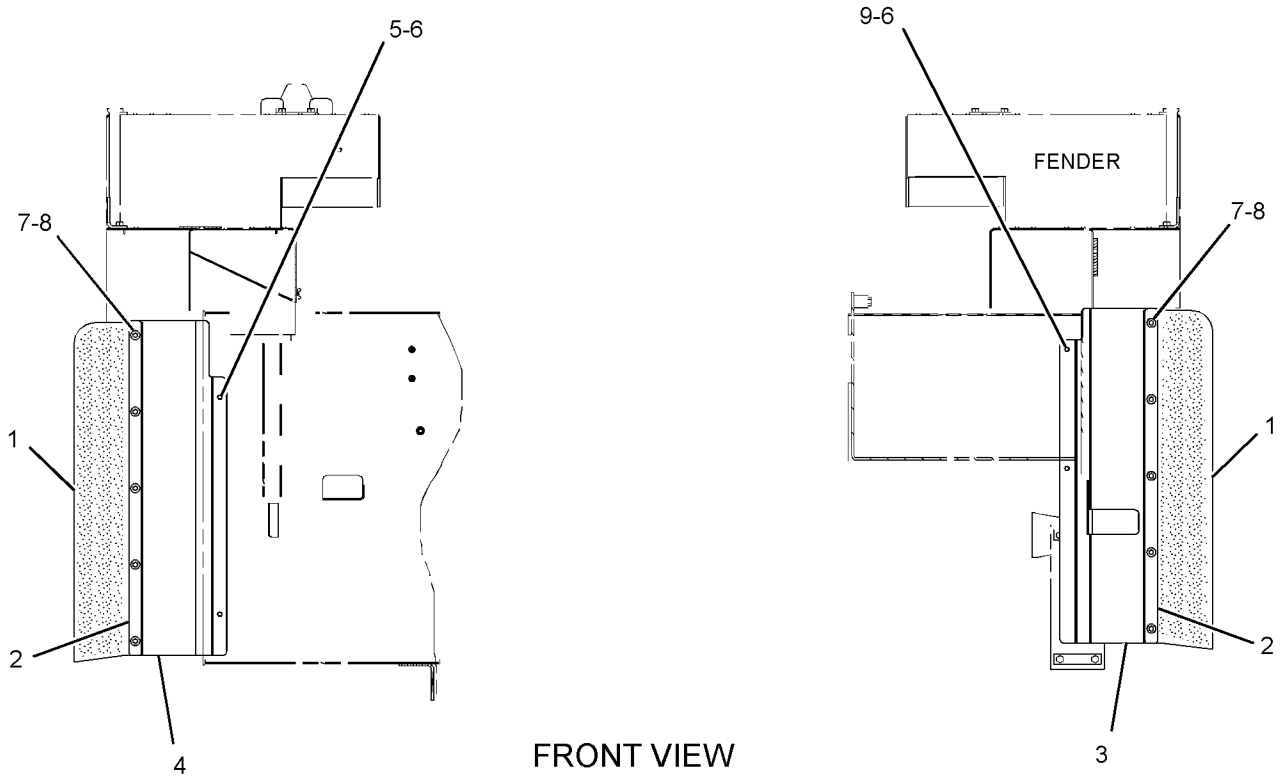

FRONT VIEW

GRAPHIC #1 **<END>** g03331048

292-6001 DOOR GP-ACCESS–HOOD, LH

S/N: JLX1-UP

PART OF 292-6000 HOOD & GUARD GP

SMCS-7273 **i05373735**

NOTE	REF NO	GRAPHIC REF	PART NUMBER	QTY	PART NAME 1 2 3 4 5 6 (PRODUCT LEVEL)	SEE PAGE
	1	1	**118-9587**	1	CAM-LATCH	
J	2	1	**275-0572**	1	LATCH AS	
	3	1	**292-5997**	1	DOOR AS (LH)	
	3A	1	**8V-7162**	1	CABLE	
	3B	1	**6V-4604**	1	RIVET-POP	
	3C	1	**9V-1820**	1	SPACER	
	3D	1	**119-0281**	2	HINGE AS	

J - REQUIRES CORPORATE KEY

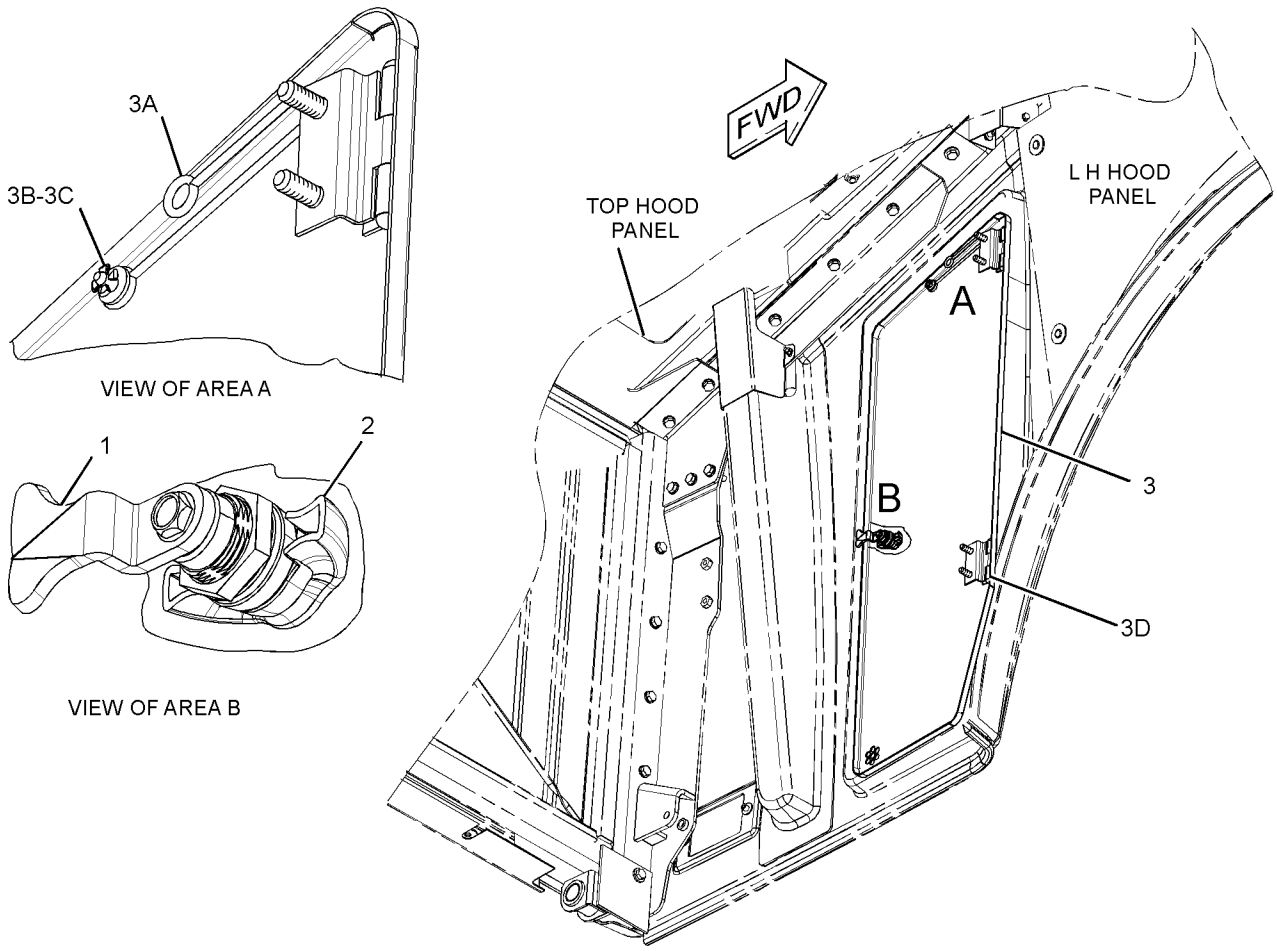

GRAPHIC #1 **<END>** g02148235

292-6002 DOOR GP-ACCESS–HOOD, RH

S/N: JLX1-UP

PART OF 292-6000 HOOD & GUARD GP

SMCS-7273 **i05384727**

NOTE	REF NO	GRAPHIC REF	PART NUMBER	QTY	PART NAME 1 2 3 4 5 6 (PRODUCT LEVEL)	SEE PAGE
	1	1	**118-9587**	1	CAM-LATCH	
J	2	1	**275-0572**	1	LATCH AS	
	3	1	**292-5995**	1	DOOR AS	
	3A	1	**119-0281**	2	HINGE AS	
	3B	1	**6V-4604**	1	RIVET-POP	
	3C	1	**8V-7162**	1	CABLE	
	3D	1	**9V-1820**	1	SPACER	

J - REQUIRES CORPORATE KEY

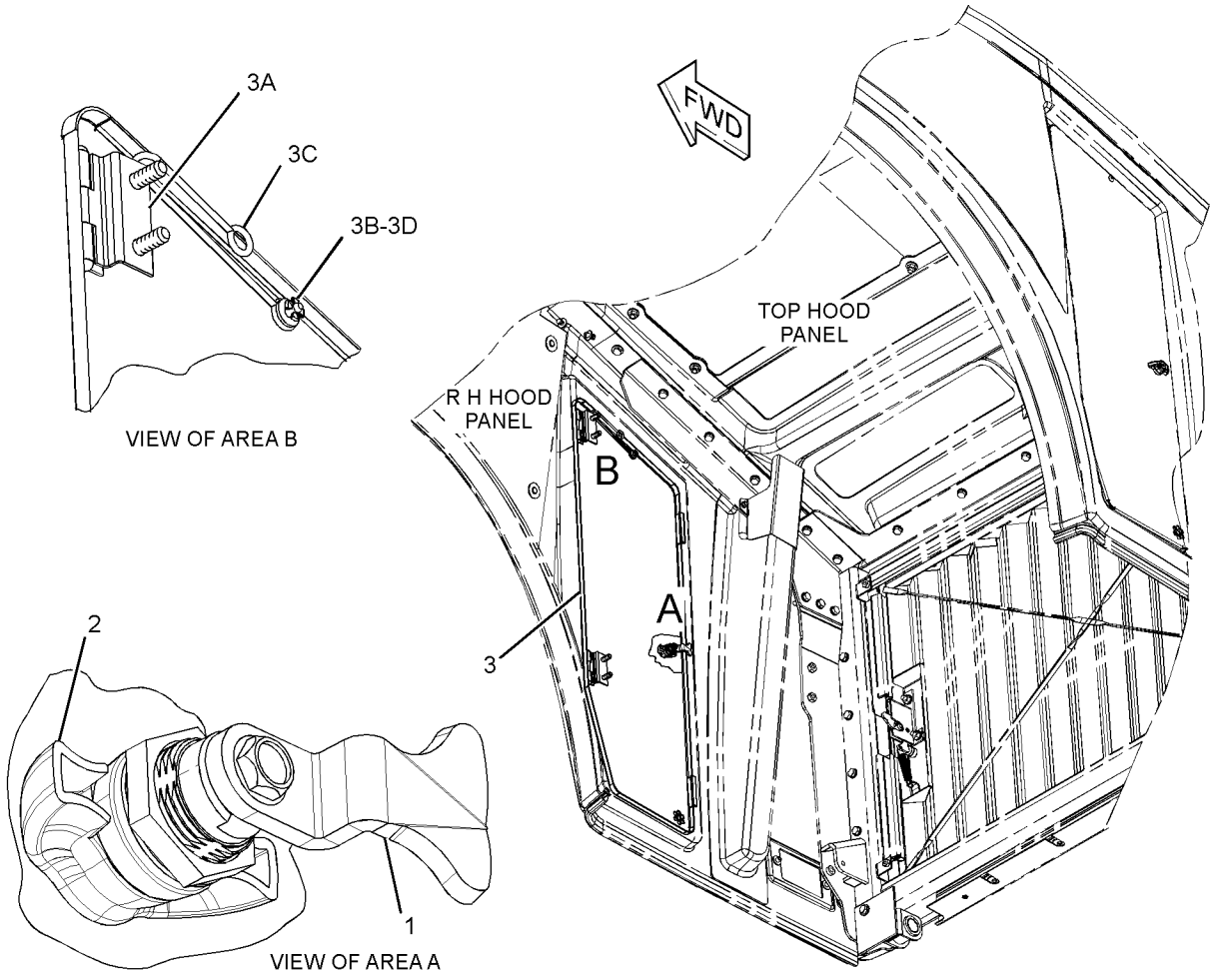

GRAPHIC #1 **<END>** g01952414

382-6646 ENCLOSURE AS-HYDRAULIC TANK

S/N: JLX1-100

PART OF 382-6647 BOX GP-SERVICE CENTER

SMCS-5056 **i04776796**

NOTE	REF NO	GRAPHIC REF	PART NUMBER	QTY	PART NAME 1 2 3 4 5 6 (PRODUCT LEVEL)	SEE PAGE
	1	1	**4E-0019**	6	BOSS (M10X1.5-THD)	
M	2	1	**355-8941**	2	NUT-WELD (M16X2-THD)	
	3	1	**7T-1099**	5	LINK	
M	4	1	**7Y-8763**	1	BOSS (M10X1.5X25-MM)	
M	5	1	**8T-3490**	5	NUT-WELD (M10X1.5-THD)	
M	6	1	**8T-3597**	4	NUT-WELD (M12X1.75-THD)	

M - METRIC PART

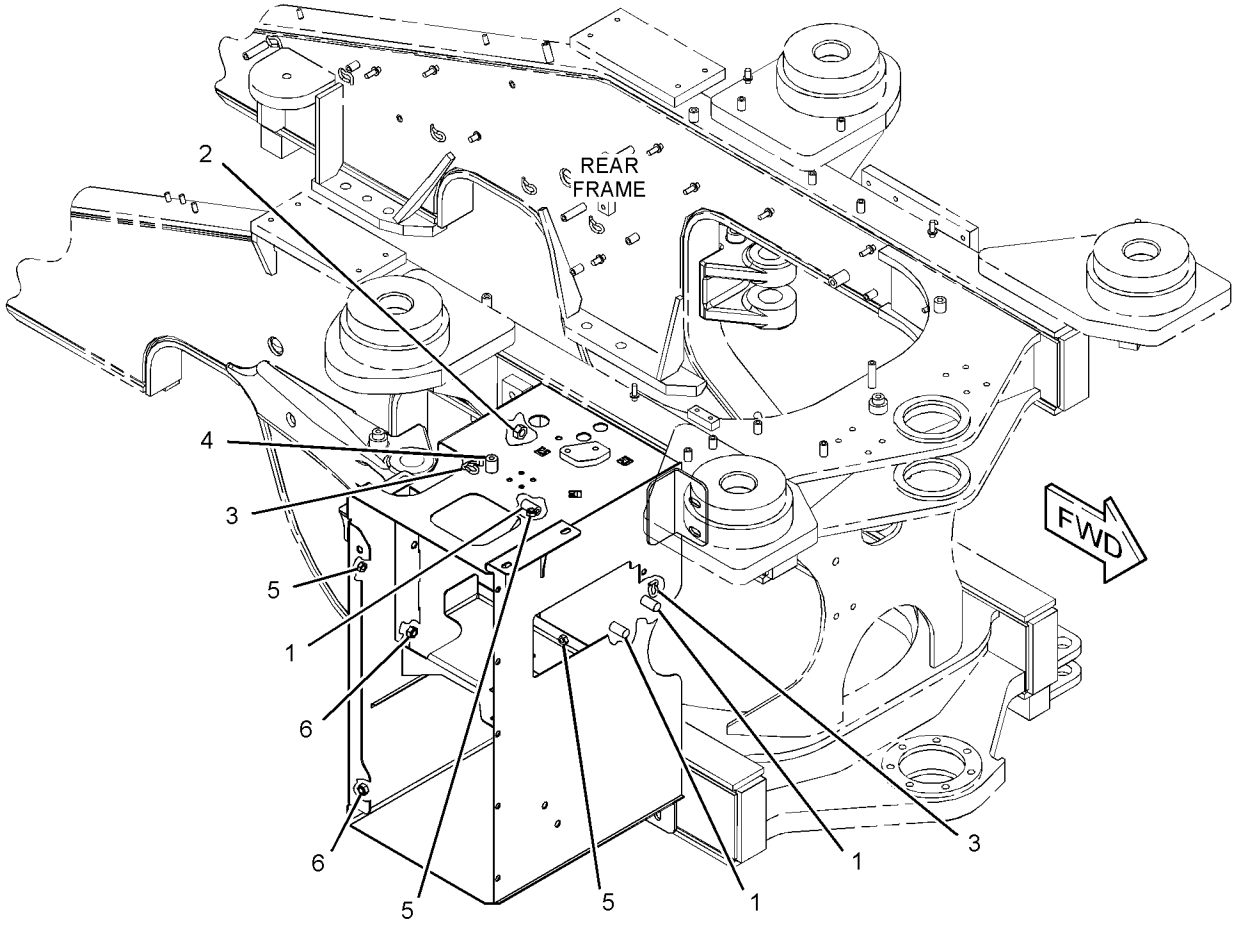

GRAPHIC #1 **<END>** g02893021

390-0483 ENCLOSURE GP-SERVICE CENTER

S/N: JLX1-UP

PART OF 388-3768 SUPPRESSION GP-SOUND

SMCS-7513 **i05302952**

NOTE	REF NO	GRAPHIC REF	PART NUMBER	QTY	PART NAME 1 2 3 4 5 6 (PRODUCT LEVEL)	SEE PAGE
	1	1	**2G-1388**	1	LATCH	
	2	1	**3B-4611**	1	PIN-COTTER	
	3	1	**246-4374**	1	DOOR GP-ACCESS (REMOTE PRESSURE TAPS)	
	4	1	**362-9260**	1	BRACKET	
	5	1	**366-5775**	1	SUPPORT AS	
	6	1	**368-0076**	1	ROD AS	
	7	1	**390-1082**	1	ENCLOSURE AS-SERVICE CENTER	
	8	1	**5P-1076**	2	WASHER-HARD (13.5X30X4-MM THK)	
	9	1	**7X-0515**	2	WASHER-HARD (17X35X5-MM THK)	
M	10	1	**7X-2553**	2	BOLT (M16X2X40-MM)	
	11	1	**8T-4121**	8	WASHER-HARD (11X21X2.5-MM THK)	
M	12	1	**8T-4136**	7	BOLT (M10X1.5X25-MM)	
M	13	1	**8T-4139**	2	BOLT (M12X1.75X30-MM)	

M - METRIC PART

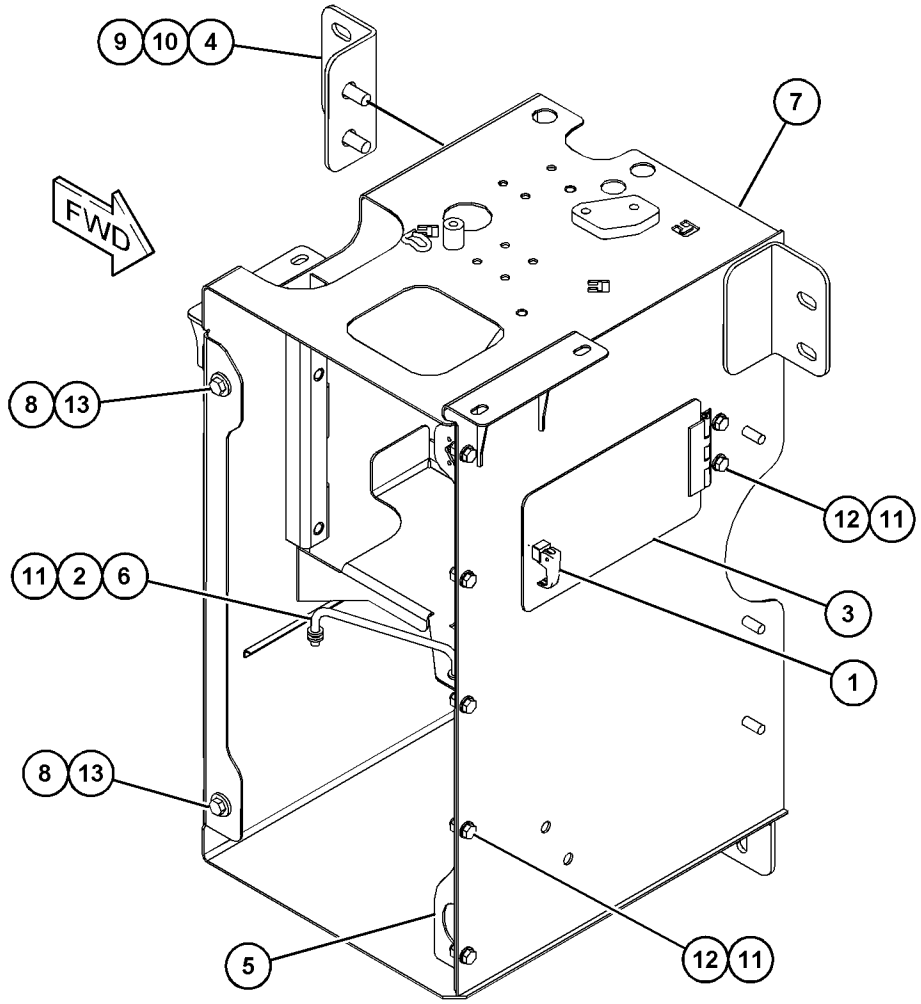

GRAPHIC #1 **<END>** g03566165

387-2082 EXTENSION GP-FENDER

S/N: JLX1-UP

PART OF 392-5605 EXTENSION GP-FENDER

SMCS-7252 **i04776869**

NOTE	REF NO	GRAPHIC REF	PART NUMBER	QTY	PART NAME 1 2 3 4 5 6 (PRODUCT LEVEL)	SEE PAGE
					(NO SERVICED PARTS)	

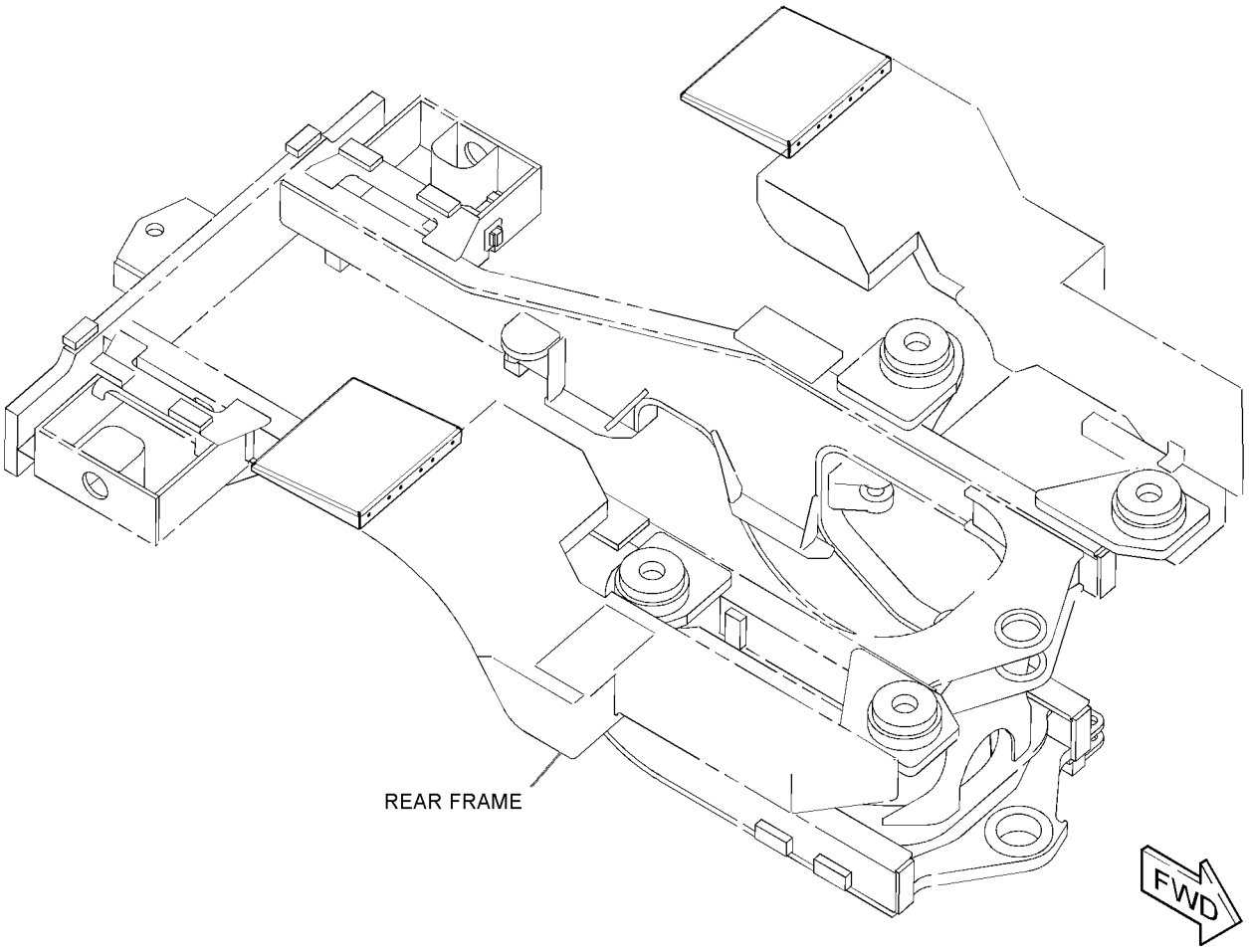

GRAPHIC #1 **<END>** g02884939

392-5605 EXTENSION GP-FENDER

S/N: JLX1-UP

SMCS-7252 **i04891828**

NOTE	REF NO	GRAPHIC REF	PART NUMBER	QTY	PART NAME 1 2 3 4 5 6 (PRODUCT LEVEL)	SEE PAGE
	1	1	**124-2456**	2	FILM-INSTRUCTION (NO STEP)	
Y	2	1	*387-2082*	1	EXTENSION GP-FENDER	519

Y - SEPARATE ILLUSTRATION

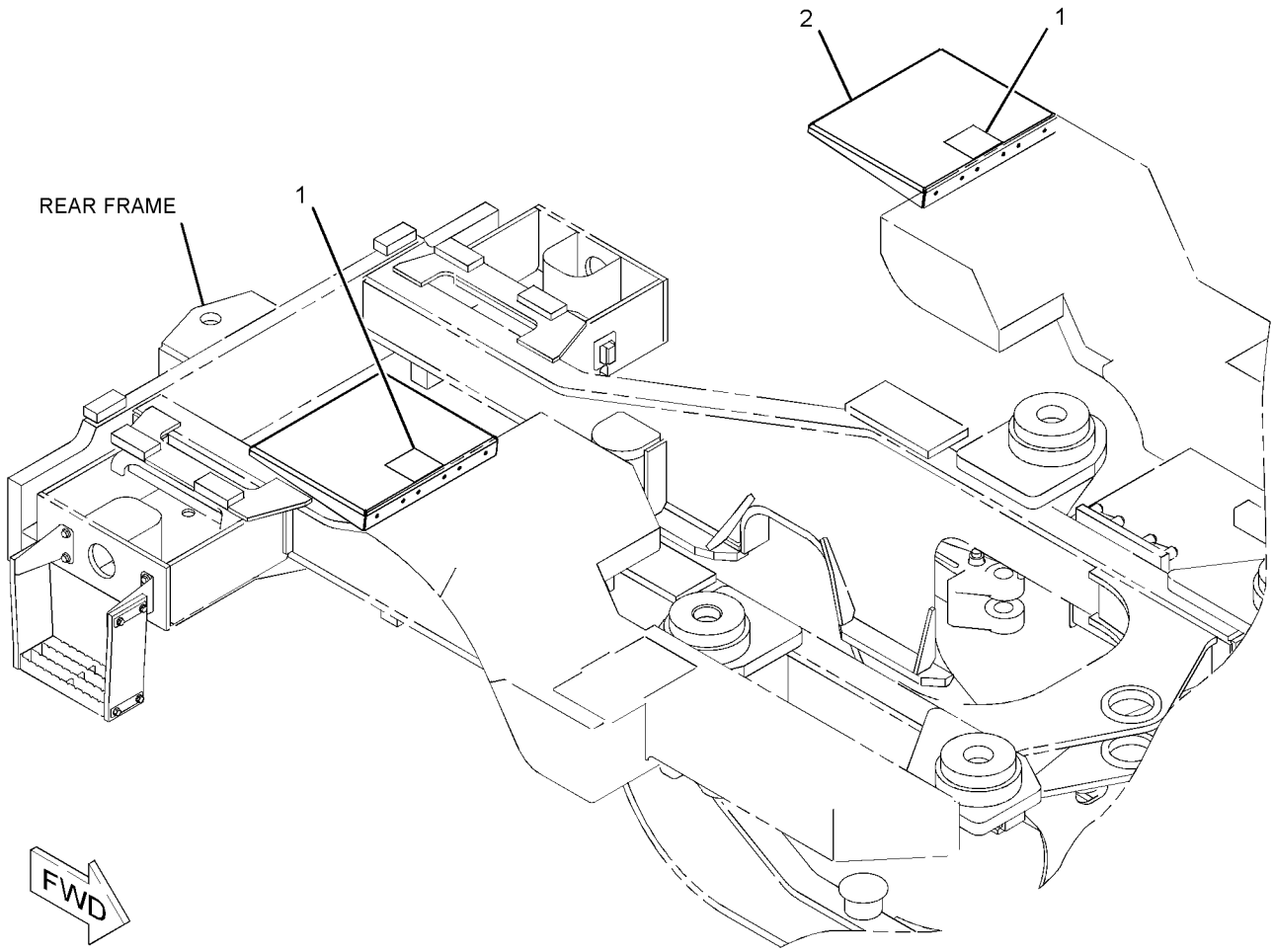

GRAPHIC #1 **<END>** g03039775

370-8323 FASTENER GP-COVER

S/N: JLX1-110

PART OF 373-5885 CAB AR, 373-5884 CAB AR-ENCLOSED ROPS

SMCS-7553 **i05270310**

NOTE	REF NO	GRAPHIC REF	PART NUMBER	QTY	PART NAME 1 2 3 4 5 6 (PRODUCT LEVEL)	SEE PAGE
	1	1	**8T-7059**	1	WASHER-HARD (11X60X8-MM THK)	
	2	1	**107-3157**	8	WASHER (22X76.2X6-MM THK)	
	3	1	**197-4859**	1	FILM-IDENTIFICATION (CATERPILLAR, REAR CAB)	
	4	1	**253-3484**	1	WASHER (13X46X3.5-MM THK)	
	5	1	**260-6701**	8	WASHER (25X60X0.32-MM THK)	
	6	1	**359-1514**	1	COVER	
	7	1	**5P-4116**	4	WASHER-HARD (8.8X20.5X2-MM THK)	
	8	1	**8T-4122**	4	WASHER-HARD (17X32X3.5-MM THK)	
M	9	1	**8T-4193**	4	BOLT (M16X2X50-MM)	
M	10	1	**8T-4196**	1	BOLT (M10X1.5X35-MM)	
M	11	1	**8T-4908**	4	BOLT (M8X1.25X25-MM)	

M - METRIC PART

370-8323 **FASTENER GP-COVER (*contd.*)** **i05270310**

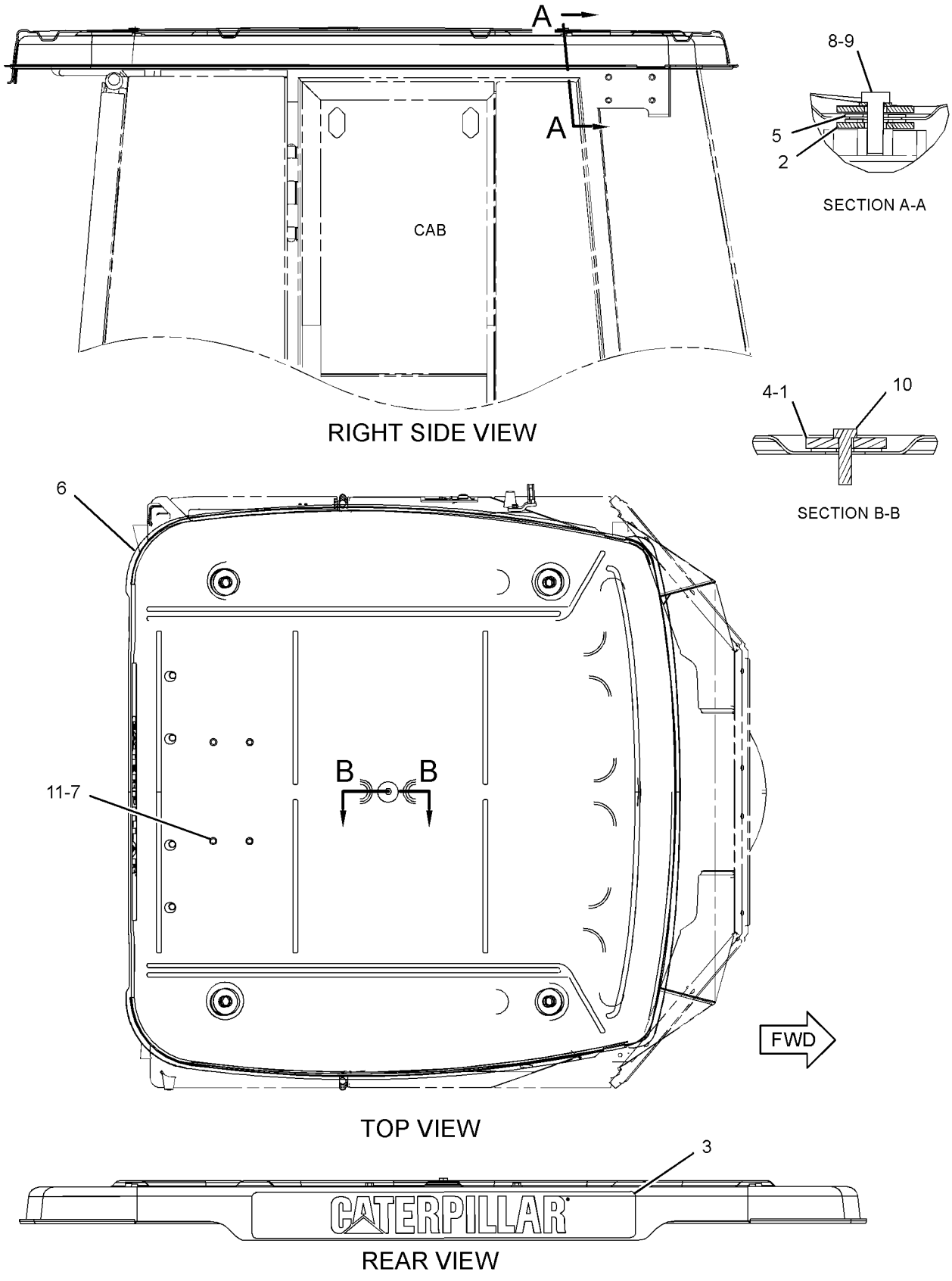

RIGHT SIDE VIEW

TOP VIEW

REAR VIEW

GRAPHIC #1 **<END>** g02888840

370-8323 FASTENER GP-COVER

S/N: JLX111-UP

PART OF 373-5885 CAB AR, 373-5884 CAB AR-ENCLOSED ROPS

SMCS-7553 **i05295921**

NOTE	REF NO	GRAPHIC REF	PART NUMBER	QTY	PART NAME 1 2 3 4 5 6 (PRODUCT LEVEL)	SEE PAGE
C	1	1	**8T-7059**	2	WASHER-HARD (11X60X8-MM THK)	
	2	1	**107-3157**	8	WASHER (22X76.2X6-MM THK)	
	3	1	**197-4859**	1	FILM-IDENTIFICATION (CATERPILLAR, REAR CAB)	
C	4	1	**197-5470**	4	GROMMET	
C	5	1	**196-0436**	4	SPACER (25X40X12-MM THK)	
	6	1	**359-1514**	1	COVER	
	7	1	**5P-4116**	4	WASHER-HARD (8.8X20.5X2-MM THK)	
	8	1	**8T-4122**	4	WASHER-HARD (17X32X3.5-MM THK)	
M	9	1	**8T-4193**	4	BOLT (M16X2X50-MM)	
M	10	1	**8T-4196**	1	BOLT (M10X1.5X35-MM)	
M	11	1	**8T-4908**	4	BOLT (M8X1.25X25-MM)	
C	12	1	**3P-3839**	1	GROMMET	
C	13	1	**092-4924**	1	PLUG-BUTTON	
C	14	1	**133-3260**	1	SPACER (11X19X10-MM THK)	

C - CHANGE FROM PREVIOUS TYPE
M - METRIC PART

370-8323 **FASTENER GP-COVER (*contd.*)** **i05295921**

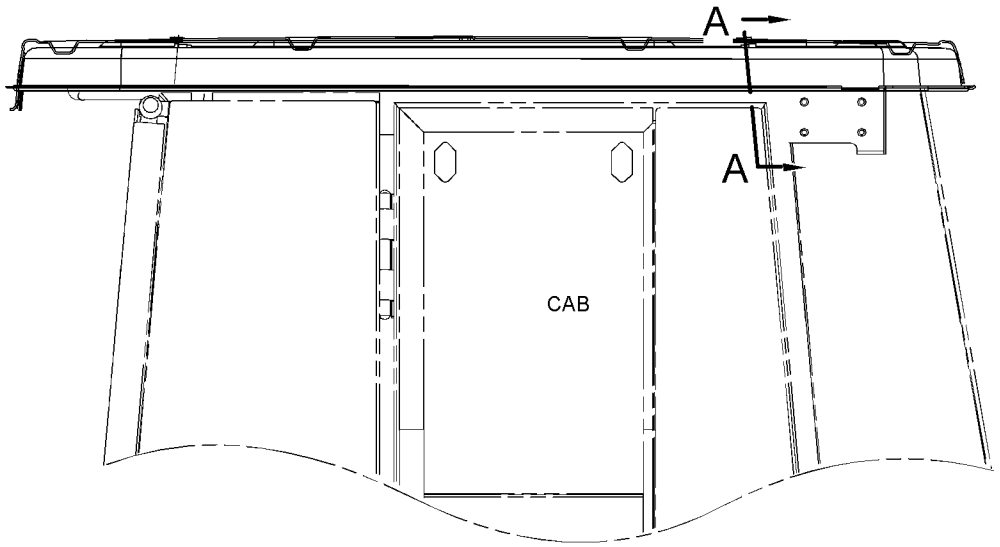

RIGHT SIDE VIEW

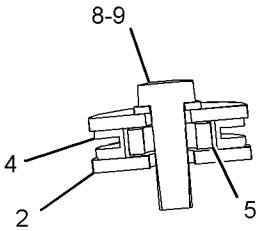

SECTION A-A

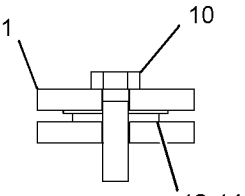

SECTION B-B

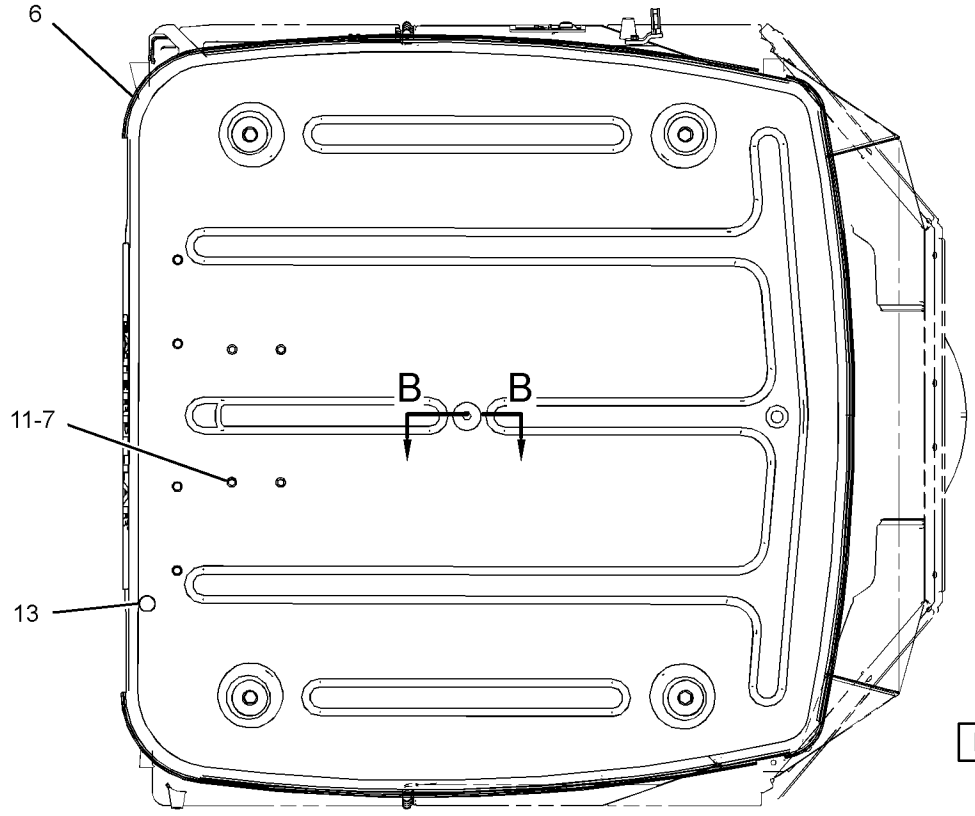

TOP VIEW

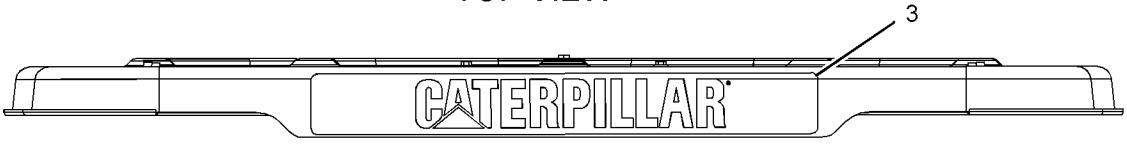

REAR VIEW

GRAPHIC #1 **<END>** g03635467

382-1186 FENDER AR-ROADING

S/N: JLX1-UP

SMCS-7252 **i04869852**

NOTE	REF NO	GRAPHIC REF	PART NUMBER	QTY	PART NAME 1 2 3 4 5 6 (PRODUCT LEVEL)	SEE PAGE
Y	1	1	**384-5251**	1	FENDER GP-ROADING	531
	2	1	*384-5252*	1	HARDWARE GP-REAR FRAME (ROADING FENDER)	
		1	**8X-5963**	2	BLOCK	
		1	**277-4551**	2	PLATE AS	

Y - SEPARATE ILLUSTRATION

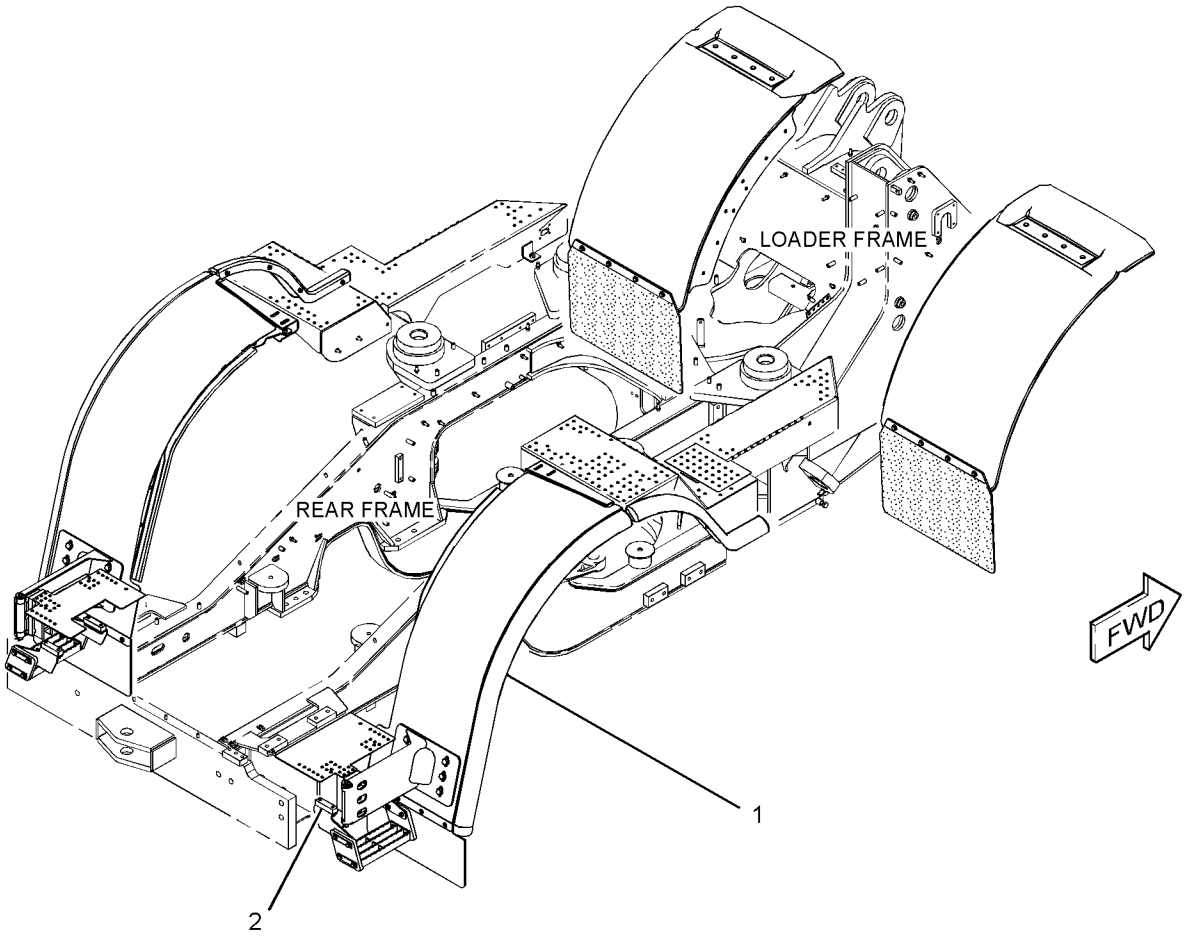

GRAPHIC #1 **<END>** g02896416

370-0441 FENDER GP

S/N: JLX1-UP

PART OF 373-8237 CHASSIS AR

SMCS-7252 **i05743405**

NOTE	REF NO	GRAPHIC REF	PART NUMBER	QTY	PART NAME 1 2 3 4 5 6 (PRODUCT LEVEL)	SEE PAGE
	1	1	**198-4777**	12	WASHER-HARD (11X25X10-MM THK)	
Y	2	1	*370-0443*	1	FENDER GP (RH)	527
Y	3	1	*370-0444*	1	FENDER GP (LH)	528
	4	1	**5P-1076**	12	WASHER-HARD (13.5X30X4-MM THK)	
M	5	1	**8T-4195**	12	BOLT (M10X1.5X30-MM)	
Y	6	1	*370-0445*	1	FENDER GP (RH)	529
Y	7	1	*370-0446*	1	FENDER GP (LH)	530
	8	1	**275-0571**	1	CAM-LATCH	
J	9	1	**275-0572**	1	LATCH AS	
M	10	1	**8T-4139**	12	BOLT (M12X1.75X30-MM)	

J - REQUIRES CORPORATE KEY
M - METRIC PART
Y - SEPARATE ILLUSTRATION

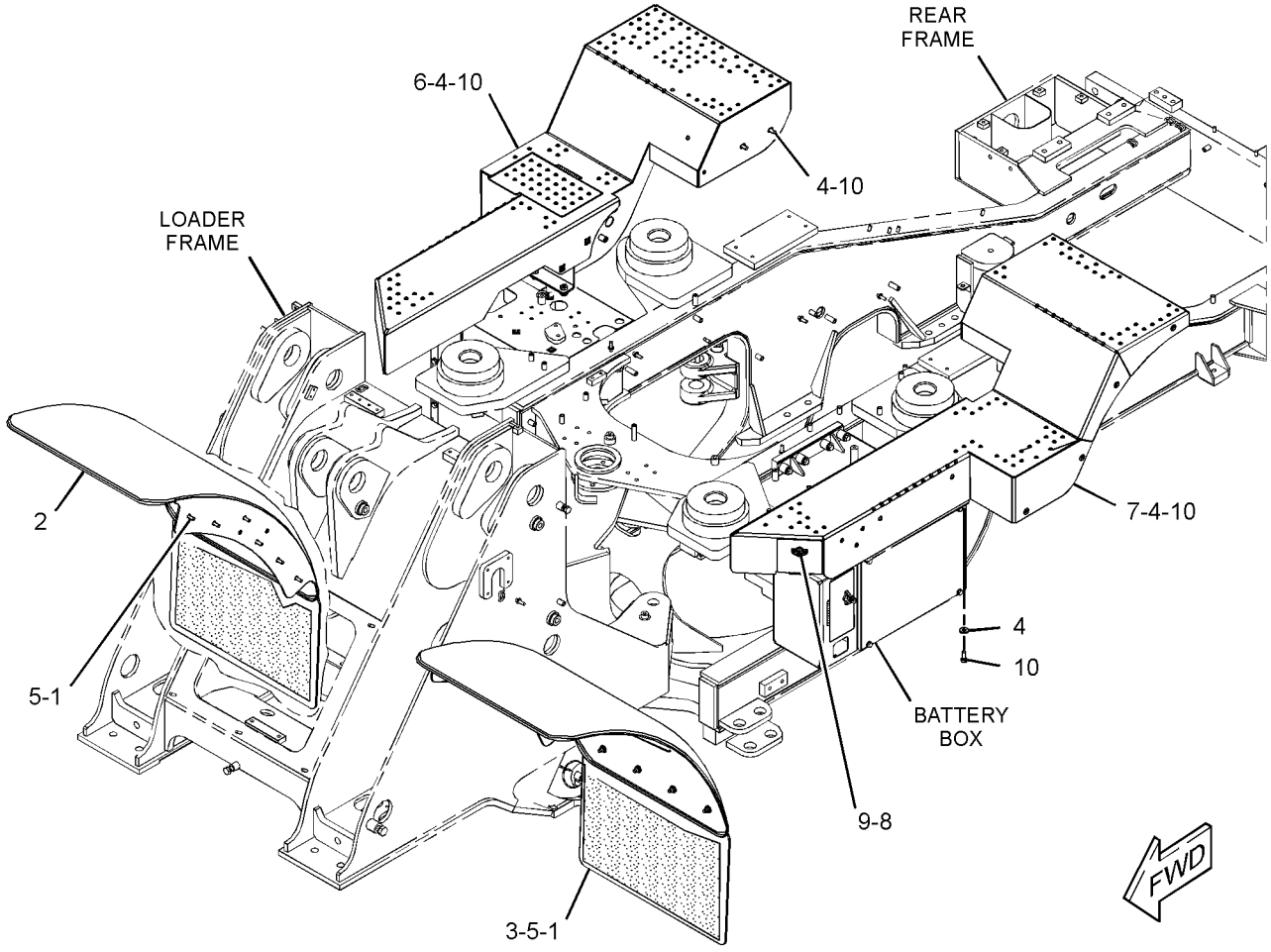

GRAPHIC #1 **<END>** g02888378

370-0443 FENDER GP–RH

S/N: JLX1-UP

PART OF 370-0441 FENDER GP

SMCS-7252 **i05389276**

NOTE	REF NO	GRAPHIC REF	PART NUMBER	QTY	PART NAME 1 2 3 4 5 6 (PRODUCT LEVEL)	SEE PAGE
	1	1	**372-8056**	1	FENDER AS (RH)	
	2	1	**376-6509**	1	STRIP	
	3	1	**383-3207**	1	FLAP	
M	4	1	**8T-4196**	4	BOLT (M10X1.5X35-MM)	
	5	1	**7X-7729**	8	WASHER (11X25X3-MM THK)	
M	6	1	**8T-0389**	4	LOCKNUT (M10X1.5-THD)	

M - METRIC PART

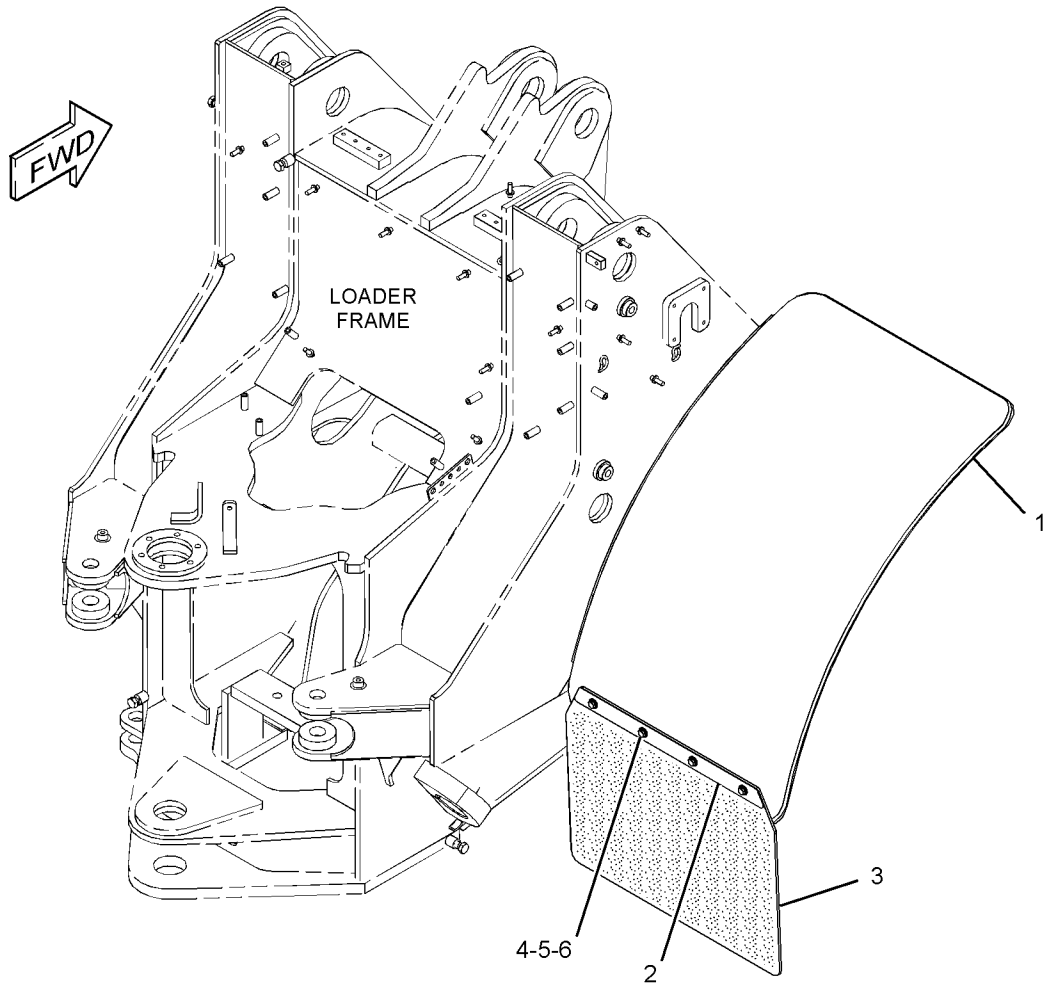

GRAPHIC #1 **<END>** g02888156

370-0444 FENDER GP

S/N: JLX1-UP

LH

PART OF 370-0441 FENDER GP

SMCS-7252 **i05389307**

NOTE	REF NO	GRAPHIC REF	PART NUMBER	QTY	PART NAME 1 2 3 4 5 6 (PRODUCT LEVEL)	SEE PAGE
	1	1	**372-8054**	1	FENDER AS (LH)	
	2	1	**376-6509**	1	STRIP	
	3	1	**383-3207**	1	FLAP	
M	4	1	**8T-4196**	4	BOLT (M10X1.5X35-MM)	
	5	1	**7X-7729**	8	WASHER (11X25X3-MM THK)	
M	6	1	**8T-0389**	4	LOCKNUT (M10X1.5-THD)	

M - METRIC PART

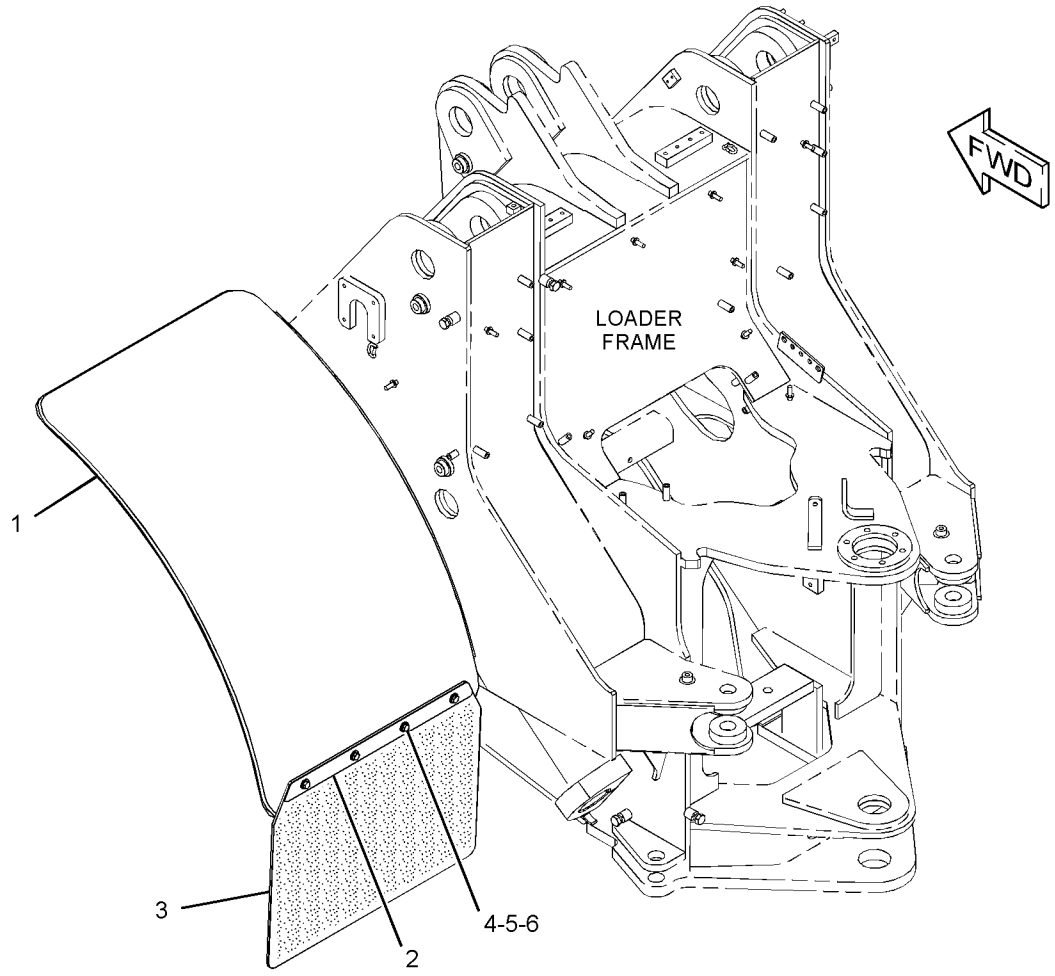

GRAPHIC #1 **<END>** g02888121

370-0445 FENDER GP

S/N: JLX1-UP

PART OF 370-0441 FENDER GP

SMCS-7252 **i05402950**

NOTE	REF NO	GRAPHIC REF	PART NUMBER	QTY	PART NAME 1 2 3 4 5 6 (PRODUCT LEVEL)	SEE PAGE
	1	1	**1K-8850**	1	SPRING	
	2	1	**303-6334**	2	PLATE	
	3	1	**364-0052**	1	FENDER AS (RH)	
		1	**4E-3956**	4	BOSS	
M		1	**6V-9632**	2	NUT-WELD (M6X1-THD)	
		1	**7T-1099**	1	LINK	
M		1	**8T-3490**	10	NUT-WELD (M10X1.5-THD)	
M		1	**8T-3597**	5	NUT-WELD (M12X1.75-THD)	
M		1	**9R-2613**	1	BOSS-WELD (M10X1.5X25-MM)	
		1	**121-1029**	2	CLIP	
	4	1	**370-4022**	1	PLATE AS	
	5	1	**7X-7729**	3	WASHER (11X25X3-MM THK)	
	6	1	**383-1725**	1	PLATE AS	
	7	1	**344-1200**	2	WASHER-HARD (6.6X12X2-MM THK)	
M	8	1	**344-1206**	2	BOLT (M6X1X16-MM)	
M	9	1	**8T-4195**	3	BOLT (M10X1.5X30-MM)	

M - METRIC PART

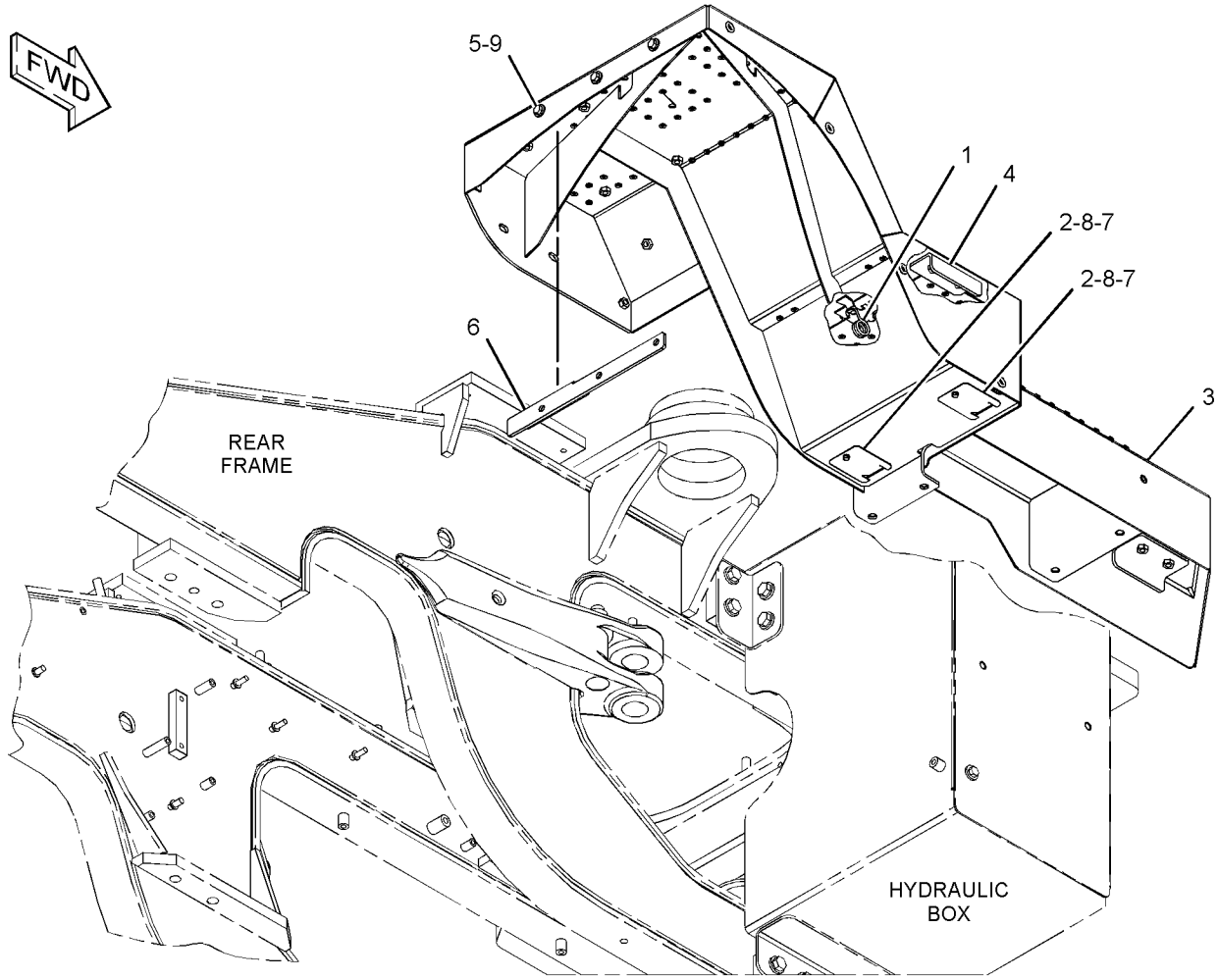

GRAPHIC #1 **<END>** g02887876

370-0446 FENDER GP

S/N: JLX1-UP

PART OF 370-0441 FENDER GP

SMCS-7252 **i05402968**

NOTE	REF NO	GRAPHIC REF	PART NUMBER	QTY	PART NAME 1 2 3 4 5 6 (PRODUCT LEVEL)	SEE PAGE
	1	1	**363-9896**	1	FENDER AS (LH)	
M		1	**8T-3490**	6	NUT-WELD (M10X1.5-THD)	
M		1	**8T-3597**	9	NUT-WELD (M12X1.75-THD)	
	2	1	**383-1727**	1	PLATE AS	
M	3	1	**8T-4195**	3	BOLT (M10X1.5X30-MM)	
	4	1	**7X-7729**	3	WASHER (11X25X3-MM THK)	

M - METRIC PART

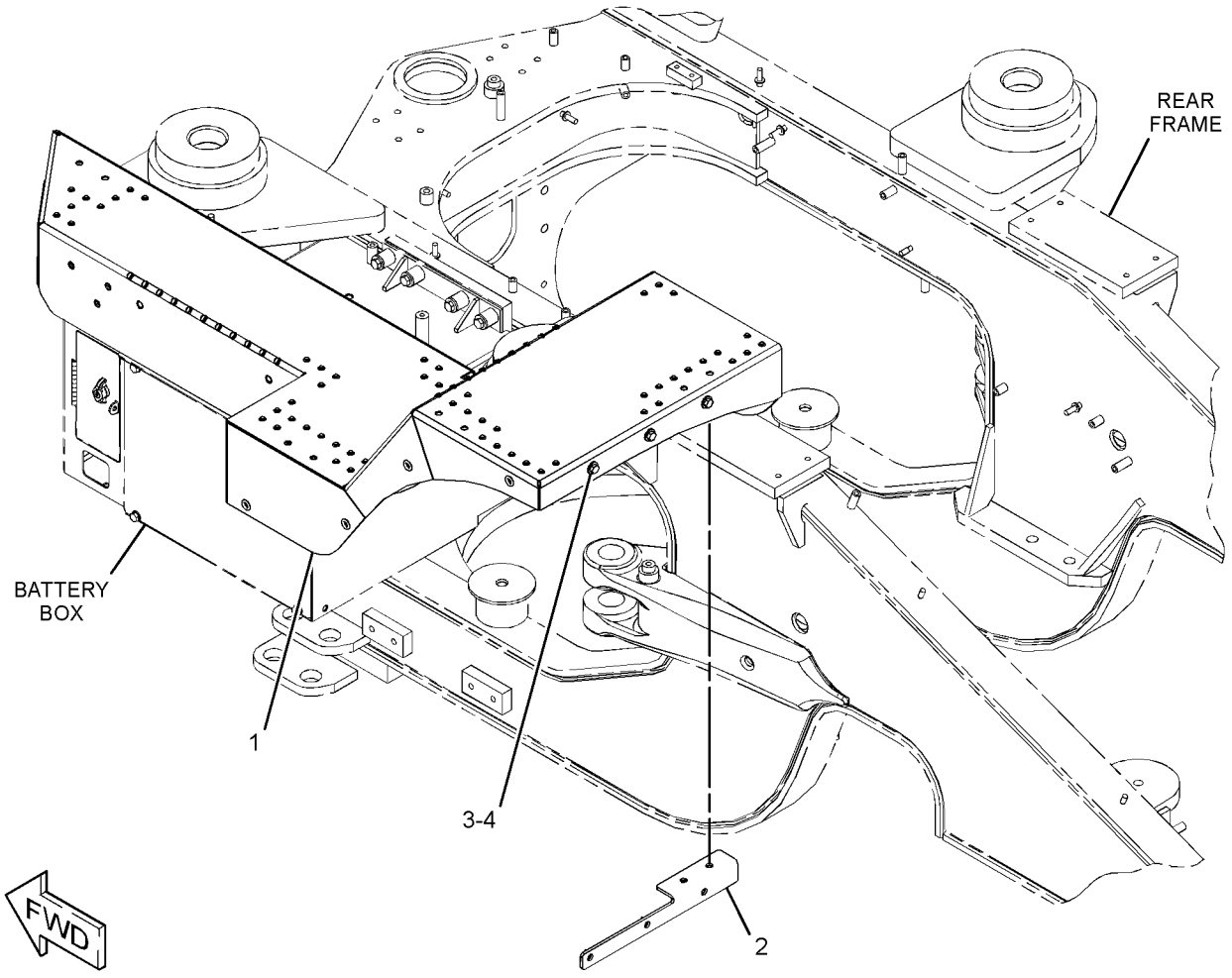

GRAPHIC #1 **<END>** g02887517

384-5251 FENDER GP-ROADING

S/N: JLX1-UP

PART OF 382-1186 FENDER AR-ROADING

SMCS-7252 **i05842188**

NOTE	REF NO	GRAPHIC REF	PART NUMBER	QTY	PART NAME 1 2 3 4 5 6 (PRODUCT LEVEL)	SEE PAGE
	1	2	**6W-5817**	2	SPRING	
	2	1	**397-9301**	16	WASHER-HARD (11.5X20X15-MM THK)	
	3	2	**3E-3826**	2	END-YOKE ROD	
	4	2	**132-1924**	1	SUPPORT AS-FENDER LATCH (LH)	
		2	**9V-0334**	1	ANGLE	
	5	2	**132-1929**	1	SUPPORT AS-FENDER LATCH (RH)	
		2	**9V-0334**	1	ANGLE	
	6	1	**141-3889**	2	EXTENSION	
	7	1	**141-3890**	2	PLATE AS	
	8	2	**178-2594**	2	BUMPER	
	9	2	**220-2612**	2	LATCH	
	10	1	**234-3545**	8	PLATE	
	11	1	**399-5239**	4	SUPPORT-STEP (RUBBER)	
	12	2	**276-1193**	2	ROD AS	
	13	1	**276-1211**	2	DEFLECTOR (REAR)	
	14	1	**276-1212**	2	STRIP	
	15	1	**276-1413**	1	DEFLECTOR (LH)	
	16	1	**276-1414**	1	DEFLECTOR (RH)	
	17	1	**276-1417**	1	DEFLECTOR (LH)	
	18	1	**276-1418**	1	DEFLECTOR (RH)	
	19	1	**276-2129**	2	BRACKET AS	
					(EACH INCLUDES)	
M		1	**8T-3490**	2	NUT-WELD (M10X1.5-THD)	
	20	1	**277-4547**	1	COVER	
	21	1	**277-4548**	1	COVER	
	22	1	**277-4549**	2	BRACKET AS	
					(EACH INCLUDES)	
M		1	**8T-3490**	2	NUT-WELD (M10X1.5-THD)	
Y	23	1	*301-2264*	1	HINGE GP-ROADING FENDER (LH)	555
Y	24	1	*301-2266*	1	HINGE GP-ROADING FENDER (RH)	556
	25	2	**312-6600**	2	CHANNEL	
	26	2	**315-8032**	1	SUPPORT AS (LH)	
	27	2	**315-8034**	1	SUPPORT AS (RH)	
	28	2	**315-8044**	2	COVER	
	29	2	**319-8865**	2	GUIDE AS	
	30	1	**329-1688**	2	ANGLE-RETAINER	
	31	1,2	**329-1689**	2	PLATE-RETAINER	
	32	1	**357-4265**	1	FENDER AS (RH)	
	33	1	**357-4266**	1	FENDER AS (LH)	
	34	1	**372-4850**	2	STEP AS	
	35	1	**376-6509**	2	STRIP	
	36	1	**383-3207**	2	FLAP	
	37	1	**384-7277**	1	FENDER AS (RH)	
	38	1	**384-7278**	1	FENDER AS (LH)	
	39	2	**092-9741**	2	GROMMET	
M	40	1	**107-9403**	6	BOLT-SOCKET HEAD (M16X2X35-MM)	
M	41	1	**129-3178**	8	LOCKNUT (M6X1-THD)	
M	42	1	**183-7121**	8	BOLT (M10X1.5X35-MM)	
	43	2	**198-4778**	4	WASHER-HARD (13.5X30X12-MM THK)	
	44	1	**8T-4121**	16	WASHER-HARD (11X21X2.5-MM THK)	
M	45	1	**344-5675**	8	NUT (M10X1.5-THD)	
M	46	1	**8T-4182**	16	BOLT (M10X1.5X45-MM)	
	48	2	**1B-0676**	2	PIN	
	49	2	**3B-2062**	2	PIN	
	50	2	**3B-4615**	4	PIN-COTTER	
	51	2	**5P-1076**	2	WASHER-HARD (13.5X30X4-MM THK)	
M	52	2	**5P-7970**	2	NUT (M8X1.25-THD)	
M	53	1	**6V-7357**	8	BOLT (M6X1X25-MM)	

384-5251 **FENDER GP-ROADING (*contd.*)** **i05842188**

NOTE	REF NO	GRAPHIC REF	PART NUMBER	QTY	PART NAME 1 2 3 4 5 6 (PRODUCT LEVEL)	SEE PAGE
	54	1,2	**7X-0578**	20	WASHER-HARD (10.2X32X2.5-MM THK)	
M	55	1	**7X-2552**	12	BOLT (M16X2X30-MM)	
	56	1,2	**7X-7729**	66	WASHER (11X25X3-MM THK)	
M	57	1	**8T-0389**	16	LOCKNUT (M10X1.5-THD)	
	58	2	**8T-3985**	2	KNOB	
	59	1	**8T-4122**	18	WASHER-HARD (17X32X3.5-MM THK)	
M	60	2	**8T-4133**	2	NUT (M10X1.5-THD)	
M	61	2	**8T-4195**	6	BOLT (M10X1.5X30-MM)	
M	62	1,2	**8T-4137**	42	BOLT (M10X1.5X20-MM)	
M	63	2	**8T-4183**	4	BOLT (M12X1.75X40-MM)	
M	64	2	**8T-4191**	6	BOLT (M10X1.5X16-MM)	
M	65	1	**8T-4192**	8	BOLT (M12X1.75X25-MM)	
	66	1	**8T-4223**	8	WASHER-HARD (13.5X25.5X3-MM THK)	
M	67	2	**9X-2041**	6	SCREW-TRUSS HEAD (M10X1.5X20-MM)	
	68	1	**9X-6165**	16	WASHER (6.5X22X2.5-MM THK)	
E	69	1	**147-2355**		SEAL (117.5-CM EACH)	

E - ORDER BY THE CENTIMETER
M - METRIC PART
Y - SEPARATE ILLUSTRATION

384-5251 **FENDER GP-ROADING (*contd.*)** **i05842188**

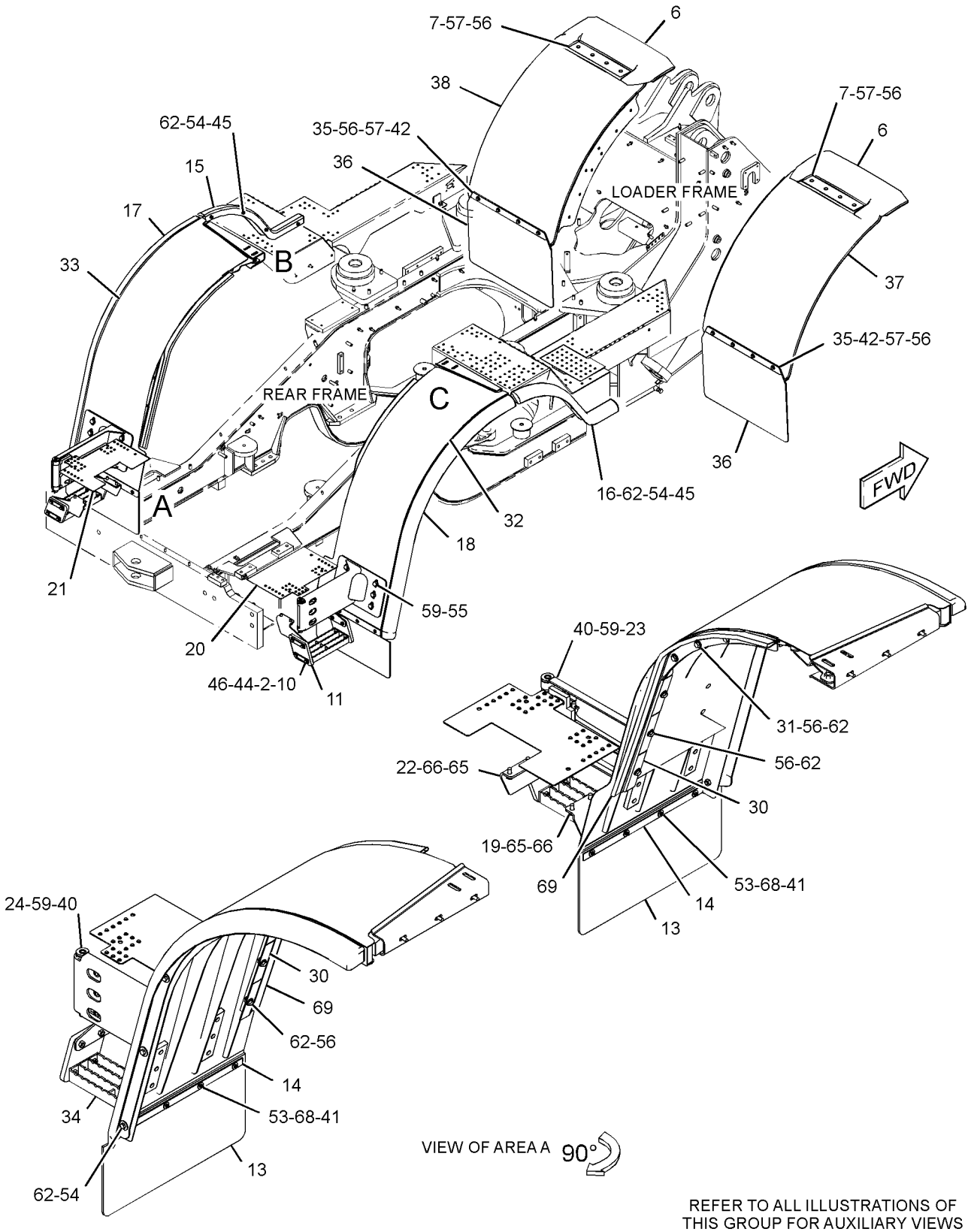

GRAPHIC #1

g03628716

384-5251 **FENDER GP-ROADING (*contd.*)** **i05842188**

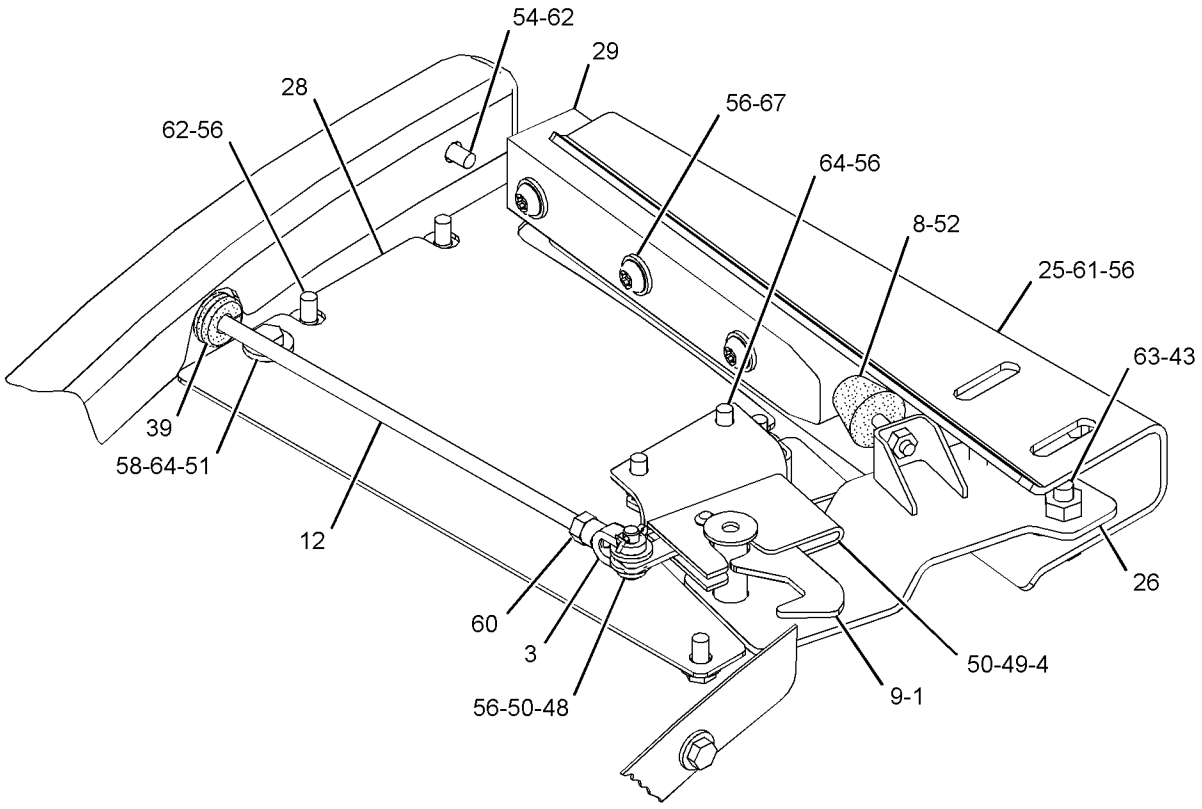

VIEW OF AREA B
(PARTS REMOVED FOR CLARITY)

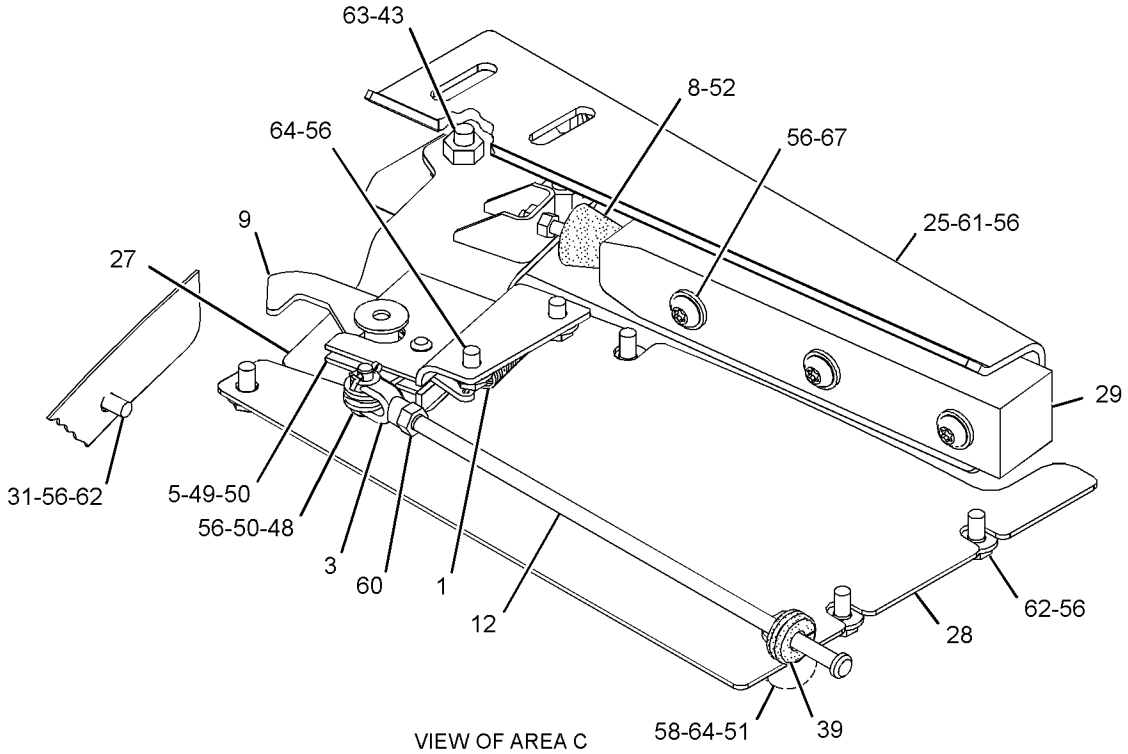

VIEW OF AREA C
(PARTS REMOVED FOR CLARITY)

GRAPHIC #2 **<END>** g02899478

374-4982 FRAME AS-LOADER

S/N: JLX1-179

PART OF 373-8237 CHASSIS AR

SMCS-7054 **i04758085**

NOTE	REF NO	GRAPHIC REF	PART NUMBER	QTY	PART NAME 1 2 3 4 5 6 (PRODUCT LEVEL)	SEE PAGE
M	1	1	**8T-4219**	6	STUD-WELD (M10X1.5X17.5-MM)	
	2	1	**8Y-7023**	2	BOSS (M12X1.75-MM)	
M	3	1	**9C-6809**	1	BLOCK (M10X1.5-MM)	
	4	1	**090-8247**	1	BLOCK	
	5	1	**276-4642**	1	SUPPORT AS	
	6	1	*377-5026*	1	PLATE AS	
M		1	**7X-0752**	1	BOSS-WELD (M10X1.5X65-MM)	
M		1	**8T-3597**	3	NUT-WELD (M12X1.75-THD)	
	7	1	*377-5028*	1	PLATE AS	
		1	**7T-1099**	1	LINK	
M		1	**8T-3490**	1	NUT-WELD (M10X1.5-THD)	
M		1	**8T-3597**	2	NUT-WELD (M12X1.75-THD)	
M	8	1	**110-2023**	15	STUD-WELD (M10X1.5X25-MM)	
	9	1	**117-0986**	1	BAR	
	10	1	**132-6964**	1	PLATE	
	11	1	**4I-3398**	1	PLATE	
	12	1	**5G-8480**	1	LUG	
	13	1	**7T-1099**	20	LINK	
M	14	1	**8T-3851**	1	BOSS-WELD (M10X1.5X17.5-MM)	
M	15	1	**8T-4935**	17	BOSS-WELD (M10X1.5X45-MM)	
M	16	1	**9R-2613**	1	BOSS-WELD (M10X1.5X25-MM)	
M	17	1	**9R-2640**	3	BOSS (M12X1.75X25-MM)	
	18	1	**9R-4595**	1	BOSS (M12X1.75X30-MM)	

M - METRIC PART

374-4982 **FRAME AS-LOADER (*contd.*)** **i04758085**

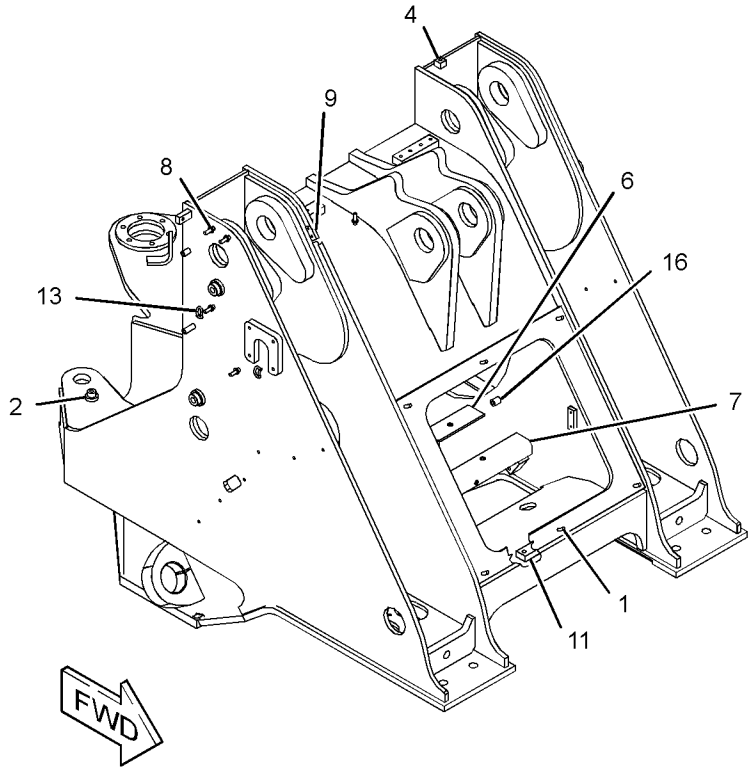

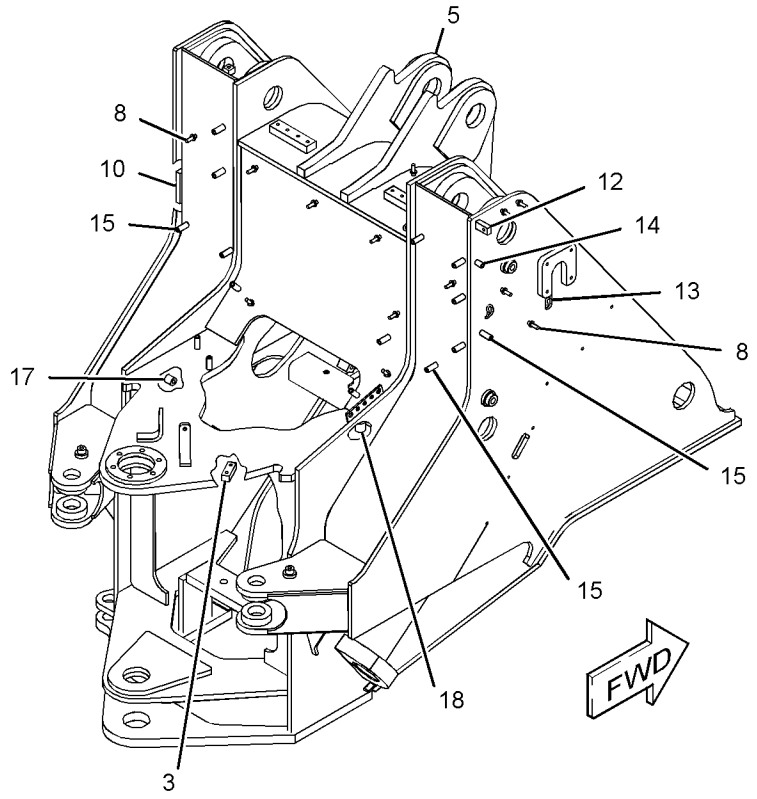

GRAPHIC #1 **<END>** g02869356

374-4982 FRAME AS-LOADER

S/N: JLX180-UP

PART OF 373-8237 CHASSIS AR

SMCS-7054 **i05306717**

NOTE	REF NO	GRAPHIC REF	PART NUMBER	QTY	PART NAME 1 2 3 4 5 6 (PRODUCT LEVEL)	SEE PAGE
	1	1	**9R-4595**	1	BOSS (M12X1.75X30-MM)	
	2	1	**8Y-7023**	2	BOSS (M12X1.75-MM)	
M	3	1	**9C-6809**	1	BLOCK (M10X1.5-MM)	
	4	1	**090-8247**	1	BLOCK	
C	5	1	**421-7634**	1	HEADER AS	
	6	1	*377-5026*	1	PLATE AS	
M		1	**7X-0752**	1	BOSS-WELD (M10X1.5X65-MM)	
M		1	**8T-3597**	3	NUT-WELD (M12X1.75-THD)	
	7	1	*377-5028*	1	PLATE AS	
		1	**7T-1099**	1	LINK	
M		1	**8T-3490**	1	NUT-WELD (M10X1.5-THD)	
M		1	**8T-3597**	2	NUT-WELD (M12X1.75-THD)	
M	8	1	**110-2023**	15	STUD-WELD (M10X1.5X25-MM)	
	9	1	**117-0986**	1	BAR	
	10	1	**132-6964**	1	PLATE	
	11	1	**4I-3398**	1	PLATE	
	12	1	**5G-8480**	1	LUG	
	13	1	**7T-1099**	20	LINK	
M	14	1	**8T-3851**	1	BOSS-WELD (M10X1.5X17.5-MM)	
M	15	1	**8T-4935**	17	BOSS-WELD (M10X1.5X45-MM)	
M	16	1	**9R-2613**	1	BOSS-WELD (M10X1.5X25-MM)	
M	17	1	**9R-2640**	3	BOSS (M12X1.75X25-MM)	
	18	1	**117-6496**	2	BLOCK	

C - CHANGE FROM PREVIOUS TYPE
M - METRIC PART

374-4982 **FRAME AS-LOADER (*contd.*)** **i05306717**

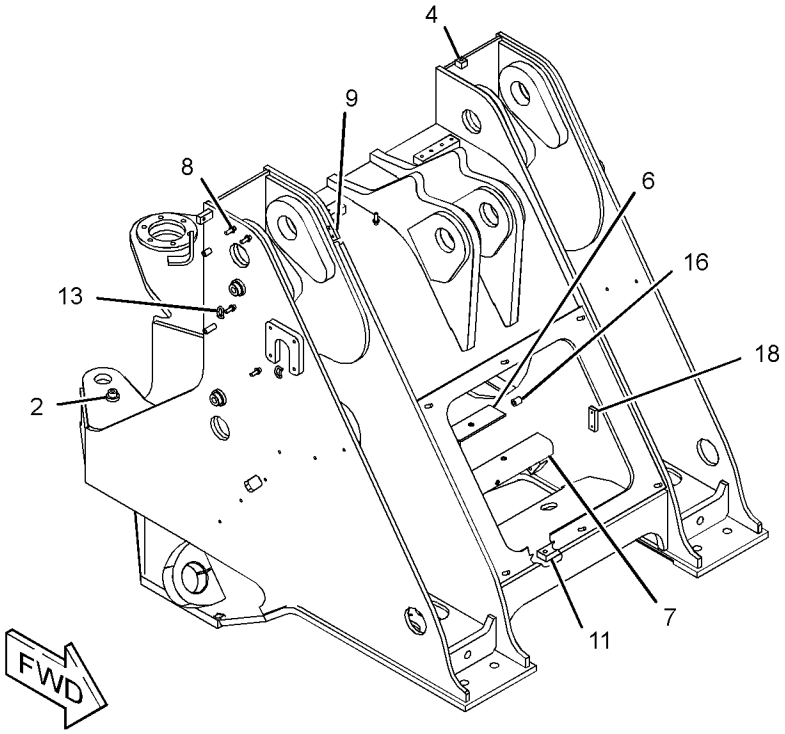

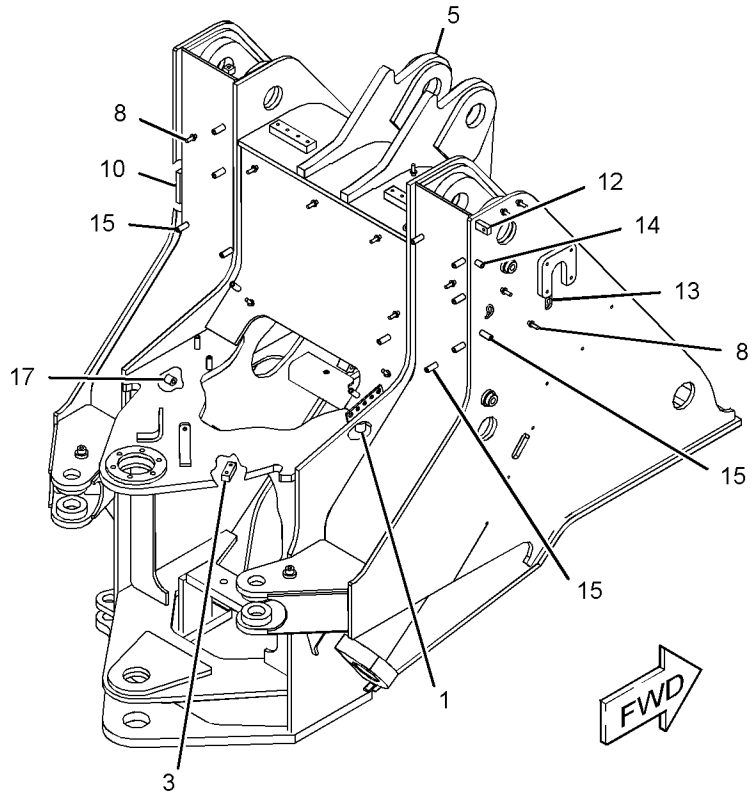

GRAPHIC #1 **<END>** g03368027

374-4981 FRAME AS-REAR

S/N: JLX1-UP

PART OF 373-8237 CHASSIS AR

SMCS-7051 **i04958913**

NOTE	REF NO	GRAPHIC REF	PART NUMBER	QTY	PART NAME 1 2 3 4 5 6 (PRODUCT LEVEL)	SEE PAGE
M	1	1	**9C-6809**	1	BLOCK (M10X1.5-MM)	
	2	1	**133-6299**	1	BRACKET AS	
	3	1	**398-1501**	1	BOX AS	
	4	1	**398-1500**	1	BOX AS	
M	5	1	**110-2023**	17	STUD-WELD (M10X1.5X25-MM)	
	6	1	**7T-1099**	17	LINK	
M	7	1	**7X-0752**	5	BOSS-WELD (M10X1.5X65-MM)	
M	8	1	**8T-3635**	4	STUD-WELD (M12X1.75X34.93-MM)	
M	9	1	**8T-3851**	24	BOSS-WELD (M10X1.5X17.5-MM)	
M	10	1	**8T-4219**	1	STUD-WELD (M10X1.5X17.5-MM)	
M	11	1	**8T-4935**	4	BOSS-WELD (M10X1.5X45-MM)	
M	12	1	**8T-4967**	10	STUD-WELD (M10X1.5X23-MM)	
	13	1	**8X-5963**	2	BLOCK	
M	14	1	**8Y-4489**	2	BOSS (M10X1.5-THD)	
	15	1	**9C-7863**	2	BLOCK	
M	16	1	**9R-2613**	4	BOSS-WELD (M10X1.5X25-MM)	
M	17	1	**9R-2640**	1	BOSS (M12X1.75X25-MM)	
M	18	1	**9R-3845**	1	BOSS (M12X1.75X38-MM)	
M	19	1	**9X-8487**	1	BOSS-WELD (M10X1.5X35-MM)	
M	20	1	**8Y-3795**	1	BOSS (M10X1.5X39-MM)	

M - METRIC PART

374-4981 **FRAME AS-REAR (*contd.*)** **i04958913**

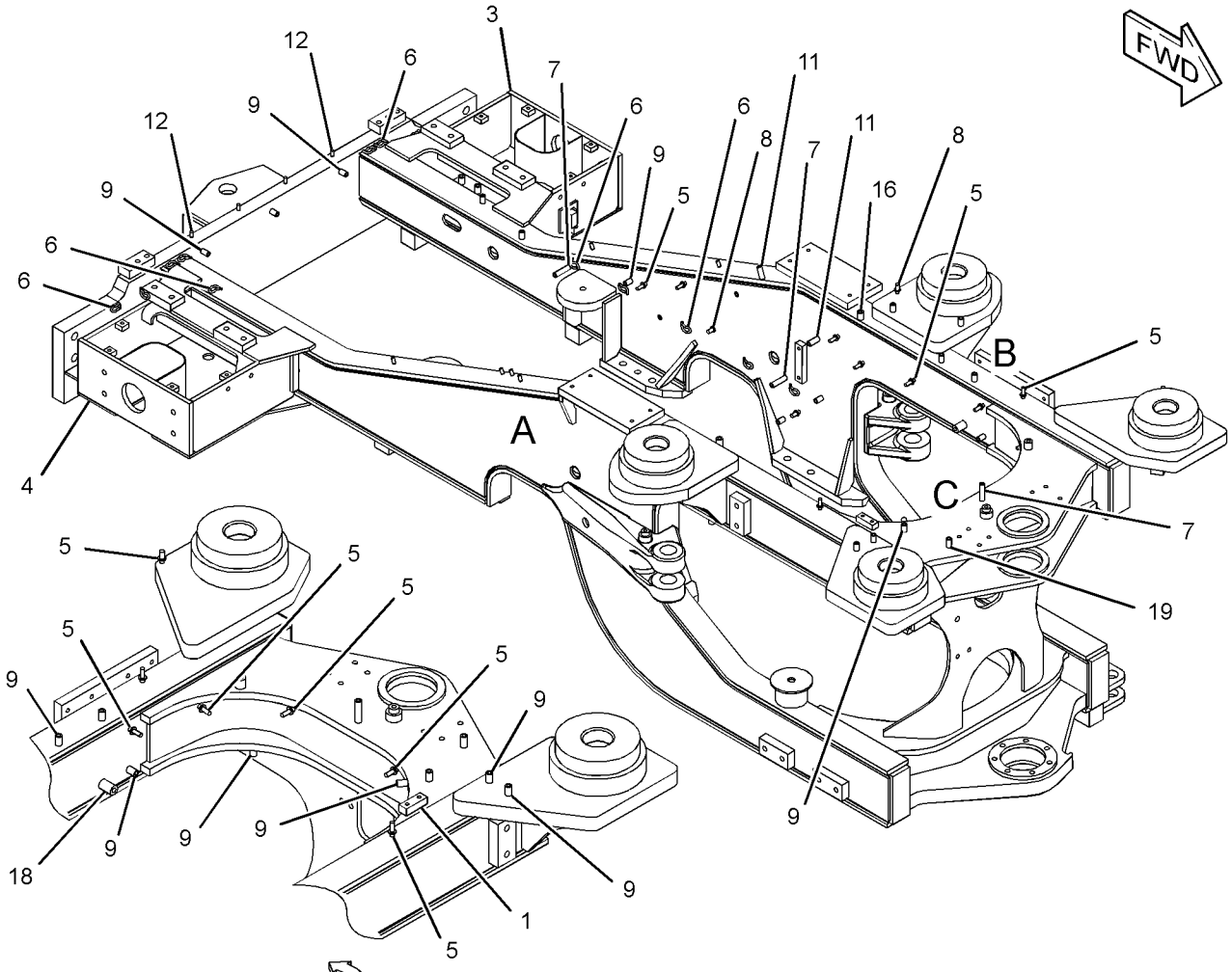

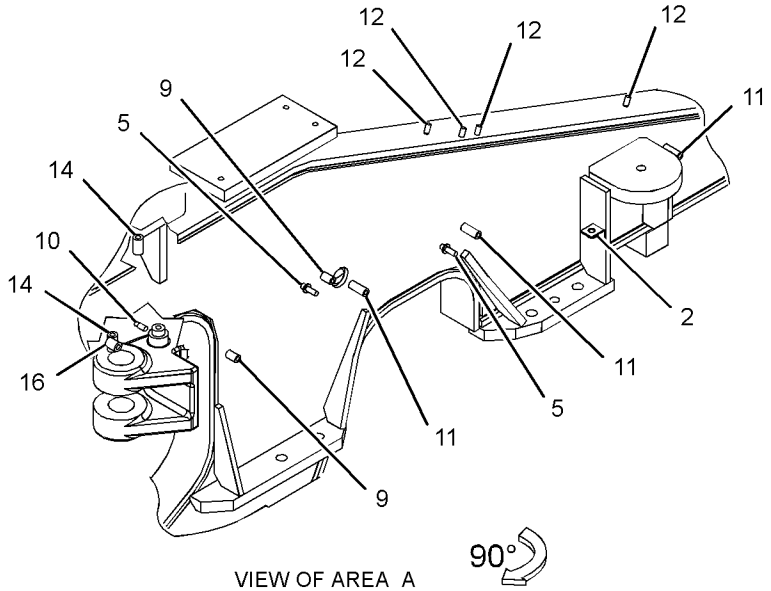

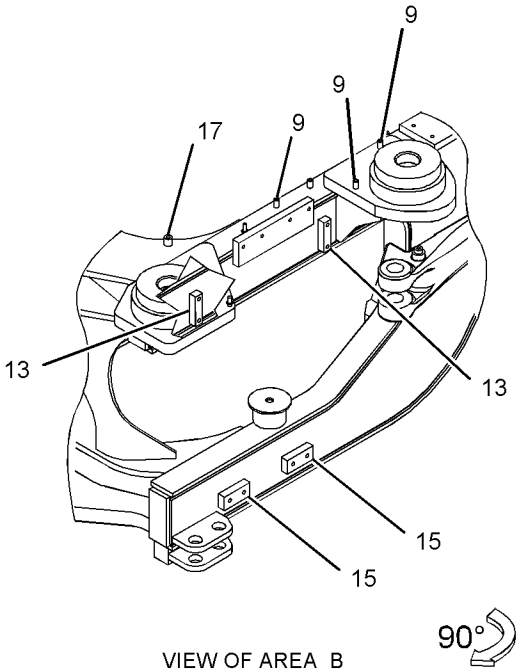

GRAPHIC #1 **<END>** g02871581

271-7220 GRILL GP-RADIATOR

S/N: JLX1-UP

PART OF 351-9911 SUPPORT GP-HOOD

SMCS-7170 **i04132851**

NOTE	REF NO	GRAPHIC REF	PART NUMBER	QTY	PART NAME 1 2 3 4 5 6 (PRODUCT LEVEL)	SEE PAGE
	1	1	**6W-5817**	1	SPRING	
	2	1	**6W-5818**	1	LATCH	
	3	1	**227-5716**	1	PIN AS	
	4	1	**174-8663**	1	PIN	
	5	1	**229-7534**	1	LATCH AS	
	6	1	**236-9939**	1	PLATE AS	
		1	**8T-4121**	2	WASHER-HARD (11X21X2.5-MM THK)	
	7	1	**271-7219**	1	GRILL AS-RADIATOR (REAR)	
	8	1	**7X-7729**	6	WASHER (11X25X3-MM THK)	
	9	1	**8T-4121**	4	WASHER-HARD (11X21X2.5-MM THK)	
M	10	1	**8T-4133**	2	NUT (M10X1.5-THD)	
M	11	1	**8T-4136**	6	BOLT (M10X1.5X25-MM)	
M	12	1	**9X-2040**	4	SCREW-TRUSS HEAD (M10X1.5X25-MM)	
	13	1	**3B-2062**	2	PIN	
	14	1	**5P-0372**	2	LOCK PIN	

M - METRIC PART

271-7220 **GRILL GP-RADIATOR (*contd.*)** **i04132851**

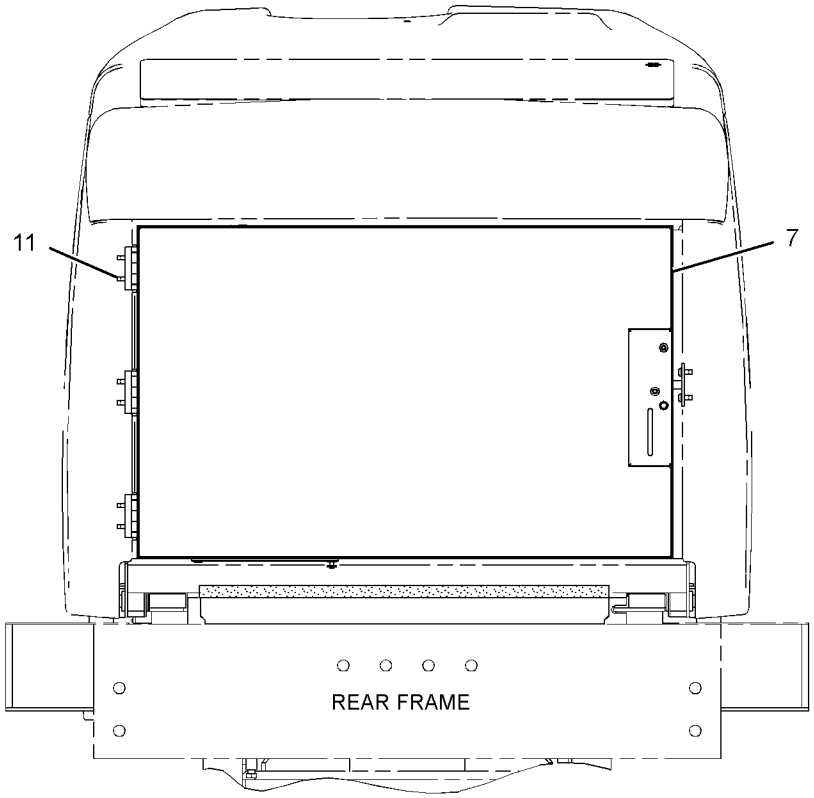

REAR VIEW

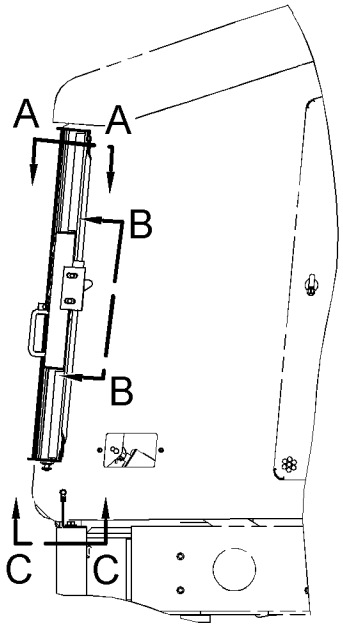

RIGHT SIDE VIEW

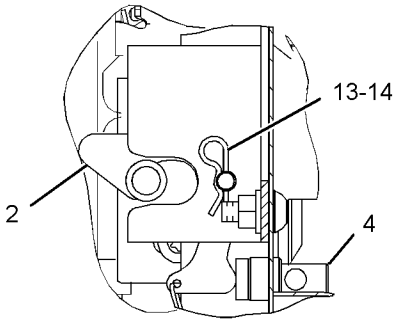

SECTION E-E

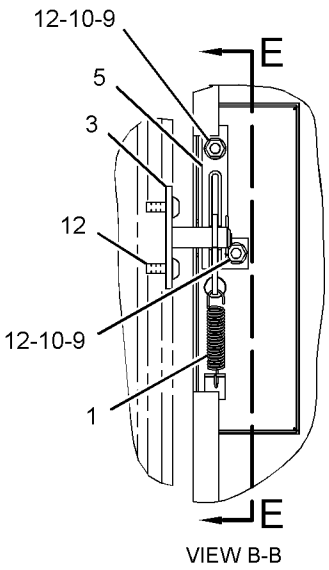

VIEW B-B

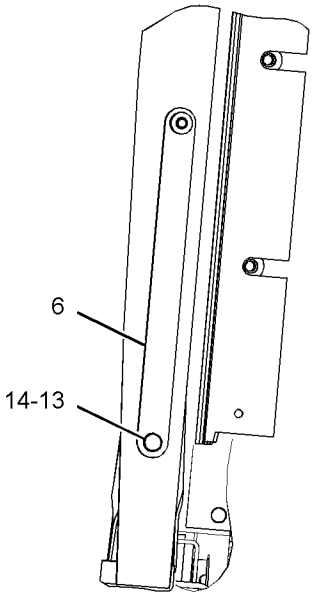

VIEW C-C

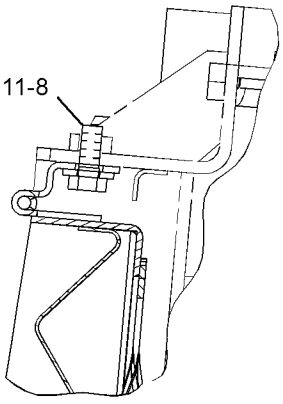

SECTION A-A

GRAPHIC #1 **<END>** g02331794

370-2229 GUARD GP-AXLE

S/N: JLX1-UP

PART OF 357-1273 AXLE AR-FIXED & OSCILLATING, 357-1276 CONFIGURATION AR

SMCS-7185 **i04889344**

NOTE	PART NUMBER	QTY	PART NAME 1 2 3 4 5 6 (PRODUCT LEVEL)	SEE PAGE
	232-0929	8	PLATE AS	
M	**8T-4196**	64	BOLT (M10X1.5X35-MM)	
	232-0928	8	PLATE	
	8T-4121	64	WASHER-HARD (11X21X2.5-MM THK)	

M - METRIC PART

<END>

143-0001 GUARD GP-AXLE OIL COOLER

S/N: JLX1-UP

PART OF 383-6023 COOLER AR-AXLE OIL

SMCS-7150 **i01744146**

NOTE	REF NO	GRAPHIC REF	PART NUMBER	QTY	PART NAME 1 2 3 4 5 6 (PRODUCT LEVEL)	SEE PAGE
M	1	1	**8T-0282**	6	BOLT (M16X2X120-MM)	
	2	1	**212-7753**	2	PLATE AS	
M	3	1	**6V-3668**	12	BOLT (M12X1.75X30-MM)	
	4	1	**7X-0618**	12	WASHER-HARD (13.5X40X5-MM THK)	
	5	1	**143-0004**	2	PLATE AS (LH)	
	6	1	**212-7754**	2	PLATE	
	7	1	**143-0003**	2	PLATE AS (RH)	
	8	1	**8T-4121**	4	WASHER-HARD (11X21X2.5-MM THK)	
M	9	1	**8T-4186**	4	BOLT (M10X1.5X40-MM)	
M	10	1	**9X-2075**	6	BOLT (M16X2X200-MM)	

M - METRIC PART

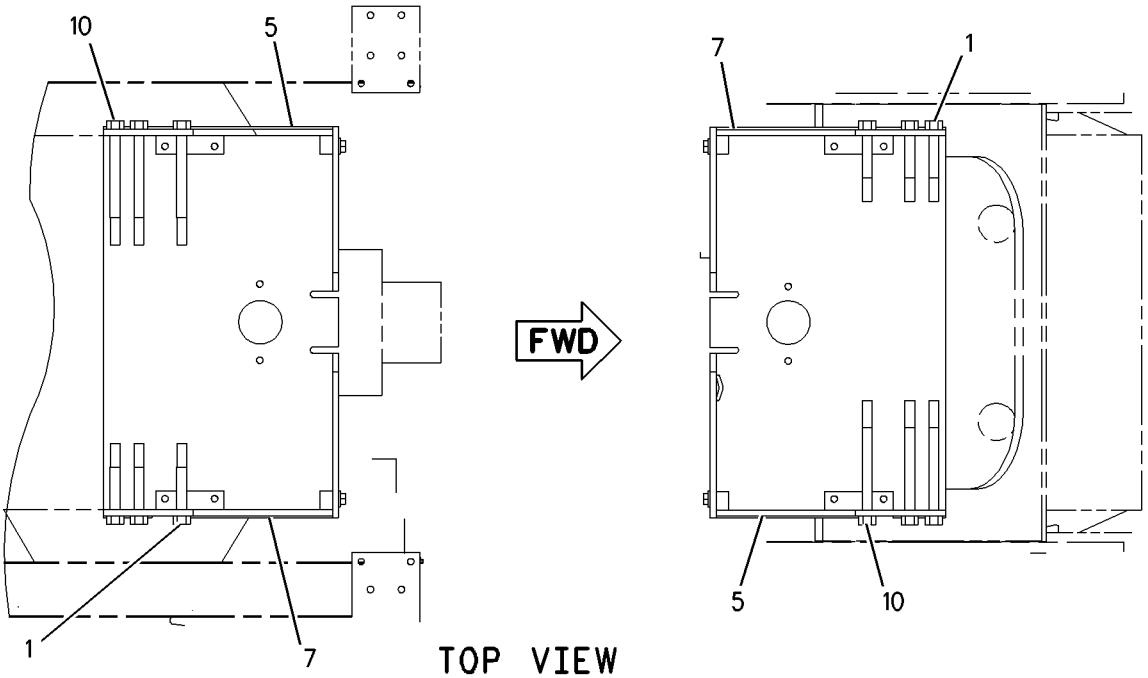

TOP VIEW

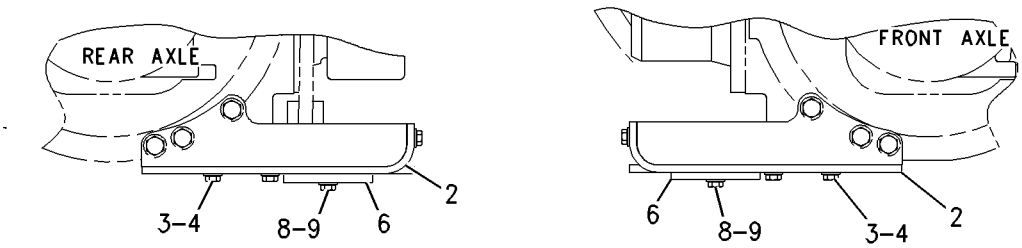

RIGHT SIDE VIEW

GRAPHIC #1 **<END>** g00892863

371-6728 GUARD GP-FRONT

S/N: JLX1-UP

PART OF 373-8237 CHASSIS AR

SMCS-7167 **i05608680**

NOTE	REF NO	GRAPHIC REF	PART NUMBER	QTY	PART NAME 1 2 3 4 5 6 (PRODUCT LEVEL)	SEE PAGE
Y	1	1	*371-6729*	1	GUARD GP-FRONT	546
	2	1	**7X-7729**	6	WASHER (11X25X3-MM THK)	
M	3	1	**8T-4136**	6	BOLT (M10X1.5X25-MM)	

M - METRIC PART
Y - SEPARATE ILLUSTRATION

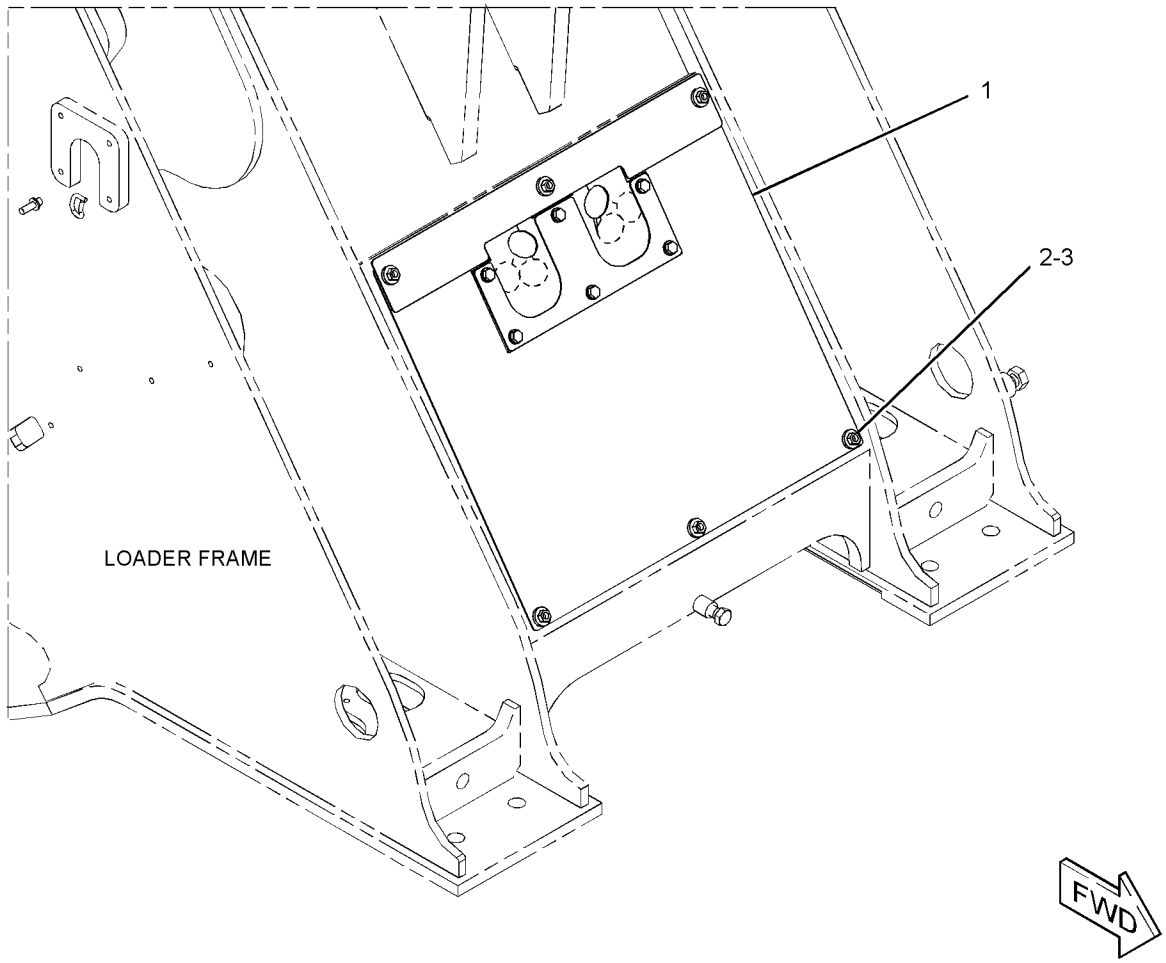

GRAPHIC #1 **<END>** g02869328

371-6729 GUARD GP-FRONT

S/N: JLX1-UP

PART OF 371-6728 GUARD GP-FRONT

SMCS-7167 **i05244452**

NOTE	REF NO	GRAPHIC REF	PART NUMBER	QTY	PART NAME 1 2 3 4 5 6 (PRODUCT LEVEL)	SEE PAGE
	1	1	**371-6731**	1	BAFFLE	
	2	1	**371-6732**	1	SHEET	
	3	1	**371-6733**	1	SHEET	
	4	1	**371-6749**	1	SHEET AS	
	5	1	**8T-4121**	6	WASHER-HARD (11X21X2.5-MM THK)	
M	6	1	**8T-4136**	6	BOLT (M10X1.5X25-MM)	

M - METRIC PART

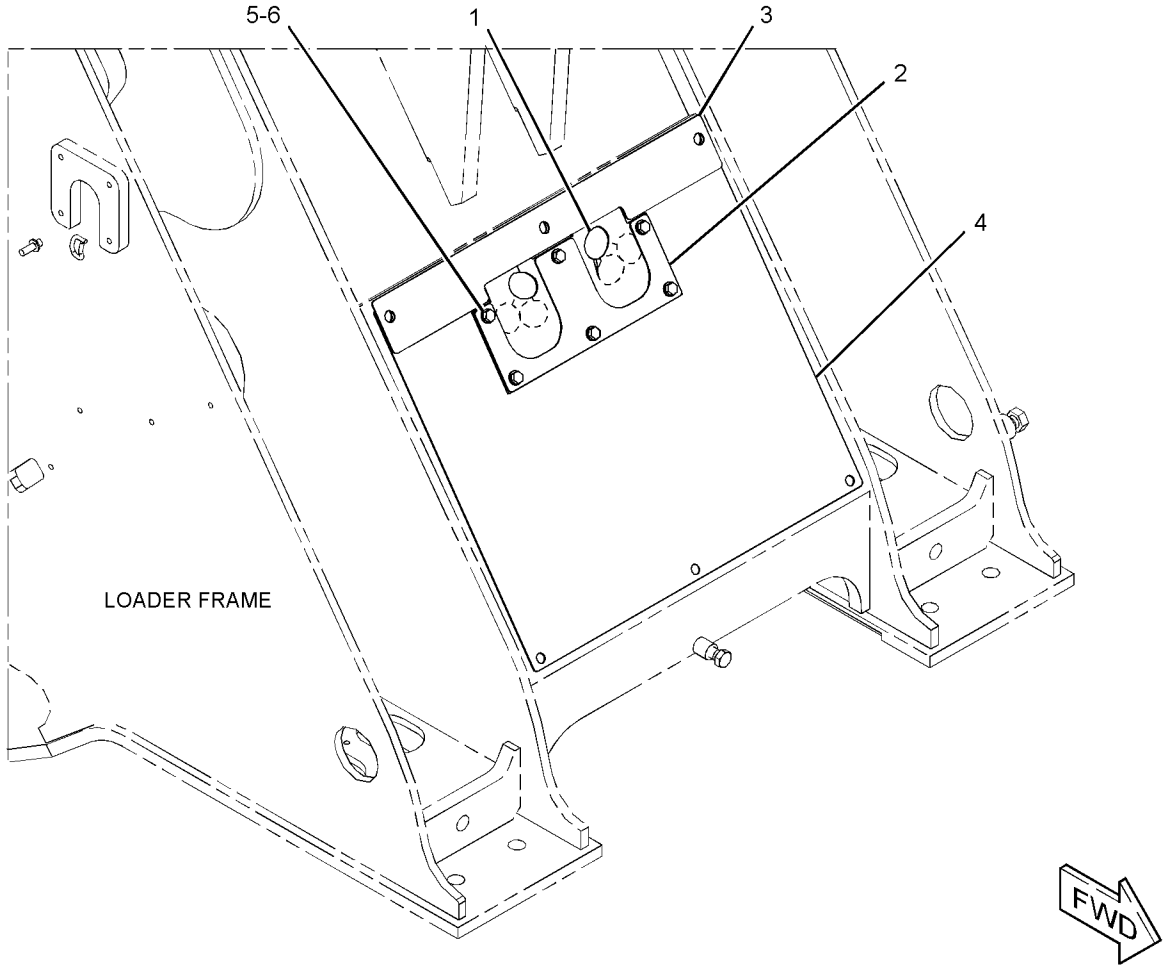

GRAPHIC #1 **<END>** g02869462

126-7710 GUARD GP-POWER TRAIN

S/N: JLX1-UP

PART OF 390-7296 CONFIGURATION AR, 368-8481, 373-8287 CONVERSION AR-MACHINE, 390-7294 DISTRIBUTION AR

SMCS-7153 **i05231032**

NOTE	REF NO	GRAPHIC REF	PART NUMBER	QTY	PART NAME 1 2 3 4 5 6 (PRODUCT LEVEL)	SEE PAGE
	1	1	**131-0030**	1	PLATE	
M	2	1	**7X-2552**	4	BOLT (M16X2X30-MM)	
	3	1	**3E-9411**	4	WASHER-HARD (17.5X38X6-MM THK)	

M - METRIC PART

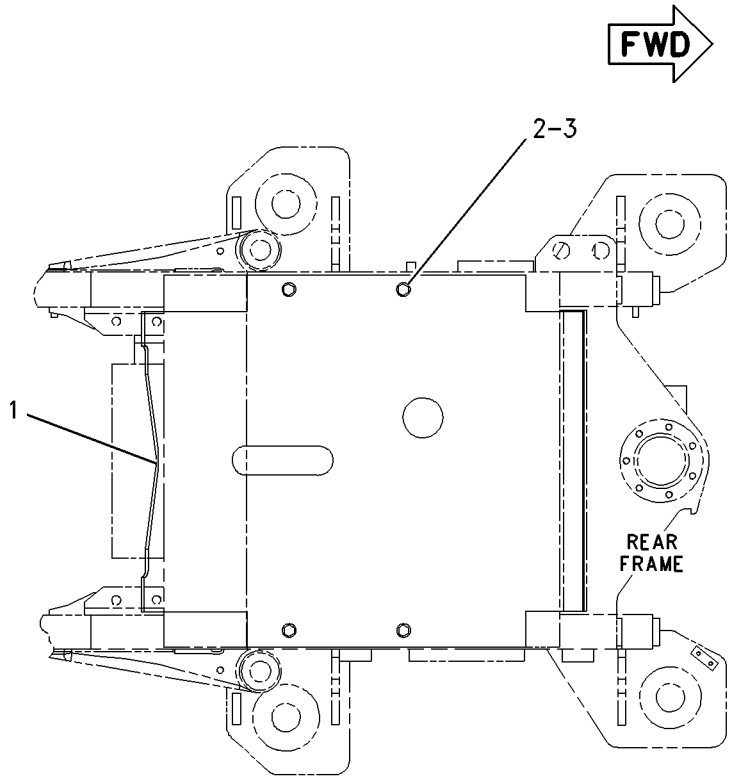

BOTTOM VIEW

GRAPHIC #1 **<END>** g00769652

156-1137 GUARD GP-POWER TRAIN–AXLE OIL COOLER

S/N: JLX1-UP

PART OF 383-6023 COOLER AR-AXLE OIL

SMCS-7153 **i00857417**

NOTE	REF NO	GRAPHIC REF	PART NUMBER	QTY	PART NAME 1 2 3 4 5 6 (PRODUCT LEVEL)	SEE PAGE
	1	1	**153-3715**	1	PLATE	
	2	1	**3E-9411**	4	WASHER-HARD (17.5X38X6-MM THK)	
M	3	1	**7X-2552**	4	BOLT (M16X2X30-MM)	

M - METRIC PART

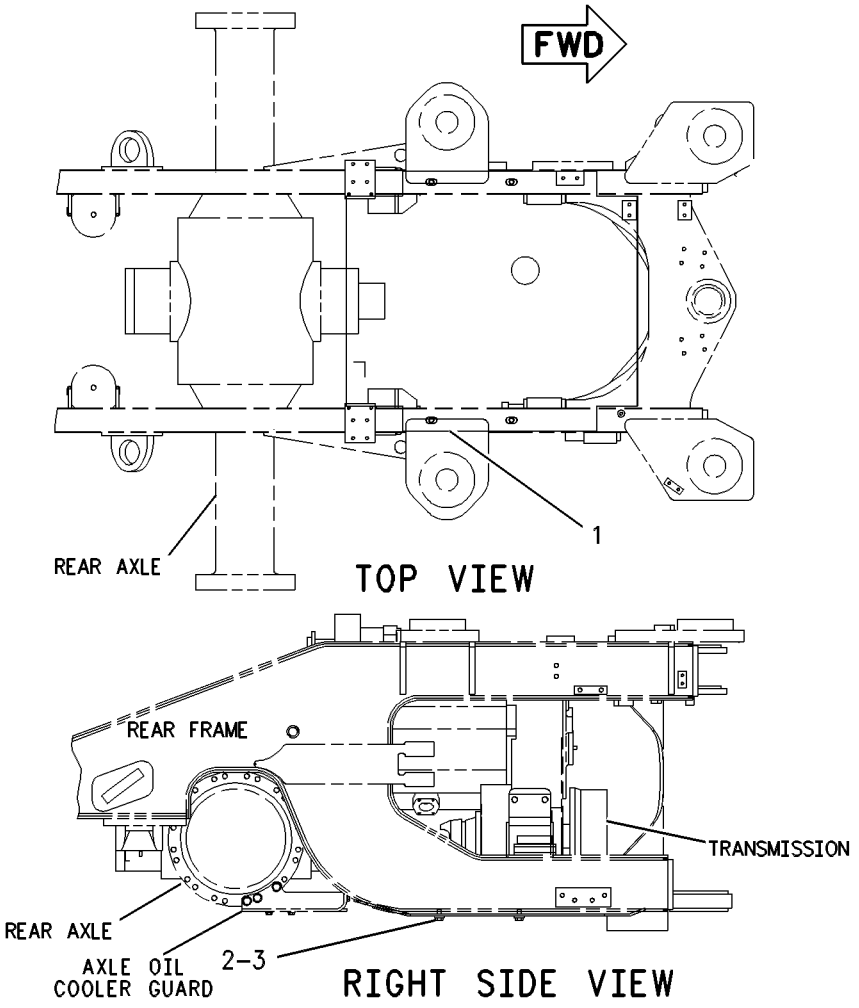

GRAPHIC #1 **<END>** g00423451

376-4020 HANDRAIL GP

S/N: JLX1-UP

PART OF 373-8264 PLATFORM AR

SMCS-7256 **i04776818**

NOTE	REF NO	GRAPHIC REF	PART NUMBER	QTY	PART NAME 1 2 3 4 5 6 (PRODUCT LEVEL)	SEE PAGE
	1	1	**376-4023**	1	HANDRAIL AS	
	2	1	**376-4026**	1	HANDRAIL AS (LH)	
	3	1	**376-4029**	1	HANDRAIL AS (RH)	
	4	1	**7X-0589**	2	WASHER-HARD (12X28.5X5-MM THK)	
M	5	1	**8T-4183**	4	BOLT (M12X1.75X40-MM)	
M	6	1	**8T-4192**	4	BOLT (M12X1.75X25-MM)	
M	7	1	**8T-4195**	2	BOLT (M10X1.5X30-MM)	
	8	1	**8T-4223**	8	WASHER-HARD (13.5X25.5X3-MM THK)	

M - METRIC PART

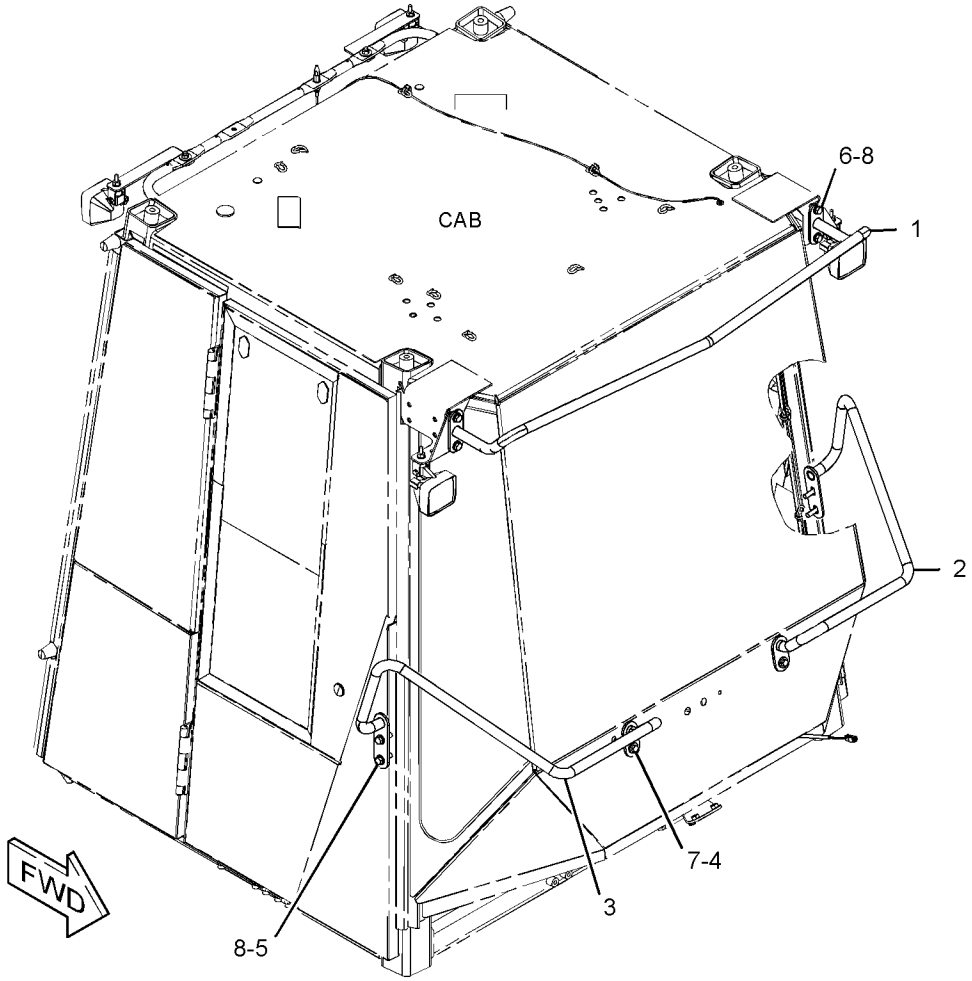

GRAPHIC #1 **<END>** g02890286

280-3329 HARDWARE GP-LOADER FRAME

S/N: JLX1-UP

PART OF 383-6026 HYDRAULIC AR

SMCS-7054, 7553 **i02581325**

NOTE	REF NO	GRAPHIC REF	PART NUMBER	QTY	PART NAME 1 2 3 4 5 6 (PRODUCT LEVEL)	SEE PAGE
	1	1	**7Y-2522**	2	PLATE	

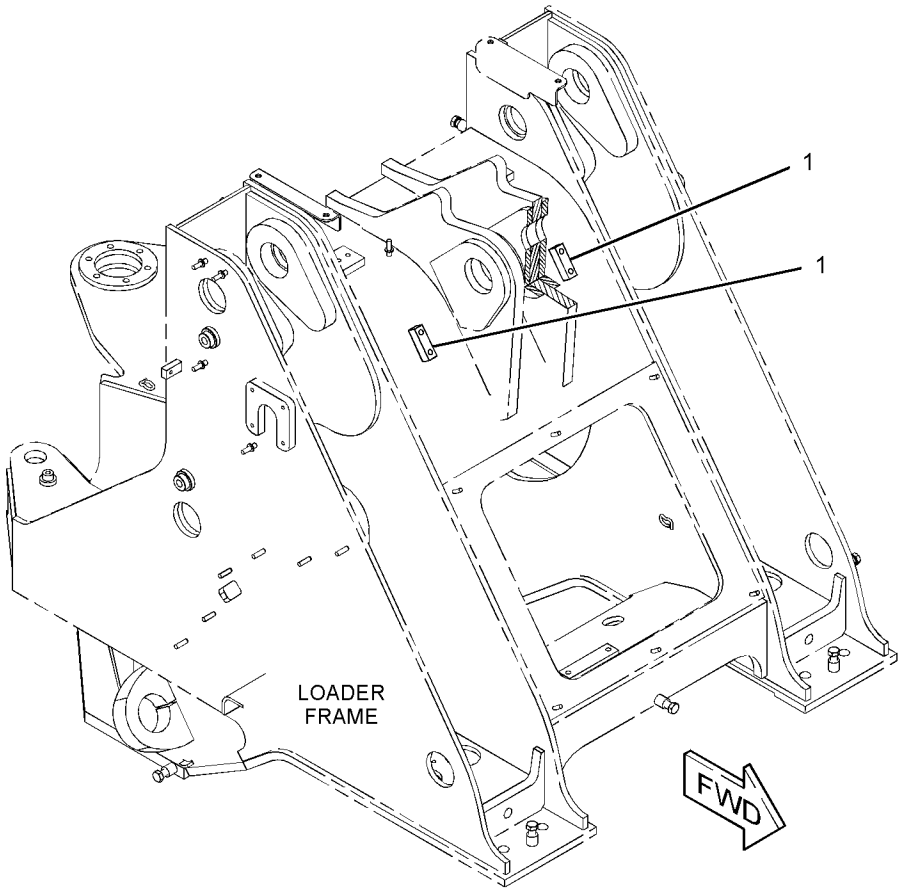

GRAPHIC #1 **<END>** g01250234

382-2522 HARDWARE GP-LOADER FRAME

S/N: JLX1-UP
CUSTOM
PART OF 419-9847 COOLER AR-AXLE OIL

SMCS-7054, 7553

i05837045

NOTE	REF NO	GRAPHIC REF	PART NUMBER	QTY	PART NAME 1 2 3 4 5 6 (PRODUCT LEVEL)	SEE PAGE
	1	1	**8X-5963**	1	BLOCK	
	2	1	**8X-6780**	1	BLOCK	

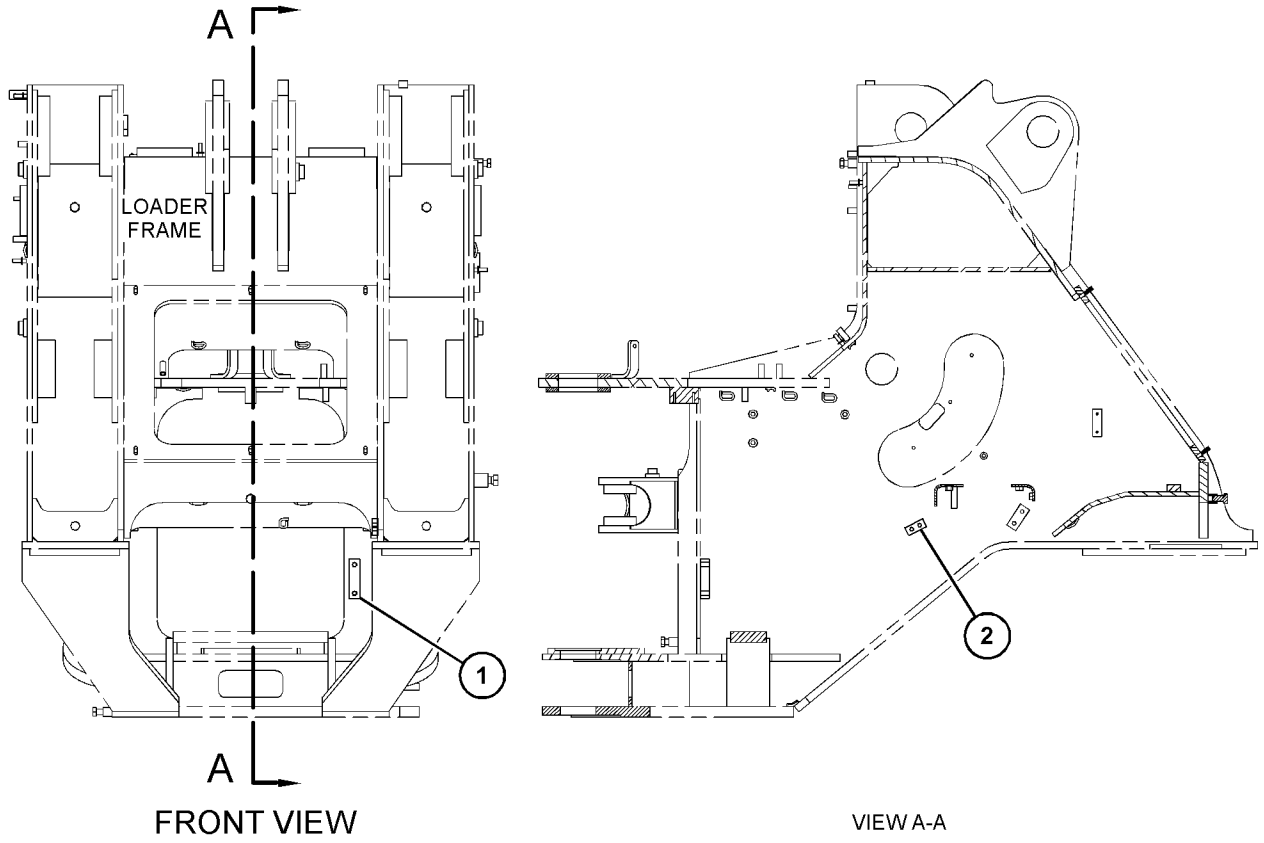

FRONT VIEW

VIEW A-A

GRAPHIC #1

<END>

g03709317

260-1533 HARDWARE GP-REAR FRAME

S/N: JLX1-UP

PART OF 262-1085, 391-6269 SUPPRESSION AR-SOUND

SMCS-7051, 7553 **i03829129**

NOTE	REF NO	GRAPHIC REF	PART NUMBER	QTY	PART NAME 1 2 3 4 5 6 (PRODUCT LEVEL)	SEE PAGE
M	1	1	**112-9073**	8	STUD-WELD (M12X1.75X21.1-MM)	

M - METRIC PART

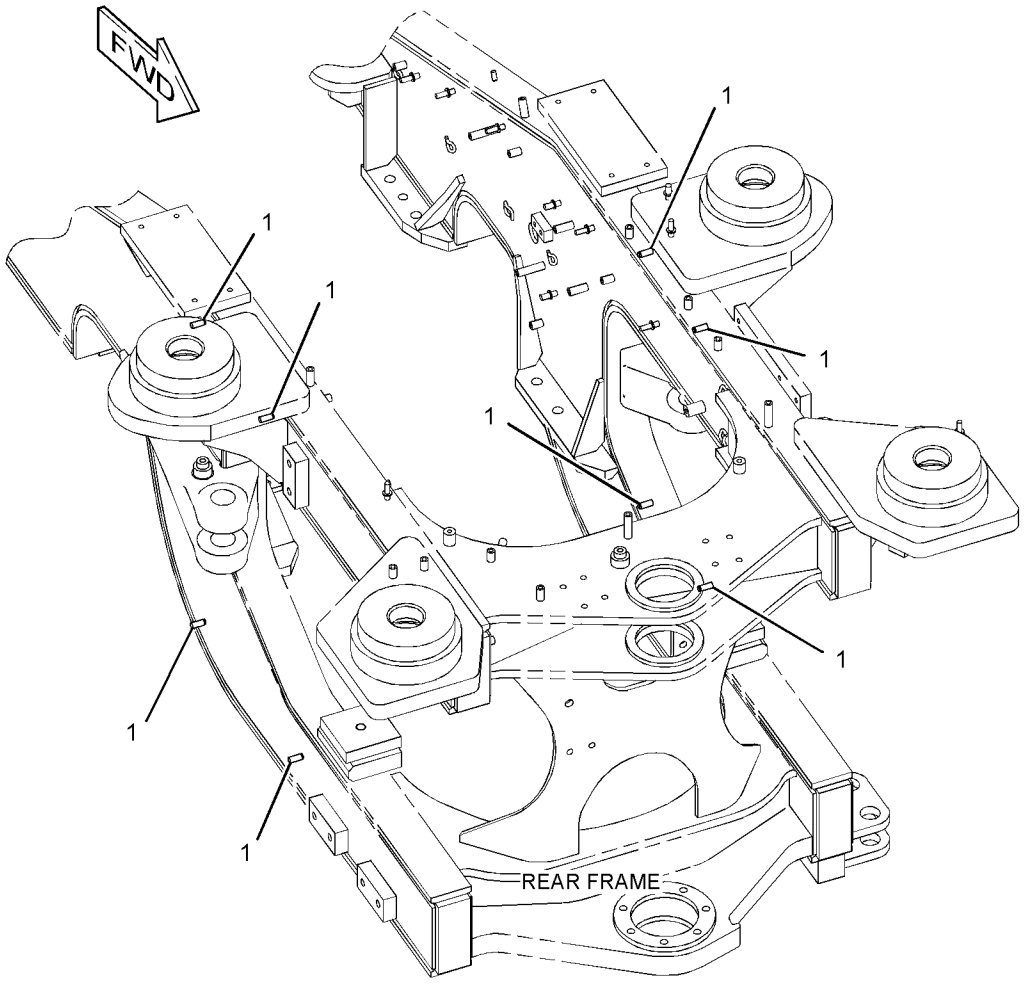

GRAPHIC #1 **<END>** g01922515

341-9522 HARDWARE GP-REAR FRAME

S/N: JLX1-UP

PART OF 373-8267 STEERING AR-SECONDARY

SMCS-7051, 7553

i03780369

NOTE	REF NO	GRAPHIC REF	PART NUMBER	QTY	PART NAME 1 2 3 4 5 6 (PRODUCT LEVEL)	SEE PAGE
	1	1	**141-2817**	1	ANGLE	
M	2	1	**8T-3851**	1	BOSS-WELD (M10X1.5X17.5-MM)	
	3	1	**295-7978**	1	BRACKET	
M	4	1	**110-2023**	2	STUD-WELD (M10X1.5X25-MM)	
M	5	1	**7X-0752**	3	BOSS-WELD (M10X1.5X65-MM)	
M	6	1	**8T-3635**	1	STUD-WELD (M12X1.75X34.93-MM OAL)	

M - METRIC PART

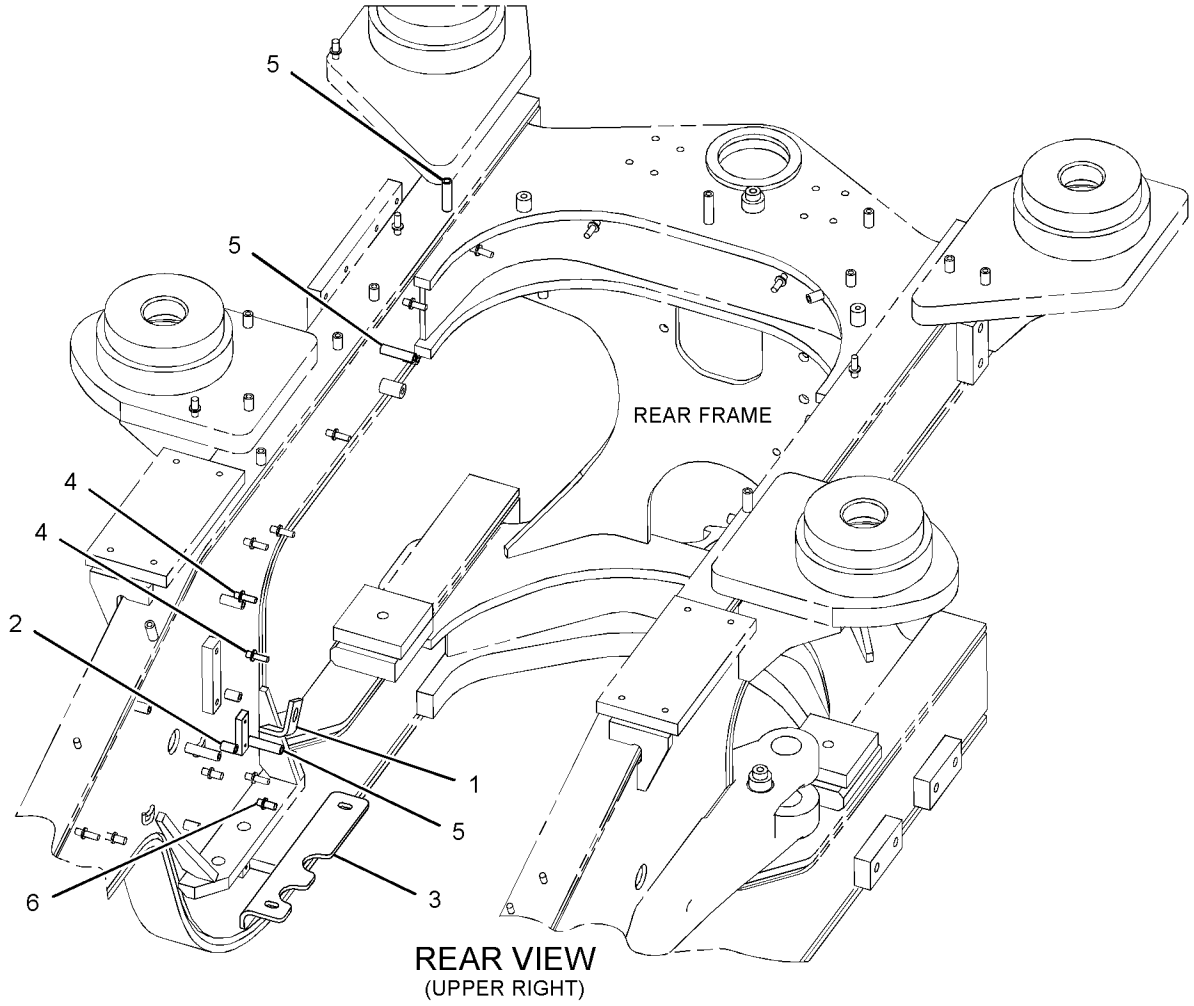

REAR VIEW
(UPPER RIGHT)

GRAPHIC #1

<END>

g02138589

382-2521 HARDWARE GP-REAR FRAME

S/N: JLX1-UP
AXLE OIL COOLER
PART OF 383-6023, 419-9847 COOLER AR-AXLE OIL

SMCS-7051, 7553 **i04774812**

NOTE	REF NO	GRAPHIC REF	PART NUMBER	QTY	PART NAME 1 2 3 4 5 6 (PRODUCT LEVEL)	SEE PAGE
	1	1	**091-1735**	1	BLOCK	
	2	1	**282-3454**	2	ANGLE AS	
					(EACH INCLUDES)	
M		1	**8T-3490**	1	NUT-WELD (M10X1.5-THD)	
	3	1	**282-3456**	1	BRACKET AS	
M		1	**8T-3490**	2	NUT-WELD (M10X1.5-THD)	
	4	1	**4I-4863**	1	BOSS	
	5	1	**8X-6780**	1	BLOCK	
M	6	1	**9R-2613**	1	BOSS-WELD (M10X1.5X25-MM)	
M	7	1	**9R-3761**	1	BOSS (M10X1.5X51-MM)	

M - METRIC PART

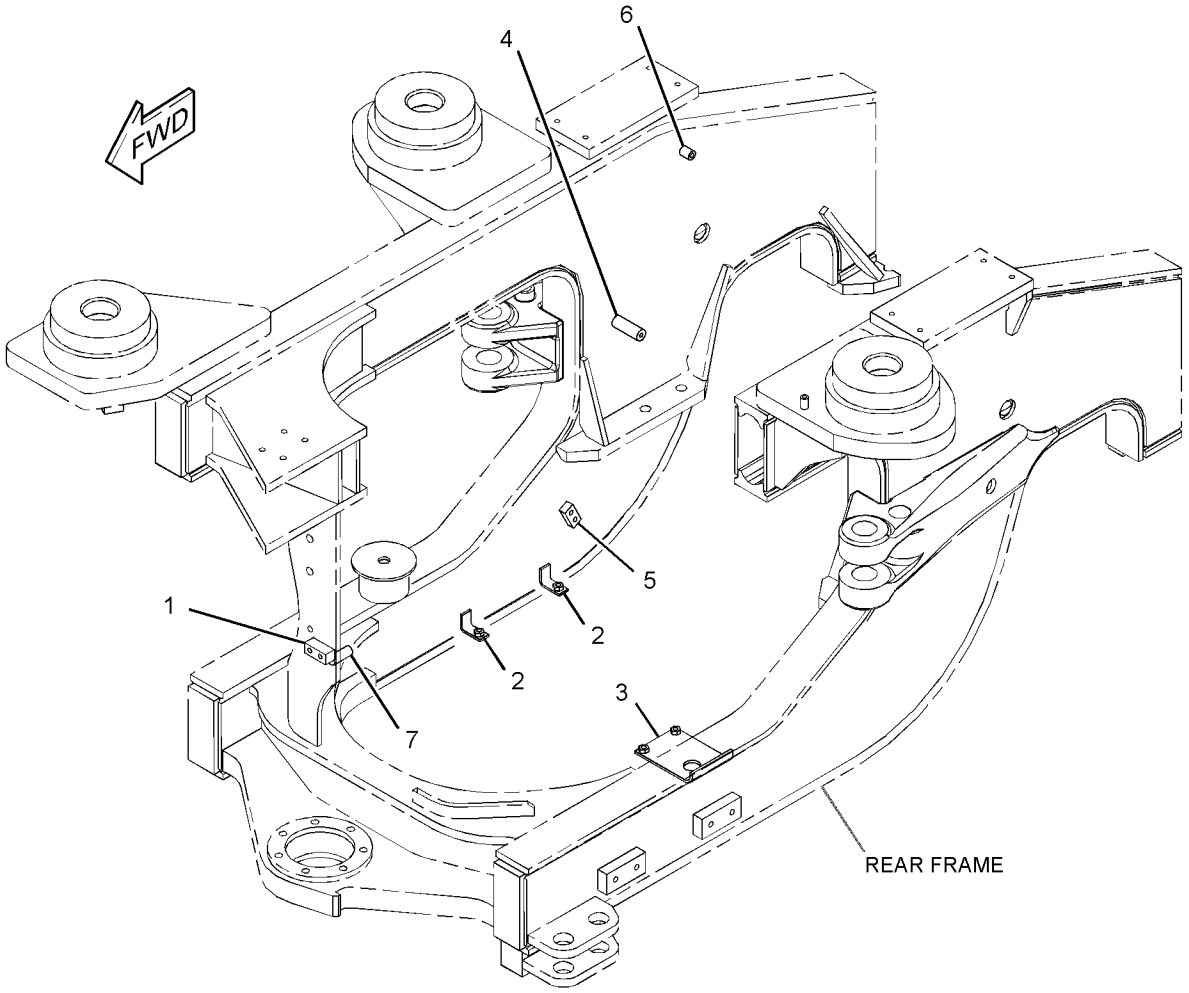

GRAPHIC #1 **<END>** g02886063

301-2264 HINGE GP-ROADING FENDER—LH

S/N: JLX1-UP

PART OF 384-5251 FENDER GP-ROADING

SMCS-7252 **i03354185**

NOTE	REF NO	GRAPHIC REF	PART NUMBER	QTY	PART NAME 1 2 3 4 5 6 (PRODUCT LEVEL)	SEE PAGE
	1	1	**3B-4627**	2	PIN-COTTER	
	2	1	**3B-4629**	1	PIN-COTTER	
	3	1	**3B-8489**	1	FITTING-GREASE	
	4	1	**132-1928**	1	PIN AS	
	5	1	**300-5451**	1	ROD AS	
		1	**8T-4223**	1	WASHER-HARD (13.5X25.5X3-MM THK)	
	6	1	**301-2261**	1	CHANNEL AS (LH)	
	7	1	**316-5863**	1	HINGE AS (LH)	
	8	1	**8T-4223**	1	WASHER-HARD (13.5X25.5X3-MM THK)	

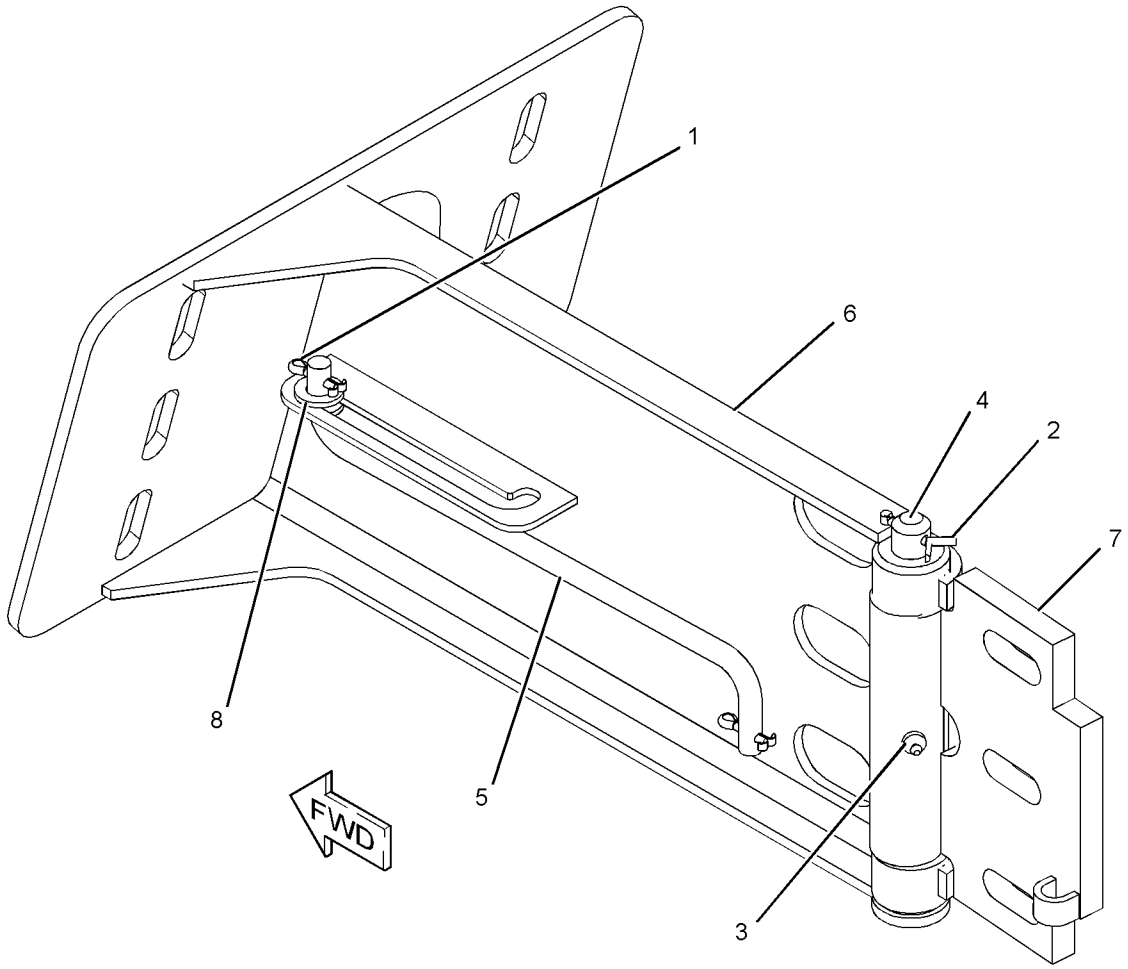

GRAPHIC #1 **<END>** g01893774

301-2266 HINGE GP-ROADING FENDER—RH

S/N: JLX1-UP

PART OF 384-5251 FENDER GP-ROADING

SMCS-7252 **i03354183**

NOTE	REF NO	GRAPHIC REF	PART NUMBER	QTY	PART NAME 1 2 3 4 5 6 (PRODUCT LEVEL)	SEE PAGE
	1	1	**3B-4627**	2	PIN-COTTER	
	2	1	**3B-4629**	1	PIN-COTTER	
	3	1	**3B-8489**	1	FITTING-GREASE	
	4	1	**132-1928**	1	PIN AS	
	5	1	**300-5451**	1	ROD AS	
		1	**8T-4223**	1	WASHER-HARD (13.5X25.5X3-MM THK)	
	6	1	**301-2263**	1	CHANNEL AS (RH)	
	7	1	**316-5830**	1	HINGE AS (RH)	
	8	1	**8T-4223**	1	WASHER-HARD (13.5X25.5X3-MM THK)	

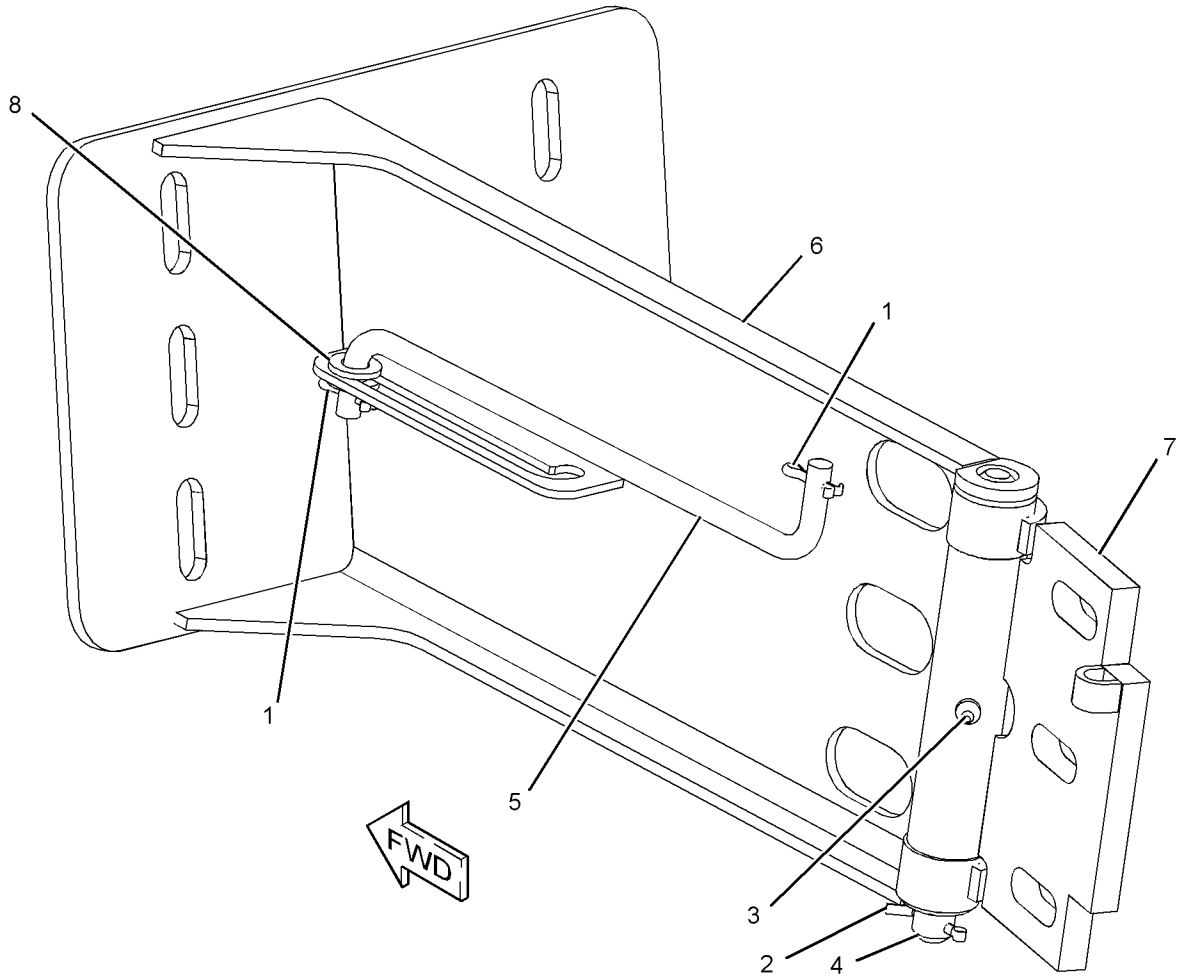

GRAPHIC #1 **<END>** g01894236

112-6953 HITCH GP-ARTICULATING

S/N: JLX1-UP

PART OF 373-8237 CHASSIS AR

SMCS-7057, 7100

i05230771

NOTE	REF NO	GRAPHIC REF	PART NUMBER	QTY	PART NAME 1 2 3 4 5 6 (PRODUCT LEVEL)	SEE PAGE
	1	1	**1B-3925**	2	CUP-BEARING	
	2	1	**3B-8489**	2	FITTING-GREASE	
	3	1	**3F-5950**	2	CONE-BEARING	
	4	1	**3K-2876**	2	SEAL-LIP TYPE	
	5	1	**5K-0983**	2	SEAL-LIP TYPE	
	6	1	**7D-8348**	2	CUP-BEARING	
	7	1	**7D-8349**	2	CONE-BEARING	
	8	1	**7G-8839**	1	SPACER (13.5X57X6-MM THK)	
	9	1	**7V-8632**	1	SPACER	
	10	1	**7V-8633**	1	SPACER	
	11	1	**118-8267**	1	PIN AS	
	12	1	**118-8269**	2	BEARING	
	13	1	**118-8270**	1	CAP	
	14	1	**118-8271**	1	PIN	
	15	1	**118-8272**	1	CAP	
	16	1	**118-8273**	1	CAP	
B	17	1	**118-8275**	1	SHIM PACK (INCLUDES 18-SHIMS)	
B	18	1	**118-8276**	1	SHIM PACK (INCLUDES 20-SHIMS)	
	19	1	**127-6513**	1	CAP	
B	20	1	**127-6514**	1	SHIM PACK (INCLUDES 20-SHIMS)	
	21	1	**134-3079**	1	PLATE	
M	22	1	**7X-2550**	7	BOLT (M12X1.75X110-MM)	
M	23	1	**8T-4192**	1	BOLT (M12X1.75X25-MM)	
M	24	1	**8T-4176**	6	BOLT (M12X1.75X90-MM)	
M	25	1	**8T-4183**	6	BOLT (M12X1.75X40-MM)	
	26	1	**8T-4223**	19	WASHER-HARD (13.5X25.5X3-MM THK)	
M	27	1	**106-4175**	2	BOLT (M20X2.5X60-MM)	
	28	1	**8T-4123**	2	WASHER (3.62X5.75X0.375-MM THK)	

B - USE AS REQUIRED
M - METRIC PART

112-6953 **HITCH GP-ARTICULATING (*contd.*)** **i05230771**

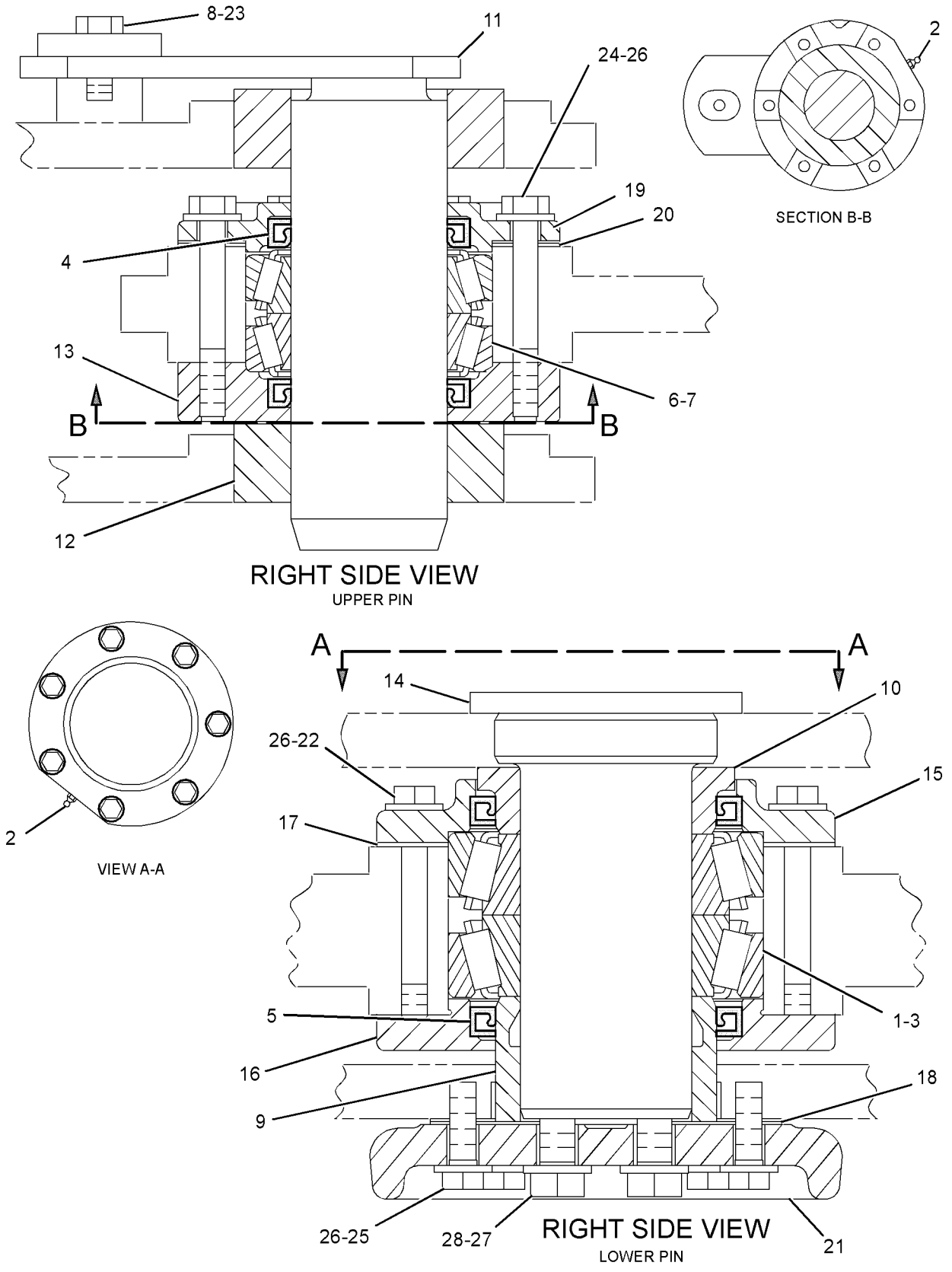

GRAPHIC #1 **<END>** g02795341

292-6000 HOOD & GUARD GP

S/N: JLX1-UP

PART OF 373-8237 CHASSIS AR

SMCS-7251 **i04907374**

NOTE	REF NO	GRAPHIC REF	PART NUMBER	QTY	PART NAME 1 2 3 4 5 6 (PRODUCT LEVEL)	SEE PAGE
	1	1	**125-7037**	1	INSERT	
	2	1	**371-0966**	1	PIPE AS	
	3	2	**239-8410**	1	PLATE	
	4	2	**243-1712**	2	BRACKET	
	5	3	**243-1722**	1	BRACKET (RH)	
	6	3	**243-1723**	1	BRACKET (LH)	
	7	3	**248-0706**	2	ROD AS	
Y	8	1	*251-1701*	1	PANEL GP-HOOD (TOP)	595
Y	9	1	*251-1705*	1	PANEL GP-HOOD (SIDE, RH)	596
Y	10	1	*251-1708*	1	PANEL GP-HOOD (SIDE, LH)	597
	12	2	**251-4755**	1	BRACKET AS (RH)	
	13	2	**251-4756**	1	BRACKET AS (LH)	
Y	14	2	**351-9911**	1	SUPPORT GP-HOOD	615
	15	2	**287-7893**	1	ANGLE	
	16	1	**292-5999**	1	GRILL AS-TOP (HOOD)	
Y	17	1	*292-6001*	1	DOOR GP-ACCESS (HOOD, LH)	515
Y	18	1	*292-6002*	1	DOOR GP-ACCESS (HOOD, RH)	516
	19	3	**3B-4611**	2	PIN-COTTER	
	20	2,3	**4M-7470**	6	GROMMET	
M	21	2	**5C-2890**	4	NUT (M6X1-THD)	
	22	1,2,3	**7X-7729**	40	WASHER (11X25X3-MM THK)	
	23	1,2,3	**8T-4121**	38	WASHER-HARD (11X21X2.5-MM THK)	
M	24	1,2,3	**8T-4133**	24	NUT (M10X1.5-THD)	
M	25	3	**8T-4138**	4	BOLT (M6X1X20-MM)	
M	26	1,2,3	**8T-4196**	54	BOLT (M10X1.5X35-MM)	
	27	3	**9M-5884**	6	BUMPER	
M	28	2	**9X-2044**	2	SCREW-TRUSS HEAD (M6X1X16-MM)	
	29	2	**9X-8256**	4	WASHER (6.6X12X2-MM THK)	
H	30	2	**308-9131**		SEAL (960-MM)	
E	31	1	**126-8472**		SEAL (7.5-CM EACH)	
	32	2	**8T-4223**	4	WASHER-HARD (13.5X25.5X3-MM THK)	
E	33	3	**300-7318**		SEAL (147-CM)	
E	34	1,2	**120-5281**		SEAL (88-CM EACH)	
	36	3	**5P-4115**	4	WASHER-HARD (7.2X19X2-MM THK)	

E - ORDER BY THE CENTIMETER
H - ORDER BY THE MILLIMETER
M - METRIC PART
Y - SEPARATE ILLUSTRATION

292-6000 **HOOD & GUARD GP** (*contd.*) **i04907374**

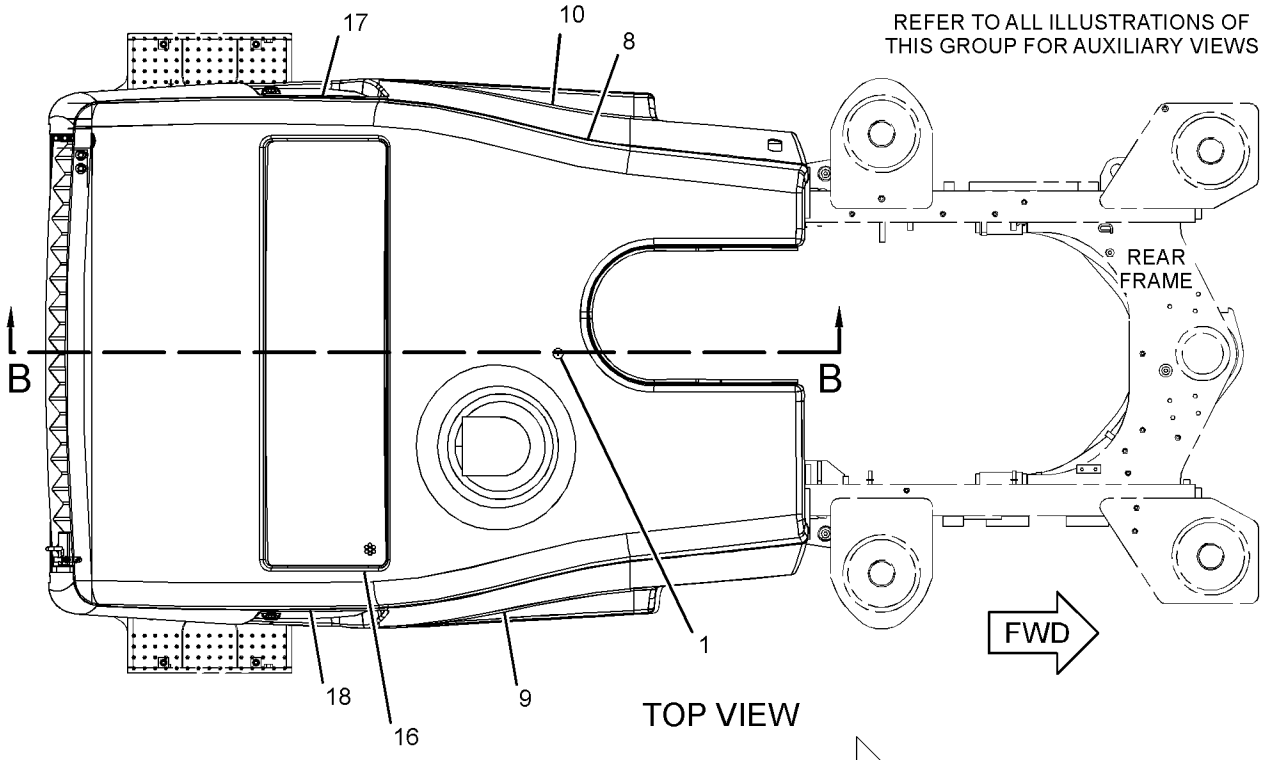

TOP VIEW

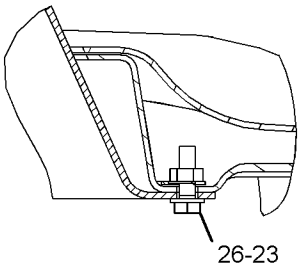

SECTION C-C

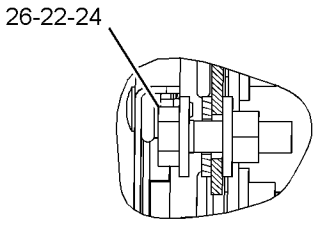

SECTION E-E

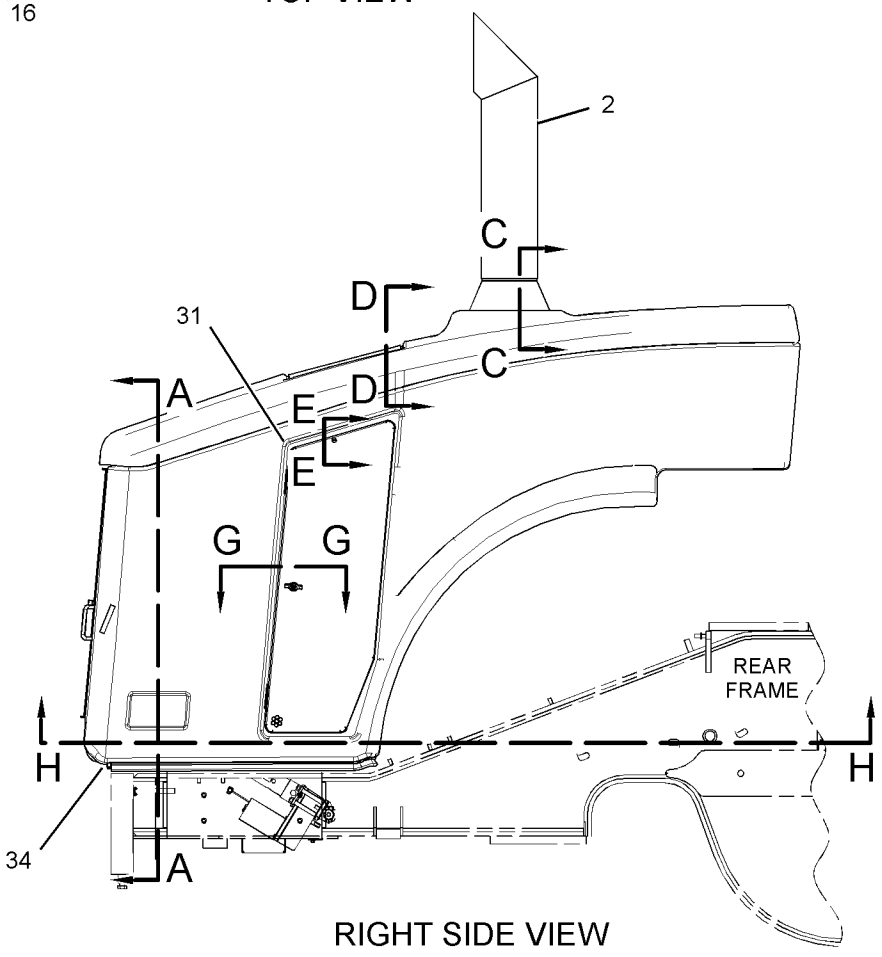

RIGHT SIDE VIEW

GRAPHIC #1 g03120796

292-6000 **HOOD & GUARD GP (*contd.*)** **i04907374**

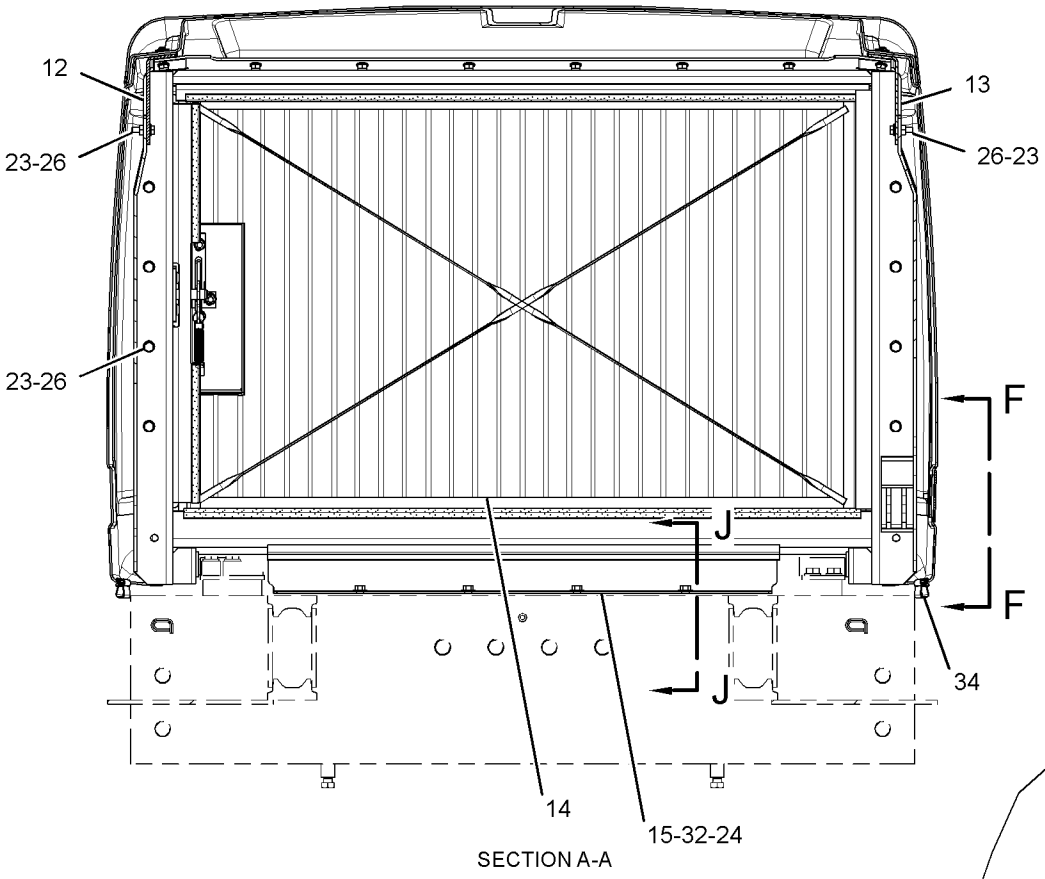

SECTION A-A

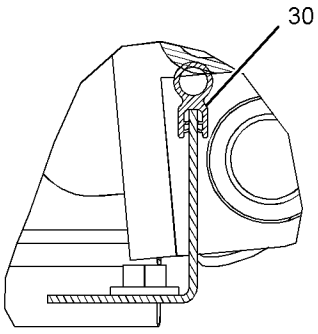

SECTION J-J

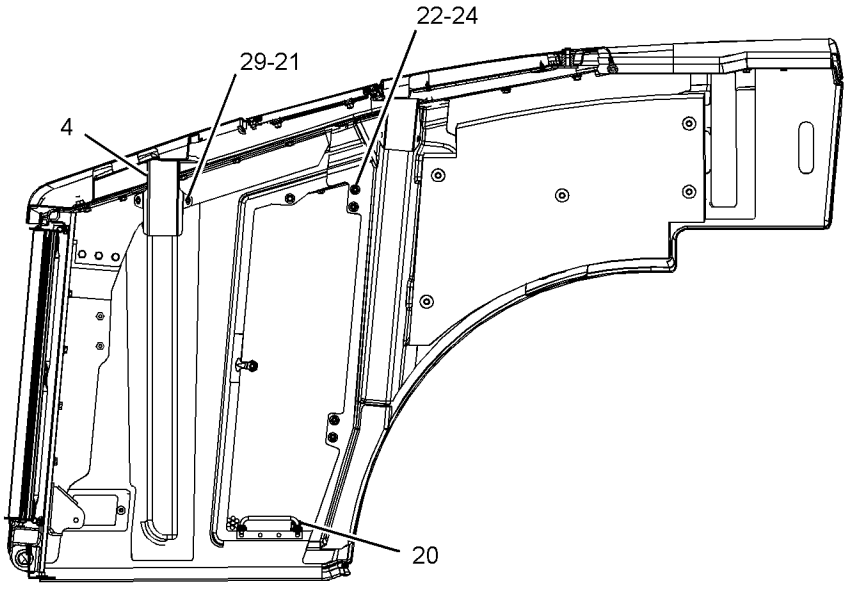

SECTION B-B

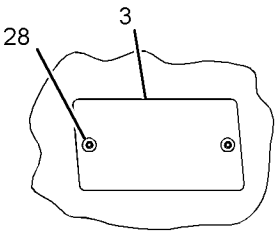

VIEW F-F

GRAPHIC #2

g03120798

292-6000 **HOOD & GUARD GP (*contd.*)** **i04907374**

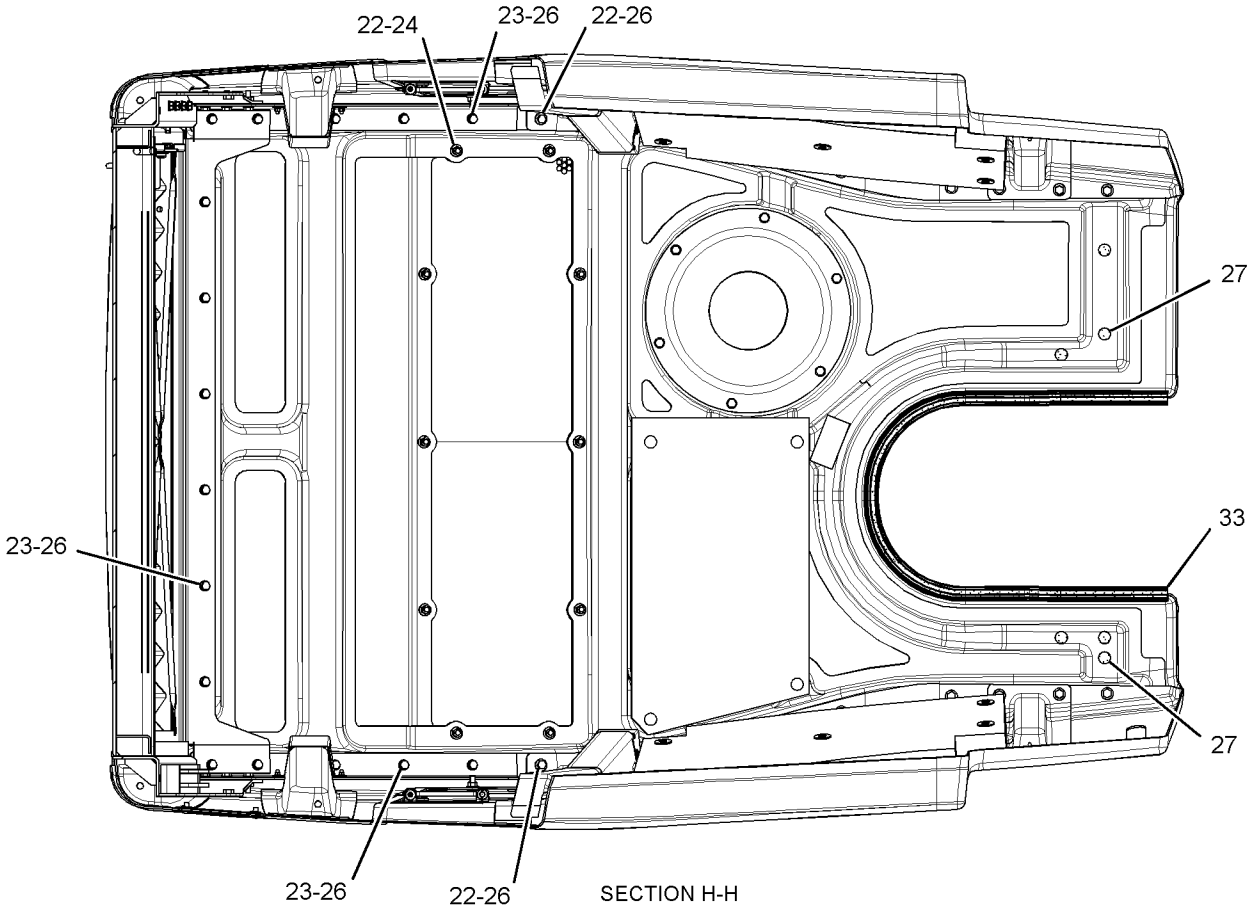

SECTION H-H

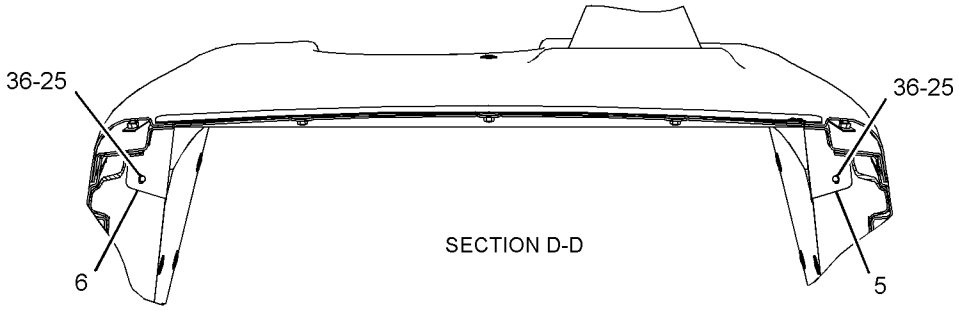

SECTION D-D

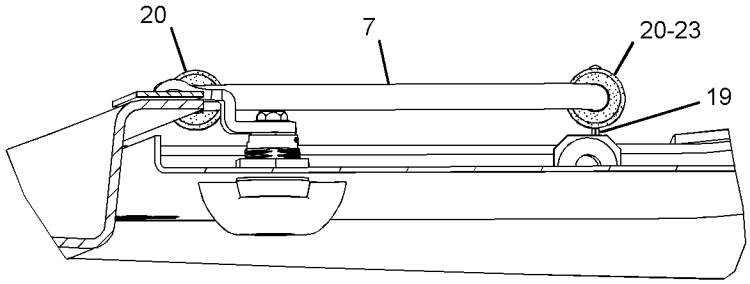

SECTION G-G

GRAPHIC #3 **<END>** g02164989

372-4849 LADDER GP

S/N: JLX1-UP
PART OF 373-8237 CHASSIS AR
TYPE 1

SMCS-7254 **i04756889**

NOTE	REF NO	GRAPHIC REF	PART NUMBER	QTY	PART NAME 1 2 3 4 5 6 (PRODUCT LEVEL)	SEE PAGE
	1	1	**7W-8106**	8	SPACER (11.13X19.05X15-MM THK)	
	2	1	**234-3545**	4	PLATE	
	3	1	**234-5110**	2	PLATE	
	4	1	**372-4852**	1	HANDRAIL AS (LH)	
	5	1	**372-4855**	1	HANDRAIL AS (RH)	
	6	1	**372-4857**	1	HANDRAIL AS (LH)	
	7	1	**372-4861**	1	HANDRAIL AS (RH)	
	8	1	**372-4863**	1	LADDER AS (LH)	
	9	1	**372-4866**	1	LADDER AS	
Y	10	1	*376-6511*	2	STEP GP	611
Y	11	1	*376-6512*	1	STEP GP	612
	12	1	**380-5783**	1	SUPPORT AS	
	13	1	**259-2627**	5	BOLT (M12X1.75X40-MM)	
	14	1	**279-6632**	12	WASHER (13.5X25.5X3-MM THK)	
	15	1	**344-1199**	32	WASHER-HARD (11X21X2.5-MM THK)	
	16	1	**368-5078**	13	BOLT (M12X1.75X30-MM)	
	17	1	**368-5079**	8	BOLT (M10X1.5X40-MM)	
	18	1	**368-5080**	20	BOLT (M10X1.5X30-MM)	
	19	1	**368-5091**	6	WASHER-HARD (13.5X30X4-MM THK)	
M	20	1	**8T-4133**	4	NUT (M10X1.5-THD)	

M - METRIC PART
Y - SEPARATE ILLUSTRATION

372-4849 **LADDER GP (*contd.*)** **i04756889**

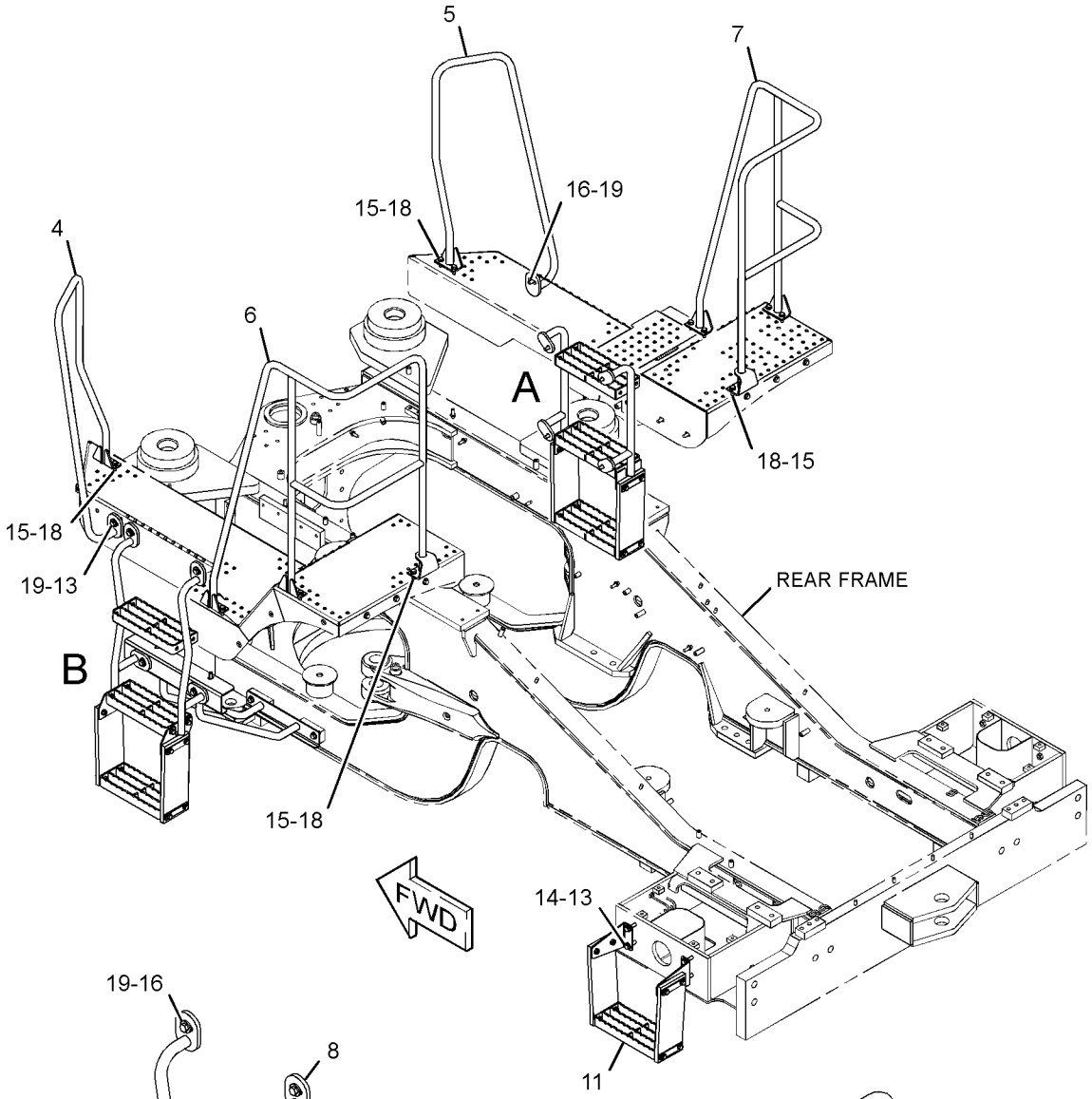

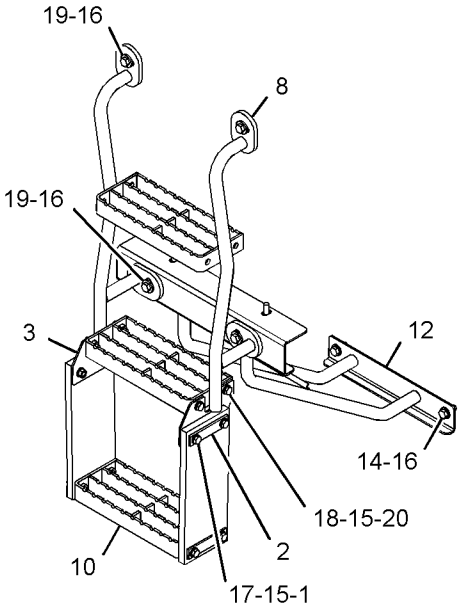

VIEW OF AREA B

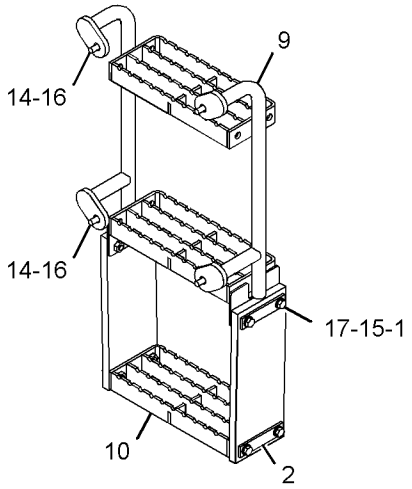

VIEW OF AREA A

GRAPHIC #1 **<END>** g02893756

372-4849 LADDER GP

S/N: JLX1-UP
PART OF 373-8237 CHASSIS AR
TYPE 2

SMCS-7254 **i05959875**

NOTE	REF NO	GRAPHIC REF	PART NUMBER	QTY	PART NAME 1 2 3 4 5 6 (PRODUCT LEVEL)	SEE PAGE
	1	1	**397-9301**	8	WASHER-HARD (11.5X20X15-MM THK)	
	3	1	**440-4805**	2	PLATE	
	4	1	**372-4852**	1	HANDRAIL AS (LH)	
	5	1	**372-4855**	1	HANDRAIL AS (RH)	
	6	1	**432-8513**	1	GUARDRAIL AS (LH)	
	7	1	**372-4861**	1	HANDRAIL AS (RH)	
	8	1	**372-4863**	1	LADDER AS (LH)	
	9	1	**372-4866**	1	LADDER AS	
Y	10	1	*376-6511*	2	STEP GP	611
Y	11	1	*376-6512*	1	STEP GP	612
	12	1	**380-5783**	1	SUPPORT AS	
CM	13	1	**8T-4183**	6	BOLT (M12X1.75X40-MM)	
C	14	1	**8T-4223**	8	WASHER-HARD (13.5X25.5X3-MM THK)	
C	15	1	**8T-4121**	32	WASHER-HARD (11X21X2.5-MM THK)	
CM	16	1	**8T-4139**	12	BOLT (M12X1.75X30-MM)	
CM	17	1	**8T-4182**	8	BOLT (M10X1.5X45-MM)	
CM	18	1	**8T-4195**	20	BOLT (M10X1.5X30-MM)	
C	19	1	**5P-1076**	10	WASHER-HARD (13.5X30X4-MM THK)	
CM	20	1	**344-5675**	4	NUT (M10X1.5-THD)	
C	21	1	**234-3545**	4	PLATE	

C - CHANGE FROM PREVIOUS TYPE
M - METRIC PART
Y - SEPARATE ILLUSTRATION

372-4849 **LADDER GP (*contd.*)** **i05959875**

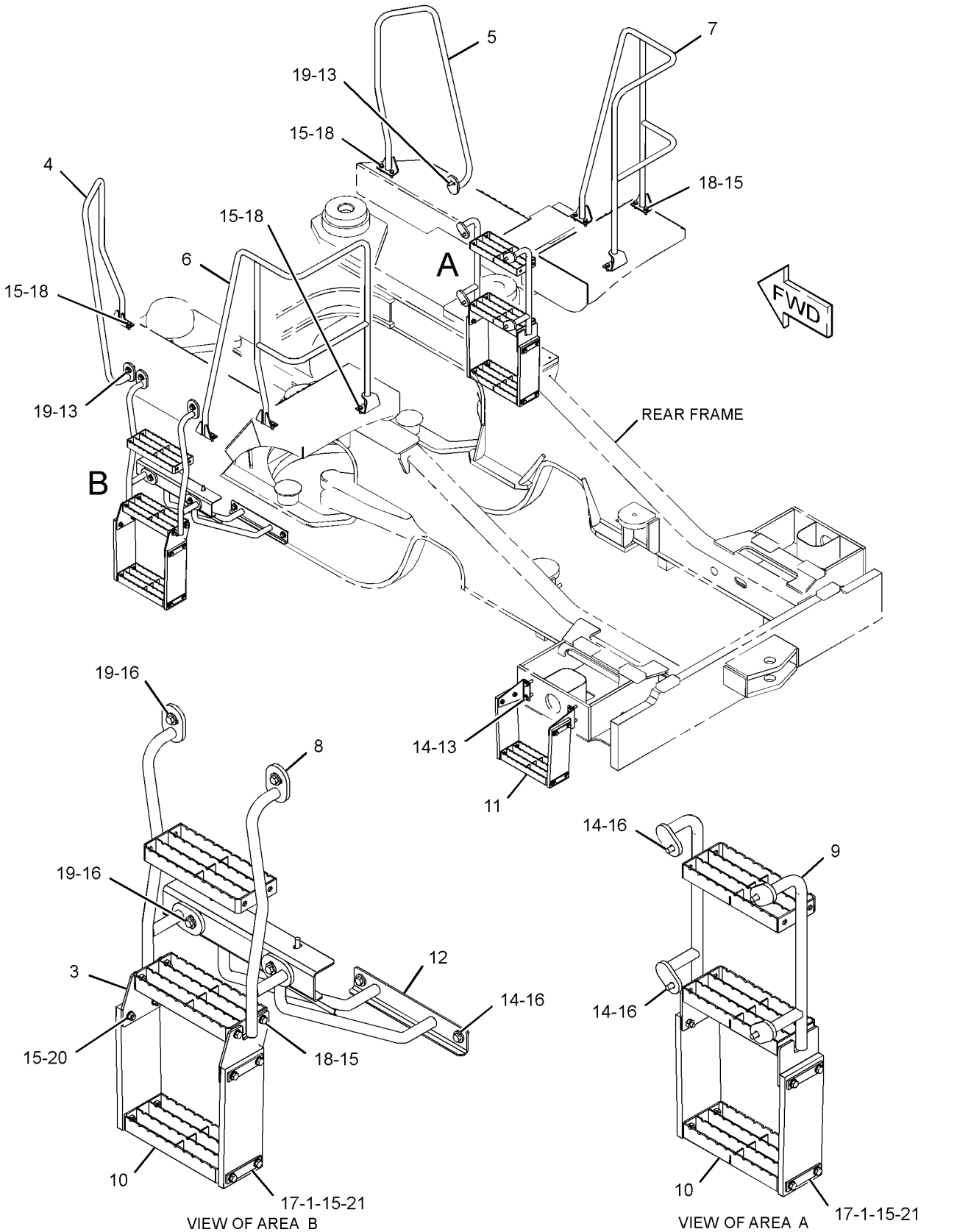

GRAPHIC #1 **<END>** g03741216

424-5828 LADDER GP–REAR

S/N: JLX1-UP
CUSTOM

SMCS-7254 **i05836076**

NOTE	REF NO	GRAPHIC REF	PART NUMBER	QTY	PART NAME 1 2 3 4 5 6 (PRODUCT LEVEL)	SEE PAGE
	1	1	**424-5829**	1	BRACKET AS	
	2	1	**424-5830**	1	STAIR AS	
	3	1	**424-5831**	1	PLATFORM AS-REAR	
	4	1	**424-5832**	1	HANDRAIL AS	
	5	1	**424-5833**	1	HANDRAIL AS	
	6	1	**424-5834**	1	HARDWARE GP-REAR FRAME	
	7	1	**424-5835**	1	HANDRAIL AS	
	8	1	**424-5836**	1	DOOR GP-ACCESS	
	9	1	**434-2753**	1	HANDRAIL AS	
	10	1	**434-2754**	3	STEP AS	
	11	1	**259-2627**	2	BOLT (M12X1.75X40-MM)	
M	12	1	**362-1320**	3	BOLT (M12X1.75X35-MM)	
	13	1	**5P-1076**	3	WASHER-HARD (13.5X30X4-MM THK)	
	14	1	**7X-7729**	19	WASHER (11X25X3-MM THK)	
	15	1	**8T-4121**	8	WASHER-HARD (11X21X2.5-MM THK)	
M	16	1	**8T-4136**	8	BOLT (M10X1.5X25-MM)	
M	17	1	**8T-4195**	19	BOLT (M10X1.5X30-MM)	
	18	1	**8T-4223**	2	WASHER-HARD (13.5X25.5X3-MM THK)	
					****STANDARD REMOVAL****	
FH			**292-6001**	1	DOOR GP-ACCESS (HOOD, LH)	
FJ			**432-8513**	1	GUARDRAIL AS (LH)	
FJM			**8T-4195**	2	BOLT (M10X1.5X30-MM)	
FJ			**8T-4121**	2	WASHER-HARD (11X21X2.5-MM THK)	

F - NOT SHOWN
H - PART OF STANDARD HOOD & GUARD GP
J - PART OF STANDARD LADDER GP
M - METRIC PART

424-5828 **LADDER GP (*contd.*)** **i05836076**

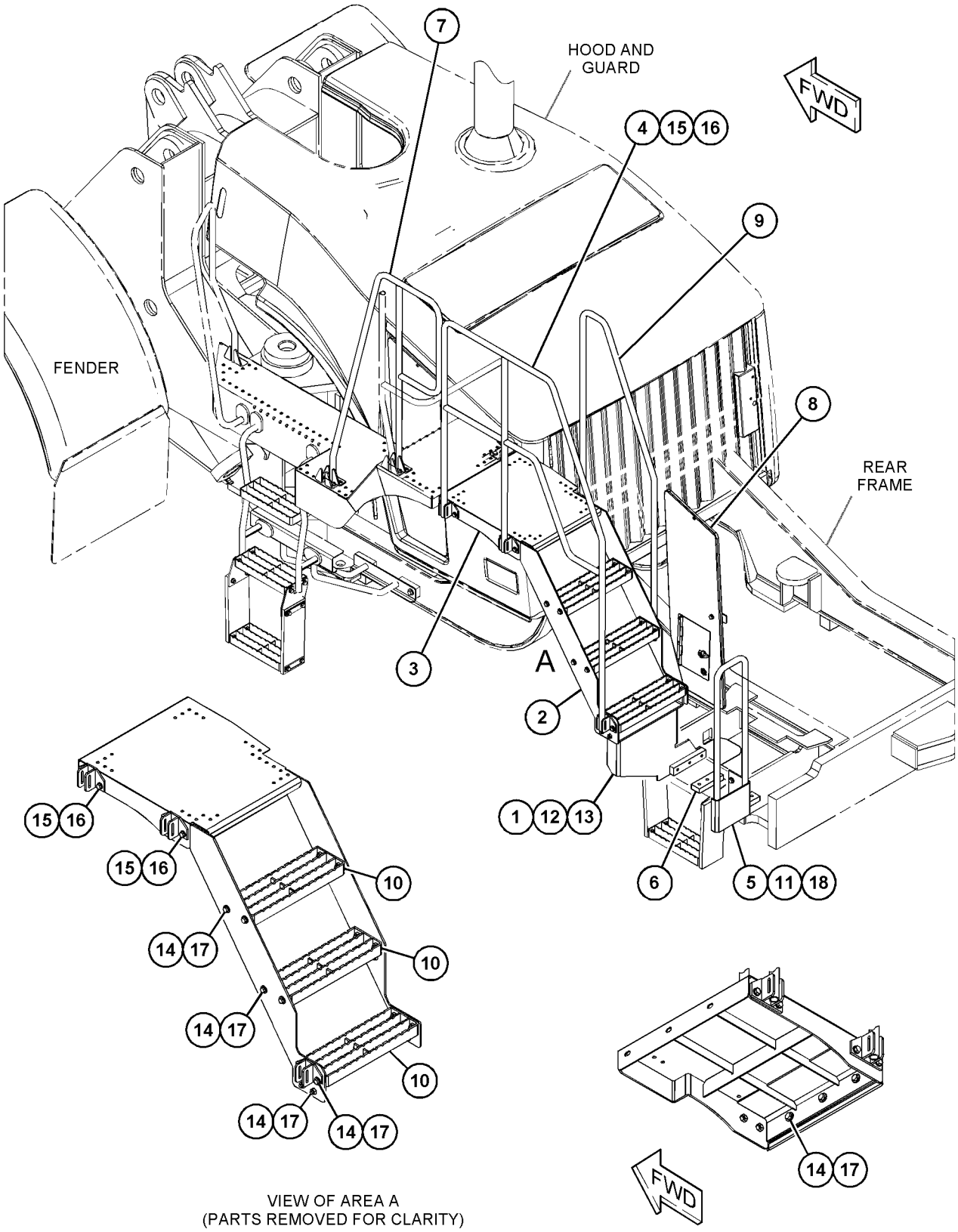

VIEW OF AREA A
(PARTS REMOVED FOR CLARITY)

GRAPHIC #1 **<END>** g03723934

392-8669 LINES GP-CENTRAL LUBRICATION

S/N: JLX1-UP

PART OF 373-8269, 386-0131 LUBRICATION AR-AUTOMATIC

SMCS-7510, 7540 **i04891104**

NOTE	REF NO	GRAPHIC REF	PART NUMBER	QTY	PART NAME 1 2 3 4 5 6 (PRODUCT LEVEL)	SEE PAGE
	1	1	**3S-2093**	4	STRAP-CABLE	
	2	1	**111-4836**	1	CLIP	
	3	1	**114-9325**	1	CLAMP-DOUBLE	
	4	1	**178-2776**	2	HOSE AS	
	5	1	**198-3897**	1	SPACER (11X20X25-MM THK)	
	6	1	**268-6372**	1	BRACKET AS	
M		1	**8T-3490**	1	NUT-WELD (M10X1.5-THD)	
		1	**268-6373**	1	PLATE	
	7	1	**392-8674**	2	HOSE AS	
M	8	1	**8C-8451**	1	BOLT (M6X1X40-MM)	
	9	1	**8T-4121**	12	WASHER-HARD (11X21X2.5-MM THK)	
M	10	1	**8T-4136**	11	BOLT (M10X1.5X25-MM)	
M	11	1	**8T-4185**	1	BOLT (M10X1.5X50-MM)	
	12	1	**9M-4995**	12	CLIP	
E	13	1	**7Y-5074**		GUARD-HOSE (76-CM)	

E - ORDER BY THE CENTIMETER
M - METRIC PART

392-8669 **LINES GP-CENTRAL LUBRICATION (*contd.*)** **i04891104**

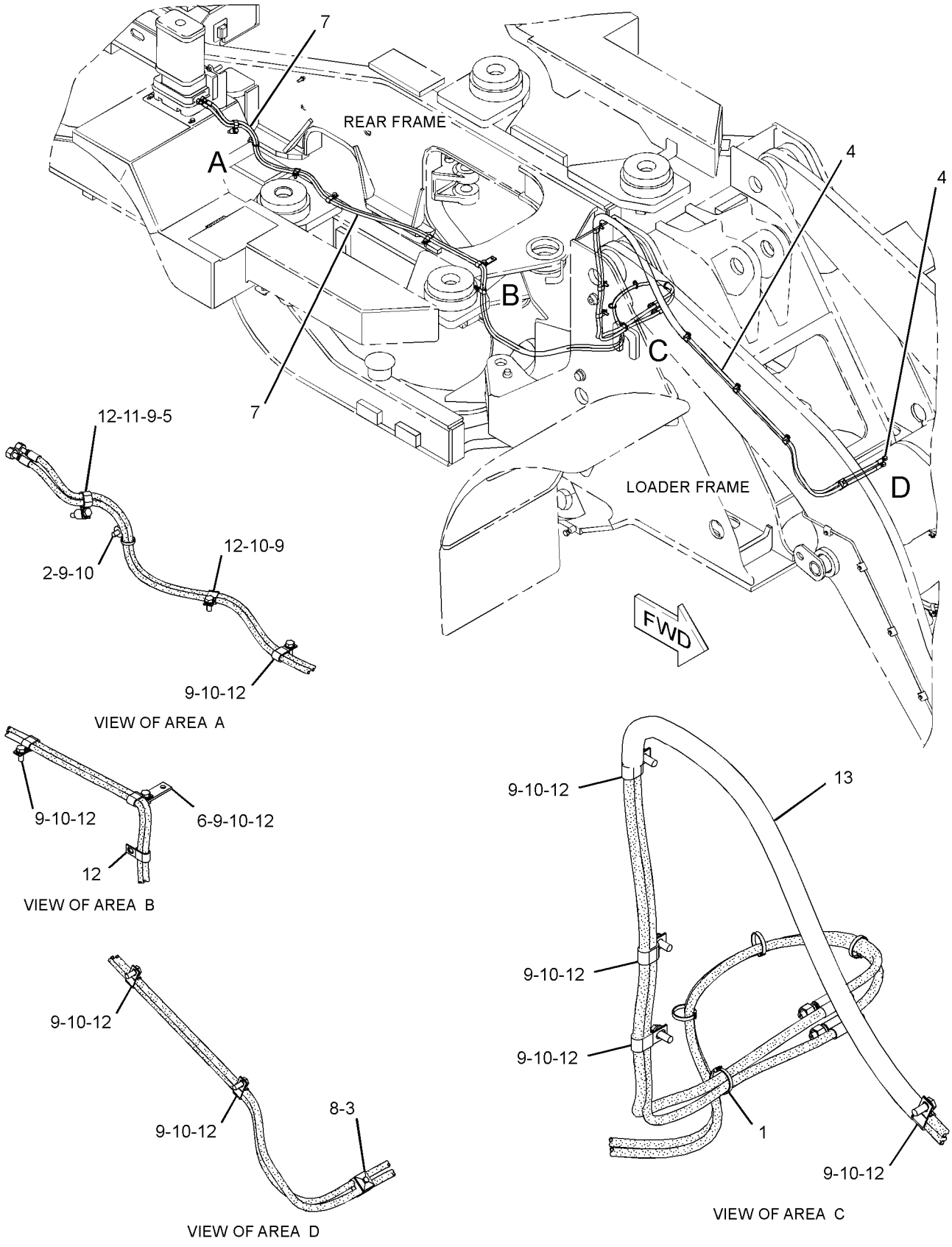

GRAPHIC #1 **<END>** g03037036

425-6513 LINES GP-CENTRAL LUBRICATION

S/N: JLX1-UP
CUSTOM
PART OF 419-9845 LUBRICATION AR-AUTOMATIC

SMCS-7510, 7540 **i05840124**

NOTE	REF NO	GRAPHIC REF	PART NUMBER	QTY	PART NAME 1 2 3 4 5 6 (PRODUCT LEVEL)	SEE PAGE
	1	1	**111-4836**	2	CLIP	
	2	1	**114-9325**	2	CLAMP-DOUBLE	
	3	1	**178-2776**	4	HOSE AS	
	4	1	**198-3897**	2	SPACER (11X20X25-MM THK)	
	5	1	**268-6372**	2	BRACKET AS	
	6	1	**370-9488**	12	STRAP-CABLE	
	7	1	**392-8674**	4	HOSE AS	
	8	1	**6D-4247**	12	CLIP	
M	9	1	**8C-8451**	2	BOLT (M6X1X40-MM)	
	10	1	**8T-4121**	12	WASHER-HARD (11X21X2.5-MM THK)	
M	11	1	**8T-4136**	11	BOLT (M10X1.5X25-MM)	
M	12	1	**8T-4185**	2	BOLT (M10X1.5X50-MM)	
E	13	1	**193-6911**		INSULATION (370-CM EACH)	
E	13A	1	**193-6911**		INSULATION (320-CM EACH)	

E - ORDER BY THE CENTIMETER
M - METRIC PART

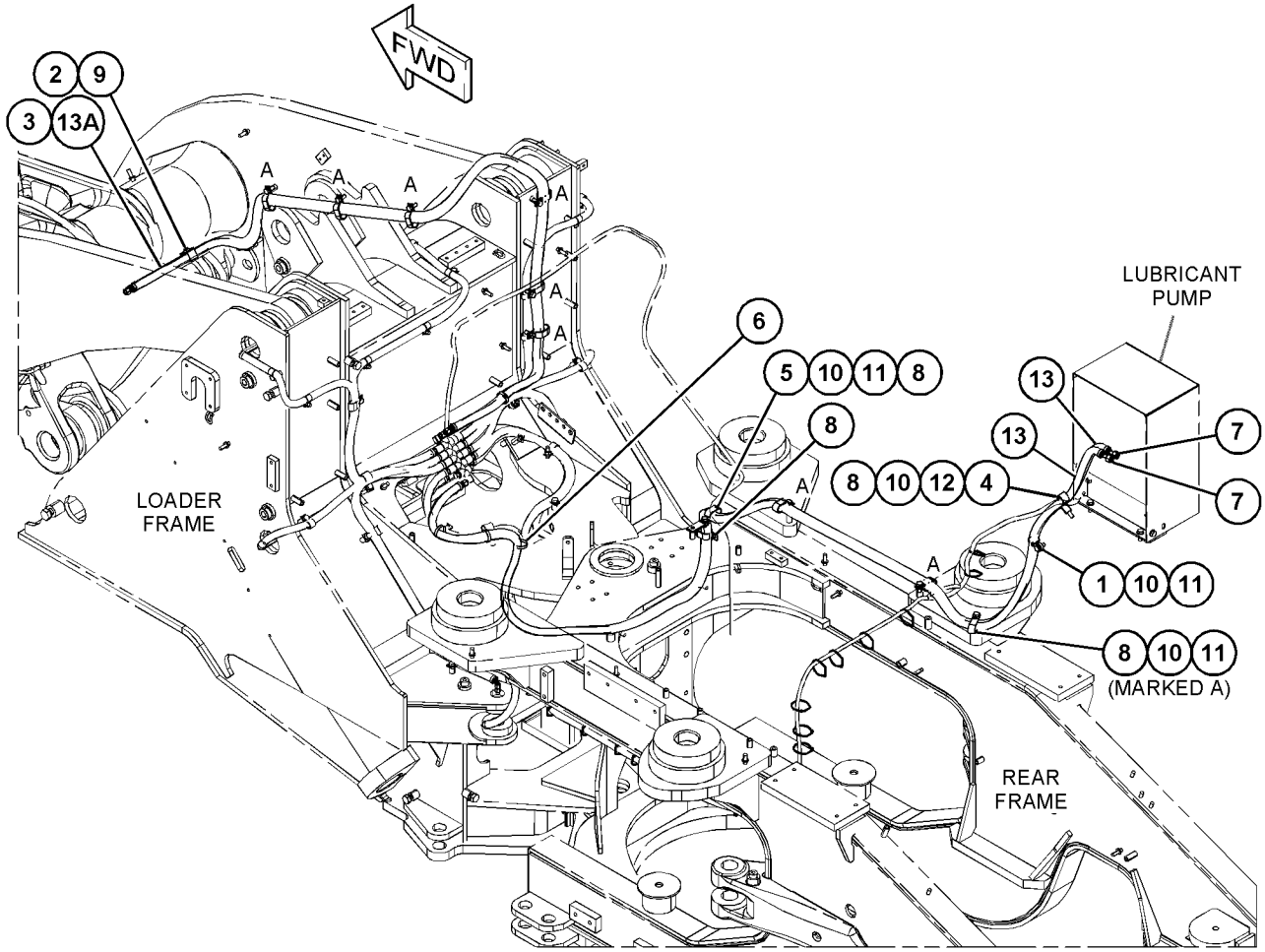

GRAPHIC #1 **<END>** g03724235

345-7045 LINES GP-FRONT LUBRICATION

S/N: JLX1-UP

PART OF 373-8294 LUBRICATION AR-AUTOMATIC

SMCS-7510, 7540 **i04891801**

NOTE	REF NO	GRAPHIC REF	PART NUMBER	QTY	PART NAME 1 2 3 4 5 6 (PRODUCT LEVEL)	SEE PAGE
	1	1	**3S-2093**	3	STRAP-CABLE	
	2	1	**177-3464**	1	ELBOW AS	
M		1	**277-3072**	1	NUT (M10X1-THD)	
		1	**277-3073**	1	FITTING-COMPRESSION	
	3	1	**177-3475**	4	CONNECTOR (REDUCER)	
	4	1	**177-3477**	1	ELBOW	
	5	1	**177-3484**	2	BOLT AS-SPECIAL (BANJO)	
	6	1	**177-3489**	1	COUPLING AS	
		1	**291-6700**	1	NUT (M10X1-THD)	
		1	**295-5405**	1	FERRULE	
	7	1	**177-3490**	2	ELBOW AS	
					(EACH INCLUDES)	
		1	**291-6700**	1	NUT (M10X1-THD)	
		1	**295-5405**	1	FERRULE	
	8	1	**178-2723**	2	ELBOW	
	9	1	**192-5918**	2	BRACKET AS	
	10	1	**251-2138**	2	ELBOW	
	11	1	**251-2139**	10	BRACKET	
	12	1	**251-7294**	2	BUSHING-SPECIAL (BANJO)	
	13	1	**256-4884**	1	BRACKET	
	14	1	**269-1884**	1	TUBE	
	15	1	**269-1885**	1	TUBE	
	16	1	**362-3047**	1	CONNECTOR	
	17	1	**335-9383**	1	COVER AS	
	18	1	**341-3670**	1	TUBE	
	19	1	**341-3671**	1	TUBE	
Y	20	1	**348-6327**	1	VALVE & LINES GP-LUBRICATION	623
	21	1	**033-8248**	2	CLIP	
	22	1	**4D-9517**	1	CLIP	
M	23	1	**5C-9553**	2	BOLT (M6X1X16-MM)	
	24	1	**5P-9299**	16	CLIP	
M	25	1	**7X-2536**	1	BOLT (M8X1.25X14-MM)	
M	26	1	**7X-2564**	1	BOLT (M20X2.5X90-MM)	
	27	1	**7X-7729**	4	WASHER (11X25X3-MM THK)	
	28	1	**8T-4121**	9	WASHER-HARD (11X21X2.5-MM THK)	
M	29	1	**8T-4136**	12	BOLT (M10X1.5X25-MM)	
M	30	1	**8T-4137**	1	BOLT (M10X1.5X20-MM)	
M	31	1	**8T-4200**	10	BOLT (M8X1.25X16-MM)	
	32	1	**8T-4224**	11	WASHER-HARD (8.8X16X2-MM THK)	
	33	1	**8T-5439**	1	WASHER-HARD (21.5X45X6-MM THK)	
	34	1	**9X-8256**	2	WASHER (6.6X12X2-MM THK)	

M - METRIC PART
Y - SEPARATE ILLUSTRATION

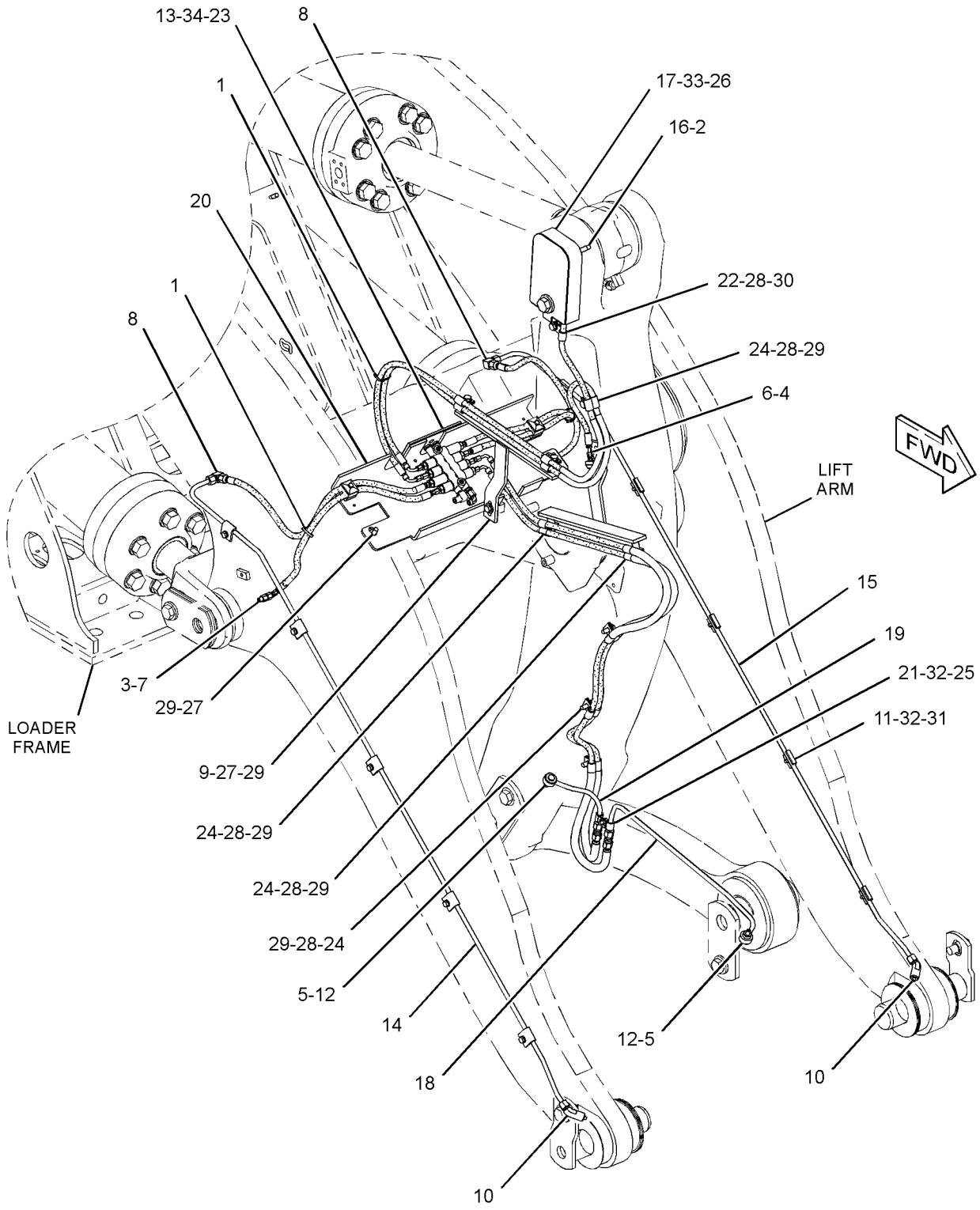

GRAPHIC #1 **<END>** g02189114

375-8450 LINES GP-FRONT LUBRICATION

S/N: JLX1-UP

PART OF 373-8269, 386-0131 LUBRICATION AR-AUTOMATIC

SMCS-7510, 7540 **i04891028**

NOTE	REF NO	GRAPHIC REF	PART NUMBER	QTY	PART NAME 1 2 3 4 5 6 (PRODUCT LEVEL)	SEE PAGE
	1	1	**3B-8686**	2	FITTING-GREASE	
	2	1	**177-3464**	1	ELBOW AS	
M		1	**277-3072**	1	NUT (M10X1-THD)	
		1	**277-3073**	1	FITTING-COMPRESSION	
	3	1	**177-3475**	4	CONNECTOR (REDUCER)	
	4	1	**177-3477**	1	ELBOW	
	5	1	**177-3489**	1	COUPLING AS	
		1	**291-6700**	1	NUT (M10X1-THD)	
		1	**295-5405**	1	FERRULE	
	6	1	**177-3490**	2	ELBOW AS	
					(EACH INCLUDES)	
		1	**291-6700**	1	NUT (M10X1-THD)	
		1	**295-5405**	1	FERRULE	
	7	1	**178-2723**	2	ELBOW	
					(EACH INCLUDES)	
		1	**291-6692**	2	FERRULE	
		1	**291-6695**	2	NUT (M16X1.5-THD)	
	8	1	**192-5918**	2	BRACKET AS	
	9	1	**221-1580**	2	ADAPTER	
	10	1	**251-2138**	2	ELBOW	
	11	1	**251-2139**	10	BRACKET	
	12	1	**253-9477**	1	TUBE AS	
	13	1	**253-9478**	1	TUBE AS	
	14	1	**256-4884**	1	BRACKET	
	15	1	**309-2856**	1	CONNECTOR	
	16	1	**335-9383**	1	COVER AS	
	17	1	**371-0947**	1	BUSHING-SPECIAL (BANJO)	
	18	1	**375-4117**	1	BOLT-BANJO	
	19	1	**375-4118**	1	BOLT-BANJO	
	20	1	**377-7222**	1	TUBE AS	
	21	1	**377-7224**	1	BUSHING-SPECIAL (BANJO)	
	22	1	**125-8797**	1	CLIP	
Y	23	1	**375-8447**	1	VALVE GP-LUBE DISTRIBUTION	629
	24	1	**3S-2093**	3	STRAP-CABLE	
	25	1	**4D-6466**	1	CLIP	
	26	1	**4D-9517**	5	CLIP	
	27	1	**5P-9299**	6	CLIP	
M	28	1	**7X-2564**	1	BOLT (M20X2.5X90-MM)	
	29	1	**7X-7729**	4	WASHER (11X25X3-MM THK)	
	30	1	**8T-4121**	8	WASHER-HARD (11X21X2.5-MM THK)	
M	31	1	**8T-4136**	7	BOLT (M10X1.5X25-MM)	
M	32	1	**8T-4137**	5	BOLT (M10X1.5X20-MM)	
M	33	1	**8T-4200**	10	BOLT (M8X1.25X16-MM)	
	34	1	**8T-4223**	1	WASHER-HARD (13.5X25.5X3-MM THK)	
	35	1	**8T-4224**	10	WASHER-HARD (8.8X16X2-MM THK)	
M	36	1	**8T-4970**	2	BOLT (M6X1X14-MM)	
	37	1	**8T-5439**	1	WASHER-HARD (21.5X45X6-MM THK)	
	38	1	**9M-4995**	1	CLIP	
	39	1	**9X-8256**	2	WASHER (6.6X12X2-MM THK)	

M - METRIC PART
Y - SEPARATE ILLUSTRATION

375-8450 **LINES GP-FRONT LUBRICATION (*contd.*)** **i04891028**

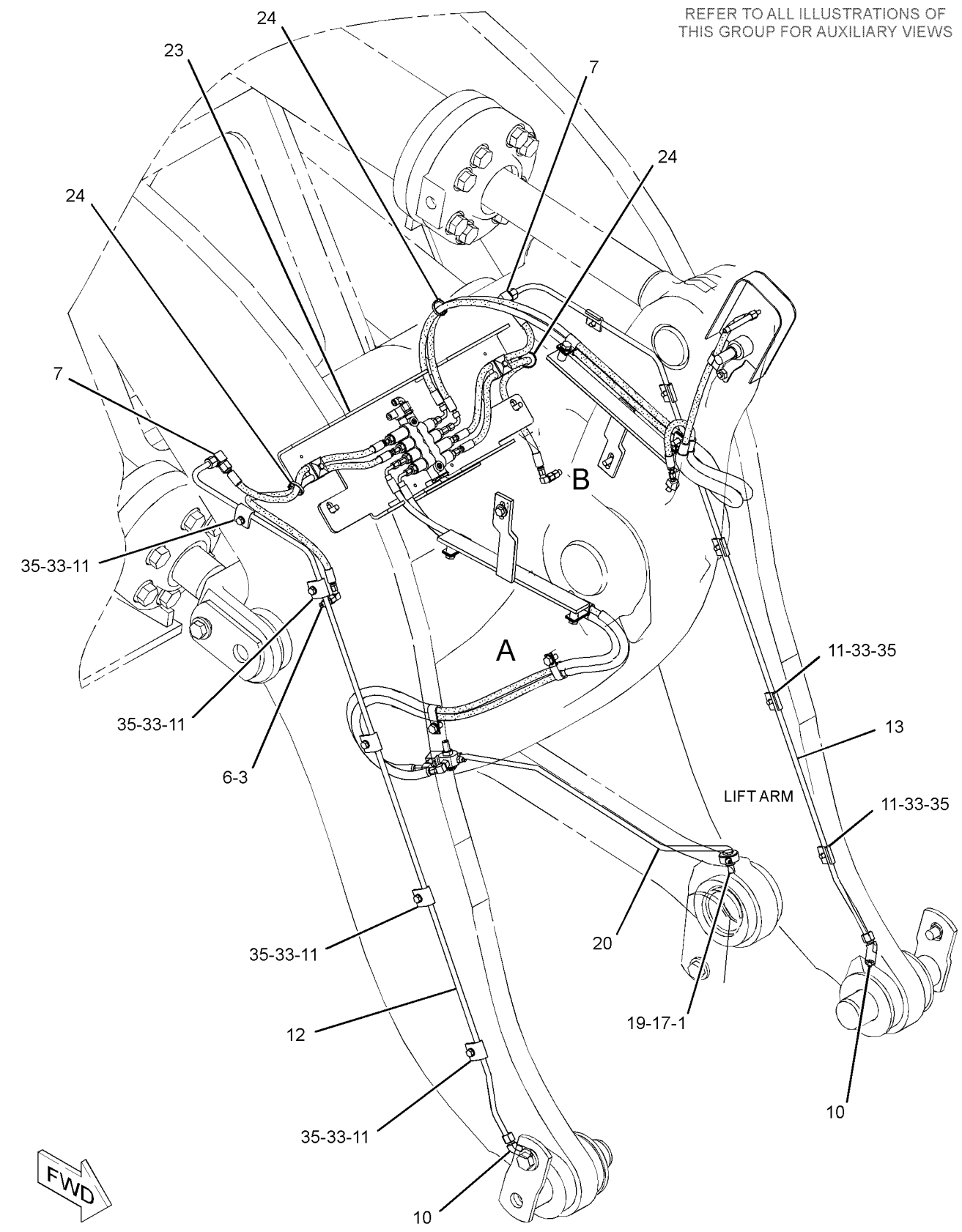

GRAPHIC #1

g03039136

375-8450 **LINES GP-FRONT LUBRICATION (*contd.*)** **i04891028**

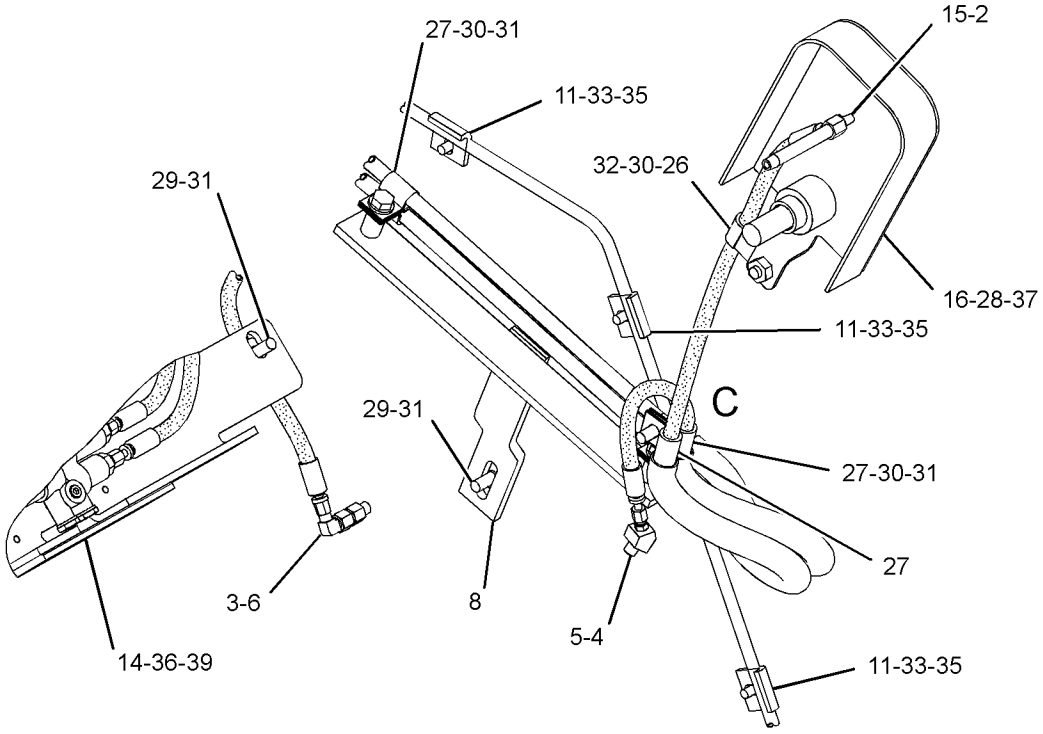

VIEW OF AREA B

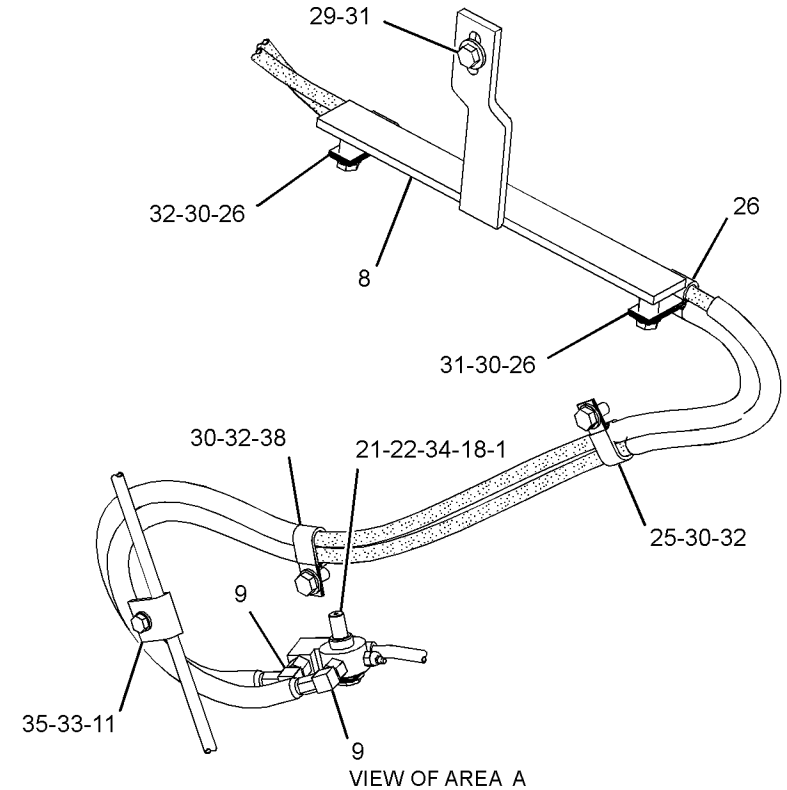

VIEW OF AREA A

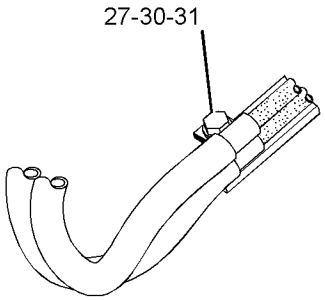

VIEW OF AREA C 90°

GRAPHIC #2 **<END>** g03039717

424-4890 LINES GP-FRONT LUBRICATION

S/N: JLX1-UP
CUSTOM
PART OF 419-9845 LUBRICATION AR-AUTOMATIC

SMCS-7510, 7540 **i05839963**

NOTE	REF NO	GRAPHIC REF	PART NUMBER	QTY	PART NAME 1 2 3 4 5 6 (PRODUCT LEVEL)	SEE PAGE
	1	2	**3B-8686**	2	FITTING-GREASE (1/8-27 PTF)	
	2	2	**177-3464**	1	ELBOW AS	
M		2	**277-3072**	1	NUT (M10X1-THD)	
		2	**277-3073**	1	FITTING-COMPRESSION	
	3	2	**177-3475**	4	CONNECTOR (REDUCER)	
	4	2	**177-3477**	1	ELBOW	
	5	2	**177-3489**	1	COUPLING AS	
		2	**291-6700**	1	NUT (M10X1-THD)	
		2	**295-5405**	1	FERRULE	
	6	2	**177-3490**	2	ELBOW AS	
					(EACH INCLUDES)	
		2	**291-6700**	1	NUT (M10X1-THD)	
		2	**295-5405**	1	FERRULE	
	7	2	**178-2723**	2	ELBOW	
					(EACH INCLUDES)	
		2	**291-6692**	2	FERRULE	
		2	**291-6695**	2	NUT (M16X1.5-THD)	
	8	2	**192-5918**	2	BRACKET AS	
	9	2	**221-1580**	2	ADAPTER	
	10	2	**251-2138**	2	ELBOW	
	11	2	**251-2139**	10	BRACKET	
	12	2	**253-9477**	1	TUBE AS	
	13	2	**253-9478**	1	TUBE AS	
	14	1	**256-4884**	1	BRACKET	
	15	2	**309-2856**	1	CONNECTOR	
	16	2	**335-9383**	1	COVER AS	
	17	1,2	**370-9488**	19	STRAP-CABLE	
	18	2	**371-0947**	1	BUSHING-SPECIAL (BANJO)	
	19	2	**375-4117**	1	BOLT-BANJO	
	20	2	**375-4118**	1	BOLT-BANJO	
	21	2	**377-7222**	1	TUBE AS	
	22	2	**377-7224**	1	BUSHING-SPECIAL (BANJO)	
	23	2	**125-8797**	1	CLIP	
Y	24	1	**375-8447**	1	VALVE GP-LUBE DISTRIBUTION	629
	25	2	**4D-9517**	1	CLIP	
	26	2	**4K-8864**	10	CLIP	
	27	2	**6D-4247**	2	CLIP	
M	28	2	**7X-2564**	1	BOLT (M20X2.5X90-MM)	
	29	1,2	**7X-7729**	4	WASHER (11X25X3-MM THK)	
	30	2	**8T-4121**	8	WASHER-HARD (11X21X2.5-MM THK)	
M	31	1,2	**8T-4136**	7	BOLT (M10X1.5X25-MM)	
M	32	2	**8T-4137**	5	BOLT (M10X1.5X20-MM)	
M	33	2	**8T-4200**	10	BOLT (M8X1.25X16-MM)	
	34	2	**8T-4223**	1	WASHER-HARD (13.5X25.5X3-MM THK)	
	35	2	**8T-4224**	10	WASHER-HARD (8.8X16X2-MM THK)	
M	36	1	**8T-4970**	2	BOLT (M6X1X14-MM)	
	37	2	**8T-5439**	1	WASHER-HARD (21.5X45X6-MM THK)	
	38	1	**9X-8256**	2	WASHER (6.6X12X2-MM THK)	
E	39	2	**193-6911**		INSULATION (160-CM)	
E	39A	2	**193-6911**		INSULATION (150-CM)	
E	39B	2	**193-6911**		INSULATION (170-CM EACH)	
E	39C	2	**193-6911**		INSULATION (65-CM EACH)	
E	39D	2	**193-6911**		INSULATION (45-CM EACH)	
					****STANDARD REMOVAL****	
FH			**2D-4867**	2	FITTING-GREASE (1/8-27 PTF)	

424-4890 **LINES GP-FRONT LUBRICATION (*contd.*)** **i05839963**

NOTE	REF NO	GRAPHIC REF	PART NUMBER	QTY	PART NAME 1 2 3 4 5 6 (PRODUCT LEVEL)	SEE PAGE
FH			**3B-8489**	6	FITTING-GREASE (1/8-27 PTF)	
FHM			**8T-5460**	1	BOLT (M20X2.5X40-MM)	
FH			**9C-7907**	1	SPACER (21.5X28X14-MM THK)	

E - ORDER BY THE CENTIMETER
F - NOT SHOWN
H - PART OF STANDARD CONTROL GP-BUCKET
M - METRIC PART
Y - SEPARATE ILLUSTRATION

424-4890 **LINES GP-FRONT LUBRICATION (*contd.*)** **i05839963**

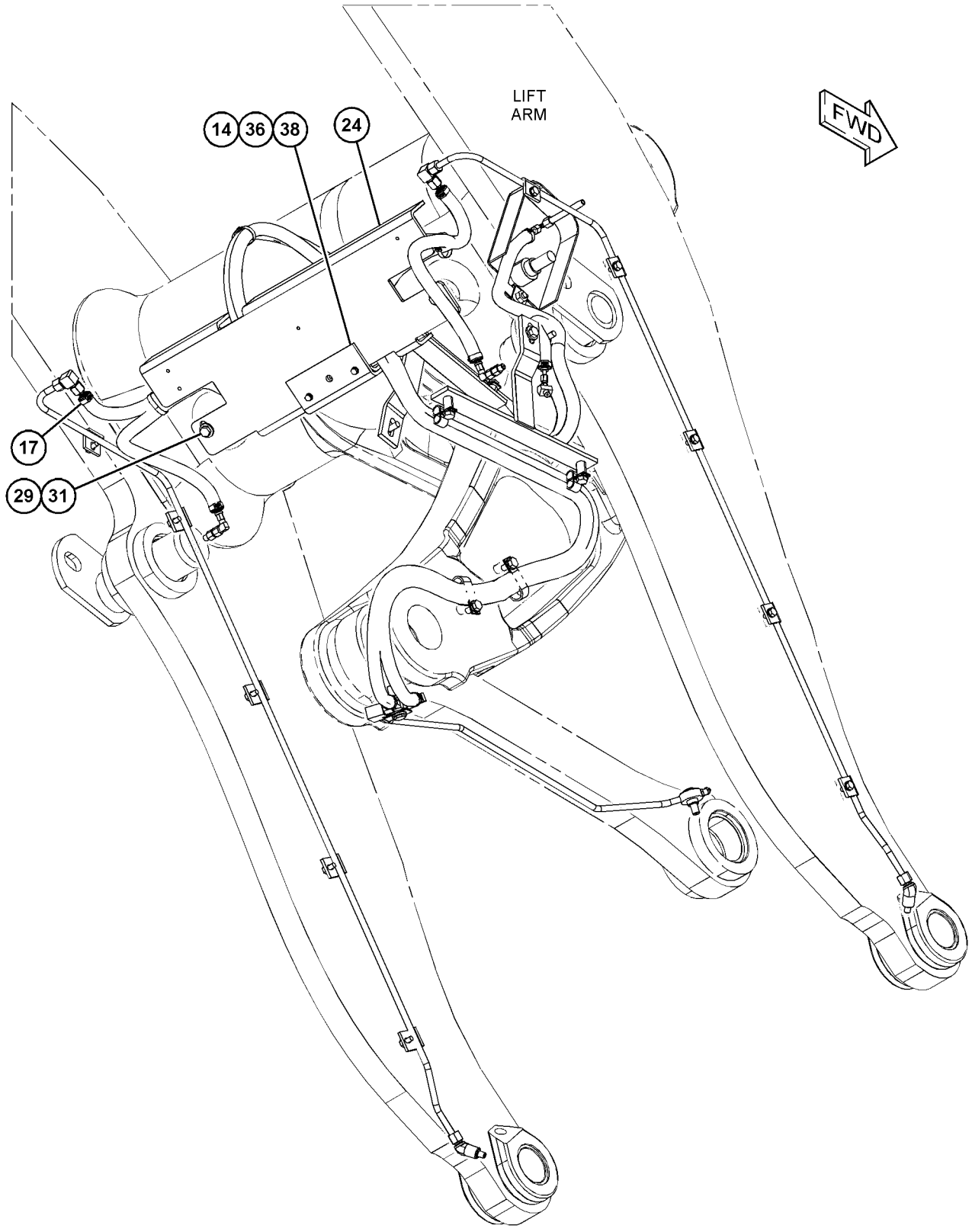

GRAPHIC #1 g03724478

424-4890 **LINES GP-FRONT LUBRICATION (*contd.*)** **i05839963**

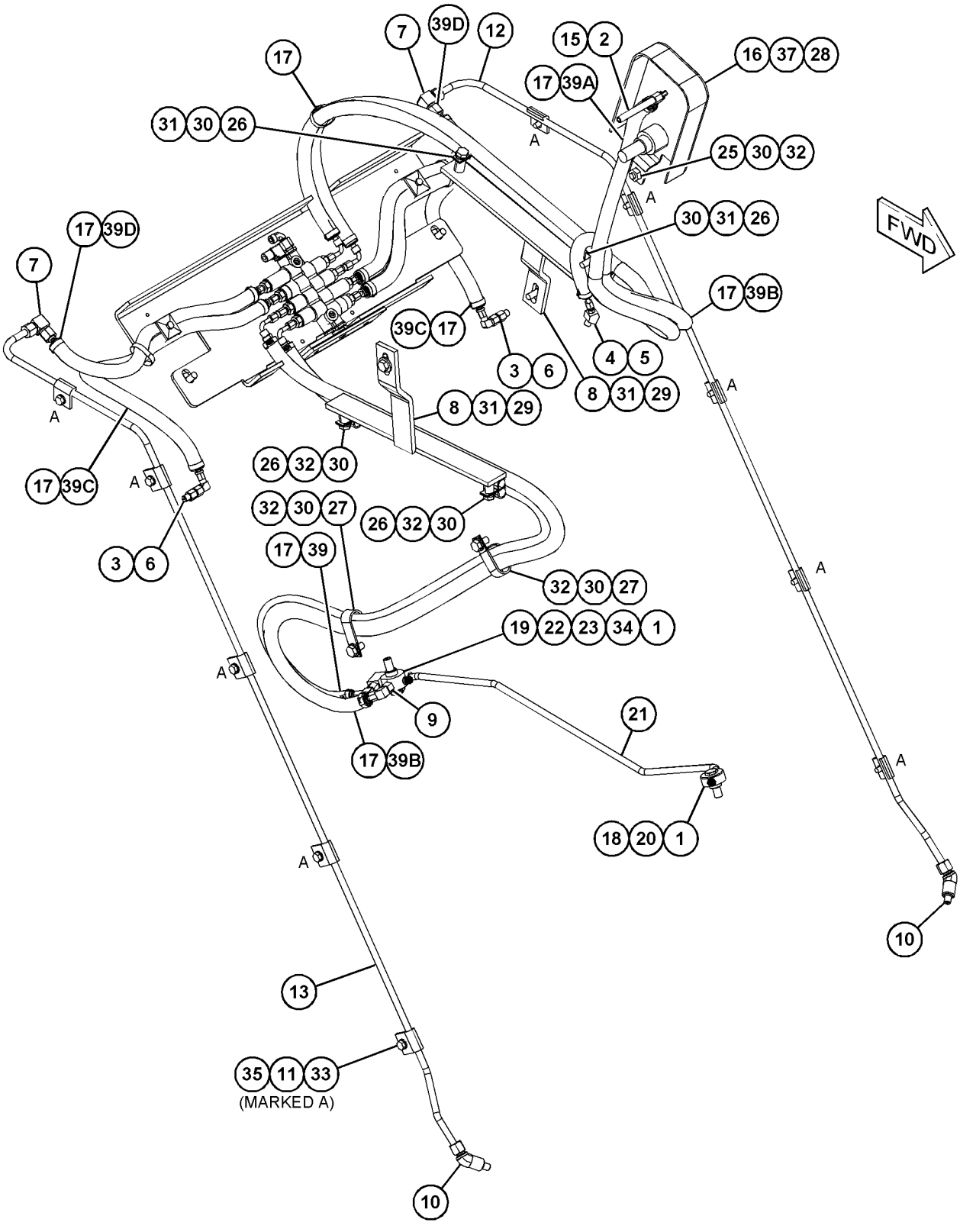

GRAPHIC #2 **<END>** g03724479

237-0433 LINES GP-GREASE

S/N: JLX1-UP

PART OF 372-2874 HYDRAULIC AR

SMCS-7510 **i05663894**

NOTE	REF NO	GRAPHIC REF	PART NUMBER	QTY	PART NAME 1 2 3 4 5 6 (PRODUCT LEVEL)	SEE PAGE
	1	3	**4H-1225**	2	WASHER (11X22X6-MM THK)	
	2	2,3	**5B-0935**	7	FITTING-GREASE	
	3	3	**5K-9242**	2	UNION-FLARED	
	4	1,2,3	**5K-9243**	5	ELBOW-FLARED	
	5	1	**5K-9979**	2	CONNECTOR	
	6	2,3	**5P-5461**	7	NUT (1/8-27-THD)	
	7	2,3	**5P-5463**	7	ADAPTER-LUBRICATION	
	8	1	**6L-3616**	1	CONNECTOR	
	9	3	**9S-7712**	2	ELBOW-FLARED	
	10	1,2,3	**111-4839**	6	STRAP	
	11	1	**144-4613**	1	ANGLE AS	
	12	3	**444-9534**	1	TUBE AS	
	13	3	**444-9535**	1	TUBE AS	
	14	3	**244-8730**	1	TUBE AS	
	15	3	**244-8731**	1	TUBE AS	
	16	2	**244-8732**	1	TUBE AS	
I	17	2	**357-7575**	1	HOSE AS	
I	18	2	**357-7576**	1	HOSE AS	
I	19	2	**357-7577**	1	HOSE AS	
I	20	2	**357-7578**	1	HOSE AS	
	21	1	**260-3820**	1	TUBE AS	
	22	1	**260-3821**	1	TUBE AS	
	23	2	**4K-8864**	2	CLIP	
	24	1,2,3	**111-4838**	6	CLIP	
	25	1,3	**2B-2404**	10	CLIP	
	26	3	**3B-6552**	4	ELBOW-PIPE	
	27	3	**5K-2298**	3	CLIP	
	28	1	**7X-0515**	1	WASHER-HARD (17X35X5-MM THK)	
	29	1,3	**8T-4121**	16	WASHER-HARD (11X21X2.5-MM THK)	
M	30	1,3	**8T-4133**	15	NUT (M10X1.5-THD)	
M	31	1	**8T-4136**	1	BOLT (M10X1.5X25-MM)	
	32	3	**9S-1812**	2	FITTING (NIPPLE-PIPE)	
E	33	2	**145-8494**		GUARD (35-CM)	

E - ORDER BY THE CENTIMETER
I - REFER TO HYDRAULIC INFORMATION SYSTEM
M - METRIC PART

237-0433 **LINES GP-GREASE (*contd.*)** **i05663894**

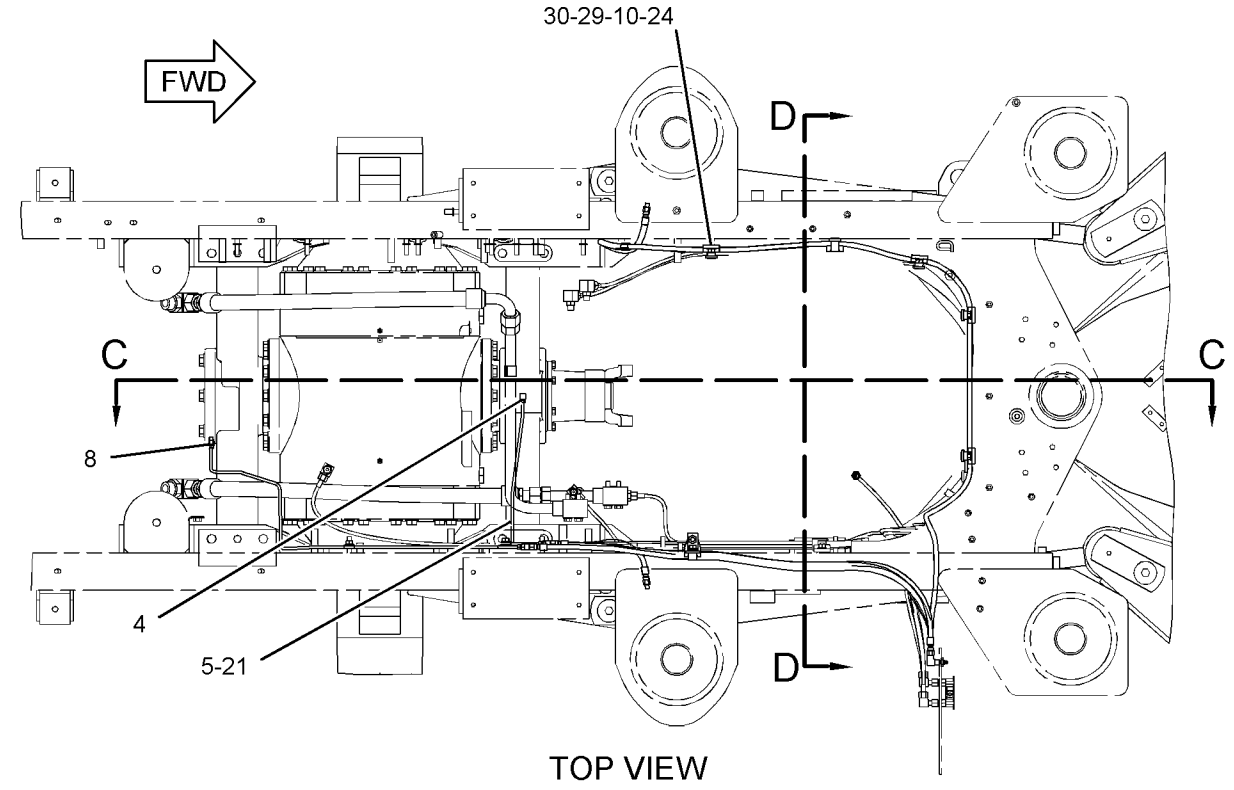

TOP VIEW

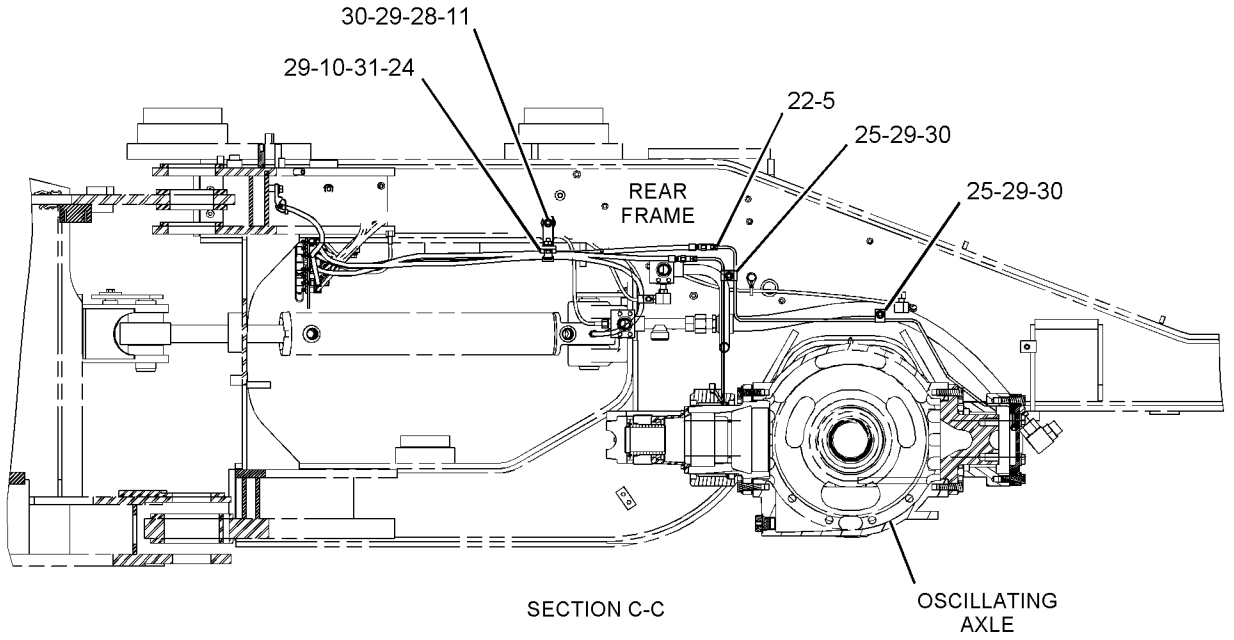

SECTION C-C

REFER TO ALL ILLUSTRATIONS OF THIS GROUP FOR AUXILIARY VIEWS

GRAPHIC #1 g02167239

237-0433 **LINES GP-GREASE (*contd.*)** **i05663894**

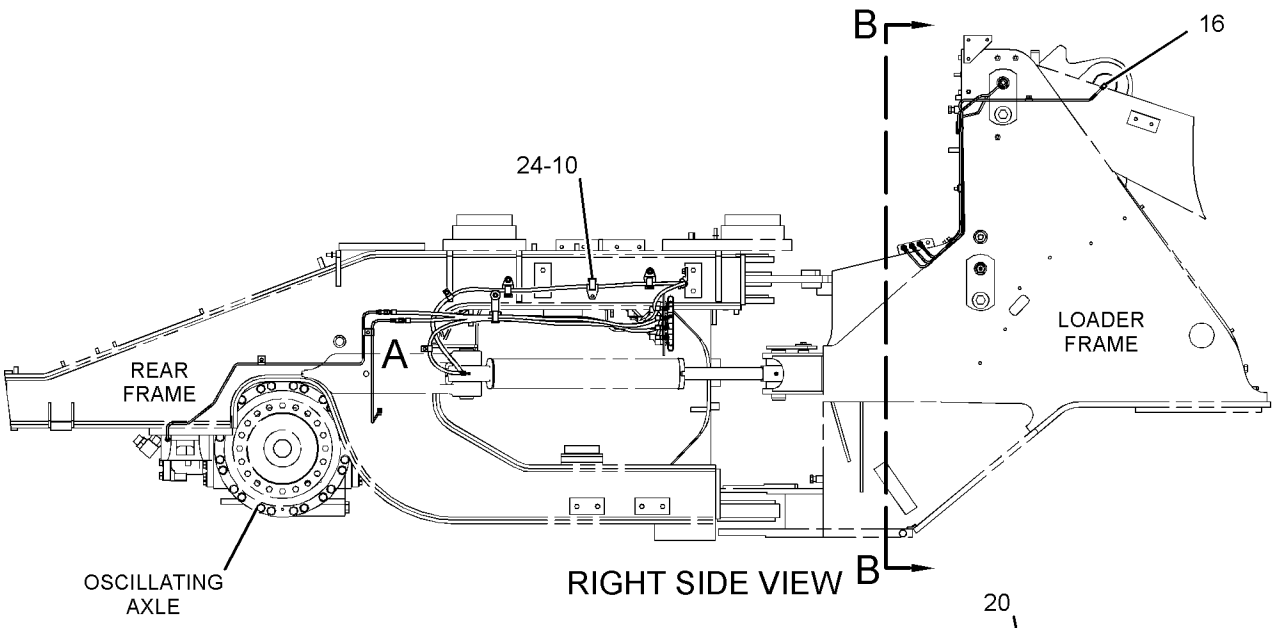

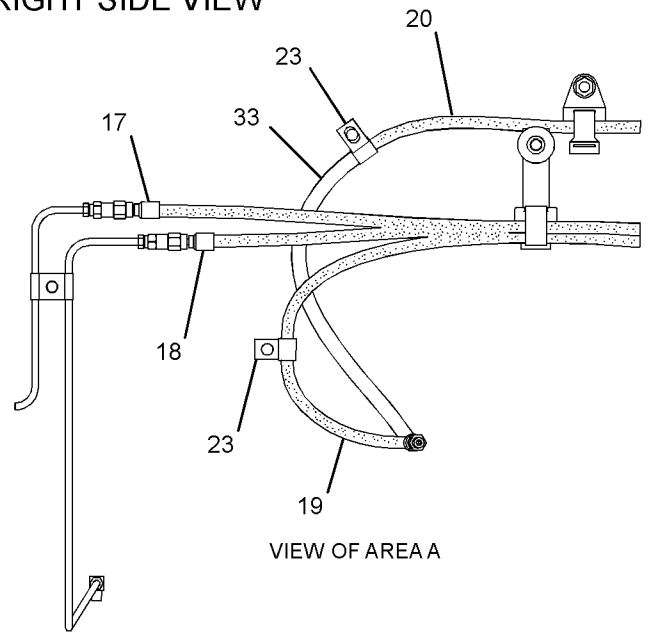

VIEW OF AREA A

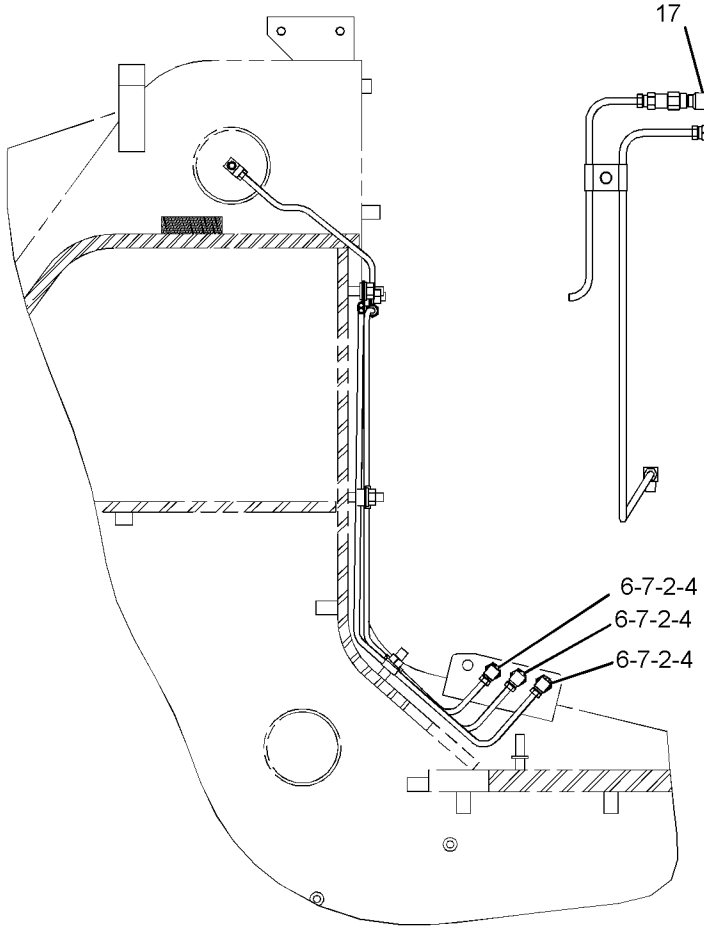

SECTION E-E

REFER TO ALL ILLUSTRATIONS OF THIS GROUP FOR AUXILIARY VIEWS

GRAPHIC #2

g02167247

237-0433 **LINES GP-GREASE (*contd.*)** **i05663894**

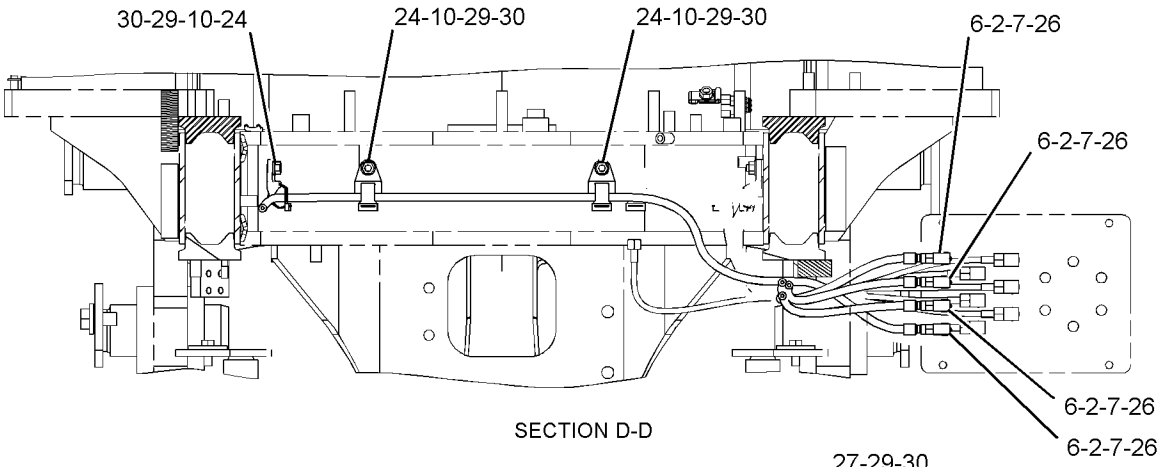

SECTION D-D

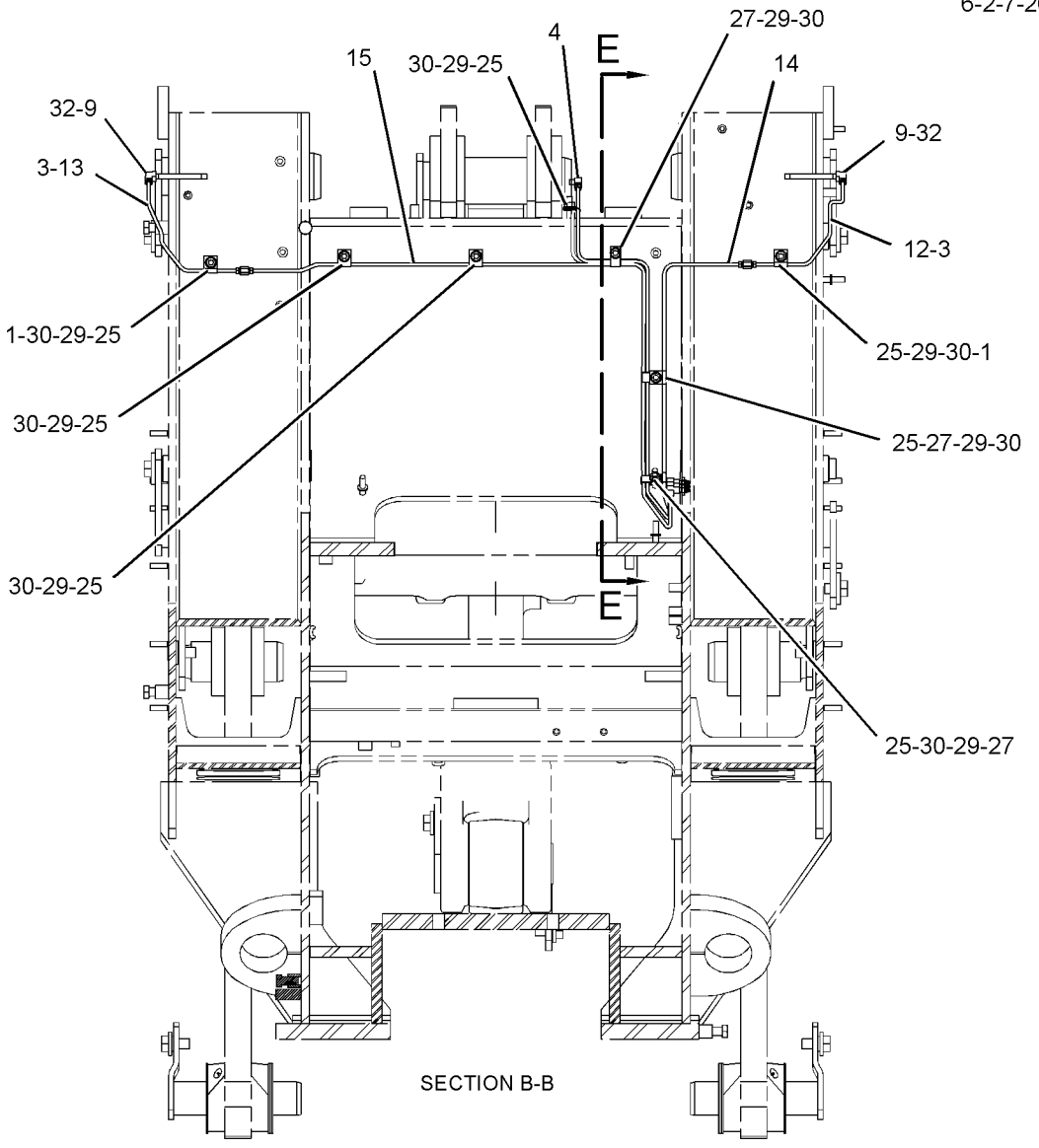

SECTION B-B

REFER TO ALL ILLUSTRATIONS OF THIS GROUP FOR AUXILIARY VIEWS

GRAPHIC #3 **<END>** g01272193

392-8668 LINES GP-REAR LUBRICATION

S/N: JLX1-UP

PART OF 373-8269, 373-8294, 386-0131 LUBRICATION AR-AUTOMATIC

SMCS-7510, 7540 **i05821149**

NOTE	REF NO	GRAPHIC REF	PART NUMBER	QTY	PART NAME 1 2 3 4 5 6 (PRODUCT LEVEL)	SEE PAGE
	1	1	**3B-8489**	6	FITTING-GREASE (1/8-27 PTF)	
	2	1	**3S-2093**	2	STRAP-CABLE	
	3	1	**4S-5719**	1	SPACER (10.31X25X12.7-MM THK)	
	4	1	**6K-0806**	1	STRAP-CABLE	
	5	1	**428-8505**	6	VALVE GP-CHECK (AUTOMATIC LUBRICATION LINE)	
	6	1	**177-3464**	9	ELBOW AS	
					(EACH INCLUDES)	
M		1	**277-3072**	1	NUT (M10X1-THD)	
		1	**277-3073**	1	FITTING-COMPRESSION	
	7	1	**177-3465**	1	CONNECTOR AS	
M		1	**277-3072**	2	NUT (M10X1-THD)	
		1	**277-3073**	2	FITTING-COMPRESSION	
	8	1	**177-3466**	4	CONNECTOR	
	9	1	**177-3468**	1	ELBOW	
	10	1	**177-3475**	9	CONNECTOR (REDUCER)	
	11	1	**204-2281**	1	STRAP-CABLE	
	12	1	**250-0241**	2	TEE	
	13	1	**281-0635**	1	TUBE AS	
	14	1	**291-4211**	4	TEE	
Y	15	1	**392-8673**	1	VALVE GP-LUBE DISTRIBUTION	630
	16	1	**2B-2404**	1	CLIP	
	17	1	**4K-8864**	5	CLIP	
	18	1	**5K-2298**	1	CLIP	
	19	1	**7X-7729**	2	WASHER (11X25X3-MM THK)	
	20	1	**8M-2772**	15	CLIP	
	21	1	**8M-2773**	3	CLIP	
	22	1	**8T-4121**	23	WASHER-HARD (11X21X2.5-MM THK)	
M	23	1	**8T-4133**	9	NUT (M10X1.5-THD)	
M	24	1	**8T-4137**	15	BOLT (M10X1.5X20-MM)	
M	25	1	**8T-4191**	1	BOLT (M10X1.5X16-MM)	
	26	1	**9X-8582**	6	CLIP	

M - METRIC PART
Y - SEPARATE ILLUSTRATION

392-8668 **LINES GP-REAR LUBRICATION (*contd.*)** **i05821149**

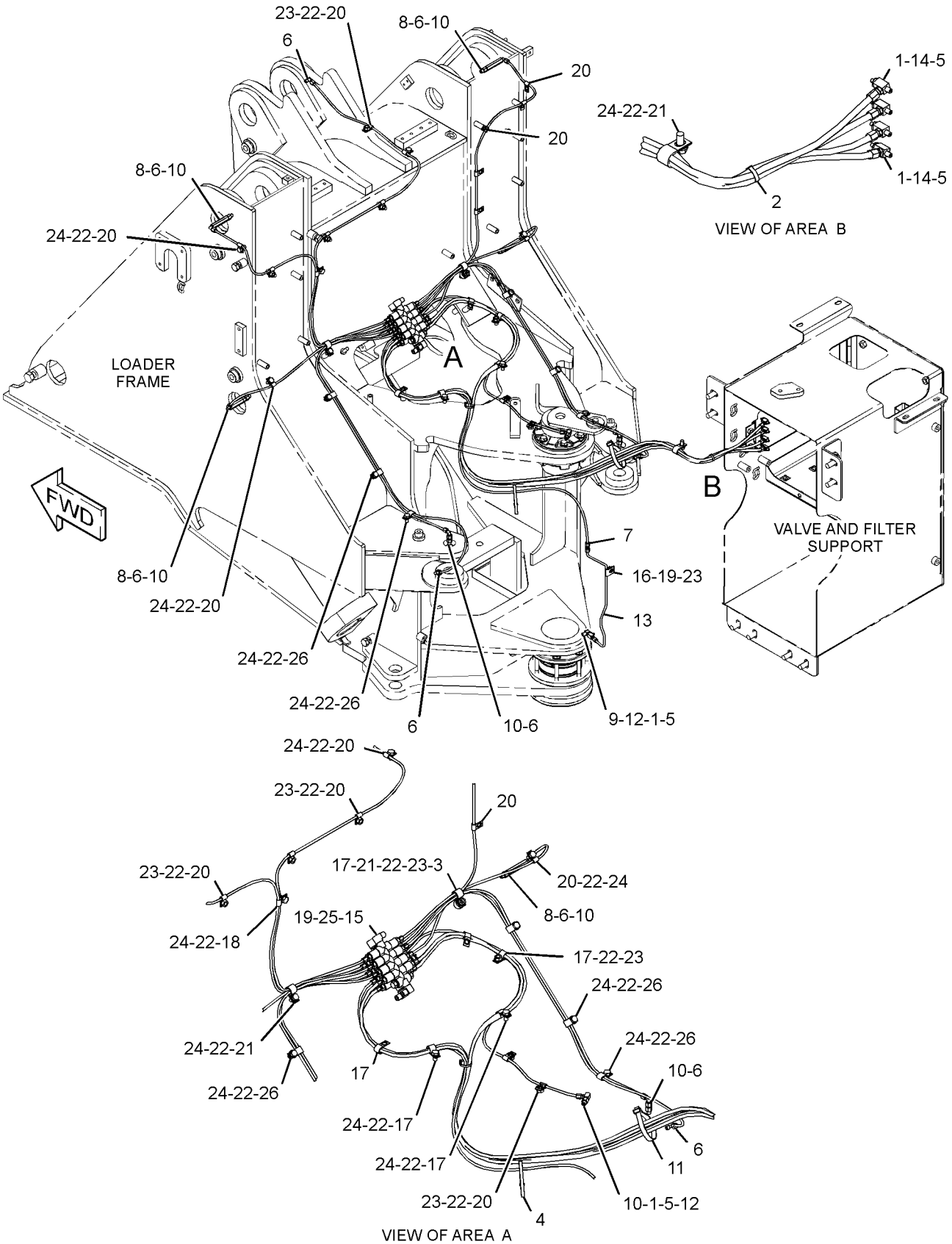

GRAPHIC #1

<END>

g03032224

425-6512 LINES GP-REAR LUBRICATION

S/N: JLX1-UP
CUSTOM
PART OF 419-9845 LUBRICATION AR-AUTOMATIC

SMCS-7510, 7540 **i05840061**

NOTE	REF NO	GRAPHIC REF	PART NUMBER	QTY	PART NAME 1 2 3 4 5 6 (PRODUCT LEVEL)	SEE PAGE
	1	1,2	**3B-8489**	6	FITTING-GREASE (1/8-27 PTF)	
	2	2	**4S-5719**	1	SPACER (10.31X25X12.7-MM THK)	
	3	2	**6K-0806**	1	STRAP-CABLE	
	4	1,2	**177-3463**	6	CONNECTOR AS	
					(EACH INCLUDES)	
M		1,2	**277-3072**	1	NUT (M10X1-THD)	
		1,2	**277-3073**	1	FITTING-COMPRESSION	
	5	2	**177-3464**	9	ELBOW AS	
					(EACH INCLUDES)	
M		2	**277-3072**	1	NUT (M10X1-THD)	
		2	**277-3073**	1	FITTING-COMPRESSION	
	6	2	**177-3465**	1	CONNECTOR AS	
M		2	**277-3072**	2	NUT (M10X1-THD)	
		2	**277-3073**	2	FITTING-COMPRESSION	
	7	2	**177-3466**	4	CONNECTOR	
	8	2	**177-3468**	1	ELBOW	
	9	2	**177-3475**	9	CONNECTOR (REDUCER)	
	10	2	**250-0241**	2	TEE	
	11	2	**281-0635**	1	TUBE AS	
	12	1	**291-4211**	4	TEE	
	13	2	**370-9488**	33	STRAP-CABLE	
Y	14	2	**392-8673**	1	VALVE GP-LUBE DISTRIBUTION	630
	15	1,2	**1S-0994**	5	CLIP	
	16	2	**2B-2404**	1	CLIP	
	17	2	**4K-6177**	7	CLIP	
	18	2	**4K-8864**	11	CLIP	
	19	2	**4S-1962**	3	CLIP	
	20	2	**7X-7729**	2	WASHER (11X25X3-MM THK)	
	21	2	**8M-2773**	4	CLIP	
	22	1,2	**8T-4121**	23	WASHER-HARD (11X21X2.5-MM THK)	
M	23	2	**8T-4133**	9	NUT (M10X1.5-THD)	
M	24	1,2	**8T-4137**	15	BOLT (M10X1.5X20-MM)	
M	25	2	**8T-4191**	1	BOLT (M10X1.5X16-MM)	
E	26	2	**193-6911**		INSULATION (130-CM EACH)	
E	26A	2	**193-6911**		INSULATION (80-CM EACH)	
E	26B	2	**193-6911**		INSULATION (120-CM EACH)	
E	26C	2	**193-6911**		INSULATION (190-CM)	
E	26D	2	**193-6911**		INSULATION (150-CM EACH)	
E	26E	2	**193-6911**		INSULATION (140-CM)	
E	26F	1	**193-6911**		INSULATION (220-CM EACH)	
E	26G	1	**193-6911**		INSULATION (200-CM EACH)	
					****STANDARD REMOVALS****	
FH			**444-9534**	1	TUBE AS	
FH			**444-9535**	1	TUBE AS	
FH			**244-8730**	1	TUBE AS	
FH			**244-8731**	1	TUBE AS	
FH			**244-8732**	1	TUBE AS	
FH			**2B-2404**	1	CLIP	
FH			**4H-1225**	1	WASHER (11X22X6-MM THK)	
FH			**5B-0935**	3	FITTING-GREASE	
FH			**5K-2298**	3	CLIP	
FH			**5K-9242**	2	UNION-FLARED	
FH			**5K-9243**	4	ELBOW-FLARED	
FH			**5P-5461**	3	NUT (1/8-27-THD)	
FH			**5P-5463**	3	ADAPTER-LUBRICATION	

425-6512 **LINES GP-REAR LUBRICATION (*contd.*)** **i05840061**

NOTE	REF NO	GRAPHIC REF	PART NUMBER	QTY	PART NAME 1 2 3 4 5 6 (PRODUCT LEVEL)	SEE PAGE
FH			**8T-4121**	8	WASHER-HARD (11X21X2.5-MM THK)	
FHM			**8T-4133**	8	NUT (M10X1.5-THD)	
FH			**9S-1812**	2	FITTING (NIPPLE-PIPE)	
FH			**9S-7712**	2	ELBOW-FLARED	
FJ			**3B-8489**	2	FITTING-GREASE (1/8-27 PTF)	
FN			**3B-8489**	1	FITTING-GREASE (1/8-27 PTF)	
FN			**3B-8491**	2	FITTING-GREASE	
FP			**2D-4867**	2	FITTING-GREASE (1/8-27 PTF)	
FP			**3B-8489**	2	FITTING-GREASE (1/8-27 PTF)	

E - ORDER BY THE CENTIMETER
F - NOT SHOWN
H - PART OF STANDARD LINES GP-GREASE
J - PART OF STANDARD HITCH GP-ARTICULATING
M - METRIC PART
N - PART OF STANDARD CONTROL GP-BUCKET
P - PART OF STANDARD CYLINDER AND MOUNTING GP-STEERING
Y - SEPARATE ILLUSTRATION

REFER TO ALL ILLUSTRATIONS OF THIS GROUP FOR AUXILIARY VIEWS

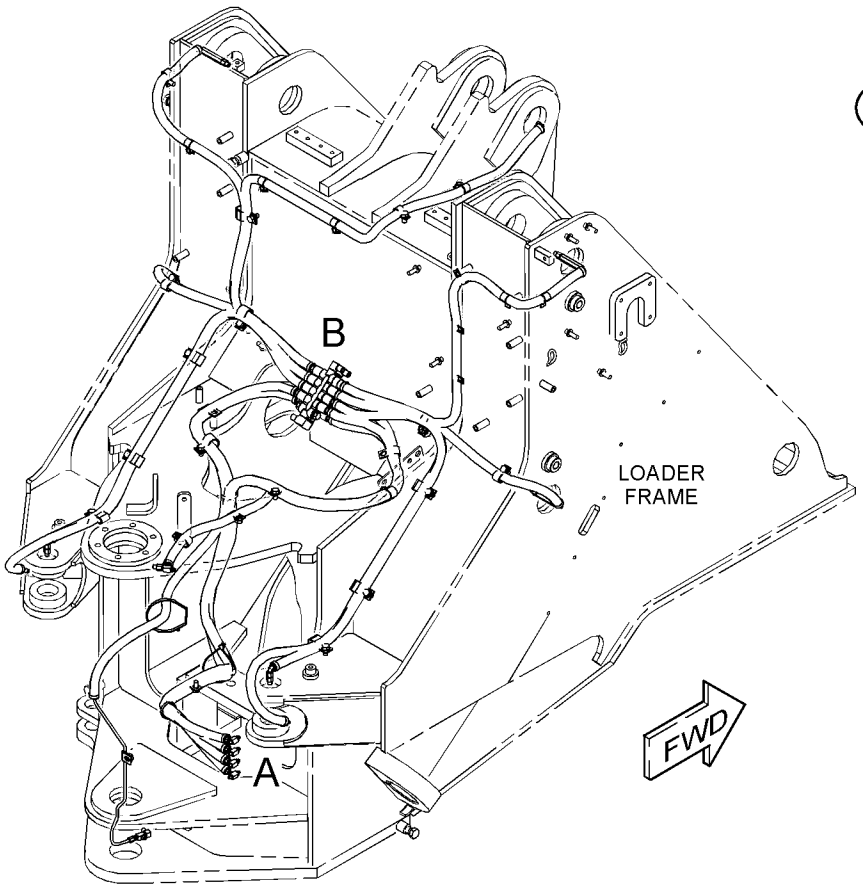

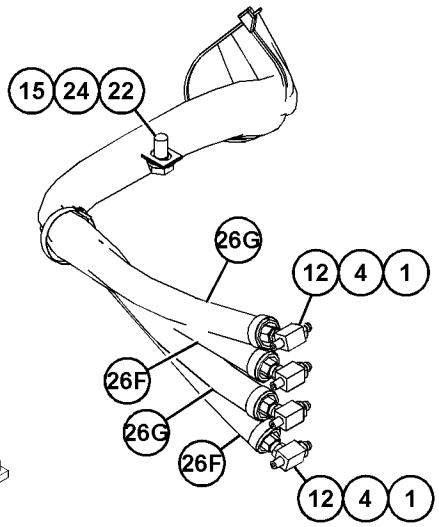

VIEW OF AREA A

GRAPHIC #1 g03699561

425-6512 **LINES GP-REAR LUBRICATION (*contd.*)** **i05840061**

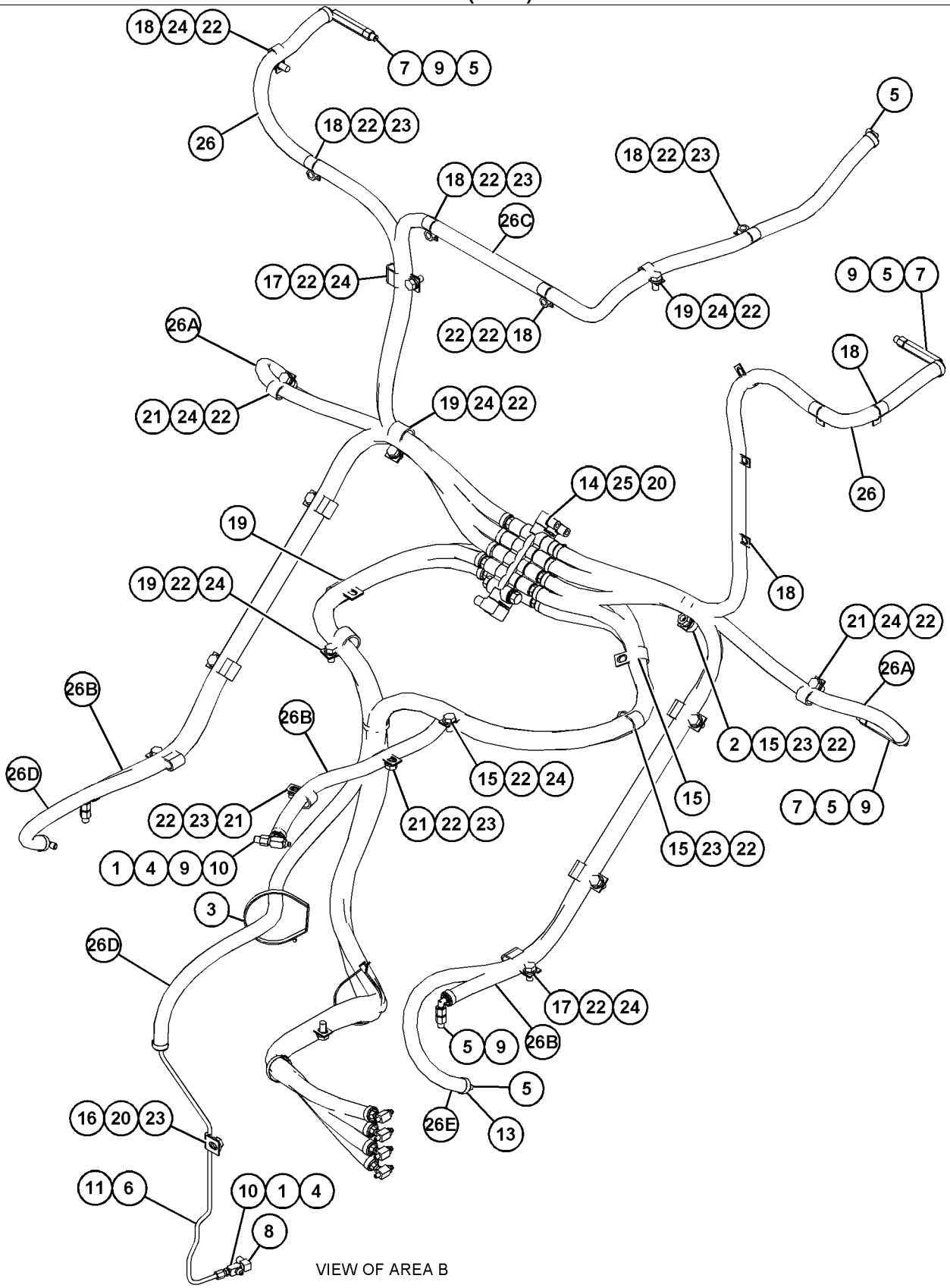

VIEW OF AREA B

GRAPHIC #2 **<END>** g03699565

112-6973 LINK GP-STEERING FRAME LOCK

S/N: JLX1-UP

PART OF 373-8237 CHASSIS AR

SMCS-7506 **i00810329**

NOTE	REF NO	GRAPHIC REF	PART NUMBER	QTY	PART NAME 1 2 3 4 5 6 (PRODUCT LEVEL)	SEE PAGE
	1	1	**5V-6380**	2	PIN	
	2	1	**8D-3791**	2	PIN	
	3	1	**127-1579**	1	LINK	

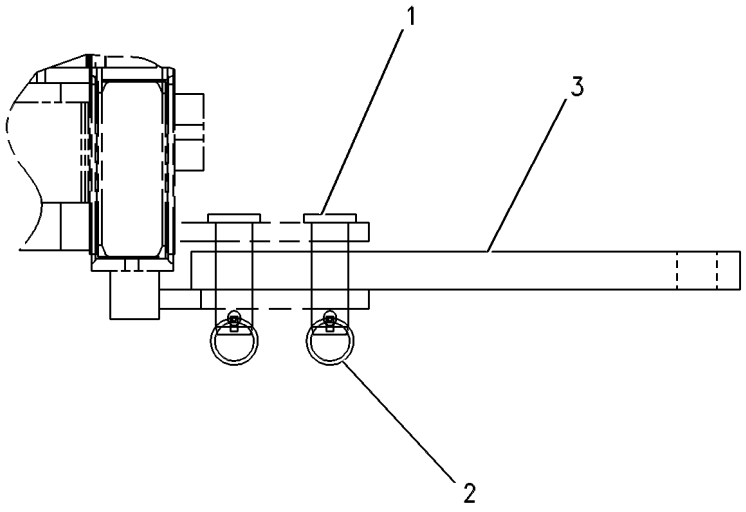

GRAPHIC #1 **<END>** g00262252

373-8269 LUBRICATION AR-AUTOMATIC

S/N: JLX1-UP

CANNOT BE USED WITH 373-8294—PAGE: 591, 386-0131—PAGE: 591

SMCS-7540 **i04891949**

NOTE	PART NUMBER	QTY	PART NAME 1 2 3 4 5 6 (PRODUCT LEVEL)	SEE PAGE
Y	*392-5599*	1	BOSS GP-LOADER FRAME	503
Y	*392-5598*	1	BOSS GP-REAR FRAME	505
Y	*392-8669*	1	LINES GP-CENTRAL LUBRICATION	569
Y	*375-8450*	1	LINES GP-FRONT LUBRICATION	574
Y	*392-8668*	1	LINES GP-REAR LUBRICATION	585
Y	*391-1082*	1	LINKAGE GP-BUCKET	911
Y	*377-3269*	1	MODULE GP-DISPLAY (AUTOMATIC LUBRICATION SYSTEM)	1032
Y	*281-0622*	1	PUMP & MTG GP-LUBRICATION	603
Y	*281-8741*	1	WIRING GP-AUTOLUBE CONTROL	325

Y - SEPARATE ILLUSTRATION

<END>

373-8294 LUBRICATION AR-AUTOMATIC—HIGH LIFT MACHINES

S/N: JLX1-UP

CANNOT BE USED WITH 373-8291—PAGE: 1172, 383-6030—PAGE: 1172

SMCS-7540 **i04891807**

NOTE	PART NUMBER	QTY	PART NAME 1 2 3 4 5 6 (PRODUCT LEVEL)	SEE PAGE
Y	*392-5599*	1	BOSS GP-LOADER FRAME	503
Y	*392-5598*	1	BOSS GP-REAR FRAME	505
Y	*345-7045*	1	LINES GP-FRONT LUBRICATION	572
Y	*392-8668*	1	LINES GP-REAR LUBRICATION	585
Y	*347-0064*	1	LINKAGE GP-BUCKET	909
Y	*377-3269*	1	MODULE GP-DISPLAY (AUTOMATIC LUBRICATION SYSTEM)	1032
Y	*281-0622*	1	PUMP & MTG GP-LUBRICATION	603
Y	*281-8741*	1	WIRING GP-AUTOLUBE CONTROL	325
	392-8670	1	LINES GP-CENTRAL LUBRICATION (HIGH LIFT MACHINES)	

Y - SEPARATE ILLUSTRATION

<END>

386-0131 LUBRICATION AR-AUTOMATIC

S/N: JLX1-UP

CANNOT BE USED WITH 373-8294—PAGE: 591

SMCS-7540 **i04891994**

NOTE	PART NUMBER	QTY	PART NAME 1 2 3 4 5 6 (PRODUCT LEVEL)	SEE PAGE
Y	*392-5599*	1	BOSS GP-LOADER FRAME	503
Y	*392-5598*	1	BOSS GP-REAR FRAME	505
Y	*392-8669*	1	LINES GP-CENTRAL LUBRICATION	569
Y	*375-8450*	1	LINES GP-FRONT LUBRICATION	574
Y	*392-8668*	1	LINES GP-REAR LUBRICATION	585
Y	*391-1083*	1	LINKAGE GP-BUCKET	912
Y	*377-3269*	1	MODULE GP-DISPLAY (AUTOMATIC LUBRICATION SYSTEM)	1032
Y	*281-0622*	1	PUMP & MTG GP-LUBRICATION	603
Y	*281-8741*	1	WIRING GP-AUTOLUBE CONTROL	325

Y - SEPARATE ILLUSTRATION

<END>

419-9845 LUBRICATION AR-AUTOMATIC

S/N: JLX1-UP

SMCS-7540 **i05836039**

NOTE	REF NO	GRAPHIC REF	PART NUMBER	QTY	PART NAME 1 2 3 4 5 6 (PRODUCT LEVEL)	SEE PAGE
Y	1	1	*377-3269*	1	MODULE GP-DISPLAY (AUTOMATIC LUBRICATION SYSTEM)	1032
Y	2	1	*392-5598*	1	BOSS GP-REAR FRAME	505
Y	3	1	*392-5599*	1	BOSS GP-LOADER FRAME	503
Y	4	1	*415-7191*	1	PUMP & MTG GP-LUBRICATION	604
Y	5	1	*424-4889*	1	LINKAGE GP-BUCKET	913
Y	6	1	*424-4890*	1	LINES GP-FRONT LUBRICATION	577
Y	7	1	*425-6512*	1	LINES GP-REAR LUBRICATION	587
Y	8	1	*425-6513*	1	LINES GP-CENTRAL LUBRICATION	571
Y	9	1	*425-6514*	1	WIRING GP-PROTECTION	374

Y - SEPARATE ILLUSTRATION

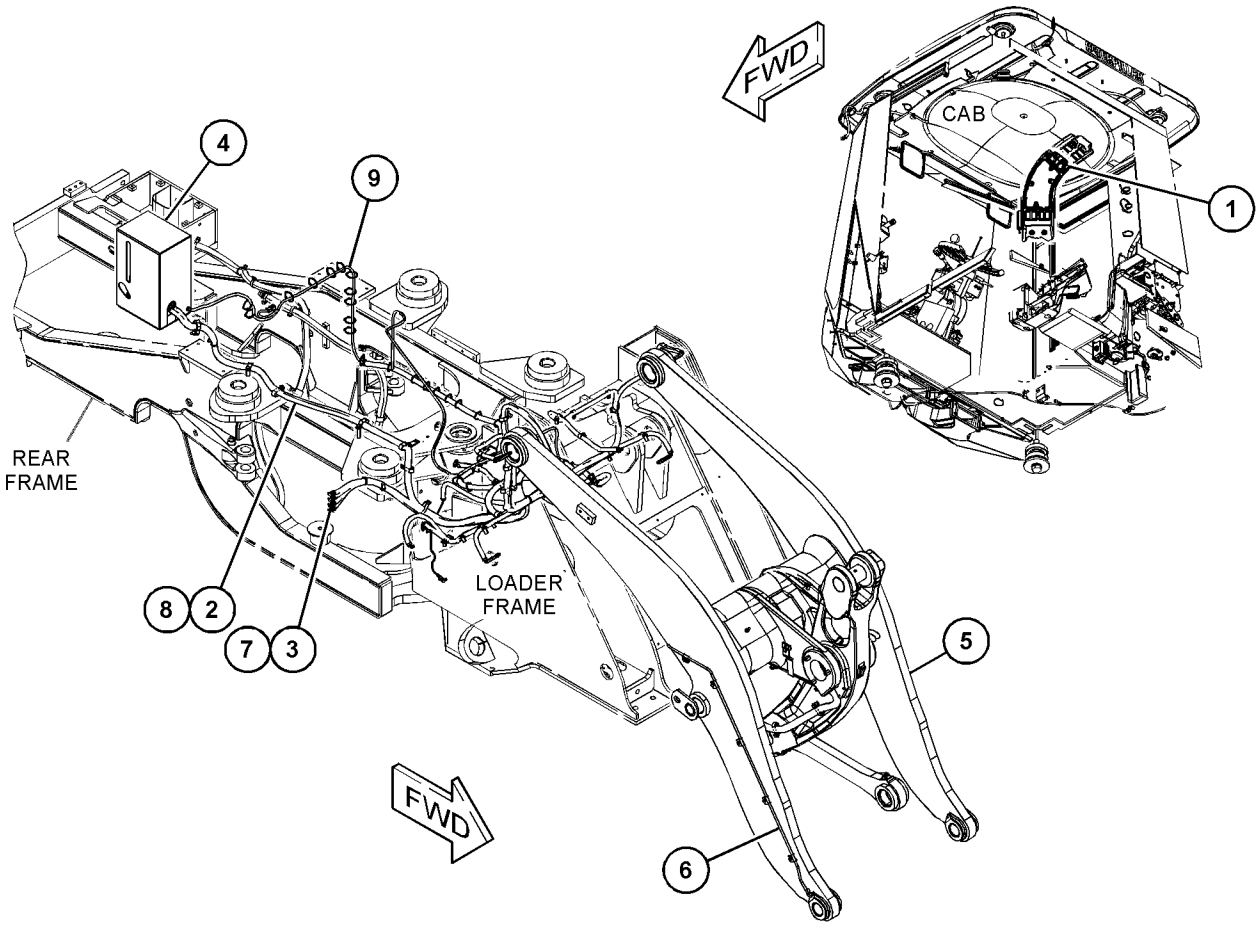

GRAPHIC #1 **<END>** g03723899

290-7202 MOUNTING GP-BRACKET—GREASE GUN

S/N: JLX1-UP

PART OF 377-4468 RADIATOR & FAN GP

SMCS-7050 **i04758495**

NOTE	REF NO	GRAPHIC REF	PART NUMBER	QTY	PART NAME 1 2 3 4 5 6 (PRODUCT LEVEL)	SEE PAGE
	1	1	**1U-7684**	2	HOLDER AS (GREASE GUN)	

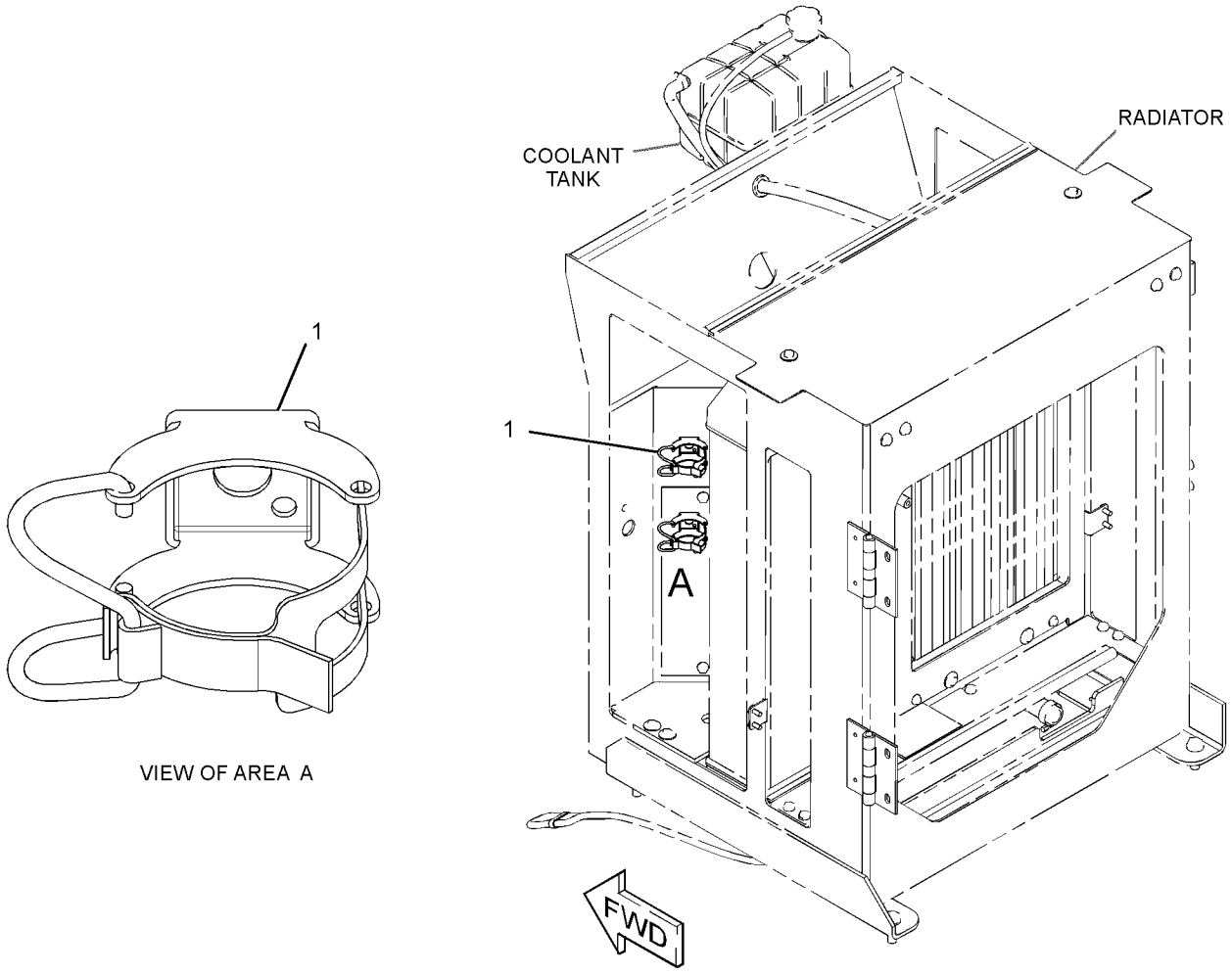

GRAPHIC #1

<END>

g01865975

267-4971 MOUNTING GP-REGISTRATION

S/N: JLX1-UP

PART OF 375-2472 LIGHTING GP-ROADING

SMCS-1429, 7050 **i04768804**

NOTE	REF NO	GRAPHIC REF	PART NUMBER	QTY	PART NAME 1 2 3 4 5 6 (PRODUCT LEVEL)	SEE PAGE
	1	1	**125-4439**	2	LAMP AS (24-VOLT, 5-WATT)	
					(EACH INCLUDES)	
		1	**263-2541**	1	LAMP (24-VOLT, 5-WATT)	
	2	1	**275-9727**	1	SHEET AS	
	3	1	**275-9728**	1	PLATE	
	4	1	**8T-4121**	2	WASHER-HARD (11X21X2.5-MM THK)	
M	5	1	**8T-0389**	2	LOCKNUT (M10X1.5-THD)	

M - METRIC PART

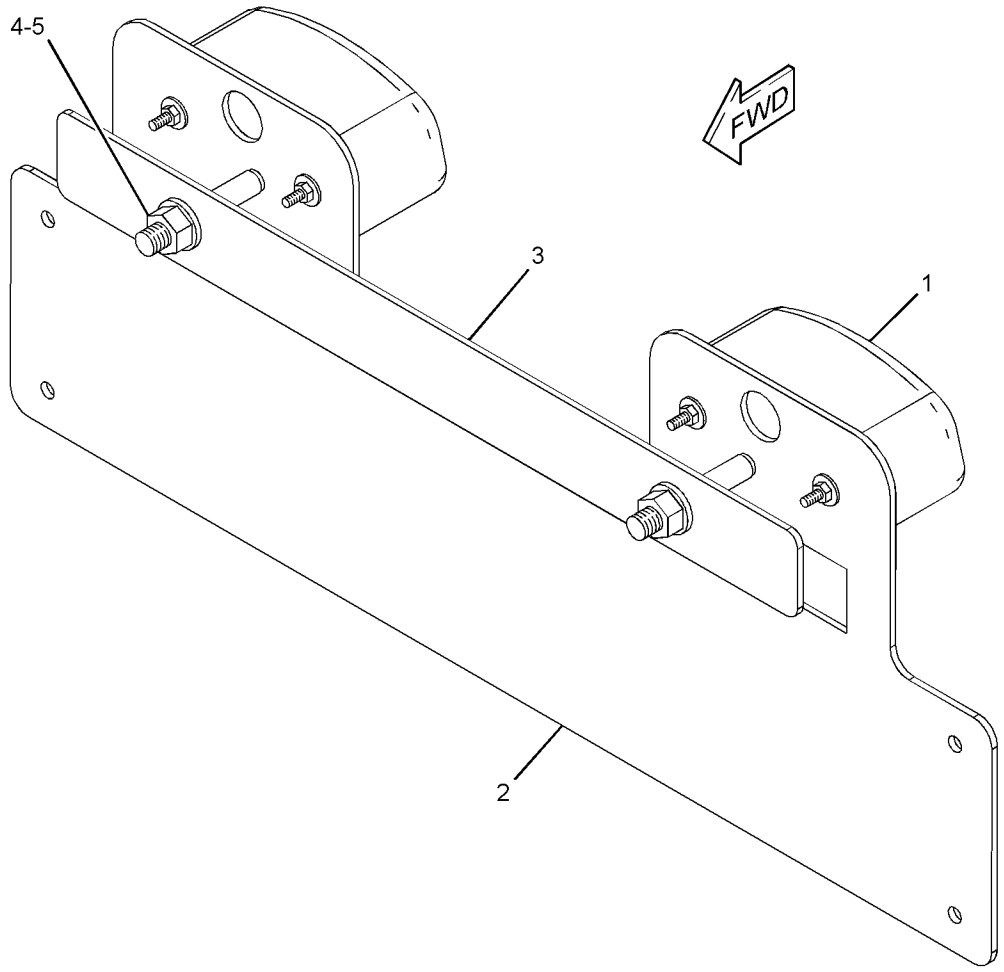

GRAPHIC #1 **<END>** g01210187

251-1701 PANEL GP-HOOD–TOP

S/N: JLX1-UP

PART OF 292-6000 HOOD & GUARD GP

SMCS-7251 **i02443941**

NOTE	REF NO	GRAPHIC REF	PART NUMBER	QTY	PART NAME 1 2 3 4 5 6 (PRODUCT LEVEL)	SEE PAGE
	1	1	**224-9392**	4	FASTENER-SINGLE HEAD	
	2	1	**246-1888**	1	INSULATION	
	3	1	**251-1702**	1	PANEL AS (TOP)	

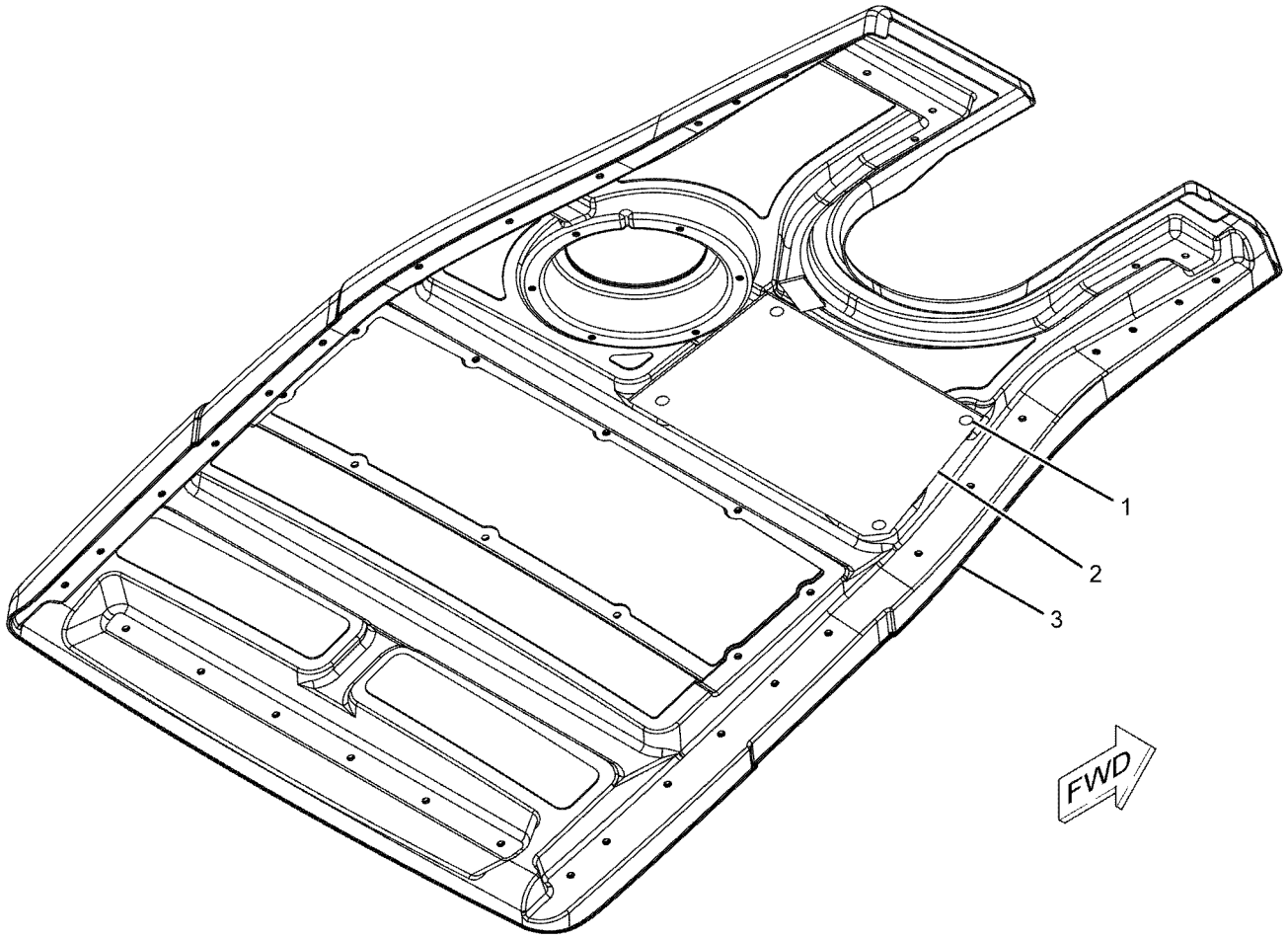

GRAPHIC #1 **<END>** g01133281

251-1705 PANEL GP-HOOD–SIDE, RH

S/N: JLX1-UP

PART OF 292-6000 HOOD & GUARD GP

SMCS-7251 **i02443925**

NOTE	REF NO	GRAPHIC REF	PART NUMBER	QTY	PART NAME 1 2 3 4 5 6 (PRODUCT LEVEL)	SEE PAGE
	1	1	**148-8240**	5	CLIP	
	2	1	**246-1890**	1	INSULATION	
	3	1	**251-1706**	1	PANEL AS (RH)	
	4	1	**7X-0603**	5	WASHER-HARD (9.9X35X2.5-MM THK)	

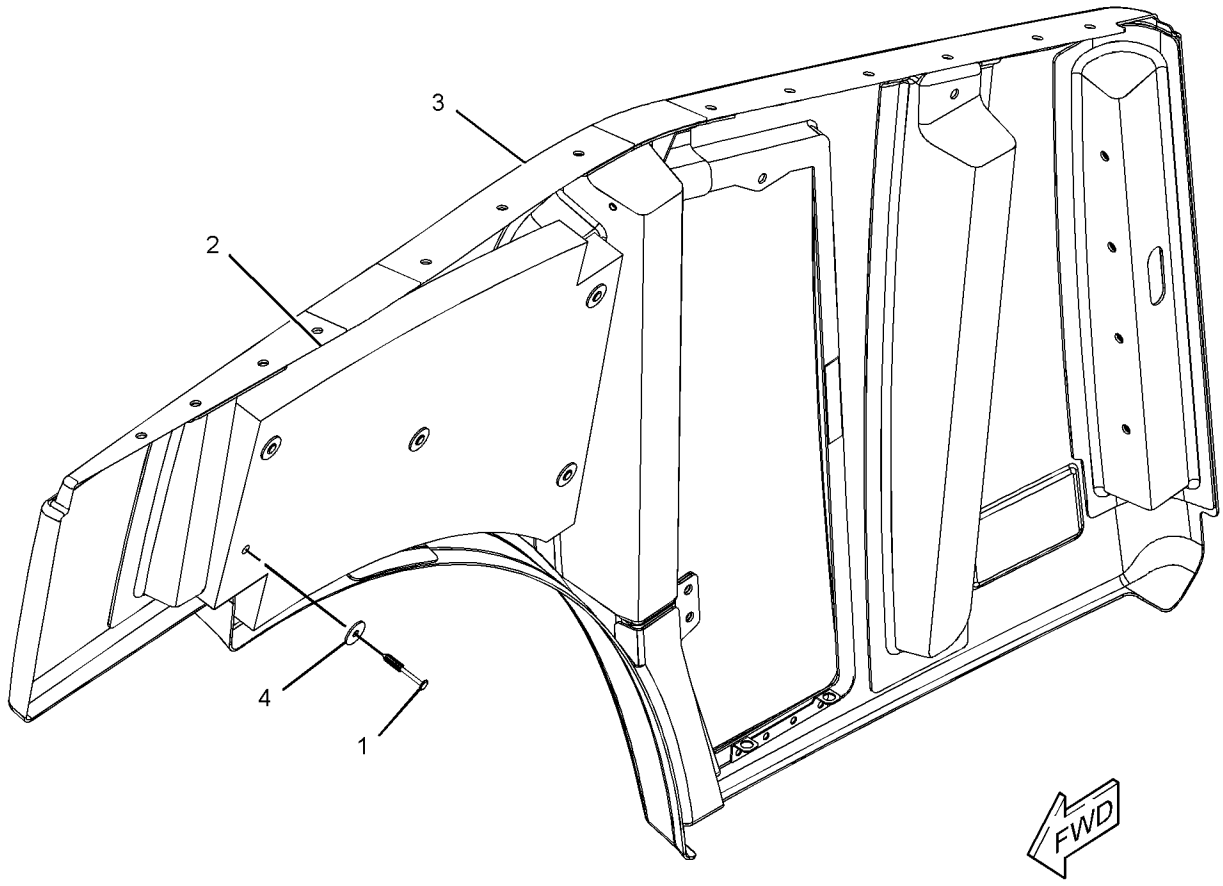

GRAPHIC #1 **<END>** g01220718

251-1708 PANEL GP-HOOD—SIDE, LH

S/N: JLX1-UP

PART OF 292-6000 HOOD & GUARD GP

SMCS-7251 **i02443913**

NOTE	REF NO	GRAPHIC REF	PART NUMBER	QTY	PART NAME 1 2 3 4 5 6 (PRODUCT LEVEL)	SEE PAGE
	1	1	**148-8240**	5	CLIP	
	2	1	**246-1889**	1	INSULATION	
	3	1	**251-1709**	1	PANEL AS (LH)	
	4	1	**7X-0603**	5	WASHER-HARD (9.9X35X2.5-MM THK)	

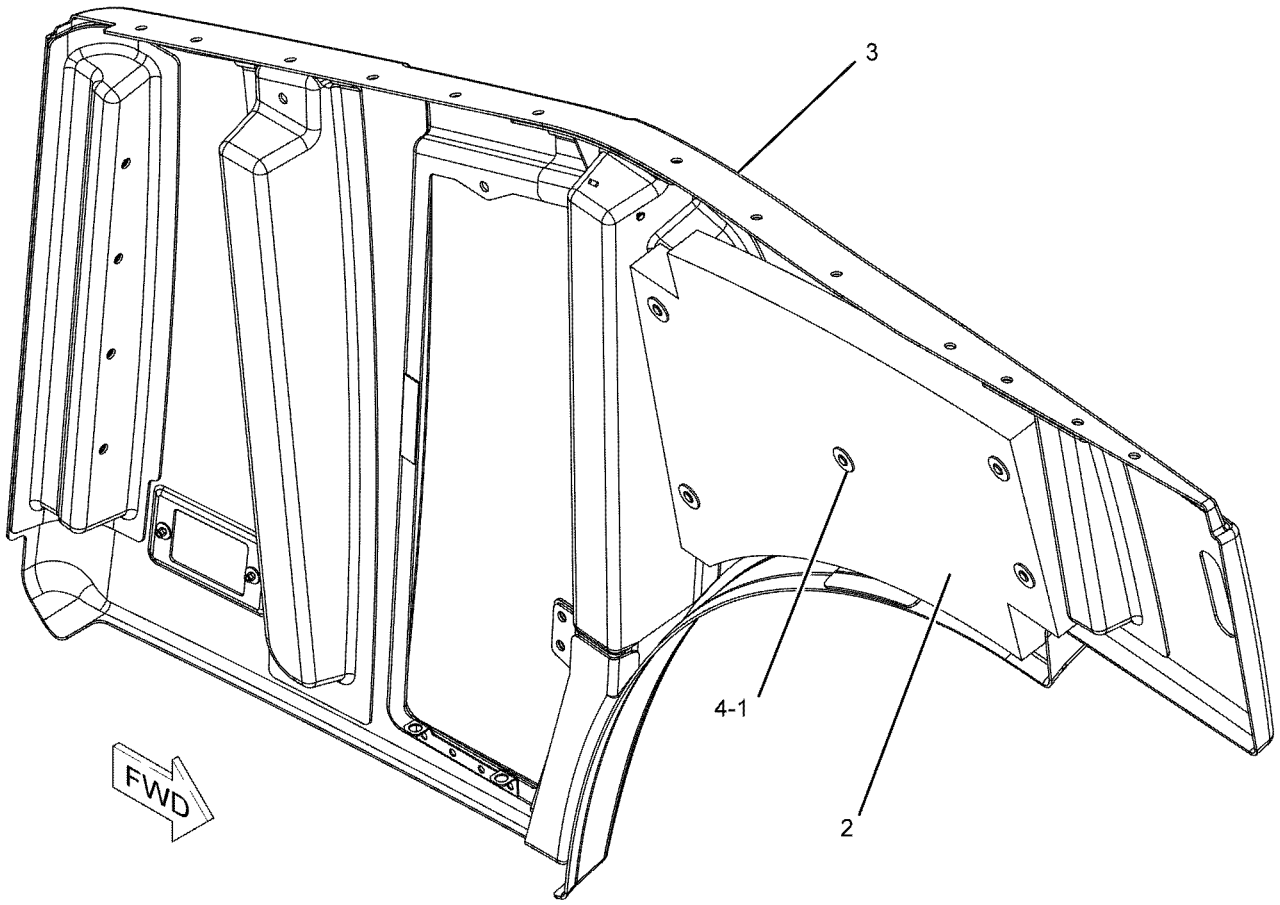

GRAPHIC #1 **<END>** g01133011

245-4083 PANEL GP-SIDE

S/N: JLX1-UP

PART OF 388-3768 SUPPRESSION GP-SOUND

SMCS-7267 **i03636802**

NOTE	REF NO	GRAPHIC REF	PART NUMBER	QTY	PART NAME 1 2 3 4 5 6 (PRODUCT LEVEL)	SEE PAGE
	1	1	**4E-1384**	4	BUMPER-CONICAL	
	2	1	**245-4094**	1	INSULATION	
	3	1	**253-2538**	1	PANEL-OUTER (LH)	
	4	1	**253-2539**	1	PANEL-OUTER (RH)	
	5	1	**294-0468**	1	PLATE AS	
	6	1	**294-0466**	1	PLATE AS	
	7	1	**253-2547**	1	SUPPORT AS (RH)	
	8	1	**253-2548**	1	SUPPORT AS (LH)	
	9	1	**253-2550**	1	PLATE AS	
	10	1	**253-2553**	1	PLATE AS	
	11	1	**253-2555**	1	PLATE AS-SUPPORT	
	12	1	**253-2556**	1	PLATE AS-SUPPORT	
M	13	1	**5C-7261**	4	NUT (M8X1.25-THD)	
	14	1	**7X-0589**	4	WASHER-HARD (12X28.5X5-MM THK)	
	15	1	**7X-7729**	38	WASHER (11X25X3-MM THK)	
M	16	1	**8T-0389**	14	LOCKNUT (M10X1.5-THD)	
M	17	1	**8T-4133**	4	NUT (M10X1.5-THD)	
M	18	1	**8T-4183**	6	BOLT (M12X1.75X40-MM)	
M	19	1	**8T-4186**	4	BOLT (M10X1.5X40-MM)	
M	20	1	**8T-4195**	18	BOLT (M10X1.5X30-MM)	
	21	1	**8T-4223**	6	WASHER-HARD (13.5X25.5X3-MM THK)	
J	23	1	**310-7066**		SEAL (960-MM EACH)	
E	24	1	**167-0608**		SEAL (27.5-CM EACH)	
E	24A	1	**167-0608**		SEAL (9.5-CM EACH)	
E	25	1	**246-0435**		SEAL (132-CM EACH)	
	26	1	**294-0470**	2	BRACKET AS	
M	27	1	**8C-8585**	2	SCREW-BUTTON HEAD (M10X1.5X20-MM)	

E - ORDER BY THE CENTIMETER
J - ORDER BY THE MILLIMETER
M - METRIC PART

245-4083 **PANEL GP-SIDE (*contd.*)** **i03636802**

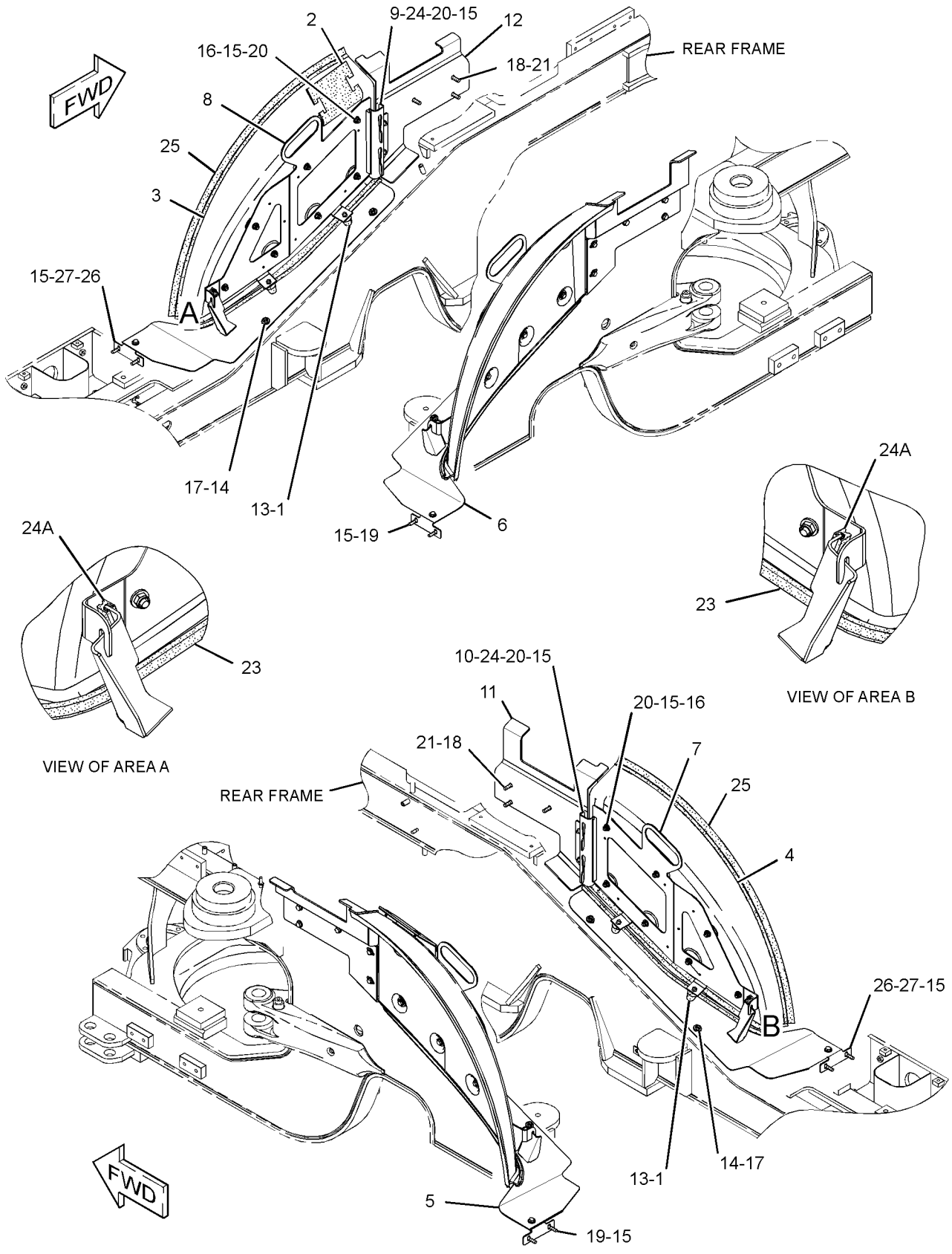

GRAPHIC #1 **<END>** g01322636

374-5370 PANEL GP-SIDE

S/N: JLX1-UP

PART OF 373-8237 CHASSIS AR

SMCS-7267 **i05353042**

NOTE	REF NO	GRAPHIC REF	PART NUMBER	QTY	PART NAME 1 2 3 4 5 6 (PRODUCT LEVEL)	SEE PAGE
	1	1	**373-4076**	1	PLATE	
	2	1	**4E-1384**	4	BUMPER-CONICAL	
	3	1	**245-4094**	1	INSULATION	
	4	1	**294-0466**	1	PLATE AS (RH)	
	5	1	**294-0468**	1	PLATE AS (LH)	
	6	1	**294-0470**	2	BRACKET AS	
	7	1	**373-4074**	1	SUPPORT AS (RH)	
	8	1	**373-4075**	1	SUPPORT AS (RH)	
	9	1	**373-4077**	1	SUPPORT AS (LH)	
	10	1	**373-4078**	1	SUPPORT AS (LH)	
	11	1	**373-4079**	1	SUPPORT AS (LH)	
	12	1	**376-6506**	1	PLATE-SUPPORT	
	13	1	**376-6507**	1	PLATE-SUPPORT	
L	14	1	**310-7066**		SEAL (960-MM EACH)	
E	15	1	**246-0435**		SEAL (126-CM EACH)	
	16	1	**259-2627**	6	BOLT (M12X1.75X40-MM)	
	17	1	**8T-4223**	6	WASHER-HARD (13.5X25.5X3-MM THK)	
	18	1	**368-5078**	2	BOLT (M12X1.75X30-MM)	
M	19	1	**8T-4186**	4	BOLT (M10X1.5X40-MM)	
M	20	1	**8T-4195**	12	BOLT (M10X1.5X30-MM)	
	21	1	**368-5090**	28	WASHER-HARD (11X25X3-MM THK)	
	22	1	**368-5091**	2	WASHER-HARD (13.5X30X4-MM THK)	
M	23	1	**5C-7261**	4	NUT (M8X1.25-THD)	
	24	1	**7X-0589**	4	WASHER-HARD (12X28.5X5-MM THK)	
	25	1	**7X-7729**	2	WASHER (11X25X3-MM THK)	
M	26	1	**8C-8585**	2	SCREW-BUTTON HEAD (M10X1.5X20-MM)	
M	27	1	**8T-0389**	12	LOCKNUT (M10X1.5-THD)	
M	28	1	**8T-4133**	4	NUT (M10X1.5-THD)	
E	29	1	**167-0608**		SEAL (9-CM EACH)	
E	29A	1	**167-0608**		SEAL (35.5-CM)	
E	29B	1	**167-0608**		SEAL (40.5-CM)	

E - ORDER BY THE CENTIMETER
L - ORDER BY THE MILLIMETER
M - METRIC PART

374-5370 **PANEL GP-SIDE (*contd.*)** **i05353042**

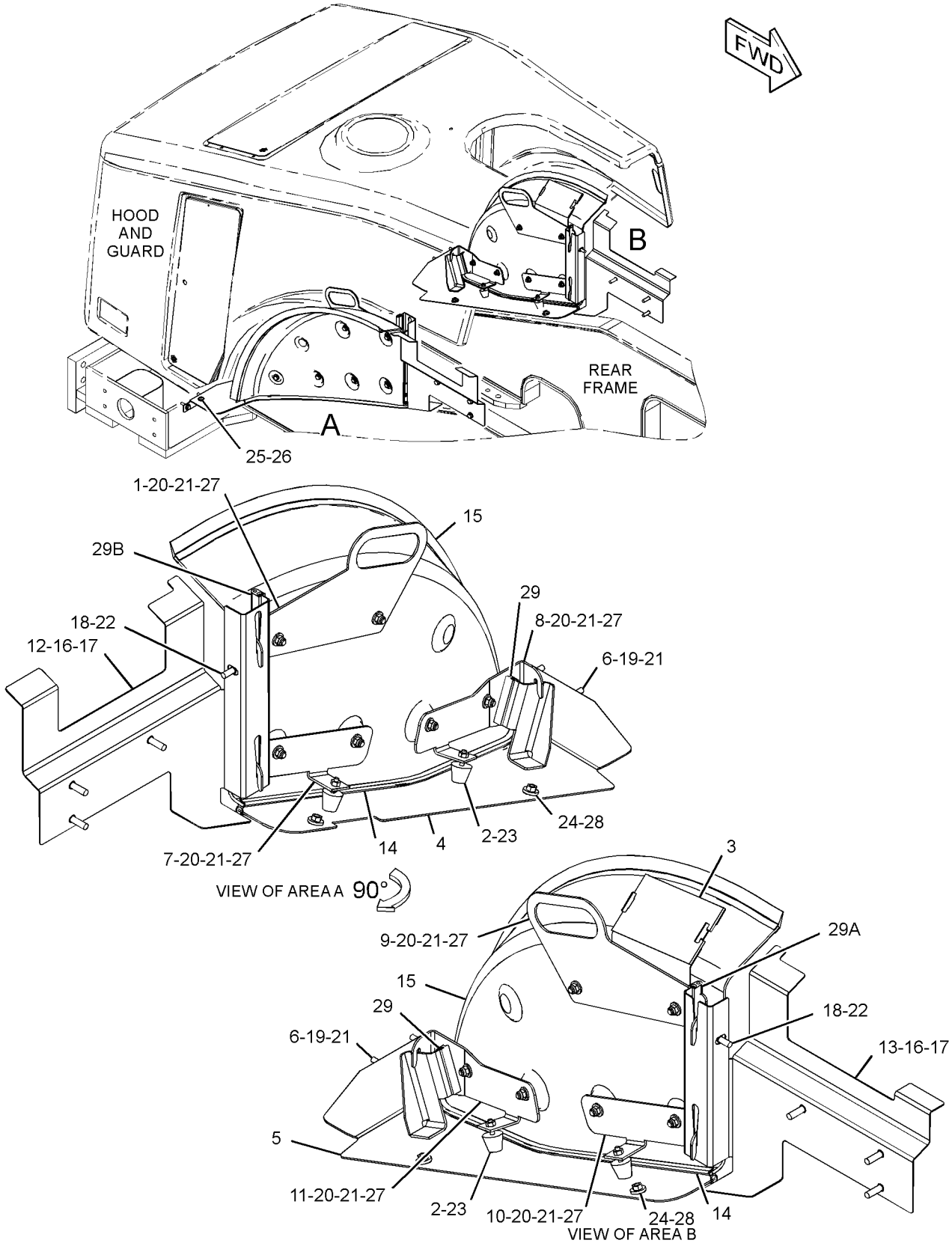

GRAPHIC #1 **<END>** g03410653

388-3762 PLATFORM GP-SERVICE

S/N: JLX1-UP

PART OF 373-8264 PLATFORM AR

SMCS-7253, 7277 **i04943459**

NOTE	REF NO	GRAPHIC REF	PART NUMBER	QTY	PART NAME 1 2 3 4 5 6 (PRODUCT LEVEL)	SEE PAGE
	1	1	**259-2627**	3	BOLT (M12X1.75X40-MM)	
	2	1	**271-6472**	1	STEP	
	3	1	**318-0536**	1	PLATE-TREAD	
	4	1	**338-0627**	1	HANDRAIL AS	
	5	1	*382-9199*	1	HARDWARE GP-REAR FRAME	
		1	**132-6964**	1	PLATE	
		1	**254-0004**	1	BRACKET AS	
		1	**276-0730**	1	BRACKET AS	
	6	1	**7X-3391**	3	WASHER-HARD (13.5X32X6-MM THK)	
	7	1	**7X-7729**	4	WASHER (11X25X3-MM THK)	
	8	1	**8T-4121**	2	WASHER-HARD (11X21X2.5-MM THK)	
M	9	1	**8T-4137**	6	BOLT (M10X1.5X20-MM)	

M - METRIC PART

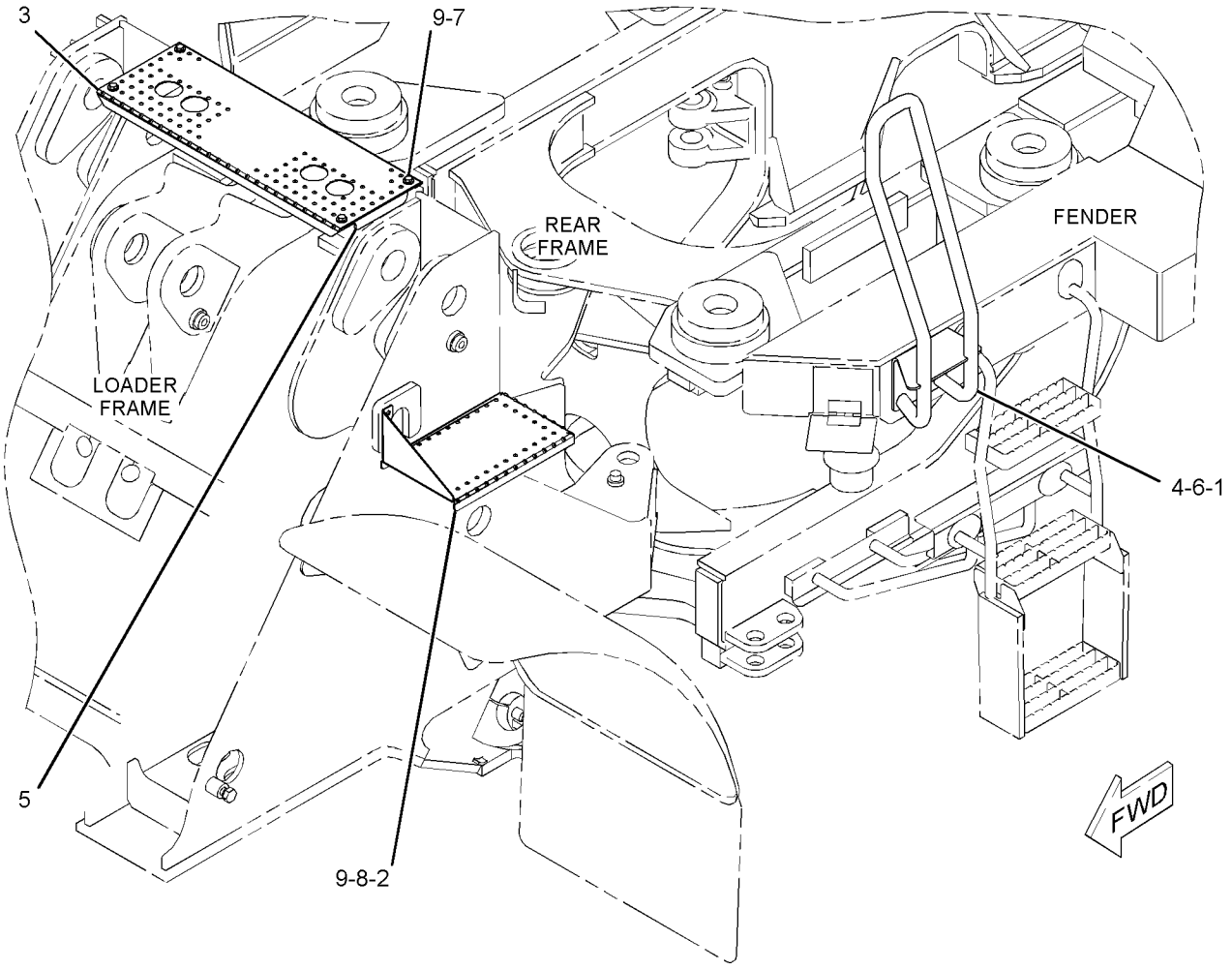

GRAPHIC #1 **<END>** g03137149

281-0622 PUMP & MTG GP-LUBRICATION

S/N: JLX1-UP

PART OF 373-8269, 373-8294, 386-0131 LUBRICATION AR-AUTOMATIC

SMCS-7540 **i03653054**

NOTE	REF NO	GRAPHIC REF	PART NUMBER	QTY	PART NAME 1 2 3 4 5 6 (PRODUCT LEVEL)	SEE PAGE
CY	1	1	**341-8583**	1	PUMP GP-LUBRICATION (AUTOMATIC LUBRICATION CONTROL)	605
	2	1	**276-3899**	1	SUPPORT AS-PUMP	
	3	1	**8T-4121**	4	WASHER-HARD (11X21X2.5-MM THK)	
M	4	1	**8T-4195**	4	BOLT (M10X1.5X30-MM)	
	5	1	**8T-4224**	4	WASHER-HARD (8.8X16X2-MM THK)	
M	6	1	**8T-6912**	4	BOLT (M8X1.25X50-MM)	

C - CHANGE FROM PREVIOUS TYPE
M - METRIC PART
Y - SEPARATE ILLUSTRATION

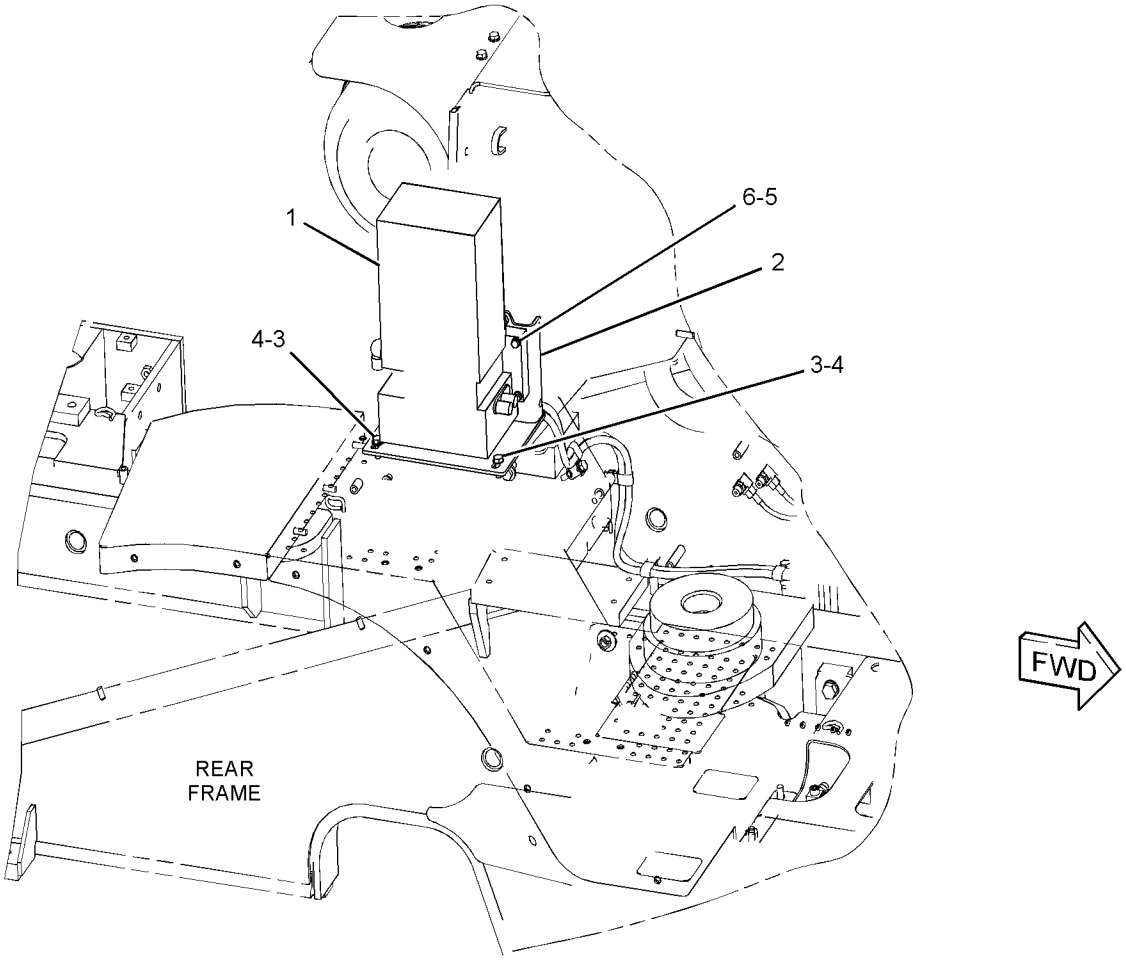

GRAPHIC #1 **<END>** g01273253

415-7191 PUMP & MTG GP-LUBRICATION

S/N: JLX1-UP

CUSTOM

PART OF 419-9845 LUBRICATION AR-AUTOMATIC

SMCS-7540 **i05839956**

NOTE	REF NO	GRAPHIC REF	PART NUMBER	QTY	PART NAME 1 2 3 4 5 6 (PRODUCT LEVEL)	SEE PAGE
	1	1	**276-3899**	1	SUPPORT AS-PUMP	
	2	1	**301-8262**	1	GUARD AS	
Y	3	1	**341-8583**	1	PUMP GP-LUBRICATION (AUTOMATIC LUBRICATION CONTROL)	605
	4	1	**8T-4121**	6	WASHER-HARD (11X21X2.5-MM THK)	
M	5	1	**8T-4136**	2	BOLT (M10X1.5X25-MM)	
M	6	1	**8T-4195**	4	BOLT (M10X1.5X30-MM)	
	7	1	**8T-4224**	4	WASHER-HARD (8.8X16X2-MM THK)	
M	8	1	**8T-6912**	4	BOLT (M8X1.25X50-MM)	

M - METRIC PART
Y - SEPARATE ILLUSTRATION

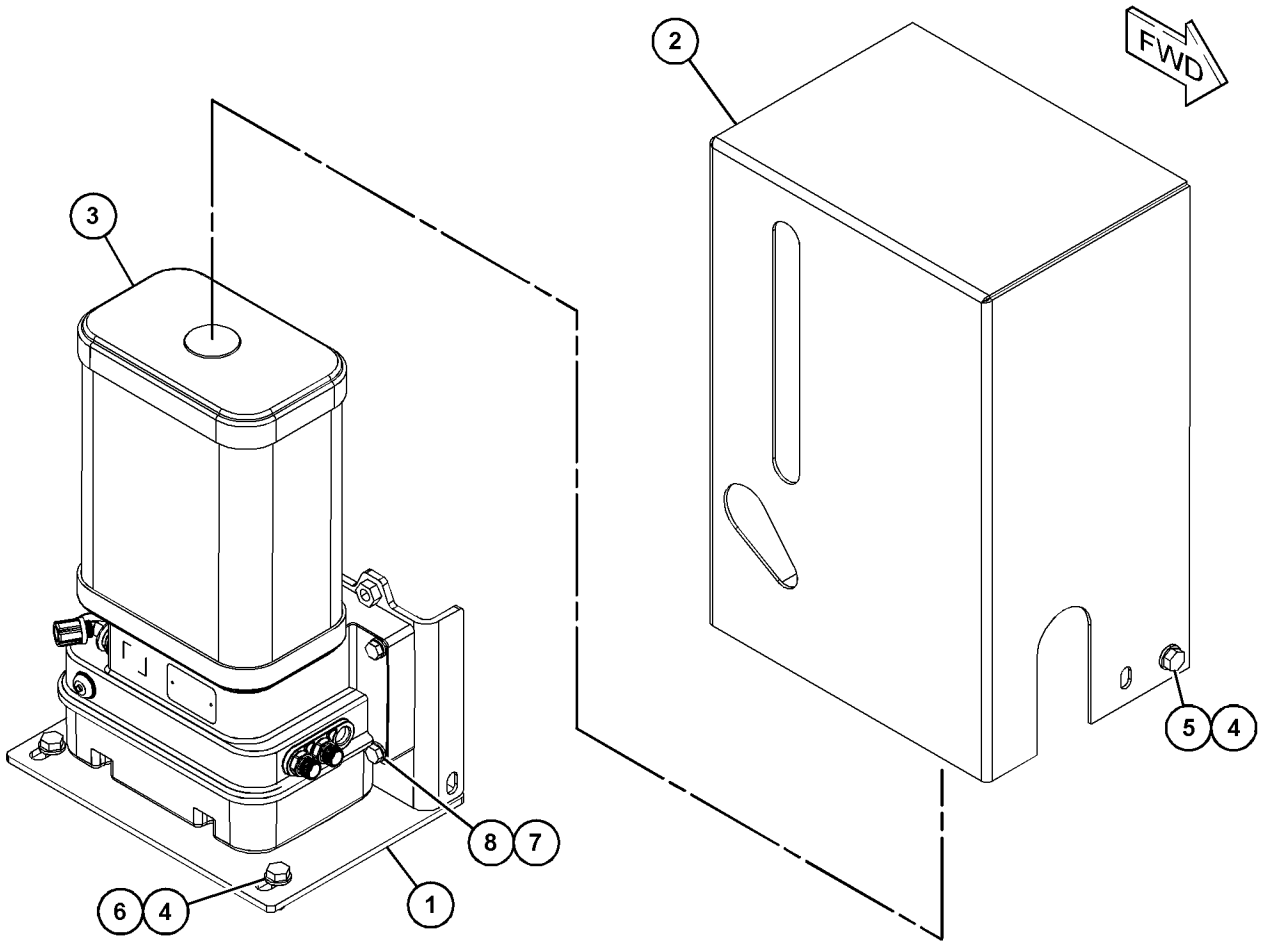

GRAPHIC #1 **<END>** g03724455

341-8583 PUMP GP-LUBRICATION—AUTOMATIC LUBRICATION CONTROL

S/N: JLX1-UP

PART OF 281-0622, 415-7191 PUMP & MTG GP-LUBRICATION

SMCS-7516, 7540

i04878077

NOTE	REF NO	GRAPHIC REF	PART NUMBER	QTY	PART NAME 1 2 3 4 5 6 (PRODUCT LEVEL)	SEE PAGE
	1	1	**196-1047**	1	COVER GP (LUBRICATION TANK)	
	2	1	**196-1049**	1	GUIDE ROD	
	3	1	**196-1053**	1	COVER GP (LUBRICATION PUMP)	
	4	1	**196-1056**	1	SEAL-O-RING	
	5	1	**196-1062**	1	FILTER AS-GREASE	
	6	1	**196-1066**	1	HARNESS AS-CONTROL (AUTOMATIC LUBRICATION)	
	7	1	**196-1070**	2	CONNECTOR	
	8	1	**196-1074**	1	BOARD AS-CIRCUIT	
	9	1	**355-2253**	1	PUMP-LUBRICATION	
	10	1	**355-2254**	1	VALVE AS	
	11	1	**355-2255**	1	SENSOR AS-LIQUID LEVEL (GREASE)	
	12	1	**355-2260**	1	SWITCH AS-PUSH BUTTON (AUTOMATIC LUBRICATION PUMP)	
	13	1	**355-2265**	1	TANK AS-LUBRICATION	
	14	1	**196-1054**	1	SEAL	
					PARTS SHOWN IN GRAPHIC(S) WITHOUT A REFERENCE NUMBER ARE NOT SERVICED SEPARATELY	

341-8583 **PUMP GP-LUBRICATION (*contd.*)** **i04878077**

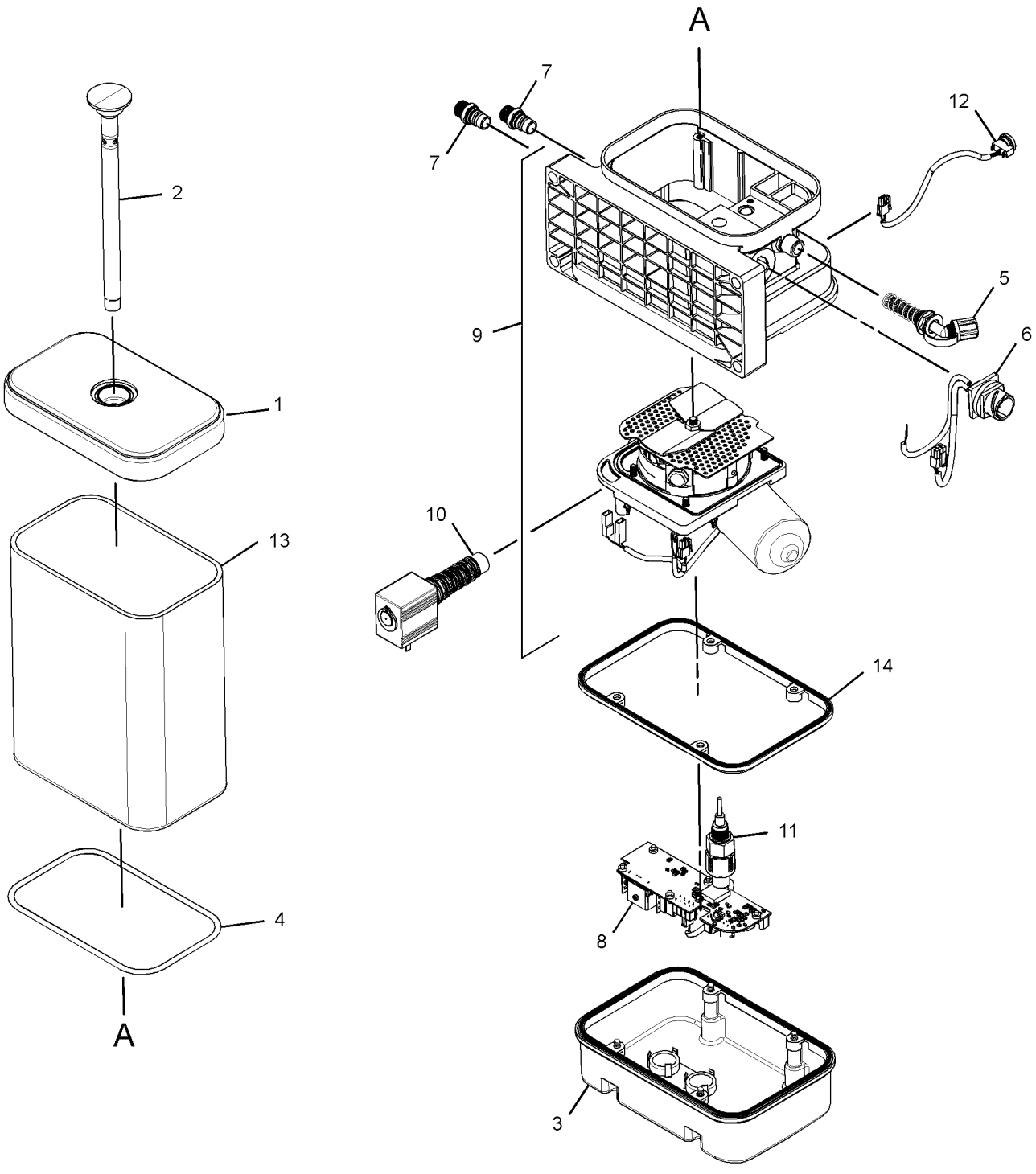

GRAPHIC #1 **<END>** g03038236

307-7317 SHIELD GP-ENGINE COMPARTMENT

S/N: JLX1-UP

PART OF 378-7472 COOLING GP-SUPPLEMENTAL

SMCS-7154, 7263 **i04250251**

NOTE	REF NO	GRAPHIC REF	PART NUMBER	QTY	PART NAME 1 2 3 4 5 6 (PRODUCT LEVEL)	SEE PAGE
	1	1	**1V-6688**	1	GROMMET	
	2	1	**190-1125**	1	GROMMET	
	3	1	**228-7549**	1	GROMMET	
	4	1	**262-0263**	1	SUPPORT AS (RH)	
	5	1	**262-0264**	1	HANDRAIL AS (LH)	
	6	1	**262-0265**	1	BAFFLE	
	7	1	**262-0266**	1	STRIP	
	8	1	**307-7316**	1	SHIELD	
	9	1	**5P-1076**	4	WASHER-HARD (13.5X30X4-MM THK)	
	10	1	**5P-9212**	2	PLUG	
	11	1	**7X-7729**	4	WASHER (11X25X3-MM THK)	
M	12	1	**8T-4133**	7	NUT (M10X1.5-THD)	
M	13	1	**8T-4183**	4	BOLT (M12X1.75X40-MM)	
M	14	1	**8T-4186**	4	BOLT (M10X1.5X40-MM)	
M	15	1	**8T-4195**	3	BOLT (M10X1.5X30-MM)	
	16	1	**8T-4226**	7	WASHER-PLATED (10.5X45X3-MM THK)	
D	17	1	**5P-7211**		SEAL (1.3-M)	
E	18	1	**300-7318**		SEAL (124.5-CM EACH)	
E	18A	1	**300-7318**		SEAL (115-CM)	

D - ORDER BY THE METER
E - ORDER BY THE CENTIMETER
M - METRIC PART

307-7317 **SHIELD GP-ENGINE COMPARTMENT (*contd.*)** **i04250251**

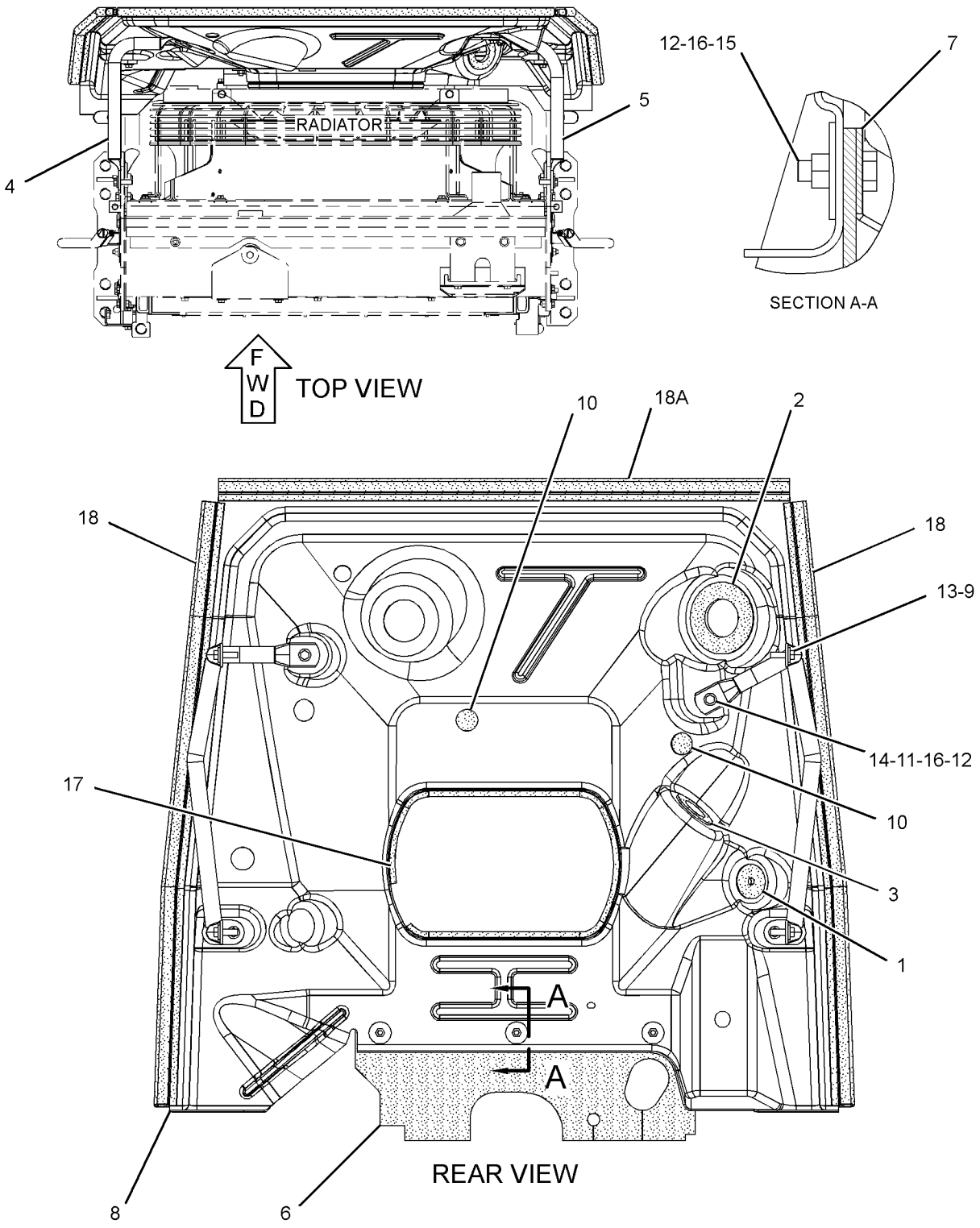

GRAPHIC #1 **<END>** g02173714

382-5732 SHIELD GP-ENGINE COMPARTMENT

S/N: JLX1-UP

PART OF 373-8237 CHASSIS AR

SMCS-7154, 7263 **i04759095**

NOTE	REF NO	GRAPHIC REF	PART NUMBER	QTY	PART NAME 1 2 3 4 5 6 (PRODUCT LEVEL)	SEE PAGE
	1	1	**190-1125**	1	GROMMET	
	2	1	**228-7549**	1	GROMMET	
	3	1	**262-0262**	1	SHIELD	
	4	1	**262-0263**	1	SUPPORT AS (RH)	
	5	1	**262-0264**	1	HANDRAIL AS (LH)	
	6	1	**262-0266**	1	STRIP	
	7	1	**382-1187**	1	BAFFLE	
	8	1	**1V-6688**	1	GROMMET	
	9	1	**5P-1076**	8	WASHER-HARD (13.5X30X4-MM THK)	
	10	1	**5P-9212**	1	PLUG	
	11	1	**7X-7729**	4	WASHER (11X25X3-MM THK)	
M	12	1	**8T-4133**	7	NUT (M10X1.5-THD)	
M	13	1	**8T-4183**	4	BOLT (M12X1.75X40-MM)	
M	14	1	**8T-4186**	4	BOLT (M10X1.5X40-MM)	
M	15	1	**8T-4195**	3	BOLT (M10X1.5X30-MM)	
	16	1	**8T-4226**	7	WASHER-PLATED (10.5X45X3-MM THK)	
M	17	1	**8T-4244**	4	NUT (M12X1.75-THD)	
E	18	1	**300-7318**		SEAL (115-CM)	
E	18A	1	**300-7318**		SEAL (124.5-CM EACH)	
H	19	1	**308-9131**		SEAL (1225-MM)	

E - ORDER BY THE CENTIMETER
H - ORDER BY THE MILIMETER
M - METRIC PART

382-5732 **SHIELD GP-ENGINE COMPARTMENT (*contd.*)** **i04759095**

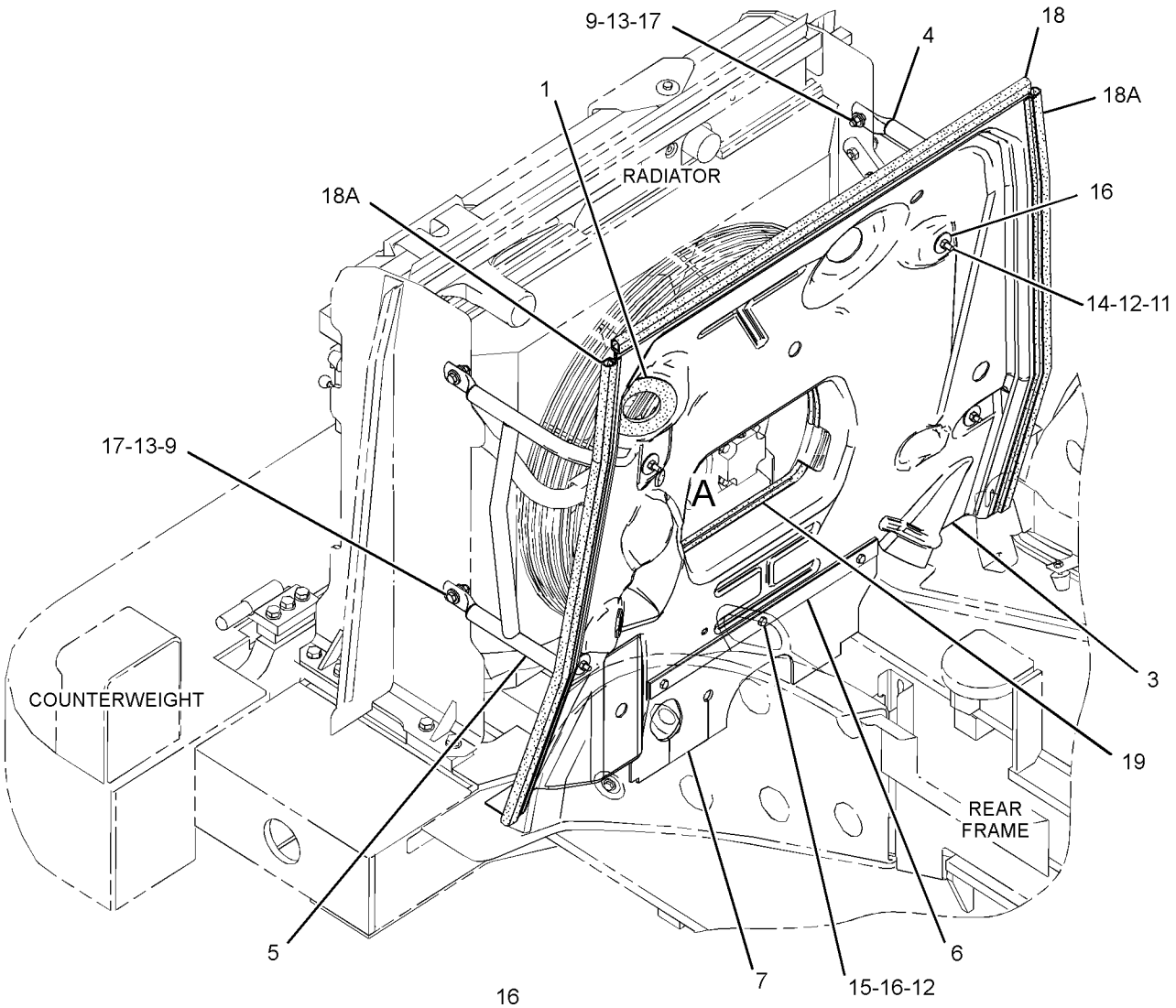

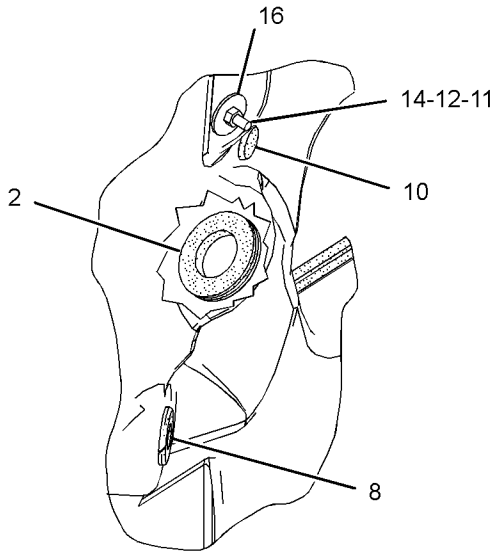

VIEW OF AREA A



GRAPHIC #1 **<END>** g02859618

376-6511 STEP GP

S/N: JLX1-UP

PART OF 372-4849 LADDER GP

SMCS-7254 **i05823042**

NOTE	REF NO	GRAPHIC REF	PART NUMBER	QTY	PART NAME 1 2 3 4 5 6 (PRODUCT LEVEL)	SEE PAGE
	1	1	**397-9301**	4	WASHER-HARD (11.5X20X15-MM THK)	
M	2	1	**8T-4186**	4	BOLT (M10X1.5X40-MM)	
	3	1	**234-5107**	2	SUPPORT-STEP (RUBBER)	
	4	1	**398-3229**	1	STEP AS	
M		1	**8T-3490**	4	NUT-WELD (M10X1.5-THD)	
	5	1	**8T-4121**	4	WASHER-HARD (11X21X2.5-MM THK)	
	6	1	**234-3545**	2	PLATE	

M - METRIC PART

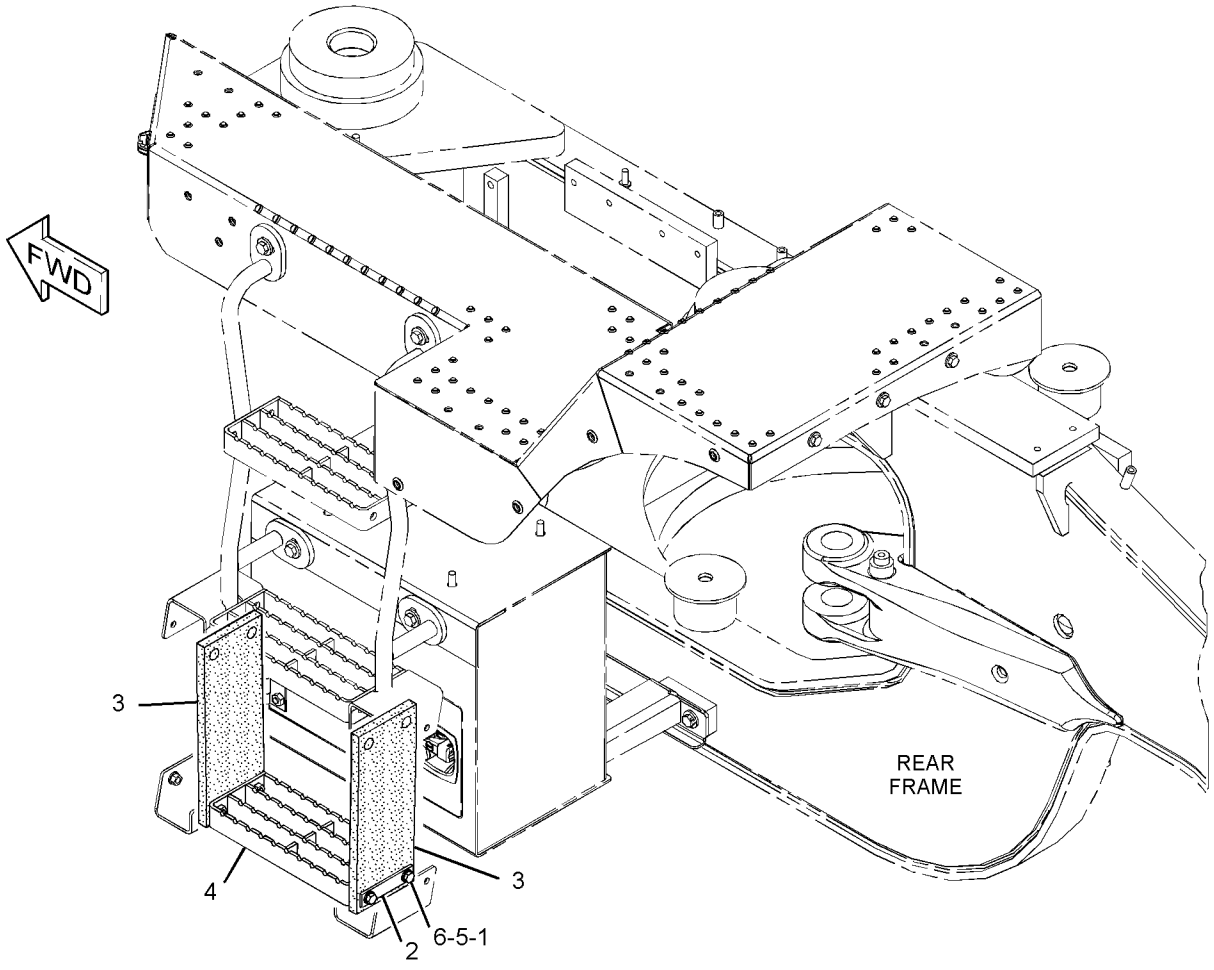

GRAPHIC #1 **<END>** g02897645

376-6512 STEP GP

S/N: JLX1-UP

PART OF 372-4849 LADDER GP, 387-2083 STEP GP

SMCS-7254 **i05823053**

NOTE	REF NO	GRAPHIC REF	PART NUMBER	QTY	PART NAME 1 2 3 4 5 6 (PRODUCT LEVEL)	SEE PAGE
	1	1	**397-9301**	8	WASHER-HARD (11.5X20X15-MM THK)	
	2	1	**234-5107**	2	SUPPORT-STEP (RUBBER)	
	3	1	**246-6727**	2	BRACKET AS	
	4	1	**398-3229**	1	STEP AS	
M		1	**8T-3490**	4	NUT-WELD (M10X1.5-THD)	
	5	1	**8T-4121**	8	WASHER-HARD (11X21X2.5-MM THK)	
M	6	1	**8T-4186**	8	BOLT (M10X1.5X40-MM)	
	7	1	**234-3545**	4	PLATE	

M - METRIC PART

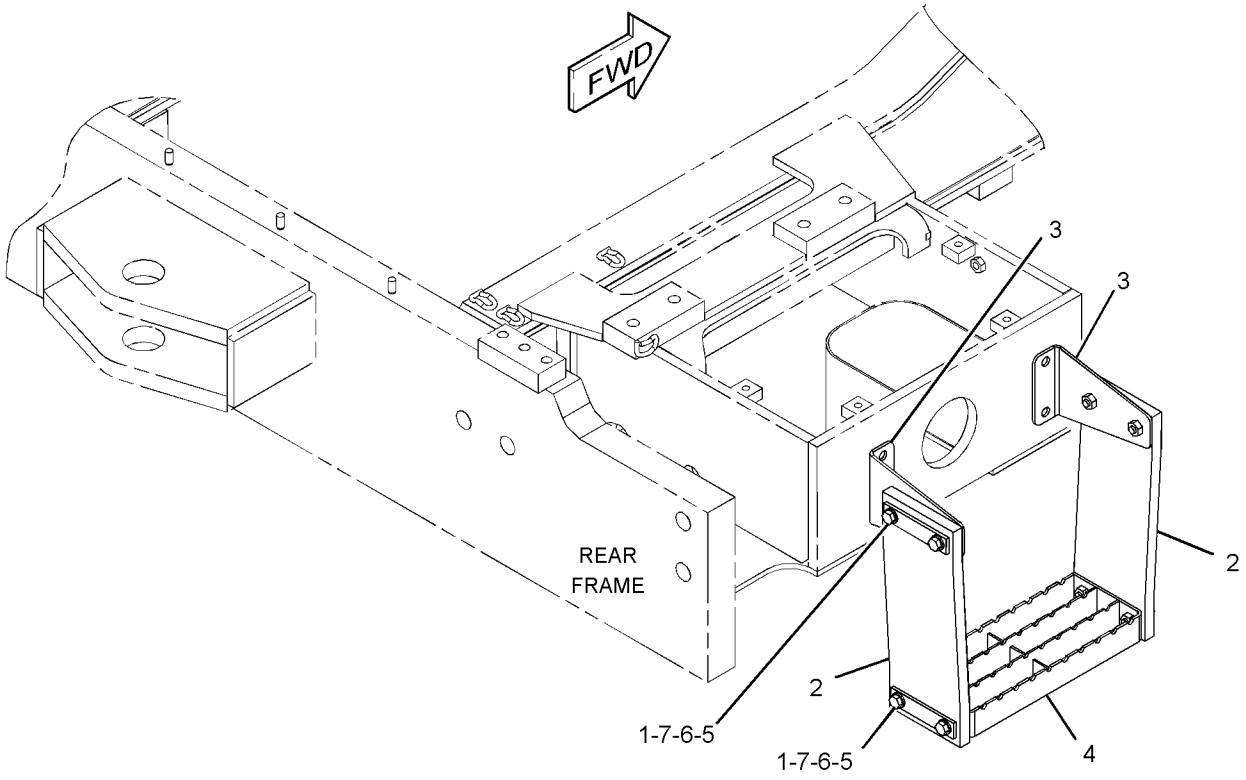

GRAPHIC #1 **<END>** g03719609

387-2083 STEP GP–RH

S/N: JLX1-UP

PART OF 386-0130 OPTION AR-REGIONAL

SMCS-7254 **i04773926**

NOTE	REF NO	GRAPHIC REF	PART NUMBER	QTY	PART NAME 1 2 3 4 5 6 (PRODUCT LEVEL)	SEE PAGE
Y	1	1	*376-6512*	1	STEP GP	612
	2	1	**259-2627**	4	BOLT (M12X1.75X40-MM)	
	3	1	**279-6632**	4	WASHER (13.5X25.5X3-MM THK)	

Y - SEPARATE ILLUSTRATION

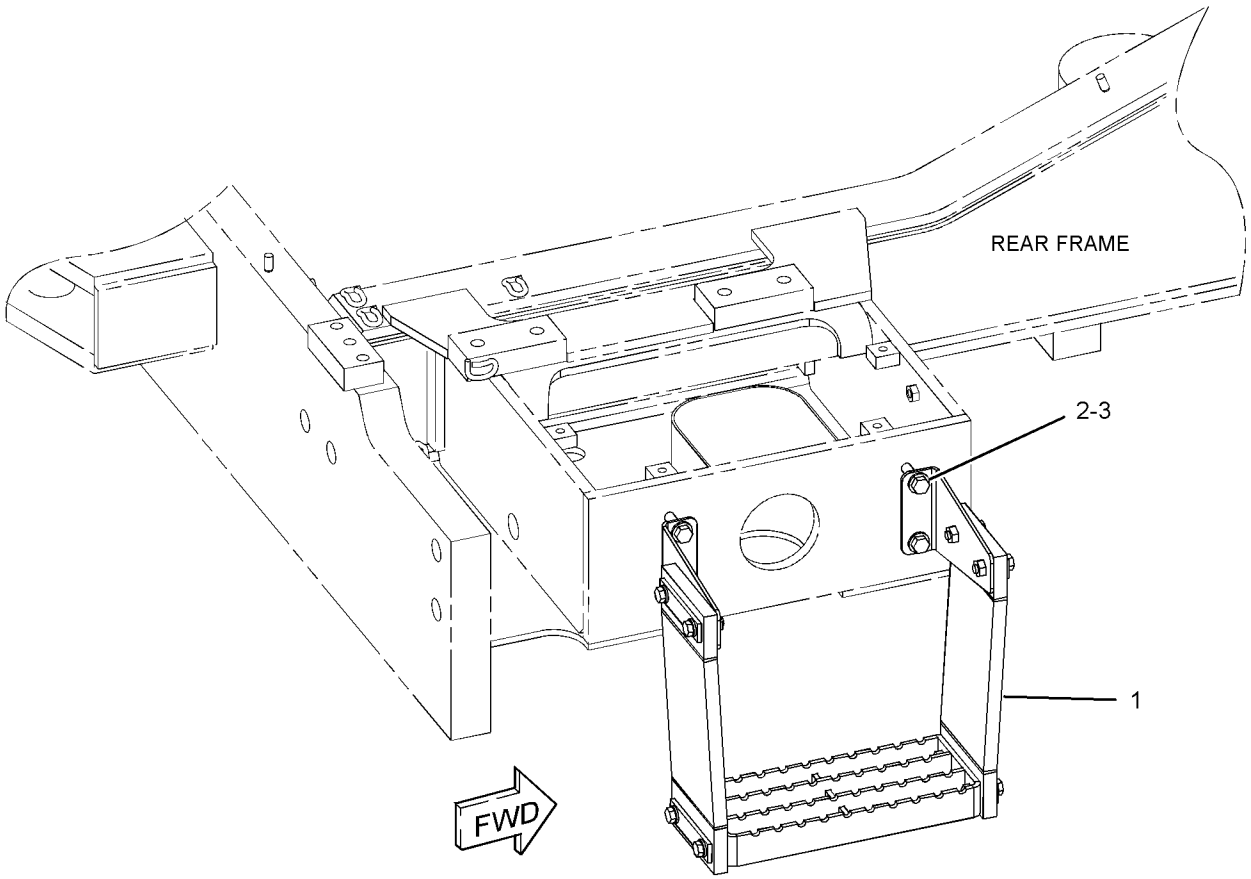

GRAPHIC #1 **<END>** g02888638

237-0447 SUPPORT GP-AIR INLET

S/N: JLX1-UP

PART OF 373-8237 CHASSIS AR

SMCS-1087 **i05333791**

NOTE	REF NO	GRAPHIC REF	PART NUMBER	QTY	PART NAME 1 2 3 4 5 6 (PRODUCT LEVEL)	SEE PAGE
	1	1	**243-5828**	1	BRACKET AS	
	2	1	**257-5064**	2	PLATE	
	3	1	**8T-4121**	13	WASHER-HARD (11X21X2.5-MM THK)	
M	4	1	**8T-4133**	4	NUT (M10X1.5-THD)	
M	5	1	**8T-4136**	12	BOLT (M10X1.5X25-MM)	
M	6	1	**8T-4196**	1	BOLT (M10X1.5X35-MM)	
S	7	1	**308-9131**		SEAL (450-MM EACH)	
	8	1	**8T-7934**	4	WASHER-HARD (11X21X5-MM THK)	

M - METRIC PART
S - ORDER BY THE MILLIMETERS

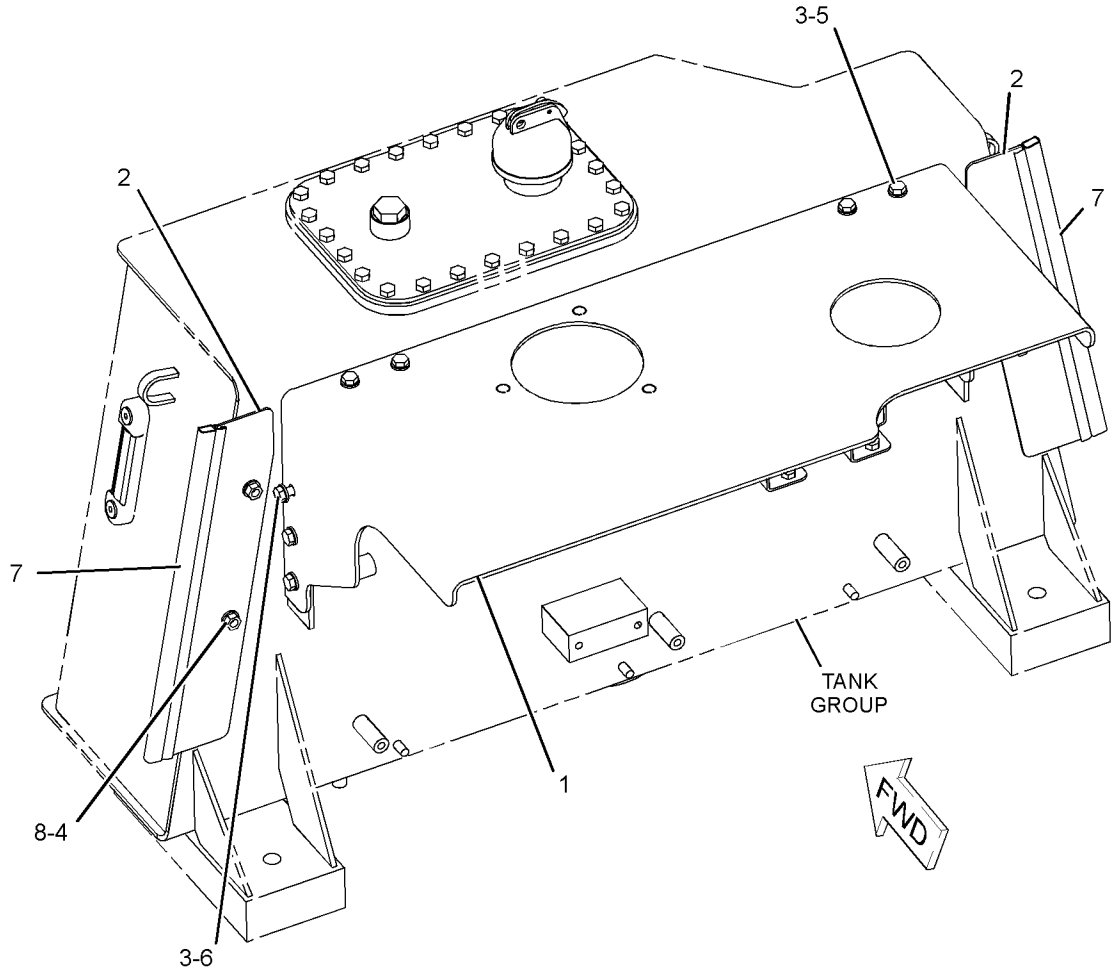

GRAPHIC #1 **<END>** g03619878

351-9911 SUPPORT GP-HOOD

S/N: JLX1-UP

PART OF 292-6000 HOOD & GUARD GP

SMCS-7251 **i03963871**

NOTE	REF NO	GRAPHIC REF	PART NUMBER	QTY	PART NAME 1 2 3 4 5 6 (PRODUCT LEVEL)	SEE PAGE
	1	1	**251-4760**	1	SUPPORT AS	
Y	2	1	*271-7220*	1	GRILL GP-RADIATOR	541
D	3	1	**6V-6604**	1	SEAL (0.8-M)	
E	4	1	**190-6616**	127	SEAL (127-CM)	
J	5	1	**310-7066**		SEAL (280-MM EACH)	
J	5A	1	**310-7066**		SEAL (1270-MM)	

D - ORDER BY THE METER
E - ORDER BY THE CENTIMETER
J - ORDER BY THE MILIMETER
Y - SEPARATE ILLUSTRATION

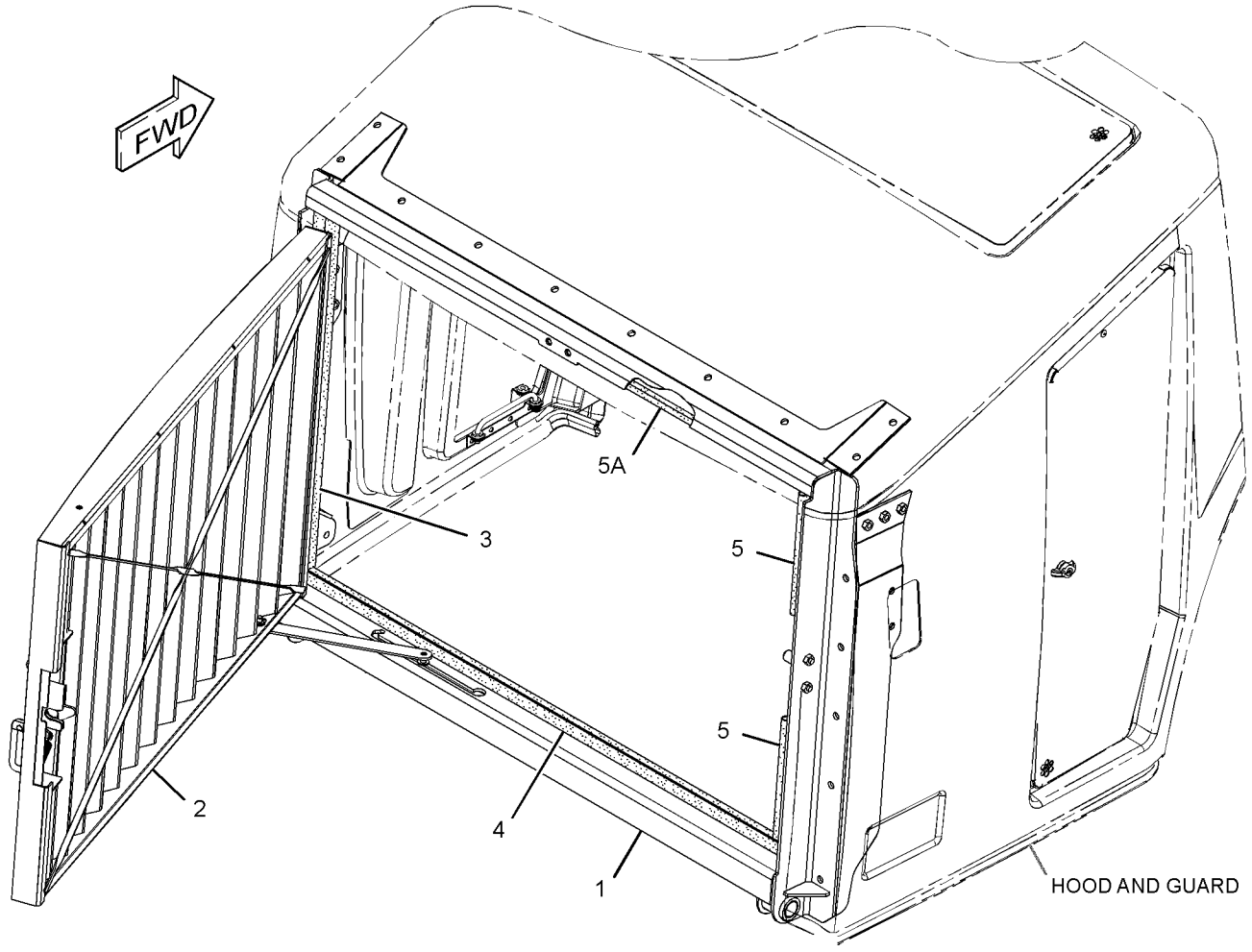

GRAPHIC #1 **<END>** g02175518

382-6648 SUPPORT GP-VALVE & FILTER

S/N: JLX1-100

PART OF 373-8237 CHASSIS AR

SMCS-4263, 5068 **i04759114**

NOTE	REF NO	GRAPHIC REF	PART NUMBER	QTY	PART NAME 1 2 3 4 5 6 (PRODUCT LEVEL)	SEE PAGE
	1	1	**2G-1388**	1	LATCH	
	2	1	**9C-5336**	2	SPACER (10.2X22X21-MM THK)	
Y	3	1	*382-6647*	1	BOX GP-SERVICE CENTER	1198
	4	1	**7X-0515**	10	WASHER-HARD (17X35X5-MM THK)	
M	5	1	**7X-2553**	10	BOLT (M16X2X40-MM)	

M - METRIC PART
Y - SEPARATE ILLUSTRATION

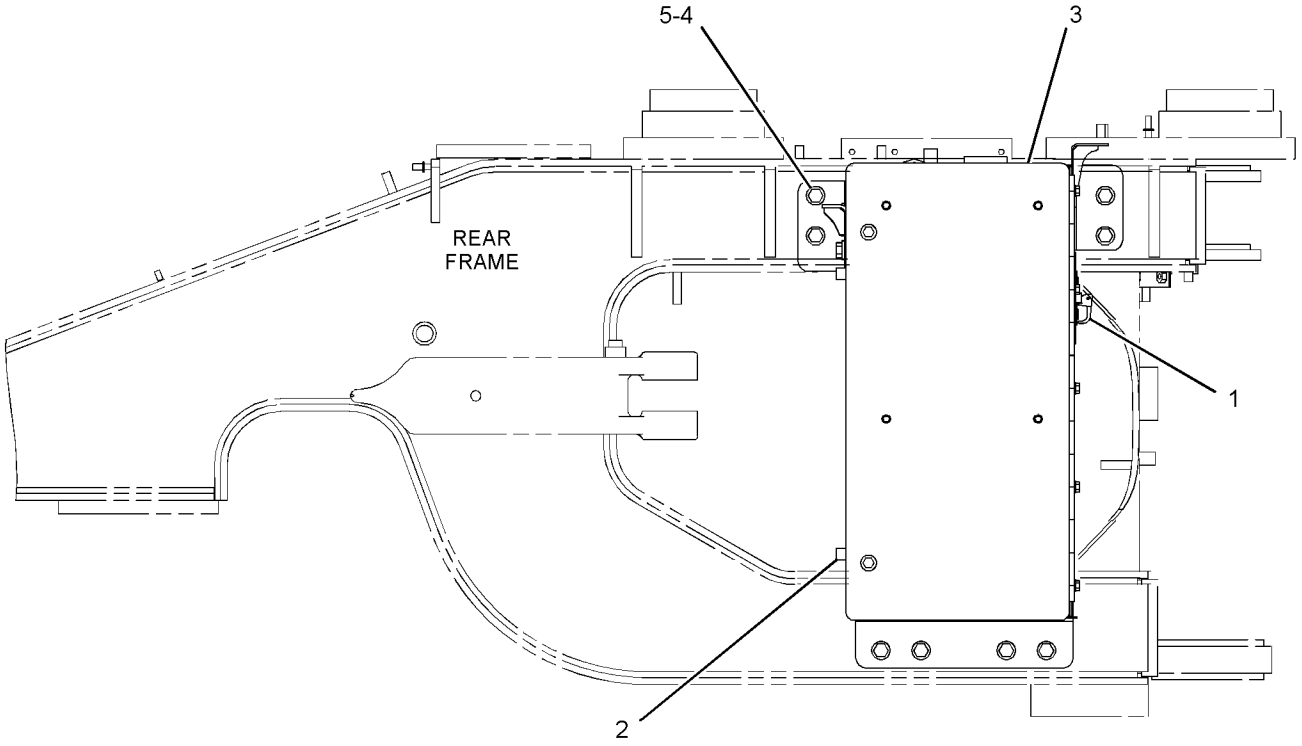

RIGHT SIDE VIEW

GRAPHIC #1 **<END>** g02860677

382-6648 SUPPORT GP-VALVE & FILTER

S/N: JLX101-UP

PART OF 373-8237 CHASSIS AR

SMCS-4263, 5068 **i05285571**

NOTE	REF NO	GRAPHIC REF	PART NUMBER	QTY	PART NAME 1 2 3 4 5 6 (PRODUCT LEVEL)	SEE PAGE
CM	1	1	**7X-2553**	8	BOLT (M16X2X40-MM)	
C	2	1	**128-8678**	2	SPACER (10.5X25X15-MM THK)	
CY	3	1	*394-6676*	1	BOX GP-SERVICE CENTER	1200
C	4	1	**7X-0515**	8	WASHER-HARD (17X35X5-MM THK)	

C - CHANGE FROM PREVIOUS TYPE
M - METRIC PART
Y - SEPARATE ILLUSTRATION

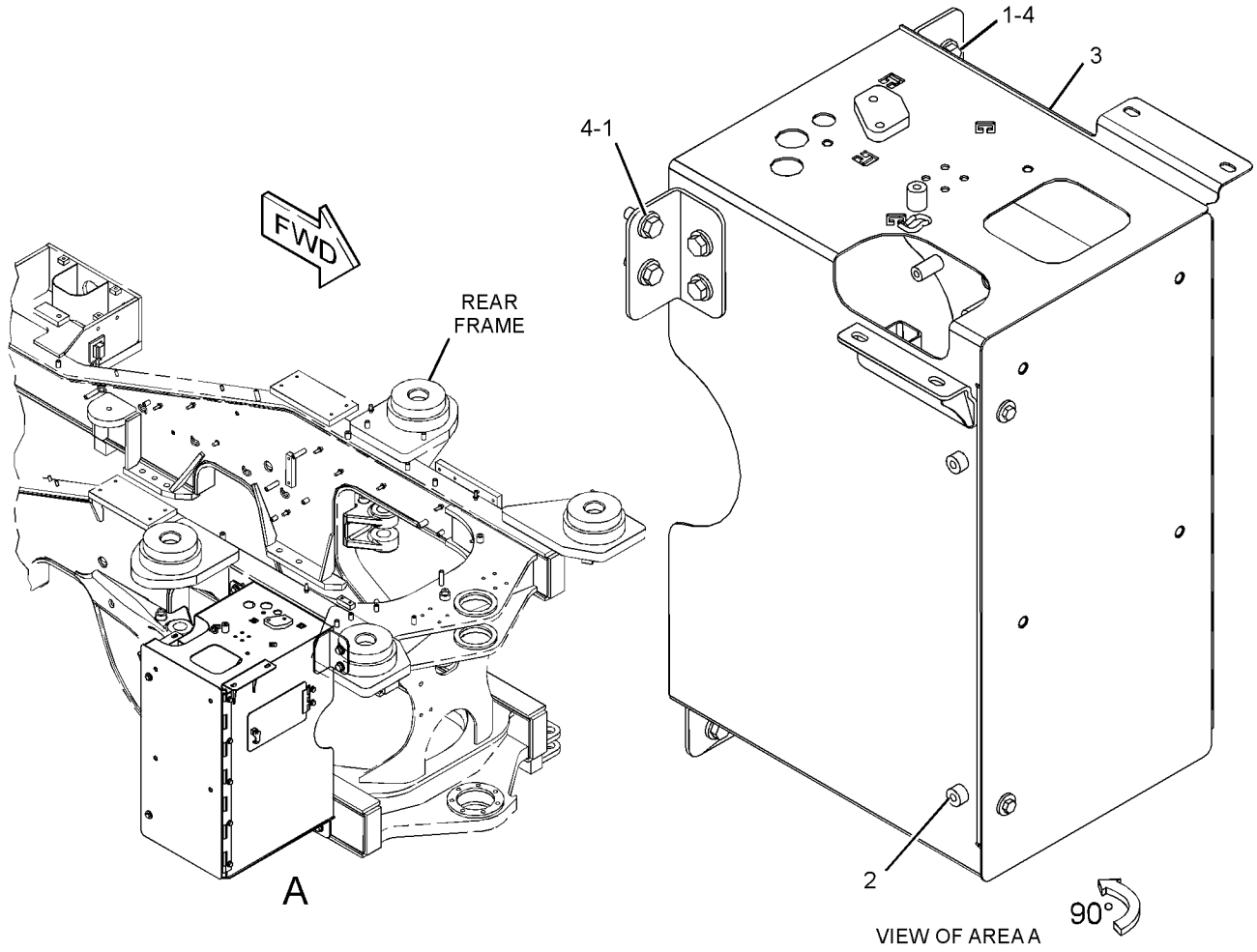

GRAPHIC #1 **<END>** g03377262

391-6269 SUPPRESSION AR-SOUND

S/N: JLX1-UP

PART OF 373-8287 CONVERSION AR-MACHINE

SMCS-7261 **i05285777**

NOTE	PART NUMBER	QTY	PART NAME 1 2 3 4 5 6 (PRODUCT LEVEL)	SEE PAGE
Y	*260-1533*	1	HARDWARE GP-REAR FRAME (SOUND SUPPRESSION)	552
Y	*388-3768*	1	SUPPRESSION GP-SOUND	619
Y	*391-4219*	1	SUPPRESSION GP-SOUND	1088
	389-3204	1	SUPPRESSION GP-SOUND (REAR WINDOW)	
	390-4286	1	GLASS	

Y - SEPARATE ILLUSTRATION

<END>

388-3768 SUPPRESSION GP-SOUND

S/N: JLX1-UP

NACD

PART OF 391-6269 SUPPRESSION AR-SOUND

SMCS-7076, 7261 **i05280816**

NOTE	REF NO	GRAPHIC REF	PART NUMBER	QTY	PART NAME 1 2 3 4 5 6 (PRODUCT LEVEL)	SEE PAGE
	1	2	**131-8641**	1	INSULATION	
	2	2	**131-8642**	1	INSULATION	
	3	1,2	**133-1644**	22	FASTENER	
	4	2	**140-6197**	1	INSULATION	
	5	2	**140-8101**	1	INSULATION	
	6	2	**151-2171**	2	INSULATION	
	7	2	**195-5826**	1	INSULATION	
Y	8	1	*245-4083*	1	PANEL GP-SIDE	598
	9	1	**246-1891**	1	INSULATION	
	10	2	**246-1892**	1	INSULATION	
	11	1	**246-2392**	1	COVER AS (LH)	
	12	2	**246-4619**	1	INSULATION	
	13	2	**251-9739**	1	COVER AS	
	14	1	**251-9746**	1	GUARD AS-HITCH	
		1	**160-1004**	3	RIVET	
	15	1	**251-9750**	1	PLATE (RH)	
	16	2	**261-5695**	1	INSULATION	
	17	2	**261-5696**	1	INSULATION	
	18	2	**261-5697**	1	INSULATION	
	19	2	**261-7496**	1	INSULATION	
	20	1	**261-7497**	1	INSULATION	
	21	1	**261-8624**	1	INSULATION	
	22	1	**261-8716**	1	INSULATION	
	23	2	**266-0142**	1	BRACKET AS (LH)	
M		2	**9R-2821**	5	BOSS (M10X1.5X15-MM)	
	24	2	**266-0143**	1	BRACKET AS (RH)	
M		2	**9R-2821**	4	BOSS (M10X1.5X15-MM)	
	25	2	**276-0038**	1	ANGLE AS	
M		2	**8T-3490**	2	NUT-WELD (M10X1.5-THD)	
	26	1	**281-2398**	1	SHIELD	
	27	2	**288-0734**	1	PANEL AS-SOUND SUPPRESSION	
		2	**7C-4868**	9	SPACER (20-MM THK)	
	28	1	**303-6430**	1	INSULATION	
	29	1	**303-6431**	1	INSULATION	
	30	1	**303-6432**	1	INSULATION	
	31	2	**310-8058**	1	INSULATION AS	
	32	2	**311-6584**	1	INSULATION	
	33	1	**325-5017**	1	BOX AS-BATTERY	
Y	34	1	*325-5254*	1	FILLER GP-POWER TRAIN OIL	406
	35	1	**342-0468**	1	GUARD AS-HITCH	
	36	1	**362-9255**	1	DOOR AS-ACCESS	
Y	37	1	*390-0483*	1	ENCLOSURE GP-SERVICE CENTER	518
	38	1	**391-7095**	1	COVER AS (RH)	
	39	1	**115-6433**	9	WASHER (11X50X6-MM THK)	
	40	1	**133-1645**	8	WASHER (7.2X19.1X3.1-MM THK)	
	41	2	**2P-9682**	2	SPACER (0.69X1X1.62-IN THK)	
	42	1,2	**4Y-3046**	10	WASHER (13.5X38X3-MM THK)	
	43	1	**5P-1076**	9	WASHER-HARD (13.5X30X4-MM THK)	
	44	1,2	**7X-0603**	22	WASHER-HARD (9.9X35X2.5-MM THK)	
M	45	2	**7X-2555**	2	BOLT (M16X2X80-MM)	
	46	2	**7X-7729**	2	WASHER (11X25X3-MM THK)	
	47	1,2	**8T-4121**	6	WASHER-HARD (11X21X2.5-MM THK)	
M	48	2	**8T-4133**	2	NUT (M10X1.5-THD)	
M	49	1	**8T-4136**	9	BOLT (M10X1.5X25-MM)	
M	50	1,2	**8T-4137**	6	BOLT (M10X1.5X20-MM)	
M	51	1	**8T-4139**	1	BOLT (M12X1.75X30-MM)	
M	52	2	**8T-4190**	2	BOLT (M16X2X25-MM)	

388-3768 **SUPPRESSION GP-SOUND (*contd.*)** **i05280816**

NOTE	REF NO	GRAPHIC REF	PART NUMBER	QTY	PART NAME 1 2 3 4 5 6 (PRODUCT LEVEL)	SEE PAGE
	53	1	**8T-4223**	1	WASHER-HARD (13.5X25.5X3-MM THK)	
M	54	1,2	**8T-4244**	19	NUT (M12X1.75-THD)	
M	55	2	**8T-6870**	9	BOLT (M8X1.25X70-MM)	
	56	2	**9M-1974**	9	WASHER-HARD (8.8X16X2-MM THK)	
	57	2	**9X-8257**	4	WASHER (17.5X30X3.5-MM THK)	
D	58	2	**5P-7211**		SEAL (0.9-M)	
D	58A	1,2	**5P-7211**		SEAL (0.3-M EACH)	

D - ORDER BY THE METER
M - METRIC PART
Y - SEPARATE ILLUSTRATION

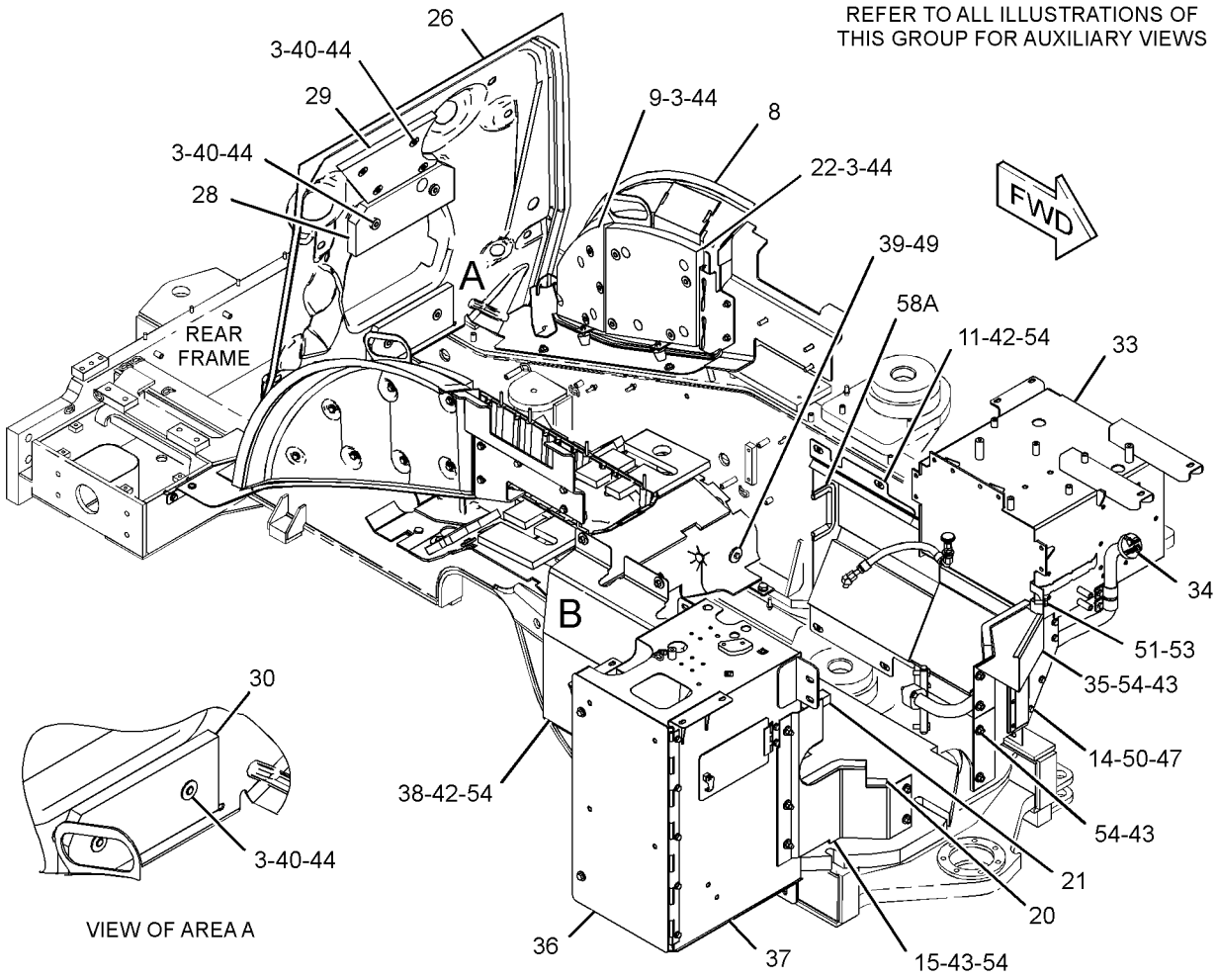

GRAPHIC #1 g03373501

388-3768 **SUPPRESSION GP-SOUND (*contd.*)** **i05280816**

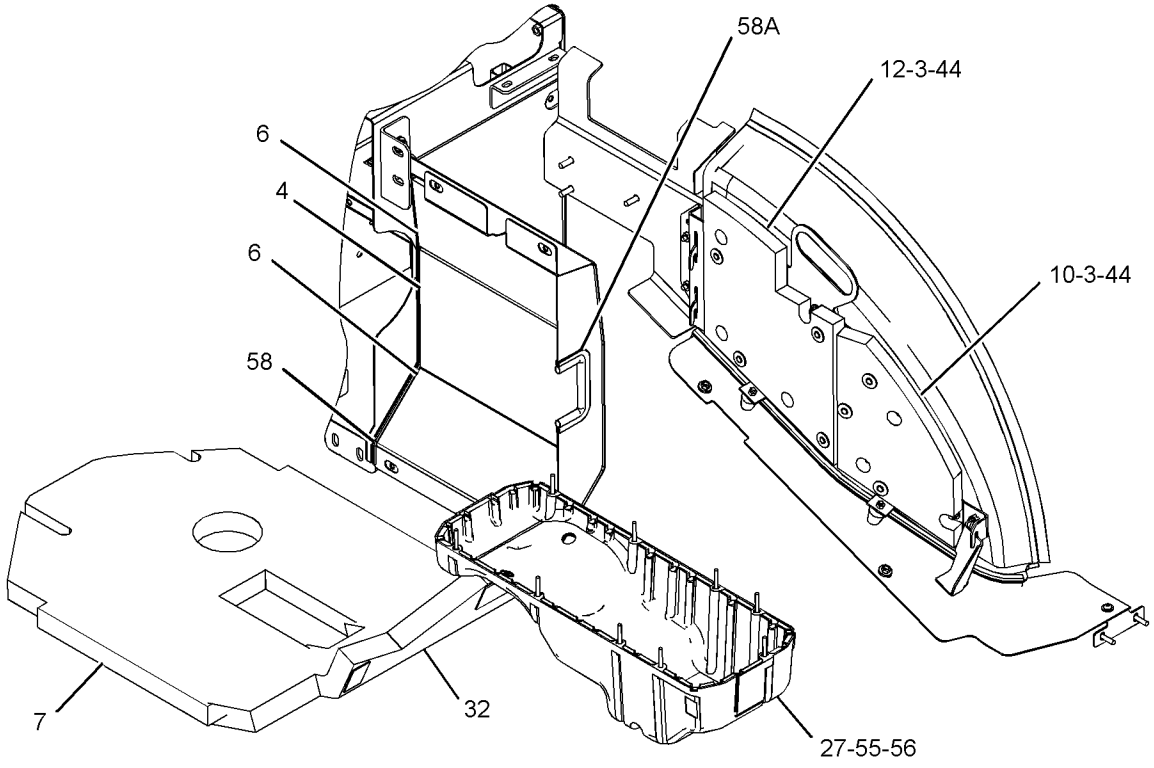

VIEW OF AREA B
(PARTS REMOVED FOR CLARITY)



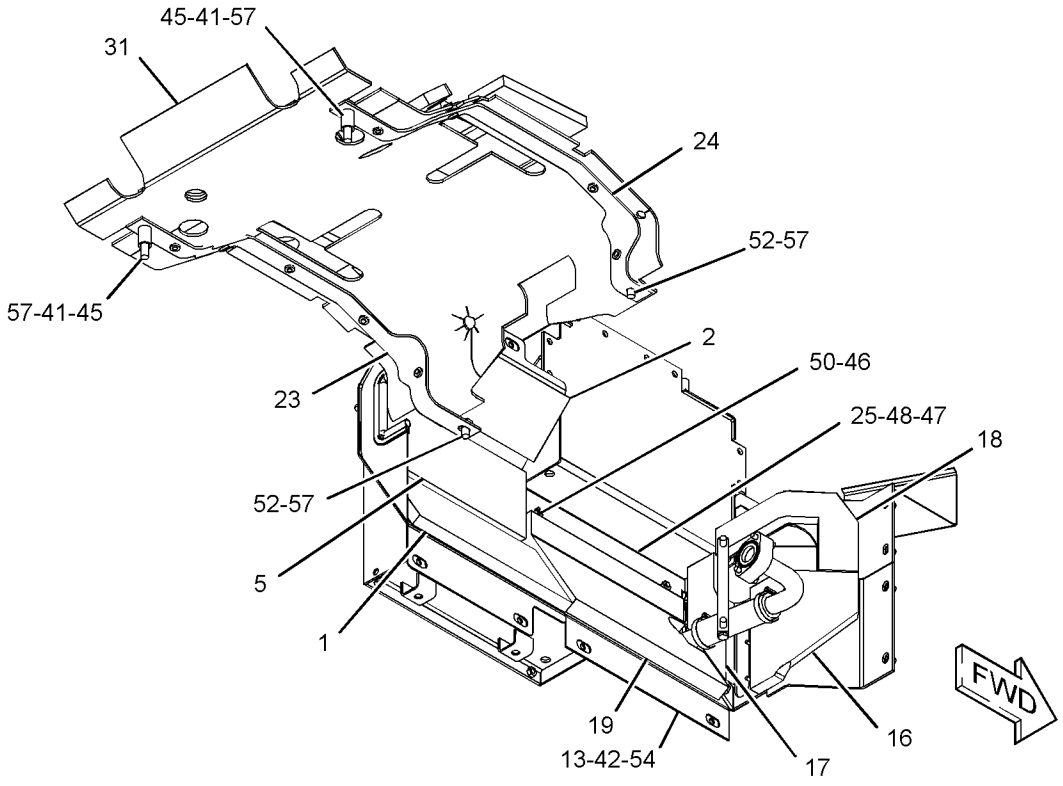

GRAPHIC #2 **<END>** g03373502

374-5373 TILT GP-HOOD

S/N: JLX1-UP

PART OF 373-8237 CHASSIS AR

SMCS-1427, 7251 **i05245042**

NOTE	REF NO	GRAPHIC REF	PART NUMBER	QTY	PART NAME 1 2 3 4 5 6 (PRODUCT LEVEL)	SEE PAGE
	1	1	**6S-6646**	2	PIN-COTTER	
	2	1	**399-5331**	1	COVER	
	3	1	**280-7076**	1	PIN AS (LH)	
	4	1	**280-7078**	1	PIN AS (RH)	
Y	5	1	**305-8958**	1	ACTUATOR GP-POWER (HOOD TILT)	501
	6	1	**382-9466**	1	COVER	
	7	1	**382-9467**	1	COVER	
	8	1	**8T-4121**	8	WASHER-HARD (11X21X2.5-MM THK)	
M	9	1	**8T-4137**	8	BOLT (M10X1.5X20-MM)	
	10	1	**7V-9791**	2	PIN	
	11	1	**7X-0599**	1	WASHER-HARD (13X20X2-MM THK)	
M	12	1	**8T-4138**	2	BOLT (M6X1X20-MM)	
M	13	1	**8T-4193**	6	BOLT (M16X2X50-MM)	
	14	1	**8T-4205**	4	WASHER-HARD (7.2X14.5X2-MM THK)	
M	15	1	**8T-4971**	2	BOLT (M6X1X30-MM)	
	16	1	**9X-8257**	6	WASHER (17.5X30X3.5-MM THK)	

M - METRIC PART
Y - SEPARATE ILLUSTRATION

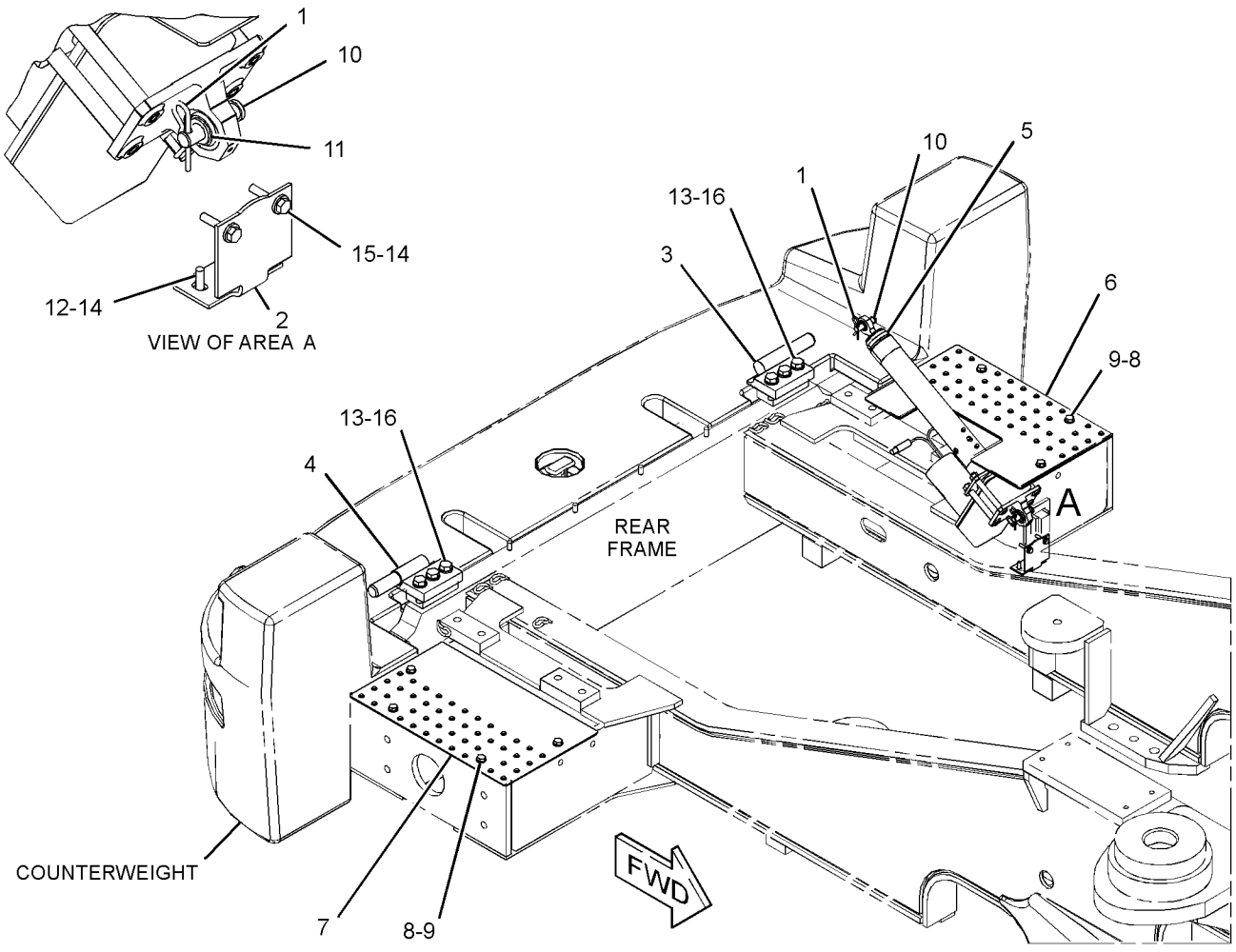

GRAPHIC #1 **<END>** g03379316

348-6327 VALVE & LINES GP-LUBRICATION

S/N: JLX1-UP

PART OF 345-7045 LINES GP-FRONT LUBRICATION

SMCS-7540 **i04294747**

NOTE	REF NO	GRAPHIC REF	PART NUMBER	QTY	PART NAME 1 2 3 4 5 6 (PRODUCT LEVEL)	SEE PAGE
	1	2	**114-9325**	2	CLAMP-DOUBLE	
	2	2	**178-2722**	2	COUPLING AS-STRAIGHT	
					(EACH INCLUDES)	
		2	**291-6692**	2	FERRULE	
		2	**291-6695**	2	NUT (M16X1.5-THD)	
	3	2	**178-2766**	2	HOSE AS (LIFT CYLINDER)	
	4	2	**178-2779**	2	HOSE AS (BUCKET)	
	5	2	**308-0399**	1	HOSE AS (TILT LEVER)	
	6	2	**192-5953**	2	HOSE AS (TILT LINKAGE)	
Y	7	2	**250-3801**	1	VALVE GP-LUBE DISTRIBUTION (8-INJECTOR)	625
	8	2	**278-2073**	1	BRACKET (MOUNTING)	
	9	2	**308-0400**	1	HOSE AS (TILT CYLINDER)	
	10	2	**095-0827**	2	LOCKWASHER	
M	11	2	**8C-8451**	2	BOLT (M6X1X40-MM)	
M	12	2	**8T-8442**	2	BOLT-SOCKET HEAD (M6X1X30-MM)	
E	13	2	**252-8211**		SLEEVE (35-CM EACH)	

E - ORDER BY THE CENTIMETER
M - METRIC PART
Y - SEPARATE ILLUSTRATION

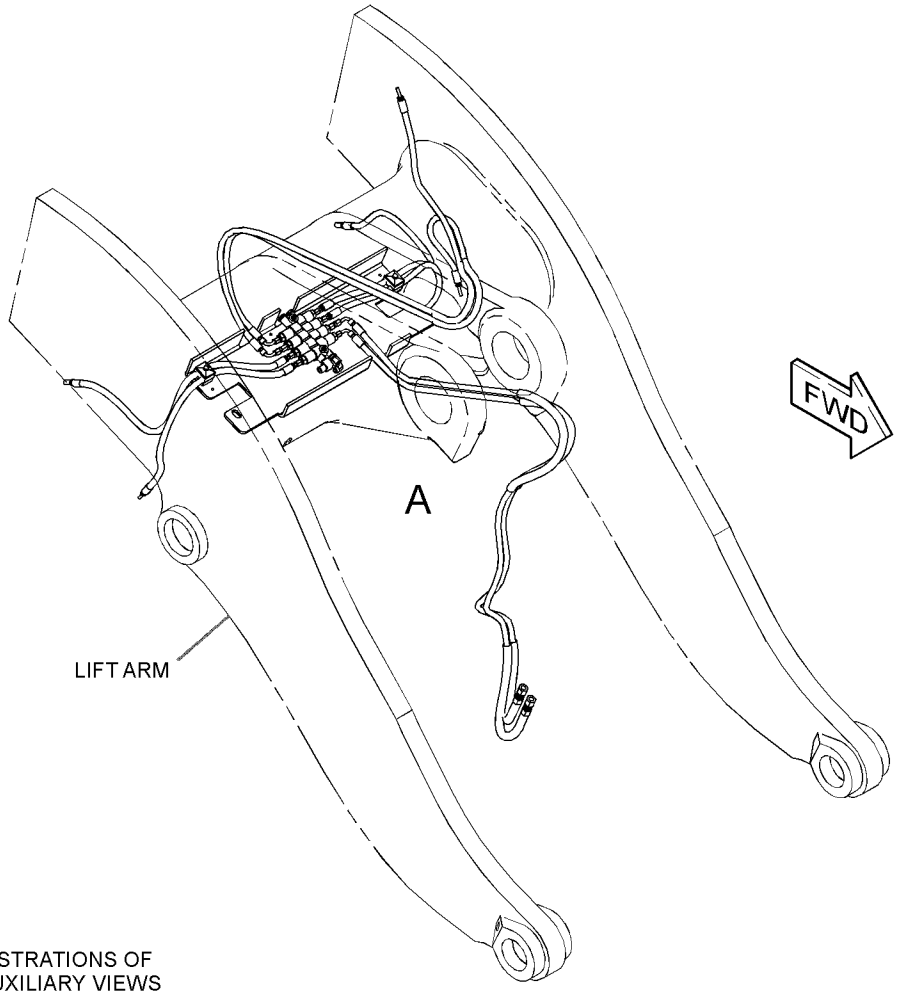

REFER TO ALL ILLUSTRATIONS OF THIS GROUP FOR AUXILIARY VIEWS

GRAPHIC #1 g02173648

348-6327 **VALVE & LINES GP-LUBRICATION (*contd.*)** **i04294747**

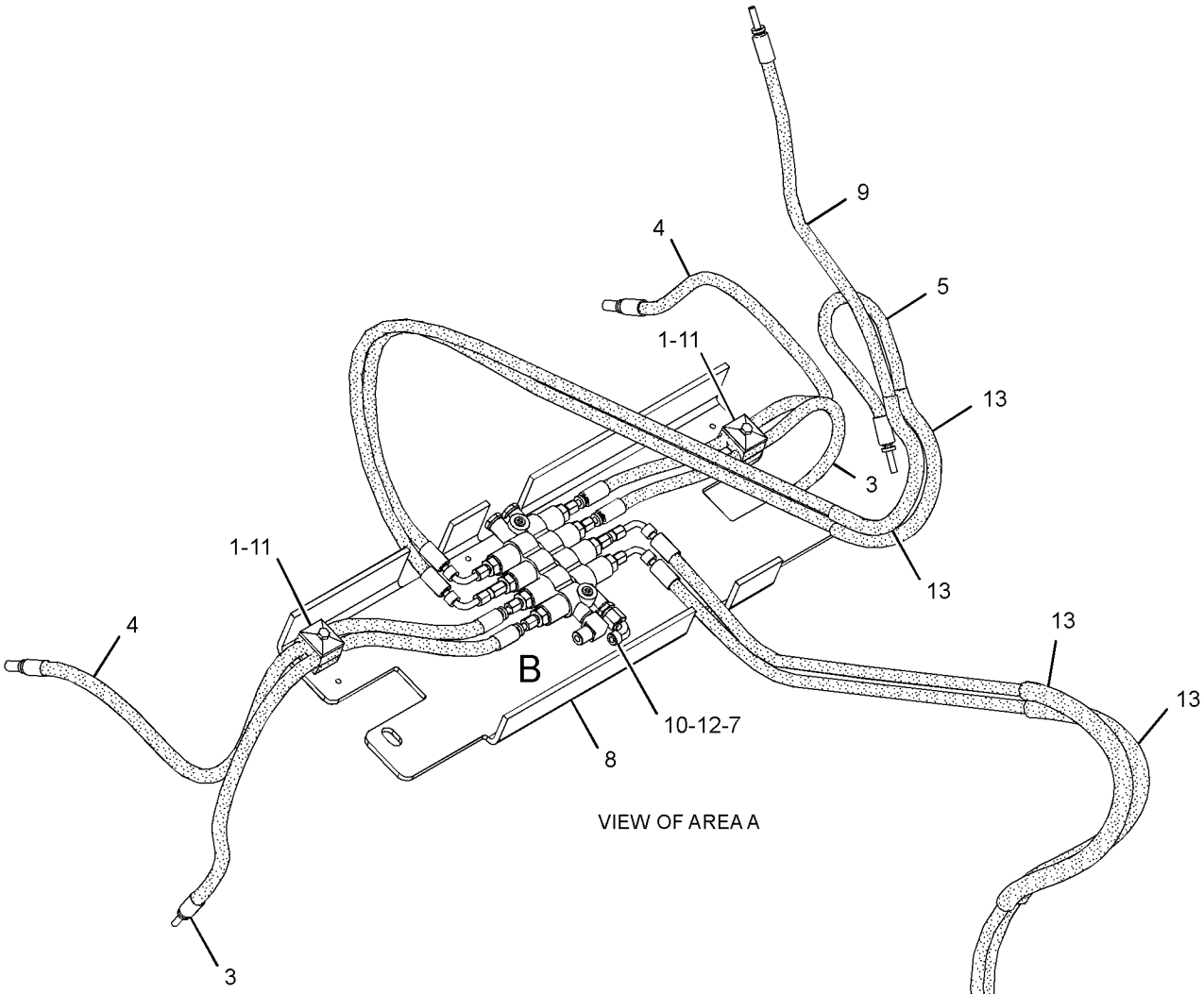

GRAPHIC #2 **<END>** g02463458

250-3801 VALVE GP-LUBE DISTRIBUTION–8-INJECTOR

S/N: JLX1-UP

PART OF 348-6327 VALVE & LINES GP-LUBRICATION

SMCS-7540 **i02533008**

NOTE	REF NO	GRAPHIC REF	PART NUMBER	QTY	PART NAME 1 2 3 4 5 6 (PRODUCT LEVEL)	SEE PAGE
	1	1	**177-3517**	1	INJECTOR AS-GREASE (NO. 4)	
	2	1	**177-3518**	2	INJECTOR AS-GREASE (NO. 8)	
	3	1	**178-2737**	1	ELBOW	
	4	1	**178-2740**	2	INJECTOR AS-GREASE (NO. 6)	
	5	1	**178-2746**	1	INJECTOR AS-GREASE (NO. 9)	
	6	1	**179-1660**	2	PLUG	
	7	1	**179-1661**	1	COUPLING	
	8	1	**192-5987**	2	GASKET	
	9	1	**192-6036**	2	CONNECTOR	
	10	1	**192-6212**	2	INJECTOR AS-GREASE (NO. 10)	
	11	1	**248-7538**	1	BLOCK-HYDRAULIC	
	12	1	**253-9795**	1	ELBOW	

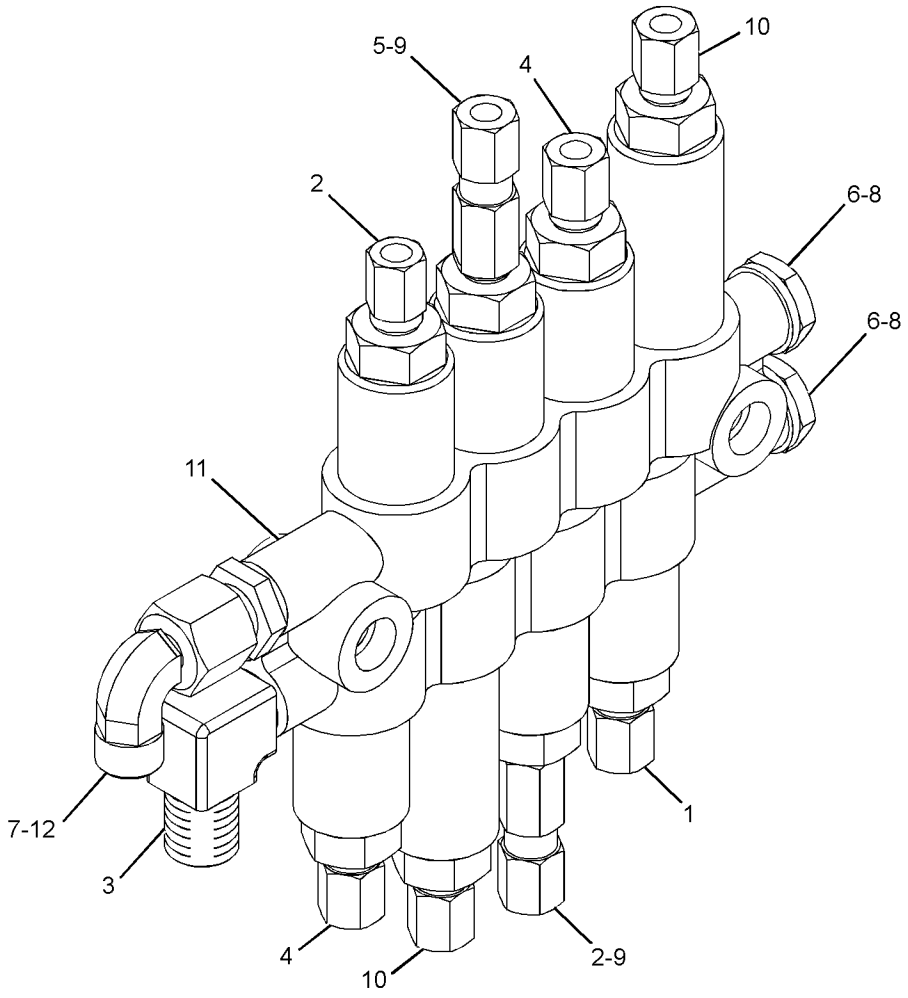

GRAPHIC #1 **<END>** g01269027

262-4834 VALVE GP-LUBE DISTRIBUTION—FRONT, 8-INJECTOR

S/N: JLX1-UP

PART OF 375-8447 VALVE GP-LUBE DISTRIBUTION

SMCS-7540 **i02534901**

NOTE	REF NO	GRAPHIC REF	PART NUMBER	QTY	PART NAME 1 2 3 4 5 6 (PRODUCT LEVEL)	SEE PAGE
	1	1	**177-3517**	1	INJECTOR AS-GREASE (NO. 4)	
	2	1	**177-3518**	2	INJECTOR AS-GREASE (NO. 8)	
	3	1	**178-2737**	1	ELBOW	
	4	1	**178-2740**	2	INJECTOR AS-GREASE (NO. 6)	
	5	1	**178-2746**	1	INJECTOR AS-GREASE (NO. 9)	
	6	1	**179-1660**	2	PLUG	
	7	1	**179-1661**	1	COUPLING	
	8	1	**192-5987**	2	GASKET	
	9	1	**192-6036**	2	CONNECTOR	
	10	1	**192-6212**	2	INJECTOR AS-GREASE (NO. 10)	
	11	1	**248-7538**	1	BLOCK-HYDRAULIC	
	12	1	**253-9795**	1	ELBOW	

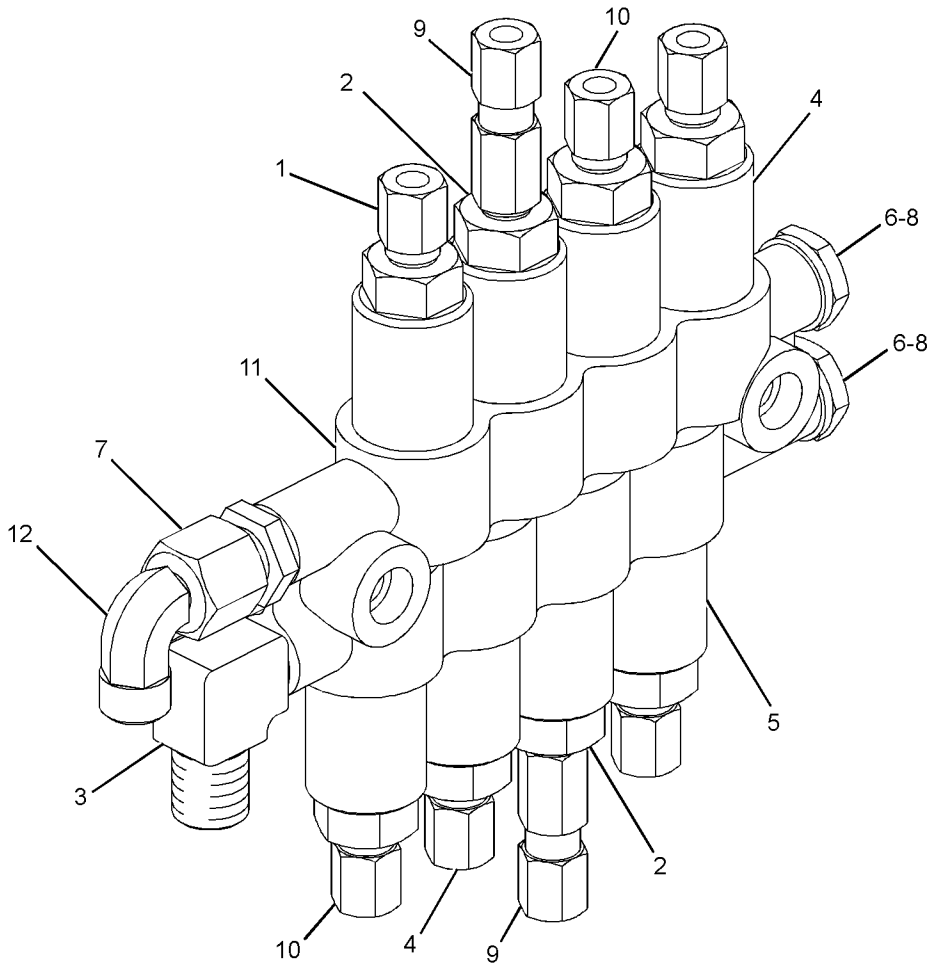

GRAPHIC #1 **<END>** g01219919

374-5932 VALVE GP-LUBE DISTRIBUTION

S/N: JLX1-UP

PART OF 392-8673 VALVE GP-LUBE DISTRIBUTION

SMCS-7540 **i04812519**

NOTE	REF NO	GRAPHIC REF	PART NUMBER	QTY	PART NAME 1 2 3 4 5 6 (PRODUCT LEVEL)	SEE PAGE
	1	1	**177-3516**	6	INJECTOR AS-GREASE (NO. 3)	
					(EACH INCLUDES)	
M		1	**277-3072**	1	NUT (M10X1-THD)	
		1	**277-3073**	1	FITTING-COMPRESSION	
	2	1	**177-3517**	2	INJECTOR AS-GREASE (NO. 4)	
					(EACH INCLUDES)	
M		1	**277-3072**	1	NUT (M10X1-THD)	
		1	**277-3073**	1	FITTING-COMPRESSION	
	3	1	**177-3518**	3	INJECTOR AS-GREASE (NO. 8)	
					(EACH INCLUDES)	
M		1	**277-3072**	1	NUT (M10X1-THD)	
		1	**277-3073**	1	FITTING-COMPRESSION	
	4	1	**177-3519**	1	SWITCH-PRESSURE (AUTOLUBE ACTUATION)	
	5	1	**177-3520**	1	VALVE (PRESSURE SWITCH)	
	6	1	**178-2697**	1	BLOCK	
	7	1	**178-2734**	2	PLUG	
	8	1	**178-2737**	4	ELBOW	
	9	1	**178-2740**	2	INJECTOR AS-GREASE (NO. 6)	
					(EACH INCLUDES)	
M		1	**277-3072**	1	NUT (M10X1-THD)	
		1	**277-3073**	1	FITTING-COMPRESSION	
	10	1	**235-9080**	2	INJECTOR AS-GREASE (NO. 1)	
					(EACH INCLUDES)	
M		1	**277-3072**	1	NUT (M10X1-THD)	
		1	**277-3073**	1	FITTING-COMPRESSION	

M - METRIC PART

374-5932 **VALVE GP-LUBE DISTRIBUTION (*contd.*)** **i04812519**

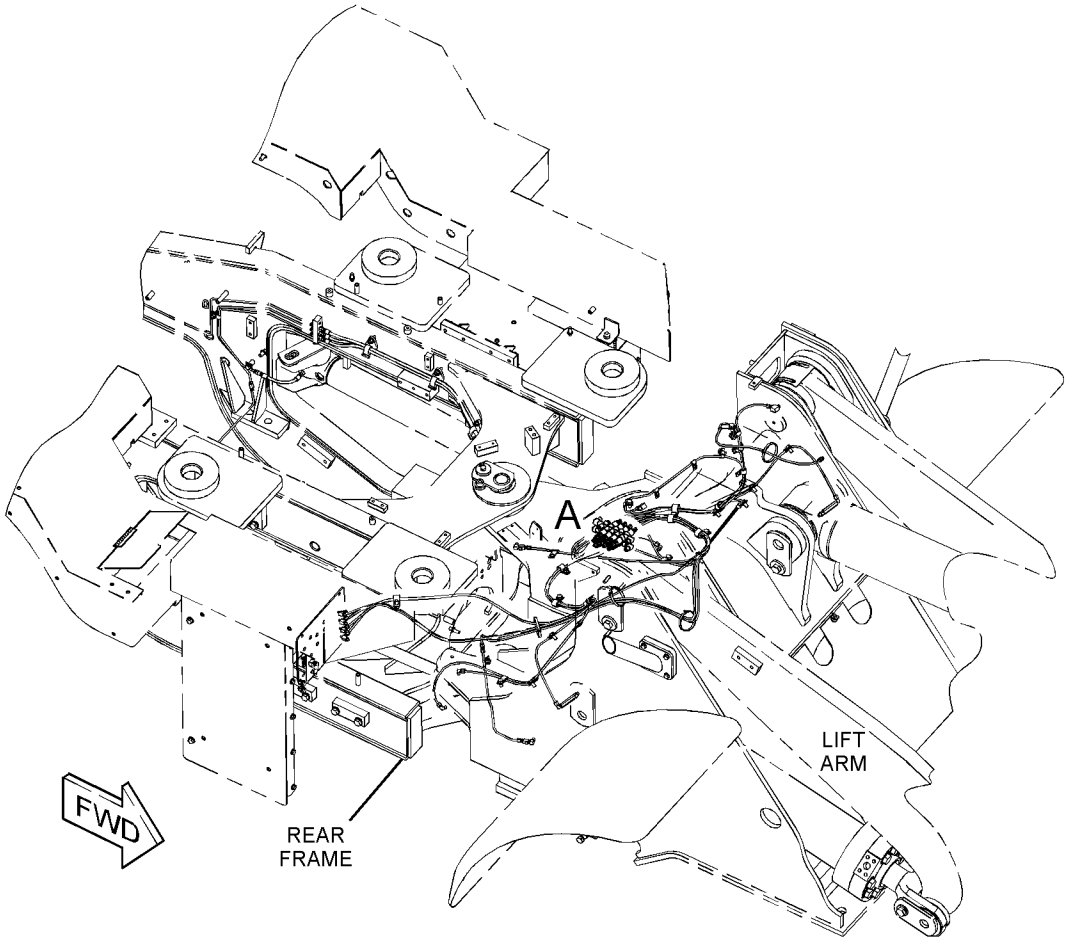

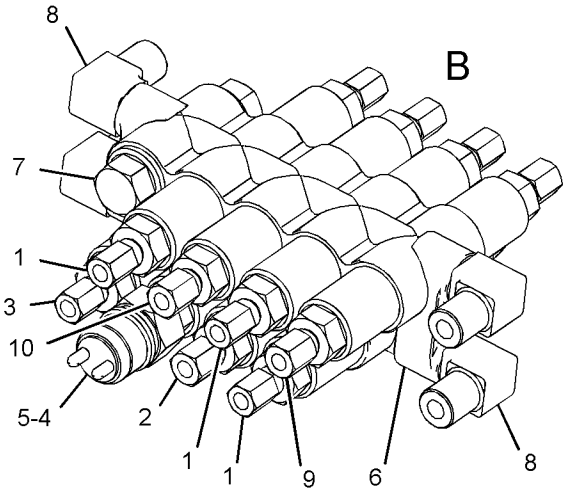

VIEW OF AREA A

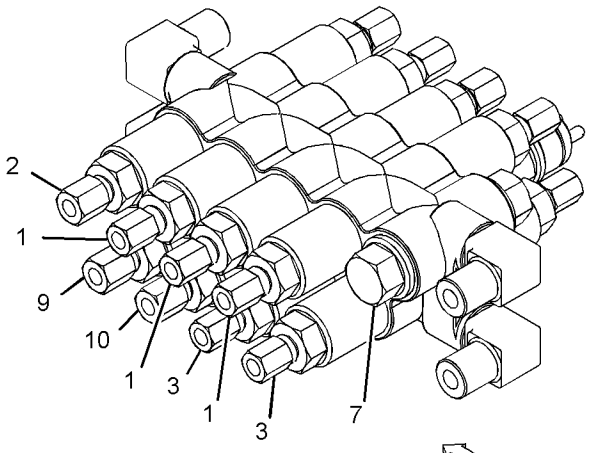

VIEW OF AREA B

GRAPHIC #1 **<END>** g02943363

375-8447 VALVE GP-LUBE DISTRIBUTION

S/N: JLX1-UP

PART OF 375-8450, 424-4890 LINES GP-FRONT LUBRICATION

SMCS-7540 **i04891038**

NOTE	REF NO	GRAPHIC REF	PART NUMBER	QTY	PART NAME 1 2 3 4 5 6 (PRODUCT LEVEL)	SEE PAGE
	1	1	**114-9325**	2	CLAMP-DOUBLE	
J	2	1	**178-2769**	2	HOSE	
J	3	1	**178-2774**	2	HOSE AS	
Y	4	1	*262-4834*	1	VALVE GP-LUBE DISTRIBUTION (FRONT, 8-INJECTOR)	626
J	5	1	**274-3948**	1	HOSE AS	
	6	1	**281-0632**	1	BRACKET-MOUNTING	
J	7	1	**308-0399**	1	HOSE AS	
J	8	1	**375-8430**	1	HOSE AS	
J	9	1	**377-7225**	1	HOSE AS	
	10	1	**095-0827**	2	LOCKWASHER	
M	11	1	**8C-8451**	2	BOLT (M6X1X40-MM)	
M	12	1	**8T-8442**	2	BOLT-SOCKET HEAD (M6X1X30-MM)	
E	13	1	**252-8211**		SLEEVE (70-CM EACH)	
					AVAILABLE REPAIR KIT(S):	
			347-7417	1	KIT-CONNECTOR	
					(INCLUDES OLIVES, FERRULES & NUTS)	

E - ORDER BY THE CENTIMETER
J - KIT MARKED J SERVICES PART MARKED J
M - METRIC PART
Y - SEPARATE ILLUSTRATION

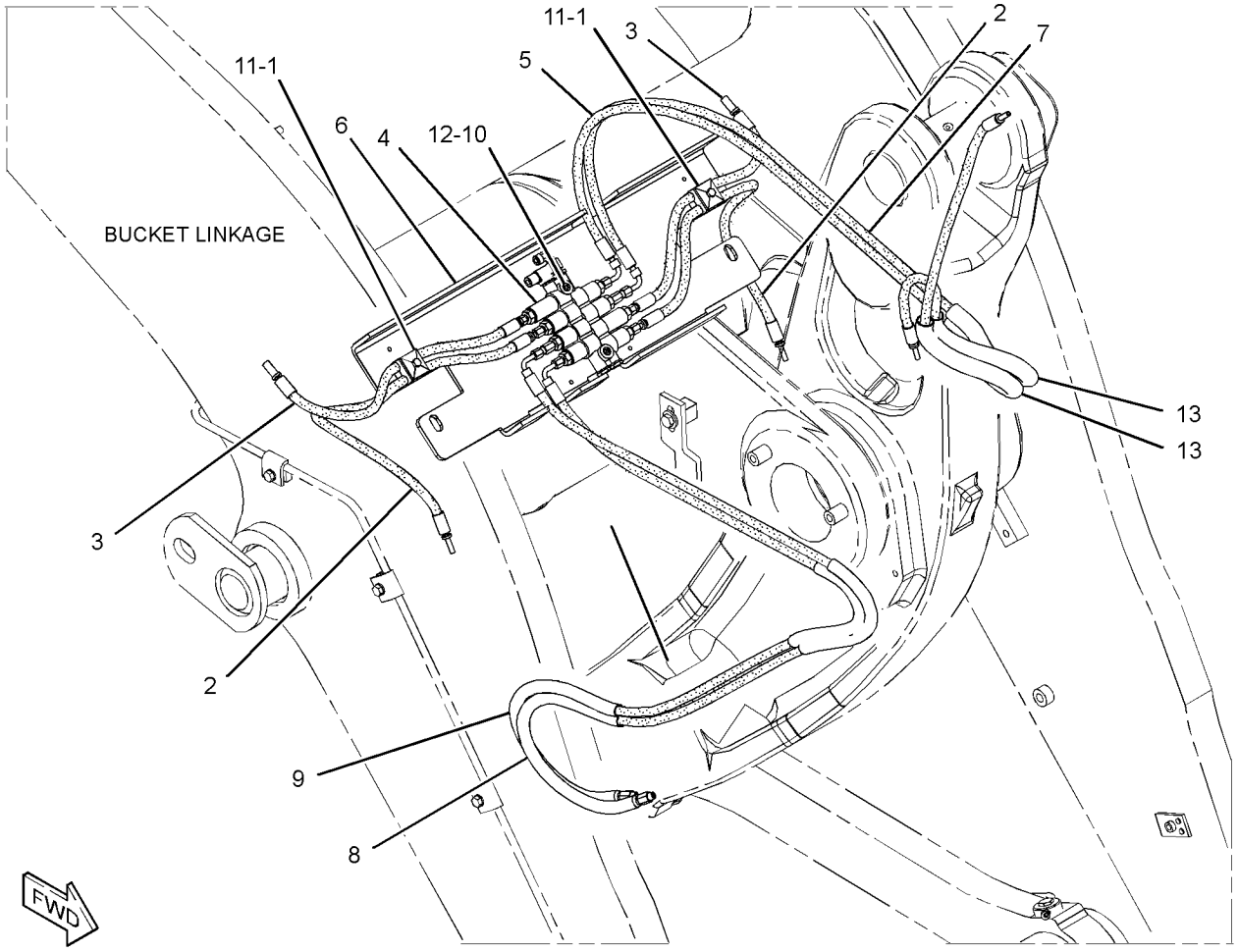

GRAPHIC #1 **<END>** g03034016

392-8673 VALVE GP-LUBE DISTRIBUTION

S/N: JLX1-UP

PART OF 392-8668, 425-6512 LINES GP-REAR LUBRICATION

SMCS-7540 **i04891102**

NOTE	REF NO	GRAPHIC REF	PART NUMBER	QTY	PART NAME 1 2 3 4 5 6 (PRODUCT LEVEL)	SEE PAGE
Y	1	1	**374-5932**	1	VALVE GP-LUBE DISTRIBUTION	627
E	2	1	**161-9031**		HOSE (414-CM)	
E	3	1	**161-9030**		HOSE (1307-CM)	
	4	1	**277-3073**	30	FITTING-COMPRESSION	
M	5	1	**277-3072**	30	NUT (M10X1-THD)	

E - ORDER BY THE CENTIMETER
M - METRIC PART
Y - SEPARATE ILLUSTRATION

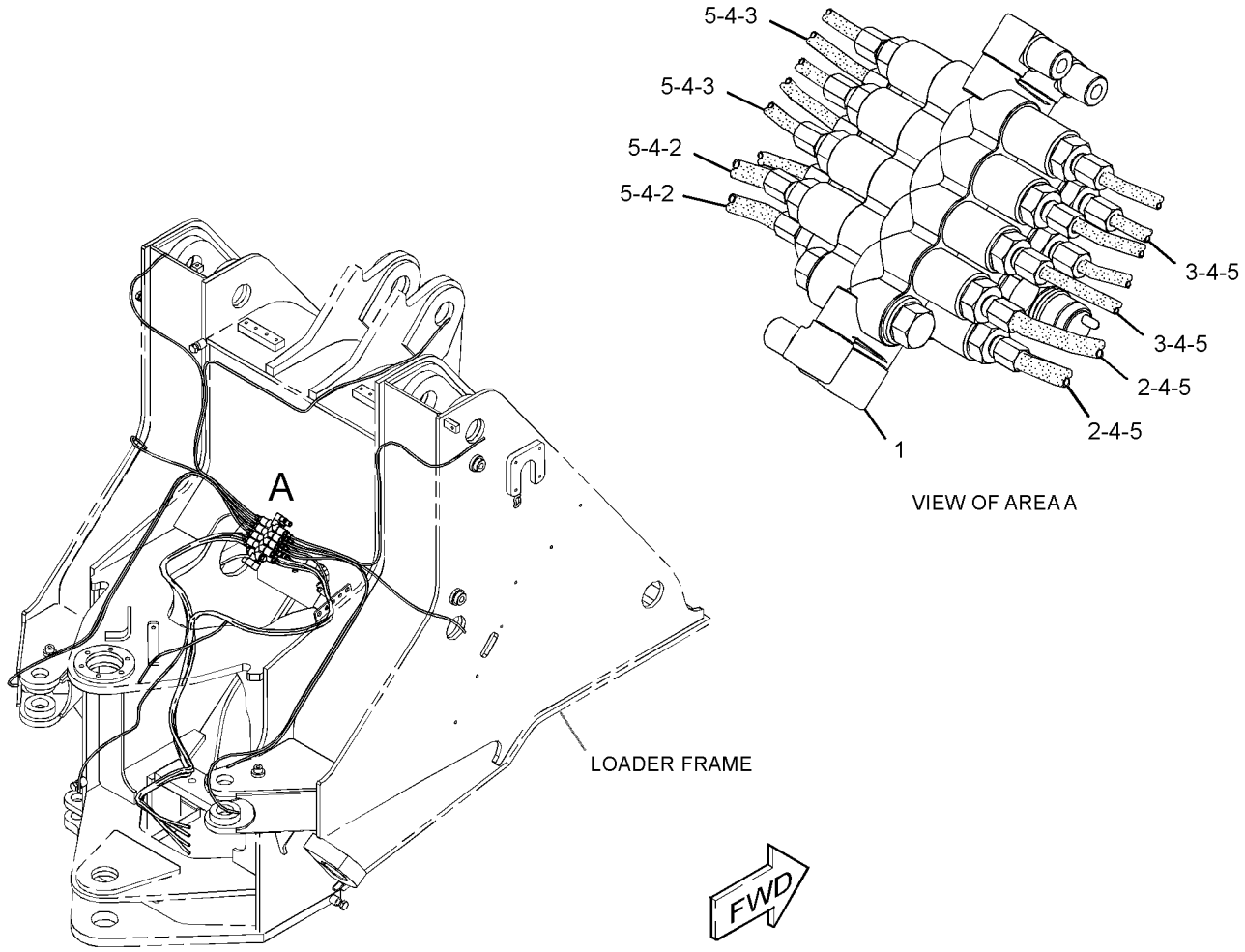

VIEW OF AREA A

GRAPHIC #1 **<END>** g03041496

PART NUMBER INDEX

Part	Page
0	
0L-2072	363
0S-0175	992
0S-1597	301
0T-0244	1072
1	
1A-2223	462
1A-8096	711
1B-0676	531
1B-3925	557
1B-8702	694
1B-8705	18
	25
	653
	973
	975
1F-5151	392
	394
1F-7960	167
1H-0974	473
1H-1023	839
1H-3244	201
	244
	245
	266
1H-3338	307
	671
1H-8720	421
	426
	463
1H-9696	420
	425
1J-2860	414
	416
	418
1J-4757	414
	416
	418
1J-9671	631
	632
	651
	711
	826
1K-4649	651
	657
	661
	665
1K-6872	926
1K-6985	647
1K-8850	529
1L-5072	408
	797
1M-3150	463
1M-3151	463
1M-4543	103
	105
	770
	772
	1010
1M-6119	177
1M-6120	177
1M-6718	703
1M-8649	463
1M-9351	498
1N-5999	34
	460
1N-8062	167
1P-0810	201
	202
	207
	214
	215
	356
	359
	363
	372
	379
1P-1670	152
1P-2807	1215
1P-3702	819
	841
1P-3703	455
	649
	653
	775
	780
1P-3704	653
	658
	662
	666
	763
	767
	778
	780
1P-3705	763
	767
1P-4278	103
	105
	150
	154
	770
	772
1P-4577	649
	702
1P-4578	763
	767
	778
	797
1P-4579	797
1P-4582	653
	658
	662
	666
1P-4584	763
	767
	797
1P-5767	763
	767
1P-6356	1010
1P-6872	679
	681
1R-0749	139
1R-0762	140
1R-1807	78
1S-0833	448
	452
1S-0994	177
	179
	587
	653
	763
	767
1S-2563	412
	413
1S-3743	491
1S-4305	1072
1S-7251	376
1S-7252	376
1S-9593	882
1T-0043	489
1T-0936	685
	783
	785
1T-1621	491
1T-1622	491
1T-1639	489
1U-0593	1158
	1167
1U-2218	733
1U-3142	711
1U-7684	593
1U-8846	20
	49
	50
	120
	122
	123
	171
	429
	434
	437
	439
	441
	443
	445
1V-6341	421
	426
	489
1V-6688	607
	609
1W-2431	127
	128
1W-2715	33
	38
1W-8407	27
2	
2A-1162	49
	55
2A-2677	377
2A-4429	33
	38
2B-2404	581
	585
	587
2B-9373	473
2C-9259	1115
	1117
	1119
	1121
	1122
	1123
	1125
	1127
	1128
	1130
	1132
	1134
	1135
	1137
	1138
	1140
	1142
	1144
	1146
	1168
	1170
2D-2443	476
	478
2D-2507	500
2D-2508	500
2D-2509	500
2D-2511	476
	478
	►500
2D-4202	797
2D-4867	577
	588
	646
	895
	898
	901
	903
2D-6235	1001
2D-6642	56
	1001
2D-9454	414
	416
	418
2D-9455	414
	416
	418
2G-1388	518
	616
	1200
2G-9524	992
2H-3088	414
	418
	420
	425
2H-3920	190
	322
	331
	332
2H-3922	306
2H-3924	1008
2H-3927	420
	425
2H-6338	763
	767
2J-3506	1147
	1148
	1149
	1150
	1151
	1156
	1157
	1159
	1163
	1164
	1165
	1166
2J-3507	1176
	1179
2J-5997	1110
2J-7686	731
	732
2J-7761	408
	797
2K-0715	437
	439
	441
	445
2K-4821	792
2K-4973	1001
	1089
2K-5232	754
	759
2K-8199	405
	429
	432
	434
	437
	439
	441
	827
	831
	835

► **PRIMARY REFERENCE**

PART NUMBER INDEX

Part	Page
	852
	856
	860
	864
	868
	872
2L-8049	202
	205
	208
2L-8054	200
	338
	340
	346
2L-8057	203
	205
	208
2L-8061	200
	338
	340
	346
2L-8066	200
	246
	251
	332
	1028
2L-8067	200
2L-8071	200
	202
	204
2L-8076	200
	257
	261
2L-8077	206
2L-8078	200
2L-8079	376
2L-8081	200
	202
	204
2L-8509	1210
	1212
2M-0344	429
	434
	437
	441
	443
	445
2M-0849	421
	426
	463
	926
2M-6471	29
2M-9780	34
	52
	78
	101
	108
	110
	448
	452
	498
	649
	696
	704
	705
	707
	752
	753
	758
	762
	766
	783
	785
	788
	825
	826
	848
	885
	1014
2N-2258	985
2N-2658	392
	394
2N-7007	420
	425
2N-8109	24
2P-1279	763
	767
	770
	799
	802
	804
	808
	811
	814
	817
2P-1293	742
	754
	759
2P-1294	55
2P-1373	429
	432
	434
	437
	439
	441
	443
	445
2P-2537	78
2P-8421	705
2P-8986	420
	425
2P-8987	420
	425
2P-9682	619
2Q-0584	452
2Q-0604	110
2R-2376	1006
2S-2596	702
	705
	707
	839
2S-4078	447
	448
	451
	720
	753
	758
	801
	807
	810
	813
	816
	827
	831
	835
2S-4663	498
2S-5835	498
2S-6408	489
2T-2171	406
	408
2T-3360	689
2V-1771	177
	179
	745
2V-3216	1104
	1107
2V-3726	1057
2W-0027	62
2W-3815	29
2W-6544	20
2W-6546	19
2W-7213	29
2W-7381	39
2W-7940	177
2W-8147	25
2Y-3209	1019
2Y-5829	67
	68
	72
	83
3	
3A-3692	455
3B-0551	429
	432
	434
	437
	439
	441
	443
	445
3B-0731	1073
3B-2062	531
	541
3B-2263	677
3B-4508	977
3B-4512	634
3B-4607	641
3B-4611	518
	559
	1198
	1200
3B-4615	531
3B-4617	633
3B-4627	555
	556
3B-4629	555
	556
3B-4631	1173
3B-4640	641
3B-6552	581
3B-8489	484
	485
	555
	556
	557
	578
	585
	587
	588
	646
	895
	898
	901
	903
	908
	1173
3B-8491	588
	895
	898
	901
	903
3B-8686	574
	577
3D-0053	792
3D-2239	500
3D-2824	101
	103
	105
	108
	110
	171
	410
	447
	451
	460
	641
	649
	651
	653
	657
	658
	661
	662
	665
	666
	677
	705
	707
	710
	752
	753
	754
	757
	758
	762
	763
	766
	767
	797
	822
3D-4603	705
3D-8317	498
3E-2310	651
3E-2332	278
	280
3E-2333	653
	799
	804
3E-3365	294
3E-3371	257
3E-3383	316
3E-3805	986
3E-3826	531
3E-4041	103
	105
3E-4052	470
	1010
3E-4058	470
	1010
3E-4312	926
3E-4315	482
	484
	494
3E-4319	425
3E-4352	130
	152
	278
	280
3E-4353	420
	425
3E-4367	202
	204
	396
3E-4883	59
3E-5169	263
	266
3E-5239	271
	329
	331
	337
	376
	1028
3E-6328	►173

PART NUMBER INDEX

Part	Page
	331
3E-6389	▶228
	331
3E-6602	1202
3E-6769	342
	679
	681
3E-6770	679
	681
3E-6771	827
	835
	853
3E-6799	491
3E-7403	720
	802
	817
3E-8005	143
	162
3E-8017	52
	138
	1208
3E-8320	177
3E-8557	202
	204
3E-8558	396
3E-9411	547
	548
3E-9412	70
	71
	157
3F-2617	1025
3F-5950	557
3F-9556	308
	310
	1046
3G-3726	694
3G-6395	1158
	1167
3G-7624	729
	730
3G-8779	731
	733
	895
	906
	907
	911
	912
	913
3H-0442	782
	831
	844
	857
	861
	865
	868
	872
3H-2652	421
	425
3H-5552	29
3H-7654	70
	71
3J-0634	420
	425
3J-1877	276
3J-1907	34
	52
	54
	103
	105
	140
	145
	150
	275
	299
	342
	359
	363
	377
	396
	411
	421
	426
	447
	451
	458
	498
	640
	644
	649
	651
	652
	653
	657
	661
	665
	694
	703
	705
	707
	720
	721
	734
	739
	741
	743
	745
	752
	753
	754
	757
	758
	759
	770
	772
	799
	800
	801
	802
	804
	807
	808
	810
	811
	813
	814
	816
	817
	820
	827
	831
	835
	839
	843
	850
	852
	853
	856
	860
	864
	868
	869
	872
	873
	1014
	1207
	1210
	1212
3J-4818	1001
	1089
3J-7354	103
	105
	278
	289
	631
	632
	640
	641
	651
	658
	661
	665
	669
	672
	677
	679
	681
	698
	699
	705
	707
	720
	752
	754
	757
	759
	763
	767
	782
	783
	785
	794
	799
	801
	802
	804
	807
	808
	810
	811
	813
	814
	816
	817
	819
	827
	831
	835
	839
	841
	843
	852
	853
	856
	860
	864
	868
	872
	876
	878
	879
	1173
	1210
	1212
3J-7479	702
3J-9449	733
3K-0158	437
	439
	441
	445
3K-0159	437
	439
	441
	445
3K-0360	52
	53
	54
	101
	108
	110
	140
	278
	327
	359
	363
	398
	649
	651
	652
	653
	657
	661
	662
	665
	666
	672
	692
	693
	694
	701
	705
	707
	753
	754
	758
	759
	783
	785
	787
	788
	794
	821
	823
	824
	826
	878
	879
	880
	884
	1014
	1207
	1210
	1212
3K-1432	462
3K-2876	557
3K-3257	55
	60
	303
	304
3K-6060	983
	1020
3K-8460	278
	711
3K-9770	1158
	1167
	1176
	1177
3L-2221	136
3L-6513	202
	204
	359
	363
3N-0759	432
	439
3N-3469	1217
3P-1156	53
	81

▶ **PRIMARY REFERENCE**

PART NUMBER INDEX

Part	Page
	87
	1209
3P-1210	679
	681
3P-2404	754
	759
3P-3441	462
3P-3839	342
	523
3P-7019	462
3P-7898	473
3P-9554	257
3P-9900	1089
3R-8530	752
	757
3R-8797	301
3S-2093	80
	140
	154
	177
	200
	208
	209
	220
	222
	224
	226
	246
	248
	251
	261
	263
	266
	269
	298
	313
	327
	332
	338
	340
	342
	346
	356
	357
	359
	363
	367
	368
	372
	376
	379
	381
	383
	396
	569
	572
	574
	585
	638
	772
	850
	917
	921
	973
	979
	983
	996
	998
	999
	1001
	1028
	1104
	1107
3S-7023	459
3S-7608	101
	108
	110
3S-8109	462
	463
3S-9233	843
3T-0852	687
	1055
3T-3422	301
3T-6541	432
	439
3T-7584	463
3T-9958	489
3T-9960	462
3V-2333	886
	887
	890
	895
3V-2431	155
	156
3V-3263	1107
3W-6116	1111
3Y-2888	299

4

4B-2049	332
4B-4158	853
	857
	861
	865
4B-4274	263
	266
	917
	1033
	1052
4B-4278	1089
4B-4280	332
	705
4B-4863	263
	266
	772
4B-9782	406
	408
	705
	707
	711
4B-9784	704
4B-9880	498
4C-9612	19
	61
4D-6466	574
4D-7388	79
	101
	410
	448
4D-7786	752
	757
4D-7794	276
	396
	641
	743
	745
4D-8123	220
	222
	224
4D-9517	103
	105
	572
	574
	577
	772
	973
4E-0019	517
4E-1384	115
	598
	600
	944
	946
	992
	1202
4E-2229	188
	190
4E-3196	895
	898
	901
	903
	913
4E-3273	479
	481
4E-3896	414
	416
	418
4E-3897	414
	416
	418
4E-3956	529
4E-4029	414
	416
	418
4E-4030	414
	416
	418
4E-4031	414
	416
	418
4E-5724	263
	266
4E-5985	479
	481
4E-6986	482
	483
4E-8329	175
4E-8534	429
	432
	434
	437
	439
	441
	443
	445
4E-8722	1057
4E-8958	1061
4E-9324	482
	484
	494
4E-9664	1061
	1062
4F-2294	309
4F-4042	1176
	1179
4F-4097	396
4F-5695	31
	32
4F-7827	1147
	1150
	1151
	1156
	1157
	1159
	1163
	1164
	1165
	1166
4F-7952	705
4F-9653	53
	155
	156
4H-1225	177
	581
	587
	743
	745
4H-4737	463
4H-6112	772
4H-6520	429
	432
	434
	437
	439
	441
	443
	445
4H-7655	448
	452
4H-8380	711
4I-3038	1057
4I-3398	535
	537
4I-4863	554
4I-7889	1018
4J-0519	702
4J-0520	410
	649
	653
	658
	662
	666
	707
	721
	748
	750
	763
	767
	778
	780
4J-0522	653
	721
	742
	748
	750
	754
	759
	763
	767
	778
	819
	841
4J-0524	763
	767
4J-0527	653
	658
	662
	666
4J-5267	649
	775
4J-5268	831
	857
	861
	865
	868
	872
4J-5309	694
	827
	831
	835
	843
	853
	857
	861

PART NUMBER INDEX

Part	Page
	865
	869
	873
4J-5477	721
	752
	757
	762
	766
	770
	772
	799
	801
	802
	804
	807
	808
	810
	811
	813
	814
	816
	817
	1173
	1210
	1212
4J-7533	498
	643
	669
	782
	827
	831
	835
	839
	843
	853
	857
	861
	865
	869
	873
4J-8996	823
	824
	825
4J-8997	819
	841
4J-9224	647
4K-0684	1176
	1177
4K-1388	460
	711
	826
4K-1540	633
4K-2039	783
	884
4K-6177	587
4K-8302	1010
4K-8864	325
	374
	577
	581
	585
	587
	770
	772
	1010
4K-9429	917
	921
4M-1831	301
4M-2381	498
4M-6425	1073
4M-7470	559
	992
4P-5918	20
	80
	122
	123
	357
4P-7428	396
4P-7429	352
	368
	720
4P-7581	198
	261
	325
	332
	342
	356
	359
	363
	367
	368
	374
	379
	381
	979
	1067
4P-7582	359
	363
4P-8134	257
	352
	357
	359
	363
	720
4P-8525	331
4R-9999	54
	69
4S-1962	101
	359
	363
	587
	641
	1010
4S-5719	368
	585
	587
4S-5824	462
4S-8537	462
4S-8541	491
4S-8598	420
	425
4T-0928	703
4T-0932	826
4T-0933	826
4T-0935	826
4T-0946	826
4T-1700	878
4T-1860	▶703
	705
4T-3015	1177
4T-4509	878
4T-5073	826
4T-6907	647
4T-8054	647
4T-8101	1176
4T-9123	1177
4T-9124	1177
4T-9905	704
4V-1939	379
	381
4V-4164	331
4V-5099	437
	439
	441
	445
4V-7081	481
4V-7099	898
	901
	903
4V-8520	898
	903
	906
	907
4V-8577	1089
4V-8674	886
	887
	890
	895
4W-2026	22
4W-2232	81
4W-3462	12
	13
	15
	19
4Y-3046	619
	1082
4Y-6135	257
4Y-9652	20
	53
5A-3646	212
	257
5A-3647	257
5B-0935	581
	587
5B-1866	72
	74
5C-2874	996
5C-2890	167
	244
	245
	257
	307
	348
	350
	355
	559
	638
	948
	952
	954
	956
	958
	960
	962
	986
	1057
	1059
	1060
	1089
	1202
5C-7261	20
	115
	141
	177
	179
	272
	332
	359
	363
	412
	413
	598
	600
	689
	929
	934
	944
	946
	948
	950
	952
	954
	956
	958
	960
	962
	986
	992
	1008
	1010
	1018
	1029
	1046
5C-7423	1002
5C-8312	318
	918
	922
5C-9553	329
	337
	507
	572
	918
	922
	950
	983
	999
	1094
5D-1026	82
	101
	108
	110
	398
	1014
5D-1242	634
5D-1911	797
5D-2651	754
	759
5D-6912	10
5D-7927	797
5F-0304	49
5F-1678	489
5F-3106	694
5F-3144	420
	425
5F-3488	797
5F-9144	145
	411
	734
5F-9657	216
5G-6505	180
5G-6973	94
	893
	894
5G-7020	653
	658
	662
	666
5G-7021	653
	658
	662
	666
5G-8480	535
	537
5G-8871	929
	934
5H-2767	824
	825
5H-3193	707
5H-3701	429
	432
	434

5

▶ **PRIMARY REFERENCE**

PART NUMBER INDEX

Part	Page
	437
	439
	441
	443
	445
5H-4020	720
	748
	750
5H-8853	53
5H-8936	406
	408
5H-9839	915
5I-3883	1010
5I-4376	275
	651
	799
	801
	804
	807
	810
	813
	816
5J-2722	702
5J-2974	406
	408
	707
5J-3306	105
5J-4773	1148
	1149
5K-0983	557
5K-1568	406
	408
5K-2298	581
	585
	587
5K-2697	448
	452
5K-3294	772
5K-4778	1010
5K-5338	641
	658
	662
	666
	743
	745
5K-8451	150
5K-9065	491
5K-9090	410
	447
	448
	451
	452
	455
	720
	748
	750
	753
	758
	762
	763
	777
	799
	801
	807
	810
	813
	816
5K-9242	581
	587
5K-9243	581
	587
5K-9979	581
5L-2931	462
5L-2952	77
5L-4141	694
5L-4759	429
	432
	434
	437
	439
	441
5L-7200	318
	320
5M-2057	839
5N-0093	29
5N-4185	76
5P-0372	541
5P-0747	376
5P-0761	177
5P-0767	82
	101
	108
	110
	398
	1014
	1018
5P-1046	103
5P-1075	1072
5P-1076	115
	134
	518
	526
	531
	565
	567
	607
	609
	619
	674
	721
	772
	800
	802
	804
	808
	811
	814
	817
	992
	1029
	1200
	1202
5P-1175	1215
5P-1251	103
	105
5P-1291	406
	408
5P-1293	651
	657
	661
	665
5P-1404	162
5P-1442	103
	105
5P-1506	210
5P-2199	696
5P-2369	452
	658
	662
	666
	763
	767
5P-2566	175
5P-2569	694
5P-2766	200
5P-3119	429
	432
	434
	437
	439
	441
	443
	445
5P-3131	463
5P-3454	202
	204
	208
	209
	263
	264
	266
5P-3779	632
	715
5P-3928	1008
5P-3929	1010
5P-3930	463
5P-3948	1010
5P-3950	1008
5P-4106	1008
5P-4115	559
	918
	922
5P-4116	181
	357
	359
	363
	521
	523
	754
	759
	797
	988
	1014
5P-4295	754
	759
5P-4423	1089
5P-4484	429
	432
	434
	437
	439
	441
	443
	445
	452
5P-4536	137
5P-4566	103
	105
5P-4571	200
	376
	1089
5P-4924	106
5P-4961	150
5P-5454	1054
5P-5461	581
	587
5P-5463	581
	587
5P-5637	1079
5P-5639	918
	922
5P-5677	226
5P-5824	1054
5P-5927	918
	922
	1006
5P-5969	985
5P-6010	1089
5P-6120	930
	935
5P-6300	783
	785
5P-6414	491
5P-6442	103
	105
5P-6724	640
5P-6879	1022
	1023
5P-6944	140
	754
	759
5P-7084	406
	408
5P-7211	607
	620
	1082
5P-7462	850
5P-7463	850
5P-7464	368
5P-7465	368
5P-7468	448
	452
	777
5P-7469	448
	452
	777
5P-7470	767
5P-7471	767
5P-7684	853
5P-7814	278
5P-7854	110
5P-7958	1057
5P-7970	77
	80
	130
	152
	162
	357
	531
5P-8136	1110
5P-8182	766
5P-8196	78
5P-8210	462
5P-8215	694
5P-8245	22
	45
	47
	401
	489
	1055
	1073
5P-8247	28
	327
	429
	432
	434
	437
	439
	441
	443
	445
5P-8248	1147
	1148
	1149
	1150
	1151
	1156
	1157
	1159
	1163
	1164
	1165
	1166
5P-8250	733
5P-8309	115
	988

PART NUMBER INDEX

Part	Page
5P-8334	482
	484
	494
5P-8347	99
	186
5P-8440	770
	772
5P-8444	448
	452
	653
	763
	767
	777
5P-8500	1019
5P-8524	332
	1104
5P-8823	1158
	1167
5P-9085	327
	367
	377
	396
	800
	802
	805
	808
	811
	814
	817
	1210
	1212
5P-9212	607
	609
5P-9262	697
	876
5P-9297	377
	413
	739
	741
5P-9299	325
	572
	574
5P-9436	763
	767
5P-9617	78
5S-7349	301
5T-5682	477
5V-0353	895
	898
	901
	903
5V-0354	895
	898
	901
	903
5V-1386	895
	911
	912
	913
5V-1508	895
	913
5V-1511	895
	898
	901
	903
5V-1874	886
	887
	890
	895
5V-6152	368
5V-6153	368
5V-6380	590
5V-8780	115

6

Part	Page
6A-5591	420
	425
6B-6682	634
6C-2356	459
6C-3678	992
	1055
6C-3679	992
6C-8352	459
6C-8353	459
6D-1641	1014
	1018
6D-3479	412
6D-4244	108
	649
	754
	759
	1010
6D-4246	396
	470
	653
	658
	662
	666
	743
	1010
6D-4247	571
	577
6D-6146	332
6D-7889	396
6D-8305	641
6E-0198	694
6E-0381	692
	693
	821
6E-0410	696
6E-1637	839
6E-3263	679
6E-3264	679
6E-3265	679
6E-3268	697
	876
6E-3269	697
	876
6E-3272	697
	876
6E-3273	697
	876
6E-3274	697
	876
6E-3275	697
	876
6E-3276	697
	876
6E-3341	683
6E-3518	826
6E-4000	679
	681
6E-4003	679
	681
6E-4004	679
	681
6E-4009	683
6E-4288	700
6E-4431	826
6E-4701	799
	801
	804
	807
	810
	811
	813
	816

Part	Page
	►820
6E-4753	701
6E-5066	669
	685
	782
6E-5200	878
6E-5289	707
6E-5397	707
6E-6129	787
	788
6E-6155	683
6E-6158	683
6E-6527	697
	698
	699
	876
6E-6528	697
	698
	699
	876
6E-6536	697
	876
6E-6537	697
	876
6E-6538	697
	876
6E-6539	697
	876
6E-6540	697
	876
6F-0253	190
	348
	350
	962
6F-3930	500
6F-5188	406
	408
6F-7045	306
6F-7062	63
6G-2263	1014
6H-5139	406
	408
6H-9361	797
6I-1418	331
	1036
	1039
	1042
6I-4361	29
6I-4362	29
6I-4363	29
6I-4364	29
6I-4365	29
6I-4366	29
6I-4793	114
6I-8497	420
	425
6J-2419	843
	852
	856
	860
	864
	868
	872
6J-2680	653
	658
	662
	666
	763
	767
6J-3134	694
	843
	853
	857
	861

Part	Page
	865
	869
	873
6J-4568	710
6J-6506	707
6J-6516	705
	707
6J-6517	707
6K-0806	357
	585
	587
6K-2430	437
	439
	441
	445
6K-6307	843
	853
	857
	861
	865
	869
	873
6K-8178	770
	772
6L-2609	77
6L-3616	581
6M-5062	884
6N-1604	216
6N-3827	301
6N-6984	672
6N-7523	207
6P-0699	103
	105
6P-2233	463
6P-7742	463
6P-7743	463
6P-7772	463
6P-7773	462
6P-7968	462
6P-7983	462
6P-7985	462
6P-8003	463
6P-8005	463
6R-1941	1111
6S-3859	929
6S-6646	622
	992
6S-7827	827
	835
	852
6S-8620	103
	105
6T-3631	162
6T-3632	162
6T-3633	162
6T-6052	707
6T-6080	789
6T-6505	917
	921
6T-6506	917
	921
6T-6708	917
	921
6T-7061	420
	425
6V-0357	827
	831
	835
	843
	852
	856
	860
	864
	869

► **PRIMARY REFERENCE**

PART NUMBER INDEX

Part	Page
	873
6V-0400	780
6V-0484	396
	649
	754
	759
6V-0491	200
6V-0545	653
6V-0683	850
6V-0834	462
6V-0835	462
6V-0852	275
	411
	421
	426
	489
	498
	644
	653
	672
	754
	759
	763
	767
	799
	801
	804
	807
	810
	813
	816
	1210
	1212
6V-1355	103
	105
6V-1438	101
	108
	110
6V-1586	463
6V-1634	97
6V-1668	918
	922
6V-1720	421
	426
6V-1722	101
	108
	110
6V-1820	421
	426
	489
	491
6V-1889	101
	108
	110
	332
	641
	649
	658
	662
	666
	754
	759
	767
	770
	772
	1008
	1210
	1212
6V-1970	1
	1019
6V-2235	103
	105
6V-2317	20
	44
	46
	78
	357
6V-2369	263
	266
6V-2495	1010
6V-2686	299
6V-2687	332
	926
6V-2689	376
6V-3250	35
	52
	99
	112
6V-3251	35
	52
	96
6V-3265	638
	1104
	1107
6V-3505	696
6V-3531	437
	439
	441
	445
6V-3538	19
	27
6V-3668	544
6V-3822	130
	141
	143
	420
	425
6V-3831	24
	52
6V-3918	50
	61
	797
6V-3938	318
6V-3940	18
	19
	62
	81
	96
	99
	278
	280
	498
6V-3960	470
6V-3965	275
	411
	421
	426
	489
	496
	497
	498
	644
	672
	754
	759
	763
	767
	799
	802
	804
	817
6V-4248	57
	83
	420
	425
	463
6V-4249	43
	130
6V-4356	1010
6V-4357	1010
6V-4589	311
	312
6V-4604	515
	516
6V-5048	34
	140
	278
6V-5049	140
	141
6V-5063	53
	63
	96
	112
	1207
6V-5142	848
6V-5192	124
	298
6V-5195	705
	707
6V-5217	50
	357
	413
6V-5218	83
	498
	687
6V-5219	973
6V-5223	99
6V-5324	703
6V-5393	827
	831
	835
	843
	852
	856
	860
	864
	869
	873
6V-5555	819
	841
6V-5556	878
	879
6V-5657	731
	732
6V-5683	973
	975
	977
6V-5686	420
	425
	429
	432
	434
	437
	439
	441
	443
	445
6V-5696	22
	70
	71
	421
	426
	462
	489
6V-5815	85
6V-5817	200
6V-5839	37
	57
	77
	83
	85
	130
	141
	143
	157
	158
	356
	396
	412
	473
	489
	491
	992
6V-5842	49
	489
6V-5843	48
	694
6V-5851	1104
	1107
6V-6317	77
	143
	356
	396
	412
	420
	425
6V-6535	1110
6V-6604	615
6V-6609	52
	64
	99
	112
	295
6V-6715	226
6V-6716	342
6V-6889	141
6V-7238	40
	398
	1014
6V-7357	348
	350
	355
	514
	531
	918
	922
	999
	1016
6V-7419	1104
	1107
6V-7420	101
	108
	110
	1014
6V-7607	844
	852
	856
	860
	864
	869
	873
6V-7636	986
6V-7673	491
6V-7687	736
	737
6V-7732	429
	432
	434
	437
	439
	441
	443
	445
6V-7744	263
	266
	736

PART NUMBER INDEX

Part	Page
	737
	797
6V-7981	157
	158
	473
6V-8076	162
	640
	752
	757
6V-8116	694
6V-8128	491
6V-8149	22
	420
	425
6V-8185	201
	986
6V-8186	308
	310
6V-8188	175
	301
6V-8197	47
	421
	425
	463
6V-8201	677
6V-8224	790
	1010
6V-8225	925
6V-8227	687
	688
6V-8237	461
	647
	731
	732
6V-8336	45
6V-8352	697
	876
6V-8369	322
	331
6V-8378	184
	263
	266
	301
	308
	310
6V-8397	52
	54
	140
	150
	275
	447
	451
	640
	641
	644
	651
	652
	653
	657
	658
	661
	662
	665
	666
	672
	720
	721
	739
	741
	743
	745
	752
	753
	757
	758
	763
	767
	799
	801
	802
	804
	807
	808
	810
	811
	813
	814
	816
	817
	820
	843
	850
	852
	856
	860
	864
	868
	872
6V-8398	406
	408
	448
	452
	641
	649
	651
	652
	653
	657
	658
	661
	662
	665
	666
	720
	753
	758
	762
	763
	766
	767
	799
	802
	804
	817
6V-8467	792
6V-8625	152
	649
6V-8627	770
	772
	1210
6V-8628	1210
	1212
6V-8629	753
	758
6V-8633	652
	657
	661
	665
	762
	766
6V-8634	651
	657
	662
	666
	672
6V-8635	447
	451
	720
	801
	807
	810
	813
	816
6V-8636	83
	140
	150
	156
	640
	651
	657
	661
	665
	739
	741
	743
	745
	799
	801
	804
	807
	810
	811
	813
	816
6V-8637	649
	752
	757
	762
6V-8638	152
6V-8640	752
	758
6V-8641	752
	757
	1210
	1212
6V-8647	80
	801
	807
	810
	813
	1173
6V-8653	1031
6V-8715	152
	162
6V-8716	775
6V-8721	152
	649
6V-8722	753
	758
6V-8723	140
	162
	657
	661
	665
6V-8724	83
	140
	152
	447
	451
	640
	644
	652
	657
	661
	665
	720
	799
	802
	804
	808
	810
	814
	816
	844
	850
	852
	856
	860
	864
	868
	872
6V-8774	652
6V-8780	799
	802
	804
	808
	811
	814
	817
6V-8781	640
	799
	802
	804
	808
	811
	814
	817
	850
6V-8782	652
6V-8784	641
6V-8789	448
	452
6V-8928	1006
6V-8934	799
	802
	804
	808
	811
	814
	817
6V-8982	753
	758
6V-8983	753
	758
6V-8986	762
	766
6V-8988	762
	766
6V-9001	652
	745
6V-9004	753
	754
	758
	766
6V-9005	720
	748
	750
6V-9007	753
	758
	766
6V-9008	455
	777
	799
	801
	807
	810
	813
	816
6V-9027	51
	99
6V-9161	641
6V-9169	406
	408
	641
	763

► **PRIMARY REFERENCE**

PART NUMBER INDEX

Part	Page
	767
6V-9170	754
	759
6V-9182	753
	758
6V-9189	229
	230
	235
	236
6V-9197	986
6V-9200	640
	658
	661
	763
	767
6V-9489	641
6V-9497	689
6V-9632	264
	266
	267
	529
	651
	720
	988
6V-9746	447
	448
	451
	452
	460
	640
	641
	649
	742
	752
	753
	754
	757
	758
	762
	763
	766
	775
	822
6V-9804	235
	236
6V-9829	739
	745
	850
6V-9832	641
6V-9835	721
	802
	808
	814
	817
6V-9836	641
	652
	653
	658
	662
	666
	743
	745
	799
	802
	804
	808
	811
	814
	817
6V-9837	652
	653
	763
	767
6V-9838	753
	758
6V-9839	766
6V-9843	653
	721
	802
	817
6V-9846	753
	758
6V-9849	1210
	1212
6V-9850	162
	641
	644
	652
	743
	745
	799
	801
	804
	807
	810
	813
	816
6V-9851	152
	649
	653
	657
	658
	662
	666
	753
	758
6V-9852	757
6V-9853	649
	753
	754
	758
	762
6V-9854	720
	763
	801
	807
	810
	813
	816
6V-9872	651
	665
	720
	752
	757
	801
	807
	810
	813
	816
6V-9873	152
	155
6V-9875	447
	451
	753
	758
6V-9876	140
	162
6V-9877	649
6W-1638	414
	416
	418
6W-2888	742
6W-2890	742
6W-3468	1139
6W-4126	482
	484
	494
6W-5817	531
	541
6W-5818	541
6Y-1085	491
6Y-1087	491
6Y-1093	491
6Y-2109	463
6Y-2538	429
	432
	434
	437
	439
	441
	443
	445
6Y-2539	414
	416
	418
6Y-2540	414
	416
	418
6Y-3149	491
6Y-3151	491
6Y-4859	491
6Y-5352	462
6Y-5952	462
6Y-7879	462
6Y-7880	463
6Y-8030	463
6Y-9713	462
	13
	15
	47
7E-0759	99
7E-2968	28
7E-3870	132
	133
7E-6794	56
7E-7779	33
	38
7F-0560	180
7F-8268	24
7F-8607	1010
7F-9571	634
7F-9572	634
7F-9578	634
7F-9579	634
7G-0437	462
7G-2950	745
	1173
7G-2951	745
	1173
7G-3710	463
7G-3711	462
7G-3832	775
7G-3833	775
7G-3834	775
7G-5444	462
7G-5569	462
7G-5572	462
7G-5593	462
7G-5594	462
7G-5614	463
7G-5675	462
7G-5730	463
7G-6061	462
7G-6062	462
7G-6952	463
7G-7053	1064
7G-7917	200
	204
7G-7918	200
	204
7G-7919	200
	204
7G-8121	462
7G-8839	557
	646
7H-1447	797
7I-4078	640
7I-7439	772
7J-0204	34
	396
	460
	783
	785
	843
	853
	857
	861
	865
	869
	873
7J-1089	707
7J-4321	707
7J-5544	398
7J-9108	653
	658
	661
	662
	665
	666
	752
	753

7

Part	Page
7B-3028	420
	425
7B-7515	463
7B-8194	711
7C-1493	78
7C-2475	12
	13
	15
	81
7C-4354	171
	770
	772
7C-4868	619
7C-5403	81
7C-6976	62
7C-6977	62
7C-7431	52
	138
	1208
7C-7980	25
7D-1553	653
	1210
7D-5252	500
7D-6922	1001
7D-7233	77
	103
	105
	150
	342
	448
	452
	757
	763
	1210
	1212
7D-7469	477
7D-8348	557
7D-8349	557
7D-9014	675
7E-0519	12

PART NUMBER INDEX

Part	Page
	757
	758
	827
	831
	835
	852
	856
	860
	864
	868
	872
7J-9885	647
7J-9933	787
	788
	826
7K-1181	101
	103
	105
	108
	118
	171
	181
	198
	202
	204
	210
	215
	220
	222
	224
	246
	248
	251
	257
	313
	325
	327
	329
	331
	337
	338
	340
	342
	346
	348
	350
	352
	355
	356
	359
	363
	368
	370
	372
	374
	379
	381
	447
	721
	743
	745
	770
	772
	800
	805
	817
	979
	999
	1024
	1025
	1067
	1210
	1212
7K-3176	1008
7K-3304	1008
7K-5634	408
7K-6536	992
7K-9205	895
	898
	901
	903
7K-9209	895
	898
	901
	903
7K-9210	724
	726
	895
	898
	901
	903
	908
7K-9211	722
	723
	724
	725
	726
7K-9212	895
	898
	901
	903
	908
7K-9218	895
	898
	901
	903
7L-2894	55
	301
7M-5130	705
7M-8485	103
	105
	404
	405
	429
	432
	434
	437
	439
	441
	443
	445
	447
	448
	451
	452
	455
	460
	694
	702
	720
	748
	750
	752
	753
	757
	758
	775
	777
	787
	788
	799
	801
	807
	810
	813
	816
	823
	824
	825
	827
	831
	832
	835
	839
	843
	852
	853
	856
	857
	860
	861
	864
	865
	869
	873
7M-9918	137
7N-0296	299
7N-0718	177
	306
7N-2059	299
7N-5683	27
7N-7221	376
	1089
7N-9017	208
	209
7N-9801	323
7N-9943	228
7P-1695	60
	303
	304
7S-0530	83
	101
	108
	110
7S-2962	420
	425
7S-4534	463
7S-5005	166
7S-6369	122
	123
7S-8158	420
	425
7S-8554	420
	425
7S-8920	406
	408
7S-8921	406
	408
7T-0020	228
7T-0093	204
7T-0094	208
	209
7T-0920	929
	934
7T-1099	517
	529
	535
	537
	539
	929
	934
7T-1285	463
7T-3267	301
7T-3268	301
7T-3276	301
7T-3277	301
7T-3278	301
7T-3279	301
7T-3451	301
7T-3454	301
7T-4532	939
	942
7T-5961	1176
7T-5963	1176
7T-6496	783
	785
7T-6799	331
7U-4891	263
	266
	331
7U-4892	263
	266
7V-2882	721
	891
7V-3791	416
7V-8632	557
7V-8633	557
7V-9791	622
7W-3872	20
7W-5095	47
7W-5340	53
	81
7W-7381	770
	772
7W-8106	563
7W-9737	86
7W-9738	86
7W-9740	86
7W-9930	86
7X-0339	175
7X-0490	921
7X-0492	770
7X-0510	59
	770
7X-0515	115
	518
	581
	616
	617
	1200
7X-0562	301
7X-0578	532
7X-0579	118
	946
7X-0582	1168
7X-0589	549
	598
	600
7X-0591	797
7X-0593	1047
	1048
	1049
	1051
7X-0599	622
	763
	767
7X-0603	596
	597
	619
	1082
7X-0605	132
	133
	134
7X-0607	170
7X-0611	675
7X-0613	162
7X-0618	544
7X-0620	263
	266
7X-0622	420
	425
7X-0752	505
	535
	537
	539
	553

► **PRIMARY REFERENCE**

PART NUMBER INDEX

Part	Page
7X-0818	272
	332
7X-0873	752
	757
7X-1041	1089
7X-1443	103
	105
	125
	126
7X-1553	677
7X-2444	752
	757
	762
	766
	811
7X-2459	644
	753
	758
7X-2533	226
7X-2536	572
7X-2537	118
	637
	988
7X-2538	940
	941
	943
7X-2543	653
	658
	662
	666
	754
	759
7X-2545	1072
7X-2546	115
7X-2550	557
	649
7X-2552	101
	108
	110
	327
	532
	547
	548
	1082
7X-2553	115
	518
	616
	617
	763
	767
	1200
7X-2554	170
7X-2555	619
	992
7X-2563	59
7X-2564	479
	481
	572
	574
	577
7X-2586	510
7X-2618	641
7X-2619	383
	973
	975
7X-2622	59
7X-2634	929
	930
	934
7X-3229	1215
7X-3332	136
7X-3373	301
7X-3383	1184
7X-3391	602
7X-3392	721
	748
	750
7X-3393	263
	266
7X-4743	754
	759
	763
	767
7X-4776	701
7X-5331	770
	772
7X-6041	988
7X-6222	396
7X-6315	192
	193
	195
7X-7608	462
7X-7644	1215
7X-7662	272
7X-7729	94
	103
	105
	115
	132
	133
	134
	162
	177
	276
	324
	357
	398
	448
	452
	514
	527
	528
	529
	530
	532
	541
	545
	559
	567
	572
	574
	577
	585
	587
	598
	600
	602
	607
	609
	619
	653
	674
	675
	721
	736
	737
	748
	750
	754
	759
	763
	767
	780
	944
	946
	1073
	1082
7X-7739	143
7X-7877	772
7X-7945	801
	804
	816
7Y-1976	103
	105
7Y-2522	550
7Y-3173	320
	1004
7Y-3951	257
7Y-3954	257
7Y-4538	780
7Y-5074	569
	1210
	1212
7Y-5241	675
7Y-5458	316
7Y-5464	316
7Y-7256	1057
7Y-8763	517
8	
8B-6342	429
	432
	434
	437
	439
	441
	443
	445
8B-6343	429
	432
	434
	437
	439
	441
	443
	445
8C-0563	31
8C-0596	359
	363
8C-3056	204
	359
	363
8C-3079	166
8C-3095	226
8C-3097	701
8C-3121	1073
8C-3132	696
8C-3205	649
	775
8C-3206	410
	653
	658
	662
	666
	705
	707
	721
	748
	750
	763
	767
	778
	780
	797
8C-3210	171
8C-3226	819
	841
8C-3398	1202
8C-3445	78
	1209
8C-3446	78
	411
	754
	759
8C-3447	411
8C-3451	752
	757
8C-3655	301
8C-5064	770
8C-5172	171
8C-5607	220
	222
	224
	226
8C-5608	220
	222
	224
	226
8C-6354	331
8C-6358	180
8C-6364	1067
8C-6416	651
8C-6438	1033
	1052
8C-6711	167
8C-6712	754
	759
8C-6738	1095
8C-6855	59
8C-6959	150
	154
8C-7581	917
	921
8C-8451	569
	571
	623
	629
8C-8478	59
8C-8585	598
	600
8C-8762	447
	451
8C-8988	641
	644
	652
	811
	850
8D-2714	463
8D-3791	590
8D-6542	1006
8D-9671	641
8E-1143	498
8E-1666	462
8E-4743	1186
8E-5247	491
8E-5300	1112
	1113
	1115
	1117
	1119
	1121
	1122
	1123
	1125
	1127
	1128
	1130
	1134
	1135
	1137
	1138
8E-5301	1112

PART NUMBER INDEX

Part	Page
	1113
	1115
	1117
	1119
	1121
	1122
	1123
	1125
	1127
	1128
	1130
	1134
	1135
	1137
	1138
8E-5310	1132
	1146
8E-5311	1132
	1146
8E-5559	1186
8E-6539	491
8E-6647	491
8E-6648	491
8E-7475	489
8E-7476	462
8E-8297	463
8E-8299	463
8E-9893	498
8F-1434	184
	263
	266
	301
	308
	310
8F-3469	827
	835
	843
	852
8F-7219	145
8F-9206	705
	707
	1010
8G-6035	992
8H-1141	301
8H-2046	76
8H-5244	72
	74
8H-5303	306
8H-5306	306
8H-7521	420
	425
8J-0331	826
8J-0412	679
	681
8J-0426	448
	452
8J-2933	1110
8J-4143	1186
8J-6815	707
8J-6875	651
	704
8K-4691	778
8L-2786	52
	140
	881
8L-8413	1089
	1217
8M-2769	101
8M-2770	103
	105
	720
	763
	767
	800
	802
	805
	808
	811
	814
	817
8M-2771	364
8M-2772	181
	585
8M-2773	379
	585
	587
	641
	653
	658
	662
	666
	800
	802
	805
	808
	811
	814
	817
8M-5253	498
8M-5860	31
	32
8M-7160	420
	425
8M-8489	473
8N-0869	177
	376
8N-1532	200
8N-1533	202
	204
8N-1535	200
	202
	204
8N-1536	200
8N-1537	200
8N-1540	200
	202
	204
8N-1541	202
	204
8N-1542	200
8N-1543	202
	204
8N-1548	200
	202
	204
8N-1549	202
	204
	208
	209
8N-2622	318
	320
8N-8846	105
8P-1812	473
8P-3251	420
	425
8P-6364	929
	934
8P-8950	462
8P-9723	463
8P-9770	1115
	1178
8R-0721	651
8R-1496	752
	757
8R-1888	392
	394
8R-1893	392
8R-2916	977
8R-2918	977
8R-3695	348
	350
	355
	721
	952
	954
	956
	958
	960
	1006
8R-4568	392
	394
8R-4571	392
	394
8R-5144	447
	451
8R-8088	792
8R-9207	392
	394
8R-9215	414
	416
	418
8R-9843	1139
	1140
8S-0023	720
	748
	750
8S-0024	720
	748
	750
8S-0527	462
8S-0934	1072
8S-2225	1061
8S-2634	177
	179
8S-3426	463
8S-6365	489
8S-7583	342
8S-7803	915
	926
8T-0078	762
8T-0100	42
	44
	46
	70
	71
	143
	162
	396
8T-0106	463
8T-0122	263
	266
8T-0226	49
8T-0276	78
8T-0282	544
8T-0288	318
	320
8T-0292	122
	123
8T-0293	63
8T-0309	1100
8T-0328	184
	263
	266
	301
	318
	320
	998
8T-0336	429
	432
	434
	437
	439
	441
	443
	445
8T-0337	772
	918
	922
	998
8T-0341	718
	719
8T-0358	420
	425
8T-0372	414
	418
	482
	483
	489
8T-0375	420
	425
8T-0380	461
8T-0389	177
	231
	232
	233
	234
	235
	236
	237
	238
	239
	240
	241
	242
	243
	527
	528
	532
	594
	598
	600
8T-0404	653
	658
	662
	666
8T-0644	112
8T-0649	429
	432
	434
	437
	439
	441
	443
	445
8T-0667	731
	732
8T-0741	641
8T-1117	80
8T-1159	155
	156
	973
	975
	977
8T-1160	94
8T-1685	460
8T-1788	731
	732
8T-1791	733
8T-1887	745
8T-1888	745
8T-1889	152
	1022
	1023
	1024
	1025
8T-1890	152

► **PRIMARY REFERENCE**

PART NUMBER INDEX

Part	Page
	1022
	1023
	1024
	1025
8T-1905	802
	804
	817
8T-2225	379
8T-2275	797
8T-2561	792
	1010
8T-2562	998
	1042
8T-2899	1062
8T-2925	392
	394
8T-3282	37
	437
	439
	441
	445
8T-3312	752
	757
8T-3490	77
	94
	177
	198
	272
	276
	338
	340
	342
	359
	363
	376
	447
	517
	529
	530
	531
	535
	537
	554
	569
	611
	612
	619
	640
	649
	745
	752
	757
	791
	929
	934
	977
	983
	1010
	1014
	1210
	1212
8T-3518	180
8T-3597	94
	517
	529
	530
	535
	537
	721
	799
8T-3612	143
	276
	413
	986
8T-3635	539
	553
	929
	934
8T-3647	175
	1036
	1039
	1042
8T-3653	59
8T-3666	39
8T-3844	1018
8T-3851	94
	503
	505
	535
	537
	539
	553
	720
	887
	891
	893
	894
8T-3985	532
8T-4121	59
	65
	79
	101
	103
	105
	108
	110
	125
	126
	130
	136
	141
	150
	171
	175
	177
	198
	220
	222
	224
	235
	236
	246
	248
	251
	253
	255
	257
	263
	266
	272
	276
	299
	303
	304
	318
	325
	327
	332
	338
	340
	342
	346
	352
	359
	363
	368
	374
	377
	379
	381
	383
	387
	406
	408
	410
	448
	452
	455
	459
	460
	470
	501
	518
	531
	541
	543
	544
	546
	559
	565
	567
	569
	571
	572
	574
	577
	581
	585
	587
	588
	594
	602
	603
	604
	611
	612
	614
	619
	622
	633
	638
	641
	644
	649
	653
	658
	662
	666
	672
	702
	705
	707
	721
	739
	741
	743
	745
	748
	750
	754
	759
	763
	767
	770
	772
	775
	777
	778
	780
	792
	797
	800
	802
	805
	808
	811
	814
	817
	850
	929
	934
	973
	975
	977
	979
	990
	992
	995
	996
	999
	1006
	1010
	1014
	1018
	1022
	1023
	1024
	1025
	1029
	1030
	1031
	1036
	1104
	1107
	1200
	1210
	1212
8T-4122	521
	523
	532
	792
8T-4123	59
	406
	408
	459
	479
	481
	557
	789
8T-4131	459
	479
	481
	1185
8T-4132	115
8T-4133	60
	101
	103
	108
	110
	136
	171
	175
	177
	220
	222
	224
	246
	248
	251
	257
	272
	324
	342
	368
	377
	379

► **PRIMARY REFERENCE**

PART NUMBER INDEX

Part	Page	Part	Page	Part	Page	Part	Page
	381		363		134		995
	448		368		141		996
	452		381		150		999
	501		410		162		1010
	532		448		175		1031
	541		452		177		1104
	559		460		198		1107
	563		514		253		1210
	581		518		255		1212
	585		541		263	8T-4138	220
	587		545		266		222
	588		546		272		224
	598		567		325		257
	600		569		327		263
	607		571		332		266
	609		572		338		332
	614		574		340		342
	619		577		342		559
	633		581		346		622
	641		604		352		720
	644		614		359		828
	653		619		363		832
	658		633		368		836
	662		641		374		844
	666		649		377		852
	743		653		398		856
	745		658		406		860
	754		662		408		864
	759		666		410		869
	763		674		448		873
	767		675		452		948
	770		702		459		952
	772		720		501		954
	800		748		532		956
	802		750		572		958
	805		754		574		960
	808		759		577		962
	811		763		585		1033
	814		767		587		1052
	817		770		602		1104
	929		772		619		1107
	934		775		622	8T-4139	368
	1010		777		638		518
	1022		778		641		526
	1023		780		653		565
	1024		800		658		619
	1025		802		662		641
	1082		805		666		654
	1087		808		672		720
	1202		811		720		743
	1210		814		739		745
	1212		817		741		777
8T-4136	101		929		743		778
	103		934		745		780
	105		977		754		792
	108		1010		759		800
	110		1014		763		802
	136		1073		767		805
	150		1082		770		807
	171		1104		772		810
	198		1107		792		813
	220		1200		800		816
	222		1210		802		850
	224		1212		805		992
	253	8T-4137	58		807		1010
	255		79		810		1200
	257		101		813	8T-4140	754
	263		103		816		759
	266		105		850	8T-4145	839
	276		108		929		844
	327		110		934		852
	332		115		944		856
	342		132		946		860
	359		133		979		864

► **PRIMARY REFERENCE**

PART NUMBER INDEX

Part	Page
	868
	872
8T-4170	459
8T-4171	271
	332
	377
	1028
	1031
8T-4172	65
	654
	658
	662
	666
	743
	745
8T-4176	557
8T-4179	1173
8T-4181	199
	360
	364
	452
8T-4182	448
	452
	470
	531
	565
	641
8T-4183	532
	549
	557
	565
	598
	607
	609
	654
	658
	662
	666
	736
	737
	763
	767
	789
	797
8T-4184	763
	767
	780
	797
	1072
8T-4185	141
	177
	179
	406
	408
	569
	571
	641
	654
	658
	662
	666
	694
	775
	973
	975
	977
8T-4186	115
	198
	377
	514
	544
	598
	600
	607
	609
	611
	612
	654
	658
	662
	666
	1088
8T-4189	299
	359
	363
	412
	754
	759
	763
	767
	986
	1055
8T-4190	509
	512
	619
8T-4191	299
	303
	304
	357
	383
	532
	585
	587
	973
8T-4192	177
	448
	452
	532
	549
	557
	646
	654
	720
	745
	748
	750
	800
	802
	805
	808
	811
	814
	817
8T-4193	521
	523
	622
	797
8T-4194	675
	742
	763
	767
	772
8T-4195	58
	59
	94
	101
	103
	105
	108
	110
	115
	125
	126
	171
	175
	235
	236
	246
	248
	251
	276
	299
	332
	342
	410
	448
	452
	526
	529
	530
	532
	549
	565
	567
	598
	600
	603
	604
	607
	609
	654
	662
	666
	694
	745
	754
	759
	763
	767
	770
	772
	792
	944
	946
	973
	975
	1006
	1010
	1014
	1022
	1023
	1024
	1025
	1029
	1030
	1082
8T-4196	103
	105
	115
	130
	141
	175
	177
	377
	387
	410
	448
	452
	455
	470
	521
	523
	527
	528
	543
	559
	614
	649
	654
	658
	662
	666
	672
	694
	702
	705
	707
	720
	736
	737
	748
	750
	754
	759
	763
	767
	775
	778
	780
	797
	1010
8T-4198	654
	658
	662
	666
	763
	767
8T-4200	320
	359
	363
	572
	574
	577
8T-4201	797
8T-4205	201
	257
	263
	266
	301
	332
	348
	350
	355
	383
	470
	622
	671
	721
	918
	922
	948
	950
	952
	954
	956
	958
	960
	962
	973
	975
	983
	1016
	1057
	1059
	1060
	1094
	1104
	1107
8T-4219	535
	539
8T-4222	929
	934
8T-4223	125
	126
	175
	177

PART NUMBER INDEX

Part	Page	Part	Page	Part	Page	Part	Page
	272		359		521		766
	342		364		523	8T-5400	1104
	368		412		926		1107
	377		572		1029	8T-5414	420
	448		574		1065	8T-5429	653
	452		577		1073		658
	532		603	8T-4910	115		662
	549		604		132		666
	555		637		133	8T-5432	1033
	556		641		134		1052
	557		705		654	8T-5436	654
	559		754		658		658
	565		759		662		662
	567		764		666		666
	574		767		764	8T-5439	59
	577		940		767		479
	598		941	8T-4935	253		481
	600		943		255		572
	620		948		535		574
	633		950		537		577
	638		952		539		895
	641		954	8T-4956	115		898
	649		956		272		901
	654		958		674		903
	658		960		720		1170
	662		962		748		1185
	666		986		750	8T-5460	578
	674		1008		775		895
	675		1010		780		898
	721		1018	8T-4967	539		901
	736		1029	8T-4970	263		903
	737		1065		266	8T-5677	359
	742	8T-4226	115		332		363
	743		141		574	8T-6381	789
	745		607		577	8T-6430	898
	748		609		1104		901
	750		672	8T-4971	115		903
	763		754		272		1168
	767		759		276		1170
	775		1082		622		1184
	777		1087		986	8T-6466	115
	778		1088		1016		150
	780	8T-4244	132	8T-4983	103		455
	792		133		105		662
	797		177	8T-4984	651		666
	800		332		657		707
	802		342		661		754
	805		377		665		759
	808		609	8T-5001	401		764
	811		620	8T-5002	429		767
	814		633		432		775
	817		638		434		778
	819		654		437		780
	841		658		439		792
	850		662		441		1010
	996		666		443	8T-6684	410
	1010		674		445		447
	1072		742	8T-5005	448		451
	1173		819		452	8T-6745	731
8T-4224	20		841		649		732
	24		977		654	8T-6870	332
	83		996		658		620
	94		1082		662	8T-6876	753
	141	8T-4648	780		666		758
	175		792		705	8T-6912	230
	177	8T-4742	986		707		603
	179	8T-4753	332		754		604
	229		999		759		1014
	230	8T-4780	895		778		1036
	272		898	8T-5035	472		1039
	276		901	8T-5043	651		1042
	299		903	8T-5062	926	8T-6974	368
	320	8T-4896	1025	8T-5389	448	8T-7044	129
	332	8T-4908	94		452	8T-7059	521

► **PRIMARY REFERENCE**

PART NUMBER INDEX

Part	Page
	523
8T-7329	754
	759
8T-7338	675
8T-7525	794
8T-7529	654
8T-7546	672
8T-7547	177
	179
	946
8T-7568	733
8T-7934	175
	614
	641
	649
	754
	759
8T-7950	37
8T-7963	687
	973
8T-7971	789
8T-8442	70
	71
	623
	629
	677
	679
	681
	698
	699
	876
8T-8566	301
8T-8569	301
8T-8641	926
8T-8729	143
	162
	171
	190
	212
	213
	228
	232
	234
	237
	238
	239
	240
	241
	242
	243
	244
	245
	257
	261
	263
	266
	294
	308
	310
	311
	323
	324
	325
	331
	342
	348
	350
	359
	363
	374
	376
	411
	734
	917
	921
	962
	967
	969
	970
	971
	980
	982
	1045
	1046
	1067
	1089
	1092
8T-8730	213
	309
	325
	374
	980
	1067
8T-8737	140
	200
	202
	204
	206
	207
	208
	209
	210
	211
	212
	213
	214
	215
	231
	232
	233
	234
	237
	238
	239
	240
	241
	242
	243
	269
	316
	322
	325
	331
	332
	337
	342
	356
	370
	372
	374
	376
	396
	965
	966
	967
	969
	970
	971
	982
	983
	1044
	1045
	1067
8T-8827	202
	204
8T-8899	753
	758
8T-8902	672
8T-8987	448
	451
8T-9005	988
	1006
8T-9079	1110
	1176
	1177
8T-9371	1089
8T-9515	402
	403
	794
8T-9597	794
8T-9655	143
	163
	185
	186
	331
	1036
	1039
	1042
8T-9658	790
	791
8T-9757	177
8T-9884	301
8U-5951	677
8V-1412	484
	485
8V-2491	1117
	1119
8V-7162	515
	516
8X-0674	789
8X-5027	651
	657
	661
	665
8X-5804	331
8X-5963	399
	525
	539
	551
8X-6780	399
	551
	554
8X-7853	1031
8Y-3795	539
8Y-4489	505
	539
8Y-4501	986
8Y-5910	926
8Y-5913	926
8Y-5914	926
8Y-6338	986
8Y-7023	535
	537
8Y-8387	651
8Y-8388	654
9	
9B-0453	638
9B-1117	689
9B-7233	318
	320
9C-0093	895
	898
	901
	903
9C-4935	721
	746
	891
9C-5336	616
9C-5344	447
	452
9C-5853	416
9C-6016	401
9C-6041	429
	432
	434
	437
	439
	441
	443
	445
9C-6327	429
	432
	434
	437
	439
	441
	443
	445
9C-6809	535
	537
	539
9C-7727	392
	394
9C-7863	539
	891
9C-7907	578
	895
	898
	901
	903
	1168
	1184
9C-8287	414
	416
	418
9C-8418	392
	394
9C-8419	429
	432
	434
	437
	439
	441
	443
	445
9C-8421	429
	432
	437
	439
	443
	445
9C-9159	483
	486
9C-9191	437
	439
	441
	445
9C-9194	429
	432
	434
	437
	439
	441
	443
	445
9C-9537	392
	394
9F-2247	301
9F-2547	301
9F-5644	306
9G-0003	177
9G-0004	177

PART NUMBER INDEX

Part	Page
9G-1234	462
9G-1491	462
9G-2673	988
	1032
9G-3695	917
	921
	980
9G-4343	200
	264
	266
9G-5127	406
	408
9G-5315	429
	434
	437
	441
	443
	445
9G-5828	463
9G-6257	420
	425
9G-6258	420
	425
9G-7411	473
9G-7412	473
9G-7683	463
9G-8661	1088
9H-1024	421
	426
9H-5546	463
9H-5604	462
9H-6454	797
9J-0477	711
9J-5550	731
	732
9J-5754	783
	785
9J-7099	732
9J-8441	1186
9J-9821	705
9K-0443	487
9K-7951	500
9K-9731	898
	901
	903
9M-0164	406
	408
9M-1503	462
9M-1974	19
	20
	50
	61
	70
	71
	77
	78
	80
	81
	83
	96
	99
	122
	123
	124
	141
	152
	163
	185
	186
	298
	357
	396
	412
	413
	498
	620
	687
	707
	973
9M-2110	498
9M-2904	79
	1001
9M-4335	392
	394
9M-4995	569
	574
9M-5024	472
9M-5137	634
9M-5138	634
9M-5139	634
9M-5140	634
9M-5870	332
9M-5884	559
9M-7394	408
	797
9M-8406	106
	150
	198
	318
	327
	381
	654
	658
	662
	666
	743
	746
	770
	772
	918
	922
	1008
	1010
9N-0869	42
	163
	185
	186
	332
	770
	772
	1036
	1039
	1042
9N-4460	462
9P-4898	762
	766
9P-5558	463
9R-2081	1010
9R-2613	529
	535
	537
	539
	554
9R-2640	535
	537
	539
	745
	1173
9R-2821	619
9R-3761	554
9R-3845	539
9R-4595	535
	537
9R-5383	177
	179
9R-5616	258
9R-9806	200
9R-9866	447
9S-1812	581
	588
9S-2396	175
9S-4167	139
	140
9S-4180	831
	839
	843
	857
	861
	865
	869
	873
9S-4181	429
	432
	434
	437
	439
	441
	443
	445
	452
	827
	831
	835
	843
	853
	857
	861
	865
	869
	873
9S-4182	705
	827
	831
	835
	843
	853
	856
	860
	864
	869
9S-4183	677
	707
	797
9S-4185	140
	653
	662
	666
	694
	707
9S-4190	783
	785
9S-4191	140
	278
	458
	694
	705
	827
	831
	835
	843
	852
	856
	860
	864
	868
	872
9S-6154	707
9S-6155	711
9S-7712	581
	588
9S-8001	498
	643
	669
	782
	827
	835
	839
	853
9S-8002	34
	278
	669
	677
	679
	681
	698
	699
	705
	707
	727
	728
	782
	794
	819
	839
	841
	876
9S-8003	139
	826
9S-8004	34
	140
	145
	827
	831
	835
	839
	843
	853
	856
	860
	864
	869
	873
9S-8005	794
	823
	824
9S-8006	29
	34
	705
	707
	825
9S-8007	783
	785
	843
	853
	857
	861
	865
	869
	873
9S-8008	63
	171
9S-9334	31
	34
	443
	445
	787
	788
9T-0546	827
	835
	852
9T-1573	►826
	839
9T-7202	826
9T-7220	707
9T-8672	707

► **PRIMARY REFERENCE**

PART NUMBER INDEX

Part	Page
9T-9226	797
9U-0512	1047
	1048
	1049
	1051
9U-0830	996
9U-1912	414
	416
	418
9U-1913	414
	416
	418
9U-2331	998
9U-2332	999
9U-4431	998
	999
9U-6998	103
	105
9U-8263	998
9U-8668	498
9U-8669	498
9V-0334	531
9V-1820	515
	516
9V-2429	414
	418
9V-2899	1139
	1140
9V-6575	1132
	1146
9W-0517	462
9W-0518	462
9W-0519	463
9W-0844	246
	251
	261
	917
	921
	1028
9W-0852	263
	266
	331
	790
	791
	917
	921
	1060
9W-1441	331
9W-1442	331
9W-1446	331
9W-1951	214
9W-2032	337
9W-2033	200
9W-6747	1147
	1148
	1149
	1156
	1157
	1163
	1164
	1165
	1166
9W-7783	843
	852
	856
	860
	864
	868
	872
9W-9930	59
9X-0145	200
9X-0262	278
	280
9X-1046	332
	1030
	1057
9X-1054	200
	337
	376
9X-1055	376
9X-1056	200
9X-1813	283
	284
	285
	291
	293
	307
	311
	312
	324
	342
	376
	411
	734
	1062
9X-2027	429
	432
	434
	437
	439
	441
	443
	445
	654
	839
9X-2032	929
	934
	1030
9X-2038	258
	320
	929
	934
9X-2040	541
	983
	1006
	1016
	1036
	1039
	1042
9X-2041	532
	1006
	1067
9X-2042	320
	929
	934
	986
	1006
9X-2043	348
	350
	355
	988
9X-2044	253
	255
	258
	348
	350
	559
	929
	934
	988
	1057
	1059
	1060
9X-2045	721
	948
	950
	952
	954
	956
	958
	960
	962
	1006
	1054
	1059
	1060
	1077
9X-2046	929
	934
	1006
	1059
	1060
9X-2075	544
9X-2085	653
9X-2098	78
9X-2099	20
	44
	46
	83
9X-2126	506
9X-2289	640
9X-2297	743
	745
9X-2305	86
9X-2480	220
	222
	224
	379
	381
	654
	799
	802
	805
	808
	811
	814
	817
9X-2488	1018
9X-2615	461
9X-2616	930
	935
9X-2619	414
	416
	418
9X-2620	414
	416
	418
9X-3265	396
9X-3294	8
	216
9X-3401	200
	202
	204
	206
	207
	208
	209
	210
	211
	212
	213
	214
	215
	248
	257
	282
	283
	291
	293
	312
	332
	337
	338
	340
	346
	352
	356
	367
	370
	372
	376
	379
	942
	948
	950
	952
	954
	983
9X-3402	200
	202
	204
	206
	207
	208
	209
	210
	211
	212
	213
	214
	215
	248
	331
	338
	340
	342
	346
	348
	350
	352
	356
	367
	370
	372
	376
	379
	396
	983
9X-3463	231
	233
9X-3465	237
	238
	239
	240
	241
	242
	243
9X-3490	202
	204
9X-4244	229
	230
9X-4492	244
	245
	257
9X-4493	244
	245
	257
9X-4609	396
9X-4824	301
9X-6032	638
9X-6155	986
9X-6165	220
	222
	224
	226
	332

► **PRIMARY REFERENCE**

PART NUMBER INDEX

Part	Page
	348
	350
	355
	514
	532
	1018
9X-6381	844
	857
	861
	865
	869
	873
9X-6395	826
	878
9X-6493	414
	416
	418
9X-6582	654
9X-6772	200
	206
	372
9X-7373	918
	922
9X-7378	360
	364
9X-7380	1010
9X-7381	470
	770
	772
	1008
	1010
9X-7382	1008
	1010
9X-7383	1008
	1010
9X-7384	1008
	1010
9X-7385	939
	942
9X-7680	679
	876
9X-7712	31
	34
9X-7737	311
	312
9X-8243	210
9X-8256	115
	171
	199
	220
	222
	224
	271
	272
	276
	332
	342
	360
	364
	368
	379
	381
	507
	559
	572
	574
	577
	654
	689
	799
	802
	805
	808
	811
	814
	817
	839
	999
	1028
	1031
	1033
	1052
9X-8257	101
	108
	110
	115
	170
	360
	364
	509
	512
	620
	622
	641
	675
	754
	759
	764
	767
	992
	1082
9X-8258	509
	510
	512
9X-8267	167
	377
9X-8268	421
	426
	489
9X-8402	754
	759
9X-8487	503
	539
9X-8582	585
9X-8873	926
9X-8896	733
9X-8916	28
9X-8918	1055
9X-8979	677
	679
	681
9X-9510	301
9X-9825	179
9Y-2700	448
	452
9Y-2988	24
9Y-3368	29
9Y-9236	103
	105
	363
031-4155	1073
031-4392	675
032-1464	105
033-5879	881
033-6027	75
033-6033	881
033-6034	698
033-6043	697
	698
	876
033-6783	762
	766
033-8248	83
	342
	359
	363
	572
053-0558	451
061-6711	462
061-9455	54
	77
061-9456	24
	52
064-3843	491
067-2551	140
	641
067-3045	108
	110
	447
	743
	745
	753
	759
	763
077-3241	404
	405
085-7356	498
085-8091	649
	775
	839
	1018
090-8247	535
	537
091-0081	105
	272
	447
	451
091-1735	554
091-1745	640
091-9035	470
092-4924	523
092-9741	531
095-0673	441
	443
095-0827	623
	629
095-0841	996
095-0913	753
	759
095-0919	694
095-1513	831
	844
	857
	861
	865
	868
	872
095-1750	880
095-1751	848
095-9805	679
	681
096-0067	986
	996
096-0192	331
096-0194	458
096-3831	787
	788
	839
096-4839	360
096-4840	348
	350
	355
096-6166	318
	392
	394
	739
	741
	745
	850
	878
	917
	921
	1030
096-6467	895
	898
	901
	903
098-8968	331
	982
099-2374	982
099-3001	447
	754
	759
	763
099-3047	794
099-3649	24
	637
	641
	770
	772
099-7241	977
100-3253	231
	232
	233
	234
	237
	238
	239
	240
	241
	242
	243
100-3254	231
	232
	233
	234
	237
	238
	239
	240
	241
	242
	243
100-3255	231
	232
	233
	234
	237
	238
	239
	240
	241

0

1

► **PRIMARY REFERENCE**

PART NUMBER INDEX

Part	Page
	242
	243
100-3320	215
100-5041	200
	337
	376
100-6551	49
100-6674	917
	921
100-7870	1014
100-8010	702
	839
100-8011	839
101-0003	1089
101-0523	29
101-0524	29
101-0525	29
101-0852	195
101-3128	185
	186
101-3129	60
101-3846	640
101-7396	276
101-9161	980
102-8702	721
102-8801	200
	202
	204
	206
	207
	211
	214
	215
	333
	372
	376
	917
	921
	980
102-8802	171
	173
	174
	200
	202
	204
	208
	209
	210
	212
	226
	244
	245
	248
	257
	261
	269
	291
	293
	294
	307
	308
	310
	311
	323
	324
	325
	338
	340
	346
	348
	350
	359
	363
	367
	374
	411
	734
	790
	791
	882
	917
	921
	939
	942
	962
	1024
	1025
	1089
	1092
102-8803	140
	143
	162
	190
	207
	208
	209
	210
	212
	228
	244
	245
	257
	282
	283
	333
	342
	359
	363
	372
	376
	379
102-8804	200
	202
	213
	325
	331
	352
	374
	1046
102-8805	210
	211
	214
	231
	232
	233
	234
	237
	238
	239
	240
	241
	242
	243
	263
	266
	316
	320
	331
	372
	982
	983
	1044
	1045
	1060
	1067
102-8806	140
	322
	325
	331
	356
	370
	374
102-9542	482
	483
103-0010	1014
103-1712	420
103-2529	154
103-5796	1170
104-2091	988
104-3351	402
	403
104-3353	402
	403
104-3354	402
104-3355	402
104-3358	402
	403
104-3359	402
	403
105-1634	677
105-1635	677
105-1636	677
105-1638	677
105-1642	677
105-1646	684
105-1648	684
105-1650	684
105-1651	684
105-1653	684
105-2145	697
	876
105-3031	677
105-3032	677
105-3033	677
105-3477	973
	975
	977
105-3481	1055
105-4177	640
105-6117	1062
105-7704	278
	280
105-9702	301
106-0107	188
	190
	▶316
106-0210	316
106-0421	3
	720
	887
	891
106-1774	640
	▶643
106-4155	202
	204
106-4175	557
107-0071	705
107-3157	521
	523
107-3394	▶1179
107-3786	689
107-4393	1008
107-4394	1008
107-4395	1008
107-4396	1008
107-4397	1010
107-4399	1010
107-4602	929
	934
107-4749	379
	381
107-7604	29
107-7694	18
107-7708	25
107-8265	640
107-9403	531
108-2949	177
108-3320	331
108-4311	1089
108-5157	878
108-5471	986
109-1779	679
	681
109-3207	146
	147
	148
	149
	823
109-4731	437
	439
	441
	445
109-5008	929
	934
	986
109-5824	752
	757
109-8203	927
	928
	▶1020
109-9015	1163
	▶1176
109-9016	1176
109-9017	1176
109-9052	1165
	1166
	▶1186
110-2023	503
	505
	535
	537
	539
	553
110-6109	188
	190
	331
110-6393	1215
110-6845	210
110-7453	420
	425
110-7524	930
	935
	986
110-7618	20
110-7887	331
110-8457	1202
111-0687	929
	934
111-1316	985
111-1562	10
111-1574	10
111-2416	215
111-3200	498
111-4627	1093
111-4836	569
	571
111-4838	581
111-4839	581
111-7092	103
	105
111-7775	651
	▶691
111-8614	484
112-0723	386
	▶389
112-0724	389

PART NUMBER INDEX

Part	Page
	▶445
112-0738	384
	▶414
112-0742	414
	418
112-0757	384
	389
	390
	391
	▶392
112-0759	392
	394
112-0764	437
	439
	441
	445
112-0765	437
	439
	441
	445
112-0778	389
	390
	391
	▶416
112-0782	414
112-1817	739
	741
	745
	850
112-2014	973
	975
112-3132	412
112-3540	1208
112-4550	162
112-5344	115
112-6646	956
	958
	960
	962
112-6953	1
	▶557
112-6956	1
	▶646
112-6973	1
	▶590
112-7847	462
112-9073	552
112-9714	689
112-9715	689
112-9716	973
	975
112-9783	1210
	1212
113-0580	202
	204
113-6069	48
113-7752	1061
	1062
113-8690	357
114-1267	▶696
	705
114-5157	1001
114-5312	973
	975
114-8843	202
	204
	210
	211
	213
	257
	325
	337
	338
	340
	342
	346
	352
	367
	374
	379
	396
114-8844	325
	374
114-8845	210
	342
	396
114-9036	462
114-9252	929
	934
114-9325	569
	571
	623
	629
115-0532	462
115-1326	420
	425
115-1648	469
	▶479
115-1650	479
	481
	▶494
115-1651	479
	▶484
115-1653	482
115-2021	489
115-2023	491
115-2025	491
115-2073	983
	1020
115-2247	1061
	1062
115-4072	48
115-4210	12
	13
	15
	▶69
115-4219	48
115-4783	420
	425
115-5669	510
115-5852	1204
115-6433	619
	1082
115-6901	705
115-9976	705
115-9978	705
116-2659	136
116-3825	489
	▶491
116-4556	12
	13
	15
	▶45
116-6952	850
116-8247	342
117-0986	535
	537
117-1410	927
	928
	▶1069
117-1559	501
117-1801	392
	394
117-1803	392
	394
117-2311	331
117-3643	13
	16
	17
	▶87
117-4473	988
117-5208	762
117-5268	671
117-6496	537
117-8131	1047
117-8929	988
	1006
	1054
117-9409	253
	255
118-1727	12
	13
	15
	▶22
118-2073	12
	13
	15
	▶40
118-4264	462
118-6365	342
118-8078	383
	973
118-8267	557
118-8269	557
118-8270	557
118-8271	557
118-8272	557
118-8273	557
118-8275	557
118-8276	557
118-9517	470
118-9573	60
	303
	304
	470
118-9587	515
	516
119-0281	515
	516
119-0959	876
119-3075	99
119-3450	506
119-3662	200
	202
	204
	205
	208
	209
	210
	266
	372
	917
	921
119-5026	1070
119-5708	162
	412
119-6220	762
119-9631	917
	921
120-4394	677
	679
	681
	794
120-5281	559
120-5727	679
120-5729	679
121-0628	694
121-1029	529
121-3307	115
121-4405	739
	741
	745
121-9300	928
	▶979
122-1671	638
122-2340	657
	661
	665
122-4026	115
	132
	133
122-4233	501
122-6660	473
122-8353	406
	408
123-0707	318
123-2896	331
123-3202	276
123-3827	1016
123-4003	429
	432
	434
	437
	439
	441
	443
	445
123-4371	1093
123-4511	122
	123
123-4750	651
	721
	799
	801
	804
	807
	810
	813
	816
	843
	852
	856
	860
	864
	868
	872
123-6713	973
	975
	977
123-7615	200
123-9431	1064
123-9624	839
123-9694	188
	190
124-0065	973
	975
	977
124-0312	981
124-0687	217
124-0786	689
124-1479	359
	363
124-2456	10
	520
	1215
124-3019	177
	342
	752
	757
	762
	766
124-6258	171
124-8635	651
	▶705
124-9402	396
125-1302	263

▶ **PRIMARY REFERENCE**

PART NUMBER INDEX

Part	Page
	▶307
125-1393	878
125-3295	1062
125-3375	420
	425
125-3376	420
	425
125-4439	594
125-7037	559
125-7874	200
	202
	204
	205
	206
	207
	208
	209
	210
	212
	213
	214
	215
	257
	325
	338
	340
	342
	346
	370
	372
	374
	376
	396
	917
	921
	983
	1067
125-7875	200
	202
	204
	207
	208
	209
	210
	214
	248
	372
	376
	1028
125-7876	205
	222
	224
	298
	359
	363
125-8534	79
125-8797	359
	363
	574
	577
125-8810	483
	485
	▶486
125-9738	3
	719
125-9740	917
	921
125-9774	651
126-1757	23
	54
126-1767	200
	202
	204
	206
	207
	208
	209
	210
	211
	212
	213
	214
	215
	248
	257
	282
	283
	332
	337
	338
	340
	346
	352
	356
	367
	370
	372
	376
	379
	939
	942
	983
126-1768	200
	202
	204
	206
	207
	208
	209
	210
	211
	212
	213
	214
	215
	248
	331
	338
	340
	342
	346
	348
	350
	352
	356
	367
	370
	372
	376
	379
	396
	983
126-1774	200
	206
	208
	209
	372
126-1818	734
126-5011	215
126-5466	52
	99
126-5484	705
126-6872	640
	651
126-7698	469
	▶633
126-7710	3
	4
	5
	7
	▶547
126-7757	59
126-8052	257
126-8472	559
126-8473	707
127-1579	590
127-1960	401
127-4732	487
127-5483	208
	209
127-6371	895
	913
127-6513	557
127-6514	557
127-8889	736
	737
127-9323	376
	640
128-0678	▶461
	475
128-1008	59
128-1026	929
	934
128-2596	1006
128-8617	1057
128-8678	617
128-9590	1115
128-9600	1128
128-9601	1130
128-9623	1115
128-9637	1115
129-2380	491
129-3032	1128
	1130
	1140
	1142
	1144
129-3178	531
	917
	921
129-3180	125
	126
	1055
129-5096	175
129-6329	420
	425
129-7163	202
	204
129-7164	202
	204
129-7184	1057
129-8090	633
129-8222	▶700
	705
	707
130-3070	▶1156
130-3071	▶1157
130-3280	136
130-3374	763
130-3515	231
	233
	237
	238
	239
	240
	241
	242
	243
130-4772	1077
130-5202	460
130-5300	253
	255
	261
	272
	299
	327
	342
	352
	359
	363
	368
	372
	376
	396
	720
	917
	921
	983
	1036
	1039
	1042
130-5301	140
	143
	162
	376
130-5530	1115
130-5537	1115
130-5538	1115
130-5539	1115
130-5540	1115
130-5541	1115
130-5542	1115
130-5543	1112
	1113
	1115
130-5553	1112
130-6692	651
	657
	661
	665
130-6789	376
130-8285	▶1147
130-8287	▶1147
130-8288	▶1163
130-9984	447
131-0030	547
131-1495	246
	1028
131-1504	206
131-1506	376
131-3540	181
131-3987	948
	950
	952
	954
	956
	958
	960
131-8641	619
	1082
131-8642	619
	1082
132-1089	1176
132-1448	217
132-1829	▶174
	313
132-1924	531
132-1928	555
	556
132-1929	531
132-2155	125
	126
132-4354	1018
132-4715	1179
132-4907	733
132-5258	▶701

PART NUMBER INDEX

Part	Page
	705
	707
132-5789	140
	181
	263
	266
	332
	338
	342
	359
	363
	368
	376
132-6964	535
	537
	602
132-7084	331
132-7370	103
	105
132-7551	177
	653
	658
	661
	665
132-9319	406
	408
133-1644	619
	1082
133-1645	619
133-3260	103
	523
133-4995	37
	52
133-5545	669
	828
	832
	836
	844
	853
	857
	861
	865
	869
	873
	885
133-6299	539
133-6379	71
133-6517	217
133-6578	794
133-9012	917
	921
134-0734	▶1158
134-1374	979
134-2540	332
	359
	363
	372
	1067
134-2636	177
134-3079	557
134-3988	140
134-4126	192
	193
	195
134-4483	33
	38
134-7258	1215
134-9569	318
	320
135-1708	406
	408
135-2543	209
135-5038	651
	657
	661
	665
135-5975	207
135-5985	752
	757
135-6616	679
	▶697
135-7470	694
135-7471	694
135-7474	694
135-7475	694
135-7477	694
135-7478	694
135-7479	694
135-7482	694
135-7483	694
135-7935	677
135-8280	988
135-8853	679
	681
135-9819	22
	54
	792
136-0822	23
136-1955	171
136-3188	925
136-3190	925
136-4183	48
136-4184	276
136-6545	401
136-6550	401
136-6551	401
136-9029	458
136-9030	458
136-9066	1217
136-9371	895
	898
	901
	903
136-9380	895
	898
	901
	903
137-1392	384
	385
	389
	390
	▶401
137-1602	137
137-4234	1132
	1148
	1161
	1169
137-4548	491
137-4549	489
137-6645	327
	342
137-6715	33
	38
137-6717	72
	74
137-6718	33
	38
137-7581	694
137-8400	782
	▶885
138-1509	▶404
	420
	425
138-1510	404
138-1645	392
	394
138-2373	▶475
	487
	488
138-2758	▶487
138-3252	37
138-3816	481
138-7198	72
	74
138-8402	72
	74
138-8403	72
	74
138-8885	1001
138-8886	1001
138-9868	72
	74
139-1398	342
139-4081	▶56
	70
	71
139-4084	56
139-4724	263
	266
139-9229	▶1176
139-9230	1176
139-9476	56
140-1739	677
140-2961	1064
140-2963	1064
140-5945	962
140-6188	33
	38
140-6194	1082
140-6197	619
	1082
140-8101	619
	1082
140-9670	33
	38
141-0312	▶487
141-2597	649
	▶702
141-2817	553
141-3889	531
141-3890	531
141-4847	1112
	1113
	1117
	1119
	1121
	1122
	1123
	1125
	1127
	1128
	1130
	1134
	1135
	1137
	1138
141-6518	772
141-8275	140
141-8748	1128
141-8749	1128
141-8750	1130
141-8751	1130
141-8761	1128
141-8762	1130
	1142
	1144
141-8765	1128
141-8807	672
141-8808	977
141-8811	977
141-8823	1139
141-8830	1139
	1140
	1142
	1144
141-9038	1112
	1113
141-9039	1112
	1113
141-9040	1112
	1113
141-9041	1112
	1113
141-9046	1139
	1140
	1142
	1144
141-9047	1139
	1140
	1142
	1144
141-9048	1139
	1140
	1142
	1144
141-9049	1139
	1140
	1142
	1144
141-9050	1112
	1113
	1139
	1140
	1142
	1144
141-9051	1112
	1113
	1139
	1140
	1142
	1144
141-9393	▶1112
	1147
141-9395	▶1113
	1147
141-9397	▶1128
	1156
141-9398	▶1130
	1157
141-9400	▶1139
	1163
141-9784	917
142-1657	1210
	1212
142-4000	657
	661
	665
	▶707
142-7289	37
142-8545	359
	363
142-9406	1178
143-0001	399
	▶544
143-0003	544
143-0004	544
143-4281	721
	801
	807
	810
	813
	816
143-4642	462
143-4654	76
143-7052	677
143-8302	694

▶ **PRIMARY REFERENCE**

PART NUMBER INDEX

Part	Page
143-9392	185
	186
144-0195	1104
	1107
144-0331	965
	966
	967
	970
	971
144-0367	763
	767
144-1636	316
144-4465	385
	▶402
144-4468	402
	403
144-4470	402
	403
144-4613	581
	640
144-5611	51
144-8299	489
145-0050	459
145-0162	25
145-0164	25
145-0168	25
145-0170	25
145-0326	1089
145-2901	51
145-6929	▶244
	253
145-7028	▶294
	396
145-7376	72
145-7385	72
145-7390	33
145-8494	581
146-0719	694
146-0720	694
146-1892	1062
146-4055	325
	374
146-4073	325
	374
146-6581	651
	657
	661
	665
146-6747	1215
147-0182	53
	112
	1207
147-0385	354
	359
	363
	1065
147-1445	200
	372
147-1446	200
	372
147-1788	694
147-1790	651
	▶694
147-2355	532
147-2864	1123
	1125
	1127
	1135
	1137
	1138
	1146
147-3672	▶1132
	1158
147-6603	703
147-6604	703
147-6605	703
147-7631	1117
	1119
147-7632	1117
	1119
147-7633	1117
	1119
	1123
	1132
	1137
	1168
	1170
	1173
147-8211	33
	38
147-8214	33
	38
147-8218	31
147-8220	33
	38
148-0913	661
	665
148-1928	396
148-2903	146
	147
	148
	149
148-3483	785
148-3587	1215
148-3626	988
148-7383	401
148-8062	720
148-8240	596
	597
148-8313	140
	754
	759
148-8316	801
	807
	810
	813
	1173
148-8318	662
	666
	672
148-8322	757
148-8323	758
148-8325	757
	1212
148-8326	665
	720
	757
	801
	807
	810
	813
	816
148-8327	757
148-8328	661
	665
	766
148-8335	720
	801
	807
	810
	813
	816
148-8336	140
	150
	640
	661
	665
	739
	741
	743
	745
	799
	801
	804
	807
	810
	811
	813
	816
148-8339	775
148-8347	758
	766
148-8351	1212
148-8352	720
	763
	801
	807
	810
	813
	816
148-8353	745
148-8355	720
148-8357	455
	799
	801
	807
	810
	813
	816
148-8360	758
148-8361	640
	658
	661
	763
	767
148-8362	410
148-8363	140
148-8365	758
148-8367	641
	644
	743
	745
	799
	801
	804
	807
	810
	813
	816
148-8369	1210
	1212
148-8370	653
	658
	661
	665
	758
148-8371	641
	644
	811
	850
148-8372	649
148-8374	140
	661
	665
148-8376	758
148-8378	140
	640
	644
	661
	665
	720
	799
	801
	804
	807
	810
	813
	816
148-8380	766
148-8381	653
	658
	662
	666
148-8382	653
	658
	662
	666
148-8388	758
148-8389	770
148-8391	447
	451
148-8392	754
	758
148-8393	757
148-8395	823
	824
148-8406	787
	788
148-8407	694
	705
	827
	831
	835
	843
	852
	856
	860
	864
	868
	872
148-8408	707
	797
148-8409	110
148-8410	110
	783
	785
148-8411	140
	653
	662
	666
	694
	707
148-8413	799
	802
	804
	808
	811
	814
	817
148-8424	672
148-8430	752
	757
148-8433	641
	653
	658
	662
	666
	743
	745
	799
	802
	804
	808
	811
	814

▶ PRIMARY REFERENCE

PART NUMBER INDEX

Part	Page
	817
148-8434	653
	721
	802
	817
148-8435	640
	799
	802
	804
	808
	811
	814
	817
	850
148-8442	460
148-8443	644
	758
148-8444	653
	763
	767
148-8446	758
148-8449	766
148-8454	448
	451
149-0668	320
149-2612	263
	266
149-4744	1073
149-5240	146
	147
	148
	149
149-9112	392
	394
149-9114	392
	394
149-9129	359
	363
	374
150-3024	105
150-3032	447
	451
150-3036	802
	804
	817
150-3065	396
	649
	754
	759
150-3378	458
150-4027	651
150-4029	799
	802
	804
	808
	811
	814
	817
150-4033	758
150-4048	758
150-4086	20
150-4651	392
	394
150-5430	742
150-5968	721
	802
	808
	814
	817
150-6255	694
150-6256	689
150-6895	1132
150-6903	1132
150-6918	1132
150-8015	1095
151-1398	201
151-2171	619
	1082
151-2184	742
151-2898	51
151-2900	51
	65
151-4506	447
	451
151-4507	447
	451
151-4809	401
151-5715	988
151-6980	689
151-6981	689
151-6982	689
151-6984	689
151-6985	689
151-6986	689
151-9274	350
	720
	948
	950
	952
	954
	964
151-9275	967
	969
	970
	971
152-1684	996
152-2788	689
152-2791	689
152-2794	689
152-6432	689
153-0088	915
	1073
153-1036	39
153-1185	483
	486
153-1277	136
153-3568	689
153-3715	548
153-3945	318
	973
	975
153-5043	294
153-5710	177
153-6237	754
	758
	766
153-6244	448
	452
	766
153-6273	1062
153-6281	177
153-7036	167
153-8002	689
153-8003	689
153-8004	689
153-8462	653
153-8463	653
153-8467	72
153-8470	72
153-9300	689
153-9301	199
	689
154-0896	57
154-1711	657
154-2883	651
	▶685
154-4563	318
	320
154-5232	1212
154-5410	1104
154-6626	198
	342
	359
	363
154-8262	320
154-9023	103
	105
154-9508	929
	934
155-0576	790
	791
155-2255	200
	202
	204
	206
	207
	214
	342
155-2258	207
155-2259	201
155-2260	201
	202
	204
	207
	208
	209
	210
	212
	214
	284
	285
	286
	342
	348
	350
	376
	379
	381
155-2265	201
	215
	325
	370
	372
	374
155-2270	140
	201
	202
	204
	207
	208
	209
	210
	212
	213
	214
	215
	246
	248
	251
	261
	309
	325
	332
	338
	340
	342
	346
	352
	367
	374
	376
	396
	917
	921
	1028
	1062
155-2271	201
	202
	204
	207
	210
	213
	331
	980
155-2274	201
	202
	204
	210
	211
	213
	214
	372
	983
	1067
155-2276	286
155-3502	720
	802
	817
155-3624	705
	827
	831
	835
	843
	852
	856
	860
	864
	868
	872
155-3677	162
155-4098	1057
155-5600	3
	▶481
	914
155-5602	418
155-5606	483
155-5607	481
	▶485
155-5609	425
155-6526	973
	975
155-6647	420
	425
155-6648	420
	425
155-7321	101
	108
	110
155-7688	929
	934
155-9116	796
155-9117	796
155-9125	794
155-9127	794
155-9133	794
156-0149	853
156-1137	399
	▶548
156-1151	416
156-1153	416
156-6129	406
	408
156-6175	220
	222
	224
	332

▶ **PRIMARY REFERENCE**

PART NUMBER INDEX

Part	Page
	348
	350
	355
156-9890	357
157-0340	384
	385
	386
	▶418
157-0670	103
	105
157-2610	▶1147
157-2611	▶1115
	1147
157-3491	685
158-3028	733
158-6072	137
158-7864	1215
158-9956	669
	782
	▶821
159-0268	895
	898
	901
	903
159-0269	895
	898
	901
	903
159-0303	12
	13
	15
	▶63
159-1503	763
	767
159-3301	850
159-8035	1111
159-8036	1111
159-8049	376
159-9322	200
	202
	204
	206
	209
	372
160-0089	694
160-1004	619
160-3518	212
160-5131	99
160-6365	1064
160-6366	1064
160-7627	657
	661
	665
160-7689	202
	204
	208
	209
160-7690	206
160-8124	215
	269
160-8230	47
160-8499	1202
160-8500	272
161-3415	1006
161-6149	880
	885
161-6154	692
	693
	821
161-6161	880
	885
161-6963	137
161-9030	630
161-9031	630
161-9289	1073
161-9916	101
	108
	110
	1014
162-0177	140
	827
	831
	835
	839
	843
	853
	856
	860
	864
	869
	873
162-1604	679
	681
162-6560	694
162-7120	509
	510
	512
162-7209	731
	732
162-8068	12
	13
	15
	▶64
162-8352	447
	451
162-9728	640
162-9997	677
163-0325	647
163-0326	647
163-0872	▶939
	940
	941
163-1135	1089
163-1137	1001
163-2478	33
	38
163-3343	742
163-3926	1061
163-8444	640
163-8682	459
163-9662	720
	745
	891
164-0210	76
164-1234	1089
164-1249	1055
164-1251	1055
164-1252	1055
164-1253	1055
164-1254	1055
164-1256	1055
164-1276	1070
164-1277	1070
164-2108	496
	497
164-3018	384
	385
	386
	▶394
164-3071	392
	394
164-4180	429
	432
	434
	437
	439
	441
	827
	831
	835
	843
	853
	856
	860
	864
	869
	873
164-5544	653
	799
	804
164-5567	275
	489
	498
	644
	653
	672
	754
	759
	763
	767
	799
	802
	804
	817
164-5574	641
164-5580	641
164-5590	754
	759
164-5598	448
	452
164-5611	752
	757
164-5619	705
	707
	825
164-5624	653
164-5662	720
	801
	807
	810
	813
	816
164-6476	392
	394
164-6871	275
164-6874	498
164-7556	229
	230
164-7908	672
164-9869	743
	745
165-0555	487
165-0556	▶487
165-2273	398
	1014
165-4446	13
	15
	16
	▶50
165-4557	12
	13
	15
	▶39
165-4925	406
	408
165-4929	429
	432
	434
	437
	439
	441
165-6162	487
165-6179	▶487
165-6365	770
	772
165-9104	1057
166-0599	272
166-1776	23
166-1781	23
	54
166-2033	752
	757
	762
	766
	811
166-2905	53
	61
166-6358	65
167-0608	598
	600
167-8121	39
168-1968	640
	651
168-2166	501
168-3379	683
168-3504	794
168-4328	665
168-6514	718
	719
168-7861	794
168-8772	998
168-8976	17
	▶82
169-1616	848
169-1617	848
169-3104	146
169-5861	278
169-5862	754
	759
169-5863	801
	804
	816
169-6352	1030
169-7395	406
	408
169-7404	758
169-8586	146
169-8598	146
170-0965	101
	108
	110
170-1821	348
	350
	962
170-3447	1008
170-3448	1008
170-4735	1212
170-5707	1111
170-7709	986
171-2206	263
171-2210	263
	266
171-2211	263
	266
171-5349	291
	293
171-6718	278
171-6723	758
172-3511	190
	348
	350
	962
172-4211	175
172-5754	12
	13
	15

▶ PRIMARY REFERENCE

PART NUMBER INDEX

Part	Page
	▶65
172-6298	129
172-8037	212
172-8039	212
172-8591	929
	934
172-9200	318
	320
	331
173-0566	405
	429
	432
	434
	437
	439
	441
173-0641	677
173-1498	65
173-2142	929
	934
173-2143	929
	934
173-2144	929
	934
173-2185	1006
173-2187	1006
173-2200	998
173-2205	1057
173-2206	1057
173-2219	926
173-2234	331
173-3993	827
	835
	839
	853
173-5549	72
173-5787	1073
173-7035	1073
173-7225	640
173-9779	647
174-0503	201
	208
	214
	372
	1067
174-2407	1080
174-3091	965
	966
	967
	969
	970
	971
174-5415	136
174-5907	140
174-7875	995
174-8131	977
174-8663	541
174-9169	299
174-9570	▶145
	165
174-9603	396
175-2834	988
175-3244	359
	363
175-4291	229
	230
175-4292	229
	230
175-4966	405
	429
	432
	434
	437
	439
175-7898	647
176-2444	487
	488
	▶502
176-7078	694
176-9237	143
176-9273	463
176-9369	691
	▶692
176-9371	691
	▶693
177-0581	125
	126
177-1058	113
177-3463	587
177-3464	572
	574
	577
	585
	587
177-3465	585
	587
177-3466	585
	587
177-3468	585
	587
177-3475	572
	574
	577
	585
	587
177-3477	572
	574
	577
177-3484	572
177-3489	572
	574
	577
177-3490	572
	574
	577
177-3516	627
177-3517	625
	626
	627
177-3518	625
	626
	627
177-3519	627
177-3520	627
177-4495	988
177-6696	917
	921
177-6704	917
	921
177-6716	917
	921
177-6727	917
	921
177-7582	689
178-2594	531
178-2697	627
178-2722	623
178-2723	572
	574
	577
178-2734	627
178-2737	625
	626
	627
178-2740	625
	626
	627
178-2746	625
	626
178-2766	623
178-2769	629
178-2774	629
178-2776	569
	571
178-2779	623
178-4323	1006
178-4930	1205
	1206
178-9983	967
	969
	970
	971
179-1660	625
	626
179-1661	625
	626
179-2600	657
	661
179-4324	501
179-4682	917
	921
179-4683	917
	921
179-7000	272
179-8128	167
179-9348	162
179-9392	1057
180-0156	195
	▶272
180-3730	171
180-3994	636
180-3997	1061
180-5789	1055
180-6213	679
	681
	684
180-9069	849
180-9340	286
183-1025	60
	303
	304
183-3399	83
	156
183-3406	140
	278
183-4365	72
183-5784	202
	204
183-5785	201
183-6845	12
	13
	15
	▶129
183-6854	129
183-6856	129
183-6970	671
183-6971	671
183-7121	531
183-7258	770
	772
183-7263	278
	705
	707
	819
	839
	841
183-7595	669
	782
	▶881
184-6636	263
	266
185-1860	372
185-1861	201
	207
	211
	214
185-3874	1029
185-4778	917
	921
185-4780	917
	921
185-4782	917
	921
185-4783	917
	921
185-4785	917
	921
185-6250	1210
	1212
185-6335	331
185-7523	▶1095
	1099
185-7524	1095
185-7525	1095
	1097
185-7531	1095
185-9356	44
	46
186-2517	463
186-2522	▶462
	493
186-3402	462
186-3735	173
	174
	226
	231
	233
	307
	322
	332
	882
	965
	966
	1024
	1025
	1044
	1062
186-5107	1089
186-6189	1010
187-0541	880
187-1469	986
187-6279	12
	13
	15
	▶83
187-6294	83
187-7331	170
187-7719	917
	921
187-8278	38
187-8279	38
187-8280	38
187-8281	38
187-9630	839
188-1616	248
188-2461	772
	▶882
188-3034	103
	105
188-5046	420
	425
188-5149	420
	425
188-5177	929
	934

▶ **PRIMARY REFERENCE**

PART NUMBER INDEX

Part	Page
188-6210	202
	204
188-6253	201
188-6254	201
188-7497	636
	▶1061
188-7690	917
	921
188-9637	684
188-9640	677
188-9641	677
189-1707	1010
189-2076	1057
189-2077	721
	948
	950
	952
	954
189-2078	721
	948
	950
	952
	954
189-2079	721
	948
	950
	952
	954
189-2512	1057
189-3158	318
	320
	333
189-4680	917
	921
189-4682	917
	921
189-5433	12
	13
	15
	▶78
189-8622	▶1044
	▶1045
	1104
	1107
189-8624	881
189-8772	129
189-8777	86
189-8780	12
	13
	15
	▶120
189-8846	689
189-9304	689
190-0643	65
190-1125	607
	609
190-6616	615
190-6728	1
	▶895
190-8494	509
	512
191-0348	261
191-0522	75
191-0523	▶75
	155
	156
191-0629	▶886
	887
	889
	895
	913
191-1782	143
	162
191-1830	420
191-1831	425
191-3678	792
191-5114	999
191-5213	77
191-7582	794
191-7583	794
191-8567	▶1047
	1050
191-8921	925
191-9247	881
	884
192-1023	404
192-1563	▶51
	66
	940
	941
192-2175	1072
192-2820	917
	921
192-2822	917
	921
192-2823	917
	921
192-2981	16
	17
	▶85
192-4263	447
	451
192-4264	447
	451
192-5017	150
192-5881	1173
192-5918	572
	574
	577
192-5953	623
192-5987	625
	626
192-6036	625
	626
192-6212	625
	626
192-7752	1089
192-7755	1089
192-7767	1089
192-7783	1089
192-7787	1089
192-7795	1089
192-7799	1089
192-7805	1089
192-7810	1089
192-7811	1001
192-7812	1001
	1089
192-7813	1001
192-7820	1089
192-7848	1089
192-9121	429
	432
	434
	443
192-9128	437
	439
	441
	445
193-0042	689
193-0702	917
	921
193-1034	101
	108
	110
193-1036	697
	876
193-2200	420
	425
193-2550	▶291
	420
	425
193-3973	198
	263
	342
193-6911	374
	571
	577
	587
194-5171	1107
194-5226	207
	284
	285
194-5227	207
	284
	285
194-6722	▶284
	359
	363
194-6725	140
	▶285
194-9472	794
194-9473	794
194-9474	794
194-9478	796
194-9479	796
194-9480	796
194-9481	796
194-9632	458
195-0321	62
195-2187	638
195-5826	619
	1082
195-5950	689
195-5951	689
195-7055	1073
195-9223	1070
196-0052	988
196-0225	683
196-0226	683
196-0436	523
196-1047	605
196-1049	605
196-1053	605
196-1054	605
196-1056	605
196-1062	605
196-1066	605
196-1070	605
196-1074	605
196-8488	484
196-8490	485
196-9519	25
197-0416	122
	123
197-0677	683
197-1397	917
	921
197-1398	917
	921
197-1399	917
	921
197-2027	1006
197-2072	1006
197-3295	721
	748
	750
197-4859	521
	523
	1205
	1206
197-5210	12
	13
	15
	▶49
197-5470	523
197-6419	689
197-6453	150
197-6474	▶1021
	1053
197-7996	482
	483
197-8419	52
	83
	1208
197-9353	62
197-9371	62
197-9372	62
197-9386	62
197-9581	113
198-2914	881
	884
198-3897	569
	571
	640
198-4776	1016
198-4777	526
	754
	759
198-4778	531
198-5351	794
198-5389	226
198-6570	1054
198-6571	1054
198-7248	9
	▶405
198-7651	752
199-4064	272
199-6592	201
199-7499	917
	921
199-9641	1057
199-9741	1175
	1178

2

Part	Page
200-0731	1057
200-1316	634
200-2217	1062
200-2218	1062
200-2219	1062
200-2220	1062
200-2221	1062
200-2258	53
	96
	1207
200-4495	48
200-4497	85
	▶86
200-4516	61
200-5728	▶212
	1069
200-6282	848
200-6345	640
	651
	762
	766
200-7138	135
200-7939	1006
200-8152	1057
200-8153	1057
200-8154	1054
	1057

PART NUMBER INDEX

Part	Page
200-8789	201
200-8895	1022
	1024
200-8896	1023
200-8897	1021
	▶1022
200-8898	1021
	▶1023
201-1531	188
	190
201-2733	1057
201-5555	318
	320
201-5563	721
	952
	954
201-6850	12
	13
	15
	▶61
201-7952	1060
201-8428	376
201-8616	▶1064
	1065
202-0669	1082
202-1327	917
	921
202-2005	498
202-2006	498
202-5397	201
	207
	214
202-6614	229
	230
202-7935	125
	126
202-8649	1024
	1025
202-8696	1010
202-8933	396
	▶498
203-2287	452
203-3768	129
203-6473	501
203-7643	1111
203-7644	1111
203-7730	1111
204-1297	207
	211
	214
204-2281	266
	331
	359
	363
	585
	640
	651
	762
	766
204-2662	762
	766
204-6195	208
204-8000	198
	331
	342
	377
205-0826	226
205-0926	986
205-1280	155
	156
205-1320	48
205-1321	16
	17
	▶48
205-4933	1036
	1039
205-6029	501
205-7048	948
	950
	952
	954
	956
	958
	960
	962
205-7299	372
	377
205-8257	226
206-1345	357
206-1749	1072
206-2423	721
	743
	745
	800
	805
	817
	850
206-5162	226
206-5203	226
206-5823	1044
	1045
206-6305	507
206-6875	78
	127
	128
	185
206-6876	140
	162
206-9278	475
	▶476
207-0697	794
	▶876
207-1551	60
	▶301
	303
207-1759	927
	928
	▶1065
207-7434	839
207-8218	783
	785
	843
	853
	857
	861
	865
	869
	873
208-2929	917
	921
208-2984	853
208-3703	1064
208-3777	999
208-3778	999
208-3779	999
208-6055	125
	126
208-7472	477
208-8760	1046
208-9277	298
208-9282	124
	298
208-9283	298
209-0499	633
209-0516	1205
	1206
209-3750	1072
209-4212	1004
209-4579	125
	126
209-4600	12
	17
	▶112
209-5528	115
209-5582	264
	267
	▶308
209-6477	125
	126
210-1254	929
	934
210-3321	20
	44
210-5590	16
	17
	▶25
210-7722	129
210-9246	53
	83
211-0052	202
	204
211-0667	1006
211-2101	58
211-5004	736
	737
211-5006	736
	737
211-5358	1089
211-6807	215
211-8073	406
	408
	763
	767
211-9120	13
	15
	16
	▶23
211-9294	1089
211-9856	1095
212-3652	16
	17
	▶62
212-3657	143
	162
	▶165
212-4288	18
212-4289	16
	17
	▶18
212-4893	25
212-6027	881
212-6933	103
	105
212-6934	103
	105
212-7042	917
	921
212-7753	544
212-7754	544
212-7779	▶1001
	1089
212-7780	1001
212-7783	1001
213-1365	437
	439
	441
	445
213-1370	437
	439
	441
	445
213-2323	226
213-3193	62
213-3719	462
213-4754	1001
213-5170	1089
213-7489	967
	969
	970
	971
213-8433	727
	728
213-8773	▶631
	640
213-9100	324
214-0113	187
214-3616	272
214-3617	272
214-4208	201
214-6156	384
	▶443
214-6161	▶384
	386
	914
214-6162	▶459
	469
214-7566	35
	49
	52
	53
	55
	78
	80
	139
	280
	287
	289
	411
	1208
	1209
214-7567	52
	139
	166
	280
	288
214-7568	52
	53
	78
	83
	121
	122
	123
	139
	152
	155
	156
	157
	158
	162
	169
	278
	280
	290
	411
	489
	496
	497
	644
	672
	754
	759
	763
	767
	799
	802
	804

▶ **PRIMARY REFERENCE**

PART NUMBER INDEX

Part	Page
	817
	881
	1208
	1209
214-7635	▶925
	1104
	1107
214-9186	930
	935
214-9398	▶384
	386
214-9453	318
	320
214-9454	318
215-3013	470
215-3014	470
215-3015	470
215-3687	644
215-6981	58
215-6982	12
	13
	15
	▶58
216-5586	29
216-7352	20
216-7752	736
	737
216-7888	1059
	1060
216-8994	727
	728
216-9058	727
	728
216-9059	727
	728
217-0162	714
	715
217-3681	401
217-4891	▶1192
217-4892	▶1196
217-5213	31
217-5288	136
217-6280	8
	▶217
217-6284	217
217-8166	318
	320
217-8339	165
217-9060	103
	105
218-0404	226
218-0481	469
218-0652	689
218-0653	689
218-0654	383
	▶689
	973
218-0859	12
	13
	15
	▶43
218-2373	496
	497
218-4935	263
	355
	359
	363
	376
219-0305	1216
219-0314	118
219-3309	70
	71
219-5844	▶31
	33
219-5846	▶33
	34
219-5847	▶34
	▶35
	37
219-5849	16
	17
	▶37
219-6314	226
219-6485	▶229
	248
219-6487	▶230
	248
	250
219-6607	226
219-7619	927
	▶973
	▶975
220-2612	531
220-4049	1031
220-8678	145
220-9081	1193
220-9082	1197
220-9089	1194
220-9090	1192
	1193
	1194
	1195
	1196
	1197
220-9091	1192
220-9092	1196
221-1580	574
	577
221-3416	275
	▶286
221-3494	83
221-4482	16
	17
	▶27
221-6803	1032
221-9963	881
222-1087	1110
222-1088	1110
222-1089	1110
222-1091	1195
222-1094	1175
	1178
222-1095	1175
	1178
222-1096	1175
	1178
222-1185	72
222-1186	72
222-2277	136
222-2307	1111
222-3785	713
	714
	715
222-3910	55
	69
222-4737	831
	839
	843
	857
	861
	865
	869
	873
222-4866	175
222-5765	713
	714
	715
222-5900	16
	▶157
222-5915	52
	99
222-5917	▶207
	357
222-9151	743
	745
223-3917	▶632
223-3924	420
	425
223-3925	420
	425
224-0672	777
224-3247	18
224-4530	785
224-5132	631
	632
224-5152	631
	632
224-6638	62
224-7262	714
	715
224-7830	1214
224-8946	1216
224-9392	181
	595
	990
225-0312	1216
225-0313	1214
225-3755	986
225-4131	716
	717
225-4256	1214
225-4257	1216
225-6827	333
225-6948	831
	843
	857
	861
	865
	869
	873
226-1240	1216
226-1242	1214
226-1274	1216
226-1275	1214
226-2684	429
	432
	434
	437
	439
	441
	443
	445
226-6039	113
226-6051	114
226-7473	185
	▶191
227-1200	31
	32
227-4340	898
	901
	903
	910
227-4342	898
	903
227-4343	898
	901
	903
227-4531	24
227-5716	541
227-5904	54
	157
	158
227-5942	99
227-6715	448
	452
227-6744	411
	734
227-7390	1214
227-7391	1216
227-7392	925
227-8305	898
	903
228-2615	1214
228-2616	1216
228-3621	43
228-4947	54
	292
228-5897	167
228-6052	231
	232
	233
	234
	237
	238
	239
	240
	241
	242
	243
228-6054	231
	232
	233
	234
	237
	238
	239
	240
	241
	242
	243
228-6056	231
	232
	233
	234
	235
	236
	237
	238
	239
	240
	241
	242
	243
228-6089	332
	721
	952
	954
228-6422	657
228-7088	53
	80
228-7089	52
	83
	152
	156
	162
	1208
228-7090	152
	155
228-7549	607
	609
228-9105	1214
228-9106	1216
229-2704	1016
229-5153	25
229-5154	25
229-5155	25

▶ PRIMARY REFERENCE

PART NUMBER INDEX

Part	Page
229-5156	25
229-6625	408
229-6964	▶1193
229-6965	▶1197
229-6969	▶1194
229-7146	1165
	1166
	▶1195
229-7534	541
229-8844	42
229-8851	298
229-9974	235
	236
230-4011	208
	209
	215
	312
230-4012	305
	356
230-4013	201
	215
230-4014	1062
230-7058	739
	741
	745
230-7640	1062
232-0343	140
	152
	▶169
232-0928	387
	543
232-0929	387
	543
232-0931	434
	441
232-1285	32
232-1335	1079
232-1336	1079
232-1337	1079
232-1338	1079
232-1374	143
	162
232-1376	143
	162
232-1685	1085
232-1686	1085
232-1688	1079
232-1693	185
	186
232-1754	70
	71
232-3317	712
	713
232-3717	16
	17
	▶70
	▶71
232-7635	718
	▶898
232-7637	▶890
	891
	898
	903
233-0891	185
	186
233-0916	1085
233-5036	1006
233-6306	794
233-7655	87
	1209
233-7676	▶1079
	1080
	1088
233-9585	849
234-1360	1085
234-3545	531
	563
	565
	611
	612
234-4869	827
	831
	835
	843
	852
	856
	860
	864
	868
	872
234-5012	278
	280
	▶295
234-5013	278
	280
	▶296
234-5107	611
	612
234-5110	563
234-5925	331
234-8738	1004
234-8739	1004
234-9571	1085
234-9572	1085
235-1423	12
	▶16
235-2496	463
235-3595	139
	140
235-3596	139
	140
235-4123	201
	207
	211
	214
	372
235-4546	983
	1020
235-5506	331
235-5527	72
	74
235-5528	71
	▶72
235-5767	683
235-5768	679
	▶683
235-8560	9
	▶246
235-9080	627
235-9651	159
	160
	161
235-9822	115
236-1068	1080
	1088
236-1069	1080
	1088
236-4545	299
236-4608	332
236-4609	332
236-4610	332
236-4611	332
236-4612	314
236-4615	317
236-4616	318
	320
236-4619	332
236-4620	188
	190
236-4621	188
	190
236-4623	315
236-4630	1028
236-4631	332
236-4971	▶1024
	1026
236-5898	1080
	1088
236-6207	1028
236-6221	278
	280
	▶292
236-6253	222
	224
	996
	999
236-7230	1216
236-7772	▶213
	999
236-7773	246
	251
236-7775	261
236-8722	332
236-9039	1
	▶1094
236-9775	246
	251
236-9776	246
	251
236-9832	827
	831
	835
	843
	852
	856
	860
	864
	868
	872
236-9939	541
237-0227	215
	289
	356
237-0233	195
	▶324
237-0431	1
	▶125
237-0433	▶581
	738
237-0434	1
	▶1014
237-0438	▶455
	738
237-0447	1
	▶614
237-0947	727
	728
237-0950	▶724
	738
237-0954	738
	▶792
237-0960	738
	▶789
237-2179	1004
237-2180	1004
237-4848	17
	▶118
237-4851	17
	▶154
237-4853	17
	▶132
237-4857	17
	▶940
237-4948	▶510
	511
	513
	718
	719
	914
237-6257	1214
237-7249	901
	▶906
237-9062	463
237-9308	140
237-9736	261
237-9821	12
	13
	15
	▶96
237-9822	12
	13
	15
	▶57
237-9823	12
	▶140
237-9836	12
	13
	15
	▶77
237-9878	671
238-0373	12
	▶44
238-1112	130
	140
238-2706	62
238-2720	62
238-4523	507
238-4524	507
238-4525	507
238-4802	12
	13
	15
	▶99
238-4803	12
238-4804	17
	▶79
238-5079	35
	52
238-5080	40
	52
	53
	139
	152
	162
	280
	296
238-5081	29
	52
	53
	80
	152
	162
	1209
238-5082	49
	55
	171
	762
	766
238-5084	35
	52
238-9842	828
	832
	836
	844
	853
	857

▶ **PRIMARY REFERENCE**

PART NUMBER INDEX

Part	Page
	861
	865
239-0583	19
	55
239-0605	669
	782
	▶848
239-0618	669
	782
239-1134	299
	▶323
239-2402	167
239-4850	187
	▶275
	1035
239-5157	832
	844
	857
	861
	865
	869
	873
239-5195	669
	782
239-5211	640
239-6336	827
	832
	835
	844
	853
	857
	861
	865
239-6986	1215
239-8410	559
239-9848	97
239-9857	97
239-9867	115
239-9870	97
239-9884	103
	105
240-4542	▶992
240-4548	992
240-4551	992
240-4552	992
240-4557	992
240-4630	992
240-4695	827
	831
	835
	843
	852
	856
	860
	864
	868
	872
240-7874	208
	209
240-8259	420
	425
240-8637	1078
	▶1082
240-8666	1107
241-0037	631
241-0078	▶101
	399
241-0091	447
	451
241-0542	46
241-0573	12
	13
	15
	▶76
241-0638	195
	▶327
241-1485	775
241-1495	775
241-1504	775
241-1512	775
241-1541	775
241-2443	752
	757
241-2451	752
	757
241-2921	1
	▶398
241-4194	299
241-4939	1069
241-6185	763
	767
241-6206	498
241-6208	762
241-6209	762
241-6215	640
	752
	757
241-6978	992
241-8368	263
	266
	▶309
241-8651	992
241-8652	992
241-8692	▶472
	493
241-8693	472
	▶473
241-8694	473
241-8695	473
241-9023	489
242-0588	231
	232
	233
	234
	237
	238
	239
	240
	241
	242
	243
242-2445	1010
242-2461	981
242-3360	137
242-3864	78
242-5206	986
242-6098	1047
242-7955	839
242-8414	447
	451
242-8415	447
	451
242-8416	447
	451
242-8417	447
	451
242-8418	447
	451
242-8421	332
242-8559	1008
242-9371	1008
242-9372	1008
242-9416	994
	▶1008
243-0570	640
243-1088	927
	928
	▶994
243-1092	994
	▶1016
243-1093	1016
	▶1018
243-1353	640
	762
	766
243-1712	559
243-1722	559
243-1723	559
243-1945	▶219
243-2289	115
243-2372	103
	105
243-2373	103
	105
243-2374	103
	105
243-3416	115
243-3696	792
243-4371	929
	934
243-4673	752
	757
243-5746	125
	126
243-5828	614
243-6467	752
	757
244-0357	118
	▶119
244-1426	752
	757
	▶822
244-2125	1008
244-2360	1018
244-2539	992
244-3114	396
	▶495
244-3168	185
	186
244-3288	640
244-3290	640
244-3375	▶718
244-3712	278
244-4500	42
244-4978	1
	▶944
244-5548	718
	719
	▶725
244-5586	▶726
	738
244-6524	▶354
	399
	400
244-6601	4
	5
	8
	9
	▶135
244-6602	96
244-6603	▶136
244-6604	140
244-6605	140
244-6908	1093
244-8730	581
	587
244-8731	581
	587
244-8732	581
	587
244-8785	1025
244-8839	944
244-8840	88
245-0766	944
	946
245-3259	50
245-3842	1202
245-4083	▶598
	619
245-4094	598
	600
245-4333	929
	934
245-4630	292
245-6375	119
245-6376	119
245-6460	1059
	1060
245-6795	121
245-7339	54
	69
245-7434	201
	207
	211
	214
	372
245-7456	792
245-8355	669
245-8819	▶1025
	1026
245-8842	348
	350
	355
245-9791	731
	732
245-9890	752
	757
246-0435	598
	600
246-0616	115
246-1177	1082
	1087
246-1184	1082
246-1187	1082
246-1777	118
246-1884	1082
	1087
246-1888	181
	595
246-1889	597
246-1890	596
246-1891	619
	1082
246-1892	619
	1082
246-2392	619
	1082
246-2393	1082
246-2931	12
	13
	15
	▶122
246-2943	1082
246-3231	1018
246-3295	253
	255
246-4374	518
	1198
	1200
246-4611	118
246-4612	119
246-4614	119
246-4615	119
246-4619	619
	1082
246-4770	640

PART NUMBER INDEX

Part	Page
246-4772	640
246-5135	649
246-5231	1078
	▶1080
246-5423	420
	425
246-5459	332
246-5613	733
246-5614	733
246-6036	83
246-6152	115
	▶458
246-6291	219
	▶226
246-6727	612
246-7272	1010
246-7273	1010
246-7274	1010
246-8628	216
246-8631	216
246-8889	762
	766
246-8907	1082
	1087
246-9345	13
	15
	▶185
246-9371	201
246-9863	1082
246-9864	1082
246-9866	1082
247-0829	11
	16
247-0831	11
247-1853	986
247-1855	986
	▶1002
247-1859	986
247-1862	986
247-1863	986
247-1865	1002
247-1869	986
247-1870	986
247-1876	19
	55
247-2699	1082
247-2700	1082
247-4285	229
247-4593	640
247-5513	752
	757
247-5572	752
	757
247-5585	743
	745
247-5586	743
	745
247-7830	▶396
	493
247-8474	327
247-8475	327
247-9865	752
	757
248-0403	651
	657
	661
	665
248-0420	195
	▶995
248-0639	▶674
	686
248-0706	559
248-0824	1202
248-0827	1202
248-2169	288
248-3288	▶184
	263
	266
248-3317	731
	732
248-4152	▶1069
248-5249	1080
	1088
248-5250	1080
	1088
248-6189	1080
248-6190	1080
	1088
248-7538	625
	626
249-2504	651
249-4134	276
249-6673	80
249-8173	▶420
	493
249-8175	▶425
	493
249-9223	12
	▶298
250-0241	585
	587
250-0841	▶137
	138
250-1424	83
	152
250-1441	460
250-3801	623
	▶625
250-9308	1002
250-9309	1002
250-9310	1002
250-9311	1002
250-9312	1002
251-1701	559
	▶595
251-1702	595
251-1705	559
	▶596
251-1706	596
251-1708	559
	▶597
251-1709	597
251-2008	455
251-2009	455
251-2010	455
251-2011	455
251-2138	572
	574
	577
251-2139	572
	574
	577
251-3104	893
	894
	907
251-3268	783
	785
	▶883
251-4162	181
251-4339	246
	251
251-4755	559
251-4756	559
251-4760	615
251-5872	1085
251-6351	447
	451
251-7294	572
251-8248	983
251-9739	619
251-9746	619
251-9750	619
251-9755	406
252-2328	12
252-5874	1215
252-5917	3
	▶314
	719
252-5920	▶318
	927
252-5924	▶317
	686
252-5925	▶313
	719
	746
	1172
252-7801	38
252-8211	623
	629
253-0861	1205
253-2111	263
253-2538	598
253-2539	598
253-2547	598
253-2548	598
253-2550	598
253-2553	598
253-2555	598
253-2556	598
253-3376	669
	782
253-3484	521
253-3951	▶320
	927
	928
253-4531	41
	940
253-9477	574
	577
253-9478	574
	577
253-9521	1006
253-9795	625
	626
254-0004	602
	1066
254-1425	140
254-3250	694
254-3571	778
	780
254-5146	792
	▶794
254-7975	1142
	1144
254-7977	1142
	1144
254-7988	1142
	1144
254-9149	956
254-9150	958
255-4368	983
255-4369	220
255-8545	929
	934
	973
	975
256-0854	1210
	1212
256-3830	70
	▶74
256-3831	▶67
	74
256-3832	67
256-3834	▶68
	74
256-3835	68
256-4884	572
	574
	577
256-6453	295
	296
	359
	363
256-7205	1010
256-7206	1010
256-7822	721
	952
	954
	958
	962
257-1762	1179
257-1766	▶1110
257-2008	927
	928
	▶998
257-2719	1067
257-2721	1067
257-3226	1010
257-3736	257
257-5064	614
257-7676	643
257-8395	1031
257-8414	669
	782
	▶880
257-8471	672
257-9145	12
	13
	15
	▶20
258-0733	299
258-0883	140
	▶311
258-2403	13
	15
	16
	▶138
258-2829	762
	766
258-3727	956
	958
	960
	962
258-4524	132
	133
	134
258-7370	1025
258-7484	181
258-8723	12
	13
	15
	▶42
259-1999	8
	▶1026
	1066
259-2627	563
	567
	600
	602
	613
259-4397	982
	1033
	1052
259-4399	982
	1033

▶ **PRIMARY REFERENCE**

PART NUMBER INDEX

Part	Page
	1052
259-5501	796
259-5502	796
259-5503	796
259-5504	794
	▶796
259-5507	794
259-5509	794
260-0149	743
	745
260-1533	▶552
	618
	1078
260-3820	581
260-3821	581
260-4698	103
	105
260-4861	140
260-5716	167
260-5864	143
	162
260-6465	460
260-6701	521
260-7524	67
	68
260-7759	78
260-8630	83
260-8631	83
260-8636	797
260-9143	752
	757
260-9219	152
260-9584	399
	400
	▶460
260-9602	▶214
	332
261-0424	850
261-3222	982
	1033
	1052
261-3802	297
	▶299
261-5695	619
261-5696	619
261-5697	619
261-6639	132
261-7496	619
261-7497	619
261-8531	127
261-8624	619
261-8716	619
	1082
261-9287	137
262-0262	609
262-0263	607
	609
262-0264	607
	609
262-0265	607
262-0266	607
	609
262-0284	167
262-0347	681
262-1085	5
	▶1078
262-1421	▶195
	220
262-2043	▶195
	218
262-4071	797
262-4561	175
262-4834	▶626
	629
262-9920	797
262-9949	▶315
	329
	337
263-1493	348
	350
	1036
	1039
	1042
263-1774	299
263-2166	983
263-2541	594
263-3180	1215
263-3322	4
	5
	8
	▶218
263-3774	▶28
	29
263-6353	8
	▶297
263-8218	147
264-0551	219
264-1387	488
264-3703	657
	661
	665
264-4297	327
	342
264-4435	1217
264-5732	215
264-6156	70
264-6157	32
264-7029	215
	312
264-7030	201
	215
	356
265-3930	420
	425
265-6696	952
	954
	958
	962
265-7607	510
265-8171	188
	190
265-9465	420
	425
266-0142	619
266-0143	619
266-1466	▶282
	1064
266-2337	272
	276
	▶283
266-2830	257
266-2831	257
266-6590	990
266-6591	990
266-6592	990
266-6593	990
266-6594	▶990
	1078
266-6631	990
266-6632	990
266-6633	990
266-7745	674
266-8650	278
	▶287
266-8944	990
266-9861	509
	512
267-1402	278
	280
	▶288
267-3506	461
267-4743	87
267-4971	257
	▶594
267-5222	1062
268-1708	1033
	1052
268-1835	▶146
	161
268-1839	16
	17
	▶159
	160
	161
268-4045	103
	105
268-4421	181
268-6372	569
	571
268-6373	569
268-6472	▶489
	493
268-6497	1036
	1039
	1042
268-6505	469
	▶493
268-6506	3
	▶493
	914
268-8643	181
268-8792	917
	921
269-0633	1132
269-1883	890
	892
	▶893
269-1884	572
269-1885	572
269-2556	1067
269-7250	276
269-7678	338
	340
	346
270-7836	819
	841
271-0263	▶636
	637
271-0264	636
	▶1062
271-2180	162
271-2910	▶1207
271-4010	195
	▶379
271-4011	379
271-4957	514
271-4958	514
271-5658	25
271-6472	602
271-7219	507
	541
271-7220	▶541
	615
271-9109	687
	688
272-0388	24
	52
272-1956	52
	129
272-5556	514
272-5749	257
272-6537	359
	363
272-6674	986
273-2554	514
273-2838	24
273-3761	1165
	1166
	▶1177
273-3762	1175
273-3765	1142
	1144
	▶1175
274-0060	736
	737
274-3774	201
	205
	210
274-3775	201
	207
274-3776	201
	207
	210
274-3777	201
274-3778	201
274-3779	201
	222
	224
274-3780	208
	209
274-3948	629
274-4283	1214
274-4284	218
274-6719	139
	280
	289
274-9189	1064
275-0023	▶381
	718
	719
275-0025	381
275-0494	1140
275-0495	1140
275-0529	276
275-0571	506
	526
	985
275-0572	506
	515
	516
	526
275-1253	139
	▶312
275-5588	983
	1020
275-5635	506
275-6530	721
	948
	950
	952
	954
275-7741	▶322
	332
275-8294	990
275-8297	990
275-8299	990
275-8301	990
275-8302	990
275-8303	990
275-8304	990
275-8305	990
275-8544	▶671
	674
275-8737	261
275-8880	797
275-8903	97

▶ PRIMARY REFERENCE

PART NUMBER INDEX

Part	Page
275-9727	594
275-9728	594
275-9774	507
276-0031	▶206
	220
	222
	224
276-0038	619
276-0730	602
	1066
276-1151	203
276-1193	531
276-1211	531
276-1212	531
276-1413	531
276-1414	531
276-1417	531
276-1418	531
276-1858	1215
276-2129	531
276-2331	1004
276-2563	▶739
	1172
276-2602	743
276-3071	719
	▶741
276-3899	603
	604
276-3965	▶917
	▶921
	994
276-4053	193
276-4642	535
276-5386	162
276-5414	7
	▶511
276-5695	752
276-6793	280
	287
276-7533	470
276-7726	1073
276-9067	278
	▶289
277-0731	671
277-1873	352
	720
277-3072	572
	574
	577
	585
	587
	627
	630
277-3073	572
	574
	577
	585
	587
	627
	630
277-3279	967
277-3282	969
277-4547	531
277-4548	531
277-4549	531
277-4551	525
277-6203	986
277-6204	986
277-8271	325
	374
277-8272	325
	374
277-8628	115
277-8863	843
	852
	856
	860
	864
	868
	872
278-0123	983
278-0644	501
278-0647	986
278-1438	203
	205
278-1439	205
278-1906	811
278-2073	623
278-2076	893
	894
278-4400	1010
278-7216	895
	913
278-8965	964
278-8967	964
278-8970	964
278-8974	964
279-0498	12
	▶186
279-3440	3
	▶887
	888
	1172
279-3561	▶891
	892
	901
279-6141	447
	451
279-6143	447
	451
279-6632	563
	613
279-8141	▶1164
279-8142	▶1165
279-8145	▶1166
279-8147	▶1140
	1164
279-8149	▶1142
	1165
279-8151	▶1144
	1166
279-8153	1140
279-8155	1142
279-8157	1144
279-8159	1140
279-8161	1142
279-8163	1144
279-8165	1142
279-8166	1142
279-8169	1144
279-8170	1144
279-8174	1140
	▶1178
279-9093	640
280-0440	967
	969
	970
	971
280-1436	248
280-1437	248
280-1456	2
	▶248
280-2748	62
280-3329	▶550
	738
280-4244	313
280-7000	990
280-7076	622
280-7078	622
280-7870	677
	681
	698
	699
281-0622	591
	▶603
281-0632	629
281-0635	585
	587
281-0639	888
	889
	▶894
	913
281-2398	619
281-8741	▶325
	591
281-8742	325
	374
281-8872	▶181
	183
282-3454	554
282-3456	554
282-6661	649
282-8827	783
	785
	787
	788
	827
	831
	835
	843
	852
	856
	860
	864
	868
	872
283-0266	411
283-0660	135
	136
283-1224	298
283-3367	689
283-9977	420
	425
	▶634
283-9978	634
283-9979	634
284-1010	827
	831
	835
	843
	852
	856
	860
	864
	868
	872
284-1011	827
	831
	835
	843
	852
	856
	860
	864
	868
	872
284-3502	80
	83
284-3623	348
	350
	355
284-3624	348
	350
	355
284-3953	988
284-4739	▶1069
284-5702	257
284-8481	203
	205
	263
	266
284-8971	125
	126
284-8972	125
284-9039	171
285-0150	967
	969
	970
	971
285-1133	195
285-5036	894
285-5600	205
286-1182	1128
	1130
286-1183	1128
	1130
286-1184	1128
	1130
286-1185	1128
	1130
286-2119	1191
286-3259	1128
	1130
286-3260	1128
	1130
286-9380	1095
287-7893	559
288-0734	619
288-0735	506
288-1401	372
288-3687	263
	266
288-7324	215
288-9179	24
289-3195	222
	224
289-5150	203
	205
	215
289-5151	203
	205
289-9885	▶1111
290-6516	177
	179
290-7202	115
	▶593
290-8160	235
	236
291-2165	332
291-4211	585
	587
291-5392	672
291-6692	574
	577
	623
291-6695	574
	577
	623
291-6700	572
	574
	577
291-6819	359
	363
292-4495	1067
292-5995	516
292-5997	515

▶ **PRIMARY REFERENCE**

PART NUMBER INDEX

Part	Page
292-5999	559
292-6000	1
	▶559
292-6001	▶515
	559
	567
292-6002	▶516
	559
292-6390	1111
292-8061	787
	788
	827
	831
	835
	843
	852
	856
	860
	864
	868
	872
293-0730	147
	148
	149
293-3609	392
	394
293-5263	710
293-8350	677
	681
	698
	699
293-8526	410
293-8834	▶1092
	1094
293-9659	1217
294-0466	598
	600
294-0468	598
	600
294-0470	598
	600
294-0877	463
294-4806	811
294-7675	120
	▶121
295-0993	827
	831
	835
	843
	852
	856
	860
	864
	868
	872
295-5405	572
	574
	577
295-5619	1173
295-7978	553
295-8961	203
	205
296-3455	412
296-4290	479
	▶482
296-4291	482
296-4292	482
	483
296-4293	481
	▶483
296-4294	483
296-5662	657
	661
	665
	▶710
296-5749	766
	770
296-5988	827
	835
296-6980	657
	661
	665
296-8060	290
296-8592	115
297-0846	1047
	1048
	1049
	1051
297-0927	1205
	1206
297-0928	1205
	1206
297-0929	▶1205
	▶1206
	1215
297-1546	653
297-2513	▶461
	475
297-3218	80
297-4841	▶149
297-4926	▶688
	977
297-4928	▶687
	973
	975
297-4929	973
	975
297-6462	12
297-7294	376
297-7976	162
298-5624	640
299-5840	979
	▶980
299-6082	359
	363
299-7996	797
299-7997	797

3

Part	Page
300-3582	1067
300-4025	1067
300-5451	555
	556
300-6465	1033
300-7318	559
	607
	609
300-7933	78
	1209
300-9550	35
	▶38
301-0038	1033
	1052
301-0356	1010
301-0359	470
301-0589	220
301-0623	752
301-2261	555
301-2263	556
301-2264	531
	▶555
301-2266	531
	▶556
301-2979	263
	266
301-2980	342
301-4565	▶1033
	1036
	1039
301-8262	604
302-0406	▶231
	▶232
	253
	255
302-0408	▶233
	▶234
	253
	255
302-3908	150
	1010
302-6378	752
	757
302-8533	898
	901
	903
303-2243	195
	▶276
303-3357	278
	280
	▶290
303-5977	714
	715
303-6334	529
303-6430	619
303-6431	619
303-6432	619
303-9566	948
	950
	952
	954
304-0492	162
304-0493	412
	413
304-4924	24
	52
304-5687	332
304-5691	332
	1036
	1039
	1042
304-7167	257
304-7168	257
305-3159	1202
305-3684	143
	162
305-4563	787
	788
305-5362	215
305-8141	27
	▶29
305-8958	▶501
	622
305-8966	501
305-8969	501
305-9192	1107
306-5348	▶329
	716
306-5349	▶338
	▶340
	716
306-5350	329
	337
306-5352	338
	340
	346
307-0047	218
307-2338	207
	214
307-4402	770
307-4671	348
	952
	▶964
307-7313	94
307-7316	607
307-7317	94
	▶607
307-9732	1006
308-0169	770
	772
308-0399	623
	629
308-0400	623
308-0467	1006
308-0948	12
	13
	15
	▶412
	▶413
308-1880	647
308-1883	647
308-1884	647
308-2071	501
308-3868	981
308-3869	▶981
	1033
	1052
308-8161	298
308-9131	559
	609
	614
309-1119	1191
309-2856	574
	577
309-3585	1035
	▶1036
	▶1039
309-5131	29
309-6898	132
309-9810	1059
	1060
310-0674	203
	205
310-1899	895
	898
	901
	903
310-2393	220
310-3277	633
310-3603	1059
	1060
310-5742	828
	832
	836
	844
	853
	857
	861
	865
	869
	873
310-7066	598
	600
	615
310-7255	32
310-7257	32
310-7300	132
	133
310-8058	619
310-9247	24
310-9391	719
	1172
	▶1173
311-2178	1048

PART NUMBER INDEX

Part	Page
	1049
	1051
311-2813	333
311-3898	1069
311-4919	143
	162
311-6112	376
311-6584	619
311-6944	▶1167
311-6953	▶1146
	1167
311-7020	399
	400
	▶470
311-8746	1067
311-9316	733
311-9318	733
312-1139	713
312-4181	1173
312-5694	1132
	1148
	1153
	1161
	1168
	1169
	1170
	1180
	1181
	1182
	1183
312-6234	1187
312-6235	1187
312-6272	1168
312-6429	▶1168
	1169
312-6432	▶1187
312-6458	94
	115
312-6600	531
312-8629	881
	884
312-8990	1168
313-4620	167
313-6043	649
313-7668	827
	831
	835
	839
	843
	852
	856
	860
	864
	868
	872
	▶884
313-7721	460
313-9083	720
	748
	750
	778
	780
313-9312	253
	255
	257
313-9353	1217
314-2405	359
	363
314-2532	253
	255
	257
314-2885	489
314-4018	939
	942
314-4184	▶32
	38
314-5274	1089
314-5275	1089
314-9339	647
314-9350	502
314-9351	502
314-9754	638
315-0096	1150
	1151
	1159
315-1416	▶1188
315-1417	▶1189
315-1419	▶1190
315-1977	6
	▶370
315-1978	370
315-3591	▶372
	1036
	1039
	1042
315-5000	1067
315-5160	710
315-5390	177
315-8032	531
315-8034	531
315-8044	531
315-9859	171
316-1438	881
316-3499	1184
316-3506	▶488
316-3590	1168
	1170
316-5240	298
316-5830	556
316-5863	555
316-8226	207
317-1204	203
	205
317-3719	▶1067
317-3727	1067
317-4589	1146
317-5425	1188
317-5426	1189
317-5427	1190
317-5436	1188
317-5437	1189
317-5438	1190
317-5591	372
317-7595	359
	363
317-8141	946
318-0536	602
318-1178	▶293
	489
318-3365	1169
	▶1184
318-6357	▶166
	167
318-8503	1097
318-8504	1097
318-9628	220
	222
	224
319-0677	157
	▶167
319-2140	770
	772
319-3819	32
319-3820	32
319-3821	32
319-3822	32
319-3823	32
319-3824	32
319-6224	162
319-6225	152
319-6227	152
319-6228	152
319-6240	152
319-6631	750
319-6633	741
319-6634	741
319-6635	721
	748
319-6636	721
	748
319-6637	739
319-6638	739
319-7384	235
	236
319-7428	488
319-7603	231
	233
319-8100	208
	209
319-8101	203
	205
319-8209	231
	232
	233
	234
319-8865	531
319-9511	687
	688
319-9556	▶965
	970
319-9557	▶966
	971
320-1457	917
	921
320-1515	237
	239
	241
	242
320-6142	711
320-9861	333
320-9997	218
	▶220
321-3337	▶1204
321-5283	651
	▶711
321-8167	790
321-8168	790
321-8191	790
321-8389	1168
321-8642	139
321-8657	162
322-0931	338
	340
	346
322-3305	177
	▶180
322-4474	922
322-7452	171
322-9492	915
323-3883	770
323-5871	1173
323-7089	1173
323-8354	506
323-8362	506
323-8367	506
323-9292	719
	▶742
323-9293	742
323-9531	496
	497
324-0674	▶376
	686
324-0675	376
324-0676	376
324-0677	367
324-0678	297
	▶367
324-0680	177
324-0681	177
324-0682	177
324-0683	177
324-0684	177
324-0685	396
324-0689	342
324-0691	342
324-0693	263
324-0694	263
	266
324-0697	359
	363
324-0698	359
	363
324-0699	263
	266
324-0700	263
324-0703	▶198
	342
324-3210	103
	105
324-7871	94
324-7874	770
	772
324-9707	452
325-3347	1036
	1039
	1042
325-3780	392
	394
325-3781	392
	394
325-4636	687
	688
325-5017	619
325-5254	▶406
	619
325-9438	177
325-9488	▶408
	738
326-0503	647
326-0610	1202
326-0612	1202
326-1006	166
326-1644	145
326-3092	1033
	1052
326-4237	420
	425
326-4287	196
326-4288	196
326-5078	1146
327-4382	1168
327-4608	342
327-6919	929
328-2585	▶147
	159
328-6130	▶1035
328-8325	79
328-9959	1067
329-0419	356
329-1428	327
329-1688	531
329-1689	531
329-3356	134
329-3734	201
	215
329-4959	917

▶ **PRIMARY REFERENCE**

PART NUMBER INDEX

Part	Page
	921
329-4983	▶1169
329-5087	276
329-5459	162
329-5511	162
329-6867	1210
	1212
329-6868	1210
	1212
329-6869	1210
	1212
329-6873	1210
	1212
329-6874	1210
	1212
329-6875	1210
	1212
329-6876	1210
	1212
329-6877	1210
	1212
329-6878	1210
	1212
330-3047	909
	910
	911
	912
	913
330-4092	477
330-4095	476
	▶477
	478
330-5048	▶1046
	1104
	1107
330-5363	▶196
	1035
330-5364	▶196
330-6022	12
	13
	15
	▶357
330-6039	12
	17
	▶278
	▶280
330-9765	280
331-3437	1168
331-4010	386
	388
	▶389
331-4011	387
	388
	▶390
331-4012	387
	388
	▶390
331-4013	387
	389
	▶390
331-4014	387
	389
	▶391
331-4015	2
	388
	▶391
331-5262	194
332-1985	868
	872
332-1987	827
	831
	835
	843
	852
	856
	860
	864
332-2788	1148
	1149
	1150
	1151
	1152
	1153
	1154
	1155
	1159
	1160
	1161
	1162
332-5240	383
332-5669	883
332-6592	507
332-6817	688
332-6885	688
332-9402	▶235
	246
	251
333-8153	983
333-8242	827
	831
	835
	843
	852
334-0437	▶8
334-0438	7
	8
	▶8
334-0440	▶9
334-1034	392
	394
334-1570	927
	928
	▶1093
334-5249	1016
334-6035	1035
334-8328	1095
334-8329	1095
335-2608	▶271
	354
335-5297	719
	▶901
335-9383	572
	574
	577
336-0277	752
	757
336-0349	994
336-0868	752
	757
336-3545	220
	▶270
336-4973	▶1180
336-4974	1180
336-4975	1180
337-0831	410
	▶411
337-7325	128
337-7979	203
	205
338-0627	602
338-0912	171
338-5716	257
338-5719	257
338-5720	257
338-9076	2
	▶12
339-2502	1031
339-8924	80
340-2566	201
340-7161	332
	999
340-7437	1026
	▶1028
340-7778	475
	▶478
340-7779	▶475
	488
341-3670	572
341-3671	572
341-6643	411
341-8249	13
	15
	▶194
341-8583	603
	604
	▶605
341-9522	▶553
	686
342-0468	619
342-0606	921
342-2750	447
	451
342-4977	20
342-9022	192
	193
342-9290	192
	193
342-9836	398
343-5527	145
344-0975	▶907
	908
	910
344-0976	▶908
	909
344-1199	506
	563
	1198
	1202
344-1200	529
344-1201	1202
344-1206	529
344-2732	▶982
	983
344-2733	982
344-3340	77
344-3455	▶237
	▶238
	260
344-3456	▶239
	▶240
	260
344-3457	▶241
	257
344-3458	▶242
	▶243
	257
344-3847	982
344-5149	1173
344-5286	640
	▶644
344-5673	721
344-5674	1202
344-5675	105
	115
	150
	531
	565
345-0387	▶1191
345-2045	960
345-2046	962
345-3770	463
345-3771	462
345-3889	412
345-7045	▶572
	591
346-0305	203
	205
	210
346-1656	909
	910
346-1657	911
	912
	913
346-3800	▶878
	879
346-4360	1090
346-4788	127
	128
346-4792	127
	128
346-5193	731
	732
346-5199	731
	732
346-5201	731
	732
346-7763	192
	193
346-9376	222
	224
347-0064	591
	▶909
	▶910
347-0612	677
	▶698
347-1668	181
347-3148	99
347-7417	629
347-8750	▶915
	1073
347-8751	915
347-8755	915
347-8756	915
347-8759	915
347-9427	▶236
	246
	251
348-4348	1006
348-6327	572
	▶623
348-7240	237
	239
348-7490	241
	242
349-1209	152
349-2593	948
	950
	952
	954
	956
	958
	960
349-2599	948
	950
	952
	954
	956
	958
	960
	962
349-2600	948

▶ **PRIMARY REFERENCE**

PART NUMBER INDEX

Part	Page
	950
	952
	954
	956
	958
	960
	962
349-6093	672
349-8238	115
349-8239	115
349-8241	115
349-8243	97
349-8245	97
349-8844	762
	766
350-5417	113
350-7475	88
350-7490	88
351-0283	40
351-3454	222
	224
351-3455	222
	224
351-6995	▶1097
	1099
351-6997	▶1098
	1099
351-8488	192
351-8490	▶192
	222
351-9309	179
	376
351-9911	559
	▶615
351-9918	229
	230
	232
	234
352-1587	5
	▶669
352-2081	▶113
	114
352-2109	112
	▶114
352-3964	338
	340
	346
	364
352-3966	357
352-4155	986
	▶1099
352-4158	1097
352-4902	1097
352-6203	▶1170
	1180
	1181
	1182
	1183
352-6208	1170
352-6236	1170
352-6237	1170
352-9153	1057
352-9954	839
352-9956	839
353-1613	1098
353-1614	1098
353-5112	280
353-5192	276
353-5193	718
	719
353-5394	1098
353-5395	1097
353-7953	152
354-1627	488
354-4031	406
354-4114	408
355-0598	220
355-1213	222
	224
355-2253	605
355-2254	605
355-2255	605
355-2260	605
355-2265	605
355-3148	359
	363
355-8941	517
355-8947	171
355-9981	▶712
	799
	801
	807
	810
	813
	816
355-9985	▶713
	804
356-1764	752
	757
356-2217	724
	▶731
356-5117	752
	757
356-5129	669
	782
356-5989	412
356-8482	651
	657
	661
	665
356-8486	762
	766
356-8550	827
	831
	835
	852
	856
	860
	864
	868
	872
356-8561	827
	831
	835
	843
	852
	856
	860
	868
	872
356-8602	823
356-8603	▶823
	827
	831
	852
	856
	860
	868
	872
356-8605	823
356-8613	823
	824
356-8617	827
	835
	852
356-8619	827
	835
	852
356-9931	675
357-1153	731
	732
357-1251	7
	▶386
357-1264	7
	▶386
357-1265	8
	▶386
357-1266	▶387
357-1267	▶387
357-1268	▶387
357-1269	▶387
357-1270	▶388
357-1271	▶388
357-1272	▶388
357-1273	▶388
357-1274	▶389
357-1275	▶389
357-1276	▶2
357-4265	531
357-4266	531
357-4361	1210
357-4362	752
	1210
357-4365	651
	657
357-4366	651
	657
357-4367	651
357-4368	651
	752
357-4369	651
	657
	762
357-4378	649
	752
	762
357-4379	752
357-4380	447
	451
	753
357-4381	447
	451
357-4427	770
	772
	1210
357-4431	657
357-4432	447
	451
	652
	657
	843
	852
	856
	860
	864
	868
	872
357-4437	649
357-4439	753
357-4442	753
357-4443	753
357-4444	753
357-4445	753
357-4446	649
357-4447	777
357-4448	447
	451
357-4458	1210
357-4459	652
357-4460	649
	657
	753
357-4463	649
	753
	762
357-4476	753
357-4477	753
357-4484	652
357-4494	753
357-4497	748
	750
357-4501	762
357-4503	762
357-4518	652
357-4528	652
357-4539	652
357-4540	652
357-4541	753
357-4550	753
357-4585	280
357-4621	762
	766
357-7575	581
357-7576	581
357-7577	581
357-7578	581
357-9560	827
	831
	835
	852
	856
	860
	864
	868
	872
358-3080	▶488
358-4872	▶199
	914
358-4889	323
358-5187	725
	▶732
358-5188	726
	▶733
358-9581	▶384
	386
	387
358-9582	▶384
	387
358-9583	▶385
	387
	388
358-9584	▶385
	388
	389
358-9585	▶385
	388
	389
358-9586	2
	▶386
	388
358-9602	384
	385
	▶429
358-9603	384
	385
	▶432
358-9604	385
	386
	▶434
358-9605	389
	390
	▶437
358-9606	390
	391
	▶439

▶ **PRIMARY REFERENCE**

PART NUMBER INDEX

Part	Page
358-9607	390
	391
	▶441
359-1303	▶488
359-1514	521
	523
359-4661	827
	831
	835
	844
	852
	856
	860
	864
	868
	872
359-4662	844
	852
	856
	860
	864
	868
	872
359-4663	827
	831
	835
	844
	852
	856
	860
	864
	868
	872
360-0187	235
	236
360-2559	1210
	1212
360-2691	133
	134
360-3549	753
360-3562	762
360-3572	652
360-3576	753
360-3677	35
	49
	99
	280
	783
	785
360-3678	280
360-3679	35
	99
	112
	121
	122
	123
	139
	152
	157
	158
	280
360-3680	64
	99
	112
	139
	152
	783
	785
360-3681	35
	96
	152
	162
	783
	785
360-3682	49
	96
	112
360-3684	35
360-3689	35
360-3692	280
360-6812	▶714
	777
360-8095	1125
360-8161	777
361-1045	222
	224
361-1437	▶1185
361-2507	▶727
	1173
361-2566	977
361-3100	▶715
361-3169	823
	824
361-5740	652
361-6015	350
	720
	954
361-6793	733
361-7636	130
362-1181	199
362-1182	199
362-1320	567
362-3047	572
362-4283	462
362-5004	1
	▶103
	▶105
362-9255	619
	1198
	1200
362-9260	518
	1198
	1200
363-1610	827
	831
	835
	844
	852
	856
	860
	864
	868
	872
363-1613	783
	785
363-2687	844
	852
	856
	860
	864
	868
	872
363-2692	844
	852
	856
	860
	864
	868
	872
363-2697	844
	852
	856
	860
	864
	868
	872
363-2698	852
	856
	860
	864
	868
	872
363-4541	463
363-5911	977
363-6423	977
363-8597	244
363-9896	530
364-0047	757
364-0052	529
364-0087	733
364-0640	799
	807
	810
	▶852
	▶856
	▶860
	▶864
364-0641	804
	▶827
	▶831
	▶835
364-0881	17
	▶127
364-2542	823
	824
364-2634	823
	824
	825
364-2657	235
	236
364-5378	127
	128
364-5389	852
364-8430	103
364-8431	103
364-8483	647
365-2565	646
365-2574	646
365-5169	24
365-6570	783
365-8417	770
	772
366-0780	783
366-0781	783
366-2756	175
366-4972	878
	879
366-5775	518
	1198
366-5829	▶1070
	1073
366-5830	1073
	▶1089
366-8298	462
366-8542	801
	807
	810
	813
	▶819
366-9955	753
	758
	▶782
367-0844	1214
367-6002	783
	785
367-6003	783
	785
367-6004	783
	785
367-7474	948
	950
367-7475	948
	950
367-7476	720
	952
367-7477	720
	952
	954
367-7478	948
	950
367-7479	720
	952
	954
367-8076	675
	▶676
367-8077	676
	▶677
367-8078	676
	▶679
	▶681
367-8264	▶1055
	1070
367-8370	1055
367-8371	1055
367-8372	1070
367-8373	1070
367-8374	▶926
	1070
367-8375	926
367-8376	1070
367-8969	799
	801
	804
	808
	811
	814
	817
367-9074	376
367-9490	▶787
	819
367-9496	819
	▶839
	841
368-0076	518
	1198
	1200
368-2317	702
368-2318	702
368-2319	702
368-2352	1170
368-2756	738
	▶797
368-2757	797
368-4198	791
368-5078	563
	600
	1198
	1202
368-5079	563
368-5080	563
	1087
	1202
368-5081	506
	1198
368-5090	600
	1087
368-5091	506
	563
	600
	1198
368-5096	844
	852
	856
	860
	864

PART NUMBER INDEX

Part	Page
	868
	872
368-8475	4
	7
	8
	▶88
368-8481	▶4
	7
369-4096	258
	260
369-6640	646
	▶647
369-6641	647
369-6662	169
369-8134	12
	13
	15
	▶24
369-8251	1077
369-9201	12
	13
	15
	▶80
369-9203	80
369-9335	783
370-0441	1
	▶526
370-0443	526
	▶527
370-0444	526
	▶528
370-0445	526
	▶529
370-0446	526
	▶530
370-2229	2
	387
	388
	▶543
370-4022	529
370-5764	827
	831
	835
	844
	852
	856
	860
	864
	868
	872
370-6297	152
	162
370-7988	929
	934
370-7989	929
	934
370-8160	827
	831
	835
370-8320	2
	▶1053
370-8321	927
	928
	▶929
	▶934
370-8322	1004
370-8323	▶521
	▶523
	927
	928
370-8324	927
	928
	▶1004
370-8325	927
	928
	▶1085
370-8326	927
	928
	▶988
370-8327	927
	928
	▶1104
	▶1107
370-8328	1085
370-8330	927
	928
	▶1057
370-8332	928
	▶1059
370-8334	▶996
	1053
370-8335	1053
	▶1077
370-8337	332
370-8339	927
	928
	▶1072
370-8340	▶1048
	1053
370-8341	929
	934
370-8357	929
	934
370-8958	753
	758
370-9109	1059
370-9488	110
	374
	451
	571
	577
	587
370-9894	1089
371-0947	574
	577
371-0966	559
371-1266	1170
371-1607	20
371-1624	956
	958
	960
	962
371-1784	839
	▶879
371-2456	1089
371-3481	20
	53
371-4443	929
	934
371-4444	988
371-4446	1004
	▶1006
371-4447	929
	934
	▶986
371-4448	1085
371-4450	1085
371-4451	988
371-4453	1085
371-4454	1085
371-4455	1032
	1059
	1060
371-4458	1057
371-4460	5
	7
	▶1054
371-4461	929
	934
	▶985
371-4462	1006
371-4475	▶638
	927
	928
371-4476	638
	1104
	1107
371-4478	929
	934
371-4479	929
	934
371-4487	927
	928
	▶948
	▶950
371-4488	3
	▶952
	▶954
371-6434	985
371-6715	91
371-6716	91
371-6728	1
	▶545
371-6729	545
	▶546
371-6731	546
371-6732	546
371-6733	546
371-6749	546
371-7186	280
371-9415	743
	745
	▶849
372-0290	799
	801
	804
	807
	810
	813
	816
372-0715	429
	432
	434
	443
372-0716	437
	439
	441
	445
372-0730	394
372-1260	956
	958
	960
	962
372-2158	1089
372-2873	2
	▶195
372-2874	2
	▶738
372-2875	2
	▶469
372-2905	191
372-2906	186
372-3389	799
	801
	804
	807
	810
	813
	816
372-4531	▶193
	224
372-4532	193
372-4677	170
	▶171
372-4679	171
372-4784	403
372-4785	403
372-4788	385
	386
	390
	391
	▶403
372-4845	▶207
	348
	350
372-4849	1
	▶563
	▶565
372-4850	531
372-4852	563
	565
372-4855	563
	565
372-4857	563
372-4861	563
	565
372-4863	563
	565
372-4866	563
	565
372-4867	359
	363
372-4870	359
	363
372-4872	195
	▶359
	▶363
372-4873	▶200
	332
372-4874	332
372-4875	▶210
	368
372-4876	▶263
	▶266
	342
372-4885	195
	▶368
372-4888	▶177
	195
372-4889	195
	▶342
372-4890	▶348
	▶350
	948
	950
	952
	954
372-5287	652
	657
	661
	665
372-5288	652
	657
	661
	665
372-5290	652
	657
	661
	665
372-5291	652
	657
	661
	665
372-6181	799
	801
	804

▶ **PRIMARY REFERENCE**

PART NUMBER INDEX

Part	Page
	807
	810
	813
	816
372-6246	929
	934
	▶1100
	▶1102
372-8054	528
372-8056	527
373-0494	195
	257
	▶371
373-0495	▶210
	371
373-0496	▶211
	371
373-0497	▶214
	355
373-0498	▶250
	927
	928
373-3436	1072
	▶1073
373-4074	600
373-4075	600
373-4076	600
373-4077	600
373-4078	600
373-4079	600
373-4650	929
	934
373-4925	801
	▶868
	▶872
373-5880	▶956
373-5881	▶958
373-5882	8
	▶960
373-5883	▶962
373-5884	▶928
	1053
373-5885	▶927
	1053
373-5886	686
	▶1053
373-5888	▶999
373-5889	999
373-5892	929
	934
373-5894	929
	934
373-5933	9
	▶251
373-7172	17
	▶303
	▶304
373-8236	▶2
373-8237	▶1
	2
373-8238	▶7
373-8240	▶4
373-8242	▶4
373-8243	▶686
373-8254	▶8
373-8255	3
	719
373-8256	▶2
373-8257	▶9
373-8259	▶651
	686
373-8262	▶718
373-8263	▶719
373-8264	▶1066
373-8265	3
	▶748
373-8266	▶410
	738
373-8267	5
	▶686
373-8268	▶1214
373-8269	▶591
373-8271	1066
373-8272	▶640
	738
373-8274	183
	▶983
373-8275	738
	▶752
	▶757
373-8276	▶657
	▶661
	▶665
	738
373-8279	1
	▶1215
373-8280	3
	719
	▶777
373-8281	719
	▶799
373-8282	195
	▶197
373-8283	195
	▶196
373-8284	195
	▶196
373-8285	195
	▶253
	▶255
373-8287	▶5
373-8289	4
	▶6
373-8290	▶719
373-8291	▶1172
373-8292	▶196
	218
373-8294	▶591
373-8295	▶649
	686
373-8465	677
373-8619	733
373-8734	731
373-9483	783
	785
373-9828	732
373-9952	738
	▶762
	▶766
373-9953	▶722
	738
373-9954	▶723
	738
373-9955	738
	▶775
373-9956	738
	▶778
373-9958	738
	▶804
373-9959	738
	▶1210
	▶1212
373-9960	3
	▶807
	▶810
	▶813
	▶816
373-9961	738
	▶850
373-9962	▶675
	738
374-1376	▶783
	852
	856
	868
374-1603	791
374-4868	2
	▶17
374-4980	512
374-4981	1
	▶539
374-4982	1
	▶535
	▶537
374-4992	946
374-4993	946
374-4994	946
374-5369	1
	▶170
374-5370	1
	▶600
374-5372	1
	▶514
374-5373	1
	▶622
374-5375	4
	7
	▶1087
374-5932	▶627
	630
374-6808	▶1148
374-6809	▶1117
	1148
374-7465	205
374-7468	205
374-9526	1215
375-1555	967
	969
	970
	971
375-1556	960
	▶967
375-1557	962
	▶969
375-1558	956
	▶970
375-1559	958
	▶971
375-2109	1117
375-2110	1117
375-2112	1117
375-2113	1117
375-2114	1117
375-2118	1117
375-2119	1117
375-2120	1117
375-2121	1117
375-2122	1117
375-2472	6
	▶257
375-3118	▶914
375-3121	5
	▶183
375-3598	1215
375-3788	827
	831
	835
	844
	852
	856
	860
	864
	868
	872
375-4117	574
	577
375-4118	574
	577
375-4323	928
	▶977
375-5750	332
375-5759	▶355
	956
	958
	960
	962
375-5760	3
	▶352
375-5761	▶331
	927
	928
375-5762	▶213
	352
	720
375-5944	956
	958
	960
	962
375-6398	718
	719
	▶750
375-6399	▶187
375-6401	▶187
375-7128	218
375-7304	▶1149
375-8099	▶260
375-8101	▶218
375-8102	▶218
375-8103	716
	▶770
375-8104	▶3
375-8108	▶179
375-8109	1
	▶512
375-8430	629
375-8447	574
	577
	▶629
375-8450	▶574
	591
375-9530	218
	▶222
376-1583	677
376-2010	98
376-3342	▶211
	258
	260
376-4020	▶549
	1066
376-4022	8
	▶1075
376-4023	549
376-4026	549
376-4029	549
376-4353	301
376-4753	2
	9
	▶261
376-6504	171
376-6506	600
376-6507	600
376-6509	527
	528
	531
376-6511	563
	565

PART NUMBER INDEX

Part	Page
	▶611
376-6512	563
	565
	▶612
	613
376-6745	1104
	1107
376-6746	▶637
	927
	928
376-6749	927
	▶1060
376-7952	649
376-7956	649
376-7957	649
376-8751	778
376-8752	778
376-8753	778
376-8754	799
	801
	804
	807
	810
	813
	816
376-8755	721
	801
	807
	810
	813
	816
376-8756	721
	801
	807
	810
	813
	816
376-8757	721
	801
	807
	810
	813
	816
376-8758	801
	807
	813
376-8759	721
	801
	807
	810
	813
	816
376-8764	799
	804
376-8765	777
376-8766	721
	801
	807
	810
	813
	816
376-8770	775
376-8771	775
376-8772	775
376-8773	775
376-8775	850
376-8784	799
	801
	804
	807
	810
	813
	816
376-8790	762
	766
376-8791	762
	766
376-8793	762
	766
376-8794	675
376-8795	762
	766
376-8796	762
	766
376-8797	762
	766
376-8798	762
	766
376-8799	762
	766
376-8800	762
	766
376-8801	762
376-8802	762
376-8804	762
	766
376-8809	652
376-8812	657
	661
	665
376-8813	657
	661
	665
376-8814	657
	661
	665
376-8824	652
	657
	661
	665
376-8827	652
	657
	661
	665
376-8830	675
376-8997	▶1119
	1149
376-9021	1119
376-9022	1119
376-9023	1119
376-9024	1119
376-9025	1119
376-9029	1119
376-9031	1119
376-9067	797
376-9582	652
376-9868	1119
376-9870	1060
377-1478	218
	▶224
377-2007	98
377-2010	97
377-2024	▶97
	115
377-2025	97
377-2026	97
377-2027	97
377-2028	▶98
	115
377-2389	1088
377-2971	261
377-3141	1001
377-3177	1
	▶1010
377-3269	591
	592
	▶1032
377-3270	1032
377-3272	187
	▶188
377-3273	187
	▶190
377-3276	929
	934
377-4468	1
	▶115
377-5026	535
	537
377-5028	535
	537
377-6862	17
	▶175
377-7222	574
	577
377-7224	574
	577
377-7225	629
377-7367	911
	912
	913
377-9310	1006
377-9582	772
378-3267	681
378-3708	1073
378-4616	155
378-6952	17
	▶59
378-7380	1
	▶150
378-7381	17
	▶133
	▶134
378-7472	▶94
	716
	717
378-7473	94
378-7474	94
378-8331	▶734
	753
	758
378-9993	▶1181
378-9995	1181
378-9996	1181
378-9999	1170
379-0000	▶1182
379-0014	▶1183
379-0015	1183
379-0016	1183
379-0019	1182
379-0020	1182
379-2185	462
379-4479	641
379-4491	1075
	▶1076
379-5207	150
379-5208	150
379-5209	150
379-6474	658
	661
	665
	▶672
379-6475	753
379-6477	641
379-6481	850
379-6484	652
379-6485	652
379-6486	652
379-6487	652
379-6492	652
379-6493	652
379-6494	762
379-6495	743
	745
379-6496	745
379-6497	719
	▶743
	1172
379-6498	447
	451
379-6499	447
	451
379-6500	447
	451
379-6501	447
	451
379-6502	447
	451
379-6504	447
	451
379-6505	399
	▶447
379-6506	721
	748
	750
379-6509	652
379-6510	652
379-6511	652
379-6512	652
379-6513	652
379-6514	652
379-6515	652
379-6516	652
379-6517	652
379-6518	652
379-6519	652
379-6520	652
379-6521	652
379-6522	652
380-1619	115
380-5754	1210
	1212
380-5755	738
	▶780
380-5756	780
380-5757	780
380-5758	780
380-5759	738
	▶801
380-5766	410
380-5769	410
380-5770	410
380-5783	563
	565
380-7143	652
	658
	661
	665
380-7177	▶337
	717
380-7178	▶346
	717
381-1713	188
381-1714	190
381-2252	649
381-2334	731
	732
381-2499	▶215
	357
381-4584	722
	▶729
381-4585	723
	▶730
381-4586	729
381-4587	730
381-4588	729
	730

PART NUMBER INDEX

Part	Page
381-4589	729
	730
381-4590	729
	730
381-4591	729
	730
381-8868	16
	▶155
382-1186	▶525
382-1187	609
382-1511	762
	766
382-2521	399
	400
	▶554
382-2522	399
	400
	▶551
382-2533	3
382-5732	1
	▶609
382-6646	▶517
	1198
382-6647	616
	▶1198
382-6648	1
	▶616
	▶617
382-7167	133
	134
382-8820	1
	▶506
382-8821	10
	▶1202
382-9199	602
382-9466	622
382-9467	622
382-9834	▶1150
382-9835	▶1151
382-9836	▶1159
383-0135	97
383-1725	529
383-1727	530
383-3207	527
	528
	531
383-4303	811
383-6023	▶399
383-6026	▶738
	914
383-6027	▶716
	▶717
383-6030	▶1172
383-7557	824
	825
384-0677	158
384-1647	196
384-4217	929
	934
384-5251	525
	▶531
384-5252	525
384-5554	▶1121
	1150
384-5556	1121
	1123
384-5557	1121
	1123
384-5559	1121
384-5560	1121
	1122
384-5568	1121
	1123
384-5573	1121
	1123
384-5574	1121
	1123
384-5577	▶1122
	1151
384-5579	1122
	1125
384-5580	1122
	1125
384-5583	1122
	1125
384-5588	1122
	1125
	1127
384-5589	1122
	1125
384-6414	▶1134
	1159
384-6416	1134
	1138
384-6417	1134
	1138
384-6418	1134
384-6419	1134
384-6457	1134
	1138
384-6461	1134
	1138
384-6462	1134
	1138
384-6525	1100
	1102
384-6526	1100
	1102
384-6527	1100
	1102
384-6528	1100
384-6529	1100
	1102
384-6530	1100
	1102
384-6531	1100
	1102
384-6532	1100
	1102
384-7277	531
384-7278	531
384-8750	827
	831
	835
	843
	852
	856
	860
	864
	868
	872
	883
384-9548	910
384-9550	911
	912
	913
384-9992	53
	112
	1207
385-0875	1122
385-4333	▶892
	910
385-4334	▶888
	912
385-4432	495
	▶496
385-8575	770
	772
	▶790
	▶791
386-0125	718
	▶903
386-0130	4
	5
	7
	▶10
386-0131	▶591
386-3993	195
386-6202	772
386-6203	772
386-6955	17
	▶41
387-0314	1089
387-0317	1089
387-0633	1087
387-0635	1087
387-1956	130
387-1975	2
	▶13
387-1976	7
	▶15
387-2082	10
	▶519
	520
387-2083	10
	▶613
387-2853	▶1029
	1053
387-2854	1029
387-2856	928
	▶1030
387-7149	156
387-8538	16
	17
	▶158
387-9427	▶148
	160
388-0721	772
388-3731	783
388-3762	▶602
	1066
388-3768	618
	▶619
388-4493	831
	844
	857
	861
	865
	868
	872
388-9379	1092
389-1072	139
389-2249	1045
389-3204	618
389-3205	▶1049
	▶1050
	1053
389-3708	121
	122
	123
	139
	152
	157
	158
	280
389-3709	49
389-3728	35
389-4203	763
	767
389-8169	671
390-0483	▶518
	619
390-0787	304
	▶305
390-1082	518
390-2314	1030
390-4282	128
390-4286	618
390-7294	▶7
390-7295	▶8
390-7296	▶3
	8
390-7297	3
	▶513
391-0953	▶889
	911
391-1082	591
	▶911
391-1083	591
	▶912
391-4215	1004
391-4219	618
	▶1088
391-4223	1035
	▶1042
391-4258	1029
391-4950	▶1152
391-4951	▶1123
	1152
391-4954	1123
	1125
391-4955	1125
391-4956	1123
	1125
391-4957	1125
391-4958	1123
	1125
391-4976	1123
391-6268	▶7
	8
391-6269	5
	▶618
391-6270	▶3
	7
391-6273	3
	▶735
391-6313	356
391-6317	152
391-6318	152
391-6319	152
391-7095	619
391-7814	735
	▶736
391-7815	735
	▶737
391-7816	736
	737
391-7817	736
	737
391-9256	17
	▶128
392-0267	264
	266
392-5598	▶505
	591
	592
392-5599	▶503
	591
	592
392-5605	▶520
392-5606	▶1035
392-7923	13
	15
	▶124
392-7951	13

▶ PRIMARY REFERENCE

PART NUMBER INDEX

Part	Page
	15
	▶152
392-8668	▶585
	591
392-8669	▶569
	591
392-8670	591
392-8671	640
392-8672	640
392-8673	585
	587
	▶630
392-8674	569
	571
392-8675	758
392-8676	▶108
	399
392-8677	753
	758
392-8681	763
	767
392-8682	753
	758
392-8683	778
	780
392-8684	778
	780
392-8685	721
	748
	750
392-8686	721
	748
	750
392-8688	763
	767
392-8690	763
	767
392-8693	766
392-8694	766
392-8695	766
392-8761	789
392-8762	789
392-9252	13
	▶60
392-9270	13
	15
	▶130
393-0904	13
	15
	▶941
393-3590	13
	15
	▶269
393-5145	677
	▶684
393-5149	677
393-5150	677
393-5151	681
393-5152	681
	▶699
393-7628	1
	▶126
394-1108	791
394-5936	1102
394-6674	1200
394-6676	617
	▶1200
394-6678	1200
394-7274	126
394-8448	447
	451
394-8476	▶1153
394-8478	▶1125
	1153
394-8568	844
	857
	861
	865
	868
	872
394-9671	▶942
	943
395-0327	▶139
	143
395-0379	1125
395-3265	▶1154
395-3266	▶1127
	1154
	1155
395-3340	1127
395-3341	1127
395-3344	1127
395-3348	1127
395-3353	1127
395-3949	▶1155
396-0385	152
	162
396-0386	152
	162
396-0393	35
	49
	280
396-0403	35
	99
	112
396-0404	35
	96
396-0405	64
	99
	112
396-1537	▶1160
396-1538	▶1135
	1160
396-1540	▶1161
396-1541	▶1137
	1161
396-1545	▶1162
396-1546	▶1138
	1162
396-2232	13
	15
	▶46
396-2352	988
396-3623	13
	15
	▶143
396-4852	844
	857
	861
	865
	868
	872
396-4980	13
	15
	▶356
396-7308	▶11
	13
396-7309	▶11
	15
396-8415	13
	15
	16
	17
	▶156
396-9453	717
	▶772
397-1168	11
	▶17
397-1829	152
397-1832	113
397-2535	12
	▶162
397-3975	11
	▶1217
397-8226	1052
397-8228	1042
397-8260	1
	▶946
397-8809	▶383
	975
397-9301	531
	565
	611
	612
398-0940	298
	▶310
398-1500	539
398-1501	539
398-3229	611
	612
398-3265	772
398-5596	139
	152
398-5597	280
398-5598	99
398-5601	152
	162
398-5612	63
	96
	112
398-8246	1216
399-0266	462
399-0347	1137
399-0352	1137
399-0354	1137
399-0356	1138
399-4259	6
	▶507
399-5239	531
399-5331	622
399-9327	263
	266
399-9329	264
	266
	▶509
418-4361	▶212
	257
418-6781	52
	1208
419-9844	913
419-9845	▶592
419-9847	▶400
420-4773	679
	681
420-7312	1088
420-7313	1088
421-4975	▶208
	359
421-4977	▶202
	263
421-7634	537
422-2152	988
423-1786	785
423-1787	785
423-1980	772
423-6772	1102
423-6832	1102
423-6833	1102
423-6834	1102
423-6836	1102
424-4889	592
	▶913
424-4890	▶577
	592
424-5828	▶567
424-5829	567
424-5830	567
424-5831	567
424-5832	567
424-5833	567
424-5834	567
424-5835	567
424-5836	567
425-6512	▶587
	592
425-6513	▶571
	592
425-6514	▶374
	592
425-6734	495
	▶497
426-3491	400
	▶451
426-3492	▶110
	400
426-5377	245
428-8505	585
430-4119	1102
430-7988	89
430-7991	89
430-7994	89
431-8802	785
432-2314	413
432-5661	▶785
	844
	860
	864
	872
432-8513	565
	567
434-1356	270
434-2753	567
434-2754	567
434-3217	413
434-4615	1107
434-5158	195
435-5501	661
	665

4

Part	Page
415-1086	▶245
	255
415-1805	1137
415-1809	1137
415-1811	1137
415-1812	1137
415-1818	1137
415-2466	1135
415-2467	1135
415-2470	1135
415-2471	1135
415-2477	1135
415-3246	733
415-7191	592
	▶604
415-9734	1088
416-0023	1092
416-9359	1054
416-9361	1042
	▶1052
417-2685	257
417-2686	509
417-2687	6

PART NUMBER INDEX

Part	Page
436-7403	▶1031
438-6425	▶204
	266
438-6426	▶209
	363
438-8324	1050
	▶1051
439-1562	1069
439-1825	80
439-1826	80
439-1965	35
440-4805	565
440-4807	1202
440-4808	1202
441-0402	196
441-6281	17
	▶943
442-6441	196
442-8389	▶7
443-3773	▶824
	835
	864
443-5778	▶720
444-1143	13
	15
	▶66
444-2026	266
444-6448	▶745
444-6523	238
	240
444-6524	243
444-9534	581
	587
444-9535	581
	587
444-9723	745
445-1714	115
445-2631	195
445-4982	788
445-4983	▶788
	841
445-4988	720
	816
	▶841
445-6109	▶825
	844
445-7502	721
	816
446-9541	743
447-1484	94
447-3258	177
448-0607	114
449-6277	192
	193
449-9227	196
450-2550	▶53
450-2761	105
450-2762	105
450-3092	13
	15
	▶123
451-5878	813
	816
	▶843
451-6644	844
451-9131	844
452-2509	▶728
455-0704	209
455-1109	▶55
455-1111	▶1208
455-1898	▶53
455-1899	▶1209
455-1900	▶52
456-0584	727
	728
456-1664	▶54
456-5130	1185
456-5558	197
457-5387	977
457-7389	20
460-3203	▶89
460-3205	89
460-3206	89
460-3208	89
460-7278	▶91
460-7279	91
460-7280	91

▶ PRIMARY REFERENCE



©2015 Caterpillar
All Rights Reserved

CAT, CATERPILLAR, their respective logos, “Caterpillar Yellow”, and the POWER EDGE trade dress as well as corporate and product identity used herein, are trademarks of Caterpillar and may not be used without permission.

SEBP5785-15
VOLUME I
Pages 1-630

950H Wheel Loader

JLX1-UP