M0066204-00 (en-us)
September 2016

RUTHZIL TRATOR COMERCIAL DE PEÇAS LTDA 11 97083-6812 ROLANDO

Parts Manual

950L Wheel Loader

TNS1-UP (Machine)
E7A1-UP (Engine)
WL51-UP (Transmission)
WSH1-UP (Transmission)
WSY1-UP (Transmission)
HML1-UP (Torque Converter)

Powered By C7.1 Engine

Product and Dealer Information

Note: For product identification plate locations, see the section “Product Identification Information” in the Operation and Maintenance Manual.

Delivery Date: _____

Product Information

Model: _____

Product Identification Number: _____

Engine Serial Number: _____

Transmission Serial Number: _____

Generator Serial Number: _____

Attachment Serial Numbers: _____

Attachment Information: _____

Customer Equipment Number: _____

Dealer Equipment Number: _____

Dealer Information

Name: _____ Branch: _____

Address: _____

_____

_____

	Dealer Contact	Phone Number	Hours
Sales:	_____	_____	_____
Parts:	_____	_____	_____
Service:	_____	_____	_____

MEMORANDA

TABLE OF CONTENTS

NAME PAGE

GENERAL INFORMATION. A6

REPAIR ALTERNATIVES. A9

SUPPLEMENTAL COOLANT ADDITIVES. A10

MAINTENANCE PARTS A11

INDEX A14

MACHINE ARRANGEMENT 1
- CHASSIS AR. 1
- COLD WEATHER AR 1
- COMMON AR 2
- CONFIGURATION AR. 2
- CONVERSION AR-MACHINE 3
- DISTRIBUTION AR 3
- SPECIAL AR-WHEEL LOADER 5

ENGINE ARRANGEMENT 7
- ENGINE AR-PRIMARY 7
- INSTALLATION AR-ENGINE 8

BASIC ENGINE 9
- AIR COMPRESSOR GP. 9
- BELT TENSIONER GP. 10
- CAMSHAFT GP 11
- COVER GP-VALVE MECHANISM 12
- CRANKSHAFT GP. 14
- CYLINDER BLOCK AS. 15
- CYLINDER BLOCK GP 16
- CYLINDER HEAD AS 17
- CYLINDER HEAD GP. 18
- DRAIN GP-OIL 19
- DRIVE GP-FAN. 20
- FASTENER GP-DAMPER & PULLEY 21
- FLYWHEEL GP. 22
- GUARD GP-BELT 23
- HOUSING GP-FLYWHEEL. 24
- HOUSING GP-FRONT 26
- JET GP-PISTON COOLING 29
- LIFTING GP-ENGINE 30
- MOUNTING GP-ENGINE 31
- MOUNTING GP-ENGINE & XMSN 32
- PAN GP-OIL 33
- PISTON & ROD GP 34
- PULLEY GP-CRANKSHAFT 35
- ROCKER ARM GP 36

LUBRICATION SYSTEM 39
- BREATHER GP 39
- COVER GP-OIL FILLER. 40
- FILLER GP-ENGINE OIL 41
- FILTER GP-ENGINE OIL 42
- GAUGE GP-OIL LEVEL (DIPSTICK) 43
- LINES GP-TURBOCHARGER OIL. 46
- PUMP GP-ENGINE OIL 47
- VALVE GP-FLUID SAMPLING 48

COOLING SYSTEM. 49
- CONNECTION GP-HEATER 49
- CONNECTION GP-WATER 50
- COOLER GP-ENGINE OIL 51
- FAN GP-SUCTION. 53
- FRAME GP-RADIATOR 57
- LINES GP-OIL COOLER 60
- LINES GP-WATER. 68
- PUMP GP-WATER. 72
- RADIATOR & AFTERCOOLER GP. 73
- SUPPORT GP-RADIATOR. 75

AIR INLET AND EXHAUST SYSTEM 78
- AIR CLEANER GP. 78
- CAP GP-AIR CLEANER. 80
- DUST EJECTOR GP. 81
- FILTER ELEMENT AS-AIR 82
- LINES GP-AFTERCOOLER AIR. 83
- LINES GP-AIR. 85
- LINES GP-EXHAUST 89
- LINES GP-TURBOCHARGER AIR. 90
- MANIFOLD GP-EXHAUST 91
- MANIFOLD GP-INLET. 92
- MOUNTING GP-AIR CLEANER 93
- MUFFLER GP 95
- PRECLEANER GP 96
- TURBOCHARGER GP 101
- VALVE GP-SOLENOID 102

FUEL SYSTEM. 103
- CAP GP-FUEL FILLER. 103
- FILTER GP-FUEL. 104
- INJECTOR GP-FUEL. 107
- LINES GP-DRAIN. 109
- LINES GP-FUEL. 110
- LINES GP-FUEL FILTER. 114
- LINES GP-FUEL INJECTION 120
- PUMP GP-FUEL INJECTION 122
- PUMP GP-FUEL PRIMING 124
- RAIL GP-FUEL 127
- TANK & MTG GP-FUEL 128
- TANK GP-FUEL 129

ELECTRICAL AND STARTING SYSTEM 131
- ADAPTER GP-SENSOR. 131
- ALARM GP 133
- ALTERNATOR GP-CHARGING 134
- BATTERY & WIRING GP 135
- BRACKET GP-MOUNTING 141
- CONTROL AR-COMMUNICATION. 142
- CONTROL GP-AUTODIG. 143

TABLE OF CONTENTS

NAME	PAGE
CONTROL GP-COMMUNICATION	144
CONTROL GP-ENGINE ELECTRONIC	149
CONTROL GP-UNPROGRAMMED	150
CONVERTER & WIRING GP-RADIO	152
ELECTRONICS GP-IMPLEMENT	153
ELECTRONICS GP-MACHINE	153
ELECTRONICS GP-MONITOR	153
ELECTRONICS GP-POWER TRAIN	154
HARNESS AS-CAB	155
HARNESS AS-CHASSIS	158
HARNESS AS-CONTROL	162
HARNESS AS-ENGINE	163
HARNESS AS-HEATER & AIR COND	165
HARNESS AS-LIGHTING	165
HARNESS AS-MONITOR	167
HARNESS AS-RADIO	167
HARNESS AS-SENSOR	168
HARNESS AS-SWITCH	169
HARNESS AS-TRANSMISSION	170
HARNESS AS-VALVE	171
HARNESS AS-WIRING	171
HEATER GP-JACKET WATER	172
INSTALLATION GP-COMMUNICATION	174
LAMP GP-FLOOD	175
LAMP GP-HEAD & SIGNAL	179
LAMP GP-WARNING BEACON	183
LIGHTING AR-FLOOD	184
LIGHTING AR-FLOOD & SIGNAL	184
LIGHTING GP-FLOOD	185
LIGHTING GP-FLOOD & SIGNAL	189
LIGHTING GP-WARNING BEACON	195
MOUNTING GP-ELECTRONIC CONTROL	196
PANEL GP-SWITCH	197
RELAY GP	198
SENSOR & MTG GP-LIFT POSITION	199
SENSOR & MTG GP-TILT POSITION	200
SENSOR GP-ENGINE	202
SENSOR GP-POSITION	203
SENSOR GP-PRESSURE	205
SENSOR GP-SPEED	208
SENSOR GP-TEMPERATURE	209
STARTING AID GP	210
STARTING AID GP-ETHER	211
STARTING MOTOR GP-ELECTRIC	213
SWITCH GP-DISCONNECT	214
SWITCH GP-MAGNETIC	215
SWITCH GP-PAYLOAD STORE	218
SWITCH GP-QUICK COUPLER	219
SWITCH GP-ROCKER	220
SWITCH GP-START	222
SWITCH GP-TOGGLE	223
VALVE GP-ETHER STARTING	224
WIRING GP-AXLE TEMPERATURE	225
WIRING GP-BRAKE	230
WIRING GP-CAB	231
WIRING GP-CHASSIS	238
WIRING GP-CONTROL	249
WIRING GP-ENGINE	253
WIRING GP-LUBRICATION	260
WIRING GP-OBJECT DETECTION	261
WIRING GP-SECONDARY STEERING	263
WIRING GP-SENSOR	265
WIRING GP-VALVE	267
POWER TRAIN	268
ACCUMULATOR GP-HYDRAULIC	268
AXLE AR-FIXED	270
AXLE AR-FIXED & OSCILLATING	274
AXLE AR-OSCILLATING	277
BRAKE & PLANETARY GP	283
CASE & PARTS GP-PLANETARY	290
CASE GP-TRANSMISSION	295
CLUTCH GP	296
CONTROL GP-DIFFERENTIAL LOCK	303
CONTROL GP-TRANSMISSION HYD	308
COOLER GP-TRANSMISSION OIL	310
COUPLING GP-DRIVE	311
COVER GP-XMSN OIL FILLER CAP	312
DIFFERENTIAL GP	313
DRAIN GP-ECOLOGY	317
FILLER GP-POWER TRAIN OIL	318
FILTER & LINES GP-TORQUE CONV	320
FILTER GP-OIL	327
GEAR GP-BEVEL	329
GEAR GP-BEVEL & PINION	331
GEAR GP-INPUT TRANSFER	339
GEAR GP-OUTPUT TRANSFER	340
HEAT EXCHANGER GP-AXLE	341
HOUSING GP-AXLE	342
HOUSING GP-FIXED AXLE	354
HOUSING GP-OSCILLATING AXLE	360
LINES GP-AXLE OIL COOLER	381
LINES GP-TORQUE CONV COOLER	385
MANIFOLD GP-CONTROL	387
MOTOR GP-GEAR	388
MOUNTING GP-AXLE OIL COOLER	389
MOUNTING GP-DRIVE AXLE	391
MOUNTING GP-RIM	392
POWER TRAIN AR	392
RIM AR	392
RIM GP-DEMOUNTABLE	392
SHAFT GP-DRIVE	394

TABLE OF CONTENTS

NAME	PAGE
SLIP JOINT GP	396
TIRE & RIM AR	397
TORQUE CONVERTER GP	398
TRANSMISSION AR	401
VALVE GP-CONTROL	402
VALVE GP-SOLENOID	403
VALVE GP-TIRE	406
VALVE GP-TRANSMISSION CONTROL	407
FRAME AND BODY	408
BAFFLE GP	408
BLOCK GP-AXLE OSC LIMITER	411
BOSS GP-LOADER FRAME	412
BOSS GP-REAR FRAME	417
BOX AS-BATTERY	421
BOX GP-BATTERY	423
BRACKET GP-MOUNTING	425
COUNTERWEIGHT & MOUNTING GP	427
COUNTERWEIGHT AR	428
COUNTERWEIGHT GP	429
COUNTERWEIGHT GP-SUPPLEMENTARY	432
COVER & PLUG GP	433
COVER GP-ACCESS	437
COVER GP-FRAME	439
DEFLECTOR GP-FENDER	440
DOOR GP-ACCESS	441
ENCLOSURE GP-SERVICE CENTER	444
EXTENSION GP-FENDER	445
FENDER AR-ROADING	446
FENDER GP	447
FLOORPLATE GP	451
FRAME AS-LOADER	452
FRAME AS-REAR	453
GRILL GP-RADIATOR	456
GUARD GP-ARTICULATION	458
GUARD GP-AXLE	459
GUARD GP-BOTTOM	460
GUARD GP-FRONT	463
GUARD GP-MUD	465
GUARD GP-POWER TRAIN	467
GUARD GP-PROTECTION	469
HANDHOLD GP	470
HANDRAIL GP	472
HARDWARE GP-CHASSIS	477
HARDWARE GP-LOADER FRAME	478
HARDWARE GP-MOUNTING	481
HARDWARE GP-REAR FRAME	482
HITCH GP-ARTICULATING	485
HOOD & GUARD GP	487
LADDER & WALKWAY GP	490
LADDER GP	495
LATCH GP	499
LINES GP-FRONT LUBRICATION	500
LINES GP-GREASE	503
LINES GP-LUBRICATION	506
LINES GP-REAR LUBRICATION	508
LINK GP-STEERING FRAME LOCK	512
LUBRICATION AR-AUTOMATIC	513
PANEL GP-HOOD	514
PANEL GP-SIDE	518
PLATE AS-MOUNTING	525
PLATE GP-MOUNTING	526
PUMP GP-LUBRICATION	527
SHIELD GP-ENGINE COMPARTMENT	531
STEP GP	537
SUPPORT GP-HOOD	540
SUPPORT GP-LADDER	547
SUPPORT GP-PLATFORM	548
SUPPORT GP-VALVE & FILTER	550
SUPPRESSION AR-SOUND	554
TILT GP-HOOD	555
VALVE & LINES GP-LUBRICATION	556
WALKWAY GP	558
BRAKING SYSTEM	565
ACCUMULATOR GP-BRAKE	565
BRAKE GP-PARKING	566
CONTROL GP-FOOT BRAKE	568
CONTROL GP-SERVICE BRAKE	570
FASTENER GP-LINES	578
MANIFOLD GP-CONTROL	579
VALVE GP-CHECK	582
VALVE GP-SHUTTLE	583
VALVE GP-SOLENOID	584
HYDRAULIC SYSTEM	586
ACCUMULATOR GP-RIDE CONTROL	586
CONTROL & LINES GP-RIDE	588
CONTROL AR-FAN	590
CYLINDER GP-COUPLER	591
CYLINDER GP-LIFT	592
CYLINDER GP-TILT	594
FILTER GP-OIL	597
GUARD GP-LIFT CYLINDER	599
GUARD GP-LINES	601
GUARD GP-TILT CYLINDER	602
HEAD GP-PUMP	604
HYDRAULIC AR	605
HYDRAULIC AR-2 VALVE	606
HYDRAULIC AR-3 VALVE	606
HYDRAULIC AR-STANDARD LIFT	607
LINES GP-COUPLER	608
LINES GP-FRONT	614
LINES GP-HYDRAULIC	616
LINES GP-HYDRAULIC OIL COOLER	627
LINES GP-LIFT CYLINDER	629

TABLE OF CONTENTS

NAME	PAGE
LINES GP-TILT CYLINDER	631
MANIFOLD GP-CONTROL	635
MANIFOLD GP-HYDRAULIC	639
MANIFOLD GP-VALVE	640
PUMP & MTG GP-HYDRAULIC	641
PUMP & MTG GP-HYDRAULIC FAN	643
PUMP & MTG GP-PISTON	644
PUMP GP-GEAR	646
PUMP GP-PISTON	648
ROTATING GP-PUMP	658
TANK & FILTER GP-HYDRAULIC	660
TANK & MTG GP-HYDRAULIC	662
VALVE & MTG GP-COUPLER	664
VALVE & MTG GP-MAIN CONTROL	666
VALVE GP-CHECK	676
VALVE GP-CHECK & RELIEF	678
VALVE GP-CONTROL	679
VALVE GP-DIVERTER	692
VALVE GP-MAIN CONTROL	693
VALVE GP-MANUAL	697
VALVE GP-PUMP CONTROL	699
VALVE GP-RELIEF	703
VALVE GP-SOLENOID	705
VALVE GP-SOLENOID & PRESS REDC	708
VALVE GP-UNLOADING	709
STEERING SYSTEM	710
CYLINDER & MTG GP-STEERING	710
CYLINDER GP-STEERING	712
LINES GP-SECONDARY STEERING	716
LINES GP-STEERING	719
PUMP & MTG GP-SECONDARY STEER	725
PUMP GP-ELECTRIC DRIVE	726
STEERING AR	727
STEERING AR-SECONDARY	727
VALVE GP-RELIEF	727
VALVE GP-SECONDARY STEERING	728
VALVE GP-STEERING	730
VALVE GP-STEERING NEUTRALIZER	734
IMPLEMENTS	735
ARM & BEARING AS-LIFT	735
ARM AS-LIFT	736
BOSS GP-LIFT ARM	737
LINK GP-TILT	740
OPERATOR STATION	744
AIR CONDITIONER GP	744
ARM GP-WINDOW WIPER	748
ARMREST GP	749
CAB AR	750
CAB AR-ENCLOSED ROPS	751
COMPRESSOR GP-REFRIGERANT	753
CONTROL & MTG GP-ELHYD	754
CONTROL AR-MONITOR	758
CONTROL GP-HANDLE	759
CONTROL GP-MONITOR	763
CONTROL GP-STEERING	764
CONTROL GP-TRANSMISSION	767
COVER GP-CAB	768
COVER GP-CONSOLE	771
DISPLAY GP-MONITOR	772
DOOR GP-CAB	773
DUCT GP-CAB AIR	786
FILTER GP-CAB AIR	789
FRAME GP-WINDOW	791
GUARD GP-WINDOW	792
HANDHOLD GP	794
INSTALLATION GP-RADIO	795
KIT-SEAT AIR COMPRESSOR	797
KIT-SHOCK ABSORBER	798
LINER GP-CAB	800
LINES GP-AIR CONDITIONER	801
LINES GP-HEATER	804
LITERATURE GP	805
MIRROR GP	806
MIRROR GP-REAR VIEW	807
MODULE GP-KEYPAD	808
MONITOR AR-PAYLOAD	809
MOTOR GP-WINDOW WIPER	812
MOUNTING GP-CAB	816
OPERATOR AR	819
OPERATOR AR-ENCLOSED ROPS	819
PANEL GP-INSTRUMENT	820
PEDAL GP-GOVERNOR	822
PLATFORM AR	823
PLATFORM GP	824
PLATFORM GP-OPERATOR	826
PRECLEANER AR-CAB AIR	830
PRINTER GP-COMPUTER	831
RADIO GP	833
ROOF GP-CAB	835
ROPS GP-ENCLOSED	837
SEAT BELT GP	840
SEAT GP	844
SEAT GP-SUSPENSION	846
SKIRT GP-CAB	847
SUPPORT GP-SEAT	848
SUSPENSION GP-SEAT	849
TRIM GP-CAB	852
VALVE GP-WATER	857
VISOR GP-CAB	858
WINDOW GP-CAB	860
WINDOW GP-DOOR	862
WINDOW GP-FRONT	866
WINDOW GP-REAR	867
WIPER GP-WINDOW	868

TABLE OF CONTENTS

NAME	PAGE
WORK TOOLS	874
ADAPTER GP-TIP	874
ADAPTER-TIP	875
BUCKET AR-ROCK	876
BUCKET AS-GENERAL PURPOSE	877
BUCKET AS-MATERIAL HANDLING	883
BUCKET AS-ROCK	889
BUCKET GP-GENERAL PURPOSE	896
BUCKET GP-MATERIAL HANDLING	901
BUCKET GP-ROCK	905
COUPLER AR-QUICK	909
COUPLER GP-QUICK	910
EDGE AS-CUTTING	912
EDGE GP-CUTTING	913
EDGE GP-SEGMENT	916
PROTECTOR GP-LINKAGE	917
PROTECTOR GP-SIDE BAR	918
TIP GP-ABRASION	919
TIP GP-EXTRA-DUTY	920
TIP GP-GENERAL PURPOSE	921
TIP GP-HEAVY PENETRATION	922
TIP GP-PENETRATION	923
SERVICE EQUIPMENT AND SUPPLIES	925
BOX AS-SERVICE CENTER	925
FILM GP	926
FILM GP-INTERNATIONAL	935
LINES GP-DIAGNOSTIC	936
PLATE & FILM GP	939
PLATE-SERIAL NUMBER	944
PART NUMBER INDEX	B1

1. MACHINE IDENTIFICATION

Cat machines are identified by Product Identification Numbers (PIN). Some components included in a machine may be identified by Serial Numbers (S/N). Typical components that will be serialized include engines, transmissions, bulldozers, and rippers. The machine and engine are further identified by arrangement numbers and in some cases modification numbers. These numbers are shown on the product identification plate(s) and on the master plate in the operator's compartment.

Cat dealers need all of these numbers to determine accurate parts identification.

Effective First Quarter 2001 the Cat Product Identification Number (PIN) changed from 8 to 17 characters. In an effort to provide uniform equipment identification, Caterpillar and other construction equipment manufacturers are moving to comply with the latest version of the product identification numbering standard. Non-road machine PINs are defined by ISO 10261. The new PIN format will apply to all Cat machines and generator sets. The PIN plates and frame marking will display the 17 character PIN. The new format will look like the following:

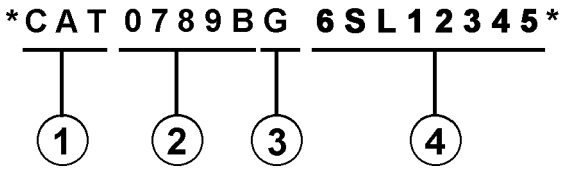

Where:

1. Caterpillar's World Manufacturing Code (characters 1-3)

2. Machine Descriptor (characters 4-8)

3. Check Character (character 9)

4. Machine Indicator Section (MIS) or Product Sequence Number (characters 10-17). These were previously referred to as the Serial Number.

Machines and generator sets produced before First Quarter 2001 will maintain their 8 character PIN format.

Components such as engines, transmissions, axles, etc. and work tools will continue to use an 8 character Serial Number (S/N).

2. ORDERING PARTS

⚠ WARNING

When replacement parts are required for this product Caterpillar recommends using Caterpillar replacement parts or parts with equivalent specifications including, but not limited to, physical dimensions, type, strength and material.

Failure to heed this warning can lead to premature failures, product damage, personal injury or death.

Quality Cat replacement parts are available from Cat dealers throughout the world. Their parts inventories are up to date and include all parts normally required to protect your investment in Cat machines. Dealers may offer repair kits or remanufactured parts to allow selection of the most effective repair alternative for a particular situation. When ordering parts, your order should specify the quantity, part number, part name, and the serial number/product identification number of the machine for which the parts are needed.

3. PARTS MANUAL ORGANIZATION

Product information in this manual is presented as "information elements" that represent all of the components for the specific model. Engine Arrangement and Seat Group are examples of information elements. The information elements are organized alphabetically by part name and secondarily by part number within each major section of the manual.

4. TABLE OF CONTENTS

A table of contents (TOC) is found at the beginning of the manual. The TOC lists each section of the manual with a complete list of all information elements organized as they appear in the manual. Page numbers are provided for quick reference to detailed parts identification illustrations and serviceable consist lists.

5. MAINTENANCE PARTS INDEX

The Maintenance Parts Index, located near the beginning of the manual, references most frequently used maintenance part numbers, providing description, quantity, usage and page number. This information is organized alphabetically by part description.

6. INDEX

The index located near the front of the manual is an alphabetical listing of all information elements included in the manual. Page numbers are provided for quick reference to detailed parts identification illustrations and serviceable consist lists.

7. PART NUMBER INDEX

A numerical index listing all part numbers and the corresponding page number(s) appears at the back of the manual.

8. CAPTIONS

Captions located at the beginning of each information element identify the part number and part name along with additional descriptive information. PIN and S/N information found in each caption should be used to select correct information for a specific machine. Field replacement options, identification of optional attachment components, and where used ("part of") information is also provided.

The first line of a caption is shown in larger type font to indicate the beginning of an information element. Captions for additional pages that may be required to illustrate an information element will be shown in standard type font and will include the term (contd.).

9. NON-SERVICED PARTS

In some instances it is necessary to display non-serviced parts that are a link to a lower level serviceable consist lists. These non-serviced part numbers are shown in italic type indicating that they are not available.

10. PARTS LIST REFERENCE NUMBERS

Numbers shown in the Ref No column correspond to numbers used in the associated graphic(s). An alphabetic suffix may be added to a reference number to identify lower level consist items. Numbers shown in the Graphic Ref column refer to the graphic number identifier displayed in the lower left corner of each illustration. The Graphic Ref number may be used in combination with the item Ref No to determine the correct part number. There may be intentional omission of a Ref No in a consist list as information is updated to reflect the latest serviceable part numbers.

11. INDENTED PART NAMES

When a part name is indented in a parts list, it is part of (included in) the group or assembly under which it is indented.

12. ILLUSTRATION REFERENCE LETTERS

When necessary, illustrations contain reference letters (A, B, C etc.) that are intended to track lines and harnesses from one point to another. They are also used to show where to reconnect illustrations that have been separated.

13. ABBREVIATIONS AND SYMBOLS

O.D. – Outside Diameter
I.D. – Inside Diameter
A – Not Part Of This Group
B – Use As Required
C – Change From Previous Type
D – Order By The Meter
E – Order By The Centimeter
F – Not Shown
G – Order By The Inch
I – Refer To Hydraulic Information System
M – Metric Part
R – Remfg Part May Be Available
Y – Separate Illustration
Z – Not Serviced Separately

14. DESCRIPTION OF TYPE CHANGES

Type - A type is defined as any configuration change that requires an additional Information Element for an Arrangement, Group, or Assembly. If serial number breaks for types are not available, a type # (Type 1, Type 2, etc.) will be displayed in the caption. These "type" changes are identified with a "C" note (change from previous type) in the Parts List. Only the "types" that apply to this Parts Manual will be included. Additional types may exist causing "C" notes to appear on an Information Element when no other types are shown.

15.<END>

This symbol indicates the end of an information element.

NOTE:

Continuing improvement and advancement of product design may cause changes to your machine which may not be included in this publication. Whenever a question arises regarding your Cat product or this publication, please consult your Cat dealer for the latest available information.

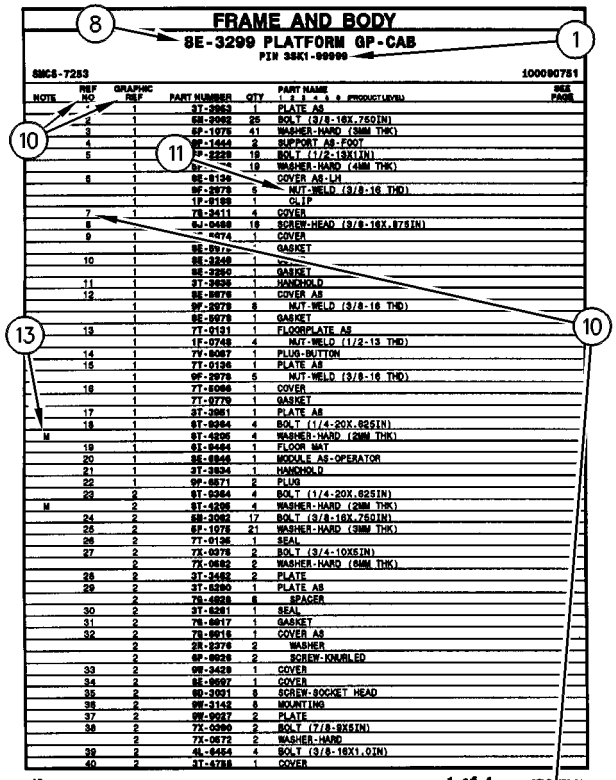

FRAME AND BODY

8E-3299 PLATFORM GP-CAB

PIN 3SK1-99999

SMCS-7283 100090751

NOTE	REF NO	GRAPHIC REF	PART NUMBER	QTY	PART NAME (1 2 3 4 5 6 PRODUCT LEVEL)	SEE PAGE
	1	1	3T-3963	1	PLATE AS	
	2	1	6M-3982	25	BOLT (3/8-16X.75DIN)	
	3	1	5P-1978	41	WASHER-HARD (3MM THK)	
	4	1	9F-1444	2	SUPPORT AS-FOOT	
	5	1	7P-2229	18	BOLT (1/2-13X1IN)	
		1	5P-[illegible]	18	WASHER-HARD (4MM THK)	
	6	1	8E-8136	1	COVER AS-LH	
		1	9F-2979	6	NUT-WELD (3/8-16 THD)	
		1	1F-8188	1	CLIP	
	7	1	7S-3411	4	COVER	
	8		5J-0488	18	SCREW-HEAD (3/8-16X.875IN)	
	9	1	[illegible]-0474	1	COVER	
		1	8E-8976	1	GASKET	
	10	1	8E-3249	1	[illegible]	
		1	8E-3250	1	GASKET	
	11	1	3T-3935	1	HANDHOLD	
	12	1	8E-8978	1	COVER AS	
		1	9F-2979	6	NUT-WELD (3/8-16 THD)	
		1	8E-8979	1	GASKET	
	13	1	7T-0131	1	FLOORPLATE AS	
		1	1F-0748	4	NUT-WELD (1/2-13 THD)	
	14	1	7V-8067	1	PLUG-BUTTON	
	15	1	7T-0136	1	PLATE AS	
		1	9F-2979	5	NUT-WELD (3/8-16 THD)	
	16	1	7T-8066	1	COVER	
		1	7T-0779	1	GASKET	
	17	1	3T-3961	1	PLATE AS	
	18	1	6T-9364	4	BOLT (1/4-20X.625IN)	
M		1	6T-4236	4	WASHER-HARD (2MM THK)	
	19	1	6I-9494	1	FLOOR MAT	
	20	1	8E-8946	1	MODULE AS-OPERATOR	
	21	1	3T-3934	1	HANDHOLD	
	22	1	9F-8571	2	PLUG	
	23	2	6T-9364	4	BOLT (1/4-20X.625IN)	
M		2	6T-4236	4	WASHER-HARD (2MM THK)	
	24	2	6M-3982	17	BOLT (3/8-16X.75DIN)	
	25	2	5P-1978	21	WASHER-HARD (3MM THK)	
	26	2	7T-0136	1	SEAL	
	27	2	7X-0378	2	BOLT (3/4-10X5IN)	
		2	7X-0682	2	WASHER-HARD (6MM THK)	
	28	2	3T-3462	2	PLATE	
	29	2	3T-8280	1	PLATE AS	
		2	7S-4828	6	SPACER	
	30	2	3T-8281	1	SEAL	
	31	2	7S-8817	1	GASKET	
	32	2	7S-8816	1	COVER AS	
		2	2S-2376	2	WASHER	
		2	6F-8628	2	SCREW-KNURLED	
	33	2	9W-3429	1	COVER	
	34	2	8E-8697	1	COVER	
	35	2	9D-3931	8	SCREW-SOCKET HEAD	
	36	2	9W-3142	8	MOUNTING	
	37	2	9W-9927	2	PLATE	
	38	2	7X-0290	2	BOLT (7/8-9X5IN)	
		2	7X-0572	2	WASHER-HARD	
	39	2	4L-6454	4	BOLT (3/8-16X1.0IN)	
	40	2	3T-4788	1	COVER	

12 FRAME AND BODY 1 of 4 SELP[illegible]70-01

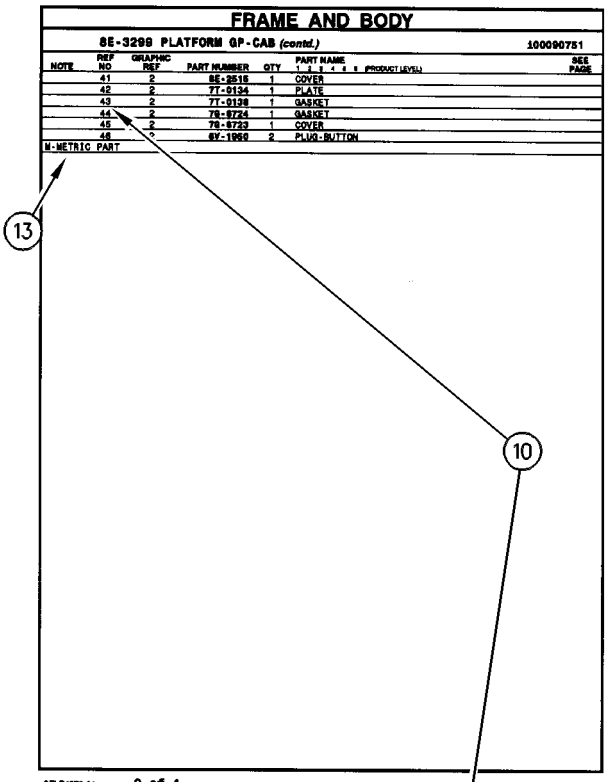

FRAME AND BODY

8E-3299 PLATFORM GP-CAB (contd.) 100090751

NOTE	REF NO	GRAPHIC REF	PART NUMBER	QTY	PART NAME (1 2 3 4 5 6 PRODUCT LEVEL)	SEE PAGE
	41	2	8E-2516	1	COVER	
	42	2	7T-0134	1	PLATE	
	43	2	7T-0138	1	GASKET	
	44	2	7S-8724	1	GASKET	
	45	2	7S-8723	1	COVER	
	46	2	6V-1960	2	PLUG-BUTTON	

M-METRIC PART

SELP4570-01 2 of 4 FRAME AND BODY 13

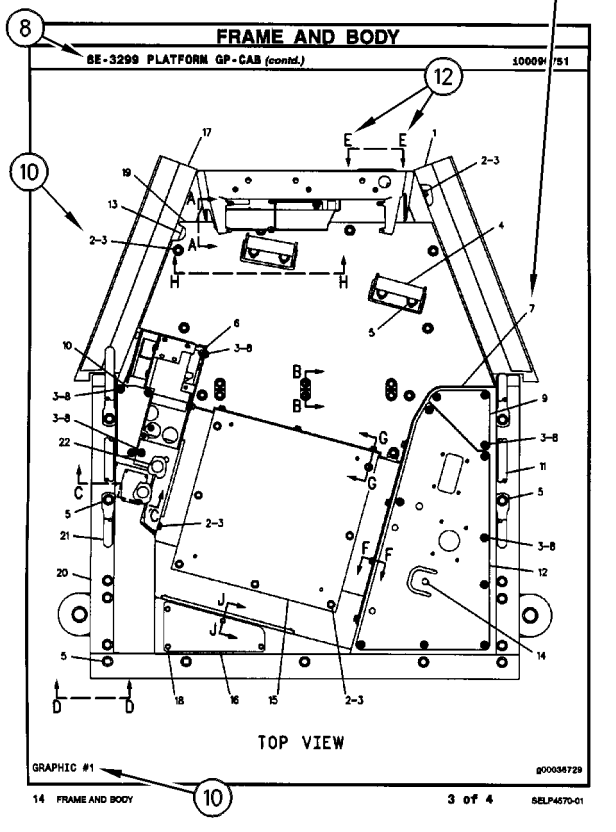

FRAME AND BODY

8E-3299 PLATFORM GP-CAB (contd.) 100090751

TOP VIEW

GRAPHIC #1 g00036729

14 FRAME AND BODY 3 of 4 SELP4570-01

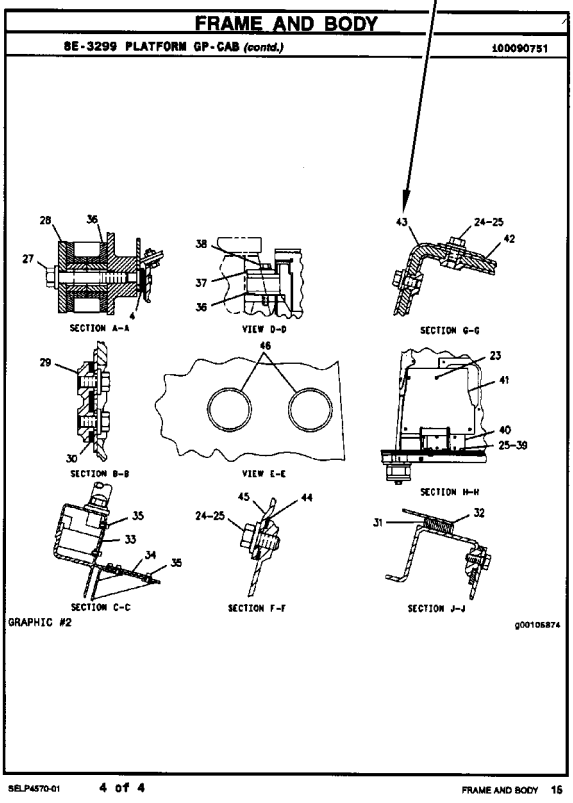

FRAME AND BODY

8E-3299 PLATFORM GP-CAB (contd.) 100090751

SECTION A-A

VIEW D-D

SECTION G-G

SECTION B-B

VIEW E-E

SECTION H-H

SECTION C-C

SECTION F-F

SECTION J-J

GRAPHIC #2 g00105874

SELP4570-01 4 of 4 FRAME AND BODY 15

REMANUFACTURED COMPONENTS

As an option when making repairs consider Cat Remanufactured Components. Components that are available through the Cat Remanufactured Program are identified three ways in the parts book:

- with the letter R in the note field of the parts list
- with an R* at the beginning of the first line of the caption
- with an *R at the end of the first line of the caption

Typical components included in the Remanufacturing Program include:

ALTERNATORS
CONNECTING RODS
CRANKSHAFTS - UNDERSIZE
CRANKSHAFTS - UPGRADE TO NEW
CYLINDER HEADS
ELECTRONIC CONTROL MODULES (ECM)
ELECTRONIC SENSORS
FUEL INJECTORS
FUEL NOZZLES
FUEL PUMPS
GOVERNORS
OIL PUMPS
PISTONS
SHORT BLOCKS
STARTERS
TURBOCHARGERS - COMPLETE
TURBOCHARGER CARTRIDGES
WATER PUMPS

Cat Remanufactured engines for many engine arrangements are also available.

SUPPLEMENTAL COOLANT ADDITIVES

CUSTOMER BENEFITS:

Protects against cavitation, foam, erosion, corrosion, and scale buildup in cooling systems.

- Provides measured coolant conditioner.

DESCRIPTION:

Additives deplete from the coolant with normal operation. For this reason, Supplemental Coolant Additives (SCA) must be added to all heavy duty coolants at regular intervals. In addition, when not using a fully formulated, pre-charged antifreeze, like Cat DEAC, an initial charge of SCA must be added to the cooling system. The amount of SCA added to the system is dependent on the capacity of the system.

The SCA for initial fill is provided as a liquid. SCA's for maintenance intervals are available in liquid form and as a spin-on element. (No Spin-on available for 3600 Family of Engines)

NOTE:

The amount of SCA added at initial fill is not the same as the amount added at maintenance intervals.

The coolant additive elements can be used with any ethylene or propylene glycol type antifreeze which meets ASTM D4985 or ASTM D5345 Specifications.

NOTE:

For use with standard heavy duty coolant only, not for use with Extended Life Coolant.

PARTS NEEDED:

Cooling System Capacity		Liquid SCA at Initial Fill	Liquid SCA at Maintenance*	Spin-on SCA Maintenance Element*
Liters	Gallons			
22-30	(6-8)	3P-2044 (1)	6V-3542 (1)	111-2370 (1)
30-38	(8-10)	3P-2044 (1) 6V-3542 (1)	111-2372 (1)	111-2369 (1)
38-49	(10-13)	3P-2044 (1) 8T-1589 (1)	111-2372 (1)	111-2369 (1)
49-64	(13-17)	3P-2044 (2)	8T-1589 (1)	9N-3368 (1)
64-83	(17-22)	3P-2044 (2) 8T-1589 (1)	111-2372 (1) 6V-3542 (1)	111-2371 (1)
83-114	(22-30)	3P-2044 (3) 8T-1589 (1)	3P-2044 (1)	9N-3718 (1)
114-163	(30-43)	3P-2044 (5)	3P-2044 (1) 6V-3542 (1)	111-2371 (2)
163-242	(43-64)	3P-2044 (8)	3P-2044 (2)	9N-3718 (2)

* Normal maintenance period is 250 hrs. See your Operation and Maintenance Manual for complete coolant maintenance instructions.

( ) Indicates quantity required.

MAINTENANCE PARTS

DESCRIPTION	PART NUMBER	QTY	WHERE USED	PAGE
AIR INLET AND EXHAUST SYSTEM				
BREATHER (SOLENOID VALVE, FAN)	4H-6112	1	LINES GP-AIR	87
FILTER ELEMENT-AIR (PRIMARY)	386-2097	1	AIR CLEANER GP	78
FILTER ELEMENT-AIR (SECONDARY)	337-0790	1	AIR CLEANER GP	78
BASIC ENGINE				
BELT-SERPENTINE	350-8742	1	DRIVE GP-FAN	20
GASKET (VALVE COVER)	388-0536	1	COVER GP-VALVE MECHANISM	12
GASKET-OIL PAN	351-4749	1	PAN GP-OIL	33
SEAL (VALVE COVER)	376-4761	1	COVER GP-VALVE MECHANISM	12
BRAKING SYSTEM				
SCREEN (HYDRAULIC)	6E-5066	1	MANIFOLD GP-CONTROL	580
COOLING SYSTEM				
CAP AS-COOLANT TANK	345-1237	1	LINES GP-WATER	68
GASKET-FILTER	277-2526	1	COOLER GP-ENGINE OIL	51
GASKET-WATER REGULATOR (TEMPERATURE)	281-8744	1	CONNECTION GP-WATER	50
REGULATOR AS-WATER TEMPERATURE (INCLUDES CONNECTOR)	417-7782	1	CONNECTION GP-WATER	50
ELECTRICAL AND STARTING SYSTEM				
BATTERY GP (12-VOLT, MAINTENANCE FREE, WET)	153-5710	2	BATTERY & WIRING GP	135
CIRCUIT BREAKER AS (15-AMPERE, MANUAL RESET)	280-2709	4	WIRING GP-CAB	231
CIRCUIT BREAKER AS (15-AMPERE) (ENGINE ECM)	230-9174	1	BATTERY & WIRING GP	135
CIRCUIT BREAKER AS (150-AMPERE) (CAB MAIN)	171-2215	1	BATTERY & WIRING GP	135
CIRCUIT BREAKER AS (20-AMPERE, MANUAL RESET)	280-2710	1	WIRING GP-CAB	231
CIRCUIT BREAKER AS (40-AMPERE) (GLOW PLUG)	171-2205	1	BATTERY & WIRING GP	135
FILTER (ETHER START)	358-4889	1	VALVE GP-ETHER STARTING	224
FLASHER AS (12/24-VOLT) (HAZARD)	380-1887	1	SWITCH GP-ROCKER	220
FUSE (10-AMPERE)	113-8490	26	WIRING GP-CAB	231
FUSE (15-AMPERE)	113-8491	16	WIRING GP-CAB	231
FUSE (20-AMPERE)	113-8492	2	WIRING GP-CAB	231
FUSE (5-AMPERE)	141-2759	5	WIRING GP-CAB	231
GLOW PLUG (24-VOLT)	462-2235	6	STARTING AID GP	210
KEY (BATTERY DISCONNECT)	8H-5306	1	SWITCH GP-DISCONNECT	214
LAMP (24-VOLT, 10-WATT)	259-1286	1	WIRING GP-CAB	231
LAMP (24-VOLT, 5-WATT) (FLOODLIGHT)	130-3515	1	LAMP GP-HEAD & SIGNAL	179
		1	LAMP GP-HEAD & SIGNAL	180

MAINTENANCE PARTS

DESCRIPTION	PART NUMBER	QTY	WHERE USED	PAGE
LAMP (24-VOLT, 75/70-WATT) (HIGH, LOW BEAM)	9X-3465	1	LAMP GP-HEAD & SIGNAL	179
		1	LAMP GP-HEAD & SIGNAL	180
LAMP AS-INDICATOR (24-VOLT) (STOP, TAIL, TURN)	392-4634	2	LIGHTING GP-FLOOD & SIGNAL	189
		2	LIGHTING GP-FLOOD & SIGNAL	192
LAMP-HALOGEN (24-VOLT, 70-WATT)	351-9918	1	LAMP GP-FLOOD	176
LAMP-HALOGEN (24-VOLT, 70-WATT) (FLOODLIGHT)	351-9918	1	LAMP GP-FLOOD	175
LAMP-TURN SIGNAL (24-VOLT, 21-WATT) (TURN SIGNAL)	242-0588	1	LAMP GP-HEAD & SIGNAL	179
		1	LAMP GP-HEAD & SIGNAL	180
FUEL SYSTEM				
CAP AS-FUEL (LOCKABLE, VENTED)	349-7059	1	CAP GP-FUEL FILLER	103
FILTER ELEMENT-FUEL	360-8960	1	FILTER GP-FUEL	104
STRAINER-FUEL (FUEL TANK)	9P-7121	1	CAP GP-FUEL FILLER	103
HYDRAULIC SYSTEM				
BREATHER AS (CAP) (HYDRAULIC TANK)	312-2684	1	TANK & MTG GP-HYDRAULIC	662
CAP AS-FILLER (NON-AIR VENTED)	497-9002	1	TANK & FILTER GP-HYDRAULIC	660
FILTER ELEMENT AS-OIL	436-3443	1	FILTER GP-OIL	598
FILTER ELEMENT-BREATHER	346-8340	1	TANK & MTG GP-HYDRAULIC	662
FILTER ELEMENT-OIL	376-1288	1	FILTER GP-OIL	597
SCREEN (HYDRAULIC)	6E-5066	1	VALVE & MTG GP-COUPLER	664
SCREEN AS (HYDRAULIC TANK)	380-8484	1	TANK & FILTER GP-HYDRAULIC	660
SEAL-VALVE COVER	230-0940	1	TANK & FILTER GP-HYDRAULIC	660
LUBRICATION SYSTEM				
CAP AS-ENGINE OIL FILLER	385-1450	1	GAUGE GP-OIL LEVEL (DIPSTICK)	43
FILTER-ENGINE OIL	462-1171	1	FILTER GP-ENGINE OIL	42
FILTER-FUMES DISPOSAL	273-5711	1	FILLER GP-ENGINE OIL	41
MACHINE ARRANGEMENT				
FILTER GP-CAB AIR	443-4189	1	SPECIAL AR-WHEEL LOADER	6
SEAT BELT GP	443-4183	1	DISTRIBUTION AR	4
		1	DISTRIBUTION AR	5
OPERATOR STATION				
BLADE AS-WIPER (400-MM) (REAR WINDOW)	6V-5851	1	WIPER GP-WINDOW	868
		1	WIPER GP-WINDOW	871
BLADE AS-WIPER (800-MM) (FRONT WINDOW)	189-8610	1	WIPER GP-WINDOW	868
		1	WIPER GP-WINDOW	871
DRYER AS-REFRIGERANT	355-1793	1	AIR CONDITIONER GP	744
FILTER ELEMENT AS-AIR (ACTIVATED CHARCOAL)	348-3432	1	FILTER GP-CAB AIR	789
		1	FILTER GP-CAB AIR	790

DESCRIPTION	PART NUMBER	QTY	WHERE USED	PAGE
FILTER ELEMENT-CAB AIR (STANDARD FILTRATION)	290-2287	1	AIR CONDITIONER GP	746
		1	FILTER GP-CAB AIR	789
FILTER-AIR	290-2288	1	AIR CONDITIONER GP	746
SEAL-INTEGRAL (1/2-IN)	327-0282	3	AIR CONDITIONER GP	744
		1	AIR CONDITIONER GP	746
		3	LINES GP-AIR CONDITIONER	801
SEAL-INTEGRAL (3/4-IN)	327-0283	1	AIR CONDITIONER GP	744
		1	AIR CONDITIONER GP	746
		1	LINES GP-AIR CONDITIONER	801
SEAT BELT GP	443-4183	1	CAB AR	750
	443-4184	1	CAB AR	750
SEAT BELT GP (RETRACTABLE, 2-IN)	353-5341	1	SEAT BELT GP	842
SEAT BELT GP (RETRACTABLE, 3-IN)	353-5342	1	SEAT BELT GP	843
POWER TRAIN				
BREATHER AS (ATMOSPHERIC) (POWER TRAIN OIL)	9G-5127	1	FILLER GP-POWER TRAIN OIL	318
CAP-FILLER (HYDRAULIC OIL)	5K-1568	1	COVER GP-XMSN OIL FILLER CAP	312
FILTER ELEMENT AS-OIL (HYDRAULIC, TRANSMISSION)	389-1079	1	FILTER GP-OIL	328
FILTER ELEMENT AS-OIL (TRANSMISSION)	389-1079	1	FILTER GP-OIL	327
PLUG (TRANSMISSION OIL DRAIN)	138-1510	1	DRAIN GP-ECOLOGY	317
PLUG AS-DRAIN	248-0833	1	HOUSING GP-AXLE	342
		1	HOUSING GP-FIXED AXLE	356
PLUG AS-DRAIN (AXLE OIL)	248-0833	1	HOUSING GP-AXLE	350
		1	HOUSING GP-OSCILLATING AXLE	372
		1	HOUSING GP-OSCILLATING AXLE	375
PLUG AS-DRAIN (DIFFERENTIAL)	248-0833	1	HOUSING GP-FIXED AXLE	354
		1	HOUSING GP-FIXED AXLE	358
		1	HOUSING GP-OSCILLATING AXLE	360
		1	HOUSING GP-OSCILLATING AXLE	363
		1	HOUSING GP-OSCILLATING AXLE	366
		1	HOUSING GP-OSCILLATING AXLE	369
		1	HOUSING GP-OSCILLATING AXLE	378
PLUG-MAGNETIC (AXLE OIL DRAIN)	5P-4484	1	HOUSING GP-AXLE	346
		1	HOUSING GP-AXLE	348
		1	HOUSING GP-AXLE	352
PLUG-MAGNETIC (DRAIN)	5P-4484	1	HOUSING GP-AXLE	344
SCREEN GP-MAGNETIC	368-5063	1	CASE & PARTS GP-PLANETARY	290
SCREEN-SUCTION	4S-8598	1	CASE & PARTS GP-PLANETARY	290

INDEX

NAME PAGE

A

ACCUMULATOR GP-BRAKE 565
ACCUMULATOR GP-HYDRAULIC. 269
ACCUMULATOR GP-HYDRAULIC–CHARGED. . . 268
ACCUMULATOR GP-RIDE CONTROL–CHARGED 586, 587
ADAPTER GP-SENSOR. 131
ADAPTER GP-TIP 874
ADAPTER-TIP 875
ADJUSTER GP-CONTROL 754, 756
AIR CLEANER GP 78, 79
AIR COMPRESSOR GP 9
AIR CONDITIONER GP 744, 746
ALARM GP–FAULT 133
ALTERNATOR GP-CHARGING 134
ARM & BEARING AS-LIFT 735
ARM AS-LIFT 736
ARM GP-WINDOW WIPER. 748
ARM GP-WINDOW WIPER (FRONT). 871
ARM GP-WINDOW WIPER (WET) (FRONT) 868
ARMREST GP–LH 749
AXLE AR-FIXED. 270, 274
AXLE AR-FIXED & OSCILLATING 274, 275, 276, 277
AXLE AR-FIXED–AUTOMATIC DIFFERENTIAL LOCK, FRONT 271, 273
AXLE AR-FIXED–ECOLOGY DRAIN VALVE 272
AXLE AR-OSCILLATING 278, 282
AXLE AR-OSCILLATING–AUTOMATIC DIFFERENTIAL LOCK, REAR 280, 281
AXLE AR-OSCILLATING–ECOLOGY DRAIN VALVE. 278
AXLE AR-OSCILLATING–LOCKING DIFFERENTIAL 279
AXLE AR-OSCILLATING–REAR. 277, 278

B

BAFFLE GP. 408, 409
BATTERY & WIRING GP 135
BATTERY GP (12-VOLT, MAINTENANCE FREE, WET) 135
BEARING GP-PILLOW BLOCK 395
BELT TENSIONER GP. 10
BELT-SERPENTINE. 20

NAME PAGE

BLADE AS-WIPER (400-MM) (REAR WINDOW). 868, 871
BLADE AS-WIPER (800-MM) (FRONT WINDOW). 868, 871
BLOCK GP-AXLE OSC LIMITER 411
BOSS GP-LIFT ARM 737, 738, 739
BOSS GP-LOADER FRAME. 1, 412, 413, 414, 415, 416
BOSS GP-REAR FRAME 417, 418, 419, 420
BOX AS-BATTERY 421, 422
BOX AS-SERVICE CENTER. 925
BOX GP-BATTERY 423, 424
BRACKET GP-MOUNTING 141, 425, 426
BRACKET GP-MOUNTING (PRINTER) 831
BRAKE & PLANETARY GP 283, 288
BRAKE & PLANETARY GP–REAR AXLE. 285
BRAKE GP-PARKING. 567
BRAKE GP-PARKING–FRONT AXLE. 566
BREATHER (SOLENOID VALVE, FAN). 87
BREATHER AS (ATMOSPHERIC) (POWER TRAIN OIL) 318
BREATHER AS (CAP) (HYDRAULIC TANK) 662
BREATHER GP 39
BRIDGE GP-VALVE 38
BUCKET AR-ROCK. 876
BUCKET AS-GENERAL PURPOSE 877, 878, 880, 882
BUCKET AS-MATERIAL HANDLING 883, 884, 886, 888
BUCKET AS-ROCK. 889, 890, 892, 894
BUCKET GP-GENERAL PURPOSE 896, 897, 898, 899, 900

INDEX

NAME PAGE

BUCKET GP-MATERIAL HANDLING 901
902
903
904
BUCKET GP-ROCK. 905
906
907
908

C

CAB AR 750
CAB AR-ENCLOSED ROPS 751
752
CAMSHAFT GP 11
CAP AS-COOLANT TANK. 68
CAP AS-ENGINE OIL FILLER 43
CAP AS-FILLER (NON-AIR VENTED) 660
CAP AS-FUEL (LOCKABLE, VENTED) 103
CAP GP-AIR CLEANER. 80
CAP GP-FUEL FILLER. 103
CAP-FILLER (HYDRAULIC OIL) 312
CASE & PARTS GP-PLANETARY 290
CASE GP-TRANSMISSION–FRONT 295
CHASSIS AR. 1
CIRCUIT BREAKER AS (15-AMPERE, MANUAL RESET). 231
CIRCUIT BREAKER AS (15-AMPERE) (ENGINE ECM) 135
CIRCUIT BREAKER AS (150-AMPERE) (CAB MAIN) 135
CIRCUIT BREAKER AS (20-AMPERE, MANUAL RESET). 231
CIRCUIT BREAKER AS (40-AMPERE) (GLOW PLUG) 135
CLUTCH GP–FIRST, THIRD. 300
CLUTCH GP–FORWARD HIGH, FORWARD LOW. 296
CLUTCH GP–REVERSE, SECOND 298
COLD WEATHER AR. 1
COMMON AR 2
COMPRESSOR GP-REFRIGERANT 753
CONFIGURATION AR. 2
CONFIGURATION AR–HIGH DEBRIS 3
CONFIGURATION-PREMIUM 809
810
CONNECTING ROD GP 34
CONNECTION GP-AIR. 92
CONNECTION GP-HEATER 49
CONNECTION GP-WATER 50
CONTROL & LINES GP-RIDE 588
CONTROL & MTG GP-ELHYD 754
756
CONTROL AR-COMMUNICATION. 142
CONTROL AR-COMMUNICATION–PRODUCT LINK CELLULAR. 142
CONTROL AR-COMMUNICATION–PRODUCT LINK SATELLITE. 142
CONTROL AR-FAN 590
CONTROL AR-FAN–INTERNATIONAL 590

NAME PAGE

CONTROL AR-MONITOR 758
CONTROL GP-AUTODIG. 143
CONTROL GP-COMMUNICATION 145
146
CONTROL GP-COMMUNICATION–NETWORK MANAGER 144
CONTROL GP-COMMUNICATION–PL641E CELLULAR. 147
CONTROL GP-COMMUNICATION–PLE631 SATELLITE. 148
CONTROL GP-COMMUNICATION–PRODUCT LINK ELITE SATELLITE 145
CONTROL GP-DIFFERENTIAL LOCK 303
305
CONTROL GP-ENGINE ELECTRONIC 149
CONTROL GP-FOOT BRAKE 568
CONTROL GP-HANDLE. 760
CONTROL GP-HANDLE (3-VALVE) 762
CONTROL GP-HANDLE–2-VALVE 759
761
CONTROL GP-HANDLE–3-VALVE 762
CONTROL GP-MONITOR 763
CONTROL GP-SERVICE BRAKE 570
571
572
CONTROL GP-STEERING. 764
CONTROL GP-TRANSMISSION. 767
CONTROL GP-TRANSMISSION HYD 308
CONTROL GP-UNPROGRAMMED–PL631 SATELLITE. 151
CONTROL GP-UNPROGRAMMED–PL641E CELLULAR. 150
CONVERSION AR-MACHINE 3
CONVERTER & WIRING GP-RADIO 152
COOLER GP-ENGINE OIL 51
52
COOLER GP-TRANSMISSION OIL. 310
CORE AS-AFTERCOOLER 73
74
CORE AS-CONDENSER 73
74
CORE AS-HYDRAULIC OIL COOLER. 74
CORE AS-OIL COOLER (HYDRAULIC) 73
CORE AS-RADIATOR. 73
74
COUNTERWEIGHT & MOUNTING GP 427
COUNTERWEIGHT AR 428
COUNTERWEIGHT GP 429
430
431
COUNTERWEIGHT GP-SUPPLEMENTARY–CONCRETE 432
COUPLER AR-QUICK. 909
COUPLER GP-QUICK. 910
COUPLING GP-DRIVE 311
COVER & PLUG GP 433
434
435
436
COVER GP 26

INDEX

NAME PAGE

COVER GP-ACCESS 437
438
COVER GP-CAB 768
769
819
COVER GP-CONSOLE 771
COVER GP-FRAME 439
COVER GP-OIL FILLER 40
COVER GP-VALVE MECHANISM 12
COVER GP-XMSN OIL FILLER CAP 312
CRANKSHAFT GP 14
CYLINDER & MTG GP-STEERING 710
711
CYLINDER BLOCK AS 15
CYLINDER BLOCK GP 16
CYLINDER GP-COUPLER 591
CYLINDER GP-LIFT 593
CYLINDER GP-LIFT–RH 592
CYLINDER GP-STEERING 712
714
CYLINDER GP-TILT 594
596
CYLINDER HEAD AS 17
CYLINDER HEAD GP 18

D

DEFLECTOR GP-FENDER 440
DIFFERENTIAL GP 316
DIFFERENTIAL GP–LOCKING DIFFERENTIAL 313
DIFFERENTIAL GP–OPEN 315
DISPLAY GP-MONITOR–POWERSHIFT 772
DISTRIBUTION AR 3
4
5
DOOR GP-ACCESS 442
443
DOOR GP-ACCESS–HOOD, RH 441
DOOR GP-CAB 778
DOOR GP-CAB–LH 774
782
DOOR GP-CAB–RH 773
777
DRAIN GP-ECOLOGY–POWER TRAIN OIL 317
DRAIN GP-OIL 19
DRIVE GP-FAN 20
DRYER AS-REFRIGERANT 744
DUCT GP-CAB AIR 786
DUST EJECTOR GP 81

E

EDGE AS-CUTTING 912
EDGE GP-CUTTING 913
914
915
EDGE GP-SEGMENT 916
ELECTRONICS GP-IMPLEMENT 153
ELECTRONICS GP-MACHINE–RELAY MODULE 153
ELECTRONICS GP-MONITOR 153
154
ELECTRONICS GP-MONITOR–CELLULAR 153
ELECTRONICS GP-MONITOR–DISPLAY 153
ELECTRONICS GP-MONITOR–XM SATELLITE 154
ELECTRONICS GP-POWER TRAIN 154
ENCLOSURE GP-SERVICE CENTER 444
ENGINE AR-PRIMARY 7
EXTENSION GP-FENDER 445

F

FAN GP-SUCTION 53
55
FASTENER GP-DAMPER & PULLEY 21
FASTENER GP-LINES 578
590
FENDER AR-ROADING 446
FENDER GP 449
FENDER GP–LH 447
FENDER GP–REAR, RH 448
FILLER GP-ENGINE OIL 41
FILLER GP-POWER TRAIN OIL 318
FILM GP 926
927
929
930
931
932
933
934
FILM GP-INTERNATIONAL–VARIABLE PITCH FAN 935
FILM-CERTIFICATION (PL631) 151
FILM-IDENTIFICATION (AUTODIG) 143
FILM-IDENTIFICATION (AUTOLUBE) 529
FILM-IDENTIFICATION (CAT) 772
929
FILM-IDENTIFICATION (CIRCUIT BREAKER) . . . 136
FILM-IDENTIFICATION (FUSE, RELAY PANEL) 232
FILM-IDENTIFICATION (FUSE/RELAY PANEL) 232
FILM-IDENTIFICATION (HVAC FILTER) 746
FILM-IDENTIFICATION (HYDRAULIC ACCUMULATOR) 268
FILM-IDENTIFICATION (IGNITION SWITCH) 941
FILM-IDENTIFICATION (JOYSTICK, 2-FUNCTION) 754
FILM-IDENTIFICATION (JOYSTICK, 3-FUNCTION) 756
FILM-IDENTIFICATION (PAYLOAD STORE) 218
FILM-INFORMATION (24-VOLT HEATER) 746
FILM-INFORMATION (HYD ACCUMULATOR, READ OMM) 586
587
FILM-INFORMATION (PL641 CELLULAR) 150

NAME PAGE

FILM-INFORMATION (SERIAL NUMBER) 151
FILM-INSTRUCTION (ALTERNATE EXIT, READ OMM) 773
FILM-INSTRUCTION (ALTERNATE EXIT, REMOVE WINDOW) 777
FILM-INSTRUCTION (HOOD TILT) 244
FILM-INSTRUCTION (NO STEP) 852
939
941
FILM-INSTRUCTION (SEAT ADJUSTMENT) 849
FILM-WARNING (DO NOT LIFT, READ OMM) 896
897
898
899
900
901
902
903
904
FILM-WARNING (DO NOT SPRAY, READ OMM) 927
FILM-WARNING (EXPLOSION HAZARD, READ OMM) 144
FILM-WARNING (FALL HAZARD, LANYARD, READ OMM) 471
926
FILM-WARNING (HIGH PRESSURE, READ OMM) 565
FILM-WARNING (UNIVERSAL WARNING) 927
FILTER (ETHER START) 224
FILTER & LINES GP-TORQUE CONV 320
324
FILTER ELEMENT AS-AIR (ACTIVATED CHARCOAL) 789
790
FILTER ELEMENT AS-AIR–ACTIVATED CHARCOAL 82
FILTER ELEMENT AS-OIL 598
FILTER ELEMENT AS-OIL (HYDRAULIC, TRANSMISSION) 328
FILTER ELEMENT AS-OIL (TRANSMISSION) . . . 327
FILTER ELEMENT-AIR (PRIMARY) 78
FILTER ELEMENT-AIR (SECONDARY) 78
FILTER ELEMENT-BREATHER 662
FILTER ELEMENT-CAB AIR (STANDARD FILTRATION) 746
789
FILTER ELEMENT-FUEL 104
FILTER ELEMENT-OIL 597
FILTER GP-CAB AIR 6
789
790
FILTER GP-ENGINE OIL 42
FILTER GP-FUEL 104
105
106
FILTER GP-OIL 328
598
FILTER GP-OIL–HYDRAULIC TANK RETURN 597

NAME PAGE

FILTER GP-OIL–HYDRAULIC, TRANSMISSION 327
FILTER-AIR 746
FILTER-ENGINE OIL 42
FILTER-FUMES DISPOSAL 41
FLASHER AS (12/24-VOLT) (HAZARD) 220
FLOOR MAT AS 819
FLOORPLATE GP 451
FLYWHEEL GP 22
FRAME AS-LOADER 452
FRAME AS-REAR 453
455
FRAME GP-RADIATOR 57
59
FRAME GP-WINDOW–FRONT 791
FUSE (10-AMPERE) 231
FUSE (15-AMPERE) 231
FUSE (20-AMPERE) 231
FUSE (5-AMPERE) 231

G

GASKET (VALVE COVER) 12
GASKET-FILTER 51
GASKET-OIL PAN 33
GASKET-WATER REGULATOR (TEMPERATURE) 50
GAUGE AS-OIL LEVEL (DIPSTICK) 43
45
GAUGE GP-OIL LEVEL (DIPSTICK) 43
45
GAUGE GP-SIGHT (POWER TRAIN OIL) 318
GAUGE-LIQUID LEVEL (SIGHT GLASS) (HYDRAULIC OIL) 660
GEAR GP-BEVEL 329
GEAR GP-BEVEL & PINION 331
334
336
GEAR GP-INPUT TRANSFER 339
GEAR GP-OUTPUT TRANSFER 340
GLOW PLUG (24-VOLT) 210
GRILL GP-RADIATOR 456
GUARD GP-ARTICULATION 458
GUARD GP-AXLE 459
GUARD GP-BELT 23
GUARD GP-BOTTOM 460
461
462
GUARD GP-FRONT 463
464
GUARD GP-LIFT CYLINDER 599
600
GUARD GP-LINES 601
GUARD GP-MUD 465
466
GUARD GP-POWER TRAIN 467
468
GUARD GP-PROTECTION 469
GUARD GP-TILT CYLINDER 602

INDEX

NAME PAGE

GUARD GP-WINDOW. 792
793

H

HANDHOLD GP 470
471
794
HANDRAIL GP 473
474
475
HANDRAIL GP–RH 472
476
HARDWARE GP-CHASSIS 477
HARDWARE GP-LOADER FRAME. 478
479
480
HARDWARE GP-MOUNTING 481
HARDWARE GP-REAR FRAME 482
HARDWARE GP-REAR FRAME–AXLE OIL COOLER MOUNTING. 483
HARNESS AS-BRAKE (STOP LIGHT). 568
HARNESS AS-CAB–CATALYST. 155
HARNESS AS-CHASSIS 158
159
161
HARNESS AS-CONTROL 162
HARNESS AS-CONTROL (TELEMATICS) 249
HARNESS AS-ENGINE 163
164
HARNESS AS-HEATER & AIR COND 165
HARNESS AS-LIGHTING. 165
166
HARNESS AS-LIGHTING (TURN SIGNAL) 220
HARNESS AS-MONITOR. 167
HARNESS AS-PLATFORM 253
258
HARNESS AS-RADIO. 167
168
HARNESS AS-RADIO (AUXILIARY) 833
HARNESS AS-RADIO (BLUETOOTH) 833
HARNESS AS-SENSOR. 168
169
HARNESS AS-SENSOR (FRONT AXLE) 225
227
HARNESS AS-SENSOR (REAR AXLE). 225
227
HARNESS AS-STARTING AID. 210
HARNESS AS-SWITCH 169
HARNESS AS-TRANSMISSION 170
HARNESS AS-VALVE. 171
HARNESS AS-WIRING (PRINTER). 831
HARNESS AS-WIRING (VARIABLE PITCH FAN) 238
HARNESS AS-WIRING–SEAT AIR COMPRESSOR. 171
HEAD GP-PUMP 604
HEAT EXCHANGER GP-AXLE–AXLE OIL 341
HEATER GP-JACKET WATER. 172
173

NAME PAGE

HITCH GP-ARTICULATING. 485
HOOD & GUARD GP. 487
HOUSING GP-AXLE 342
346
348
350
HOUSING GP-AXLE–FIXED AXLE 344
HOUSING GP-AXLE–OSCILLATING AXLE, OPEN DIFFERENTIAL. 352
HOUSING GP-FIXED AXLE 354
358
HOUSING GP-FIXED AXLE–FIXED 356
HOUSING GP-FLYWHEEL 24
HOUSING GP-FRONT 26
27
HOUSING GP-OSCILLATING AXLE. 360
363
366
369
372
378
HOUSING GP-OSCILLATING AXLE–OSCILLATING. 375
HYDRAULIC AR. 605
HYDRAULIC AR-2 VALVE. 606
HYDRAULIC AR-3 VALVE. 606
HYDRAULIC AR-STANDARD LIFT 607

I

INDICATOR AS-PRESSURE (FILTER BYPASS) 598
INJECTOR GP-FUEL 107
108
INSTALLATION AR-ENGINE. 8
INSTALLATION GP-COMMUNICATION 174
INSTALLATION GP-RADIO 795
INSTALLATION GP-RADIO–CITIZEN BAND. 796

J

JET GP-PISTON COOLING 29

K

KEY (BATTERY DISCONNECT) 214
KIT-SEAT AIR COMPRESSOR 797
KIT-SHOCK ABSORBER 798

L

LADDER & WALKWAY GP. 490
492
494
LADDER GP 497
LADDER GP–LH. 495
496

INDEX

NAME PAGE

LADDER GP–RH 498
LAMP (24-VOLT, 10-WATT) 231
LAMP (24-VOLT, 5-WATT) (FLOODLIGHT) 179
180
LAMP (24-VOLT, 75/70-WATT) (HIGH, LOW BEAM) 179
180
LAMP AS-INDICATOR (24-VOLT) (STOP, TAIL, TURN) 189
192
LAMP GP-DOME (24-VOLT) 231
LAMP GP-FLOOD 175
176
LAMP GP-FLOOD (LED) 187
188
LAMP GP-FLOOD (LED) (LOW BEAM) 187
LAMP GP-FLOOD–LED 178
LAMP GP-FLOOD–WORK LIGHTS 177
LAMP GP-HEAD & SIGNAL–LED 181
182
LAMP GP-HEAD & SIGNAL–LH 180
LAMP GP-HEAD & SIGNAL–RH 179
LAMP GP-WARNING BEACON 183
LAMP GP-WARNING BEACON (AMBER, STROBE) 195
LAMP-HALOGEN (24-VOLT, 70-WATT) 176
LAMP-HALOGEN (24-VOLT, 70-WATT) (FLOODLIGHT) 175
LAMP-TURN SIGNAL (24-VOLT, 21-WATT) (TURN SIGNAL) 179
180
LATCH GP 499
LIFTING GP-ENGINE 30
LIGHTING AR-FLOOD & SIGNAL–AUXILIARY 184
LIGHTING AR-FLOOD & SIGNAL–HALOGEN . . . 184
LIGHTING AR-FLOOD–LED 184
LIGHTING GP-FLOOD 186
LIGHTING GP-FLOOD & SIGNAL 189
LIGHTING GP-FLOOD & SIGNAL–HALOGEN . . . 191
LIGHTING GP-FLOOD & SIGNAL–LED 192
194
LIGHTING GP-FLOOD–CAB ROOF 185
187
188
LIGHTING GP-WARNING BEACON 195
LINER GP-CAB 800
LINES GP-AFTERCOOLER AIR 83
LINES GP-AIR 85
86
87
LINES GP-AIR CONDITIONER 801
LINES GP-AXLE OIL COOLER 381
382
LINES GP-COUPLER 608
609
612
LINES GP-DIAGNOSTIC 936
LINES GP-DRAIN 109
LINES GP-EXHAUST 89
LINES GP-FRONT 614

NAME PAGE

LINES GP-FRONT LUBRICATION 500
LINES GP-FUEL 110
111
112
113
LINES GP-FUEL FILTER 114
118
LINES GP-FUEL INJECTION 120
121
LINES GP-GREASE 503
504
LINES GP-HEATER 804
LINES GP-HYDRAULIC 616
618
619
625
LINES GP-HYDRAULIC OIL COOLER 627
LINES GP-LIFT CYLINDER 629
LINES GP-LUBRICATION 506
LINES GP-OIL COOLER 60
65
66
LINES GP-REAR LUBRICATION 508
LINES GP-SECONDARY STEERING 716
LINES GP-STEERING 719
724
LINES GP-TILT CYLINDER 631
633
LINES GP-TORQUE CONV COOLER 385
LINES GP-TURBOCHARGER AIR 90
LINES GP-TURBOCHARGER OIL 46
LINES GP-WATER–RADIATOR 68
LINK GP-STEERING FRAME LOCK 512
LINK GP-TILT 740
743
LITERATURE GP 805
LITERATURE GP (STANDARD CAB) 2
LUBRICATION AR-AUTOMATIC 513

M

MANIFOLD GP-CONTROL 579
580
635
637
MANIFOLD GP-CONTROL–AXLE OIL FLOW DIVIDER 387
MANIFOLD GP-EXHAUST 91
MANIFOLD GP-HYDRAULIC 639
MANIFOLD GP-INLET 92
MANIFOLD GP-VALVE 640
MIRROR GP 806
MIRROR GP-REAR VIEW 807
MODULE GP-CONTROL (ENGINE ECM) 255
MODULE GP-KEYPAD 808
MODULE GP-RELAY DRIVER 231
MONITOR AR-PAYLOAD 809
810
811

INDEX

NAME PAGE

MONITOR AR-PAYLOAD–AUTODIG. 809
810
MONITOR AR-PAYLOAD–PAYLOAD CONTROL 809
MOTOR GP-ELEC HYD PUMP 726
MOTOR GP-GEAR 388
MOTOR GP-WINDOW WIPER. 813
814
815
MOTOR GP-WINDOW WIPER–CAB. 812
MOUNTING GP-AIR CLEANER 93
MOUNTING GP-AXLE OIL COOLER–FIXED 390
MOUNTING GP-AXLE OIL COOLER–HEAT EXCHANGER 389
MOUNTING GP-CAB. 817
818
MOUNTING GP-CAB–HEAVY-DUTY. 816
MOUNTING GP-DRIVE AXLE 391
MOUNTING GP-ELECTRONIC CONTROL 196
MOUNTING GP-ENGINE 31
MOUNTING GP-ENGINE & XMSN–AIR CLEANER. 32
MOUNTING GP-RIM 392
MUFFLER GP. 95

O

OPERATOR AR 819
OPERATOR AR-ENCLOSED ROPS. 819

P

PAN GP-OIL 33
PANEL GP-HOOD–LH 516
PANEL GP-HOOD–REAR 514
PANEL GP-HOOD–RH 515
PANEL GP-HOOD–TOP 517
PANEL GP-INSTRUMENT 820
PANEL GP-SIDE 518
519
521
522
523
PANEL GP-SIDE–LH. 524
PANEL GP-SIDE–RH 520
PANEL GP-SWITCH 197
PEDAL GP-GOVERNOR 822
PEDAL GP-GOVERNOR (THROTTLE) 822
PISTON & ROD GP 34
PLATE & FILM GP 939
941
PLATE AS-MOUNTING. 525
PLATE GP-AXLE IDENTIFICATION 270
274
282
PLATE GP-MOUNTING–COUNTERWEIGHT 526
PLATE-INFORMATION (ENGINE SHUTOFF). . . . 244
PLATE-SERIAL NUMBER 944
PLATE-SERIAL NUMBER (TRANSMISSION). . . . 290

NAME PAGE

PLATFORM AR 823
PLATFORM GP 824
825
PLATFORM GP-OPERATOR 826
827
829
PLATFORM GP–REAR. 824
PLUG (TRANSMISSION OIL DRAIN). 317
PLUG AS-DRAIN 342
356
PLUG AS-DRAIN (AXLE OIL) 350
372
375
PLUG AS-DRAIN (DIFFERENTIAL). 354
358
360
363
366
369
378
PLUG-MAGNETIC (AXLE OIL DRAIN). 346
348
352
PLUG-MAGNETIC (DRAIN) 344
POWER TRAIN AR. 392
PRECLEANER AR-CAB AIR. 830
PRECLEANER GP. 96
97
98
99
100
PRINTER GP-COMPUTER 831
PROTECTOR GP-LINKAGE 917
PROTECTOR GP-SIDE BAR 918
PULLEY GP-CRANKSHAFT 35
PUMP & MTG GP-HYDRAULIC 641
642
PUMP & MTG GP-HYDRAULIC FAN 643
PUMP & MTG GP-PISTON. 645
PUMP & MTG GP-PISTON–BRAKE, HYDRAULIC FAN 644
PUMP & MTG GP-SECONDARY STEER. 725
PUMP GP-ELECTRIC DRIVE. 726
PUMP GP-ENGINE OIL. 47
PUMP GP-FUEL INJECTION 122
123
PUMP GP-FUEL PRIMING 124
PUMP GP-FUEL PRIMING–ELECTRIC 126
PUMP GP-GEAR 646
726
PUMP GP-LUBRICATION 527
529
PUMP GP-METERING (HMU) 764
PUMP GP-PISTON 648
650
652
654
PUMP GP-WATER. 72

INDEX

NAME PAGE

R

RADIATOR & AFTERCOOLER GP. 73
74
RADIO GP (AM/FM/USB/BLUETOOTH). 834
RADIO GP–AM/FM/WB/CD PLAYER 833
RADIO GP–AM/FM/WB/CD/USB/BLUETOOTH. . . 834
RAIL GP-FUEL 127
REGULATOR AS-WATER TEMPERATURE (INCLUDES CONNECTOR). 50
RELAY AS (24-VOLT) 198
231
RELAY AS (24-VOLT) (HOOD TILT) 244
RELAY GP–VARIABLE PITCH FAN. 198
RIM AR. 392
RIM GP-DEMOUNTABLE. 392
393
ROCKER ARM GP 36
38
ROOF GP-CAB. 835
836
ROPS GP-ENCLOSED 837
ROPS GP-ENCLOSED–CAB. 839
ROTATING GP-PUMP 659
ROTATING GP-PUMP–REAR. 658

S

SCREEN (HYDRAULIC). 580
664
SCREEN AS (HYDRAULIC TANK). 660
SCREEN GP-MAGNETIC. 290
SCREEN-SUCTION 290
SEAL (VALVE COVER) 12
SEAL-CRANKSHAFT (REAR) 24
SEAL-INTEGRAL (1/2-IN). 744
746
801
SEAL-INTEGRAL (3/4-IN). 744
746
801
SEAL-VALVE COVER. 660
SEAT BELT GP 4
5
750
840
841
SEAT BELT GP (RETRACTABLE, 2-IN). 842
SEAT BELT GP (RETRACTABLE, 3-IN). 843
SEAT BELT GP–RETRACTABLE, 2-IN 842
SEAT BELT GP–RETRACTABLE, 3-IN 843
SEAT GP 844
SEAT GP-SUSPENSION 846
SENDER AS-LEVEL (FUEL). 129
SENSOR (FUEL RAIL PRESSURE). 127
SENSOR & MTG GP-LIFT POSITION–LIFT. 199
SENSOR & MTG GP-TILT POSITION. 200
SENSOR AS-TEMPERATURE (AXLE). 225
SENSOR AS-TEMPERATURE (FRONT AXLE) 227
SENSOR AS-TEMPERATURE (REAR AXLE) . . . 227
SENSOR GP-ENGINE 7
202
SENSOR GP-LIQUID LEVEL (WATER IN FUEL) 114
SENSOR GP-POSITION (ROTARY). 199
200
SENSOR GP-POSITION (ROTARY) (THROTTLE) 822
SENSOR GP-POSITION (STEERING). 714
SENSOR GP-POSITION–ROTARY 203
204
SENSOR GP-PRESSURE 205
206
207
SENSOR GP-PRESSURE (AIR INLET). 93
SENSOR GP-PRESSURE (ENGINE OIL). 202
SENSOR GP-PRESSURE (HYDRAULIC IMPLEMENT). 666
673
SENSOR GP-PRESSURE (IMPLEMENT PUMP). 669
SENSOR GP-PRESSURE (INLET MANIFOLD AIR) 202
SENSOR GP-PRESSURE (SECONDARY STEERING) 716
SENSOR GP-PRESSURE (SERVICE BRAKE). 573
SENSOR GP-PRESSURE (STEERING PUMP). 131
SENSOR GP-SPEED 208
SENSOR GP-SPEED (ENGINE) 202
SENSOR GP-SPEED (FRONT WHEEL). 227
SENSOR GP-SPEED (REAR WHEEL) 227
SENSOR GP-TEMPERATURE 209
SENSOR GP-TEMPERATURE (AIR INLET). 93
SENSOR GP-TEMPERATURE (HYDRAULIC TANK OIL) 662
SENSOR GP-TEMPERATURE (TORQUE CONVERTER OIL). 385
SENSOR GP-TEMPERATURE (TRANSMISSION OIL) 402
SENSOR-PRESSURE (LIFT CYLINDER HEAD END) 207
809
810
SENSOR-PRESSURE (LIFT CYLINDER ROD END) 206
809
810
SENSOR-PRESSURE (LIFT, HEAD END) 809
SENSOR-PROXIMITY (LUBRICANT) 556
SENSOR-TEMPERATURE. 209
SENSOR-TEMPERATURE (AIR INLET MANIFOLD) 202
SENSOR-TEMPERATURE (AIR INLET). 93
SENSOR-TEMPERATURE (COOLANT). 202
SENSOR-TEMPERATURE (HYDRAULIC OIL). . . 662
SENSOR-TEMPERATURE (TORQUE CONVERTER OIL) 385

INDEX

NAME PAGE

SHAFT GP-DRIVE 394
395
SHIELD GP-ENGINE COMPARTMENT 531
533
535
536
SKIRT GP-CAB. 847
SLIP JOINT GP 396
SOFTWARE GP-IMPLEMENT. 153
SOFTWARE GP-MACHINE 153
SOFTWARE GP-MONITOR. 153
154
SOFTWARE GP-MONITOR (CELLULAR) 150
153
SOFTWARE GP-MONITOR (INSTRUMENT PANEL) 153
772
SOFTWARE GP-MONITOR (SATELLITE RADIO) 154
SOFTWARE GP-MONITOR (TELEMATICS) 153
SOFTWARE GP-POWER TRAIN. 154
SOLENOID. 92
SPECIAL AR-WHEEL LOADER 5
6
SPIDER & BEARING GP 394
395
396
SPRING AS-GAS (HOOD). 487
SPRING-GAS (CAB DOOR) 778
782
STARTING AID GP 210
STARTING AID GP-ETHER 211
STARTING MOTOR GP-ELECTRIC 213
STARTING MOTOR GP-ELECTRIC (24-VOLT) 213
STEERING AR 727
STEERING AR-SECONDARY. 727
STEP GP 537
538
STEP GP–REAR 539
STRAINER-FUEL (FUEL TANK) 103
SUPPORT GP-HOOD. 544
545
546
SUPPORT GP-HOOD–LH 543
SUPPORT GP-HOOD–REAR 540
SUPPORT GP-HOOD–RH. 542
SUPPORT GP-HOOD–TOP. 541
SUPPORT GP-LADDER. 547
SUPPORT GP-LINES 118
SUPPORT GP-PLATFORM 549
SUPPORT GP-PLATFORM–REAR 548
SUPPORT GP-RADIATOR. 75
76
SUPPORT GP-RADIATOR–LOWER 77
SUPPORT GP-SEAT. 848
SUPPORT GP-VALVE & FILTER 550
551
552
553
SUPPRESSION AR-SOUND 554

NAME PAGE

SUSPENSION GP-SEAT–AIR. 849
SWITCH AS-LIMIT (DOOR) 231
SWITCH AS-LIMIT (NORMALLY CLOSED) (BRAKE PEDAL) 568
SWITCH AS-PRESSURE (HIGH, LOW) (REFRIGERANT, HIGH SIDE) 801
SWITCH AS-PRESSURE (HYDRAULIC OIL). . . . 327
SWITCH AS-PRESSURE (REFRIGERANT, LOW SIDE). 801
SWITCH AS-PUSH BUTTON (AUTODIG). 143
SWITCH AS-PUSH BUTTON (PAYLOAD STORE). 218
SWITCH AS-ROCKER (24-VOLT). 220
SWITCH AS-ROCKER (24-VOLT) (AIR CONDITIONER CONTROL). 231
SWITCH AS-ROCKER (24-VOLT) (IMPLEMENT LOCKOUT). 251
SWITCH AS-ROCKER (PARKING BRAKE) 230
SWITCH AS-ROCKER (QUICK COUPLER) 219
SWITCH AS-ROCKER (WINDOW WASHER) . . . 232
SWITCH AS-THERMOSTAT (HVAC) 746
SWITCH AS-TOGGLE (HOOD TILT ACTUATOR) 244
SWITCH AS-TURN SIGNAL 220
SWITCH GP-DISCONNECT–BATTERY 214
SWITCH GP-MAGNETIC 217
SWITCH GP-MAGNETIC (24-VOLT) (GLOW PLUG) 244
SWITCH GP-MAGNETIC–GLOW PLUG RELAY. 215
SWITCH GP-MAGNETIC–SECONDARY STEERING CONTROL 216
SWITCH GP-PAYLOAD STORE 218
SWITCH GP-QUICK COUPLER. 219
SWITCH GP-ROCKER 220
SWITCH GP-START 222
SWITCH GP-TOGGLE 223

T

TANK & FILTER GP-HYDRAULIC 660
TANK & MTG GP-FUEL 128
TANK & MTG GP-HYDRAULIC–LH 662
TANK GP-FUEL 129
TILT GP-HOOD 555
TIP GP-ABRASION–HEAVY-DUTY 919
TIP GP-EXTRA-DUTY. 920
TIP GP-GENERAL PURPOSE 921
TIP GP-HEAVY PENETRATION 922
TIP GP-PENETRATION 923
924
TIRE & RIM AR. 397
TORQUE CONVERTER GP 398
TRANSMISSION AR 401
TRIM GP-CAB. 854
TRIM GP-CAB–ROADING 852
TURBOCHARGER GP 101

NAME PAGE

U

UNIVERSAL JOINT GP 394
395

V

VALVE & LINES GP-LUBRICATION. 556
VALVE & MTG GP-COUPLER. 664
VALVE & MTG GP-MAIN CONTROL. 666
669
671
VALVE & MTG GP-MAIN CONTROL–LOGGING, WITH RIDE CONTROL 673
VALVE AS-CONTROL. 707
VALVE AS-PRESSURE RELIEF (REFRIGERANT COMPRESSOR) 753
VALVE GP 678
VALVE GP-BRAKE CONTROL. 573
VALVE GP-CHECK 404
506
556
582
620
676
677
VALVE GP-CHECK (AXLE OIL COOLER BYPASS) 387
VALVE GP-CHECK (LOAD SIGNAL) 684
688
694
VALVE GP-CHECK & RELIEF 678
VALVE GP-CONTROL 679
681
683
688
VALVE GP-CONTROL (RIDE CONTROL) 635
637
VALVE GP-CONTROL–TRANSMISSION 402
VALVE GP-DIVERTER 692
VALVE GP-ETHER STARTING 224
VALVE GP-FLOW DIVIDER (AXLE OIL). 387
VALVE GP-FLUID SAMPLING 48
62
320
324
VALVE GP-LUBE DISTRIBUTION (FRONT). 506
VALVE GP-LUBE DISTRIBUTION (MAIN) 556
VALVE GP-MAIN CONTROL 693
VALVE GP-MAKEUP. 683
688
VALVE GP-MAKEUP (RELIEF) 693
VALVE GP-MANUAL. 697
VALVE GP-PRESSURE REDUCING (IMPLEMENT) 620
VALVE GP-PRESSURE REDUCING (TORQUE) 664
VALVE GP-PRIORITY. 580

NAME PAGE

VALVE GP-PUMP CONTROL. 699
700
701
VALVE GP-RELIEF 635
637
679
703
704
727
VALVE GP-RELIEF (AXLE OIL) 387
VALVE GP-RELIEF (LINE, TILT). 688
VALVE GP-RELIEF (LOAD SIGNAL) 684
688
VALVE GP-RELIEF (MARGIN). 684
688
694
VALVE GP-RELIEF (PILOT OPERATED HYDRAULIC) 694
VALVE GP-RELIEF (PILOT OPERATED) 635
VALVE GP-RELIEF (TILT CONTROL) 684
694
VALVE GP-RELIEF (TILT). 684
688
694
VALVE GP-SECONDARY STEERING 728
VALVE GP-SELECTOR (STEERING). 730
VALVE GP-SHUTOFF (TRANSMISSION OIL COOLER) 310
VALVE GP-SHUTTLE 583
VALVE GP-SHUTTLE (HYDRAULIC FAN) 580
VALVE GP-SHUTTLE (PILOT OIL). 640
VALVE GP-SOLENOID. 102
403
404
405
584
585
705
706
707
VALVE GP-SOLENOID (24-VOLT) (COLD START APPL, HYDRAULIC FAN) 707
VALVE GP-SOLENOID (24-VOLT) (HYDRAULIC) 616
VALVE GP-SOLENOID (24-VOLT) (ON/OFF) . . . 635
VALVE GP-SOLENOID (24-VOLT) (PILOT ON, OFF) 684
688
694
VALVE GP-SOLENOID (24-VOLT) (QUICK COUPLER) 664
VALVE GP-SOLENOID (24-VOLT) (RIDE CONTROL). 637
683
693
VALVE GP-SOLENOID (CLUTCH) 402
407
VALVE GP-SOLENOID (DIFFERENTIAL LOCK) 303
VALVE GP-SOLENOID (LOAD SENSING) 650

NAME PAGE

VALVE GP-SOLENOID (PRESSURE REDUCING) 404
708
VALVE GP-SOLENOID & PRESS REDC–AUTO DIFFERENTIAL LOCK 708
VALVE GP-STEERING 730
733
VALVE GP-STEERING NEUTRALIZER 734
VALVE GP-TIRE 406
VALVE GP-TRANSMISSION CONTROL 407
VALVE GP-UNLOADING–DIRECT OPERATED 709
VALVE GP-WATER 857
VISOR GP-CAB 750
858
859

W

WALKWAY GP 559
563
WALKWAY GP–LH 558
WALKWAY GP–RH 561
562
564
WINDOW GP-CAB 860
WINDOW GP-CAB–FRONT 861
WINDOW GP-DOOR 865
WINDOW GP-DOOR–LH 862
864
WINDOW GP-DOOR–RH 863
WINDOW GP-FRONT 866
WINDOW GP-REAR 867
WIPER GP-WINDOW 868
871
WIRING GP-AXLE TEMPERATURE 225
WIRING GP-AXLE TEMPERATURE–DIFFERENTIAL 227
WIRING GP-BRAKE 230
WIRING GP-CAB–CATALYST 231
WIRING GP-CHASSIS 238
240
241
244
248
WIRING GP-CONTROL 249
251
WIRING GP-ENGINE 253
255
258
WIRING GP-LUBRICATION 260
WIRING GP-OBJECT DETECTION 261
WIRING GP-SECONDARY STEERING 263
WIRING GP-SENSOR 265
266
WIRING GP-VALVE 267

MACHINE ARRANGEMENT

456-5790 CHASSIS AR

S/N: TNS1-UP

PART OF 456-5788 COMMON AR

SMCS-7000 **i06796499**

NOTE	PART NUMBER	QTY	PART NAME 1 2 3 4 5 6 (PRODUCT LEVEL)	SEE PAGE
Y	*418-7892*	1	BAFFLE GP	408
Y	*364-9806*	1	COOLER GP-TRANSMISSION OIL	310
Y	**438-5702**	1	FRAME AS-LOADER	452
Y	**437-3721**	1	FRAME AS-REAR	455
Y	*420-3010*	1	FRAME GP-RADIATOR	57
Y	*388-4766*	1	HITCH GP-ARTICULATING	485
Y	*415-8192*	1	LINES GP-AFTERCOOLER AIR	83
Y	*415-8195*	1	LINES GP-WATER	68
Y	*371-4430*	1	LINK GP-STEERING FRAME LOCK	512
Y	*458-8276*	1	PLATFORM GP	824
Y	*436-2351*	1	TANK & MTG GP-FUEL	128
	437-3713	1	BOSS GP-LOADER FRAME	

Y - SEPARATE ILLUSTRATION

<END>

386-7382 COLD WEATHER AR

S/N: TNS1-UP

120-VOLT

SMCS-7000 **i06761513**

NOTE	PART NUMBER	QTY	PART NAME 1 2 3 4 5 6 (PRODUCT LEVEL)	SEE PAGE
Y	*265-7724*	1	HEATER GP-JACKET WATER	172
Y	*360-0338*	1	LINES GP-HYDRAULIC (COLD START)	616
Y	*450-5474*	1	PUMP & MTG GP-PISTON	645
Y	*365-0102*	1	STARTING AID GP-ETHER	211

Y - SEPARATE ILLUSTRATION

<END>

386-7383 COLD WEATHER AR

S/N: TNS1-UP

240-VOLT

SMCS-7000 **i06761515**

NOTE	PART NUMBER	QTY	PART NAME 1 2 3 4 5 6 (PRODUCT LEVEL)	SEE PAGE
Y	*267-0339*	1	HEATER GP-JACKET WATER	173
Y	*360-0338*	1	LINES GP-HYDRAULIC (COLD START)	616
Y	*450-5474*	1	PUMP & MTG GP-PISTON	645
Y	*365-0102*	1	STARTING AID GP-ETHER	211

Y - SEPARATE ILLUSTRATION

<END>

MACHINE ARRANGEMENT

456-5788 COMMON AR

S/N: TNS1-UP

PART OF 492-4033, 492-4034 DISTRIBUTION AR

SMCS-7000 **i06797162**

NOTE	PART NUMBER	QTY	PART NAME 1 2 3 4 5 6 (PRODUCT LEVEL)	SEE PAGE
Y	*456-5790*	1	CHASSIS AR	1
Y	*456-5817*	1	CONFIGURATION AR	2
Y	*456-5791*	1	CONTROL AR-MONITOR	758
Y	*463-8880*	1	HYDRAULIC AR	605
Y	*390-0579*	1	INSTALLATION AR-ENGINE	8
Y	*455-3941*	1	OPERATOR AR-ENCLOSED ROPS	819
Y	*463-8849*	1	POWER TRAIN AR	392

Y - SEPARATE ILLUSTRATION

<END>

456-5817 CONFIGURATION AR

S/N: TNS1-UP

PART OF 456-5788 COMMON AR

SMCS-7000 **i06797166**

NOTE	PART NUMBER	QTY	PART NAME 1 2 3 4 5 6 (PRODUCT LEVEL)	SEE PAGE
Y	*471-8184*	1	ELECTRONICS GP-IMPLEMENT	153
Y	*395-4301*	1	ELECTRONICS GP-MACHINE	153
Y	*449-0902*	1	ELECTRONICS GP-MONITOR (INDICATION DISPLAY)	153
Y	*477-2641*	1	ELECTRONICS GP-MONITOR (DISPLAY)	154
Y	*477-2642*	1	ELECTRONICS GP-POWER TRAIN	154
Y	*454-0180*	1	FILM GP	930
Y	*463-8878*	1	FILM GP	931
Y	*6V-1970*	1	LITERATURE GP (STANDARD CAB)	805
Y	*439-3509*	1	PLATE & FILM GP	939

Y - SEPARATE ILLUSTRATION

<END>

492-3988 CONFIGURATION AR

S/N: TNS1-UP

PART OF 512-0946, 512-0947 CAB AR, 492-4033, 492-4034 DISTRIBUTION AR

SMCS-7000 **i06809137**

NOTE	PART NUMBER	QTY	PART NAME 1 2 3 4 5 6 (PRODUCT LEVEL)	SEE PAGE
Y	*458-0049*	1	COVER GP-CAB	769
Y	*366-0730*	1	ROOF GP-CAB	835

Y - SEPARATE ILLUSTRATION

<END>

505-1521 CONFIGURATION AR–HIGH DEBRIS

S/N: TNS1-UP

CAB

SMCS-7000 **i06797216**

NOTE	PART NUMBER	QTY	PART NAME 1 2 3 4 5 6 (PRODUCT LEVEL)	SEE PAGE
Y	*416-9577*	1	COVER GP-ACCESS	437
Y	*444-3238*	1	ROOF GP-CAB	836

Y - SEPARATE ILLUSTRATION

<END>

499-1654 CONVERSION AR-MACHINE

S/N: TNS1-UP

PART OF 492-4033, 492-4034 DISTRIBUTION AR

SMCS-7000 **i06797215**

NOTE	PART NUMBER	QTY	PART NAME 1 2 3 4 5 6 (PRODUCT LEVEL)	SEE PAGE
Y	*462-6970*	1	ACCUMULATOR GP-HYDRAULIC	269
Y	*373-3930*	1	FILM GP	926
Y	**458-2253**	1	MANIFOLD GP-CONTROL	580
Y	*394-2474*	1	WIRING GP-BRAKE (PARKING)	230

Y - SEPARATE ILLUSTRATION

<END>

476-2460 DISTRIBUTION AR

S/N: TNS1-UP

SMCS-7000 **i06810313**

NOTE	PART NUMBER	QTY	PART NAME 1 2 3 4 5 6 (PRODUCT LEVEL)	SEE PAGE
Y	*257-1766*	1	ADAPTER GP-TIP (K-80)	874
Y	*395-3265*	1	BUCKET GP-GENERAL PURPOSE	899
Y	*107-3394*	1	EDGE GP-SEGMENT	916
Y	*229-6965*	8	TIP GP-PENETRATION (K-80)	924

Y - SEPARATE ILLUSTRATION

<END>

476-2461 DISTRIBUTION AR

S/N: TNS1-UP

SMCS-7000 **i06810507**

NOTE	PART NUMBER	QTY	PART NAME 1 2 3 4 5 6 (PRODUCT LEVEL)	SEE PAGE
Y	*257-1766*	1	ADAPTER GP-TIP (K-80)	874
Y	*394-8476*	1	BUCKET GP-GENERAL PURPOSE	898
Y	*107-3394*	1	EDGE GP-SEGMENT	916
Y	*229-6965*	8	TIP GP-PENETRATION (K-80)	924

Y - SEPARATE ILLUSTRATION

<END>

MACHINE ARRANGEMENT

492-4033 DISTRIBUTION AR

S/N: TNS1-UP

CONSTRUCTION

SMCS-7000 **i06810857**

NOTE	PART NUMBER	QTY	PART NAME 1 2 3 4 5 6 (PRODUCT LEVEL)	SEE PAGE
Y	*463-8850*	1	AXLE AR-FIXED & OSCILLATING	275
Y	*503-1906*	1	CAB AR-ENCLOSED ROPS	752
Y	*365-0112*	1	CAP GP-AIR CLEANER	80
Y	*456-5788*	1	COMMON AR	2
Y	*492-3988*	1	CONFIGURATION AR	2
Y	*506-8479*	1	CONTROL & MTG GP-ELHYD	754
Y	*505-1547*	1	CONTROL AR-FAN	590
Y	*434-0693*	1	CONTROL GP-COMMUNICATION (PRODUCT LINK ELITE SATELLITE)	145
Y	*499-1654*	1	CONVERSION AR-MACHINE	3
Y	*463-8879*	1	COUNTERWEIGHT AR	428
Y	**435-8541**	1	ENGINE AR-PRIMARY	7
Y	*464-6672*	1	FENDER AR-ROADING	446
Y	*367-9027*	1	GUARD GP-POWER TRAIN	467
Y	*336-0000*	1	HOOD & GUARD GP	487
Y	*492-4022*	1	HYDRAULIC AR-2 VALVE	606
Y	*492-4028*	1	HYDRAULIC AR-STANDARD LIFT	607
Y	*492-4031*	1	LINK GP-TILT	743
Y	*492-3985*	1	OPERATOR AR	819
Y	*434-0687*	1	PUMP & MTG GP-HYDRAULIC	641
Y	*415-8207*	1	RADIATOR & AFTERCOOLER GP	73
Y	*443-4183*	1	SEAT BELT GP	842
Y	*492-4020*	1	SPECIAL AR-WHEEL LOADER	5
Y	*456-5818*	1	STEERING AR	727
Y	*508-7627*	1	SUPPRESSION AR-SOUND	554

Y - SEPARATE ILLUSTRATION

<END>

492-4034 DISTRIBUTION AR

S/N: TNS1-UP

MINING

SMCS-7000 **i06818678**

NOTE	PART NUMBER	QTY	PART NAME 1 2 3 4 5 6 (PRODUCT LEVEL)	SEE PAGE
Y	*463-8850*	1	AXLE AR-FIXED & OSCILLATING	275
Y	*503-1906*	1	CAB AR-ENCLOSED ROPS	752
Y	*365-0112*	1	CAP GP-AIR CLEANER	80
Y	*456-5788*	1	COMMON AR	2
Y	*492-3988*	1	CONFIGURATION AR	2
Y	*506-8479*	1	CONTROL & MTG GP-ELHYD	754
Y	*505-1547*	1	CONTROL AR-FAN	590
Y	*434-0693*	1	CONTROL GP-COMMUNICATION (PRODUCT LINK ELITE SATELLITE)	145
Y	*499-1654*	1	CONVERSION AR-MACHINE	3
Y	*463-8893*	1	COUNTERWEIGHT AR	428
Y	**435-8541**	1	ENGINE AR-PRIMARY	7
Y	*464-6672*	1	FENDER AR-ROADING	446
Y	*367-9027*	1	GUARD GP-POWER TRAIN	467
Y	*495-6107*	1	GUARD GP-TILT CYLINDER	602
Y	*336-0000*	1	HOOD & GUARD GP	487
Y	*492-4022*	1	HYDRAULIC AR-2 VALVE	606
Y	*492-4028*	1	HYDRAULIC AR-STANDARD LIFT	607
Y	*492-4031*	1	LINK GP-TILT	743
Y	*492-3985*	1	OPERATOR AR	819
Y	*434-0687*	1	PUMP & MTG GP-HYDRAULIC	641
Y	*415-8207*	1	RADIATOR & AFTERCOOLER GP	73
Y	*443-4183*	1	SEAT BELT GP	842
Y	*492-4020*	1	SPECIAL AR-WHEEL LOADER	5
Y	*456-5818*	1	STEERING AR	727
Y	*508-7627*	1	SUPPRESSION AR-SOUND	554

Y - SEPARATE ILLUSTRATION

<END>

492-4020 SPECIAL AR-WHEEL LOADER

S/N: TNS1-UP

PART OF 492-4033, 492-4034 DISTRIBUTION AR

SMCS-7000 **i06810329**

NOTE	PART NUMBER	QTY	PART NAME 1 2 3 4 5 6 (PRODUCT LEVEL)	SEE PAGE
Y	*360-0309*	1	FILLER GP-POWER TRAIN OIL	318
Y	*443-4188*	1	FILTER GP-CAB AIR	789
Y	*391-5784*	1	GRILL GP-RADIATOR	456
Y	*492-4021*	1	HYDRAULIC AR	605
Y	*504-2869*	1	PLATFORM GP-OPERATOR	827
Y	*367-2611*	1	SUPPORT GP-LADDER	547
Y	*504-1657*	1	WALKWAY GP	562

Y - SEPARATE ILLUSTRATION

<END>

MACHINE ARRANGEMENT

507-9161 SPECIAL AR-WHEEL LOADER

S/N: TNS1-UP
INDUSTRIAL

SMCS-7000 **i06809569**

NOTE	PART NUMBER	QTY	PART NAME 1 2 3 4 5 6 (PRODUCT LEVEL)	SEE PAGE
Y	*485-8807*	1	BAFFLE GP	409
Y	*465-4983*	1	BOSS GP-LOADER FRAME	416
Y	*360-0309*	1	FILLER GP-POWER TRAIN OIL	318
Y	*443-4189*	1	FILTER GP-CAB AIR	790
Y	*391-5784*	1	GRILL GP-RADIATOR	456
Y	*393-5078*	1	GUARD GP-ARTICULATION	458
Y	*483-9445*	1	GUARD GP-BOTTOM	461
Y	*488-8987*	1	GUARD GP-BOTTOM	462
Y	*465-4984*	1	GUARD GP-BOTTOM	460
Y	*465-4985*	1	GUARD GP-LIFT CYLINDER	599
Y	*415-7928*	1	GUARD GP-PROTECTION	469
Y	*392-9385*	1	HARDWARE GP-LOADER FRAME	478
Y	*492-4021*	1	HYDRAULIC AR	605
Y	*504-2876*	1	LADDER & WALKWAY GP	494
Y	*454-4238*	1	SKIRT GP-CAB	847
Y	*485-2626*	1	SUPPORT GP-PLATFORM	549
Y	*504-2015*	1	WALKWAY GP	563

Y - SEPARATE ILLUSTRATION

<END>

435-8541 ENGINE AR-PRIMARY

S/N: E7A1-UP
186 BRAKE KW (249 BHP) AT 2200 RPM
PART OF 492-4033, 492-4034 DISTRIBUTION AR

SMCS-1000 **i06715951**

NOTE	PART NUMBER	QTY	PART NAME 1 2 3 4 5 6 (PRODUCT LEVEL)	SEE PAGE
Y	*374-7094*	1	AIR COMPRESSOR GP	9
Y	*385-8001*	1	ALTERNATOR GP-CHARGING	134
Y	*375-4479*	1	BELT TENSIONER GP	10
Y	*425-0196*	1	BREATHER GP (CRANKCASE)	39
Y	*396-2617*	1	CAMSHAFT GP	11
Y	*346-2911*	1	CONNECTION GP-HEATER	49
Y	*373-3607*	1	CONNECTION GP-WATER	50
Y	*371-2537*	1	CONTROL GP-ENGINE ELECTRONIC	149
Y	*378-8283*	1	COOLER GP-ENGINE OIL	51
Y	*436-1195*	1	COVER GP-VALVE MECHANISM	12
Y	*374-6300*	1	CRANKSHAFT GP	14
Y	*390-0854*	1	CYLINDER BLOCK GP	16
Y	*385-2572*	1	CYLINDER HEAD GP	18
Y	*378-8166*	1	DRAIN GP-OIL	19
Y	*374-7093*	1	DRIVE GP-FAN	20
Y	*375-0098*	1	FASTENER GP-DAMPER & PULLEY	21
Y	*425-0197*	1	FILLER GP-ENGINE OIL	41
Y	*486-6463*	1	COVER GP-OIL FILLER	40
Y	*390-0060*	1	FILM GP	927
Y	*415-5625*	1	FILM GP	929
Y	*346-0220*	1	FILTER GP-ENGINE OIL	42
Y	*426-3292*	1	FILTER GP-FUEL	106
Y	*345-9028*	1	FLYWHEEL GP	22
Y	*445-9256*	1	GAUGE GP-OIL LEVEL (DIPSTICK)	45
Y	*418-0928*	1	WIRING GP-ENGINE	253
Y	*472-4943*	1	WIRING GP-ENGINE	258
Y	*378-0582*	1	HOUSING GP-FLYWHEEL	24
Y	*375-4606*	1	HOUSING GP-FRONT	26
Y	*375-4645*	1	HOUSING GP-FRONT	27
Y	*416-8908*	1	INJECTOR GP-FUEL	108
Y	*371-2478*	1	JET GP-PISTON COOLING	29
Y	*371-2735*	1	LIFTING GP-ENGINE	30
Y	*426-3312*	1	LINES GP-FUEL FILTER	118
Y	*393-7694*	1	MANIFOLD GP-EXHAUST	91
Y	*391-5523*	1	MANIFOLD GP-INLET	92
Y	*395-0112*	1	MOUNTING GP-ELECTRONIC CONTROL	196
Y	*346-1510*	1	MOUNTING GP-ENGINE	31
Y	*378-0595*	1	PAN GP-OIL	33
Y	*369-7304*	1	PISTON & ROD GP	34
Y	*371-2554*	1	PULLEY GP-CRANKSHAFT	35
Y	*462-6685*	1	PUMP GP-ENGINE OIL	47
Y	*391-4811*	1	PUMP GP-FUEL INJECTION	123
Y	*372-2297*	1	PUMP GP-WATER	72
Y	*394-9639*	1	RAIL GP-FUEL	127
Y	*371-2480*	1	ROCKER ARM GP	38
Y	*395-0110*	1	SENSOR GP-ENGINE	202
Y	*395-0114*	1	STARTING AID GP	210

435-8541 **ENGINE AR-PRIMARY (**contd.**)** **i06715951**

NOTE	PART NUMBER	QTY	PART NAME 1 2 3 4 5 6 (PRODUCT LEVEL)	SEE PAGE
Y	*371-2541*	1	STARTING MOTOR GP-ELECTRIC	213
Y	*416-6970*	1	TURBOCHARGER GP	101
Y	*371-2745*	1	VALVE GP-FLUID SAMPLING	48
	453-9676	1	ELECTRONICS GP-ENGINE	

Y - SEPARATE ILLUSTRATION

<END>

390-0579 INSTALLATION AR-ENGINE

S/N: TNS1-UP

PART OF 456-5788 COMMON AR

SMCS-1000 **i06759750**

NOTE	PART NUMBER	QTY	PART NAME 1 2 3 4 5 6 (PRODUCT LEVEL)	SEE PAGE
Y	*365-0097*	1	DUST EJECTOR GP	81
Y	*365-0084*	1	GAUGE GP-OIL LEVEL (DIPSTICK)	43
Y	*365-0171*	1	GUARD GP-BELT	23
Y	*365-0086*	1	LINES GP-DRAIN	109
Y	*365-0087*	1	LINES GP-EXHAUST	89
Y	*365-0166*	1	LINES GP-FUEL FILTER	114
Y	*365-0165*	1	MOUNTING GP-AIR CLEANER	93
Y	*365-0132*	1	MOUNTING GP-ENGINE & XMSN	32
Y	*365-0089*	1	MUFFLER GP	95

Y - SEPARATE ILLUSTRATION

<END>

374-7094 AIR COMPRESSOR GP

S/N: E7A1-UP

PART OF 435-8541 ENGINE AR-PRIMARY

SMCS-1803, 1804 **i05330642**

NOTE	REF NO	GRAPHIC REF	PART NUMBER	QTY	PART NAME 1 2 3 4 5 6 (PRODUCT LEVEL)	SEE PAGE
	1	1	**127-3361**	2	BOLT (M8X1.25X95-MM)	
M	2	1	**101-7178**	3	BOLT (M10X1.5X55-MM)	
Y	3	1	**320-1291**	1	COMPRESSOR GP-REFRIGERANT	753
	4	1	**330-1725**	1	BRACKET AS	
		1	**161-9820**	2	PIN	
	5	1	**346-2999**	2	BOLT (M8X1.25X16.6-MM)	

M - METRIC PART
Y - SEPARATE ILLUSTRATION

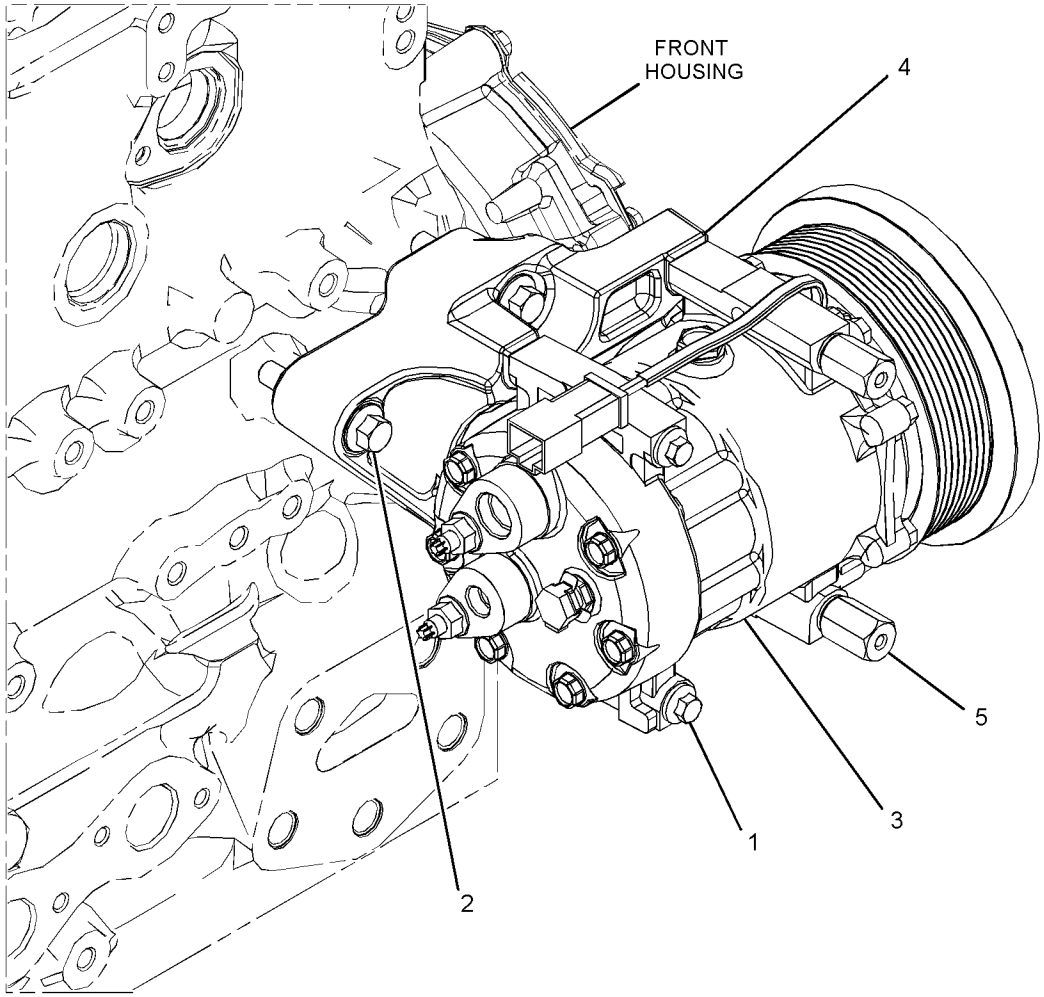

GRAPHIC #1 <END> g02510958

375-4479 BELT TENSIONER GP

S/N: E7A1-UP

PART OF 435-8541 ENGINE AR-PRIMARY

SMCS-1357, 1358, 1397 **i05892193**

NOTE	REF NO	GRAPHIC REF	PART NUMBER	QTY	PART NAME 1 2 3 4 5 6 (PRODUCT LEVEL)	SEE PAGE
	1	1	**369-1255**	1	TENSIONER	
	2	1	**337-6324**	1	PULLEY	

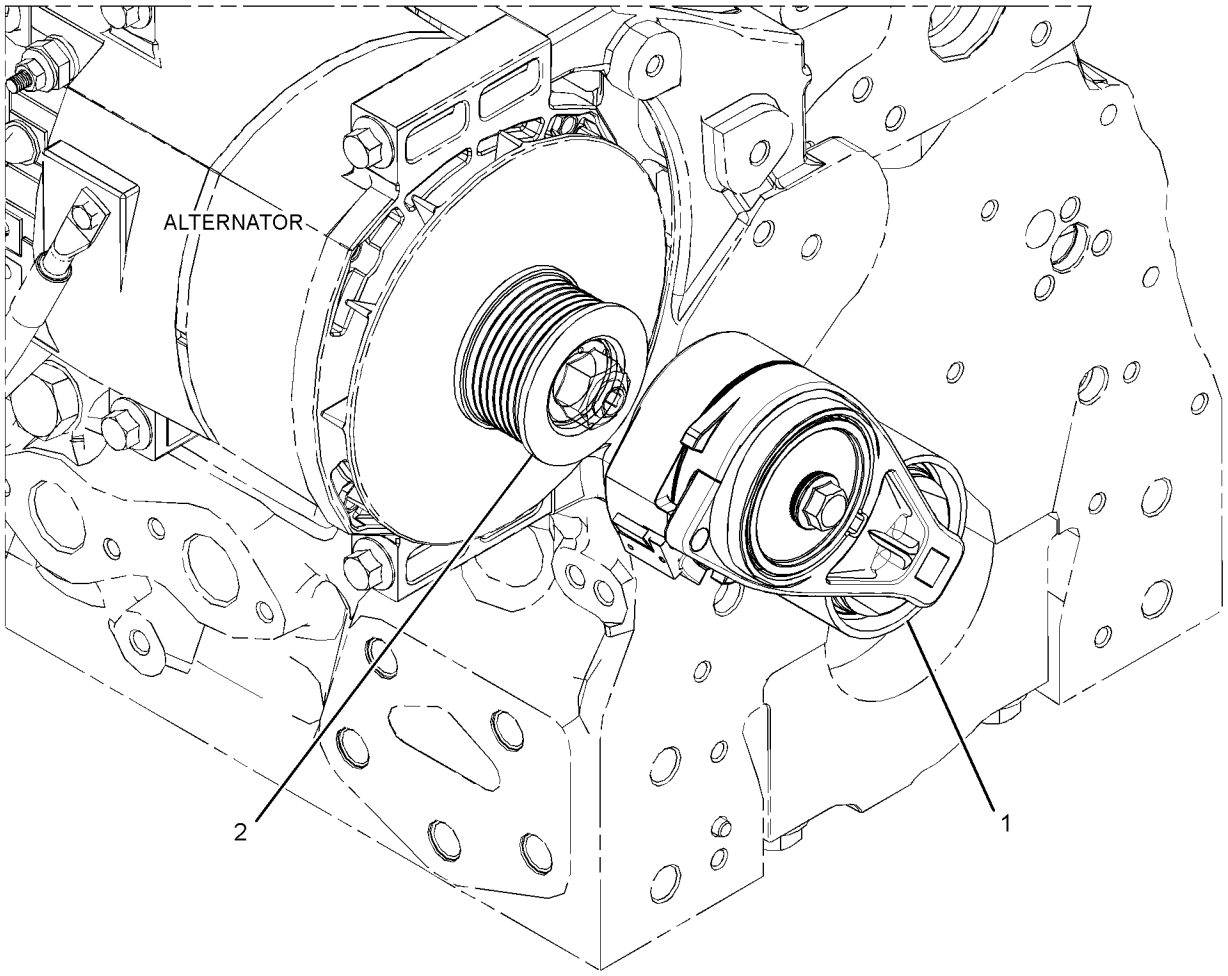

GRAPHIC #1 <END> g02406802

396-2617 CAMSHAFT GP

S/N: E7A1-UP

PART OF 435-8541 ENGINE AR-PRIMARY

SMCS-1210, 1211, 1212

i06547034

NOTE	REF NO	GRAPHIC REF	PART NUMBER	QTY	PART NAME 1 2 3 4 5 6 (PRODUCT LEVEL)	SEE PAGE
	1	1	**278-5125**	12	TAPPET	
	2	1	**395-1802**	1	CAMSHAFT GP	
	2A	1	**067-6135**	1	KEY-WOODRUFF	
	3	1	**278-5126**	12	PUSHROD	

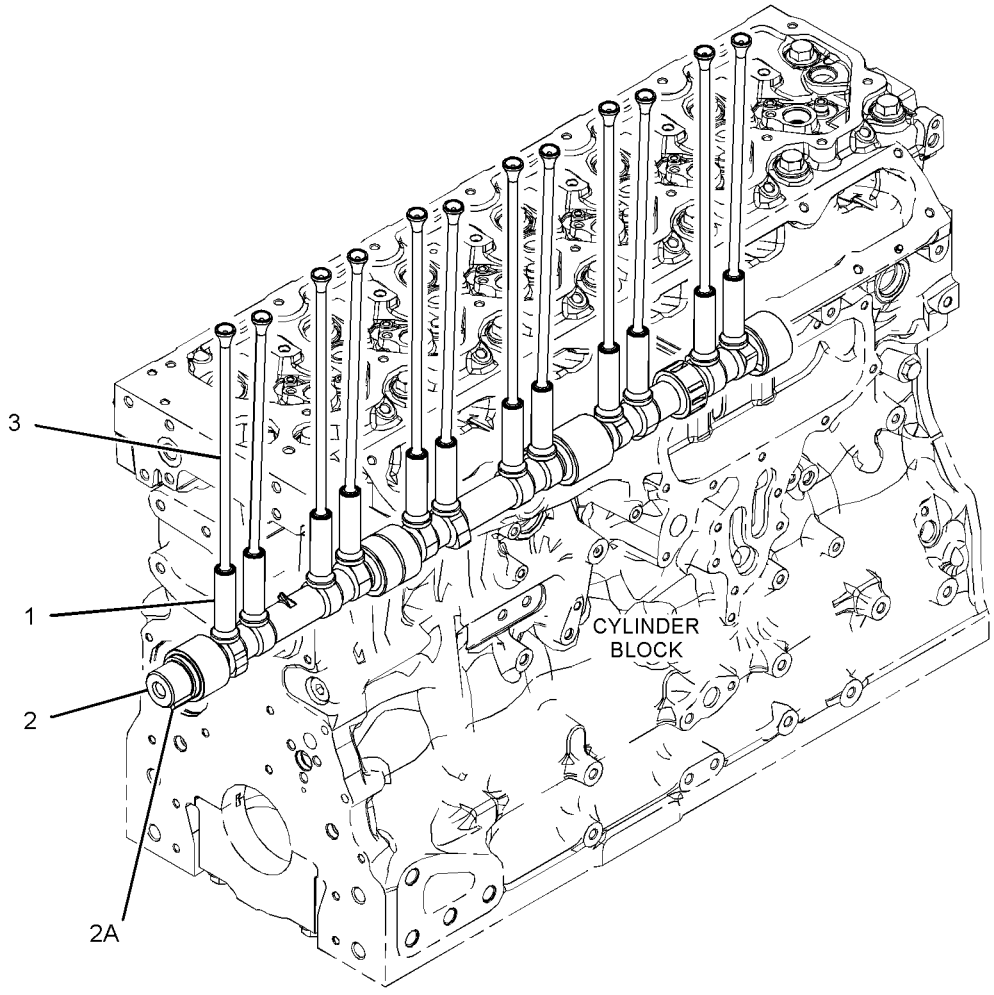

GRAPHIC #1

<END>

g06031635

436-1195 COVER GP-VALVE MECHANISM

S/N: E7A1-UP

PART OF 435-8541 ENGINE AR-PRIMARY

SMCS-1107 **i06091903**

NOTE	REF NO	GRAPHIC REF	PART NUMBER	QTY	PART NAME 1 2 3 4 5 6 (PRODUCT LEVEL)	SEE PAGE
M	1	1	**101-3895**	9	BOLT (M8X1.25X35-MM)	
	2	1	**103-5705**	6	BOLT (M8X1.25X110-MM)	
	3	1	**383-1382**	1	COVER GP-VALVE MECHANISM	
	3A	1	**195-9245**	3	SCREW (M4X0.7X10-MM)	
	3B	1	**376-4761**	1	SEAL (VALVE COVER)	
	3C	1	**380-9615**	1	BREATHER (VALVE MECHANISM)	
	4	1	**388-0536**	1	GASKET (VALVE COVER)	
	5	1	**455-3113**	1	COVER-BASE	
M	6	1	**6I-0217**	14	BOLT (M8X1.25X20-MM)	

M - METRIC PART

436-1195 **COVER GP-VALVE MECHANISM (**contd.**)** **i06091903**

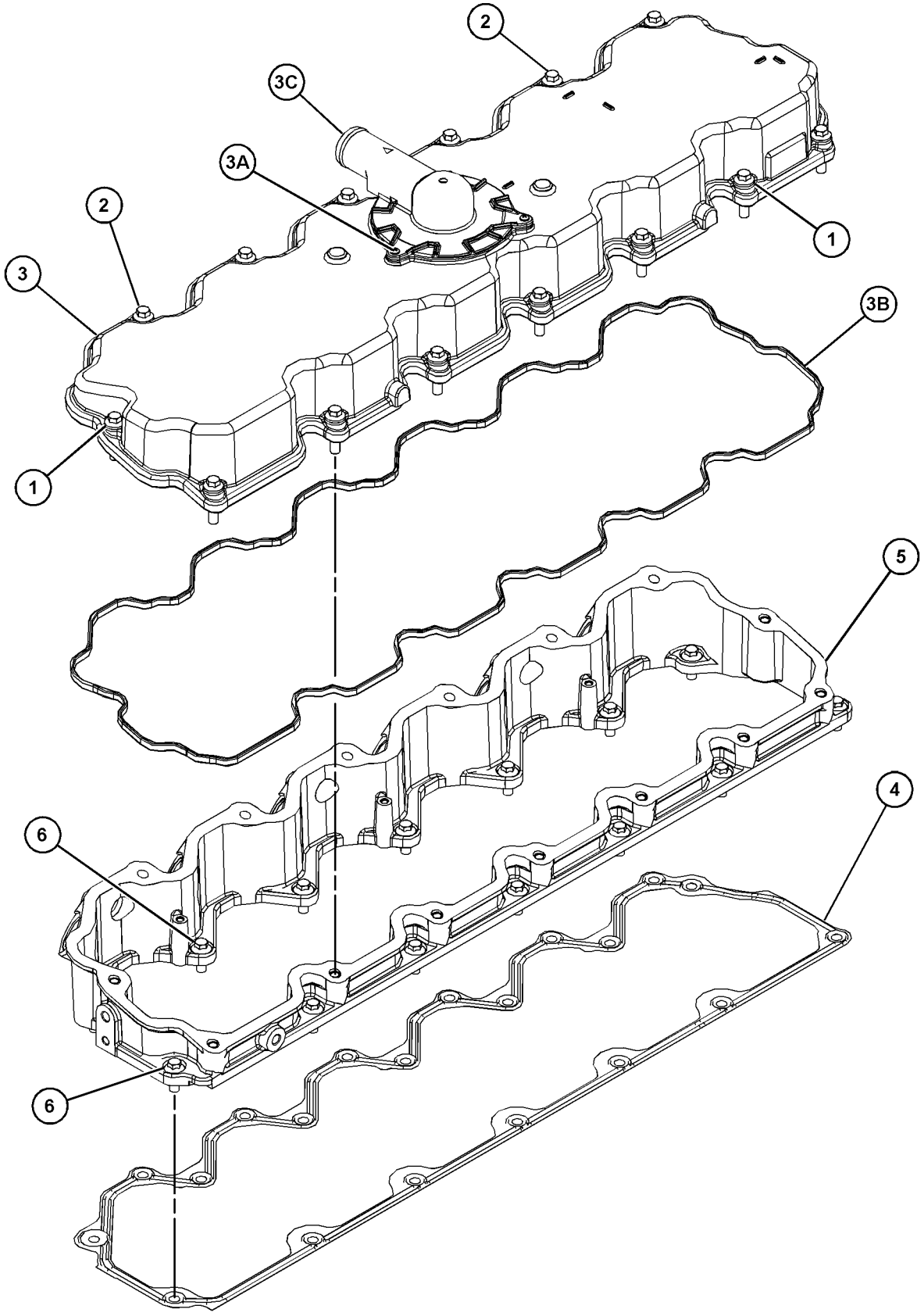

GRAPHIC #1 <END> g06003702

374-6300 CRANKSHAFT GP

S/N: E7A1-UP

PART OF 435-8541 ENGINE AR-PRIMARY

SMCS-1202 **i05331583**

NOTE	REF NO	GRAPHIC REF	PART NUMBER	QTY	PART NAME 1 2 3 4 5 6 (PRODUCT LEVEL)	SEE PAGE
P	1	1	*317-5485*	7	BEARING	
P	2	1	*317-5486*	7	BEARING	
	3	1	**339-8780**	1	DOWEL	
J	4	1	**363-0559**	2	WASHER-THRUST	
	5	1	**376-4074**	1	CRANKSHAFT	
	6	1	**376-4078**	1	DISC-TIMING	
	7	1	**067-6135**	1	KEY-WOODRUFF	
	8	1	**276-7391**	1	GEAR (34-TEETH)	
	9	1	**276-7394**	3	SCREW (M6X1XX12-MM)	
					AVAILABLE REPAIR KIT(S):	
P			**360-1978**	1	KIT-BEARING (STANDARD)	
					(INCLUDES BEARINGS)	
J			**364-5145**	1	KIT-WASHER (STANDARD)	
					(INCLUDES WASHERS)	

J - KIT MARKED J SERVICES PART(S) MARKED J
P - KIT MARKED P SERVICES PART(S) MARKED P

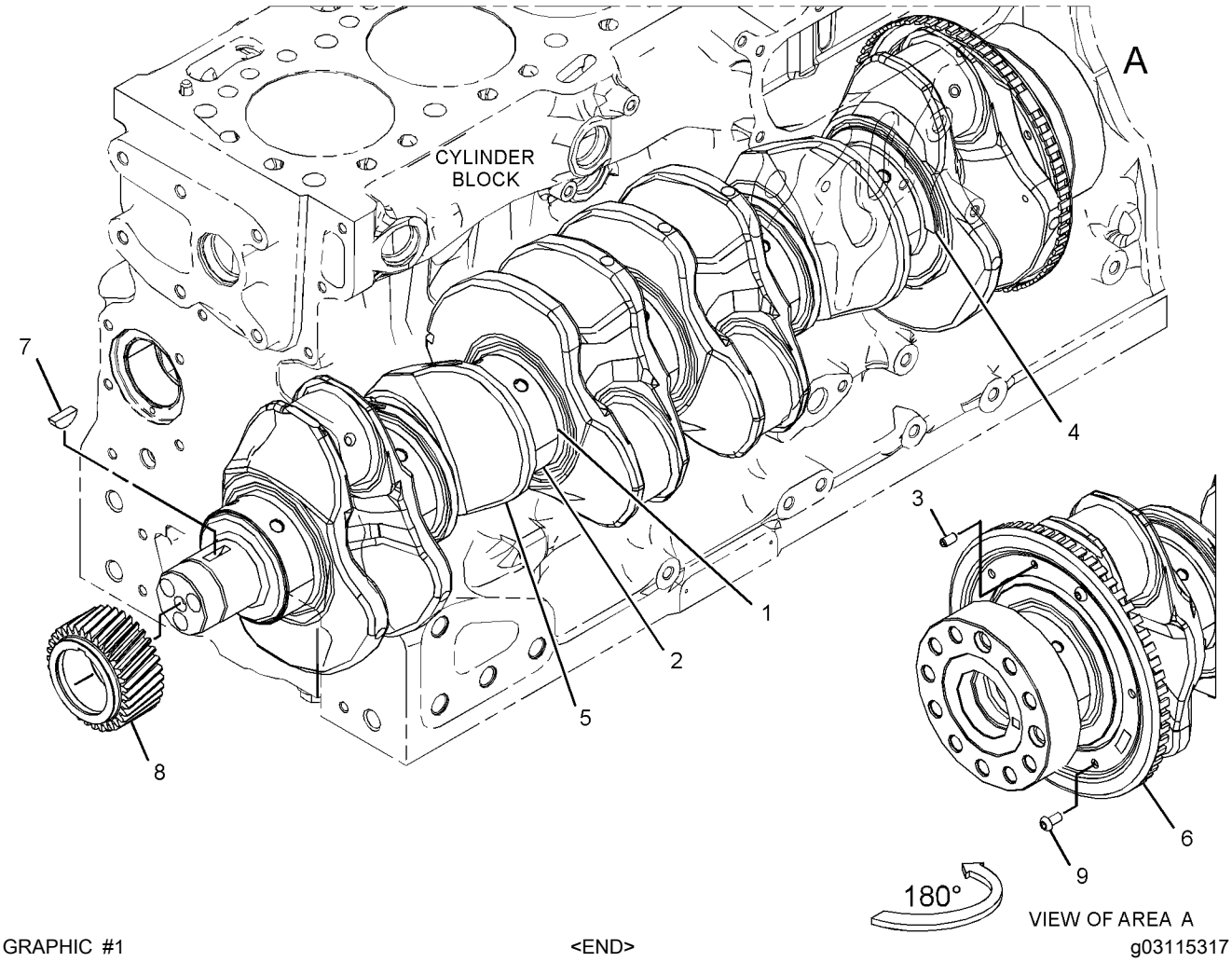

GRAPHIC #1 <END> g03115317

383-3581 CYLINDER BLOCK AS

S/N: E7A1-UP

PART OF 390-0854 CYLINDER BLOCK GP

SMCS-1201 **i05342073**

NOTE	REF NO	GRAPHIC REF	PART NUMBER	QTY	PART NAME 1 2 3 4 5 6 (PRODUCT LEVEL)	SEE PAGE
	1	1	**232-7597**	4	PLUG	
	2	1	**276-5602**	2	PLUG-CORE	
	3	1	**232-7596**	1	PLUG	
	4	1	**067-6043**	7	PLUG-SIDE	
	5	1	**067-6823**	1	PLUG	
	6	1	**185-0884**	2	DOWEL	
	7	1	**225-8858**	2	PLUG	
	8	1	**232-7599**	2	PLUG	
	9	1	**276-5600**	14	BOLT-SPECIAL (BEARING CAP)	
	10	1	**331-6835**	2	PLUG-SEAL	

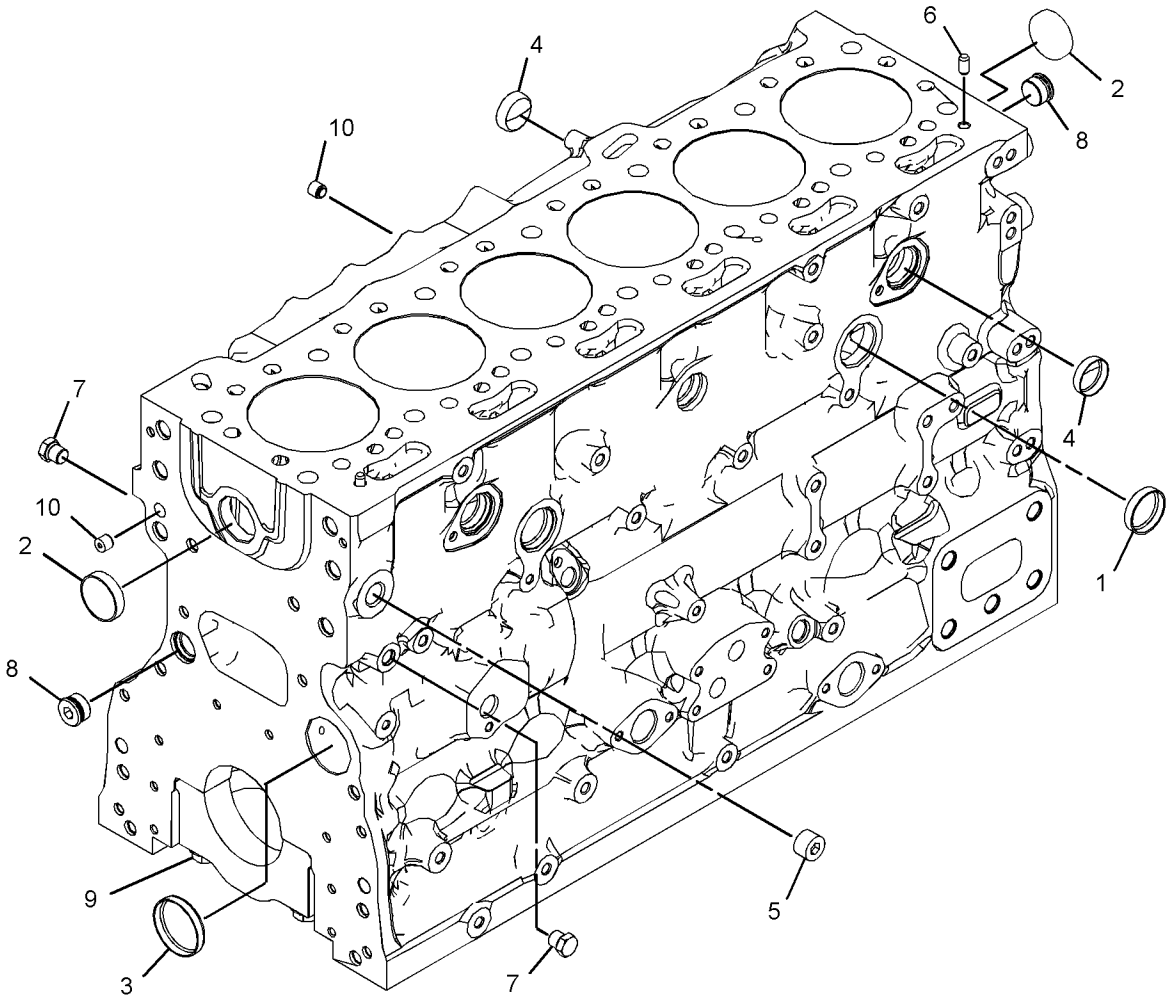

GRAPHIC #1 <END> g03351937

390-0854 CYLINDER BLOCK GP

S/N: E7A1-UP

PART OF 435-8541 ENGINE AR-PRIMARY

SMCS-1201 **i06547930**

NOTE	REF NO	GRAPHIC REF	PART NUMBER	QTY	PART NAME 1 2 3 4 5 6 (PRODUCT LEVEL)	SEE PAGE
	1	1	**276-5603**	1	SEAL-O-RING	
Y	2	1	*383-3581*	1	CYLINDER BLOCK AS	15
M	3	1	**209-9219**	10	BOLT (M8X1.25X16-MM)	
	4	1	**232-7449**	1	HOUSING AS	
	5	1	**232-1322**	1	PLUG	

M - METRIC PART
Y - SEPARATE ILLUSTRATION

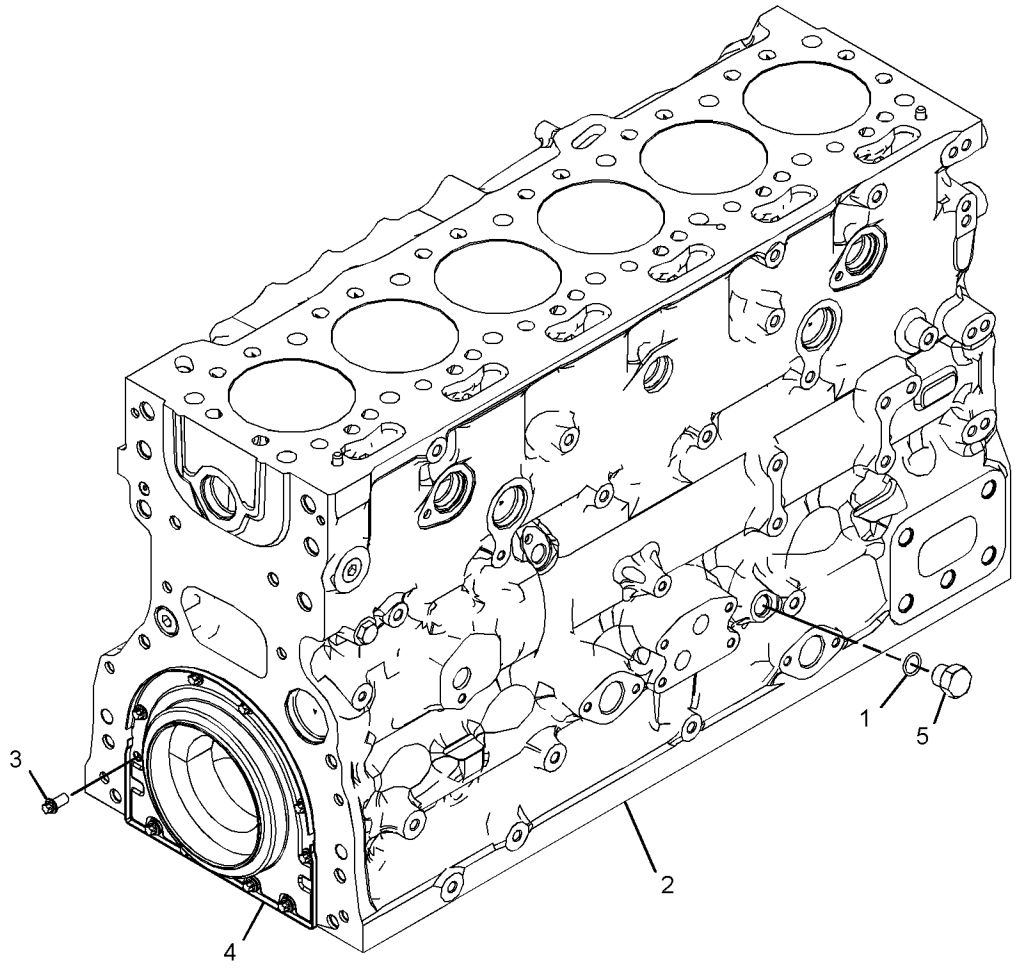

GRAPHIC #1 <END> g03384924

384-5313 CYLINDER HEAD AS

S/N: E7A1-UP

PART OF 385-2572 CYLINDER HEAD GP

SMCS-1100, 1101

i05330860

NOTE	REF NO	GRAPHIC REF	PART NUMBER	QTY	PART NAME 1 2 3 4 5 6 (PRODUCT LEVEL)	SEE PAGE
	1	1	**276-8116**	6	PLUG-CORE	
	2	1	**377-0400**	12	INSERT-VALVE SEAT (EXHAUST)	
	3	1	**377-0399**	12	INSERT-VALVE SEAT (INTAKE)	
	4	1	**276-8117**	13	PLUG-CORE	

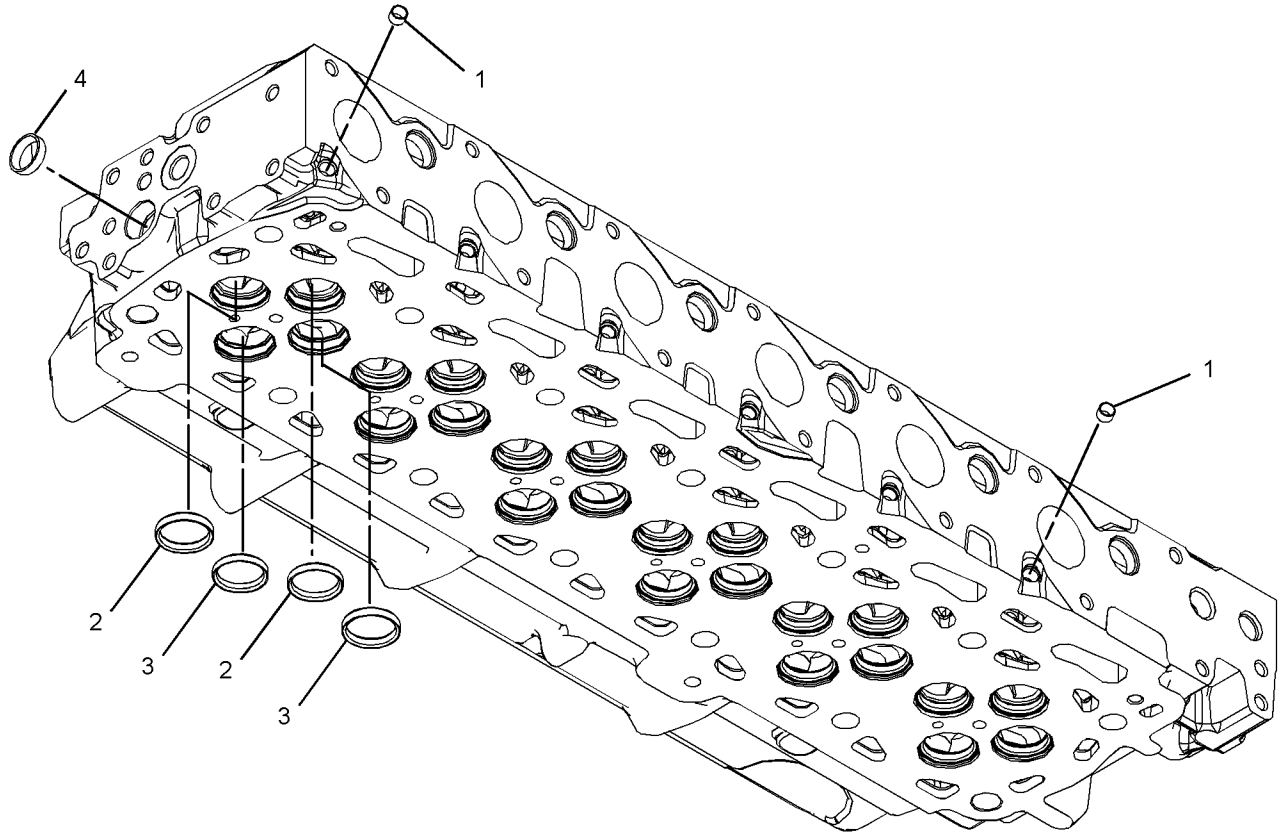

GRAPHIC #1 <END> g03379426

385-2572 CYLINDER HEAD GP

S/N: E7A1-UP

PART OF 435-8541 ENGINE AR-PRIMARY

SMCS-1100 **i05330848**

NOTE	REF NO	GRAPHIC REF	PART NUMBER	QTY	PART NAME 1 2 3 4 5 6 (PRODUCT LEVEL)	SEE PAGE
	1	1	**199-9751**	1	SEAL-O-RING	
Y	2	1	**384-5313**	1	CYLINDER HEAD AS	17
	3	1	**388-4707**	1	GASKET-CYLINDER HEAD	
	4	1	**232-1322**	1	PLUG	
	5	1	**276-8134**	14	BOLT-SPECIAL (CYLINDER HEAD)	
	6	1	**277-4302**	2	DOWEL	
	7	1	**295-6661**	1	PLUG	

Y - SEPARATE ILLUSTRATION

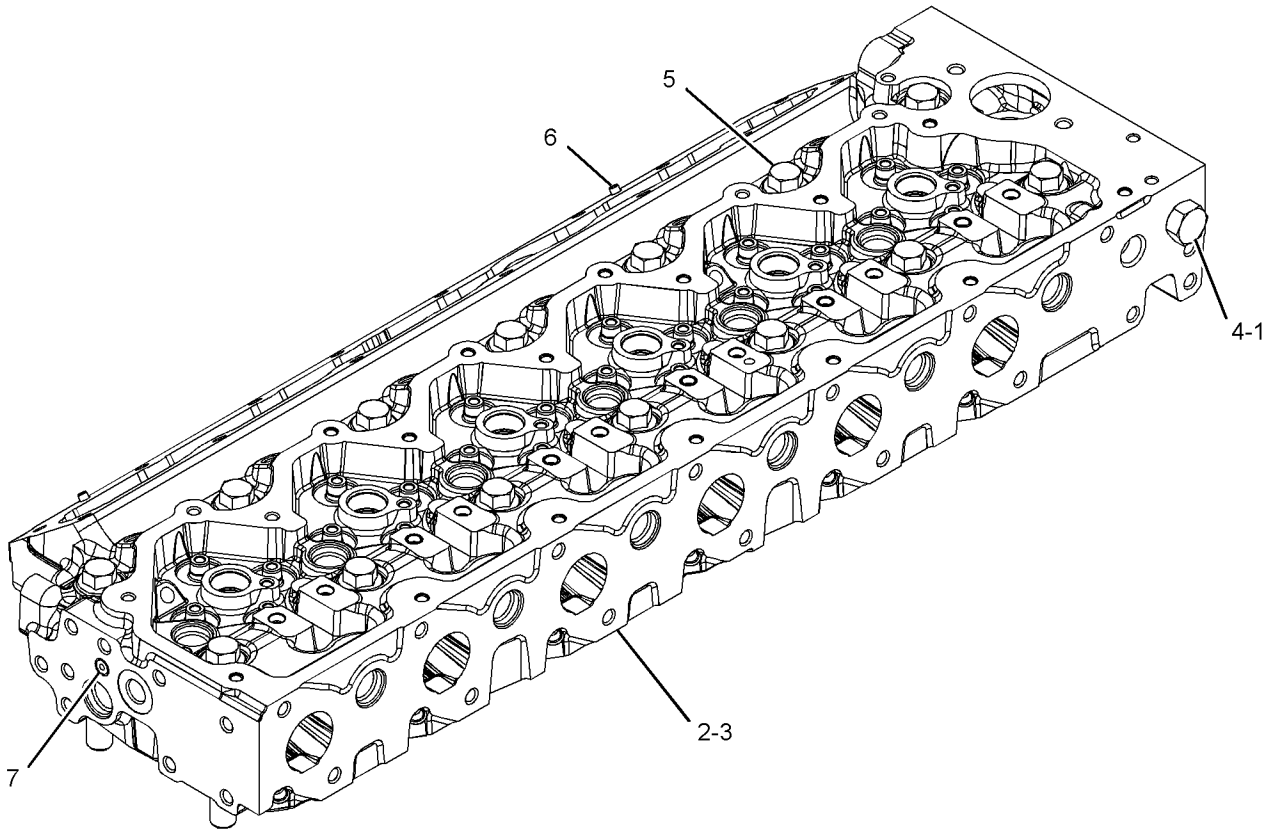

GRAPHIC #1 <END> g03379427

378-8166 DRAIN GP-OIL

S/N: E7A1-UP

PART OF 435-8541 ENGINE AR-PRIMARY

SMCS-1302 **i05892196**

NOTE	REF NO	GRAPHIC REF	PART NUMBER	QTY	PART NAME 1 2 3 4 5 6 (PRODUCT LEVEL)	SEE PAGE
	1	1	**6V-7238**	1	VALVE-SHUTOFF	
	2	1	**3K-0360**	1	SEAL-O-RING	

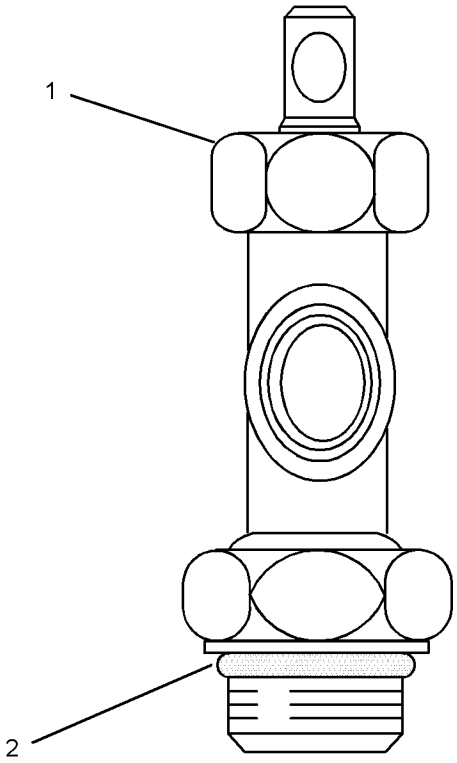

GRAPHIC #1 <END> g03457400

374-7093 DRIVE GP-FAN

S/N: E7A1-UP

PART OF 435-8541 ENGINE AR-PRIMARY

SMCS-1359 **i05892197**

NOTE	REF NO	GRAPHIC REF	PART NUMBER	QTY	PART NAME 1 2 3 4 5 6 (PRODUCT LEVEL)	SEE PAGE
	1	1	**350-8742**	1	BELT-SERPENTINE	
	2	1	**371-8298**	1	BRACKET	
	3	1	**377-9255**	1	PULLEY AS (8-GROOVE)	
M	4	1	**111-0859**	2	BOLT (M10X1.5X35-MM)	

M - METRIC PART

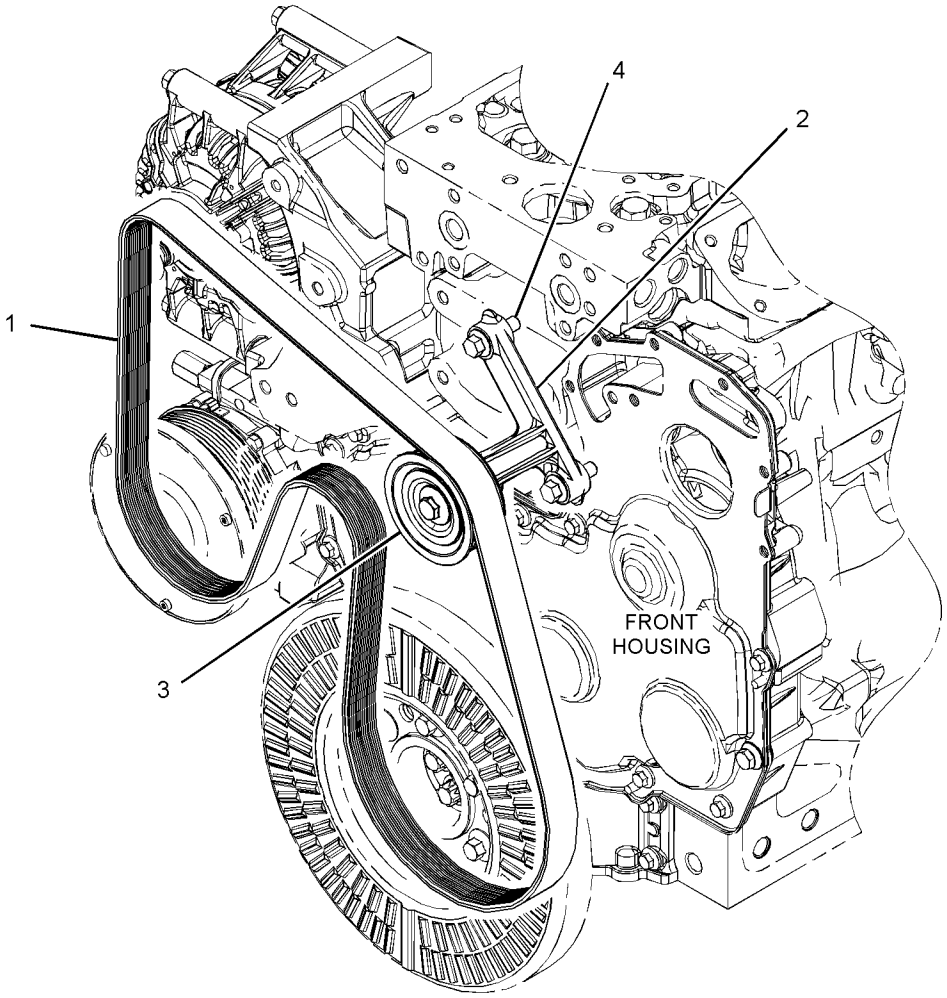

GRAPHIC #1 <END> g03457836

375-0098 FASTENER GP-DAMPER & PULLEY

S/N: E7A1-UP

PART OF 435-8541 ENGINE AR-PRIMARY

SMCS-1205, 7553

i05332368

NOTE	REF NO	GRAPHIC REF	PART NUMBER	QTY	PART NAME 1 2 3 4 5 6 (PRODUCT LEVEL)	SEE PAGE
M	1	1	**274-1935**	6	BOLT (M12X1.75X30-MM)	

M - METRIC PART

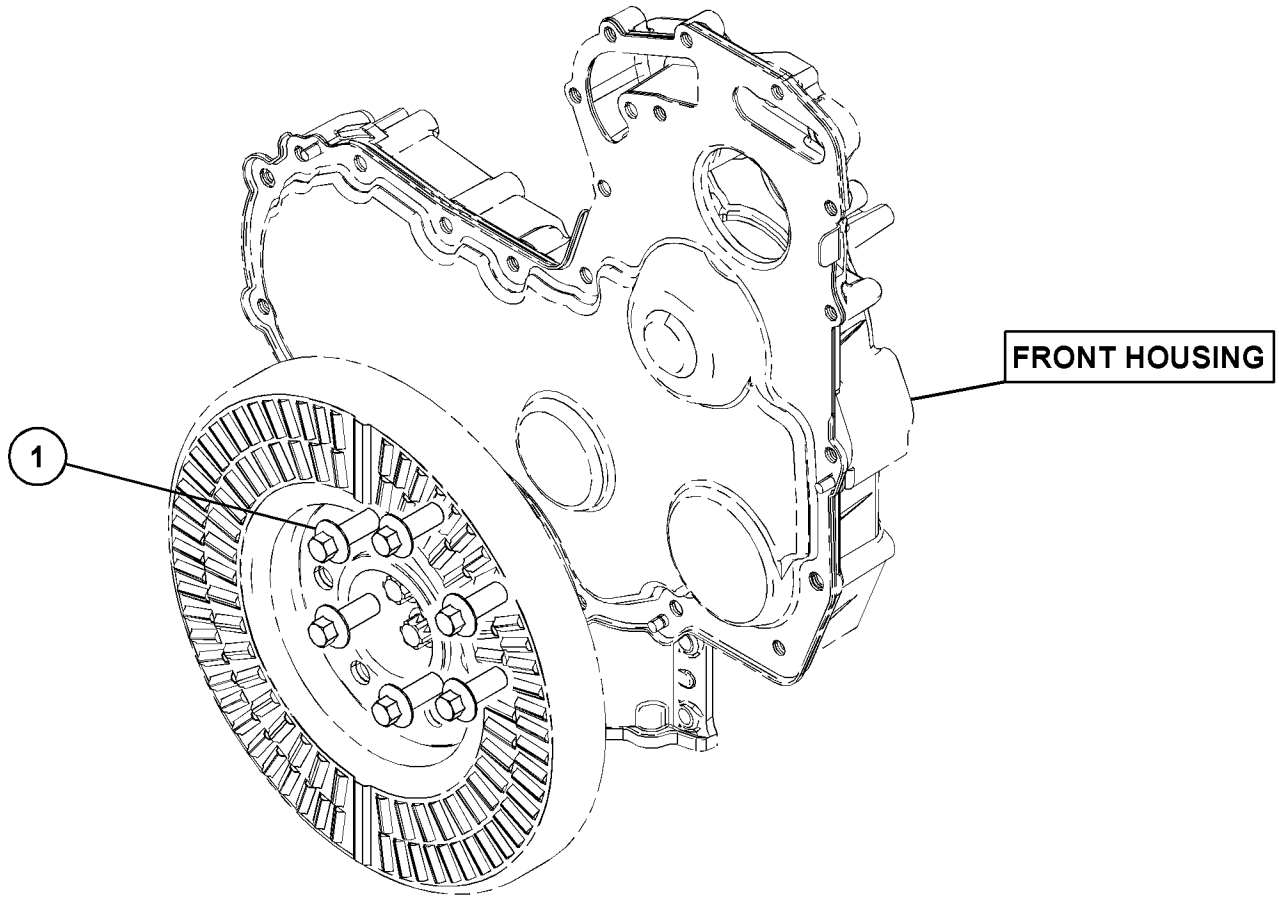

GRAPHIC #1 <END> g03172177

345-9028 FLYWHEEL GP

S/N: E7A1-UP

PART OF 435-8541 ENGINE AR-PRIMARY

SMCS-1156 **i06547100**

NOTE	REF NO	GRAPHIC REF	PART NUMBER	QTY	PART NAME 1 2 3 4 5 6 (PRODUCT LEVEL)	SEE PAGE
	1	1	**0S-1603**	12	BOLT (1/2-20X1.5-IN)	
	2	1	**145-4911**	12	WASHER	
	3	1	**277-0587**	1	FLYWHEEL AS	
	3A	1	**277-0588**	1	GEAR-STARTING MOTOR RING (134-TEETH)	

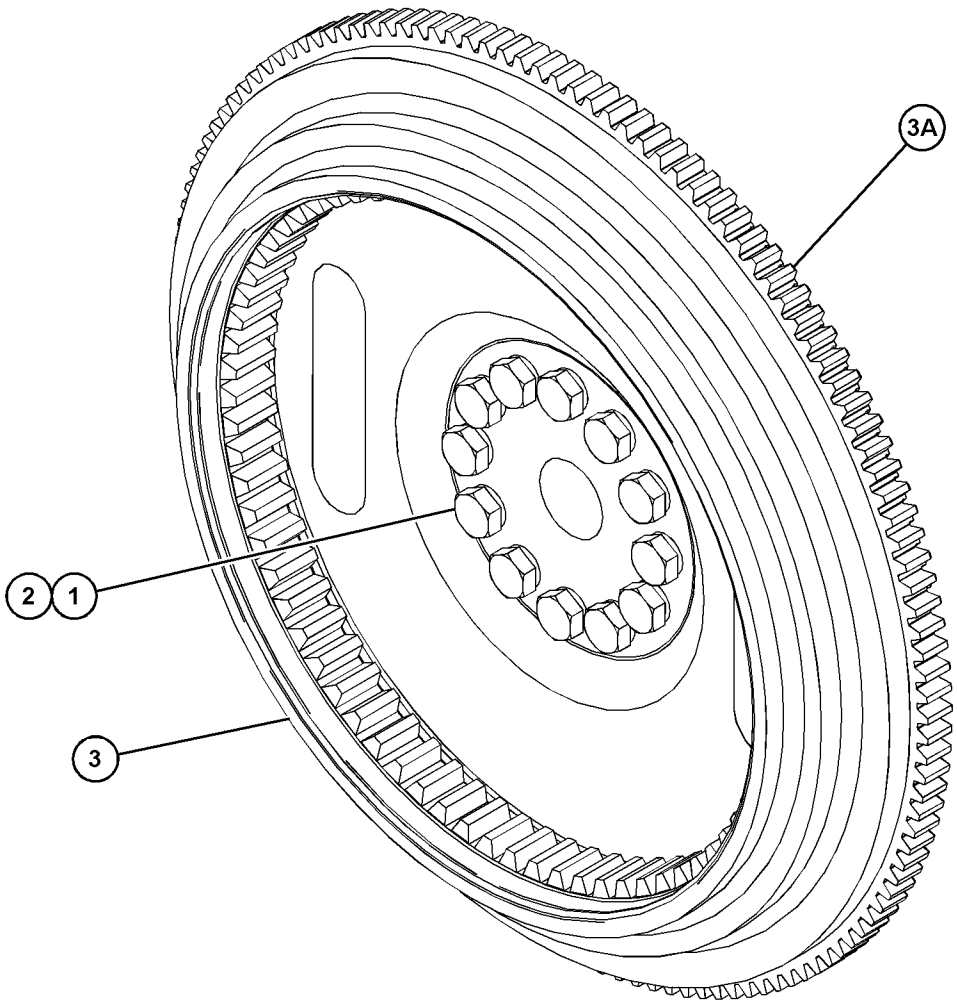

GRAPHIC #1 <END> g06031647

365-0171 GUARD GP-BELT

S/N: TNS1-UP

PART OF 390-0579 INSTALLATION AR-ENGINE

SMCS-7174 **i06759791**

NOTE	REF NO	GRAPHIC REF	PART NUMBER	QTY	PART NAME 1 2 3 4 5 6 (PRODUCT LEVEL)	SEE PAGE
	1	1	**365-0170**	1	BRACKET	
M	2	1	**8T-4171**	2	BOLT (M6X1X12-MM)	
	3	1	**9X-8256**	2	WASHER (6.6X12X2-MM THK)	

M - METRIC PART

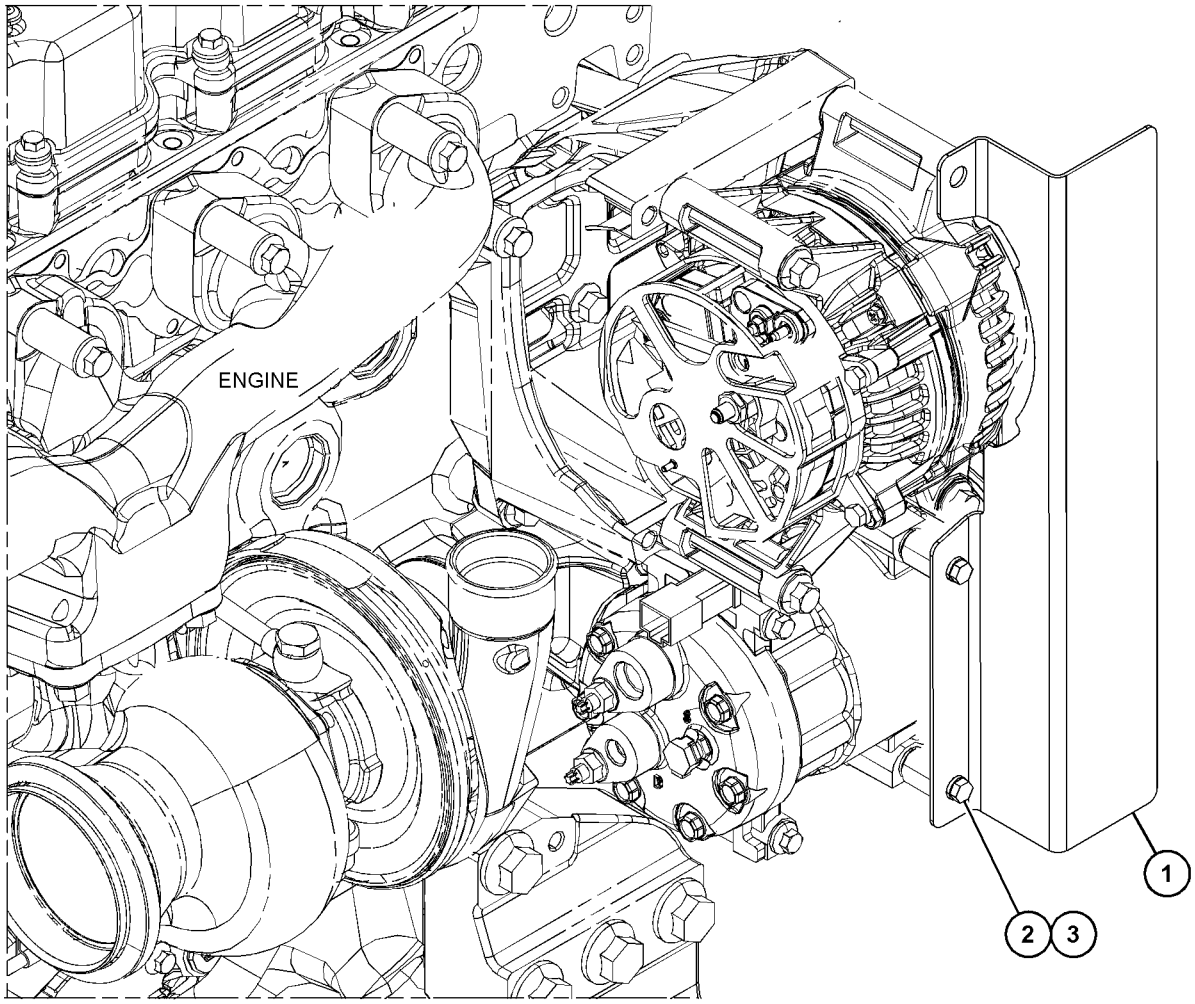

GRAPHIC #1 <END> g06046285

378-0582 HOUSING GP-FLYWHEEL

S/N: E7A1-UP

PART OF 435-8541 ENGINE AR-PRIMARY

SMCS-1157 **i06547022**

NOTE	REF NO	GRAPHIC REF	PART NUMBER	QTY	PART NAME 1 2 3 4 5 6 (PRODUCT LEVEL)	SEE PAGE
	1	1	**277-0116**	1	SEAL-CRANKSHAFT (REAR)	
	2	1	**283-4662**	4	BOLT-FLANGE HEAD	
M	3	1	**283-8301**	4	BOLT (M16X2X60-MM)	
	4	1	**287-8597**	2	DOWEL	
	5	1	**288-6974**	4	BOLT	
	6	1	**354-8322**	2	PLUG	
	7	1	**373-2103**	1	HOUSING-FLYWHEEL	
	8	1	**375-7531**	1	GASKET	
	9	1	**393-4006**	1	GASKET	
	10	1	**1W-6735**	1	COVER-FLYWHEEL HOUSING	
M	11	1	**7E-7606**	4	BOLT (M10X1.5X16-MM)	

M - METRIC PART

378-0582 **HOUSING GP-FLYWHEEL (**contd.**)** **i06547022**

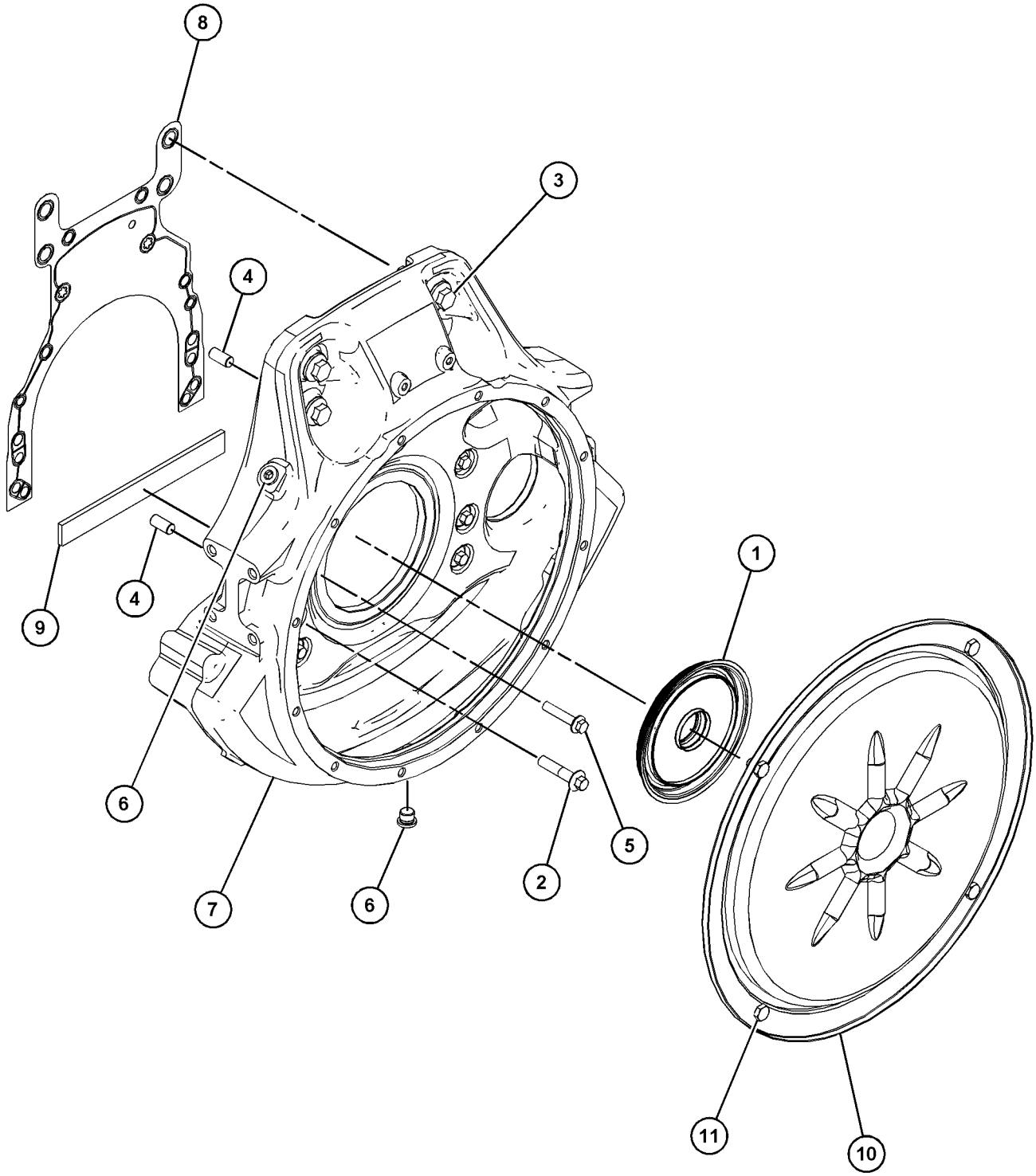

GRAPHIC #1 <END> g06001796

375-4606 HOUSING GP-FRONT

S/N: E7A1-UP
PTO
PART OF 435-8541 ENGINE AR-PRIMARY

SMCS-1151, 1162, 1206 **i06547013**

NOTE	REF NO	GRAPHIC REF	PART NUMBER	QTY	PART NAME 1 2 3 4 5 6 (PRODUCT LEVEL)	SEE PAGE
M	1	1	**102-9941**	2	BOLT (M12X1.75X25-MM)	
	2	1	**277-4223**	1	PLUG	
	3	1	**291-6526**	1	BEARING-NEEDLE	
	4	1	**369-6810**	1	COVER GP	
	4A	1	**357-2646**	1	PLATE-SEAL	
	5	1	**293-9737**	1	GEAR (34-TEETH)	
	6	1	**302-6780**	1	BALL BEARING	
	7	1	**291-6529**	1	CLIP	
	8	1	**291-6528**	1	CLIP	

M - METRIC PART

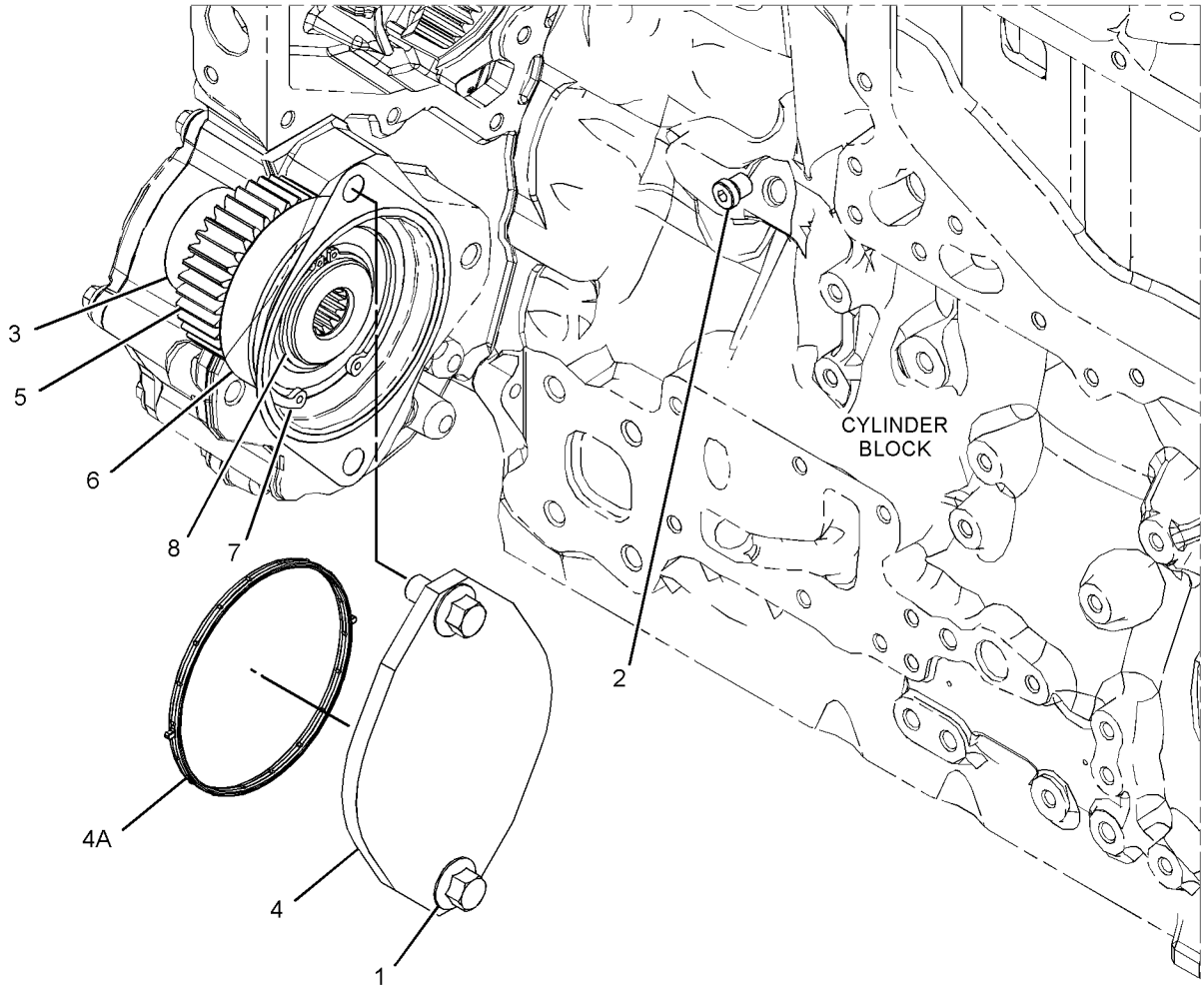

GRAPHIC #1 <END> g06031020

375-4645 HOUSING GP-FRONT

S/N: E7A1-UP
HD LHS PTO 280NM
PART OF 435-8541 ENGINE AR-PRIMARY

SMCS-1151, 1162, 1206

i06810485

NOTE	REF NO	GRAPHIC REF	PART NUMBER	QTY	PART NAME 1 2 3 4 5 6 (PRODUCT LEVEL)	SEE PAGE
M	1	1	**6I-0454**	6	BOLT (M10X1.5X70-MM)	
M	2	1	**7C-4616**	1	BOLT (M12X1.75X45-MM)	
	3	1	**067-6179**	1	DOWEL	
M	4	1	**100-3751**	5	BOLT (M8X1.25X65-MM)	
M	5	1	**101-3895**	2	BOLT (M8X1.25X35-MM)	
	6	1	**133-1011**	1	WASHER	
	7	1	**232-3666**	1	WASHER-THRUST	
	8	1	**277-3012**	1	GASKET-COVER	
	9	1	**277-3013**	1	SEAL	
	10	1	**291-6517**	1	PLATE	
	11	1	**381-9252**	1	GEAR-IDLER (73-TEETH)	
	12	1	**416-1234**	1	CASE-GEAR	
	13	1	**418-7684**	1	GEAR-IDLER (44-TEETH)	
M	14	1	**6I-0217**	6	BOLT (M8X1.25X20-MM)	
M	15	1	**6I-0254**	3	BOLT (M8X1.25X30-MM)	
M	16	1	**6I-0260**	9	BOLT (M8X1.25X25-MM)	
M	17	1	**6I-0645**	4	BOLT (M8X1.25X25-MM)	
	18	1	**425-7103**	1	GEAR (68-TEETH)	
	19	1	**291-6521**	1	TUBE	
	20	1	**291-6522**	2	CLIP	
	21	1	**291-6523**	1	COVER-FRONT	
	22	1	**291-6524**	1	GASKET	

M - METRIC PART

375-4645 **HOUSING GP-FRONT (**contd.**)** **i06810485**

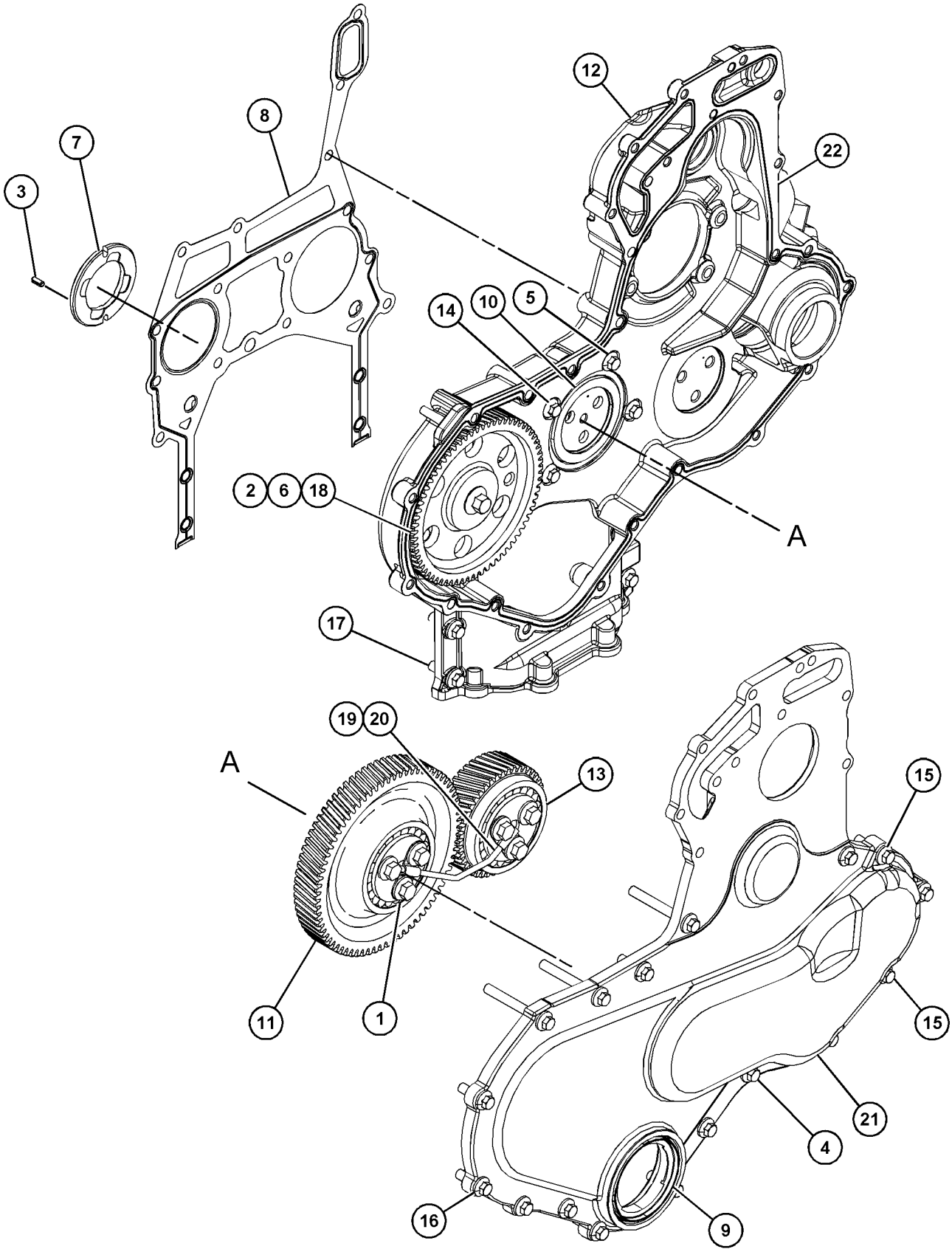

GRAPHIC #1 <END> g03664565

371-2478 JET GP-PISTON COOLING

S/N: E7A1-UP

PART OF 435-8541 ENGINE AR-PRIMARY

SMCS-1331 **i05331889**

NOTE	REF NO	GRAPHIC REF	PART NUMBER	QTY	PART NAME 1 2 3 4 5 6 (PRODUCT LEVEL)	SEE PAGE
M	1	1	**100-4841**	6	BOLT (M6X1X10-MM)	
	2	1	**329-3796**	6	TUBE AS-OIL JET	

M - METRIC PART

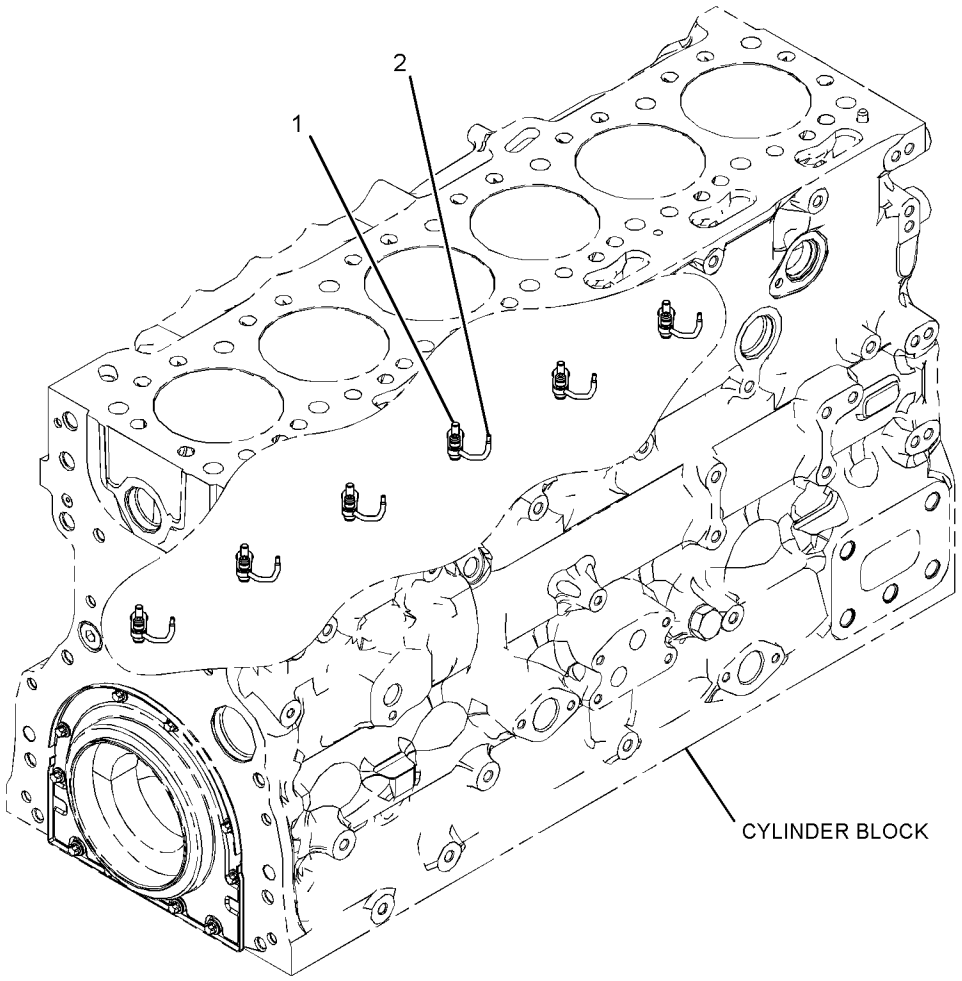

GRAPHIC #1 <END> g03378569

371-2735 LIFTING GP-ENGINE

S/N: E7A1-UP

PART OF 435-8541 ENGINE AR-PRIMARY

SMCS-1122 **i05331884**

NOTE	REF NO	GRAPHIC REF	PART NUMBER	QTY	PART NAME 1 2 3 4 5 6 (PRODUCT LEVEL)	SEE PAGE
	1	1	**279-9651**	1	PLATE-LIFTING	
	2	1	**279-9652**	1	PLATE-LIFTING	
M	3	1	**6I-0654**	4	BOLT (M10X1.5X25-MM)	

M - METRIC PART

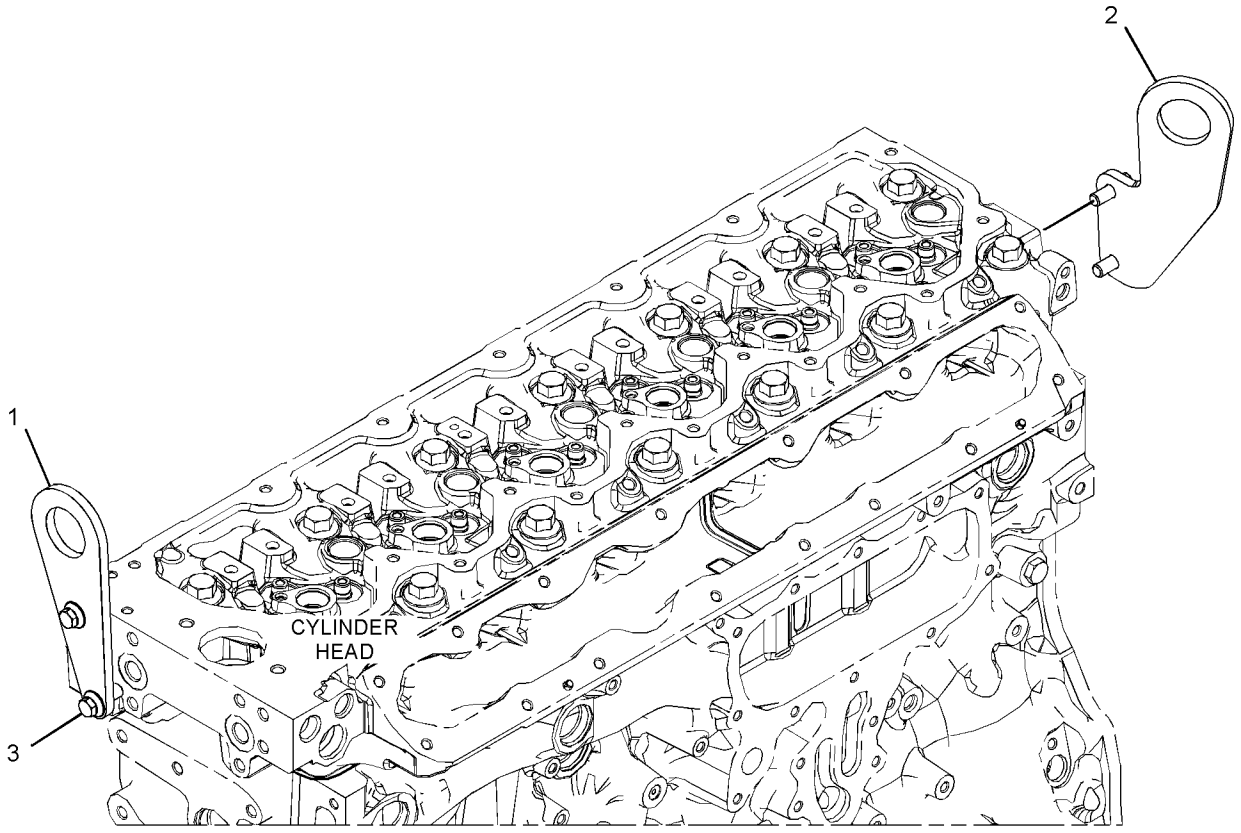

GRAPHIC #1 <END> g03098956

346-1510 MOUNTING GP-ENGINE

S/N: E7A1-UP

PART OF 435-8541 ENGINE AR-PRIMARY

SMCS-1152, 1153, 1154

i05892206

NOTE	REF NO	GRAPHIC REF	PART NUMBER	QTY	PART NAME 1 2 3 4 5 6 (PRODUCT LEVEL)	SEE PAGE
M	1	1	**283-8301**	2	BOLT (M16X2X60-MM)	
M	2	1	**283-8302**	6	BOLT (M16X2X80-MM)	
	3	1	**277-4490**	2	BRACKET-MOUNTING	

M - METRIC PART

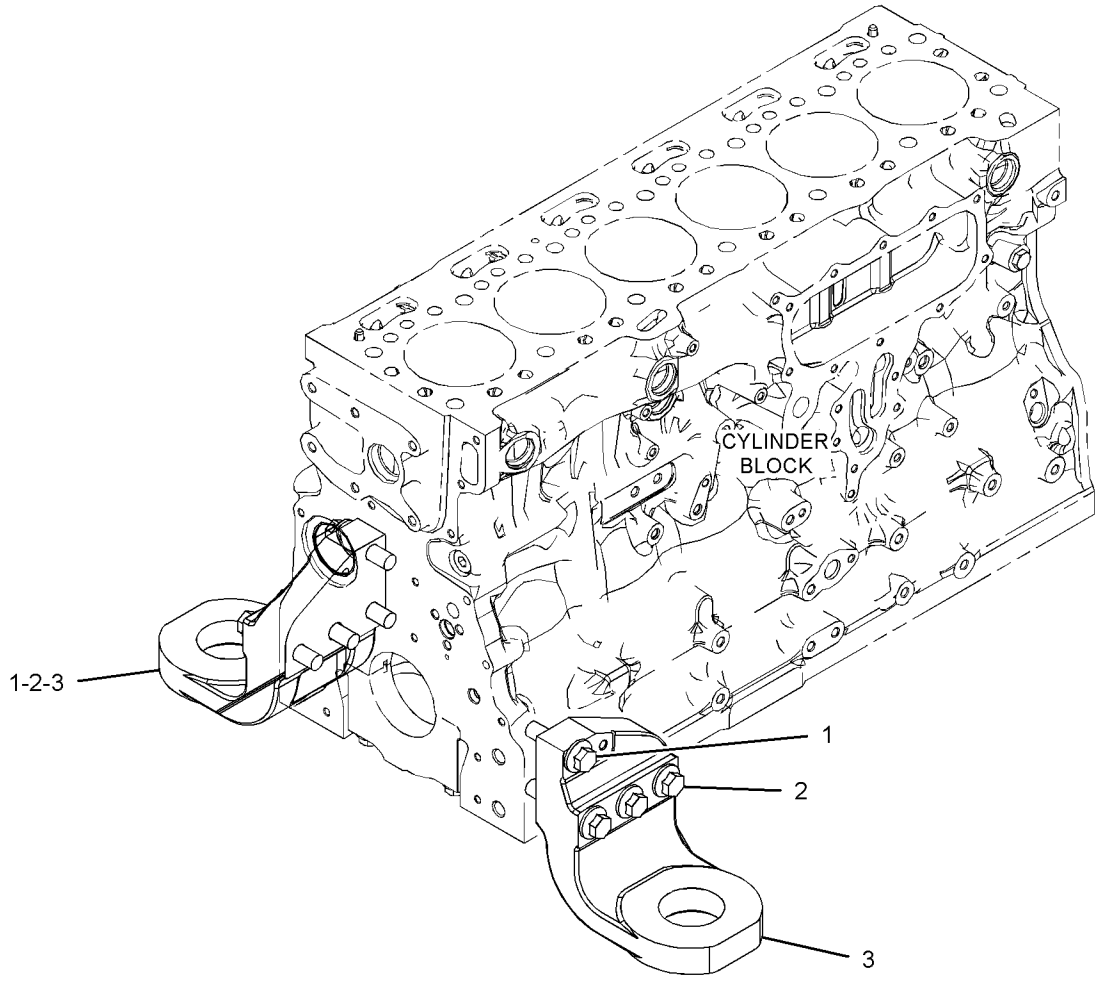

GRAPHIC #1 <END> g03507641

365-0132 MOUNTING GP-ENGINE & XMSN–AIR CLEANER

S/N: TNS1-UP

PART OF 390-0579 INSTALLATION AR-ENGINE

SMCS-1152, 1154, 3082 **i05786157**

NOTE	REF NO	GRAPHIC REF	PART NUMBER	QTY	PART NAME 1 2 3 4 5 6 (PRODUCT LEVEL)	SEE PAGE
	1	1	**7X-2622**	4	WASHER (22X115X10-MM THK)	
	2	1	**137-6617**	8	MOUNT AS	
	3	1	**137-6627**	4	SLEEVE	
	4	1	**365-0077**	2	SUPPORT	
M	5	1	**8T-0656**	4	BOLT (M20X2.5X150-MM)	
	6	1	**8T-4123**	4	WASHER (3.62X5.75X0.375-MM THK)	
M	7	1	**8T-4193**	8	BOLT (M16X2X50-MM)	
M	8	1	**8T-4195**	12	BOLT (M10X1.5X30-MM)	
	9	1	**8T-4896**	12	WASHER-HARD (10.2X18.5X2.5-MM THK)	
	10	1	**9X-8257**	8	WASHER (17.5X30X3.5-MM THK)	

M - METRIC PART

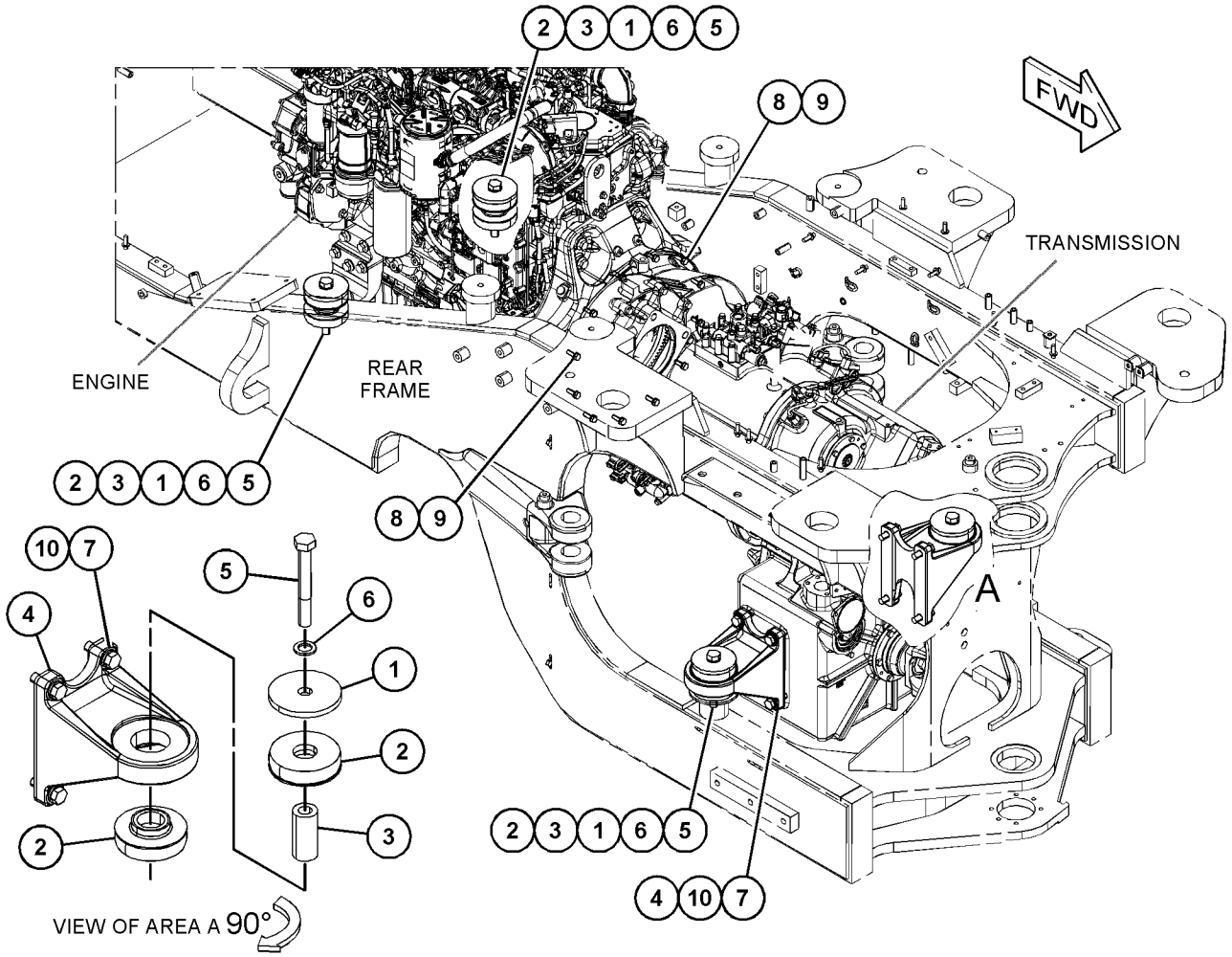

GRAPHIC #1 <END> g03677388

378-0595 PAN GP-OIL

S/N: E7A1-UP

PART OF 435-8541 ENGINE AR-PRIMARY

SMCS-1302 **i06547092**

NOTE	REF NO	GRAPHIC REF	PART NUMBER	QTY	PART NAME 1 2 3 4 5 6 (PRODUCT LEVEL)	SEE PAGE
M	1	1	**6I-0363**	2	BOLT (M6X1X20-MM)	
	2	1	**230-8094**	1	BRIDGE	
	3	1	**348-8607**	1	TUBE AS	
	4	1	**351-4749**	1	GASKET-OIL PAN	
	5	1	**417-0322**	1	PAN GP-OIL	
	5A	1	**8L-2786**	2	SEAL-O-RING	
	5B	1	**9S-4185**	2	PLUG (3/4-16-THD)	
M	6	1	**6I-0217**	28	BOLT (M8X1.25X20-MM)	
M	7	1	**6I-0260**	2	BOLT (M8X1.25X25-MM)	
M	8	1	**6I-0572**	2	BOLT (M8X1.25X20-MM)	
	9	1	**6I-4681**	1	GASKET	

M - METRIC PART

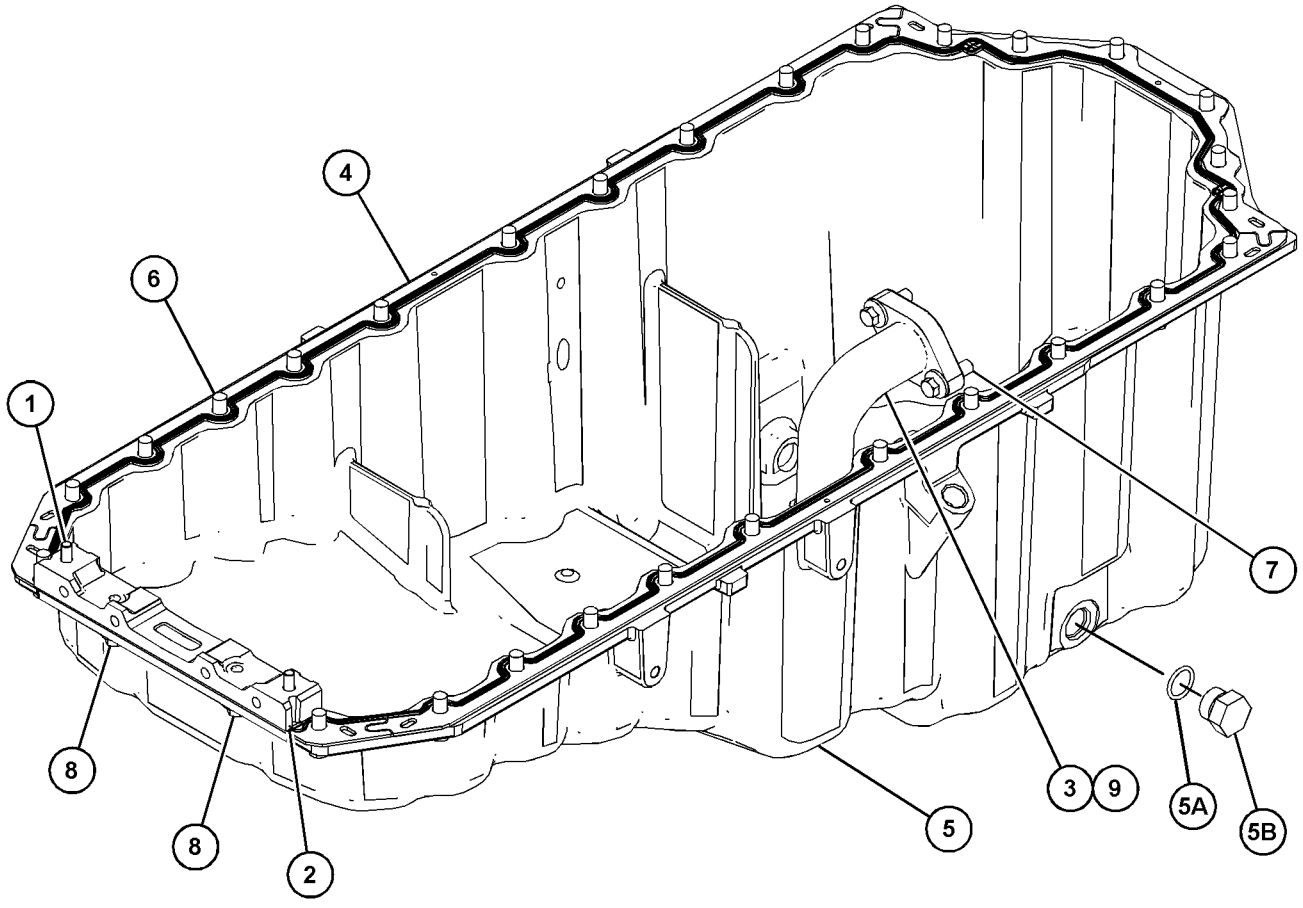

GRAPHIC #1 <END> g06031593

369-7304 PISTON & ROD GP

S/N: E7A1-UP

PART OF 435-8541 ENGINE AR-PRIMARY

SMCS-1225 **i06810520**

NOTE	REF NO	GRAPHIC REF	PART NUMBER	QTY	PART NAME 1 2 3 4 5 6 (PRODUCT LEVEL)	SEE PAGE
	1	1	**331-0290**	6	CONNECTING ROD GP	
LP	2	1	**369-3186**	6	PISTON GP	
J	3	1	*317-5482*	6	BEARING	
J	4	1	*470-8038*	6	BEARING	
P	5	1	**124-3536**	12	RING-RETAINING	
					AVAILABLE REPAIR KIT(S):	
J			**360-1564**	1	KIT-BEARING (CONNECTING ROD) (PISTON)	
L			**276-7476**	1	KIT-PISTON RING (STANDARD)	
P			**443-9475**	1	KIT-PISTON (STANDARD)	

J - KIT MARKED J SERVICES PART(S) MARKED J
L - KIT MARKED L SERVICES PART(S) MARKED L
P - KIT MARKED P SERVICES PART(S) MARKED P

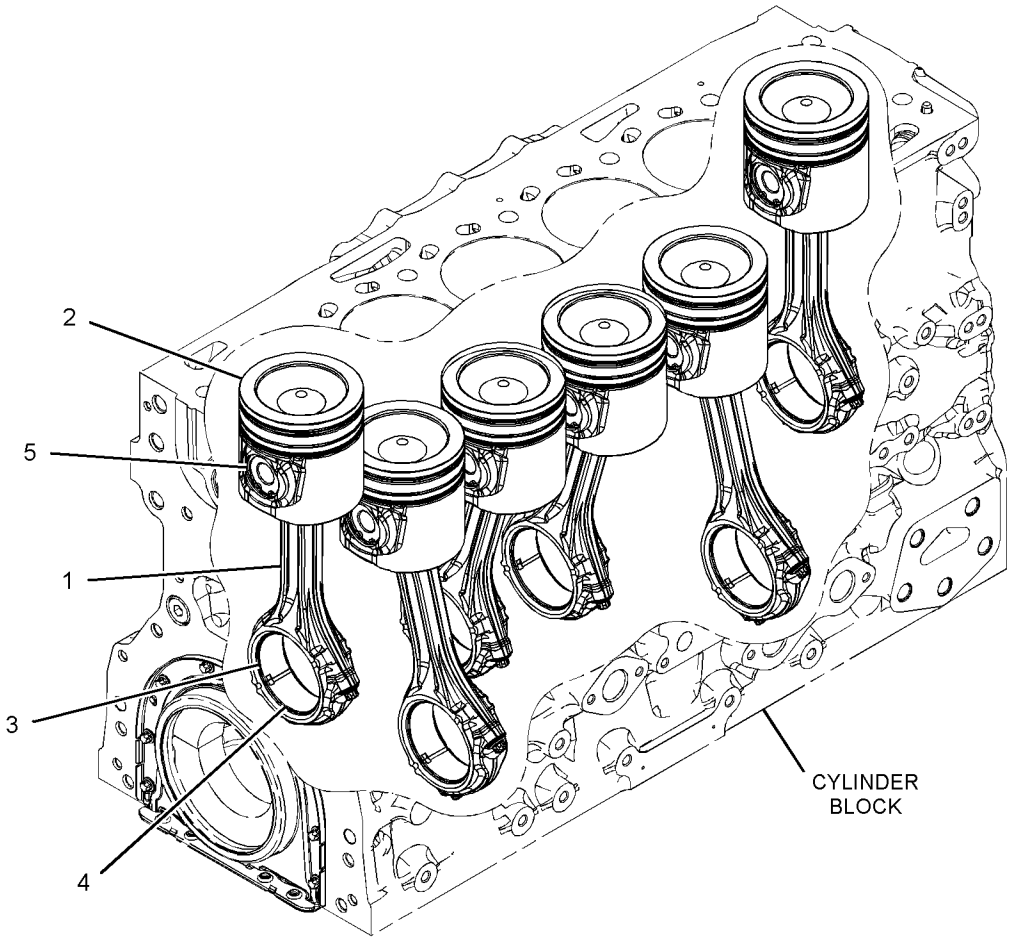

GRAPHIC #1 <END> g03532656

371-2554 PULLEY GP-CRANKSHAFT

S/N: E7A1-UP

PART OF 435-8541 ENGINE AR-PRIMARY

SMCS-1205 **i05332376**

NOTE	REF NO	GRAPHIC REF	PART NUMBER	QTY	PART NAME 1 2 3 4 5 6 (PRODUCT LEVEL)	SEE PAGE
	1	1	**274-1931**	1	PULLEY (8-GROOVE)	
	2	1	**342-6502**	1	ADAPTER	
M	3	1	**342-6510**	3	BOLT-TORX (M14X1.5X70-MM)	
	4	1	**351-1724**	1	DAMPER	

M - METRIC PART

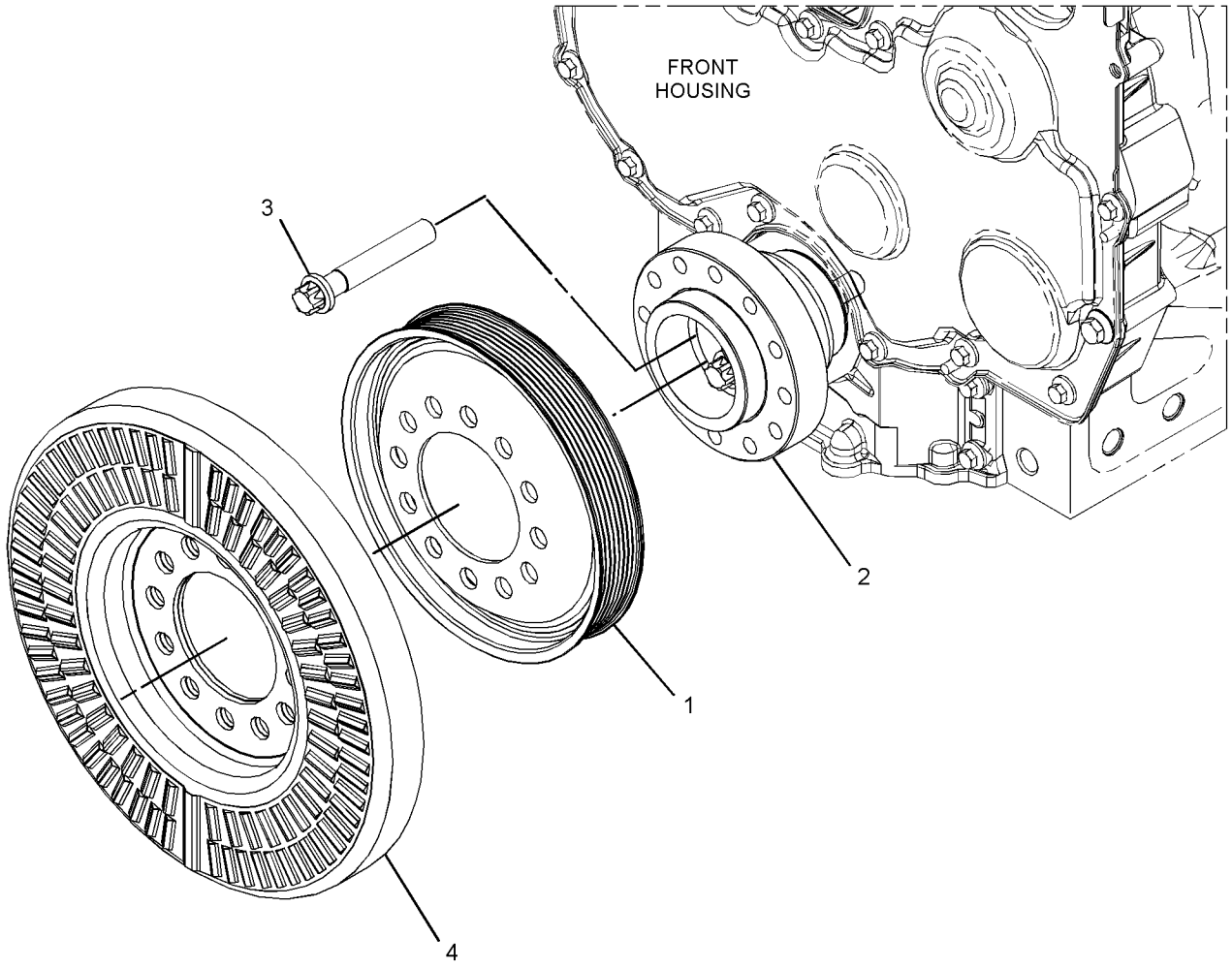

GRAPHIC #1 <END> g03110077

280-1911 ROCKER ARM GP

S/N: E7A1-UP

PART OF 371-2480 ROCKER ARM GP

SMCS-1123 **i02752423**

NOTE	REF NO	GRAPHIC REF	PART NUMBER	QTY	PART NAME 1 2 3 4 5 6 (PRODUCT LEVEL)	SEE PAGE
	1	1	**276-9201**	1	CLIP	
	2	1	**276-9206**	5	SPRING-SHAFT	
	3	1	**276-9207**	1	SPRING-SHAFT	
	4	1	**277-5307**	1	SHAFT AS-ROCKER ARM	
	4A	1	**276-9200**	1	PLUG-SHAFT END	
	5	1	**278-5111**	6	ROCKER ARM AS	
					(EACH INCLUDES)	
	5A	1	**276-9230**	1	NUT	
	5B	1	**278-5113**	1	SCREW-ADJUSTING (TORX)	
	6	1	**278-5112**	6	ROCKER ARM AS	
					(EACH INCLUDES)	
	6A	1	**276-9230**	1	NUT	
	6B	1	**278-5113**	1	SCREW-ADJUSTING (TORX)	
	7	1	**280-1912**	6	BRACKET	
	8	1	**280-1913**	6	RETAINER	
	9	1	**280-1914**	12	BOLT (M8X1.25X55-MM)	

280-1911 **ROCKER ARM GP (**contd.**)** **i02752423**

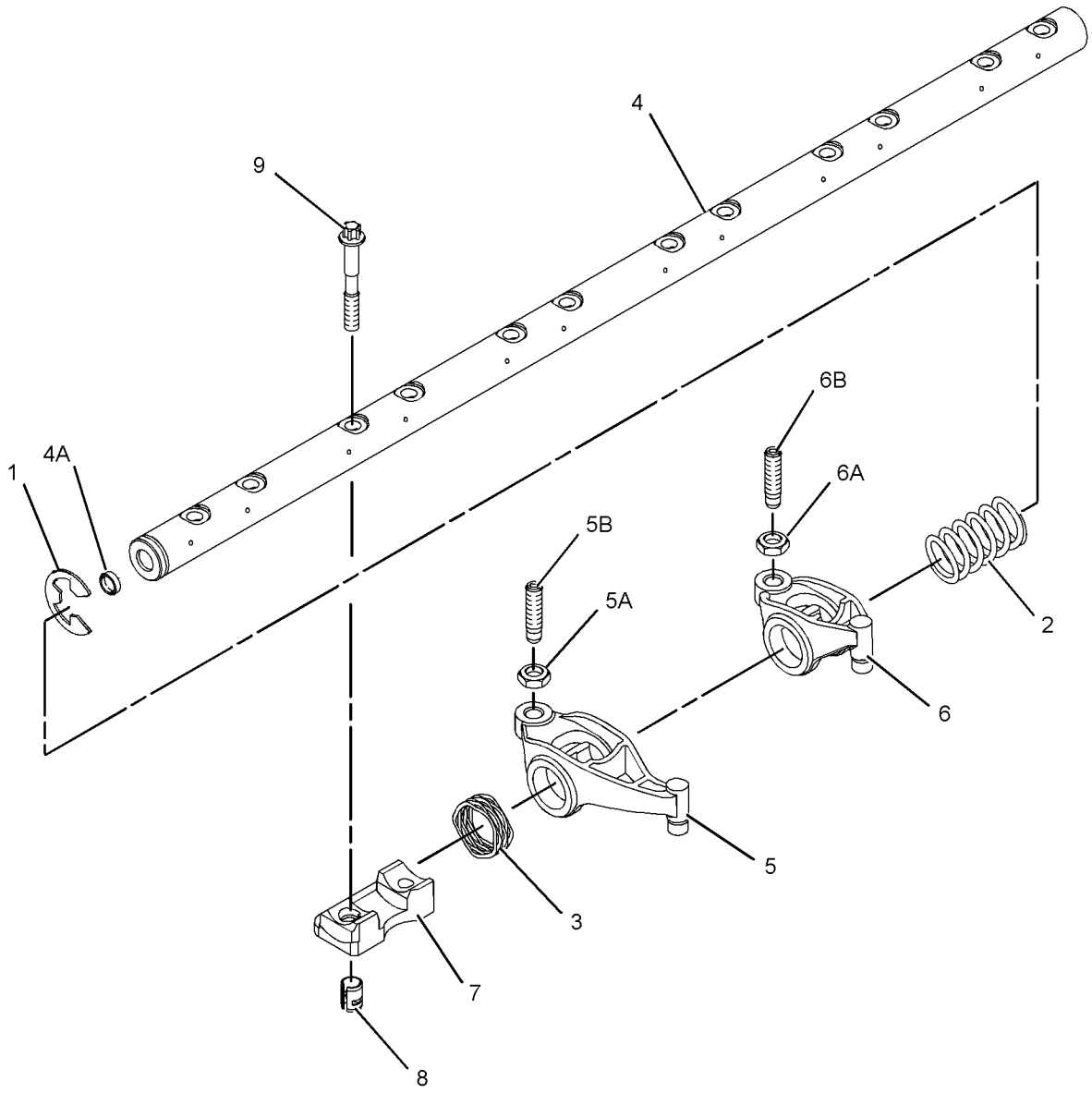

GRAPHIC #1 <END> g01235750

371-2480 ROCKER ARM GP

S/N: E7A1-UP

PART OF 435-8541 ENGINE AR-PRIMARY

SMCS-1123 **i05773127**

NOTE	REF NO	GRAPHIC REF	PART NUMBER	QTY	PART NAME 1 2 3 4 5 6 (PRODUCT LEVEL)	SEE PAGE
	1	1	**436-0521**	24	SPRING-VALVE	
	2	1	**346-4709**	12	BRIDGE GP-VALVE	
	3	1	**276-8123**	48	RETAINER	
	4	1	**276-8133**	24	CAP-VALVE	
Y	5	1	**280-1911**	1	ROCKER ARM GP	36
	6	1	**299-5511**	24	SEAL-VALVE STEM	
	7	1	**309-6678**	12	VALVE-INLET	
	8	1	**339-9637**	12	VALVE-EXHAUST	

Y - SEPARATE ILLUSTRATION

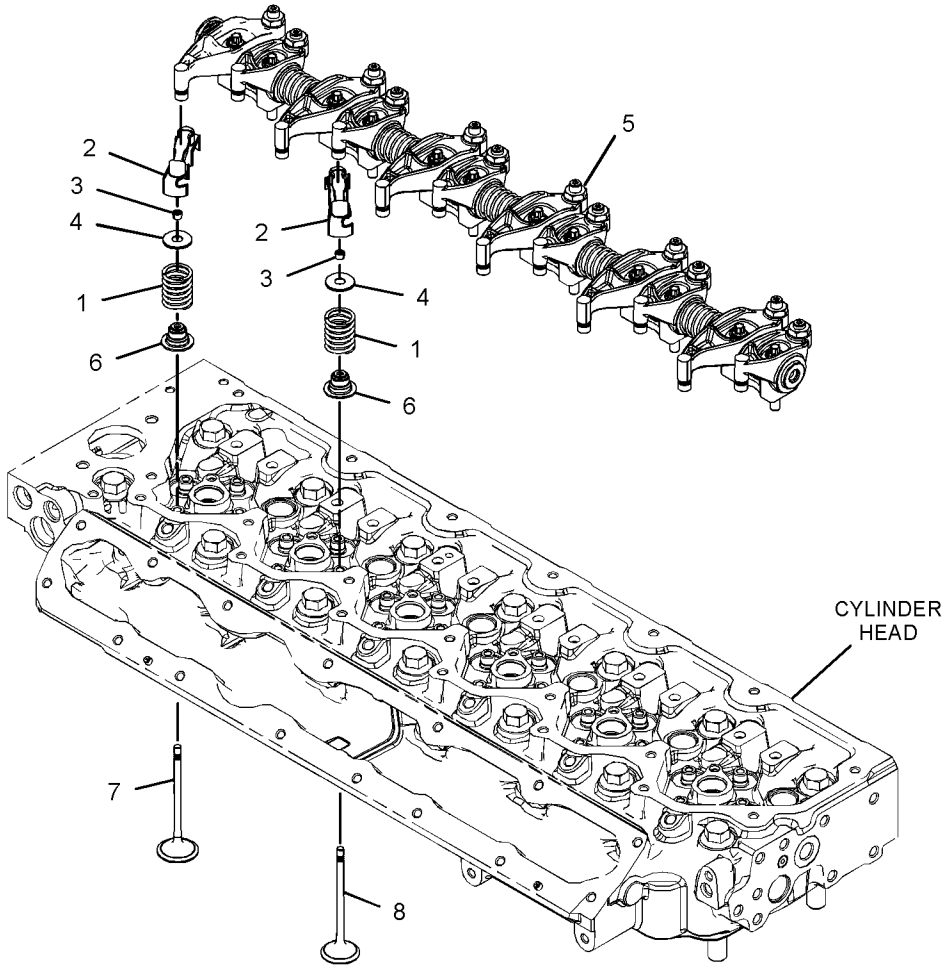

GRAPHIC #1 <END> g03103178

425-0196 BREATHER GP

S/N: E7A1-UP

PART OF 435-8541 ENGINE AR-PRIMARY

SMCS-1317 **i05727294**

NOTE	REF NO	GRAPHIC REF	PART NUMBER	QTY	PART NAME 1 2 3 4 5 6 (PRODUCT LEVEL)	SEE PAGE
M	1	1	**124-3815**	3	BOLT (M8X1.25X16-MM)	
	2	1	**5V-9155**	1	CLAMP-HOSE	
	3	1	**9M-7958**	1	CLAMP-HOSE	
	4	1	**363-5813**	1	CLAMP-HOSE	
	5	1	**316-9351**	1	MOUNTING-CABLE TIE	
	6	1	**424-0566**	1	HOSE	
	7	1	**424-3214**	1	BASE AS-OIL FILTER	
	7A	1	**286-0015**	1	STEM	
	8	1	**428-7042**	1	BRACKET	
	9	1	**430-6686**	1	BRACKET-FILTER	
	10	1	**433-2039**	1	HOSE	
M	11	1	**195-2186**	3	BOLT-SOCKET HEAD	
M	12	1	**6I-0260**	2	BOLT (M8X1.25X25-MM)	

M - METRIC PART

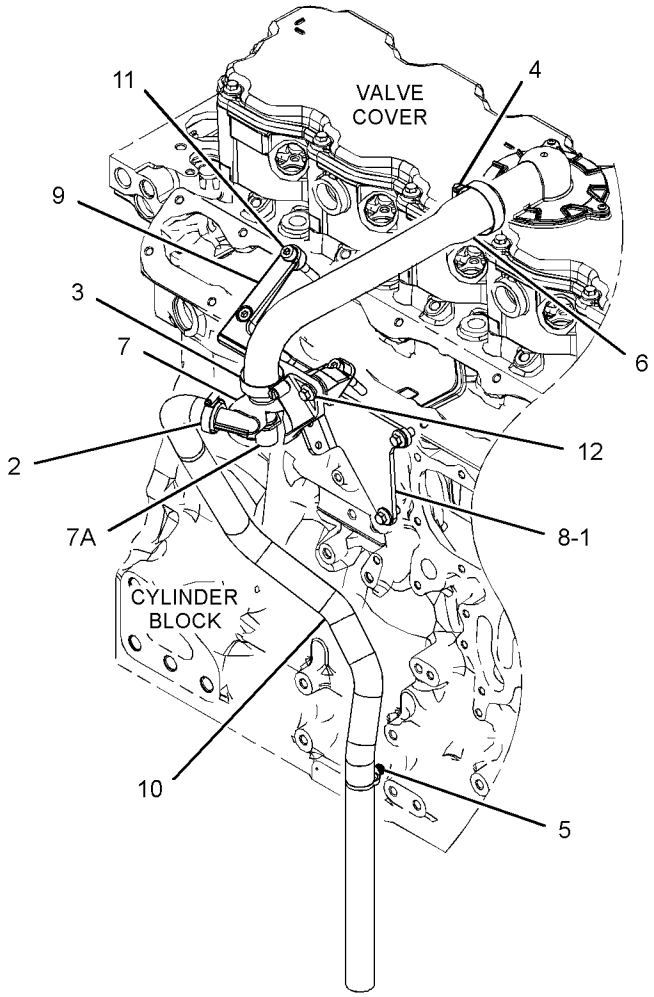

GRAPHIC #1 <END> g03653579

486-6463 COVER GP-OIL FILLER

S/N: E7A1-UP

PART OF 435-8541 ENGINE AR-PRIMARY

SMCS-1316 **i06547143**

NOTE	REF NO	GRAPHIC REF	PART NUMBER	QTY	PART NAME 1 2 3 4 5 6 (PRODUCT LEVEL)	SEE PAGE
	1	1	*418-8553*	1	COVER AS	
	1A	1	**306-2337**	1	SEAL-O-RING	
M	2	1	**6I-0217**	2	BOLT (M8X1.25X20-MM)	
M	3	1	**6I-0260**	2	BOLT (M8X1.25X25-MM)	
	4	1	**277-1974**	1	PLATE AS	
	4A	1	**277-1975**	1	SEAL-O-RING	

M - METRIC PART

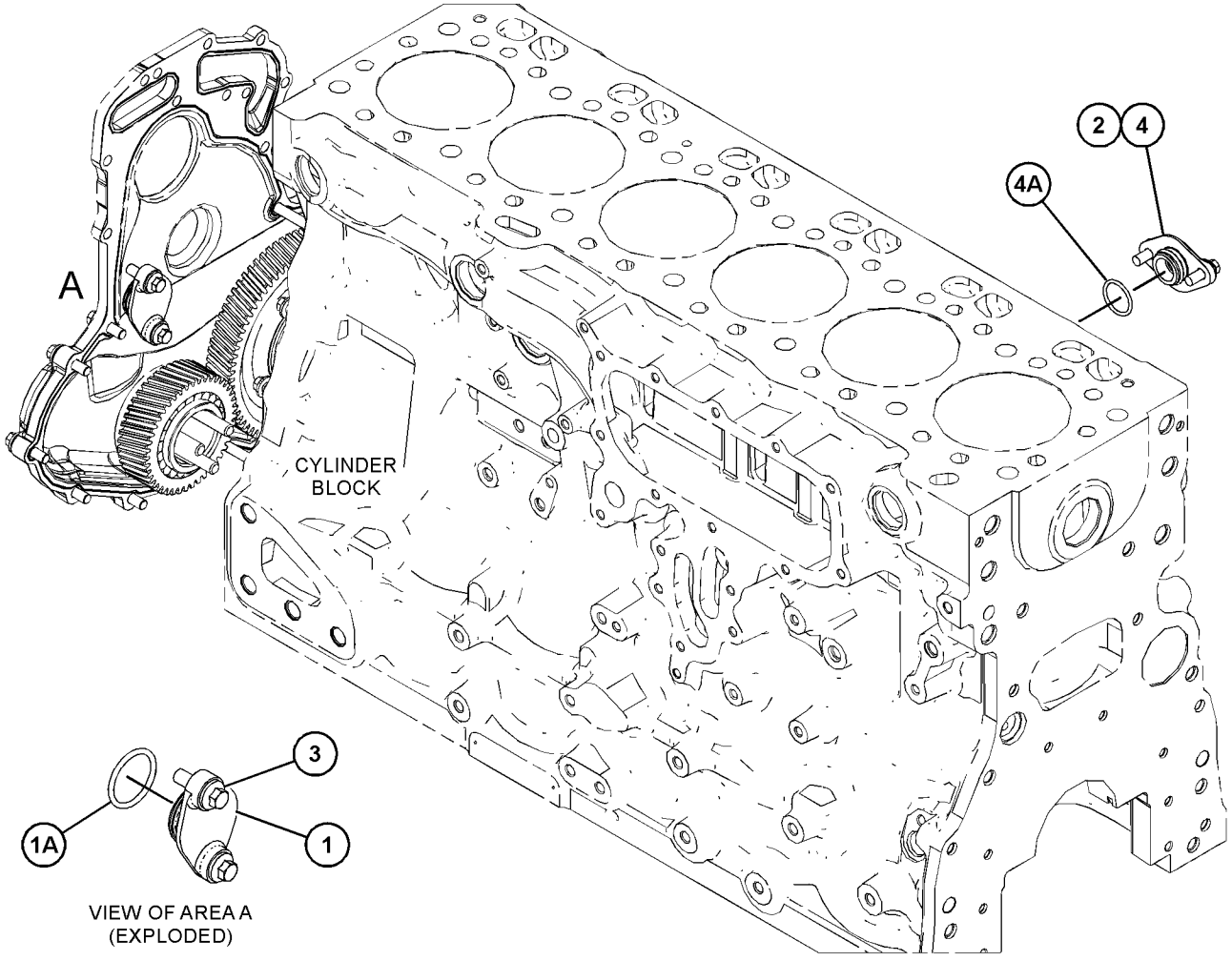

GRAPHIC #1 <END> g06031667

425-0197 FILLER GP-ENGINE OIL

S/N: E7A1-UP

PART OF 435-8541 ENGINE AR-PRIMARY

SMCS-1316 **i05331705**

NOTE	REF NO	GRAPHIC REF	PART NUMBER	QTY	PART NAME 1 2 3 4 5 6 (PRODUCT LEVEL)	SEE PAGE
	1	1	**273-5711**	1	FILTER-FUMES DISPOSAL	

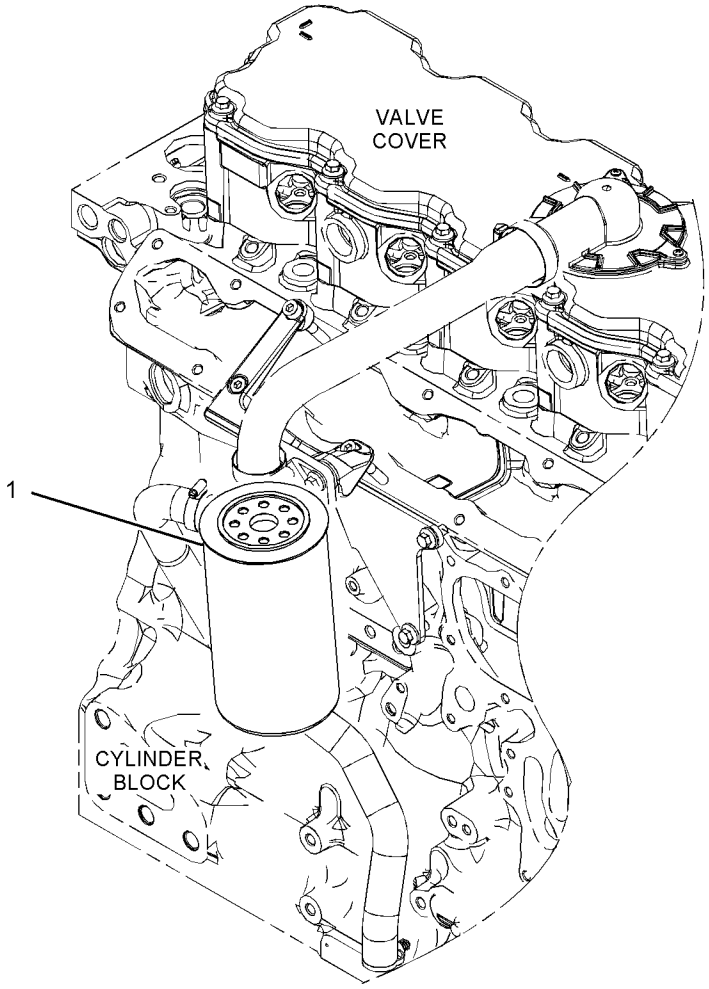

GRAPHIC #1 <END> g03380365

346-0220 FILTER GP-ENGINE OIL

S/N: E7A1-UP

PART OF 435-8541 ENGINE AR-PRIMARY

SMCS-1306, 1308

i05882505

NOTE	REF NO	GRAPHIC REF	PART NUMBER	QTY	PART NAME 1 2 3 4 5 6 (PRODUCT LEVEL)	SEE PAGE
	1	1	**462-1171**	1	FILTER-ENGINE OIL	

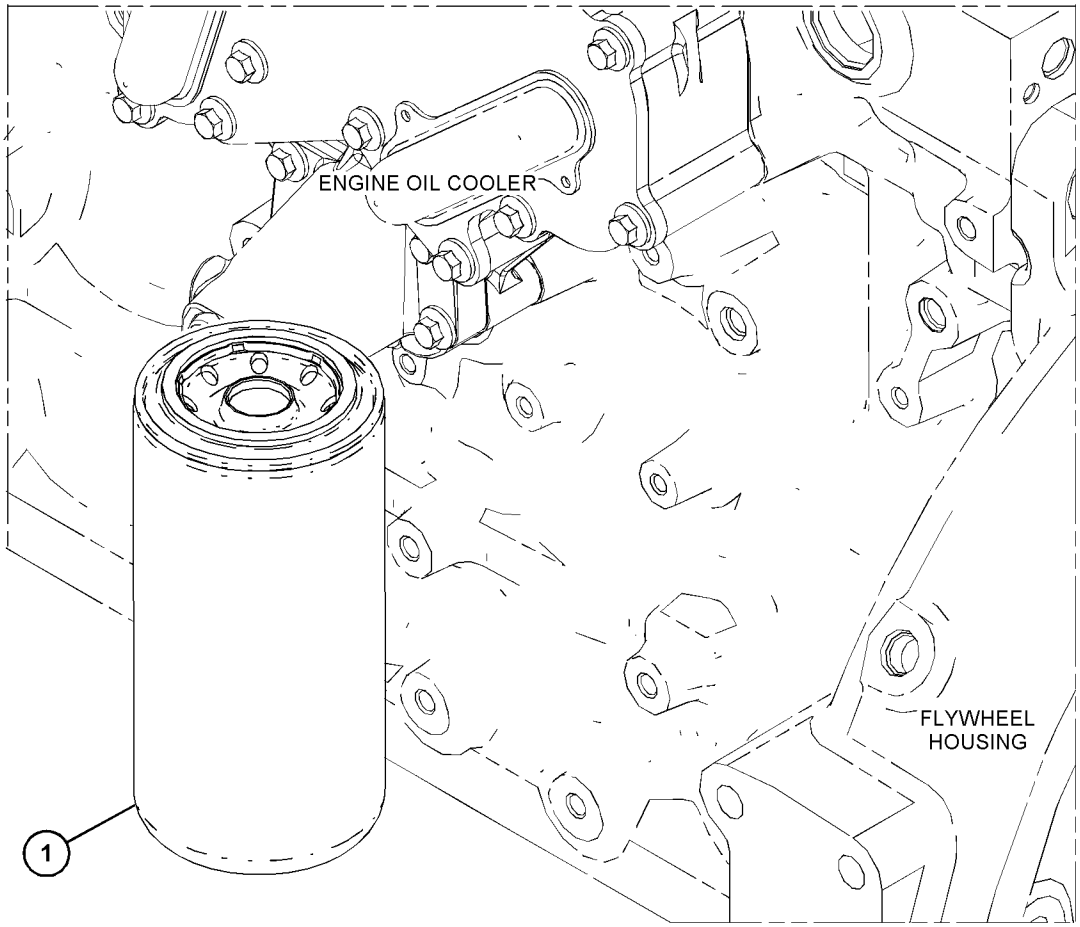

GRAPHIC #1 <END> g03710180

365-0084 GAUGE GP-OIL LEVEL (DIPSTICK)

S/N: TNS1-UP

PART OF 390-0579 INSTALLATION AR-ENGINE

SMCS-1326 **i06759753**

NOTE	REF NO	GRAPHIC REF	PART NUMBER	QTY	PART NAME 1 2 3 4 5 6 (PRODUCT LEVEL)	SEE PAGE
	1	1	**365-0099**	1	TUBE AS	
	2	1	**365-0151**	1	FILLER AS-OIL	
		1	**385-1450**	1	CAP AS-ENGINE OIL FILLER	
		1	**5P-7958**	2	SLEEVE-CABLE SPLICE	
		1	**293-7589**	1	SEAL-O-RING	
	3	1	**365-0163**	1	BRACKET AS	
	4	1	**365-0182**	1	HOSE	
	5	1	*372-5156*	1	GAUGE GP-OIL LEVEL (DIPSTICK)	
		1	**228-7089**	2	SEAL-O-RING	
		1	**372-5157**	1	GAUGE AS-OIL LEVEL (DIPSTICK)	
		1	**372-5158**	1	TUBE AS	
	6	1	**067-2551**	1	CLIP	
	7	1	**211-8073**	2	CAP-PROTECTION	
	8	1	**252-8073**	1	SEAL-O-RING	
	9	1	**347-4163**	2	CLAMP-BAND	
	10	1	**7B-1597**	1	CLIP	
M	11	1	**7X-2552**	2	BOLT (M16X2X30-MM)	
	12	1	**7X-7729**	1	WASHER (11X25X3-MM THK)	
	13	1	**8T-4121**	2	WASHER-HARD (11X21X2.5-MM THK)	
	14	1	**8T-4122**	2	WASHER-HARD (17X32X3.5-MM THK)	
M	15	1	**8T-4136**	2	BOLT (M10X1.5X25-MM)	
M	16	1	**8T-4195**	1	BOLT (M10X1.5X30-MM)	
	17	1	**8T-4224**	2	WASHER-HARD (8.8X16X2-MM THK)	
M	18	1	**8T-7547**	2	BOLT (M8X1.25X30-MM)	

M - METRIC PART

365-0084 **GAUGE GP-OIL LEVEL (DIPSTICK) (**contd.**)** **i06759753**

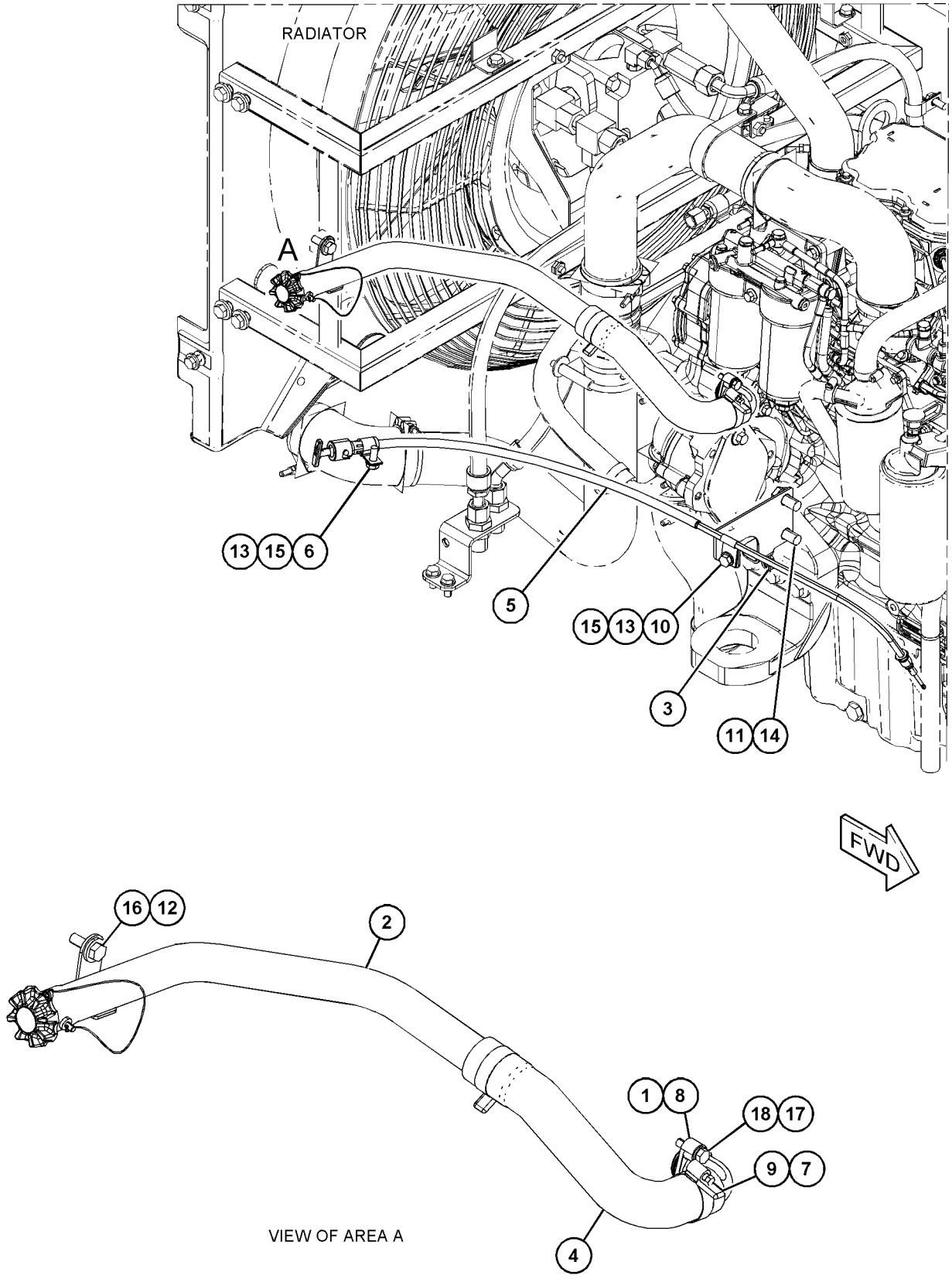

GRAPHIC #1 <END> g06050615

445-9256 GAUGE GP-OIL LEVEL (DIPSTICK)

S/N: E7A1-UP

PART OF 435-8541 ENGINE AR-PRIMARY

SMCS-1326 **i06547113**

NOTE	REF NO	GRAPHIC REF	PART NUMBER	QTY	PART NAME 1 2 3 4 5 6 (PRODUCT LEVEL)	SEE PAGE
	1	1	**6I-1497**	1	SEAL	
	2	1	**353-2638**	1	GAUGE AS-OIL LEVEL (DIPSTICK)	
		1	**228-7089**	1	SEAL-O-RING	
		1	**275-9891**	2	SEAL-O-RING	
	3	1	**354-8322**	1	PLUG	

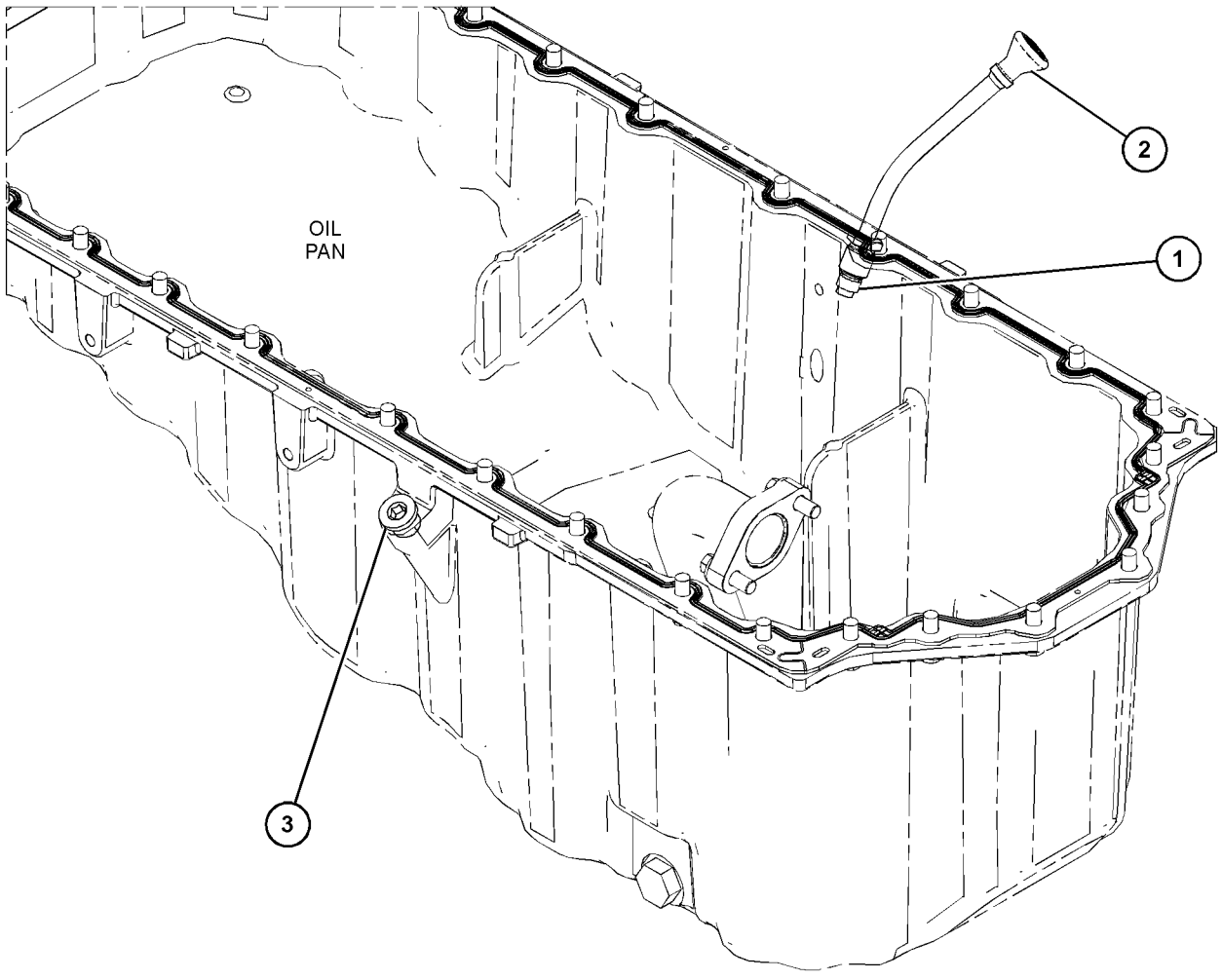

GRAPHIC #1 <END> g06031578

368-8559 LINES GP-TURBOCHARGER OIL

S/N: E7A1-UP

PART OF 416-6970 TURBOCHARGER GP

SMCS-1052, 1307 **i04838031**

NOTE	REF NO	GRAPHIC REF	PART NUMBER	QTY	PART NAME 1 2 3 4 5 6 (PRODUCT LEVEL)	SEE PAGE
M	1	1	**277-9938**	1	BOLT-SPECIAL (BANJO)	
	2	1	**277-9940**	1	SEAL-O-RING	
	3	1	**365-5823**	2	WASHER	

M - METRIC PART

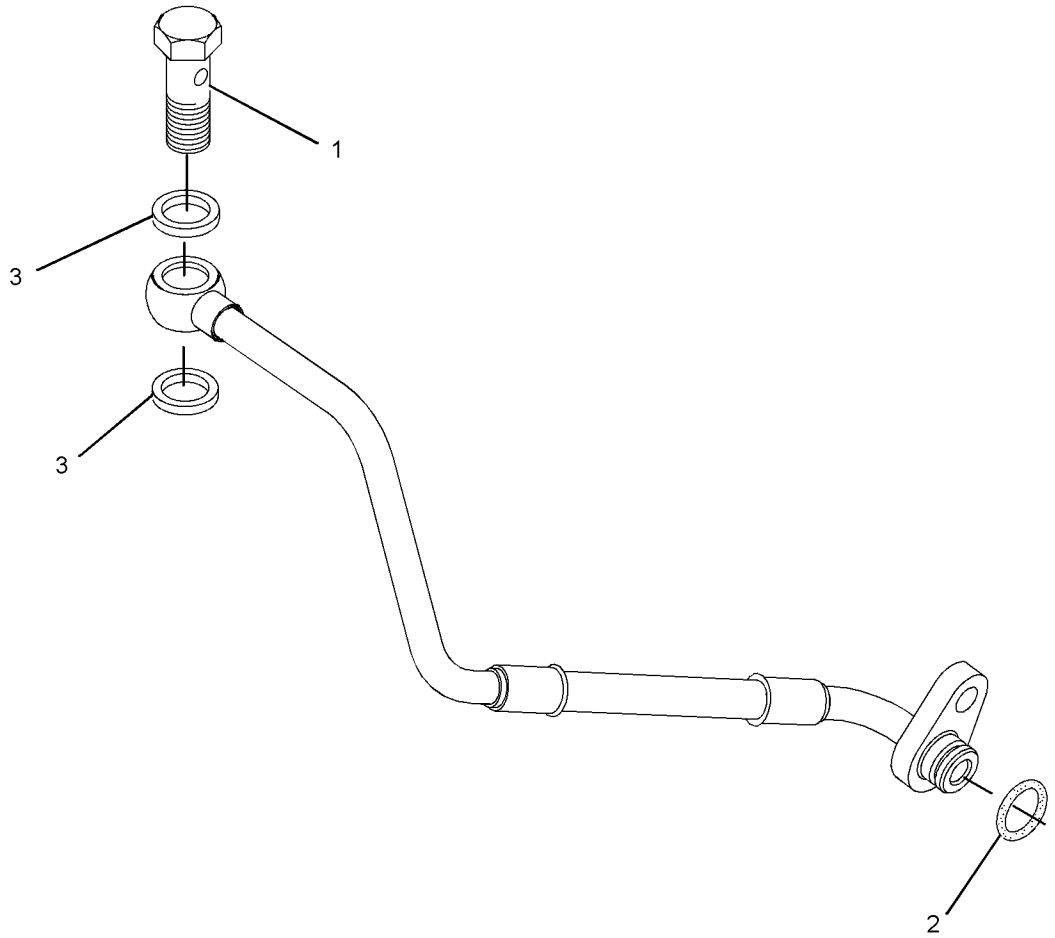

GRAPHIC #1 <END> g02400339

462-6685 PUMP GP-ENGINE OIL

S/N: E7A1-UP

PART OF 435-8541 ENGINE AR-PRIMARY

SMCS-1304, 1315

i06267216

NOTE	REF NO	GRAPHIC REF	PART NUMBER	QTY	PART NAME 1 2 3 4 5 6 (PRODUCT LEVEL)	SEE PAGE
	1	1	**469-5033**	1	PUMP AS-ENGINE OIL	
M	2	1	**6I-1090**	4	BOLT (M8X1.25X40-MM)	

M - METRIC PART

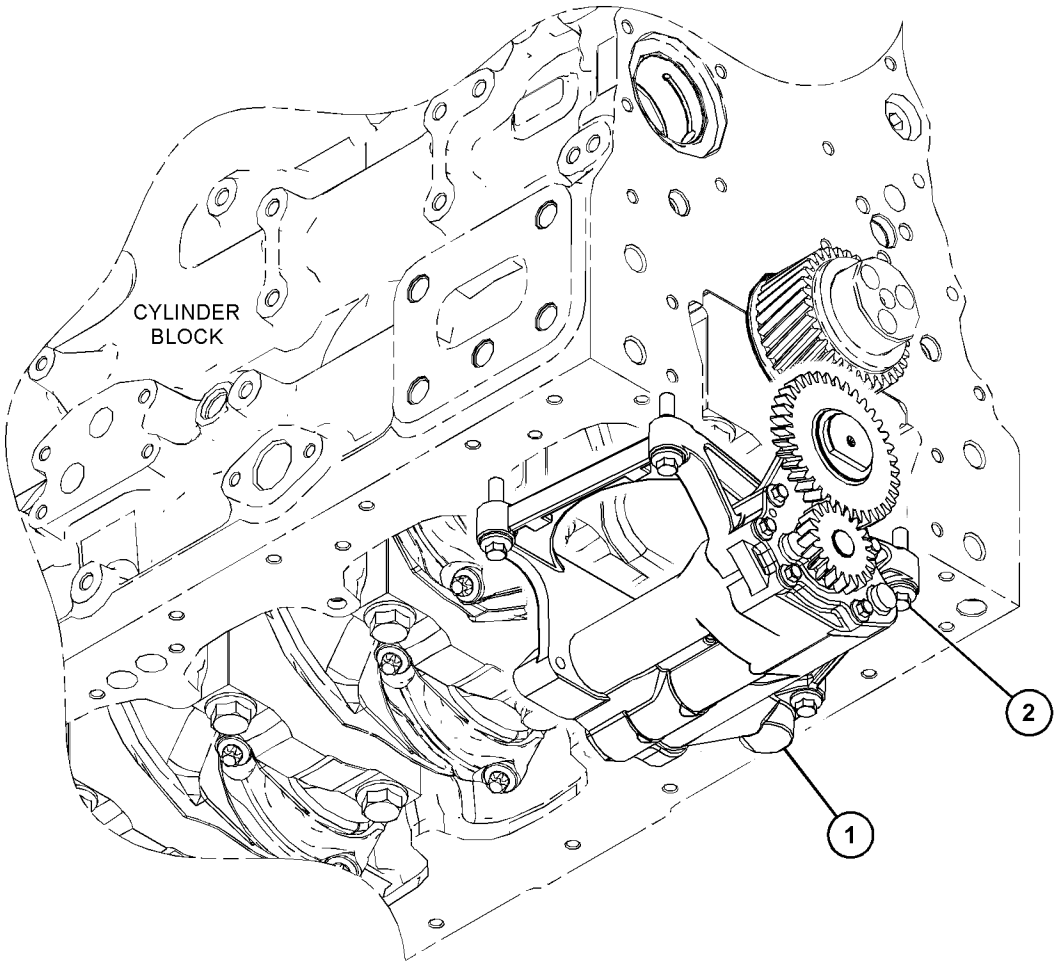

GRAPHIC #1

<END>

g03797853

371-2745 VALVE GP-FLUID SAMPLING

S/N: E7A1-UP

PART OF 435-8541 ENGINE AR-PRIMARY

SMCS-7542 **i05331565**

NOTE	REF NO	GRAPHIC REF	PART NUMBER	QTY	PART NAME 1 2 3 4 5 6 (PRODUCT LEVEL)	SEE PAGE
	1	1	**216-9633**	1	VALVE AS-FLUID SAMPLING	
	2	1	**8C-3445**	1	CAP-DUST	

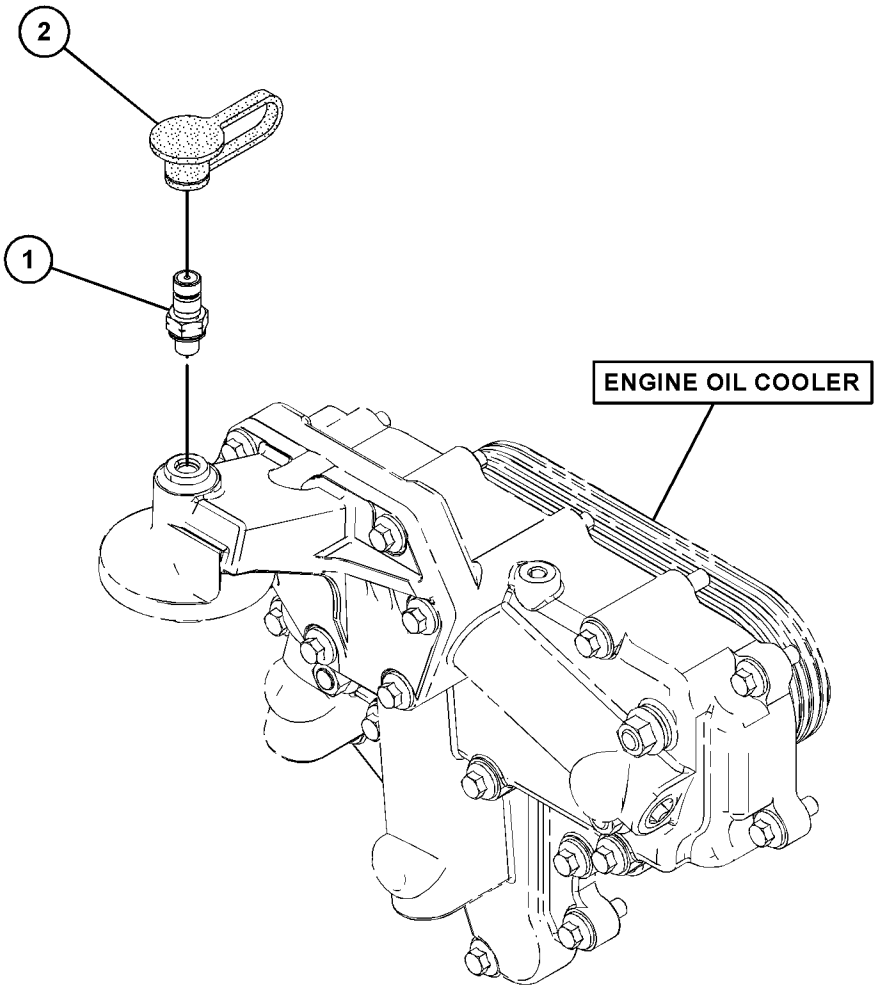

GRAPHIC #1 <END> g03178016

346-2911 CONNECTION GP-HEATER

S/N: E7A1-UP

FOR USE WITH OPTIONAL CUSTOMER CONNECTION FOR CAB HEATER

PART OF 435-8541 ENGINE AR-PRIMARY

SMCS-1380, 1383

i05303153

NOTE	REF NO	GRAPHIC REF	PART NUMBER	QTY	PART NAME 1 2 3 4 5 6 (PRODUCT LEVEL)	SEE PAGE
	1	1	**067-6823**	1	PLUG	
	2	1	**9X-3959**	1	ELBOW	
	3	1	**7W-4669**	1	ADAPTER	

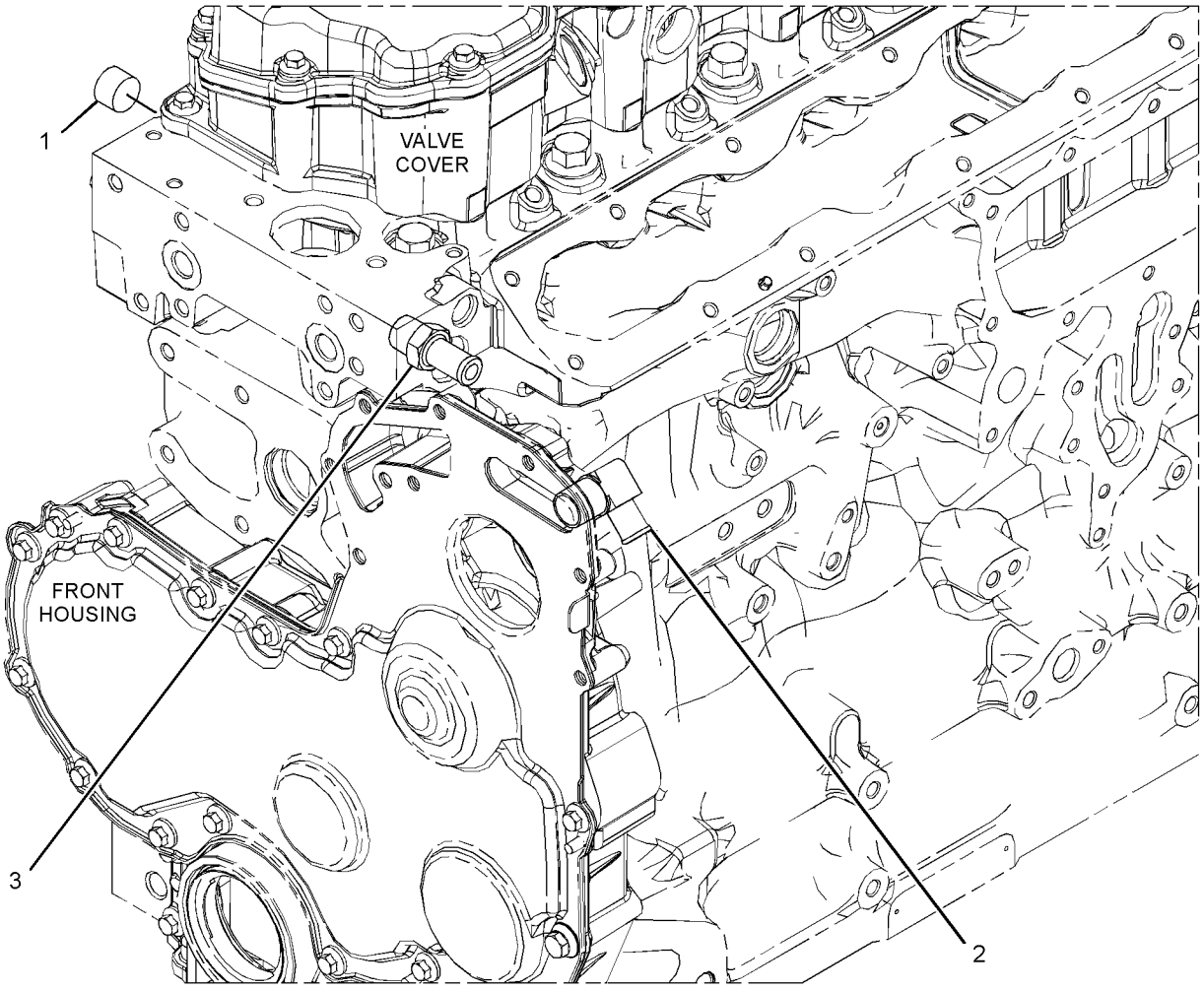

GRAPHIC #1 <END> g03105759

373-3607 CONNECTION GP-WATER

S/N: E7A1-UP

PART OF 435-8541 ENGINE AR-PRIMARY

SMCS-1380 **i05331563**

NOTE	REF NO	GRAPHIC REF	PART NUMBER	QTY	PART NAME 1 2 3 4 5 6 (PRODUCT LEVEL)	SEE PAGE
M	1	1	**123-2899**	2	BOLT (M10X1.5X40-MM)	
	2	1	**417-7782**	1	REGULATOR AS-WATER TEMPERATURE (INCLUDES CONNECTOR)	
	3	1	**281-8744**	1	GASKET-WATER REGULATOR (TEMPERATURE)	

M - METRIC PART

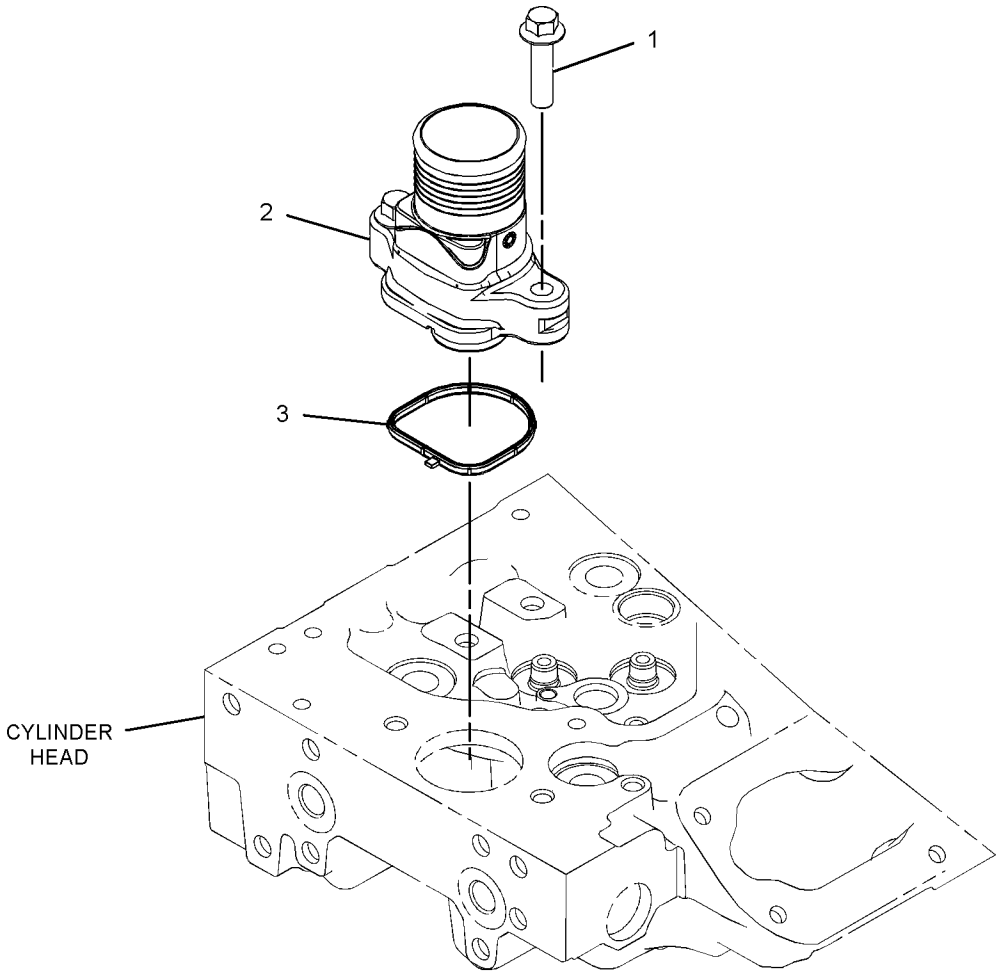

GRAPHIC #1 <END> g03341487

378-8283 COOLER GP-ENGINE OIL

S/N: E7A1-UP

PART OF 435-8541 ENGINE AR-PRIMARY

SMCS-1378 **i06811325**

NOTE	REF NO	GRAPHIC REF	PART NUMBER	QTY	PART NAME 1 2 3 4 5 6 (PRODUCT LEVEL)	SEE PAGE
	1	1	**103-5705**	3	BOLT (M8X1.25X110-MM)	
	2	1	**113-8129**	5	BOLT (M8X1.25X75-MM)	
	3	1	**277-2525**	1	HEAD AS-OIL FILTER	
Y	4	1	*419-3606*	1	COOLER GP-ENGINE OIL	52
M	5	1	**6I-0217**	6	BOLT (M8X1.25X20-MM)	
M	6	1	**6I-0260**	8	BOLT (M8X1.25X25-MM)	
	7	1	**225-7944**	1	GASKET	
	8	1	**232-3751**	1	PLATE	
	9	1	**277-2526**	1	GASKET-FILTER	
	10	1	**277-2537**	1	PLATE	

M - METRIC PART
Y - SEPARATE ILLUSTRATION

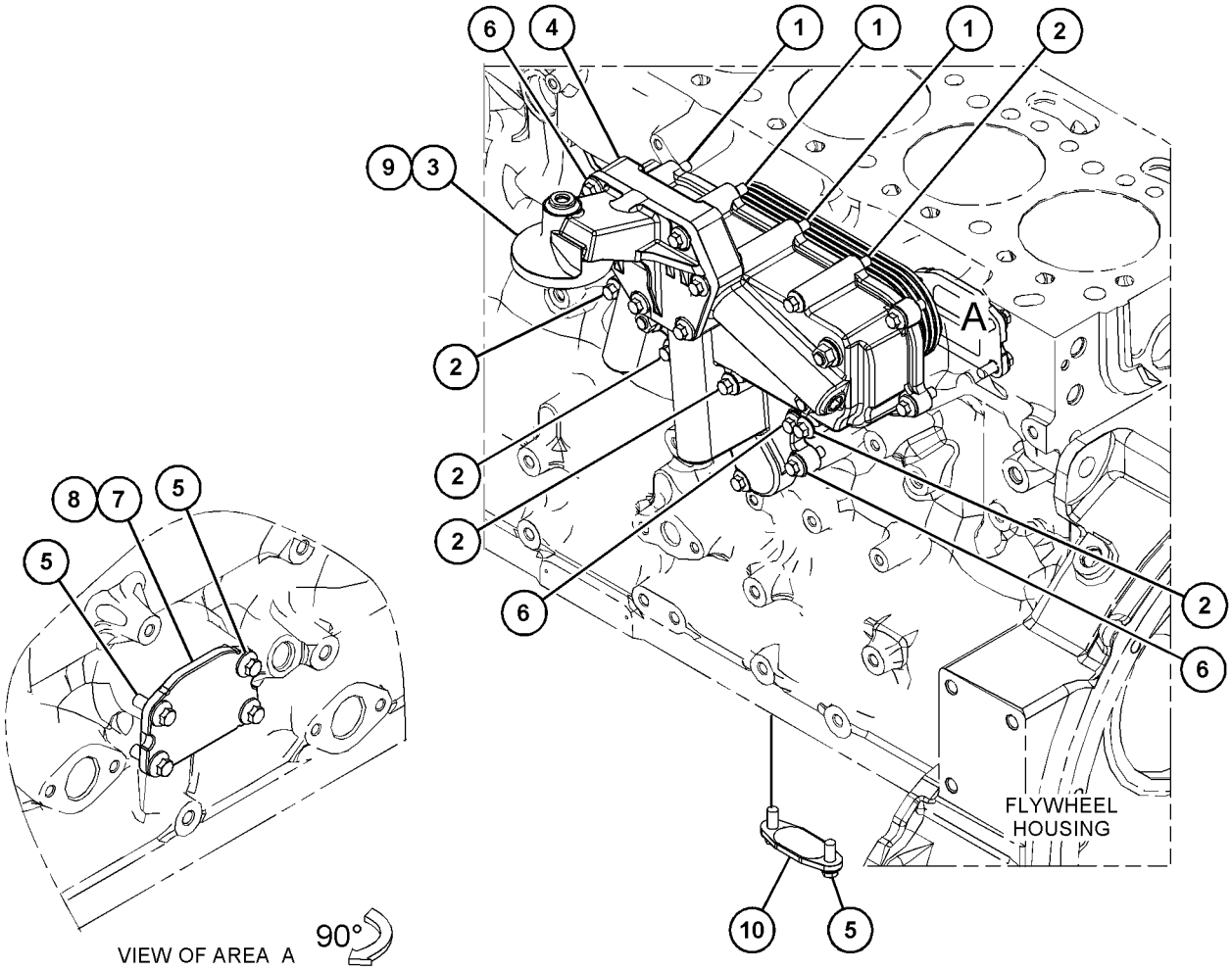

GRAPHIC #1 <END> g06124017

419-3606 COOLER GP-ENGINE OIL

S/N: E7A1-UP

PART OF 378-8283 COOLER GP-ENGINE OIL

SMCS-1378 **i06564454**

NOTE	REF NO	GRAPHIC REF	PART NUMBER	QTY	PART NAME 1 2 3 4 5 6 (PRODUCT LEVEL)	SEE PAGE
	1	1	**100-4003**	2	STUD (M10X1.5X35-MM)	
	2	1	**102-9909**	2	STUD (M10X1.5X25-MM)	
	3	1	**351-8206**	2	SEAL	
	4	1	**419-3607**	1	COOLER	
	5	1	**419-3608**	1	HOUSING	
M	6	1	**6I-0260**	4	BOLT (M8X1.25X25-MM)	
M	7	1	**6I-0594**	4	NUT (M10X1.5-THD)	
	8	1	**277-2500**	1	GASKET	
	9	1	**277-2503**	3	PLUG	

M - METRIC PART

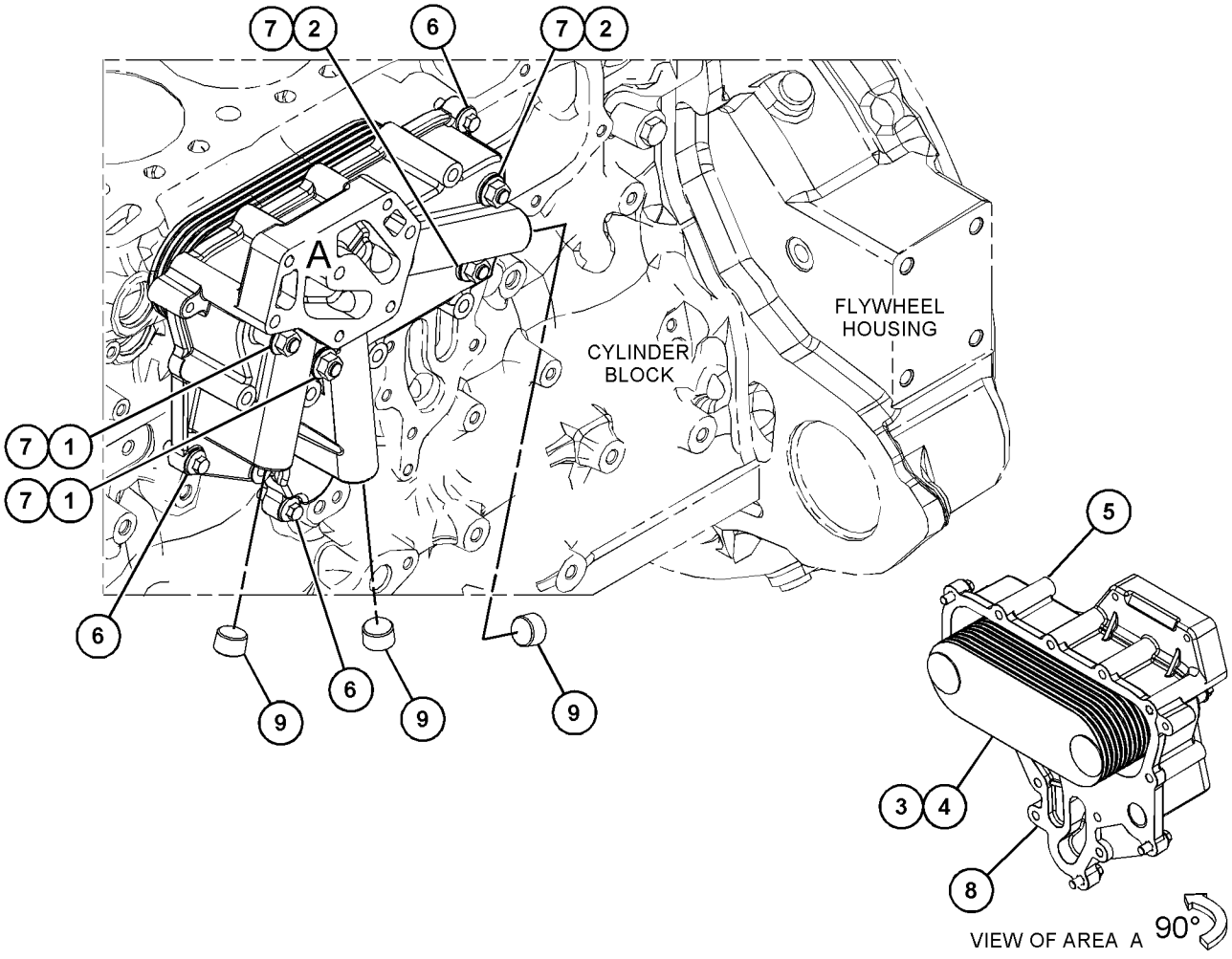

GRAPHIC #1 <END> g03562236

501-3064 FAN GP-SUCTION

S/N: TNS1-UP

PART OF 505-1547 CONTROL AR-FAN

SMCS-1356 **i06732566**

NOTE	REF NO	GRAPHIC REF	PART NUMBER	QTY	PART NAME 1 2 3 4 5 6 (PRODUCT LEVEL)	SEE PAGE
	1	1	**3B-4618**	4	PIN-COTTER	
	2	1	**235-9822**	1	CONE	
	3	1	**243-3416**	1	ADAPTER	
	4	1	**246-0616**	1	SPIDER AS-FAN (8-BLADE)	
	5	1	**364-9954**	2	PLATE	
	6	1	**375-3749**	1	GUARD AS-FAN	
M		1	**8T-3490**	2	NUT-WELD (M10X1.5-THD)	
	7	1	**380-1619**	1	DEFLECTOR	
	8	1	**423-3286**	1	SHROUD AS-FAN	
M		1	**6V-7357**	12	BOLT (M6X1X25-MM)	
		1	**9X-2038**	12	WASHER (7X19X2-MM THK)	
	9	1	**445-1714**	1	SPACER (50.5X127X12-MM THK)	
Y	10	1	**491-9530**	1	MOTOR GP-GEAR	388
	11	1	**499-8426**	1	SUPPORT AS-MOTOR	
	12	1	**508-0786**	4	BRACKET AS	
					(EACH INCLUDES)	
M		1	**8T-3490**	4	NUT-WELD (M10X1.5-THD)	
M	13	1	**364-9794**	4	BOLT (M10X1.5X55-MM)	
	14	1	**5P-9212**	1	PLUG	
	15	1	**7X-0515**	1	WASHER-HARD (17X35X5-MM THK)	
	16	1	**7X-7729**	12	WASHER (11X25X3-MM THK)	
	17	1	**8T-4121**	8	WASHER-HARD (11X21X2.5-MM THK)	
M	18	1	**8T-4132**	1	NUT (M16X2-THD)	
M	19	1	**8T-4136**	8	BOLT (M10X1.5X25-MM)	
M	20	1	**8T-4186**	6	BOLT (M10X1.5X40-MM)	
M	21	1	**8T-4195**	8	BOLT (M10X1.5X30-MM)	
	22	1	**8T-4223**	2	WASHER-HARD (13.5X25.5X3-MM THK)	
	23	1	**8T-4226**	8	WASHER-PLATED (10.5X45X3-MM THK)	
M	24	1	**8T-4956**	10	BOLT (M12X1.75X35-MM)	
M	25	1	**8T-6466**	8	BOLT (M10X1.5X60-MM)	
	26	1	**8T-7934**	6	WASHER-HARD (11X21X5-MM THK)	
	27	1	**8T-7971**	8	WASHER-HARD (13.5X25.5X5-MM THK)	
E	28	1	**123-3827**		SEAL (91-CM EACH)	
J	29	1	**308-9131**		SEAL (1130-MM)	
J	29A	1	**308-9131**		SEAL (1118-MM)	
B	30	1	**312-6458**		TAPE-REFLECTIVE	

B - USE AS REQUIRED
E - ORDER BY THE CENTIMETER
J - ORDER BY THE MILLIMETER
M - METRIC PART
Y - SEPARATE ILLUSTRATION

501-3064 **FAN GP-SUCTION (**contd.**)** **i06732566**

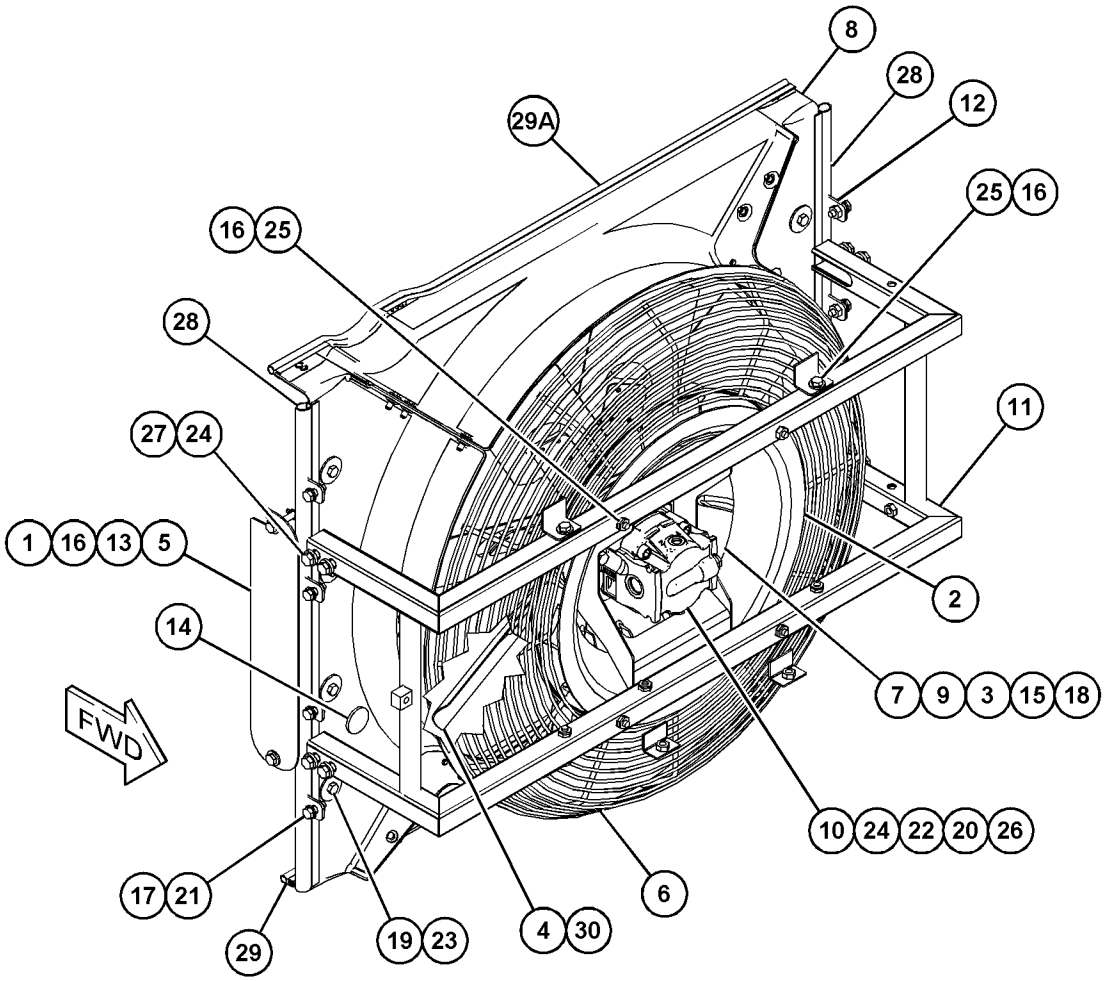

GRAPHIC #1 <END> g06108589

501-3065 FAN GP-SUCTION

S/N: TNS1-UP
VARIABLE PITCH FAN
PART OF 505-1548 CONTROL AR-FAN

SMCS-1356 **i06779824**

NOTE	REF NO	GRAPHIC REF	PART NUMBER	QTY	PART NAME 1 2 3 4 5 6 (PRODUCT LEVEL)	SEE PAGE
	1	1	**235-9822**	1	CONE	
	2	1	**243-3416**	1	ADAPTER	
H	3	1	**307-7313**	1	FAN AS	
	4	1	**375-3750**	1	GUARD AS-FAN	
M		1	**8T-3490**	2	NUT-WELD (M10X1.5-THD)	
	5	1	**380-1619**	1	DEFLECTOR	
	6	1	**423-3286**	1	SHROUD AS-FAN	
M		1	**6V-7357**	12	BOLT (M6X1X25-MM)	
		1	**9X-2038**	12	WASHER (7X19X2-MM THK)	
	7	1	**432-0095**	2	COVER AS	
D		1	**8T-5372**		SEAL (0.9-M)	
L		1	**423-6238**	1	LATCH AS	
		1	**432-0112**	1	HINGE AS	
	8	1	**447-1484**	1	FLANGE	
Y	9	1	**491-9530**	1	MOTOR GP-GEAR (VARIABLE PITCH FAN)	388
	10	1	**499-8429**	1	SUPPORT AS	
	11	1	**508-0786**	4	BRACKET AS	
	12	1	**7X-0515**	1	WASHER-HARD (17X35X5-MM THK)	
	13	1	**7X-7729**	12	WASHER (11X25X3-MM THK)	
M	14	1	**8T-1160**	6	BOLT-SOCKET HEAD (M10X1.5X50-MM)	
	15	1	**8T-4121**	8	WASHER-HARD (11X21X2.5-MM THK)	
M	16	1	**8T-4132**	1	NUT (M16X2-THD)	
M	17	1	**8T-4136**	8	BOLT (M10X1.5X25-MM)	
M	18	1	**8T-4195**	12	BOLT (M10X1.5X30-MM)	
	19	1	**8T-4223**	2	WASHER-HARD (13.5X25.5X3-MM THK)	
	20	1	**8T-4224**	6	WASHER-HARD (8.8X16X2-MM THK)	
	21	1	**8T-4226**	8	WASHER-PLATED (10.5X45X3-MM THK)	
M	22	1	**8T-4956**	10	BOLT (M12X1.75X35-MM)	
M	23	1	**8T-5093**	6	BOLT-LOCKING (M8X1.25X25-MM)	
M	24	1	**8T-6466**	8	BOLT (M10X1.5X60-MM)	
	25	1	**8T-7971**	8	WASHER-HARD (13.5X25.5X5-MM THK)	
E	26	1	**123-3827**		SEAL (91-CM EACH)	
J	27	1	**308-9131**		SEAL (1118-MM)	
J	27A	1	**308-9131**		SEAL (1131-MM)	
B	28	1	**312-6458**		TAPE-REFLECTIVE	
					AVAILABLE REPAIR KIT(S):	
H			**324-7871**	1	KIT-FAN BLADE	

B - USE AS REQUIRED
D - ORDER BY THE METER
E - ORDER BY THE CENTIMETER
H - KIT MARKED H SERVICES PART(S) MARKED H
J - ORDER MY THE MILLIMETER
L - REQUIRES CORPORATE KEY
M - METRIC PART
Y - SEPARATE ILLUSTRATION

501-3065 **FAN GP-SUCTION (**contd.**)** **i06779824**

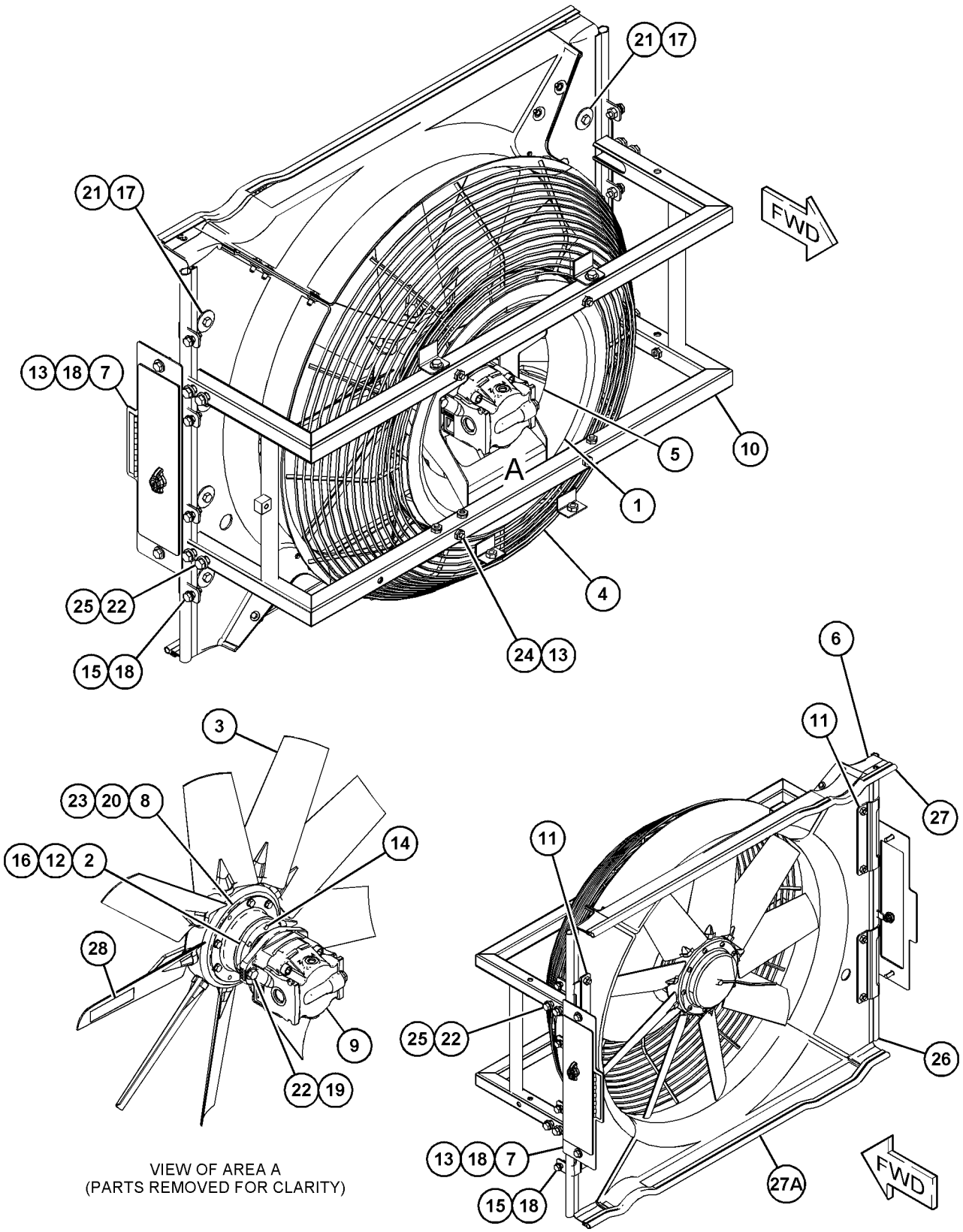

VIEW OF AREA A
(PARTS REMOVED FOR CLARITY)

GRAPHIC #1 <END> g06104174

420-3010 FRAME GP-RADIATOR

S/N: TNS1-UP

PART OF 456-5790 CHASSIS AR

SMCS-1353, 7272

i06759686

NOTE	REF NO	GRAPHIC REF	PART NUMBER	QTY	PART NAME 1 2 3 4 5 6 (PRODUCT LEVEL)	SEE PAGE
	1	1	**4E-1384**	2	BUMPER-CONICAL	
	2	1	**112-5344**	1	LATCH AS-DOOR (LH)	
Y	3	1	*420-3015*	1	FRAME GP-RADIATOR (COOLING)	59
	4	1	**436-5945**	1	STRIKER	
M	5	1	**344-5675**	9	NUT (M10X1.5-THD)	
M	6	1	**5C-2890**	4	NUT (M6X1-THD)	
M	7	1	**5C-7261**	2	NUT (M8X1.25-THD)	
	8	1	**5V-8780**	1	KNOB	
M	9	1	**6V-7744**	4	LOCKNUT (M10X1.5-THD)	
M	10	1	**7X-0474**	4	BOLT (M10X1.5X220-MM)	
	11	1	**7X-0515**	8	WASHER-HARD (17X35X5-MM THK)	
	12	1	**7X-0579**	4	WASHER-HARD (8.8X25.5X2-MM THK)	
	13	1	**7X-0632**	1	WASHER-HARD (11X36X6-MM THK)	
	14	1	**7X-7729**	49	WASHER (11X25X3-MM THK)	
M	15	1	**8T-4136**	6	BOLT (M10X1.5X25-MM)	
M	16	1	**8T-4195**	25	BOLT (M10X1.5X30-MM)	
M	17	1	**8T-4196**	4	BOLT (M10X1.5X35-MM)	
	18	1	**8T-4226**	4	WASHER-PLATED (10.5X45X3-MM THK)	
M	19	1	**8T-6466**	2	BOLT (M10X1.5X60-MM)	
M	20	1	**8T-7338**	8	BOLT (M16X2X45-MM)	
M	21	1	**8T-7547**	4	BOLT (M8X1.25X30-MM)	
	22	1	**9X-8256**	4	WASHER (6.6X12X2-MM THK)	
D	23	1	**5P-8309**		SEAL (0.7-M)	
E	24	1	**190-6616**		SEAL (41-CM)	
E	24A	1	**190-6616**		SEAL (32-CM)	
E	25	1	**356-3181**		SEAL (92-CM EACH)	

D - ORDER BY THE METER
E - ORDER BY THE CENTIMETER
M - METRIC PART
Y - SEPARATE ILLUSTRATION

420-3010 **FRAME GP-RADIATOR (**contd.**)** **i06759686**

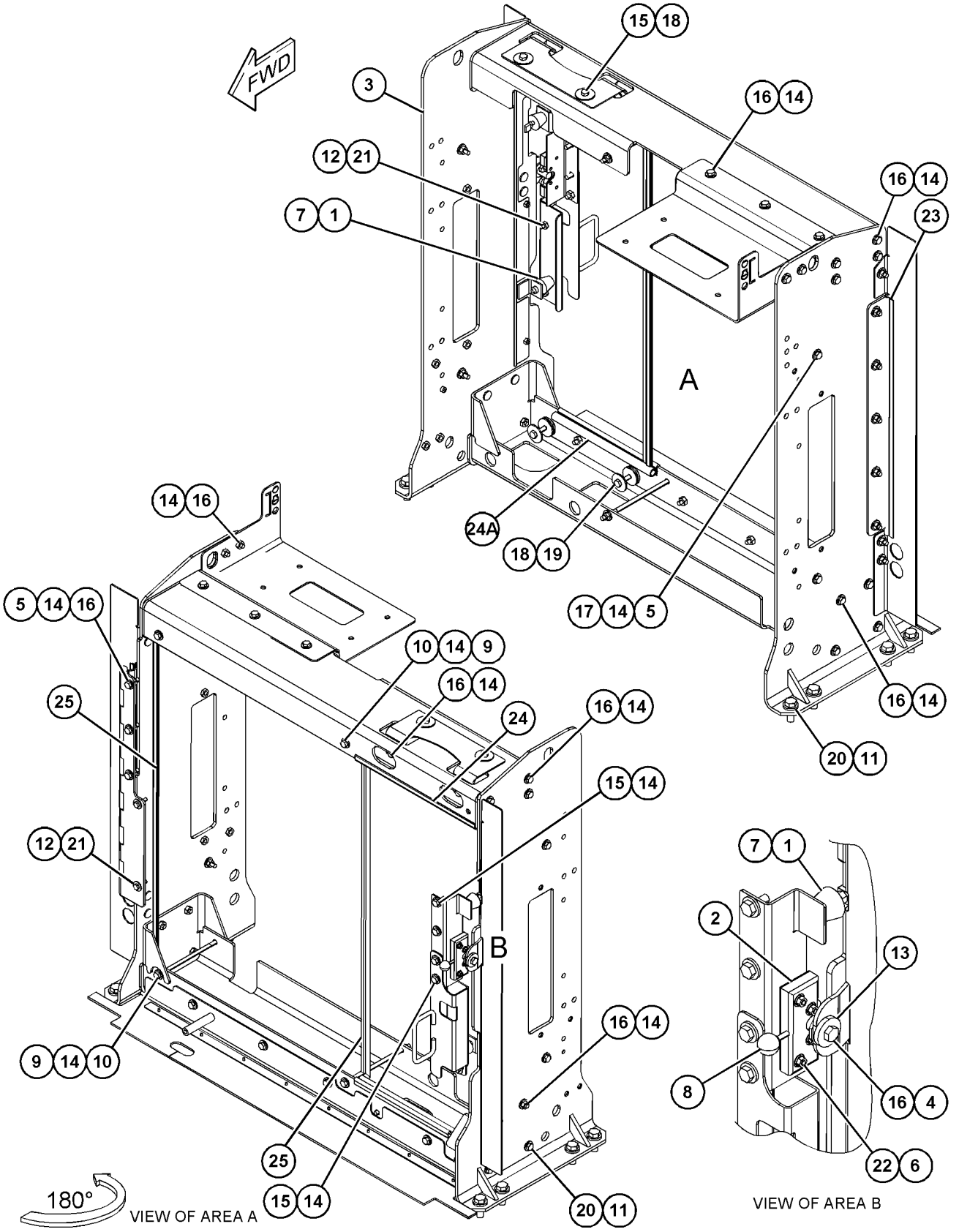

GRAPHIC #1 <END> g06050146

420-3015 FRAME GP-RADIATOR

S/N: TNS1-UP

PART OF 420-3010 FRAME GP-RADIATOR

SMCS-1353, 7272 **i06759687**

NOTE	REF NO	GRAPHIC REF	PART NUMBER	QTY	PART NAME 1 2 3 4 5 6 (PRODUCT LEVEL)	SEE PAGE
Y	1	1	*415-8206*	1	SUPPORT GP-RADIATOR (RH)	75
Y	2	1	*415-8209*	1	SUPPORT GP-RADIATOR (LH)	76
	3	1	*420-3003*	1	SUPPORT AS-UPPER	
M		1	**8T-3490**	14	NUT-WELD (M10X1.5-THD)	
	4	1	**420-3006**	1	BRACKET AS	
M		1	**8T-3490**	2	NUT-WELD (M10X1.5-THD)	
Y	5	1	*449-3342*	1	SUPPORT GP-RADIATOR (LOWER)	77
	6	1	**485-1920**	1	BRACKET AS	
M		1	**8T-3490**	2	NUT-WELD (M10X1.5-THD)	
	7	1	**487-3413**	1	BRACKET AS	
M		1	**8T-3490**	1	NUT-WELD (M10X1.5-THD)	
	8	1	**494-6824**	1	BRACKET AS	
M		1	**8T-3612**	2	NUT-WELD (M8X1.25-THD)	

M - METRIC PART
Y - SEPARATE ILLUSTRATION

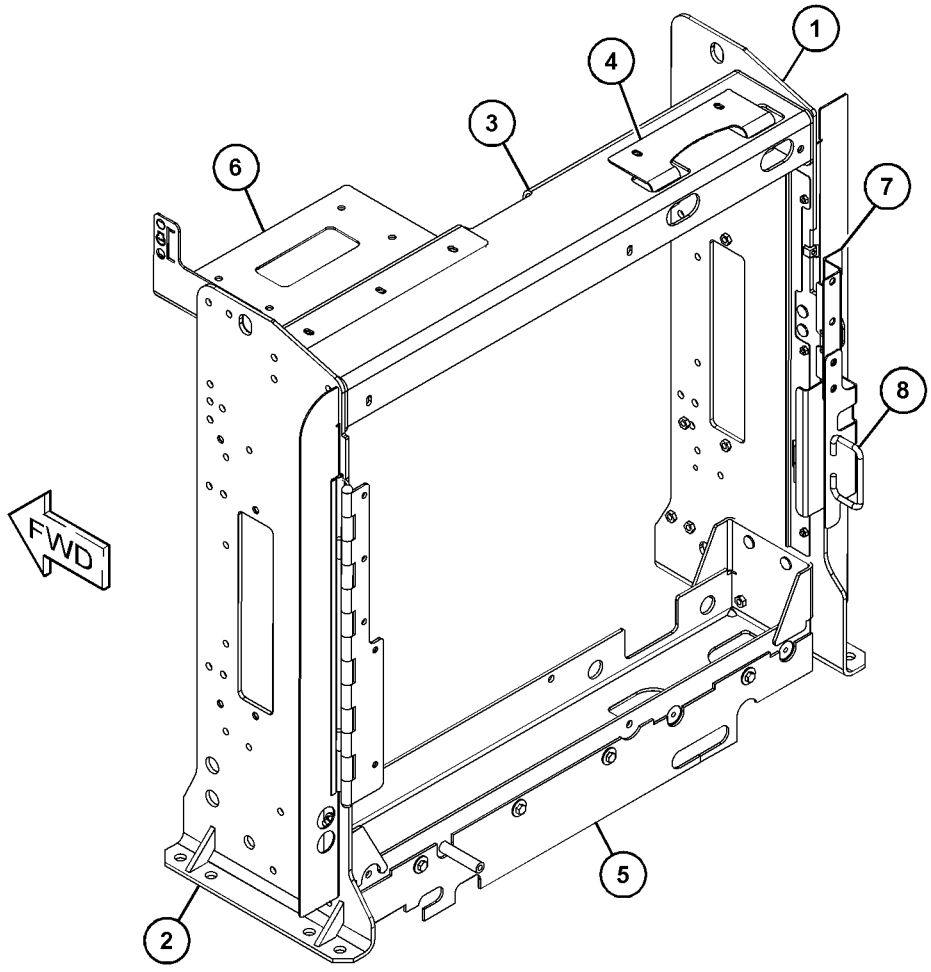

GRAPHIC #1 <END> g06050621

436-7006 LINES GP-OIL COOLER

S/N: TNS1-UP

PART OF 492-4021 HYDRAULIC AR

SMCS-1374, 5057 **i06796410**

NOTE	REF NO	GRAPHIC REF	PART NUMBER	QTY	PART NAME 1 2 3 4 5 6 (PRODUCT LEVEL)	SEE PAGE
	1	2	*148-8428*	1	TEE AS	
		2	**3K-0360**	1	SEAL-O-RING	
		2	**6V-8398**	2	SEAL-O-RING	
		2	**6V-8782**	1	TEE	
	2	2	**7K-1181**	7	STRAP-CABLE (5.72-MM DIA)	
	3	2	**9X-2538**	1	ELBOW	
	4	2	**104-8903**	2	GUARD	
	5	2	*148-8327*	1	CONNECTOR AS	
		2	**3D-2824**	1	SEAL-O-RING	
		2	**6V-8637**	1	CONNECTOR	
		2	**6V-9746**	1	SEAL-O-RING	
	6	2	*148-8339*	1	CONNECTOR AS	
		2	**6V-8716**	1	CONNECTOR (STRAIGHT)	
		2	**6V-9746**	1	SEAL-O-RING	
		2	**7M-8485**	1	SEAL-O-RING	
	7	1	*148-8347*	1	ELBOW AS	
		1	**3D-2824**	1	SEAL-O-RING	
		1	**6V-9007**	1	ELBOW	
		1	**6V-9746**	1	SEAL-O-RING	
	8	2	*148-8360*	1	ELBOW AS	
		2	**6V-9182**	1	ELBOW	
		2	**6V-9746**	1	SEAL-O-RING	
		2	**7M-8485**	1	SEAL-O-RING	
	9	1	*148-8367*	1	ELBOW AS (90-DEG)	
		1	**6V-8397**	1	SEAL-O-RING	
		1	**6V-9850**	1	ELBOW	
	10	2	*148-8376*	1	ELBOW AS	
		2	**6V-8983**	1	ELBOW	
		2	**6V-9746**	2	SEAL-O-RING	
	11	2	*148-8382*	2	ELBOW AS	
					(EACH INCLUDES)	
		2	**3D-2824**	1	SEAL-O-RING	
		2	**7J-9108**	1	SEAL-O-RING	
		2	**8T-0404**	1	ELBOW	
	12	2	*148-8392*	2	ELBOW AS	
					(EACH INCLUDES)	
		2	**6V-9746**	1	SEAL-O-RING	
		2	**6V-9853**	1	ELBOW	
	13	2	*148-8408*	1	PLUG AS	
		2	**3D-2824**	1	SEAL-O-RING	
		2	**9S-4183**	1	PLUG (1-1/16-12-THD)	
	14	2	*153-6238*	1	ELBOW AS	
		2	**2S-4078**	1	SEAL-O-RING	
		2	**6V-8400**	1	SEAL-O-RING	
		2	**6V-9006**	1	ELBOW	
	15	2	*185-2245*	1	ADAPTER AS	
		2	**6V-9746**	1	SEAL-O-RING	
		2	**157-8510**	1	ADAPTER	

436-7006 **LINES GP-OIL COOLER (**contd.**)** **i06796410**

NOTE	REF NO	GRAPHIC REF	PART NUMBER	QTY	PART NAME 1 2 3 4 5 6 (PRODUCT LEVEL)	SEE PAGE
	16	2	**188-8726**	1	VALVE-BYPASS	
	17	2	*194-2555*	1	TEE AS	
		2	**6V-8398**	2	SEAL-O-RING	
		2	**194-2554**	1	TEE	
	18	2	*241-6207*	1	TEE AS	
		2	**6V-9746**	3	SEAL-O-RING	
		2	**132-5152**	1	TEE-UNION	
	19	2	**360-0415**	1	BRACKET AS	
	20	2	**372-3632**	1	BRACKET AS	
	21	1	**384-9469**	1	TUBE AS	
	22	2	**384-9501**	1	HOSE	
I	23	2	**387-4617**	1	HOSE AS	
	24	2	**415-7501**	1	TUBE AS	
	25	2	**415-7502**	1	TUBE AS	
I	26	2	**415-7504**	1	HOSE AS	
	27	2	**415-7507**	1	BRACKET AS	
I	28	2	**419-3291**	1	HOSE AS	
I	29	2	**419-3292**	1	HOSE AS	
I	30	2	**427-0332**	1	HOSE AS	
I	31	2	**427-0333**	1	HOSE AS	
	32	2	**427-0355**	1	BRACKET	
I	33	1	**427-0370**	1	HOSE AS	
Y	34	2	**436-3444**	1	FILTER GP-OIL (HYDRAULIC)	598
I	35	1	**436-7063**	1	HOSE AS	
	36	2	**444-6933**	1	BRACKET AS	
M		2	**8T-3490**	1	NUT-WELD (M10X1.5-THD)	
I	37	1	**460-9978**	1	HOSE AS	
	38	2	**463-8122**	1	BRACKET AS	
M		2	**8T-3490**	2	NUT-WELD (M10X1.5-THD)	
M		2	**8T-3612**	2	NUT-WELD (M8X1.25-THD)	
	39	1	**067-2551**	3	CLIP	
	40	2	*107-8265*	1	TEE AS-SWIVEL	
		2	**6V-9746**	1	SEAL-O-RING	
		2	**9X-2289**	1	TEE-SWIVEL	
	41	2	**130-9984**	1	CLIP	
	42	2	**132-5789**	1	CLIP	
	43	1	*148-8326*	1	CONNECTOR AS	
		1	**3J-7354**	1	SEAL-O-RING	
		1	**6V-8397**	1	SEAL-O-RING	
		1	**6V-9872**	1	CONNECTOR	
	44	2	*153-6232*	1	ELBOW AS	
		2	**3D-2824**	1	SEAL-O-RING	
		2	**7J-9108**	1	SEAL-O-RING	
		2	**8T-0120**	1	ELBOW	
	45	2	*153-6242*	1	CONNECTOR AS	
		2	**6V-9746**	1	SEAL-O-RING	
		2	**7M-8485**	1	SEAL-O-RING	
		2	**8T-0197**	1	CONNECTOR	
	46	2	**162-9112**	1	GROMMET-SPLIT	
	47	2	*164-5567*	1	COUPLER AS-QUICK DISCONNECT (MALE)	
		2	**6V-3965**	1	FITTING (QUICK DISCONNECT)	

436-7006 **LINES GP-OIL COOLER (**contd.**)** **i06796410**

NOTE	REF NO	GRAPHIC REF	PART NUMBER	QTY	PART NAME 1 2 3 4 5 6 (PRODUCT LEVEL)	SEE PAGE
		2	**214-7568**	1	SEAL-O-RING	
	48	2	*164-5590*	1	VALVE GP-FLUID SAMPLING	
		2	**3J-7354**	1	SEAL-O-RING	
		2	**8C-3446**	1	VALVE-SAMPLING	
	49	2	*169-7397*	1	ADAPTER AS	
		2	**3K-0360**	1	SEAL-O-RING	
		2	**3P-1932**	1	ADAPTER	
	50	2	**177-8839**	1	CLIP	
	51	2	**198-4776**	2	WASHER-HARD (8.8X20X8-MM THK)	
	52	2	**1S-0994**	2	CLIP	
	53	2	**206-2423**	1	SADDLE	
	54	2	**211-8073**	2	CAP-PROTECTION	
	55	2	**2P-1293**	2	LOCKNUT (1-3/16-12-THD)	
	56	1	**3E-4321**	5	CLIP	
	57	2	**5P-4116**	2	WASHER-HARD (8.8X20.5X2-MM THK)	
	58	2	**5P-7464**	1	CLIP (SLOT)	
	59	2	**5P-7465**	1	CLIP (TAB)	
	60	2	**6V-0852**	1	CAP-DUST	
	61	2	**6V-7359**	1	GROMMET (25-MM ID, 37-MM OD)	
	62	2	**6V-9169**	1	NUT (13/16-16-THD)	
	63	2	**7X-4743**	2	GROMMET	
	64	2	**7X-7729**	6	WASHER (11X25X3-MM THK)	
	65	2	**8C-3451**	1	CAP-DUST (HYDRAULIC OIL)	
	66	2	**8S-0023**	1	CLIP (SLOT)	
	67	2	**8S-0024**	1	CLIP (TAB)	
	68	2	**8T-1887**	1	CLIP (SLOT)	
	69	2	**8T-1888**	1	CLIP (TAB)	
	70	1,2	**8T-4121**	19	WASHER-HARD (11X21X2.5-MM THK)	
M	71	1,2	**8T-4136**	7	BOLT (M10X1.5X25-MM)	
M	72	1,2	**8T-4137**	11	BOLT (M10X1.5X20-MM)	
M	73	2	**8T-4139**	2	BOLT (M12X1.75X30-MM)	
M	74	2	**8T-4177**	2	BOLT (M8X1.25X90-MM)	
M	75	2	**8T-4195**	4	BOLT (M10X1.5X30-MM)	
M	76	2	**8T-4196**	2	BOLT (M10X1.5X35-MM)	
	77	2	**8T-4223**	2	WASHER-HARD (13.5X25.5X3-MM THK)	
M	78	2	**8T-4908**	2	BOLT (M8X1.25X25-MM)	
	79	2	**8T-4983**	2	CLAMP-HOSE	
	80	1	**9X-8250**	2	CLIP	

I - REFER TO HYDRAULIC INFORMATION SYSTEM
M - METRIC PART
Y - SEPARATE ILLUSTRATION

436-7006 **LINES GP-OIL COOLER (**contd.**)** **i06796410**

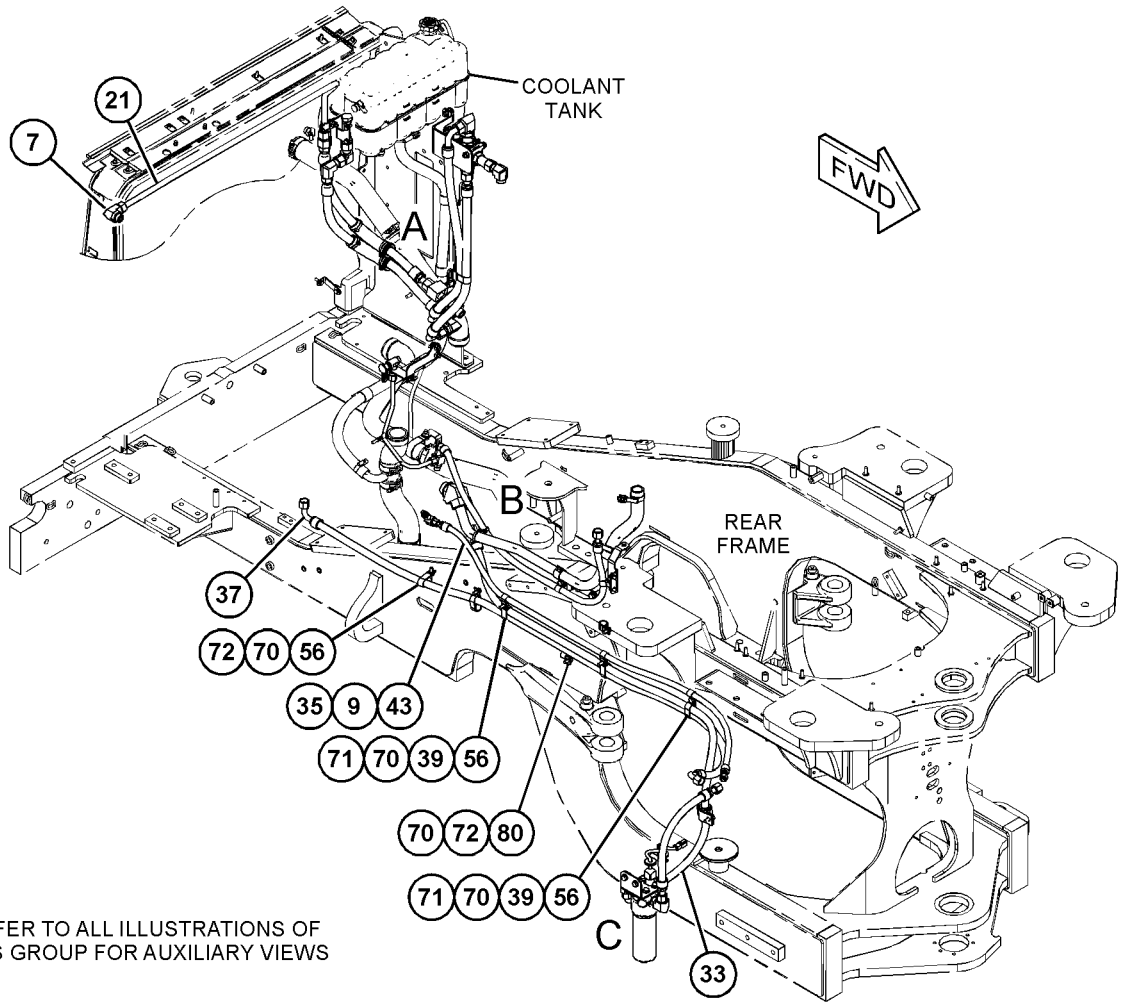

GRAPHIC #1 g06048770

436-7006 **LINES GP-OIL COOLER (**contd.**)** **i06796410**

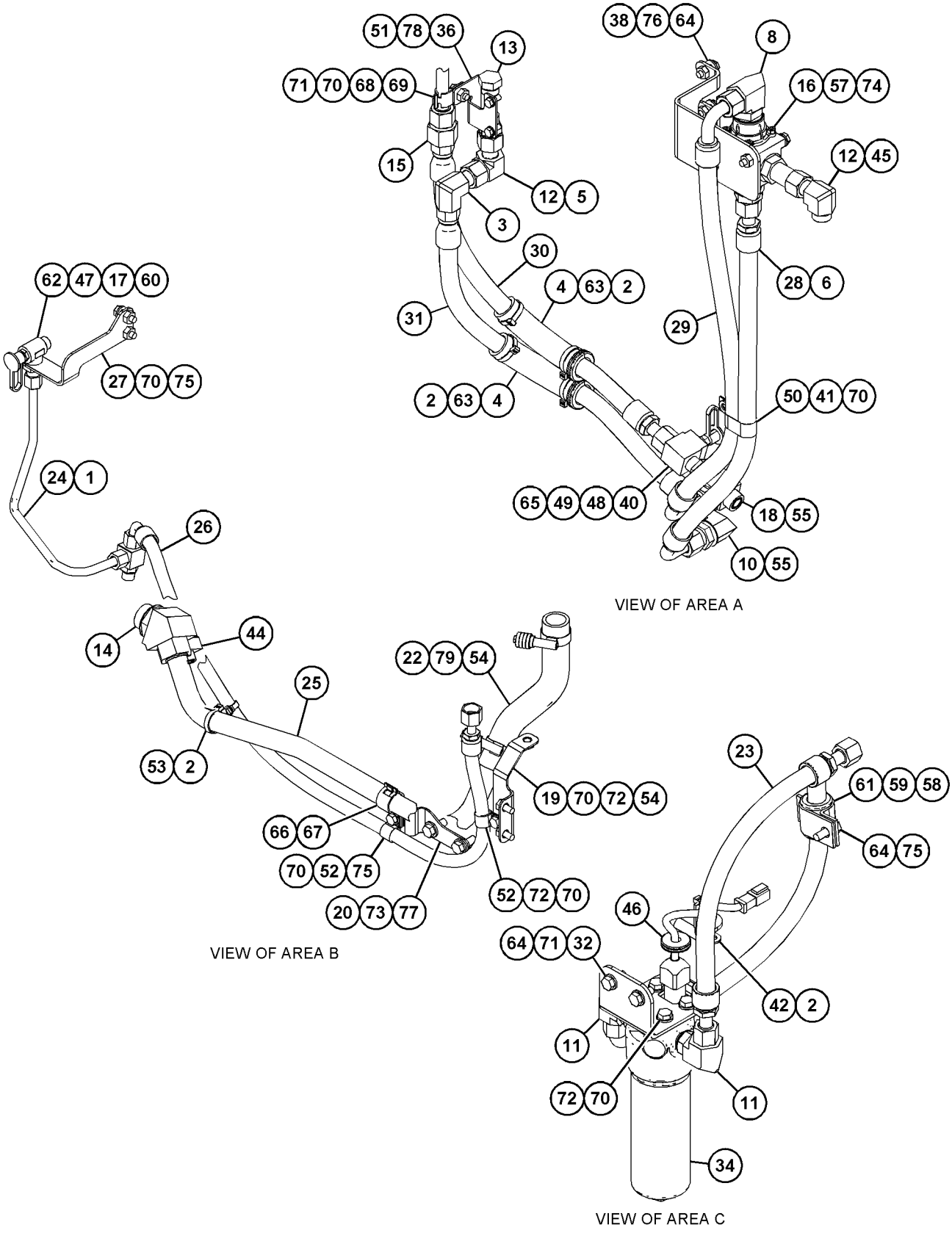

GRAPHIC #2 <END> g06048771

463-8112 LINES GP-OIL COOLER

S/N: TNS1-UP

PART OF 508-7627, 508-7631 SUPPRESSION AR-SOUND

SMCS-1374, 5057

i06781883

NOTE	REF NO	GRAPHIC REF	PART NUMBER	QTY	PART NAME 1 2 3 4 5 6 (PRODUCT LEVEL)	SEE PAGE
	1	1	**7K-1181**	2	STRAP-CABLE (5.72-MM DIA)	
I	2	1	**467-4368**	1	HOSE AS	
	3	1	**091-9035**	1	SPACER (11X25X20-MM THK)	
	4	1	*148-8446*	1	TEE AS-SWIVEL	
		1	**6V-9838**	1	TEE-SWIVEL	
		1	**7J-9108**	2	SEAL-O-RING	
	5	1	*165-4935*	1	PLUG AS	
		1	**6V-9510**	1	PLUG (1-14-THD)	
		1	**7J-9108**	1	SEAL-O-RING	
	6	1	**206-2423**	1	SADDLE	
M	7	1	**344-5675**	1	NUT (M10X1.5-THD)	
	8	1	**9X-8250**	1	CLIP	
	9	1	**8T-1889**	1	CLIP (SLOT)	
	10	1	**8T-1890**	1	CLIP (TAB)	
	11	1	**8T-4121**	2	WASHER-HARD (11X21X2.5-MM THK)	
M	12	1	**8T-6466**	1	BOLT (M10X1.5X60-MM)	

I - REFER TO HYDRAULIC INFORMATION SYSTEM
M - METRIC PART

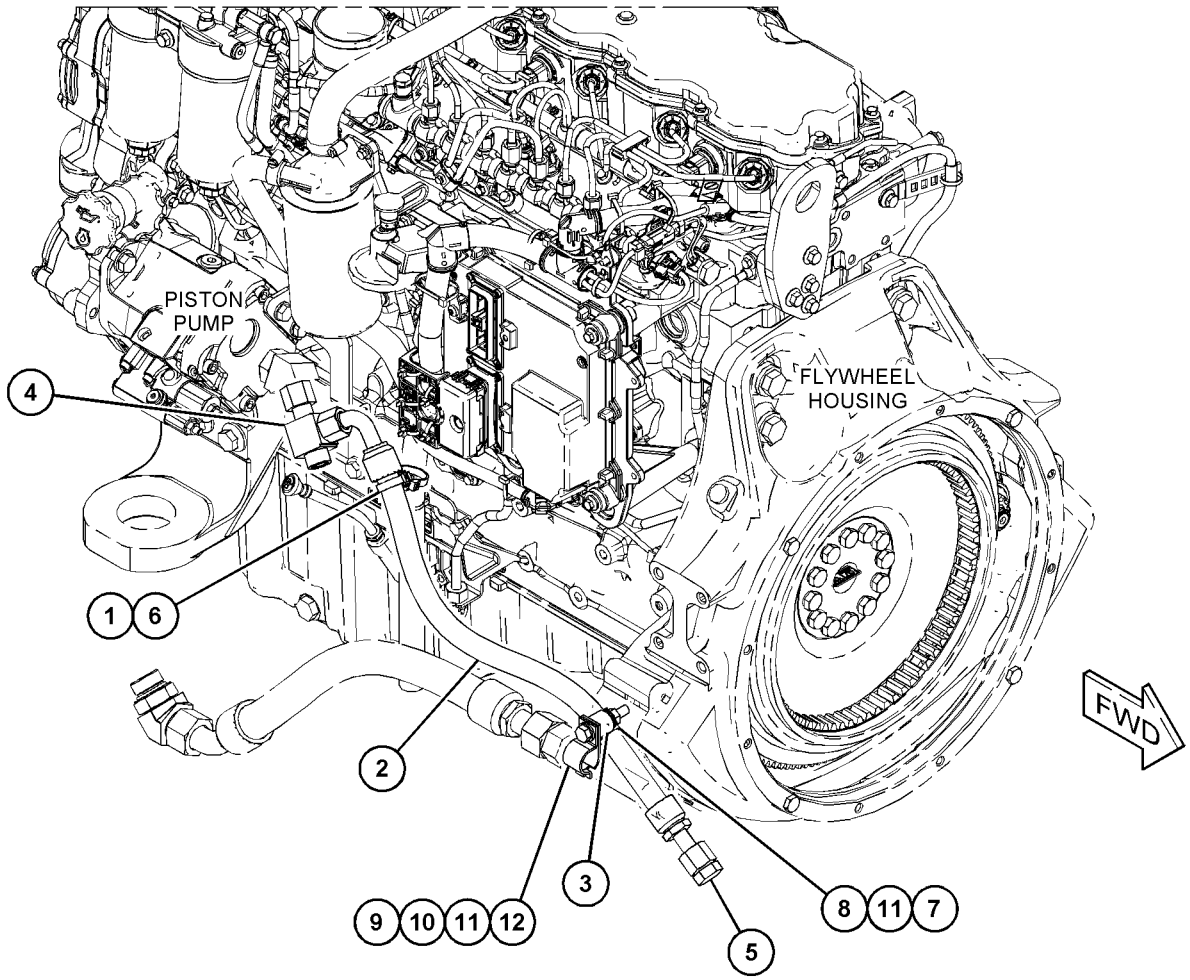

GRAPHIC #1 <END> g06022143

463-8113 LINES GP-OIL COOLER

S/N: TNS1-UP
EUROPEAN MARKET
PART OF 508-7629 SUPPRESSION AR-SOUND

SMCS-1374, 5057

i06751820

NOTE	REF NO	GRAPHIC REF	PART NUMBER	QTY	PART NAME 1 2 3 4 5 6 (PRODUCT LEVEL)	SEE PAGE
	1	1	**7K-1181**	2	STRAP-CABLE (5.72-MM DIA)	
	2	1	**233-2300**	1	FITTING-CROSS	
I	3	1	**467-4367**	1	HOSE AS	
I	4	1	**467-4368**	1	HOSE AS	
	5	1	**467-4369**	1	BRACKET AS	
	6	1	**091-9035**	1	SPACER (11X25X20-MM THK)	
	7	1	*165-4935*	2	PLUG AS	
					(EACH INCLUDES)	
		1	**6V-9510**	1	PLUG (1-14-THD)	
		1	**7J-9108**	1	SEAL-O-RING	
	8	1	**206-2423**	1	SADDLE	
M	9	1	**344-5675**	1	NUT (M10X1.5-THD)	
	10	1	**6D-4244**	2	CLIP	
	11	1	**7J-9108**	3	SEAL-O-RING	
	12	1	**8T-1889**	1	CLIP (SLOT)	
	13	1	**8T-1890**	1	CLIP (TAB)	
	14	1	**8T-4121**	3	WASHER-HARD (11X21X2.5-MM THK)	
M	15	1	**8T-4136**	1	BOLT (M10X1.5X25-MM)	
M	16	1	**8T-6466**	1	BOLT (M10X1.5X60-MM)	

I - REFER TO HYDRAULIC INFORMATION SYSTEM
M - METRIC PART

463-8113 **LINES GP-OIL COOLER (**contd.**)** **i06751820**

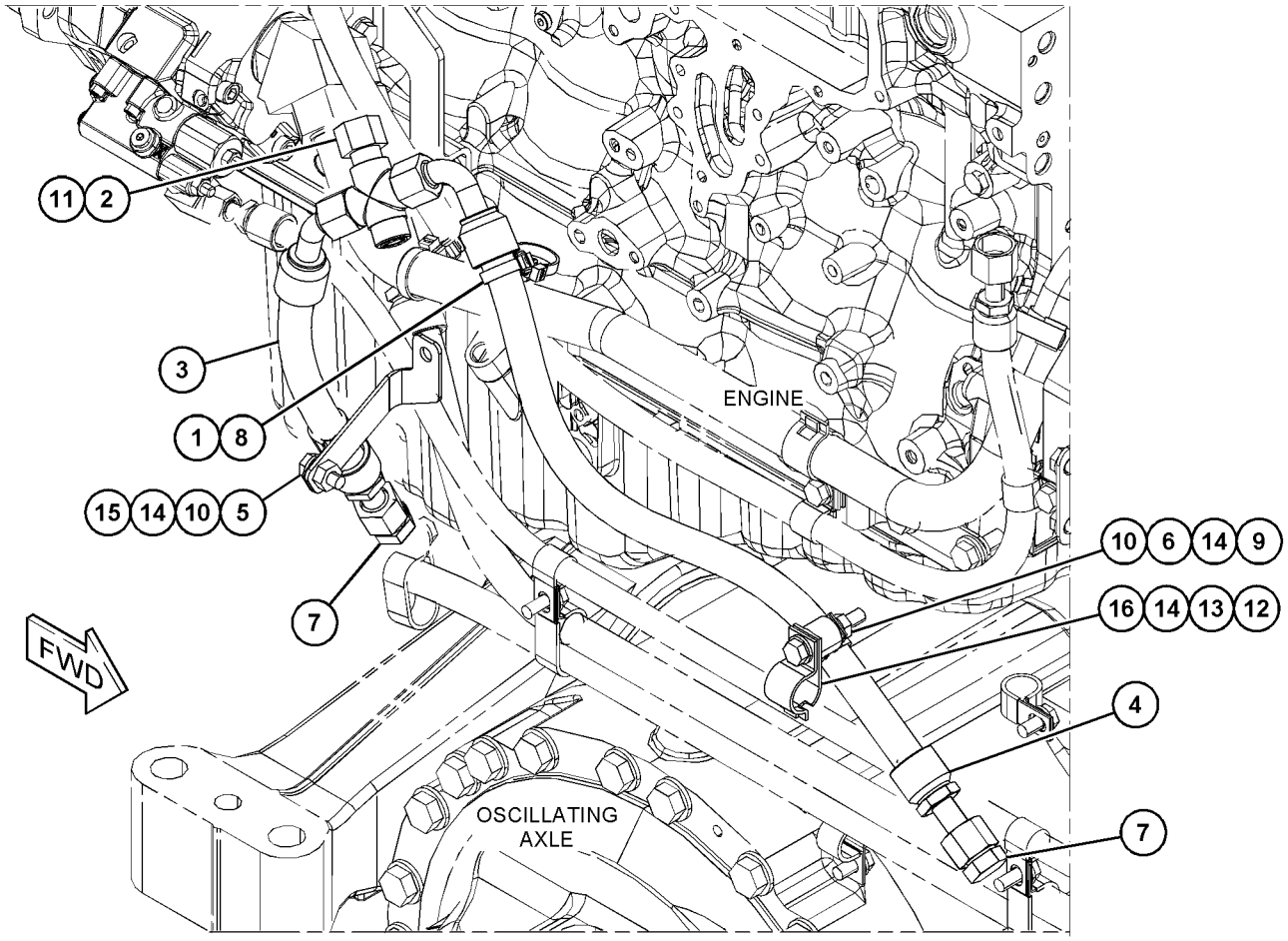

GRAPHIC #1 <END> g06050066

415-8195 LINES GP-WATER–RADIATOR

S/N: TNS1-UP

PART OF 456-5790 CHASSIS AR

SMCS-1380 **i06759672**

NOTE	REF NO	GRAPHIC REF	PART NUMBER	QTY	PART NAME 1 2 3 4 5 6 (PRODUCT LEVEL)	SEE PAGE
	1	1	**364-9781**	1	HOSE	
	2	1,2	**3E-4096**	12	CAP	
	3	2	**162-9728**	1	BRACKET AS	
	4	2	**183-7264**	1	VALVE AS-FLUID SAMPLING	
		2	**3J-1907**	1	SEAL-O-RING	
	5	2	**226-6583**	1	BRACKET AS	
	6	1	**486-0884**	1	TANK GP-COOLANT (RADIATOR)	
		1	**345-1237**	1	CAP AS-COOLANT TANK	
	7	1	**502-6857**	1	TUBE	
	8	2	**365-0036**	1	BRACKET AS	
M		2	**8T-3490**	1	NUT-WELD (M10X1.5-THD)	
	9	1	*366-4698*	1	PLUG AS	
		1	**360-3690**	1	PLUG (7/16-20-THD)	
		1	**3J-7354**	1	SEAL-O-RING	
	10	1	**501-9116**	1	TUBE AS	
	11	1	**501-9117**	1	HOSE	
	12	1	**501-9118**	1	HOSE	
	13	1	**415-8203**	1	HOSE	
	14	1	**501-8916**	1	HOSE	
	15	2	**450-3850**	1	PLUG-RUBBER	
	16	2	**453-8404**	1	TUBE AS	
	17	2	**453-8409**	1	HOSE	
	18	2	*459-0654*	1	ADAPTER AS	
		2	**459-0653**	1	ADAPTER	
		2	**6V-3251**	1	SEAL-O-RING	
	19	1,2	**467-2726**	10	CLAMP-T BOLT	
M	20	2	**101-3129**	1	STUD (M10X1.5-THD)	
	21	1,2	**147-0385**	3	CLIP	
	22	2	**157-0670**	1	CAP-DUST	
	23	2	**286-0693**	4	SPACER (11X25X18-MM THK)	
	24	1	**1P-4278**	1	CLAMP-HOSE	
	25	1	**211-8071**	1	CAP-PROTECTIVE	
	26	1,2	**211-8073**	5	CAP-PROTECTION	
	27	1	**212-6934**	1	CLAMP-T BOLT	
	28	1	**217-6885**	1	CLAMP	
	29	2	*241-6215*	1	ELBOW AS	
		2	**6V-8076**	1	ELBOW	
		2	**3J-1907**	1	SEAL-O-RING	
M	30	2	**344-5675**	1	NUT (M10X1.5-THD)	
	31	2	**443-3947**	3	CLAMP-HOSE	
	32	1,2	**4D-7388**	4	CLIP	
	33	2	**5P-4116**	2	WASHER-HARD (8.8X20.5X2-MM THK)	
	34	2	**6V-3378**	1	CLIP	
	35	1	**7K-1181**	4	STRAP-CABLE (5.72-MM DIA)	
	36	1,2	**7X-7958**	2	CLAMP-HOSE	
M	37	2	**8T-4196**	4	BOLT (M10X1.5X35-MM)	
	38	2	**8T-4121**	6	WASHER-HARD (11X21X2.5-MM THK)	
M	39	2	**8T-4136**	2	BOLT (M10X1.5X25-MM)	

415-8195 **LINES GP-WATER (**contd.**)** **i06759672**

NOTE	REF NO	GRAPHIC REF	PART NUMBER	QTY	PART NAME 1 2 3 4 5 6 (PRODUCT LEVEL)	SEE PAGE
M	40	2	**8T-6466**	2	BOLT (M10X1.5X60-MM)	
M	41	2	**8T-7547**	2	BOLT (M8X1.25X30-MM)	
E	42	1	**349-6239**		HOSE (181-CM)	
E	43	2	**351-9048**		HOSE (38-CM)	
E	44	1	**7Y-1976**		HOSE-WATER (169-CM)	
	45	1	**290-5562**	2	MOUNT (DUAL SWIVEL)	

E - ORDER BY THE CENTIMETER
M - METRIC PART

415-8195 **LINES GP-WATER (**contd.**)** **i06759672**

REFER TO ALL ILLUSTRATIONS OF
THIS GROUP FOR AUXILIARY VIEWS

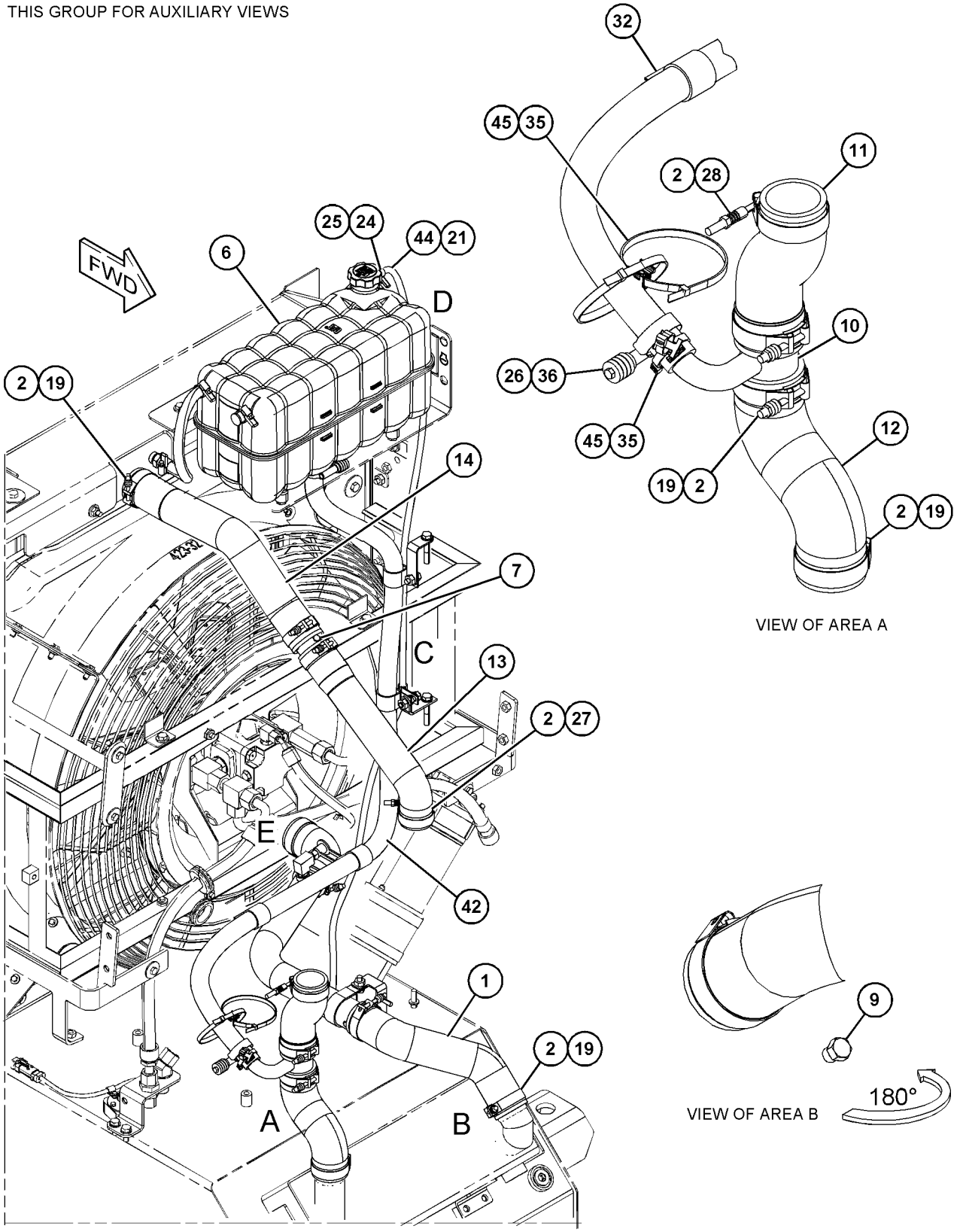

GRAPHIC #1 g06110630

415-8195 **LINES GP-WATER (**contd.**)** **i06759672**

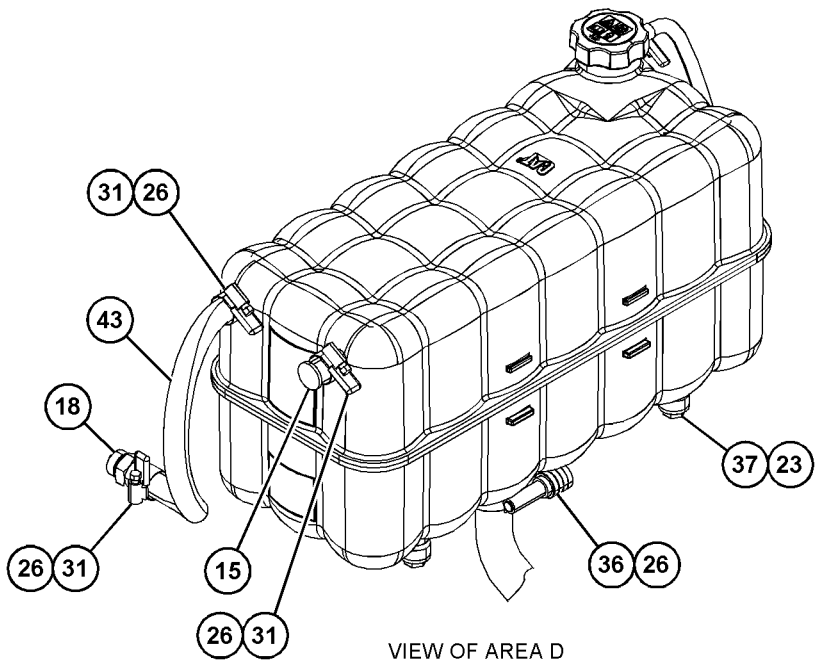

VIEW OF AREA D

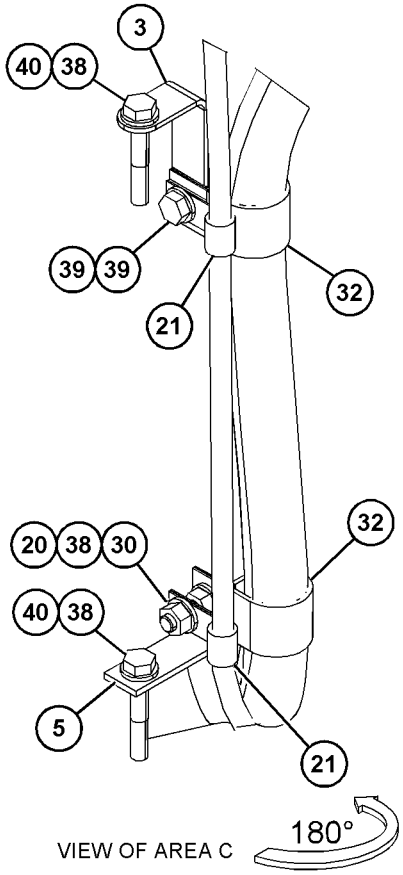

VIEW OF AREA C

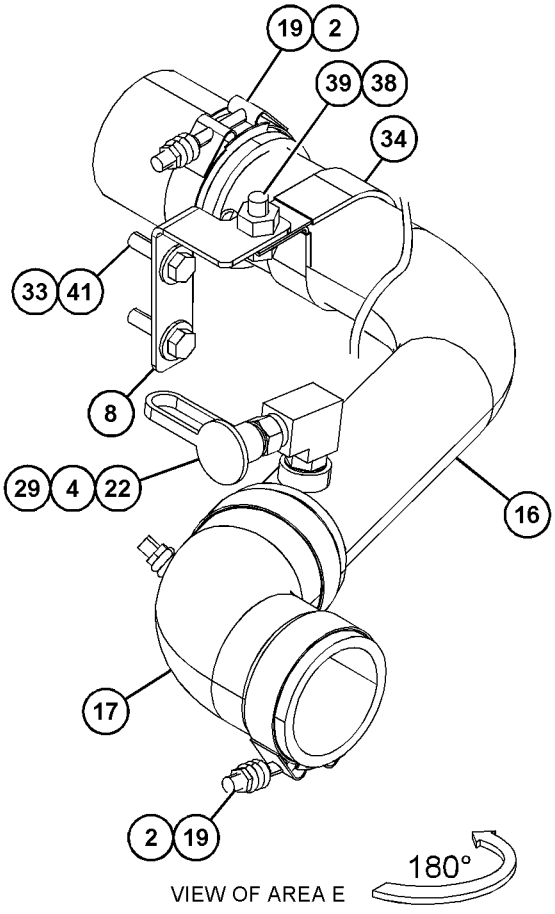

VIEW OF AREA E

GRAPHIC #2 <END> g06110631

372-2297 PUMP GP-WATER

S/N: E7A1-UP

PART OF 435-8541 ENGINE AR-PRIMARY

SMCS-1361 **i06580493**

NOTE	REF NO	GRAPHIC REF	PART NUMBER	QTY	PART NAME 1 2 3 4 5 6 (PRODUCT LEVEL)	SEE PAGE
M	1	1	**6I-0217**	2	BOLT (M8X1.25X20-MM)	
	2	1	**354-4754**	1	KIT-WATER PUMP	
	3	1	**113-8129**	2	BOLT (M8X1.25X75-MM)	
	4	1	**225-8019**	1	GASKET	
	5	1	**225-7741**	1	CONNECTION AS	
	5A	1	**225-7738**	1	SEAL-O-RING	
	5B	1	**225-7739**	1	SEAL-O-RING	
M	6	1	**6I-0254**	2	BOLT (M8X1.25X30-MM)	
M	7	1	**6I-0839**	5	BOLT (M8X1.25X70-MM)	

M - METRIC PART

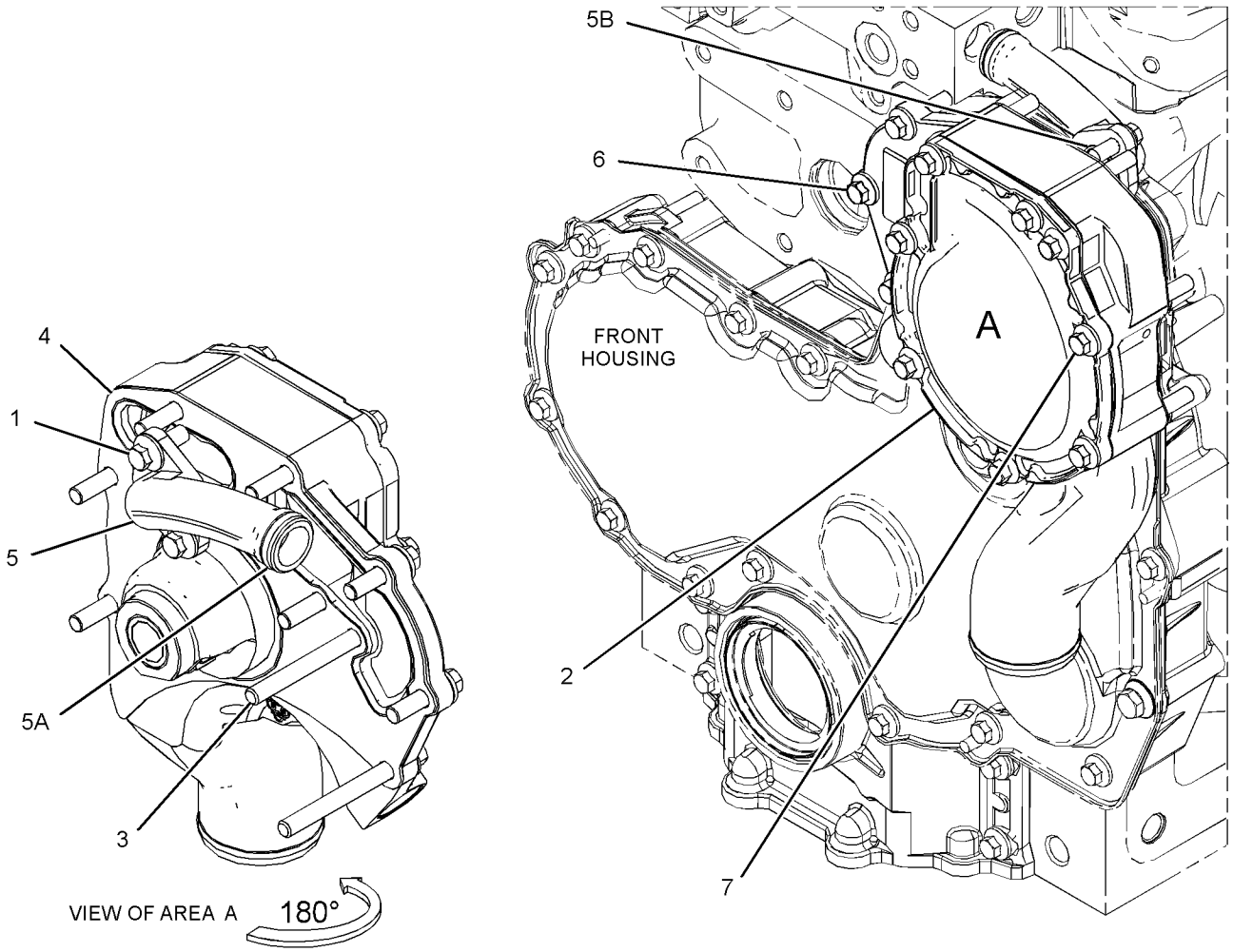

GRAPHIC #1 <END> g06032434

415-8207 RADIATOR & AFTERCOOLER GP

S/N: TNS1-UP
CANNOT BE USED WITH 426-0593—PAGE: 74
PART OF 492-4033, 492-4034 DISTRIBUTION AR

SMCS-1063, 1353 **i06810226**

NOTE	REF NO	GRAPHIC REF	PART NUMBER	QTY	PART NAME 1 2 3 4 5 6 (PRODUCT LEVEL)	SEE PAGE
	1	1	**121-3307**	2	MOUNT AS-RESILIENT	
	2	1	**349-5935**	1	CORE AS-OIL COOLER (HYDRAULIC)	
	3	1	**416-5237**	1	CORE AS-RADIATOR	
		1	**335-5462**	8	PIN	
	4	1	**416-5238**	1	CORE AS-AFTERCOOLER	
	5	1	**334-2578**	1	CORE AS-CONDENSER	
		1	**317-8141**	4	MOUNT	

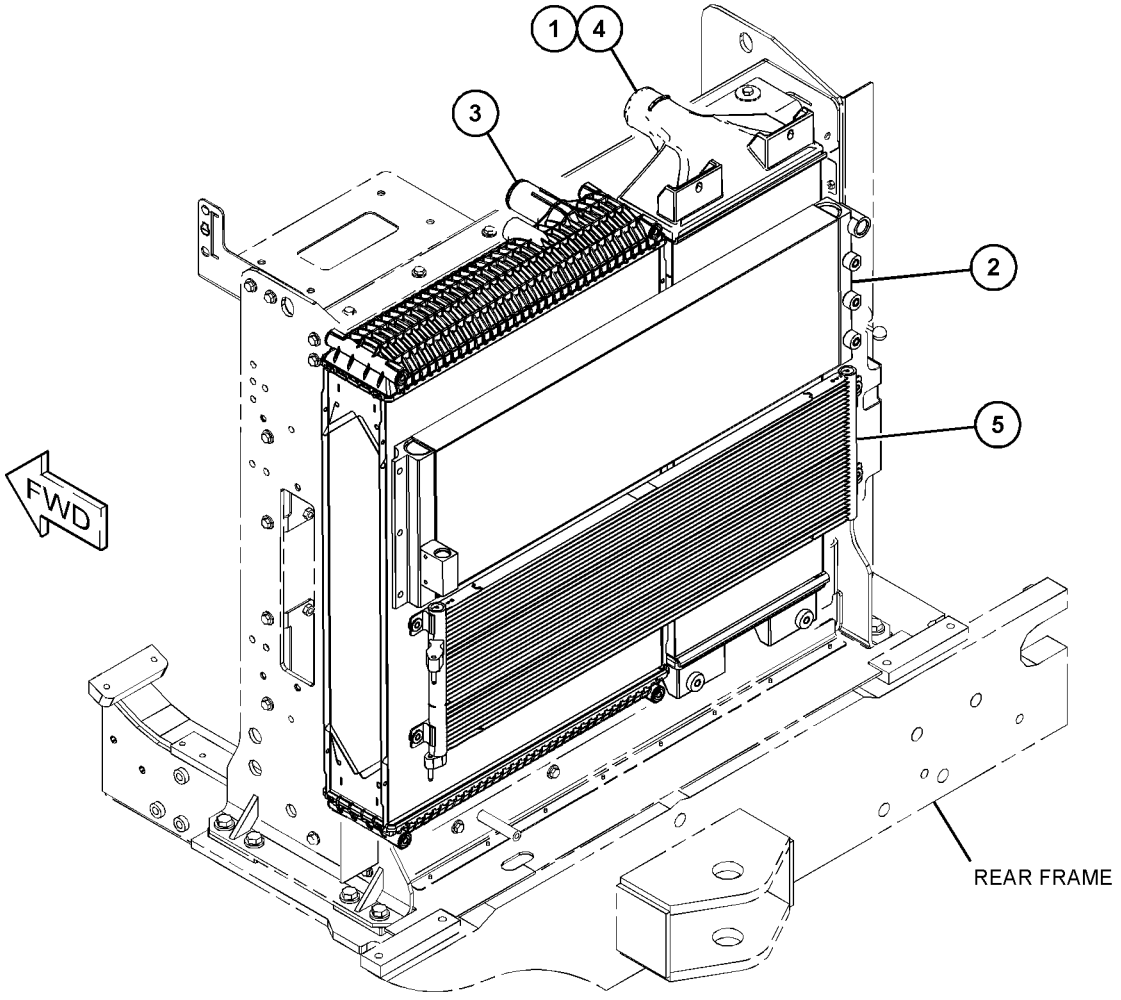

GRAPHIC #1 <END> g06122975

426-0593 RADIATOR & AFTERCOOLER GP

S/N: TNS1-UP

CANNOT BE USED WITH 415-8207

SMCS-1063, 1353

i06769710

NOTE	REF NO	GRAPHIC REF	PART NUMBER	QTY	PART NAME 1 2 3 4 5 6 (PRODUCT LEVEL)	SEE PAGE
	1	1	**121-3307**	2	MOUNT AS-RESILIENT	
	2	1	**349-5934**	1	CORE AS-HYDRAULIC OIL COOLER	
	3	1	**416-5237**	1	CORE AS-RADIATOR	
		1	**335-5462**	8	PIN	
	4	1	**416-5238**	1	CORE AS-AFTERCOOLER	
	5	1	**329-8587**	1	CORE AS-CONDENSER	

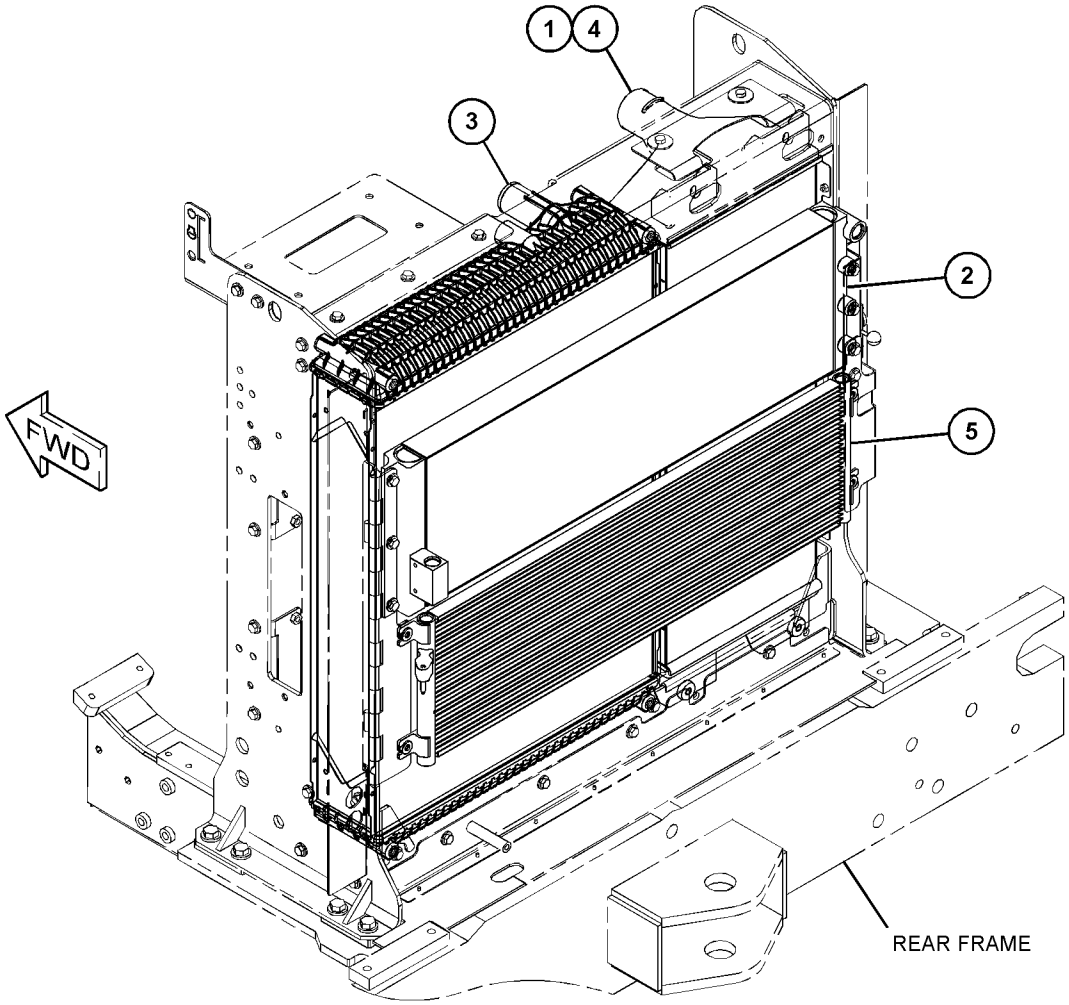

GRAPHIC #1 <END> g06029334

415-8206 SUPPORT GP-RADIATOR

S/N: TNS1-UP
RH
PART OF 420-3015 FRAME GP-RADIATOR

SMCS-1351, 1353

i06737255

NOTE	REF NO	GRAPHIC REF	PART NUMBER	QTY	PART NAME 1 2 3 4 5 6 (PRODUCT LEVEL)	SEE PAGE
	1	1	**475-9728**	1	BRACKET	
	2	1	**364-9814**	1	ANGLE AS	
	3	1	**415-8214**	1	SUPPORT AS-RADIATOR (RH)	
	4	1	**418-7900**	1	BRACKET	
M	5	1	**344-5675**	2	NUT (M10X1.5-THD)	
M	6	1	**6V-7357**	3	BOLT (M6X1X25-MM)	
	7	1	**7X-7729**	2	WASHER (11X25X3-MM THK)	
	8	1	**9X-8256**	3	WASHER (6.6X12X2-MM THK)	

M - METRIC PART

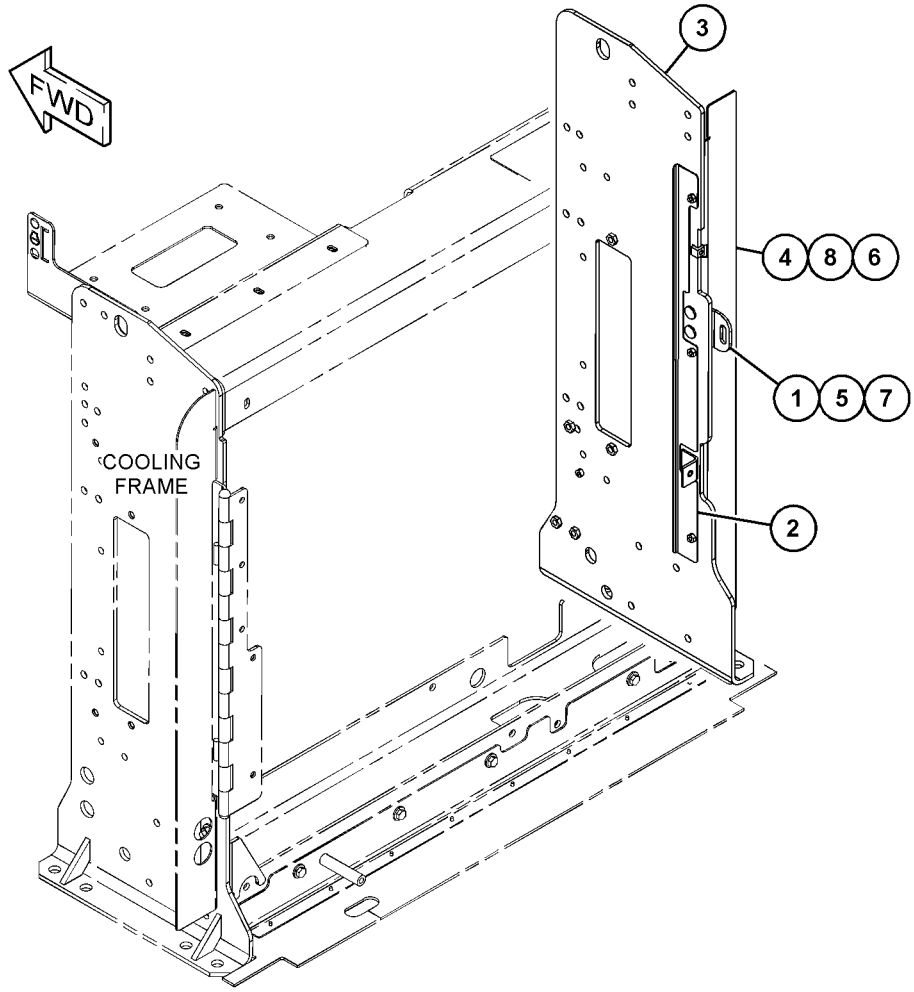

GRAPHIC #1

<END>

g06012999

415-8209 SUPPORT GP-RADIATOR

S/N: TNS1-UP
LH
PART OF 420-3015 FRAME GP-RADIATOR

SMCS-1351, 1353

i06739887

NOTE	REF NO	GRAPHIC REF	PART NUMBER	QTY	PART NAME 1 2 3 4 5 6 (PRODUCT LEVEL)	SEE PAGE
	1	1	**415-8210**	1	SUPPORT AS-RADIATOR (LH)	
	2	1	**449-9543**	1	HINGE AS	
	3	1	**453-0862**	1	BRACKET	
M	4	1	**344-5675**	8	NUT (M10X1.5-THD)	
	5	1	**7X-7729**	8	WASHER (11X25X3-MM THK)	
D	6	1	**5P-8309**		SEAL (0.7-M)	

D - ORDER BY THE METER
M - METRIC PART

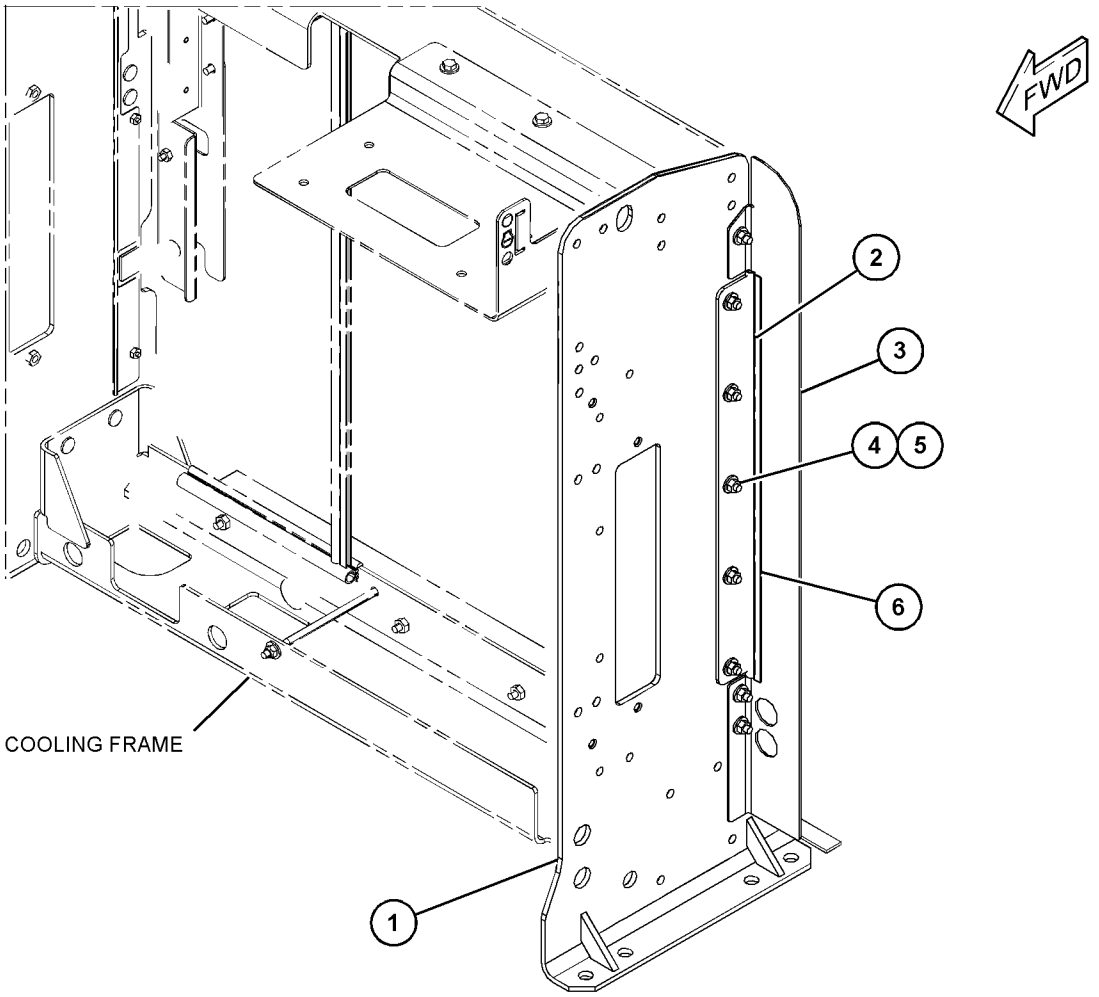

GRAPHIC #1 <END> g06113663

449-3342 SUPPORT GP-RADIATOR–LOWER

S/N: TNS1-UP

PART OF 420-3015 FRAME GP-RADIATOR

SMCS-1351, 1353 **i06759689**

NOTE	REF NO	GRAPHIC REF	PART NUMBER	QTY	PART NAME 1 2 3 4 5 6 (PRODUCT LEVEL)	SEE PAGE
	1	1	**420-3001**	1	BAFFLE AS	
		1	**139-3785**	8	RIVET-POP	
	2	1	**449-3343**	1	SUPPORT AS-LOWER	
M		1	**8T-3490**	10	NUT-WELD (M10X1.5-THD)	
		1	**8T-4226**	2	WASHER-PLATED (10.5X45X3-MM THK)	
	3	1	**7X-7729**	4	WASHER (11X25X3-MM THK)	
M	4	1	**8T-4195**	4	BOLT (M10X1.5X30-MM)	

M - METRIC PART

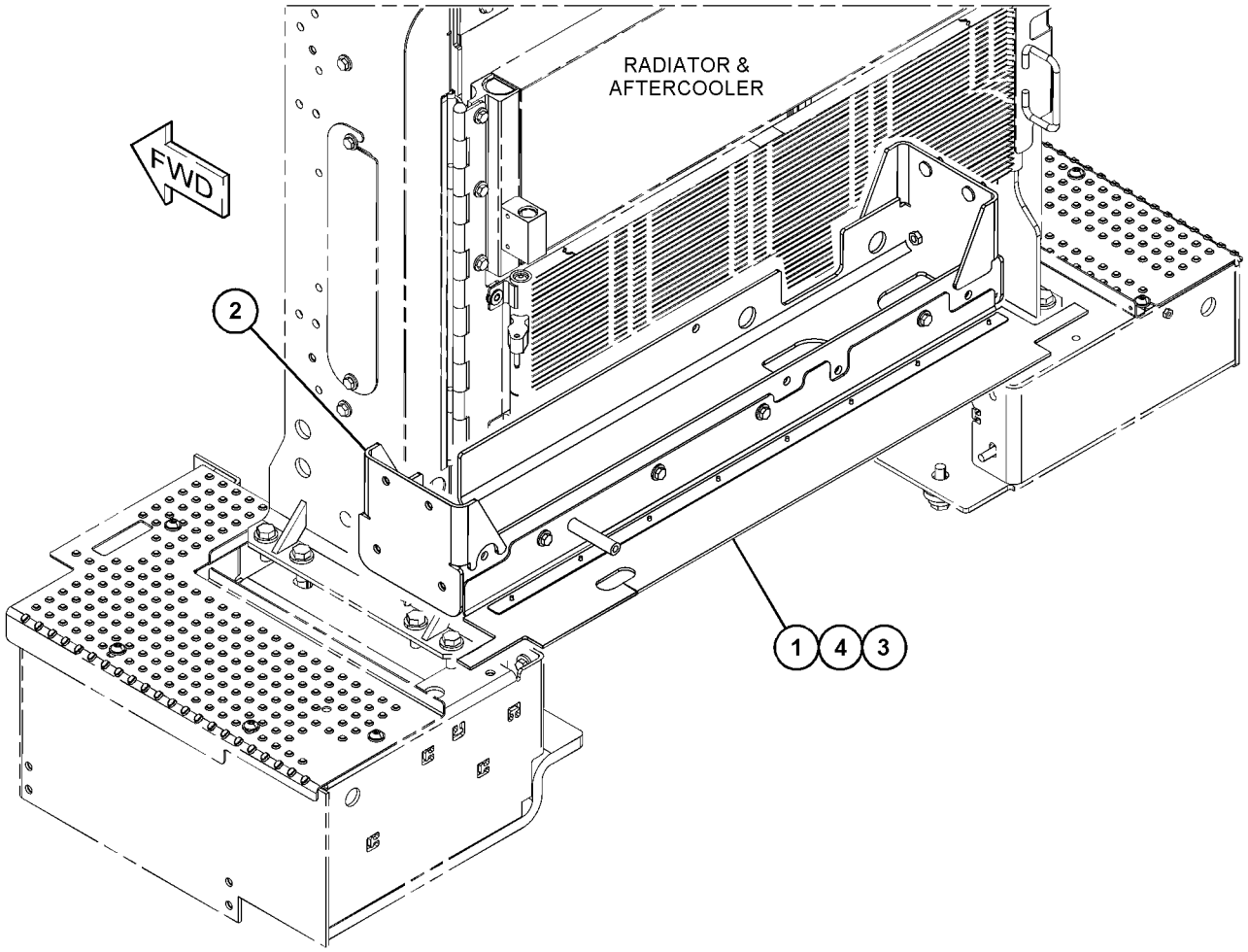

GRAPHIC #1 <END> g06049988

349-6258 AIR CLEANER GP

S/N: TNS1-UP

PART OF 365-0153 AIR CLEANER GP

SMCS-1051, 1054

i04786396

NOTE	REF NO	GRAPHIC REF	PART NUMBER	QTY	PART NAME 1 2 3 4 5 6 (PRODUCT LEVEL)	SEE PAGE
	1	1	**116-5763**	16	CLIP-SPRING	
	2	1	**337-0790**	1	FILTER ELEMENT-AIR (SECONDARY)	
	3	1	**386-2097**	1	FILTER ELEMENT-AIR (PRIMARY)	
	4	1	**349-6266**	1	COVER AS-AIR CLEANER	
		1	**332-4910**	6	LATCH AS	
	5	1	**373-2761**	1	GASKET	

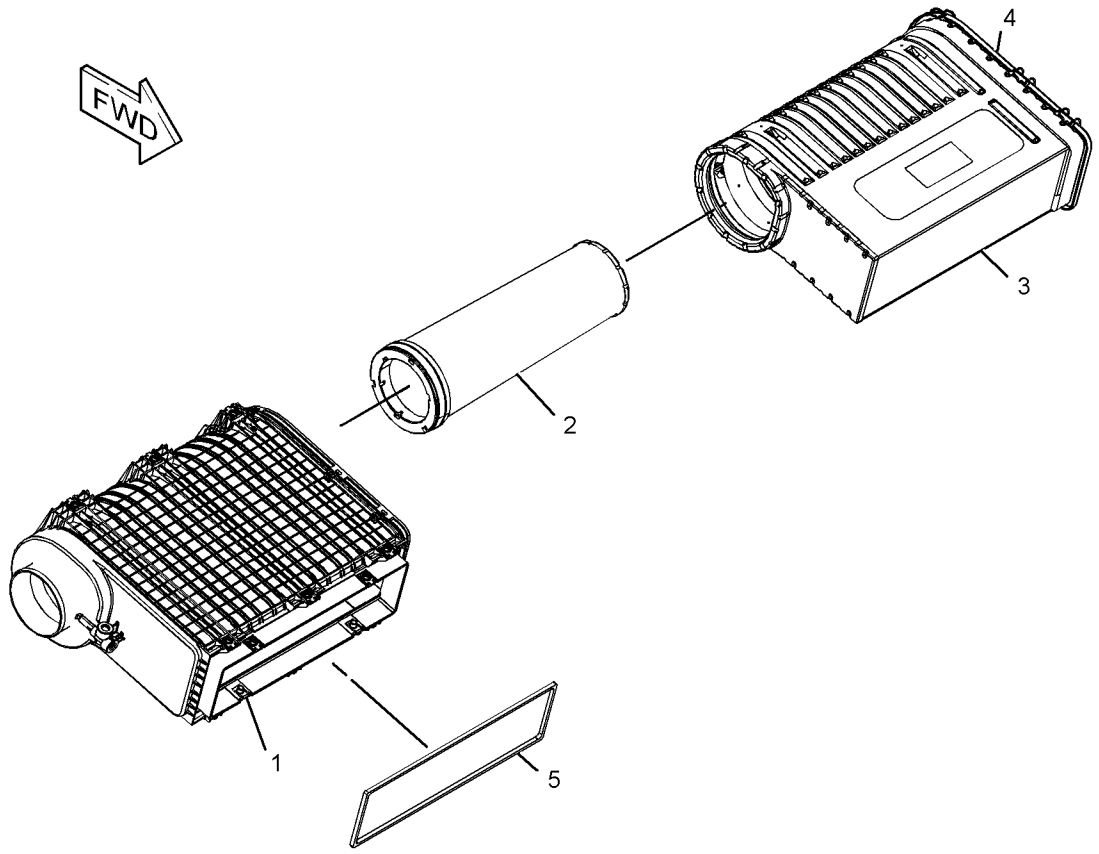

GRAPHIC #1 <END> g02281456

365-0153 AIR CLEANER GP

S/N: TNS1-UP

PART OF 365-0165 MOUNTING GP-AIR CLEANER

SMCS-1051, 1054 **i05786152**

NOTE	REF NO	GRAPHIC REF	PART NUMBER	QTY	PART NAME 1 2 3 4 5 6 (PRODUCT LEVEL)	SEE PAGE
	1	1	**131-6143**	1	CLAMP-HOSE	
	2	1	**340-1455**	1	SEAL	
	3	1	**340-1456**	1	PLENUM	
Y	4	1	**349-6258**	1	AIR CLEANER GP	78
	5	1	**365-0351**	1	VALVE-CHECK	
	6	1	**452-4023**	1	PRECLEANER	
M	7	1	**112-8293**	4	BOLT-FLANGE HEAD (M8X1.25X30-MM)	
	8	1	**5P-0600**	1	CLAMP-HOSE	
	9	1	**8T-2561**	4	WASHER-HARD (10.5X28.5X5-MM THK)	

M - METRIC PART
Y - SEPARATE ILLUSTRATION

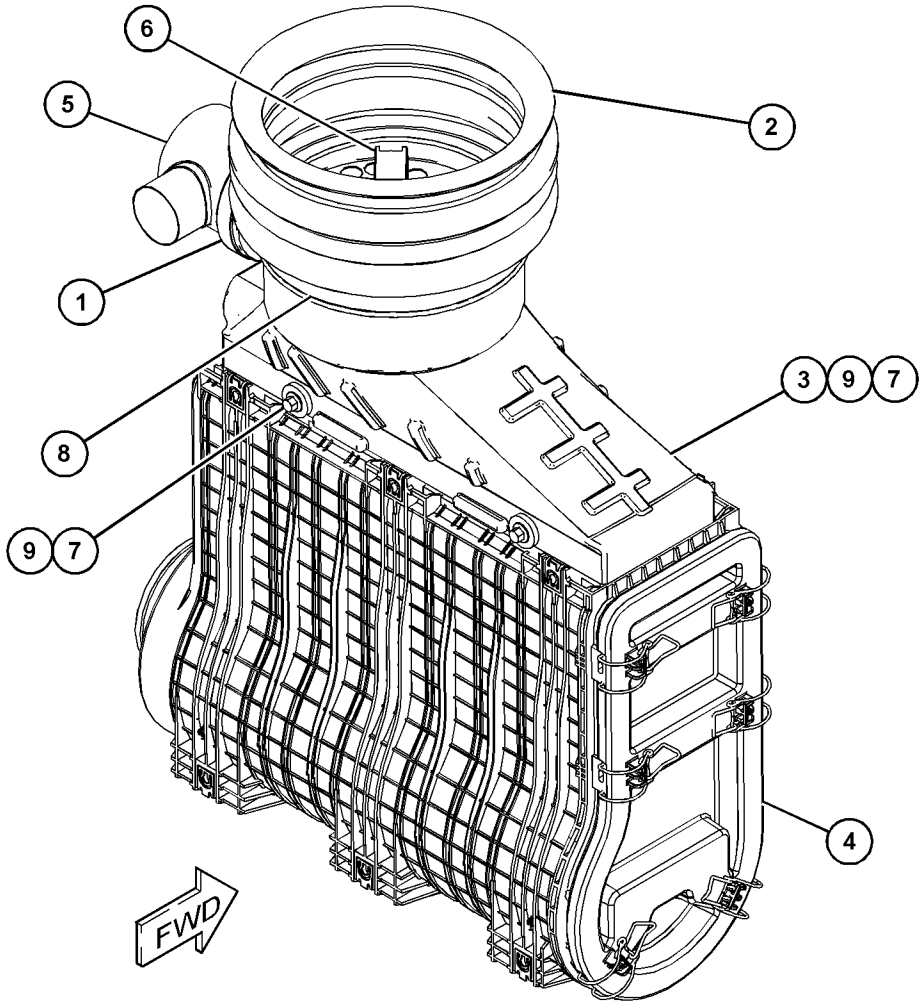

GRAPHIC #1 <END> g03678722

365-0112 CAP GP-AIR CLEANER

S/N: TNS1-UP

CANNOT BE USED WITH 365-0120—PAGE: 98, 365-0121—PAGE: 99

PART OF 492-4033, 492-4034 DISTRIBUTION AR

SMCS-1051 **i06677436**

NOTE	REF NO	GRAPHIC REF	PART NUMBER	QTY	PART NAME 1 2 3 4 5 6 (PRODUCT LEVEL)	SEE PAGE
	1	1	**1S-9937**	1	CAP AS-AIR CLEANER	

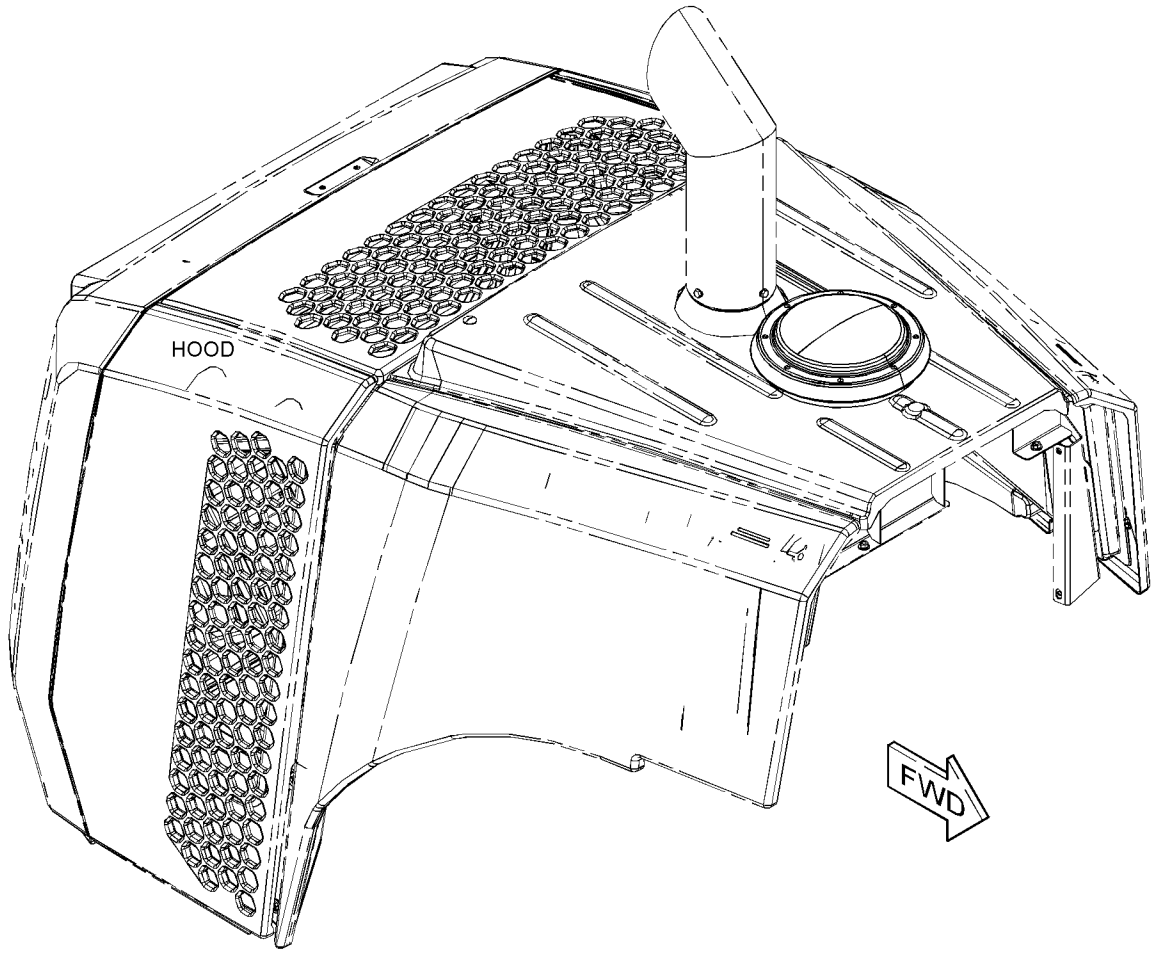

GRAPHIC #1 <END> g03660778

365-0097 DUST EJECTOR GP

S/N: TNS1-UP

PART OF 390-0579 INSTALLATION AR-ENGINE

SMCS-1068 **i06759772**

NOTE	REF NO	GRAPHIC REF	PART NUMBER	QTY	PART NAME 1 2 3 4 5 6 (PRODUCT LEVEL)	SEE PAGE
	1	1	**337-7325**	1	CLAMP-BAND	
	2	1	**365-0092**	1	TUBE AS	
	3	1	**495-8029**	1	HOSE	
	4	1	**211-8073**	2	CAP-PROTECTION	
	5	1	**335-9214**	2	CLAMP-BAND	

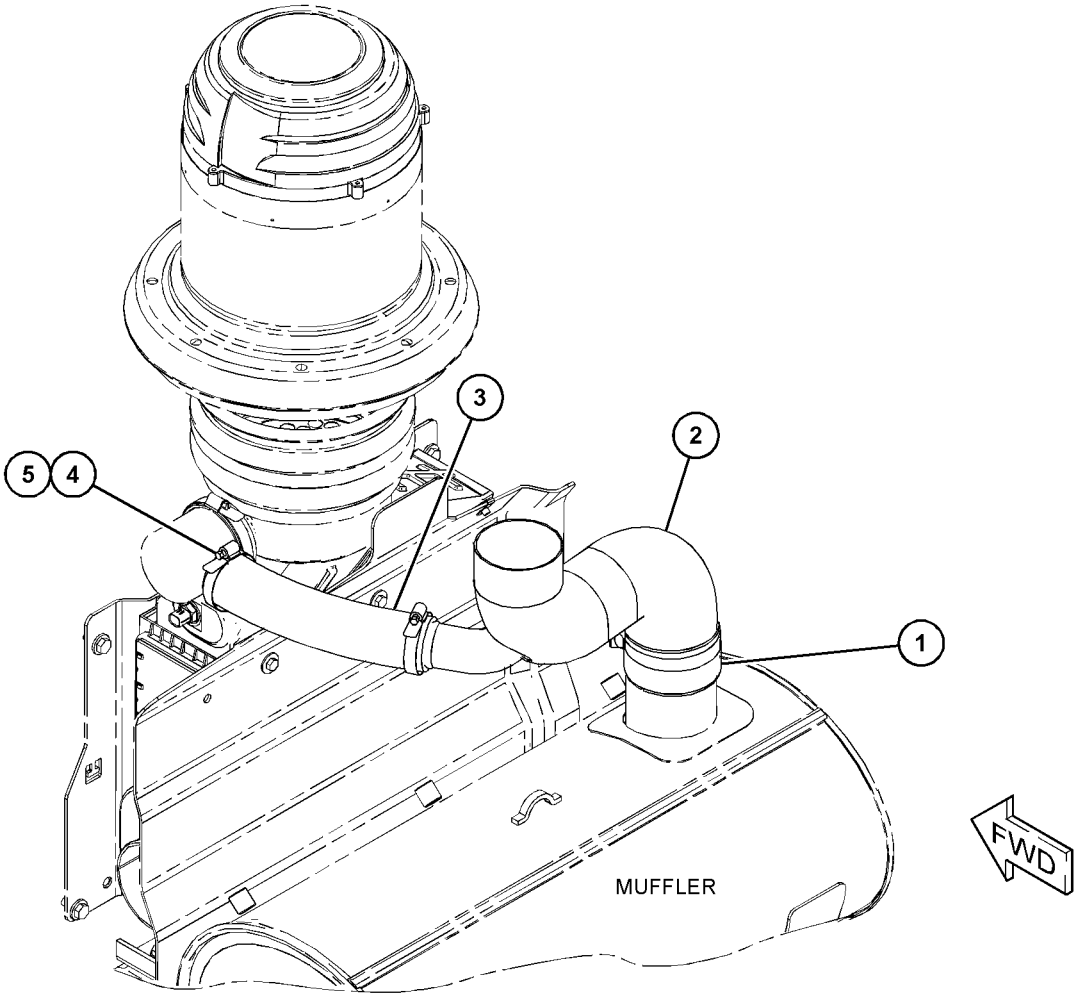

GRAPHIC #1 <END> g06049760

348-3432 FILTER ELEMENT AS-AIR—ACTIVATED CHARCOAL

S/N: TNS1-UP

PART OF 443-4189 FILTER GP-CAB AIR

SMCS-1054 **i06666842**

NOTE	PART NUMBER	QTY	PART NAME 1 2 3 4 5 6 (PRODUCT LEVEL)	SEE PAGE
			(NO SERVICED PARTS)	
			<END>	

415-8192 LINES GP-AFTERCOOLER AIR

S/N: TNS1-UP

PART OF 456-5790 CHASSIS AR

SMCS-1063, 1071

i06759670

NOTE	REF NO	GRAPHIC REF	PART NUMBER	QTY	PART NAME 1 2 3 4 5 6 (PRODUCT LEVEL)	SEE PAGE
	1	1	**415-8191**	1	TUBE	
	2	1	**415-8193**	1	TUBE	
	3	1	**415-8194**	1	TUBE	
	4	1	**3E-4096**	10	CAP	
	5	1	**309-4069**	2	HOSE	
	6	1	**364-9846**	1	BRACKET AS	
	7	1	**415-8196**	1	HOSE	
	8	1	**415-8198**	1	HOSE-ELBOW	
	9	1	**415-8199**	1	HOSE	
	10	1	**432-3596**	1	CLAMP	
	11	1	**209-4578**	8	CLAMP-T BOLT	
	12	1	**209-4580**	1	CLAMP-T BOLT	
	13	1	**212-6934**	1	CLAMP-T BOLT	
	14	1	**325-1242**	2	CLIP	
	15	1	**8T-4121**	2	WASHER-HARD (11X21X2.5-MM THK)	
M	16	1	**8T-4136**	3	BOLT (M10X1.5X25-MM)	
	17	1	**8T-4222**	4	WASHER-PLATED (11X32X2.5-MM THK)	
M	18	1	**8T-4195**	3	BOLT (M10X1.5X30-MM)	
	19	1	**507-2433**	1	BRACKET AS	
	20	1	**7X-7729**	2	WASHER (11X25X3-MM THK)	

M - METRIC PART

415-8192 **LINES GP-AFTERCOOLER AIR (**contd.**)** **i06759670**

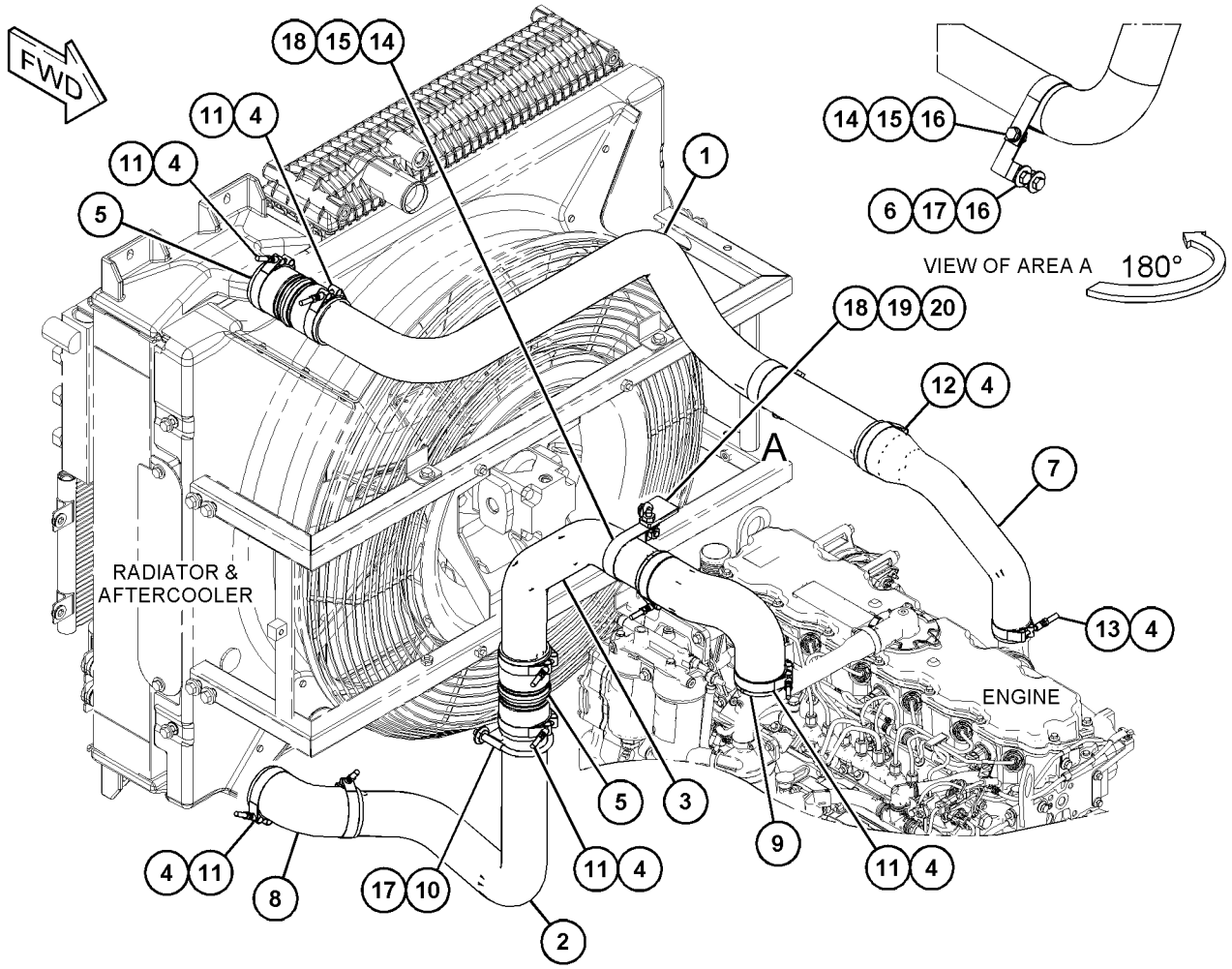

GRAPHIC #1 <END> g06122267

365-0111 LINES GP-AIR

S/N: TNS1-UP

PART OF 505-1547 CONTROL AR-FAN

SMCS-1071 **i06761539**

NOTE	REF NO	GRAPHIC REF	PART NUMBER	QTY	PART NAME 1 2 3 4 5 6 (PRODUCT LEVEL)	SEE PAGE
	1	1	**365-0106**	1	TUBE	
	2	1	**365-0133**	1	HOSE-MOLDED	
	3	1	**365-0174**	1	HOSE	
	4	1	**211-8073**	4	CAP-PROTECTION	
	5	1	**346-4788**	1	CLAMP-BAND	
	6	1	**346-4791**	3	CLAMP-BAND	

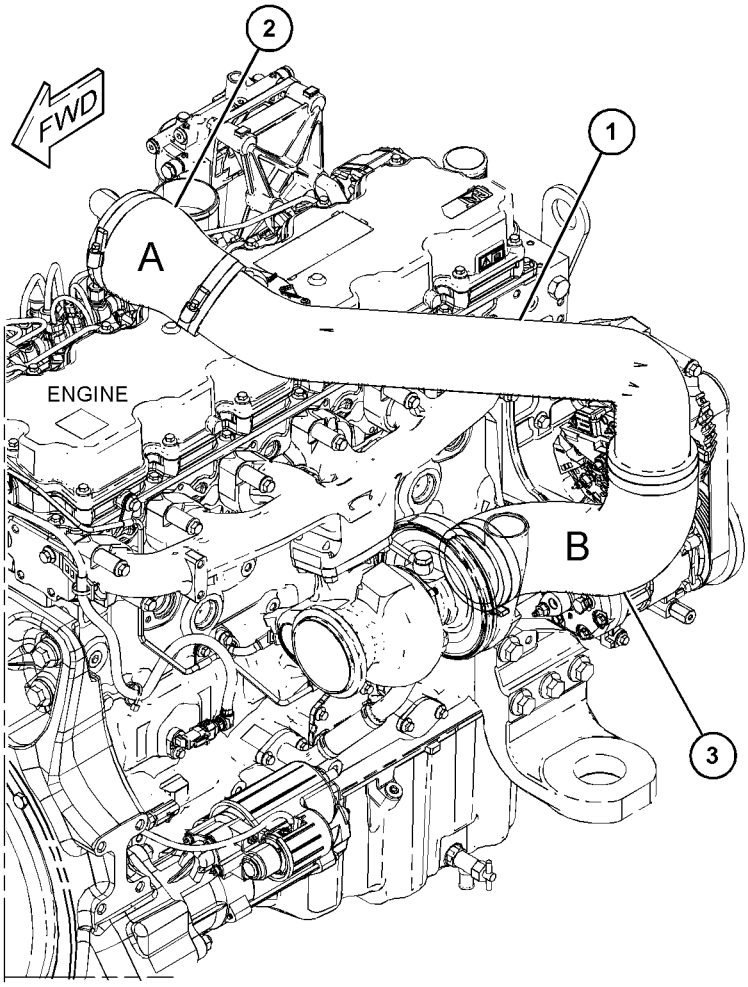

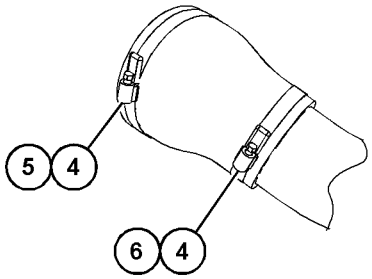

VIEW OF AREA A

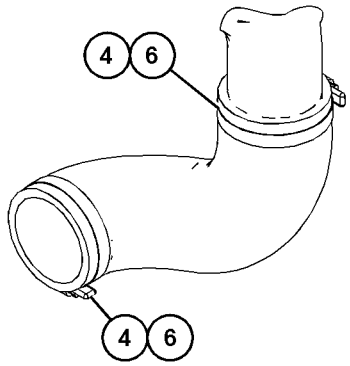

VIEW OF AREA B

GRAPHIC #1 <END> g06050335

365-0183 LINES GP-AIR

S/N: TNS1-UP

PART OF 505-1548 CONTROL AR-FAN

SMCS-1071 **i06779980**

NOTE	REF NO	GRAPHIC REF	PART NUMBER	QTY	PART NAME 1 2 3 4 5 6 (PRODUCT LEVEL)	SEE PAGE
	1	1	**365-0133**	1	HOSE-MOLDED	
	2	1	**365-0164**	1	TUBE AS	
	3	1	**365-0174**	1	HOSE	
	4	1	**211-8073**	4	CAP-PROTECTION	
	5	1	**346-4788**	1	CLAMP-BAND	
	6	1	**346-4791**	3	CLAMP-BAND	

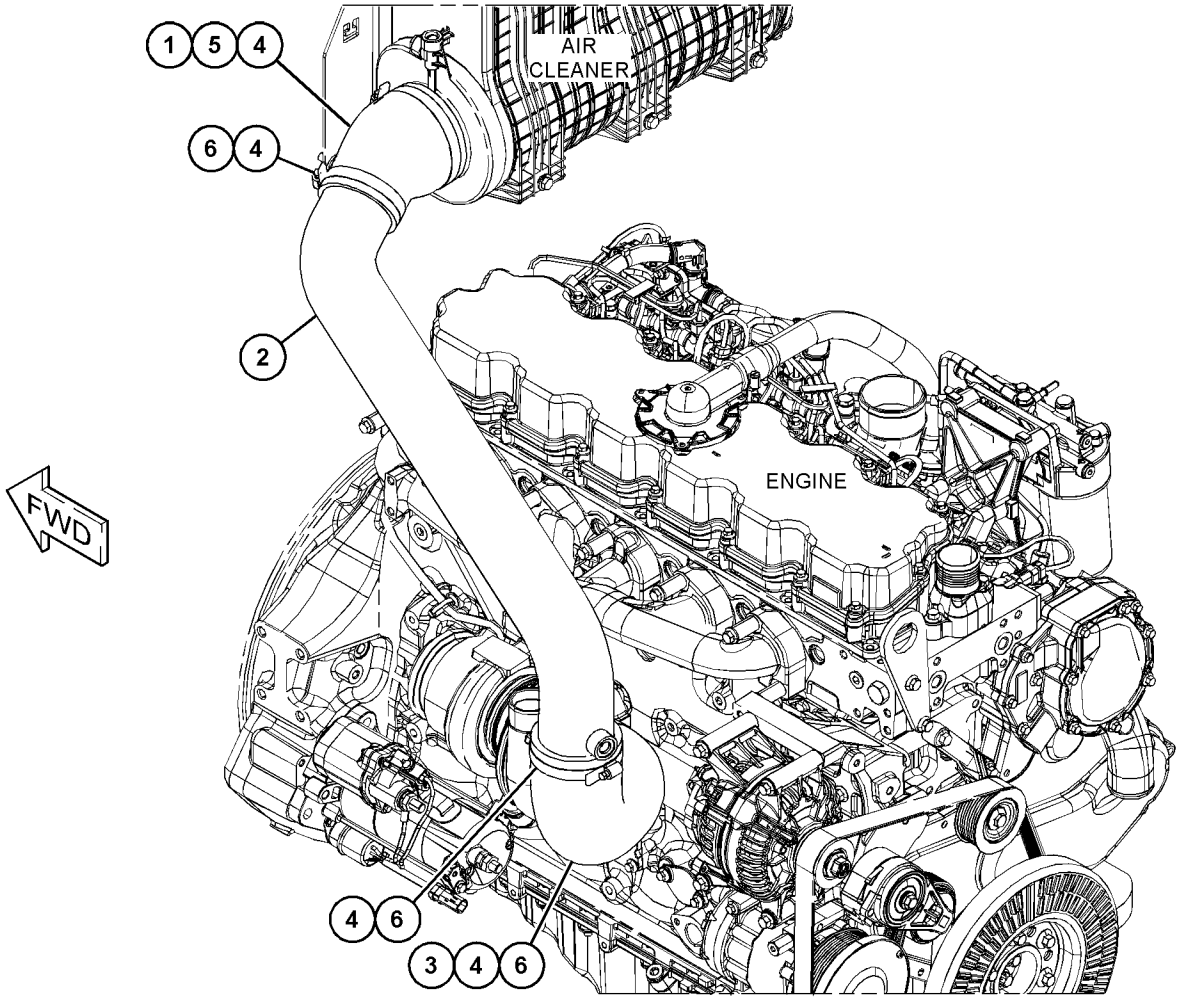

GRAPHIC #1 <END> g06048259

463-1125 LINES GP-AIR

S/N: TNS1-UP

PART OF 505-1548 CONTROL AR-FAN

SMCS-1071 **i06779894**

NOTE	REF NO	GRAPHIC REF	PART NUMBER	QTY	PART NAME 1 2 3 4 5 6 (PRODUCT LEVEL)	SEE PAGE
	1	1	**4H-6112**	1	BREATHER (SOLENOID VALVE, FAN)	
	2	1	**7J-8611**	1	ELBOW-PIPE	
	3	1	**7K-1181**	3	STRAP-CABLE (5.72-MM DIA)	
	4	1	*148-8368*	1	ELBOW AS	
		1	**3J-1907**	1	SEAL-O-RING	
		1	**4J-5477**	1	SEAL-O-RING	
		1	**6V-8627**	1	ELBOW	
Y	5	1	**188-2461**	1	VALVE GP-SOLENOID (VARIABLE PITCH FAN)	102
	6	1	**206-2423**	1	SADDLE	
	7	1	**364-9876**	1	BRACKET AS	
M		1	**8T-3490**	1	NUT-WELD (M10X1.5-THD)	
	8	1	*377-9564*	3	ELBOW AS	
					(EACH INCLUDES)	
		1	**4J-5477**	1	SEAL-O-RING	
		1	**377-9563**	1	ADAPTER-ELBOW	
	9	1	*377-9581*	1	ELBOW AS	
		1	**4J-5477**	1	SEAL-O-RING	
		1	**377-9577**	1	ADAPTER-ELBOW	
Y	10	1	**389-6081**	1	PUMP & MTG GP-HYDRAULIC FAN (VARIABLE PITCH FAN AIR PUMP)	643
	11	1	**396-4306**	1	HOSE AS	
	12	1	**396-4307**	1	BRACKET AS	
M		1	**9X-2032**	2	NUT-WELD (M4X0.7-THD)	
I	13	1	**463-1126**	1	HOSE AS	
I	14	1	**463-1127**	1	HOSE AS	
	15	1	**124-0174**	2	CLIP	
M	16	1	**170-5632**	2	BOLT (M4X0.7X16-MM)	
	17	1	**198-4766**	1	WASHER-HARD (11X25X10-MM THK)	
	18	1	**1P-4278**	1	CLAMP-HOSE	
	19	1	**2Y-5429**	1	GROMMET	
M	20	1	**344-5675**	1	NUT (M10X1.5-THD)	
	21	1	**4D-9517**	3	CLIP	
	22	1	**5F-9757**	1	GROMMET	
	23	1	**5P-4116**	1	WASHER-HARD (8.8X20.5X2-MM THK)	
	24	1	**7X-0579**	6	WASHER-HARD (8.8X25.5X2-MM THK)	
	25	1	**7X-7729**	2	WASHER (11X25X3-MM THK)	
	26	1	**8T-3016**	2	WASHER (5.3X10X1-MM THK)	
	27	1	**8T-4121**	2	WASHER-HARD (11X21X2.5-MM THK)	
M	28	1	**8T-4137**	1	BOLT (M10X1.5X20-MM)	
M	29	1	**8T-4195**	2	BOLT (M10X1.5X30-MM)	
M	30	1	**8T-6912**	3	BOLT (M8X1.25X50-MM)	
M	31	1	**8T-7547**	1	BOLT (M8X1.25X30-MM)	

I - REFER TO HYDRAULIC INFORMATION SYSTEM
M - METRIC PART
Y - SEPARATE ILLUSTRATION

463-1125 **LINES GP-AIR (**contd.**)** **i06779894**

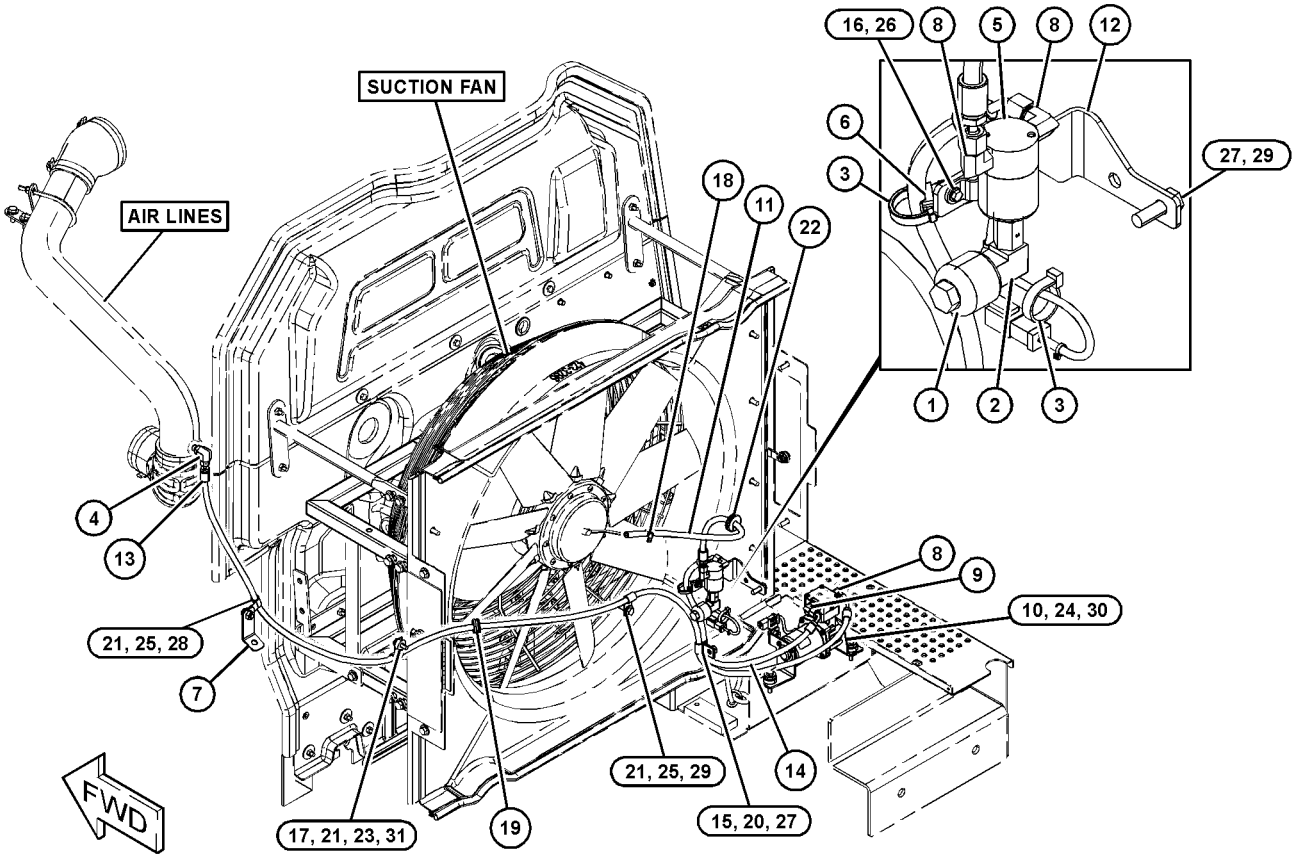

GRAPHIC #1 <END> g03834532

365-0087 LINES GP-EXHAUST

S/N: TNS1-UP

PART OF 390-0579 INSTALLATION AR-ENGINE

SMCS-1061 **i06759763**

NOTE	REF NO	GRAPHIC REF	PART NUMBER	QTY	PART NAME 1 2 3 4 5 6 (PRODUCT LEVEL)	SEE PAGE
	1	1	**337-7325**	1	CLAMP-BAND	
	2	1	**365-0175**	1	TUBE	
	3	1	**282-8229**	1	CLAMP AS	

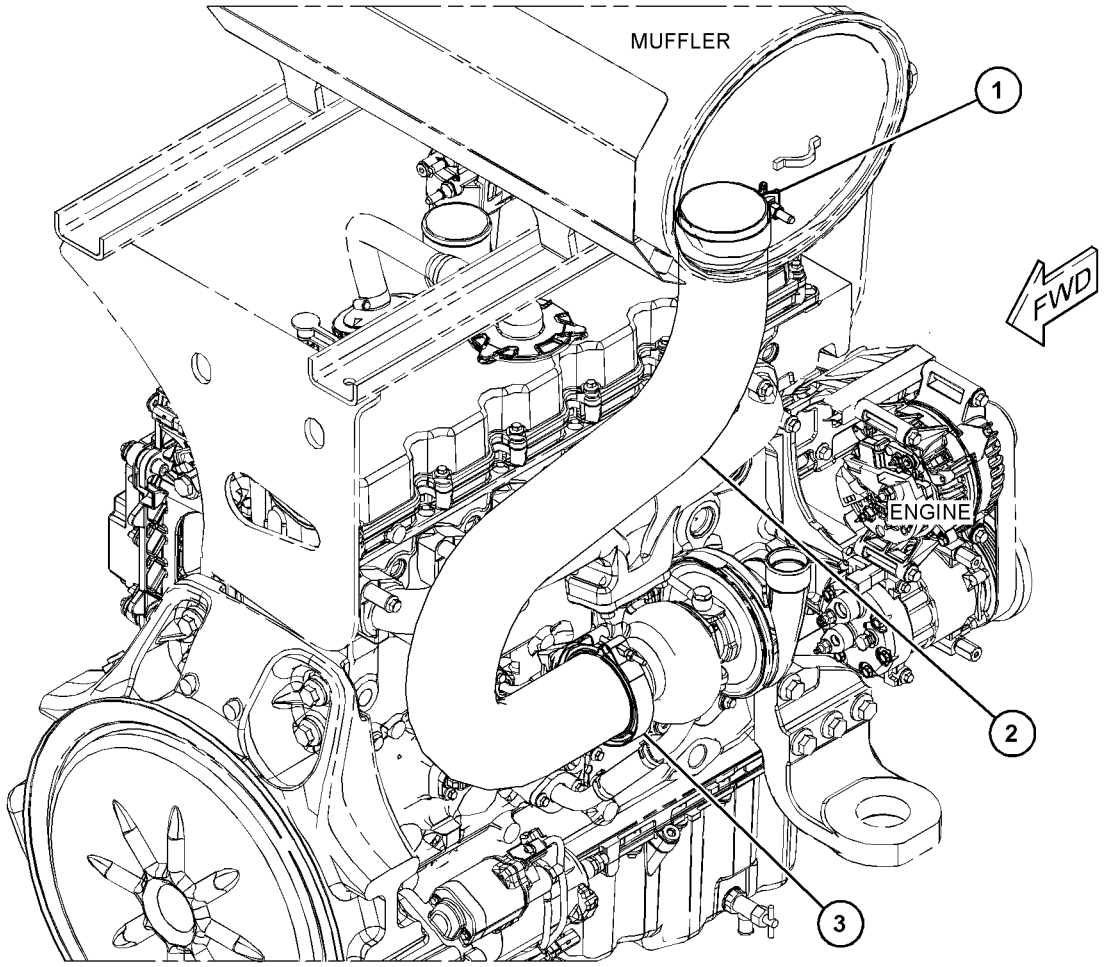

GRAPHIC #1 <END> g06049058

420-9572 LINES GP-TURBOCHARGER AIR

S/N: E7A1-UP

PART OF 416-6970 TURBOCHARGER GP

SMCS-1052, 1071

i06599224

NOTE	REF NO	GRAPHIC REF	PART NUMBER	QTY	PART NAME 1 2 3 4 5 6 (PRODUCT LEVEL)	SEE PAGE
	1	1	**225-8526**	2	WASHER (10.4X13.75X1.37-MM THK)	
	2	1	**133-9469**	2	CLIP	
	3	1	**225-8524**	1	BOLT-SPECIAL	
	4	1	**335-8611**	2	CLIP	
	6	1	**422-7715**	1	HOSE-TURBOCHARGER	
	7	1	**107-2348**	2	CLIP	

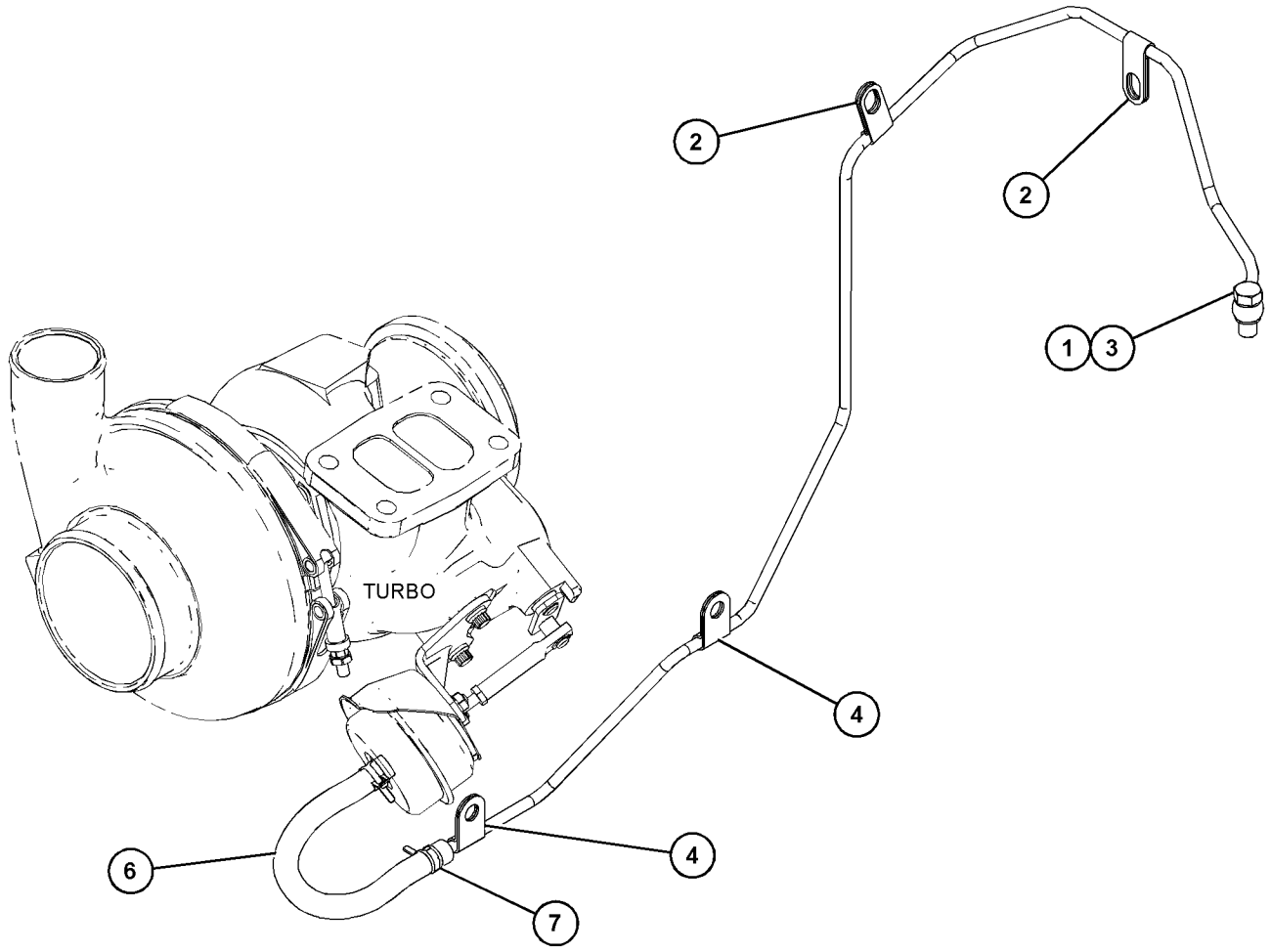

GRAPHIC #1 <END> g06041344

393-7694 MANIFOLD GP-EXHAUST

S/N: E7A1-UP

PART OF 435-8541 ENGINE AR-PRIMARY

SMCS-1059 **i05331885**

NOTE	REF NO	GRAPHIC REF	PART NUMBER	QTY	PART NAME 1 2 3 4 5 6 (PRODUCT LEVEL)	SEE PAGE
	1	1	**238-8292**	12	BOLT-FLANGE HEAD	
	2	1	**286-7851**	12	SPACER	
	3	1	**367-3340**	4	STUD	
	4	1	**384-2286**	1	MANIFOLD	
	5	1	**416-7727**	2	GASKET	

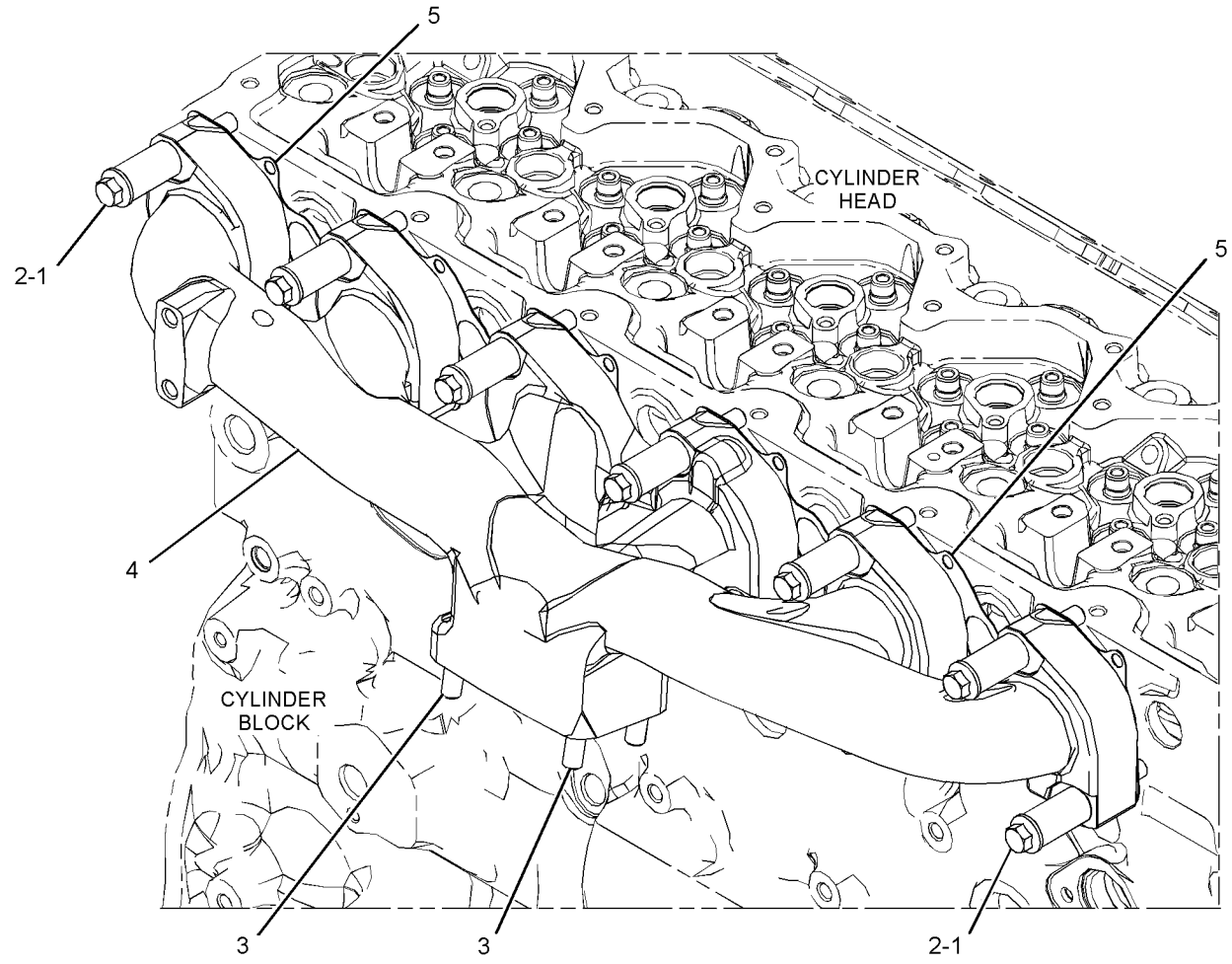

GRAPHIC #1 <END> g03379009

391-5523 MANIFOLD GP-INLET

S/N: E7A1-UP

PART OF 435-8541 ENGINE AR-PRIMARY

SMCS-1058 **i05832948**

NOTE	REF NO	GRAPHIC REF	PART NUMBER	QTY	PART NAME 1 2 3 4 5 6 (PRODUCT LEVEL)	SEE PAGE
M	1	1	**6I-0917**	2	BOLT (M6X1X25-MM)	
	2	1	**105-2740**	12	BOLT	
	3	1	**369-1658**	1	SOLENOID	
	4	1	**452-9704**	1	COVER (CYLINDER HEAD)	
M	5	1	**6I-0260**	4	BOLT (M8X1.25X25-MM)	
	6	1	**390-7626**	1	CONNECTION GP-AIR	
		1	**238-8288**	1	GASKET-INLET	
		1	**292-3462**	1	PLUG-PIPE	

M - METRIC PART

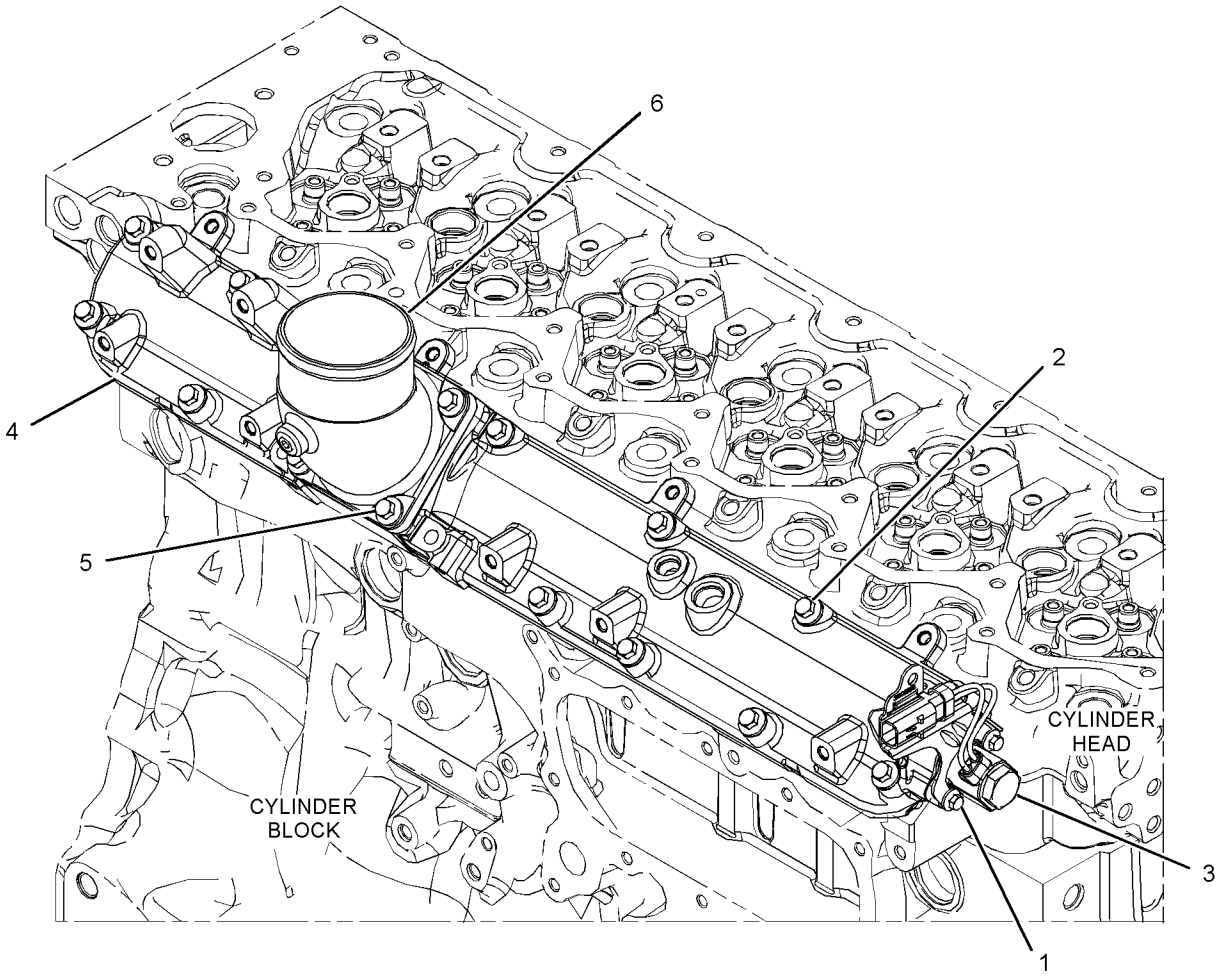

GRAPHIC #1 <END> g03476304

365-0165 MOUNTING GP-AIR CLEANER

S/N: TNS1-UP

PART OF 390-0579 INSTALLATION AR-ENGINE

SMCS-1051 **i06759776**

NOTE	REF NO	GRAPHIC REF	PART NUMBER	QTY	PART NAME 1 2 3 4 5 6 (PRODUCT LEVEL)	SEE PAGE
	1	1	**260-9210**	1	PLUG	
Y	2	1	*331-1134*	1	SENSOR GP-PRESSURE (AIR INLET)	205
	3	1	*340-0508*	1	SENSOR GP-TEMPERATURE (AIR INLET)	
		1	**238-5080**	1	SEAL-O-RING	
		1	**256-6453**	1	SENSOR-TEMPERATURE (AIR INLET)	
	4	1	**365-0105**	1	SHIELD AS	
M		1	**172-8591**	1	NUT-SPRING (M6X1-THD)	
	5	1	**365-0145**	1	BRACKET	
	6	1	**365-0146**	1	BRACKET AS	
M		1	**8T-3490**	1	NUT-WELD (M10X1.5-THD)	
Y	7	1	*365-0153*	1	AIR CLEANER GP	79
	8	1	**211-8073**	2	CAP-PROTECTION	
	9	1	**228-7100**	1	SEAL-O-RING	
	10	1	**5P-4116**	4	WASHER-HARD (8.8X20.5X2-MM THK)	
	11	1	**7X-0579**	6	WASHER-HARD (8.8X25.5X2-MM THK)	
	12	1	**7X-7729**	4	WASHER (11X25X3-MM THK)	
M	13	1	**8T-4136**	3	BOLT (M10X1.5X25-MM)	
M	14	1	**8T-4189**	10	BOLT (M8X1.25X20-MM)	
M	15	1	**8T-4196**	1	BOLT (M10X1.5X35-MM)	

M - METRIC PART
Y - SEPARATE ILLUSTRATION

365-0165 **MOUNTING GP-AIR CLEANER (**contd.**)** **i06759776**

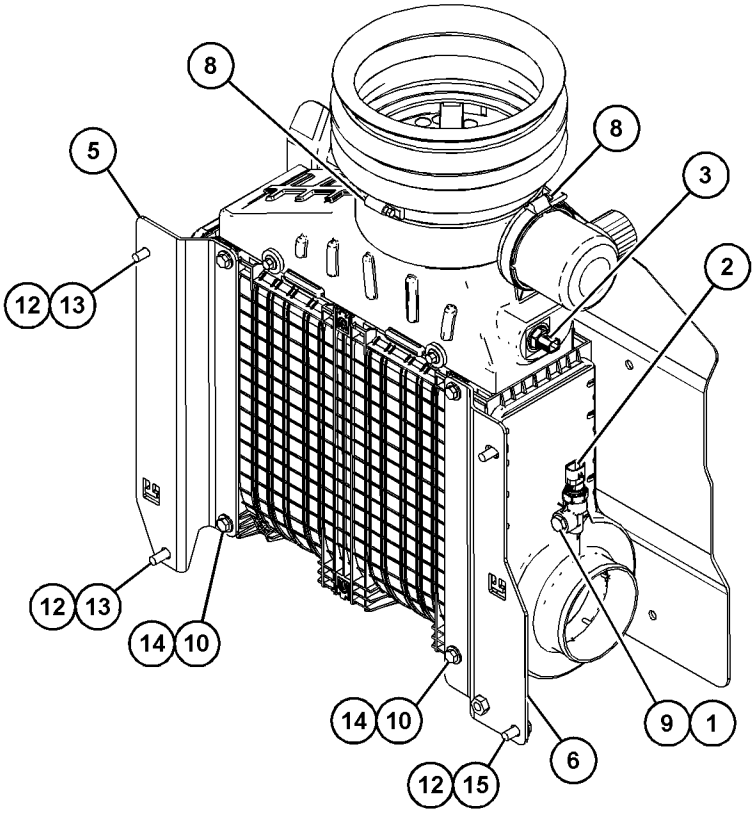

VIEW OF AREA A



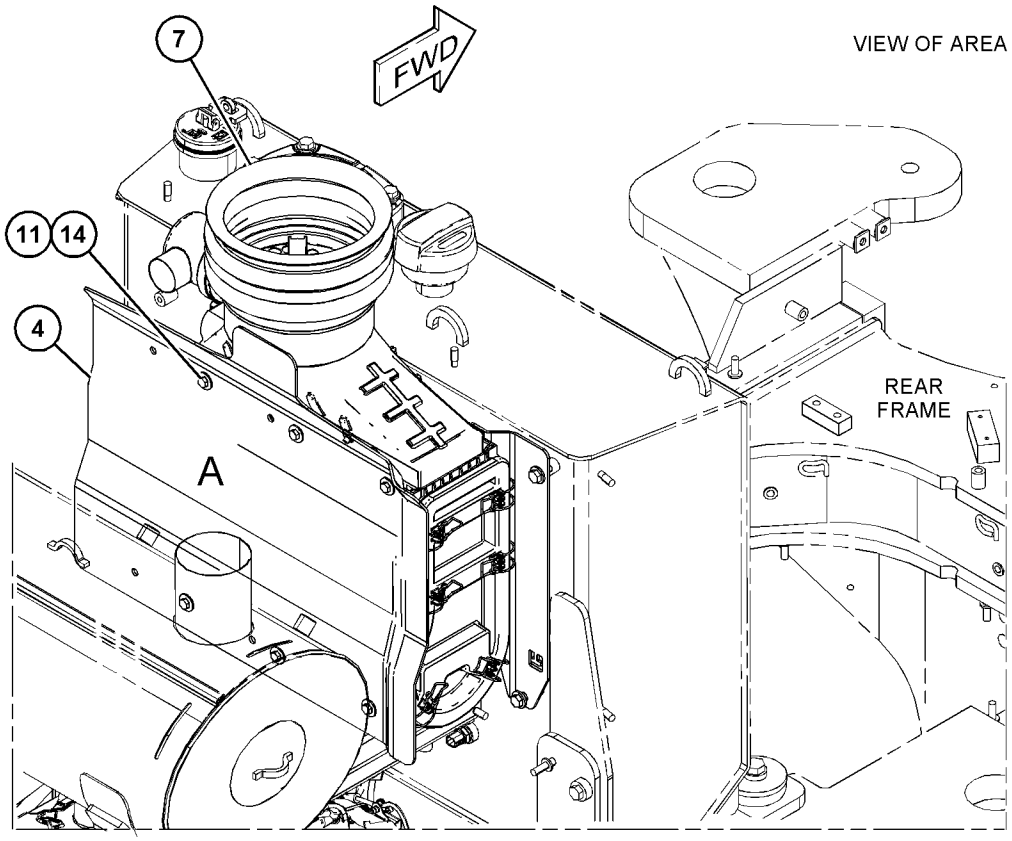

GRAPHIC #1 <END> g06050372

365-0089 MUFFLER GP

S/N: TNS1-UP

PART OF 390-0579 INSTALLATION AR-ENGINE

SMCS-1062 **i06759770**

NOTE	REF NO	GRAPHIC REF	PART NUMBER	QTY	PART NAME 1 2 3 4 5 6 (PRODUCT LEVEL)	SEE PAGE
	1	1	**360-2691**	1	MUFFLER AS	
	2	1	**365-0094**	1	BRACKET AS	
	3	1	**365-0095**	1	BRACKET	
	4	1	**365-0172**	1	BRACKET AS	
	5	1	**467-9056**	1	BRACKET	
	6	1	**118-0275**	8	WASHER (13.5X32X8-MM THK)	
M	7	1	**344-5675**	4	NUT (M10X1.5-THD)	
M	8	1	**8T-4186**	4	BOLT (M10X1.5X40-MM)	
M	9	1	**8T-4194**	4	BOLT (M12X1.75X50-MM)	
M	10	1	**8T-4195**	8	BOLT (M10X1.5X30-MM)	
M	11	1	**329-3356**	4	NUT (M12X1.75-THD)	
	12	1	**8T-7934**	16	WASHER-HARD (11X21X5-MM THK)	
	13	1	**316-9351**	2	MOUNTING-CABLE TIE	

M - METRIC PART

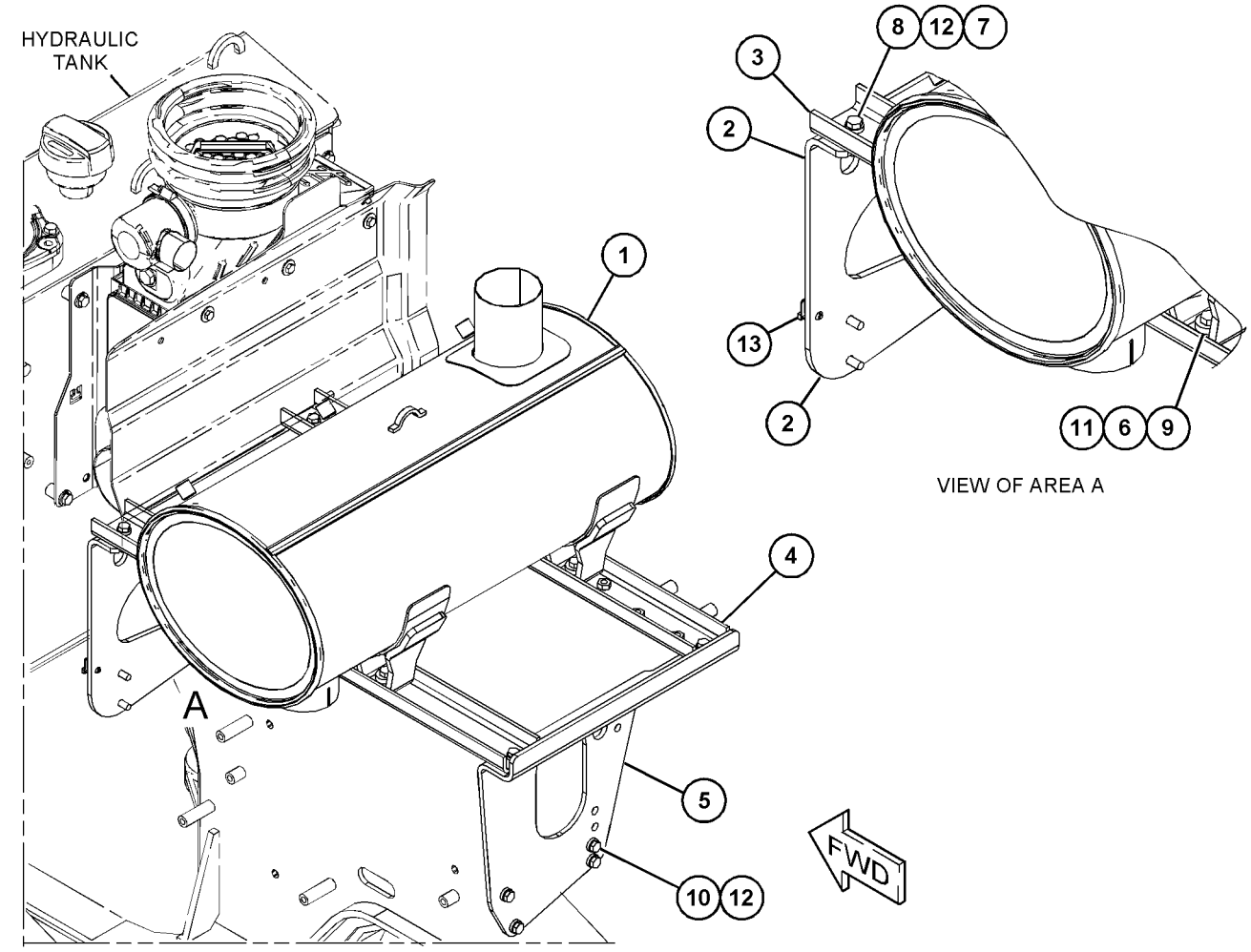

GRAPHIC #1 <END> g06121851

340-1427 PRECLEANER GP

S/N: TNS1-UP

PART OF 365-0120 PRECLEANER GP

SMCS-1055 **i05243960**

NOTE	REF NO	GRAPHIC REF	PART NUMBER	QTY	PART NAME 1 2 3 4 5 6 (PRODUCT LEVEL)	SEE PAGE
	1	1	**416-6472**	1	PIPE AS-EXTENSION	
	2	1	**361-3199**	1	PRECLEANER AS	
		1	**176-8234**	1	CLAMP	

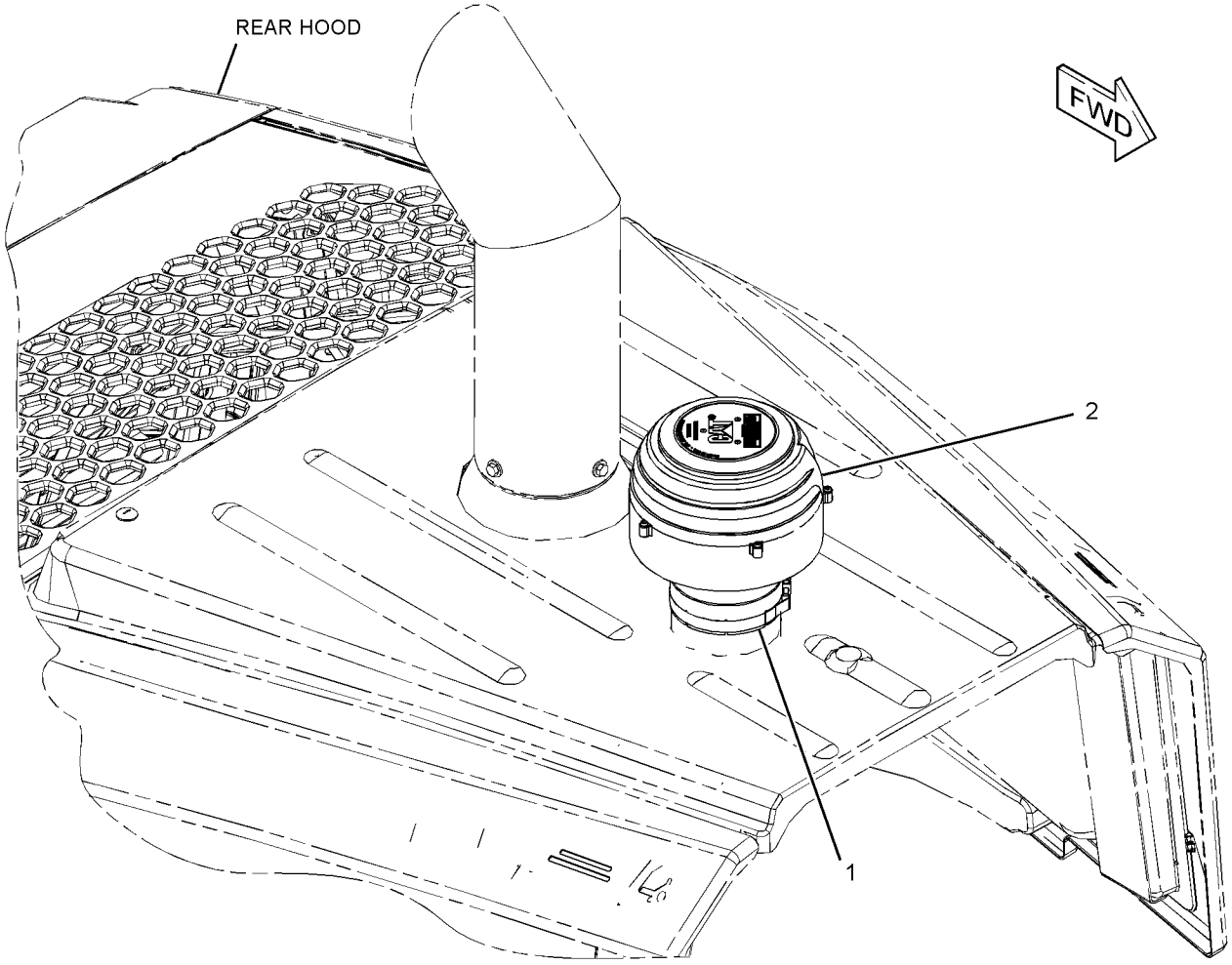

GRAPHIC #1 <END> g03358553

340-1502 PRECLEANER GP

S/N: TNS1-UP

PART OF 365-0121 PRECLEANER GP

SMCS-1055 **i05243975**

NOTE	REF NO	GRAPHIC REF	PART NUMBER	QTY	PART NAME 1 2 3 4 5 6 (PRODUCT LEVEL)	SEE PAGE
	1	1	**145-6669**	6	SCREW-SELF-TAPPING (10X0.75-IN)	
	2	1	**416-6472**	1	PIPE AS-EXTENSION	
	3	1	**416-6474**	1	PIPE AS-EXTENSION	
	4	1	**345-1979**	1	SCREEN	
	5	1	**361-3199**	1	PRECLEANER AS	
		1	**176-8234**	1	CLAMP	

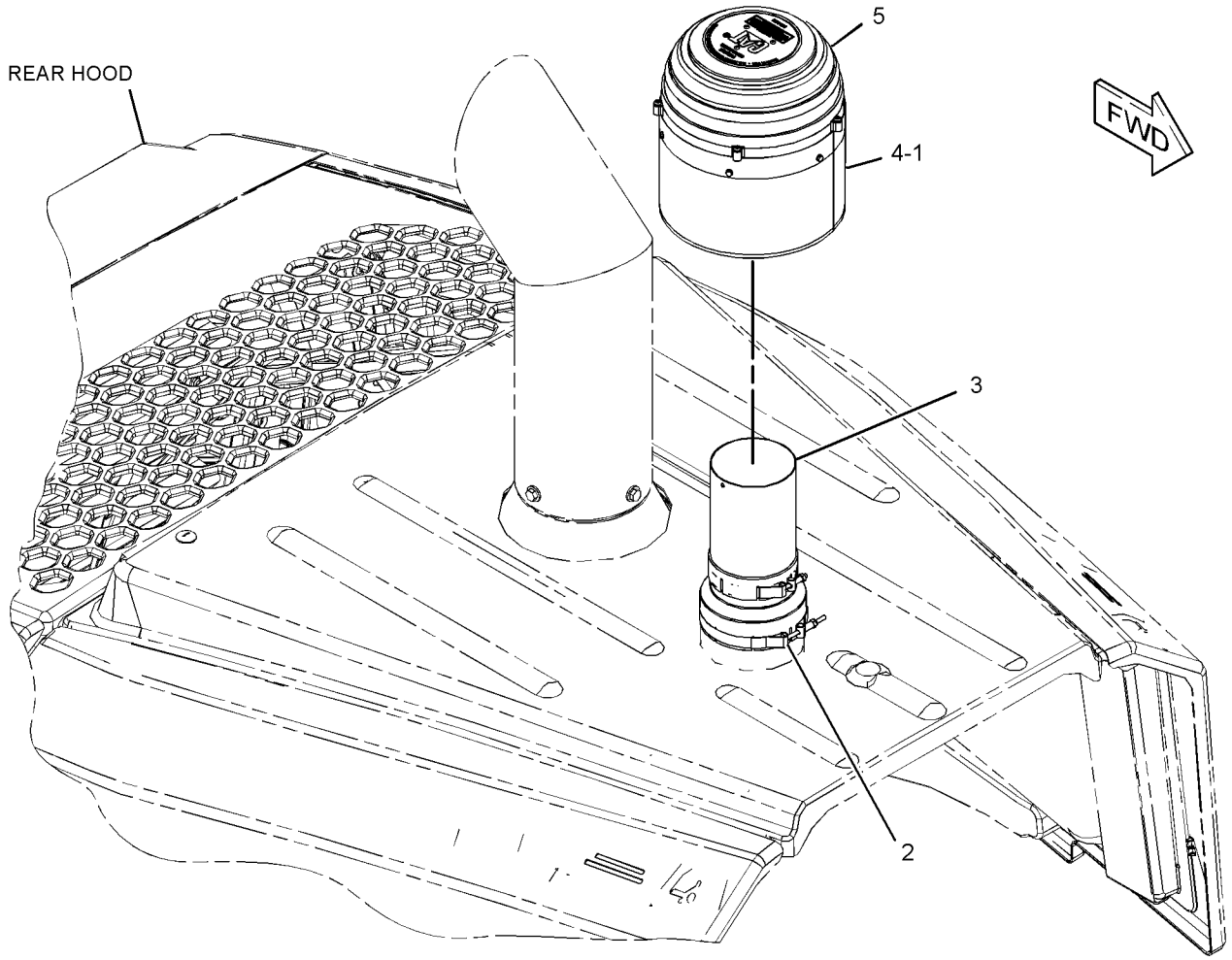

GRAPHIC #1 <END> g03373236

365-0120 PRECLEANER GP

S/N: TNS1-UP

SMCS-1055 **i06740765**

NOTE	REF NO	GRAPHIC REF	PART NUMBER	QTY	PART NAME 1 2 3 4 5 6 (PRODUCT LEVEL)	SEE PAGE
Y	1	1	**340-1427**	1	PRECLEANER GP	96
	2	1	**362-1181**	1	GUARD-ALTERNATOR (FRONT)	
	3	1	**362-1182**	1	GUARD-ALTERNATOR (REAR)	
M	4	1	**153-9301**	4	BOLT-SOCKET HEAD (M4X0.7X10-MM)	
M	5	1	**8T-4181**	3	BOLT (M6X1X20-MM)	
	6	1	**9X-8256**	3	WASHER (6.6X12X2-MM THK)	

M - METRIC PART
Y - SEPARATE ILLUSTRATION

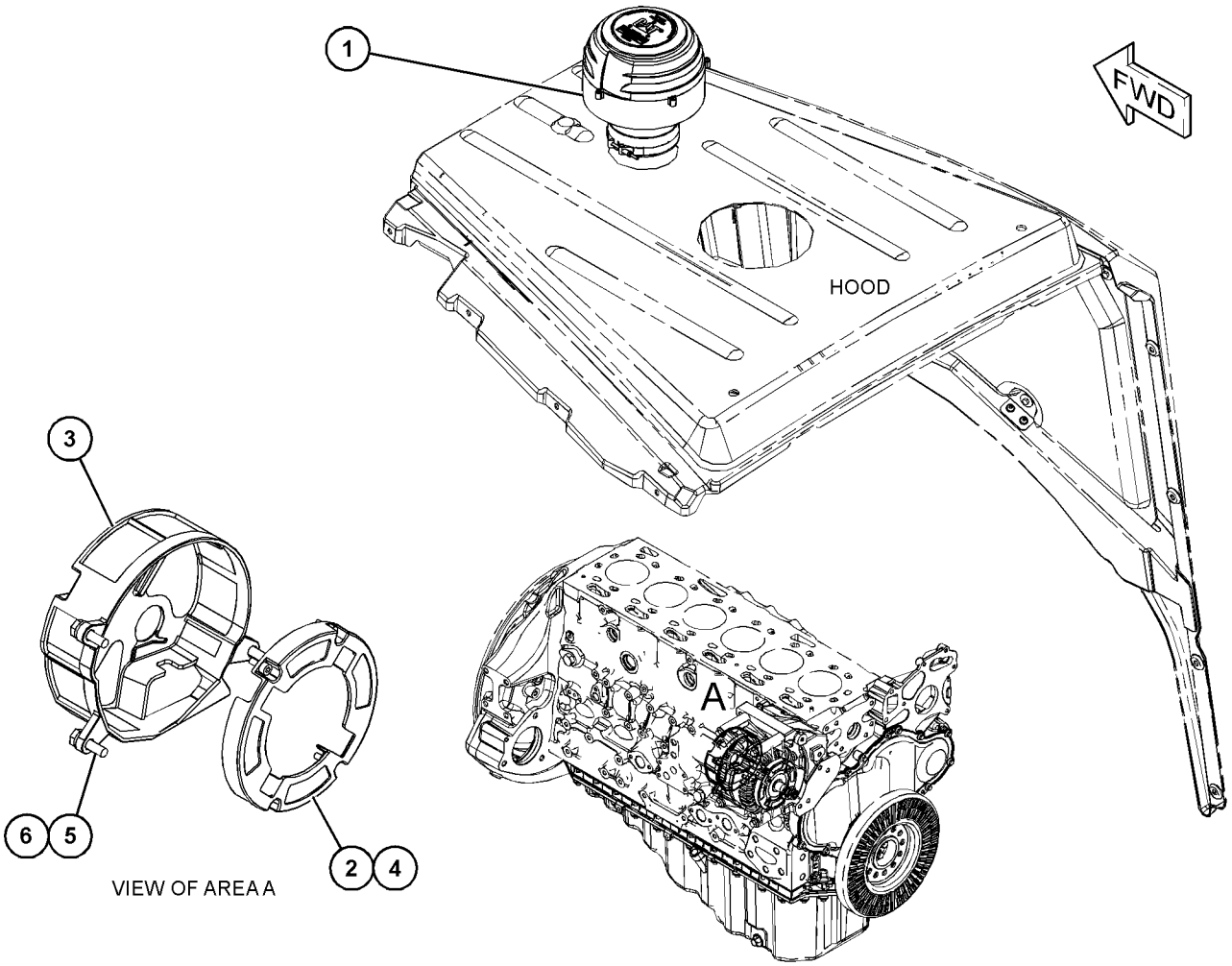

GRAPHIC #1 <END> g03666321

365-0121 PRECLEANER GP

S/N: TNS1-UP

CANNOT BE USED WITH 365-0112—PAGE: 80, 365-0120—PAGE: 98

SMCS-1055 **i06796342**

NOTE	REF NO	GRAPHIC REF	PART NUMBER	QTY	PART NAME 1 2 3 4 5 6 (PRODUCT LEVEL)	SEE PAGE
Y	1	1	**340-1502**	1	PRECLEANER GP	97
	2	1	**362-1181**	1	GUARD-ALTERNATOR (FRONT)	
	3	1	**362-1182**	1	GUARD-ALTERNATOR (REAR)	
M	4	1	**153-9301**	4	BOLT-SOCKET HEAD (M4X0.7X10-MM)	
M	5	1	**8T-4181**	3	BOLT (M6X1X20-MM)	
	6	1	**9X-8256**	3	WASHER (6.6X12X2-MM THK)	

M - METRIC PART
Y - SEPARATE ILLUSTRATION

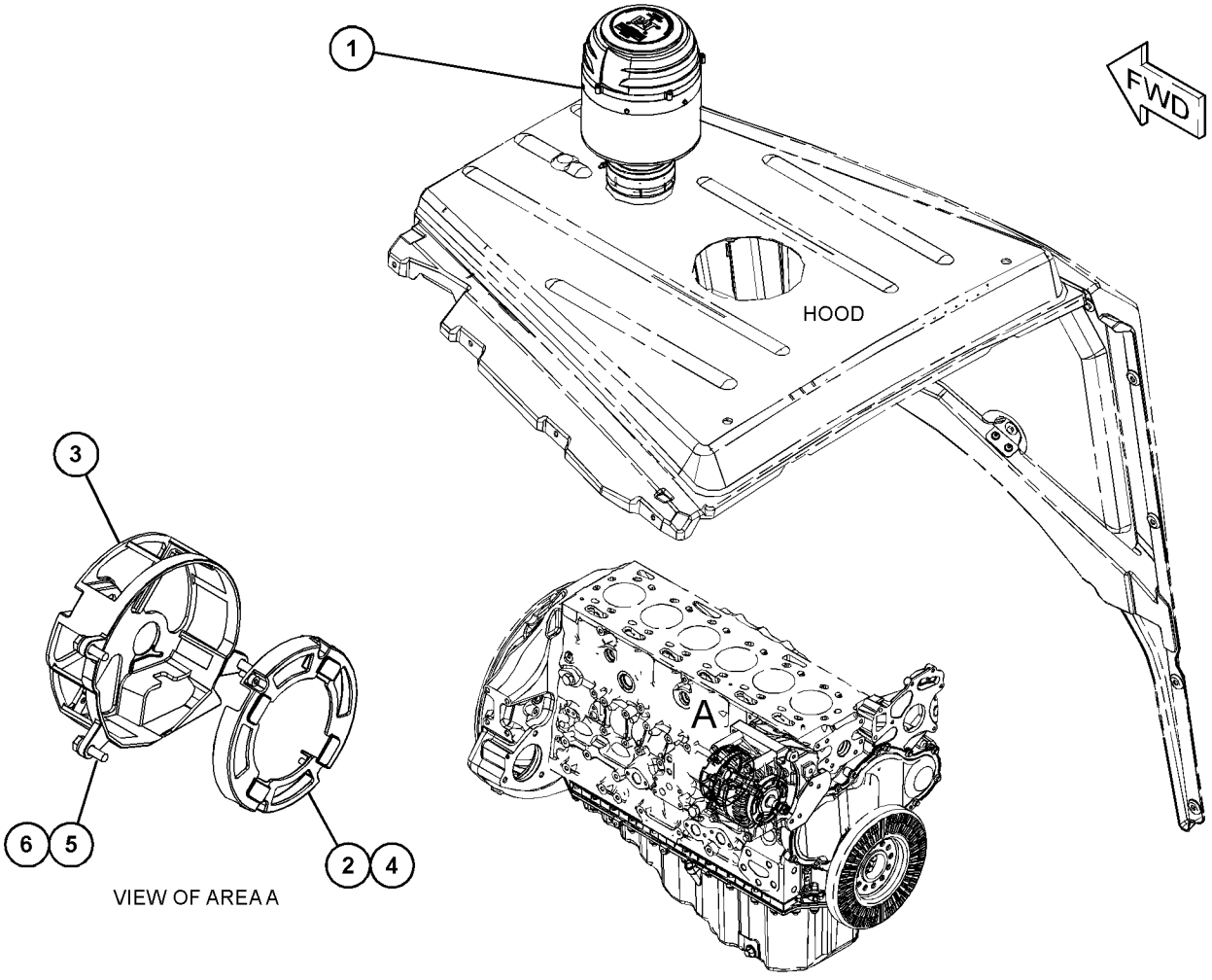

GRAPHIC #1 <END> g03666332

371-5100 PRECLEANER GP

S/N: TNS1-UP

PART OF 492-3989 PRECLEANER AR-CAB AIR

SMCS-1055 **i06786337**

NOTE	REF NO	GRAPHIC REF	PART NUMBER	QTY	PART NAME 1 2 3 4 5 6 (PRODUCT LEVEL)	SEE PAGE
	1	1	**488-3907**	1	PRECLEANER GP (CAB AIR)	
		1	**385-7511**	1	MOTOR AS-BLOWER (24-VOLT, CAB AIR)	
		1	**9W-0852**	2	PIN-CONNECTOR (14-GA TO 16-GA)	
		1	**102-8802**	1	KIT-RECEPTACLE (2-PIN)	
					(INCLUDES RECEPTACLE AS & WEDGE)	
	2	1	**299-3205**	1	SEAL (PRECLEANER)	
	3	1	**299-3206**	2	SEAL (EJECTOR)	
	4	1	**364-8938**	1	INSULATION	
	5	1	**364-8939**	2	INSULATION	
	6	1	**371-5099**	1	BRACKET	
M	7	1	**8T-4138**	6	BOLT (M6X1X20-MM)	
	8	1	**9X-8256**	6	WASHER (6.6X12X2-MM THK)	

M - METRIC PART

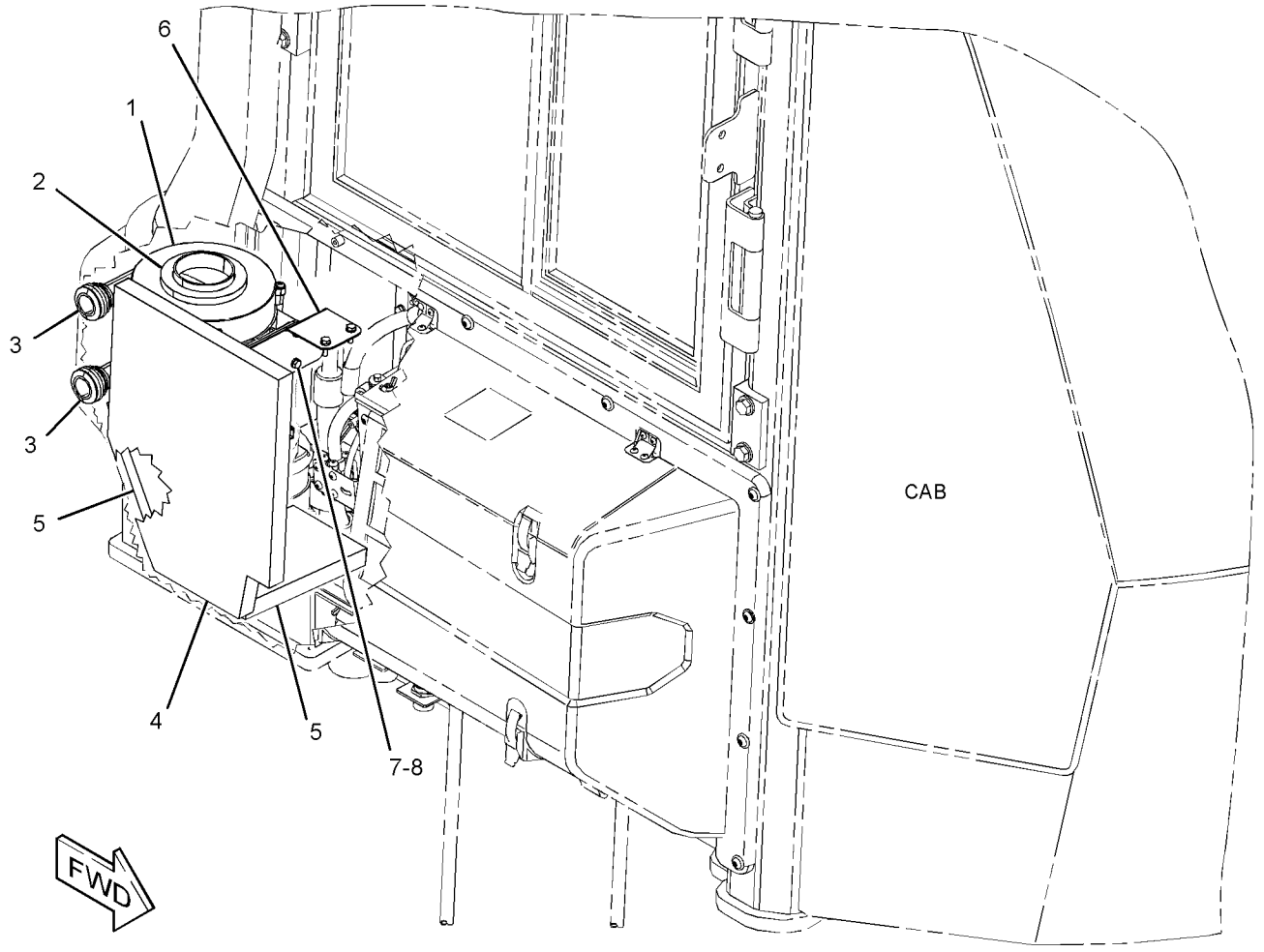

GRAPHIC #1 <END> g03494137

416-6970 TURBOCHARGER GP

S/N: E7A1-UP

PART OF 435-8541 ENGINE AR-PRIMARY

SMCS-1052, 1053

i06547098

NOTE	REF NO	GRAPHIC REF	PART NUMBER	QTY	PART NAME 1 2 3 4 5 6 (PRODUCT LEVEL)	SEE PAGE
M	1	1	**6I-0217**	5	BOLT (M8X1.25X20-MM)	
M	2	1	**6I-0563**	4	NUT (M10X1.5-THD)	
M	3	1	**100-4830**	2	BOLT (M10X1.5X20-MM)	
M	4	1	**124-3815**	2	BOLT (M8X1.25X16-MM)	
	5	1	**278-0017**	1	GASKET	
Y	6	1	**368-8559**	1	LINES GP-TURBOCHARGER OIL	46
	7	1	**420-2371**	1	LINE AS	
Y	8	1	**420-9572**	1	LINES GP-TURBOCHARGER AIR	90
	9	1	**435-4500**	1	TURBOCHARGER	
	10	1	**437-4170**	1	GASKET	

M - METRIC PART
Y - SEPARATE ILLUSTRATION

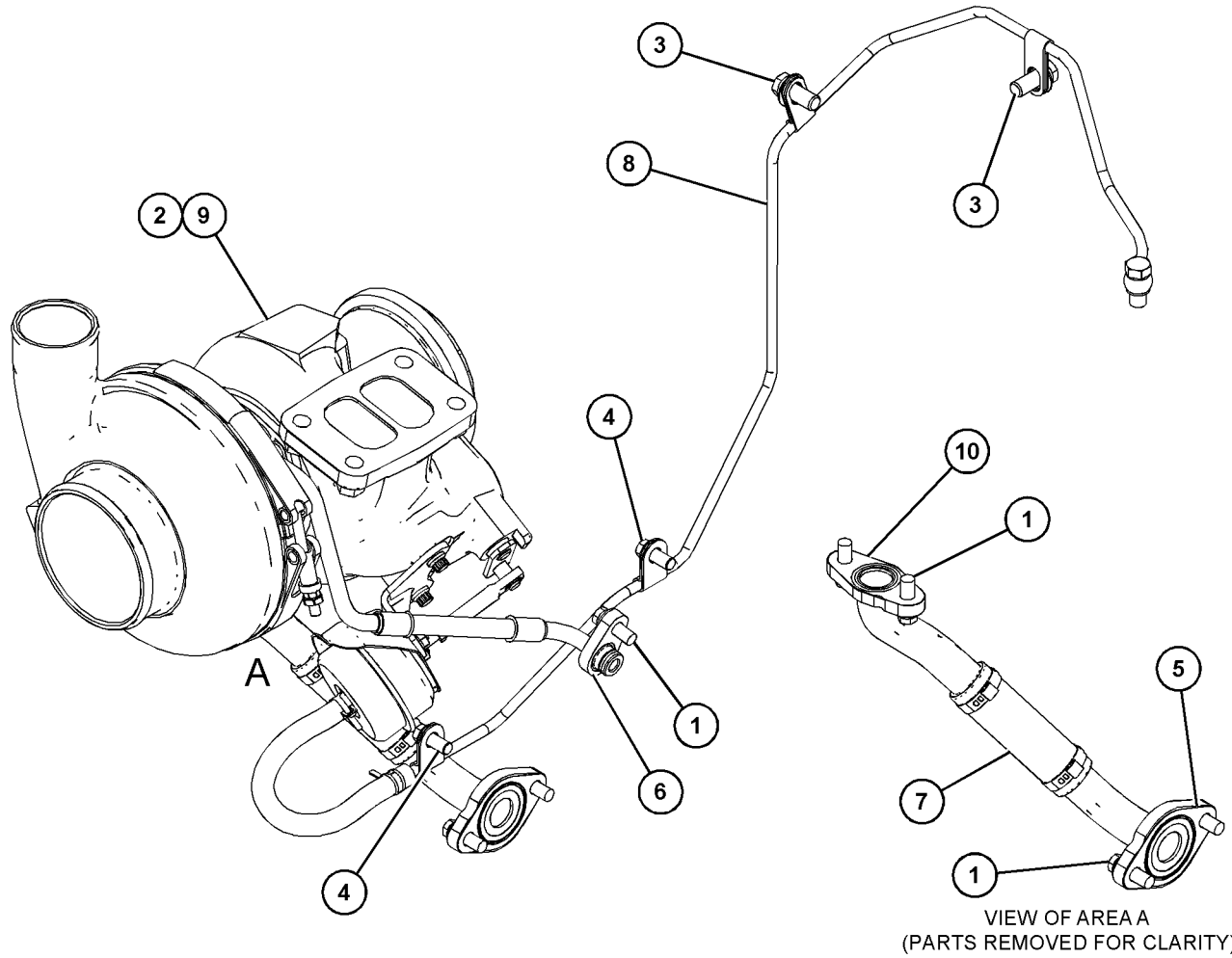

VIEW OF AREA A
(PARTS REMOVED FOR CLARITY)

GRAPHIC #1

<END>

g06041329

188-2461 VALVE GP-SOLENOID

S/N: TNS1-UP

PART OF 463-1125 LINES GP-AIR

SMCS-1061, 5479 **i04918057**

NOTE	REF NO	GRAPHIC REF	PART NUMBER	QTY	PART NAME 1 2 3 4 5 6 (PRODUCT LEVEL)	SEE PAGE
	1	1	**1S-9593**	2	STRAP-CABLE	
	2	1	**102-8802**	1	KIT-RECEPTACLE (2-PIN)	
					(INCLUDES RECEPTACLE AS & WEDGE)	
	3	1	**186-3735**	2	PIN-CONNECTOR (16-GA TO 18-GA)	

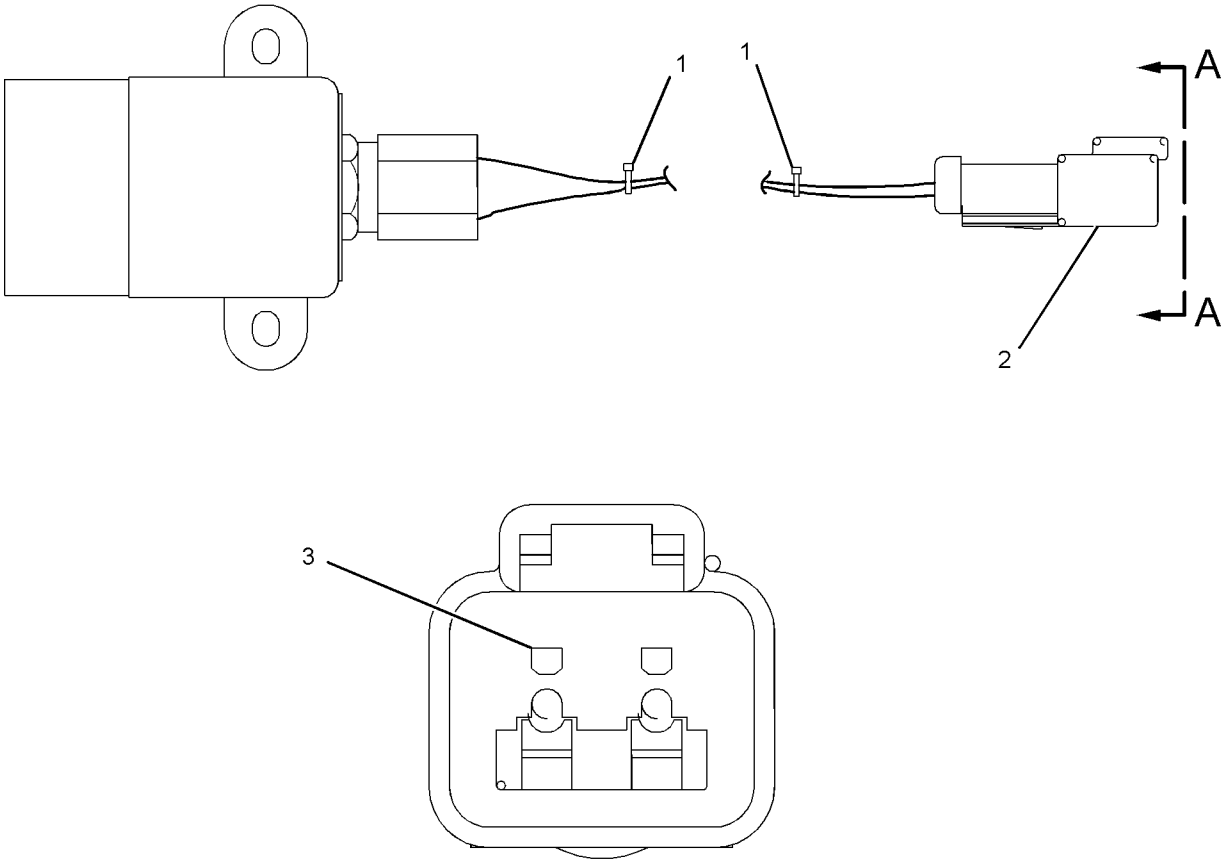

VIEW A-A

GRAPHIC #1 <END> g01016999

419-4936 CAP GP-FUEL FILLER

S/N: TNS1-UP

PART OF 436-2350 TANK GP-FUEL

SMCS-1273 **i06274024**

NOTE	REF NO	GRAPHIC REF	PART NUMBER	QTY	PART NAME 1 2 3 4 5 6 (PRODUCT LEVEL)	SEE PAGE
	1	1	**9P-7121**	1	STRAINER-FUEL (FUEL TANK)	
	2	1	**357-7399**	1	CAP GP-FUEL FILLER	
		1	**349-7059**	1	CAP AS-FUEL (LOCKABLE, VENTED)	
		1	**7D-7111**	1	SEAL-O-RING	
		1	**350-7735**	1	KIT-CAP FILTER (FUEL TANK)	
					(INCLUDES BODY-BREATHER, GASKET, SCREWS & WASHERS)	
		1	**364-1995**	1	BOOT-FUEL CAP	
	3	1	**358-1742**	1	HOSE	
	4	1	**358-1745**	1	TUBE AS-FILLER	
	5	1	**221-9208**	2	CLAMP	

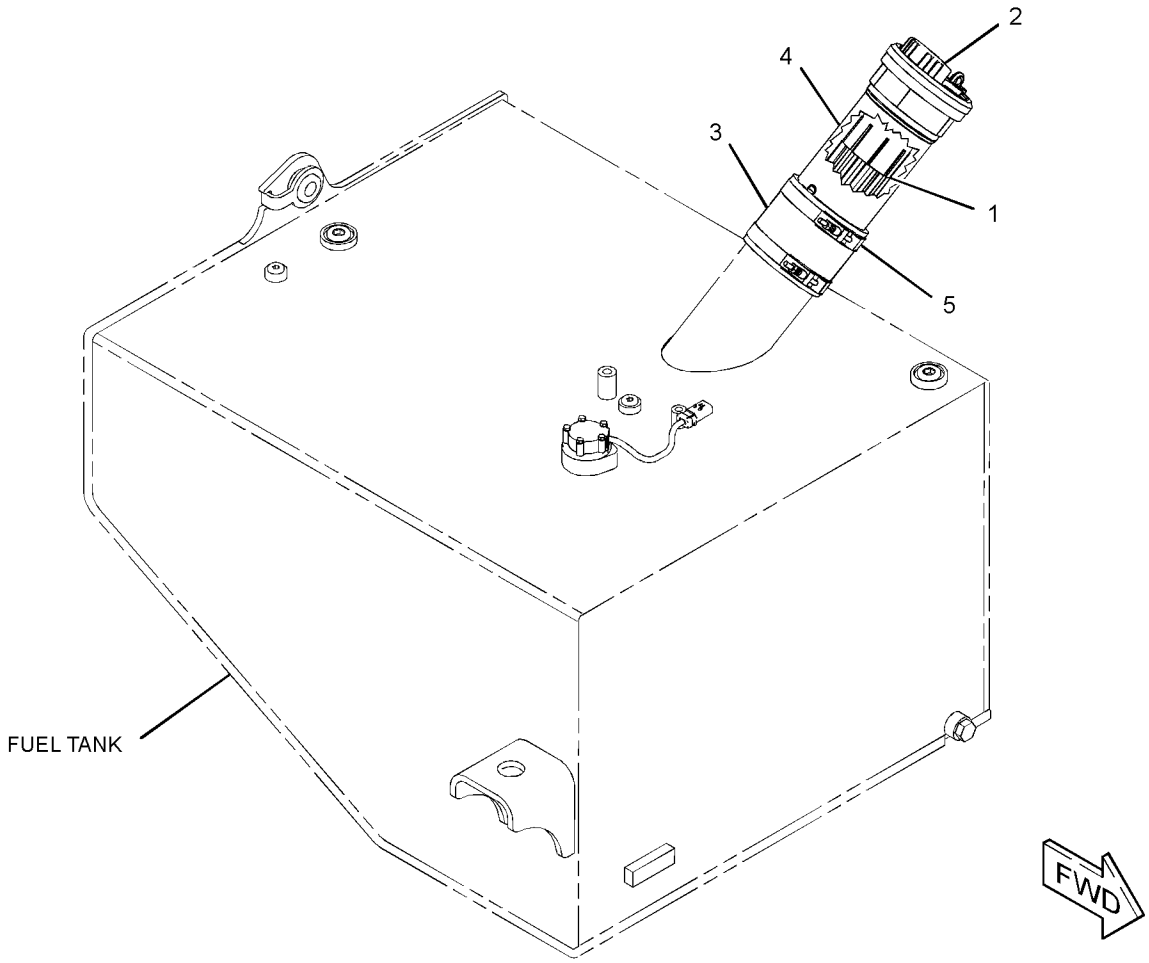

GRAPHIC #1 <END> g03506981

360-8958 FILTER GP-FUEL

S/N: E7A1-UP

PART OF 421-5684 FILTER GP-FUEL

SMCS-1261 **i06791520**

NOTE	REF NO	GRAPHIC REF	PART NUMBER	QTY	PART NAME 1 2 3 4 5 6 (PRODUCT LEVEL)	SEE PAGE
	1	1	**360-8960**	1	FILTER ELEMENT-FUEL	
					AVAILABLE REPAIR KIT(S):	
			362-5412	1	KIT-DRAIN (FUEL FILTER)	
					(INCLUDES DRAIN, KNOB, & SEALS)	
			370-8376	1	KIT-FUEL SYSTEM PARTS	

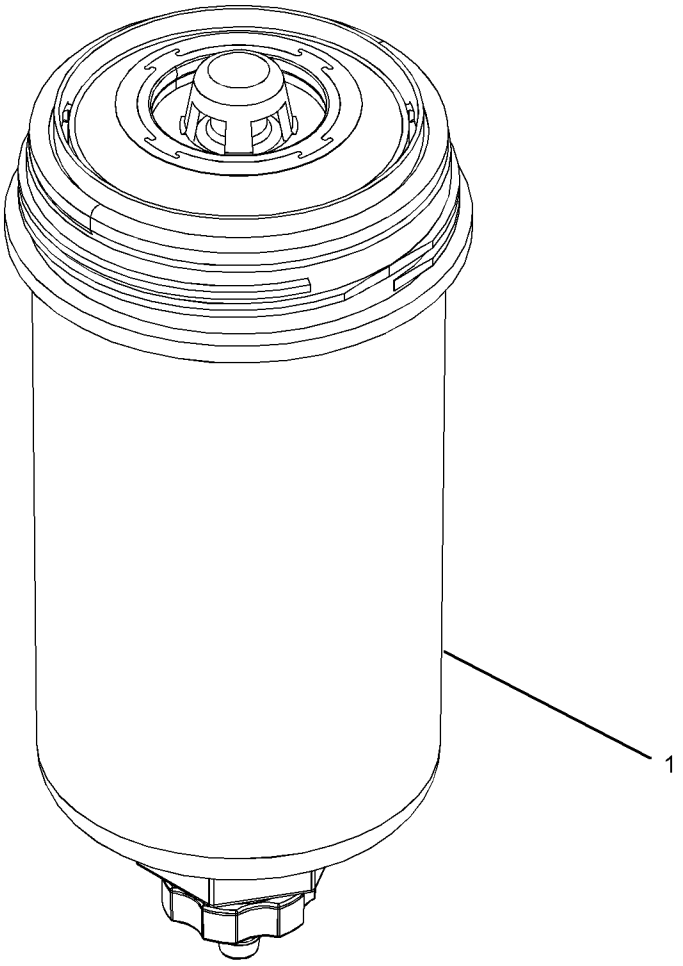

GRAPHIC #1 <END> g03173178

421-5684 FILTER GP-FUEL

S/N: E7A1-UP

PART OF 426-3292 FILTER GP-FUEL

SMCS-1261 **i05333255**

NOTE	REF NO	GRAPHIC REF	PART NUMBER	QTY	PART NAME 1 2 3 4 5 6 (PRODUCT LEVEL)	SEE PAGE
Y	1	1	**360-8958**	1	FILTER GP-FUEL	104
	2	1	**362-9689**	1	SCREW-SPECIAL	
					AVAILABLE REPAIR KIT(S):	
			362-5412	1	KIT-DRAIN	
					(INCLUDES DRAIN, KNOB, & SEAL REPLACEMENTS)	

Y - SEPARATE ILLUSTRATION

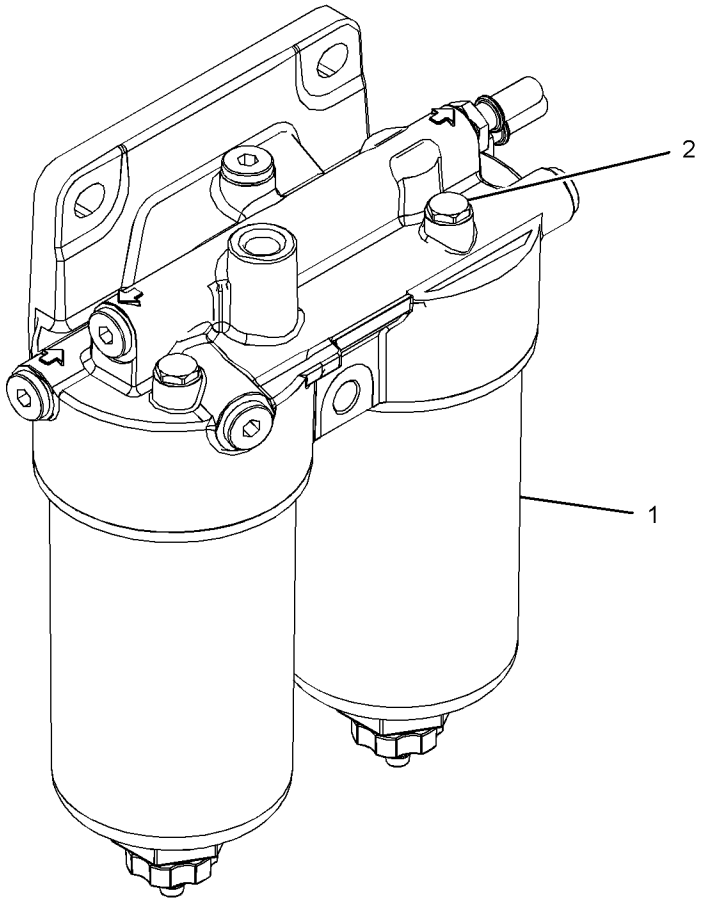

GRAPHIC #1 <END> g03379539

426-3292 FILTER GP-FUEL

S/N: E7A1-UP

PART OF 435-8541 ENGINE AR-PRIMARY

SMCS-1261 **i05331842**

NOTE	REF NO	GRAPHIC REF	PART NUMBER	QTY	PART NAME 1 2 3 4 5 6 (PRODUCT LEVEL)	SEE PAGE
Y	1	1	*421-5684*	1	FILTER GP-FUEL	105

Y - SEPARATE ILLUSTRATION

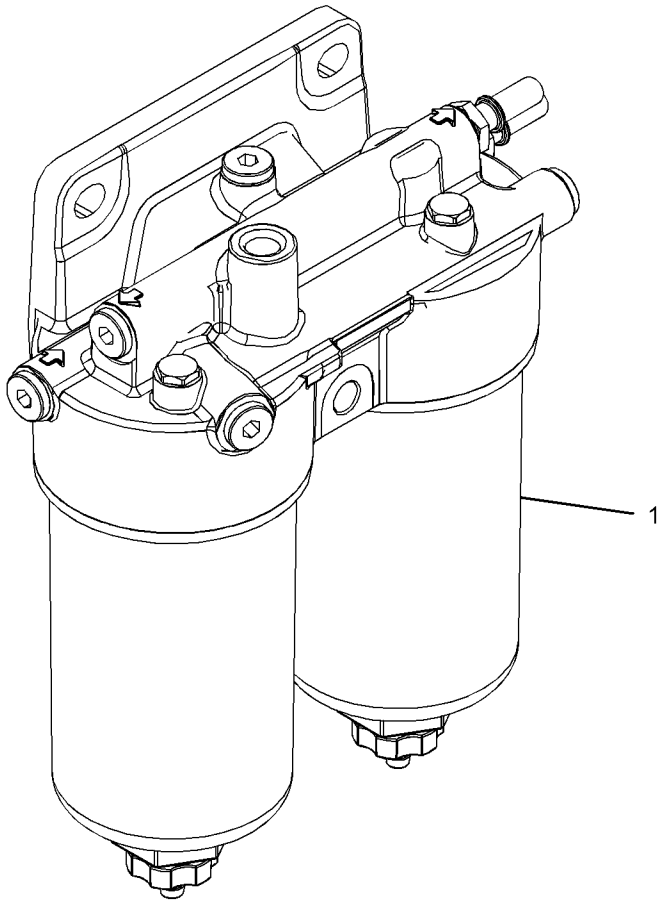

GRAPHIC #1 <END> g03379517

396-9626 INJECTOR GP-FUEL*R

S/N: E7A1-UP

PART OF 416-8908 INJECTOR GP-FUEL

SMCS-1251, 1254, 1290, 1713

i06564461

NOTE	REF NO	GRAPHIC REF	PART NUMBER	QTY	PART NAME 1 2 3 4 5 6 (PRODUCT LEVEL)	SEE PAGE
	1	1	**376-6403**	1	WASHER-SEALING	
	2	1	**376-6405**	1	SEAL-O-RING	

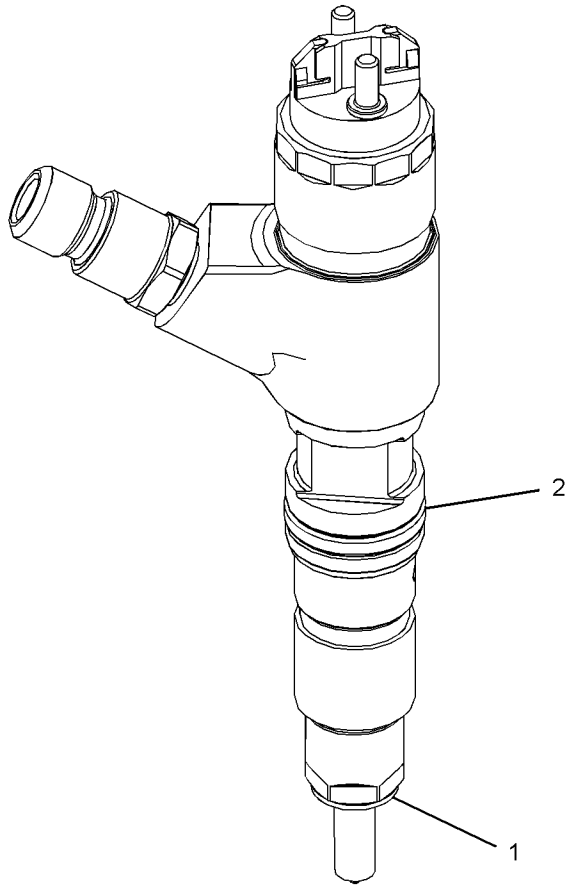

GRAPHIC #1

<END>

g03566176

416-8908 INJECTOR GP-FUEL

S/N: E7A1-UP

PART OF 435-8541 ENGINE AR-PRIMARY

SMCS-1251, 1254, 1290, 1713 **i06547039**

NOTE	REF NO	GRAPHIC REF	PART NUMBER	QTY	PART NAME 1 2 3 4 5 6 (PRODUCT LEVEL)	SEE PAGE
	1	1	**278-5170**	6	BOLT	
	2	1	**369-7799**	6	CLAMP-INJECTOR	
YR	3	1	**396-9626**	6	INJECTOR GP-FUEL	107
	4	1	**277-5067**	6	SLEEVE	

R - REMANUFACTURED PART MAY BE AVAILABLE
Y - SEPARATE ILLUSTRATION

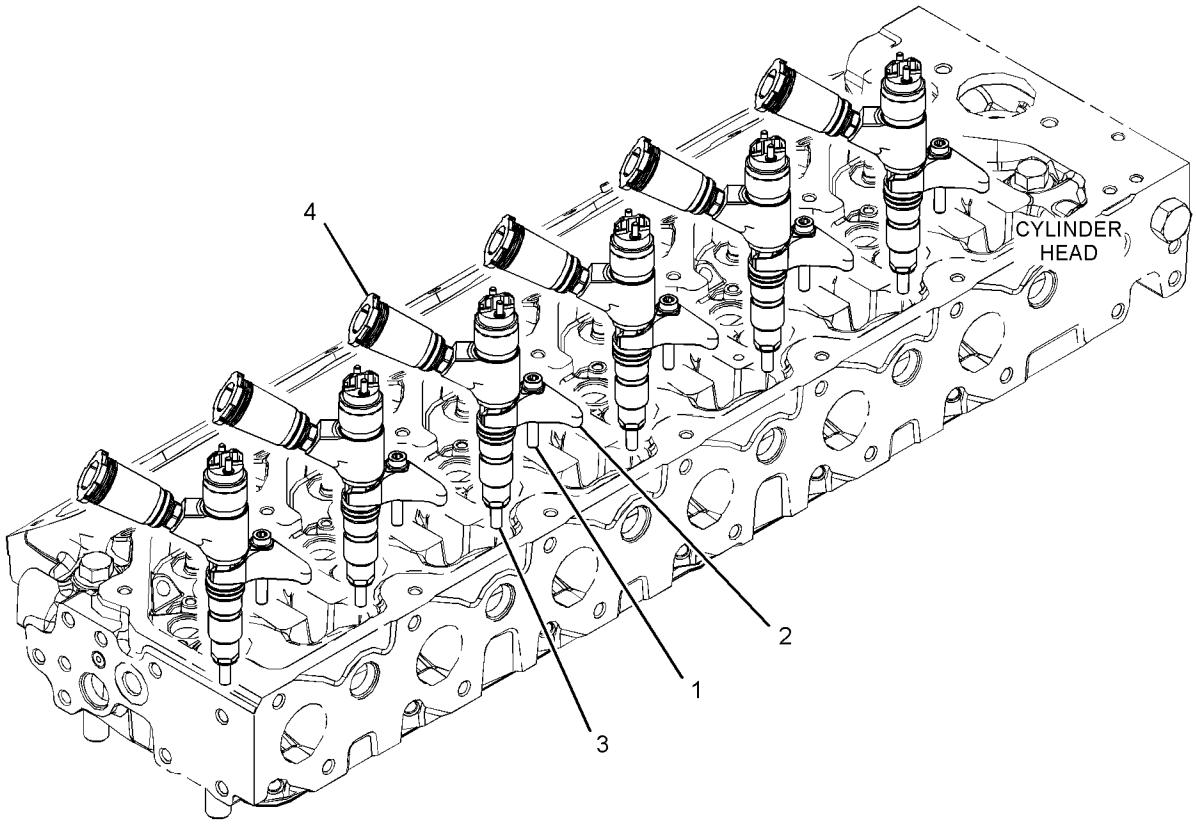

GRAPHIC #1 <END> g03535641

365-0086 LINES GP-DRAIN

S/N: TNS1-UP

PART OF 390-0579 INSTALLATION AR-ENGINE

SMCS-1274 **i06759759**

NOTE	REF NO	GRAPHIC REF	PART NUMBER	QTY	PART NAME 1 2 3 4 5 6 (PRODUCT LEVEL)	SEE PAGE
	1	1	**211-8073**	1	CAP-PROTECTION	
	2	1	**5D-1026**	1	CLAMP-BAND	
E	3	1	**5P-0767**		HOSE (37-CM)	

E - ORDER BY THE CENTIMETER

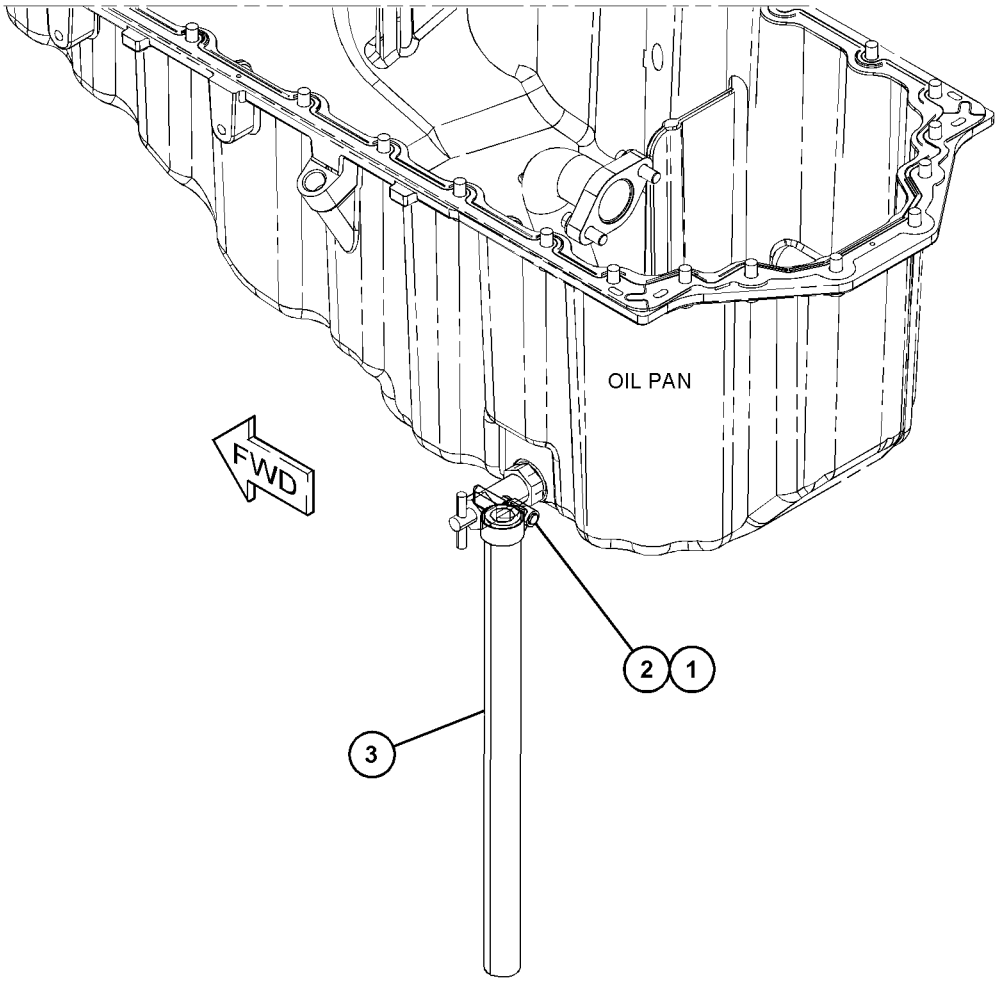

GRAPHIC #1 <END> g06044275

433-1316 LINES GP-FUEL

S/N: E7A1-UP

PART OF 426-3312 LINES GP-FUEL FILTER

SMCS-1274 **i05341897**

NOTE	REF NO	GRAPHIC REF	PART NUMBER	QTY	PART NAME 1 2 3 4 5 6 (PRODUCT LEVEL)	SEE PAGE
	1	1	**246-4361**	2	WASHER (10.5X14X1.5-MM THK)	
	2	1	**385-1398**	1	CONNECTION-FUEL	
	3	1	**386-1864**	1	BOLT-BANJO	
	4	1	**247-4928**	2	WASHER (16.5X20.5X1.6-MM THK)	

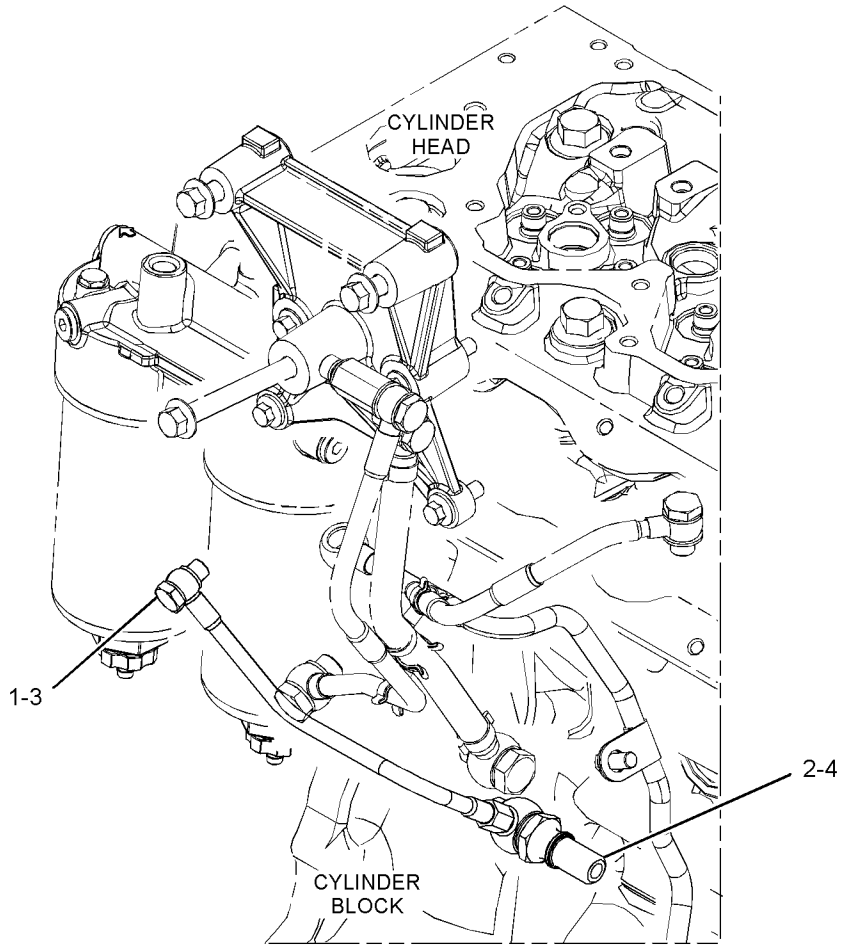

GRAPHIC #1 <END> g03384847

442-8465 LINES GP-FUEL

S/N: E7A1-UP

PART OF 426-3312 LINES GP-FUEL FILTER

SMCS-1274 **i05843927**

NOTE	REF NO	GRAPHIC REF	PART NUMBER	QTY	PART NAME 1 2 3 4 5 6 (PRODUCT LEVEL)	SEE PAGE
M	1	1	**277-9938**	1	BOLT-SPECIAL (BANJO)	
	2	1	**286-2890**	2	WASHER	
	3	1	**295-4670**	1	BOLT-SPECIAL (BANJO)	

M - METRIC PART

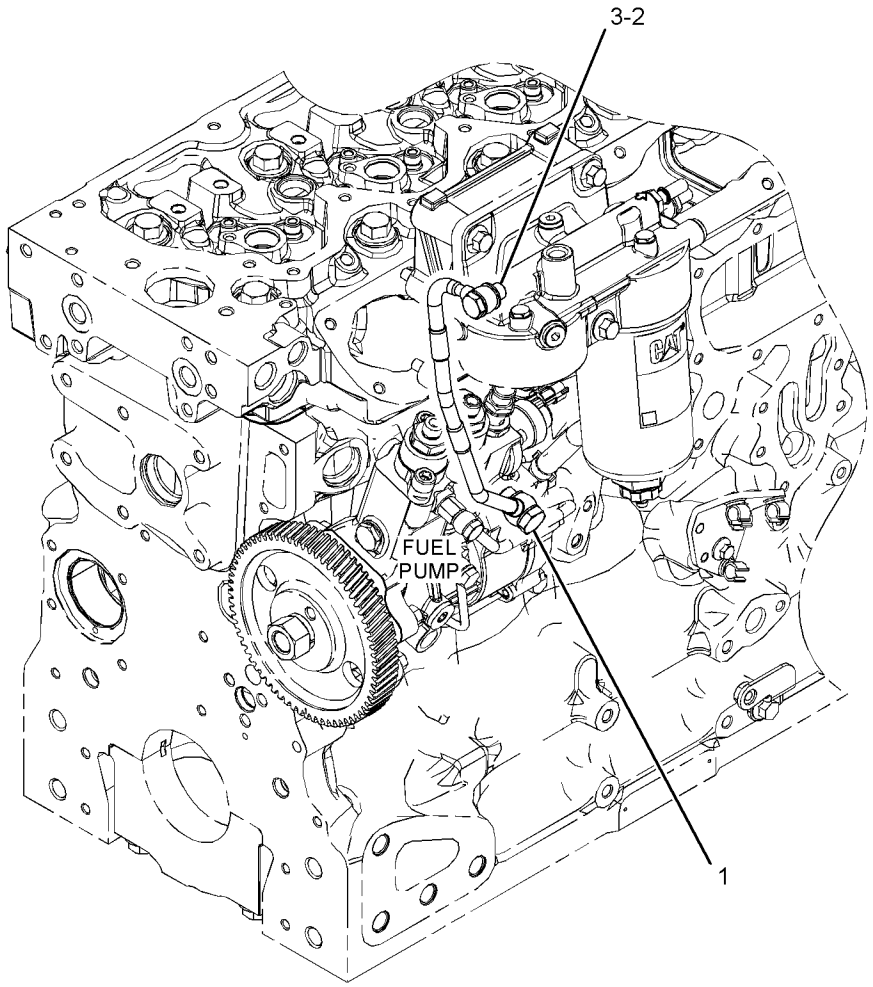

GRAPHIC #1 <END> g03564656

464-7899 LINES GP-FUEL

S/N: E7A1-UP

PART OF 426-3312 LINES GP-FUEL FILTER

SMCS-1274 **i06022311**

NOTE	REF NO	GRAPHIC REF	PART NUMBER	QTY	PART NAME 1 2 3 4 5 6 (PRODUCT LEVEL)	SEE PAGE
	1	1	**349-6847**	2	CLIP	
	2	1	**377-5988**	1	BOLT	
	3	1	**286-2890**	2	WASHER	
M	4	1	**161-7614**	1	NUT (M16X1.5-THD)	
	5	1	**277-4993**	1	SEAL-O-RING	

M - METRIC PART

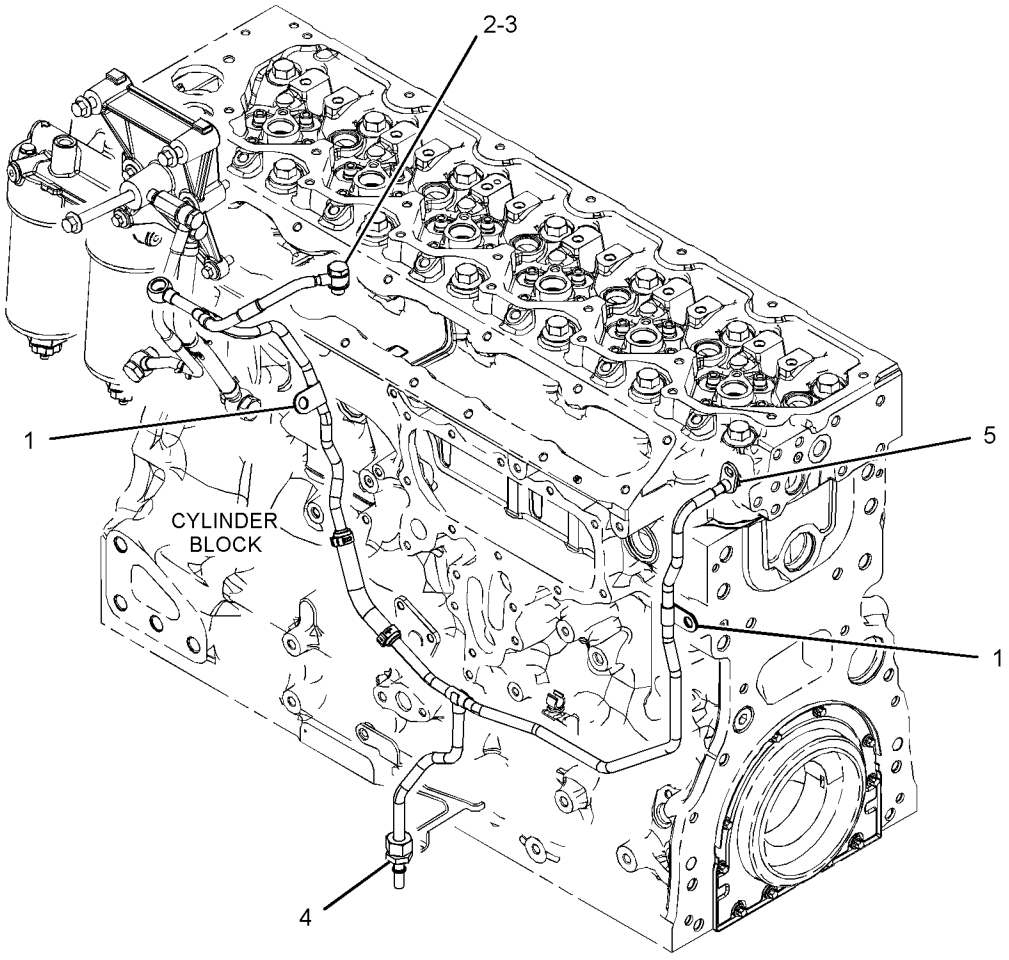

GRAPHIC #1 <END> g03384683

484-7200 LINES GP-FUEL

S/N: E7A1-UP

PART OF 426-3312 LINES GP-FUEL FILTER

SMCS-1274 **i06218623**

NOTE	REF NO	GRAPHIC REF	PART NUMBER	QTY	PART NAME 1 2 3 4 5 6 (PRODUCT LEVEL)	SEE PAGE
	1	1	**247-4928**	2	WASHER (16.5X20.5X1.6-MM THK)	
	2	1	**286-2890**	2	WASHER	
	3	1	**295-4670**	1	BOLT-SPECIAL (BANJO)	
M	4	1	**386-2737**	1	BOLT-BANJO (M16X1.5X27-MM)	
	5	1	*396-2102*	1	LINE AS-FUEL	
E		1	**347-8645**		HOSE (28-CM)	

E - ORDER BY THE CENTIMETER
M - METRIC PART

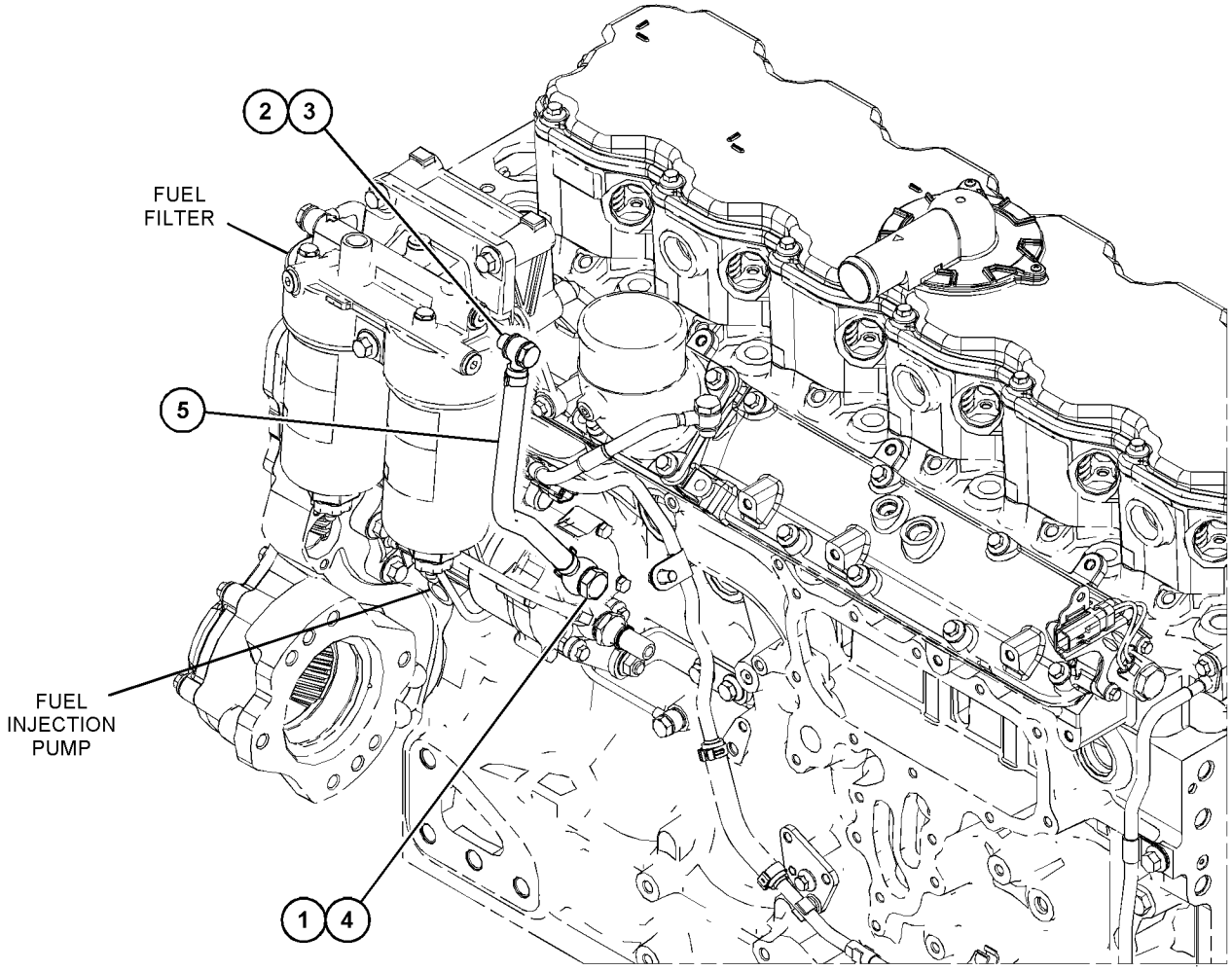

GRAPHIC #1 <END> g03875694

365-0166 LINES GP-FUEL FILTER

S/N: TNS1-UP

PART OF 390-0579 INSTALLATION AR-ENGINE

SMCS-1261, 1274 **i06759783**

NOTE	REF NO	GRAPHIC REF	PART NUMBER	QTY	PART NAME 1 2 3 4 5 6 (PRODUCT LEVEL)	SEE PAGE
	1	1	**3S-2093**	3	STRAP-CABLE	
	2	1,2	**7K-1181**	11	STRAP-CABLE (5.72-MM DIA)	
	3	1,2	**8T-9655**	6	MOUNT-ISOLATION (ISOLATION)	
	4	2	**159-8329**	1	BRACKET AS	
	5	1	**191-1782**	1	SPACER (8.5X12.7X38.2-MM THK)	
	6	2	**191-1783**	2	SPACER (8.5X12.7X87.3-MM THK)	
	7	1	*260-9219*	1	CONNECTOR AS	
		1	**6V-8638**	1	CONNECTOR	
		1	**228-7090**	1	SEAL-O-RING	
		1	**238-5081**	1	SEAL-O-RING	
	8	1	**264-3518**	1	CONNECTOR-RECEPTACLE	
	9	1	*281-5977*	1	CONNECTOR AS	
		1	**6V-8642**	1	CONNECTOR	
		1	**228-7091**	1	SEAL-O-RING	
		1	**238-5081**	1	SEAL-O-RING	
	10	2	**290-5562**	2	MOUNT (DUAL SWIVEL)	
	11	1	**291-2275**	1	BRACKET AS	
	12	1	*309-5131*	2	PLUG AS	
					(EACH INCLUDES)	
		1	**9S-8006**	1	PLUG (7/8-14-THD)	
		1	**238-5081**	1	SEAL-O-RING	
	13	1	**355-0632**	1	CONNECTOR-SPECIAL	
	14	1	**365-0088**	1	BRACKET AS	
	15	1	**365-0167**	1	BRACKET AS	
	16	1	**365-0178**	1	HOSE AS	
	17	1	**365-0179**	1	HOSE AS	
	18	2	**382-2001**	1	SENSOR GP-LIQUID LEVEL (WATER IN FUEL)	
		2	**102-8804**	1	KIT-RECEPTACLE (4-PIN)	
					(INCLUDES RECEPTACLE AS & WEDGE)	
		2	**214-7568**	1	SEAL-O-RING	
		2	**9X-3401**	4	PIN-CONNECTOR (16-GA TO 18-GA)	
Y	19	1	*442-0646*	1	PUMP GP-FUEL PRIMING	126
	20	1	**472-8285**	1	HOSE AS	
	21	2	**130-5300**	1	CLIP	
	22	1	**1S-0994**	1	CLIP	
	23	1,2	**211-8073**	2	CAP-PROTECTION	
	24	1	**228-7089**	1	SEAL-O-RING	
	25	1,2	**238-5080**	2	SEAL-O-RING	
	26	1	**245-8842**	1	CLIP	
	27	2	**277-1873**	1	CLIP	
	28	2	**4I-0472**	1	CLIP	
	29	2	**4P-7581**	1	CLIP	
	30	1,2	**5D-1026**	2	CLAMP-BAND	
	31	1	**6S-8620**	1	CLAMP-HOSE	
	32	2	**6V-1230**	1	ELBOW	
	33	1	**6V-8723**	1	ELBOW	
	34	1,2	**7X-0579**	6	WASHER-HARD (8.8X25.5X2-MM THK)	
M	35	2	**7X-2539**	2	BOLT (M8X1.25X110-MM)	

365-0166 **LINES GP-FUEL FILTER (**contd.**)** **i06759783**

NOTE	REF NO	GRAPHIC REF	PART NUMBER	QTY	PART NAME 1 2 3 4 5 6 (PRODUCT LEVEL)	SEE PAGE
	36	2	**8S-0948**	1	CLIP	
	37	1,2	**8T-4121**	13	WASHER-HARD (11X21X2.5-MM THK)	
M	38	1,2	**8T-4136**	13	BOLT (M10X1.5X25-MM)	
M	39	1	**8T-4192**	1	BOLT (M12X1.75X25-MM)	
	40	1	**8T-4223**	1	WASHER-HARD (13.5X25.5X3-MM THK)	
M	41	1	**8T-6869**	1	BOLT (M8X1.25X60-MM)	
	42	1	**9M-8406**	3	CLIP	
E	43	1	**7Y-5074**		GUARD-HOSE (32-CM)	
E	44	1	**8C-6959**		HOSE (71-CM)	
E	44A	1	**8C-6959**		HOSE (72-CM)	
E	44B	1	**8C-6959**		HOSE (77-CM)	

E - ORDER BY THE CENTIMETER
M - METRIC PART
Y - SEPARATE ILLUSTRATION

365-0166 **LINES GP-FUEL FILTER (**contd.**)** **i06759783**

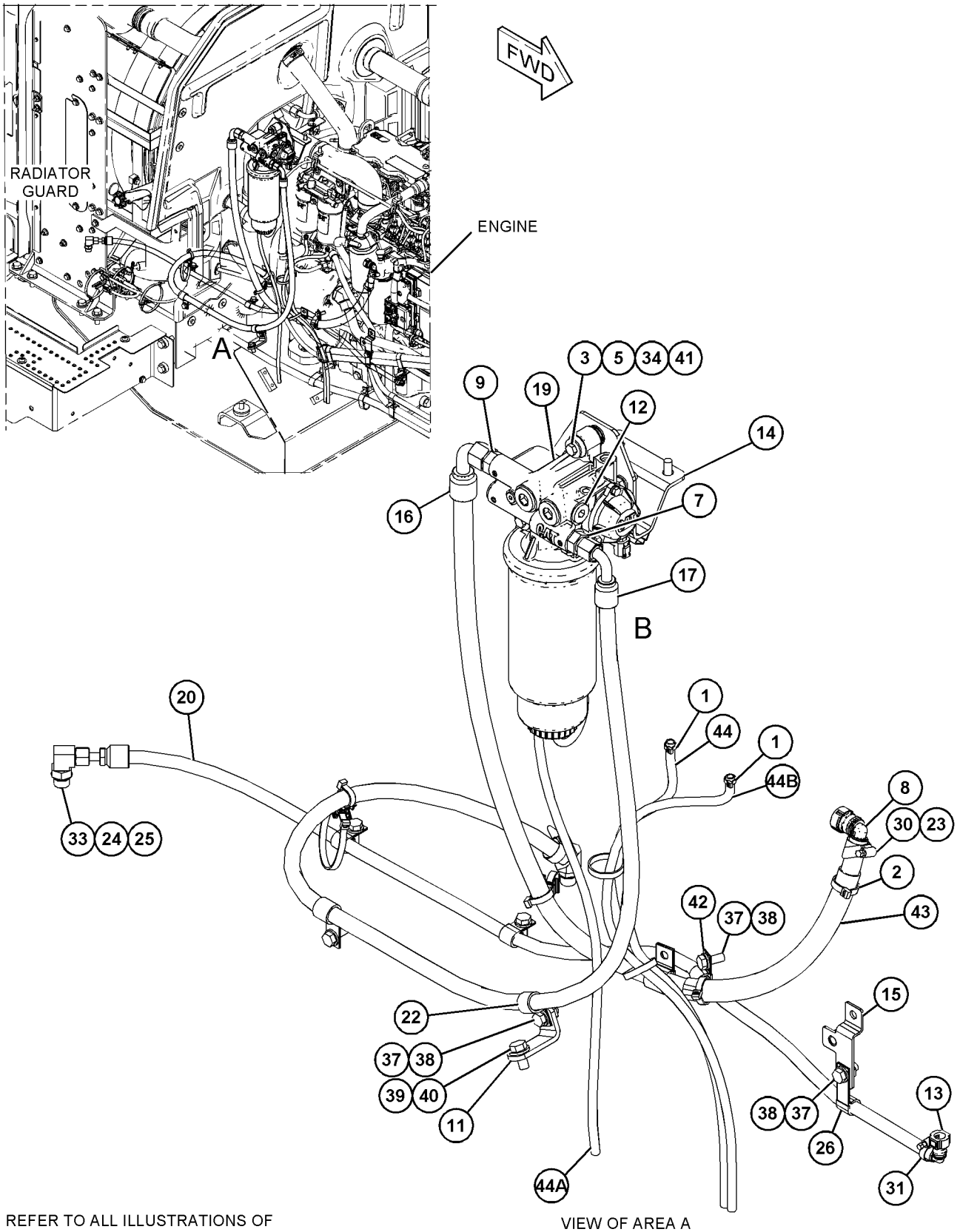

REFER TO ALL ILLUSTRATIONS OF THIS GROUP FOR AUXILIARY VIEWS

VIEW OF AREA A

GRAPHIC #1

g06049960

365-0166 **LINES GP-FUEL FILTER (**contd.**)** **i06759783**

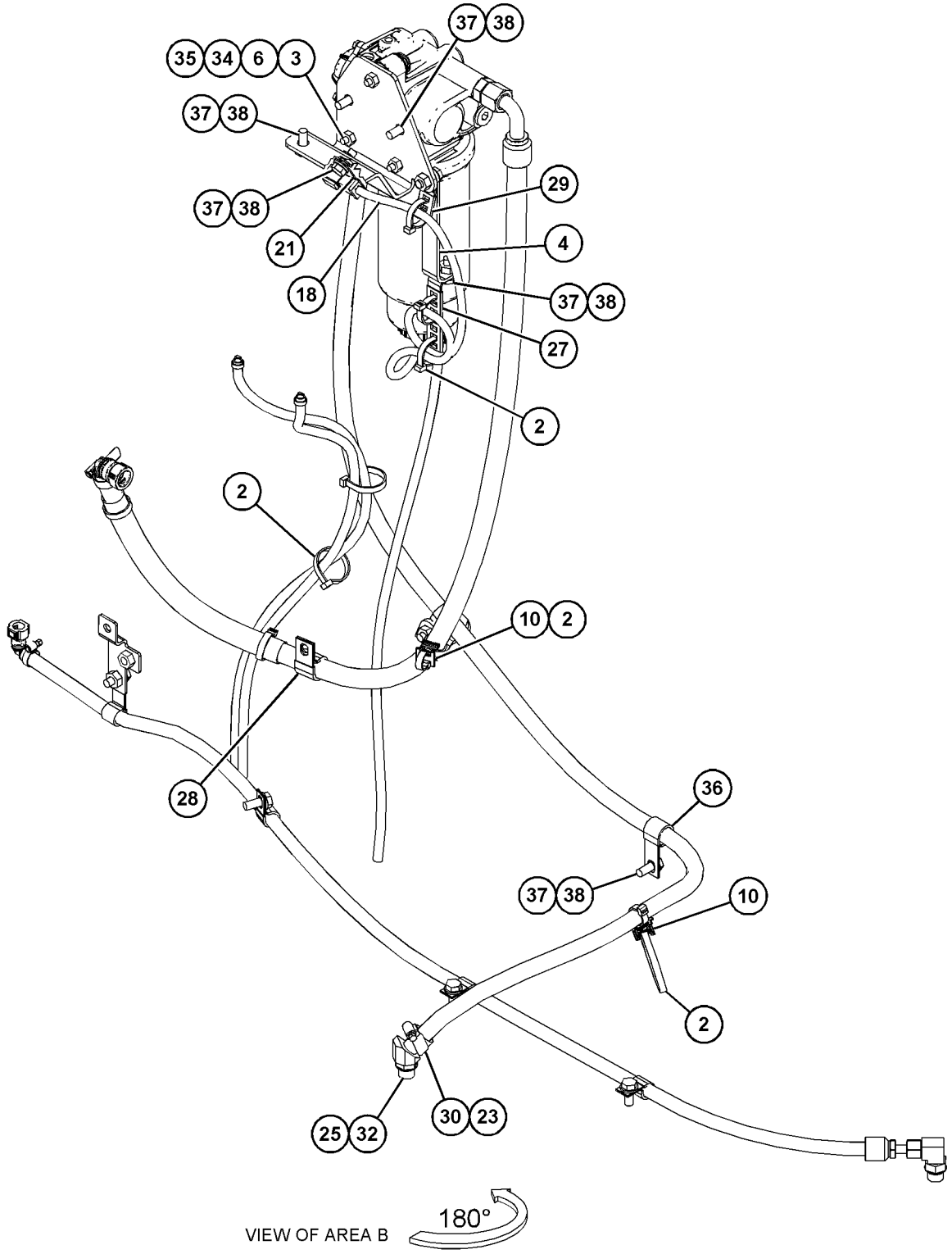

GRAPHIC #2 <END> g06050345

426-3312 LINES GP-FUEL FILTER

S/N: E7A1-UP

PART OF 435-8541 ENGINE AR-PRIMARY

SMCS-1261, 1274 **i06272779**

NOTE	REF NO	GRAPHIC REF	PART NUMBER	QTY	PART NAME 1 2 3 4 5 6 (PRODUCT LEVEL)	SEE PAGE
M	1	1	**6I-0593**	2	BOLT (M10X1.5X30-MM)	
M	2	1	**6I-4200**	2	BOLT (M10X1.5X16-MM)	
M	3	1	**100-4458**	2	BOLT (M8X1.25X14-MM)	
M	4	1	**164-7468**	1	BOLT (M10X1.5X95-MM)	
	5	1	**442-8569**	1	CLIP-PIPE	
	6	1	**208-9287**	2	BOLT-FLANGE HEAD (M8X1.25X50-MM)	
Y	7	1	**442-8465**	1	LINES GP-FUEL	111
	8	1	**389-5775**	1	BRACKET	
	9	1	**389-5784**	1	BRACKET-FILTER	
	10	1	**390-0755**	1	BRACKET AS	
	11	1	**390-8738**	1	SUPPORT GP-LINES	
	12	1	**391-1817**	1	SUPPORT GP-LINES	
Y	13	1	**484-7200**	1	LINES GP-FUEL	113
CY	14	1	**464-7899**	1	LINES GP-FUEL	112
Y	15	1	**433-1316**	1	LINES GP-FUEL	110
M	16	1	**6I-0217**	1	BOLT (M8X1.25X20-MM)	
M	17	1	**6I-0260**	3	BOLT (M8X1.25X25-MM)	
	18	1	*330-9723*	2	PLUG AS	
					(EACH INCLUDES)	
		1	**228-7100**	1	SEAL-O-RING	
		1	**241-6157**	1	PLUG	

C - CHANGE FROM PREVIOUS TYPE
M - METRIC PART
Y - SEPARATE ILLUSTRATION

426-3312 **LINES GP-FUEL FILTER (**contd.**)** **i06272779**

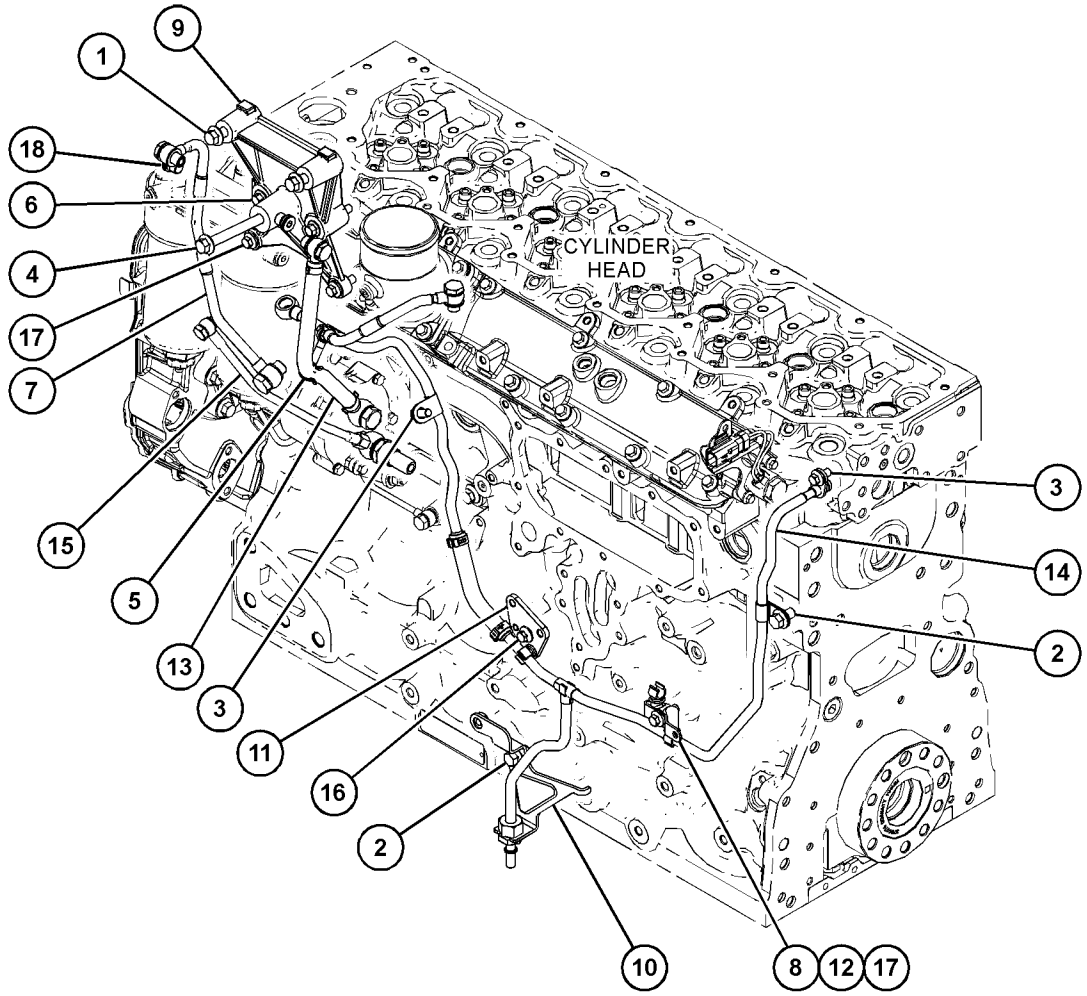

GRAPHIC #1 <END> g03887191

370-5520 LINES GP-FUEL INJECTION

S/N: E7A1-UP

PART OF 394-9639 RAIL GP-FUEL

SMCS-1252, 1254 **i05333502**

NOTE	REF NO	GRAPHIC REF	PART NUMBER	QTY	PART NAME 1 2 3 4 5 6 (PRODUCT LEVEL)	SEE PAGE
	1	1	**395-1633**	1	BRACKET AS	
M		1	**6I-0631**	1	BOLT (M6X1X12-MM)	
	2	1	**370-5516**	1	LINE AS-FUEL INJECTION	
	3	1	**370-5517**	1	LINE AS-FUEL INJECTION	
	4	1	**370-5518**	1	LINE AS-FUEL INJECTION	

M - METRIC PART

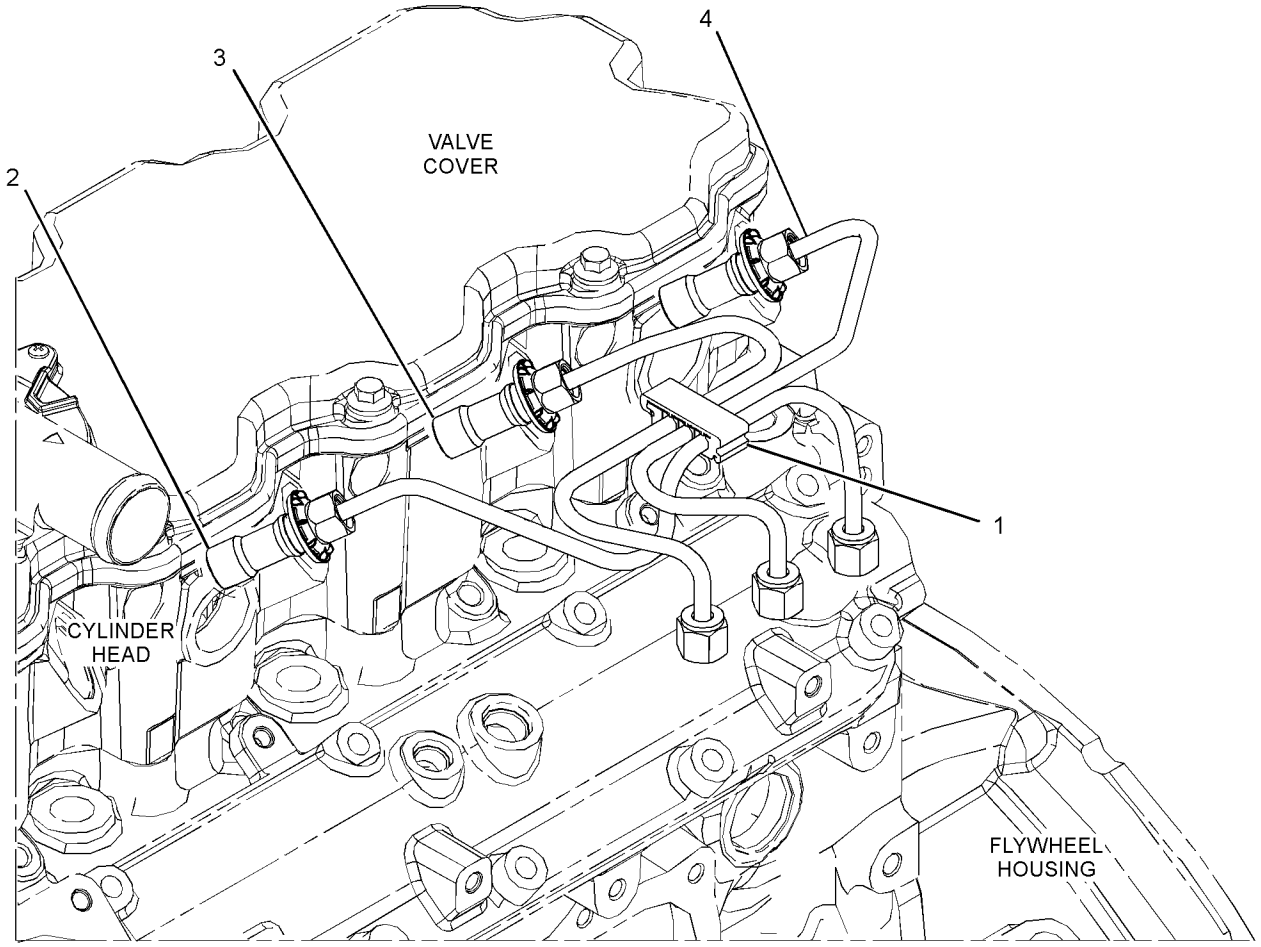

GRAPHIC #1 <END> g03380791

394-0525 LINES GP-FUEL INJECTION

S/N: E7A1-UP

PART OF 394-9639 RAIL GP-FUEL

SMCS-1252, 1254

i05490216

NOTE	REF NO	GRAPHIC REF	PART NUMBER	QTY	PART NAME 1 2 3 4 5 6 (PRODUCT LEVEL)	SEE PAGE
	1	1	**395-1633**	1	BRACKET AS	
M	1A	1	**6I-0631**	1	BOLT (M6X1X12-MM)	
	2	1	**370-5513**	1	LINE AS-FUEL	
	3	1	**393-5467**	1	LINE AS-FUEL	
	4	1	**393-5468**	1	LINE AS-FUEL	

M - METRIC PART

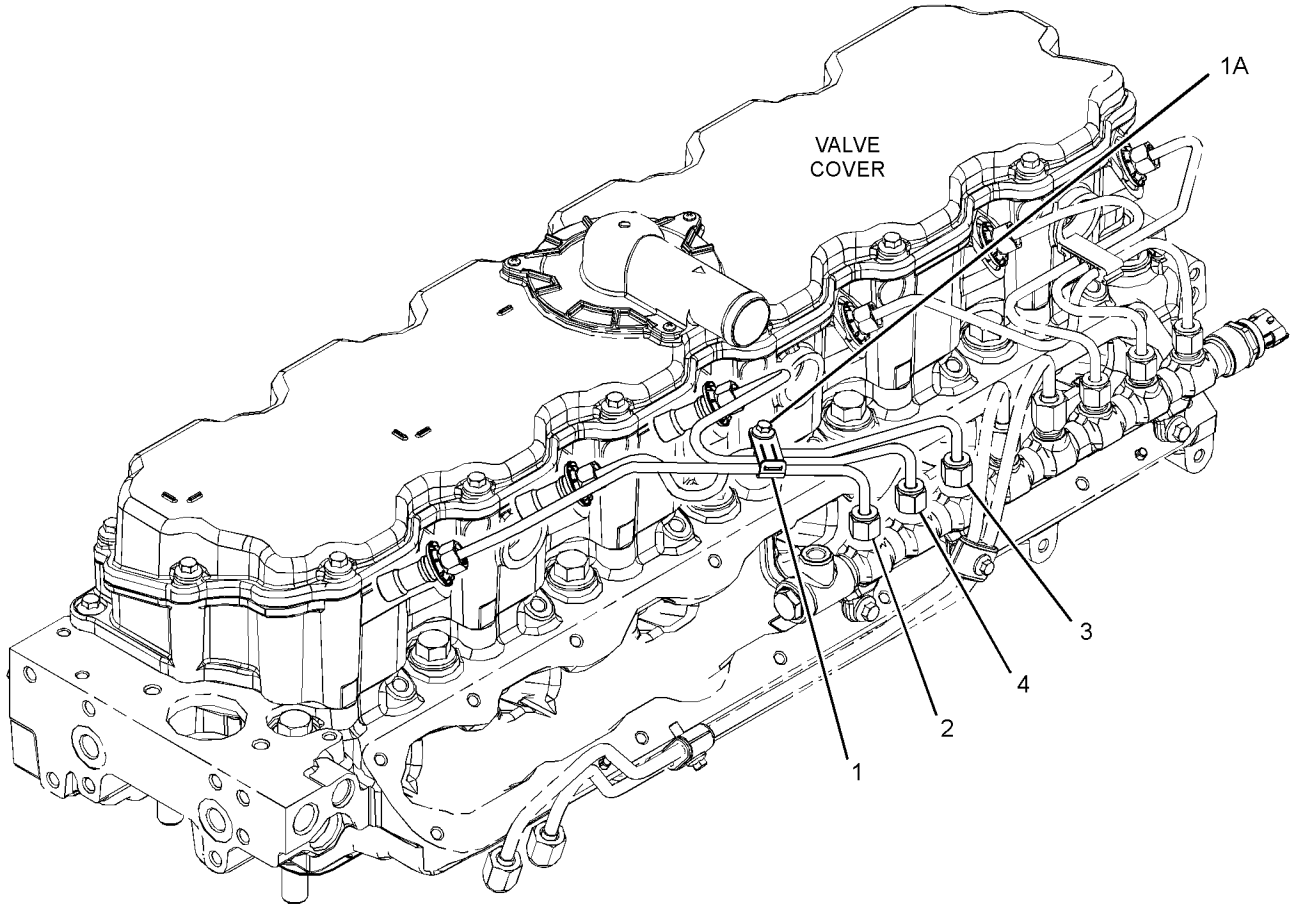

GRAPHIC #1 <END> g03479680

375-2647 PUMP GP-FUEL INJECTION*R

S/N: E7A1-UP

PART OF 391-4811 PUMP GP-FUEL INJECTION

SMCS-1251, 1290 **i05756354**

NOTE	REF NO	GRAPHIC REF	PART NUMBER	QTY	PART NAME 1 2 3 4 5 6 (PRODUCT LEVEL)	SEE PAGE
	1	1	**386-3819**	1	KEY-SHAFT	
	2	1	**375-8254**	1	VALVE	
	3	1	**376-6409**	1	SEAL	
	4	1	**376-6410**	1	RETAINER-WASHER	
	5	1	**376-6411**	1	NUT-SHAFT	
	6	1	**386-2971**	2	WASHER	
	7	1	**386-2976**	2	WASHER	

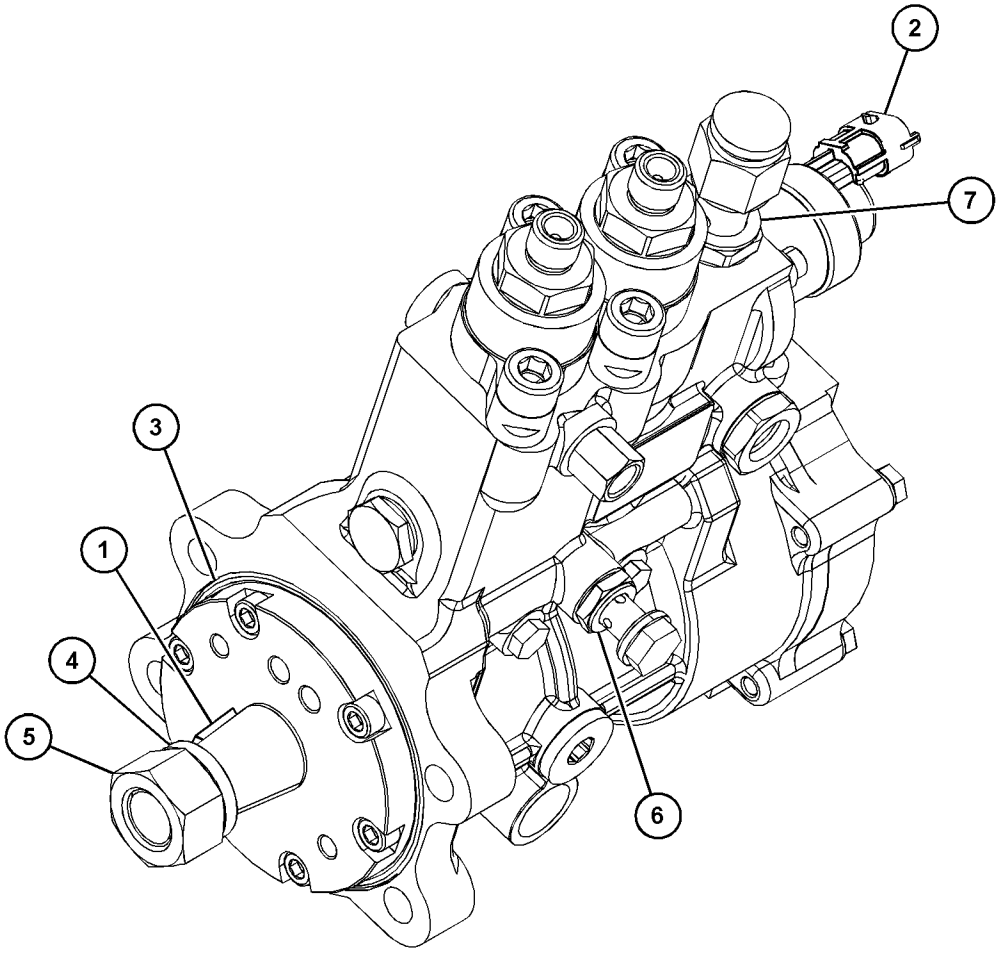

GRAPHIC #1 <END> g03657844

391-4811 PUMP GP-FUEL INJECTION

S/N: E7A1-UP

PART OF 435-8541 ENGINE AR-PRIMARY

SMCS-1251, 1290 **i06259842**

NOTE	REF NO	GRAPHIC REF	PART NUMBER	QTY	PART NAME 1 2 3 4 5 6 (PRODUCT LEVEL)	SEE PAGE
M	1	1	**286-0123**	4	BOLT (M10X1.5X35-MM THK)	
M	2	1	**6I-0654**	3	BOLT (M10X1.5X25-MM)	
	3	1	**371-2684**	1	BRACKET	
	4	1	**371-2691**	1	BRACKET	
	5	1	**371-7263**	1	LINE AS-FUEL	
YR	6	1	**375-2647**	1	PUMP GP-FUEL INJECTION	122
	7	1	**476-2947**	1	GEAR-FUEL PUMP	
M	8	1	**6I-0217**	2	BOLT (M8X1.25X20-MM)	
	9	1	**346-0006**	1	BOLT-SPECIAL	
	10	1	**346-0007**	2	WASHER	
M	11	1	**6I-0594**	1	NUT (M10X1.5-THD)	

M - METRIC PART
R - REMANUFACTURED PART MAY BE AVAILABLE
Y - SEPARATE ILLUSTRATION

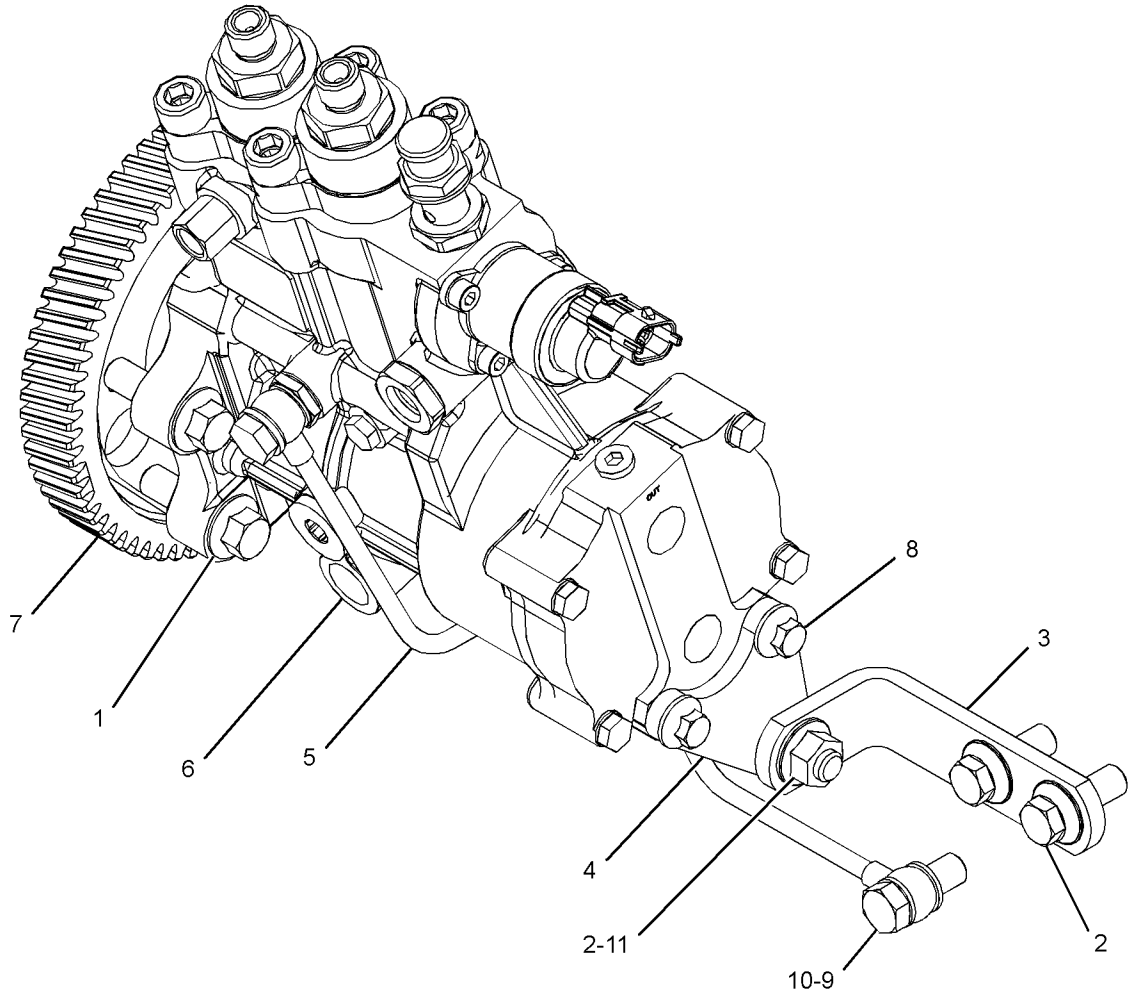

GRAPHIC #1 <END> g03378913

247-6050 PUMP GP-FUEL PRIMING

S/N: TNS1-UP

PART OF 442-0646 PUMP GP-FUEL PRIMING

SMCS-1258 **i06759787**

NOTE	REF NO	GRAPHIC REF	PART NUMBER	QTY	PART NAME 1 2 3 4 5 6 (PRODUCT LEVEL)	SEE PAGE
	1	1	**436-8983**	2	VALVE-CHECK	
	2	1	**162-2222**	2	SPRING	
	3	1	**173-1016**	2	RING-BACKUP	
	4	1	**179-7400**	2	SEAL	
	5	1	**188-7536**	1	SEAL	
	6	1	**188-7541**	1	SEAL	
	7	1	**236-6717**	2	SEAL-O-RING	
	8	1	**6D-5801**	2	LOCKNUT (8-32-THD)	
	9	1	**447-7206**	1	SEAL-O-RING	
M	10	1	**8T-4138**	3	BOLT (M6X1X20-MM)	
	11	1	**9S-4167**	1	STUD-HOLLOW (1-14X1.47-IN)	
	12	1	**9S-8002**	1	PLUG (7/16-20-THD)	
	13	1	**9X-8267**	3	WASHER (6.6X12X2-MM THK)	
					PARTS SHOWN IN GRAPHIC(S) WITHOUT A REFERENCE NUMBER ARE NOT SERVICED SEPARATELY	

M - METRIC PART

247-6050 **PUMP GP-FUEL PRIMING (**contd.**)** **i06759787**

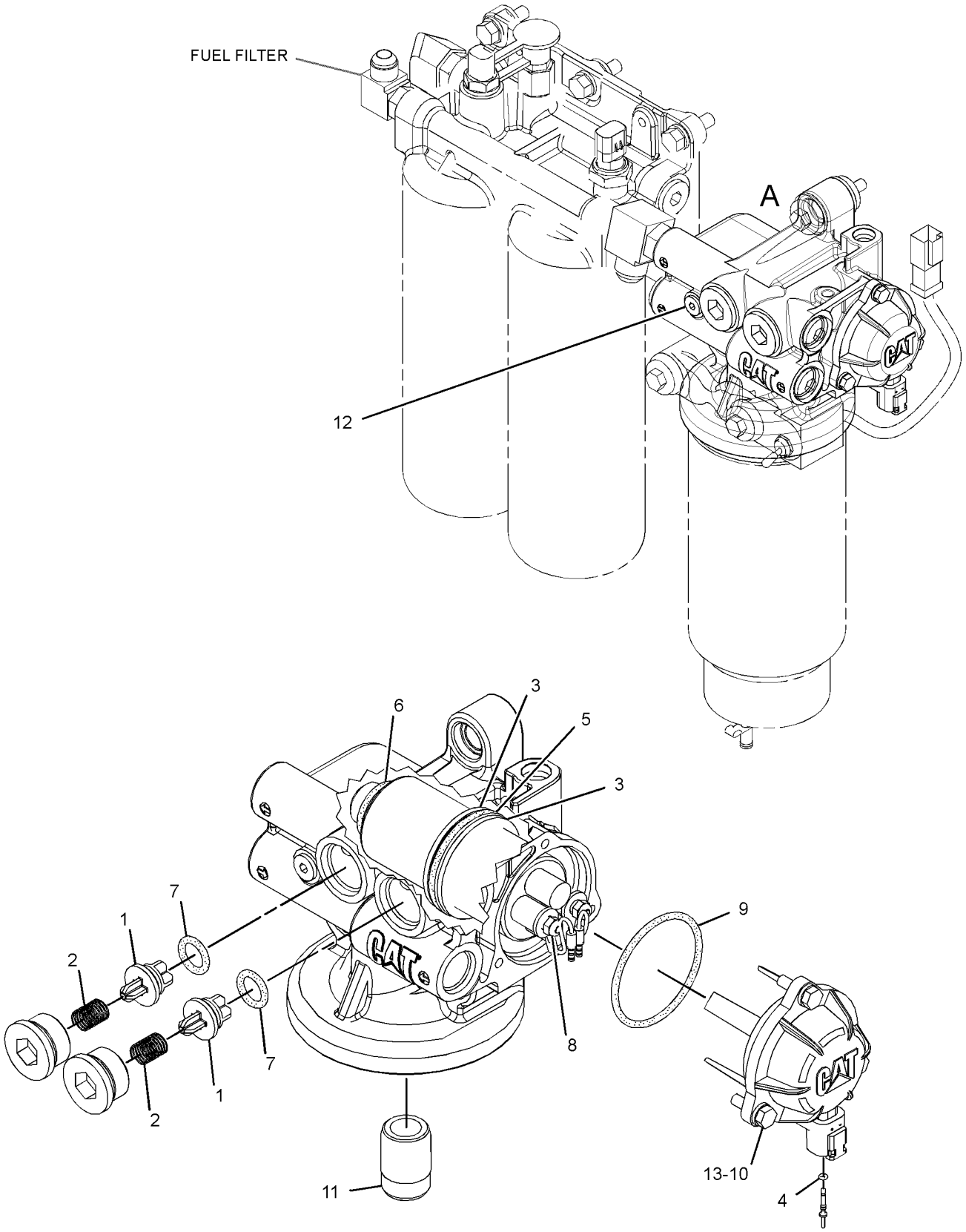

VIEW OF AREA A

GRAPHIC #1 <END> g02854219

442-0646 PUMP GP-FUEL PRIMING–ELECTRIC

S/N: TNS1-UP

PART OF 365-0166 LINES GP-FUEL FILTER

SMCS-1258 **i06759784**

NOTE	REF NO	GRAPHIC REF	PART NUMBER	QTY	PART NAME 1 2 3 4 5 6 (PRODUCT LEVEL)	SEE PAGE
Y	1	1	**247-6050**	1	PUMP GP-FUEL PRIMING	124
	2	1	**423-8524**	1	FILTER GP-WATER SEP & FUEL	

Y - SEPARATE ILLUSTRATION

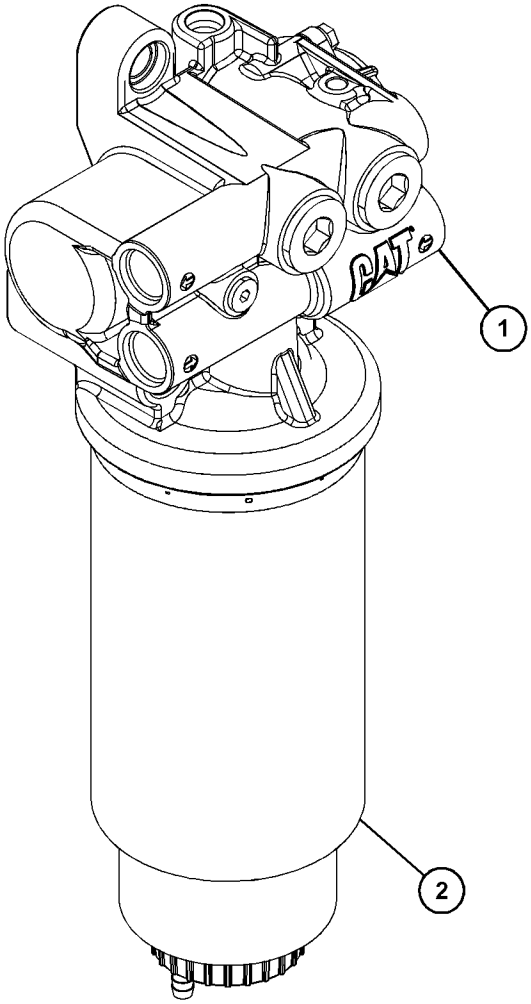

GRAPHIC #1 <END> g06049586

394-9639 RAIL GP-FUEL

S/N: E7A1-UP

PART OF 435-8541 ENGINE AR-PRIMARY

SMCS-1288 **i05489964**

NOTE	REF NO	GRAPHIC REF	PART NUMBER	QTY	PART NAME 1 2 3 4 5 6 (PRODUCT LEVEL)	SEE PAGE
M	1	1	**6I-0260**	3	BOLT (M8X1.25X25-MM)	
M	2	1	**099-6418**	1	NUT (M6X1-THD)	
	3	1	**206-1826**	2	BOLT	
Y	4	1	*370-5520*	1	LINES GP-FUEL INJECTION	120
	5	1	**375-0482**	4	CLAMP-PIPE	
	6	1	**375-0483**	2	INSERT-CLAMP	
	7	1	**375-2649**	1	RAIL GP-FUEL	
		1	**375-6988**	1	SENSOR (FUEL RAIL PRESSURE)	
		1	**398-6226**	1	VALVE (FUEL RAIL PRESSURE)	
	8	1	**393-2034**	1	LINE AS-FUEL	
	9	1	**393-2035**	1	LINE AS-FUEL	
Y	10	1	**394-0525**	1	LINES GP-FUEL INJECTION	121

M - METRIC PART
Y - SEPARATE ILLUSTRATION

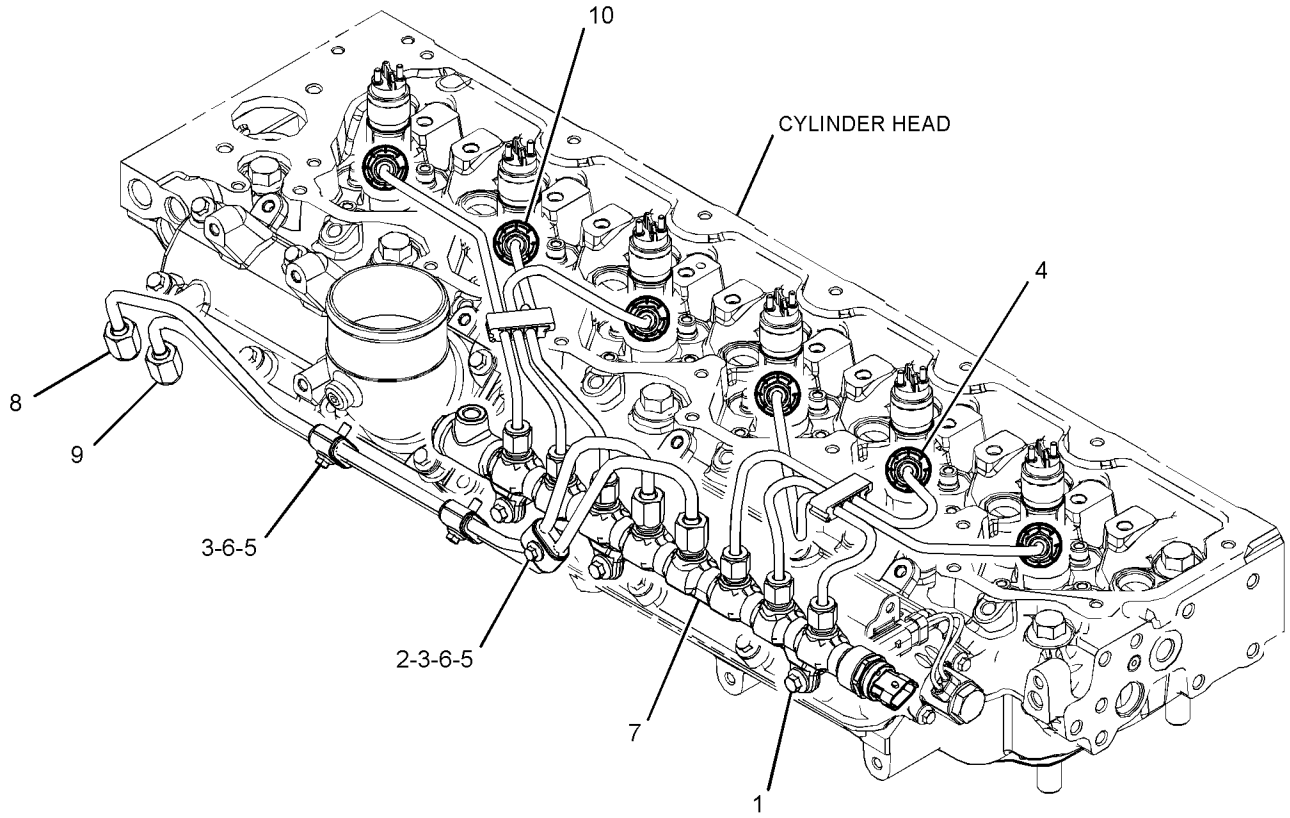

GRAPHIC #1 <END> g03380177

436-2351 TANK & MTG GP-FUEL

S/N: TNS1-UP

PART OF 456-5790 CHASSIS AR

SMCS-1273 **i06728762**

NOTE	REF NO	GRAPHIC REF	PART NUMBER	QTY	PART NAME 1 2 3 4 5 6 (PRODUCT LEVEL)	SEE PAGE
Y	1	1	*436-2350*	1	TANK GP-FUEL	129
	2	1	**151-5520**	4	WASHER (17X56X5-MM THK)	
	3	1	**187-7331**	4	MOUNT-RUBBER	
	4	1	**4F-6464**	2	WASHER-HARD (26.2X60.3X5-MM THK)	
M	5	1	**7X-2454**	1	BOLT (M24X3X110-MM)	
M	6	1	**7X-2554**	2	BOLT (M16X2X70-MM)	
	7	1	**9X-8257**	2	WASHER (17.5X30X3.5-MM THK)	

M - METRIC PART
Y - SEPARATE ILLUSTRATION

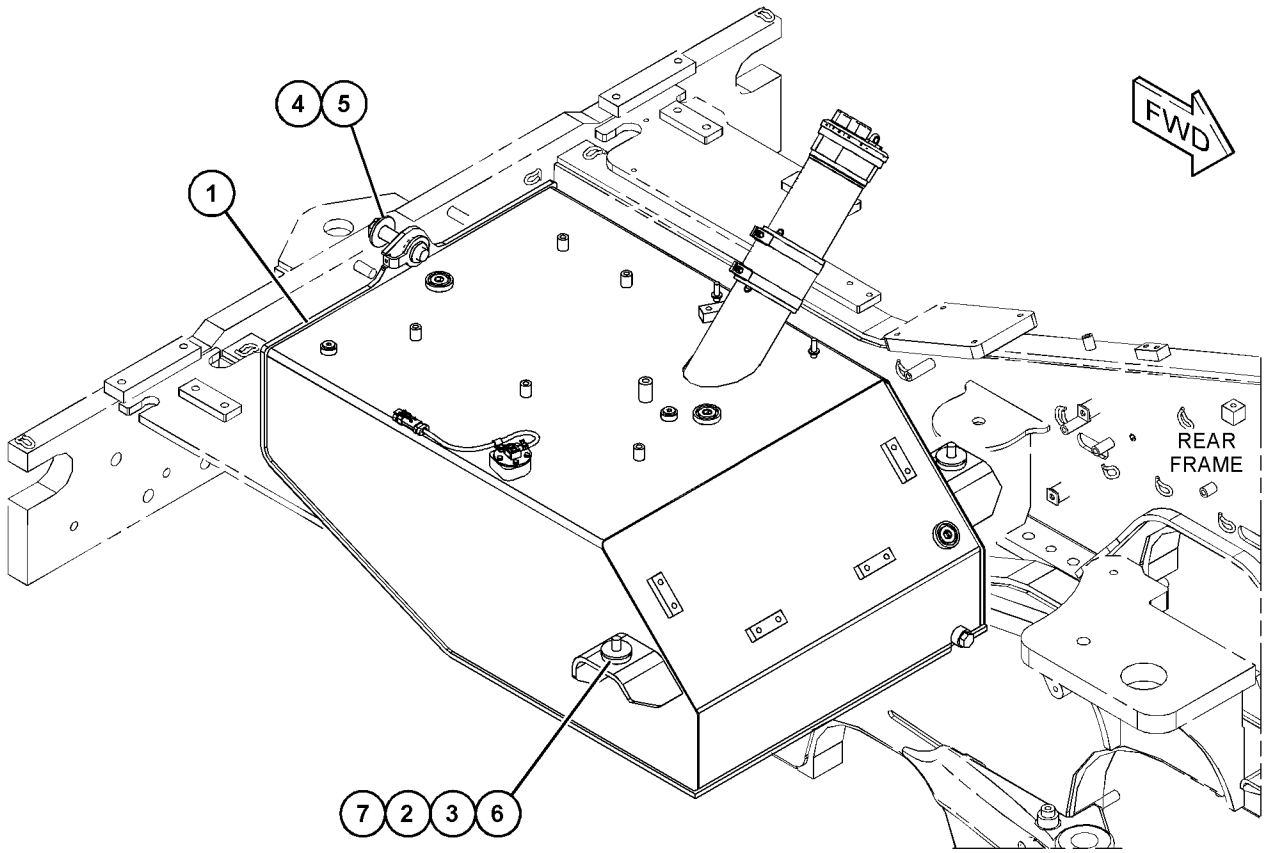

GRAPHIC #1 <END> g06028211

436-2350 TANK GP-FUEL

S/N: TNS1-UP
289-L (76-U.S. GAL)
PART OF 436-2351 TANK & MTG GP-FUEL

SMCS-1273 **i06807029**

NOTE	REF NO	GRAPHIC REF	PART NUMBER	QTY	PART NAME 1 2 3 4 5 6 (PRODUCT LEVEL)	SEE PAGE
	1	1	**304-6792**	1	PLUG	
	2	1	*148-8409*	3	PLUG AS	
					(EACH INCLUDES)	
		1	**9S-8008**	1	PLUG (1-1/16-12-THD)	
		1	**3D-2824**	1	SEAL-O-RING	
Y	3	1	*419-4936*	1	CAP GP-FUEL FILLER (TANK)	103
	4	1	**358-1765**	1	TANK AS-FUEL	
	5	1	**363-4123**	1	GASKET	
	6	1	**433-6560**	1	BRACKET AS	
	7	1	**457-0033**	1	SENDER AS-LEVEL (FUEL)	
		1	**8T-8737**	1	PLUG-SEAL	
		1	**9X-3401**	2	PIN-CONNECTOR (16-GA TO 18-GA)	
		1	**230-4014**	1	RECEPTACLE AS-CONNECTOR (3-PIN)	
	8	1	**228-5009**	1	CLIP	
	9	1	**2M-9780**	1	SEAL-O-RING	
M	10	1	**7X-7920**	5	BOLT (M5X0.8X14-MM)	
	11	1	**8T-0328**	5	WASHER-HARD (5.5X10X1-MM THK)	

M - METRIC PART
Y - SEPARATE ILLUSTRATION

436-2350 **TANK GP-FUEL (**contd.**)** **i06807029**

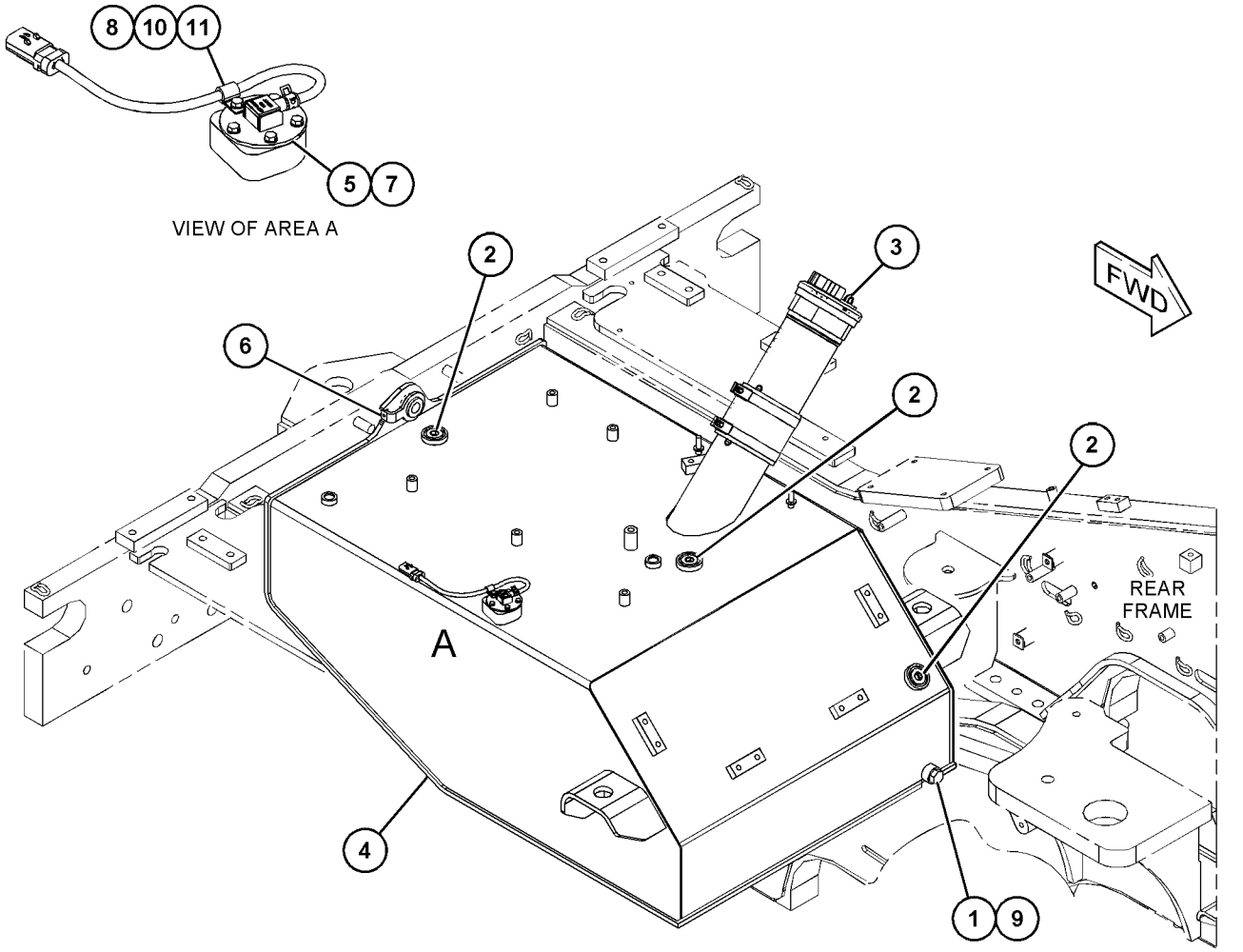

GRAPHIC #1 <END> g06028216

436-7009 ADAPTER GP-SENSOR

S/N: TNS1-UP

PART OF 456-5818 STEERING AR, 463-8869 STEERING AR-SECONDARY

SMCS-1900 **i06796442**

NOTE	REF NO	GRAPHIC REF	PART NUMBER	QTY	PART NAME 1 2 3 4 5 6 (PRODUCT LEVEL)	SEE PAGE
	1	1	*148-8315*	1	CONNECTOR AS	
		1	**2M-9780**	1	SEAL-O-RING	
		1	**6V-8642**	1	CONNECTOR	
		1	**7J-9108**	1	SEAL-O-RING	
	2	1	*148-8325*	1	CONNECTOR AS	
		1	**3J-1907**	1	SEAL-O-RING	
		1	**4J-5477**	1	SEAL-O-RING	
		1	**6V-8641**	1	CONNECTOR	
	3	1	*148-8336*	2	CONNECTOR AS (45-DEG ELBOW)	
					(EACH INCLUDES)	
		1	**3J-1907**	1	SEAL-O-RING	
		1	**6V-8397**	1	SEAL-O-RING	
		1	**6V-8636**	1	CONNECTOR	
	4	1	*148-8378*	1	ELBOW AS (90-DEG)	
		1	**3J-1907**	1	SEAL-O-RING	
		1	**6V-8397**	1	SEAL-O-RING	
		1	**6V-8724**	1	ELBOW	
	5	1	*148-8390*	1	ELBOW AS	
		1	**2M-9780**	1	SEAL-O-RING	
		1	**6V-8626**	1	ELBOW	
		1	**7J-9108**	1	SEAL-O-RING	
	6	1	*164-6874*	1	FITTING AS-ELBOW (QUICK DISCONNECT, MALE)	
		1	**3J-1907**	1	SEAL-O-RING	
		1	**085-7356**	1	FITTING	
	7	1	*168-1968*	1	TEE AS	
		1	**3J-1907**	1	SEAL-O-RING	
		1	**6V-8397**	1	SEAL-O-RING	
		1	**126-6872**	1	TEE	
	8	1	**213-3745**	2	ELBOW	
	9	1	*229-5336*	1	TEE AS	
		1	**3J-1907**	1	SEAL-O-RING	
		1	**4J-5477**	1	SEAL-O-RING	
		1	**081-5648**	1	TEE	
	10	1	**344-7391**	1	SENSOR GP-PRESSURE (STEERING PUMP)	
	11	1	**462-7023**	1	BRACKET AS	
M		1	**8T-3490**	2	NUT-WELD (M10X1.5-THD)	
	12	1	*164-5567*	3	COUPLER AS-QUICK DISCONNECT (MALE)	
					(EACH INCLUDES)	
		1	**6V-3965**	1	FITTING (QUICK DISCONNECT)	
		1	**214-7568**	1	SEAL-O-RING	
	13	1	**3J-1907**	1	SEAL-O-RING	
	14	1	**6V-0852**	3	CAP-DUST	
M	15	1	**7X-2543**	2	BOLT (M10X1.5X120-MM)	
	16	1	**8T-4121**	5	WASHER-HARD (11X21X2.5-MM THK)	
M	17	1	**8T-4136**	3	BOLT (M10X1.5X25-MM)	

M - METRIC PART

436-7009 **ADAPTER GP-SENSOR (**contd.**)** **i06796442**

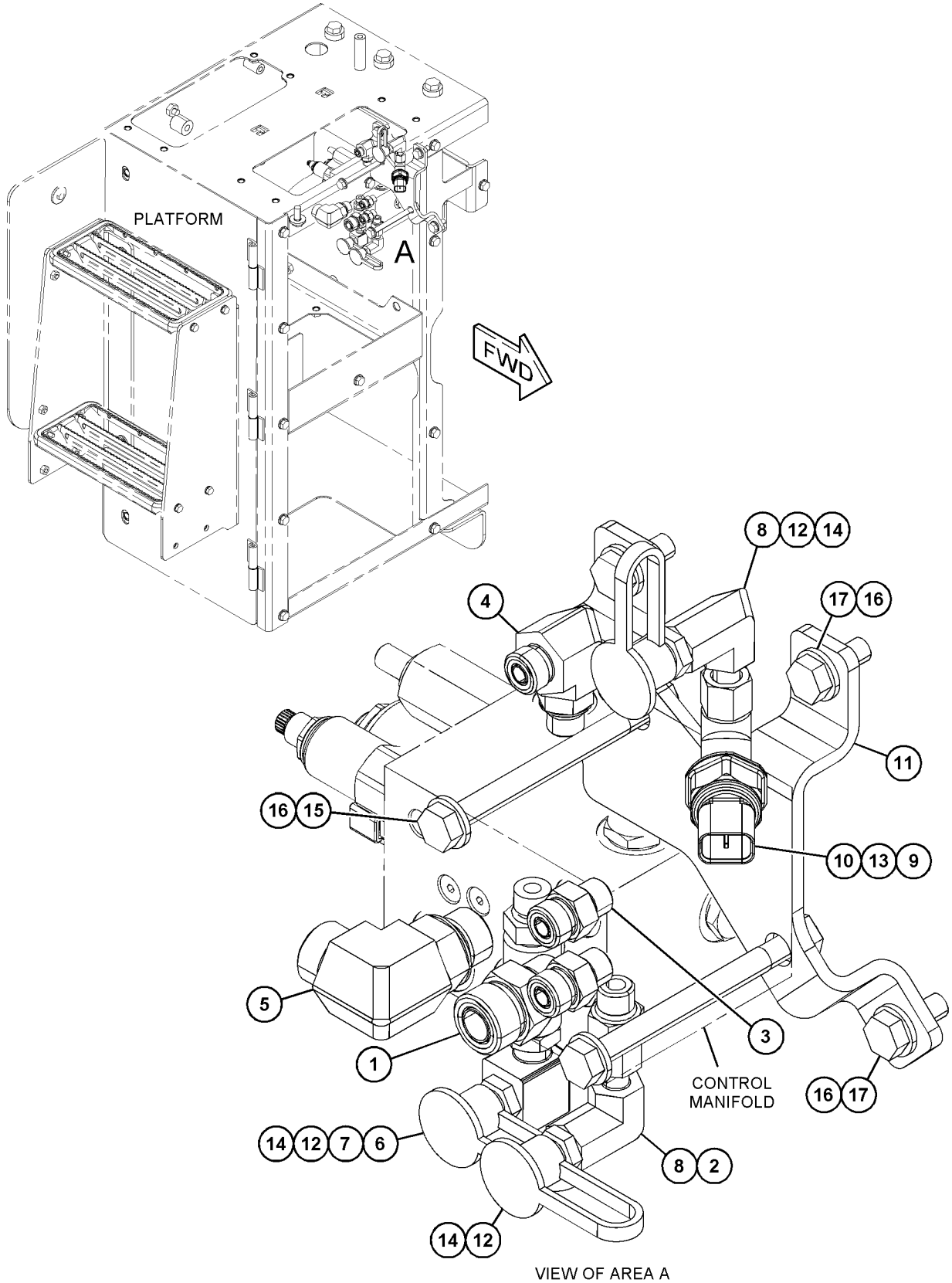

VIEW OF AREA A

GRAPHIC #1 <END> g06048330

132-1829 ALARM GP–FAULT

S/N: TNS1-UP

PART OF 502-5907 WIRING GP-CAB

SMCS-7400, 7402, 7407 **i06811605**

NOTE	REF NO	GRAPHIC REF	PART NUMBER	QTY	PART NAME 1 2 3 4 5 6 (PRODUCT LEVEL)	SEE PAGE
	1	1	**102-8802**	1	KIT-RECEPTACLE (2-PIN)	
					(INCLUDES RECEPTACLE AS & WEDGE)	
	2	1	**186-3735**	2	PIN-CONNECTOR (16-GA TO 18-GA)	

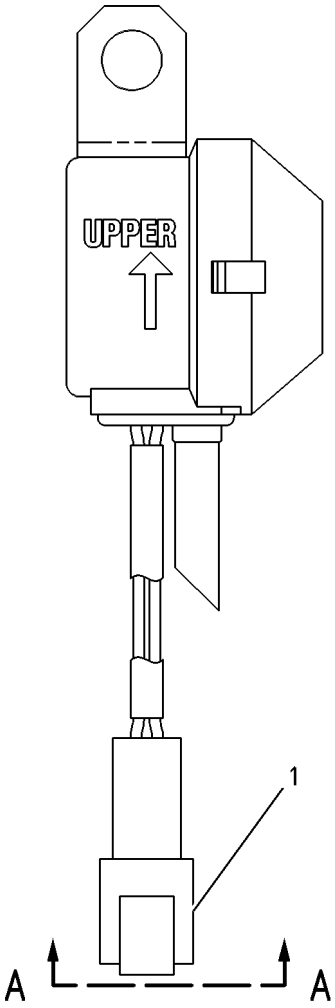

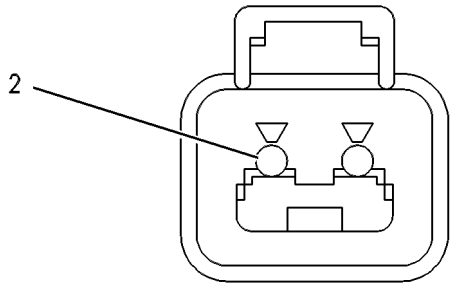

VIEW A-A

GRAPHIC #1 <END> g00272185

385-8001 ALTERNATOR GP-CHARGING

S/N: E7A1-UP
24-VOLTS, 115-AMPERES
PART OF 435-8541 ENGINE AR-PRIMARY

SMCS-1405 **i05334078**

NOTE	REF NO	GRAPHIC REF	PART NUMBER	QTY	PART NAME 1 2 3 4 5 6 (PRODUCT LEVEL)	SEE PAGE
M	1	1	**111-0859**	4	BOLT (M10X1.5X35-MM)	
M	2	1	**164-7468**	4	BOLT (M10X1.5X95-MM)	
R	3	1	**344-5081**	1	ALTERNATOR GP-CHARGING (24-VOLT, 115-AMPERE)	
	4	1	**394-4451**	1	BRACKET AS	
		1	**161-9820**	2	PIN	

M - METRIC PART
R - REMANUFACTURED PART MAY BE AVAILABLE

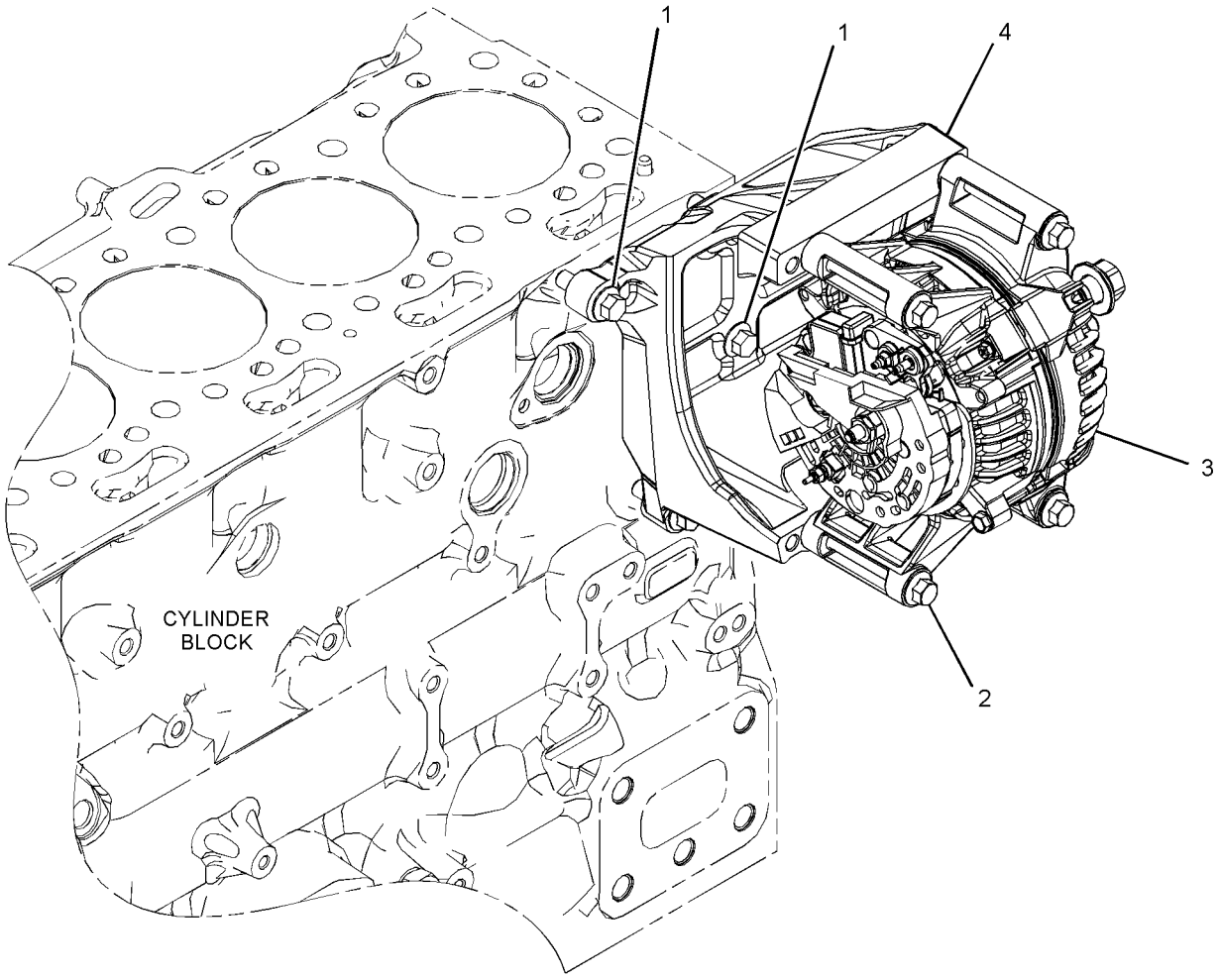

GRAPHIC #1 <END> g03380061

418-8025 BATTERY & WIRING GP

S/N: TNS1-UP

PART OF 456-5818 STEERING AR, 463-8869 STEERING AR-SECONDARY

SMCS-1401, 1402, 1408 **i06781686**

NOTE	REF NO	GRAPHIC REF	PART NUMBER	QTY	PART NAME 1 2 3 4 5 6 (PRODUCT LEVEL)	SEE PAGE
	1	2	**3E-8320**	1	PLATE-INSTRUCTION (BATTERY)	
	2	1,2	**3S-2093**	11	STRAP-CABLE	
Y	3	2	**7N-0718**	1	SWITCH GP-DISCONNECT (BATTERY)	214
	4	2	**8S-2634**	1	COVER AS	
	5	1	**8V-0622**	1	CABLE AS-BATTERY	
		1	**9G-0003**	1	COVER AS-TERMINAL (BLACK)	
		1	**8L-8413**	1	STRAP-CABLE (WHITE)	
		1	**9G-0004**	1	COVER AS-TERMINAL (RED)	
		1	**8L-8413**	1	STRAP-CABLE (WHITE)	
		1	**8C-5917**	1	TERMINAL AS-BATTERY (POSITIVE)	
		1	**1M-6119**	1	BOLT (5/16-18X1.375-IN)	
		1	**1M-6120**	1	NUT (5/16-18-THD)	
		1	**8T-9757**	1	TERMINAL AS-BATTERY (NEGATIVE)	
		1	**1M-6119**	1	BOLT (5/16-18X1.375-IN)	
		1	**1M-6120**	1	NUT (5/16-18-THD)	
E		1	**159-8049**		CABLE (00-GA, RED) (16-CM)	
	6	2	**8W-8528**	1	SLEEVE	
	7	2	**9G-9154**	1	CLIP	
	8	3	**9P-6571**	1	PLUG	
	9	1	**124-3019**	1	BRACKET AS	
M		1	**8T-3490**	1	NUT-WELD (M10X1.5-THD)	
	10	1	**134-3355**	1	STRAP AS	
	11	2	**142-3331**	1	BRACKET AS	
	12	1	**149-4993**	1	STRAP AS-GROUND	
	13	1	**153-5710**	2	BATTERY GP (12-VOLT, MAINTENANCE FREE, WET)	
	14	1	**153-6281**	1	HOLD-DOWN-BATTERY	
	15	2	**171-2205**	1	CIRCUIT BREAKER AS (40-AMPERE) (GLOW PLUG)	
		2	**1H-3244**	2	LOCKWASHER	
		2	**4E-5724**	2	WASHER (7X12X1-MM THK)	
		2	**8T-0122**	2	NUT-FULL (1/4-28-THD)	
	16	2	**171-2215**	1	CIRCUIT BREAKER AS (150-AMPERE) (CAB MAIN)	
		2	**1H-3244**	2	LOCKWASHER	
		2	**4E-5724**	2	WASHER (7X12X1-MM THK)	
		2	**8T-0122**	2	NUT-FULL (1/4-28-THD)	
	17	1	**192-5017**	1	BRACKET AS	
M		1	**8T-3490**	1	NUT-WELD (M10X1.5-THD)	
	18	2	**230-9174**	1	CIRCUIT BREAKER AS (15-AMPERE) (ENGINE ECM)	
		2	**6V-8378**	2	NUT (10-32-THD)	
		2	**8F-1434**	2	LOCKWASHER	
		2	**8T-0328**	2	WASHER-HARD (5.5X10X1-MM THK)	
	19	3	**287-5279**	1	BRACKET AS	
M		3	**8T-3490**	1	NUT-WELD (M10X1.5-THD)	
	20	2	**342-9671**	1	RECEPTACLE AS-AUXILIARY START	
	21	1	**364-7254**	1	CABLE AS	
		1	**1S-7252**	1	TERMINAL-CABLE (00-GA, 3/8-IN SCREW)	
E		1	**159-8050**		CABLE (00-GA, BLACK) (44-CM)	
B		1	**1P-0810**		TAPE-ELECTRICAL	

418-8025 **BATTERY & WIRING GP (**contd.**)** **i06781686**

NOTE	REF NO	GRAPHIC REF	PART NUMBER	QTY	PART NAME 1 2 3 4 5 6 (PRODUCT LEVEL)	SEE PAGE
		1	**299-9092**	1	COVER-TERMINAL (BLACK)	
		1	**315-0180**	1	TERMINAL-RING (00-GA, 3/8-IN SCREW)	
	22	1	**372-8368**	1	CABLE AS	
		1	**7T-9987**	1	COVER AS-TERMINAL (RED)	
		1	**8L-8413**	1	STRAP-CABLE (WHITE)	
		1	**3S-6049**	1	TERMINAL AS-BATTERY (POSITIVE)	
		1	**1M-6119**	1	BOLT (5/16-18X1.375-IN)	
		1	**1M-6120**	1	NUT (5/16-18-THD)	
E		1	**159-8049**		CABLE (00-GA, RED) (97-CM)	
B		1	**1P-0810**		TAPE-ELECTRICAL	
		1	**311-3475**	1	TERMINAL-RING	
	23	2	**376-9204**	1	FILM-IDENTIFICATION (CIRCUIT BREAKER)	
	24	2	**387-9631**	1	STRAP	
	25	2	**391-0842**	1	BAR-BUS	
	26	1	**391-0844**	1	CABLE AS	
		1	**1M-4986**	1	TERMINAL-RING (0-GA, 1/2-IN SCREW)	
E		1	**159-8047**		CABLE-ELECTRICAL (0-GA, RED) (106-CM)	
B		1	**1P-0810**		TAPE-ELECTRICAL	
		1	**328-8425**	1	COVER-TERMINAL (RED)	
	27	2	**391-0845**	1	BUS BAR AS	
	28	1	**393-1844**	1	CABLE AS	
		1	**4D-1248**	1	TERMINAL (00-GA, 3/8-IN SCREW)	
		1	**7T-9988**	1	COVER AS-TERMINAL (BLACK)	
		1	**8L-8413**	1	STRAP-CABLE (WHITE)	
		1	**3S-6050**	1	TERMINAL AS-BATTERY (NEGATIVE)	
		1	**1M-6119**	1	BOLT (5/16-18X1.375-IN)	
		1	**1M-6120**	1	NUT (5/16-18-THD)	
E		1	**159-8050**		CABLE (00-GA, BLACK) (67-CM)	
B		1	**1P-0810**		TAPE-ELECTRICAL	
	29	2	**418-8023**	1	FILM-IDENTIFICATION (CIRCUIT BREAKER)	
	30	1	**418-8028**	1	CABLE AS	
		1	**9X-9825**	1	TERMINAL-CABLE (00-GA, 1/2-IN SCREW)	
		1	**030-1705**	1	TERMINAL-CABLE (00-GA, 5/16-IN SCREW)	
E		1	**159-8049**		CABLE (00-GA, RED) (86-CM)	
B		1	**1P-0810**		TAPE-ELECTRICAL	
		1	**276-1786**	1	COVER-TERMINAL (RED)	
		1	**328-8425**	1	COVER-TERMINAL (RED)	
	31	2	**418-8029**	1	CABLE AS	
E		2	**159-8050**		CABLE (00-GA, BLACK) (46-CM)	
		2	**276-7278**	1	TERMINAL-RING	
		2	**299-9092**	1	COVER-TERMINAL (BLACK)	
	32	1	**440-5388**	1	CABLE AS	
E		1	**159-8049**		CABLE (00-GA, RED) (187-CM)	
B		1	**1P-0810**		TAPE-ELECTRICAL	
		1	**311-3475**	1	TERMINAL-RING	
M	33	1	**108-2949**	2	STUD (M10X1.5X270-MM)	
	34	1	**130-9984**	1	CLIP	
	35	2	**133-6934**	1	SPACER (11X20X25-MM THK)	
M	36	1,2	**142-3953**	2	STUD (M10X1.5-THD)	
	37	1,2,3	**221-3525**	14	GROMMET	
	38	2,3	**2V-1771**	6	GROMMET	

418-8025 **BATTERY & WIRING GP (**contd.**)** **i06781686**

NOTE	REF NO	GRAPHIC REF	PART NUMBER	QTY	PART NAME 1 2 3 4 5 6 (PRODUCT LEVEL)	SEE PAGE
M	39	2	**344-5674**	4	NUT (M8X1.25-THD)	
M	40	1,2,3	**344-5675**	6	NUT (M10X1.5-THD)	
	41	2	**3E-6754**	1	GROMMET	
M	42	2	**3T-0852**	3	LOCKNUT (M8X1.25-THD)	
	43	3	**3V-4791**	3	GROMMET	
	44	1,2	**4D-6988**	2	CLIP	
	45	3	**4L-3641**	2	CLIP	
	46	2	**4S-1962**	1	CLIP	
	47	1	**5P-4115**	1	WASHER-HARD (7.2X19X2-MM THK)	
	48	2	**5P-4116**	12	WASHER-HARD (8.8X20.5X2-MM THK)	
	49	3	**6D-4246**	2	CLIP	
	50	3	**6V-0292**	1	PLUG	
	51	2	**7T-9988**	1	COVER AS-TERMINAL (BLACK)	
		2	**8L-8413**	1	STRAP-CABLE (WHITE)	
	52	2	**7U-4891**	4	SCREW (10-32X1-IN)	
	53	2	**7U-4892**	2	SCREW (8-32X0.75-IN)	
	54	1	**7X-7729**	2	WASHER (11X25X3-MM THK)	
	55	2	**8S-0948**	1	CLIP	
M	56	1	**8T-0389**	2	LOCKNUT (M10X1.5-THD)	
	57	3	**8T-1887**	3	CLIP (SLOT)	
	58	3	**8T-1888**	3	CLIP (TAB)	
	59	1,2,3	**8T-1889**	11	CLIP (SLOT)	
	60	1,2,3	**8T-1890**	11	CLIP (TAB)	
	61	1,2,3	**8T-4121**	27	WASHER-HARD (11X21X2.5-MM THK)	
M	62	1,2,3	**8T-4136**	16	BOLT (M10X1.5X25-MM)	
M	63	1,2	**8T-4137**	3	BOLT (M10X1.5X20-MM)	
M	64	2	**8T-4185**	1	BOLT (M10X1.5X50-MM)	
M	65	1	**8T-4186**	1	BOLT (M10X1.5X40-MM)	
M	66	2	**8T-4189**	1	BOLT (M8X1.25X20-MM)	
M	68	2	**8T-4908**	4	BOLT (M8X1.25X25-MM)	
	69	2,3	**9D-3769**	2	GROMMET	
	70	2	**9X-5632**	1	COVER-TERMINAL (RED, RH POS)	

B - USE AS REQUIRED
E - ORDER BY THE CENTIMETER
M - METRIC PART
Y - SEPARATE ILLUSTRATION

418-8025 **BATTERY & WIRING GP** (contd.) **i06781686**

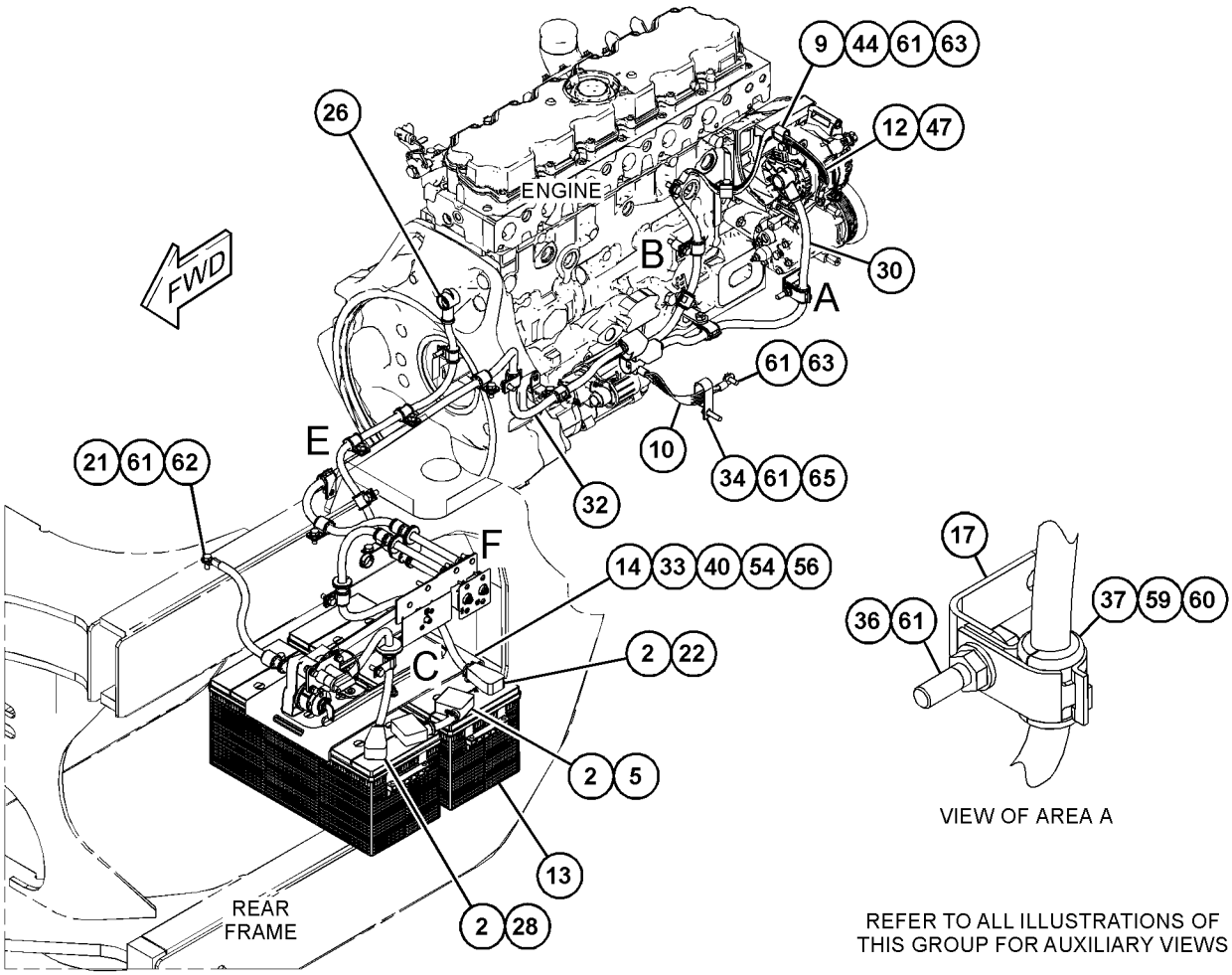

GRAPHIC #1 g06115833

418-8025 **BATTERY & WIRING GP (**contd.**)** **i06781686**

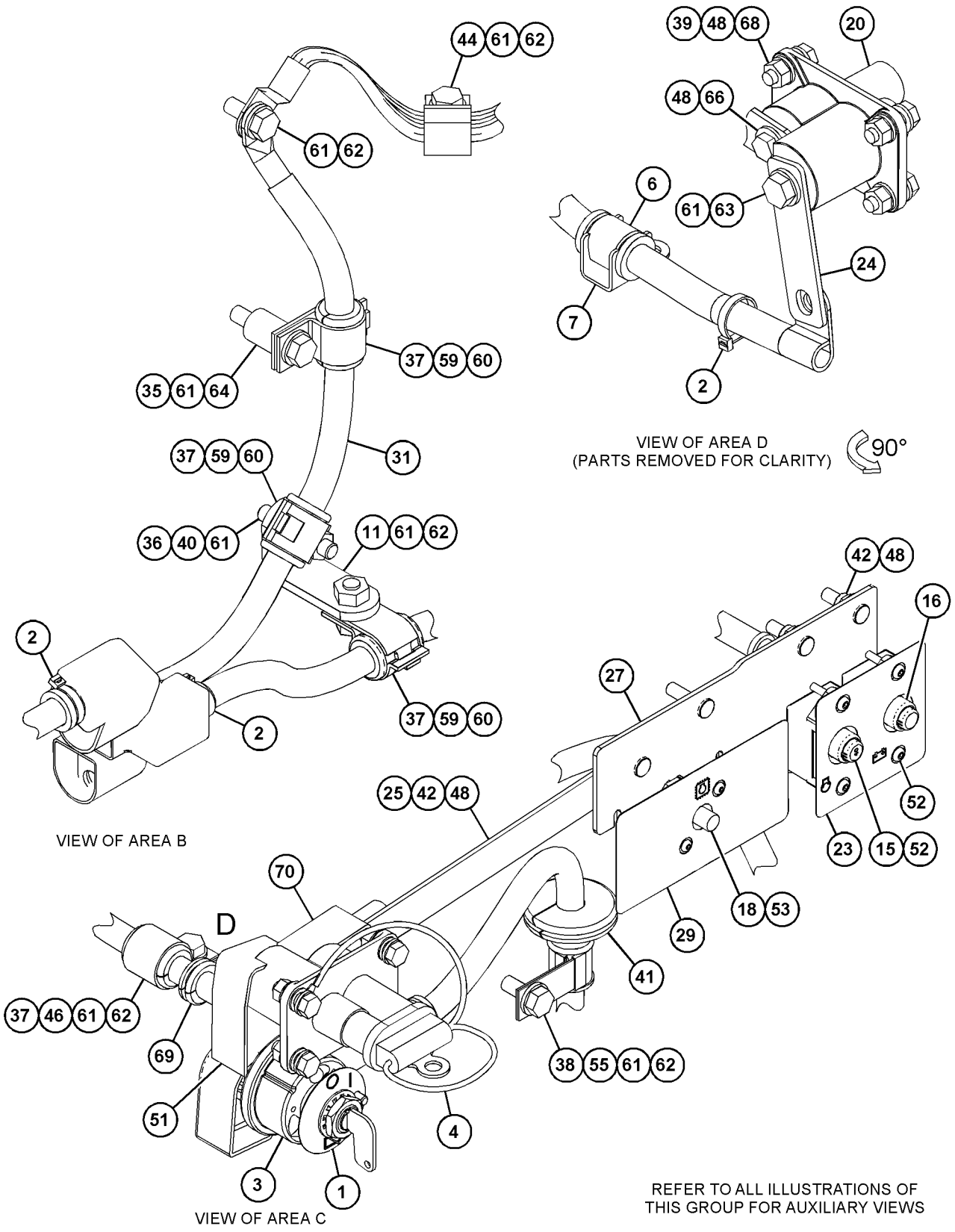

GRAPHIC #2

g06115836

418-8025 **BATTERY & WIRING GP (**contd.**)** **i06781686**

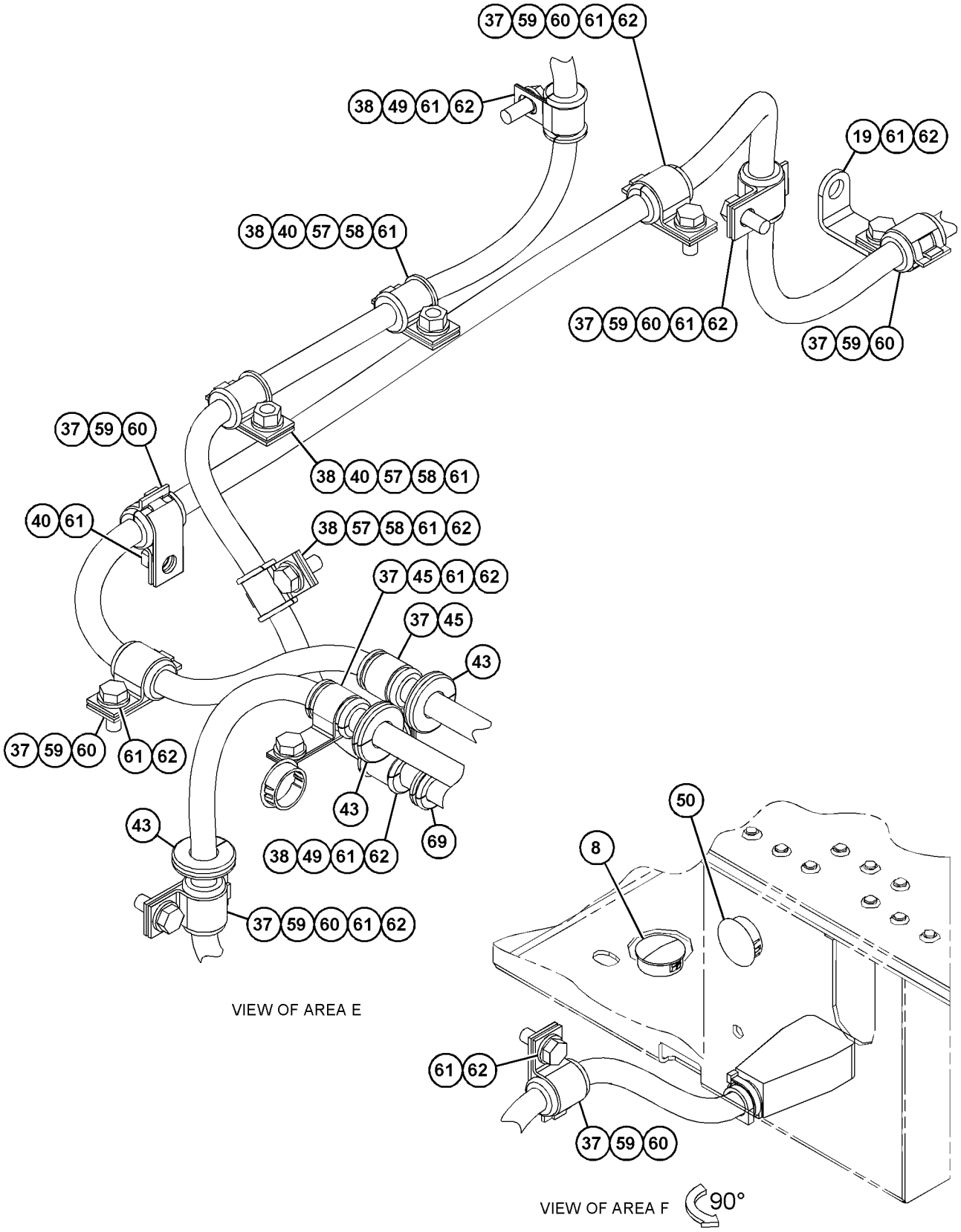

GRAPHIC #3 <END> g06050063

372-1866 BRACKET GP-MOUNTING

S/N: TNS1-UP

PART OF 491-7467 LIGHTING GP-WARNING BEACON

SMCS-0635, 1408 **i06780640**

NOTE	REF NO	GRAPHIC REF	PART NUMBER	QTY	PART NAME 1 2 3 4 5 6 (PRODUCT LEVEL)	SEE PAGE
	1	1	**372-1867**	1	TUBE AS	
	2	1	**377-5645**	1	BRACKET AS	
M		1	**159-9539**	2	NUT-WELD (M6X1-THD)	
	3	1	**377-5647**	1	SPRING	
	4	1	**5P-1076**	1	WASHER-HARD (13.5X30X4-MM THK)	
	5	1	**6C-9038**	1	WASHER (12.2X25X1-MM THK)	
M	6	1	**8C-8992**	1	BOLT-LOCKING (M12X1.75X30-MM)	
	7	1	**8T-4122**	1	WASHER-HARD (17X32X3.5-MM THK)	

M - METRIC PART

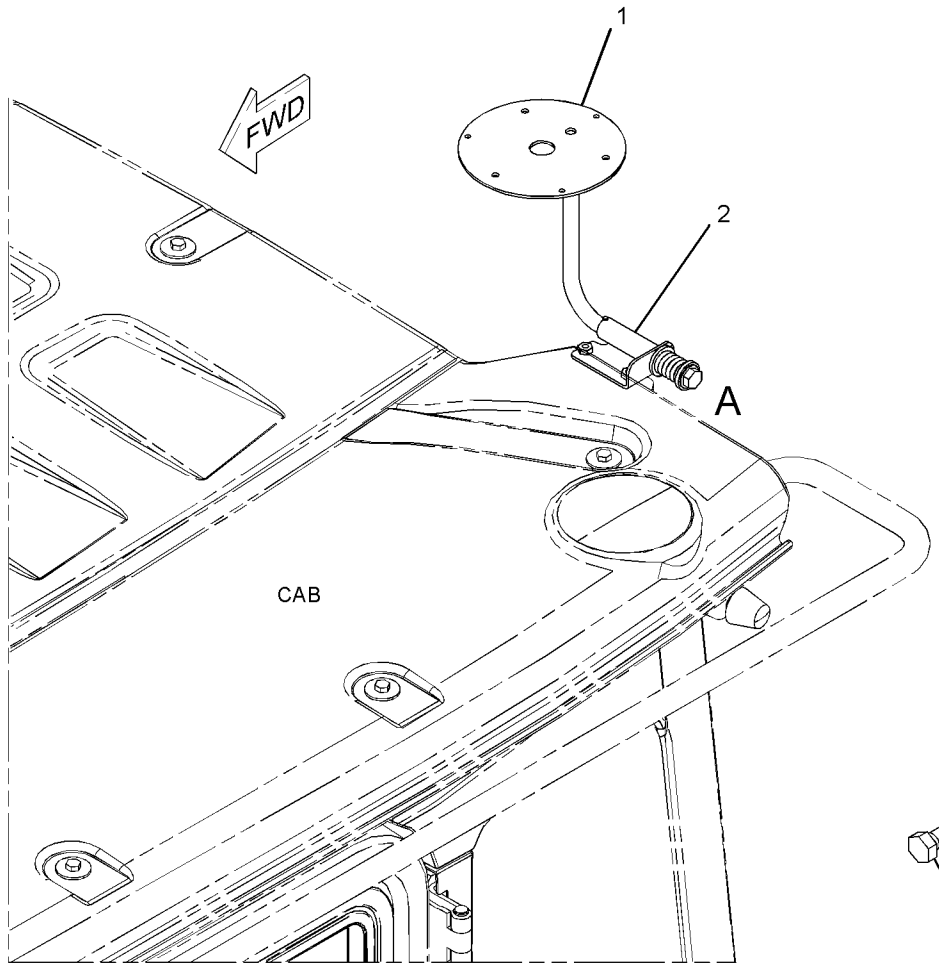

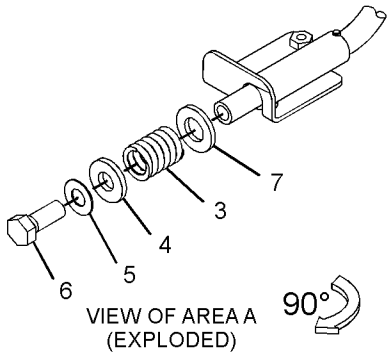

GRAPHIC #1 <END> g03449098

468-0572 CONTROL AR-COMMUNICATION

S/N: TNS1-UP

SMCS-7600 **i06796525**

NOTE	PART NUMBER	QTY	PART NAME 1 2 3 4 5 6 (PRODUCT LEVEL)	SEE PAGE
Y	*458-9155*	1	CONTROL GP-COMMUNICATION (NETWORK MANAGER)	146
Y	*460-2433*	1	ELECTRONICS GP-MONITOR (NETWORK MANAGER)	153
Y	*458-9160*	1	WIRING GP-CONTROL (NETWORK MANAGER)	249

Y - SEPARATE ILLUSTRATION

<END>

515-8976 CONTROL AR-COMMUNICATION—PRODUCT LINK CELLULAR

S/N: TNS1-UP

SMCS-7600 **i06797234**

NOTE	PART NUMBER	QTY	PART NAME 1 2 3 4 5 6 (PRODUCT LEVEL)	SEE PAGE
Y	*434-0691*	1	CONTROL GP-COMMUNICATION	145

Y - SEPARATE ILLUSTRATION

<END>

515-8977 CONTROL AR-COMMUNICATION—PRODUCT LINK SATELLITE

S/N: TNS1-UP

SMCS-7600 **i06796526**

NOTE	PART NUMBER	QTY	PART NAME 1 2 3 4 5 6 (PRODUCT LEVEL)	SEE PAGE
Y	*434-0693*	1	CONTROL GP-COMMUNICATION (PRODUCT LINK ELITE SATELLITE)	145

Y - SEPARATE ILLUSTRATION

<END>

313-2523 CONTROL GP-AUTODIG

S/N: TNS1-UP

PART OF 364-1295, 370-3814, 517-7122 MONITOR AR-PAYLOAD

SMCS-5741 **i06064257**

NOTE	REF NO	GRAPHIC REF	PART NUMBER	QTY	PART NAME 1 2 3 4 5 6 (PRODUCT LEVEL)	SEE PAGE
	1	1	**201-1531**	1	FILM-IDENTIFICATION (AUTODIG)	
	2	1	**332-2155**	1	SWITCH AS-PUSH BUTTON (AUTODIG)	
		1	**6F-0253**	1	LOCKWASHER	
		1	**9X-3402**	3	SOCKET-CONNECTOR (16-GA TO 18-GA)	
					–OR–	
		1	**126-1768**	3	SOCKET-CONNECTOR (14-GA TO 16-GA)	
		1	**172-3511**	1	NUT (5/8-24-THD)	

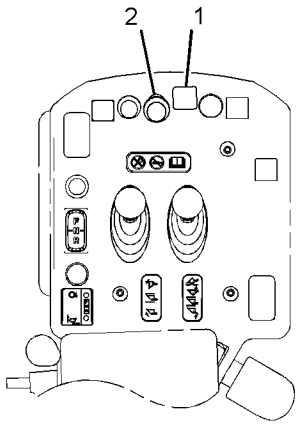

VIEW A-A

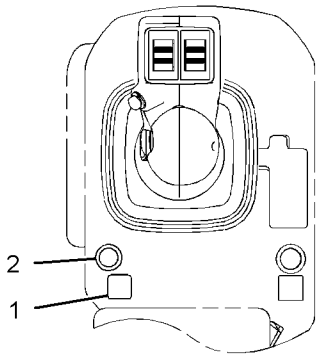

OPTIONAL DESIGN

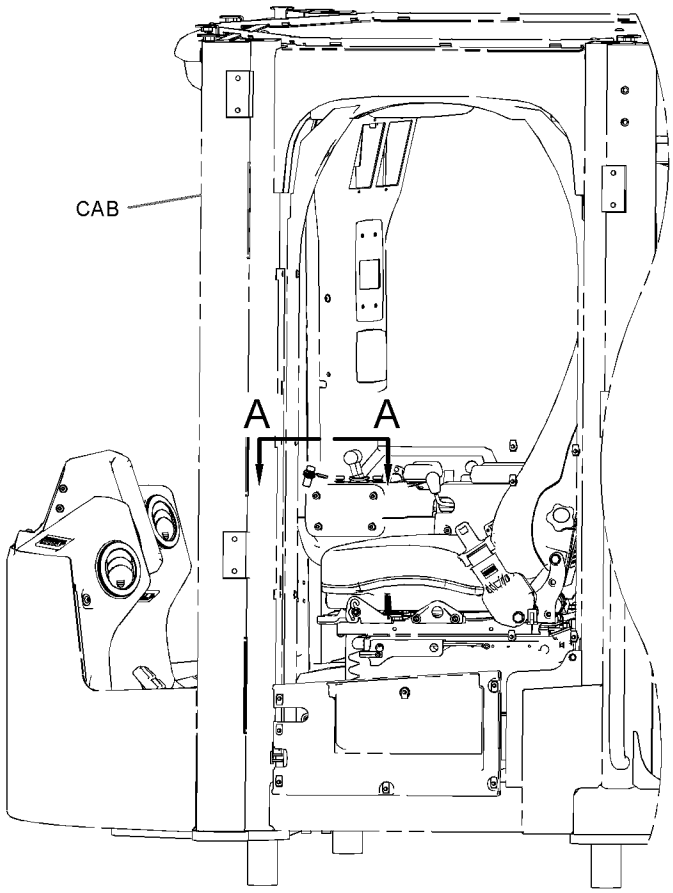

LEFT SIDE VIEW

GRAPHIC #1 <END> g02362281

417-4722 CONTROL GP-COMMUNICATION–NETWORK MANAGER

S/N: TNS1-UP

PART OF 458-9155 CONTROL GP-COMMUNICATION

SMCS-7610, 7620

i06661839

NOTE	REF NO	GRAPHIC REF	PART NUMBER	QTY	PART NAME 1 2 3 4 5 6 (PRODUCT LEVEL)	SEE PAGE
R	1	1	**459-0786**	1	CONTROL GP-COMMUNICATION (NETWORK MANAGER)	
		1	**7X-6315**	1	STRAP AS-GROUND	
		1	**8C-8514**	1	SCREW-MACHINE (8-32X0.375-IN)	
		1	**134-4126**	1	WASHER (4.52X8.28X0.76-MM THK)	
		1	**175-4168**	12	SCREW-PAN HEAD (6-32X0.37-IN)	
		1	**272-2379**	1	FILM-WARNING (EXPLOSION HAZARD, READ OMM)	

R - REMANUFACTURED PART MAY BE AVAILABLE

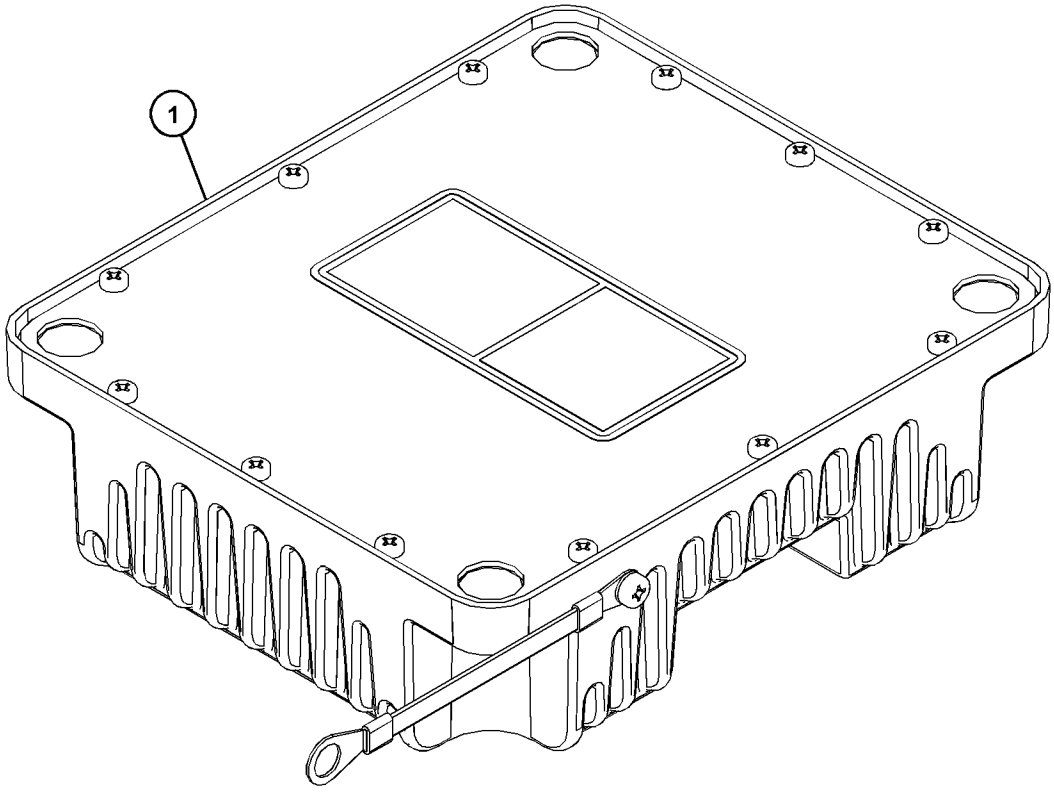

GRAPHIC #1 <END> g03786631

434-0691 CONTROL GP-COMMUNICATION

S/N: TNS1-UP

PART OF 515-8976 CONTROL AR-COMMUNICATION

SMCS-7610, 7620

i06769755

NOTE	PART NUMBER	QTY	PART NAME 1 2 3 4 5 6 (PRODUCT LEVEL)	SEE PAGE
Y	*458-9155*	1	CONTROL GP-COMMUNICATION (NETWORK MANAGER)	146
Y	*458-9156*	1	CONTROL GP-COMMUNICATION (CELLULAR)	147
Y	*460-2433*	1	ELECTRONICS GP-MONITOR (NETWORK MANAGER)	153
Y	*466-9427*	1	ELECTRONICS GP-MONITOR (CELLULAR)	153
Y	*458-9159*	1	INSTALLATION GP-COMMUNICATION	174
Y	*458-9160*	1	WIRING GP-CONTROL	249

Y - SEPARATE ILLUSTRATION

<END>

434-0693 CONTROL GP-COMMUNICATION—PRODUCT LINK ELITE SATELLITE

S/N: TNS1-UP

PART OF 515-8977 CONTROL AR-COMMUNICATION, 492-4033, 492-4034 DISTRIBUTION AR

SMCS-7610, 7620

i06740772

NOTE	PART NUMBER	QTY	PART NAME 1 2 3 4 5 6 (PRODUCT LEVEL)	SEE PAGE
Y	*458-9155*	1	CONTROL GP-COMMUNICATION (NETWORK MANAGER)	146
Y	*458-9157*	1	CONTROL GP-COMMUNICATION (XM SATELLITE)	148
Y	*460-2433*	1	ELECTRONICS GP-MONITOR (NETWORK MANAGER)	153
Y	*466-9428*	1	ELECTRONICS GP-MONITOR (XM SATELLITE)	154
Y	*458-9159*	1	INSTALLATION GP-COMMUNICATION	174
Y	*458-9160*	1	WIRING GP-CONTROL	249

Y - SEPARATE ILLUSTRATION

<END>

458-9155 CONTROL GP-COMMUNICATION

S/N: TNS1-UP

PLE601 NETWORK MANAGER

PART OF 468-0572 CONTROL AR-COMMUNICATION, 434-0691, 434-0693 CONTROL GP-COMMUNICATION

SMCS-7610, 7620 **i06769756**

NOTE	REF NO	GRAPHIC REF	PART NUMBER	QTY	PART NAME 1 2 3 4 5 6 (PRODUCT LEVEL)	SEE PAGE
	1	1	**8C-5607**	8	MOUNT-ISOLATION	
	2	1	**8C-5608**	4	SPACER (6.5X9.5X25.4-MM THK)	
Y	3	1	**417-4722**	1	CONTROL GP-COMMUNICATION (NETWORK MANAGER)	144
M	4	1	**6V-7728**	4	BOLT (M6X1X45-MM)	
	5	1	**9X-6165**	7	WASHER (6.5X22X2.5-MM THK)	

M - METRIC PART
Y - SEPARATE ILLUSTRATION

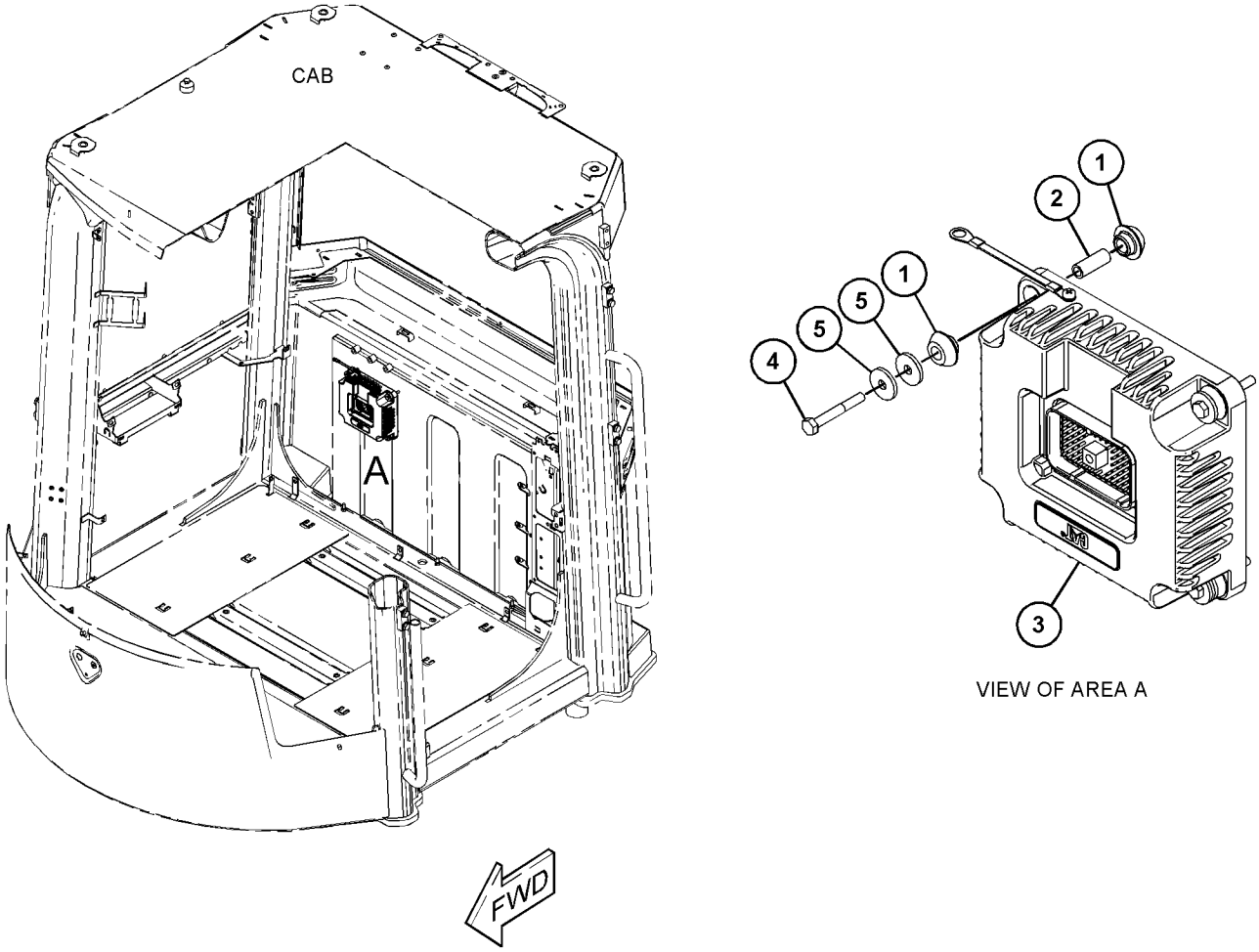

VIEW OF AREA A

GRAPHIC #1 <END> g06121249

458-9156 CONTROL GP-COMMUNICATION–PL641E CELLULAR

S/N: TNS1-UP

PART OF 434-0691 CONTROL GP-COMMUNICATION

SMCS-7610, 7620

i06648965

NOTE	REF NO	GRAPHIC REF	PART NUMBER	QTY	PART NAME 1 2 3 4 5 6 (PRODUCT LEVEL)	SEE PAGE
	1	1	**8T-8737**	8	PLUG-SEAL	
YR	2	1	**440-2105**	1	CONTROL GP-UNPROGRAMMED (PL641E CELLULAR)	150
	3	1	**155-2265**	1	KIT-CONNECTING PLUG (8-PIN)	
					(INCLUDES PLUG AS, WEDGE & INTERFACE SEAL)	
M	4	1	**9X-2045**	4	SCREW-TRUSS HEAD (M6X1X20-MM)	

M - METRIC PART
R - REMANUFACTURED PART MAY BE AVAILABLE
Y - SEPARATE ILLUSTRATION

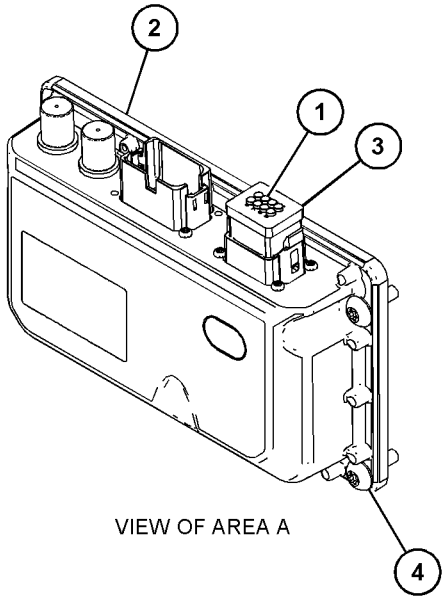

VIEW OF AREA A

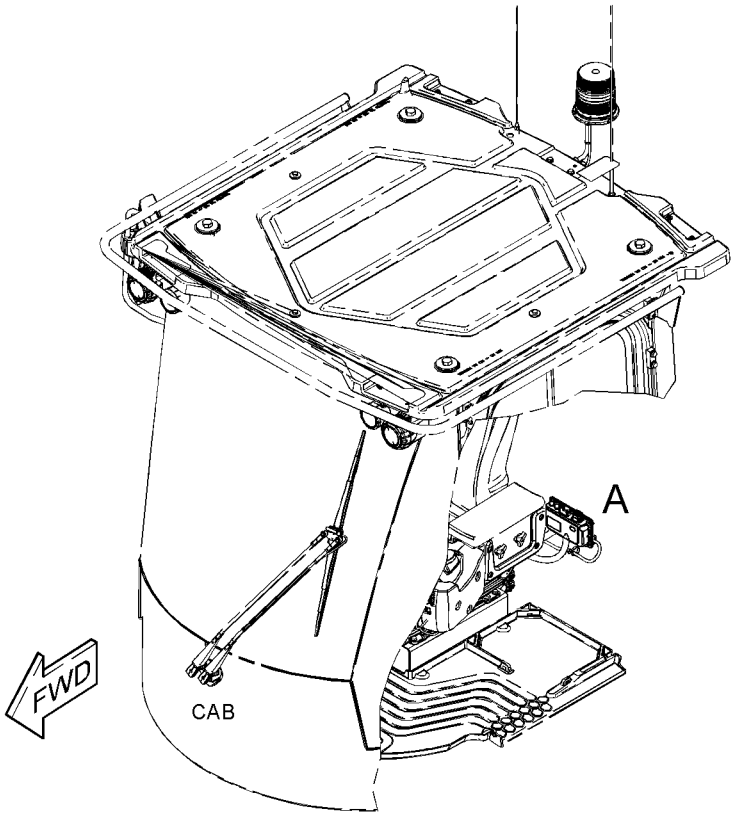

GRAPHIC #1

<END>

g06001030

458-9157 CONTROL GP-COMMUNICATION–PLE631 SATELLITE

S/N: TNS1-UP

PART OF 434-0693 CONTROL GP-COMMUNICATION

SMCS-7610, 7620 **i06781866**

NOTE	REF NO	GRAPHIC REF	PART NUMBER	QTY	PART NAME 1 2 3 4 5 6 (PRODUCT LEVEL)	SEE PAGE
YR	1	1	**442-7199**	1	CONTROL GP-UNPROGRAMMED (PL631 SATELLITE)	151
M	2	1	**9X-2045**	4	SCREW-TRUSS HEAD (M6X1X20-MM)	
	3	1	**155-2265**	1	KIT-CONNECTING PLUG (8-PIN)	
					(INCLUDES PLUG AS, WEDGE, & INTERFACE SEAL)	
	4	1	**8T-8737**	8	PLUG-SEAL	

M - METRIC PART
R - REMANUFACTURED PART MAY BE AVAILABLE
Y - SEPARATE ILLUSTRATION

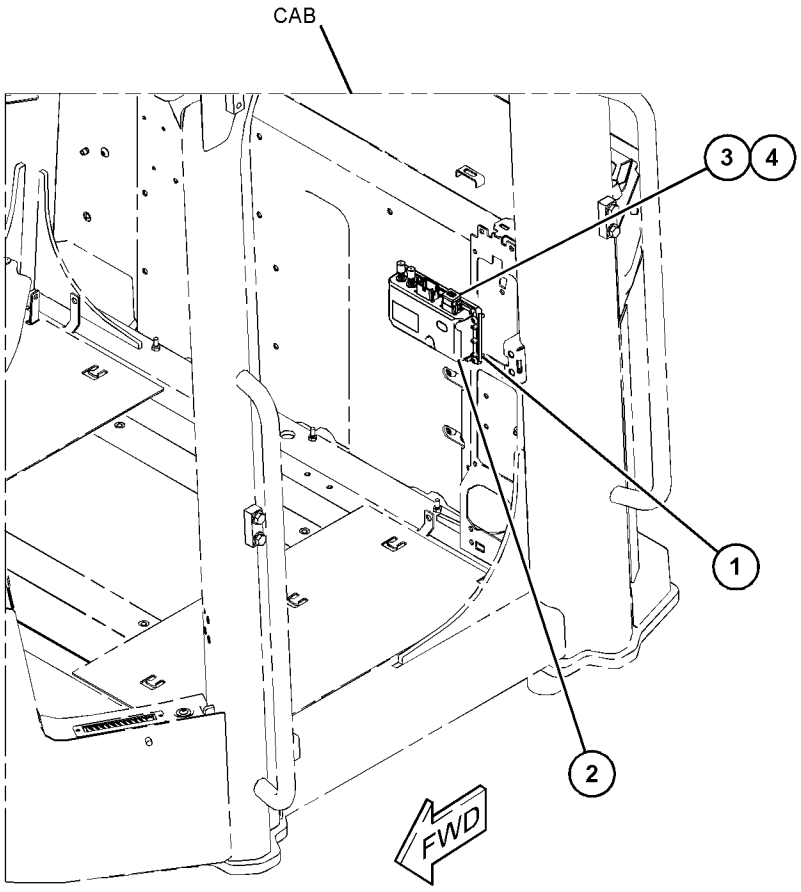

GRAPHIC #1 <END> g06104077

371-2537 CONTROL GP-ENGINE ELECTRONIC

S/N: E7A1-UP

PART OF 435-8541 ENGINE AR-PRIMARY

SMCS-1901 **i05936675**

NOTE	REF NO	GRAPHIC REF	PART NUMBER	QTY	PART NAME 1 2 3 4 5 6 (PRODUCT LEVEL)	SEE PAGE
	1	1	**7W-2632**	1	WASHER (8.5X16.8X1.6-MM THK)	
	2	1	**217-0099**	4	SPACER (8.2X25X2-MM THK)	
	3	1	**278-5203**	4	SPACER	
	4	1	**155-0576**	8	MOUNT-ISOLATION	
M	5	1	**6I-0456**	4	BOLT (M8X1.25X45-MM)	
	6	1	**374-2640**	1	CONTROL GP-UNPROGRAMMED	

M - METRIC PART

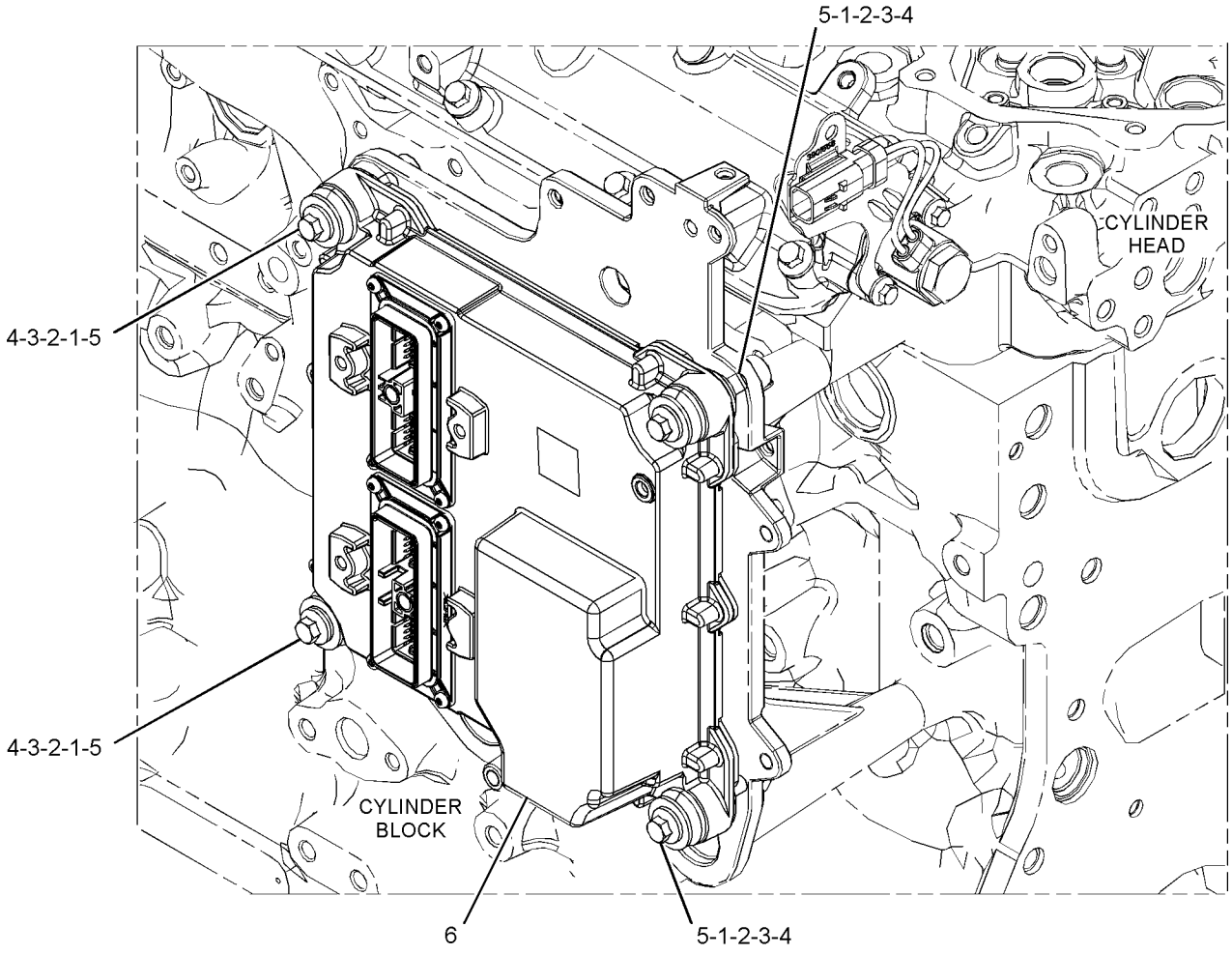

GRAPHIC #1 <END> g03644945

440-2105 CONTROL GP-UNPROGRAMMED–PL641E CELLULAR*R

S/N: TNS1-UP

PART OF 458-9156 CONTROL GP-COMMUNICATION

SMCS-7610 **i06587368**

NOTE	REF NO	GRAPHIC REF	PART NUMBER	QTY	PART NAME 1 2 3 4 5 6 (PRODUCT LEVEL)	SEE PAGE
	1	1	**449-7301**	1	FILM-INFORMATION (PL641 CELLULAR)	
F			**482-8138**	1	SOFTWARE GP-MONITOR (CELLULAR)	

F - NOT SHOWN

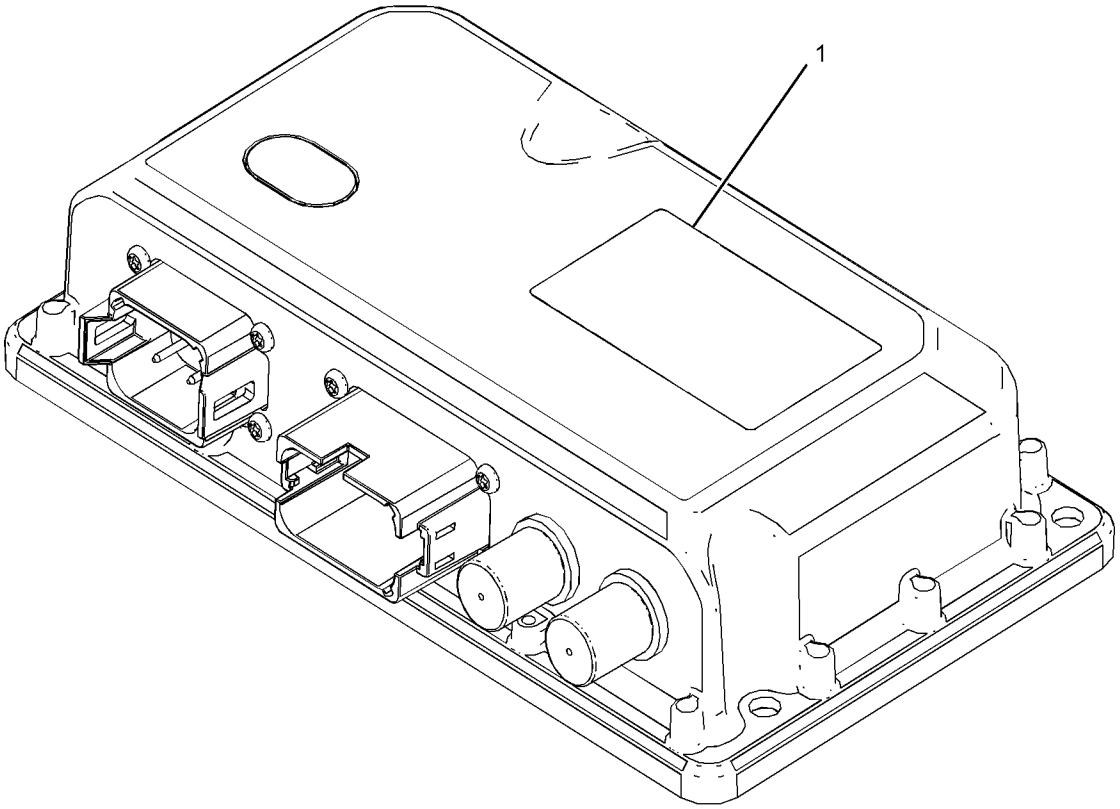

GRAPHIC #1 <END> g03853143

442-7199 CONTROL GP-UNPROGRAMMED–PL631 SATELLITE*R

S/N: TNS1-UP

PART OF 458-9157 CONTROL GP-COMMUNICATION

SMCS-7610 **i06555755**

NOTE	REF NO	GRAPHIC REF	PART NUMBER	QTY	PART NAME 1 2 3 4 5 6 (PRODUCT LEVEL)	SEE PAGE
	1	1	**467-2513**	1	FILM-CERTIFICATION (PL631)	
	2	1	**449-7303**	1	FILM-INFORMATION (SERIAL NUMBER)	
F			**482-8159**	1	SOFTWARE GP-ELECTRONIC (SATELLITE RADIO)	

F - NOT SHOWN

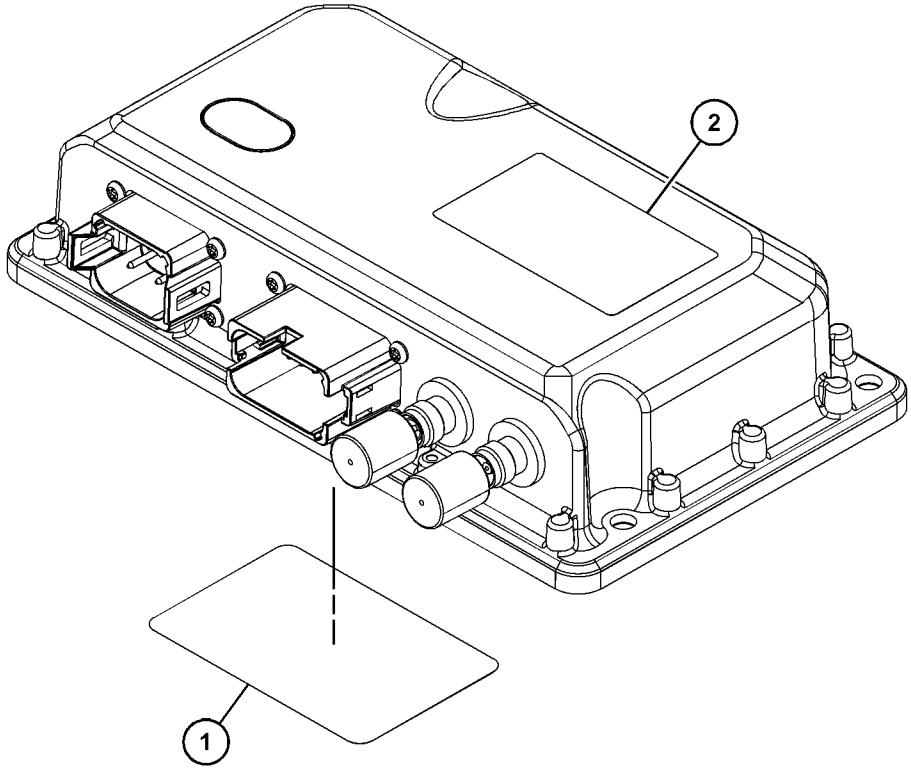

GRAPHIC #1 <END> g03836726

486-6649 CONVERTER & WIRING GP-RADIO

S/N: TNS1-UP

PART OF 372-1603 INSTALLATION GP-RADIO

SMCS-1408, 1421 **i06760168**

NOTE	REF NO	GRAPHIC REF	PART NUMBER	QTY	PART NAME 1 2 3 4 5 6 (PRODUCT LEVEL)	SEE PAGE
	1	1	**7K-1181**	3	STRAP-CABLE (5.72-MM DIA)	
	2	1	**443-6362**	1	CONVERTER-POWER (24-VOLT TO 12-VOLT)	
Y	3	1	**487-5854**	1	HARNESS AS-RADIO	168
M	4	1	**6V-8225**	4	NUT (M6X1-THD)	
	5	1	**9X-8256**	4	WASHER (6.6X12X2-MM THK)	

M - METRIC PART
Y - SEPARATE ILLUSTRATION

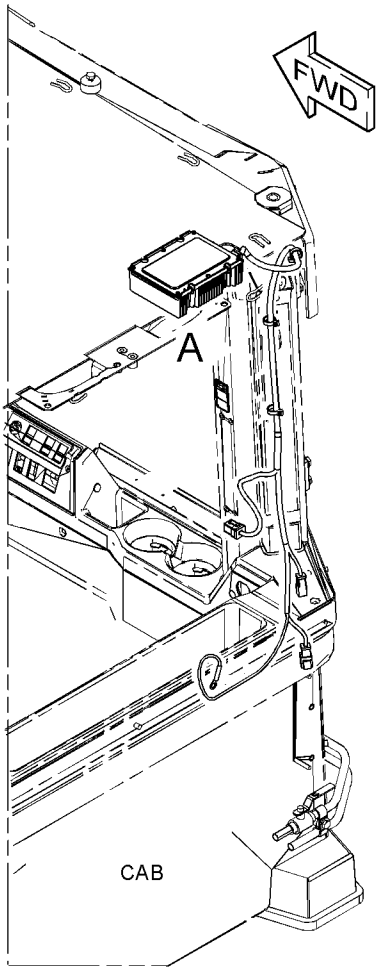

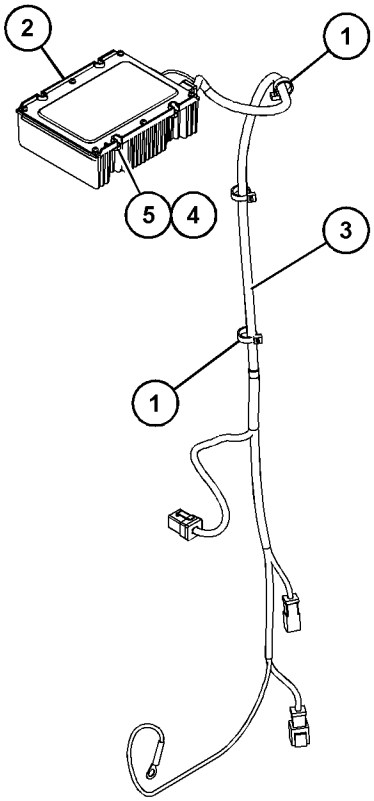

VIEW OF AREA A

GRAPHIC #1 <END> g06017184

471-8184 ELECTRONICS GP-IMPLEMENT

S/N: TNS1-UP

PART OF 456-5817 CONFIGURATION AR

SMCS-5701, 7610, 7620 **i06759847**

NOTE	PART NUMBER	QTY	PART NAME 1 2 3 4 5 6 (PRODUCT LEVEL)	SEE PAGE
	514-1252	1	SOFTWARE GP-IMPLEMENT	

<END>

395-4301 ELECTRONICS GP-MACHINE–RELAY MODULE

S/N: TNS1-UP

PART OF 456-5817 CONFIGURATION AR

SMCS-7610, 7620 **i06676210**

NOTE	PART NUMBER	QTY	PART NAME 1 2 3 4 5 6 (PRODUCT LEVEL)	SEE PAGE
	480-5894	1	SOFTWARE GP-MACHINE	

<END>

449-0902 ELECTRONICS GP-MONITOR–DISPLAY

S/N: TNS1-UP

PART OF 456-5817 CONFIGURATION AR

SMCS-7490, 7494, 7601, 7603, 7610, 7620 **i06721930**

NOTE	PART NUMBER	QTY	PART NAME 1 2 3 4 5 6 (PRODUCT LEVEL)	SEE PAGE
	479-8936	1	SOFTWARE GP-MONITOR (INSTRUMENT PANEL)	

<END>

460-2433 ELECTRONICS GP-MONITOR

S/N: TNS1-UP

TELEMATICS

PART OF 468-0572 CONTROL AR-COMMUNICATION, 434-0691, 434-0693 CONTROL GP-COMMUNICATION

SMCS-7490, 7494, 7601, 7603, 7610, 7620 **i06721973**

NOTE	PART NUMBER	QTY	PART NAME 1 2 3 4 5 6 (PRODUCT LEVEL)	SEE PAGE
	502-3816	1	SOFTWARE GP-MONITOR (TELEMATICS)	
	499-6966	1	SOFTWARE GP-MONITOR	

<END>

466-9427 ELECTRONICS GP-MONITOR–CELLULAR

S/N: TNS1-UP

PART OF 434-0691 CONTROL GP-COMMUNICATION

SMCS-7490, 7494, 7601, 7603, 7610, 7620 **i06753217**

NOTE	PART NUMBER	QTY	PART NAME 1 2 3 4 5 6 (PRODUCT LEVEL)	SEE PAGE
	502-3810	1	SOFTWARE GP-MONITOR (CELLULAR)	

<END>

466-9428 ELECTRONICS GP-MONITOR–XM SATELLITE

S/N: TNS1-UP

PART OF 434-0693 CONTROL GP-COMMUNICATION

SMCS-7490, 7494, 7601, 7603, 7610, 7620 **i06753226**

NOTE	PART NUMBER	QTY	PART NAME 1 2 3 4 5 6 (PRODUCT LEVEL)	SEE PAGE
	502-3813	1	SOFTWARE GP-MONITOR (SATELLITE RADIO)	

<END>

477-2641 ELECTRONICS GP-MONITOR

S/N: TNS1-UP

PART OF 456-5817 CONFIGURATION AR

SMCS-7490, 7494, 7601, 7603, 7610, 7620 **i06721964**

NOTE	PART NUMBER	QTY	PART NAME 1 2 3 4 5 6 (PRODUCT LEVEL)	SEE PAGE
	494-7017	1	SOFTWARE GP-MONITOR	

<END>

477-2642 ELECTRONICS GP-POWER TRAIN

S/N: TNS1-UP

PART OF 456-5817 CONFIGURATION AR

SMCS-4800, 4808, 7610, 7620 **i06722645**

NOTE	PART NUMBER	QTY	PART NAME 1 2 3 4 5 6 (PRODUCT LEVEL)	SEE PAGE
	491-2383	1	SOFTWARE GP-POWER TRAIN	

<END>

502-5906 HARNESS AS-CAB—CATALYST

S/N: TNS1-UP

PART OF 502-5907 WIRING GP-CAB

SMCS-1408 **i06818619**

NOTE	PART NUMBER	QTY	PART NAME 1 2 3 4 5 6 (PRODUCT LEVEL)	SEE PAGE
	102-8802	4	KIT-RECEPTACLE (2-PIN)	
	102-8803	1	KIT-RECEPTACLE (3-PIN)	
			(EACH RECEPTACLE KIT INCLUDES RECEPTACLE AS & WEDGE)	
	3E-3371	1	WEDGE-RECEPTACLE LOCK (3-PIN)	
	102-8804	1	KIT-RECEPTACLE (4-PIN)	
			(INCLUDES RECEPTACLE AS & WEDGE)	
	3E-3377	1	WEDGE-RECEPTACLE LOCK (4-PIN)	
	3E-5226	2	SOCKET-CONNECTOR (12-GA TO 14-GA)	
	103-8133	2	KIT-RECEPTACLE (12-PIN)	
			(EACH INCLUDES RECEPTACLE AS & WEDGE)	
	6V-0491	6	TERMINAL-BLADE (14-GA TO 18-GA)	
	7K-1181	1	STRAP-CABLE (5.72-MM DIA)	
	7R-2750	44	SEAL-CONNECTOR	
	7R-2751	129	PLUG-CONNECTOR (1-PIN)	
G	**160-2245**		SLEEVE-ABRASION (5.6-IN)	
	8T-8737	287	PLUG-SEAL	
	196-2412	92	TERMINAL AS (16-GA)	
	110-0203	4	CONNECTOR AS (18-GA, BLACK)	
	123-7615	3	CONNECTOR (1-PIN)	
E	**125-7874**		TUBE-HEAT SHRINK (5.72-MM DIA) (380-CM)	
E	**125-7875**		TUBE-HEAT SHRINK (7.44-MM DIA) (55-CM)	
	9X-3402	350	SOCKET-CONNECTOR (16-GA TO 18-GA)	
			—OR—	
	126-1768	350	SOCKET-CONNECTOR (14-GA TO 16-GA)	
	128-4123	1	SEAL-CABLE	
	128-5016	92	SEAL-CABLE	
	5P-4571	2	TERMINAL-BLADE (14-GA TO 16-GA)	
	097-7234	8	TERMINAL-BLADE (18-GA TO 22-GA)	
	2L-8052	3	TERMINAL-RING (6-GA, 3/8-IN SCREW)	
			—OR—	
	2L-8060	3	TERMINAL-RING (8-GA, 3/8-IN SCREW)	
	2L-8069	7	TERMINAL-RING (2-GA TO 10-GA, 3/8-IN SCREW)	
	2L-8079	2	TERMINAL-RING (14-GA TO 16-GA, 3/8-IN SCREW)	
	9X-3401	204	PIN-CONNECTOR (16-GA TO 18-GA)	
			—OR—	
	126-1767	204	PIN-CONNECTOR (14-GA TO 16-GA)	
	147-1445	2	PLUG AS-CONNECTOR (70-PIN)	
			(EACH INCLUDES)	
	159-9322	1	SEAL-O-RING	
	147-1446	2	PLUG AS-CONNECTOR (70-PIN)	
			(EACH INCLUDES)	
	159-9322	1	SEAL-O-RING	
	5P-2766	2	TERMINAL-RING (18-GA TO 22-GA, NO. 6 SCREW)	
	155-2255	4	KIT-CONNECTING PLUG (12-PIN)	
	155-2256	1	KIT-CONNECTING PLUG (12-PIN)	
			(EACH PLUG KIT INCLUDES PLUG AS, WEDGE, & INTERFACE SEAL)	
	155-2258	5	WEDGE-PLUG LOCK (12-PIN)	
	155-2259	2	WEDGE-PLUG LOCK (8-PIN)	

502-5906 **HARNESS AS-CAB (**contd.**)** **i06818619**

NOTE	PART NUMBER	QTY	PART NAME 1 2 3 4 5 6 (PRODUCT LEVEL)	SEE PAGE
	155-2265	2	KIT-CONNECTING PLUG (8-PIN)	
	155-2260	5	KIT-CONNECTING PLUG (3-PIN)	
	155-2270	5	KIT-CONNECTING PLUG (2-PIN)	
	155-2271	1	KIT-CONNECTING PLUG (4-PIN)	
	174-0503	1	KIT-CONNECTING PLUG (3-PIN)	
	155-2274	6	KIT-CONNECTING PLUG (6-PIN)	
			(EACH PLUG KIT INCLUDES PLUG AS, WEDGE(S) & INTERFACE SEAL)	
	160-7690	1	PLUG AS-CONNECTOR (70-PIN)	
	159-9322	1	SEAL-O-RING	
B	**1P-0810**		TAPE-ELECTRICAL	
	166-5229	1	KIT-RECEPTACLE (12-PIN)	
			(INCLUDES RECEPTACLE AS & WEDGE)	
	167-3692	1	RECEPTACLE AS-CONNECTOR (31-PIN)	
	169-0705	18	SEAL	
	196-2413	39	TERMINAL AS (12-GA)	
	177-9645	1	KIT-RECEPTACLE (2-PIN)	
			(INCLUDES RECEPTACLE AS & WEDGE)	
	177-9648	1	KIT-CONNECTING PLUG (2-PIN)	
			(INCLUDES PLUG AS & WEDGE)	
	185-1861	33	SEAL-WIRE	
	192-5017	2	BRACKET AS	
	202-5397	11	PLUG	
	204-1297	31	TERMINAL AS-BLADE (18-GA TO 20-GA)	
			(EACH INCLUDES)	
	235-4123	1	TERMINAL (18-GA TO 20-GA)	
	245-7434	5	KIT-CONNECTING PLUG (10-PIN)	
			(EACH INCLUDES PLUG CONNECTOR, WIRE AS & PLUGS)	
	224-2734	1	RECEPTACLE AS-CONNECTOR (70-PIN)	
	224-2735	1	RECEPTACLE AS-CONNECTOR (70-PIN)	
	227-6731	1	KIT-RECEPTACLE (12-PIN)	
			(INCLUDES RECEPTACLE AS & WEDGE)	
	230-4009	2	PLUG AS-CONNECTOR (12-PIN)	
			(EACH INCLUDES)	
	455-0709	1	SEAL-CONNECTOR	
	230-4013	1	PLUG AS-CONNECTOR (3-PIN)	
	455-0705	1	SEAL-CONNECTOR	
	230-5008	1	PLUG AS-CONNECTOR (4-PIN)	
	455-0706	1	SEAL-CONNECTOR	
	230-5010	2	PLUG AS-CONNECTOR (6-PIN)	
			(EACH INCLUDES)	
	455-0707	1	SEAL-CONNECTOR	
	231-2295	2	PLUG AS-CONNECTOR (8-PIN)	
			(EACH INCLUDES)	
	455-0708	1	SEAL-CONNECTOR	
	239-7352	1	PLUG AS-CONNECTOR (6-PIN)	
	455-0707	1	SEAL-CONNECTOR	
	239-7356	1	PLUG AS-CONNECTOR (12-PIN)	
	455-0709	1	SEAL-CONNECTOR	
	243-4509	1	RECEPTACLE AS-CONNECTOR (8-PIN)	
	272-2843	1	RECEPTACLE AS-CONNECTOR (47-PIN)	
	274-3784	1	CAP-SEAL	
	281-8811	1	PLUG AS-CONNECTOR (6-PIN)	

502-5906 **HARNESS AS-CAB (**contd.**)** **i06818619**

NOTE	PART NUMBER	QTY	PART NAME 1 2 3 4 5 6 (PRODUCT LEVEL)	SEE PAGE
	455-0707	1	SEAL-CONNECTOR	
	309-9886	2	BLOCK AS-FUSE	
			(EACH INCLUDES)	
M	**5C-7261**	2	NUT (M8X1.25-THD)	
	7X-0608	2	WASHER-HARD (10.2X16X2-MM THK)	
	264-3617	2	LOCKWASHER	
B	**329-3734**		TAPE-ELECTRICAL	
	374-7463	2	CAP-SEAL	
	374-7466	1	CAP-SEAL	
	374-7467	1	CAP-SEAL	
	451-8019	1	RECEPTACLE AS-CONNECTOR (14-PIN)	

B - USE AS REQUIRED
E - ORDER BY THE CENTIMETER
G - ORDER BY THE INCH
M - METRIC PART

<END>

480-2074 HARNESS AS-CHASSIS

S/N: TNS1-UP
FRONT
PART OF 480-2073 WIRING GP-CHASSIS

SMCS-1408 **i06815351**

NOTE	PART NUMBER	QTY	PART NAME 1 2 3 4 5 6 (PRODUCT LEVEL)	SEE PAGE
	102-8804	1	KIT-RECEPTACLE (4-PIN)	
			(INCLUDES RECEPTACLE AS & WEDGES)	
E	**5P-1506**		HOSE (62-CM)	
	8T-8737	9	PLUG-SEAL	
E	**9X-8243**		TUBE-HEAT SHRINK (39.9-MM DIA) (10-CM)	
E	**125-7874**		TUBE-HEAT SHRINK (5.72-MM DIA) (40-CM)	
E	**125-7875**		TUBE-HEAT SHRINK (7.44-MM DIA) (5-CM)	
	9X-3402	100	SOCKET-CONNECTOR (16-GA TO 18-GA)	
			—OR—	
	126-1768	100	SOCKET-CONNECTOR (14-GA TO 16-GA)	
	9X-3401	7	PIN-CONNECTOR (16-GA TO 18-GA)	
			—OR—	
	126-1767	7	PIN-CONNECTOR (14-GA TO 16-GA)	
	155-2255	1	KIT-CONNECTING PLUG (12-PIN)	
	155-2270	9	KIT-CONNECTING PLUG (2-PIN)	
	155-2274	4	KIT-CONNECTING PLUG (6-PIN)	
	155-2260	2	KIT-CONNECTING PLUG (3-PIN)	
			(EACH PLUG KIT INCLUDES PLUG AS, WEDGE(S), & INTERFACE SEAL)	
	230-4013	1	PLUG AS-CONNECTOR (3-PIN)	
	455-0705	1	SEAL-CONNECTOR	
	237-0227	2	PLUG AS-CONNECTOR (3-PIN)	
			(EACH INCLUDES)	
	455-0705	1	SEAL-CONNECTOR	
	243-4506	1	RECEPTACLE AS-CONNECTOR (3-PIN)	
	274-3781	2	CAP-SEAL	
	290-5664	4	STRAP-CABLE	
	324-6266	1	PLUG AS-CONNECTOR (40-PIN)	
	110-6844	1	SEAL	
B	**329-3734**		TAPE-ELECTRICAL	
B	**368-2369**		TAPE	
	374-7463	3	CAP-SEAL	
	374-7464	1	CAP-SEAL	
	374-7466	2	CAP-SEAL	
	155-2258	1	WEDGE-PLUG LOCK (12-PIN)	

B - USE AS REQUIRED
E - ORDER BY THE CENTIMETER

<END>

480-2090 HARNESS AS-CHASSIS

S/N: TNS1-UP

PART OF 480-2089 WIRING GP-CHASSIS

SMCS-1408 **i06756739**

NOTE	PART NUMBER	QTY	PART NAME 1 2 3 4 5 6 (PRODUCT LEVEL)	SEE PAGE
	102-8802	4	KIT-RECEPTACLE (2-PIN)	
	102-8804	1	KIT-RECEPTACLE (4-PIN)	
			(EACH RECEPTACLE KIT INCLUDES RECEPTACLE AS & WEDGE)	
	3E-3377	1	WEDGE-RECEPTACLE LOCK (4-PIN)	
	102-8805	1	KIT-RECEPTACLE (6-PIN)	
			(INCLUDES RECEPTACLE AS & WEDGE)	
	3E-3383	1	WEDGE-RECEPTACLE LOCK (6-PIN)	
	102-8801	3	KIT-RECEPTACLE (12-PIN)	
			(INCLUDES RECEPTACLE AS & WEDGE)	
	7K-1181	4	STRAP-CABLE (5.72-MM DIA)	
	7T-0094	1	SOCKET-CONNECTOR (12-GA TO 14-GA)	
	8T-8737	82	PLUG-SEAL	
E	**125-7874**		TUBE-HEAT SHRINK (5.72-MM DIA) (110-CM)	
E	**125-7875**		TUBE-HEAT SHRINK (7.44-MM DIA) (15-CM)	
	9X-3402	203	SOCKET-CONNECTOR (16-GA TO 18-GA)	
			—OR—	
	126-1768	203	SOCKET-CONNECTOR (14-GA TO 16-GA)	
	126-1774	2	COVER-CONNECTOR	
G	**160-2247**		SLEEVE-ABRASION (10.7-IN)	
	2L-8050	1	TERMINAL-RING (6-GA, 1/4-IN SCREW)	
			—OR—	
	2L-8058	1	TERMINAL-RING (8-GA, 1/4-IN SCREW)	
	2L-8051	2	TERMINAL-RING (6-GA, 5/16-IN SCREW)	
			—OR—	
	5P-3455	2	TERMINAL-RING (8-GA, 5/16-IN SCREW)	
	2L-8052	2	TERMINAL-RING (6-GA, 3/8-IN SCREW)	
			—OR—	
	2L-8060	2	TERMINAL-RING (8-GA, 3/8-IN SCREW)	
	2L-8066	1	TERMINAL-RING (10-GA TO 12-GA, NO. 10 SCREW)	
	2L-8069	1	TERMINAL-RING (2-GA TO 10-GA, 3/8-IN SCREW)	
	2L-8076	1	TERMINAL-RING (14-GA TO 16-GA, NO. 10 SCREW)	
	9X-3401	79	PIN-CONNECTOR (16-GA TO 18-GA)	
			—OR—	
	126-1767	79	PIN-CONNECTOR (14-GA TO 16-GA)	
	155-2260	3	KIT-CONNECTING PLUG (3-PIN)	
			(EACH INCLUDES PLUG AS, WEDGES & INTERFACE SEAL)	
	155-2258	1	WEDGE-PLUG LOCK (12-PIN)	
	155-2255	1	KIT-CONNECTING PLUG (12-PIN)	
	155-2270	14	KIT-CONNECTING PLUG (2-PIN)	
	155-2271	4	KIT-CONNECTING PLUG (4-PIN)	
	155-2274	2	KIT-CONNECTING PLUG (6-PIN)	
			(EACH PLUG KIT INCLUDES PLUG AS, WEDGE, & INTERFACE SEAL)	
	160-7689	1	PLUG AS-CONNECTOR (70-PIN)	
	159-9322	1	SEAL-O-RING	
	160-7690	1	PLUG AS-CONNECTOR (70-PIN)	
	159-9322	1	SEAL-O-RING	
B	**1P-0810**		TAPE-ELECTRICAL	
	167-3693	1	PLUG AS-CONNECTOR (31-PIN)	

480-2090 **HARNESS AS-CHASSIS (**contd.**)** **i06756739**

NOTE	PART NUMBER	QTY	PART NAME 1 2 3 4 5 6 (PRODUCT LEVEL)	SEE PAGE
	204-6195	1	SOCKET-CONNECTOR (10-GA)	
	230-4013	2	PLUG AS-CONNECTOR (3-PIN)	
			(EACH INCLUDES)	
	455-0705	1	SEAL-CONNECTOR	
	251-8248	1	CABLE AS-COMMUNICATION (5-M)	
	290-5664	9	STRAP-CABLE	
	324-6267	1	RECEPTACLE AS-CONNECTOR (40-PIN)	
E	**327-0136**		TAPE-ELECTRICAL (113-CM)	
E	**329-3734**		TAPE-ELECTRICAL (225-CM)	
	374-7463	6	CAP-SEAL	
	374-7464	2	CAP-SEAL	
	374-7465	2	CAP-SEAL	
	382-3077	2	BOOT	

B - USE AS REQUIRED
E - ORDER BY THE CENTIMETER
G - ORDER BY THE INCH

<END>

491-6708 HARNESS AS-CHASSIS

S/N: TNS1-UP

PART OF 480-2084 WIRING GP-CHASSIS

SMCS-1408 **i06811110**

NOTE	PART NUMBER	QTY	PART NAME 1 2 3 4 5 6 (PRODUCT LEVEL)	SEE PAGE
	9X-3401	7	PIN-CONNECTOR (16-GA TO 18-GA)	
			—OR—	
	126-1767	7	PIN-CONNECTOR (14-GA TO 16-GA)	
	155-2255	1	KIT-CONNECTING PLUG (12-PIN)	
	155-2270	4	KIT-CONNECTING PLUG (2-PIN)	
			(EACH PLUG KIT INCLUDES PLUG AS, WEDGE, & INTERFACE SEAL)	
	230-4013	1	PLUG AS-CONNECTOR (3-PIN)	
	237-0227	1	PLUG AS-CONNECTOR (3-PIN)	
			(EACH PLUG AS INCLUDES)	
	455-0705	1	SEAL-CONNECTOR	
	8T-8737	11	PLUG-SEAL	
	102-8801	1	KIT-RECEPTACLE (12-PIN)	
			(INCLUDES RECEPTACLE AS & WEDGE)	
	9X-3402	20	SOCKET-CONNECTOR (16-GA TO 18-GA)	
			—OR—	
	126-1768	20	SOCKET-CONNECTOR (14-GA TO 16-GA)	
B	**1P-0810**		TAPE-ELECTRICAL	
B	**329-3734**		TAPE-ELECTRICAL	
E	**125-7874**		TUBE-HEAT SHRINK (5.72-MM DIA) (5-CM)	
	155-2258	1	WEDGE-PLUG LOCK (12-PIN)	

B - USE AS REQUIRED
E - ORDER BY THE CENTIMETER

<END>

502-0276 HARNESS AS-CONTROL

S/N: TNS1-UP

PART OF 506-5902 WIRING GP-CONTROL

SMCS-1408 **i06807241**

NOTE	PART NUMBER	QTY	PART NAME 1 2 3 4 5 6 (PRODUCT LEVEL)	SEE PAGE
	8T-8737	11	PLUG-SEAL	
E	**125-7874**		TUBE-HEAT SHRINK (5.72-MM DIA) (25-CM)	
	9X-3402	44	SOCKET-CONNECTOR (16-GA TO 18-GA)	
			—OR—	
	126-1768	44	SOCKET-CONNECTOR (14-GA TO 16-GA)	
	9X-3401	5	PIN-CONNECTOR (16-GA TO 18-GA)	
			—OR—	
	126-1767	5	PIN-CONNECTOR (14-GA TO 16-GA)	
	155-2260	1	KIT-CONNECTING PLUG (3-PIN)	
	155-2270	1	KIT-CONNECTING PLUG (2-PIN)	
			(EACH PLUG KIT INCLUDES PLUG AS, WEDGE, & INTERFACE SEAL)	
B	**1P-0810**		TAPE-ELECTRICAL	
	167-3693	1	PLUG AS-CONNECTOR (31-PIN)	
	185-1861	5	SEAL-WIRE	
	202-5397	5	PLUG	
	204-1297	5	TERMINAL AS-BLADE (18-GA TO 20-GA)	
			(EACH INCLUDES)	
	235-4123	1	TERMINAL (18-GA TO 20-GA)	
	245-7434	1	KIT-CONNECTING PLUG (10-PIN)	
			(INCLUDES PLUG-CONNECTOR, WIRE AS & PLUG)	
	230-4009	1	PLUG AS-CONNECTOR (12-PIN)	
	455-0709	1	SEAL-CONNECTOR	
	230-5010	1	PLUG AS-CONNECTOR (6-PIN)	
	455-0707	1	SEAL-CONNECTOR	
	230-5011	1	RECEPTACLE AS-CONNECTOR (6-PIN)	
	374-7464	1	CAP-SEAL	

B - USE AS REQUIRED
E - ORDER BY THE CENTIMETER

<END>

416-5388 HARNESS AS-ENGINE

S/N: E7A1-UP

PART OF 418-0928, 472-4943 WIRING GP-ENGINE

SMCS-1408 **i06574329**

NOTE	PART NUMBER	QTY	PART NAME 1 2 3 4 5 6 (PRODUCT LEVEL)	SEE PAGE
E	**125-7874**		TUBE-HEAT SHRINK (5.72-MM DIA) (10-CM)	
	9X-3402	16	SOCKET-CONNECTOR (16-GA TO 18-GA)	
			—OR—	
	126-1768	16	SOCKET-CONNECTOR (14-GA TO 16-GA)	
	155-2271	3	KIT-CONNECTING PLUG (4-PIN)	
			(EACH INCLUDES PLUG AS, WEDGE, & INTERFACE SEAL)	
	194-5226	12	WIRE AS (16-GA)	
			—OR—	
	194-5227	12	WIRE AS (14-GA)	
	185-1860	5	SEAL-WIRE	
	206-1345	14	STRAP-CABLE	
	217-9039	6	STRAP-CABLE	
	238-8247	2	PLUG AS-CONNECTOR (2-PIN)	
	238-8245	1	PLUG AS-CONNECTOR (2-PIN)	
	230-4011	2	PLUG AS-CONNECTOR (2-PIN)	
			(EACH PLUG AS INCLUDES)	
	455-0704	1	SEAL-CONNECTOR	
	245-1043	1	PLUG AS-CONNECTOR (64-PIN)	
M	**267-7207**	1	BOLT-SPECIAL (M6X1-THD)	
	245-1044	2	LOCK-CONNECTOR	
	267-9572	31	SOCKET-CONNECTION (18-GA)	
	245-1048	33	PLUG-CONNECTOR (1-PIN)	
	281-8804	2	PLUG AS-CONNECTOR (3-PIN)	
			(EACH INCLUDES)	
	455-0705	1	SEAL-CONNECTOR	
E	**292-2893**		CONDUIT (10.1-MM ID) (65-CM)	
E	**292-2896**		CONDUIT (45-CM)	
	316-9351	4	MOUNTING-CABLE TIE	
	356-1219	2	STRAP-CABLE	
	372-6382	5	SOCKET-CONNECTOR	
	377-6932	1	COVER	

E - ORDER BY THE CENTIMETER
M - METRIC PART

<END>

436-6946 HARNESS AS-ENGINE

S/N: TNS1-UP

PART OF 436-6944 WIRING GP-ENGINE

SMCS-1408 **i06796404**

NOTE	PART NUMBER	QTY	PART NAME 1 2 3 4 5 6 (PRODUCT LEVEL)	SEE PAGE
	3S-2093	2	STRAP-CABLE	
	7T-0093	1	PIN-CONNECTOR (12-GA TO 14-GA)	
	8T-8737	26	PLUG-SEAL	
	9X-3402	36	SOCKET-CONNECTOR (16-GA TO 18-GA)	
			—OR—	
	126-1768	36	SOCKET-CONNECTOR (14-GA TO 16-GA)	
	2L-8077	1	TERMINAL-RING (14-GA TO 16-GA, 1/4-IN SCREW)	
	134-2540	1	RESISTOR AS-CONNECTION (3-PIN)	
	9X-3401	29	PIN-CONNECTOR (16-GA TO 18-GA)	
			—OR—	
	126-1767	29	PIN-CONNECTOR (14-GA TO 16-GA)	
	155-2270	7	KIT-CONNECTING PLUG (2-PIN)	
	155-2271	1	KIT-CONNECTING PLUG (4-PIN)	
	174-0503	1	KIT-CONNECTING PLUG (3-PIN)	
			(EACH PLUG KIT INCLUDES PLUG AS, WEDGE(S) & INTERFACE SEAL)	
	167-3692	1	RECEPTACLE AS-CONNECTION (31-PIN)	
	211-0052	2	NUT (1-11/16-18-THD)	
	218-4935	1	SUPPRESSOR-ARC	
	230-4009	1	PLUG AS-CONNECTOR (12-PIN)	
	455-0709	1	SEAL-CONNECTOR	
	230-4011	4	PLUG AS-CONNECTOR (2-PIN)	
			(EACH INCLUDES)	
	455-0704	1	SEAL-CONNECTOR	
	245-1042	1	PLUG AS-CONNECTOR (64-PIN)	
M	**267-7207**	1	BOLT-SPECIAL (M6X1-THD)	
	245-1044	2	LOCK-CONNECTOR	
	245-1045	1	COVER	
	267-9572	28	SOCKET-CONNECTION (18-GA)	
	245-1048	36	PLUG-CONNECTOR (1-PIN)	
	274-3780	1	CAP-SEAL	
	276-1151	1	PIN-CONNECTOR (8-GA TO 10-GA)	
	281-8803	1	PLUG AS-CONNECTOR (3-PIN)	
	455-0705	1	SEAL-CONNECTOR	
	295-8961	1	RECEPTACLE AS-CONNECTOR (18-PIN)	
	310-0674	2	LOCKWASHER	
	311-6183	1	TERMINAL AS-RING	
E	**119-3662**		TUBE-HEAT SHRINK (10.85-MM DIA) (4-CM)	
	374-7463	2	CAP-SEAL	
	382-3077	2	BOOT	
B	**1P-0810**		TAPE-ELECTRICAL	
E	**9X-1813**		SLEEVE (36-CM)	
E	**125-7874**		TUBE-HEAT SHRINK (5.72-MM DIA) (45-CM)	
E	**125-7875**		TUBE-HEAT SHRINK (7.44-MM DIA) (5-CM)	

B - USE AS REQUIRED
E - ORDER BY THE CENTIMETER
M - METRIC PART

<END>

462-4373 HARNESS AS-HEATER & AIR COND

S/N: TNS1-UP

PART OF 459-3538 AIR CONDITIONER GP

SMCS-1408 **i06641730**

NOTE	PART NUMBER	QTY	PART NAME 1 2 3 4 5 6 (PRODUCT LEVEL)	SEE PAGE
	6A-5277	1	CONNECTOR	
	6T-6505	2	HOUSING-RECEPTACLE (BLADE, POSITIVE LOCK)	
	6T-6506	2	TERMINAL-BLADE (14-GA TO 18-GA)	
	6V-0491	4	TERMINAL-BLADE (14-GA TO 18-GA)	
	8T-8737	3	PLUG-SEAL	
E	**119-3662**		TUBE-HEAT SHRINK (10.85-MM DIA) (7-CM)	
	9X-3402	17	SOCKET-CONNECTOR (16-GA TO 18-GA)	
			—OR—	
	126-1768	17	SOCKET-CONNECTOR (14-GA TO 16-GA)	
	155-2255	1	KIT-CONNECTING PLUG (12-PIN)	
	155-2270	2	KIT-CONNECTING PLUG (2-PIN)	
	155-2271	1	KIT-CONNECTING PLUG (4-PIN)	
			(EACH PLUG KIT INCLUDES PLUG AS, WEDGE, & INTERFACE SEAL)	
B	**1P-0810**		TAPE-ELECTRICAL	

B - USE AS REQUIRED
E - ORDER BY THE CENTIMETER

<END>

491-6705 HARNESS AS-LIGHTING

S/N: TNS1-UP

PART OF 491-6700 LIGHTING GP-FLOOD & SIGNAL

SMCS-1408 **i06733267**

NOTE	PART NUMBER	QTY	PART NAME 1 2 3 4 5 6 (PRODUCT LEVEL)	SEE PAGE
	9X-3401	5	PIN-CONNECTOR (16-GA TO 18-GA)	
			—OR—	
	126-1767	5	PIN-CONNECTOR (14-GA TO 16-GA)	
	155-2274	1	KIT-CONNECTING PLUG (6-PIN)	
			(INCLUDES PLUG AS, WEDGE, & INTERFACE SEAL)	
	8T-8737	2	PLUG-SEAL	
	102-8805	1	KIT-RECEPTACLE (6-PIN)	
			(INCLUDES RECEPTACLE AS & WEDGE)	
	9X-3402	5	SOCKET-CONNECTOR (16-GA TO 18-GA)	
			—OR—	
	126-1768	5	SOCKET-CONNECTOR (14-GA TO 16-GA)	
	3E-3383	1	WEDGE-RECEPTACLE LOCK (6-PIN)	

<END>

502-9875 HARNESS AS-LIGHTING

S/N: TNS1-UP

PART OF 502-5907 WIRING GP-CAB

SMCS-1408 **i06774898**

NOTE	PART NUMBER	QTY	PART NAME 1 2 3 4 5 6 (PRODUCT LEVEL)	SEE PAGE
	8T-8737	2	PLUG-SEAL	
E	**119-3662**		TUBE-HEAT SHRINK (10.85-MM DIA) (39-CM)	
E	**125-7874**		TUBE-HEAT SHRINK (5.72-MM DIA) (5-CM)	
E	**125-7875**		TUBE-HEAT SHRINK (7.44-MM DIA) (15-CM)	
	9X-3402	43	SOCKET-CONNECTOR (16-GA TO 18-GA)	
			—OR—	
	126-1768	43	SOCKET-CONNECTOR (14-GA TO 16-GA)	
	2L-8071	1	TERMINAL-RING (10-GA TO 12-GA, 1/2-IN SCREW)	
	155-2255	1	KIT-CONNECTING PLUG (12-PIN)	
	155-2260	1	KIT-CONNECTING PLUG (3-PIN)	
	155-2270	9	KIT-CONNECTING PLUG (2-PIN)	
	155-2274	2	KIT-CONNECTING PLUG (6-PIN)	
			(EACH PLUG KIT INCLUDES PLUG AS, WEDGE(S) & INTERFACE SEAL)	
	155-2258	1	WEDGE-PLUG LOCK (12-PIN)	
B	**1P-0810**		TAPE-ELECTRICAL	
	374-7463	5	CAP-SEAL	
	374-7464	1	CAP-SEAL	
	374-7466	2	CAP-SEAL	

B - USE AS REQUIRED
E - ORDER BY THE CENTIMETER

<END>

483-2480 HARNESS AS-MONITOR

S/N: TNS1-UP

PART OF 418-8030 WIRING GP-OBJECT DETECTION

SMCS-1408, 7490 **i06756508**

NOTE	PART NUMBER	QTY	PART NAME 1 2 3 4 5 6 (PRODUCT LEVEL)	SEE PAGE
	261-3223	1	CABLE AS-COMMUNICATION	
	374-7463	1	CAP-SEAL	
	374-7465	3	CAP-SEAL	
E	**5I-4200**		GUARD (40-CM)	
	290-5664	4	STRAP-CABLE	
	155-2255	1	KIT-CONNECTING PLUG (12-PIN)	
	155-2270	5	KIT-CONNECTING PLUG (2-PIN)	
	155-2271	3	KIT-CONNECTING PLUG (4-PIN)	
			(EACH PLUG KIT INCLUDES PLUG AS, WEDGE, & INTERFACE SEAL)	
	8T-8737	4	PLUG-SEAL	
	9X-3402	30	SOCKET-CONNECTOR (16-GA TO 18-GA)	
			—OR—	
	126-1768	30	SOCKET-CONNECTOR (14-GA TO 16-GA)	
	218-4935	1	SUPPRESSOR-ARC	
B	**1P-0810**		TAPE-ELECTRICAL	
B	**329-3734**		TAPE-ELECTRICAL	
E	**119-3662**		TUBE-HEAT SHRINK (10.85-MM DIA) (7-CM)	
E	**125-7874**		TUBE-HEAT SHRINK (5.72-MM DIA) (10-CM)	

B - USE AS REQUIRED
E - ORDER BY THE CENTIMETER

<END>

200-5728 HARNESS AS-RADIO

S/N: TNS1-UP

4 FLANGE

PART OF 481-6616 RADIO GP

SMCS-1408 **i05716252**

NOTE	PART NUMBER	QTY	PART NAME 1 2 3 4 5 6 (PRODUCT LEVEL)	SEE PAGE
	172-8037	1	CONNECTOR (RADIO)	
	160-3518	1	KIT-RECEPTACLE (8-PIN)	
			(INCLUDES RECEPTACLE AS & WEDGE)	
	8T-8729	7	PIN-CONNECTOR (16-GA TO 18-GA)	
	8T-8737	1	PLUG-SEAL	
	172-8039	11	TERMINAL (RADIO)	

<END>

487-5854 HARNESS AS-RADIO

S/N: TNS1-UP

PART OF 486-6649 CONVERTER & WIRING GP-RADIO

SMCS-1408 **i06760172**

NOTE	PART NUMBER	QTY	PART NAME 1 2 3 4 5 6 (PRODUCT LEVEL)	SEE PAGE
	102-8802	1	KIT-RECEPTACLE (2-PIN)	
			(INCLUDES RECEPTACLE AS & WEDGE)	
	7T-0093	2	PIN-CONNECTOR (12-GA TO 14-GA)	
	8T-8737	10	PLUG-SEAL	
E	**119-3662**		TUBE-HEAT SHRINK (10.85-MM DIA) (13-CM)	
	9X-3402	1	SOCKET-CONNECTOR (16-GA TO 18-GA)	
			—OR—	
	126-1768	1	SOCKET-CONNECTOR (14-GA TO 16-GA)	
	2L-8069	1	TERMINAL-RING (2-GA TO 10-GA, 3/8-IN SCREW)	
	9X-3401	2	PIN-CONNECTOR (16-GA TO 18-GA)	
			—OR—	
	126-1767	2	PIN-CONNECTOR (14-GA TO 16-GA)	
	155-2274	1	KIT-CONNECTING PLUG (6-PIN)	
			(INCLUDES PLUG AS, WEDGES & INTERFACE SEAL)	
	177-9645	1	KIT-RECEPTACLE (2-PIN)	
	177-9653	1	KIT-RECEPTACLE (4-PIN)	
			(EACH RECEPTACLE KIT INCLUDES RECEPTACLE AS & WEDGE)	
	177-9656	2	KIT-CONNECTING PLUG (4-PIN)	
			(EACH INCLUDES PLUG AS & WEDGE)	
B	**329-3734**		TAPE-ELECTRICAL	
	3E-5226	7	SOCKET-CONNECTOR (12-GA TO 14-GA)	

B - USE AS REQUIRED
E - ORDER BY THE CENTIMETER

<END>

374-4756 HARNESS AS-SENSOR

S/N: TNS1-UP

ARTICULATION ANGLE

PART OF 374-4755 WIRING GP-SENSOR

SMCS-1408 **i06720470**

NOTE	PART NUMBER	QTY	PART NAME 1 2 3 4 5 6 (PRODUCT LEVEL)	SEE PAGE
	102-8803	1	KIT-RECEPTACLE (3-PIN)	
			(INCLUDES RECEPTACLE AS & WEDGE)	
	8T-8737	4	PLUG-SEAL	
	9X-3402	3	SOCKET-CONNECTOR (16-GA TO 18-GA)	
			—OR—	
	126-1768	3	SOCKET-CONNECTOR (14-GA TO 16-GA)	
	9X-3401	3	PIN-CONNECTOR (16-GA TO 18-GA)	
			—OR—	
	126-1767	3	PIN-CONNECTOR (14-GA TO 16-GA)	
B	**1P-0810**		TAPE-ELECTRICAL	
E	**210-8958**		TUBE-HEAT SHRINK (24-MM DIA) (7-CM)	
	276-1242	1	KIT-CONNECTING PLUG (4-PIN)	
			(INCLUDES PLUG AS, WEDGE & INTERFACE SEAL)	

B - USE AS REQUIRED
E - ORDER BY THE CENTIMETER

<END>

457-5588 HARNESS AS-SENSOR

S/N: TNS1-UP
TILT
PART OF 418-8038 WIRING GP-SENSOR

SMCS-1408 **i06810236**

NOTE	PART NUMBER	QTY	PART NAME 1 2 3 4 5 6 (PRODUCT LEVEL)	SEE PAGE
E	**5I-4200**		GUARD (94-CM)	
	155-2260	1	KIT-CONNECTING PLUG (3-PIN)	
			(INCLUDES PLUG AS, WEDGES & INTERFACE SEAL)	
	230-4013	1	PLUG AS-CONNECTOR (3-PIN)	
	455-0705	1	SEAL-CONNECTOR	
E	**9X-1813**		SLEEVE (54-CM)	
	9X-3402	6	SOCKET-CONNECTOR (16-GA TO 18-GA)	
			—OR—	
	126-1768	6	SOCKET-CONNECTOR (14-GA TO 16-GA)	
E	**125-7876**		TUBE-HEAT SHRINK (17.78-MM DIA) (15-CM)	

E - ORDER BY THE CENTIMETER

<END>

394-2467 HARNESS AS-SWITCH

S/N: TNS1-UP
PART OF 394-2474 WIRING GP-BRAKE

SMCS-1408 **i05758463**

NOTE	PART NUMBER	QTY	PART NAME 1 2 3 4 5 6 (PRODUCT LEVEL)	SEE PAGE
	8T-8737	1	PLUG-SEAL	
	9X-3402	7	SOCKET-CONNECTOR (16-GA TO 18-GA)	
			—OR—	
	126-1768	7	SOCKET-CONNECTOR (14-GA TO 16-GA)	
	185-1861	7	SEAL-WIRE	
	202-5397	3	PLUG	
	204-1297	7	TERMINAL AS-BLADE (18-GA TO 20-GA)	
	235-4123	1	TERMINAL (18-GA TO 20-GA)	
	245-7434	1	KIT-CONNECTING PLUG (10-PIN)	
			(KIT INCLUDES PLUG AS, WEDGE & INTERFACE SEAL)	
	231-2295	1	PLUG AS-CONNECTOR (8-PIN)	
	264-7033	1	SEAL-CONNECTOR	
E	**329-3734**		TAPE-ELECTRICAL (42-CM)	

E - ORDER BY THE CENTIMETER

<END>

422-3662 HARNESS AS-TRANSMISSION

S/N: WL51-UP; WSH1-UP; WSY1-UP

PART OF 502-5784 CONTROL GP-TRANSMISSION HYD

SMCS-1408 **i05973163**

NOTE	PART NUMBER	QTY	PART NAME 1 2 3 4 5 6 (PRODUCT LEVEL)	SEE PAGE
	102-8805	1	KIT-RECEPTACLE (6-PIN)	
	102-8801	1	KIT-RECEPTACLE (12-PIN)	
			(EACH RECEPTACLE KIT INCLUDES RECEPTACLE AS & WEDGE)	
	8T-8737	37	PLUG-SEAL	
E	**114-8843**		SLEEVE-PLASTIC (360-CM)	
E	**125-7874**		TUBE-HEAT SHRINK (5.72-MM DIA) (30-CM)	
	9X-3402	55	SOCKET-CONNECTOR (16-GA TO 18-GA)	
			—OR—	
	126-1768	55	SOCKET-CONNECTOR (14-GA TO 16-GA)	
	9X-3401	13	PIN-CONNECTOR (16-GA TO 18-GA)	
			—OR—	
	126-1767	13	PIN-CONNECTOR (14-GA TO 16-GA)	
	155-2255	2	KIT-CONNECTING PLUG (12-PIN)	
	155-2257	1	KIT-CONNECTING PLUG (12-PIN)	
	155-2274	1	KIT-CONNECTING PLUG (6-PIN)	
			(EACH PLUG KIT INCLUDES PLUG AS, WEDGE & INTERFACE SEAL)	
B	**1P-0810**		TAPE-ELECTRICAL	
	169-0705	65	SEAL	
	230-4013	1	PLUG AS-CONNECTOR (3-PIN)	
	237-0227	1	PLUG AS-CONNECTOR (3-PIN)	
			(EACH PLUG AS INCLUDES)	
	455-0705	1	SEAL-CONNECTOR	
	240-7874	2	PLUG AS-CONNECTOR (2-PIN)	
			(EACH INCLUDES)	
	455-0704	1	SEAL-CONNECTOR	
	272-2843	1	RECEPTACLE AS-CONNECTOR (47-PIN)	
	274-3780	1	CAP-SEAL	
	274-3781	2	CAP-SEAL	
B	**329-3734**		TAPE-ELECTRICAL	
	331-4226	12	KIT-CONNECTING PLUG (2-PIN)	
			(EACH INCLUDES PLUG AS, WEDGE & INTERFACE SEAL)	
	374-7463	1	CAP-SEAL	
	374-7468	2	CAP-SEAL	

B - USE AS REQUIRED
E - ORDER BY THE CENTIMETER

<END>

484-5573 HARNESS AS-VALVE

S/N: TNS1-UP

PART OF 501-1071 WIRING GP-VALVE

SMCS-1408 **i06754213**

NOTE	PART NUMBER	QTY	PART NAME 1 2 3 4 5 6 (PRODUCT LEVEL)	SEE PAGE
	374-7463	2	CAP-SEAL	
	9X-3401	5	PIN-CONNECTOR (16-GA TO 18-GA)	
			—OR—	
	126-1767	5	PIN-CONNECTOR (14-GA TO 16-GA)	
	155-2270	4	KIT-CONNECTING PLUG (2-PIN)	
			(EACH INCLUDES PLUG AS, WEDGE, & INTERFACE SEAL)	
	8T-8737	1	PLUG-SEAL	
	102-8805	1	KIT-RECEPTACLE (6-PIN)	
			(INCLUDES RECEPTACLE AS & WEDGE)	
	9X-3402	8	SOCKET-CONNECTOR (16-GA TO 18-GA)	
			—OR—	
	126-1768	8	SOCKET-CONNECTOR (14-GA TO 16-GA)	
B	**329-3734**		TAPE-ELECTRICAL	
E	**125-7874**		TUBE-HEAT SHRINK (5.72-MM DIA) (5-CM)	

B - USE AS REQUIRED
E - ORDER BY THE CENTIMETER

<END>

433-5754 HARNESS AS-WIRING—SEAT AIR COMPRESSOR

S/N: TNS1-UP

PART OF 191-2933 SUSPENSION GP-SEAT

SMCS-1408 **i05858236**

NOTE	PART NUMBER	QTY	PART NAME 1 2 3 4 5 6 (PRODUCT LEVEL)	SEE PAGE
	102-8802	1	KIT-RECEPTACLE (2-PIN)	
			(INCLUDES RECEPTACLE AS & WEDGE)	
	9X-3401	2	PIN-CONNECTOR (16-GA TO 18-GA)	
			—OR—	
	126-1767	2	PIN-CONNECTOR (14-GA TO 16-GA)	
B	**329-3734**		TAPE-ELECTRICAL	
B	**1P-0810**		TAPE-ELECTRICAL	
	5P-4571	2	TERMINAL-BLADE (14-GA TO 16-GA)	
	097-7234	2	TERMINAL-BLADE (18-GA TO 22-GA)	

B - USE AS REQUIRED

<END>

265-7724 HEATER GP-JACKET WATER

S/N: TNS1-UP

PART OF 386-7382 COLD WEATHER AR

SMCS-1383 **i05426404**

NOTE	REF NO	GRAPHIC REF	PART NUMBER	QTY	PART NAME 1 2 3 4 5 6 (PRODUCT LEVEL)	SEE PAGE
	1	1	**6N-1604**	1	CAP AS-DUST	
	2	1	**7K-1181**	1	STRAP-CABLE (5.72-MM DIA)	
	3	1	**260-1555**	1	ELEMENT AS-JACKET WATER HEATER (120-VOLT, 1000-WATT)	
		1	**4D-9986**	1	SEAL-O-RING	
	4	1	**260-1566**	1	CORD AS-HEATER	
M	5	1	**8T-4200**	1	BOLT (M8X1.25X16-MM)	
	6	1	**8T-4224**	1	WASHER-HARD (8.8X16X2-MM THK)	

M - METRIC PART

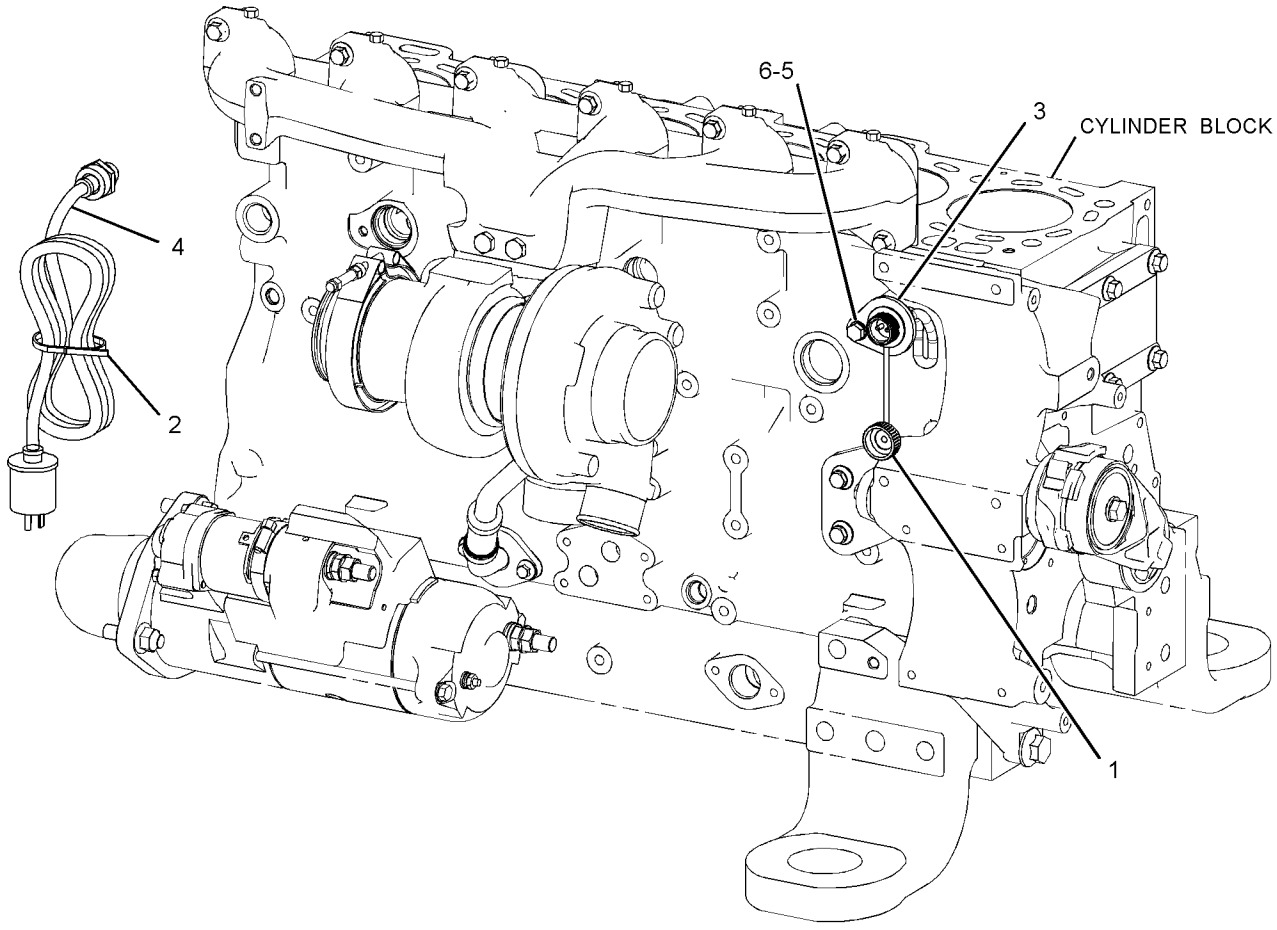

GRAPHIC #1 <END> g01343350

267-0339 HEATER GP-JACKET WATER

S/N: TNS1-UP

PART OF 386-7383 COLD WEATHER AR

SMCS-1383 **i05767954**

NOTE	REF NO	GRAPHIC REF	PART NUMBER	QTY	PART NAME 1 2 3 4 5 6 (PRODUCT LEVEL)	SEE PAGE
	1	1	**6N-1604**	1	CAP AS-DUST	
	2	1	**7K-1181**	1	STRAP-CABLE (5.72-MM DIA)	
	3	1	**260-1556**	1	ELEMENT AS-JACKET WATER HEATER (240-VOLT, 1000-WATT)	
		1	**4D-9986**	1	SEAL-O-RING	
	4	1	**260-1569**	1	CORD AS-HEATER	
M	5	1	**8T-4200**	1	BOLT (M8X1.25X16-MM)	
	6	1	**8T-4224**	1	WASHER-HARD (8.8X16X2-MM THK)	

M - METRIC PART

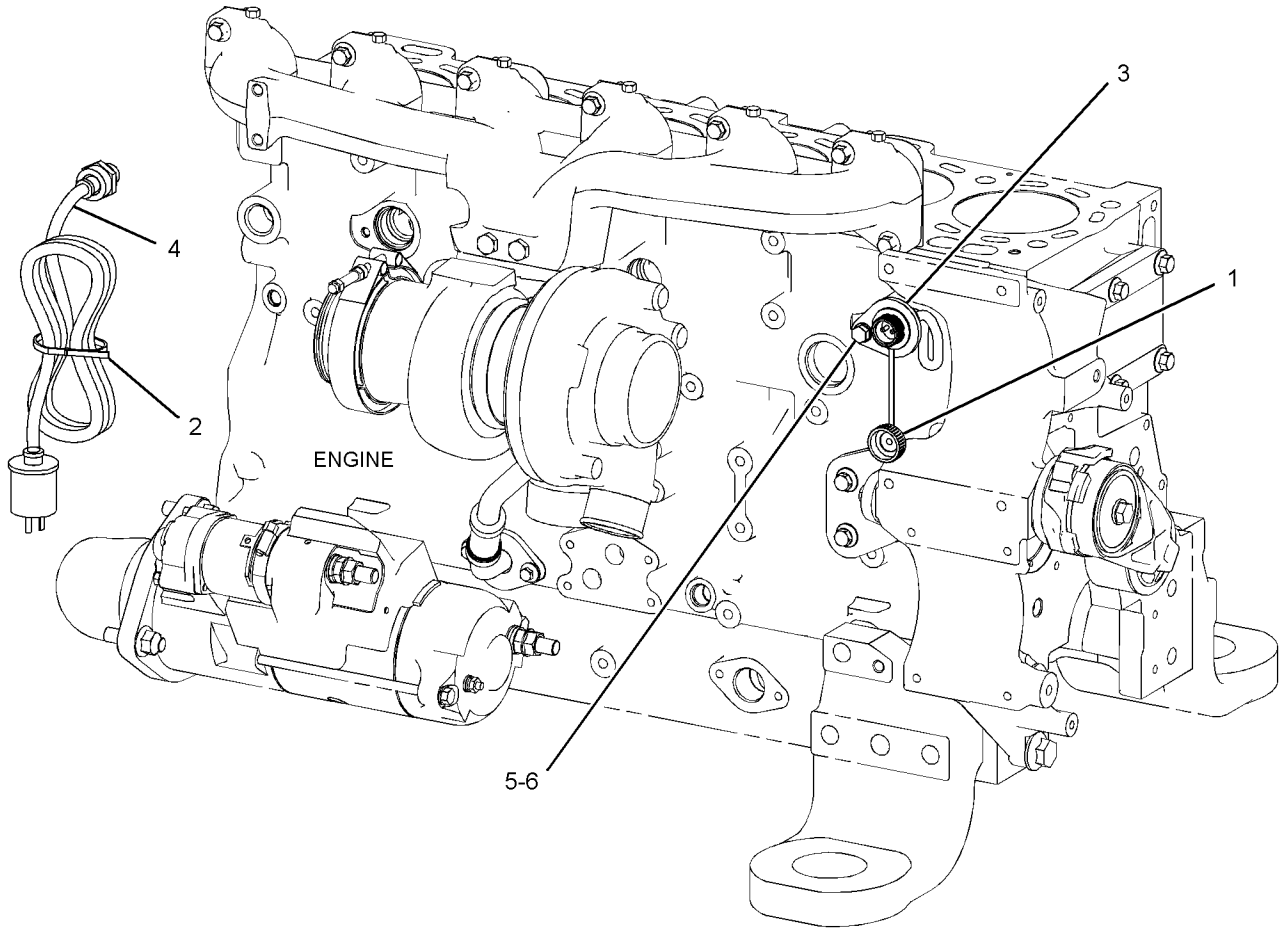

GRAPHIC #1 <END> g01426588

458-9159 INSTALLATION GP-COMMUNICATION

S/N: TNS1-UP

PART OF 434-0691, 434-0693 CONTROL GP-COMMUNICATION

SMCS-7606 **i06606785**

NOTE	REF NO	GRAPHIC REF	PART NUMBER	QTY	PART NAME 1 2 3 4 5 6 (PRODUCT LEVEL)	SEE PAGE
	1	1	**327-6195**	1	CABLE AS (ANTENNA)	
	2	1	**443-8462**	1	ANTENNA AS (CELLULAR)	
		1	**361-1045**	1	NUT-SPECIAL (5/8-18-THD)	
		1	**385-8201**	1	CAP AS-CONNECTOR	
	3	1	**3S-2093**	6	STRAP-CABLE	
	4	1	**7K-1181**	5	STRAP-CABLE (5.72-MM DIA)	
	5	1	**2D-2751**	1	GROMMET	

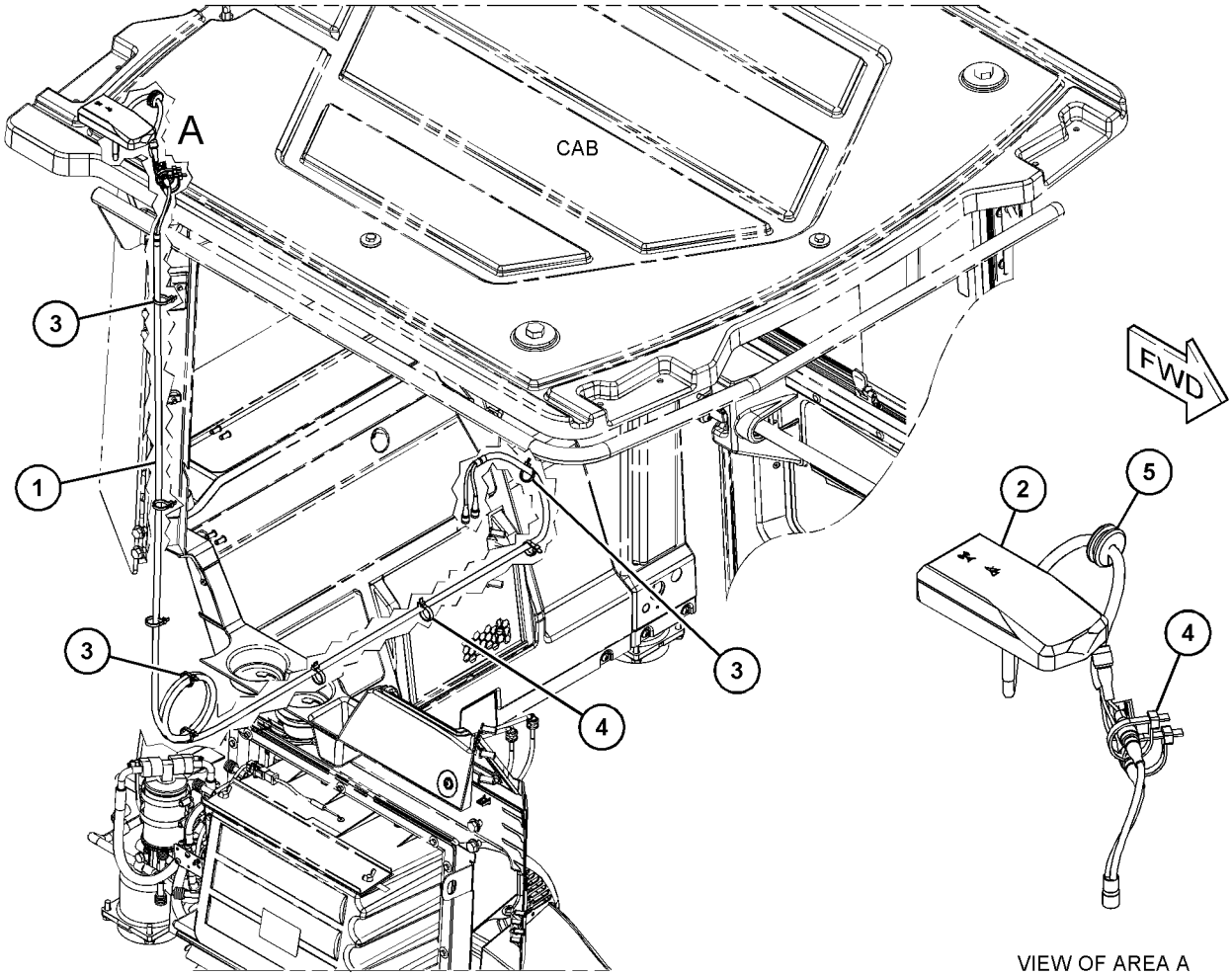

VIEW OF AREA A

GRAPHIC #1 <END> g06012845

325-4471 LAMP GP-FLOOD

S/N: TNS1-UP
24-VOLT
PART OF 446-8300 LIGHTING GP-FLOOD & SIGNAL

SMCS-1434 **i06258940**

NOTE	REF NO	GRAPHIC REF	PART NUMBER	QTY	PART NAME 1 2 3 4 5 6 (PRODUCT LEVEL)	SEE PAGE
	1	1	**175-4291**	1	BRACKET AS	
M	2	1	**9X-4244**	2	SCREW-SPECIAL (M4X1.79X25-MM)	
	3	1	**351-9918**	1	LAMP-HALOGEN (24-VOLT, 70-WATT) (FLOODLIGHT)	
	4	1	**8T-4224**	1	WASHER-HARD (8.8X16X2-MM THK)	
M	5	1	**8T-7547**	1	BOLT (M8X1.25X30-MM)	
M	6	1	**5C-7261**	1	NUT (M8X1.25-THD)	

M - METRIC PART

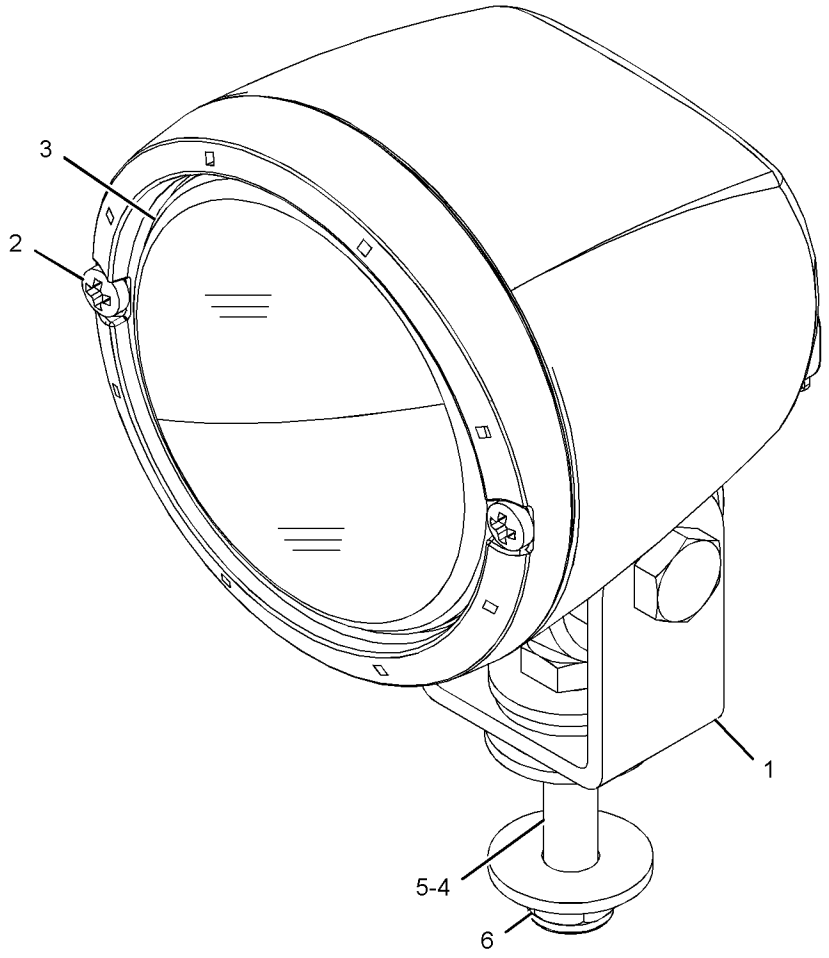

GRAPHIC #1 <END> g02097194

339-3505 LAMP GP-FLOOD

S/N: TNS1-UP
24-VOLT, 70-WATT
PART OF 372-1597, 372-1608 LIGHTING GP-FLOOD

SMCS-1434 **i06258941**

NOTE	REF NO	GRAPHIC REF	PART NUMBER	QTY	PART NAME 1 2 3 4 5 6 (PRODUCT LEVEL)	SEE PAGE
	1	1	**175-4291**	1	BRACKET AS	
M	2	1	**9X-4244**	2	SCREW-SPECIAL (M4X1.79X25-MM)	
	3	1	**351-9918**	1	LAMP-HALOGEN (24-VOLT, 70-WATT)	
	4	1	**8T-4224**	1	WASHER-HARD (8.8X16X2-MM THK)	
M	5	1	**8T-7547**	1	BOLT (M8X1.25X30-MM)	
M	6	1	**5C-7261**	1	NUT (M8X1.25-THD)	

M - METRIC PART

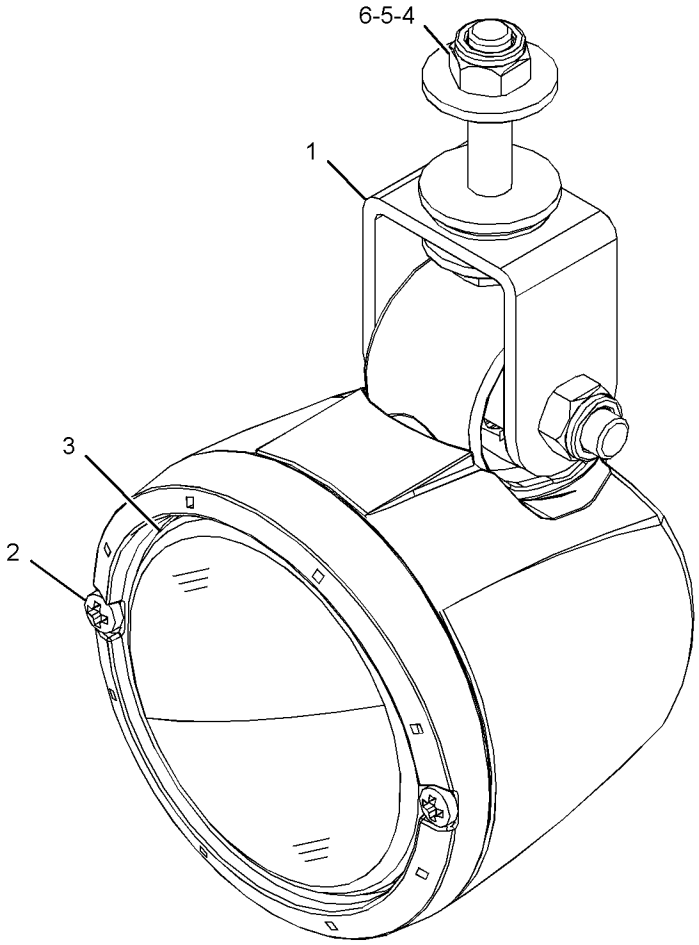

GRAPHIC #1 <END> g02098634

426-5380 LAMP GP-FLOOD—WORK LIGHTS

S/N: TNS1-UP
9-VOLT TO 32-VOLT. LED
PART OF 460-7446, 479-9394 LIGHTING GP-FLOOD

SMCS-1434 **i06219214**

NOTE	REF NO	GRAPHIC REF	PART NUMBER	QTY	PART NAME 1 2 3 4 5 6 (PRODUCT LEVEL)	SEE PAGE
	1	1	**389-0447**	1	BRACKET AS	

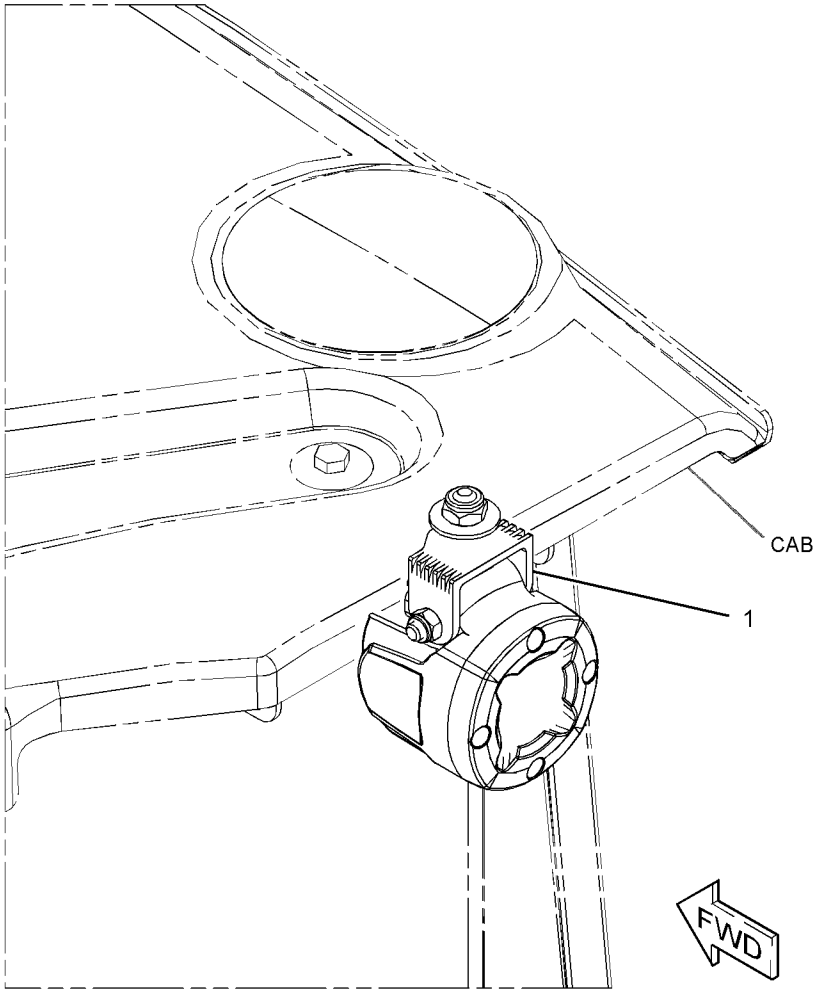

GRAPHIC #1 <END> g03381869

466-2421 LAMP GP-FLOOD–LED

S/N: TNS1-UP
9 VOLT TO 32 VOLT
PART OF 491-6700 LIGHTING GP-FLOOD & SIGNAL

SMCS-1434 **i06733210**

NOTE	REF NO	GRAPHIC REF	PART NUMBER	QTY	PART NAME 1 2 3 4 5 6 (PRODUCT LEVEL)	SEE PAGE
	1	1	**481-1153**	1	BRACKET AS	

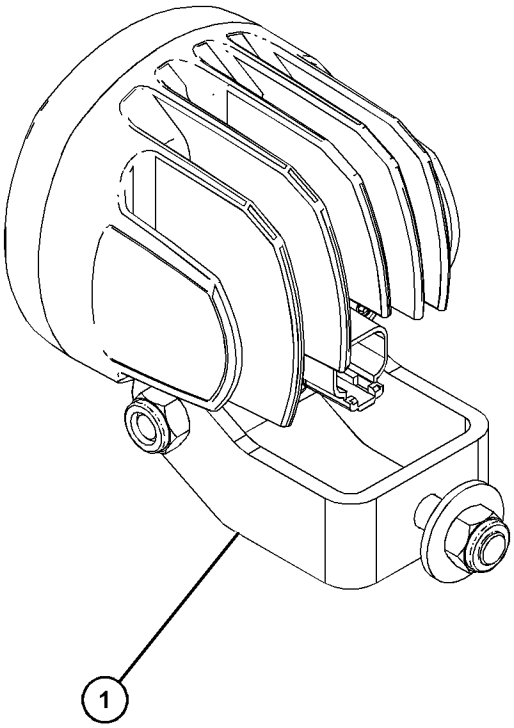

GRAPHIC #1 <END> g06108548

344-3455 LAMP GP-HEAD & SIGNAL–RH

S/N: TNS1-UP
24-VOLT
PART OF 473-9799 LIGHTING GP-FLOOD & SIGNAL

SMCS-1429, 1430 **i06779787**

NOTE	REF NO	GRAPHIC REF	PART NUMBER	QTY	PART NAME 1 2 3 4 5 6 (PRODUCT LEVEL)	SEE PAGE
	1	1	**8T-8737**	1	PLUG-SEAL	
	2	1	**228-6054**	1	BEZEL	
	3	1	**444-6523**	1	LENS AS (HEADLIGHT)	
	4	1	**228-6052**	1	LENS AS (TURN SIGNAL)	
	5	1	**228-6056**	6	SCREW (4-32X1.26-IN)	
	6	1	**9X-3465**	1	LAMP (24-VOLT, 75/70-WATT) (HIGH, LOW BEAM)	
	7	1	**130-3515**	1	LAMP (24-VOLT, 5-WATT) (FLOODLIGHT)	
	8	1	**242-0588**	1	LAMP-TURN SIGNAL (24-VOLT, 21-WATT) (TURN SIGNAL)	
M	9	1	**8T-0389**	1	LOCKNUT (M10X1.5-THD)	
	10	1	**100-3253**	1	SPACER (SPHERICAL)	
	11	1	**100-3254**	1	SPACER (SPHERICAL)	
	12	1	**100-3255**	2	WASHER (SPHERICAL)	
	13	1	**102-8805**	1	KIT-RECEPTACLE (6-PIN)	
					(INCLUDES RECEPTACLE AS & WEDGE)	
	14	1	**8T-8729**	5	PIN-CONNECTOR (16-GA TO 18-GA)	

M - METRIC PART

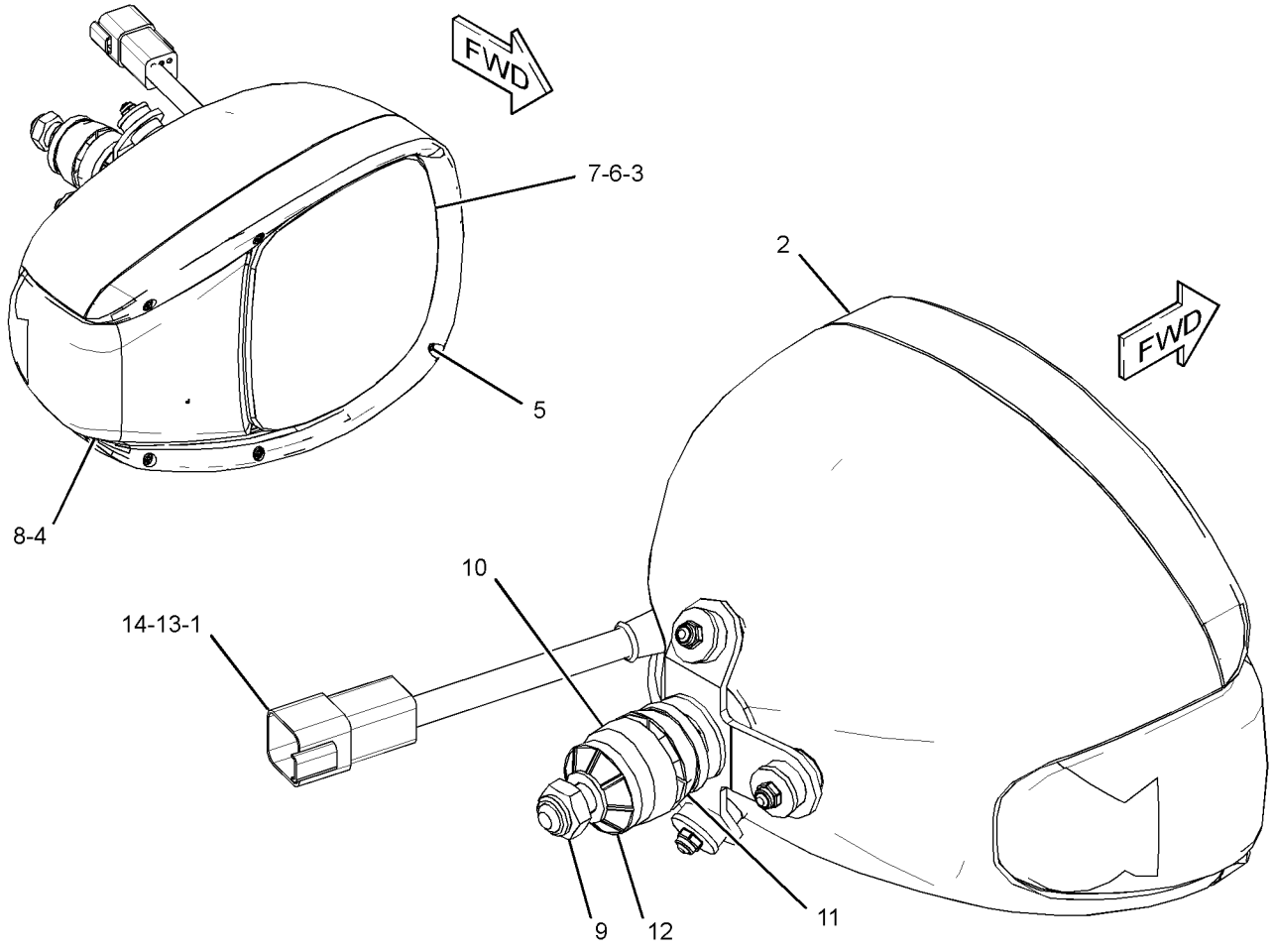

GRAPHIC #1 <END> g03681817

344-3456 LAMP GP-HEAD & SIGNAL–LH

S/N: TNS1-UP

PART OF 473-9799 LIGHTING GP-FLOOD & SIGNAL

SMCS-1429, 1430 **i06779791**

NOTE	REF NO	GRAPHIC REF	PART NUMBER	QTY	PART NAME 1 2 3 4 5 6 (PRODUCT LEVEL)	SEE PAGE
	1	1	**8T-8737**	1	PLUG-SEAL	
	2	1	**228-6054**	1	BEZEL	
	3	1	**444-6523**	1	LENS AS (HEADLIGHT)	
	4	1	**228-6052**	1	LENS AS (TURN SIGNAL)	
	5	1	**228-6056**	6	SCREW (4-32X1.26-IN)	
	6	1	**9X-3465**	1	LAMP (24-VOLT, 75/70-WATT) (HIGH, LOW BEAM)	
	7	1	**130-3515**	1	LAMP (24-VOLT, 5-WATT) (FLOODLIGHT)	
	8	1	**242-0588**	1	LAMP-TURN SIGNAL (24-VOLT, 21-WATT) (TURN SIGNAL)	
M	9	1	**8T-0389**	1	LOCKNUT (M10X1.5-THD)	
	10	1	**100-3253**	1	SPACER (SPHERICAL)	
	11	1	**100-3254**	1	SPACER (SPHERICAL)	
	12	1	**100-3255**	2	WASHER (SPHERICAL)	
	13	1	**102-8805**	1	KIT-RECEPTACLE (6-PIN)	
					(INCLUDES RECEPTACLE AS & WEDGE)	
	14	1	**8T-8729**	5	PIN-CONNECTOR (16-GA TO 18-GA)	

M - METRIC PART

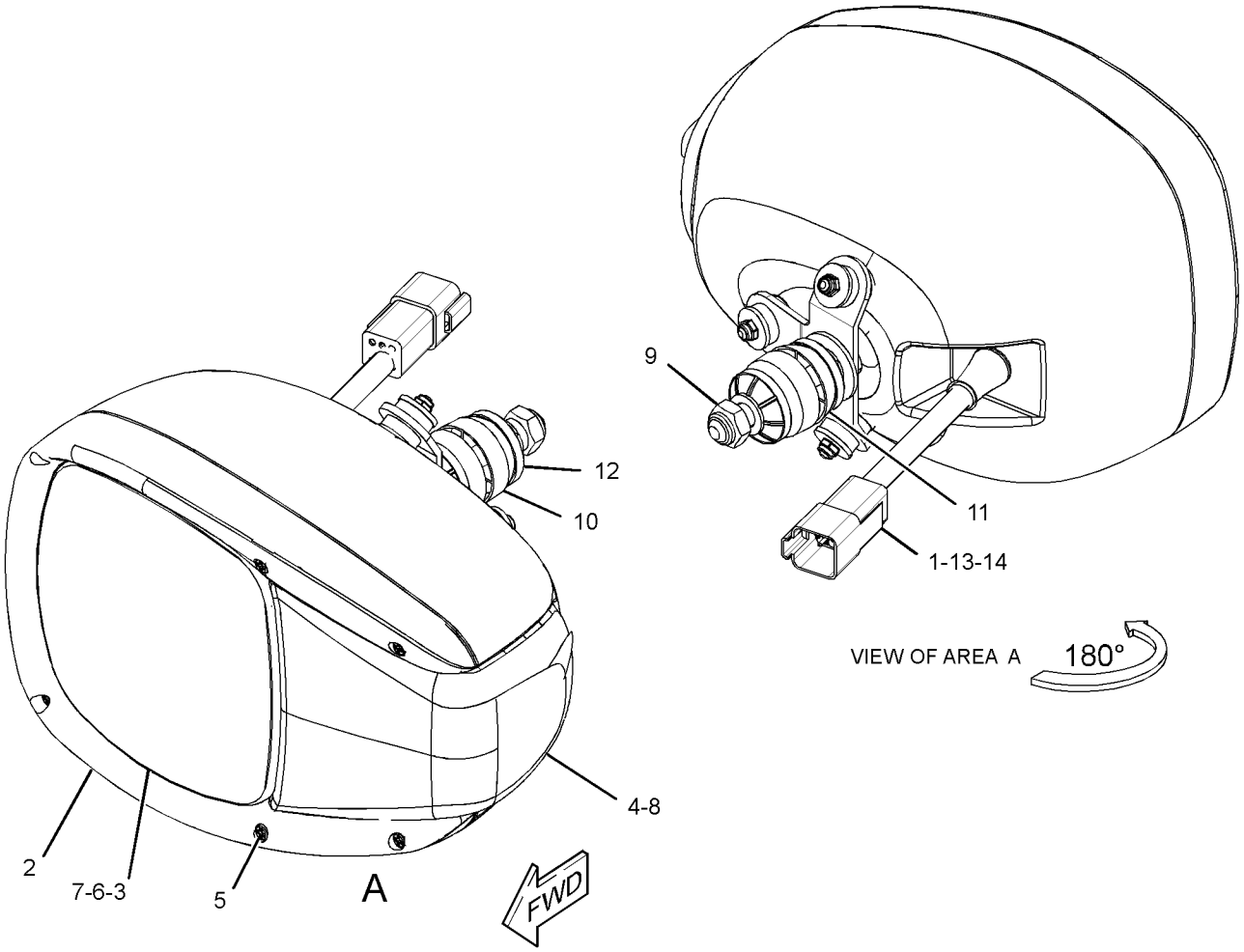

GRAPHIC #1 <END> g03681831

457-6743 LAMP GP-HEAD & SIGNAL–LED

S/N: TNS1-UP

PART OF 491-6701 LIGHTING GP-FLOOD & SIGNAL

SMCS-1429, 1430

i06733225

NOTE	REF NO	GRAPHIC REF	PART NUMBER	QTY	PART NAME 1 2 3 4 5 6 (PRODUCT LEVEL)	SEE PAGE
	1	1	**487-7761**	1	LENS AS (HEADLIGHT)	
	2	1	**487-7762**	1	LENS AS (SIGNAL)	
M	3	1	**8T-0389**	1	LOCKNUT (M10X1.5-THD)	
	4	1	**100-3253**	1	SPACER (SPHERICAL)	
	5	1	**100-3254**	1	SPACER (SPHERICAL)	
	6	1	**100-3255**	1	WASHER (SPHERICAL)	

M - METRIC PART

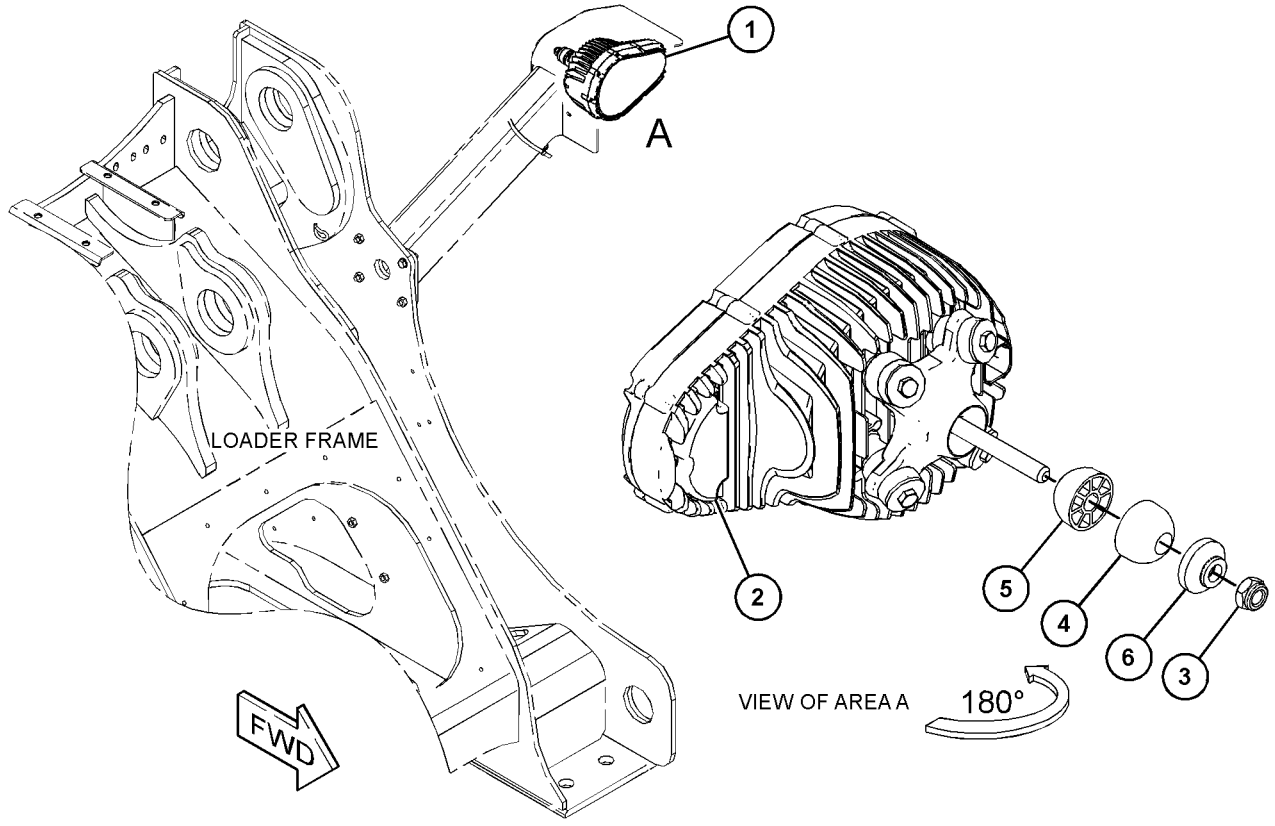

GRAPHIC #1 <END> g06121790

457-6744 LAMP GP-HEAD & SIGNAL–LED

S/N: TNS1-UP

PART OF 491-6701 LIGHTING GP-FLOOD & SIGNAL

SMCS-1429, 1430

i06733237

NOTE	REF NO	GRAPHIC REF	PART NUMBER	QTY	PART NAME 1 2 3 4 5 6 (PRODUCT LEVEL)	SEE PAGE
	1	1	**487-7761**	1	LENS AS (HEADLIGHT)	
	2	1	**487-7762**	1	LENS AS (SIGNAL)	
M	3	1	**8T-0389**	1	LOCKNUT (M10X1.5-THD)	
	4	1	**100-3253**	1	SPACER (SPHERICAL)	
	5	1	**100-3254**	1	SPACER (SPHERICAL)	
	6	1	**100-3255**	1	WASHER (SPHERICAL)	

M - METRIC PART

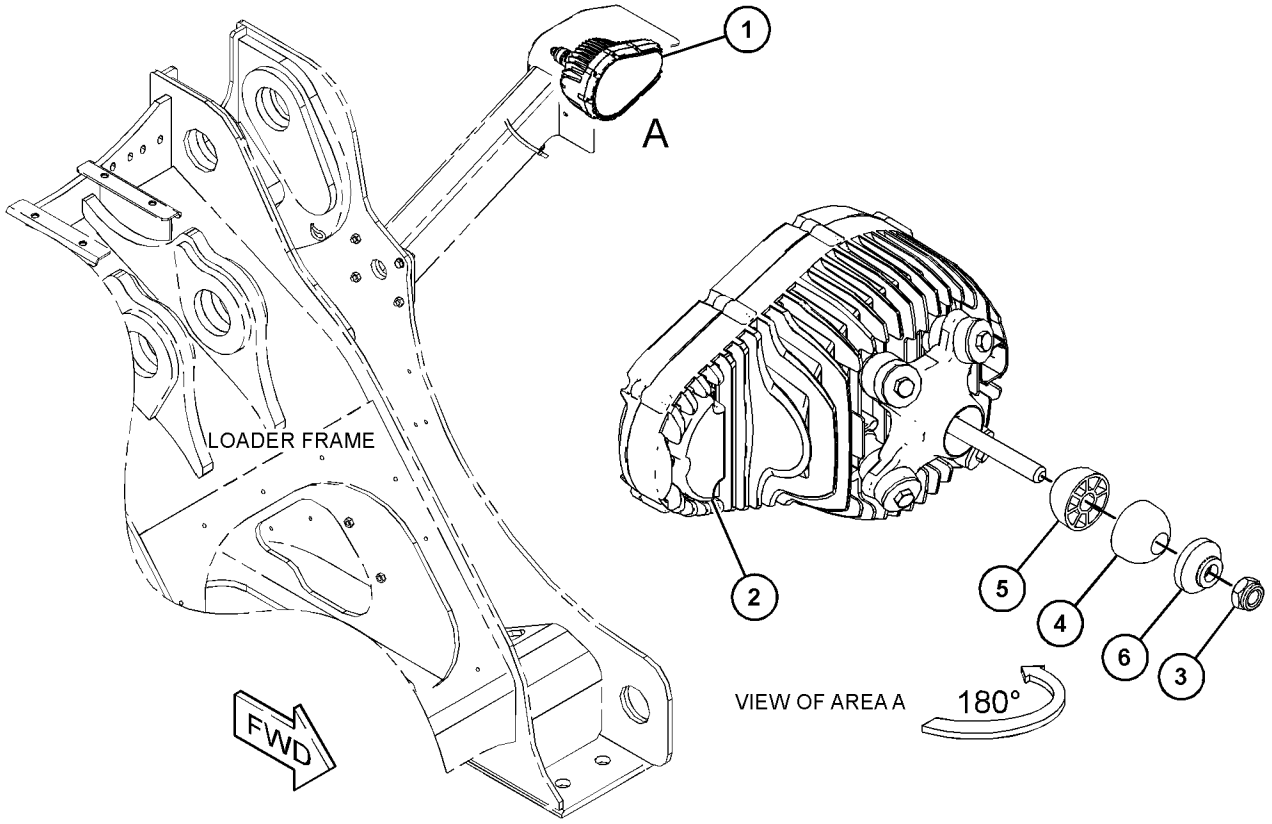

GRAPHIC #1 <END> g06121737

371-2241 LAMP GP-WARNING BEACON

S/N: TNS1-UP

PART OF 491-7467 LIGHTING GP-WARNING BEACON

SMCS-1431 **i06804851**

NOTE	REF NO	GRAPHIC REF	PART NUMBER	QTY	PART NAME 1 2 3 4 5 6 (PRODUCT LEVEL)	SEE PAGE
	1	1	**102-8802**	1	KIT-RECEPTACLE (2-PIN)	
					(INCLUDES RECEPTACLE AS & WEDGE)	
	2	1	**8T-8729**	2	PIN-CONNECTOR (16-GA TO 18-GA)	
	3	1	**389-5708**	1	LENS (AMBER, WARNING BEACON)	
E	4	1	**9X-1386**		SLEEVE (44-CM)	

E - ORDER BY THE CENTIMETER

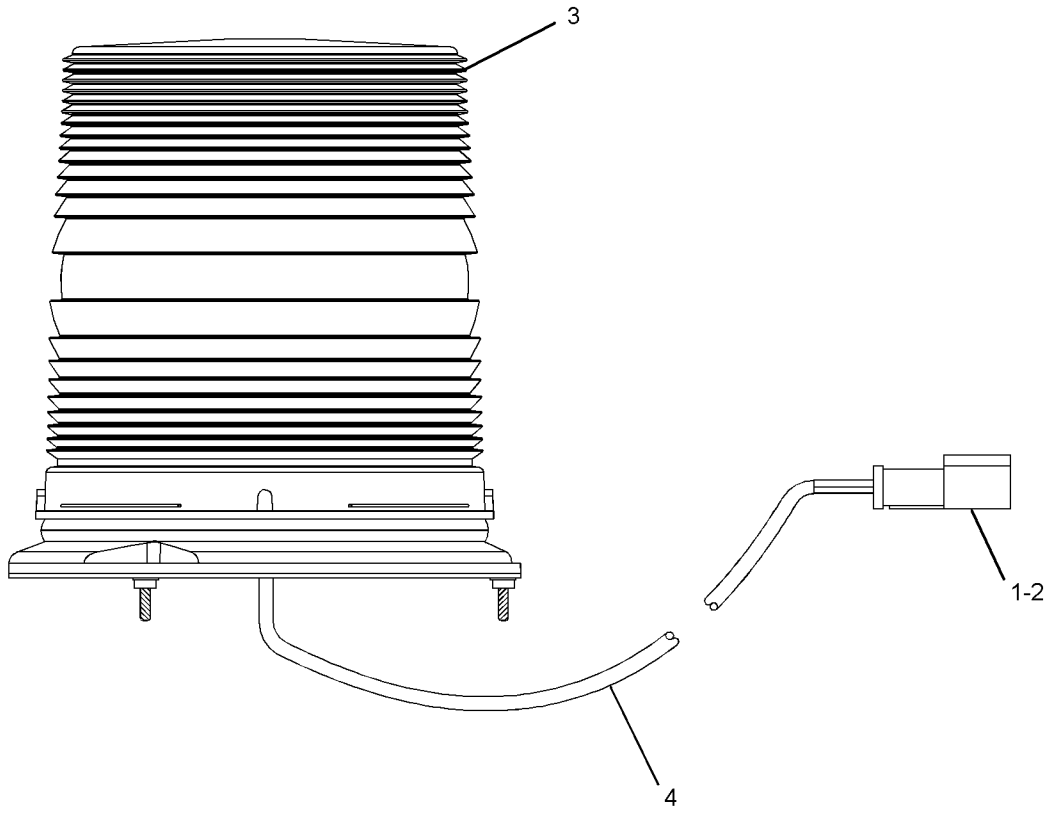

GRAPHIC #1 <END> g02934916

506-3489 LIGHTING AR-FLOOD–LED

S/N: TNS1-UP
AUXILIARY

SMCS-1429, 1434 **i06733173**

NOTE	PART NUMBER	QTY	PART NAME 1 2 3 4 5 6 (PRODUCT LEVEL)	SEE PAGE
Y	*460-7446*	1	LIGHTING GP-FLOOD (LED)	187
Y	*479-9394*	1	LIGHTING GP-FLOOD (LED)	188
Y	*491-6700*	1	LIGHTING GP-FLOOD & SIGNAL	192

Y - SEPARATE ILLUSTRATION

<END>

486-2308 LIGHTING AR-FLOOD & SIGNAL–AUXILIARY

S/N: TNS1-UP
LED

SMCS-1430, 1434 **i06782297**

NOTE	PART NUMBER	QTY	PART NAME 1 2 3 4 5 6 (PRODUCT LEVEL)	SEE PAGE
Y	*372-1597*	1	LIGHTING GP-FLOOD (CAB ROOF)	185
Y	*372-1608*	1	LIGHTING GP-FLOOD (CAB)	186
Y	*446-8300*	1	LIGHTING GP-FLOOD & SIGNAL	189

Y - SEPARATE ILLUSTRATION

<END>

486-2311 LIGHTING AR-FLOOD & SIGNAL–HALOGEN

S/N: TNS1-UP

SMCS-1430, 1434 **i06726468**

NOTE	PART NUMBER	QTY	PART NAME 1 2 3 4 5 6 (PRODUCT LEVEL)	SEE PAGE
Y	*372-1608*	1	LIGHTING GP-FLOOD (CAB)	186
Y	*446-8300*	1	LIGHTING GP-FLOOD & SIGNAL	189

Y - SEPARATE ILLUSTRATION

<END>

372-1597 LIGHTING GP-FLOOD—CAB ROOF

S/N: TNS1-UP

PART OF 486-2308 LIGHTING AR-FLOOD & SIGNAL

SMCS-1434 **i06760128**

NOTE	REF NO	GRAPHIC REF	PART NUMBER	QTY	PART NAME 1 2 3 4 5 6 (PRODUCT LEVEL)	SEE PAGE
Y	1	1	**339-3505**	4	LAMP GP-FLOOD (24-VOLT, 70-WATT)	176

Y - SEPARATE ILLUSTRATION

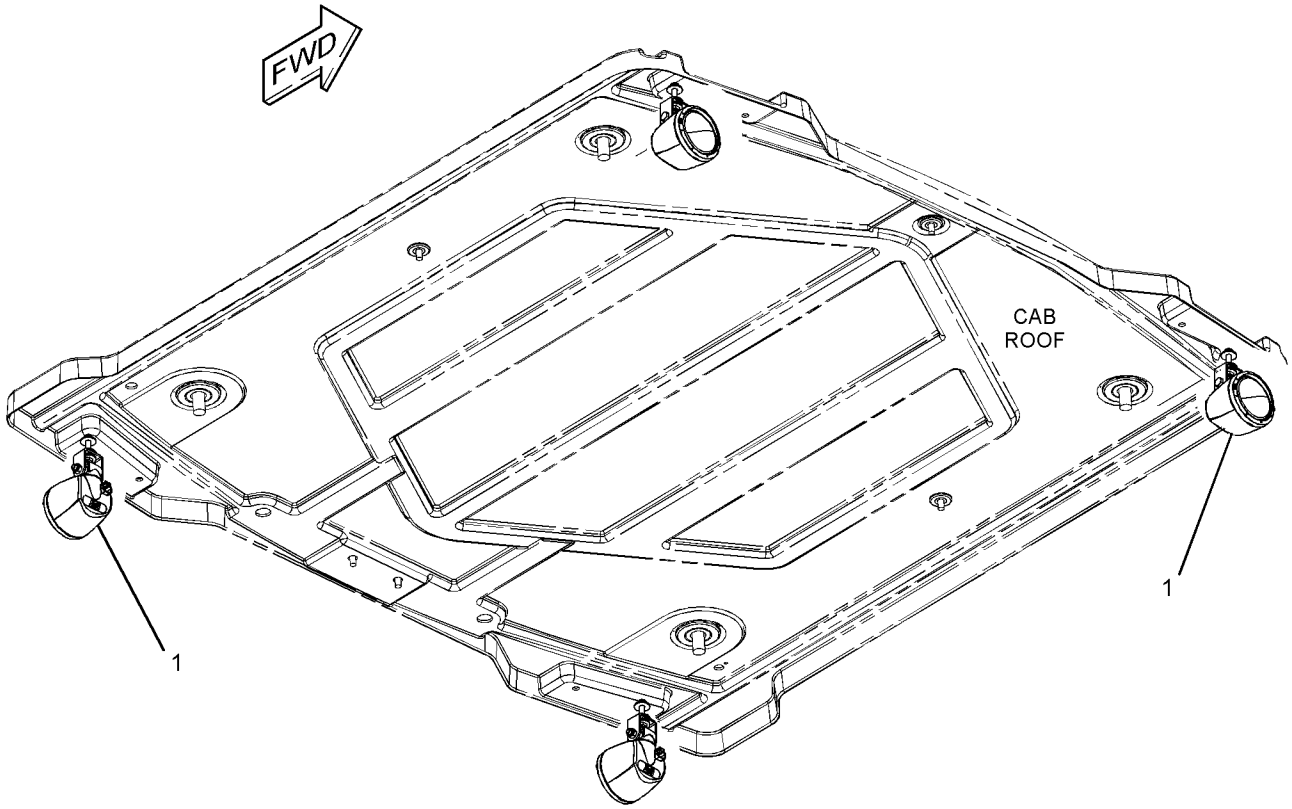

GRAPHIC #1 <END> g03459917

372-1608 LIGHTING GP-FLOOD

S/N: TNS1-UP

PART OF 486-2308, 486-2311 LIGHTING AR-FLOOD & SIGNAL

SMCS-1434 **i05800295**

NOTE	REF NO	GRAPHIC REF	PART NUMBER	QTY	PART NAME 1 2 3 4 5 6 (PRODUCT LEVEL)	SEE PAGE
Y	1	1	**339-3505**	4	LAMP GP-FLOOD (24-VOLT, 70-WATT) (CAB FRONT)	176

Y - SEPARATE ILLUSTRATION

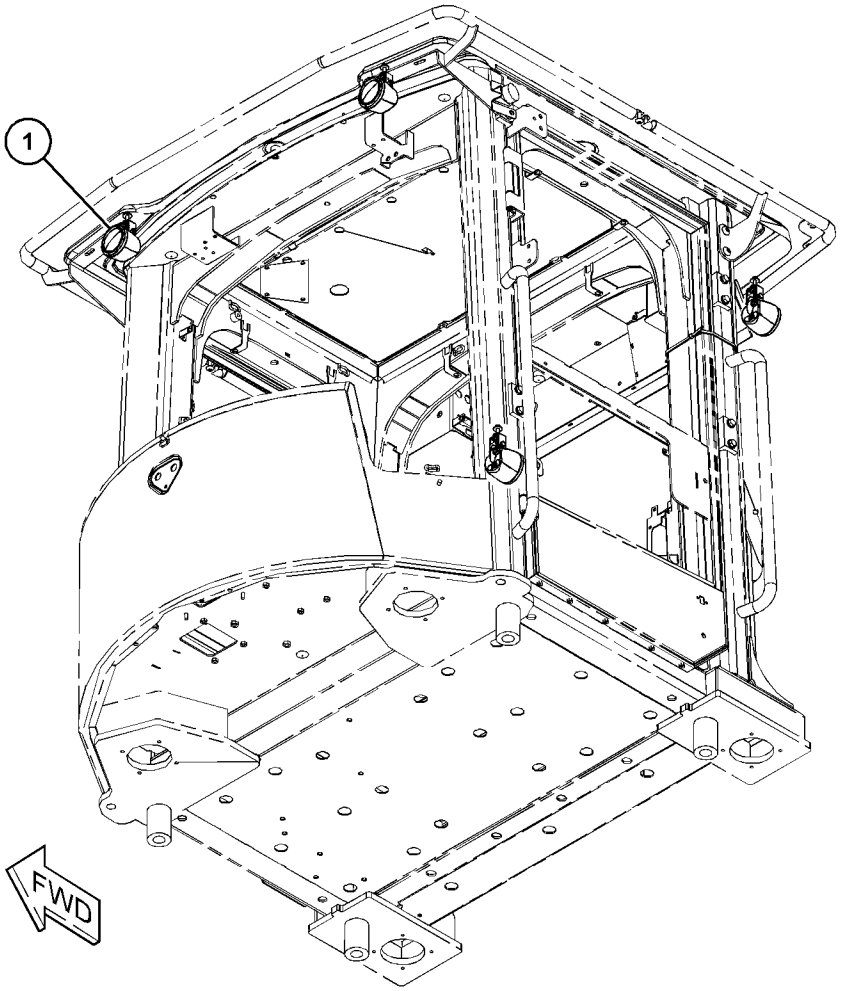

GRAPHIC #1 <END> g03506716

460-7446 LIGHTING GP-FLOOD—CAB ROOF

S/N: TNS1-UP

PART OF 506-3489 LIGHTING AR-FLOOD

SMCS-1434 **i06606643**

NOTE	REF NO	GRAPHIC REF	PART NUMBER	QTY	PART NAME 1 2 3 4 5 6 (PRODUCT LEVEL)	SEE PAGE
Y	1	1	**426-5380**	2	LAMP GP-FLOOD (LED)	177
	2	1	**461-7569**	2	LAMP GP-FLOOD (LED) (LOW BEAM)	

Y - SEPARATE ILLUSTRATION

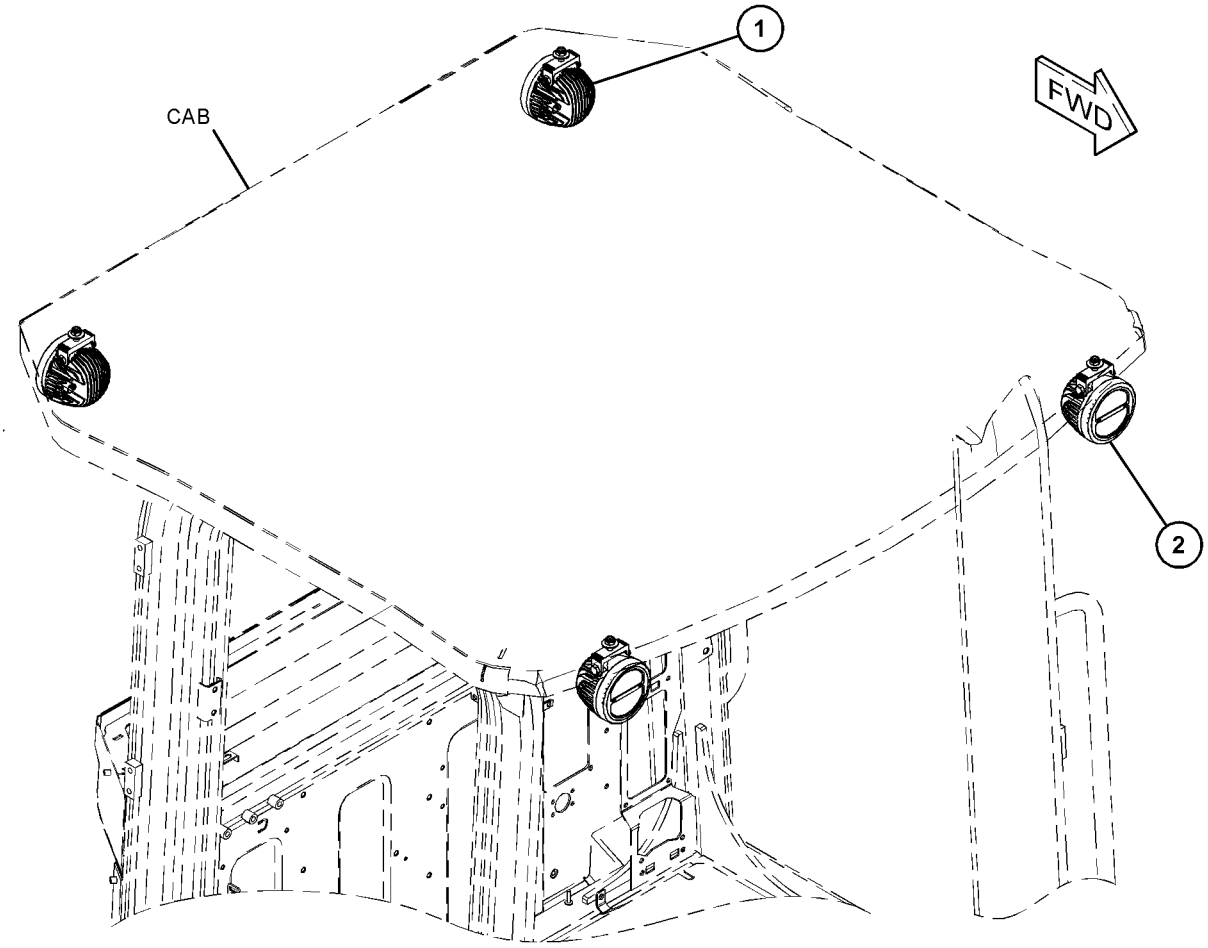

GRAPHIC #1 <END> g06017837

479-9394 LIGHTING GP-FLOOD—CAB ROOF

S/N: TNS1-UP

LED

PART OF 506-3489 LIGHTING AR-FLOOD

SMCS-1434 **i06606642**

NOTE	REF NO	GRAPHIC REF	PART NUMBER	QTY	PART NAME 1 2 3 4 5 6 (PRODUCT LEVEL)	SEE PAGE
Y	1	1	**426-5380**	4	LAMP GP-FLOOD (LED)	177

Y - SEPARATE ILLUSTRATION

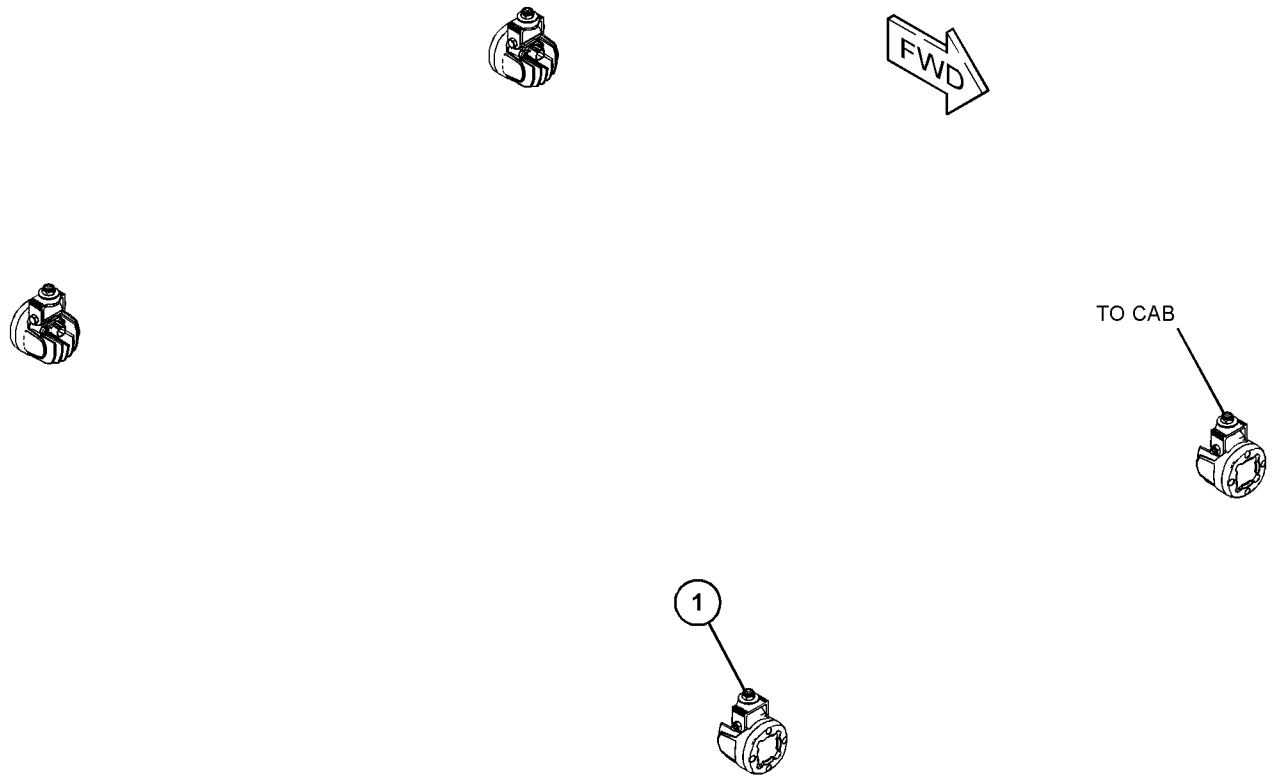

GRAPHIC #1 <END> g06005527

446-8300 LIGHTING GP-FLOOD & SIGNAL

S/N: TNS1-UP

PART OF 486-2308, 486-2311 LIGHTING AR-FLOOD & SIGNAL

SMCS-1430, 1434

i06774446

NOTE	REF NO	GRAPHIC REF	PART NUMBER	QTY	PART NAME 1 2 3 4 5 6 (PRODUCT LEVEL)	SEE PAGE
	1	1	**246-3290**	2	PLATE AS	
					(EACH INCLUDES)	
M		1	**8T-4935**	1	BOSS-WELD (M10X1.5X45-MM)	
Y	2	1	**325-4471**	2	LAMP GP-FLOOD (24-VOLT, 35-WATT) (REAR)	175
J	3	1	**392-4634**	2	LAMP AS-INDICATOR (24-VOLT) (STOP, TAIL, TURN)	
					(EACH INCLUDES)	
		1	**8T-8729**	4	PIN-CONNECTOR (16-GA TO 18-GA)	
	4	1	**422-1670**	2	PLATE	
Y	5	1	*473-9799*	1	LIGHTING GP-FLOOD & SIGNAL	191
	6	1	**130-5300**	2	CLIP	
M	7	1	**344-5673**	6	NUT (M6X1-THD)	
	8	1	**8T-4121**	10	WASHER-HARD (11X21X2.5-MM THK)	
M	9	1	**8T-4137**	2	BOLT (M10X1.5X20-MM)	
M	10	1	**8T-4186**	8	BOLT (M10X1.5X40-MM)	
	11	1	**9X-2038**	8	WASHER (7X19X2-MM THK)	
M	12	1	**9X-2044**	8	SCREW-TRUSS HEAD (M6X1X16-MM)	
M	13	1	**9X-2045**	6	SCREW-TRUSS HEAD (M6X1X20-MM)	
	14	1	**9X-8256**	6	WASHER (6.6X12X2-MM THK)	
					AVAILABLE REPAIR KIT(S):	
J			**102-8804**	1	KIT-RECEPTACLE (4-PIN)	
					(INCLUDES RECEPTACLE AS & WEDGE)	

J - KITS MARKED J SERVICES PART(S) MARKED J
M - METRIC PART
Y - SEPARATE ILLUSTRATION

446-8300 **LIGHTING GP-FLOOD & SIGNAL (**contd.**)** **i06774446**

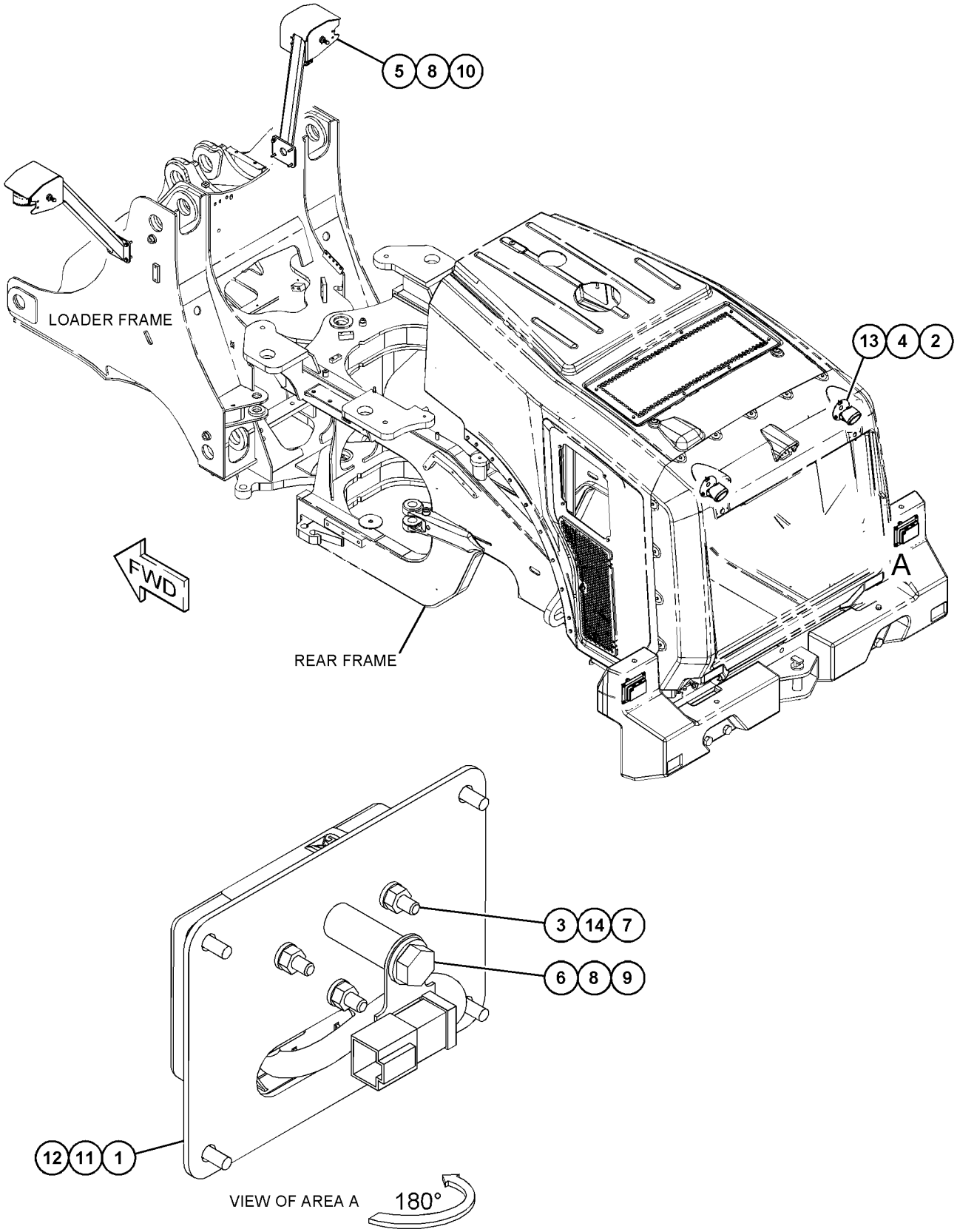

GRAPHIC #1 <END> g06122813

473-9799 LIGHTING GP-FLOOD & SIGNAL–HALOGEN

S/N: TNS1-UP

PART OF 446-8300 LIGHTING GP-FLOOD & SIGNAL

SMCS-1430, 1434 **i06774444**

NOTE	REF NO	GRAPHIC REF	PART NUMBER	QTY	PART NAME 1 2 3 4 5 6 (PRODUCT LEVEL)	SEE PAGE
	1	1	**7K-1181**	2	STRAP-CABLE (5.72-MM DIA)	
	2	1	**174-7876**	1	HORN AS (24-VOLT, LOW TONE)	
Y	3	1	**344-3455**	1	LAMP GP-HEAD & SIGNAL (24-VOLT) (RH)	179
Y	4	1	**344-3456**	1	LAMP GP-HEAD & SIGNAL (24-VOLT) (LH)	180
	5	1	**364-7301**	1	BRACKET AS (LH)	
	6	1	**364-7306**	1	BRACKET AS (RH)	
M	7	1	**1W-9589**	2	NUT (M10X1.5-THD)	
	8	1	**8T-4121**	1	WASHER-HARD (11X21X2.5-MM THK)	
M	9	1	**8T-4137**	1	BOLT (M10X1.5X20-MM)	

M - METRIC PART
Y - SEPARATE ILLUSTRATION

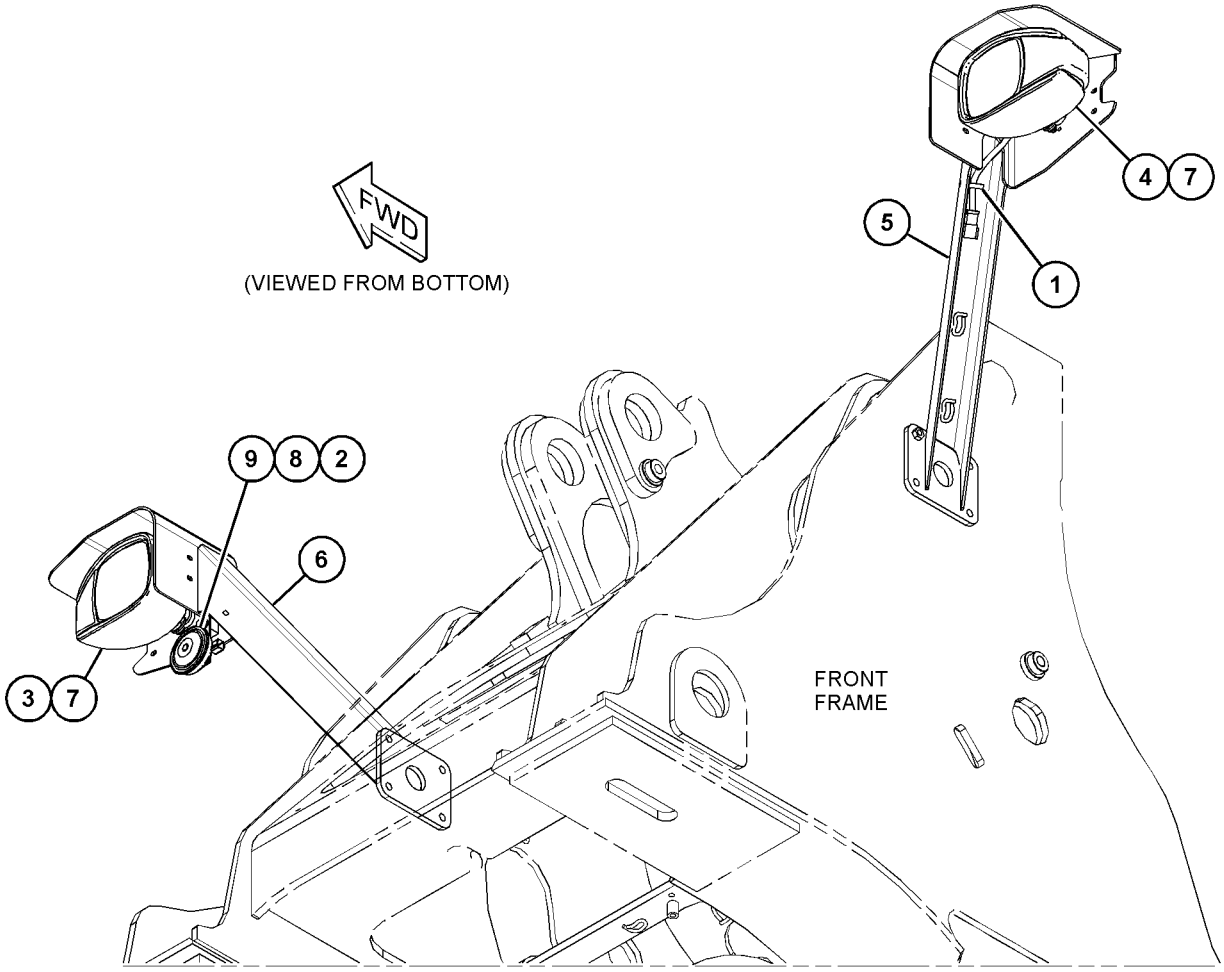

GRAPHIC #1 <END> g06122933

491-6700 LIGHTING GP-FLOOD & SIGNAL—LED

S/N: TNS1-UP

PART OF 506-3489 LIGHTING AR-FLOOD

SMCS-1430, 1434

i06733185

NOTE	REF NO	GRAPHIC REF	PART NUMBER	QTY	PART NAME 1 2 3 4 5 6 (PRODUCT LEVEL)	SEE PAGE
	1	1	**7K-1181**	2	STRAP-CABLE (5.72-MM DIA)	
	2	1	**246-3290**	2	PLATE AS	
					(EACH INCLUDES)	
M		1	**8T-4935**	1	BOSS-WELD (M10X1.5X45-MM)	
	3	1	**392-4634**	2	LAMP AS-INDICATOR (24-VOLT) (STOP, TAIL, TURN)	
					(EACH INCLUDES)	
		1	**8T-8729**	4	PIN-CONNECTOR (16-GA TO 18-GA)	
		1	**102-8804**	1	KIT-RECEPTACLE (4-PIN)	
					(INCLUDES RECEPTACLE AS & WEDGE)	
	4	1	**422-1670**	2	PLATE	
Y	5	1	**466-2421**	2	LAMP GP-FLOOD (32-VOLT) (REAR WORK LIGHTS)	178
Y	6	1	*491-6701*	1	LIGHTING GP-FLOOD & SIGNAL	194
Y	7	1	**491-6705**	2	HARNESS AS-LIGHTING	165
	8	1	**130-5300**	2	CLIP	
M	9	1	**344-5673**	6	NUT (M6X1-THD)	
	10	1	**8T-4121**	10	WASHER-HARD (11X21X2.5-MM THK)	
M	11	1	**8T-4137**	2	BOLT (M10X1.5X20-MM)	
M	12	1	**8T-4186**	8	BOLT (M10X1.5X40-MM)	
	13	1	**9X-2038**	8	WASHER (7X19X2-MM THK)	
M	14	1	**9X-2044**	8	SCREW-TRUSS HEAD (M6X1X16-MM)	
M	15	1	**9X-2045**	6	SCREW-TRUSS HEAD (M6X1X20-MM)	
	16	1	**9X-8256**	6	WASHER (6.6X12X2-MM THK)	

M - METRIC PART
Y - SEPARATE ILLUSTRATION

491-6700 **LIGHTING GP-FLOOD & SIGNAL (**contd.**)** **i06733185**

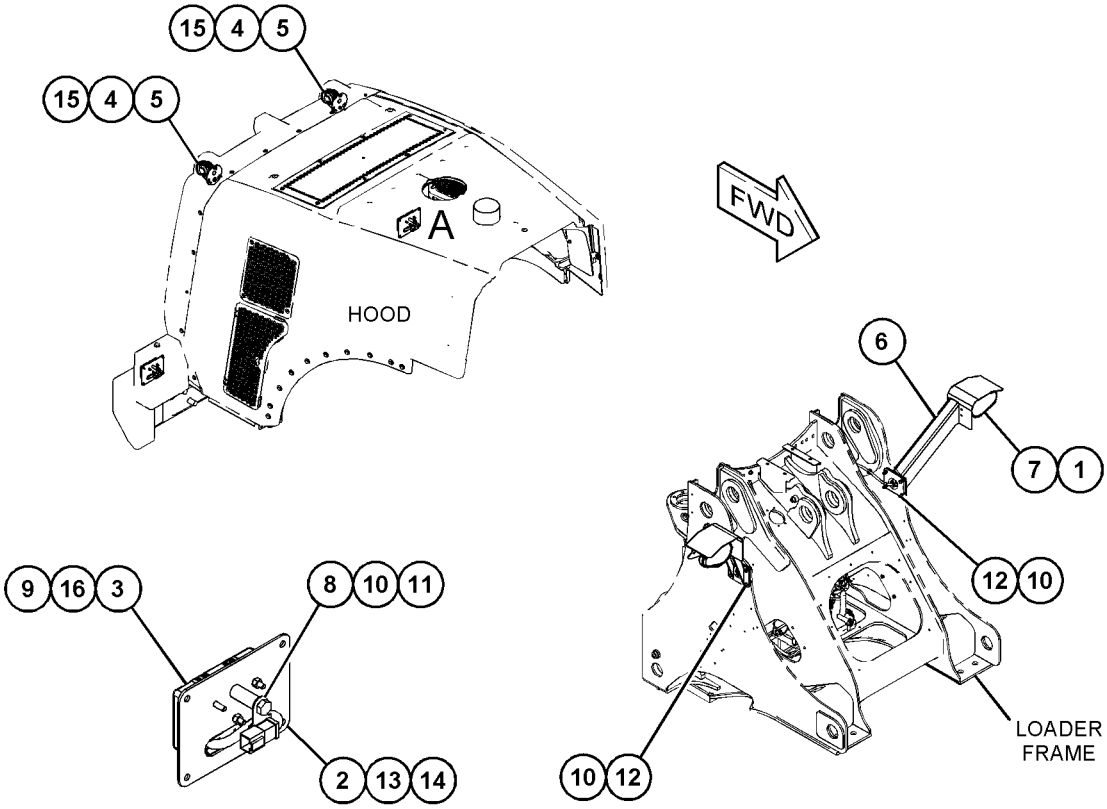

VIEW OF AREA A

GRAPHIC #1 <END> g06113676

491-6701 LIGHTING GP-FLOOD & SIGNAL–LED

S/N: TNS1-UP

PART OF 491-6700 LIGHTING GP-FLOOD & SIGNAL

SMCS-1430, 1434 **i06782338**

NOTE	REF NO	GRAPHIC REF	PART NUMBER	QTY	PART NAME 1 2 3 4 5 6 (PRODUCT LEVEL)	SEE PAGE
	1	1	**174-7876**	1	HORN AS (24-VOLT, LOW TONE)	
	2	1	**364-7301**	1	BRACKET AS (LH)	
	3	1	**364-7306**	1	BRACKET AS (RH)	
Y	4	1	**457-6743**	1	LAMP GP-HEAD & SIGNAL (RH)	181
Y	5	1	**457-6744**	1	LAMP GP-HEAD & SIGNAL (LH)	182
M	6	1	**1W-9589**	2	NUT (M10X1.5-THD)	
	7	1	**8T-4121**	1	WASHER-HARD (11X21X2.5-MM THK)	
M	8	1	**8T-4137**	1	BOLT (M10X1.5X20-MM)	

M - METRIC PART
Y - SEPARATE ILLUSTRATION

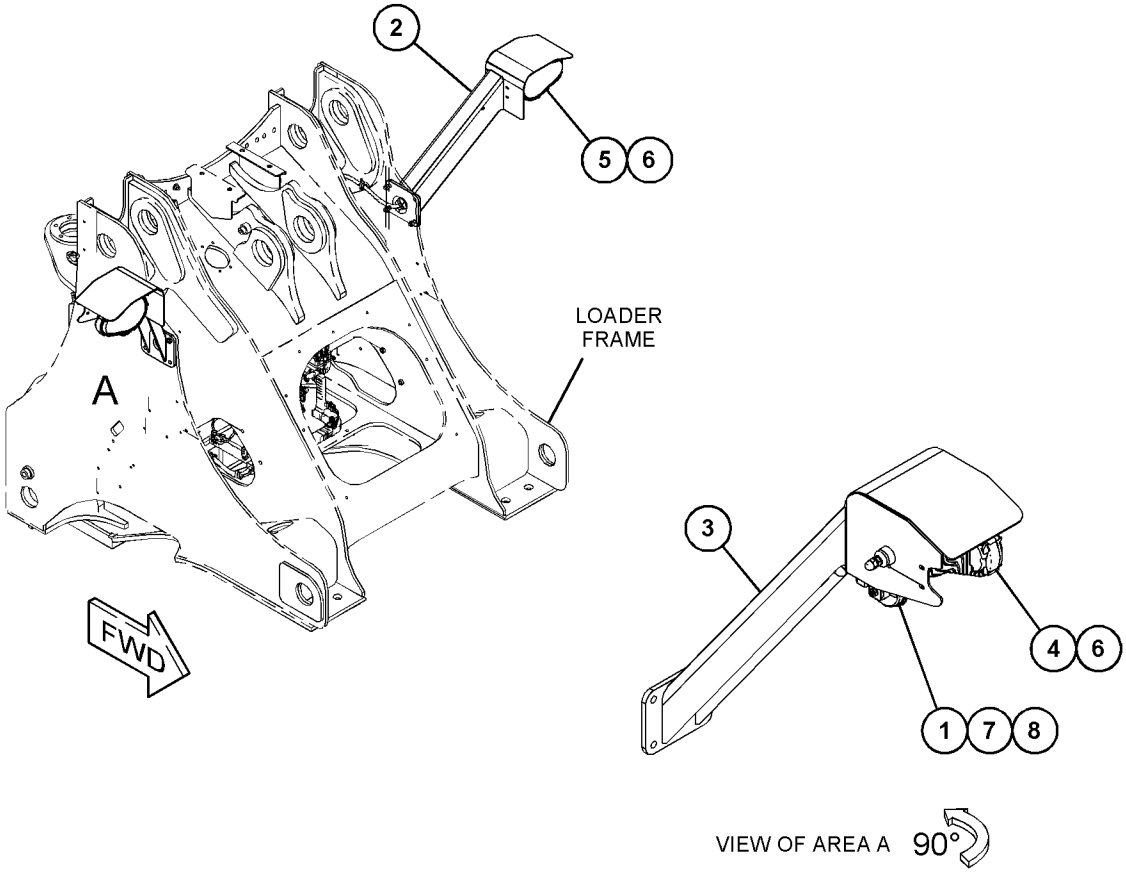

GRAPHIC #1 <END> g06100931

491-7467 LIGHTING GP-WARNING BEACON

S/N: TNS1-UP
AMBER, STROBE

SMCS-1431 **i06786071**

NOTE	REF NO	GRAPHIC REF	PART NUMBER	QTY	PART NAME 1 2 3 4 5 6 (PRODUCT LEVEL)	SEE PAGE
	1	1	**491-7468**	1	BRACKET	
Y	2	1	**371-2241**	1	LAMP GP-WARNING BEACON (AMBER, STROBE)	183
Y	3	1	*372-1866*	1	BRACKET GP-MOUNTING (WARNING BEACON)	141
	4	1	**8M-2771**	2	CLIP	
M	5	1	**8T-4200**	2	BOLT (M8X1.25X16-MM)	
	6	1	**8T-4224**	2	WASHER-HARD (8.8X16X2-MM THK)	
M	7	1	**9X-2044**	2	SCREW-TRUSS HEAD (M6X1X16-MM)	
	8	1	**3S-2093**	5	STRAP-CABLE	

M - METRIC PART
Y - SEPARATE ILLUSTRATION

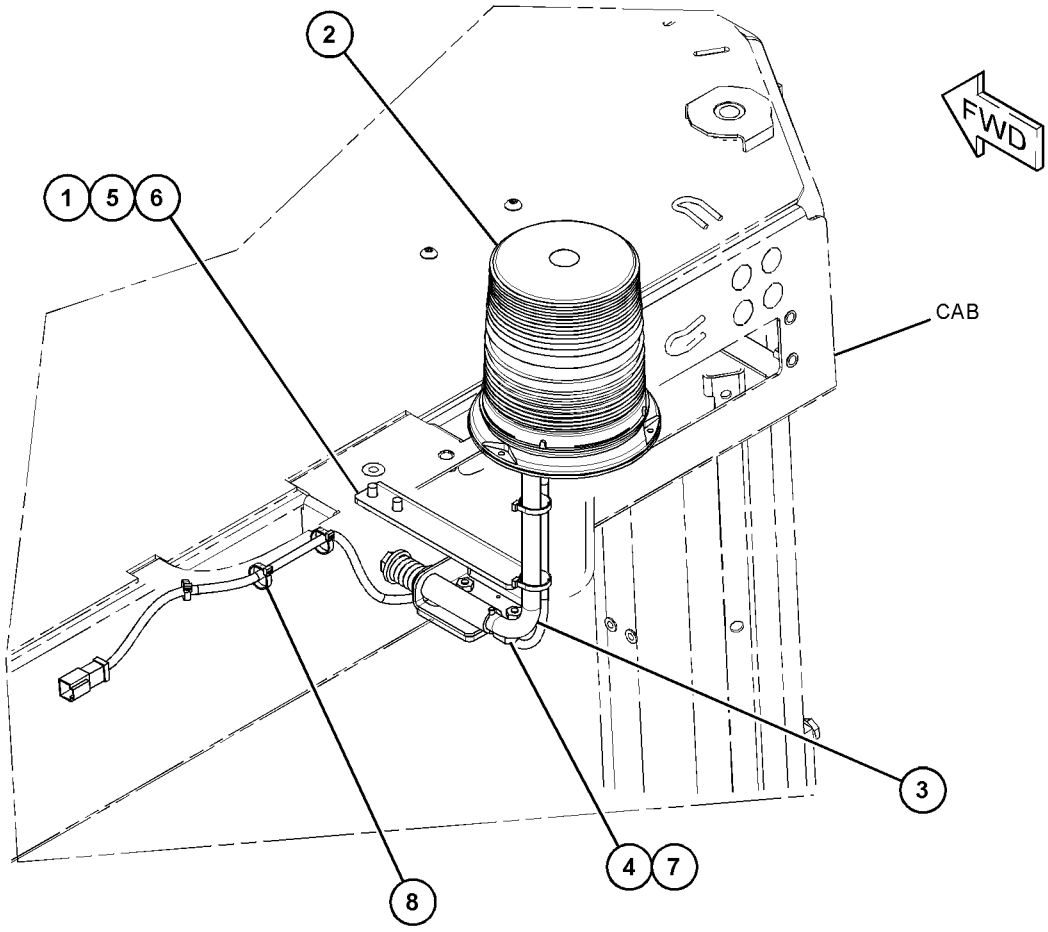

GRAPHIC #1 <END> g06113743

395-0112 MOUNTING GP-ELECTRONIC CONTROL

S/N: E7A1-UP

PART OF 435-8541 ENGINE AR-PRIMARY

SMCS-1901, 7610 **i06554274**

NOTE	REF NO	GRAPHIC REF	PART NUMBER	QTY	PART NAME 1 2 3 4 5 6 (PRODUCT LEVEL)	SEE PAGE
	1	1	**446-1268**	1	BRACKET AS	
M	2	1	**6I-0292**	2	BOLT (M8X1.25X140-MM)	
M	3	1	**6I-0293**	2	BOLT (M8X1.25X80-MM)	

M - METRIC PART

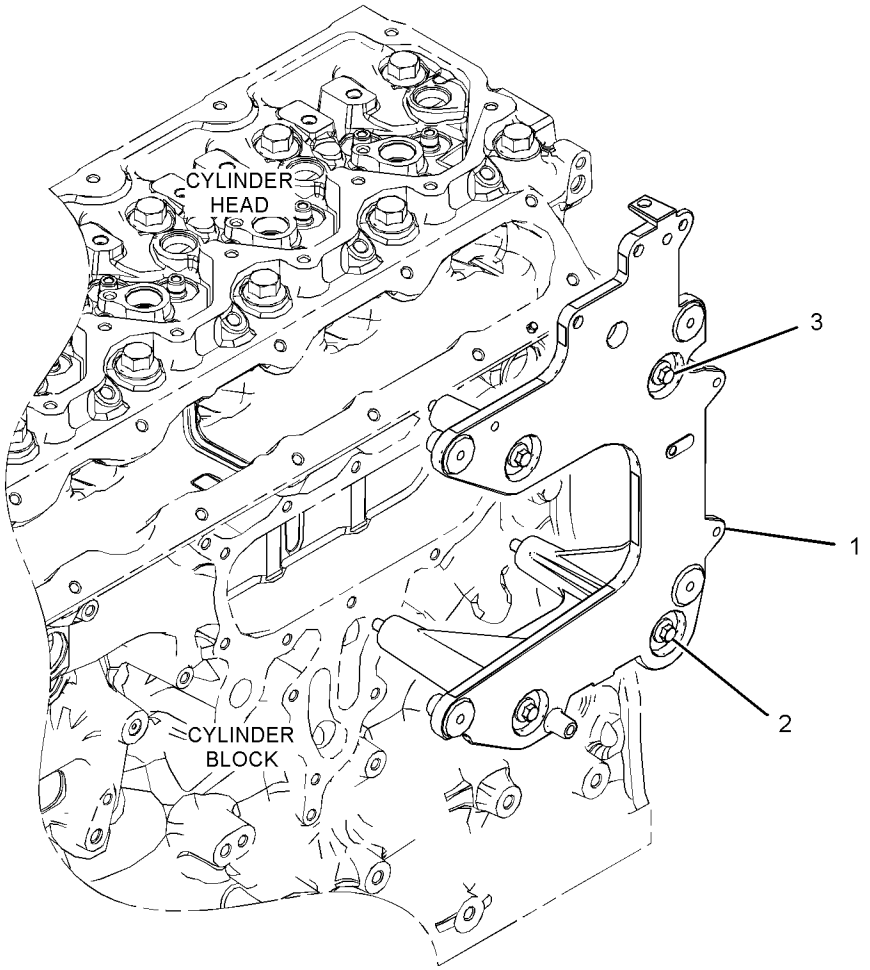

GRAPHIC #1 <END> g06032947

477-7801 PANEL GP-SWITCH

S/N: TNS1-UP

PART OF 455-3940 CAB AR

SMCS-1408, 1429, 7332, 7451 **i06641558**

NOTE	REF NO	GRAPHIC REF	PART NUMBER	QTY	PART NAME 1 2 3 4 5 6 (PRODUCT LEVEL)	SEE PAGE
	1	1	**206-1667**	2	CLIP	
	2	1	**464-1111**	1	COVER AS-SWITCH	
	3	1	**495-9794**	2	CLIP	
	4	1	**114-6658**	2	WASHER (6.5X17X1-MM THK)	
M	5	1	**172-8591**	4	NUT-SPRING (M6X1-THD)	
M	6	1	**9X-2045**	2	SCREW-TRUSS HEAD (M6X1X20-MM)	
M	7	1	**9X-6155**	4	BOLT-SOCKET HEAD (M6X1X16.7-MM)	

M - METRIC PART

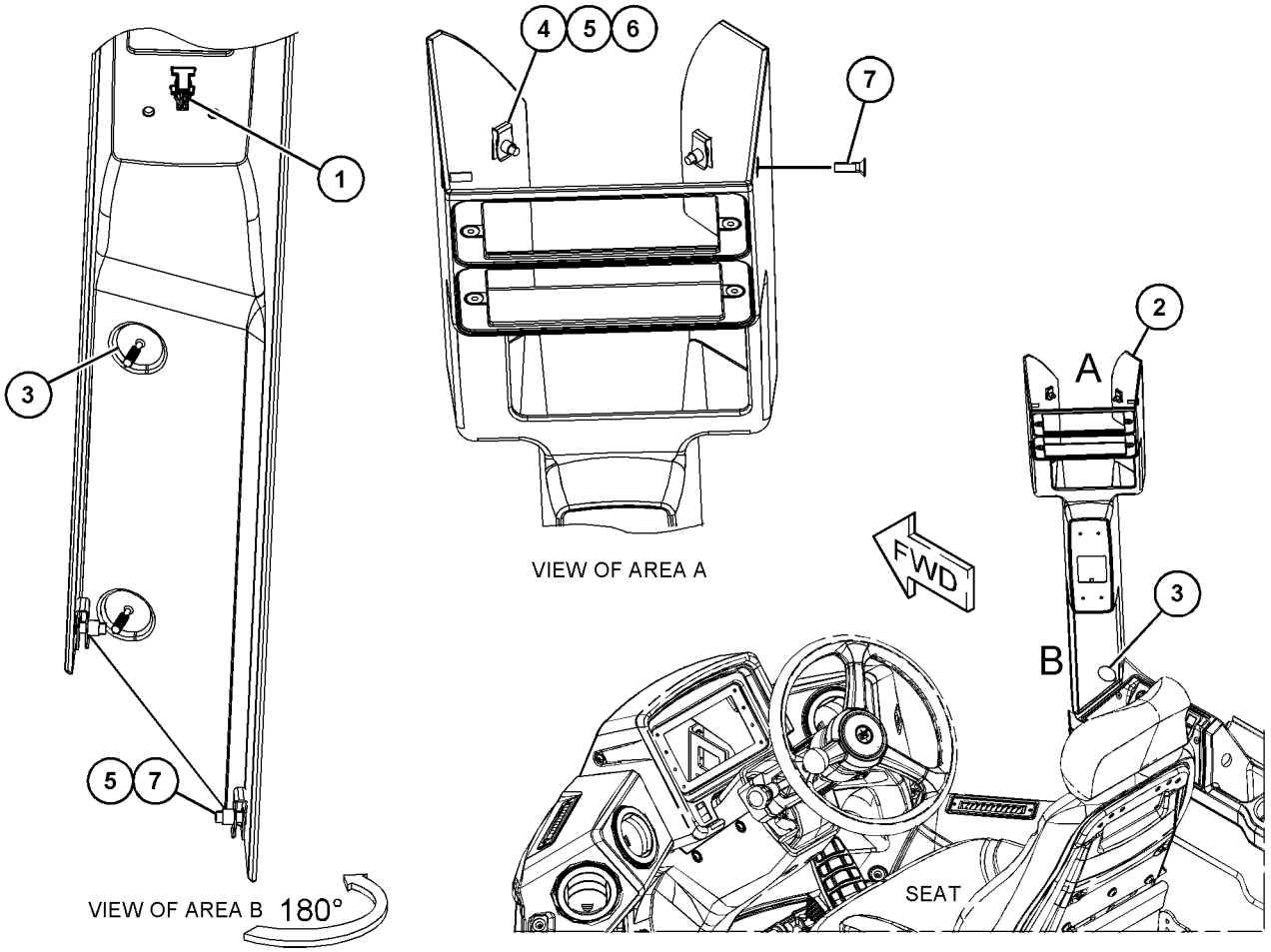

GRAPHIC #1 <END> g06049576

346-1067 RELAY GP–VARIABLE PITCH FAN

S/N: TNS1-UP

PART OF 505-1548 CONTROL AR-FAN

SMCS-1422, 4493 **i06540106**

NOTE	REF NO	GRAPHIC REF	PART NUMBER	QTY	PART NAME 1 2 3 4 5 6 (PRODUCT LEVEL)	SEE PAGE
	1	1	**248-2841**	1	RELAY AS (24-VOLT)	

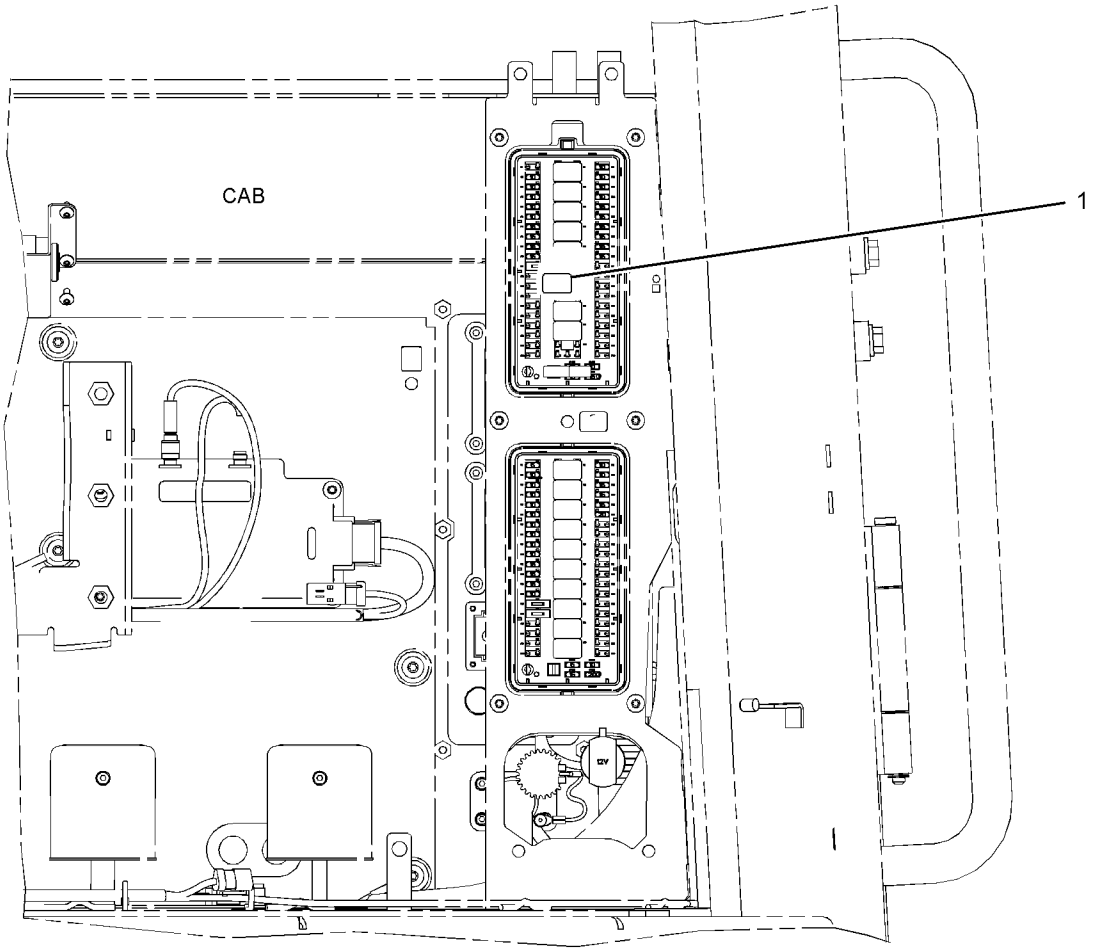

FRONT VIEW

GRAPHIC #1 <END> g03127077

466-1902 SENSOR & MTG GP-LIFT POSITION—LIFT

S/N: TNS1-UP

PART OF 507-6190 HYDRAULIC AR, 492-4028 HYDRAULIC AR-STANDARD LIFT

SMCS-5736 **i06809477**

NOTE	REF NO	GRAPHIC REF	PART NUMBER	QTY	PART NAME 1 2 3 4 5 6 (PRODUCT LEVEL)	SEE PAGE
	1	1	**7K-1181**	1	STRAP-CABLE (5.72-MM DIA)	
	2	1	**116-0118**	1	CLIP	
	3	1	**249-4134**	1	PLATE	
Y	4	1	**266-2337**	1	SENSOR GP-POSITION (ROTARY)	204
	5	1	**381-6686**	1	PLATE	
	6	1	**393-1842**	1	BRACKET	
M	7	1	**344-5674**	5	NUT (M8X1.25-THD)	
M	8	1	**7X-0818**	5	BOLT (M8X1.25X45-MM)	
	9	1	**8T-4121**	3	WASHER-HARD (11X21X2.5-MM THK)	
M	10	1	**8T-4132**	1	NUT (M16X2-THD)	
M	11	1	**8T-4137**	3	BOLT (M10X1.5X20-MM)	
	12	1	**8T-4224**	10	WASHER-HARD (8.8X16X2-MM THK)	
M	13	1	**8T-4971**	2	BOLT (M6X1X30-MM)	
M	14	1	**8T-6383**	1	BOLT (M16X2X200-MM)	
	15	1	**9X-8256**	2	WASHER (6.6X12X2-MM THK)	

M - METRIC PART
Y - SEPARATE ILLUSTRATION

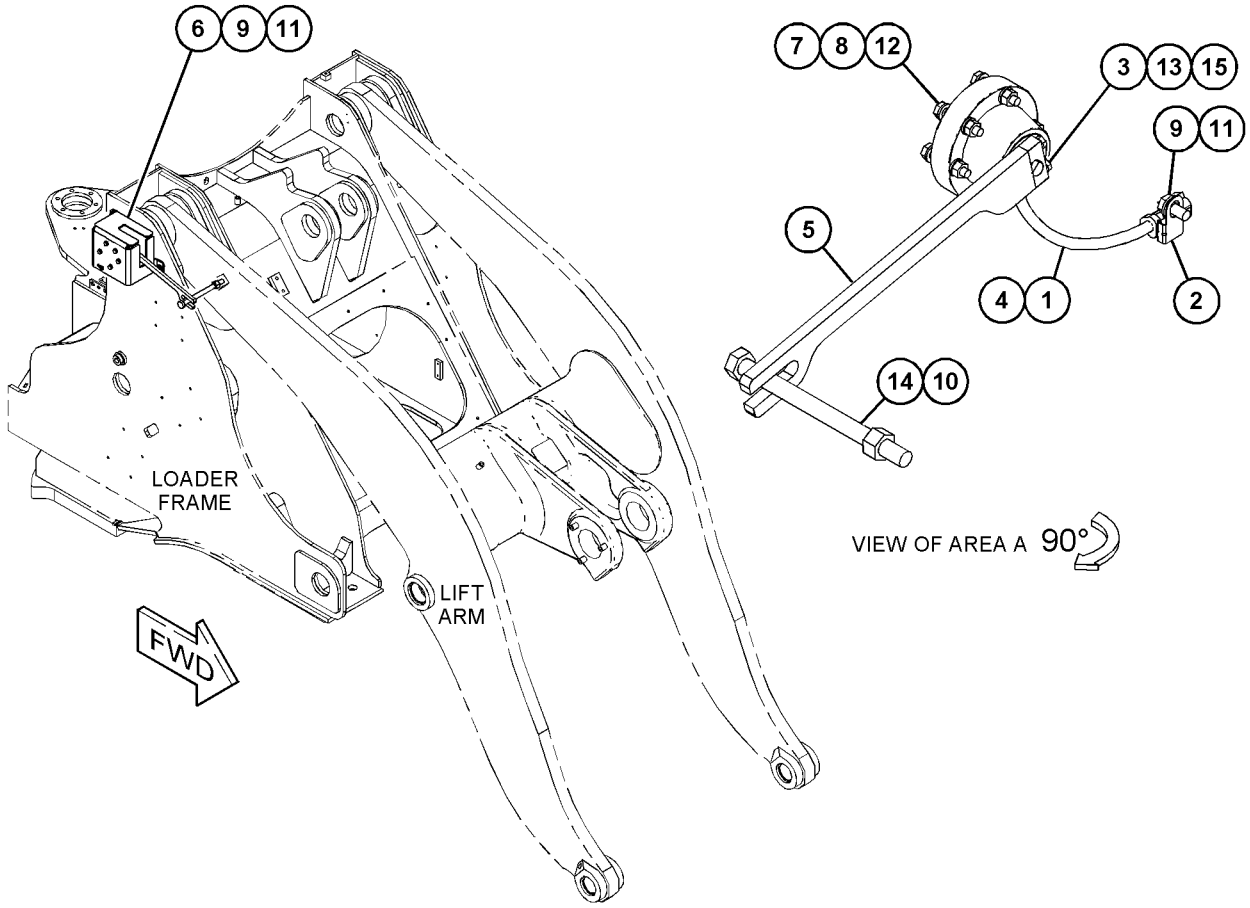

GRAPHIC #1 <END> g06021939

303-2243 SENSOR & MTG GP-TILT POSITION

S/N: TNS1-UP

PART OF 507-6190 HYDRAULIC AR, 492-4028 HYDRAULIC AR-STANDARD LIFT

SMCS-5736 **i05225912**

NOTE	REF NO	GRAPHIC REF	PART NUMBER	QTY	PART NAME 1 2 3 4 5 6 (PRODUCT LEVEL)	SEE PAGE
	1	1	**123-3202**	1	STRAP-CABLE	
	2	1	**3J-1877**	1	SPACER (10.7X17.14X37.1-MM THK)	
Y	3	1	**266-2337**	1	SENSOR GP-POSITION (ROTARY)	204
	4	1	**249-4134**	1	PLATE	
	5	1	**329-5087**	1	COVER	
	6	1	**269-7250**	1	PLATE	
	7	1	**275-0529**	1	BRACKET AS	
M		1	**8T-3612**	5	NUT-WELD (M8X1.25-THD)	
M		1	**8T-3490**	5	NUT-WELD (M10X1.5-THD)	
C	8	1	**353-5192**	1	BRACKET	
	9	1	**4D-7794**	1	CLIP	
	10	1	**7X-7729**	4	WASHER (11X25X3-MM THK)	
CM	11	1	**136-4184**	5	BOLT-SOCKET HEAD (M8X1.25X40-MM)	
M	12	1	**101-7396**	1	BOLT-SOCKET HEAD (M10X1.5X50-MM)	
	13	1	**8T-4121**	5	WASHER-HARD (11X21X2.5-MM THK)	
M	14	1	**8T-4136**	4	BOLT (M10X1.5X25-MM)	
M	15	1	**8T-4195**	5	BOLT (M10X1.5X30-MM)	
	16	1	**8T-4224**	5	WASHER-HARD (8.8X16X2-MM THK)	
M	17	1	**8T-4971**	2	BOLT (M6X1X30-MM)	
	18	1	**9X-8256**	2	WASHER (6.6X12X2-MM THK)	

C - CHANGE FROM PREVIOUS TYPE
M - METRIC PART
Y - SEPARATE ILLUSTRATION

303-2243 **SENSOR & MTG GP-TILT POSITION (**contd.**)** **i05225912**

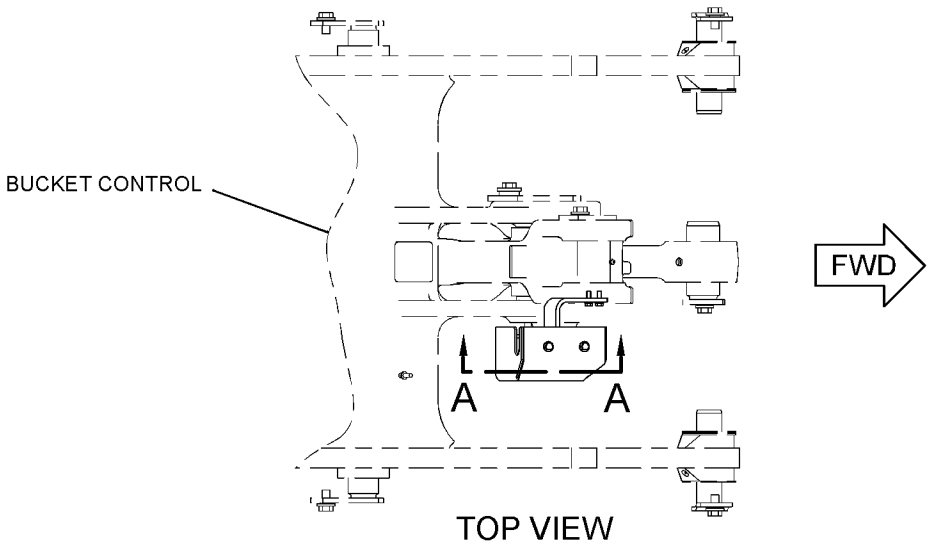

TOP VIEW

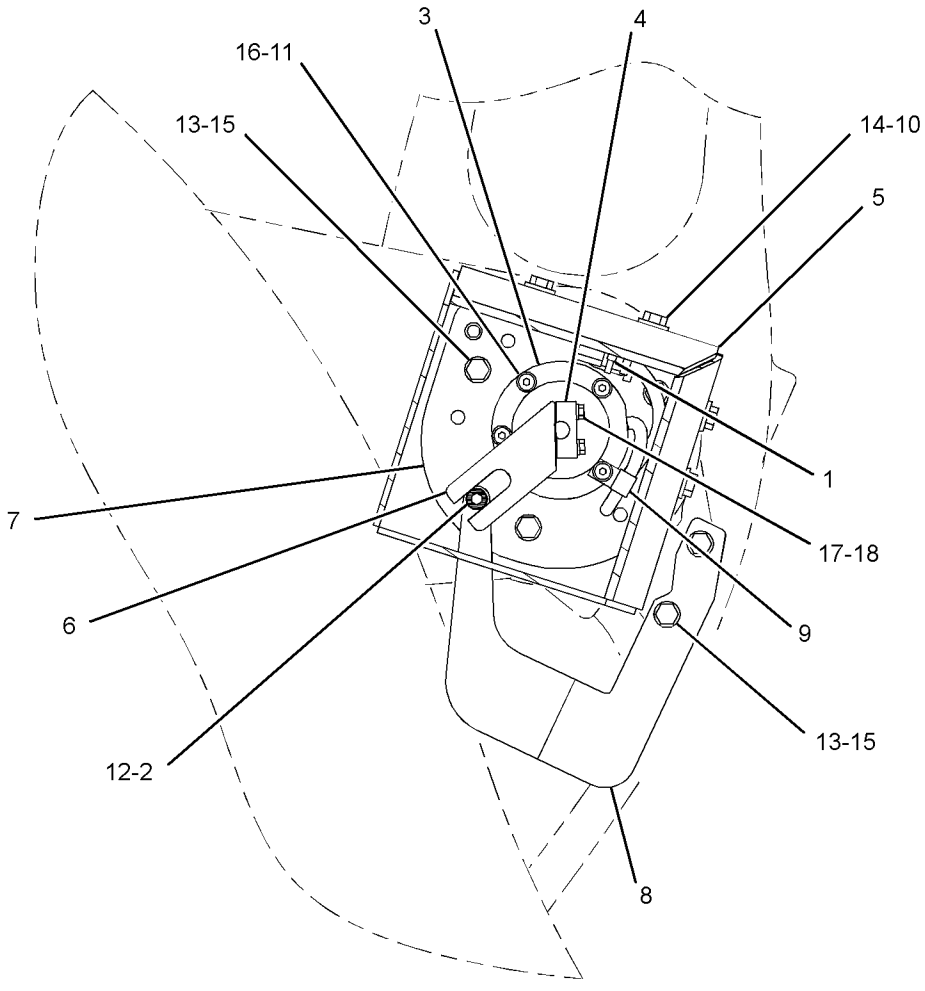

SECTION A-A

GRAPHIC #1 <END> g02637857

395-0110 SENSOR GP-ENGINE

S/N: E7A1-UP

PART OF 435-8541 ENGINE AR-PRIMARY

SMCS-1718, 1906, 1907, 1912, 1917, 1923, 1924, 1928, 1929, 7400

i06251971

NOTE	REF NO	GRAPHIC REF	PART NUMBER	QTY	PART NAME 1 2 3 4 5 6 (PRODUCT LEVEL)	SEE PAGE
M	1	1	**124-3815**	2	BOLT (M8X1.25X16-MM)	
	2	1	**199-9252**	1	SEAL-O-RING	
	3	1	**199-9267**	1	SEAL-O-RING	
	4	1	**199-9751**	1	SEAL-O-RING	
	5	1	**384-3888**	2	SENSOR GP-SPEED (ENGINE)	
	6	1	**256-6454**	1	SENSOR-TEMPERATURE (AIR INLET MANIFOLD)	
	6A	1	**256-6454**	1	SENSOR-TEMPERATURE (COOLANT)	
	7	1	**276-5603**	1	SEAL-O-RING	
	8	1	**320-3060**	1	SENSOR GP-PRESSURE (ENGINE OIL)	
	9	1	**320-3062**	1	SENSOR GP-PRESSURE (INLET MANIFOLD AIR)	
	10	1	**228-4947**	2	SEAL-O-RING	

M - METRIC PART

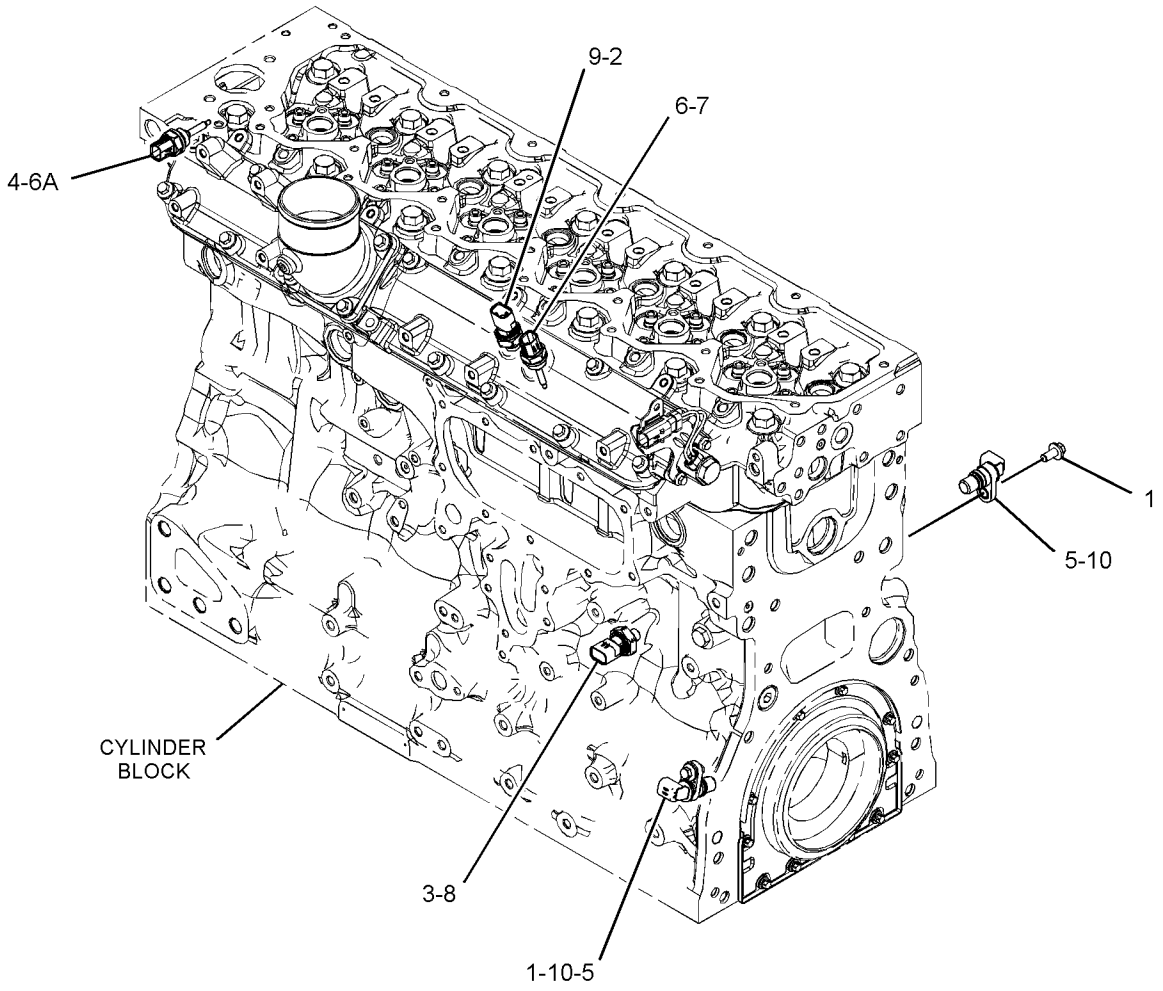

GRAPHIC #1

<END>

g03380662

266-1466 SENSOR GP-POSITION–ROTARY

S/N: TNS1-UP
500 HERTZ, 72 DEGREE
PART OF 499-3486 CONTROL GP-FOOT BRAKE

SMCS-4269, 5702, 5736, 5737, 7494

i06688212

NOTE	REF NO	GRAPHIC REF	PART NUMBER	QTY	PART NAME 1 2 3 4 5 6 (PRODUCT LEVEL)	SEE PAGE
	1	1	**9X-3401**	3	PIN-CONNECTOR (16-GA TO 18-GA)	
					–OR–	
		1	**126-1767**	3	PIN-CONNECTOR (14-GA TO 16-GA)	
	2	1	**102-8803**	1	KIT-RECEPTACLE (3-PIN)	
					(INCLUDES RECEPTACLE AS & WEDGE)	

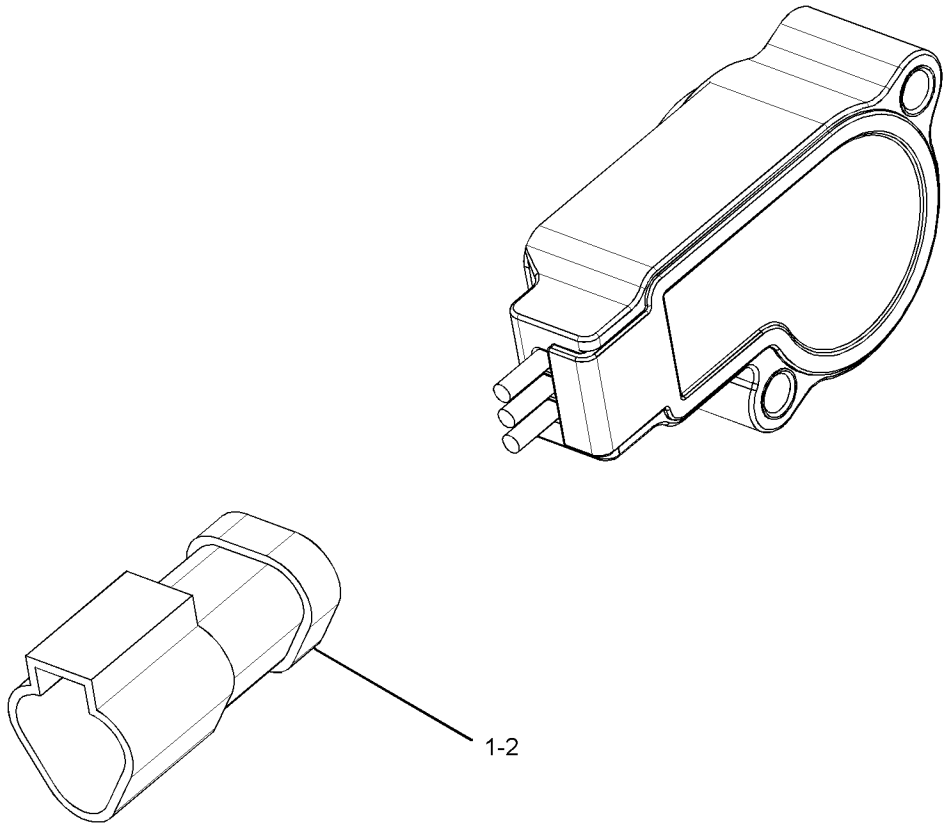

GRAPHIC #1

<END>

g01583458

266-2337 SENSOR GP-POSITION–ROTARY

S/N: TNS1-UP

PART OF 466-1902 SENSOR & MTG GP-LIFT POSITION, 303-2243 SENSOR & MTG GP-TILT POSITION

SMCS-4269, 5702, 5736, 5737, 7494

i03753238

NOTE	REF NO	GRAPHIC REF	PART NUMBER	QTY	PART NAME 1 2 3 4 5 6 (PRODUCT LEVEL)	SEE PAGE
	1	1	**102-8803**	1	KIT-RECEPTACLE (3-PIN)	
					(INCLUDES RECEPTACLE AS & WEDGE)	
	2	1	**9X-3401**	3	PIN-CONNECTOR (16-GA TO 18-GA)	
					–OR–	
		1	**126-1767**	3	PIN-CONNECTOR (14-GA TO 16-GA)	
E	3	1	**9X-1813**		SLEEVE (17-CM)	

E - ORDER BY THE CENTIMETER

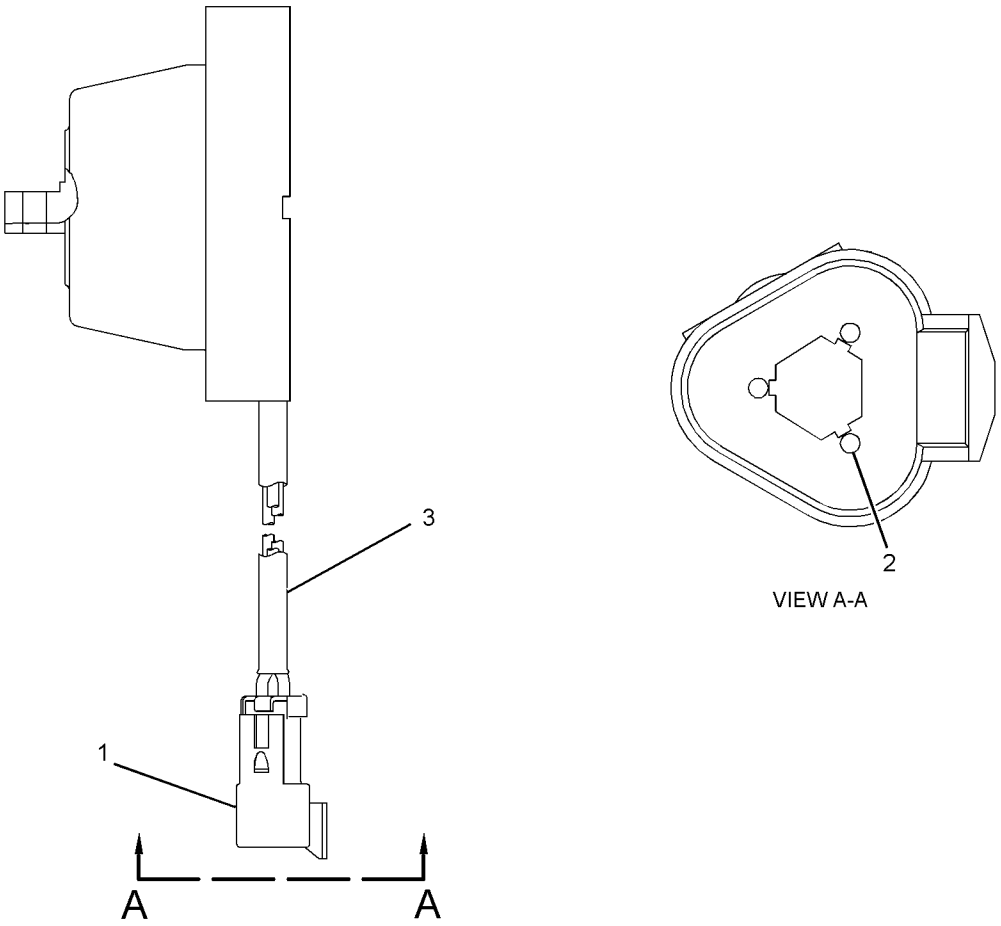

GRAPHIC #1

<END>

g01954240

331-1134 SENSOR GP-PRESSURE

S/N: TNS1-UP

PART OF 365-0165 MOUNTING GP-AIR CLEANER

SMCS-1408, 1925, 7494

i05254696

NOTE	REF NO	GRAPHIC REF	PART NUMBER	QTY	PART NAME 1 2 3 4 5 6 (PRODUCT LEVEL)	SEE PAGE
	1	1	**320-3063**	1	SENSOR GP-PRESSURE	
	2	1	**228-7100**	1	SEAL-O-RING	

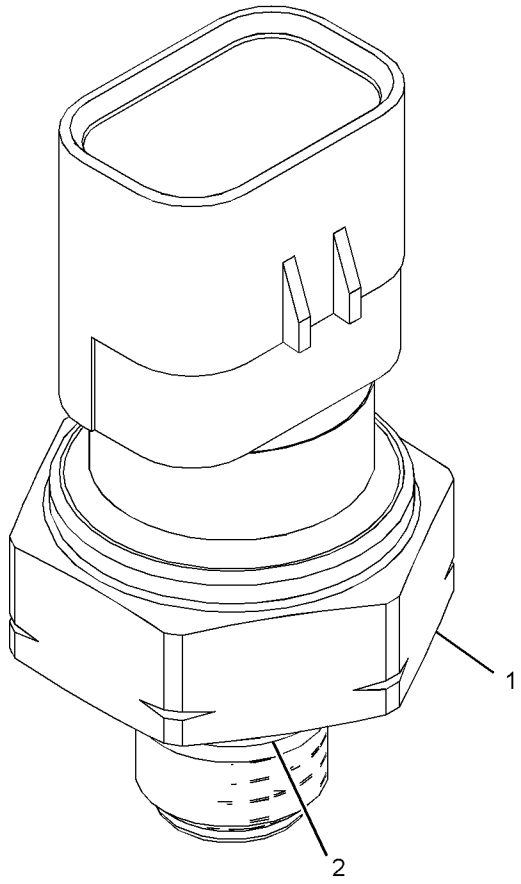

GRAPHIC #1

<END>

g03346854

360-3489 SENSOR GP-PRESSURE

S/N: TNS1-UP

PART OF 517-7121, 517-7122 MONITOR AR-PAYLOAD

SMCS-1408, 1925, 7494 **i06638780**

NOTE	REF NO	GRAPHIC REF	PART NUMBER	QTY	PART NAME 1 2 3 4 5 6 (PRODUCT LEVEL)	SEE PAGE
	1	1	**349-1178**	1	SENSOR-PRESSURE (LIFT CYLINDER ROD END)	
	2	1	**3J-1907**	1	SEAL-O-RING	

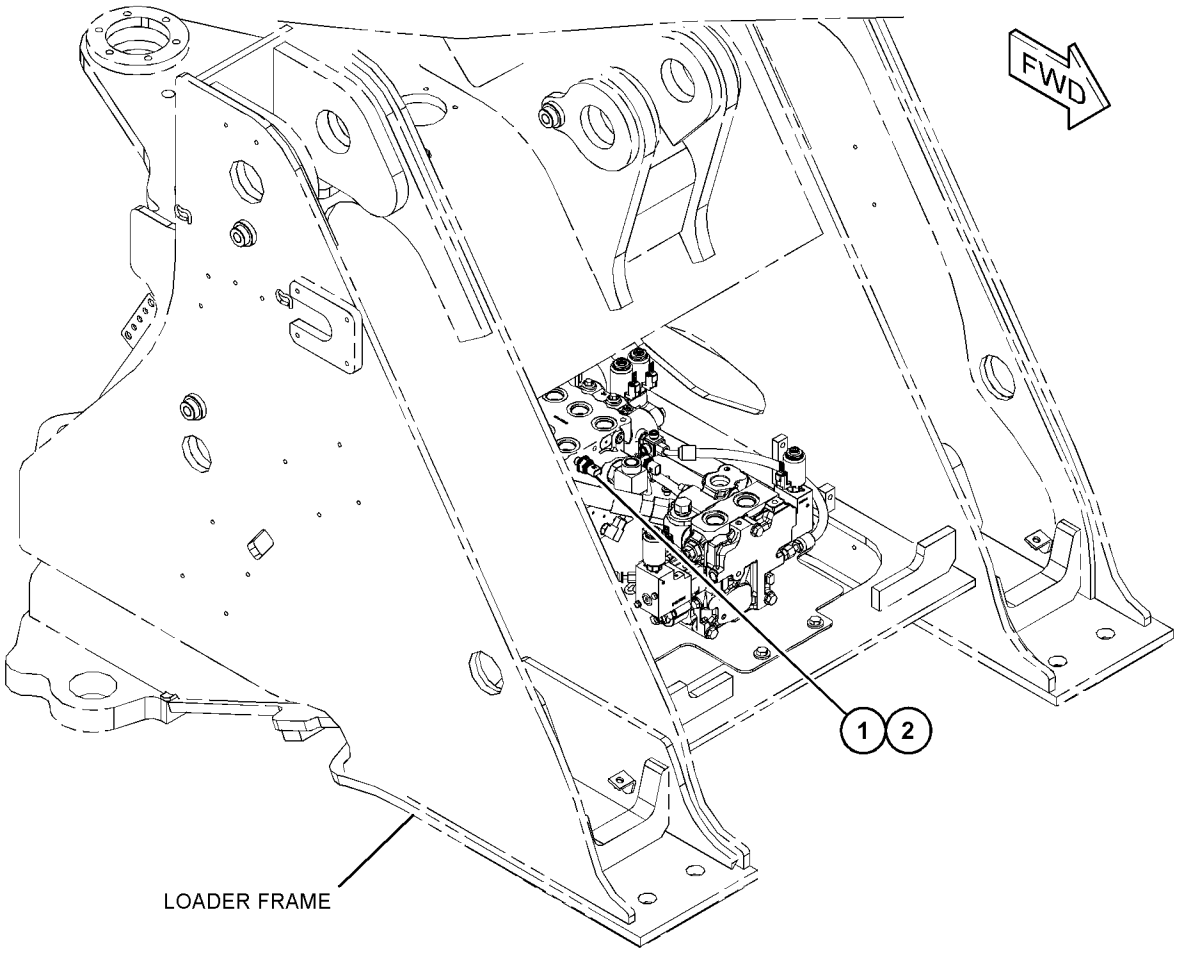

GRAPHIC #1 <END> g06048196

360-3494 SENSOR GP-PRESSURE

S/N: TNS1-UP

PART OF 517-7121, 517-7122 MONITOR AR-PAYLOAD

SMCS-1408, 1925, 7494 **i06805527**

NOTE	REF NO	GRAPHIC REF	PART NUMBER	QTY	PART NAME 1 2 3 4 5 6 (PRODUCT LEVEL)	SEE PAGE
	1	1	**349-1178**	1	SENSOR-PRESSURE (LIFT CYLINDER HEAD END)	
	2	1	**3J-1907**	1	SEAL-O-RING	

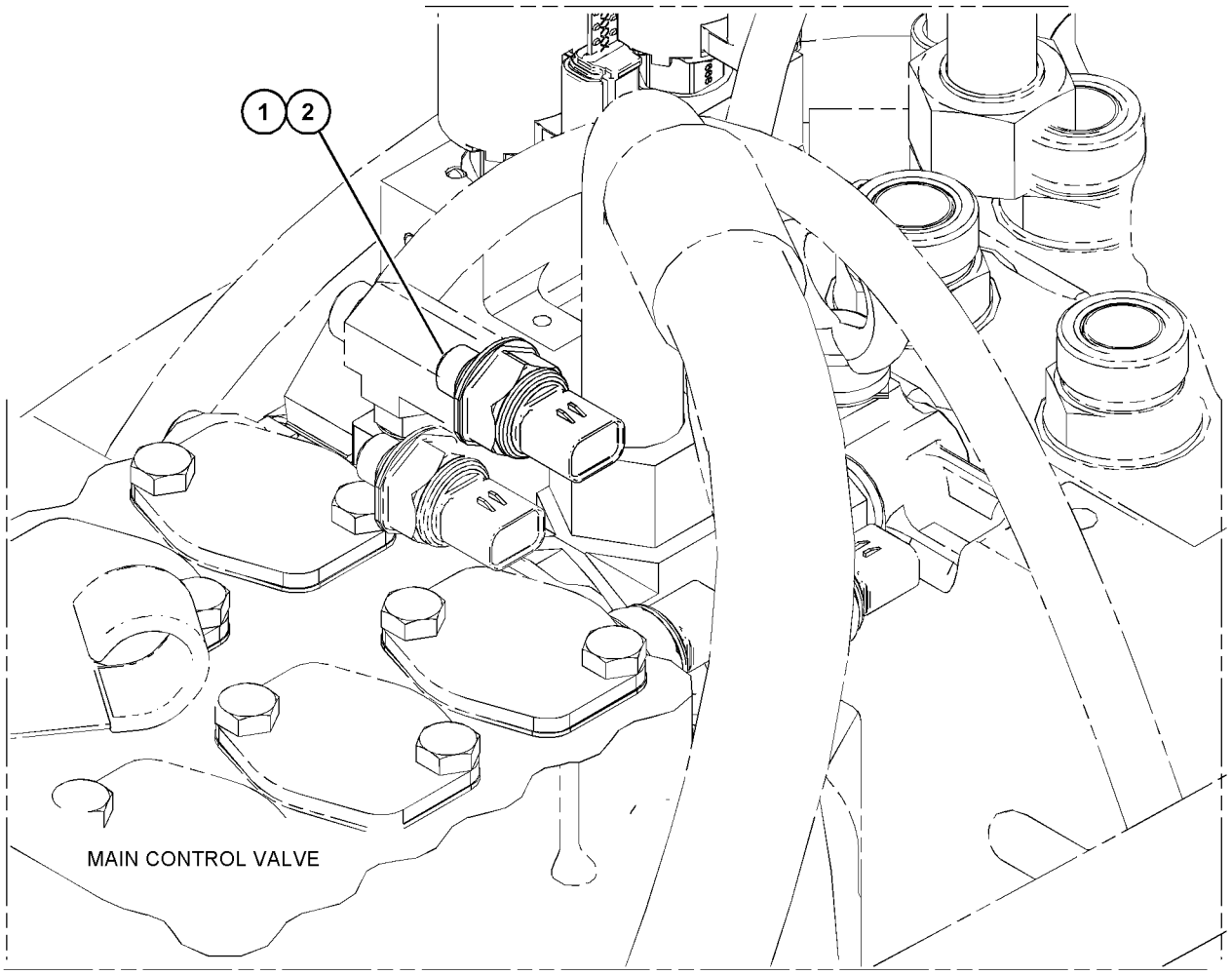

GRAPHIC #1 <END> g06047756

318-1179 SENSOR GP-SPEED

S/N: WL51-UP; WSH1-UP; WSY1-UP
MAGNETIC. HIGH OUTPUT
PART OF 502-5784 CONTROL GP-TRANSMISSION HYD

SMCS-1907, 1912, 3175, 4803, 7493 **i05366097**

NOTE	REF NO	GRAPHIC REF	PART NUMBER	QTY	PART NAME 1 2 3 4 5 6 (PRODUCT LEVEL)	SEE PAGE
	1	1	**171-5349**	1	STRAP-MARKER	
	2	1	**102-8802**	1	KIT-RECEPTACLE (2-PIN)	
					(INCLUDES RECEPTACLE AS & WEDGE)	
	3	1	**9X-3401**	2	PIN-CONNECTOR (16-GA TO 18-GA)	
					–OR–	
		1	**126-1767**	2	PIN-CONNECTOR (14-GA TO 16-GA)	
E	4	1	**329-0418**		SLEEVE (14-CM)	

E - ORDER BY THE CENTIMETER

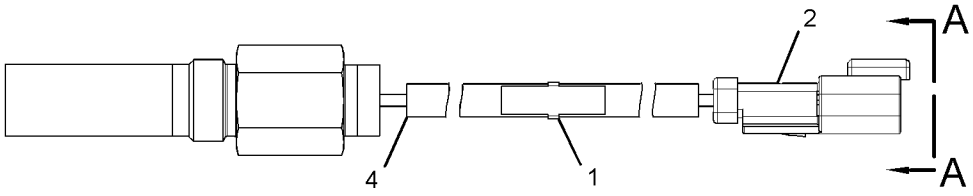

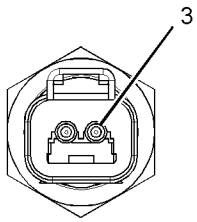

VIEW A-A

GRAPHIC #1 <END> g03177638

234-5013 SENSOR GP-TEMPERATURE

S/N: WL51-UP; WSH1-UP; WSY1-UP
AMPSEAL CONNECTOR
PART OF 423-0861 VALVE GP-CONTROL

SMCS-1408, 1906, 1919, 1921, 1922, 1928, 1929, 301T, 3194, 429T, 509T

i03645027

NOTE	REF NO	GRAPHIC REF	PART NUMBER	QTY	PART NAME 1 2 3 4 5 6 (PRODUCT LEVEL)	SEE PAGE
	1	1	**256-6453**	1	SENSOR-TEMPERATURE	
	2	1	**238-5080**	1	SEAL-O-RING	

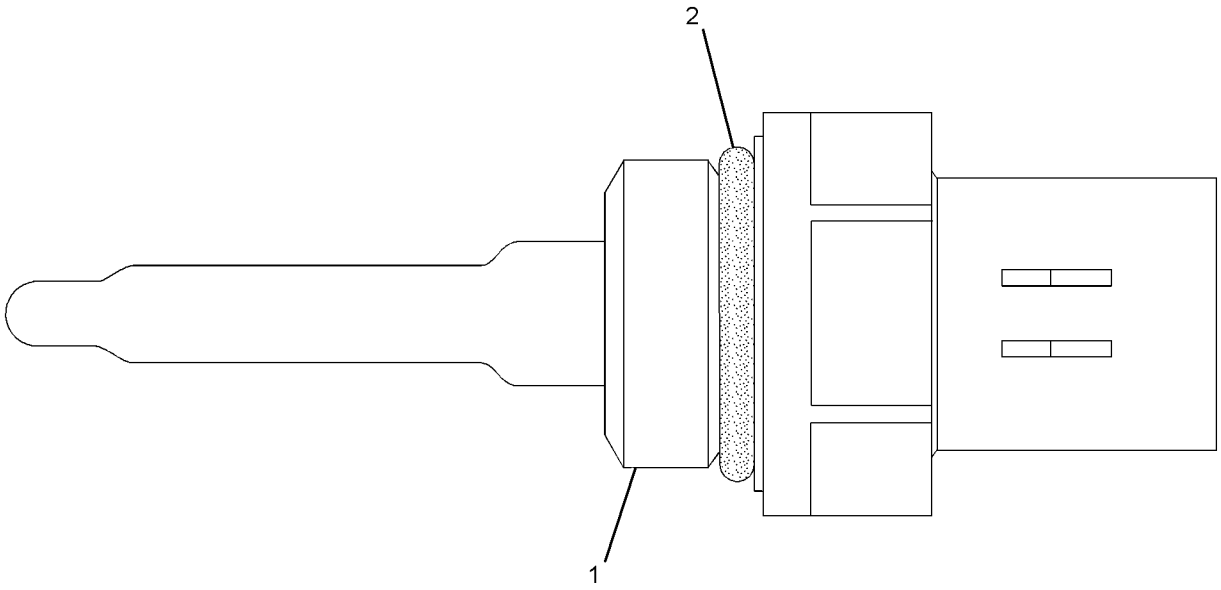

GRAPHIC #1 <END> g01164268

395-0114 STARTING AID GP

S/N: E7A1-UP

PART OF 435-8541 ENGINE AR-PRIMARY

SMCS-1090 **i06559381**

NOTE	REF NO	GRAPHIC REF	PART NUMBER	QTY	PART NAME 1 2 3 4 5 6 (PRODUCT LEVEL)	SEE PAGE
M	1	1	**112-7704**	1	BOLT (M6X1X30-MM)	
M	2	1	**5C-2890**	2	NUT (M6X1-THD)	
	3	1	**217-9039**	1	STRAP-CABLE	
	4	1	**462-2235**	6	GLOW PLUG (24-VOLT)	
	5	1	**368-3145**	1	BUS BAR AS	
	6	1	**384-7567**	1	HARNESS AS-STARTING AID	
		1	**2L-8050**	2	TERMINAL-RING (6-GA, 1/4-IN SCREW)	
					—OR—	
		1	**2L-8058**	2	TERMINAL-RING (8-GA, 1/4-IN SCREW)	
		1	**427-9771**	1	CLIP	
M	7	1	**208-8469**	1	LOCKNUT (M6X1-THD)	
	8	1	**275-2428**	1	INSULATOR	
	9	1	**277-4409**	1	CAP	
	10	1	**067-6070**	1	WASHER	
	11	1	**275-2431**	1	WASHER	

M - METRIC PART

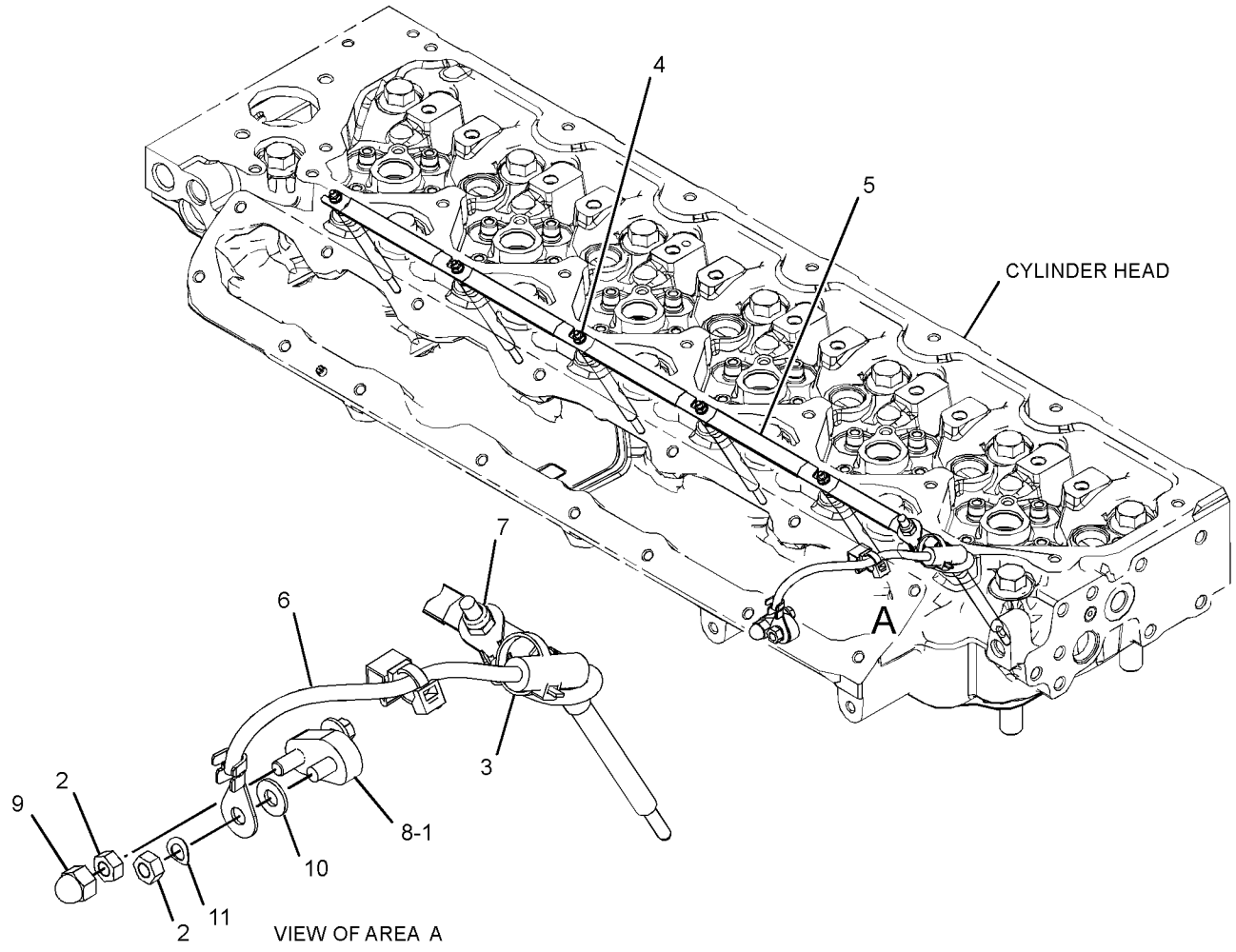

GRAPHIC #1 <END> g06032380

365-0102 STARTING AID GP-ETHER

S/N: TNS1-UP

PART OF 386-7382, 386-7383 COLD WEATHER AR

SMCS-1456 **i06753216**

NOTE	REF NO	GRAPHIC REF	PART NUMBER	QTY	PART NAME 1 2 3 4 5 6 (PRODUCT LEVEL)	SEE PAGE
	1	1	**7N-2059**	1	CLAMP AS	
Y	2	1	**239-1134**	1	VALVE GP-ETHER STARTING (24-VOLT)	224
	3	1	**252-1607**	1	ATOMIZER AS	
		1	**236-4545**	1	NUT-SLEEVE (5/16-24-THD)	
	4	1	**276-5436**	1	FITTING AS	
		1	**236-4545**	1	NUT-SLEEVE (5/16-24-THD)	
	5	1	**130-5300**	1	CLIP	
	6	1	**6V-2686**	4	CLIP	
	7	1	**8T-4121**	4	WASHER-HARD (11X21X2.5-MM THK)	
M	8	1	**8T-4133**	4	NUT (M10X1.5-THD)	
M	9	1	**8T-4200**	4	BOLT (M8X1.25X16-MM)	
	10	1	**8T-4224**	4	WASHER-HARD (8.8X16X2-MM THK)	
D	11	1	**5P-5630**		TUBE (1.6-M)	
A		1	**7N-0296**	1	CYLINDER AS-ETHER	
					(MUST BE PROCURED LOCALLY FROM YOUR CAT DEALER)	

A - NOT PART OF THIS GROUP
D - ORDER BY THE METER
M - METRIC PART
Y - SEPARATE ILLUSTRATION

365-0102 **STARTING AID GP-ETHER (**contd.**)** **i06753216**

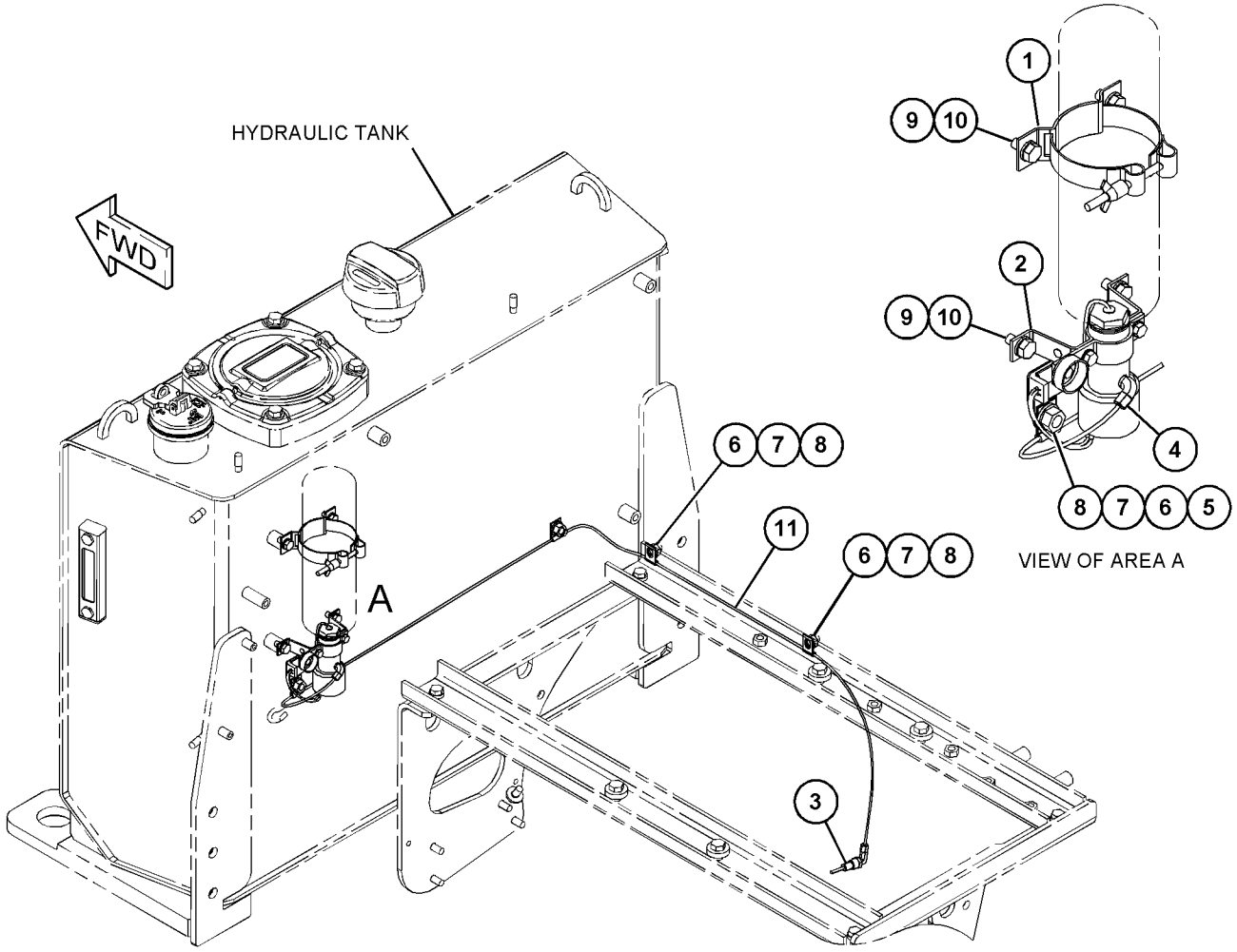

GRAPHIC #1 <END> g06029030

371-2541 STARTING MOTOR GP-ELECTRIC

S/N: E7A1-UP

PART OF 435-8541 ENGINE AR-PRIMARY

SMCS-1453 **i06807113**

NOTE	REF NO	GRAPHIC REF	PART NUMBER	QTY	PART NAME 1 2 3 4 5 6 (PRODUCT LEVEL)	SEE PAGE
	1	1	**183-1343**	3	STUD	
	2	1	**436-9104**	1	STARTING MOTOR GP-ELECTRIC (24-VOLT)	
M	3	1	**184-0983**	3	NUT-HEX FLANGE (M12X1.75-THD)	

M - METRIC PART

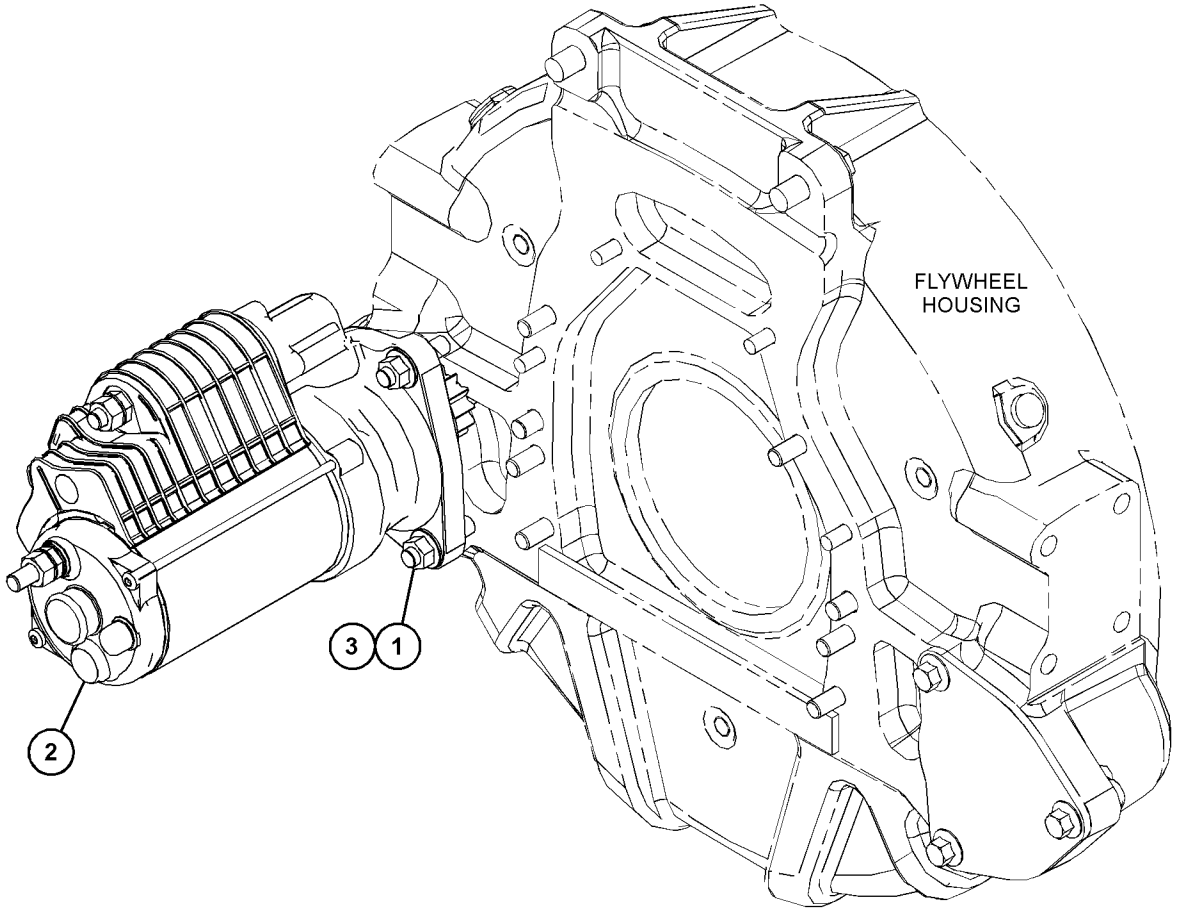

GRAPHIC #1 <END> g03863804

7N-0718 SWITCH GP-DISCONNECT–BATTERY

S/N: TNS1-UP

12-VOLT

PART OF 418-8025 BATTERY & WIRING GP

SMCS-1411 **i02587657**

NOTE	REF NO	GRAPHIC REF	PART NUMBER	QTY	PART NAME 1 2 3 4 5 6 (PRODUCT LEVEL)	SEE PAGE
	1	1	**8H-5306**	1	KEY (BATTERY DISCONNECT)	
	2	1	**8H-5303**	1	NUT (3/4-16-THD)	
	3	1	**2H-3922**	2	LOCKWASHER	
	4	1	**9F-5644**	2	LOCKWASHER	
	5	1	**6F-7045**	2	NUT-FULL (3/8-24-THD)	

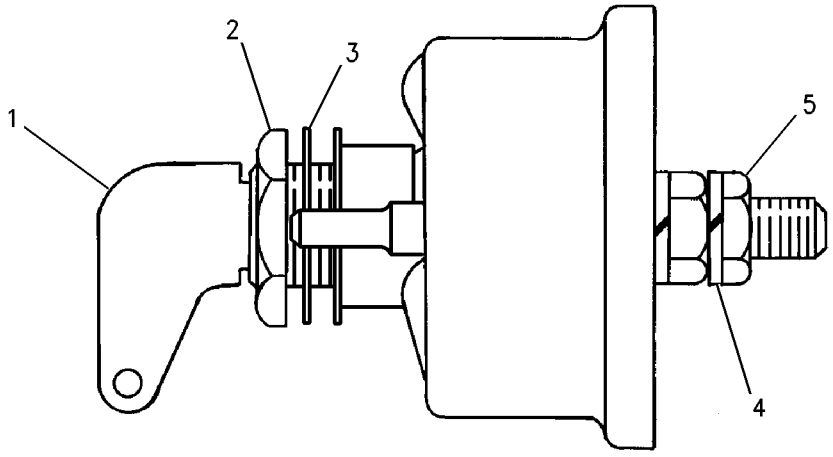

GRAPHIC #1 <END> g00715584

241-8368 SWITCH GP-MAGNETIC—GLOW PLUG RELAY

S/N: TNS1-UP
24-VOLT
PART OF 502-5907 WIRING GP-CAB

SMCS-7499 **i06811579**

NOTE	REF NO	GRAPHIC REF	PART NUMBER	QTY	PART NAME 1 2 3 4 5 6 (PRODUCT LEVEL)	SEE PAGE
	1	1	**155-2270**	1	KIT-CONNECTING PLUG (2-PIN)	
					(INCLUDES PLUG AS, WEDGE & INTERFACE SEAL)	
	2	1	**4F-2294**	2	NUT-JAM (5/16-24-THD)	
	3	1	**8T-8730**	2	SOCKET-CONNECTOR (16-GA TO 18-GA)	

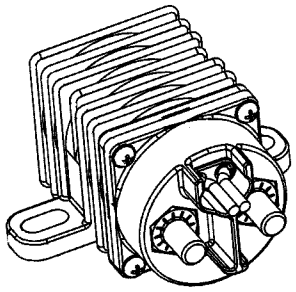

ISOMETRIC VIEW

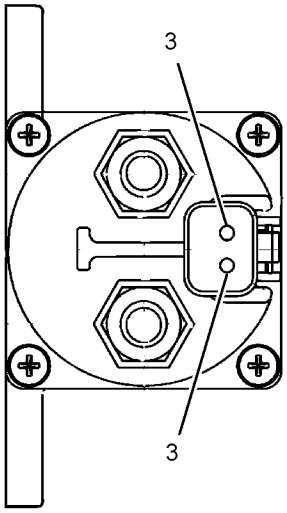

VIEW A-A

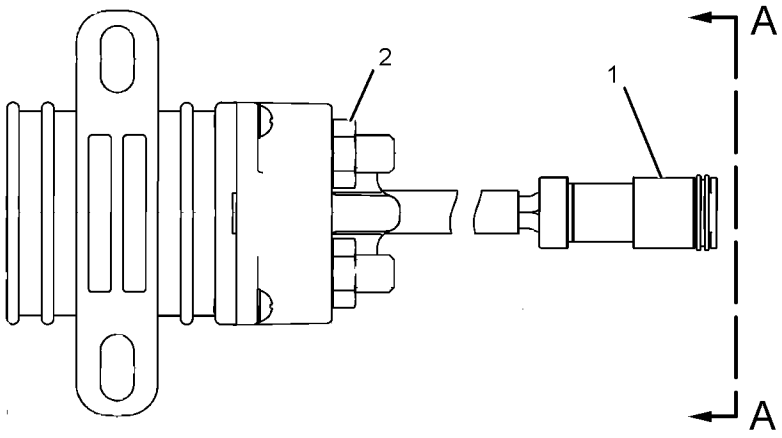

GRAPHIC #1 <END> g01077362

337-9078 SWITCH GP-MAGNETIC—SECONDARY STEERING CONTROL

S/N: TNS1-UP

24-VOLT TO 32-VOLT

PART OF 364-7285 WIRING GP-SECONDARY STEERING

SMCS-7499 **i06041908**

NOTE	REF NO	GRAPHIC REF	PART NUMBER	QTY	PART NAME 1 2 3 4 5 6 (PRODUCT LEVEL)	SEE PAGE
	1	1	**7X-0620**	2	WASHER-HARD (5.5X13X1.6-MM THK)	
	2	1	**8F-1434**	2	LOCKWASHER	
	3	1	**6V-8378**	2	NUT (10-32-THD)	
	4	1	**4L-6499**	2	WASHER (0.38X0.88X0.06-IN THK)	
	5	1	**4D-1326**	2	LOCKWASHER (EXTERNAL TOOTH)	
	6	1	**1B-2578**	2	NUT (3/8-16-THD)	

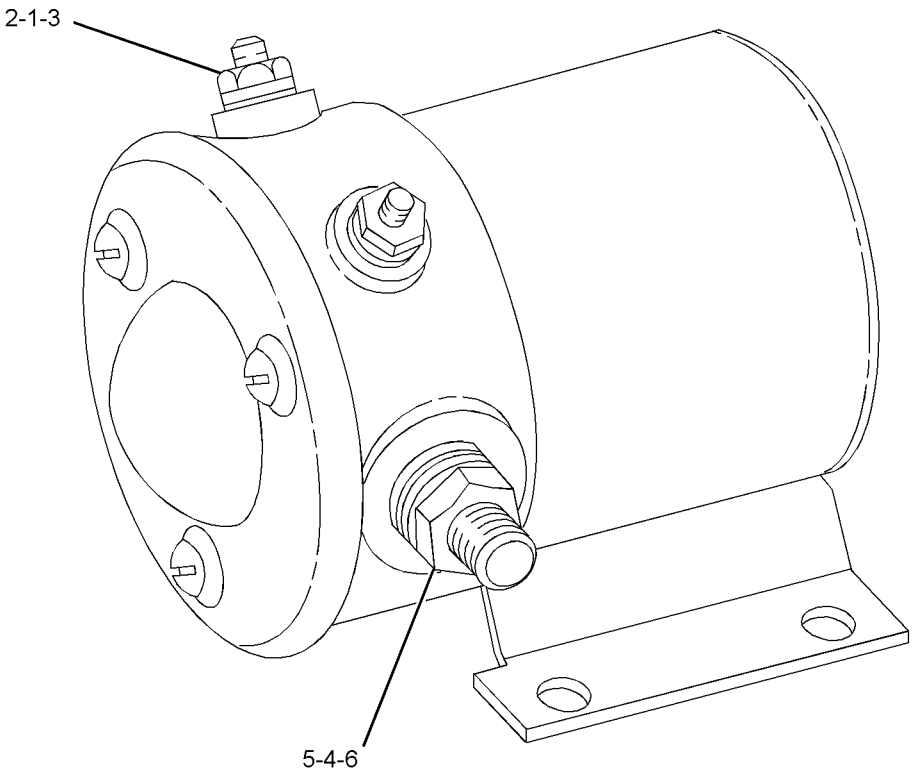

GRAPHIC #1 <END> g01132022

398-0940 SWITCH GP-MAGNETIC

S/N: TNS1-UP
24-VOLT
PART OF 480-2084 WIRING GP-CHASSIS

SMCS-7499 **i06693572**

NOTE	REF NO	GRAPHIC REF	PART NUMBER	QTY	PART NAME 1 2 3 4 5 6 (PRODUCT LEVEL)	SEE PAGE
	1	1	**102-8802**	1	KIT-RECEPTACLE (2-PIN)	
					(INCLUDES RECEPTACLE AS & WEDGE)	
	2	1	**8T-8729**	2	PIN-CONNECTOR (16-GA TO 18-GA)	
	3	1	**3F-9556**	2	LOCKWASHER	
	4	1	**4F-2294**	2	NUT-JAM (5/16-24-THD)	
	5	1	**6V-8378**	2	NUT (10-32-THD)	
	6	1	**8F-1434**	2	LOCKWASHER	

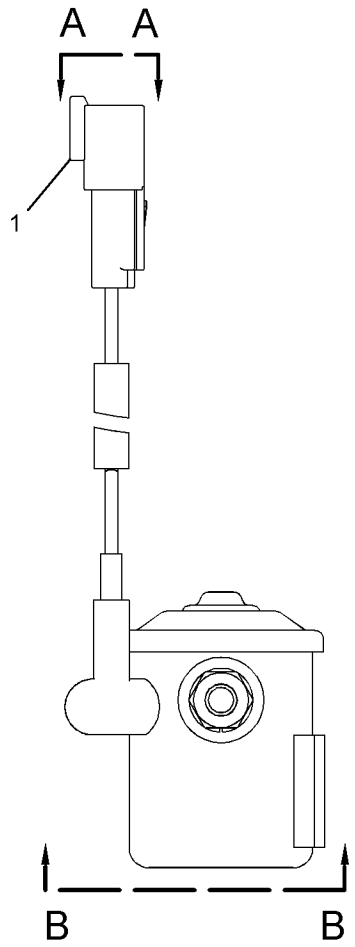

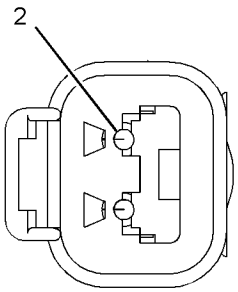

VIEW A-A

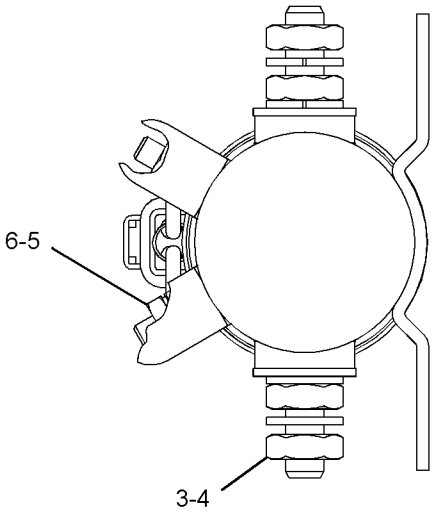

VIEW B-B

GRAPHIC #1 <END> g03351877

313-2522 SWITCH GP-PAYLOAD STORE

S/N: TNS1-UP

PART OF 364-1293, 364-1295, 370-3813, 370-3814, 517-7121, 517-7122 MONITOR AR-PAYLOAD

SMCS-7332 **i06057020**

NOTE	REF NO	GRAPHIC REF	PART NUMBER	QTY	PART NAME 1 2 3 4 5 6 (PRODUCT LEVEL)	SEE PAGE
	1	1	**268-6497**	1	FILM-IDENTIFICATION (PAYLOAD STORE)	
	2	1	**332-2155**	1	SWITCH AS-PUSH BUTTON (PAYLOAD STORE)	
		1	**6F-0253**	1	LOCKWASHER	
		1	**172-3511**	1	NUT (5/8-24-THD)	
		1	**9X-3402**	3	SOCKET-CONNECTOR (16-GA TO 18-GA)	
					–OR–	
		1	**126-1768**	3	SOCKET-CONNECTOR (14-GA TO 16-GA)	

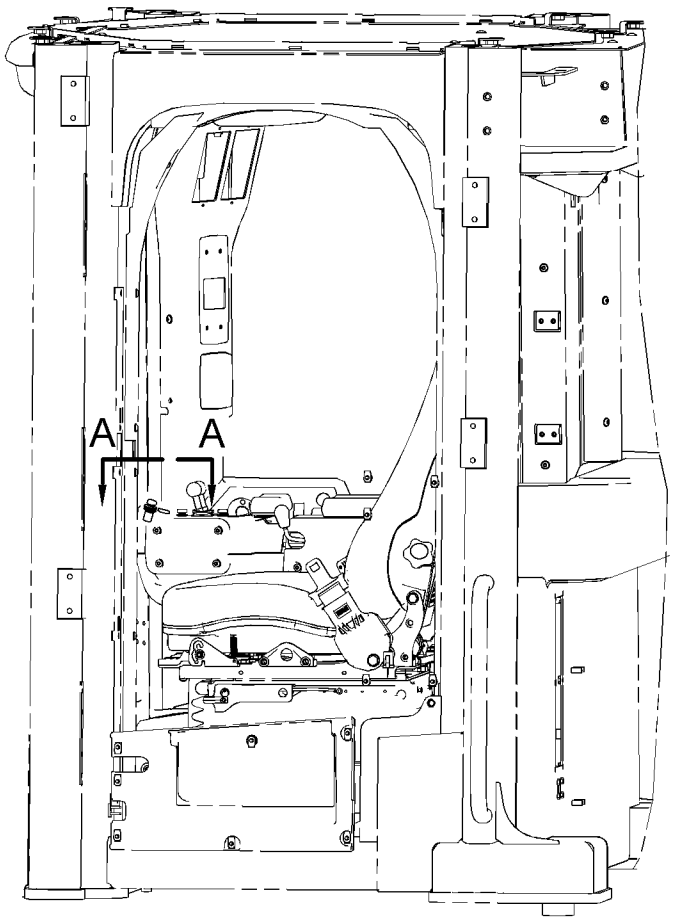

LEFT SIDE VIEW

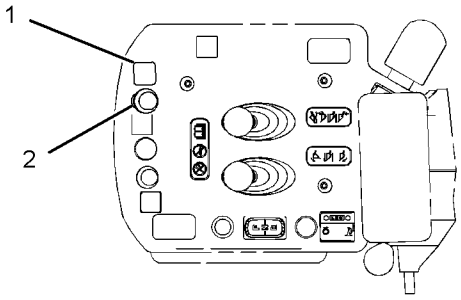

VIEW A-A

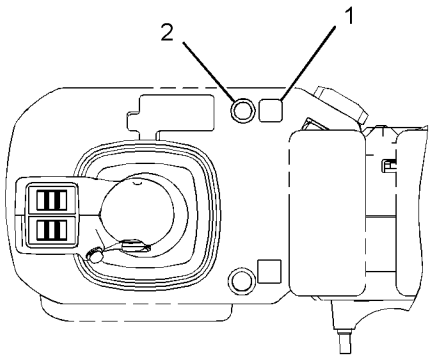

VIEW A-A
(OPTIONAL DESIGN)

GRAPHIC #1 <END> g02366416

427-4963 SWITCH GP-QUICK COUPLER

S/N: TNS1-UP

PART OF 463-8873 COUPLER AR-QUICK

SMCS-6129, 7332 **i06819315**

NOTE	REF NO	GRAPHIC REF	PART NUMBER	QTY	PART NAME 1 2 3 4 5 6 (PRODUCT LEVEL)	SEE PAGE
	1	1	**424-4914**	1	SWITCH AS-ROCKER (QUICK COUPLER)	

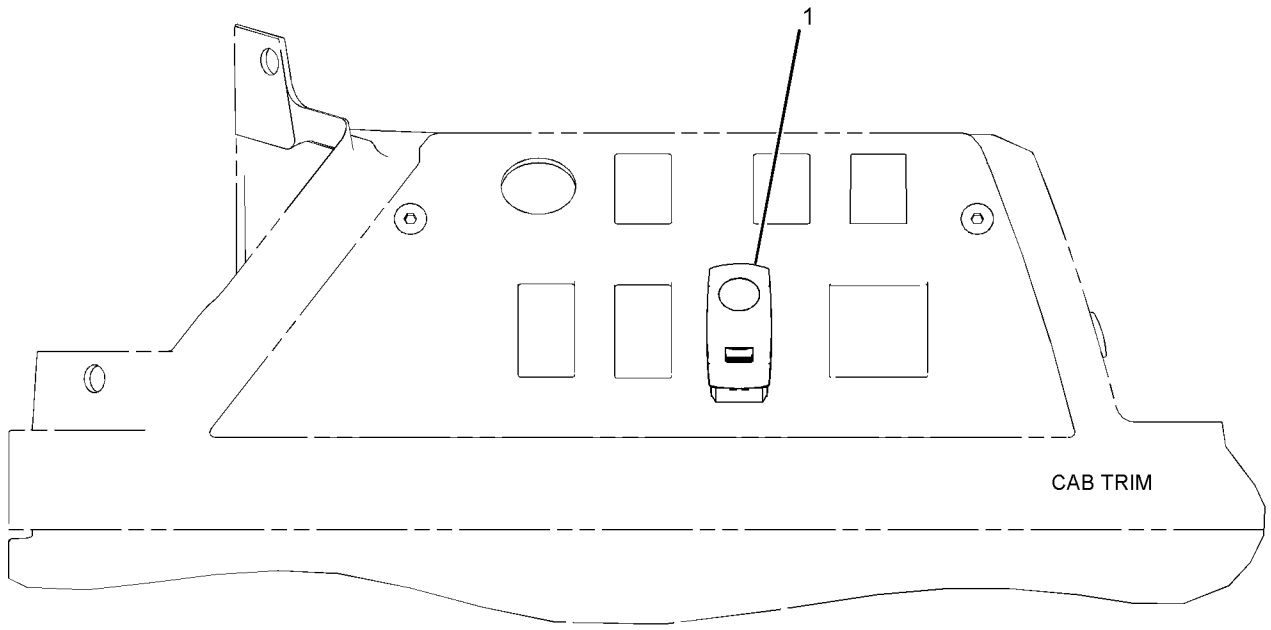

GRAPHIC #1 <END> g03510537

461-6791 SWITCH GP-ROCKER

S/N: TNS1-UP

PART OF 450-1842 COVER GP-CONSOLE

SMCS-7332 **i06653537**

NOTE	REF NO	GRAPHIC REF	PART NUMBER	QTY	PART NAME 1 2 3 4 5 6 (PRODUCT LEVEL)	SEE PAGE
	1	1	**8N-2622**	1	LEVER (TURN SIGNAL SWITCH)	
	2	1	**134-9569**	1	SWITCH AS-TURN SIGNAL	
		1	**5L-7200**	1	SCREW (8-32X0.375-IN)	
		1	**9B-7233**	1	LOCKWASHER	
	3	1	**149-0668**	1	COVER	
	4	1	**154-4563**	1	HARNESS AS-LIGHTING (TURN SIGNAL)	
		1	**9W-0852**	3	PIN-CONNECTOR (14-GA TO 16-GA)	
		1	**9X-3401**	3	PIN-CONNECTOR (16-GA TO 18-GA)	
					—OR—	
		1	**126-1767**	3	PIN-CONNECTOR (14-GA TO 16-GA)	
		1	**102-8805**	1	KIT-RECEPTACLE (6-PIN)	
					(INCLUDES RECEPTACLE AS & WEDGE)	
		1	**5P-4571**	6	TERMINAL-BLADE (14-GA TO 16-GA)	
					—OR—	
		1	**7N-7221**	6	TERMINAL-BLADE (18-GA TO 22-GA)	
	5	1	**154-8262**	1	BRACKET AS	
	6	1	**201-5555**	1	PLATE-INSTRUCTION (TURN SIGNAL)	
	7	1	**214-9453**	1	BOOT	
	8	1	**380-1887**	1	FLASHER AS (12/24-VOLT) (HAZARD)	
M	9	1	**174-8131**	3	SCREW-TRUSS HEAD (M4X0.7X12-MM)	
	10	1	**236-4616**	1	SWITCH AS-ROCKER (24-VOLT)	
M	11	1	**7Y-3173**	3	SCREW-BUTTON HEAD (M4X0.7X12-MM)	
M	12	1	**8T-4200**	2	BOLT (M8X1.25X16-MM)	
	13	1	**8T-4224**	2	WASHER-HARD (8.8X16X2-MM THK)	
	14	1	**9X-2038**	4	WASHER (7X19X2-MM THK)	
M	15	1	**9X-2042**	4	SCREW-TRUSS HEAD (M6X1X12-MM)	

M - METRIC PART

461-6791 **SWITCH GP-ROCKER (**contd.**)** **i06653537**

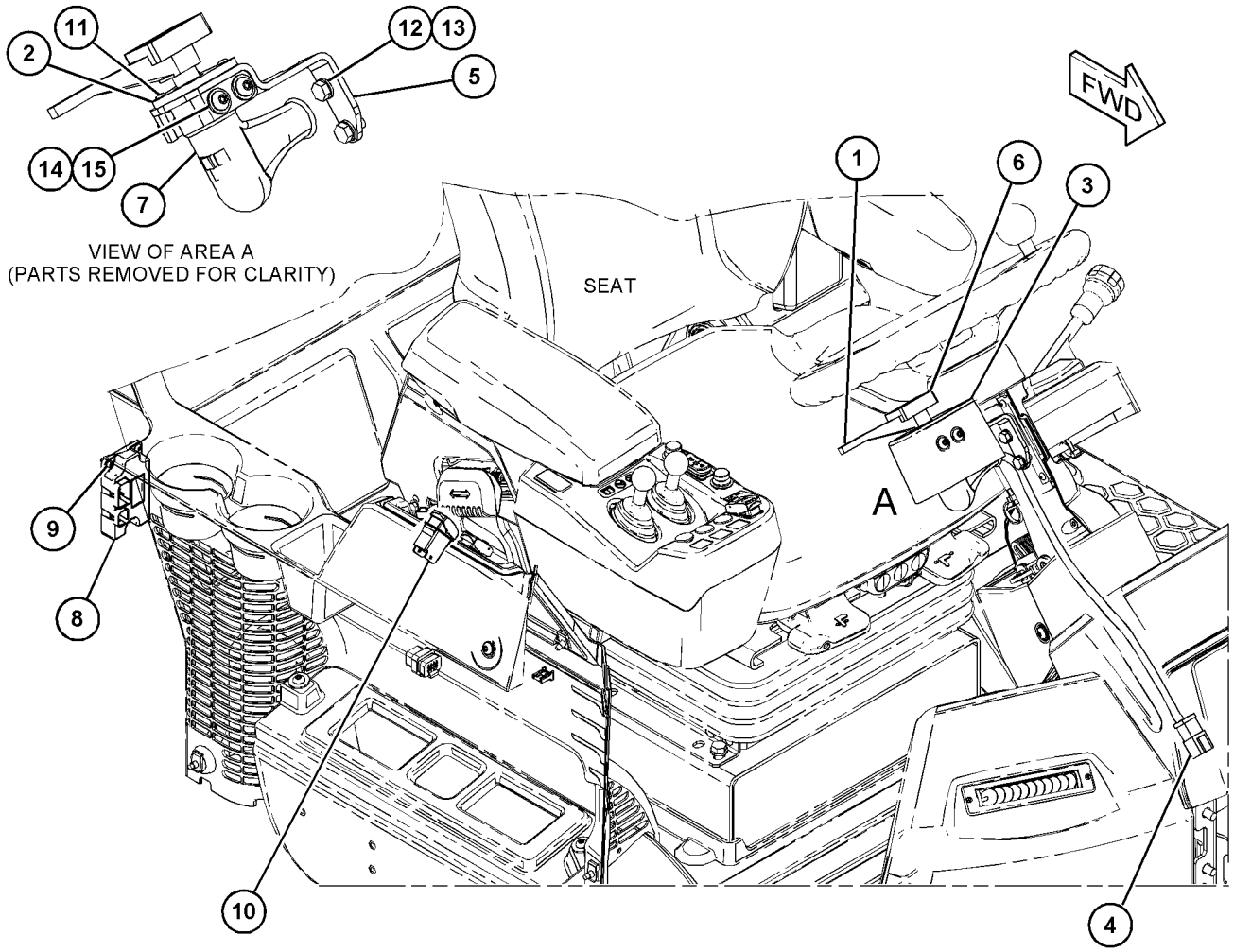

GRAPHIC #1 <END> g06048800

255-2752 SWITCH GP-START

S/N: TNS1-UP

PART OF 502-5907 WIRING GP-CAB

SMCS-1416 **i05909865**

NOTE	REF NO	GRAPHIC REF	PART NUMBER	QTY	PART NAME 1 2 3 4 5 6 (PRODUCT LEVEL)	SEE PAGE
	1	1	**7T-6799**	1	NUT-MOUNTING (1-32-THD)	
	2	1	**102-8805**	1	KIT-RECEPTACLE (6-PIN)	
					'(INCLUDES RECEPTACLE AS & WEDGE)	
	3	1	**8T-8729**	5	PIN-CONNECTOR (16-GA TO 18-GA)	
	4	1	**8T-8737**	1	PLUG-SEAL	

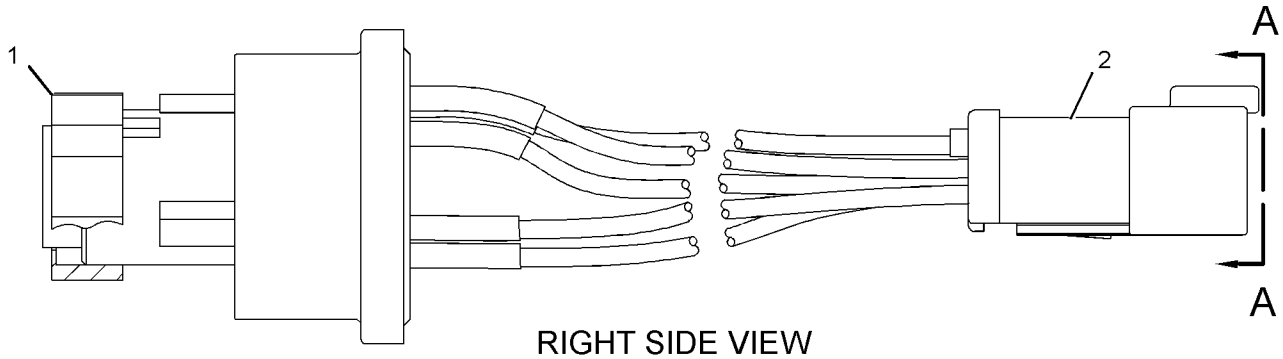

RIGHT SIDE VIEW

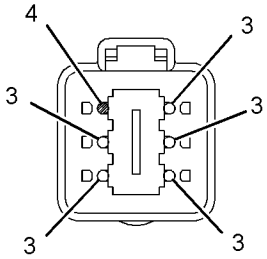

VIEW A-A

GRAPHIC #1 <END> g02255874

297-8752 SWITCH GP-TOGGLE

S/N: TNS1-UP

PART OF 480-2084 WIRING GP-CHASSIS

SMCS-7332 **i05914790**

NOTE	REF NO	GRAPHIC REF	PART NUMBER	QTY	PART NAME 1 2 3 4 5 6 (PRODUCT LEVEL)	SEE PAGE
	1	1	**230-4014**	1	RECEPTACLE AS-CONNECTOR (3-PIN)	
	2	1	**8T-8729**	3	PIN-CONNECTOR (16-GA TO 18-GA)	
					PARTS SHOWN IN GRAPHIC(S) WITHOUT A REFERENCE NUMBER ARE NOT SERVICED SEPARATELY	

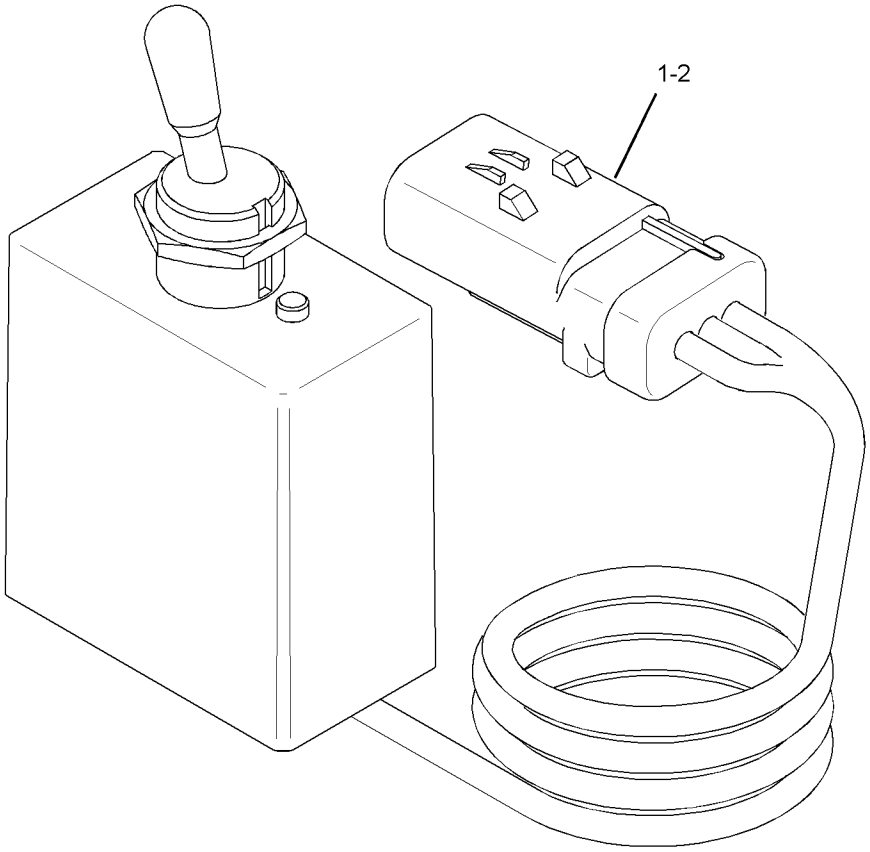

GRAPHIC #1 <END> g02497776

239-1134 VALVE GP-ETHER STARTING

S/N: TNS1-UP
24-VOLT, CONTINUOUS
PART OF 365-0102 STARTING AID GP-ETHER

SMCS-1456 **i03907816**

NOTE	REF NO	GRAPHIC REF	PART NUMBER	QTY	PART NAME 1 2 3 4 5 6 (PRODUCT LEVEL)	SEE PAGE
	1	1	**7N-9801**	1	GASKET	
	2	1	**102-8802**	1	KIT-RECEPTACLE (2-PIN)	
					(INCLUDES RECEPTACLE AS & WEDGE)	
	3	1	**8T-8729**	2	PIN-CONNECTOR (16-GA TO 18-GA)	
	4	1	**358-4889**	1	FILTER (ETHER START)	

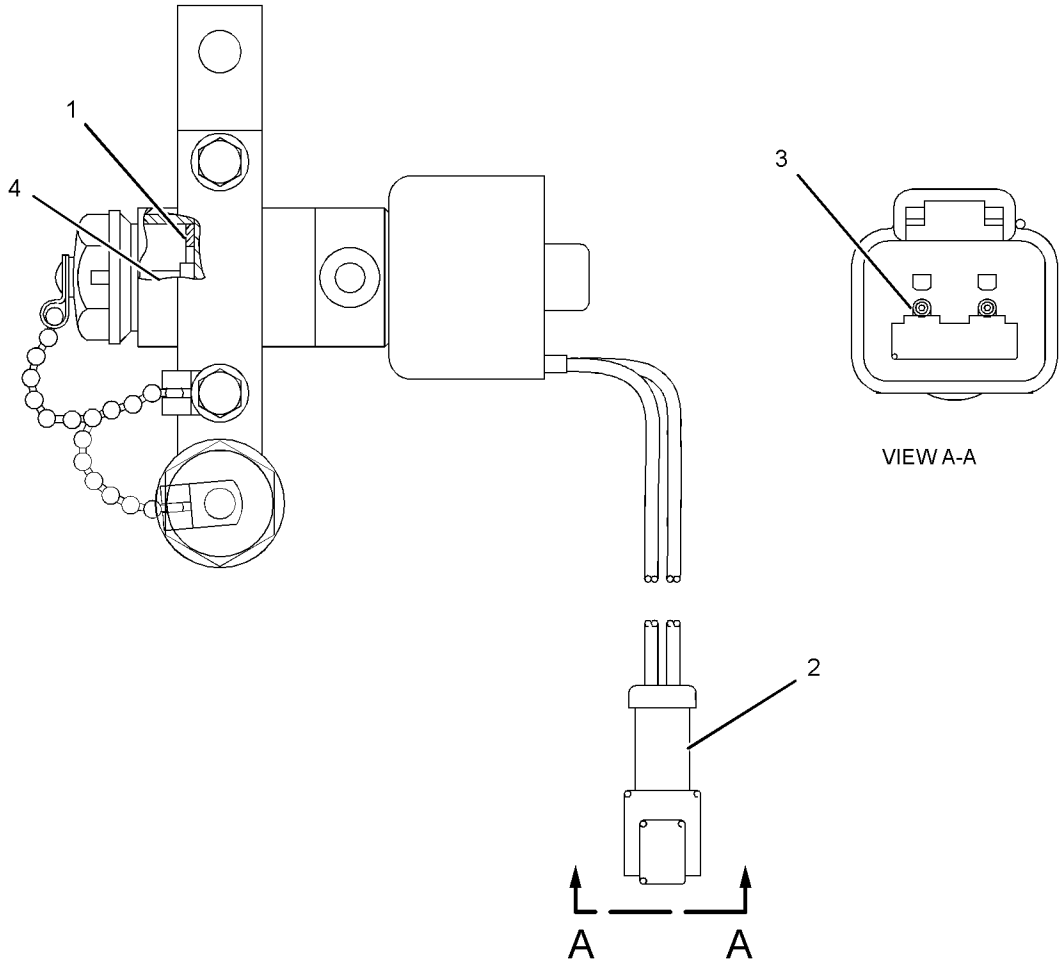

GRAPHIC #1 <END> g02138138

364-7276 WIRING GP-AXLE TEMPERATURE

S/N: TNS1-UP

PART OF 456-5805, 463-8850, 463-8851, 463-8852, 463-8853 AXLE AR-FIXED & OSCILLATING

SMCS-1408, 3278, 429T

i06819317

NOTE	REF NO	GRAPHIC REF	PART NUMBER	QTY	PART NAME 1 2 3 4 5 6 (PRODUCT LEVEL)	SEE PAGE
	1	1	**3S-2093**	2	STRAP-CABLE	
	2	1	**7K-1181**	7	STRAP-CABLE (5.72-MM DIA)	
	3	1	**264-4297**	2	SENSOR AS-TEMPERATURE (AXLE)	
					(EACH INCLUDES)	
		1	**137-6645**	1	PAD-CONNECTOR	
	4	1	**364-7315**	1	HARNESS AS-SENSOR (REAR AXLE)	
G		1	**9X-2372**		HOSE (20.1-IN)	
		1	**8T-8737**	2	PLUG-SEAL	
E		1	**114-8843**		SLEEVE-PLASTIC (20-CM)	
		1	**9X-3402**	4	SOCKET-CONNECTOR (16-GA TO 18-GA)	
					—OR—	
		1	**126-1768**	4	SOCKET-CONNECTOR (14-GA TO 16-GA)	
		1	**155-2270**	1	KIT-CONNECTING PLUG (2-PIN)	
		1	**155-2271**	1	KIT-CONNECTING PLUG (4-PIN)	
					(EACH PLUG KIT INCLUDES PLUG AS, WEDGE & INTERFACE SEAL)	
B		1	**1P-0810**	1	TAPE-ELECTRICAL	
E		1	**210-8958**		TUBE-HEAT SHRINK (24-MM DIA) (10-CM)	
	5	1	**364-7316**	1	HARNESS AS-SENSOR (FRONT AXLE)	
		1	**8T-8737**	2	PLUG-SEAL	
E		1	**114-8843**		SLEEVE-PLASTIC (20-CM)	
		1	**9X-3402**	4	SOCKET-CONNECTOR (16-GA TO 18-GA)	
					—OR—	
		1	**126-1768**	4	SOCKET-CONNECTOR (14-GA TO 16-GA)	
		1	**155-2270**	1	KIT-CONNECTING PLUG (2-PIN)	
		1	**155-2271**	1	KIT-CONNECTING PLUG (4-PIN)	
					(EACH PLUG KIT INCLUDES PLUG AS, WEDGE & INTERFACE SEAL)	
B		1	**1P-0810**	1	TAPE-ELECTRICAL	
	6	1	**391-7230**	2	BRACKET	
	7	1	**132-5789**	1	CLIP	
	9	1	**3K-0360**	2	SEAL-O-RING	
	10	1	**4K-8864**	2	CLIP	
	11	1	**4P-7581**	4	CLIP	
	12	1	**5P-1076**	4	WASHER-HARD (13.5X30X4-MM THK)	
	13	1	**6W-6672**	2	SPACER (10.5X20X38-MM THK)	
	14	1	**8T-4121**	7	WASHER-HARD (11X21X2.5-MM THK)	
M	15	1	**8T-4137**	5	BOLT (M10X1.5X20-MM)	
M	16	1	**8T-4139**	4	BOLT (M12X1.75X30-MM)	
M	17	1	**8T-6466**	2	BOLT (M10X1.5X60-MM)	

B - USE AS REQUIRED
E - ORDER BY THE CENTIMETER
G - ORDER BY THE INCH
M - METRIC PART

364-7276 **WIRING GP-AXLE TEMPERATURE (**contd.**)** **i06819317**

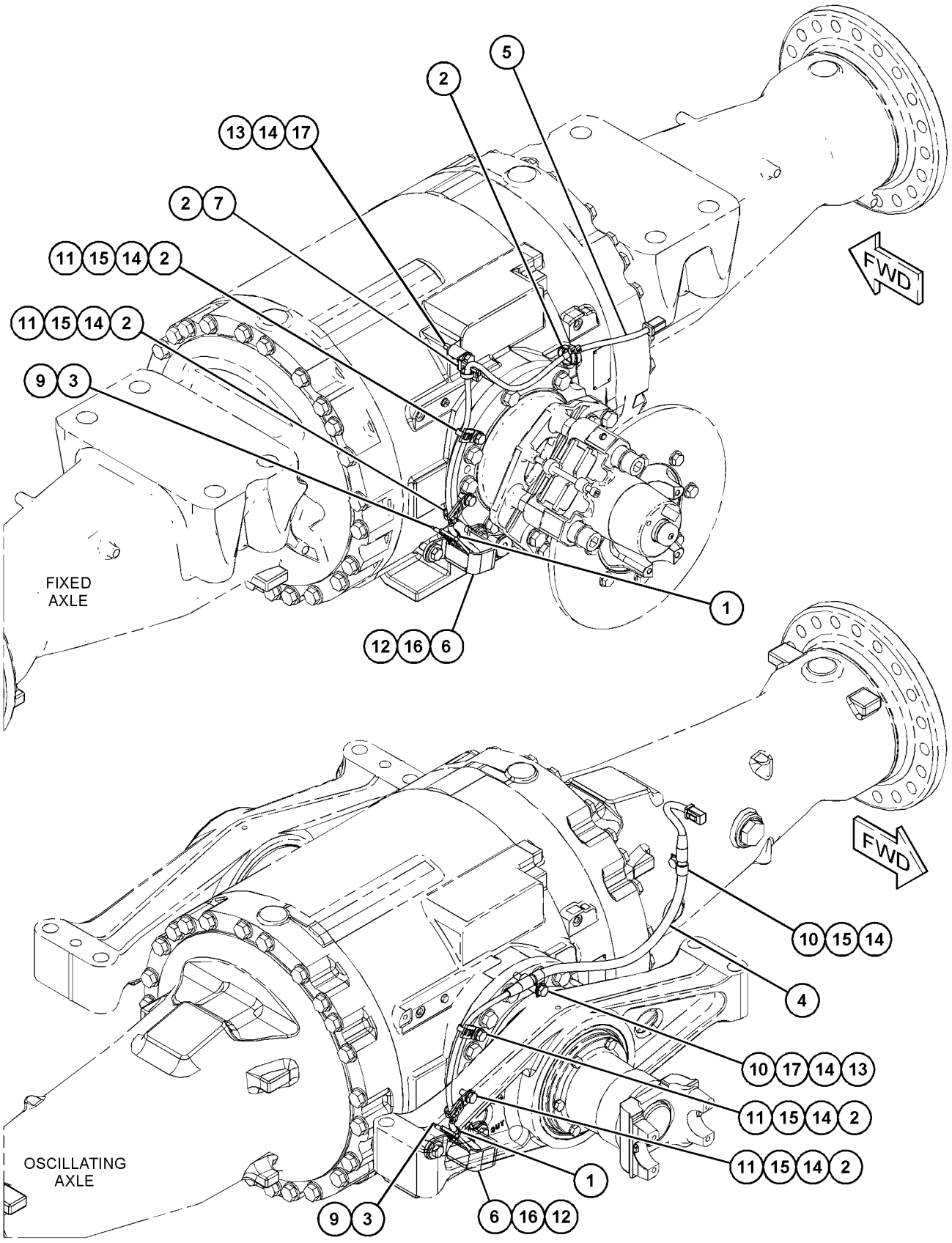

GRAPHIC #1 <END> g03811165

364-7295 WIRING GP-AXLE TEMPERATURE—DIFFERENTIAL

S/N: TNS1-UP

PART OF 463-8854, 463-8856 AXLE AR-FIXED & OSCILLATING

SMCS-1408, 3278, 429T

i06819320

NOTE	REF NO	GRAPHIC REF	PART NUMBER	QTY	PART NAME 1 2 3 4 5 6 (PRODUCT LEVEL)	SEE PAGE
	1	1	**3S-2093**	4	STRAP-CABLE	
	2	1	**7K-1181**	11	STRAP-CABLE (5.72-MM DIA)	
	3	1	**127-9323**	1	BRACKET AS	
	4	1	**264-4297**	1	SENSOR AS-TEMPERATURE (REAR AXLE)	
	4A	1	**264-4297**	1	SENSOR AS-TEMPERATURE (FRONT AXLE)	
					(EACH INCLUDES)	
		1	**137-6645**	1	PAD-CONNECTOR	
	5	1	**364-7317**	1	HARNESS AS-SENSOR (REAR AXLE)	
G		1	**9X-2373**		HOSE (20.1-IN)	
E		1	**114-8843**		SLEEVE-PLASTIC (20-CM)	
		1	**9X-3402**	6	SOCKET-CONNECTOR (16-GA TO 18-GA)	
					—OR—	
		1	**126-1768**	6	SOCKET-CONNECTOR (14-GA TO 16-GA)	
		1	**155-2270**	1	KIT-CONNECTING PLUG (2-PIN)	
		1	**155-2271**	1	KIT-CONNECTING PLUG (4-PIN)	
					(EACH PLUG KIT INCLUDES PLUG AS, WEDGE & INTERFACE SEAL)	
B		1	**1P-0810**	1	TAPE-ELECTRICAL	
E		1	**210-8958**		TUBE-HEAT SHRINK (24-MM DIA) (10-CM)	
		1	**344-1686**	2	SOCKET-CONNECTOR (18-GA)	
	6	1	**364-7318**	1	HARNESS AS-SENSOR (FRONT AXLE)	
E		1	**114-8843**		SLEEVE-PLASTIC (20-CM)	
		1	**9X-3402**	6	SOCKET-CONNECTOR (16-GA TO 18-GA)	
					—OR—	
		1	**126-1768**	6	SOCKET-CONNECTOR (14-GA TO 16-GA)	
		1	**155-2270**	1	KIT-CONNECTING PLUG (2-PIN)	
		1	**155-2271**	1	KIT-CONNECTING PLUG (4-PIN)	
					(EACH PLUG KIT INCLUDES PLUG AS, WEDGE & INTERFACE SEAL)	
B		1	**1P-0810**	1	TAPE-ELECTRICAL	
		1	**344-1686**	2	SOCKET-CONNECTOR (18-GA)	
	7	1	**365-8427**	1	BRACKET	
	8	1	**384-3887**	1	SENSOR GP-SPEED (REAR WHEEL)	
	8A	1	**384-3887**	1	SENSOR GP-SPEED (FRONT WHEEL)	
	9	1	**391-7230**	2	BRACKET	
	10	1	**117-1385**	2	SEAL-O-RING	
	11	1	**132-5789**	1	CLIP (LADDER)	
	12	1	**206-5017**	1	SPACER (11X20X5-MM THK)	
	13	1	**211-9032**	2	WASHER-HARD (8.8X13X2-MM THK)	
	14	1	**237-9960**	1	CLIP (LADDER)	
	16	1	**3K-0360**	2	SEAL-O-RING	
	17	1	**4P-7581**	7	CLIP (LADDER)	
	18	1	**5P-1076**	4	WASHER-HARD (13.5X30X4-MM THK)	
	19	1	**6W-6672**	2	SPACER (10.5X20X38-MM THK)	
	20	1	**8M-2773**	2	CLIP (LOOP)	
M	21	1	**8T-1158**	2	BOLT-SOCKET HEAD (M8X1.25X20-MM)	
	22	1	**8T-4121**	11	WASHER-HARD (11X21X2.5-MM THK)	
M	23	1	**8T-4136**	2	BOLT (M10X1.5X25-MM)	
M	24	1	**8T-4137**	8	BOLT (M10X1.5X20-MM)	

364-7295 **WIRING GP-AXLE TEMPERATURE (**contd.**)** **i06819320**

NOTE	REF NO	GRAPHIC REF	PART NUMBER	QTY	PART NAME 1 2 3 4 5 6 (PRODUCT LEVEL)	SEE PAGE
M	25	1	**8T-4139**	4	BOLT (M12X1.75X30-MM)	
M	27	1	**8T-6466**	2	BOLT (M10X1.5X60-MM)	

B - USE AS REQUIRED
E - ORDER BY THE CENTIMETER
G - ORDER BY THE INCH
M - METRIC PART

364-7295 **WIRING GP-AXLE TEMPERATURE (**contd.**)** **i06819320**

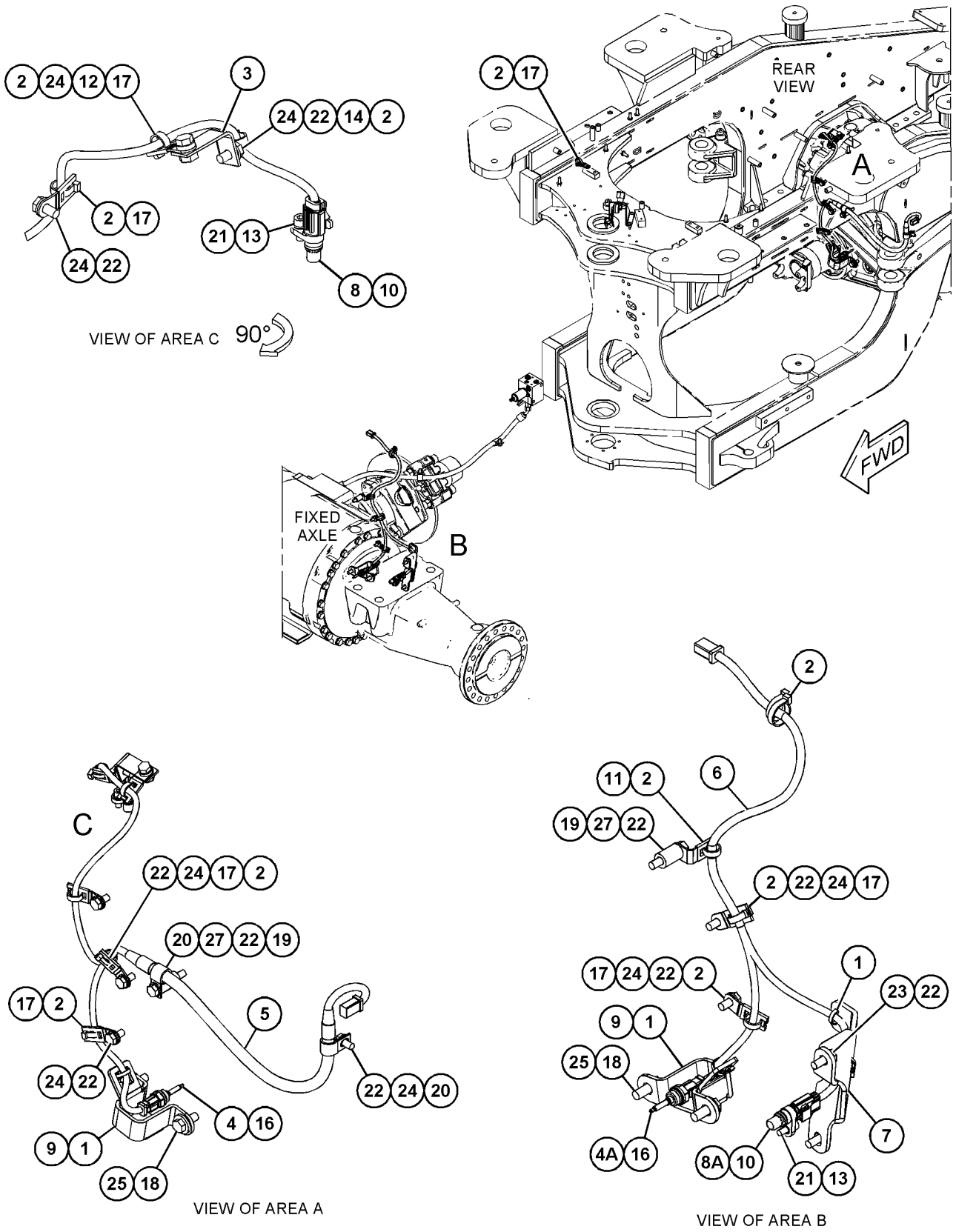

GRAPHIC #1 <END> g03810928

394-2474 WIRING GP-BRAKE

S/N: TNS1-UP

PART OF 499-1654 CONVERSION AR-MACHINE

SMCS-1408 **i06807105**

NOTE	REF NO	GRAPHIC REF	PART NUMBER	QTY	PART NAME 1 2 3 4 5 6 (PRODUCT LEVEL)	SEE PAGE
	1	1	**228-6089**	1	PLUG (ROCKER SWITCH)	
	2	1	**367-5213**	1	SWITCH AS-ROCKER (PARKING BRAKE)	
Y	3	1	**394-2467**	1	HARNESS AS-SWITCH (PARKING BRAKE)	169

Y - SEPARATE ILLUSTRATION

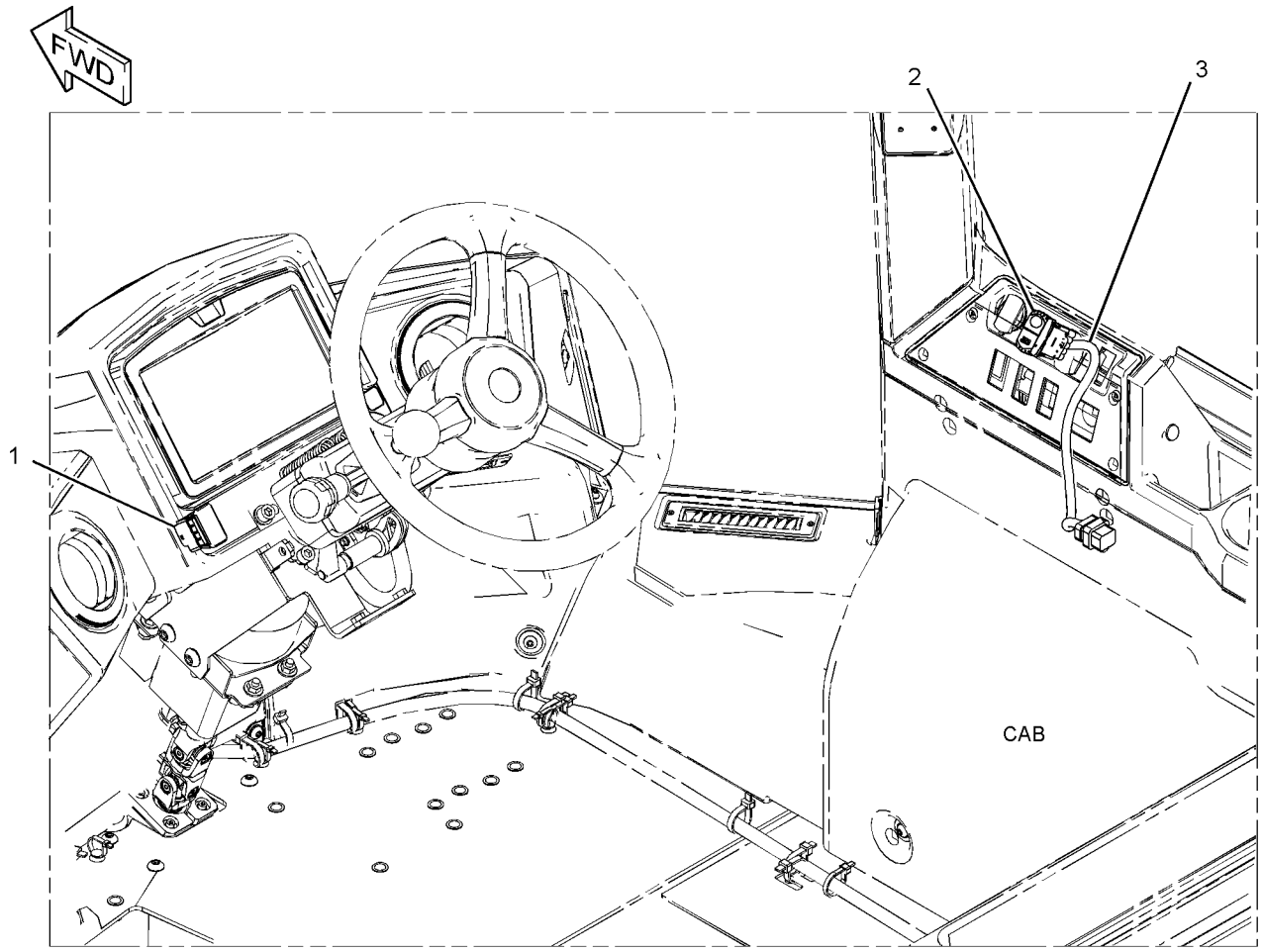

GRAPHIC #1 <END> g03493637

502-5907 WIRING GP-CAB—CATALYST

S/N: TNS1-UP

PART OF 503-1904 OPERATOR AR

SMCS-1408, 7301 **i06816316**

NOTE	REF NO	GRAPHIC REF	PART NUMBER	QTY	PART NAME 1 2 3 4 5 6 (PRODUCT LEVEL)	SEE PAGE
	1	2	**455-9580**	1	CONTROL GP-UNPROGRAMMED (ELECTRONIC)	
	2	2	**455-9584**	1	CONTROL GP-ELECTRONIC	
	3	2	**8T-9655**	22	MOUNT-ISOLATION (ISOLATION)	
	4	1	**8X-9618**	2	STRAP AS-GROUND	
M	5	1,2,3	**9X-2044**	24	SCREW-TRUSS HEAD (M6X1X16-MM)	
	6	1	**105-8034**	1	SWITCH AS-LIMIT (DOOR)	
	7	1	**107-6032**	2	LAMP GP-DOME (24-VOLT)	
					(EACH INCLUDES)	
		1	**259-1286**	1	LAMP (24-VOLT, 10-WATT)	
	8	3	**113-8490**	26	FUSE (10-AMPERE)	
	9	3	**113-8491**	16	FUSE (15-AMPERE)	
	10	3	**113-8492**	2	FUSE (20-AMPERE)	
	11	1	**123-9694**	1	HORN	
Y	12	1	**132-1829**	1	ALARM GP (24-VOLT) (ACTION)	133
	13	3	**141-2759**	5	FUSE (5-AMPERE)	
	14	4	**187-8675**	1	GASKET	
	15	1	**228-6089**	1	PLUG (ROCKER SWITCH)	
Y	16	4	**241-8368**	2	SWITCH GP-MAGNETIC (24-VOLT) (MAIN POWER RELAY)	215
	17	3	**242-1555**	1	PULLER-FUSE	
	18	3	**248-2841**	18	RELAY AS (24-VOLT)	
	19	1	**251-1198**	1	SWITCH AS-ROCKER (24-VOLT) (AIR CONDITIONER CONTROL)	
Y	20	1	**255-2752**	1	SWITCH GP-START (KEY)	222
	21	1	**267-5243**	1	PANEL AS	
		1	**271-7312**	1	KNOB (TEMPERATURE CONTROL)	
		1	**285-7415**	1	KNOB (BLOWER FAN SPEED)	
	22	3	**270-2679**	1	LOCKWASHER	
	23	4	**272-7239**	1	BLOCK AS	
	24	3	**280-2709**	4	CIRCUIT BREAKER AS (15-AMPERE, MANUAL RESET)	
	25	4	**280-2710**	1	CIRCUIT BREAKER AS (20-AMPERE, MANUAL RESET)	
R	26	2	**299-5744**	1	MODULE GP-RELAY DRIVER	
		2	**7X-6315**	1	STRAP AS-GROUND	
		1	**134-4126**	1	WASHER (4.52X8.28X0.76-MM THK)	
		1	**184-2472**	1	SCREW-PAN HEAD (8-32X0.375-IN)	
	27	2,3	**310-0674**	2	LOCKWASHER	
	28	4	**330-3356**	1	BAR-BUS	
	29	1,3	**335-5365**	3	SOCKET-AUXILIARY POWER (12-VOLT)	
	30	2	**340-7161**	1	CONVERTER-POWER (24-VOLT TO 12-VOLT)	
	31	3	**361-6287**	1	PLATE	
	32	3	**361-6288**	1	GASKET	
	33	4	**380-1792**	1	CABLE AS	
	34	3	**380-8064**	1	CABLE AS	
J		3	**6V-2366**		CABLE-ELECTRICAL (4-GA, RED) (3-DM)	
		3	**5P-3454**	1	TERMINAL-RING (4-GA, 5/16-IN SCREW)	
		3	**283-6447**	1	TERMINAL-RING	
	35	4	**380-8065**	1	BAR-BUS	
	36	4	**381-1603**	1	CABLE AS	

502-5907 **WIRING GP-CAB (**contd.**)** **i06816316**

NOTE	REF NO	GRAPHIC REF	PART NUMBER	QTY	PART NAME 1 2 3 4 5 6 (PRODUCT LEVEL)	SEE PAGE
D		4	**5P-5689**		WIRE (8-GA, BLACK) (0.2-M)	
		4	**2L-8054**	1	TERMINAL-RING (6-GA, 1/2-IN SCREW)	
					—OR—	
		4	**2L-8061**	1	TERMINAL-RING (8-GA, 1/2-IN SCREW)	
	37	1	**391-4339**	1	BRACKET AS	
M		1	**6V-9632**	2	NUT-WELD (M6X1-THD)	
M		1	**8T-3612**	2	NUT-WELD (M8X1.25-THD)	
	38	4	**391-4496**	1	BRACKET AS	
	39	1	**433-9549**	1	GASKET	
	40	1	**433-9550**	1	PLATE	
	41	3	**455-9568**	1	CAP AS	
	42	1	**456-8327**	1	CABLE AS	
	43	1	**461-7393**	1	PANEL AS	
		1	**271-7312**	2	KNOB (FRONT, REAR WIPER)	
	44	2	**499-3175**	1	FILM-IDENTIFICATION (FUSE/RELAY PANEL)	
	45	2	**500-5120**	1	BRACKET	
Y	46	2	**502-5906**	1	HARNESS AS-CAB (MAIN)	155
Y	47	1	**502-9875**	1	HARNESS AS-LIGHTING (CAB FLOODLIGHTS)	166
M	48	4	**096-4833**	4	BOLT-SOCKET HEAD (M5X0.8X20-MM)	
M	49	1,2	**127-2170**	3	SCREW-TRUSS HEAD (M8X1.25X20-MM)	
	50	1	**130-5300**	1	CLIP	
	51	1,2	**132-5789**	2	CLIP	
	52	1,2	**134-2540**	4	RESISTOR AS-CONNECTION (3-PIN)	
M	53	3	**138-8454**	1	SCREW-TRUSS HEAD (M4X0.7X10-MM)	
	54	3	**203-9007**	1	NUT (1-1/2-18-THD)	
	55	1	**206-1345**	7	STRAP-CABLE	
	56	2,3	**211-0052**	2	NUT (1-11/16-18-THD)	
	57	4	**2D-2751**	1	GROMMET	
M	58	1	**2Y-5829**	2	NUT (M10X1.5-THD)	
	59	4	**350-5720**	1	CLIP	
	60	2	**352-3964**	1	CLIP	
	61	2	**352-3966**	2	CLIP	
	62	2	**352-3968**	2	CLIP	
	63	1	**391-4889**	1	SWITCH AS-ROCKER (WINDOW WASHER)	
	64	4	**3S-2093**	2	STRAP-CABLE	
	65	3	**4B-4277**	4	WASHER (8.8X17.5X1.6-MM THK)	
	66	1	**4P-7581**	4	CLIP	
	67	2	**504-2882**	1	FILM-IDENTIFICATION (FUSE, RELAY PANEL)	
M	68	2,4	**5C-7261**	7	NUT (M8X1.25-THD)	
	69	2	**6I-1418**	11	SPACER (8.2X12.7X28.7-MM THK)	
	70	3	**6V-2687**	8	SCREW-PAN HEAD (10-24X1-IN)	
M	71	1,3	**7I-2272**	16	BOLT (M5X0.8X12-MM)	
	72	1,2,4	**7K-1181**	87	STRAP-CABLE (5.72-MM DIA)	
	73	4	**7X-0608**	4	WASHER-HARD (10.2X16X2-MM THK)	
M	74	2	**7X-0818**	11	BOLT (M8X1.25X45-MM)	
	75	1,3,4	**8T-0328**	20	WASHER-HARD (5.5X10X1-MM THK)	
	76	1,2	**8T-4121**	12	WASHER-HARD (11X21X2.5-MM THK)	
M	77	1,2	**8T-4137**	10	BOLT (M10X1.5X20-MM)	
M	78	4	**8T-4179**	2	BOLT (M12X1.75X20-MM)	
	79	4	**8T-4223**	2	WASHER-HARD (13.5X25.5X3-MM THK)	
M	80	1	**8T-4970**	1	BOLT (M6X1X14-MM)	

502-5907 **WIRING GP-CAB (**contd.**)** **i06816316**

NOTE	REF NO	GRAPHIC REF	PART NUMBER	QTY	PART NAME 1 2 3 4 5 6 (PRODUCT LEVEL)	SEE PAGE
	81	2,4	**9M-1974**	4	WASHER-HARD (8.8X16X2-MM THK)	
	82	2	**9N-0869**	11	WASHER-HARD (8.8X25.5X2-MM THK)	
M	83	1,2	**9X-1046**	6	SCREW (M4X0.7X18-MM)	
M	84	1,4	**9X-2045**	8	SCREW-TRUSS HEAD (M6X1X20-MM)	
	85	1	**9X-6165**	1	WASHER (6.5X22X2.5-MM THK)	

D - ORDER BY THE METER
J - ORDER BY THE DECIMETER
M - METRIC PART
R - REMANUFACTURED PART MAY BE AVAILABLE
Y - SEPARATE ILLUSTRATION

502-5907 **WIRING GP-CAB (**contd.**)** **i06816316**

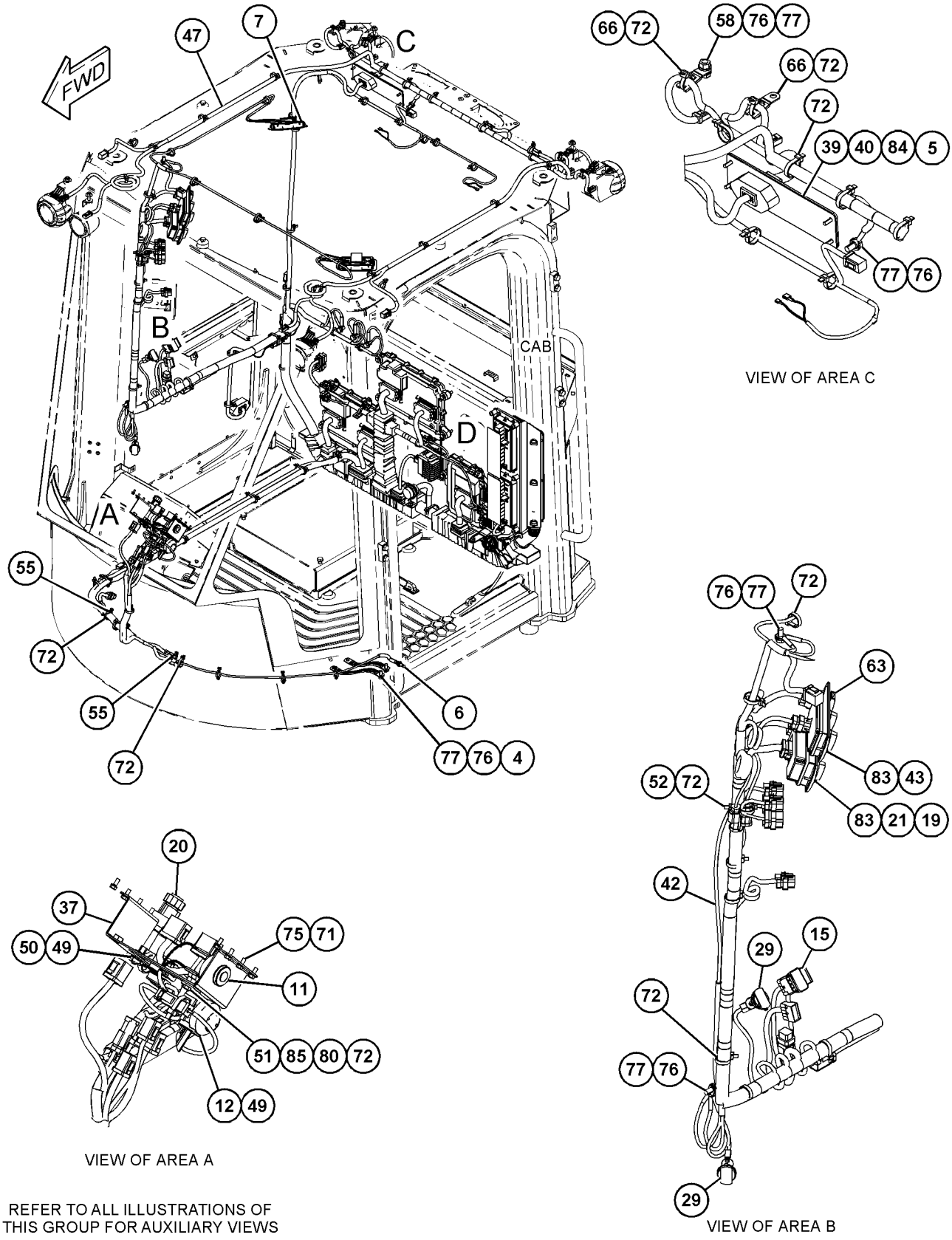

REFER TO ALL ILLUSTRATIONS OF THIS GROUP FOR AUXILIARY VIEWS

GRAPHIC #1

g06127435

502-5907 **WIRING GP-CAB (**contd.**)** **i06816316**

REFER TO ALL ILLUSTRATIONS OF
THIS GROUP FOR AUXILIARY VIEWS

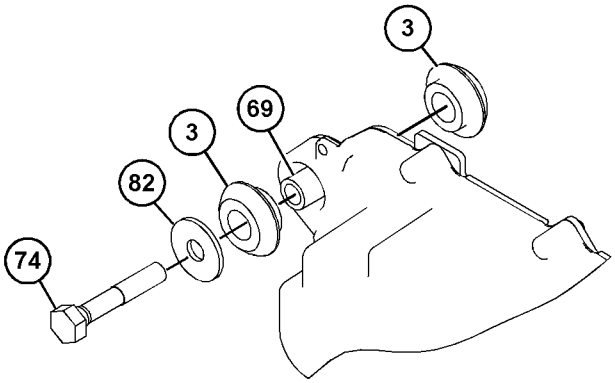

VIEW OF AREA E

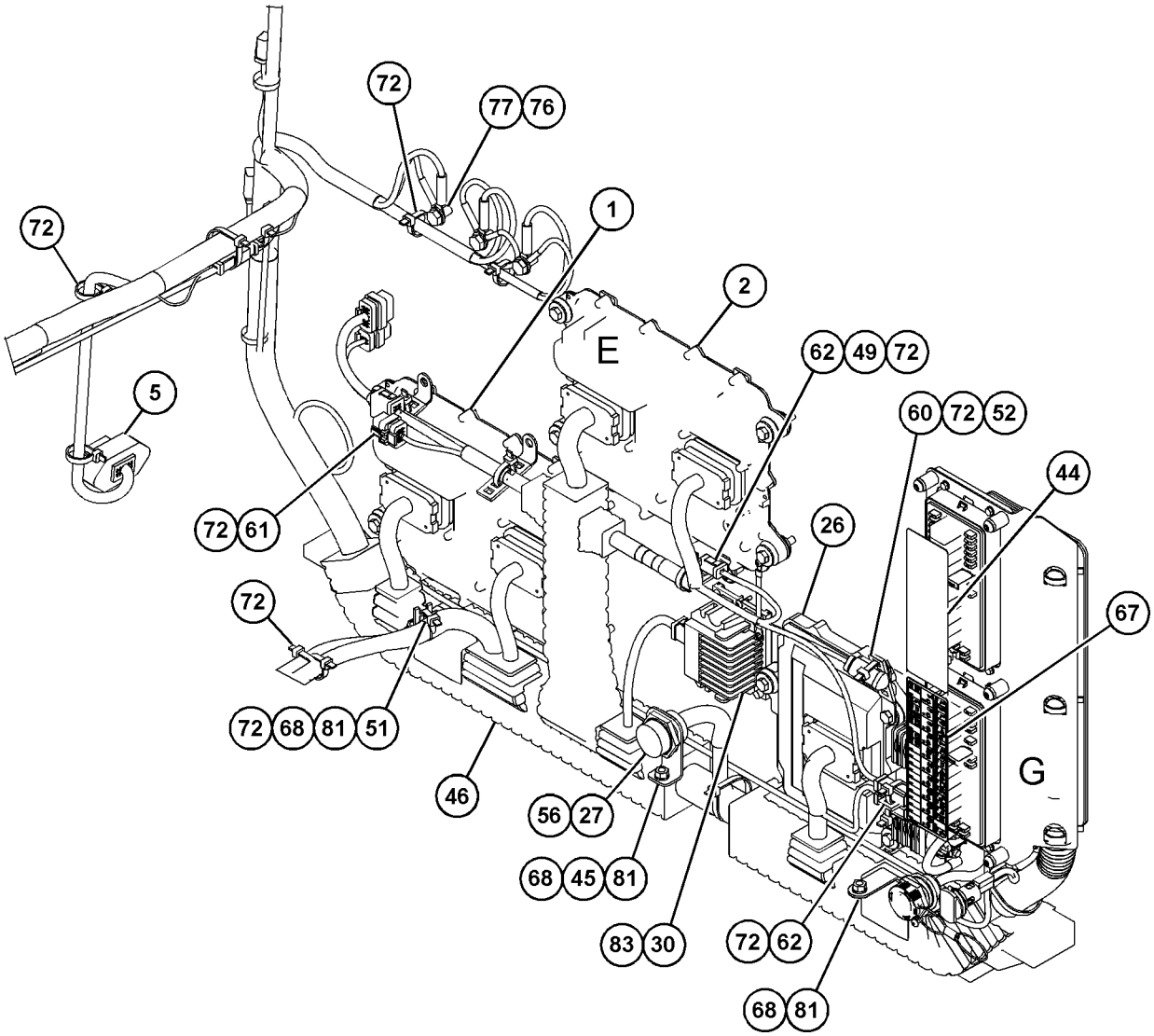

VIEW OF AREA D

GRAPHIC #2 g06127436

502-5907 **WIRING GP-CAB (**contd.**)** **i06816316**

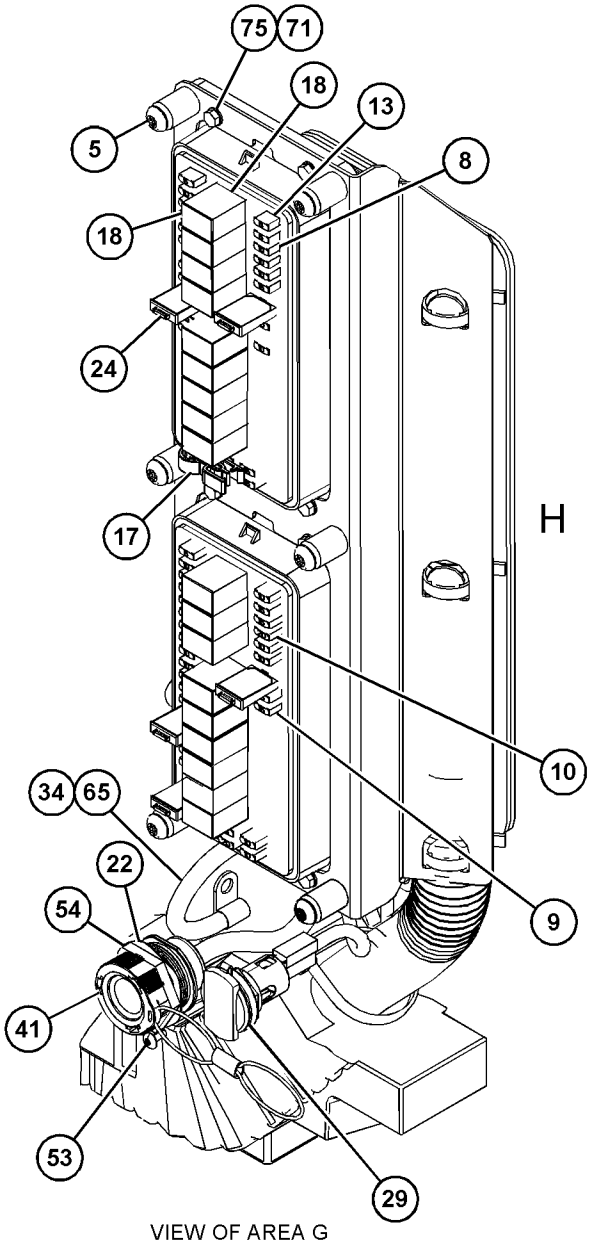

VIEW OF AREA G
(PARTS REMOVED FOR CLARITY)

H

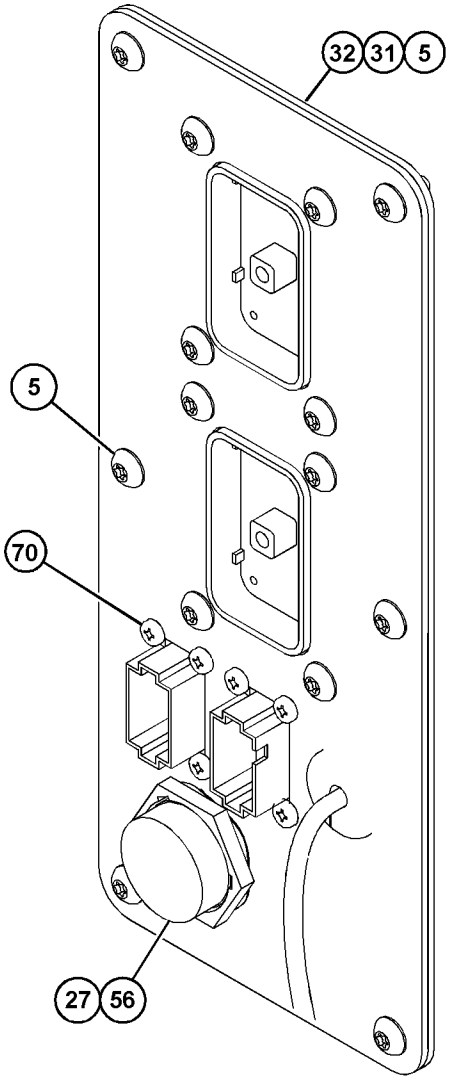

VIEW OF AREA H

180°

GRAPHIC #3

g06127437

502-5907 **WIRING GP-CAB (**contd.**)** **i06816316**

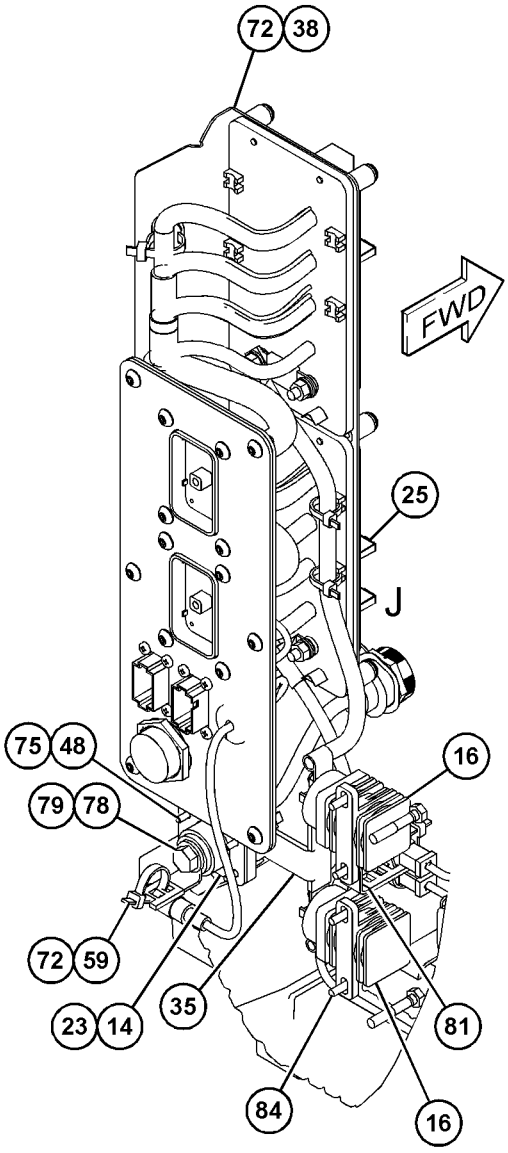

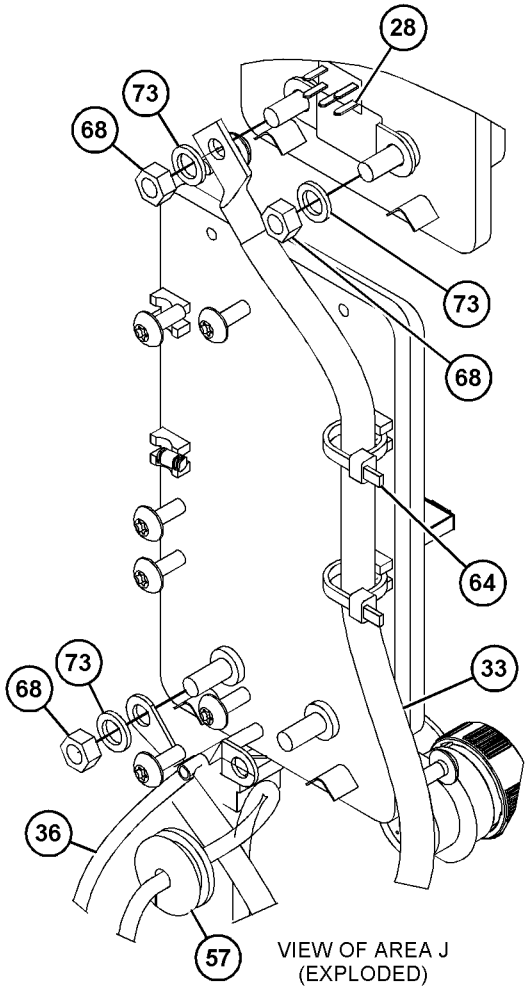

VIEW OF AREA J
(EXPLODED)

GRAPHIC #4 <END> g06127438

464-1468 WIRING GP-CHASSIS

S/N: TNS1-UP

PART OF 505-1548 CONTROL AR-FAN

SMCS-1408 **i06779880**

NOTE	REF NO	GRAPHIC REF	PART NUMBER	QTY	PART NAME 1 2 3 4 5 6 (PRODUCT LEVEL)	SEE PAGE
	1	1	**7K-1181**	2	STRAP-CABLE (5.72-MM DIA)	
	2	1	**464-1470**	1	HARNESS AS-WIRING (VARIABLE PITCH FAN)	
		1	**102-8802**	1	KIT-RECEPTACLE (2-PIN)	
					(INCLUDES RECEPTACLE AS & WEDGE)	
B		1	**329-3734**		TAPE-ELECTRICAL	
E		1	**125-7874**		TUBE-HEAT SHRINK (5.72-MM DIA) (10-CM)	
		1	**9X-3402**	4	SOCKET-CONNECTOR (16-GA TO 18-GA)	
					—OR—	
		1	**126-1768**	4	SOCKET-CONNECTOR (14-GA TO 16-GA)	
		1	**9X-3401**	2	PIN-CONNECTOR (16-GA TO 18-GA)	
					—OR—	
		1	**126-1767**	2	PIN-CONNECTOR (14-GA TO 16-GA)	
		1	**155-2270**	2	KIT-CONNECTING PLUG (2-PIN)	
					(EACH PLUG KIT INCLUDES PLUG AS, WEDGE & INTERFACE SEAL)	
	3	1	**130-5300**	2	CLIP	
	4	1	**132-5789**	1	CLIP	
M	5	1	**142-3953**	1	STUD (M10X1.5-THD)	
	6	1	**8T-4121**	1	WASHER-HARD (11X21X2.5-MM THK)	

B - USE AS REQUIRED
E - ORDER BY THE CENTIMETER
M - METRIC PART

464-1468 **WIRING GP-CHASSIS (**contd.**)** **i06779880**

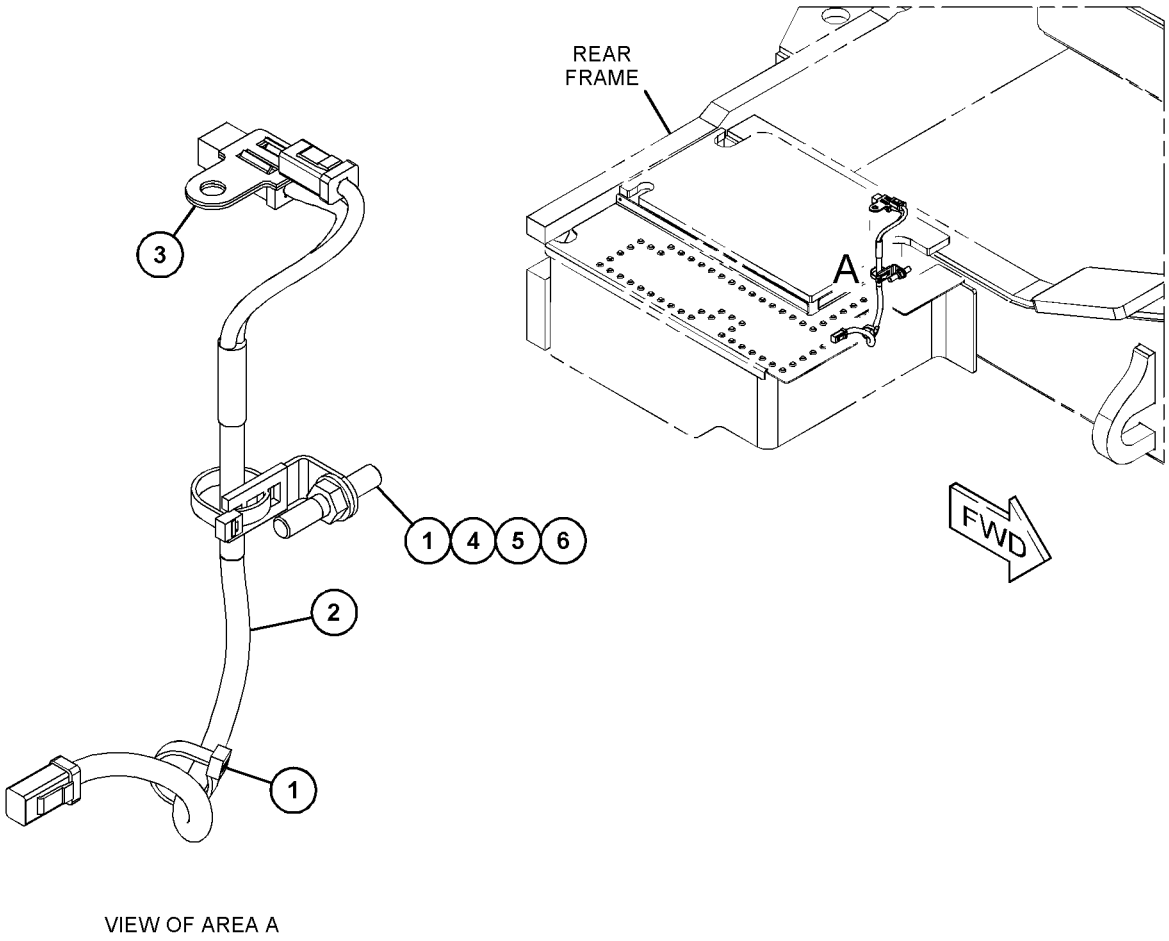

VIEW OF AREA A

GRAPHIC #1 <END> g06121055

480-2073 WIRING GP-CHASSIS

S/N: TNS1-UP

FRONT

PART OF 480-2083 WIRING GP-CHASSIS

SMCS-1408 **i06811092**

NOTE	PART NUMBER	QTY	PART NAME 1 2 3 4 5 6 (PRODUCT LEVEL)	SEE PAGE
Y	*480-2074*	1	HARNESS AS-CHASSIS	158
	316-9351	1	MOUNTING-CABLE TIE	
	3S-2093	2	STRAP-CABLE	

Y - SEPARATE ILLUSTRATION

<END>

480-2083 WIRING GP-CHASSIS

S/N: TNS1-UP

PART OF 492-4021 HYDRAULIC AR

SMCS-1408 **i06811089**

NOTE	REF NO	GRAPHIC REF	PART NUMBER	QTY	PART NAME 1 2 3 4 5 6 (PRODUCT LEVEL)	SEE PAGE
	1	2	**3S-2093**	3	STRAP-CABLE	
	2	1,2	**7K-1181**	40	STRAP-CABLE (5.72-MM DIA)	
	3	2	**091-0081**	1	SPACER (10.5X20X10-MM THK)	
Y	4	1	**480-2073**	1	WIRING GP-CHASSIS	240
	5	2	**130-5300**	1	CLIP	
	6	1,2	**132-5789**	7	CLIP	
	7	2	**316-9351**	1	MOUNTING-CABLE TIE	
M	8	2	**344-5675**	4	NUT (M10X1.5-THD)	
	9	2	**347-4734**	1	CLIP	
	10	1,2	**4P-7581**	5	CLIP	
	11	2	**5V-6152**	4	CLAMP	
	12	2	**5V-6153**	2	PLATE-COVER	
	13	1,2	**8T-4121**	14	WASHER-HARD (11X21X2.5-MM THK)	
M	14	1,2	**8T-4137**	8	BOLT (M10X1.5X20-MM)	
M	15	2	**8T-4191**	1	BOLT (M10X1.5X16-MM)	
M	16	2	**8T-4195**	1	BOLT (M10X1.5X30-MM)	
M	17	2	**8T-6974**	4	BOLT (M6X1X80-MM)	
	18	2	**9X-8256**	4	WASHER (6.6X12X2-MM THK)	

M - METRIC PART
Y - SEPARATE ILLUSTRATION

480-2083 **WIRING GP-CHASSIS (**contd.**)** **i06811089**

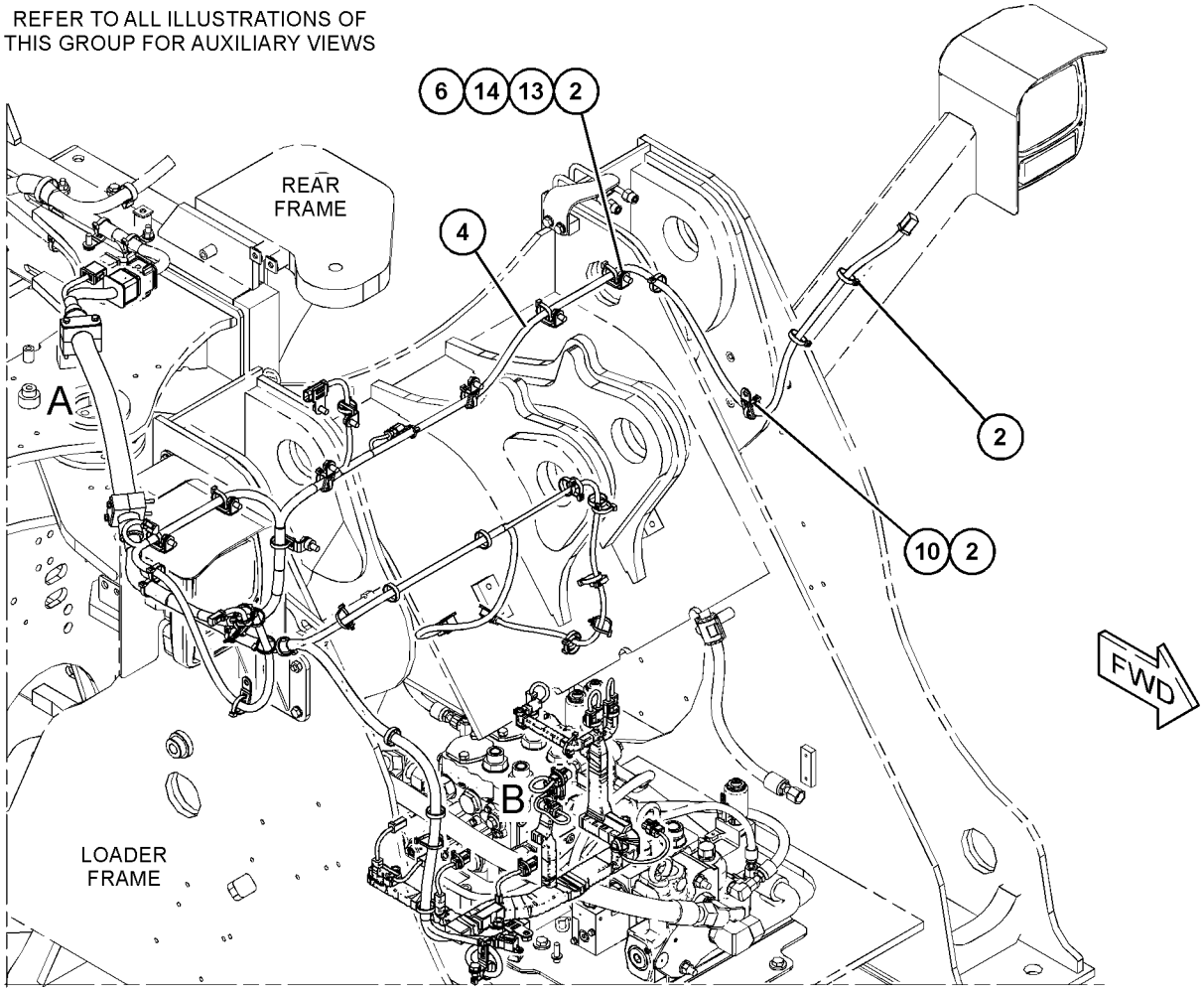

GRAPHIC #1 g06129103

480-2083 **WIRING GP-CHASSIS (**contd.**)** **i06811089**

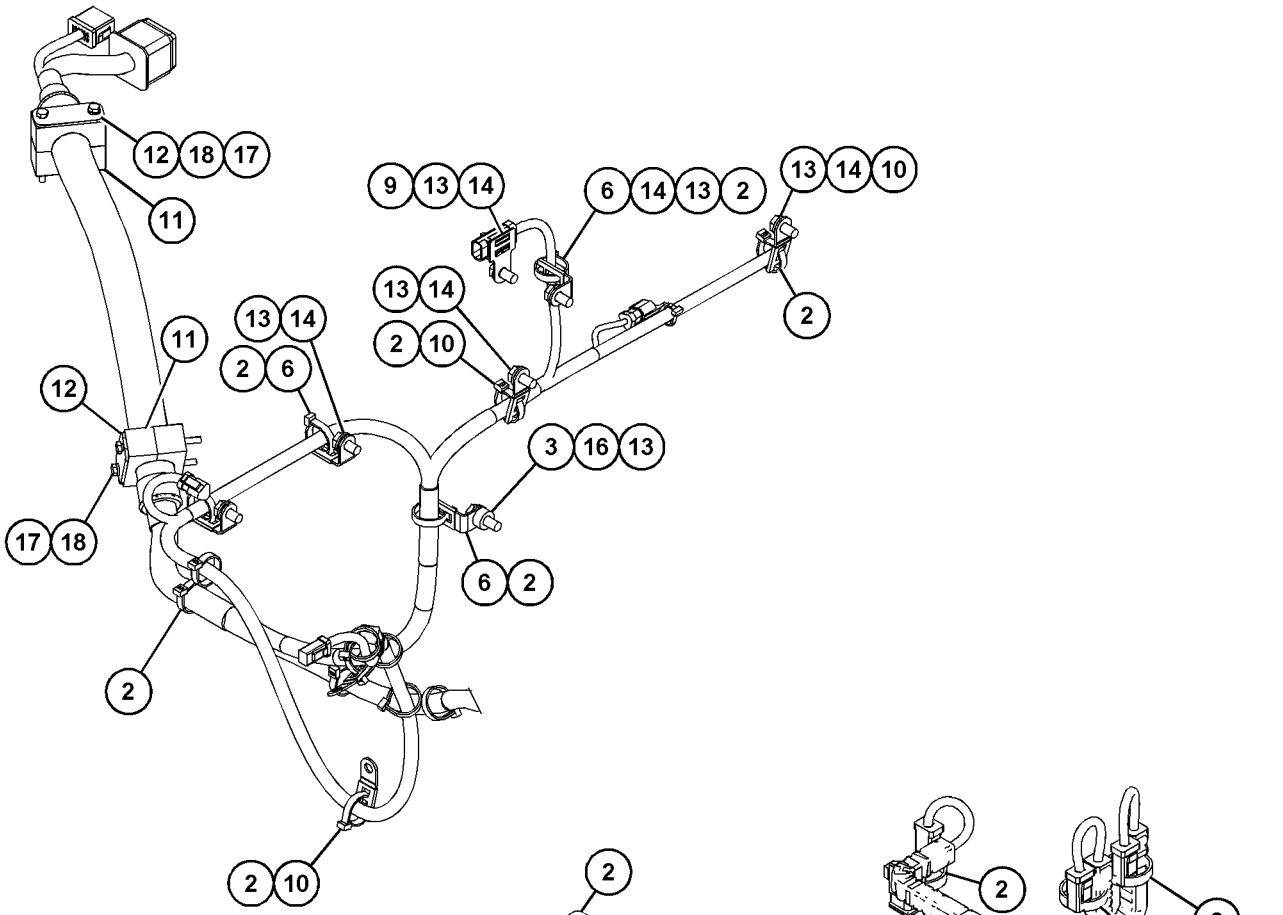

VIEW OF AREA A

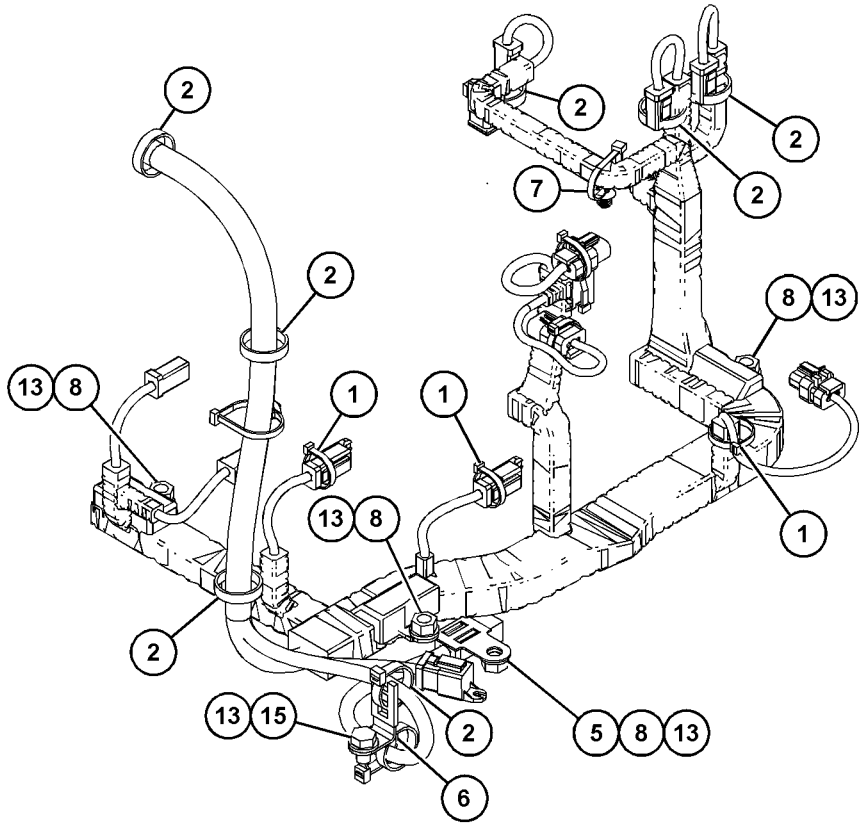

VIEW OF AREA B

GRAPHIC #2 <END> g06129104

480-2084 WIRING GP-CHASSIS

S/N: TNS1-UP

PART OF 492-4021 HYDRAULIC AR

SMCS-1408 **i06811097**

NOTE	REF NO	GRAPHIC REF	PART NUMBER	QTY	PART NAME 1 2 3 4 5 6 (PRODUCT LEVEL)	SEE PAGE
	1	2	**3E-5169**	1	GUARD-SWITCH	
	2	2	**3S-2093**	1	STRAP-CABLE	
	3	2,3	**7K-1181**	70	STRAP-CABLE (5.72-MM DIA)	
	4	2	**116-0118**	1	CLIP	
	5	3	**127-9323**	1	BRACKET AS	
M		3	**8T-3490**	1	NUT-WELD (M10X1.5-THD)	
	6	2	**149-2612**	1	RELAY AS (24-VOLT) (HOOD TILT)	
		2	**8T-8729**	2	PIN-CONNECTOR (16-GA TO 18-GA)	
		2	**9W-0852**	4	PIN-CONNECTOR (14-GA TO 16-GA)	
		2	**102-8805**	1	KIT-RECEPTACLE (6-PIN)	
					(INCLUDES RECEPTACLE AS & WEDGE)	
	7	2	**184-6636**	1	PLATE-INFORMATION (ENGINE SHUTOFF)	
	8	2	**217-5449**	1	SPACER (10.5X20X29-MM THK)	
	9	2	**229-3177**	1	PLATE AS	
		2	**6V-6716**	2	RIVET-TRUSS HEAD	
		2	**109-1645**	1	CLIP	
	10	2	**290-5664**	1	STRAP-CABLE	
	11	2	**301-2980**	1	SWITCH AS-TOGGLE (HOOD TILT ACTUATOR)	
		2	**102-8803**	1	KIT-RECEPTACLE (3-PIN)	
					(INCLUDES RECEPTACLE AS & WEDGE)	
		2	**3E-3371**	1	WEDGE-RECEPTACLE LOCK (3-PIN)	
		2	**8T-8729**	3	PIN-CONNECTOR (16-GA TO 18-GA)	
		2	**6T-3631**	2	NUT-HEX (15/32-32-THD)	
		2	**6T-3632**	1	LOCKWASHER	
		2	**6T-3633**	1	RING-LOCKING	
Y	12	2	**297-8752**	1	SWITCH GP-TOGGLE (ENGINE SHUTOFF)	223
	13	3	**326-8796**	1	BRACKET	
	14	2	**366-4869**	1	FILM-INSTRUCTION (HOOD TILT)	
	15	2	**367-2481**	1	CAP	
	16	3	**372-0671**	1	BRACKET AS	
Y	17	2	**398-0940**	1	SWITCH GP-MAGNETIC (24-VOLT) (GLOW PLUG)	217
Y	18	1	**480-2089**	1	WIRING GP-CHASSIS	248
Y	19	3	**491-6708**	1	HARNESS AS-CHASSIS	161
	20	2,3	**130-5300**	7	CLIP	
	21	2,3	**132-5789**	11	CLIP	
	22	2,3	**204-2281**	10	STRAP-CABLE	
	23	2,3	**204-8000**	6	MOUNTING-CABLE TIE	
M	24	3	**329-3356**	1	NUT (M12X1.75-THD)	
M	25	2,3	**344-5675**	10	NUT (M10X1.5-THD)	
	26	2	**347-4734**	2	CLIP	
	27	2,3	**352-3970**	2	CLIP	
	28	2	**381-2621**	1	MOUNTING-CABLE TIE	
	29	2	**4P-7428**	1	CLIP	
	30	2,3	**4P-7581**	11	CLIP	
M	31	2	**5C-9553**	6	BOLT (M6X1X16-MM)	
	32	3	**5P-7468**	2	CLIP (SLOT)	
	33	3	**5P-7469**	2	CLIP (TAB)	
	34	3	**5P-8444**	2	GROMMET (37-MM ID)	

480-2084 **WIRING GP-CHASSIS (**contd.**)** **i06811097**

NOTE	REF NO	GRAPHIC REF	PART NUMBER	QTY	PART NAME 1 2 3 4 5 6 (PRODUCT LEVEL)	SEE PAGE
	35	2	**6V-0292**	1	PLUG	
M	36	2	**6V-7357**	1	BOLT (M6X1X25-MM)	
	37	2	**6W-6672**	1	SPACER (10.5X20X38-MM THK)	
	38	2,3	**8T-4121**	32	WASHER-HARD (11X21X2.5-MM THK)	
M	39	2,3	**8T-4136**	4	BOLT (M10X1.5X25-MM)	
M	40	2,3	**8T-4137**	19	BOLT (M10X1.5X20-MM)	
M	41	3	**8T-4139**	1	BOLT (M12X1.75X30-MM)	
M	42	2	**8T-4179**	1	BOLT (M12X1.75X20-MM)	
M	43	2	**8T-4185**	1	BOLT (M10X1.5X50-MM)	
M	44	2	**8T-4195**	2	BOLT (M10X1.5X30-MM)	
M	45	3	**8T-4196**	2	BOLT (M10X1.5X35-MM)	
	46	2	**8T-4205**	4	WASHER-HARD (7.2X14.5X2-MM THK)	
	47	2,3	**8T-4223**	3	WASHER-HARD (13.5X25.5X3-MM THK)	
M	48	2	**8T-6466**	1	BOLT (M10X1.5X60-MM)	
	49	2	**9X-8256**	3	WASHER (6.6X12X2-MM THK)	

M - METRIC PART
Y - SEPARATE ILLUSTRATION

REFER TO ALL ILLUSTRATIONS OF
THIS GROUP FOR AUXILIARY VIEWS

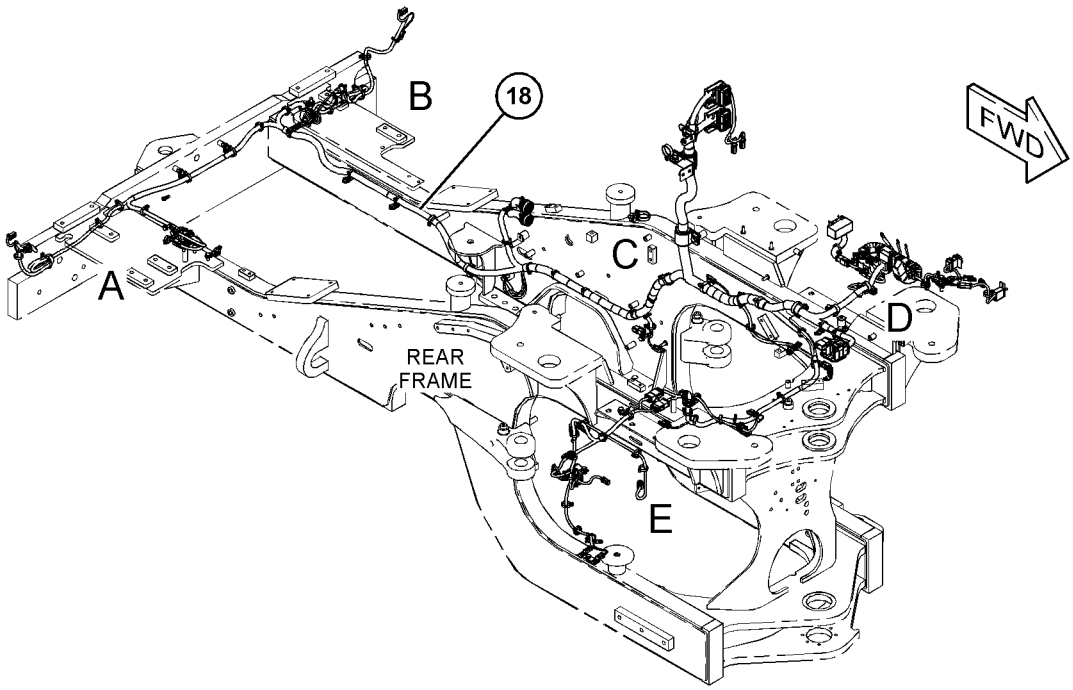

GRAPHIC #1 g06129886

480-2084 **WIRING GP-CHASSIS (**contd.**)** **i06811097**

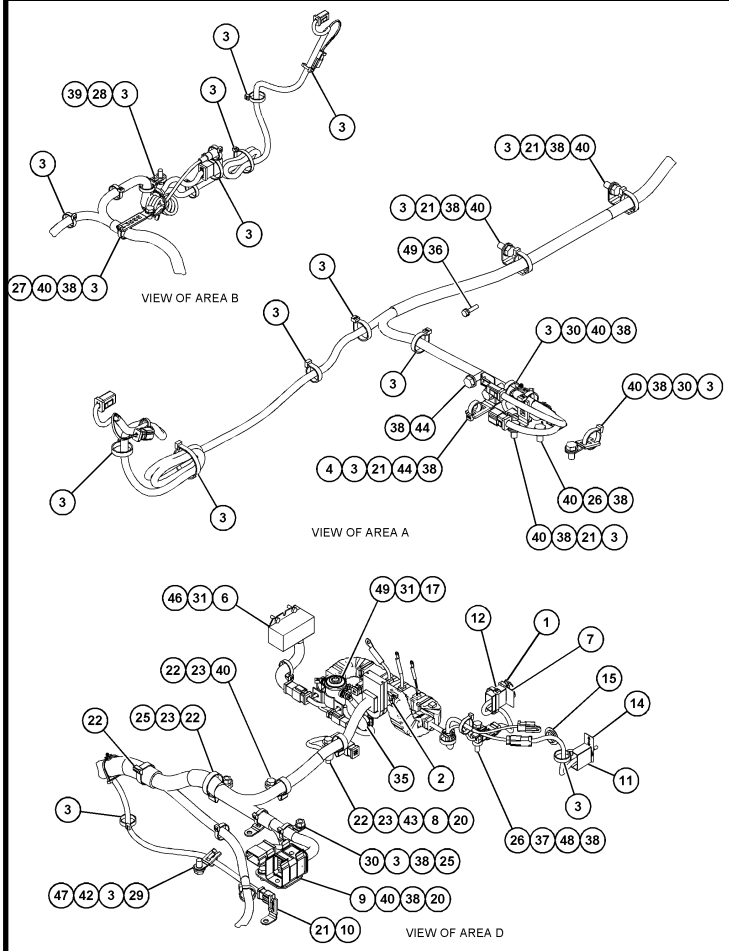

GRAPHIC #2 g06129887

480-2084 **WIRING GP-CHASSIS (**contd.**)** **i06811097**

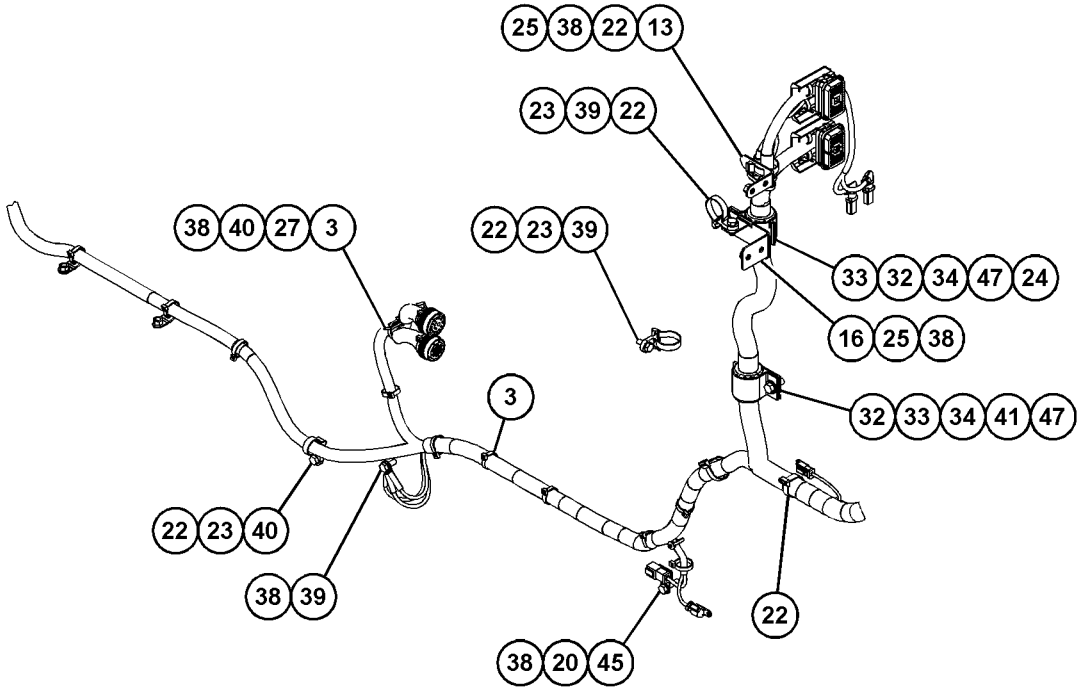

VIEW OF AREA C

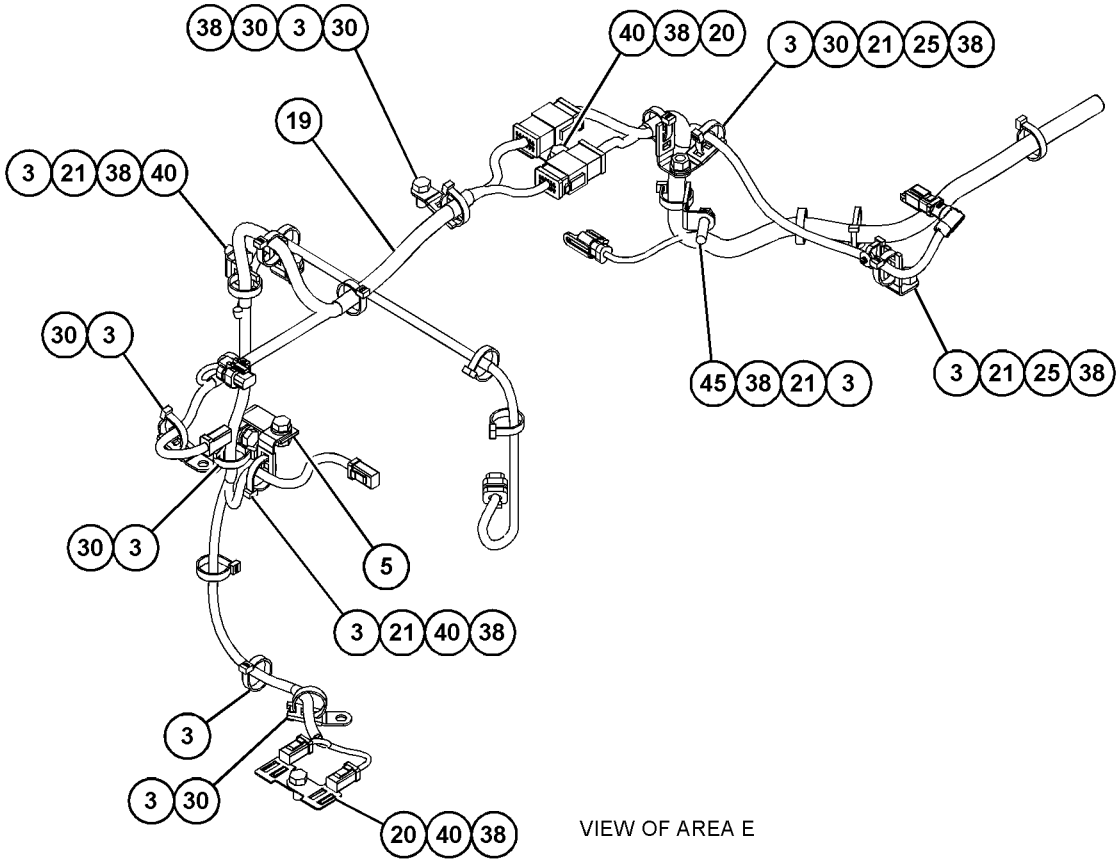

VIEW OF AREA E

GRAPHIC #3 <END> g06129888

480-2089 WIRING GP-CHASSIS

S/N: TNS1-UP

PART OF 480-2084 WIRING GP-CHASSIS

SMCS-1408 **i06756734**

NOTE	PART NUMBER	QTY	PART NAME 1 2 3 4 5 6 (PRODUCT LEVEL)	SEE PAGE
	316-9351	2	MOUNTING-CABLE TIE	
Y	*480-2090*	1	HARNESS AS-CHASSIS	159

Y - SEPARATE ILLUSTRATION

<END>

458-9160 WIRING GP-CONTROL

S/N: TNS1-UP

TELEMATICS

PART OF 468-0572 CONTROL AR-COMMUNICATION, 434-0691, 434-0693 CONTROL GP-COMMUNICATION

SMCS-1408 **i06606786**

NOTE	REF NO	GRAPHIC REF	PART NUMBER	QTY	PART NAME 1 2 3 4 5 6 (PRODUCT LEVEL)	SEE PAGE
	1	1	**450-7571**	1	HARNESS AS-CONTROL (TELEMATICS)	
		1	**102-8801**	1	KIT-RECEPTACLE (12-PIN)	
					(INCLUDES RECEPTACLE AS & WEDGE)	
		1	**8T-8737**	64	PLUG-SEAL	
E		1	**125-7874**		TUBE-HEAT SHRINK (5.72-MM DIA) (10-CM)	
		1	**9X-3402**	26	SOCKET-CONNECTOR (16-GA TO 18-GA)	
					—OR—	
		1	**126-1768**	26	SOCKET-CONNECTOR (14-GA TO 16-GA)	
		1	**2L-8079**	1	TERMINAL-RING (14-GA TO 16-GA, 3/8-IN SCREW)	
		1	**9X-3401**	12	PIN-CONNECTOR (16-GA TO 18-GA)	
					—OR—	
		1	**126-1767**	12	PIN-CONNECTOR (14-GA TO 16-GA)	
		1	**147-1445**	1	PLUG AS-CONNECTOR (70-PIN)	
		1	**159-9322**	1	SEAL-O-RING	
		1	**155-2256**	1	KIT-CONNECTING PLUG (12-PIN)	
					(INCLUDES PLUG AS, WEDGE & INTERFACE SEAL)	
		1	**243-4509**	1	RECEPTACLE AS-CONNECTOR (8-PIN)	
E		1	**329-3734**		TAPE-ELECTRICAL (236-CM)	
	2	1	**132-5789**	1	CLIP	
	3	1	**3S-2093**	2	STRAP-CABLE	
	4	1	**7K-1181**	5	STRAP-CABLE (5.72-MM DIA)	

E - ORDER BY THE CENTIMETER

458-9160 **WIRING GP-CONTROL (**contd.**)** **i06606786**

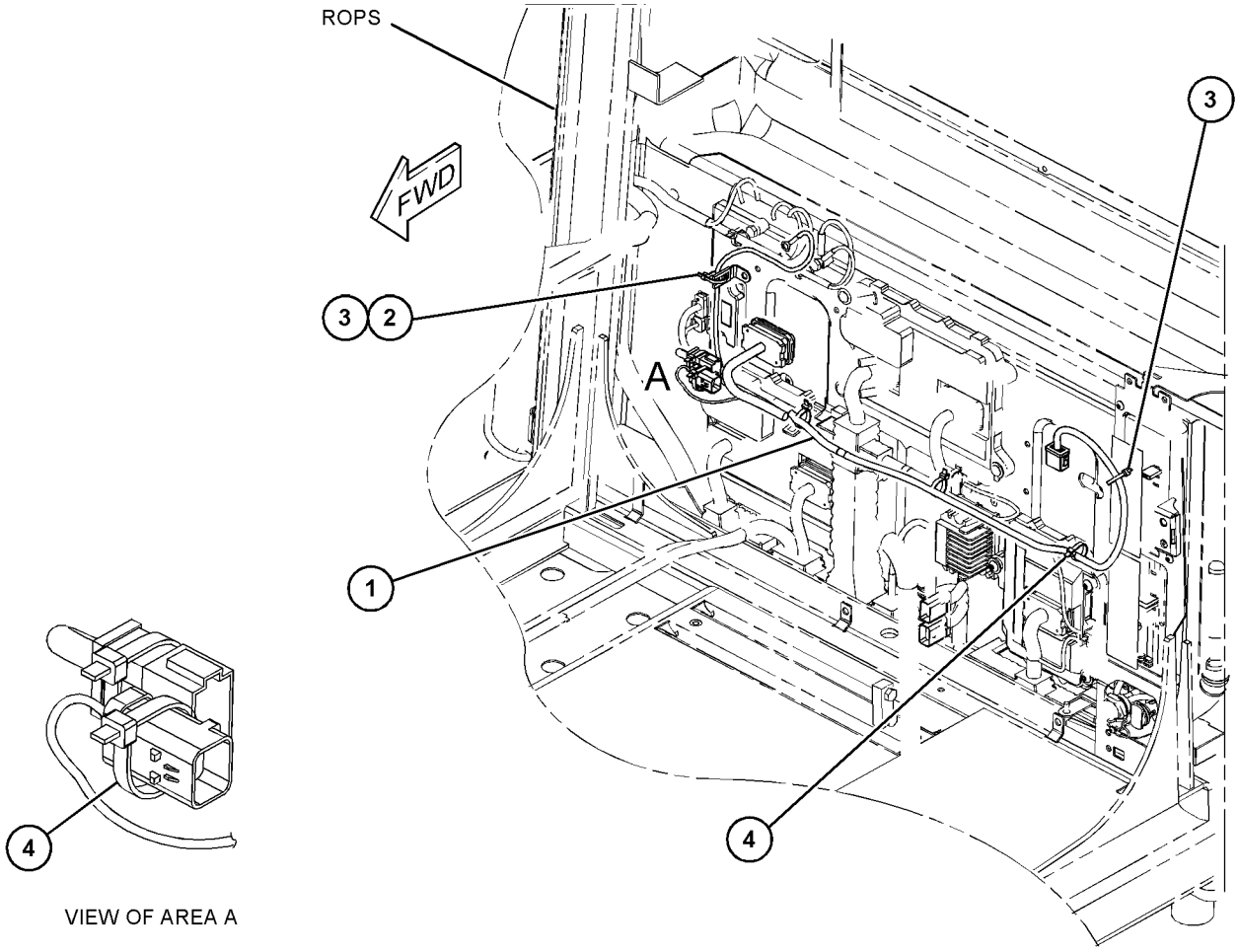

VIEW OF AREA A

GRAPHIC #1 <END> g03843881

506-5902 WIRING GP-CONTROL

S/N: TNS1-UP

PART OF 506-8479, 506-8480 CONTROL & MTG GP-ELHYD

SMCS-1408 **i06814615**

NOTE	REF NO	GRAPHIC REF	PART NUMBER	QTY	PART NAME 1 2 3 4 5 6 (PRODUCT LEVEL)	SEE PAGE
	1	1	**228-6089**	1	PLUG (ROCKER SWITCH)	
	2	1	**230-5010**	1	PLUG AS-CONNECTOR (6-PIN)	
		1	**455-0707**	1	SEAL-CONNECTOR	
	3	1	**284-3623**	1	SWITCH AS-ROCKER (24-VOLT) (IMPLEMENT LOCKOUT)	
Y	4	1	**502-0276**	1	HARNESS AS-CONTROL	162
	5	1	**096-1349**	1	CLIP	
	6	1	**132-5789**	2	CLIP	
	7	1	**156-6175**	1	CLIP	
	8	1	**4P-7581**	2	CLIP	
M	9	1	**5C-2890**	1	NUT (M6X1-THD)	
M	10	1	**6V-7357**	1	BOLT (M6X1X25-MM)	
	11	1	**7K-1181**	10	STRAP-CABLE (5.72-MM DIA)	
	12	1	**8R-3695**	2	GROMMET	
M	13	1	**8T-4189**	3	BOLT (M8X1.25X20-MM)	
	14	1	**8T-4205**	2	WASHER-HARD (7.2X14.5X2-MM THK)	
	15	1	**8T-4224**	3	WASHER-HARD (8.8X16X2-MM THK)	
M	16	1	**9X-2043**	1	SCREW-TRUSS HEAD (M6X1X14-MM)	
	17	1	**9X-6165**	1	WASHER (6.5X22X2.5-MM THK)	

M - METRIC PART
Y - SEPARATE ILLUSTRATION

506-5902 **WIRING GP-CONTROL (**contd.**)** **i06814615**

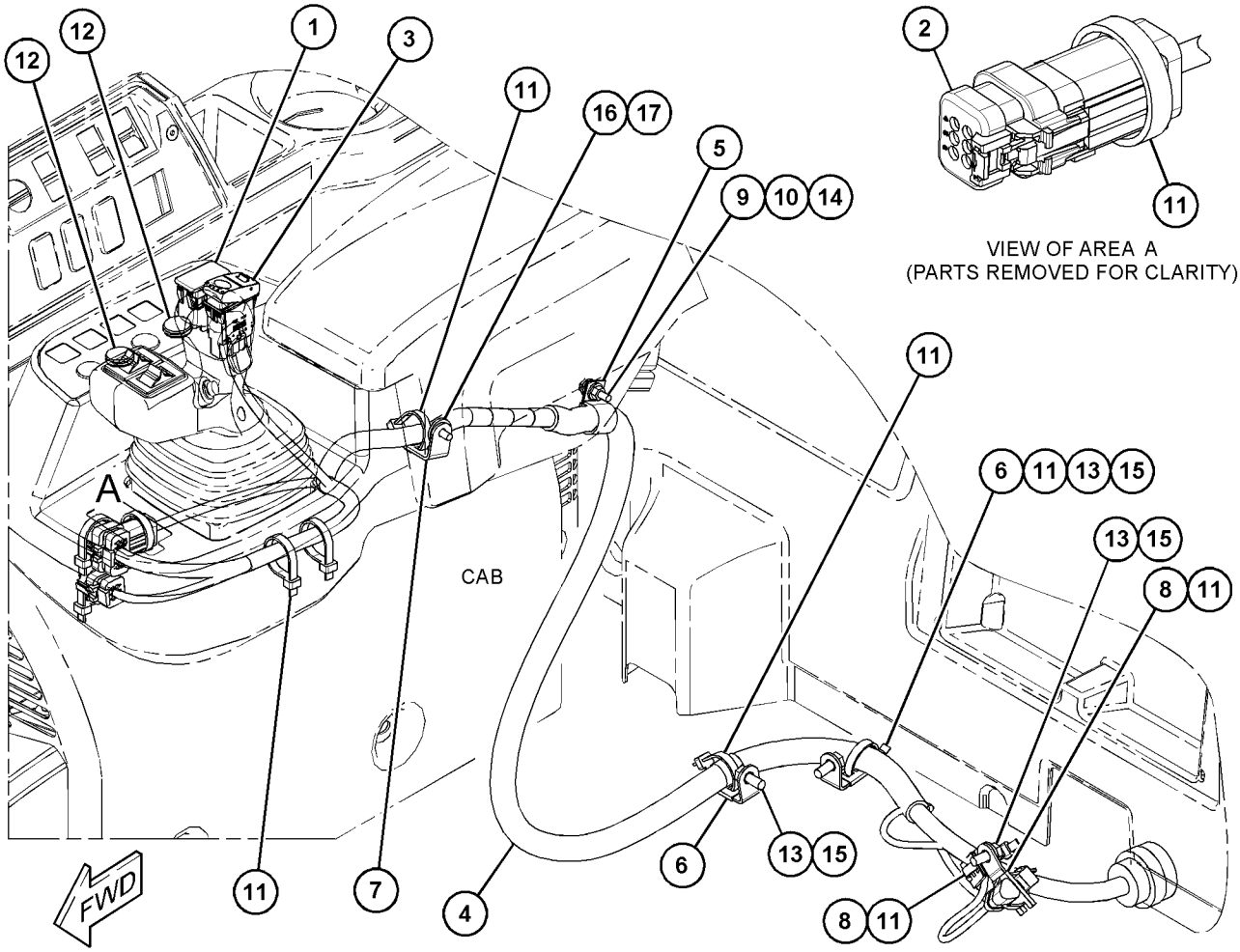

GRAPHIC #1 <END> g06126056

418-0928 WIRING GP-ENGINE

S/N: E7A1-UP

PART OF 435-8541 ENGINE AR-PRIMARY

SMCS-1403, 1408

i06547095

NOTE	REF NO	GRAPHIC REF	PART NUMBER	QTY	PART NAME 1 2 3 4 5 6 (PRODUCT LEVEL)	SEE PAGE
M	1	1	**6I-0654**	1	BOLT (M10X1.5X25-MM)	
M	2	1	**124-3815**	2	BOLT (M8X1.25X16-MM)	
	3	1	**217-9039**	1	STRAP-CABLE	
	4	1	**348-4637**	1	BOLT	
	5	1	**377-1293**	1	BRACKET	
	6	1	**389-3863**	1	BRACKET	
Y	7	1	**416-5388**	1	HARNESS AS-ENGINE	163
	8	1	**458-3745**	3	HARNESS AS-PLATFORM	
					(EACH INCLUDES)	
	8A	1	**332-7865**	1	TIE-CABLE	
M	9	1	**232-1693**	1	BOLT-FLANGE HEAD (M6X1X35-MM)	
M	10	1	**254-3633**	3	BOLT-FLANGE HEAD (M6X1X16-MM, SELF LOCKING)	
	11	1	**323-7347**	3	SEAL-O-RING	
	12	1	**352-3964**	1	CLIP	

M - METRIC PART
Y - SEPARATE ILLUSTRATION

418-0928 **WIRING GP-ENGINE (**contd.**)** **i06547095**

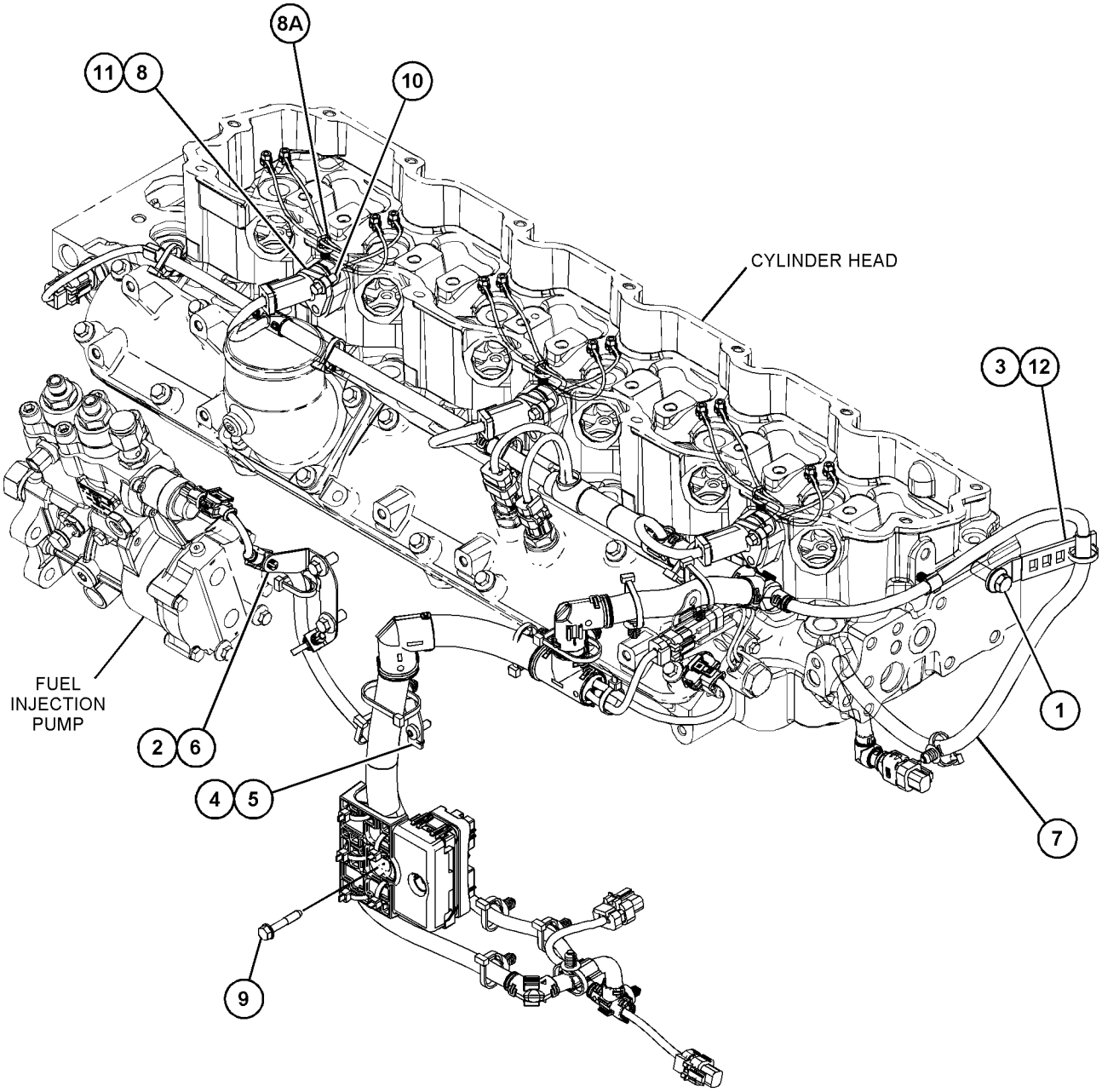

GRAPHIC #1 <END> g06032077

436-6944 WIRING GP-ENGINE

S/N: TNS1-UP

PART OF 492-4021 HYDRAULIC AR

SMCS-1403, 1408 **i06796401**

NOTE	REF NO	GRAPHIC REF	PART NUMBER	QTY	PART NAME 1 2 3 4 5 6 (PRODUCT LEVEL)	SEE PAGE
	1	1,2	**3S-2093**	3	STRAP-CABLE	
	2	1,2	**7K-1181**	38	STRAP-CABLE (5.72-MM DIA)	
	3	1,2	**116-0118**	2	CLIP	
	4	2	**142-1657**	1	BRACKET AS	
	5	2	**393-1869**	1	BRACKET	
Y	6	1	**436-6946**	1	HARNESS AS-ENGINE	164
R	7	1	**438-8223**	1	MODULE GP-CONTROL (ENGINE ECM)	
	8	2	**130-5300**	3	CLIP	
	9	1,2	**132-5789**	9	CLIP	
	10	1,2	**204-2281**	4	STRAP-CABLE	
	11	1,2	**204-8000**	3	MOUNTING-CABLE TIE	
	12	2	**228-5009**	1	CLIP	
	13	2	**230-7732**	1	MOUNTING-CABLE TIE	
M	14	1	**344-5675**	2	NUT (M10X1.5-THD)	
	15	2	**352-3968**	1	CLIP	
	16	2	**4P-7428**	2	CLIP	
	17	1,2	**4P-7581**	12	CLIP	
	18	1,2	**4P-8134**	3	CLIP	
	19	2	**5P-4116**	5	WASHER-HARD (8.8X20.5X2-MM THK)	
	20	2	**6V-1249**	2	GROMMET (22-MM ID)	
	21	1	**7V-6571**	2	GROMMET	
M	22	1	**7X-2533**	4	BOLT (M6X1X35-MM)	
	23	1,2	**8T-4121**	14	WASHER-HARD (11X21X2.5-MM THK)	
M	24	1,2	**8T-4136**	6	BOLT (M10X1.5X25-MM)	
M	25	2	**8T-4137**	7	BOLT (M10X1.5X20-MM)	
M	26	2	**8T-4139**	1	BOLT (M12X1.75X30-MM)	
M	27	2	**8T-4192**	1	BOLT (M12X1.75X25-MM)	
M	28	2	**8T-4196**	1	BOLT (M10X1.5X35-MM)	
M	29	2	**8T-4200**	5	BOLT (M8X1.25X16-MM)	
	30	2	**8T-4223**	1	WASHER-HARD (13.5X25.5X3-MM THK)	
	31	1	**8T-4224**	4	WASHER-HARD (8.8X16X2-MM THK)	

M - METRIC PART
R - REMANUFACTURED PART MAY BE AVAILABLE
Y - SEPARATE ILLUSTRATION

436-6944 **WIRING GP-ENGINE (**contd.**)** **i06796401**

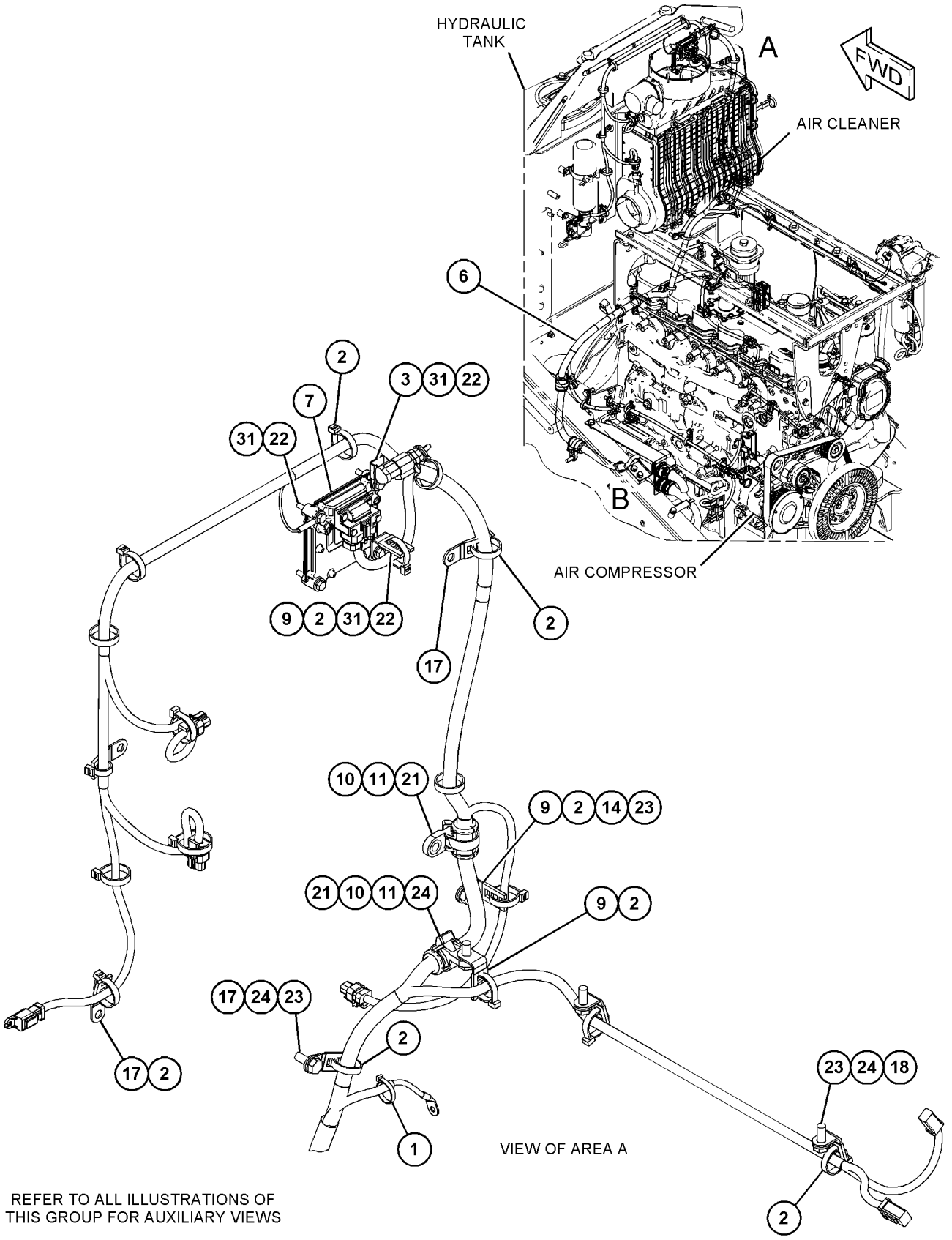

REFER TO ALL ILLUSTRATIONS OF THIS GROUP FOR AUXILIARY VIEWS

GRAPHIC #1

g06048069

436-6944 **WIRING GP-ENGINE (**contd.**)** **i06796401**

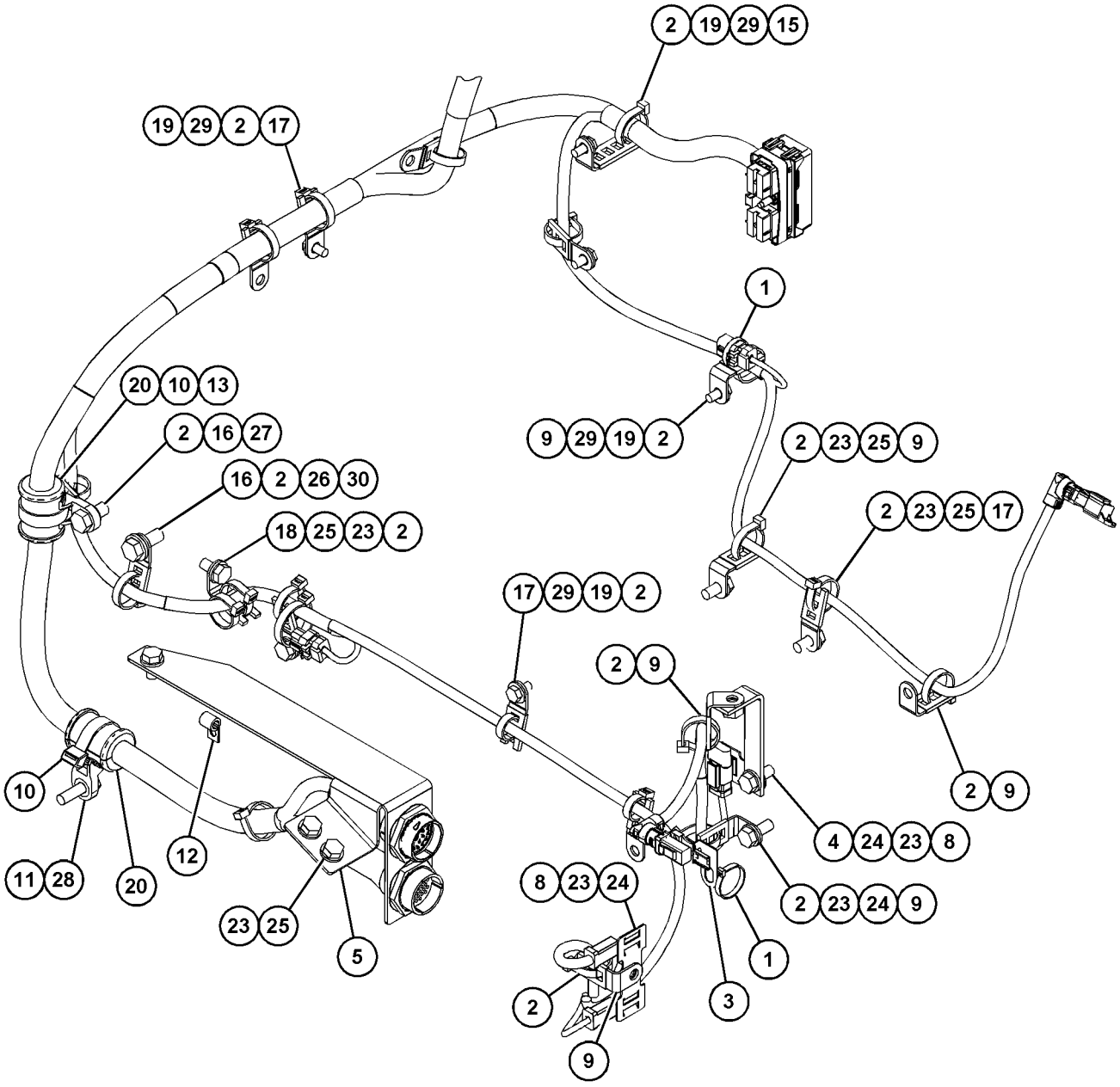

VIEW OF AREA B

GRAPHIC #2 <END> g06048176

472-4943 WIRING GP-ENGINE

S/N: E7A1-UP

PART OF 435-8541 ENGINE AR-PRIMARY

SMCS-1403, 1408 **i06683035**

NOTE	REF NO	GRAPHIC REF	PART NUMBER	QTY	PART NAME 1 2 3 4 5 6 (PRODUCT LEVEL)	SEE PAGE
M	1	1	**6I-0654**	1	BOLT (M10X1.5X25-MM)	
M	2	1	**100-4830**	1	BOLT (M10X1.5X20-MM)	
M	3	1	**124-3815**	2	BOLT (M8X1.25X16-MM)	
	4	1	**217-9039**	1	STRAP-CABLE	
	5	1	**290-1993**	1	STRAP-CABLE	
	6	1	**323-7347**	3	SEAL-O-RING	
	7	1	**348-4637**	1	BOLT	
	8	1	**377-1293**	1	BRACKET	
	9	1	**389-3863**	1	BRACKET	
Y	10	1	**416-5388**	1	HARNESS AS-ENGINE	163
	11	1	**431-9793**	1	BRACKET	
	12	1	**458-3745**	3	HARNESS AS-PLATFORM	
					(EACH INCLUDES)	
	12A	1	**332-7865**	1	TIE-CABLE	
M	13	1	**232-1693**	1	BOLT-FLANGE HEAD (M6X1X35-MM)	
M	14	1	**254-3633**	3	BOLT-FLANGE HEAD (M6X1X16-MM, SELF LOCKING)	
	15	1	**352-3964**	1	CLIP	

M - METRIC PART
Y - SEPARATE ILLUSTRATION

472-4943 **WIRING GP-ENGINE (**contd.**)** **i06683035**

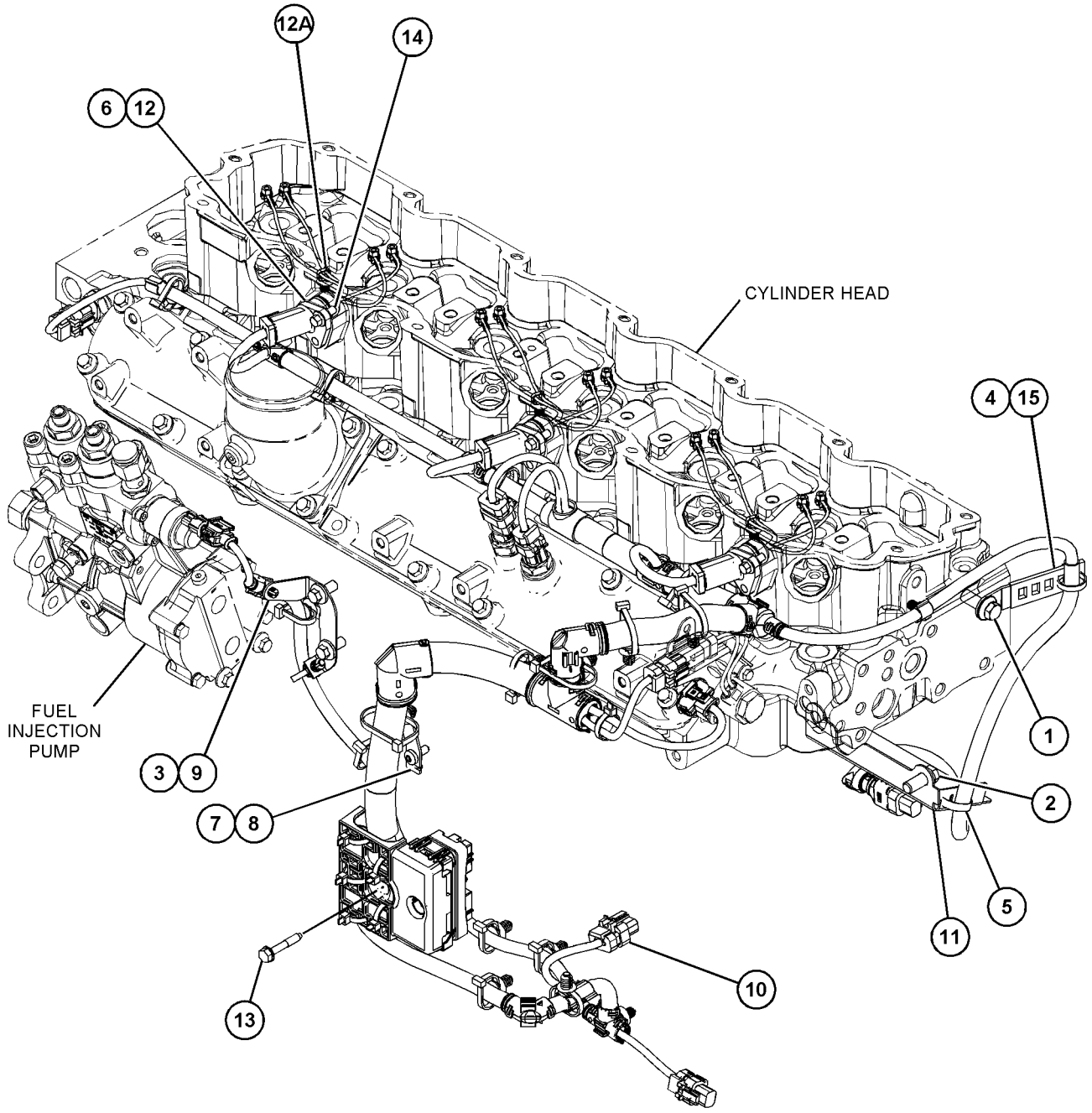

GRAPHIC #1 <END> g06032120

489-3220 WIRING GP-LUBRICATION

S/N: TNS1-UP

PART OF 495-9704 LUBRICATION AR-AUTOMATIC

SMCS-1408 **i06740273**

NOTE	REF NO	GRAPHIC REF	PART NUMBER	QTY	PART NAME 1 2 3 4 5 6 (PRODUCT LEVEL)	SEE PAGE
	1	1	**7K-1181**	1	STRAP-CABLE (5.72-MM DIA)	
	2	1	**487-1747**	1	HARNESS AS-PUMP	
		1	**8T-8737**	3	PLUG-SEAL	
		1	**9X-3402**	10	SOCKET-CONNECTOR (16-GA TO 18-GA)	
					–OR–	
		1	**126-1768**	10	SOCKET-CONNECTOR (14-GA TO 16-GA)	
		1	**155-2260**	1	KIT-CONNECTING PLUG (3-PIN)	
					(INCLUDES PLUG AS, WEDGES & INTERFACE SEAL)	
		1	**155-2271**	1	KIT-CONNECTING PLUG (4-PIN)	
		1	**155-2274**	1	KIT-CONNECTING PLUG (6-PIN)	
					(EACH PLUG KIT INCLUDES PLUG AS, WEDGE, & INTERFACE SEAL)	
B		1	**1P-0810**		TAPE-ELECTRICAL	
		1	**311-8739**	1	ADAPTER-CONNECTOR	
	3	1	**204-1611**	3	STRAP (DUAL)	

B - USE AS REQUIRED

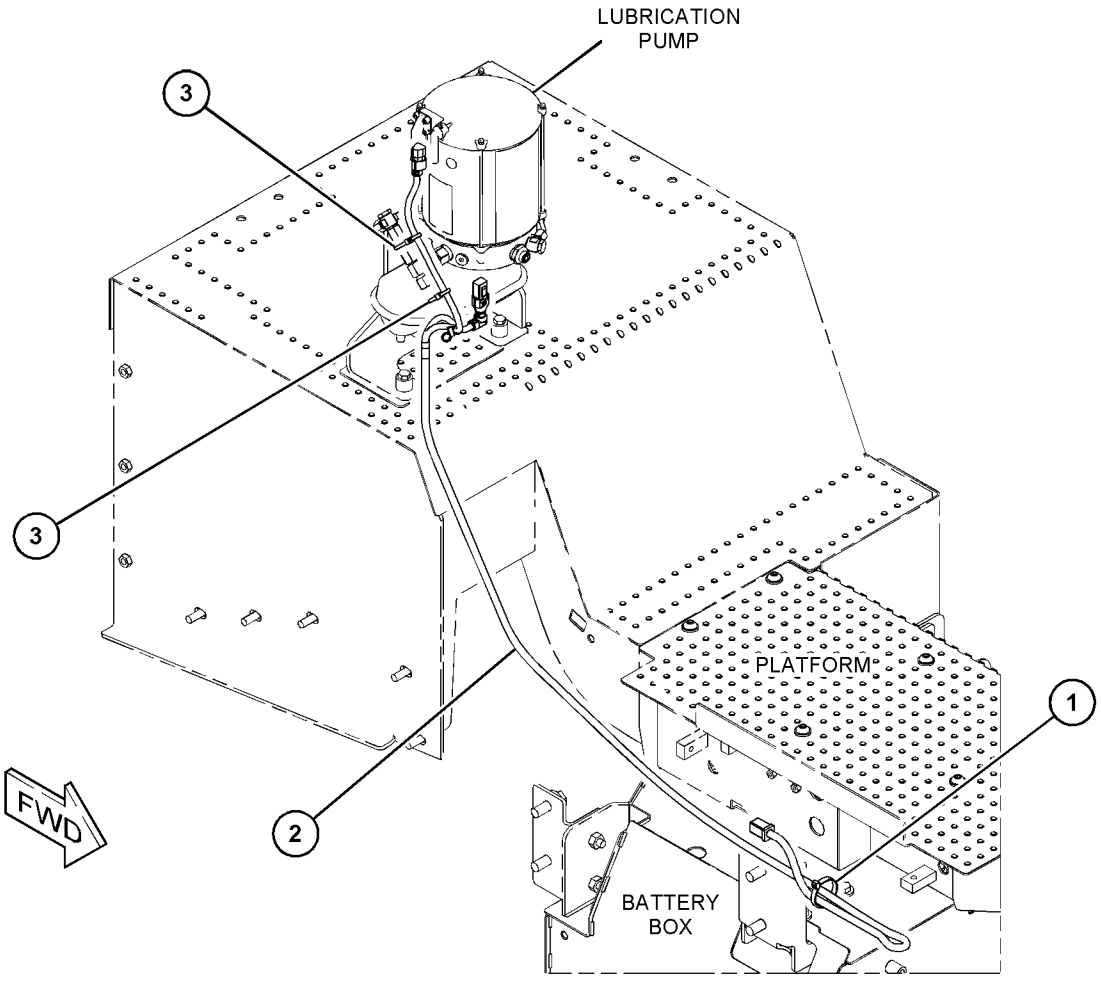

GRAPHIC #1 <END> g06108656

418-8030 WIRING GP-OBJECT DETECTION

S/N: TNS1-UP

PART OF 492-4021 HYDRAULIC AR

SMCS-1408 **i06756506**

NOTE	REF NO	GRAPHIC REF	PART NUMBER	QTY	PART NAME 1 2 3 4 5 6 (PRODUCT LEVEL)	SEE PAGE
	1	1	**9X-7345**	2	GROMMET	
	2	1	**7K-1181**	20	STRAP-CABLE (5.72-MM DIA)	
	3	1	**116-0118**	1	CLIP	
	4	1	**220-0229**	1	ALARM AS (BACKUP)	
		1	**102-8802**	1	KIT-RECEPTACLE (2-PIN)	
					(INCLUDES RECEPTACLE AS & WEDGE)	
		1	**8T-8729**	2	PIN-CONNECTOR (16-GA TO 18-GA)	
E		1	**9X-1813**		SLEEVE (29-CM)	
H	5	1	**347-1668**	1	CAMERA AS (115-DEG, COLOR)	
Y	6	1	**483-2480**	1	HARNESS AS-MONITOR (CAMERA)	167
	7	1	**091-0081**	1	SPACER (10.5X20X10-MM THK)	
	8	1	**5P-6629**	1	GROMMET	
	9	1	**130-5300**	1	CLIP	
	10	1	**132-5789**	8	CLIP	
M	11	1	**344-5674**	2	NUT (M8X1.25-THD)	
M	12	1	**344-5675**	1	NUT (M10X1.5-THD)	
	13	1	**5P-5148**	2	STRAP-CABLE	
	14	1	**7G-7053**	2	GROMMET	
	15	1	**7X-0579**	8	WASHER-HARD (8.8X25.5X2-MM THK)	
	16	1	**7X-7729**	2	WASHER (11X25X3-MM THK)	
	17	1	**9M-8406**	2	CLIP	
	18	1	**8T-4121**	1	WASHER-HARD (11X21X2.5-MM THK)	
M	19	1	**8T-4136**	2	BOLT (M10X1.5X25-MM)	
M	20	1	**8T-4185**	1	BOLT (M10X1.5X50-MM)	
M	21	1	**8T-4200**	4	BOLT (M8X1.25X16-MM)	
M	22	1	**8T-4908**	2	BOLT (M8X1.25X25-MM)	
					AVAILABLE REPAIR KIT(S):	
H			**251-4162**	1	KIT-BRACKET (CAMERA)	
					(INCLUDES BRACKET, BOLTS, NUTS, GASKET & WRENCH)	

E - ORDER BY THE CENTIMETER
H - KIT MARKED H SERVICES PART(S) MARKED H
M - METRIC PART
Y - SEPARATE ILLUSTRATION

418-8030 **WIRING GP-OBJECT DETECTION (**contd.**)** **i06756506**

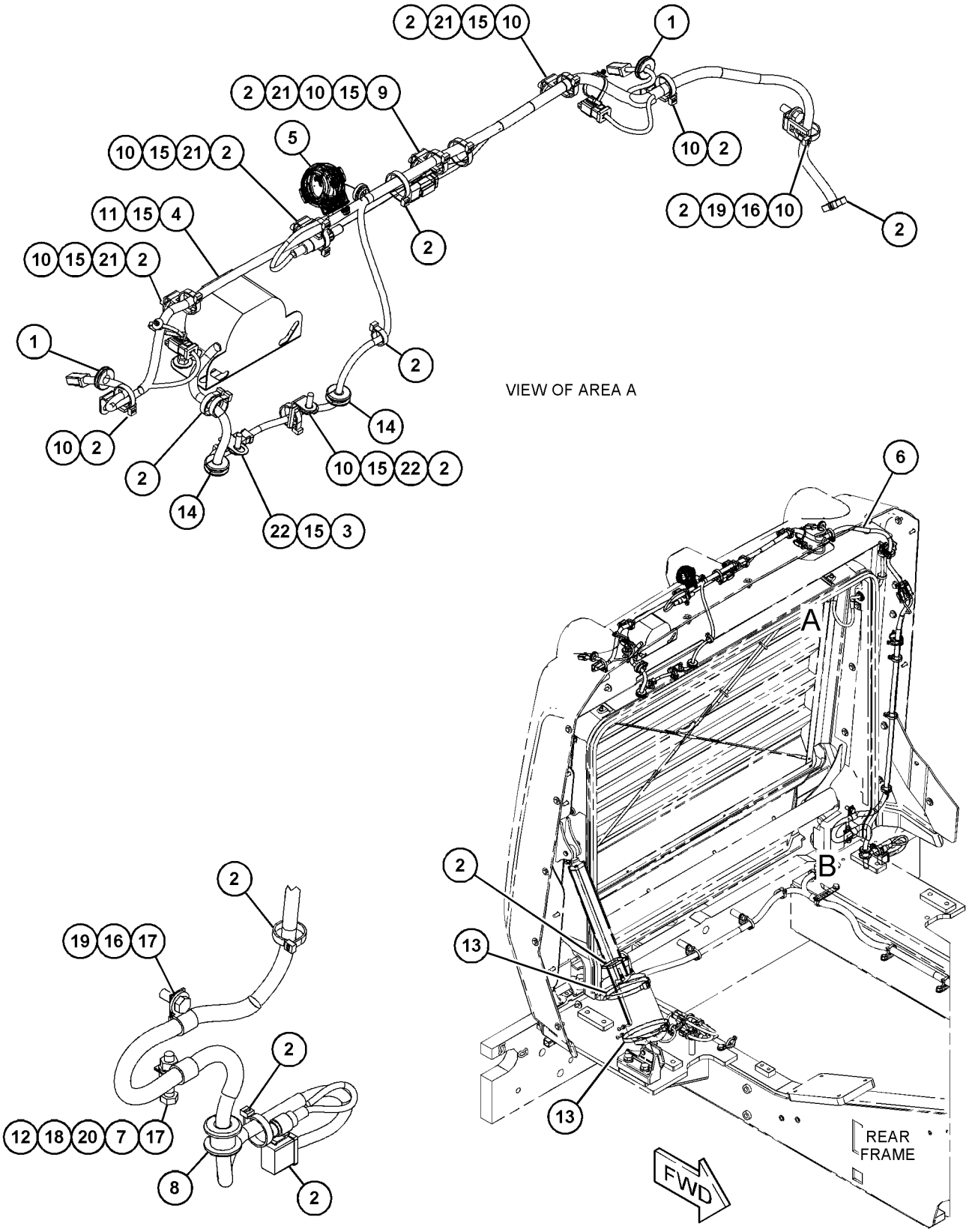

GRAPHIC #1 <END> g06107983

364-7285 WIRING GP-SECONDARY STEERING

S/N: TNS1-UP

PART OF 463-8869 STEERING AR-SECONDARY

SMCS-1408, 4334 **i06721780**

NOTE	REF NO	GRAPHIC REF	PART NUMBER	QTY	PART NAME 1 2 3 4 5 6 (PRODUCT LEVEL)	SEE PAGE
	1	1	**3S-2093**	3	STRAP-CABLE	
	2	1	**7K-1181**	3	STRAP-CABLE (5.72-MM DIA)	
	3	1	**132-1805**	1	STRAP AS-GROUND	
	4	1	**337-0048**	1	BRACKET AS	
Y	5	1	**337-9078**	1	SWITCH GP-MAGNETIC (24-VOLT TO 32-VOLT) (SECONDARY STEERING)	216
	6	1	**370-5753**	1	HARNESS AS-STEERING (SECONDARY)	
		1	**102-8802**	1	KIT-RECEPTACLE (2-PIN)	
					(INCLUDES RECEPTACLE AS & WEDGE)	
		1	**2L-8076**	2	TERMINAL-RING (14-GA TO 16-GA, NO. 10 SCREW)	
		1	**9X-3401**	2	PIN-CONNECTOR (16-GA TO 18-GA)	
					—OR—	
		1	**126-1767**	2	PIN-CONNECTOR (14-GA TO 16-GA)	
	7	1	**372-8372**	1	CABLE AS	
E		1	**159-8049**		CABLE (00-GA, RED) (108-CM)	
		1	**276-1786**	1	COVER-TERMINAL (RED)	
		1	**276-7278**	1	TERMINAL-RING	
		1	**299-6082**	1	COVER-TERMINAL (RED)	
		1	**315-0180**	1	TERMINAL-RING (00-GA, 3/8-IN SCREW)	
	8	1	**372-8373**	1	CABLE AS	
E		1	**159-8049**		CABLE (00-GA, RED) (73-CM)	
		1	**276-1786**	1	COVER-TERMINAL (RED)	
		1	**311-3475**	1	TERMINAL-RING	
		1	**315-0180**	1	TERMINAL-RING (00-GA, 3/8-IN SCREW)	
	9	1	**130-5300**	1	CLIP	
	10	1	**132-5789**	1	CLIP	
	11	1	**221-3525**	6	GROMMET	
	12	1	**303-4649**	1	CLIP	
M	13	1	**344-5675**	3	NUT (M10X1.5-THD)	
M	14	1	**3T-0852**	1	LOCKNUT (M8X1.25-THD)	
	15	1	**3V-4791**	1	GROMMET	
	16	1	**4L-3641**	2	CLIP	
M	17	1	**5C-9553**	4	BOLT (M6X1X16-MM)	
	18	1	**5P-4116**	1	WASHER-HARD (8.8X20.5X2-MM THK)	
	19	1	**8T-1889**	4	CLIP (SLOT)	
	20	1	**8T-1890**	4	CLIP (TAB)	
	21	1	**8T-4121**	9	WASHER-HARD (11X21X2.5-MM THK)	
M	22	1	**8T-4136**	4	BOLT (M10X1.5X25-MM)	
M	23	1	**8T-4191**	2	BOLT (M10X1.5X16-MM)	
	24	1	**8T-4224**	4	WASHER-HARD (8.8X16X2-MM THK)	

E - ORDER BY THE CENTIMETER
M - METRIC PART
Y - SEPARATE ILLUSTRATION

364-7285 **WIRING GP-SECONDARY STEERING (**contd.**)** **i06721780**

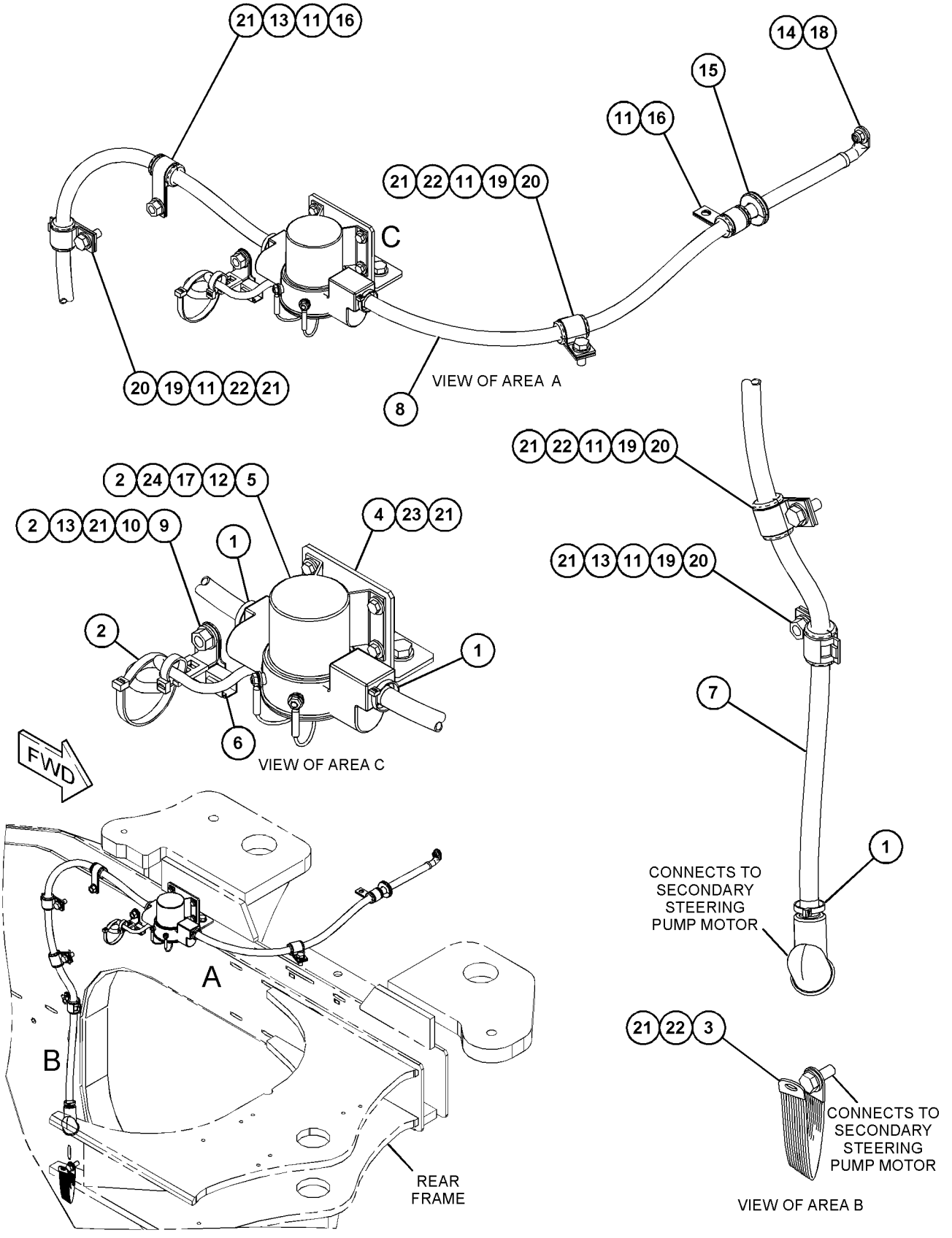

GRAPHIC #1 <END> g03679538

374-4755 WIRING GP-SENSOR

S/N: TNS1-UP

LEFT STEERING CYL POSITION

PART OF 463-8854, 463-8856, 463-8857 AXLE AR-FIXED & OSCILLATING

SMCS-1408 **i06720468**

NOTE	REF NO	GRAPHIC REF	PART NUMBER	QTY	PART NAME 1 2 3 4 5 6 (PRODUCT LEVEL)	SEE PAGE
	1	1	**7K-1181**	1	STRAP-CABLE (5.72-MM DIA)	
	2	1	**4D-7794**	1	CLIP	
	3	1	**125-8534**	1	PLATE AS	
Y	4	1	**374-4756**	1	HARNESS AS-SENSOR (DIFFERENTIAL LOCK)	168
M	5	1	**344-5675**	1	NUT (M10X1.5-THD)	
	6	1	**6V-3265**	2	CLIP	
	7	1	**8T-4121**	2	WASHER-HARD (11X21X2.5-MM THK)	
M	8	1	**8T-4137**	1	BOLT (M10X1.5X20-MM)	

M - METRIC PART
Y - SEPARATE ILLUSTRATION

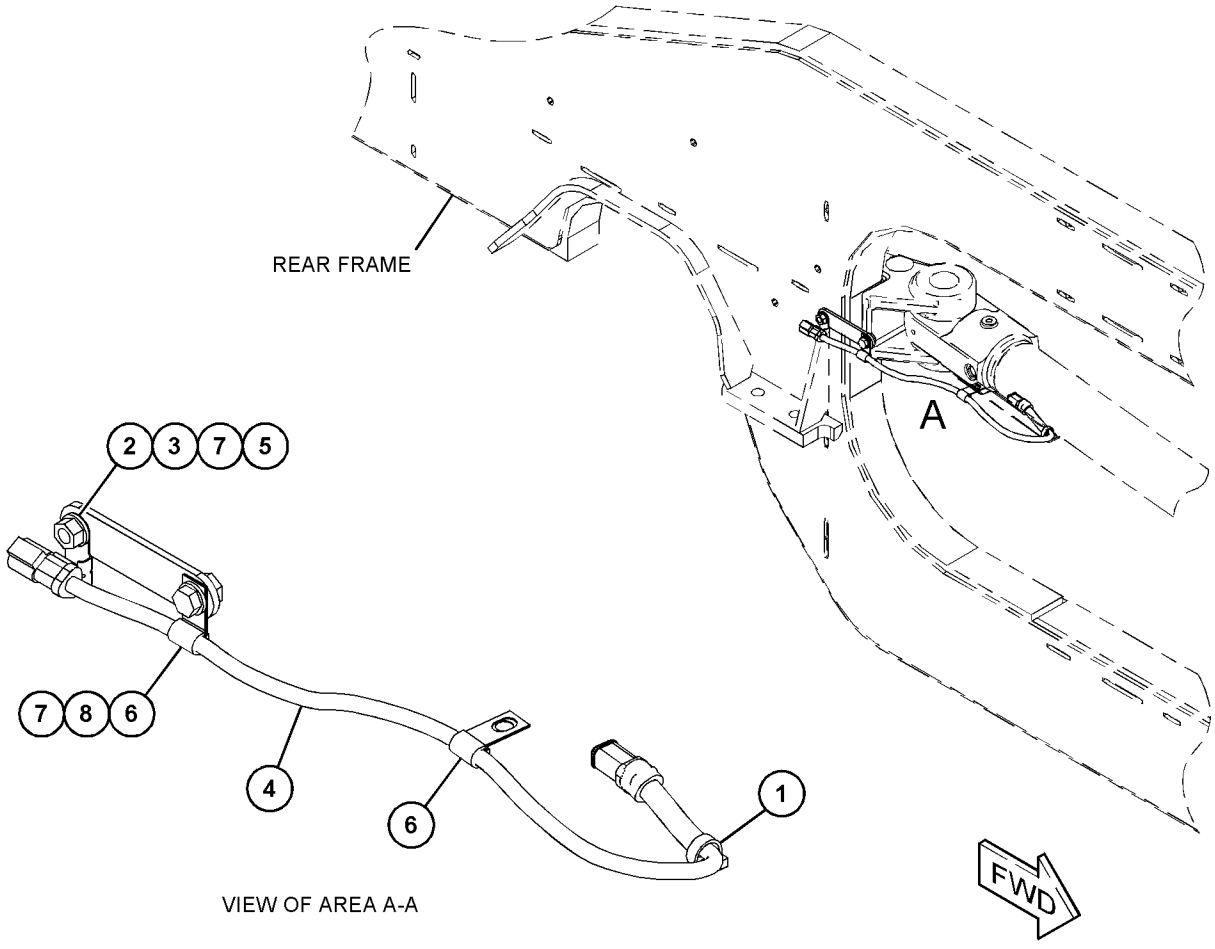

GRAPHIC #1 <END> g03680297

418-8038 WIRING GP-SENSOR

S/N: TNS1-UP

TILT

PART OF 507-6190 HYDRAULIC AR, 492-4028 HYDRAULIC AR-STANDARD LIFT

SMCS-1408 **i06809564**

NOTE	REF NO	GRAPHIC REF	PART NUMBER	QTY	PART NAME 1 2 3 4 5 6 (PRODUCT LEVEL)	SEE PAGE
	1	1	**3S-2093**	1	STRAP-CABLE	
	2	1	**7K-1181**	3	STRAP-CABLE (5.72-MM DIA)	
	3	1	**239-3291**	4	CLAMP-HALF	
Y	4	1	**457-5588**	1	HARNESS AS-SENSOR	169
	5	1	**461-8042**	2	GROMMET	
	6	1	**4D-7794**	5	CLIP	
	7	1	**4P-7581**	1	CLIP	
	8	1	**4P-8134**	1	CLIP	
	9	1	**7V-5628**	2	PLATE	
M	10	1	**7X-2534**	4	BOLT (M6X1X50-MM)	
	11	1	**8T-4121**	6	WASHER-HARD (11X21X2.5-MM THK)	
M	12	1	**8T-4136**	1	BOLT (M10X1.5X25-MM)	
M	13	1	**8T-4137**	4	BOLT (M10X1.5X20-MM)	
M	14	1	**8T-4191**	1	BOLT (M10X1.5X16-MM)	
	15	1	**9X-8256**	4	WASHER (6.6X12X2-MM THK)	

M - METRIC PART
Y - SEPARATE ILLUSTRATION

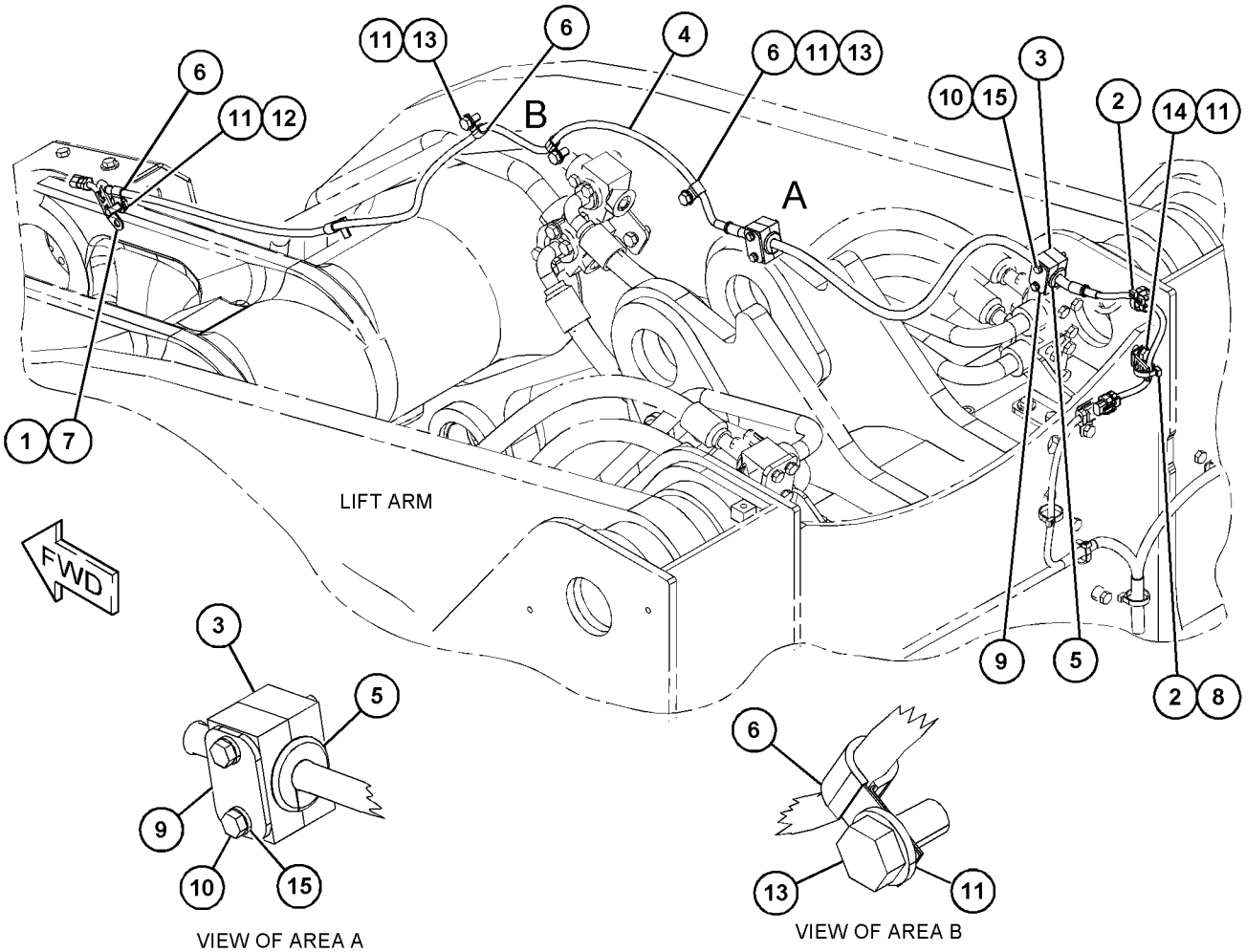

GRAPHIC #1 <END> g06021763

501-1071 WIRING GP-VALVE

S/N: TNS1-UP

PART OF 492-4025 HYDRAULIC AR-3 VALVE

SMCS-1408, 5734 **i06732741**

NOTE	REF NO	GRAPHIC REF	PART NUMBER	QTY	PART NAME 1 2 3 4 5 6 (PRODUCT LEVEL)	SEE PAGE
	1	1	**3S-2093**	6	STRAP-CABLE	
	2	1	**7K-1181**	9	STRAP-CABLE (5.72-MM DIA)	
Y	3	1	**484-5573**	1	HARNESS AS-VALVE	171
	4	1	**206-2423**	2	SADDLE	
	5	1	**277-1873**	2	CLIP	
M	6	1	**344-5675**	2	NUT (M10X1.5-THD)	
	7	1	**4P-7581**	1	CLIP	
	8	1	**8T-4121**	2	WASHER-HARD (11X21X2.5-MM THK)	

M - METRIC PART
Y - SEPARATE ILLUSTRATION

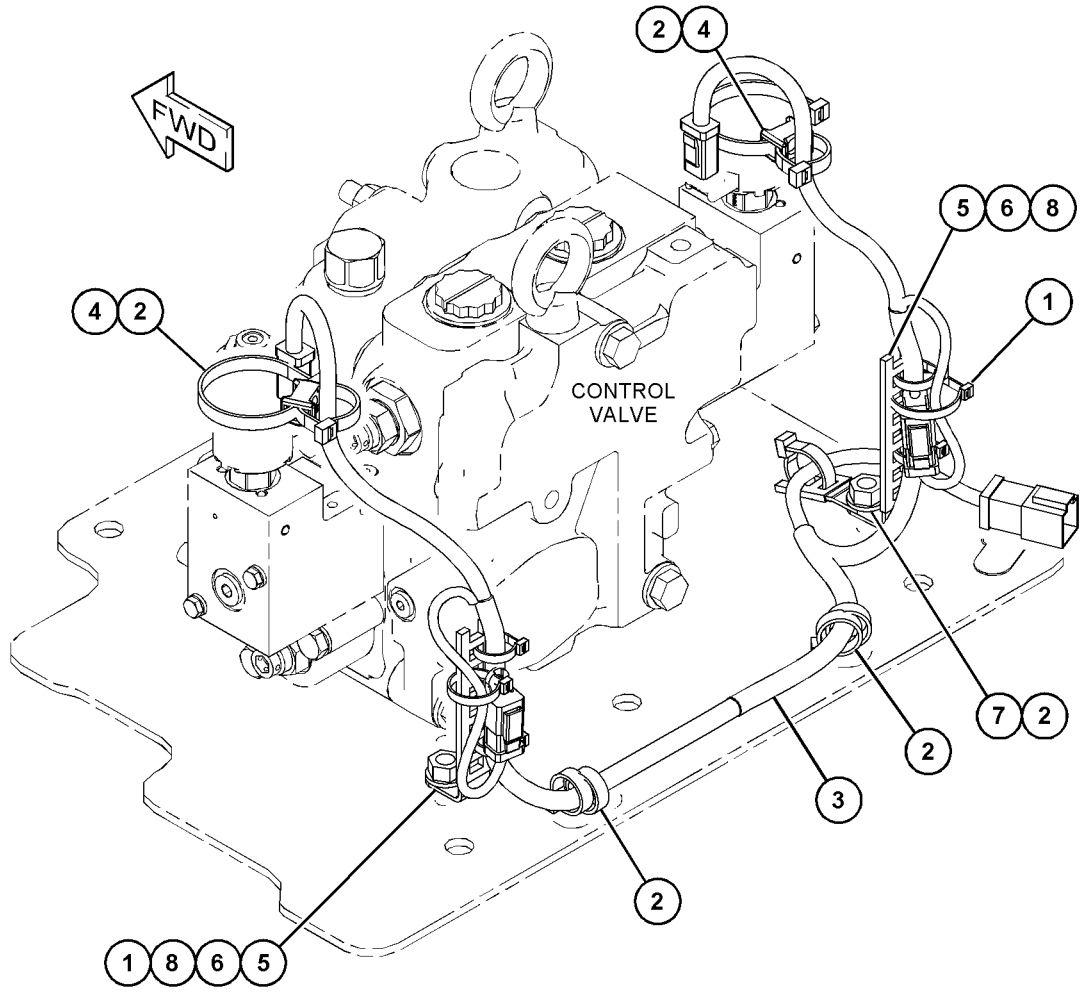

GRAPHIC #1 <END> g06106401

355-9981 ACCUMULATOR GP-HYDRAULIC—CHARGED

S/N: TNS1-UP

PART OF 462-6970 ACCUMULATOR GP-HYDRAULIC

SMCS-5077 **i05757672**

NOTE	REF NO	GRAPHIC REF	PART NUMBER	QTY	PART NAME 1 2 3 4 5 6 (PRODUCT LEVEL)	SEE PAGE
	1	1	**232-3317**	2	FILM-IDENTIFICATION (HYDRAULIC ACCUMULATOR)	

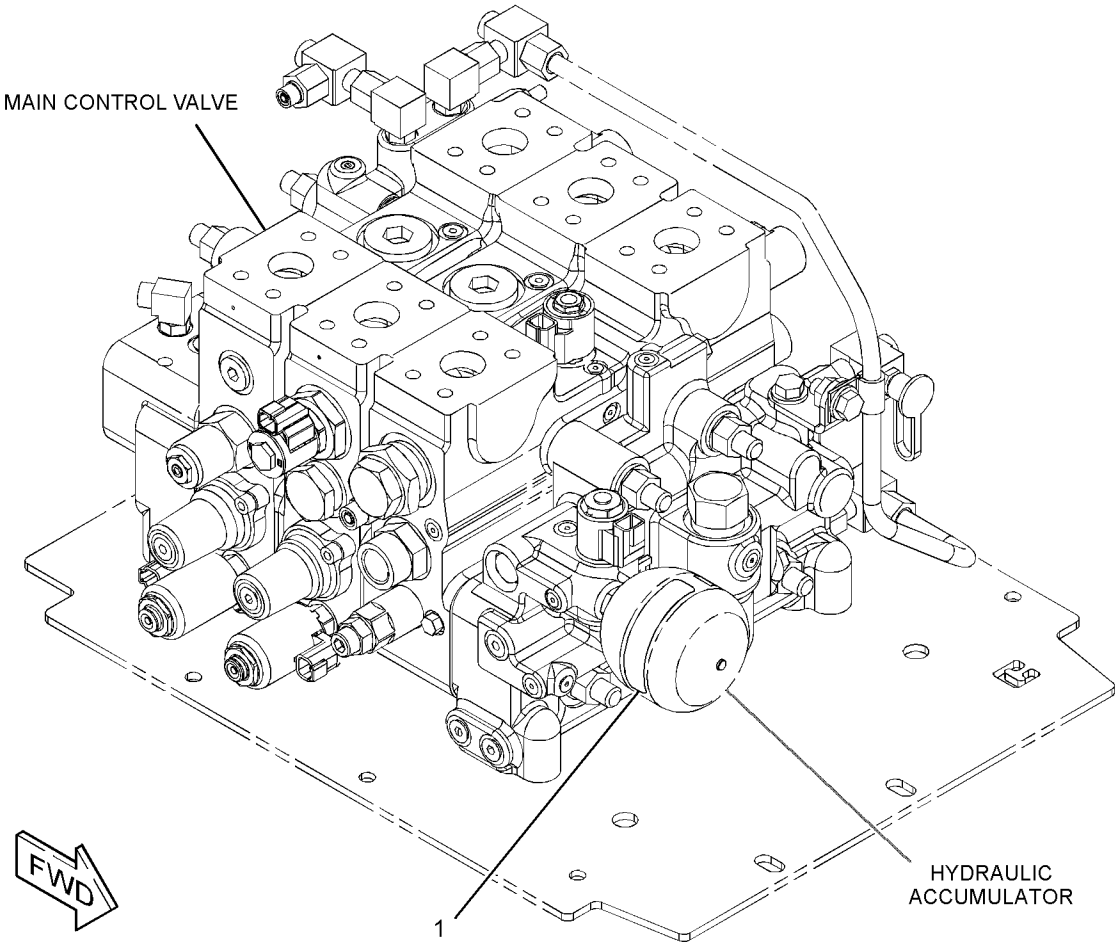

GRAPHIC #1 <END> g03666230

462-6970 ACCUMULATOR GP-HYDRAULIC

S/N: TNS1-UP

PART OF 499-1654 CONVERSION AR-MACHINE

SMCS-5077 **i06736863**

NOTE	REF NO	GRAPHIC REF	PART NUMBER	QTY	PART NAME 1 2 3 4 5 6 (PRODUCT LEVEL)	SEE PAGE
Y	1	1	*355-9981*	1	ACCUMULATOR GP-HYDRAULIC (CHARGED) (PILOT)	268
Y	2	1	*375-2801*	2	ACCUMULATOR GP-BRAKE (CHARGED)	565
	3	1	**3J-1907**	1	SEAL-O-RING	

Y - SEPARATE ILLUSTRATION

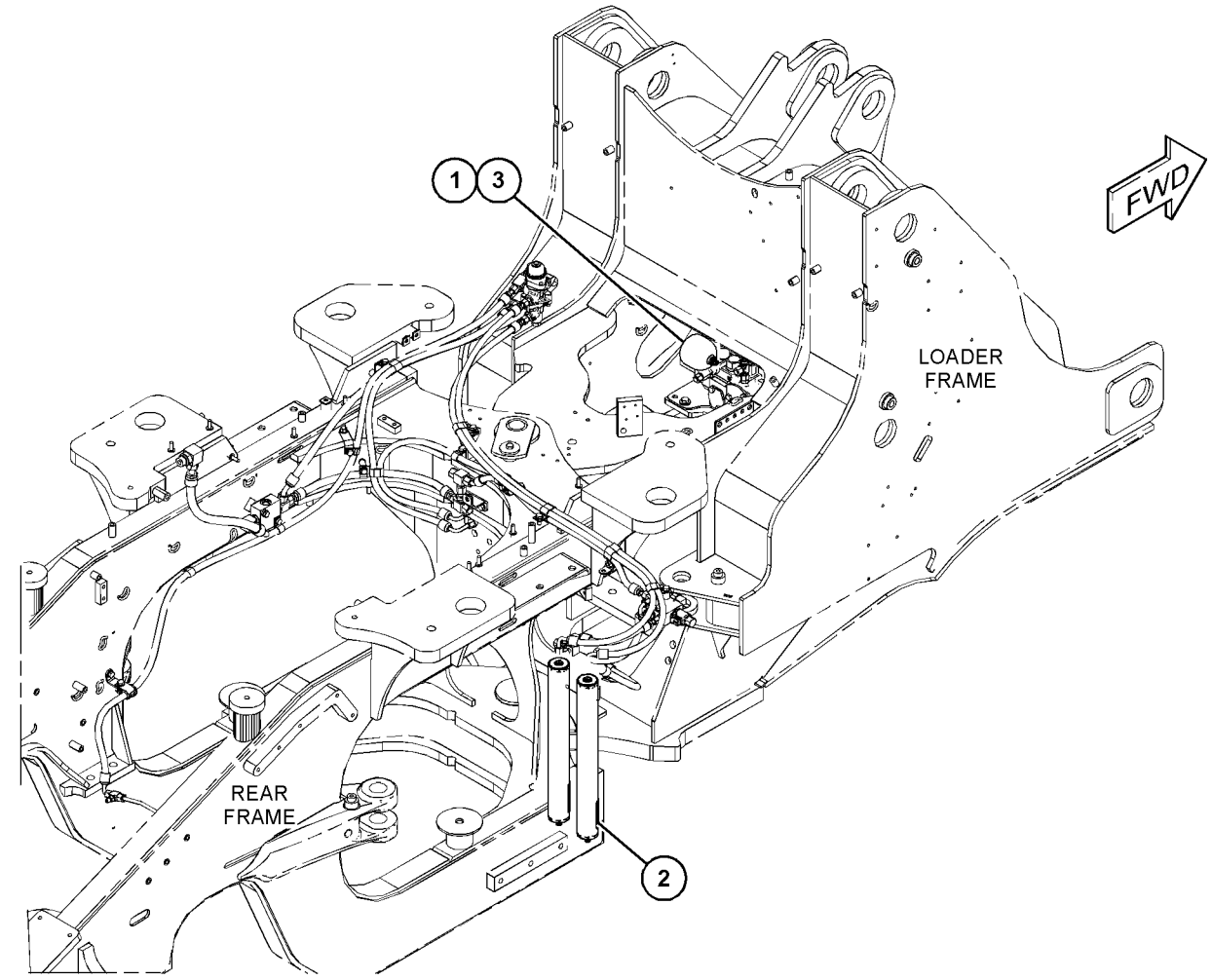

GRAPHIC #1 <END> g06028228

371-7337 AXLE AR-FIXED

S/N: TNS1-UP

PART OF 456-5805 AXLE AR-FIXED & OSCILLATING

SMCS-3013, 3278 **i06797148**

NOTE	PART NUMBER	QTY	PART NAME 1 2 3 4 5 6 (PRODUCT LEVEL)	SEE PAGE
Y	*373-6682*	2	BRAKE & PLANETARY GP	288
Y	*371-5086*	1	BRAKE GP-PARKING	566
Y	*436-6571*	1	DIFFERENTIAL GP	316
Y	*363-3920*	1	GEAR GP-BEVEL	329
Y	*466-8748*	1	HOUSING GP-AXLE	344

Y - SEPARATE ILLUSTRATION

<END>

371-7344 AXLE AR-FIXED

S/N: TNS1-UP

PART OF 463-8852 AXLE AR-FIXED & OSCILLATING

SMCS-3013, 3278 **i06797014**

NOTE	PART NUMBER	QTY	PART NAME 1 2 3 4 5 6 (PRODUCT LEVEL)	SEE PAGE
Y	*373-6682*	2	BRAKE & PLANETARY GP	288
Y	*371-5086*	1	BRAKE GP-PARKING	566
Y	*436-6571*	1	DIFFERENTIAL GP	316
Y	*363-3920*	1	GEAR GP-BEVEL	329
Y	*468-5066*	1	HOUSING GP-AXLE	350
	220-7925	1	PLATE GP-AXLE IDENTIFICATION	

Y - SEPARATE ILLUSTRATION

<END>

371-7345 AXLE AR-FIXED

S/N: TNS1-UP

PART OF 463-8853 AXLE AR-FIXED & OSCILLATING

SMCS-3013, 3278 **i06796989**

NOTE	PART NUMBER	QTY	PART NAME 1 2 3 4 5 6 (PRODUCT LEVEL)	SEE PAGE
Y	*373-6682*	2	BRAKE & PLANETARY GP	288
Y	*371-5086*	1	BRAKE GP-PARKING	566
Y	*436-6571*	1	DIFFERENTIAL GP	316
Y	*363-3920*	1	GEAR GP-BEVEL	329
Y	*342-7632*	1	HEAT EXCHANGER GP-AXLE	341
Y	*466-8751*	1	HOUSING GP-AXLE	346
Y	*377-1468*	1	MOUNTING GP-AXLE OIL COOLER (CONNECTING)	390
	220-7925	1	PLATE GP-AXLE IDENTIFICATION	

Y - SEPARATE ILLUSTRATION

<END>

371-7346 AXLE AR-FIXED–AUTOMATIC DIFFERENTIAL LOCK, FRONT

S/N: TNS1-UP
ECOLOGY DRAIN
PART OF 463-8854 AXLE AR-FIXED & OSCILLATING

SMCS-3013, 3278

i06574220

NOTE	REF NO	GRAPHIC REF	PART NUMBER	QTY	PART NAME 1 2 3 4 5 6 (PRODUCT LEVEL)	SEE PAGE
Y	1	1	*373-6682*	1	BRAKE & PLANETARY GP (FRONT)	288
Y	2	1	*355-1142*	1	DIFFERENTIAL GP	313
Y	3	1	*356-3418*	1	GEAR GP-BEVEL & PINION	334
Y	4	1	*360-9856*	1	BRAKE & PLANETARY GP	283
Y	5	1	*371-5086*	1	BRAKE GP-PARKING	566
Y	6	1	*371-7382*	1	HOUSING GP-FIXED AXLE	354

Y - SEPARATE ILLUSTRATION

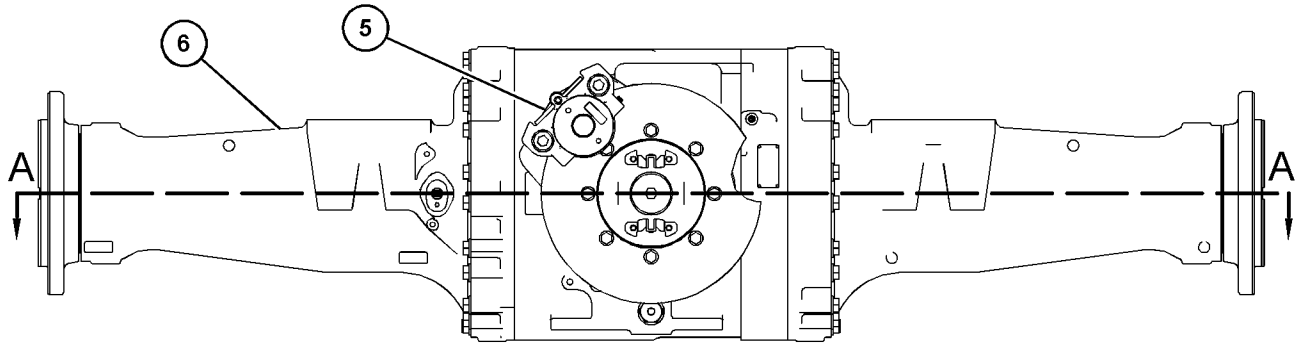

REAR VIEW

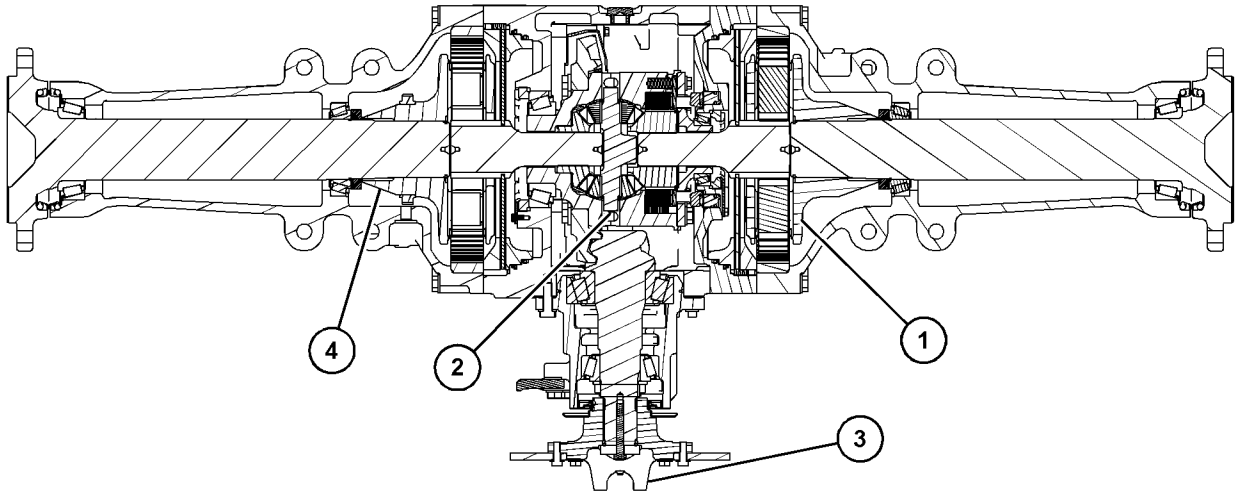

SECTION A-A

GRAPHIC #1

<END>

g03687820

371-7347 AXLE AR-FIXED—ECOLOGY DRAIN VALVE

S/N: TNS1-UP

W/ INTERNAL OIL COOLER

PART OF 463-8857 AXLE AR-FIXED & OSCILLATING

SMCS-3013, 3278

i06720300

NOTE	PART NUMBER	QTY	PART NAME 1 2 3 4 5 6 (PRODUCT LEVEL)	SEE PAGE
Y	*373-6682*	1	BRAKE & PLANETARY GP (FRONT)	288
Y	*360-9856*	1	BRAKE & PLANETARY GP	283
Y	*371-5086*	1	BRAKE GP-PARKING (FRONT AXLE)	566
Y	**355-1142**	1	DIFFERENTIAL GP	313
Y	*356-3418*	1	GEAR GP-BEVEL & PINION	334
Y	*342-7632*	1	HEAT EXCHANGER GP-AXLE	341
Y	*371-7383*	1	HOUSING GP-FIXED AXLE	356
Y	*377-1468*	1	MOUNTING GP-AXLE OIL COOLER (CONNECTING)	390

Y - SEPARATE ILLUSTRATION

<END>

371-7349 AXLE AR-FIXED–AUTOMATIC DIFFERENTIAL LOCK, FRONT

S/N: TNS1-UP
ECOLOGY DRAIN, SEAL GUARDS
PART OF 463-8856 AXLE AR-FIXED & OSCILLATING

SMCS-3013, 3278

i06752382

NOTE	REF NO	GRAPHIC REF	PART NUMBER	QTY	PART NAME 1 2 3 4 5 6 (PRODUCT LEVEL)	SEE PAGE
Y	1	1	*373-6682*	1	BRAKE & PLANETARY GP (FRONT)	288
Y	2	1	**355-1142**	1	DIFFERENTIAL GP	313
Y	3	1	*356-3418*	1	GEAR GP-BEVEL & PINION	334
Y	4	1	*360-9856*	1	BRAKE & PLANETARY GP	283
Y	5	1	*371-5086*	1	BRAKE GP-PARKING	566
Y	6	1	*371-7385*	1	HOUSING GP-FIXED AXLE	358

Y - SEPARATE ILLUSTRATION

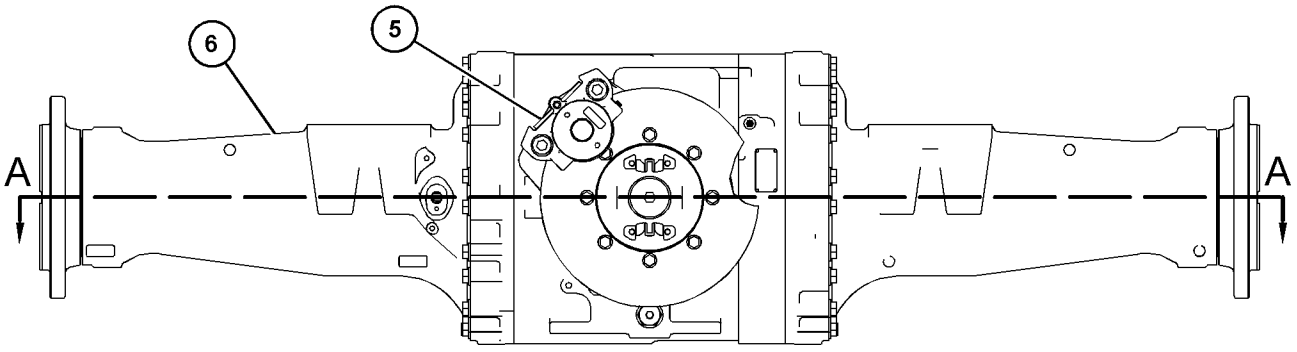

REAR VIEW

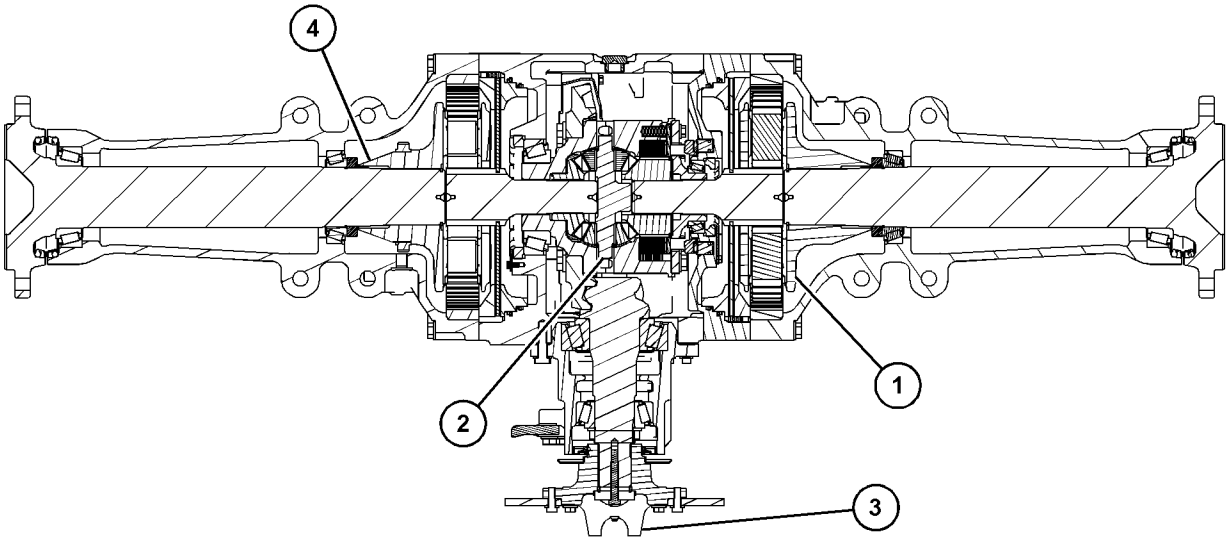

SECTION A-A

GRAPHIC #1

<END>

g03687862

371-7350 AXLE AR-FIXED

S/N: TNS1-UP

PART OF 463-8850 AXLE AR-FIXED & OSCILLATING

SMCS-3013, 3278 **i06797085**

NOTE	PART NUMBER	QTY	PART NAME 1 2 3 4 5 6 (PRODUCT LEVEL)	SEE PAGE
Y	*373-6682*	2	BRAKE & PLANETARY GP	288
Y	*371-5086*	1	BRAKE GP-PARKING	566
Y	*436-6571*	1	DIFFERENTIAL GP	316
Y	*363-3920*	1	GEAR GP-BEVEL	329
Y	*371-7386*	1	HOUSING GP-AXLE	342
	220-7925	1	PLATE GP-AXLE IDENTIFICATION	

Y - SEPARATE ILLUSTRATION

<END>

466-8752 AXLE AR-FIXED

S/N: TNS1-UP

PART OF 463-8851 AXLE AR-FIXED & OSCILLATING

SMCS-3013, 3278 **i06797093**

NOTE	PART NUMBER	QTY	PART NAME 1 2 3 4 5 6 (PRODUCT LEVEL)	SEE PAGE
Y	*373-6682*	2	BRAKE & PLANETARY GP	288
Y	*371-5086*	1	BRAKE GP-PARKING	566
Y	*436-6571*	1	DIFFERENTIAL GP	316
Y	*363-3920*	1	GEAR GP-BEVEL	329
Y	*466-8753*	1	HOUSING GP-AXLE	348
	220-7925	1	PLATE GP-AXLE IDENTIFICATION	

Y - SEPARATE ILLUSTRATION

<END>

456-5805 AXLE AR-FIXED & OSCILLATING

S/N: TNS1-UP

SMCS-3013, 3278 **i06797138**

NOTE	PART NUMBER	QTY	PART NAME 1 2 3 4 5 6 (PRODUCT LEVEL)	SEE PAGE
Y	*371-7337*	1	AXLE AR-FIXED	270
Y	*466-8754*	1	AXLE AR-OSCILLATING	282
Y	*374-5482*	1	CYLINDER & MTG GP-STEERING	710
Y	*360-0357*	1	LINES GP-AXLE OIL COOLER	381
Y	*436-7013*	1	MANIFOLD GP-HYDRAULIC	639
Y	*364-7276*	1	WIRING GP-AXLE TEMPERATURE	225

Y - SEPARATE ILLUSTRATION

<END>

463-8850 AXLE AR-FIXED & OSCILLATING

S/N: TNS1-UP
STANDARD, W/ECOLOGY DRAIN
PART OF 492-4033, 492-4034 DISTRIBUTION AR

SMCS-3013, 3278 **i06797071**

NOTE	PART NUMBER	QTY	PART NAME 1 2 3 4 5 6 (PRODUCT LEVEL)	SEE PAGE
Y	*371-7350*	1	AXLE AR-FIXED	274
Y	*371-7351*	1	AXLE AR-OSCILLATING	278
Y	*374-5482*	1	CYLINDER & MTG GP-STEERING	710
Y	*360-0357*	1	LINES GP-AXLE OIL COOLER	381
Y	*436-7013*	1	MANIFOLD GP-HYDRAULIC	639
Y	*364-7276*	1	WIRING GP-AXLE TEMPERATURE	225

Y - SEPARATE ILLUSTRATION

<END>

463-8851 AXLE AR-FIXED & OSCILLATING

S/N: TNS1-UP
STANDARD, W/ECOLOGY DRAIN

SMCS-3013, 3278 **i06797027**

NOTE	PART NUMBER	QTY	PART NAME 1 2 3 4 5 6 (PRODUCT LEVEL)	SEE PAGE
Y	*466-8752*	1	AXLE AR-FIXED	274
Y	*371-7353*	1	AXLE AR-OSCILLATING	278
Y	*374-5482*	1	CYLINDER & MTG GP-STEERING	710
Y	*360-0357*	1	LINES GP-AXLE OIL COOLER	381
Y	*436-7013*	1	MANIFOLD GP-HYDRAULIC	639
Y	*364-7276*	1	WIRING GP-AXLE TEMPERATURE	225

Y - SEPARATE ILLUSTRATION

<END>

463-8852 AXLE AR-FIXED & OSCILLATING

S/N: TNS1-UP

SMCS-3013, 3278 **i06797002**

NOTE	PART NUMBER	QTY	PART NAME 1 2 3 4 5 6 (PRODUCT LEVEL)	SEE PAGE
Y	*371-7344*	1	AXLE AR-FIXED	270
Y	*371-7338*	1	AXLE AR-OSCILLATING	277
Y	*374-5482*	1	CYLINDER & MTG GP-STEERING	710
Y	*370-2229*	1	GUARD GP-AXLE	459
Y	*360-0357*	1	LINES GP-AXLE OIL COOLER	381
Y	*436-7013*	1	MANIFOLD GP-HYDRAULIC	639
Y	*364-7276*	1	WIRING GP-AXLE TEMPERATURE	225

Y - SEPARATE ILLUSTRATION

<END>

463-8853 AXLE AR-FIXED & OSCILLATING

S/N: TNS1-UP

STANDARD, W/ECOLOGY DRAIN

SMCS-3013, 3278

i06796982

NOTE	PART NUMBER	QTY	PART NAME 1 2 3 4 5 6 (PRODUCT LEVEL)	SEE PAGE
Y	*371-7345*	1	AXLE AR-FIXED	270
Y	*371-7352*	1	AXLE AR-OSCILLATING	278
Y	*374-5482*	1	CYLINDER & MTG GP-STEERING	710
Y	*375-2924*	1	HARDWARE GP-REAR FRAME (AXLE OIL COOLER MOUNTING)	483
Y	*436-7030*	1	LINES GP-AXLE OIL COOLER	382
Y	*436-7013*	1	MANIFOLD GP-HYDRAULIC	639
Y	*364-7276*	1	WIRING GP-AXLE TEMPERATURE	225

Y - SEPARATE ILLUSTRATION

<END>

463-8854 AXLE AR-FIXED & OSCILLATING

S/N: TNS1-UP

STANDARD, W/ECOLOGY DRAIN

SMCS-3013, 3278

i06796467

NOTE	PART NUMBER	QTY	PART NAME 1 2 3 4 5 6 (PRODUCT LEVEL)	SEE PAGE
Y	*371-7346*	1	AXLE AR-FIXED	271
Y	*371-7356*	1	AXLE AR-OSCILLATING	279
Y	*394-3964*	1	BOSS GP-REAR FRAME	418
Y	*436-7028*	1	CONTROL GP-DIFFERENTIAL LOCK	303
Y	*436-7029*	1	CONTROL GP-DIFFERENTIAL LOCK	305
Y	*374-5483*	1	CYLINDER & MTG GP-STEERING	711
Y	*360-0357*	1	LINES GP-AXLE OIL COOLER	381
Y	*364-7295*	1	WIRING GP-AXLE TEMPERATURE	227
Y	*374-4755*	1	WIRING GP-SENSOR	265

Y - SEPARATE ILLUSTRATION

<END>

463-8856 AXLE AR-FIXED & OSCILLATING

S/N: TNS1-UP
STANDARD, W/ECOLOGY DRAIN

SMCS-3013, 3278 **i06796473**

NOTE	PART NUMBER	QTY	PART NAME 1 2 3 4 5 6 (PRODUCT LEVEL)	SEE PAGE
Y	*371-7349*	1	AXLE AR-FIXED	273
Y	*371-7359*	1	AXLE AR-OSCILLATING	281
Y	*394-3964*	1	BOSS GP-REAR FRAME	418
Y	*436-7028*	1	CONTROL GP-DIFFERENTIAL LOCK	303
Y	*436-7029*	1	CONTROL GP-DIFFERENTIAL LOCK	305
Y	*374-5483*	1	CYLINDER & MTG GP-STEERING	711
Y	*370-2229*	1	GUARD GP-AXLE	459
Y	*360-0357*	1	LINES GP-AXLE OIL COOLER	381
Y	*364-7295*	1	WIRING GP-AXLE TEMPERATURE	227
Y	*374-4755*	1	WIRING GP-SENSOR	265

Y - SEPARATE ILLUSTRATION

<END>

463-8857 AXLE AR-FIXED & OSCILLATING

S/N: TNS1-UP
STANDARD, W/ECOLOGY DRAIN

SMCS-3013, 3278 **i06796960**

NOTE	PART NUMBER	QTY	PART NAME 1 2 3 4 5 6 (PRODUCT LEVEL)	SEE PAGE
Y	*371-7347*	1	AXLE AR-FIXED	272
Y	*371-7357*	1	AXLE AR-OSCILLATING	280
Y	*394-3964*	1	BOSS GP-REAR FRAME	418
Y	*436-7028*	1	CONTROL GP-DIFFERENTIAL LOCK	303
Y	*436-7029*	1	CONTROL GP-DIFFERENTIAL LOCK	305
Y	*374-5483*	1	CYLINDER & MTG GP-STEERING	711
Y	*436-7030*	1	LINES GP-AXLE OIL COOLER	382
Y	*374-4755*	1	WIRING GP-SENSOR	265

Y - SEPARATE ILLUSTRATION

<END>

371-7338 AXLE AR-OSCILLATING—REAR

S/N: TNS1-UP
OPEN DIFFERENTIAL, AXLE OIL COOLER, ECOLOGY DRAIN
PART OF 463-8852 AXLE AR-FIXED & OSCILLATING

SMCS-3013, 3278 **i06752224**

NOTE	PART NUMBER	QTY	PART NAME 1 2 3 4 5 6 (PRODUCT LEVEL)	SEE PAGE
Y	*364-2562*	2	BRAKE & PLANETARY GP	285
Y	**355-1153**	1	DIFFERENTIAL GP	315
Y	*363-3919*	1	GEAR GP-BEVEL & PINION	336
Y	*371-7390*	1	HOUSING GP-OSCILLATING AXLE	369

Y - SEPARATE ILLUSTRATION

<END>

371-7351 AXLE AR-OSCILLATING—ECOLOGY DRAIN VALVE

S/N: TNS1-UP
OPEN DIFFERENTIAL
PART OF 463-8850 AXLE AR-FIXED & OSCILLATING

SMCS-3013, 3278 **i06819325**

NOTE	PART NUMBER	QTY	PART NAME 1 2 3 4 5 6 (PRODUCT LEVEL)	SEE PAGE
Y	*364-2562*	2	BRAKE & PLANETARY GP	285
Y	*355-1153*	1	DIFFERENTIAL GP	315
Y	*363-3919*	1	GEAR GP-BEVEL & PINION	336
Y	*371-7387*	1	HOUSING GP-OSCILLATING AXLE	360

Y - SEPARATE ILLUSTRATION

<END>

371-7352 AXLE AR-OSCILLATING—REAR

S/N: TNS1-UP
OPEN DIFFERENTIAL
PART OF 463-8853 AXLE AR-FIXED & OSCILLATING

SMCS-3013, 3278 **i06555675**

NOTE	PART NUMBER	QTY	PART NAME 1 2 3 4 5 6 (PRODUCT LEVEL)	SEE PAGE
Y	*364-2562*	2	BRAKE & PLANETARY GP	285
Y	**355-1153**	1	DIFFERENTIAL GP	315
Y	*363-3919*	1	GEAR GP-BEVEL & PINION	336
Y	*342-7632*	1	HEAT EXCHANGER GP-AXLE	341
Y	*371-7388*	1	HOUSING GP-OSCILLATING AXLE	363
Y	*373-6685*	1	MOUNTING GP-AXLE OIL COOLER (CONNECTING)	389

Y - SEPARATE ILLUSTRATION

<END>

371-7353 AXLE AR-OSCILLATING

S/N: TNS1-UP
OPEN DIFFERENTIAL, REAR
PART OF 463-8851 AXLE AR-FIXED & OSCILLATING

SMCS-3013, 3278 **i06797046**

NOTE	PART NUMBER	QTY	PART NAME 1 2 3 4 5 6 (PRODUCT LEVEL)	SEE PAGE
Y	*364-2562*	2	BRAKE & PLANETARY GP	285
Y	**355-1153**	1	DIFFERENTIAL GP	315
Y	*363-3919*	1	GEAR GP-BEVEL & PINION	336
Y	*371-7389*	1	HOUSING GP-OSCILLATING AXLE	366

Y - SEPARATE ILLUSTRATION

<END>

371-7356 AXLE AR-OSCILLATING—LOCKING DIFFERENTIAL

S/N: TNS1-UP
ECOLOGY DRAIN
PART OF 463-8854 AXLE AR-FIXED & OSCILLATING

SMCS-3013, 3278

i06574278

NOTE	REF NO	GRAPHIC REF	PART NUMBER	QTY	PART NAME 1 2 3 4 5 6 (PRODUCT LEVEL)	SEE PAGE
Y	1	1	*373-6682*	1	BRAKE & PLANETARY GP (FRONT)	288
Y	2	1	**355-1142**	1	DIFFERENTIAL GP	313
Y	3	1	*355-1152*	1	GEAR GP-BEVEL & PINION	331
Y	4	1	*360-9856*	1	BRAKE & PLANETARY GP	283
Y	5	1	*371-7392*	1	HOUSING GP-OSCILLATING AXLE	372

Y - SEPARATE ILLUSTRATION

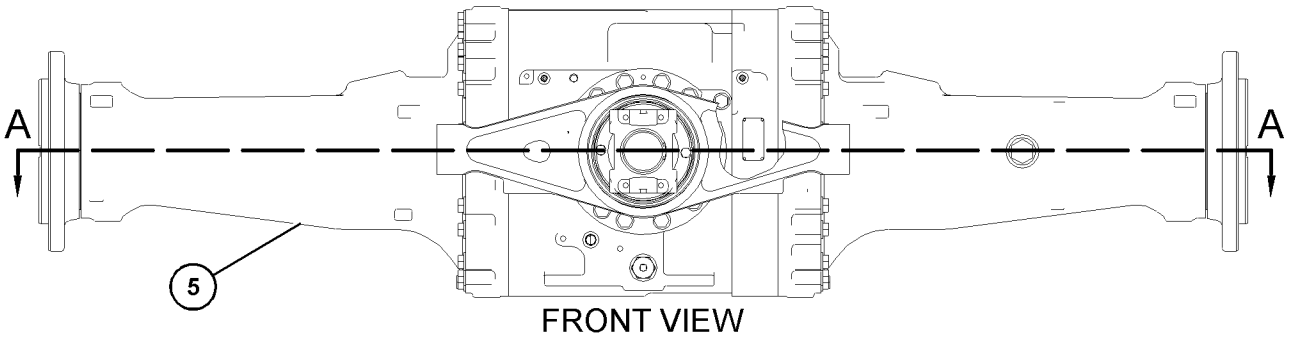

FRONT VIEW

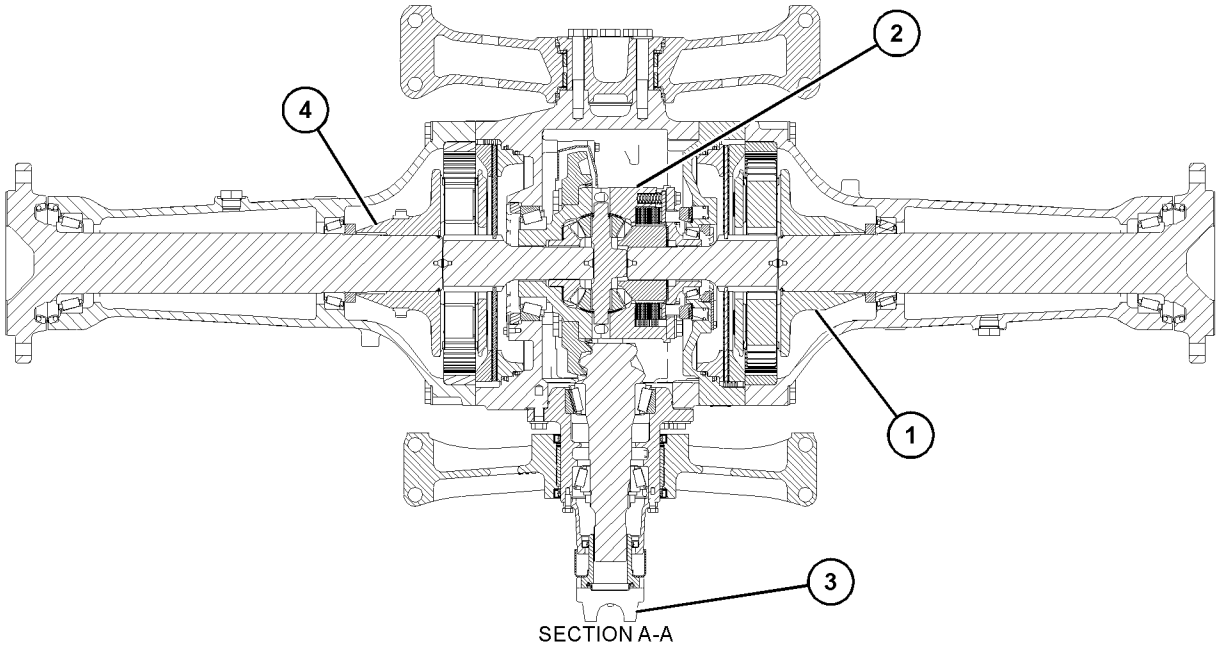

SECTION A-A

GRAPHIC #1

<END>

g03687872

371-7357 AXLE AR-OSCILLATING—AUTOMATIC DIFFERENTIAL LOCK, REAR

S/N: TNS1-UP

PART OF 463-8857 AXLE AR-FIXED & OSCILLATING

SMCS-3013, 3278

i06720319

NOTE	PART NUMBER	QTY	PART NAME 1 2 3 4 5 6 (PRODUCT LEVEL)	SEE PAGE
Y	*373-6682*	1	BRAKE & PLANETARY GP (FRONT)	288
Y	*360-9856*	1	BRAKE & PLANETARY GP	283
Y	**355-1142**	1	DIFFERENTIAL GP	313
Y	*355-1152*	1	GEAR GP-BEVEL & PINION	331
Y	*342-7632*	1	HEAT EXCHANGER GP-AXLE	341
Y	*371-7393*	1	HOUSING GP-OSCILLATING AXLE	375
Y	*373-6685*	1	MOUNTING GP-AXLE OIL COOLER (CONNECTING)	389

Y - SEPARATE ILLUSTRATION

<END>

371-7359 AXLE AR-OSCILLATING—AUTOMATIC DIFFERENTIAL LOCK, REAR

S/N: TNS1-UP
ECOLOGY DRAIN, SEAL GUARDS
PART OF 463-8856 AXLE AR-FIXED & OSCILLATING

SMCS-3013, 3278

i06752384

NOTE	REF NO	GRAPHIC REF	PART NUMBER	QTY	PART NAME 1 2 3 4 5 6 (PRODUCT LEVEL)	SEE PAGE
Y	1	1	*373-6682*	1	BRAKE & PLANETARY GP	288
Y	2	1	**355-1142**	1	DIFFERENTIAL GP	313
Y	3	1	*355-1152*	1	GEAR GP-BEVEL & PINION	331
Y	4	1	*360-9856*	1	BRAKE & PLANETARY GP	283
Y	5	1	*371-7395*	1	HOUSING GP-OSCILLATING AXLE	378

Y - SEPARATE ILLUSTRATION

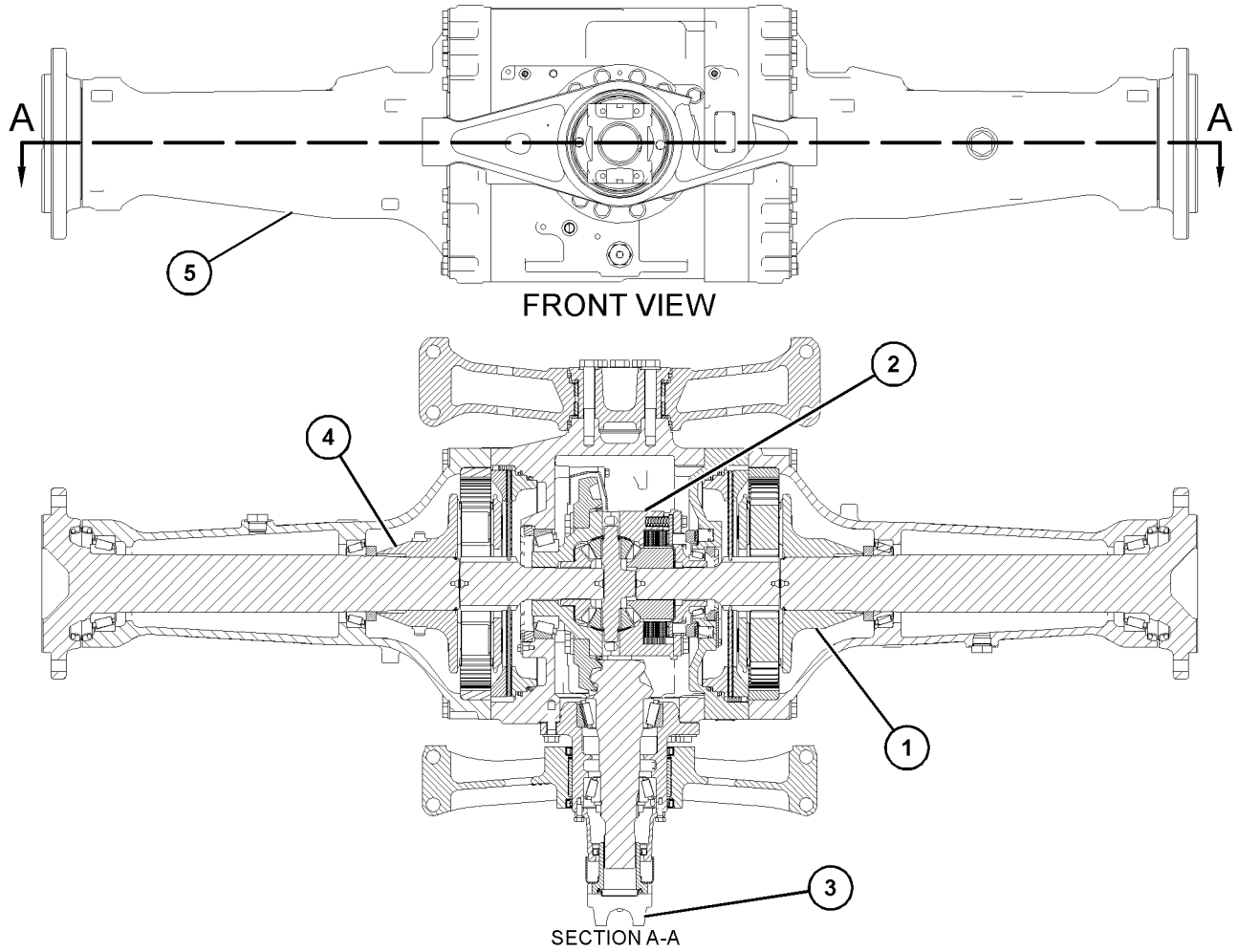

GRAPHIC #1

<END>

g03687881

466-8754 AXLE AR-OSCILLATING

S/N: TNS1-UP

PART OF 456-5805 AXLE AR-FIXED & OSCILLATING

SMCS-3013, 3278

i06797522

NOTE	PART NUMBER	QTY	PART NAME 1 2 3 4 5 6 (PRODUCT LEVEL)	SEE PAGE
Y	*364-2562*	2	BRAKE & PLANETARY GP	285
Y	*355-1153*	1	DIFFERENTIAL GP	315
Y	*363-3919*	1	GEAR GP-BEVEL & PINION	336
Y	*468-5070*	1	HOUSING GP-AXLE	352
	220-7925	1	PLATE GP-AXLE IDENTIFICATION	

Y - SEPARATE ILLUSTRATION

<END>

360-9856 BRAKE & PLANETARY GP

S/N: TNS1-UP

PART OF 371-7346, 371-7347, 371-7349 AXLE AR-FIXED, 371-7356, 371-7357, 371-7359 AXLE AR-OSCILLATING

SMCS-4011, 4255

i06574229

NOTE	REF NO	GRAPHIC REF	PART NUMBER	QTY	PART NAME 1 2 3 4 5 6 (PRODUCT LEVEL)	SEE PAGE
	1	1	**187-9762**	1	SEAL-BRAKE	
	2	1	**293-3609**	3	SPRING	
	3	1	**307-1570**	1	PISTON-REACTION	
	4	1	**307-2246**	1	PLATE-REACTION	
	5	1	**311-2939**	1	RING	
	6	1	**312-4319**	1	RING-BACKUP	
	7	1	**312-4320**	1	RING-BACKUP	
	8	1	**312-4321**	1	SEAL-D-RING	
	9	1	**360-9857**	1	CARRIER-PLANETARY	
	10	1	**364-3085**	3	GEAR-PLANETARY (30-TEETH)	
	11	1	**364-3086**	1	GEAR-RING (81-TEETH)	
	12	1	**366-5768**	3	SHAFT	
	13	1	**366-5769**	3	BUSHING	
	14	1	**371-1691**	6	WASHER-THRUST	
	15	1	**373-6683**	1	PIN	
	16	1	**375-0276**	1	DISC-FRICTION	
	17	1	**424-5167**	1	GEAR-SUN (18-TEETH)	
	18	1	**138-1645**	3	PIN-SPRING	
	19	1	**149-9112**	1	DOWEL-HOLLOW	
	20	1	**150-4651**	1	SEAL-O-RING	
	21	1	**287-7340**	1	PLUG	
	22	1	**469-0883**	4	DOWEL	
	23	1	**3E-5001**	1	PIN-SPRING	
	24	1	**3K-0360**	1	SEAL-O-RING	
	25	1	**3P-7832**	3	DOWEL	
	26	1	**8T-2925**	3	PIN-SPRING	

360-9856 **BRAKE & PLANETARY GP** (contd.) **i06574229**

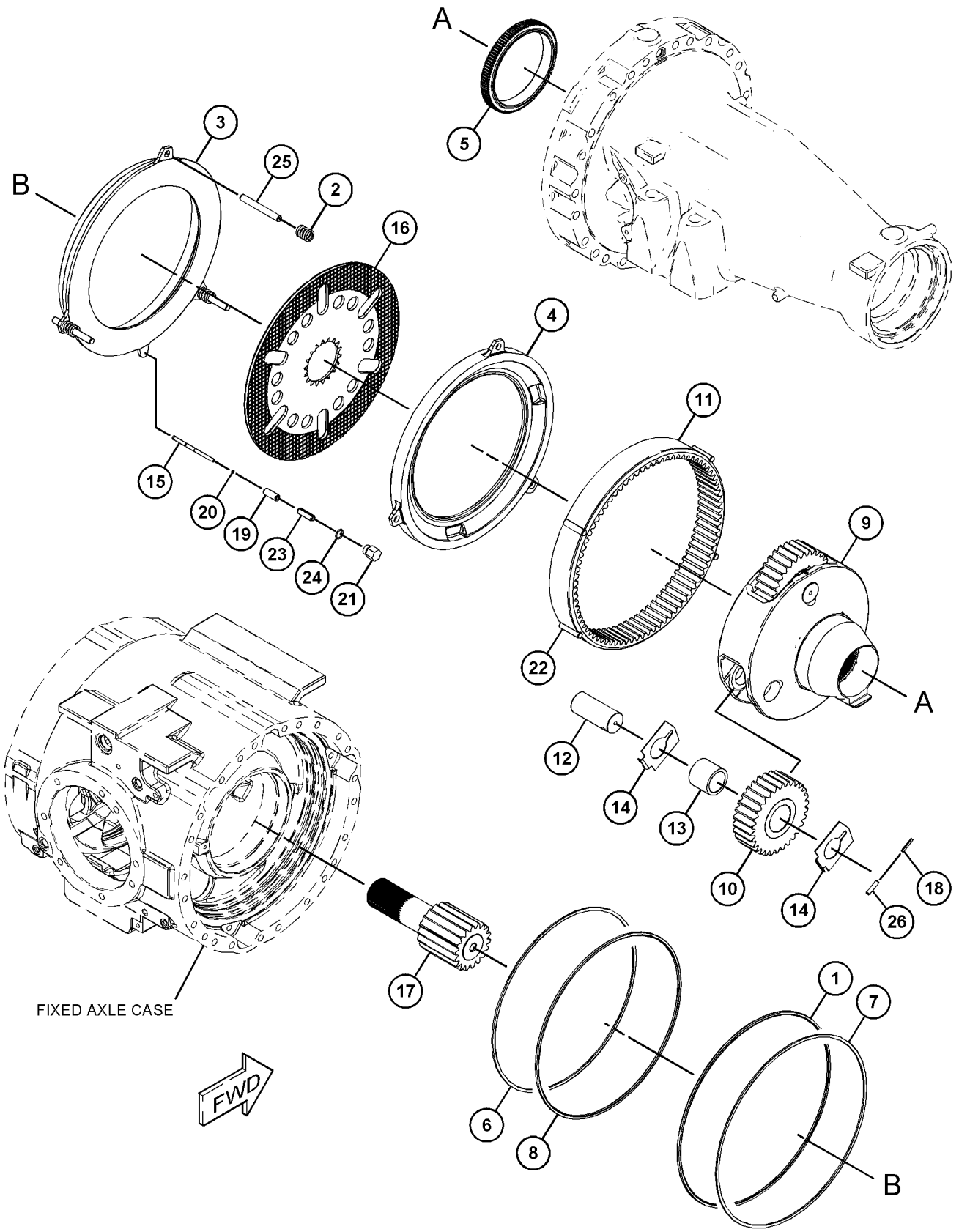

GRAPHIC #1 <END> g03685348

364-2562 BRAKE & PLANETARY GP–REAR AXLE

S/N: TNS1-UP

FOR USE WITH OPEN DIFFERENTIAL

PART OF 371-7338, 371-7351, 371-7352, 371-7353, 466-8754 AXLE AR-OSCILLATING

SMCS-4011, 4255

i05944580

NOTE	REF NO	GRAPHIC REF	PART NUMBER	QTY	PART NAME 1 2 3 4 5 6 (PRODUCT LEVEL)	SEE PAGE
	1	2	**187-9762**	1	SEAL-BRAKE	
	2	2	**293-3609**	3	SPRING	
	3	2	**307-1570**	1	PISTON-REACTION	
	4	2	**307-2246**	1	PLATE-REACTION	
	5	2	**312-4319**	1	RING-BACKUP	
	6	2	**312-4320**	1	RING-BACKUP	
	7	2	**312-4321**	1	SEAL-D-RING	
	8	1	**364-2561**	1	CARRIER-PLANETARY	
	9	1	**364-3085**	3	GEAR-PLANETARY (30-TEETH)	
	10	2	**364-3086**	1	GEAR-RING (81-TEETH)	
	11	1	**366-5768**	3	SHAFT	
	12	1	**366-5769**	3	BUSHING	
	13	1	**371-1691**	6	WASHER-THRUST	
	14	2	**373-6683**	1	PIN	
	15	2	**375-0276**	1	DISC-FRICTION	
	16	2	**424-5167**	1	GEAR-SUN (18-TEETH)	
	17	1	**138-1645**	3	PIN-SPRING	
	18	2	**149-9112**	1	DOWEL-HOLLOW	
	19	2	**150-4651**	1	SEAL-O-RING	
	20	2	**287-7340**	1	PLUG	
	21	2	**469-0883**	4	DOWEL	
	22	2	**3E-5001**	1	PIN-SPRING	
	23	2	**3K-0360**	1	SEAL-O-RING	
	24	2	**3P-7832**	3	DOWEL	
	25	1	**8T-2925**	3	PIN-SPRING	

364-2562 **BRAKE & PLANETARY GP** (contd.) **i05944580**

REFER TO ALL ILLUSTRATIONS OF
THIS GROUP FOR AUXILIARY VIEWS

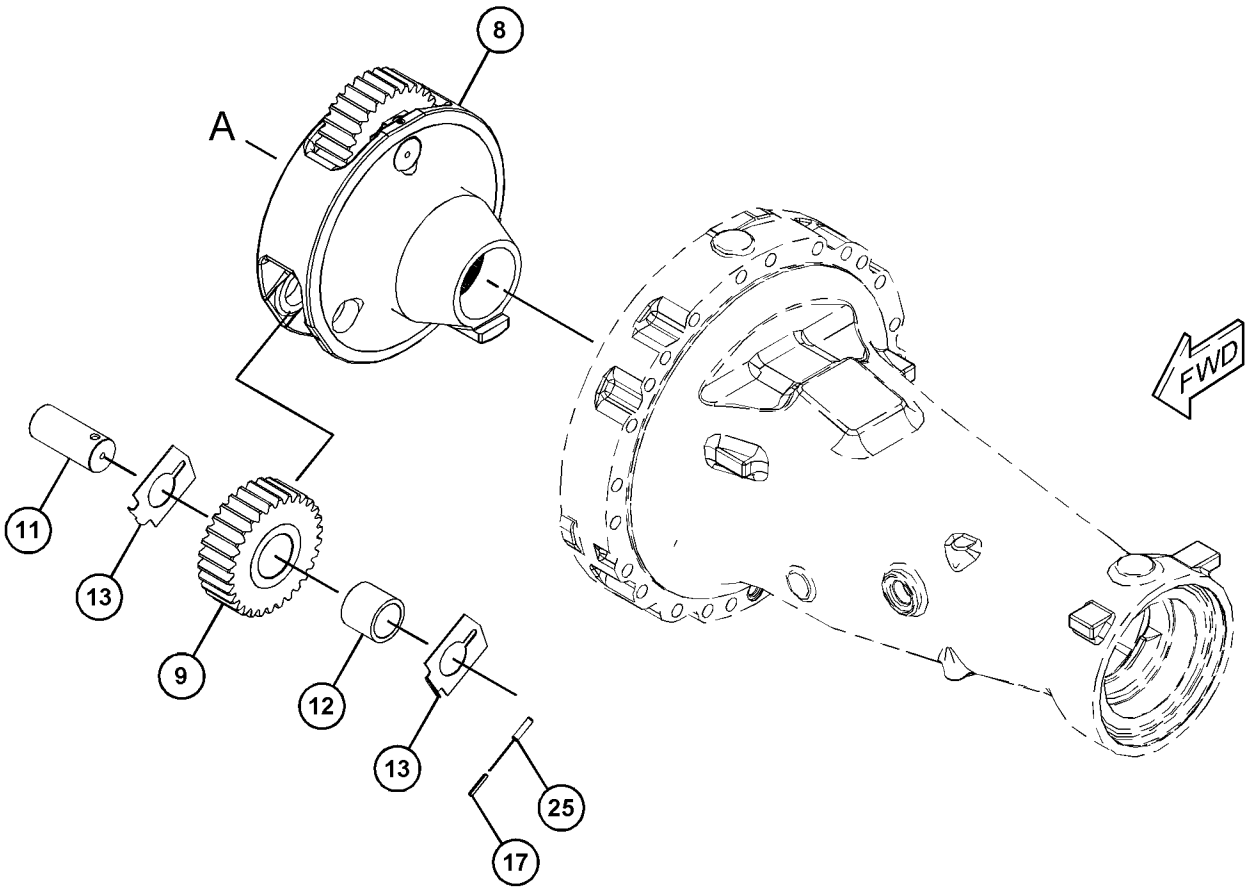

GRAPHIC #1 g03680527

364-2562 **BRAKE & PLANETARY GP (**contd.**)** **i05944580**

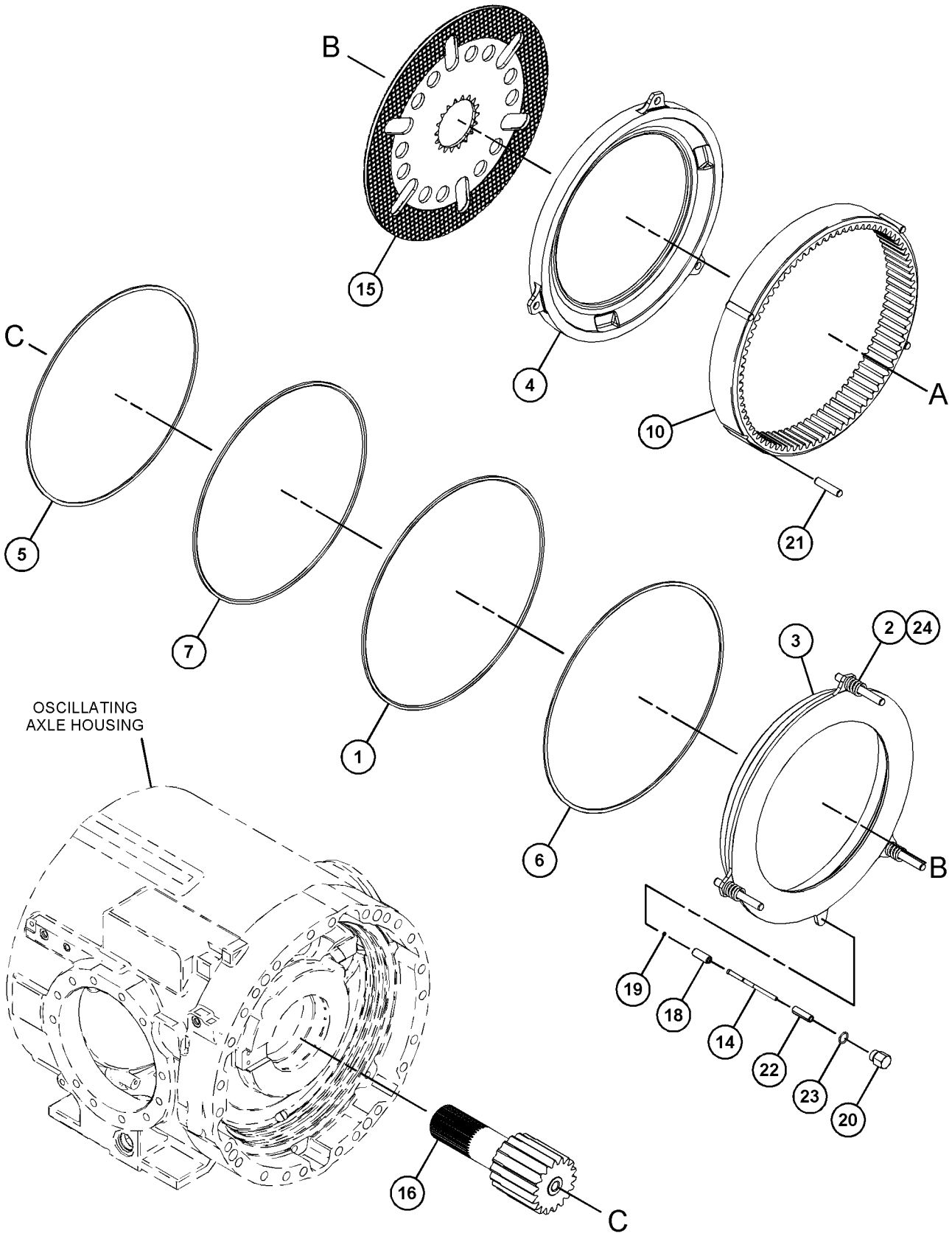

GRAPHIC #2 <END> g03680524

373-6682 BRAKE & PLANETARY GP

S/N: TNS1-UP

PART OF 371-7337, 371-7344, 371-7345, 371-7346, 371-7347, 371-7349, 371-7350, 466-8752 AXLE AR-FIXED, 371-7356, 371-7357, 371-7359 AXLE AR-OSCILLATING

SMCS-4011, 4255

i06820683

NOTE	REF NO	GRAPHIC REF	PART NUMBER	QTY	PART NAME 1 2 3 4 5 6 (PRODUCT LEVEL)	SEE PAGE
	1	1	**187-9762**	1	SEAL-BRAKE	
	2	1	**293-3609**	3	SPRING	
	3	1	**307-1570**	1	PISTON-REACTION	
	4	1	**307-2246**	1	PLATE-REACTION	
	5	1	**312-4319**	1	RING-BACKUP	
	6	1	**312-4320**	1	RING-BACKUP	
	7	1	**312-4321**	1	SEAL-D-RING	
	8	1	**364-3085**	3	GEAR-PLANETARY (30-TEETH)	
	9	1	**364-3086**	1	GEAR-RING (81-TEETH)	
	10	1	**366-5768**	3	SHAFT	
	11	1	**366-5769**	3	BUSHING	
	12	1	**371-1691**	6	WASHER-THRUST	
	13	1	**373-6683**	1	PIN	
	14	1	**375-0276**	1	DISC-FRICTION	
	15	1	**360-9857**	1	CARRIER-PLANETARY	
	16	1	**424-5167**	1	GEAR-SUN (18-TEETH)	
	17	1	**138-1645**	3	PIN-SPRING	
	18	1	**149-9112**	1	DOWEL-HOLLOW	
	19	1	**150-4651**	1	SEAL-O-RING	
	20	1	**287-7340**	1	PLUG	
	21	1	**469-0883**	4	DOWEL	
	22	1	**3E-5001**	1	PIN-SPRING	
	23	1	**3K-0360**	1	SEAL-O-RING	
	24	1	**3P-7832**	3	DOWEL	
	25	1	**8T-2925**	3	PIN-SPRING	

373-6682 **BRAKE & PLANETARY GP (**contd.**)** **i06820683**

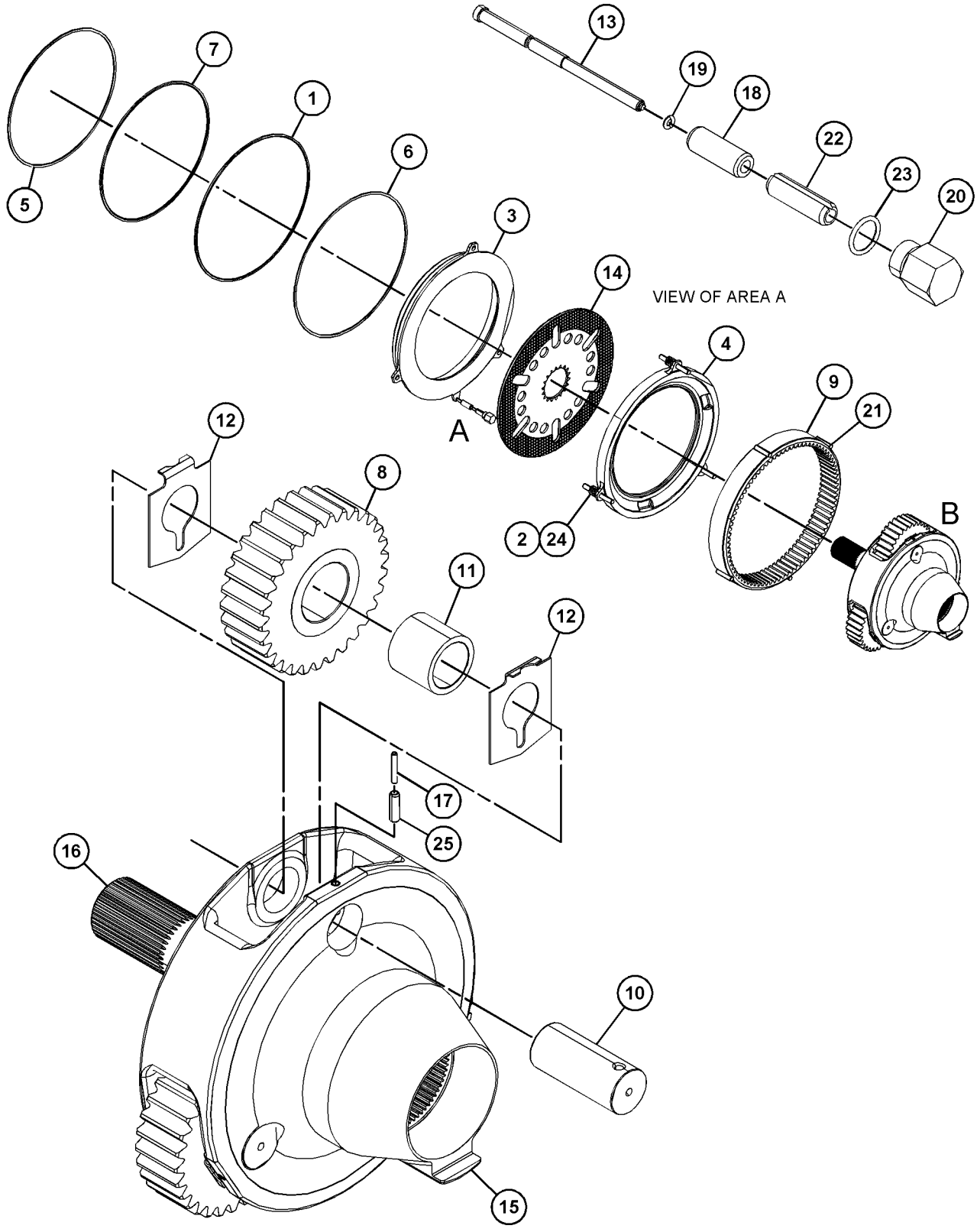

VIEW OF AREA B

GRAPHIC #1 <END> g03687078

418-5468 CASE & PARTS GP-PLANETARY

S/N: WL51-UP; WSH1-UP; WSY1-UP
PART OF 357-1577 TRANSMISSION AR

SMCS-3064 **i05799699**

NOTE	REF NO	GRAPHIC REF	PART NUMBER	QTY	PART NAME 1 2 3 4 5 6 (PRODUCT LEVEL)	SEE PAGE
	1	3	**4S-8598**	1	SCREEN-SUCTION	
	2	1	**6V-1720**	1	PLATE-SERIAL NUMBER (TRANSMISSION)	
	3	3	**6Y-0809**	1	COVER	
	4	2	**6Y-8506**	1	CAGE-BEARING	
	5	2	**8E-5261**	1	SHIM PACK (INCLUDES 24-SHIMS)	
Y	6	1	**138-1509**	1	DRAIN GP-ECOLOGY (POWER TRAIN OIL)	317
	7	2	**148-1928**	1	VALVE-RELIEF	
	8	2	**193-2200**	2	SEAL-LIP TYPE	
	9	2	**223-3925**	1	CAGE-BEARING	
	10	3	**368-5063**	1	SCREEN GP-MAGNETIC	
		3	**8M-7160**	3	MAGNET	
	11	1	*309-2996*	2	PLUG AS	
					(EACH INCLUDES)	
		1	**6Y-4638**	1	PLUG-HEX SOCKET (1-5/16-12-THD)	
		1	**7M-8485**	1	SEAL-O-RING	
	12	2	**358-5287**	1	SHIM PACK (INCLUDES 13-SHIMS)	
	13	2	**358-7784**	1	FLANGE-PUMP DRIVE	
	14	2	**358-7786**	1	GEAR (88-TEETH)	
	15	3	**360-0262**	1	ADAPTER-PUMP	
Y	16	3	**417-5202**	1	CASE GP-TRANSMISSION	295
	17	3	**417-5204**	1	CASE AS-TRANSMISSION	
		3	**8T-5353**	2	DOWEL	
		3	**368-0214**	3	PLUG AS	
		3	**420-9432**	1	TUBE-SUCTION	
	18	2	**419-0998**	1	PLATE-BAFFLE	
	19	2	*436-6464*	1	SHAFT AS	
		2	**7T-9356**	1	PLUG-CUP	
		2	**358-7788**	1	SHAFT	
	20	2	**437-1311**	1	BAFFLE	
	21	1	*148-8309*	1	ADAPTER AS	
		1	**2P-8421**	1	ADAPTER-O-RING	
		1	**3D-2824**	1	SEAL-O-RING	
	22	1,3	*148-8409*	2	PLUG AS	
					(EACH INCLUDES)	
		1,3	**3D-2824**	1	SEAL-O-RING	
		1,3	**9S-8008**	1	PLUG (1-1/16-12-THD)	
	23	1	*150-4027*	1	TEE AS	
		1	**3E-2310**	1	TEE	
		1	**3J-1907**	1	SEAL-O-RING	
		1	**6V-8397**	1	SEAL-O-RING	
	24	2	*162-0177*	4	PLUG AS	
					(EACH INCLUDES)	
		2	**3J-1907**	1	SEAL-O-RING	
		2	**9S-8004**	1	PLUG (9/16-18-THD)	
	25	1	*164-5567*	1	COUPLER AS-QUICK DISCONNECT (MALE)	
		1	**6V-3965**	1	FITTING (QUICK DISCONNECT)	
		1	**214-7568**	1	SEAL-O-RING	
	26	2	**170-1807**	1	BEARING-SPECIAL RACE	

418-5468 **CASE & PARTS GP-PLANETARY (**contd.**)** **i05799699**

NOTE	REF NO	GRAPHIC REF	PART NUMBER	QTY	PART NAME 1 2 3 4 5 6 (PRODUCT LEVEL)	SEE PAGE
M	27	2	**192-4744**	3	BOLT (M10X1.5X20-MM)	
	28	2	**1T-0043**	1	BALL BEARING	
	29	2	**1T-1639**	1	RING	
	30	2	**2H-6184**	1	SEAL-O-RING	
	31	2	**2P-8986**	2	CUP-BEARING	
	32	2	**3J-7719**	1	RING-RETAINING (INNER)	
	33	2	**5F-3144**	1	SEAL-O-RING	
	34	3	**5M-2894**	23	WASHER-HARD (10.2X18.5X2.5-MM THK)	
	35	2	**5P-8245**	1	WASHER-HARD (13.5X25.5X3-MM THK)	
	36	2	**5P-9806**	1	SEAL-O-RING	
	37	1	**6V-0852**	1	CAP-DUST	
M	38	1	**6V-1820**	12	BOLT (M10X1.5X30-MM)	
M	39	1	**6V-3940**	5	BOLT (M8X1.25X25-MM)	
M	40	1	**6V-5217**	3	BOLT (M8X1.25X20-MM)	
M	41	2	**6V-5696**	1	BOLT (M12X1.75X80-MM)	
	42	1,2	**6V-5839**	7	WASHER (11X21X2.5-MM THK)	
M	43	1,3	**6V-5842**	31	BOLT (M10X1.5X40-MM)	
	44	2	**7J-8209**	2	CUP-BEARING	
	45	2	**7L-6326**	1	CLIP	
M	46	2	**8C-2926**	6	BOLT (M10X1.5X140-MM)	
	47	2	**8E-5380**	5	BEARING-ROLLER	
	48	3	**8H-7521**	1	SEAL-O-RING	
	49	1	**9M-1974**	5	WASHER-HARD (8.8X16X2-MM THK)	
	50	2	**9X-4609**	1	SEAL-O-RING	
BF			**8C-8422**		SEALANT	

B - USE AS REQUIRED
F - NOT SHOWN
M - METRIC PART
Y - SEPARATE ILLUSTRATION

418-5468 **CASE & PARTS GP-PLANETARY (**contd.**)** **i05799699**

REFER TO ALL ILLUSTRATIONS OF
THIS GROUP FOR AUXILIARY VIEWS

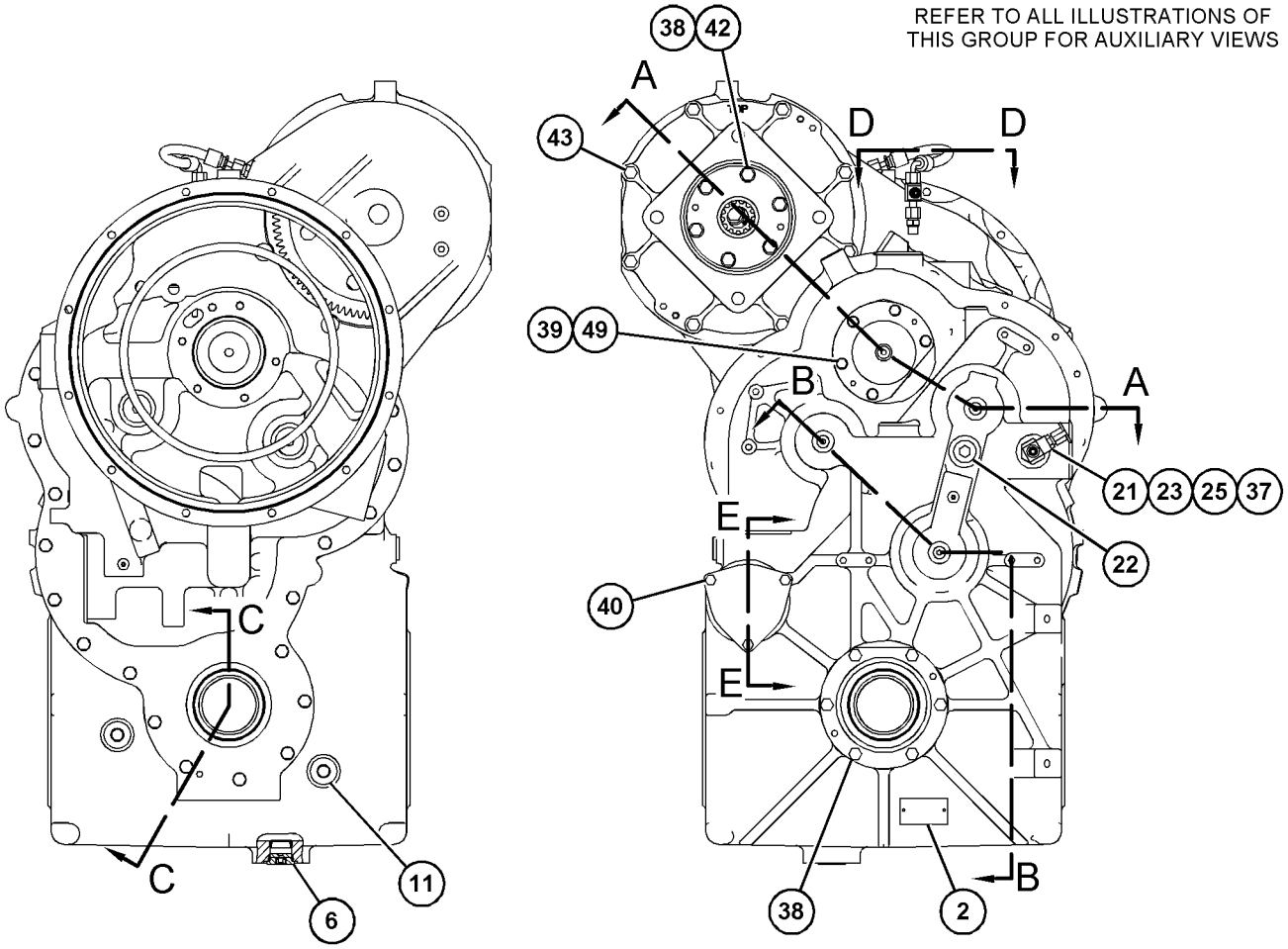

REAR VIEW FRONT VIEW

GRAPHIC #1 g03687787

418-5468 **CASE & PARTS GP-PLANETARY (**contd.**)** **i05799699**

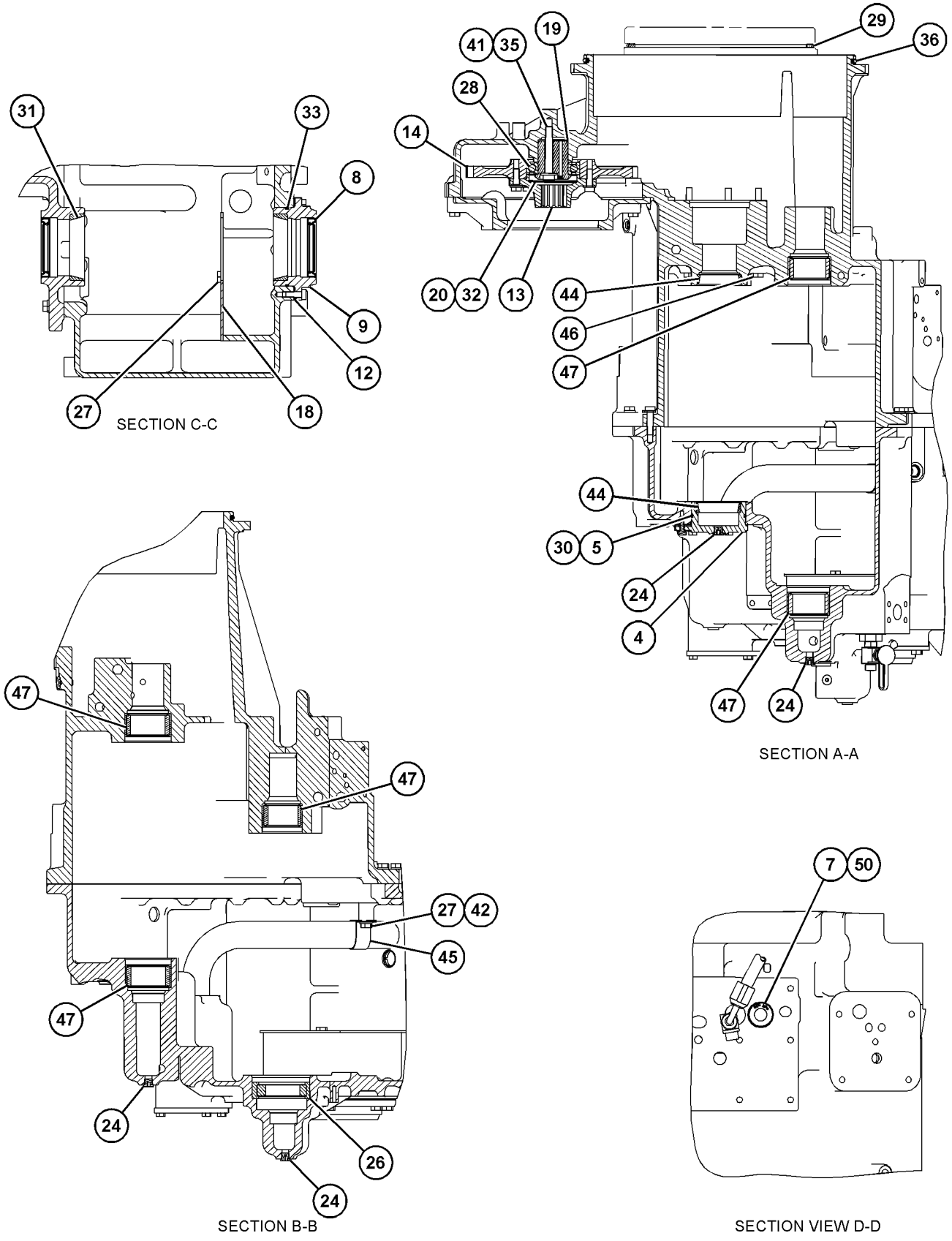

GRAPHIC #2

g03687789

418-5468 **CASE & PARTS GP-PLANETARY (**contd.**)** **i05799699**

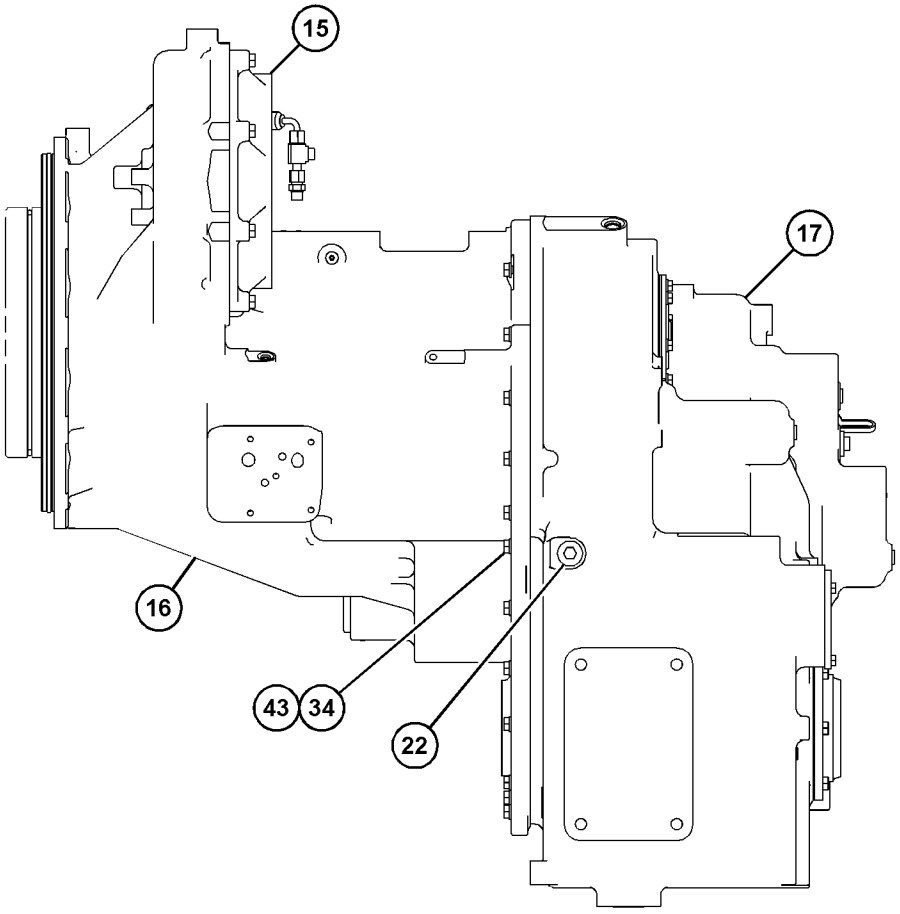

RIGHT SIDE VIEW

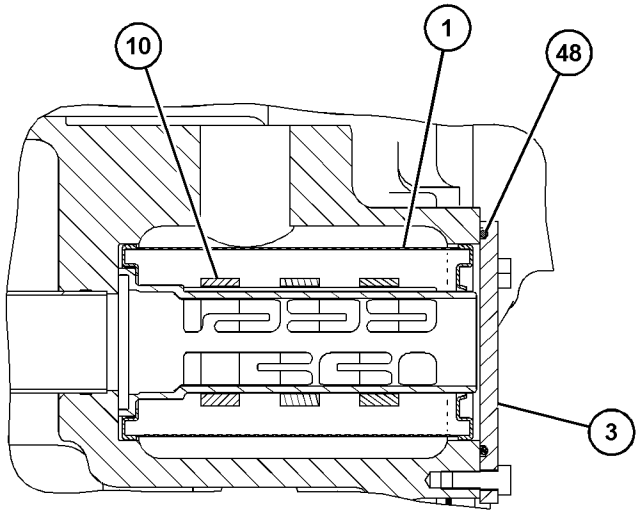

SECTION E-E

GRAPHIC #3 <END> g03687790

417-5202 CASE GP-TRANSMISSION–FRONT

S/N: WL51-UP; WSH1-UP; WSY1-UP

PART OF 418-5468 CASE & PARTS GP-PLANETARY

SMCS-3064 **i06088804**

NOTE	REF NO	GRAPHIC REF	PART NUMBER	QTY	PART NAME 1 2 3 4 5 6 (PRODUCT LEVEL)	SEE PAGE
	1	1	**368-0214**	4	PLUG AS	
	2	1	**8T-5353**	2	DOWEL	
I	3	1	**436-9070**	1	HOSE AS	
	4	1	*148-8325*	2	CONNECTOR AS	
					(EACH INCLUDES)	
		1	**3J-1907**	1	SEAL-O-RING	
		1	**4J-5477**	1	SEAL-O-RING	
		1	**6V-8641**	1	CONNECTOR	
	5	1	*150-5968*	1	TEE AS	
		1	**4J-5477**	2	SEAL-O-RING	
		1	**6V-9835**	1	TEE	

I - REFER TO HYDRAULIC INFORMATION SYSTEM

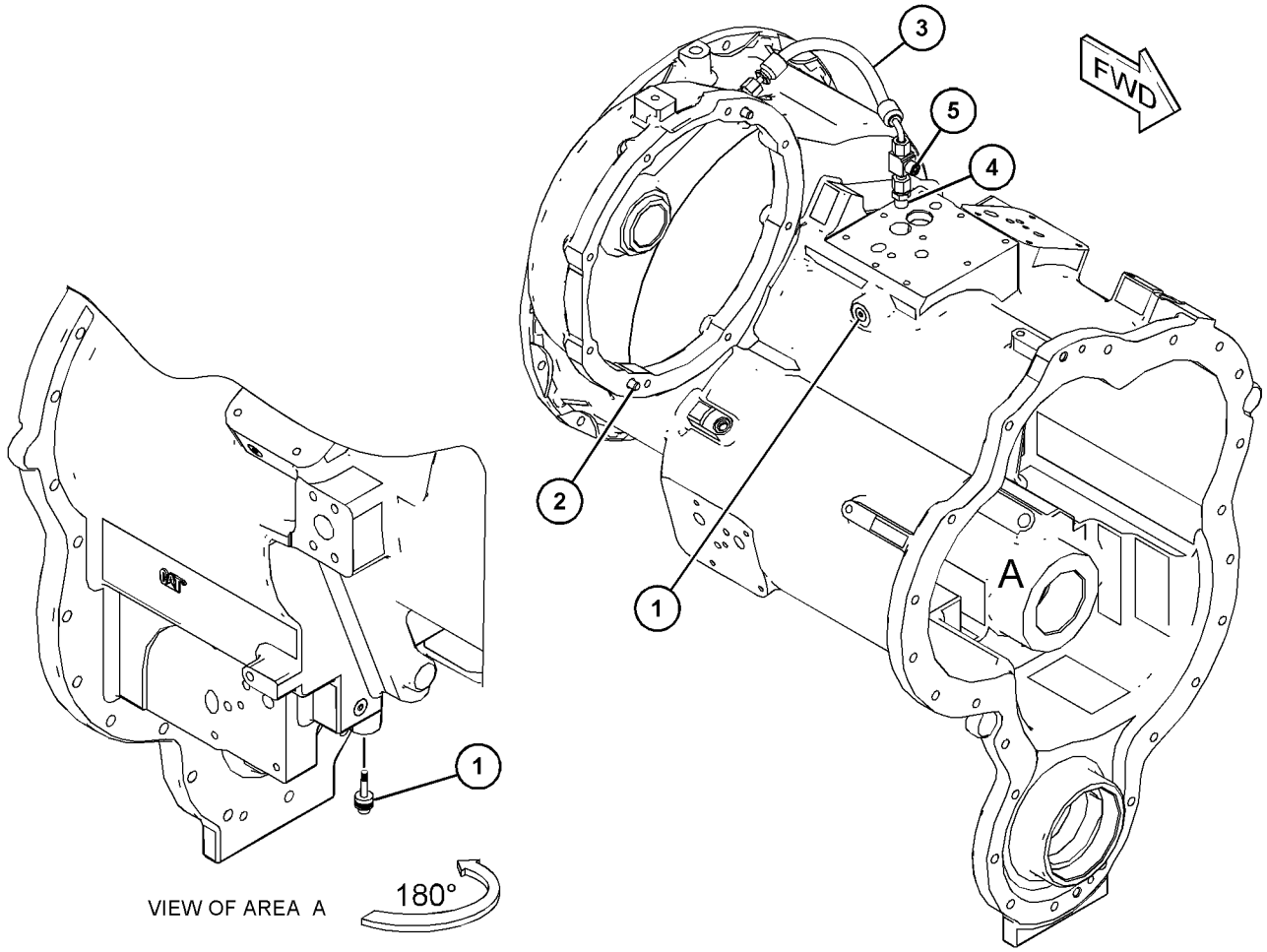

GRAPHIC #1 <END> g03808525

422-9033 CLUTCH GP—FORWARD HIGH, FORWARD LOW

S/N: WL51-UP; WSH1-UP; WSY1-UP
PART OF 357-1577 TRANSMISSION AR

SMCS-3155 **i06122116**

NOTE	REF NO	GRAPHIC REF	PART NUMBER	QTY	PART NAME 1 2 3 4 5 6 (PRODUCT LEVEL)	SEE PAGE
	1	1	**6Y-8265**	2	SEAL AS-BALANCE	
	2	1	**6Y-8512**	2	PLATE-CLUTCH	
	3	1	**8E-8317**	2	DISC-THRUST	
	4	1	**8E-8654**	2	DISC-THRUST	
	5	1	**9W-9278**	2	RETAINER	
	6	1	**9W-9399**	2	RING-SEAL	
	7	1	**9W-9436**	2	RING-SEAL	
	8	1	**265-5287**	4	RING-SEAL	
	9	1	**352-6112**	1	GEAR (64-TEETH)	
	10	1	**354-4032**	13	DISC-FRICTION	
	11	1	**354-7553**	1	GEAR AS (52-TEETH)	
	11A	1	**8E-3416**	1	BUSHING	
	11B	1	**8E-3435**	1	BUSHING	
	12	1	**355-8920**	4	DISC-FRICTION	
	13	1	**358-7769**	1	HUB AS	
	13A	1	**8E-3416**	1	BUSHING	
	14	1	**424-7152**	1	SHAFT AS	
	15	1	**418-1201**	2	SPRING-WAVE	
	16	1	**424-7149**	2	PLATE-END	
	17	1	**470-1447**	15	PLATE-CLUTCH	
	18	1	**469-9205**	2	PISTON	
	19	1	**236-2541**	2	RING-RETAINING	
	20	1	**6V-2394**	1	RING-RETAINING	
	21	1	**8T-0251**	6	RING-RETAINING	

422-9033 **CLUTCH GP (**contd.**)** **i06122116**

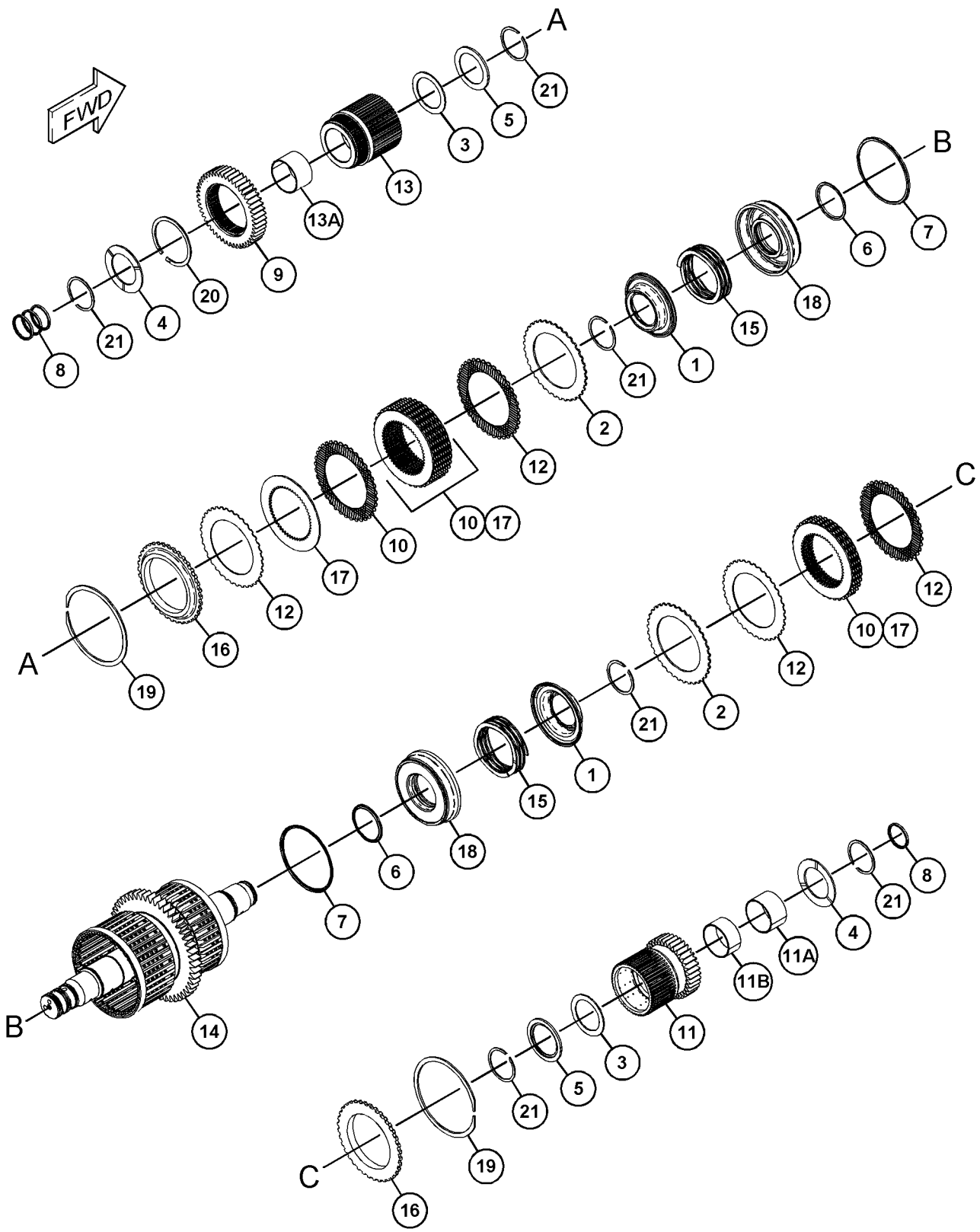

GRAPHIC #1 <END> g03686642

422-9034 CLUTCH GP—REVERSE, SECOND

S/N: WL51-UP; WSH1-UP; WSY1-UP

PART OF 357-1577 TRANSMISSION AR

SMCS-3155 **i06122118**

NOTE	REF NO	GRAPHIC REF	PART NUMBER	QTY	PART NAME 1 2 3 4 5 6 (PRODUCT LEVEL)	SEE PAGE
	1	1	**6Y-8265**	2	SEAL AS-BALANCE	
	2	1	**358-7769**	1	HUB AS	
	2A	1	**8E-3416**	1	BUSHING	
	3	1	**173-7431**	1	HUB AS	
	3A	1	**8E-3416**	1	BUSHING	
	4	1	**6Y-8512**	2	PLATE-CLUTCH	
	5	1	**8E-8317**	2	DISC-THRUST	
	6	1	**8E-8653**	1	DISC-THRUST	
	7	1	**8E-8654**	2	DISC-THRUST	
	8	1	**9W-9399**	2	RING-SEAL	
	9	1	**8T-0251**	6	RING-RETAINING	
	10	1	**9W-9271**	1	WASHER	
	11	1	**9W-9278**	2	RETAINER	
	12	1	**9W-9436**	2	RING-SEAL	
	13	1	**418-1201**	2	SPRING-WAVE	
	14	1	**424-7149**	2	PLATE-END	
	15	1	**354-4032**	13	DISC-FRICTION	
	16	1	**424-7153**	1	SHAFT AS	
	17	1	**470-1447**	15	PLATE-CLUTCH	
	18	1	**265-5287**	4	RING-SEAL	
	19	1	**352-6112**	1	GEAR (64-TEETH)	
	20	1	**352-6114**	1	GEAR (64-TEETH)	
	21	1	**352-6115**	1	GEAR (31-TEETH)	
	22	1	**469-9205**	2	PISTON	
	23	1	**357-1591**	1	SPACER AS	
	24	1	**6V-2394**	2	RING-RETAINING	
	25	1	**355-8920**	4	DISC-FRICTION	
	26	1	**236-2541**	2	RING-RETAINING	

422-9034 **CLUTCH GP** (contd.) **i06122118**

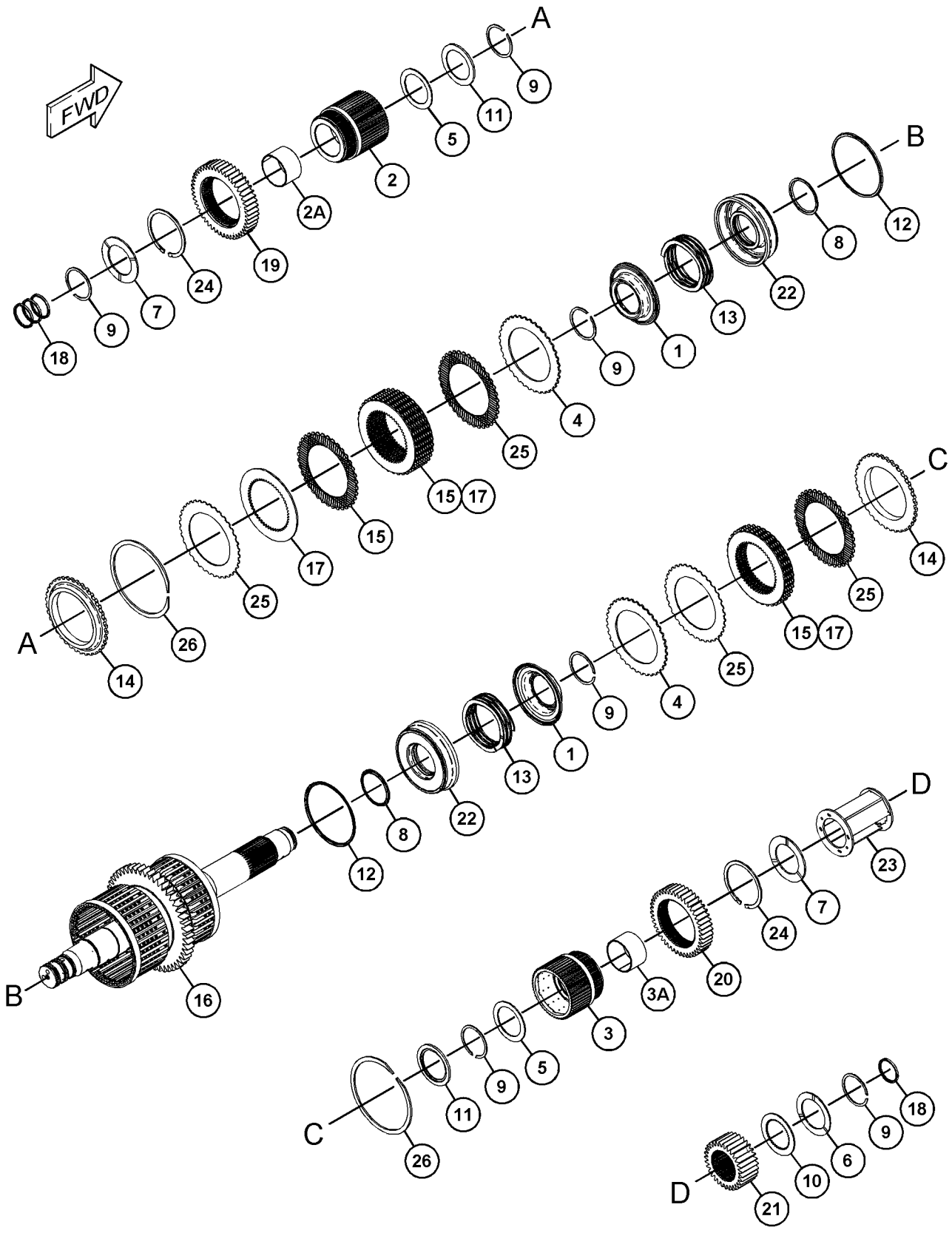

GRAPHIC #1 <END> g03719734

422-9035 CLUTCH GP—FIRST, THIRD

S/N: WL51-UP; WSH1-UP; WSY1-UP

PART OF 357-1577 TRANSMISSION AR

SMCS-3155 **i06122119**

NOTE	REF NO	GRAPHIC REF	PART NUMBER	QTY	PART NAME 1 2 3 4 5 6 (PRODUCT LEVEL)	SEE PAGE
	1	1	**6Y-0373**	1	RETAINER-RING	
	2	2	**6Y-1758**	1	GEAR (46-TEETH)	
	3	2	**6Y-8265**	1	SEAL AS-BALANCE	
	4	1	**6Y-8288**	1	PISTON-BALANCE	
	5	1	**6Y-8289**	1	HUB AS	
	5A	1	**8E-3433**	1	BUSHING	
	6	2	**6Y-8512**	1	PLATE-CLUTCH	
	7	1	**8E-5735**	1	RING-SEAL	
	8	1	**8E-5737**	1	RING-SEAL	
	9	1	**8E-5742**	1	RING-SEAL	
	10	2	**8E-8317**	1	DISC-THRUST	
	11	1	**8E-8321**	2	DISC-THRUST	
	12	1	**8E-8652**	1	DISC-THRUST	
	13	2	**8E-8654**	1	DISC-THRUST	
	14	2	**9W-9278**	1	RETAINER	
	15	2	**9W-9399**	1	RING-SEAL	
	16	2	**9W-9436**	1	RING-SEAL	
	17	2	**173-7431**	11	HUB AS	
					(EACH INCLUDES)	
	17A	2	**8E-3416**	1	BUSHING	
	18	1,2	**265-5287**	4	RING-SEAL	
	19	1	**352-6116**	1	GEAR (72-TEETH)	
	20	2	**354-4032**	4	DISC-FRICTION	
	21	2	**355-8920**	2	DISC-FRICTION	
	22	1	**357-8939**	9	PLATE-CLUTCH	
	23	2	**418-1201**	1	SPRING-WAVE	
	24	1	**424-0896**	8	DISC-FRICTION	
	25	1	**424-0897**	2	DISC-FRICTION	
	26	2	**424-7149**	1	PLATE-END	
	27	1	**424-7150**	1	PLATE	
	28	2	**424-7154**	1	SHAFT AS	
	29	1	**424-7156**	1	PLATE-END	
	30	2	**470-1447**	5	PLATE-CLUTCH	
	31	2	**469-9205**	1	PISTON	
	32	1	**469-9206**	1	PISTON	
	33	1	**452-3986**	1	GEAR (48-TEETH)	
	34	1	**104-7336**	2	RING-RETAINING	
	35	2	**236-2541**	1	RING-RETAINING	
	36	2	**6V-2394**	1	RING-RETAINING	
	37	1	**8C-3979**	1	RING-RETAINING	
	38	1	**8C-8550**	1	RING-RETAINING	
	39	1	**8E-1279**	1	SPRING-WAVE	
	40	2	**8T-0251**	3	RING-RETAINING	
	41	1	**9U-9322**	1	RING-RETAINING	

422-9035 **CLUTCH GP** (contd.) **i06122119**

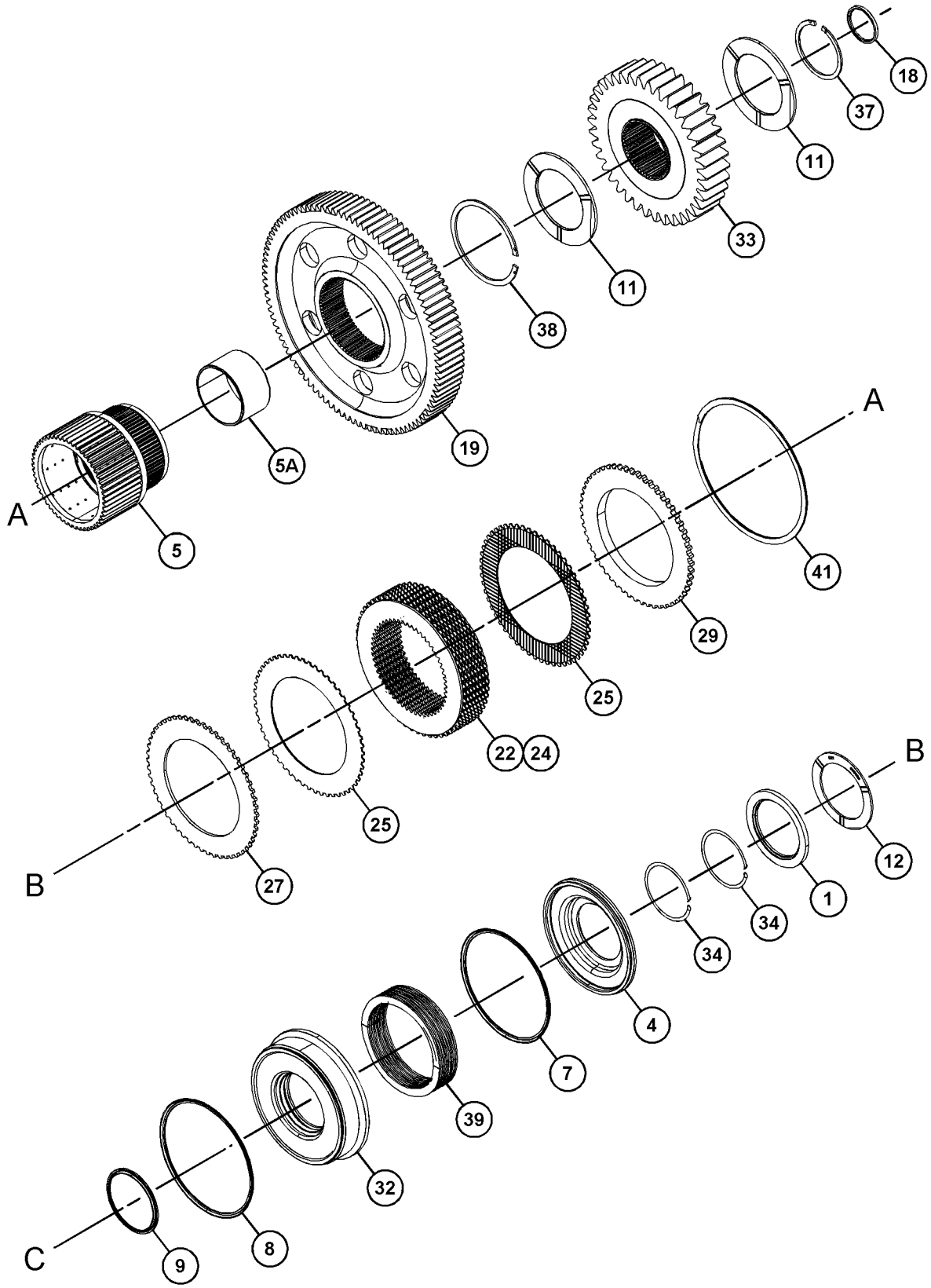

GRAPHIC #1 g03686251

422-9035 **CLUTCH GP** (contd.) **i06122119**

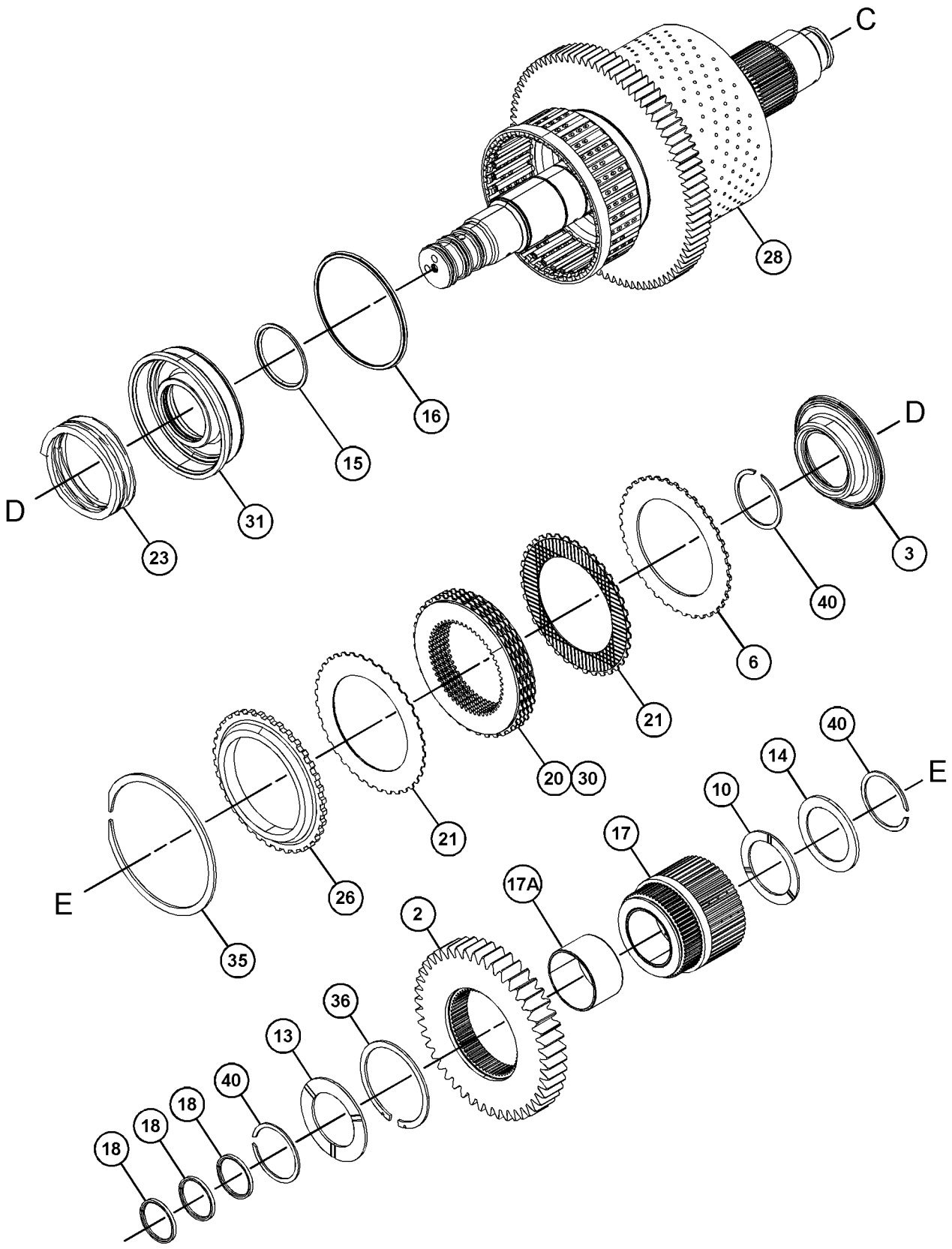

GRAPHIC #2 <END> g03686252

436-7028 CONTROL GP-DIFFERENTIAL LOCK

S/N: TNS1-UP

FRONT

PART OF 463-8854, 463-8856, 463-8857 AXLE AR-FIXED & OSCILLATING

SMCS-3264, 3272 **i06796469**

NOTE	REF NO	GRAPHIC REF	PART NUMBER	QTY	PART NAME 1 2 3 4 5 6 (PRODUCT LEVEL)	SEE PAGE
	1	1	*150-4027*	1	TEE AS	
		1	**3E-2310**	1	TEE	
		1	**3J-1907**	1	SEAL-O-RING	
		1	**6V-8397**	1	SEAL-O-RING	
	2	1	*165-4931*	1	ELBOW AS	
		1	**3J-1907**	1	SEAL-O-RING	
		1	**6V-8077**	1	ELBOW	
Y	3	1	**385-7261**	1	VALVE GP-SOLENOID (DIFFERENTIAL LOCK)	404
I	4	1	**389-4097**	1	HOSE AS	
I	5	1	**436-7187**	1	HOSE AS	
	6	1	*480-3046*	1	TEE AS	
		1	**6V-8397**	1	SEAL-O-RING	
		1	**123-2169**	1	FITTING-ORFS	
	7	1	*148-8336*	1	CONNECTOR AS (45-DEG ELBOW)	
		1	**3J-1907**	1	SEAL-O-RING	
		1	**6V-8397**	1	SEAL-O-RING	
		1	**6V-8636**	1	CONNECTOR	
	8	1	*148-8363*	1	ELBOW AS	
		1	**3K-0360**	1	SEAL-O-RING	
		1	**6V-8397**	1	SEAL-O-RING	
		1	**6V-9876**	1	ELBOW	
	9	1	*164-5567*	2	COUPLER AS-QUICK DISCONNECT (MALE)	
					(EACH INCLUDES)	
		1	**6V-3965**	1	FITTING (QUICK DISCONNECT)	
		1	**214-7568**	1	SEAL-O-RING	
	10	1	**6V-0852**	2	CAP-DUST	
	11	1	**8M-2773**	2	CLIP	
	12	1	**8T-4121**	2	WASHER-HARD (11X21X2.5-MM THK)	
M	13	1	**8T-4137**	2	BOLT (M10X1.5X20-MM)	

I - REFER TO HYDRAULIC INFORMATION SYSTEM
M - METRIC PART
Y - SEPARATE ILLUSTRATION

436-7028 **CONTROL GP-DIFFERENTIAL LOCK (**contd.**)** **i06796469**

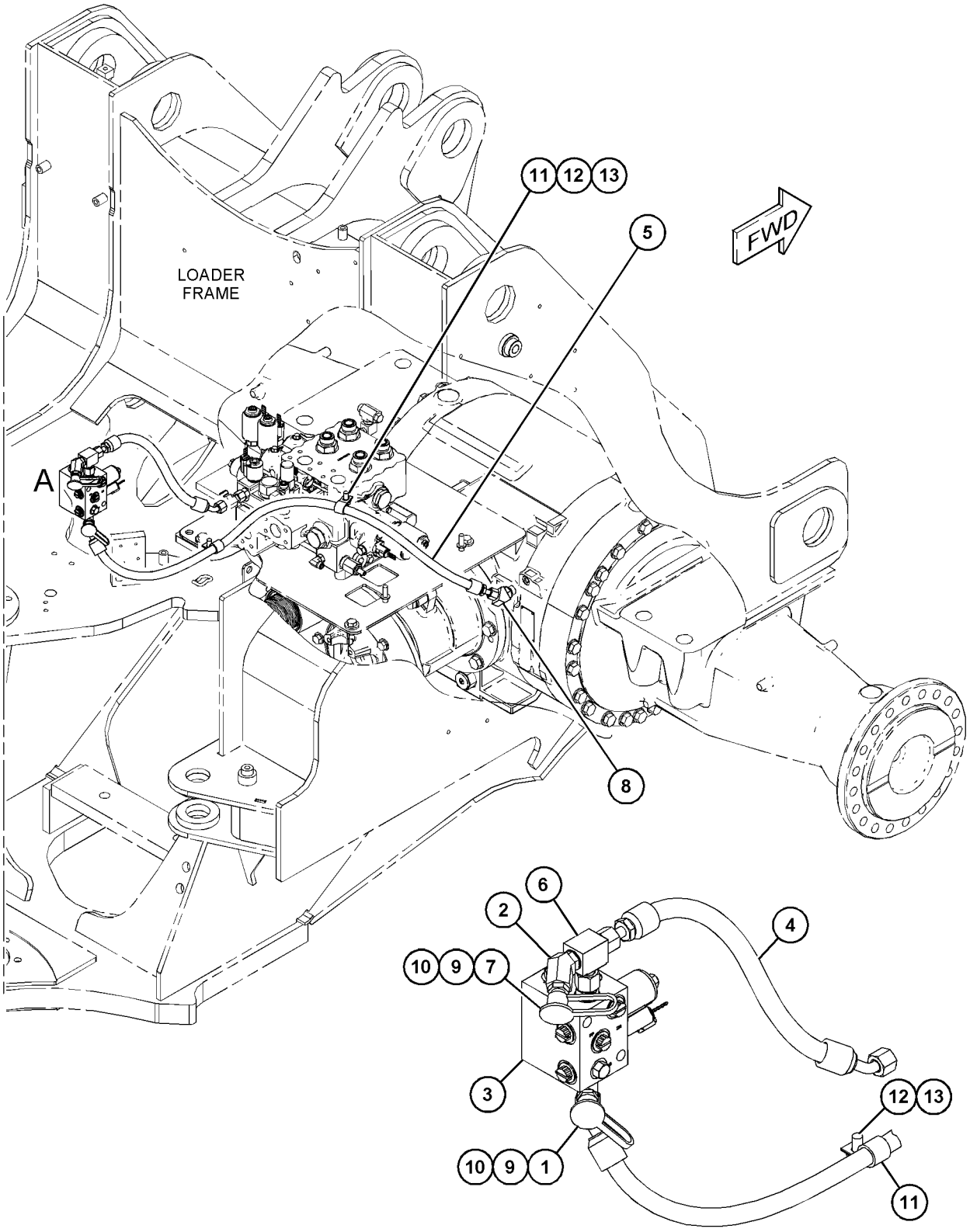

VIEW OF AREA A

GRAPHIC #1 <END> g06040600

436-7029 CONTROL GP-DIFFERENTIAL LOCK

S/N: TNS1-UP

REAR

PART OF 463-8854, 463-8856, 463-8857 AXLE AR-FIXED & OSCILLATING

SMCS-3264, 3272 **i06796470**

NOTE	REF NO	GRAPHIC REF	PART NUMBER	QTY	PART NAME 1 2 3 4 5 6 (PRODUCT LEVEL)	SEE PAGE
	1	1	**3S-2093**	2	STRAP-CABLE	
I	2	1	**346-8565**	1	HOSE AS	
Y	3	1	**371-4745**	1	VALVE GP-SOLENOID & PRESS REDC (DIFFERENTIAL LOCK)	708
	4	1	**384-9470**	1	BRACKET	
	5	1	**391-6976**	1	TUBE AS	
I	6	1	**427-0361**	1	HOSE AS	
I	7	1	**465-1634**	1	HOSE AS	
	8	1	*148-8318*	1	CONNECTOR AS	
		1	**3K-0360**	1	SEAL-O-RING	
		1	**6V-8397**	1	SEAL-O-RING	
		1	**6V-8634**	1	CONNECTOR	
	9	1	*148-8336*	1	CONNECTOR AS (45-DEG ELBOW)	
		1	**3J-1907**	1	SEAL-O-RING	
		1	**6V-8397**	1	SEAL-O-RING	
		1	**6V-8636**	1	CONNECTOR	
	10	1	*148-8365*	1	ELBOW AS	
		1	**3J-1907**	1	SEAL-O-RING	
		1	**6V-8398**	1	SEAL-O-RING	
		1	**8T-6876**	1	ELBOW	
	11	1	*148-8366*	1	ELBOW AS	
		1	**6V-8397**	2	SEAL-O-RING	
		1	**6V-8987**	1	ELBOW	
	12	1	*148-8378*	1	ELBOW AS (90-DEG)	
		1	**3J-1907**	1	SEAL-O-RING	
		1	**6V-8397**	1	SEAL-O-RING	
		1	**6V-8724**	1	ELBOW	
	13	1	*148-8443*	1	TEE AS	
		1	**3J-1907**	1	SEAL-O-RING	
		1	**6V-8397**	1	SEAL-O-RING	
		1	**7X-2459**	1	TEE-O-RING	
	14	1	*164-5567*	1	COUPLER AS-QUICK DISCONNECT (MALE)	
		1	**6V-3965**	1	FITTING (QUICK DISCONNECT)	
		1	**214-7568**	1	SEAL-O-RING	
	15	1	*165-4931*	1	ELBOW AS	
		1	**3J-1907**	1	SEAL-O-RING	
		1	**6V-8077**	1	ELBOW	
	16	1	**206-2423**	1	SADDLE	
	17	1	**297-1546**	1	CLIP	
	18	1	**318-0820**	2	GROMMET	
	19	1	**6V-0852**	1	CAP-DUST	
	20	1	**6V-9168**	1	NUT (11/16-16-THD)	
	21	1	**8M-2773**	4	CLIP	
	22	1	**8T-1889**	2	CLIP (SLOT)	
	23	1	**8T-1890**	2	CLIP (TAB)	
	24	1	**8T-4121**	7	WASHER-HARD (11X21X2.5-MM THK)	

436-7029 **CONTROL GP-DIFFERENTIAL LOCK (**contd.**)** **i06796470**

NOTE	REF NO	GRAPHIC REF	PART NUMBER	QTY	PART NAME 1 2 3 4 5 6 (PRODUCT LEVEL)	SEE PAGE
M	25	1	**8T-4136**	2	BOLT (M10X1.5X25-MM)	
M	26	1	**8T-4137**	4	BOLT (M10X1.5X20-MM)	

I - REFER TO HYDRAULIC INFORMATION SYSTEM
M - METRIC PART
Y - SEPARATE ILLUSTRATION

436-7029 **CONTROL GP-DIFFERENTIAL LOCK (**contd.**)** **i06796470**

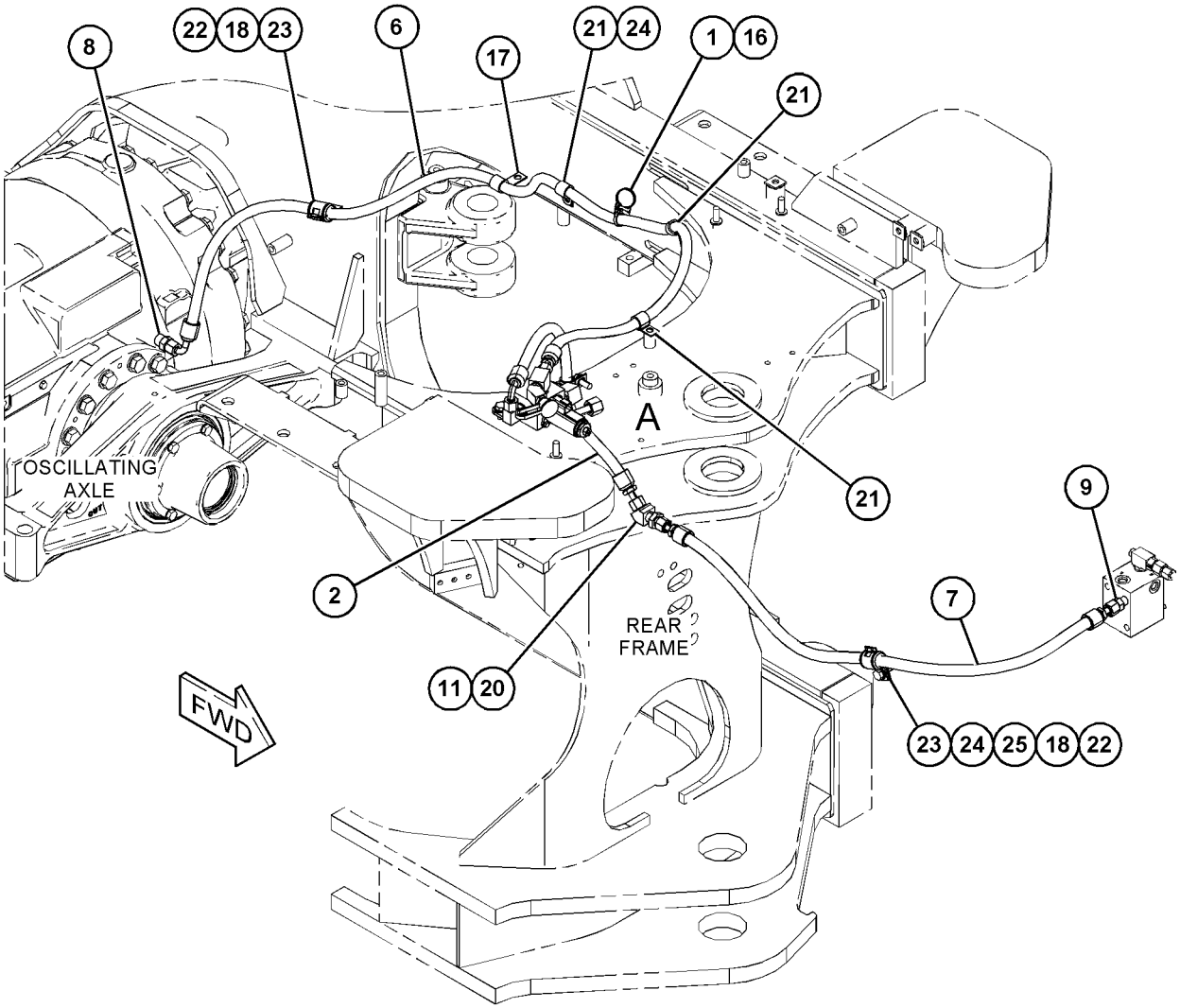

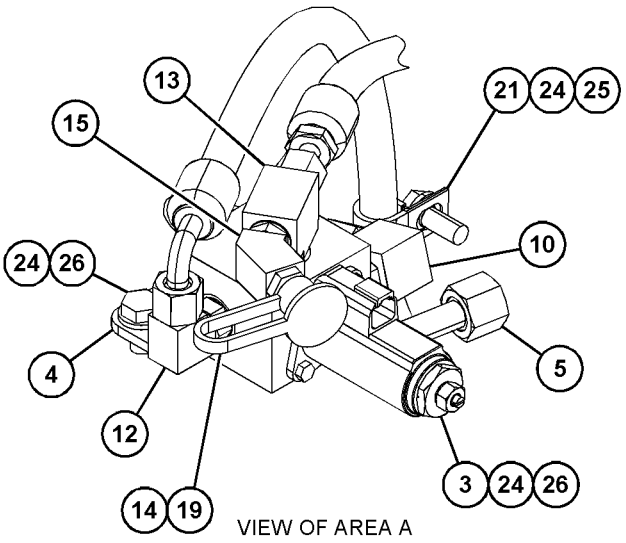

VIEW OF AREA A

GRAPHIC #1 <END> g06049276

502-5784 CONTROL GP-TRANSMISSION HYD

S/N: WL51-UP; WSH1-UP; WSY1-UP
PART OF 357-1577 TRANSMISSION AR

SMCS-3073, 3167 **i06779803**

NOTE	REF NO	GRAPHIC REF	PART NUMBER	QTY	PART NAME 1 2 3 4 5 6 (PRODUCT LEVEL)	SEE PAGE
	1	1	**3S-2093**	14	STRAP-CABLE	
	2	1	**197-6453**	1	BRACKET AS	
M		1	**8T-3490**	1	NUT-WELD (M10X1.5-THD)	
Y	3	1	**318-1179**	4	SENSOR GP-SPEED (MAGNETIC, HIGH OUTPUT) (TRANSMISSION)	208
Y	4	1	*354-7569*	3	VALVE GP-TRANSMISSION CONTROL	407
Y	5	1	**422-3662**	1	HARNESS AS-TRANSMISSION	170
Y	6	1	*423-0861*	1	VALVE GP-CONTROL (TRANSMISSION)	402
M	7	1	**101-3129**	1	STUD (M10X1.5-THD)	
	8	1	**130-5300**	3	CLIP	
	9	1	**132-5789**	7	CLIP	
	10	1	**351-3525**	1	CLIP	
	11	1	**3K-0360**	4	SEAL-O-RING	
	12	1	**4P-7581**	3	CLIP	
	13	1	**4P-8134**	1	CLIP	
	14	1	**5P-7465**	1	CLIP (TAB)	
M	15	1	**8T-4195**	1	BOLT (M10X1.5X30-MM)	
	16	1	**6V-7359**	1	GROMMET (25-MM ID, 37-MM OD)	
	17	1	**8T-4121**	6	WASHER-HARD (11X21X2.5-MM THK)	
M	18	1	**8T-4137**	5	BOLT (M10X1.5X20-MM)	
	19	1	**8T-4224**	24	WASHER-HARD (8.8X16X2-MM THK)	
	20	1	**8T-4646**	1	CLIP (SLOT)	
M	21	1	**8T-6869**	24	BOLT (M8X1.25X60-MM)	

M - METRIC PART
Y - SEPARATE ILLUSTRATION

502-5784 **CONTROL GP-TRANSMISSION HYD (**contd.**)** **i06779803**

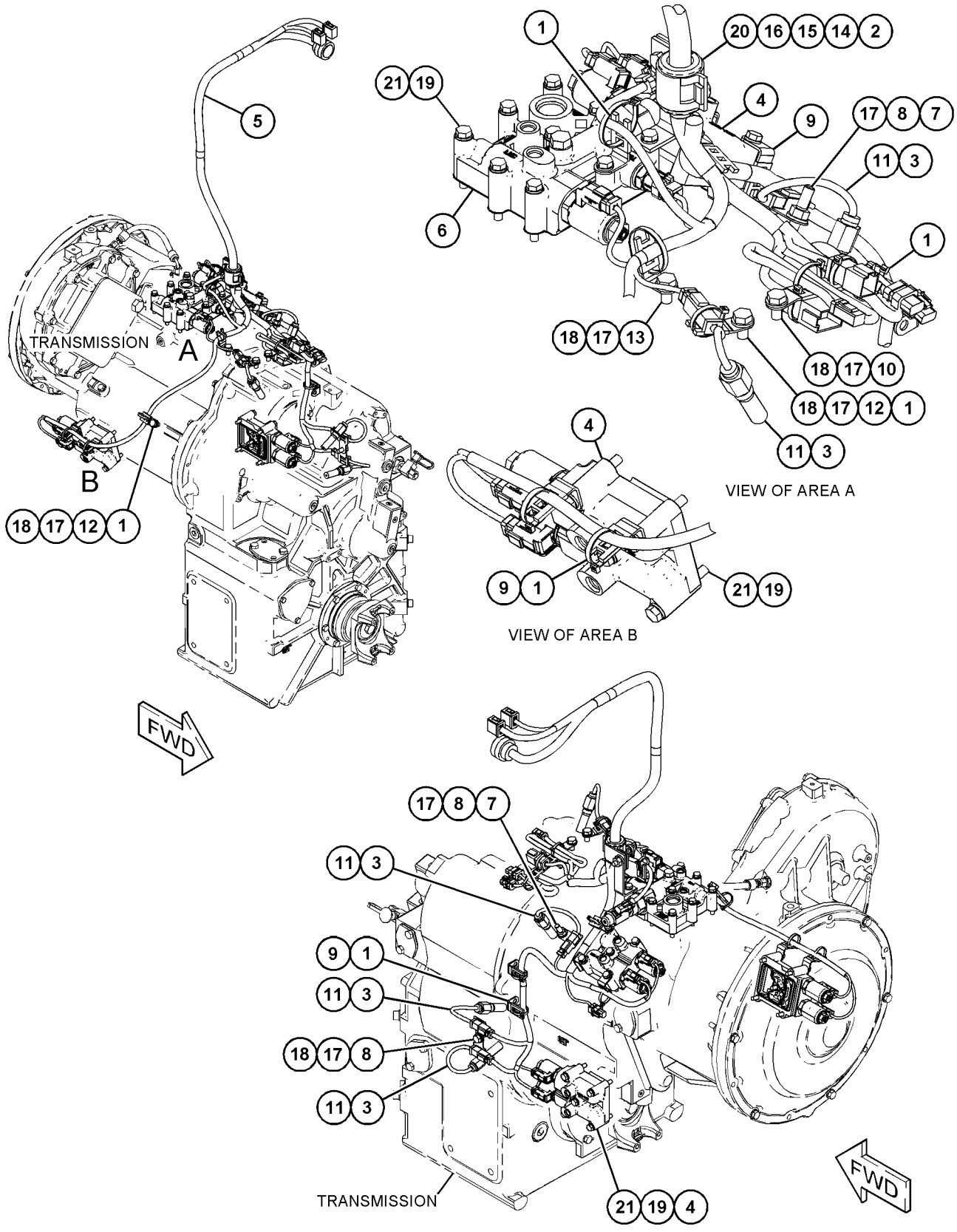

GRAPHIC #1 <END> g06122171

364-9806 COOLER GP-TRANSMISSION OIL

S/N: TNS1-UP

PART OF 456-5790 CHASSIS AR

SMCS-1375 **i06738383**

NOTE	REF NO	GRAPHIC REF	PART NUMBER	QTY	PART NAME 1 2 3 4 5 6 (PRODUCT LEVEL)	SEE PAGE
	1	1	**498-0140**	1	COOLER AS-TRANSMISSION OIL	
	2	1	**165-2273**	1	VALVE GP-SHUTOFF (TRANSMISSION OIL COOLER)	
		1	**3K-0360**	1	SEAL-O-RING	
		1	**6V-7238**	1	VALVE-SHUTOFF	
E	3	1	**5P-0767**		HOSE (24-CM)	
	4	1	**443-3947**	1	CLAMP-HOSE	
	5	1	**7X-7729**	8	WASHER (11X25X3-MM THK)	
M	6	1	**8T-4137**	8	BOLT (M10X1.5X20-MM)	

E - ORDER BY THE CENTIMETER
M - METRIC PART

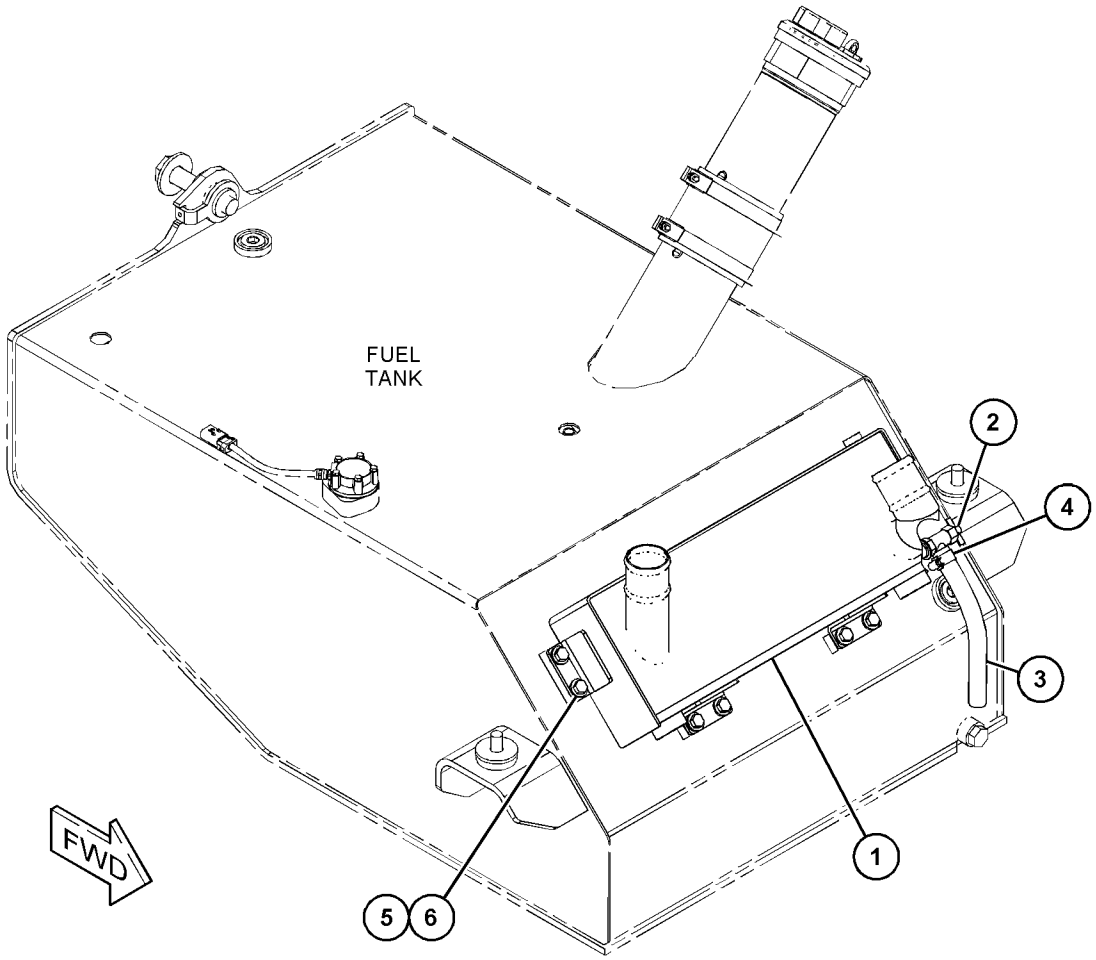

GRAPHIC #1 <END> g06099487

260-8733 COUPLING GP-DRIVE

S/N: HML1-UP

PART OF 357-5988 TORQUE CONVERTER GP

SMCS-3252 **i05799726**

NOTE	REF NO	GRAPHIC REF	PART NUMBER	QTY	PART NAME 1 2 3 4 5 6 (PRODUCT LEVEL)	SEE PAGE
	1	1	**327-5802**	10	SPRING	
	2	1	**327-5803**	5	SPRING	
	3	1	**327-5804**	5	SPRING	
	4	1	**0S-1594**	10	BOLT (3/8-16X1-IN)	
	5	1	**9S-8752**	10	NUT-FULL (3/8-16-THD)	

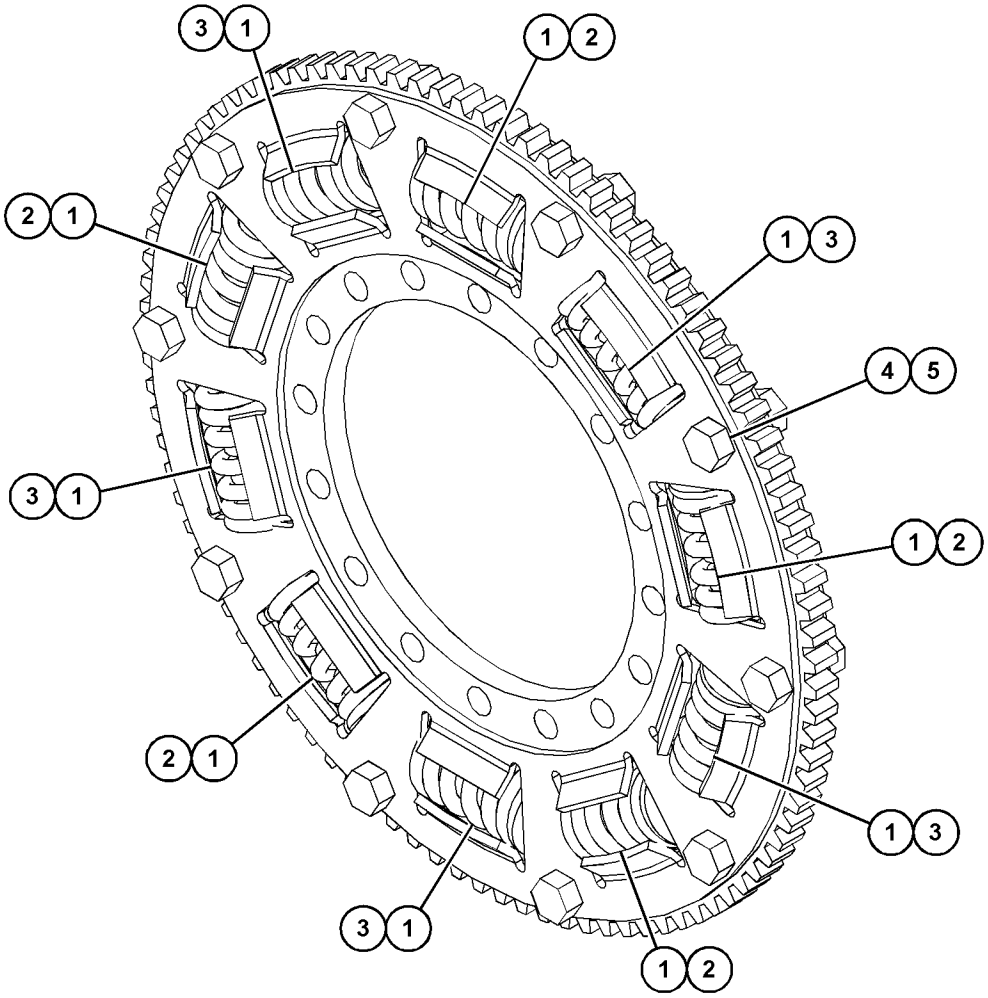

GRAPHIC #1 <END> g03678499

368-6468 COVER GP-XMSN OIL FILLER CAP

S/N: TNS1-UP

PART OF 360-0309 FILLER GP-POWER TRAIN OIL

SMCS-3005, 3030, 7315 **i04716318**

NOTE	REF NO	GRAPHIC REF	PART NUMBER	QTY	PART NAME 1 2 3 4 5 6 (PRODUCT LEVEL)	SEE PAGE
	1	1	**4B-9782**	1	BALL	
	2	1	**5K-1568**	1	CAP-FILLER (HYDRAULIC OIL)	
	3	1	**6F-5188**	1	SEAL-RING	
	4	1	**6H-5139**	1	PLATE-PRESSURE	
	5	1	**7K-5634**	1	COVER	
	6	1	**9M-7394**	1	LEVER	
	7	1	**1L-5072**	1	DOWEL	
	8	1	**2J-7761**	1	RING-RETAINING	

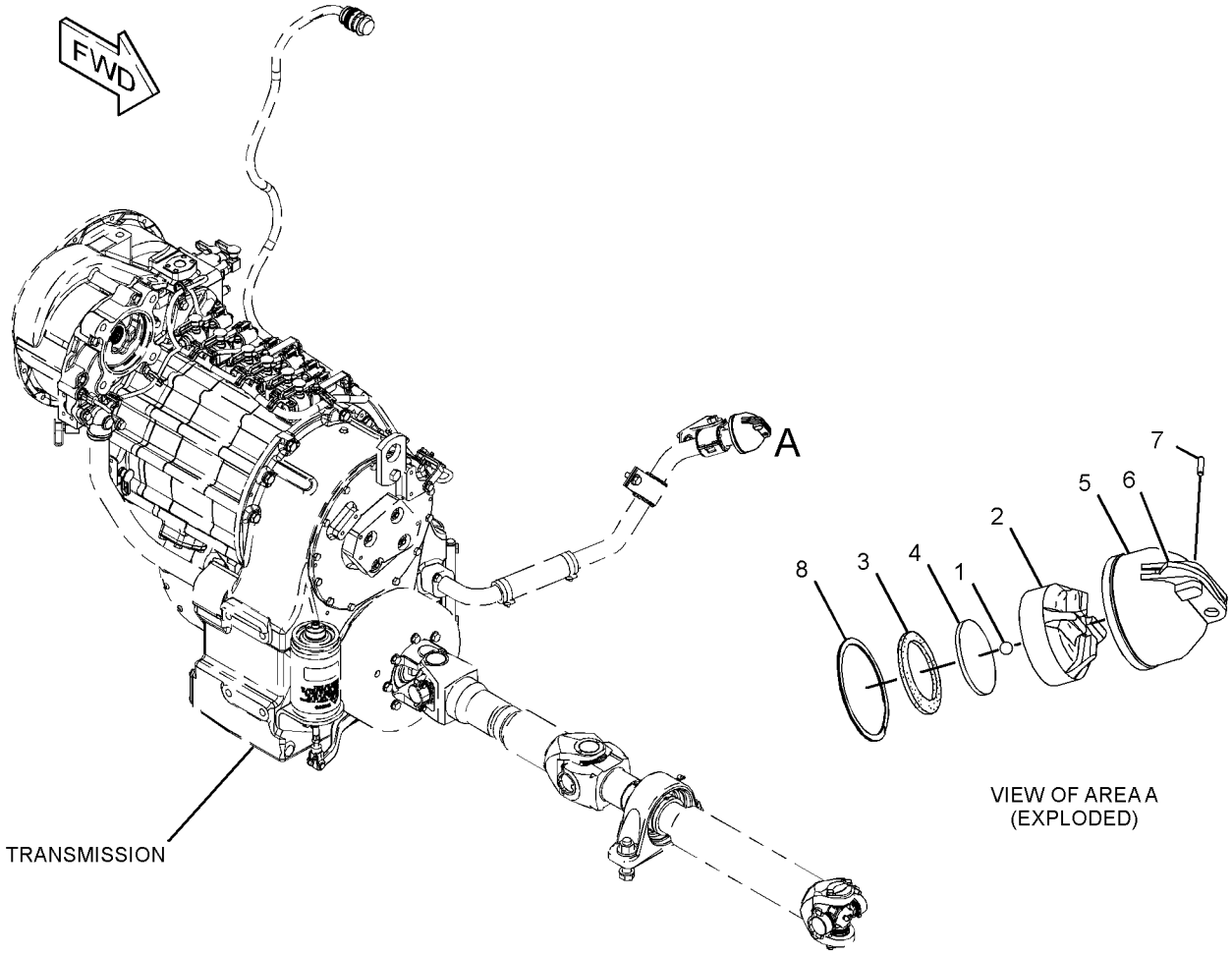

GRAPHIC #1 <END> g02531436

355-1142 DIFFERENTIAL GP—LOCKING DIFFERENTIAL

S/N: TNS1-UP

PART OF 371-7346, 371-7347, 371-7349 AXLE AR-FIXED, 371-7356, 371-7357, 371-7359 AXLE AR-OSCILLATING

SMCS-3258 **i06772086**

NOTE	REF NO	GRAPHIC REF	PART NUMBER	QTY	PART NAME 1 2 3 4 5 6 (PRODUCT LEVEL)	SEE PAGE
	1	1	**9C-6016**	4	PINION-DIFFERENTIAL BEVEL (11-TEETH)	
	2	1	**148-7841**	3	SPRING	
	3	1	**193-3068**	1	GEAR-DIFFERENTIAL BEVEL (16-TEETH)	
	4	1	**201-8476**	9	PLATE-SEPARATOR	
	5	1	**201-8477**	9	DISC-FRICTION	
	6	1	**209-0229**	1	SEAL	
	7	1	**209-0230**	1	SEAL	
	8	1	**217-3681**	4	WASHER-THRUST	
	9	1	*279-4346*	1	BEARING AS-NEEDLE	
		1	**6I-9248**	1	BEARING-THRUST	
		1	**6I-9249**	2	RACE-THRUST BEARING	
	10	1	**355-1143**	1	CASE AS-DIFFERENTIAL	
	11	1	**355-1148**	1	SPIDER	
	12	1	**355-1150**	1	GEAR-DIFFERENTIAL BEVEL (37-TEETH)	
	13	1	**355-1151**	1	PLATE-THRUST	
	14	1	**355-1156**	1	RING-THRUST	
	15	1	**355-9789**	1	PISTON	
	16	1	**450-2572**	2	WASHER-THRUST	
	17	1	**151-4809**	4	BUSHING	
	18	1	**5P-8247**	8	WASHER-HARD (17X32X3.5-MM THK)	
	19	1	**8K-1207**	3	DOWEL	
M	20	1	**8T-0375**	8	BOLT (M16X2X45-MM)	

M - METRIC PART

355-1142 **DIFFERENTIAL GP (**contd.**)** **i06772086**

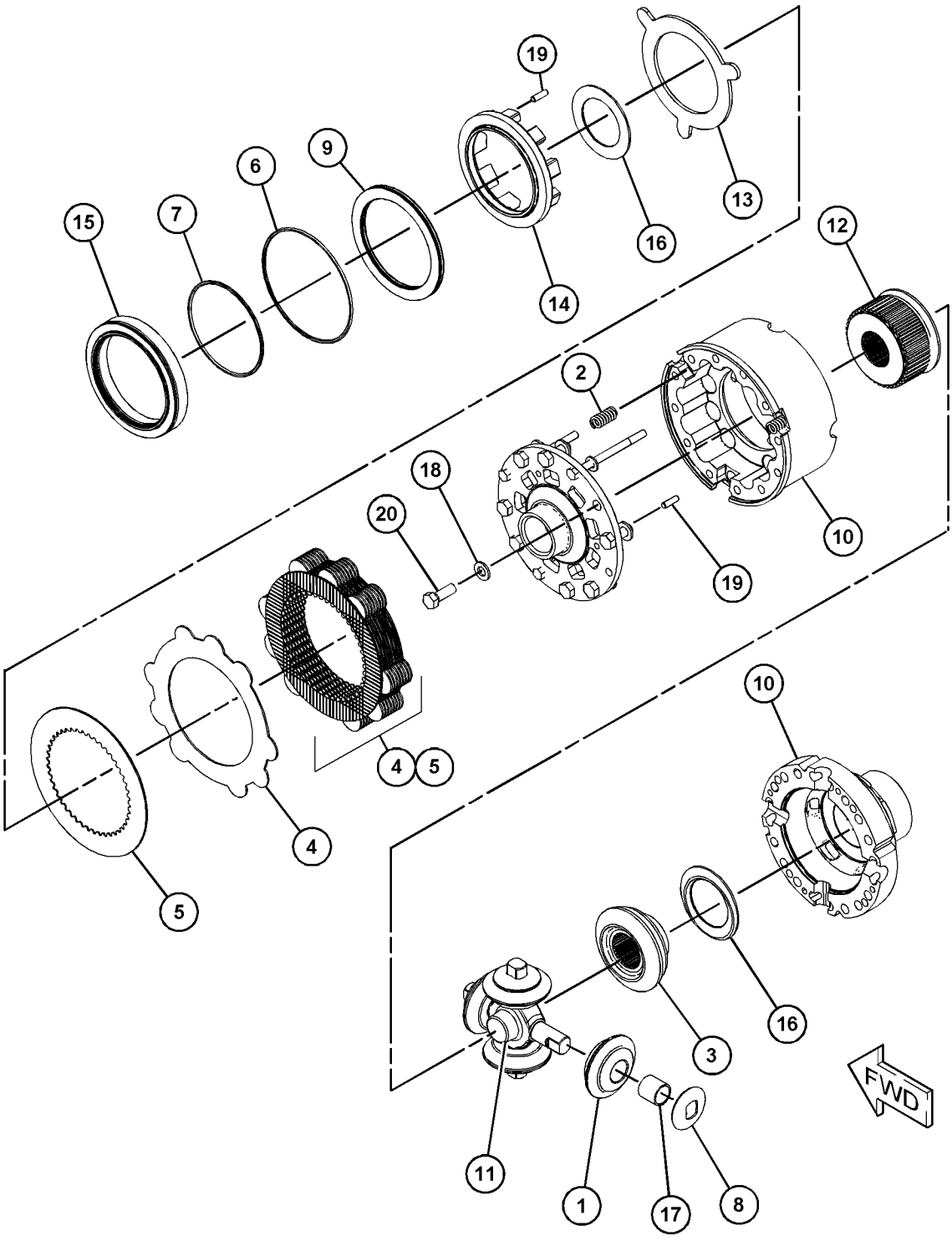

GRAPHIC #1 <END> g03684565

355-1153 DIFFERENTIAL GP–OPEN

S/N: TNS1-UP

PART OF 371-7338, 371-7351, 371-7352, 371-7353, 466-8754 AXLE AR-OSCILLATING

SMCS-3258 **i06680446**

NOTE	REF NO	GRAPHIC REF	PART NUMBER	QTY	PART NAME 1 2 3 4 5 6 (PRODUCT LEVEL)	SEE PAGE
	1	1	**9C-6016**	4	PINION-DIFFERENTIAL BEVEL (11-TEETH)	
	2	1	**193-3068**	2	GEAR-DIFFERENTIAL BEVEL (16-TEETH)	
	3	1	**217-3681**	4	WASHER-THRUST	
	4	1	**355-1148**	1	SPIDER	
	5	1	**355-1154**	1	CASE AS-DIFFERENTIAL	
	6	1	**450-2572**	2	WASHER-THRUST	
	7	1	**151-4809**	4	BUSHING	

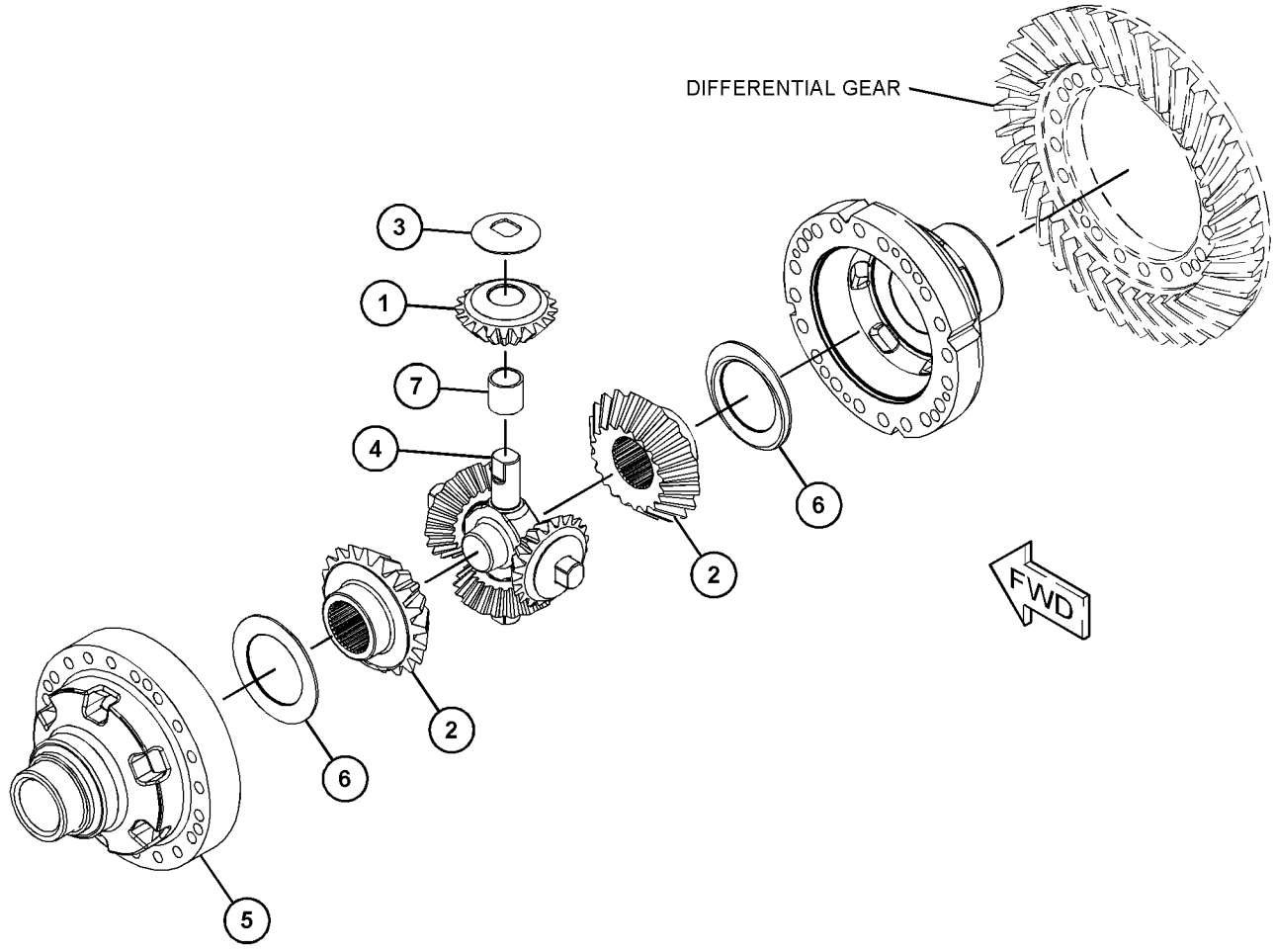

GRAPHIC #1 <END> g03681070

436-6571 DIFFERENTIAL GP

S/N: TNS1-UP

PART OF 371-7337, 371-7344, 371-7345, 371-7350, 466-8752 AXLE AR-FIXED

SMCS-3258 **i06781546**

NOTE	REF NO	GRAPHIC REF	PART NUMBER	QTY	PART NAME 1 2 3 4 5 6 (PRODUCT LEVEL)	SEE PAGE
	1	1	**9C-6016**	4	PINION-DIFFERENTIAL BEVEL (11-TEETH)	
	2	1	**193-3068**	2	GEAR-DIFFERENTIAL BEVEL (16-TEETH)	
	3	1	**217-3681**	4	WASHER-THRUST	
	4	1	**355-1148**	1	SPIDER	
	5	1	**436-6569**	1	CASE AS-DIFFERENTIAL	
	6	1	**450-2572**	2	WASHER-THRUST	
	7	1	**151-4809**	4	BUSHING	

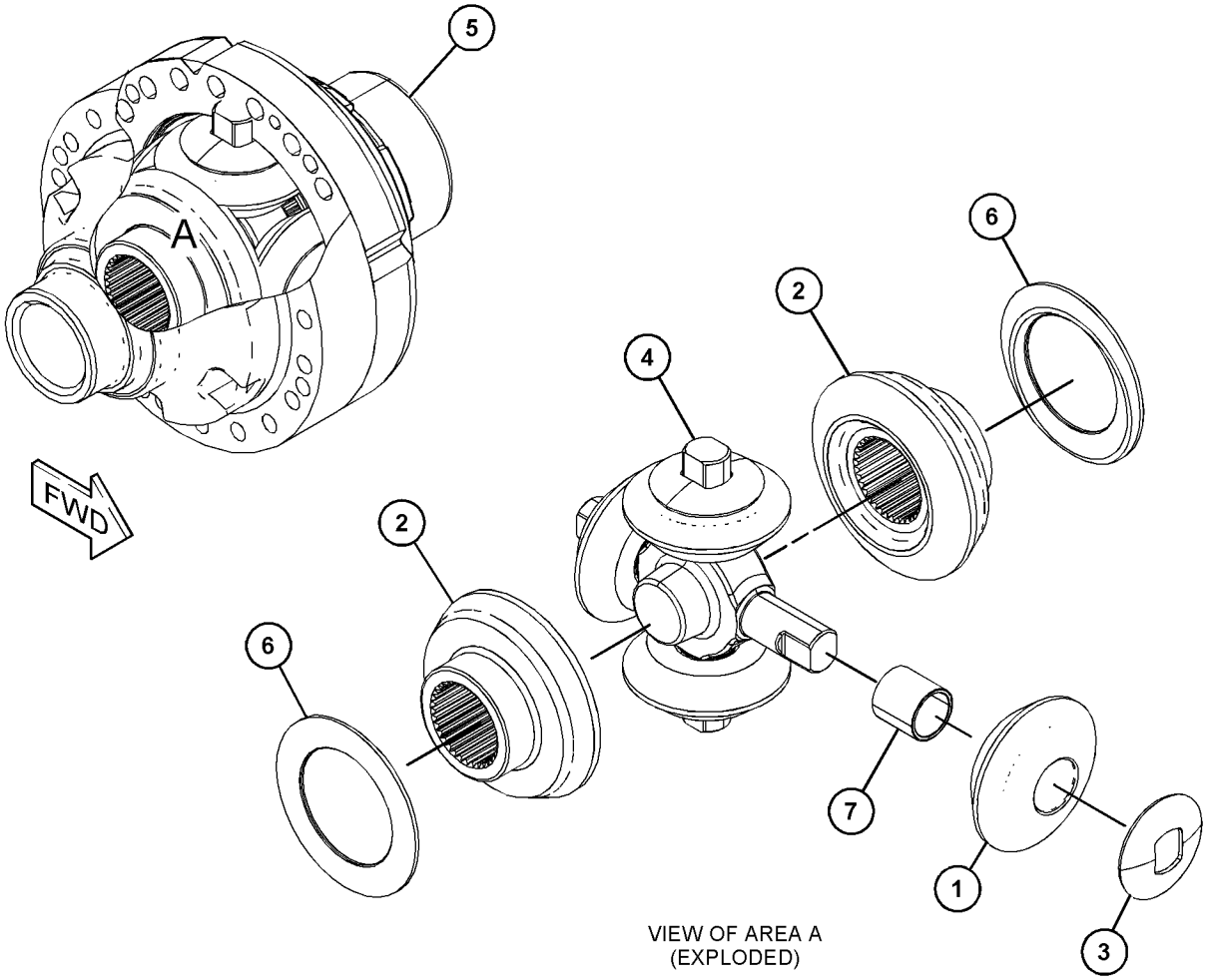

VIEW OF AREA A
(EXPLODED)

GRAPHIC #1 <END> g06042079

138-1509 DRAIN GP-ECOLOGY–POWER TRAIN OIL

S/N: WL51-UP; WSH1-UP; WSY1-UP

PART OF 418-5468 CASE & PARTS GP-PLANETARY

SMCS-3260 **i03539109**

NOTE	REF NO	GRAPHIC REF	PART NUMBER	QTY	PART NAME 1 2 3 4 5 6 (PRODUCT LEVEL)	SEE PAGE
	1	1	**138-1510**	1	PLUG (TRANSMISSION OIL DRAIN)	
	2	1	**192-1023**	1	DRAIN AS	
		1	**077-3241**	1	SEAL-O-RING	
	3	1	**7M-8485**	1	SEAL-O-RING	

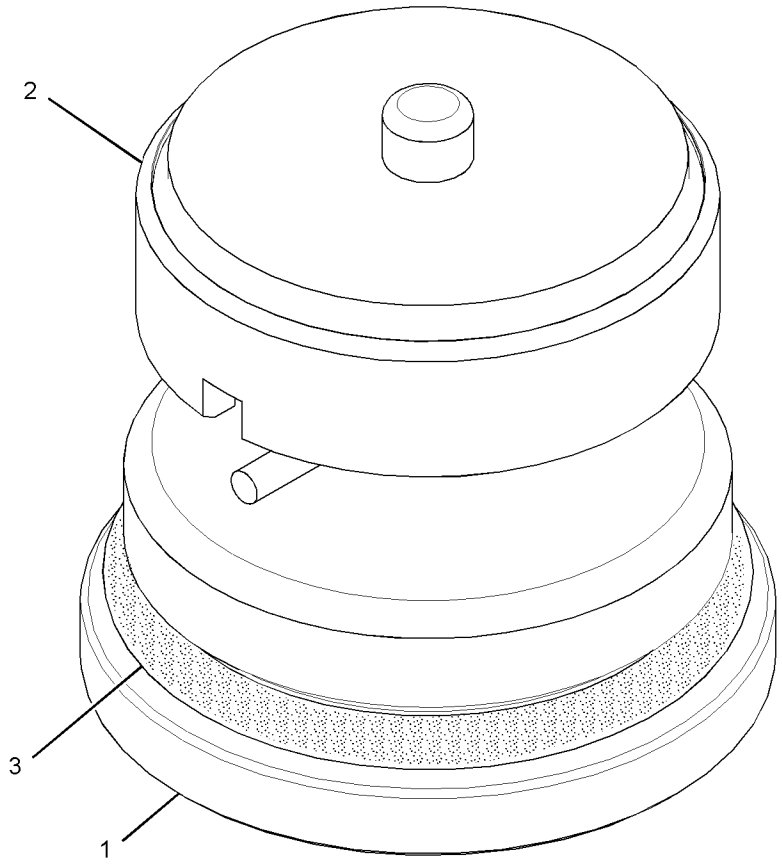

GRAPHIC #1 <END> g01298016

360-0309 FILLER GP-POWER TRAIN OIL

S/N: TNS1-UP

PART OF 492-4020, 507-9161 SPECIAL AR-WHEEL LOADER

SMCS-3005, 3081

i06041918

NOTE	REF NO	GRAPHIC REF	PART NUMBER	QTY	PART NAME 1 2 3 4 5 6 (PRODUCT LEVEL)	SEE PAGE
	1	1	**5P-7175**	1	FITTING-STRAIGHT	
	2	1	**9G-5127**	1	BREATHER AS (ATMOSPHERIC) (POWER TRAIN OIL)	
	3	1	**178-5210**	1	ELBOW	
	4	1	**297-7987**	1	ELBOW	
Y	5	1	*368-6468*	1	COVER GP-XMSN OIL FILLER CAP	312
	6	1	**376-2204**	1	GAUGE GP-SIGHT (POWER TRAIN OIL)	
		1	**5J-2974**	4	SEAL-O-RING	
M		1	**122-8353**	2	BOLT (M12X1.75X46.5-MM)	
	7	1	**391-6961**	1	BRACKET AS	
	8	1	**391-6983**	1	TUBE AS	
	9	1	**391-6984**	1	HOSE	
	10	1	**8T-4983**	2	CLAMP-HOSE	
M	11	1	**176-9237**	1	BOLT-SPECIAL (M10X1.5-THD)	
	12	1	**5H-2730**	1	GASKET	
	13	1	**5P-4961**	2	CLAMP-HOSE	
	14	1	**5P-7468**	2	CLIP (SLOT)	
	15	1	**5P-7469**	2	CLIP (TAB)	
	16	1	**5P-8444**	2	GROMMET (37-MM ID)	
	17	1	**6V-5048**	1	SEAL-O-RING	
	18	1	**8S-7169**	1	COUPLING	
	19	1	**8T-4121**	8	WASHER-HARD (11X21X2.5-MM THK)	
M	20	1	**8T-4133**	1	NUT (M10X1.5-THD)	
M	21	1	**8T-4136**	4	BOLT (M10X1.5X25-MM)	
M	22	1	**8T-4195**	1	BOLT (M10X1.5X30-MM)	
	23	1	**8T-4223**	2	WASHER-HARD (13.5X25.5X3-MM THK)	
M	24	1	**8T-4956**	2	BOLT (M12X1.75X35-MM)	
M	25	1	**8T-6466**	1	BOLT (M10X1.5X60-MM)	
	26	1	**9C-5344**	1	SPACER (10.5X20X18-MM THK)	
	27	1	**9M-8406**	3	CLIP (LOOP)	
G	28	1	**423-1982**		HOSE (45-IN)	

G - ORDER BY THE INCH
M - METRIC PART
Y - SEPARATE ILLUSTRATION

360-0309 **FILLER GP-POWER TRAIN OIL (**contd.**)** **i06041918**

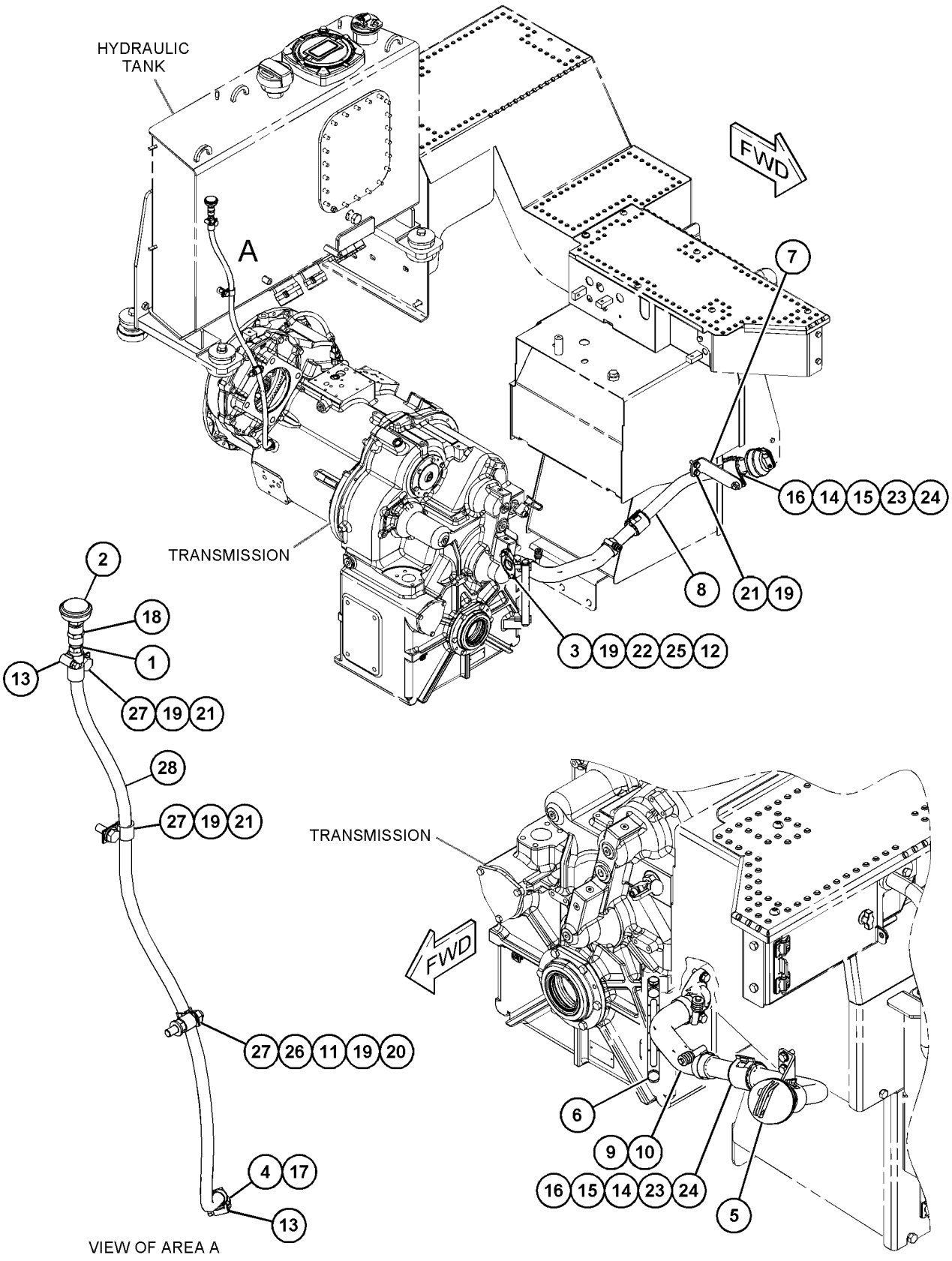

GRAPHIC #1 <END> g03831534

494-5024 FILTER & LINES GP-TORQUE CONV

S/N: TNS1-UP

PART OF 508-7627, 508-7631 SUPPRESSION AR-SOUND

SMCS-3103 **i06810292**

NOTE	REF NO	GRAPHIC REF	PART NUMBER	QTY	PART NAME 1 2 3 4 5 6 (PRODUCT LEVEL)	SEE PAGE
	1	1	**6V-9833**	1	CAP AS	
	2	1	**7K-1181**	3	STRAP-CABLE (5.72-MM DIA)	
	3	1	*148-8317*	1	CONNECTOR AS	
		1	**3D-2824**	1	SEAL-O-RING	
		1	**5K-9090**	1	SEAL-O-RING	
		1	**6V-8714**	1	CONNECTOR	
	4	1	*148-8335*	1	CONNECTOR AS	
		1	**5K-9090**	1	SEAL-O-RING	
		1	**6V-8635**	1	CONNECTOR	
		1	**7M-8485**	1	SEAL-O-RING	
	5	1	*148-8357*	2	ELBOW AS (90-DEG)	
					(EACH INCLUDES)	
		1	**5K-9090**	1	SEAL-O-RING	
		1	**6V-9008**	1	ELBOW	
		1	**7M-8485**	1	SEAL-O-RING	
	6	1	*148-8445*	1	TEE AS	
		1	**5K-9090**	2	SEAL-O-RING	
		1	**6V-9847**	1	TEE-SWIVEL	
	7	1	*164-5567*	1	COUPLER AS-QUICK DISCONNECT (MALE)	
		1	**6V-3965**	1	FITTING (QUICK DISCONNECT)	
		1	**214-7568**	1	SEAL-O-RING	
	8	1	*164-5590*	1	VALVE GP-FLUID SAMPLING	
		1	**3J-7354**	1	SEAL-O-RING	
		1	**8C-3446**	1	VALVE-SAMPLING	
	9	1	*222-6869*	1	CONNECTOR AS	
		1	**3J-1907**	1	SEAL-O-RING	
		1	**6V-8397**	1	SEAL-O-RING	
		1	**9X-2614**	1	CONNECTOR	
	10	1	*250-1458*	1	TEE AS	
		1	**5K-9090**	1	SEAL-O-RING	
		1	**7M-8485**	1	SEAL-O-RING	
		1	**250-1457**	1	TEE	
	11	1	*287-7341*	1	ELBOW AS	
		1	**3J-7354**	1	SEAL-O-RING	
		1	**151-5145**	1	ELBOW	
	12	1	**372-3720**	1	HOSE	
	13	1	**372-3723**	1	TUBE AS	
	14	1	**372-3724**	1	TUBE AS	
	15	1	**386-5249**	1	SHIM (0.25-MM THK)	
Y	16	1	*393-0755*	1	FILTER GP-OIL (HYDRAULIC, TRANSMISSION)	327
I	17	1	**419-3282**	1	HOSE AS	
I	18	1	**427-0366**	1	HOSE AS	
	19	1	**450-5465**	1	TUBE AS	
	20	1	**450-5467**	1	BRACKET AS	
M		1	**8T-3490**	4	NUT-WELD (M10X1.5-THD)	
	21	1	**450-5469**	1	PLATE AS	
M		1	**8T-3490**	1	NUT-WELD (M10X1.5-THD)	

494-5024 **FILTER & LINES GP-TORQUE CONV (**contd.**)** **i06810292**

NOTE	REF NO	GRAPHIC REF	PART NUMBER	QTY	PART NAME 1 2 3 4 5 6 (PRODUCT LEVEL)	SEE PAGE
M		1	**388-5576**	1	BOSS-WELD (M10X1.5X30-MM)	
I	22	1	**450-5470**	1	HOSE AS	
	23	1	**450-5472**	1	BRACKET AS	
M		1	**9R-2613**	3	BOSS-WELD (M10X1.5X25-MM)	
	24	1	**463-8075**	1	BLOCK	
	25	1	**463-8076**	1	BRACKET AS	
M		1	**8T-3490**	2	NUT-WELD (M10X1.5-THD)	
	26	1	**508-1574**	1	BRACKET	
I	27	1	**511-0270**	1	HOSE AS	
	28	1	**091-9035**	2	SPACER (11X25X20-MM THK)	
	29	1	*148-8362*	1	ELBOW AS	
		1	**3D-2824**	1	SEAL-O-RING	
		1	**5K-9090**	1	SEAL-O-RING	
		1	**8T-6684**	1	ELBOW	
	30	1	**162-9112**	1	GROMMET-SPLIT	
	31	1	**198-4777**	1	WASHER-HARD (11X25X10-MM THK)	
	32	1	**1P-3707**	2	SEAL-RECTANGULAR	
	33	1	**200-6345**	1	MOUNT (DUAL SWIVEL)	
	34	1	**211-8073**	2	CAP-PROTECTION	
	35	1	**222-9151**	3	WASHER-HARD (11X32X5-MM THK)	
M	36	1	**250-0394**	2	BOLT (M10X1.5X50-MM)	
M	37	1	**276-1326**	2	BOLT (M10X1.5X55-MM)	
	38	1	**291-5203**	1	BOLT (M10X1.5X40-MM)	
	39	1	**4D-7388**	1	CLIP	
	40	1	**4P-7581**	1	CLIP	
	41	1	**4S-1962**	1	CLIP	
	42	1	**5K-9090**	1	SEAL-O-RING	
	43	1	**6V-0852**	1	CAP-DUST	
	44	1	**7X-7729**	2	WASHER (11X25X3-MM THK)	
	45	1	**8C-3447**	1	CAP-DUST	
	46	1	**8T-4121**	14	WASHER-HARD (11X21X2.5-MM THK)	
M	47	1	**8T-4136**	13	BOLT (M10X1.5X25-MM)	
M	48	1	**8T-4137**	1	BOLT (M10X1.5X20-MM)	
M	49	1	**8T-4194**	4	BOLT (M12X1.75X50-MM)	
	50	1	**8T-4223**	8	WASHER-HARD (13.5X25.5X3-MM THK)	
M	51	1	**8T-4910**	4	BOLT (M12X1.75X60-MM)	
	52	1	**8T-6703**	2	CLAMP-HOSE	

I - REFER TO HYDRAULIC INFORMATION SYSTEM
M - METRIC PART
Y - SEPARATE ILLUSTRATION

494-5024 **FILTER & LINES GP-TORQUE CONV** (contd.) **i06810292**

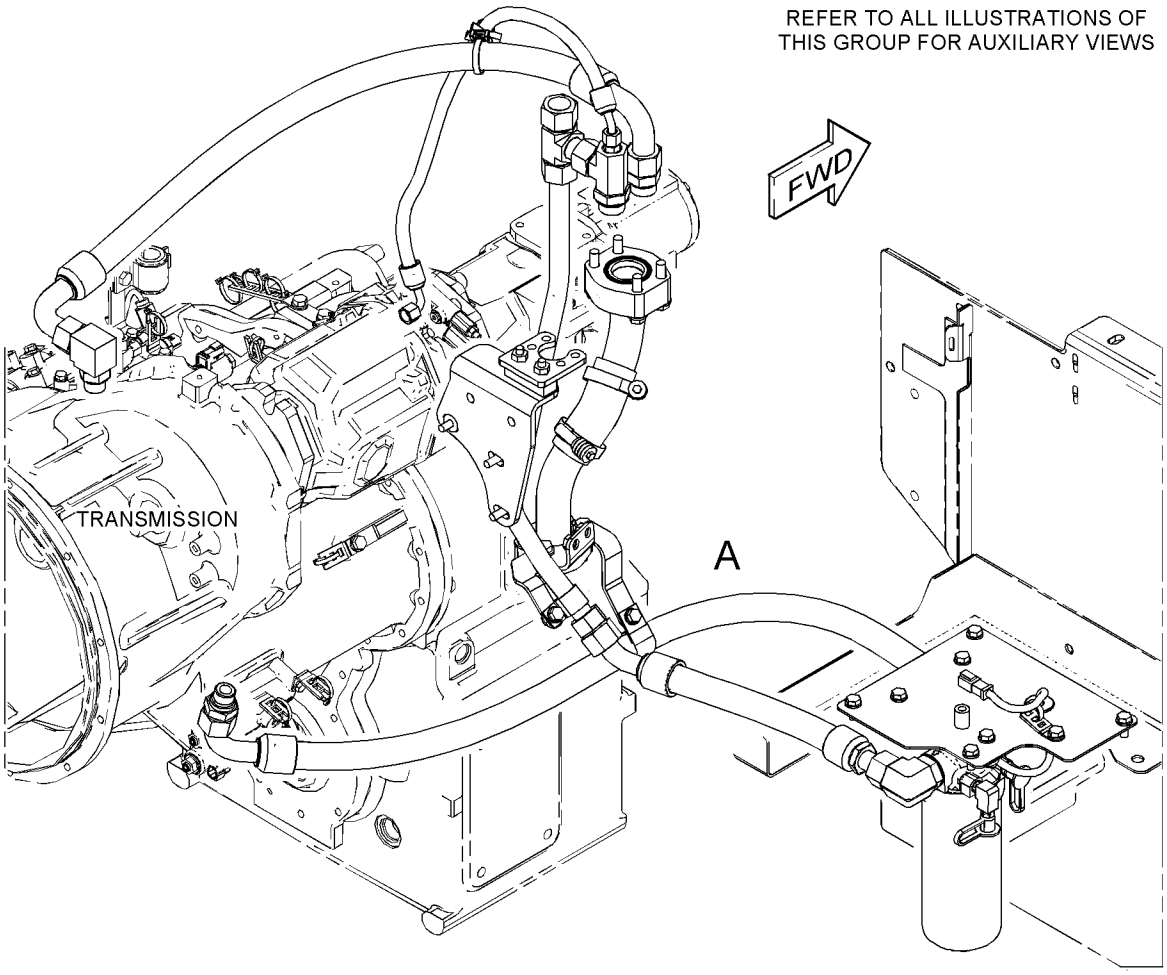

GRAPHIC #1 g06129140

494-5024 **FILTER & LINES GP-TORQUE CONV** (contd.) **i06810292**

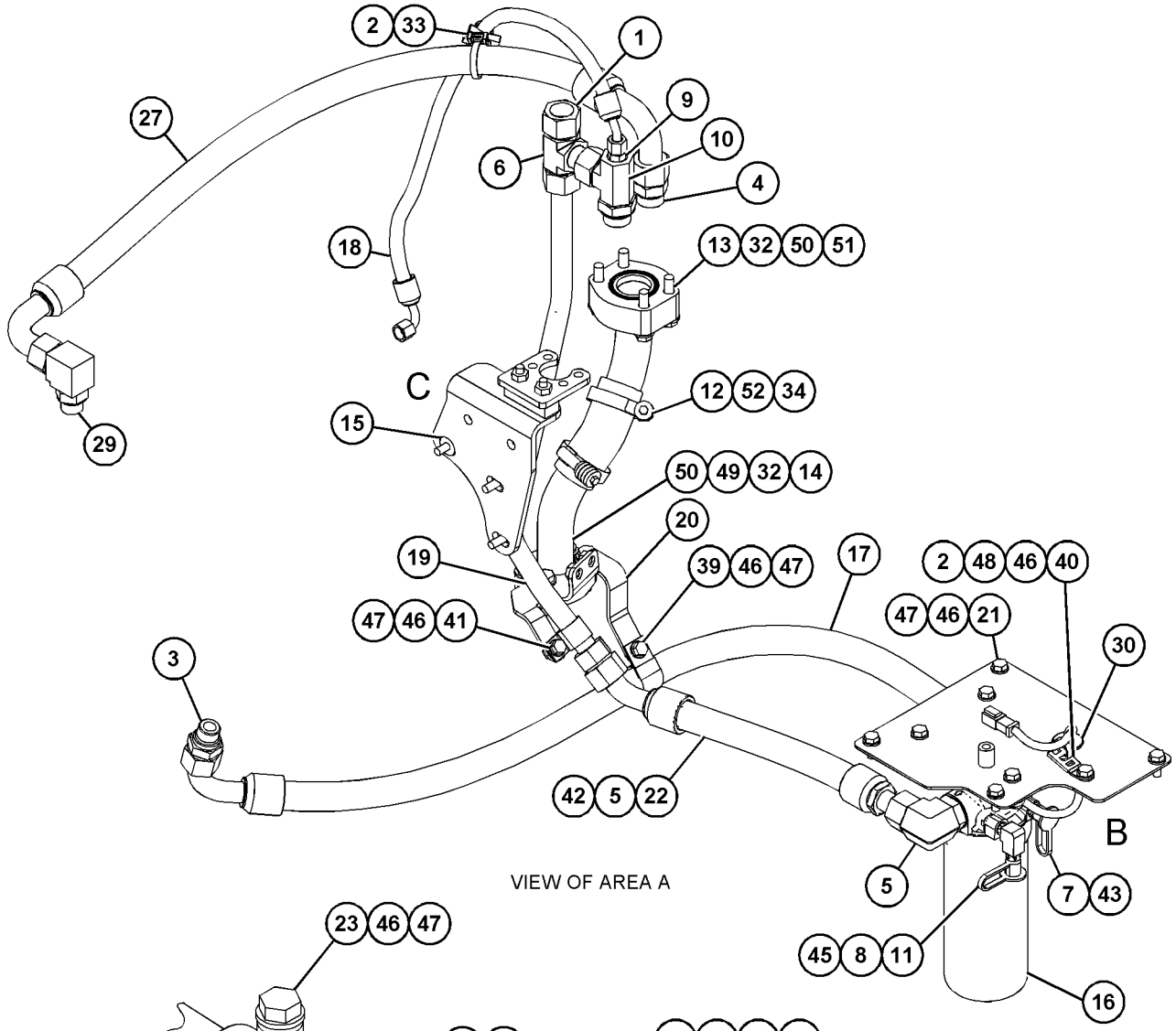

VIEW OF AREA A

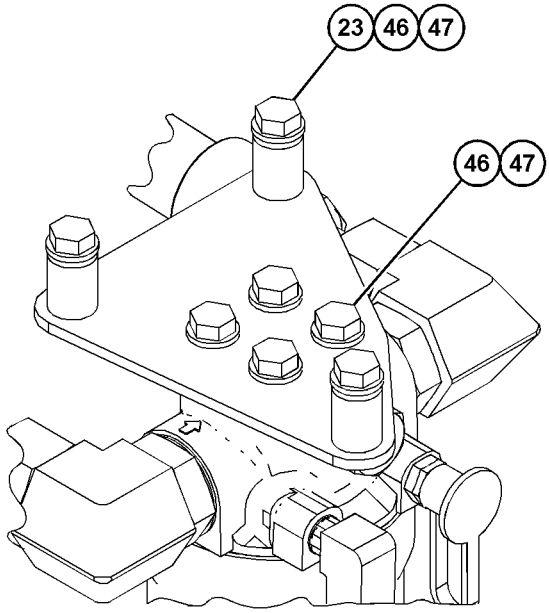

VIEW OF AREA B
(PARTS REMOVED FOR CLARITY)

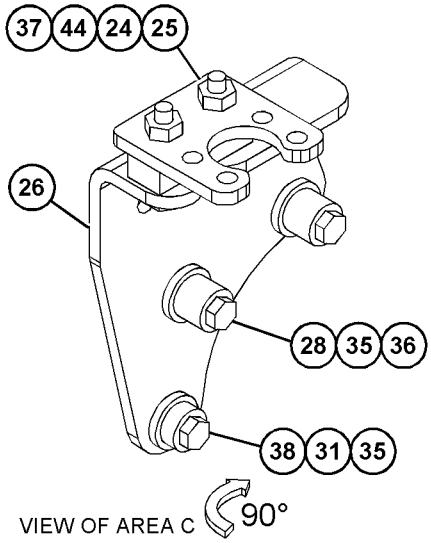

VIEW OF AREA C

GRAPHIC #2 <END> g06129141

511-0269 FILTER & LINES GP-TORQUE CONV

S/N: TNS1-UP

PART OF 508-7629 SUPPRESSION AR-SOUND

SMCS-3103 **i06811139**

NOTE	REF NO	GRAPHIC REF	PART NUMBER	QTY	PART NAME 1 2 3 4 5 6 (PRODUCT LEVEL)	SEE PAGE
	1	1	**6V-9833**	1	CAP AS	
	2	1	**7K-1181**	3	STRAP-CABLE (5.72-MM DIA)	
	3	1	*148-8317*	2	CONNECTOR AS	
					(EACH INCLUDES)	
		1	**3D-2824**	1	SEAL-O-RING	
		1	**5K-9090**	1	SEAL-O-RING	
		1	**6V-8714**	1	CONNECTOR	
	4	1	*148-8335*	1	CONNECTOR AS	
		1	**5K-9090**	1	SEAL-O-RING	
		1	**6V-8635**	1	CONNECTOR	
		1	**7M-8485**	1	SEAL-O-RING	
	5	1	*148-8357*	2	ELBOW AS (90-DEG)	
					(EACH INCLUDES)	
		1	**5K-9090**	1	SEAL-O-RING	
		1	**6V-9008**	1	ELBOW	
		1	**7M-8485**	1	SEAL-O-RING	
	6	1	*148-8445*	1	TEE AS	
		1	**5K-9090**	2	SEAL-O-RING	
		1	**6V-9847**	1	TEE-SWIVEL	
	7	1	*164-5567*	1	COUPLER AS-QUICK DISCONNECT (MALE)	
		1	**6V-3965**	1	FITTING (QUICK DISCONNECT)	
		1	**214-7568**	1	SEAL-O-RING	
	8	1	*164-5590*	1	VALVE GP-FLUID SAMPLING	
		1	**3J-7354**	1	SEAL-O-RING	
		1	**8C-3446**	1	VALVE-SAMPLING	
	9	1	*222-6869*	1	CONNECTOR AS	
		1	**3J-1907**	1	SEAL-O-RING	
		1	**6V-8397**	1	SEAL-O-RING	
		1	**9X-2614**	1	CONNECTOR	
	10	1	*250-1458*	1	TEE AS	
		1	**5K-9090**	1	SEAL-O-RING	
		1	**7M-8485**	1	SEAL-O-RING	
		1	**250-1457**	1	TEE	
	11	1	*287-7341*	1	ELBOW AS	
		1	**3J-7354**	1	SEAL-O-RING	
		1	**124-8909**	1	ELBOW	
	12	1	**372-3720**	1	HOSE	
	13	1	**372-3723**	1	TUBE AS	
	14	1	**372-3724**	1	TUBE AS	
	15	1	**386-5249**	1	SHIM (0.25-MM THK)	
Y	16	1	*393-0755*	1	FILTER GP-OIL (HYDRAULIC, TRANSMISSION)	327
	17	1	**419-3280**	1	BRACKET	
I	18	1	**419-3282**	1	HOSE AS	
I	19	1	**427-0366**	1	HOSE AS	
	20	1	**450-5465**	1	TUBE AS	
	21	1	**450-5467**	1	BRACKET AS	
M		1	**8T-3490**	4	NUT-WELD (M10X1.5-THD)	
	22	1	**450-5469**	1	PLATE AS	

511-0269 **FILTER & LINES GP-TORQUE CONV** (contd.) **i06811139**

NOTE	REF NO	GRAPHIC REF	PART NUMBER	QTY	PART NAME 1 2 3 4 5 6 (PRODUCT LEVEL)	SEE PAGE
M		1	**8T-3490**	1	NUT-WELD (M10X1.5-THD)	
M		1	**388-5576**	1	BOSS-WELD (M10X1.5X30-MM)	
I	23	1	**450-5470**	1	HOSE AS	
	24	1	**463-8075**	1	BLOCK	
	25	1	**463-8076**	1	BRACKET AS	
M		1	**8T-3490**	2	NUT-WELD (M10X1.5-THD)	
	26	1	**508-1574**	1	BRACKET	
I	27	1	**511-0270**	1	HOSE AS	
	28	1	**091-9035**	2	SPACER (11X25X20-MM THK)	
	29	1	*148-8362*	1	ELBOW AS	
		1	**3D-2824**	1	SEAL-O-RING	
		1	**5K-9090**	1	SEAL-O-RING	
		1	**8T-6684**	1	ELBOW	
	30	1	**162-9112**	1	GROMMET-SPLIT	
	31	1	**198-4777**	1	WASHER-HARD (11X25X10-MM THK)	
	32	1	**1P-3707**	2	SEAL-RECTANGULAR	
	33	1	**200-6345**	1	MOUNT (DUAL SWIVEL)	
	34	1	**211-8073**	2	CAP-PROTECTION	
	35	1	**222-9151**	3	WASHER-HARD (11X32X5-MM THK)	
	36	1	**243-2289**	3	MOUNT AS	
M	37	1	**250-0394**	2	BOLT (M10X1.5X50-MM)	
M	38	1	**276-1326**	2	BOLT (M10X1.5X55-MM)	
	39	1	**291-5203**	1	BOLT (M10X1.5X40-MM)	
M	40	1	**344-5675**	3	NUT (M10X1.5-THD)	
	41	1	**4D-7388**	1	CLIP	
	42	1	**4P-7581**	1	CLIP	
	43	1	**4S-1962**	1	CLIP	
	44	1	**5K-9090**	1	SEAL-O-RING	
	45	1	**6V-0852**	1	CAP-DUST	
	46	1	**7X-7729**	2	WASHER (11X25X3-MM THK)	
	47	1	**8C-3447**	1	CAP-DUST	
	48	1	**8T-4121**	14	WASHER-HARD (11X21X2.5-MM THK)	
M	49	1	**8T-4136**	10	BOLT (M10X1.5X25-MM)	
M	50	1	**8T-4137**	1	BOLT (M10X1.5X20-MM)	
M	51	1	**8T-4186**	3	BOLT (M10X1.5X40-MM)	
M	52	1	**8T-4194**	4	BOLT (M12X1.75X50-MM)	
	53	1	**8T-4223**	8	WASHER-HARD (13.5X25.5X3-MM THK)	
	54	1	**8T-4226**	6	WASHER-PLATED (10.5X45X3-MM THK)	
M	55	1	**8T-4910**	4	BOLT (M12X1.75X60-MM)	
	56	1	**8T-6703**	2	CLAMP-HOSE	

I - REFER TO HYDRAULIC INFORMATION SYSTEM
M - METRIC PART
Y - SEPARATE ILLUSTRATION

511-0269 **FILTER & LINES GP-TORQUE CONV** (contd.) **i06811139**

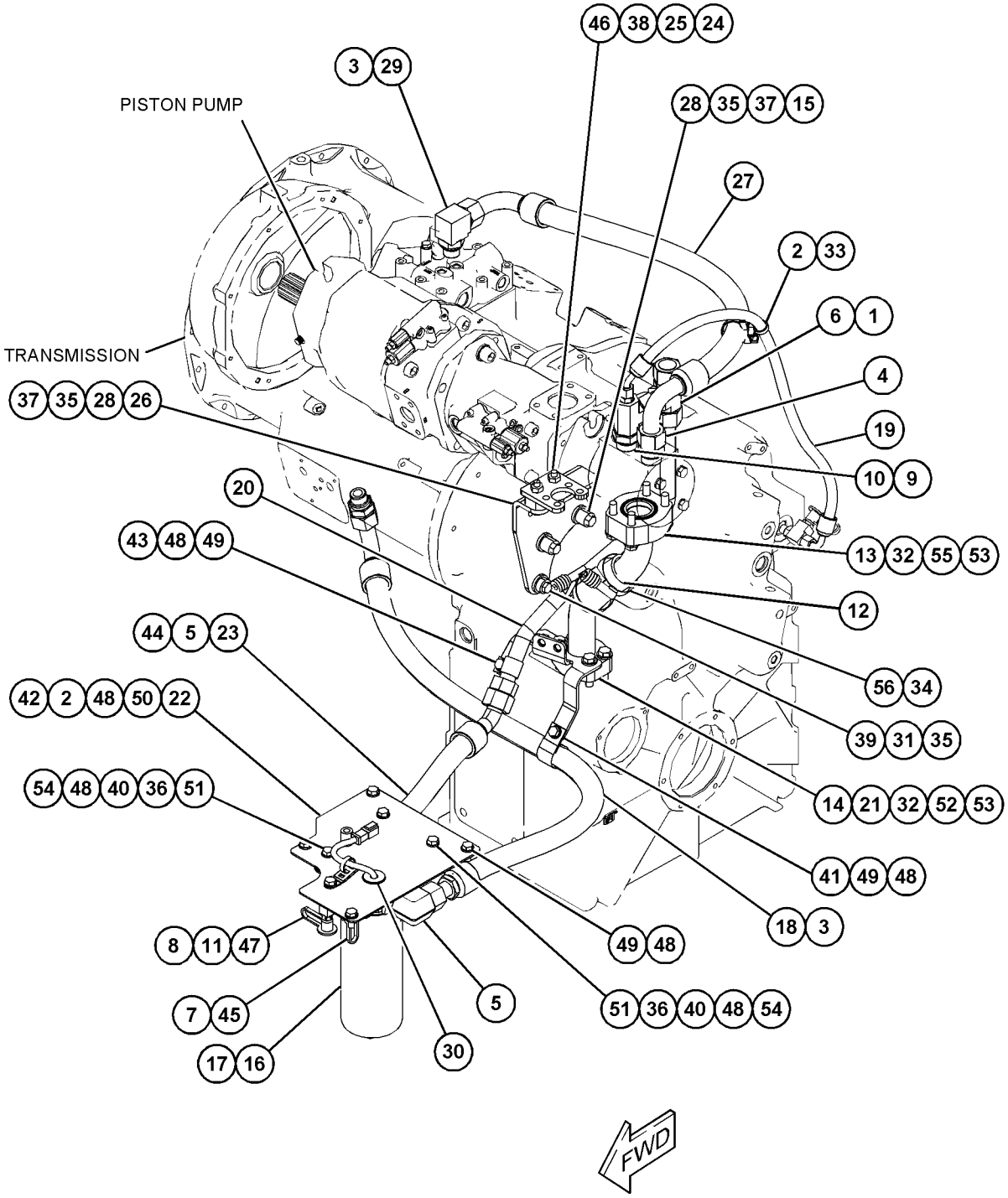

GRAPHIC #1 <END> g06129894

393-0755 FILTER GP-OIL—HYDRAULIC, TRANSMISSION

S/N: TNS1-UP

PART OF 494-5024, 511-0269 FILTER & LINES GP-TORQUE CONV

SMCS-3004, 3067 **i05823290**

NOTE	REF NO	GRAPHIC REF	PART NUMBER	QTY	PART NAME 1 2 3 4 5 6 (PRODUCT LEVEL)	SEE PAGE
	1	1	**348-1047**	1	BASE AS-FILTER	
		1	**6V-5048**	1	SEAL-O-RING	
		1	**9S-4182**	1	PLUG (7/16-20-THD)	
		1	**9S-4191**	1	PLUG (9/16-18-THD)	
		1	**214-7568**	1	SEAL-O-RING	
	2	1	**349-6097**	1	SWITCH AS-PRESSURE (HYDRAULIC OIL)	
		1	**033-6033**	1	SEAL-O-RING	
		1	**206-9295**	1	SEAL-O-RING	
Y	3	1	**428-8645**	1	FILTER GP-OIL (HYDRAULIC, TRANSMISSION)	328
	4	1	**095-1671**	1	SEAL-O-RING	
	5	1	**389-1079**	1	FILTER ELEMENT AS-OIL (TRANSMISSION)	
		1	**095-1671**	1	SEAL-O-RING	

Y - SEPARATE ILLUSTRATION

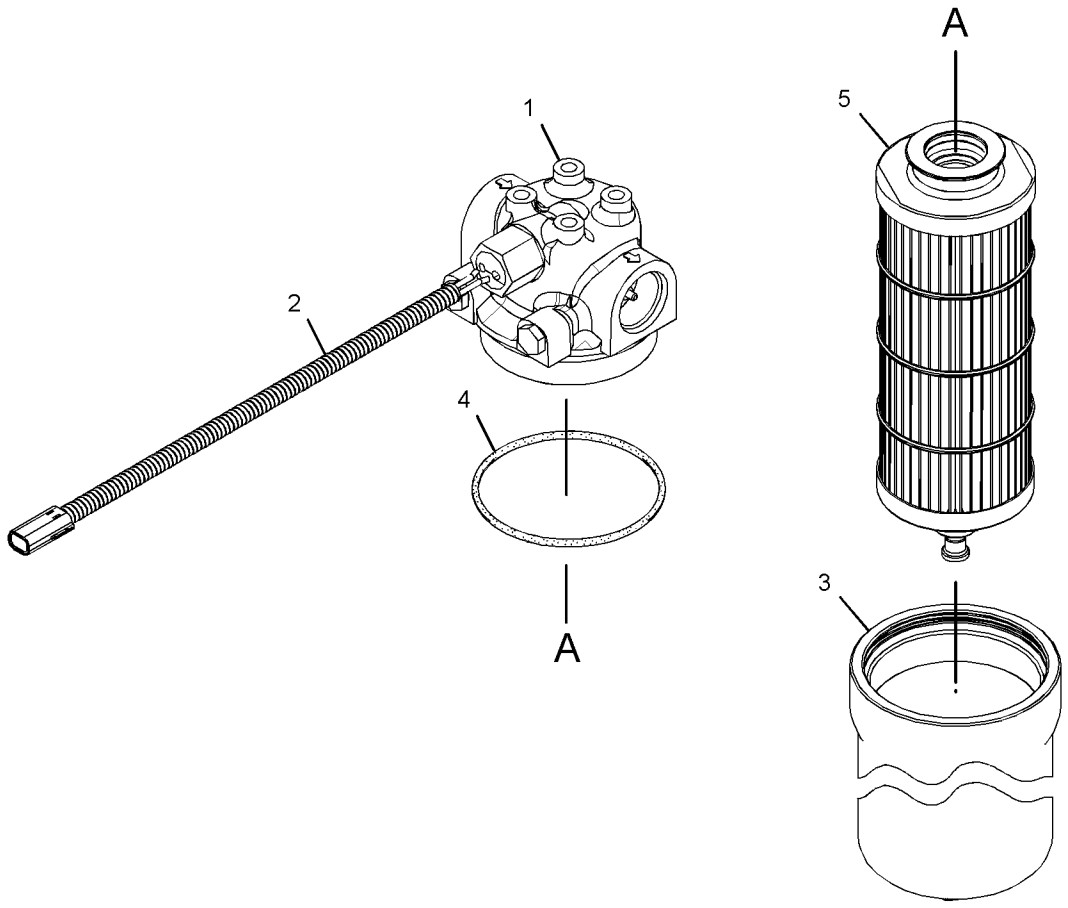

GRAPHIC #1 <END> g02638297

428-8645 FILTER GP-OIL

S/N: TNS1-UP

PART OF 393-0755 FILTER GP-OIL

SMCS-3004, 3067 **i05844308**

NOTE	REF NO	GRAPHIC REF	PART NUMBER	QTY	PART NAME 1 2 3 4 5 6 (PRODUCT LEVEL)	SEE PAGE
	1	1	**9S-8002**	1	PLUG (7/16-20-THD)	
	2	1	**389-1079**	1	FILTER ELEMENT AS-OIL (HYDRAULIC, TRANSMISSION)	
			095-1671	1	SEAL-O-RING	
	3	1	**095-1671**	1	SEAL-O-RING	
	4	1	**6V-5048**	1	SEAL-O-RING	

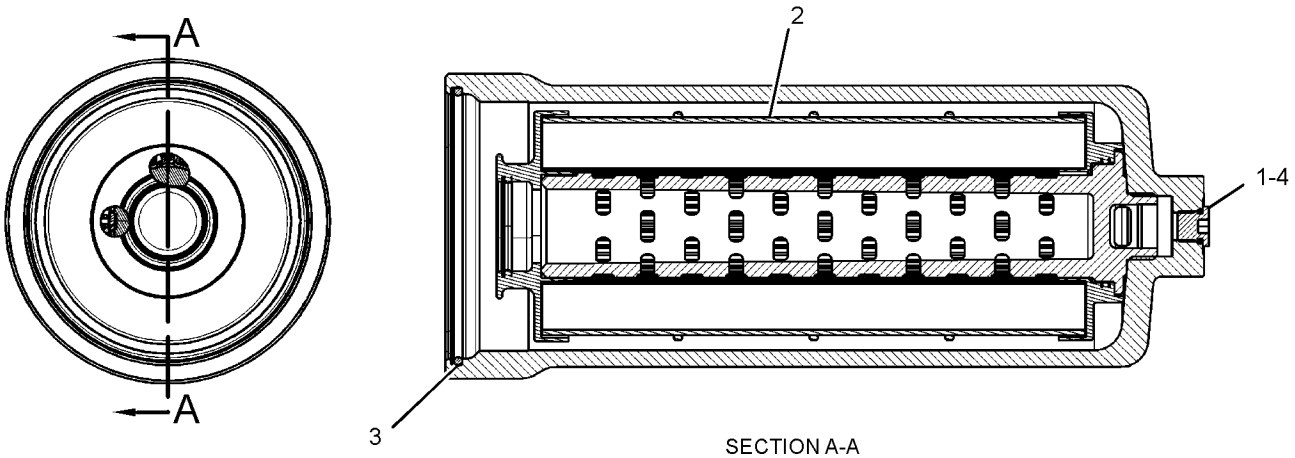

SECTION A-A

GRAPHIC #1 <END> g03582661

363-3920 GEAR GP-BEVEL

S/N: TNS1-UP

PART OF 371-7337, 371-7344, 371-7345, 371-7350, 466-8752 AXLE AR-FIXED

SMCS-3256 **i06796993**

NOTE	REF NO	GRAPHIC REF	PART NUMBER	QTY	PART NAME 1 2 3 4 5 6 (PRODUCT LEVEL)	SEE PAGE
	1	1	**295-2343**	1	NUT-ADJUSTING	
	2	1	**297-3211**	1	LOCK-BEARING	
	3	1	**304-3750**	1	NUT-ADJUSTING	
	4	1	**356-3661**	1	GEAR SET-BEVEL	
	5	1	**376-3127**	1	YOKE AS	
	6	1	**395-3316**	1	LOCK-BEARING	
	7	1	**030-0060**	1	CUP-BEARING	
	8	1	**030-0061**	1	CONE-BEARING	
	9	1	**1L-7518**	1	CONE-BEARING	
	10	1	**271-9096**	1	BEARING AS-TAPERED ROLLER	
	11	1	**2D-9454**	1	CUP-BEARING	
	12	1	**2D-9455**	1	CONE-BEARING	
	13	1	**2H-3088**	1	SEAL-O-RING	
	14	1	**376-1575**	20	BOLT	
	15	1	**6B-4370**	1	CUP-BEARING	
M	16	1	**6V-8210**	3	BOLT (M8X1.25X16-MM)	
	17	1	**6W-1638**	1	WASHER (71X95X5-MM THK)	
M	18	1	**8T-0372**	1	BOLT (M12X1.75X90-MM)	
M	19	1	**9C-8287**	1	LOCKNUT-STAKE (M70X1.5-THD)	
	20	1	**9V-2429**	1	RETAINER	
	21	1	**9X-2619**	4	PIN-SPRING	
	22	1	**9X-2620**	4	PIN-SPRING	

M - METRIC PART

363-3920 **GEAR GP-BEVEL (**contd.**)** **i06796993**

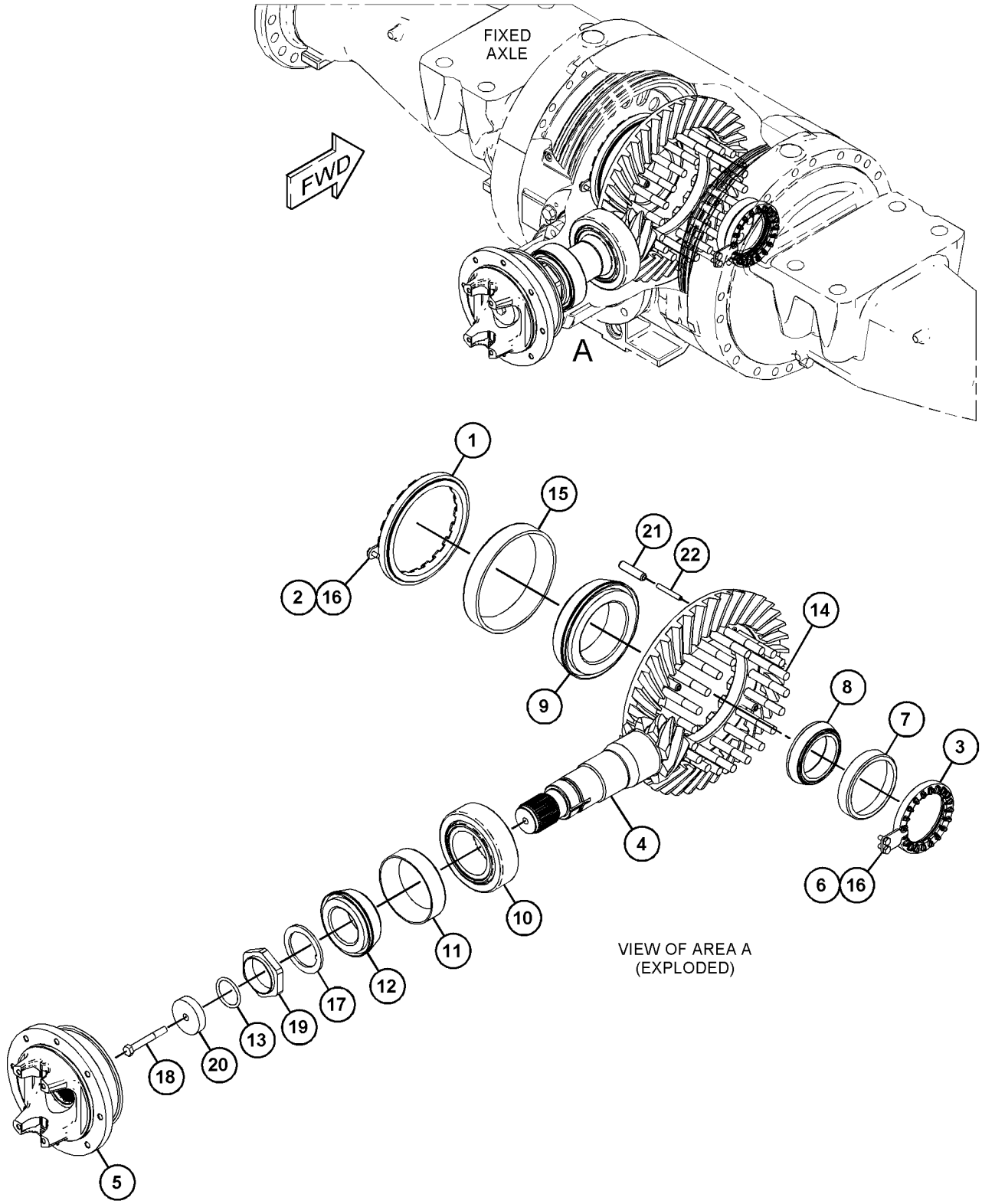

VIEW OF AREA A
(EXPLODED)

GRAPHIC #1 <END> g06048286

355-1152 GEAR GP-BEVEL & PINION

S/N: TNS1-UP

FOR USE WITH LOCKING AXLE, REAR

PART OF 371-7356, 371-7357, 371-7359 AXLE AR-OSCILLATING

SMCS-3254, 3256 **i06574279**

NOTE	REF NO	GRAPHIC REF	PART NUMBER	QTY	PART NAME 1 2 3 4 5 6 (PRODUCT LEVEL)	SEE PAGE
	1	1	**1L-7518**	1	CONE-BEARING	
	2	2	**2D-9455**	1	CONE-BEARING	
	3	2	**6W-1638**	1	WASHER (71X95X5-MM THK)	
M	4	2	**9C-8287**	1	LOCKNUT-STAKE (M70X1.5-THD)	
	5	2	**156-1151**	1	YOKE AS	
		2	**7V-3791**	1	GUARD	
		2	**156-1153**	1	KIT-SERVICE (YOKE)	
					(KIT INCLUDES DUST CAP, SEAL & RING)	
	6	2	**271-9096**	1	BEARING AS-TAPERED ROLLER	
	7	1	**295-2343**	1	NUT-ADJUSTING	
	8	1	**297-3211**	1	LOCK-BEARING	
	9	2	**304-3750**	1	NUT-ADJUSTING	
	10	2	**355-1210**	1	GEAR SET-BEVEL (38-TEETH)	
	11	2	**376-1575**	20	BOLT	
	12	2	**395-3316**	1	LOCK-BEARING	
	13	2	**030-0060**	1	CUP-BEARING	
	14	2	**030-0061**	1	CONE-BEARING	
	15	2	**2D-9454**	1	CUP-BEARING	
	16	2	**3E-4356**	20	WASHER-HARD (17.5X30X6-MM THK)	
	17	1	**6B-4370**	1	CUP-BEARING	
M	18	1,2	**6V-8210**	3	BOLT (M8X1.25X16-MM)	
	19	2	**9X-2619**	4	PIN-SPRING	
	20	2	**9X-2620**	4	PIN-SPRING	

M - METRIC PART

355-1152 **GEAR GP-BEVEL & PINION (**contd.**)** **i06574279**

REFER TO ALL ILLUSTRATIONS OF
THIS GROUP FOR AUXILIARY VIEWS

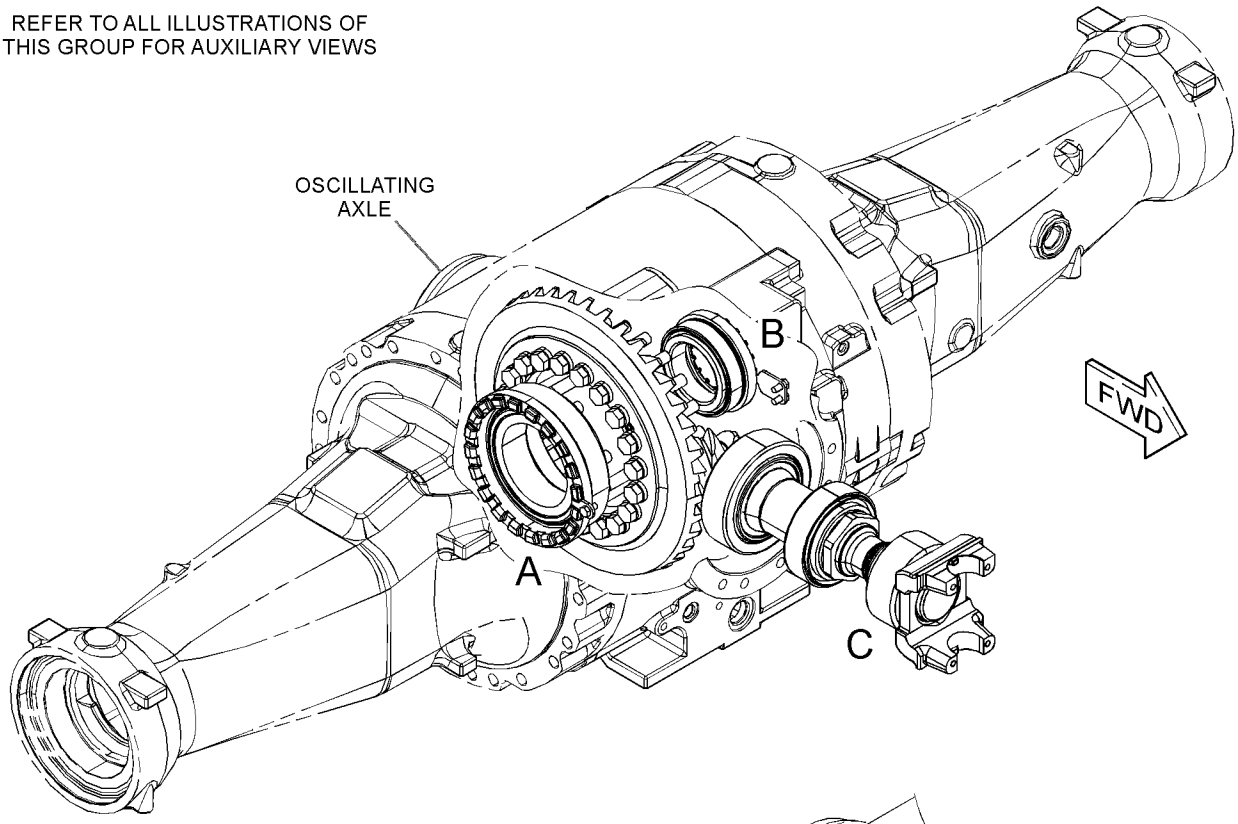

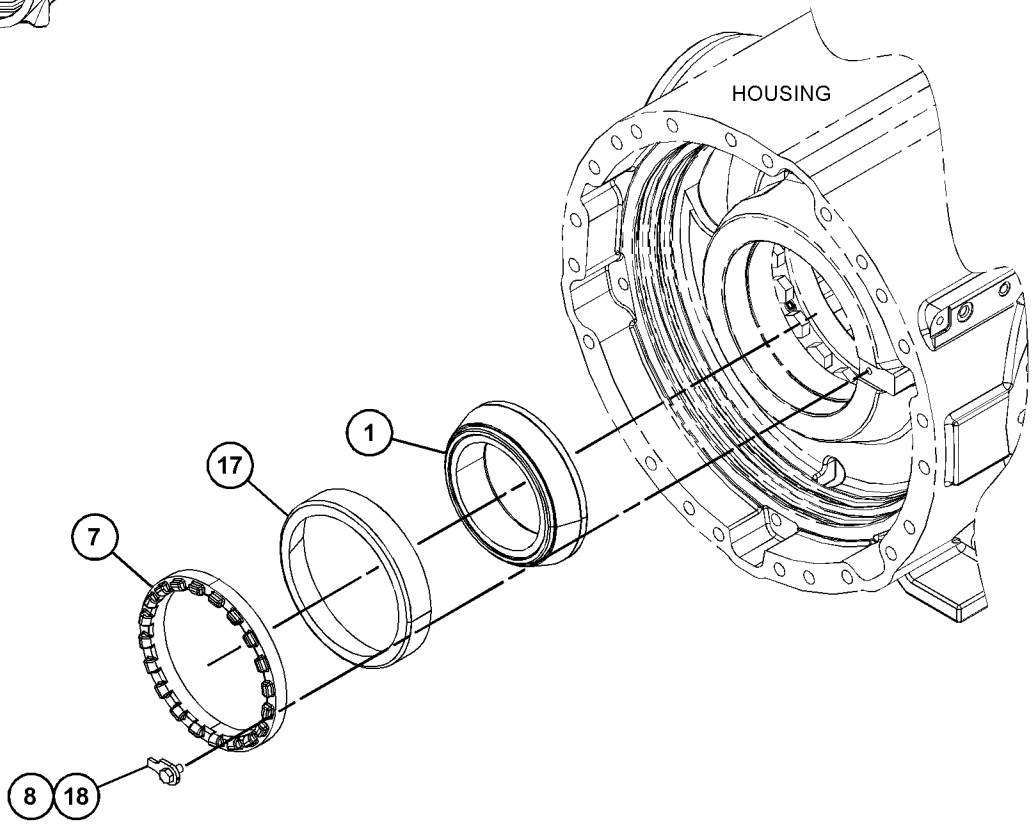

VIEW OF AREA A
(EXPLODED)

GRAPHIC #1 g03682317

355-1152 **GEAR GP-BEVEL & PINION (**contd.**)** **i06574279**

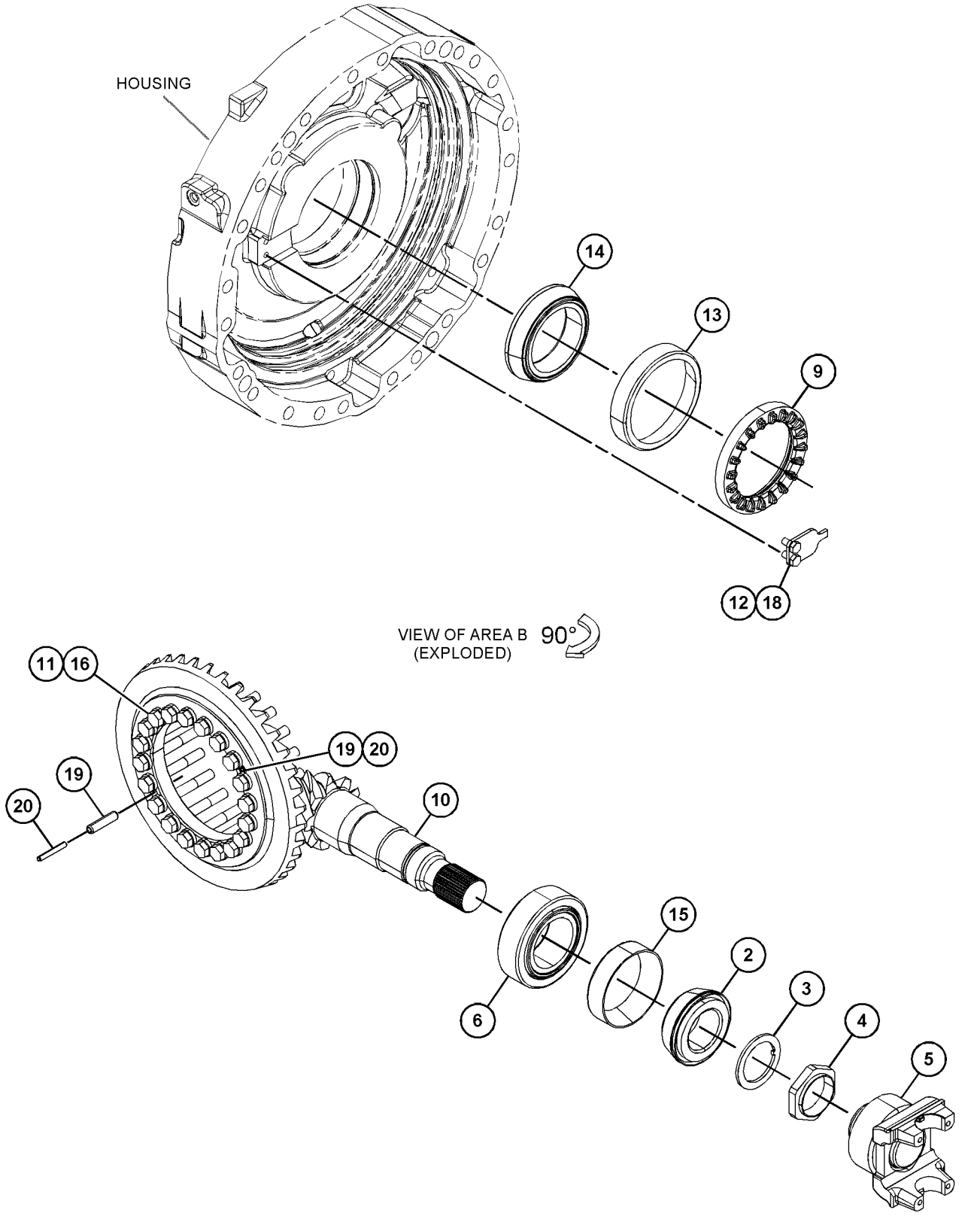

GRAPHIC #2 <END> g03682318

356-3418 GEAR GP-BEVEL & PINION

S/N: TNS1-UP

FOR USE WITH FRONT, LOCKING DIFFERENTIAL

PART OF 371-7346, 371-7347, 371-7349 AXLE AR-FIXED

SMCS-3254, 3256 **i06772087**

NOTE	REF NO	GRAPHIC REF	PART NUMBER	QTY	PART NAME 1 2 3 4 5 6 (PRODUCT LEVEL)	SEE PAGE
	1	1	**1L-7518**	1	CONE-BEARING	
	2	1	**2D-9455**	1	CONE-BEARING	
	3	1	**2H-3088**	1	SEAL-O-RING	
	4	1	**6B-4370**	1	CUP-BEARING	
	5	1	**6W-1638**	1	WASHER (71X95X5-MM THK)	
M	6	1	**9C-8287**	1	LOCKNUT-STAKE (M70X1.5-THD)	
	7	1	**9V-2429**	1	RETAINER	
	8	1	**271-9096**	1	BEARING AS-TAPERED ROLLER	
	9	1	**295-2343**	1	NUT-ADJUSTING	
	10	1	**297-3211**	1	LOCK-BEARING	
	11	1	**304-3750**	1	NUT-ADJUSTING	
	12	1	**356-3661**	1	GEAR SET-BEVEL	
	13	1	**376-1575**	20	BOLT	
	14	1	**376-3127**	1	YOKE AS	
		1	**271-8680**	1	GUARD	
	15	1	**395-3316**	1	LOCK-BEARING	
	16	1	**030-0060**	1	CUP-BEARING	
	17	1	**030-0061**	1	CONE-BEARING	
	18	1	**2D-9454**	1	CUP-BEARING	
	19	1	**3E-4356**	20	WASHER-HARD (17.5X30X6-MM THK)	
M	20	1	**6V-8210**	3	BOLT (M8X1.25X16-MM)	
M	21	1	**8T-0372**	1	BOLT (M12X1.75X90-MM)	
	22	1	**9X-2619**	4	PIN-SPRING	
	23	1	**9X-2620**	4	PIN-SPRING	

M - METRIC PART

356-3418 **GEAR GP-BEVEL & PINION (**contd.**)** **i06772087**

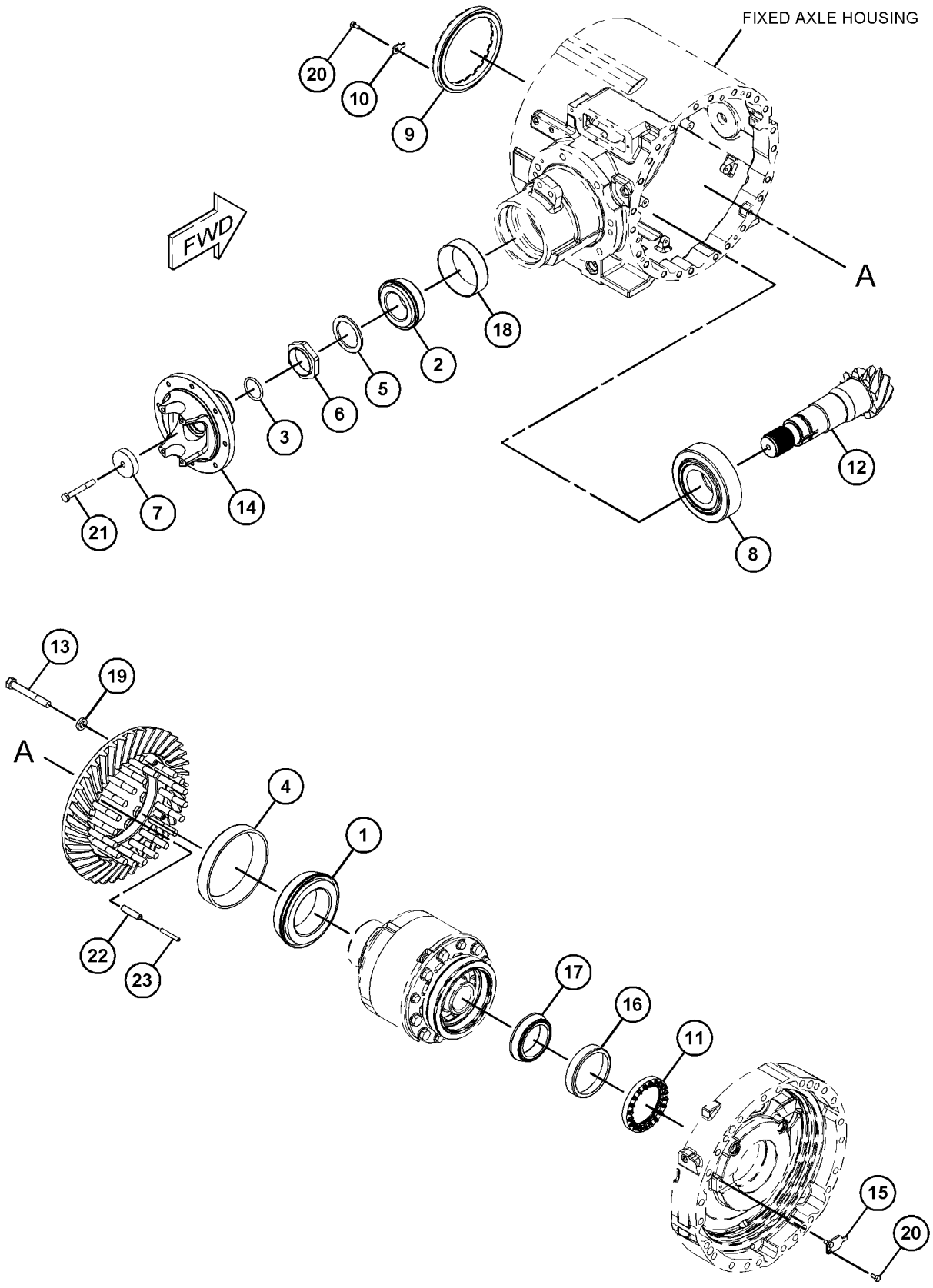

GRAPHIC #1 <END> g03681420

363-3919 GEAR GP-BEVEL & PINION

S/N: TNS1-UP

FOR USE WITH OPEN DIFFERENTIAL

PART OF 371-7338, 371-7351, 371-7352, 371-7353, 466-8754 AXLE AR-OSCILLATING

SMCS-3254, 3256 **i05811730**

NOTE	REF NO	GRAPHIC REF	PART NUMBER	QTY	PART NAME 1 2 3 4 5 6 (PRODUCT LEVEL)	SEE PAGE
	1	2	**156-1151**	1	YOKE AS	
		2	**7V-3791**	1	GUARD	
		2	**156-1153**	1	KIT-SERVICE	
					(INCLUDING CUP-DUST, SEAL & RING-SNAP)	
	2	2	**271-9096**	1	BEARING AS-TAPERED ROLLER	
	3	2	**297-3211**	1	LOCK-BEARING	
	4	2	**304-3750**	1	NUT-ADJUSTING	
	5	2	**355-1210**	1	GEAR SET-BEVEL (38-TEETH)	
	6	2	**368-8010**	1	NUT-ADJUSTING	
	7	2	**395-3316**	1	LOCK-BEARING	
	8	2	**030-0060**	1	CUP-BEARING	
	9	2	**030-0061**	1	CONE-BEARING	
	10	2	**2D-9454**	1	CUP-BEARING	
	11	2	**2D-9455**	1	CONE-BEARING	
	12	2	**376-1575**	20	BOLT	
	13	2	**4B-9373**	1	CONE-BEARING (TAPERED ROLLER)	
	14	2	**4B-9374**	1	CUP-BEARING (TAPERED ROLLER)	
M	15	2	**6V-8210**	3	BOLT (M8X1.25X16-MM)	
	16	2	**6W-1638**	1	WASHER (71X95X5-MM THK)	
M	17	2	**9C-8287**	1	LOCKNUT-STAKE (M70X1.5-THD)	
	18	2	**9X-2619**	4	PIN-SPRING	
	19	2	**9X-2620**	4	PIN-SPRING	

M - METRIC PART

363-3919 **GEAR GP-BEVEL & PINION (**contd.**)** **i05811730**

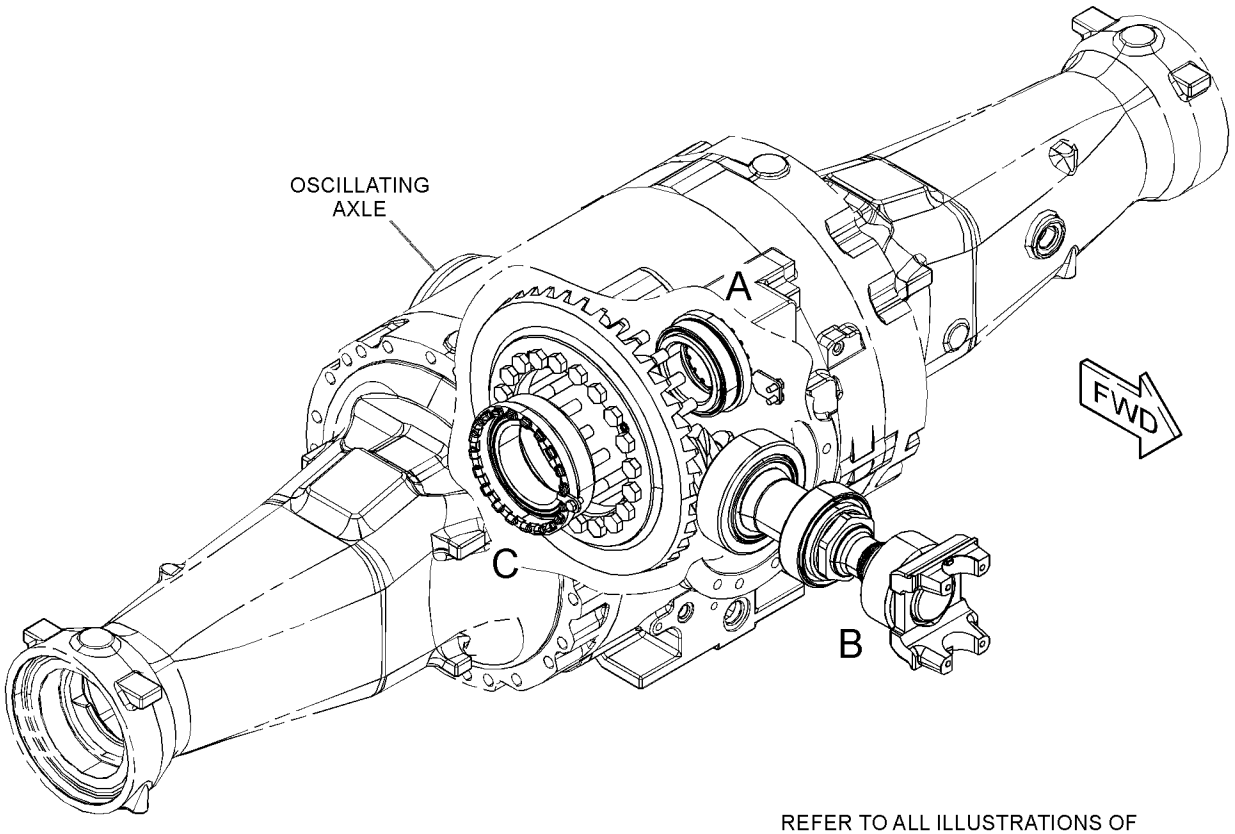

REFER TO ALL ILLUSTRATIONS OF
THIS GROUP FOR AUXILIARY VIEWS

GRAPHIC #1 g03682230

363-3919 **GEAR GP-BEVEL & PINION (**contd.**)** **i05811730**

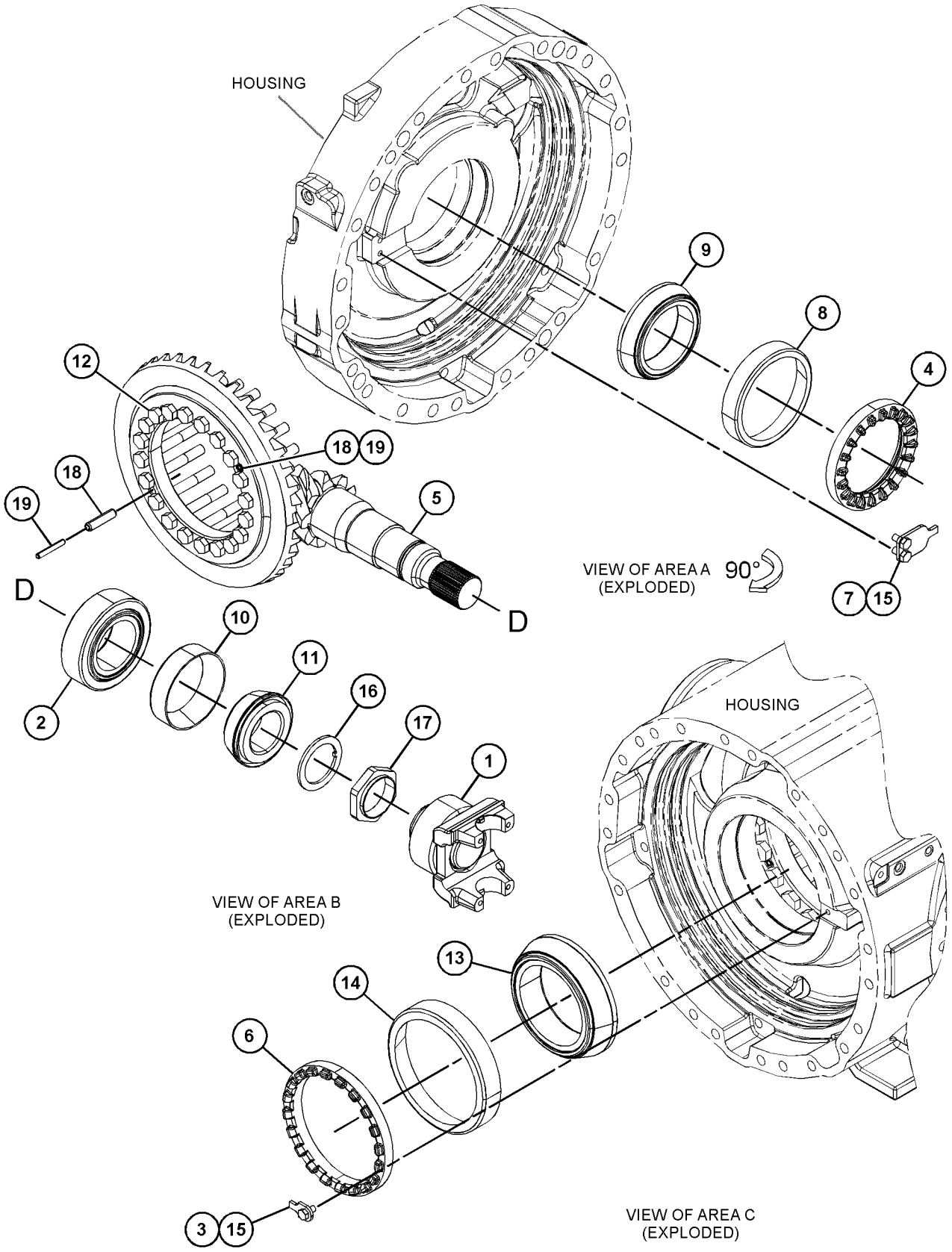

GRAPHIC #2 <END> g03682231

357-1578 GEAR GP-INPUT TRANSFER

S/N: WL51-UP; WSH1-UP; WSY1-UP

PART OF 357-1577 TRANSMISSION AR

SMCS-3159 **i05799722**

NOTE	REF NO	GRAPHIC REF	PART NUMBER	QTY	PART NAME 1 2 3 4 5 6 (PRODUCT LEVEL)	SEE PAGE
	1	1	**7J-8210**	2	CONE-BEARING	
	2	1	**1N-7057**	1	RING-SEAL	
	3	1	**9M-2008**	2	RING-METAL SEAL	
	4	1	**147-1689**	1	CARRIER-SEAL	
	5	1	**419-0999**	1	SHAFT	
	6	1	**352-6110**	1	GEAR (34-TEETH)	
	7	1	**352-6111**	1	GEAR (57-TEETH)	

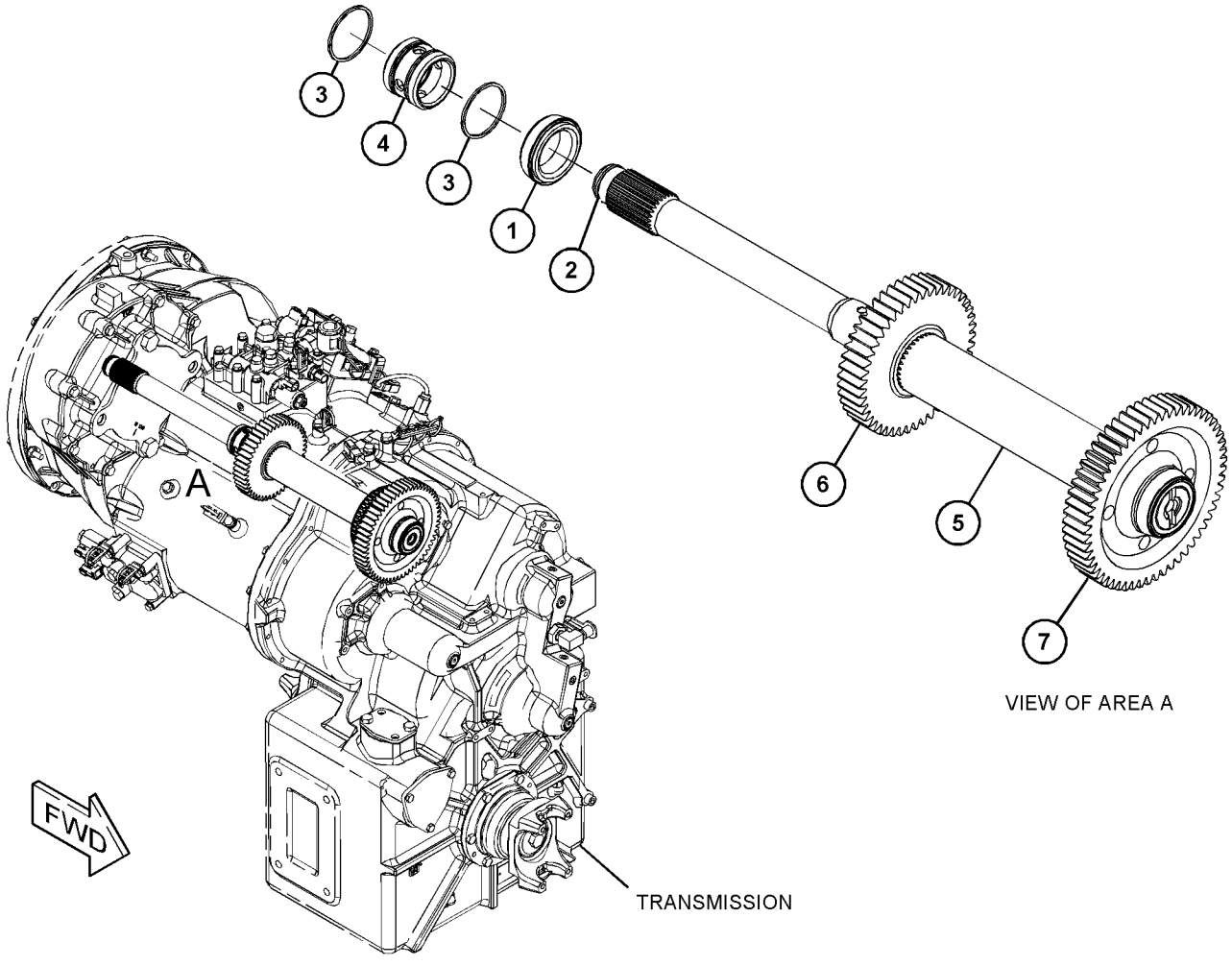

GRAPHIC #1 <END> g03687017

357-1589 GEAR GP-OUTPUT TRANSFER

S/N: WL51-UP; WSH1-UP; WSY1-UP
PART OF 357-1577 TRANSMISSION AR

SMCS-3075, 3159 **i05799720**

NOTE	REF NO	GRAPHIC REF	PART NUMBER	QTY	PART NAME 1 2 3 4 5 6 (PRODUCT LEVEL)	SEE PAGE
	1	1	**265-3930**	2	RETAINER	
	2	1	**399-8294**	1	SHAFT-OUTPUT	
	3	1	**452-3988**	1	GEAR (48-TEETH)	
	4	1	**113-5304**	2	SEAL-O-RING	
	5	1	**2P-8987**	2	CONE-BEARING	
M	6	1	**8T-0358**	2	BOLT (M16X2X90-MM)	
	7	1	**115-1326**	2	YOKE AS	
					(EACH INCLUDES)	
		1	**7S-8158**	1	GUARD	

M - METRIC PART

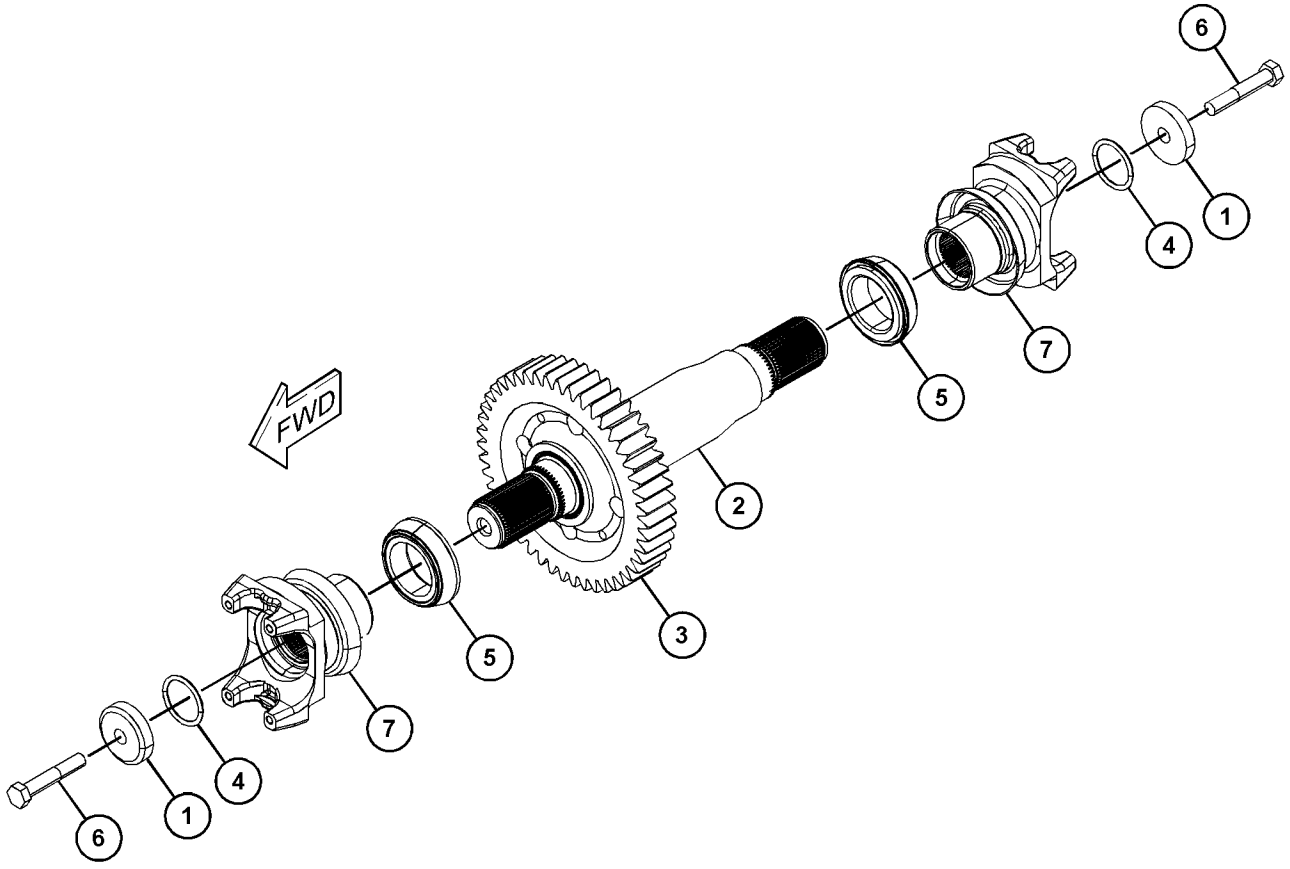

GRAPHIC #1 <END> g03684641

342-7632 HEAT EXCHANGER GP-AXLE—AXLE OIL

S/N: TNS1-UP

PART OF 371-7345, 371-7347 AXLE AR-FIXED, 371-7352, 371-7357 AXLE AR-OSCILLATING

SMCS-1379 **i06680548**

NOTE	REF NO	GRAPHIC REF	PART NUMBER	QTY	PART NAME 1 2 3 4 5 6 (PRODUCT LEVEL)	SEE PAGE
	1	1	**342-7627**	1	HEADER	
	2	1	**342-7631**	1	HEAT EXCHANGER AS-AXLE	
M		1	**6V-5218**	12	BOLT (M8X1.25X35-MM)	
		1	**132-7534**	12	LOCK	
	3	1	**106-9586**	2	SEAL-O-RING	
M	4	1	**247-1606**	6	BOLT-SOCKET HEAD (M8X1.25X140-MM)	
M	5	1	**6I-0572**	3	BOLT (M8X1.25X20-MM)	
M	6	1	**8T-4189**	6	BOLT (M8X1.25X20-MM)	
	7	1	**8T-4224**	6	WASHER-HARD (8.8X16X2-MM THK)	
	8	1	**9M-1974**	6	WASHER-HARD (8.8X16X2-MM THK)	
BF			**7Y-1528**		SEALANT	

B - USE AS REQUIRED
F - NOT SHOWN
M - METRIC PART

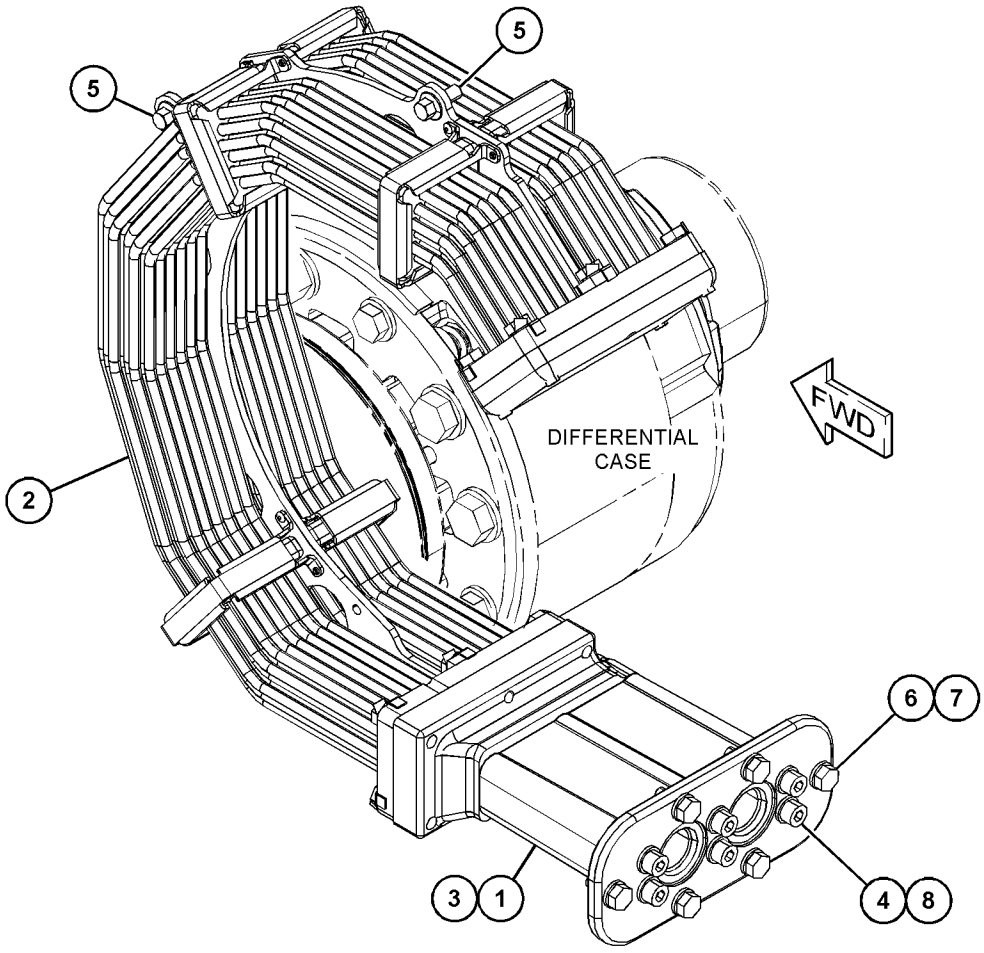

GRAPHIC #1 <END> g03686937

371-7386 HOUSING GP-AXLE

S/N: TNS1-UP
FIXED
PART OF 371-7350 AXLE AR-FIXED

SMCS-3260, 3278 **i06814662**

NOTE	REF NO	GRAPHIC REF	PART NUMBER	QTY	PART NAME 1 2 3 4 5 6 (PRODUCT LEVEL)	SEE PAGE
	1	1	**8T-0336**	1	FITTING-PRESSURE RELIEF	
	2	1	**9G-5315**	2	SEAL GP-DUO-CONE	
	3	1	**248-0833**	1	PLUG AS-DRAIN	
		1	**3S-9233**	1	SEAL-O-RING	
		1	**5L-4759**	1	SEAL-O-RING	
		1	**259-7138**	1	PLUG	
	4	1	**264-0575**	1	SEAL-LIP TYPE	
	5	1	**455-8046**	1	HOUSING-PINION	
B	6	1	**360-9855**	1	SHIM PACK (INCLUDES 11-SHIMS)	
	7	1	**376-6952**	1	SHROUD AS	
	8	1	**358-1208**	2	SHAFT-AXLE	
	9	1	**469-0896**	2	HOUSING-AXLE	
	10	1	**396-3895**	1	HOUSING AS	
	11	1	*164-4180*	1	PLUG AS	
		1	**7M-8485**	1	SEAL-O-RING	
		1	**9S-4181**	1	PLUG (5/16-12-THD)	
M	12	1	**236-0483**	24	BOLT (M16X2X190-MM)	
	13	1	**2P-1373**	2	CUP-BEARING	
M	14	1	**418-6609**	3	BOLT-FLANGE HEAD (M8X1.25X80-MM)	
	15	1	**5P-3119**	2	RING-RETAINING	
	16	1	**5P-8247**	56	WASHER-HARD (17X32X3.5-MM THK)	
M	17	1	**6C-5304**	24	BOLT (M16X2X110-MM)	
M	18	1	**6V-5686**	8	BOLT (M16X2X50-MM)	
	19	1	**6Y-2538**	2	CONE-BEARING	
	20	1	**7M-8485**	1	SEAL-O-RING	
	21	1	**8B-6342**	2	CONE-BEARING	
	22	1	**8B-6343**	2	CUP-BEARING	
	23	1	**9C-6041**	3	DOWEL	
	24	1	**9C-8419**	2	NUT-BEARING	
	25	1	**9M-5024**	1	SEAL-O-RING	
BF		1	**1U-8846**		SEALANT-GASKET	

B - USE AS REQUIRED
F - NOT SHOWN
M - METRIC PART

371-7386 **HOUSING GP-AXLE (**contd.**)** **i06814662**

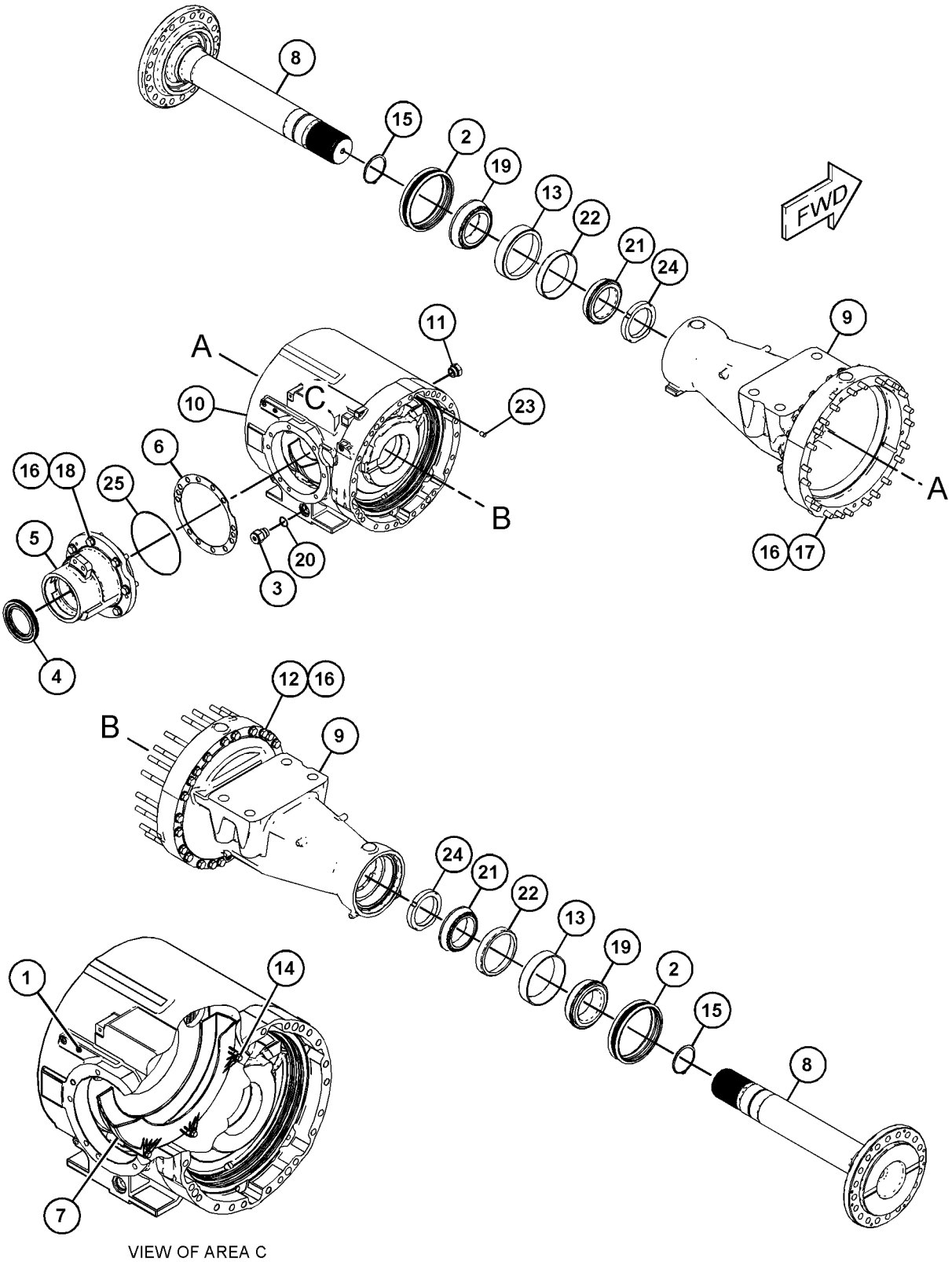

VIEW OF AREA C

GRAPHIC #1 <END> g06051203

466-8748 HOUSING GP-AXLE—FIXED AXLE

S/N: TNS1-UP

PART OF 371-7337 AXLE AR-FIXED

SMCS-3260, 3278 **i06814655**

NOTE	REF NO	GRAPHIC REF	PART NUMBER	QTY	PART NAME 1 2 3 4 5 6 (PRODUCT LEVEL)	SEE PAGE
	1	1	**8T-0336**	1	FITTING-PRESSURE RELIEF	
	2	1	**9G-5315**	2	SEAL GP-DUO-CONE	
	3	1	*164-4180*	1	PLUG AS	
		1	**7M-8485**	1	SEAL-O-RING	
		1	**9S-4181**	1	PLUG (5/16-12-THD)	
	4	1	**264-0575**	1	SEAL-LIP TYPE	
	5	1	**358-1208**	2	SHAFT-AXLE	
B	6	1	**360-9855**	1	SHIM PACK (INCLUDES 11-SHIMS)	
	7	1	**376-6952**	1	SHROUD AS	
	8	1	**396-3895**	1	HOUSING AS	
	9	1	**455-8046**	1	HOUSING-PINION	
	10	1	**469-0896**	2	HOUSING-AXLE	
M	11	1	**236-0483**	24	BOLT (M16X2X190-MM)	
	12	1	**2P-1373**	2	CUP-BEARING	
M	13	1	**418-6609**	3	BOLT-FLANGE HEAD (M8X1.25X80-MM)	
	14	1	**5P-3119**	2	RING-RETAINING	
	15	1	**5P-4484**	1	PLUG-MAGNETIC (DRAIN)	
	16	1	**5P-8247**	56	WASHER-HARD (17X32X3.5-MM THK)	
M	17	1	**6C-5304**	24	BOLT (M16X2X110-MM)	
M	18	1	**6V-5686**	8	BOLT (M16X2X50-MM)	
	19	1	**6Y-2538**	2	CONE-BEARING	
	20	1	**7M-8485**	1	SEAL-O-RING	
	21	1	**8B-6342**	2	CONE-BEARING	
	22	1	**8B-6343**	2	CUP-BEARING	
	23	1	**9C-6041**	3	DOWEL	
	24	1	**9C-8419**	2	NUT-BEARING	
	25	1	**9M-5024**	1	SEAL-O-RING	

B - USE AS REQUIRED
M - METRIC PART

466-8748 **HOUSING GP-AXLE (**contd.**)** **i06814655**

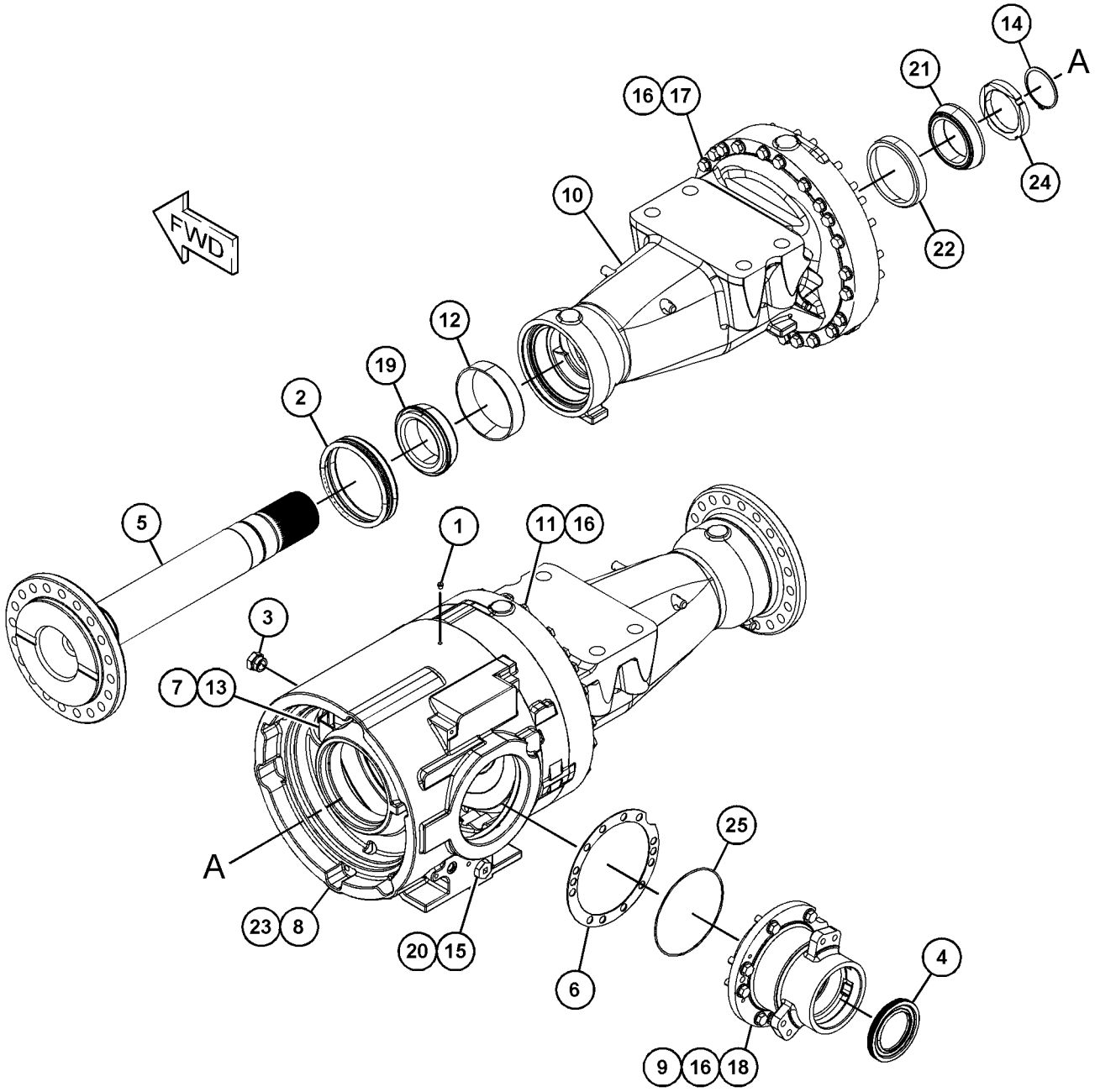

GRAPHIC #1 <END> g06052630

466-8751 HOUSING GP-AXLE

S/N: TNS1-UP
FIXED
PART OF 371-7345 AXLE AR-FIXED

SMCS-3260, 3278

i06814674

NOTE	REF NO	GRAPHIC REF	PART NUMBER	QTY	PART NAME 1 2 3 4 5 6 (PRODUCT LEVEL)	SEE PAGE
	1	1	**8T-0336**	1	FITTING-PRESSURE RELIEF	
	2	1	**9G-5315**	2	SEAL GP-DUO-CONE	
	3	1	**5P-4484**	1	PLUG-MAGNETIC (AXLE OIL DRAIN)	
	4	1	**264-0575**	1	SEAL-LIP TYPE	
	5	1	**455-8046**	1	HOUSING-PINION	
B	6	1	**360-9855**	1	SHIM PACK (INCLUDES 11-SHIMS)	
	7	1	**376-6952**	1	SHROUD AS	
	8	1	**358-1208**	2	SHAFT-AXLE	
	9	1	**469-0896**	2	HOUSING-AXLE	
	10	1	**469-0801**	1	HOUSING AS	
	11	1	*164-4180*	1	PLUG AS (AXLE OIL)	
		1	**9S-4181**	1	PLUG (5/16-12-THD)	
		1	**7M-8485**	1	SEAL-O-RING	
M	12	1	**236-0483**	24	BOLT (M16X2X190-MM)	
	13	1	**2P-1373**	2	CUP-BEARING	
M	14	1	**418-6609**	3	BOLT-FLANGE HEAD (M8X1.25X80-MM)	
	15	1	**5P-3119**	2	RING-RETAINING	
	16	1	**5P-8247**	56	WASHER-HARD (17X32X3.5-MM THK)	
M	17	1	**6C-5304**	24	BOLT (M16X2X110-MM)	
M	18	1	**6V-5686**	8	BOLT (M16X2X50-MM)	
	19	1	**6Y-2538**	2	CONE-BEARING	
	20	1	**7M-8485**	1	SEAL-O-RING	
	21	1	**8B-6342**	2	CONE-BEARING	
	22	1	**8B-6343**	2	CUP-BEARING	
	23	1	**9C-6041**	3	DOWEL	
	24	1	**9C-8419**	2	NUT-BEARING	
	25	1	**9M-5024**	1	SEAL-O-RING	
BF		1	**8C-8422**		SEALANT	

B - USE AS REQUIRED
F - NOT SHOWN
M - METRIC PART

466-8751 **HOUSING GP-AXLE (**contd.**)** **i06814674**

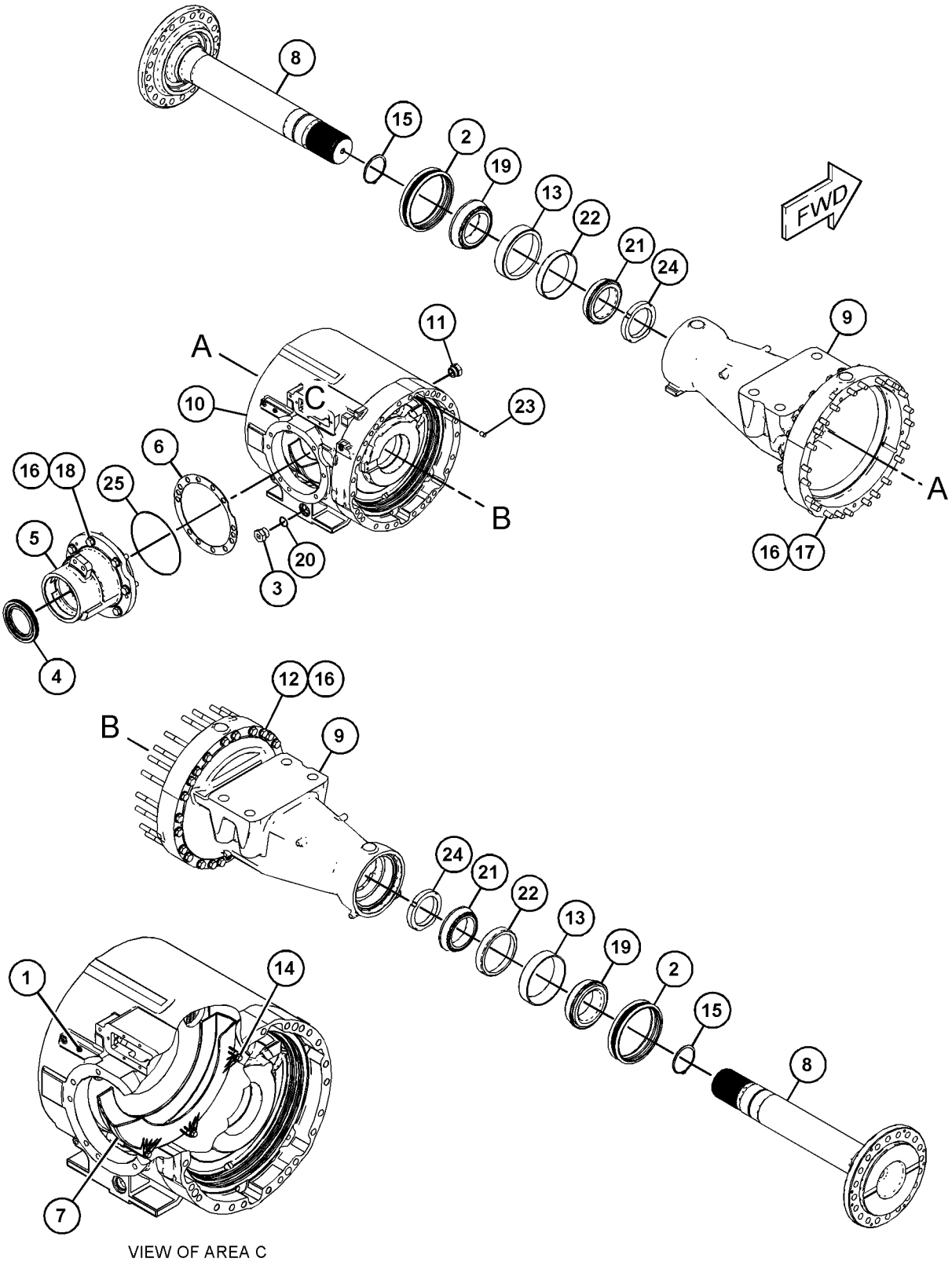

VIEW OF AREA C

GRAPHIC #1 <END> g06047776

466-8753 HOUSING GP-AXLE

S/N: TNS1-UP
FIXED
PART OF 466-8752 AXLE AR-FIXED

SMCS-3260, 3278

i06814641

NOTE	REF NO	GRAPHIC REF	PART NUMBER	QTY	PART NAME 1 2 3 4 5 6 (PRODUCT LEVEL)	SEE PAGE
	1	1	**8T-0336**	1	FITTING-PRESSURE RELIEF	
	2	1	**3T-6541**	2	SEAL GP-DUO-CONE	
	3	1	**5P-4484**	1	PLUG-MAGNETIC (AXLE OIL DRAIN)	
	4	1	**264-0575**	1	SEAL-LIP TYPE	
	5	1	**455-8046**	1	HOUSING-PINION	
B	6	1	**360-9855**	1	SHIM PACK (INCLUDES 11-SHIMS)	
	7	1	**376-6952**	1	SHROUD AS	
	8	1	**358-1208**	2	SHAFT-AXLE	
	9	1	**469-0896**	2	HOUSING-AXLE	
	10	1	**396-3895**	1	HOUSING AS	
	11	1	*164-4180*	1	PLUG AS (AXLE OIL)	
		1	**7M-8485**	1	SEAL-O-RING	
		1	**9S-4181**	1	PLUG (5/16-12-THD)	
M	12	1	**236-0483**	24	BOLT (M16X2X190-MM)	
	13	1	**2P-1373**	2	CUP-BEARING	
M	14	1	**418-6609**	3	BOLT-FLANGE HEAD (M8X1.25X80-MM)	
	15	1	**5P-3119**	2	RING-RETAINING	
	16	1	**5P-8247**	56	WASHER-HARD (17X32X3.5-MM THK)	
M	17	1	**6C-5304**	24	BOLT (M16X2X110-MM)	
M	18	1	**6V-5686**	8	BOLT (M16X2X50-MM)	
	19	1	**6Y-2538**	2	CONE-BEARING	
	20	1	**7M-8485**	1	SEAL-O-RING	
	21	1	**8B-6342**	2	CONE-BEARING	
	22	1	**8B-6343**	2	CUP-BEARING	
	23	1	**9C-6041**	3	DOWEL	
	24	1	**9C-8419**	2	NUT-BEARING	
	25	1	**9M-5024**	1	SEAL-O-RING	
BF		1	**8C-8422**		SEALANT	

B - USE AS REQUIRED
F - NOT SHOWN
M - METRIC PART

466-8753 **HOUSING GP-AXLE (**contd.**)** **i06814641**

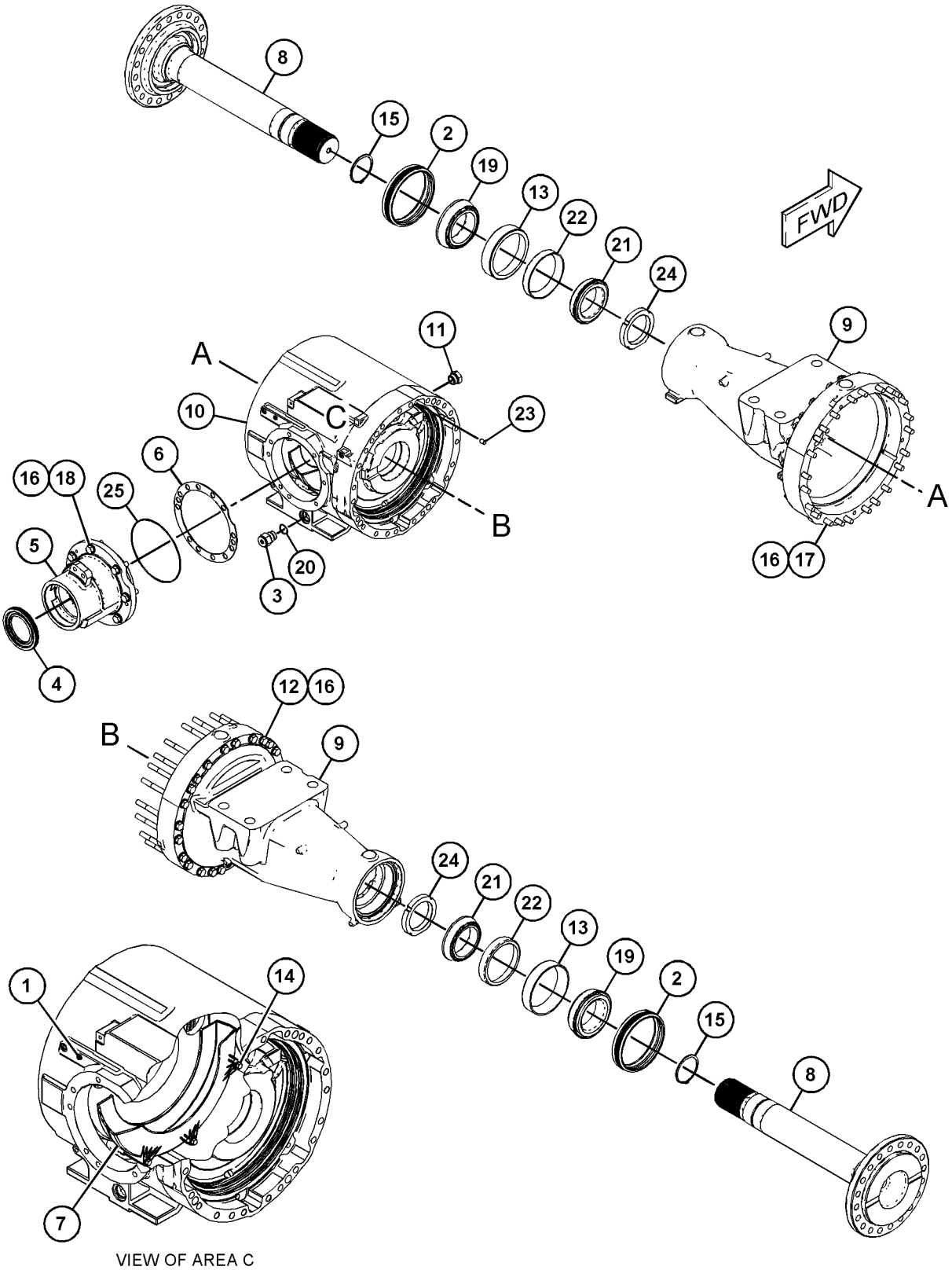

VIEW OF AREA C

GRAPHIC #1 <END> g06047784

468-5066 HOUSING GP-AXLE

S/N: TNS1-UP
FIXED
PART OF 371-7344 AXLE AR-FIXED

SMCS-3260, 3278 **i06797020**

NOTE	REF NO	GRAPHIC REF	PART NUMBER	QTY	PART NAME 1 2 3 4 5 6 (PRODUCT LEVEL)	SEE PAGE
	1	1	**8T-0336**	1	FITTING-PRESSURE RELIEF	
	2	1	**9G-5315**	2	SEAL GP-DUO-CONE	
	3	1	**248-0833**	1	PLUG AS-DRAIN (AXLE OIL)	
		1	**259-7138**	1	PLUG	
		1	**3S-9233**	1	SEAL-O-RING	
		1	**5L-4759**	1	SEAL-O-RING	
	4	1	**264-0575**	1	SEAL-LIP TYPE	
	5	1	**455-8046**	1	HOUSING-PINION	
B	6	1	**360-9855**	1	SHIM PACK (INCLUDES 11-SHIMS)	
	7	1	**376-6952**	1	SHROUD AS	
	8	1	**396-3891**	2	SHAFT-AXLE	
	9	1	**469-0896**	2	HOUSING-AXLE	
	10	1	**396-3895**	1	HOUSING AS	
	11	1	*164-4180*	1	PLUG AS	
		1	**7M-8485**	1	SEAL-O-RING	
		1	**9S-4181**	1	PLUG (5/16-12-THD)	
M	12	1	**236-0483**	24	BOLT (M16X2X190-MM)	
	13	1	**2P-1373**	2	CUP-BEARING	
M	14	1	**418-6609**	3	BOLT-FLANGE HEAD (M8X1.25X80-MM)	
	15	1	**5P-3119**	2	RING-RETAINING	
	16	1	**5P-8247**	56	WASHER-HARD (17X32X3.5-MM THK)	
M	17	1	**6C-5304**	24	BOLT (M16X2X110-MM)	
M	18	1	**6V-5686**	8	BOLT (M16X2X50-MM)	
	19	1	**6Y-2538**	2	CONE-BEARING	
	20	1	**7M-8485**	1	SEAL-O-RING	
	21	1	**8B-6342**	2	CONE-BEARING	
	22	1	**8B-6343**	2	CUP-BEARING	
	23	1	**9C-6041**	3	DOWEL	
	24	1	**9C-8419**	2	NUT-BEARING	
	25	1	**9M-5024**	1	SEAL-O-RING	
BF		1	**8C-8422**		SEALANT	

B - USE AS REQUIRED
F - NOT SHOWN
M - METRIC PART

468-5066 **HOUSING GP-AXLE (**contd.**)** **i06797020**

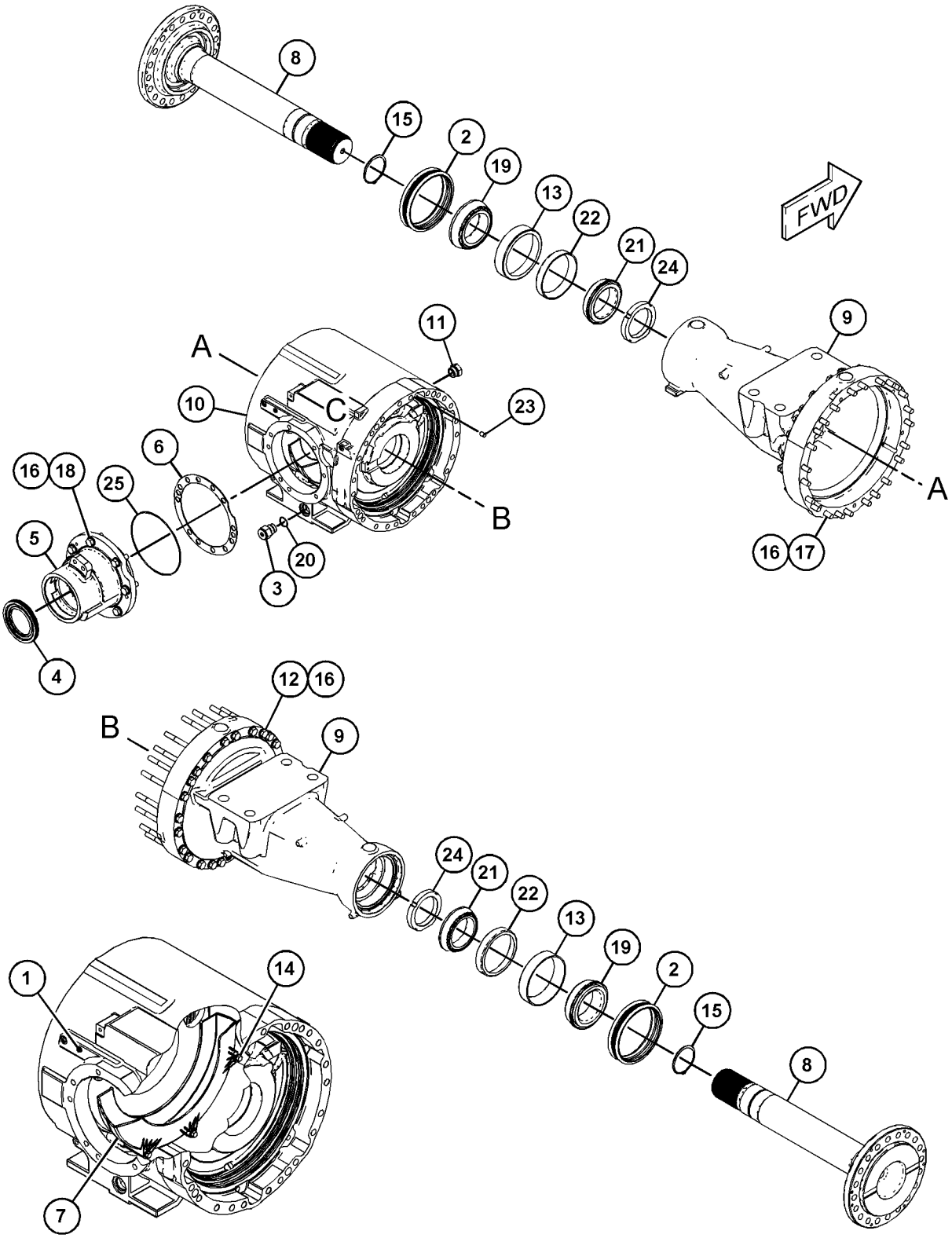

VIEW OF AREA C

GRAPHIC #1 <END> g06047770

468-5070 HOUSING GP-AXLE—OSCILLATING AXLE, OPEN DIFFERENTIAL

S/N: TNS1-UP

PART OF 466-8754 AXLE AR-OSCILLATING

SMCS-3260, 3278 **i06814648**

NOTE	REF NO	GRAPHIC REF	PART NUMBER	QTY	PART NAME 1 2 3 4 5 6 (PRODUCT LEVEL)	SEE PAGE
	1	1	**4E-8534**	1	RETAINER-SEAL	
	2	1	**6Y-1031**	2	CONE-BEARING	
	3	1	**9C-6313**	2	NUT-BEARING	
	4	1	**9G-5315**	2	SEAL GP-DUO-CONE	
	5	1	**467-0997**	1	TRUNNION	
	6	1	**467-0998**	2	WASHER-THRUST	
	7	1	**304-0295**	1	SUPPORT AS-TRUNNION (FRONT)	
	7A	1	**2V-9404**	1	RING-RETAINING	
	7B	1	**8J-4869**	2	SEAL-LIP TYPE	
	7C	1	**360-9858**	1	BUSHING	
	8	1	**304-0297**	1	SUPPORT AS-TRUNNION (REAR)	
	8A	1	**320-5177**	1	BUSHING	
	9	1	**358-1404**	1	HOUSING-PINION	
	10	1	**469-0898**	2	HOUSING-AXLE	
	11	1	**358-6701**	2	SHAFT-AXLE	
B	12	1	**360-9855**	1	SHIM PACK (INCLUDES 11-SHIMS)	
	13	1	**376-6949**	1	HOUSING AS-OSCILLATING	
M		1	**095-0673**	4	BOLT-SOCKET HEAD (M12X1.75X60-MM)	
	14	1	**376-6952**	1	SHROUD AS	
	15	1	**123-4003**	1	SEAL-LIP TYPE	
M	16	1	**236-0483**	24	BOLT (M16X2X190-MM)	
	17	1	*164-4180*	2	PLUG AS (AXLE OIL)	
					(EACH INCLUDES)	
		1	**7M-8485**	1	SEAL-O-RING	
		1	**9S-4181**	1	PLUG (5/16-12-THD)	
	18	1	**2K-9295**	2	BEARING AS-TAPERED ROLLER	
	19	1	**3B-4124**	2	CUP-BEARING (TAPERED ROLLER)	
M	20	1	**418-6609**	3	BOLT-FLANGE HEAD (M8X1.25X80-MM)	
	21	1	**4F-9652**	2	SEAL-O-RING	
	22	1	**5P-4484**	1	PLUG-MAGNETIC (AXLE OIL DRAIN)	
	23	1	**5P-8247**	60	WASHER-HARD (17X32X3.5-MM THK)	
M	24	1	**6C-5304**	24	BOLT (M16X2X110-MM)	
M	25	1	**6V-5686**	12	BOLT (M16X2X50-MM)	
M	26	1	**6V-7732**	6	BOLT (M10X1.5X25-MM)	
	27	1	**6Y-1032**	2	CUP-BEARING	
	28	1	**7M-8485**	1	SEAL-O-RING	
	29	1	**8T-0336**	2	FITTING-PRESSURE RELIEF	
M	30	1	**8T-0655**	8	BOLT (M20X2.5X130-MM)	
	31	1	**8T-3282**	8	WASHER-HARD (22X35X3.5-MM THK)	
	32	1	**8T-3727**	2	RING-RETAINING	
	33	1	**9C-6041**	3	DOWEL	
	34	1	**9M-5024**	1	SEAL-O-RING	
	35	1	**9X-2027**	6	WASHER (11X18X2-MM THK)	
BF			**8C-8422**		SEALANT	

B - USE AS REQUIRED
F - NOT SHOWN
M - METRIC PART

468-5070 **HOUSING GP-AXLE (**contd.**)** **i06814648**

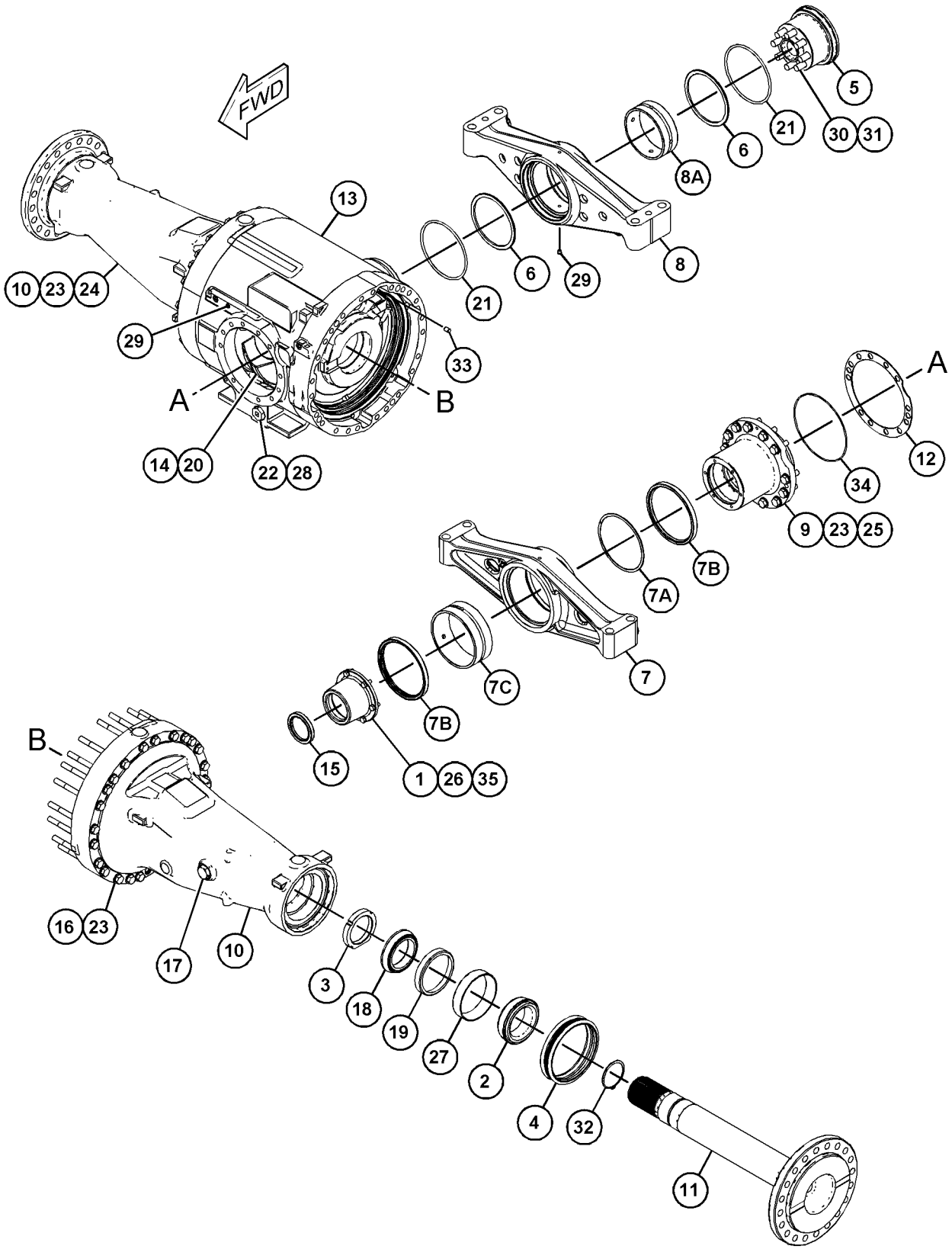

GRAPHIC #1 <END> g06048444

371-7382 HOUSING GP-FIXED AXLE

S/N: TNS1-UP

FOR USE WITH AUTOMATIC LOCKING DIFFERENTIAL

PART OF 371-7346 AXLE AR-FIXED

SMCS-3260 **i06780567**

NOTE	REF NO	GRAPHIC REF	PART NUMBER	QTY	PART NAME 1 2 3 4 5 6 (PRODUCT LEVEL)	SEE PAGE
	1	1	**1K-6853**	1	FITTING-PRESSURE RELIEF	
	2	1	**9G-5315**	2	SEAL GP-DUO-CONE	
					(EACH INCLUDES)	
		1	**2M-0344**	2	RING-SEALING	
	3	1	**248-0833**	1	PLUG AS-DRAIN (DIFFERENTIAL)	
		1	**3S-9233**	1	SEAL-O-RING	
		1	**5L-4759**	1	SEAL-O-RING	
		1	**259-7138**	1	PLUG	
	4	1	**264-0575**	1	SEAL-LIP TYPE	
	5	1	**351-2548**	1	TUBE	
	6	1	**455-8046**	1	HOUSING-PINION	
	7	1	**358-1208**	2	SHAFT-AXLE	
	8	1	**469-0897**	1	HOUSING-AXLE	
B	9	1	**360-9855**	1	SHIM PACK (INCLUDES 11-SHIMS)	
	10	1	**376-6947**	1	HOUSING AS	
M		1	**095-0673**	4	BOLT-SOCKET HEAD (M12X1.75X60-MM)	
	11	1	**376-6952**	1	SHROUD AS	
	12	1	**469-0896**	1	HOUSING-AXLE	
	13	1	*148-8410*	1	PLUG AS	
		1	**2M-9780**	1	SEAL-O-RING	
		1	**9S-4190**	1	PLUG-O-RING (7/8-14-THD)	
	14	1	*164-4180*	1	PLUG AS	
		1	**7M-8485**	1	SEAL-O-RING	
		1	**9S-4181**	1	PLUG (5/16-12-THD)	
M	15	1	**236-0483**	24	BOLT (M16X2X190-MM)	
	16	1	**2P-1373**	2	CUP-BEARING	
M	17	1	**418-6609**	3	BOLT-FLANGE HEAD (M8X1.25X80-MM)	
	18	1	**4J-2506**	1	SEAL-O-RING	
	19	1	**5P-3119**	2	RING-RETAINING	
	20	1	**5P-8247**	56	WASHER-HARD (17X32X3.5-MM THK)	
M	21	1	**6C-5304**	24	BOLT (M16X2X110-MM)	
	22	1	**6F-5559**	1	SEAL-O-RING	
M	23	1	**6V-5686**	8	BOLT (M16X2X50-MM)	
	24	1	**6Y-2538**	2	CONE-BEARING	
	25	1	**7M-8485**	1	SEAL-O-RING	
	26	1	**8B-6342**	2	CONE-BEARING	
	27	1	**8B-6343**	2	CUP-BEARING	
	28	1	**9C-6041**	3	DOWEL	
	29	1	**9C-8419**	2	NUT-BEARING	
	30	1	**9M-5024**	1	SEAL-O-RING	
BF			**8C-8422**		SEALANT	

B - USE AS REQUIRED
F - NOT SHOWN
M - METRIC PART

371-7382 **HOUSING GP-FIXED AXLE (**contd.**)** **i06780567**

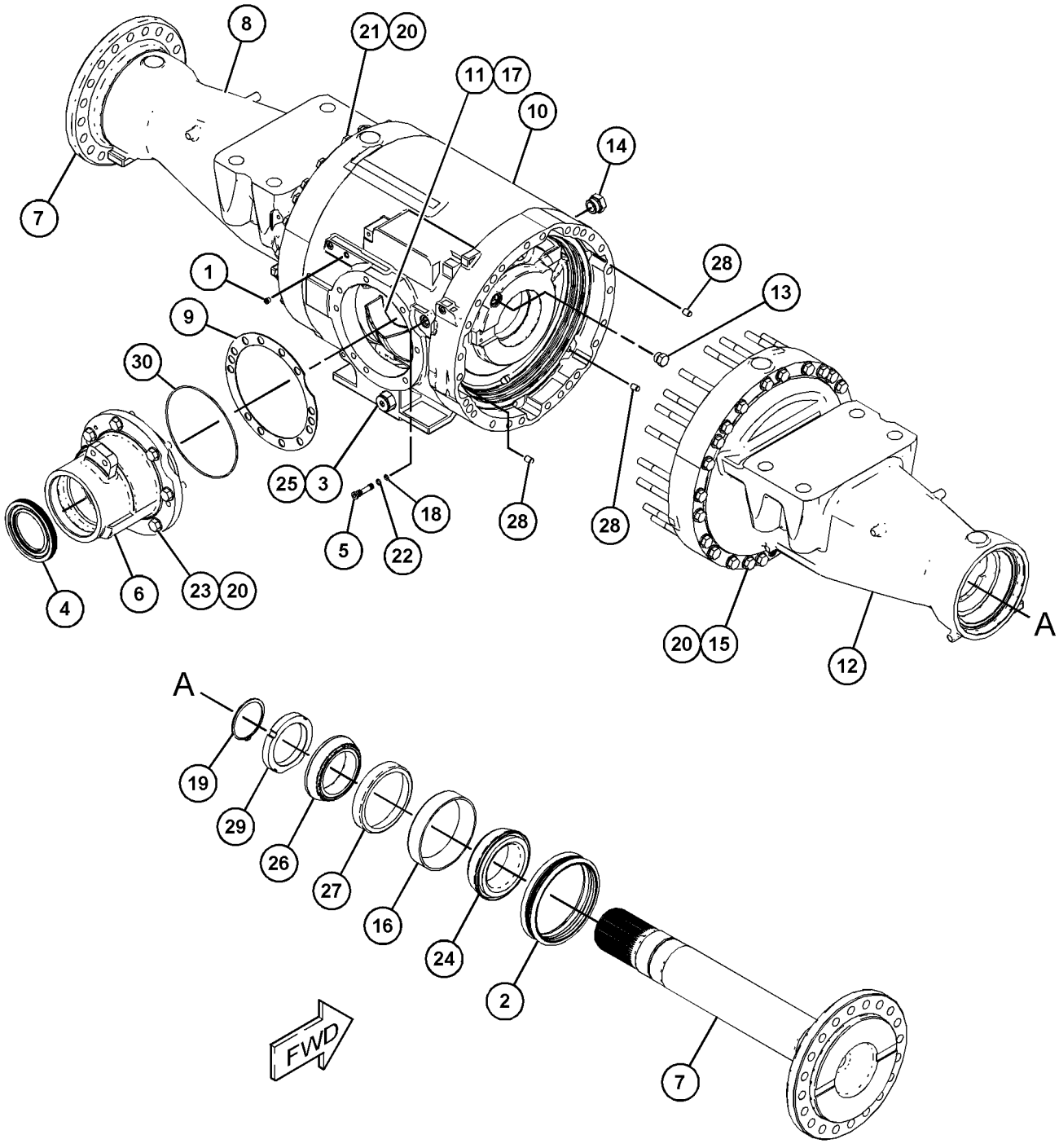

GRAPHIC #1 <END> g03684013

371-7383 HOUSING GP-FIXED AXLE—FIXED

S/N: TNS1-UP

PART OF 371-7347 AXLE AR-FIXED

SMCS-3260 **i06720315**

NOTE	REF NO	GRAPHIC REF	PART NUMBER	QTY	PART NAME 1 2 3 4 5 6 (PRODUCT LEVEL)	SEE PAGE
	1	1	**8B-6343**	2	CUP-BEARING	
	2	1	**9G-5315**	2	SEAL GP-DUO-CONE	
					(EACH INCLUDES)	
		1	**2M-0344**	2	RING-SEALING	
	3	1	*148-8410*	1	PLUG AS	
		1	**2M-9780**	1	SEAL-O-RING	
		1	**9S-4190**	1	PLUG-O-RING (7/8-14-THD)	
	4	1	*164-4180*	1	PLUG AS	
		1	**7M-8485**	1	SEAL-O-RING	
		1	**9S-4181**	1	PLUG (5/16-12-THD)	
	5	1	**248-0833**	1	PLUG AS-DRAIN	
		1	**3S-9233**	1	SEAL-O-RING	
		1	**5L-4759**	1	SEAL-O-RING	
		1	**259-7138**	1	PLUG	
	6	1	**264-0575**	1	SEAL-LIP TYPE	
	7	1	**351-2548**	1	TUBE	
	8	1	**455-8046**	1	HOUSING-PINION	
	9	1	**358-1205**	1	HOUSING AS	
	10	1	**358-1208**	2	SHAFT-AXLE	
	11	1	**469-0897**	1	HOUSING-AXLE	
	12	1	**360-9855**	1	SHIM PACK (INCLUDES 11-SHIMS)	
	13	1	**376-6952**	1	SHROUD AS	
	14	1	**469-0896**	1	HOUSING-AXLE	
M	15	1	**236-0483**	24	BOLT (M16X2X190-MM)	
	16	1	**2P-1373**	2	CUP-BEARING	
M	17	1	**418-6609**	3	BOLT-FLANGE HEAD (M8X1.25X80-MM)	
	18	1	**4J-2506**	1	SEAL-O-RING	
	19	1	**5P-3119**	2	RING-RETAINING	
	20	1	**5P-8247**	56	WASHER-HARD (17X32X3.5-MM THK)	
M	21	1	**6C-5304**	24	BOLT (M16X2X110-MM)	
	22	1	**6F-5559**	1	SEAL-O-RING	
M	23	1	**6V-5686**	8	BOLT (M16X2X50-MM)	
	24	1	**6Y-2538**	2	CONE-BEARING	
	25	1	**7M-8485**	1	SEAL-O-RING	
	26	1	**8B-6342**	2	CONE-BEARING	
	27	1	**1K-6853**	1	FITTING-PRESSURE RELIEF	
	28	1	**9C-6041**	3	DOWEL	
	29	1	**9C-8419**	2	NUT-BEARING	
	30	1	**9M-5024**	1	SEAL-O-RING	
BF			**8C-8422**		SEALANT	

B - USE AS REQUIRED
F - NOT SHOWN
M - METRIC PART

371-7383 **HOUSING GP-FIXED AXLE (**contd.**)** **i06720315**

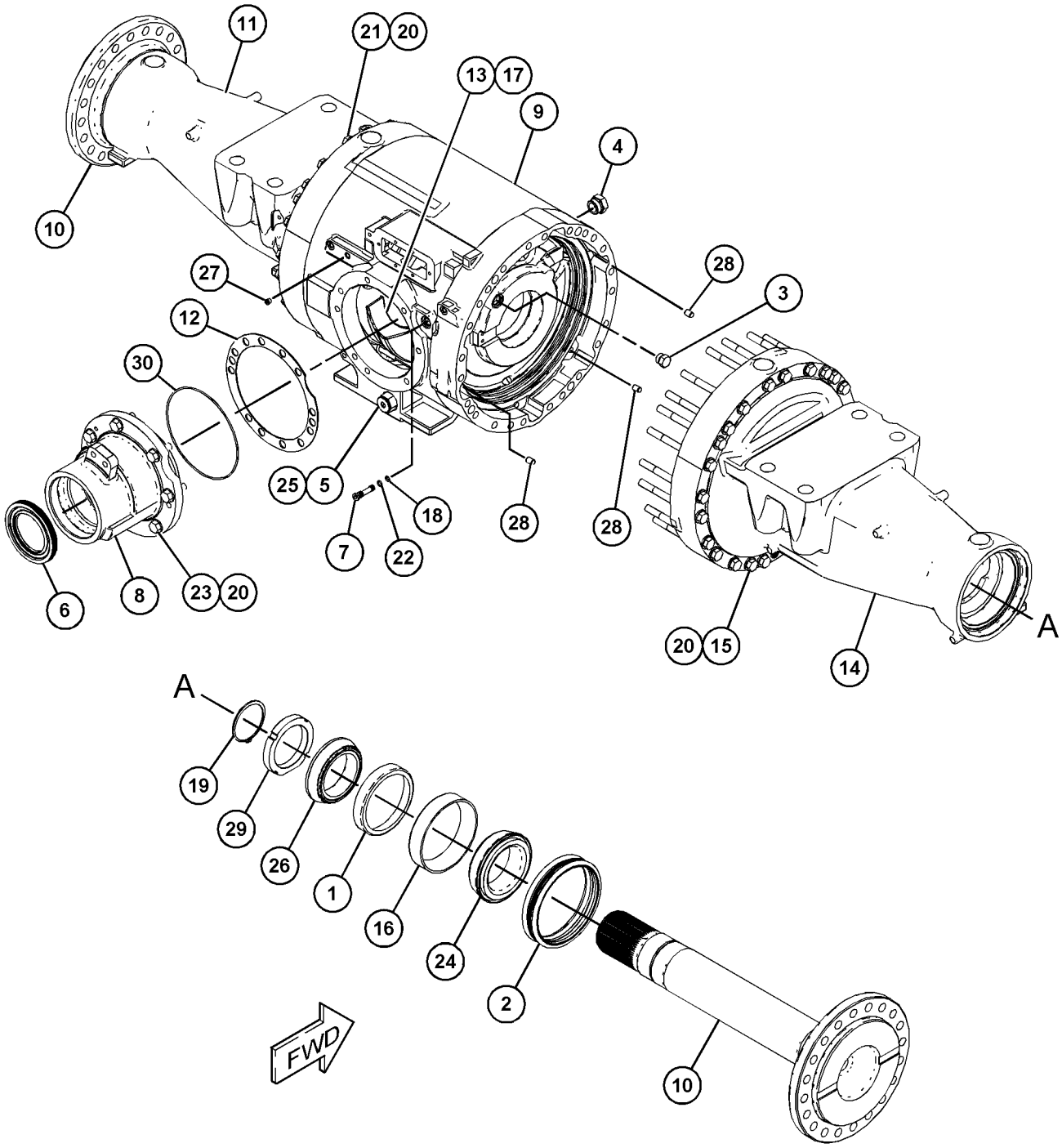

GRAPHIC #1 <END> g03684966

371-7385 HOUSING GP-FIXED AXLE

S/N: TNS1-UP

FOR USE WITH AUTOMATIC LOCKING DIFFERENTIAL & SEAL GUARDS, AXLE OIL COOLER

PART OF 371-7349 AXLE AR-FIXED

SMCS-3260 **i06780580**

NOTE	REF NO	GRAPHIC REF	PART NUMBER	QTY	PART NAME 1 2 3 4 5 6 (PRODUCT LEVEL)	SEE PAGE
	1	1	**9G-5315**	2	SEAL GP-DUO-CONE	
					(EACH INCLUDES)	
		1	**2M-0344**	2	RING-SEALING	
	2	1	*148-8410*	1	PLUG AS	
		1	**2M-9780**	1	SEAL-O-RING	
		1	**9S-4190**	1	PLUG-O-RING (7/8-14-THD)	
	3	1	*164-4180*	1	PLUG AS	
		1	**7M-8485**	1	SEAL-O-RING	
		1	**9S-4181**	1	PLUG (5/16-12-THD)	
	4	1	**248-0833**	1	PLUG AS-DRAIN (DIFFERENTIAL)	
		1	**3S-9233**	1	SEAL-O-RING	
		1	**5L-4759**	1	SEAL-O-RING	
		1	**259-7138**	1	PLUG	
	5	1	**264-0575**	1	SEAL-LIP TYPE	
	6	1	**351-2548**	1	TUBE	
	7	1	**455-8046**	1	HOUSING-PINION	
	8	1	**469-0897**	1	HOUSING-AXLE	
	9	1	**360-9855**	1	SHIM PACK (INCLUDES 11-SHIMS)	
	10	1	**376-6947**	1	HOUSING AS	
M		1	**095-0673**	4	BOLT-SOCKET HEAD (M12X1.75X60-MM)	
	11	1	**376-6952**	1	SHROUD AS	
	12	1	**469-0896**	1	HOUSING-AXLE	
	13	1	**396-3891**	2	SHAFT-AXLE	
M	14	1	**236-0483**	24	BOLT (M16X2X190-MM)	
	15	1	**2P-1373**	2	CUP-BEARING	
M	16	1	**418-6609**	3	BOLT-FLANGE HEAD (M8X1.25X80-MM)	
	17	1	**4J-2506**	1	SEAL-O-RING	
	18	1	**5P-3119**	2	RING-RETAINING	
	19	1	**5P-8247**	56	WASHER-HARD (17X32X3.5-MM THK)	
M	20	1	**6C-5304**	24	BOLT (M16X2X110-MM)	
	21	1	**6F-5559**	1	SEAL-O-RING	
M	22	1	**6V-5686**	8	BOLT (M16X2X50-MM)	
	23	1	**6Y-2538**	2	CONE-BEARING	
	24	1	**7M-8485**	1	SEAL-O-RING	
	25	1	**8B-6342**	2	CONE-BEARING	
	26	1	**8B-6343**	2	CUP-BEARING	
	27	1	**8T-0336**	1	FITTING-PRESSURE RELIEF	
	28	1	**9C-6041**	3	DOWEL	
	29	1	**9C-8419**	2	NUT-BEARING	
	30	1	**9M-5024**	1	SEAL-O-RING	
BF			**8C-8422**		SEALANT	

B - USE AS REQUIRED
F - NOT SHOWN
M - METRIC PART

371-7385 **HOUSING GP-FIXED AXLE (**contd.**)** **i06780580**

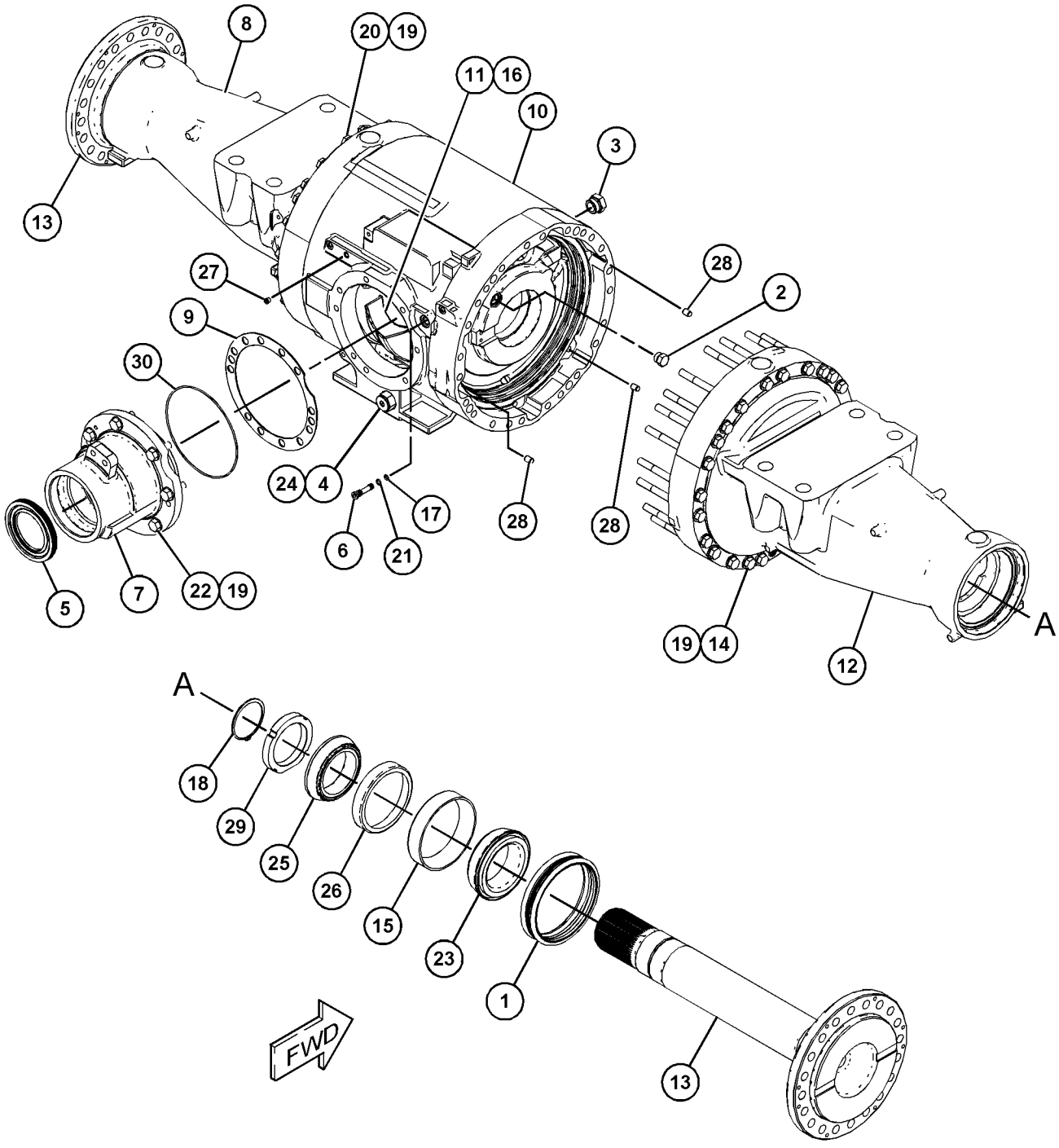

GRAPHIC #1 <END> g03683867

371-7387 HOUSING GP-OSCILLATING AXLE

S/N: TNS1-UP
FOR USE WITH OPEN DIFFERENTIAL
PART OF 371-7351 AXLE AR-OSCILLATING

SMCS-3260, 3268

i06770236

NOTE	REF NO	GRAPHIC REF	PART NUMBER	QTY	PART NAME 1 2 3 4 5 6 (PRODUCT LEVEL)	SEE PAGE
	1	1	**4E-8534**	1	RETAINER-SEAL	
	2	1	**6Y-1031**	2	CONE-BEARING	
	3	1	**9C-6313**	2	NUT-BEARING	
	4	1	**9G-5315**	2	SEAL GP-DUO-CONE	
	5	1	**467-0997**	1	TRUNNION	
	6	1	**467-0998**	2	WASHER-THRUST	
	7	1	**248-0833**	1	PLUG AS-DRAIN (DIFFERENTIAL)	
		1	**3S-9233**	1	SEAL-O-RING	
		1	**5L-4759**	1	SEAL-O-RING	
		1	**259-7138**	1	PLUG	
	8	1	**304-0295**	1	SUPPORT AS-TRUNNION (FRONT)	
	8A	1	**360-9858**	1	BUSHING	
		1	**2V-9404**	1	RING-RETAINING	
		1	**8J-4869**	2	SEAL-LIP TYPE	
	9	1	**491-6932**	1	SUPPORT AS	
	9A	1	**491-6934**	1	BEARING-SLEEVE	
	10	1	**503-3072**	2	HOUSING-AXLE	
	11	1	**358-1404**	1	HOUSING-PINION	
	12	1	**358-6701**	2	SHAFT-AXLE	
	13	1	**360-9855**	1	SHIM PACK (INCLUDES 11-SHIMS)	
	14	1	**504-0368**	1	HOUSING AS-AXLE	
M		1	**095-0673**	4	BOLT-SOCKET HEAD (M12X1.75X60-MM)	
	15	1	**376-6952**	1	SHROUD AS	
	16	1	**123-4003**	1	SEAL-LIP TYPE	
	17	1	*164-4180*	2	PLUG AS	
					(EACH INCLUDES)	
		1	**7M-8485**	1	SEAL-O-RING	
		1	**9S-4181**	1	PLUG (5/16-12-THD)	
M	18	1	**236-0483**	24	BOLT (M16X2X190-MM)	
	19	1	**2K-9295**	2	BEARING AS-TAPERED ROLLER	
	20	1	**3B-4124**	2	CUP-BEARING (TAPERED ROLLER)	
M	21	1	**418-6609**	3	BOLT-FLANGE HEAD (M8X1.25X80-MM)	
	22	1	**4F-9652**	2	SEAL-O-RING	
	23	1	**5P-8247**	60	WASHER-HARD (17X32X3.5-MM THK)	
M	24	1	**6C-5304**	24	BOLT (M16X2X110-MM)	
M	25	1	**6V-5686**	12	BOLT (M16X2X50-MM)	
M	26	1	**6V-7732**	6	BOLT (M10X1.5X25-MM)	
	27	1	**6Y-1032**	2	CUP-BEARING	
	28	1	**7M-8485**	1	SEAL-O-RING	
	29	1	**8T-0336**	1	FITTING-PRESSURE RELIEF	
M	30	1	**8T-0655**	8	BOLT (M20X2.5X130-MM)	
	31	1	**8T-3282**	8	WASHER-HARD (22X35X3.5-MM THK)	
	32	1	**8T-3727**	2	RING-RETAINING	
	33	1	**9C-6041**	3	DOWEL	
	34	1	**9M-5024**	1	SEAL-O-RING	
	35	1	**9X-2027**	6	WASHER (11X18X2-MM THK)	

371-7387 **HOUSING GP-OSCILLATING AXLE (**contd.**)** **i06770236**

NOTE	REF NO	GRAPHIC REF	PART NUMBER	QTY	PART NAME 1 2 3 4 5 6 (PRODUCT LEVEL)	SEE PAGE
	36	1	**1K-6853**	1	FITTING-PRESSURE RELIEF	
	37	1	**5M-6214**	1	PLUG (1/8-27 PTF)	
F		1	**8C-8422**		SEALANT	

F - NOT SHOWN
M - METRIC PART

371-7387 **HOUSING GP-OSCILLATING AXLE (**contd.**)** **i06770236**

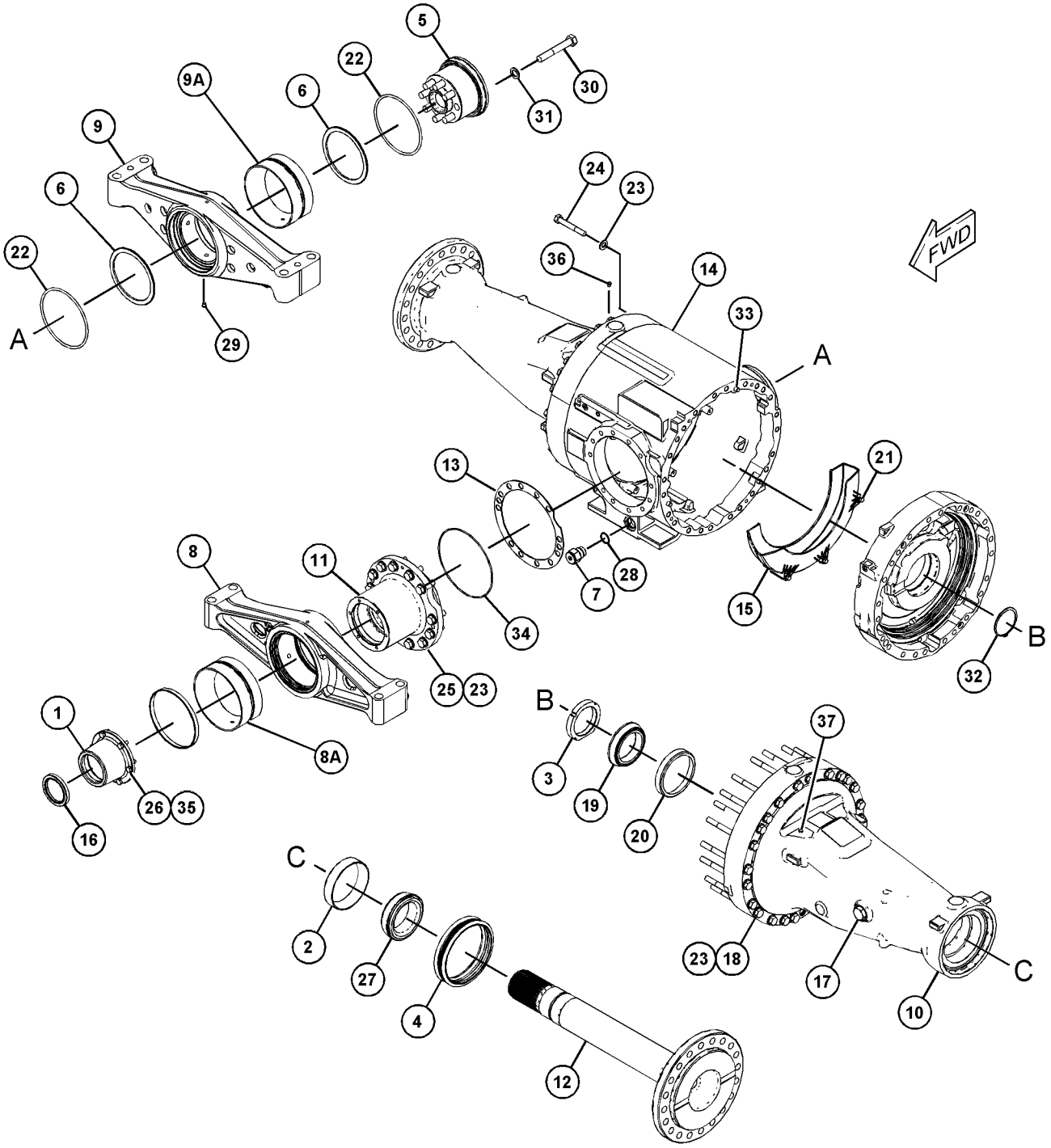

GRAPHIC #1 <END> g06123861

371-7388 HOUSING GP-OSCILLATING AXLE

S/N: TNS1-UP
FOR USE WITH AXLE OIL COOLER, OPEN DIFFERENTIAL
PART OF 371-7352 AXLE AR-OSCILLATING

SMCS-3260, 3268 **i06780602**

NOTE	REF NO	GRAPHIC REF	PART NUMBER	QTY	PART NAME 1 2 3 4 5 6 (PRODUCT LEVEL)	SEE PAGE
	1	1	**4E-8534**	1	RETAINER-SEAL	
	2	1	**6Y-1031**	2	CONE-BEARING	
	3	1	**9C-6313**	2	NUT-BEARING	
	4	1	**9G-5315**	2	SEAL GP-DUO-CONE	
	5	1	**467-0997**	1	TRUNNION	
	6	1	**467-0998**	2	WASHER-THRUST	
	7	1	**248-0833**	1	PLUG AS-DRAIN (DIFFERENTIAL)	
		1	**3S-9233**	1	SEAL-O-RING	
		1	**5L-4759**	1	SEAL-O-RING	
		1	**259-7138**	1	PLUG	
	8	1	**304-0295**	1	SUPPORT AS-TRUNNION (FRONT)	
	8A	1	**360-9858**	1	BUSHING	
		1	**2V-9404**	1	RING-RETAINING	
		1	**8J-4869**	2	SEAL-LIP TYPE	
	9	1	**491-6932**	1	SUPPORT AS	
	9A	1	**491-6934**	1	BEARING-SLEEVE	
	10	1	**503-3072**	2	HOUSING-AXLE	
	11	1	**358-1404**	1	HOUSING-PINION	
	12	1	**358-6701**	2	SHAFT-AXLE	
B	13	1	**360-9855**	1	SHIM PACK (INCLUDES 11-SHIMS)	
	14	1	**504-0371**	1	HOUSING AS-AXLE	
M		1	**095-0673**	4	BOLT-SOCKET HEAD (M12X1.75X60-MM)	
	15	1	**376-6952**	1	SHROUD AS	
	16	1	**123-4003**	1	SEAL-LIP TYPE	
	17	1	*164-4180*	2	PLUG AS	
					(EACH INCLUDES)	
		1	**7M-8485**	1	SEAL-O-RING	
		1	**9S-4181**	1	PLUG (5/16-12-THD)	
M	18	1	**236-0483**	24	BOLT (M16X2X190-MM)	
	19	1	**2K-9295**	2	BEARING AS-TAPERED ROLLER	
	20	1	**3B-4124**	2	CUP-BEARING (TAPERED ROLLER)	
M	21	1	**418-6609**	3	BOLT-FLANGE HEAD (M8X1.25X80-MM)	
	22	1	**4F-9652**	2	SEAL-O-RING	
	23	1	**5P-8247**	60	WASHER-HARD (17X32X3.5-MM THK)	
M	24	1	**6C-5304**	24	BOLT (M16X2X110-MM)	
M	25	1	**6V-5686**	12	BOLT (M16X2X50-MM)	
M	26	1	**6V-7732**	6	BOLT (M10X1.5X25-MM)	
	27	1	**6Y-1032**	2	CUP-BEARING	
	28	1	**7M-8485**	1	SEAL-O-RING	
	29	1	**8T-0336**	1	FITTING-PRESSURE RELIEF	
M	30	1	**8T-0655**	8	BOLT (M20X2.5X130-MM)	
	31	1	**8T-3282**	8	WASHER-HARD (22X35X3.5-MM THK)	
	32	1	**8T-3727**	2	RING-RETAINING	
	33	1	**9C-6041**	3	DOWEL	
	34	1	**9M-5024**	1	SEAL-O-RING	
	35	1	**9X-2027**	6	WASHER (11X18X2-MM THK)	

371-7388 **HOUSING GP-OSCILLATING AXLE (**contd.**)** **i06780602**

NOTE	REF NO	GRAPHIC REF	PART NUMBER	QTY	PART NAME 1 2 3 4 5 6 (PRODUCT LEVEL)	SEE PAGE
	36	1	**1K-6853**	1	FITTING-PRESSURE RELIEF	
	37	1	**5M-6214**	1	PLUG (1/8-27 PTF)	
BF		1	**8C-8422**		SEALANT	
					PARTS SHOWN IN GRAPHIC(S) WITHOUT A REFERENCE NUMBER ARE NOT SERVICED SEPARATELY	

B - USE AS REQUIRED
F - NOT SHOWN
M - METRIC PART

371-7388 **HOUSING GP-OSCILLATING AXLE (**contd.**)** **i06780602**

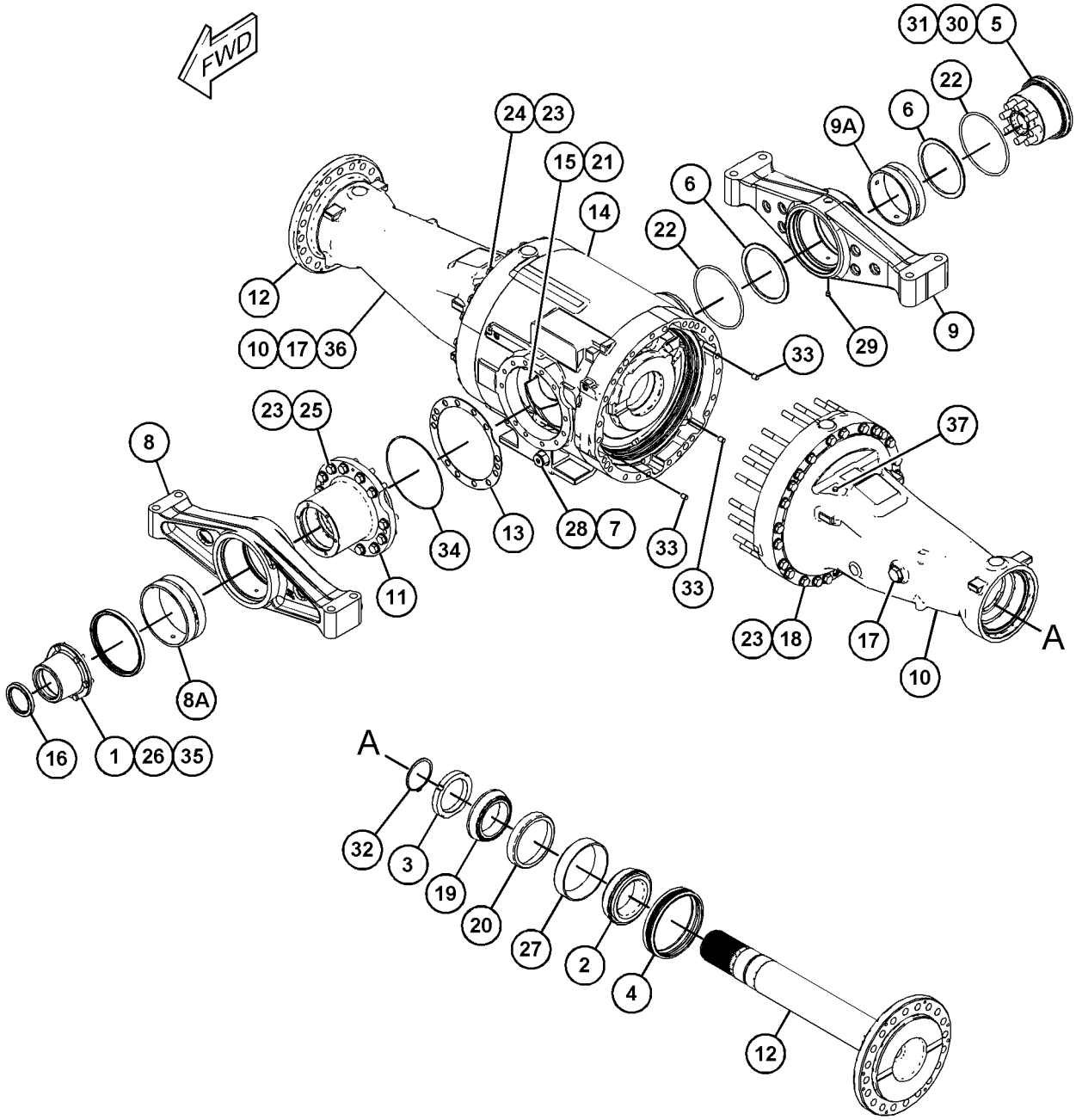

GRAPHIC #1 <END> g06122970

371-7389 HOUSING GP-OSCILLATING AXLE

S/N: TNS1-UP
ARCTIC SEALS
FOR USE WITH OPEN DIFFERENTIAL
PART OF 371-7353 AXLE AR-OSCILLATING

SMCS-3260, 3268 **i06797063**

NOTE	REF NO	GRAPHIC REF	PART NUMBER	QTY	PART NAME 1 2 3 4 5 6 (PRODUCT LEVEL)	SEE PAGE
	1	1	**3T-6541**	2	SEAL GP-DUO-CONE	
					(EACH INCLUDES)	
		1	**3N-0759**	2	RING-SEALING	
	2	1	**4E-8534**	1	RETAINER-SEAL	
	3	1	**9C-6313**	2	NUT-BEARING	
	4	1	*164-4180*	2	PLUG AS	
					(EACH INCLUDES)	
		1	**7M-8485**	1	SEAL-O-RING	
		1	**9S-4181**	1	PLUG (5/16-12-THD)	
	5	1	**467-0997**	1	TRUNNION	
	6	1	**467-0998**	2	WASHER-THRUST	
	7	1	**248-0833**	1	PLUG AS-DRAIN (DIFFERENTIAL)	
		1	**3S-9233**	1	SEAL-O-RING	
		1	**5L-4759**	1	SEAL-O-RING	
		1	**259-7138**	1	PLUG	
	8	1	**304-0295**	1	SUPPORT AS-TRUNNION (FRONT)	
		1	**2V-9404**	1	RING-RETAINING	
		1	**8J-4869**	2	SEAL-LIP TYPE	
		1	**360-9858**	1	BUSHING	
	9	1	**304-0297**	1	SUPPORT AS-TRUNNION (REAR)	
		1	**320-5177**	1	BUSHING	
	10	1	**469-0898**	2	HOUSING-AXLE	
	11	1	**358-1404**	1	HOUSING-PINION	
	12	1	**358-6701**	2	SHAFT-AXLE	
	13	1	**360-9855**	1	SHIM PACK (INCLUDES 11-SHIMS)	
	14	1	**376-6949**	1	HOUSING AS-OSCILLATING	
	15	1	**376-6952**	1	SHROUD AS	
	16	1	**123-4003**	1	SEAL-LIP TYPE	
M	17	1	**236-0483**	24	BOLT (M16X2X190-MM)	
	18	1	**2K-9295**	2	BEARING AS-TAPERED ROLLER	
	19	1	**3B-4124**	2	CUP-BEARING (TAPERED ROLLER)	
M	20	1	**418-6609**	3	BOLT-FLANGE HEAD (M8X1.25X80-MM)	
	21	1	**4F-9652**	2	SEAL-O-RING	
	22	1	**5P-8247**	60	WASHER-HARD (17X32X3.5-MM THK)	
M	23	1	**6C-5304**	24	BOLT (M16X2X110-MM)	
M	24	1	**6V-5686**	12	BOLT (M16X2X50-MM)	
M	25	1	**6V-7732**	6	BOLT (M10X1.5X25-MM)	
	26	1	**6Y-1031**	2	CONE-BEARING	
	27	1	**6Y-1032**	2	CUP-BEARING	
	28	1	**7M-8485**	1	SEAL-O-RING	
	29	1	**8T-0336**	2	FITTING-PRESSURE RELIEF	
M	30	1	**8T-0655**	8	BOLT (M20X2.5X130-MM)	
	31	1	**8T-3282**	8	WASHER-HARD (22X35X3.5-MM THK)	
	32	1	**8T-3727**	2	RING-RETAINING	
	33	1	**9C-6041**	3	DOWEL	
	34	1	**9M-5024**	1	SEAL-O-RING	

371-7389 **HOUSING GP-OSCILLATING AXLE (**contd.**)** **i06797063**

NOTE	REF NO	GRAPHIC REF	PART NUMBER	QTY	PART NAME 1 2 3 4 5 6 (PRODUCT LEVEL)	SEE PAGE
	35	1	**9X-2027**	6	WASHER (11X18X2-MM THK)	
BF			**8C-8422**		SEALANT	

B - USE AS REQUIRED
F - NOT SHOWN
M - METRIC PART

371-7389 **HOUSING GP-OSCILLATING AXLE (**contd.**)** **i06797063**

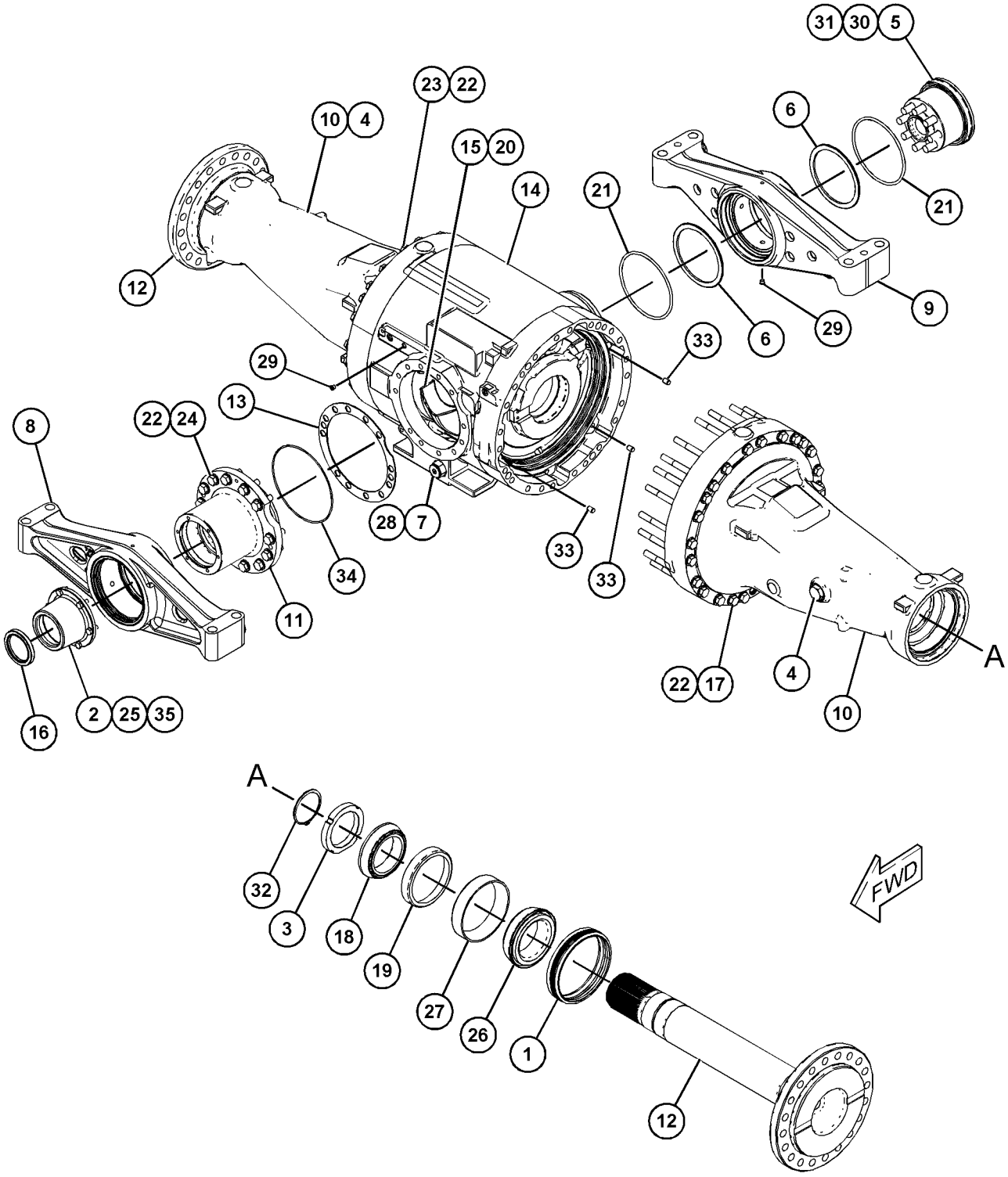

GRAPHIC #1 <END> g03685101

371-7390 HOUSING GP-OSCILLATING AXLE

S/N: TNS1-UP

SEAL GUARD ATTACHMENTS, OPEN DIFFERENTIAL

PART OF 371-7338 AXLE AR-OSCILLATING

SMCS-3260, 3268 **i06771985**

NOTE	REF NO	GRAPHIC REF	PART NUMBER	QTY	PART NAME 1 2 3 4 5 6 (PRODUCT LEVEL)	SEE PAGE
	1	1	**4E-8534**	1	RETAINER-SEAL	
	2	1	**6Y-1031**	2	CONE-BEARING	
	3	1	**9C-6313**	2	NUT-BEARING	
	4	1	**9G-5315**	2	SEAL GP-DUO-CONE	
	5	1	**467-0997**	1	TRUNNION	
	6	1	**467-0998**	2	WASHER-THRUST	
	7	1	**248-0833**	1	PLUG AS-DRAIN (DIFFERENTIAL)	
		1	**3S-9233**	1	SEAL-O-RING	
		1	**5L-4759**	1	SEAL-O-RING	
		1	**259-7138**	1	PLUG	
	8	1	**304-0295**	1	SUPPORT AS-TRUNNION (FRONT)	
	8A	1	**360-9858**	1	BUSHING	
		1	**2V-9404**	1	RING-RETAINING	
		1	**8J-4869**	2	SEAL-LIP TYPE	
	9	1	**491-6932**	1	SUPPORT AS	
	9A	1	**491-6934**	1	BEARING-SLEEVE	
	11	1	**358-1404**	1	HOUSING-PINION	
	12	1	**360-9855**	1	SHIM PACK (INCLUDES 11-SHIMS)	
	13	1	**504-0368**	1	HOUSING AS-AXLE	
M		1	**095-0673**	4	BOLT-SOCKET HEAD (M12X1.75X60-MM)	
	14	1	**376-6952**	1	SHROUD AS	
	15	1	**396-3892**	2	SHAFT-AXLE	
	16	1	**123-4003**	1	SEAL-LIP TYPE	
	17	1	*164-4180*	2	PLUG AS	
					(EACH INCLUDES)	
		1	**7M-8485**	1	SEAL-O-RING	
		1	**9S-4181**	1	PLUG (5/16-12-THD)	
M	18	1	**236-0483**	24	BOLT (M16X2X190-MM)	
	19	1	**2K-9295**	2	BEARING AS-TAPERED ROLLER	
	20	1	**3B-4124**	2	CUP-BEARING (TAPERED ROLLER)	
M	21	1	**418-6609**	3	BOLT-FLANGE HEAD (M8X1.25X80-MM)	
	22	1	**4F-9652**	2	SEAL-O-RING	
	23	1	**5P-8247**	60	WASHER-HARD (17X32X3.5-MM THK)	
M	24	1	**6C-5304**	24	BOLT (M16X2X110-MM)	
M	25	1	**6V-5686**	12	BOLT (M16X2X50-MM)	
M	26	1	**6V-7732**	6	BOLT (M10X1.5X25-MM)	
	27	1	**6Y-1032**	2	CUP-BEARING	
	28	1	**7M-8485**	1	SEAL-O-RING	
	29	1	**8T-0336**	1	FITTING-PRESSURE RELIEF	
M	30	1	**8T-0655**	8	BOLT (M20X2.5X130-MM)	
	31	1	**8T-3282**	8	WASHER-HARD (22X35X3.5-MM THK)	
	32	1	**8T-3727**	2	RING-RETAINING	
	33	1	**9C-6041**	3	DOWEL	
	34	1	**9M-5024**	1	SEAL-O-RING	
	35	1	**9X-2027**	6	WASHER (11X18X2-MM THK)	
	36	1	**1K-6853**	1	FITTING-PRESSURE RELIEF	

371-7390 **HOUSING GP-OSCILLATING AXLE (**contd.**)** **i06771985**

NOTE	REF NO	GRAPHIC REF	PART NUMBER	QTY	PART NAME 1 2 3 4 5 6 (PRODUCT LEVEL)	SEE PAGE
	37	1	**503-3072**	2	HOUSING-AXLE	
	38	1	**5M-6214**	1	PLUG (1/8-27 PTF)	
BF		1	**8C-8422**		SEALANT	
					PARTS SHOWN IN GRAPHIC(S) WITHOUT A REFERENCE NUMBER ARE NOT SERVICED SEPARATELY	

B - USE AS REQUIRED
F - NOT SHOWN
M - METRIC PART

371-7390 **HOUSING GP-OSCILLATING AXLE (**contd.**)** **i06771985**

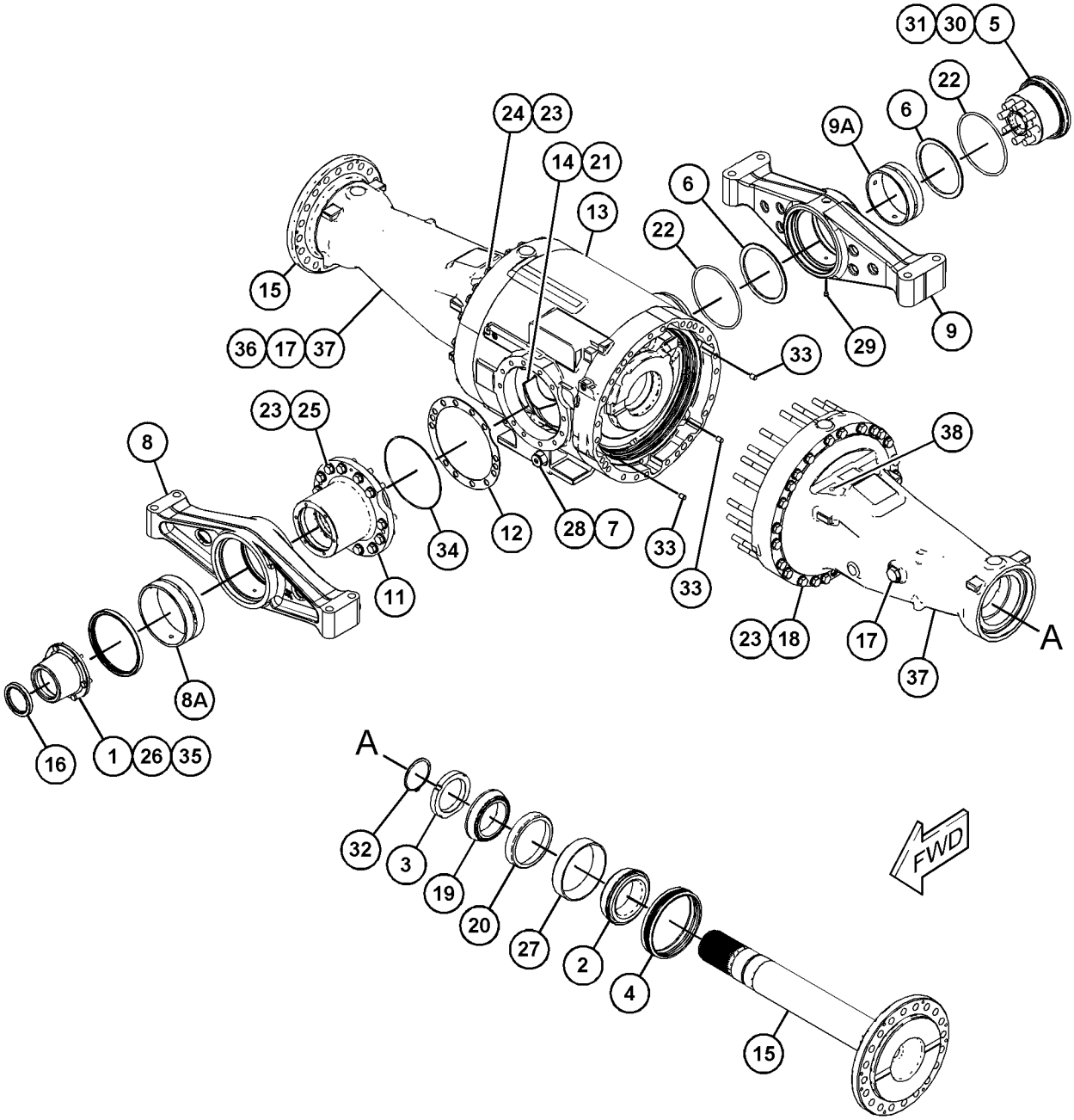

GRAPHIC #1 <END> g06122442

371-7392 HOUSING GP-OSCILLATING AXLE

S/N: TNS1-UP
ARCTIC SEALS
FOR USE WITH AUTOMATIC LOCKING DIFFERENTIAL
PART OF 371-7356 AXLE AR-OSCILLATING

SMCS-3260, 3268 **i06780606**

NOTE	REF NO	GRAPHIC REF	PART NUMBER	QTY	PART NAME 1 2 3 4 5 6 (PRODUCT LEVEL)	SEE PAGE
	1	1	**4E-8534**	1	RETAINER-SEAL	
	2	1	**8B-6343**	2	CUP-BEARING	
	3	1	**9G-5315**	2	SEAL GP-DUO-CONE	
					(EACH INCLUDES)	
		1	**2M-0344**	2	RING-SEALING	
	4	1	**467-0997**	1	TRUNNION	
	5	1	**467-0998**	2	WASHER-THRUST	
	6	1	**248-0833**	1	PLUG AS-DRAIN (AXLE OIL)	
		1	**3S-9233**	1	SEAL-O-RING	
		1	**5L-4759**	1	SEAL-O-RING	
		1	**259-7138**	1	PLUG	
	7	1	**304-0295**	1	SUPPORT AS-TRUNNION (FRONT)	
	7A	1	**360-9858**	1	BUSHING	
		1	**2V-9404**	1	RING-RETAINING	
		1	**8J-4869**	2	SEAL-LIP TYPE	
	8	1	**491-6932**	1	SUPPORT AS	
	8A	1	**491-6934**	1	BEARING-SLEEVE	
	9	1	**351-2548**	1	TUBE	
	10	1	**358-1208**	2	SHAFT-AXLE	
	11	1	**358-1404**	1	HOUSING-PINION	
	12	1	**504-0373**	1	HOUSING AS-OSCILLATING	
M		1	**095-0673**	4	BOLT-SOCKET HEAD (M12X1.75X60-MM)	
	13	1	**360-9855**	1	SHIM PACK (INCLUDES 11-SHIMS) (2.65-MM THK)	
	14	1	**503-3073**	1	HOUSING-AXLE	
	15	1	**376-6952**	1	SHROUD AS	
	16	1	**469-0899**	1	HOUSING-AXLE	
	17	1	**123-4003**	1	SEAL-LIP TYPE	
	18	1	*148-8410*	1	PLUG AS	
		1	**2M-9780**	1	SEAL-O-RING	
		1	**9S-4190**	1	PLUG-O-RING (7/8-14-THD)	
	19	1	*164-4180*	1	PLUG AS	
		1	**7M-8485**	1	SEAL-O-RING	
		1	**9S-4181**	1	PLUG (5/16-12-THD)	
M	20	1	**236-0483**	24	BOLT (M16X2X190-MM)	
	21	1	**2P-1373**	2	CUP-BEARING	
M	22	1	**418-6609**	3	BOLT-FLANGE HEAD (M8X1.25X80-MM)	
	23	1	**4F-9652**	2	SEAL-O-RING	
	24	1	**4J-2506**	1	SEAL-O-RING	
	25	1	**5P-3119**	2	RING-RETAINING	
	26	1	**5P-8247**	60	WASHER-HARD (17X32X3.5-MM THK)	
M	27	1	**6C-5304**	24	BOLT (M16X2X110-MM)	
	28	1	**6F-5559**	1	SEAL-O-RING	
M	29	1	**6V-5686**	12	BOLT (M16X2X50-MM)	
M	30	1	**6V-7732**	6	BOLT (M10X1.5X25-MM)	
	31	1	**6Y-2538**	2	CONE-BEARING	
	32	1	**7M-8485**	1	SEAL-O-RING	

371-7392 **HOUSING GP-OSCILLATING AXLE (**contd.**)** **i06780606**

NOTE	REF NO	GRAPHIC REF	PART NUMBER	QTY	PART NAME 1 2 3 4 5 6 (PRODUCT LEVEL)	SEE PAGE
	33	1	**8B-6342**	2	CONE-BEARING	
	34	1	**8T-0336**	1	FITTING-PRESSURE RELIEF	
M	35	1	**8T-0655**	8	BOLT (M20X2.5X130-MM)	
	36	1	**8T-3282**	8	WASHER-HARD (22X35X3.5-MM THK)	
	37	1	**9C-6041**	3	DOWEL	
	38	1	**9C-8419**	2	NUT-BEARING	
	39	1	**9M-5024**	1	SEAL-O-RING	
	40	1	**9X-2027**	6	WASHER (11X18X2-MM THK)	
	41	1	**1K-6853**	1	FITTING-PRESSURE RELIEF	
BF		1	**8C-8422**		SEALANT	
					PARTS SHOWN IN GRAPHIC(S) WITHOUT A REFERENCE NUMBER ARE NOT SERVICED SEPARATELY	

B - USE AS REQUIRED
F - NOT SHOWN
M - METRIC PART

371-7392 **HOUSING GP-OSCILLATING AXLE (**contd.**)** **i06780606**

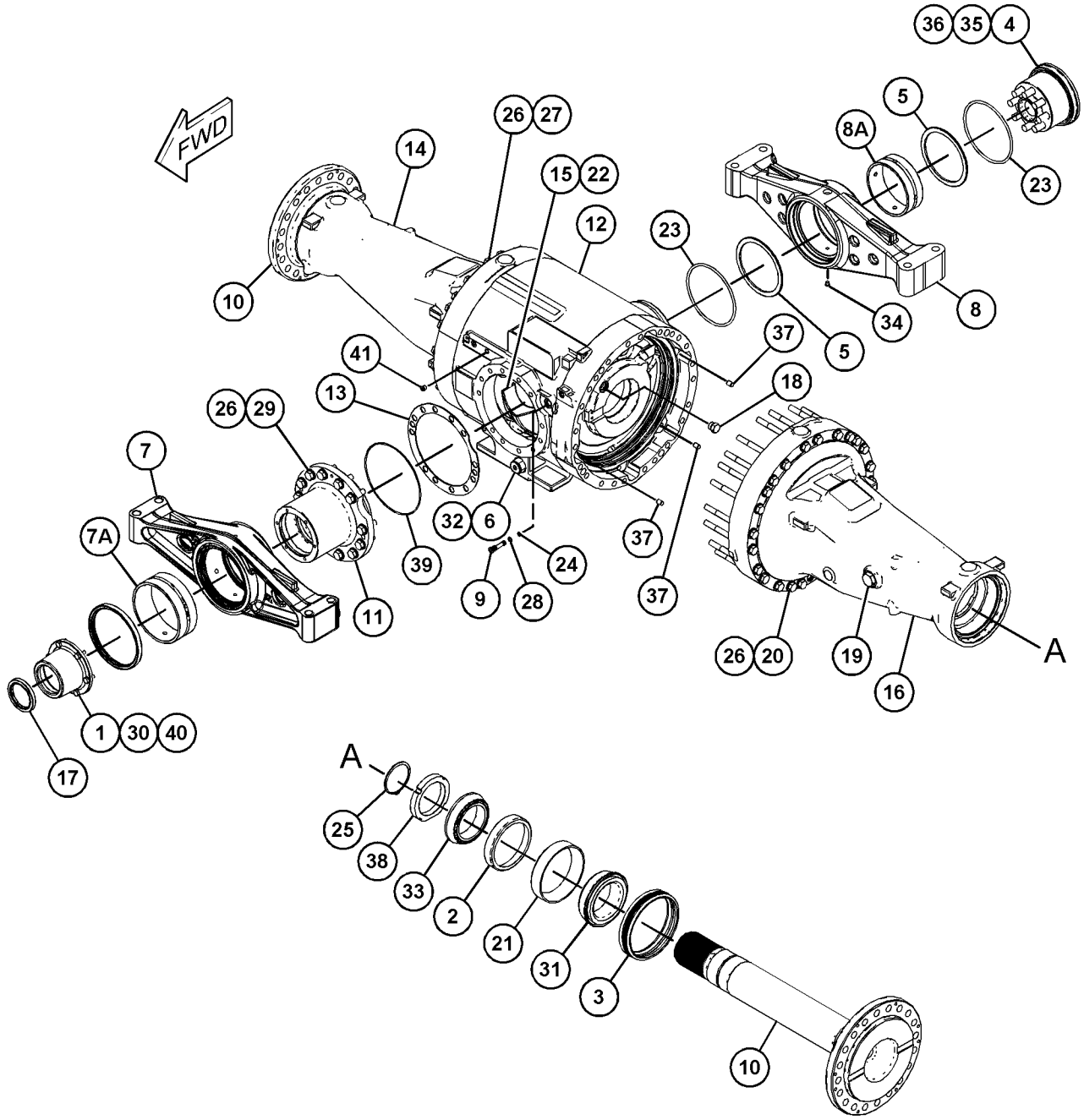

GRAPHIC #1 <END> g06115267

371-7393 HOUSING GP-OSCILLATING AXLE—OSCILLATING

S/N: TNS1-UP

FOR USE WITH INTERNAL AXLE OIL COOLER & AUTOMATIC LOCKING DIFFERENTIAL

PART OF 371-7357 AXLE AR-OSCILLATING

SMCS-3260, 3268

i06780612

NOTE	REF NO	GRAPHIC REF	PART NUMBER	QTY	PART NAME 1 2 3 4 5 6 (PRODUCT LEVEL)	SEE PAGE
	1	1	**4E-8534**	1	RETAINER-SEAL	
	2	1	**8B-6343**	2	CUP-BEARING	
	3	1	**9G-5315**	2	SEAL GP-DUO-CONE	
					(EACH INCLUDES)	
		1	**2M-0344**	2	RING-SEALING	
	4	1	**467-0997**	1	TRUNNION	
	5	1	**467-0998**	2	WASHER-THRUST	
	6	1	**248-0833**	1	PLUG AS-DRAIN (AXLE OIL)	
		1	**3S-9233**	1	SEAL-O-RING	
		1	**5L-4759**	1	SEAL-O-RING	
		1	**259-7138**	1	PLUG	
	7	1	**304-0295**	1	SUPPORT AS-TRUNNION (FRONT)	
	7A	1	**360-9858**	1	BUSHING	
		1	**2V-9404**	1	RING-RETAINING	
		1	**8J-4869**	2	SEAL-LIP TYPE	
	8	1	**491-6932**	1	SUPPORT AS	
	8A	1	**491-6934**	1	BEARING-SLEEVE	
	9	1	**351-2548**	1	TUBE	
	10	1	**358-1208**	2	SHAFT-AXLE	
	11	1	**358-1404**	1	HOUSING-PINION	
	12	1	**504-0374**	1	HOUSING AS-OSCILLATING	
M		1	**095-0673**	4	BOLT-SOCKET HEAD (M12X1.75X60-MM)	
	13	1	**360-9855**	1	SHIM PACK (INCLUDES 11-SHIMS) (2.65-MM THK)	
	14	1	**503-3073**	1	HOUSING-AXLE	
	15	1	**376-6952**	1	SHROUD AS	
	16	1	**469-0899**	1	HOUSING-AXLE	
	17	1	**123-4003**	1	SEAL-LIP TYPE	
	18	1	*148-8410*	1	PLUG AS	
		1	**2M-9780**	1	SEAL-O-RING	
		1	**9S-4190**	1	PLUG-O-RING (7/8-14-THD)	
	19	1	*164-4180*	1	PLUG AS	
		1	**7M-8485**	1	SEAL-O-RING	
		1	**9S-4181**	1	PLUG (5/16-12-THD)	
M	20	1	**236-0483**	24	BOLT (M16X2X190-MM)	
	21	1	**2P-1373**	2	CUP-BEARING	
M	22	1	**418-6609**	3	BOLT-FLANGE HEAD (M8X1.25X80-MM)	
	23	1	**4F-9652**	2	SEAL-O-RING	
	24	1	**4J-2506**	1	SEAL-O-RING	
	25	1	**5P-3119**	2	RING-RETAINING	
	26	1	**5P-8247**	60	WASHER-HARD (17X32X3.5-MM THK)	
M	27	1	**6C-5304**	24	BOLT (M16X2X110-MM)	
	28	1	**6F-5559**	1	SEAL-O-RING	
M	29	1	**6V-5686**	12	BOLT (M16X2X50-MM)	
M	30	1	**6V-7732**	6	BOLT (M10X1.5X25-MM)	
	31	1	**6Y-2538**	2	CONE-BEARING	
	32	1	**7M-8485**	1	SEAL-O-RING	

371-7393 **HOUSING GP-OSCILLATING AXLE (**contd.**)** **i06780612**

NOTE	REF NO	GRAPHIC REF	PART NUMBER	QTY	PART NAME 1 2 3 4 5 6 (PRODUCT LEVEL)	SEE PAGE
	33	1	**8B-6342**	2	CONE-BEARING	
	34	1	**8T-0336**	1	FITTING-PRESSURE RELIEF	
M	35	1	**8T-0655**	8	BOLT (M20X2.5X130-MM)	
	36	1	**8T-3282**	8	WASHER-HARD (22X35X3.5-MM THK)	
	37	1	**9C-6041**	3	DOWEL	
	38	1	**9C-8419**	2	NUT-BEARING	
	39	1	**9M-5024**	1	SEAL-O-RING	
	40	1	**9X-2027**	6	WASHER (11X18X2-MM THK)	
	41	1	**1K-6853**	1	FITTING-PRESSURE RELIEF	
BF		1	**8C-8422**		SEALANT	
					PARTS SHOWN IN GRAPHIC(S) WITHOUT A REFERENCE NUMBER ARE NOT SERVICED SEPARATELY	

B - USE AS REQUIRED
F - NOT SHOWN
M - METRIC PART

371-7393 **HOUSING GP-OSCILLATING AXLE (**contd.**)** **i06780612**

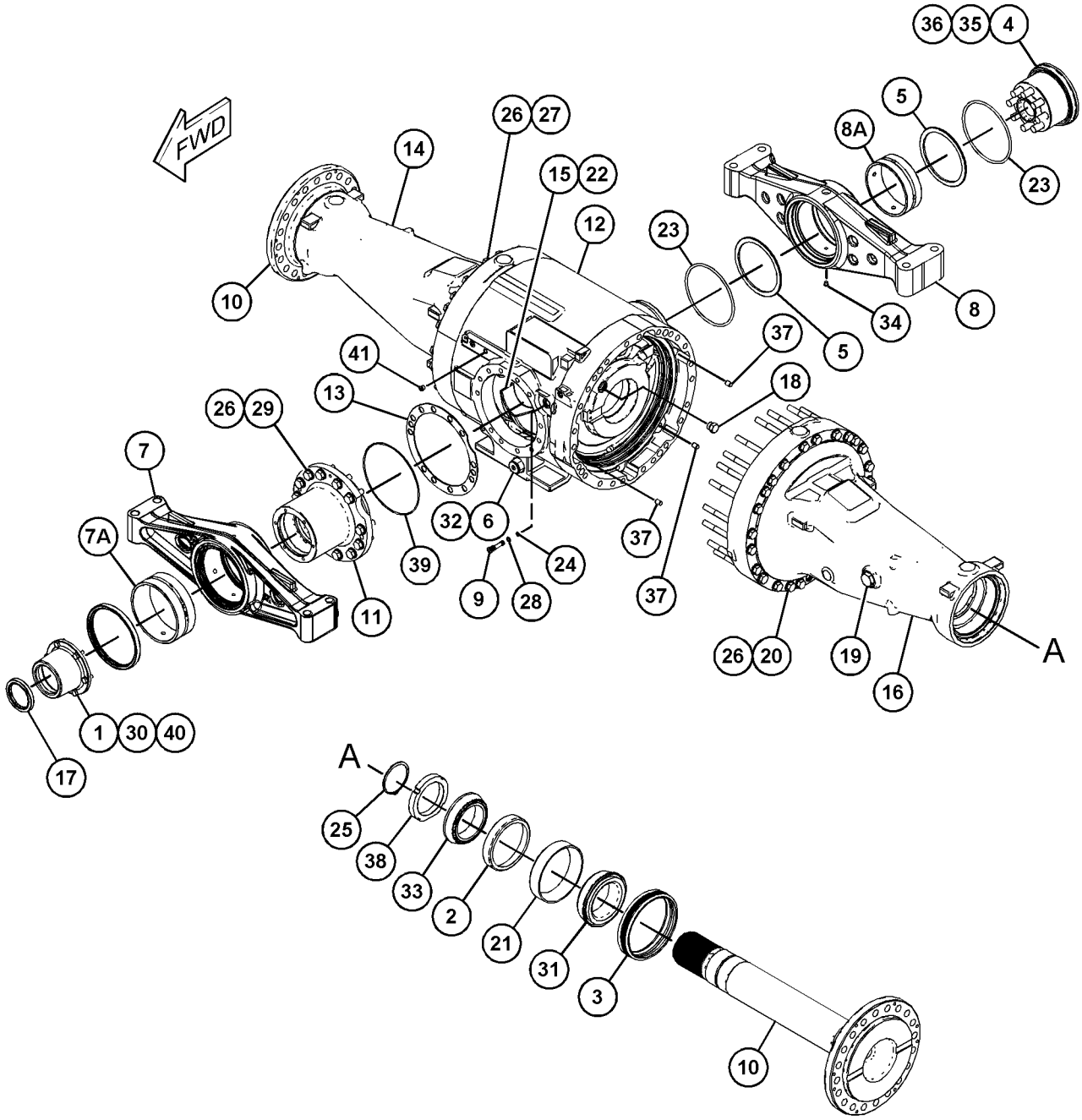

GRAPHIC #1 <END> g06115267

371-7395 HOUSING GP-OSCILLATING AXLE

S/N: TNS1-UP
SEAL GUARDS
FOR USE WITH AUTOMATIC LOCKING DIFFERENTIAL, SEAL GROUPS
PART OF 371-7359 AXLE AR-OSCILLATING

SMCS-3260, 3268 **i06780616**

NOTE	REF NO	GRAPHIC REF	PART NUMBER	QTY	PART NAME 1 2 3 4 5 6 (PRODUCT LEVEL)	SEE PAGE
	1	1	**4E-8534**	1	RETAINER-SEAL	
	2	1	**8B-6343**	2	CUP-BEARING	
	3	1	**9G-5315**	2	SEAL GP-DUO-CONE	
					(EACH INCLUDES)	
	3A	1	**2M-0344**	2	RING-SEALING	
	4	1	**467-0997**	1	TRUNNION	
	5	1	**467-0998**	2	WASHER-THRUST	
	6	1	**248-0833**	1	PLUG AS-DRAIN (DIFFERENTIAL)	
		1	**3S-9233**	1	SEAL-O-RING	
		1	**5L-4759**	1	SEAL-O-RING	
		1	**259-7138**	1	PLUG	
	7	1	**304-0295**	1	SUPPORT AS-TRUNNION (FRONT)	
	7A	1	**2V-9404**	1	RING-RETAINING	
	7B	1	**360-9858**	1	BUSHING	
		1	**8J-4869**	2	SEAL-LIP TYPE	
	8	1	**491-6932**	1	SUPPORT AS	
	8A	1	**491-6934**	1	BEARING-SLEEVE	
	9	1	**351-2548**	1	TUBE	
	10	1	**358-1404**	1	HOUSING-PINION	
B	11	1	**360-9855**	1	SHIM PACK (INCLUDES 11-SHIMS)	
	12	1	**469-0899**	1	HOUSING-AXLE	
	13	1	**504-0373**	1	HOUSING AS-OSCILLATING	
M		1	**095-0673**	4	BOLT-SOCKET HEAD (M12X1.75X60-MM)	
	14	1	**376-6952**	1	SHROUD AS	
	15	1	**503-3073**	1	HOUSING-AXLE	
	16	1	**396-3891**	2	SHAFT-AXLE	
	17	1	**123-4003**	1	SEAL-LIP TYPE	
	18	1	*148-8410*	1	PLUG AS	
		1	**2M-9780**	1	SEAL-O-RING	
		1	**9S-4190**	1	PLUG-O-RING (7/8-14-THD)	
	19	1	*164-4180*	1	PLUG AS	
		1	**7M-8485**	1	SEAL-O-RING	
		1	**9S-4181**	1	PLUG (5/16-12-THD)	
M	20	1	**236-0483**	24	BOLT (M16X2X190-MM)	
	21	1	**2P-1373**	2	CUP-BEARING	
M	22	1	**418-6609**	3	BOLT-FLANGE HEAD (M8X1.25X80-MM)	
	23	1	**4F-9652**	2	SEAL-O-RING	
	24	1	**4J-2506**	1	SEAL-O-RING	
	25	1	**5P-3119**	2	RING-RETAINING	
	26	1	**5P-8247**	60	WASHER-HARD (17X32X3.5-MM THK)	
M	27	1	**6C-5304**	24	BOLT (M16X2X110-MM)	
	28	1	**6F-5559**	1	SEAL-O-RING	
M	29	1	**6V-5686**	12	BOLT (M16X2X50-MM)	
M	30	1	**6V-7732**	6	BOLT (M10X1.5X25-MM)	
	31	1	**6Y-2538**	2	CONE-BEARING	
	32	1	**7M-8485**	1	SEAL-O-RING	

371-7395 **HOUSING GP-OSCILLATING AXLE (**contd.**)** **i06780616**

NOTE	REF NO	GRAPHIC REF	PART NUMBER	QTY	PART NAME 1 2 3 4 5 6 (PRODUCT LEVEL)	SEE PAGE
	33	1	**8B-6342**	2	CONE-BEARING	
	34	1	**8T-0336**	1	FITTING-PRESSURE RELIEF	
M	35	1	**8T-0655**	8	BOLT (M20X2.5X130-MM)	
	36	1	**8T-3282**	8	WASHER-HARD (22X35X3.5-MM THK)	
	37	1	**9C-6041**	3	DOWEL	
	38	1	**9C-8419**	2	NUT-BEARING	
	39	1	**9M-5024**	1	SEAL-O-RING	
	40	1	**9X-2027**	6	WASHER (11X18X2-MM THK)	
	41	1	**1K-6853**	1	FITTING-PRESSURE RELIEF	

B - USE AS REQUIRED
M - METRIC PART

371-7395 **HOUSING GP-OSCILLATING AXLE (**contd.**)** **i06780616**

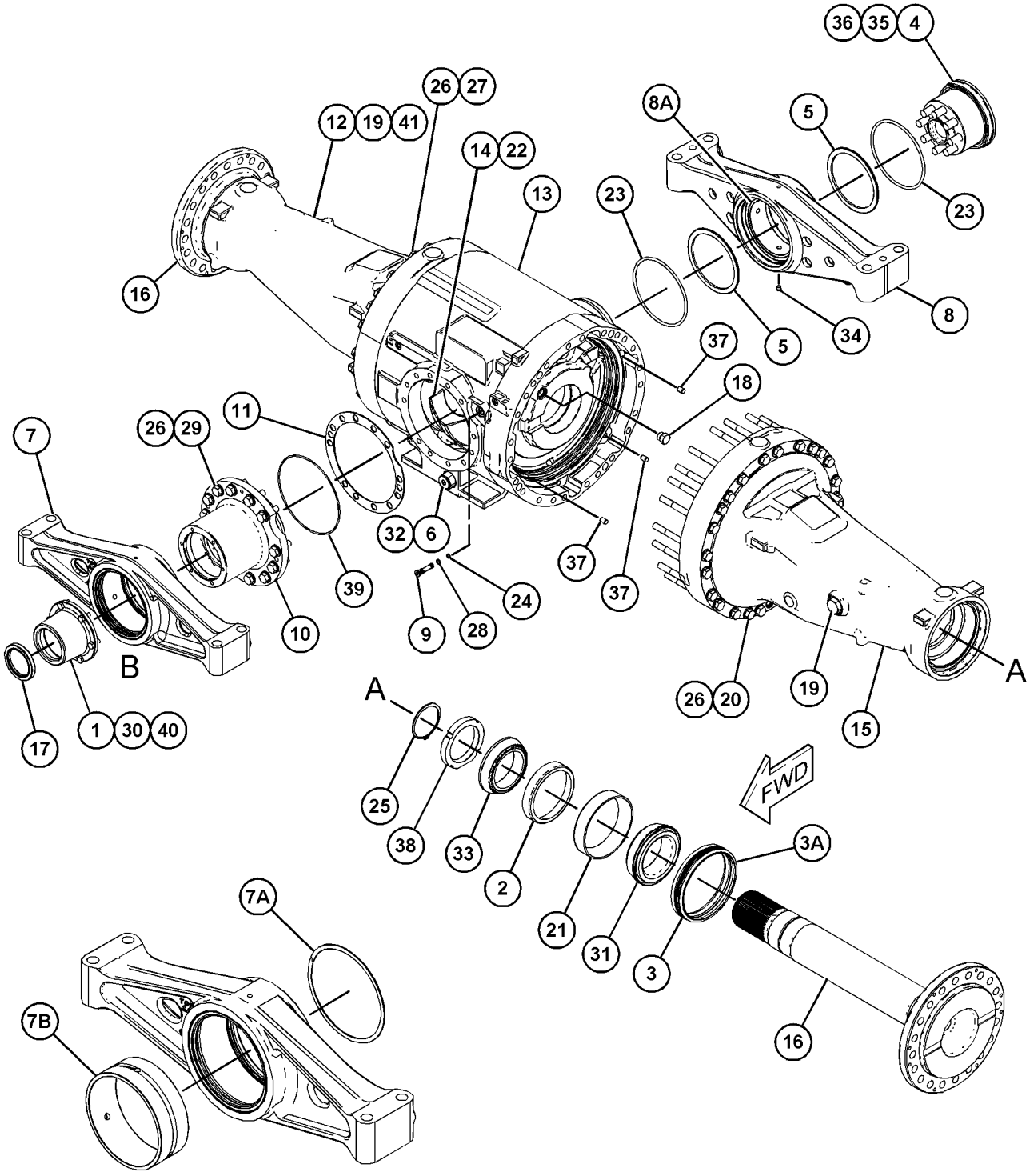

VIEW OF AREA B

GRAPHIC #1 <END> g06125935

360-0357 LINES GP-AXLE OIL COOLER

S/N: TNS1-UP

PART OF 456-5805, 463-8850, 463-8851, 463-8852, 463-8854, 463-8856 AXLE AR-FIXED & OSCILLATING

SMCS-1365, 3016

i06819343

NOTE	REF NO	GRAPHIC REF	PART NUMBER	QTY	PART NAME 1 2 3 4 5 6 (PRODUCT LEVEL)	SEE PAGE
I	1	1	**384-9480**	1	HOSE AS	
	2	1	*106-8715*	1	ELBOW AS	
		1	**3D-2824**	1	SEAL-O-RING	
		1	**8C-8400**	1	ELBOW	
		1	**6V-9746**	1	SEAL-O-RING	
	3	1	**133-6934**	1	SPACER (11X20X25-MM THK)	
	4	1	**6D-4244**	3	CLIP	
	5	1	**8T-4121**	4	WASHER-HARD (11X21X2.5-MM THK)	
M	6	1	**8T-4185**	1	BOLT (M10X1.5X50-MM)	
E	7	1	**7I-1024**		GUARD-HOSE (27-CM)	

E - ORDER BY THE CENTIMETER
I - REFER TO HYDRAULIC INFORMATION SYSTEM
M - METRIC PART

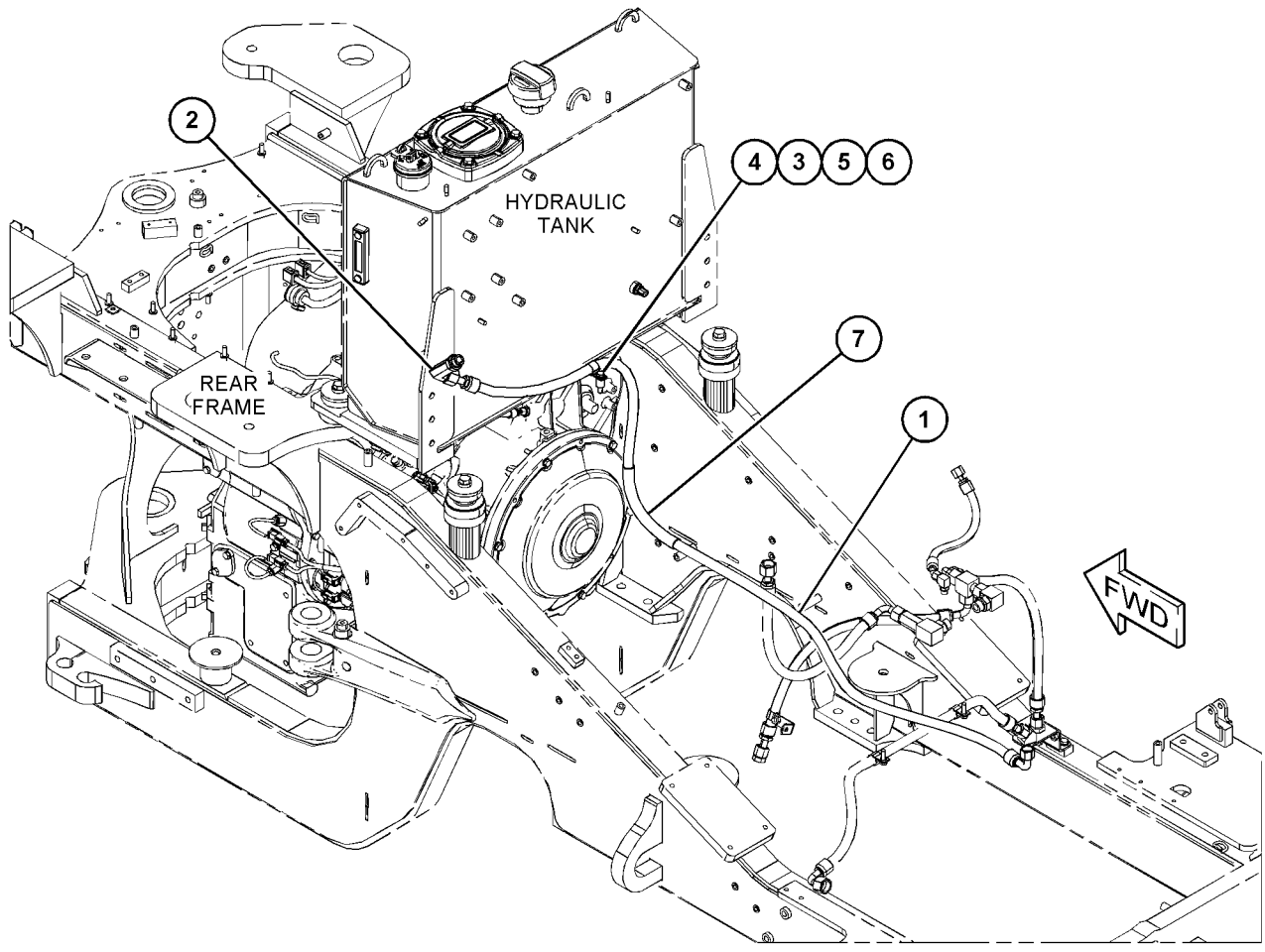

GRAPHIC #1 <END> g03680062

436-7030 LINES GP-AXLE OIL COOLER

S/N: TNS1-UP

PART OF 463-8853, 463-8857 AXLE AR-FIXED & OSCILLATING

SMCS-1365, 3016

i06796979

NOTE	REF NO	GRAPHIC REF	PART NUMBER	QTY	PART NAME 1 2 3 4 5 6 (PRODUCT LEVEL)	SEE PAGE
	1	1	**7K-1181**	2	STRAP-CABLE (5.72-MM DIA)	
	2	1	*106-8715*	2	ELBOW AS	
					(EACH INCLUDES)	
		1	**3D-2824**	1	SEAL-O-RING	
		1	**6V-9746**	1	SEAL-O-RING	
		1	**8C-8400**	1	ELBOW	
	3	1	**127-9323**	1	BRACKET AS	
M		1	**8T-3490**	1	NUT-WELD (M10X1.5-THD)	
	4	1	**144-4613**	1	ANGLE AS	
M		1	**8T-3490**	1	NUT-WELD (M10X1.5-THD)	
	5	1	*148-8364*	3	ELBOW AS	
					(EACH INCLUDES)	
		1	**3K-0360**	1	SEAL-O-RING	
		1	**6V-8398**	1	SEAL-O-RING	
		1	**6V-8625**	1	ELBOW	
	6	1	*148-8374*	1	ELBOW AS	
		1	**3K-0360**	1	SEAL-O-RING	
		1	**6V-8397**	1	SEAL-O-RING	
		1	**6V-8723**	1	ELBOW	
	7	1	*148-8382*	1	ELBOW AS	
		1	**3D-2824**	1	SEAL-O-RING	
		1	**7J-9108**	1	SEAL-O-RING	
		1	**8T-0404**	1	ELBOW	
	8	1	**184-6892**	2	ELBOW	
Y	9	1	**237-8180**	1	MANIFOLD GP-CONTROL (AXLE OIL FLOW DIVIDER)	387
I	10	1	**375-6801**	2	HOSE AS	
	11	1	**384-9474**	1	PLATE	
I	12	1	**384-9520**	2	HOSE AS	
I	13	1	**452-7164**	1	HOSE AS	
I	14	1	**452-7165**	1	HOSE AS	
I	15	1	**452-7166**	1	HOSE AS	
I	16	1	**452-7167**	1	HOSE AS	
I	17	1	**452-7169**	1	HOSE AS	
	18	1	**452-7170**	1	TUBE AS	
	19	1	**452-7171**	1	TUBE AS	
I	20	1	**452-7181**	1	HOSE AS	
	21	1	**133-6934**	2	SPACER (11X20X25-MM THK)	
	22	1	*148-8375*	2	ELBOW AS	
					(EACH INCLUDES)	
		1	**6V-8398**	2	SEAL-O-RING	
		1	**6V-8981**	1	ELBOW	
	23	1	*153-6241*	6	ELBOW AS	
					(EACH INCLUDES)	
		1	**6V-8398**	1	SEAL-O-RING	
		1	**8C-8989**	1	ELBOW	
	24	1	**204-1611**	1	STRAP (DUAL)	
	25	1	**206-2423**	1	SADDLE	
M	26	1	**287-3049**	1	STUD (M10X1.5X50-MM)	

436-7030 **LINES GP-AXLE OIL COOLER (**contd.**)** **i06796979**

NOTE	REF NO	GRAPHIC REF	PART NUMBER	QTY	PART NAME 1 2 3 4 5 6 (PRODUCT LEVEL)	SEE PAGE
M	27	1	**344-5675**	5	NUT (M10X1.5-THD)	
	28	1	**3E-4321**	2	CLIP	
	29	1	**3E-6909**	2	CLIP	
	30	1	**6D-4244**	1	CLIP	
	31	1	**6V-8398**	6	SEAL-O-RING	
	32	1	**6V-9169**	4	NUT (13/16-16-THD)	
	33	1	**7S-1912**	2	CLIP	
M	34	1	**7X-2545**	2	BOLT (M10X1.5X150-MM)	
	35	1	**7X-7729**	4	WASHER (11X25X3-MM THK)	
	36	1	**8T-4121**	10	WASHER-HARD (11X21X2.5-MM THK)	
M	37	1	**8T-4136**	2	BOLT (M10X1.5X25-MM)	
M	38	1	**8T-4137**	1	BOLT (M10X1.5X20-MM)	
M	39	1	**8T-4139**	2	BOLT (M12X1.75X30-MM)	
M	40	1	**8T-4185**	1	BOLT (M10X1.5X50-MM)	
	41	1	**8T-4223**	2	WASHER-HARD (13.5X25.5X3-MM THK)	
E	42	1	**7I-1024**		GUARD-HOSE (26-CM)	

E - ORDER BY THE CENTIMETER
I - REFER TO HYDRAULIC INFORMATION SYSTEM
M - METRIC PART
Y - SEPARATE ILLUSTRATION

436-7030 **LINES GP-AXLE OIL COOLER (**contd.**)** **i06796979**

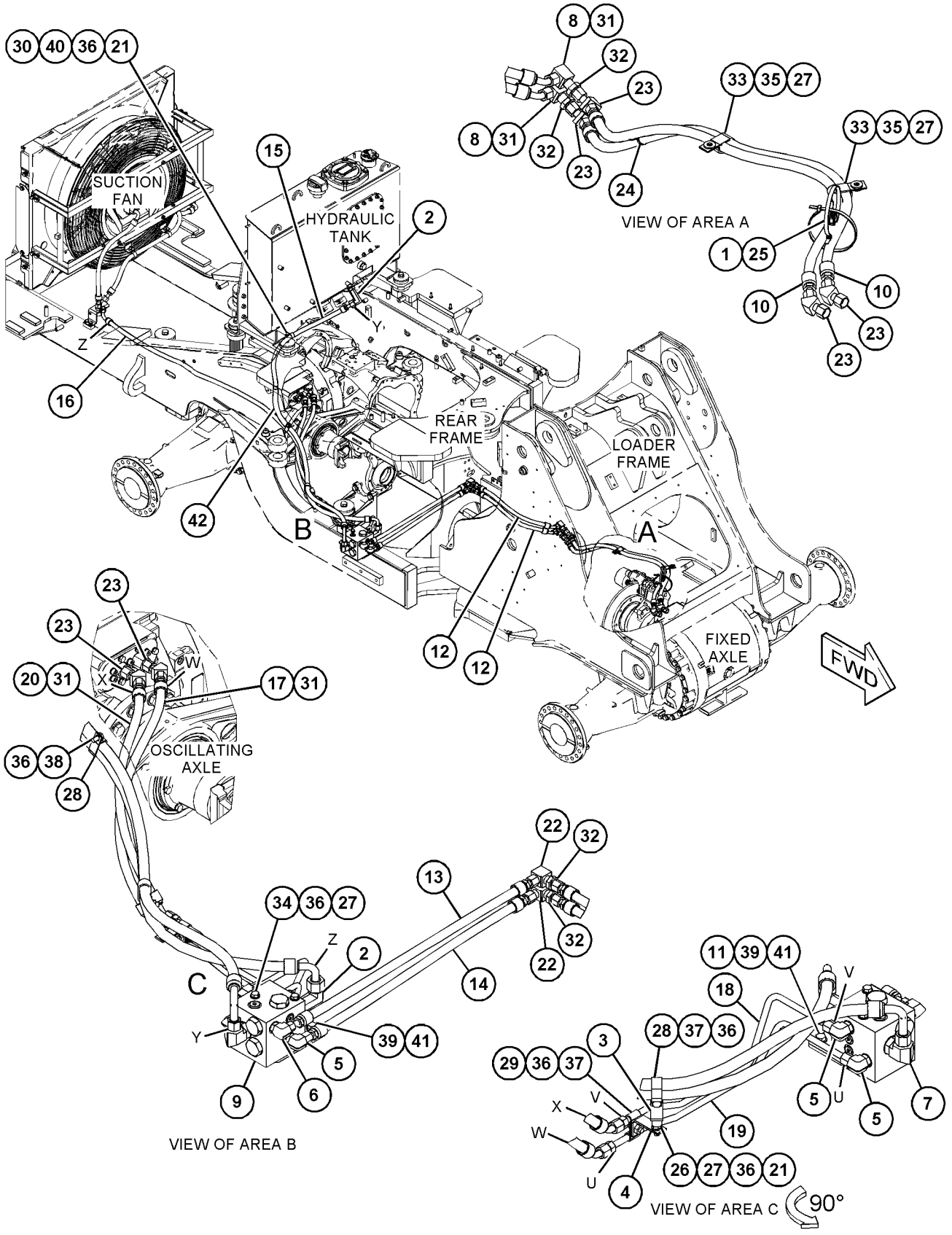

GRAPHIC #1 <END> g06043704

360-0310 LINES GP-TORQUE CONV COOLER

S/N: TNS1-UP

PART OF 492-4021 HYDRAULIC AR

SMCS-1375, 3016 **i05786631**

NOTE	REF NO	GRAPHIC REF	PART NUMBER	QTY	PART NAME 1 2 3 4 5 6 (PRODUCT LEVEL)	SEE PAGE
	1	1	**3S-2093**	2	STRAP-CABLE	
	2	1	**7K-1181**	1	STRAP-CABLE (5.72-MM DIA)	
	3	1	*148-8411*	1	PLUG AS	
		1	**3K-0360**	1	SEAL-O-RING	
		1	**9S-4185**	1	PLUG (3/4-16-THD)	
	4	1	*340-0508*	1	SENSOR GP-TEMPERATURE (TORQUE CONVERTER OIL)	
		1	**238-5080**	1	SEAL-O-RING	
		1	**256-6453**	1	SENSOR-TEMPERATURE (TORQUE CONVERTER OIL)	
	5	1	**427-0323**	1	TUBE AS	
I	6	1	**427-0324**	2	HOSE AS	
	7	1	**427-0344**	1	TUBE AS	
	8	1	**091-9035**	1	SPACER (11X25X20-MM THK)	
	9	1	**132-5789**	1	CLIP (LADDER)	
	10	1	**206-2423**	1	SADDLE	
	11	1	**228-7093**	2	SEAL-O-RING	
	12	1	**235-2474**	2	SEAL-RECTANGULAR	
	13	1	*319-6219*	2	ELBOW AS	
					(EACH INCLUDES)	
		1	**6V-9005**	1	ELBOW	
		1	**228-7093**	1	SEAL-O-RING	
		1	**238-5084**	1	SEAL-O-RING	
	14	1	**4S-1962**	3	CLIP (LOOP)	
	15	1	**8T-4121**	11	WASHER-HARD (11X21X2.5-MM THK)	
M	16	1	**8T-4137**	2	BOLT (M10X1.5X20-MM)	
M	17	1	**8T-4186**	1	BOLT (M10X1.5X40-MM)	
M	18	1	**8T-6466**	8	BOLT (M10X1.5X60-MM)	

I - REFER TO HYDRAULIC INFORMATION SYSTEM
M - METRIC PART

360-0310 **LINES GP-TORQUE CONV COOLER (**contd.**)** **i05786631**

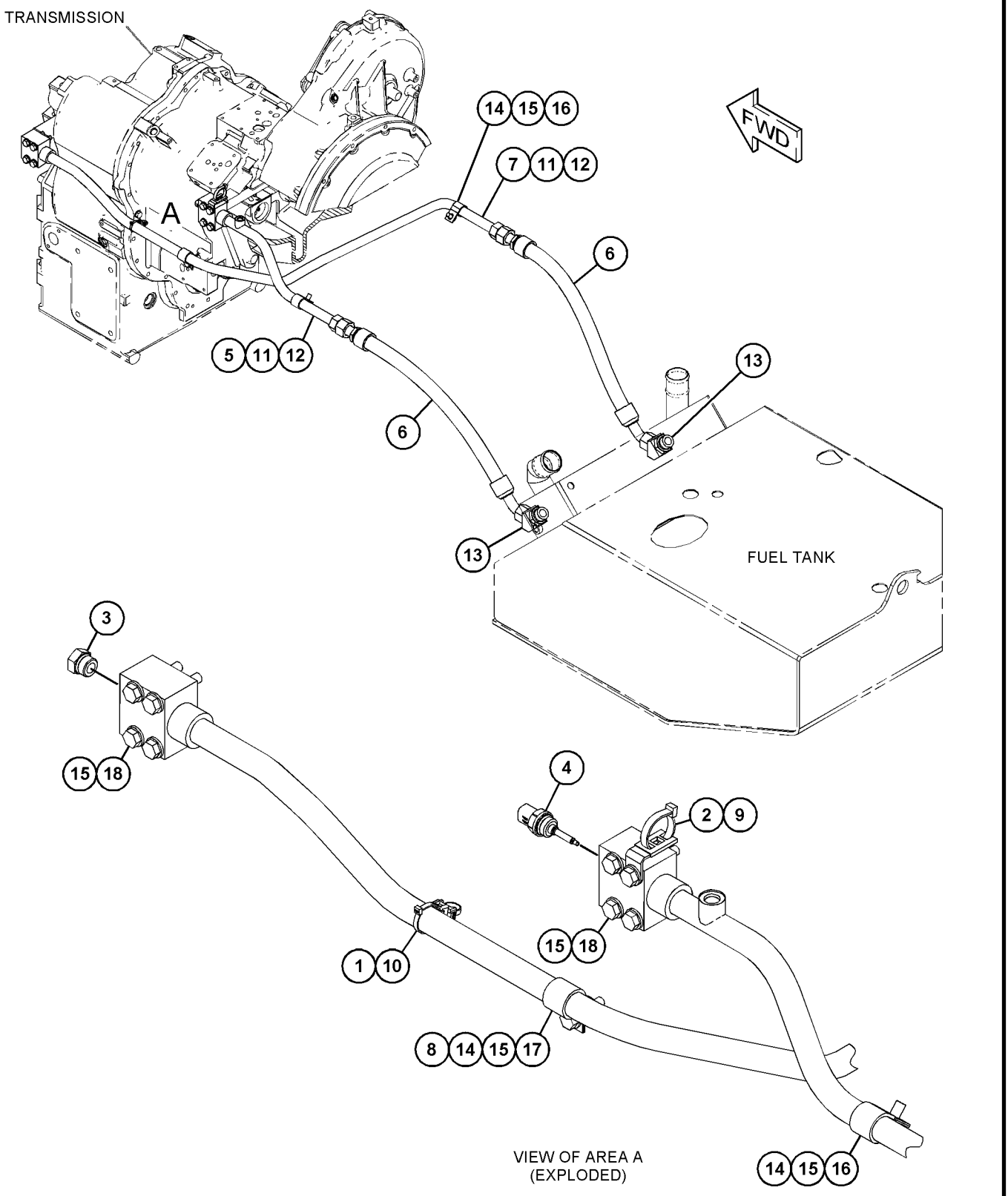

GRAPHIC #1 <END> g03678185

237-8180 MANIFOLD GP-CONTROL–AXLE OIL FLOW DIVIDER

S/N: TNS1-UP

PART OF 436-7030 LINES GP-AXLE OIL COOLER

SMCS-3206, 3272, 5137

i03629225

NOTE	REF NO	GRAPHIC REF	PART NUMBER	QTY	PART NAME 1 2 3 4 5 6 (PRODUCT LEVEL)	SEE PAGE
J	1	1	**142-8977**	2	VALVE GP-CHECK (AXLE OIL COOLER BYPASS)	
H	2	1	**237-8181**	1	VALVE GP-FLOW DIVIDER (AXLE OIL)	
N	3	1	**237-8183**	1	VALVE GP-RELIEF (AXLE OIL)	
	4	1	**9S-8004**	4	PLUG (9/16-18-THD)	
	5	1	**3J-1907**	4	SEAL-O-RING	
	6	1	**9S-8005**	1	PLUG (3/4-16-THD)	
	7	1	**3K-0360**	1	SEAL-O-RING	
					AVAILABLE REPAIR KIT(S):	
J			**141-1232**	1	KIT-SEAL	
H			**237-8260**	1	KIT-SEAL	
N			**227-5509**	1	KIT-SEAL	

H - KIT MARKED H SERVICES PART(S) MARKED H
J - KIT MARKED J SERVICES PART(S) MARKED J
N - KIT MARKED N SERVICES PART(S) MARKED N

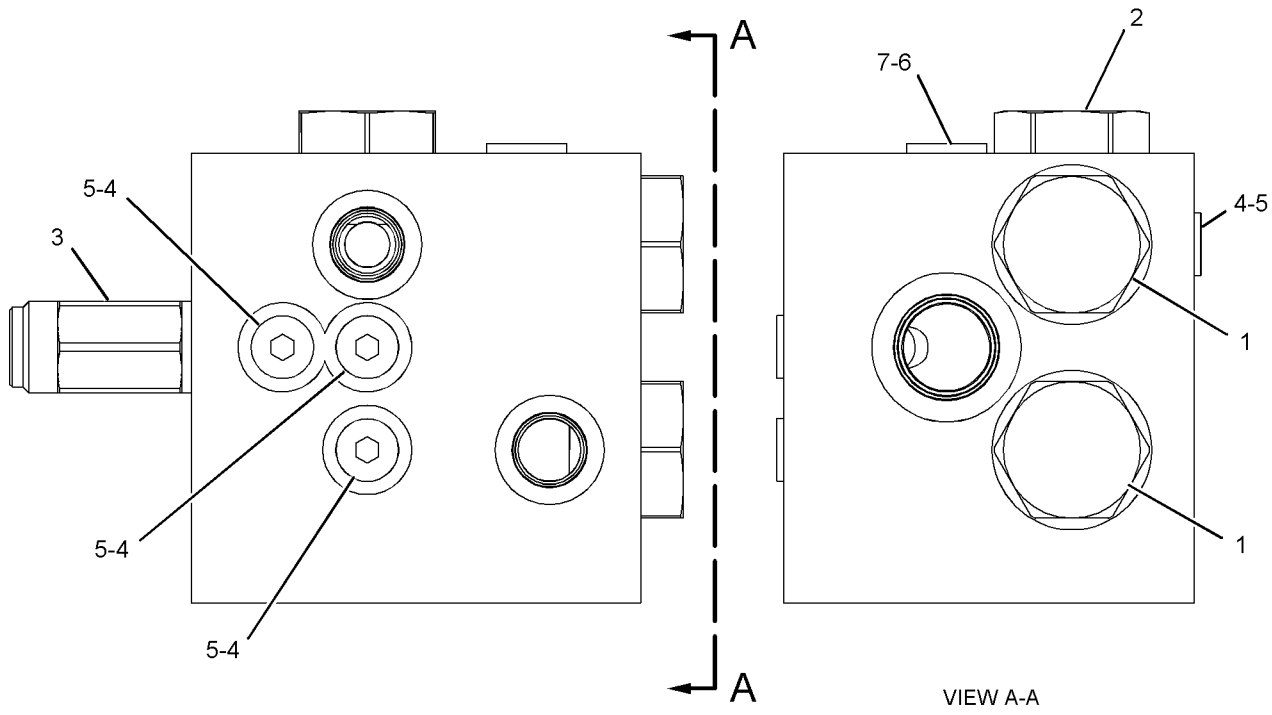

GRAPHIC #1

<END>

g01080215

491-9530 MOTOR GP-GEAR

S/N: TNS1-UP

PART OF 501-3064, 501-3065 FAN GP-SUCTION

SMCS-5061 **i06733486**

NOTE	REF NO	GRAPHIC REF	PART NUMBER	QTY	PART NAME 1 2 3 4 5 6 (PRODUCT LEVEL)	SEE PAGE
	1	1	**350-9190**	1	VALVE	
J	2	1	**350-9186**	1	SEAL-DUST	
J	3	1	**350-9189**	1	SEAL-DUST	
	4	1	**271-2360**	4	WASHER-HARD (15X22X2.5-MM THK)	
	5	1	**313-5646**	4	BOLT (M14X2X60-MM)	
					AVAILABLE REPAIR KIT(S):	
J			**500-0703**	1	KIT-SEAL	
					(INCLUDES SEALS & RINGS)	

J - KIT MARKED J SERVICES PART(S) MARKED J

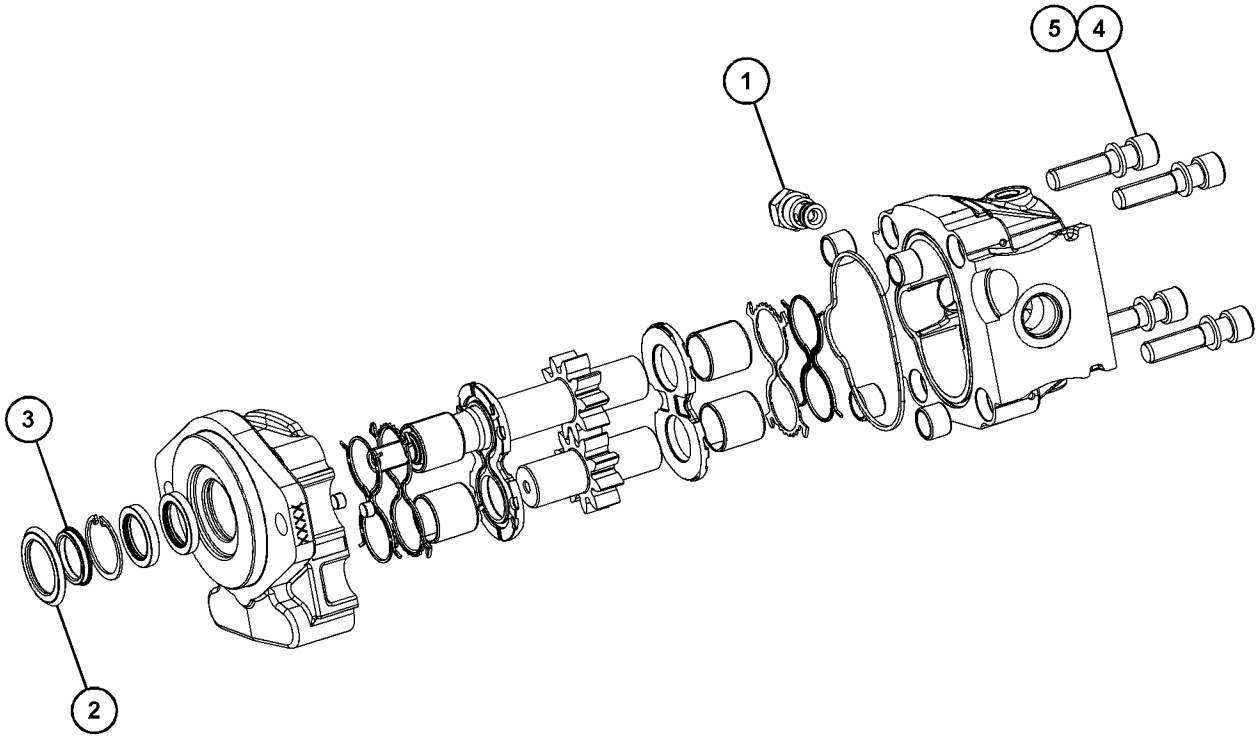

GRAPHIC #1 <END> g06121762

373-6685 MOUNTING GP-AXLE OIL COOLER–HEAT EXCHANGER

S/N: TNS1-UP

PART OF 371-7352, 371-7357 AXLE AR-OSCILLATING

SMCS-1365 **i06555714**

NOTE	REF NO	GRAPHIC REF	PART NUMBER	QTY	PART NAME 1 2 3 4 5 6 (PRODUCT LEVEL)	SEE PAGE
	1	1	*205-2357*	1	CONNECTOR AS	
		1	**3D-2824**	1	SEAL-O-RING	
		1	**6V-8398**	1	SEAL-O-RING	
		1	**8T-7968**	1	CONNECTOR	
	2	1	*148-8328*	1	CONNECTOR AS	
		1	**3D-2824**	1	SEAL-O-RING	
		1	**6V-8398**	1	SEAL-O-RING	
		1	**6V-8633**	1	CONNECTOR	

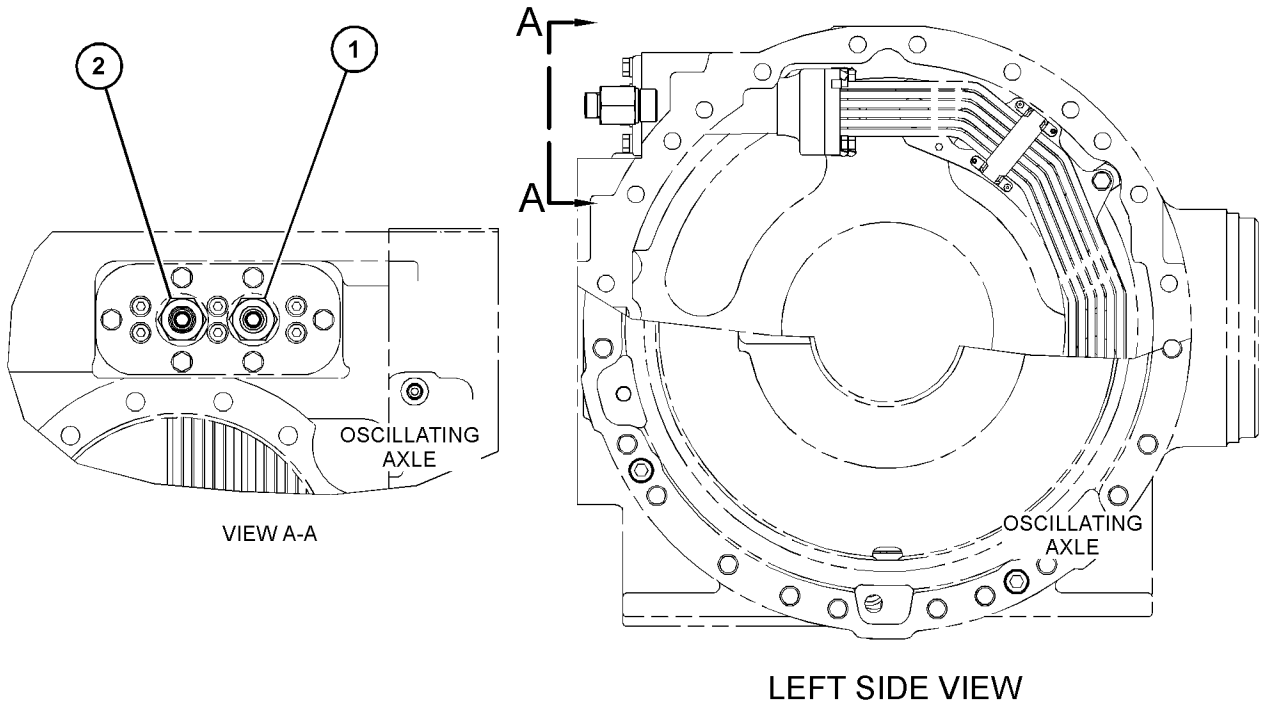

GRAPHIC #1 <END> g03681114

377-1468 MOUNTING GP-AXLE OIL COOLER—FIXED

S/N: TNS1-UP

PART OF 371-7345, 371-7347 AXLE AR-FIXED

SMCS-1365 **i06555607**

NOTE	REF NO	GRAPHIC REF	PART NUMBER	QTY	PART NAME 1 2 3 4 5 6 (PRODUCT LEVEL)	SEE PAGE
	1	1	*148-8328*	2	CONNECTOR AS	
					(EACH INCLUDES)	
		1	**3D-2824**	1	SEAL-O-RING	
		1	**6V-8398**	1	SEAL-O-RING	
		1	**6V-8633**	1	CONNECTOR	

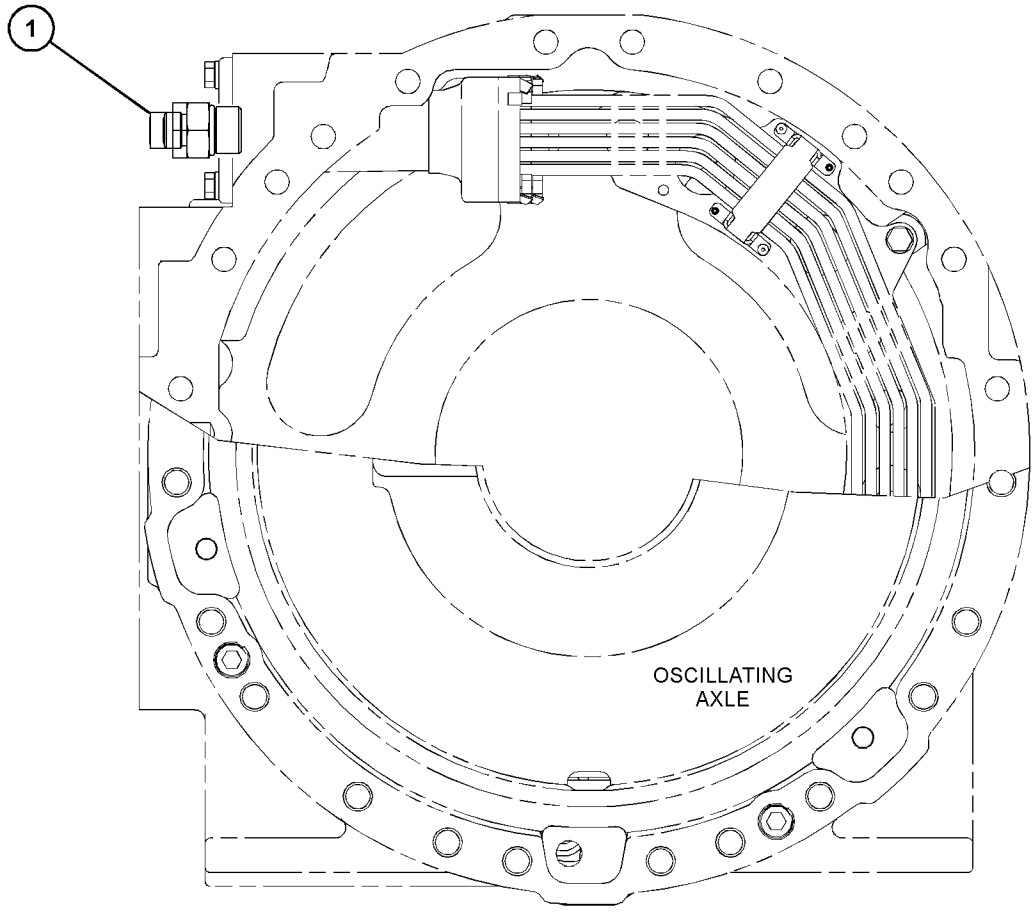

LEFT SIDE VIEW

GRAPHIC #1 <END> g03681503

466-3745 MOUNTING GP-DRIVE AXLE

S/N: TNS1-UP

PART OF 463-8849 POWER TRAIN AR

SMCS-3260, 3278

i06796503

NOTE	REF NO	GRAPHIC REF	PART NUMBER	QTY	PART NAME 1 2 3 4 5 6 (PRODUCT LEVEL)	SEE PAGE
M	1	1	**202-0308**	8	BOLT (M20X2.5X150-MM)	
	2	1	**377-1465**	2	PLATE	
	3	1	**444-2665**	2	PLATE	
	4	1	**461-4450**	2	PLATE	
M	5	1	**190-8494**	8	BOLT (M30X3.5X200-MM)	
	6	1	**6K-8987**	2	DOWEL	
	7	1	**7X-7729**	4	WASHER (11X25X3-MM THK)	
	8	1	**8T-4123**	16	WASHER (3.62X5.75X0.375-MM THK)	
M	9	1	**8T-4131**	8	NUT (M20X2.5-THD)	
M	10	1	**8T-4136**	4	BOLT (M10X1.5X25-MM)	
	11	1	**9X-8258**	8	WASHER (33X56X6-MM THK)	

M - METRIC PART

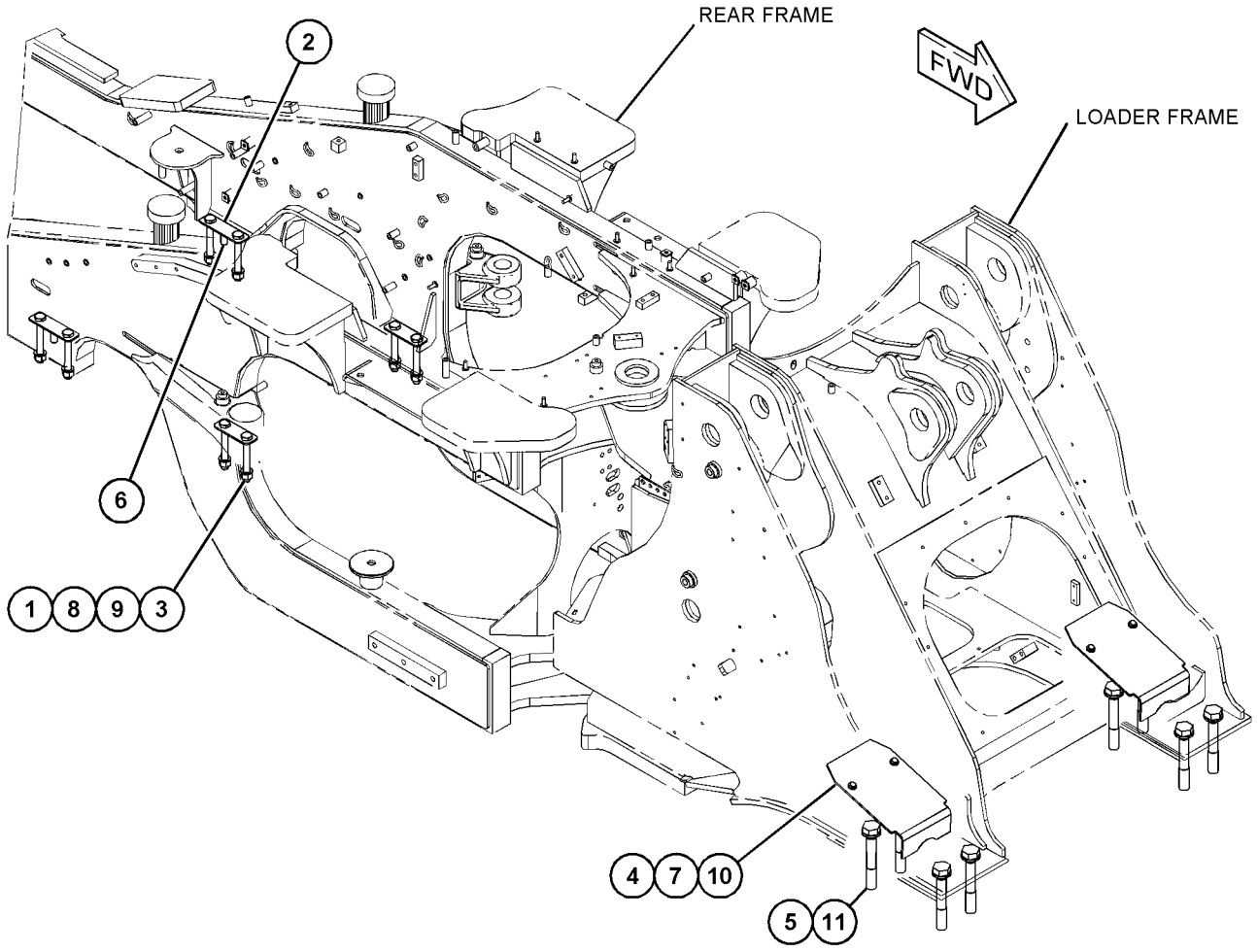

GRAPHIC #1

<END>

g06031089

297-2513 MOUNTING GP-RIM

S/N: TNS1-UP

PART OF 373-4064 RIM AR

SMCS-4202, 4209 **i06787415**

NOTE	PART NUMBER	QTY	PART NAME 1 2 3 4 5 6 (PRODUCT LEVEL)	SEE PAGE
M	**7X-2575**	80	BOLT (M24X3X60-MM)	
	8T-4167	80	WASHER-HARD (26X44X4-MM THK)	

M - METRIC PART

<END>

463-8849 POWER TRAIN AR

S/N: TNS1-UP

PART OF 456-5788 COMMON AR

SMCS-3000, 4000 **i06796502**

NOTE	PART NUMBER	QTY	PART NAME 1 2 3 4 5 6 (PRODUCT LEVEL)	SEE PAGE
Y	*466-3745*	1	MOUNTING GP-DRIVE AXLE	391
Y	*372-0613*	1	SHAFT GP-DRIVE	394
Y	**357-1577**	1	TRANSMISSION AR	401

Y - SEPARATE ILLUSTRATION

<END>

373-4064 RIM AR

S/N: TNS1-UP

PART OF 373-4052, 373-4053, 373-4057, 385-3544 TIRE & RIM AR

SMCS-4209 **i06760341**

NOTE	PART NUMBER	QTY	PART NAME 1 2 3 4 5 6 (PRODUCT LEVEL)	SEE PAGE
Y	*297-2513*	1	MOUNTING GP-RIM	392
Y	*373-4066*	4	RIM GP-DEMOUNTABLE	392

Y - SEPARATE ILLUSTRATION

<END>

373-4066 RIM GP-DEMOUNTABLE

S/N: TNS1-UP

19.5 X 25

PART OF 373-4064 RIM AR

SMCS-4209 **i05755413**

NOTE	PART NUMBER	QTY	PART NAME 1 2 3 4 5 6 (PRODUCT LEVEL)	SEE PAGE
Y	*373-4068*	1	RIM GP-DEMOUNTABLE	393
Y	**2D-2511**	1	VALVE GP-TIRE	406
	2D-2443	1	SEAL-O-RING	

Y - SEPARATE ILLUSTRATION

<END>

373-4068 RIM GP-DEMOUNTABLE

S/N: TNS1-UP

19.5X25

PART OF 373-4066 RIM GP-DEMOUNTABLE

SMCS-4209 **i05873271**

NOTE	REF NO	GRAPHIC REF	PART NUMBER	QTY	PART NAME 1 2 3 4 5 6 (PRODUCT LEVEL)	SEE PAGE
	1	1	**5T-5682**	1	DRIVER	
	2	1	**7D-7469**	1	RING-LOCK	
	3	1	**208-7472**	1	FLANGE AS	
	4	1	**373-4070**	1	RIM AS	

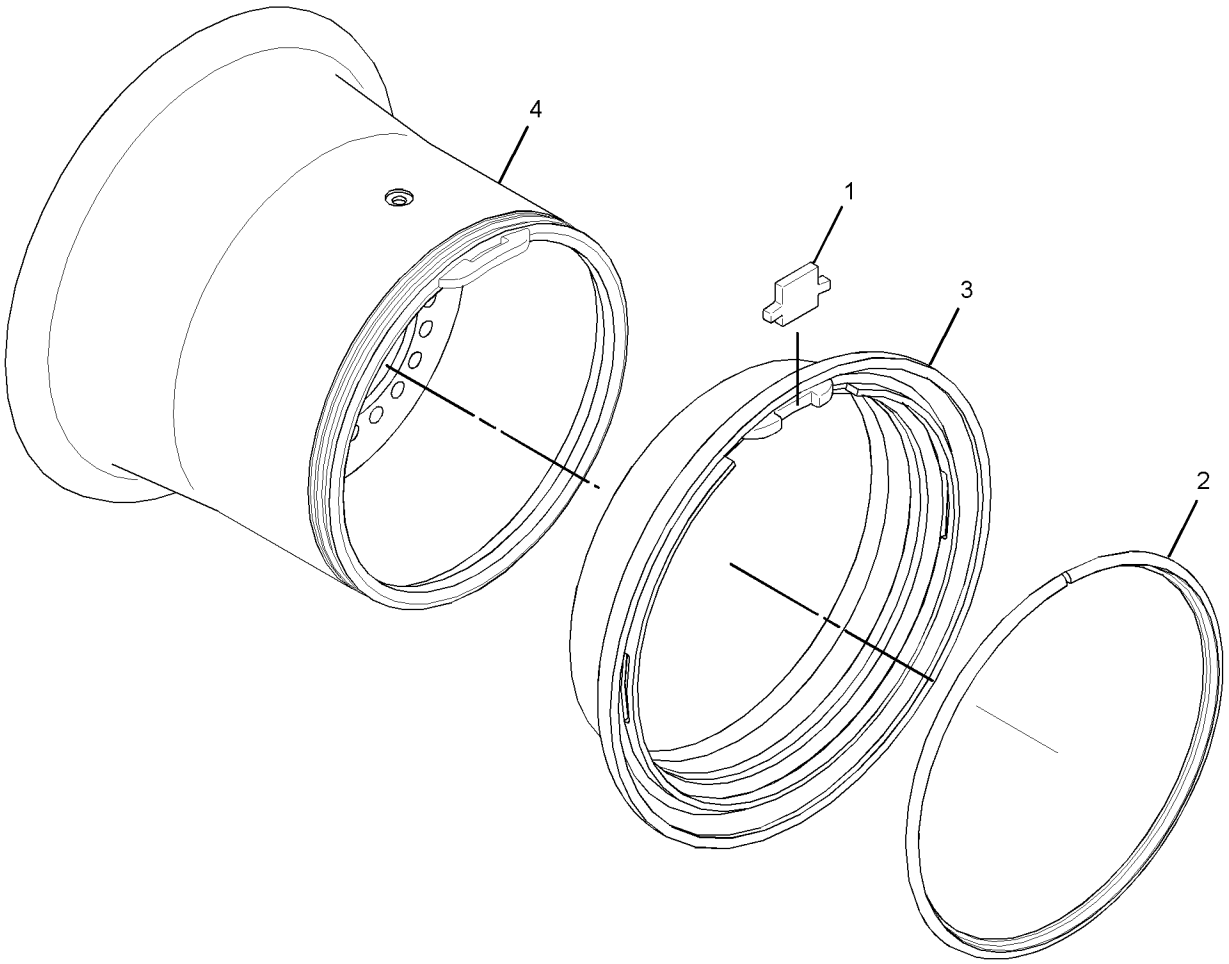

GRAPHIC #1 <END> g03656256

372-0613 SHAFT GP-DRIVE

S/N: TNS1-UP

PART OF 463-8849 POWER TRAIN AR

SMCS-3253 **i06780628**

NOTE	REF NO	GRAPHIC REF	PART NUMBER	QTY	PART NAME 1 2 3 4 5 6 (PRODUCT LEVEL)	SEE PAGE
	1	1	**4E-3273**	10	STRAP	
Y	2	1	**374-4555**	1	SLIP JOINT GP	396
Y	3	1	*375-8558*	1	SHAFT GP-DRIVE	395
	4	1	**380-5932**	1	UNIVERSAL JOINT GP	
		1	**4E-9324**	2	SPIDER & BEARING GP	
					(EACH INCLUDES)	
M		1	**3E-4315**	4	BOLT-LOCKING (M8X1X14-MM)	
		1	**5P-8334**	1	FITTING-HYDRAULIC	
		1	**6W-4126**	2	STRAP-LOCKING	
M	5	1	**4E-5985**	20	BOLT-12 POINT HEAD (M10X1.25X20-MM)	
M	6	1	**7X-2564**	2	BOLT (M20X2.5X90-MM)	
	7	1	**8T-5439**	4	WASHER-HARD (21.5X45X6-MM THK)	
M	8	1	**8T-4131**	2	NUT (M20X2.5-THD)	

M - METRIC PART
Y - SEPARATE ILLUSTRATION

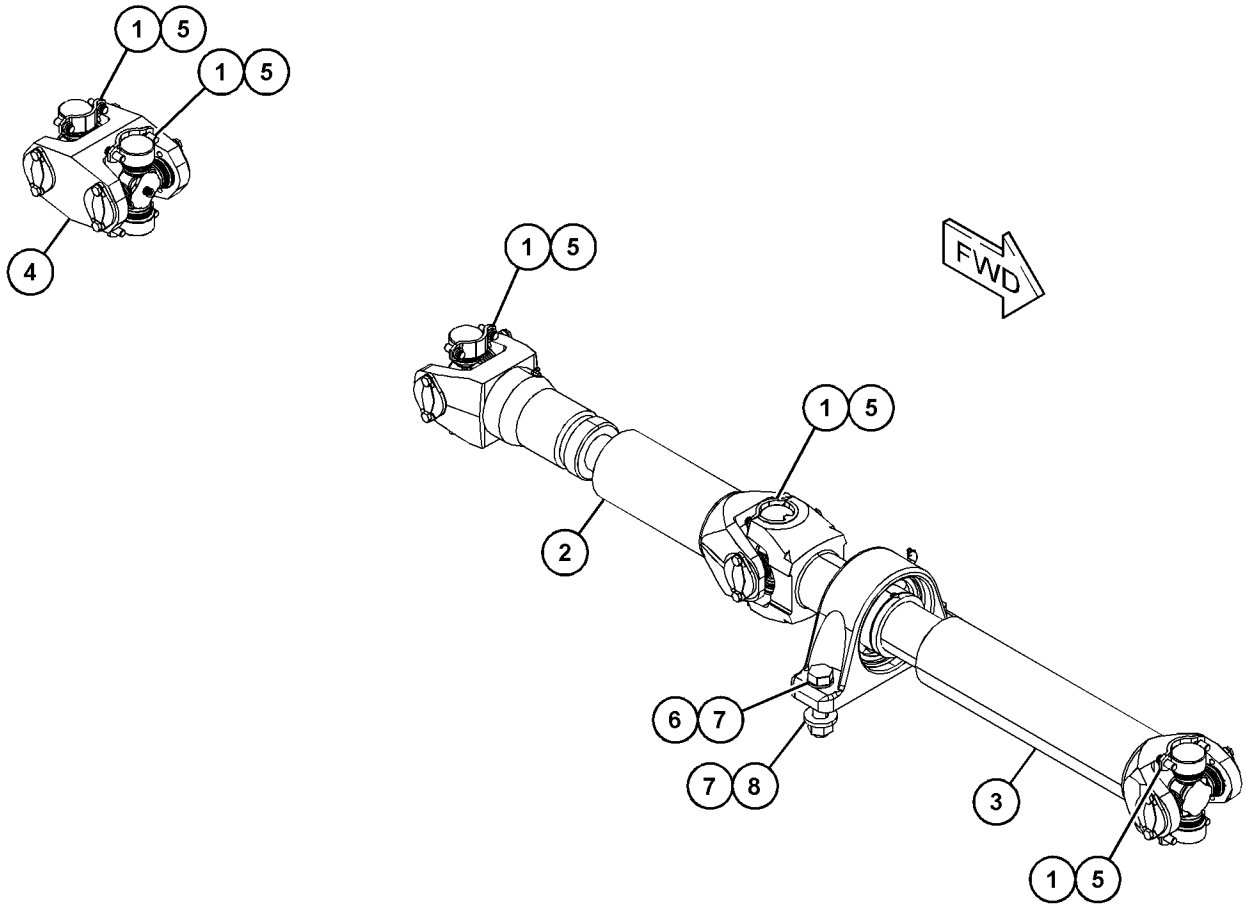

GRAPHIC #1 <END> g06111893

375-8558 SHAFT GP-DRIVE

S/N: TNS1-UP

PART OF 372-0613 SHAFT GP-DRIVE

SMCS-3253 **i06041731**

NOTE	REF NO	GRAPHIC REF	PART NUMBER	QTY	PART NAME 1 2 3 4 5 6 (PRODUCT LEVEL)	SEE PAGE
	1	1	**4E-6986**	1	RETAINER	
	2	1	**296-4292**	1	BEARING GP-PILLOW BLOCK	
		1	**102-9542**	1	FITTING	
		1	**197-7996**	1	KIT-SETSCREW	
					(KIT INCLUDES SETSCREWS & NUTS)	
	3	1	**375-8559**	1	UNIVERSAL JOINT GP	
	3A	1	**4E-9324**	1	SPIDER & BEARING GP	
M	3B	1	**3E-4315**	4	BOLT-LOCKING (M8X1X14-MM)	
	3C	1	**5P-8334**	1	FITTING-HYDRAULIC	
	3D	1	**6W-4126**	2	STRAP-LOCKING	
	4	1	**115-1653**	1	YOKE	
M	5	1	**8T-0372**	1	BOLT (M12X1.75X90-MM)	

M - METRIC PART

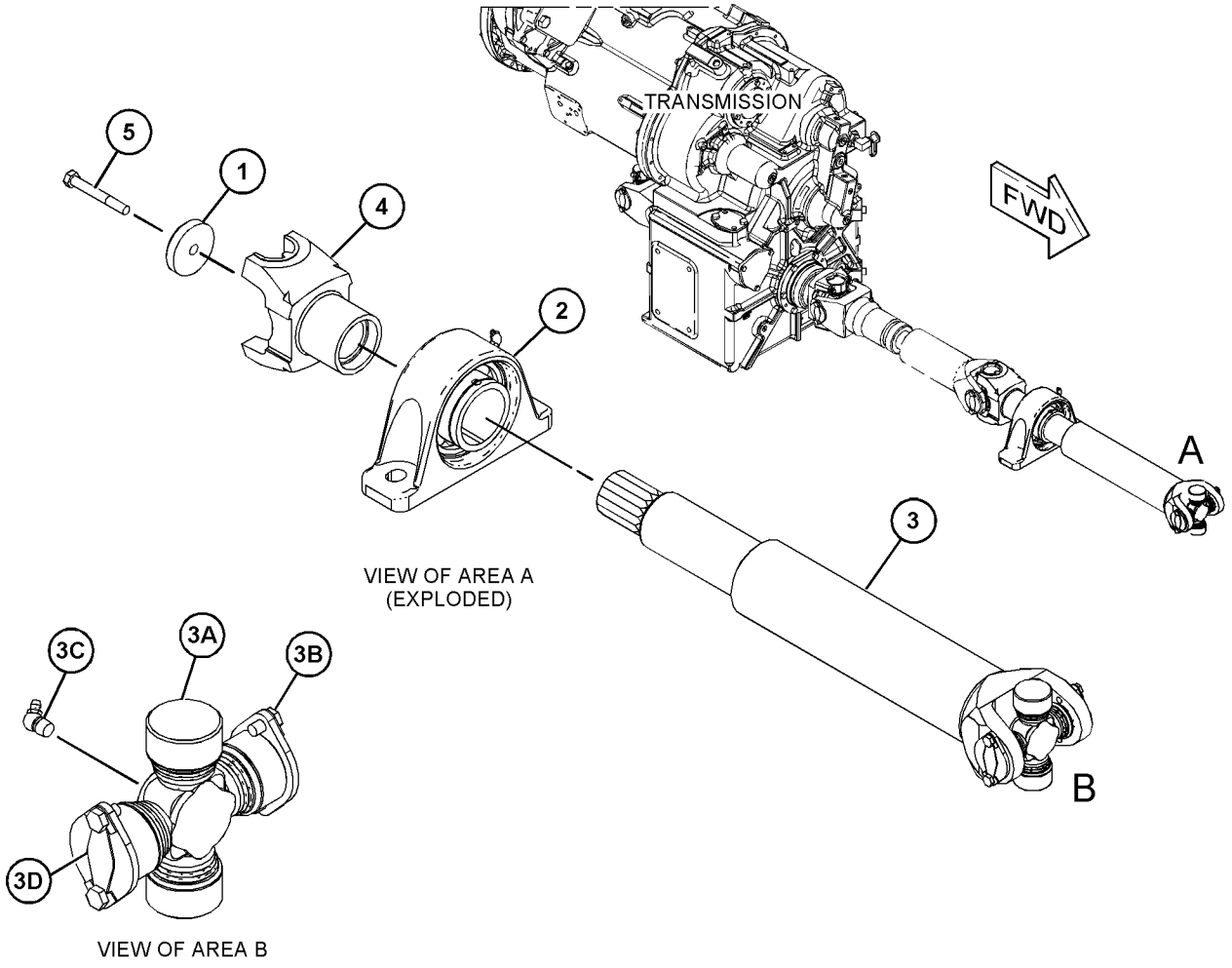

GRAPHIC #1 <END> g03677234

374-4555 SLIP JOINT GP

S/N: TNS1-UP

PART OF 372-0613 SHAFT GP-DRIVE

SMCS-3251 **i06034649**

NOTE	REF NO	GRAPHIC REF	PART NUMBER	QTY	PART NAME 1 2 3 4 5 6 (PRODUCT LEVEL)	SEE PAGE
	1	1	**3B-8489**	1	FITTING-GREASE (1/8-27 PTF)	
	2	1	**8V-1412**	1	RETAINER	
	3	1	**196-8488**	1	CAP-DUST	
	4	1	**4E-9324**	2	SPIDER & BEARING GP	
					(EACH INCLUDES)	
M		1	**3E-4315**	4	BOLT-LOCKING (M8X1X14-MM)	
		1	**5P-8334**	1	FITTING-HYDRAULIC	
		1	**6W-4126**	2	STRAP-LOCKING	

M - METRIC PART

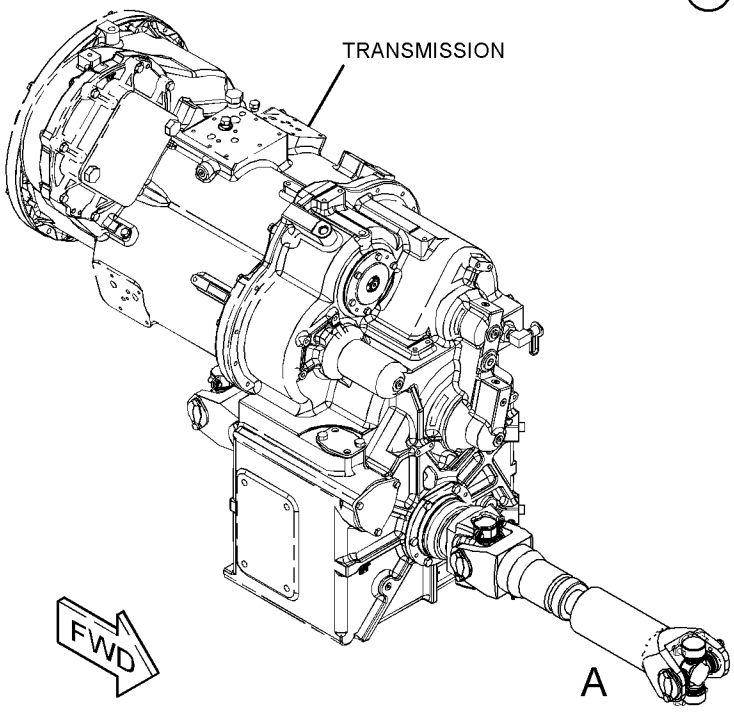

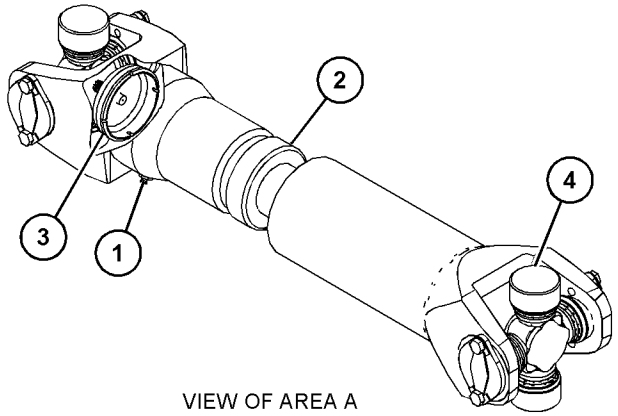

VIEW OF AREA A

GRAPHIC #1 <END> g03687162

373-4052 TIRE & RIM AR

S/N: TNS1-UP

SMCS-4202 **i06712071**

NOTE	PART NUMBER	QTY	PART NAME 1 2 3 4 5 6 (PRODUCT LEVEL)	SEE PAGE
Y	*373-4064*	1	RIM AR	392
	354-1627	4	TIRE (23.5-R25)	

Y - SEPARATE ILLUSTRATION

<END>

373-4053 TIRE & RIM AR

S/N: TNS1-UP

SMCS-4202 **i05765886**

NOTE	PART NUMBER	QTY	PART NAME 1 2 3 4 5 6 (PRODUCT LEVEL)	SEE PAGE
Y	*373-4064*	1	RIM AR	392
	319-7428	4	TIRE (23.5-R25)	

Y - SEPARATE ILLUSTRATION

<END>

373-4057 TIRE & RIM AR

S/N: TNS1-UP

SMCS-4202 **i06753272**

NOTE	PART NUMBER	QTY	PART NAME 1 2 3 4 5 6 (PRODUCT LEVEL)	SEE PAGE
Y	*367-2299*	1	BLOCK GP-AXLE OSC LIMITER	411
Y	*373-4064*	1	RIM AR	392
	6C-8882	4	TIRE (23.5-R25)	

Y - SEPARATE ILLUSTRATION

<END>

385-3544 TIRE & RIM AR

S/N: TNS1-UP

SMCS-4202 **i06753188**

NOTE	PART NUMBER	QTY	PART NAME 1 2 3 4 5 6 (PRODUCT LEVEL)	SEE PAGE
Y	*373-4064*	1	RIM AR	392
	378-5706	4	TIRE (23.5-R25)	

Y - SEPARATE ILLUSTRATION

<END>

357-5988 TORQUE CONVERTER GP

S/N: HML1-UP
WITHOUT POWER TAKE-OFF
PART OF 357-1577 TRANSMISSION AR

SMCS-3101 **i06820674**

NOTE	REF NO	GRAPHIC REF	PART NUMBER	QTY	PART NAME 1 2 3 4 5 6 (PRODUCT LEVEL)	SEE PAGE
	1	2	**8P-7857**	9	ROLLER-FREEWHEEL	
	2	2	**1T-1356**	1	RING-SEAL	
	3	2	**456-7022**	9	SPRING-FREEWHEEL	
	4	2	**8P-8555**	1	RACE-FREEWHEEL	
	5	1	**258-5652**	1	DISC-FRICTION	
Y	6	1	**260-8733**	1	COUPLING GP-DRIVE (TORQUE CONVERTER)	311
	7	1	**263-2875**	1	RING-SEAL	
	8	1	**263-2876**	1	RING-SEAL	
	9	1	**268-5577**	1	TURBINE-CONVERTER	
	10	2	**289-4141**	1	CAM-FREEWHEEL	
	11	1	**323-2092**	1	PLATE	
	12	1	**323-2093**	1	PLATE-SPLINED	
	13	1	**325-9335**	1	PLATE-SEPARATOR	
	14	2	**357-7449**	1	CARRIER-STATOR	
	15	2	**357-7450**	1	HUB-IMPELLER	
	16	1	**357-7451**	1	HUB	
	17	2	**357-7453**	1	GEAR-PUMP (88-TEETH)	
	18	2	**357-7454**	1	IMPELLER-CONVERTER	
	19	1	**357-9710**	1	PISTON	
	20	2	**361-6722**	2	WASHER-THRUST	
	21	2	**361-6725**	1	RACE-THRUST	
	22	1	**361-6731**	1	HOUSING AS	
		1	**1T-0936**	1	PLUG-ORIFICE	
		1	**392-9262**	1	BUSHING	
	23	2	**363-8109**	1	STATOR-CONVERTER	
	24	1	**304-2746**	2	BEARING-THRUST	
	25	1,2	**359-4894**	2	RING-RETAINING	
	26	2	**360-6838**	1	BEARING-THRUST	
	27	1	**5G-7636**	2	DOWEL	
	28	2	**5P-3629**	1	RING-RETAINING	
M	29	1	**6V-5230**	18	BOLT (M10X1.5X60-MM)	
	30	1	**6V-5839**	18	WASHER (11X21X2.5-MM THK)	
	31	2	**8M-2031**	1	BALL BEARING	
M	32	2	**8T-0271**	8	BOLT-SOCKET HEAD (M10X1.5X35-MM)	
M	33	1	**8T-9515**	16	BOLT-SOCKET HEAD (M10X1.5X40-MM)	

M - METRIC PART
Y - SEPARATE ILLUSTRATION

357-5988 **TORQUE CONVERTER GP** (contd.) **i06820674**

REFER TO ALL ILLUSTRATIONS OF
THIS GROUP FOR AUXILIARY VIEWS

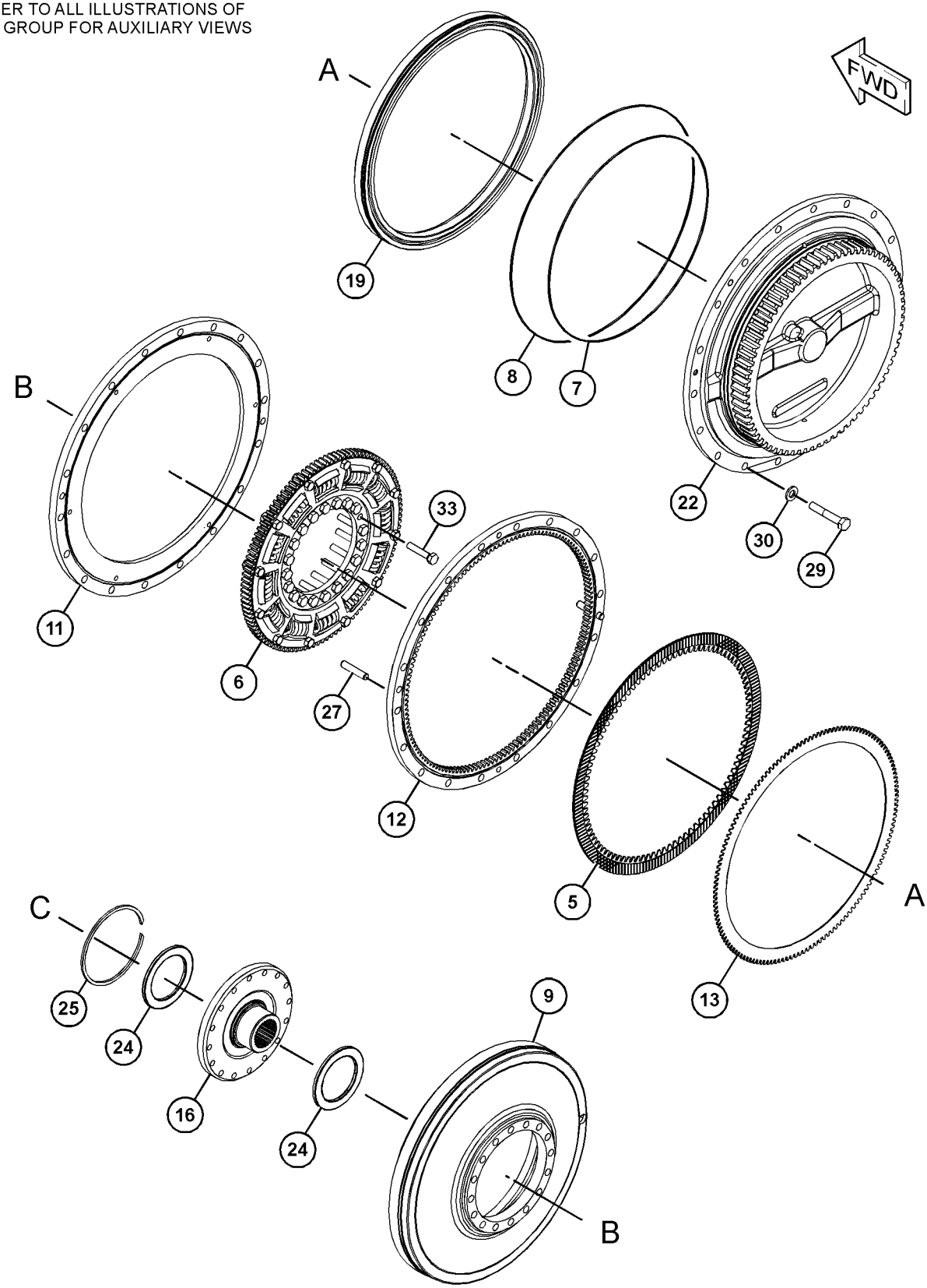

GRAPHIC #1 g03680247

357-5988 **TORQUE CONVERTER GP** (contd.) **i06820674**

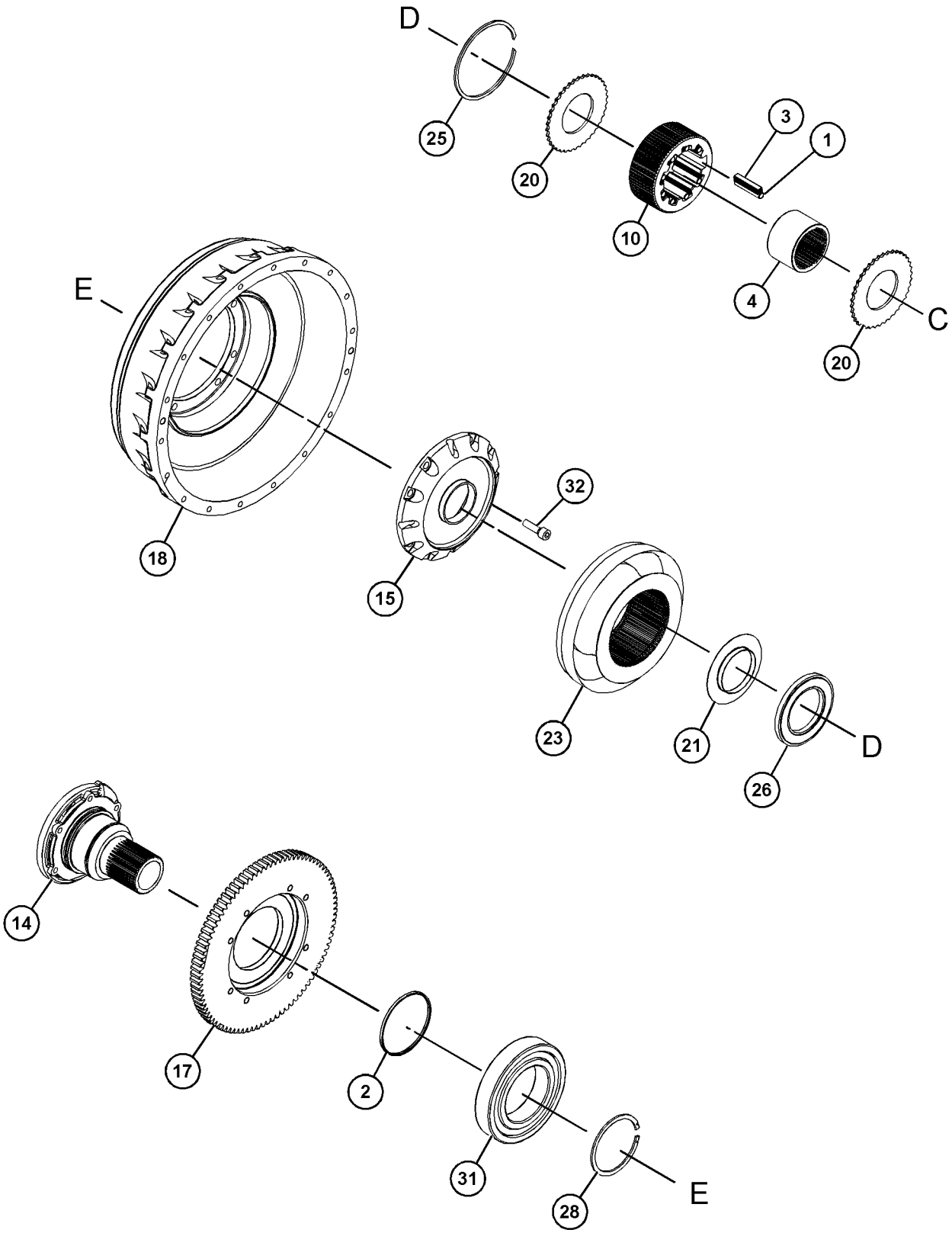

GRAPHIC #2 <END> g06023034

357-1577 TRANSMISSION AR

S/N: WL51-UP; WSH1-UP; WSY1-UP
PART OF 463-8849 POWER TRAIN AR

SMCS-3030 **i06779799**

NOTE	REF NO	GRAPHIC REF	PART NUMBER	QTY	PART NAME 1 2 3 4 5 6 (PRODUCT LEVEL)	SEE PAGE
Y	1	1	*502-5784*	1	CONTROL GP-TRANSMISSION HYD	308
Y	2	1	*418-5468*	1	CASE & PARTS GP-PLANETARY	290
Y	3	1	*357-1578*	1	GEAR GP-INPUT TRANSFER	339
Y	4	1	*357-1589*	1	GEAR GP-OUTPUT TRANSFER	340
Y	5	1	**357-5988**	1	TORQUE CONVERTER GP	398
Y	6	1	*422-9033*	1	CLUTCH GP (FORWARD HIGH, FORWARD LOW)	296
Y	7	1	*422-9034*	1	CLUTCH GP (REVERSE, SECOND)	298
Y	8	1	*422-9035*	1	CLUTCH GP (FIRST, THIRD)	300

Y - SEPARATE ILLUSTRATION

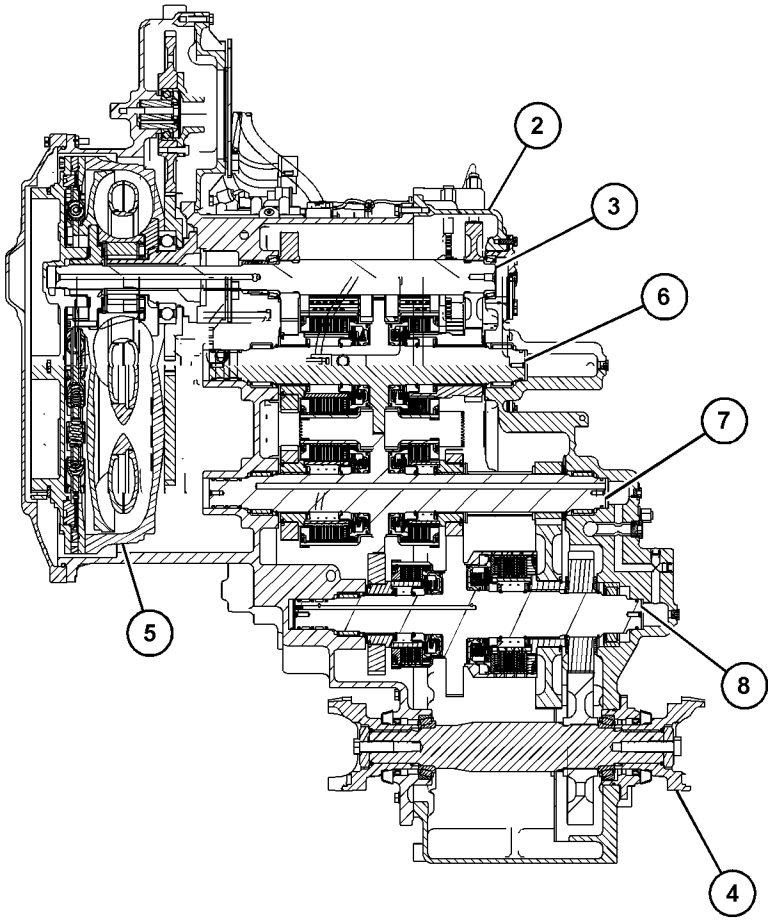

SECTION A-A

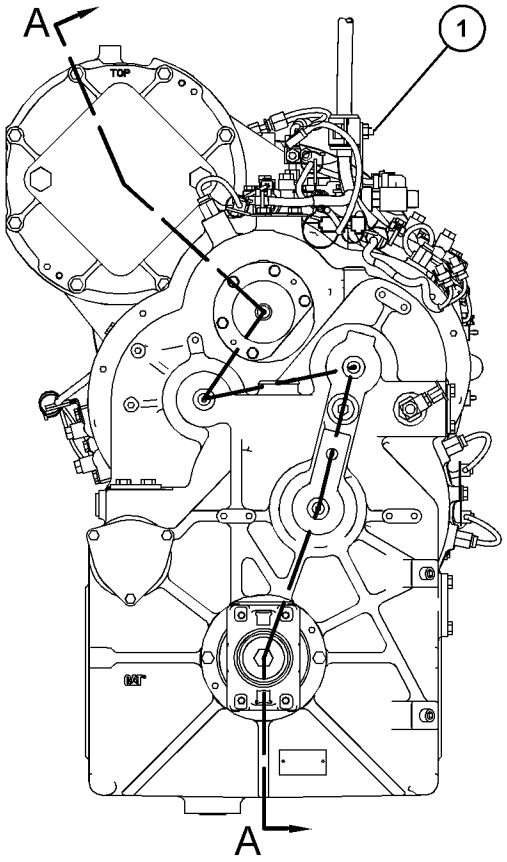

REAR VIEW

GRAPHIC #1 <END> g03688508

423-0861 VALVE GP-CONTROL—TRANSMISSION

S/N: WL51-UP; WSH1-UP; WSY1-UP

PART OF 502-5784 CONTROL GP-TRANSMISSION HYD

SMCS-3073, 3167, 4352 **i05799980**

NOTE	REF NO	GRAPHIC REF	PART NUMBER	QTY	PART NAME 1 2 3 4 5 6 (PRODUCT LEVEL)	SEE PAGE
	1	1	**379-0216**	1	VALVE GP-SOLENOID (CLUTCH)	
		1	**164-2108**	1	WASHER (13.03X25.4X2.38-MM THK)	
		1	**218-2373**	1	NUT (1/2-28-THD)	
		1	**323-9533**	1	COIL AS (12-VOLT)	
	2	1	**358-7794**	1	GASKET	
Y	3	1	*234-5013*	1	SENSOR GP-TEMPERATURE (TRANSMISSION OIL)	209
Y	4	1	**421-8199**	1	VALVE GP-SOLENOID (RELIEF)	405
	5	1	**352-6118**	1	MANIFOLD	
	6	1	*148-8407*	1	PLUG AS	
		1	**9S-4191**	1	PLUG (9/16-18-THD)	
		1	**3J-1907**	1	SEAL-O-RING	

Y - SEPARATE ILLUSTRATION

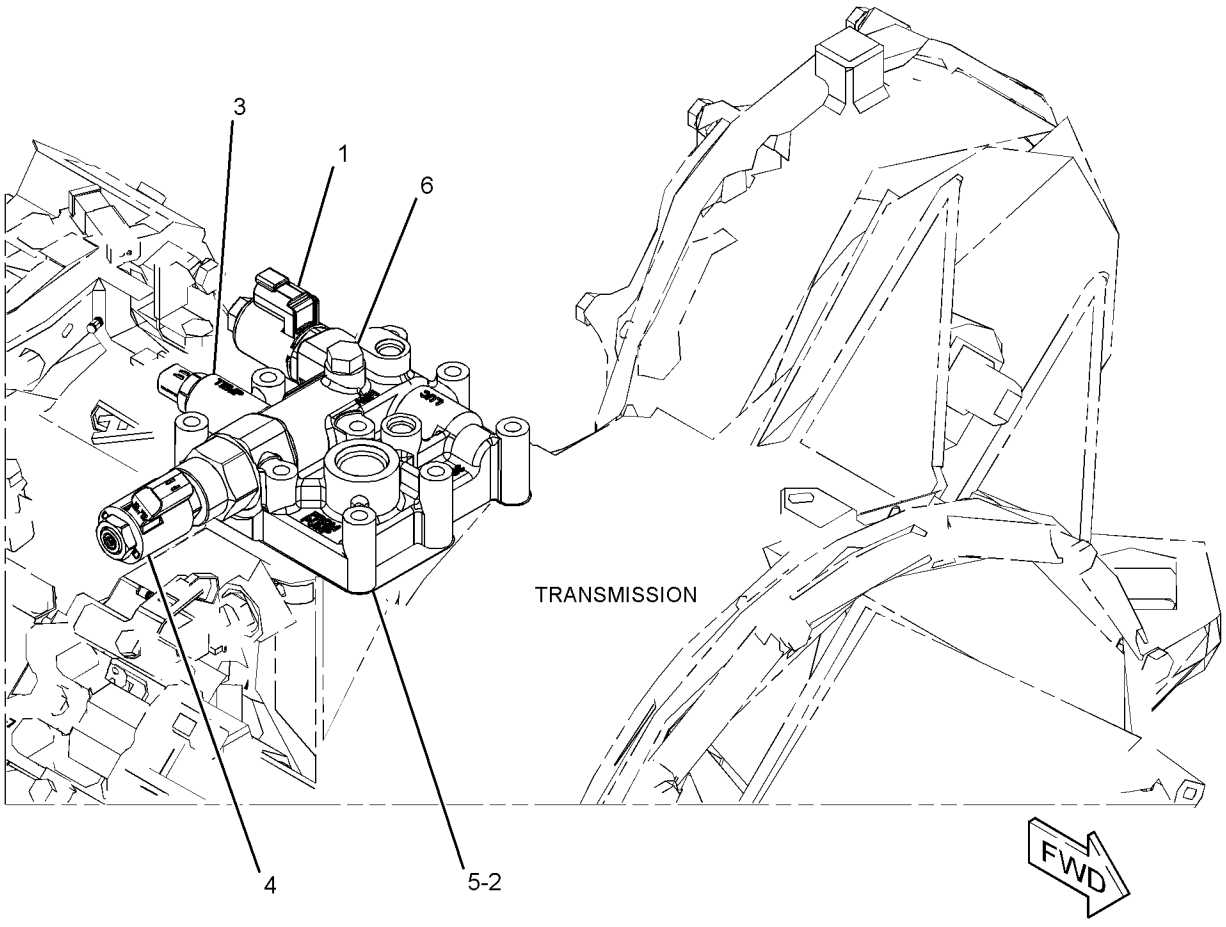

GRAPHIC #1 <END> g03537237

111-9916 VALVE GP-SOLENOID

S/N: TNS1-UP

PART OF 385-7261 VALVE GP-SOLENOID, 371-4745 VALVE GP-SOLENOID & PRESS REDC

SMCS-3174, 4804, 4805, 5479 **i05606711**

NOTE	REF NO	GRAPHIC REF	PART NUMBER	QTY	PART NAME 1 2 3 4 5 6 (PRODUCT LEVEL)	SEE PAGE
	1	1	**095-1750**	1	SEAL-O-RING	
	2	1	**6V-8398**	1	SEAL-O-RING	
	3	1	**095-1751**	1	SEAL-O-RING	
	4	1	**095-1586**	1	SEAL-O-RING	
M	5	1	**114-0623**	1	NUT AS (M6X1-THD)	

M - METRIC PART

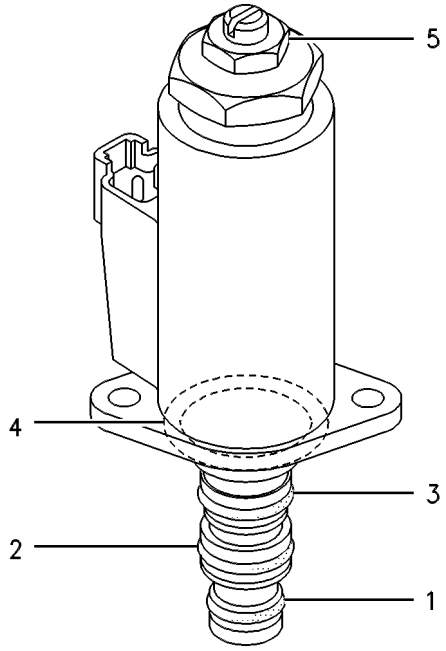

GRAPHIC #1 <END> g00258219

385-7261 VALVE GP-SOLENOID

S/N: TNS1-UP

PART OF 436-7028 CONTROL GP-DIFFERENTIAL LOCK

SMCS-3174, 4804, 4805, 5479 **i05849345**

NOTE	REF NO	GRAPHIC REF	PART NUMBER	QTY	PART NAME 1 2 3 4 5 6 (PRODUCT LEVEL)	SEE PAGE
Y	1	1	**111-9916**	1	VALVE GP-SOLENOID (PRESSURE REDUCING)	403
J	2	1	**239-0617**	1	VALVE GP-CHECK	
		1	**3H-0442**	1	SEAL-O-RING	
		1	**095-1513**	1	SEAL-O-RING	
	3	1	*173-3993*	1	PLUG AS	
		1	**4J-7533**	1	SEAL-O-RING	
		1	**9S-8001**	1	PLUG	
M	4	1	**7I-2272**	1	BOLT (M5X0.8X12-MM)	
					AVAILABLE REPAIR KIT(S):	
J			**239-5157**	1	KIT-SEAL (CHECK VALVE)	
					(INCLUDES SEAL RINGS & BACK-UP RINGS)	

J - KIT MARKED J SERVICES PART(S) MARKED J
M - METRIC PART
Y - SEPARATE ILLUSTRATION

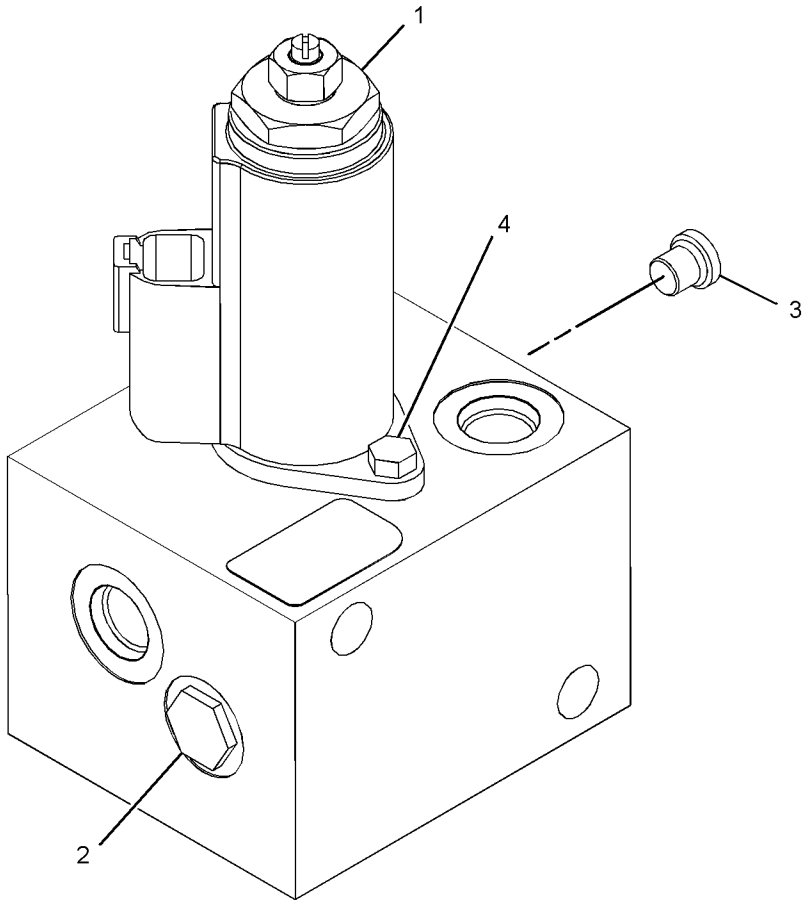

GRAPHIC #1 <END> g03432375

421-8199 VALVE GP-SOLENOID

S/N: WL51-UP; WSH1-UP; WSY1-UP

PART OF 423-0861 VALVE GP-CONTROL

SMCS-3174, 4804, 4805, 5479 **i05800009**

NOTE	REF NO	GRAPHIC REF	PART NUMBER	QTY	PART NAME 1 2 3 4 5 6 (PRODUCT LEVEL)	SEE PAGE
	1	1	**450-1004**	1	NUT-SPECIAL	
	2	1	**421-6497**	1	COIL AS	
	3	1	**033-6034**	1	SEAL-O-RING	
	4	1	**215-4639**	1	SEAL-O-RING	
	5	1	**5P-7857**	1	RING-BACKUP	
	6	1	**5P-9186**	1	SEAL-O-RING	
	7	1	**6V-3838**	1	RING-BACKUP	

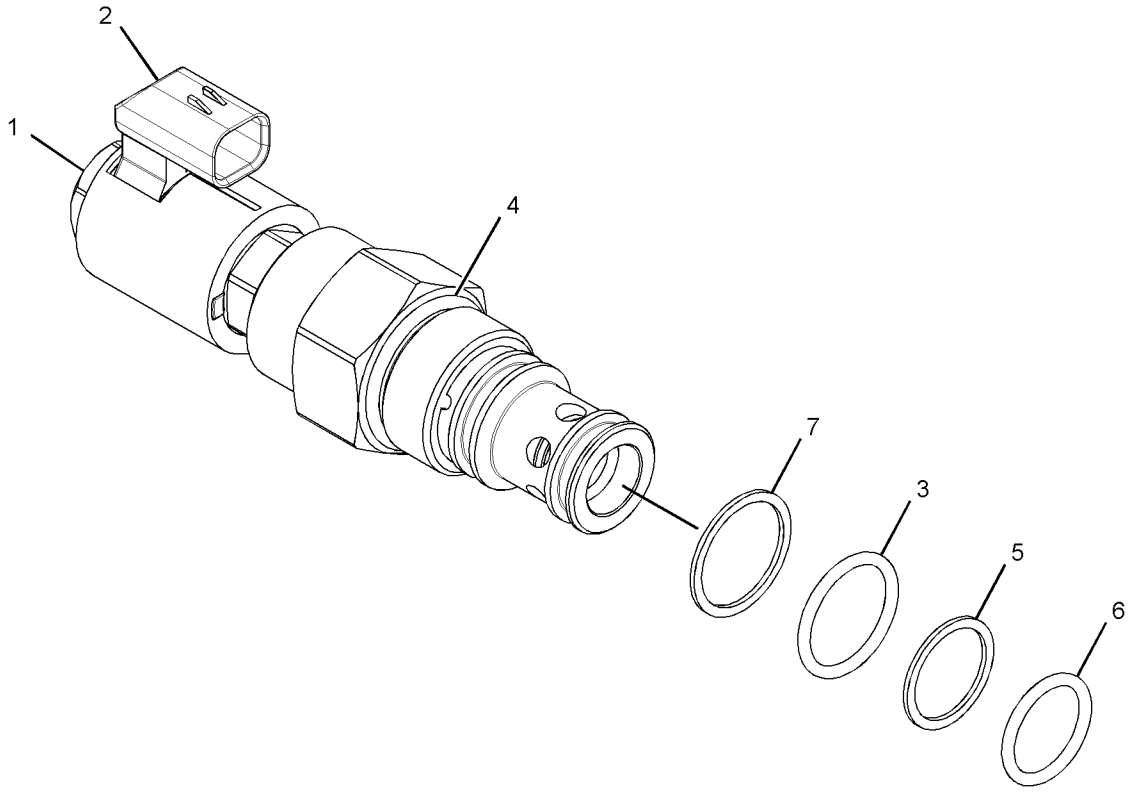

GRAPHIC #1 <END> g03416575

2D-2511 VALVE GP-TIRE

S/N: TNS1-UP

PART OF 373-4066 RIM GP-DEMOUNTABLE

SMCS-4203 **i04804719**

NOTE	REF NO	GRAPHIC REF	PART NUMBER	QTY	PART NAME 1 2 3 4 5 6 (PRODUCT LEVEL)	SEE PAGE
	1	1	**3D-2239**	1	VALVE AS-TIRE	
	1A	1	**6F-3930**	1	CORE-VALVE	
	1B	1	**9K-7951**	1	CAP-VALVE (STEM)	
	2	1	**7D-5252**	1	SPUD AS	
	2A	1	**2D-2507**	1	SPUD	
	2B	1	**2D-2508**	1	GROMMET	
	2C	1	**2D-2509**	1	LOCKNUT (11/16-16-THD)	

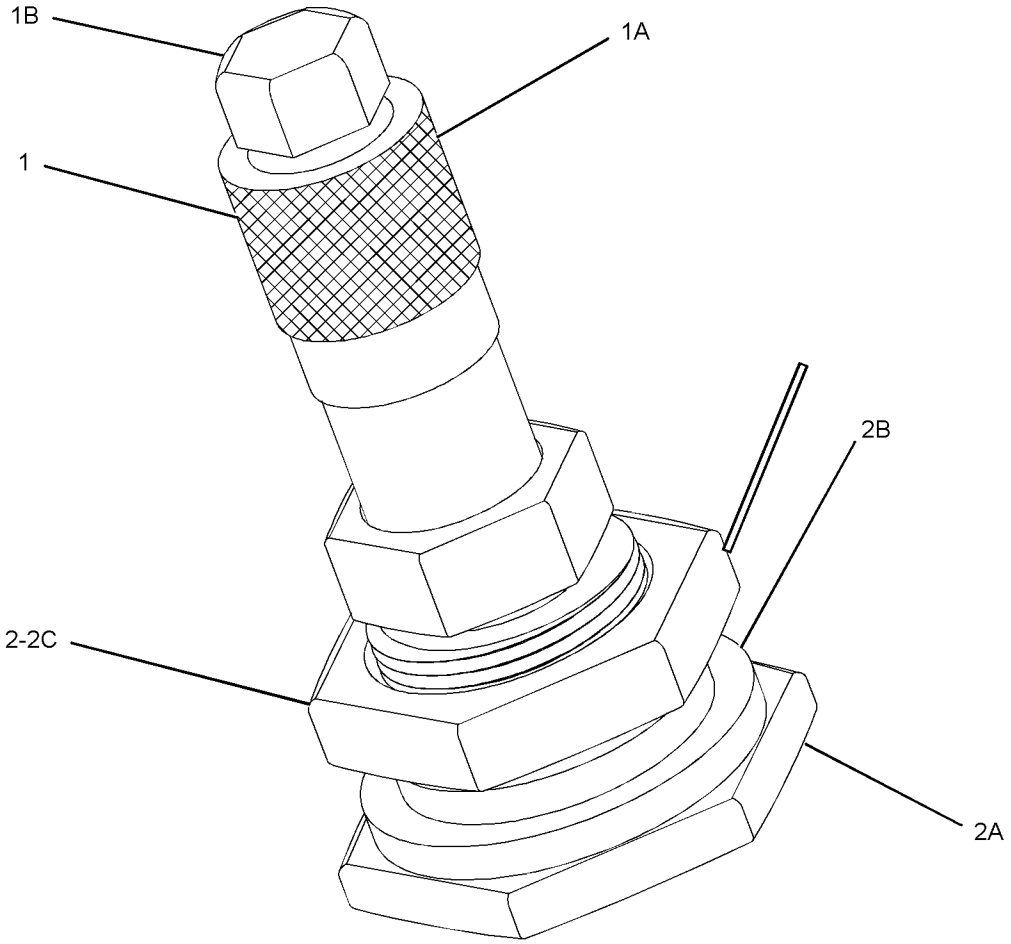

GRAPHIC #1 <END> g02345745

354-7569 VALVE GP-TRANSMISSION CONTROL

S/N: WL51-UP; WSH1-UP; WSY1-UP

PART OF 502-5784 CONTROL GP-TRANSMISSION HYD

SMCS-3073, 3167

i05784837

NOTE	REF NO	GRAPHIC REF	PART NUMBER	QTY	PART NAME 1 2 3 4 5 6 (PRODUCT LEVEL)	SEE PAGE
	1	1	*379-0216*	2	VALVE GP-SOLENOID (CLUTCH)	
					(EACH INCLUDES)	
		1	**164-2108**	1	WASHER (13.03X25.4X2.38-MM THK)	
		1	**218-2373**	1	NUT (1/2-28-THD)	
		1	**323-9533**	1	COIL AS (12-VOLT)	
	2	1	**354-7571**	1	MANIFOLD	
	3	1	**358-7793**	1	GASKET	

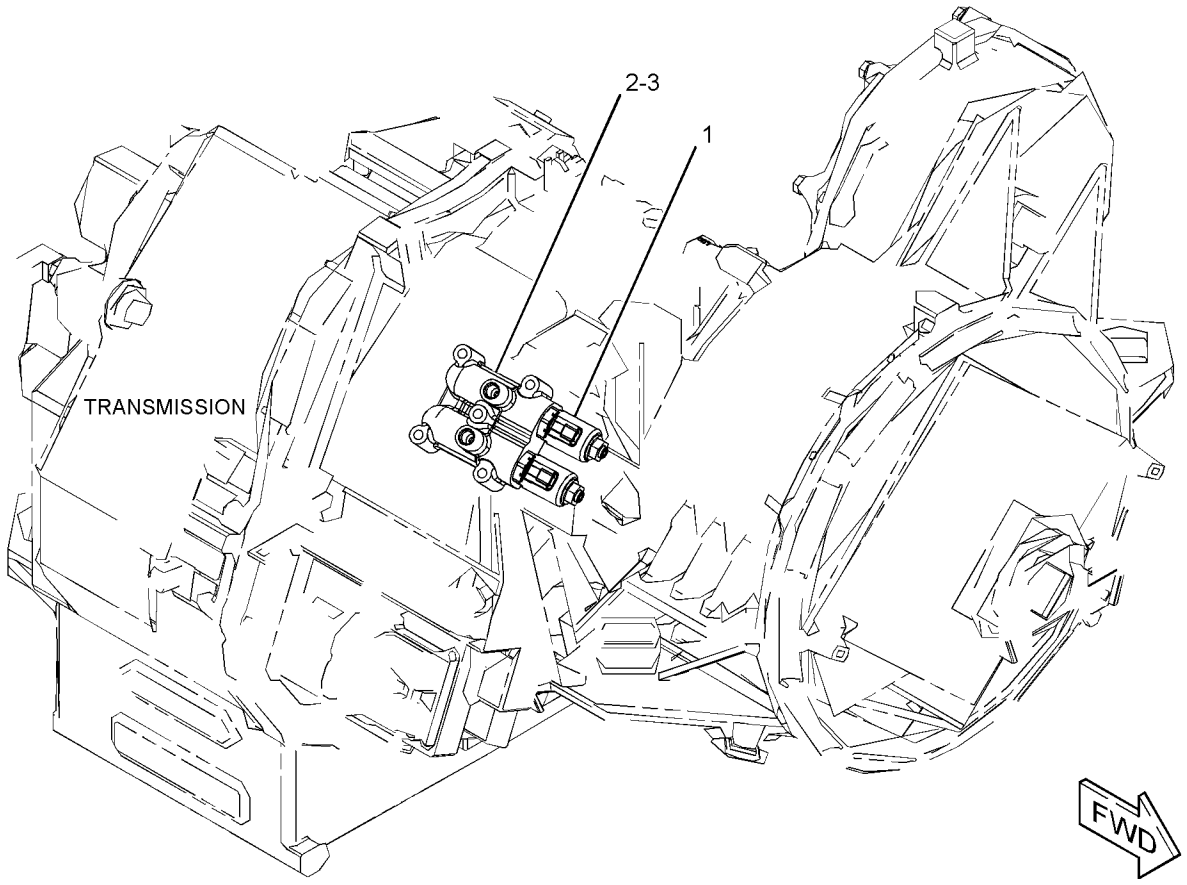

GRAPHIC #1 <END> g03533279

418-7892 BAFFLE GP

S/N: TNS1-UP

PART OF 456-5790 CHASSIS AR

SMCS-7076 **i06759676**

NOTE	REF NO	GRAPHIC REF	PART NUMBER	QTY	PART NAME 1 2 3 4 5 6 (PRODUCT LEVEL)	SEE PAGE
	1	1	**367-2481**	1	CAP	
	2	1	**418-7893**	1	BAFFLE AS	
M		1	**6V-7357**	4	BOLT (M6X1X25-MM)	
		1	**7X-0579**	2	WASHER-HARD (8.8X25.5X2-MM THK)	
M		1	**8T-4908**	2	BOLT (M8X1.25X25-MM)	
		1	**9X-2038**	4	WASHER (7X19X2-MM THK)	
	3	1	**487-8662**	1	BRACKET	
	4	1	**487-8663**	1	BRACKET	
M	5	1	**6V-7357**	2	BOLT (M6X1X25-MM)	
	6	1	**7X-0579**	12	WASHER-HARD (8.8X25.5X2-MM THK)	
M	7	1	**8T-4908**	12	BOLT (M8X1.25X25-MM)	
	8	1	**9X-2038**	2	WASHER (7X19X2-MM THK)	
J	9	1	**308-9131**		SEAL (1190-MM)	
E	10	1	**433-6397**		SEAL (323-CM)	
E	10A	1	**433-6397**		SEAL (87-CM)	

E - ORDER BY THE CENTIMETER
J - ORDER BY MILLIMETER
M - METRIC PART

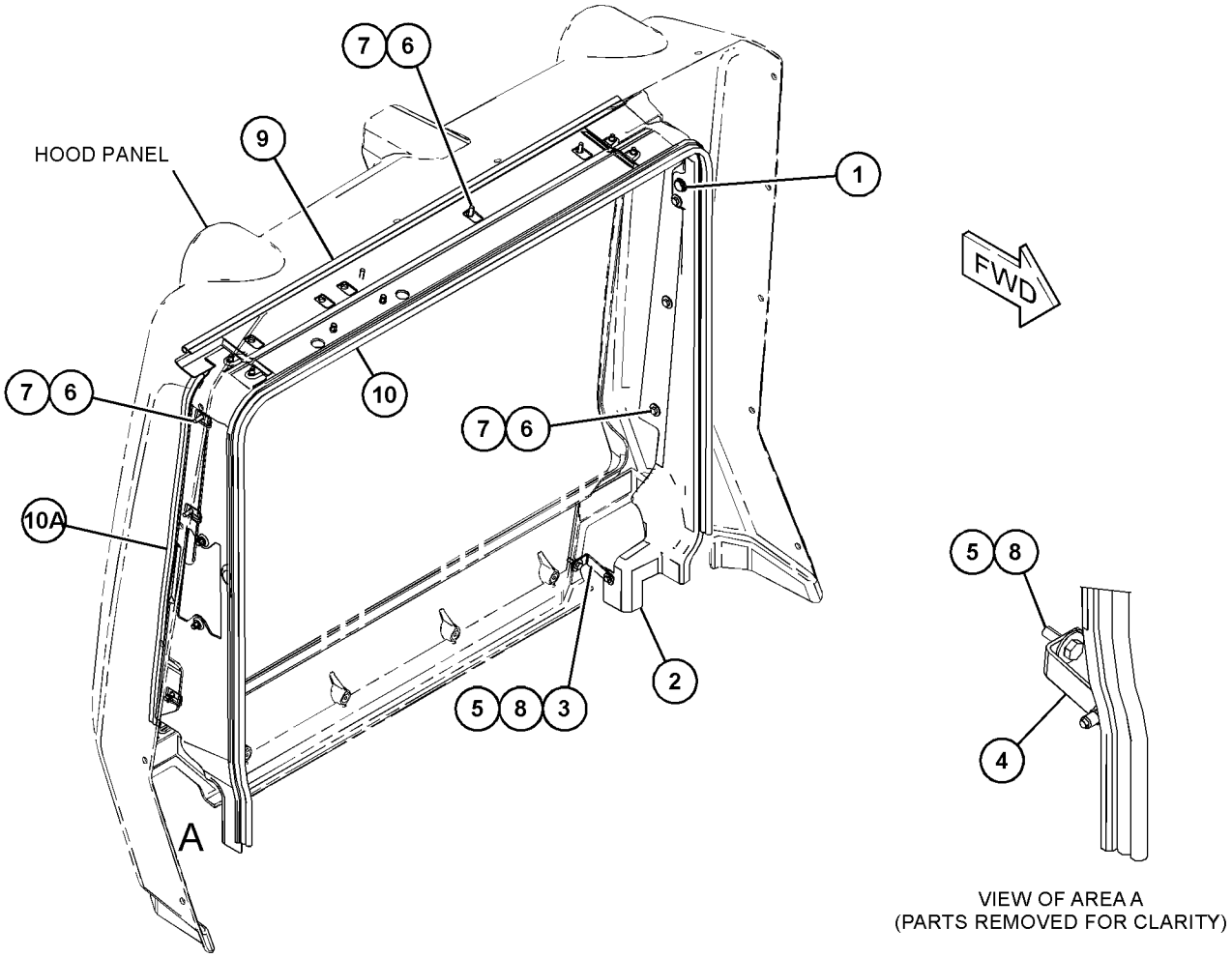

GRAPHIC #1 <END> g06119891

485-8807 BAFFLE GP

S/N: TNS1-UP

PART OF 507-9161 SPECIAL AR-WHEEL LOADER

SMCS-7076 **i06791155**

NOTE	REF NO	GRAPHIC REF	PART NUMBER	QTY	PART NAME 1 2 3 4 5 6 (PRODUCT LEVEL)	SEE PAGE
	1	1	**339-8538**	1	STRIP	
	2	1	**358-1815**	1	FLAP	
	3	1	**389-2935**	1	STRIP	
	4	1	**389-2989**	1	PLATE AS	
M		1	**8T-3612**	2	NUT-WELD (M8X1.25-THD)	
	5	1	**389-2993**	1	FLAP	
	6	1	**384-1628**	1	WASHER-HARD (8.8X35X4-MM THK)	
	7	1	**5P-4116**	4	WASHER-HARD (8.8X20.5X2-MM THK)	
	8	1	**7X-7729**	2	WASHER (11X25X3-MM THK)	
M	9	1	**8T-4195**	2	BOLT (M10X1.5X30-MM)	
M	10	1	**8T-7547**	5	BOLT (M8X1.25X30-MM)	

M - METRIC PART

485-8807 **BAFFLE GP** (contd.) **i06791155**

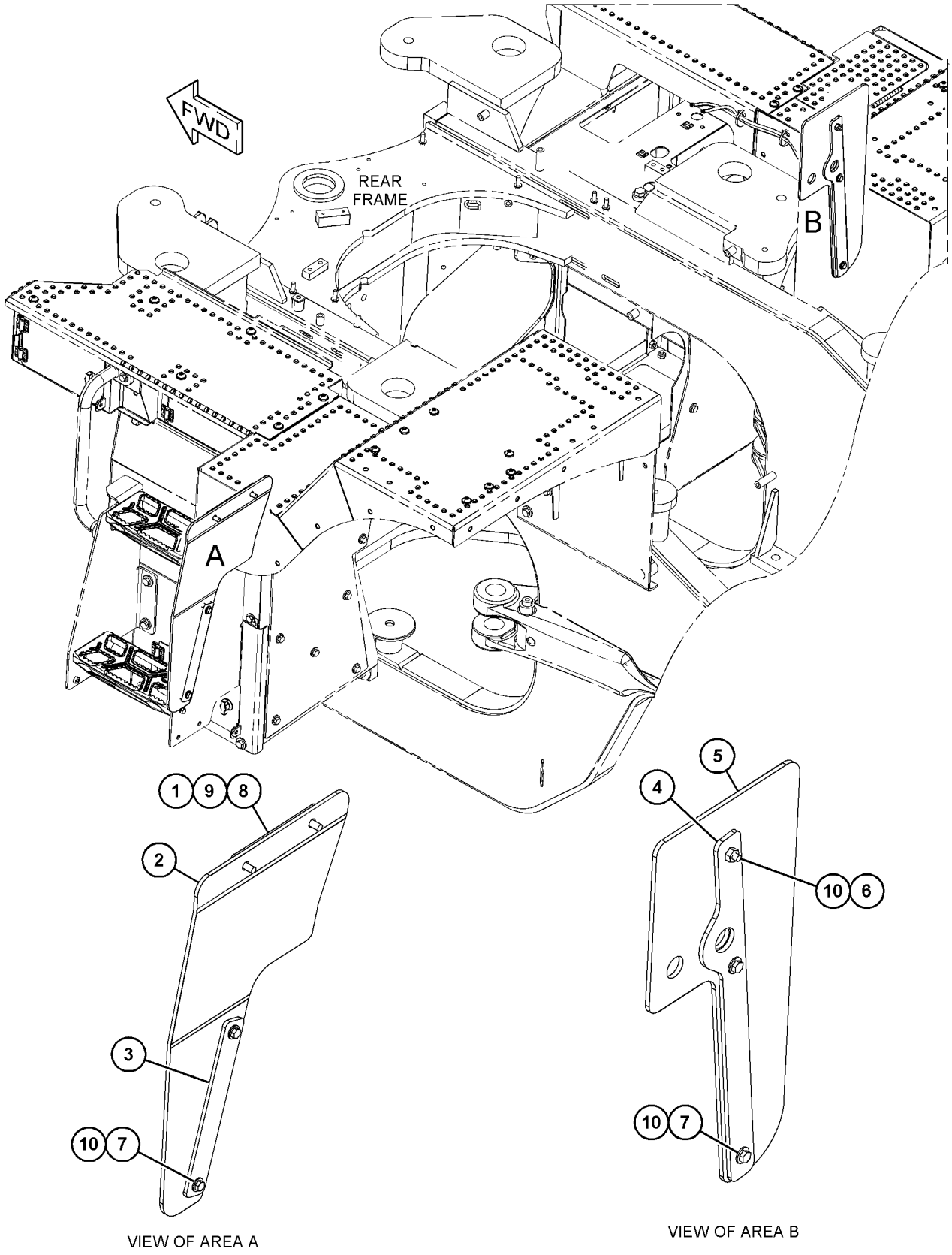

VIEW OF AREA A

VIEW OF AREA B

GRAPHIC #1 <END> g06006545

367-2299 BLOCK GP-AXLE OSC LIMITER

S/N: TNS1-UP

PART OF 373-4057 TIRE & RIM AR

SMCS-3278, 7051

i06648809

NOTE	REF NO	GRAPHIC REF	PART NUMBER	QTY	PART NAME 1 2 3 4 5 6 (PRODUCT LEVEL)	SEE PAGE
	1	1	**314-9350**	2	BLOCK	
	2	1	**314-9351**	2	BLOCK	

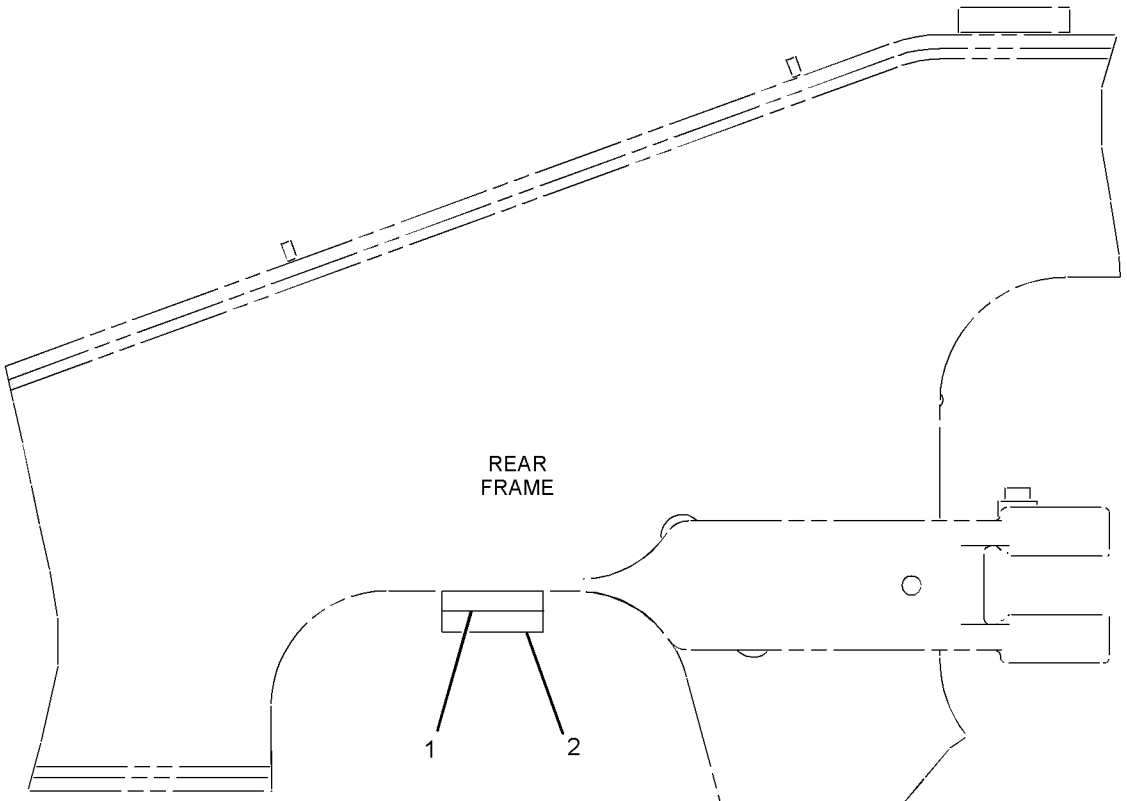

RIGHT SIDE VIEW

GRAPHIC #1

<END>

g01459675

461-4444 BOSS GP-LOADER FRAME

S/N: TNS1-UP
RIDE CONTROL
PART OF 492-4023 HYDRAULIC AR-2 VALVE, 492-4025 HYDRAULIC AR-3 VALVE

SMCS-7054 **i06810232**

NOTE	REF NO	GRAPHIC REF	PART NUMBER	QTY	PART NAME 1 2 3 4 5 6 (PRODUCT LEVEL)	SEE PAGE
	1	1	**8X-5963**	2	BLOCK (M12X1.75-MM)	

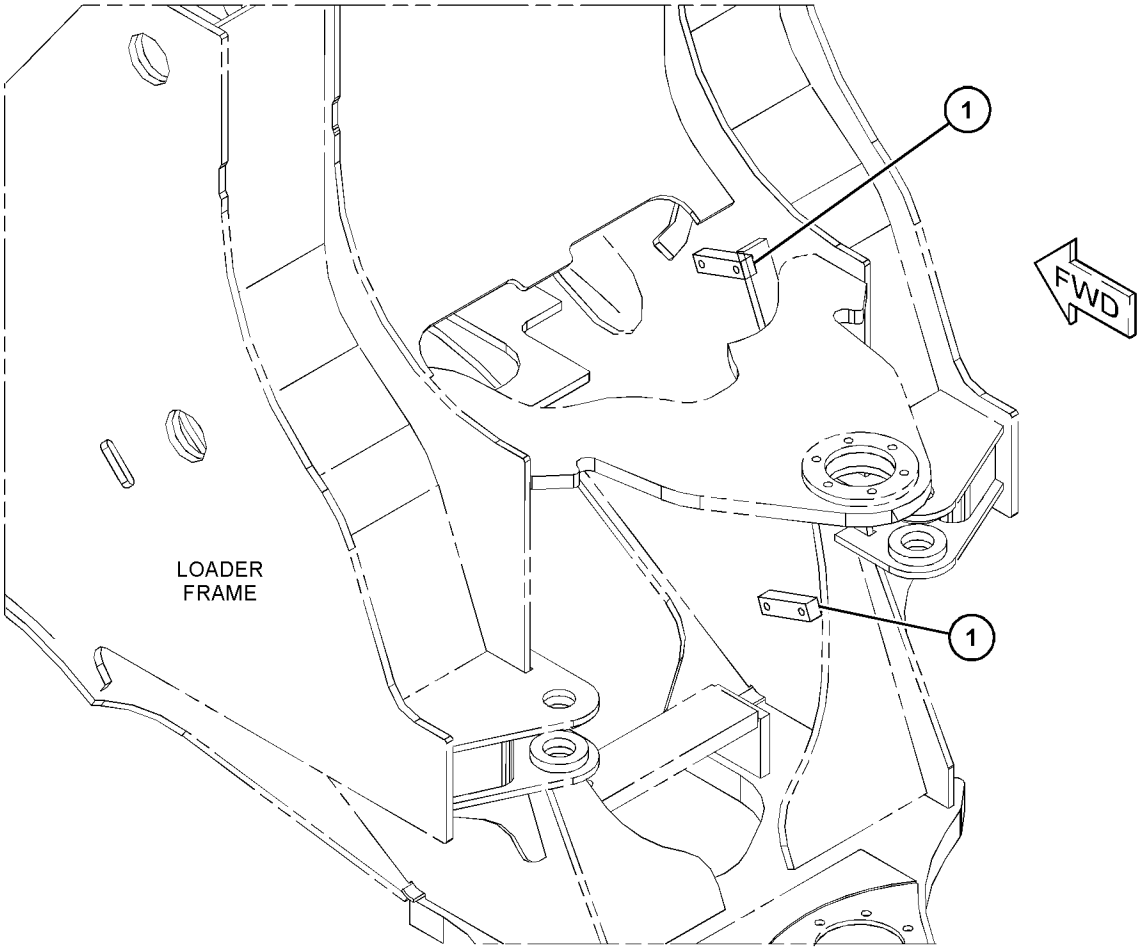

GRAPHIC #1 <END> g06038567

461-4445 BOSS GP-LOADER FRAME

S/N: TNS1-UP

PART OF 492-4025 HYDRAULIC AR-3 VALVE

SMCS-7054 **i06810299**

NOTE	REF NO	GRAPHIC REF	PART NUMBER	QTY	PART NAME 1 2 3 4 5 6 (PRODUCT LEVEL)	SEE PAGE
	1	1	**8X-7853**	2	BLOCK	

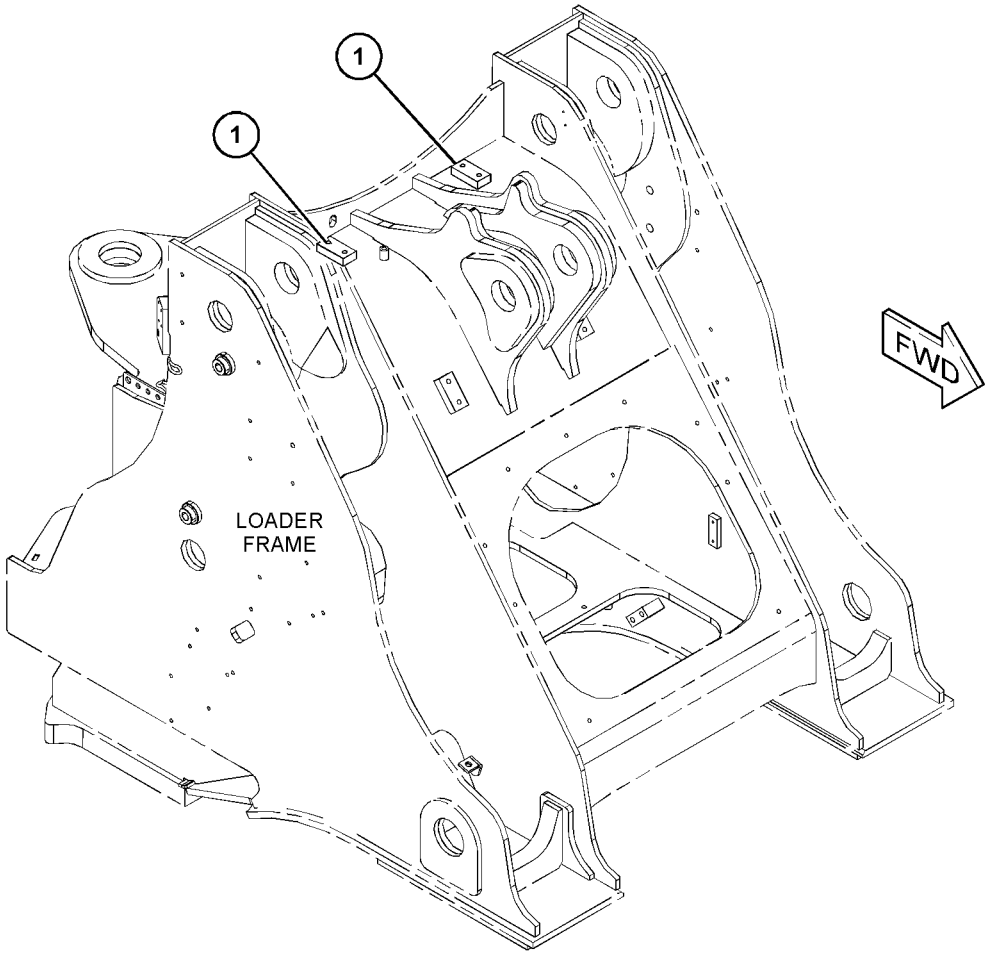

GRAPHIC #1 <END> g06040563

461-4446 BOSS GP-LOADER FRAME

S/N: TNS1-UP

PART OF 463-8873 COUPLER AR-QUICK

SMCS-7054 **i06810861**

NOTE	REF NO	GRAPHIC REF	PART NUMBER	QTY	PART NAME 1 2 3 4 5 6 (PRODUCT LEVEL)	SEE PAGE
	1	1	**091-1735**	1	BLOCK	
M	2	1	**389-0871**	2	BOSS-WELD (M10X1.5X45-MM)	
M	3	1	**430-5328**	2	BOSS-WELD (M10X1.5X65-MM)	
	4	1	**7Y-2522**	1	PLATE	

M - METRIC PART

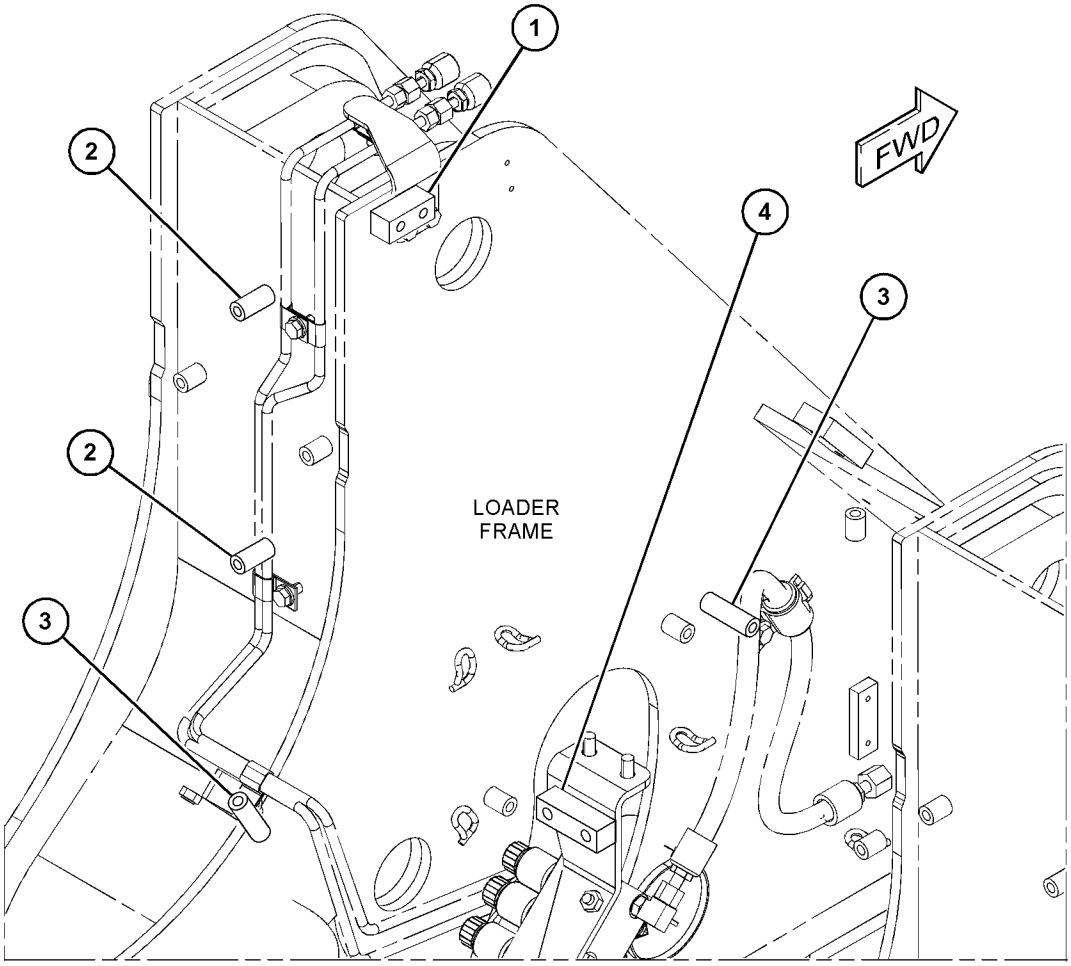

GRAPHIC #1 <END> g06030389

464-0927 BOSS GP-LOADER FRAME

S/N: TNS1-UP

PART OF 505-1548 CONTROL AR-FAN

SMCS-7054 **i06779887**

NOTE	REF NO	GRAPHIC REF	PART NUMBER	QTY	PART NAME 1 2 3 4 5 6 (PRODUCT LEVEL)	SEE PAGE
	1	1	**125-9738**	1	BLOCK	
M	2	1	**430-5327**	1	BOSS-WELD (M10X1.5X55-MM)	

M - METRIC PART

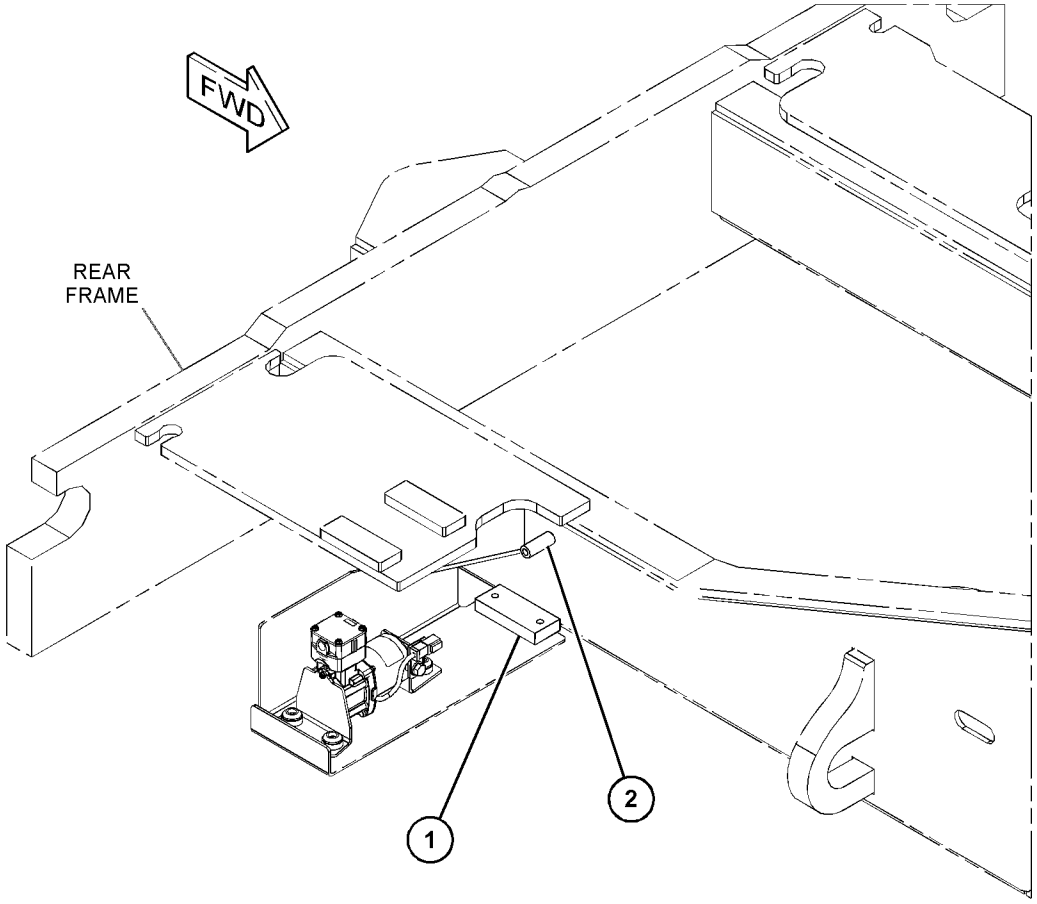

GRAPHIC #1 <END> g03841566

465-4983 BOSS GP-LOADER FRAME

S/N: TNS1-UP

PART OF 507-9161 SPECIAL AR-WHEEL LOADER

SMCS-7054 **i06809578**

NOTE	REF NO	GRAPHIC REF	PART NUMBER	QTY	PART NAME 1 2 3 4 5 6 (PRODUCT LEVEL)	SEE PAGE
	1	1	**9C-4935**	2	PLATE	

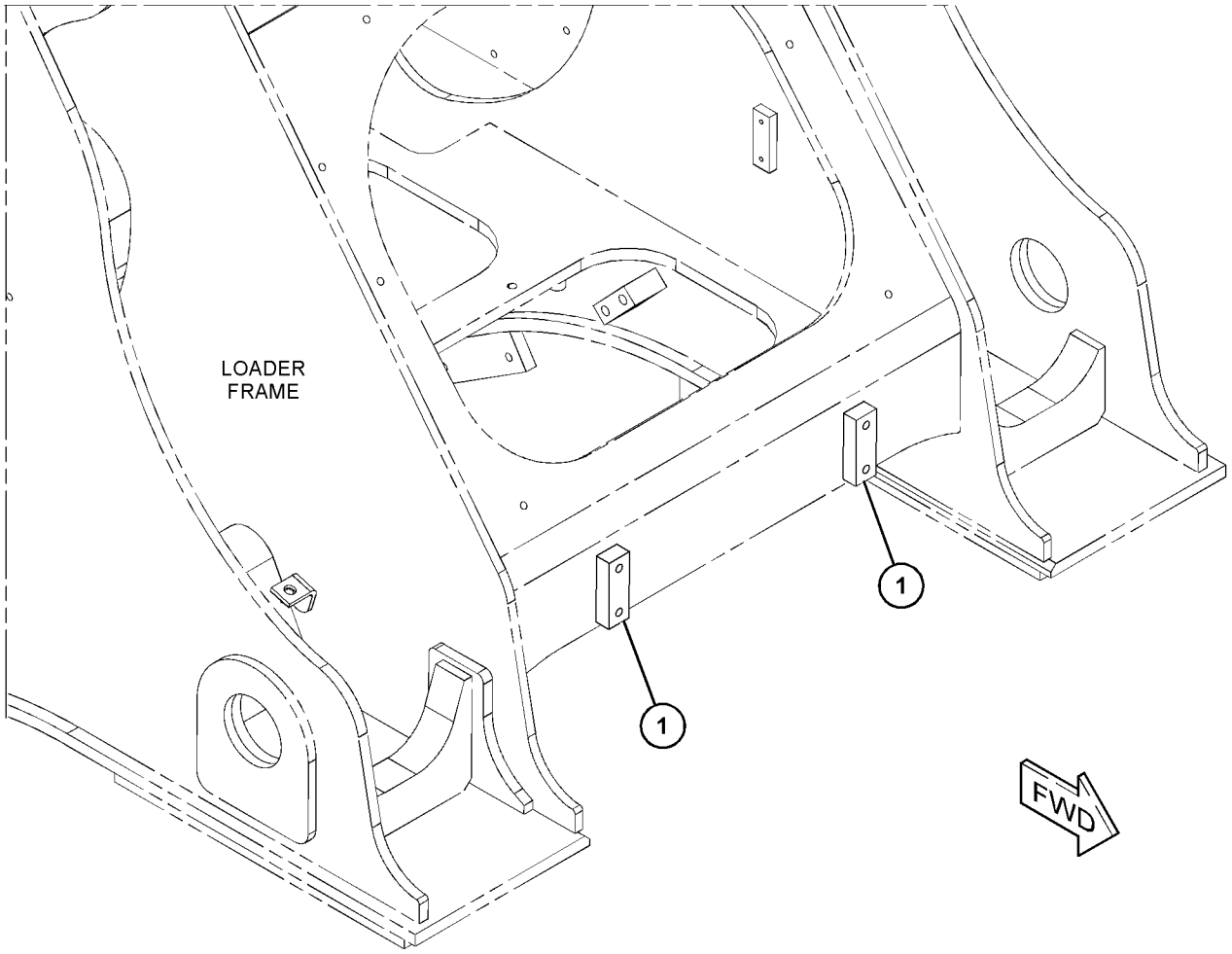

GRAPHIC #1 <END> g06050728

376-7773 BOSS GP-REAR FRAME

S/N: TNS1-UP

PART OF 508-7629, 508-7631 SUPPRESSION AR-SOUND

SMCS-7051 **i06726120**

NOTE	REF NO	GRAPHIC REF	PART NUMBER	QTY	PART NAME 1 2 3 4 5 6 (PRODUCT LEVEL)	SEE PAGE
M	1	1	**446-5835**	8	STUD-WELD (M12X1.75X33-MM)	

M - METRIC PART

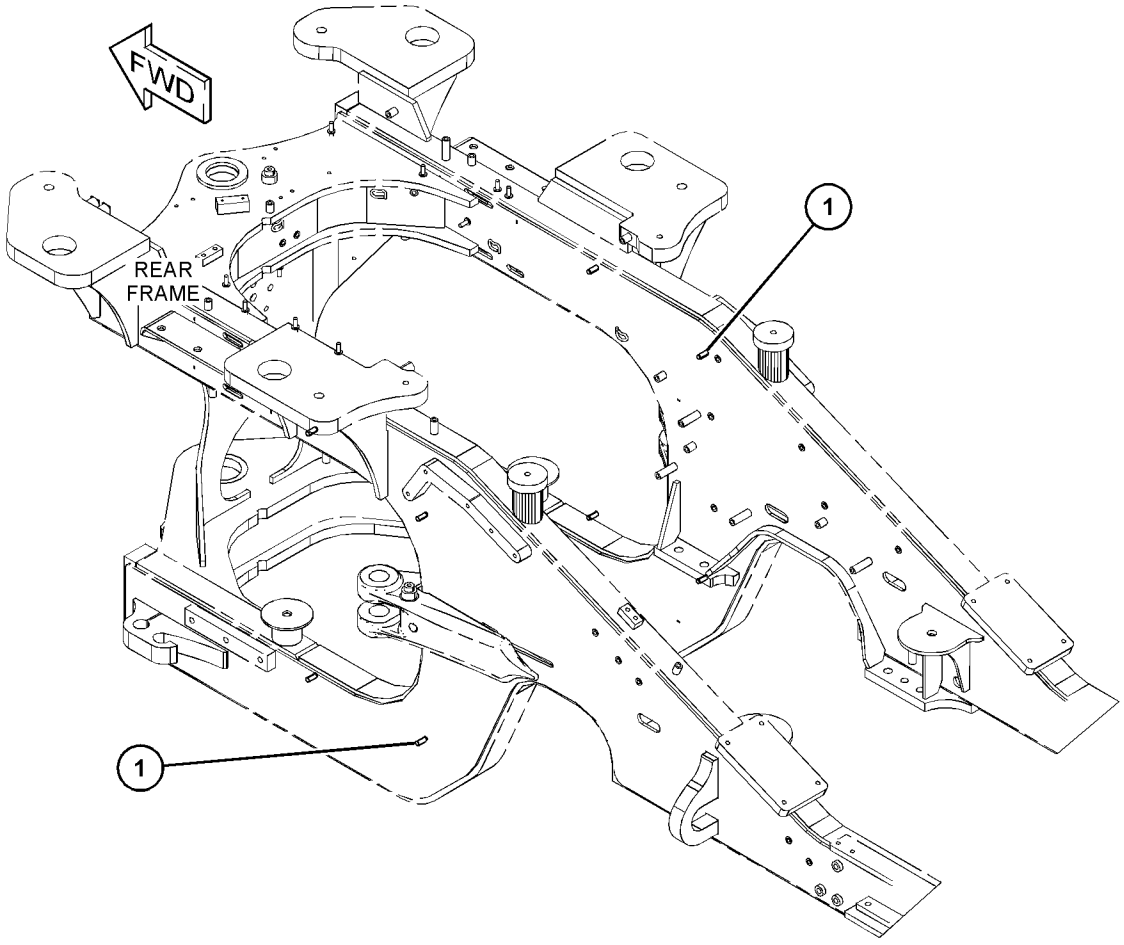

GRAPHIC #1 <END> g03688289

394-3964 BOSS GP-REAR FRAME

S/N: TNS1-UP

PART OF 463-8854, 463-8856, 463-8857 AXLE AR-FIXED & OSCILLATING

SMCS-7051 **i06574287**

NOTE	REF NO	GRAPHIC REF	PART NUMBER	QTY	PART NAME 1 2 3 4 5 6 (PRODUCT LEVEL)	SEE PAGE
M	1	1	**9C-6809**	1	BLOCK (M10X1.5-MM)	

M - METRIC PART

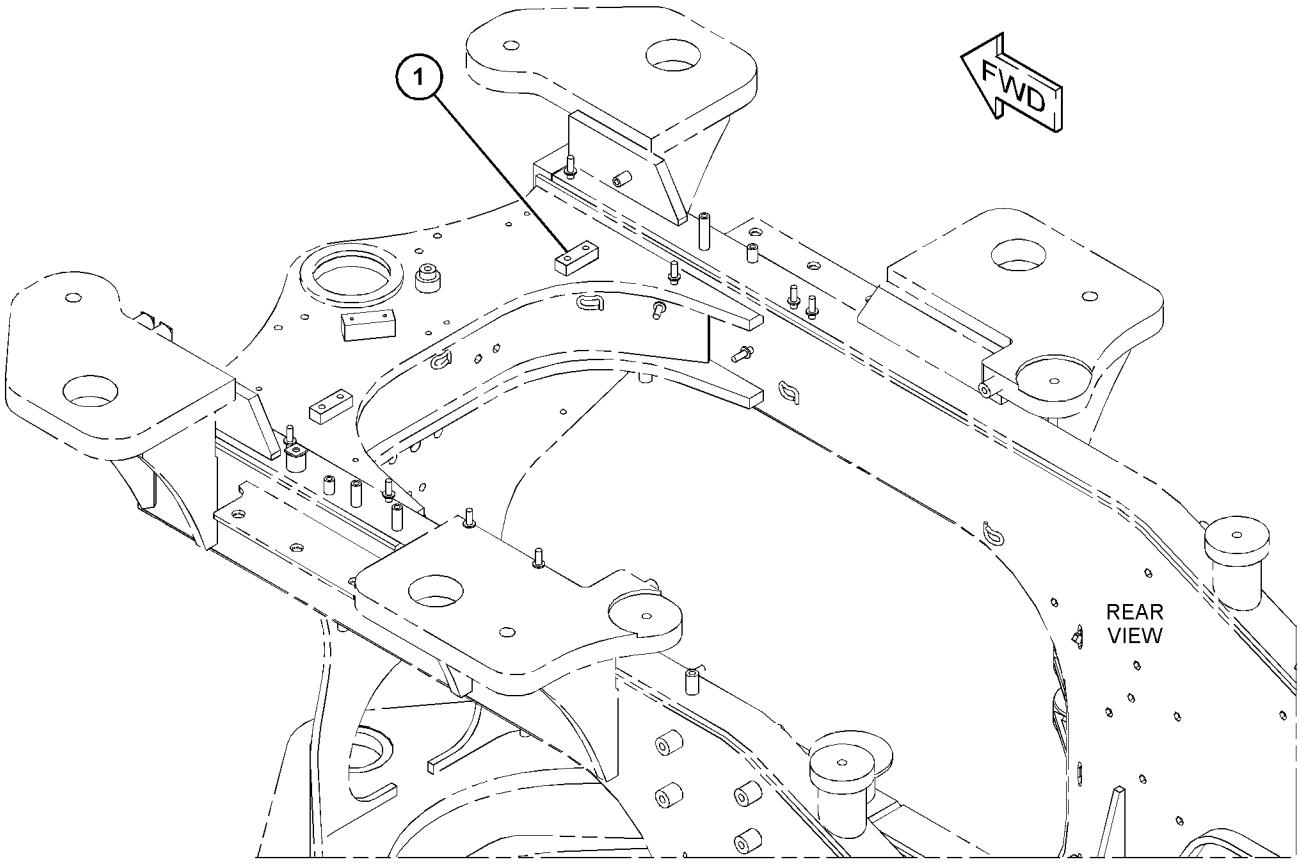

GRAPHIC #1 <END> g03686966

488-6374 BOSS GP-REAR FRAME

S/N: TNS1-UP

PART OF 495-9704 LUBRICATION AR-AUTOMATIC

SMCS-7051 **i06753645**

NOTE	REF NO	GRAPHIC REF	PART NUMBER	QTY	PART NAME 1 2 3 4 5 6 (PRODUCT LEVEL)	SEE PAGE
	1	1	**7T-1099**	1	LINK	
	2	1	**492-9998**	1	BLOCK	
M	3	1	**9C-7929**	1	BLOCK (M10X1.5-MM)	

M - METRIC PART

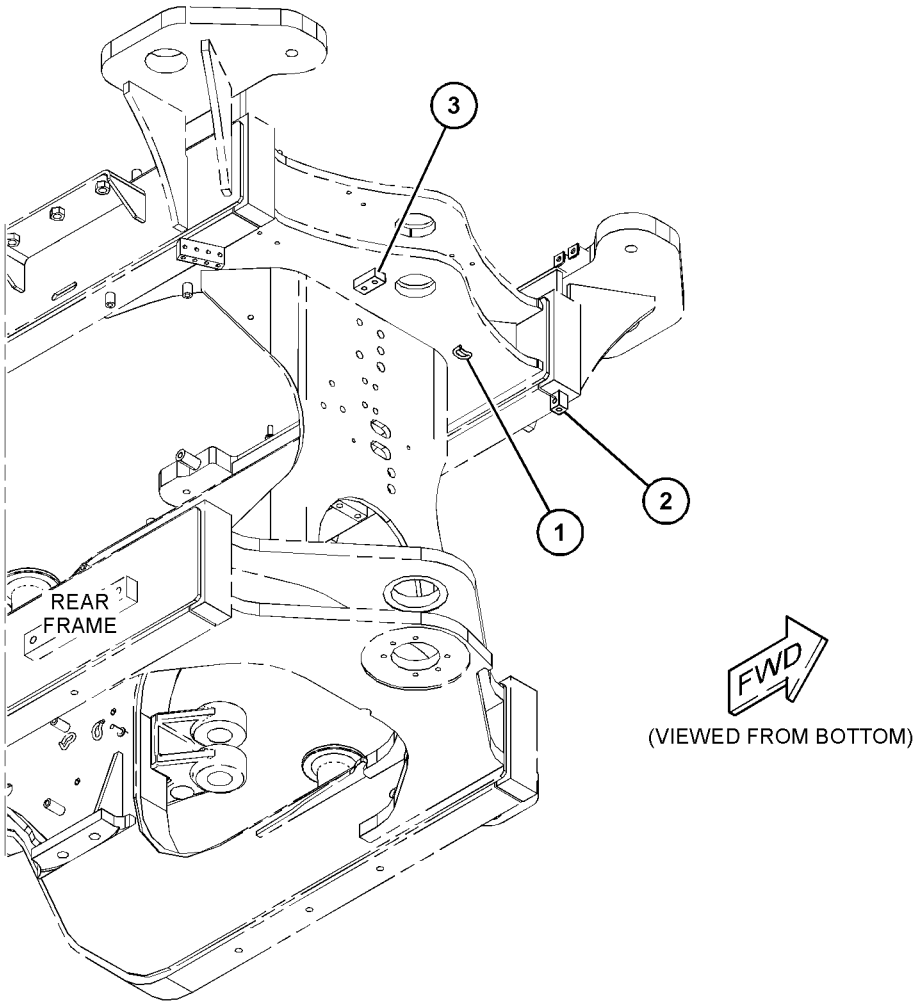

GRAPHIC #1 <END> g06101541

492-3670 BOSS GP-REAR FRAME

S/N: TNS1-UP
AUTOLUBE
PART OF 495-9704 LUBRICATION AR-AUTOMATIC

SMCS-7051 **i06811132**

NOTE	REF NO	GRAPHIC REF	PART NUMBER	QTY	PART NAME 1 2 3 4 5 6 (PRODUCT LEVEL)	SEE PAGE
	1	1	**492-9998**	2	BLOCK	
	2	1	**091-1735**	1	BLOCK	
	3	1	**7T-1099**	3	LINK	
M	4	1	**9C-7929**	1	BLOCK (M10X1.5-MM)	
M	5	1	**9R-2613**	7	BOSS-WELD (M10X1.5X25-MM)	
M	6	1	**9R-2672**	2	BOSS-THREADED (M10X1.5-THD)	
M	7	1	**9R-3761**	1	BOSS (M10X1.5X51-MM)	
M	8	1	**9R-9866**	1	BOSS-THREADED (M10X1.5-THD)	

M - METRIC PART

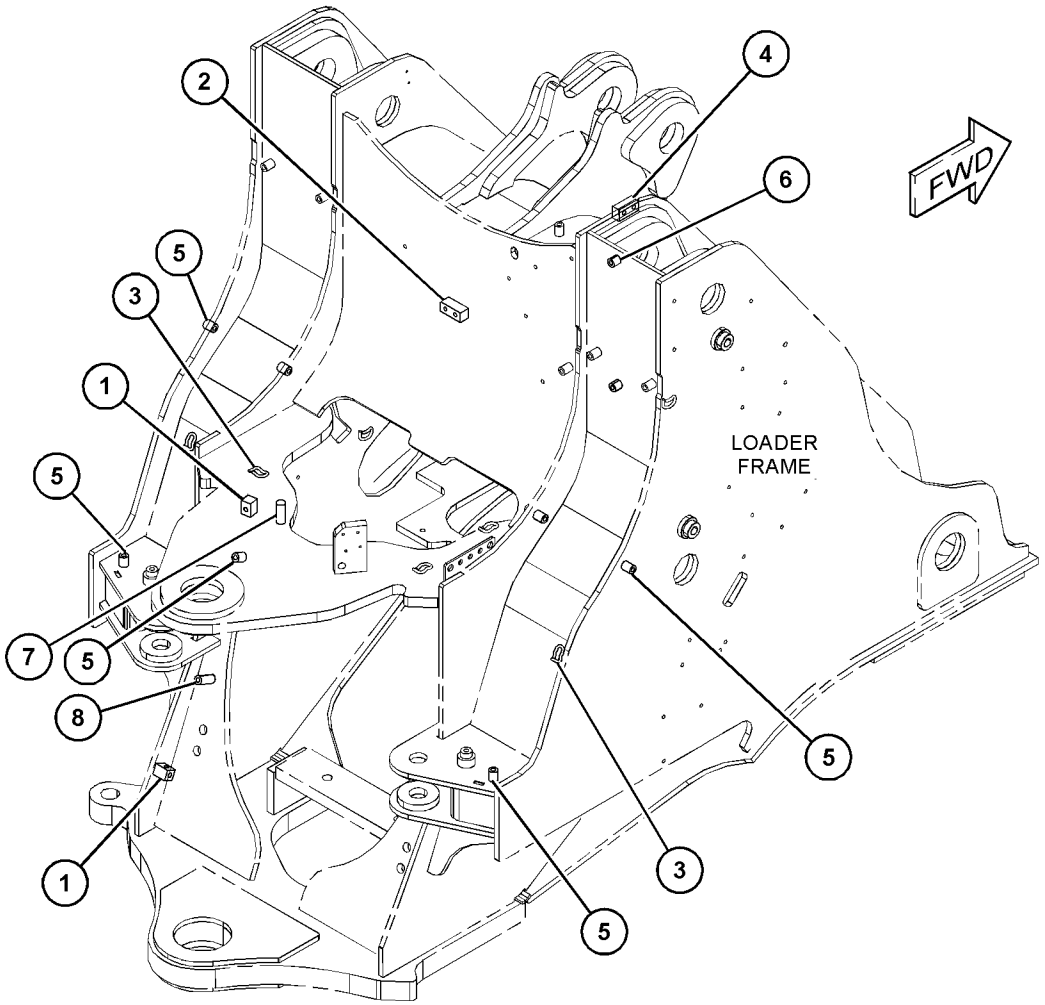

GRAPHIC #1 <END> g06126385

504-2866 BOX AS-BATTERY

S/N: TNS1-UP

PART OF 504-2867 BOX GP-BATTERY

SMCS-7257 **i06753531**

NOTE	REF NO	GRAPHIC REF	PART NUMBER	QTY	PART NAME 1 2 3 4 5 6 (PRODUCT LEVEL)	SEE PAGE
M	1	1	**212-8834**	2	BOSS (M10X1.5X60-MM)	
M	2	1	**5G-8480**	3	LUG (M10X1.5-THD)	
M	3	1	**8T-3490**	17	NUT-WELD (M10X1.5-THD)	
M	4	1	**8T-3597**	7	NUT-WELD (M12X1.75-THD)	
	5	1	**7T-1099**	1	LINK	

M - METRIC PART

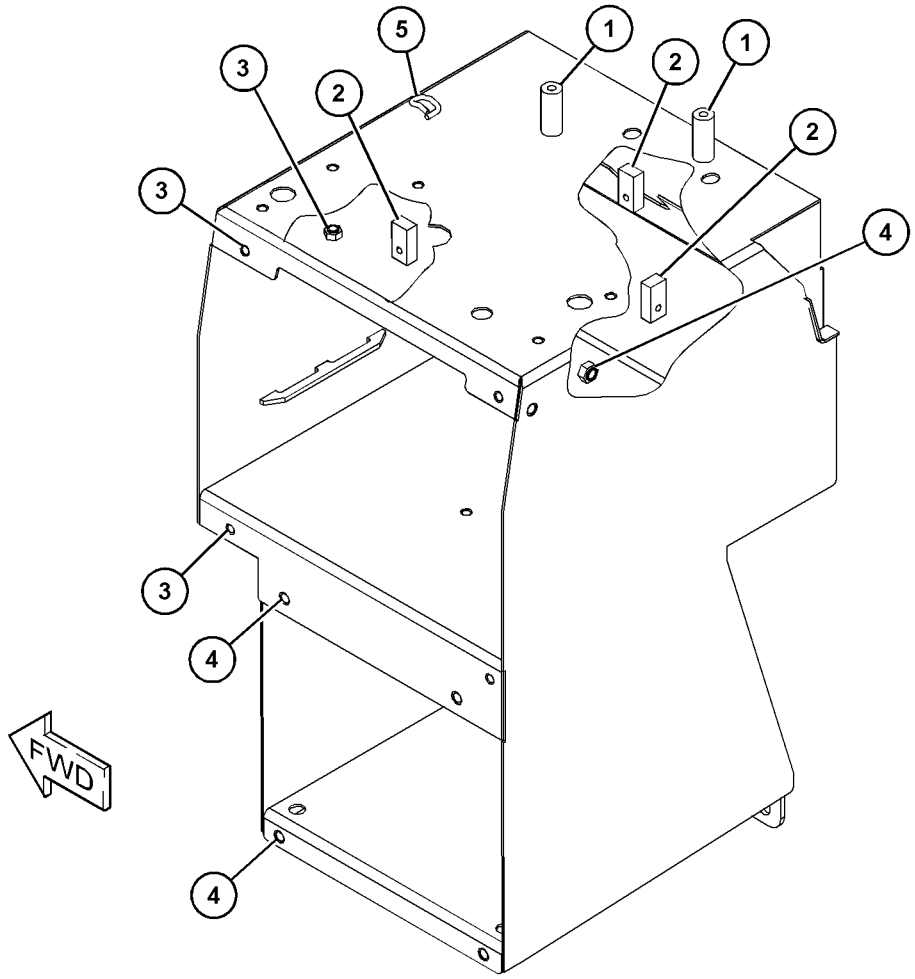

GRAPHIC #1 <END> g06101468

504-2873 BOX AS-BATTERY

S/N: TNS1-UP

PART OF 504-2874 BOX GP-BATTERY

SMCS-7257 **i06756802**

NOTE	REF NO	GRAPHIC REF	PART NUMBER	QTY	PART NAME 1 2 3 4 5 6 (PRODUCT LEVEL)	SEE PAGE
M	1	1	**212-8834**	2	BOSS (M10X1.5X60-MM)	
M	2	1	**5G-8480**	3	LUG (M10X1.5-THD)	
	3	1	**7T-1099**	1	LINK	
M	4	1	**8T-3490**	40	NUT-WELD (M10X1.5-THD)	
M	5	1	**8T-3597**	7	NUT-WELD (M12X1.75-THD)	

M - METRIC PART

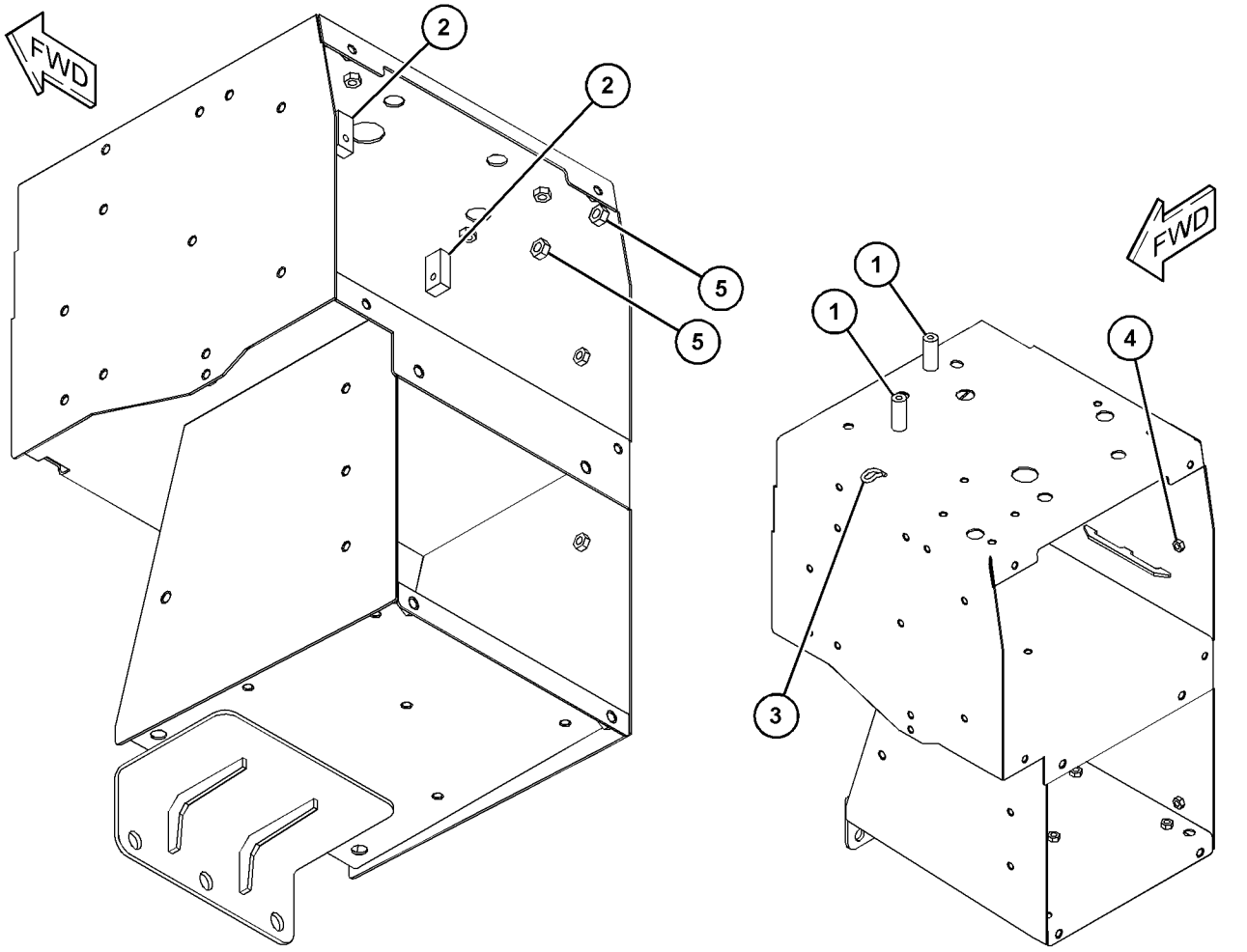

GRAPHIC #1 <END> g06104665

504-2867 BOX GP-BATTERY

S/N: TNS1-UP

PART OF 504-2868 LADDER & WALKWAY GP

SMCS-7257 **i06753526**

NOTE	REF NO	GRAPHIC REF	PART NUMBER	QTY	PART NAME 1 2 3 4 5 6 (PRODUCT LEVEL)	SEE PAGE
	1	1	**125-8176**	1	CAM-LATCH	
	2	1	**174-6381**	1	LATCH AS	
	3	1	**397-7875**	1	SHEET	
Y	4	1	*447-8926*	1	DOOR GP-ACCESS (BATTERY)	443
Y	5	1	**504-2866**	1	BOX AS-BATTERY	421

Y - SEPARATE ILLUSTRATION

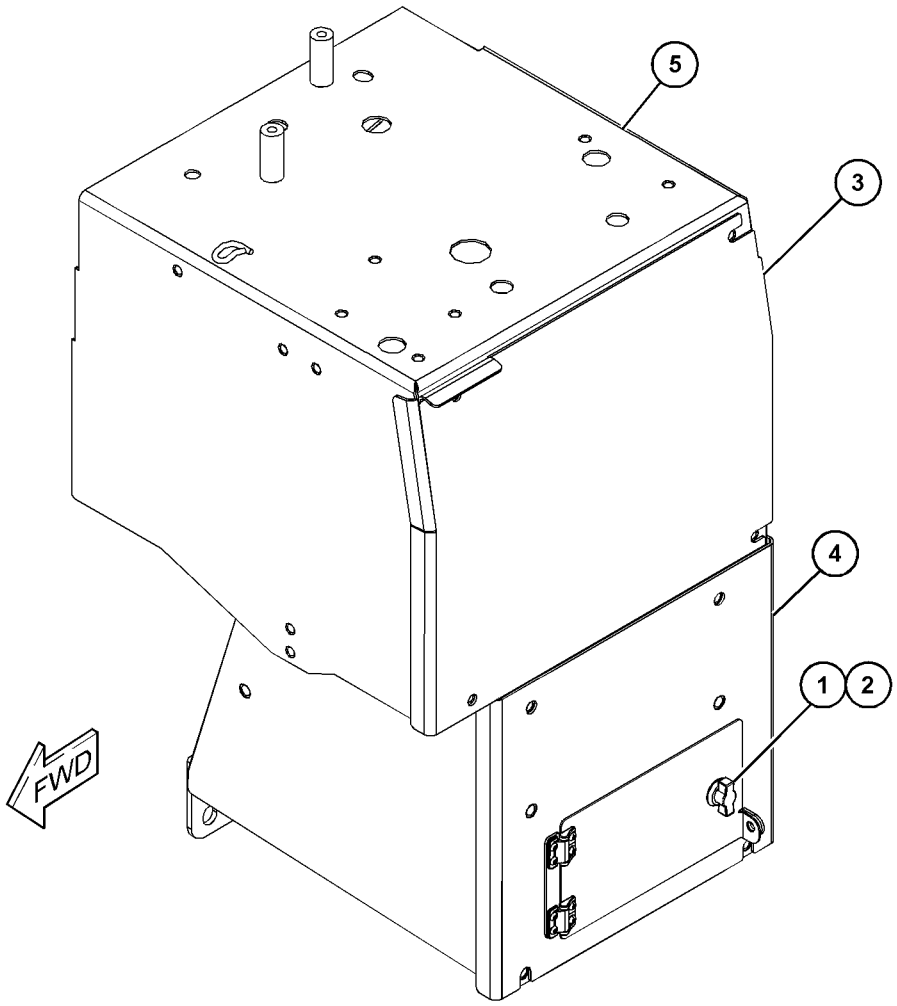

GRAPHIC #1 <END> g06101449

504-2874 BOX GP-BATTERY

S/N: TNS1-UP

PART OF 504-2875 LADDER & WALKWAY GP

SMCS-7257 **i06756795**

NOTE	REF NO	GRAPHIC REF	PART NUMBER	QTY	PART NAME 1 2 3 4 5 6 (PRODUCT LEVEL)	SEE PAGE
	1	1	**125-8176**	1	CAM-LATCH	
	2	1	**174-6381**	1	LATCH AS	
	3	1	**397-7875**	1	SHEET	
	4	1	**416-5060**	1	PLATE	
	5	1	**416-5061**	1	PLATE	
	6	1	**416-5062**	1	PLATE	
Y	7	1	*447-8926*	1	DOOR GP-ACCESS (BATTERY)	443
Y	8	1	**504-2873**	1	BOX AS-BATTERY	422

Y - SEPARATE ILLUSTRATION

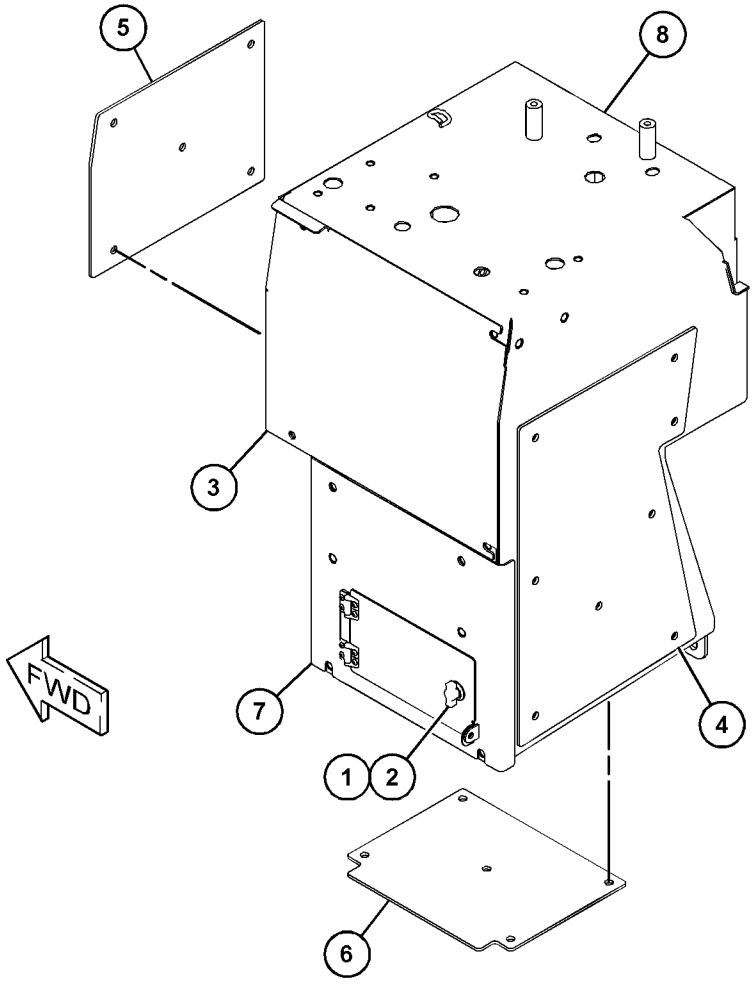

GRAPHIC #1 <END> g06104683

465-6575 BRACKET GP-MOUNTING

S/N: TNS1-UP

PART OF 336-0000 HOOD & GUARD GP

SMCS-0635, 5057 **i06553848**

NOTE	REF NO	GRAPHIC REF	PART NUMBER	QTY	PART NAME 1 2 3 4 5 6 (PRODUCT LEVEL)	SEE PAGE
	1	1	**451-1558**	1	BLOCK AS	
	2	1	**465-6574**	1	BRACKET	
	3	1	**7X-7729**	4	WASHER (11X25X3-MM THK)	
M	4	1	**8T-4133**	2	NUT (M10X1.5-THD)	
M	5	1	**8T-4182**	2	BOLT (M10X1.5X45-MM)	

M - METRIC PART

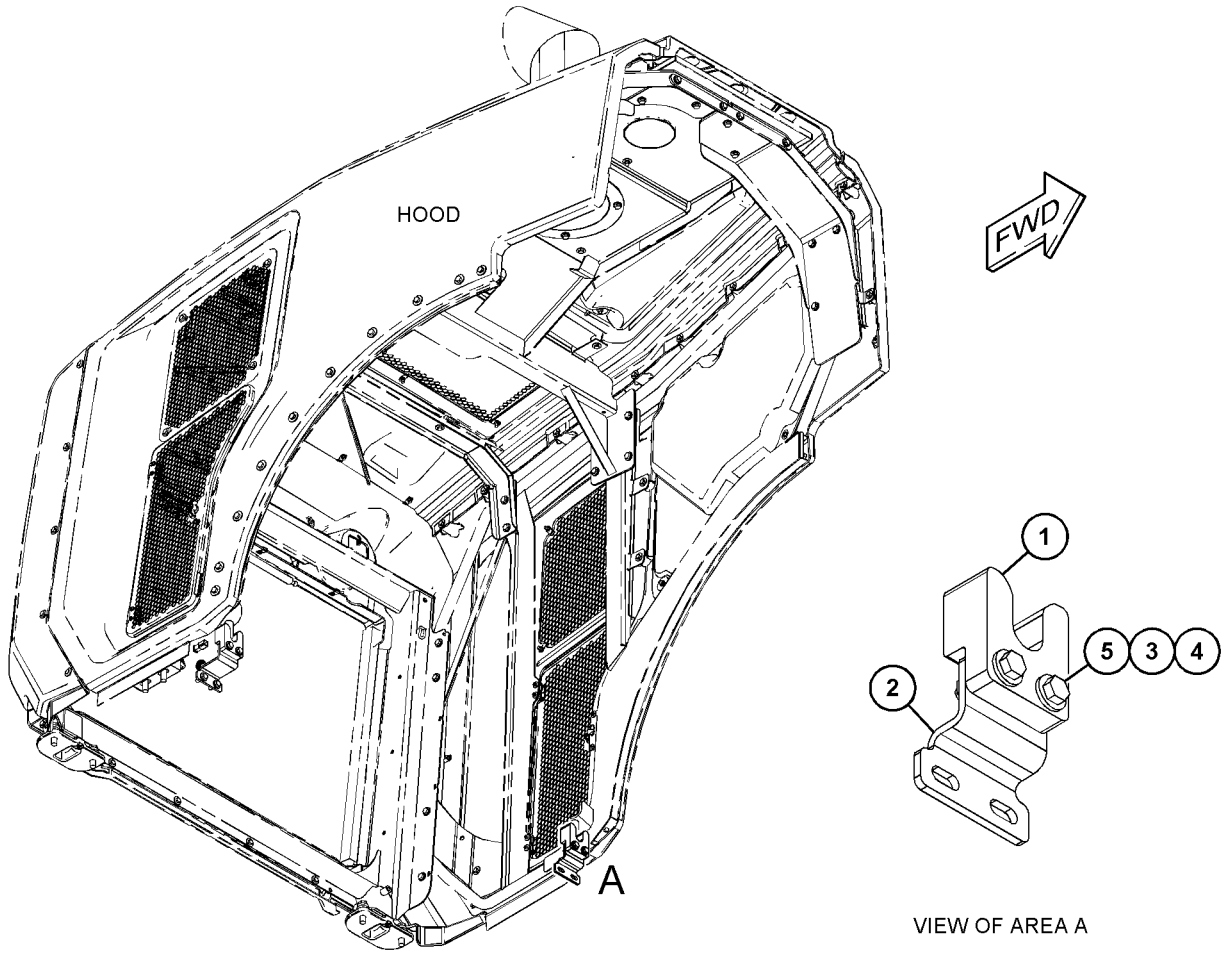

GRAPHIC #1 <END> g06007301

465-6580 BRACKET GP-MOUNTING

S/N: TNS1-UP

PART OF 336-0000 HOOD & GUARD GP

SMCS-0635, 5057 **i06553849**

NOTE	REF NO	GRAPHIC REF	PART NUMBER	QTY	PART NAME 1 2 3 4 5 6 (PRODUCT LEVEL)	SEE PAGE
	1	1	**451-1558**	1	BLOCK AS	
	2	1	**465-6581**	1	BRACKET	
	3	1	**7X-7729**	4	WASHER (11X25X3-MM THK)	
M	4	1	**8T-4133**	2	NUT (M10X1.5-THD)	
M	5	1	**8T-4182**	2	BOLT (M10X1.5X45-MM)	

M - METRIC PART

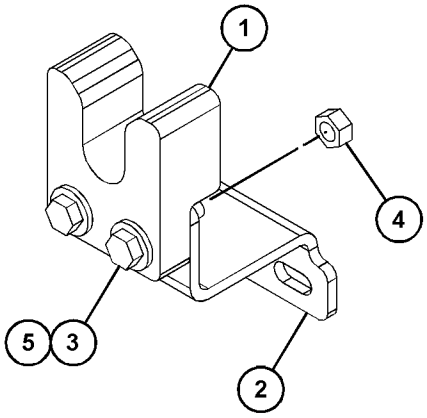

VIEW OF AREA A

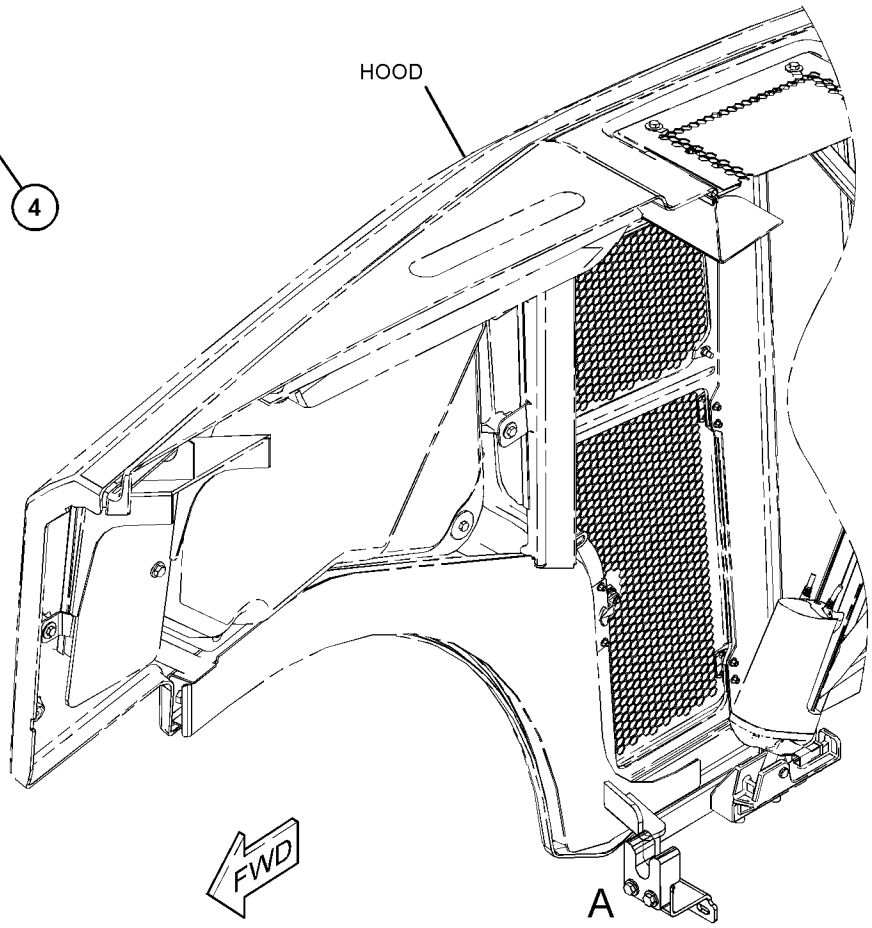

GRAPHIC #1 <END> g06001476

438-5742 COUNTERWEIGHT & MOUNTING GP

S/N: TNS1-UP

PART OF 463-8879 COUNTERWEIGHT AR

SMCS-7056 **i06797200**

NOTE	REF NO	GRAPHIC REF	PART NUMBER	QTY	PART NAME 1 2 3 4 5 6 (PRODUCT LEVEL)	SEE PAGE
	1	1	**162-7120**	1	PIN	
Y	2	1	**438-5743**	1	COUNTERWEIGHT GP (LH)	430
Y	3	1	**464-7203**	1	COUNTERWEIGHT GP (RH)	431
	4	1	**115-5669**	1	PIN	
M	5	1	**7X-2581**	6	BOLT (M30X3.5X100-MM)	
M	6	1	**8T-4190**	4	BOLT (M16X2X25-MM)	
	7	1	**9X-8257**	4	WASHER (17.5X30X3.5-MM THK)	
	8	1	**9X-8258**	6	WASHER (33X56X6-MM THK)	

M - METRIC PART
Y - SEPARATE ILLUSTRATION

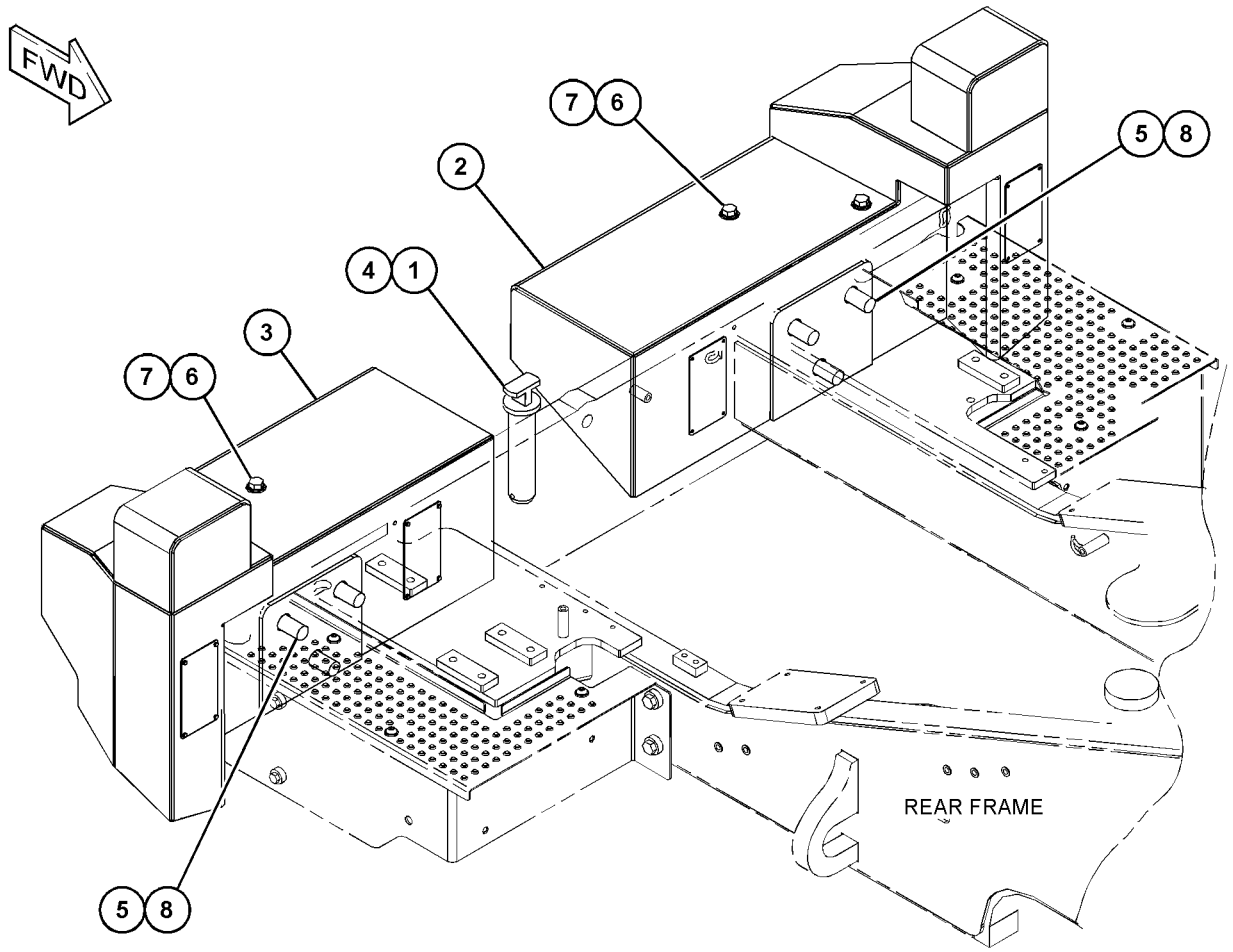

GRAPHIC #1 <END> g06048911

463-8879 COUNTERWEIGHT AR

S/N: TNS1-UP

PART OF 492-4033 DISTRIBUTION AR

SMCS-7056 **i06797199**

NOTE	PART NUMBER	QTY	PART NAME 1 2 3 4 5 6 (PRODUCT LEVEL)	SEE PAGE
Y	*438-5742*	1	COUNTERWEIGHT & MOUNTING GP	427
Y	*456-5849*	1	COUNTERWEIGHT GP-SUPPLEMENTARY	432

Y - SEPARATE ILLUSTRATION

<END>

463-8893 COUNTERWEIGHT AR

S/N: TNS1-UP

PART OF 492-4034 DISTRIBUTION AR

SMCS-7056 **i06797197**

NOTE	PART NUMBER	QTY	PART NAME 1 2 3 4 5 6 (PRODUCT LEVEL)	SEE PAGE
Y	*393-0072*	1	COUNTERWEIGHT GP	429
Y	*456-5848*	1	PLATE GP-MOUNTING	526

Y - SEPARATE ILLUSTRATION

<END>

393-0072 COUNTERWEIGHT GP

S/N: TNS1-UP

PART OF 463-8893 COUNTERWEIGHT AR

SMCS-7056 **i06681616**

NOTE	REF NO	GRAPHIC REF	PART NUMBER	QTY	PART NAME 1 2 3 4 5 6 (PRODUCT LEVEL)	SEE PAGE
	1	1	**162-7120**	1	PIN	
	2	1	**393-0073**	1	COUNTERWEIGHT (RH)	
	3	1	**393-0074**	1	COUNTERWEIGHT (LH)	
	4	1	**115-5669**	1	PIN	
M	5	1	**130-0099**	8	BOLT (M30X3.5X130-MM)	
M	6	1	**7X-2552**	2	BOLT (M16X2X30-MM)	
	7	1	**9X-8257**	2	WASHER (17.5X30X3.5-MM THK)	
	8	1	**9X-8258**	8	WASHER (33X56X6-MM THK)	

M - METRIC PART

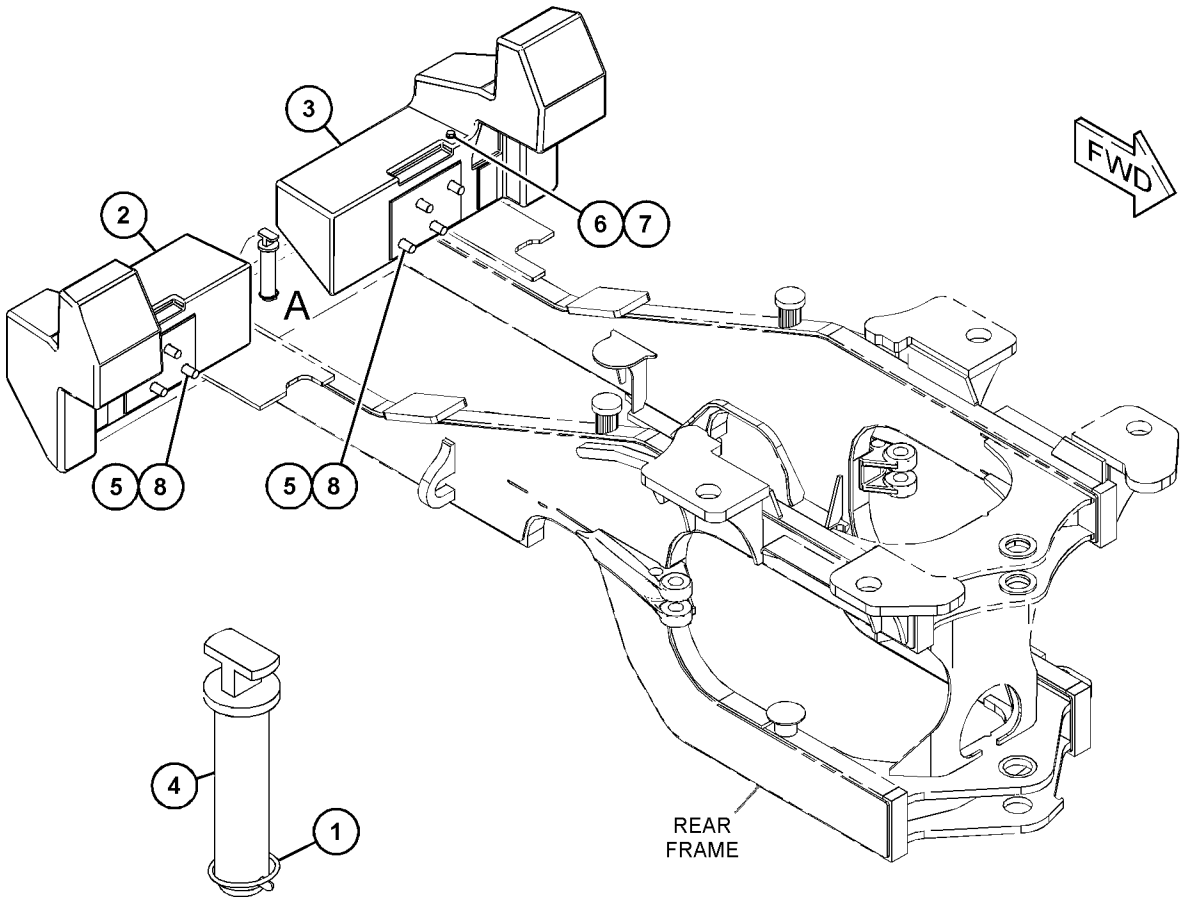

VIEW OF AREA A

GRAPHIC #1 <END> g03658283

438-5743 COUNTERWEIGHT GP

S/N: TNS1-UP
373-KG (822.3-LB)
PART OF 438-5742 COUNTERWEIGHT & MOUNTING GP

SMCS-7056 **i06797202**

NOTE	REF NO	GRAPHIC REF	PART NUMBER	QTY	PART NAME 1 2 3 4 5 6 (PRODUCT LEVEL)	SEE PAGE
	1	1	**438-5746**	1	COUNTERWEIGHT AS	
	2	1	**459-7604**	2	PLATE	
	3	1	**096-6166**	8	WASHER-HARD (4.5X9X1-MM THK)	
M	4	1	**170-5632**	8	BOLT (M4X0.7X16-MM)	

M - METRIC PART

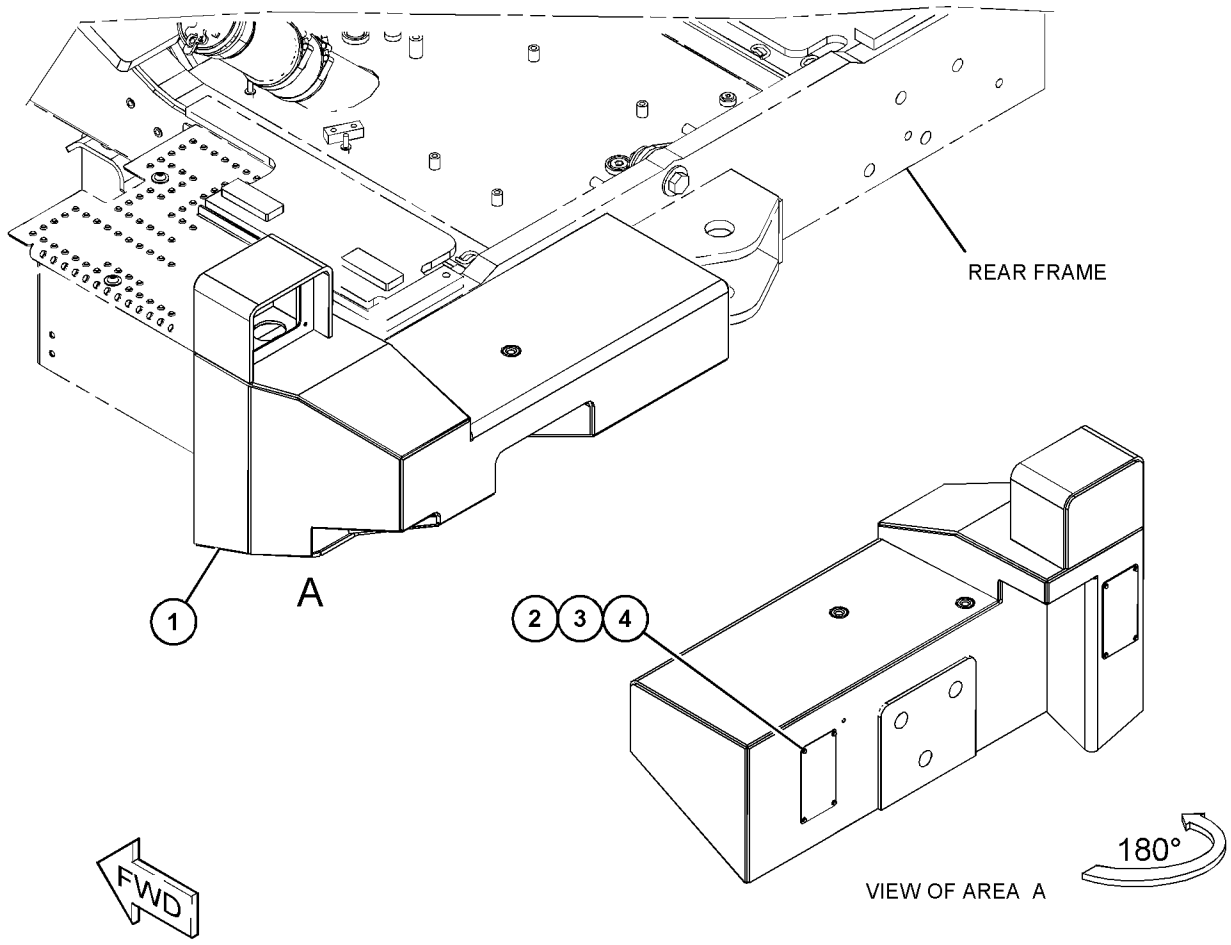

GRAPHIC #1 <END> g06051867

464-7203 COUNTERWEIGHT GP

S/N: TNS1-UP

PART OF 438-5742 COUNTERWEIGHT & MOUNTING GP

SMCS-7056 **i06797201**

NOTE	REF NO	GRAPHIC REF	PART NUMBER	QTY	PART NAME 1 2 3 4 5 6 (PRODUCT LEVEL)	SEE PAGE
	1	1	**459-7604**	2	PLATE	
	2	1	**461-4432**	1	COUNTERWEIGHT AS	
	3	1	**096-6166**	8	WASHER-HARD (4.5X9X1-MM THK)	
M	4	1	**170-5632**	8	BOLT (M4X0.7X16-MM)	

M - METRIC PART

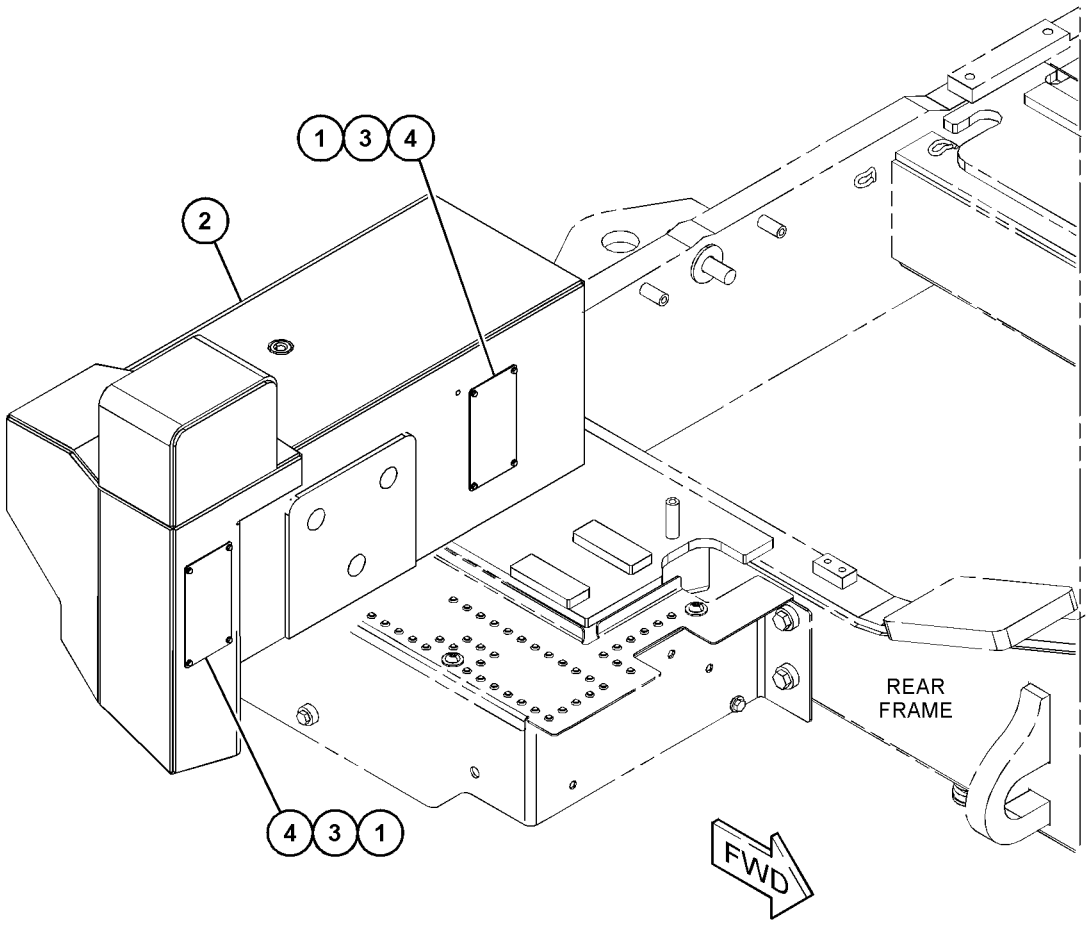

GRAPHIC #1 <END> g06042192

456-5849 COUNTERWEIGHT GP-SUPPLEMENTARY—CONCRETE

S/N: TNS1-UP

PART OF 463-8879 COUNTERWEIGHT AR

SMCS-7056 **i06759700**

NOTE	REF NO	GRAPHIC REF	PART NUMBER	QTY	PART NAME 1 2 3 4 5 6 (PRODUCT LEVEL)	SEE PAGE
	1	1	**458-8281**	2	BOX AS	
					(EACH INCLUDES)	
M		1	**8T-4970**	4	BOLT (M6X1X14-MM)	
		1	**9X-8256**	4	WASHER (6.6X12X2-MM THK)	
	2	1	**198-4781**	4	WASHER-HARD (22X40X10-MM THK)	
M	3	1	**4I-6994**	4	BOLT (M20X2.5X330-MM)	

M - METRIC PART

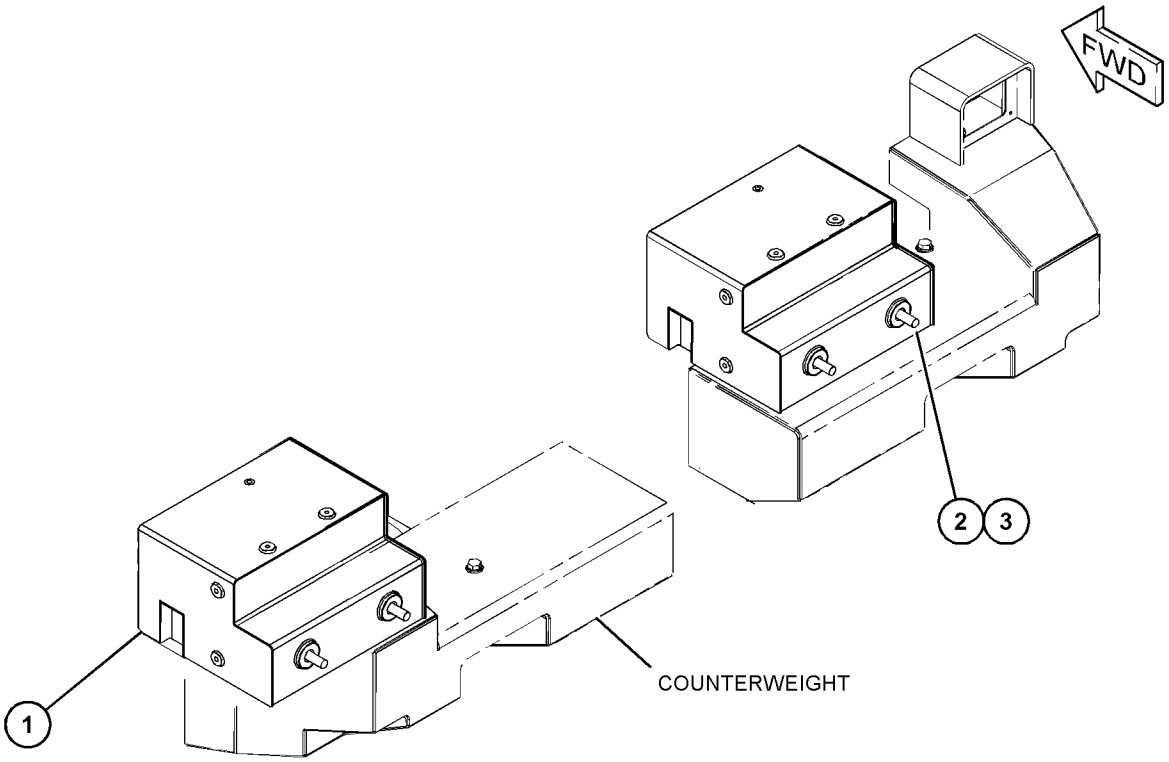

GRAPHIC #1 <END> g06048671

436-2371 COVER & PLUG GP

S/N: TNS1-UP

FOR USE WITH FRONT FENDERS

PART OF 464-6672, 464-6673, 464-6676 FENDER AR-ROADING

SMCS-0663 **i06606795**

NOTE	REF NO	GRAPHIC REF	PART NUMBER	QTY	PART NAME 1 2 3 4 5 6 (PRODUCT LEVEL)	SEE PAGE
	1	1	**436-2370**	14	PLUG	

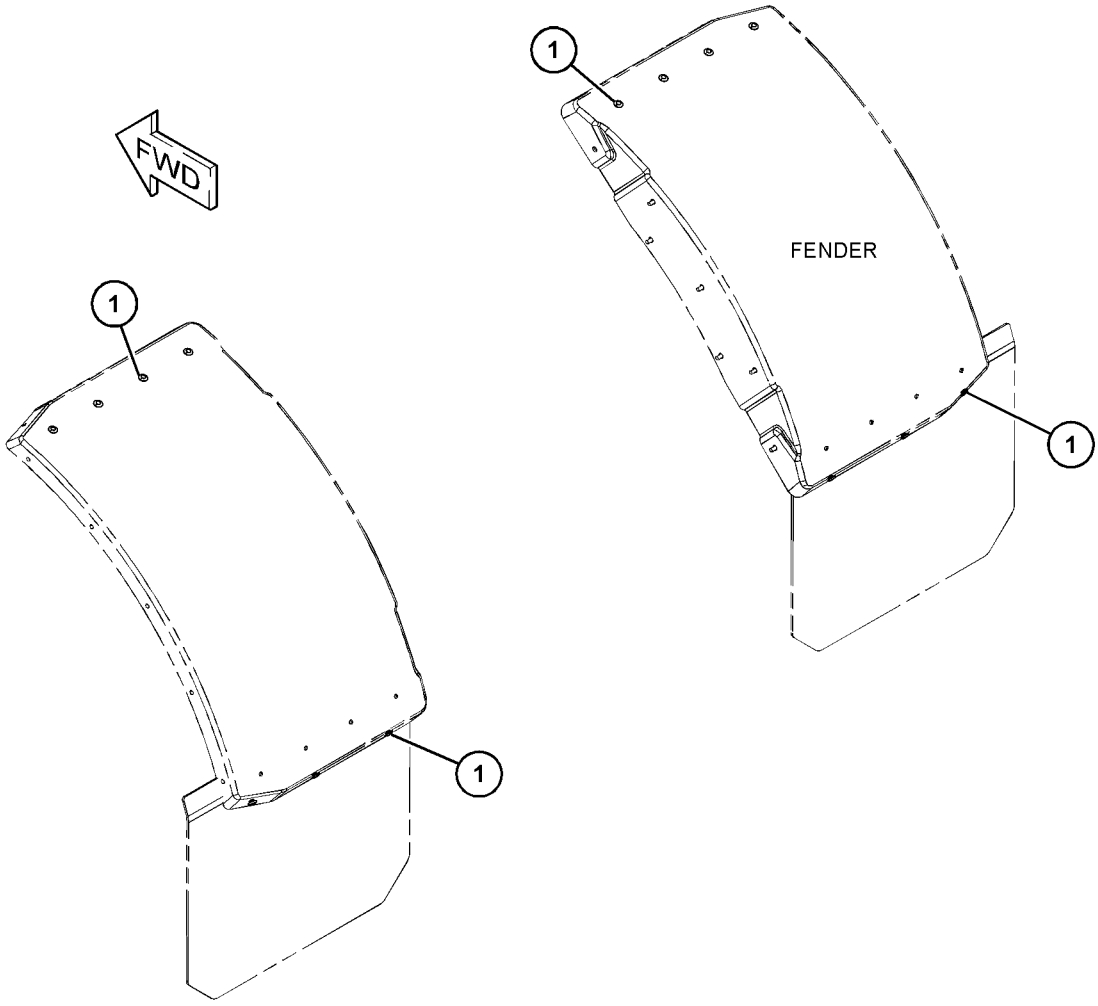

GRAPHIC #1 <END> g06005928

436-2372 COVER & PLUG GP

S/N: TNS1-UP

PART OF 464-6672, 464-6673, 464-6676 FENDER AR-ROADING

SMCS-0663 **i06606796**

NOTE	REF NO	GRAPHIC REF	PART NUMBER	QTY	PART NAME 1 2 3 4 5 6 (PRODUCT LEVEL)	SEE PAGE
	1	1	**436-2370**	10	PLUG	

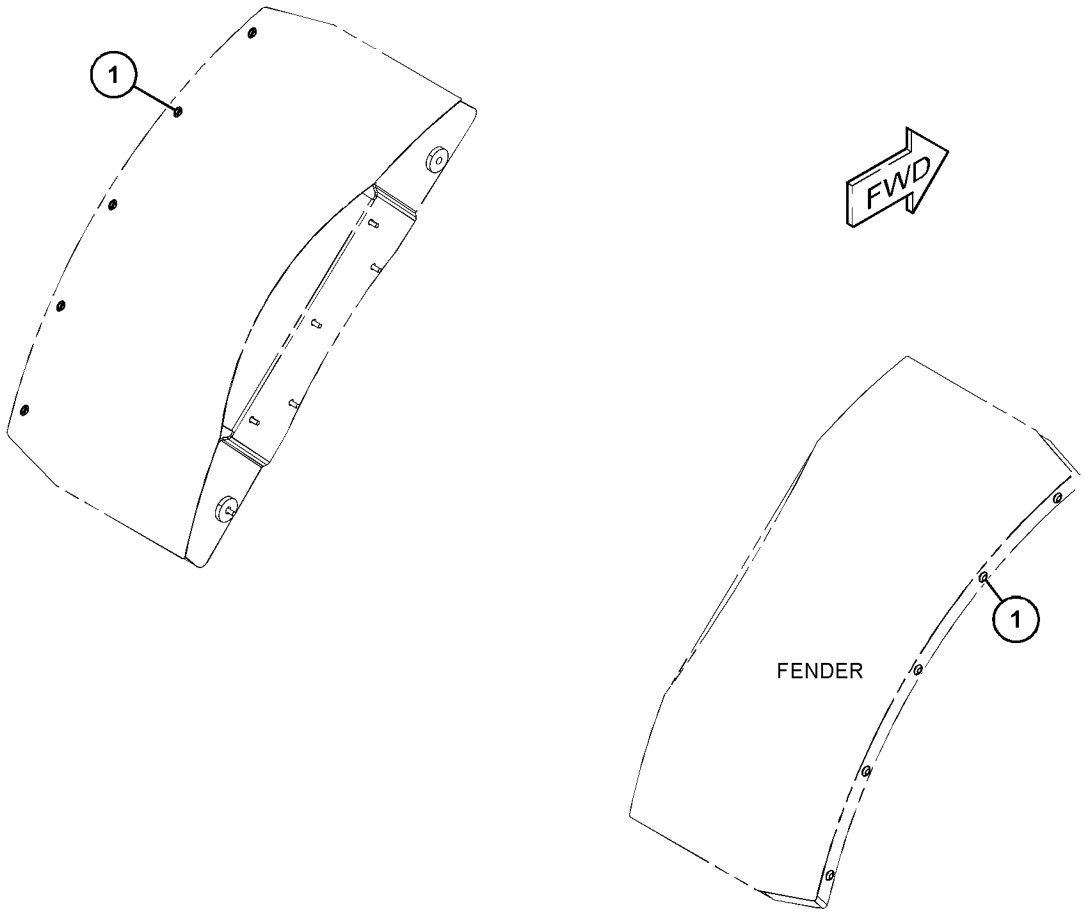

GRAPHIC #1 <END> g06005955

436-2373 COVER & PLUG GP

S/N: TNS1-UP
FOR USE WITH FRONT FENDERS
PART OF 464-6672, 464-6676 FENDER AR-ROADING

SMCS-0663 **i06606797**

NOTE	REF NO	GRAPHIC REF	PART NUMBER	QTY	PART NAME 1 2 3 4 5 6 (PRODUCT LEVEL)	SEE PAGE
	1	1	**436-2370**	6	PLUG	

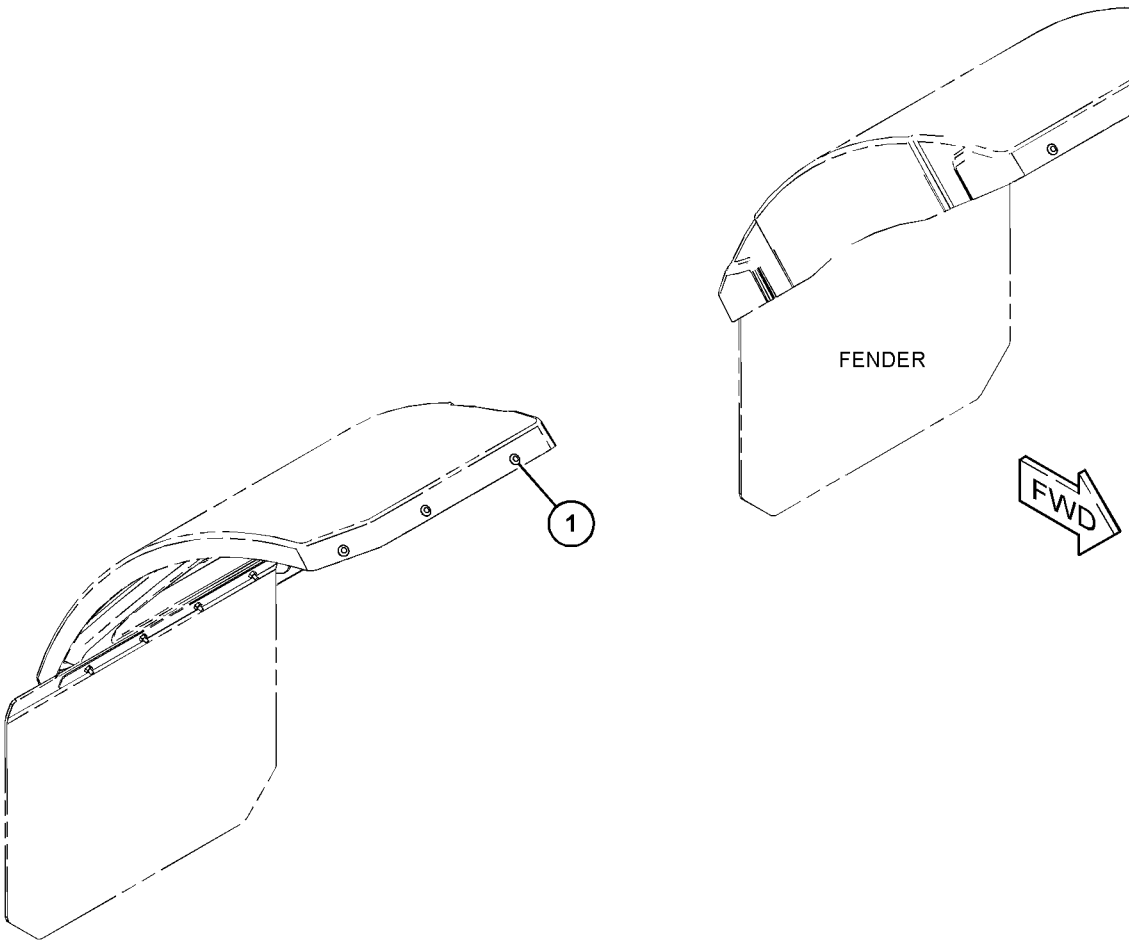

GRAPHIC #1 <END> g06006558

511-0283 COVER & PLUG GP

S/N: TNS1-UP

PART OF 492-4031 LINK GP-TILT

SMCS-0663 **i06811068**

NOTE	REF NO	GRAPHIC REF	PART NUMBER	QTY	PART NAME 1 2 3 4 5 6 (PRODUCT LEVEL)	SEE PAGE
	1	1	**3B-8489**	11	FITTING-GREASE (1/8-27 PTF)	
	2	1	**5M-6214**	4	PLUG (1/8-27 PTF)	
	3	1	**222-3487**	3	ADAPTER	

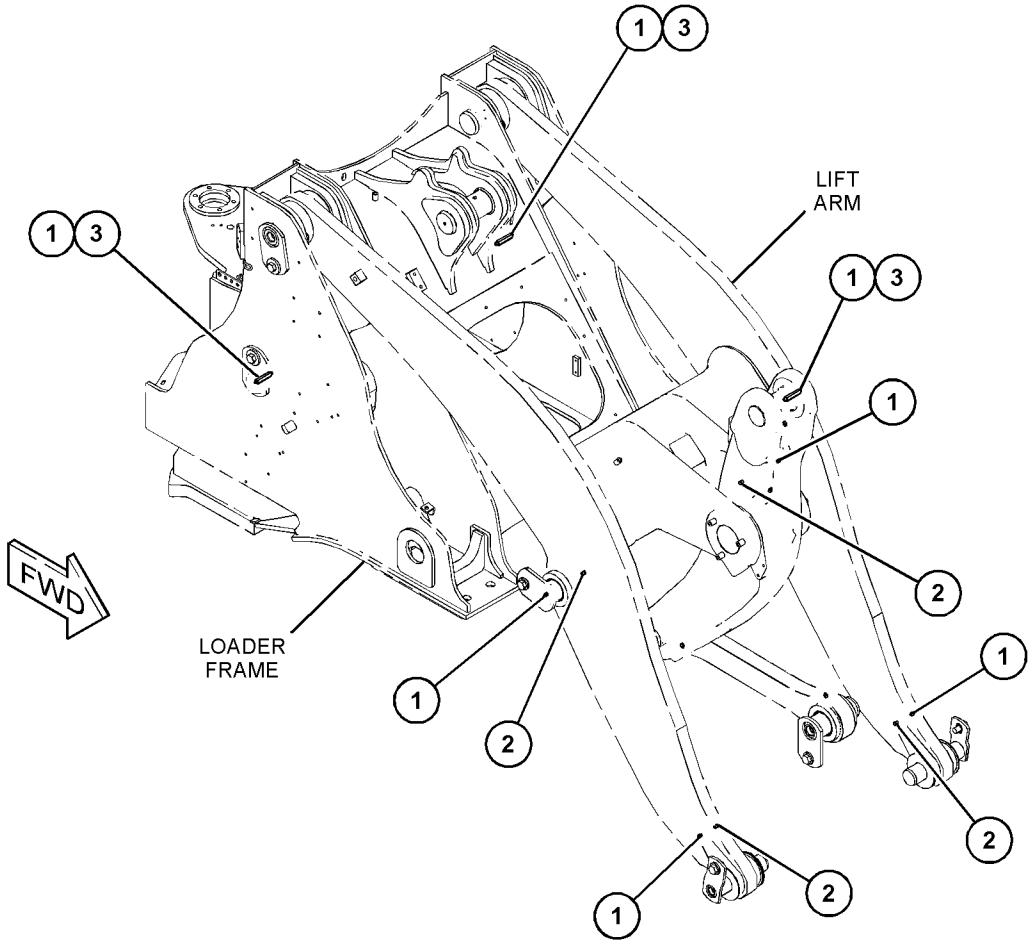

GRAPHIC #1 <END> g06127057

416-9577 COVER GP-ACCESS

S/N: TNS1-UP
CANNOT BE USED WITH 371-5100—PAGE: 100
PART OF 505-1521 CONFIGURATION AR

SMCS-726A **i06632157**

NOTE	REF NO	GRAPHIC REF	PART NUMBER	QTY	PART NAME 1 2 3 4 5 6 (PRODUCT LEVEL)	SEE PAGE
	1	1	**372-7820**	1	COVER	
	2	1	**416-8444**	1	COVER AS	
M		1	**6V-9632**	6	NUT-WELD (M6X1-THD)	
	3	1	**416-8448**	1	COVER	
	4	1	**416-8460**	1	SEAL	
	5	1	**416-8471**	1	BRACKET AS	
M		1	**8T-3490**	4	NUT-WELD (M10X1.5-THD)	
	6	1	**416-9589**	1	SEAL	
	7	1	**141-6518**	10	SPACER (13.5X30X10-MM THK)	
M	8	1	**6V-8836**	6	BOLT (M6X1X14-MM)	
	9	1	**7X-7729**	4	WASHER (11X25X3-MM THK)	
M	10	1	**8T-4137**	4	BOLT (M10X1.5X20-MM)	
	11	1	**9X-2038**	16	WASHER (7X19X2-MM THK)	
M	12	1	**9X-2043**	10	SCREW-TRUSS HEAD (M6X1X14-MM)	

M - METRIC PART

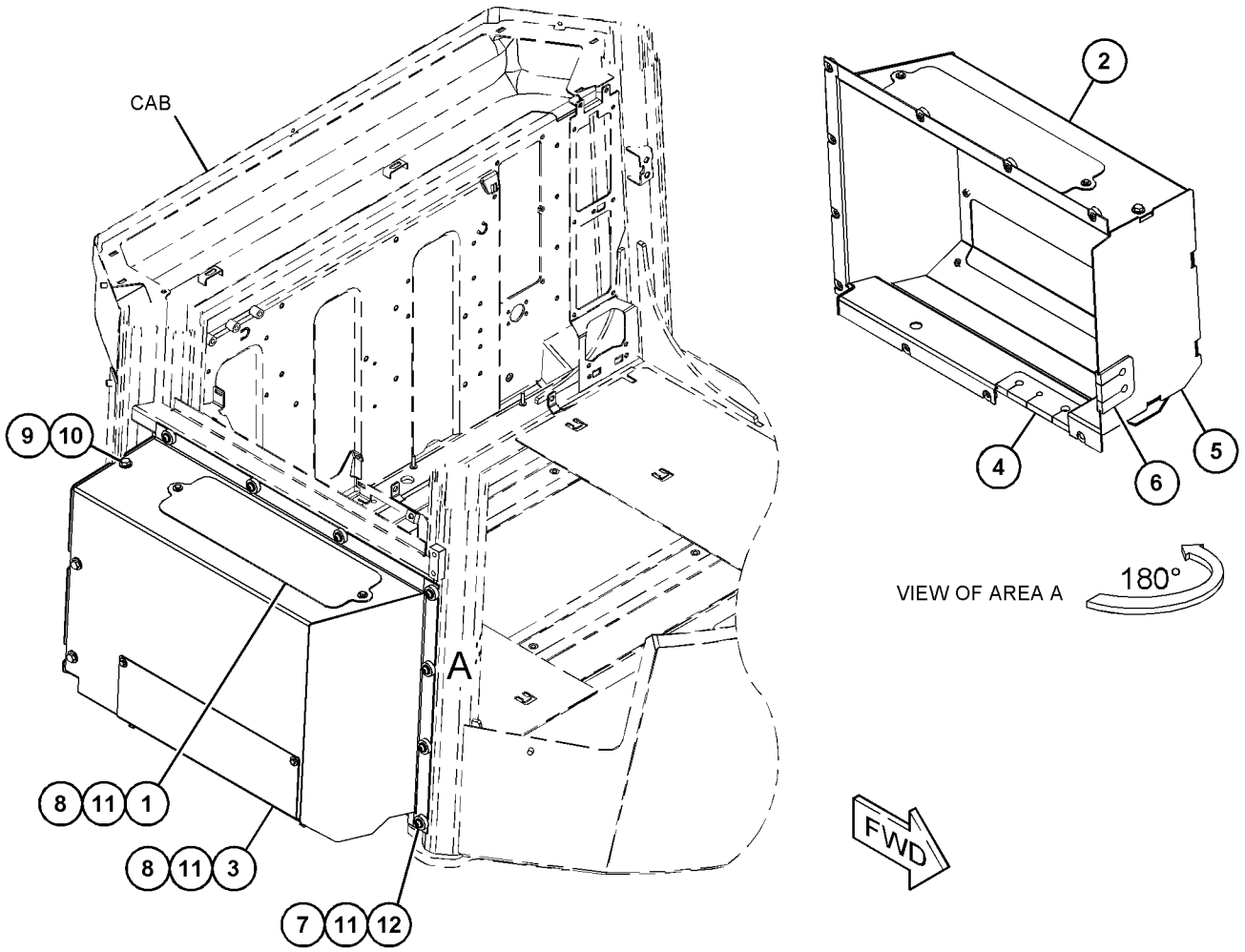

GRAPHIC #1 <END> g03485697

510-2592 COVER GP-ACCESS

S/N: TNS1-UP

PART OF 492-4031 LINK GP-TILT

SMCS-726A **i06732619**

NOTE	REF NO	GRAPHIC REF	PART NUMBER	QTY	PART NAME 1 2 3 4 5 6 (PRODUCT LEVEL)	SEE PAGE
	1	1	**504-2786**	1	SHEET	
	2	1	**7X-7729**	3	WASHER (11X25X3-MM THK)	
M	3	1	**9X-2039**	3	SCREW-TRUSS HEAD (M10X1.5X35-MM)	

M - METRIC PART

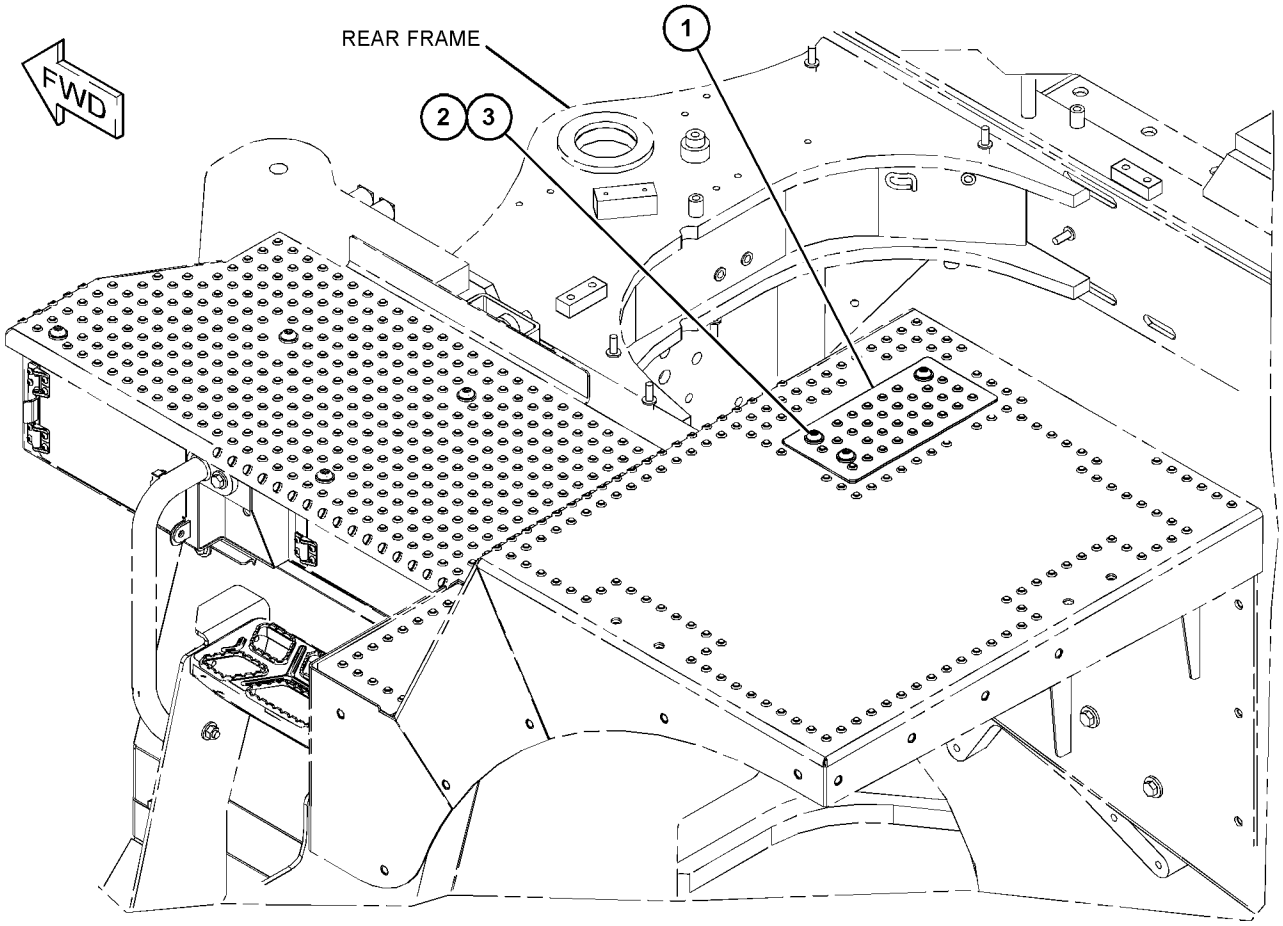

GRAPHIC #1 <END> g06099464

364-8480 COVER GP-FRAME

S/N: TNS1-UP

PART OF 508-7629, 508-7631 SUPPRESSION AR-SOUND

SMCS-7051 **i06726117**

NOTE	REF NO	GRAPHIC REF	PART NUMBER	QTY	PART NAME 1 2 3 4 5 6 (PRODUCT LEVEL)	SEE PAGE
	1	1	**372-4665**	1	COVER (RH)	
	2	1	**372-4667**	1	COVER (LH)	
	3	1	**7X-0618**	8	WASHER-HARD (13.5X40X5-MM THK)	
M	4	1	**8T-4244**	8	NUT (M12X1.75-THD)	

M - METRIC PART

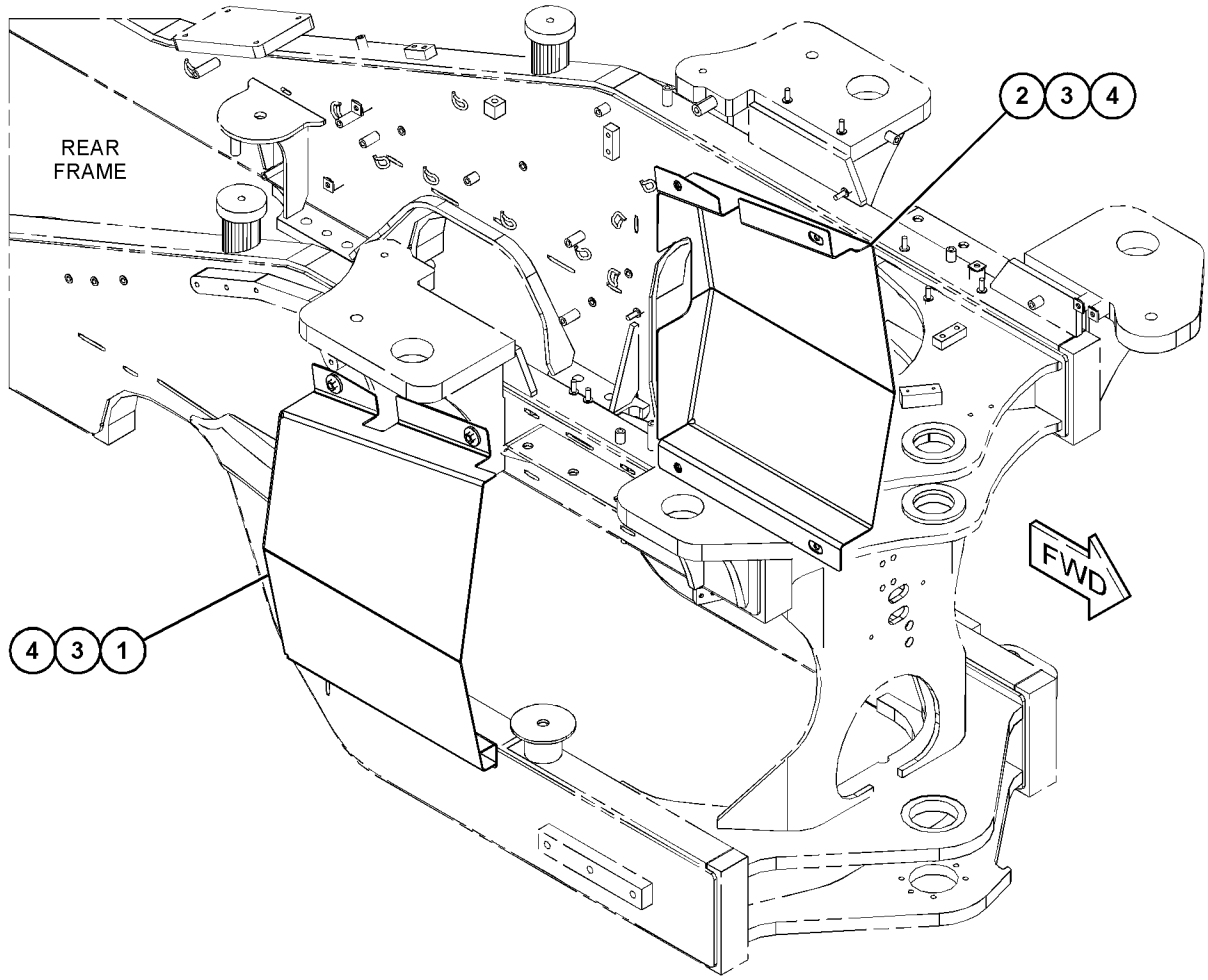

GRAPHIC #1 <END> g03672730

454-7823 DEFLECTOR GP-FENDER

S/N: TNS1-UP

PART OF 464-6672, 464-6673 FENDER AR-ROADING

SMCS-7252 **i06723287**

NOTE	REF NO	GRAPHIC REF	PART NUMBER	QTY	PART NAME 1 2 3 4 5 6 (PRODUCT LEVEL)	SEE PAGE
	1	1	**339-3230**	1	DEFLECTOR (LH)	
	2	1	**339-3231**	1	DEFLECTOR (RH)	
M	3	1	**8T-4195**	10	BOLT (M10X1.5X30-MM)	
	4	1	**8T-4222**	10	WASHER-PLATED (11X32X2.5-MM THK)	

M - METRIC PART

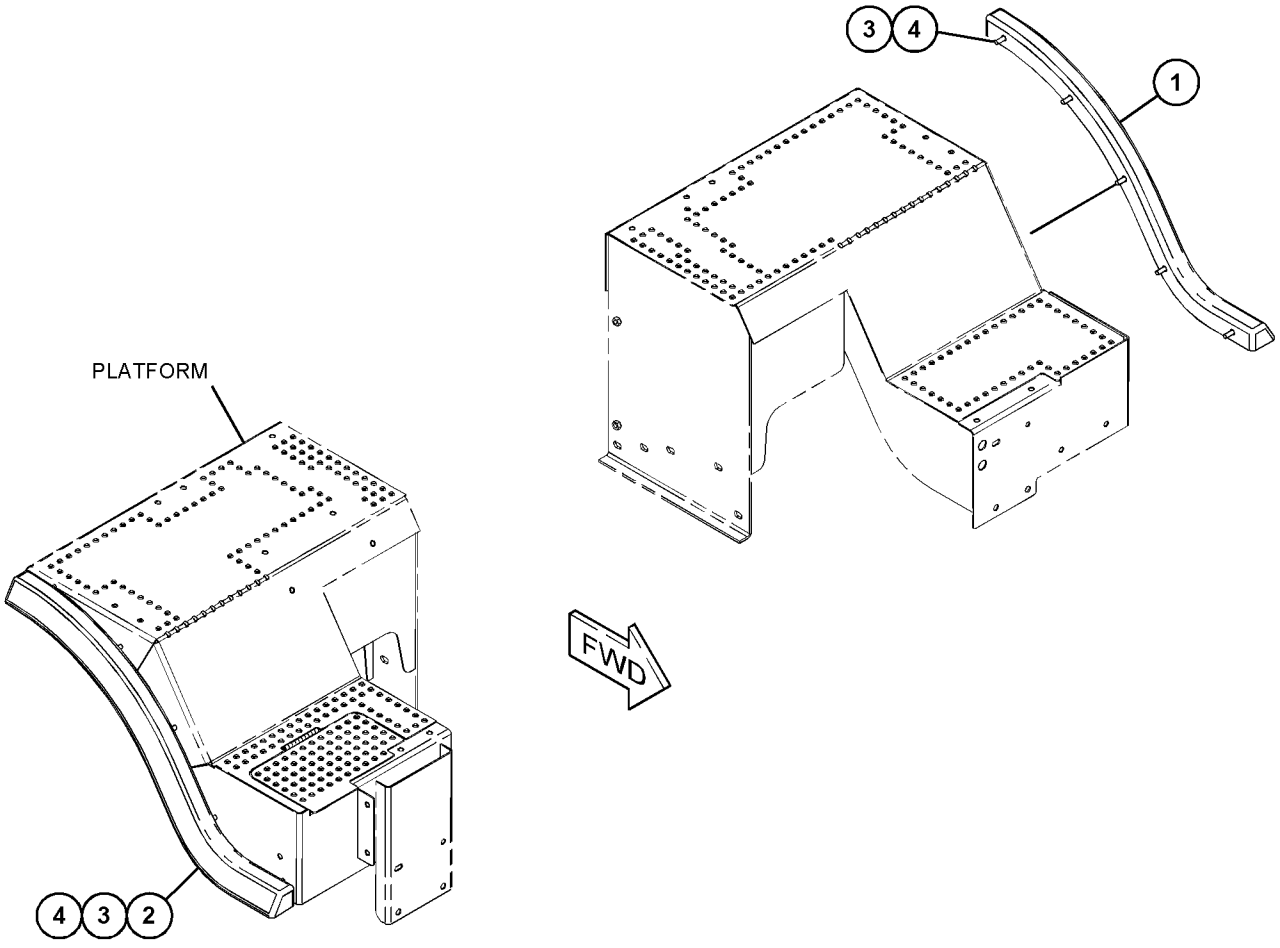

GRAPHIC #1 <END> g06006964

391-5780 DOOR GP-ACCESS—HOOD, RH

S/N: TNS1-UP

PART OF 336-0000 HOOD & GUARD GP

SMCS-7273 **i06553796**

NOTE	REF NO	GRAPHIC REF	PART NUMBER	QTY	PART NAME 1 2 3 4 5 6 (PRODUCT LEVEL)	SEE PAGE
	1	1	**118-9587**	1	CAM-LATCH	
	2	1	**391-5781**	1	DOOR (RH)	
	3	1	**454-0230**	2	HINGE AS	
J	4	1	**465-6593**	1	LATCH AS	
	5	1	**479-3260**	4	WASHER (5.5X13X1.2-MM THK)	
	6	1	**490-8846**	4	SCREW-PAN HEAD (M5X0.8X12-MM)	
M	7	1	**5C-2874**	4	NUT (M5X0.8-THD)	

J - REQUIRES CORPORATE KEY
M - METRIC PART

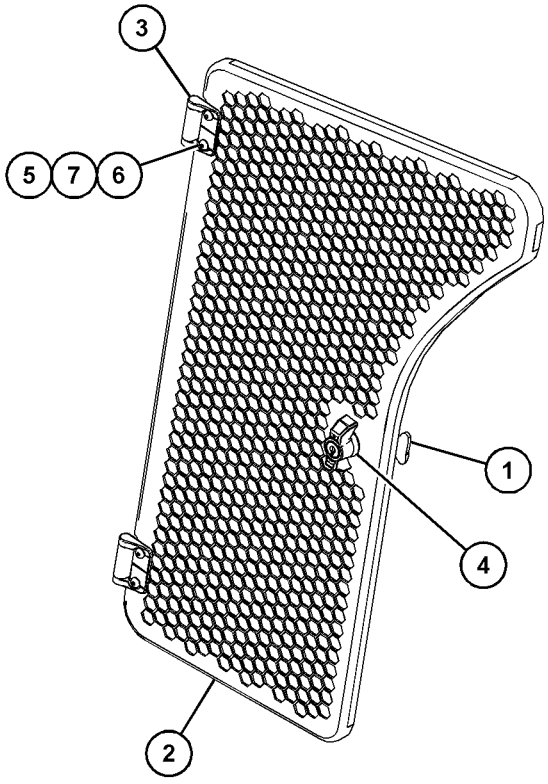

VIEW OF AREA A

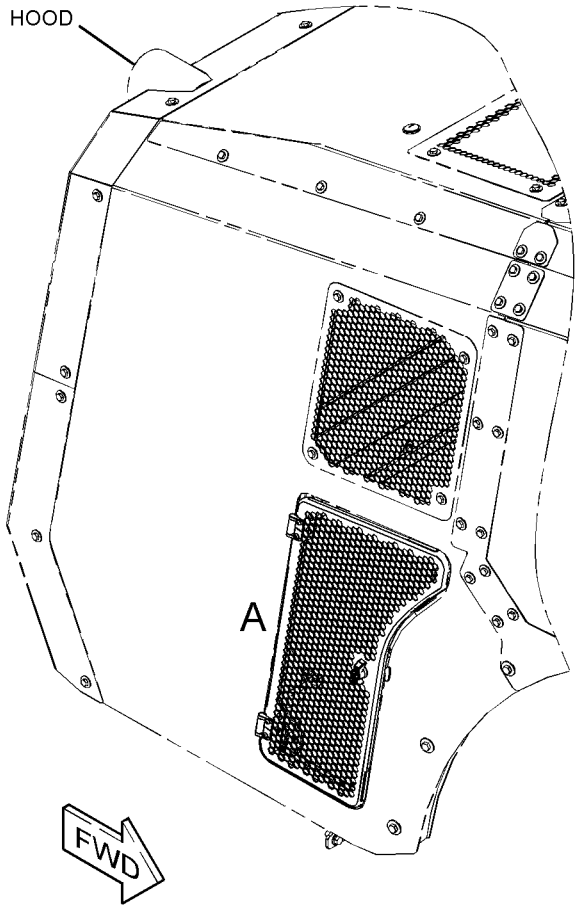

GRAPHIC #1 <END> g06007034

391-5782 DOOR GP-ACCESS

S/N: TNS1-UP

PART OF 336-0000 HOOD & GUARD GP

SMCS-7273 **i06814017**

NOTE	REF NO	GRAPHIC REF	PART NUMBER	QTY	PART NAME 1 2 3 4 5 6 (PRODUCT LEVEL)	SEE PAGE
	1	1	**118-9587**	1	CAM-LATCH	
	2	1	**391-5783**	1	DOOR (ACCESS)	
	3	1	**454-0230**	2	HINGE AS	
J	4	1	**465-6593**	1	LATCH AS	
	5	1	**479-3260**	4	WASHER (5.5X13X1.2-MM THK)	
	6	1	**490-8846**	4	SCREW-PAN HEAD (M5X0.8X12-MM)	
M	7	1	**5C-2874**	4	NUT (M5X0.8-THD)	

J - REQUIRES CORPORATE KEY
M - METRIC PART

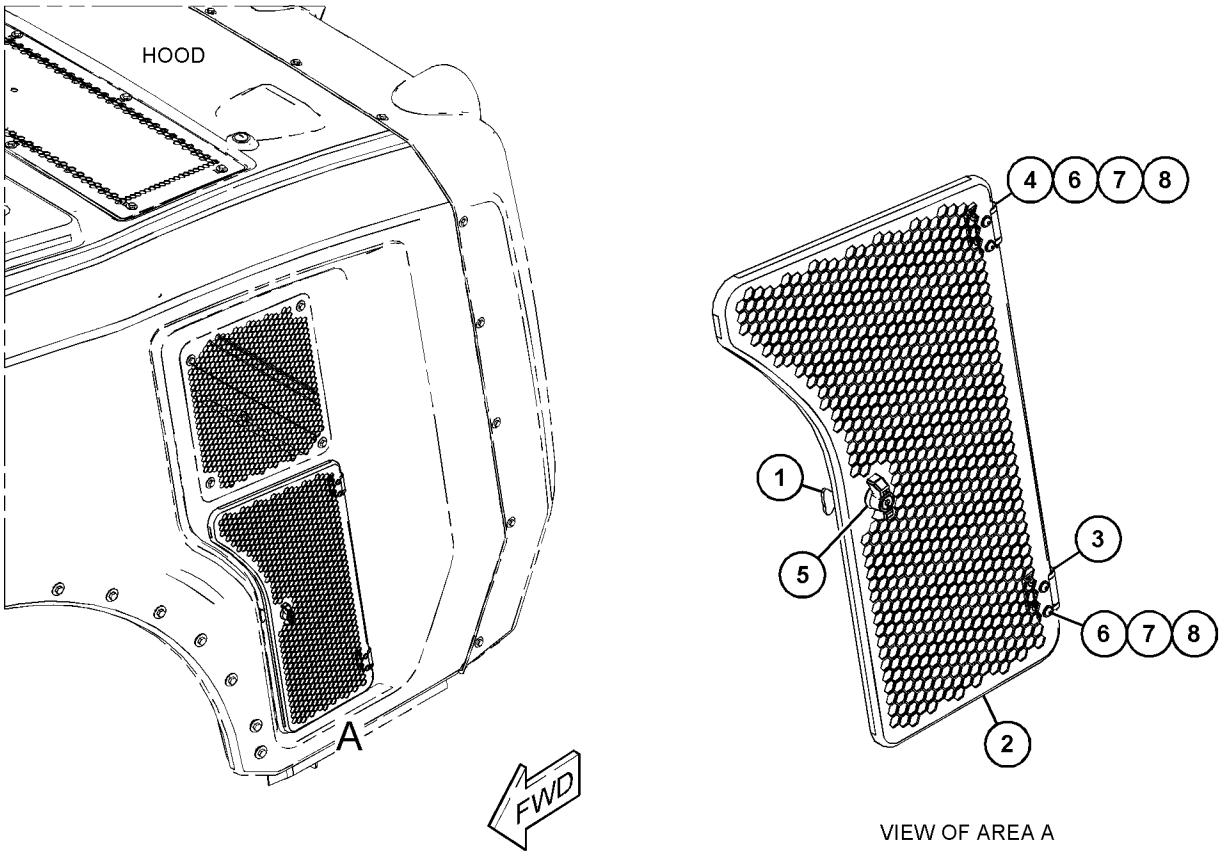

VIEW OF AREA A

GRAPHIC #1 <END> g03851531

447-8926 DOOR GP-ACCESS

S/N: TNS1-UP

PART OF 504-2867, 504-2874 BOX GP-BATTERY

SMCS-7273 **i06819356**

NOTE	REF NO	GRAPHIC REF	PART NUMBER	QTY	PART NAME 1 2 3 4 5 6 (PRODUCT LEVEL)	SEE PAGE
	1	1	**340-2580**	1	HINGE AS (TOP)	
	2	1	**340-2581**	1	HINGE AS (BOTTOM)	
	3	1	**437-7858**	1	SHEET AS	
M		1	**9X-2032**	4	NUT-WELD (M4X0.7-THD)	
	4	1	**438-0890**	1	SHEET	
	5	1	**447-8927**	1	PANEL AS-DOOR	
M		1	**8T-3597**	2	NUT-WELD (M12X1.75-THD)	
M		1	**9X-2032**	4	NUT-WELD (M4X0.7-THD)	
M	6	1	**174-8131**	4	SCREW-TRUSS HEAD (M4X0.7X12-MM)	
M	7	1	**233-9161**	4	SCREW-TRUSS HEAD (M4X0.7X18-MM)	
D	8	1	**8T-5372**		SEAL (0.7-M)	

D - ORDER BY THE METER
M - METRIC PART

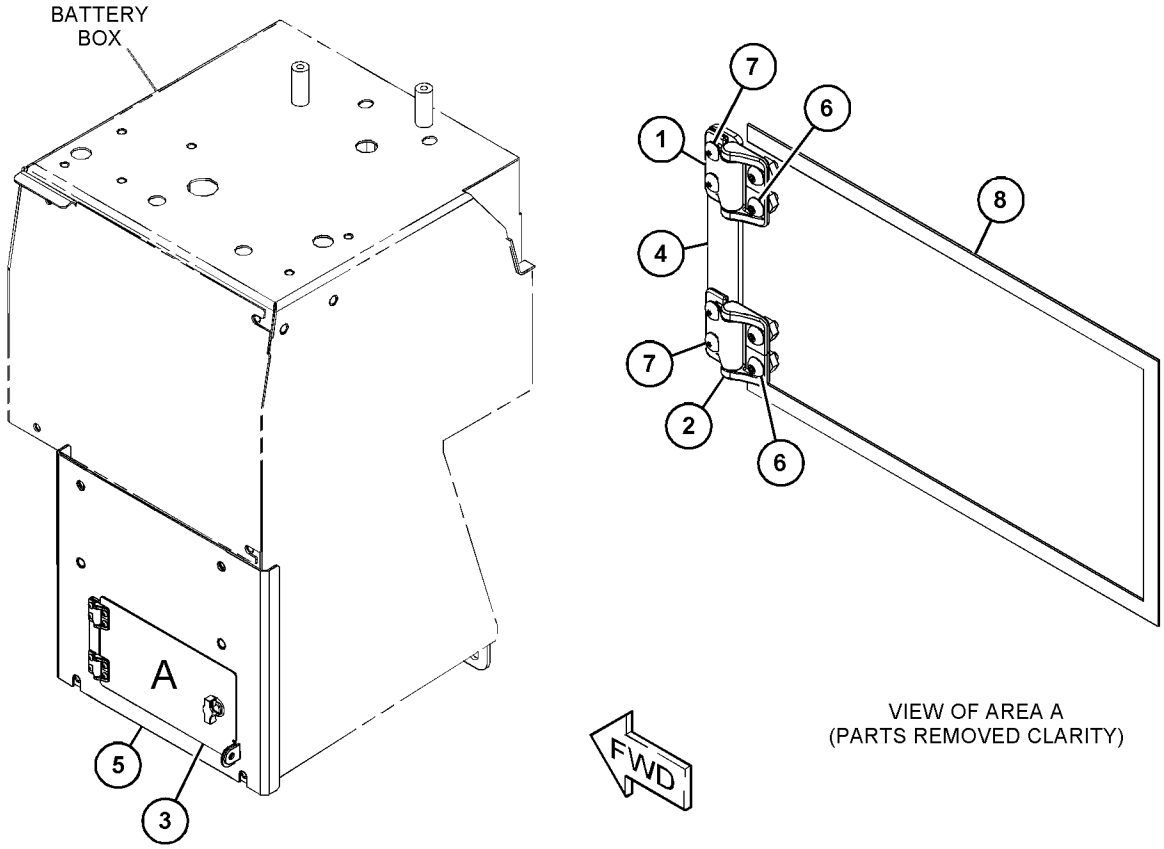

GRAPHIC #1 <END> g03670680

443-2251 ENCLOSURE GP-SERVICE CENTER

S/N: TNS1-UP

PART OF 443-2250 SUPPORT GP-VALVE & FILTER

SMCS-7513 **i06629785**

NOTE	REF NO	GRAPHIC REF	PART NUMBER	QTY	PART NAME 1 2 3 4 5 6 (PRODUCT LEVEL)	SEE PAGE
	1	1	**5D-9629**	1	ROD	
M	2	1	**9R-4595**	1	BOSS (M12X1.75X30-MM)	
M	3	1	**9R-2613**	2	BOSS-WELD (M10X1.5X25-MM)	
M	4	1	**9C-7929**	1	BLOCK (M10X1.5-MM)	
M	5	1	**8Y-4489**	1	BOSS (M10X1.5-THD)	
M	6	1	**8T-3597**	6	NUT-WELD (M12X1.75-THD)	
M	7	1	**8T-3490**	42	NUT-WELD (M10X1.5-THD)	
M	8	1	**7Y-6338**	1	BOSS (M10X1.5X70-MM)	
	9	1	**7T-1099**	1	LINK	
	10	1	*432-6738*	1	DOOR AS-ACCESS (SERVICE CENTER)	
M		1	**8T-3597**	4	NUT-WELD (M12X1.75-THD)	
		1	**331-1679**	3	HINGE AS (RH)	

M - METRIC PART

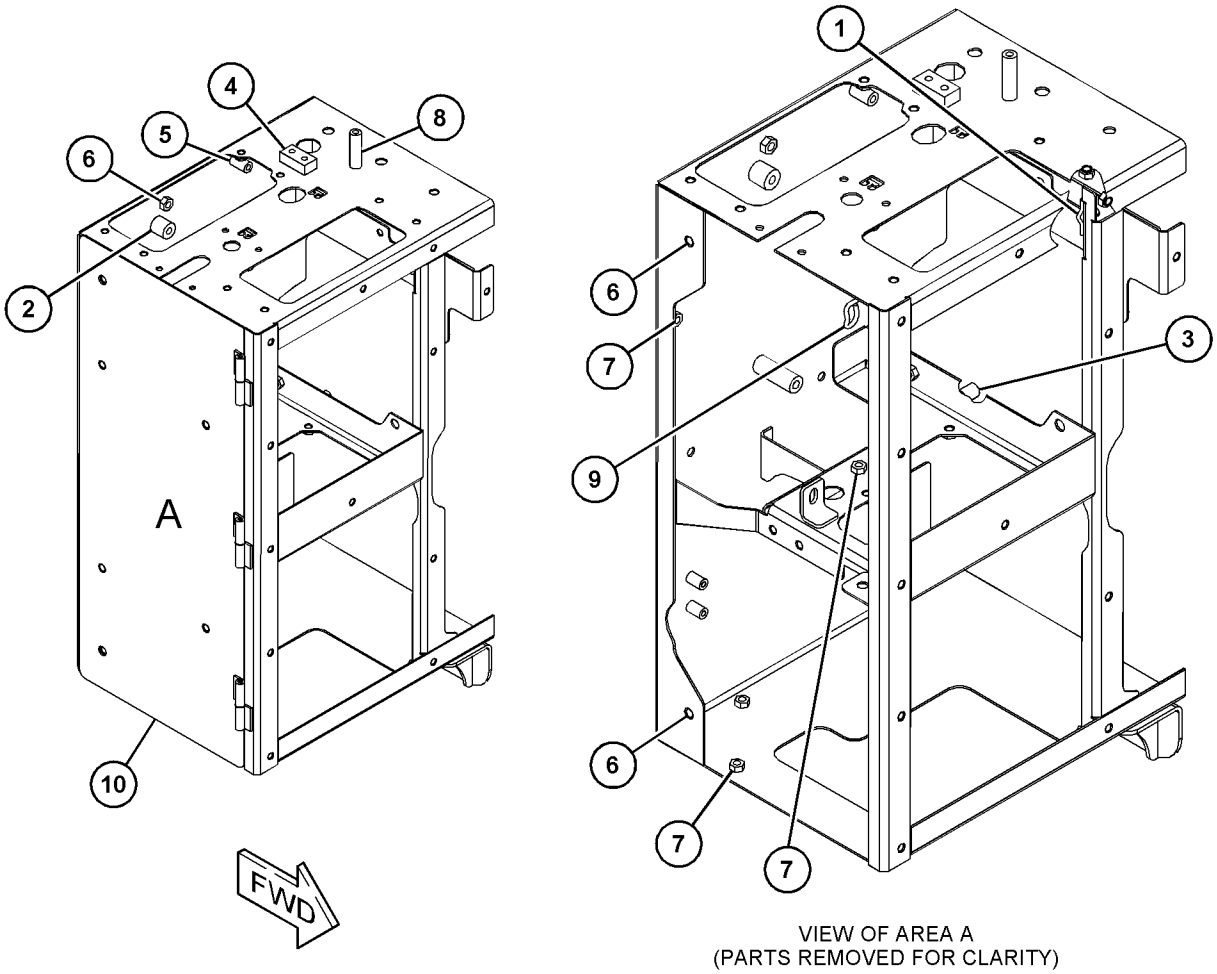

VIEW OF AREA A
(PARTS REMOVED FOR CLARITY)

GRAPHIC #1 <END> g03670449

454-7830 EXTENSION GP-FENDER

S/N: TNS1-UP

PART OF 464-6672 FENDER AR-ROADING

SMCS-7252 **i06723291**

NOTE	REF NO	GRAPHIC REF	PART NUMBER	QTY	PART NAME 1 2 3 4 5 6 (PRODUCT LEVEL)	SEE PAGE
	1	1	**375-0909**	2	EXTENSION	
	2	1	**144-8344**	6	SPACER (11X19X20-MM THK)	
M	3	1	**8T-4182**	6	BOLT (M10X1.5X45-MM)	
	4	1	**8T-4222**	6	WASHER-PLATED (11X32X2.5-MM THK)	

M - METRIC PART

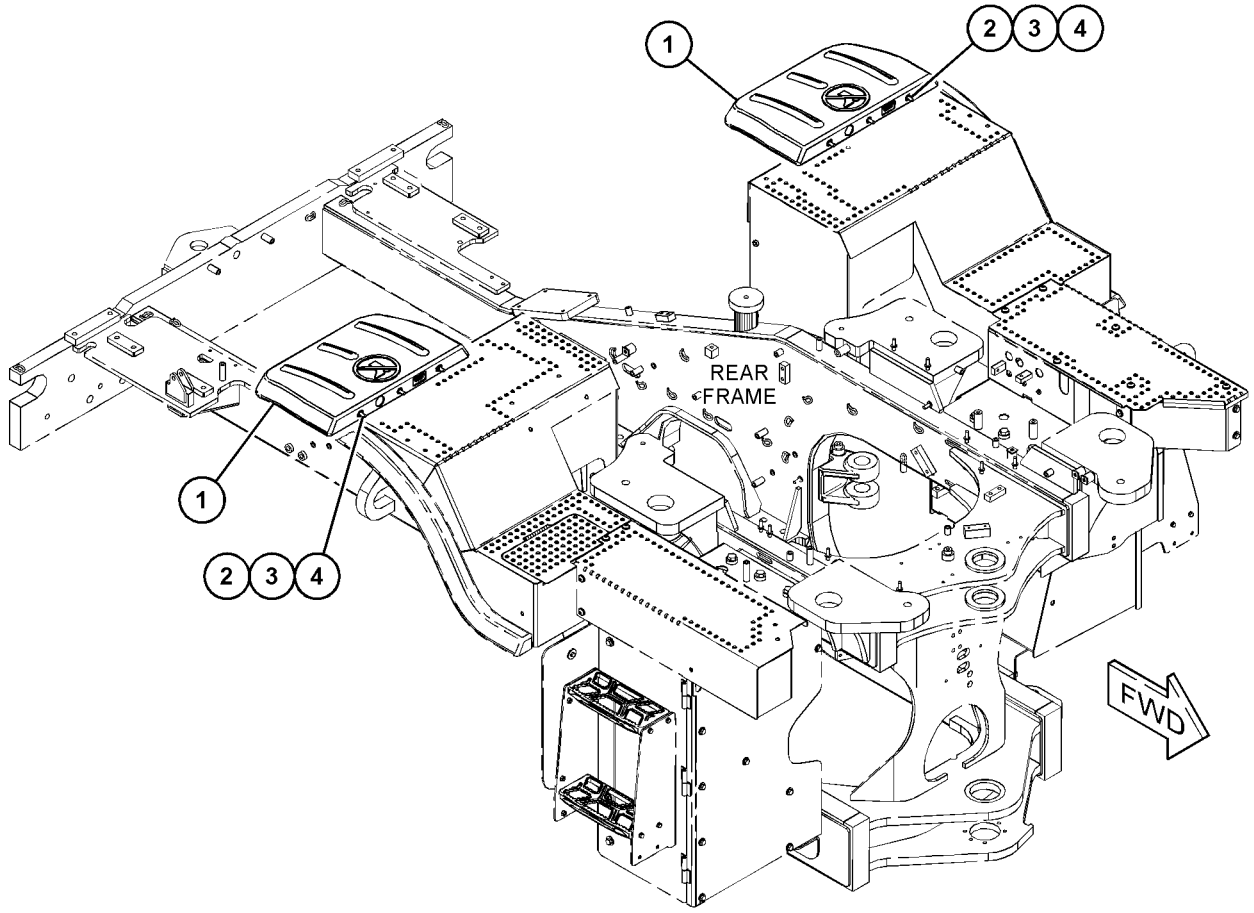

GRAPHIC #1 <END> g06007299

464-6672 FENDER AR-ROADING

S/N: TNS1-UP

PART OF 492-4033, 492-4034 DISTRIBUTION AR

SMCS-7252 **i06737791**

NOTE	PART NUMBER	QTY	PART NAME 1 2 3 4 5 6 (PRODUCT LEVEL)	SEE PAGE
Y	*436-2371*	1	COVER & PLUG GP (FENDER)	433
Y	*436-2372*	1	COVER & PLUG GP (FENDER)	434
Y	*436-2373*	1	COVER & PLUG GP (FENDER)	435
Y	*454-7823*	1	DEFLECTOR GP-FENDER	440
Y	*454-7830*	1	EXTENSION GP-FENDER	445
Y	*454-7820*	1	FENDER GP	449
Y	*454-7850*	1	HANDRAIL GP	475
Y	*464-6689*	1	STEP GP	537

Y - SEPARATE ILLUSTRATION

<END>

464-6673 FENDER AR-ROADING

S/N: TNS1-UP

CANNOT BE USED WITH 464-6672—PAGE: 446

SMCS-7252 **i06736276**

NOTE	PART NUMBER	QTY	PART NAME 1 2 3 4 5 6 (PRODUCT LEVEL)	SEE PAGE
Y	*436-2371*	1	COVER & PLUG GP (FENDER)	433
Y	*436-2372*	1	COVER & PLUG GP (FENDER)	434
Y	*454-7823*	1	DEFLECTOR GP-FENDER	440
Y	*454-7820*	1	FENDER GP	449
Y	*454-7850*	1	HANDRAIL GP	475
Y	*464-6689*	1	STEP GP	537
Y	*454-7831*	1	TRIM GP-CAB	852

Y - SEPARATE ILLUSTRATION

<END>

464-6676 FENDER AR-ROADING

S/N: TNS1-UP

SMCS-7252 **i06770112**

NOTE	PART NUMBER	QTY	PART NAME 1 2 3 4 5 6 (PRODUCT LEVEL)	SEE PAGE
Y	*436-2371*	1	COVER & PLUG GP (FENDER)	433
Y	*436-2372*	1	COVER & PLUG GP (FENDER)	434
Y	*436-2373*	1	COVER & PLUG GP (FENDER)	435
Y	*454-7820*	1	FENDER GP	449
Y	*367-2602*	1	HANDRAIL GP	473
Y	*464-6689*	1	STEP GP	537

Y - SEPARATE ILLUSTRATION

<END>

389-2890 FENDER GP–LH

S/N: TNS1-UP

PART OF 454-7831 TRIM GP-CAB

SMCS-7252 **i06723330**

NOTE	REF NO	GRAPHIC REF	PART NUMBER	QTY	PART NAME 1 2 3 4 5 6 (PRODUCT LEVEL)	SEE PAGE
	1	1	**389-2886**	1	FENDER-REAR (LH)	
	2	1	**389-2888**	1	DEFLECTOR (FENDER, REAR, LH)	
	3	1	**389-2923**	1	BRACKET AS	
	4	1	**389-2957**	1	BRACKET AS	
	5	1	**460-3065**	1	BRACKET	
M	6	1	**131-3540**	9	LOCKNUT (M8X1.25-THD)	
	7	1	**7X-0579**	20	WASHER-HARD (8.8X25.5X2-MM THK)	
M	8	1	**8T-7547**	11	BOLT (M8X1.25X30-MM)	
BE	9	1	**458-7842**		TAPE	

B - USE AS REQUIRED
E - ORDER BY THE CENTIMETER
M - METRIC PART

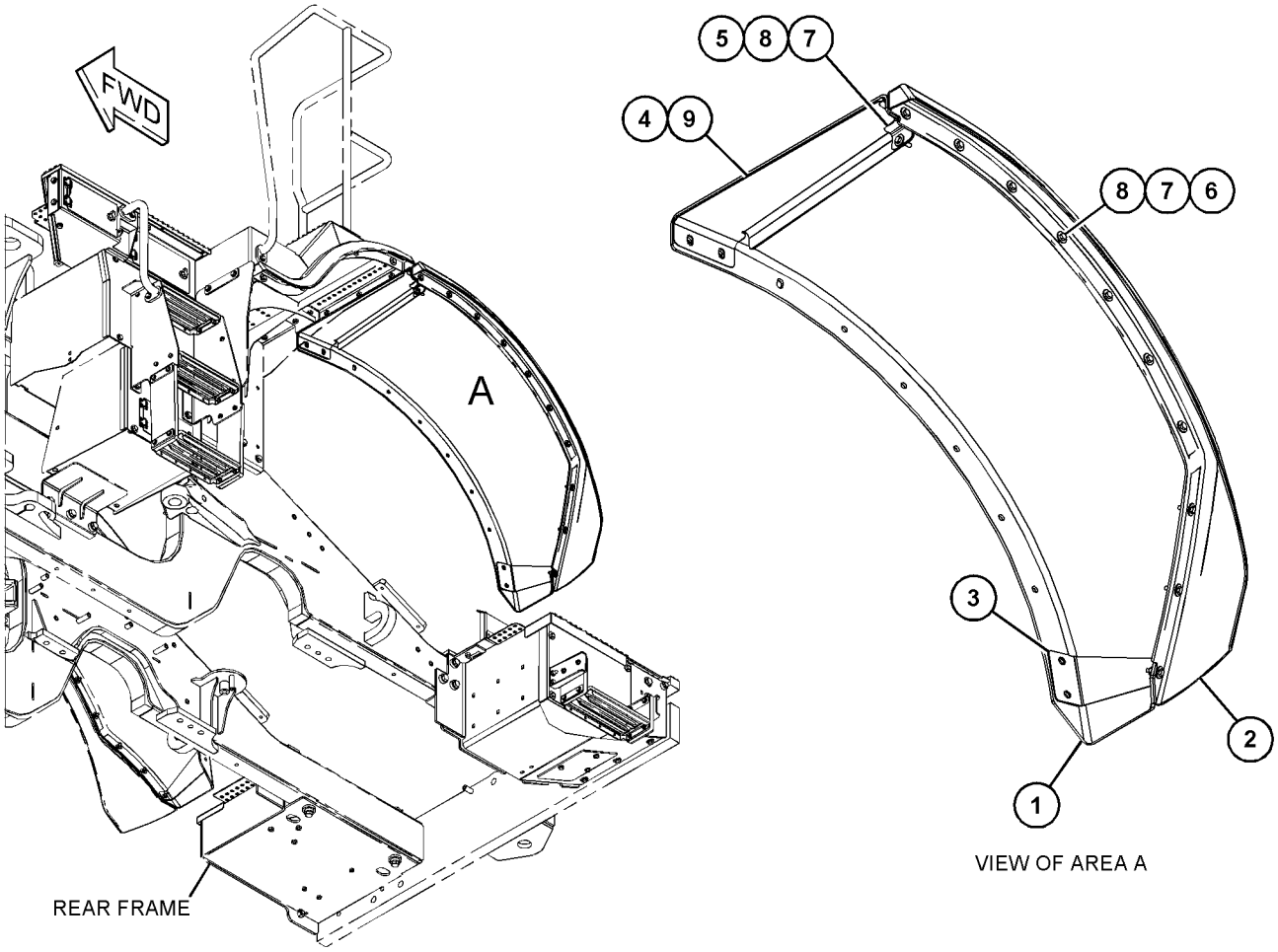

GRAPHIC #1 <END> g03844633

389-2891 FENDER GP–REAR, RH

S/N: TNS1-UP

PART OF 454-7831 TRIM GP-CAB

SMCS-7252 **i06781464**

NOTE	REF NO	GRAPHIC REF	PART NUMBER	QTY	PART NAME 1 2 3 4 5 6 (PRODUCT LEVEL)	SEE PAGE
	1	1	**485-2212**	1	FENDER AS (RH)	
		1	**389-2887**	1	FENDER-REAR (RH)	
		1	**389-2958**	1	BRACKET AS (RH)	
M		1	**8T-3612**	1	NUT-WELD (M8X1.25-THD)	
B		1	**458-7842**		TAPE	
	2	1	**389-2889**	1	DEFLECTOR (RH)	
	3	1	**477-8142**	1	BRACKET	
	4	1	**478-1591**	1	BRACKET AS	
M		1	**8T-3612**	1	NUT-WELD (M8X1.25-THD)	
	5	1	**460-3064**	1	BRACKET (RH)	
M	6	1	**131-3540**	9	LOCKNUT (M8X1.25-THD)	
	7	1	**7X-0579**	20	WASHER-HARD (8.8X25.5X2-MM THK)	
M	8	1	**8T-7547**	11	BOLT (M8X1.25X30-MM)	

B - USE AS REQUIRED
M - METRIC PART

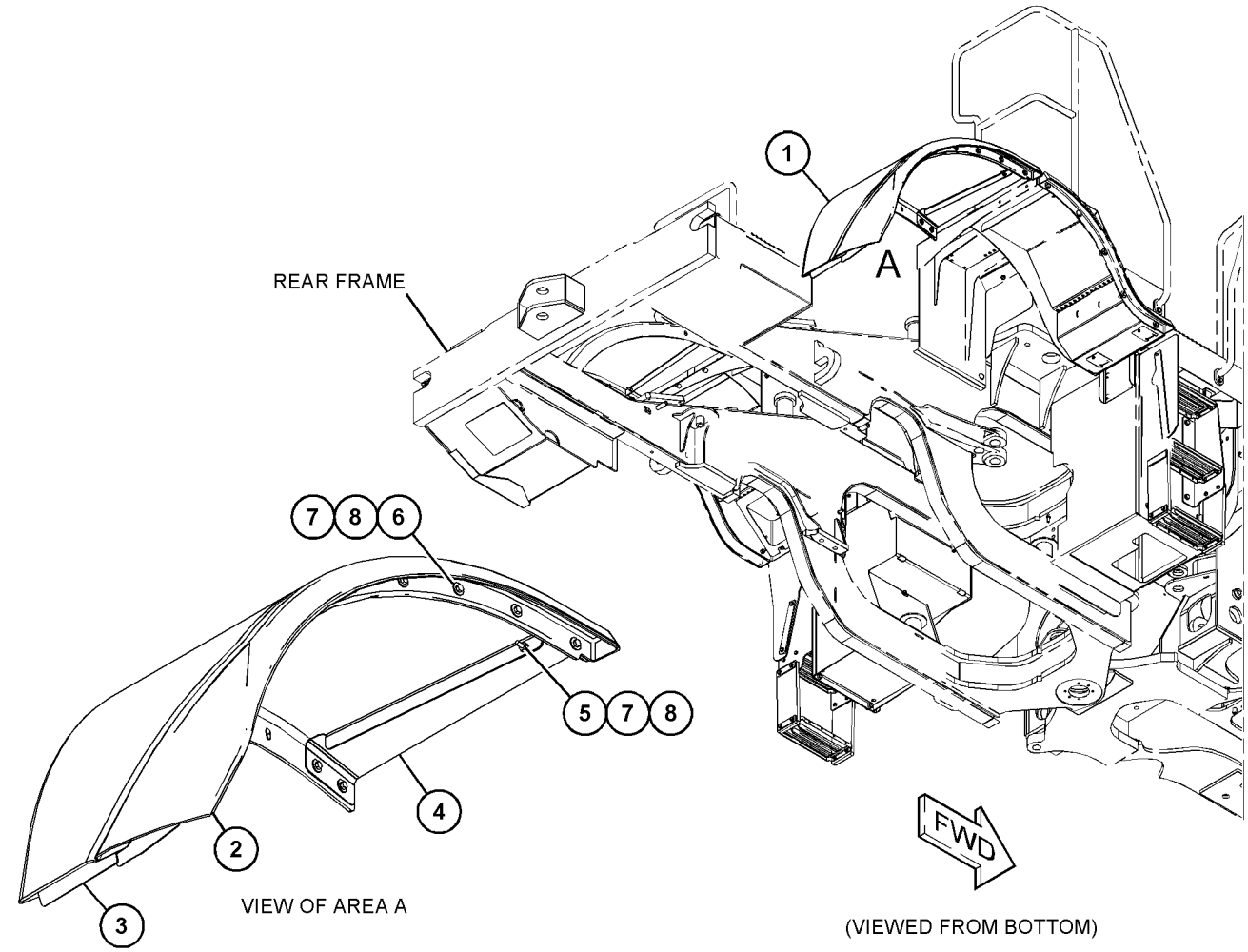

GRAPHIC #1

<END>

g06122345

454-7820 FENDER GP

S/N: TNS1-UP

PART OF 464-6672, 464-6673, 464-6676 FENDER AR-ROADING

SMCS-7252 **i06738240**

NOTE	REF NO	GRAPHIC REF	PART NUMBER	QTY	PART NAME 1 2 3 4 5 6 (PRODUCT LEVEL)	SEE PAGE
	1	1	**436-2368**	8	COLLAR	
	2	1	**454-7758**	2	STRIP AS	
					(EACH INCLUDES)	
M		1	**8T-3612**	4	NUT-WELD (M8X1.25-THD)	
	3	1	**464-6660**	2	FENDER AS	
	4	1	**464-6669**	2	MUD FLAP	
	5	1	**499-4657**	1	PLATE AS	
	6	1	**499-4658**	1	PLATE AS	
	7	1	**499-5524**	2	PLATE AS	
					(EACH INCLUDES)	
M		1	**8T-3490**	1	NUT-WELD (M10X1.5-THD)	
M	8	1	**500-6257**	6	BOLT-HEAD (M10X1.5X45-MM)	
	9	1	**7X-0579**	8	WASHER-HARD (8.8X25.5X2-MM THK)	
	10	1	**7X-7729**	6	WASHER (11X25X3-MM THK)	
M	11	1	**8T-3647**	8	BOLT (M8X1.25X80-MM)	
	12	1	**8T-4121**	16	WASHER-HARD (11X21X2.5-MM THK)	
M	13	1	**8T-4136**	16	BOLT (M10X1.5X25-MM)	
M	14	1	**8T-4195**	14	BOLT (M10X1.5X30-MM)	
	15	1	**8T-4226**	14	WASHER-PLATED (10.5X45X3-MM THK)	

M - METRIC PART

454-7820 **FENDER GP (**contd.**)** **i06738240**

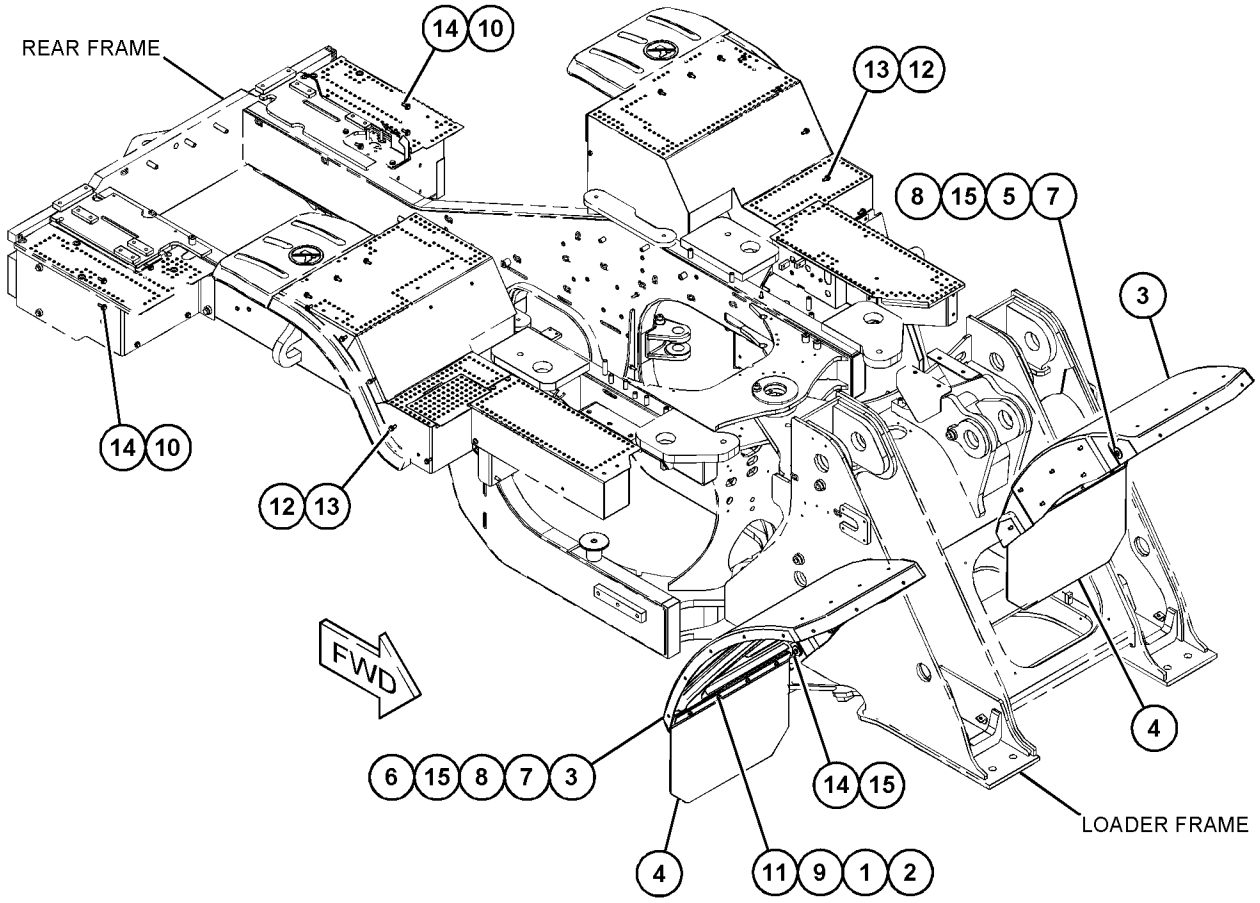

GRAPHIC #1 <END> g06109380

366-0729 FLOORPLATE GP

S/N: TNS1-UP

PART OF 455-3940 CAB AR

SMCS-7265 **i05805501**

NOTE	REF NO	GRAPHIC REF	PART NUMBER	QTY	PART NAME 1 2 3 4 5 6 (PRODUCT LEVEL)	SEE PAGE
	1	1	**8D-6542**	19	GROMMET	
	2	1	**8P-6364**	2	PLUG	

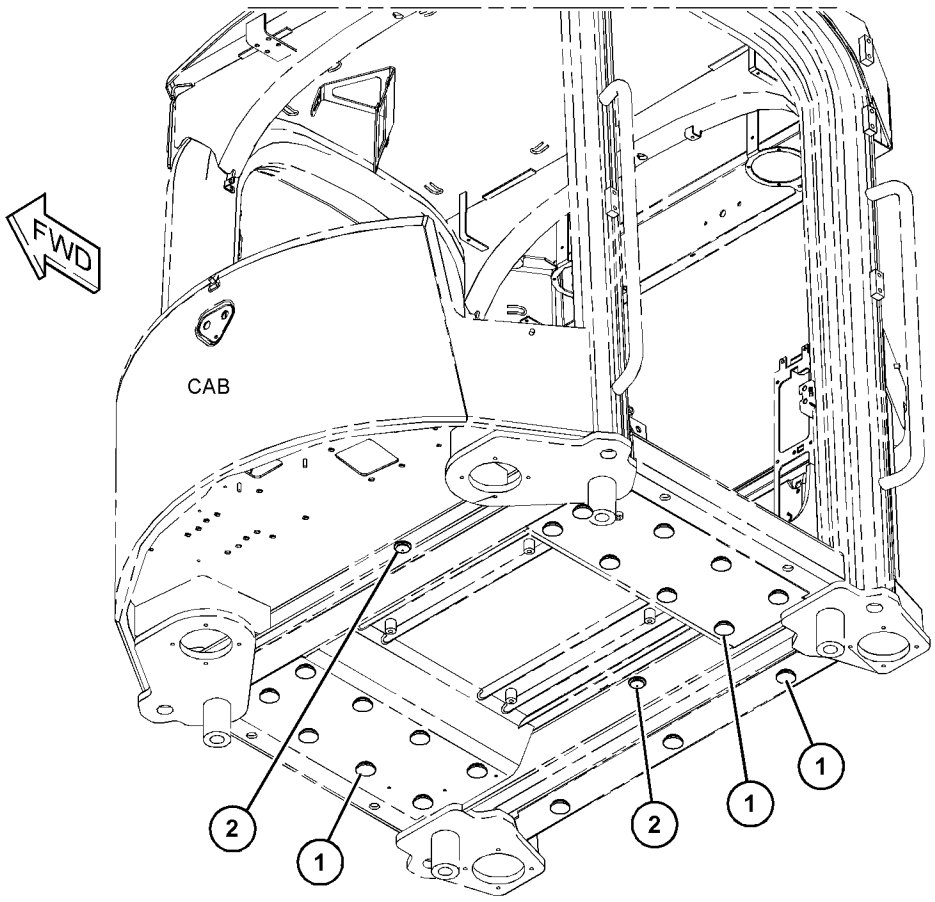

GRAPHIC #1 <END> g03612256

438-5702 FRAME AS-LOADER

S/N: TNS1-UP

PART OF 456-5790 CHASSIS AR

SMCS-7054 **i06796500**

NOTE	REF NO	GRAPHIC REF	PART NUMBER	QTY	PART NAME 1 2 3 4 5 6 (PRODUCT LEVEL)	SEE PAGE
M	1	1	**110-6269**	4	BOSS (M20X2.5X25-MM)	
M	2	1	**9C-6809**	1	BLOCK (M10X1.5-MM)	
M	3	1	**388-5576**	11	BOSS-WELD (M10X1.5X30-MM)	
M	4	1	**389-0871**	1	BOSS-WELD (M10X1.5X45-MM)	
M	5	1	**430-5327**	1	BOSS-WELD (M10X1.5X55-MM)	
M	6	1	**446-5834**	1	STUD-WELD (M10X1.5X41-MM)	
	7	1	**7T-1099**	17	LINK	
	8	1	**8X-7853**	2	BLOCK	

M - METRIC PART

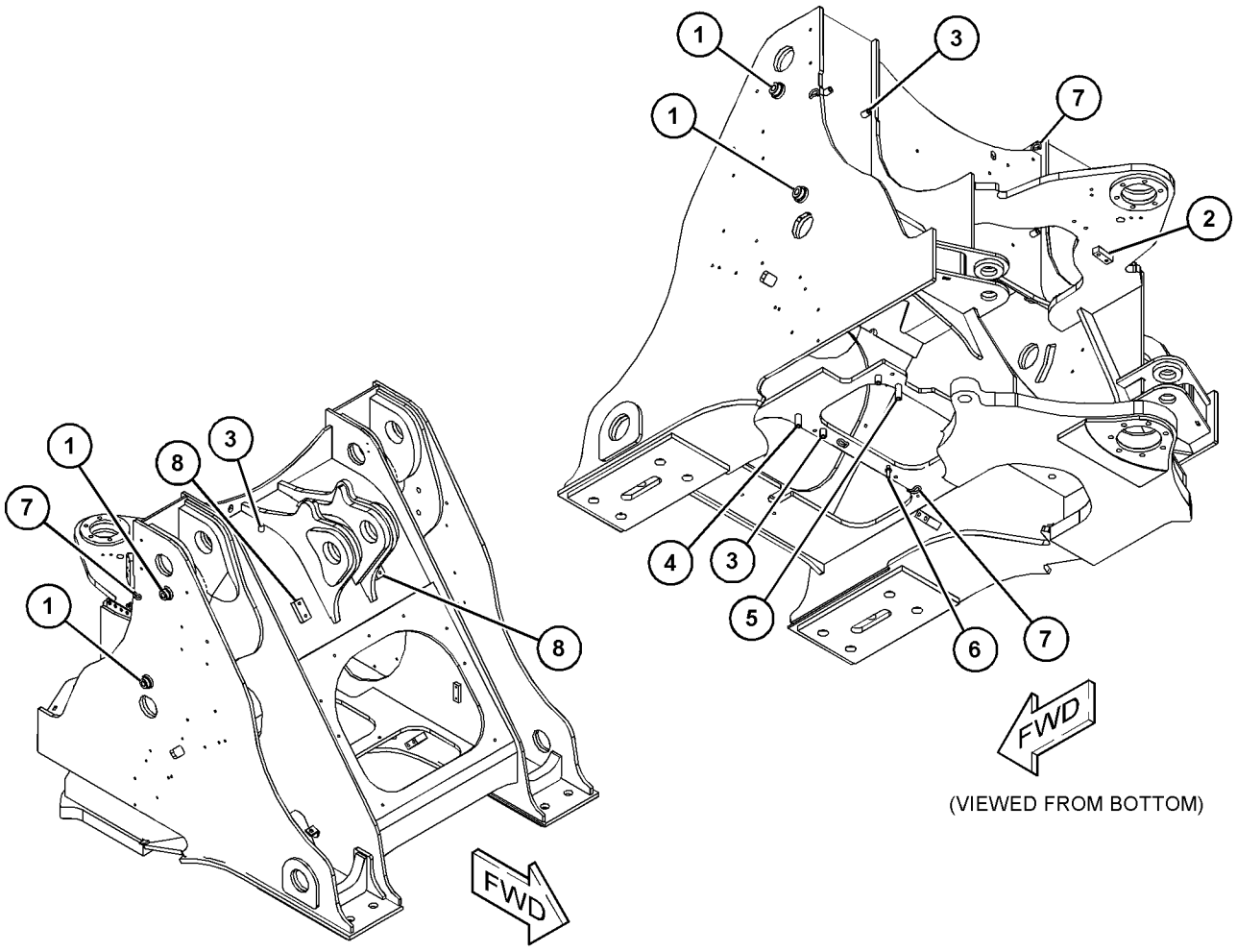

GRAPHIC #1 <END> g06030979

437-3714 FRAME AS-REAR

S/N: TNS1-UP

PART OF 437-3721 FRAME AS-REAR

SMCS-7051 **i06728776**

NOTE	REF NO	GRAPHIC REF	PART NUMBER	QTY	PART NAME 1 2 3 4 5 6 (PRODUCT LEVEL)	SEE PAGE
	1	1	**148-3072**	1	BLOCK	
	3	1	*346-1540*	2	PLATE AS	
					(EACH INCLUDES)	
		1	**4I-7077**	1	BOSS	
	6	1	*360-2924*	2	PLATE AS	
					(EACH INCLUDES)	
M		1	**355-8941**	3	NUT-WELD (M16X2-THD)	
	10	1	*372-6021*	1	RAIL AS	
		1	**7T-1099**	13	LINK	
		1	**260-0215**	3	NUT-WELD (M12X1.75-THD)	
	18	1	*374-1901*	1	HITCH AS	
		1	**7T-1099**	3	LINK	
	30	1	*464-0919*	1	RAIL AS	
		1	**7T-1099**	4	LINK	
	33	1	**125-5006**	5	BOSS AS	
					(EACH INCLUDES)	
		1	**8S-1783**	1	PLATE-GROUNDING	
M		1	**8Y-3925**	1	BOSS (M10X1.5X30-MM)	
M	34	1	**388-5576**	16	BOSS-WELD (M10X1.5X30-MM)	
M	35	1	**389-0871**	5	BOSS-WELD (M10X1.5X45-MM)	
M	37	1	**430-5327**	1	BOSS-WELD (M10X1.5X55-MM)	
M	38	1	**430-5328**	11	BOSS-WELD (M10X1.5X65-MM)	
M	40	1	**446-5834**	14	STUD-WELD (M10X1.5X41-MM)	
	41	1	**7T-1099**	12	LINK	
	42	1	**7Y-2522**	1	PLATE	
M	43	1	**8R-7783**	1	BOSS (M12X1.75X45-MM)	
M	45	1	**9C-6809**	2	BLOCK (M10X1.5-MM)	
M	46	1	**9C-7929**	2	BLOCK (M10X1.5-MM)	
	47	1	**9C-9446**	1	BLOCK	
M	48	1	**9R-2672**	1	BOSS-THREADED (M10X1.5-THD)	

M - METRIC PART

437-3714 **FRAME AS-REAR** (contd.) **i06728776**

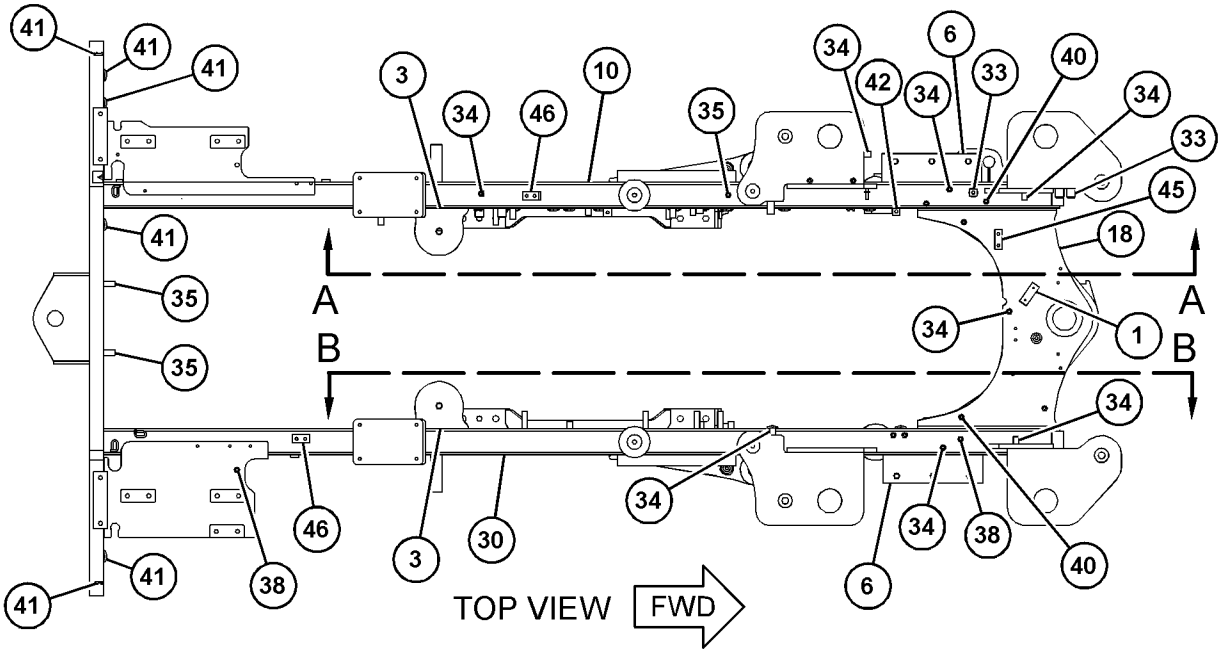

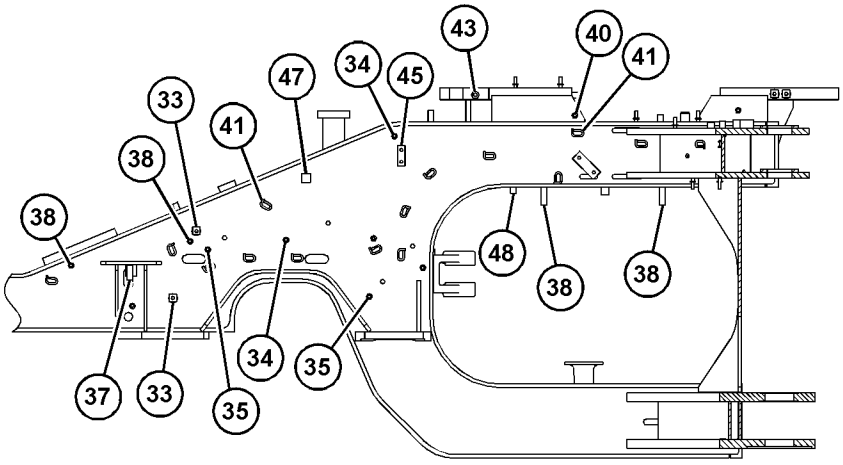

SECTION A-A

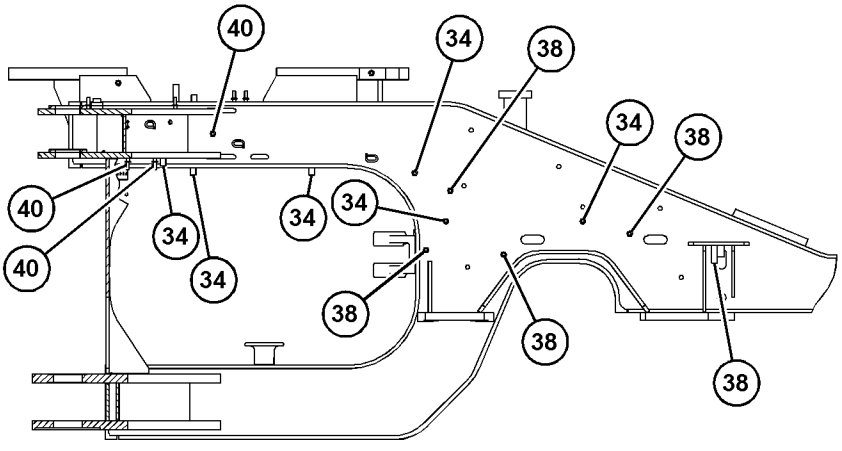

SECTION B-B

GRAPHIC #1 <END> g06041861

437-3721 FRAME AS-REAR

S/N: TNS1-UP
HARDWARE
PART OF 456-5790 CHASSIS AR

SMCS-7051 **i06728770**

NOTE	REF NO	GRAPHIC REF	PART NUMBER	QTY	PART NAME 1 2 3 4 5 6 (PRODUCT LEVEL)	SEE PAGE
M	1	1	**246-7854**	26	NUT-SPECIAL (M10X1.5-THD)	
Y	2	1	*437-3714*	1	FRAME AS-REAR	453

M - METRIC PART
Y - SEPARATE ILLUSTRATION

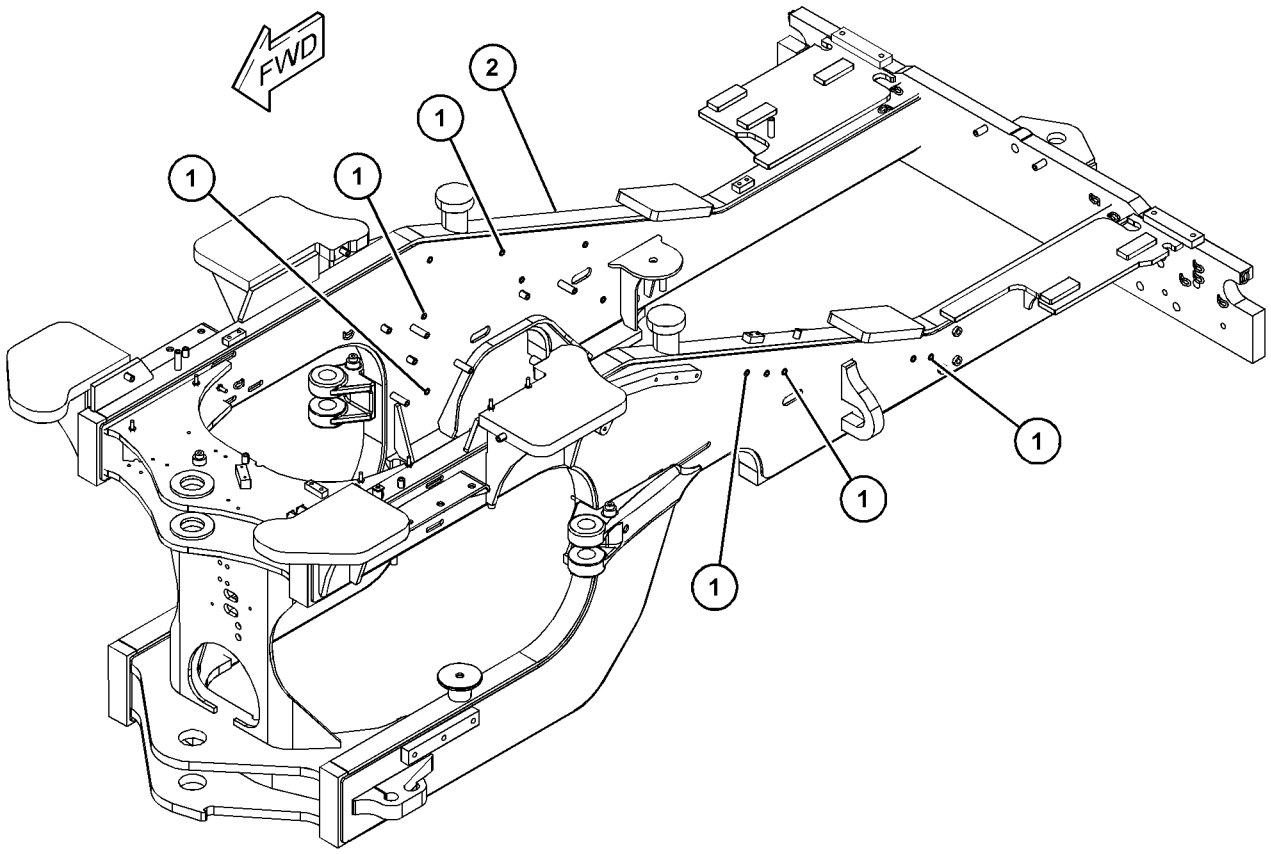

GRAPHIC #1 <END> g06030444

391-5784 GRILL GP-RADIATOR

S/N: TNS1-UP

PART OF 492-4020, 507-9161 SPECIAL AR-WHEEL LOADER

SMCS-7170 **i06762379**

NOTE	REF NO	GRAPHIC REF	PART NUMBER	QTY	PART NAME 1 2 3 4 5 6 (PRODUCT LEVEL)	SEE PAGE
	1	1	**6W-5817**	1	SPRING	
	2	1	**6W-5818**	1	LATCH	
	3	1	**174-8663**	1	PIN	
	4	1	**208-6176**	1	STUD-BALL	
	5	1	**494-8154**	1	GRILL AS-REAR (REAR)	
	5A	1	**9V-0453**	1	BUSHING-TERMINAL	
M		1	**8T-3612**	2	NUT-WELD (M8X1.25-THD)	
		1	**174-3085**	3	HINGE AS	
	6	1	**3B-2062**	1	PIN	
	7	1	**3B-4617**	1	PIN-COTTER	
	8	1	**7X-0579**	1	WASHER-HARD (8.8X25.5X2-MM THK)	
E	9	1	**7X-7877**		STRIP-EDGE (5-CM EACH)	

E - ORDER BY THE CENTIMETER
M - METRIC PART

391-5784 **GRILL GP-RADIATOR (**contd.**)** **i06762379**

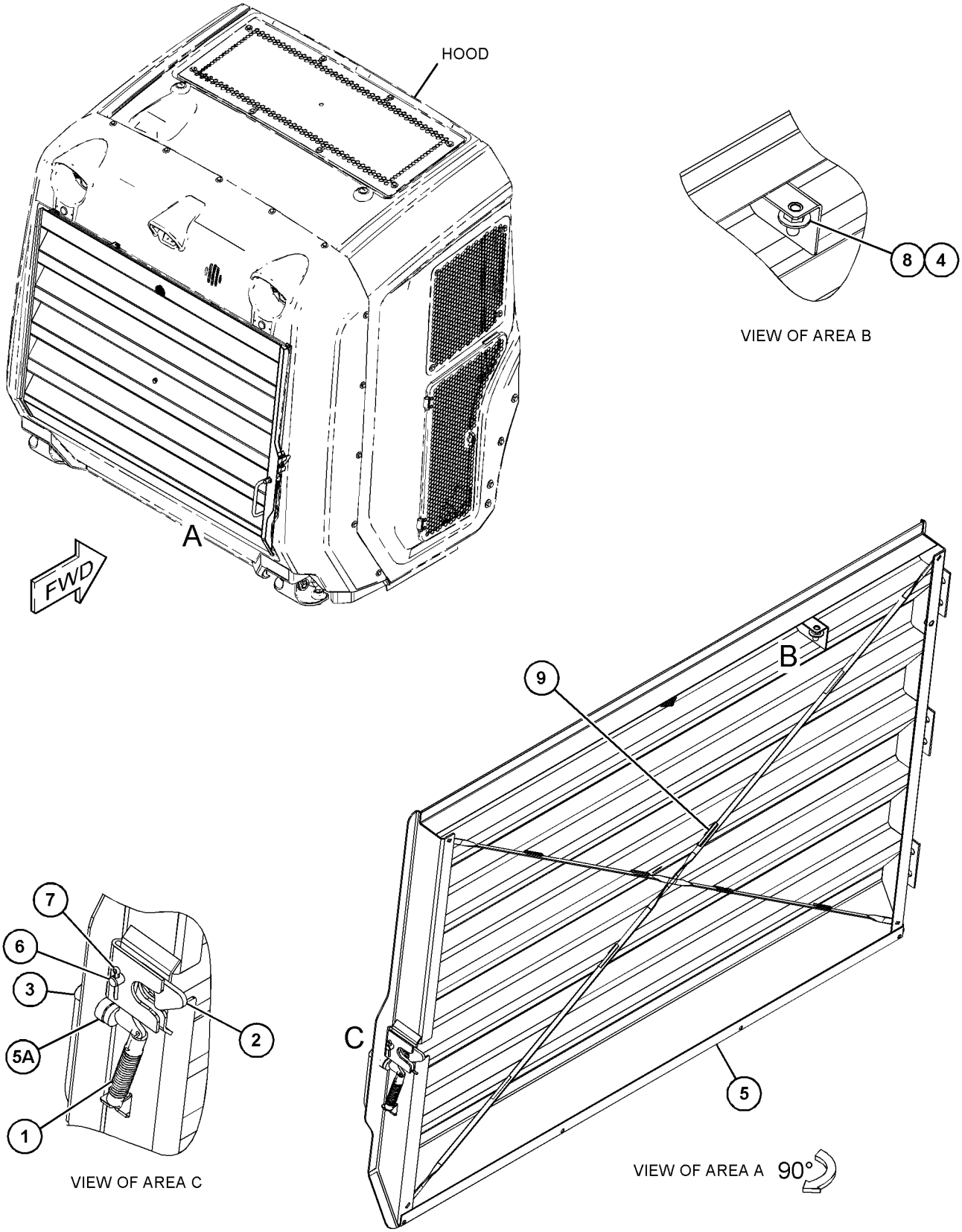

GRAPHIC #1 <END> g06105041

393-5078 GUARD GP-ARTICULATION

S/N: TNS1-UP

PART OF 507-9161 SPECIAL AR-WHEEL LOADER

SMCS-7150 **i06781486**

NOTE	REF NO	GRAPHIC REF	PART NUMBER	QTY	PART NAME 1 2 3 4 5 6 (PRODUCT LEVEL)	SEE PAGE
	1	1	**511-2488**	1	GUARD (RH)	
	2	1	**395-2956**	1	GUARD (LH)	
	3	1	**416-7096**	1	GUARD AS	
M		1	**8T-3490**	2	NUT-WELD (M10X1.5-THD)	
	4	1	**416-7098**	1	GUARD (LH)	
	5	1	**7X-7729**	16	WASHER (11X25X3-MM THK)	
M	6	1	**8T-4133**	6	NUT (M10X1.5-THD)	
M	7	1	**8T-4136**	8	BOLT (M10X1.5X25-MM)	
M	8	1	**8T-4137**	2	BOLT (M10X1.5X20-MM)	

M - METRIC PART

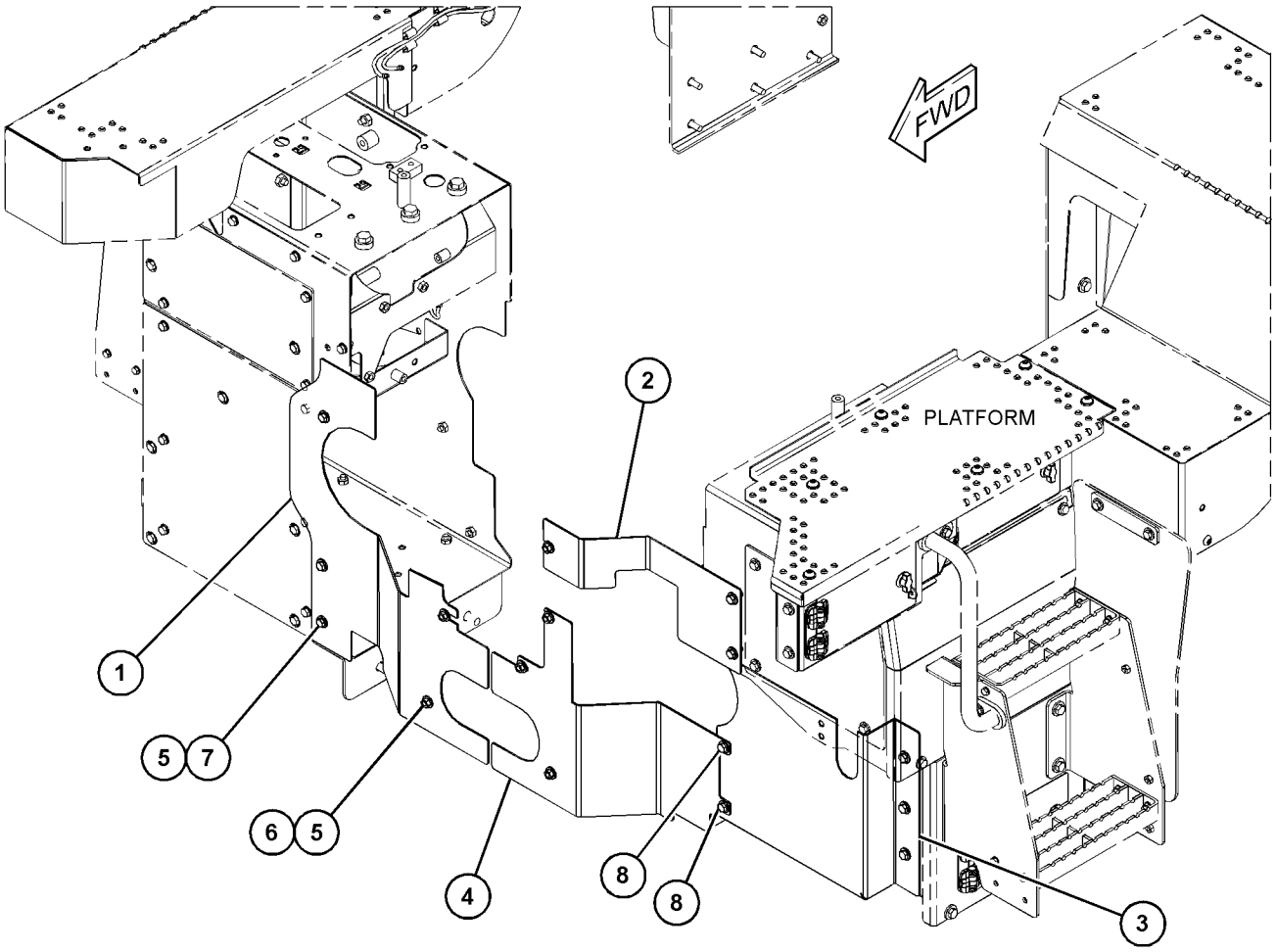

GRAPHIC #1 <END> g06112594

370-2229 GUARD GP-AXLE

S/N: TNS1-UP

PART OF 463-8852, 463-8856 AXLE AR-FIXED & OSCILLATING

SMCS-7185 **i04889344**

NOTE	PART NUMBER	QTY	PART NAME 1 2 3 4 5 6 (PRODUCT LEVEL)	SEE PAGE
	232-0929	8	PLATE AS	
M	**8T-4196**	64	BOLT (M10X1.5X35-MM)	
	232-0928	8	PLATE	
	8T-4121	64	WASHER-HARD (11X21X2.5-MM THK)	

M - METRIC PART

<END>

465-4984 GUARD GP-BOTTOM

S/N: TNS1-UP

PART OF 507-9161 SPECIAL AR-WHEEL LOADER

SMCS-7153 **i06809577**

NOTE	REF NO	GRAPHIC REF	PART NUMBER	QTY	PART NAME 1 2 3 4 5 6 (PRODUCT LEVEL)	SEE PAGE
	1	1	**465-6957**	1	GUARD AS	
M		1	**8T-3597**	4	NUT-WELD (M12X1.75-THD)	
M		1	**9U-1793**	4	BLOCK (M12X1.75-MM)	
		1	**465-6962**	1	PLATE	
	2	1	**465-6960**	1	PLATE AS (LH)	
	3	1	**465-6961**	1	PLATE AS (RH)	
	4	1	**466-8176**	1	GUARD AS	
	5	1	**5P-1076**	16	WASHER-HARD (13.5X30X4-MM THK)	
M	6	1	**8T-4139**	8	BOLT (M12X1.75X30-MM)	
M	7	1	**8T-4956**	8	BOLT (M12X1.75X35-MM)	

M - METRIC PART

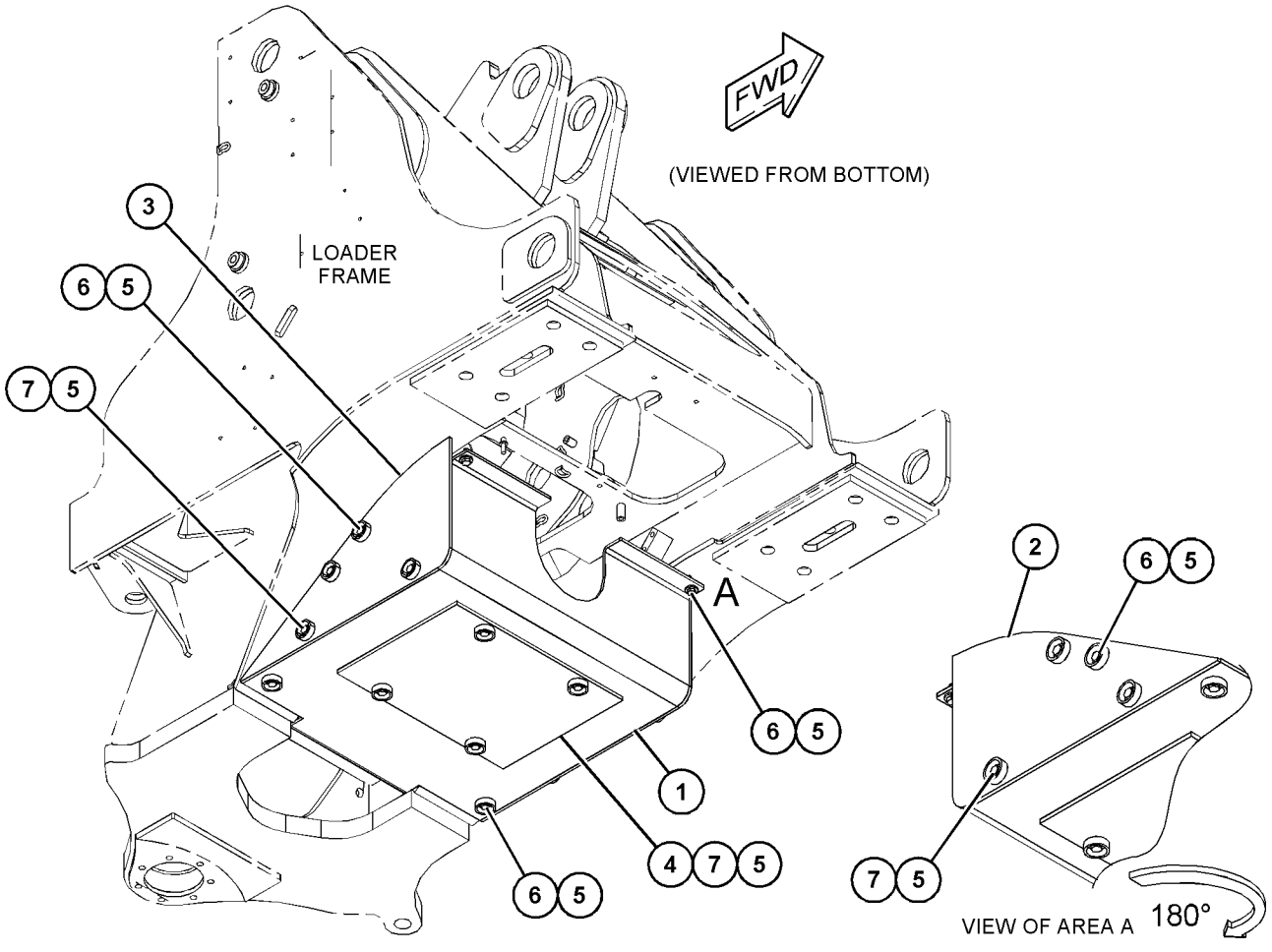

GRAPHIC #1 <END> g06041492

483-9445 GUARD GP-BOTTOM

S/N: TNS1-UP

PART OF 507-9161 SPECIAL AR-WHEEL LOADER

SMCS-7153 **i06753598**

NOTE	REF NO	GRAPHIC REF	PART NUMBER	QTY	PART NAME 1 2 3 4 5 6 (PRODUCT LEVEL)	SEE PAGE
	1	1	**483-9446**	1	GUARD AS	
	2	1	**267-8821**	2	WASHER (17X36X12-MM THK)	
	3	1	**6C-9149**	2	WASHER (22X50X10-MM THK)	
M	4	1	**8T-4140**	2	BOLT (M16X2X60-MM)	

M - METRIC PART

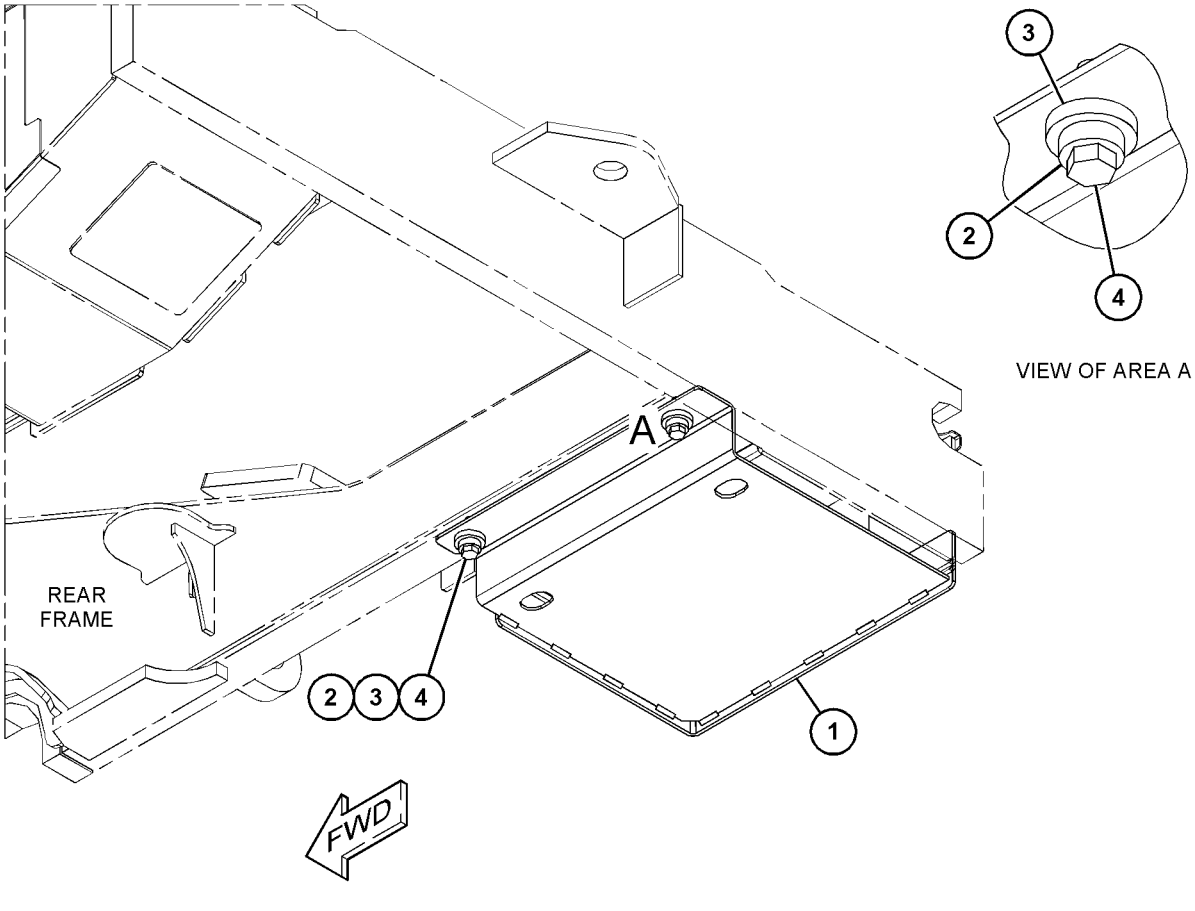

(VIEWED FROM BOTTOM)

GRAPHIC #1 <END> g06012811

488-8987 GUARD GP-BOTTOM

S/N: TNS1-UP

PART OF 507-9161 SPECIAL AR-WHEEL LOADER

SMCS-7153 **i06759641**

NOTE	REF NO	GRAPHIC REF	PART NUMBER	QTY	PART NAME 1 2 3 4 5 6 (PRODUCT LEVEL)	SEE PAGE
	1	1	**488-7054**	1	GUARD AS	
	2	1	**267-8821**	2	WASHER (17X36X12-MM THK)	
	3	1	**6C-9149**	2	WASHER (22X50X10-MM THK)	
M	4	1	**8T-4140**	2	BOLT (M16X2X60-MM)	
	5	1	**7X-3391**	1	WASHER-HARD (13.5X32X6-MM THK)	

M - METRIC PART

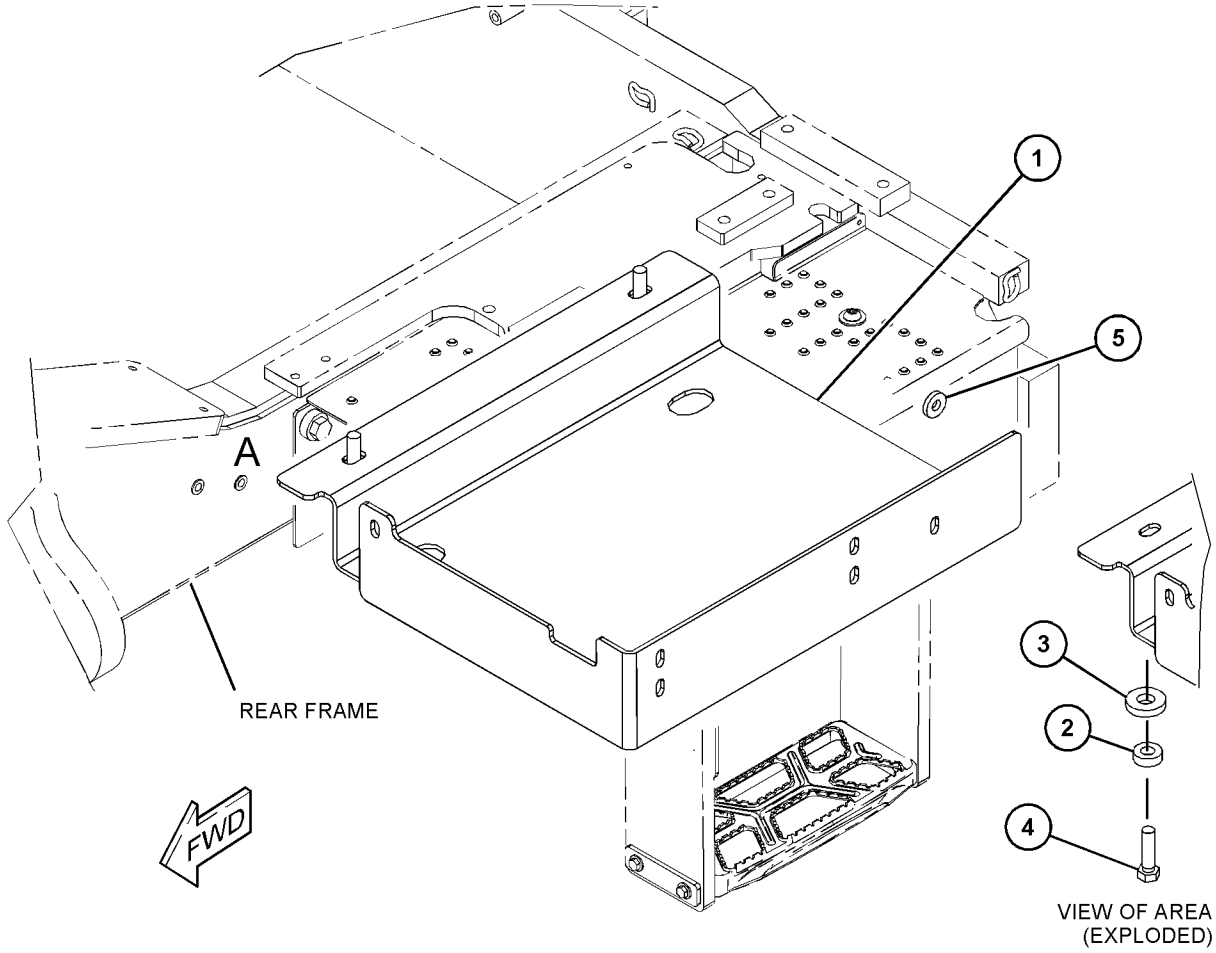

GRAPHIC #1 <END> g06122681

505-5242 GUARD GP-FRONT

S/N: TNS1-UP

PART OF 492-4022, 492-4023 HYDRAULIC AR-2 VALVE, 492-4025 HYDRAULIC AR-3 VALVE

SMCS-7167 **i06810276**

NOTE	REF NO	GRAPHIC REF	PART NUMBER	QTY	PART NAME 1 2 3 4 5 6 (PRODUCT LEVEL)	SEE PAGE
M	1	1	**134-5245**	7	BOLT (M10X1.5X30-MM)	
Y	2	1	*505-5243*	1	GUARD GP-FRONT	464
	3	1	**505-7955**	7	WASHER-HARD	

M - METRIC PART
Y - SEPARATE ILLUSTRATION

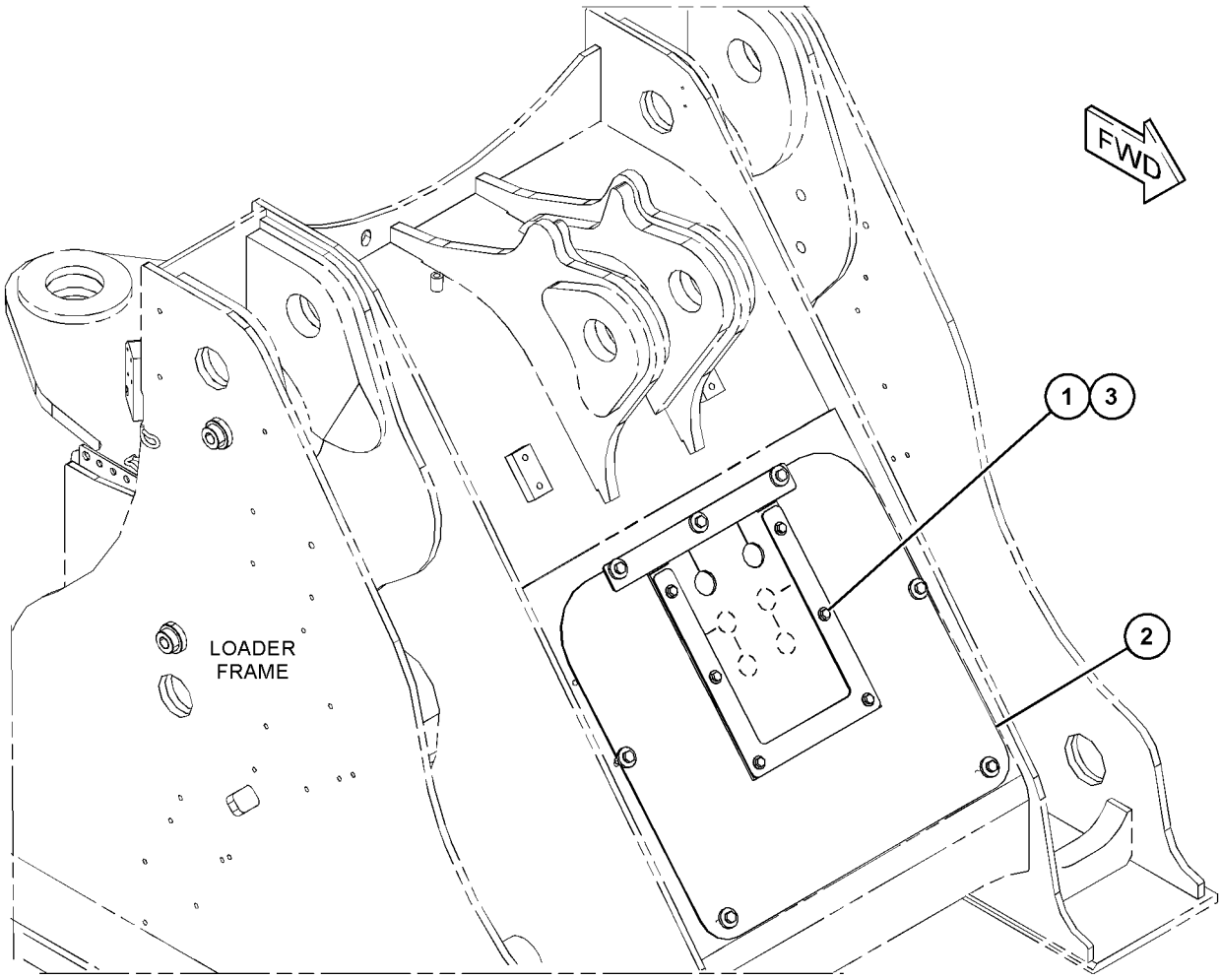

GRAPHIC #1 <END> g06126306

505-5243 GUARD GP-FRONT

S/N: TNS1-UP

PART OF 505-5242 GUARD GP-FRONT

SMCS-7167 **i06810287**

NOTE	REF NO	GRAPHIC REF	PART NUMBER	QTY	PART NAME 1 2 3 4 5 6 (PRODUCT LEVEL)	SEE PAGE
	1	1	**456-5896**	1	SHEET	
	2	1	**456-5897**	1	SHEET	
	3	1	**458-8290**	1	PLATE AS	
M		1	**8T-3612**	6	NUT-WELD (M8X1.25-THD)	
	4	1	**505-6022**	1	BAFFLE	
	5	1	**5P-4116**	6	WASHER-HARD (8.8X20.5X2-MM THK)	
M	6	1	**8T-4908**	6	BOLT (M8X1.25X25-MM)	

M - METRIC PART

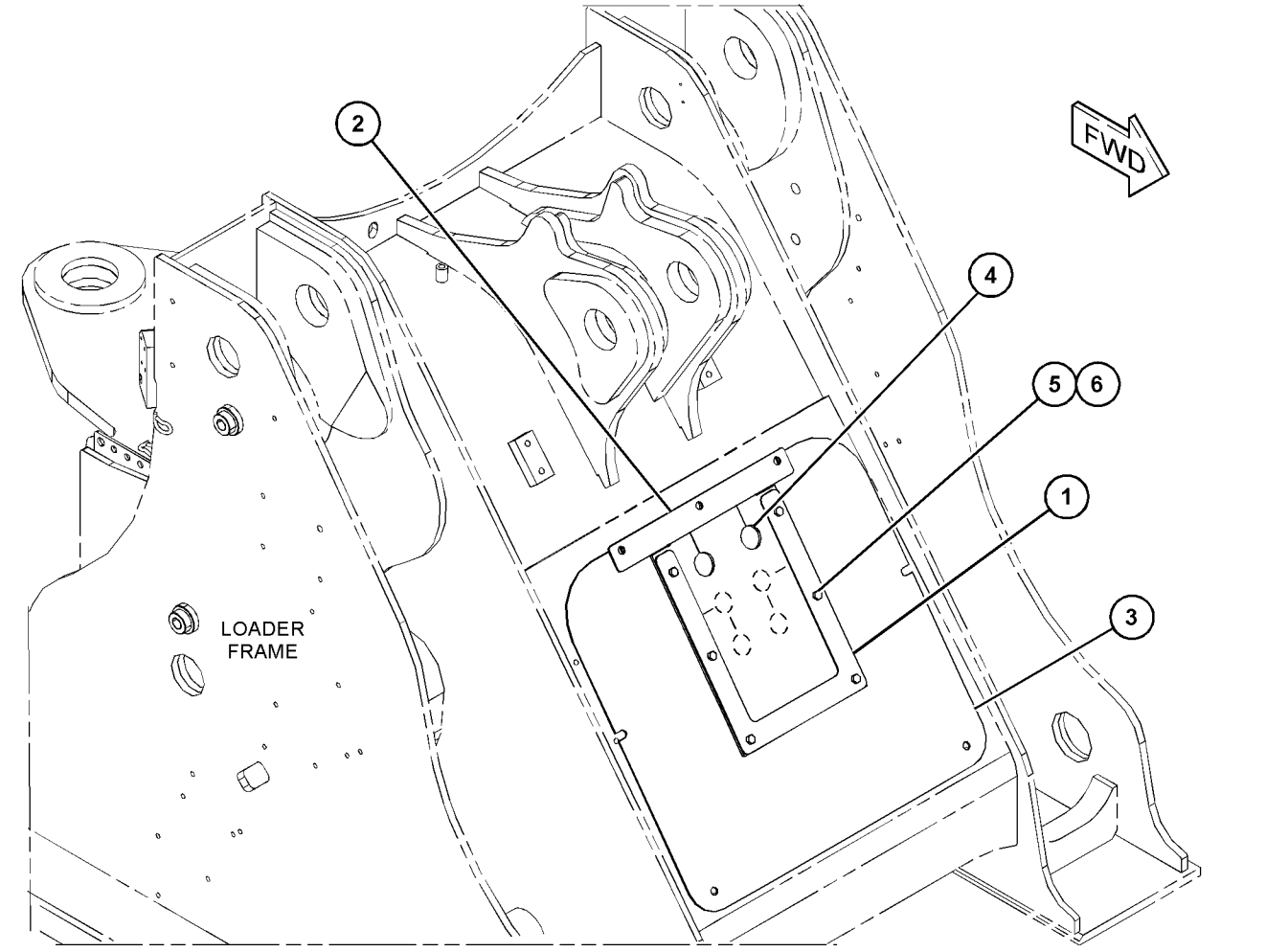

GRAPHIC #1 <END> g06126278

477-8029 GUARD GP-MUD

S/N: TNS1-UP

PART OF 454-7831 TRIM GP-CAB

SMCS-4220, 7252 **i06723366**

NOTE	REF NO	GRAPHIC REF	PART NUMBER	QTY	PART NAME 1 2 3 4 5 6 (PRODUCT LEVEL)	SEE PAGE
	1	1	**162-2480**	6	RIVET	
	2	1	**477-6040**	1	BRACKET AS (LH)	
	3	1	**477-6041**	3	STRIP	
	4	1	**477-8024**	1	FLAP	
	5	1	**479-2800**	1	SHEET	
	6	1	**479-2801**	1	STRIP AS	
M		1	**8T-3490**	4	NUT-WELD (M10X1.5-THD)	
	7	1	**7X-7729**	4	WASHER (11X25X3-MM THK)	
M	8	1	**8T-4196**	4	BOLT (M10X1.5X35-MM)	

M - METRIC PART

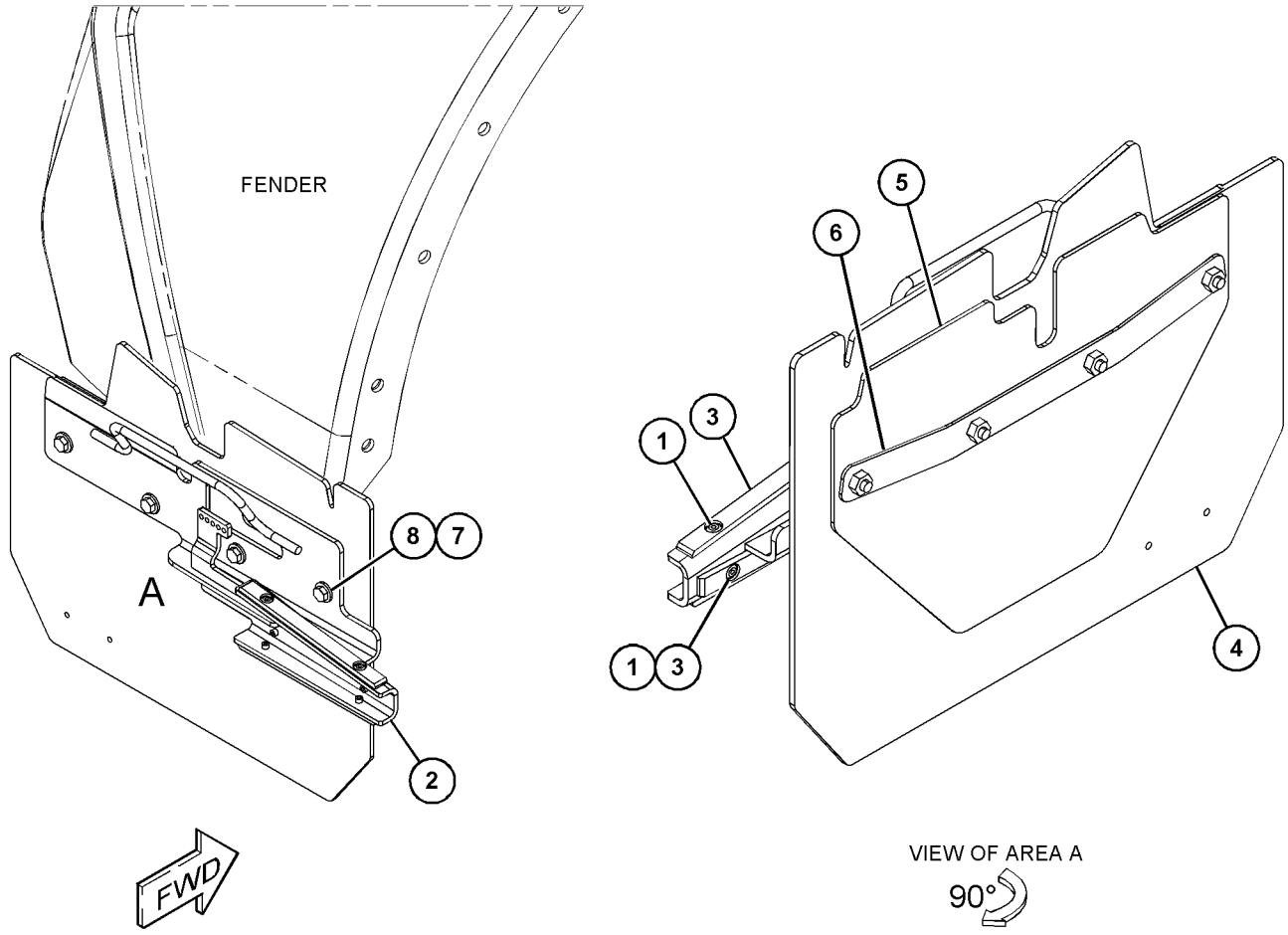

GRAPHIC #1 <END> g06007548

477-8030 GUARD GP-MUD

S/N: TNS1-UP

PART OF 454-7831 TRIM GP-CAB

SMCS-4220, 7252 **i06723368**

NOTE	REF NO	GRAPHIC REF	PART NUMBER	QTY	PART NAME 1 2 3 4 5 6 (PRODUCT LEVEL)	SEE PAGE
	1	1	**479-2800**	1	SHEET	
	2	1	**162-2480**	6	RIVET	
	3	1	**477-6041**	3	STRIP	
	4	1	**477-8024**	1	FLAP	
	5	1	**477-8110**	1	BRACKET AS (RH)	
	6	1	**479-2801**	1	STRIP AS	
M		1	**8T-3490**	4	NUT-WELD (M10X1.5-THD)	
	7	1	**7X-7729**	4	WASHER (11X25X3-MM THK)	
M	8	1	**8T-4196**	4	BOLT (M10X1.5X35-MM)	

M - METRIC PART

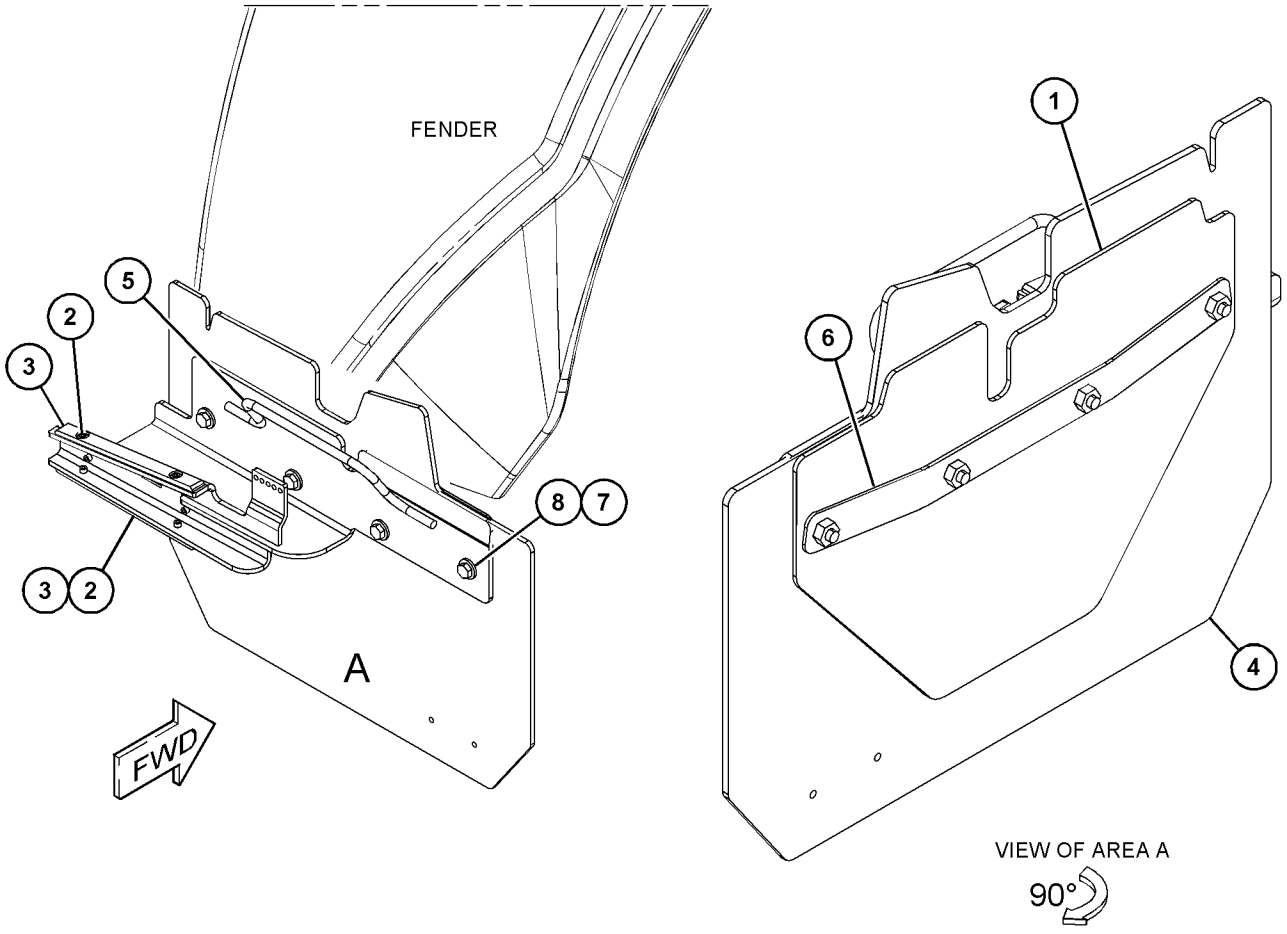

GRAPHIC #1 <END> g06007510

367-9027 GUARD GP-POWER TRAIN

S/N: TNS1-UP

PART OF 492-4033, 492-4034 DISTRIBUTION AR

SMCS-7153 **i06760117**

NOTE	REF NO	GRAPHIC REF	PART NUMBER	QTY	PART NAME 1 2 3 4 5 6 (PRODUCT LEVEL)	SEE PAGE
	1	1	**367-9029**	1	PLATE	
	2	1	**367-9033**	1	GUARD AS	
	3	1	**367-9037**	1	PLATE	
	4	1	**7X-0583**	6	WASHER-HARD (17X45X6-MM THK)	
	5	1	**7X-7729**	4	WASHER (11X25X3-MM THK)	
M	6	1	**8T-4195**	4	BOLT (M10X1.5X30-MM)	
M	7	1	**8T-4779**	6	BOLT (M16X2X35-MM)	

M - METRIC PART

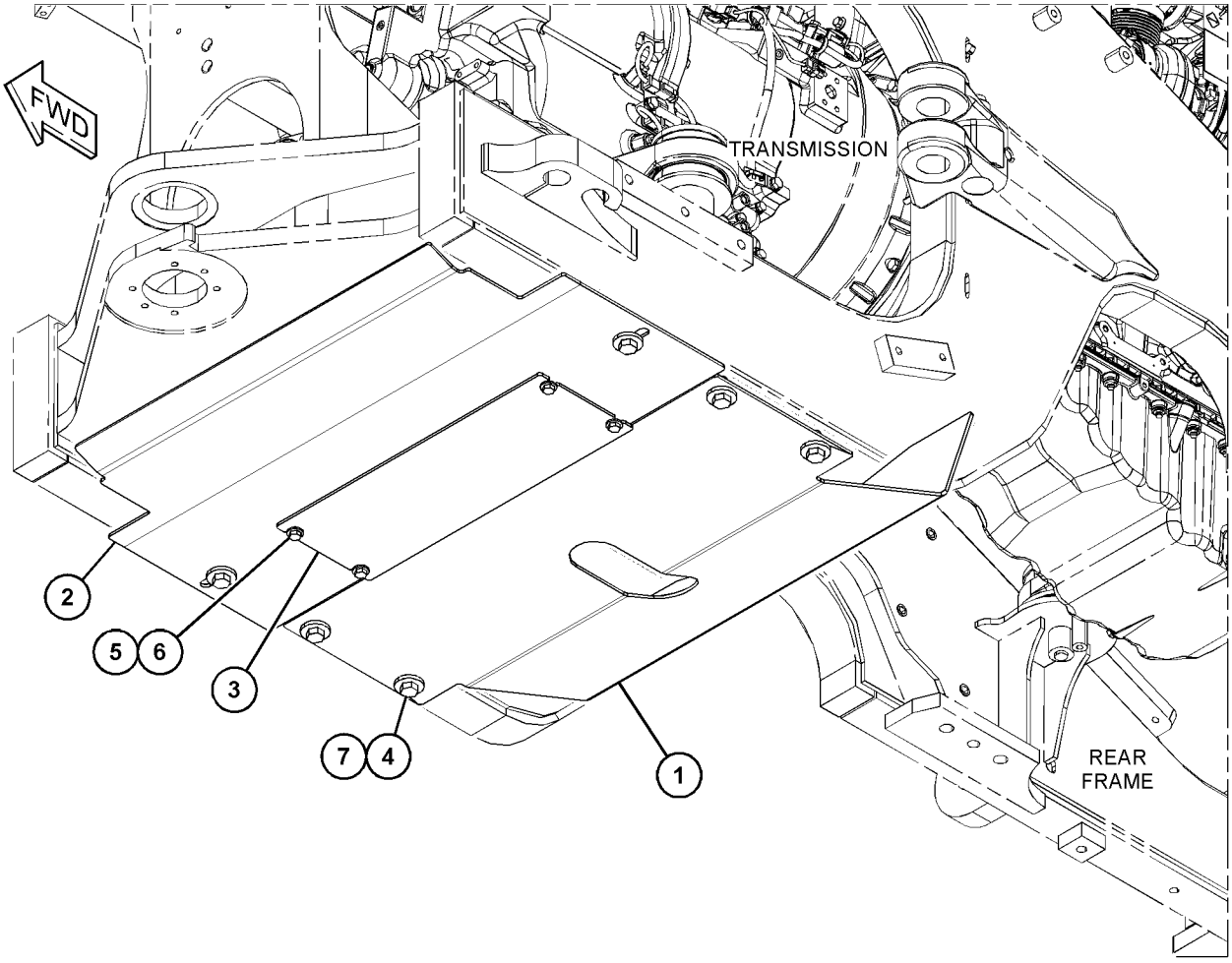

GRAPHIC #1 <END> g03677410

399-4332 GUARD GP-POWER TRAIN

S/N: TNS1-UP

FOR USE WITH WASTE & SCRAP APPLICATIONS

SMCS-7153 **i06796354**

NOTE	REF NO	GRAPHIC REF	PART NUMBER	QTY	PART NAME 1 2 3 4 5 6 (PRODUCT LEVEL)	SEE PAGE
	1	1	**250-2320**	1	PIN AS (LH)	
	2	1	**250-2321**	1	PIN AS (RH)	
	3	1	**367-9037**	1	PLATE	
	4	1	**390-4378**	2	BRACKET AS	
	5	1	**399-4333**	1	GUARD AS	
	6	1	**399-4334**	1	COVER	
	7	1	**151-5520**	6	WASHER (17X56X5-MM THK)	
	8	1	**7X-0550**	6	WASHER-HARD (13.5X32X5-MM THK)	
	9	1	**7X-7729**	8	WASHER (11X25X3-MM THK)	
M	10	1	**8T-4183**	6	BOLT (M12X1.75X40-MM)	
M	11	1	**8T-4195**	8	BOLT (M10X1.5X30-MM)	
M	12	1	**8T-4779**	6	BOLT (M16X2X35-MM)	

M - METRIC PART

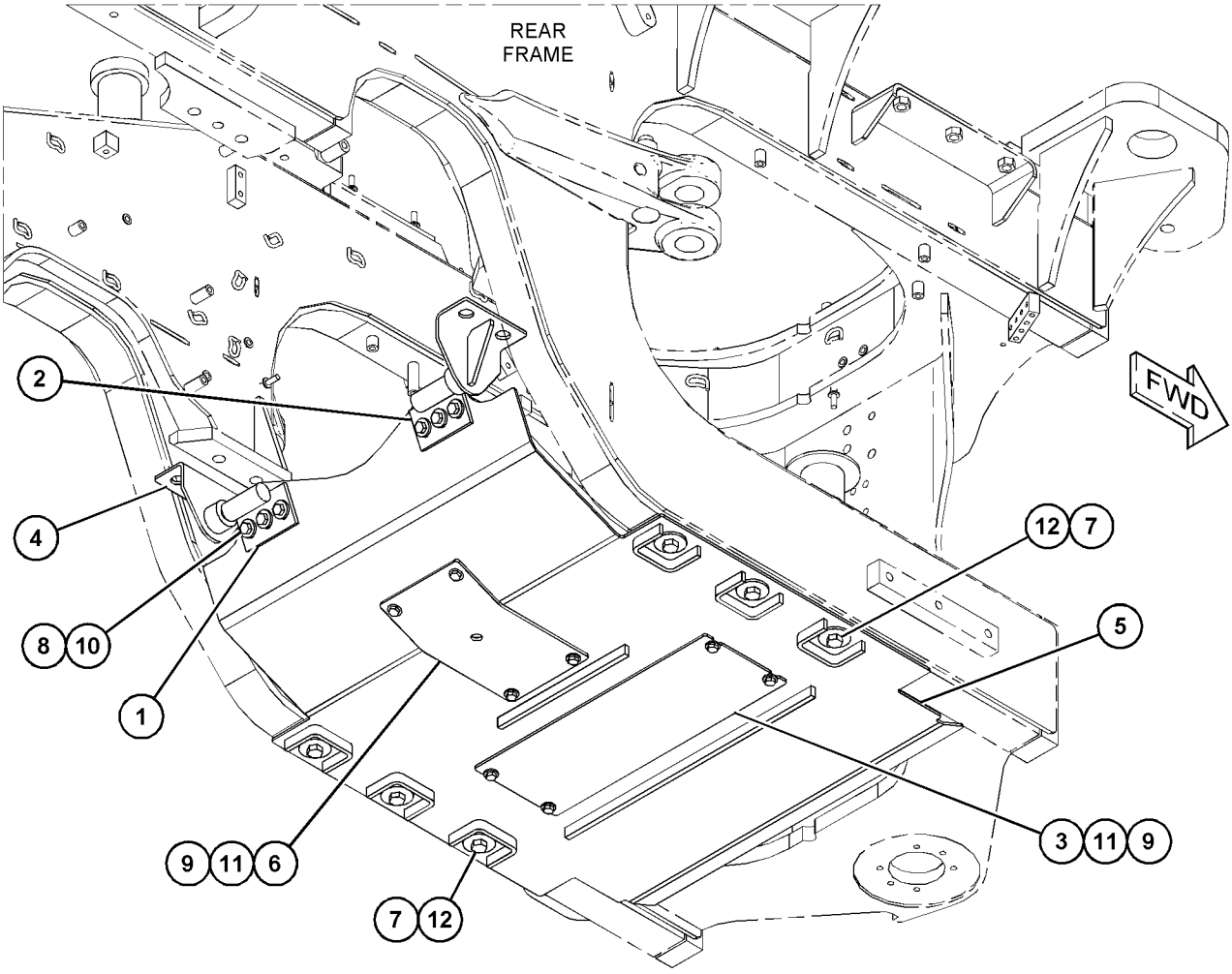

GRAPHIC #1 <END> g03681515

415-7928 GUARD GP-PROTECTION

S/N: TNS1-UP

PART OF 507-9161 SPECIAL AR-WHEEL LOADER

SMCS-7150, 7315, 795C

i06756640

NOTE	REF NO	GRAPHIC REF	PART NUMBER	QTY	PART NAME 1 2 3 4 5 6 (PRODUCT LEVEL)	SEE PAGE
	1	1	**415-7882**	1	PLATE	
	2	1	**7X-7729**	4	WASHER (11X25X3-MM THK)	
M	3	1	**8T-4136**	4	BOLT (M10X1.5X25-MM)	

M - METRIC PART

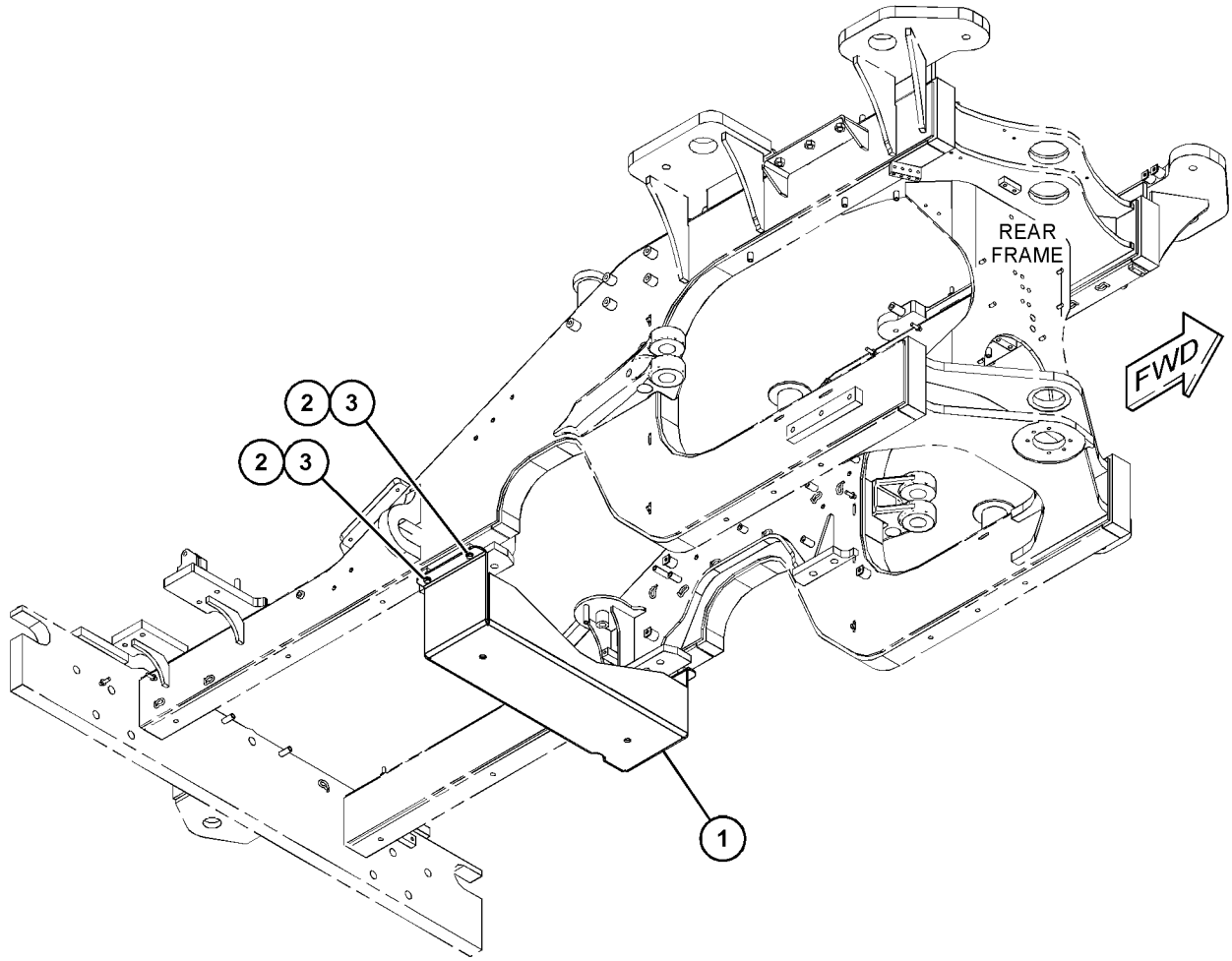

GRAPHIC #1

<END>

g03680059

366-0732 HANDHOLD GP

S/N: TNS1-UP

PART OF 464-2483 HANDHOLD GP

SMCS-7256 **i06735469**

NOTE	REF NO	GRAPHIC REF	PART NUMBER	QTY	PART NAME 1 2 3 4 5 6 (PRODUCT LEVEL)	SEE PAGE
M	1	1	**345-7725**	8	SCREW-TRUSS HEAD (M12X1.75X25-MM)	
	2	1	**379-8450**	1	TUBE AS	
	3	1	**367-2481**	2	CAP	
	4	1	**8T-4223**	8	WASHER-HARD (13.5X25.5X3-MM THK)	

M - METRIC PART

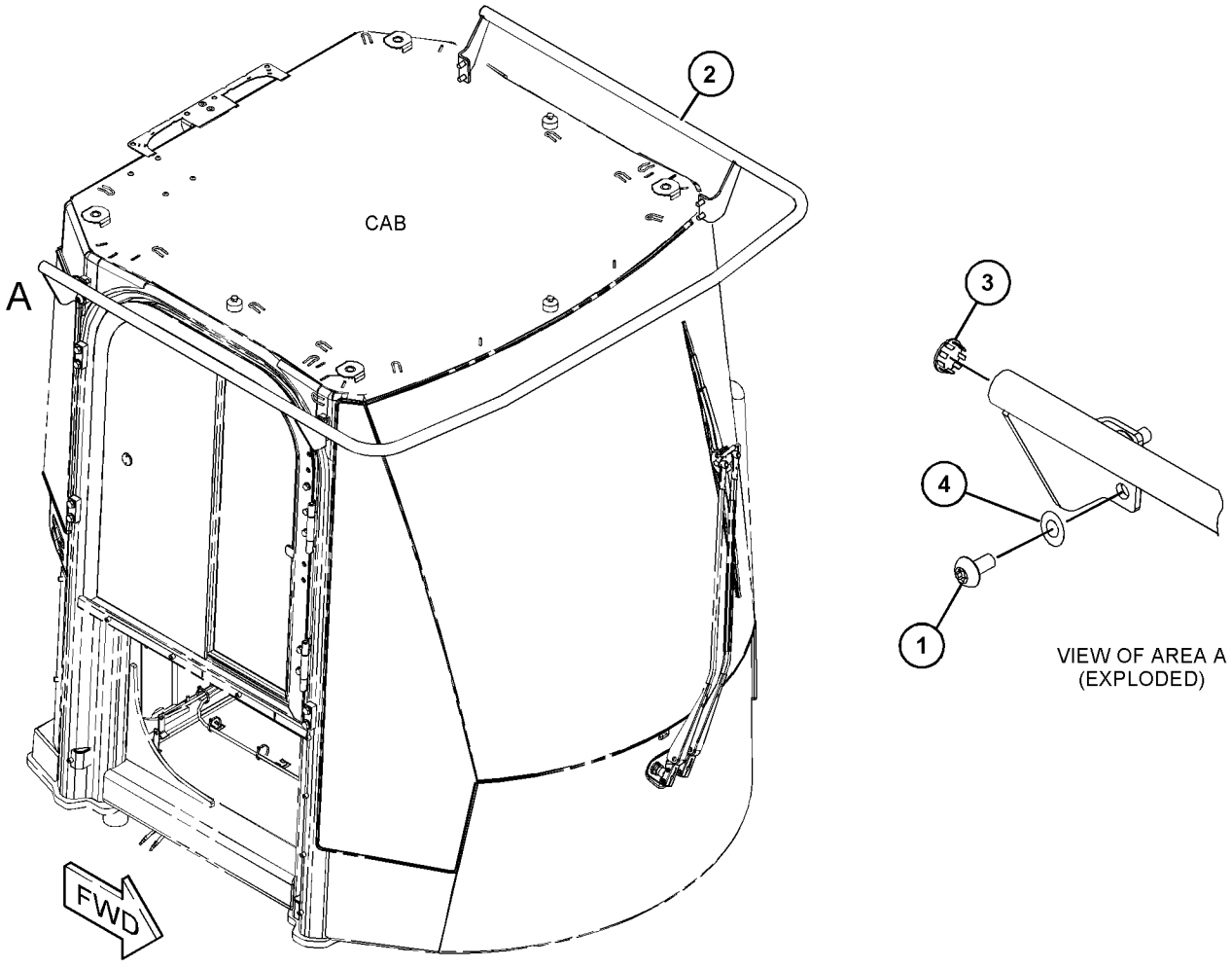

GRAPHIC #1 <END> g06097705

464-2483 HANDHOLD GP

S/N: TNS1-UP

SMCS-7256 **i06674852**

NOTE	PART NUMBER	QTY	PART NAME 1 2 3 4 5 6 (PRODUCT LEVEL)	SEE PAGE
Y	*366-0732*	1	HANDHOLD GP	470
	450-7011	1	FILM-WARNING (FALL HAZARD, LANYARD, READ OMM)	
			(ON ROOF CAP JUST ABOVE TIE OFF LOCATION)	

Y - SEPARATE ILLUSTRATION

<END>

358-1818 HANDRAIL GP–RH

S/N: TNS1-UP

PART OF 367-2602 HANDRAIL GP

SMCS-7256 **i06819362**

NOTE	REF NO	GRAPHIC REF	PART NUMBER	QTY	PART NAME 1 2 3 4 5 6 (PRODUCT LEVEL)	SEE PAGE
	1	1	**358-1819**	1	GUARDRAIL AS (RH)	
	2	1	**358-1820**	1	HANDRAIL AS (RH)	

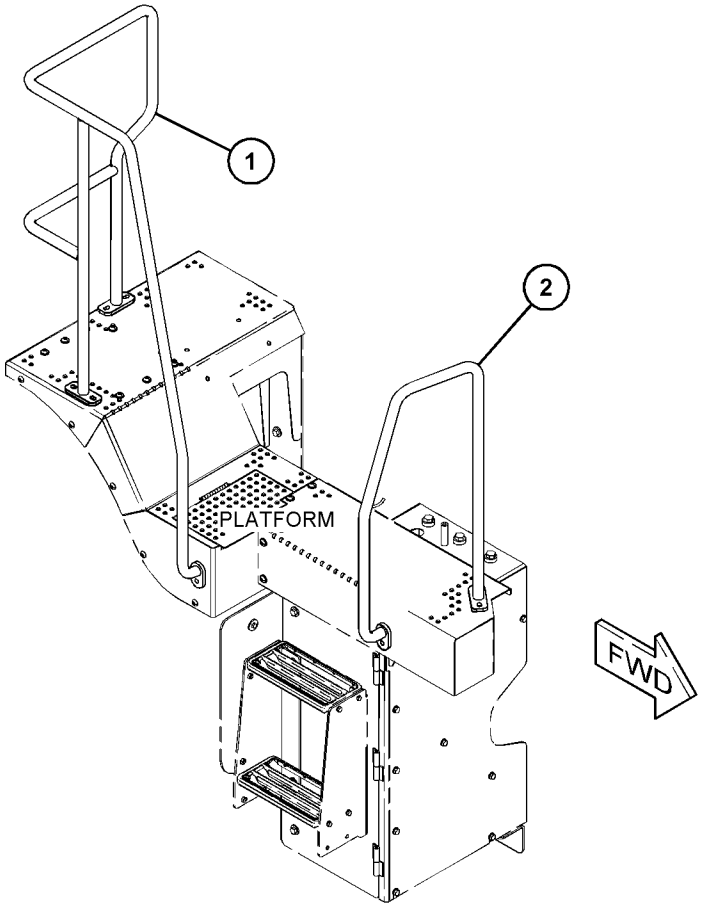

GRAPHIC #1 <END> g06127764

367-2602 HANDRAIL GP

S/N: TNS1-UP

PART OF 464-6676 FENDER AR-ROADING

SMCS-7256 **i06730708**

NOTE	REF NO	GRAPHIC REF	PART NUMBER	QTY	PART NAME 1 2 3 4 5 6 (PRODUCT LEVEL)	SEE PAGE
Y	1	1	*358-1818*	1	HANDRAIL GP (RH)	472
	2	1	**358-1823**	1	GUARDRAIL AS (LH)	
	3	1	**380-5223**	1	HANDHOLD	
	4	1	**7X-7729**	15	WASHER (11X25X3-MM THK)	
M	5	1	**8T-4196**	15	BOLT (M10X1.5X35-MM)	

M - METRIC PART
Y - SEPARATE ILLUSTRATION

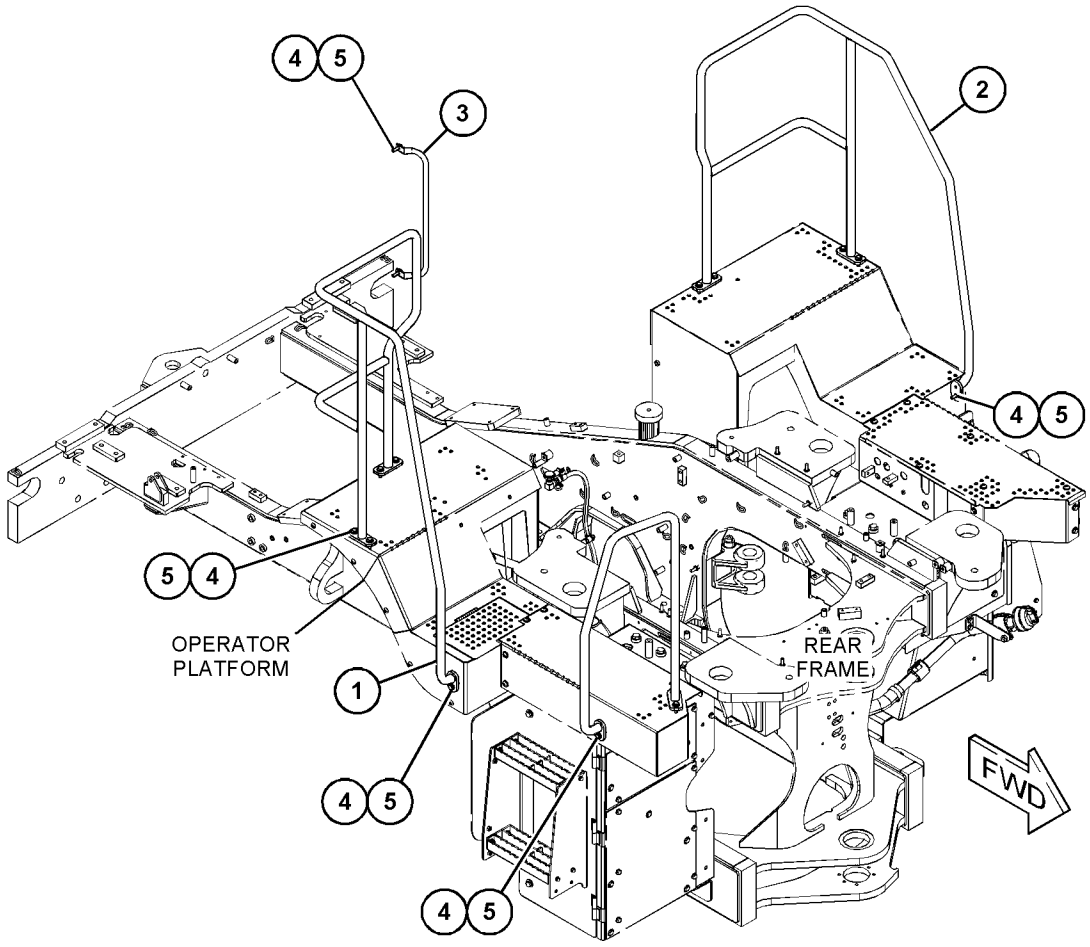

GRAPHIC #1 <END> g03672763

389-1956 HANDRAIL GP

S/N: TNS1-UP

PART OF 493-9616 CAB AR-ENCLOSED ROPS

SMCS-7256 **i06739573**

NOTE	REF NO	GRAPHIC REF	PART NUMBER	QTY	PART NAME 1 2 3 4 5 6 (PRODUCT LEVEL)	SEE PAGE
M	1	1	**345-7725**	8	SCREW-TRUSS HEAD (M12X1.75X25-MM)	
	2	1	**479-7391**	1	TUBE AS	
	3	1	**367-2481**	2	CAP	
	4	1	**8T-4223**	8	WASHER-HARD (13.5X25.5X3-MM THK)	

M - METRIC PART

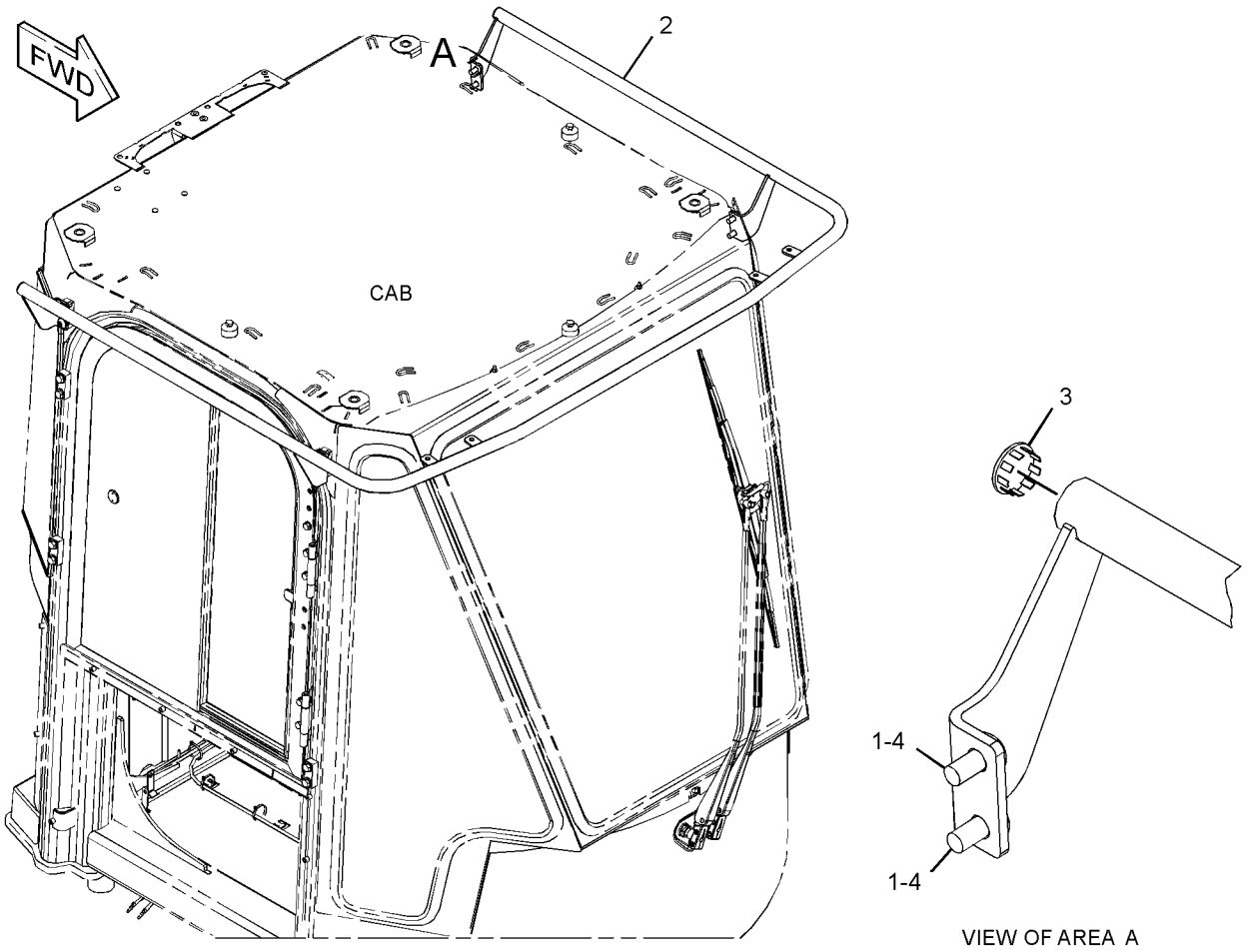

GRAPHIC #1 <END> g06100024

454-7850 HANDRAIL GP

S/N: TNS1-UP

PART OF 464-6672, 464-6673 FENDER AR-ROADING

SMCS-7256 **i06736285**

NOTE	REF NO	GRAPHIC REF	PART NUMBER	QTY	PART NAME 1 2 3 4 5 6 (PRODUCT LEVEL)	SEE PAGE
	1	1	**380-5223**	1	HANDHOLD	
Y	2	1	**454-7851**	1	HANDRAIL GP	476
	3	1	**490-8319**	1	GUARDRAIL AS (LH)	
	4	1	**7X-7729**	15	WASHER (11X25X3-MM THK)	
M	5	1	**8T-4196**	15	BOLT (M10X1.5X35-MM)	

M - METRIC PART
Y - SEPARATE ILLUSTRATION

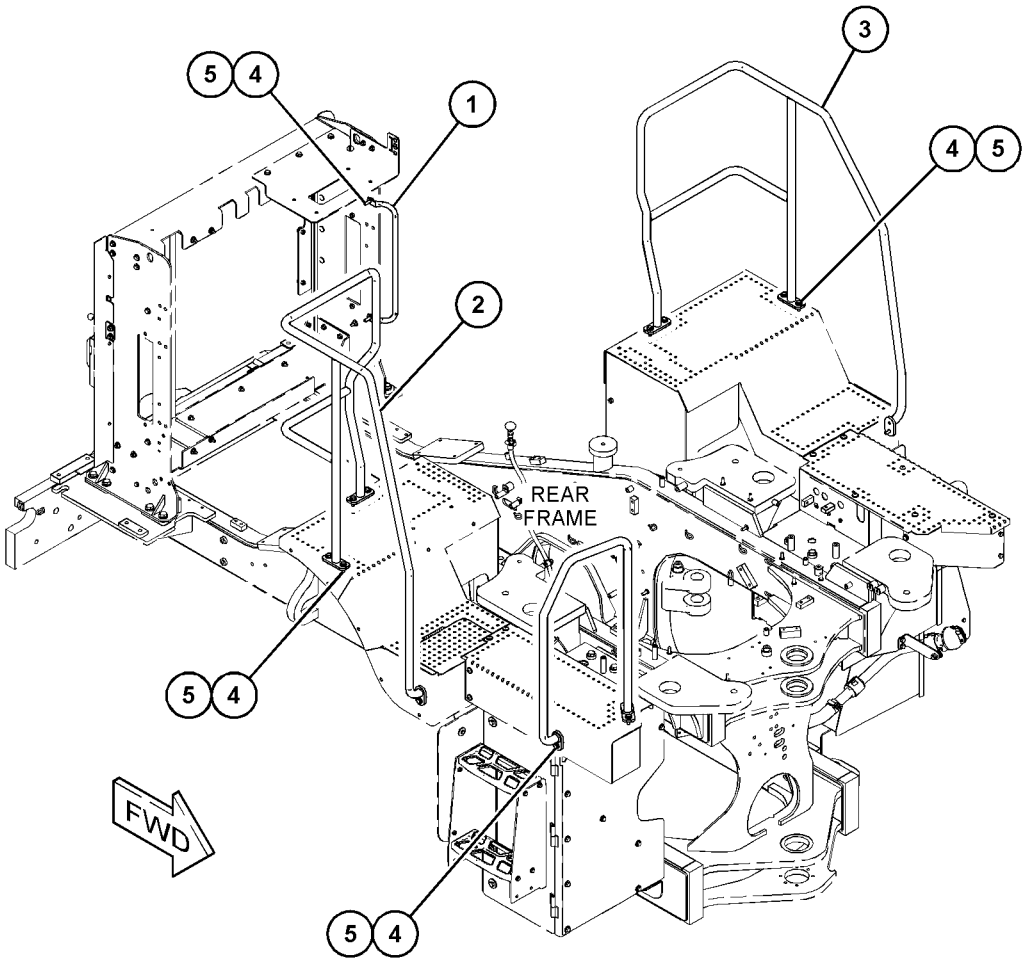

GRAPHIC #1 <END> g06108801

454-7851 HANDRAIL GP–RH

S/N: TNS1-UP

PART OF 454-7850 HANDRAIL GP

SMCS-7256 **i06736288**

NOTE	REF NO	GRAPHIC REF	PART NUMBER	QTY	PART NAME 1 2 3 4 5 6 (PRODUCT LEVEL)	SEE PAGE
	1	1	**454-7852**	1	GUARDRAIL AS (RH)	
	2	1	**454-7853**	1	HANDRAIL AS (RH)	

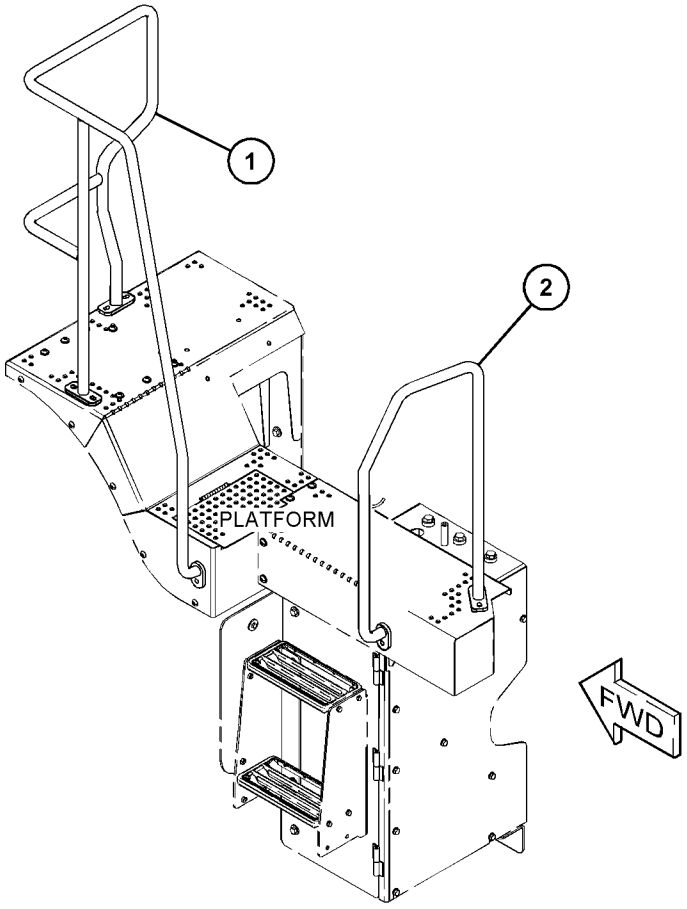

GRAPHIC #1 <END> g06098021

506-3504 HARDWARE GP-CHASSIS

S/N: TNS1-UP

PART OF 492-4031 LINK GP-TILT

SMCS-7156, 7553

i06732613

NOTE	REF NO	GRAPHIC REF	PART NUMBER	QTY	PART NAME 1 2 3 4 5 6 (PRODUCT LEVEL)	SEE PAGE
M	1	1	**8T-4137**	3	BOLT (M10X1.5X20-MM)	
	2	1	**8T-4121**	3	WASHER-HARD (11X21X2.5-MM THK)	

M - METRIC PART

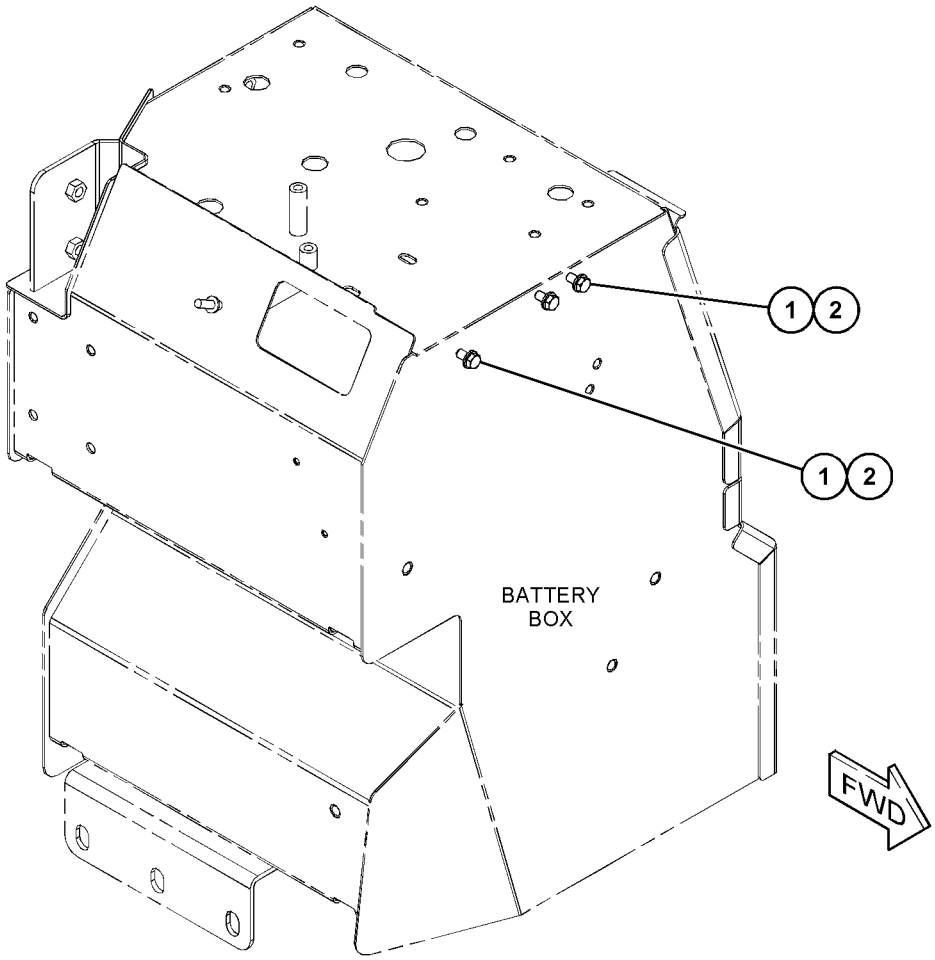

GRAPHIC #1

<END>

g06107375

392-9385 HARDWARE GP-LOADER FRAME

S/N: TNS1-UP

PART OF 507-9161 SPECIAL AR-WHEEL LOADER

SMCS-7054, 7553

i06756654

NOTE	REF NO	GRAPHIC REF	PART NUMBER	QTY	PART NAME 1 2 3 4 5 6 (PRODUCT LEVEL)	SEE PAGE
	1	1	**5G-6973**	4	LUG (M10X1.5-THD)	
M	2	1	**8T-4967**	6	STUD-WELD (M10X1.5X23-MM)	

M - METRIC PART

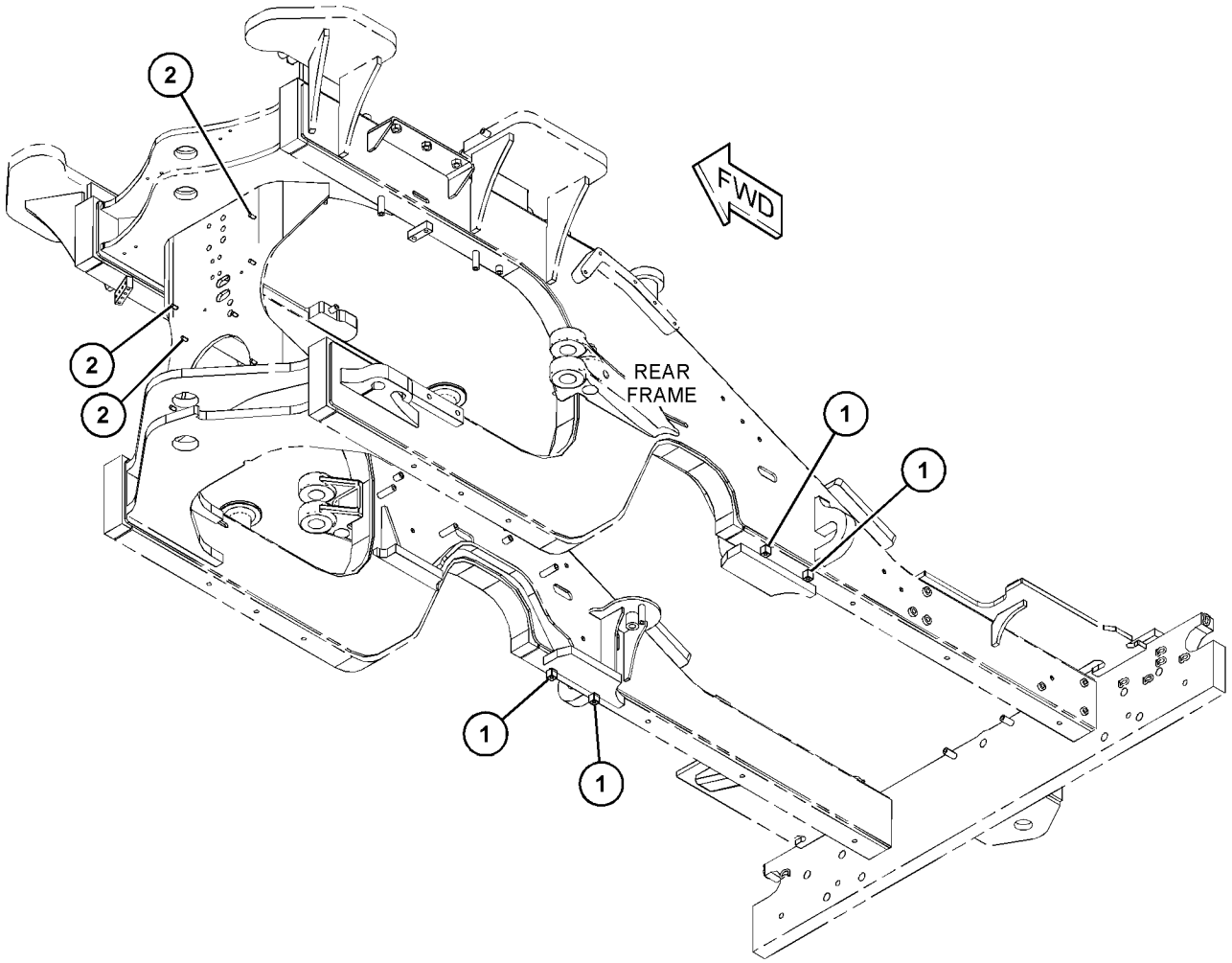

GRAPHIC #1

<END>

g03842048

511-0284 HARDWARE GP-LOADER FRAME

S/N: TNS1-UP
AUTOLUBE
PART OF 495-9704 LUBRICATION AR-AUTOMATIC

SMCS-7054, 7553

i06811112

NOTE	REF NO	GRAPHIC REF	PART NUMBER	QTY	PART NAME 1 2 3 4 5 6 (PRODUCT LEVEL)	SEE PAGE
	1	1	**3B-8489**	5	FITTING-GREASE (1/8-27 PTF)	

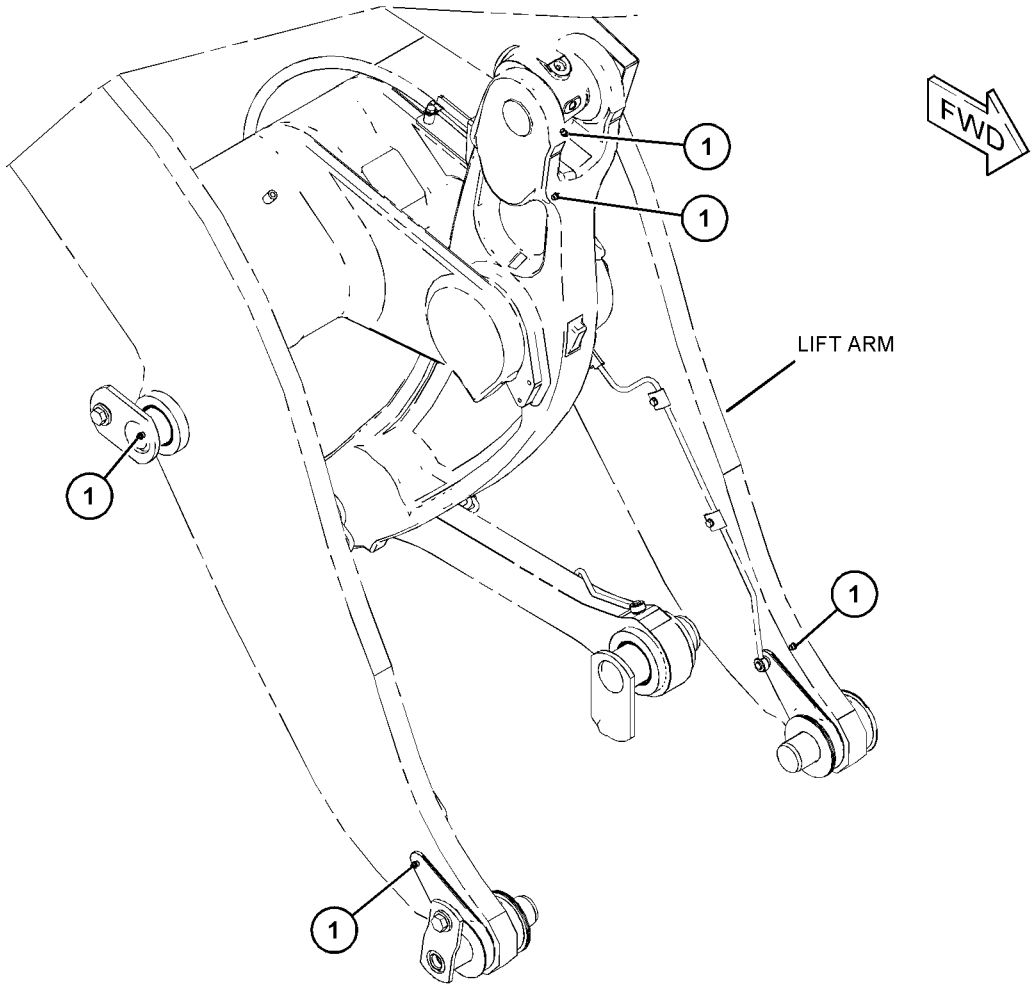

GRAPHIC #1

<END>

g06128587

512-6100 HARDWARE GP-LOADER FRAME

S/N: TNS1-UP

PART OF 492-4031 LINK GP-TILT

SMCS-7054, 7553 **i06811122**

NOTE	REF NO	GRAPHIC REF	PART NUMBER	QTY	PART NAME 1 2 3 4 5 6 (PRODUCT LEVEL)	SEE PAGE
M	1	1	**8T-4137**	2	BOLT (M10X1.5X20-MM)	
M	2	1	**2W-9533**	2	BOLT (M8X1.25X10-MM)	
	3	1	**8T-4121**	2	WASHER-HARD (11X21X2.5-MM THK)	
	4	1	**8T-4224**	2	WASHER-HARD (8.8X16X2-MM THK)	

M - METRIC PART

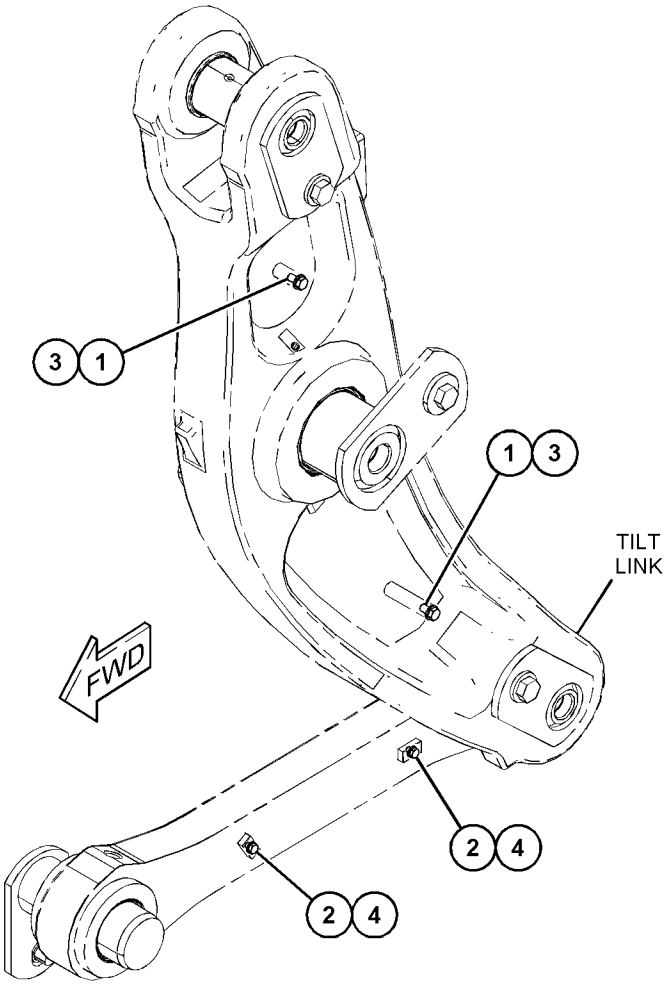

GRAPHIC #1 <END> g06128672

372-3897 HARDWARE GP-MOUNTING

S/N: TNS1-UP

PART OF 455-3940 CAB AR

SMCS-7050, 7553 **i06641554**

NOTE	REF NO	GRAPHIC REF	PART NUMBER	QTY	PART NAME 1 2 3 4 5 6 (PRODUCT LEVEL)	SEE PAGE
M	1	1	**3E-8020**	3	SCREW-TRUSS HEAD (M6X1X25-MM)	
	2	1	**4H-3001**	1	PLUG-BUTTON	
	3	1	**5G-2003**	3	SPACER (6.8X13X10-MM THK)	
	4	1	**9X-2038**	3	WASHER (7X19X2-MM THK)	

M - METRIC PART

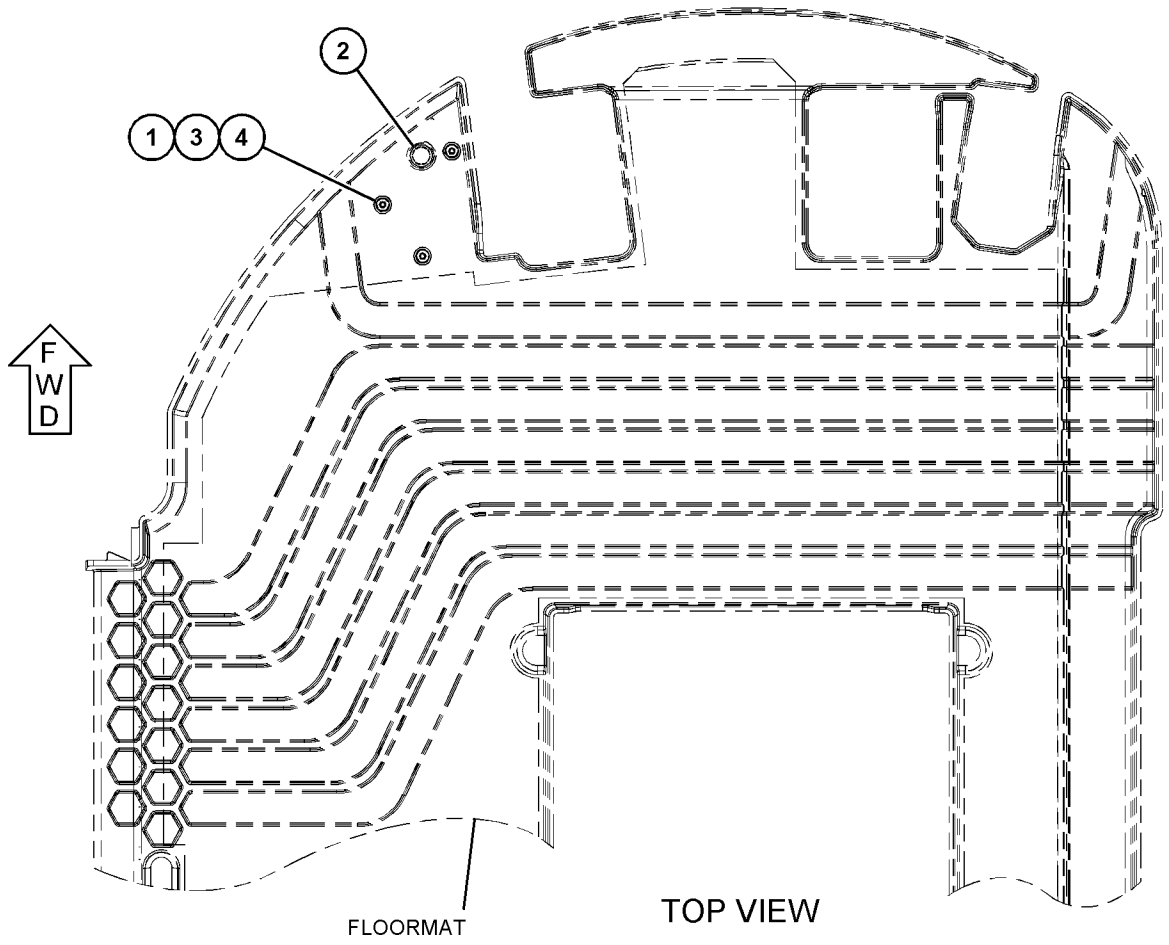

GRAPHIC #1 <END> g03599823

372-6646 HARDWARE GP-REAR FRAME

S/N: TNS1-UP

PART OF 463-8869 STEERING AR-SECONDARY

SMCS-7051, 7553 **i06721627**

NOTE	REF NO	GRAPHIC REF	PART NUMBER	QTY	PART NAME 1 2 3 4 5 6 (PRODUCT LEVEL)	SEE PAGE
	1	1	**124-0065**	1	BLOCK	
	2	1	**125-5006**	1	BOSS AS	
		1	**8S-1783**	1	PLATE-GROUNDING	
M		1	**8Y-3925**	1	BOSS (M10X1.5X30-MM)	
M	3	1	**388-5576**	1	BOSS-WELD (M10X1.5X30-MM)	
M	4	1	**389-0871**	3	BOSS-WELD (M10X1.5X45-MM)	
	5	1	**7T-1099**	1	LINK	
M	6	1	**446-5834**	3	STUD-WELD (M10X1.5X41-MM)	
	7	1	**5I-3333**	1	PLATE	

M - METRIC PART

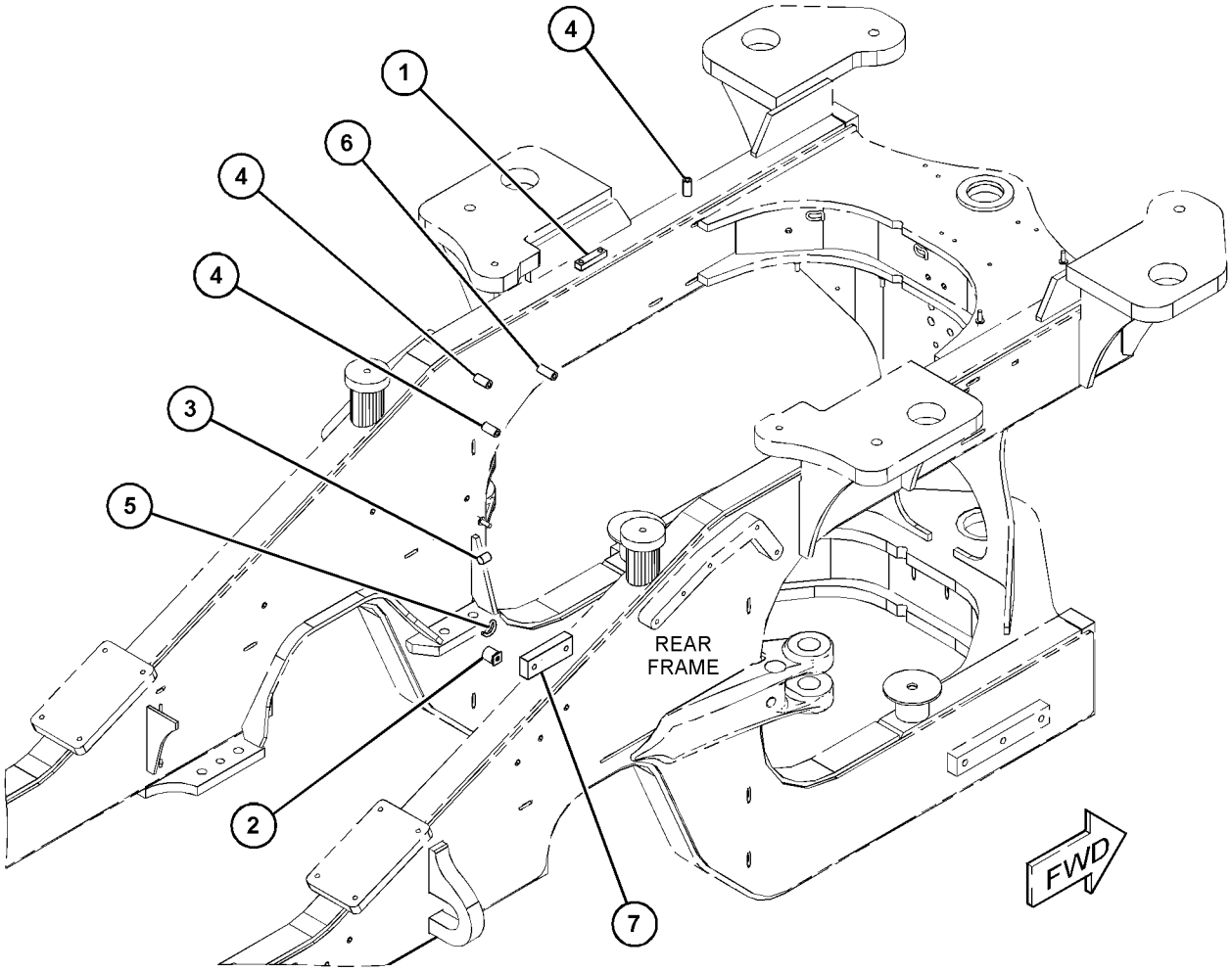

GRAPHIC #1 <END> g03686729

375-2924 HARDWARE GP-REAR FRAME–AXLE OIL COOLER MOUNTING

S/N: TNS1-UP

PART OF 463-8853 AXLE AR-FIXED & OSCILLATING

SMCS-7051, 7553

i06555717

NOTE	REF NO	GRAPHIC REF	PART NUMBER	QTY	PART NAME 1 2 3 4 5 6 (PRODUCT LEVEL)	SEE PAGE
	1	1	**7Y-2522**	1	PLATE	
M	2	1	**9R-2613**	1	BOSS-WELD (M10X1.5X25-MM)	

M - METRIC PART

375-2924 **HARDWARE GP-REAR FRAME (**contd.**)** **i06555717**

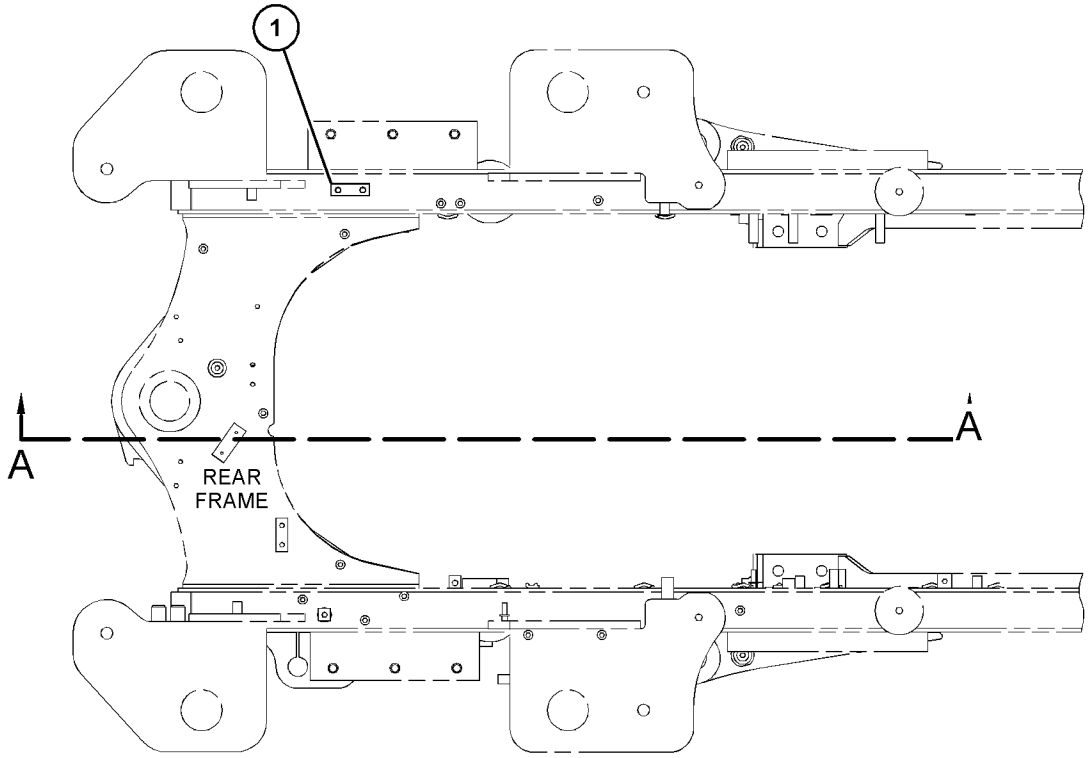

TOP VIEW

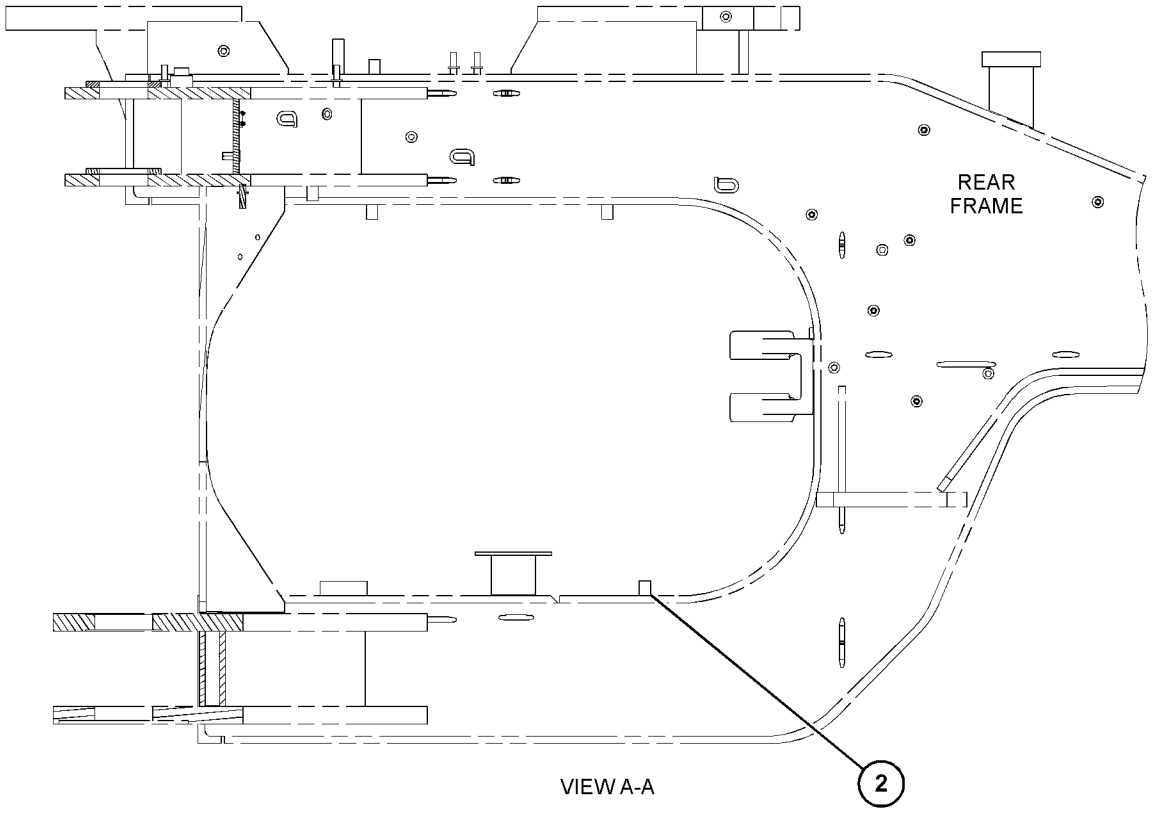

VIEW A-A

GRAPHIC #1 <END> g03682129

388-4766 HITCH GP-ARTICULATING

S/N: TNS1-UP

PART OF 456-5790 CHASSIS AR

SMCS-7057, 7100

i06759665

NOTE	REF NO	GRAPHIC REF	PART NUMBER	QTY	PART NAME 1 2 3 4 5 6 (PRODUCT LEVEL)	SEE PAGE
	1	1	**1B-3925**	2	CUP-BEARING (LOWER HITCH)	
	2	1	**3F-5950**	2	CONE-BEARING (LOWER HITCH)	
	3	1	**4K-6781**	1	SPACER	
	4	1	**7D-8348**	2	CUP-BEARING (UPPER HITCH)	
	5	1	**7D-8349**	2	CONE-BEARING (UPPER HITCH)	
	6	1	**118-8267**	1	PIN AS	
	7	1	**118-8270**	1	CAP (UPPER HITCH)	
	8	1	**118-8271**	1	PIN	
B	9	1	**118-8275**	1	SHIM PACK (INCLUDES 18-SHIMS)	
B	10	1	**118-8276**	1	SHIM PACK (INCLUDES 20-SHIMS)	
	11	1	**127-6513**	1	CAP (UPPER HITCH)	
B	12	1	**127-6514**	1	SHIM PACK (INCLUDES 20-SHIMS)	
	13	1	**134-3079**	1	PLATE	
	14	1	**388-4769**	1	CAP (LOWER HITCH)	
	15	1	**388-4771**	1	CAP (LOWER HITCH)	
	16	1	**388-4773**	1	SPACER	
M	17	1	**106-4175**	2	BOLT (M20X2.5X60-MM)	
	18	1	**3B-8489**	2	FITTING-GREASE (1/8-27 PTF)	
	19	1	**3K-2876**	2	SEAL-LIP TYPE	
	20	1	**4T-0370**	2	BUSHING	
	21	1	**5K-0983**	2	SEAL-LIP TYPE	
	22	1	**7G-8839**	1	SPACER (13.5X57X6-MM THK)	
M	23	1	**7X-2549**	7	BOLT (M12X1.75X100-MM)	
	24	1	**8T-4123**	2	WASHER (3.62X5.75X0.375-MM THK)	
M	25	1	**8T-4139**	1	BOLT (M12X1.75X30-MM)	
M	26	1	**8T-4176**	6	BOLT (M12X1.75X90-MM)	
M	27	1	**8T-4183**	6	BOLT (M12X1.75X40-MM)	
	28	1	**8T-4223**	19	WASHER-HARD (13.5X25.5X3-MM THK)	

B - USE AS REQUIRED
M - METRIC PART

388-4766 **HITCH GP-ARTICULATING (**contd.**)** **i06759665**

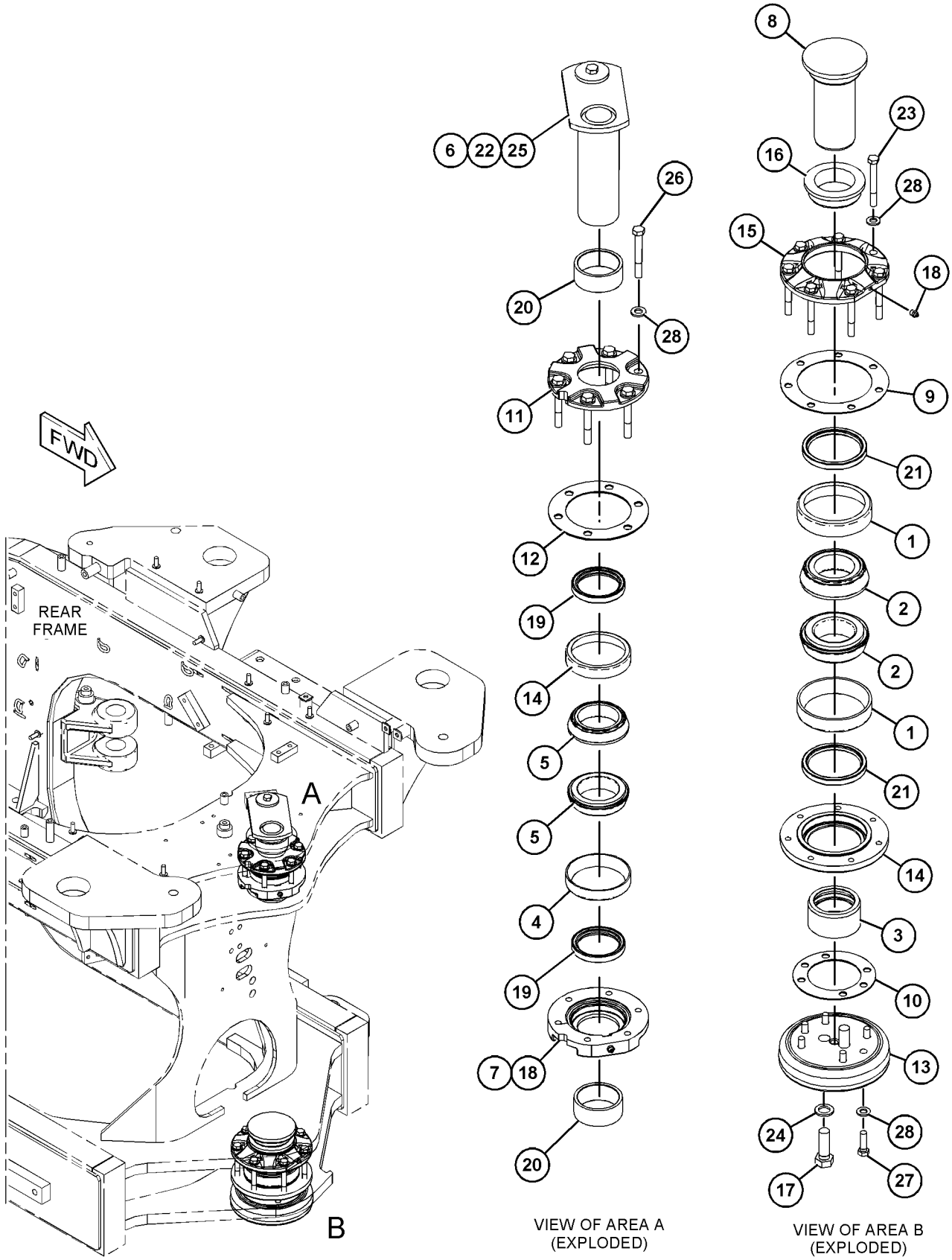

VIEW OF AREA A (EXPLODED)

VIEW OF AREA B (EXPLODED)

GRAPHIC #1

<END>

g03673521

336-0000 HOOD & GUARD GP

S/N: TNS1-UP

PART OF 492-4033, 492-4034 DISTRIBUTION AR

SMCS-7251 **i06760015**

NOTE	REF NO	GRAPHIC REF	PART NUMBER	QTY	PART NAME 1 2 3 4 5 6 (PRODUCT LEVEL)	SEE PAGE
	1	1	**208-6176**	1	STUD-BALL	
	2	1	**218-0728**	2	SPRING	
	3	2	**367-2481**	4	CAP	
Y	4	2	*379-9411*	1	TILT GP-HOOD	555
	5	2	**379-9436**	1	PLATE	
Y	6	2	*379-9441*	1	PANEL GP-HOOD (REAR)	514
Y	7	2	*383-2930*	1	PANEL GP-HOOD (RH)	515
Y	8	2	*383-2940*	1	PANEL GP-HOOD (LH)	516
Y	9	2	*383-2950*	1	PANEL GP-HOOD (TOP)	517
Y	10	2	*391-5780*	1	DOOR GP-ACCESS (HOOD, RH)	441
Y	11	1	*391-5782*	1	DOOR GP-ACCESS (HOOD, LH)	442
Y	12	2	*391-5801*	1	SUPPORT GP-HOOD (REAR)	540
Y	13	2	*391-5802*	1	SUPPORT GP-HOOD (TOP)	541
Y	14	2	*391-5803*	1	SUPPORT GP-HOOD (RH)	542
Y	15	1	*391-5804*	1	SUPPORT GP-HOOD (LH)	543
	16	2	**422-1629**	1	PIPE AS	
	17	2	**422-1653**	1	BRACKET AS	
	18	2	**422-1654**	1	BRACKET AS	
					(EACH BRACKET AS INCLUDES)	
M		2	**8T-3490**	2	NUT-WELD (M10X1.5-THD)	
	19	1	**431-4263**	1	PLATE AS	
	20	1	**451-1550**	1	SPRING AS-GAS (HOOD)	
		1	**218-0728**	2	SPRING	
Y	21	1	*465-6575*	1	BRACKET GP-MOUNTING (HOOD)	425
Y	22	2	*465-6580*	1	BRACKET GP-MOUNTING (HOOD)	426
M	23	1,2	**191-2276**	12	SCREW-TRUSS HEAD (M5X0.8X20-MM)	
	24	2	**339-8810**	3	INSERT	
M	25	1,2	**3T-0851**	12	LOCKNUT (M5X0.8-THD)	
	26	1,2	**9X-2038**	16	WASHER (7X19X2-MM THK)	
	27	1,2	**7X-0579**	60	WASHER-HARD (8.8X25.5X2-MM THK)	
	28	1,2	**7X-7729**	58	WASHER (11X25X3-MM THK)	
	29	2	**8T-2444**	2	STUD-BALL	
M	30	1,2	**8T-4136**	54	BOLT (M10X1.5X25-MM)	
M	31	1,2	**8T-4195**	24	BOLT (M10X1.5X30-MM)	
	32	1,2	**491-8257**	40	BOLT (M8X1.25X16-MM)	
	33	2	**8T-4222**	20	WASHER-PLATED (11X32X2.5-MM THK)	
M	34	1,2	**8T-4908**	17	BOLT (M8X1.25X25-MM)	
D	35	2	**6V-6604**		SEAL (0.8-M)	
E	37	1,2	**126-8472**		SEAL (7.5-CM EACH)	
E	38	2	**246-0435**		SEAL (70-CM) (74-CM)	
E	39	2	**310-6270**		SEAL (38-CM EACH)	
E	40	2	**469-9149**		SEAL (118-CM)	

D - ORDER BY THE METER
E - ORDER BY THE CENTIMETER
M - METRIC PART
Y - SEPARATE ILLUSTRATION

336-0000 **HOOD & GUARD GP** (contd.) **i06760015**

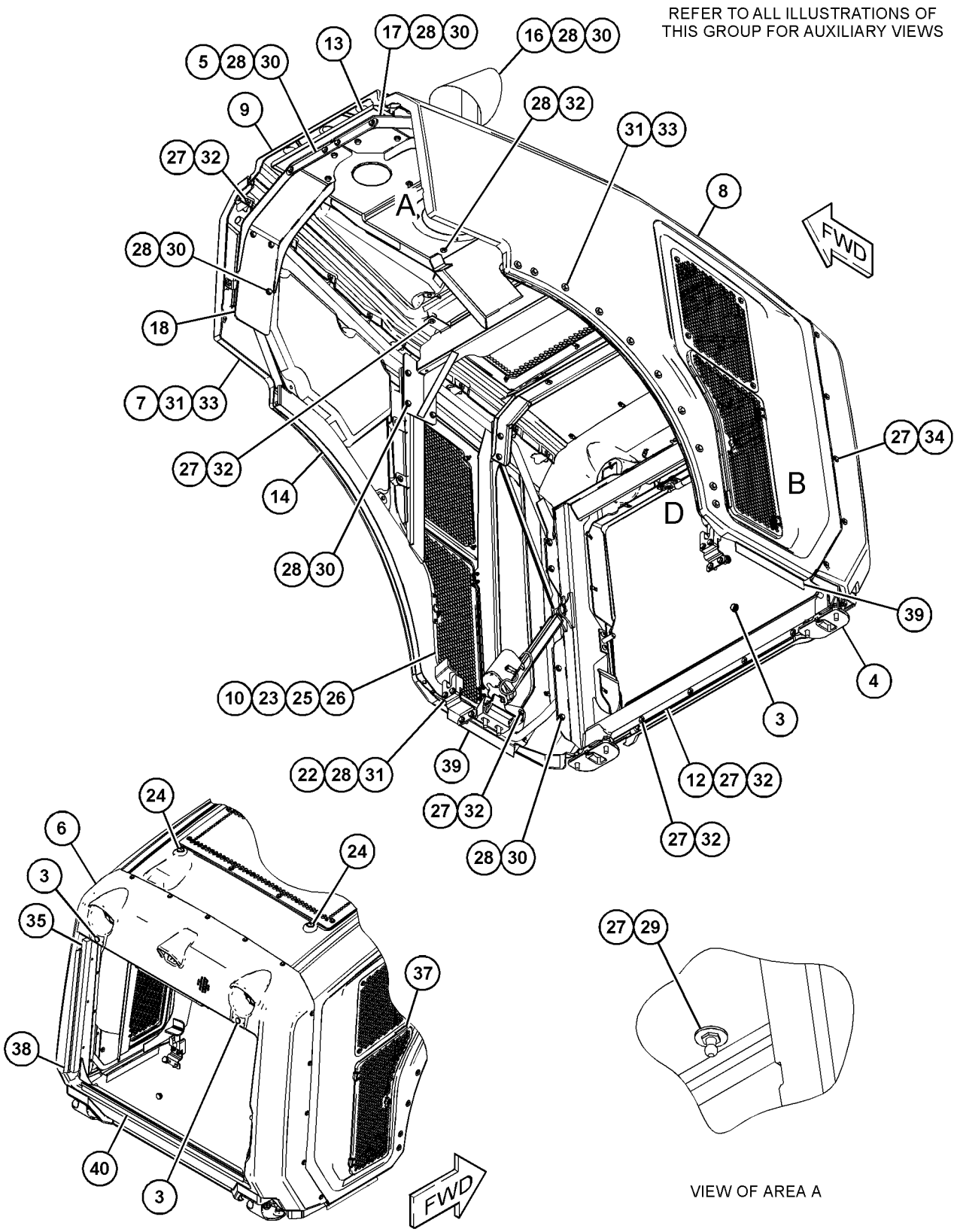

GRAPHIC #1 g06110232

336-0000 **HOOD & GUARD GP (**contd.**)** **i06760015**

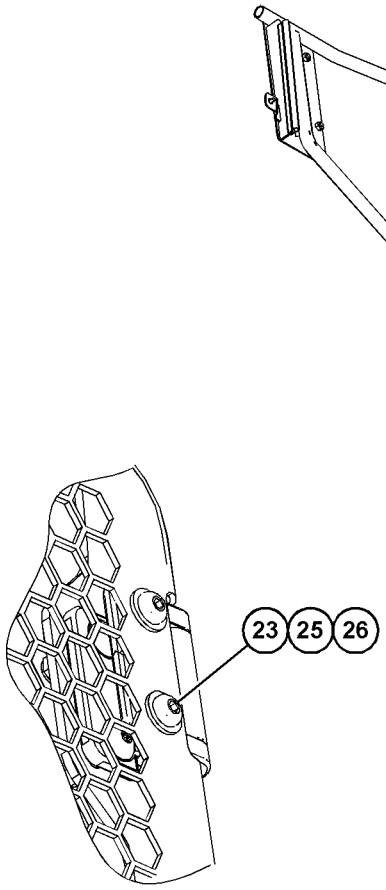

VIEW OF AREA C

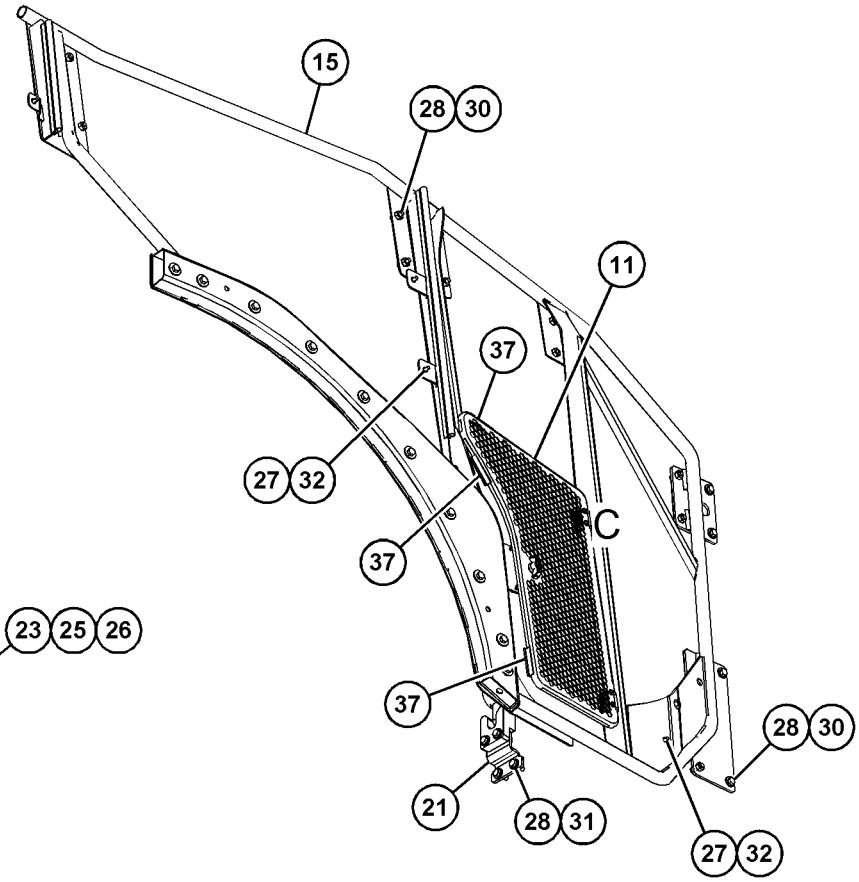

VIEW OF AREA B
(PARTS REMOVED FOR CLARITY)

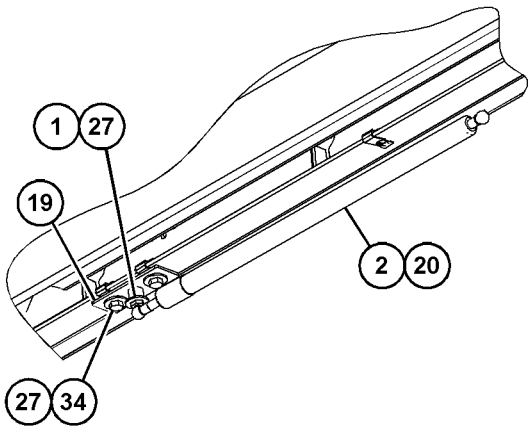

VIEW OF AREA D
(PARTS REMOVED FOR CLARITY)

GRAPHIC #2 <END> g06110233

504-2868 LADDER & WALKWAY GP

S/N: TNS1-UP

PART OF 504-2869 PLATFORM GP-OPERATOR

SMCS-7254, 7255 **i06753463**

NOTE	REF NO	GRAPHIC REF	PART NUMBER	QTY	PART NAME 1 2 3 4 5 6 (PRODUCT LEVEL)	SEE PAGE
	1	1	**380-5252**	1	HANDRAIL AS (LH)	
Y	2	1	*485-2088*	1	LADDER GP (LH)	496
Y	3	1	*485-2201*	1	WALKWAY GP (LH)	558
	4	1	**504-2864**	1	FENDER AS	
M		1	**8T-3490**	20	NUT-WELD (M10X1.5-THD)	
M		1	**178-7023**	3	BOSS (M10X1.5X30-MM)	
Y	5	1	*504-2867*	1	BOX GP-BATTERY	423
	6	1	**5P-1076**	4	WASHER-HARD (13.5X30X4-MM THK)	
	7	1	**7X-7729**	5	WASHER (11X25X3-MM THK)	
M	8	1	**8T-4136**	5	BOLT (M10X1.5X25-MM)	
M	9	1	**8T-4139**	4	BOLT (M12X1.75X30-MM)	

M - METRIC PART
Y - SEPARATE ILLUSTRATION

504-2868 **LADDER & WALKWAY GP (**contd.**)** **i06753463**

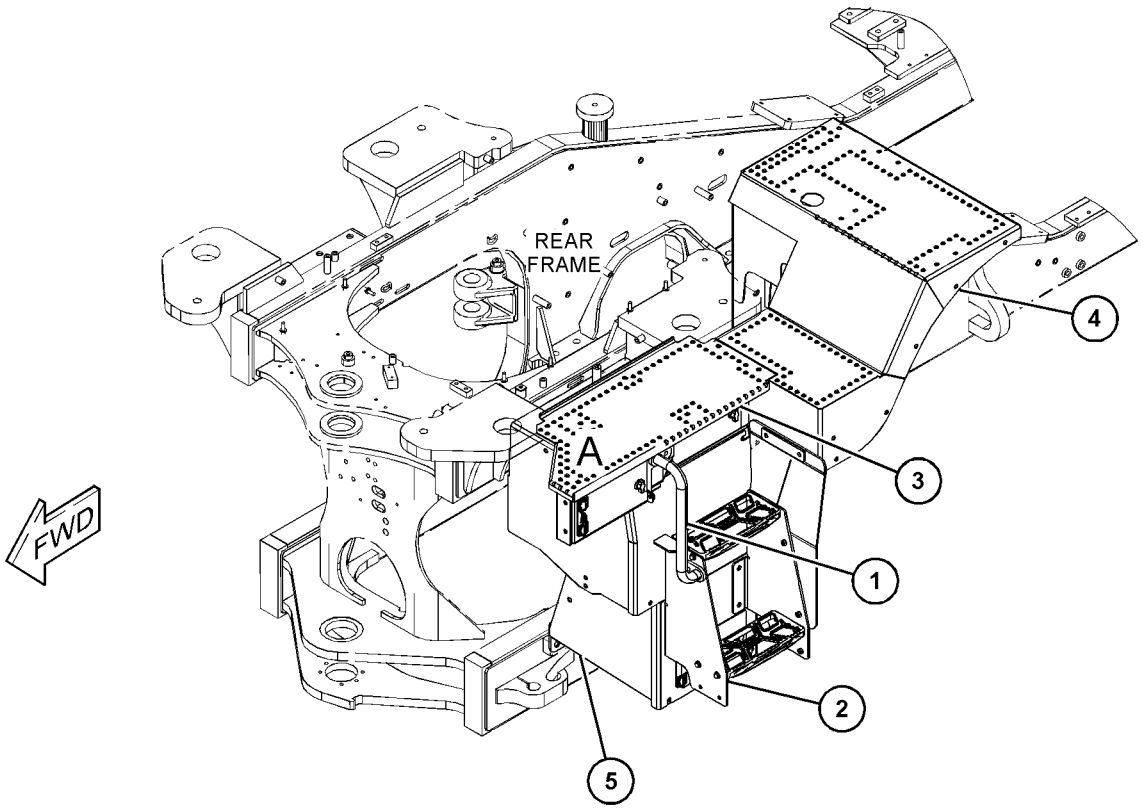

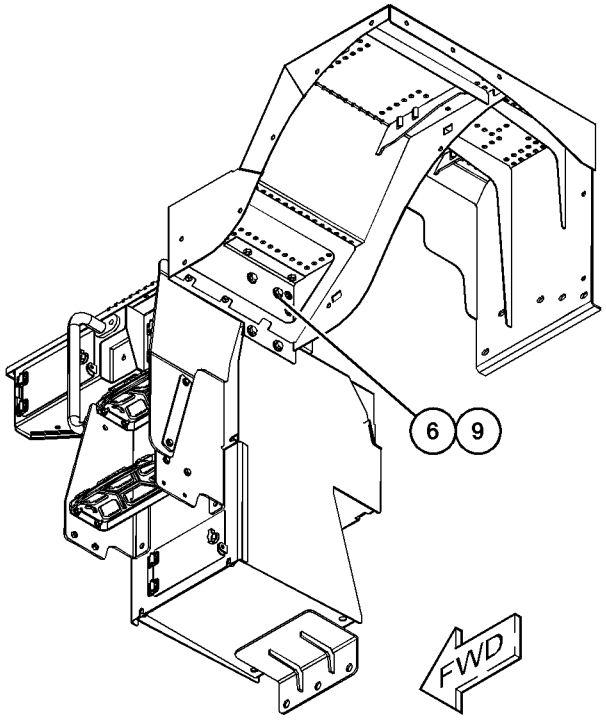

(VIEWED FROM BOTTOM)

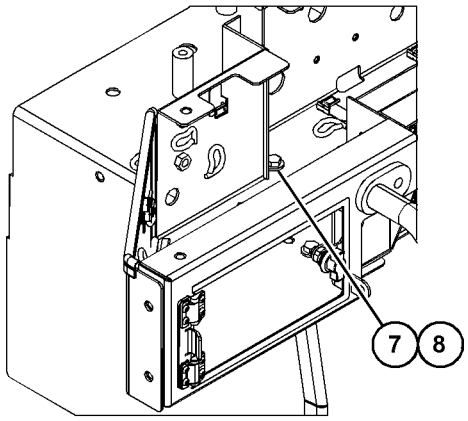

VIEW OF AREA A
(PARTS REMOVED FOR CLARITY)

GRAPHIC #1 <END> g06109043

504-2875 LADDER & WALKWAY GP

S/N: TNS1-UP

PART OF 504-2876 LADDER & WALKWAY GP

SMCS-7254, 7255

i06756782

NOTE	REF NO	GRAPHIC REF	PART NUMBER	QTY	PART NAME 1 2 3 4 5 6 (PRODUCT LEVEL)	SEE PAGE
	1	1	**380-5252**	1	HANDRAIL AS (LH)	
	2	1	**428-7563**	1	PLATE	
Y	3	1	*485-2201*	1	WALKWAY GP (LH)	558
Y	4	1	*485-2575*	1	LADDER GP (LH)	497
Y	5	1	**504-2871**	1	PLATFORM GP-OPERATOR	829
Y	6	1	*504-2874*	1	BOX GP-BATTERY	424
M	7	1	**344-5675**	7	NUT (M10X1.5-THD)	
	8	1	**5P-1076**	4	WASHER-HARD (13.5X30X4-MM THK)	
	9	1	**7X-7729**	37	WASHER (11X25X3-MM THK)	
M	10	1	**8T-4136**	23	BOLT (M10X1.5X25-MM)	
M	11	1	**8T-4139**	4	BOLT (M12X1.75X30-MM)	
M	12	1	**9X-2039**	7	SCREW-TRUSS HEAD (M10X1.5X35-MM)	

M - METRIC PART
Y - SEPARATE ILLUSTRATION

504-2875 **LADDER & WALKWAY GP** (contd.) **i06756782**

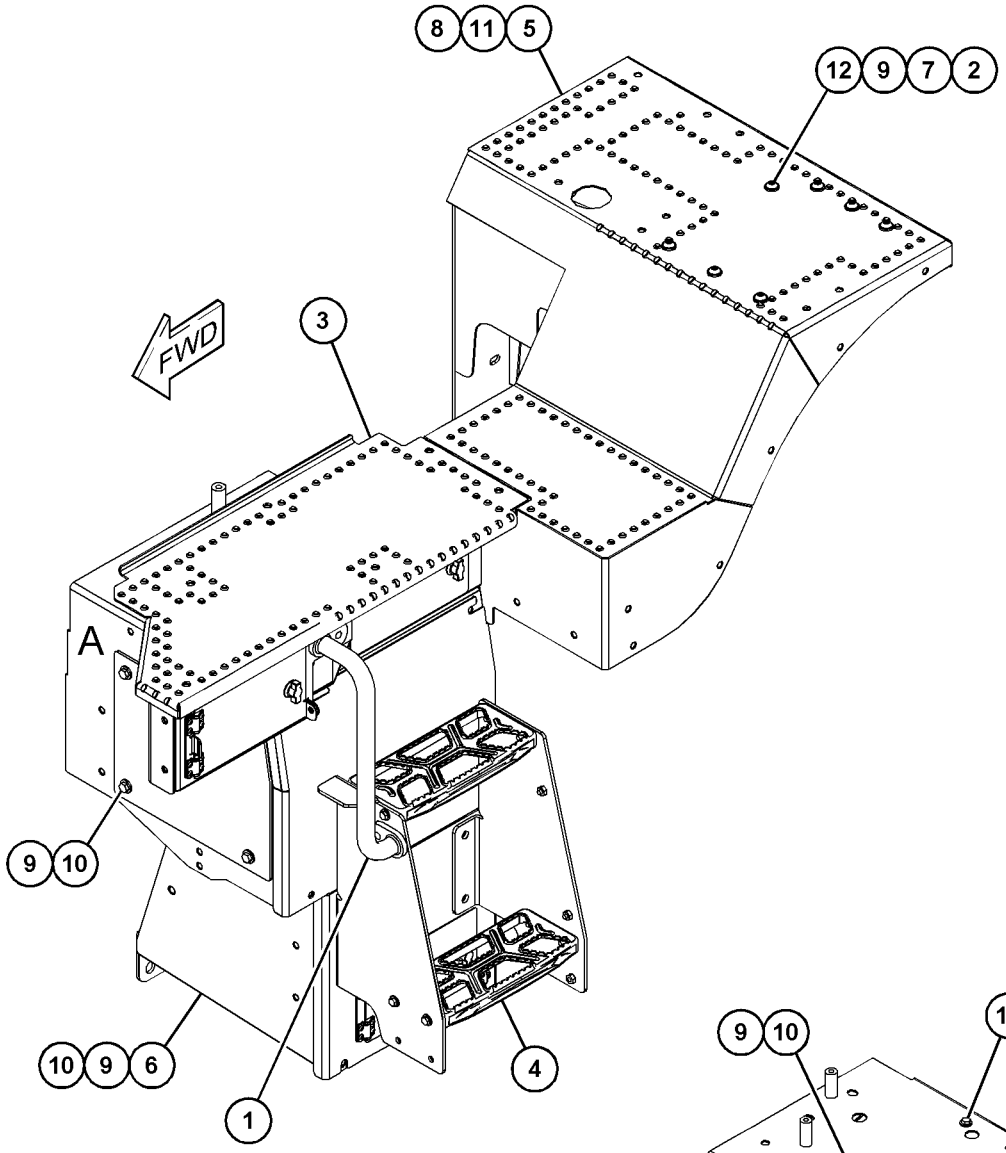

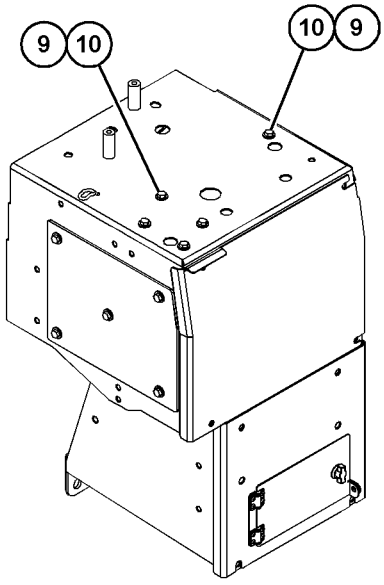

VIEW OF AREA A
(PARTS REMOVED FOR CLARITY)

GRAPHIC #1 <END> g06103745

504-2876 LADDER & WALKWAY GP

S/N: TNS1-UP

PART OF 507-9161 SPECIAL AR-WHEEL LOADER

SMCS-7254, 7255 **i06756765**

NOTE	REF NO	GRAPHIC REF	PART NUMBER	QTY	PART NAME 1 2 3 4 5 6 (PRODUCT LEVEL)	SEE PAGE
Y	1	1	*504-2875*	1	LADDER & WALKWAY GP	492
	2	1	**267-8821**	6	WASHER (17X36X12-MM THK)	
M	3	1	**344-5675**	1	NUT (M10X1.5-THD)	
	4	1	**5P-1076**	11	WASHER-HARD (13.5X30X4-MM THK)	
	5	1	**7X-7729**	22	WASHER (11X25X3-MM THK)	
M	6	1	**8T-4136**	11	BOLT (M10X1.5X25-MM)	
M	7	1	**8T-4137**	2	BOLT (M10X1.5X20-MM)	
M	8	1	**8T-4139**	6	BOLT (M12X1.75X30-MM)	
M	9	1	**8T-4196**	2	BOLT (M10X1.5X35-MM)	
M	10	1	**8T-4956**	5	BOLT (M12X1.75X35-MM)	
M	11	1	**8T-7338**	6	BOLT (M16X2X45-MM)	
M	12	1	**9X-2040**	6	SCREW-TRUSS HEAD (M10X1.5X25-MM)	

M - METRIC PART
Y - SEPARATE ILLUSTRATION

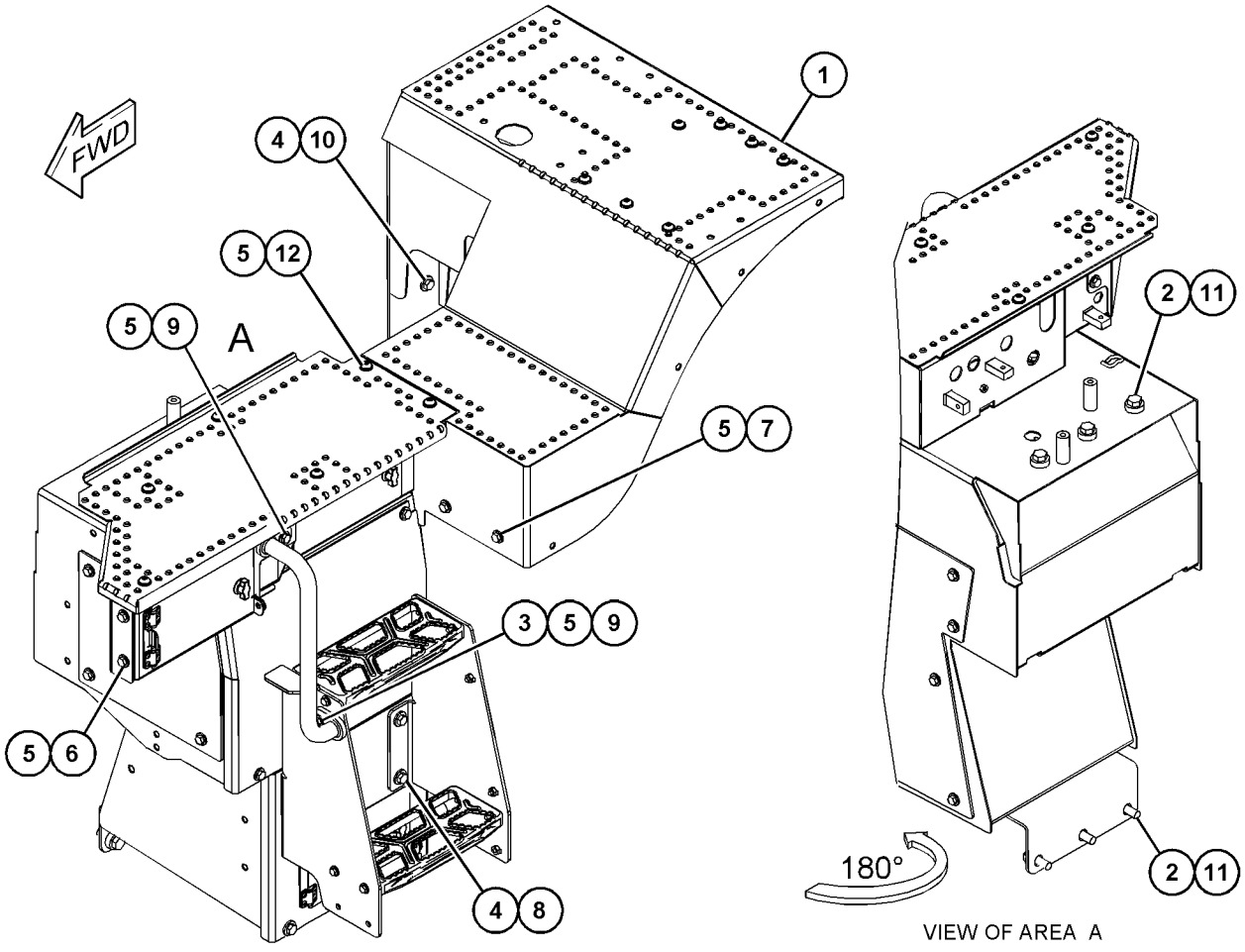

GRAPHIC #1 <END> g06104395

485-1970 LADDER GP–LH

S/N: TNS1-UP

PART OF 485-1964 SUPPORT GP-VALVE & FILTER

SMCS-7254 **i06819370**

NOTE	REF NO	GRAPHIC REF	PART NUMBER	QTY	PART NAME 1 2 3 4 5 6 (PRODUCT LEVEL)	SEE PAGE
	1	1	**367-2562**	1	SHEET AS (LH)	
	2	1	**367-2563**	1	SHEET AS (RH)	
	3	1	**389-2989**	1	PLATE AS	
M		1	**8T-3612**	1	NUT-WELD (M8X1.25-THD)	
	4	1	**389-2993**	1	FLAP	
	5	1	**454-7800**	2	STEP AS	
M	6	1	**344-5674**	8	NUT (M8X1.25-THD)	
	7	1	**384-1628**	1	WASHER-HARD (8.8X35X4-MM THK)	
	8	1	**5P-4116**	18	WASHER-HARD (8.8X20.5X2-MM THK)	
M	9	1	**8T-7547**	11	BOLT (M8X1.25X30-MM)	

M - METRIC PART

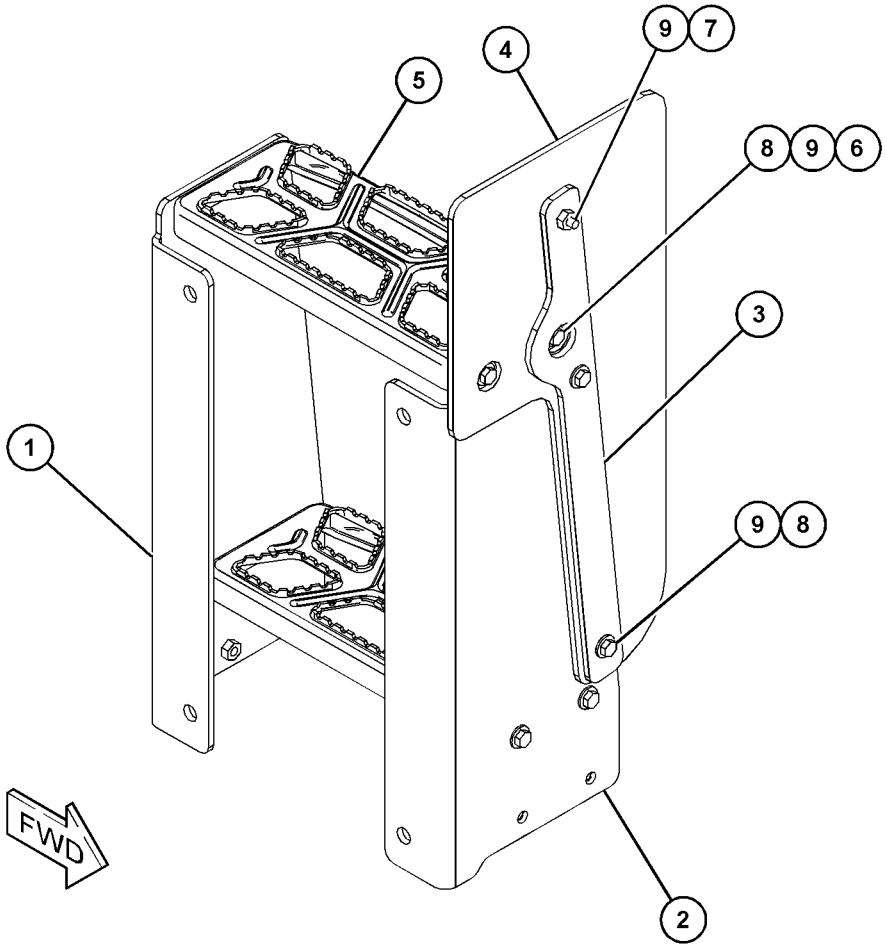

GRAPHIC #1 <END> g06108009

485-2088 LADDER GP–LH

S/N: TNS1-UP

PART OF 504-2868 LADDER & WALKWAY GP

SMCS-7254 **i06753478**

NOTE	REF NO	GRAPHIC REF	PART NUMBER	QTY	PART NAME 1 2 3 4 5 6 (PRODUCT LEVEL)	SEE PAGE
	1	1	**339-8538**	1	STRIP	
	2	1	**358-1815**	1	FLAP	
	3	1	**367-2560**	1	SHEET AS (LH)	
M		1	**8T-3612**	2	NUT-WELD (M8X1.25-THD)	
	4	1	**367-2561**	1	SHEET AS (RH)	
M		1	**8T-3612**	4	NUT-WELD (M8X1.25-THD)	
	5	1	**389-2935**	1	STRIP	
	6	1	**454-7800**	2	STEP AS	
M	7	1	**344-5674**	8	NUT (M8X1.25-THD)	
	8	1	**5P-4116**	18	WASHER-HARD (8.8X20.5X2-MM THK)	
M	9	1	**8T-7547**	10	BOLT (M8X1.25X30-MM)	

M - METRIC PART

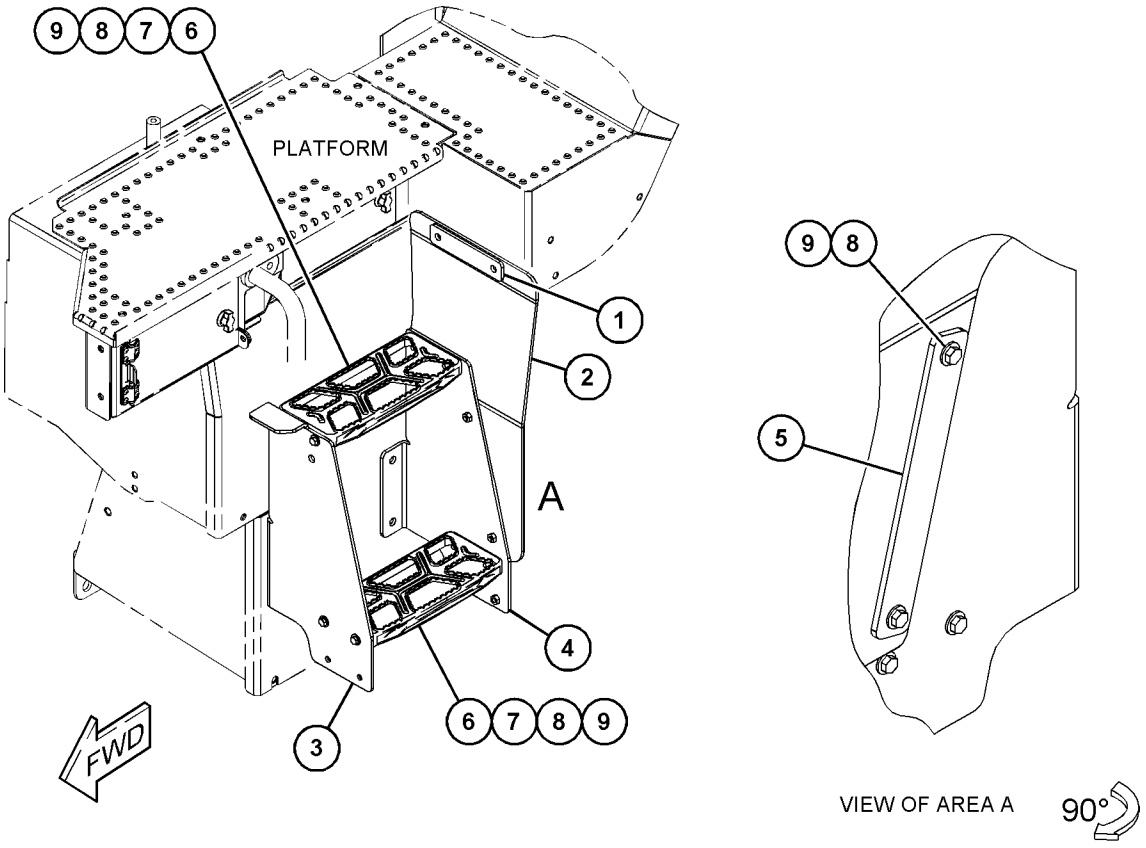

GRAPHIC #1 <END> g06101229

485-2575 LADDER GP

S/N: TNS1-UP

LH

PART OF 504-2875 LADDER & WALKWAY GP

SMCS-7254 **i06756790**

NOTE	REF NO	GRAPHIC REF	PART NUMBER	QTY	PART NAME 1 2 3 4 5 6 (PRODUCT LEVEL)	SEE PAGE
	1	1	**367-2560**	1	SHEET AS (LH)	
	2	1	**367-2561**	1	SHEET AS (RH)	
	3	1	**454-7800**	2	STEP AS	
M	4	1	**344-5674**	8	NUT (M8X1.25-THD)	
	5	1	**5P-4116**	18	WASHER-HARD (8.8X20.5X2-MM THK)	
M	6	1	**8T-4189**	2	BOLT (M8X1.25X20-MM)	
M	7	1	**8T-7547**	8	BOLT (M8X1.25X30-MM)	

M - METRIC PART

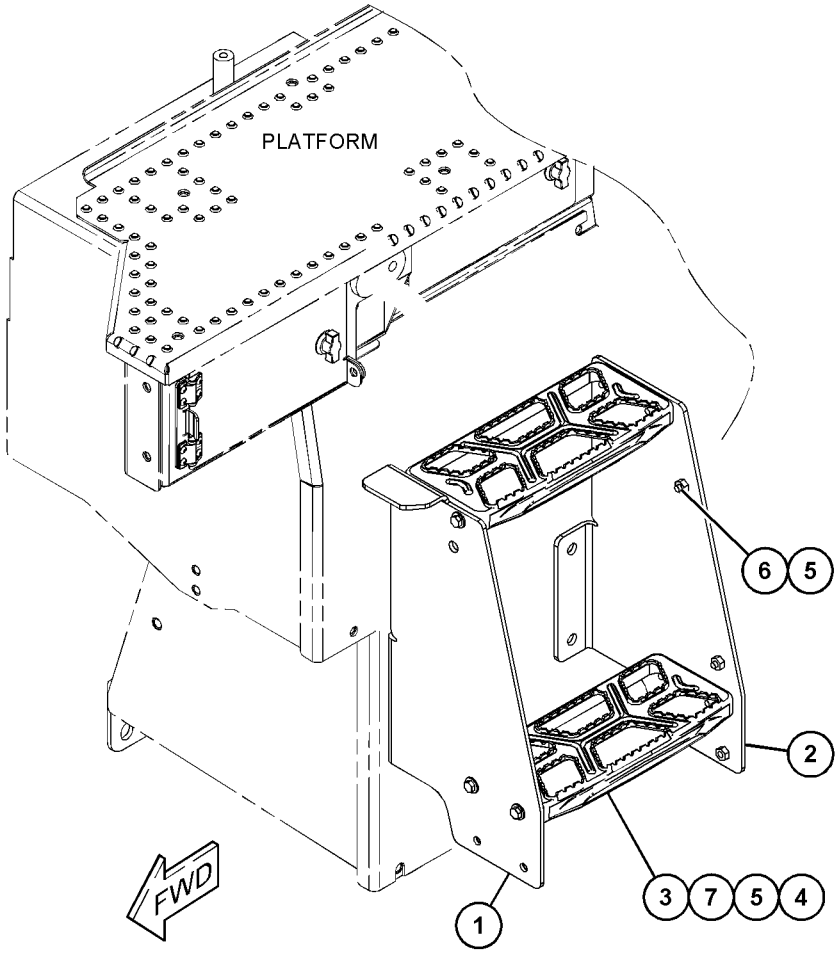

GRAPHIC #1 <END> g06103727

485-2592 LADDER GP–RH

S/N: TNS1-UP

PART OF 485-2603 SUPPORT GP-VALVE & FILTER

SMCS-7254 **i06756824**

NOTE	REF NO	GRAPHIC REF	PART NUMBER	QTY	PART NAME 1 2 3 4 5 6 (PRODUCT LEVEL)	SEE PAGE
	1	1	**367-2562**	1	SHEET AS (LH)	
	2	1	**367-2563**	1	SHEET AS (RH)	
	3	1	**454-7800**	2	STEP AS	
M	4	1	**344-5674**	8	NUT (M8X1.25-THD)	
	5	1	**5P-4116**	18	WASHER-HARD (8.8X20.5X2-MM THK)	
M	6	1	**8T-4189**	2	BOLT (M8X1.25X20-MM)	
M	7	1	**8T-7547**	8	BOLT (M8X1.25X30-MM)	

M - METRIC PART

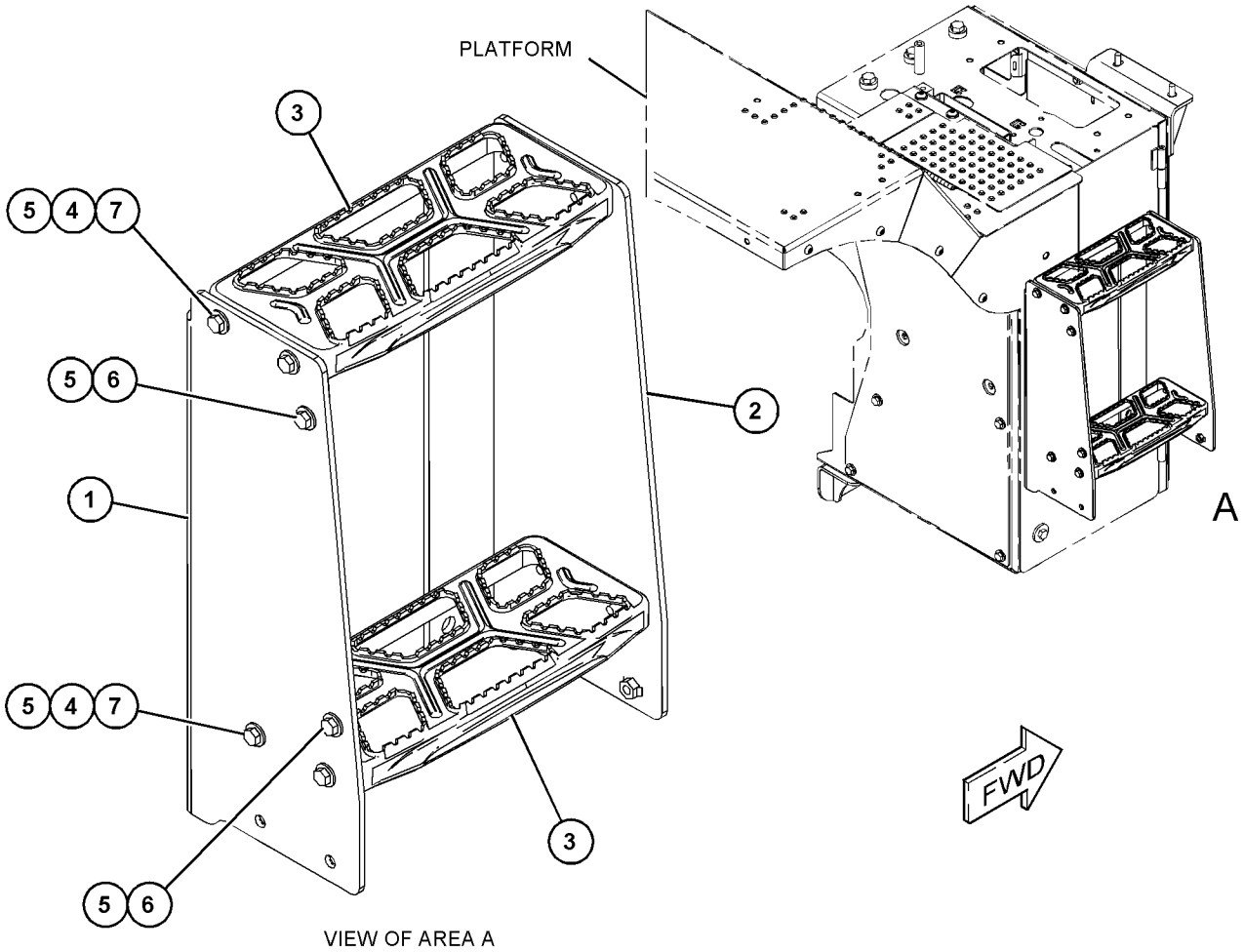

VIEW OF AREA A

GRAPHIC #1 <END> g06102452

500-0589 LATCH GP

S/N: TNS1-UP

PART OF 433-8092, 433-8102 PANEL GP-SIDE

SMCS-7251 **i06737584**

NOTE	REF NO	GRAPHIC REF	PART NUMBER	QTY	PART NAME 1 2 3 4 5 6 (PRODUCT LEVEL)	SEE PAGE
	1	1	**355-5288**	1	PLATE	
	2	1	**478-5343**	1	LATCH AS	
M	3	1	**143-1284**	3	SCREW-BUTTON HEAD (M5X0.8X30-MM)	
M	4	1	**3T-0851**	3	LOCKNUT (M5X0.8-THD)	
	5	1	**9X-8256**	3	WASHER (6.6X12X2-MM THK)	

M - METRIC PART

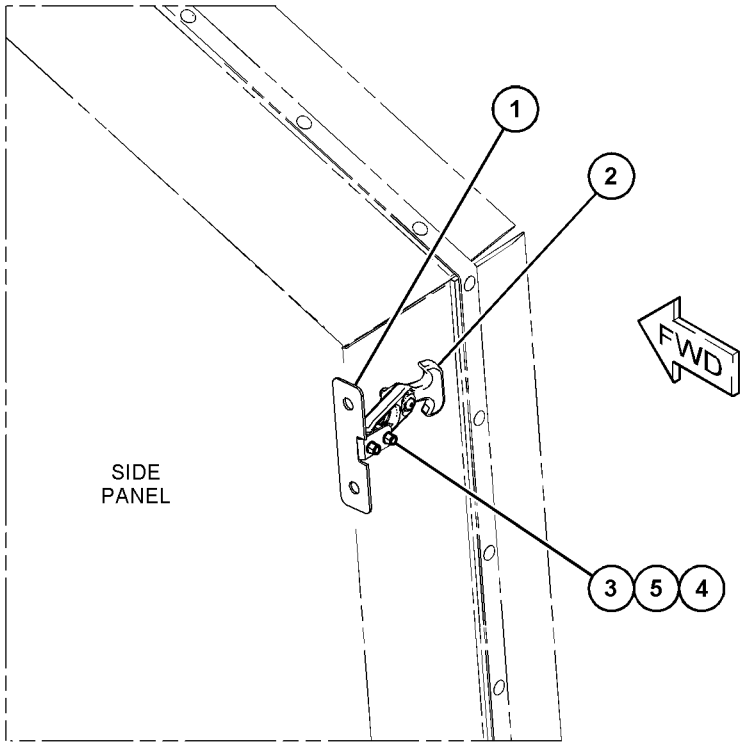

GRAPHIC #1 <END> g06108531

500-3677 LINES GP-FRONT LUBRICATION

S/N: TNS1-UP

PART OF 495-9704 LUBRICATION AR-AUTOMATIC

SMCS-7510, 7540 **i06811115**

NOTE	REF NO	GRAPHIC REF	PART NUMBER	QTY	PART NAME 1 2 3 4 5 6 (PRODUCT LEVEL)	SEE PAGE
	1	1	**3B-8486**	1	FITTING-GREASE (1/8-27 PTF)	
	2	1	**4M-8973**	3	ELBOW	
	3	1	**5P-3422**	1	TEE-PIPE	
	4	1	**5P-3741**	2	TEE-PIPE	
	5	1	**6J-3958**	2	COUPLING-PIPE	
	6	1	**7K-1181**	10	STRAP-CABLE (5.72-MM DIA)	
	7	1	**8T-4121**	7	WASHER-HARD (11X21X2.5-MM THK)	
	8	1	**091-0081**	1	SPACER (10.5X20X10-MM THK)	
	9	1	*108-6709*	9	CONNECTOR AS	
					(EACH INCLUDES)	
		1	**5W-1636**	1	NUT	
		1	**268-1623**	1	CONNECTOR	
		1	**471-3702**	1	SLEEVE	
	10	1	**222-3487**	1	ADAPTER	
	11	1	**251-2139**	5	BRACKET	
	12	1	**278-5856**	1	CLAMP	
	13	1	**335-9388**	1	BOSS	
M	14	1	**344-5673**	2	NUT (M6X1-THD)	
Y	15	1	*488-9578*	1	LINES GP-LUBRICATION	506
	16	1	**492-9964**	1	BRACKET AS	
	17	1	**498-1649**	1	PLATE	
	18	1	**498-1657**	2	BUSHING AS	
					(EACH INCLUDES)	
		1	**7T-2671**	1	WASHER	
		1	**243-1935**	1	SEAL-O-RING	
	19	1	**498-1658**	2	BUSHING AS	
					(EACH INCLUDES)	
		1	**4J-7533**	1	SEAL-O-RING	
		1	**7T-2671**	1	WASHER	
	20	1	**500-3634**	1	BRACKET AS	
M		1	**9R-2613**	2	BOSS-WELD (M10X1.5X25-MM)	
		1	**463-8093**	1	BLOCK	
I	21	1	**500-3683**	2	HOSE AS	
	22	1	**500-3685**	1	TUBE	
	23	1	**500-3686**	1	TUBE	
	24	1	**500-3687**	1	TUBE	
	25	1	**500-3688**	1	TUBE	
	26	1	**353-7957**	2	GROMMET	
	27	1	**5P-9085**	3	CLIP	
	28	1	**6H-9049**	4	FITTING	
M	29	1	**7X-2534**	2	BOLT (M6X1X50-MM)	
M	30	1	**7X-2564**	1	BOLT (M20X2.5X90-MM)	
	31	1	**7X-7729**	4	WASHER (11X25X3-MM THK)	
	32	1	**8T-1887**	2	CLIP (SLOT)	
	33	1	**8T-1888**	2	CLIP (TAB)	
M	34	1	**8T-4136**	4	BOLT (M10X1.5X25-MM)	
M	35	1	**8T-4137**	5	BOLT (M10X1.5X20-MM)	
M	36	1	**8T-4195**	1	BOLT (M10X1.5X30-MM)	

500-3677 **LINES GP-FRONT LUBRICATION (**contd.**)** **i06811115**

NOTE	REF NO	GRAPHIC REF	PART NUMBER	QTY	PART NAME 1 2 3 4 5 6 (PRODUCT LEVEL)	SEE PAGE
M	37	1	**8T-4196**	1	BOLT (M10X1.5X35-MM)	
M	38	1	**8T-4200**	6	BOLT (M8X1.25X16-MM)	
	39	1	**8T-4224**	6	WASHER-HARD (8.8X16X2-MM THK)	
	40	1	**8T-5439**	1	WASHER-HARD (21.5X45X6-MM THK)	
	41	1	**9X-8256**	4	WASHER (6.6X12X2-MM THK)	
	42	1	**9X-8582**	3	CLIP	
E	43	1	**7I-1024**		GUARD-HOSE (59-CM)	
E	44	1	**502-1344**		GUARD (33-CM EACH)	

E - ORDER BY THE CENTIMETER
I - REFER TO HYDRAULIC INFORMATION SYSTEM
M - METRIC PART
Y - SEPARATE ILLUSTRATION

500-3677 **LINES GP-FRONT LUBRICATION (**contd.**)** **i06811115**

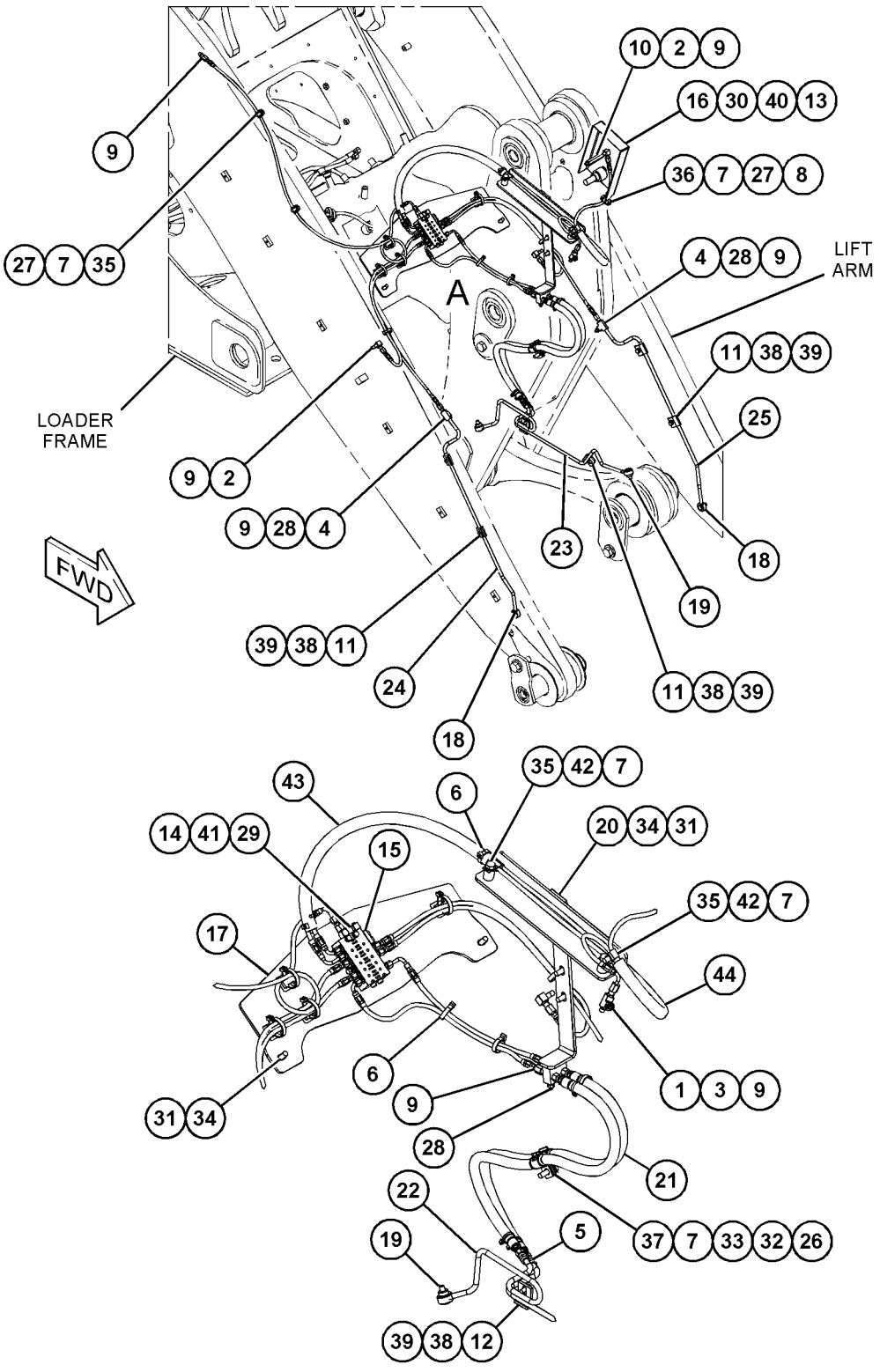

VIEW OF AREA A

GRAPHIC #1 <END> g06129205

360-0315 LINES GP-GREASE

S/N: TNS1-UP

PART OF 492-4021 HYDRAULIC AR

SMCS-7510 **i05786607**

NOTE	REF NO	GRAPHIC REF	PART NUMBER	QTY	PART NAME 1 2 3 4 5 6 (PRODUCT LEVEL)	SEE PAGE
	1	1	**3B-6552**	2	ELBOW-PIPE	
	2	1	**3B-8489**	4	FITTING-GREASE (1/8-27 PTF)	
	3	1	**4M-8973**	2	ELBOW	
	4	1	**5M-6214**	4	PLUG (1/8-27 PTF)	
	5	1	**372-3639**	1	HOSE AS	
	6	1	**384-9536**	1	HOSE AS	
	7	1	**384-9537**	1	HOSE AS	
	8	1	**391-6998**	1	BRACKET AS	
M		1	**8T-3490**	1	NUT-WELD (M10X1.5-THD)	
	9	1	**427-0364**	1	HOSE AS	
	10	1	**033-8248**	11	CLIP	
M	11	1	**101-3129**	1	STUD (M10X1.5-THD)	
M	12	1	**344-5675**	3	NUT (M10X1.5-THD)	
	13	1	**8T-4121**	12	WASHER-HARD (11X21X2.5-MM THK)	
M	14	1	**8T-4137**	4	BOLT (M10X1.5X20-MM)	
M	15	1	**8T-4196**	4	BOLT (M10X1.5X35-MM)	
	16	1	**9M-4995**	3	CLIP	

M - METRIC PART

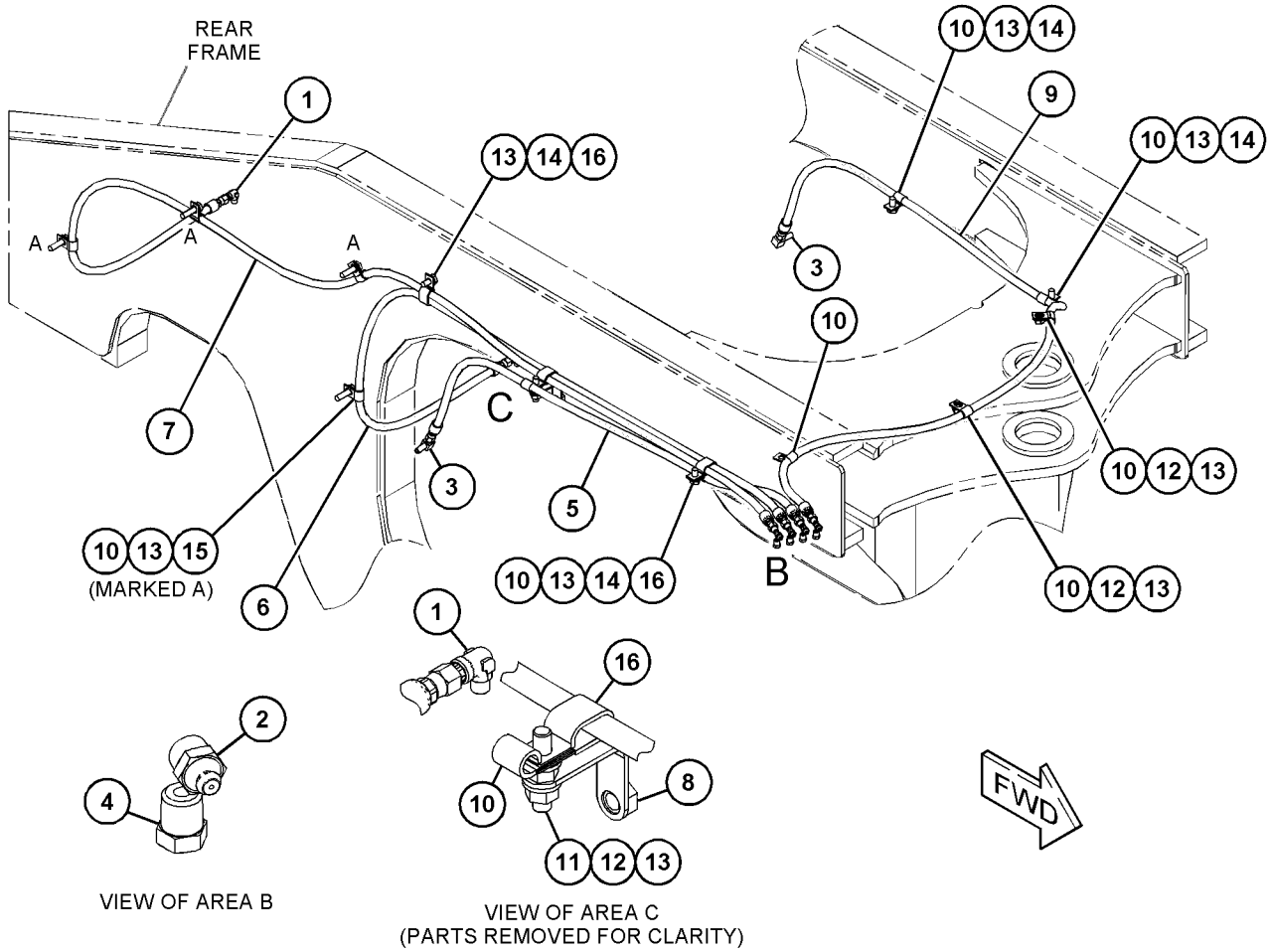

GRAPHIC #1 <END> g03677812

436-7008 LINES GP-GREASE

S/N: TNS1-UP

PART OF 507-6190 HYDRAULIC AR, 492-4028 HYDRAULIC AR-STANDARD LIFT

SMCS-7510 **i06809474**

NOTE	REF NO	GRAPHIC REF	PART NUMBER	QTY	PART NAME 1 2 3 4 5 6 (PRODUCT LEVEL)	SEE PAGE
	1	1	**5K-9242**	3	UNION-FLARED	
	2	1	**5K-9243**	1	ELBOW-FLARED	
	3	1	**5M-6214**	3	PLUG (1/8-27 PTF)	
	4	1	**6L-3616**	3	CONNECTOR	
	5	1	**9S-7712**	2	ELBOW-FLARED	
	6	1	**373-7808**	2	TUBE AS	
	7	1	**462-7010**	1	TUBE AS	
	8	1	**462-7011**	1	TUBE AS	
	9	1	**462-7012**	1	TUBE AS	
	10	1	**462-7013**	1	TUBE AS	
	11	1	**2B-2404**	9	CLIP	
	12	1	**5B-0935**	3	FITTING-GREASE	
	13	1	**5K-2298**	3	CLIP	
	14	1	**5P-3422**	3	TEE-PIPE	
	15	1	**5P-5461**	3	NUT (1/8-27-THD)	
	16	1	**5P-5463**	3	ADAPTER-LUBRICATION	
	17	1	**8T-4121**	3	WASHER-HARD (11X21X2.5-MM THK)	
M	18	1	**8T-4136**	1	BOLT (M10X1.5X25-MM)	
M	19	1	**8T-4137**	2	BOLT (M10X1.5X20-MM)	
	20	1	**9S-1812**	2	FITTING (NIPPLE-PIPE)	

M - METRIC PART

436-7008 **LINES GP-GREASE (**contd.**)** **i06809474**

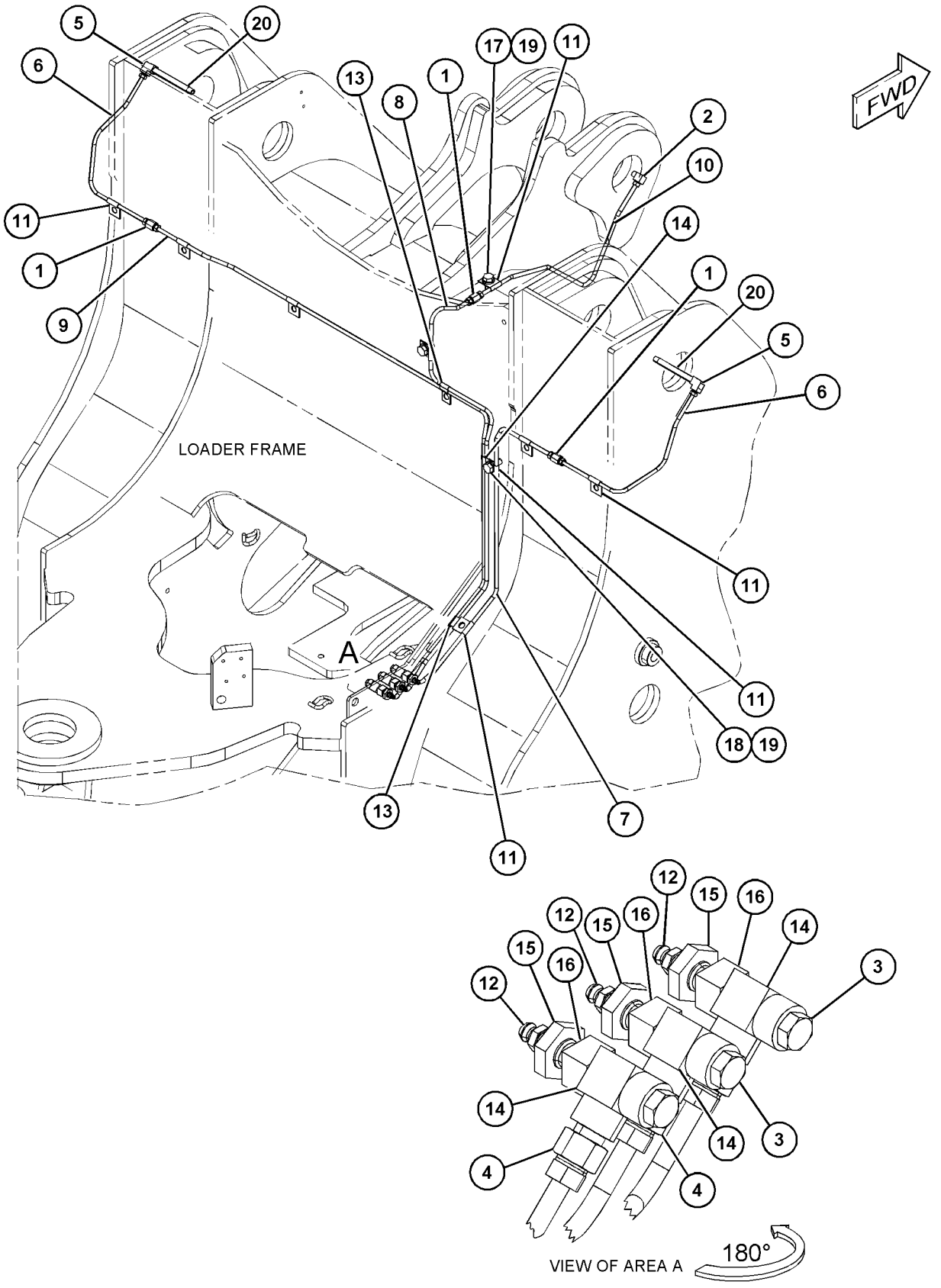

GRAPHIC #1 <END> g06021884

488-9578 LINES GP-LUBRICATION

S/N: TNS1-UP

FRONT

PART OF 500-3677 LINES GP-FRONT LUBRICATION

SMCS-7510, 7540

i06811073

NOTE	REF NO	GRAPHIC REF	PART NUMBER	QTY	PART NAME 1 2 3 4 5 6 (PRODUCT LEVEL)	SEE PAGE
	1	1	**117-7629**	3	TUBE AS	
	2	1	**117-7631**	18	FITTING-COUPLING	
	3	1	**242-7014**	2	TUBE AS	
	4	1	**492-9960**	1	VALVE GP-LUBE DISTRIBUTION (FRONT)	
		1	**117-7634**	1	FITTING-STRAIGHT	
		1	**493-0008**	8	VALVE GP-CHECK	
		1	**493-0016**	1	FITTING	
	5	1	**492-9996**	12	FITTING-ADAPTER	
	6	1	**493-0008**	1	VALVE GP-CHECK	
	7	1	**499-6958**	1	FITTING-ADAPTER	
D	8	1	**169-8323**		HOSE (1.5-M EACH)	
D	8A	1	**169-8323**		HOSE (0.7-M EACH)	
D	8B	1	**169-8323**		HOSE (0.8-M EACH)	
D	8C	1	**169-8323**		HOSE (0.5-M EACH)	
D	8D	1	**169-8323**		HOSE (1.7-M)	
B	9	1	**1P-0810**		TAPE-ELECTRICAL	

B - USE AS REQUIRED
D - ORDER BY THE METER

488-9578 **LINES GP-LUBRICATION (**contd.**)** **i06811073**

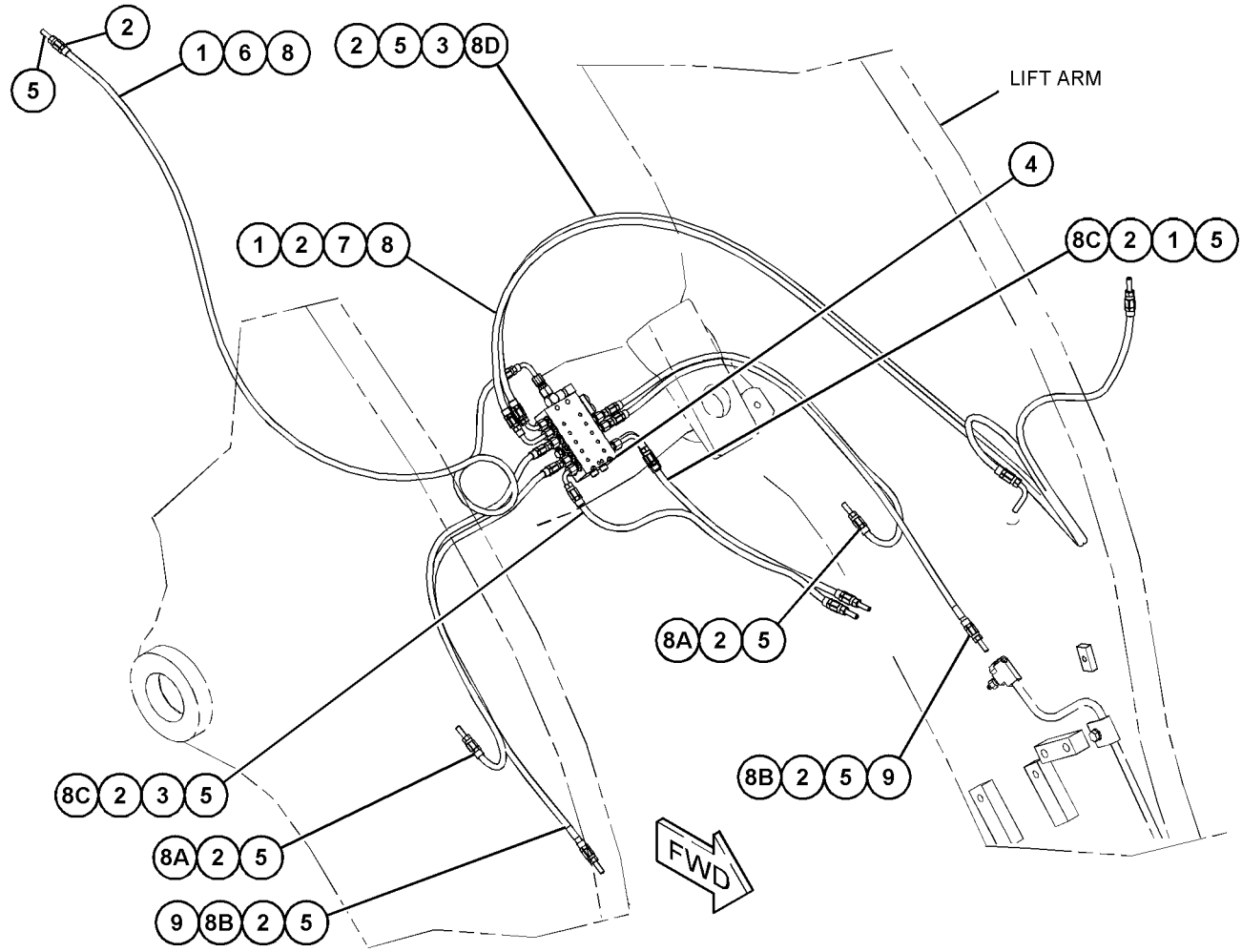

GRAPHIC #1 <END> g06129472

500-3681 LINES GP-REAR LUBRICATION

S/N: TNS1-UP

PART OF 495-9704 LUBRICATION AR-AUTOMATIC

SMCS-7510, 7540 **i06811157**

NOTE	REF NO	GRAPHIC REF	PART NUMBER	QTY	PART NAME 1 2 3 4 5 6 (PRODUCT LEVEL)	SEE PAGE
	1	2	**3B-8485**	1	ELBOW	
	2	2	**3B-8488**	1	FITTING-GREASE (1/8-27 PTF)	
	3	2	**3S-2093**	2	STRAP-CABLE	
	4	2	**5T-9033**	1	GROMMET	
	5	2	**6V-9168**	1	NUT (11/16-16-THD)	
	6	2	**7K-1181**	10	STRAP-CABLE (5.72-MM DIA)	
	7	2	**8C-6915**	1	ADAPTER-BULKHEAD	
	8	2	**8T-4121**	15	WASHER-HARD (11X21X2.5-MM THK)	
	9	2	*108-6709*	19	CONNECTOR AS	
					(EACH INCLUDES)	
		2	**5W-1636**	1	NUT	
		2	**268-1623**	1	CONNECTOR	
		2	**471-3702**	1	SLEEVE	
	10	2	**126-2565**	2	ADAPTER	
	11	2	**192-5017**	2	BRACKET AS	
					(EACH INCLUDES)	
M		2	**8T-3490**	1	NUT-WELD (M10X1.5-THD)	
		2	**201-8357**	1	BRACKET	
	12	2	**222-3487**	2	ADAPTER	
	13	2	**358-2416**	1	BRACKET AS	
M		2	**8T-3490**	1	NUT-WELD (M10X1.5-THD)	
	14	2	**372-5320**	1	HOSE AS	
Y	15	2	*488-9581*	1	VALVE & LINES GP-LUBRICATION	556
I	16	2	**492-9970**	1	HOSE AS	
	17	2	**492-9971**	1	HOSE AS	
	18	2	**492-9975**	1	BRACKET AS	
M		2	**8T-3597**	1	NUT-WELD (M12X1.75-THD)	
	19	2	**492-9997**	1	BRACKET	
	20	2	**500-3625**	1	TUBE AS	
I	21	2	**500-3630**	1	HOSE AS	
	22	2	**133-6934**	1	SPACER (11X20X25-MM THK)	
	23	2	**178-3620**	3	STRAP-DUAL CLAMP	
	24	2	**198-4777**	2	WASHER-HARD (11X25X10-MM THK)	
	25	2	**204-2281**	6	STRAP-CABLE	
	26	2	**204-8000**	3	MOUNTING-CABLE TIE	
	27	2	**206-2423**	1	SADDLE	
	28	2	**3F-6166**	1	EXTENSION	
	29	2	**5G-3676**	2	GROMMET	
	30	2	**5P-3422**	6	TEE-PIPE	
	31	2	**5P-9085**	10	CLIP	
	32	2	**6H-9049**	12	FITTING	
	33	2	**6K-6967**	2	ADAPTER-PIPE	
	34	2	**6V-8397**	1	SEAL-O-RING	
	35	2	**7S-3916**	2	CLIP (TAB)	
	36	2	**7S-3919**	2	CLIP (SLOT)	
	37	2	**7X-7729**	6	WASHER (11X25X3-MM THK)	
M	38	2	**8T-4136**	16	BOLT (M10X1.5X25-MM)	
M	39	2	**8T-4137**	7	BOLT (M10X1.5X20-MM)	

500-3681 **LINES GP-REAR LUBRICATION (**contd.**)** **i06811157**

NOTE	REF NO	GRAPHIC REF	PART NUMBER	QTY	PART NAME 1 2 3 4 5 6 (PRODUCT LEVEL)	SEE PAGE
M	40	2	**8T-4182**	1	BOLT (M10X1.5X45-MM)	
M	41	2	**8T-4186**	2	BOLT (M10X1.5X40-MM)	
	42	2	**8T-4223**	1	WASHER-HARD (13.5X25.5X3-MM THK)	
M	43	2	**8T-4956**	1	BOLT (M12X1.75X35-MM)	
E	44	2	**292-2896**		CONDUIT (161-CM)	
E	45	2	**113-3438**		GUARD-HOSE (52-CM)	
E	46	2	**292-2893**		CONDUIT (10.1-MM ID) (133-CM)	
E	47	2	**7I-1024**		GUARD-HOSE (51-CM)	

E - ORDER BY THE CENTIMETER
I - REFER TO HYDRAULIC INFORMATION SYSTEM
M - METRIC PART
Y - SEPARATE ILLUSTRATION

500-3681 **LINES GP-REAR LUBRICATION (**contd.**)** **i06811157**

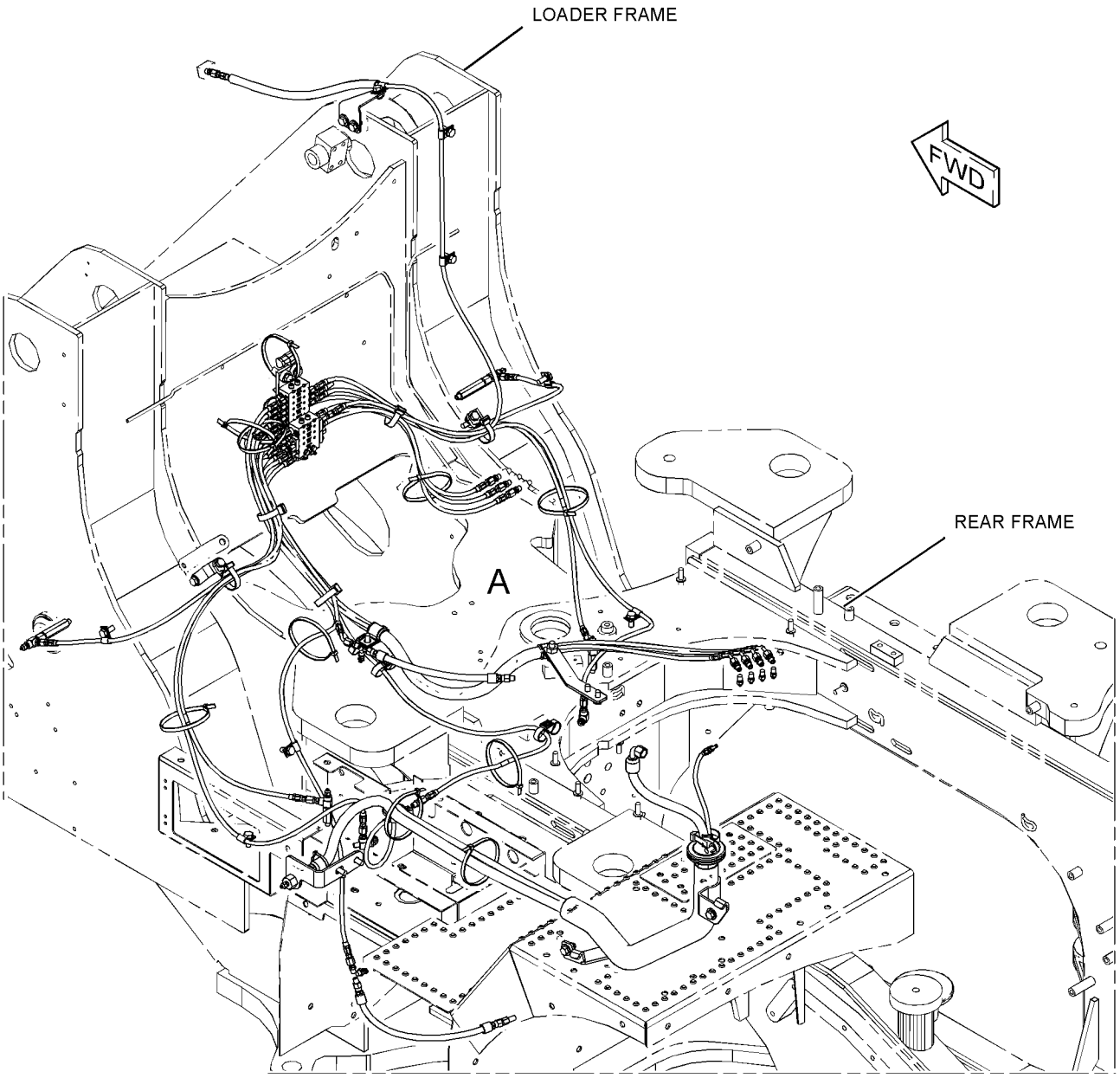

REFER TO ALL ILLUSTRATIONS OF
THIS GROUP FOR AUXILIARY VIEWS

GRAPHIC #1 g06128896

500-3681 **LINES GP-REAR LUBRICATION (**contd.**)** **i06811157**

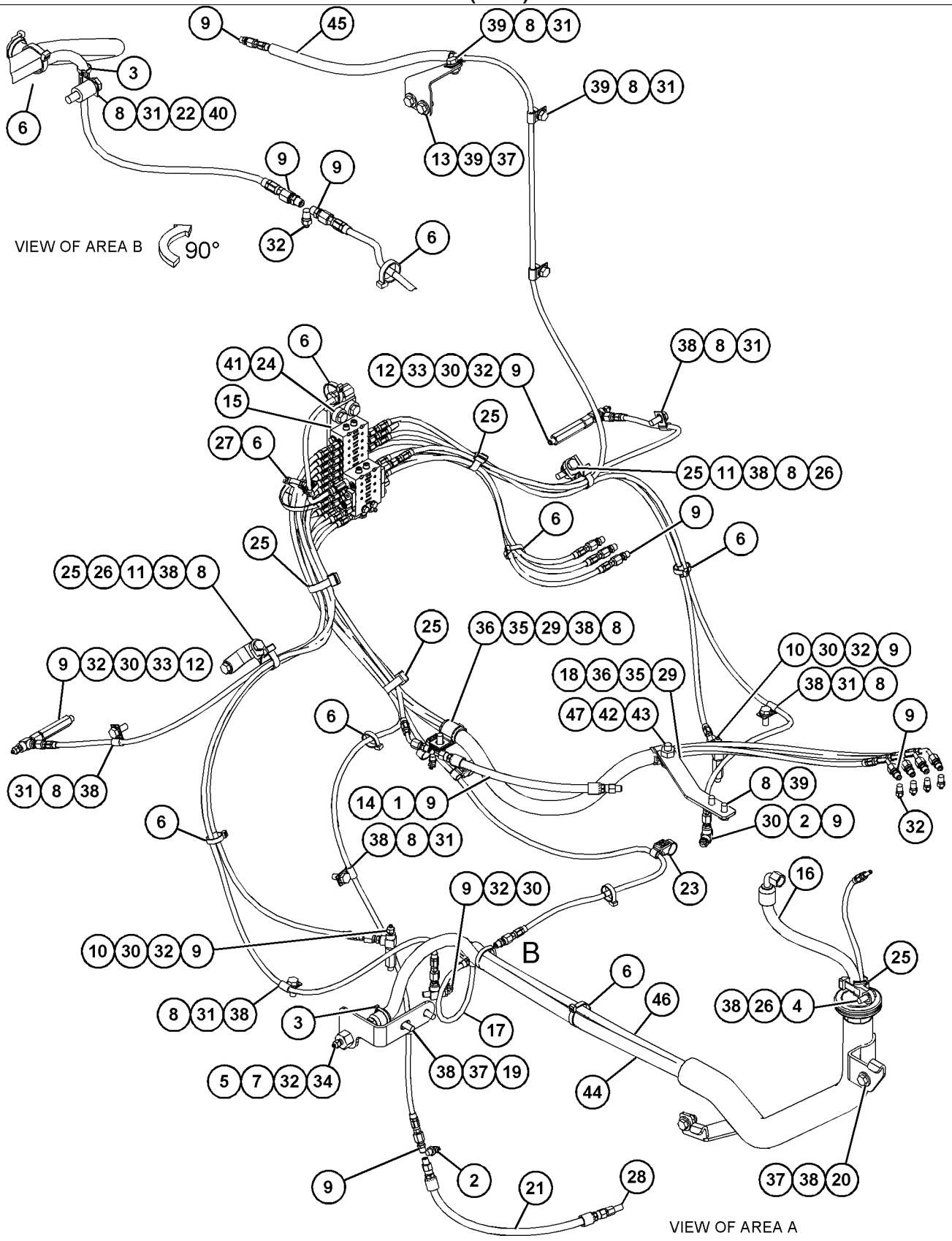

GRAPHIC #2

<END>

g06129136

371-4430 LINK GP-STEERING FRAME LOCK

S/N: TNS1-UP

PART OF 456-5790 CHASSIS AR

SMCS-7506 **i06608516**

NOTE	REF NO	GRAPHIC REF	PART NUMBER	QTY	PART NAME 1 2 3 4 5 6 (PRODUCT LEVEL)	SEE PAGE
	1	1	**5T-8417**	2	PIN (TOP)	
	2	1	**8D-3791**	2	PIN (BOTTOM)	
	3	1	**371-4429**	1	PLATE AS	

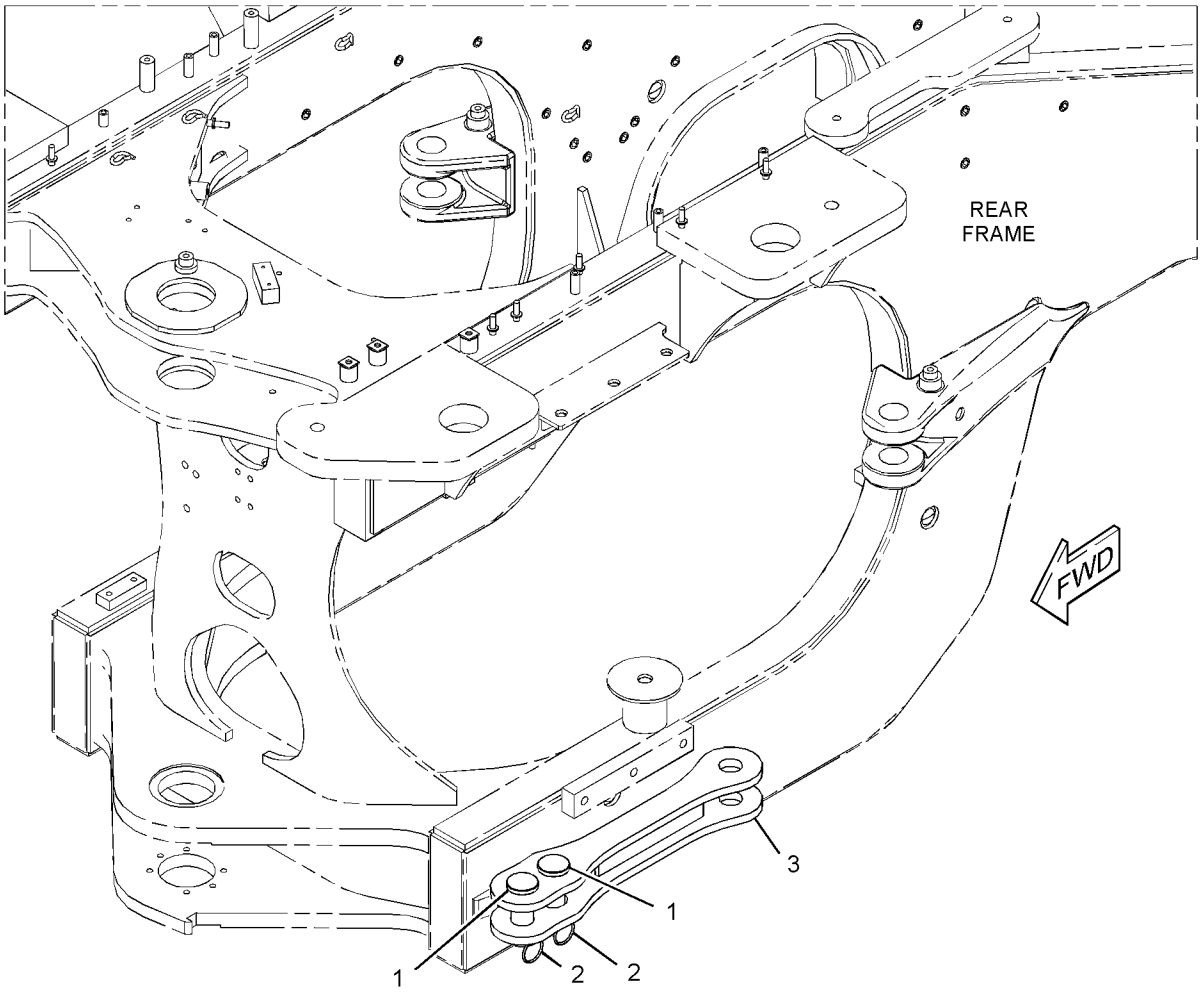

GRAPHIC #1 <END> g03498100

495-9704 LUBRICATION AR-AUTOMATIC

S/N: TNS1-UP

STANDARD LIFT

SMCS-7540 **i06810473**

NOTE	PART NUMBER	QTY	PART NAME 1 2 3 4 5 6 (PRODUCT LEVEL)	SEE PAGE
Y	*488-6374*	1	BOSS GP-REAR FRAME	419
Y	*491-2141*	1	BOSS GP-LIFT ARM	739
Y	*492-3670*	1	BOSS GP-REAR FRAME	420
Y	*511-0284*	1	HARDWARE GP-LOADER FRAME	479
Y	*500-3677*	1	LINES GP-FRONT LUBRICATION	500
Y	*500-3681*	1	LINES GP-REAR LUBRICATION	508
Y	*463-5433*	1	LINK GP-TILT	740
Y	*493-0009*	1	PUMP GP-LUBRICATION	529
Y	*489-3220*	1	WIRING GP-LUBRICATION	260

Y - SEPARATE ILLUSTRATION

<END>

379-9441 PANEL GP-HOOD–REAR

S/N: TNS1-UP

PART OF 336-0000 HOOD & GUARD GP

SMCS-7251 **i06781355**

NOTE	REF NO	GRAPHIC REF	PART NUMBER	QTY	PART NAME 1 2 3 4 5 6 (PRODUCT LEVEL)	SEE PAGE
	1	1	**505-0113**	6	NUT-CLIP	
M	2	1	**332-4695**	8	NUT (M8X1.25-THD)	
	3	1	**383-2928**	1	PANEL AS (REAR)	

M - METRIC PART

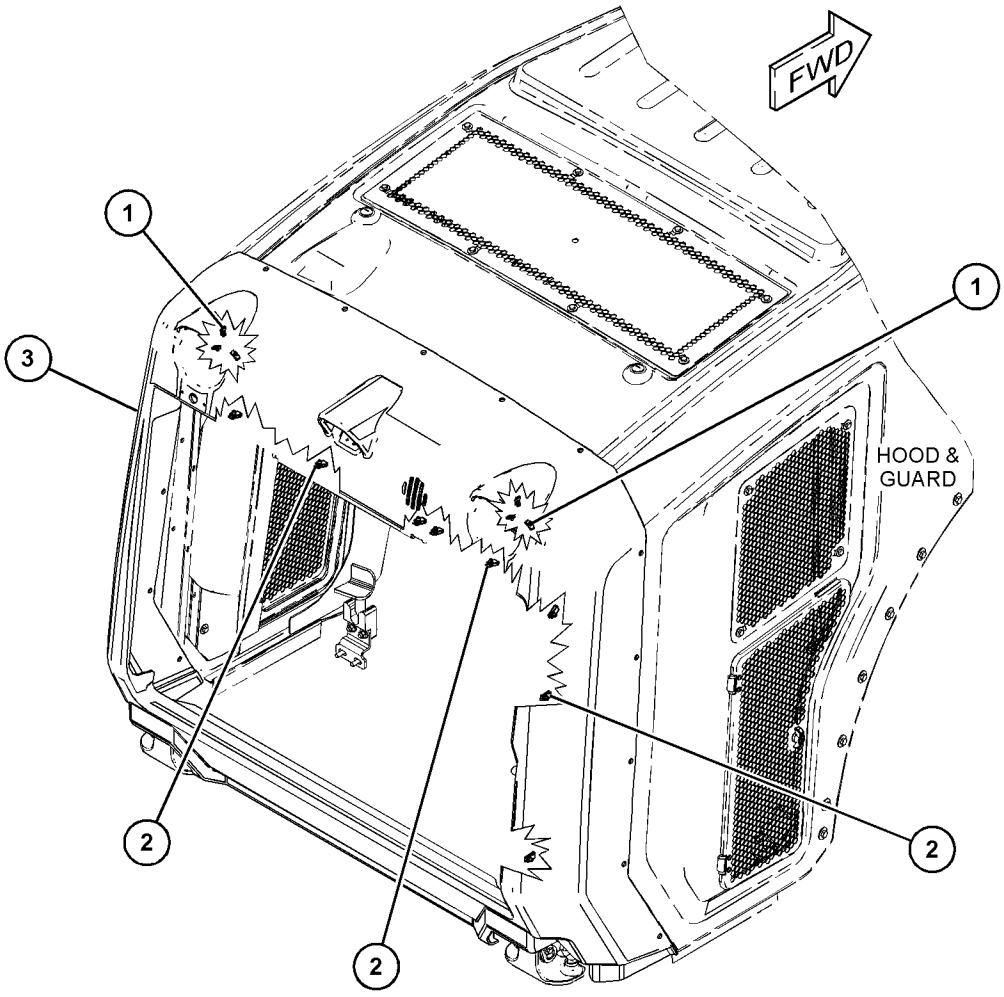

GRAPHIC #1 <END> g06001944

383-2930 PANEL GP-HOOD—RH

S/N: TNS1-UP

PART OF 336-0000 HOOD & GUARD GP

SMCS-7251 **i06781405**

NOTE	REF NO	GRAPHIC REF	PART NUMBER	QTY	PART NAME 1 2 3 4 5 6 (PRODUCT LEVEL)	SEE PAGE
M	1	1	**332-4695**	9	NUT (M8X1.25-THD)	
	2	1	**383-2926**	1	PANEL AS (RH)	
	3	1	**391-5785**	1	SCREEN	
	4	1	**399-6194**	1	PANEL AS-SOUND SUPPRESSION	
	5	1	**7X-0579**	4	WASHER-HARD (8.8X25.5X2-MM THK)	
M	6	1	**6I-0572**	5	BOLT (M8X1.25X20-MM)	
	7	1	**8T-4226**	5	WASHER-PLATED (10.5X45X3-MM THK)	
M	8	1	**8T-4908**	4	BOLT (M8X1.25X25-MM)	

M - METRIC PART

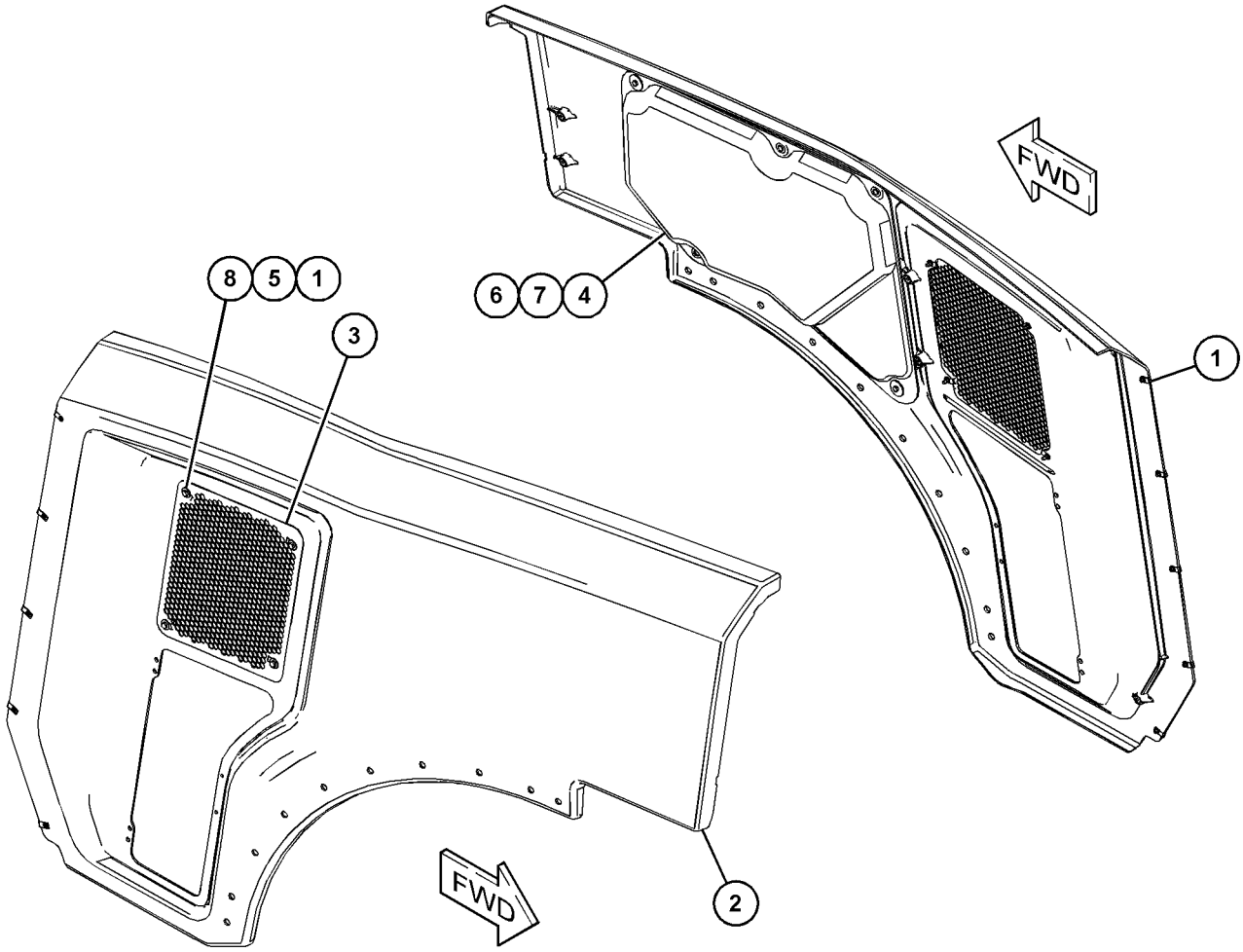

GRAPHIC #1 <END> g06001805

383-2940 PANEL GP-HOOD–LH

S/N: TNS1-UP

PART OF 336-0000 HOOD & GUARD GP

SMCS-7251 **i06781411**

NOTE	REF NO	GRAPHIC REF	PART NUMBER	QTY	PART NAME 1 2 3 4 5 6 (PRODUCT LEVEL)	SEE PAGE
M	1	1	**332-4695**	9	NUT (M8X1.25-THD)	
	2	1	**383-2927**	1	PANEL AS (LH)	
	3	1	**391-5785**	1	SCREEN	
	4	1	**399-6193**	1	PANEL AS-SOUND SUPPRESSION	
	5	1	**7X-0579**	4	WASHER-HARD (8.8X25.5X2-MM THK)	
M	6	1	**6I-0572**	5	BOLT (M8X1.25X20-MM)	
	7	1	**8T-4226**	5	WASHER-PLATED (10.5X45X3-MM THK)	
M	8	1	**8T-4908**	4	BOLT (M8X1.25X25-MM)	

M - METRIC PART

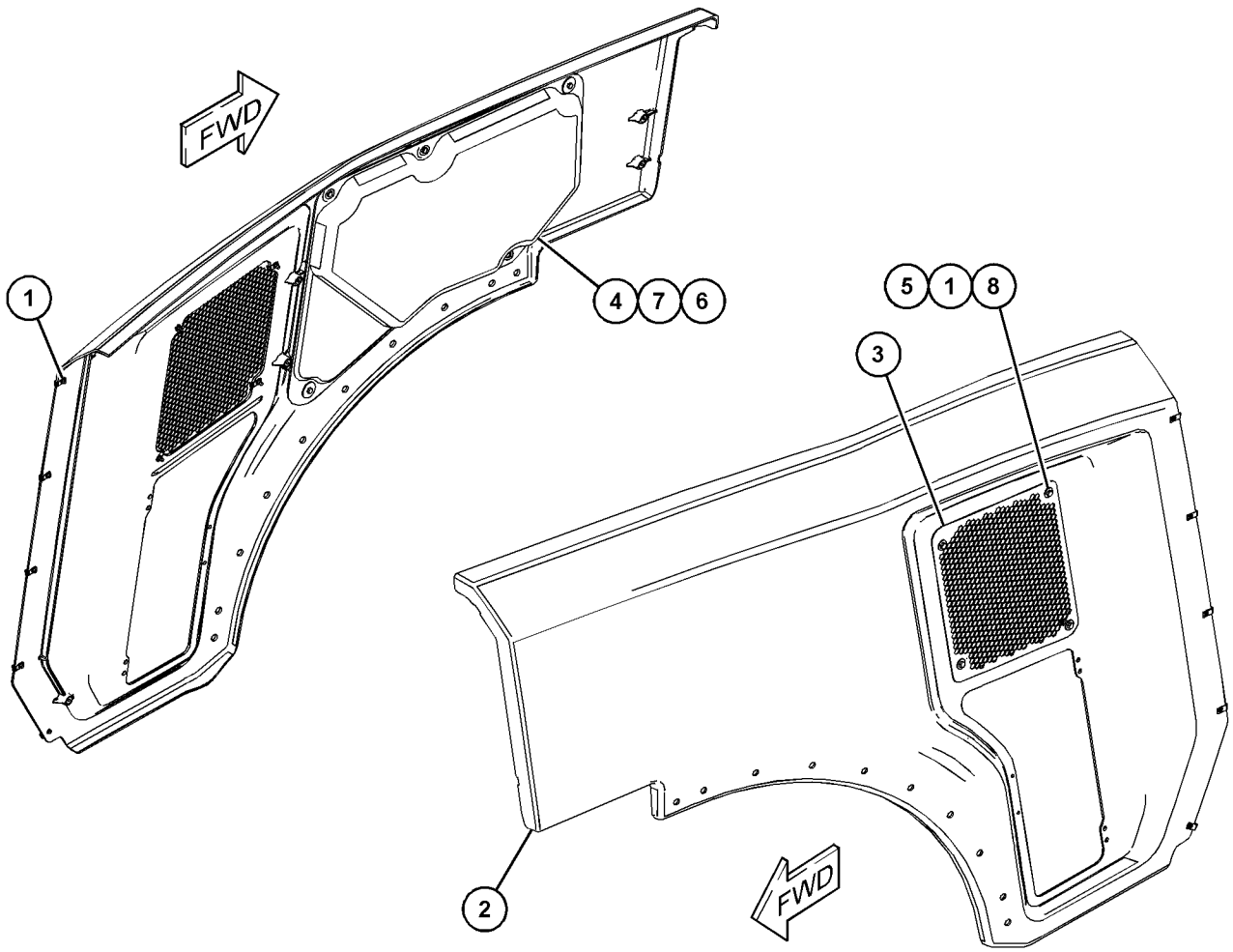

GRAPHIC #1 <END> g06001798

383-2950 PANEL GP-HOOD–TOP

S/N: TNS1-UP

PART OF 336-0000 HOOD & GUARD GP

SMCS-7251 **i06781421**

NOTE	REF NO	GRAPHIC REF	PART NUMBER	QTY	PART NAME 1 2 3 4 5 6 (PRODUCT LEVEL)	SEE PAGE
M	1	1	**332-4695**	13	NUT (M8X1.25-THD)	
	2	1	**383-2925**	1	PANEL AS	
	3	1	**391-5771**	1	SCREEN-TOP	
	4	1	**399-6195**	1	PANEL AS-SOUND SUPPRESSION	
	5	1	**399-6196**	1	PANEL AS-SOUND SUPPRESSION	
	6	1	**7X-0579**	8	WASHER-HARD (8.8X25.5X2-MM THK)	
M	7	1	**6I-0572**	4	BOLT (M8X1.25X20-MM)	
	8	1	**8T-4226**	4	WASHER-PLATED (10.5X45X3-MM THK)	
M	9	1	**8T-4908**	8	BOLT (M8X1.25X25-MM)	

M - METRIC PART

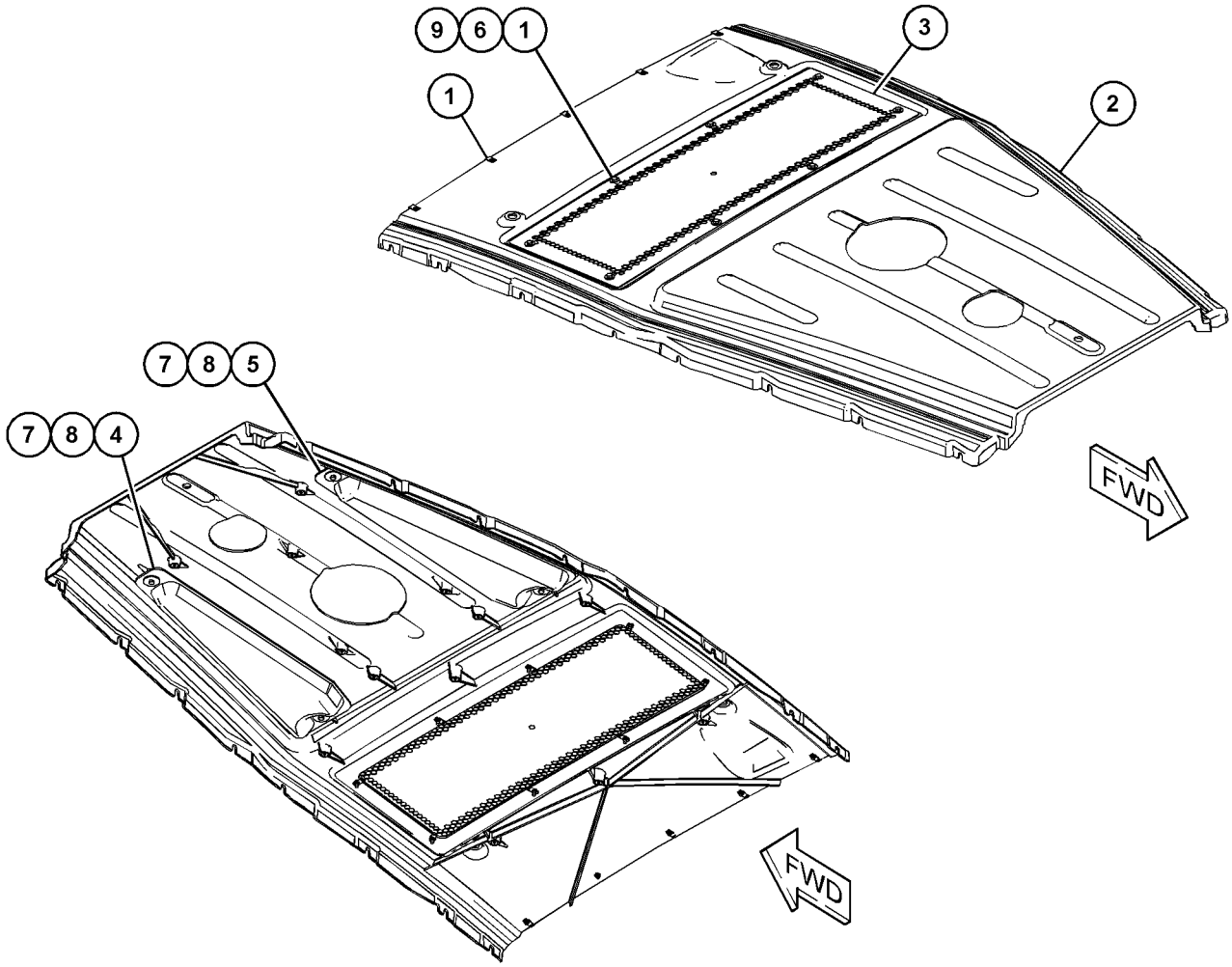

GRAPHIC #1 <END> g06007018

430-8831 PANEL GP-SIDE

S/N: TNS1-UP

PART OF 433-8100 PANEL GP-SIDE

SMCS-7267 **i06729929**

NOTE	REF NO	GRAPHIC REF	PART NUMBER	QTY	PART NAME 1 2 3 4 5 6 (PRODUCT LEVEL)	SEE PAGE
	1	1	**392-0736**	2	BRACKET	
Y	2	1	**433-8092**	1	PANEL GP-SIDE (RH)	519
Y	3	1	**433-8094**	1	PANEL GP-SIDE (RH)	520

Y - SEPARATE ILLUSTRATION

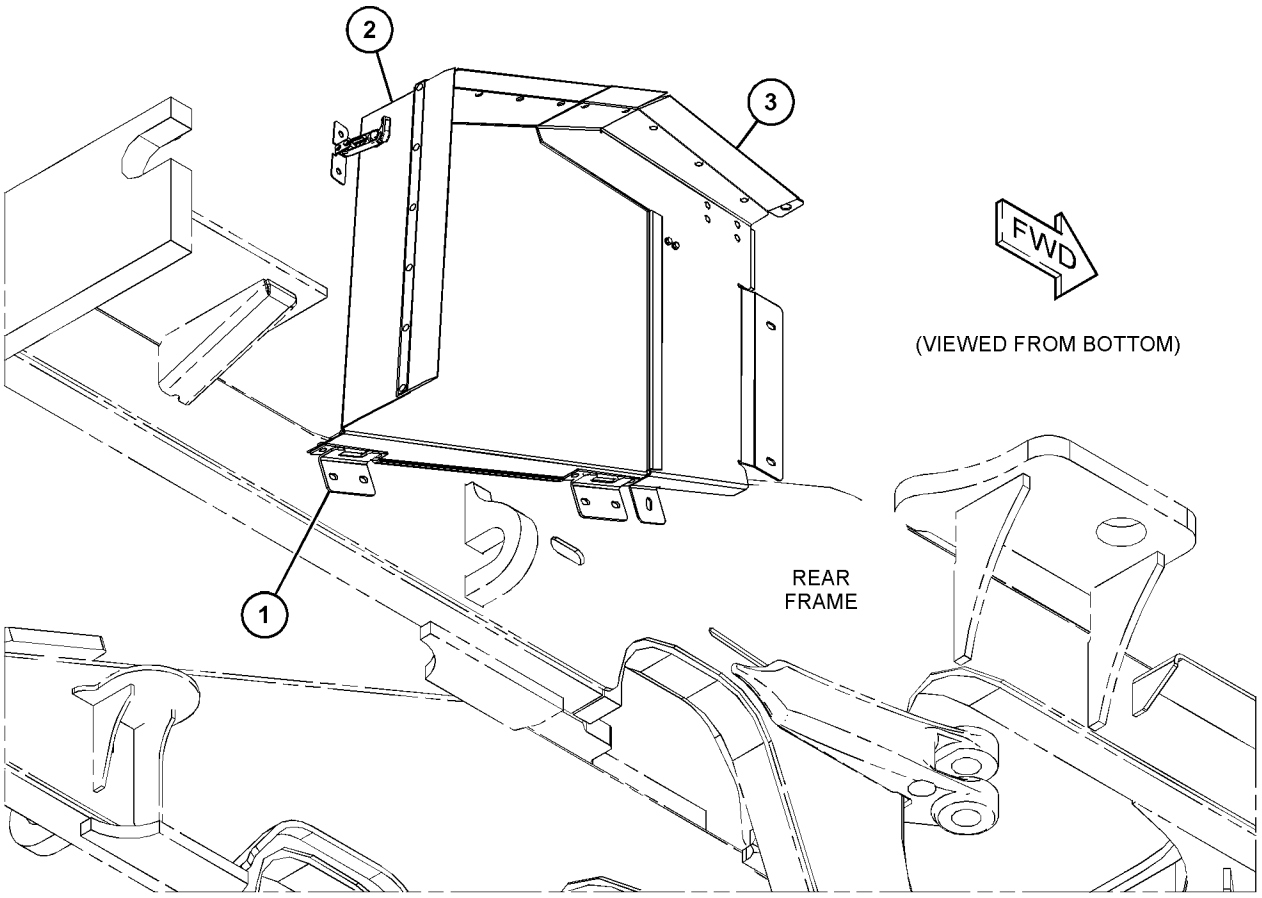

GRAPHIC #1 <END> g06016634

433-8092 PANEL GP-SIDE

S/N: TNS1-UP

PART OF 430-8831 PANEL GP-SIDE

SMCS-7267 **i06781712**

NOTE	REF NO	GRAPHIC REF	PART NUMBER	QTY	PART NAME 1 2 3 4 5 6 (PRODUCT LEVEL)	SEE PAGE
Y	1	1	*500-0589*	1	LATCH GP	499
	2	1	**433-8091**	1	PLATE AS	
		1	**6C-7875**	14	RIVET-POP	
		1	**392-0737**	2	BLOCK	
D	3	1	**5P-5637**		SEAL (0.6-M)	
E	4	1	**7X-7898**		TRIM (48-CM)	

D - ORDER BY THE METER
E - ORDER BY THE CENTIMETER
Y - SEPARATE ILLUSTRATION

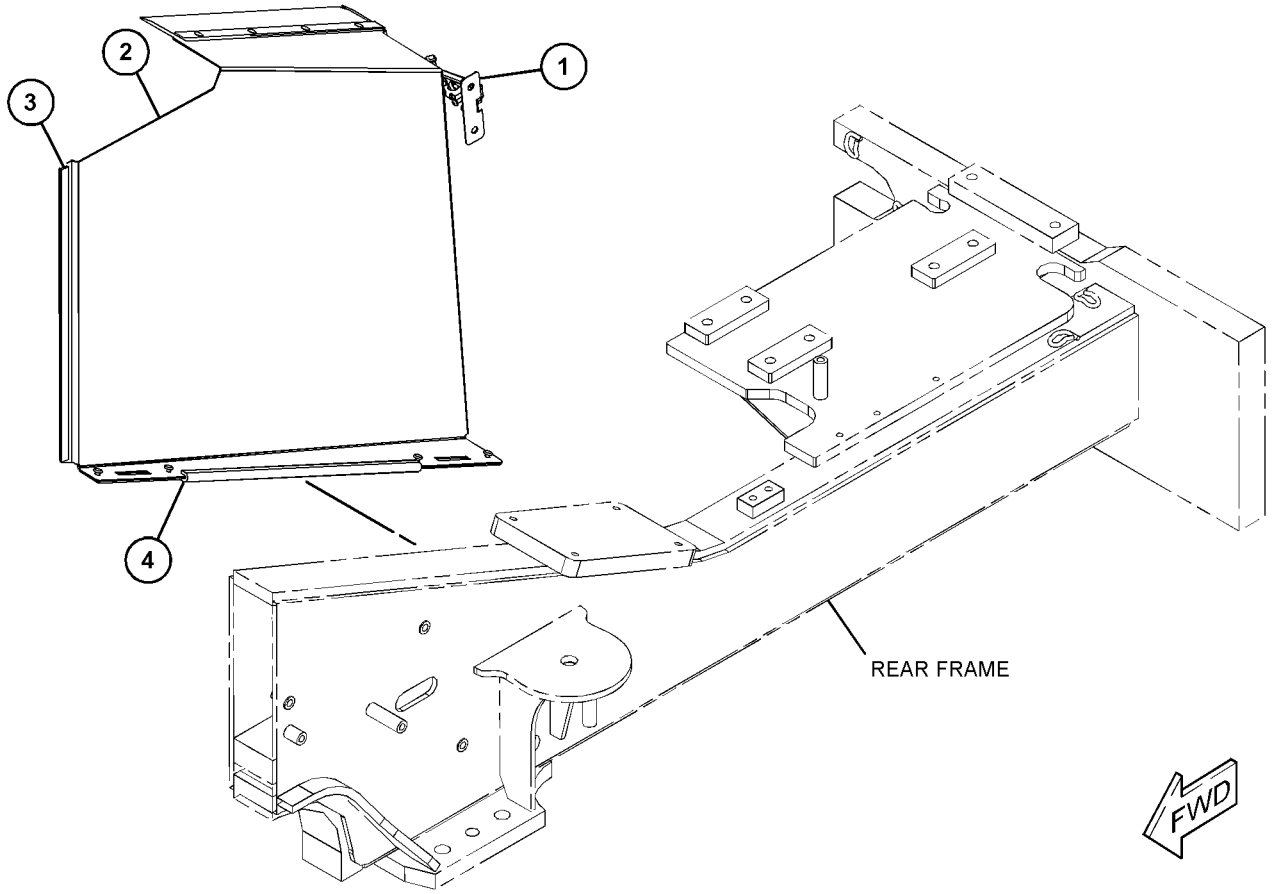

GRAPHIC #1 <END> g06121250

433-8094 PANEL GP-SIDE–RH

S/N: TNS1-UP

PART OF 430-8831 PANEL GP-SIDE

SMCS-7267 **i06736264**

NOTE	REF NO	GRAPHIC REF	PART NUMBER	QTY	PART NAME 1 2 3 4 5 6 (PRODUCT LEVEL)	SEE PAGE
	1	1	**9X-8256**	4	WASHER (6.6X12X2-MM THK)	
	2	1	**390-8555**	1	BRACKET	
	3	1	**390-8559**	1	MAGNET	
	4	1	**415-1789**	1	SPACER (6.6X11X6-MM THK)	
	5	1	**433-8093**	1	PLATE AS (RH)	
	5A	1	**6C-7875**	9	RIVET-POP	
E	5B	1	**437-4490**		SEAL (37-CM)	
E	5C	1	**437-4490**		SEAL (18-CM)	
M	6	1	**5C-2890**	1	NUT (M6X1-THD)	
	7	1	**9X-2038**	1	WASHER (7X19X2-MM THK)	
M	8	1	**8T-4138**	2	BOLT (M6X1X20-MM)	
M	9	1	**8T-4171**	1	BOLT (M6X1X12-MM)	
M	10	1	**344-5673**	2	NUT (M6X1-THD) (15-CM)	

E - ORDER BY THE CENTIMETER
M - METRIC PART

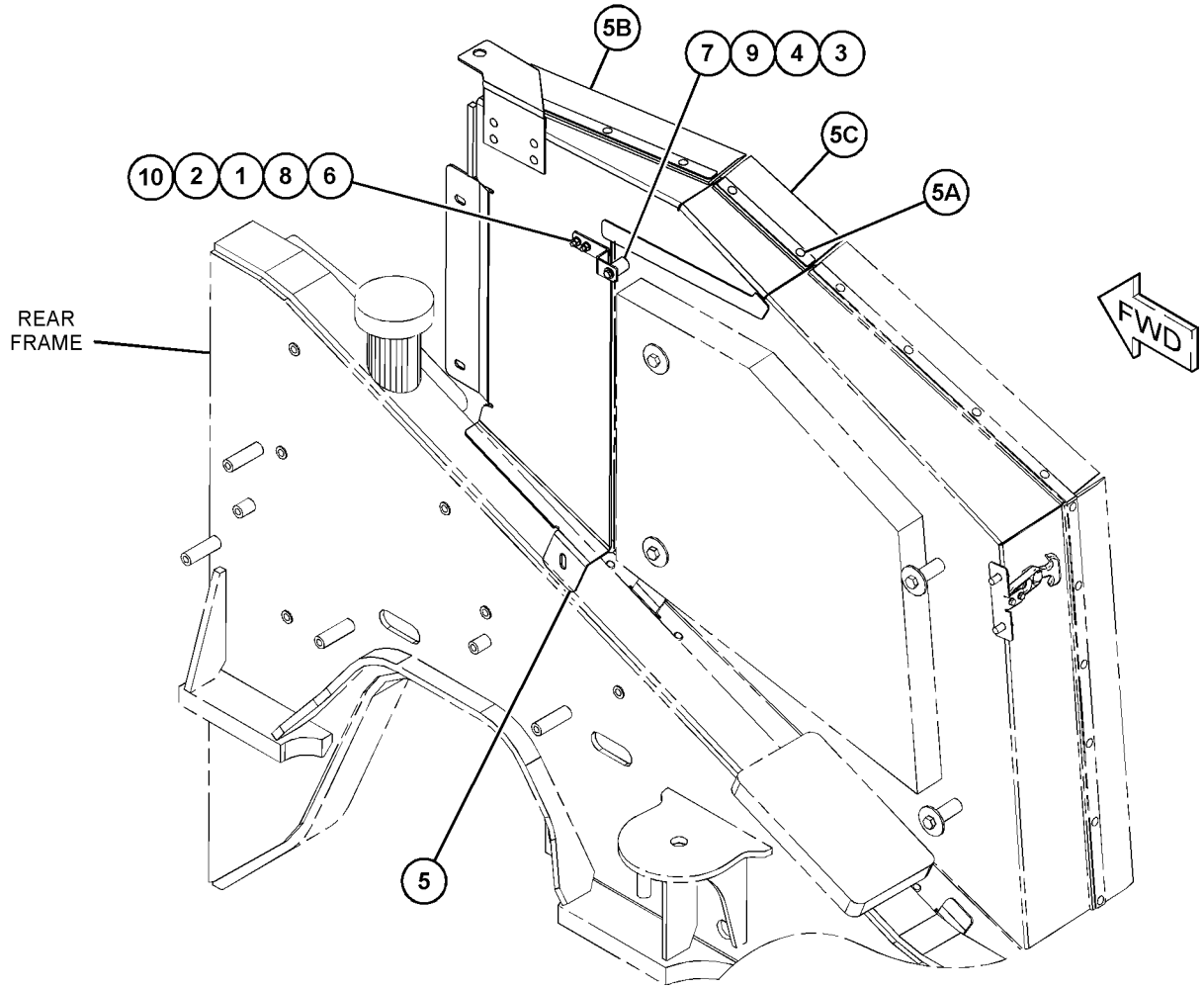

GRAPHIC #1 <END> g06098571

433-8098 PANEL GP-SIDE

S/N: TNS1-UP

PART OF 433-8100 PANEL GP-SIDE

SMCS-7267 **i06738544**

NOTE	REF NO	GRAPHIC REF	PART NUMBER	QTY	PART NAME 1 2 3 4 5 6 (PRODUCT LEVEL)	SEE PAGE
	1	1	**392-0736**	2	BRACKET	
Y	2	1	**433-8099**	1	PANEL GP-SIDE (LH)	522
Y	3	1	**433-8102**	1	PANEL GP-SIDE (LH)	524

Y - SEPARATE ILLUSTRATION

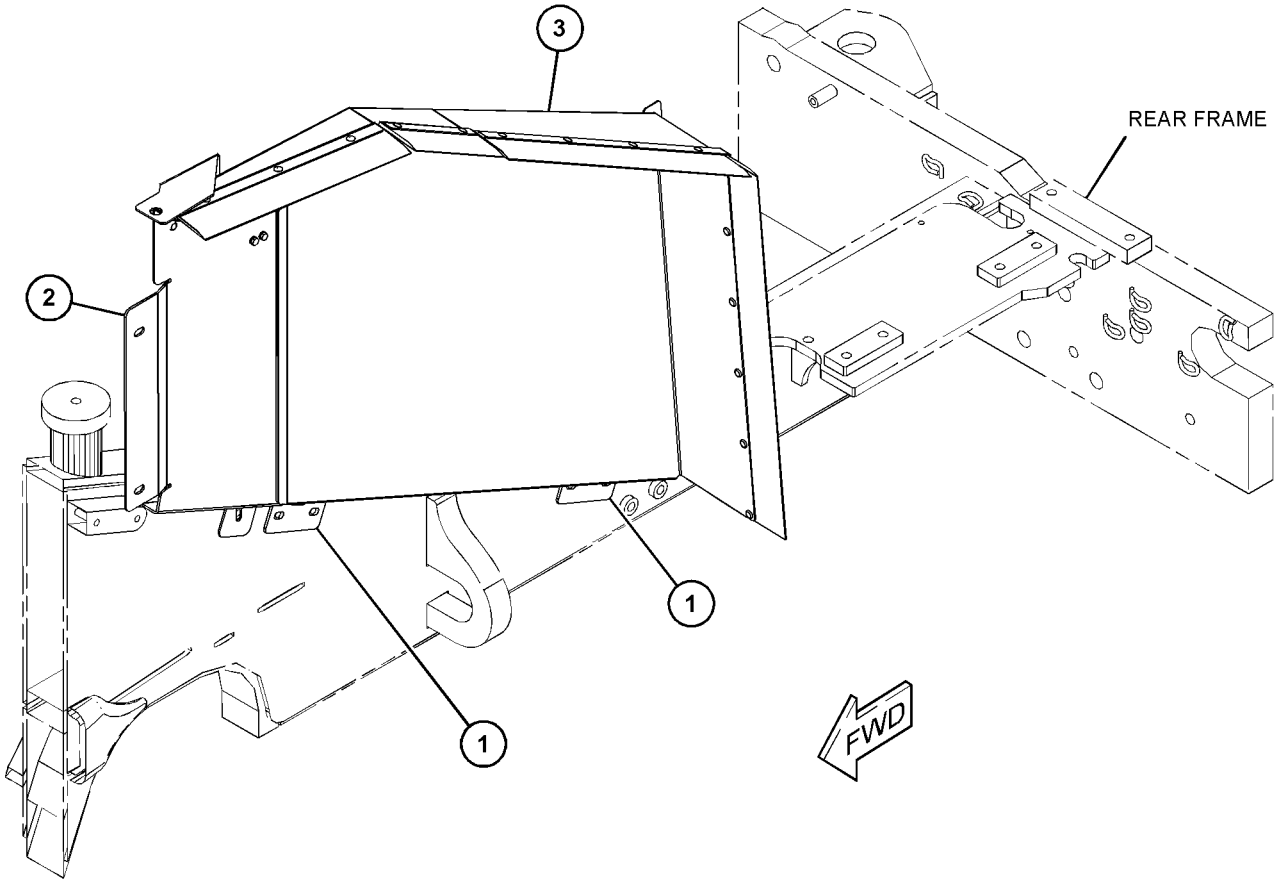

GRAPHIC #1 <END> g06016679

433-8099 PANEL GP-SIDE

S/N: TNS1-UP
LH
PART OF 433-8098 PANEL GP-SIDE

SMCS-7267 **i06781724**

NOTE	REF NO	GRAPHIC REF	PART NUMBER	QTY	PART NAME 1 2 3 4 5 6 (PRODUCT LEVEL)	SEE PAGE
	1	1	**390-8555**	1	BRACKET	
	2	1	**390-8559**	1	MAGNET	
	3	1	**415-1789**	1	SPACER (6.6X11X6-MM THK)	
	4	1	*433-8108*	1	PLATE AS (LH)	
	4A	1	**6C-7875**	9	RIVET-POP	
E	4B	1	**437-4490**		SEAL (37-CM)	
E	4C	1	**437-4490**		SEAL (18-CM)	
M	5	1	**344-5673**	2	NUT (M6X1-THD)	
	6	1	**9X-2038**	1	WASHER (7X19X2-MM THK)	
M	7	1	**8T-4138**	2	BOLT (M6X1X20-MM)	
M	8	1	**8T-4171**	1	BOLT (M6X1X12-MM)	
	9	1	**9X-8256**	4	WASHER (6.6X12X2-MM THK)	

E - ORDER BY THE CENTIMETER
M - METRIC PART

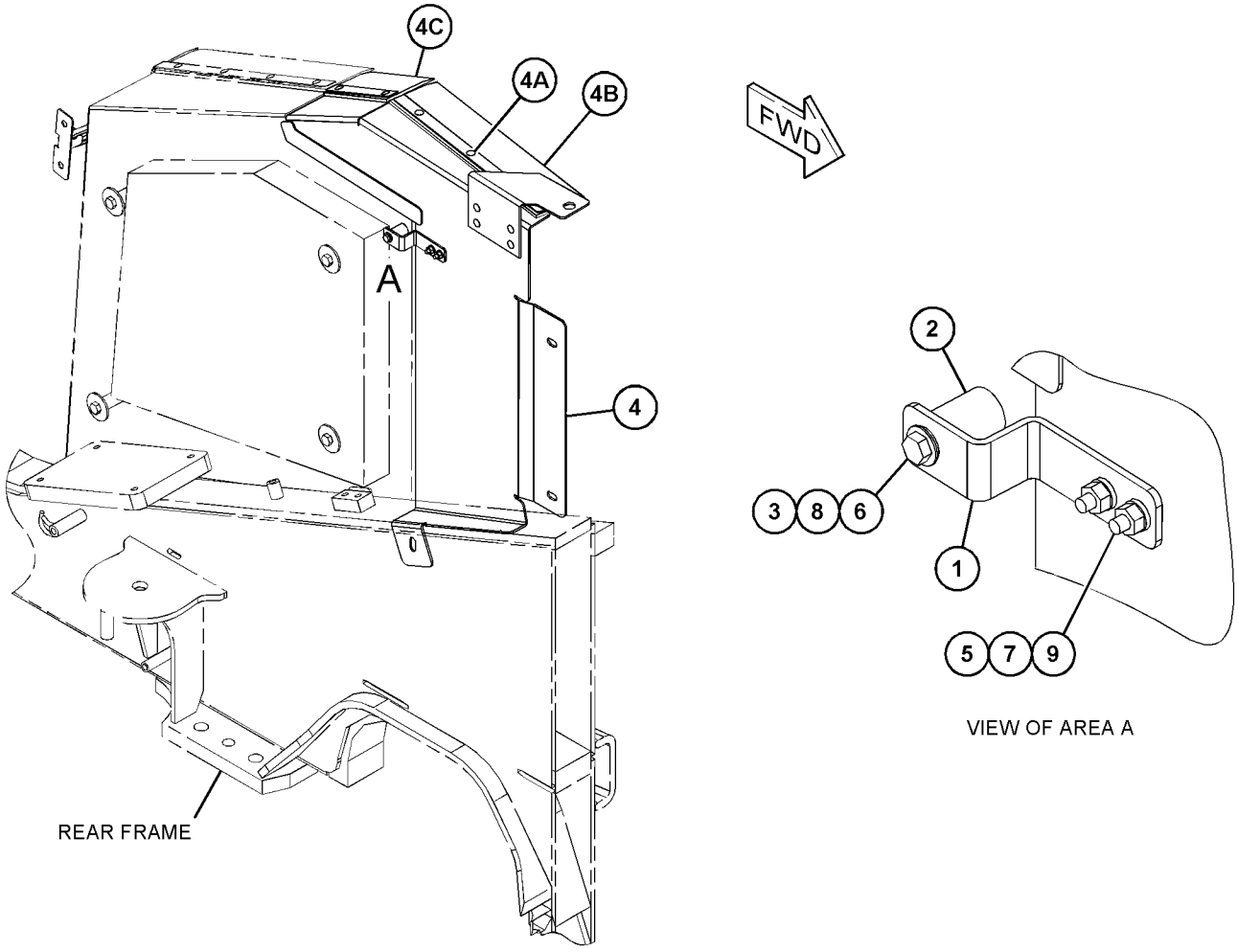

GRAPHIC #1 <END> g06016953

433-8100 PANEL GP-SIDE

S/N: TNS1-UP

PART OF 508-7627, 508-7629, 508-7631 SUPPRESSION AR-SOUND

SMCS-7267 **i06729922**

NOTE	REF NO	GRAPHIC REF	PART NUMBER	QTY	PART NAME 1 2 3 4 5 6 (PRODUCT LEVEL)	SEE PAGE
Y	1	1	*430-8831*	1	PANEL GP-SIDE (RH)	518
Y	2	1	*433-8098*	1	PANEL GP-SIDE (LH)	521
	3	1	**7X-7729**	20	WASHER (11X25X3-MM THK)	
M	4	1	**8T-4137**	2	BOLT (M10X1.5X20-MM)	
M	5	1	**8T-4196**	14	BOLT (M10X1.5X35-MM)	
M	6	1	**8T-4191**	4	BOLT (M10X1.5X16-MM)	

M - METRIC PART
Y - SEPARATE ILLUSTRATION

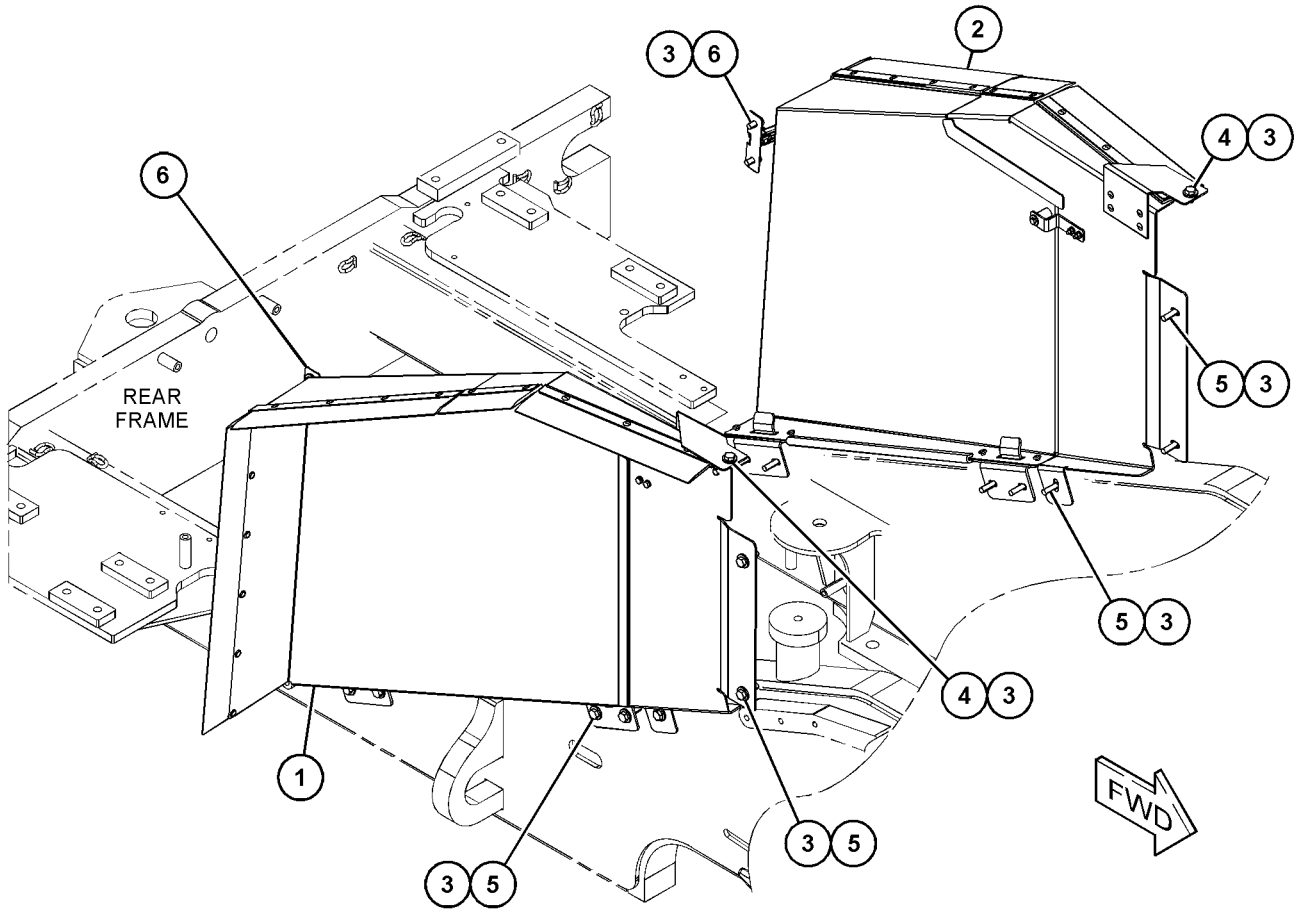

GRAPHIC #1 <END> g06073757

433-8102 PANEL GP-SIDE–LH

S/N: TNS1-UP

PART OF 433-8098 PANEL GP-SIDE

SMCS-7267 **i06737580**

NOTE	REF NO	GRAPHIC REF	PART NUMBER	QTY	PART NAME 1 2 3 4 5 6 (PRODUCT LEVEL)	SEE PAGE
Y	1	1	*500-0589*	1	LATCH GP	499
	2	1	**433-8104**	1	PLATE AS (LH)	
E	2A	1	**437-4490**		SEAL (49-CM)	
E	2B	1	**437-4490**		SEAL (67-CM)	
		1	**6C-7875**	14	RIVET-POP	
		1	**392-0737**	2	BLOCK	
D	3	1	**5P-5637**		SEAL (0.6-M)	
E	4	1	**7X-7898**		TRIM (48-CM)	

D - ORDER BY THE METER
E - ORDER BY THE CENTIMETER
Y - SEPARATE ILLUSTRATION

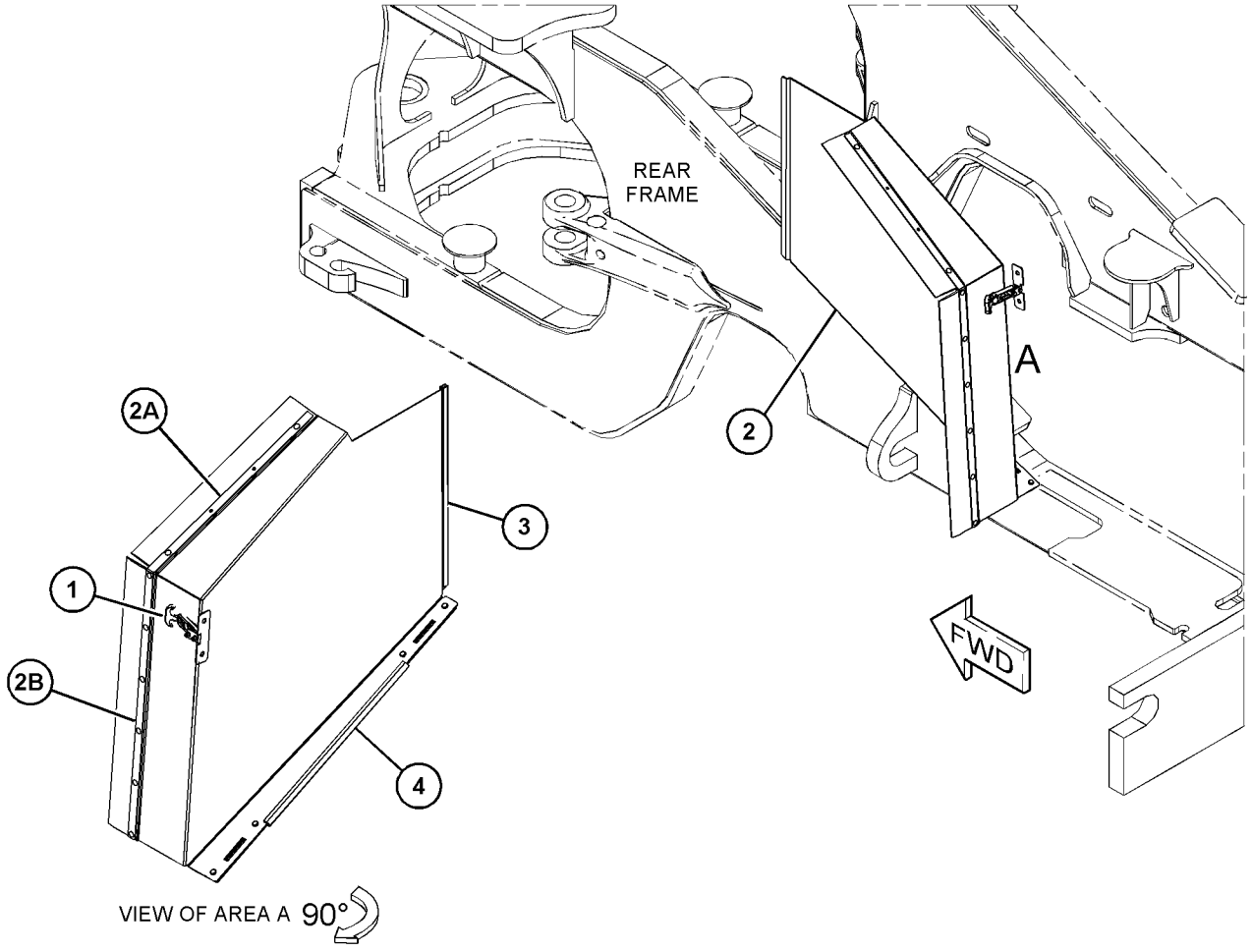

GRAPHIC #1 <END> g06110408

461-4441 PLATE AS-MOUNTING

S/N: TNS1-UP

PART OF 463-8896 PLATFORM AR

SMCS-7267 **i06797107**

NOTE	REF NO	GRAPHIC REF	PART NUMBER	QTY	PART NAME 1 2 3 4 5 6 (PRODUCT LEVEL)	SEE PAGE
	1	1	**461-4442**	2	PLATE AS	
					(EACH INCLUDES)	
M		1	**8T-3597**	2	NUT-WELD (M12X1.75-THD)	
	2	1	**132-6964**	1	PLATE	

M - METRIC PART

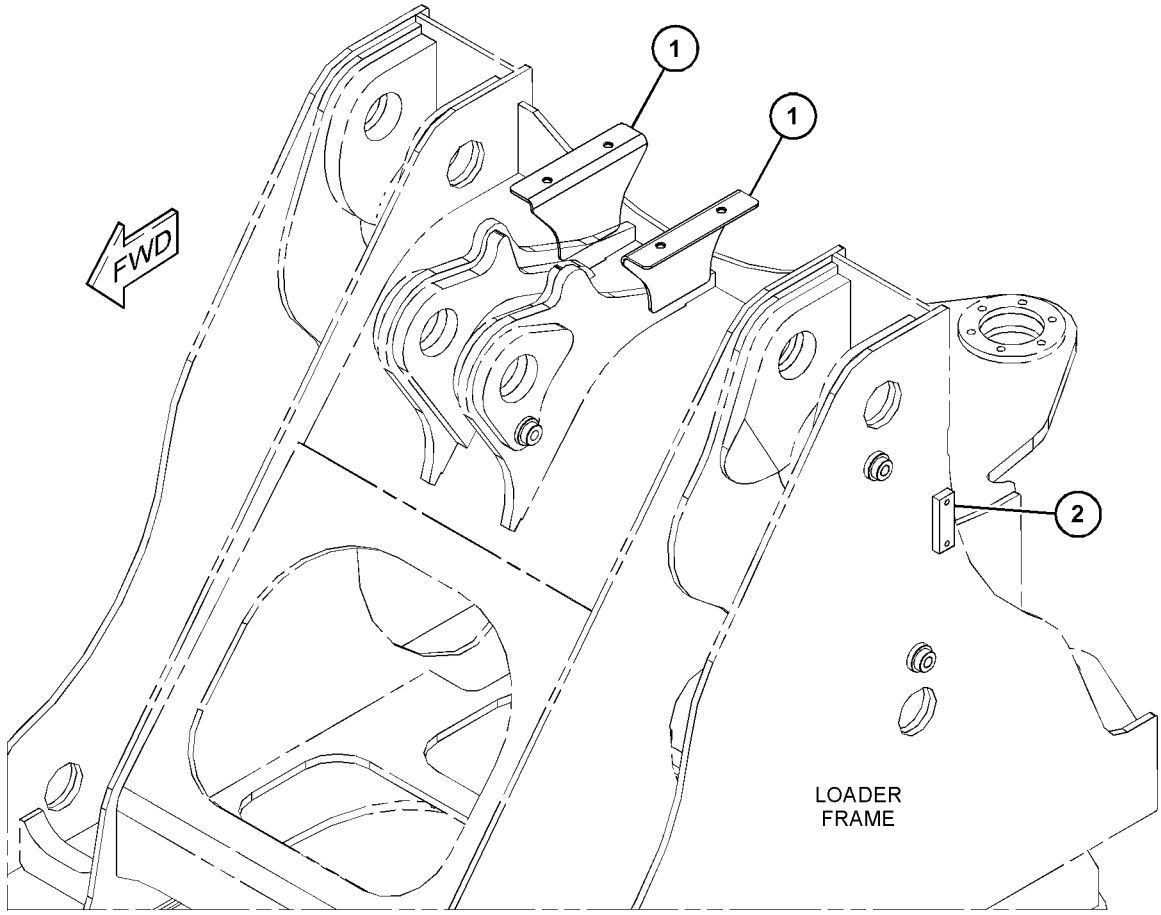

GRAPHIC #1 <END> g06040875

456-5848 PLATE GP-MOUNTING—COUNTERWEIGHT

S/N: TNS1-UP

PART OF 463-8893 COUNTERWEIGHT AR

SMCS-7050 **i06796522**

NOTE	REF NO	GRAPHIC REF	PART NUMBER	QTY	PART NAME 1 2 3 4 5 6 (PRODUCT LEVEL)	SEE PAGE
	1	1	**458-8287**	1	PLATE AS	
	2	1	**465-4951**	1	PLATE AS (REAR)	
					(EACH PLATE AS INCLUDES)	
M		1	**8T-3597**	2	NUT-WELD (M12X1.75-THD)	
M		1	**090-8247**	1	BLOCK (M10X1.5-MM)	
	3	1	**198-4781**	4	WASHER-HARD (22X40X10-MM THK)	
M	4	1	**7X-2563**	4	BOLT (M20X2.5X60-MM)	

M - METRIC PART

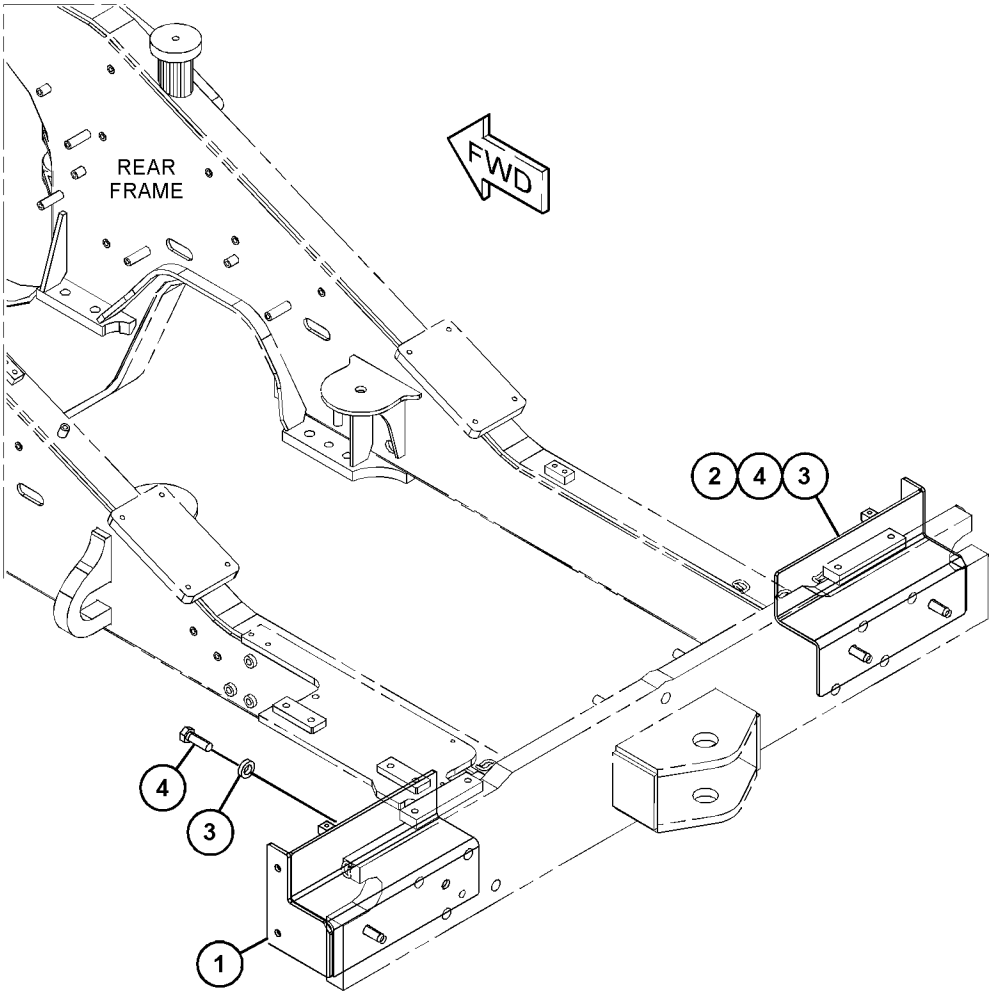

GRAPHIC #1 <END> g06040690

488-9572 PUMP GP-LUBRICATION

S/N: TNS1-UP

PART OF 493-0009 PUMP GP-LUBRICATION

SMCS-7516, 7540

i06769689

NOTE	REF NO	GRAPHIC REF	PART NUMBER	QTY	PART NAME 1 2 3 4 5 6 (PRODUCT LEVEL)	SEE PAGE
	1	1	**117-7631**	2	FITTING-COUPLING	
	2	1	**493-0010**	1	FITTING	
	3	1	**499-6958**	1	FITTING-ADAPTER	
	4	1	**504-7384**	1	ADAPTER	
	5	1	**504-7385**	2	FITTING	
	6	1	**504-7386**	1	ADAPTER	
	7	1	**504-7387**	1	VALVE AS	
	8	1	**504-7388**	1	ADAPTER	
	9	1	**504-7389**	1	WASHER (14X18.7X1.5-MM THK)	
	10	1	**504-7390**	1	RESERVOIR	
	11	1	**504-7391**	1	PLUG	
	12	1	**504-7392**	1	SEAL	
	13	1	**504-7393**	1	SEAL	
	14	1	**504-7394**	1	SEAL	
	15	1	**504-7395**	4	SCREW-FLAT HEAD (M4X0.7X35-MM)	
	16	1	**504-7396**	1	COVER AS	
	17	1	**504-7397**	1	SCRAPER AS	
	18	1	**504-7398**	1	PISTON	
	19	1	**504-7399**	4	STUD (M4X0.5X206-MM)	
	20	1	**504-7400**	1	BREATHER (LUBRICATION PUMP)	
	21	1	**504-7401**	1	COVER AS	
	22	1	**504-7403**	1	WASHER (20.7X28X1.5-MM THK)	
	23	1	**504-7404**	1	BASE AS	
	24	1	**504-7405**	1	PLUG (M20X1.5-THD)	
	25	1	**446-8945**	4	NUT (M4X0.7-THD)	
D	26	1	**169-8323**		HOSE (0.4-M)	

D - ORDER BY THE METER

488-9572 **PUMP GP-LUBRICATION (**contd.**)** **i06769689**

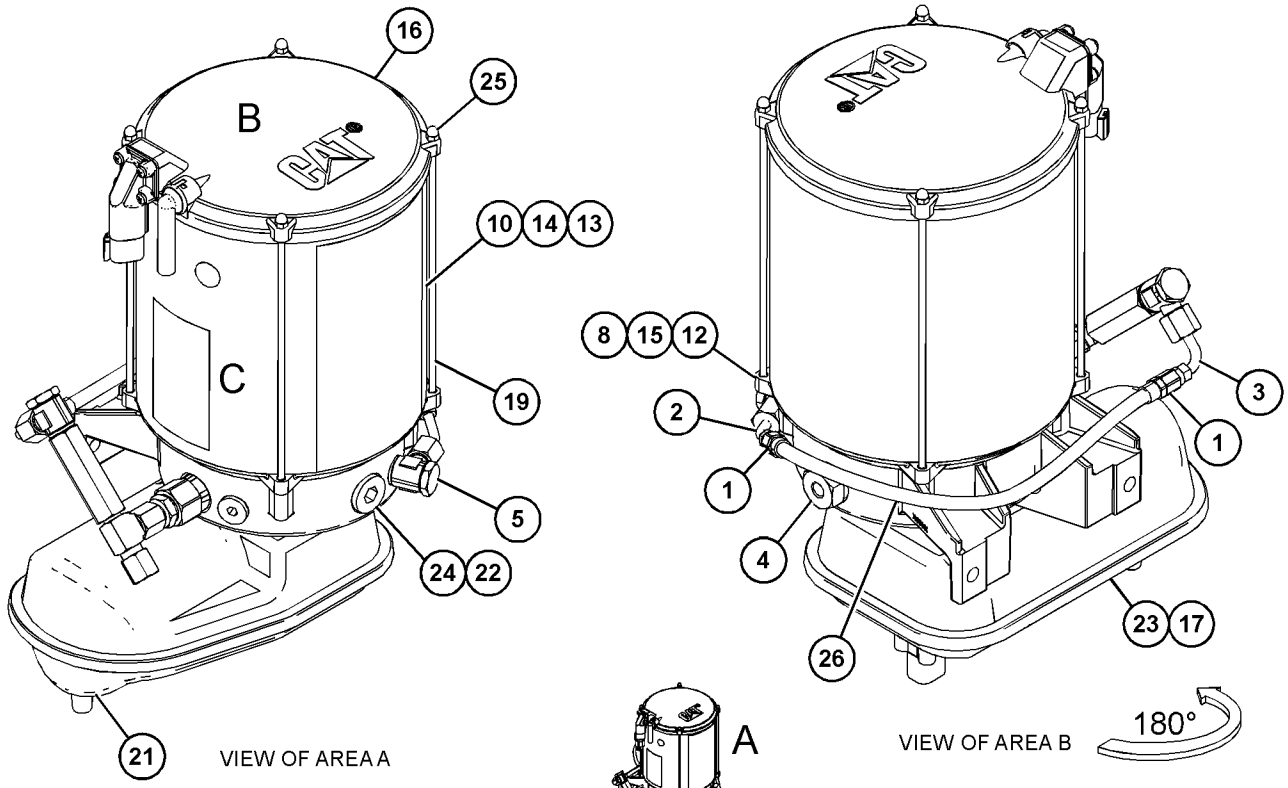

GRAPHIC #1 <END> g06109552

493-0009 PUMP GP-LUBRICATION

S/N: TNS1-UP

PART OF 495-9704 LUBRICATION AR-AUTOMATIC

SMCS-7516, 7540

i06791929

NOTE	REF NO	GRAPHIC REF	PART NUMBER	QTY	PART NAME 1 2 3 4 5 6 (PRODUCT LEVEL)	SEE PAGE
	1	1	**6H-9049**	1	FITTING	
	2	1	**7K-1181**	1	STRAP-CABLE (5.72-MM DIA)	
	3	1	*341-0118*	1	CONNECTOR AS	
		1	**341-0117**	1	CONNECTOR	
		1	**6V-8397**	1	SEAL-O-RING	
		1	**8T-7877**	1	SEAL-O-RING	
Y	4	1	**488-9572**	1	PUMP GP-LUBRICATION	527
	5	1	**492-9994**	1	BRACKET AS	
M		1	**8T-3490**	2	NUT-WELD (M10X1.5-THD)	
	6	1	**507-2556**	1	FILM-IDENTIFICATION (AUTOLUBE)	
	7	1	**513-7163**	1	BRACKET AS	
M		1	**8T-3490**	1	NUT-WELD (M10X1.5-THD)	
	8	1	**091-9035**	3	SPACER (11X25X20-MM THK)	
M	9	1	**344-5674**	2	NUT (M8X1.25-THD)	
	10	1	**5P-4116**	2	WASHER-HARD (8.8X20.5X2-MM THK)	
M	11	1	**7X-2537**	2	BOLT (M8X1.25X35-MM)	
	12	1	**8T-4121**	1	WASHER-HARD (11X21X2.5-MM THK)	
M	13	1	**8T-4136**	1	BOLT (M10X1.5X25-MM)	
M	14	1	**8T-4185**	3	BOLT (M10X1.5X50-MM)	
	15	1	**8T-4224**	2	WASHER-HARD (8.8X16X2-MM THK)	

M - METRIC PART
Y - SEPARATE ILLUSTRATION

493-0009 **PUMP GP-LUBRICATION (**contd.**)** **i06791929**

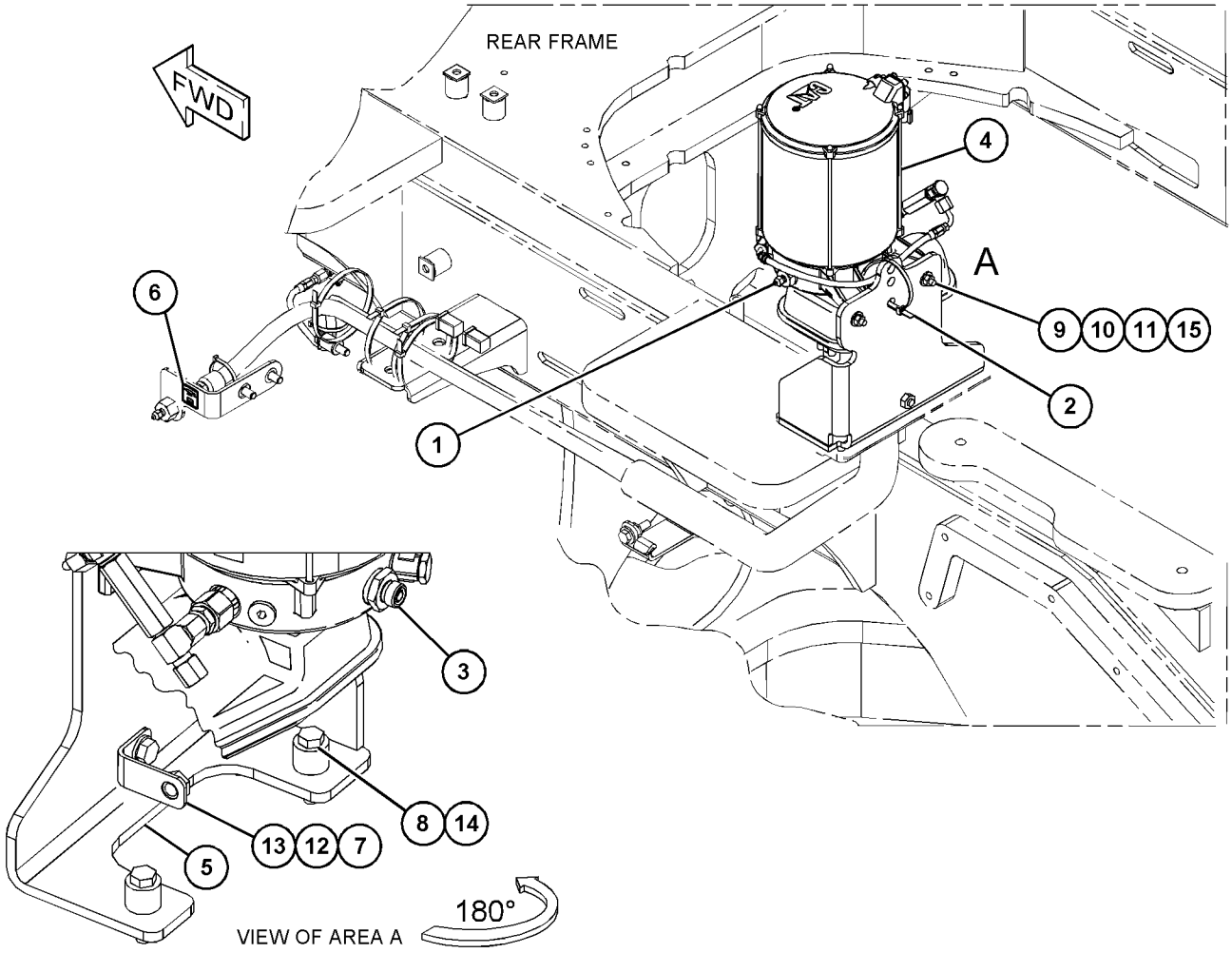

GRAPHIC #1 <END> g06101638

395-2550 SHIELD GP-ENGINE COMPARTMENT

S/N: TNS1-UP

PART OF 505-1547 CONTROL AR-FAN

SMCS-7154, 7263 **i06761556**

NOTE	REF NO	GRAPHIC REF	PART NUMBER	QTY	PART NAME 1 2 3 4 5 6 (PRODUCT LEVEL)	SEE PAGE
	1	1	**370-9074**	1	BRACKET AS (LH)	
	2	1	**370-9075**	1	BRACKET AS (RH)	
					(EACH BRACKET AS INCLUDES)	
M		1	**8T-3490**	3	NUT-WELD (M10X1.5-THD)	
M		1	**8T-3612**	1	NUT-WELD (M8X1.25-THD)	
	3	1	**375-0895**	2	SUPPORT AS	
					(EACH INCLUDES)	
M		1	**8T-3612**	2	NUT-WELD (M8X1.25-THD)	
Y	4	1	*395-2552*	1	SHIELD GP-ENGINE COMPARTMENT	535
	5	1	**156-0283**	6	WASHER-HARD (8.4X35X2.5-MM THK)	
	6	1	**190-1125**	1	GROMMET	
	7	1	**1V-6688**	2	GROMMET	
M	8	1	**8T-0389**	4	LOCKNUT (M10X1.5-THD)	
	9	1	**5F-9757**	1	GROMMET	
	10	1	**6P-0699**	2	GROMMET	
	11	1	**7X-7729**	10	WASHER (11X25X3-MM THK)	
	12	1	**7Y-5497**	1	GROMMET	
	13	1	**7Y-8171**	1	GROMMET	
M	14	1	**8T-4196**	5	BOLT (M10X1.5X35-MM)	
M	15	1	**8T-6466**	1	BOLT (M10X1.5X60-MM)	
M	16	1	**8T-7547**	6	BOLT (M8X1.25X30-MM)	

M - METRIC PART
Y - SEPARATE ILLUSTRATION

395-2550 **SHIELD GP-ENGINE COMPARTMENT (**contd.**)** **i06761556**

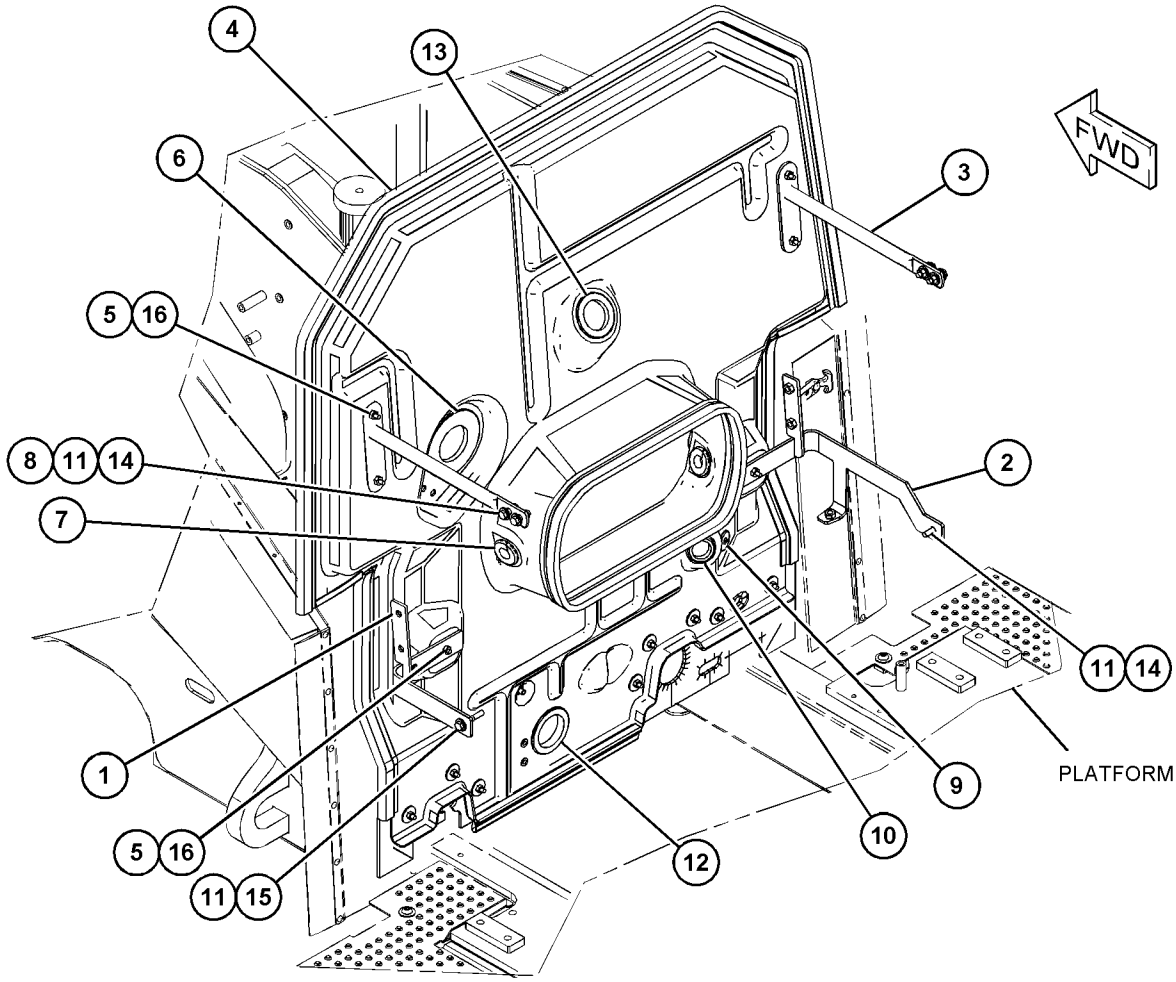

GRAPHIC #1 <END> g06051647

395-2551 SHIELD GP-ENGINE COMPARTMENT

S/N: TNS1-UP

PART OF 505-1548 CONTROL AR-FAN

SMCS-7154, 7263 **i06779911**

NOTE	REF NO	GRAPHIC REF	PART NUMBER	QTY	PART NAME 1 2 3 4 5 6 (PRODUCT LEVEL)	SEE PAGE
	1	1	**370-9074**	1	BRACKET AS (LH)	
M		1	**8T-3490**	3	NUT-WELD (M10X1.5-THD)	
M		1	**8T-3612**	1	NUT-WELD (M8X1.25-THD)	
	2	1	**370-9075**	1	BRACKET AS (RH)	
M		1	**8T-3490**	3	NUT-WELD (M10X1.5-THD)	
M		1	**8T-3612**	1	NUT-WELD (M8X1.25-THD)	
	3	1	**375-0895**	2	SUPPORT AS	
					(EACH INCLUDES)	
M		1	**8T-3612**	2	NUT-WELD (M8X1.25-THD)	
Y	4	1	*395-2554*	1	SHIELD GP-ENGINE COMPARTMENT	536
	5	1	**156-0283**	6	WASHER-HARD (8.4X35X2.5-MM THK)	
	6	1	**190-1125**	1	GROMMET	
	7	1	**1V-6688**	2	GROMMET	
M	8	1	**344-5675**	4	NUT (M10X1.5-THD)	
	9	1	**5F-9757**	1	GROMMET	
	10	1	**6P-0699**	2	GROMMET	
	11	1	**7X-7729**	10	WASHER (11X25X3-MM THK)	
	12	1	**7Y-8171**	1	GROMMET	
M	13	1	**8T-4196**	5	BOLT (M10X1.5X35-MM)	
M	14	1	**8T-6466**	1	BOLT (M10X1.5X60-MM)	
M	15	1	**8T-7547**	6	BOLT (M8X1.25X30-MM)	
	16	1	**7Y-5497**	1	GROMMET	

M - METRIC PART
Y - SEPARATE ILLUSTRATION

395-2551 **SHIELD GP-ENGINE COMPARTMENT (**contd.**)** **i06779911**

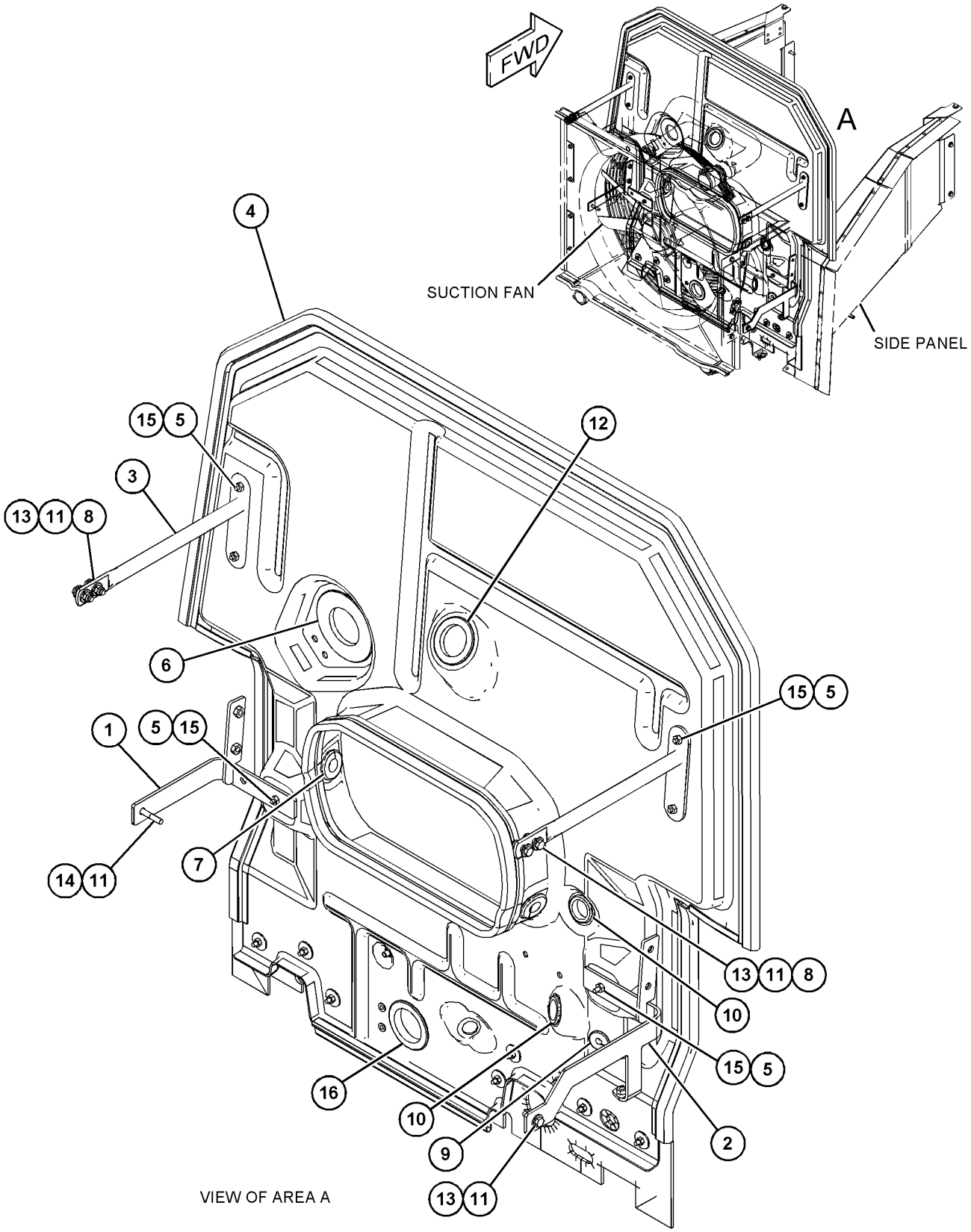

GRAPHIC #1 <END> g06049745

395-2552 SHIELD GP-ENGINE COMPARTMENT

S/N: TNS1-UP

PART OF 395-2550 SHIELD GP-ENGINE COMPARTMENT

SMCS-7154, 7263 **i06761560**

NOTE	REF NO	GRAPHIC REF	PART NUMBER	QTY	PART NAME 1 2 3 4 5 6 (PRODUCT LEVEL)	SEE PAGE
	1	1	**9R-5008**	8	SPACER (11X20X6-MM THK)	
	2	1	**367-2599**	1	BAFFLE	
	3	1	**395-2553**	1	SHIELD AS	
	4	1	**395-2556**	1	BAFFLE	
	5	1	**156-0283**	16	WASHER-HARD (8.4X35X2.5-MM THK)	
M	6	1	**344-5674**	8	NUT (M8X1.25-THD)	
M	7	1	**8T-7547**	8	BOLT (M8X1.25X30-MM)	
	8	1	**132-8502**		SEAL (45-CM)	
E	9	1	**246-0435**		SEAL (70-CM) (14-CM EACH)	
E	10	1	**300-7318**		SEAL (58-CM)	
E	10A	1	**300-7318**		SEAL (52-CM)	
E	10B	1	**300-7318**		SEAL (264-CM)	
E	11	1	**352-3588**		SEAL (146-CM)	

E - ORDER BY THE CENTIMETER
M - METRIC PART

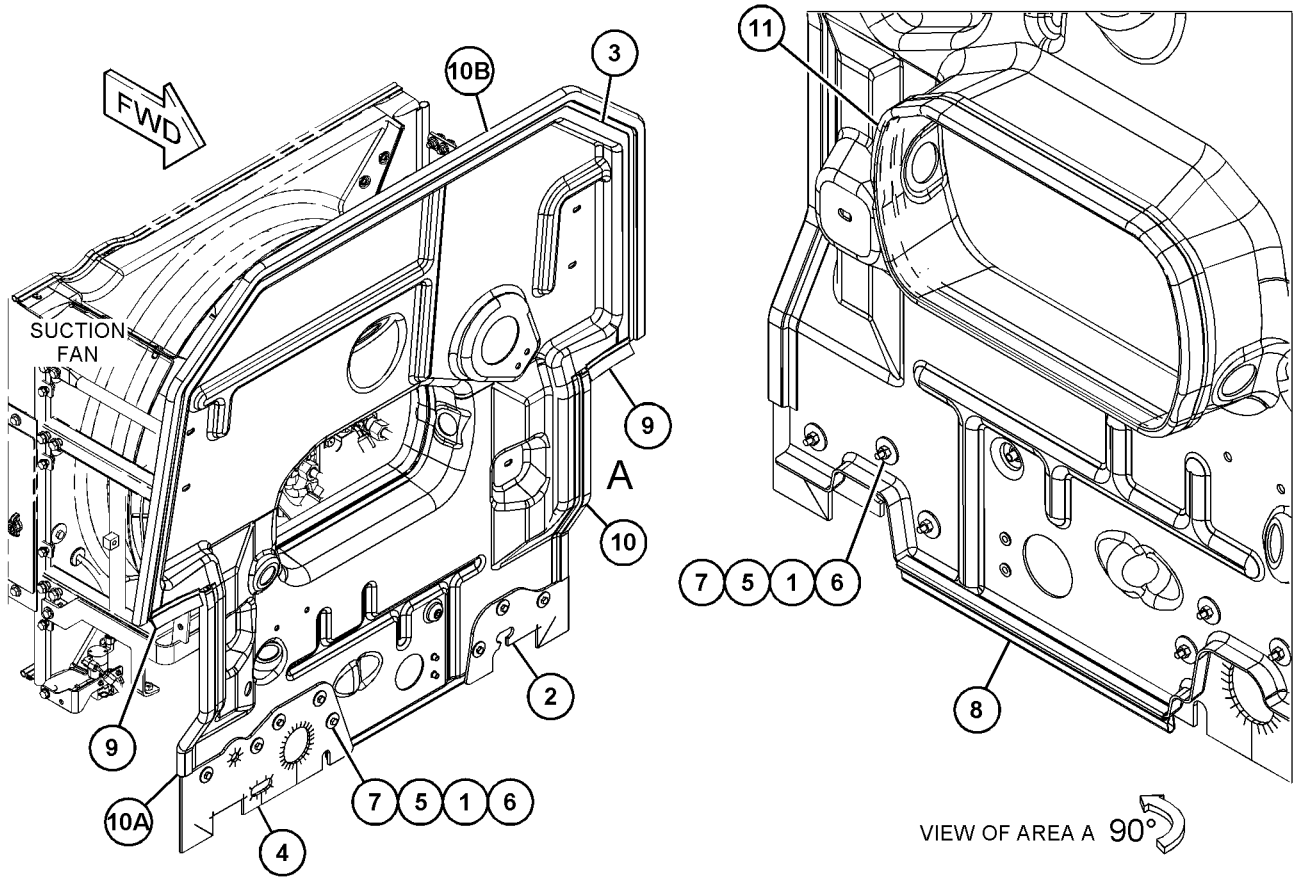

GRAPHIC #1 <END> g06050648

395-2554 SHIELD GP-ENGINE COMPARTMENT

S/N: TNS1-UP

PART OF 395-2551 SHIELD GP-ENGINE COMPARTMENT

SMCS-7154, 7263

i06779978

NOTE	REF NO	GRAPHIC REF	PART NUMBER	QTY	PART NAME 1 2 3 4 5 6 (PRODUCT LEVEL)	SEE PAGE
	1	1	**9R-5008**	8	SPACER (11X20X6-MM THK)	
	2	1	**367-2599**	1	BAFFLE	
	3	1	**395-2555**	1	SHIELD AS	
	4	1	**395-2556**	1	BAFFLE	
	5	1	**156-0283**	16	WASHER-HARD (8.4X35X2.5-MM THK)	
M	6	1	**344-5674**	8	NUT (M8X1.25-THD)	
M	7	1	**8T-7547**	8	BOLT (M8X1.25X30-MM)	
E	8	1	**132-8502**		SEAL (45-CM)	
E	9	1	**246-0435**		SEAL (70-CM) (14-CM EACH)	
E	10	1	**300-7318**		SEAL (58-CM)	
E	10A	1	**300-7318**		SEAL (52-CM)	
E	10B	1	**300-7318**		SEAL (264-CM)	
E	11	1	**352-3588**		SEAL (151-CM)	

E - ORDER BY THE CENTIMETER
M - METRIC PART

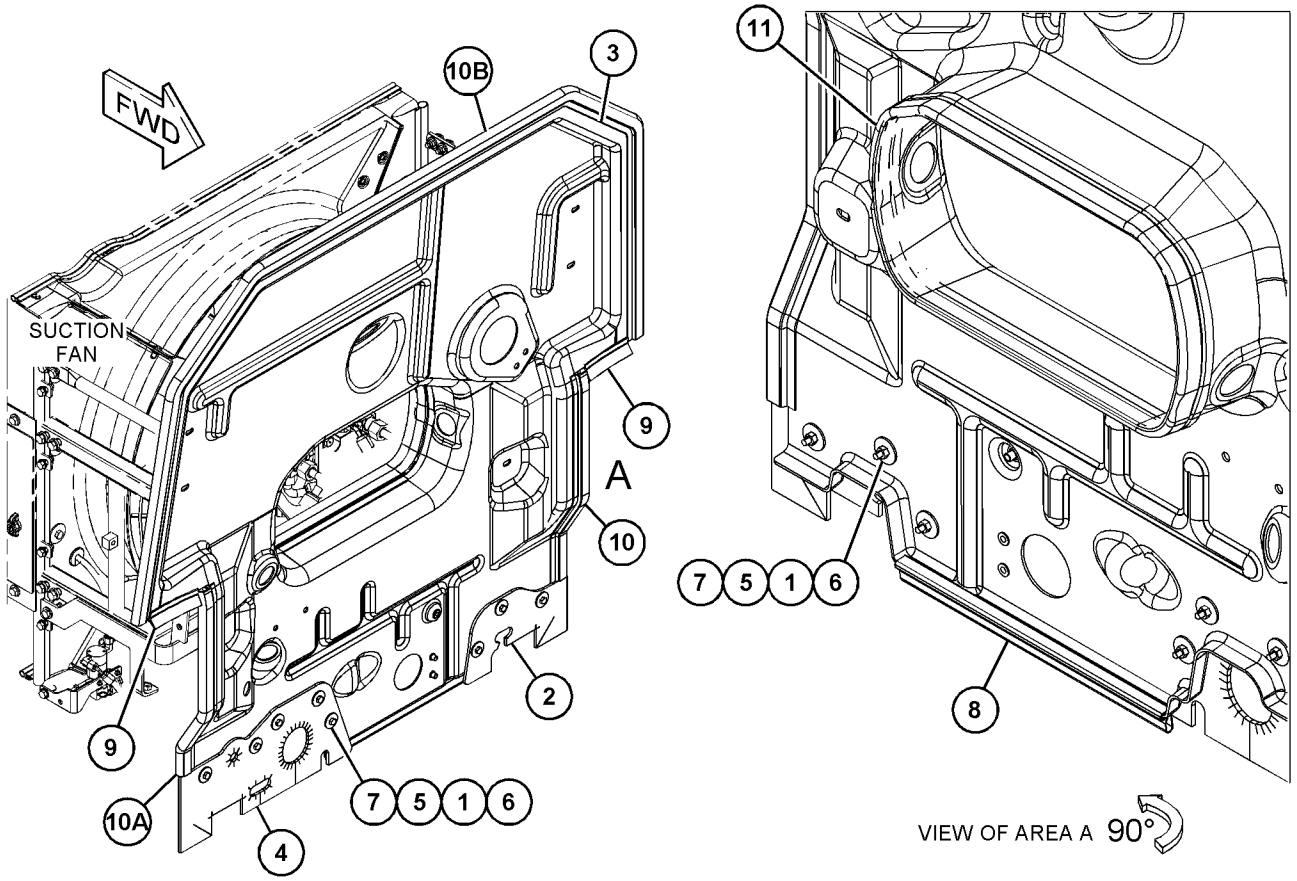

GRAPHIC #1 <END> g06050648

464-6689 STEP GP

S/N: TNS1-UP

PART OF 464-6672, 464-6673, 464-6676 FENDER AR-ROADING

SMCS-7254 **i06723292**

NOTE	REF NO	GRAPHIC REF	PART NUMBER	QTY	PART NAME 1 2 3 4 5 6 (PRODUCT LEVEL)	SEE PAGE
	1	1	**297-9080**	4	STRIP	
Y	2	1	*479-1920*	2	STEP GP	538
Y	3	1	*479-1921*	1	STEP GP (REAR)	539
M	4	1	**099-3649**	8	BOLT (M8X1.25X40-MM)	
	5	1	**3L-0594**	8	SPACER (8.7X15.9X15.9-MM THK)	
	6	1	**5P-4116**	8	WASHER-HARD (8.8X20.5X2-MM THK)	
	7	1	**8T-4121**	4	WASHER-HARD (11X21X2.5-MM THK)	
M	8	1	**8T-4196**	4	BOLT (M10X1.5X35-MM)	

M - METRIC PART
Y - SEPARATE ILLUSTRATION

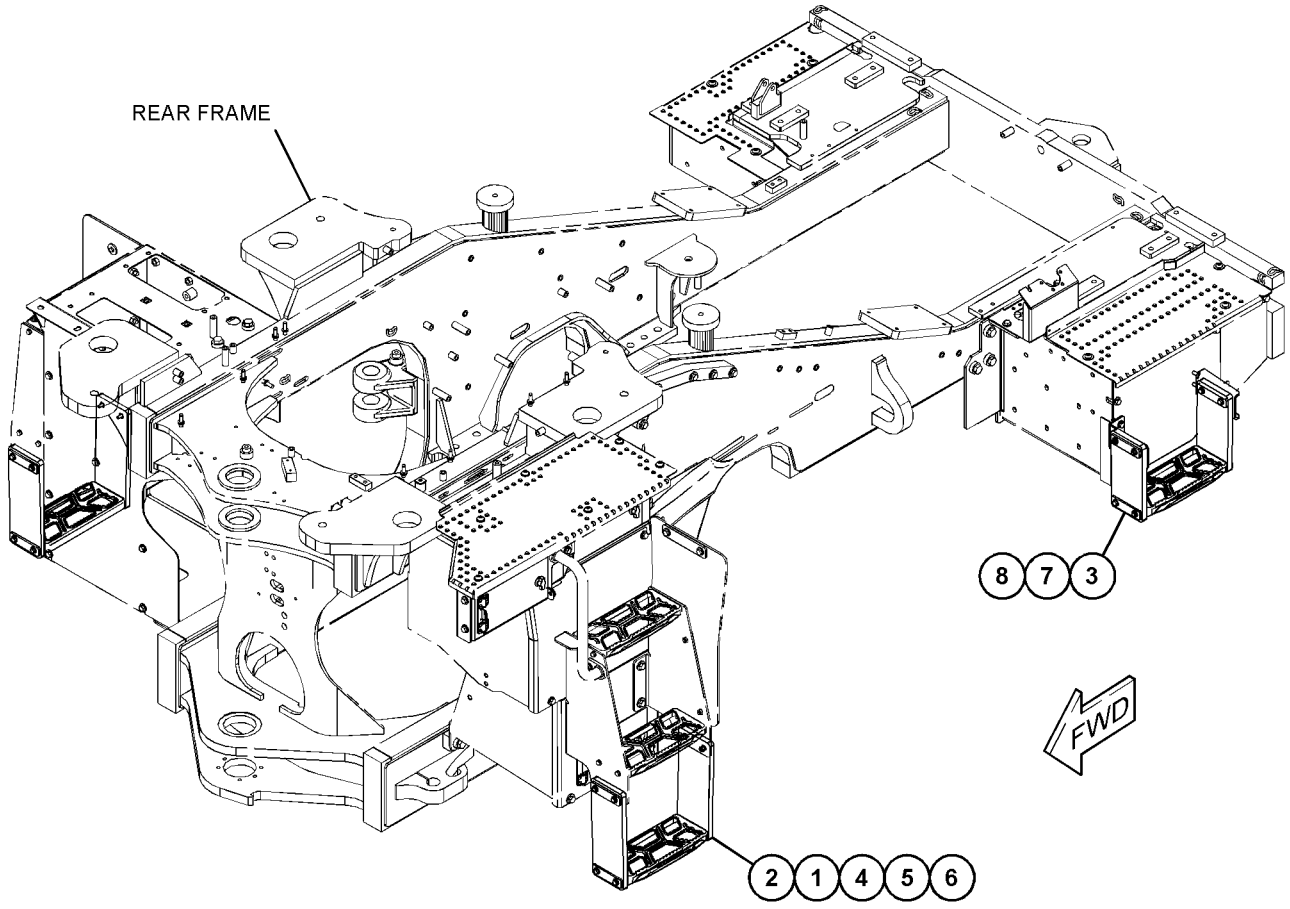

GRAPHIC #1 <END> g06000822

479-1920 STEP GP

S/N: TNS1-UP

PART OF 464-6689 STEP GP

SMCS-7254 **i06774774**

NOTE	REF NO	GRAPHIC REF	PART NUMBER	QTY	PART NAME 1 2 3 4 5 6 (PRODUCT LEVEL)	SEE PAGE
	1	1	**297-9080**	2	STRIP	
	2	1	**367-2480**	2	BELT	
	3	1	**454-7800**	1	STEP AS	
M	4	1	**099-3649**	4	BOLT (M8X1.25X40-MM)	
	5	1	**3L-0594**	4	SPACER (8.7X15.9X15.9-MM THK)	
	6	1	**5P-4116**	8	WASHER-HARD (8.8X20.5X2-MM THK)	
M	7	1	**131-3540**	4	LOCKNUT (M8X1.25-THD)	

M - METRIC PART

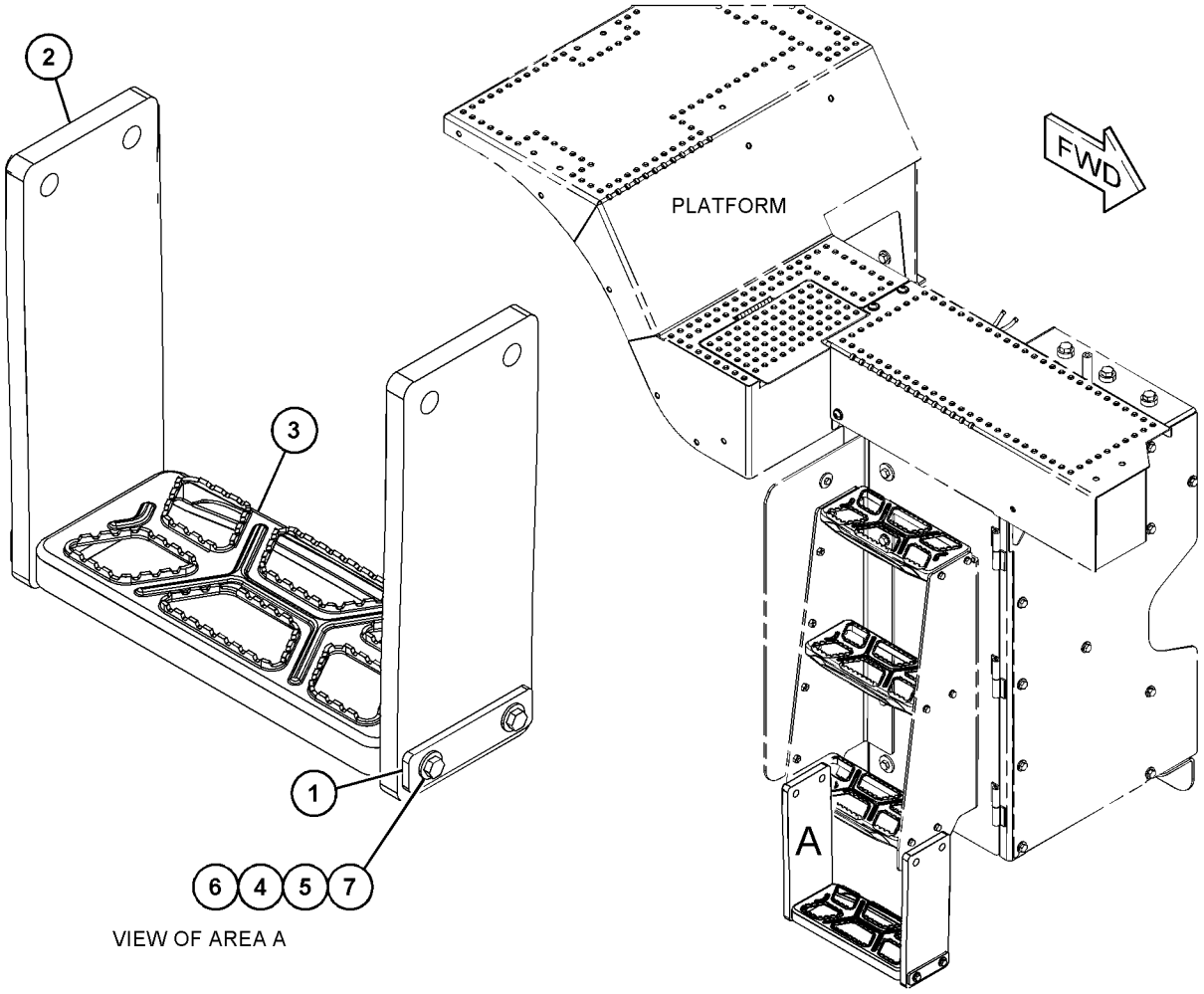

VIEW OF AREA A

GRAPHIC #1 <END> g06113935

479-1921 STEP GP–REAR

S/N: TNS1-UP

PART OF 464-6689 STEP GP

SMCS-7254 **i06782280**

NOTE	REF NO	GRAPHIC REF	PART NUMBER	QTY	PART NAME 1 2 3 4 5 6 (PRODUCT LEVEL)	SEE PAGE
	1	1	**389-3007**	1	BRACKET	
	2	1	**297-9080**	4	STRIP	
	3	1	**454-7800**	1	STEP AS	
	4	1	**484-1271**	1	BRACKET	
	5	1	**484-2858**	2	BELT	
M	6	1	**099-3649**	8	BOLT (M8X1.25X40-MM)	
	7	1	**3L-0594**	8	SPACER (8.7X15.9X15.9-MM THK)	
	8	1	**5P-4116**	16	WASHER-HARD (8.8X20.5X2-MM THK)	
M	9	1	**131-3540**	8	LOCKNUT (M8X1.25-THD)	

M - METRIC PART

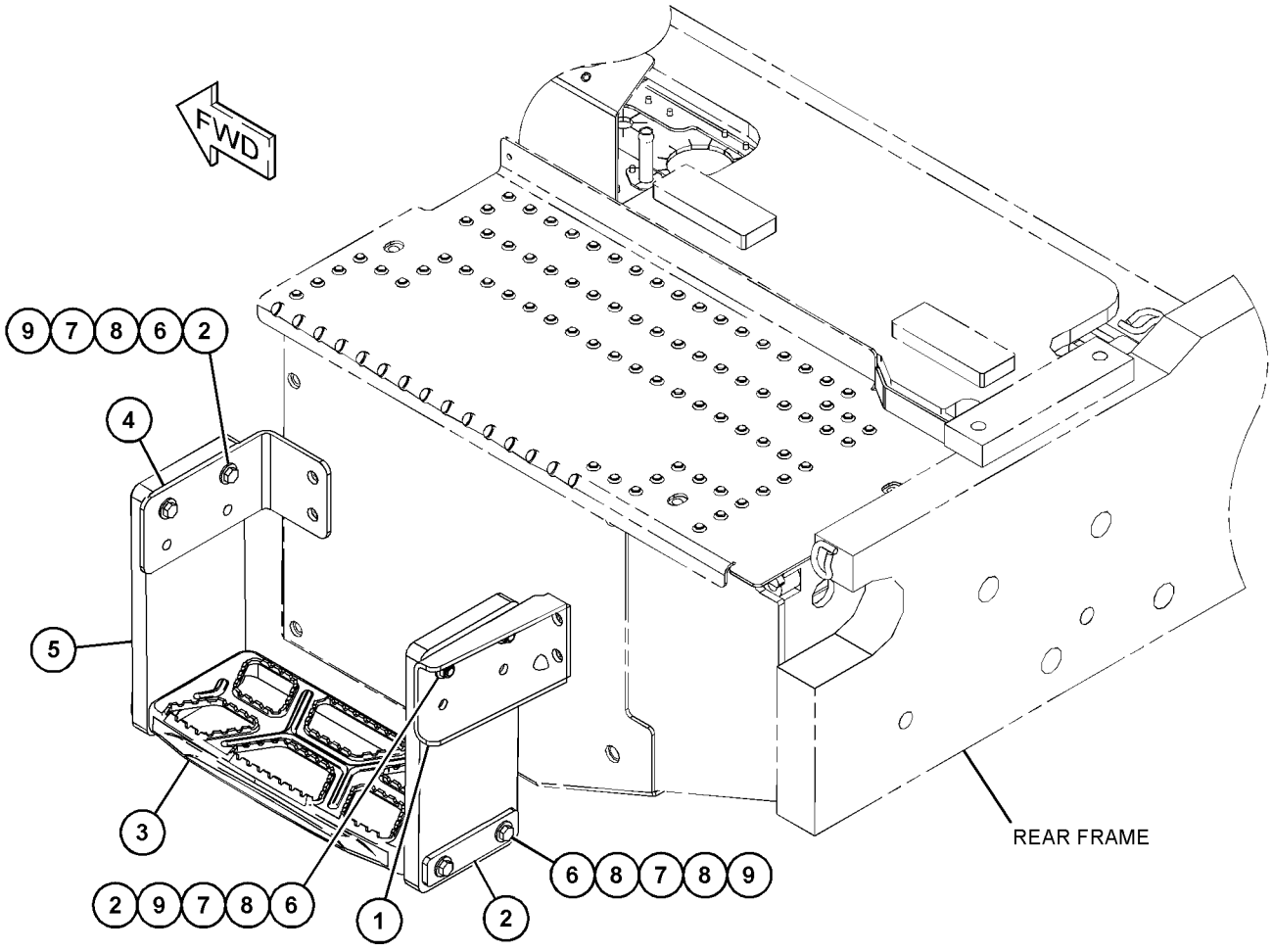

GRAPHIC #1 <END> g06077107

391-5801 SUPPORT GP-HOOD–REAR

S/N: TNS1-UP

PART OF 336-0000 HOOD & GUARD GP

SMCS-7251 **i06553833**

NOTE	REF NO	GRAPHIC REF	PART NUMBER	QTY	PART NAME 1 2 3 4 5 6 (PRODUCT LEVEL)	SEE PAGE
	1	1	**296-9937**	1	PIN AS	
	2	1	**383-2959**	1	SUPPORT AS (REAR)	
		1	**7T-1099**	2	LINK	
M		1	**8T-3490**	17	NUT-WELD (M10X1.5-THD)	
M		1	**8T-3612**	5	NUT-WELD (M8X1.25-THD)	
M		1	**9R-2613**	1	BOSS-WELD (M10X1.5X25-MM)	
M	3	1	**9X-2040**	2	SCREW-TRUSS HEAD (M10X1.5X25-MM)	

M - METRIC PART

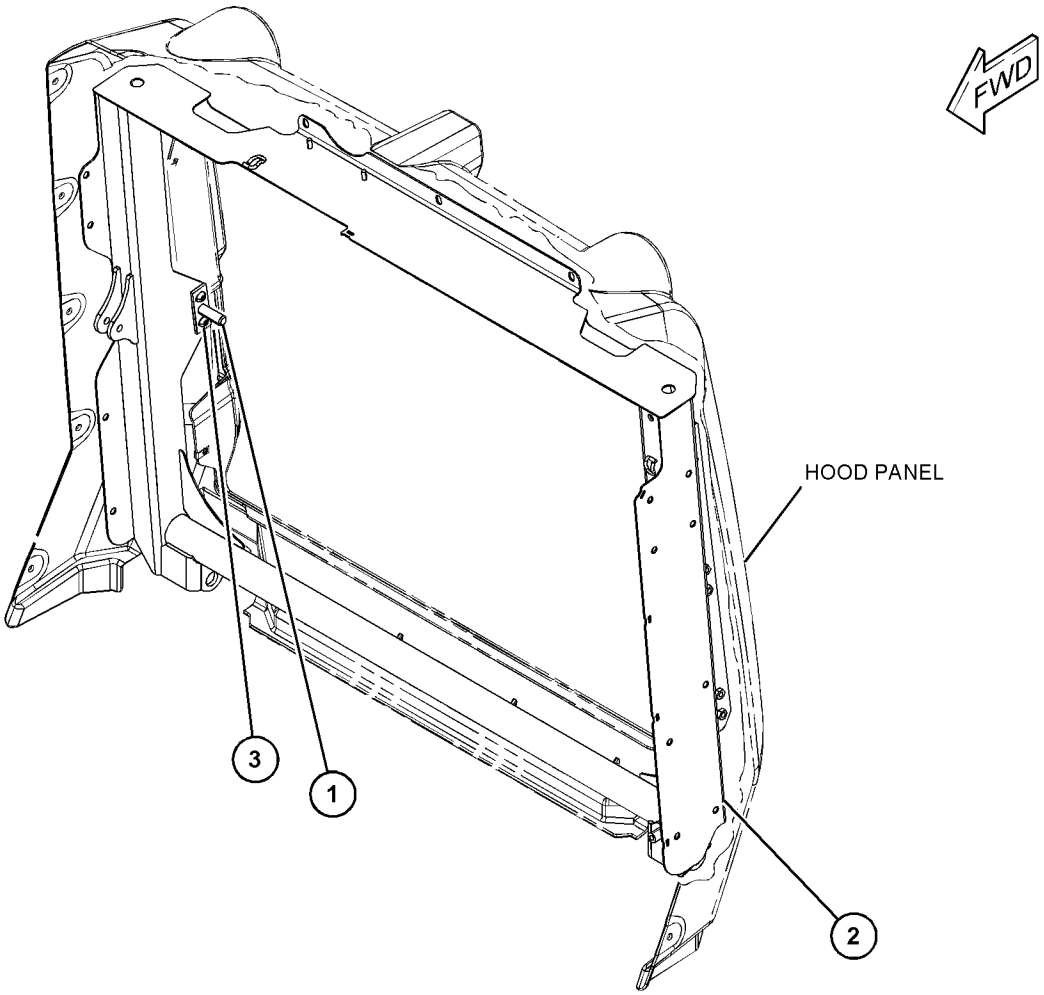

GRAPHIC #1 <END> g06002824

391-5802 SUPPORT GP-HOOD–TOP

S/N: TNS1-UP

PART OF 336-0000 HOOD & GUARD GP

SMCS-7251 **i06781474**

NOTE	REF NO	GRAPHIC REF	PART NUMBER	QTY	PART NAME 1 2 3 4 5 6 (PRODUCT LEVEL)	SEE PAGE
	1	1	**383-2951**	1	BRACKET AS	
M		1	**8T-3490**	10	NUT-WELD (M10X1.5-THD)	
M		1	**9R-2640**	1	BOSS (M12X1.75X25-MM)	
	2	1	**422-1649**	1	CHANNEL AS	
M		1	**9R-2640**	2	BOSS (M12X1.75X25-MM)	
N	3	1	**308-9131**		SEAL (432-MM EACH)	
E	4	1	**149-5933**		SEAL (55-CM)	

E - ORDER BY THE CENTIMETER
M - METRIC PART
N - ORDER BY THE MILLIMETER

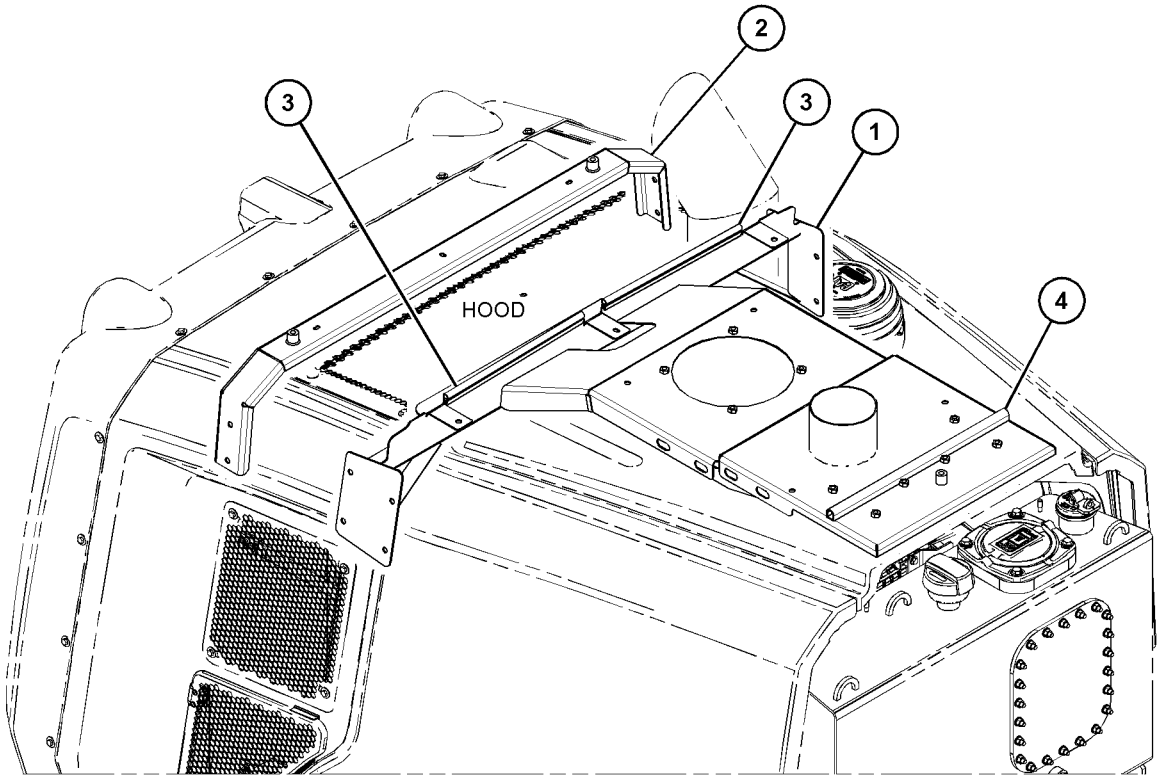

GRAPHIC #1 <END> g06121252

391-5803 SUPPORT GP-HOOD–RH

S/N: TNS1-UP

PART OF 336-0000 HOOD & GUARD GP

SMCS-7251 **i06553842**

NOTE	REF NO	GRAPHIC REF	PART NUMBER	QTY	PART NAME 1 2 3 4 5 6 (PRODUCT LEVEL)	SEE PAGE
	1	1	**383-2931**	1	SUPPORT AS (RH)	
D	2	1	**5P-5637**		SEAL (1.2-M)	
N	3	1	**308-9131**		SEAL (700-MM)	
N	3A	1	**308-9131**		SEAL (328-MM)	

D - ORDER BY THE METER
N - ORDER BY THE MILLIMETER

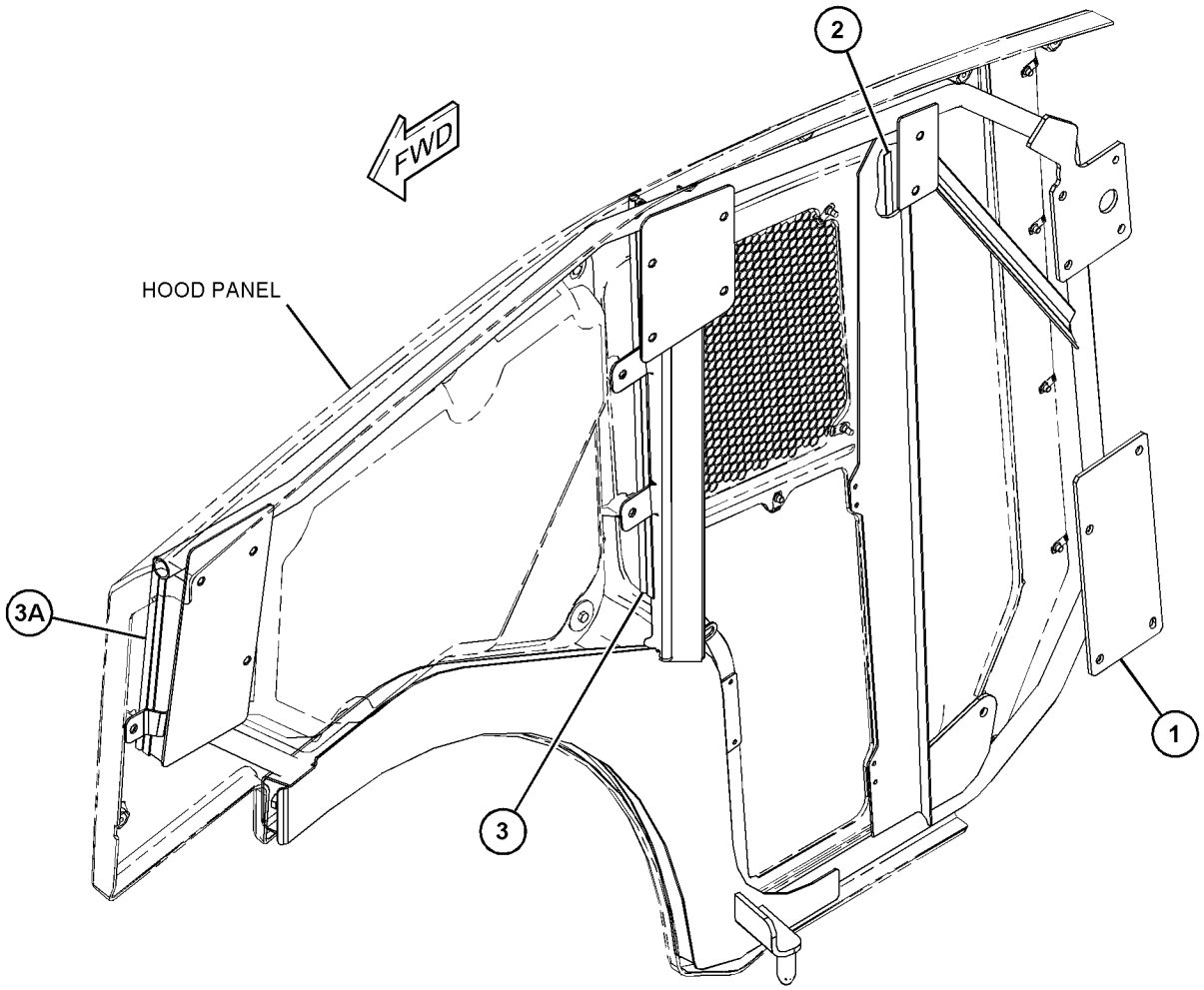

GRAPHIC #1 <END> g06007024

391-5804 SUPPORT GP-HOOD–LH

S/N: TNS1-UP

PART OF 336-0000 HOOD & GUARD GP

SMCS-7251 **i06553846**

NOTE	REF NO	GRAPHIC REF	PART NUMBER	QTY	PART NAME 1 2 3 4 5 6 (PRODUCT LEVEL)	SEE PAGE
	1	1	**383-2941**	1	SUPPORT AS (LH)	
M		1	**8T-3490**	14	NUT-WELD (M10X1.5-THD)	
D	2	1	**5P-5637**		SEAL (1.2-M)	
N	3	1	**308-9131**		SEAL (700-MM)	
N	3A	1	**308-9131**		SEAL (328-MM)	

D - ORDER BY THE METER
M - METRIC PART
N - ORDER BY THE MILLIMETER

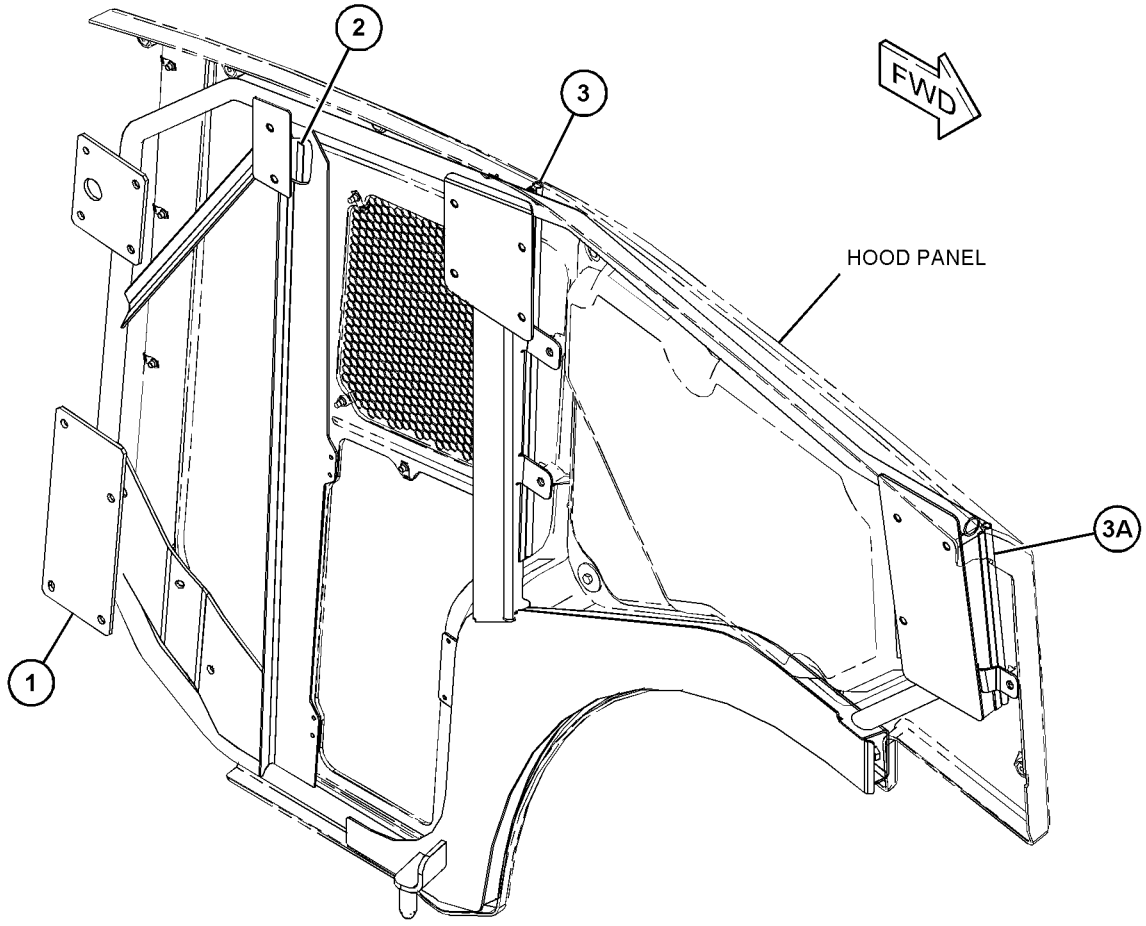

GRAPHIC #1 <END> g06000952

397-5830 SUPPORT GP-HOOD

S/N: TNS1-UP

PART OF 465-8122 SUPPORT GP-HOOD

SMCS-7251 **i06781551**

NOTE	REF NO	GRAPHIC REF	PART NUMBER	QTY	PART NAME 1 2 3 4 5 6 (PRODUCT LEVEL)	SEE PAGE
Y	1	1	*397-5831*	1	SUPPORT GP-HOOD	545
	2	1	**397-5832**	1	PLATE AS	
	3	1	**397-5833**	1	PLATE AS	
					(EACH PLATE AS INCLUDES)	
		1	**162-2480**	3	RIVET	

Y - SEPARATE ILLUSTRATION

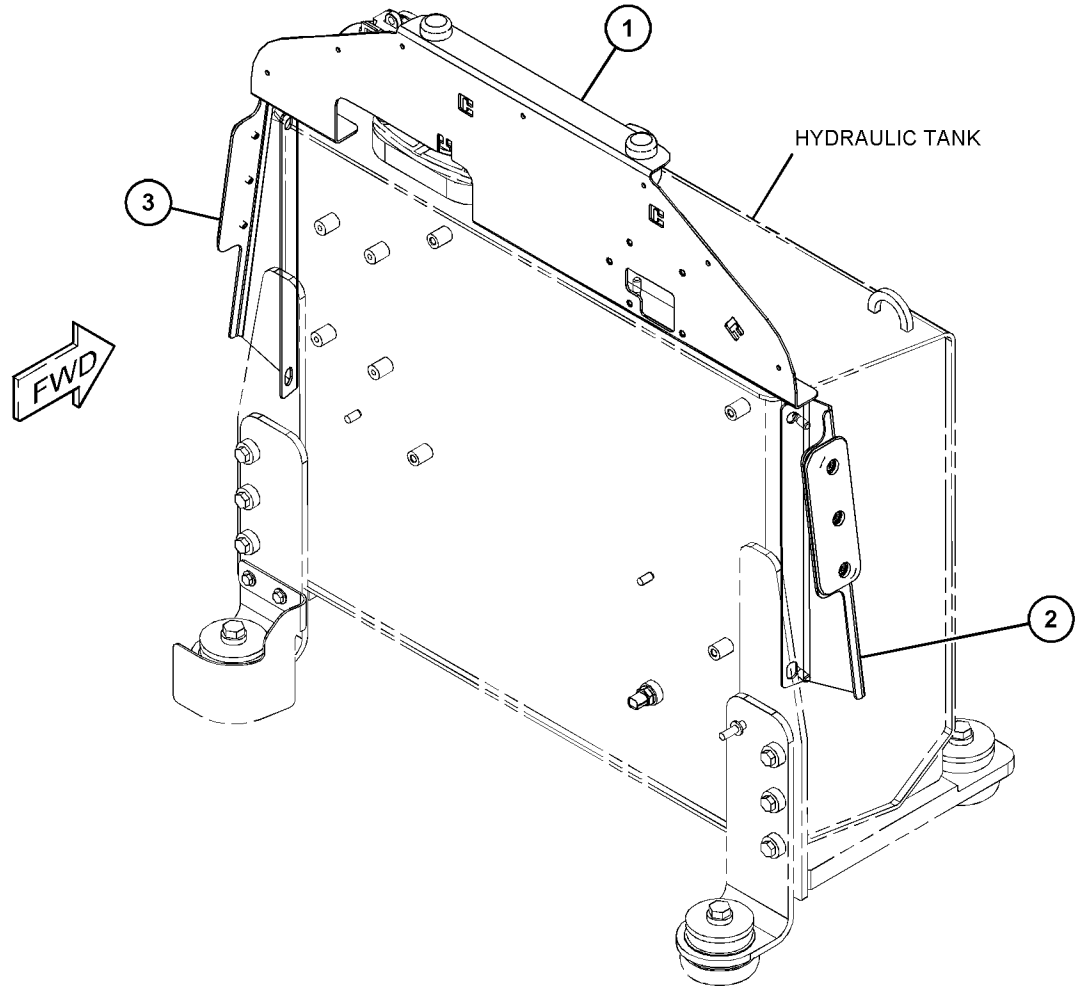

GRAPHIC #1 <END> g06016564

397-5831 SUPPORT GP-HOOD

S/N: TNS1-UP

PART OF 397-5830 SUPPORT GP-HOOD

SMCS-7251 **i06781549**

NOTE	REF NO	GRAPHIC REF	PART NUMBER	QTY	PART NAME 1 2 3 4 5 6 (PRODUCT LEVEL)	SEE PAGE
	1	1	**163-7988**	2	BUMPER AS	
	2	1	**494-8149**	1	BRACKET AS	
M		1	**6V-9632**	5	NUT-WELD (M6X1-THD)	
M		1	**8T-3490**	2	NUT-WELD (M10X1.5-THD)	

M - METRIC PART

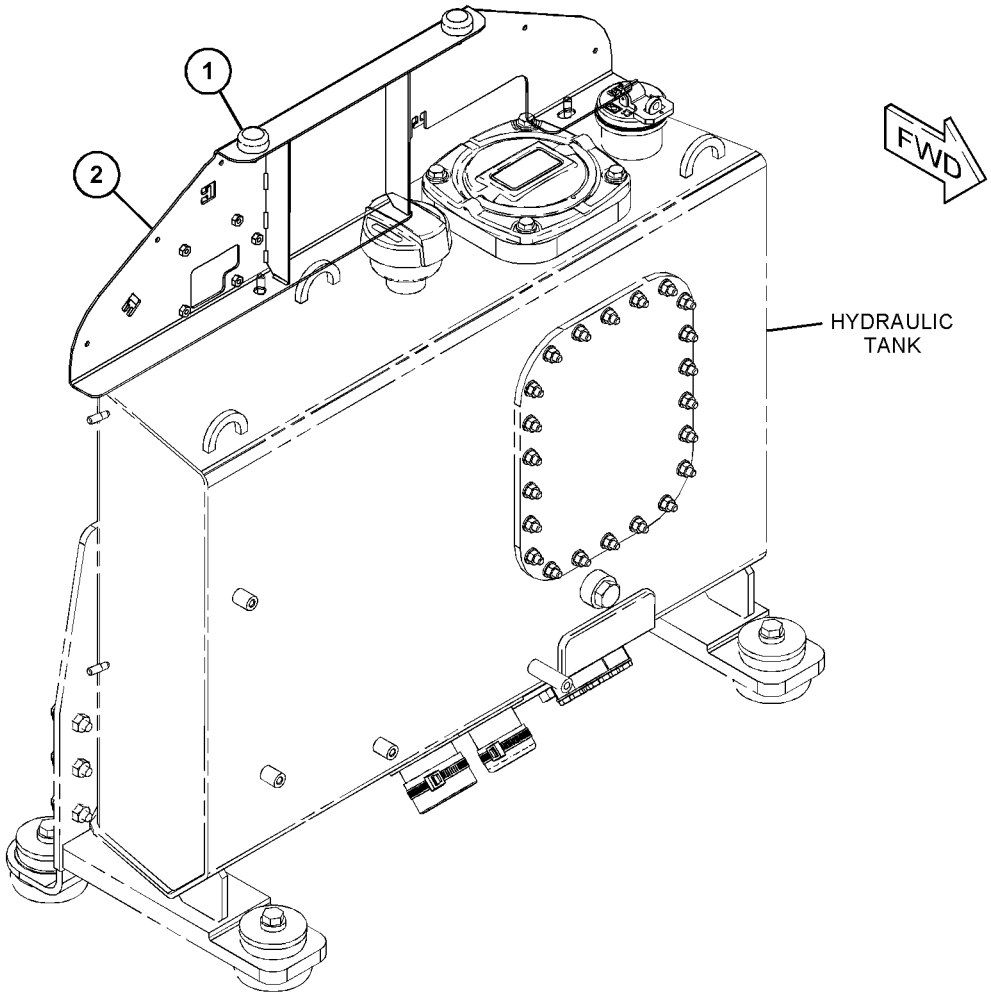

GRAPHIC #1 <END> g06016527

465-8122 SUPPORT GP-HOOD

S/N: TNS1-UP

PART OF 508-7627, 508-7629, 508-7631 SUPPRESSION AR-SOUND

SMCS-7251 **i06818511**

NOTE	REF NO	GRAPHIC REF	PART NUMBER	QTY	PART NAME 1 2 3 4 5 6 (PRODUCT LEVEL)	SEE PAGE
Y	1	1	*397-5830*	1	SUPPORT GP-HOOD	544
	2	1	**198-4777**	6	WASHER-HARD (11X25X10-MM THK)	
M	3	1	**8T-4133**	6	NUT (M10X1.5-THD)	

M - METRIC PART
Y - SEPARATE ILLUSTRATION

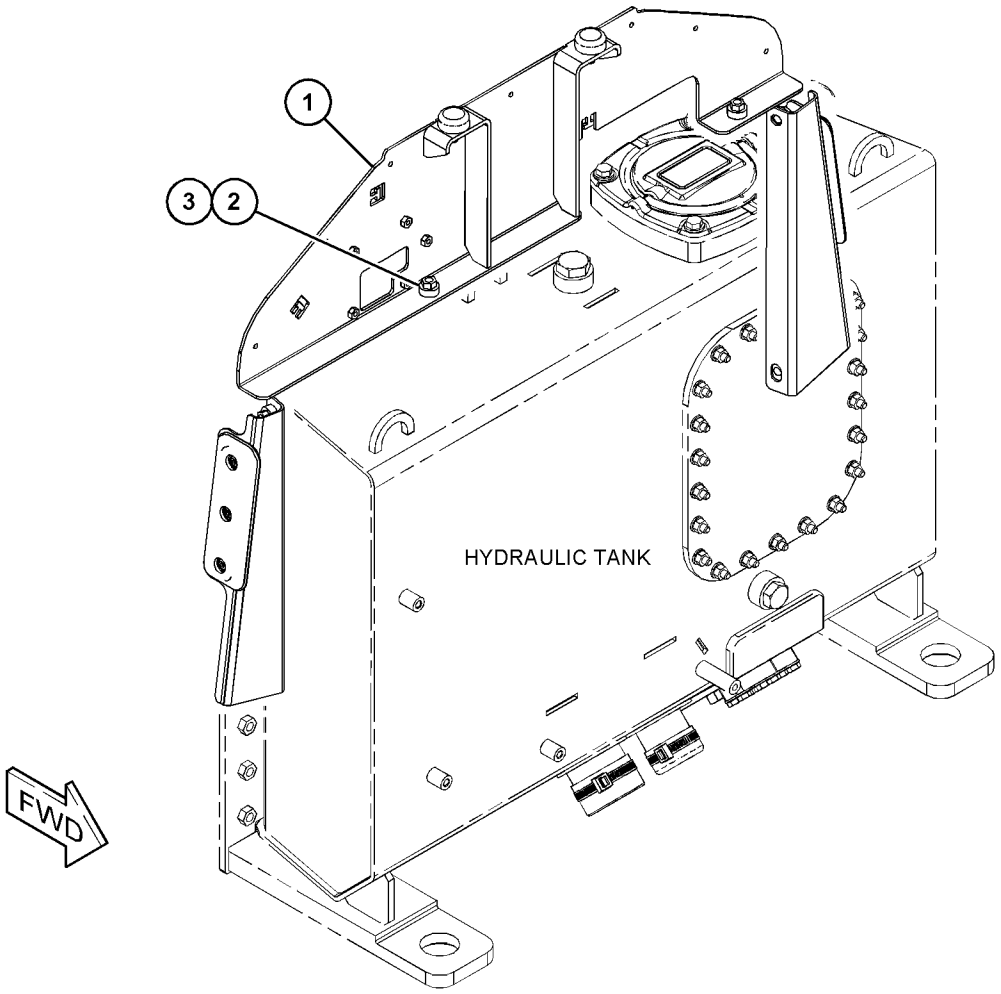

GRAPHIC #1 <END> g06127199

367-2611 SUPPORT GP-LADDER

S/N: TNS1-UP

PART OF 492-4020 SPECIAL AR-WHEEL LOADER

SMCS-7254 **i06809784**

NOTE	REF NO	GRAPHIC REF	PART NUMBER	QTY	PART NAME 1 2 3 4 5 6 (PRODUCT LEVEL)	SEE PAGE
Y	1	1	*485-1964*	1	SUPPORT GP-VALVE & FILTER (SUPPORT)	552
	2	1	**267-8821**	6	WASHER (17X36X12-MM THK)	
	3	1	**7X-7729**	12	WASHER (11X25X3-MM THK)	
M	4	1	**8T-4136**	12	BOLT (M10X1.5X25-MM)	
M	5	1	**8T-7338**	6	BOLT (M16X2X45-MM)	

M - METRIC PART
Y - SEPARATE ILLUSTRATION

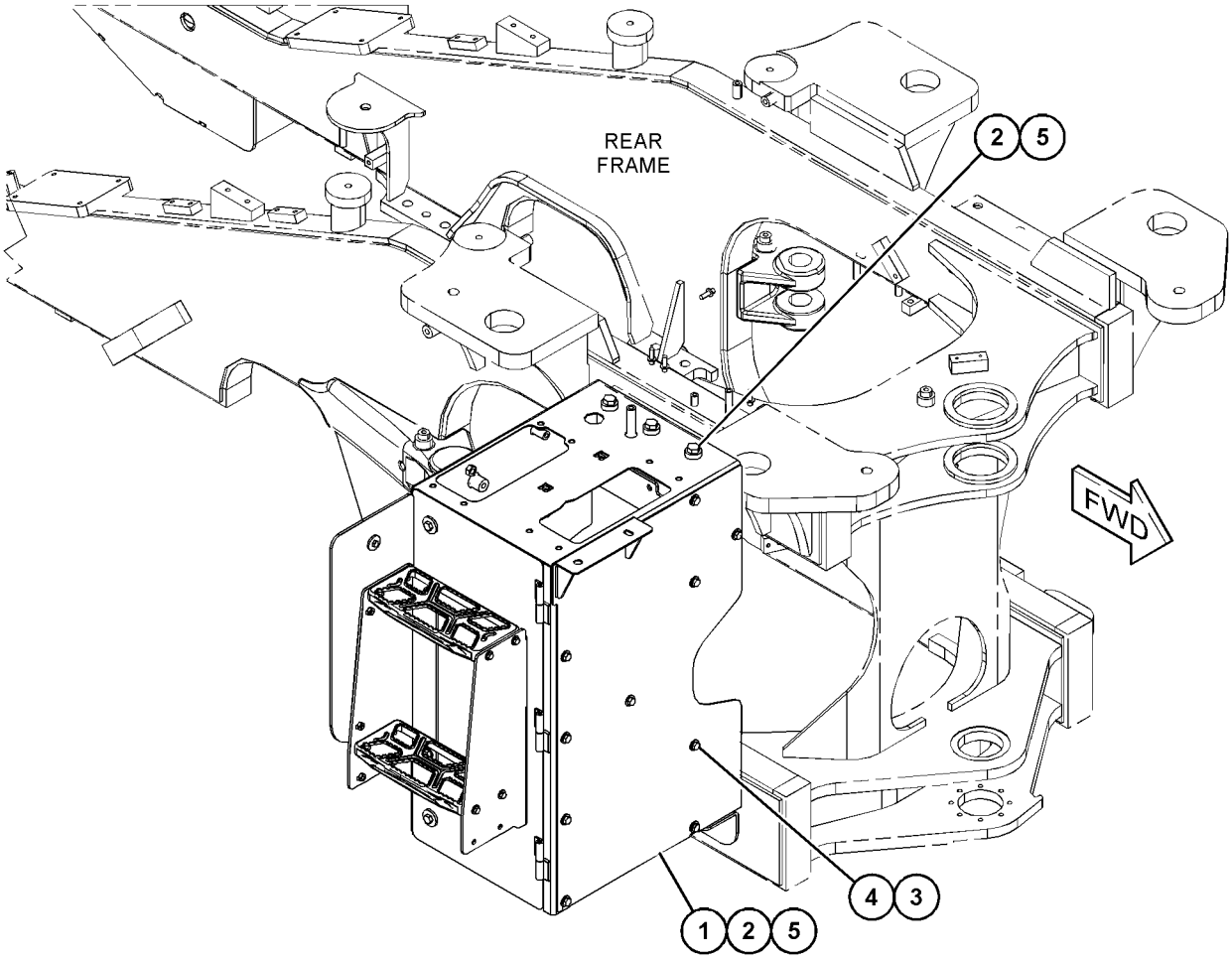

GRAPHIC #1 <END> g06121823

458-8277 SUPPORT GP-PLATFORM–REAR

S/N: TNS1-UP

PART OF 458-8276 PLATFORM GP

SMCS-7253 **i06759715**

NOTE	REF NO	GRAPHIC REF	PART NUMBER	QTY	PART NAME 1 2 3 4 5 6 (PRODUCT LEVEL)	SEE PAGE
	1	1	**458-8278**	1	PLATE AS (LH)	
M		1	**8T-3490**	10	NUT-WELD (M10X1.5-THD)	
M		1	**090-8247**	2	BLOCK (M10X1.5-MM)	
	2	1	**458-8279**	1	PLATE AS (RH)	
M		1	**8T-3490**	6	NUT-WELD (M10X1.5-THD)	
M		1	**090-8247**	2	BLOCK (M10X1.5-MM)	

M - METRIC PART

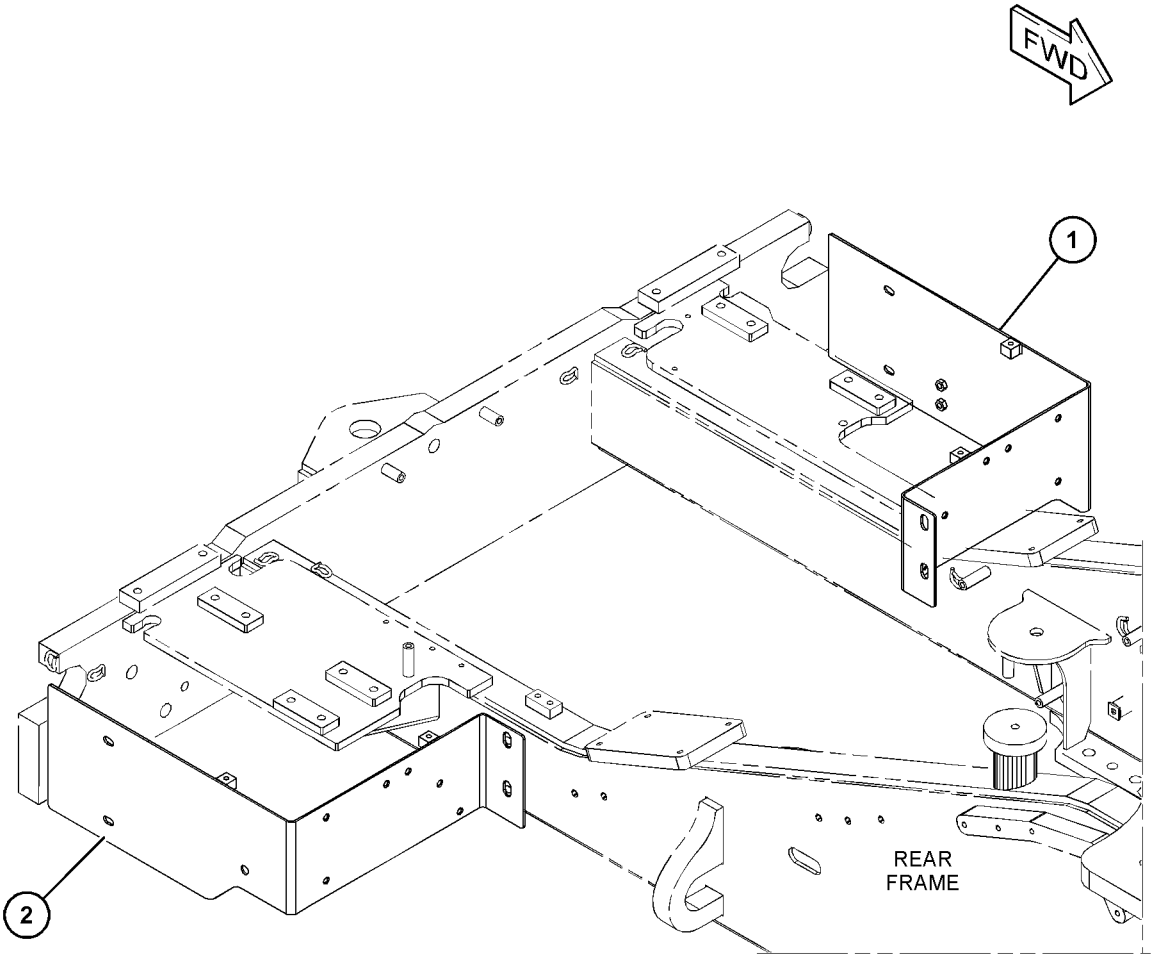

GRAPHIC #1 <END> g06050025

485-2626 SUPPORT GP-PLATFORM

S/N: TNS1-UP

PART OF 507-9161 SPECIAL AR-WHEEL LOADER

SMCS-7253 **i06756808**

NOTE	REF NO	GRAPHIC REF	PART NUMBER	QTY	PART NAME 1 2 3 4 5 6 (PRODUCT LEVEL)	SEE PAGE
Y	1	1	*485-2603*	1	SUPPORT GP-VALVE & FILTER	553
	2	1	**267-8821**	6	WASHER (17X36X12-MM THK)	
	3	1	**7X-7729**	13	WASHER (11X25X3-MM THK)	
M	4	1	**8T-4136**	13	BOLT (M10X1.5X25-MM)	
M	5	1	**8T-7338**	6	BOLT (M16X2X45-MM)	

M - METRIC PART
Y - SEPARATE ILLUSTRATION

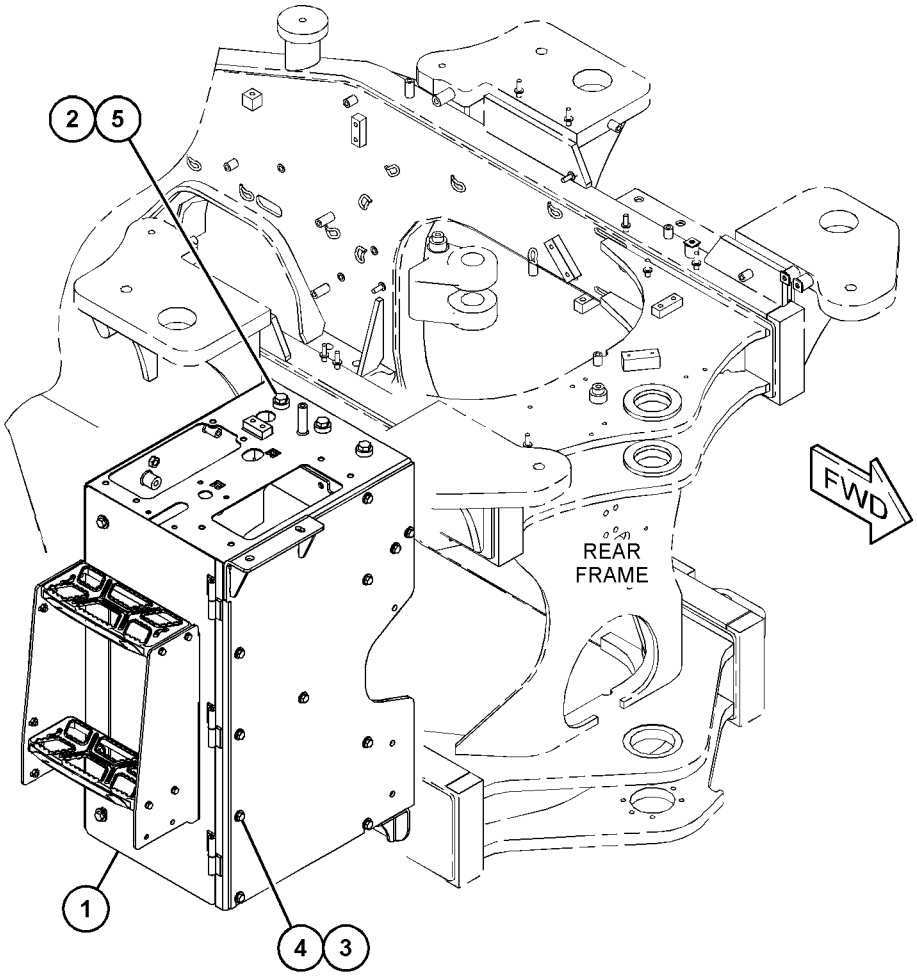

GRAPHIC #1 <END> g06104157

441-9228 SUPPORT GP-VALVE & FILTER

S/N: TNS1-UP

PART OF 485-1964 SUPPORT GP-VALVE & FILTER

SMCS-0635, 4263, 5068, 7513 **i06734282**

NOTE	REF NO	GRAPHIC REF	PART NUMBER	QTY	PART NAME 1 2 3 4 5 6 (PRODUCT LEVEL)	SEE PAGE
	1	1	**376-6629**	1	SHEET AS	
Y	2	1	**441-9230**	1	BOX AS-SERVICE CENTER (HYDRAULIC)	925
	3	1	**490-3700**	1	ROD AS	
		1	**3E-4352**	1	WASHER-HARD (8.8X20.5X2.5-MM THK)	
	4	1	**3B-4611**	1	PIN-COTTER	
	5	1	**4M-7470**	1	GROMMET	
	6	1	**7X-0618**	2	WASHER-HARD (13.5X40X5-MM THK)	
	7	1	**5P-4116**	1	WASHER-HARD (8.8X20.5X2-MM THK)	
M	8	1	**8T-4139**	2	BOLT (M12X1.75X30-MM)	

M - METRIC PART
Y - SEPARATE ILLUSTRATION

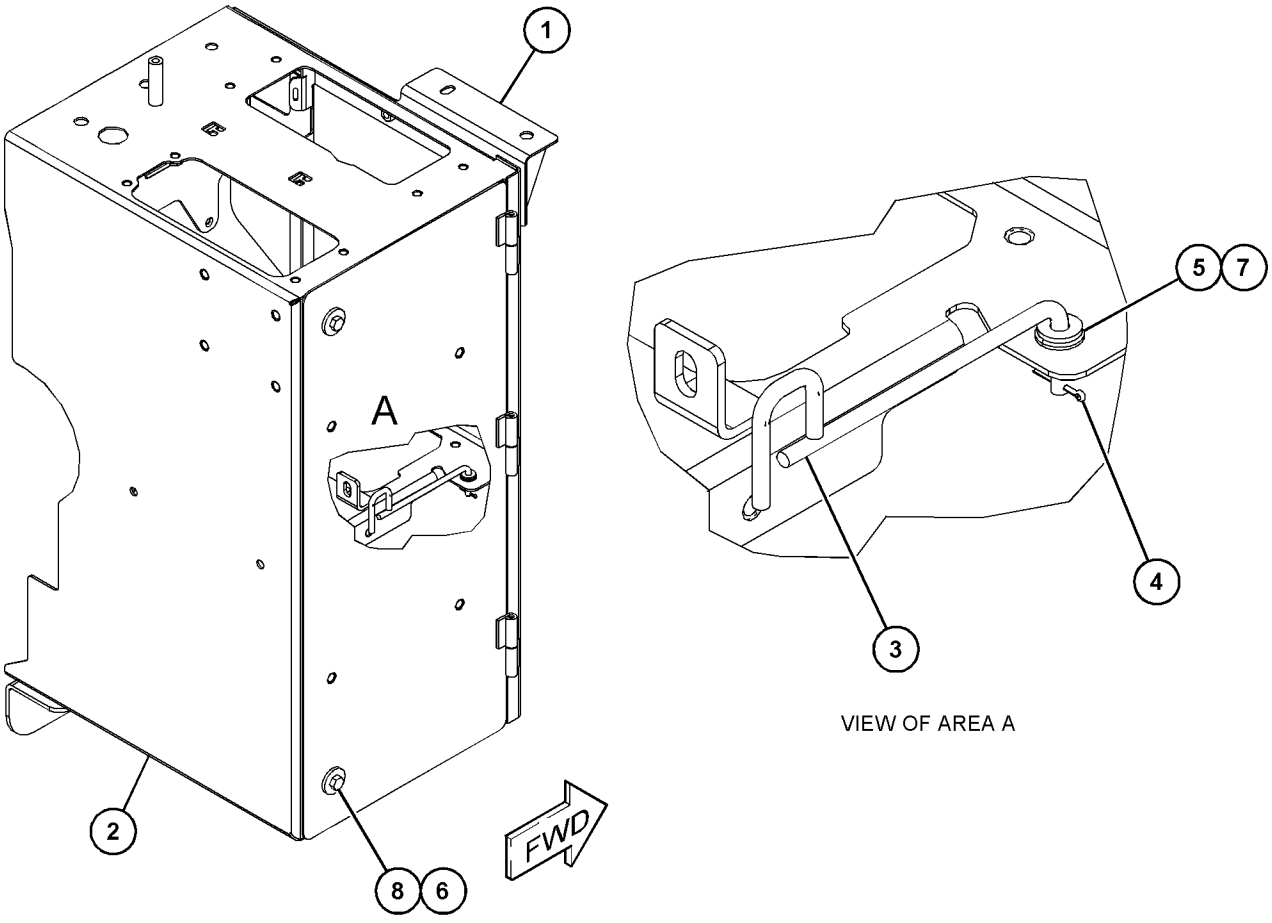

VIEW OF AREA A

GRAPHIC #1 <END> g06107357

443-2250 SUPPORT GP-VALVE & FILTER

S/N: TNS1-UP

PART OF 485-2603 SUPPORT GP-VALVE & FILTER

SMCS-0635, 4263, 5068, 7513 **i06801073**

NOTE	REF NO	GRAPHIC REF	PART NUMBER	QTY	PART NAME 1 2 3 4 5 6 (PRODUCT LEVEL)	SEE PAGE
	1	1	**3B-4611**	1	PIN-COTTER	
	2	1	**430-8857**	1	SHEET AS	
M		1	**8T-3490**	4	NUT-WELD (M10X1.5-THD)	
Y	3	1	**443-2251**	1	ENCLOSURE GP-SERVICE CENTER	444
	4	1	**490-3700**	1	ROD AS	
		1	**3E-4352**	1	WASHER-HARD (8.8X20.5X2.5-MM THK)	
	5	1	**4M-7470**	1	GROMMET	
	6	1	**7X-0618**	2	WASHER-HARD (13.5X40X5-MM THK)	
	7	1	**5P-4116**	1	WASHER-HARD (8.8X20.5X2-MM THK)	
M	8	1	**8T-4139**	2	BOLT (M12X1.75X30-MM)	

M - METRIC PART
Y - SEPARATE ILLUSTRATION

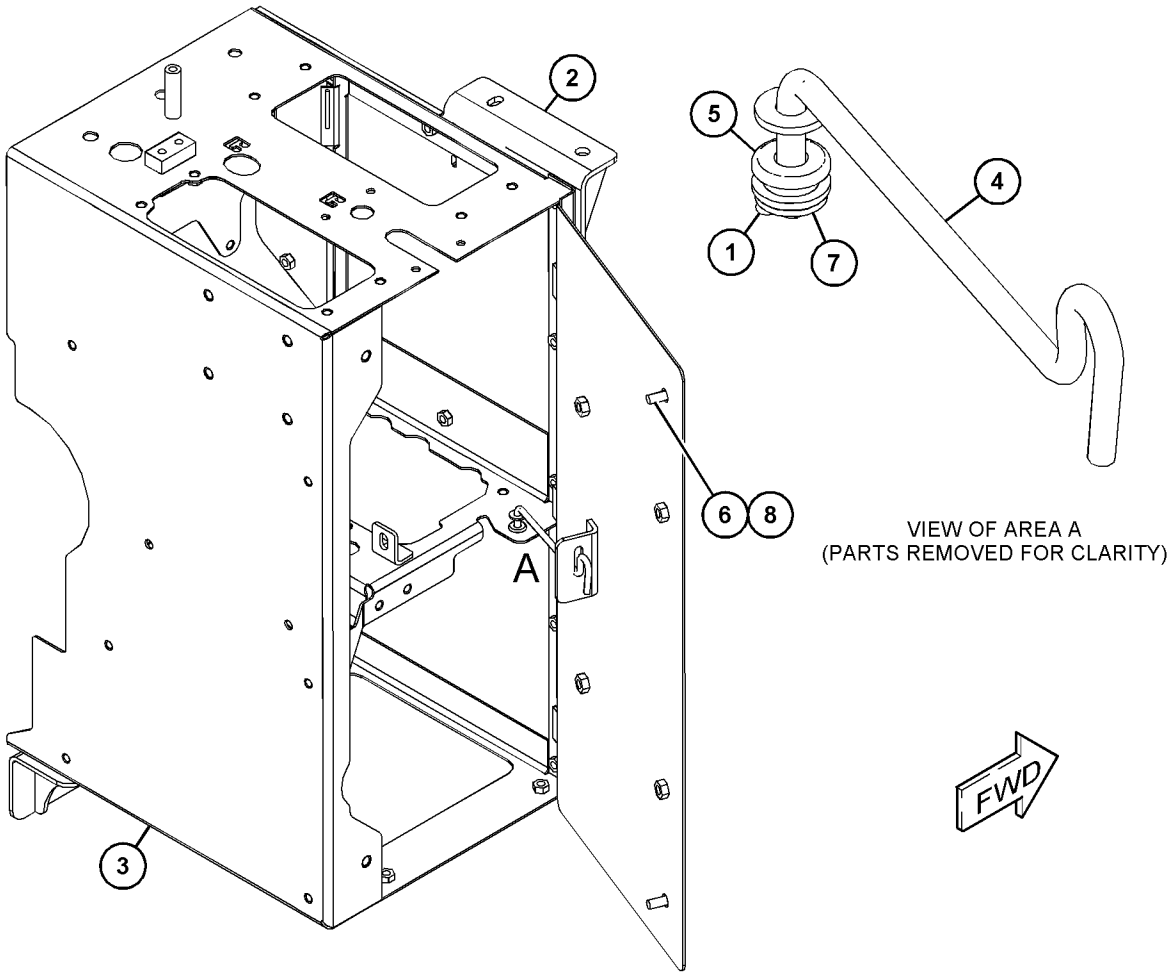

GRAPHIC #1 <END> g03670346

485-1964 SUPPORT GP-VALVE & FILTER

S/N: TNS1-UP

PART OF 367-2611 SUPPORT GP-LADDER

SMCS-0635, 4263, 5068, 7513 **i06734181**

NOTE	REF NO	GRAPHIC REF	PART NUMBER	QTY	PART NAME 1 2 3 4 5 6 (PRODUCT LEVEL)	SEE PAGE
Y	1	1	*441-9228*	1	SUPPORT GP-VALVE & FILTER	550
Y	2	1	*485-1970*	1	LADDER GP (RH)	495
M	3	1	**8T-4139**	4	BOLT (M12X1.75X30-MM)	
	4	1	**8T-4223**	4	WASHER-HARD (13.5X25.5X3-MM THK)	

M - METRIC PART
Y - SEPARATE ILLUSTRATION

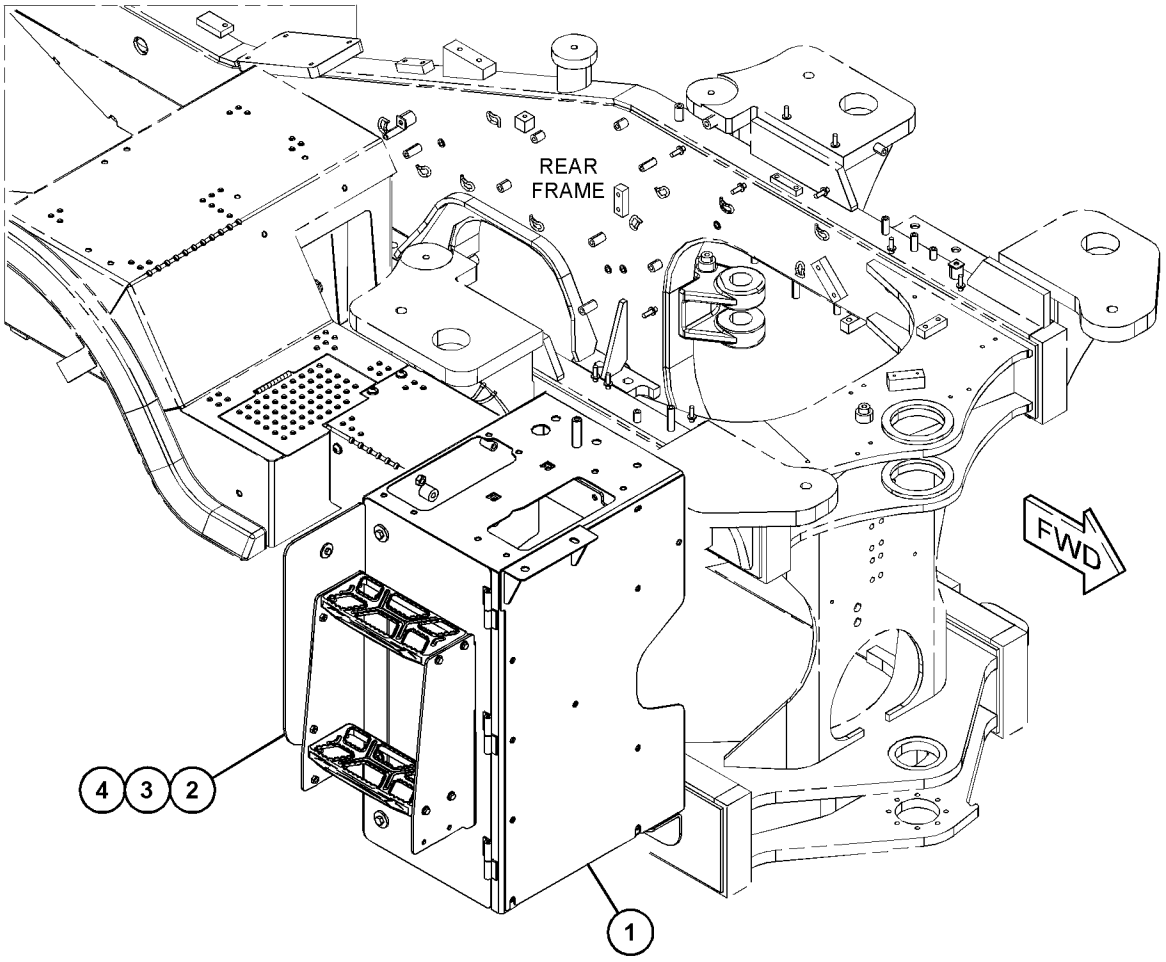

GRAPHIC #1 <END> g06106863

485-2603 SUPPORT GP-VALVE & FILTER

S/N: TNS1-UP

PART OF 485-2626 SUPPORT GP-PLATFORM

SMCS-0635, 4263, 5068, 7513 **i06756822**

NOTE	REF NO	GRAPHIC REF	PART NUMBER	QTY	PART NAME 1 2 3 4 5 6 (PRODUCT LEVEL)	SEE PAGE
	1	1	**390-7372**	1	PLATE	
	2	1	**390-7373**	1	PLATE	
Y	3	1	*443-2250*	1	SUPPORT GP-VALVE & FILTER	551
Y	4	1	*485-2592*	1	LADDER GP	498
	5	1	**7X-7729**	11	WASHER (11X25X3-MM THK)	
M	6	1	**8T-4136**	11	BOLT (M10X1.5X25-MM)	
M	7	1	**8T-4139**	4	BOLT (M12X1.75X30-MM)	
	8	1	**8T-4223**	4	WASHER-HARD (13.5X25.5X3-MM THK)	

M - METRIC PART
Y - SEPARATE ILLUSTRATION

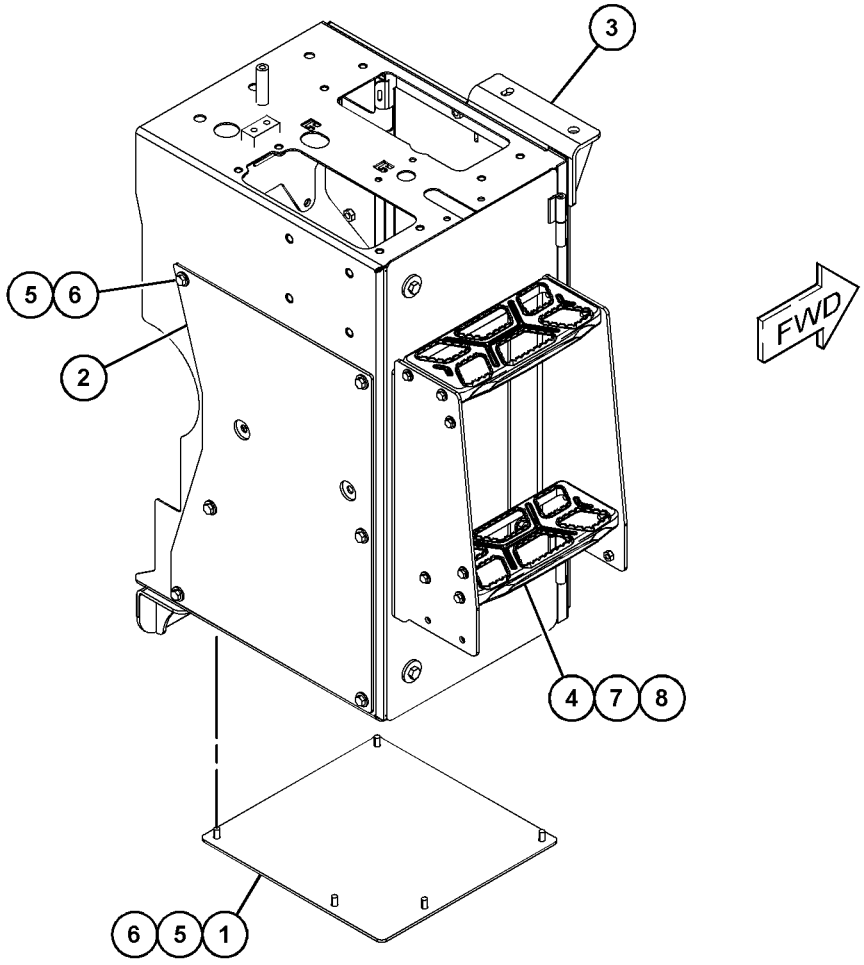

GRAPHIC #1 <END> g06104712

508-7627 SUPPRESSION AR-SOUND

S/N: TNS1-UP

PART OF 492-4033, 492-4034 DISTRIBUTION AR

SMCS-7261 **i06809510**

NOTE	PART NUMBER	QTY	PART NAME 1 2 3 4 5 6 (PRODUCT LEVEL)	SEE PAGE
Y	*494-5024*	1	FILTER & LINES GP-TORQUE CONV	320
Y	*494-5025*	1	LINES GP-HYDRAULIC	618
Y	*463-8112*	1	LINES GP-OIL COOLER	65
Y	*433-8100*	1	PANEL GP-SIDE	523
Y	*465-8122*	1	SUPPORT GP-HOOD	546

Y - SEPARATE ILLUSTRATION

<END>

508-7629 SUPPRESSION AR-SOUND

S/N: TNS1-UP

SMCS-7261 **i06809542**

NOTE	PART NUMBER	QTY	PART NAME 1 2 3 4 5 6 (PRODUCT LEVEL)	SEE PAGE
Y	*376-7773*	1	BOSS GP-REAR FRAME	417
Y	*364-8480*	1	COVER GP-FRAME	439
Y	*511-0269*	1	FILTER & LINES GP-TORQUE CONV	324
Y	*511-0271*	1	LINES GP-HYDRAULIC	625
Y	*463-8113*	1	LINES GP-OIL COOLER	66
Y	*433-8100*	1	PANEL GP-SIDE	523
Y	*465-8122*	1	SUPPORT GP-HOOD	546

Y - SEPARATE ILLUSTRATION

<END>

508-7631 SUPPRESSION AR-SOUND

S/N: TNS1-UP

HIGH FLOW, SOUND SUPPRESSION

SMCS-7261 **i06809489**

NOTE	PART NUMBER	QTY	PART NAME 1 2 3 4 5 6 (PRODUCT LEVEL)	SEE PAGE
Y	*376-7773*	1	BOSS GP-REAR FRAME	417
Y	*364-8480*	1	COVER GP-FRAME	439
Y	*494-5024*	1	FILTER & LINES GP-TORQUE CONV	320
Y	*494-5025*	1	LINES GP-HYDRAULIC	618
Y	*463-8112*	1	LINES GP-OIL COOLER	65
Y	*433-8100*	1	PANEL GP-SIDE	523
Y	*465-8122*	1	SUPPORT GP-HOOD	546

Y - SEPARATE ILLUSTRATION

<END>

379-9411 TILT GP-HOOD

S/N: TNS1-UP

PART OF 336-0000 HOOD & GUARD GP

SMCS-1427, 7251 **i06740788**

NOTE	REF NO	GRAPHIC REF	PART NUMBER	QTY	PART NAME 1 2 3 4 5 6 (PRODUCT LEVEL)	SEE PAGE
	1	1	**6S-6646**	2	PIN-COTTER	
J	2	1	**379-9413**	1	ACTUATOR AS	
	3	1	**379-9414**	2	BRACKET AS	
					(EACH INCLUDES)	
	3A	1	**115-4968**	2	BUSHING	
	4	1	**454-0228**	2	PIN AS	
	5	1	**479-3050**	1	BRACKET (RH)	
	6	1	**7V-9791**	2	PIN	
	7	1	**198-4780**	6	WASHER-HARD (17.5X32X8-MM THK)	
	8	1	**7X-0613**	2	WASHER-HARD (8.8X25.5X5-MM THK)	
M	9	1	**8T-4140**	4	BOLT (M16X2X60-MM)	
M	10	1	**8T-4200**	2	BOLT (M8X1.25X16-MM)	
M	11	1	**118-7313**	2	BOLT (M16X2X70-MM)	
					AVAILABLE REPAIR KIT(S):	
J			**102-8802**	1	KIT-RECEPTACLE (2-PIN)	
					(INCLUDES RECEPTACLE AS & WEDGE)	

J - KITS MARKED J SERVICE PARTS MARKED J
M - METRIC PART

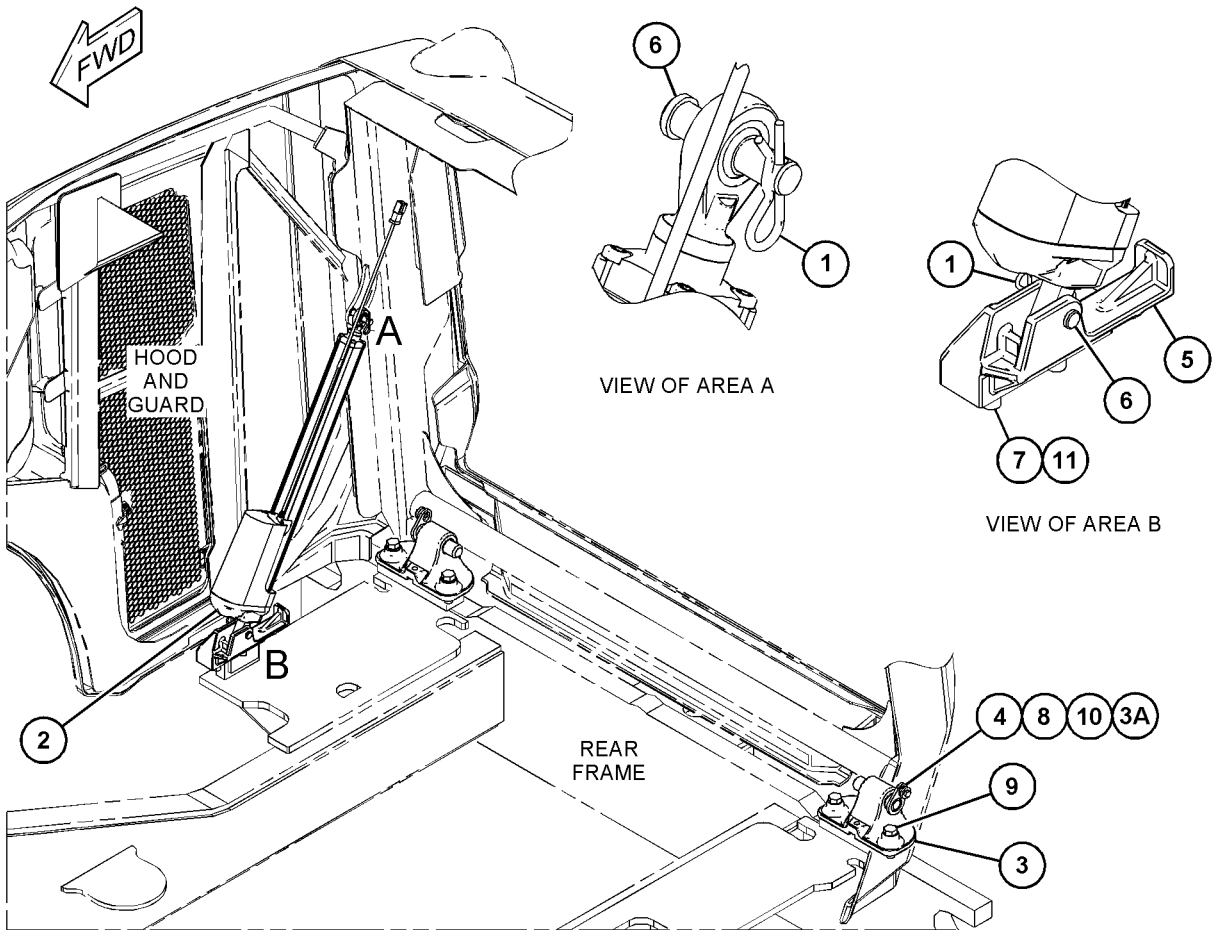

GRAPHIC #1 <END> g06100923

488-9581 VALVE & LINES GP-LUBRICATION

S/N: TNS1-UP

PART OF 500-3681 LINES GP-REAR LUBRICATION

SMCS-7540 **i06811170**

NOTE	REF NO	GRAPHIC REF	PART NUMBER	QTY	PART NAME 1 2 3 4 5 6 (PRODUCT LEVEL)	SEE PAGE
	1	1	**7K-1181**	1	STRAP-CABLE (5.72-MM DIA)	
	2	1	**117-7631**	36	FITTING-COUPLING	
	3	1	**492-9946**	1	VALVE GP-LUBE DISTRIBUTION (MAIN)	
		1	**492-9963**	1	FITTING	
		1	**493-0008**	2	VALVE GP-CHECK	
		1	**493-0017**	1	SENSOR-PROXIMITY (LUBRICANT)	
	4	1	**492-9965**	1	VALVE GP-LUBE DISTRIBUTION	
		1	**492-9963**	1	FITTING	
		1	**493-0008**	15	VALVE GP-CHECK	
	5	1	**492-9996**	29	FITTING-ADAPTER	
	6	1	**493-0001**	4	FITTING-ADAPTER	
	7	1	**493-0010**	1	FITTING	
	8	1	**499-6958**	2	FITTING-ADAPTER	
	9	1	**500-3682**	1	BRACKET AS	
M	10	1	**344-5673**	2	NUT (M6X1-THD)	
M	11	1	**8T-6974**	2	BOLT (M6X1X80-MM)	
	12	1	**9X-8256**	4	WASHER (6.6X12X2-MM THK)	
D	13	1	**169-8323**		HOSE (0.4-M)	
D	13A	1	**169-8323**		HOSE (1.5-M)	
D	13B	1	**169-8323**		HOSE (0.9-M)	
D	13C	1	**169-8323**		HOSE (0.5-M EACH)	
D	13D	1	**169-8323**		HOSE (1.1-M EACH)	
D	13E	1	**169-8323**		HOSE (1.6-M EACH)	
D	13F	1	**169-8323**		HOSE (1-M EACH)	
D	13G	1	**169-8323**		HOSE (1.4-M)	
D	13H	1	**169-8323**		HOSE (1.7-M)	
D	13J	1	**169-8323**		HOSE (1.8-M)	
D	13K	1	**169-8323**		HOSE (1.9-M)	
D	13L	1	**169-8323**		HOSE (0.6-M)	
B	14	1	**1P-0810**		TAPE-ELECTRICAL	

B - USE AS REQUIRED
D - ORDER BY THE METER
M - METRIC PART

488-9581 **VALVE & LINES GP-LUBRICATION (**contd.**)** **i06811170**

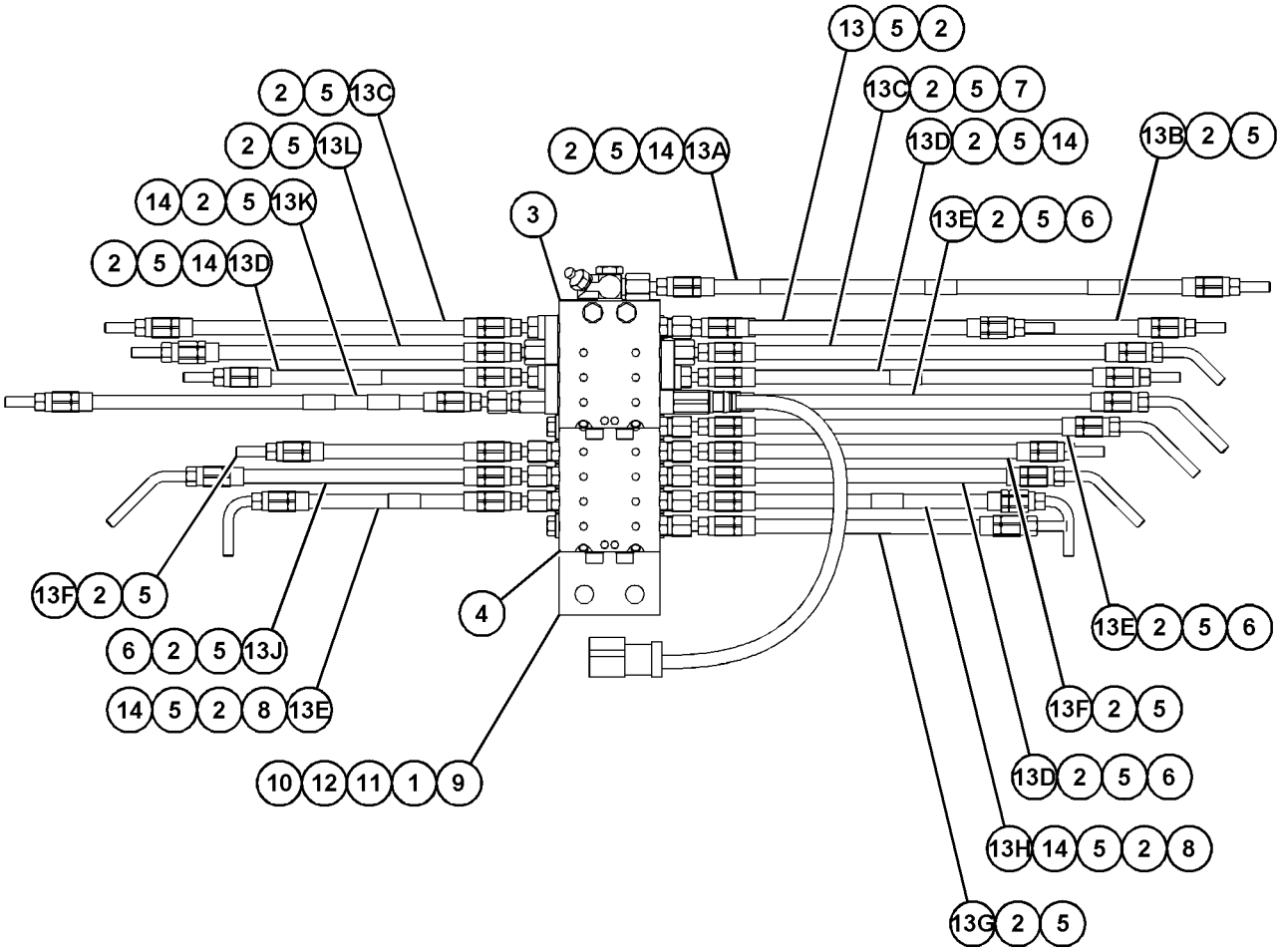

GRAPHIC #1 <END> g06129557

485-2201 WALKWAY GP–LH

S/N: TNS1-UP

PART OF 504-2868, 504-2875 LADDER & WALKWAY GP

SMCS-7255 **i06753495**

NOTE	REF NO	GRAPHIC REF	PART NUMBER	QTY	PART NAME 1 2 3 4 5 6 (PRODUCT LEVEL)	SEE PAGE
	1	1	**398-6790**	1	PLATE	
Y	2	1	*485-2205*	1	WALKWAY GP	559

Y - SEPARATE ILLUSTRATION

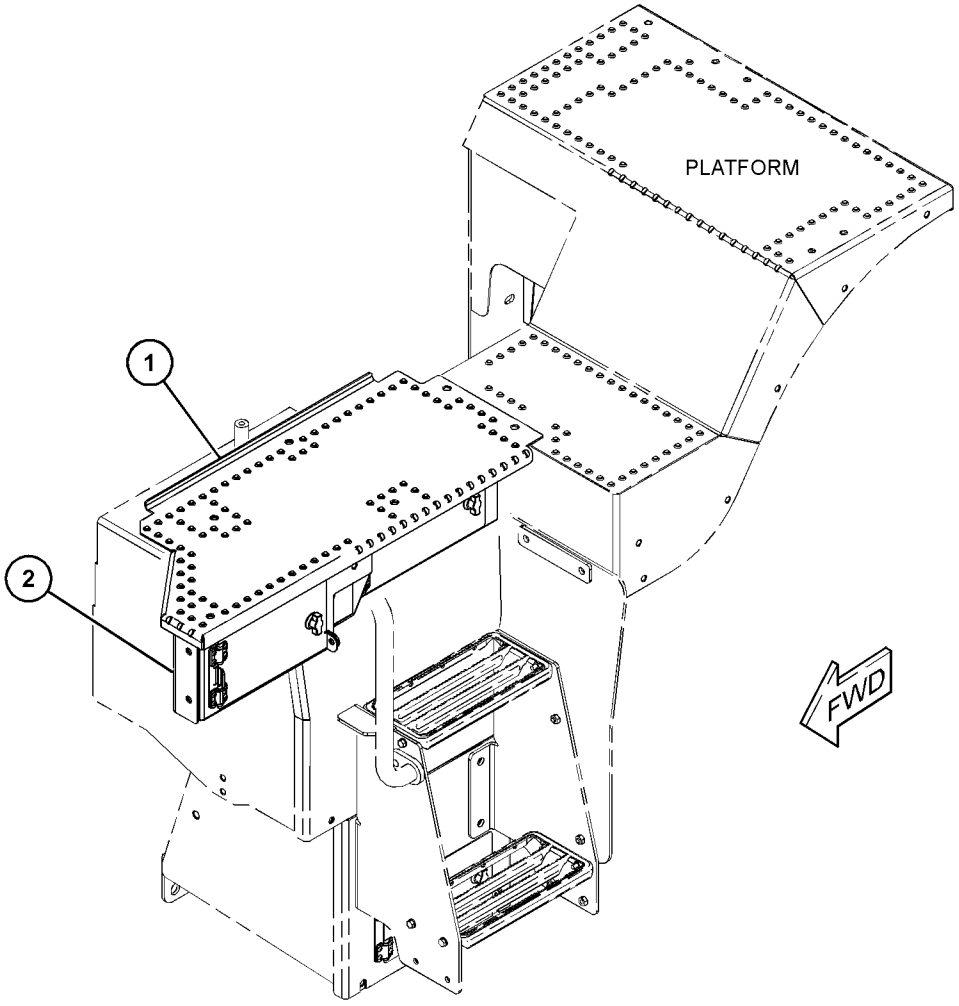

GRAPHIC #1 <END> g06101576

485-2205 WALKWAY GP

S/N: TNS1-UP

PART OF 485-2201 WALKWAY GP

SMCS-7255 **i06753516**

NOTE	REF NO	GRAPHIC REF	PART NUMBER	QTY	PART NAME 1 2 3 4 5 6 (PRODUCT LEVEL)	SEE PAGE
	1	1	**125-8176**	2	CAM-LATCH	
	2	1	**174-6381**	2	LATCH AS	
	3	1	**340-2580**	2	HINGE AS	
	4	1	**340-2581**	2	HINGE AS	
J	5	1	**308-9131**		SEAL (329-MM)	
J	5A	1	**308-9131**		SEAL (305-MM)	
D	6	1	**8T-5372**		SEAL (0.8-M)	
D	6A	1	**8T-5372**		SEAL (0.7-M)	
	7	1	**437-7789**	1	SHEET	
	8	1	**437-7858**	1	SHEET AS	
	9	1	**437-7860**	1	SHEET AS	
					(EACH SHEET AS INCLUDES)	
M		1	**9X-2032**	4	NUT-WELD (M4X0.7-THD)	
	10	1	**438-0890**	1	SHEET	
M	11	1	**233-9161**	8	SCREW-TRUSS HEAD (M4X0.7X18-MM)	
	12	1	**485-2208**	1	PLATFORM AS	
M	13	1	**174-8131**	8	SCREW-TRUSS HEAD (M4X0.7X12-MM)	
	14	1	**399-6975**	1	SHEET AS	
M		1	**8T-3490**	1	NUT-WELD (M10X1.5-THD)	
	15	1	**426-5351**	1	SHEET AS	
		1	**7T-1099**	2	LINK	
		1	**121-1029**	2	CLIP	
	16	1	**483-2811**	1	SHEET AS	
M		1	**8T-3490**	1	NUT-WELD (M10X1.5-THD)	

D - ORDER BY THE METER
J - ORDER BY THE MILLIMETER
M - METRIC PART

485-2205 **WALKWAY GP (**contd.**)** **i06753516**

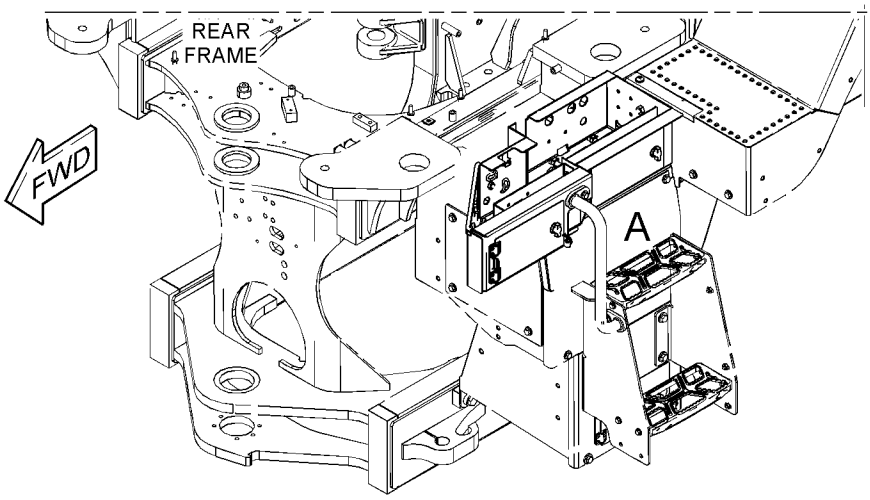

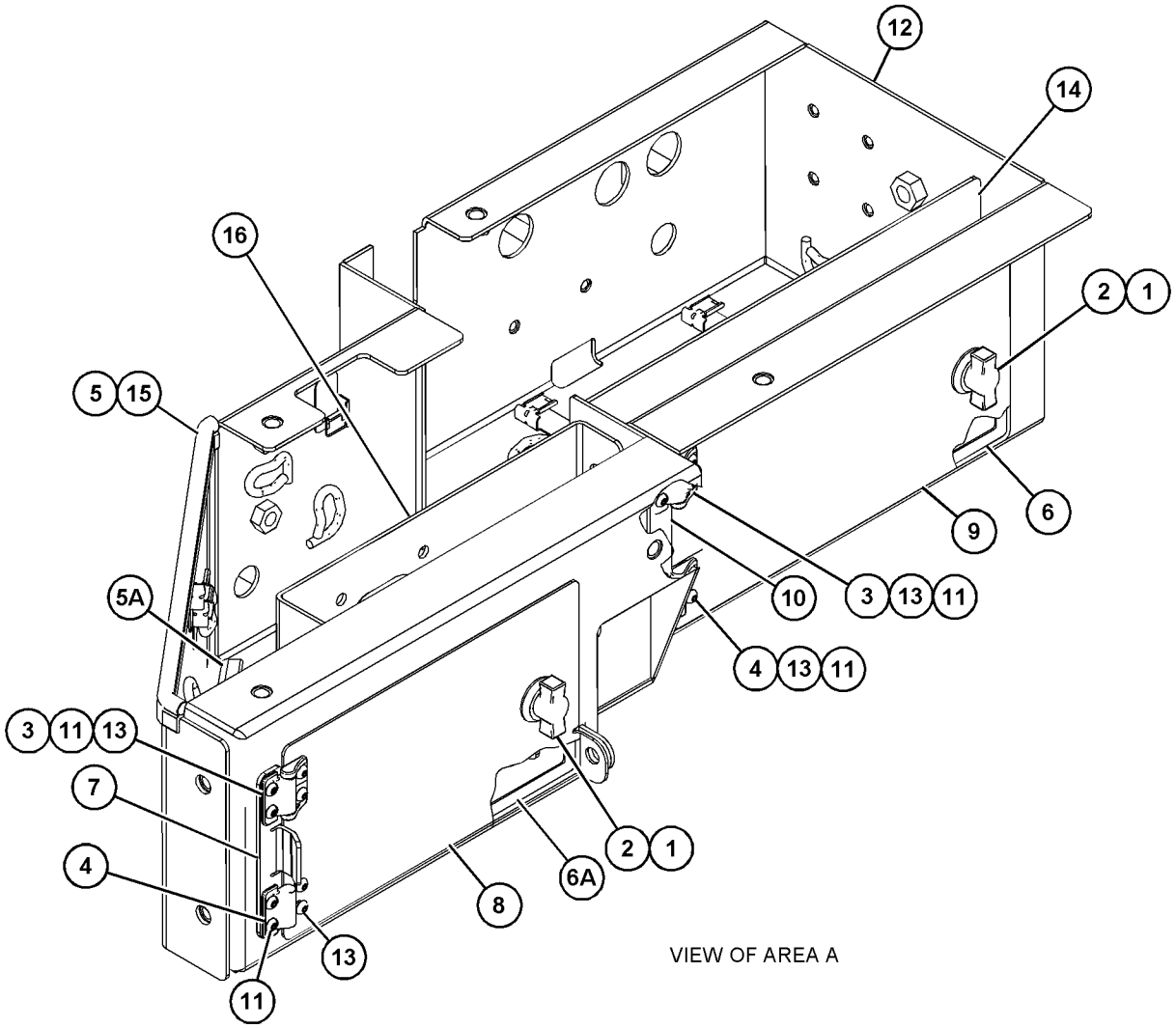

VIEW OF AREA A

GRAPHIC #1 <END> g06102280

504-1656 WALKWAY GP–RH

S/N: TNS1-UP

PART OF 504-1657 WALKWAY GP

SMCS-7255 **i06734442**

NOTE	REF NO	GRAPHIC REF	PART NUMBER	QTY	PART NAME 1 2 3 4 5 6 (PRODUCT LEVEL)	SEE PAGE
	1	1	**374-1872**	1	PLATFORM AS (RH)	
	2	1	**504-1655**	1	PLATFORM AS (RH)	
	3	1	**7X-7729**	4	WASHER (11X25X3-MM THK)	
M	4	1	**9X-2041**	4	SCREW-TRUSS HEAD (M10X1.5X20-MM)	

M - METRIC PART

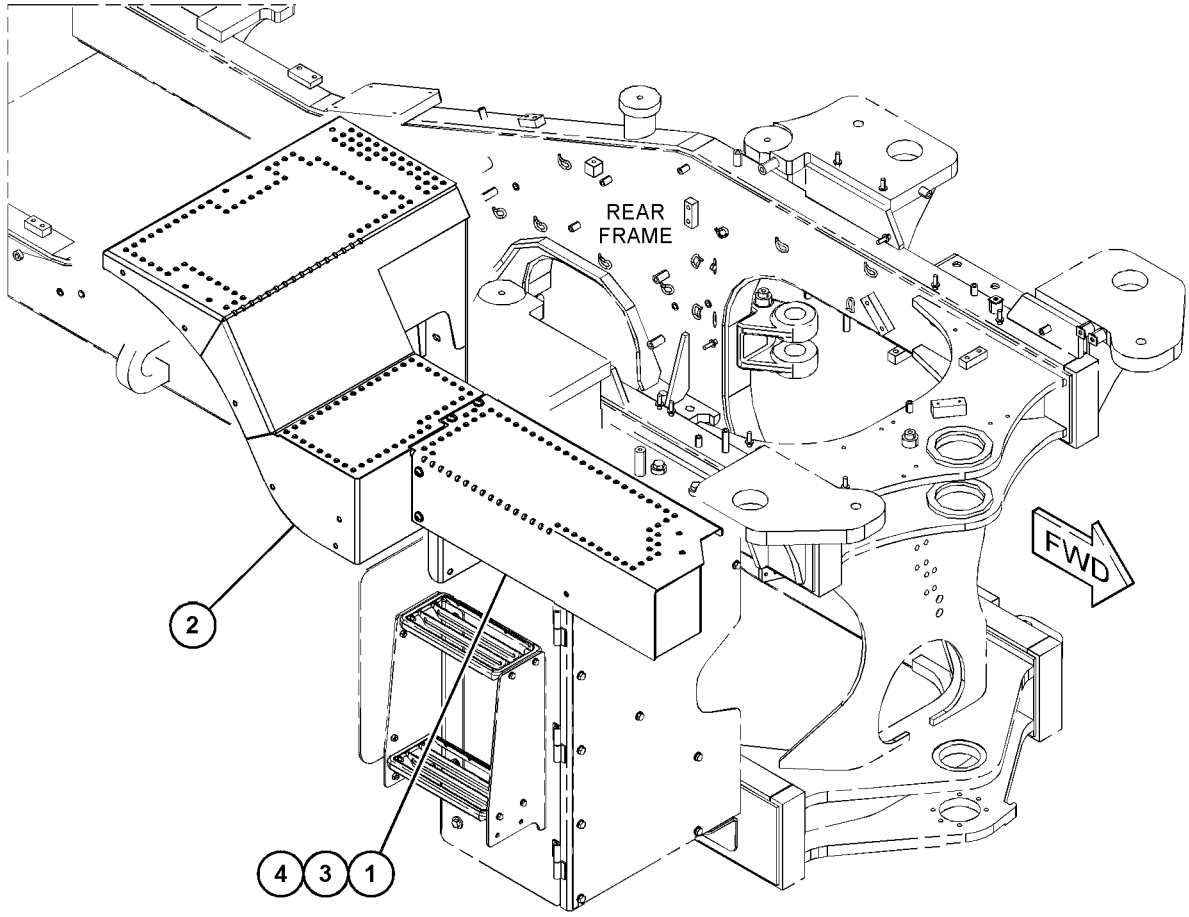

GRAPHIC #1 <END> g06106868

504-1657 WALKWAY GP–RH

S/N: TNS1-UP

PART OF 492-4020 SPECIAL AR-WHEEL LOADER

SMCS-7255 **i06734436**

NOTE	REF NO	GRAPHIC REF	PART NUMBER	QTY	PART NAME 1 2 3 4 5 6 (PRODUCT LEVEL)	SEE PAGE
Y	1	1	*504-1656*	1	WALKWAY GP (RH)	561
	2	1	**5P-1076**	11	WASHER-HARD (13.5X30X4-MM THK)	
M	3	1	**8T-4139**	6	BOLT (M12X1.75X30-MM)	
M	4	1	**8T-4956**	5	BOLT (M12X1.75X35-MM)	

M - METRIC PART
Y - SEPARATE ILLUSTRATION

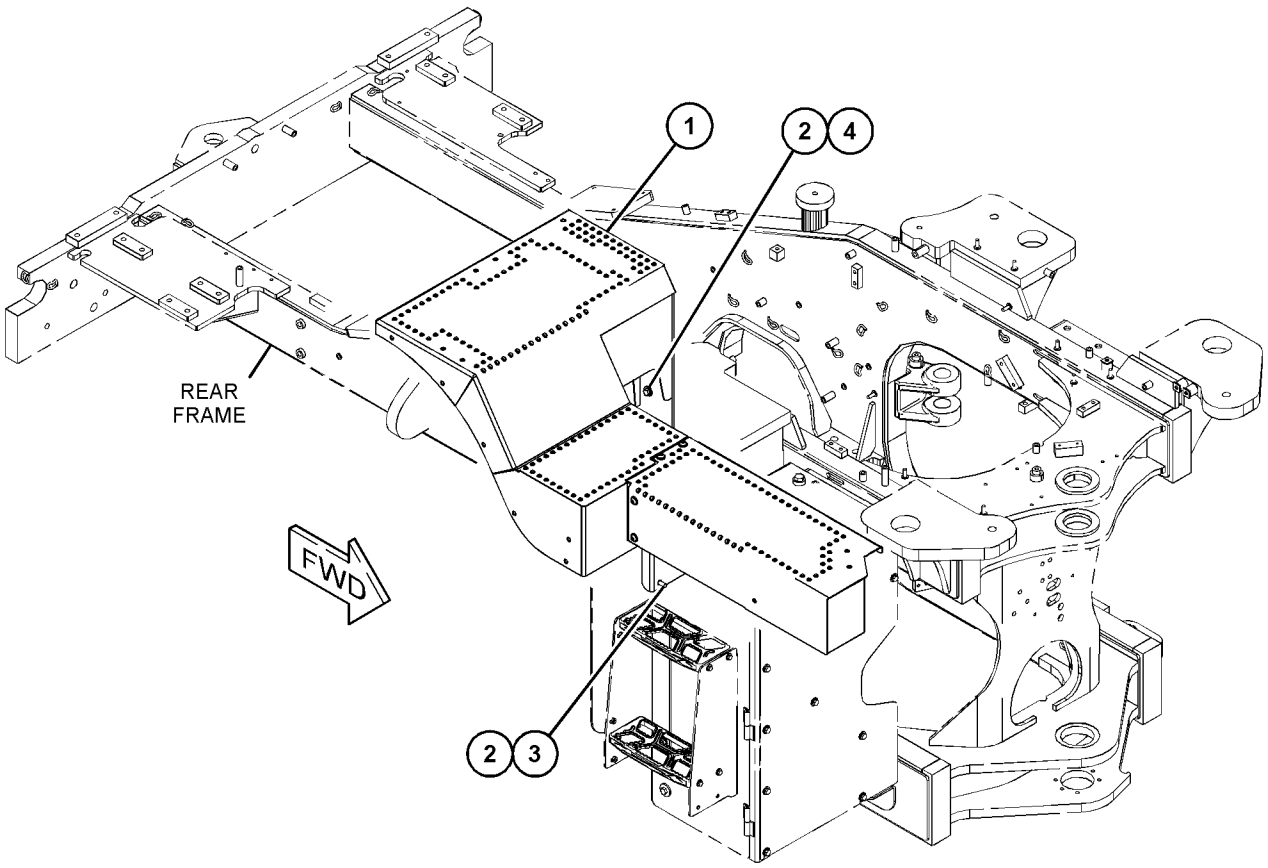

GRAPHIC #1 <END> g06100936

504-2015 WALKWAY GP

S/N: TNS1-UP

PART OF 507-9161 SPECIAL AR-WHEEL LOADER

SMCS-7255 **i06756826**

NOTE	REF NO	GRAPHIC REF	PART NUMBER	QTY	PART NAME 1 2 3 4 5 6 (PRODUCT LEVEL)	SEE PAGE
Y	1	1	*512-3288*	1	WALKWAY GP (RH)	564
	2	1	**5P-1076**	11	WASHER-HARD (13.5X30X4-MM THK)	
M	3	1	**8T-4139**	6	BOLT (M12X1.75X30-MM)	
M	4	1	**8T-4956**	5	BOLT (M12X1.75X35-MM)	

M - METRIC PART
Y - SEPARATE ILLUSTRATION

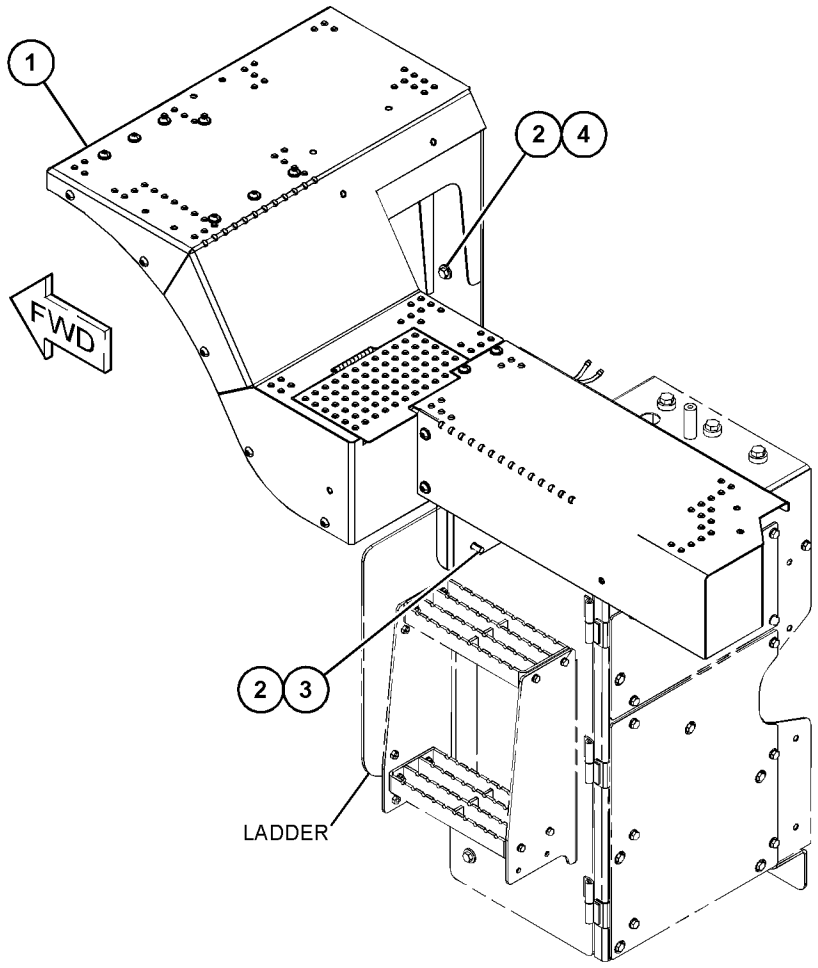

GRAPHIC #1 <END> g03680087

512-3288 WALKWAY GP–RH

S/N: TNS1-UP

PART OF 504-2015 WALKWAY GP

SMCS-7255 **i06756831**

NOTE	REF NO	GRAPHIC REF	PART NUMBER	QTY	PART NAME 1 2 3 4 5 6 (PRODUCT LEVEL)	SEE PAGE
	1	1	**374-1872**	1	PLATFORM AS (RH)	
	2	1	**428-7563**	1	PLATE	
	3	1	**512-3287**	1	PLATFORM AS (RH)	
	4	1	**7X-7729**	18	WASHER (11X25X3-MM THK)	
M	5	1	**8T-4133**	7	NUT (M10X1.5-THD)	
M	6	1	**9X-2039**	7	SCREW-TRUSS HEAD (M10X1.5X35-MM)	
M	7	1	**9X-2040**	2	SCREW-TRUSS HEAD (M10X1.5X25-MM)	
M	8	1	**9X-2041**	2	SCREW-TRUSS HEAD (M10X1.5X20-MM)	

M - METRIC PART

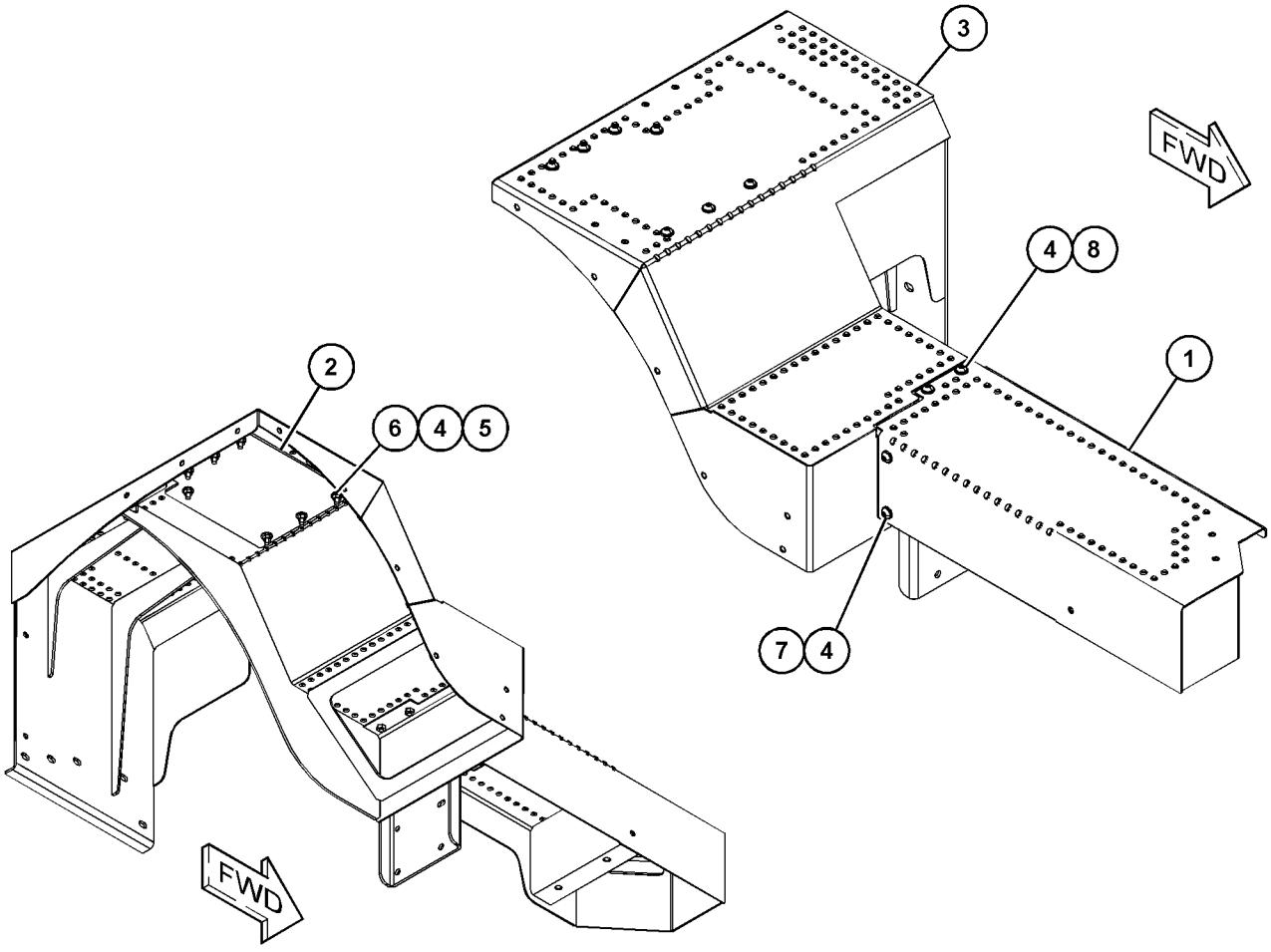

(VIEWED FROM BOTTOM)

GRAPHIC #1 <END> g06106535

375-2801 ACCUMULATOR GP-BRAKE

S/N: TNS1-UP

PART OF 462-6970 ACCUMULATOR GP-HYDRAULIC

SMCS-4263 **i06648762**

NOTE	REF NO	GRAPHIC REF	PART NUMBER	QTY	PART NAME 1 2 3 4 5 6 (PRODUCT LEVEL)	SEE PAGE
	1	1	**224-5132**	1	CAP (GAS VALVE)	
	2	1	**224-5152**	1	VALVE-GAS	
	3	1	**241-0037**	1	FILM-WARNING (HIGH PRESSURE, READ OMM)	
	4	1	**1J-9671**	1	SEAL-O-RING	
	5	1	**3J-7354**	1	SEAL-O-RING	

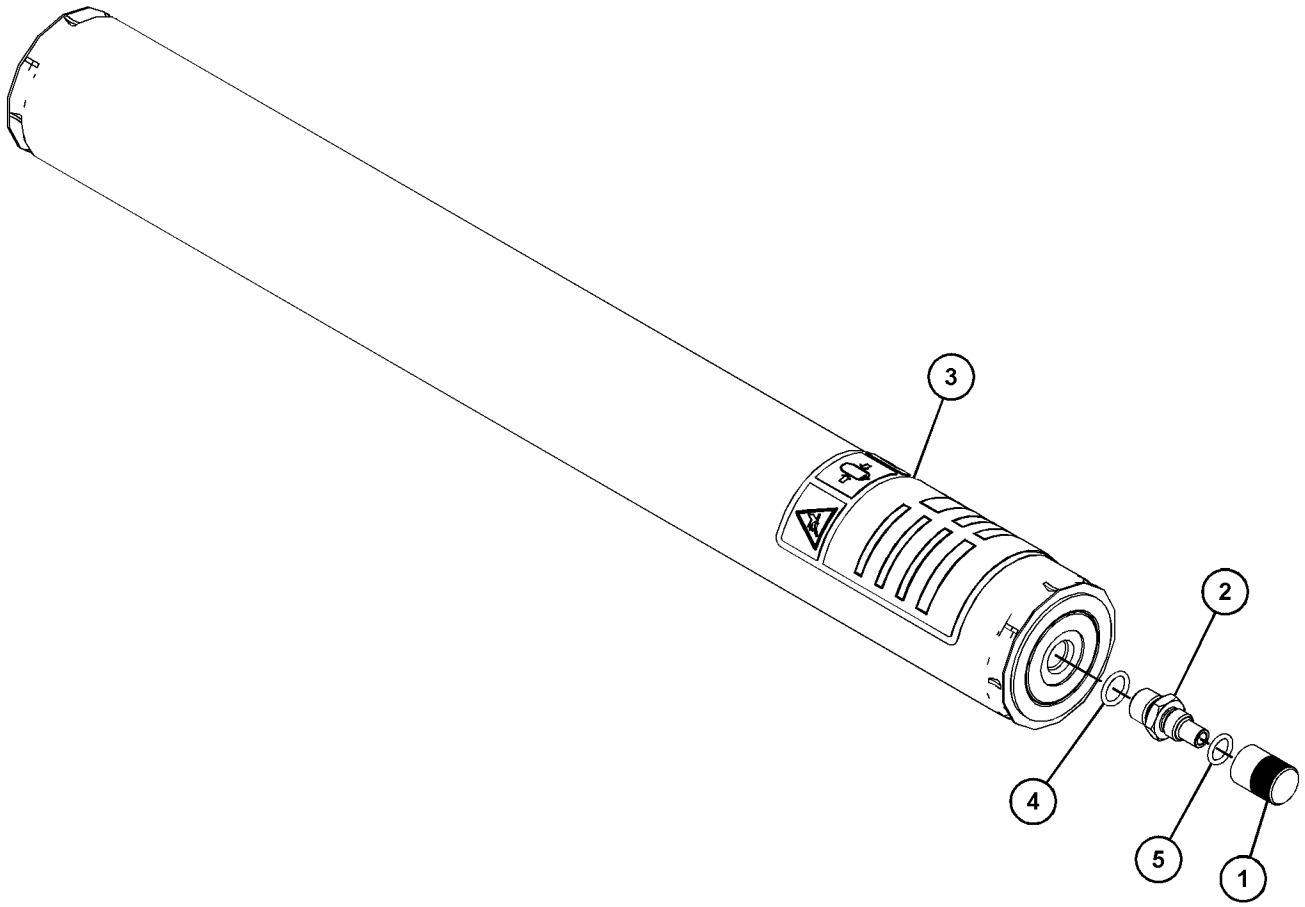

GRAPHIC #1 <END> g03678716

371-5086 BRAKE GP-PARKING—FRONT AXLE

S/N: TNS1-UP

PART OF 371-7337, 371-7344, 371-7345, 371-7346, 371-7347, 371-7349, 371-7350, 466-8752 AXLE AR-FIXED

SMCS-4267 **i06774406**

NOTE	REF NO	GRAPHIC REF	PART NUMBER	QTY	PART NAME 1 2 3 4 5 6 (PRODUCT LEVEL)	SEE PAGE
	1	1	**459-0561**	1	DISC	
Y	2	1	**436-5961**	1	BRAKE GP-PARKING	567
	3	1	**447-3742**	1	BRACKET	
M	4	1	**488-3022**	4	BOLT-HEAD (M16X2X55-MM)	
	5	1	**8T-4223**	8	WASHER-HARD (13.5X25.5X3-MM THK)	
M	6	1	**8T-4183**	8	BOLT (M12X1.75X40-MM)	
	7	1	**9X-8257**	4	WASHER (17.5X30X3.5-MM THK)	

M - METRIC PART
Y - SEPARATE ILLUSTRATION

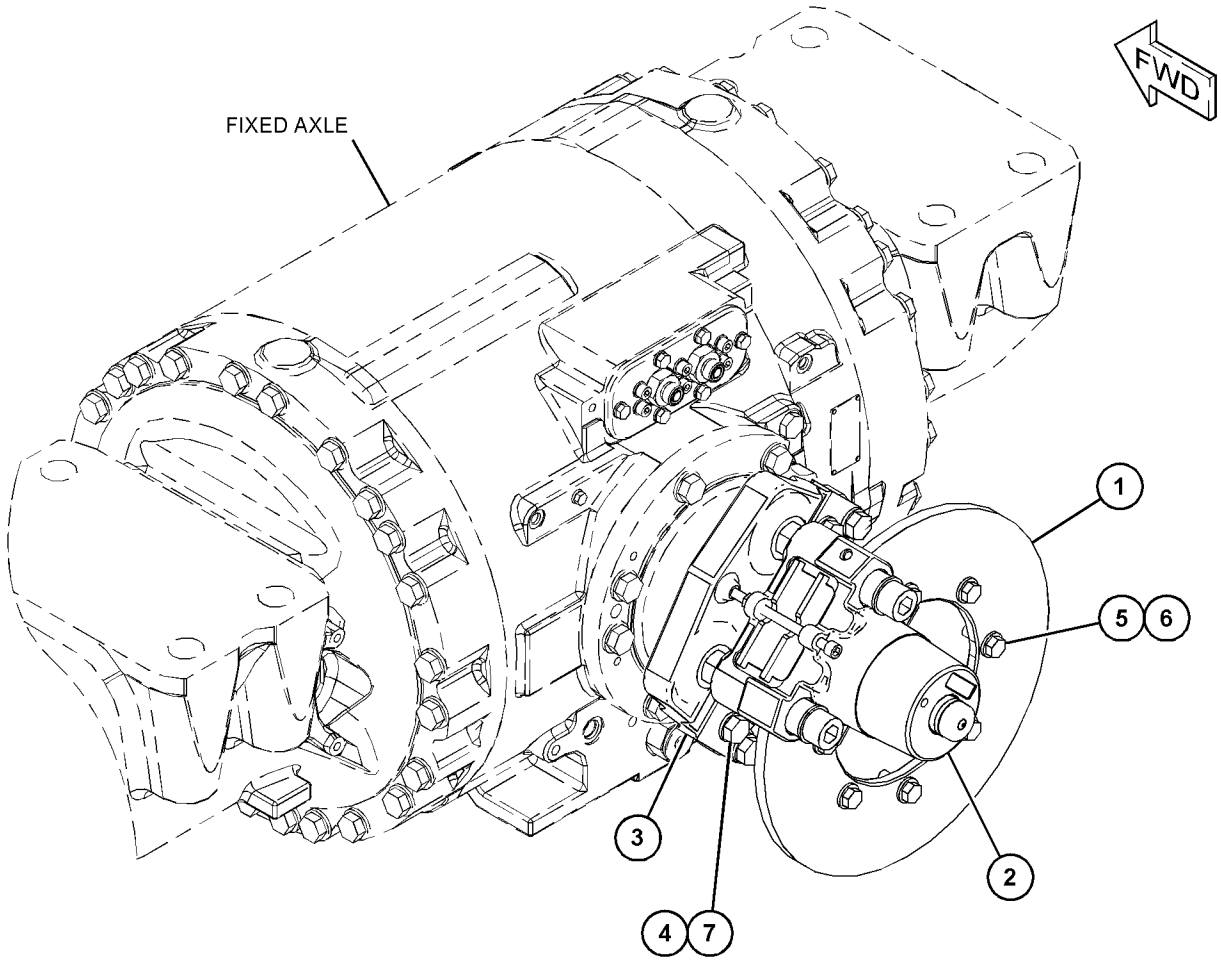

GRAPHIC #1 <END> g03680393

436-5961 BRAKE GP-PARKING

S/N: TNS1-UP

PART OF 371-5086 BRAKE GP-PARKING

SMCS-4267 **i06574254**

NOTE	REF NO	GRAPHIC REF	PART NUMBER	QTY	PART NAME 1 2 3 4 5 6 (PRODUCT LEVEL)	SEE PAGE
	1	1	**369-6073**	1	KIT-PISTON (PARKING BRAKE)	
					(INCLUDES PART(S) MARKED B IN GRAPHIC)	
	2	1	**369-6074**	1	KIT-SPRING (PARKING BRAKE)	
					(INCLUDES PART(S) MARKED C IN GRAPHIC)	
	3	1	**8L-3837**	1	BOLT-SOCKET HEAD	
	4	1	**6V-8801**	1	NUT (3/8-16-THD)	
	5	1	**376-7694**	1	KIT-LINING (PARKING BRAKE)	
					(INCLUDES PART(S) MARKED D IN GRAPHIC)	
	6	1	**376-7695**	1	KIT-MOUNTING (PARKING BRAKE)	
					(INCLUDES PART(S) MARKED E IN GRAPHIC)	
	7	1	**376-7696**	1	KIT-SEAL (PARKING BRAKE)	
					(INCLUDES PART(S) MARKED F IN GRAPHIC)	

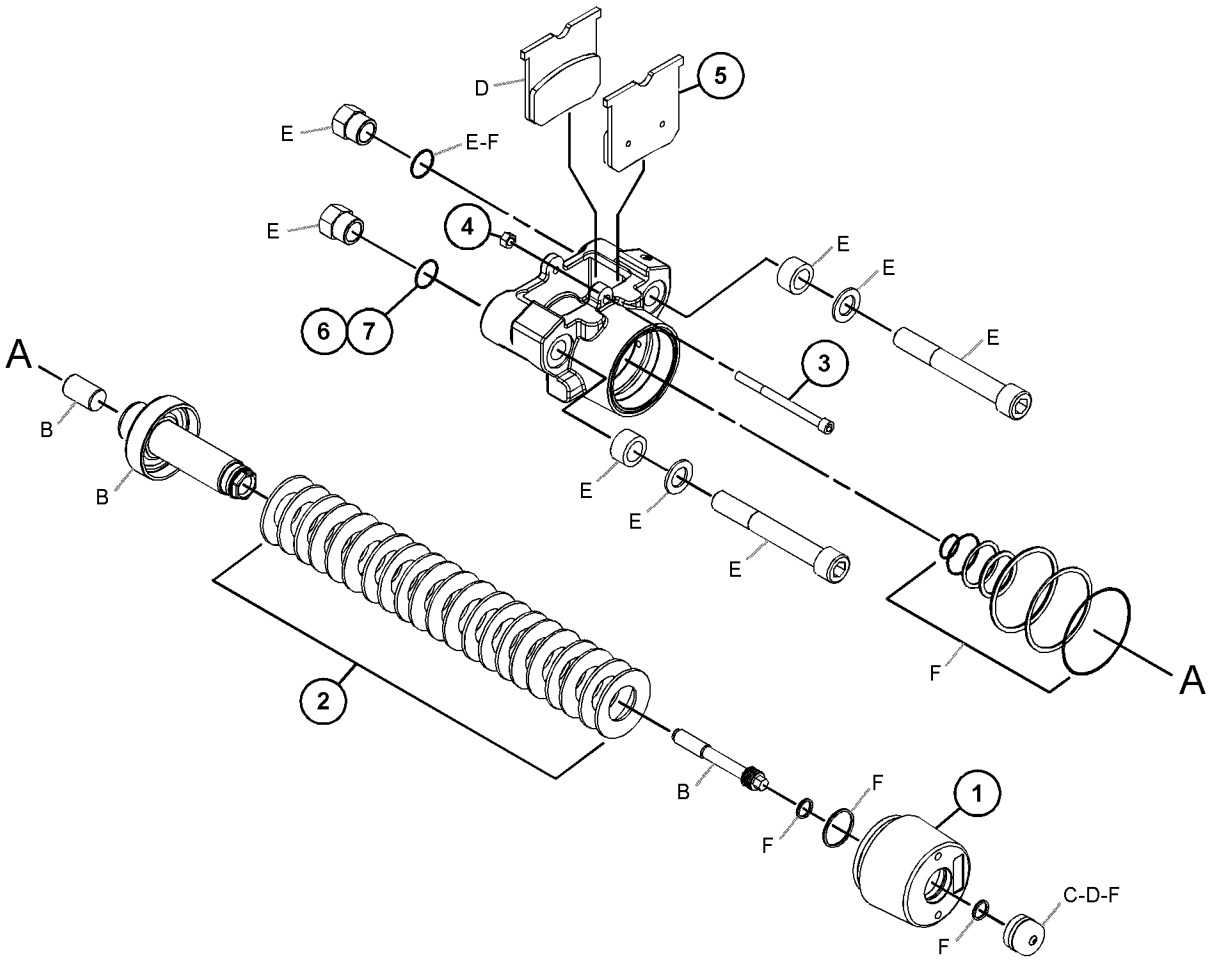

GRAPHIC #1 <END> g03506107

499-3486 CONTROL GP-FOOT BRAKE

S/N: TNS1-UP

PART OF 371-2223 CONTROL GP-SERVICE BRAKE

SMCS-4269 **i06569972**

NOTE	REF NO	GRAPHIC REF	PART NUMBER	QTY	PART NAME 1 2 3 4 5 6 (PRODUCT LEVEL)	SEE PAGE
	1	1	**105-6117**	1	SWITCH AS-LIMIT (NORMALLY CLOSED) (BRAKE PEDAL)	
	2	1	**146-1892**	1	HARNESS AS-BRAKE (STOP LIGHT)	
		1	*4E-8951*	1	GROMMET AS	
		1	**8C-8514**	1	SCREW-MACHINE (8-32X0.375-IN)	
		1	**8T-8730**	2	SOCKET-CONNECTOR (16-GA TO 18-GA)	
		1	**5P-2957**	2	TERMINAL-BLADE (14-GA TO 16-GA)	
					—OR—	
		1	**5P-5602**	2	TERMINAL-BLADE (18-GA TO 22-GA)	
		1	**155-2270**	1	KIT-CONNECTING PLUG (2-PIN)	
					(INCLUDES PLUG AS & WEDGE)	
	3	1	**200-2217**	1	COVER	
	4	1	**200-2218**	1	BRACKET AS-ADJUSTABLE SWITCH	
	5	1	**200-2219**	6	BOLT (M5X0.8X25-MM)	
	6	1	**200-2220**	1	SEAL	
Y	7	1	**266-1466**	1	SENSOR GP-POSITION (ROTARY)	203
M	8	1	**125-3295**	2	SCREW-PAN HEAD (M2.5X0.45X12-MM)	
M	9	1	**8T-2899**	2	SCREW-MACHINE (M2.5X0.45X6-MM)	
M	10	1	**6V-2313**	2	BOLT (M5X0.8X30-MM)	
	11	1	**211-9336**	2	WASHER (5.4X9.8X0.7-MM THK)	

M - METRIC PART
Y - SEPARATE ILLUSTRATION

499-3486 **CONTROL GP-FOOT BRAKE (**contd.**)** **i06569972**

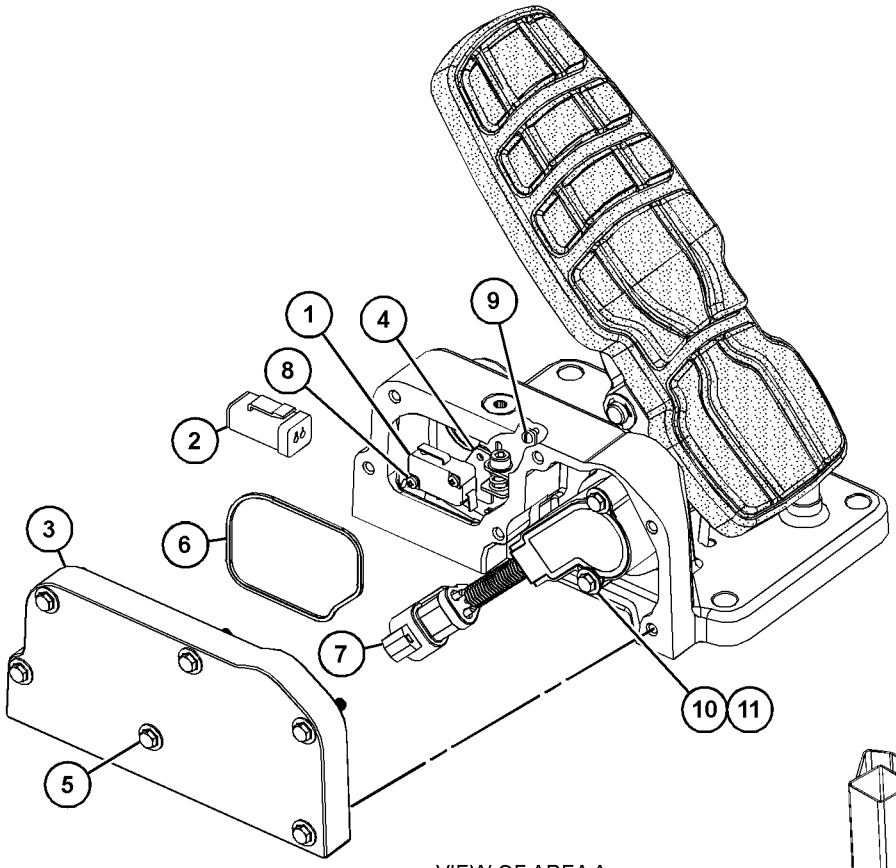

VIEW OF AREA A

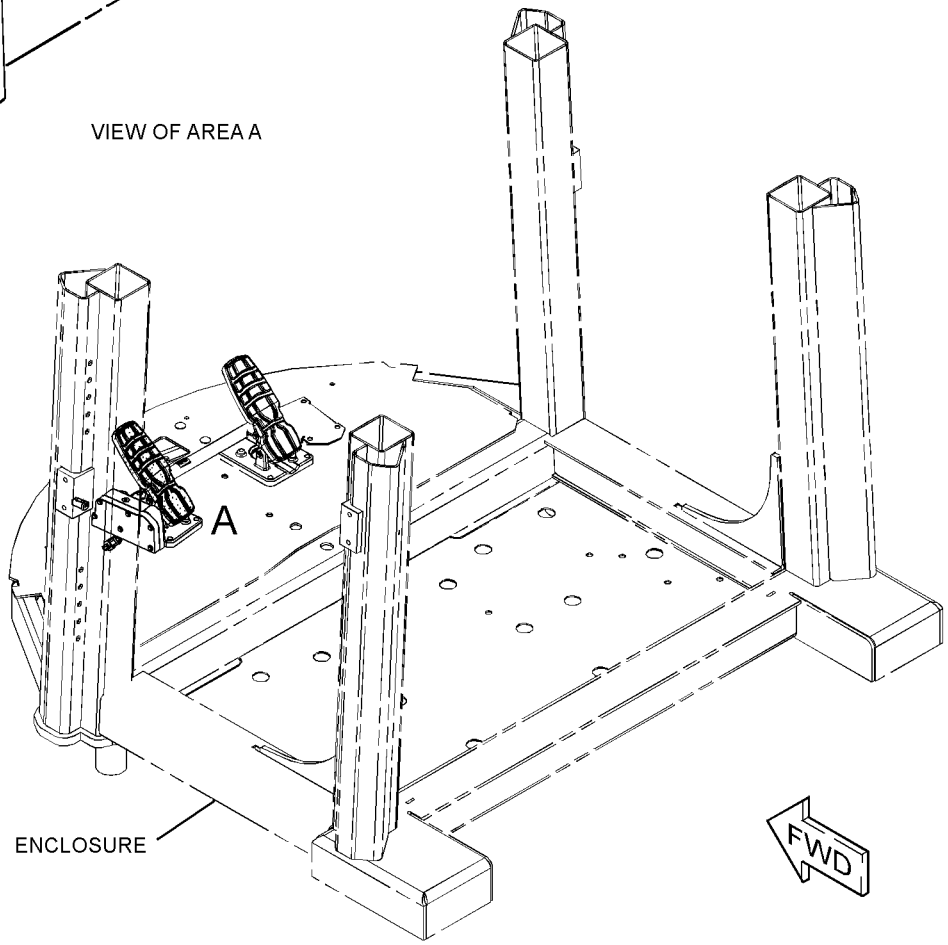

GRAPHIC #1 <END> g06025724

371-2223 CONTROL GP-SERVICE BRAKE

S/N: TNS1-UP

PART OF 371-5010 CONTROL GP-SERVICE BRAKE

SMCS-4257, 4258, 4263, 4265, 4269, 4280 **i06569942**

NOTE	REF NO	GRAPHIC REF	PART NUMBER	QTY	PART NAME 1 2 3 4 5 6 (PRODUCT LEVEL)	SEE PAGE
	1	1	**398-2917**	1	SHAFT AS	
	2	1	**499-3487**	1	PEDAL AS	
Y	3	1	**499-3486**	1	CONTROL GP-FOOT BRAKE	568

Y - SEPARATE ILLUSTRATION

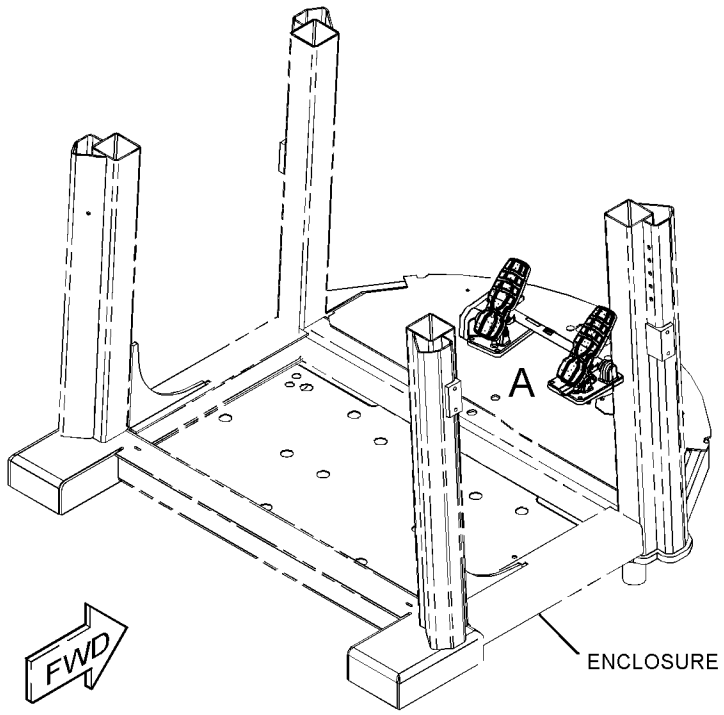

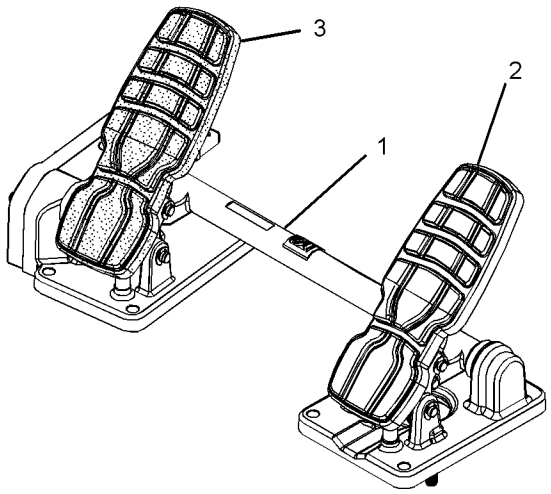

VIEW OF AREA A

GRAPHIC #1 <END> g02336456

371-5010 CONTROL GP-SERVICE BRAKE

S/N: TNS1-UP

PART OF 503-1904 OPERATOR AR

SMCS-4257, 4258, 4263, 4265, 4269, 4280 **i06569949**

NOTE	REF NO	GRAPHIC REF	PART NUMBER	QTY	PART NAME 1 2 3 4 5 6 (PRODUCT LEVEL)	SEE PAGE
Y	1	1	**371-2223**	1	CONTROL GP-SERVICE BRAKE	570
M	2	1	**099-3649**	6	BOLT (M8X1.25X40-MM)	
	3	1	**8T-4224**	6	WASHER-HARD (8.8X16X2-MM THK)	

M - METRIC PART
Y - SEPARATE ILLUSTRATION

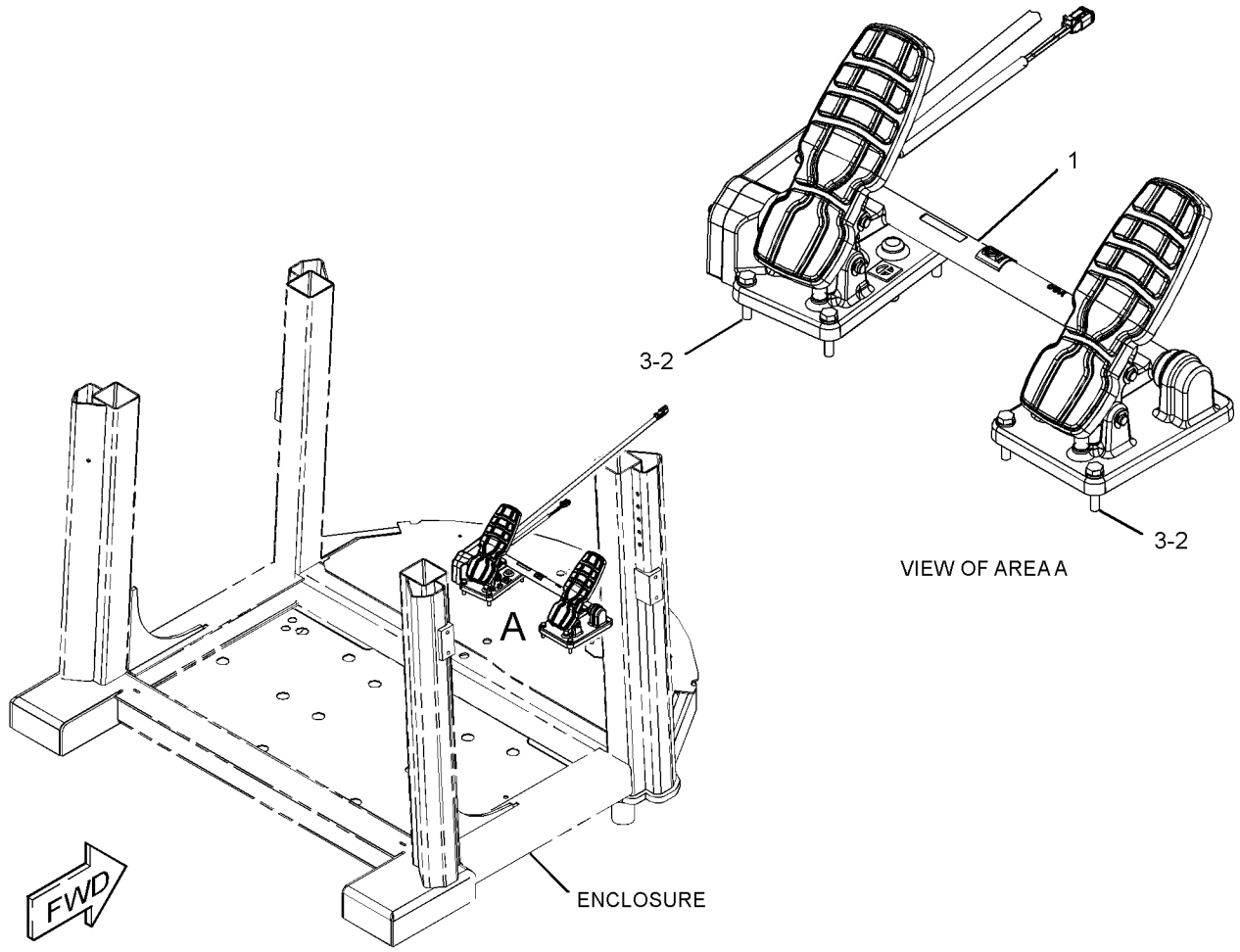

GRAPHIC #1 <END> g03492657

436-7004 CONTROL GP-SERVICE BRAKE

S/N: TNS1-UP

PART OF 492-4021 HYDRAULIC AR

SMCS-4257, 4258, 4263, 4265, 4269, 4280 **i06796406**

NOTE	REF NO	GRAPHIC REF	PART NUMBER	QTY	PART NAME 1 2 3 4 5 6 (PRODUCT LEVEL)	SEE PAGE
	1	3	*150-4037*	1	TEE AS	
		3	**6V-9844**	1	TEE-SWIVEL	
		3	**6V-8398**	2	SEAL-O-RING	
	2	1	*156-4281*	1	TEE AS	
		1	**7X-0838**	1	TEE-O-RING	
		1	**3J-7354**	1	SEAL-O-RING	
		1	**6V-8397**	2	SEAL-O-RING	
	3	3	*169-4273*	1	TEE AS	
		3	**7X-7715**	1	TEE	
		3	**6V-8398**	3	SEAL-O-RING	
	4	2	**3S-2093**	2	STRAP-CABLE	
	5	3	**106-0430**	1	MANIFOLD	
	6	2,3	*148-8336*	3	CONNECTOR AS (45-DEG ELBOW)	
					(EACH INCLUDES)	
		2,3	**6V-8636**	1	CONNECTOR	
		2,3	**3J-1907**	1	SEAL-O-RING	
		2,3	**6V-8397**	1	SEAL-O-RING	
	7	1,2	*148-8361*	2	ELBOW AS	
					(EACH INCLUDES)	
		1,2	**6V-9200**	1	ELBOW	
		1,2	**3J-7354**	1	SEAL-O-RING	
		1,2	**6V-8397**	1	SEAL-O-RING	
	8	2	*148-8378*	1	ELBOW AS (90-DEG)	
		2	**6V-8724**	1	ELBOW	
		2	**3J-1907**	1	SEAL-O-RING	
		2	**6V-8397**	1	SEAL-O-RING	
	9	1	*148-8382*	1	ELBOW AS	
		1	**8T-0404**	1	ELBOW	
		1	**3D-2824**	1	SEAL-O-RING	
		1	**7J-9108**	1	SEAL-O-RING	
	10	3	*148-8428*	1	TEE AS	
		3	**6V-8782**	1	TEE	
		3	**3K-0360**	1	SEAL-O-RING	
		3	**6V-8398**	2	SEAL-O-RING	
	11	2	*148-8434*	1	TEE AS	
		2	**6V-9843**	1	TEE	
		2	**6V-8397**	2	SEAL-O-RING	
	12	2	*148-8435*	3	TEE AS	
					(EACH INCLUDES)	
		2	**6V-8781**	1	TEE	
		2	**3J-1907**	1	SEAL-O-RING	
		2	**6V-8397**	2	SEAL-O-RING	
	13	3	*148-8443*	2	TEE AS	
					(EACH INCLUDES)	
		3	**7X-2459**	1	TEE-O-RING	
		3	**3J-1907**	1	SEAL-O-RING	
		3	**6V-8397**	1	SEAL-O-RING	
	14	3	*164-5567*	2	COUPLER AS-QUICK DISCONNECT (MALE)	

436-7004 **CONTROL GP-SERVICE BRAKE (**contd.**)** **i06796406**

NOTE	REF NO	GRAPHIC REF	PART NUMBER	QTY	PART NAME 1 2 3 4 5 6 (PRODUCT LEVEL)	SEE PAGE
					(EACH INCLUDES)	
		3	**6V-3965**	1	FITTING (QUICK DISCONNECT)	
		3	**214-7568**	1	SEAL-O-RING	
	15	3	*164-5624*	1	ELBOW AS	
		3	**9X-2085**	1	ELBOW	
		3	**3J-1907**	1	SEAL-O-RING	
		3	**6V-8398**	1	SEAL-O-RING	
	16	3	*164-6874*	2	FITTING AS-ELBOW (QUICK DISCONNECT, MALE)	
					(EACH INCLUDES)	
		3	**085-7356**	1	FITTING	
		3	**3J-1907**	1	SEAL-O-RING	
	17	2	*173-7225*	1	TEE AS	
		2	**6V-9161**	1	TEE	
		2	**3J-7354**	1	SEAL-O-RING	
		2	**6V-8397**	2	SEAL-O-RING	
	18	1,3	**192-5017**	3	BRACKET AS	
					(EACH INCLUDES)	
M		1,3	**8T-3490**	1	NUT-WELD (M10X1.5-THD)	
		1,3	**201-8357**	1	BRACKET	
	19	1	**287-5279**	1	BRACKET AS	
M		1	**8T-3490**	1	NUT-WELD (M10X1.5-THD)	
	20	2	**296-5270**	1	SENSOR GP-PRESSURE (SERVICE BRAKE)	
I	21	1	**323-4495**	1	HOSE AS	
I	22	1	**346-8414**	1	HOSE AS	
I	23	1	**367-0286**	1	HOSE AS	
	24	1	**372-3689**	1	BRACKET AS	
M		1	**8T-3490**	2	NUT-WELD (M10X1.5-THD)	
J	25	3	**375-2814**	1	VALVE GP-BRAKE CONTROL	
I	26	1	**381-7774**	1	HOSE AS	
	27	3	**384-9450**	1	BRACKET AS	
M		3	**8T-3490**	3	NUT-WELD (M10X1.5-THD)	
I	28	1	**384-9456**	1	HOSE AS	
	29	1,2	**384-9542**	2	TUBE AS	
I	30	1	**384-9543**	1	HOSE AS	
I	31	1	**384-9544**	1	HOSE AS	
I	32	1	**391-6943**	1	HOSE AS	
I	33	1	**427-0354**	2	HOSE AS	
I	34	1	**427-0362**	1	HOSE AS	
I	35	1	**427-0363**	1	HOSE AS	
Y	36	2	**448-4308**	1	MANIFOLD GP-CONTROL	579
	37	3	**450-5491**	1	BRACKET AS	
M		3	**8T-3490**	1	NUT-WELD (M10X1.5-THD)	
I	38	1	**452-7158**	1	HOSE AS	
I	39	2	**460-9984**	1	HOSE AS	
I	40	2	**460-9997**	1	HOSE AS	
	41	1,2,3	**067-2551**	9	CLIP	
M	42	2	**101-3129**	3	STUD (M10X1.5-THD)	
	43	2	**133-6934**	1	SPACER (11X20X25-MM THK)	
	44	2	*149-5452*	2	UNION AS (STRAIGHT)	
					(EACH INCLUDES)	
		2	**6V-8994**	1	UNION (STRAIGHT)	

436-7004 **CONTROL GP-SERVICE BRAKE (**contd.**)** **i06796406**

NOTE	REF NO	GRAPHIC REF	PART NUMBER	QTY	PART NAME 1 2 3 4 5 6 (PRODUCT LEVEL)	SEE PAGE
		2	**6V-8397**	2	SEAL-O-RING	
	45	2	*150-3036*	1	ELBOW AS	
		2	**8T-1905**	1	ELBOW	
		2	**3J-1907**	1	SEAL-O-RING	
		2	**6V-8397**	1	SEAL-O-RING	
	46	1	*150-4048*	1	ELBOW AS	
		1	**6V-8722**	1	ELBOW	
		1	**3K-0360**	1	SEAL-O-RING	
		1	**7J-9108**	1	SEAL-O-RING	
	47	1	**197-4566**	1	BRACKET AS	
	48	2	**1J-9671**	1	SEAL-O-RING	
	49	2	**206-2423**	1	SADDLE	
M	50	3	**344-5675**	3	NUT (M10X1.5-THD)	
	51	1,2,3	**4D-7733**	8	CLIP	
	52	1,3	**5P-4295**	2	CLIP	
	53	2	**6D-8305**	1	CLAMP	
	54	3	**6V-0852**	2	CAP-DUST	
	55	2	**6V-9168**	2	NUT (11/16-16-THD)	
	56	3	**6V-9169**	1	NUT (13/16-16-THD)	
	57	3	**6V-9830**	2	CAP AS (ORIFICE)	
	58	1,2	**7S-3916**	3	CLIP (TAB)	
	59	1,2	**7S-3919**	3	CLIP (SLOT)	
	60	1,2	**7V-6571**	3	GROMMET	
	61	1,2	**7X-7729**	3	WASHER (11X25X3-MM THK)	
	62	3	**8R-0721**	1	SPACER (11X16X35-MM THK)	
	63	1,2,3	**8T-4121**	27	WASHER-HARD (11X21X2.5-MM THK)	
M	64	1,2,3	**8T-4136**	11	BOLT (M10X1.5X25-MM)	
M	65	1,3	**8T-4137**	4	BOLT (M10X1.5X20-MM)	
M	66	2	**8T-4172**	1	BOLT (M10X1.5X80-MM)	
M	67	2	**8T-4185**	1	BOLT (M10X1.5X50-MM)	
M	68	1	**8T-4186**	2	BOLT (M10X1.5X40-MM)	
M	69	3	**8T-4195**	1	BOLT (M10X1.5X30-MM)	
M	70	3	**8T-4196**	2	BOLT (M10X1.5X35-MM)	
	71	2	**8T-4223**	1	WASHER-HARD (13.5X25.5X3-MM THK)	
M	72	2	**8T-4956**	1	BOLT (M12X1.75X35-MM)	
M	73	3	**8T-5005**	1	BOLT (M10X1.5X70-MM)	
M	74	3	**8T-6466**	2	BOLT (M10X1.5X60-MM)	
	75	3	**8T-7934**	1	WASHER-HARD (11X21X5-MM THK)	
					AVAILABLE REPAIR KIT(S):	
J			**397-2326**	1	KIT-SEAL	
					(INCLUDES O-RING SEALS, QUAD RING, BOOT, CUP & INSTRUCTIONS)	

I - REFER TO HYDRAULIC INFORMATION SYSTEM
J - KIT MARKED J SERVICES PART(S) MARKED J
M - METRIC PART
Y - SEPARATE ILLUSTRATION

436-7004 **CONTROL GP-SERVICE BRAKE (**contd.**)** **i06796406**

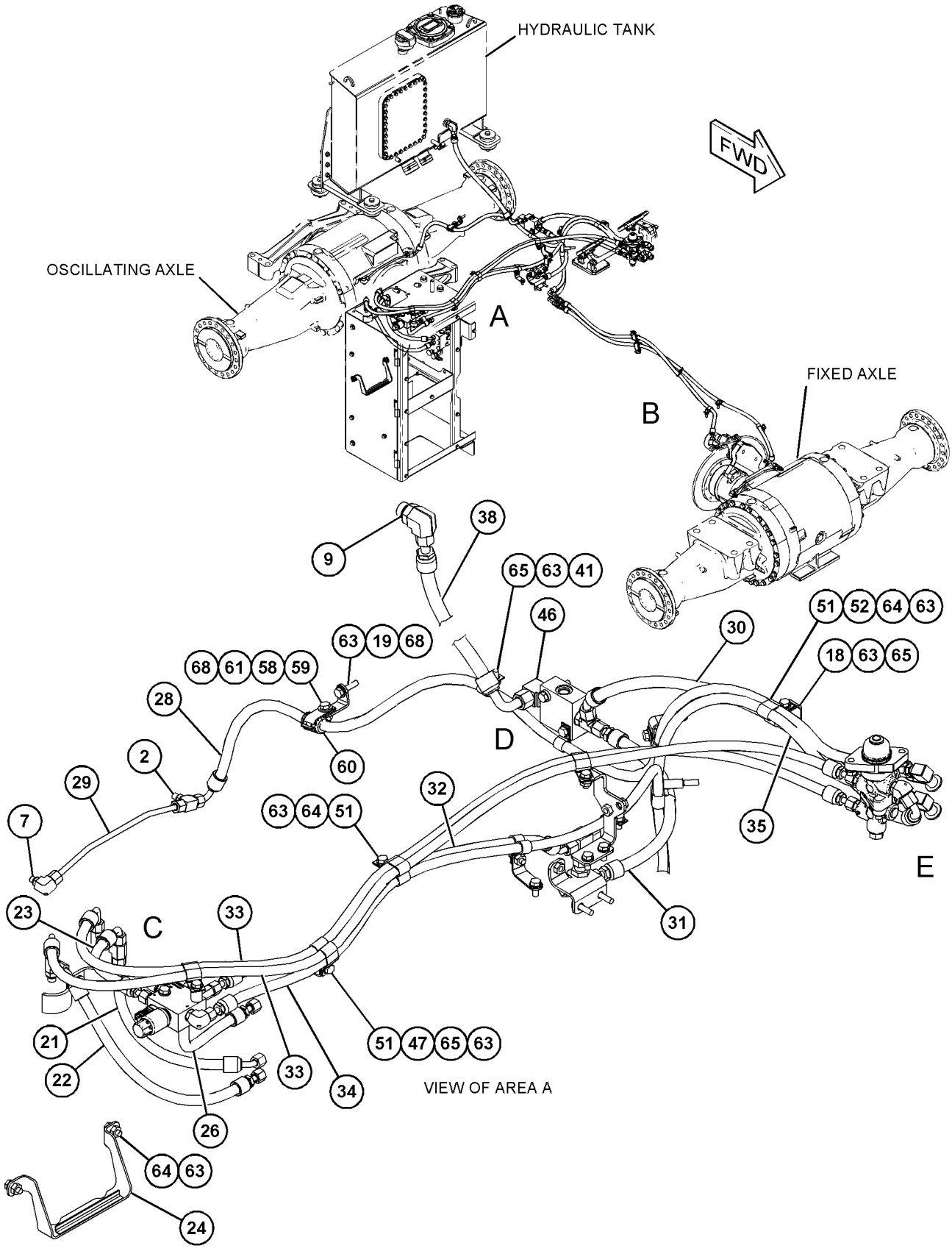

GRAPHIC #1

g06052476

436-7004 **CONTROL GP-SERVICE BRAKE (**contd.**)** **i06796406**

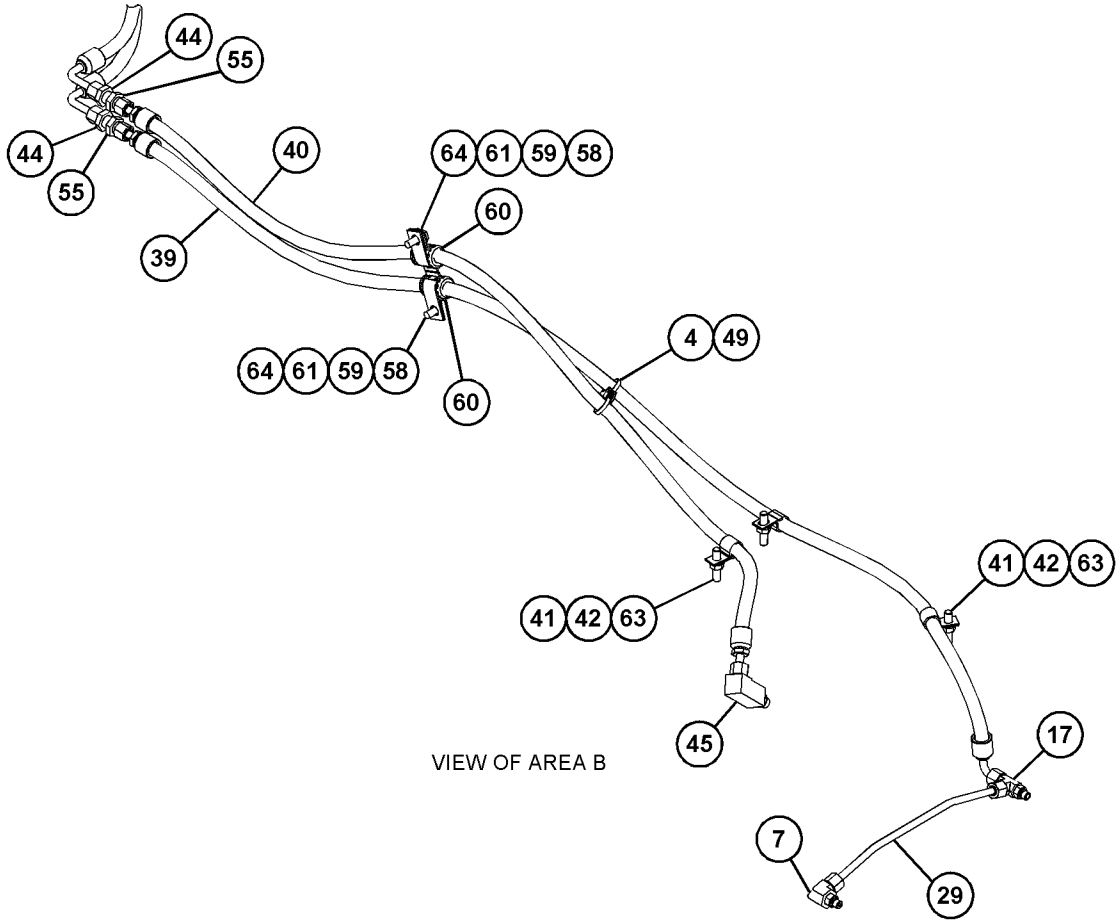

VIEW OF AREA B

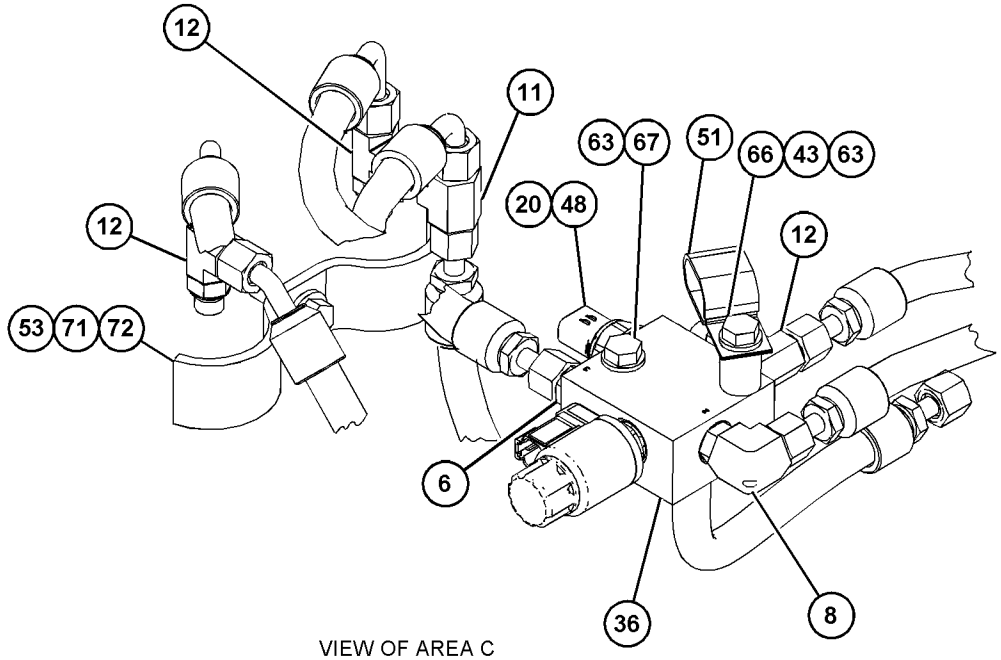

VIEW OF AREA C

GRAPHIC #2 g06052477

436-7004 **CONTROL GP-SERVICE BRAKE (**contd.**)** **i06796406**

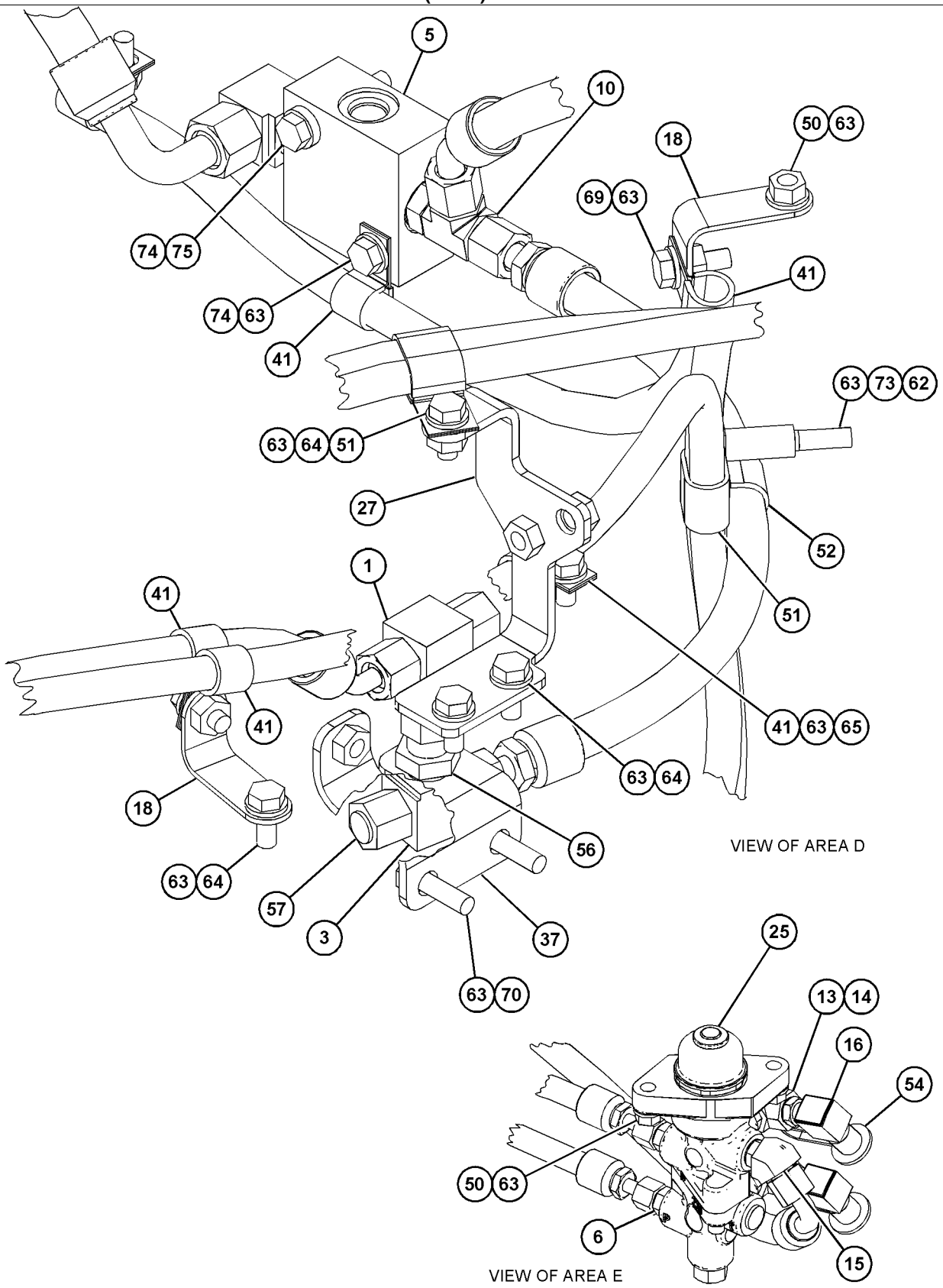

GRAPHIC #3 <END> g06052478

446-4834 FASTENER GP-LINES

S/N: TNS1-UP

PART OF 505-1548 CONTROL AR-FAN

SMCS-5057, 7553

i06779900

NOTE	REF NO	GRAPHIC REF	PART NUMBER	QTY	PART NAME 1 2 3 4 5 6 (PRODUCT LEVEL)	SEE PAGE
	1	1	**5P-1076**	1	WASHER-HARD (13.5X30X4-MM THK)	
M	2	1	**8T-4139**	1	BOLT (M12X1.75X30-MM)	

M - METRIC PART

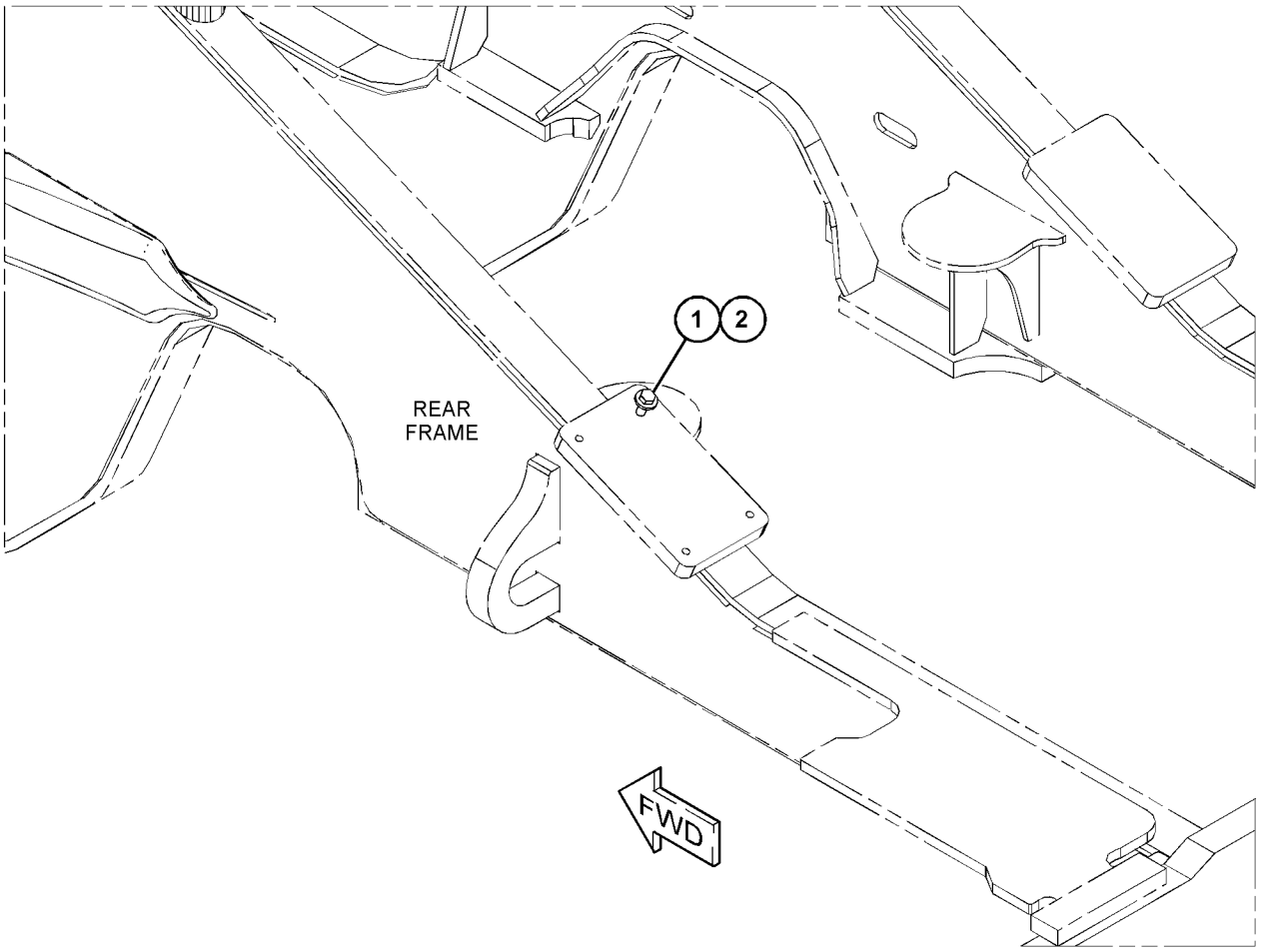

GRAPHIC #1 <END> g06049050

448-4308 MANIFOLD GP-CONTROL

S/N: TNS1-UP
24-VOLT DC
PART OF 436-7004 CONTROL GP-SERVICE BRAKE

SMCS-4322, 5264

i06217171

NOTE	REF NO	GRAPHIC REF	PART NUMBER	QTY	PART NAME 1 2 3 4 5 6 (PRODUCT LEVEL)	SEE PAGE
Y	1	1	**448-4307**	1	VALVE GP-SOLENOID (24-VOLT) (PARKING BRAKE)	585

Y - SEPARATE ILLUSTRATION

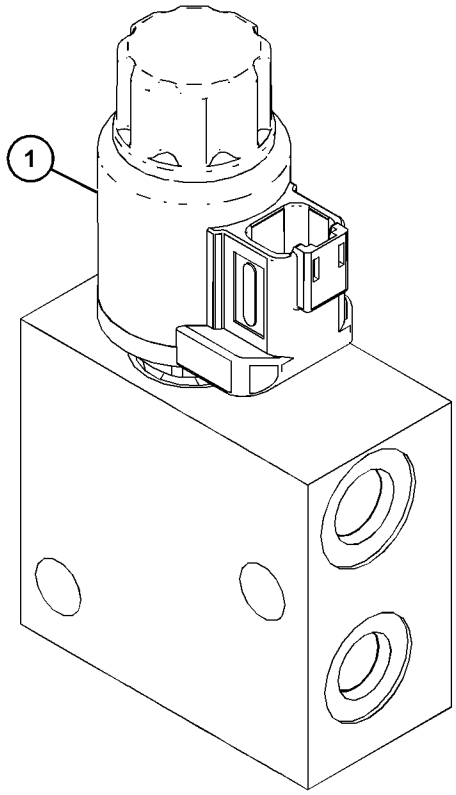

GRAPHIC #1

<END>

g03563119

458-2253 MANIFOLD GP-CONTROL

S/N: TNS1-UP

PART OF 499-1654 CONVERSION AR-MACHINE

SMCS-4322, 5264 **i06657451**

NOTE	REF NO	GRAPHIC REF	PART NUMBER	QTY	PART NAME 1 2 3 4 5 6 (PRODUCT LEVEL)	SEE PAGE
Y	1	1	**239-0605**	1	VALVE GP-DIVERTER (BRAKE ACCUMULATOR)	692
Y	2	1	**158-9956**	1	VALVE GP-CHECK (BRAKE, HYDRAULIC FAN)	582
	3	1	**356-5129**	1	VALVE GP-PRIORITY	
Y	4	1	**137-8400**	1	VALVE GP-UNLOADING	709
Y	5	1	**257-8414**	1	VALVE GP-SHUTTLE (BRAKE ACCUMULATOR)	583
L	6	1	**239-0618**	1	VALVE GP-SHUTTLE (HYDRAULIC FAN)	
		1	**3H-0442**	1	SEAL-O-RING	
Y	7	1	**183-7595**	1	VALVE GP-SOLENOID (24-VOLT) (HYDRAULIC FAN)	584
	8	1	**6E-5066**	1	SCREEN (HYDRAULIC)	
	9	1	**3J-7354**	3	SEAL-O-RING	
	10	1	**9S-8002**	3	PLUG (7/16-20-THD)	
	11	1	**253-3376**	1	PIN-THREADED	
	12	1	**4J-7533**	5	SEAL-O-RING	
	13	1	**9S-8001**	5	PLUG	
					AVAILABLE REPAIR KIT(S):	
L			**239-5195**	1	KIT-SEAL (SHUTTLE VALVE)	
					(INCLUDES RINGS & SEAL)	

L - KIT MARKED L SERVICES PART(S) MARKED L
Y - SEPARATE ILLUSTRATION

458-2253 **MANIFOLD GP-CONTROL (**contd.**)** **i06657451**

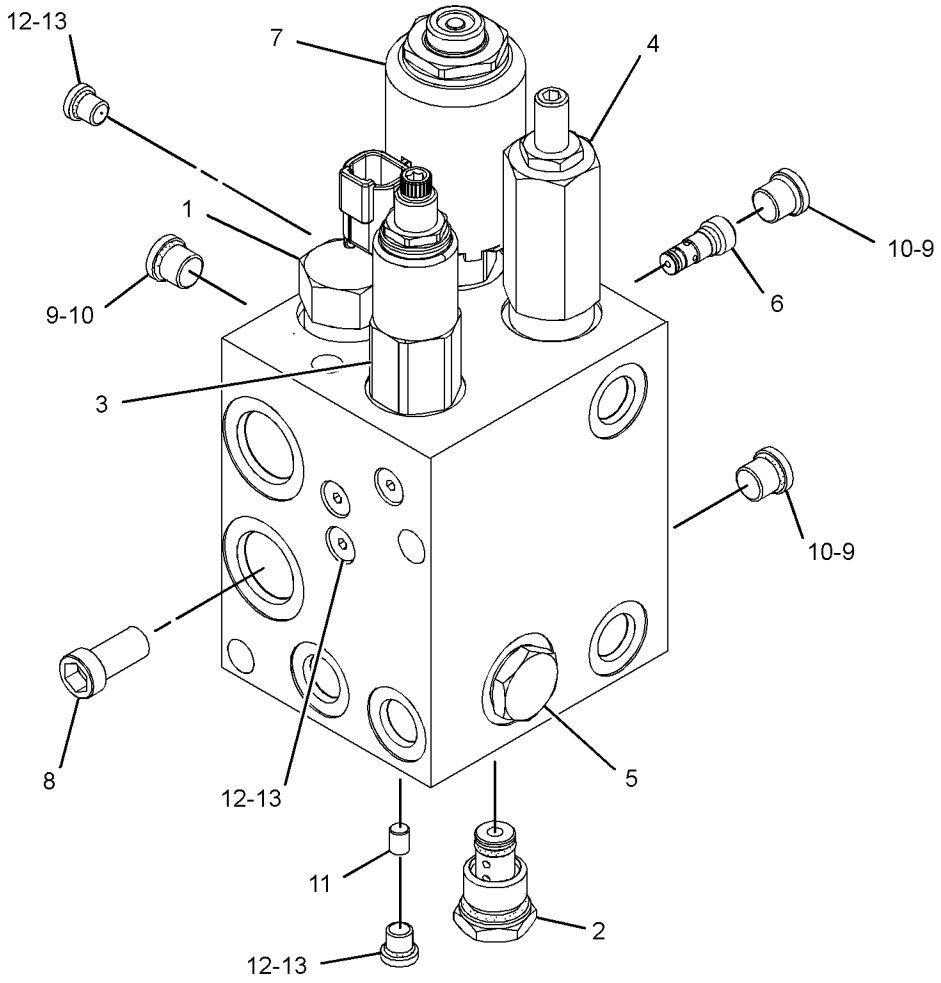

GRAPHIC #1 <END> g02896797

158-9956 VALVE GP-CHECK

S/N: TNS1-UP

PART OF 458-2253 MANIFOLD GP-CONTROL

SMCS-4275, 5067 **i02106248**

NOTE	REF NO	GRAPHIC REF	PART NUMBER	QTY	PART NAME 1 2 3 4 5 6 (PRODUCT LEVEL)	SEE PAGE
	1	1	**3K-0360**	1	SEAL-O-RING	
	2	1	**161-6154**	1	SEAL-O-RING	
	3	1	**6E-0381**	1	RING-BACKUP	

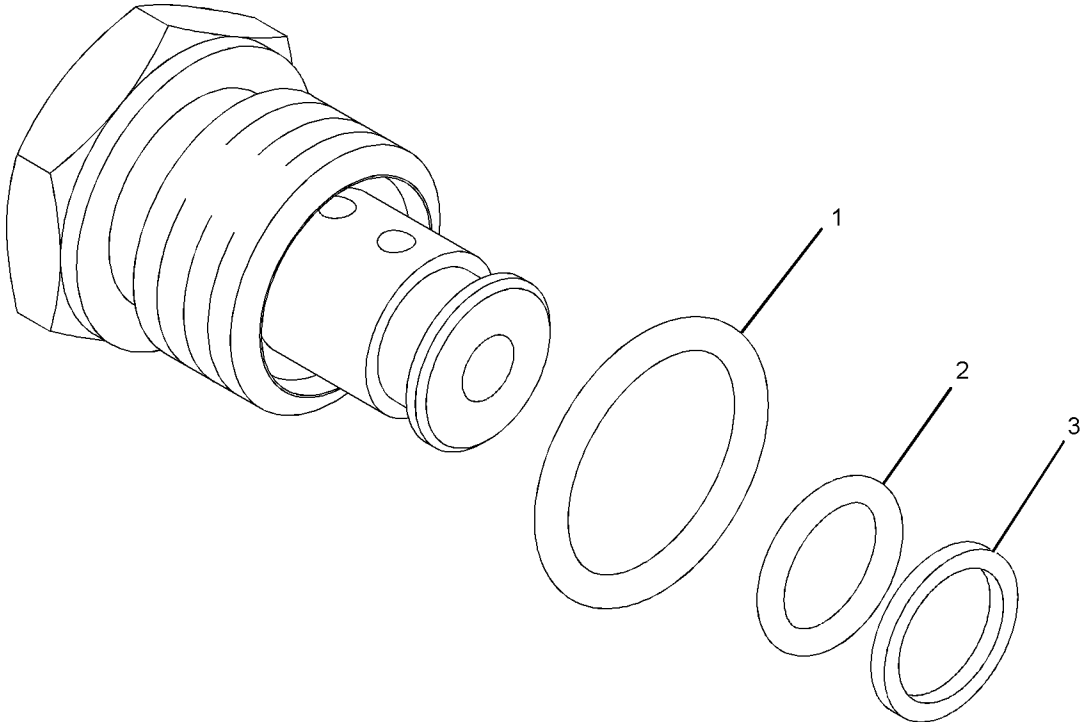

GRAPHIC #1 <END> g01016882

257-8414 VALVE GP-SHUTTLE

S/N: TNS1-UP

PART OF 458-2253 MANIFOLD GP-CONTROL

SMCS-4289 **i02708474**

NOTE	REF NO	GRAPHIC REF	PART NUMBER	QTY	PART NAME 1 2 3 4 5 6 (PRODUCT LEVEL)	SEE PAGE
	1	1	**3K-0360**	1	SEAL-O-RING	
	2	1	**161-6149**	1	SEAL-O-RING	
	3	1	**095-1750**	1	SEAL-O-RING	
	4	1	**161-6161**	1	RING-BACKUP	
	5	1	**187-0541**	1	RING-BACKUP	

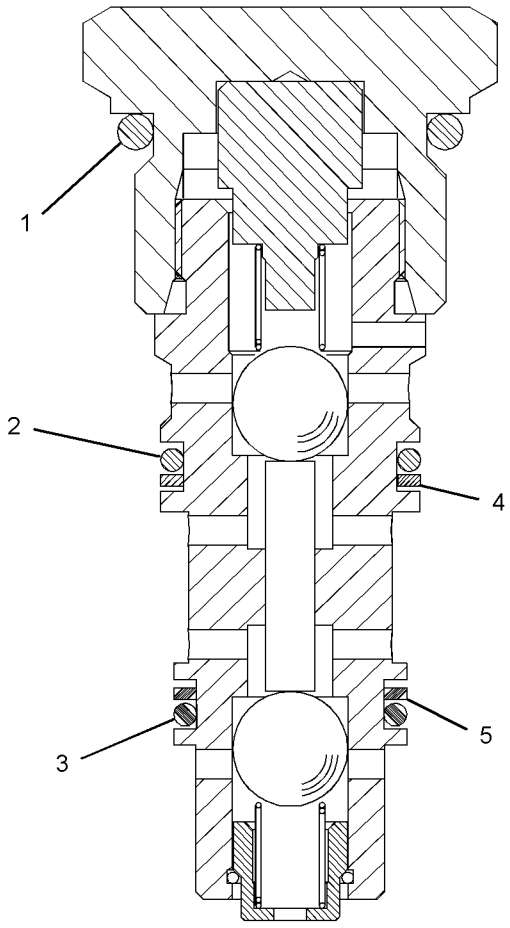

GRAPHIC #1 <END> g01104191

183-7595 VALVE GP-SOLENOID

S/N: TNS1-UP

PART OF 458-2253 MANIFOLD GP-CONTROL

SMCS-4804, 4805, 5479 **i05857458**

NOTE	REF NO	GRAPHIC REF	PART NUMBER	QTY	PART NAME 1 2 3 4 5 6 (PRODUCT LEVEL)	SEE PAGE
	1	1	**312-8629**	1	COIL AS (24-VOLT)	
	2	1	*189-8624*	1	ADAPTER AS	
		1	**8L-2786**	1	SEAL-O-RING	
		1	**033-5879**	1	SEAL-O-RING	
		1	**033-6033**	1	SEAL-O-RING	
		1	**212-6027**	1	RING	
		1	**221-9963**	1	RING	
	3	1	**191-9247**	1	WASHER (19.15X31.65X2.36-MM THK)	
	4	1	**198-2914**	1	NUT (3/4-32-THD)	
	5	1	**316-1438**	1	CARTRIDGE AS	
		1	**214-7568**	2	SEAL-O-RING	

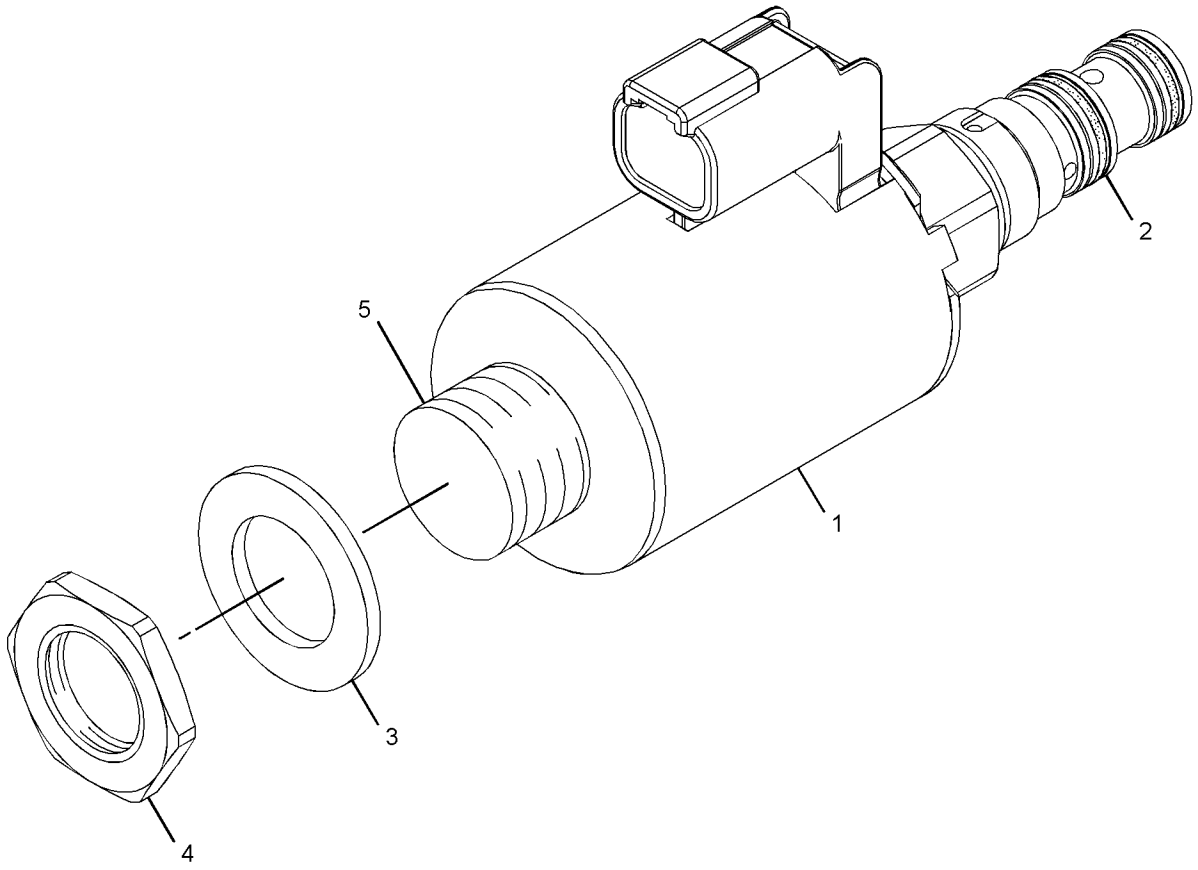

GRAPHIC #1 <END> g01936941

448-4307 VALVE GP-SOLENOID

S/N: TNS1-UP

PART OF 448-4308 MANIFOLD GP-CONTROL

SMCS-4804, 4805, 5479

i05835896

NOTE	REF NO	GRAPHIC REF	PART NUMBER	QTY	PART NAME 1 2 3 4 5 6 (PRODUCT LEVEL)	SEE PAGE
	1	1	**367-8532**	1	COIL AS (24-VOLT) (SOLENOID VALVE)	
					AVAILABLE REPAIR KIT(S):	
			426-4823	1	KIT-SEAL (SOLENOID VALVE)	
					(INCLUDES O-RINGS & BACKUP RINGS)	

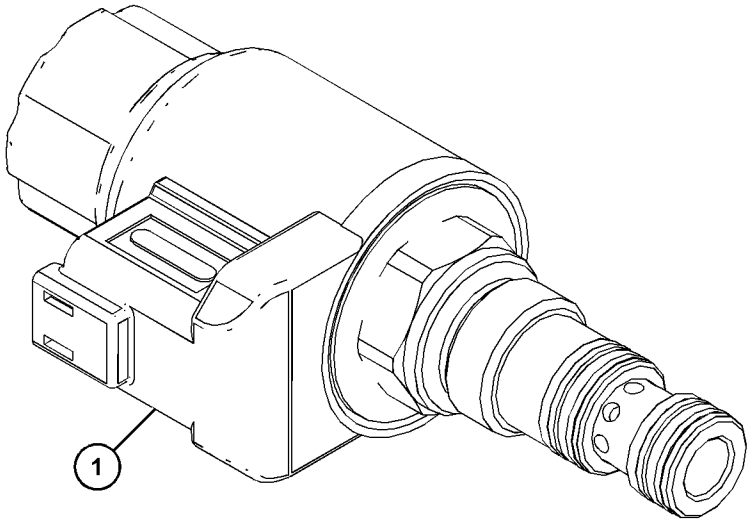

GRAPHIC #1

<END>

g03563097

460-3921 ACCUMULATOR GP-RIDE CONTROL–CHARGED

S/N: TNS1-UP

PART OF 511-0265 CONTROL & LINES GP-RIDE

SMCS-5004, 5077 **i05848402**

NOTE	REF NO	GRAPHIC REF	PART NUMBER	QTY	PART NAME 1 2 3 4 5 6 (PRODUCT LEVEL)	SEE PAGE
	1	1	**217-0162**	1	CAP	
M	2	1	**222-3785**	1	SCREW-VENT (M8X1.5-THD)	
	3	1	**224-7262**	1	SEAL-O-RING	
	4	1	**222-5765**	1	SEAL-RING	
	5	1	**303-5977**	1	FILM-INFORMATION (HYD ACCUMULATOR, READ OMM)	

M - METRIC PART

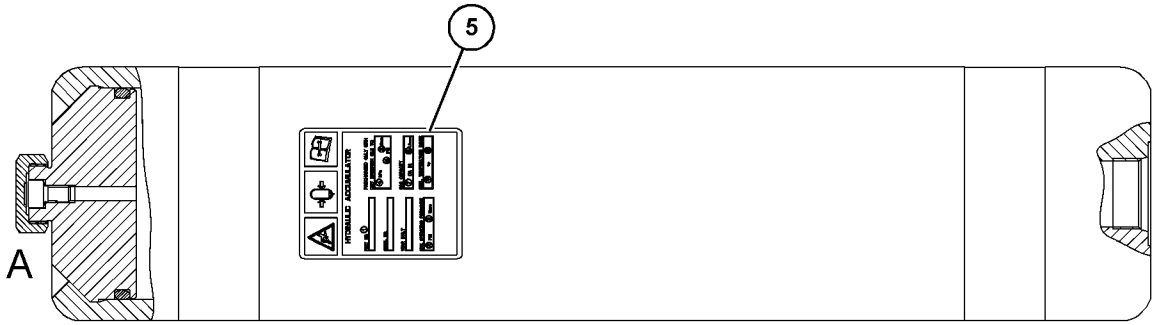

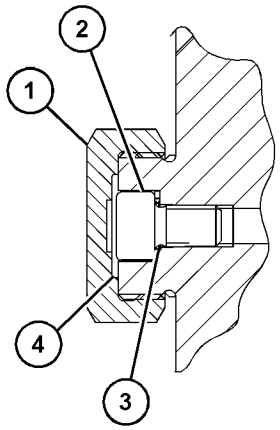

VIEW OF AREA A

GRAPHIC #1 <END> g03698430

460-3922 ACCUMULATOR GP-RIDE CONTROL–CHARGED

S/N: TNS1-UP

PART OF 511-0265 CONTROL & LINES GP-RIDE

SMCS-5004, 5077

i05848397

NOTE	REF NO	GRAPHIC REF	PART NUMBER	QTY	PART NAME 1 2 3 4 5 6 (PRODUCT LEVEL)	SEE PAGE
	1	1	**217-0162**	1	CAP	
M	2	1	**222-3785**	1	SCREW-VENT (M8X1.5-THD)	
	3	1	**224-7262**	1	SEAL-O-RING	
	4	1	**222-5765**	1	SEAL-RING	
	5	1	**303-5977**	1	FILM-INFORMATION (HYD ACCUMULATOR, READ OMM)	

M - METRIC PART

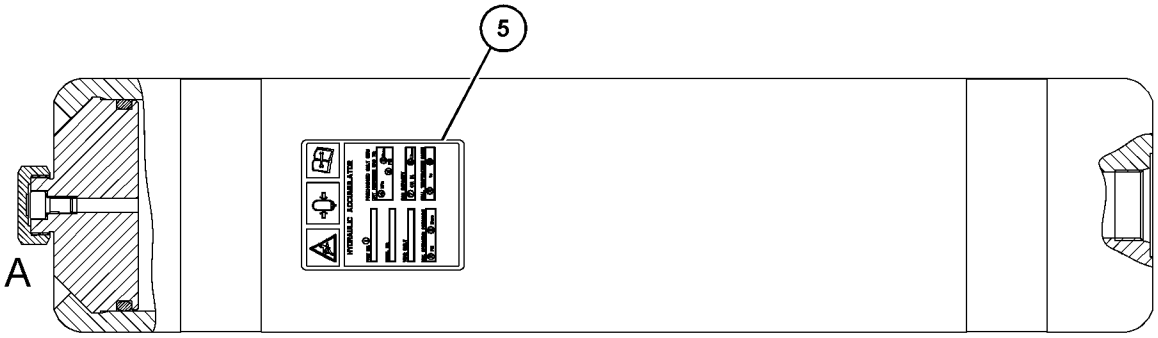

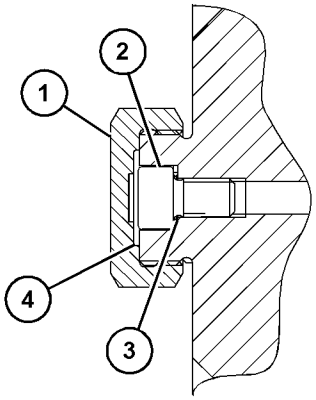

VIEW OF AREA A

GRAPHIC #1 <END> g03698422

511-0265 CONTROL & LINES GP-RIDE

S/N: TNS1-UP

PART OF 492-4023 HYDRAULIC AR-2 VALVE, 492-4025 HYDRAULIC AR-3 VALVE

SMCS-5004, 5057 **i06810535**

NOTE	REF NO	GRAPHIC REF	PART NUMBER	QTY	PART NAME 1 2 3 4 5 6 (PRODUCT LEVEL)	SEE PAGE
	1	1	**8B-9294**	1	SPACER (13.5X38X30-MM THK)	
	2	1	*148-8357*	1	ELBOW AS (90-DEG)	
		1	**5K-9090**	1	SEAL-O-RING	
		1	**6V-9008**	1	ELBOW	
		1	**7M-8485**	1	SEAL-O-RING	
	3	1	*150-3055*	2	CONNECTOR AS	
					(EACH INCLUDES)	
		1	**7M-8485**	2	SEAL-O-RING	
		1	**113-4676**	1	CONNECTOR	
Y	4	1	*460-3921*	1	ACCUMULATOR GP-RIDE CONTROL (CHARGED)	586
Y	5	1	*460-3922*	1	ACCUMULATOR GP-RIDE CONTROL (CHARGED)	587
	6	1	**461-0020**	1	BRACKET AS	
M		1	**8T-3490**	4	NUT-WELD (M10X1.5-THD)	
M		1	**8T-3597**	1	NUT-WELD (M12X1.75-THD)	
	7	1	**481-5790**	1	MANIFOLD	
I	8	1	**511-0266**	1	HOSE AS	
	9	1	**127-4833**	4	CLIP	
	10	1	**198-4778**	4	WASHER-HARD (13.5X30X12-MM THK)	
	11	1	**5P-1076**	4	WASHER-HARD (13.5X30X4-MM THK)	
	12	1	**5P-7468**	1	CLIP (SLOT)	
	13	1	**5P-7469**	1	CLIP (TAB)	
	14	1	**5P-8444**	1	GROMMET (37-MM ID)	
	15	1	**7X-7729**	4	WASHER (11X25X3-MM THK)	
	16	1	**8T-4121**	3	WASHER-HARD (11X21X2.5-MM THK)	
M	17	1	**8T-4136**	4	BOLT (M10X1.5X25-MM)	
M	18	1	**8T-4183**	4	BOLT (M12X1.75X40-MM)	
M	19	1	**8T-4196**	3	BOLT (M10X1.5X35-MM)	
	20	1	**8T-4223**	1	WASHER-HARD (13.5X25.5X3-MM THK)	
M	21	1	**8T-4910**	1	BOLT (M12X1.75X60-MM)	

I - REFER TO HYDRAULIC INFORMATION SYSTEM
M - METRIC PART
Y - SEPARATE ILLUSTRATION

511-0265 **CONTROL & LINES GP-RIDE (**contd.**)** **i06810535**

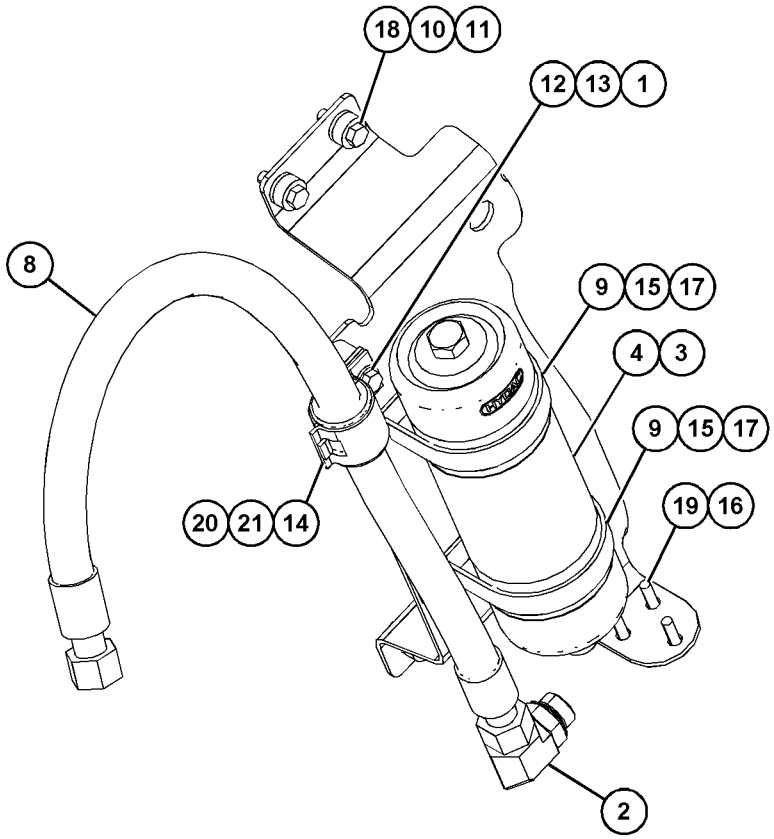

VIEW OF AREA A
(PARTS REMOVED FOR CLARITY)

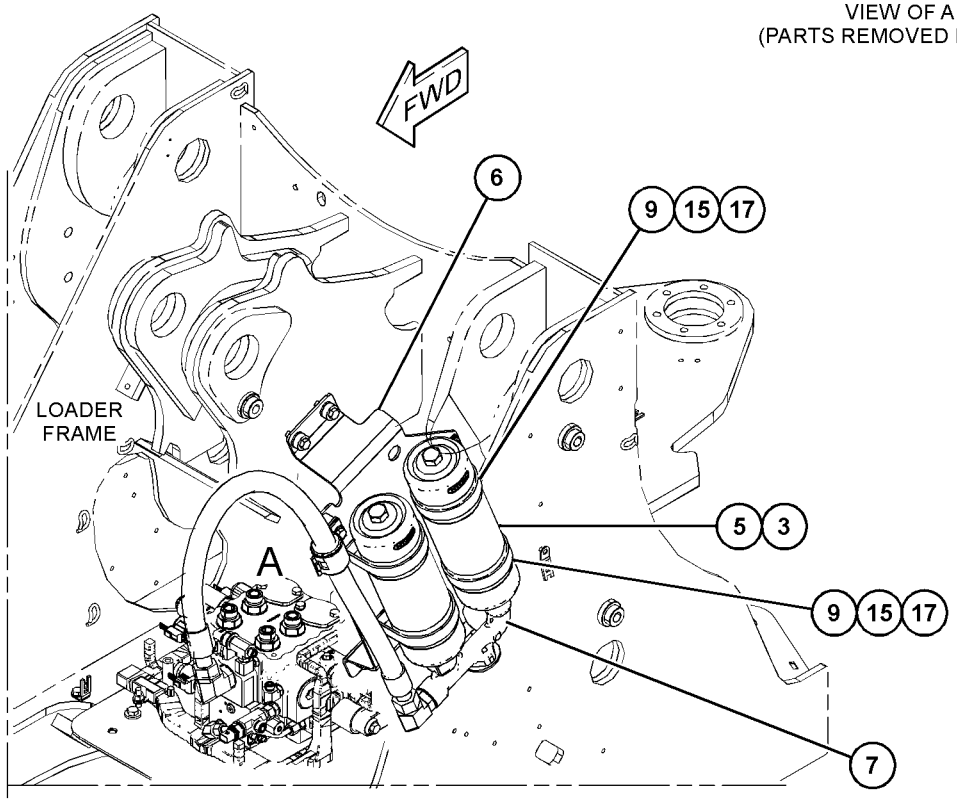

GRAPHIC #1 <END> g06129133

505-1547 CONTROL AR-FAN

S/N: TNS1-UP

PART OF 492-4033, 492-4034 DISTRIBUTION AR

SMCS-1386, 138R

i06761679

NOTE	PART NUMBER	QTY	PART NAME 1 2 3 4 5 6 (PRODUCT LEVEL)	SEE PAGE
Y	*501-3064*	1	FAN GP-SUCTION	53
Y	*365-0111*	1	LINES GP-AIR	85
Y	*488-9569*	1	LINES GP-HYDRAULIC OIL COOLER	627
Y	*395-2550*	1	SHIELD GP-ENGINE COMPARTMENT	531

Y - SEPARATE ILLUSTRATION

<END>

505-1548 CONTROL AR-FAN—INTERNATIONAL

S/N: TNS1-UP

SMCS-1386, 138R

i06761665

NOTE	PART NUMBER	QTY	PART NAME 1 2 3 4 5 6 (PRODUCT LEVEL)	SEE PAGE
Y	*464-0927*	1	BOSS GP-LOADER FRAME	415
Y	*501-3065*	1	FAN GP-SUCTION	55
Y	*446-4834*	1	FASTENER GP-LINES	578
Y	*484-9694*	1	FILM GP-INTERNATIONAL	935
Y	*508-1550*	1	GUARD GP-LINES	601
Y	*365-0183*	1	LINES GP-AIR	86
Y	*463-1125*	1	LINES GP-AIR (VARIABLE PITCH FAN)	87
Y	*488-9569*	1	LINES GP-HYDRAULIC OIL COOLER	627
Y	*465-0997*	1	PLATFORM GP (VARIABLE PITCH FAN)	825
Y	*346-1067*	1	RELAY GP (VARIABLE PITCH FAN)	198
Y	*395-2551*	1	SHIELD GP-ENGINE COMPARTMENT	533
Y	*464-1468*	1	WIRING GP-CHASSIS (VARIABLE PITCH FAN)	238

Y - SEPARATE ILLUSTRATION

<END>

452-2509 CYLINDER GP-COUPLER

S/N: TNS1-UP
63.5-MM (2.5-IN) BORE X 95.3-MM (3.75-IN) STROKE
PART OF 310-9391 COUPLER GP-QUICK

SMCS-5133 **i05761310**

NOTE	REF NO	GRAPHIC REF	PART NUMBER	QTY	PART NAME 1 2 3 4 5 6 (PRODUCT LEVEL)	SEE PAGE
	1	1	*216-9059*	1	PLUG AS	
		1	**216-8994**	1	SEAL-O-RING	
		1	**216-9058**	1	PLUG	
J	2	1	**237-0947**	1	VALVE GP-CHECK (PILOT OPERATED) (QUICK COUPLER)	
	3	1	**9S-8002**	8	PLUG (7/16-20-THD)	
					AVAILABLE REPAIR KIT(S):	
			456-0584	1	KIT-SEAL (COUPLER CYLINDER)	
					(KIT INCLUDES O-RINGS, BACK-UP RINGS, BP SEAL, POLYPAK & DUST SEAL)	
J			**213-8433**	1	KIT-SEAL (CHECK VALVE)	

J - KIT MARKED J SERVICES PART(S) MARKED J

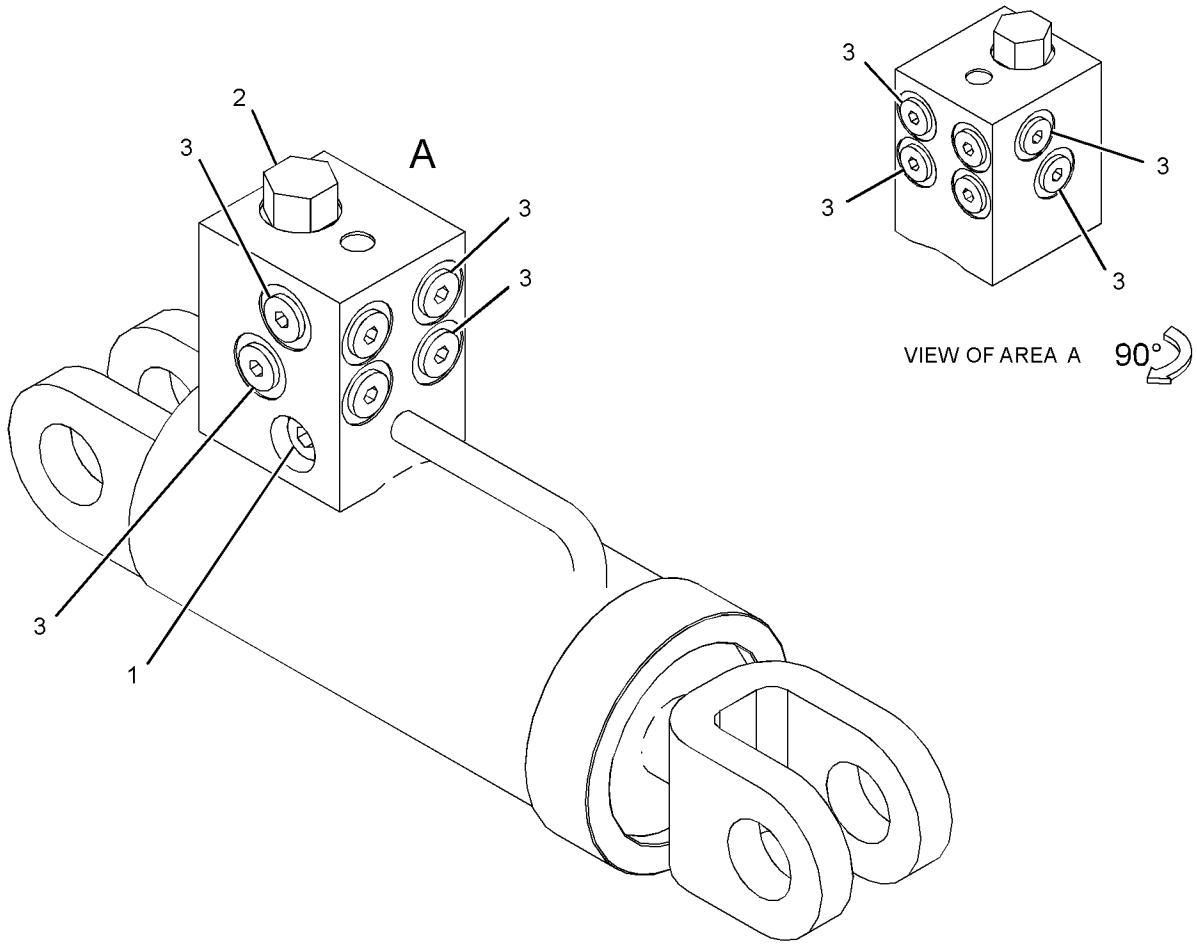

GRAPHIC #1 <END> g02722154

489-4697 CYLINDER GP-LIFT–RH

S/N: TNS1-UP

140-MM (5.6-IN) BORE X 800-MM (31.5-IN) STROKE

PART OF 507-6190 HYDRAULIC AR, 492-4028 HYDRAULIC AR-STANDARD LIFT

SMCS-5102 **i06810418**

NOTE	REF NO	GRAPHIC REF	PART NUMBER	QTY	PART NAME 1 2 3 4 5 6 (PRODUCT LEVEL)	SEE PAGE
	1	1	**7Y-5116**	1	RING	
	2	1	**8F-9516**	1	SEAL-O-RING	
	3	1	**8J-1689**	1	RING-BACKUP	
	4	1	**9X-3598**	1	SEAL AS	
M	5	1	**147-5835**	1	LOCKNUT-SPECIAL	
	6	1	**158-9065**	2	RING	
	7	1	**165-9286**	1	SEAL-LIP TYPE	
	8	1	**170-9844**	1	SEAL-BUFFER	
	9	1	**170-9860**	1	SEAL-U-CUP	
	10	1	**265-9683**	1	RING-WEAR	
	11	1	**349-5784**	1	HEAD	
	12	1	**371-0443**	1	SEAL-O-RING	
	13	1	**489-4698**	1	ROD AS	
	14	1	**489-4699**	1	CYLINDER AS-LIFT	
	14A	1	**3G-7624**	1	BUSHING	
	15	1	**498-2919**	1	PISTON	

M - METRIC PART

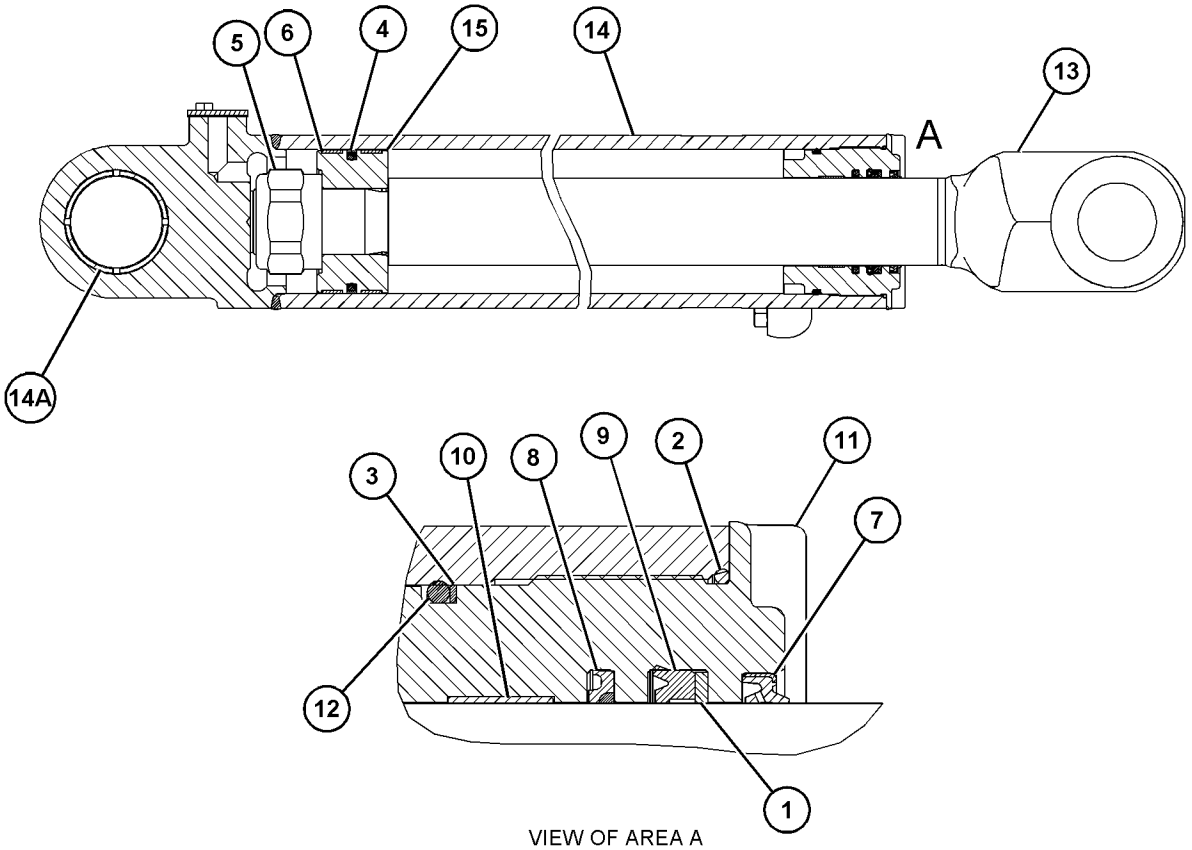

VIEW OF AREA A

GRAPHIC #1 <END> g06125809

494-5323 CYLINDER GP-LIFT

S/N: TNS1-UP

140-MM (5.5 -IN) BORE X 800-MM (31.5-IN) STROKE. LH

PART OF 507-6190 HYDRAULIC AR, 492-4028 HYDRAULIC AR-STANDARD LIFT

SMCS-5102 **i06810394**

NOTE	REF NO	GRAPHIC REF	PART NUMBER	QTY	PART NAME 1 2 3 4 5 6 (PRODUCT LEVEL)	SEE PAGE
	1	1	**7Y-5116**	1	RING	
	2	1	**8F-9516**	1	SEAL-O-RING	
	3	1	**8J-1689**	1	RING-BACKUP	
	4	1	**9X-3598**	1	SEAL AS	
M	5	1	**147-5835**	1	LOCKNUT-SPECIAL	
	6	1	**158-9065**	2	RING	
	7	1	**165-9286**	1	SEAL-LIP TYPE	
	8	1	**170-9844**	1	SEAL-BUFFER	
	9	1	**170-9860**	1	SEAL-U-CUP	
	10	1	**265-9683**	1	RING-WEAR	
	11	1	**349-5784**	1	HEAD	
	12	1	**371-0443**	1	SEAL-O-RING	
	13	1	**489-4698**	1	ROD AS	
	14	1	**494-5322**	1	CYLINDER AS-LIFT	
	14A	1	**3G-7624**	1	BUSHING	
	15	1	**498-2919**	1	PISTON	

M - METRIC PART

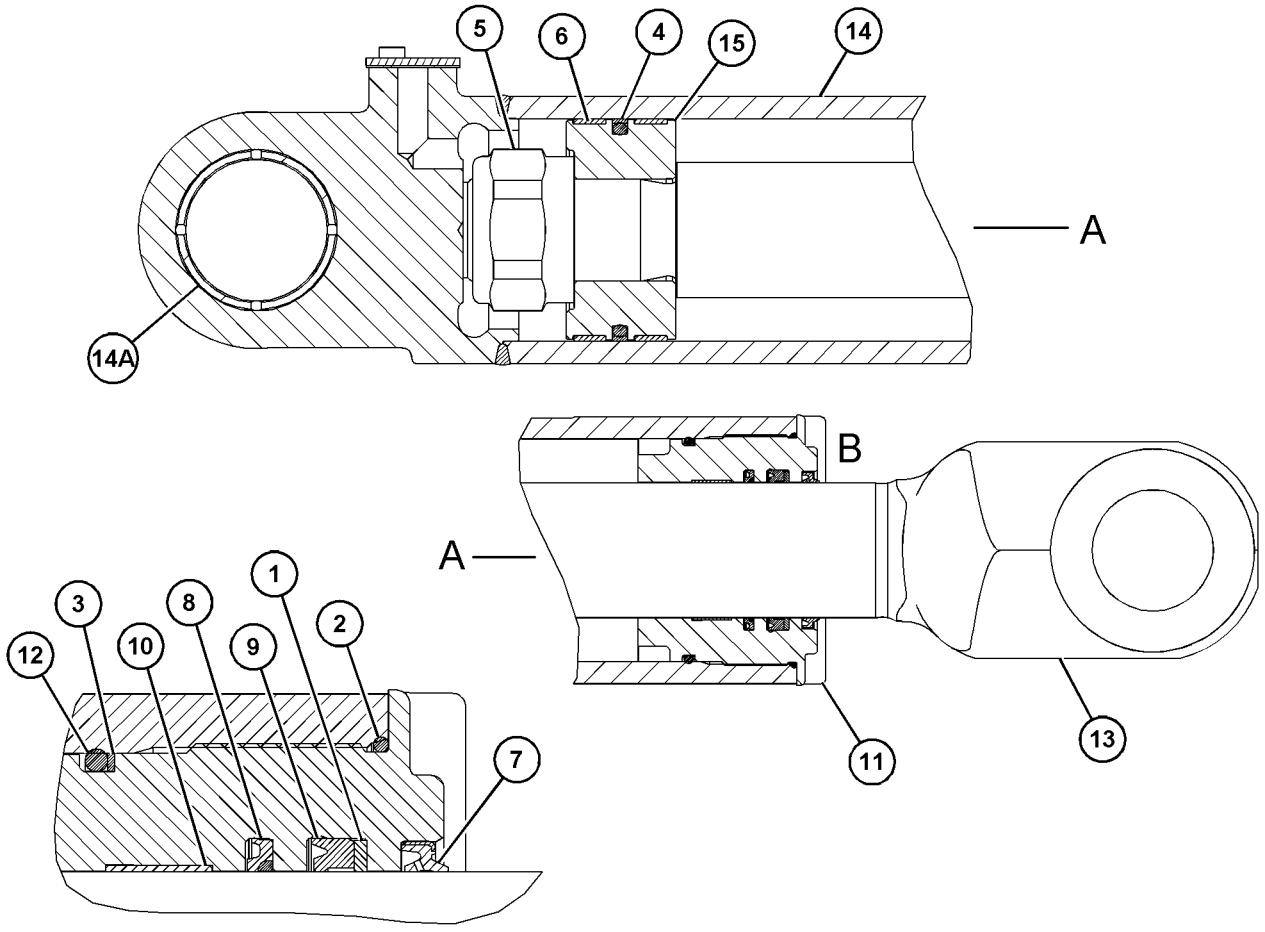

VIEW OF AREA B

GRAPHIC #1 <END> g06128704

482-9215 CYLINDER GP-TILT

S/N: TNS1-UP

158.8-MM (6.3-IN) BORE X 545-MM (21-5-IN) STROKE

PART OF 492-4028 HYDRAULIC AR-STANDARD LIFT

SMCS-5104 **i06810339**

NOTE	REF NO	GRAPHIC REF	PART NUMBER	QTY	PART NAME 1 2 3 4 5 6 (PRODUCT LEVEL)	SEE PAGE
	1	1	**482-9221**	1	CYLINDER AS	
	1A	1	**9J-7099**	1	BUSHING	
	2	1	**373-8734**	1	ROD AS	
	2A	1	**3G-8779**	1	BUSHING	
	3	1	**245-9791**	1	HEAD	
	4	1	**248-3317**	1	PISTON	
	5	1	**2J-7686**	1	LOCKNUT (2.5X12-THD)	
	6	1	**6V-8237**	8	WASHER (26X44X4-MM THK)	
M	7	1	**8T-0667**	8	BOLT (M24X3X100-MM)	
	8	1	**8T-1788**	1	SEAL AS	
	9	1	**9J-5550**	1	RING-WEAR	
	10	1	**6V-5657**	1	SEAL-O-RING	
	11	1	**346-5199**	1	SEAL-WIPER	
	12	1	**346-5201**	1	SEAL-U-CUP	
	13	1	**346-5193**	1	SEAL AS-BUFFER	
	14	1	**8T-6745**	1	RING-WEAR	
	15	1	**162-7209**	1	RING-BACKUP	

M - METRIC PART

482-9215 **CYLINDER GP-TILT (**contd.**)** **i06810339**

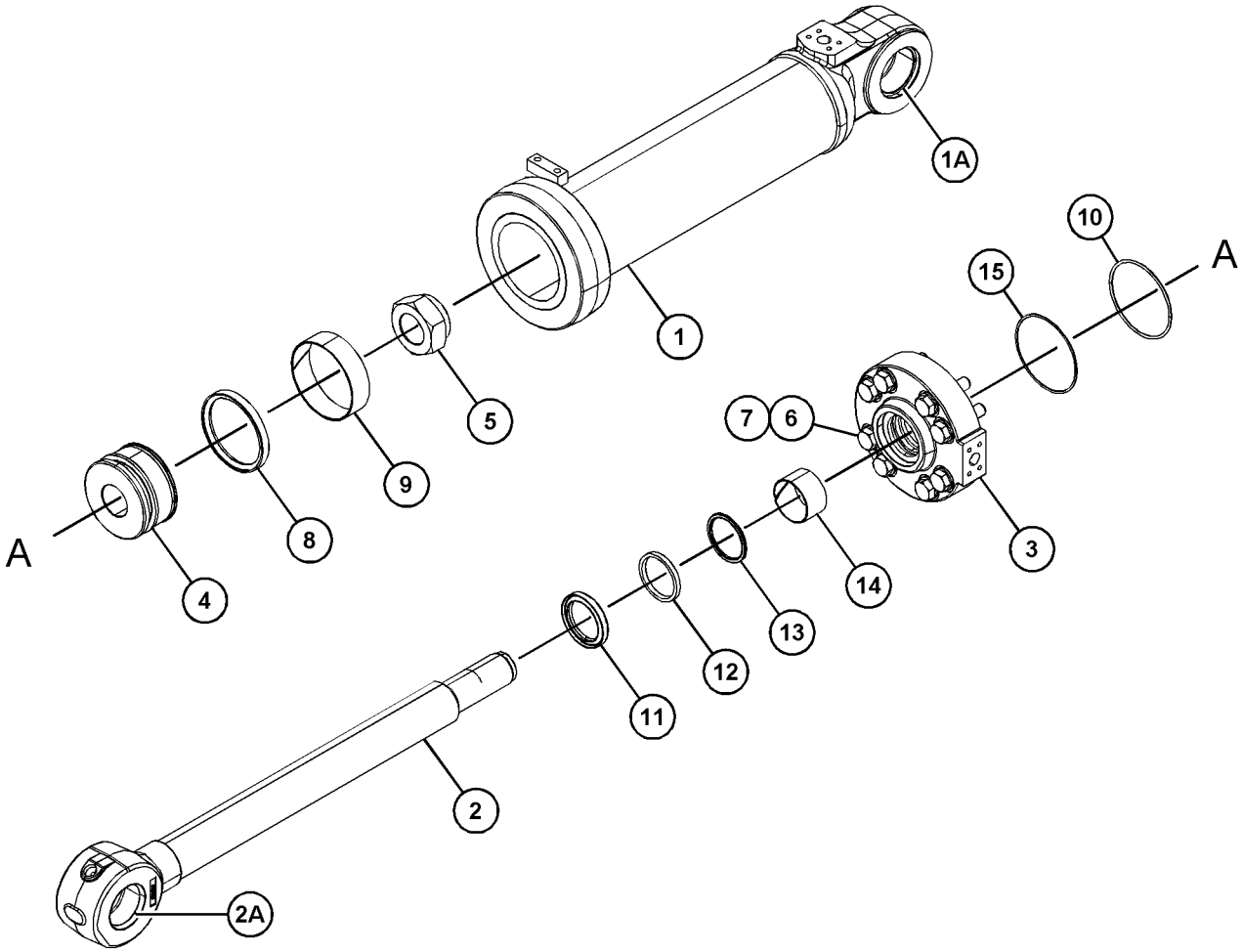

GRAPHIC #1 <END> g06034292

482-9218 CYLINDER GP-TILT

S/N: TNS1-UP
190.5-MM (7.5-IN) BORE X 545-MM (21.5-IN) STROKE
PART OF 507-6190 HYDRAULIC AR

SMCS-5104 **i06809558**

NOTE	REF NO	GRAPHIC REF	PART NUMBER	QTY	PART NAME 1 2 3 4 5 6 (PRODUCT LEVEL)	SEE PAGE
	1	1	**1U-2218**	1	RING-WEAR	
	2	1	**3J-9449**	1	LOCKNUT (2-1/2-12-THD)	
	3	1	**8T-1791**	1	SEAL AS	
	4	1	**8T-7568**	1	SEAL-O-RING	
	5	1	**132-4907**	1	RING-WEAR	
	6	1	**158-3028**	1	RING-BACKUP	
	7	1	**246-5613**	1	HEAD	
	8	1	**246-5614**	1	PISTON	
	9	1	**311-9316**	1	SEAL AS-BUFFER	
	10	1	**311-9318**	1	SEAL-WIPER	
	11	1	**364-0087**	1	SEAL-U-CUP	
	12	1	**373-8619**	1	ROD AS	
	13	1	**482-9224**	1	CYLINDER AS	
	13A	1	**9J-7099**	1	BUSHING	
	14	1	**5P-8250**	11	WASHER (28X49X5-MM THK)	
	15	1	**1D-4639**	11	BOLT (1-8X4-IN)	

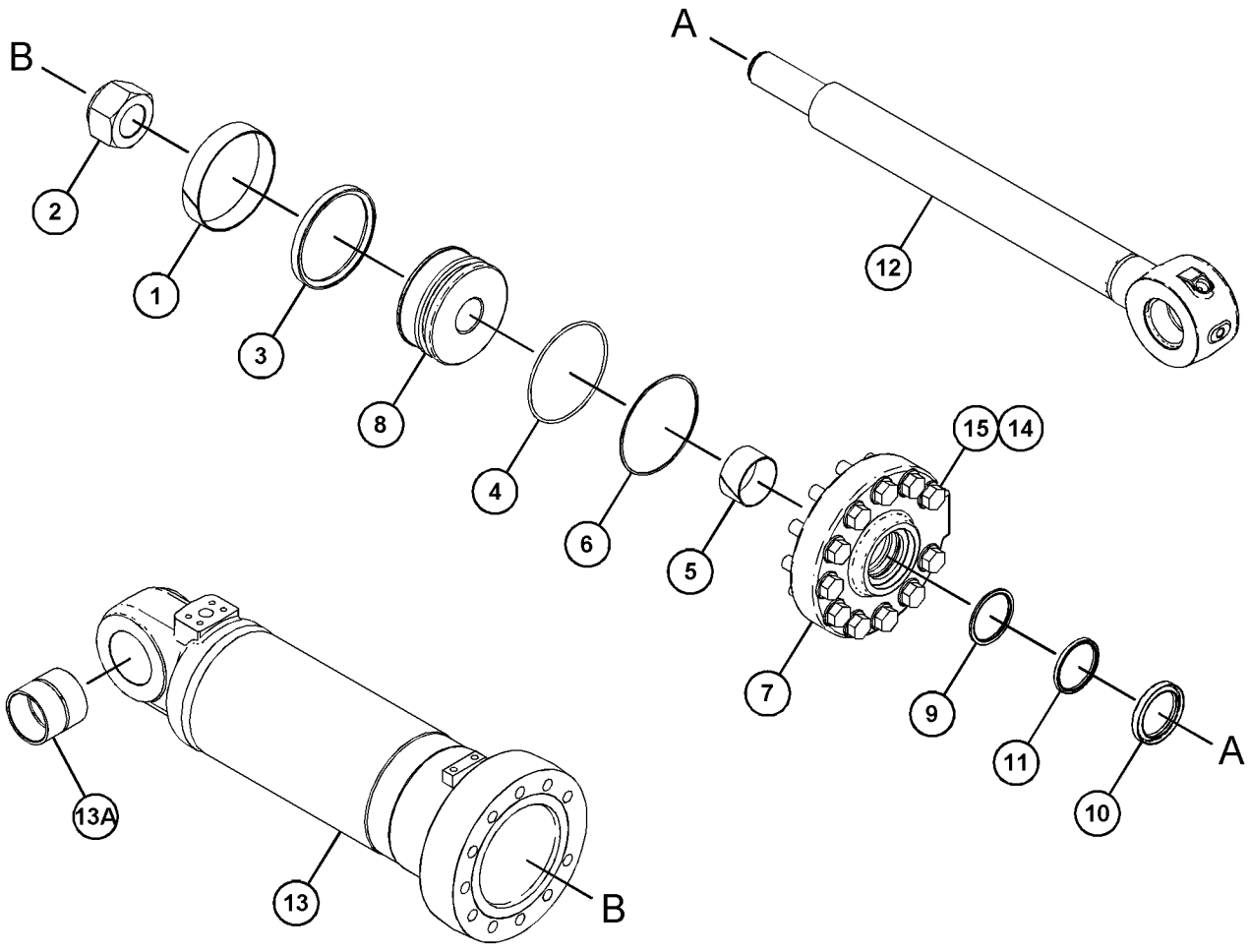

GRAPHIC #1 <END> g06038405

376-1286 FILTER GP-OIL—HYDRAULIC TANK RETURN

S/N: TNS1-UP

PART OF 447-8195 TANK & FILTER GP-HYDRAULIC

SMCS-5068, 5091, 5092

i06739981

NOTE	REF NO	GRAPHIC REF	PART NUMBER	QTY	PART NAME 1 2 3 4 5 6 (PRODUCT LEVEL)	SEE PAGE
	1	1	**376-1288**	1	FILTER ELEMENT-OIL	
	2	1	**378-1147**	1	COVER	
	3	1	**442-2479**	1	VALVE-BYPASS	
	4	1	**378-1149**	1	HOUSING AS-OIL FILTER	
	5	1	**378-1150**	1	FLANGE	
	6	1	**378-1491**	1	GASKET	
	7	1	**5K-1787**	1	SEAL-O-RING	
M	8	1	**9X-6032**	3	BOLT-SOCKET HEAD (M10X1.5X30-MM)	

M - METRIC PART

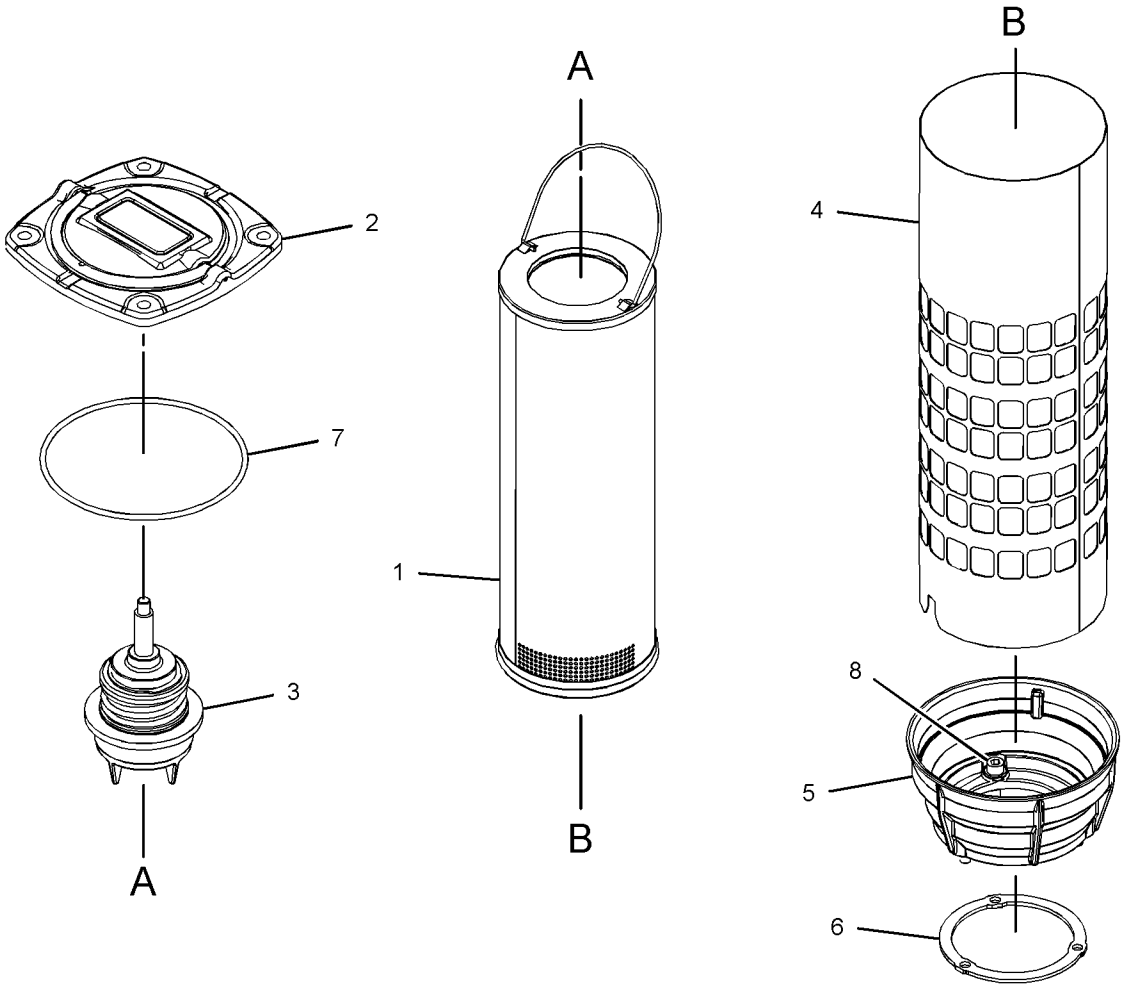

GRAPHIC #1 <END> g03344095

436-3444 FILTER GP-OIL

S/N: TNS1-UP

PART OF 436-7006 LINES GP-OIL COOLER

SMCS-5068, 5091, 5092 **i06791982**

NOTE	REF NO	GRAPHIC REF	PART NUMBER	QTY	PART NAME 1 2 3 4 5 6 (PRODUCT LEVEL)	SEE PAGE
	1	1	**490-0662**	1	INDICATOR AS-PRESSURE (FILTER BYPASS)	
		1	**102-8802**	1	KIT-RECEPTACLE (2-PIN)	
					(INCLUDES RECEPTACLE AS & WEDGE)	
J	2	1	**369-7506**	1	KIT-FILTER SEAL	
					(INCLUDES RINGS)	
J	3	1	**436-3443**	1	FILTER ELEMENT AS-OIL	
J	4	1	**437-9766**	1	HOUSING AS-FILTER (INCLUDES SEAL KIT)	

J - KIT MARKED J SERVICES PART(S) MARKED J

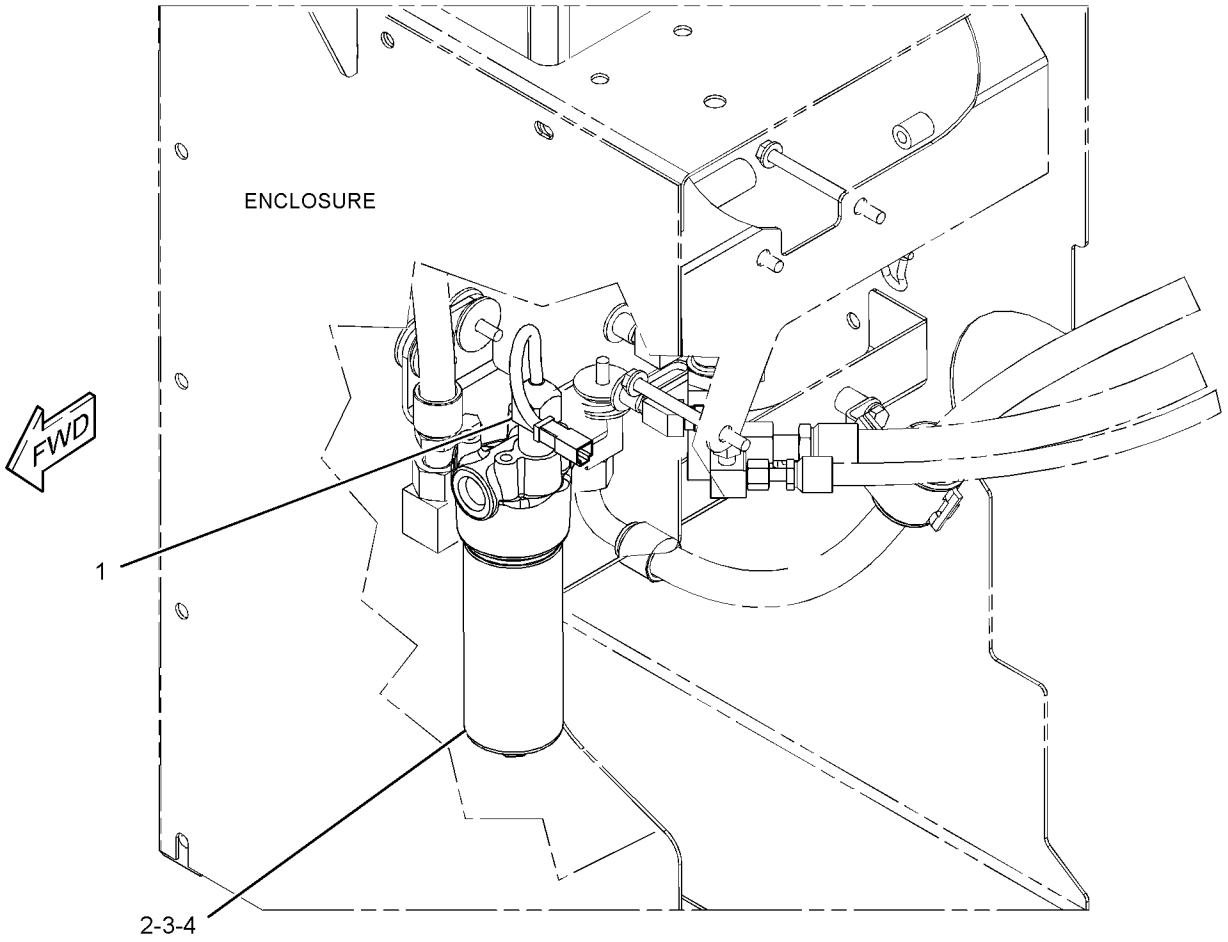

GRAPHIC #1 <END> g03432006

465-4985 GUARD GP-LIFT CYLINDER

S/N: TNS1-UP

PART OF 507-9161 SPECIAL AR-WHEEL LOADER

SMCS-5102, 7164

i06809573

NOTE	REF NO	GRAPHIC REF	PART NUMBER	QTY	PART NAME 1 2 3 4 5 6 (PRODUCT LEVEL)	SEE PAGE
	1	1	**454-5263**	1	GUARD AS	
		1	**162-2480**	6	RIVET	
Y	2	1	*465-6092*	2	GUARD GP-LIFT CYLINDER	600
	3	1	**222-9151**	8	WASHER-HARD (11X32X5-MM THK)	
	4	1	**8T-4121**	4	WASHER-HARD (11X21X2.5-MM THK)	
M	5	1	**8T-4136**	4	BOLT (M10X1.5X25-MM)	
M	6	1	**8T-4195**	8	BOLT (M10X1.5X30-MM)	

M - METRIC PART
Y - SEPARATE ILLUSTRATION

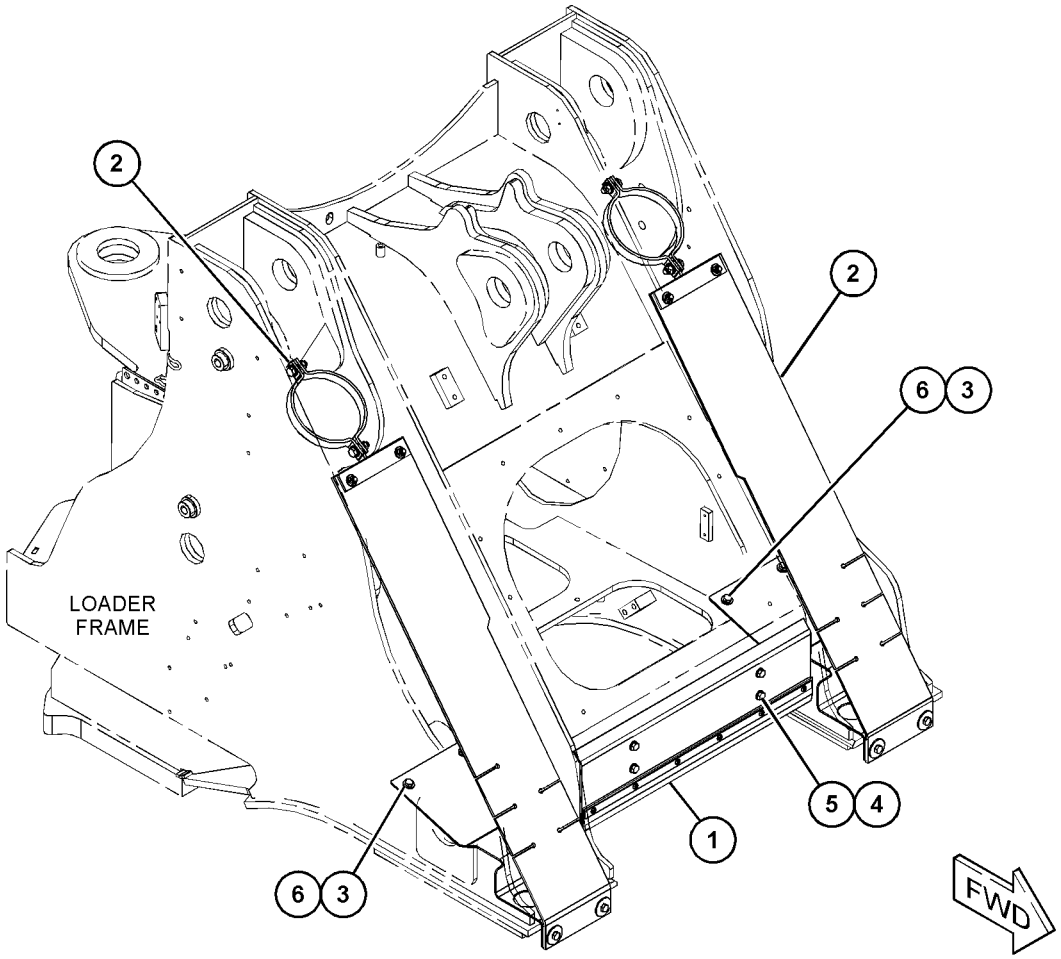

GRAPHIC #1

<END>

g06042136

465-6092 GUARD GP-LIFT CYLINDER

S/N: TNS1-UP

PART OF 465-4985 GUARD GP-LIFT CYLINDER

SMCS-5102, 7164 **i06809576**

NOTE	REF NO	GRAPHIC REF	PART NUMBER	QTY	PART NAME 1 2 3 4 5 6 (PRODUCT LEVEL)	SEE PAGE
M	1	1	**8T-4183**	2	BOLT (M12X1.75X40-MM)	
	2	1	**8T-4223**	4	WASHER-HARD (13.5X25.5X3-MM THK)	
	3	1	**127-8889**	1	PLATE	
	4	1	**211-5004**	1	PLATE AS	
	5	1	**391-7816**	1	CLIP	
	6	1	**391-7817**	1	CLIP	
	7	1	**465-6093**	1	GUARD	
	8	1	**466-6946**	1	PLATE AS	
M		1	**8T-3490**	2	NUT-WELD (M10X1.5-THD)	
M	9	1	**6V-7687**	2	LOCKNUT (M12X1.75-THD)	
M	10	1	**6V-7744**	2	LOCKNUT (M10X1.5-THD)	
	11	1	**7X-7729**	2	WASHER (11X25X3-MM THK)	
M	12	1	**8T-4196**	2	BOLT (M10X1.5X35-MM)	

M - METRIC PART

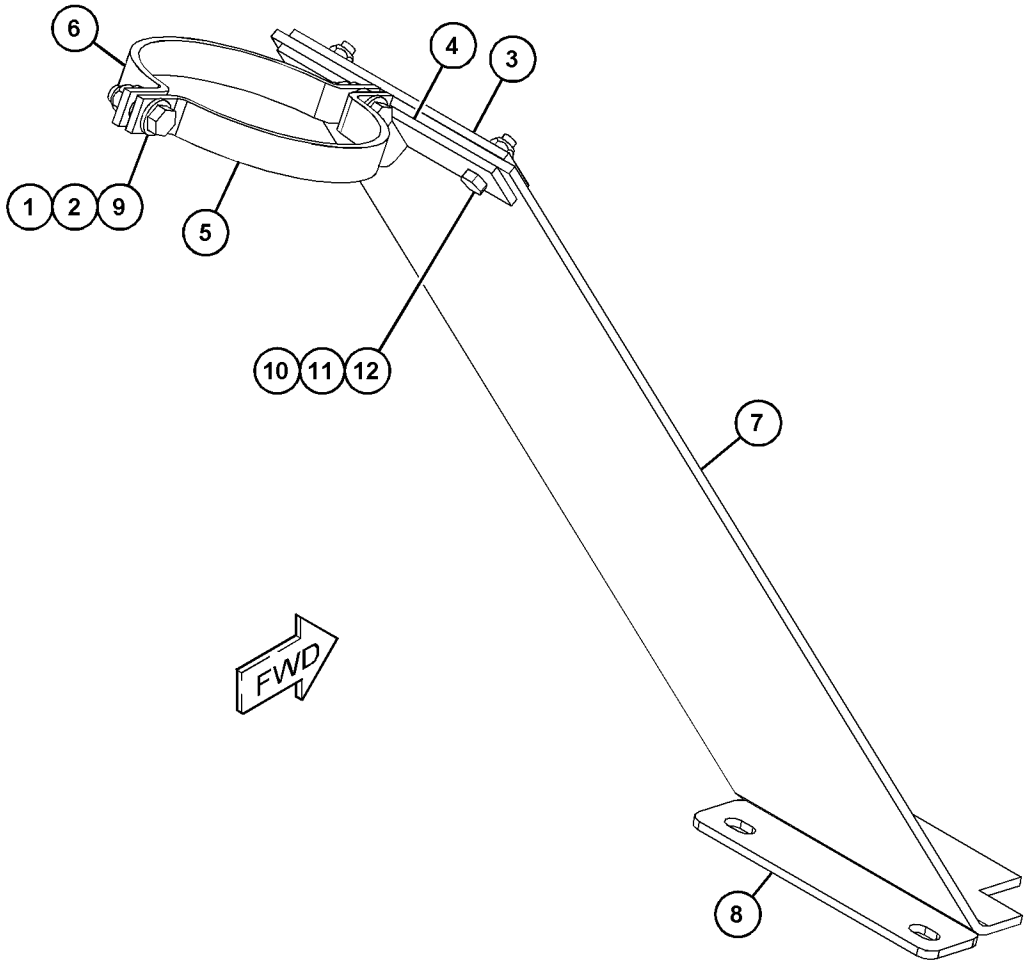

GRAPHIC #1 <END> g06045710

508-1550 GUARD GP-LINES

S/N: TNS1-UP
VARIABLE PITCH FAN
PART OF 505-1548 CONTROL AR-FAN

SMCS-7167 **i06761656**

NOTE	REF NO	GRAPHIC REF	PART NUMBER	QTY	PART NAME 1 2 3 4 5 6 (PRODUCT LEVEL)	SEE PAGE
E	1	1	**7Y-5074**		GUARD-HOSE (41-CM)	

E - ORDER BY THE CENTIMETER

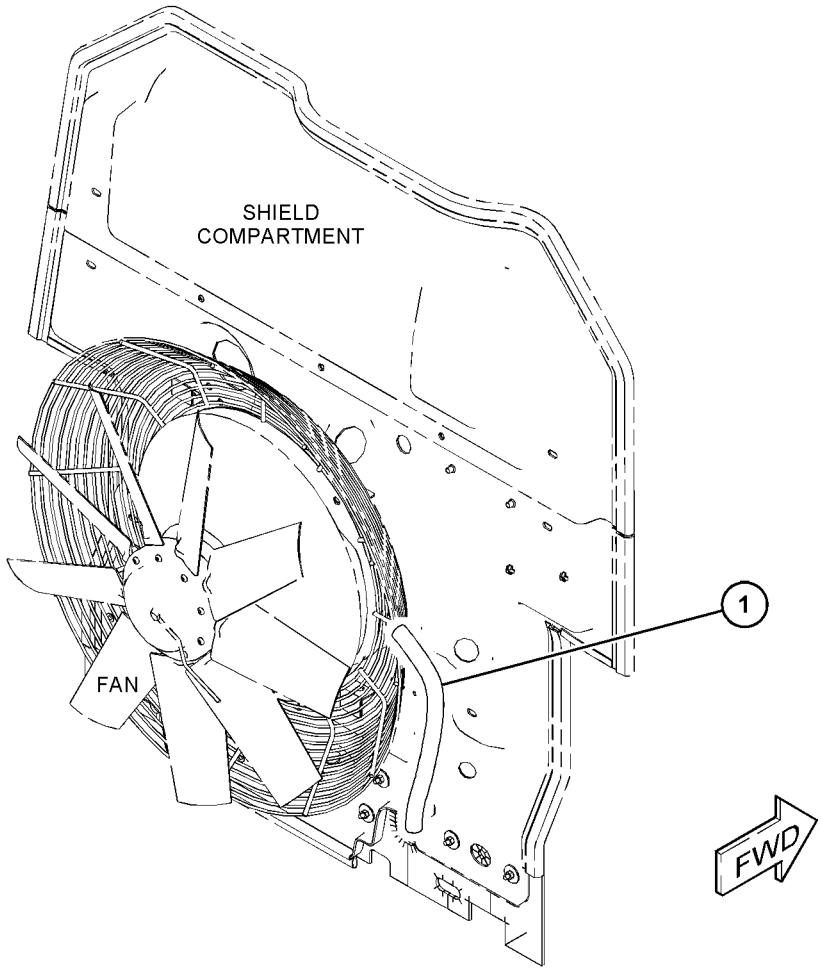

GRAPHIC #1 <END> g06104308

495-6107 GUARD GP-TILT CYLINDER

S/N: TNS1-UP

PART OF 492-4034 DISTRIBUTION AR

SMCS-5104, 7164 **i06808310**

NOTE	REF NO	GRAPHIC REF	PART NUMBER	QTY	PART NAME 1 2 3 4 5 6 (PRODUCT LEVEL)	SEE PAGE
	1	1	**495-6191**	1	CLAMP	
	2	1	**495-6192**	1	CLAMP AS	
M		1	**8T-3490**	2	NUT-WELD (M10X1.5-THD)	
	3	1	**495-6193**	1	GUARD AS	
		1	**4N-0684**	2	DOWEL	
M		1	**8T-3612**	4	NUT-WELD (M8X1.25-THD)	
	4	1	**495-6194**	1	CHANNEL AS (LH)	
	5	1	**495-6195**	1	CHANNEL AS (RH)	
	6	1	**495-6196**	1	BRACKET AS	
M		1	**8T-3490**	2	NUT-WELD (M10X1.5-THD)	
	7	1	**495-6197**	1	CLAMP AS	
M		1	**8T-3490**	2	NUT-WELD (M10X1.5-THD)	
	8	1	**495-6198**	1	CLAMP	
	9	1	**500-0714**	2	PIN AS	
M	10	1	**105-3482**	4	BOLT-SOCKET HEAD (M8X1.25X16-MM)	
M	11	1	**7X-2454**	2	BOLT (M24X3X110-MM)	
	12	1	**7X-7729**	4	WASHER (11X25X3-MM THK)	
	13	1	**8T-4121**	8	WASHER-HARD (11X21X2.5-MM THK)	
M	14	1	**8T-4133**	2	NUT (M10X1.5-THD)	
M	15	1	**8T-4136**	4	BOLT (M10X1.5X25-MM)	
	17	1	**8T-4167**	2	WASHER-HARD (26X44X4-MM THK)	
M	18	1	**8T-4183**	2	BOLT (M12X1.75X40-MM)	
M	19	1	**8T-4195**	4	BOLT (M10X1.5X30-MM)	
	20	1	**8T-4223**	4	WASHER-HARD (13.5X25.5X3-MM THK)	
	21	1	**8T-4224**	4	WASHER-HARD (8.8X16X2-MM THK)	
M	22	1	**8T-4244**	2	NUT (M12X1.75-THD)	
	23	1	**8T-4821**	2	WASHER (13.5X40X3-MM THK)	

M - METRIC PART

495-6107 **GUARD GP-TILT CYLINDER (**contd.**)** **i06808310**

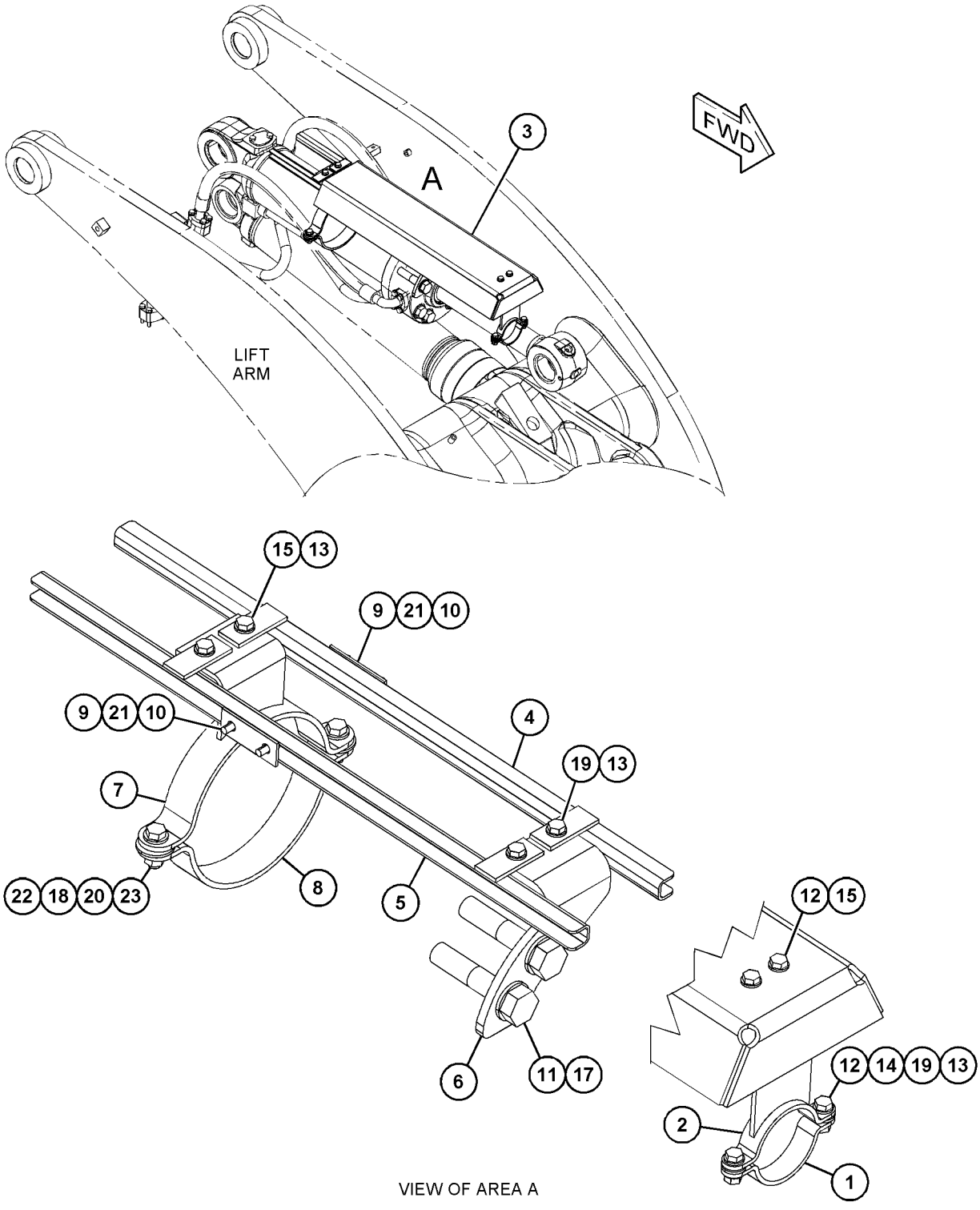

GRAPHIC #1 <END> g06121158

367-7557 HEAD GP-PUMP

S/N: TNS1-UP

PART OF 466-3770 PUMP GP-PISTON

SMCS-5070 **i05784349**

NOTE	REF NO	GRAPHIC REF	PART NUMBER	QTY	PART NAME 1 2 3 4 5 6 (PRODUCT LEVEL)	SEE PAGE
	1	1	**245-8472**	2	PLUG-EXPANSION	
	2	1	**292-8061**	1	PLUG-EXPANSION	
	3	1	**362-0720**	1	HEAD AS	
	4	1	**365-8999**	1	BEARING AS	
	5	1	**282-8827**	3	PLUG	

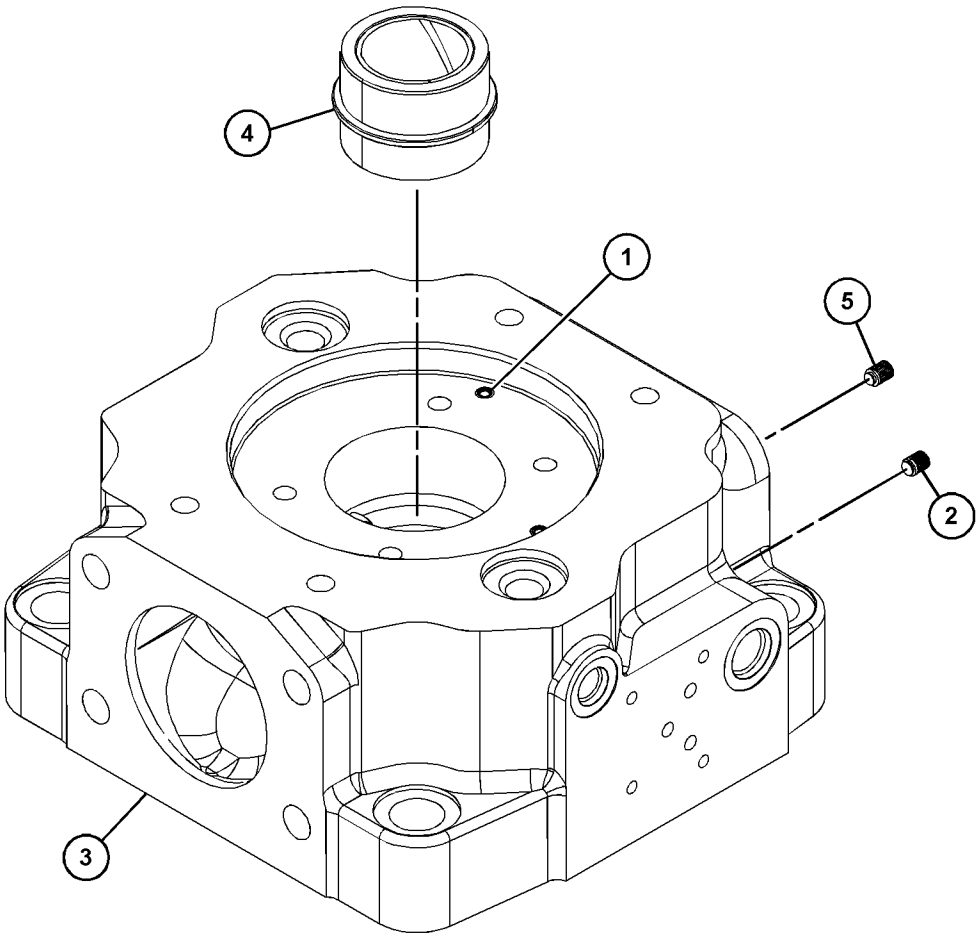

GRAPHIC #1 <END> g03503796

463-8880 HYDRAULIC AR

S/N: TNS1-UP

PART OF 456-5788 COMMON AR

SMCS-5051 **i06796504**

NOTE	PART NUMBER	QTY	PART NAME 1 2 3 4 5 6 (PRODUCT LEVEL)	SEE PAGE
Y	*436-7003*	1	PUMP & MTG GP-HYDRAULIC	642
Y	*415-7495*	1	TANK & MTG GP-HYDRAULIC	662

Y - SEPARATE ILLUSTRATION

<END>

492-4021 HYDRAULIC AR

S/N: TNS1-UP

PART OF 492-4020, 507-9161 SPECIAL AR-WHEEL LOADER

SMCS-5051 **i06810866**

NOTE	PART NUMBER	QTY	PART NAME 1 2 3 4 5 6 (PRODUCT LEVEL)	SEE PAGE
Y	*436-7004*	1	CONTROL GP-SERVICE BRAKE	572
Y	*364-9803*	1	LINES GP-AIR CONDITIONER	801
Y	*489-0460*	1	LINES GP-DIAGNOSTIC	936
Y	*360-0315*	1	LINES GP-GREASE	503
Y	*415-8197*	1	LINES GP-HEATER	804
Y	*511-0268*	1	LINES GP-HYDRAULIC	619
Y	*436-7006*	1	LINES GP-OIL COOLER	60
Y	*360-0310*	1	LINES GP-TORQUE CONV COOLER	385
Y	*480-2084*	1	WIRING GP-CHASSIS	244
Y	*436-6944*	1	WIRING GP-ENGINE	255
Y	*480-2083*	1	WIRING GP-CHASSIS (FRONT)	241
Y	*418-8030*	1	WIRING GP-OBJECT DETECTION (CAMERA)	261

Y - SEPARATE ILLUSTRATION

<END>

507-6190 HYDRAULIC AR

S/N: TNS1-UP

LOGGING

SMCS-5051 **i06809548**

NOTE	PART NUMBER	QTY	PART NAME 1 2 3 4 5 6 (PRODUCT LEVEL)	SEE PAGE
Y	**491-2079**	1	ARM & BEARING AS-LIFT	735
Y	**489-4697**	1	CYLINDER GP-LIFT	592
Y	**494-5323**	1	CYLINDER GP-LIFT	593
Y	*482-9218*	1	CYLINDER GP-TILT	596
Y	*436-7008*	1	LINES GP-GREASE	504
Y	*494-5021*	1	LINES GP-LIFT CYLINDER	629
Y	*465-8745*	1	LINES GP-TILT CYLINDER	633
Y	*466-1902*	1	SENSOR & MTG GP-LIFT POSITION	199
Y	*303-2243*	1	SENSOR & MTG GP-TILT POSITION	200
Y	*436-7007*	1	VALVE GP-MANUAL	697
Y	*418-8038*	1	WIRING GP-SENSOR (TILT)	266

Y - SEPARATE ILLUSTRATION

<END>

492-4022 HYDRAULIC AR-2 VALVE

S/N: TNS1-UP

PART OF 492-4033, 492-4034 DISTRIBUTION AR

SMCS-5051 **i06809531**

NOTE	PART NUMBER	QTY	PART NAME 1 2 3 4 5 6 (PRODUCT LEVEL)	SEE PAGE
Y	*505-5242*	1	GUARD GP-FRONT	463
Y	*494-5030*	1	VALVE & MTG GP-MAIN CONTROL	669

Y - SEPARATE ILLUSTRATION

<END>

492-4023 HYDRAULIC AR-2 VALVE

S/N: TNS1-UP

SMCS-5051 **i06809433**

NOTE	PART NUMBER	QTY	PART NAME 1 2 3 4 5 6 (PRODUCT LEVEL)	SEE PAGE
Y	*461-4444*	1	BOSS GP-LOADER FRAME (RIDE CONTROL)	412
Y	*511-0265*	1	CONTROL & LINES GP-RIDE	588
Y	*505-5242*	1	GUARD GP-FRONT	463
Y	*462-7025*	1	VALVE & MTG GP-MAIN CONTROL	666

Y - SEPARATE ILLUSTRATION

<END>

492-4025 HYDRAULIC AR-3 VALVE

S/N: TNS1-UP

RIDE CONTROL

SMCS-5051 **i06810495**

NOTE	PART NUMBER	QTY	PART NAME 1 2 3 4 5 6 (PRODUCT LEVEL)	SEE PAGE
Y	*463-5397*	1	BOSS GP-LIFT ARM	737
Y	*461-4444*	1	BOSS GP-LOADER FRAME (RIDE CONTROL)	412
Y	*461-4445*	1	BOSS GP-LOADER FRAME	413
Y	*511-0265*	1	CONTROL & LINES GP-RIDE	588
Y	*505-5242*	1	GUARD GP-FRONT	463
Y	*505-5231*	1	LINES GP-FRONT	614
Y	*462-7025*	1	VALVE & MTG GP-MAIN CONTROL	666
Y	*505-5229*	1	VALVE & MTG GP-MAIN CONTROL	671
Y	*501-1071*	1	WIRING GP-VALVE	267

Y - SEPARATE ILLUSTRATION

<END>

492-4028 HYDRAULIC AR-STANDARD LIFT

S/N: TNS1-UP

PART OF 492-4033, 492-4034 DISTRIBUTION AR

SMCS-4257, 5057, 5104 **i06810335**

NOTE	PART NUMBER	QTY	PART NAME 1 2 3 4 5 6 (PRODUCT LEVEL)	SEE PAGE
Y	**491-2079**	1	ARM & BEARING AS-LIFT	735
Y	**489-4697**	1	CYLINDER GP-LIFT	592
Y	**494-5323**	1	CYLINDER GP-LIFT	593
Y	*482-9215*	1	CYLINDER GP-TILT	594
Y	*436-7008*	1	LINES GP-GREASE	504
Y	*494-5021*	1	LINES GP-LIFT CYLINDER	629
Y	*436-7001*	1	LINES GP-TILT CYLINDER	631
Y	*466-1902*	1	SENSOR & MTG GP-LIFT POSITION	199
Y	*303-2243*	1	SENSOR & MTG GP-TILT POSITION	200
Y	*436-7007*	1	VALVE GP-MANUAL	697
Y	*418-8038*	1	WIRING GP-SENSOR (TILT)	266

Y - SEPARATE ILLUSTRATION

<END>

323-9292 LINES GP-COUPLER

S/N: TNS1-UP

FOR USE WITH 950H,962H,966H & 972H WHEEL LOADERS

SMCS-5057, 5133

i03909997

NOTE	REF NO	GRAPHIC REF	PART NUMBER	QTY	PART NAME 1 2 3 4 5 6 (PRODUCT LEVEL)	SEE PAGE
	1	1	**6W-2888**	2	FITTING AS (QUICK DISCONNECT, MALE)	
	2	1	**6W-2890**	2	CAP AS-DUST	
	3	1	**150-5430**	2	ADAPTER AS	
					(EACH INCLUDES)	
		1	**6V-9746**	1	SEAL-O-RING	
		1	**163-3343**	1	SEAL	
	4	1	**151-2184**	2	PLATE-BRACKET	
I	5	1	**323-9293**	2	HOSE AS	
	6	1	**2P-1293**	2	LOCKNUT (1-3/16-12-THD)	
	7	1	**4J-0522**	2	SEAL-O-RING	
M	8	1	**8T-4194**	4	BOLT (M12X1.75X50-MM)	
	9	1	**8T-4223**	8	WASHER-HARD (13.5X25.5X3-MM THK)	
M	10	1	**8T-4244**	4	NUT (M12X1.75-THD)	

I - REFER TO HYDRAULIC INFORMATION SYSTEM
M - METRIC PART

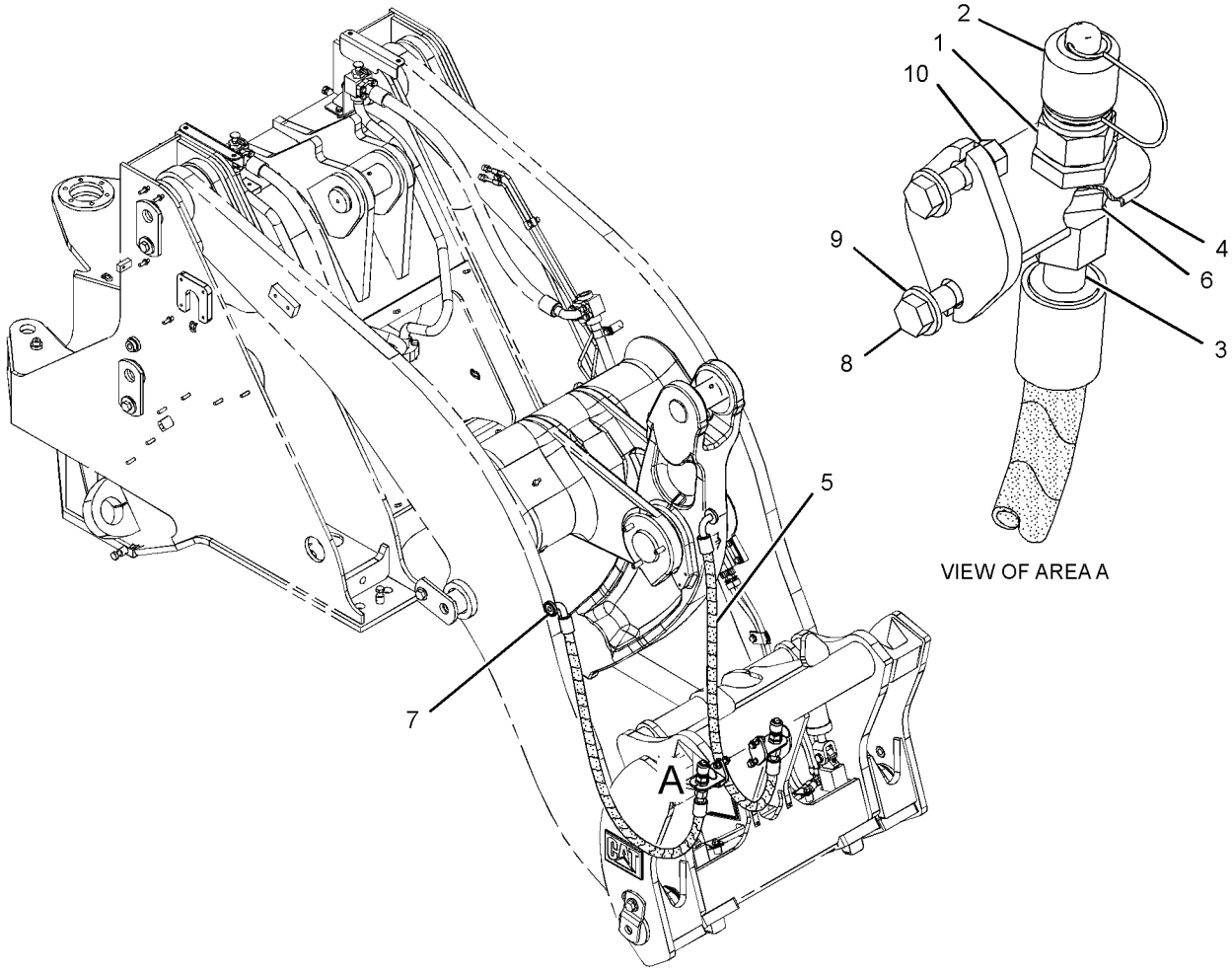

GRAPHIC #1

<END>

g01694278

436-7024 LINES GP-COUPLER

S/N: TNS1-UP

PART OF 463-8873 COUPLER AR-QUICK

SMCS-5057, 5133 **i06796483**

NOTE	REF NO	GRAPHIC REF	PART NUMBER	QTY	PART NAME 1 2 3 4 5 6 (PRODUCT LEVEL)	SEE PAGE
	1	1	**7K-1181**	2	STRAP-CABLE (5.72-MM DIA)	
	2	1	**123-4750**	1	VALVE AS-CHECK	
		1	**3J-1907**	1	SEAL-O-RING	
		1	**6V-8397**	1	SEAL-O-RING	
	3	1	*148-8367*	3	ELBOW AS (90-DEG)	
					(EACH INCLUDES)	
		1	**6V-9850**	1	ELBOW	
		1	**6V-8397**	1	SEAL-O-RING	
	4	1	**154-6626**	1	BRACKET AS	
	5	1	**228-7080**	1	BRACKET AS	
M		1	**8T-3490**	1	NUT-WELD (M10X1.5-THD)	
Y	6	1	**416-4796**	1	VALVE & MTG GP-COUPLER	664
I	7	1	**436-7162**	1	HOSE AS	
	8	1	**460-9977**	1	BRACKET AS	
M		1	**110-2023**	1	STUD-WELD (M10X1.5X25-MM)	
I	9	1	**461-0010**	1	HOSE AS	
I	10	1	**462-7015**	1	HOSE AS	
	11	1	**494-5014**	1	TUBE AS	
	12	1	**494-5015**	1	TUBE AS	
	13	1	**494-5016**	1	BRACKET AS	
M		1	**8T-3490**	2	NUT-WELD (M10X1.5-THD)	
	14	1	**132-5789**	1	CLIP	
	15	1	*148-8336*	3	CONNECTOR AS (45-DEG ELBOW)	
					(EACH INCLUDES)	
		1	**6V-8636**	1	CONNECTOR	
		1	**3J-1907**	1	SEAL-O-RING	
		1	**6V-8397**	1	SEAL-O-RING	
	16	1	*148-8378*	1	ELBOW AS (90-DEG)	
		1	**6V-8724**	1	ELBOW	
		1	**3J-1907**	1	SEAL-O-RING	
		1	**6V-8397**	1	SEAL-O-RING	
	17	1	**202-2762**	1	CLIP	
	18	1	**2R-1866**	2	CLAMP	
M	19	1	**344-5675**	1	NUT (M10X1.5-THD)	
	20	1	**4P-7581**	1	CLIP	
	21	1	**5P-7462**	1	CLIP (SLOT)	
	22	1	**5P-7463**	1	CLIP (TAB)	
	23	1	**6V-0683**	1	GROMMET (19-MM ID)	
	24	1	**6V-8397**	2	SEAL-O-RING	
	25	1	**7X-7729**	1	WASHER (11X25X3-MM THK)	
	26	1	**8B-6127**	4	CLIP	
	27	1	**8T-4121**	10	WASHER-HARD (11X21X2.5-MM THK)	
M	28	1	**8T-4136**	3	BOLT (M10X1.5X25-MM)	
M	29	1	**8T-4137**	3	BOLT (M10X1.5X20-MM)	
M	30	1	**8T-4139**	2	BOLT (M12X1.75X30-MM)	
M	31	1	**8T-4178**	2	BOLT (M10X1.5X90-MM)	
M	32	1	**8T-4195**	2	BOLT (M10X1.5X30-MM)	
	33	1	**8T-4223**	2	WASHER-HARD (13.5X25.5X3-MM THK)	

436-7024 **LINES GP-COUPLER (**contd.**)** **i06796483**

NOTE	REF NO	GRAPHIC REF	PART NUMBER	QTY	PART NAME 1 2 3 4 5 6 (PRODUCT LEVEL)	SEE PAGE

I - REFER TO HYDRAULIC INFORMATION SYSTEM
M - METRIC PART
Y - SEPARATE ILLUSTRATION

436-7024 **LINES GP-COUPLER (**contd.**)** **i06796483**

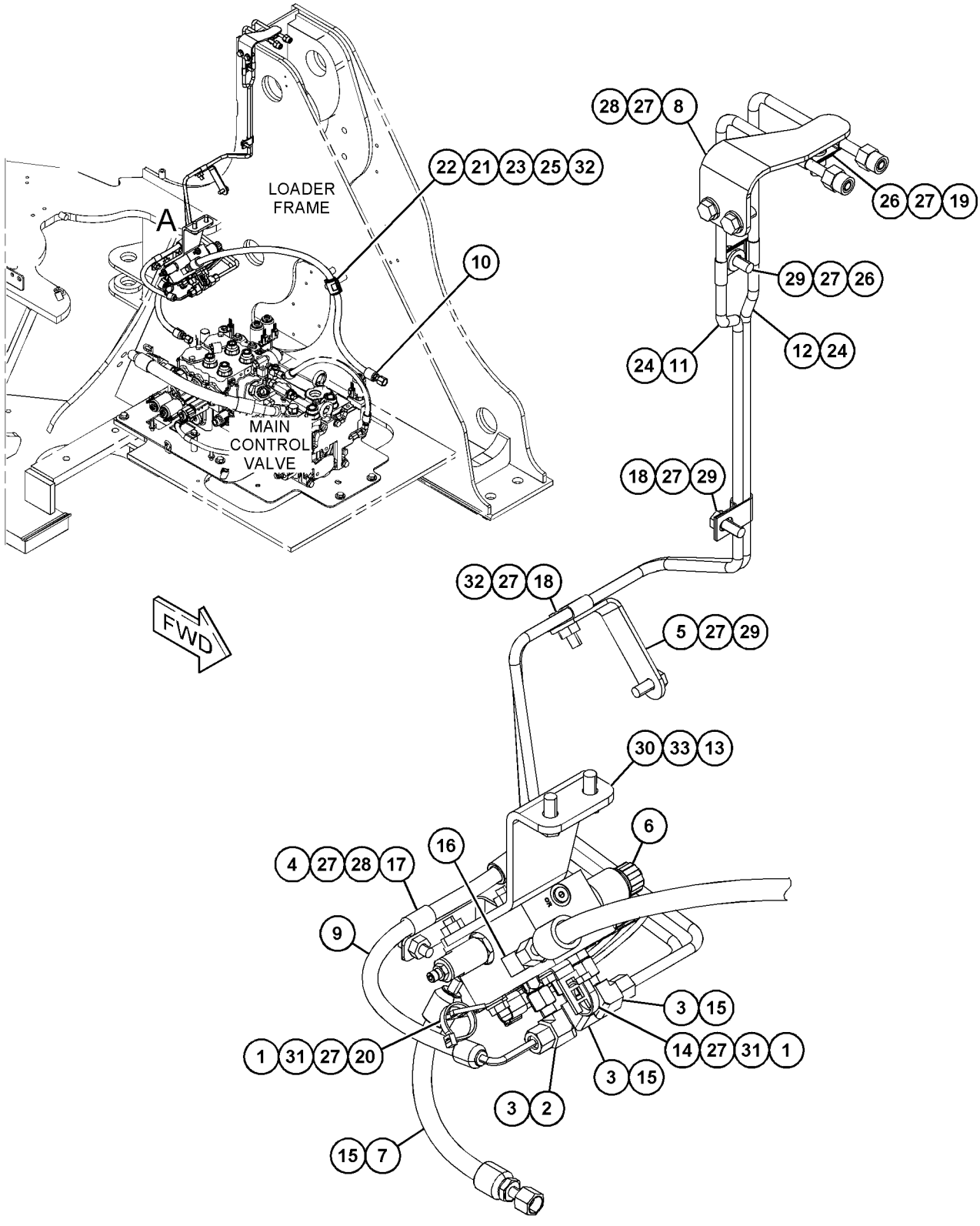

VIEW OF AREA A

GRAPHIC #1 <END> g06048086

460-9973 LINES GP-COUPLER

S/N: TNS1-UP
STANDARD LIFT, FRONT
PART OF 463-8873 COUPLER AR-QUICK

SMCS-5057, 5133

i06797187

NOTE	REF NO	GRAPHIC REF	PART NUMBER	QTY	PART NAME 1 2 3 4 5 6 (PRODUCT LEVEL)	SEE PAGE
	1	1	**112-1817**	2	VALVE-BALL	
	2	1	**230-7058**	1	BRACKET	
	3	1	**460-9971**	1	TUBE AS	
	4	1	**460-9972**	1	TUBE AS	
I	5	1	**460-9976**	2	HOSE AS	
	6	1	**096-6166**	8	WASHER-HARD (4.5X9X1-MM THK)	
M	7	1	**121-4405**	8	BOLT (M4X0.7X12-MM)	
	8	1	*148-8336*	4	CONNECTOR AS (45-DEG ELBOW)	
					(EACH INCLUDES)	
		1	**3J-1907**	1	SEAL-O-RING	
		1	**6V-8397**	1	SEAL-O-RING	
		1	**6V-8636**	1	CONNECTOR	
	9	1	**1F-7567**	3	CLIP	
	10	1	**6V-8397**	2	SEAL-O-RING	
	11	1	**6V-9829**	2	CAP	
	12	1	**7B-1597**	3	CLIP	
	13	1	**8B-6127**	2	CLIP	
	14	1	**8T-4121**	8	WASHER-HARD (11X21X2.5-MM THK)	
M	15	1	**8T-4137**	5	BOLT (M10X1.5X20-MM)	
M	16	1	**8T-4191**	3	BOLT (M10X1.5X16-MM)	

I - REFER TO HYDRAULIC INFORMATION SYSTEM
M - METRIC PART

460-9973 **LINES GP-COUPLER (**contd.**)** **i06797187**

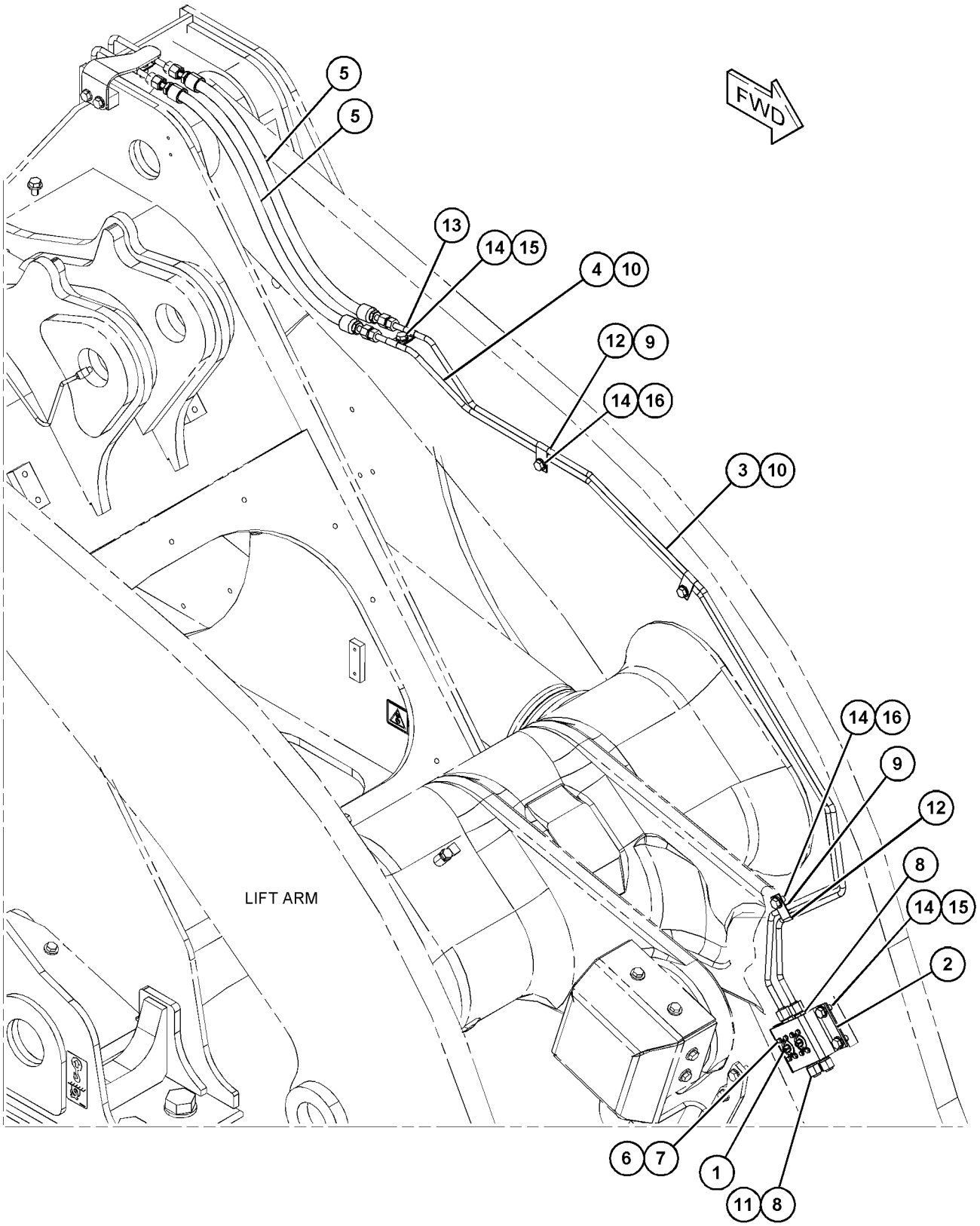

GRAPHIC #1 <END> g06021815

505-5231 LINES GP-FRONT

S/N: TNS1-UP

3-VALVE

PART OF 492-4025 HYDRAULIC AR-3 VALVE

SMCS-5057 **i06819114**

NOTE	REF NO	GRAPHIC REF	PART NUMBER	QTY	PART NAME 1 2 3 4 5 6 (PRODUCT LEVEL)	SEE PAGE
	1	1	**197-3295**	8	FLANGE-HALF	
	2	1	**436-7058**	2	BRACKET	
	3	1	**436-7061**	1	BRACKET AS	
M		1	**8T-3490**	2	NUT-WELD (M10X1.5-THD)	
	4	1	**436-7062**	1	BRACKET AS	
M		1	**8T-3490**	2	NUT-WELD (M10X1.5-THD)	
	5	1	**436-7135**	2	PLATE	
	6	1	**462-6972**	2	PLATE	
I	7	1	**462-6978**	2	HOSE AS	
	8	1	**462-6982**	1	TUBE AS	
	9	1	**462-6983**	1	TUBE AS	
	10	1	**505-5232**	1	TUBE AS	
	11	1	**505-5233**	1	TUBE AS	
	12	1	**4J-0520**	2	SEAL-O-RING	
	13	1	**4J-0522**	4	SEAL-O-RING	
	14	1	**5H-4020**	2	COVER	
	15	1	**5P-1076**	8	WASHER-HARD (13.5X30X4-MM THK)	
	16	1	**7X-3392**	16	WASHER-HARD (13.5X22.5X3-MM THK)	
	17	1	**7X-7729**	12	WASHER (11X25X3-MM THK)	
	18	1	**8C-3206**	4	FLANGE-HALF	
	19	1	**8T-4121**	8	WASHER-HARD (11X21X2.5-MM THK)	
M	20	1	**8T-4136**	8	BOLT (M10X1.5X25-MM)	
M	21	1	**8T-4139**	8	BOLT (M12X1.75X30-MM)	
M	22	1	**8T-4192**	8	BOLT (M12X1.75X25-MM)	
M	23	1	**8T-4195**	4	BOLT (M10X1.5X30-MM)	
M	24	1	**8T-4196**	8	BOLT (M10X1.5X35-MM)	
	25	1	**8T-4223**	8	WASHER-HARD (13.5X25.5X3-MM THK)	
M	26	1	**8T-4956**	16	BOLT (M12X1.75X35-MM)	

I - REFER TO HYDRAULIC INFORMATION SYSTEM
M - METRIC PART

505-5231 **LINES GP-FRONT (**contd.**)** **i06819114**

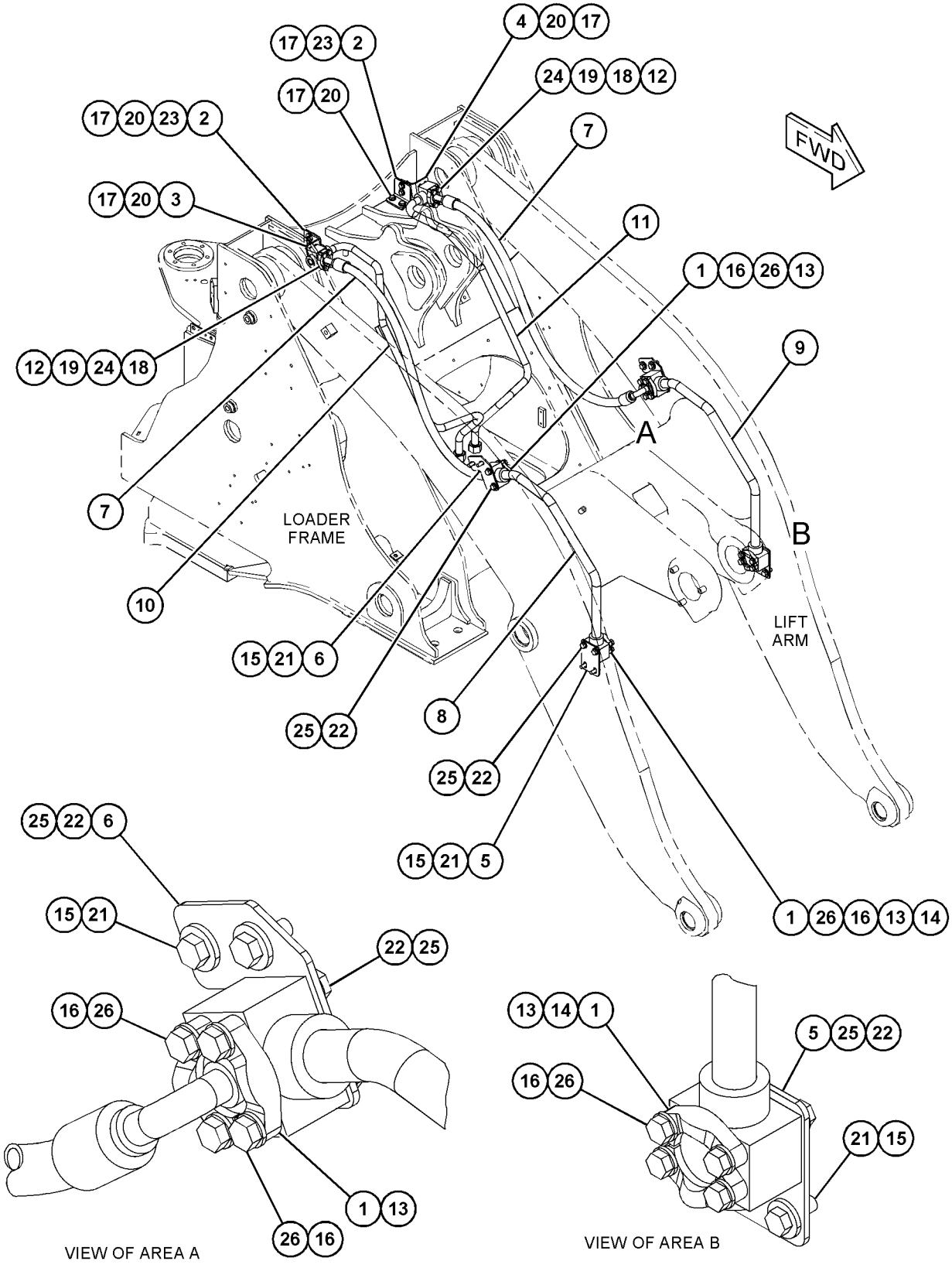

GRAPHIC #1 <END> g06128707

360-0338 LINES GP-HYDRAULIC

S/N: TNS1-UP

PART OF 386-7382, 386-7383 COLD WEATHER AR

SMCS-5057 **i06761565**

NOTE	REF NO	GRAPHIC REF	PART NUMBER	QTY	PART NAME 1 2 3 4 5 6 (PRODUCT LEVEL)	SEE PAGE
	1	1	**7K-1181**	4	STRAP-CABLE (5.72-MM DIA)	
	2	1	*148-8357*	2	ELBOW AS (90-DEG)	
					(EACH INCLUDES)	
		1	**5K-9090**	1	SEAL-O-RING	
		1	**6V-9008**	1	ELBOW	
		1	**7M-8485**	1	SEAL-O-RING	
Y	3	1	**361-5941**	1	VALVE GP-SOLENOID (24-VOLT) (HYDRAULIC)	707
I	4	1	**391-6959**	1	HOSE AS	
	5	1	**450-5480**	1	TUBE AS	
	6	1	**463-8080**	1	BRACKET AS	
M		1	**8T-3490**	4	NUT-WELD (M10X1.5-THD)	
		1	**144-8976**	2	SPACER (11X25.4X26-MM THK)	
	7	1	**091-9035**	1	SPACER (11X25X20-MM THK)	
	8	1	*148-8362*	1	ELBOW AS	
		1	**3D-2824**	1	SEAL-O-RING	
		1	**5K-9090**	1	SEAL-O-RING	
		1	**8T-6684**	1	ELBOW	
M	9	1	**196-6723**	1	BOLT (M10X1.5X70-MM)	
	10	1	**206-2423**	2	SADDLE	
	11	1	**7X-3391**	2	WASHER-HARD (13.5X32X6-MM THK)	
	12	1	**7X-7729**	2	WASHER (11X25X3-MM THK)	
	13	1	**8T-4121**	2	WASHER-HARD (11X21X2.5-MM THK)	
M	14	1	**8T-4178**	2	BOLT (M10X1.5X90-MM)	
M	15	1	**8T-6466**	2	BOLT (M10X1.5X60-MM)	
	16	1	**8T-7934**	1	WASHER-HARD (11X21X5-MM THK)	
E	17	1	**206-2724**		GUARD-HOSE (35-CM)	

E - ORDER BY THE CENTIMETER
I - REFER TO HYDRAULIC INFORMATION SYSTEM
M - METRIC PART
Y - SEPARATE ILLUSTRATION

360-0338 **LINES GP-HYDRAULIC (**contd.**)** **i06761565**

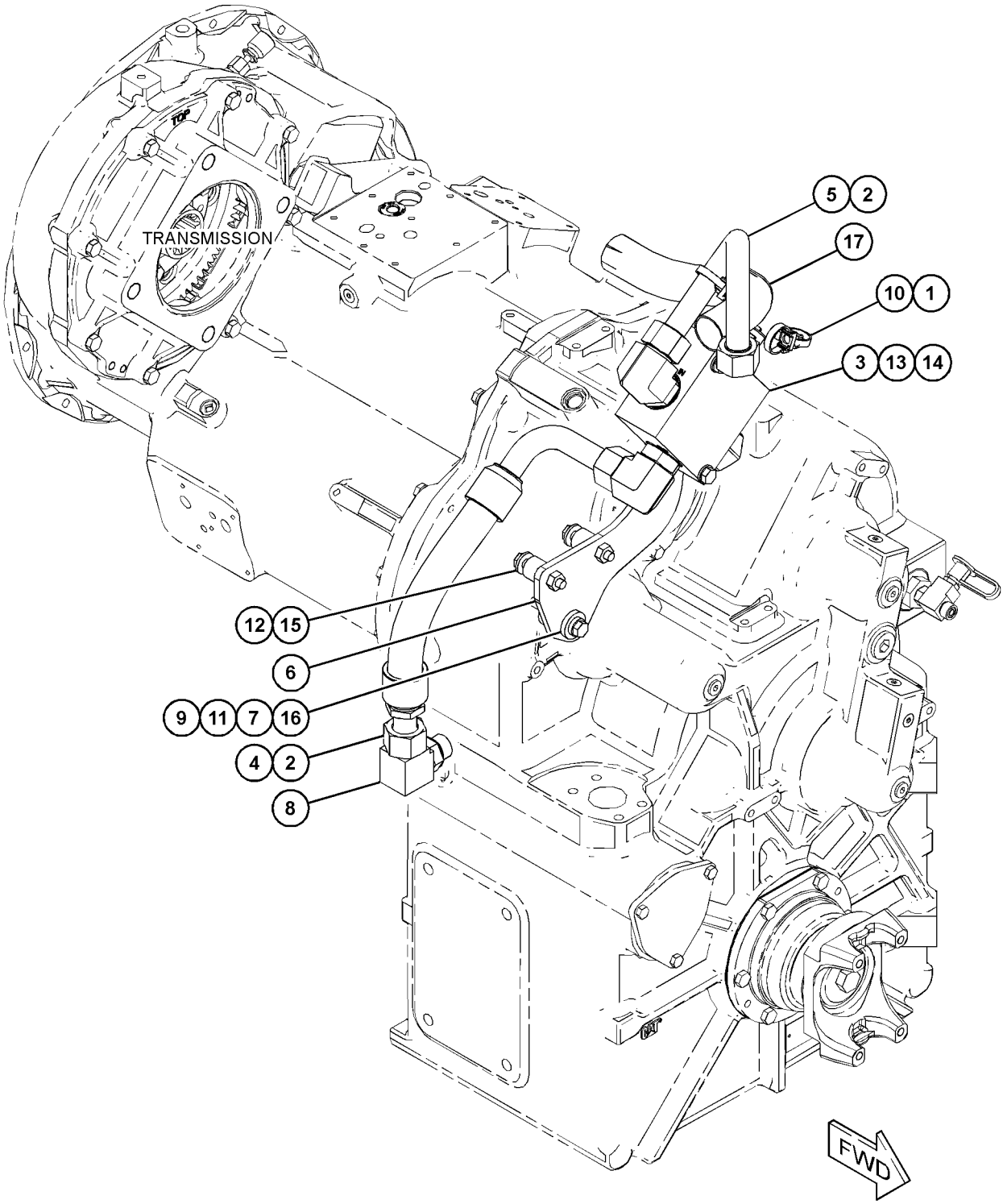

GRAPHIC #1 <END> g06123327

494-5025 LINES GP-HYDRAULIC

S/N: TNS1-UP

PART OF 508-7627, 508-7631 SUPPRESSION AR-SOUND

SMCS-5057 **i06810289**

NOTE	REF NO	GRAPHIC REF	PART NUMBER	QTY	PART NAME 1 2 3 4 5 6 (PRODUCT LEVEL)	SEE PAGE
	1	1	**7K-1181**	2	STRAP-CABLE (5.72-MM DIA)	
	2	1	**489-0449**	1	HOSE AS	
	3	1	**1P-3704**	1	SEAL-RECTANGULAR	
	4	1	**1P-5767**	2	FLANGE-HALF	
	5	1	**206-2423**	1	SADDLE	
	6	1	**4J-0520**	1	SEAL-O-RING	
	7	1	**8C-3206**	2	FLANGE-HALF	
	8	1	**8T-4121**	4	WASHER-HARD (11X21X2.5-MM THK)	
M	9	1	**8T-4194**	4	BOLT (M12X1.75X50-MM)	
M	10	1	**8T-4196**	4	BOLT (M10X1.5X35-MM)	
	11	1	**8T-4223**	4	WASHER-HARD (13.5X25.5X3-MM THK)	

M - METRIC PART

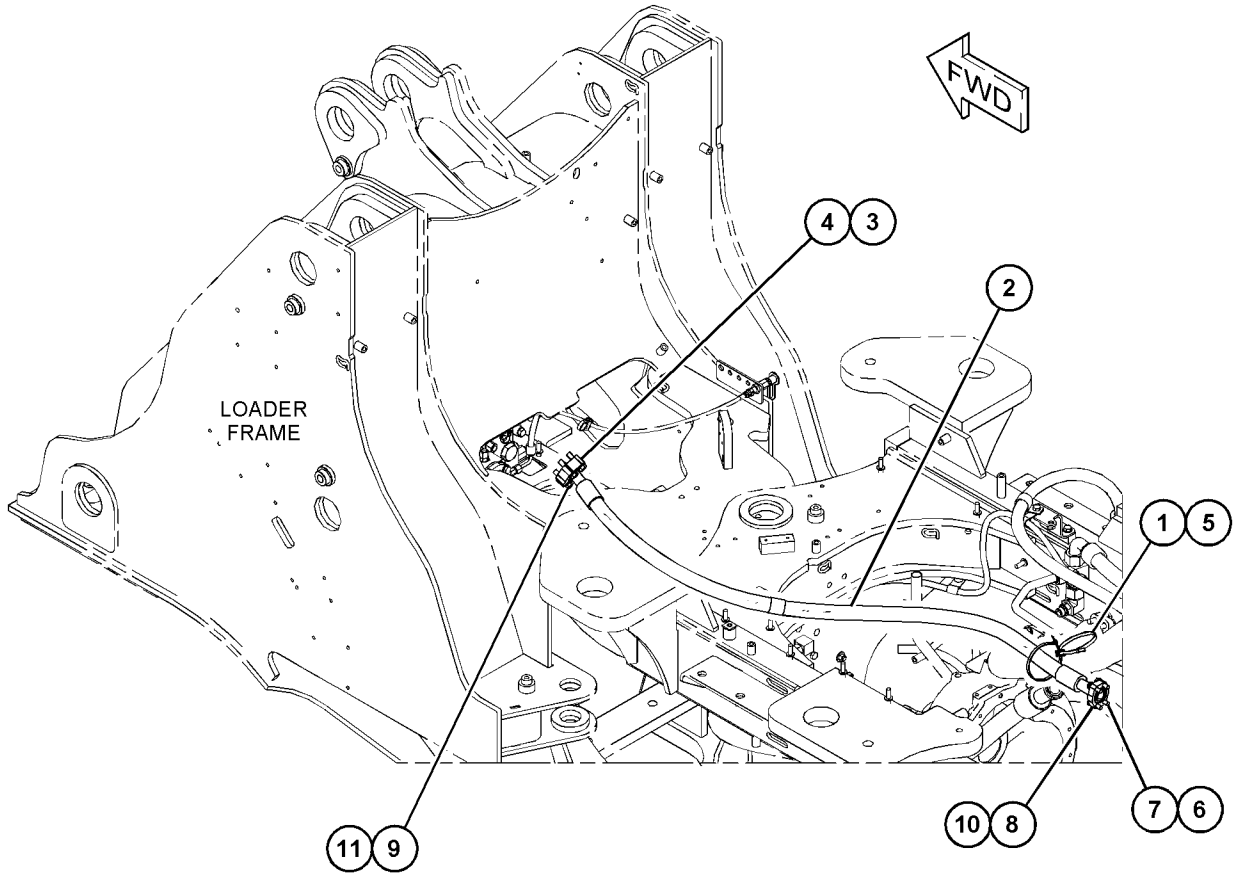

GRAPHIC #1 <END> g06126184

511-0268 LINES GP-HYDRAULIC

S/N: TNS1-UP

PART OF 492-4021 HYDRAULIC AR

SMCS-5057 **i06811087**

NOTE	REF NO	GRAPHIC REF	PART NUMBER	QTY	PART NAME 1 2 3 4 5 6 (PRODUCT LEVEL)	SEE PAGE
	1	2	**6J-2680**	1	SEAL-O-RING	
	2	2	**2P-1279**	2	LOCKNUT (9/16-18-THD)	
	3	1	**7K-1181**	6	STRAP-CABLE (5.72-MM DIA)	
	4	2	**7X-0584**	4	WASHER-HARD (13.5X20.5X2-MM THK)	
	5	2	**8T-4223**	7	WASHER-HARD (13.5X25.5X3-MM THK)	
	6	1,2	*148-8316*	3	CONNECTOR AS	
					(EACH INCLUDES)	
		1,2	**3J-7354**	1	SEAL-O-RING	
		1,2	**4J-5477**	1	SEAL-O-RING	
		1,2	**6V-8647**	1	CONNECTOR	
	7	1	*148-8336*	1	CONNECTOR AS (45-DEG ELBOW)	
		1	**3J-1907**	1	SEAL-O-RING	
		1	**6V-8397**	1	SEAL-O-RING	
		1	**6V-8636**	1	CONNECTOR	
	8	2	*148-8347*	2	ELBOW AS	
					(EACH INCLUDES)	
		2	**3D-2824**	1	SEAL-O-RING	
		2	**6V-9007**	1	ELBOW	
		2	**6V-9746**	1	SEAL-O-RING	
	9	1	*148-8353*	1	ELBOW AS	
		1	**3J-1907**	1	SEAL-O-RING	
		1	**6V-8397**	1	SEAL-O-RING	
		1	**6V-9001**	1	ELBOW	
	10	2	*148-8364*	1	ELBOW AS	
		2	**3K-0360**	1	SEAL-O-RING	
		2	**6V-8398**	1	SEAL-O-RING	
		2	**6V-8625**	1	ELBOW	
	11	1	*148-8413*	1	REDUCER AS	
		1	**4J-5477**	1	SEAL-O-RING	
		1	**6V-8934**	1	ADAPTER	
	12	2	*148-8431*	1	TEE AS	
		2	**5K-9090**	2	SEAL-O-RING	
		2	**6V-8785**	1	TEE	
		2	**7M-8485**	1	SEAL-O-RING	
	13	1	*148-8433*	1	TEE AS	
		1	**6V-8397**	2	SEAL-O-RING	
		1	**6V-9836**	1	TEE-SWIVEL	
	14	1	*148-8435*	1	TEE AS	
		1	**3J-1907**	1	SEAL-O-RING	
		1	**6V-8397**	2	SEAL-O-RING	
		1	**6V-8781**	1	TEE	
	15	1	*150-4043*	1	CONNECTOR AS	
		1	**3J-1907**	1	SEAL-O-RING	
		1	**6V-8398**	1	SEAL-O-RING	
		1	**6V-9873**	1	CONNECTOR	
	16	1,2	*164-5567*	2	COUPLER AS-QUICK DISCONNECT (MALE)	
					(EACH INCLUDES)	
		1,2	**6V-3965**	1	FITTING (QUICK DISCONNECT)	

511-0268 **LINES GP-HYDRAULIC (**contd.**)** **i06811087**

NOTE	REF NO	GRAPHIC REF	PART NUMBER	QTY	PART NAME 1 2 3 4 5 6 (PRODUCT LEVEL)	SEE PAGE
		1,2	**214-7568**	1	SEAL-O-RING	
	17	1	*165-4931*	1	ELBOW AS	
		1	**3J-1907**	1	SEAL-O-RING	
		1	**6V-8077**	1	ELBOW	
	18	2	*169-5863*	1	ADAPTER AS	
		2	**4J-5477**	1	SEAL-O-RING	
		2	**7X-7945**	1	ADAPTER (9/16-18-THD)	
	19	1	*216-9797*	1	CONNECTOR AS	
		1	**3J-1907**	1	SEAL-O-RING	
		1	**6V-8397**	1	SEAL-O-RING	
	20	2	*241-6185*	1	PLUG AS	
		2	**3D-2824**	1	SEAL-O-RING	
		2	**5P-9436**	1	PLUG	
	21	2	*241-6208*	1	ELBOW AS	
		2	**2M-9780**	1	SEAL-O-RING	
		2	**5K-9090**	1	SEAL-O-RING	
		2	**119-6220**	1	ELBOW	
	22	2	**246-8889**	1	ELBOW	
	23	1	*281-5898*	1	TEE AS	
		1	**3J-1907**	1	SEAL-O-RING	
		1	**6V-8398**	2	SEAL-O-RING	
		1	**153-6270**	1	TEE	
	24	2	*341-0120*	1	TEE AS	
		2	**5K-9090**	1	SEAL-O-RING	
		2	**6V-9746**	1	SEAL-O-RING	
		2	**341-0119**	1	TEE	
M	25	1,2	**344-5675**	5	NUT (M10X1.5-THD)	
	26	2	**349-8844**	1	VALVE GP-CHECK	
	27	1	*351-0290*	1	ADAPTER AS	
		1	**3J-7354**	1	SEAL-O-RING	
		1	**4J-5477**	1	SEAL-O-RING	
		1	**308-9568**	1	ADAPTER-TEE	
	28	2	**356-8486**	1	ELBOW	
	29	2	*357-4621*	1	CONNECTOR AS	
		2	**033-6783**	1	FITTING	
		2	**238-5082**	1	SEAL-O-RING	
	30	1	**367-8969**	1	VALVE GP-PRESSURE REDUCING (IMPLEMENT)	
I	31	2	**372-3670**	1	HOSE AS	
	32	2	**372-3679**	1	BRACKET AS	
M		2	**8T-3490**	4	NUT-WELD (M10X1.5-THD)	
	33	2	**376-2198**	1	BRACKET AS	
M		2	**8T-3490**	1	NUT-WELD (M10X1.5-THD)	
	34	2	**376-2200**	1	BRACKET AS	
M		2	**8T-3490**	2	NUT-WELD (M10X1.5-THD)	
	35	2	**376-8804**	2	CLAMP	
	36	2	**384-9481**	1	HOSE AS	
I	37	2	**384-9499**	1	HOSE AS	
	38	2	**384-9529**	1	BRACKET AS	
M		2	**8T-3490**	5	NUT-WELD (M10X1.5-THD)	
I	39	1	**384-9530**	1	HOSE AS	
	40	2	**389-4203**	1	VALVE-BALL	

511-0268 **LINES GP-HYDRAULIC (**contd.**)** **i06811087**

NOTE	REF NO	GRAPHIC REF	PART NUMBER	QTY	PART NAME 1 2 3 4 5 6 (PRODUCT LEVEL)	SEE PAGE
	41	1	*395-8606*	1	TEE AS	
		1	**6V-8398**	1	SEAL-O-RING	
		1	**459-0661**	1	ADAPTER-TEE	
	42	2	**436-7065**	1	HOSE	
I	43	2	**436-7148**	1	HOSE AS	
I	44	2	**436-7149**	1	HOSE AS	
I	45	1	**436-7184**	1	HOSE AS	
I	46	1	**436-7185**	1	HOSE AS	
I	47	1	**436-7200**	1	HOSE AS	
I	48	1	**452-7159**	1	HOSE AS	
I	49	1	**460-1766**	1	HOSE AS	
	50	2	**462-7024**	1	TUBE AS	
	51	2	**489-0447**	1	TUBE AS	
	52	1	**489-0451**	1	HOSE AS	
I	53	2	**489-0452**	1	HOSE AS	
I	54	1	**489-0453**	1	HOSE AS	
	55	2	**494-5022**	1	BRACKET AS	
M		2	**8T-3490**	4	NUT-WELD (M10X1.5-THD)	
	56	1	**067-2551**	2	CLIP	
M	57	1	**101-3129**	2	STUD (M10X1.5-THD)	
	58	2	**133-6934**	5	SPACER (11X20X25-MM THK)	
	59	2	**144-0367**	2	CLAMP-HOSE	
	60	2	*148-8375*	1	ELBOW AS	
		2	**6V-8398**	2	SEAL-O-RING	
		2	**6V-8981**	1	ELBOW	
	61	2	*148-8384*	1	ELBOW AS	
		2	**4J-5477**	2	SEAL-O-RING	
		2	**6V-8979**	1	ELBOW	
	62	2	**149-7738**	3	CLIP	
	63	2	*150-3071*	1	REDUCER AS	
		2	**6V-8945**	1	REDUCER-O-RING	
		2	**7J-9108**	1	SEAL-O-RING	
	64	2	**159-1503**	1	CLAMP-HOSE	
M	65	2	**198-3899**	2	SCREW-BUTTON HEAD (M8X1.25X20-MM)	
	66	1	**198-4777**	2	WASHER-HARD (11X25X10-MM THK)	
	67	2	**1P-3705**	1	SEAL-RECTANGULAR	
	68	1,2	**1P-4578**	6	FLANGE-HALF	
	69	2	**1P-4584**	2	FLANGE-HALF	
	70	1	**1S-0994**	2	CLIP	
	71	2	**202-2762**	1	CLIP	
	72	1	**206-2423**	3	SADDLE	
	73	2	**243-2289**	3	MOUNT AS	
	74	1,2	**4J-0522**	4	SEAL-O-RING	
	75	2	**5G-3676**	1	GROMMET	
	76	2	**5P-7470**	1	CLIP (SLOT)	
	77	2	**5P-7471**	1	CLIP (TAB)	
	78	2	**5P-8182**	1	GROMMET (46-MM ID)	
	79	2	**5P-8444**	1	GROMMET (37-MM ID)	
	80	2	**5V-9221**	1	SPACER (13.8X25X25-MM THK)	
	81	2	**6K-8178**	1	CLIP	
	82	2	**6V-0826**	1	GROMMET	

511-0268 **LINES GP-HYDRAULIC (**contd.**)** **i06811087**

NOTE	REF NO	GRAPHIC REF	PART NUMBER	QTY	PART NAME 1 2 3 4 5 6 (PRODUCT LEVEL)	SEE PAGE
	83	1,2	**6V-0852**	2	CAP-DUST	
	84	2	**6V-9169**	1	NUT (13/16-16-THD)	
	85	1	**6V-9828**	1	CAP AS	
	86	1	**6V-9829**	1	CAP	
	87	1	**6V-9830**	1	CAP AS (ORIFICE)	
	88	2	**7S-3916**	1	CLIP (TAB)	
	89	2	**7S-3919**	1	CLIP (SLOT)	
	90	2	**7X-4743**	1	GROMMET	
	91	2	**7X-7729**	4	WASHER (11X25X3-MM THK)	
	92	2	**8T-1889**	1	CLIP (SLOT)	
	93	2	**8T-1890**	1	CLIP (TAB)	
	94	1,2	**8T-4121**	38	WASHER-HARD (11X21X2.5-MM THK)	
M	95	2	**8T-4136**	5	BOLT (M10X1.5X25-MM)	
M	96	2	**8T-4137**	3	BOLT (M10X1.5X20-MM)	
M	97	2	**8T-4178**	4	BOLT (M10X1.5X90-MM)	
M	98	2	**8T-4183**	2	BOLT (M12X1.75X40-MM)	
M	99	2	**8T-4184**	4	BOLT (M12X1.75X45-MM)	
M	100	2	**8T-4185**	4	BOLT (M10X1.5X50-MM)	
M	101	2	**8T-4186**	4	BOLT (M10X1.5X40-MM)	
M	102	2	**8T-4195**	1	BOLT (M10X1.5X30-MM)	
M	103	1,2	**8T-4196**	5	BOLT (M10X1.5X35-MM)	
	104	2	**8T-4224**	2	WASHER-HARD (8.8X16X2-MM THK)	
	105	2	**8T-4226**	6	WASHER-PLATED (10.5X45X3-MM THK)	
M	106	2	**8T-4910**	3	BOLT (M12X1.75X60-MM)	
M	107	2	**8T-4956**	2	BOLT (M12X1.75X35-MM)	
M	108	2	**8T-6466**	4	BOLT (M10X1.5X60-MM)	
M	109	1,2	**8T-6685**	6	BOLT (M10X1.5X110-MM)	
	110	2	**9P-4898**	1	SPACER (12.7X19.05X19-MM THK)	
M	111	1	**9X-2480**	2	BOLT (M6X1X45-MM)	
	112	2	**9X-6579**	1	NUT-ORIFICE (7/16-12-THD)	
	113	1	**9X-8256**	2	WASHER (6.6X12X2-MM THK)	

I - REFER TO HYDRAULIC INFORMATION SYSTEM
M - METRIC PART

511-0268 **LINES GP-HYDRAULIC (**contd.**)** **i06811087**

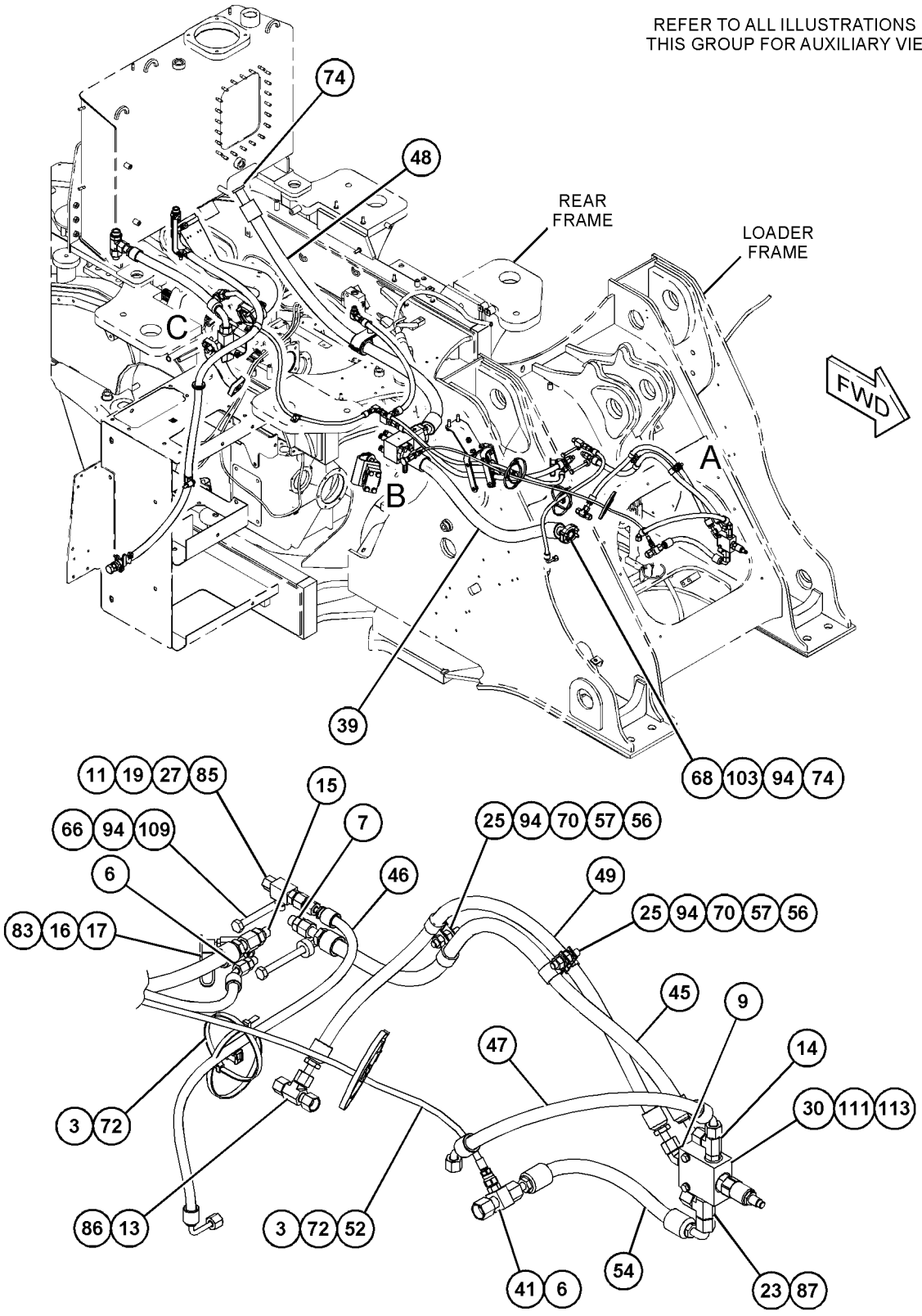

VIEW OF AREA A

GRAPHIC #1 g06126607

511-0268 **LINES GP-HYDRAULIC (**contd.**)** **i06811087**

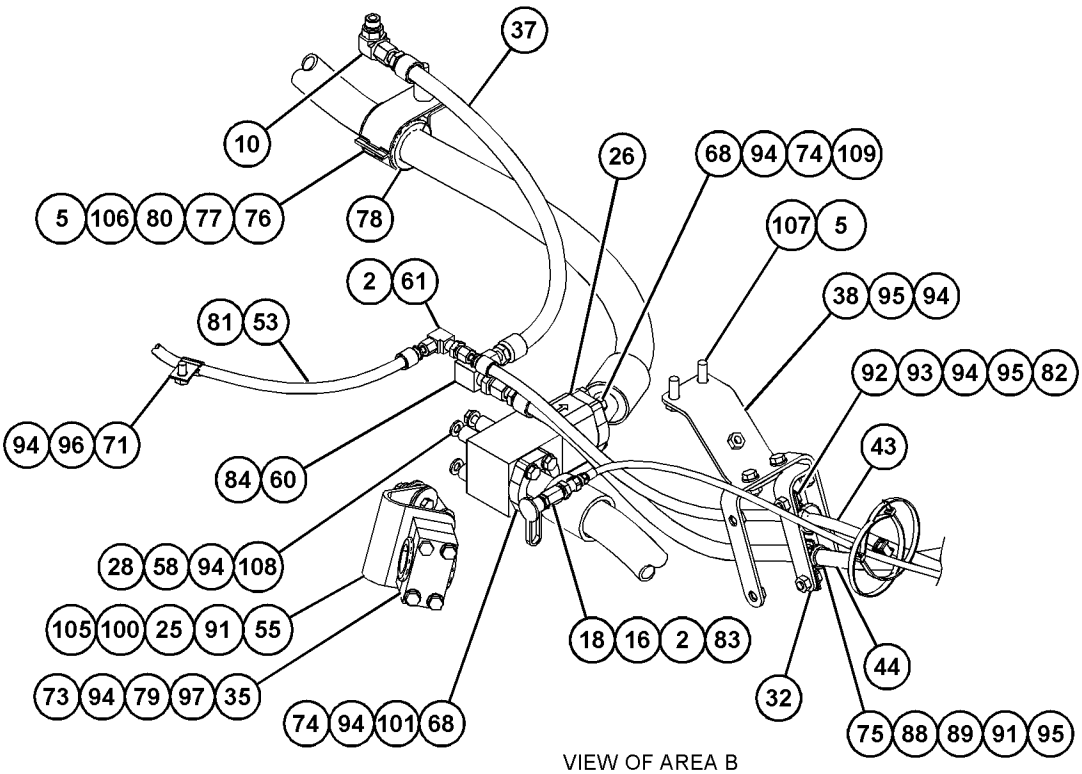

VIEW OF AREA B

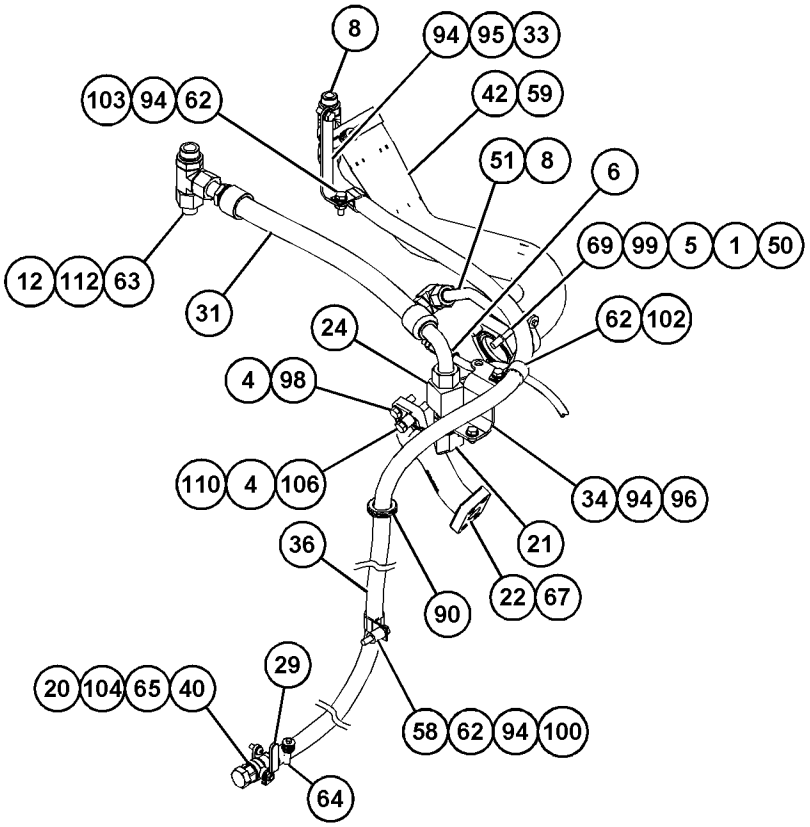

VIEW OF AREA C

GRAPHIC #2 <END> g06126609

511-0271 LINES GP-HYDRAULIC

S/N: TNS1-UP

PART OF 508-7629 SUPPRESSION AR-SOUND

SMCS-5057 **i06811076**

NOTE	REF NO	GRAPHIC REF	PART NUMBER	QTY	PART NAME 1 2 3 4 5 6 (PRODUCT LEVEL)	SEE PAGE
	1	1	**7K-1181**	2	STRAP-CABLE (5.72-MM DIA)	
	2	1	**8T-7087**	1	GROMMET (34-MM ID)	
	3	1	*164-5581*	1	PLUG AS	
		1	**6V-9511**	1	PLUG (1-3/16-12-THD)	
		1	**6V-9746**	1	SEAL-O-RING	
	4	1	**355-0319**	1	BLOCK	
I	5	1	**508-1577**	1	HOSE AS	
I	6	1	**508-1578**	1	HOSE AS	
	7	1	*148-8422*	1	TEE AS	
		1	**5K-9090**	1	SEAL-O-RING	
		1	**6V-9746**	1	SEAL-O-RING	
		1	**7M-8485**	1	SEAL-O-RING	
		1	**8T-6356**	1	TEE-O-RING PORT	
M	8	1	**175-9079**	1	ROD-LINK	
	9	1	**1P-3704**	1	SEAL-RECTANGULAR	
	10	1	**206-2423**	1	SADDLE	
M	11	1	**170-8553**	4	BOLT-SOCKET HEAD (M12X1.75X40-MM)	
M	12	1	**344-5675**	2	NUT (M10X1.5-THD)	
	13	1	**4J-0520**	1	SEAL-O-RING	
	14	1	**5P-7466**	1	CLIP (SLOT)	
	15	1	**5P-7467**	1	CLIP (TAB)	
	16	1	**5P-7468**	1	CLIP (SLOT)	
	17	1	**5P-7469**	1	CLIP (TAB)	
	18	1	**5P-8112**	1	GROMMET (30-MM ID)	
	19	1	**7X-7729**	4	WASHER (11X25X3-MM THK)	
	20	1	**8C-3206**	2	FLANGE-HALF	
	21	1	**8T-4121**	4	WASHER-HARD (11X21X2.5-MM THK)	
M	22	1	**8T-4196**	4	BOLT (M10X1.5X35-MM)	
E	23	1	**7I-1024**		GUARD-HOSE (36-CM EACH)	

E - ORDER BY THE CENTIMETER
I - REFER TO HYDRAULIC INFORMATION SYSTEM
M - METRIC PART

511-0271 **LINES GP-HYDRAULIC (**contd.**)** **i06811076**

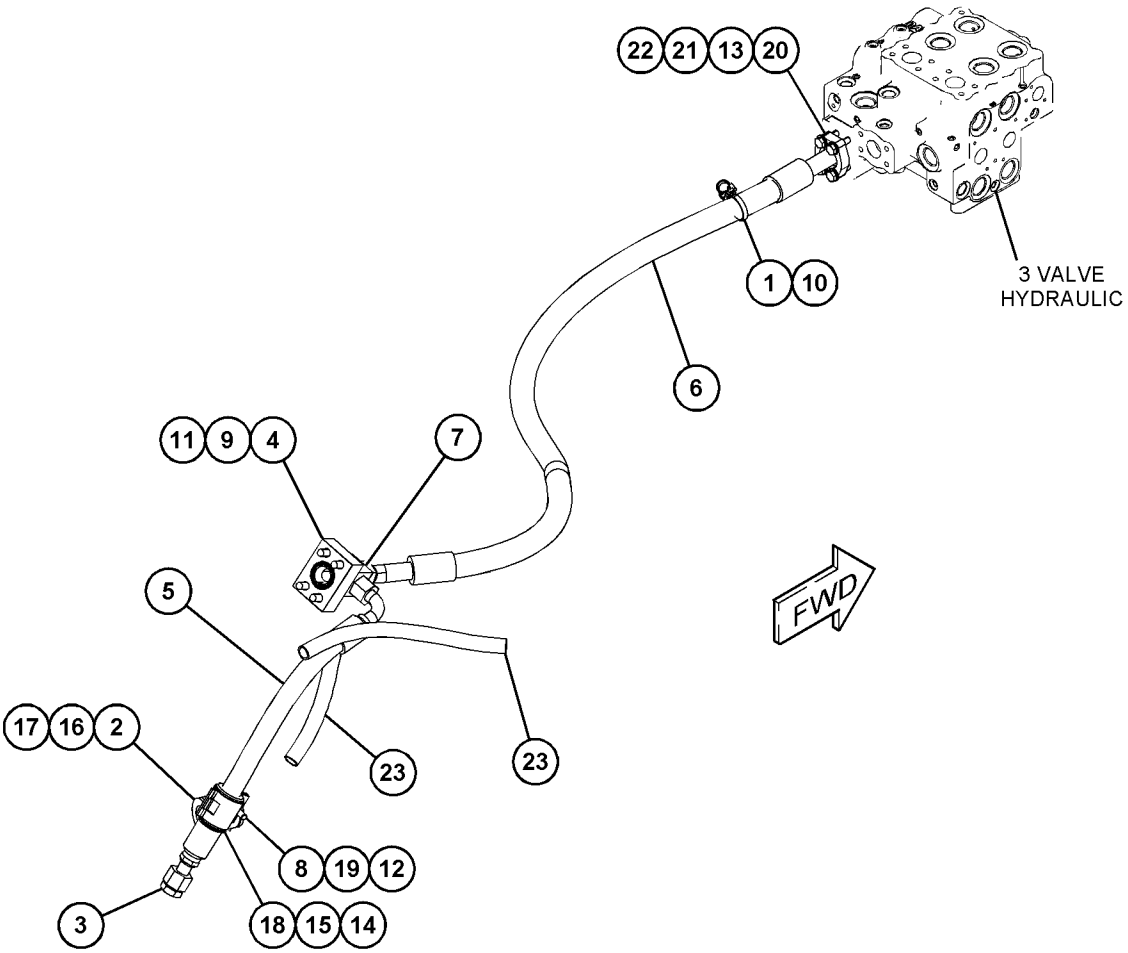

GRAPHIC #1 <END> g06128764

488-9569 LINES GP-HYDRAULIC OIL COOLER

S/N: TNS1-UP

PART OF 505-1547, 505-1548 CONTROL AR-FAN

SMCS-1374, 5057

i06732562

NOTE	REF NO	GRAPHIC REF	PART NUMBER	QTY	PART NAME 1 2 3 4 5 6 (PRODUCT LEVEL)	SEE PAGE
	1	1	*148-8347*	1	ELBOW AS	
		1	**3D-2824**	1	SEAL-O-RING	
		1	**6V-9007**	1	ELBOW	
		1	**6V-9746**	1	SEAL-O-RING	
	2	1	*148-8378*	1	ELBOW AS (90-DEG)	
		1	**3J-1907**	1	SEAL-O-RING	
		1	**6V-8397**	1	SEAL-O-RING	
		1	**6V-8724**	1	ELBOW	
	3	1	*169-7409*	1	UNION AS	
		1	**6V-8996**	1	UNION	
		1	**7J-9108**	2	SEAL-O-RING	
	4	1	*190-9821*	1	ELBOW AS	
		1	**6V-8989**	1	ELBOW	
		1	**7J-9108**	2	SEAL-O-RING	
	5	1	*341-0108*	1	ELBOW AS	
		1	**3D-2824**	1	SEAL-O-RING	
		1	**341-0107**	1	ELBOW	
	6	1	**391-7000**	1	BRACKET AS	
M		1	**8T-3490**	1	NUT-WELD (M10X1.5-THD)	
I	7	1	**450-5460**	1	HOSE AS	
I	8	1	**481-5786**	1	HOSE AS	
I	9	1	**481-5787**	1	HOSE AS	
I	10	1	**481-5789**	1	HOSE AS	
	11	1	*207-0649*	1	CONNECTOR AS	
		1	**3D-2824**	1	SEAL-O-RING	
		1	**6V-9746**	1	SEAL-O-RING	
		1	**8C-8417**	1	CONNECTOR	
	12	1	**6V-9170**	2	NUT-BULKHEAD (1-14-THD)	
	13	1	**8T-4121**	4	WASHER-HARD (11X21X2.5-MM THK)	
M	14	1	**8T-4136**	2	BOLT (M10X1.5X25-MM)	
M	15	1	**8T-4196**	2	BOLT (M10X1.5X35-MM)	
	16	1	**9X-8250**	2	CLIP	

I - REFER TO HYDRAULIC INFORMATION SYSTEM
M - METRIC PART

488-9569 **LINES GP-HYDRAULIC OIL COOLER (**contd.**)** **i06732562**

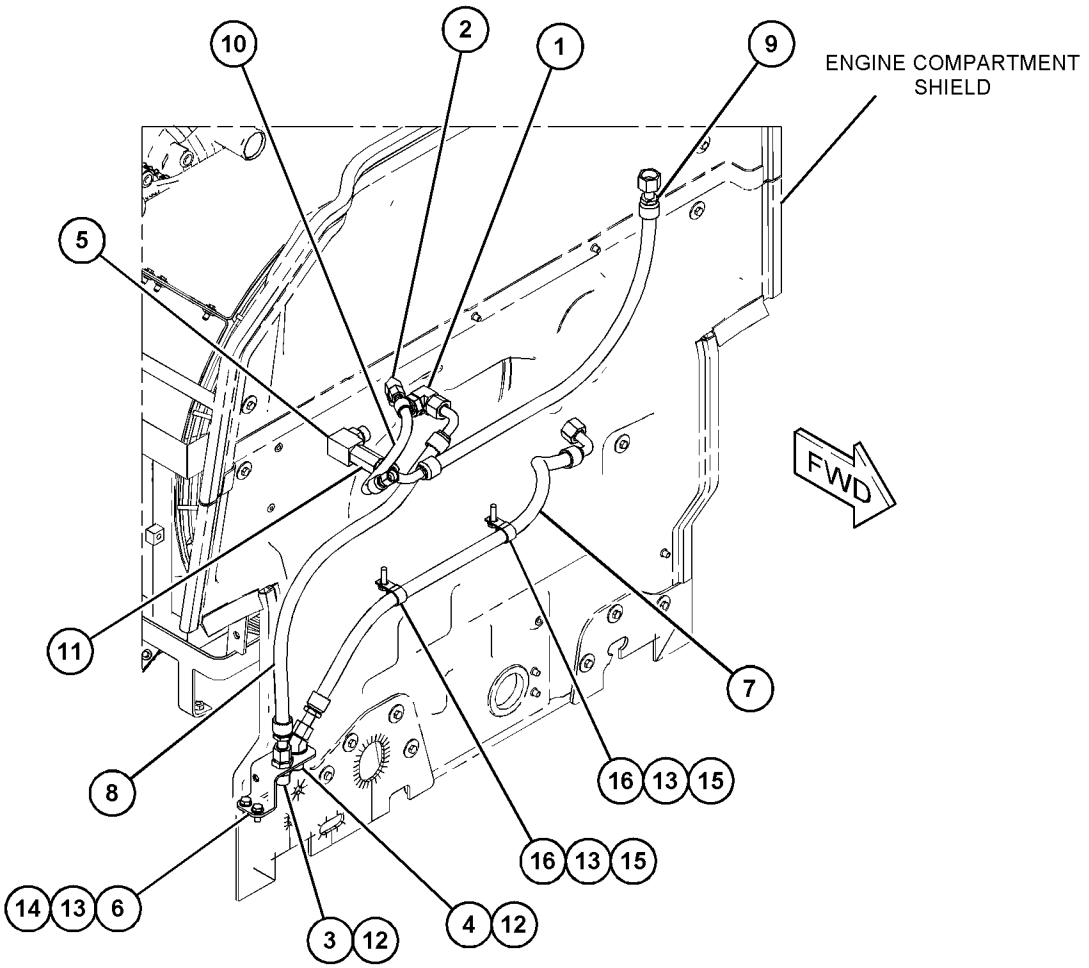

GRAPHIC #1 <END> g06108544

494-5021 LINES GP-LIFT CYLINDER

S/N: TNS1-UP

PART OF 507-6190 HYDRAULIC AR, 492-4028 HYDRAULIC AR-STANDARD LIFT

SMCS-5057, 5102 **i06810480**

NOTE	REF NO	GRAPHIC REF	PART NUMBER	QTY	PART NAME 1 2 3 4 5 6 (PRODUCT LEVEL)	SEE PAGE
	1	1	**091-0081**	2	SPACER (10.5X20X10-MM THK)	
	2	1	**119-2325**	4	SUPPORT AS	
	3	1	*148-8317*	2	CONNECTOR AS	
					(EACH INCLUDES)	
		1	**3D-2824**	1	SEAL-O-RING	
		1	**5K-9090**	1	SEAL-O-RING	
		1	**6V-8714**	1	CONNECTOR	
	4	1	**436-7052**	2	BRACKET	
I	5	1	**462-7017**	1	HOSE AS	
I	6	1	**462-7018**	1	HOSE AS	
I	7	1	**462-7019**	1	HOSE AS	
I	8	1	**462-7020**	1	HOSE AS	
	9	1	**494-5019**	1	TUBE AS	
	10	1	**494-5020**	1	TUBE AS	
	11	1	**511-0281**	1	TUBE AS	
	12	1	**511-0282**	1	TUBE AS	
M	13	1	**085-8091**	8	BOLT (M10X1.5X55-MM)	
	14	1	**1P-3703**	2	SEAL-RECTANGULAR	
	15	1	**4J-5267**	4	SEAL-O-RING	
	16	1	**7G-3832**	2	GROMMET	
	17	1	**7G-3833**	2	CLIP (TAB)	
	18	1	**7G-3834**	2	CLIP (SLOT)	
	19	1	**8C-3205**	8	FLANGE-HALF	
	20	1	**8T-1889**	2	CLIP (SLOT)	
	21	1	**8T-1890**	2	CLIP (TAB)	
	22	1	**8T-4121**	40	WASHER-HARD (11X21X2.5-MM THK)	
M	23	1	**8T-4136**	8	BOLT (M10X1.5X25-MM)	
M	24	1	**8T-4186**	6	BOLT (M10X1.5X40-MM)	
M	25	1	**8T-4196**	16	BOLT (M10X1.5X35-MM)	
	26	1	**8T-4223**	4	WASHER-HARD (13.5X25.5X3-MM THK)	
M	27	1	**8T-4956**	4	BOLT (M12X1.75X35-MM)	
M	28	1	**8T-6466**	2	BOLT (M10X1.5X60-MM)	

I - REFER TO HYDRAULIC INFORMATION SYSTEM
M - METRIC PART

494-5021 **LINES GP-LIFT CYLINDER (**contd.**)** **i06810480**

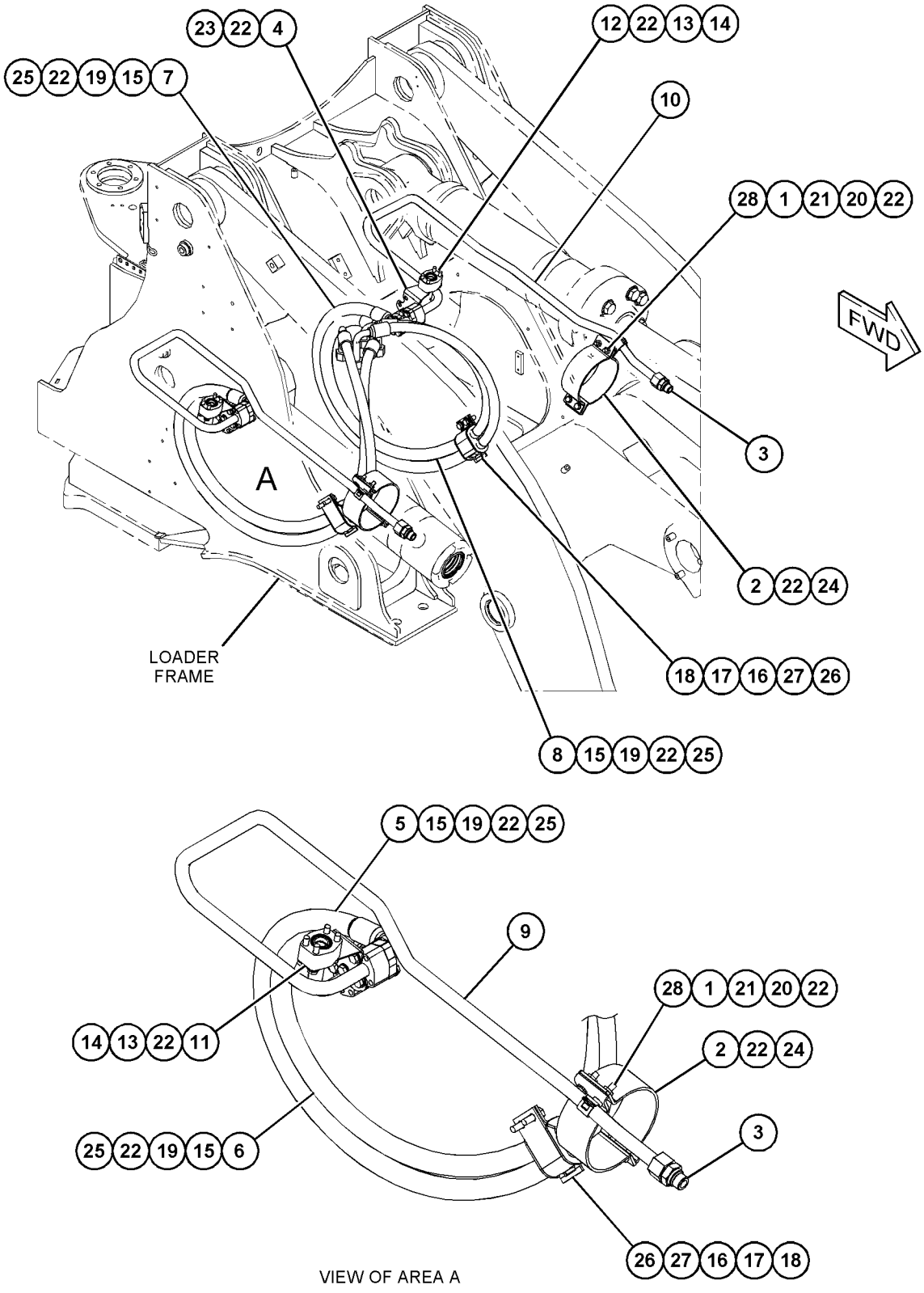

GRAPHIC #1 <END> g06126102

436-7001 LINES GP-TILT CYLINDER

S/N: TNS1-UP

PART OF 492-4028 HYDRAULIC AR-STANDARD LIFT

SMCS-5057, 5104 **i06810864**

NOTE	REF NO	GRAPHIC REF	PART NUMBER	QTY	PART NAME 1 2 3 4 5 6 (PRODUCT LEVEL)	SEE PAGE
	1	1	**254-3571**	1	BRACKET AS	
	2	1	**376-8751**	1	TUBE AS	
I	3	1	**381-7714**	1	HOSE AS	
	4	1	**436-7117**	2	BRACKET AS	
	5	1	**436-7120**	1	TUBE AS	
	6	1	**436-7121**	1	TUBE AS	
I	7	1	**461-0007**	1	HOSE AS	
	8	1	**1P-3704**	3	SEAL-RECTANGULAR	
	9	1	**1P-4578**	2	FLANGE-HALF	
	10	1	**4J-0520**	3	SEAL-O-RING	
	11	1	**4J-0522**	1	SEAL-O-RING	
	12	1	**5P-1076**	2	WASHER-HARD (13.5X30X4-MM THK)	
	13	1	**7X-7729**	4	WASHER (11X25X3-MM THK)	
	14	1	**8C-3206**	6	FLANGE-HALF	
	15	1	**8K-4691**	6	CLAMP-HALF	
	16	1	**8T-4121**	28	WASHER-HARD (11X21X2.5-MM THK)	
M	17	1	**8T-4136**	4	BOLT (M10X1.5X25-MM)	
M	18	1	**8T-4139**	8	BOLT (M12X1.75X30-MM)	
M	19	1	**8T-4196**	16	BOLT (M10X1.5X35-MM)	
	20	1	**8T-4223**	6	WASHER-HARD (13.5X25.5X3-MM THK)	
M	21	1	**8T-5005**	4	BOLT (M10X1.5X70-MM)	
M	22	1	**8T-6466**	8	BOLT (M10X1.5X60-MM)	

I - REFER TO HYDRAULIC INFORMATION SYSTEM
M - METRIC PART

436-7001 **LINES GP-TILT CYLINDER (**contd.**)** **i06810864**

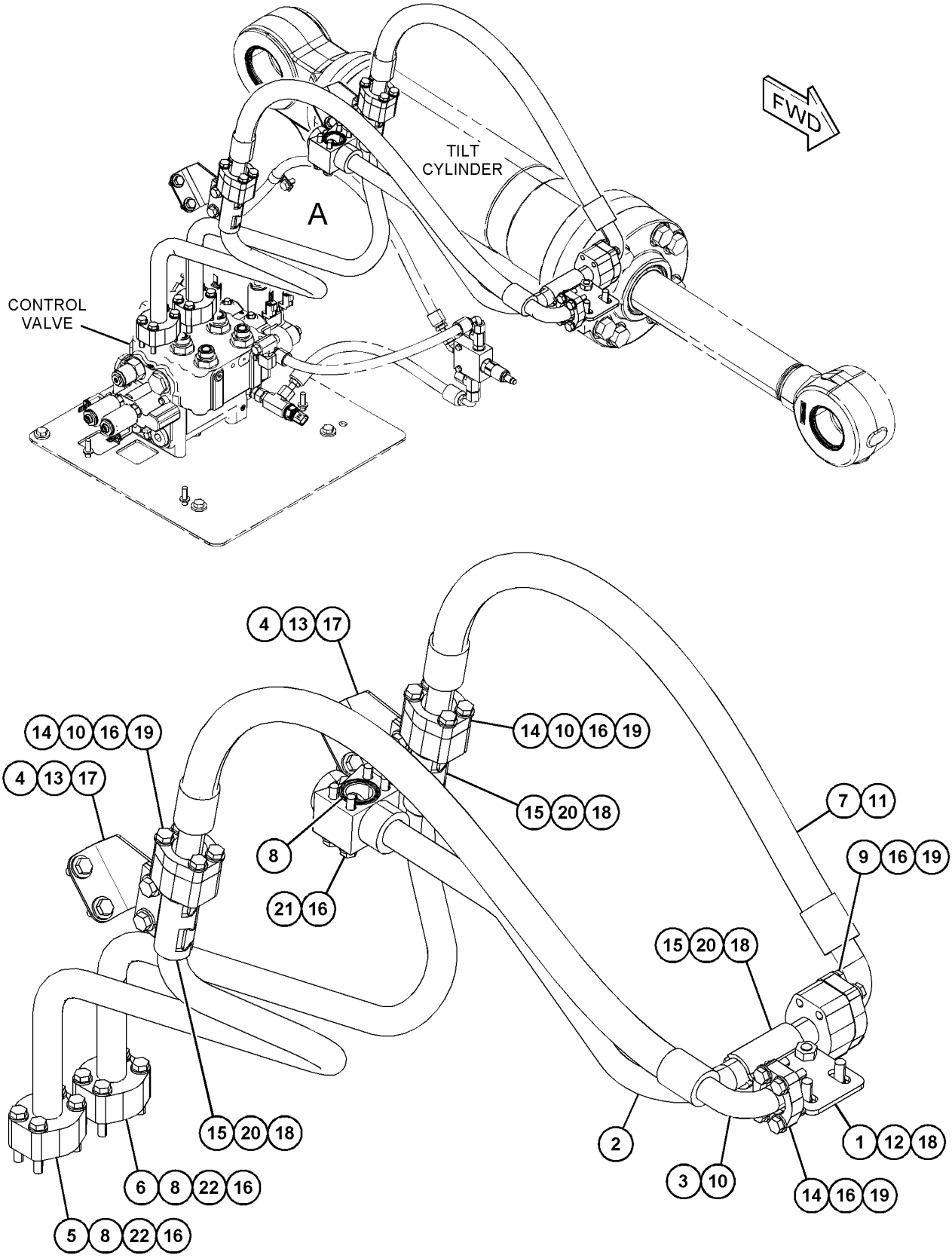

GRAPHIC #1 <END> g06021958

465-8745 LINES GP-TILT CYLINDER

S/N: TNS1-UP

PART OF 507-6190 HYDRAULIC AR

SMCS-5057, 5104 **i06809563**

NOTE	REF NO	GRAPHIC REF	PART NUMBER	QTY	PART NAME 1 2 3 4 5 6 (PRODUCT LEVEL)	SEE PAGE
	1	1	**436-7117**	2	BRACKET AS	
					(EACH INCLUDES)	
M		1	**8T-3597**	2	NUT-WELD (M12X1.75-THD)	
	2	1	**436-7120**	1	TUBE AS	
	3	1	**436-7121**	1	TUBE AS	
I	4	1	**466-6972**	1	HOSE AS	
I	5	1	**466-6973**	1	HOSE AS	
	6	1	*489-0455*	1	BRACKET AS	
M		1	**8T-3597**	2	NUT-WELD (M12X1.75-THD)	
	7	1	**495-4520**	1	TUBE AS	
	8	1	**1P-3703**	2	SEAL-RECTANGULAR	
	9	1	**1P-3704**	3	SEAL-RECTANGULAR	
	10	1	**4J-0520**	2	SEAL-O-RING	
	11	1	**5P-1076**	2	WASHER-HARD (13.5X30X4-MM THK)	
	12	1	**6V-0400**	4	FLANGE-HALF	
	13	1	**7X-7729**	4	WASHER (11X25X3-MM THK)	
	14	1	**7Y-4538**	2	CLAMP-HALF	
	15	1	**8C-3206**	4	FLANGE-HALF	
	16	1	**8K-4691**	4	CLAMP-HALF	
	17	1	**8T-4121**	16	WASHER-HARD (11X21X2.5-MM THK)	
M	18	1	**8T-4136**	4	BOLT (M10X1.5X25-MM)	
M	19	1	**8T-4139**	6	BOLT (M12X1.75X30-MM)	
M	20	1	**8T-4184**	8	BOLT (M12X1.75X45-MM)	
M	21	1	**8T-4196**	8	BOLT (M10X1.5X35-MM)	
	22	1	**8T-4223**	18	WASHER-HARD (13.5X25.5X3-MM THK)	
M	23	1	**8T-4648**	4	BOLT (M12X1.75X70-MM)	
M	24	1	**8T-4956**	2	BOLT (M12X1.75X35-MM)	
M	25	1	**8T-6466**	8	BOLT (M10X1.5X60-MM)	

I - REFER TO HYDRAULIC INFORMATION SYSTEM
M - METRIC PART

465-8745 **LINES GP-TILT CYLINDER (**contd.**)** **i06809563**

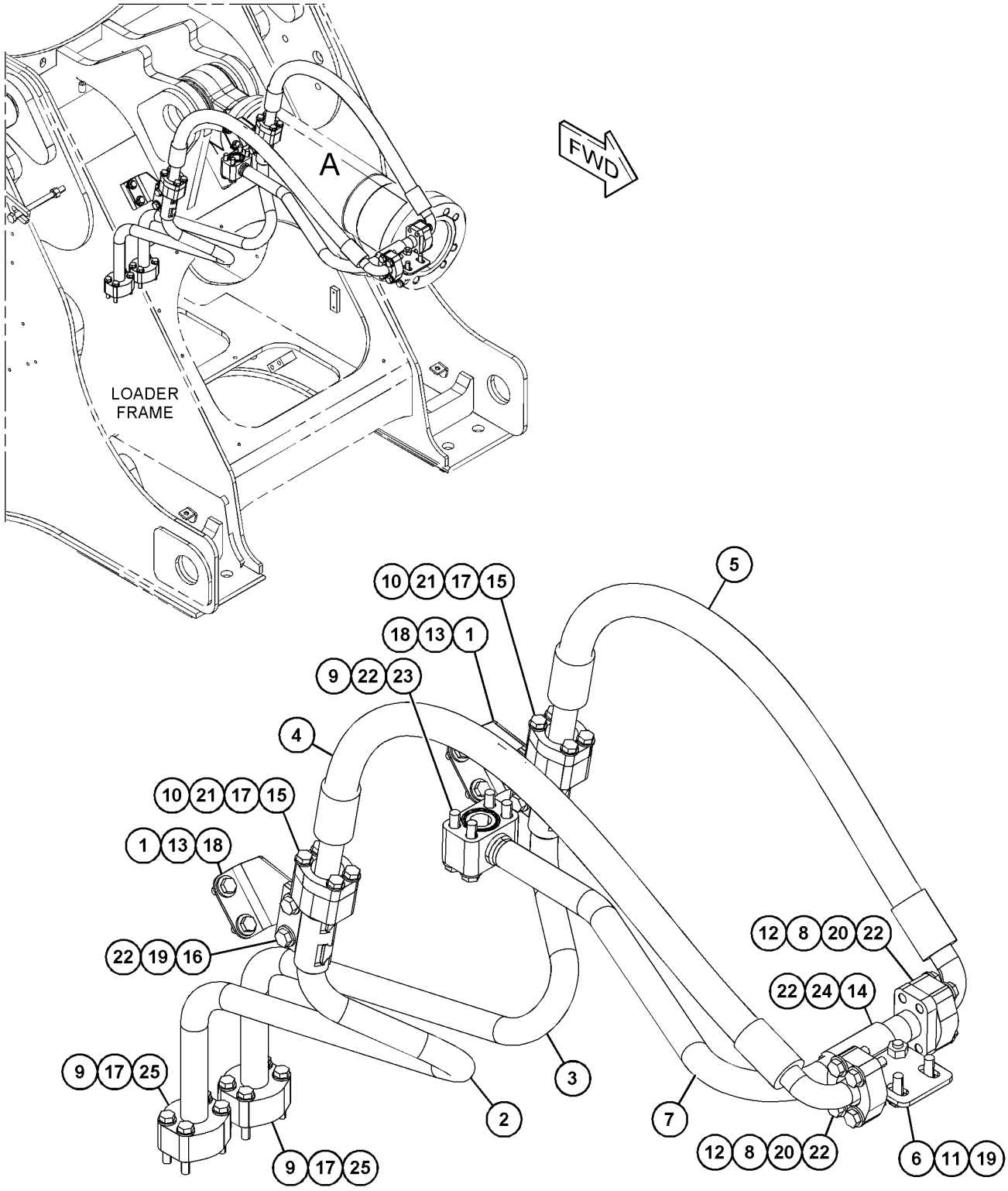

VIEW OF AREA A

GRAPHIC #1 <END> g06040941

432-5661 MANIFOLD GP-CONTROL

S/N: TNS1-UP

PART OF 451-5876 VALVE GP-MAIN CONTROL

SMCS-4264, 5072, 5264, 5467, 5479 **i05360903**

NOTE	REF NO	GRAPHIC REF	PART NUMBER	QTY	PART NAME 1 2 3 4 5 6 (PRODUCT LEVEL)	SEE PAGE
	1	1	**1T-0936**	2	PLUG-ORIFICE	
	2	1	**7T-6496**	1	PLUG	
	3	1	**9J-5754**	1	SPRING	
	4	1	**148-3483**	7	PLUG (EXPANSION)	
	5	1	**224-4530**	1	VALVE GP-RELIEF (PILOT OPERATED)	
Y	6	1	**251-3268**	1	VALVE GP-SOLENOID (24-VOLT) (ON/OFF)	705
	7	1	**282-8827**	1	PLUG (EXPANSION)	
M	8	1	**363-1613**	1	BOLT (M5X0.8X15-MM)	
	9	1	*367-6002*	4	PLUG AS	
		1	**3J-7354**	1	SEAL-O-RING	
		1	**360-3677**	1	PLUG (7/16-20-THD)	
	10	1	*367-6003*	2	PLUG AS	
		1	**3K-0360**	1	SEAL-O-RING	
		1	**360-3680**	1	PLUG	
	11	1	*367-6004*	1	PLUG AS	
		1	**2M-9780**	1	SEAL-O-RING	
		1	**360-3681**	1	PLUG (7/8-14-THD)	
	12	1	**373-9483**	1	VALVE GP-RELIEF	
	13	1	**423-1786**	2	RETAINER	
	14	1	**423-1787**	1	SPRING	
	15	1	**431-8802**	1	VALVE GP-CONTROL (RIDE CONTROL)	
	16	1	**148-8410**	1	PLUG AS	
		1	**2M-9780**	1	SEAL-O-RING	
		1	**9S-4190**	1	PLUG-O-RING (7/8-14-THD)	
	17	1	*207-8218*	1	PLUG AS	
		1	**7J-0204**	1	SEAL-O-RING	
		1	**9S-8007**	1	PLUG	
	18	1	**5P-6300**	4	SEAL-O-RING	

M - METRIC PART
Y - SEPARATE ILLUSTRATION

432-5661 **MANIFOLD GP-CONTROL (**contd.**)** **i05360903**

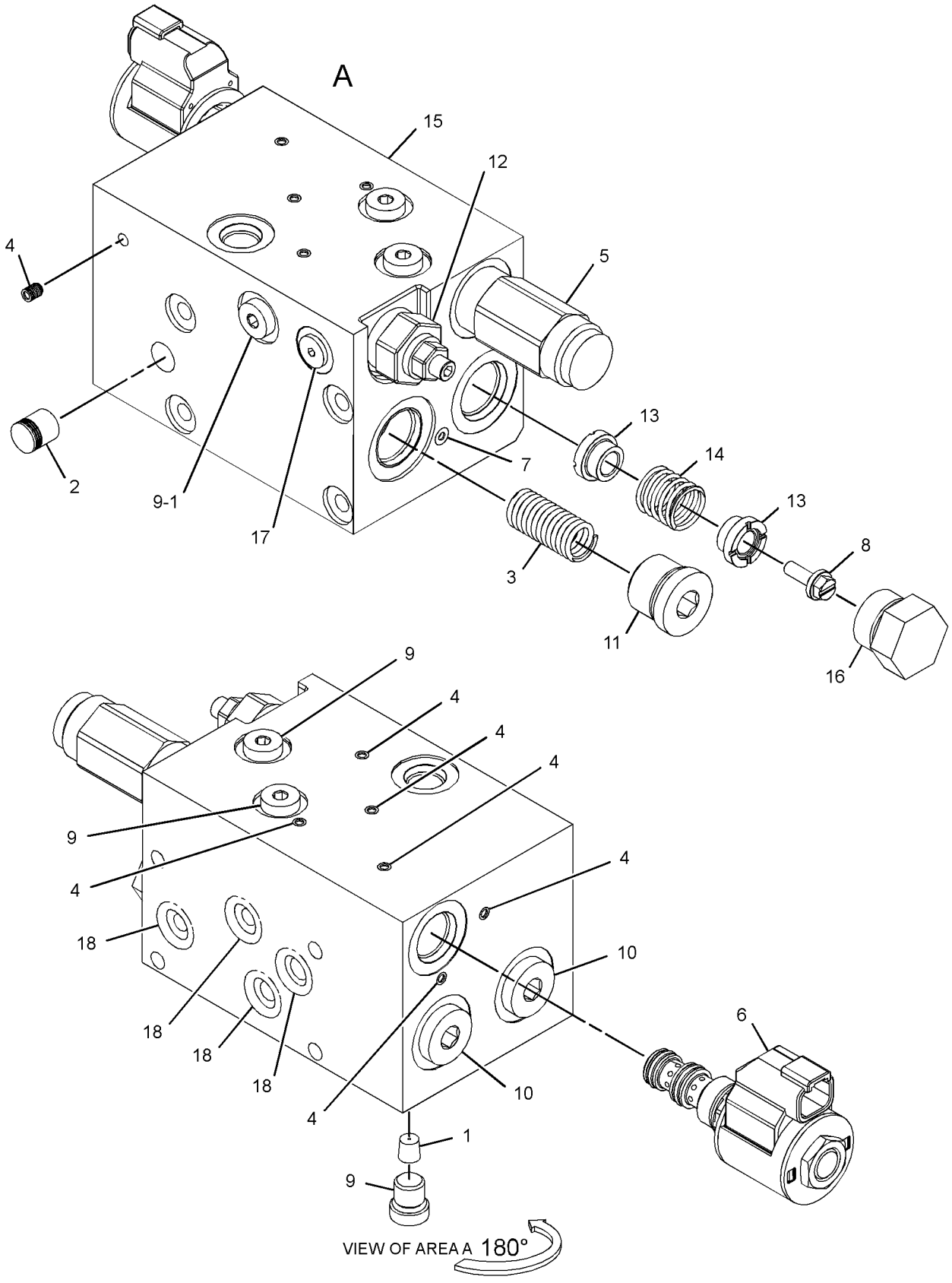

GRAPHIC #1 <END> g03354515

455-0949 MANIFOLD GP-CONTROL

S/N: TNS1-UP

PART OF 451-5878 VALVE GP-CONTROL

SMCS-4264, 5072, 5264, 5467, 5479 **i05749947**

NOTE	REF NO	GRAPHIC REF	PART NUMBER	QTY	PART NAME 1 2 3 4 5 6 (PRODUCT LEVEL)	SEE PAGE
	1	1	**1T-0936**	1	PLUG-ORIFICE	
	2	1	**5P-6300**	4	SEAL-O-RING	
	3	1	**7T-6496**	1	PLUG	
	4	1	**9J-5754**	1	SPRING	
	5	1	**101-4845**	1	PLUG-ORIFICE	
	6	1	**148-3483**	7	PLUG	
	7	1	*148-8410*	1	PLUG AS	
		1	**2M-9780**	1	SEAL-O-RING	
		1	**9S-4190**	1	PLUG-O-RING (7/8-14-THD)	
	8	1	*207-8218*	1	PLUG AS	
		1	**7J-0204**	1	SEAL-O-RING	
		1	**9S-8007**	1	PLUG	
	9	1	**282-8827**	1	PLUG	
M	10	1	**363-1613**	1	BOLT (M5X0.8X15-MM)	
	11	1	*367-6002*	4	PLUG AS	
					(EACH INCLUDES)	
		1	**3J-7354**	1	SEAL-O-RING	
		1	**360-3677**	1	PLUG (7/16-20-THD)	
	12	1	*367-6003*	2	PLUG AS	
					(EACH INCLUDES)	
		1	**3K-0360**	1	SEAL-O-RING	
		1	**360-3680**	1	PLUG	
	13	1	*367-6004*	1	PLUG AS	
		1	**2M-9780**	1	SEAL-O-RING	
		1	**360-3681**	1	PLUG (7/8-14-THD)	
H	14	1	**397-9397**	1	VALVE GP-SOLENOID (24-VOLT) (RIDE CONTROL)	
		1	**367-8532**	1	COIL AS (24-VOLT)	
	15	1	**423-1786**	2	RETAINER	
	16	1	**423-1787**	1	SPRING	
	17	1	**431-8802**	1	VALVE GP-CONTROL (RIDE CONTROL)	
J	18	1	**445-8805**	1	VALVE GP-RELIEF	
		1	**2M-9780**	1	SEAL-O-RING	
		1	**161-6149**	1	SEAL-O-RING	
		1	**161-6161**	2	RING-BACKUP	
	19	1	**455-5822**	1	VALVE GP-RELIEF	
					AVAILABLE REPAIR KIT(S):	
J			**133-5545**	1	KIT-SEAL (RELIEF VALVE)	
					(INCLUDES O-RINGS & BACK-UP RINGS)	
H			**426-4823**	1	KIT-SEAL (SOLENOID VALVE)	
					(INCLUDES O-RINGS & BACK-UP RINGS)	

H - KIT MARKED H SERVICES PART(S) MARKED H
J - KIT MARKED J SERVICES PART(S) MARKED J
M - METRIC PART

455-0949 **MANIFOLD GP-CONTROL (**contd.**)** **i05749947**

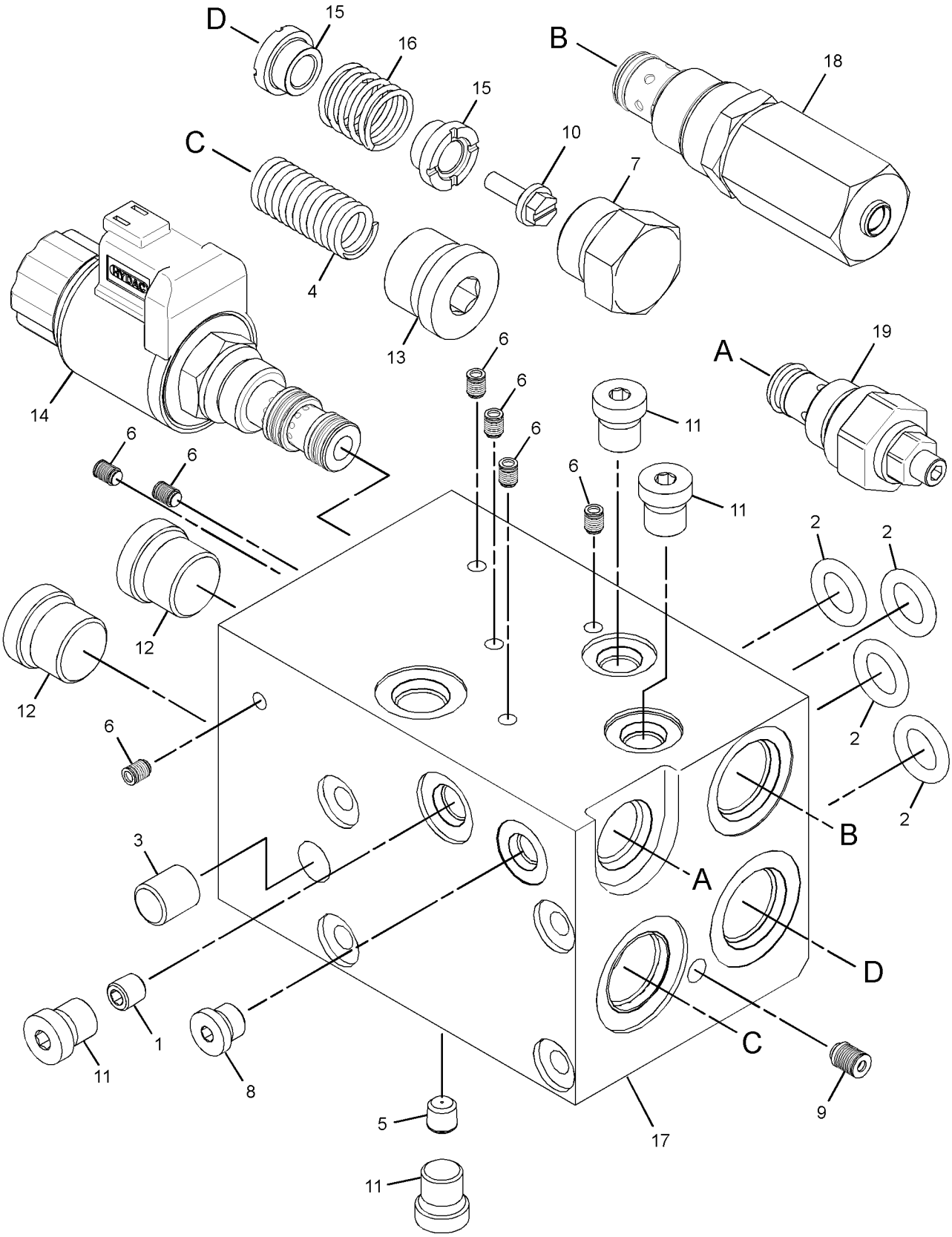

GRAPHIC #1 <END> g03656637

436-7013 MANIFOLD GP-HYDRAULIC

S/N: TNS1-UP

PART OF 456-5805, 463-8850, 463-8851, 463-8852, 463-8853 AXLE AR-FIXED & OSCILLATING

SMCS-5264 **i06796991**

NOTE	REF NO	GRAPHIC REF	PART NUMBER	QTY	PART NAME 1 2 3 4 5 6 (PRODUCT LEVEL)	SEE PAGE
Y	1	1	**6E-4701**	1	VALVE GP-CHECK (HYDRAULIC LOCKOUT)	677
	2	1	*165-4931*	1	ELBOW AS	
		1	**3J-1907**	1	SEAL-O-RING	
		1	**6V-8077**	1	ELBOW	
	3	1	*173-3993*	1	PLUG AS	
		1	**4J-7533**	1	SEAL-O-RING	
		1	**9S-8001**	1	PLUG	
I	4	1	**389-4097**	1	HOSE AS	
	5	1	**417-3325**	1	MANIFOLD	
	6	1	*480-3046*	1	TEE AS	
		1	**6V-8397**	1	SEAL-O-RING	
		1	**123-2169**	1	FITTING-ORFS	
	7	1	*164-5567*	1	COUPLER AS-QUICK DISCONNECT (MALE)	
		1	**6V-3965**	1	FITTING (QUICK DISCONNECT)	
		1	**214-7568**	1	SEAL-O-RING	
	8	1	**6V-0852**	1	CAP-DUST	

I - REFER TO HYDRAULIC INFORMATION SYSTEM
Y - SEPARATE ILLUSTRATION

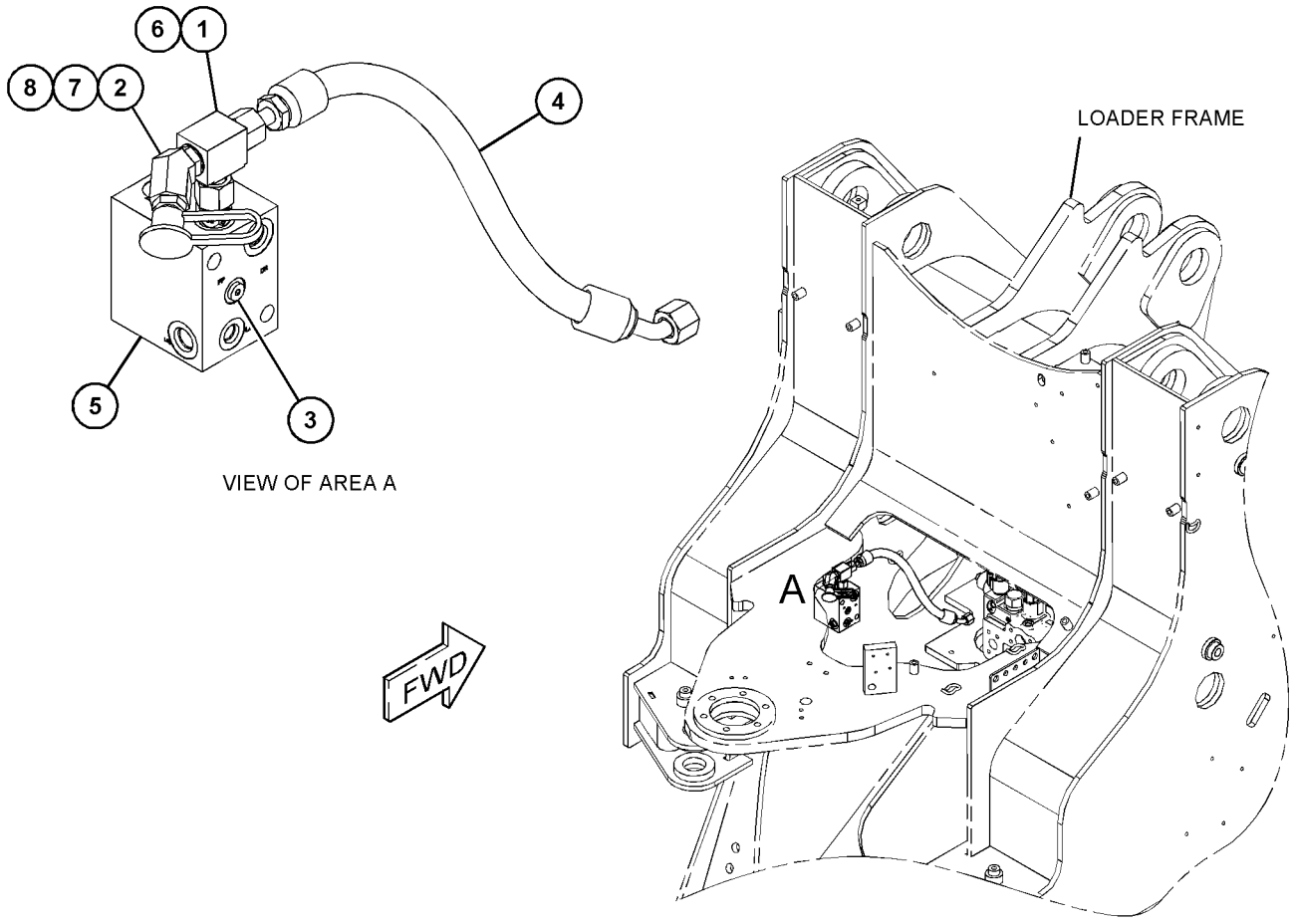

GRAPHIC #1 <END> g06040193

445-4983 MANIFOLD GP-VALVE

S/N: TNS1-UP

PART OF 445-4988 VALVE GP-CONTROL

SMCS-5264 **i06034399**

NOTE	REF NO	GRAPHIC REF	PART NUMBER	QTY	PART NAME 1 2 3 4 5 6 (PRODUCT LEVEL)	SEE PAGE
	1	1	**3K-0360**	1	SEAL-O-RING	
	2	1	**6E-6129**	1	PLUG-MAIN RELIEF	
	3	1	**7J-9933**	1	SEAL-O-RING	
	4	1	**096-3831**	1	ORIFICE	
	5	1	*148-8406*	2	PLUG AS	
					(EACH INCLUDES)	
		1	**7M-8485**	1	SEAL-O-RING	
		1	**9S-9334**	1	PLUG-O-RING	
	6	1	**282-8827**	3	PLUG	
	7	1	**292-8061**	4	PLUG-EXPANSION	
	8	1	**305-4563**	1	VALVE GP-SHUTTLE (PILOT OIL)	
		1	**2M-9780**	1	SEAL-O-RING	
	9	1	*445-4982*	1	MANIFOLD-INLET	

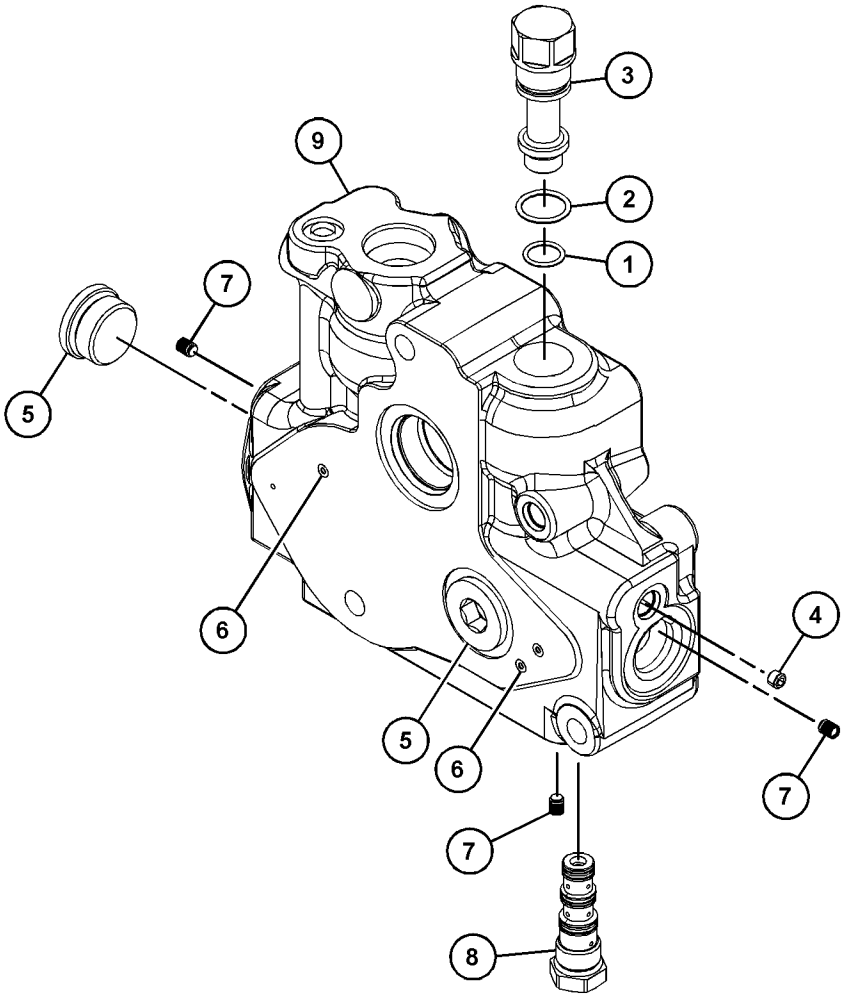

GRAPHIC #1 <END> g03487821

434-0687 PUMP & MTG GP-HYDRAULIC

S/N: TNS1-UP

PART OF 492-4033, 492-4034 DISTRIBUTION AR

SMCS-5055, 5070, 5073, 5084

i06769721

NOTE	PART NUMBER	QTY	PART NAME 1 2 3 4 5 6 (PRODUCT LEVEL)	SEE PAGE
Y	*415-7493*	1	PUMP & MTG GP-PISTON	644

Y - SEPARATE ILLUSTRATION

<END>

436-7003 PUMP & MTG GP-HYDRAULIC

S/N: TNS1-UP

PART OF 463-8880 HYDRAULIC AR

SMCS-5055, 5070, 5073, 5084 **i06796505**

NOTE	REF NO	GRAPHIC REF	PART NUMBER	QTY	PART NAME 1 2 3 4 5 6 (PRODUCT LEVEL)	SEE PAGE
Y	1	1	**362-9554**	1	PUMP GP-GEAR (TRANSMISSION)	646
	2	1	**372-6784**	1	COUPLING AS	
		1	**204-3975**	1	PIN-SPRING	
Y	3	1	**455-1846**	1	PUMP GP-PISTON (STEERING)	652
Y	4	1	**466-3770**	1	PUMP GP-PISTON (IMPLEMENT PUMP)	654
	5	1	**2K-8257**	1	SEAL-O-RING	
M	6	1	**304-9129**	4	BOLT (M20X2.5X55-MM)	
	7	1	**5F-3106**	1	SEAL-O-RING	
	8	1	**6V-8467**	1	SEAL-O-RING	
	9	1	**8T-4123**	4	WASHER (3.62X5.75X0.375-MM THK)	
M	10	1	**8T-4183**	2	BOLT (M12X1.75X40-MM)	
M	11	1	**8T-4193**	2	BOLT (M16X2X50-MM)	
	12	1	**8T-4223**	2	WASHER-HARD (13.5X25.5X3-MM THK)	
	13	1	**9X-8257**	2	WASHER (17.5X30X3.5-MM THK)	

M - METRIC PART
Y - SEPARATE ILLUSTRATION

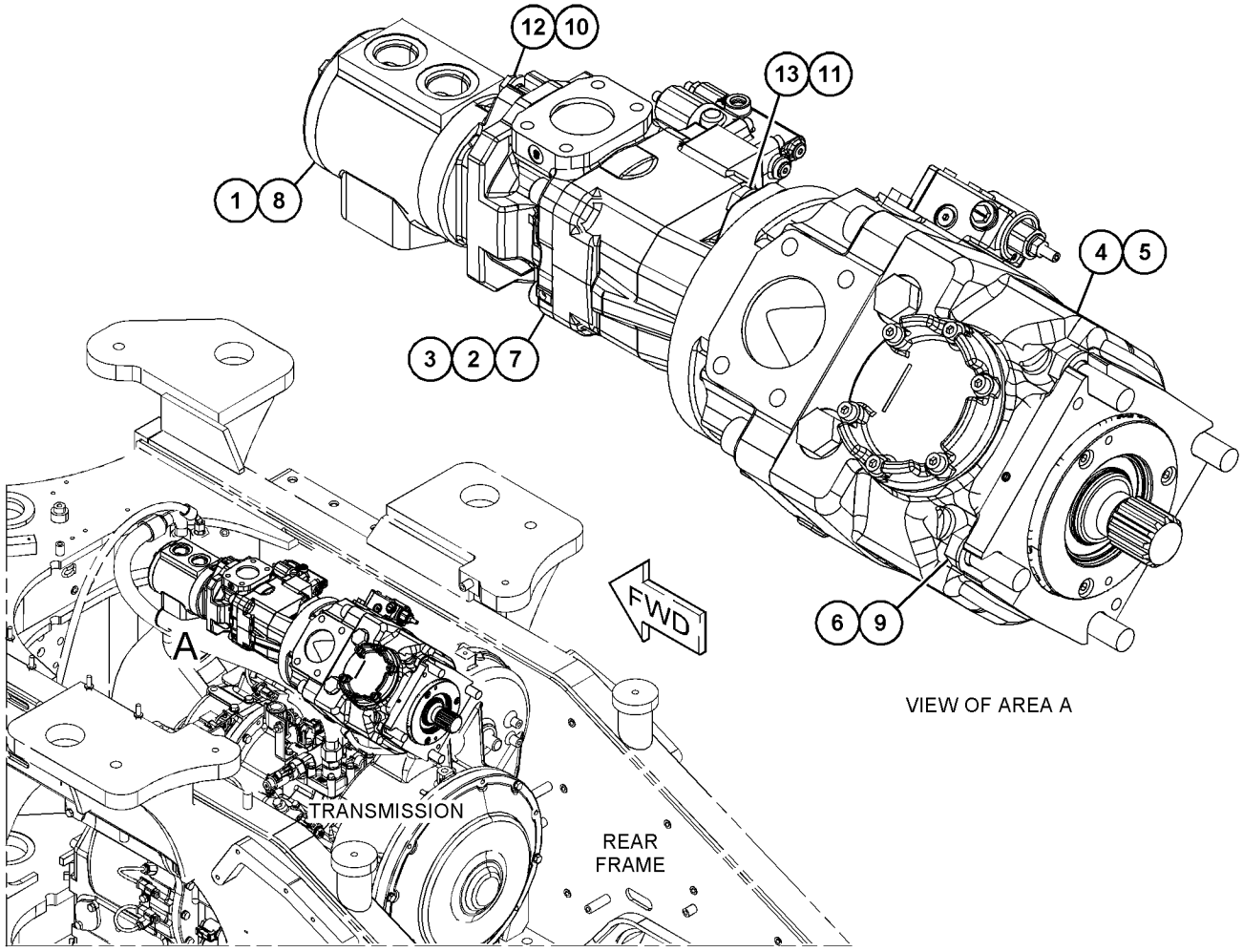

VIEW OF AREA A

GRAPHIC #1 <END> g06047745

389-6081 PUMP & MTG GP-HYDRAULIC FAN

S/N: TNS1-UP

PART OF 463-1125 LINES GP-AIR

SMCS-1387 **i05684911**

NOTE	REF NO	GRAPHIC REF	PART NUMBER	QTY	PART NAME 1 2 3 4 5 6 (PRODUCT LEVEL)	SEE PAGE
M	1	1	**8T-4137**	1	BOLT (M10X1.5X20-MM)	
	2	1	**8T-9658**	3	SPACER (8.2X12.7X25.4-MM THK)	
	3	1	**9W-0852**	2	PIN-CONNECTOR (14-GA TO 16-GA)	
	4	1	**155-0576**	6	MOUNT-ISOLATION	
	5	1	**368-4198**	1	PUMP AS-AIR (VARIABLE PITCH FAN)	
	6	1	**393-5130**	1	BRACKET AS	
M		1	**8T-3490**	1	NUT-WELD (M10X1.5-THD)	
	7	1	**394-1108**	1	BRACKET AS	
	8	1	**130-5300**	1	CLIP	
	9	1	**102-8802**	1	KIT-RECEPTACLE (2-PIN)	
					(KIT INCLUDES RECEPTACLE AS & WEDGE)	
	10	1	**8T-4121**	1	WASHER-HARD (11X21X2.5-MM THK)	

M - METRIC PART

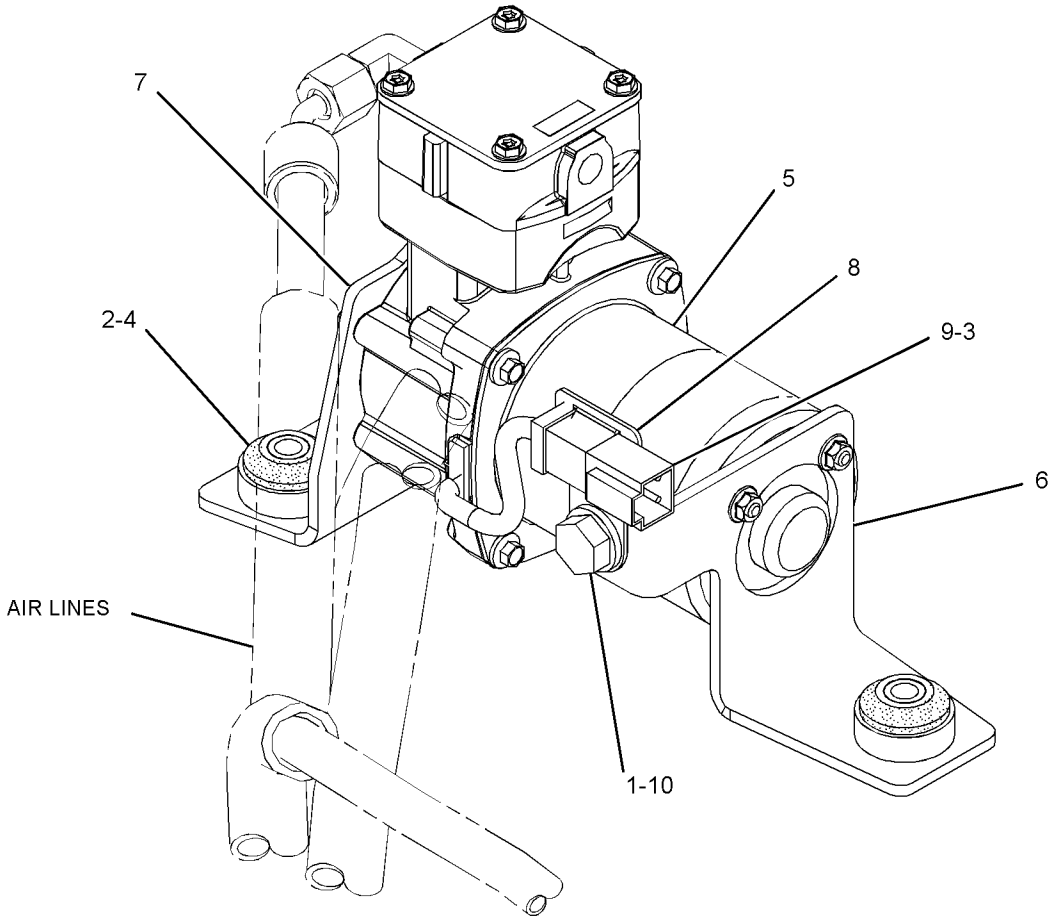

GRAPHIC #1 <END> g02932078

415-7493 PUMP & MTG GP-PISTON–BRAKE, HYDRAULIC FAN

S/N: TNS1-UP

PART OF 434-0687 PUMP & MTG GP-HYDRAULIC

SMCS-5070 **i06769725**

NOTE	REF NO	GRAPHIC REF	PART NUMBER	QTY	PART NAME 1 2 3 4 5 6 (PRODUCT LEVEL)	SEE PAGE
	1	1	**291-6531**	1	GASKET	
Y	2	1	**399-5055**	1	PUMP GP-PISTON (BRAKE, HYDRAULIC FAN)	648
	3	1	**415-7497**	1	BRACKET	
	4	1	**397-9301**	2	WASHER-HARD (11.5X20X15-MM THK)	
	5	1	**7X-7729**	2	WASHER (11X25X3-MM THK)	
	6	1	**8T-4121**	2	WASHER-HARD (11X21X2.5-MM THK)	
M	7	1	**8T-4136**	2	BOLT (M10X1.5X25-MM)	
M	8	1	**8T-4196**	2	BOLT (M10X1.5X35-MM)	
	9	1	**8T-4223**	2	WASHER-HARD (13.5X25.5X3-MM THK)	
M	10	1	**8T-4956**	2	BOLT (M12X1.75X35-MM)	

M - METRIC PART
Y - SEPARATE ILLUSTRATION

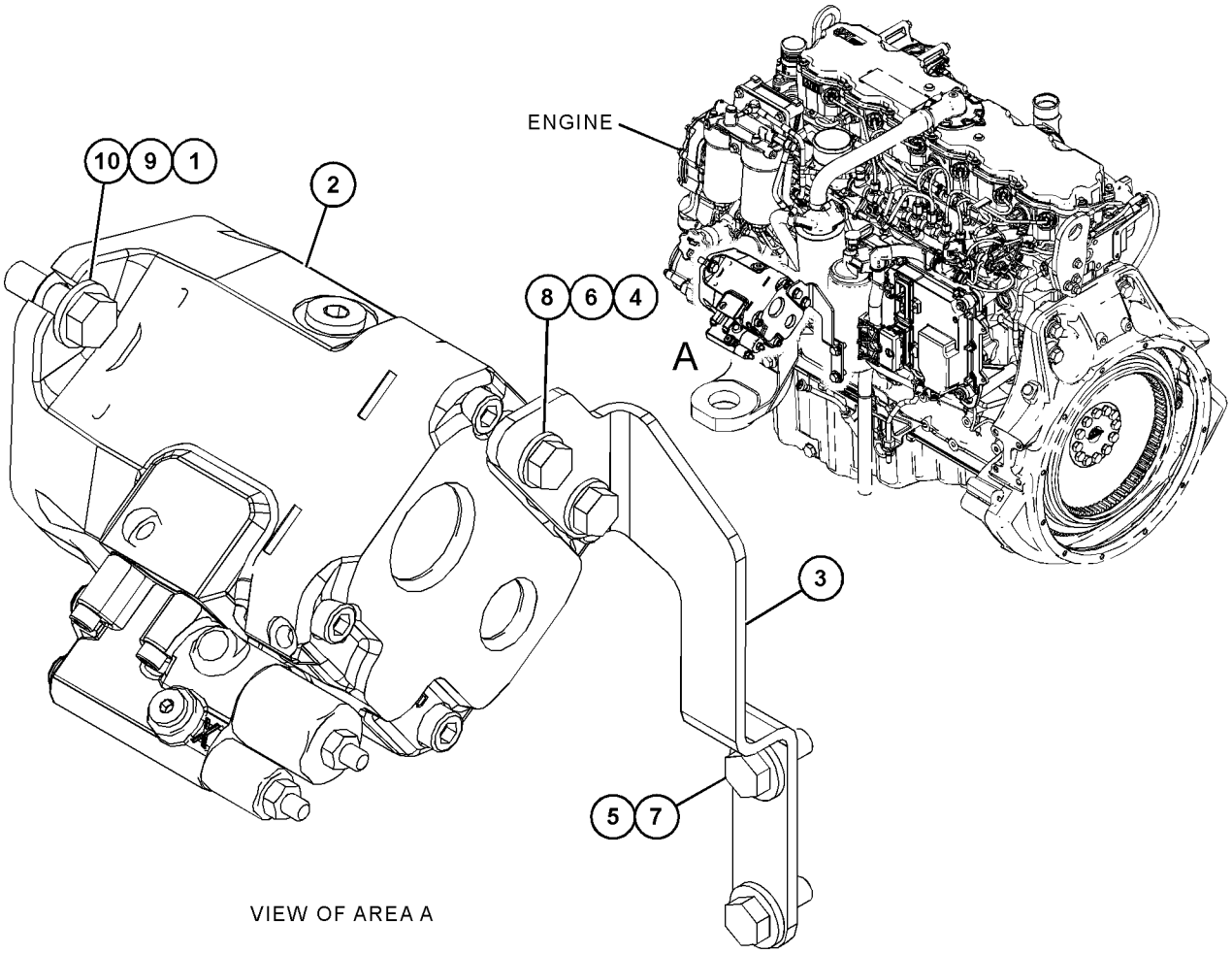

VIEW OF AREA A

GRAPHIC #1 <END> g03662684

450-5474 PUMP & MTG GP-PISTON

S/N: TNS1-UP

PART OF 386-7382, 386-7383 COLD WEATHER AR

SMCS-5070 **i06753213**

NOTE	REF NO	GRAPHIC REF	PART NUMBER	QTY	PART NAME 1 2 3 4 5 6 (PRODUCT LEVEL)	SEE PAGE
	1	1	**291-6531**	1	GASKET	
	2	1	**415-7497**	1	BRACKET	
Y	3	1	**430-9006**	1	PUMP GP-PISTON (BRAKE, HYDRAULIC FAN)	650
	4	1	**397-9301**	2	WASHER-HARD (11.5X20X15-MM THK)	
	5	1	**7X-7729**	2	WASHER (11X25X3-MM THK)	
	6	1	**8T-4121**	2	WASHER-HARD (11X21X2.5-MM THK)	
M	7	1	**8T-4136**	2	BOLT (M10X1.5X25-MM)	
M	8	1	**8T-4196**	2	BOLT (M10X1.5X35-MM)	
	9	1	**8T-4223**	2	WASHER-HARD (13.5X25.5X3-MM THK)	
M	10	1	**8T-4956**	2	BOLT (M12X1.75X35-MM)	

M - METRIC PART
Y - SEPARATE ILLUSTRATION

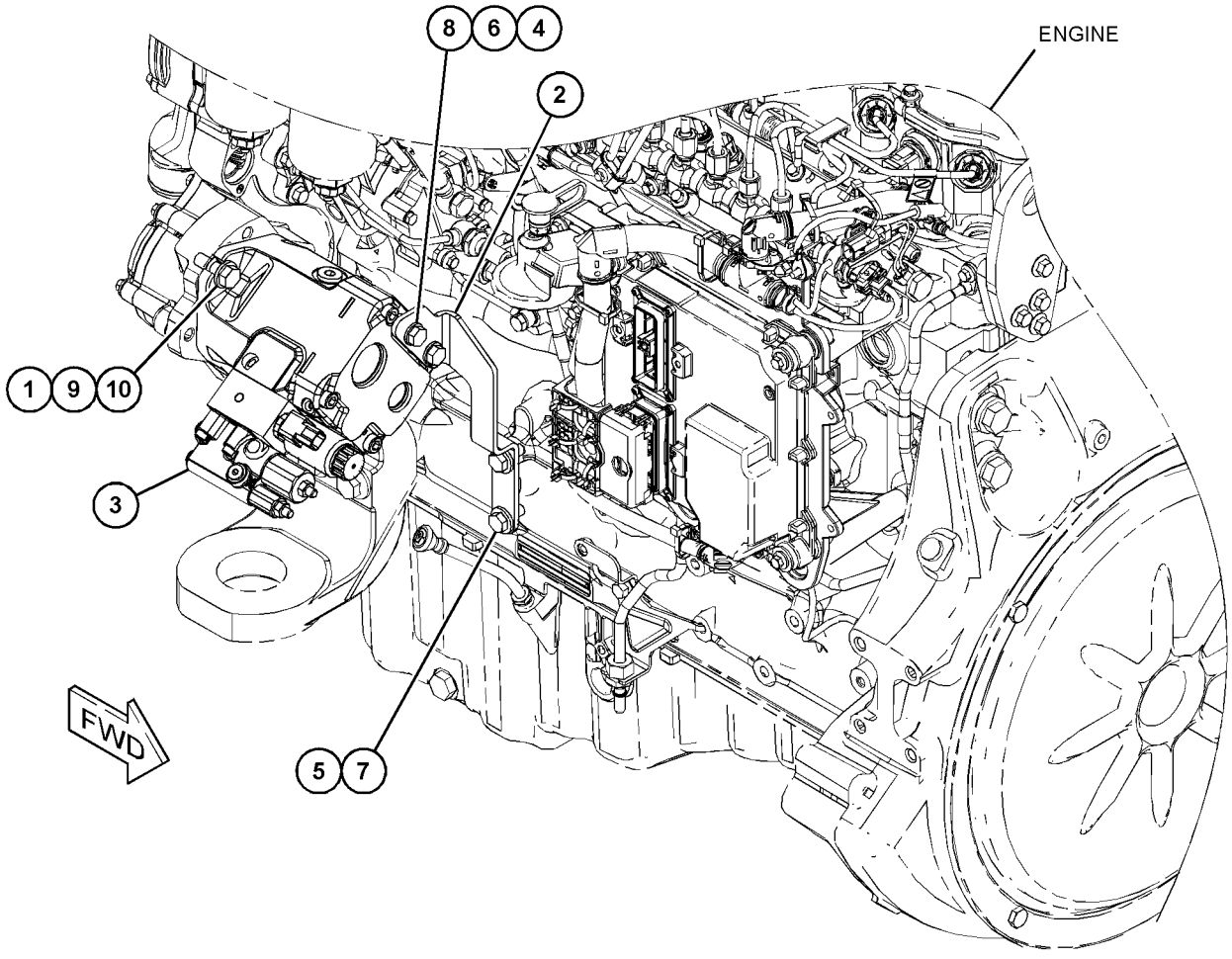

GRAPHIC #1 <END> g06028950

362-9554 PUMP GP-GEAR

S/N: TNS1-UP

IMPLEMENT, STEERING, BRAKE

PART OF 436-7003 PUMP & MTG GP-HYDRAULIC

SMCS-5073 **i06654077**

NOTE	REF NO	GRAPHIC REF	PART NUMBER	QTY	PART NAME 1 2 3 4 5 6 (PRODUCT LEVEL)	SEE PAGE
	1	1	**424-0045**	4	SEAL-WASHER	
	2	1	**361-4001**	1	COVER-OIL PUMP	
	3	1	**363-7241**	1	ADAPTER AS-OIL PUMP	
	3A	1	**361-3994**	2	BUSHING	
	4	1	**363-7282**	1	BODY AS-PUMP	
		1	**8M-8489**	2	DOWEL	
	5	1	**363-7284**	1	GEAR AS-PUMP	
		1	**1B-8704**	1	KEY-WOODRUFF	
	6	1	**363-7286**	2	GEAR-OIL PUMP	
	7	1	**363-7287**	1	GEAR AS-PUMP	
		1	**1B-8704**	1	KEY-WOODRUFF	
	8	1	**480-6338**	2	SEAL-LIP TYPE	
	9	1	**1B-8704**	1	KEY-WOODRUFF	
	10	1	**1L-3768**	1	RING-RETAINING	
	11	1	**3S-0004**	4	WASHER (0.406X0.728X0.09-IN THK)	
	12	1	**4M-0189**	2	SEAL-O-RING	
M	13	1	**8C-2926**	4	BOLT (M10X1.5X140-MM)	

M - METRIC PART

362-9554 **PUMP GP-GEAR (**contd.**)** **i06654077**

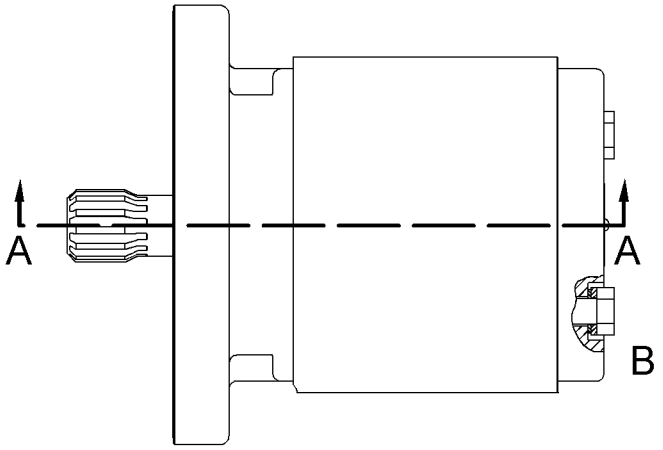

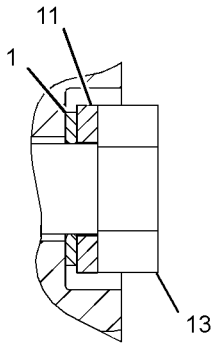

VIEW OF AREA B

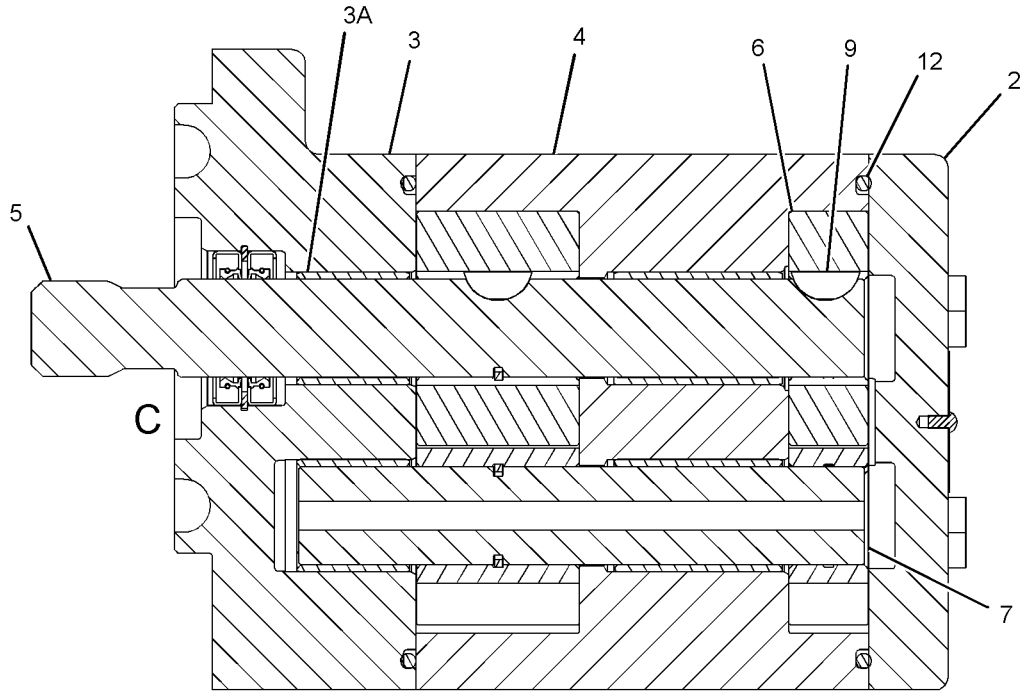

SECTION A-A

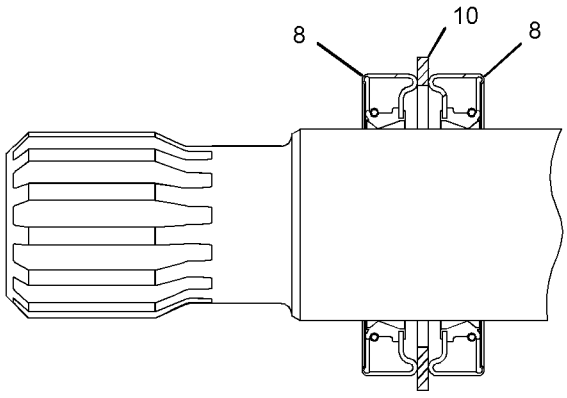

VIEW OF AREA C

GRAPHIC #1 <END> g06063178

399-5055 PUMP GP-PISTON

S/N: TNS1-UP

PART OF 415-7493 PUMP & MTG GP-PISTON

SMCS-5070 **i06769729**

NOTE	REF NO	GRAPHIC REF	PART NUMBER	QTY	PART NAME 1 2 3 4 5 6 (PRODUCT LEVEL)	SEE PAGE
	1	1	**191-7581**	1	SHAFT	
	2	1	**8T-9597**	1	RING-RETAINING	
	3	1	**155-9127**	1	SEAL	
	4	1	**9S-8005**	1	PLUG (3/4-16-THD)	
	5	1	**3K-0360**	1	SEAL-O-RING	
	6	1	**194-9472**	1	SPRING	
	7	1	**174-9994**	1	PISTON-CONTROL	
	8	1	**198-5351**	1	PLUG	
	9	1	**8T-7525**	1	SEAL-O-RING	
	10	1	**9X-8979**	1	DOWEL	
	11	1	**259-5507**	1	ROD-PISTON	
	12	1	**120-4394**	1	PLUG-BREAK OFF	
M	13	1	**8T-9515**	4	BOLT-SOCKET HEAD (M10X1.5X40-MM)	
	14	1	**191-7583**	1	BEARING AS-ROLLER	
	15	1	**194-9473**	1	RING	
	16	1	**191-7582**	1	SHIM (2.5-MM THK)	
Y	17	1	**364-8631**	1	ROTATING GP-PUMP	658
	18	1	**279-3393**	1	SWASHPLATE	
	19	1	**194-9474**	2	BEARING-CRADLE	
	20	1	**155-9125**	1	BEARING AS-ROLLER	
	21	1	**155-9137**	1	PLATE	
Y	22	1	**360-1413**	1	VALVE GP-PUMP CONTROL	700
	23	1	**280-7870**	1	GASKET	
M	24	1	**8T-8442**	4	BOLT-SOCKET HEAD (M6X1X30-MM)	
					AVAILABLE REPAIR KIT(S):	
			364-8630	1	KIT-SEAL	
					(INCLUDES SHAFT SEAL & O-RINGS)	

M - METRIC PART
Y - SEPARATE ILLUSTRATION

399-5055 **PUMP GP-PISTON** (contd.) **i06769729**

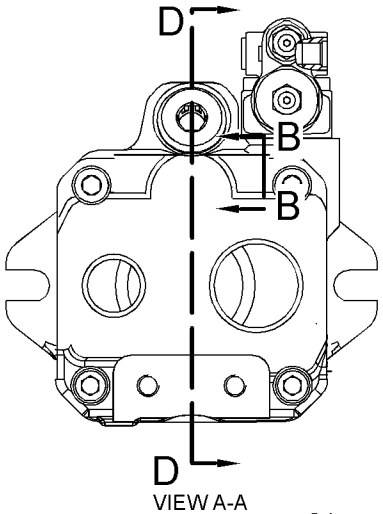

VIEW A-A

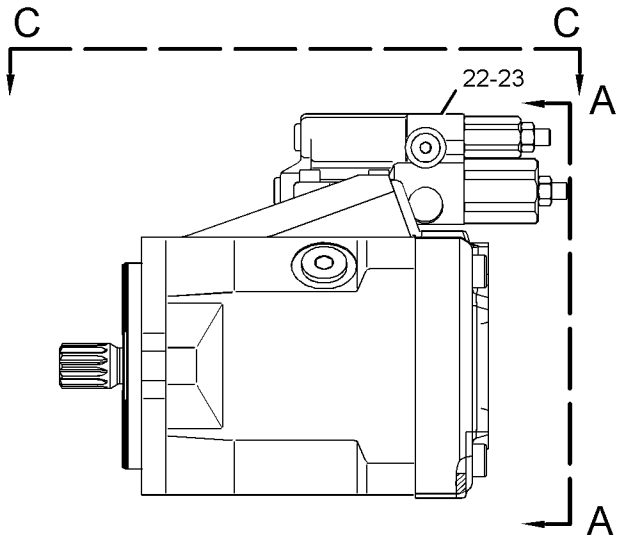

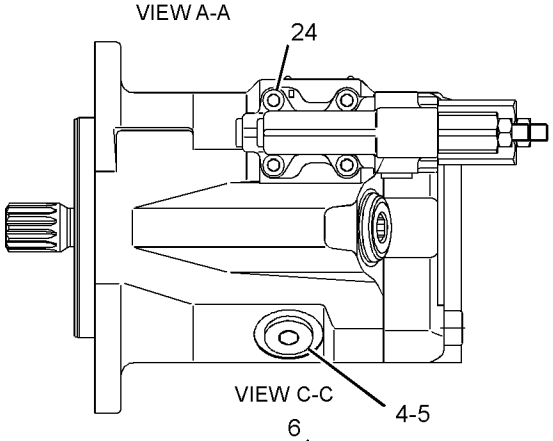

VIEW C-C

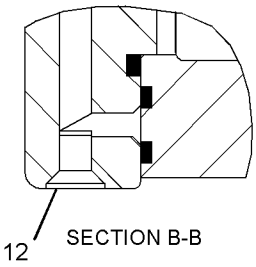

SECTION B-B

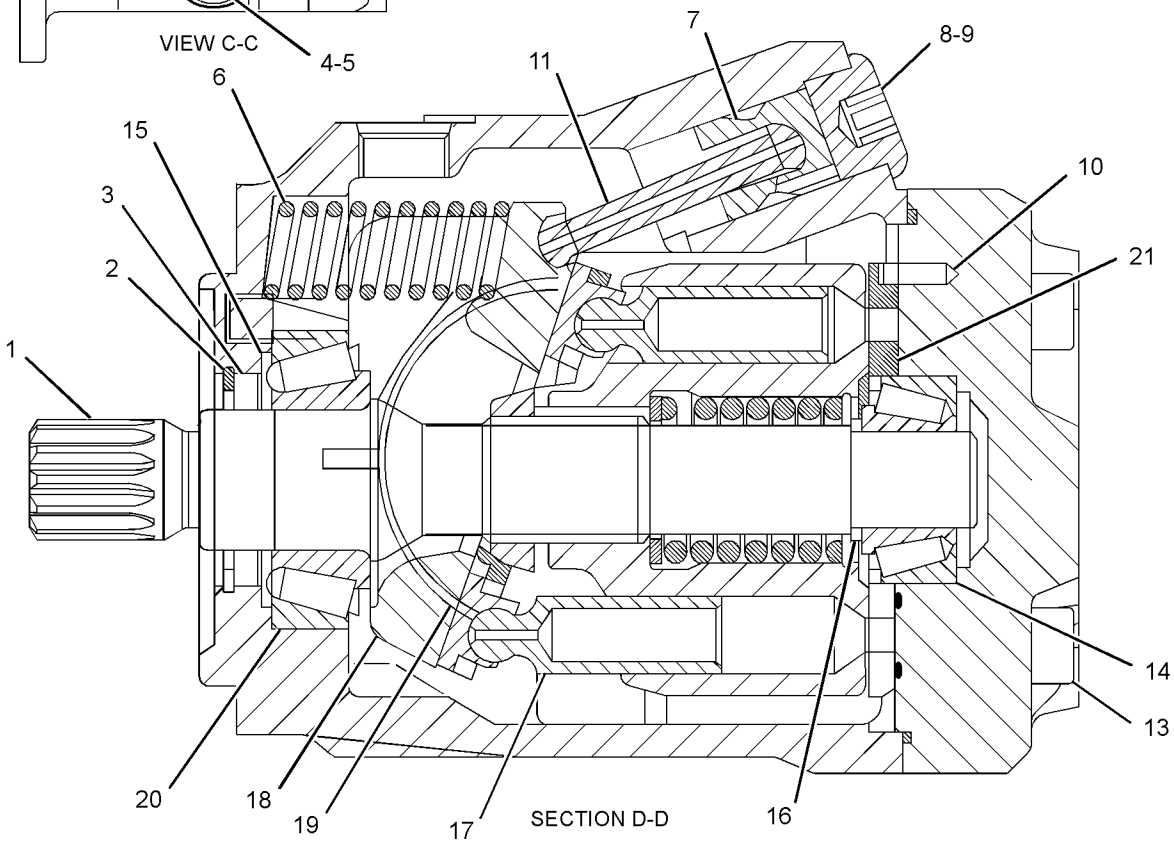

SECTION D-D

GRAPHIC #1 <END> g03534980

430-9006 PUMP GP-PISTON

S/N: TNS1-UP

PART OF 450-5474 PUMP & MTG GP-PISTON

SMCS-5070 **i06753220**

NOTE	REF NO	GRAPHIC REF	PART NUMBER	QTY	PART NAME 1 2 3 4 5 6 (PRODUCT LEVEL)	SEE PAGE
	1	1	**191-7581**	1	SHAFT	
	2	1	**8T-9597**	1	RING-RETAINING	
	3	1	**155-9127**	1	SEAL	
	4	1	**9S-8005**	1	PLUG (3/4-16-THD)	
	5	1	**3K-0360**	1	SEAL-O-RING	
	6	1	**194-9472**	1	SPRING	
	7	1	**174-9994**	1	PISTON-CONTROL	
	8	1	**198-5351**	1	PLUG	
	9	1	**8T-7525**	1	SEAL-O-RING	
	10	1	**9X-8979**	1	DOWEL	
	11	1	**259-5507**	1	ROD-PISTON	
	12	1	**120-4394**	1	PLUG-BREAK OFF	
M	13	1	**8T-9515**	4	BOLT-SOCKET HEAD (M10X1.5X40-MM)	
	14	1	**191-7583**	1	BEARING AS-ROLLER	
	15	1	**194-9473**	1	RING	
	16	1	**191-7582**	1	SHIM (2.5-MM THK)	
Y	17	1	**364-8631**	1	ROTATING GP-PUMP	658
	18	1	**279-3393**	1	SWASHPLATE	
	19	1	**194-9474**	2	BEARING-CRADLE	
	20	1	**155-9125**	1	BEARING AS-ROLLER	
	21	1	**155-9137**	1	PLATE	
Y	22	1	**360-1413**	1	VALVE GP-PUMP CONTROL	700
	23	1	**280-7870**	2	GASKET	
M	24	1	**8T-8442**	4	BOLT-SOCKET HEAD (M6X1X30-MM)	
	25	1	**469-5750**	1	PLATE	
	26	1	**479-3085**	1	VALVE GP-SOLENOID (LOAD SENSING)	
		1	**342-7206**	1	KIT-SEAL	
					(INCLUDES RINGS)	
		1	**217-3875**	1	SEAL-O-RING	
		1	**247-7054**	1	COLLAR-LOCKING	
		1	**453-1743**	1	COIL AS	
					AVAILABLE REPAIR KIT(S):	
			364-8630	1	KIT-SEAL	
					(INCLUDES SEAL & RINGS)	

M - METRIC PART
Y - SEPARATE ILLUSTRATION

430-9006 **PUMP GP-PISTON** (contd.) **i06753220**

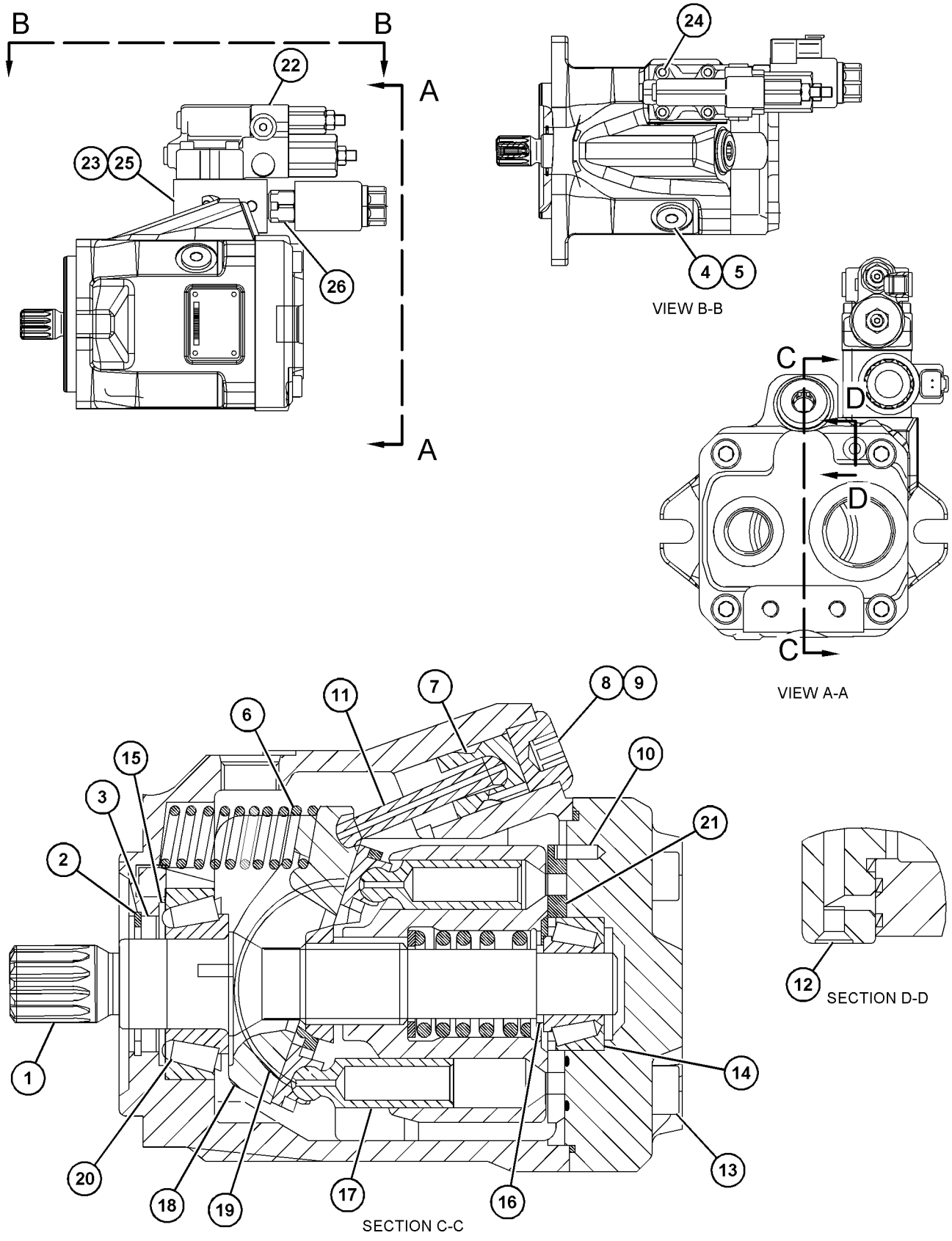

GRAPHIC #1 <END> g06030379

455-1846 PUMP GP-PISTON

S/N: TNS1-UP

PART OF 436-7003 PUMP & MTG GP-HYDRAULIC

SMCS-5070 **i05786038**

NOTE	REF NO	GRAPHIC REF	PART NUMBER	QTY	PART NAME 1 2 3 4 5 6 (PRODUCT LEVEL)	SEE PAGE
	1	1	**180-6213**	1	RING-RETAINING	
	2	1	**139-2840**	1	SEAL-SHAFT	
M	3	1	**6R-7943**	2	SCREW (M5X0.8X15-MM)	
	4	1	**168-2197**	1	SPRING	
	5	1	**274-7452**	1	LINK-CONTROL	
	6	1	**174-9994**	1	PISTON-CONTROL	
	7	1	**8T-7525**	1	SEAL-O-RING	
	8	1	**310-7267**	1	PLUG-CONTROL	
	9	1	**9W-2109**	1	CONE-BEARING	
	10	1	**9W-2110**	1	CUP-TAPERED ROLLER	
M	11	1	**8T-2503**	4	BOLT-SOCKET HEAD (M14X2X35-MM)	
	12	1	**9X-8979**	1	DOWEL	
	13	1	**192-7470**	1	SEAL-O-RING	
	14	1	**168-2203**	1	SHIM-SHAFT (3-MM THK)	
Y	15	1	**376-0900**	1	ROTATING GP-PUMP	659
	16	1	**168-7317**	1	SWASHPLATE	
	17	1	**279-2619**	1	COUPLER	
	18	1	**3P-1210**	1	CONE-BEARING	
	19	1	**8J-0412**	1	CUP-BEARING	
	20	1	**190-6507**	1	RING-STOP	
	21	1	**235-2404**	1	SHAFT	
	22	1	**120-4394**	2	PLUG-BREAK OFF	
	23	1	**168-3504**	2	SEAL	
	24	1	**9S-8006**	1	PLUG (7/8-14-THD)	
	25	1	**2M-9780**	1	SEAL-O-RING	
Y	26	1	**348-5974**	1	VALVE GP-PUMP CONTROL (PISTON)	699
	27	1	**282-0918**	1	BEARING-CRADLE	
	28	1	**282-0919**	1	BEARING-CRADLE	
	29	1	**280-7870**	1	GASKET	
	30	1	**376-0898**	1	PLATE-VALVE	
M	31	1	**8T-8442**	4	BOLT-SOCKET HEAD (M6X1X30-MM)	
	32	1	**9S-8002**	1	PLUG (7/16-20-THD)	
	33	1	**3J-7354**	1	SEAL-O-RING	
					AVAILABLE REPAIR KIT(S):	
			293-8350	1	KIT-SEAL (PISTON PUMP)	
					(INCLUDES O-RINGS & BACKUP RINGS)	

M - METRIC PART
Y - SEPARATE ILLUSTRATION

455-1846 **PUMP GP-PISTON (**contd.**)** **i05786038**

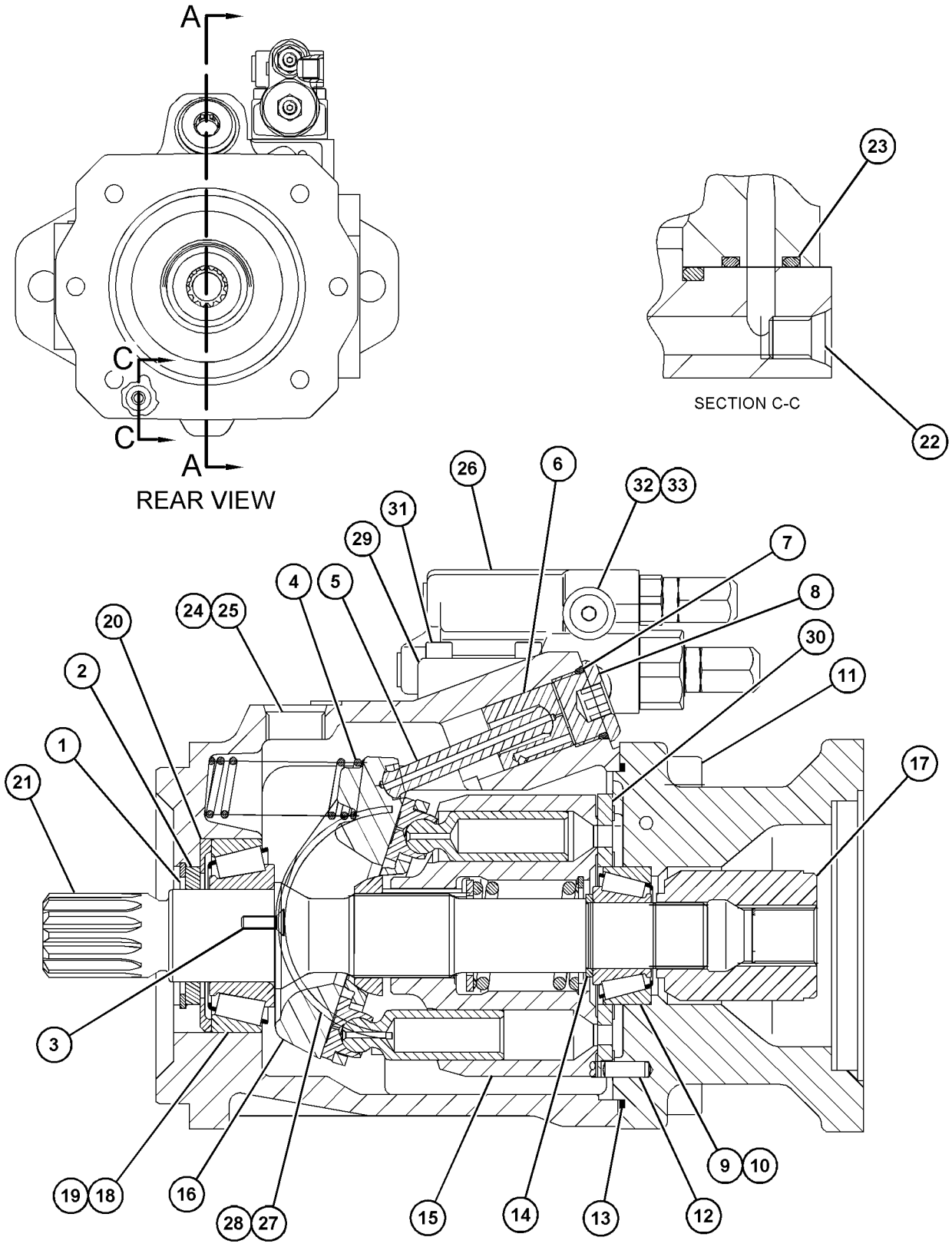

GRAPHIC #1 <END> g03687367

466-3770 PUMP GP-PISTON

S/N: TNS1-UP

PART OF 436-7003 PUMP & MTG GP-HYDRAULIC

SMCS-5070 **i06796508**

NOTE	REF NO	GRAPHIC REF	PART NUMBER	QTY	PART NAME 1 2 3 4 5 6 (PRODUCT LEVEL)	SEE PAGE
	1	1	**3D-2824**	4	SEAL-O-RING	
	2	1	**3D-4603**	1	PLUG-PIPE	
	3	2	**3F-5792**	1	SEAL-O-RING	
	4	2	**3J-1907**	1	SEAL-O-RING	
	5	2	**3J-7354**	1	SEAL-O-RING	
	6	2	**3K-0360**	1	SEAL-O-RING	
	7	1	**4B-4158**	4	SCREW-DRIVE (NO 4X0.25-IN)	
M	8	1	**5A-3604**	3	BOLT-SOCKET HEAD (M8X1.25X25-MM)	
	9	2	**6J-3134**	3	SEAL-O-RING	
	10	1	**6S-3002**	1	SEAL-O-RING	
M	11	1	**6V-5192**	6	BOLT-SOCKET HEAD (M8X1.25X30-MM)	
M	12	2	**7Y-5217**	4	BOLT-SOCKET HEAD (M20X2.5X70-MM)	
	13	1	**8B-7216**	2	SEAL-O-RING	
M	14	2	**8C-6965**	4	BOLT-SOCKET HEAD (M6X1X45-MM)	
	15	2	**8F-6230**	1	SEAL-O-RING	
	16	1	**8H-7521**	1	SEAL-O-RING	
	17	1	**8J-0101**	1	PLATE-NOTICE (HYDRAULIC OIL FILL)	
	18	1	**9S-4183**	4	PLUG (1-1/16-12-THD)	
	19	2	**9S-4191**	1	PLUG (9/16-18-THD)	
	20	2	**9S-8002**	1	PLUG (7/16-20-THD)	
	21	2	**9S-8005**	1	PLUG (3/4-16-THD)	
M	22	2	**9X-2546**	2	BOLT (M6X1X20-MM)	
M	23	2	**101-7397**	4	BOLT-SOCKET HEAD (M12X1.75X50-MM)	
	24	1	**129-7927**	1	BEARING	
	25	1	**129-7979**	2	DOWEL	
	26	1,2	**192-0573**	5	PIN-DOWEL	
	27	2	**247-8920**	1	ORIFICE	
	28	2	**330-5623**	2	LINK (TIMING)	
	29	2	**330-5624**	2	BEARING-SPECIAL	
	30	2	**330-5635**	2	NUT-SEAL (M16X2-THD)	
	33	2	**340-2655**	2	RETAINER	
	34	1	**342-9549**	2	SEAL-LIP TYPE	
	35	2	**360-2791**	1	SWASHPLATE	
	36	2	**360-3491**	1	ACTUATOR	
	37	2	**360-3495**	1	ACTUATOR	
	38	2	**360-3496**	2	LINK-ACTUATOR	
	39	2	**360-3499**	1	SPRING	
	41	1	**362-0722**	1	BODY	
	43	2	**364-2931**	1	ADAPTER	
	44	1	*365-9261*	1	RETAINER AS	
		1	**9W-7783**	2	PLUG	
		1	**340-1489**	1	RETAINER	
	45	2	**366-8395**	2	SETSCREW (M16X2X45-MM)	
Y	46	2	**367-2660**	1	VALVE GP-PUMP CONTROL (IMPLEMENT)	701
Y	47	2	**367-7557**	1	HEAD GP-PUMP (IMPLEMENT)	604
	48	1	**370-0933**	1	COVER	
	50	1	**433-9791**	2	SPRING	

466-3770 **PUMP GP-PISTON (**contd.**)** **i06796508**

NOTE	REF NO	GRAPHIC REF	PART NUMBER	QTY	PART NAME 1 2 3 4 5 6 (PRODUCT LEVEL)	SEE PAGE
	51	1	**433-9792**	2	SPACER (48.43X61.3X0.7-MM THK)	
	52	1	**8T-4241**	1	RING-RETAINING (EXTERNAL)	

PARTS SHOWN IN GRAPHIC(S) WITHOUT A REFERENCE NUMBER ARE NOT SERVICED SEPARATELY

M - METRIC PART
Y - SEPARATE ILLUSTRATION

466-3770 **PUMP GP-PISTON (**contd.**)** **i06796508**

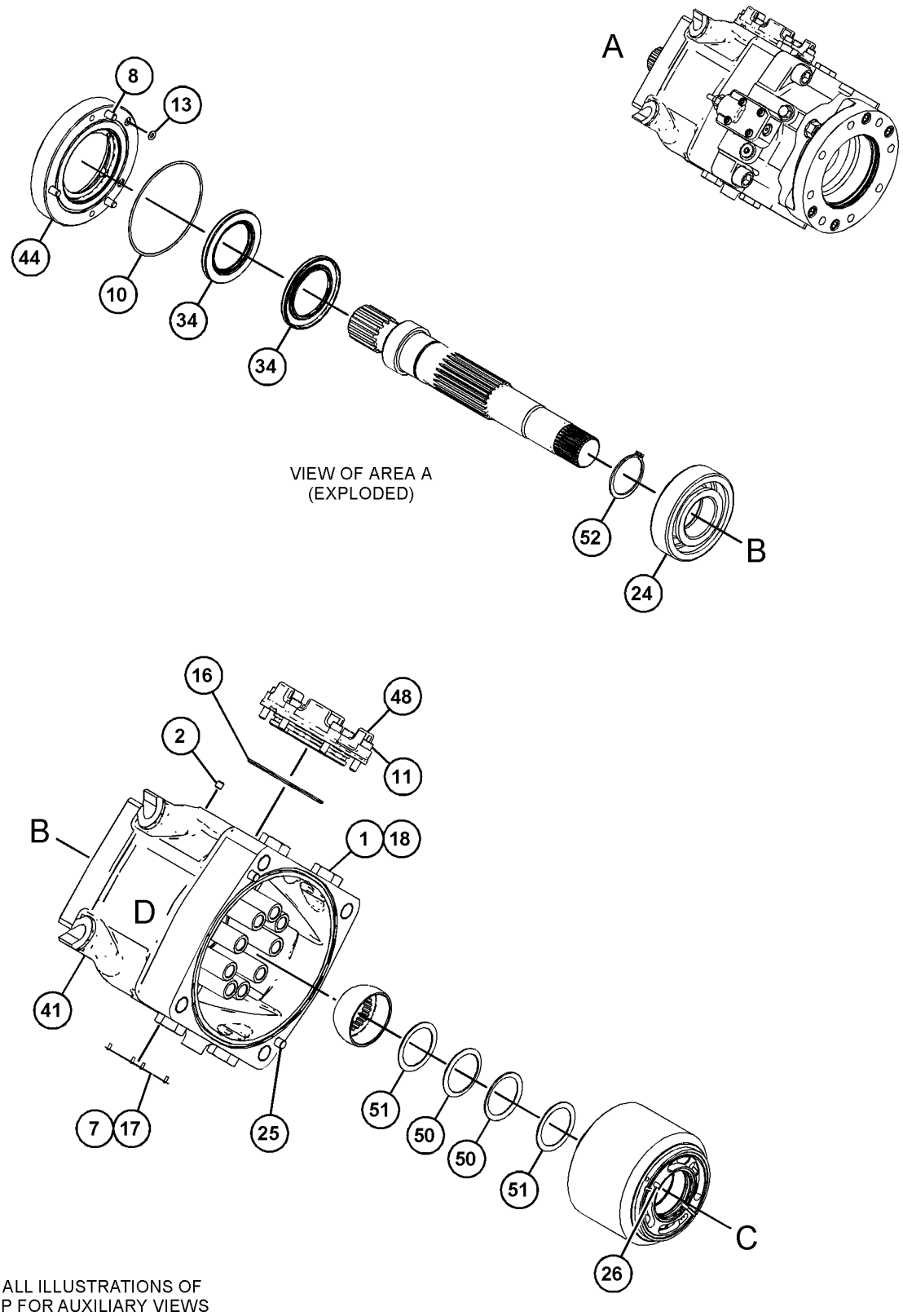

REFER TO ALL ILLUSTRATIONS OF
THIS GROUP FOR AUXILIARY VIEWS

GRAPHIC #1 g06050545

466-3770 **PUMP GP-PISTON (**contd.**)** **i06796508**

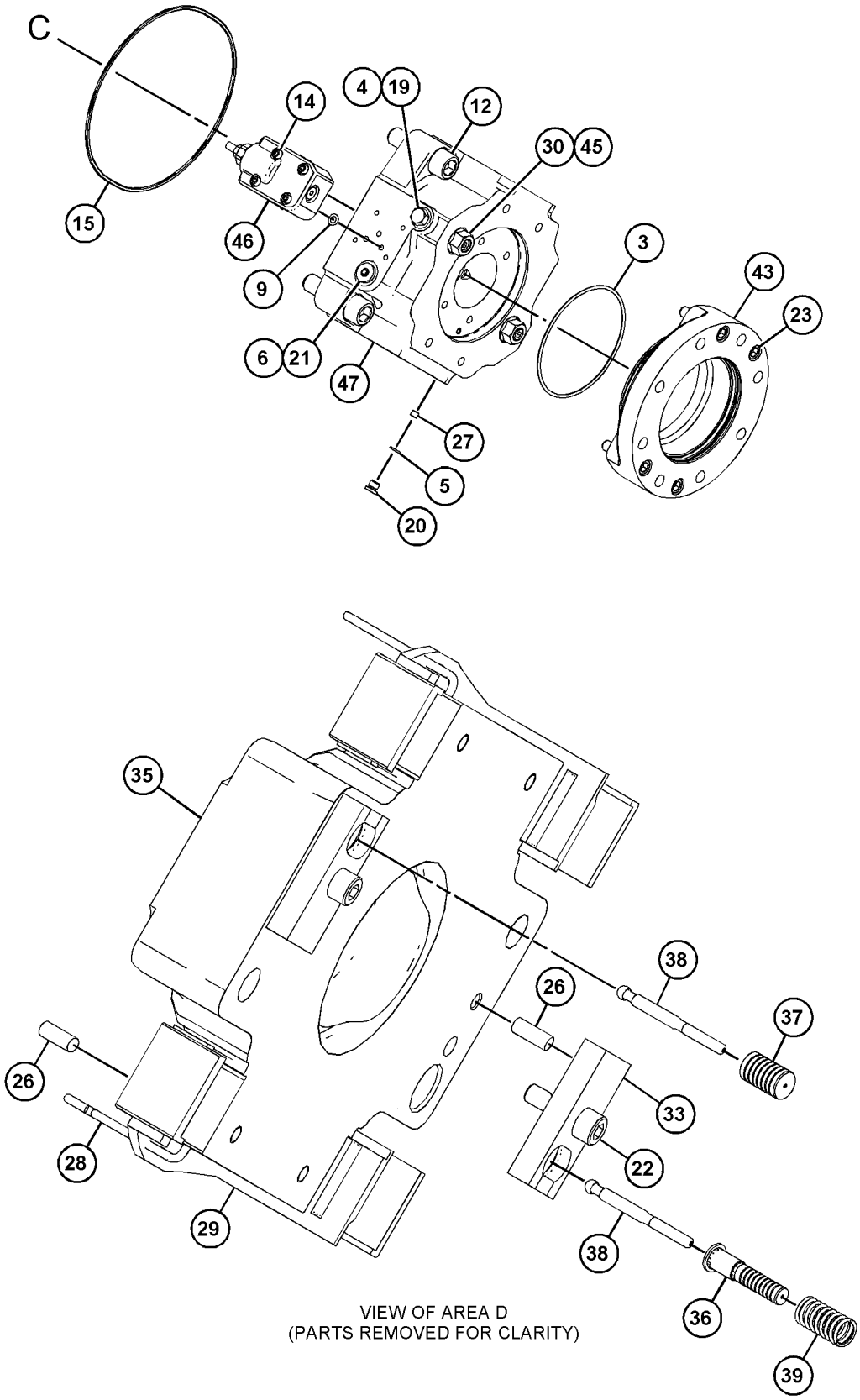

VIEW OF AREA D
(PARTS REMOVED FOR CLARITY)

GRAPHIC #2 <END> g06050546

364-8631 ROTATING GP-PUMP–REAR

S/N: TNS1-UP
ECOLOGY DRAIN VALVE
PART OF 399-5055, 430-9006 PUMP GP-PISTON

SMCS-1387, 5070, 5084 **i04718692**

NOTE	REF NO	GRAPHIC REF	PART NUMBER	QTY	PART NAME 1 2 3 4 5 6 (PRODUCT LEVEL)	SEE PAGE
	1	1	**194-9480**	1	RING-RETAINING	
	2	1	**194-9481**	1	DISC-THRUST	
	3	1	**194-9479**	3	PIN	
	4	1	**233-4880**	9	PISTON AS	
	5	1	**266-7837**	1	PLATE	
	6	1	**266-7838**	1	GUIDE	

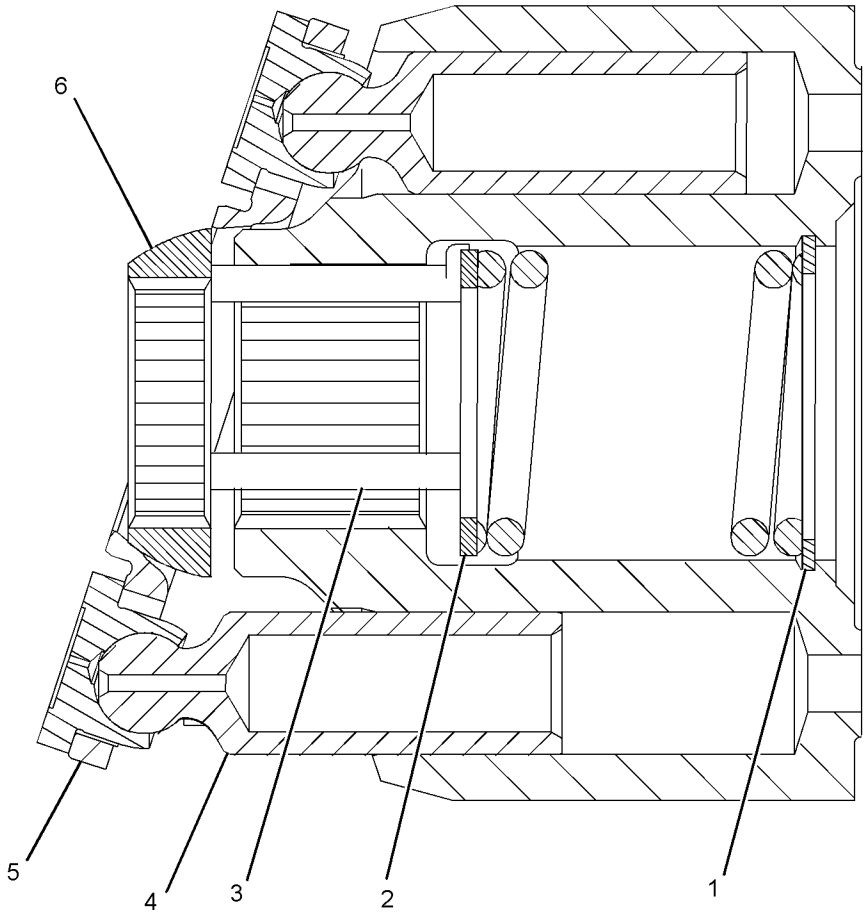

GRAPHIC #1 <END> g02566278

376-0900 ROTATING GP-PUMP

S/N: TNS1-UP

PART OF 455-1846 PUMP GP-PISTON

SMCS-1387, 5070, 5084

i05784356

NOTE	REF NO	GRAPHIC REF	PART NUMBER	QTY	PART NAME 1 2 3 4 5 6 (PRODUCT LEVEL)	SEE PAGE
	1	1	**168-3384**	9	PISTON AS-PUMP	
	2	1	**168-3385**	1	PLATE-RETRACTION	
	3	1	**168-3378**	1	BEARING-SPHERICAL	
	4	1	**168-3381**	1	SPRING	
	5	1	**168-3379**	3	PIN	
	6	1	**6V-7723**	1	RING-RETAINING	
	7	1	**168-3382**	1	WASHER (30X42X2.7-MM THK)	

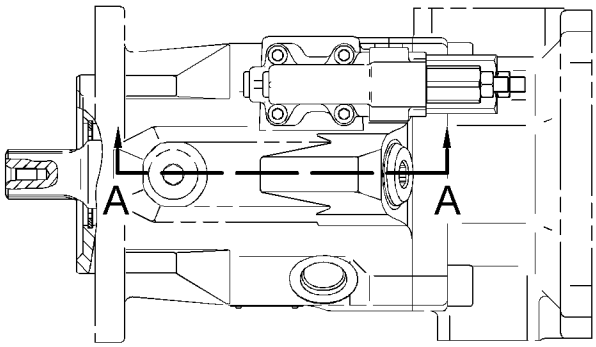

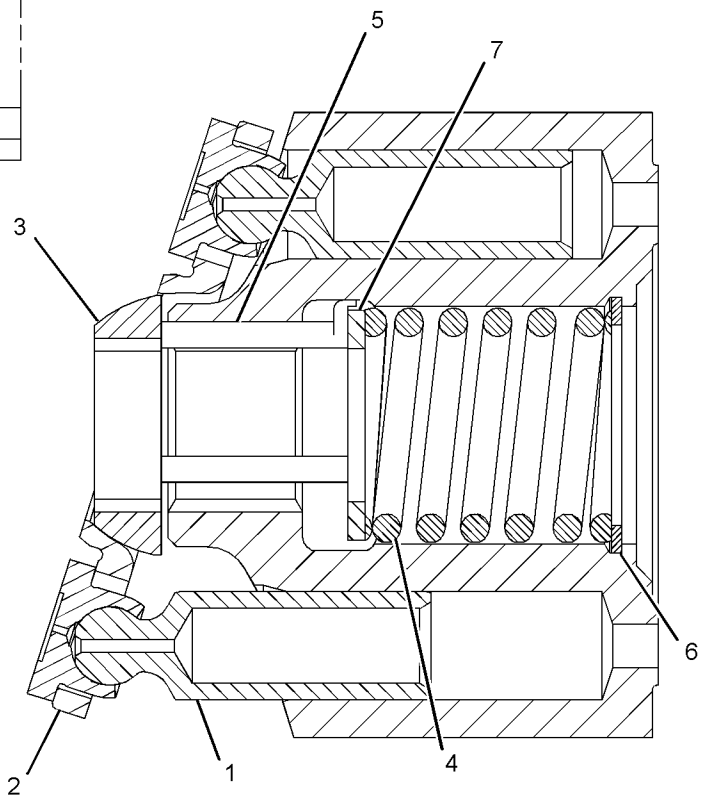

SECTION A-A

GRAPHIC #1

<END>

g03297696

447-8195 TANK & FILTER GP-HYDRAULIC

S/N: TNS1-UP

159-L (42-U.S. GAL)

PART OF 415-7495 TANK & MTG GP-HYDRAULIC

SMCS-5056, 5068

i06781775

NOTE	REF NO	GRAPHIC REF	PART NUMBER	QTY	PART NAME 1 2 3 4 5 6 (PRODUCT LEVEL)	SEE PAGE
M	1	1	**8T-4139**	4	BOLT (M12X1.75X30-MM)	
M	2	1	**8T-4196**	8	BOLT (M10X1.5X35-MM)	
	3	1	**1P-4578**	2	FLANGE-HALF	
	4	1	**8C-3206**	2	FLANGE-HALF	
	5	1	**8T-4121**	30	WASHER-HARD (11X21X2.5-MM THK)	
	6	1	**8T-4223**	4	WASHER-HARD (13.5X25.5X3-MM THK)	
	7	1	**497-9002**	1	CAP AS-FILLER (NON-AIR VENTED)	
	8	1	*148-8408*	1	PLUG AS	
		1	**9S-4183**	1	PLUG (1-1/16-12-THD)	
		1	**3D-2824**	1	SEAL-O-RING	
	9	1	**206-8818**	1	STRAINER-FUEL	
	10	1	**230-0940**	1	SEAL-VALVE COVER	
	11	1	**260-8636**	1	GAUGE-LIQUID LEVEL (SIGHT GLASS) (HYDRAULIC OIL)	
M	12	1	**344-5675**	22	NUT (M10X1.5-THD)	
Y	13	1	**376-1286**	1	FILTER GP-OIL (HYDRAULIC TANK RETURN)	597
	14	1	**380-8484**	1	SCREEN AS (HYDRAULIC TANK)	
		1	**030-4606**	1	SEAL-O-RING	
	15	1	**431-4886**	1	COVER	
	16	1	**447-1503**	1	TANK AS-HYDRAULIC	

M - METRIC PART
Y - SEPARATE ILLUSTRATION

447-8195 **TANK & FILTER GP-HYDRAULIC (**contd.**)** **i06781775**

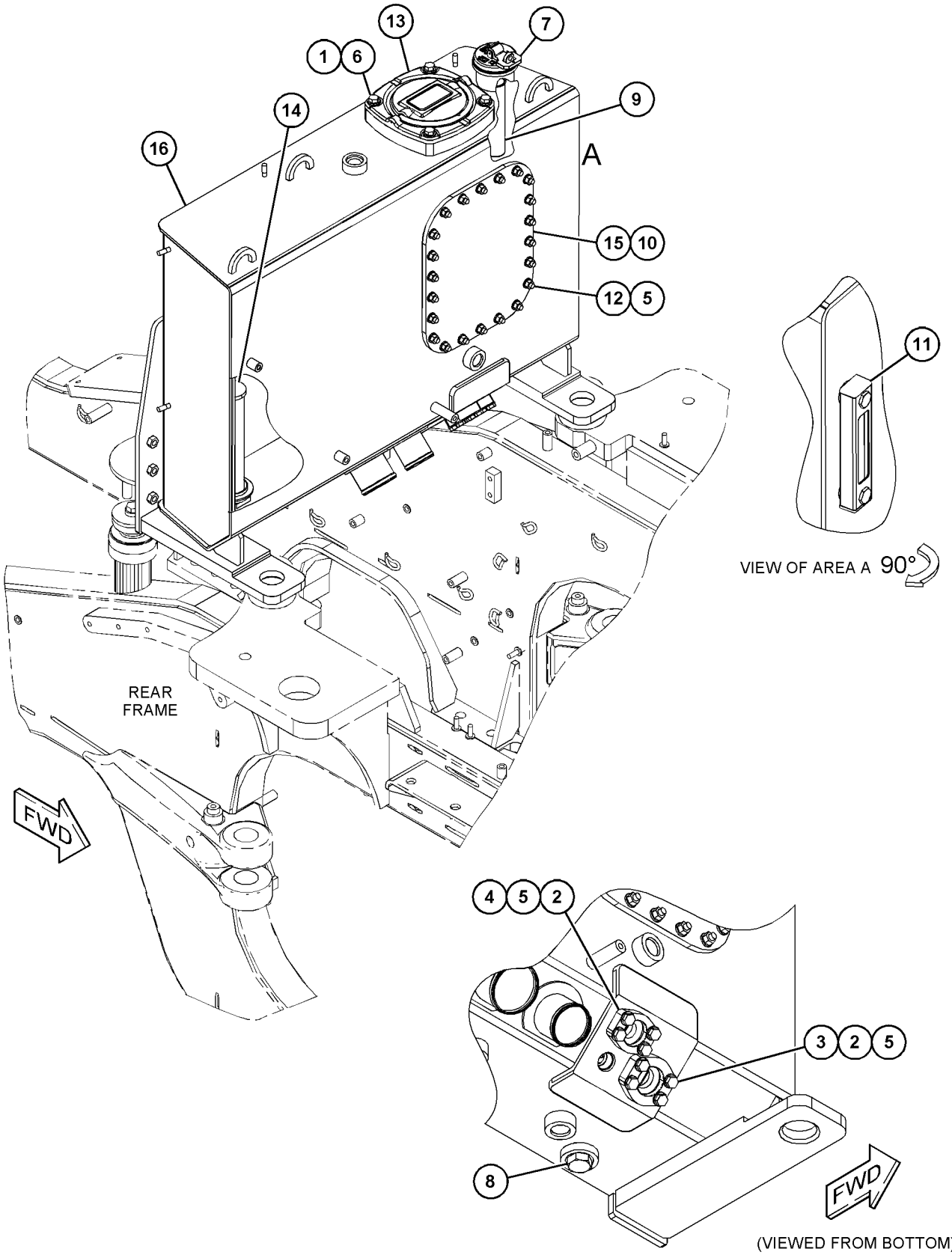

GRAPHIC #1 <END> g06050701

415-7495 TANK & MTG GP-HYDRAULIC–LH

S/N: TNS1-UP

PART OF 463-8880 HYDRAULIC AR

SMCS-5056 **i06759266**

NOTE	REF NO	GRAPHIC REF	PART NUMBER	QTY	PART NAME 1 2 3 4 5 6 (PRODUCT LEVEL)	SEE PAGE
	1	1	**312-2684**	1	BREATHER AS (CAP) (HYDRAULIC TANK)	
		1	**346-8340**	1	FILTER ELEMENT-BREATHER	
	2	1	**335-2474**	4	MOUNT AS	
	3	1	*340-0508*	1	SENSOR GP-TEMPERATURE (HYDRAULIC TANK OIL)	
		1	**238-5080**	1	SEAL-O-RING	
		1	**256-6453**	1	SENSOR-TEMPERATURE (HYDRAULIC OIL)	
	4	1	**372-2017**	4	SLEEVE	
Y	5	1	*447-8195*	1	TANK & FILTER GP-HYDRAULIC	660
	6	1	**481-4049**	1	SHIELD-HEAT	
	7	1	**488-9549**	1	BRACKET AS-SIDE (LH)	
	8	1	**488-9551**	1	BRACKET AS-SIDE (RH)	
	9	1	**198-4778**	6	WASHER-HARD (13.5X30X12-MM THK)	
	10	1	**198-4780**	4	WASHER-HARD (17.5X32X8-MM THK)	
	11	1	**5P-4116**	2	WASHER-HARD (8.8X20.5X2-MM THK)	
M	12	1	**7X-2556**	4	BOLT (M16X2X100-MM)	
M	13	1	**8T-4189**	2	BOLT (M8X1.25X20-MM)	
M	14	1	**8T-4194**	6	BOLT (M12X1.75X50-MM)	
	15	1	**9W-9952**	4	WASHER (16.75X86X8-MM THK)	

M - METRIC PART
Y - SEPARATE ILLUSTRATION

415-7495 **TANK & MTG GP-HYDRAULIC (**contd.**)** **i06759266**

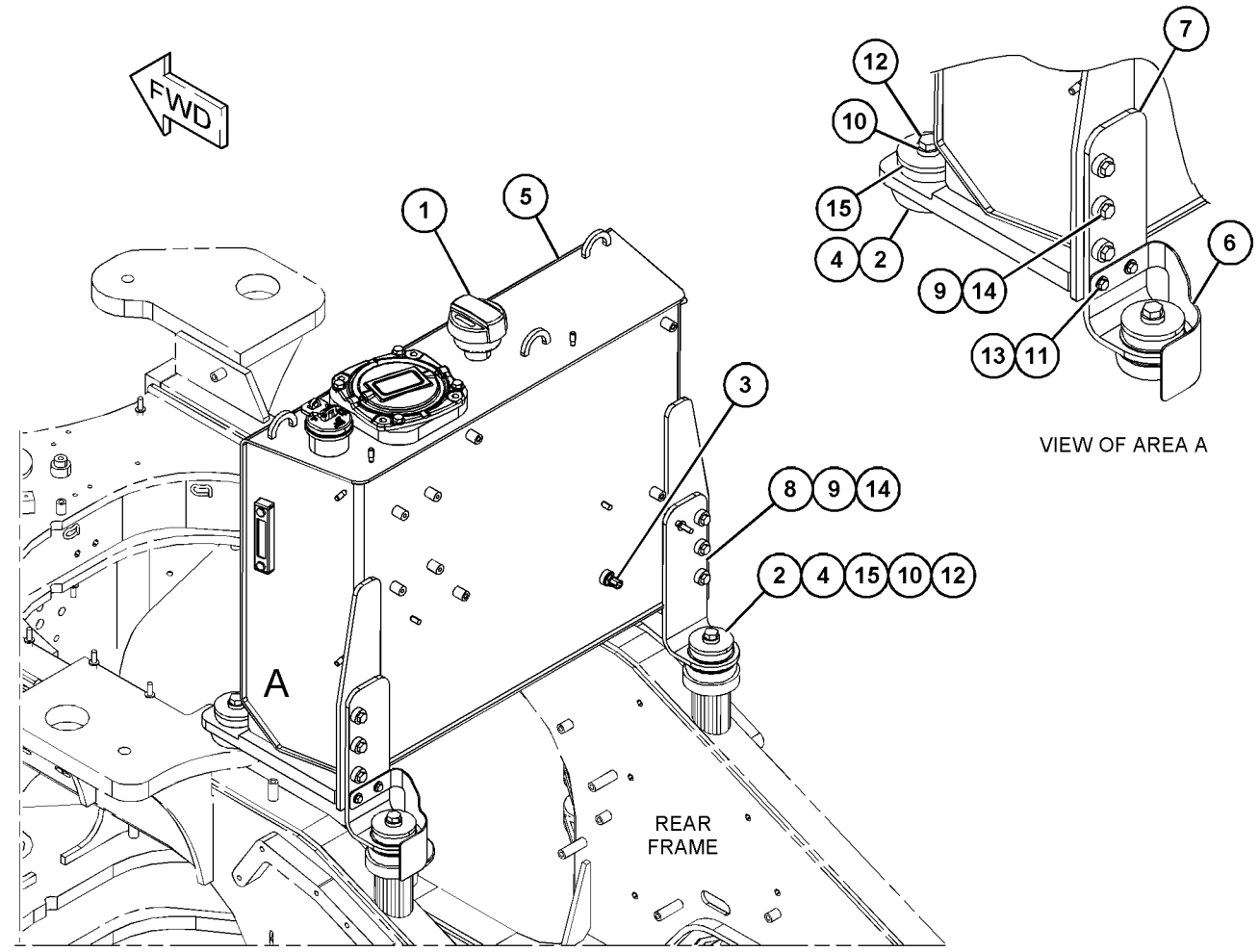

GRAPHIC #1 <END> g06046878

416-4796 VALVE & MTG GP-COUPLER

S/N: TNS1-UP

PART OF 436-7024 LINES GP-COUPLER

SMCS-5491 **i06638486**

NOTE	REF NO	GRAPHIC REF	PART NUMBER	QTY	PART NAME 1 2 3 4 5 6 (PRODUCT LEVEL)	SEE PAGE
J	1	1	**352-2734**	3	VALVE GP-SOLENOID (24-VOLT) (QUICK COUPLER)	
					(EACH INCLUDES)	
		1	**367-8532**	1	COIL AS (24-VOLT)	
J	2	1	**430-8811**	1	VALVE GP-PRESSURE REDUCING (TORQUE)	
	3	1	**426-4824**	1	PLUG-ORIFICE	
	4	1	**6E-5066**	1	SCREEN (HYDRAULIC)	
	5	1	**6V-3965**	1	FITTING (QUICK DISCONNECT)	
	6	1	**6V-0852**	1	CAP-DUST	
	7	1	**430-8807**	1	HARNESS AS-SOLENOID (QUICK COUPLER)	
		1	**102-8805**	1	KIT-RECEPTACLE (6-PIN)	
					(INCLUDES RECEPTACLE AS & WEDGE)	
		1	**8T-8729**	6	PIN-CONNECTOR (16-GA TO 18-GA)	
		1	**8T-8730**	6	SOCKET-CONNECTOR (16-GA TO 18-GA)	
		1	**155-2270**	3	KIT-CONNECTING PLUG (2-PIN)	
					(EACH INCLUDES PLUG AS, WEDGE, & INTERFACE SEAL)	
	8	1	**9S-8002**	1	PLUG (7/16-20-THD)	
	9	1	**3J-7354**	1	SEAL-O-RING	
M	10	1	**8T-4200**	1	BOLT (M8X1.25X16-MM)	
	11	1	**8T-4224**	1	WASHER-HARD (8.8X16X2-MM THK)	
	12	1	**130-5300**	1	CLIP	
	13	1	**214-7568**	1	SEAL-O-RING	
					AVAILABLE REPAIR KIT(S):	
J			**426-4823**	1	KIT-SEAL (SOLENOID VALVE)	
					(INCLUDES O-RINGS & BACKUP RINGS)	

J - KIT MARKED J SERVICES PART(S) MARKED J
M - METRIC PART

416-4796 **VALVE & MTG GP-COUPLER (**contd.**)** **i06638486**

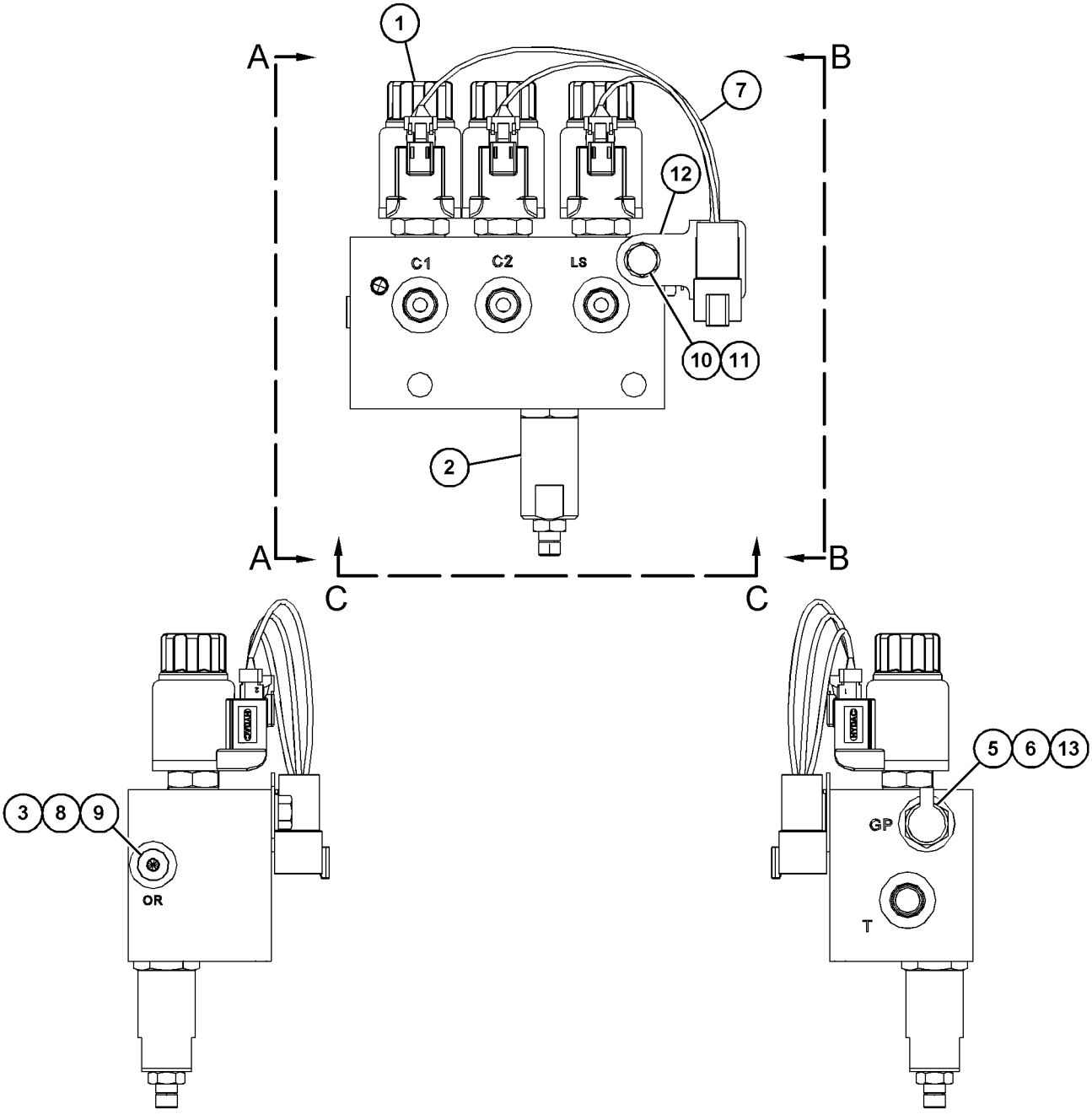

GRAPHIC #1

<END>

g06072985

462-7025 VALVE & MTG GP-MAIN CONTROL

S/N: TNS1-UP

WITH RIDE CONTROL

PART OF 492-4023 HYDRAULIC AR-2 VALVE, 492-4025 HYDRAULIC AR-3 VALVE

SMCS-5051 **i06810518**

NOTE	REF NO	GRAPHIC REF	PART NUMBER	QTY	PART NAME 1 2 3 4 5 6 (PRODUCT LEVEL)	SEE PAGE
Y	1	1	**6E-4701**	1	VALVE GP-CHECK (PILOT OIL)	677
	2	1	*148-8336*	1	CONNECTOR AS (45-DEG ELBOW)	
		1	**3J-1907**	1	SEAL-O-RING	
		1	**6V-8397**	1	SEAL-O-RING	
		1	**6V-8636**	1	CONNECTOR	
	3	1	*148-8339*	4	CONNECTOR AS	
					(EACH INCLUDES)	
		1	**6V-8716**	1	CONNECTOR (STRAIGHT)	
		1	**6V-9746**	1	SEAL-O-RING	
		1	**7M-8485**	1	SEAL-O-RING	
	4	1	*148-8357*	1	ELBOW AS (90-DEG)	
		1	**5K-9090**	1	SEAL-O-RING	
		1	**6V-9008**	1	ELBOW	
		1	**7M-8485**	1	SEAL-O-RING	
	5	1	*148-8369*	1	ELBOW AS	
		1	**3J-7354**	1	SEAL-O-RING	
		1	**4J-5477**	1	SEAL-O-RING	
		1	**6V-8628**	1	ELBOW	
	6	1	*148-8378*	1	ELBOW AS (90-DEG)	
		1	**3J-1907**	1	SEAL-O-RING	
		1	**6V-8397**	1	SEAL-O-RING	
		1	**6V-8724**	1	ELBOW	
	7	1	*148-8407*	1	PLUG AS	
		1	**3J-1907**	1	SEAL-O-RING	
		1	**9S-4191**	1	PLUG (9/16-18-THD)	
	8	1	*148-8433*	1	TEE AS	
		1	**6V-8397**	2	SEAL-O-RING	
		1	**6V-9836**	1	TEE-SWIVEL	
	9	1	*148-8443*	1	TEE AS	
		1	**3J-1907**	1	SEAL-O-RING	
		1	**6V-8397**	1	SEAL-O-RING	
		1	**7X-2459**	1	TEE-O-RING	
	10	1	*150-4043*	1	CONNECTOR AS	
		1	**3J-1907**	1	SEAL-O-RING	
		1	**6V-8398**	1	SEAL-O-RING	
		1	**6V-9873**	1	CONNECTOR	
	11	1	*162-8264*	1	TEE AS	
		1	**6V-8398**	1	SEAL-O-RING	
		1	**081-5645**	1	TEE	
	12	1	*164-6874*	1	FITTING AS-ELBOW (QUICK DISCONNECT, MALE)	
		1	**3J-1907**	1	SEAL-O-RING	
		1	**085-7356**	1	FITTING	
	13	1	**344-7391**	1	SENSOR GP-PRESSURE (HYDRAULIC IMPLEMENT)	
Y	14	1	**451-5878**	1	VALVE GP-CONTROL (TILT, LIFT)	683
	15	1	**494-9479**	1	PLATE AS	
M		1	**8T-3597**	2	NUT-WELD (M12X1.75-THD)	

462-7025 **VALVE & MTG GP-MAIN CONTROL (**contd.**)** **i06810518**

NOTE	REF NO	GRAPHIC REF	PART NUMBER	QTY	PART NAME 1 2 3 4 5 6 (PRODUCT LEVEL)	SEE PAGE
M		1	**110-2023**	3	STUD-WELD (M10X1.5X25-MM)	
M		1	**430-5328**	1	BOSS-WELD (M10X1.5X65-MM)	
	16	1	**3J-1907**	1	SEAL-O-RING	
	17	1	**5P-1076**	8	WASHER-HARD (13.5X30X4-MM THK)	
	18	1	**6V-9829**	1	CAP	
M	19	1	**8T-4139**	4	BOLT (M12X1.75X30-MM)	
M	20	1	**8T-4192**	4	BOLT (M12X1.75X25-MM)	

M - METRIC PART
Y - SEPARATE ILLUSTRATION

462-7025 **VALVE & MTG GP-MAIN CONTROL (**contd.**)** **i06810518**

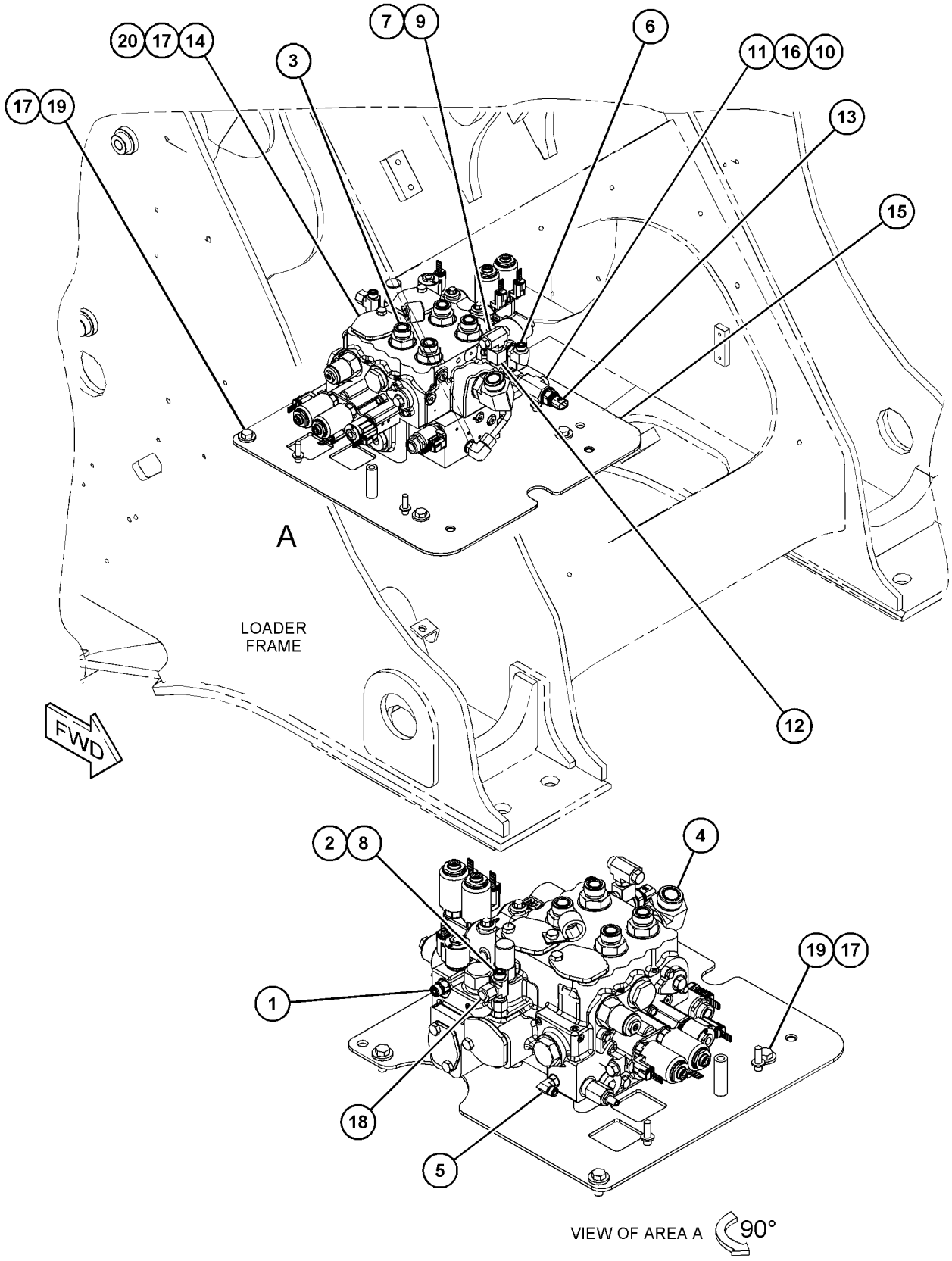

GRAPHIC #1 <END> g06125561

494-5030 VALVE & MTG GP-MAIN CONTROL

S/N: TNS1-UP
WITHOUT RIDE CONTROL
PART OF 492-4022 HYDRAULIC AR-2 VALVE

SMCS-5051 **i06811145**

NOTE	REF NO	GRAPHIC REF	PART NUMBER	QTY	PART NAME 1 2 3 4 5 6 (PRODUCT LEVEL)	SEE PAGE
	1	1	**3J-1907**	1	SEAL-O-RING	
Y	2	1	**6E-4701**	1	VALVE GP-CHECK (PILOT OIL)	677
	3	1	**6V-9829**	1	CAP	
	4	1	*148-8336*	1	CONNECTOR AS (45-DEG ELBOW)	
		1	**3J-1907**	1	SEAL-O-RING	
		1	**6V-8397**	1	SEAL-O-RING	
		1	**6V-8636**	1	CONNECTOR	
	5	1	*148-8339*	4	CONNECTOR AS	
					(EACH INCLUDES)	
		1	**6V-8716**	1	CONNECTOR (STRAIGHT)	
		1	**6V-9746**	1	SEAL-O-RING	
		1	**7M-8485**	1	SEAL-O-RING	
	6	1	*148-8369*	1	ELBOW AS	
		1	**3J-7354**	1	SEAL-O-RING	
		1	**4J-5477**	1	SEAL-O-RING	
		1	**6V-8628**	1	ELBOW	
	7	1	*148-8378*	1	ELBOW AS (90-DEG)	
		1	**3J-1907**	1	SEAL-O-RING	
		1	**6V-8397**	1	SEAL-O-RING	
		1	**6V-8724**	1	ELBOW	
	8	1	*148-8407*	1	PLUG AS	
		1	**3J-1907**	1	SEAL-O-RING	
		1	**9S-4191**	1	PLUG (9/16-18-THD)	
	9	1	*148-8433*	1	TEE AS	
		1	**6V-8397**	2	SEAL-O-RING	
		1	**6V-9836**	1	TEE-SWIVEL	
	10	1	*148-8443*	1	TEE AS	
		1	**3J-1907**	1	SEAL-O-RING	
		1	**6V-8397**	1	SEAL-O-RING	
		1	**7X-2459**	1	TEE-O-RING	
	11	1	*150-4043*	1	CONNECTOR AS	
		1	**3J-1907**	1	SEAL-O-RING	
		1	**6V-8398**	1	SEAL-O-RING	
		1	**6V-9873**	1	CONNECTOR	
	12	1	*162-8264*	1	TEE AS	
		1	**6V-8398**	1	SEAL-O-RING	
		1	**081-5645**	1	TEE	
	13	1	*164-6874*	1	FITTING AS-ELBOW (QUICK DISCONNECT, MALE)	
		1	**3J-1907**	1	SEAL-O-RING	
		1	**085-7356**	1	FITTING	
	14	1	**344-7391**	1	SENSOR GP-PRESSURE (IMPLEMENT PUMP)	
Y	15	1	**463-8679**	1	VALVE GP-CONTROL (TILT, LIFT)	688
	16	1	**494-9479**	1	PLATE AS	
M		1	**8T-3597**	2	NUT-WELD (M12X1.75-THD)	
M		1	**110-2023**	3	STUD-WELD (M10X1.5X25-MM)	
M		1	**430-5328**	1	BOSS-WELD (M10X1.5X65-MM)	
	17	1	**5P-1076**	8	WASHER-HARD (13.5X30X4-MM THK)	

494-5030 **VALVE & MTG GP-MAIN CONTROL (**contd.**)** **i06811145**

NOTE	REF NO	GRAPHIC REF	PART NUMBER	QTY	PART NAME 1 2 3 4 5 6 (PRODUCT LEVEL)	SEE PAGE
M	18	1	**8T-4139**	4	BOLT (M12X1.75X30-MM)	
M	19	1	**8T-4192**	4	BOLT (M12X1.75X25-MM)	

M - METRIC PART
Y - SEPARATE ILLUSTRATION

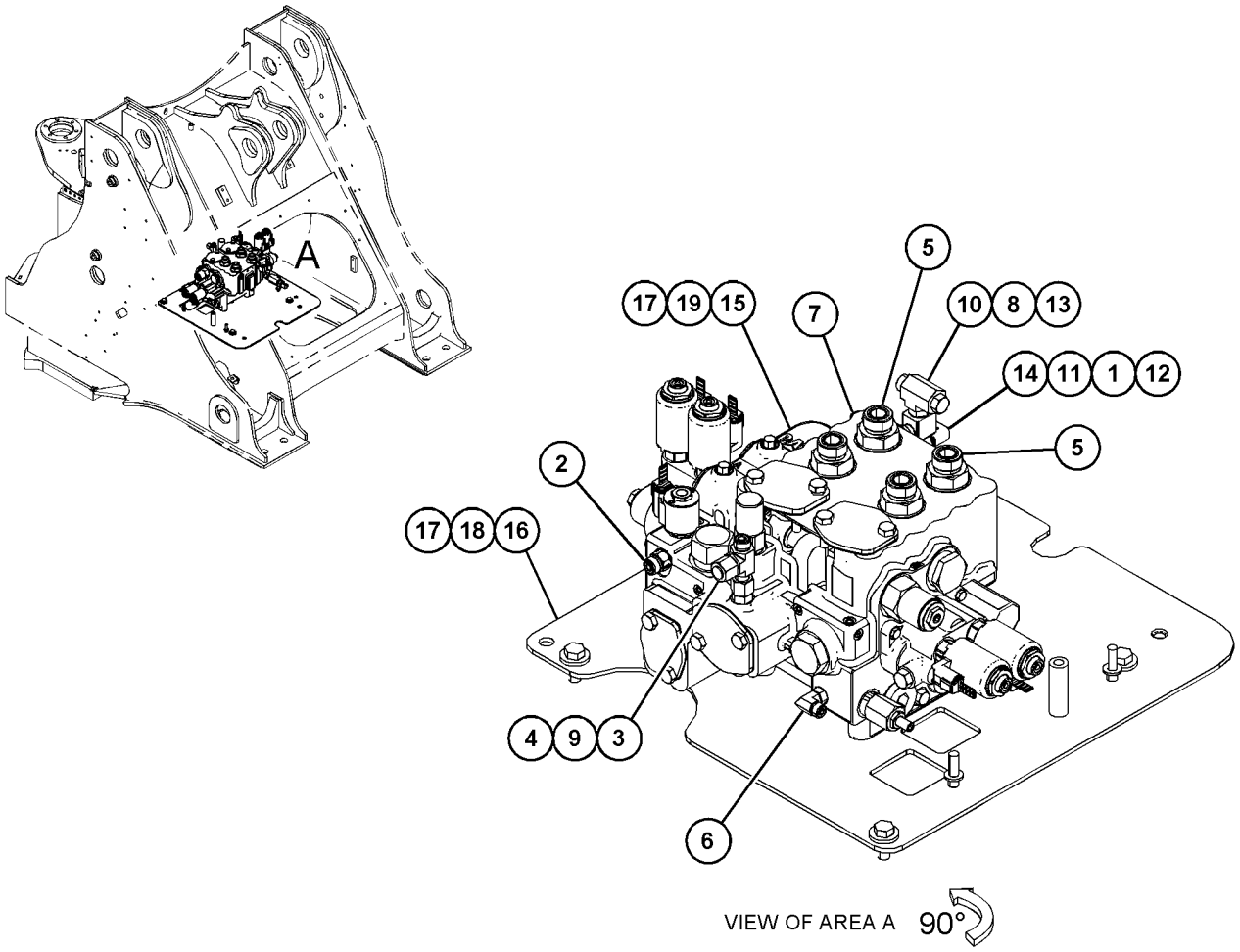

GRAPHIC #1 <END> g06128694

505-5229 VALVE & MTG GP-MAIN CONTROL

S/N: TNS1-UP

3-VALVE

PART OF 492-4025 HYDRAULIC AR-3 VALVE

SMCS-5051 **i06811125**

NOTE	REF NO	GRAPHIC REF	PART NUMBER	QTY	PART NAME 1 2 3 4 5 6 (PRODUCT LEVEL)	SEE PAGE
Y	1	1	**6E-4701**	1	VALVE GP-CHECK (PILOT OIL)	677
	2	1	*148-8326*	1	CONNECTOR AS	
		1	**3J-7354**	1	SEAL-O-RING	
		1	**6V-8397**	1	SEAL-O-RING	
		1	**6V-9872**	1	CONNECTOR	
	3	1	*148-8335*	4	CONNECTOR AS	
					(EACH INCLUDES)	
		1	**5K-9090**	1	SEAL-O-RING	
		1	**6V-8635**	1	CONNECTOR	
		1	**7M-8485**	1	SEAL-O-RING	
	4	1	*148-8352*	1	ELBOW AS	
		1	**5K-9090**	1	SEAL-O-RING	
		1	**6V-9854**	1	ELBOW (SWIVEL)	
	5	1	*148-8357*	1	ELBOW AS (90-DEG)	
		1	**5K-9090**	1	SEAL-O-RING	
		1	**6V-9008**	1	ELBOW	
		1	**7M-8485**	1	SEAL-O-RING	
	6	1	*148-8378*	2	ELBOW AS (90-DEG)	
					(EACH INCLUDES)	
		1	**3J-1907**	1	SEAL-O-RING	
		1	**6V-8397**	1	SEAL-O-RING	
		1	**6V-8724**	1	ELBOW	
	7	1	*148-8391*	1	ELBOW AS	
		1	**2S-4078**	1	SEAL-O-RING	
		1	**5K-9090**	1	SEAL-O-RING	
		1	**8T-8987**	1	ELBOW	
	8	1	*148-8435*	1	TEE AS	
		1	**3J-1907**	1	SEAL-O-RING	
		1	**6V-8397**	2	SEAL-O-RING	
		1	**6V-8781**	1	TEE	
	9	1	*150-4047*	1	ADAPTER AS	
		1	**3J-7354**	1	SEAL-O-RING	
		1	**8T-2353**	1	ADAPTER	
Y	10	1	**445-4988**	1	VALVE GP-CONTROL (AUXILIARY, THIRD FUNCTION)	681
	11	1	**494-9472**	1	PLATE AS	
		1	**7T-1099**	2	LINK	
M		1	**110-2023**	2	STUD-WELD (M10X1.5X25-MM)	
		1	**121-1029**	1	CLIP	
I	12	1	**494-9478**	1	HOSE AS	
I	13	1	**494-9482**	1	HOSE AS	
I	14	1	**494-9483**	1	HOSE AS	
I	15	1	**494-9484**	1	HOSE AS	
I	16	1	**505-5230**	1	HOSE AS	
	17	1	*150-4042*	1	CONNECTOR AS	
		1	**3J-7354**	1	SEAL-O-RING	
		1	**4J-5477**	1	SEAL-O-RING	
		1	**6V-9010**	1	CONNECTOR-PORT	

505-5229 **VALVE & MTG GP-MAIN CONTROL (**contd.**)** **i06811125**

NOTE	REF NO	GRAPHIC REF	PART NUMBER	QTY	PART NAME 1 2 3 4 5 6 (PRODUCT LEVEL)	SEE PAGE
	18	1	**198-4778**	1	WASHER-HARD (13.5X30X12-MM THK)	
	19	1	**310-7300**	1	CLIP	
	20	1	**3E-6909**	1	CLIP	
	21	1	**5P-1076**	8	WASHER-HARD (13.5X30X4-MM THK)	
	22	1	**8T-4121**	1	WASHER-HARD (11X21X2.5-MM THK)	
M	23	1	**8T-4137**	1	BOLT (M10X1.5X20-MM)	
M	24	1	**8T-4139**	4	BOLT (M12X1.75X30-MM)	
M	25	1	**8T-4192**	3	BOLT (M12X1.75X25-MM)	
M	26	1	**8T-4956**	1	BOLT (M12X1.75X35-MM)	

I - REFER TO HYDRAULIC INFORMATION SYSTEM
M - METRIC PART
Y - SEPARATE ILLUSTRATION

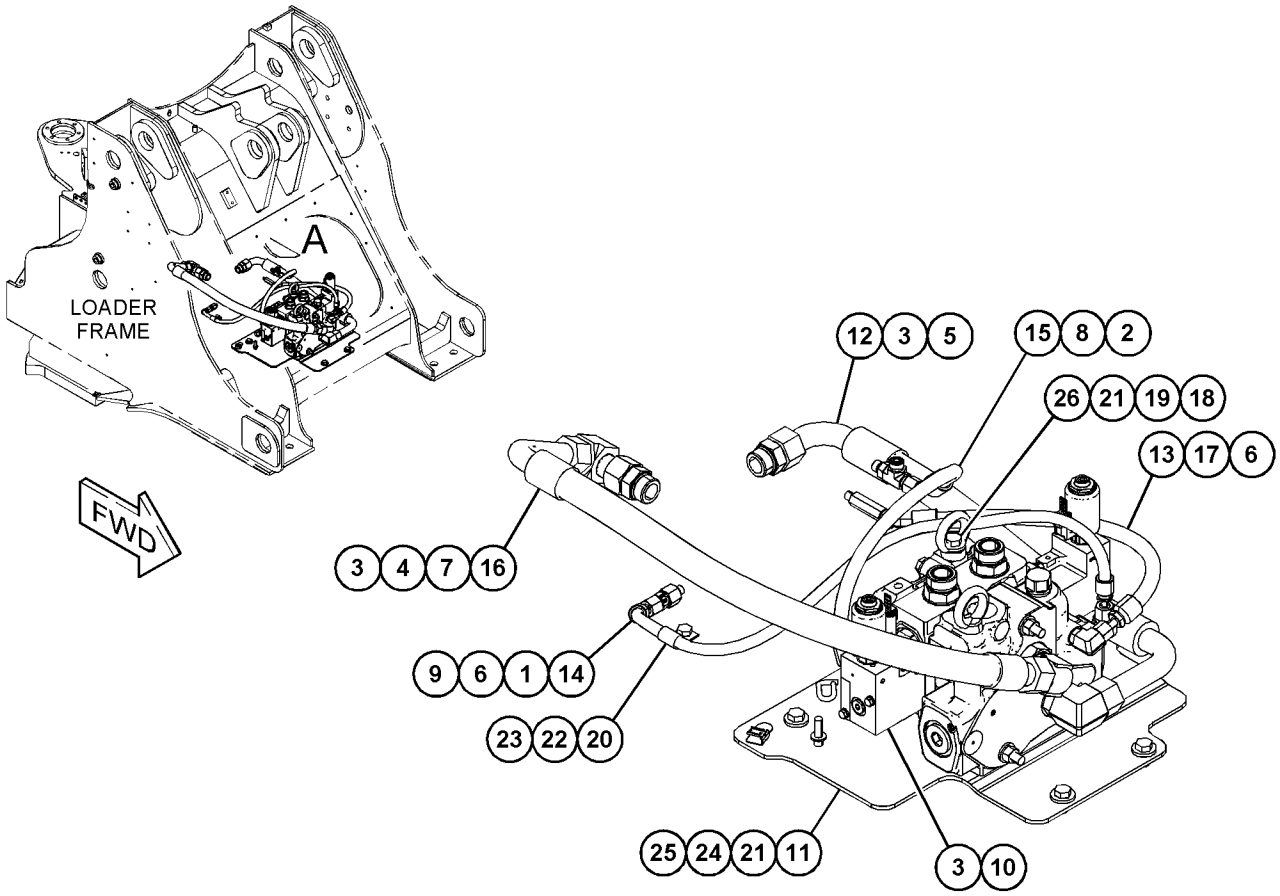

VIEW OF AREA A

GRAPHIC #1 <END> g06128679

508-7684 VALVE & MTG GP-MAIN CONTROL—LOGGING, WITH RIDE CONTROL

S/N: TNS1-UP

SMCS-5051 **i06809900**

NOTE	REF NO	GRAPHIC REF	PART NUMBER	QTY	PART NAME 1 2 3 4 5 6 (PRODUCT LEVEL)	SEE PAGE
Y	1	1	**6E-4701**	1	VALVE GP-CHECK (PILOT OIL)	677
	2	1	*148-8336*	1	CONNECTOR AS (45-DEG ELBOW)	
		1	**3J-1907**	1	SEAL-O-RING	
		1	**6V-8397**	1	SEAL-O-RING	
		1	**6V-8636**	1	CONNECTOR	
	3	1	*148-8339*	4	CONNECTOR AS	
					(EACH INCLUDES)	
		1	**6V-8716**	1	CONNECTOR (STRAIGHT)	
		1	**6V-9746**	1	SEAL-O-RING	
		1	**7M-8485**	1	SEAL-O-RING	
	4	1	*148-8357*	1	ELBOW AS (90-DEG)	
		1	**5K-9090**	1	SEAL-O-RING	
		1	**6V-9008**	1	ELBOW	
		1	**7M-8485**	1	SEAL-O-RING	
	5	1	*148-8369*	1	ELBOW AS	
		1	**3J-7354**	1	SEAL-O-RING	
		1	**4J-5477**	1	SEAL-O-RING	
		1	**6V-8628**	1	ELBOW	
	6	1	*148-8378*	1	ELBOW AS (90-DEG)	
		1	**3J-1907**	1	SEAL-O-RING	
		1	**6V-8397**	1	SEAL-O-RING	
		1	**6V-8724**	1	ELBOW	
	7	1	*148-8407*	1	PLUG AS	
		1	**3J-1907**	1	SEAL-O-RING	
		1	**9S-4191**	1	PLUG (9/16-18-THD)	
	8	1	*148-8433*	1	TEE AS	
		1	**6V-8397**	2	SEAL-O-RING	
		1	**6V-9836**	1	TEE-SWIVEL	
	9	1	*148-8443*	1	TEE AS	
		1	**3J-1907**	1	SEAL-O-RING	
		1	**6V-8397**	1	SEAL-O-RING	
		1	**7X-2459**	1	TEE-O-RING	
	10	1	*150-4043*	1	CONNECTOR AS	
		1	**3J-1907**	1	SEAL-O-RING	
		1	**6V-8398**	1	SEAL-O-RING	
		1	**6V-9873**	1	CONNECTOR	
	11	1	*162-8264*	1	TEE AS	
		1	**6V-8398**	1	SEAL-O-RING	
		1	**081-5645**	1	TEE	
	12	1	*164-6874*	1	FITTING AS-ELBOW (QUICK DISCONNECT, MALE)	
		1	**3J-1907**	1	SEAL-O-RING	
		1	**085-7356**	1	FITTING	
	13	1	**344-7391**	1	SENSOR GP-PRESSURE (HYDRAULIC IMPLEMENT)	
Y	14	1	**451-5876**	1	VALVE GP-MAIN CONTROL (LIFT, TILT)	693
	15	1	**494-9479**	1	PLATE AS	
M		1	**8T-3597**	2	NUT-WELD (M12X1.75-THD)	
M		1	**110-2023**	3	STUD-WELD (M10X1.5X25-MM)	

508-7684 **VALVE & MTG GP-MAIN CONTROL (**contd.**)** **i06809900**

NOTE	REF NO	GRAPHIC REF	PART NUMBER	QTY	PART NAME 1 2 3 4 5 6 (PRODUCT LEVEL)	SEE PAGE
M		1	**430-5328**	1	BOSS-WELD (M10X1.5X65-MM)	
	16	1	**3J-1907**	1	SEAL-O-RING	
	17	1	**5P-1076**	8	WASHER-HARD (13.5X30X4-MM THK)	
	18	1	**6V-9829**	1	CAP	
M	19	1	**8T-4139**	4	BOLT (M12X1.75X30-MM)	
M	20	1	**8T-4192**	4	BOLT (M12X1.75X25-MM)	

M - METRIC PART
Y - SEPARATE ILLUSTRATION

508-7684 **VALVE & MTG GP-MAIN CONTROL (**contd.**)** **i06809900**

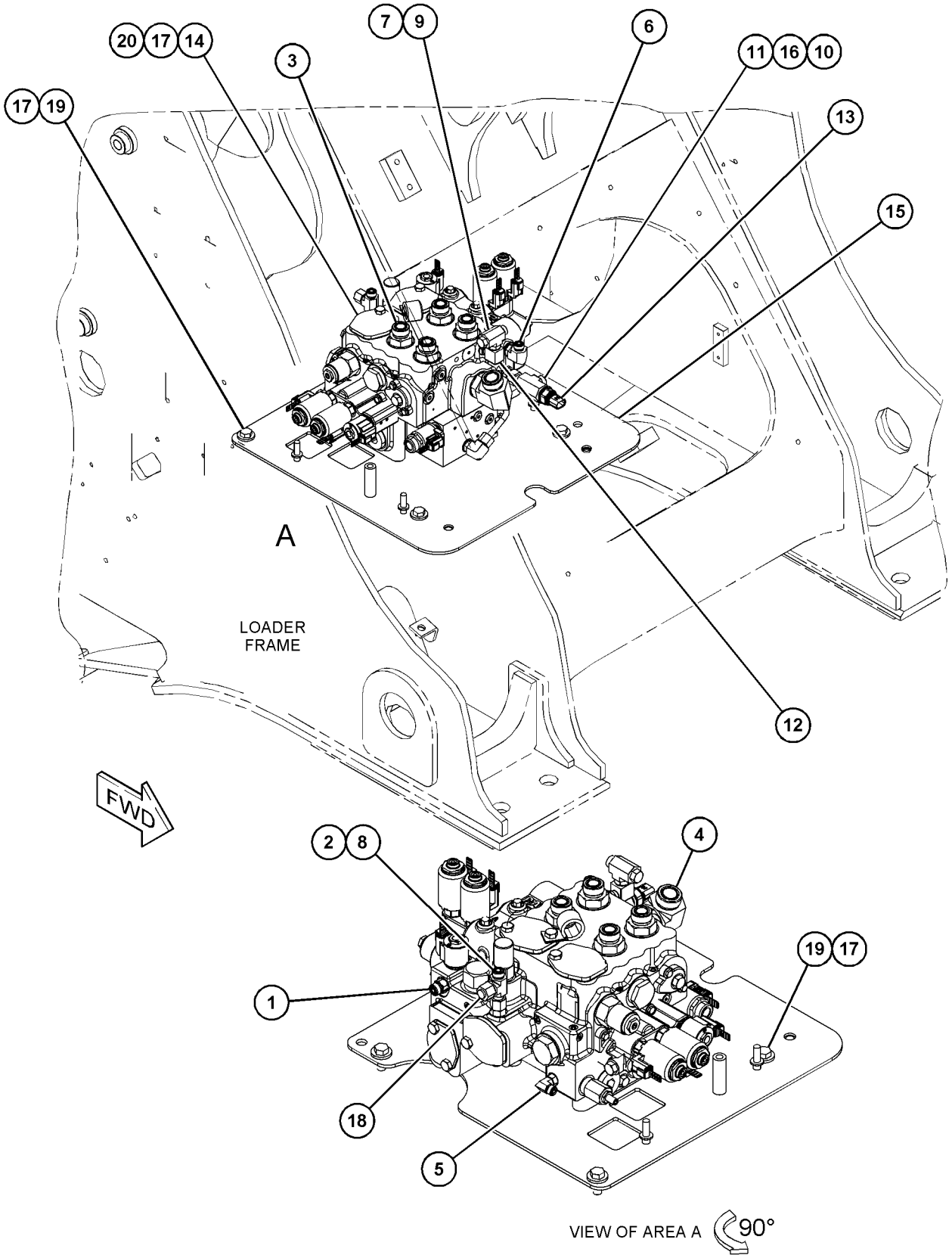

GRAPHIC #1 <END> g06125525

445-6109 VALVE GP-CHECK

S/N: TNS1-UP

PART OF 451-5878, 463-8679 VALVE GP-CONTROL, 451-5876 VALVE GP-MAIN CONTROL

SMCS-5067 **i06819391**

NOTE	REF NO	GRAPHIC REF	PART NUMBER	QTY	PART NAME 1 2 3 4 5 6 (PRODUCT LEVEL)	SEE PAGE
	1	1	**4J-8996**	1	SEAL-O-RING	
	2	1	**5H-2767**	1	SEAL-O-RING	
	3	1	**7M-8485**	1	SEAL-O-RING	
	4	1	*164-5619*	1	PLUG AS	
		1	**2M-9780**	1	SEAL-O-RING	
		1	**9S-8006**	1	PLUG (7/8-14-THD)	
	5	1	**364-2634**	1	RING-BACKUP	
					AVAILABLE REPAIR KIT(S):	
			383-7557	1	KIT-SEAL (CHECK VALVE)	
					(INCLUDES RINGS & BACKUP RINGS)	

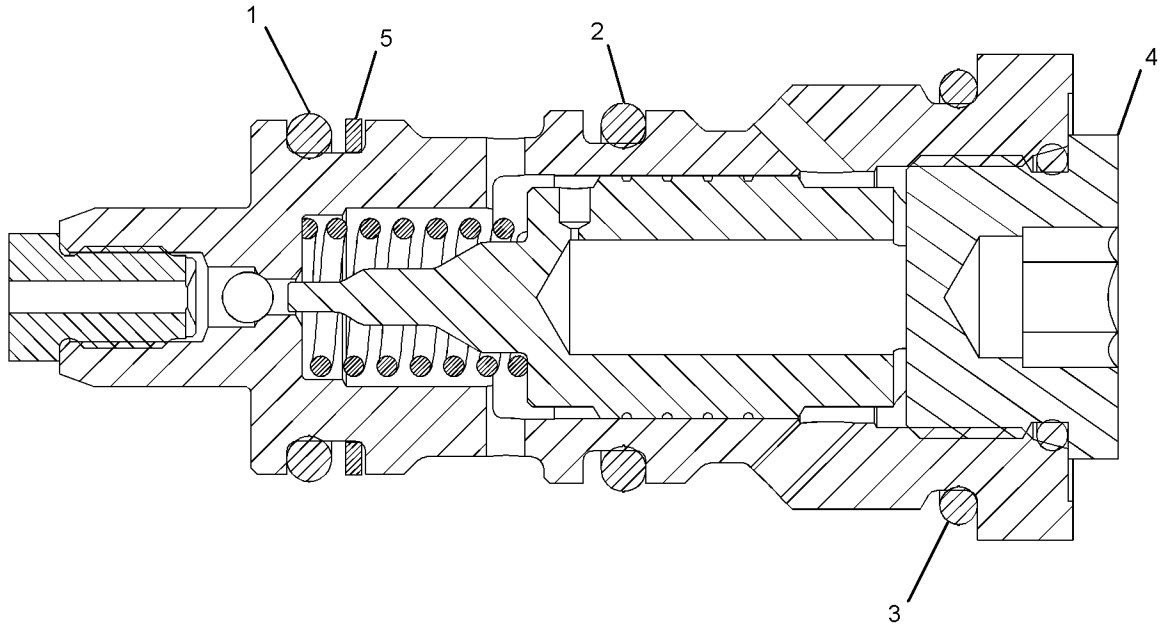

GRAPHIC #1 <END> g03645486

6E-4701 VALVE GP-CHECK

S/N: TNS1-UP

PART OF 436-7013 MANIFOLD GP-HYDRAULIC, 462-7025, 494-5030, 505-5229, 508-7684 VALVE & MTG GP-MAIN CONTROL

SMCS-5067 **i03827235**

NOTE	REF NO	GRAPHIC REF	PART NUMBER	QTY	PART NAME 1 2 3 4 5 6 (PRODUCT LEVEL)	SEE PAGE
	1	1	**3J-1907**	1	SEAL-O-RING	
	2	1	**6V-8397**	1	SEAL-O-RING	

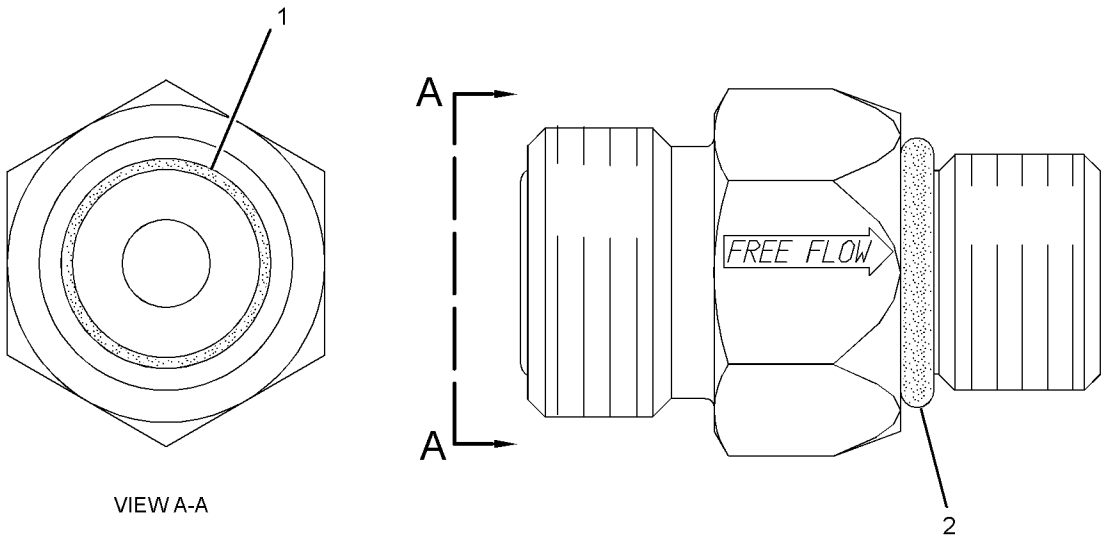

VIEW A-A

GRAPHIC #1 <END> g01944653

9T-1573 VALVE GP-CHECK & RELIEF

S/N: TNS1-UP

PART OF 367-9496 VALVE GP-CONTROL

SMCS-5453 **i04783159**

NOTE	REF NO	GRAPHIC REF	PART NUMBER	QTY	PART NAME 1 2 3 4 5 6 (PRODUCT LEVEL)	SEE PAGE
	1	1	**9T-7202**	1	RETAINER AS	
	2	1	**6E-4431**	1	BODY AS	
	3	1	**8J-0331**	1	VALVE	
	4	1	**1J-9671**	1	SEAL-O-RING	
	5	1	**9S-8003**	1	PLUG (1/2-20-THD)	
	6	1	**6E-3518**	1	SPRING	
	7	1	**9X-6395**	1	NUT (3/4-16-THD)	
	8	1	**4K-1388**	1	SEAL-O-RING	
	9	1	**4T-0935**	1	SPRING	
	10	1	**7J-9933**	1	SEAL-O-RING	
	11	1	**4T-0946**	1	VALVE GP	
	12	1	**4T-0932**	1	BUSHING	
	13	1	**2M-9780**	1	SEAL-O-RING	
	14	1	**4T-0933**	1	RING-RETAINING	
	15	1	**4T-5073**	1	RING-BACKUP	
	16	1	**3K-0360**	1	SEAL-O-RING	

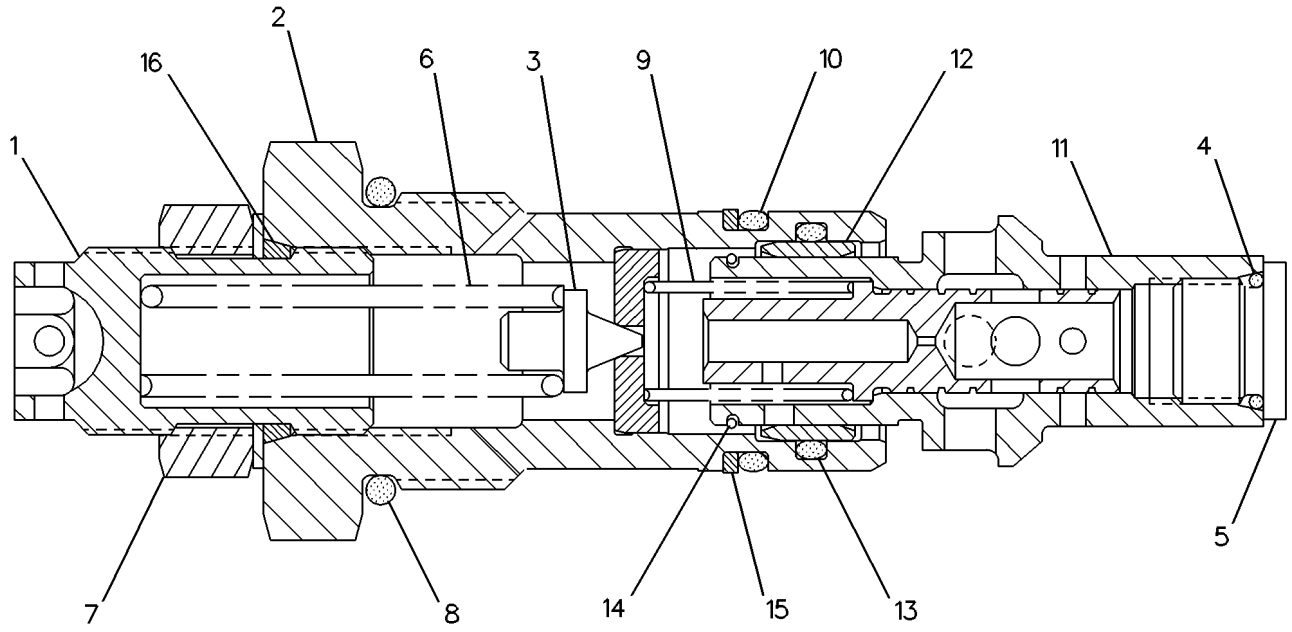

GRAPHIC #1 <END> g00130994

367-9496 VALVE GP-CONTROL

S/N: TNS1-UP

PART OF 445-4988 VALVE GP-CONTROL

SMCS-5051 **i04777623**

NOTE	REF NO	GRAPHIC REF	PART NUMBER	QTY	PART NAME 1 2 3 4 5 6 (PRODUCT LEVEL)	SEE PAGE
	1	1	**2S-2596**	1	SPRING	
M	2	1	**8T-4145**	4	BOLT (M6X1X95-MM)	
Y	3	1	**9T-1573**	2	VALVE GP-CHECK & RELIEF	678
	4	1	**096-3831**	1	ORIFICE	
	5	1	**100-8010**	1	VALVE-CHECK	
	6	1	**100-8011**	1	PLUG	
B	7	1	**6E-1637**	4	SHIM (1-MM THK)	
	8	1	**207-7434**	2	RETAINER	
	9	1	**242-7955**	2	HOUSING AS	
Y	10	1	**313-7668**	2	VALVE GP-SOLENOID (24-VOLT)	706
	11	1	**352-9954**	2	SPRING	
	12	1	**352-9956**	2	RETAINER	
	13	1	**7M-8485**	1	SEAL-O-RING	
	14	1	**9X-2027**	2	WASHER (11X18X2-MM THK)	
	15	1	**9X-8256**	4	WASHER (6.6X12X2-MM THK)	
Y	16	1	**371-1784**	1	VALVE GP-RELIEF	704
M	17	1	**085-8091**	2	BOLT (M10X1.5X55-MM)	
	18	1	**123-9624**	1	SPRING	
	19	1	*162-0177*	2	PLUG AS	
					(EACH INCLUDES)	
		1	**3J-1907**	1	SEAL-O-RING	
		1	**9S-8004**	1	PLUG (9/16-18-THD)	
	20	1	*173-3993*	2	PLUG AS	
					(EACH INCLUDES)	
		1	**4J-7533**		SEAL-O-RING	
		1	**9S-8001**	1	PLUG	
	21	1	*183-7263*	2	PLUG AS	
					(EACH INCLUDES)	
		1	**3J-7354**	1	SEAL-O-RING	
		1	**9S-8002**	1	PLUG (7/16-20-THD)	
	22	1	**187-9630**	2	SEAL-O-RING	
	23	1	**1H-1023**	4	SEAL-O-RING	
	24	1	*222-4737*	1	PLUG AS	
		1	**4J-7533**	1	SEAL-O-RING	
		1	**9S-4180**	1	PLUG	
	25	1	**5M-2057**	1	SEAL-O-RING	

B - USE AS REQUIRED
M - METRIC PART
Y - SEPARATE ILLUSTRATION

367-9496 **VALVE GP-CONTROL (**contd.**)** **i04777623**

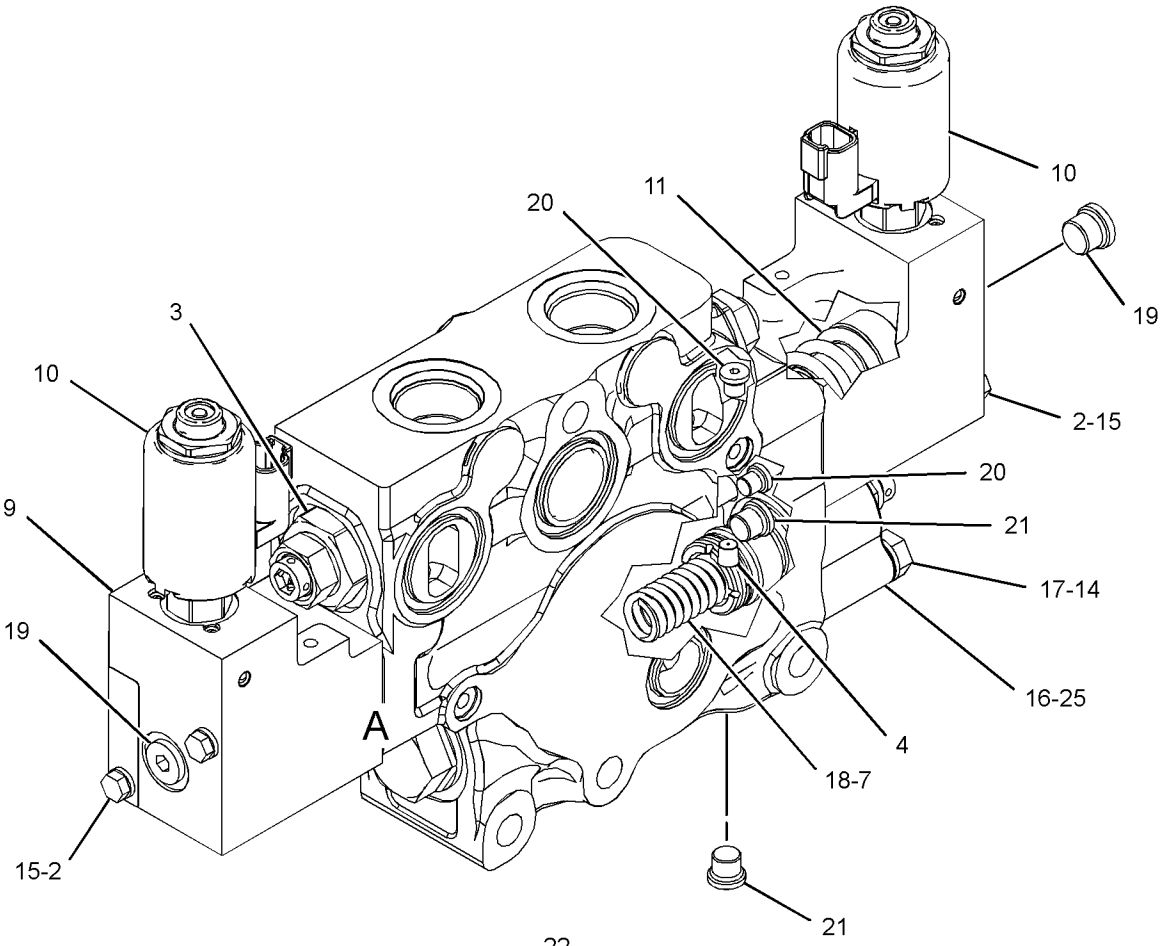

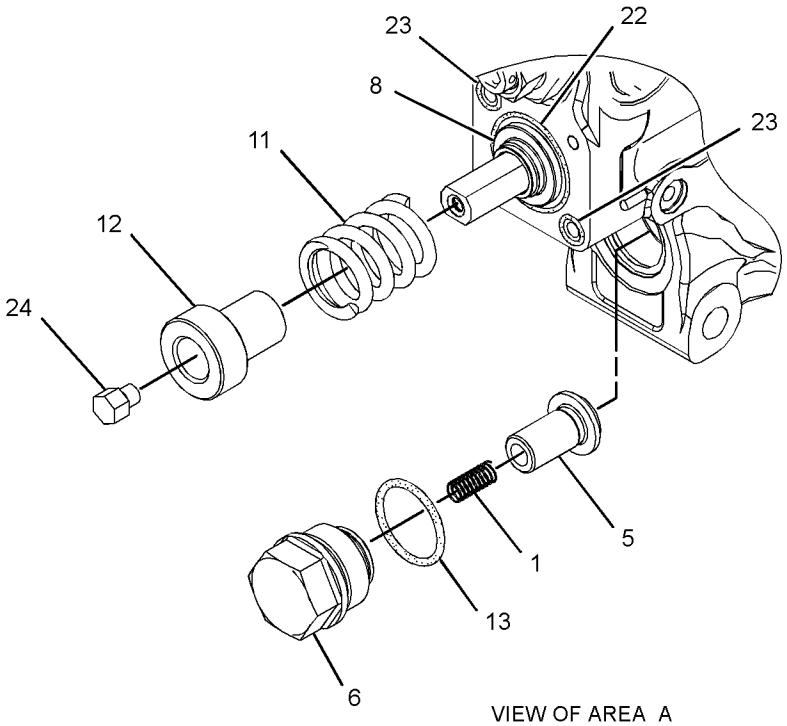

VIEW OF AREA A
(PARTS REMOVED FOR CLARITY)

GRAPHIC #1 <END> g02900316

445-4988 VALVE GP-CONTROL

S/N: TNS1-UP

PART OF 505-5229 VALVE & MTG GP-MAIN CONTROL

SMCS-5051 **i06792820**

NOTE	REF NO	GRAPHIC REF	PART NUMBER	QTY	PART NAME 1 2 3 4 5 6 (PRODUCT LEVEL)	SEE PAGE
	1	1	**1P-3702**	1	SEAL-RECTANGULAR	
	2	1	**4J-0522**	6	SEAL-O-RING	
	3	1	**4J-8997**	1	SEAL-O-RING	
	4	1	**6V-5555**	6	SEAL-O-RING	
	5	1	*183-7263*	1	PLUG AS	
		1	**3J-7354**	1	SEAL-O-RING	
		1	**9S-8002**	1	PLUG (7/16-20-THD)	
	6	1	**270-7836**	1	COVER	
Y	7	1	**367-9496**	1	VALVE GP-CONTROL (THIRD FUNCTION)	679
Y	8	1	**445-4983**	1	MANIFOLD GP-VALVE (LOAD SENSING)	640
M	9	1	**329-3356**	3	NUT (M12X1.75-THD)	
	10	1	**8T-4223**	6	WASHER-HARD (13.5X25.5X3-MM THK)	
M	11	1	**8C-3226**	3	BOLT (M12X1.75X200-MM)	

M - METRIC PART
Y - SEPARATE ILLUSTRATION

445-4988 **VALVE GP-CONTROL (**contd.**)** **i06792820**

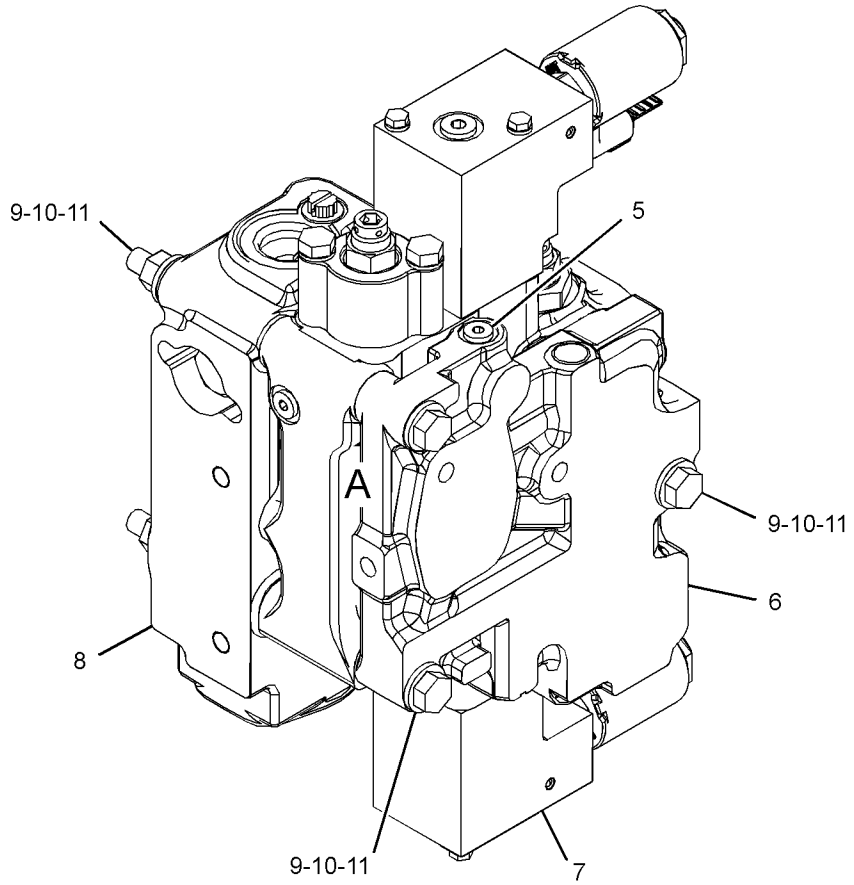

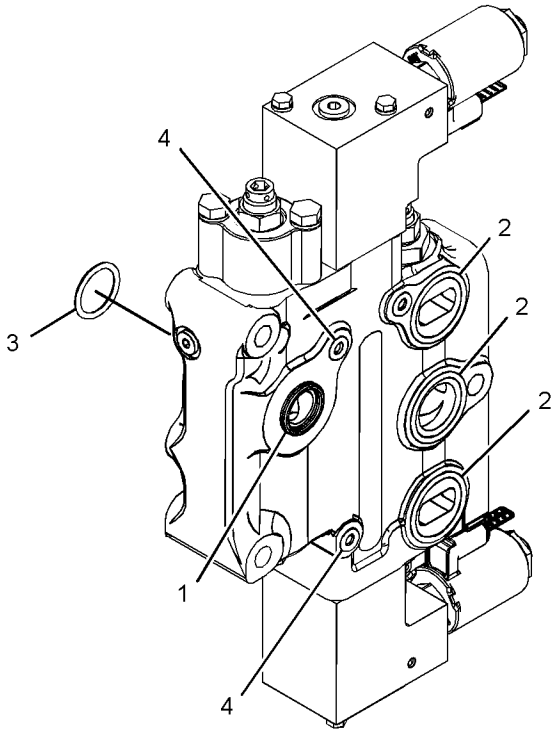

VIEW OF AREA A
(PARTS REMOVED FOR CLARITY)

GRAPHIC #1 <END> g03487396

451-5878 VALVE GP-CONTROL

S/N: TNS1-UP

PART OF 462-7025 VALVE & MTG GP-MAIN CONTROL

SMCS-5051 **i06238496**

NOTE	REF NO	GRAPHIC REF	PART NUMBER	QTY	PART NAME 1 2 3 4 5 6 (PRODUCT LEVEL)	SEE PAGE
	1	1	**3S-9233**	1	SEAL-O-RING	
	3	1	**4J-5309**	2	SEAL-O-RING	
	4	3	**6J-2419**	1	SEAL-O-RING	
	5	1	**6J-3134**	1	SEAL-O-RING	
	6	3	**6K-6307**	1	SEAL-O-RING	
	7	3	**6V-0357**	1	SEAL-O-RING	
	8	3	**6V-5393**	2	SEAL-O-RING	
	9	2	**7M-8485**	2	SEAL-O-RING	
	10	1	**8F-3469**	1	SEAL-O-RING	
	11	3	**9W-7783**	2	PLUG	
	12	1	**123-4750**	1	VALVE AS-CHECK	
		1	**3J-1907**	1	SEAL-O-RING	
		1	**6V-8397**	1	SEAL-O-RING	
	13	1,3	*148-8407*	5	PLUG AS	
					(EACH INCLUDES)	
		1,3	**3J-1907**	1	SEAL-O-RING	
		1,3	**9S-4191**	1	PLUG (9/16-18-THD)	
	14	3	*155-3624*	2	PLUG AS	
					(EACH INCLUDES)	
		3	**3J-7354**	1	SEAL-O-RING	
		3	**9S-4182**	1	PLUG (7/16-20-THD)	
	15	1,3	*162-0177*	5	PLUG AS	
					(EACH INCLUDES)	
		1,3	**3J-1907**	1	SEAL-O-RING	
		1,3	**9S-8004**	1	PLUG (9/16-18-THD)	
	16	1,2	*164-4180*	2	PLUG AS	
					(EACH INCLUDES)	
		1,2	**7M-8485**	1	SEAL-O-RING	
		1,2	**9S-4181**	1	PLUG (5/16-12-THD)	
	17	3	*207-8218*	1	PLUG AS	
		3	**7J-0204**	1	SEAL-O-RING	
		3	**9S-8007**	1	PLUG	
	18	2	*222-4737*	2	PLUG AS	
					(EACH INCLUDES)	
		2	**4J-7533**	1	SEAL-O-RING	
		2	**9S-4180**	1	PLUG	
	19	2	**225-6948**	2	SEAL-O-RING	
H	20	2	**234-4869**	1	VALVE GP-MAKEUP	
	21	2	**236-9832**	2	SPRING	
	22	3	**240-4695**	1	RING-BACKUP	
	23	1	**277-8863**	1	VALVE GP-SOLENOID (24-VOLT) (RIDE CONTROL)	
		1	**384-8750**	1	COIL AS (24-VOLT)	
	24	1,2,3	**282-8827**	9	PLUG	
	25	2	**284-1010**	2	SPRING	
	26	2	**284-1011**	2	SPRING	
	27	1	**292-8061**	5	PLUG-EXPANSION	
	28	2	**295-0993**	4	RETAINER	
Y	29	1	**313-7668**	1	VALVE GP-SOLENOID (24-VOLT) (LOWER)	706
Y	29A	1	**313-7668**	1	VALVE GP-SOLENOID (24-VOLT) (TILT DUMP)	706

451-5878 **VALVE GP-CONTROL (**contd.**)** **i06238496**

NOTE	REF NO	GRAPHIC REF	PART NUMBER	QTY	PART NAME 1 2 3 4 5 6 (PRODUCT LEVEL)	SEE PAGE
Y	29B	1	**313-7668**	1	VALVE GP-SOLENOID (24-VOLT) (LIFT)	706
Y	29C	1	**313-7668**	1	VALVE GP-SOLENOID (24-VOLT) (TILT BACK)	706
J	30	2	**332-1987**	1	VALVE GP-RELIEF (TILT CONTROL)	
	31	1	**333-8242**	1	VALVE GP-SOLENOID (24-VOLT) (PILOT ON, OFF)	
		1	**384-8750**	1	COIL AS (24-VOLT)	
	34	2	**356-8561**	2	VALVE-CONTROL	
	35	1	*357-4432*	1	ELBOW AS	
		1	**3J-1907**	1	SEAL-O-RING	
		1	**6V-8397**	1	SEAL-O-RING	
		1	**6V-8724**	1	ELBOW	
	36	2	**359-4662**	1	HOUSING	
	37	2	**359-4663**	1	HOUSING	
	38	2	**363-1610**	2	SPRING	
	39	3	**363-2687**	1	HOUSING	
	40	3	**363-2692**	1	SPRING	
	41	3	**363-2697**	1	RETAINER	
	43	1	**368-5096**	1	TUBE AS	
L	44	1	**370-5764**	1	VALVE GP-RELIEF (MARGIN)	
N	45	1	**375-3788**	1	VALVE GP-RELIEF (LOAD SIGNAL)	
P	46	2	**388-4493**	2	VALVE GP-CHECK (LOAD SIGNAL)	
					(EACH INCLUDES)	
		2	**3H-0442**	1	SEAL-O-RING	
		2	**095-1513**	1	SEAL-O-RING	
	47	3	**394-8568**	1	PLUG-RETAINER	
	48	3	**396-4852**	1	SEAL-O-RING	
CY	49	1	**455-0949**	1	MANIFOLD GP-CONTROL	637
Y	50	2	**445-6109**	2	VALVE GP-CHECK (PILOT OPERATED)	676
	52	1	**451-6644**	1	VALVE GP-RELIEF (TILT)	
	53	2	**451-9131**	2	PLUG-RETAINER	
M	57	2	**359-4661**	2	BOLT (M10X1.5X25-MM)	
	58	3	**6V-7607**	1	WASHER-HARD (20X30X2.5-MM THK)	
M	59	2,3	**8T-4138**	10	BOLT (M6X1X20-MM)	
M	60	1	**8T-4145**	4	BOLT (M6X1X95-MM)	
	61	1	**9X-6381**	4	WASHER (6.5X12.5X1.6-MM THK)	
					AVAILABLE REPAIR KIT(S):	
H			**238-9842**	1	KIT-SEAL (RELIEF VALVE)	
N			**133-5545**	1	KIT-SEAL (RELIEF VALVE)	
P			**239-5157**	1	KIT-SEAL (CHECK VALVE)	
					(EACH KIT INCLUDES RINGS & SEALS)	
J			**310-5742**	1	KIT-SEAL (RELIEF VALVE)	
					(INCLUDES RINGS)	
L			**239-6336**	1	KIT-SEAL (RELIEF VALVE)	
					(INCLUDES SEALS)	

C - CHANGE FROM PREVIOUS TYPE
H - KIT MARKED H SERVICES PART(S) MARKED H
J - KIT MARKED J SERVICES PART(S) MARKED J
L - KIT MARKED L SERVICES PART(S) MARKED L
M - METRIC PART
N - KIT MARKED N SERVICES PART(S) MARKED N
P - KIT MARKED P SERVICES PART(S) MARKED P
Y - SEPARATE ILLUSTRATION

451-5878 **VALVE GP-CONTROL** (contd.) **i06238496**

REFER TO ALL ILLUSTRATIONS OF THIS GROUP FOR AUXILIARY VIEWS

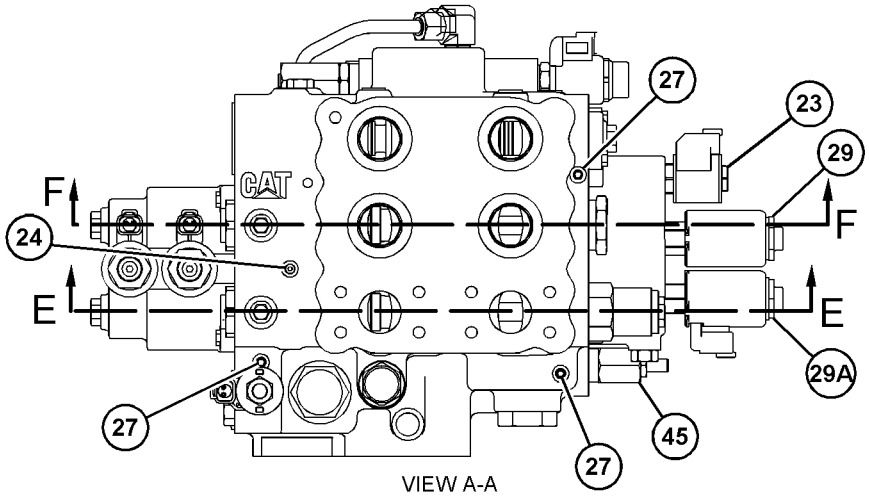

VIEW A-A

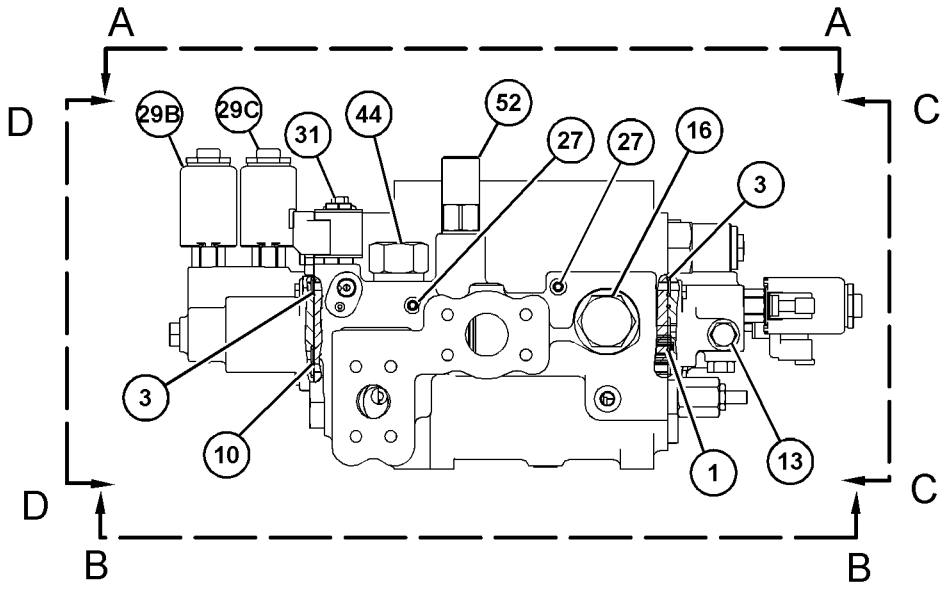

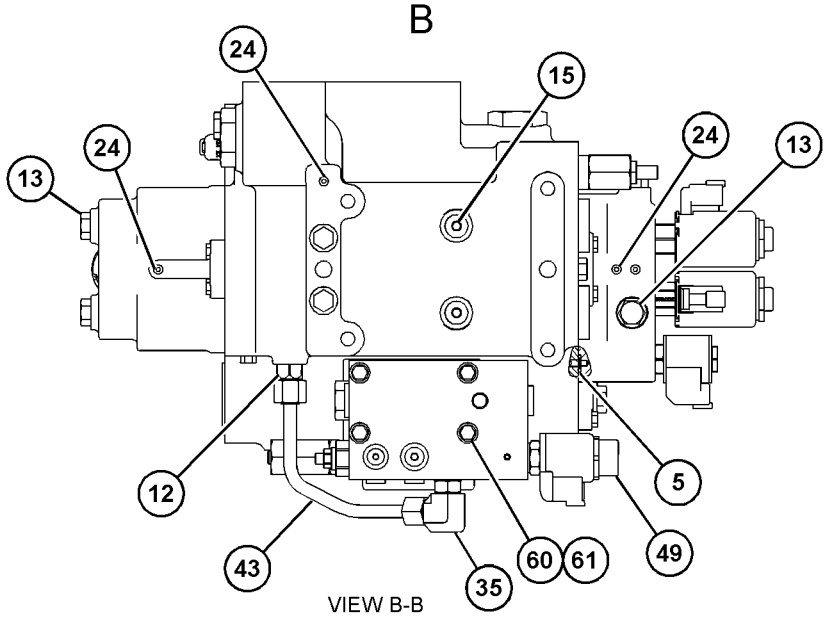

VIEW B-B

GRAPHIC #1 g06126875

451-5878 **VALVE GP-CONTROL (**contd.**)** **i06238496**

REFER TO ALL ILLUSTRATIONS OF THIS GROUP FOR AUXILIARY VIEWS

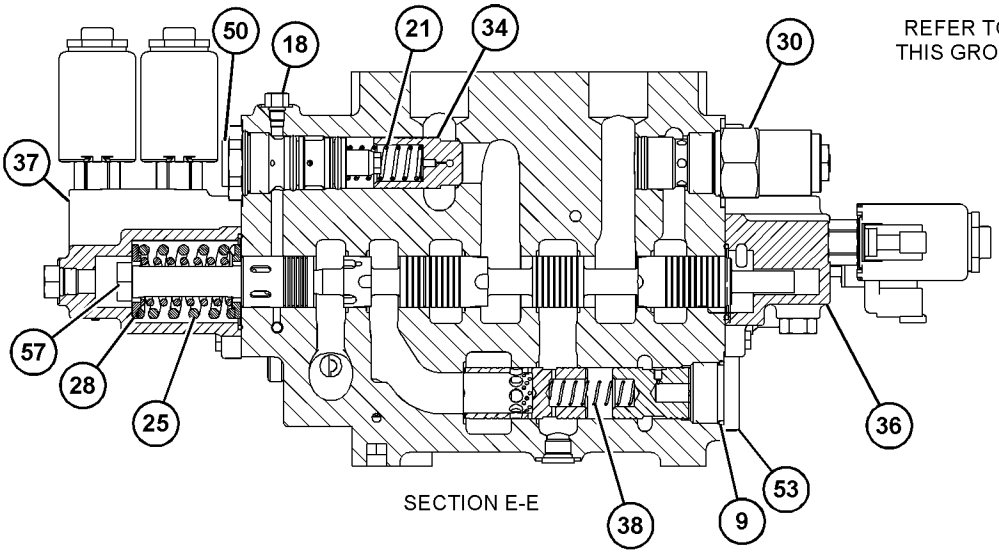

SECTION E-E

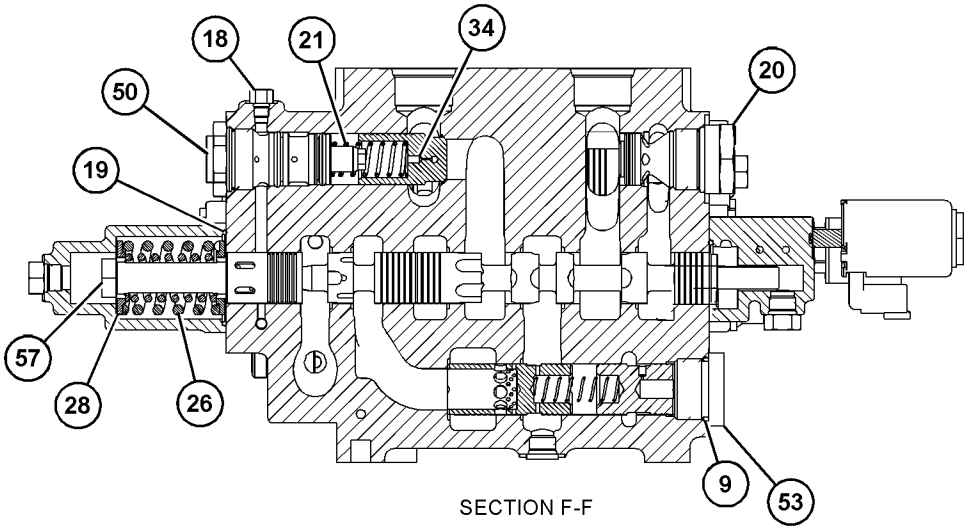

SECTION F-F

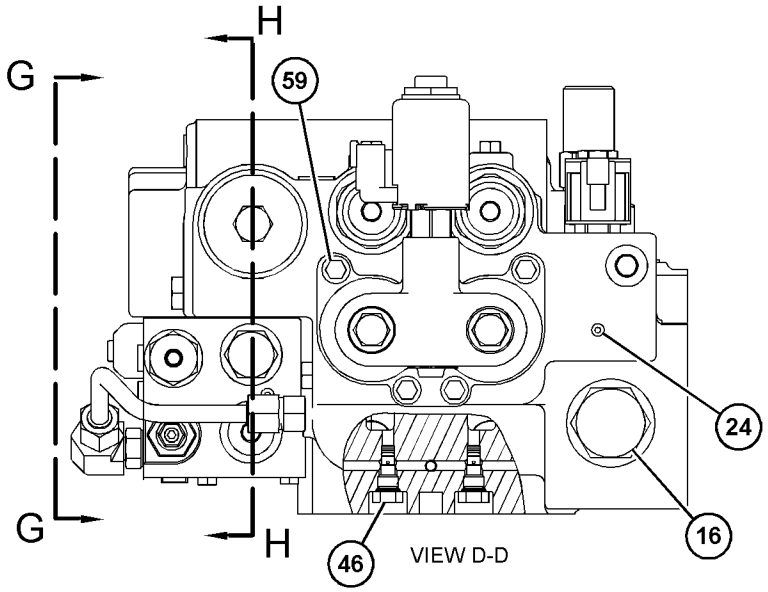

VIEW D-D

GRAPHIC #2 g03784660

451-5878 **VALVE GP-CONTROL** (contd.) **i06238496**

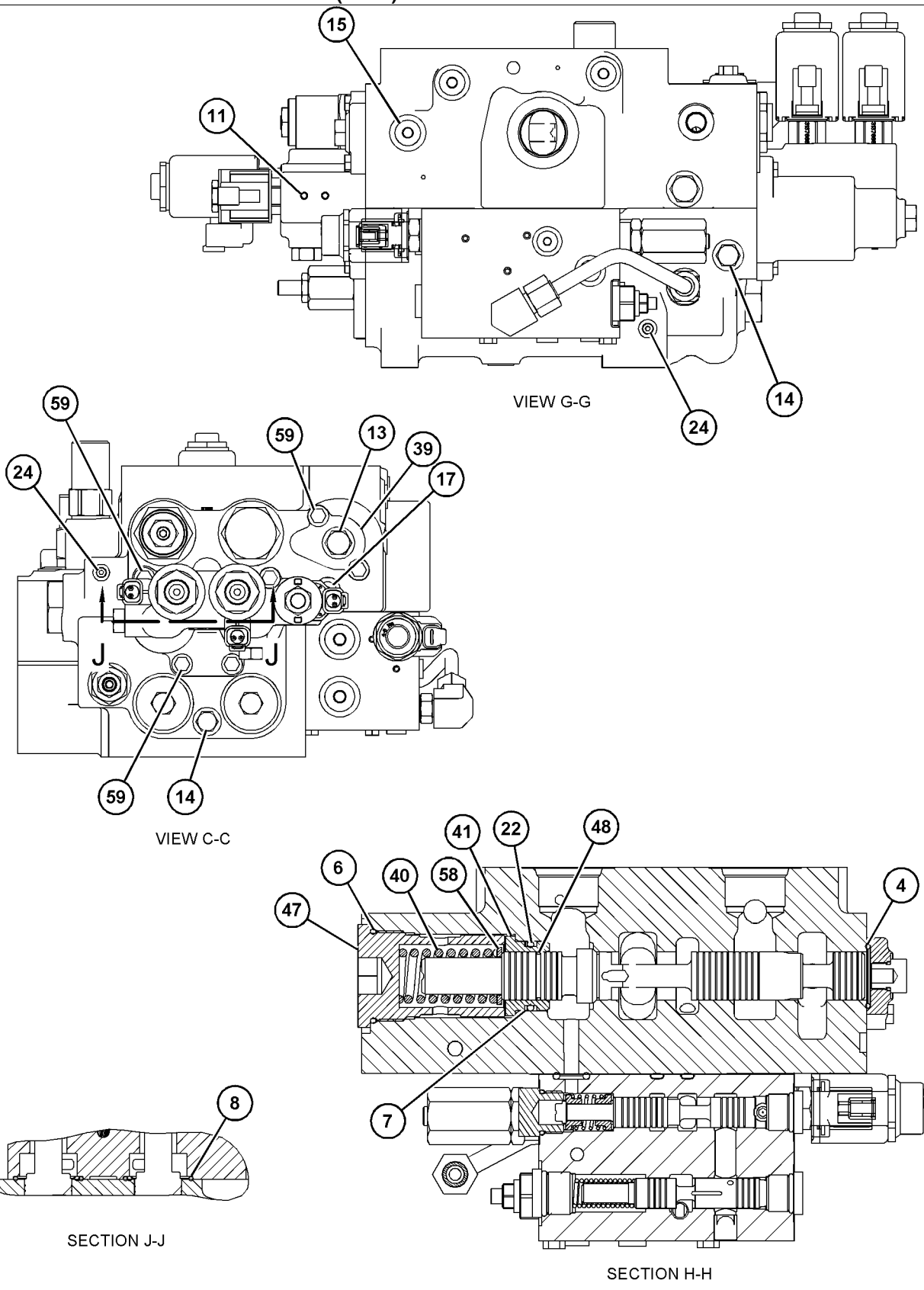

GRAPHIC #3 <END> g03784661

463-8679 VALVE GP-CONTROL

S/N: TNS1-UP

PART OF 494-5030 VALVE & MTG GP-MAIN CONTROL

SMCS-5051 **i06811161**

NOTE	REF NO	GRAPHIC REF	PART NUMBER	QTY	PART NAME 1 2 3 4 5 6 (PRODUCT LEVEL)	SEE PAGE
	1	1	**3S-9233**	1	SEAL-O-RING	
	3	2	**4J-5309**	2	SEAL-O-RING	
	4	2	**6V-5393**	2	SEAL-O-RING	
	5	2	**7M-8485**	2	SEAL-O-RING	
	6	1	**8F-3469**	1	SEAL-O-RING	
M	7	1	**8T-4138**	8	BOLT (M6X1X20-MM)	
	8	1,2	*148-8407*	5	PLUG AS	
					(EACH INCLUDES)	
		1,2	**3J-1907**	1	SEAL-O-RING	
		1,2	**9S-4191**	1	PLUG (9/16-18-THD)	
	9	1,2	*155-3624*	2	PLUG AS	
					(EACH INCLUDES)	
		1,2	**3J-7354**	1	SEAL-O-RING	
		1,2	**9S-4182**	1	PLUG (7/16-20-THD)	
	10	1,2	*162-0177*	4	PLUG AS	
					(EACH INCLUDES)	
		1,2	**3J-1907**	1	SEAL-O-RING	
		1,2	**9S-8004**	1	PLUG (9/16-18-THD)	
	11	1	*164-4180*	2	PLUG AS	
					(EACH INCLUDES)	
		1	**7M-8485**	1	SEAL-O-RING	
		1	**9S-4181**	1	PLUG (5/16-12-THD)	
	12	2	*222-4737*	2	PLUG AS	
					(EACH INCLUDES)	
		2	**4J-7533**	1	SEAL-O-RING	
		2	**9S-4180**	1	PLUG	
	13	2	**225-6948**	2	SEAL-O-RING	
	14	2	**234-4869**	1	VALVE GP-MAKEUP	
	15	2	**236-9832**	2	SPRING	
	16	1,2	**282-8827**	9	PLUG	
	17	2	**284-1010**	2	SPRING	
	18	2	**284-1011**	2	SPRING	
	19	1	**292-8061**	4	PLUG-EXPANSION	
	20	2	**295-0993**	4	RETAINER	
Y	21	1	**313-7668**	4	VALVE GP-SOLENOID (24-VOLT) (LIFT, LOWER, DUMP, TILT BACK)	706
	22	2	**332-1987**	1	VALVE GP-RELIEF (LINE, TILT)	
	23	1	**333-8242**	1	VALVE GP-SOLENOID (24-VOLT) (PILOT ON, OFF)	
	26	2	**356-8561**	2	VALVE-CONTROL (ANTI-DRIFT)	
M	27	2	**359-4661**	2	BOLT (M10X1.5X25-MM)	
	28	2	**359-4663**	1	HOUSING	
	29	2	**363-1610**	2	SPRING	
	31	1	**370-5764**	1	VALVE GP-RELIEF (MARGIN)	
	32	1	**375-3788**	1	VALVE GP-RELIEF (LOAD SIGNAL)	
	33	1	**388-4493**	2	VALVE GP-CHECK (LOAD SIGNAL)	
Y	34	2	**445-6109**	2	VALVE GP-CHECK (PILOT OPERATED)	676
	35	2	**451-9131**	2	PLUG-RETAINER	
	40	1	**495-5300**	1	VALVE GP-RELIEF (TILT)	

463-8679 **VALVE GP-CONTROL (**contd.**)** **i06811161**

NOTE	REF NO	GRAPHIC REF	PART NUMBER	QTY	PART NAME 1 2 3 4 5 6 (PRODUCT LEVEL)	SEE PAGE
					PARTS SHOWN IN GRAPHIC(S) WITHOUT A REFERENCE NUMBER ARE NOT SERVICED SEPARATELY	

M - METRIC PART
Y - SEPARATE ILLUSTRATION

463-8679 **VALVE GP-CONTROL** (contd.) **i06811161**

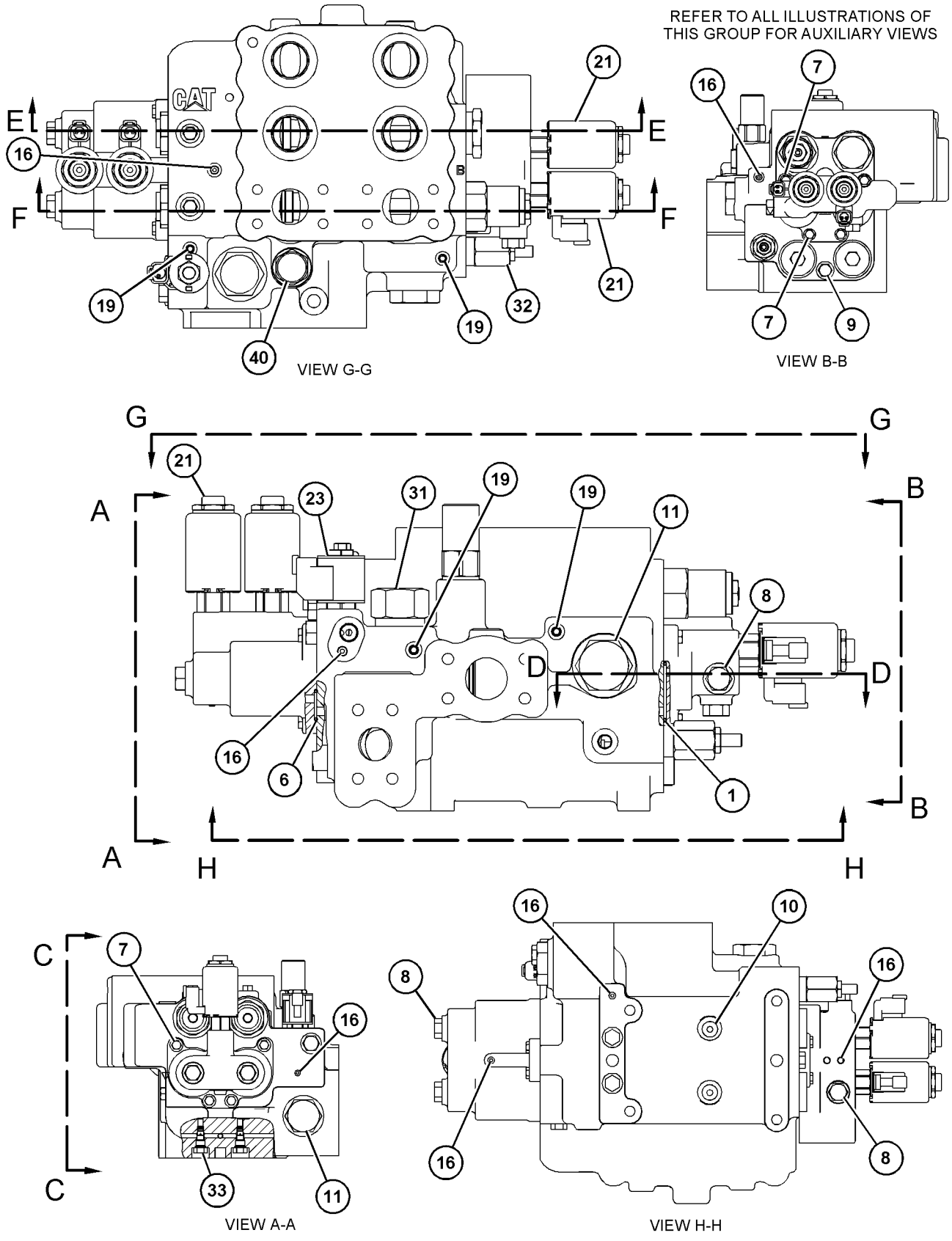

GRAPHIC #1 g06128996

463-8679 **VALVE GP-CONTROL (**contd.**)** **i06811161**

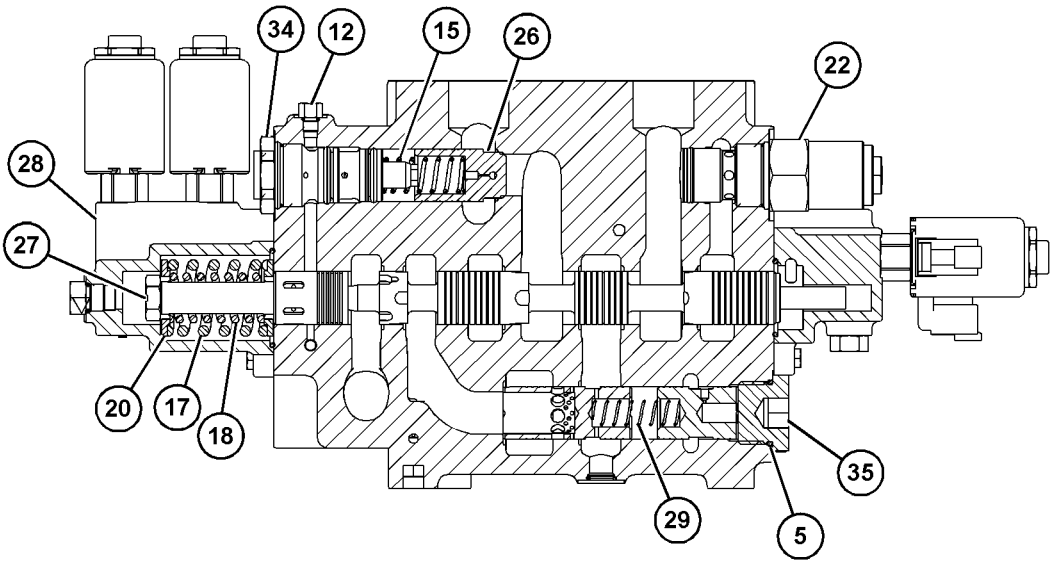

SECTION F-F

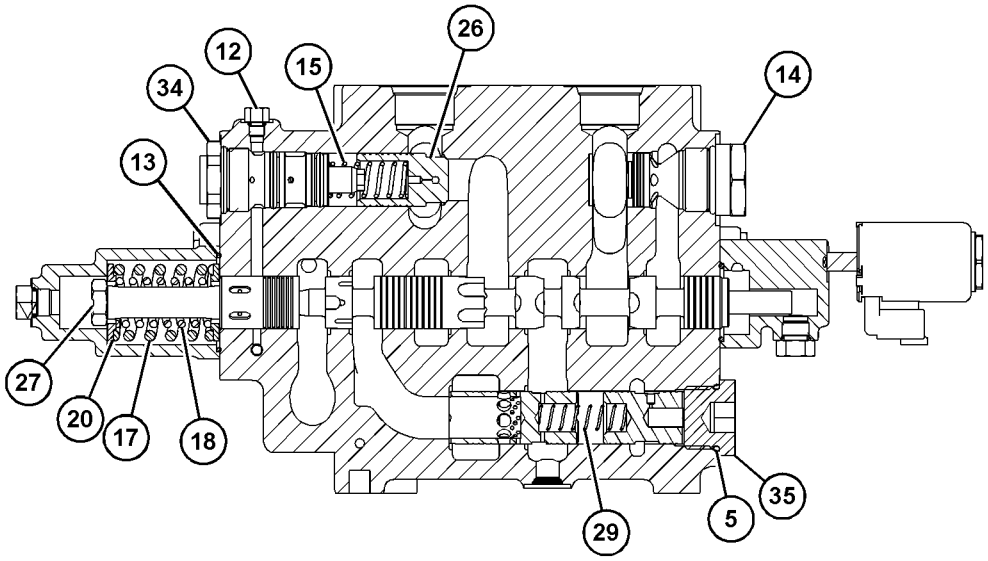

SECTION E-E

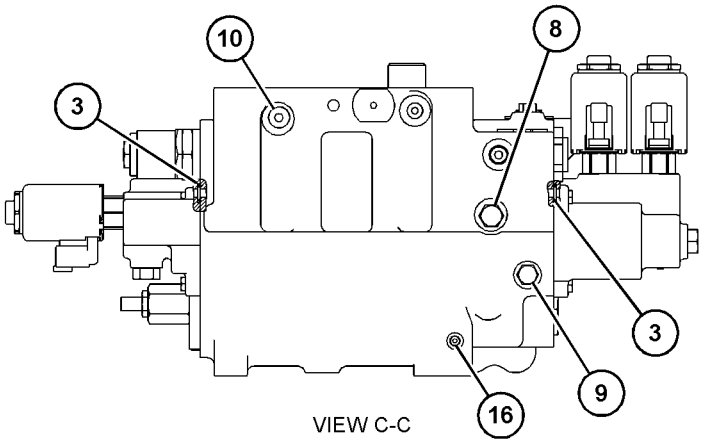

VIEW C-C

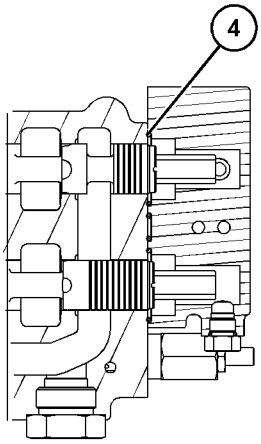

SECTION D-D

GRAPHIC #2 <END> g06129381

239-0605 VALVE GP-DIVERTER

S/N: TNS1-UP

PART OF 458-2253 MANIFOLD GP-CONTROL

SMCS-5066 **i04133992**

NOTE	REF NO	GRAPHIC REF	PART NUMBER	QTY	PART NAME 1 2 3 4 5 6 (PRODUCT LEVEL)	SEE PAGE
	1	1	**2M-9780**	1	SEAL-O-RING	
	2	1	**6V-5142**	1	SEAL-O-RING	
	3	1	**169-1617**	2	RING-BACKUP	
	4	1	**095-1751**	1	SEAL-O-RING	
	5	1	**169-1616**	2	RING-BACKUP	
					AVAILABLE REPAIR KIT(S):	
			200-6282	1	KIT-SEAL (DIVERTER VALVE)	
					(INCLUDES SEALS & RINGS)	

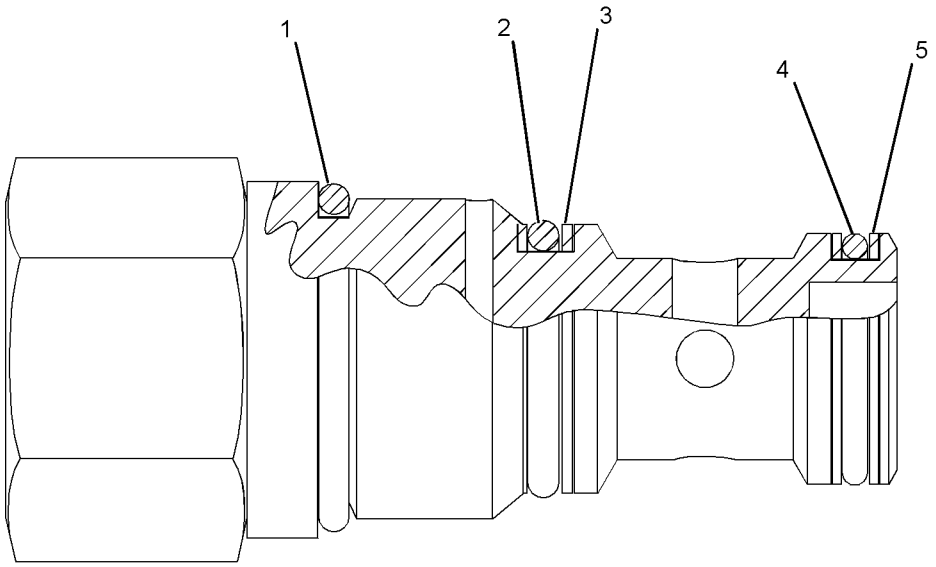

GRAPHIC #1 <END> g01056821

451-5876 VALVE GP-MAIN CONTROL

S/N: TNS1-UP

PART OF 508-7684 VALVE & MTG GP-MAIN CONTROL

SMCS-5051 **i06523932**

NOTE	REF NO	GRAPHIC REF	PART NUMBER	QTY	PART NAME 1 2 3 4 5 6 (PRODUCT LEVEL)	SEE PAGE
	1	1	**3S-9233**	1	SEAL-O-RING	
	3	1	**4J-5309**	2	SEAL-O-RING	
	4	1	**6J-2419**	1	SEAL-O-RING	
	5	1	**6J-3134**	1	SEAL-O-RING	
	6	1	**6K-6307**	1	SEAL-O-RING	
	7	1	**6V-0357**	1	SEAL-O-RING	
	8	1	**6V-5393**	2	SEAL-O-RING	
	9	1	**7M-8485**	2	SEAL-O-RING	
	10	1	**8F-3469**	1	SEAL-O-RING	
	11	1	**9W-7783**	2	PLUG	
	12	1	**123-4750**	1	VALVE AS-CHECK	
		1	**6V-8397**	1	SEAL-O-RING	
		1	**3J-1907**	1	SEAL-O-RING	
	13	1	*148-8407*	5	PLUG AS	
					(EACH INCLUDES)	
		1	**3J-1907**	1	SEAL-O-RING	
		1	**9S-4191**	1	PLUG (9/16-18-THD)	
	14	1	*155-3624*	2	PLUG AS	
					(EACH INCLUDES)	
		1	**3J-7354**	1	SEAL-O-RING	
		1	**9S-4182**	1	PLUG (7/16-20-THD)	
	15	1	*162-0177*	5	PLUG AS	
					(EACH INCLUDES)	
		1	**3J-1907**	1	SEAL-O-RING	
		1	**9S-8004**	1	PLUG (9/16-18-THD)	
	16	1	*164-4180*	2	PLUG AS	
					(EACH INCLUDES)	
		1	**7M-8485**	1	SEAL-O-RING	
		1	**9S-4181**	1	PLUG (5/16-12-THD)	
	17	1	*207-8218*	1	PLUG AS	
		1	**7J-0204**	1	SEAL-O-RING	
		1	**9S-8007**	1	PLUG	
	18	1	*222-4737*	2	PLUG AS	
					(EACH INCLUDES)	
		1	**4J-7533**	1	SEAL-O-RING	
		1	**9S-4180**	1	PLUG	
	19	1	**225-6948**	2	SEAL-O-RING	
J	20	1	**234-4869**	1	VALVE GP-MAKEUP (RELIEF)	
	21	1	**236-9832**	2	SPRING	
	22	1	**240-4695**	1	RING-BACKUP	
	23	1	**277-8863**	1	VALVE GP-SOLENOID (24-VOLT) (RIDE CONTROL)	
		1	**384-8750**	1	COIL AS (24-VOLT)	
	24	1	**282-8827**	9	PLUG	
	25	1	**284-1010**	2	SPRING	
	26	1	**284-1011**	2	SPRING	
	27	1	**292-8061**	5	PLUG-EXPANSION	
	28	1	**295-0993**	4	RETAINER	
Y	29	1	**313-7668**	1	VALVE GP-SOLENOID (24-VOLT) (LIFT, HEAD END)	706
Y	29A	1	**313-7668**	1	VALVE GP-SOLENOID (24-VOLT) (LIFT, LOWER)	706

451-5876 **VALVE GP-MAIN CONTROL (**contd.**)** **i06523932**

NOTE	REF NO	GRAPHIC REF	PART NUMBER	QTY	PART NAME 1 2 3 4 5 6 (PRODUCT LEVEL)	SEE PAGE
Y	29B	1	**313-7668**	1	VALVE GP-SOLENOID (24-VOLT) (TILT DUMP)	706
Y	29C	1	**313-7668**	1	VALVE GP-SOLENOID (24-VOLT) (TILT BACK)	706
H	30	1	**332-1985**	1	VALVE GP-RELIEF (TILT CONTROL)	
	31	1	**333-8242**	1	VALVE GP-SOLENOID (24-VOLT) (PILOT ON, OFF)	
		1	**384-8750**	1	COIL AS (24-VOLT)	
	34	1	**356-8561**	2	VALVE-CONTROL	
	35	1	*357-4432*	1	ELBOW AS	
		1	**3J-1907**	1	SEAL-O-RING	
		1	**6V-8397**	1	SEAL-O-RING	
		1	**6V-8724**	1	ELBOW	
	36	1	**359-4662**	1	HOUSING	
	37	1	**359-4663**	1	HOUSING	
	38	1	**363-1610**	2	SPRING	
	39	1	**363-2687**	1	HOUSING	
	40	1	**363-2692**	1	SPRING	
	41	1	**363-2697**	1	RETAINER	
	43	1	**368-5096**	1	TUBE AS	
L	44	1	**370-5764**	1	VALVE GP-RELIEF (MARGIN)	
N	45	1	**375-3788**	1	VALVE GP-RELIEF (PILOT OPERATED HYDRAULIC)	
V	46	1	**388-4493**	2	VALVE GP-CHECK (LOAD SIGNAL)	
					(EACH INCLUDES)	
		1	**3H-0442**	1	SEAL-O-RING	
		1	**095-1513**	1	SEAL-O-RING	
	47	1	**394-8568**	1	PLUG-RETAINER	
	48	1	**396-4852**	1	SEAL-O-RING	
Y	49	1	**432-5661**	1	MANIFOLD GP-CONTROL	635
Y	50	1	**445-6109**	2	VALVE GP-CHECK (PILOT OPERATED)	676
	52	1	**451-6644**	1	VALVE GP-RELIEF (TILT)	
	53	1	**451-9131**	2	PLUG-RETAINER	
M	57	1	**359-4661**	2	BOLT (M10X1.5X25-MM)	
	58	1	**6V-7607**	1	WASHER-HARD (20X30X2.5-MM THK)	
M	59	1	**8T-4138**	10	BOLT (M6X1X20-MM)	
M	60	1	**8T-4145**	4	BOLT (M6X1X95-MM)	
	61	1	**9X-6381**	4	WASHER (6.5X12.5X1.6-MM THK)	
					PARTS SHOWN IN GRAPHIC(S) WITHOUT A REFERENCE NUMBER ARE NOT SERVICED SEPARATELY	
					AVAILABLE REPAIR KIT(S):	
J			**238-9842**	1	KIT-SEAL (RELIEF VALVE)	
					(INCLUDES O-RING SEALS & BACK-UP RINGS)	
H			**310-5742**	1	KIT-SEAL (RELIEF VALVE)	
					(INCLUDES O-RING SEALS & BACK-UP RING)	
L			**239-6336**	1	KIT-SEAL (RELIEF VALVE)	
					(INCLUDES O-RING SEALS & BACK-UP RING SEALS)	
N			**133-5545**		KIT-SEAL (RELIEF VALVE)	
					(INCLUDES O-RING SEALS & BACK-UP RING SEALS)	
V			**239-5157**	1	KIT-SEAL (CHECK VALVE)	
					(INCLUDES O-RING SEALS & BACK-UP RING SEALS)	
J			**238-9842**	1	KIT-SEAL (RELIEF VALVE)	
					(INCLUDES O-RING SEALS & BACK-UP RINGS)	
H			**310-5742**	1	KIT-SEAL (RELIEF VALVE)	
					(INCLUDES O-RING SEALS & BACK-UP RING)	

451-5876 **VALVE GP-MAIN CONTROL (**contd.**)** **i06523932**

NOTE	REF NO	GRAPHIC REF	PART NUMBER	QTY	PART NAME 1 2 3 4 5 6 (PRODUCT LEVEL)	SEE PAGE
L			**239-6336**	1	KIT-SEAL (RELIEF VALVE)	
					(INCLUDES O-RING SEALS & BACK-UP RING SEALS)	
N			**133-5545**		KIT-SEAL (RELIEF VALVE)	
					(INCLUDES O-RING SEALS & BACK-UP RING SEALS)	
V			**239-5157**	1	KIT-SEAL (CHECK VALVE)	
					(INCLUDES O-RING SEALS & BACK-UP RING SEALS)	

H - KIT MARKED H SERVICES PART(S) MARKED H
J - KIT MARKED J SERVICES PART(S) MARKED J
L - KIT MARKED L SERVICES PART(S) MARKED L
M - METRIC PART
N - KIT MARKED N SERVICES PART(S) MARKED N
V - KIT MARKED V SERVICES PART(S) MARKED V
Y - SEPARATE ILLUSTRATION

451-5876 **VALVE GP-MAIN CONTROL (**contd.**)** **i06523932**

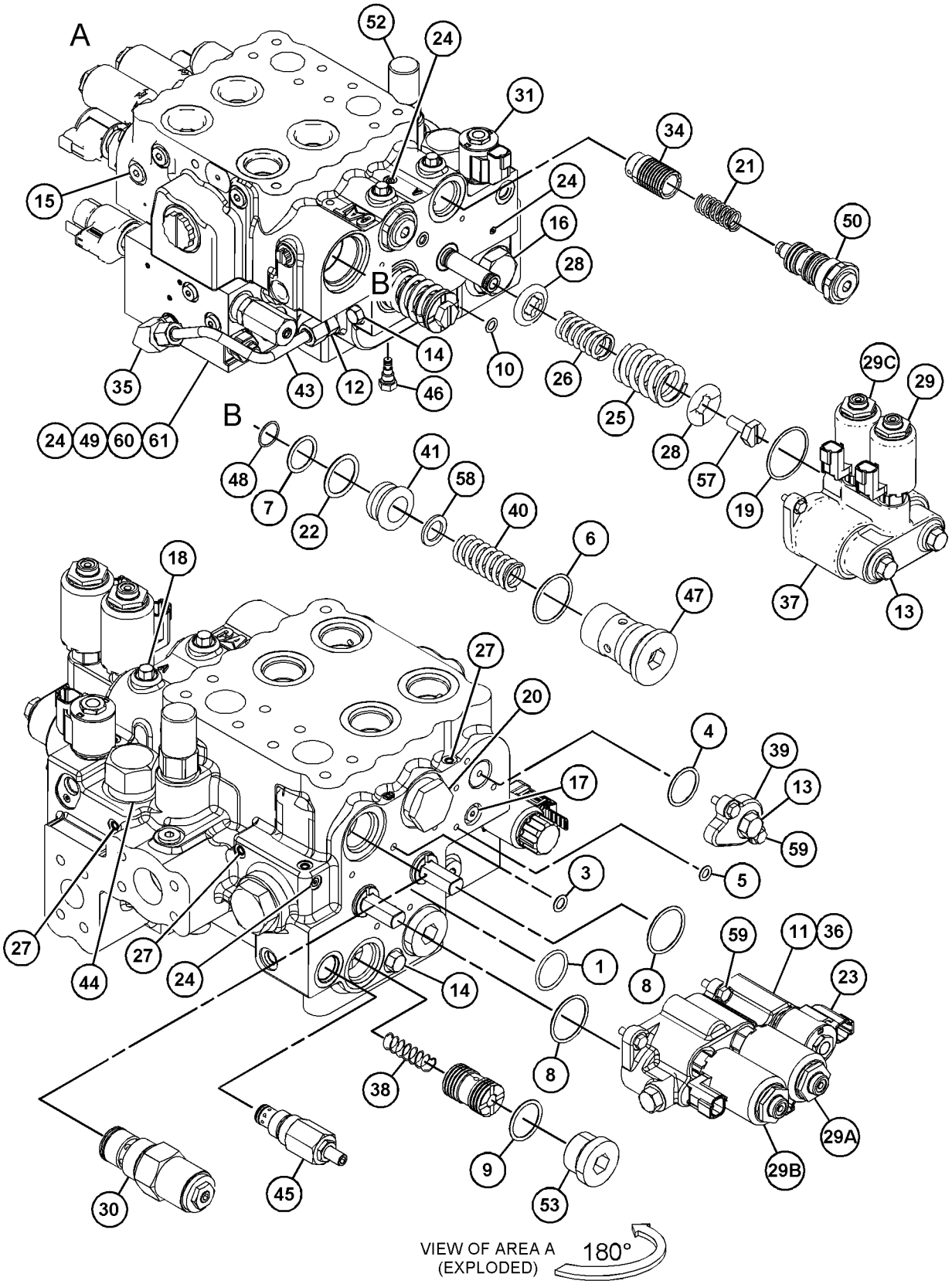

GRAPHIC #1 <END> g03749052

436-7007 VALVE GP-MANUAL

S/N: TNS1-UP

PART OF 507-6190 HYDRAULIC AR, 492-4028 HYDRAULIC AR-STANDARD LIFT

SMCS-5001, 5130, 5147

i06796412

NOTE	REF NO	GRAPHIC REF	PART NUMBER	QTY	PART NAME 1 2 3 4 5 6 (PRODUCT LEVEL)	SEE PAGE
	1	1	**112-1817**	1	VALVE-BALL	
I	2	1	**348-5339**	1	HOSE AS	
I	3	1	**436-7182**	1	HOSE AS	
	4	1	**436-7197**	1	BRACKET	
	5	1	**096-6166**	4	WASHER-HARD (4.5X9X1-MM THK)	
M	6	1	**121-4405**	4	BOLT (M4X0.7X12-MM)	
	7	1	*148-8378*	2	ELBOW AS (90-DEG)	
					(EACH INCLUDES)	
		1	**3J-1907**	1	SEAL-O-RING	
		1	**6V-8397**	1	SEAL-O-RING	
		1	**6V-8724**	1	ELBOW	
M	8	1	**344-5675**	1	NUT (M10X1.5-THD)	
	9	1	**4S-4455**	1	CLIP	
	10	1	**5P-8939**	1	GROMMET	
	11	1	**7X-7729**	2	WASHER (11X25X3-MM THK)	
	12	1	**8T-1889**	1	CLIP (SLOT)	
	13	1	**8T-1890**	1	CLIP (TAB)	
	14	1	**8T-4121**	2	WASHER-HARD (11X21X2.5-MM THK)	
M	15	1	**8T-4136**	2	BOLT (M10X1.5X25-MM)	
M	16	1	**8T-4195**	1	BOLT (M10X1.5X30-MM)	

I - REFER TO HYDRAULIC INFORMATION SYSTEM
M - METRIC PART

436-7007 **VALVE GP-MANUAL (**contd.**)** **i06796412**

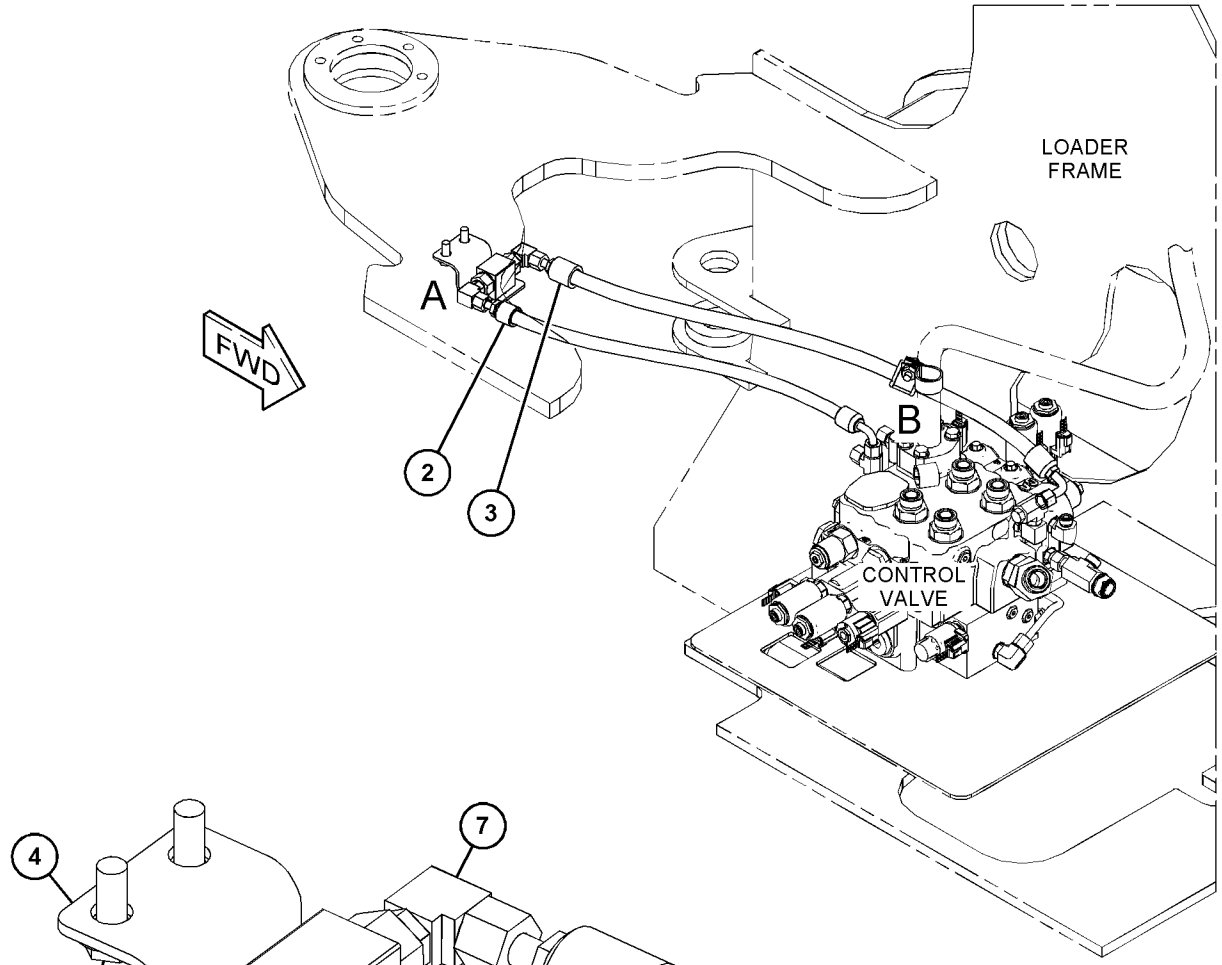

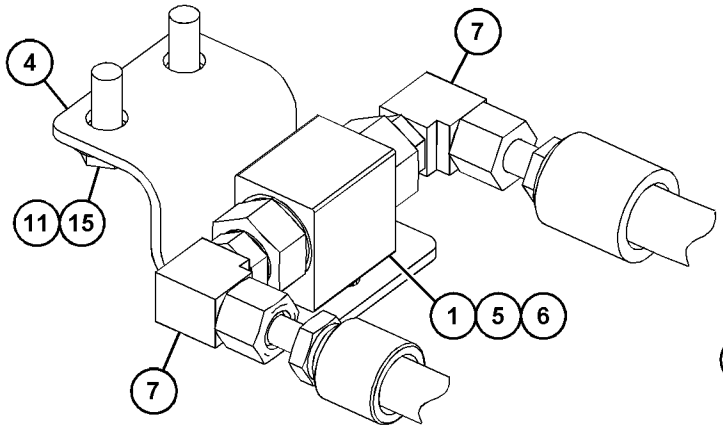

VIEW OF AREA A

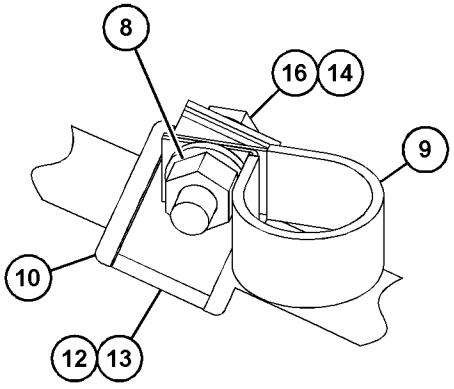

VIEW OF AREA B

GRAPHIC #1 <END> g06031687

348-5974 VALVE GP-PUMP CONTROL

S/N: TNS1-UP

PART OF 455-1846 PUMP GP-PISTON

SMCS-5455 **i06819393**

NOTE	REF NO	GRAPHIC REF	PART NUMBER	QTY	PART NAME 1 2 3 4 5 6 (PRODUCT LEVEL)	SEE PAGE
	1	1	**280-7870**	1	GASKET	
M	2	1	**8T-8442**	4	BOLT-SOCKET HEAD (M6X1X30-MM)	
	3	1	**6E-6528**	2	SEAL	
	4	1	**033-6043**	1	SEAL-O-RING	
	5	1	**6V-8352**	1	SEAL-O-RING	

M - METRIC PART

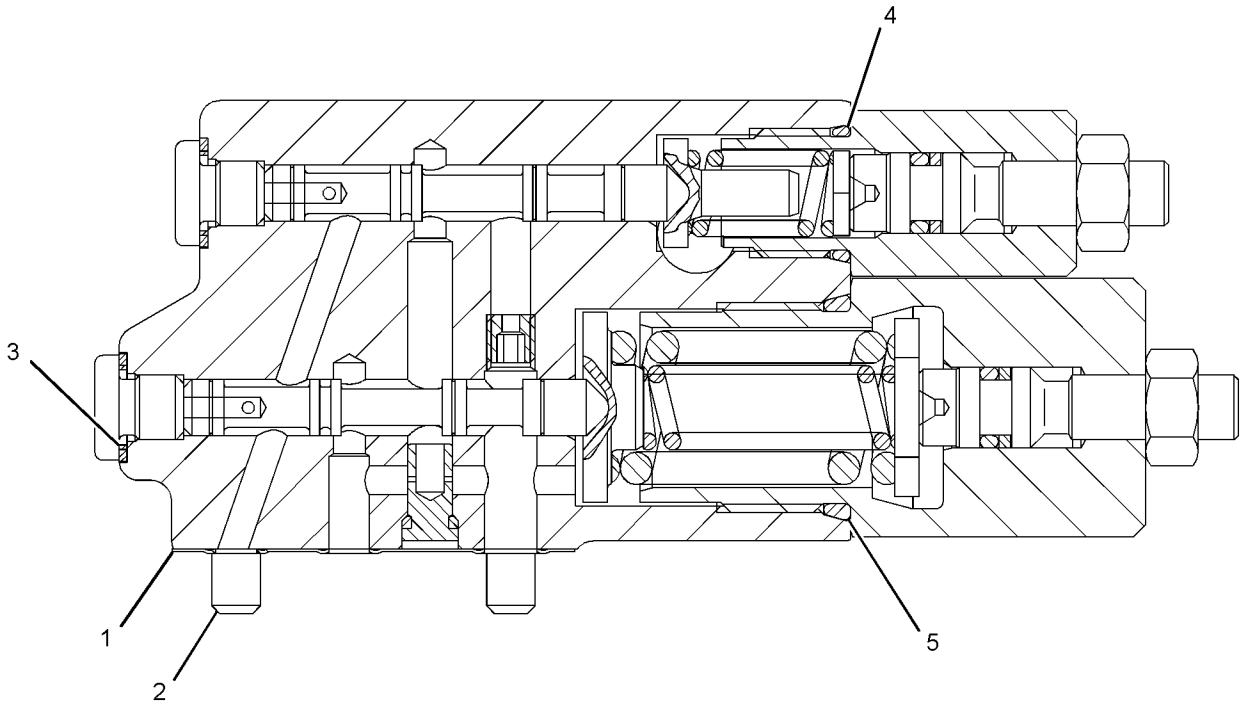

GRAPHIC #1 <END> g02153298

360-1413 VALVE GP-PUMP CONTROL

S/N: TNS1-UP

PART OF 399-5055, 430-9006 PUMP GP-PISTON

SMCS-5455 **i04718694**

NOTE	REF NO	GRAPHIC REF	PART NUMBER	QTY	PART NAME 1 2 3 4 5 6 (PRODUCT LEVEL)	SEE PAGE
	1	1	**6E-6528**	2	SEAL	
	2	1	**9S-8002**	1	PLUG (7/16-20-THD)	
	3	1	**3J-7354**	1	SEAL-O-RING	
	4	1	**033-6043**	1	SEAL-O-RING	
	5	1	**6V-6339**	1	SEAL-O-RING	
					AVAILABLE REPAIR KIT(S):	
			293-8350	1	KIT-SEAL	
					(INCLUDES BACK-UP RINGS & O-RINGS)	

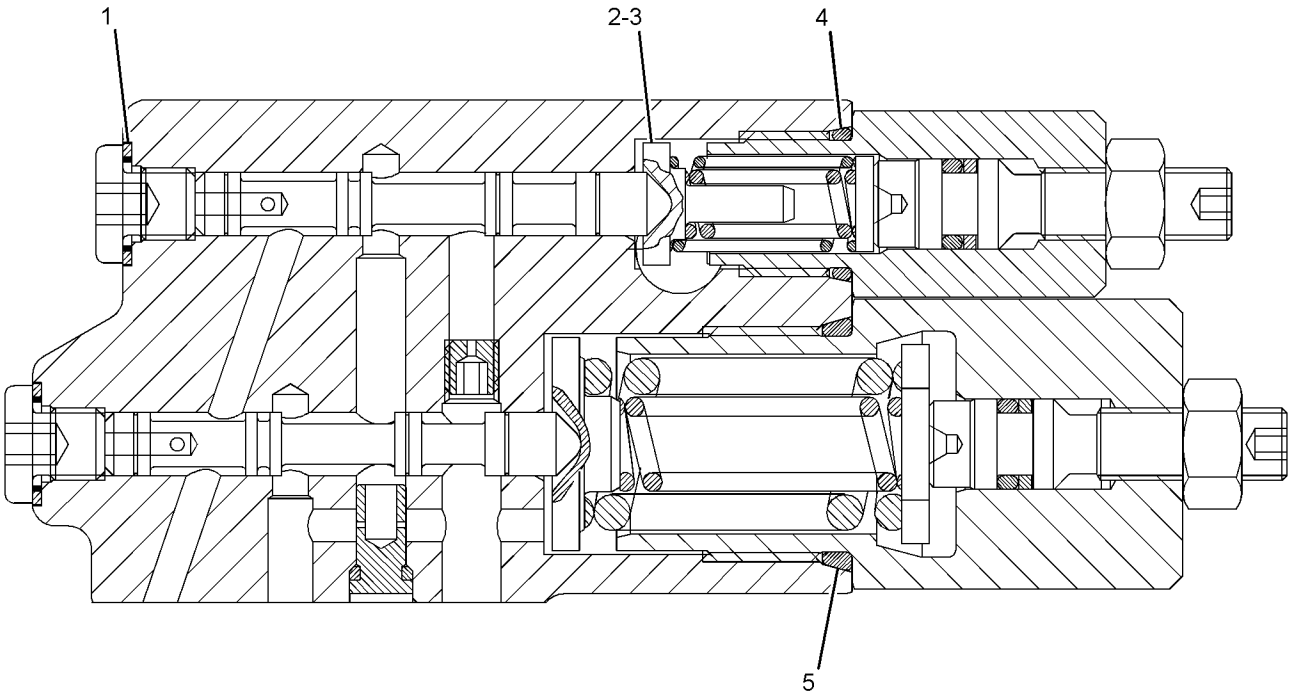

GRAPHIC #1 <END> g02348698

367-2660 VALVE GP-PUMP CONTROL

S/N: TNS1-UP
IMPLEMENT
PART OF 466-3770 PUMP GP-PISTON

SMCS-5455 **i05784346**

NOTE	REF NO	GRAPHIC REF	PART NUMBER	QTY	PART NAME 1 2 3 4 5 6 (PRODUCT LEVEL)	SEE PAGE
	1	1	**148-3483**	1	PLUG	
M	2	1	**8T-9532**	1	SETSCREW-SOCKET	
	3	1	*225-4820*	2	PLUG AS	
					(EACH INCLUDES)	
		1	**3J-7354**	1	SEAL-O-RING	
		1	**225-4821**	1	PLUG	
	4	1	**359-9310**	1	ORIFICE	
	5	1	**8T-7524**	1	SEAL-O-RING	
M	6	1	**5W-9420**	1	LOCKNUT (M8X1.25-THD)	
	7	1	**417-3615**	1	SPRING	
	8	1	**396-5692**	1	ORIFICE	
	9	1	**416-1370**	1	RETAINER	
	10	1	**416-1372**	1	RETAINER	
	11	1	**416-7124**	1	ADAPTER	
	12	1	**416-7427**	1	SPRING	
					PARTS SHOWN IN GRAPHIC(S) WITHOUT A REFERENCE NUMBER ARE NOT SERVICED SEPARATELY	

M - METRIC PART

367-2660 **VALVE GP-PUMP CONTROL (**contd.**)** **i05784346**

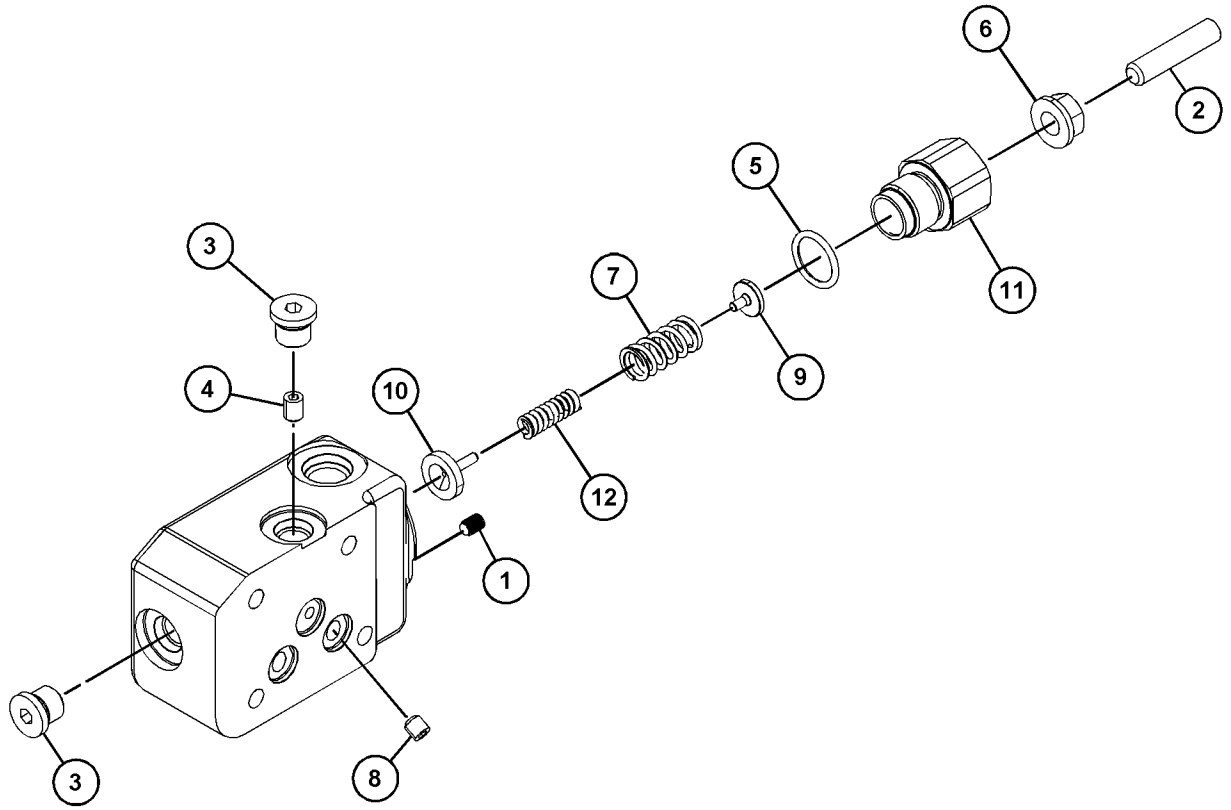

GRAPHIC #1 <END> g03503616

346-3800 VALVE GP-RELIEF

S/N: TNS1-UP

PART OF 371-1784 VALVE GP-RELIEF

SMCS-5069, 5117 **i04783130**

NOTE	REF NO	GRAPHIC REF	PART NUMBER	QTY	PART NAME 1 2 3 4 5 6 (PRODUCT LEVEL)	SEE PAGE
	1	1	**4T-4509**	1	SEAT	
	2	1	**6E-5200**	1	RETAINER AS	
	3	1	**9X-6395**	1	NUT (3/4-16-THD)	
	4	1	**108-5157**	1	VALVE	
	5	1	**6V-5556**	1	SEAL-O-RING	
	6	1	**125-1393**	1	SPRING	
					—OR—	
		1	**4T-1700**	1	SPRING	
	7	1	**366-4972**	2	RING-BACKUP	
B	8	1	**096-6166**	1	WASHER-HARD (4.5X9X1-MM THK)	
	9	1	**3J-7354**	1	SEAL-O-RING	
	10	1	**3K-0360**	1	SEAL-O-RING	

B - USE AS REQUIRED

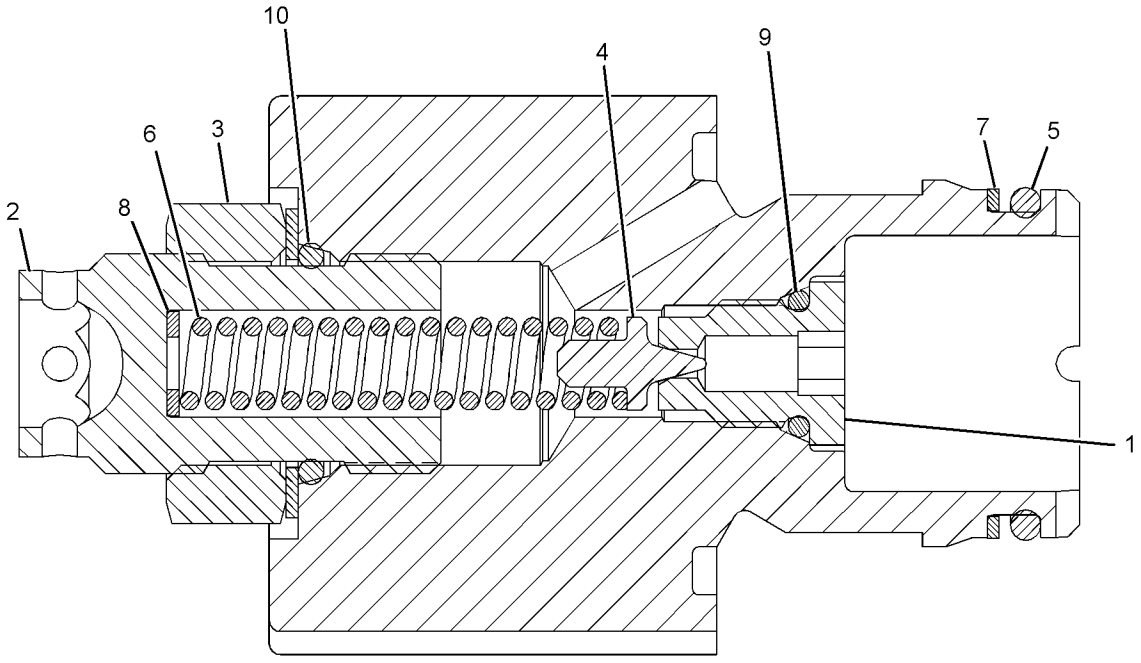

GRAPHIC #1 <END> g02519416

371-1784 VALVE GP-RELIEF

S/N: TNS1-UP

PART OF 367-9496 VALVE GP-CONTROL

SMCS-5069, 5117 **i04783137**

NOTE	REF NO	GRAPHIC REF	PART NUMBER	QTY	PART NAME 1 2 3 4 5 6 (PRODUCT LEVEL)	SEE PAGE
Y	1	1	*346-3800*	1	VALVE GP-RELIEF	703
	2	1	**3J-7354**	1	SEAL-O-RING	
	3	1	**3K-0360**	1	SEAL-O-RING	
	4	1	**366-4972**	1	RING-BACKUP	
	5	1	**6V-5556**	1	SEAL-O-RING	

Y - SEPARATE ILLUSTRATION

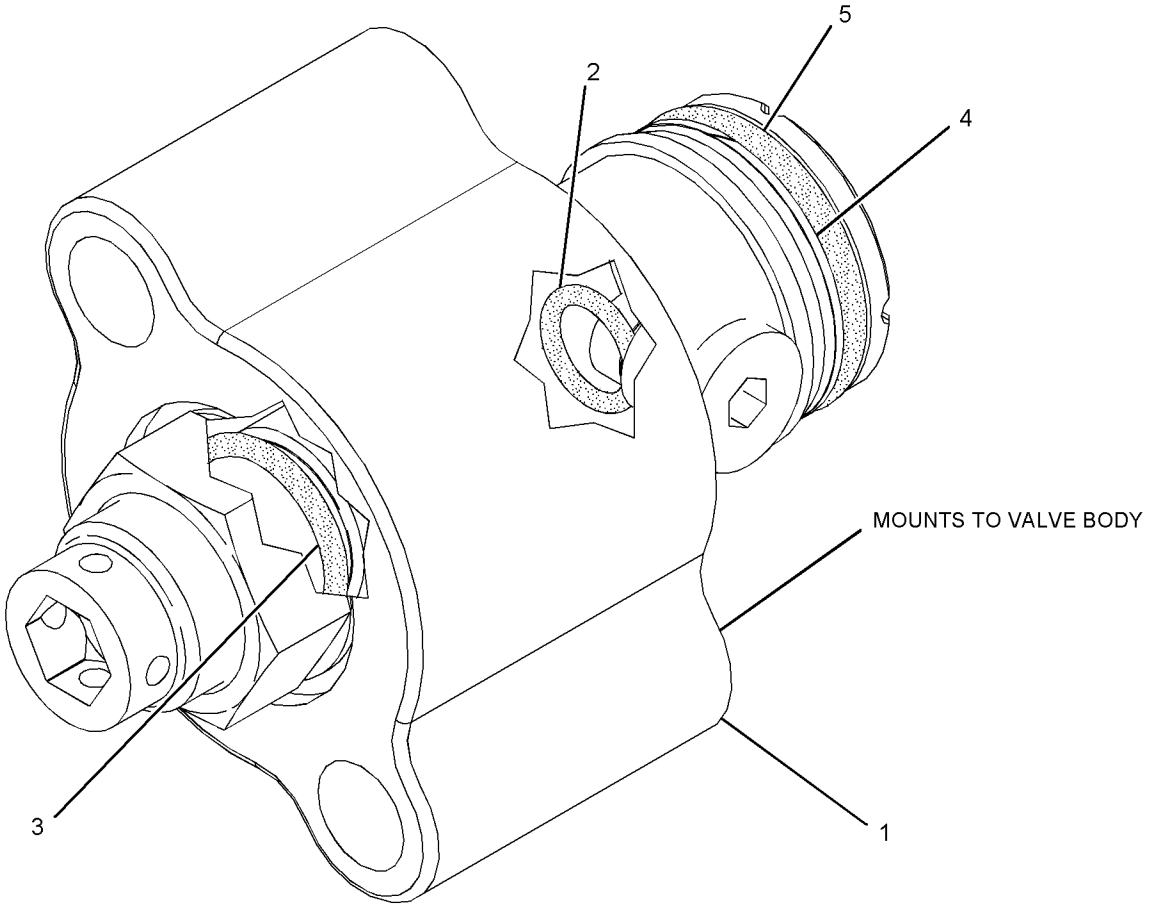

GRAPHIC #1 <END> g02897278

251-3268 VALVE GP-SOLENOID

S/N: TNS1-UP
24-VOLT
OPTIONAL FIELD REPLACEMENT ORDER 1-397-9397 VALVE GP-SOLENOID
PART OF 432-5661 MANIFOLD GP-CONTROL, 361-5941 VALVE GP-SOLENOID

SMCS-5132, 5479 **i05423596**

NOTE	REF NO	GRAPHIC REF	PART NUMBER	QTY	PART NAME 1 2 3 4 5 6 (PRODUCT LEVEL)	SEE PAGE
	1	1	**384-8750**	1	COIL AS (24-VOLT)	
					AVAILABLE REPAIR KIT(S):	
			332-5669	1	KIT-SEAL (SOLENOID VALVE)	
					(INCLUDES O-RING SEALS & BACKUP RINGS)`	

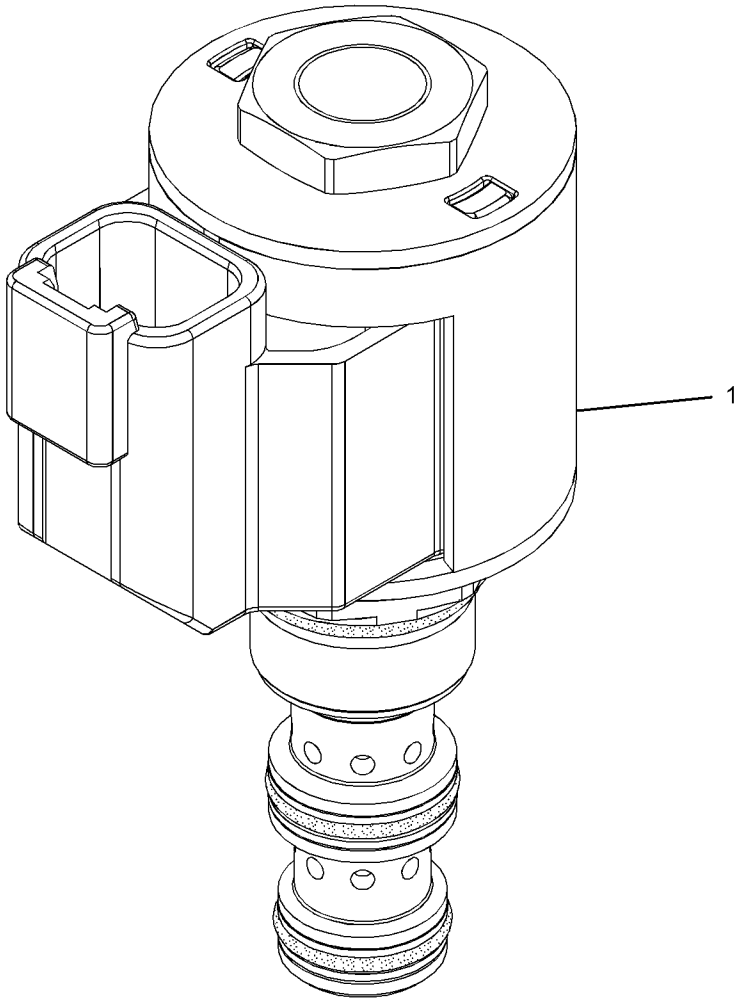

GRAPHIC #1 <END> g02173984

313-7668 VALVE GP-SOLENOID

S/N: TNS1-UP
24-VOLT
PART OF 367-9496, 451-5878, 463-8679 VALVE GP-CONTROL, 451-5876 VALVE GP-MAIN CONTROL

SMCS-5132, 5479 **i04188429**

NOTE	REF NO	GRAPHIC REF	PART NUMBER	QTY	PART NAME 1 2 3 4 5 6 (PRODUCT LEVEL)	SEE PAGE
	1	1	**191-9247**	1	WASHER (19.15X31.65X2.36-MM THK)	
	2	1	**198-2914**	1	NUT (3/4-32-THD)	
	3	1	**312-8629**	1	COIL AS (24-VOLT)	
F			**3K-0360**	1	SEAL-O-RING	
F			**4K-2039**	1	SEAL-O-RING	
F			**6M-5062**	1	SEAL-O-RING	

F - NOT SHOWN

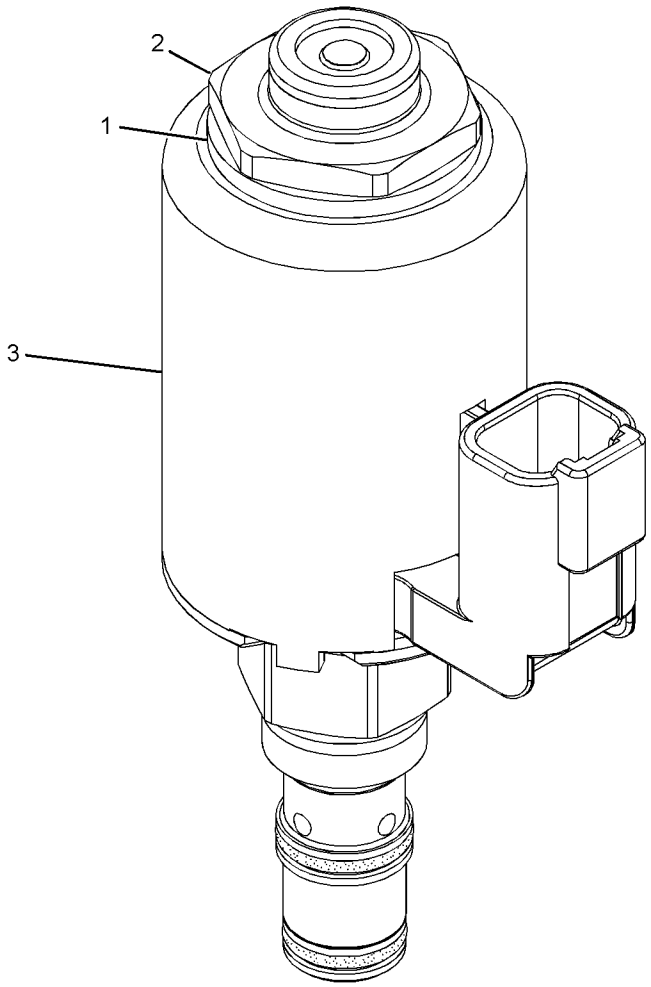

GRAPHIC #1 <END> g01637233

361-5941 VALVE GP-SOLENOID

S/N: TNS1-UP
24-VOLT
PART OF 360-0338 LINES GP-HYDRAULIC

SMCS-5132, 5479

i06284373

NOTE	REF NO	GRAPHIC REF	PART NUMBER	QTY	PART NAME 1 2 3 4 5 6 (PRODUCT LEVEL)	SEE PAGE
Y	1	1	**251-3268**	1	VALVE GP-SOLENOID (24-VOLT) (COLD START APPL, HYDRAULIC FAN)	705
J	2	1	**271-2510**	1	VALVE AS-CONTROL	
					AVAILABLE REPAIR KIT(S):	
J			**274-6217**	1	KIT-SEAL (CONTROL VALVE)	
					(INCLUDES SEAL-O-RINGS & BACK-UP RINGS)	

J - KIT MARKED J SERVICES PART(S) MARKED J
Y - SEPARATE ILLUSTRATION

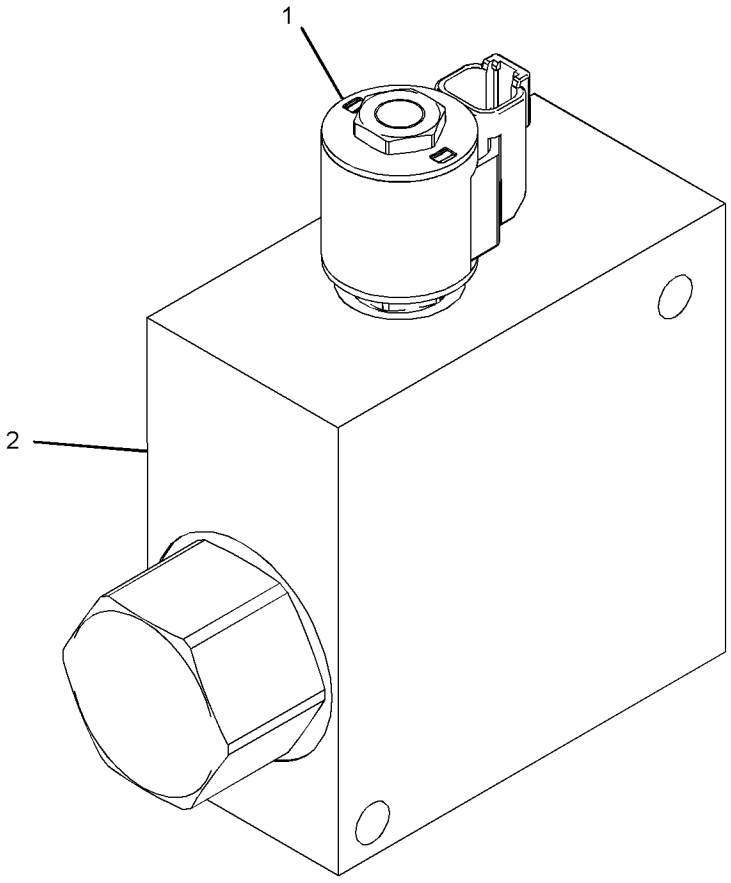

GRAPHIC #1 <END> g02380242

371-4745 VALVE GP-SOLENOID & PRESS REDC–AUTO

DIFFERENTIAL LOCK

S/N: TNS1-UP

PART OF 436-7029 CONTROL GP-DIFFERENTIAL LOCK

SMCS-5467, 5479 **i06606800**

NOTE	REF NO	GRAPHIC REF	PART NUMBER	QTY	PART NAME 1 2 3 4 5 6 (PRODUCT LEVEL)	SEE PAGE
Y	1	1	**111-9916**	1	VALVE GP-SOLENOID (PRESSURE REDUCING)	403
M	2	1	**7I-2272**	2	BOLT (M5X0.8X12-MM)	

M - METRIC PART
Y - SEPARATE ILLUSTRATION

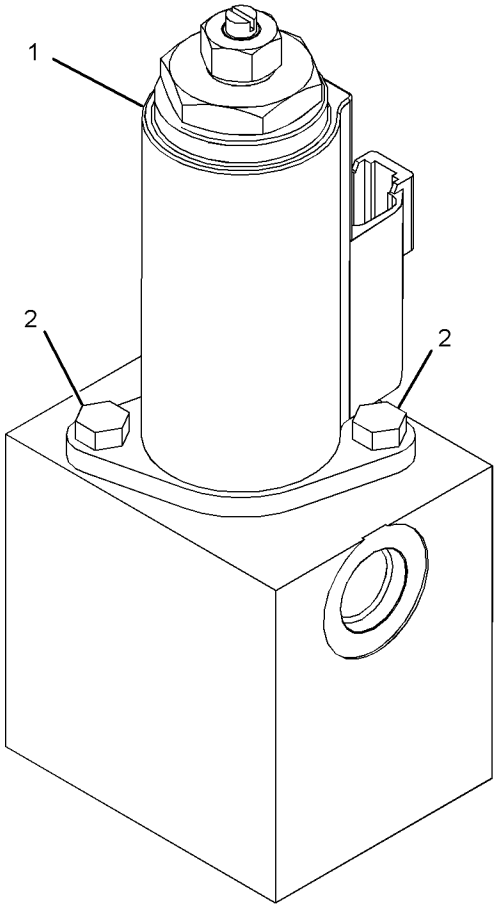

GRAPHIC #1 <END> g03500156

137-8400 VALVE GP-UNLOADING—DIRECT OPERATED

S/N: TNS1-UP

PART OF 458-2253 MANIFOLD GP-CONTROL

SMCS-5051, 5059

i04784189

NOTE	PART NUMBER	QTY	PART NAME 1 2 3 4 5 6 (PRODUCT LEVEL)	SEE PAGE
	161-6161	2	RING-BACKUP	
	2M-9780	1	SEAL-O-RING	
	161-6149	1	SEAL-O-RING	
			AVAILABLE REPAIR KIT(S):	
	133-5545	1	KIT-SEAL (RELIEF VALVE)	

<END>

374-5482 CYLINDER & MTG GP-STEERING

S/N: TNS1-UP

PART OF 456-5805, 463-8850, 463-8851, 463-8852, 463-8853 AXLE AR-FIXED & OSCILLATING

SMCS-4303 **i05803417**

NOTE	REF NO	GRAPHIC REF	PART NUMBER	QTY	PART NAME 1 2 3 4 5 6 (PRODUCT LEVEL)	SEE PAGE
Y	1	1	**359-6706**	2	CYLINDER GP-STEERING (RH, LH)	712
	2	1	**365-2565**	4	WASHER (53X110X3-MM THK)	
	3	1	**383-3725**	4	PIN AS	
	4	1	**2D-4867**	4	FITTING-GREASE (1/8-27 PTF)	
	5	1	**3B-8489**	2	FITTING-GREASE (1/8-27 PTF)	
	6	1	**7G-8839**	4	SPACER (13.5X57X6-MM THK)	
M	7	1	**8T-4192**	4	BOLT (M12X1.75X25-MM)	

M - METRIC PART
Y - SEPARATE ILLUSTRATION

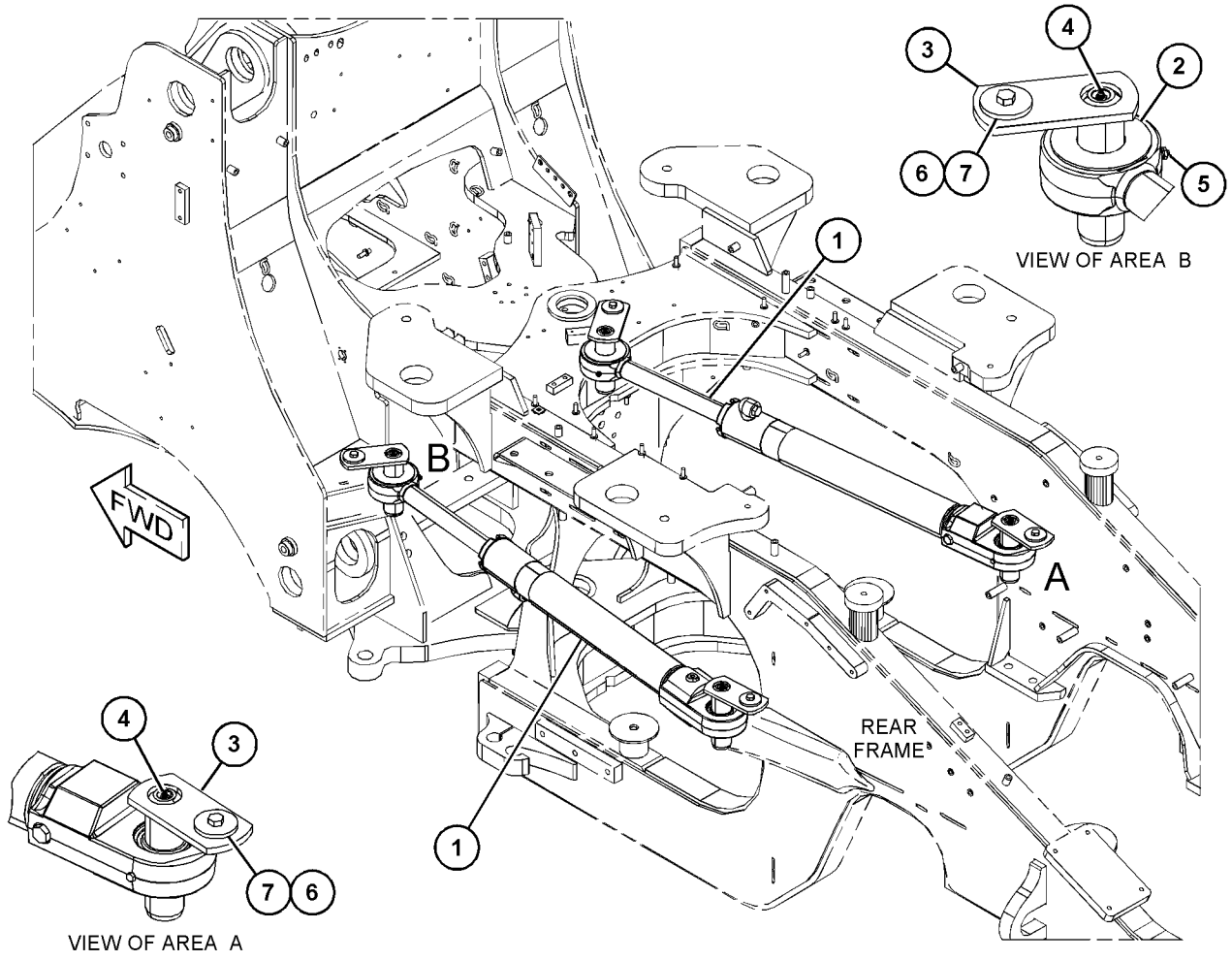

GRAPHIC #1 <END> g03678507

374-5483 CYLINDER & MTG GP-STEERING

S/N: TNS1-UP

PART OF 463-8854, 463-8856, 463-8857 AXLE AR-FIXED & OSCILLATING

SMCS-4303 **i06721571**

NOTE	REF NO	GRAPHIC REF	PART NUMBER	QTY	PART NAME 1 2 3 4 5 6 (PRODUCT LEVEL)	SEE PAGE
Y	1	1	**359-6706**	1	CYLINDER GP-STEERING (RH)	712
	2	1	**365-2565**	4	WASHER (53X110X3-MM THK)	
	3	1	**383-3725**	4	PIN AS	
Y	4	1	**395-0394**	1	CYLINDER GP-STEERING (LH)	714
	5	1	**2D-4867**	4	FITTING-GREASE (1/8-27 PTF)	
	6	1	**3B-8489**	2	FITTING-GREASE (1/8-27 PTF)	
	7	1	**7G-8839**	4	SPACER (13.5X57X6-MM THK)	
M	8	1	**8T-4192**	4	BOLT (M12X1.75X25-MM)	

M - METRIC PART
Y - SEPARATE ILLUSTRATION

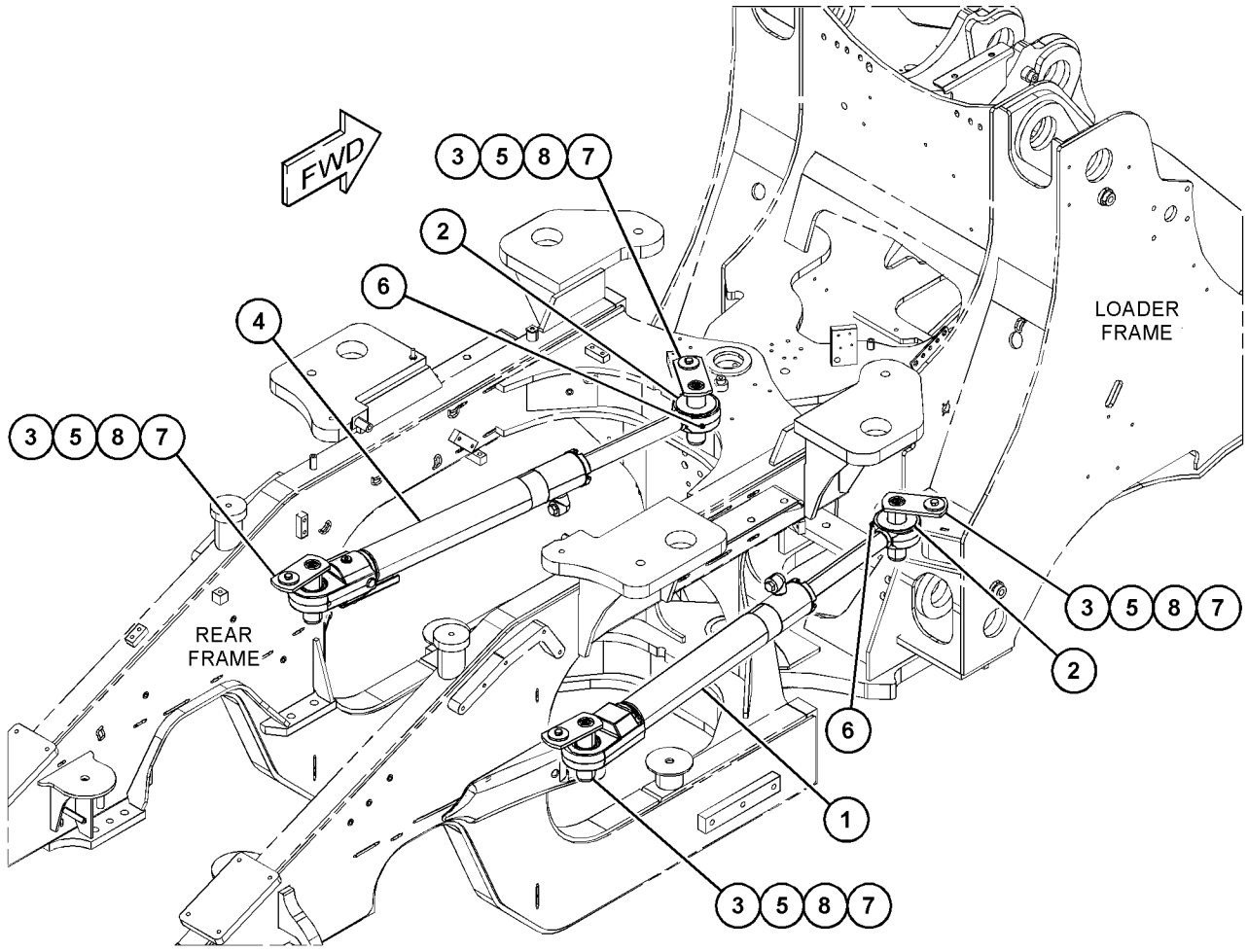

GRAPHIC #1 <END> g03678648

359-6706 CYLINDER GP-STEERING

S/N: TNS1-UP

80-MM (3.15-IN) BORE X 581.5-MM (22.9-IN) STROKE

PART OF 374-5482, 374-5483 CYLINDER & MTG GP-STEERING

SMCS-4303 **i06786034**

NOTE	REF NO	GRAPHIC REF	PART NUMBER	QTY	PART NAME 1 2 3 4 5 6 (PRODUCT LEVEL)	SEE PAGE
	1	1	**141-0709**	1	RING-WEAR	
	2	1	**161-7147**	1	SEAL-PISTON	
	3	1	**374-9656**	1	HEAD	
	4	1	**374-9657**	1	PISTON	
	5	1	**375-1154**	1	ROD AS	
		1	**1K-6985**	2	RING-RETAINING	
		1	**364-8483**	1	BEARING-ALIGNING	
	6	1	*375-1440*	1	CYLINDER AS	
		1	**3K-0360**	2	SEAL-O-RING	
		1	**9S-4185**	2	PLUG (3/4-16-THD)	
		1	**371-2180**	1	TUBE AS	
		1	*375-0400*	1	CAP AS	
		1	**1K-6985**	2	RING-RETAINING	
		1	**9M-1328**	1	BEARING-SELF-ALIGNING	
	7	1	**518-0952**	1	RING-WEAR	
	8	1	**149-0231**	1	SEAL-O-RING	
	9	1	**1H-7339**	1	SEAL-O-RING	
	10	1	**1S-0668**	1	RING	
	11	1	**2M-9780**	1	SEAL-O-RING	
	12	1	**329-5788**	1	SEAL AS-BUFFER	
	13	1	**329-5790**	1	SEAL-WIPER	
	14	1	**329-5792**	1	SEAL-U-CUP	
	15	1	**3K-0360**	1	SEAL-O-RING	
	16	1	**5M-6214**	2	PLUG (1/8-27 PTF)	
	17	1	**9S-4185**	1	PLUG (3/4-16-THD)	
	18	1	**9S-4190**	1	PLUG-O-RING (7/8-14-THD)	
M	19	1	**9X-6611**	1	SETSCREW-SOCKET (M10X1.5X16-MM)	

M - METRIC PART

359-6706 **CYLINDER GP-STEERING** (contd.) **i06786034**

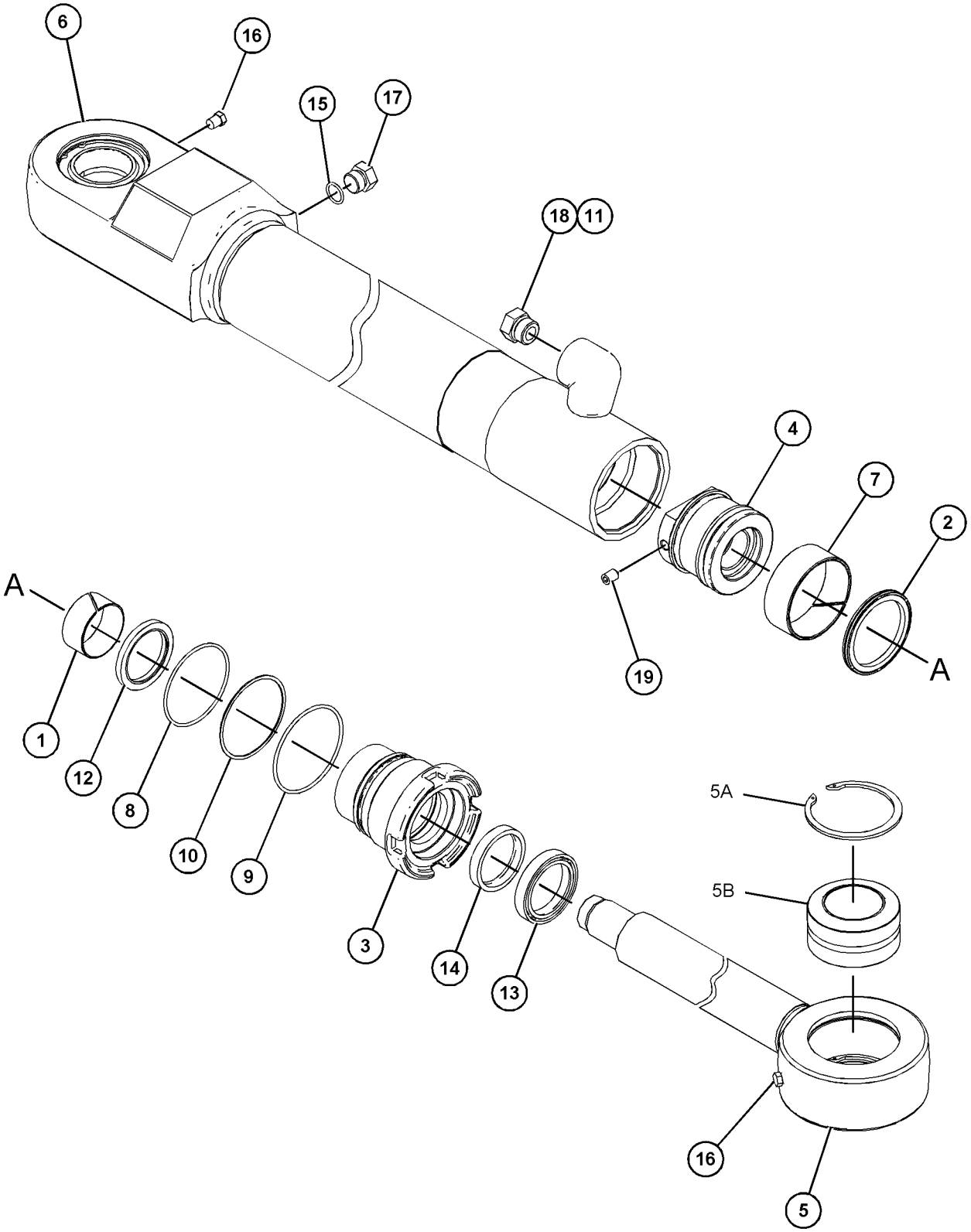

GRAPHIC #1 <END> g03690407

395-0394 CYLINDER GP-STEERING

S/N: TNS1-UP

80-MM (3.15-IN) BORE X 581.5-MM (22.9-IN) STROKE

PART OF 374-5483 CYLINDER & MTG GP-STEERING

SMCS-4303 **i06781497**

NOTE	REF NO	GRAPHIC REF	PART NUMBER	QTY	PART NAME 1 2 3 4 5 6 (PRODUCT LEVEL)	SEE PAGE
	1	1	**1H-7339**	1	SEAL-O-RING	
	2	1	**1S-0668**	1	RING	
	3	1	**2M-9780**	1	SEAL-O-RING	
	5	1	**3K-0360**	1	SEAL-O-RING	
	6	1	**5M-6214**	2	PLUG (1/8-27 PTF)	
	7	1	**8T-8737**	1	PLUG-SEAL	
	8	1	**9S-4185**	1	PLUG (3/4-16-THD)	
	9	1	**9S-4190**	1	PLUG-O-RING (7/8-14-THD)	
	10	1	**102-2244**	1	GROMMET	
	11	1	**141-0709**	1	RING-WEAR	
	12	1	**149-0231**	1	SEAL-O-RING	
	13	1	**161-7147**	1	SEAL-PISTON	
	14	1	**212-0907**	1	PLATE-CONNECTOR	
	15	1	**217-3311**	1	MAGNET (RING)	
	16	1	**242-9514**	1	CARRIER	
	17	1	**242-9515**	1	RING-RETAINING	
	18	1	**276-1816**	1	GUARD	
	19	1	**329-5788**	1	SEAL AS-BUFFER	
	20	1	**329-5790**	1	SEAL-WIPER	
	21	1	**329-5792**	1	SEAL-U-CUP	
	22	1	*330-9723*	1	PLUG AS	
		1	**228-7100**	1	SEAL-O-RING	
		1	**241-6157**	1	PLUG	
	23	1	**370-9892**	1	ROD AS	
	23A	1	**1K-6985**	2	RING-RETAINING	
	23B	1	**364-8483**	1	BEARING-ALIGNING	
	24	1	**374-9656**	1	HEAD	
	25	1	**374-9657**	1	PISTON	
	26	1	**395-0393**	1	CYLINDER AS-STEERING	
	26A	1	**1K-6985**	2	RING-RETAINING	
	26B	1	**9M-1328**	1	BEARING-SELF-ALIGNING	
	27	1	**395-0395**	1	SENSOR GP-POSITION (STEERING)	
		1	**118-8586**	1	SEAL-O-RING	
		1	**420-5767**	1	RING-BACKUP	
	28	1	**518-0952**	1	RING-WEAR	
	29	1	**102-8804**	1	KIT-RECEPTACLE (4-PIN)	
					(INCLUDES RECEPTACLE AS & WEDGE)	
	30	1	**3V-2431**	2	WASHER (10.2X16X2-MM THK)	
	31	1	**4S-5565**	2	BOLT (3/8-16X0.875-IN)	
M	33	1	**495-5314**	1	SETSCREW-SOCKET (M5X0.8X20-MM)	
M	34	1	**9X-6611**	1	SETSCREW-SOCKET (M10X1.5X16-MM)	
E	35	1	**9X-1386**		SLEEVE (7-CM)	

E - ORDER BY THE CENTIMETER
M - METRIC PART

395-0394 **CYLINDER GP-STEERING (**contd.**)** **i06781497**

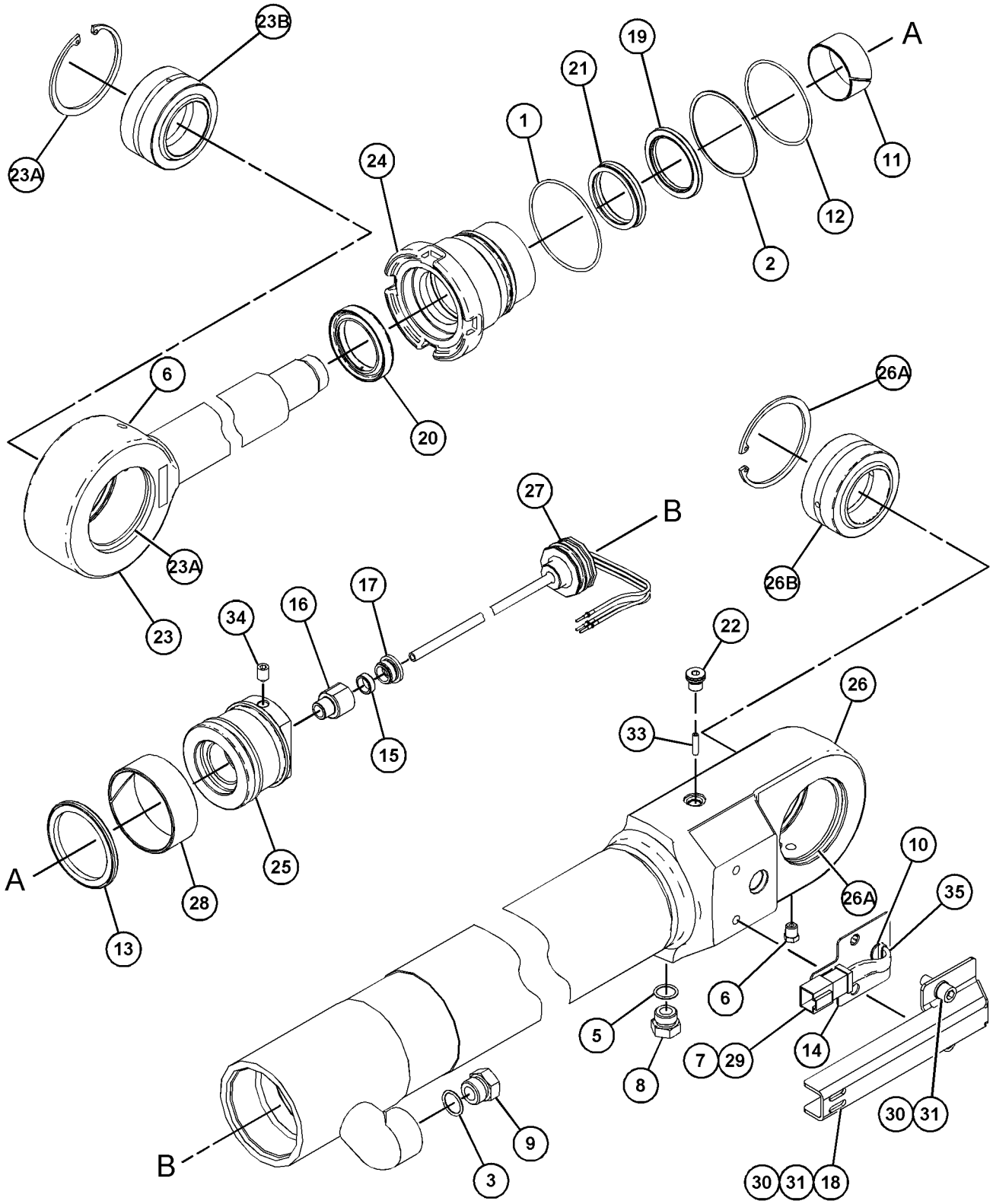

GRAPHIC #1 <END> g06115746

360-0323 LINES GP-SECONDARY STEERING

S/N: TNS1-UP

PART OF 463-8869 STEERING AR-SECONDARY

SMCS-4304 **i06721764**

NOTE	REF NO	GRAPHIC REF	PART NUMBER	QTY	PART NAME 1 2 3 4 5 6 (PRODUCT LEVEL)	SEE PAGE
C	1	1	**3S-2093**	1	STRAP-CABLE	
C	2	1	**7K-1181**	3	STRAP-CABLE (5.72-MM DIA)	
	3	1	**8C-3206**	8	FLANGE-HALF	
	4	1	*153-6237*	2	ELBOW AS	
					(EACH INCLUDES)	
		1	**3D-2824**	1	SEAL-O-RING	
		1	**6V-9004**	1	ELBOW	
		1	**6V-9746**	1	SEAL-O-RING	
	5	1	**224-9222**	1	BRACKET	
	6	1	**344-7391**	1	SENSOR GP-PRESSURE (SECONDARY STEERING)	
I	7	1	**384-9484**	1	HOSE AS	
I	8	1	**391-6991**	1	HOSE AS	
Y	9	1	**396-9028**	1	VALVE GP-SECONDARY STEERING (WITH MANIFOLD)	728
	10	1	**419-5574**	1	SENSOR GP-PRESSURE (SECONDARY STEERING)	
I	11	1	**450-5485**	1	HOSE AS	
	12	1	**450-5486**	1	BRACKET AS	
M		1	**8T-3490**	3	NUT-WELD (M10X1.5-THD)	
I	13	1	**452-7183**	1	HOSE AS	
CI	14	1	**463-8118**	1	HOSE AS	
M	15	1	**101-3129**	1	STUD (M10X1.5-THD)	
	16	1	**132-5789**	1	CLIP	
	17	1	*148-8372*	1	ELBOW AS	
		1	**2M-9780**	1	SEAL-O-RING	
		1	**6V-8398**	1	SEAL-O-RING	
		1	**6V-8721**	1	ELBOW	
	18	1	**149-7738**	2	CLIP	
	19	1	**178-3620**	1	STRAP-DUAL CLAMP	
C	20	1	**198-4777**	1	WASHER-HARD (11X25X10-MM THK)	
	21	1	**1J-9671**	1	SEAL-O-RING	
C	22	1	**1S-0994**	2	CLIP	
	23	1	**204-2281**	2	STRAP-CABLE	
	24	1	**206-2423**	1	SADDLE	
M	25	1	**311-8193**	4	BOLT (M10X1.5X45-MM)	
CM	26	1	**344-5675**	4	NUT (M10X1.5-THD)	
	27	1	**345-3753**	1	MOUNTING-CABLE TIE	
	28	1	**3J-1907**	1	SEAL-O-RING	
	29	1	**4J-0520**	4	SEAL-O-RING	
C	30	1	**7D-1553**	1	CLIP	
C	31	1	**7S-3916**	1	CLIP (TAB)	
C	32	1	**7S-3919**	1	CLIP (SLOT)	
C	33	1	**7X-7729**	7	WASHER (11X25X3-MM THK)	
C	34	1	**8T-4121**	23	WASHER-HARD (11X21X2.5-MM THK)	
M	35	1	**8T-4136**	3	BOLT (M10X1.5X25-MM)	
CM	36	1	**8T-4182**	1	BOLT (M10X1.5X45-MM)	
CM	37	1	**8T-4195**	2	BOLT (M10X1.5X30-MM)	
CM	38	1	**8T-4196**	12	BOLT (M10X1.5X35-MM)	
M	39	1	**8T-6685**	3	BOLT (M10X1.5X110-MM)	

360-0323 **LINES GP-SECONDARY STEERING (**contd.**)** **i06721764**

NOTE	REF NO	GRAPHIC REF	PART NUMBER	QTY	PART NAME 1 2 3 4 5 6 (PRODUCT LEVEL)	SEE PAGE

C - CHANGE FROM PREVIOUS TYPE
I - REFER TO HYDRAULIC INFORMATION SYSTEM
M - METRIC PART
Y - SEPARATE ILLUSTRATION

360-0323 **LINES GP-SECONDARY STEERING** (contd.) **i06721764**

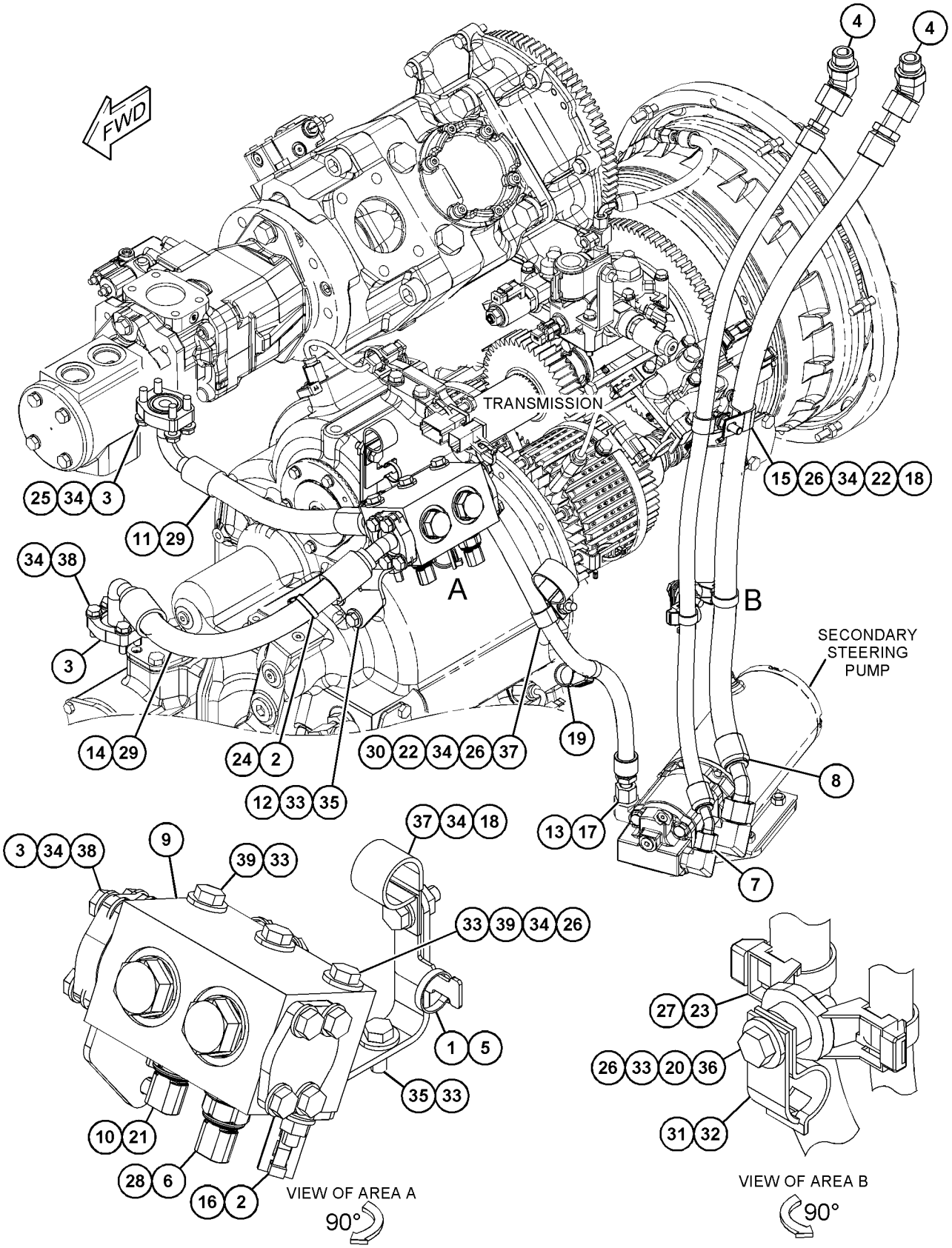

GRAPHIC #1 <END> g06013286

360-0306 LINES GP-STEERING

S/N: TNS1-UP

PART OF 456-5818 STEERING AR, 463-8869 STEERING AR-SECONDARY

SMCS-4304 **i06779875**

NOTE	REF NO	GRAPHIC REF	PART NUMBER	QTY	PART NAME 1 2 3 4 5 6 (PRODUCT LEVEL)	SEE PAGE
	1	1,2	**7K-1181**	10	STRAP-CABLE (5.72-MM DIA)	
M	2	2	**146-6581**	2	BOLT-FLAT HEAD (M12X1.75X72-MM)	
	3	1	**192-5017**	1	BRACKET AS	
	4	2	*250-1417*	1	ELBOW AS	
		2	**3J-1907**	2	SEAL-O-RING	
		2	**6V-8397**	4	SEAL-O-RING	
		2	**250-1416**	2	ELBOW	
	5	1	*250-1467*	1	CONNECTOR AS	
		1	**3J-7354**	1	SEAL-O-RING	
		1	**4J-5477**	1	SEAL-O-RING	
		1	**7I-8663**	1	CONNECTOR	
	6	1	**294-5076**	1	PLATE AS	
Y	7	2	**296-5662**	2	VALVE GP-STEERING NEUTRALIZER	734
	8	2	*309-5127*	2	ELBOW AS	
					(EACH INCLUDES)	
		2	**6V-8397**	1	SEAL-O-RING	
		2	**152-3411**	1	ELBOW	
	10	1	**360-0370**	1	HOSE	
	11	1	**360-0371**	1	ELBOW	
	12	1	**360-0374**	2	TUBE AS	
	13	1	**360-0377**	1	BRACKET AS	
I	14	1	**360-0384**	1	HOSE AS	
Y	15	2	*441-3485*	1	VALVE GP-STEERING	733
	16	2	**384-9453**	1	BRACKET AS	
I	17	1	**384-9478**	1	HOSE AS	
I	19	1	**384-9532**	2	HOSE AS	
I	20	1	**384-9533**	2	HOSE AS	
I	21	2	**391-6966**	1	HOSE AS	
I	22	2	**391-6967**	1	HOSE AS	
I	23	2	**391-6969**	1	HOSE AS	
I	24	2	**391-6970**	1	HOSE AS	
I	25	1	**415-7499**	1	HOSE AS	
I	26	1	**415-7500**	1	HOSE AS	
	27	2	**427-0343**	2	BRACKET	
I	28	2	**450-5493**	1	HOSE AS	
I	29	2	**450-5494**	1	HOSE AS	
	30	2	**450-5499**	1	TUBE AS	
I	31	2	**450-5500**	1	HOSE AS	
	32	1	**452-7174**	1	HOSE AS	
	33	1	*148-8315*	2	CONNECTOR AS	
					(EACH INCLUDES)	
		1	**2M-9780**	1	SEAL-O-RING	
		1	**6V-8642**	1	CONNECTOR	
		1	**7J-9108**	1	SEAL-O-RING	
	34	2	*148-8336*	2	CONNECTOR AS (45-DEG ELBOW)	
					(EACH INCLUDES)	
		2	**3J-1907**	1	SEAL-O-RING	
		2	**6V-8397**	1	SEAL-O-RING	

360-0306 **LINES GP-STEERING (**contd.**)** **i06779875**

NOTE	REF NO	GRAPHIC REF	PART NUMBER	QTY	PART NAME 1 2 3 4 5 6 (PRODUCT LEVEL)	SEE PAGE
		2	**6V-8636**	1	CONNECTOR	
	35	1,2	*148-8340*	4	CONNECTOR AS	
					(EACH INCLUDES)	
		1,2	**3K-0360**	1	SEAL-O-RING	
		1,2	**6V-8398**	1	SEAL-O-RING	
		1,2	**6V-8639**	1	CONNECTOR	
	36	1	*148-8351*	1	ELBOW AS	
		1	**4J-5477**	1	SEAL-O-RING	
		1	**6V-9849**	1	ELBOW	
	37	2	*148-8353*	2	ELBOW AS	
					(EACH INCLUDES)	
		2	**3J-1907**	1	SEAL-O-RING	
		2	**6V-8397**	1	SEAL-O-RING	
		2	**6V-9001**	1	ELBOW	
	38	2	*148-8363*	1	ELBOW AS	
		2	**3K-0360**	1	SEAL-O-RING	
		2	**6V-8397**	1	SEAL-O-RING	
		2	**6V-9876**	1	ELBOW	
	39	2	*148-8365*	1	ELBOW AS	
		2	**3J-1907**	1	SEAL-O-RING	
		2	**6V-8398**	1	SEAL-O-RING	
		2	**8T-6876**	1	ELBOW	
	40	2	*148-8371*	1	ELBOW AS	
		2	**6V-8397**	1	SEAL-O-RING	
		2	**8C-8988**	1	ELBOW	
	42	1	*150-4048*	2	ELBOW AS	
					(EACH INCLUDES)	
		1	**3K-0360**	1	SEAL-O-RING	
		1	**6V-8722**	1	ELBOW	
		1	**7J-9108**	1	SEAL-O-RING	
	43	2	*155-3502*	1	ADAPTER AS	
		2	**3E-7403**	1	ADAPTER	
		2	**6V-8398**	1	SEAL-O-RING	
	44	1	*164-7908*	1	ELBOW AS	
		1	**3J-7354**	1	SEAL-O-RING	
		1	**6V-8397**	1	SEAL-O-RING	
		1	**8T-7546**	1	ELBOW	
	45	1	*165-4934*	2	PLUG AS	
					(EACH INCLUDES)	
		1	**6V-8397**	1	SEAL-O-RING	
		1	**6V-9508**	1	PLUG (11/16-16-THD)	
	46	1	**091-9035**	1	SPACER (11X25X20-MM THK)	
	47	2	**204-2281**	1	STRAP-CABLE	
	48	1,2	**206-2423**	5	SADDLE	
	49	1	*268-1646*	1	UNION AS-CROSS	
		1	**3K-0360**	1	SEAL-O-RING	
		1	**6V-8398**	3	SEAL-O-RING	
		1	**268-1645**	1	CROSS	
	50	2	**297-1546**	1	CLIP	
M	51	2	**329-3356**	2	NUT (M12X1.75-THD)	
M	52	2	**344-5675**	4	NUT (M10X1.5-THD)	

360-0306 **LINES GP-STEERING (**contd.**)** **i06779875**

NOTE	REF NO	GRAPHIC REF	PART NUMBER	QTY	PART NAME 1 2 3 4 5 6 (PRODUCT LEVEL)	SEE PAGE
	53	1	**3G-8054**	2	CLIP (TAB)	
	54	1	**3G-8057**	2	CLIP (SLOT)	
	55	1	**3P-5903**	2	CLIP (TAB)	
	56	1	**3P-5904**	2	CLIP (SLOT)	
	57	2	**4D-7733**	2	CLIP	
	58	1	**4J-0520**	2	SEAL-O-RING	
	59	1	**4J-0528**	1	SEAL-O-RING	
	60	1	**6V-0974**	2	GROMMET	
	62	1	**7J-9108**	2	SEAL-O-RING	
M	63	2	**7X-2543**	1	BOLT (M10X1.5X120-MM)	
	64	1	**8C-3206**	2	FLANGE-HALF	
	65	1,2	**067-2551**	5	CLIP	
	66	1,2	**8T-4121**	37	WASHER-HARD (11X21X2.5-MM THK)	
M	67	1,2	**8T-4136**	11	BOLT (M10X1.5X25-MM)	
M	68	1	**8T-4137**	2	BOLT (M10X1.5X20-MM)	
M	69	1	**8T-4176**	1	BOLT (M12X1.75X90-MM)	
M	71	1,2	**8T-4195**	6	BOLT (M10X1.5X30-MM)	
M	72	1,2	**8T-4196**	6	BOLT (M10X1.5X35-MM)	
	73	1	**8T-4223**	3	WASHER-HARD (13.5X25.5X3-MM THK)	
M	74	1	**8T-4910**	2	BOLT (M12X1.75X60-MM)	
	75	1	**8T-4984**	2	CLAMP-HOSE	
M	76	2	**8T-5436**	2	BOLT (M10X1.5X130-MM)	
M	77	1,2	**8T-6466**	5	BOLT (M10X1.5X60-MM)	

I - REFER TO HYDRAULIC INFORMATION SYSTEM
M - METRIC PART
Y - SEPARATE ILLUSTRATION

360-0306 **LINES GP-STEERING** (contd.) **i06779875**

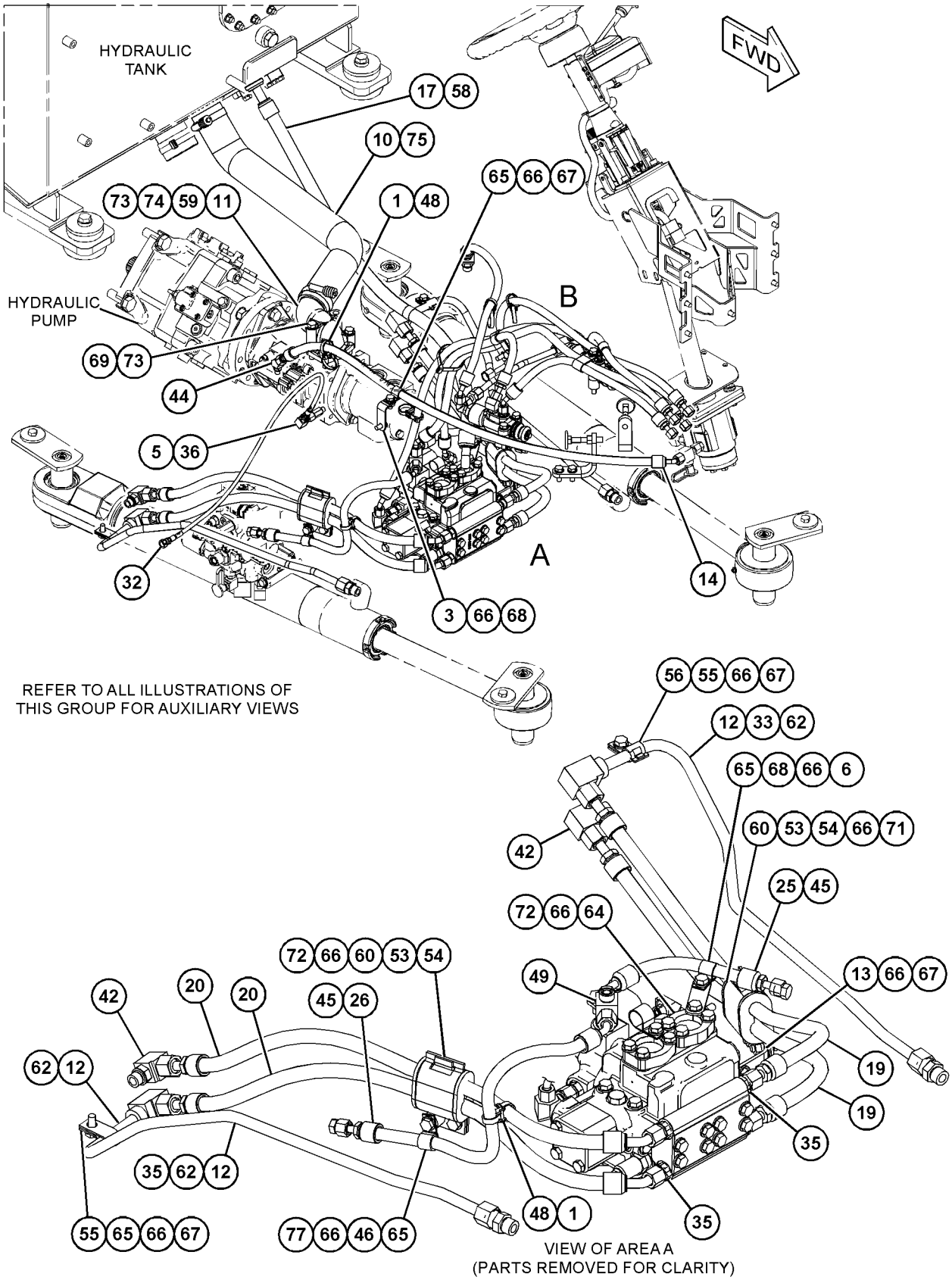

GRAPHIC #1 g06116217

360-0306 **LINES GP-STEERING (**contd.**)** **i06779875**

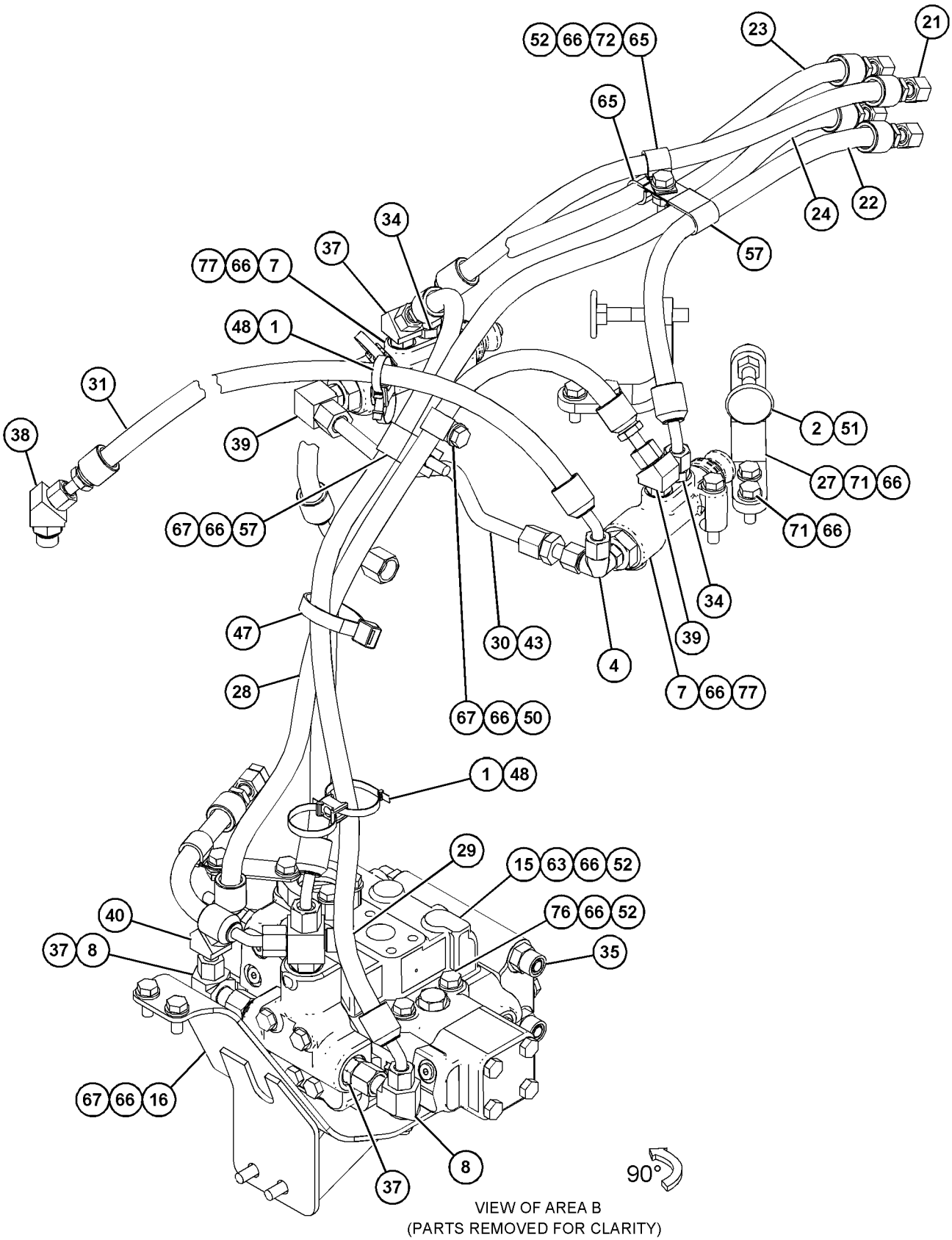

VIEW OF AREA B
(PARTS REMOVED FOR CLARITY)

GRAPHIC #2 <END> g03686337

360-0361 LINES GP-STEERING

S/N: TNS1-UP

PART OF 456-5818 STEERING AR

SMCS-4304 **i05866311**

NOTE	REF NO	GRAPHIC REF	PART NUMBER	QTY	PART NAME 1 2 3 4 5 6 (PRODUCT LEVEL)	SEE PAGE
	1	1	**3S-2093**	1	STRAP-CABLE	
	2	1	**197-6453**	1	BRACKET AS	
	3	1	**224-9222**	1	BRACKET	
	4	1	**427-0346**	1	TUBE AS	
I	5	1	**427-0347**	1	HOSE AS	
	6	1	**149-7738**	1	CLIP	
	7	1	**1P-3703**	1	SEAL-RECTANGULAR	
	8	1	**4J-0520**	1	SEAL-O-RING	
	9	1	**8C-3206**	2	FLANGE-HALF	
	10	1	**8T-4121**	10	WASHER-HARD (11X21X2.5-MM THK)	
M	11	1	**8T-4136**	1	BOLT (M10X1.5X25-MM)	
M	12	1	**8T-4137**	1	BOLT (M10X1.5X20-MM)	
M	13	1	**311-8193**	4	BOLT (M10X1.5X45-MM)	
M	14	1	**8T-4195**	4	BOLT (M10X1.5X30-MM)	
	15	1	**6V-9746**	1	SEAL-O-RING	

I - REFER TO HYDRAULIC INFORMATION SYSTEM
M - METRIC PART

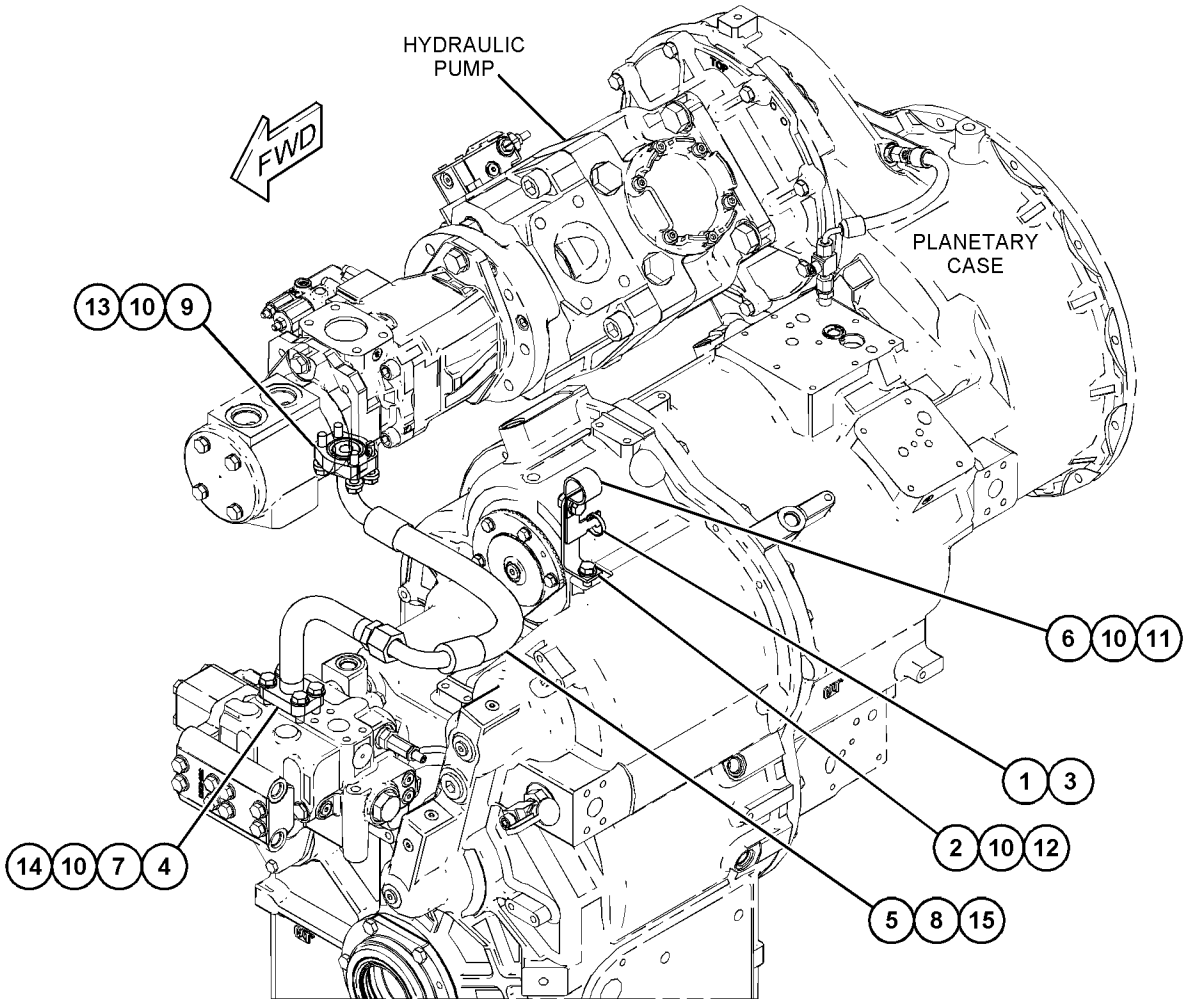

GRAPHIC #1 <END> g03703223

360-0324 PUMP & MTG GP-SECONDARY STEER

S/N: TNS1-UP

PART OF 463-8869 STEERING AR-SECONDARY

SMCS-4324 **i06721617**

NOTE	REF NO	GRAPHIC REF	PART NUMBER	QTY	PART NAME 1 2 3 4 5 6 (PRODUCT LEVEL)	SEE PAGE
Y	1	1	**378-4323**	1	PUMP GP-ELECTRIC DRIVE (SECONDARY STEERING)	726
	2	1	**391-6989**	1	BRACKET AS	
	3	1	*148-8347*	1	ELBOW AS	
		1	**3D-2824**	1	SEAL-O-RING	
		1	**6V-9007**	1	ELBOW	
		1	**6V-9746**	1	SEAL-O-RING	
	4	1	*148-8364*	2	ELBOW AS	
					(EACH INCLUDES)	
		1	**3K-0360**	1	SEAL-O-RING	
		1	**6V-8398**	1	SEAL-O-RING	
		1	**6V-8625**	1	ELBOW	
	5	1	**8T-4121**	4	WASHER-HARD (11X21X2.5-MM THK)	
M	6	1	**8T-4136**	4	BOLT (M10X1.5X25-MM)	
M	7	1	**8T-4139**	2	BOLT (M12X1.75X30-MM)	
	8	1	**8T-4223**	2	WASHER-HARD (13.5X25.5X3-MM THK)	

M - METRIC PART
Y - SEPARATE ILLUSTRATION

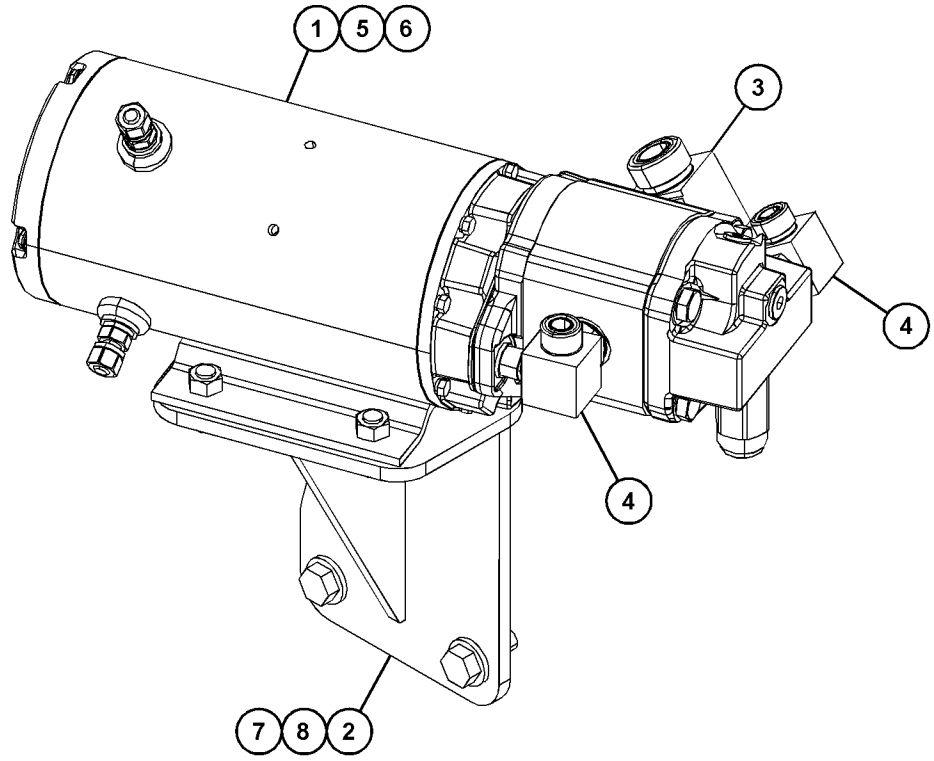

GRAPHIC #1 <END> g03680699

378-4323 PUMP GP-ELECTRIC DRIVE

S/N: TNS1-UP

PART OF 360-0324 PUMP & MTG GP-SECONDARY STEER

SMCS-4324 **i06781360**

NOTE	REF NO	GRAPHIC REF	PART NUMBER	QTY	PART NAME 1 2 3 4 5 6 (PRODUCT LEVEL)	SEE PAGE
J	1	1	**335-9250**	1	PUMP GP-GEAR	
		1	**135-5935**	1	SEAL-SHAFT	
	2	1	**117-5268**	1	GASKET	
	3	1	**389-8169**	1	MOTOR GP-ELEC HYD PUMP	
	4	1	**237-9878**	1	VALVE GP-RELIEF	
	5	1	**358-3182**	1	KIT-SEAL (SECONDARY STEERING PUMP)	
					(INCLUDES BACKUP RING & O-RINGS)	
	6	1	**388-1563**	2	BOLT-SOCKET HEAD (M10X1.5X30-MM)	
	7	1	**113-0693**	2	LOCKWASHER (10.2X18.1X2.2-MM THK)	
					AVAILABLE REPAIR KIT(S):	
J			**201-0418**	1	KIT-SEAL	
					(INCLUDES RETAINER RING, BACKUP RINGS, SEALS & O-RINGS)	

J - KIT MARKED J SERVICES PART(S) MARKED J

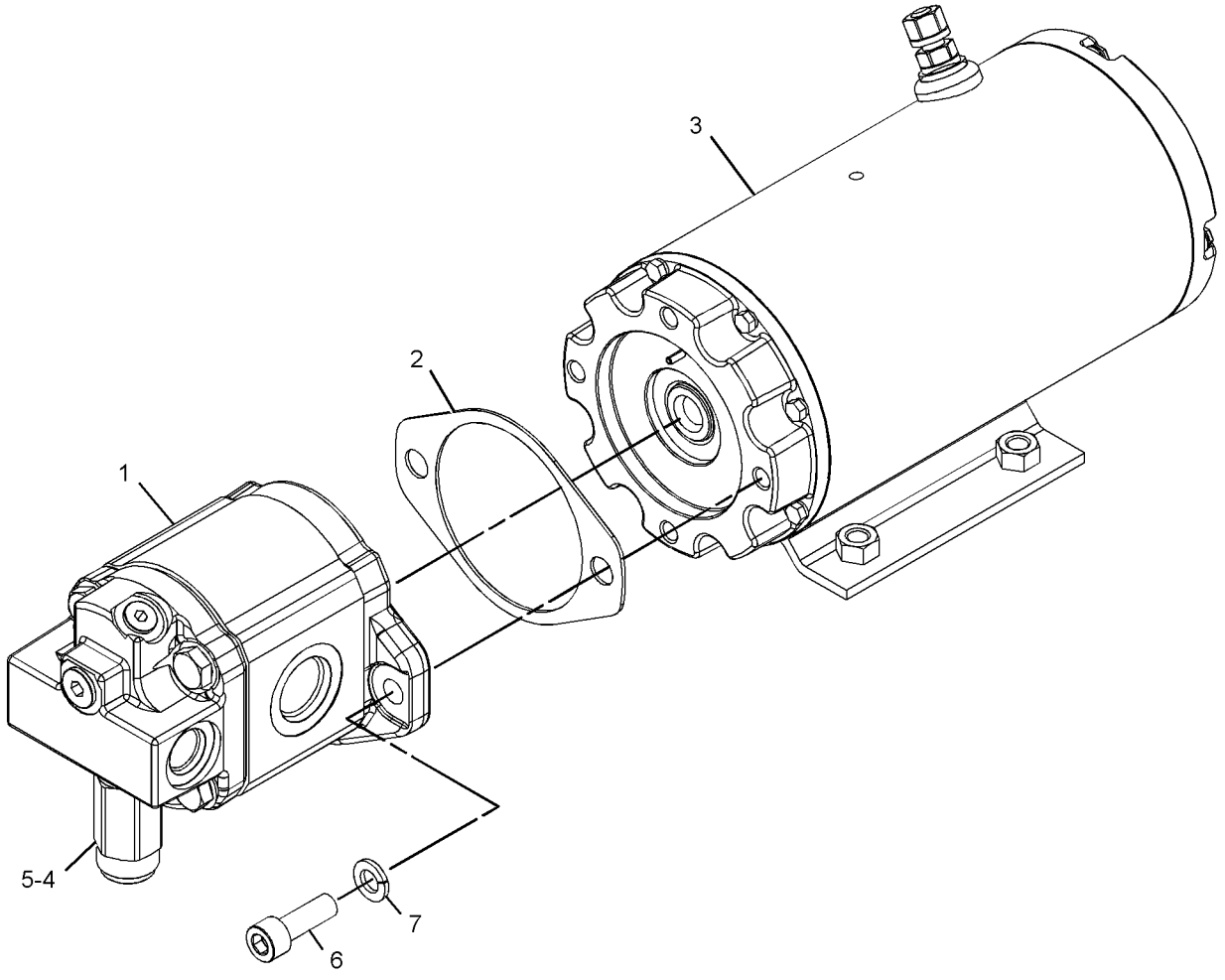

GRAPHIC #1 <END> g03077938

456-5818 STEERING AR

S/N: TNS1-UP

PART OF 492-4033, 492-4034 DISTRIBUTION AR

SMCS-4300 **i06796438**

NOTE	PART NUMBER	QTY	PART NAME 1 2 3 4 5 6 (PRODUCT LEVEL)	SEE PAGE
Y	*418-8025*	1	BATTERY & WIRING GP	135
Y	*360-0306*	1	LINES GP-STEERING	719
Y	*360-0361*	1	LINES GP-STEERING	724
Y	*436-7009*	1	ADAPTER GP-SENSOR	131
Y - SEPARATE ILLUSTRATION				

<END>

463-8869 STEERING AR-SECONDARY

S/N: TNS1-UP

SMCS-4300 **i06796477**

NOTE	PART NUMBER	QTY	PART NAME 1 2 3 4 5 6 (PRODUCT LEVEL)	SEE PAGE
Y	*418-8025*	1	BATTERY & WIRING GP	135
Y	*372-6646*	1	HARDWARE GP-REAR FRAME (SECONDARY STEERING)	482
Y	*360-0323*	1	LINES GP-SECONDARY STEERING	716
Y	*360-0306*	1	LINES GP-STEERING	719
Y	*360-0324*	1	PUMP & MTG GP-SECONDARY STEER	725
Y	*436-7009*	1	ADAPTER GP-SENSOR	131
Y	*364-7285*	1	WIRING GP-SECONDARY STEERING	263
Y - SEPARATE ILLUSTRATION				

<END>

129-8222 VALVE GP-RELIEF

S/N: TNS1-UP

PART OF 374-9878 VALVE GP-STEERING

SMCS-4322, 5069, 7428 **i06819405**

NOTE	PART NUMBER	QTY	PART NAME 1 2 3 4 5 6 (PRODUCT LEVEL)	SEE PAGE
			AVAILABLE REPAIR KIT(S):	
	6E-4288	1	KIT-SEAL (CROSSOVER RELIEF VALVE)	
			(INCLUDES SEALS & RINGS)	

<END>

396-9028 VALVE GP-SECONDARY STEERING

S/N: TNS1-UP

PART OF 360-0323 LINES GP-SECONDARY STEERING

SMCS-4339 **i05980090**

NOTE	REF NO	GRAPHIC REF	PART NUMBER	QTY	PART NAME 1 2 3 4 5 6 (PRODUCT LEVEL)	SEE PAGE
	1	1	**2S-2596**	2	SPRING	
	2	1	**100-8010**	2	VALVE-CHECK (STEERING)	
	3	1	*368-2318*	2	PLUG AS	
					(EACH INCLUDES)	
		1	**368-2317**	1	PLUG	
		1	**368-2319**	1	BUSHING	
M	4	1	**8T-4136**	8	BOLT (M10X1.5X25-MM)	
	5	1	**8T-4121**	8	WASHER-HARD (11X21X2.5-MM THK)	
	6	1	*148-8407*	1	PLUG AS	
		1	**3J-1907**	1	SEAL-O-RING	
		1	**9S-4191**	1	PLUG (9/16-18-THD)	
	7	1	**3J-7479**	2	COVER	
	8	1	**7M-8485**	2	SEAL-O-RING	
	9	1	**4J-0519**	2	SEAL-O-RING	
B	10	1	**5J-2722**	8	SHIM (1.22-MM THK)	

PARTS SHOWN IN GRAPHIC(S) WITHOUT A REFERENCE NUMBER ARE NOT SERVICED SEPARATELY

B - USE AS REQUIRED
M - METRIC PART

396-9028 **VALVE GP-SECONDARY STEERING (**contd.**)** **i05980090**

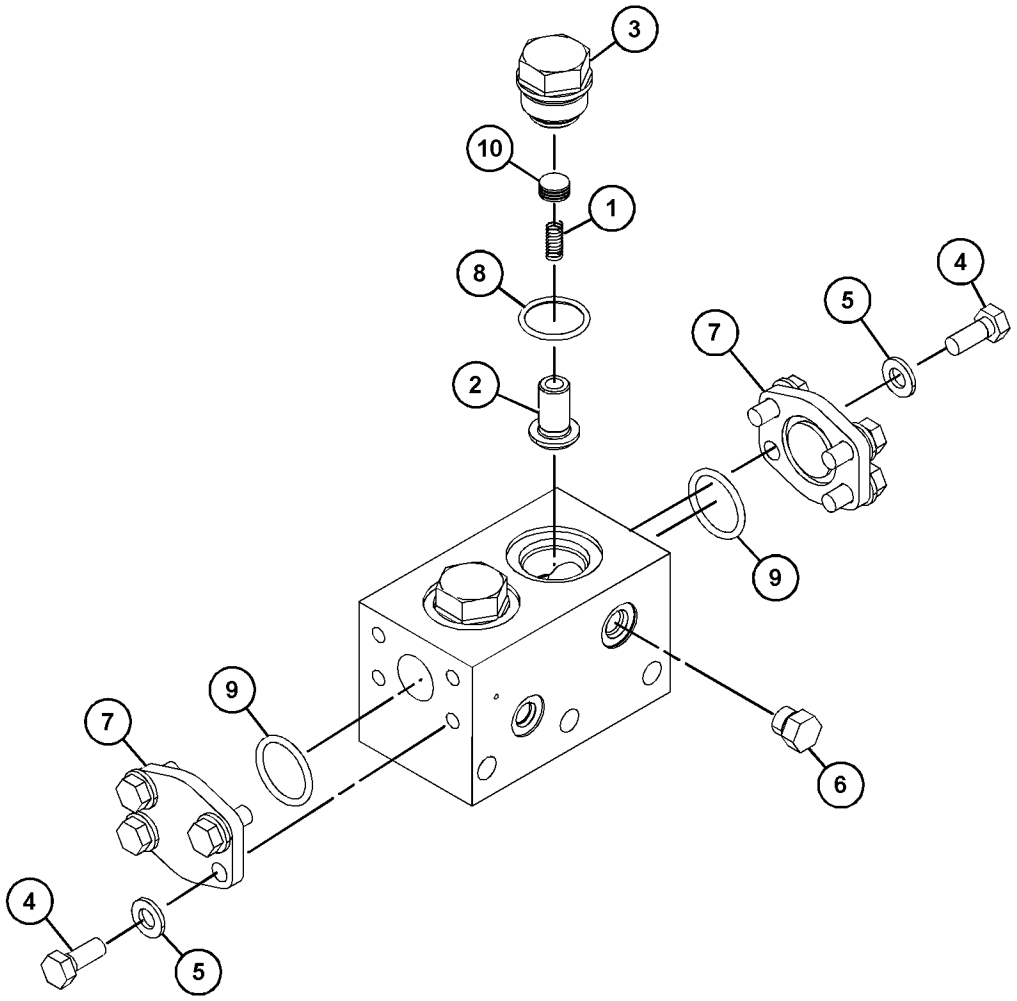

GRAPHIC #1 <END> g03495523

374-9878 VALVE GP-STEERING

S/N: TNS1-UP

PART OF 441-3485 VALVE GP-STEERING

SMCS-4307 **i05811504**

NOTE	REF NO	GRAPHIC REF	PART NUMBER	QTY	PART NAME 1 2 3 4 5 6 (PRODUCT LEVEL)	SEE PAGE
	1	2	**2S-2596**	4	SPRING	
	2	1	**6E-5397**	1	VALVE GP-SELECTOR (STEERING)	
		1	**3K-0360**	2	SEAL-O-RING	
		1	**5H-3193**	2	PIN-SPRING	
		1	**6E-5289**	2	CONNECTOR	
		1	**6E-5291**	2	SPRING	
	3	1	**6J-6506**	1	SPACER	
	4	1	**6T-6052**	1	PLUG-ORIFICE	
M	5	1	**107-0269**	1	BOLT-HEAD (M8X1.25X50-MM)	
	6	1	**7J-4321**	1	RETAINER-SPRING	
	7	2	**8J-6815**	2	PLUG-ORIFICE	
	8	2	**9J-9821**	4	SEAT	
	9	2	**9S-6154**	2	PLUG AS	
					(EACH INCLUDES)	
		2	**3J-1907**	1	SEAL-O-RING	
		2	**5H-3193**	1	PIN-SPRING	
		2	**7J-1089**	1	PLUG	
	10	1	**9T-7220**	1	COVER	
	11	1	**9T-8672**	1	RETAINER	
	12	1	**126-8473**	1	SPRING	
Y	13	1	**129-8222**	1	VALVE GP-RELIEF (STEERING CYLINDER CROSSOVER)	727
	14	1	**376-0631**	1	VALVE GP-RELIEF (PUMP BACKUP)	
	16	2	*148-8408*	1	PLUG AS	
		2	**3D-2824**	1	SEAL-O-RING	
		2	**9S-4183**	1	PLUG (1-1/16-12-THD)	
	17	1	*164-5619*	1	PLUG AS	
		1	**2M-9780**	1	SEAL-O-RING	
		1	**9S-8006**	1	PLUG (7/8-14-THD)	
	18	1,2	*183-7263*	11	PLUG AS	
					(EACH INCLUDES)	
		1,2	**3J-7354**	1	SEAL-O-RING	
		1,2	**9S-8002**	1	PLUG (7/16-20-THD)	
	19	2	**3J-1907**	2	SEAL-O-RING	
	20	2	**4B-9782**	4	BALL	
	21	1	**4J-0520**	1	SEAL-O-RING	
	22	2	**5J-2974**	2	SEAL-O-RING	
B	23	1	**6J-6516**	8	SHIM (0.01-IN THK)	
B	24	1	**6J-6517**	1	SHIM (0.12-MM THK)	
	25	1	**8C-3206**	4	FLANGE-HALF	
	26	1,2	**8F-9206**	7	SEAL-O-RING	
	27	1	**8T-4121**	8	WASHER-HARD (11X21X2.5-MM THK)	
M	28	1	**8T-4196**	10	BOLT (M10X1.5X35-MM)	
M	29	1	**8T-5005**	4	BOLT (M10X1.5X70-MM)	
M	30	1	**8T-6466**	2	BOLT (M10X1.5X60-MM)	
	31	1	**9M-1974**	1	WASHER-HARD (8.8X16X2-MM THK)	

B - USE AS REQUIRED
M - METRIC PART
Y - SEPARATE ILLUSTRATION

374-9878 **VALVE GP-STEERING (**contd.**)** **i05811504**

REFER TO ALL ILLUSTRATIONS OF
THIS GROUP FOR AUXILIARY VIEWS

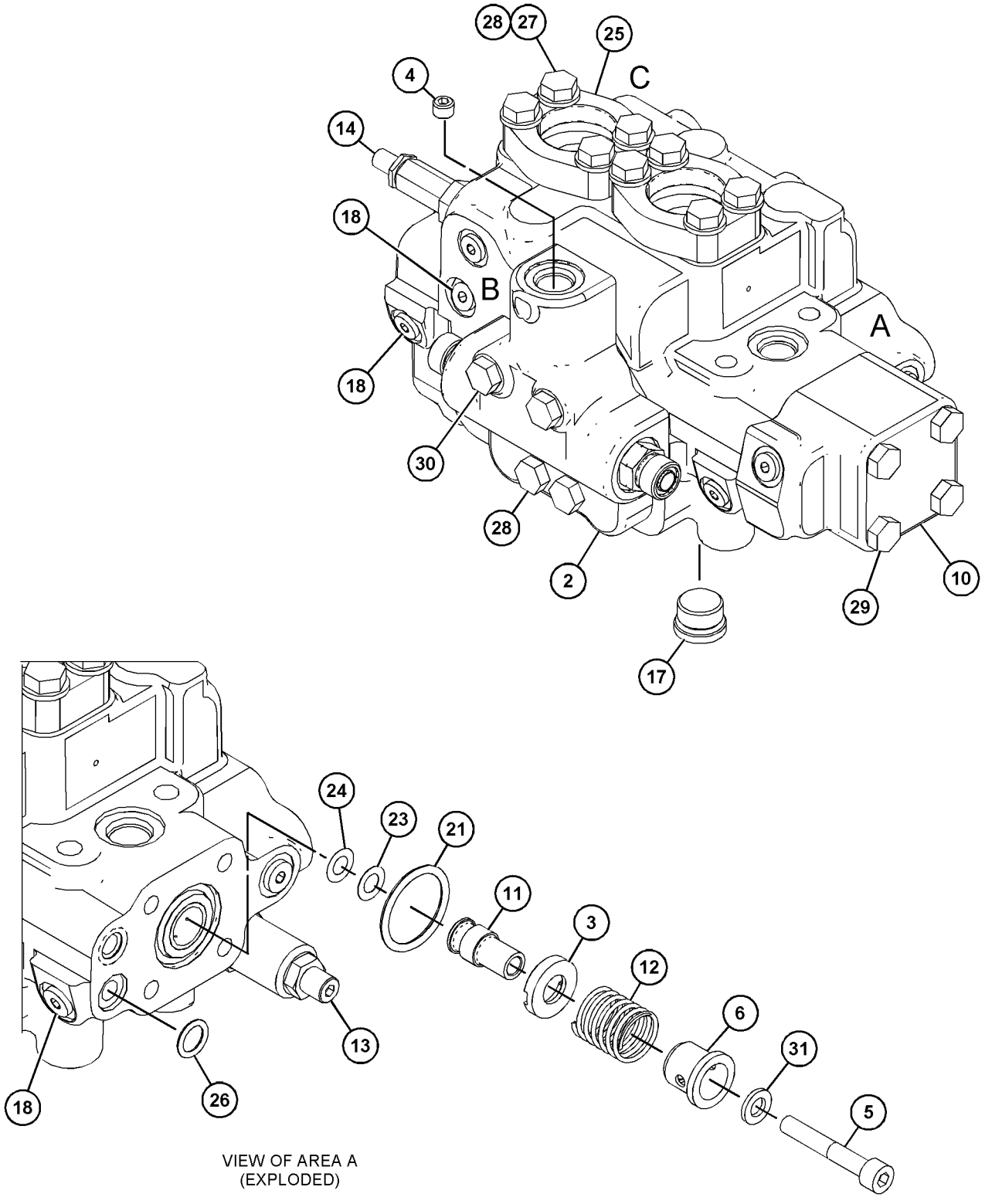

VIEW OF AREA A
(EXPLODED)

GRAPHIC #1 g03680561

374-9878 **VALVE GP-STEERING (**contd.**)** **i05811504**

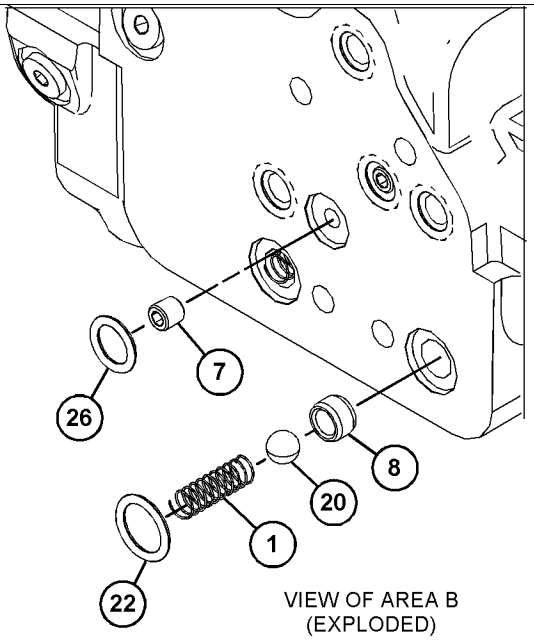

VIEW OF AREA B
(EXPLODED)

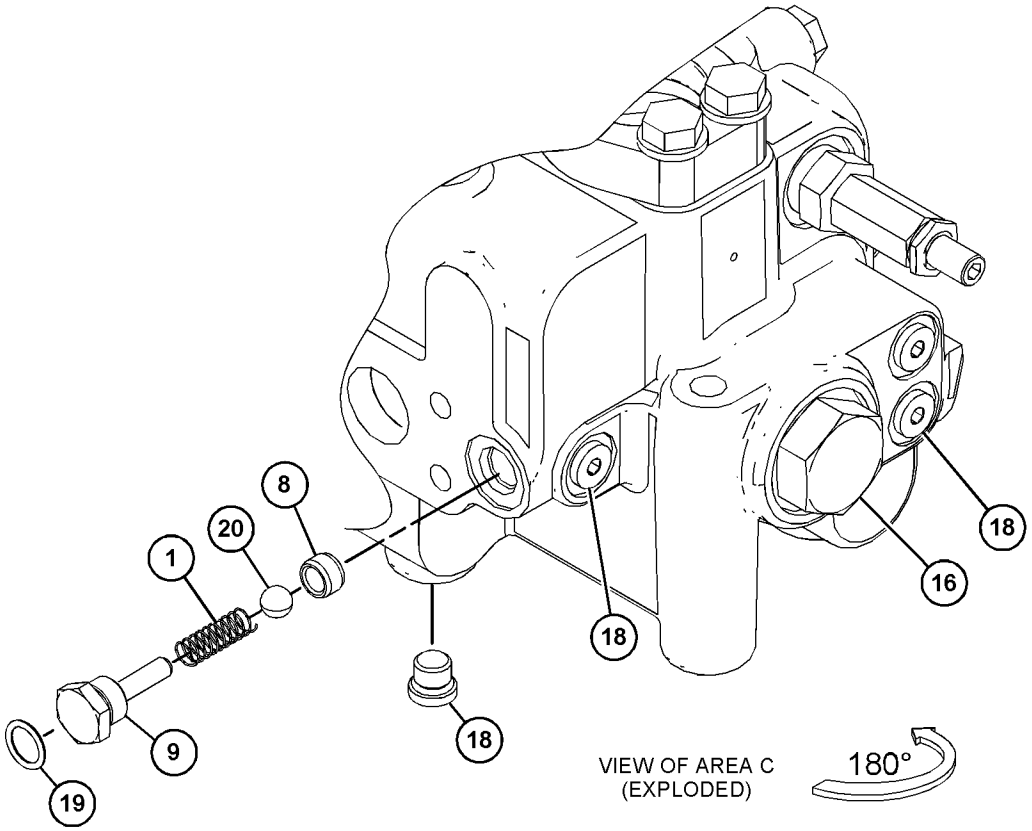

VIEW OF AREA C
(EXPLODED)

GRAPHIC #2 <END> g03680562

441-3485 VALVE GP-STEERING

S/N: TNS1-UP

PART OF 360-0306 LINES GP-STEERING

SMCS-4307 **i06779872**

NOTE	REF NO	GRAPHIC REF	PART NUMBER	QTY	PART NAME 1 2 3 4 5 6 (PRODUCT LEVEL)	SEE PAGE
M	1	1	**8T-6466**	8	BOLT (M10X1.5X60-MM)	
	2	1	**4J-0520**	2	SEAL-O-RING	
	3	1	**8T-4121**	8	WASHER-HARD (11X21X2.5-MM THK)	
	4	1	**360-0293**	1	MANIFOLD	
Y	5	1	**374-9878**	1	VALVE GP-STEERING	730

M - METRIC PART
Y - SEPARATE ILLUSTRATION

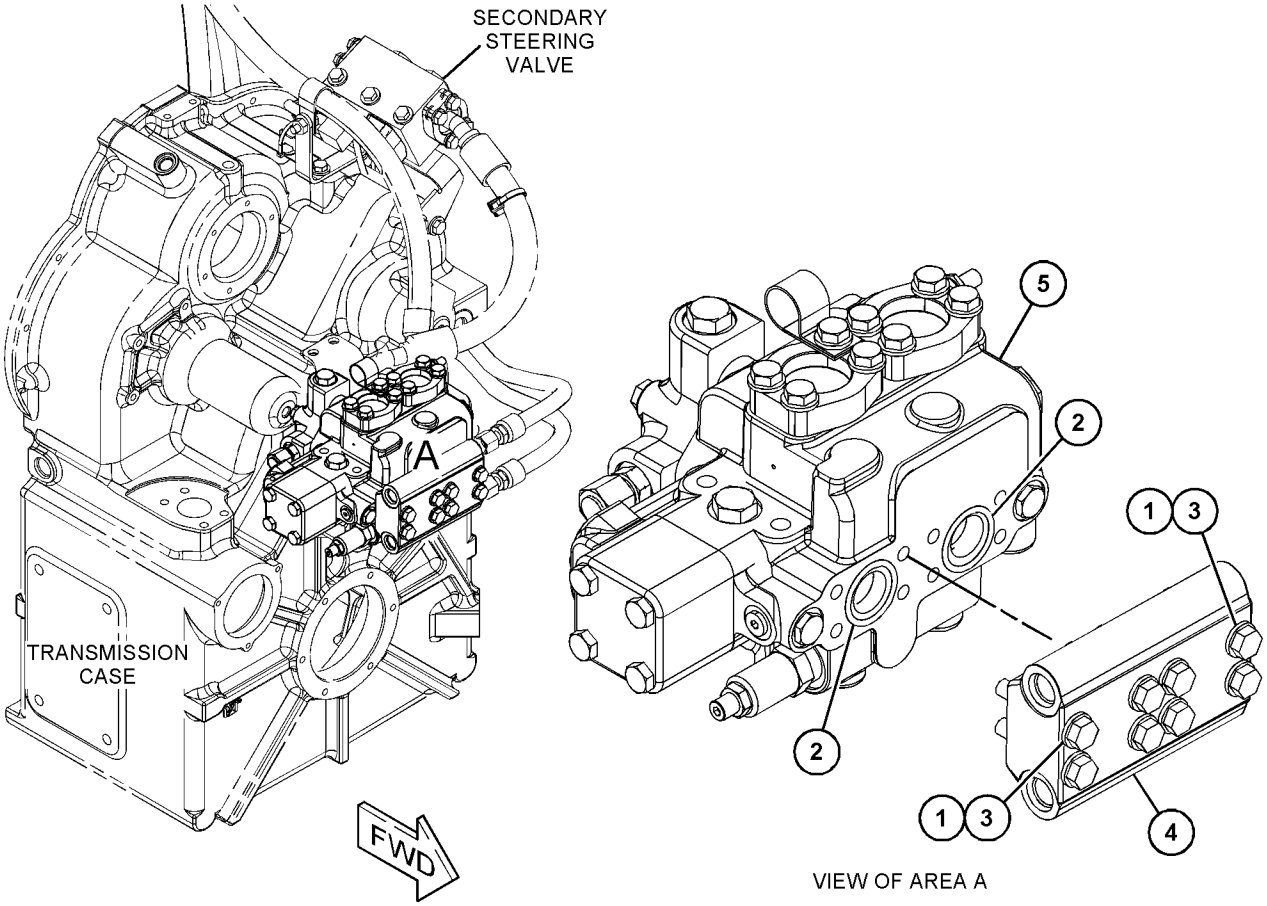

GRAPHIC #1 <END> g03841879

296-5662 VALVE GP-STEERING NEUTRALIZER

S/N: TNS1-UP

PART OF 360-0306 LINES GP-STEERING

SMCS-4330 **i06231203**

NOTE	REF NO	GRAPHIC REF	PART NUMBER	QTY	PART NAME 1 2 3 4 5 6 (PRODUCT LEVEL)	SEE PAGE
	1	1	**6J-4568**	1	BOOT	
	2	1	**3D-2824**	1	SEAL-O-RING	
	3	1	**293-5263**	1	SPRING	
	4	1	**447-5613**	1	SEAL-LIP TYPE	
					PARTS SHOWN IN GRAPHIC(S) WITHOUT A REFERENCE NUMBER ARE NOT SERVICED SEPARATELY	

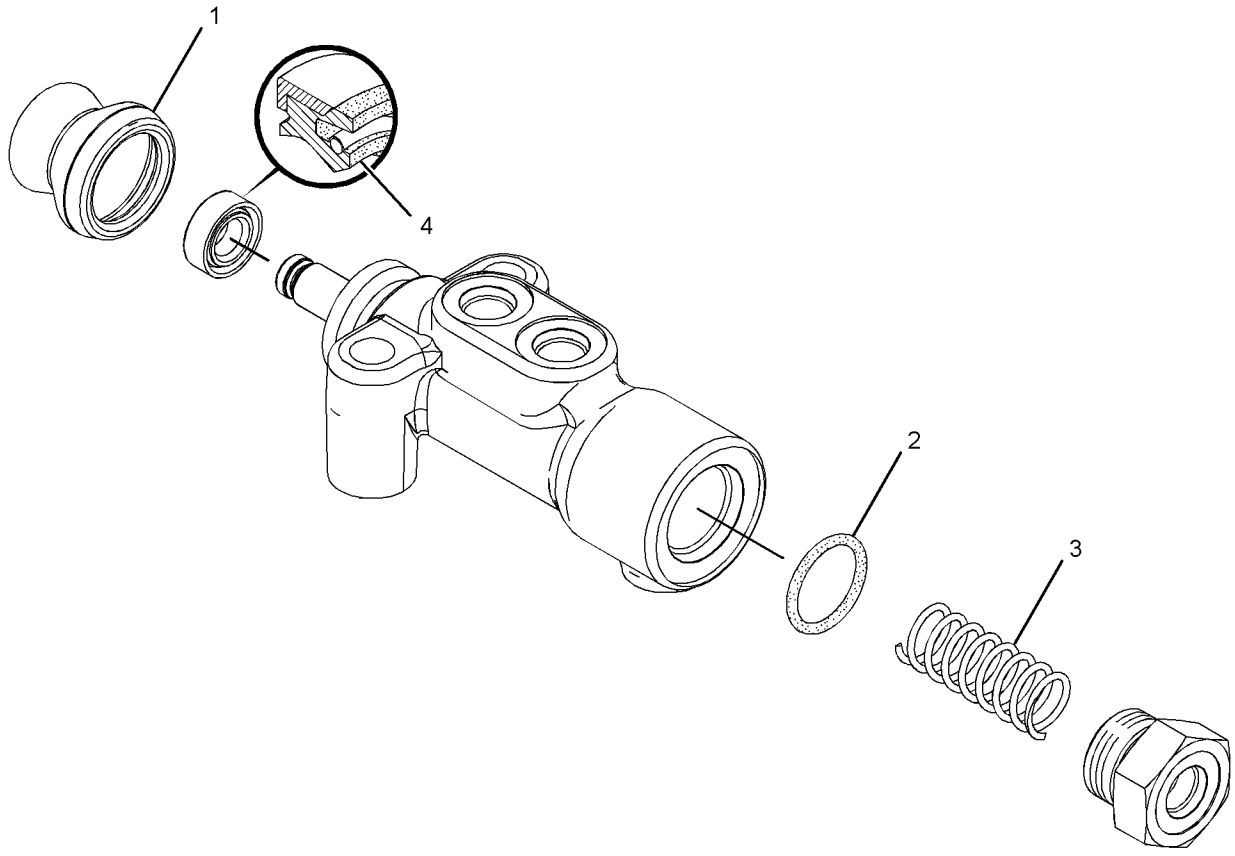

GRAPHIC #1 <END> g01955696

491-2079 ARM & BEARING AS-LIFT

S/N: TNS1-UP

PART OF 507-6190 HYDRAULIC AR, 492-4028 HYDRAULIC AR-STANDARD LIFT

SMCS-6118, 6119, 7069 **i06811134**

NOTE	REF NO	GRAPHIC REF	PART NUMBER	QTY	PART NAME 1 2 3 4 5 6 (PRODUCT LEVEL)	SEE PAGE
Y	1	1	**491-2080**	1	ARM AS-LIFT	736
	2	1	**493-5904**	2	BEARING-SLEEVE	
	3	1	**3V-2333**	2	BUSHING	
	4	1	**4V-8674**	2	BUSHING	

Y - SEPARATE ILLUSTRATION

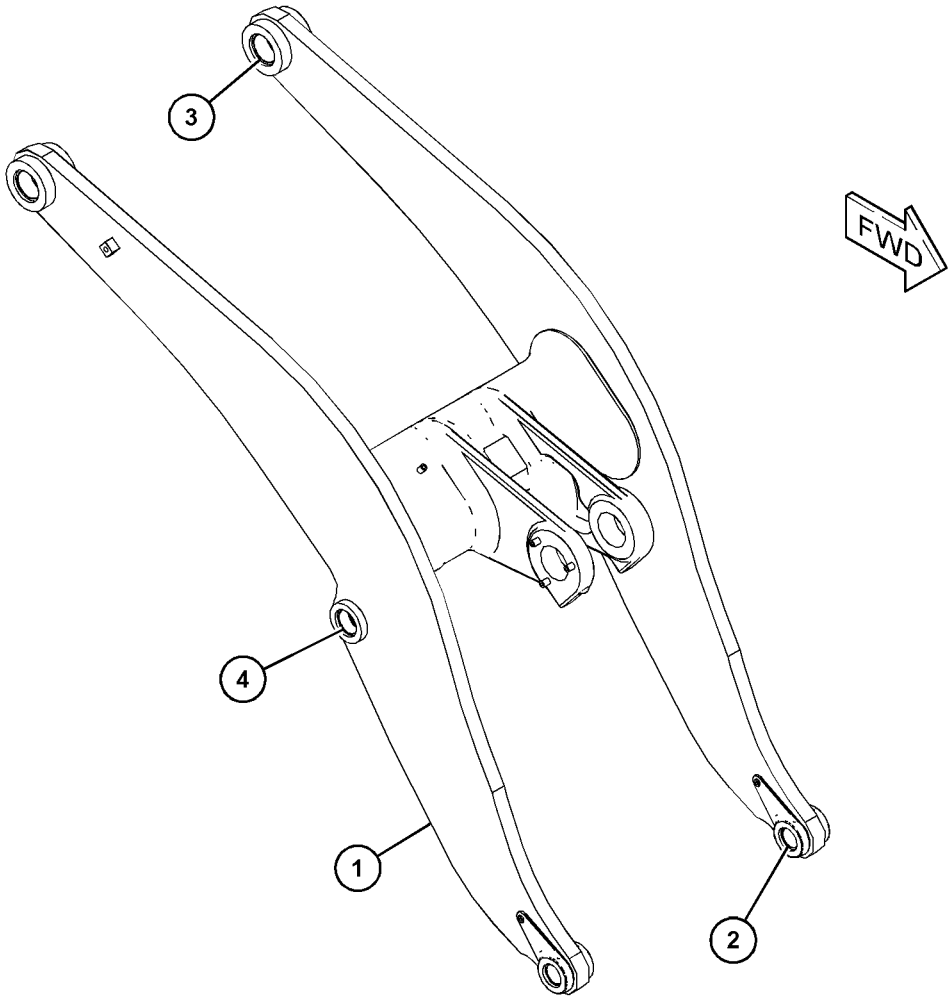

GRAPHIC #1 <END> g06126939

491-2080 ARM AS-LIFT

S/N: TNS1-UP

PART OF 491-2079 ARM & BEARING AS-LIFT

SMCS-6119 **i06815472**

NOTE	REF NO	GRAPHIC REF	PART NUMBER	QTY	PART NAME 1 2 3 4 5 6 (PRODUCT LEVEL)	SEE PAGE
M	1	1	**9R-2613**	3	BOSS-WELD (M10X1.5X25-MM)	
M	2	1	**106-1139**	1	BOSS (M20X2.5X25-MM)	
M	3	1	**116-8026**	1	BLOCK-WELD (M6X1X50-MM)	
M	4	1	**156-1817**	1	BLOCK (M16X2X31-MM)	
M	5	1	**388-5576**	4	BOSS-WELD (M10X1.5X30-MM)	

M - METRIC PART

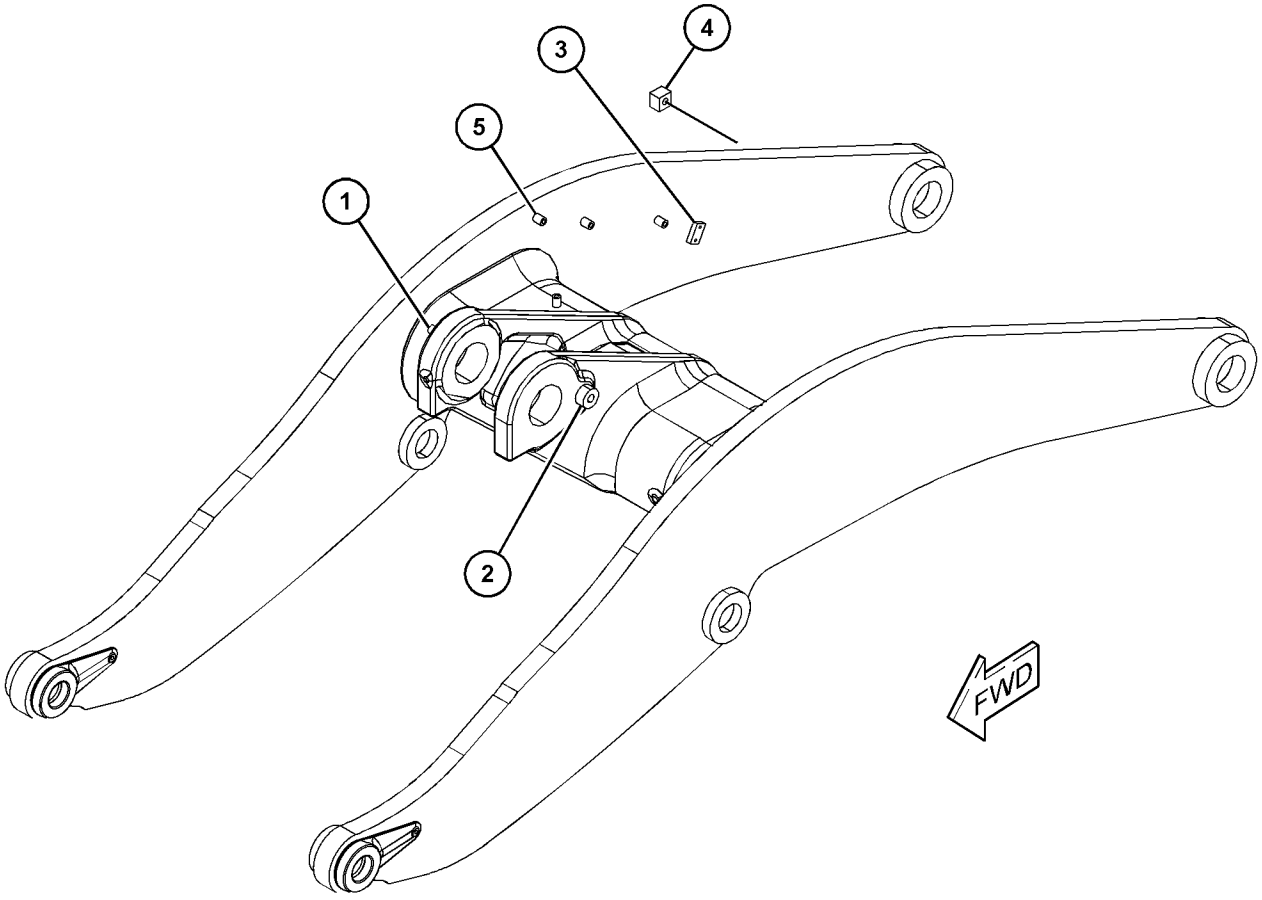

GRAPHIC #1 <END> g06128172

463-5397 BOSS GP-LIFT ARM

S/N: TNS1-UP

PART OF 492-4025 HYDRAULIC AR-3 VALVE

SMCS-6118, 6119, 6501, 7553

i06810503

NOTE	REF NO	GRAPHIC REF	PART NUMBER	QTY	PART NAME 1 2 3 4 5 6 (PRODUCT LEVEL)	SEE PAGE
	1	1	**7Y-2522**	4	PLATE	

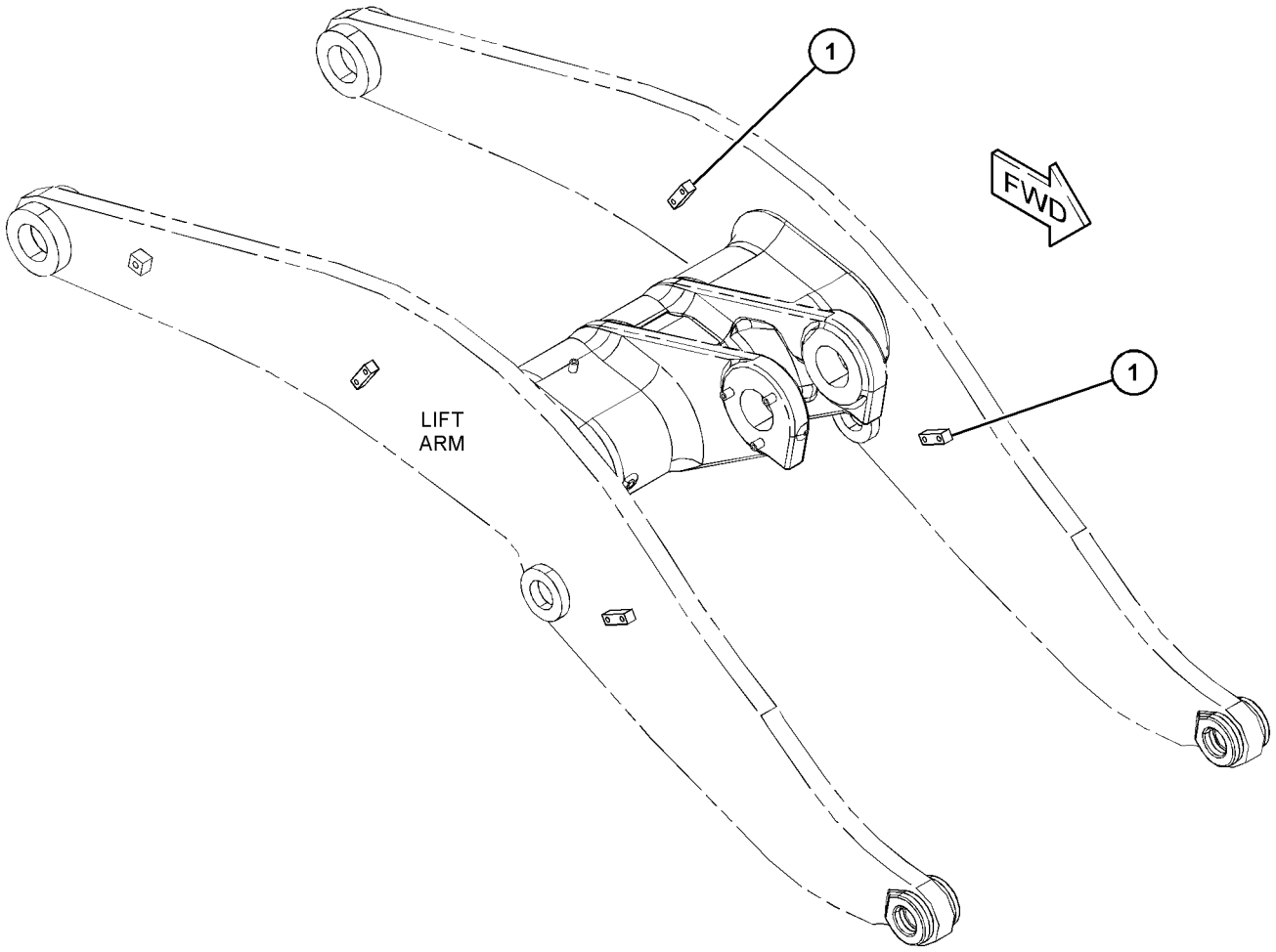

GRAPHIC #1 <END> g06040338

463-5399 BOSS GP-LIFT ARM

S/N: TNS1-UP

PART OF 463-8873 COUPLER AR-QUICK

SMCS-6118, 6119, 6501, 7553 **i06797191**

NOTE	REF NO	GRAPHIC REF	PART NUMBER	QTY	PART NAME 1 2 3 4 5 6 (PRODUCT LEVEL)	SEE PAGE
M	1	1	**163-9662**	1	BOSS-THREADED (M12X1.75-THD)	
	2	1	**9C-4935**	2	PLATE	
M	3	1	**9C-7929**	1	BLOCK (M10X1.5-MM)	
M	4	1	**9R-2821**	3	BOSS (M10X1.5X15-MM)	

M - METRIC PART

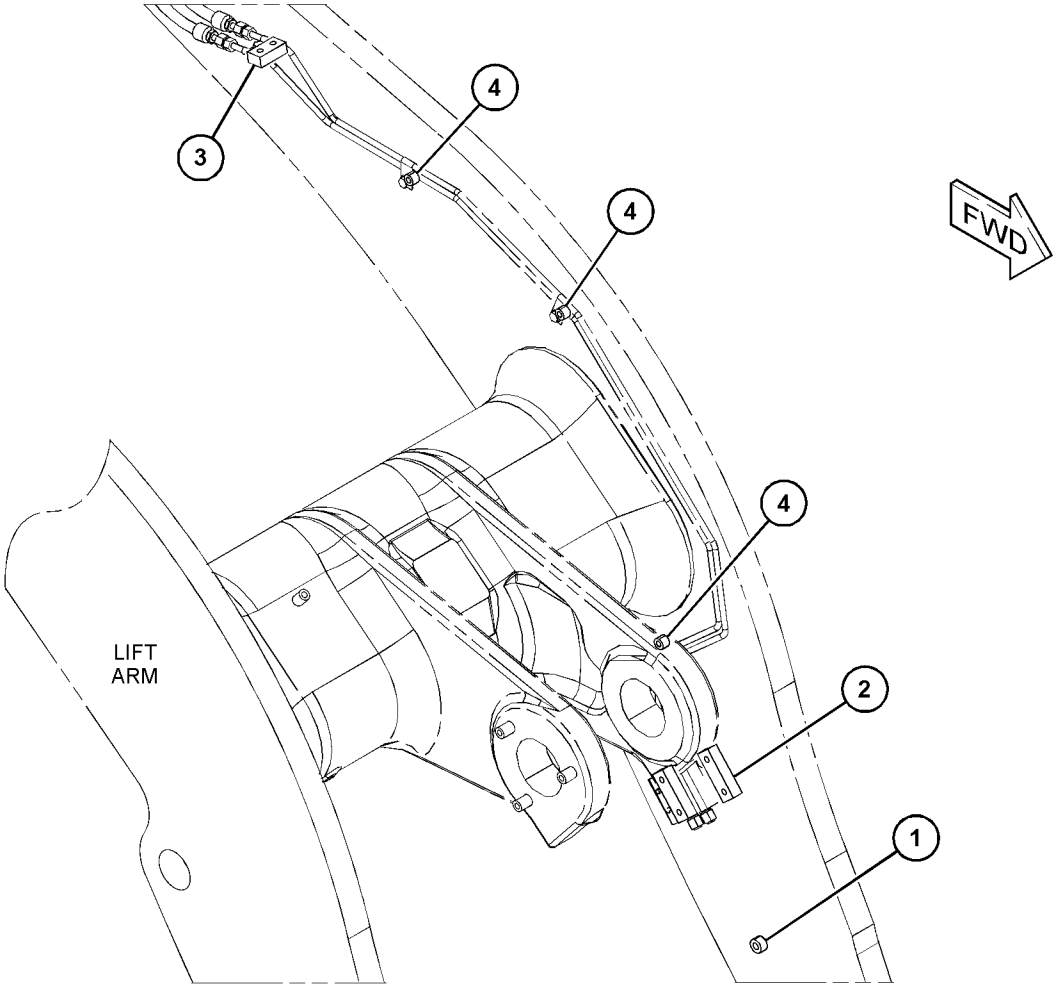

GRAPHIC #1 <END> g06030409

491-2141 BOSS GP-LIFT ARM

S/N: TNS1-UP
AUTOLUBE
PART OF 495-9704 LUBRICATION AR-AUTOMATIC

SMCS-6118, 6119, 6501, 7553 **i06811069**

NOTE	REF NO	GRAPHIC REF	PART NUMBER	QTY	PART NAME 1 2 3 4 5 6 (PRODUCT LEVEL)	SEE PAGE
	1	1	**2R-1920**	1	BLOCK	
M	2	1	**251-3104**	4	BLOCK-THREADED (M8X1.25X18-MM)	
M	3	1	**278-2076**	2	BLOCK-THREADED (M10X1.5X17.5-MM)	
M	4	1	**388-5576**	2	BOSS-WELD (M10X1.5X30-MM)	
M	5	1	**430-5327**	1	BOSS-WELD (M10X1.5X55-MM)	
	6	1	**9C-4935**	1	PLATE	

M - METRIC PART

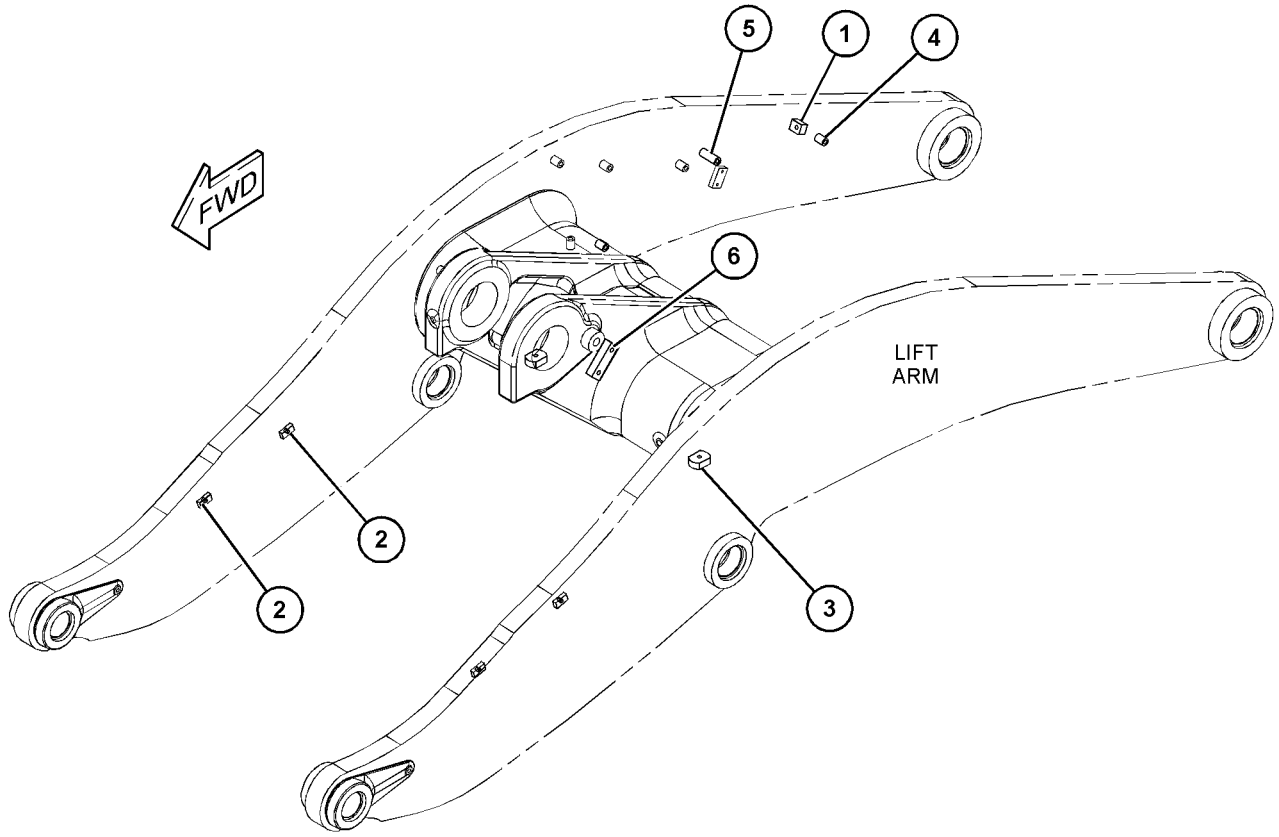

GRAPHIC #1 <END> g06126359

463-5433 LINK GP-TILT

S/N: TNS1-UP

AUTOLUBE

PART OF 492-4031 LINK GP-TILT, 495-9704 LUBRICATION AR-AUTOMATIC

SMCS-6117 **i06809526**

NOTE	REF NO	GRAPHIC REF	PART NUMBER	QTY	PART NAME 1 2 3 4 5 6 (PRODUCT LEVEL)	SEE PAGE
B	1	2	**5V-0353**	4	WASHER (65X133X1.6-MM THK)	
	2	2	**5V-1508**	1	PIN AS	
	3	2	**5V-1511**	2	PIN AS	
	4	2	**9C-0093**	1	PIN AS	
	5	1,2	**9C-7907**	7	SPACER (21.5X28X14-MM THK)	
	6	1,2	**096-6467**	6	WASHER (22X60X8-MM THK)	
	7	1	**136-9371**	4	PIN AS	
	8	1	**136-9380**	1	PIN AS	
B	9	1	**159-0268**	4	SHIM (1-MM THK)	
B	10	1	**159-0269**	4	SHIM (2-MM THK)	
	11	2	**310-1899**	1	PIN AS	
	12	1	**478-5991**	2	PIN AS	
	13	1	**346-1657**	1	PIN AS	
	14	2	**384-9550**	1	LEVER AS	
	14A	2	**5V-1386**	1	BUSHING	
	15	2	**463-5367**	1	LINK AS-TILT	
	15A	2	**3G-8779**	2	BUSHING	
	16	1	**3B-8489**	4	FITTING-GREASE (1/8-27 PTF)	
B	17	2	**5V-0354**	6	WASHER (66X133X3-MM THK)	
	18	2	**7K-9205**	4	SEAL-LIP TYPE	
	19	1	**7K-9209**	4	SEAL-LIP TYPE	
	20	2	**7K-9210**	4	SEAL-LIP TYPE	
	21	1	**7K-9212**	4	SEAL-LIP TYPE	
	22	2	**7K-9218**	2	SEAL-LIP TYPE	
M	23	1,2	**8T-4780**	6	BOLT (M20X2.5X30-MM)	
	24	1,2	**8T-5439**	7	WASHER-HARD (21.5X45X6-MM THK)	
M	25	1,2	**8T-5460**	7	BOLT (M20X2.5X40-MM)	

B - USE AS REQUIRED
M - METRIC PART

463-5433 **LINK GP-TILT (**contd.**)** **i06809526**

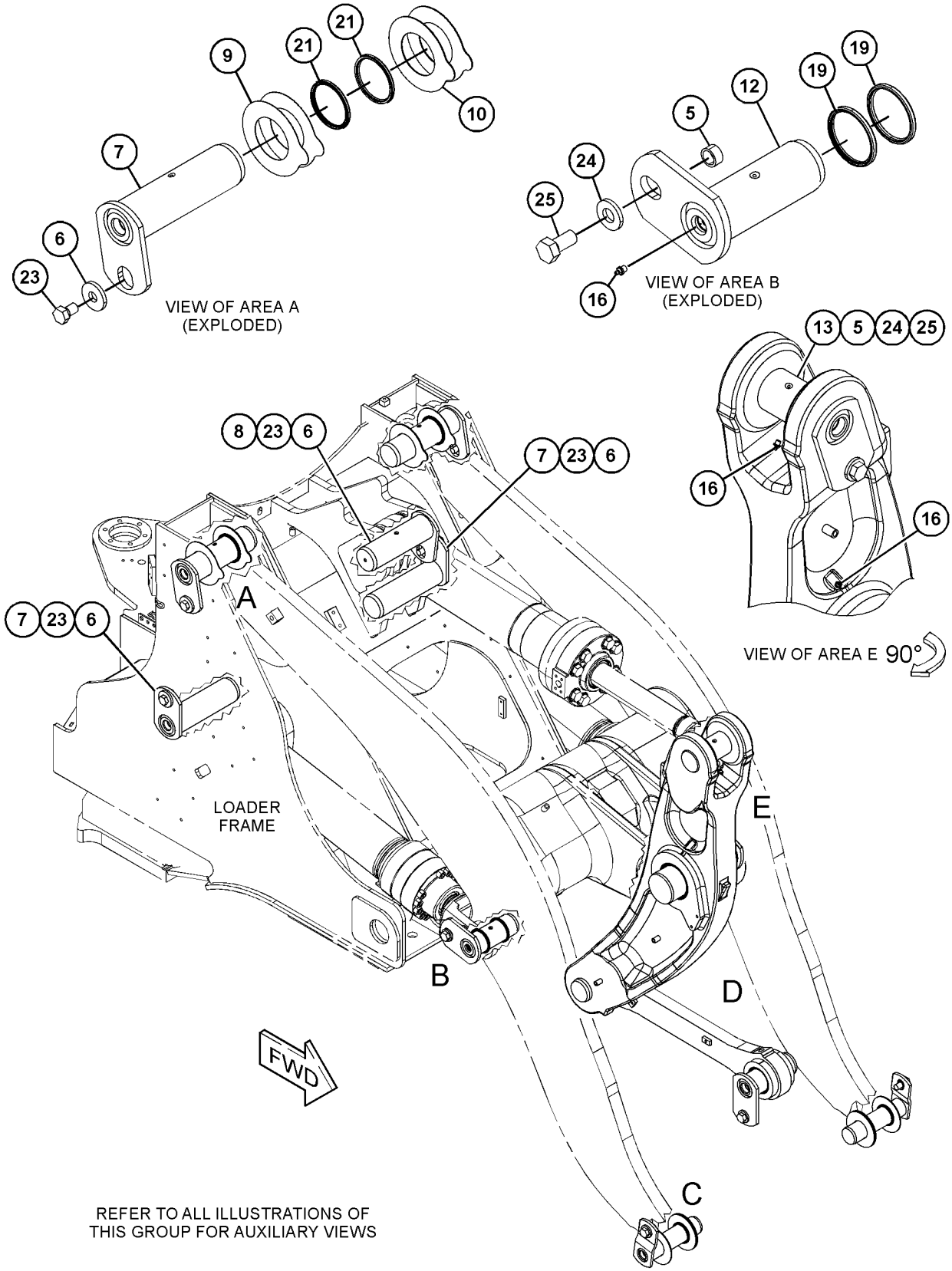

GRAPHIC #1 g06041310

463-5433 **LINK GP-TILT (**contd.**)** **i06809526**

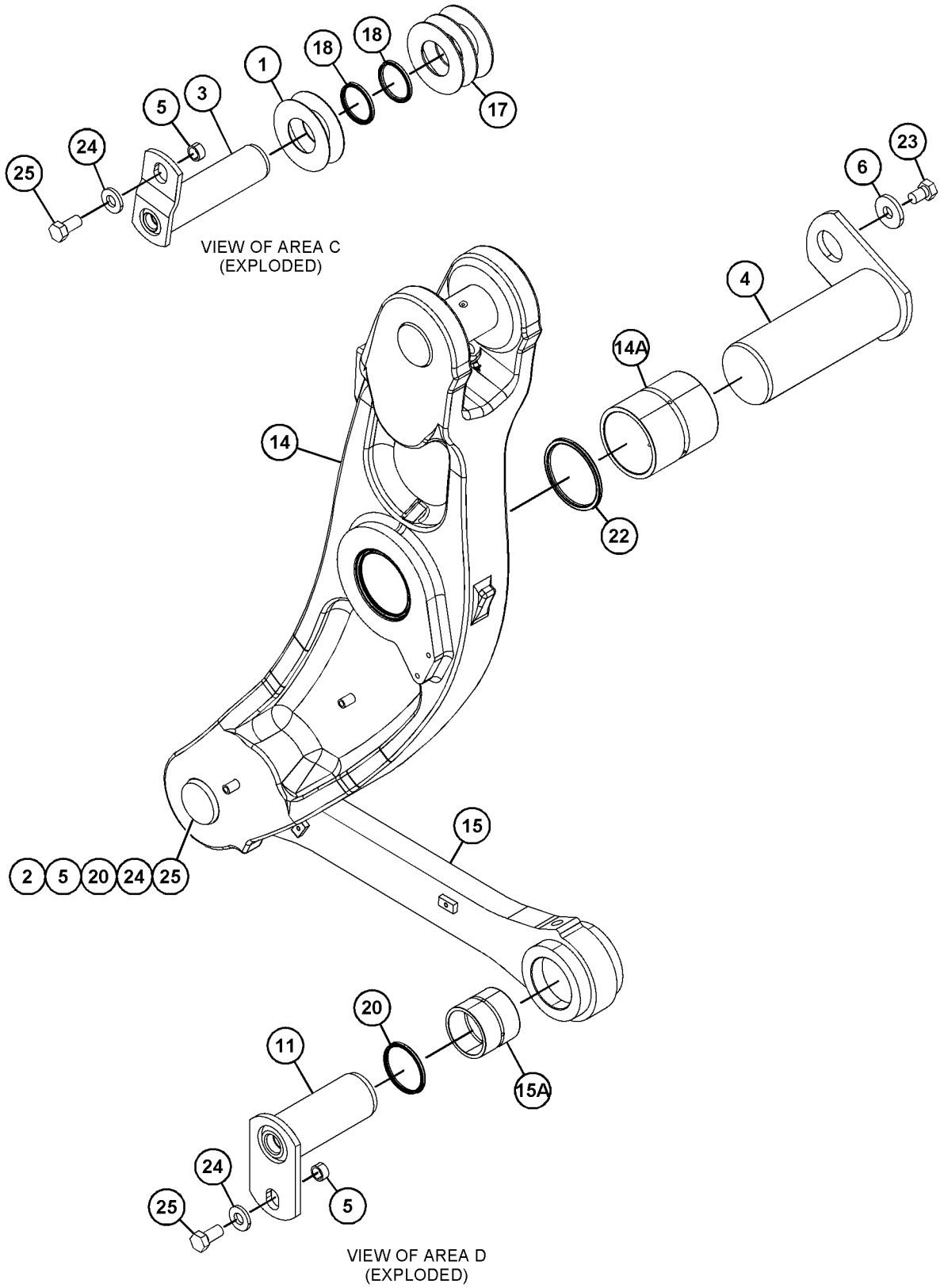

GRAPHIC #2 <END> g06041312

492-4031 LINK GP-TILT

S/N: TNS1-UP

STANDARD LIFT

PART OF 492-4033, 492-4034 DISTRIBUTION AR

SMCS-6117 **i06810272**

NOTE	PART NUMBER	QTY	PART NAME 1 2 3 4 5 6 (PRODUCT LEVEL)	SEE PAGE
Y	*511-0283*	1	COVER & PLUG GP	436
Y	*510-2592*	1	COVER GP-ACCESS	438
Y	*512-6100*	1	HARDWARE GP-LOADER FRAME	480
Y	*506-3504*	1	HARDWARE GP-CHASSIS	477
Y	*463-5433*	1	LINK GP-TILT	740

Y - SEPARATE ILLUSTRATION

<END>

459-3537 AIR CONDITIONER GP

S/N: TNS1-UP

PART OF 455-3940 CAB AR

SMCS-7320 **i06641552**

NOTE	REF NO	GRAPHIC REF	PART NUMBER	QTY	PART NAME 1 2 3 4 5 6 (PRODUCT LEVEL)	SEE PAGE
	1	1	**7K-3176**	1	COUPLING AS-REFRIGERANT (SELF-SEALING)	
	2	1	**293-6151**	2	TUBE	
	3	1	**327-0282**	3	SEAL-INTEGRAL (1/2-IN)	
	4	1	**327-0283**	1	SEAL-INTEGRAL (3/4-IN)	
	5	1	**355-1790**	1	CLAMP	
	6	1	**355-1793**	1	DRYER AS-REFRIGERANT	
Y	7	1	*459-3538*	1	AIR CONDITIONER GP	746
I	8	1	**459-4225**	1	HOSE AS	
	9	1	**459-4226**	1	HOSE AS	
G		1	**329-9931**		HOSE (13.4-IN)	
		1	**372-0984**	1	COUPLING AS-AIR CONDITIONER	
	10	1	**459-4227**	1	HOSE AS	
G		1	**329-9931**		HOSE (17.4-IN)	
		1	**478-5464**	1	COUPLING AS-AIR CONDITIONER	
	11	1	**462-5196**	1	BRACKET AS	
M		1	**6V-9632**	12	NUT-WELD (M6X1-THD)	
M		1	**8T-3490**	1	NUT-WELD (M10X1.5-THD)	
M	12	1	**178-3336**	2	NUT-HEX FLANGE (M8X1.25-THD)	
M	13	1	**209-8296**	1	BOLT-SOCKET HEAD (M8X1.25X25-MM)	
M	14	1	**5C-2890**	2	NUT (M6X1-THD)	
	15	1	**5P-3928**	1	COUPLING AS-REFRIGERANT (SELF-SEALING)	
	16	1	**5P-4106**	1	NUT (1-7/16-16-THD)	
	17	1	**7K-3304**	1	NUT-JAM (1-20-THD)	
	18	1	**8T-4121**	2	WASHER-HARD (11X21X2.5-MM THK)	
M	19	1	**8T-4137**	2	BOLT (M10X1.5X20-MM)	
M	20	1	**8T-4138**	10	BOLT (M6X1X20-MM)	
	21	1	**8T-4224**	1	WASHER-HARD (8.8X16X2-MM THK)	
	22	1	**9M-7959**	2	CLAMP-HOSE	
	23	1	**9M-8406**	4	CLIP	
	24	1	**9X-2488**	4	CLAMP-HOSE	
	25	1	**9X-6165**	12	WASHER (6.5X22X2.5-MM THK)	
	26	1	**9X-7383**	1	SEAL-O-RING	
	27	1	**9X-7384**	1	SEAL-O-RING	
E	28	1	**5P-0767**		HOSE (21-CM)	
E	28A	1	**5P-0767**		HOSE (15-CM)	

E - ORDER BY THE CENTIMETER
G - ORDER BY THE INCH
I - REFER TO HYDRAULIC INFORMATION SYSTEM
M - METRIC PART
Y - SEPARATE ILLUSTRATION

459-3537 **AIR CONDITIONER GP (**contd.**)** **i06641552**

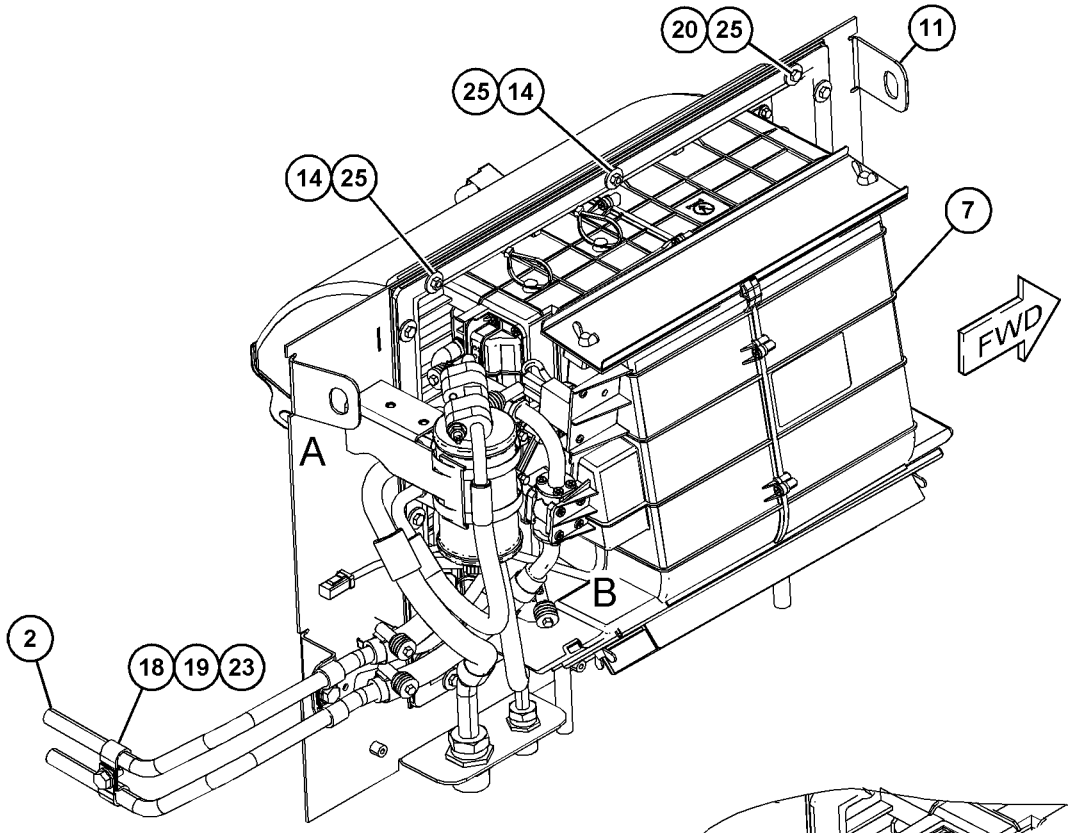

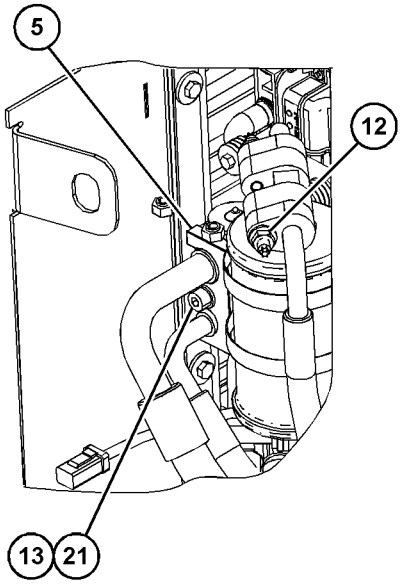

VIEW OF AREA A
(PARTS REMOVED FOR CLARITY)

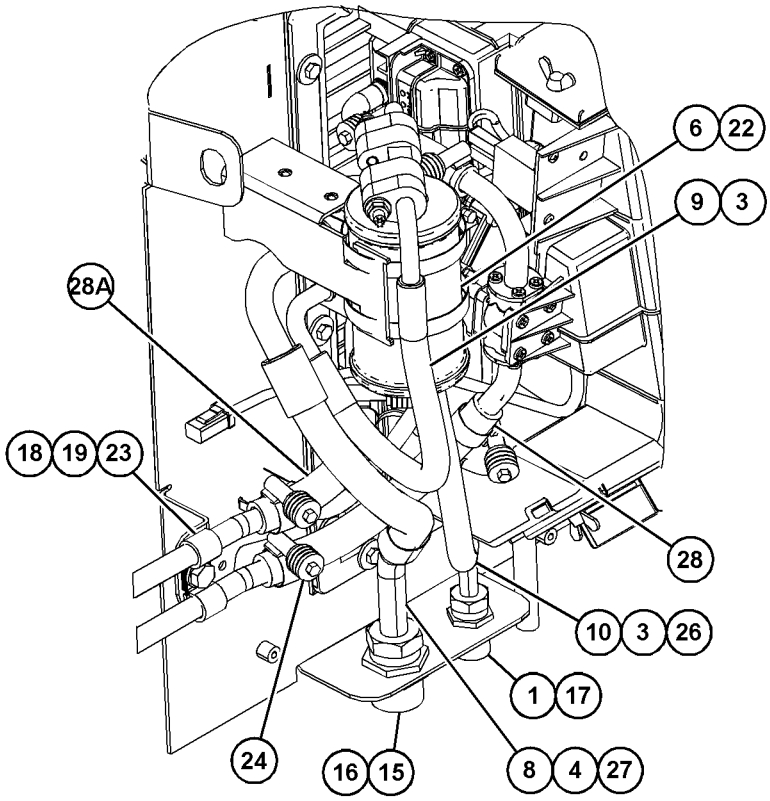

VIEW OF AREA B

GRAPHIC #1 <END> g06050482

459-3538 AIR CONDITIONER GP

S/N: TNS1-UP

PART OF 459-3537 AIR CONDITIONER GP

SMCS-7320 **i06641723**

NOTE	REF NO	GRAPHIC REF	PART NUMBER	QTY	PART NAME 1 2 3 4 5 6 (PRODUCT LEVEL)	SEE PAGE
Y	1	1	**441-4589**	1	VALVE GP-WATER	857
	2	1	**290-2287**	1	FILTER ELEMENT-CAB AIR (STANDARD FILTRATION)	
	3	1	**290-2288**	1	FILTER-AIR	
	4	1	**291-9146**	1	PLATE	
	5	1	**302-8727**	1	SEAL	
	6	1	**322-4474**	1	FILM-INFORMATION (24-VOLT HEATER)	
	7	1	**322-7212**	1	BLOWER AS	
		1	**5W-1992**	4	TERMINAL	
		1	**5W-2005**	1	HOUSING	
		1	**9W-0852**	2	PIN-CONNECTOR (14-GA TO 16-GA)	
		1	**102-8802**	1	KIT-RECEPTACLE (2-PIN)	
					(INCLUDES RECEPTACLE AS & WEDGE)	
	8	1	**327-0282**	1	SEAL-INTEGRAL (1/2-IN)	
	9	1	**327-0283**	1	SEAL-INTEGRAL (3/4-IN)	
	10	1	**329-0238**	1	FILM-IDENTIFICATION (HVAC FILTER)	
	11	1	**335-6983**	2	CLAMP-BAND	
	12	1	**355-1791**	1	VALVE-EXPANSION	
	13	1	**431-3852**	1	CASE AS	
	14	1	**431-3853**	1	CASE AS	
	15	1	**431-3854**	1	COIL AS-HEATER	
	16	1	**431-3855**	1	CASE	
	17	1	**431-3856**	2	SEAL	
	18	1	**431-3857**	1	PLATE AS	
M		1	**9X-2032**	8	NUT-WELD (M4X0.7-THD)	
	19	1	**431-3858**	1	SEAL	
	20	1	**431-3863**	1	CASE	
	21	1	**431-3865**	1	CASE	
	22	1	**431-3867**	1	PAN-DRAIN	
	23	1	**431-3868**	2	GROMMET	
	24	1	**441-4588**	1	PLATE	
	25	1	**459-3539**	1	COIL AS-EVAPORATOR	
Y	26	1	**462-4373**	1	HARNESS AS-HEATER & AIR COND	165
	27	1	**468-8952**	2	VALVE	
M	28	1	**096-4034**	4	BOLT-WING (M6X1X15-MM)	
MR	29	1	**100-4838**	19	BOLT (M6X1X20-MM)	
M	30	1	**151-6282**	2	BOLT-SOCKET HEAD (M6X1X40-MM)	
	31	1	**206-1345**	7	STRAP-CABLE	
	32	1	**3E-5464**	1	SWITCH AS-THERMOSTAT (HVAC)	
	33	1	**6V-2687**	16	SCREW-PAN HEAD (10-24X1-IN)	
M	34	1	**8T-0337**	10	SCREW-MACHINE (M4X0.7X12-MM)	
	35	1	**9G-2673**	1	GROMMET	
	36	1	**9X-2488**	2	CLAMP-HOSE	
E	37	1	**136-1953**		HOSE (11-CM)	
D	38	1	**5P-6129**		TUBE (0.2-M EACH)	

D - ORDER BY THE METER
E - ORDER BY THE CENTIMETER
M - METRIC PART
R - REMANUFACTURED PART MAY BE AVAILABLE
Y - SEPARATE ILLUSTRATION

459-3538 **AIR CONDITIONER GP (**contd.**)** **i06641723**

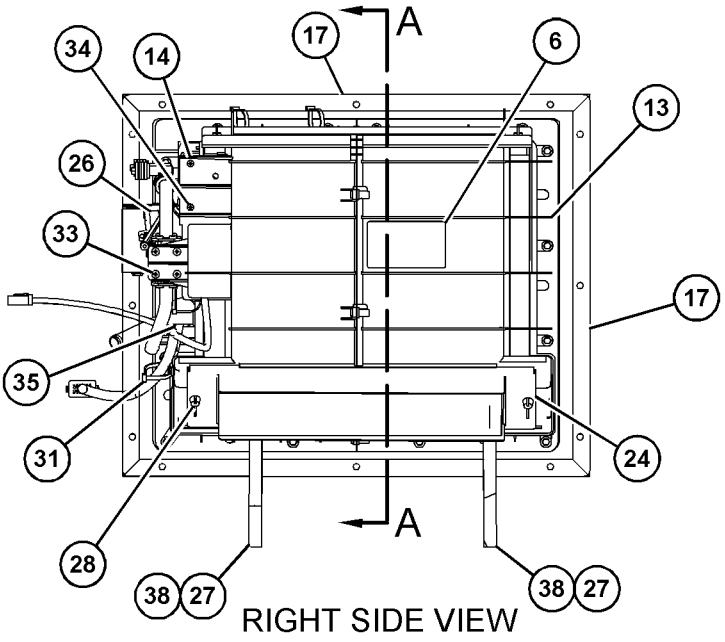

RIGHT SIDE VIEW

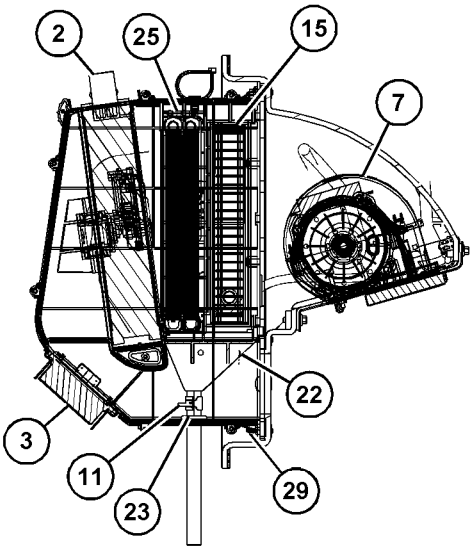

SECTION A-A

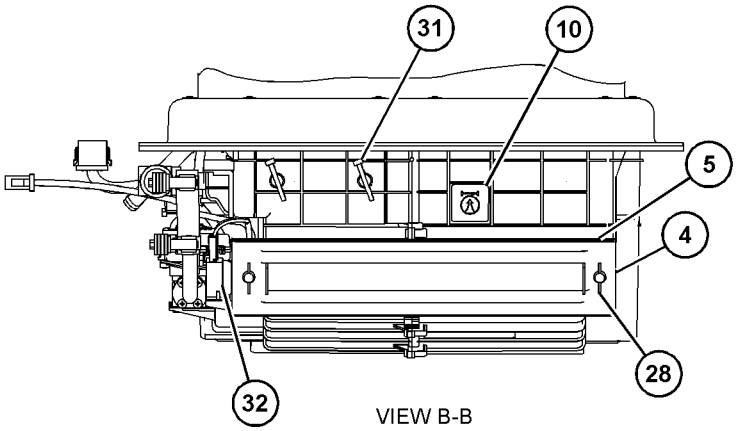

VIEW B-B

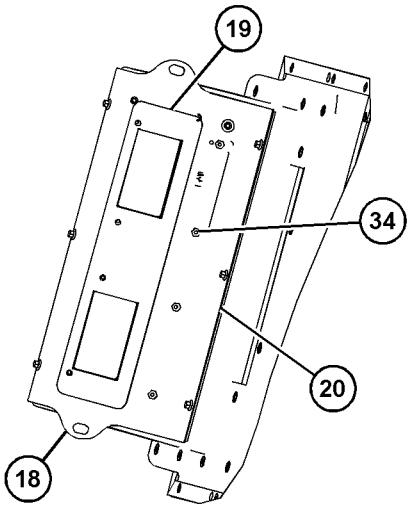

VIEW C-C

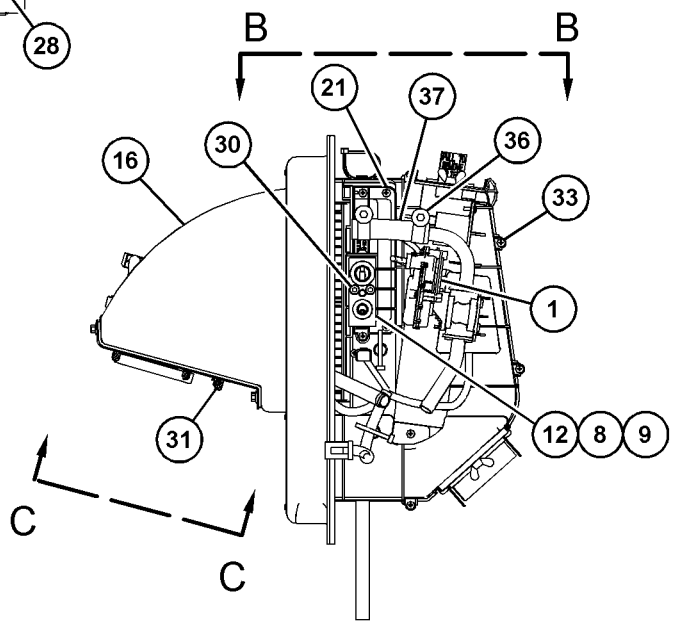

REAR VIEW

GRAPHIC #1 <END> g06050588

373-2414 ARM GP-WINDOW WIPER

S/N: TNS1-UP

PART OF 488-5867 WIPER GP-WINDOW

SMCS-7305 **i06273882**

NOTE	REF NO	GRAPHIC REF	PART NUMBER	QTY	PART NAME 1 2 3 4 5 6 (PRODUCT LEVEL)	SEE PAGE
C	1	1	**473-9079**	1	CLIP-HOSE	
	2	1	**228-6428**	1	NOZZLE AS	
C	3	1	**473-9080**	1	CLIP-HOSE	
E	4	1	**194-5171**		HOSE (96-CM)	

C - CHANGE FROM PREVIOUS TYPE
E - ORDER BY THE CENTIMETER

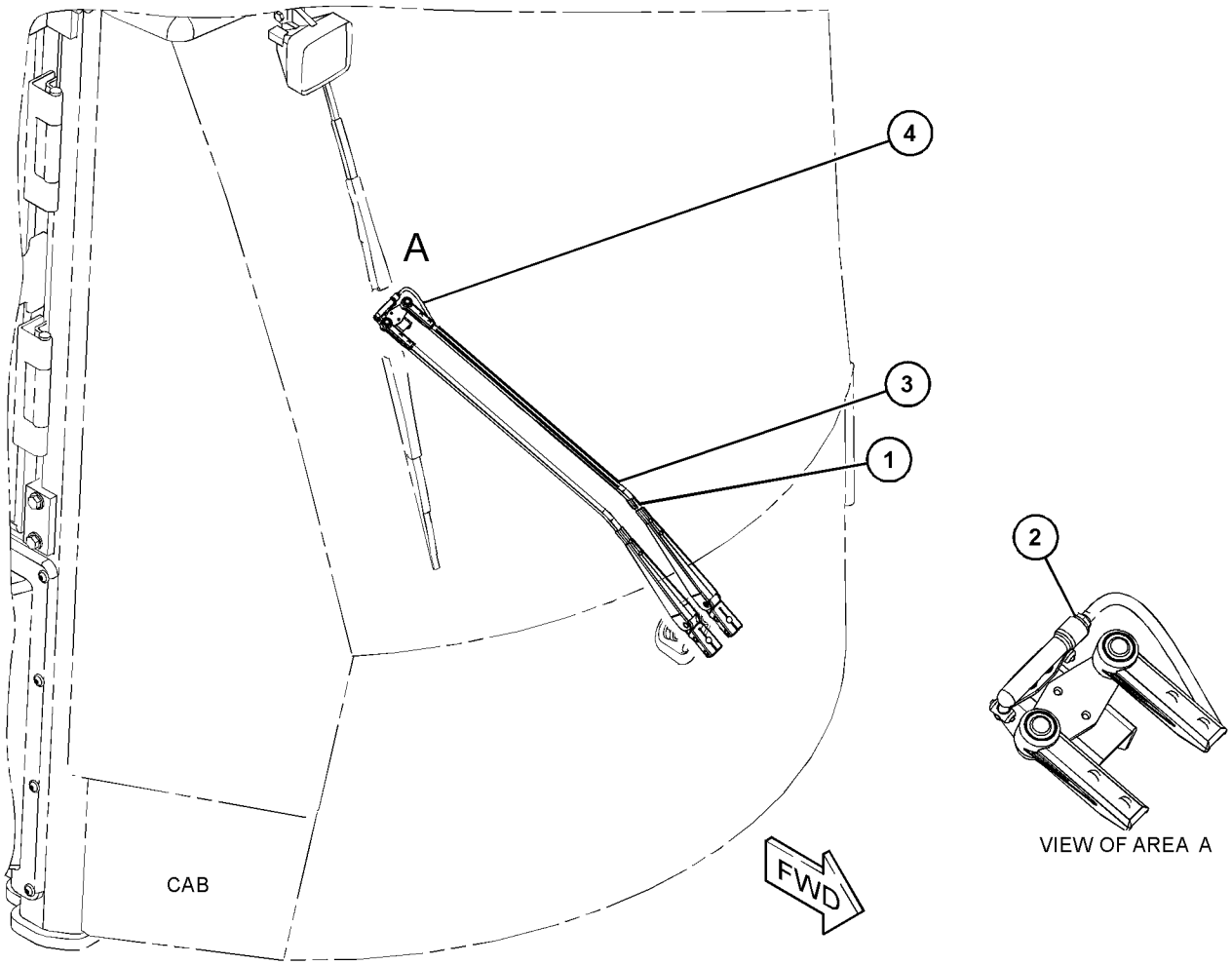

GRAPHIC #1 <END> g06008400

384-8730 ARMREST GP–LH

S/N: TNS1-UP

PART OF 490-5982 SEAT GP-SUSPENSION

SMCS-7307, 7312

i06590930

NOTE	REF NO	GRAPHIC REF	PART NUMBER	QTY	PART NAME 1 2 3 4 5 6 (PRODUCT LEVEL)	SEE PAGE
M	1	1	**8T-4956**	1	BOLT (M12X1.75X35-MM)	
	2	1	**384-8728**	1	ARMREST AS (LH)	
	3	1	**399-1570**	1	BRACKET (LH)	
M	4	1	**129-3180**	1	LOCKNUT (M12X1.75-THD)	
	5	1	**8T-4223**	2	WASHER-HARD (13.5X25.5X3-MM THK)	

M - METRIC PART

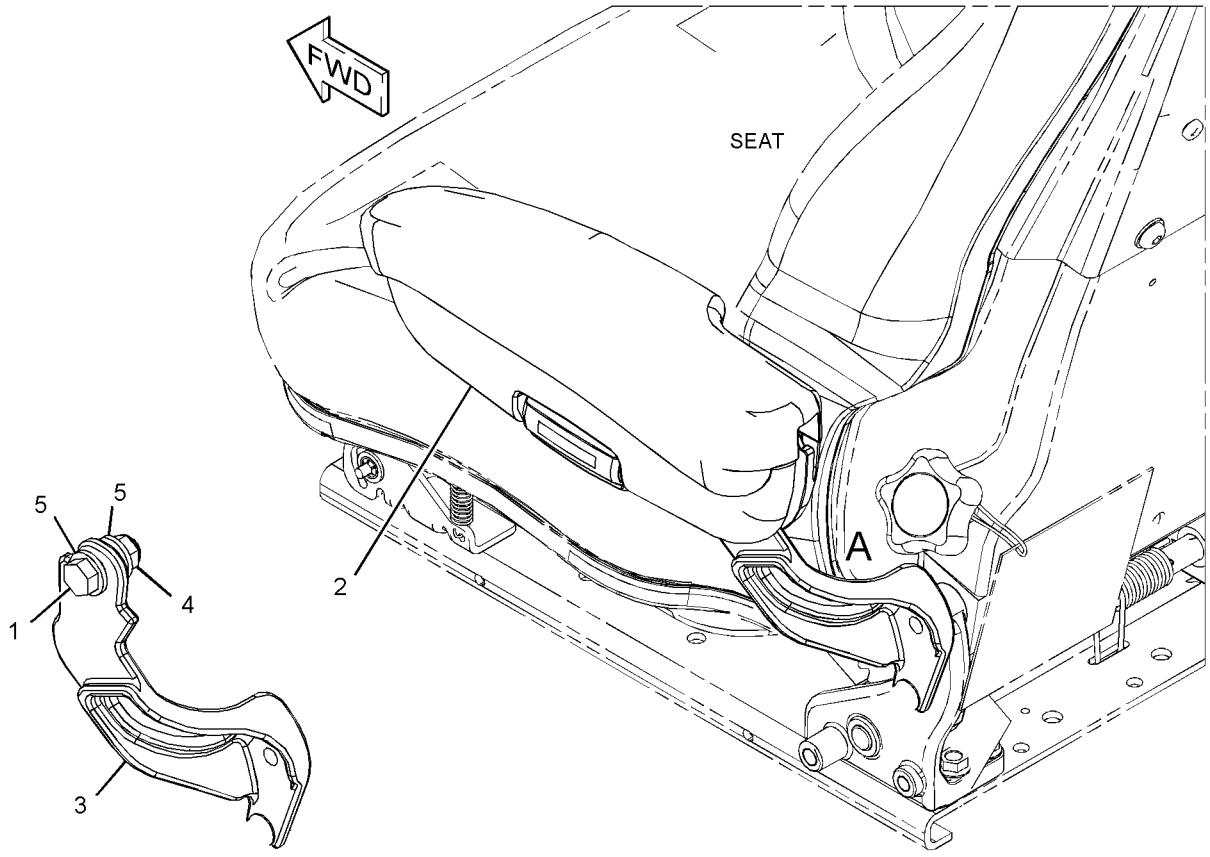

VIEW OF AREA A
(PARTS REMOVED FOR CLARITY)

GRAPHIC #1 <END> g06040591

455-3940 CAB AR

S/N: TNS1-UP

PART OF 455-3941 OPERATOR AR-ENCLOSED ROPS

SMCS-7301 **i06641534**

NOTE	PART NUMBER	QTY	PART NAME 1 2 3 4 5 6 (PRODUCT LEVEL)	SEE PAGE
Y	*459-3537*	1	AIR CONDITIONER GP	744
Y	*361-7165*	1	DUCT GP-CAB AIR	786
Y	*366-0729*	1	FLOORPLATE GP	451
Y	*372-3897*	1	HARDWARE GP-MOUNTING	481
Y	*366-0733*	1	INSTALLATION GP-RADIO	795
Y	*454-9350*	1	LINER GP-CAB	800
Y	*477-7801*	1	PANEL GP-SWITCH	197
Y	*454-4493*	1	PLATE & FILM GP	941
Y	*454-9349*	1	TRIM GP-CAB	854
Y	*391-5308*	1	VISOR GP-CAB	859

Y - SEPARATE ILLUSTRATION

<END>

512-0946 CAB AR

S/N: TNS1-UP

SMCS-7301 **i06809517**

NOTE	PART NUMBER	QTY	PART NAME 1 2 3 4 5 6 (PRODUCT LEVEL)	SEE PAGE
Y	*492-3994*	1	CAB AR-ENCLOSED ROPS	751
Y	*492-3988*	1	CONFIGURATION AR	2
Y	*492-3985*	1	OPERATOR AR	819
Y	*443-4183*	1	SEAT BELT GP	842

Y - SEPARATE ILLUSTRATION

<END>

512-0947 CAB AR

S/N: TNS1-UP

SMCS-7301 **i06809537**

NOTE	PART NUMBER	QTY	PART NAME 1 2 3 4 5 6 (PRODUCT LEVEL)	SEE PAGE
Y	*492-3994*	1	CAB AR-ENCLOSED ROPS	751
Y	*492-3988*	1	CONFIGURATION AR	2
Y	*372-1603*	1	INSTALLATION GP-RADIO (CITIZEN BAND)	796
Y	*492-3986*	1	OPERATOR AR	819
Y	*443-4184*	1	SEAT BELT GP	843

Y - SEPARATE ILLUSTRATION

<END>

492-3994 CAB AR-ENCLOSED ROPS

S/N: TNS1-UP

PART OF 512-0946, 512-0947 CAB AR

SMCS-7301 **i06809890**

NOTE	PART NUMBER	QTY	PART NAME 1 2 3 4 5 6 (PRODUCT LEVEL)	SEE PAGE
Y	*503-1906*	1	CAB AR-ENCLOSED ROPS	752

Y - SEPARATE ILLUSTRATION

<END>

493-9616 CAB AR-ENCLOSED ROPS

S/N: TNS1-UP

SMCS-7301 **i06752146**

NOTE	PART NUMBER	QTY	PART NAME 1 2 3 4 5 6 (PRODUCT LEVEL)	SEE PAGE
Y	*461-4302*	1	DOOR GP-CAB (RH)	777
Y	*502-6446*	1	DOOR GP-CAB (LH) (LH)	778
Y	*372-3896*	1	FRAME GP-WINDOW (FRONT)	791
Y	*389-1956*	1	HANDRAIL GP	474
Y	*501-0558*	1	MOUNTING GP-CAB	818
Y	*490-3562*	1	ROPS GP-ENCLOSED	839
Y	*372-2735*	1	WINDOW GP-CAB	860
Y	*366-0734*	1	WINDOW GP-REAR (CAB)	867
Y	*496-3368*	1	WIPER GP-WINDOW	871

Y - SEPARATE ILLUSTRATION

<END>

493-9617 CAB AR-ENCLOSED ROPS

S/N: TNS1-UP

SMCS-7301 **i06752153**

NOTE	PART NUMBER	QTY	PART NAME 1 2 3 4 5 6 (PRODUCT LEVEL)	SEE PAGE
Y	*461-4302*	1	DOOR GP-CAB (RH)	777
Y	*502-6446*	1	DOOR GP-CAB (LH)	778
Y	*372-3896*	1	FRAME GP-WINDOW (FRONT)	791
Y	*372-3947*	1	GUARD GP-WINDOW	792
Y	*380-3725*	1	HANDHOLD GP	794
Y	*501-0558*	1	MOUNTING GP-CAB	818
Y	*490-3562*	1	ROPS GP-ENCLOSED	839
Y	*372-2735*	1	WINDOW GP-CAB	860
Y	*366-0734*	1	WINDOW GP-REAR (CAB)	867
Y	*496-3368*	1	WIPER GP-WINDOW	871

Y - SEPARATE ILLUSTRATION

<END>

493-9618 CAB AR-ENCLOSED ROPS

S/N: TNS1-UP

SMCS-7301 **i06782453**

NOTE	PART NUMBER	QTY	PART NAME 1 2 3 4 5 6 (PRODUCT LEVEL)	SEE PAGE
Y	*372-3954*	1	DOOR GP-CAB (RH)	773
Y	*502-6447*	1	DOOR GP-CAB (LH)	782
Y	*372-3948*	1	GUARD GP-WINDOW	793
Y	*380-3725*	1	HANDHOLD GP	794
Y	*372-1606*	1	MOUNTING GP-CAB (HEAVY-DUTY)	816
Y	*490-3562*	1	ROPS GP-ENCLOSED	839
Y	*462-0651*	1	WINDOW GP-FRONT (CAB)	866
Y	*366-0734*	1	WINDOW GP-REAR (CAB)	867
Y	*488-5867*	1	WIPER GP-WINDOW	868

Y - SEPARATE ILLUSTRATION

<END>

493-9619 CAB AR-ENCLOSED ROPS

S/N: TNS1-UP

SMCS-7301 **i06782450**

NOTE	PART NUMBER	QTY	PART NAME 1 2 3 4 5 6 (PRODUCT LEVEL)	SEE PAGE
Y	*461-4302*	1	DOOR GP-CAB (RH)	777
Y	*502-6446*	1	DOOR GP-CAB (LH) (LH)	778
Y	*372-3947*	1	GUARD GP-WINDOW	792
Y	*380-3725*	1	HANDHOLD GP	794
Y	*501-0558*	1	MOUNTING GP-CAB	818
Y	*490-3562*	1	ROPS GP-ENCLOSED (CAB)	839
Y	*462-0651*	1	WINDOW GP-FRONT (CAB)	866
Y	*366-0734*	1	WINDOW GP-REAR (CAB)	867
Y	*488-5867*	1	WIPER GP-WINDOW	868

Y - SEPARATE ILLUSTRATION

<END>

503-1906 CAB AR-ENCLOSED ROPS

S/N: TNS1-UP

PART OF 492-3994 CAB AR-ENCLOSED ROPS, 492-4033, 492-4034 DISTRIBUTION AR

SMCS-7301 **i06809910**

NOTE	PART NUMBER	QTY	PART NAME 1 2 3 4 5 6 (PRODUCT LEVEL)	SEE PAGE
Y	*391-5327*	1	DOOR GP-CAB	774
Y	*501-0558*	1	MOUNTING GP-CAB	818
Y	*490-3562*	1	ROPS GP-ENCLOSED	839
Y	*486-9082*	1	WINDOW GP-CAB	861
Y	*462-0651*	1	WINDOW GP-FRONT (CAB)	866
Y	*366-0734*	1	WINDOW GP-REAR (CAB)	867
Y	*488-5867*	1	WIPER GP-WINDOW	868

Y - SEPARATE ILLUSTRATION

<END>

320-1291 COMPRESSOR GP-REFRIGERANT

S/N: E7A1-UP

PART OF 374-7094 AIR COMPRESSOR GP

SMCS-1802 **i05826342**

NOTE	REF NO	GRAPHIC REF	PART NUMBER	QTY	PART NAME 1 2 3 4 5 6 (PRODUCT LEVEL)	SEE PAGE
	1	1	**102-8802**	1	KIT-RECEPTACLE (2-PIN)	
					(INCLUDES RECEPTACLE AS & WEDGE)	
	2	1	**314-4018**	1	VALVE AS-PRESSURE RELIEF (REFRIGERANT COMPRESSOR)	
	3	1	**126-1767**	2	PIN-CONNECTOR (14-GA TO 16-GA)	
	4	1	**7T-4532**	1	PLUG AS	

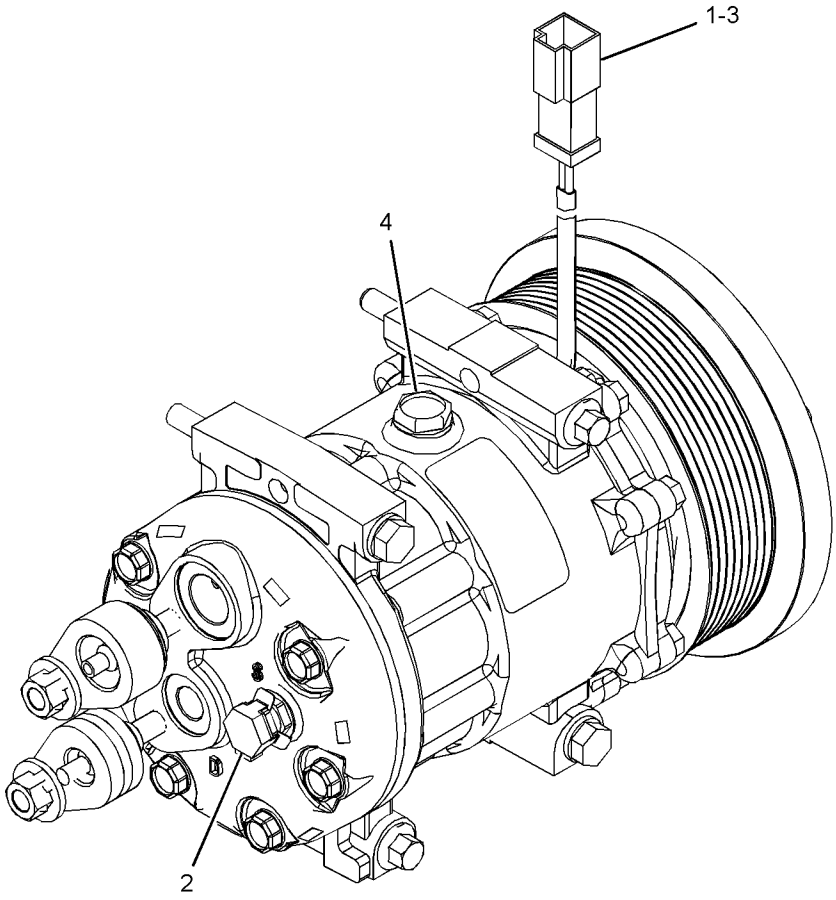

GRAPHIC #1 <END> g02214255

506-8479 CONTROL & MTG GP-ELHYD

S/N: TNS1-UP

PART OF 492-4033, 492-4034 DISTRIBUTION AR

SMCS-5702 **i06818686**

NOTE	REF NO	GRAPHIC REF	PART NUMBER	QTY	PART NAME 1 2 3 4 5 6 (PRODUCT LEVEL)	SEE PAGE
	1	1	**349-2600**	1	ADJUSTER GP-CONTROL	
M		1	**131-3987**	2	SCREW (M4X0.7X12-MM)	
		1	**349-2593**	1	HANDLE	
	2	1	**366-4865**	1	FILM-IDENTIFICATION (JOYSTICK, 2-FUNCTION)	
	3	1	**371-1624**	1	COVER	
	4	1	**372-1260**	1	BRACKET AS	
	5	1	**375-5944**	1	COVER	
	6	1	**443-9873**	1	CUSHION AS	
M		1	**205-7048**	4	INSERT-THREADED (M6X1-X14.73-MM)	
Y	7	1	**458-8673**	1	CONTROL GP-HANDLE (2-VALVE) (BUCKET)	761
Y	8	1	*506-5902*	1	WIRING GP-CONTROL	251
M	9	1	**112-6646**	4	LOCKNUT (M6X1-THD)	
M	10	1	**5C-2890**	3	NUT (M6X1-THD)	
M	11	1	**5C-7261**	3	NUT (M8X1.25-THD)	
	12	1	**8R-3695**	2	GROMMET	
M	13	1	**8T-4138**	3	BOLT (M6X1X20-MM)	
	14	1	**8T-4205**	6	WASHER-HARD (7.2X14.5X2-MM THK)	
	15	1	**8T-4224**	3	WASHER-HARD (8.8X16X2-MM THK)	
M	16	1	**9X-2044**	4	SCREW-TRUSS HEAD (M6X1X16-MM)	
M	17	1	**9X-2045**	9	SCREW-TRUSS HEAD (M6X1X20-MM)	

M - METRIC PART
Y - SEPARATE ILLUSTRATION

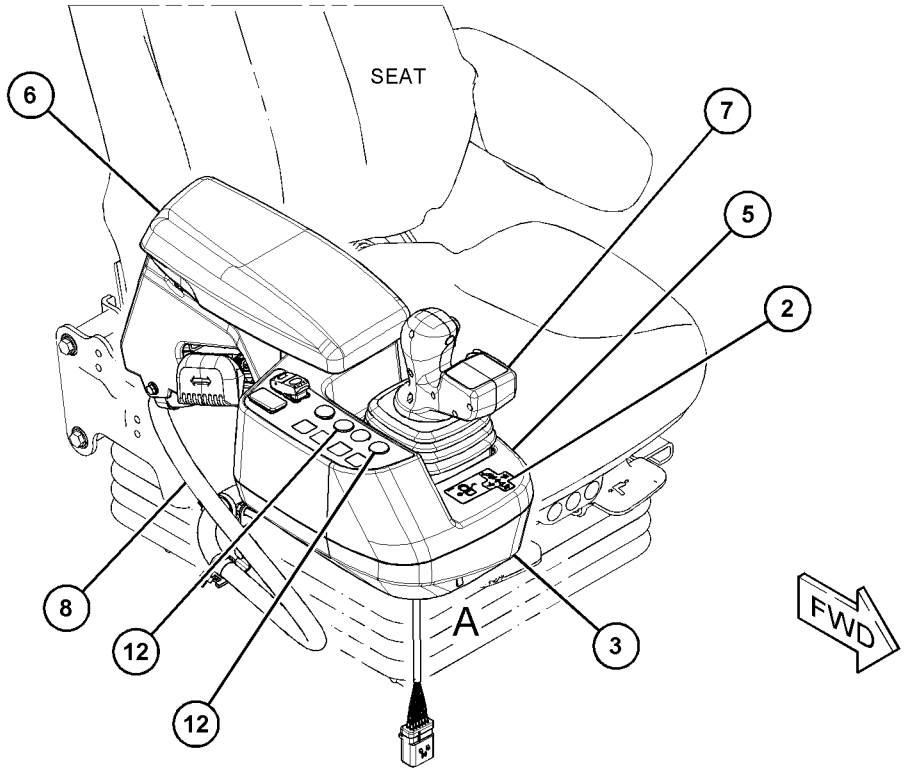

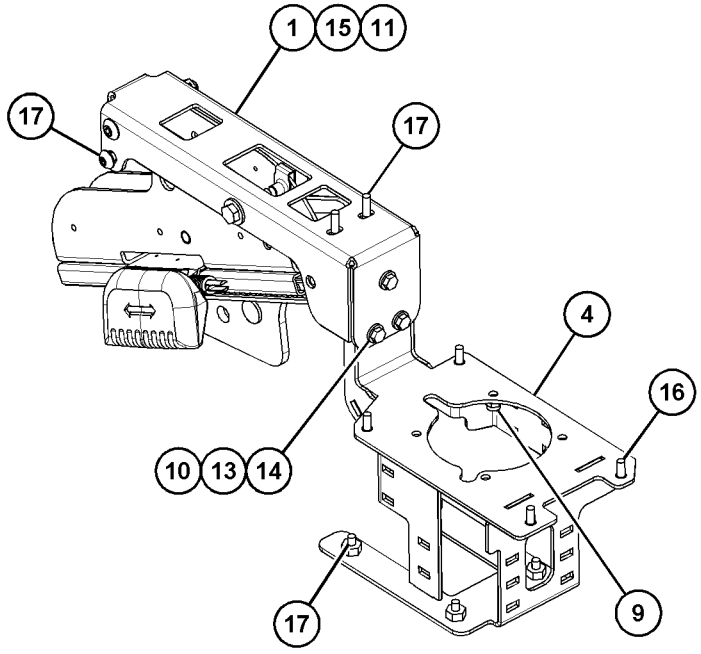

VIEW OF AREA A
(PARTS REMOVED FOR CLARITY)

GRAPHIC #1 <END> g06127251

506-8480 CONTROL & MTG GP-ELHYD

S/N: TNS1-UP

3-FUNCTION

SMCS-5702 **i06812659**

NOTE	REF NO	GRAPHIC REF	PART NUMBER	QTY	PART NAME 1 2 3 4 5 6 (PRODUCT LEVEL)	SEE PAGE
	1	1	**349-2600**	1	ADJUSTER GP-CONTROL	
M		1	**131-3987**	2	SCREW (M4X0.7X12-MM)	
		1	**349-2593**	1	HANDLE	
	2	1	**366-4866**	1	FILM-IDENTIFICATION (JOYSTICK, 3-FUNCTION)	
	3	1	**371-1624**	1	COVER	
	4	1	**372-1260**	1	BRACKET AS	
	5	1	**375-5944**	1	COVER	
	6	1	**443-9873**	1	CUSHION AS	
M		1	**205-7048**	4	INSERT-THREADED (M6X1-X14.73-MM)	
Y	7	1	**458-8674**	1	CONTROL GP-HANDLE (3-VALVE)	762
Y	8	1	*506-5902*	1	WIRING GP-CONTROL	251
M	9	1	**112-6646**	4	LOCKNUT (M6X1-THD)	
M	10	1	**5C-2890**	3	NUT (M6X1-THD)	
M	11	1	**5C-7261**	3	NUT (M8X1.25-THD)	
	12	1	**8R-3695**	2	GROMMET	
M	13	1	**8T-4138**	3	BOLT (M6X1X20-MM)	
	14	1	**8T-4205**	6	WASHER-HARD (7.2X14.5X2-MM THK)	
	15	1	**8T-4224**	3	WASHER-HARD (8.8X16X2-MM THK)	
M	16	1	**9X-2044**	4	SCREW-TRUSS HEAD (M6X1X16-MM)	
M	17	1	**9X-2045**	9	SCREW-TRUSS HEAD (M6X1X20-MM)	

M - METRIC PART
Y - SEPARATE ILLUSTRATION

506-8480 **CONTROL & MTG GP-ELHYD** (contd.) **i06812659**

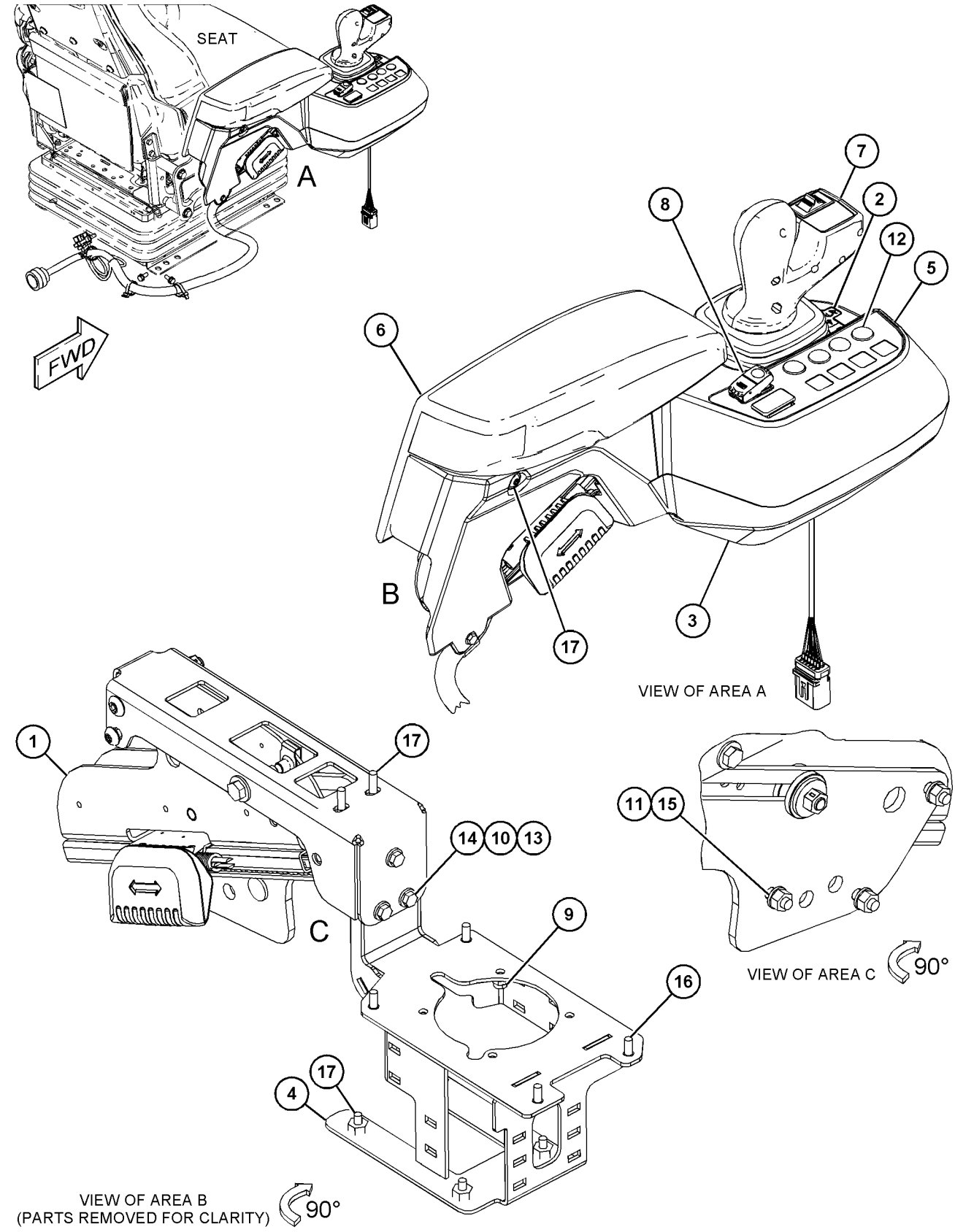

GRAPHIC #1 <END> g06125142

456-5791 CONTROL AR-MONITOR

S/N: TNS1-UP

PART OF 456-5788 COMMON AR

SMCS-7490, 7601

i06796501

NOTE	PART NUMBER	QTY	PART NAME 1 2 3 4 5 6 (PRODUCT LEVEL)	SEE PAGE
Y	*461-2922*	1	CONTROL GP-MONITOR	763
Y	*450-1842*	1	COVER GP-CONSOLE	771

Y - SEPARATE ILLUSTRATION

<END>

328-5932 CONTROL GP-HANDLE–2-VALVE

S/N: TNS1-UP

PART OF 458-8673 CONTROL GP-HANDLE

SMCS-5063, 5705

i06649013

NOTE	REF NO	GRAPHIC REF	PART NUMBER	QTY	PART NAME 1 2 3 4 5 6 (PRODUCT LEVEL)	SEE PAGE
	1	1	**260-6728**	1	RECEPTACLE AS-CONNECTOR (12-PIN)	
	2	1	**9X-3401**	8	PIN-CONNECTOR (16-GA TO 18-GA)	
	3	1	**8T-8737**	4	PLUG-SEAL	

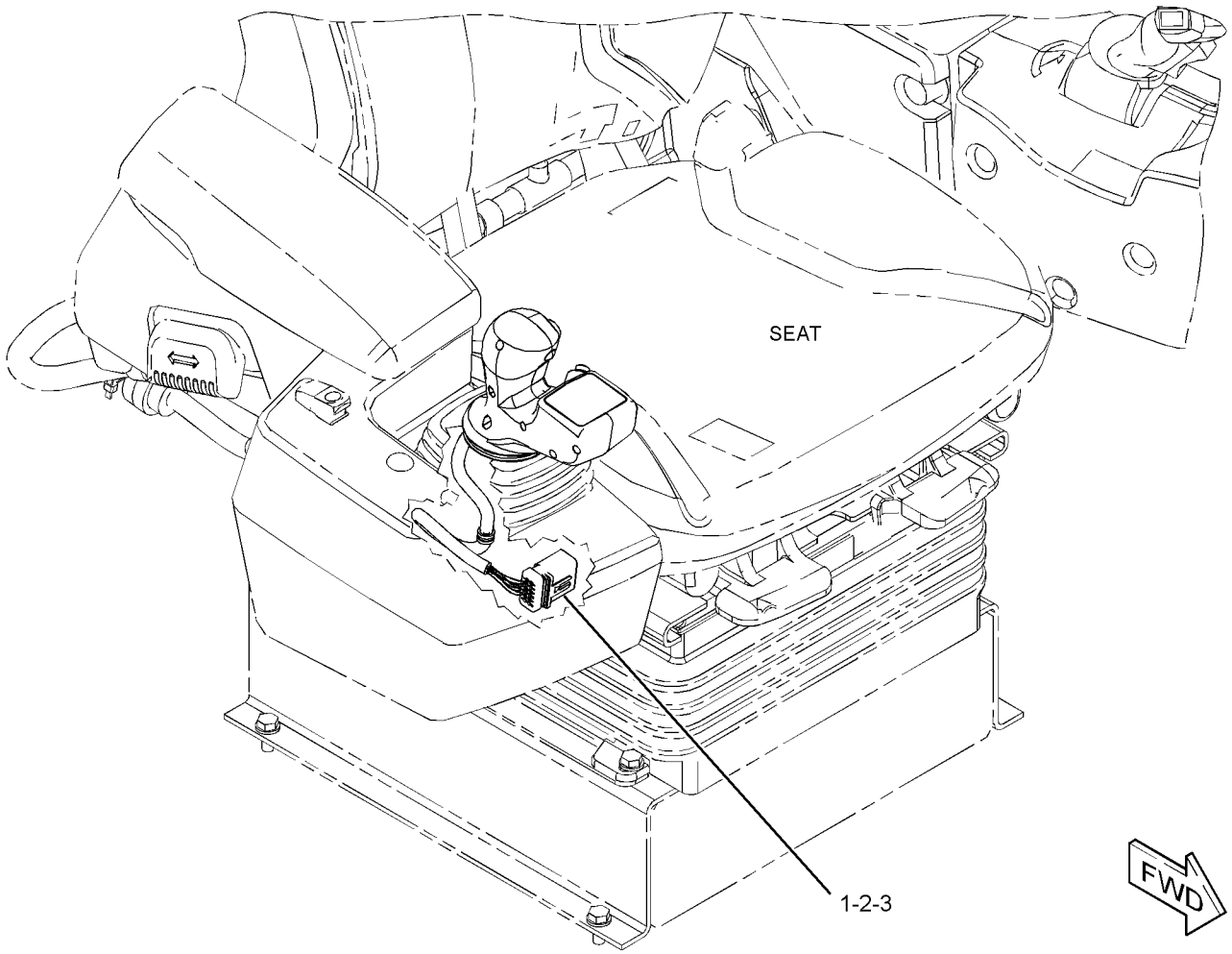

GRAPHIC #1

<END>

g02453003

328-5933 CONTROL GP-HANDLE

S/N: TNS1-UP

PART OF 458-8674 CONTROL GP-HANDLE

SMCS-5063, 5705 **i06649007**

NOTE	REF NO	GRAPHIC REF	PART NUMBER	QTY	PART NAME 1 2 3 4 5 6 (PRODUCT LEVEL)	SEE PAGE
	1	1	**260-6728**	1	RECEPTACLE AS-CONNECTOR (12-PIN)	
	2	1	**9X-3401**	11	PIN-CONNECTOR (16-GA TO 18-GA)	
	3	1	**8T-8737**	1	PLUG-SEAL	

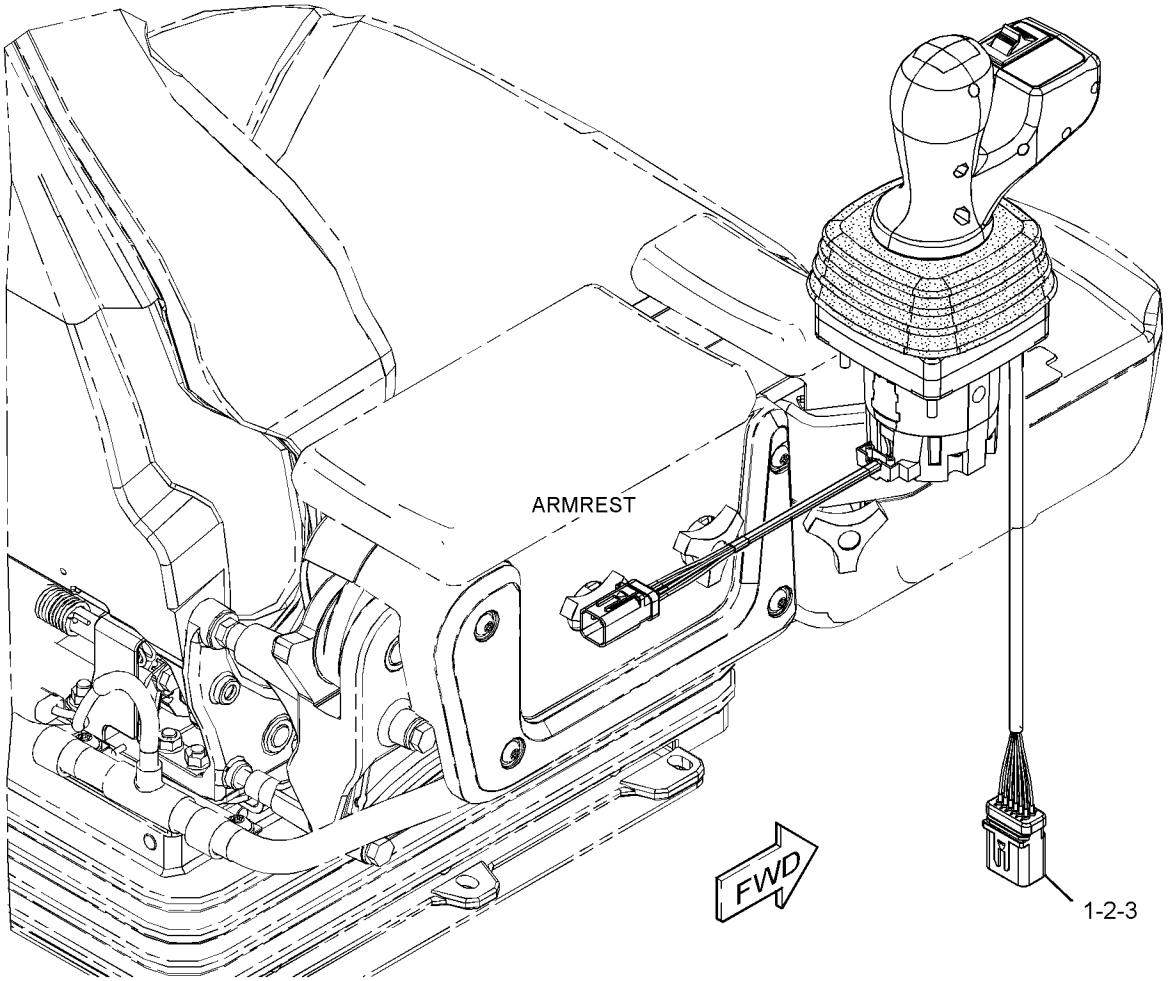

GRAPHIC #1 <END> g02611116

458-8673 CONTROL GP-HANDLE–2-VALVE

S/N: TNS1-UP

PART OF 506-8479 CONTROL & MTG GP-ELHYD

SMCS-5063, 5705 **i06649008**

NOTE	REF NO	GRAPHIC REF	PART NUMBER	QTY	PART NAME 1 2 3 4 5 6 (PRODUCT LEVEL)	SEE PAGE
Y	1	1	**328-5932**	1	CONTROL GP-HANDLE (2-VALVE)	759
	2	1	**455-1861**	1	BASE AS-JOYSTICK	
		1	**9X-3401**	6	PIN-CONNECTOR (16-GA TO 18-GA)	
M		1	**280-0440**	4	STUD-MOUNTING (M6X1-THD)	
		1	**281-3136**	1	RECEPTACLE AS-CONNECTOR (6-PIN)	
	3	1	**285-0150**	1	BOOT	
	4	1	**281-3136**	1	RECEPTACLE AS-CONNECTOR (6-PIN)	
	5	1	**260-6728**	1	RECEPTACLE AS-CONNECTOR (12-PIN)	
	6	1	**9X-3401**	14	PIN-CONNECTOR (16-GA TO 18-GA)	
	7	1	**8T-8737**	4	PLUG-SEAL	

M - METRIC PART
Y - SEPARATE ILLUSTRATION

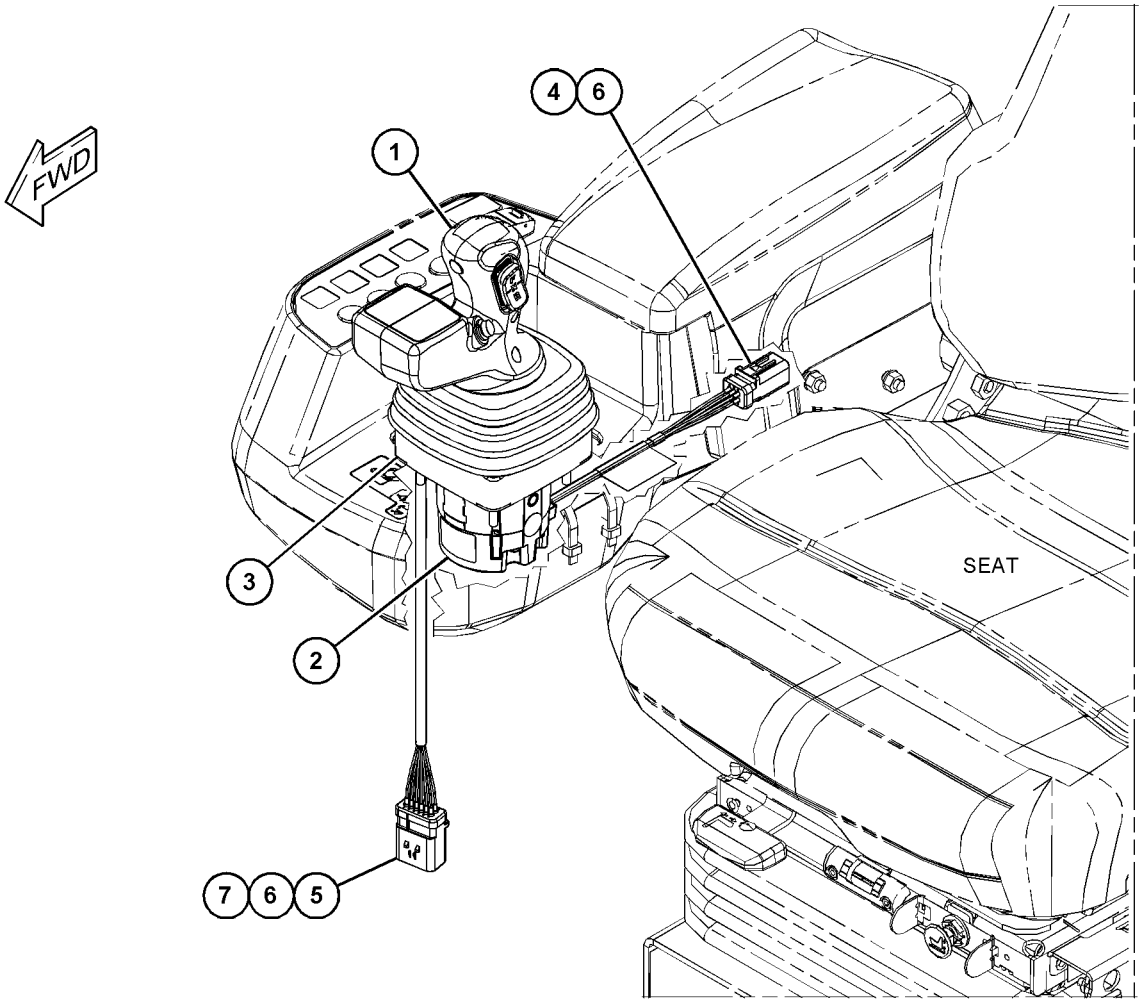

GRAPHIC #1 <END> g06000666

458-8674 CONTROL GP-HANDLE–3-VALVE

S/N: TNS1-UP

PART OF 506-8480 CONTROL & MTG GP-ELHYD

SMCS-5063, 5705 **i06649005**

NOTE	REF NO	GRAPHIC REF	PART NUMBER	QTY	PART NAME 1 2 3 4 5 6 (PRODUCT LEVEL)	SEE PAGE
Y	1	1	**328-5933**	1	CONTROL GP-HANDLE (3-VALVE)	760
	2	1	**455-1861**	1	BASE AS-JOYSTICK	
		1	**9X-3401**	6	PIN-CONNECTOR (16-GA TO 18-GA)	
M		1	**280-0440**	4	STUD-MOUNTING (M6X1-THD)	
		1	**281-3136**	1	RECEPTACLE AS-CONNECTOR (6-PIN)	
	3	1	**285-0150**	1	BOOT	
	4	1	**281-3136**	1	RECEPTACLE AS-CONNECTOR (6-PIN)	
	5	1	**260-6728**	1	RECEPTACLE AS-CONNECTOR (12-PIN)	
	6	1	**9X-3401**	17	PIN-CONNECTOR (16-GA TO 18-GA)	
	7	1	**8T-8737**	1	PLUG-SEAL	

M - METRIC PART
Y - SEPARATE ILLUSTRATION

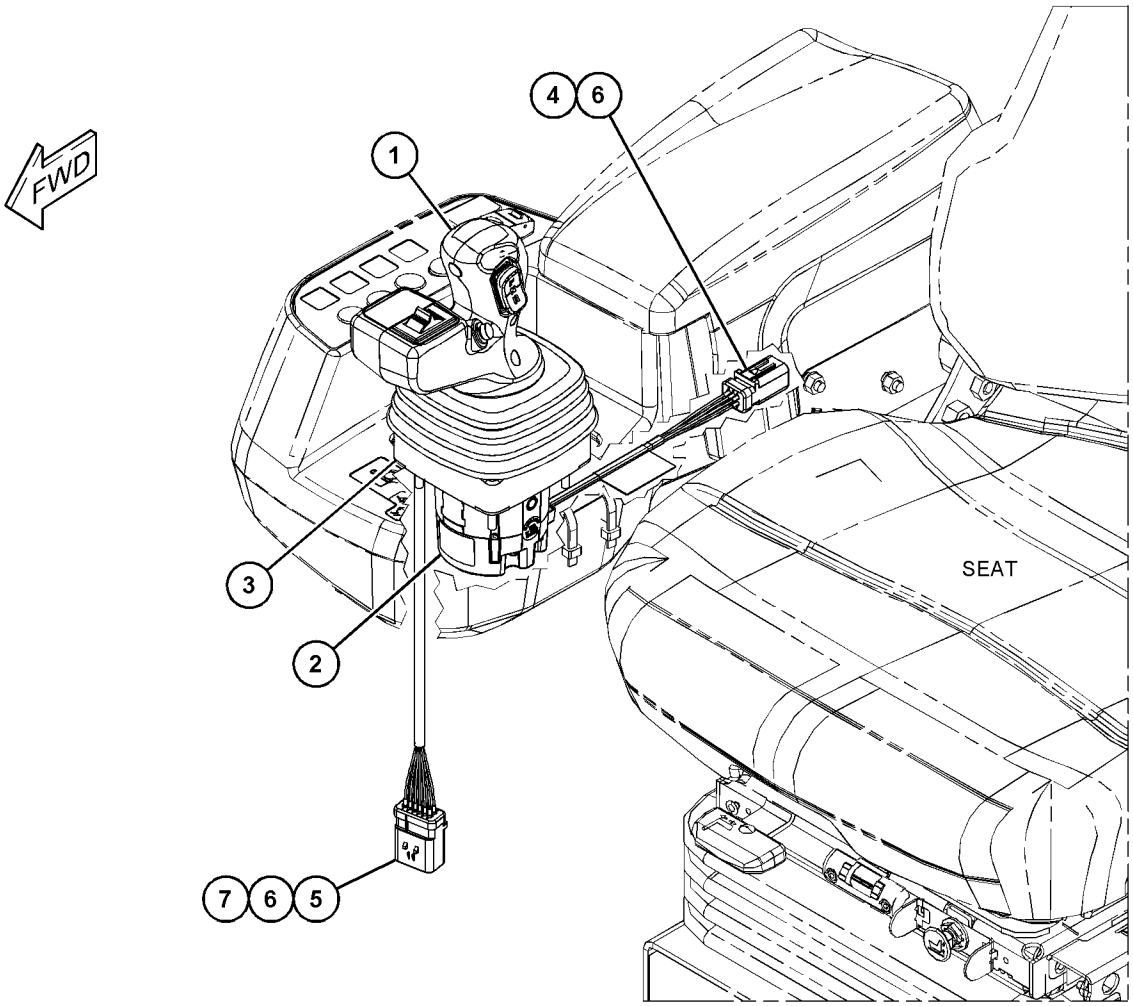

GRAPHIC #1 <END> g06001385

461-2922 CONTROL GP-MONITOR

S/N: TNS1-UP

PART OF 456-5791 CONTROL AR-MONITOR

SMCS-7490, 7494, 7601 **i06648375**

NOTE	REF NO	GRAPHIC REF	PART NUMBER	QTY	PART NAME 1 2 3 4 5 6 (PRODUCT LEVEL)	SEE PAGE
Y	1	1	**420-4284**	1	DISPLAY GP-MONITOR	772
Y	2	1	**463-0707**	1	MODULE GP-KEYPAD	808

Y - SEPARATE ILLUSTRATION

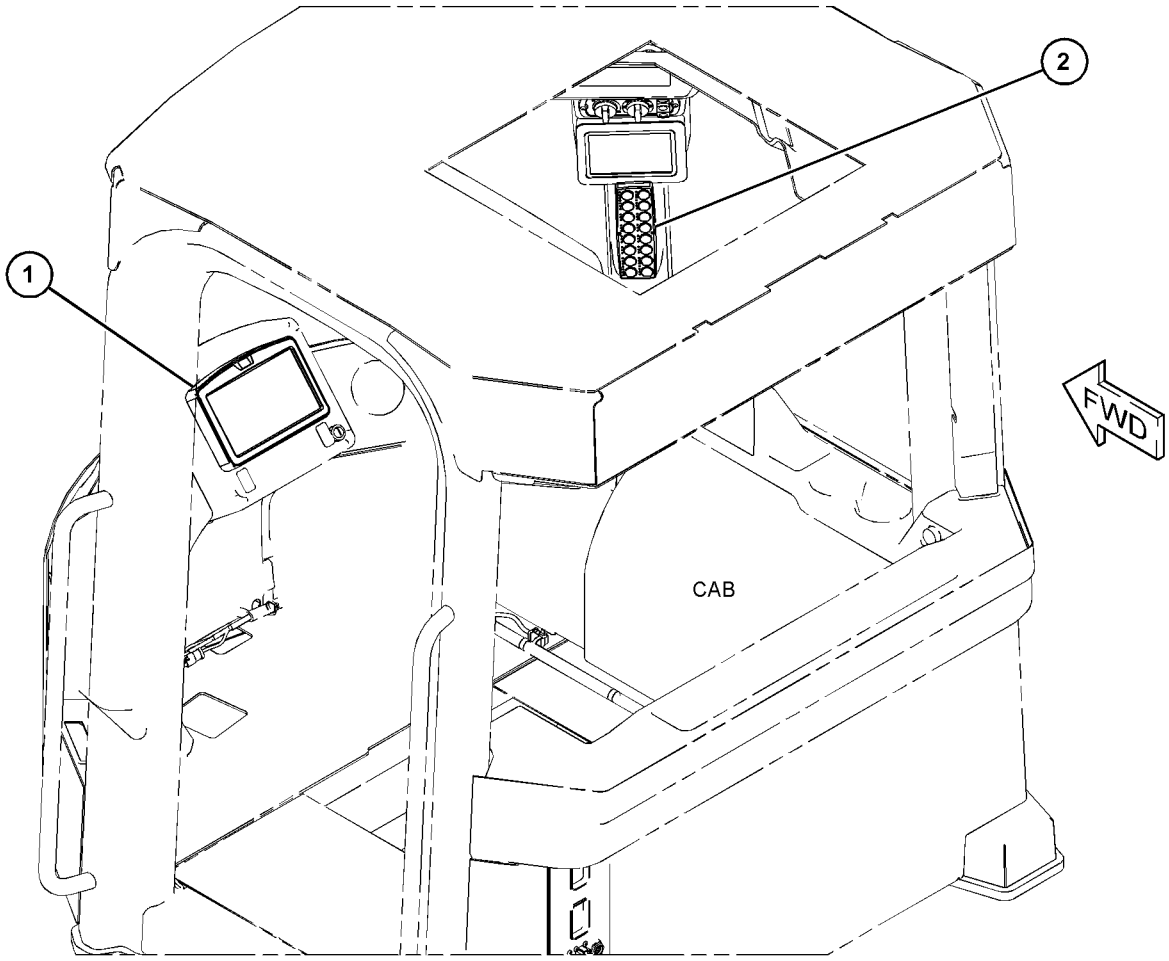

GRAPHIC #1 <END> g06049071

459-5277 CONTROL GP-STEERING

S/N: TNS1-UP

PART OF 503-1904 OPERATOR AR

SMCS-4310, 4338, 4343 **i06656362**

NOTE	REF NO	GRAPHIC REF	PART NUMBER	QTY	PART NAME 1 2 3 4 5 6 (PRODUCT LEVEL)	SEE PAGE
	1	1	**8R-2916**	1	COVER AS (CAT STEERING WHEEL)	
	2	1	**8R-2918**	1	KNOB AS	
		1	**3B-4508**	1	LOCKWASHER	
M		1	**8T-4244**	1	NUT (M12X1.75-THD)	
M	3	1	**9X-6032**	4	BOLT-SOCKET HEAD (M10X1.5X30-MM)	
	4	1	*148-8424*	1	TEE AS	
		1	**6V-8397**	1	SEAL-O-RING	
		1	**8T-8902**	1	ADAPTER-TEE	
	6	1	**300-6714**	8	MOUNT	
	7	1	**332-3578**	4	SPACER (8.2X12.7X22.8-MM THK)	
J	8	1	**349-6093**	1	PUMP GP-METERING (HMU)	
	9	1	**466-4381**	1	STEERING COLUMN GP	
		1	**149-2906**	1	KIT-NUT	
					(INCLUDES NUTS)	
	10	1	**350-1115**	1	BRACKET AS	
	11	1	**350-1547**	1	PLATE	
	12	1	**352-2557**	1	SEAL-INSULATION	
	13	1	**361-2566**	1	COVER	
	14	1	**363-5911**	1	STEERING WHEEL AS	
		1	**363-6423**	1	PLUG	
	15	1	**375-7235**	1	BRACKET AS	
	16	1	**386-5265**	1	ADAPTER AS	
	17	1	*148-8318*	2	CONNECTOR AS	
					(EACH INCLUDES)	
		1	**3K-0360**	1	SEAL-O-RING	
		1	**6V-8397**	1	SEAL-O-RING	
		1	**6V-8634**	1	CONNECTOR	
	18	1	*148-8326*	1	CONNECTOR AS	
		1	**3J-7354**	1	SEAL-O-RING	
		1	**6V-8397**	1	SEAL-O-RING	
		1	**6V-9872**	1	CONNECTOR	
	19	1	*148-8363*	2	ELBOW AS	
					(EACH INCLUDES)	
		1	**3K-0360**	1	SEAL-O-RING	
		1	**6V-8397**	1	SEAL-O-RING	
		1	**6V-9876**	1	ELBOW	
	20	1	*148-8371*	2	ELBOW AS	
					(EACH INCLUDES)	
		1	**6V-8397**	1	SEAL-O-RING	
		1	**8C-8988**	1	ELBOW	
	21	1	*164-5567*	1	COUPLER AS-QUICK DISCONNECT (MALE)	
		1	**6V-3965**	1	FITTING (QUICK DISCONNECT)	
		1	**214-7568**	1	SEAL-O-RING	
M	22	1	**174-8131**	3	SCREW-TRUSS HEAD (M4X0.7X12-MM)	
Y	23	1	**462-1019**	1	CONTROL GP-TRANSMISSION	767
	24	1	**3S-2093**	4	STRAP-CABLE	
M	25	1	**5C-7261**	8	NUT (M8X1.25-THD)	
	26	1	**5P-4116**	4	WASHER-HARD (8.8X20.5X2-MM THK)	

459-5277 **CONTROL GP-STEERING (**contd.**)** **i06656362**

NOTE	REF NO	GRAPHIC REF	PART NUMBER	QTY	PART NAME 1 2 3 4 5 6 (PRODUCT LEVEL)	SEE PAGE
	27	1	**6V-0852**	1	CAP-DUST	
M	28	1	**8C-6364**	4	BOLT-SOCKET HEAD (M5X0.8X14-MM)	
	29	1	**8T-0328**	4	WASHER-HARD (5.5X10X1-MM THK)	
	30	1	**8T-4121**	14	WASHER-HARD (11X21X2.5-MM THK)	
M	31	1	**8T-4137**	12	BOLT (M10X1.5X20-MM)	
	32	1	**8T-4224**	4	WASHER-HARD (8.8X16X2-MM THK)	
M	33	1	**8T-6912**	4	BOLT (M8X1.25X50-MM)	
	34	1	**9N-0869**	4	WASHER-HARD (8.8X25.5X2-MM THK)	
E	35	1	**7X-7877**		STRIP-EDGE (14-CM)	
	36	1	**130-5300**	1	CLIP	
					AVAILABLE REPAIR KIT(S):	
J			**257-8471**	1	KIT-SEAL (HMU)	
					(INCLUDES SEAL U-CUPS, SEAL O-RINGS & RING-BACK)	

E - ORDER BY THE CENTIMETER
J - KIT MARKED J SERVICES PART(S) MARKED J
M - METRIC PART
Y - SEPARATE ILLUSTRATION

459-5277 **CONTROL GP-STEERING (**contd.**)** **i06656362**

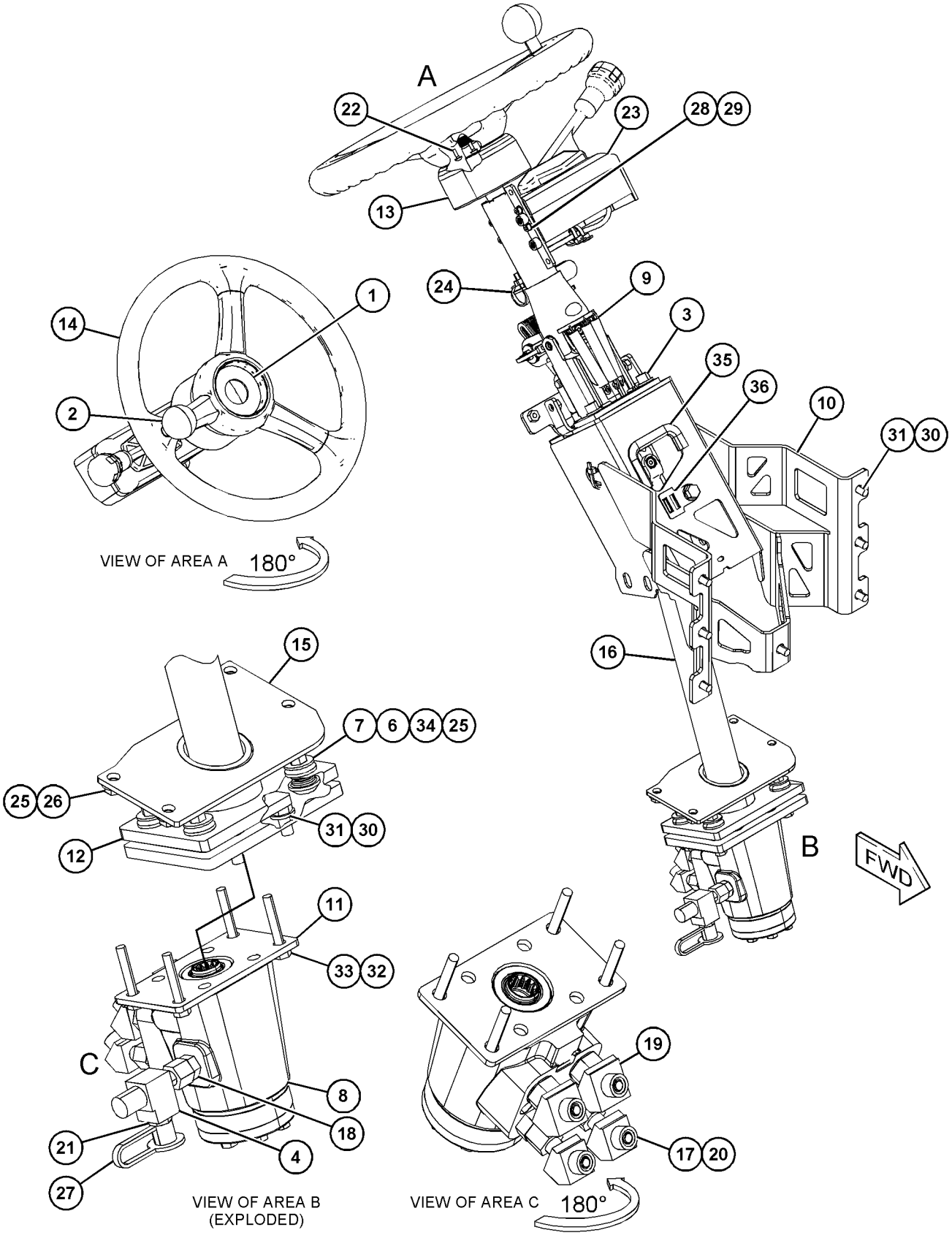

GRAPHIC #1 <END> g06048266

462-1019 CONTROL GP-TRANSMISSION

S/N: TNS1-UP

PART OF 459-5277 CONTROL GP-STEERING

SMCS-3065, 3168

i06815170

NOTE	REF NO	GRAPHIC REF	PART NUMBER	QTY	PART NAME 1 2 3 4 5 6 (PRODUCT LEVEL)	SEE PAGE
	1	1	**102-8801**	1	KIT-RECEPTACLE (12-PIN)	
					(INCLUDES RECEPTACLE AS & WEDGE)	
	2	1	**8T-8730**	4	SOCKET-CONNECTOR (16-GA TO 18-GA)	
	3	1	**8T-8729**	9	PIN-CONNECTOR (16-GA TO 18-GA)	
	4	1	**101-9161**	1	WIRE AS	
	5	1	**155-2271**	1	KIT-CONNECTING PLUG (4-PIN)	
					(INCLUDES PLUG AS, WEDGE, & INTERFACE SEAL)	
	6	1	**9G-3695**	2	PLUG-SEAL	

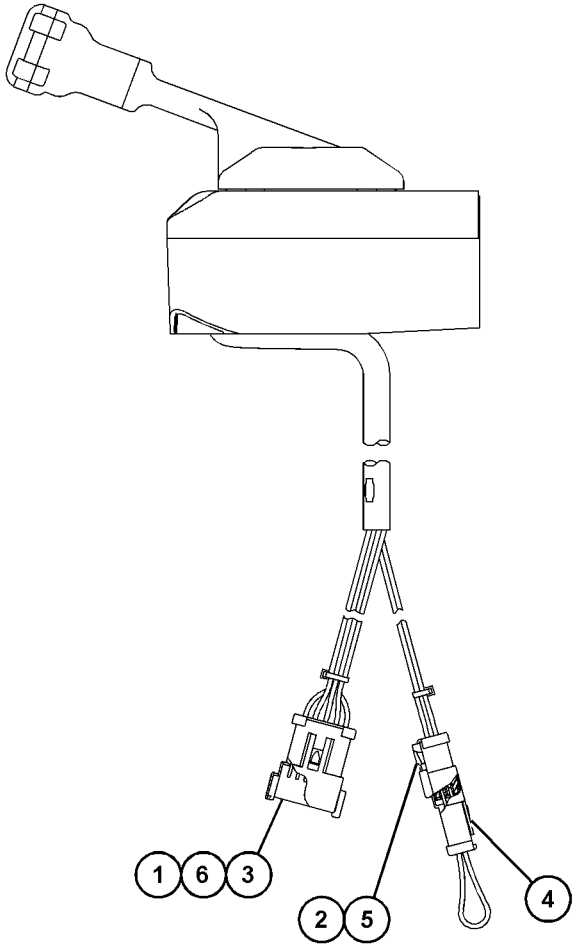

GRAPHIC #1 <END> g06024890

388-3724 COVER GP-CAB

S/N: TNS1-UP

PART OF 455-3941 OPERATOR AR-ENCLOSED ROPS

SMCS-7301 **i05807882**

NOTE	REF NO	GRAPHIC REF	PART NUMBER	QTY	PART NAME 1 2 3 4 5 6 (PRODUCT LEVEL)	SEE PAGE
	1	1	**352-6099**	1	COVER	
M	2	1	**9X-2043**	7	SCREW-TRUSS HEAD (M6X1X14-MM)	

M - METRIC PART

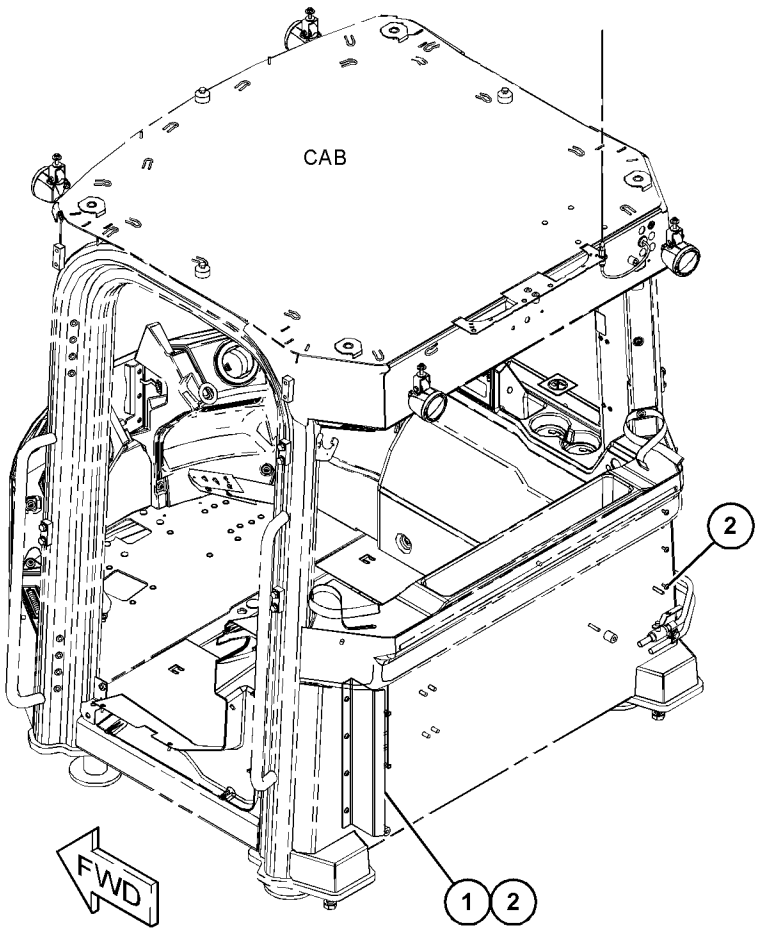

GRAPHIC #1 <END> g03687274

458-0049 COVER GP-CAB

S/N: TNS1-UP

PART OF 492-3988 CONFIGURATION AR, 492-3989 PRECLEANER AR-CAB AIR

SMCS-7301 **i06657242**

NOTE	REF NO	GRAPHIC REF	PART NUMBER	QTY	PART NAME 1 2 3 4 5 6 (PRODUCT LEVEL)	SEE PAGE
	1	1	**296-6748**	1	COVER AS (HVAC) (MAIN)	
	2	1	**296-6750**	1	COVER AS (HVAC) (TOP)	
	3	1	**296-6751**	1	SEAL	
	4	1	**296-6752**	1	SEAL	
	5	1	**299-3204**	1	SEAL	
	6	1	**299-3210**	1	COVER AS (BOTTOM)	
	7	1	**352-4145**	2	KEEPER	
	8	1	**372-0686**	1	DUCT-INLET	
	9	1	**392-5579**	4	LATCH AS	
	10	1	**392-5581**	4	HINGE AS	
M	11	1	**138-8454**	24	SCREW-TRUSS HEAD (M4X0.7X10-MM)	
	12	1	**2G-8096**	1	MOUNTING	
M	13	1	**368-0571**	2	SCREW-MACHINE (M4X0.7X16-MM)	
M	14	1	**5P-7848**	2	NUT (M4X0.7-THD)	
	15	1	**6P-5560**	2	GROMMET	
	16	1	**9X-2038**	16	WASHER (7X19X2-MM THK)	
M	17	1	**9X-2043**	13	SCREW-TRUSS HEAD (M6X1X14-MM)	
M	18	1	**9X-2046**	3	SCREW-TRUSS HEAD (M6X1X35-MM)	
E	19	1	**3E-6602**		SEAL (46-CM)	
E	19A	1	**3E-6602**		SEAL (180-CM)	
E	19B	1	**3E-6602**		SEAL (14-CM)	
E	20	1	**3E-3805**		SEAL (118-CM EACH)	

E - ORDER BY THE CENTIMETER
M - METRIC PART

458-0049 **COVER GP-CAB** (contd.) **i06657242**

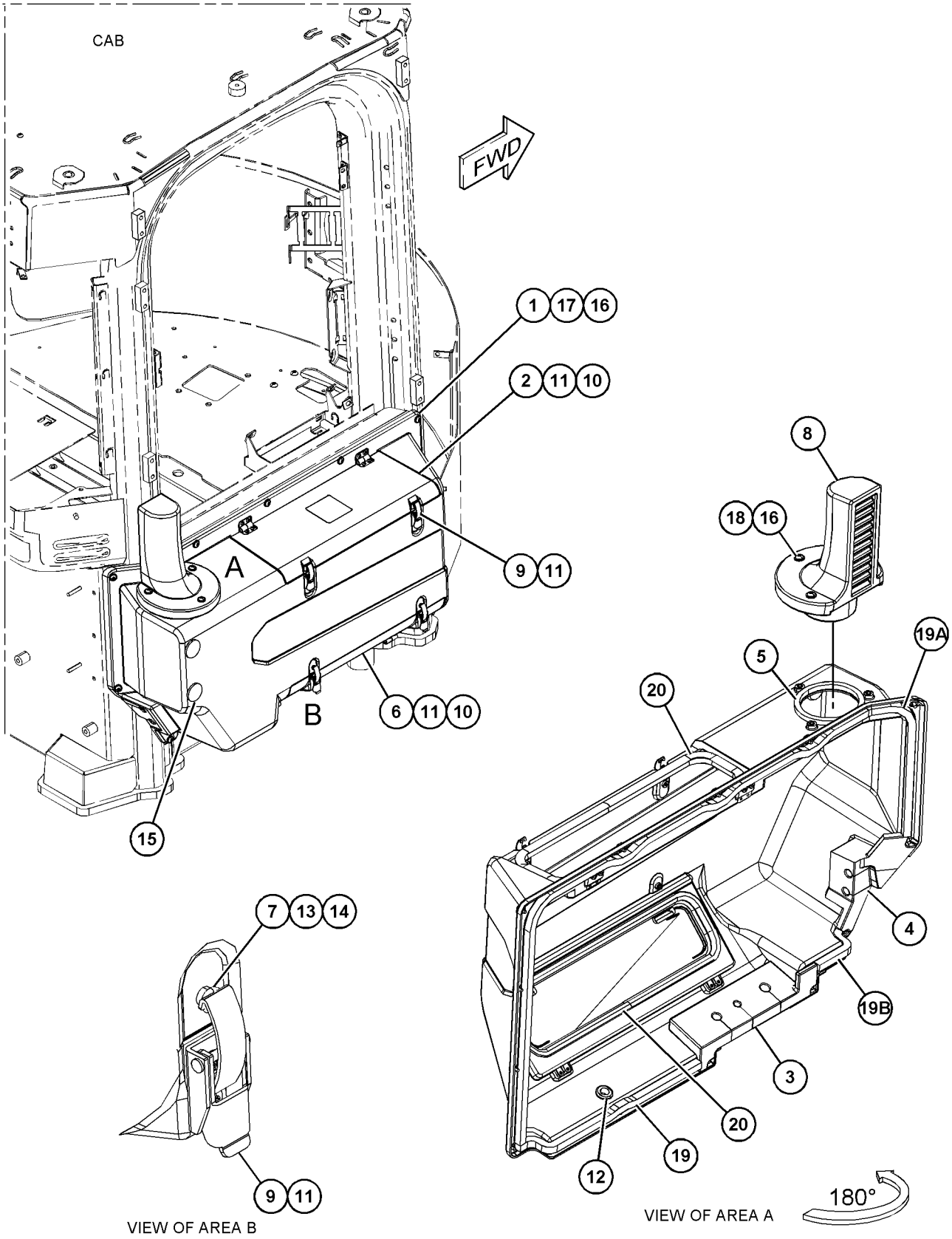

GRAPHIC #1 <END> g06048238

450-1842 COVER GP-CONSOLE

S/N: TNS1-UP

PART OF 456-5791 CONTROL AR-MONITOR

SMCS-5258 **i06653533**

NOTE	REF NO	GRAPHIC REF	PART NUMBER	QTY	PART NAME 1 2 3 4 5 6 (PRODUCT LEVEL)	SEE PAGE
	1	1	**460-3526**	1	COVER (RH)	
Y	2	1	*461-6791*	1	SWITCH GP-ROCKER (TURN SIGNAL, HAZARD)	220
M	3	1	**138-8454**	3	SCREW-TRUSS HEAD (M4X0.7X10-MM)	

M - METRIC PART
Y - SEPARATE ILLUSTRATION

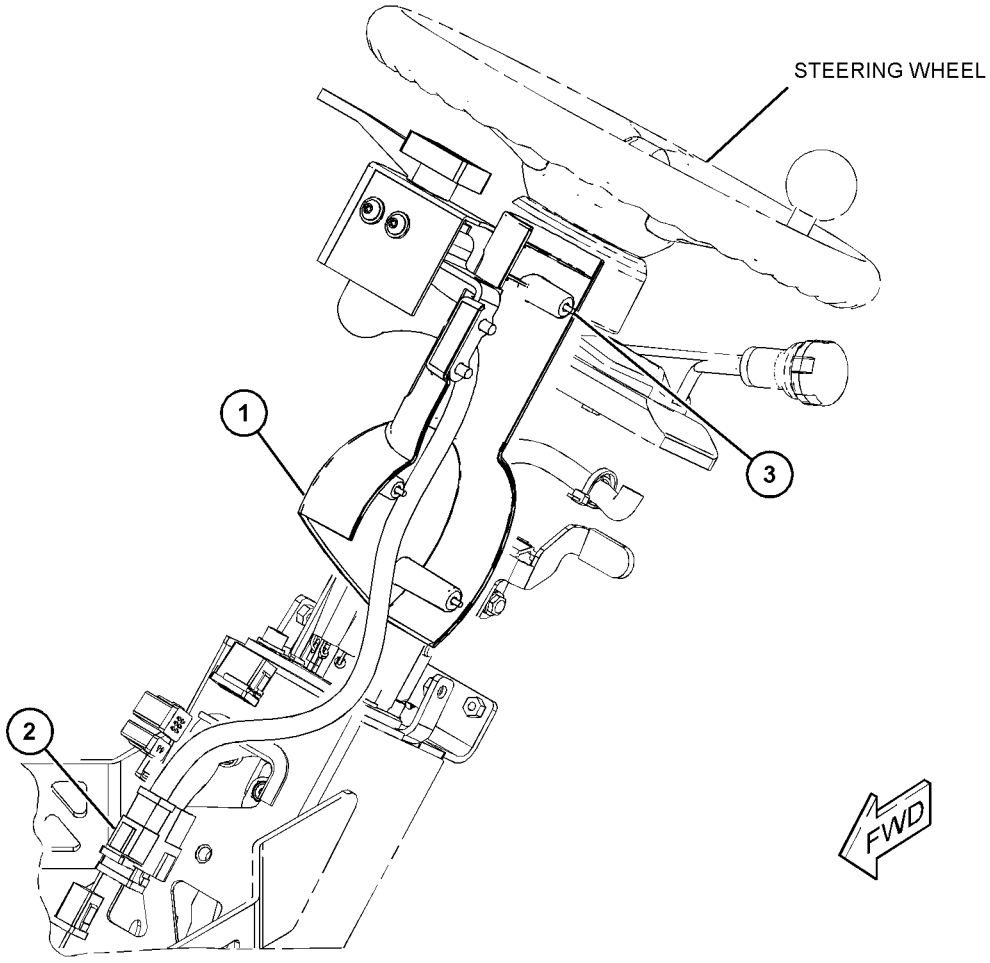

GRAPHIC #1 <END> g06048937

420-4284 DISPLAY GP-MONITOR—POWERSHIFT

S/N: TNS1-UP

PART OF 461-2922 CONTROL GP-MONITOR

SMCS-7490 **i06648376**

NOTE	REF NO	GRAPHIC REF	PART NUMBER	QTY	PART NAME 1 2 3 4 5 6 (PRODUCT LEVEL)	SEE PAGE
	1	1	**364-8277**	1	FILM-IDENTIFICATION (CAT)	
	2	1	**479-8936**	1	SOFTWARE GP-MONITOR (INSTRUMENT PANEL)	

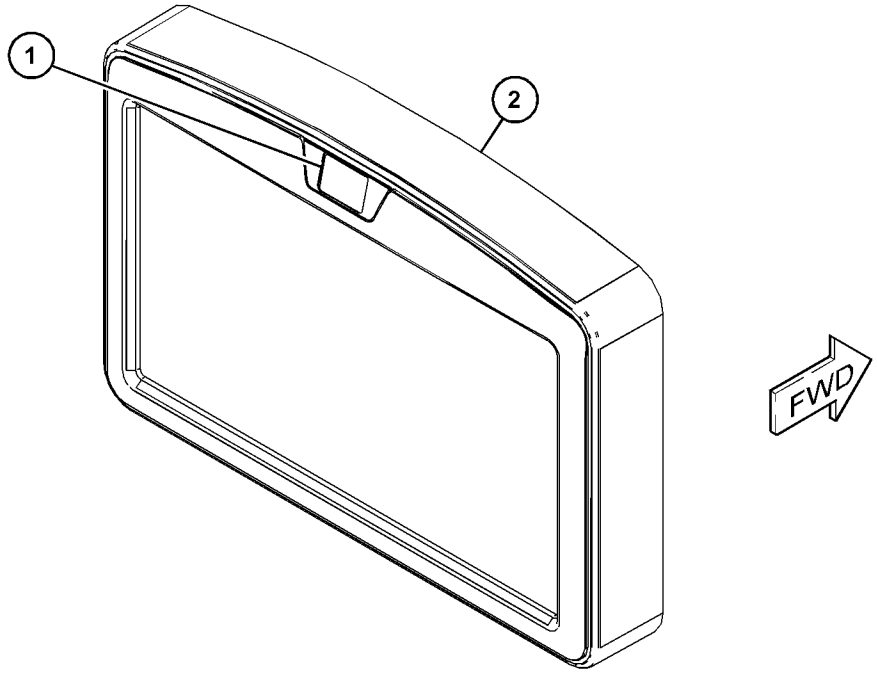

GRAPHIC #1 <END> g06045649

372-3954 DOOR GP-CAB–RH

S/N: TNS1-UP

PART OF 493-9618 CAB AR-ENCLOSED ROPS

SMCS-7308 **i06780629**

NOTE	REF NO	GRAPHIC REF	PART NUMBER	QTY	PART NAME 1 2 3 4 5 6 (PRODUCT LEVEL)	SEE PAGE
	1	1	**382-9155**	2	HINGE AS	
					(EACH INCLUDES)	
	1A	1	**372-5042**	2	BUSHING	
M		1	**8T-3490**	2	NUT-WELD (M10X1.5-THD)	
	2	1	**382-9160**	3	PLATE AS	
Y	3	1	**382-9208**	1	WINDOW GP-DOOR (RH)	863
	4	1	**388-4274**	1	PLATE AS	
	5	1	**5P-4116**	3	WASHER-HARD (8.8X20.5X2-MM THK)	
	6	1	**8T-4121**	5	WASHER-HARD (11X21X2.5-MM THK)	
M	7	1	**8T-4137**	5	BOLT (M10X1.5X20-MM)	
M	8	1	**9X-2039**	6	SCREW-TRUSS HEAD (M10X1.5X35-MM)	
M	9	1	**9X-2044**	14	SCREW-TRUSS HEAD (M6X1X16-MM)	
M	10	1	**127-2170**	2	SCREW-TRUSS HEAD (M8X1.25X20-MM)	
E	11	1	**345-3155**		SEAL (333-CM)	
	12	1	**369-9949**	1	FILM-INSTRUCTION (ALTERNATE EXIT, READ OMM)	

E - ORDER BY THE CENTIMETER
M - METRIC PART
Y - SEPARATE ILLUSTRATION

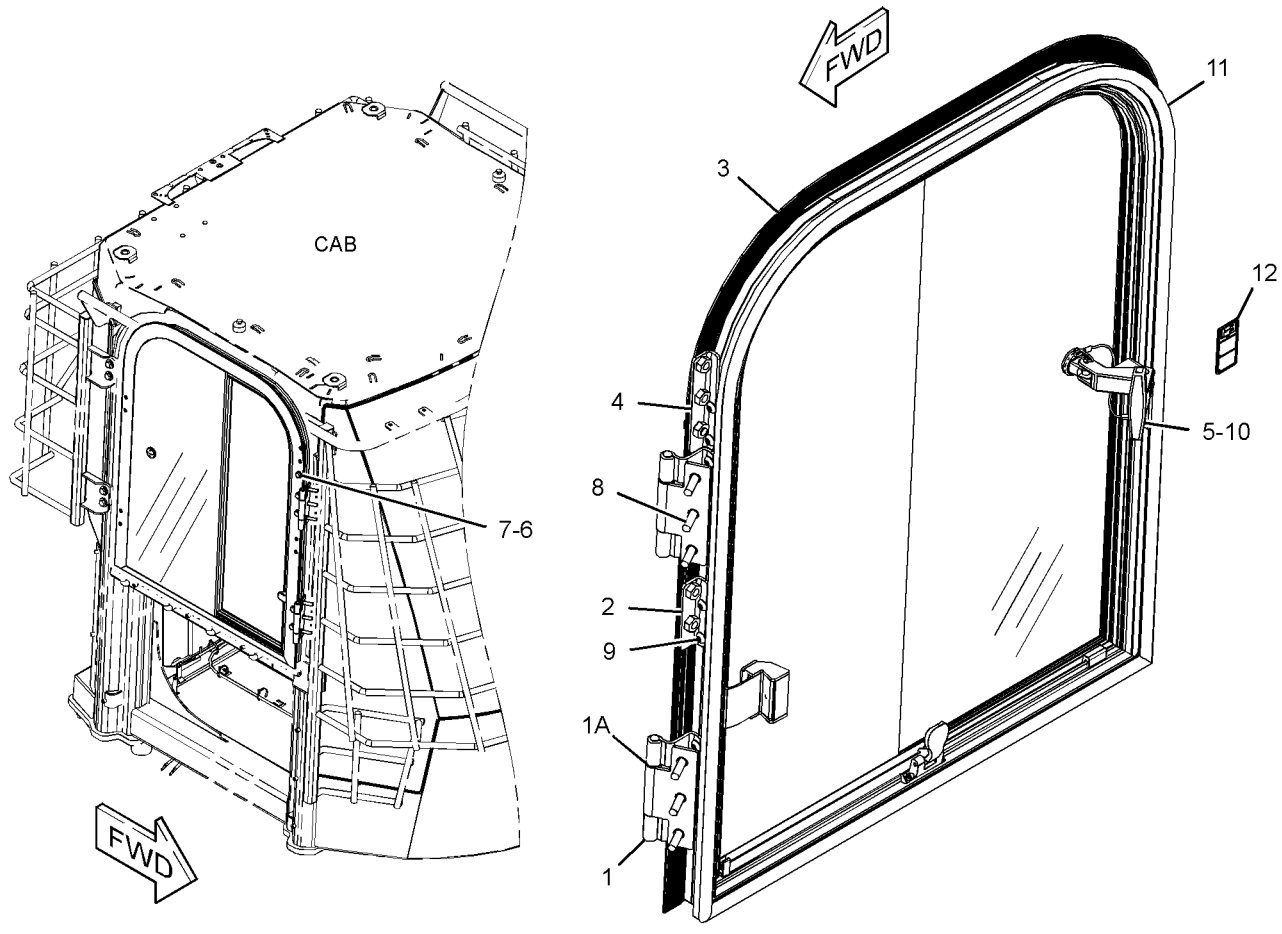

GRAPHIC #1 <END> g06013462

391-5327 DOOR GP-CAB–LH

S/N: TNS1-UP

PART OF 503-1906 CAB AR-ENCLOSED ROPS

SMCS-7308 **i06683250**

NOTE	REF NO	GRAPHIC REF	PART NUMBER	QTY	PART NAME 1 2 3 4 5 6 (PRODUCT LEVEL)	SEE PAGE
	1	1	**6V-7636**	1	PIN AS-SPRING	
	2	1	**085-7329**	2	SPACER (9X19X30-MM THK)	
	3	1	**108-5471**	1	CLEVIS	
	4	1	**110-8152**	1	HANDLE AS-PULL	
	5	1	**178-5572**	4	SPACER-SPECIAL (WINDOW)	
M	6	1	**195-3699**	1	NUT (M8X1.25-THD)	
	7	1	**214-9186**	12	BUTTON	
	8	1	**242-5206**	3	SPACER (6.4X12.5X0.76-MM THK)	
J	9	1	**252-1862**	1	HANDLE AS-PULL	
	10	1	**252-1863**	1	GASKET	
	11	1	**269-2890**	1	CLEVIS	
	12	1	**269-2892**	1	PIN	
	13	1	**285-3692**	1	SPACER-SPECIAL	
	14	1	**302-6392**	1	PLUG	
M	15	1	**322-0819**	5	INSERT-THREADED (M10X1.5-THD)	
	16	1	**346-3811**	1	NUT-SQUARE	
	17	1	**366-4535**	1	DOOR AS-CAB (LH)	
		1	**5P-0537**	2	WASHER-HARD (7.2X14.5X2-MM THK)	
M		1	**184-0982**	2	SCREW-PAN HEAD (M6X1X16-MM)	
	18	1	**371-6088**	1	GLASS	
	19	1	**371-9511**	2	HINGE AS	
					(EACH INCLUDES)	
	19A	1	**372-5042**	2	BUSHING	
	20	1	**371-9520**	1	TUBE AS	
	21	1	**475-8095**	2	PLATE AS	
					(EACH INCLUDES)	
M		1	**8T-3490**	2	NUT-WELD (M10X1.5-THD)	
	22	1	**383-3563**	1	BELLCRANK AS	
Y	23	1	**392-3980**	1	WINDOW GP-DOOR (LH)	864
	24	1	**475-9824**	1	SPRING-GAS (DOOR)	
	25	1	**446-0368**	1	PLATE AS	
	26	1	**418-0207**	1	ROD	
	27	1	**418-0210**	1	BUSHING	
	28	1	**422-1675**	2	KNOB	
	29	1	**423-2603**	1	LATCH AS	
	30	1	**426-5412**	1	SEAL AS	
		1	**426-2831**	1	SEAL-DOOR	
		1	**426-5409**	48	PIN	
	31	1	**436-1542**	4	PLUG-BUTTON	
	32	1	**439-0688**	1	STRIKER AS	
	33	1	**031-0249**	1	LOCKNUT (10-24-THD)	
M	34	1	**105-3486**	2	BOLT-SOCKET HEAD (M6X1X50-MM)	
	35	1	**117-8929**	1	WASHER (6.6X22X2-MM THK)	
M	36	1	**127-2170**	10	SCREW-TRUSS HEAD (M8X1.25X20-MM)	
M	37	1	**137-2255**	1	BOLT (M8X1.25X8-MM)	
M	38	1	**195-0936**	5	INSERT-THREADED (M6X1-THD)	
	39	1	**3E-4353**	4	WASHER-HARD (11X25X3-MM THK)	
M	40	1	**5C-9553**	1	BOLT (M6X1X16-MM)	

391-5327 **DOOR GP-CAB (**contd.**)** **i06683250**

NOTE	REF NO	GRAPHIC REF	PART NUMBER	QTY	PART NAME 1 2 3 4 5 6 (PRODUCT LEVEL)	SEE PAGE
	41	1	**5P-4116**	11	WASHER-HARD (8.8X20.5X2-MM THK)	
	42	1	**6V-5839**	2	WASHER (11X21X2.5-MM THK)	
	43	1	**7M-9910**	1	SCREW-MACHINE (10-24X1-IN)	
M	44	1	**8T-3991**	4	SCREW-BUTTON HEAD (M6X1X20-MM)	
M	45	1	**8T-4138**	2	BOLT (M6X1X20-MM)	
	46	1	**8T-6902**	1	CLIP	
M	47	1	**9X-2039**	8	SCREW-TRUSS HEAD (M10X1.5X35-MM)	
M	48	1	**9X-2040**	2	SCREW-TRUSS HEAD (M10X1.5X25-MM)	
M	49	1	**9X-2041**	2	SCREW-TRUSS HEAD (M10X1.5X20-MM)	
	50	1	**9X-8256**	2	WASHER (6.6X12X2-MM THK)	
	51	1	**9X-6421**	1	RING-RETAINING	
	52	1	**486-4041**	1	BRACKET AS	
M		1	**8T-3597**	1	NUT-WELD (M12X1.75-THD)	
	53	1	**391-5346**	1	COVER-DOOR	
	54	1	**206-1667**	6	CLIP	
	55	1	**486-9155**	1	BUMPER AS	
M	56	1	**9X-6155**	3	BOLT-SOCKET HEAD (M6X1X16.7-MM)	
M	57	1	**8T-8549**	1	LOCKNUT (M12X1.75-THD)	

J - REQUIRES CORPORATE KEY
M - METRIC PART
Y - SEPARATE ILLUSTRATION

391-5327 **DOOR GP-CAB** (contd.) **i06683250**

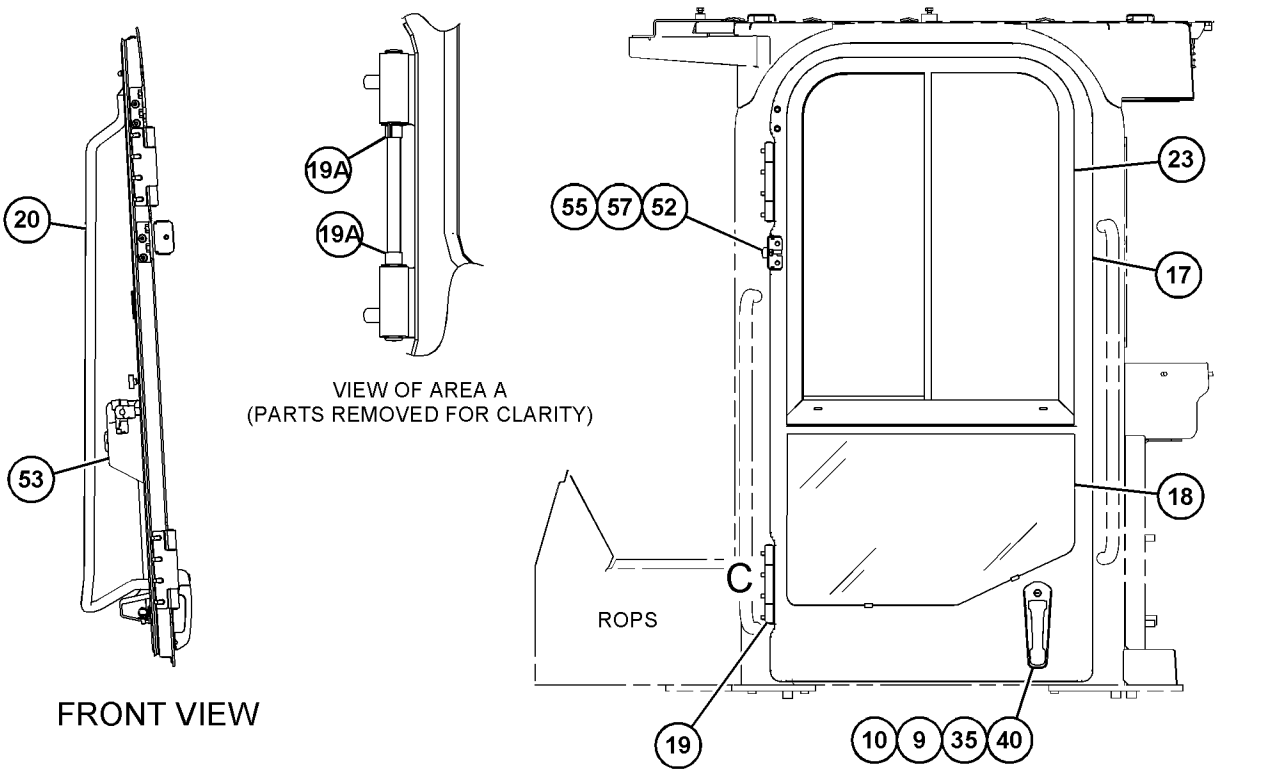

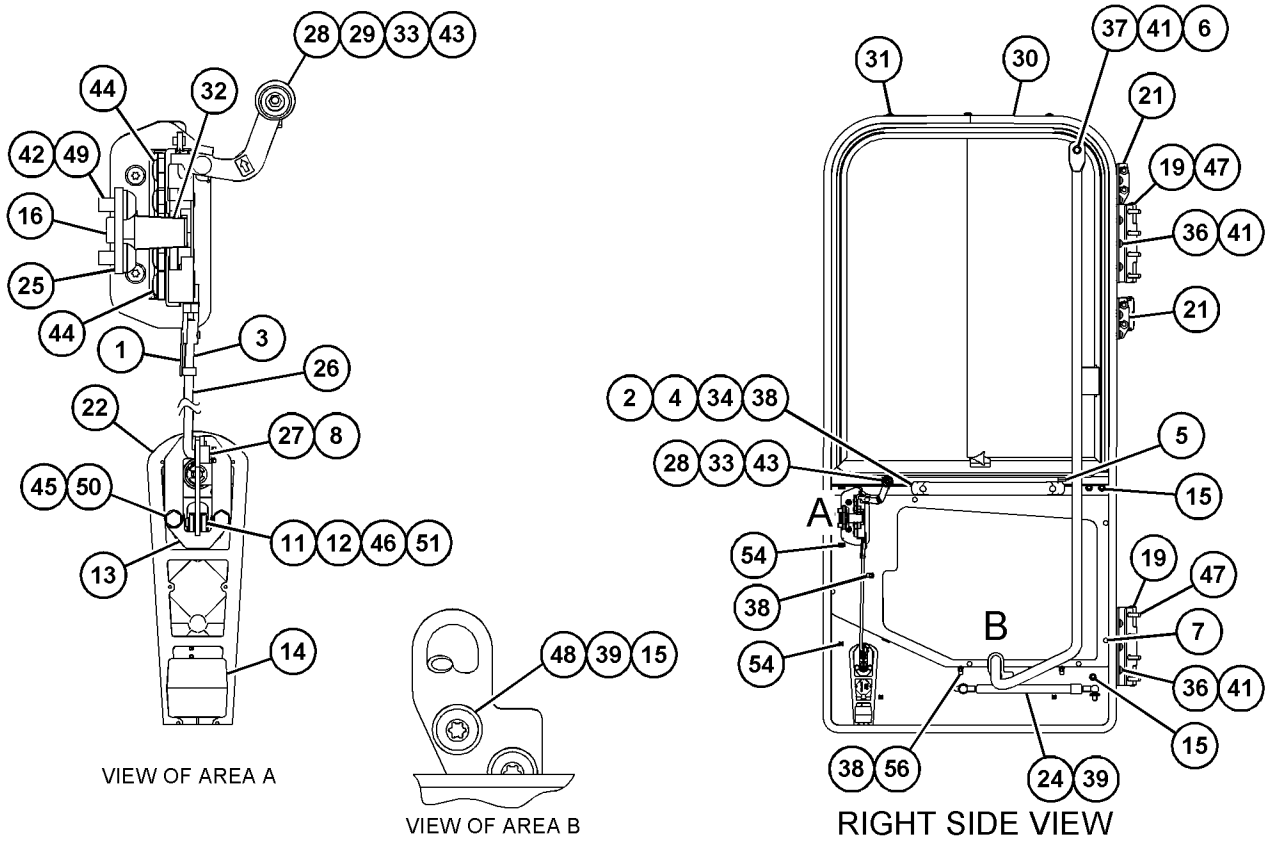

GRAPHIC #1 <END> g06075312

461-4302 DOOR GP-CAB–RH

S/N: TNS1-UP

PART OF 493-9616, 493-9617, 493-9619 CAB AR-ENCLOSED ROPS

SMCS-7308 **i06733516**

NOTE	REF NO	GRAPHIC REF	PART NUMBER	QTY	PART NAME 1 2 3 4 5 6 (PRODUCT LEVEL)	SEE PAGE
	1	1	**154-8079**	2	NUT-RETAINER (U-TYPE)	
	2	1	**280-8618**	1	HAMMER	
	3	1	**214-9186**	7	BUTTON	
Y	4	1	**461-3172**	1	WINDOW GP-DOOR	865
M	5	1	**7Y-3173**	2	SCREW-BUTTON HEAD (M4X0.7X12-MM)	
M	6	1	**9X-2039**	6	SCREW-TRUSS HEAD (M10X1.5X35-MM)	
	7	1	**467-5351**	1	FILM-INSTRUCTION (ALTERNATE EXIT, REMOVE WINDOW)	
	8	1	**178-5572**	2	SPACER-SPECIAL (WINDOW)	

M - METRIC PART
Y - SEPARATE ILLUSTRATION

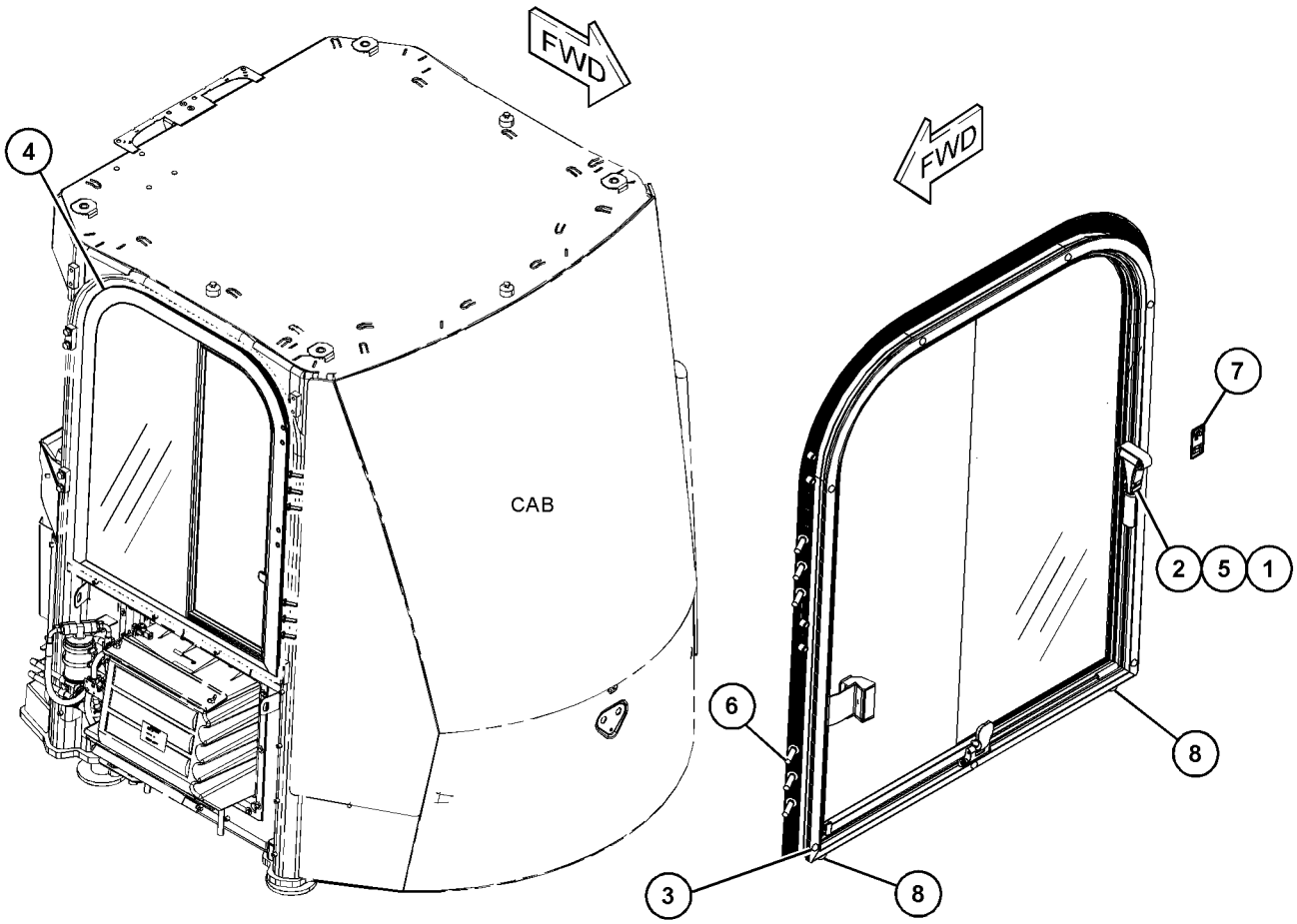

GRAPHIC #1 <END> g06096732

502-6446 DOOR GP-CAB

S/N: TNS1-UP

PART OF 493-9616, 493-9617, 493-9619 CAB AR-ENCLOSED ROPS

SMCS-7308 **i06677574**

NOTE	REF NO	GRAPHIC REF	PART NUMBER	QTY	PART NAME 1 2 3 4 5 6 (PRODUCT LEVEL)	SEE PAGE
	1	2	**6V-7636**	1	PIN AS-SPRING	
M	2	1	**6V-7687**	1	LOCKNUT (M12X1.75-THD)	
M	3	2	**9X-6155**	1	BOLT-SOCKET HEAD (M6X1X16.7-MM)	
	4	2	**090-9555**	2	CLIP	
	5	2	**178-5572**	4	SPACER-SPECIAL (WINDOW)	
	6	2	**206-1667**	6	CLIP	
	7	2	**214-9186**	12	BUTTON	
J	8	2	**252-1862**	1	HANDLE AS-PULL	
	9	2	**252-1863**	1	GASKET	
	10	2	**269-2890**	1	CLEVIS	
	11	2	**269-2892**	1	PIN	
	12	2	**285-3692**	1	SPACER-SPECIAL	
	13	1	**302-6392**	1	PLUG	
Y	14	1	**371-6089**	1	WINDOW GP-DOOR	862
	15	1,2	**371-9511**	2	HINGE AS	
					(EACH INCLUDES)	
	15A	2	**372-5042**	2	BUSHING	
	16	1	**371-9522**	1	BRACKET	
	17	2	**372-7280**	1	LATCH AS	
	18	2	**374-3585**	1	END-YOKE ROD	
	19	2	**374-3586**	1	PIN AS-SPRING	
	20	2	**377-0647**	1	BRACKET	
	21	2	**383-3563**	1	BELLCRANK AS	
	22	2	**418-0207**	1	ROD	
	23	2	**418-0210**	1	BUSHING	
	24	1	**426-5412**	1	SEAL AS	
	25	2	**436-1542**	6	PLUG-BUTTON	
	26	2	**439-0688**	1	STRIKER AS	
	27	2	**446-0368**	1	PLATE AS	
	28	2	**454-0658**	1	SPRING-GAS (CAB DOOR)	
	29	1	**460-7427**	1	COVER-DOOR	
	30	1	**462-6225**	1	GLASS	
	31	1	**465-5966**	1	DOOR AS-CAB	
		1	**5P-0537**	2	WASHER-HARD (7.2X14.5X2-MM THK)	
M		1	**184-0982**	2	SCREW-PAN HEAD (M6X1X16-MM)	
	32	1	**465-5987**	1	TUBE AS	
	33	1	**474-7583**	1	HANDLE AS	
	34	1	**475-8095**	2	PLATE AS	
M		1	**8T-3490**	2	NUT-WELD (M10X1.5-THD)	
	35	1	**486-4041**	1	BRACKET AS	
M		1	**8T-3597**	1	NUT-WELD (M12X1.75-THD)	
	36	1	**486-9155**	1	BUMPER AS	
		1	*486-9154*	1	STUD-MOUNTING	
	37	1,2	**114-6658**	5	WASHER (6.5X17X1-MM THK)	
	38	2	**108-5471**	1	CLEVIS	
	39	2	**119-9706**	2	STUD-BALL	
M	40	2	**121-9870**	4	SCREW-MACHINE (M6X1X40-MM)	
M	41	1,2	**127-2170**	10	SCREW-TRUSS HEAD (M8X1.25X20-MM)	

502-6446 **DOOR GP-CAB (**contd.**)** **i06677574**

NOTE	REF NO	GRAPHIC REF	PART NUMBER	QTY	PART NAME 1 2 3 4 5 6 (PRODUCT LEVEL)	SEE PAGE
M	42	1	**137-2255**	1	BOLT (M8X1.25X8-MM)	
M	43	2	**195-0936**	1	INSERT-THREADED (M6X1-THD)	
M	44	1	**195-3699**	1	NUT (M8X1.25-THD)	
	45	2	**242-5206**	3	SPACER (6.4X12.5X0.76-MM THK)	
M	46	1,2	**322-0819**	6	INSERT-THREADED (M10X1.5-THD)	
M	47	2	**344-5673**	4	NUT (M6X1-THD)	
	48	2	**346-3811**	1	NUT-SQUARE	
	49	2	**3E-4353**	5	WASHER-HARD (11X25X3-MM THK)	
M	50	1,2	**172-8591**	3	NUT-SPRING (M6X1-THD)	
M	51	2	**5C-9553**	1	BOLT (M6X1X16-MM)	
	52	1,2	**5P-4116**	11	WASHER-HARD (8.8X20.5X2-MM THK)	
	53	1	**6V-5839**	3	WASHER (11X21X2.5-MM THK)	
M	54	2	**8T-4138**	2	BOLT (M6X1X20-MM)	
	55	2	**8T-6902**	1	CLIP	
	56	2	**9X-2038**	1	WASHER (7X19X2-MM THK)	
M	57	1,2	**9X-2039**	8	SCREW-TRUSS HEAD (M10X1.5X35-MM)	
M	58	1,2	**9X-2040**	6	SCREW-TRUSS HEAD (M10X1.5X25-MM)	
M	59	2	**9X-2041**	2	SCREW-TRUSS HEAD (M10X1.5X20-MM)	
M	60	2	**9X-2042**	2	SCREW-TRUSS HEAD (M6X1X12-MM)	
M	61	1,2	**9X-2044**	3	SCREW-TRUSS HEAD (M6X1X16-MM)	
	62	2	**9X-6421**	1	RING-RETAINING	
	63	2	**9X-8256**	2	WASHER (6.6X12X2-MM THK)	

J - REQUIRES CORPORATE KEY
M - METRIC PART
Y - SEPARATE ILLUSTRATION

502-6446 **DOOR GP-CAB** (contd.) **i06677574**

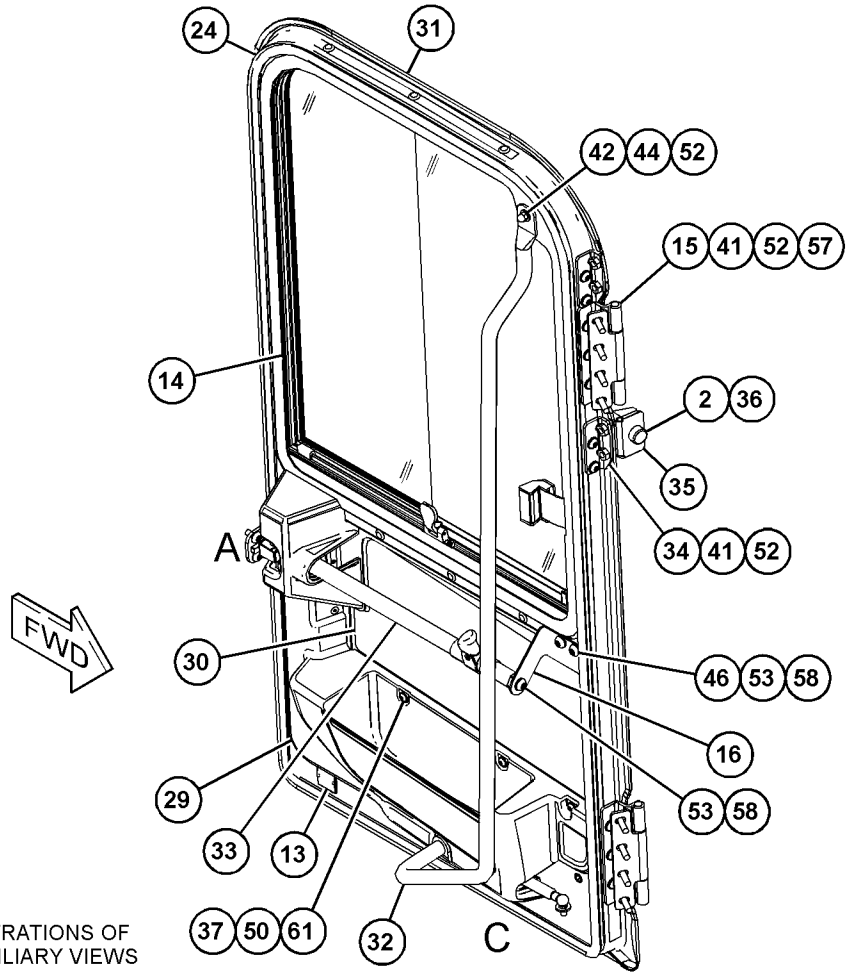

REFER TO ALL ILLUSTRATIONS OF THIS GROUP FOR AUXILIARY VIEWS

GRAPHIC #1 g06069795

502-6446 **DOOR GP-CAB (**contd.**)** **i06677574**

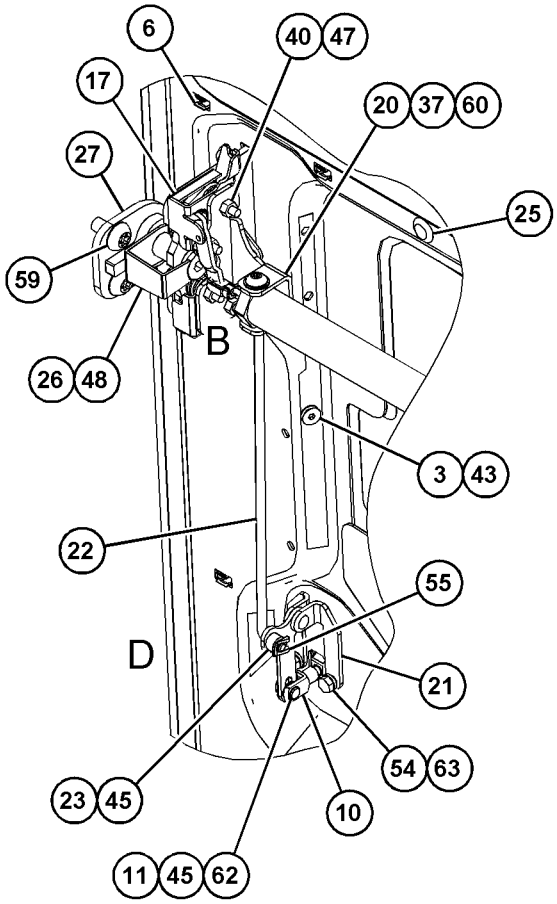

VIEW OF AREA A
(PARTS REMOVED FOR CLARITY)

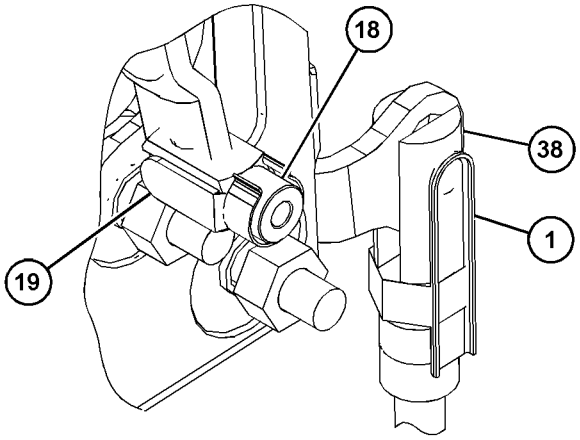

VIEW OF AREA B
(PARTS REMOVED FOR CLARITY)

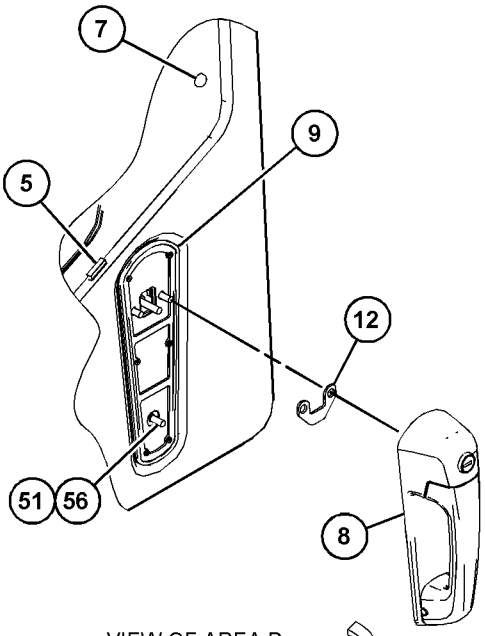

VIEW OF AREA D
(EXPLODED)

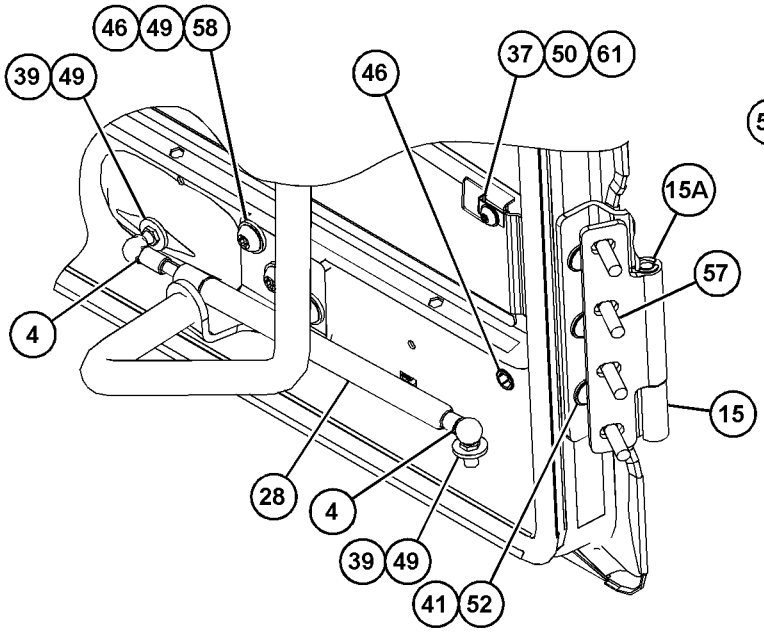

VIEW OF AREA C
(PARTS REMOVED FOR CLARITY)

GRAPHIC #2 <END> g06069796

502-6447 DOOR GP-CAB—LH

S/N: TNS1-UP

PART OF 493-9618 CAB AR-ENCLOSED ROPS

SMCS-7308 **i06795316**

NOTE	REF NO	GRAPHIC REF	PART NUMBER	QTY	PART NAME 1 2 3 4 5 6 (PRODUCT LEVEL)	SEE PAGE
	1	2	**6V-7636**	1	PIN AS-SPRING	
	2	2	**090-9555**	2	CLIP	
	3	2	**178-5572**	4	SPACER-SPECIAL (WINDOW)	
	4	2	**214-9186**	12	BUTTON	
J	5	2	**252-1862**	1	HANDLE AS-PULL	
	6	2	**252-1863**	1	GASKET	
	7	2	**269-2890**	1	CLEVIS	
M	8	1	**8T-4244**	1	NUT (M12X1.75-THD)	
M	9	2	**9X-6155**	1	BOLT-SOCKET HEAD (M6X1X16.7-MM)	
	10	2	**269-2892**	1	PIN	
	11	2	**285-3692**	1	SPACER-SPECIAL	
	12	1	**302-6392**	1	PLUG	
	13	2	**346-3811**	1	NUT-SQUARE	
	14	2	**367-2178**	1	SPRING-GAS (CAB DOOR)	
Y	15	1	**371-6089**	1	WINDOW GP-DOOR	862
	16	1	**371-9511**	2	HINGE AS	
					(EACH INCLUDES)	
	16A	1	**372-5042**	2	BUSHING	
	17	1	**371-9522**	1	BRACKET	
	18	2	**372-7280**	1	LATCH AS	
	19	2	**374-3585**	1	END-YOKE ROD	
	20	2	**374-3586**	1	PIN AS-SPRING	
	21	2	**377-0647**	1	BRACKET	
	22	2	**383-3563**	1	BELLCRANK AS	
	23	2	**418-0207**	1	ROD	
	24	2	**418-0210**	1	BUSHING	
	25	1	**426-5412**	1	SEAL AS	
	26	1	**436-1542**	6	PLUG-BUTTON	
	27	2	**439-0688**	1	STRIKER AS	
	28	2	**446-0368**	1	PLATE AS	
	29	1	**460-7427**	1	COVER-DOOR	
	30	1	**462-6225**	1	GLASS	
	31	1	**465-5970**	1	DOOR AS	
	32	1	**465-5987**	1	TUBE AS	
	33	1	**474-7583**	1	HANDLE AS	
	34	1	**475-8095**	4	PLATE AS	
					(EACH INCLUDES)	
M		1	**8T-3490**	2	NUT-WELD (M10X1.5-THD)	
	35	1	**501-3976**	1	BRACKET AS	
M		1	**8T-3597**	1	NUT-WELD (M12X1.75-THD)	
	36	1	**486-9155**	1	BUMPER AS	
	37	1,2	**114-6658**	5	WASHER (6.5X17X1-MM THK)	
	38	2	**108-5471**	1	CLEVIS	
	39	2	**119-9706**	2	STUD-BALL	
M	40	2	**121-9870**	4	SCREW-MACHINE (M6X1X40-MM)	
M	41	1	**127-2170**	14	SCREW-TRUSS HEAD (M8X1.25X20-MM)	
M	42	1	**137-2255**	1	BOLT (M8X1.25X8-MM)	
M	43	2	**195-0936**	1	INSERT-THREADED (M6X1-THD)	

502-6447 **DOOR GP-CAB (**contd.**)** **i06795316**

NOTE	REF NO	GRAPHIC REF	PART NUMBER	QTY	PART NAME 1 2 3 4 5 6 (PRODUCT LEVEL)	SEE PAGE
M	44	1	**195-3699**	1	NUT (M8X1.25-THD)	
	45	2	**242-5206**	3	SPACER (6.4X12.5X0.76-MM THK)	
M	46	1,2	**322-0819**	6	INSERT-THREADED (M10X1.5-THD)	
M	47	2	**344-5673**	4	NUT (M6X1-THD)	
	48	2	**3E-4353**	5	WASHER-HARD (11X25X3-MM THK)	
M	49	1	**172-8591**	3	NUT-SPRING (M6X1-THD)	
M	50	2	**5C-9553**	1	BOLT (M6X1X16-MM)	
	51	1	**5P-4116**	15	WASHER-HARD (8.8X20.5X2-MM THK)	
	52	1	**6V-5839**	3	WASHER (11X21X2.5-MM THK)	
M	53	2	**8T-4138**	2	BOLT (M6X1X20-MM)	
	54	2	**8T-6902**	1	CLIP	
	55	2	**9X-2038**	1	WASHER (7X19X2-MM THK)	
M	56	1	**9X-2039**	8	SCREW-TRUSS HEAD (M10X1.5X35-MM)	
M	57	1,2	**9X-2040**	6	SCREW-TRUSS HEAD (M10X1.5X25-MM)	
M	58	2	**9X-2041**	2	SCREW-TRUSS HEAD (M10X1.5X20-MM)	
M	59	2	**9X-2042**	2	SCREW-TRUSS HEAD (M6X1X12-MM)	
M	60	1	**9X-2044**	3	SCREW-TRUSS HEAD (M6X1X16-MM)	
	61	2	**206-1667**	6	CLIP	
	62	2	**9X-6421**	1	RING-RETAINING	
	63	2	**9X-8256**	2	WASHER (6.6X12X2-MM THK)	

J - REQUIRES CORPORATE KEY
M - METRIC PART
Y - SEPARATE ILLUSTRATION

502-6447 **DOOR GP-CAB** (contd.) **i06795316**

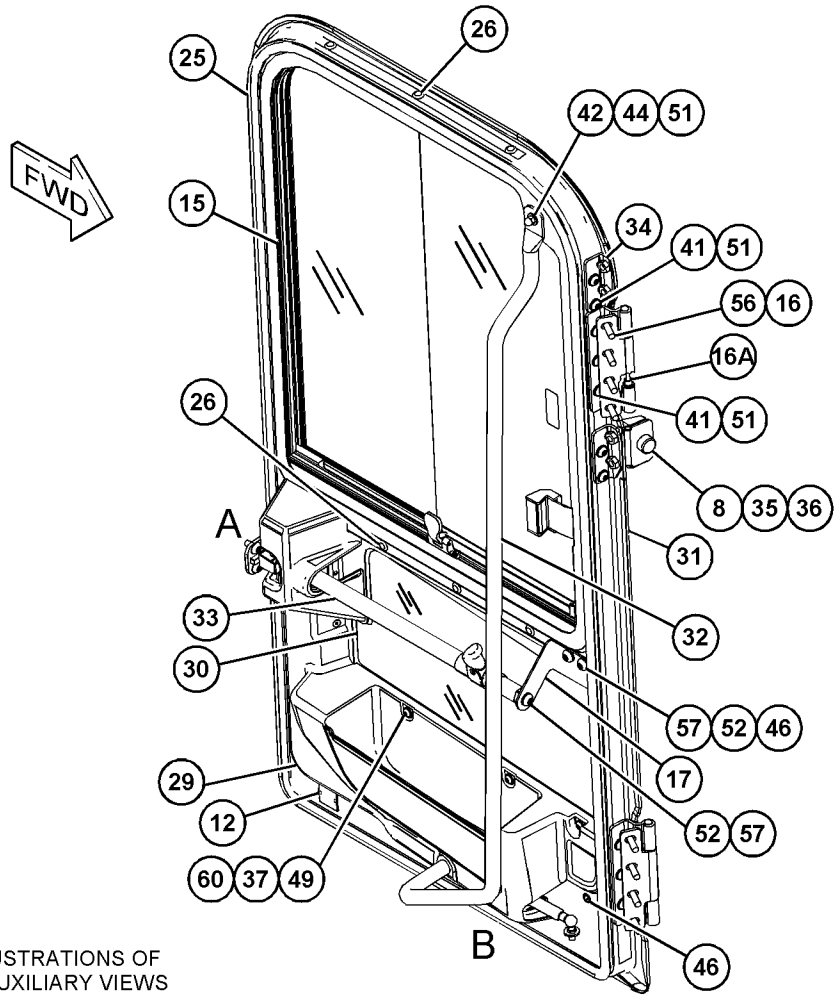

REFER TO ALL ILLUSTRATIONS OF
THIS GROUP FOR AUXILIARY VIEWS

GRAPHIC #1 g06070306

502-6447 **DOOR GP-CAB (**contd.**)** **i06795316**

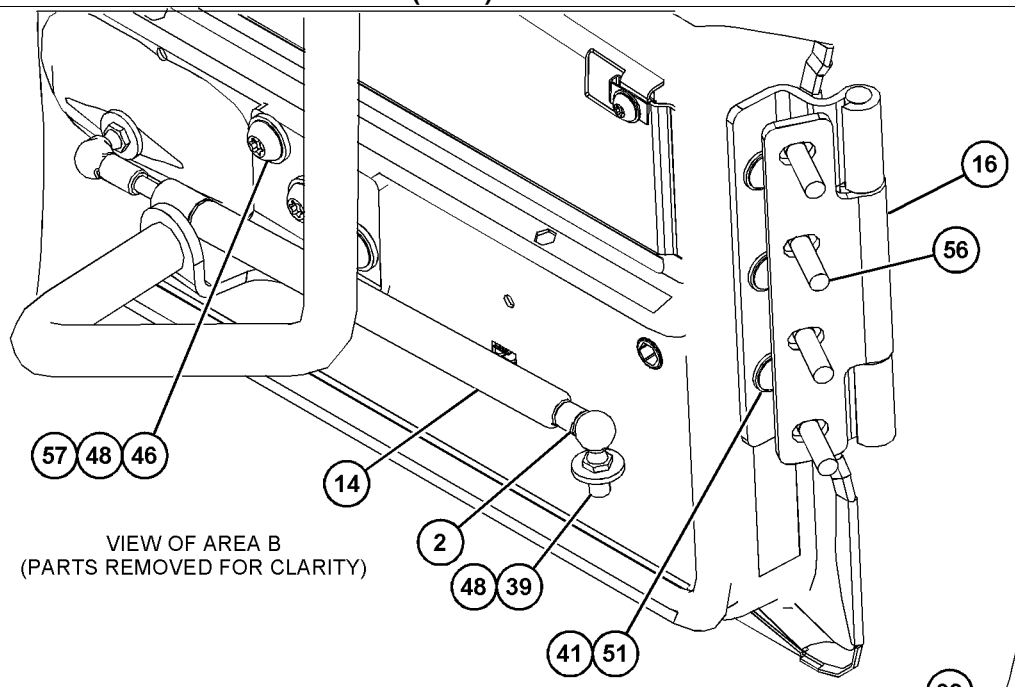

VIEW OF AREA B
(PARTS REMOVED FOR CLARITY)

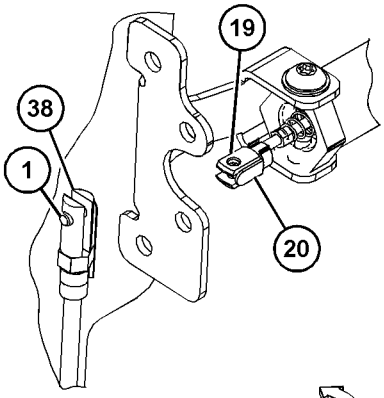

VIEW OF AREA D
(PARTS REMOVED FOR CLARITY) 90°

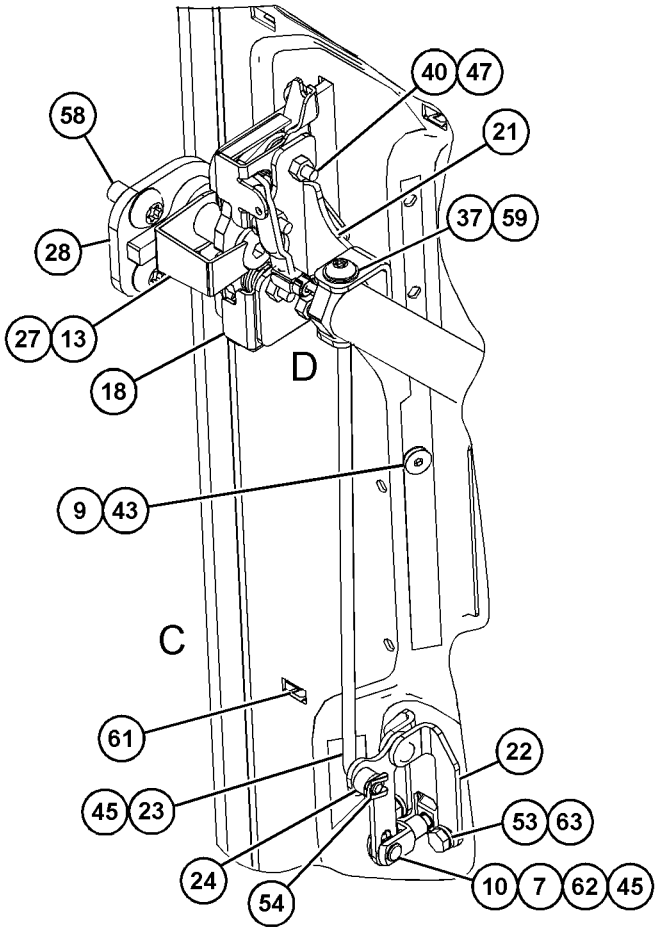

VIEW OF AREA A
(PARTS REMOVED FOR CLARITY)

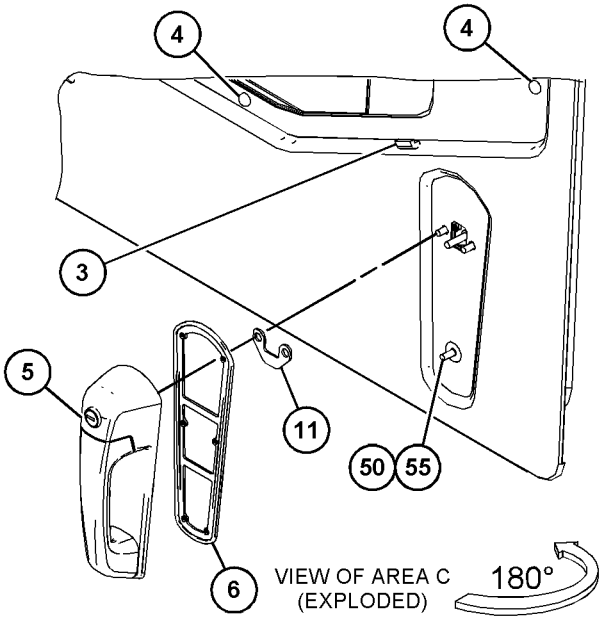

VIEW OF AREA C
(EXPLODED) 180°

GRAPHIC #2 <END> g06070309

361-7165 DUCT GP-CAB AIR

S/N: TNS1-UP

PART OF 455-3940 CAB AR

SMCS-734D **i06043207**

NOTE	REF NO	GRAPHIC REF	PART NUMBER	QTY	PART NAME 1 2 3 4 5 6 (PRODUCT LEVEL)	SEE PAGE
	1	2	**171-4046**	3	LOUVER AS-VENT	
	2	1,2	**171-4047**	6	LOUVER AS-VENT	
	3	2	**296-3724**	1	DUCT AS (RH)	
	4	2	**296-3725**	1	DUCT AS (LH)	
	5	2	**302-9147**	1	DUCT AS (CENTER)	
	6	1	**365-8379**	1	DUCT AS (LH)	
	7	1	**372-0677**	1	DUCT AS (RH)	
	8	1,2	**7X-0579**	17	WASHER-HARD (8.8X25.5X2-MM THK)	
	9	1,2	**104-2091**	24	SCREW-FLAT HEAD (6-20X0.5-IN)	
M	10	2	**111-4627**	6	SCREW-MACHINE (M6X1X30-MM)	
M	11	1,2	**172-8591**	5	NUT-SPRING (M6X1-THD)	
M	12	1,2	**9X-2043**	4	SCREW-TRUSS HEAD (M6X1X14-MM)	
M	13	2	**9X-2045**	2	SCREW-TRUSS HEAD (M6X1X20-MM)	
M	14	1,2	**121-9870**	5	SCREW-MACHINE (M6X1X40-MM)	
E	15	2	**8T-9005**		SEAL (66-CM)	
E	15A	2	**8T-9005**		SEAL (51-CM EACH)	
E	15B	2	**8T-9005**		SEAL (53-CM)	

E - ORDER BY THE CENTIMETER
M - METRIC PART

361-7165 **DUCT GP-CAB AIR (**contd.**)** **i06043207**

REFER TO ALL ILLUSTRATIONS OF
THIS GROUP FOR AUXILIARY VIEWS

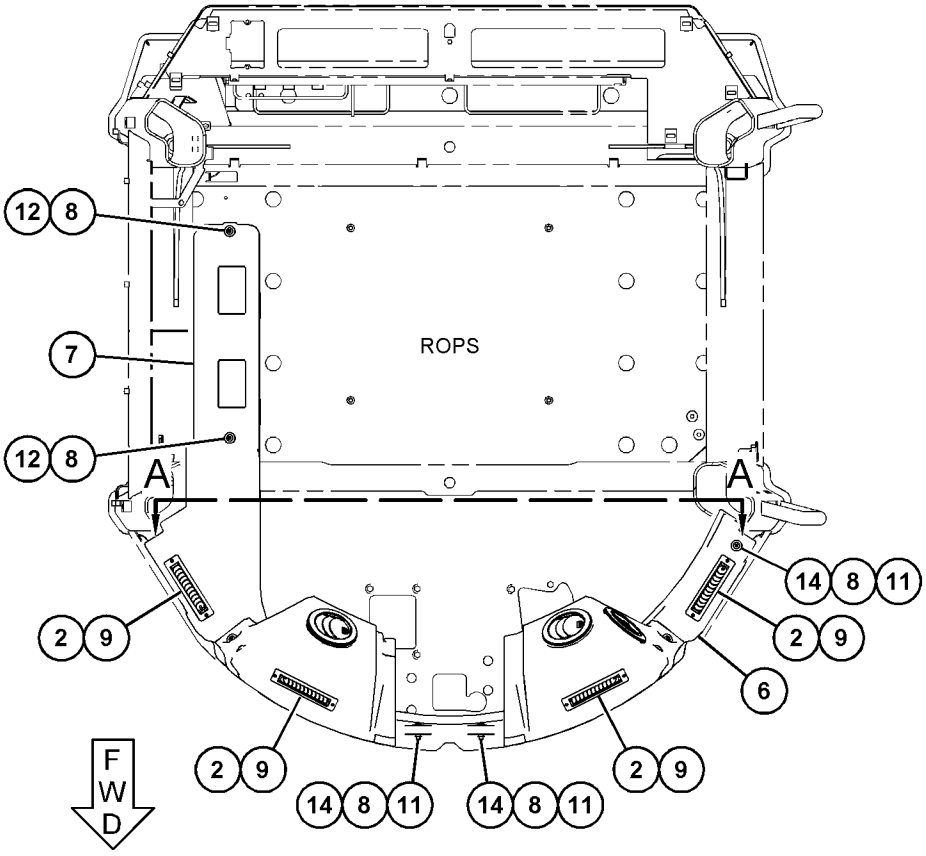

TOP VIEW

GRAPHIC #1 g03495897

361-7165 **DUCT GP-CAB AIR (**contd.**)** **i06043207**

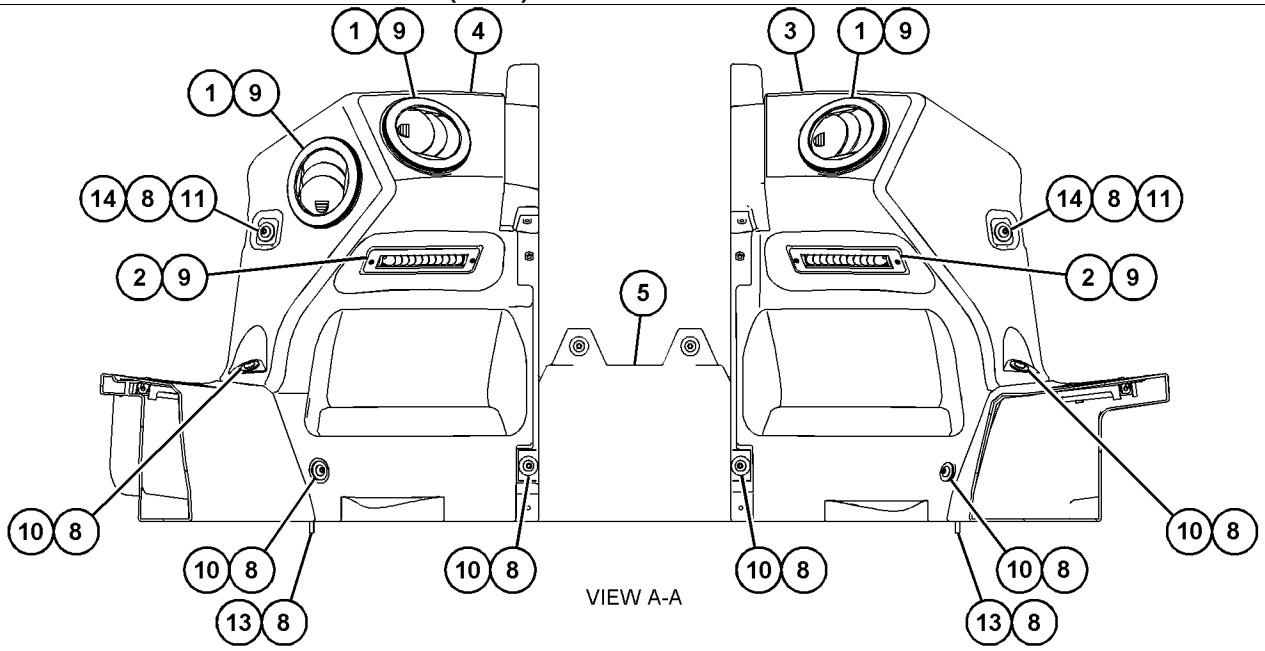

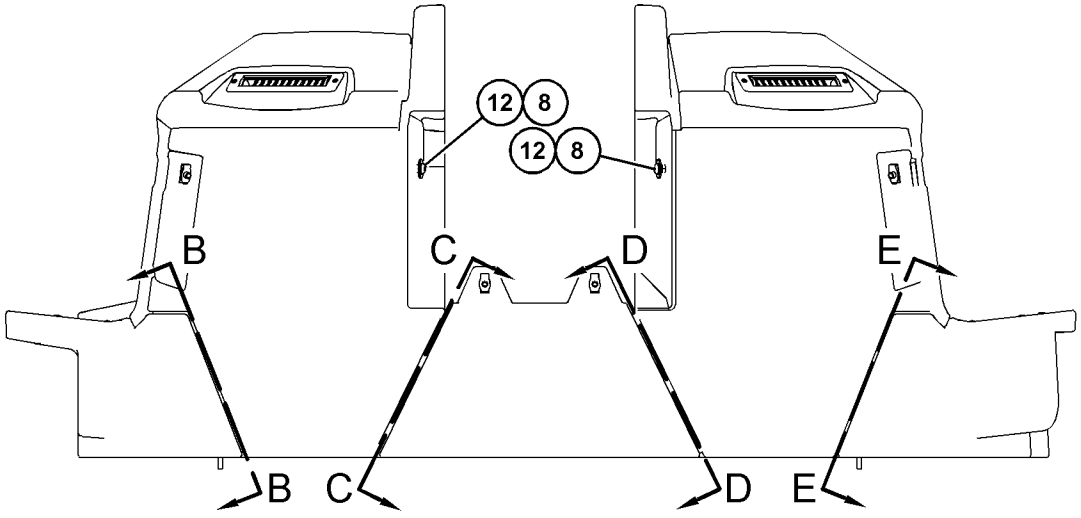

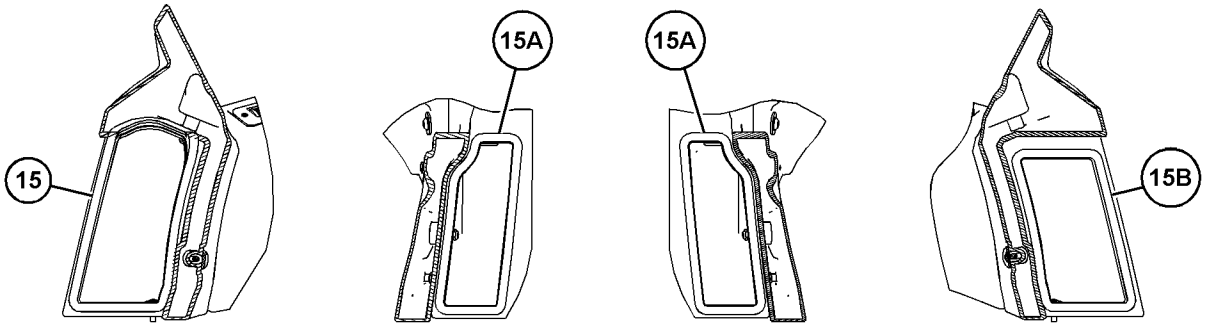

GRAPHIC #2 <END> g03495898

443-4188 FILTER GP-CAB AIR

S/N: TNS1-UP

PART OF 492-4020 SPECIAL AR-WHEEL LOADER

SMCS-7342 **i06657233**

NOTE	REF NO	GRAPHIC REF	PART NUMBER	QTY	PART NAME 1 2 3 4 5 6 (PRODUCT LEVEL)	SEE PAGE
	1	1	**290-2287**	1	FILTER ELEMENT-CAB AIR (STANDARD FILTRATION)	
					–OR–	
		1	**348-3432**	1	FILTER ELEMENT AS-AIR (ACTIVATED CHARCOAL)	

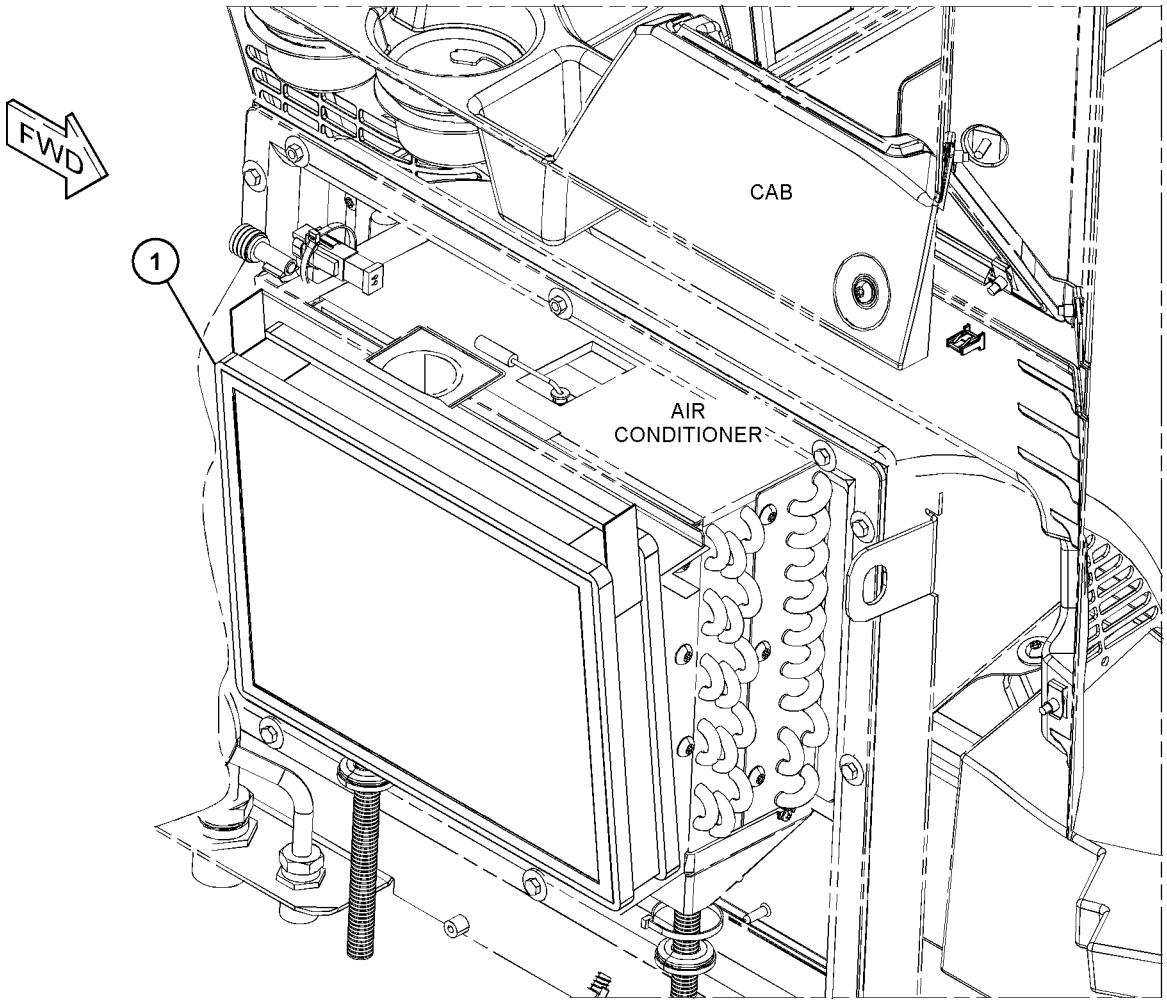

GRAPHIC #1 <END> g06005869

443-4189 FILTER GP-CAB AIR

S/N: TNS1-UP
CARBON
PART OF 507-9161 SPECIAL AR-WHEEL LOADER

SMCS-7342 **i06629006**

NOTE	PART NUMBER	QTY	PART NAME 1 2 3 4 5 6 (PRODUCT LEVEL)	SEE PAGE
Y	**348-3432**	1	FILTER ELEMENT AS-AIR (ACTIVATED CHARCOAL)	82

Y - SEPARATE ILLUSTRATION

<END>

372-3896 FRAME GP-WINDOW—FRONT

S/N: TNS1-UP

PART OF 493-9616, 493-9617 CAB AR-ENCLOSED ROPS

SMCS-7310 **i06740741**

NOTE	REF NO	GRAPHIC REF	PART NUMBER	QTY	PART NAME 1 2 3 4 5 6 (PRODUCT LEVEL)	SEE PAGE
	1	1	**214-9186**	16	BUTTON	
	2	1	**365-9646**	1	FRAME AS-WINDOW	
	3	1	**3E-4352**	2	WASHER-HARD (8.8X20.5X2.5-MM THK)	
M	4	1	**5C-2890**	2	NUT (M6X1-THD)	
	5	1	**9X-8256**	2	WASHER (6.6X12X2-MM THK)	
	6	1	**454-5385**	4	WASHER-HARD (22X76X6-MM THK)	
	7	1	**183-6121**	3	WASHER (10.31X38.1X4.78-MM THK)	
	8	1	**7X-7729**	4	WASHER (11X25X3-MM THK)	

M - METRIC PART

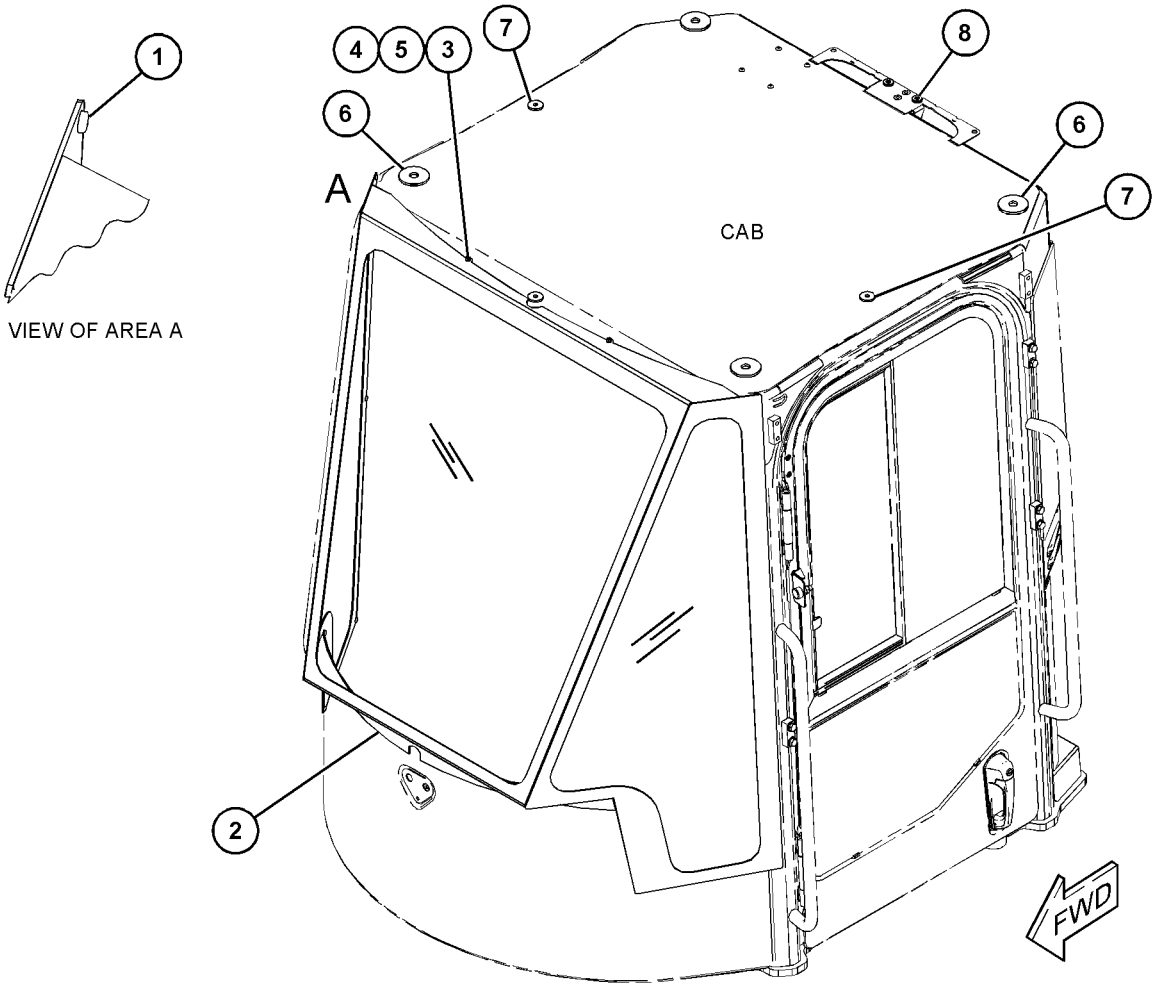

GRAPHIC #1 <END> g06103117

372-3947 GUARD GP-WINDOW

S/N: TNS1-UP

PART OF 493-9617, 493-9619 CAB AR-ENCLOSED ROPS

SMCS-7165, 7182, 7310 **i06808316**

NOTE	REF NO	GRAPHIC REF	PART NUMBER	QTY	PART NAME 1 2 3 4 5 6 (PRODUCT LEVEL)	SEE PAGE
	1	1	**377-4754**	4	BRACKET AS	
					(EACH INCLUDES)	
M		1	**8T-3490**	2	NUT-WELD (M10X1.5-THD)	
	2	1	**495-6587**	1	GUARD AS-FRONT (WINDOW)	
M		1	**9R-2640**	4	BOSS (M12X1.75X25-MM)	
	3	1	**8T-4121**	8	WASHER-HARD (11X21X2.5-MM THK)	
M	4	1	**8T-4195**	8	BOLT (M10X1.5X30-MM)	
	5	1	**5P-1076**	8	WASHER-HARD (13.5X30X4-MM THK)	
M	6	1	**8T-4192**	8	BOLT (M12X1.75X25-MM)	

M - METRIC PART

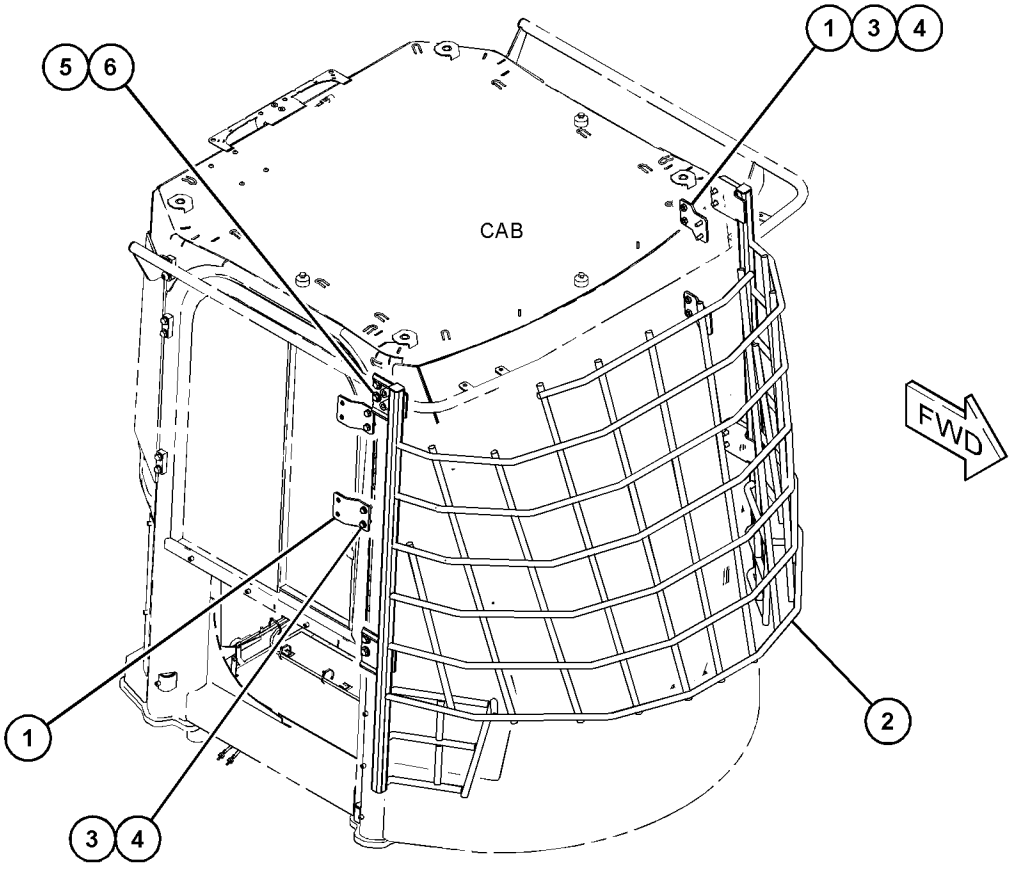

GRAPHIC #1 <END> g06104938

372-3948 GUARD GP-WINDOW

S/N: TNS1-UP

PART OF 493-9618 CAB AR-ENCLOSED ROPS

SMCS-7165, 7182, 7310 **i06793064**

NOTE	REF NO	GRAPHIC REF	PART NUMBER	QTY	PART NAME 1 2 3 4 5 6 (PRODUCT LEVEL)	SEE PAGE
D	1	1	**6V-2496**		SEAL (0.8-M)	
	2	1	**495-6587**	1	GUARD AS-FRONT	
	3	1	**377-4801**	1	GUARD AS (REAR)	
	4	1	**377-4802**	1	GUARD AS (RH)	
	5	1	**377-4803**	1	GUARD AS (LH)	
	6	1	**5P-1076**	16	WASHER-HARD (13.5X30X4-MM THK)	
	7	1	**8T-4121**	22	WASHER-HARD (11X21X2.5-MM THK)	
M	8	1	**8T-4186**	4	BOLT (M10X1.5X40-MM)	
M	9	1	**8T-4192**	16	BOLT (M12X1.75X25-MM)	
M	10	1	**8T-4195**	18	BOLT (M10X1.5X30-MM)	

D - ORDER BY THE METER
M - METRIC PART

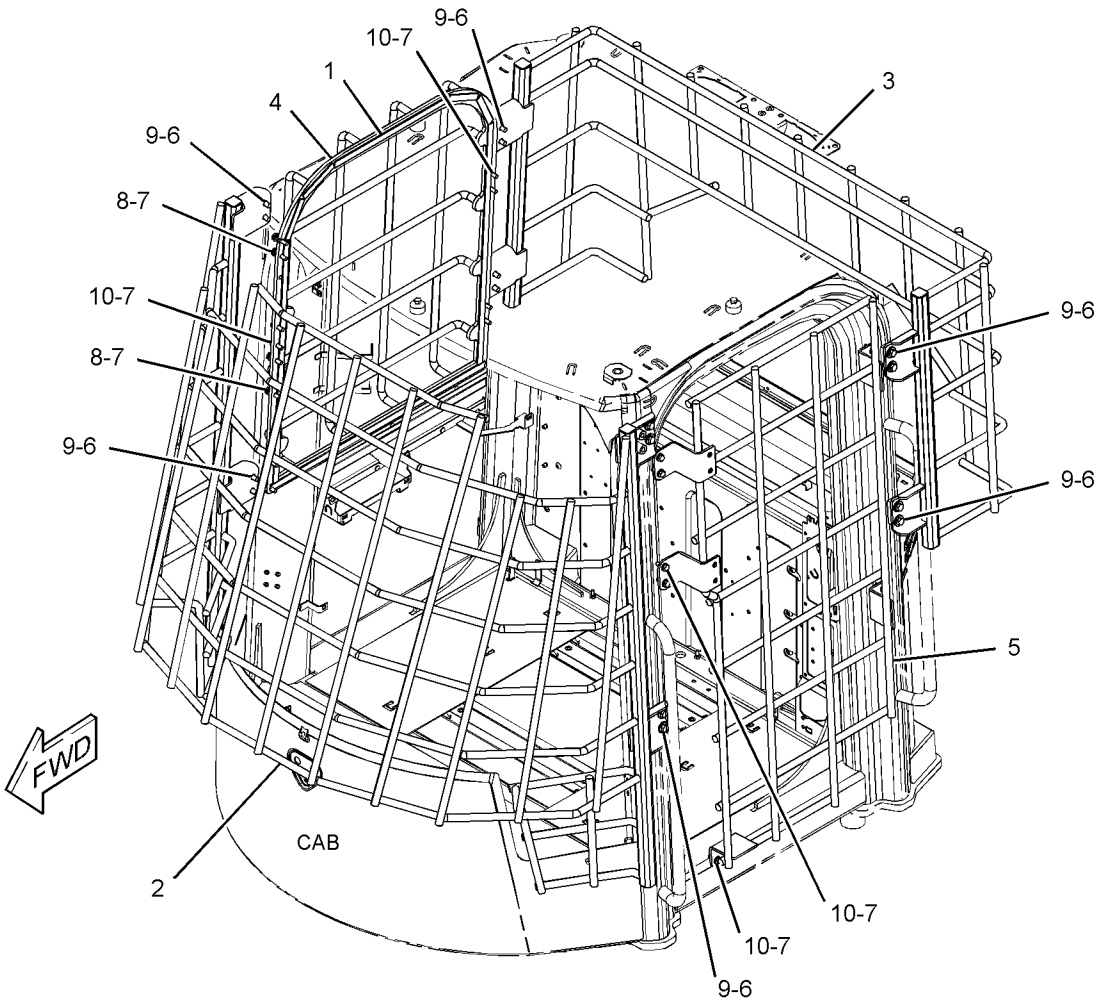

GRAPHIC #1 <END> g03430206

380-3725 HANDHOLD GP

S/N: TNS1-UP

PART OF 493-9617, 493-9618, 493-9619 CAB AR-ENCLOSED ROPS

SMCS-7256 **i06781381**

NOTE	REF NO	GRAPHIC REF	PART NUMBER	QTY	PART NAME 1 2 3 4 5 6 (PRODUCT LEVEL)	SEE PAGE
	1	1	**481-5565**	1	TUBE AS	
	2	1	**367-2481**	2	CAP	
M	3	1	**345-7725**	8	SCREW-TRUSS HEAD (M12X1.75X25-MM)	
	4	1	**8T-4223**	8	WASHER-HARD (13.5X25.5X3-MM THK)	

M - METRIC PART

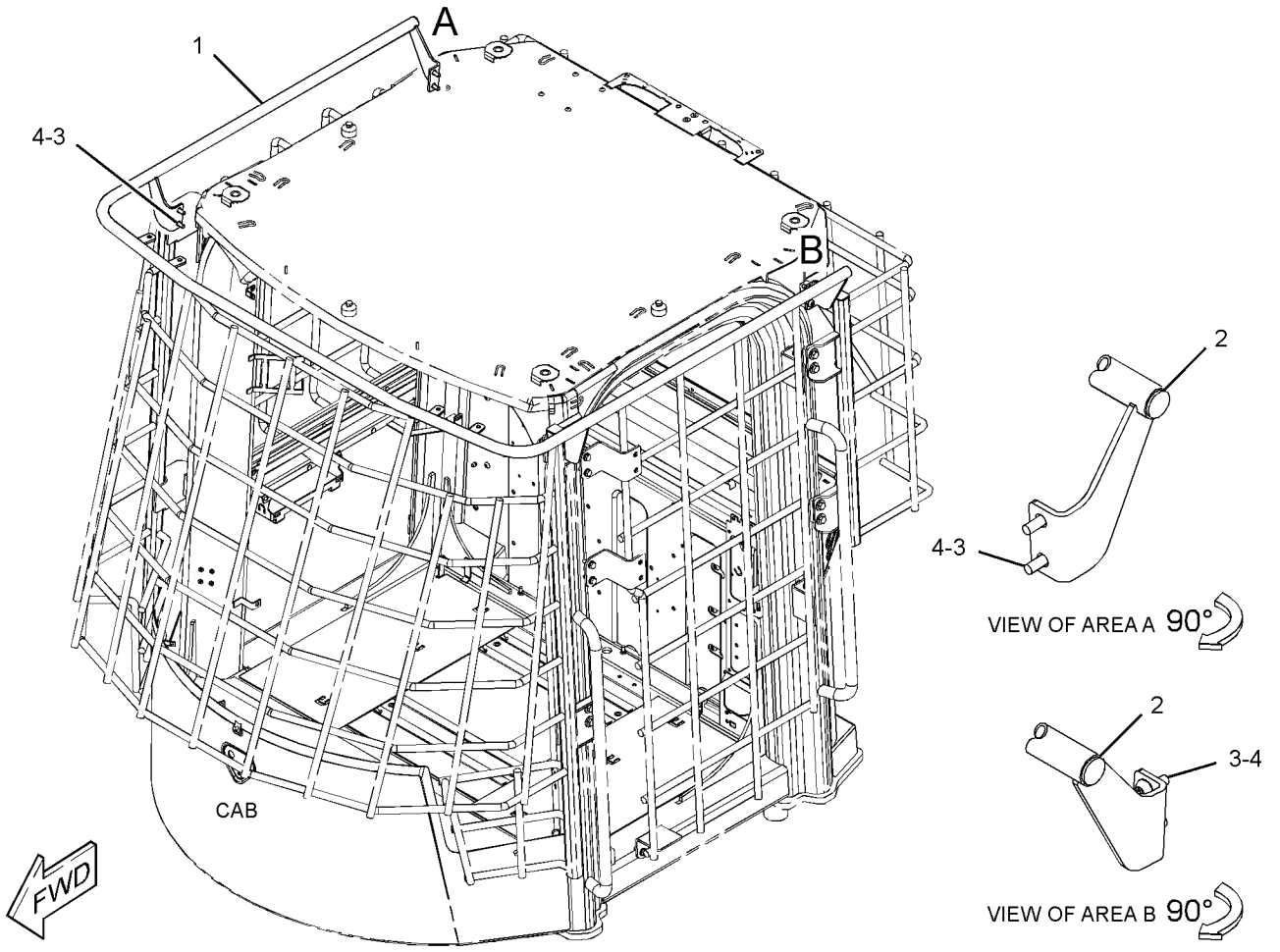

GRAPHIC #1 <END> g06003846

366-0733 INSTALLATION GP-RADIO

S/N: TNS1-UP

PART OF 455-3940 CAB AR

SMCS-7338 **i06759859**

NOTE	REF NO	GRAPHIC REF	PART NUMBER	QTY	PART NAME 1 2 3 4 5 6 (PRODUCT LEVEL)	SEE PAGE
	1	1	**9U-2331**	1	ANTENNA AS (COMMUNICATION RADIO)	
	2	1	**9U-4431**	1	MOUNT-ANTENNA	
	3	1	**9U-8263**	1	COVER	
	4	1	**124-4884**	1	CABLE AS	
	5	1	**168-8772**	2	SPEAKER AS-RADIO	
	6	1	**373-4446**	1	PLUG	
M	7	1	**9X-1046**	8	SCREW (M4X0.7X18-MM)	
	8	1	**154-8079**	8	NUT-RETAINER (U-TYPE)	
	9	1	**2D-2751**	1	GROMMET	
	10	1	**7K-1181**	3	STRAP-CABLE (5.72-MM DIA)	
	11	1	**8T-0328**	8	WASHER-HARD (5.5X10X1-MM THK)	
	12	1	**7F-6998**	1	LOCKWASHER	

M - METRIC PART

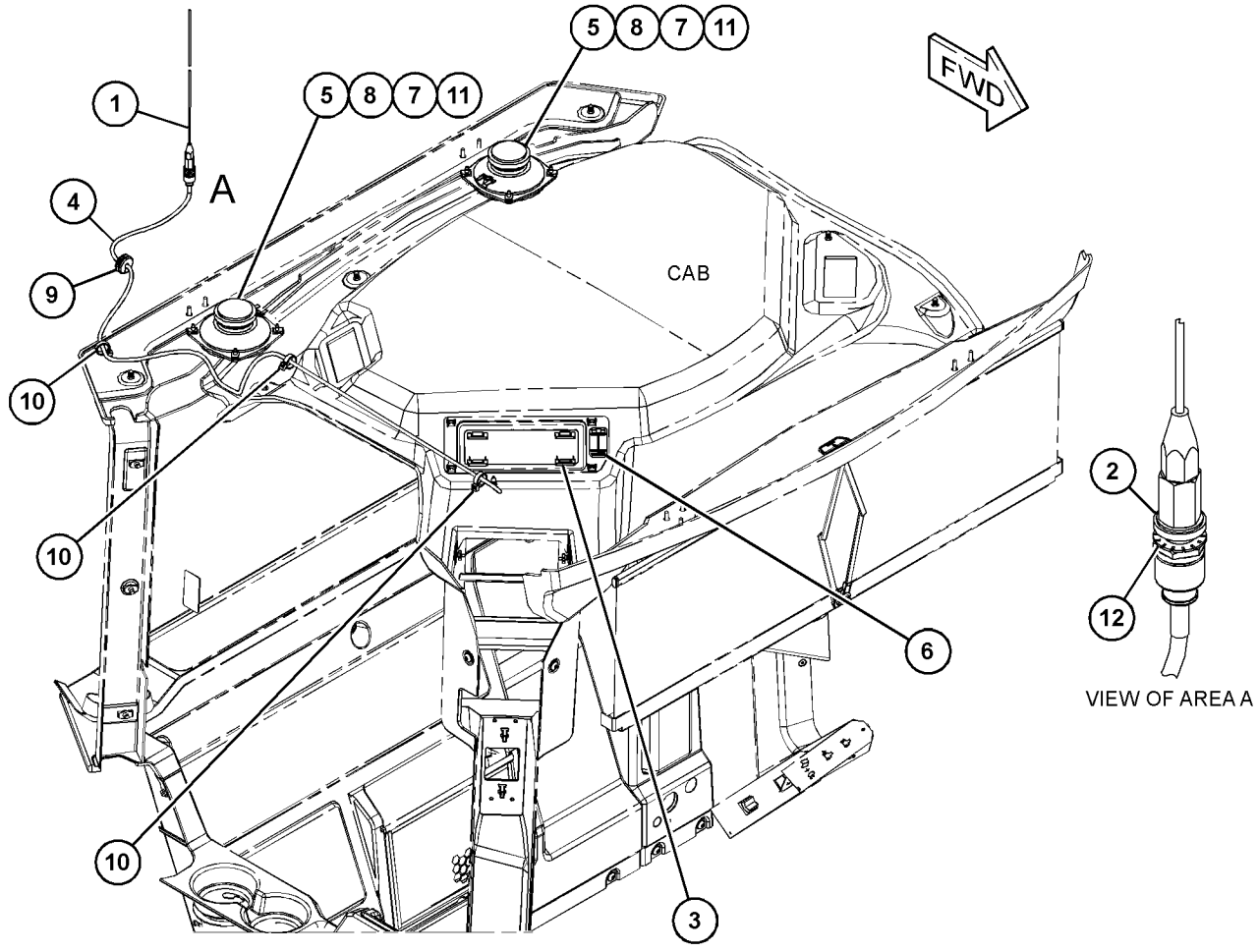

GRAPHIC #1 <END> g03834625

372-1603 INSTALLATION GP-RADIO—CITIZEN BAND

S/N: TNS1-UP

PART OF 512-0947 CAB AR

SMCS-7338 **i06811370**

NOTE	REF NO	GRAPHIC REF	PART NUMBER	QTY	PART NAME 1 2 3 4 5 6 (PRODUCT LEVEL)	SEE PAGE
	1	1	**9U-2332**	1	ANTENNA AS (CB)	
	2	1	**7K-1181**	8	STRAP-CABLE (5.72-MM DIA)	
	3	1	**9U-4431**	1	MOUNT-ANTENNA	
	4	1	**191-5114**	1	CABLE AS (COAX)	
	5	1	**208-3778**	1	BRACKET	
Y	6	1	*486-6649*	1	CONVERTER & WIRING GP-RADIO	152
	7	1	**2D-2751**	1	GROMMET	
M	8	1	**6V-7357**	4	BOLT (M6X1X25-MM)	
	9	1	**9X-8256**	4	WASHER (6.6X12X2-MM THK)	

M - METRIC PART
Y - SEPARATE ILLUSTRATION

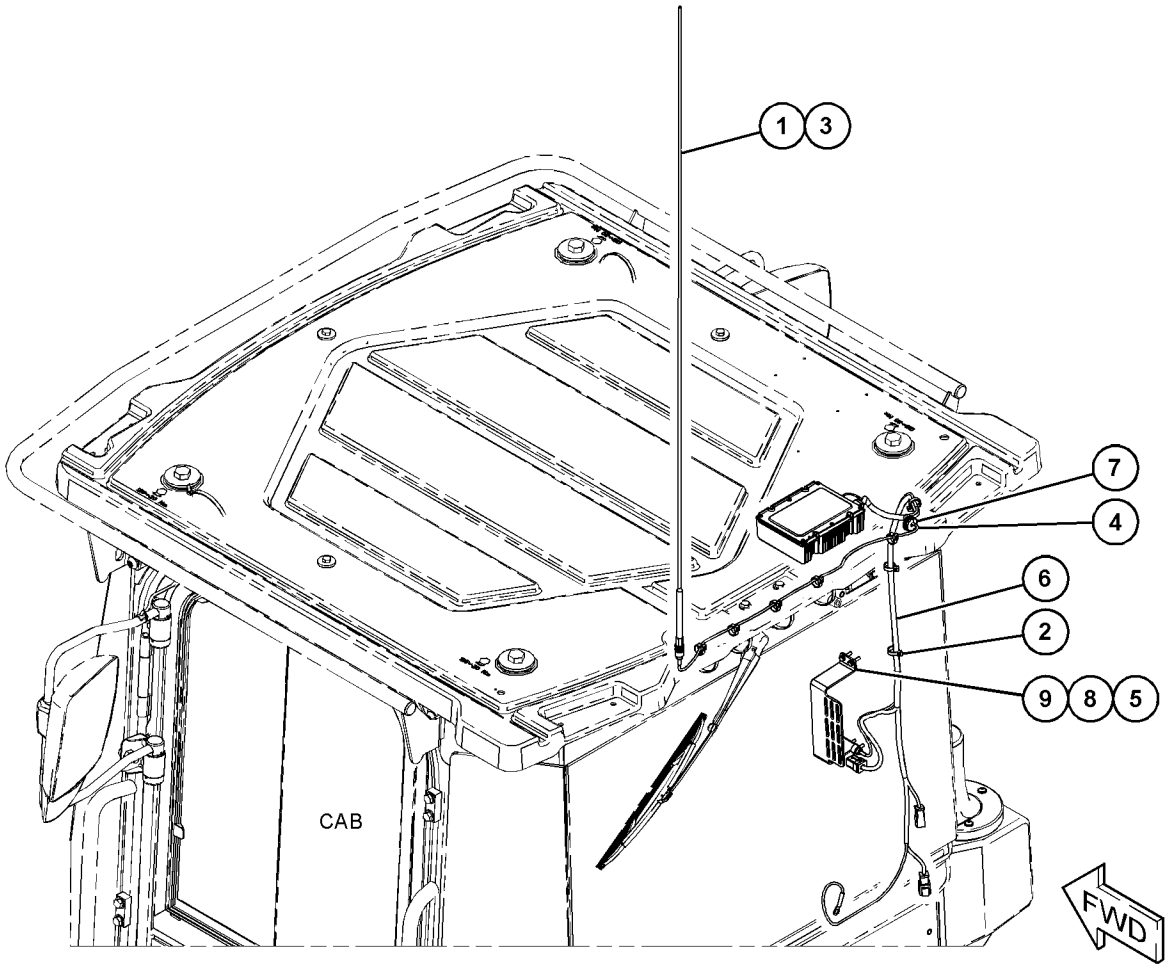

GRAPHIC #1 <END> g06121248

452-6716 KIT-SEAT AIR COMPRESSOR

S/N: TNS1-UP

PART OF 191-2933 SUSPENSION GP-SEAT

SMCS-731K, 7324

i06264722

NOTE	PART NUMBER	QTY	PART NAME 1 2 3 4 5 6 (PRODUCT LEVEL)	SEE PAGE
	372-2158	1	BRACKET-MOUNTING	
	370-9894	1	COMPRESSOR AS	
	186-5107	2	SCREW-DRIVE (NO 8-16X1.25-IN)	
	8L-8413	6	STRAP-CABLE (WHITE)	

<END>

212-7779 KIT-SHOCK ABSORBER

S/N: TNS1-UP

PART OF 191-2933 SUSPENSION GP-SEAT

SMCS-7324 **i06816332**

NOTE	REF NO	GRAPHIC REF	PART NUMBER	QTY	PART NAME 1 2 3 4 5 6 (PRODUCT LEVEL)	SEE PAGE
	1	1	**3S-2093**	1	STRAP-CABLE	
	2	1	**7D-6922**	1	LOCKNUT (6-32-THD)	
	3	1	**114-5157**	2	ADJUSTER	
	4	1	**138-8885**	1	BOLT-SOCKET HEAD (6-32X0.5-IN)	
	5	1	**163-1137**	2	BEARING	
	6	1	**192-7811**	2	WASHER (13X22X2-MM THK)	
	7	1	**192-7812**	1	BOLT-SPECIAL	
	8	1	**192-7813**	1	BOLT-SPECIAL	
	9	1	**212-7780**	1	ABSORBER AS-SHOCK	
	10	1	**212-7783**	1	KIT-PULLEY	
					(INCLUDES PARTS MARKED "H" IN GRAPHIC)	
	11	1	**213-4754**	1	KNOB	
	12	1	**9M-2904**	1	CLAMP-HOSE	
	13	1	**377-3141**	1	CABLE AS	
	14	1	**138-8886**	1	BOLT-SOCKET HEAD (1/4-20X1.5-IN)	
	15	1	**2D-6235**	3	LOCKNUT (1/4-20-THD)	
	16	1	**2D-6642**	1	BALL	
	17	1	**2K-4973**	1	LOCKNUT (3/8-16-THD)	
	18	1	**3J-4818**	1	LOCKWASHER (EXTERNAL TOOTH)	
					PARTS SHOWN IN GRAPHIC(S) WITHOUT A REFERENCE NUMBER ARE NOT SERVICED SEPARATELY	

212-7779 **KIT-SHOCK ABSORBER (**contd.**)** **i06816332**

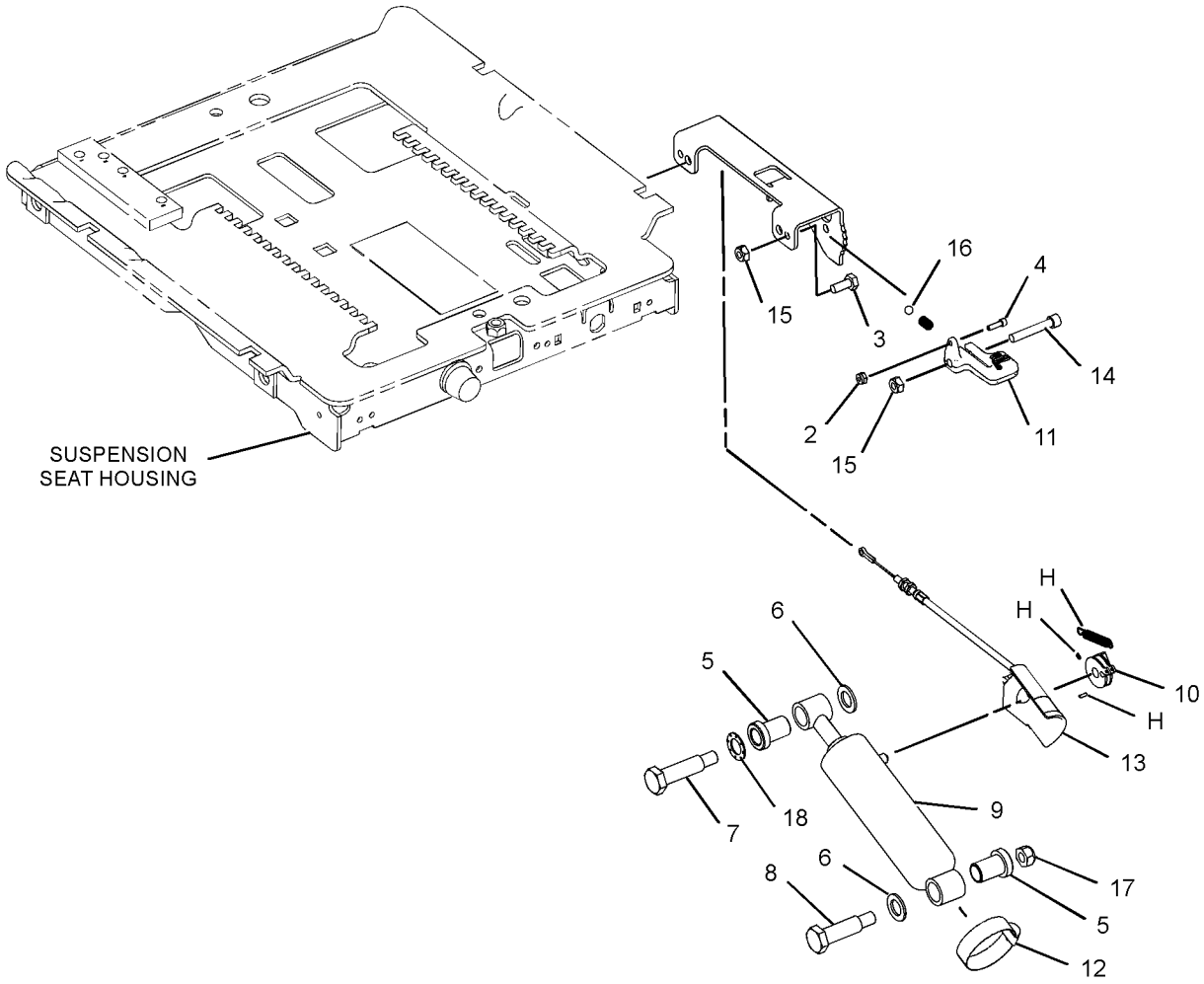

GRAPHIC #1 <END> g03662307

454-9350 LINER GP-CAB

S/N: TNS1-UP

PART OF 455-3940 CAB AR

SMCS-7329 **i06641556**

NOTE	REF NO	GRAPHIC REF	PART NUMBER	QTY	PART NAME 1 2 3 4 5 6 (PRODUCT LEVEL)	SEE PAGE
	1	1	**206-1667**	4	CLIP	
	2	1	**209-0746**	1	STRAP	
	3	1	**365-8361**	1	LINER AS-CAB	
	4	1	**365-8362**	1	HEADLINER	
	5	1	**365-8363**	1	BEZEL-RADIO	
	6	1	**466-1621**	1	HOOK-COAT	
	7	1	**114-6658**	6	WASHER (6.5X17X1-MM THK)	
M	8	1	**3E-8020**	1	SCREW-TRUSS HEAD (M6X1X25-MM)	
	9	1	**365-8373**	10	FASTENER	
	10	1	**9X-2038**	1	WASHER (7X19X2-MM THK)	
M	11	1	**9X-2045**	7	SCREW-TRUSS HEAD (M6X1X20-MM)	

M - METRIC PART

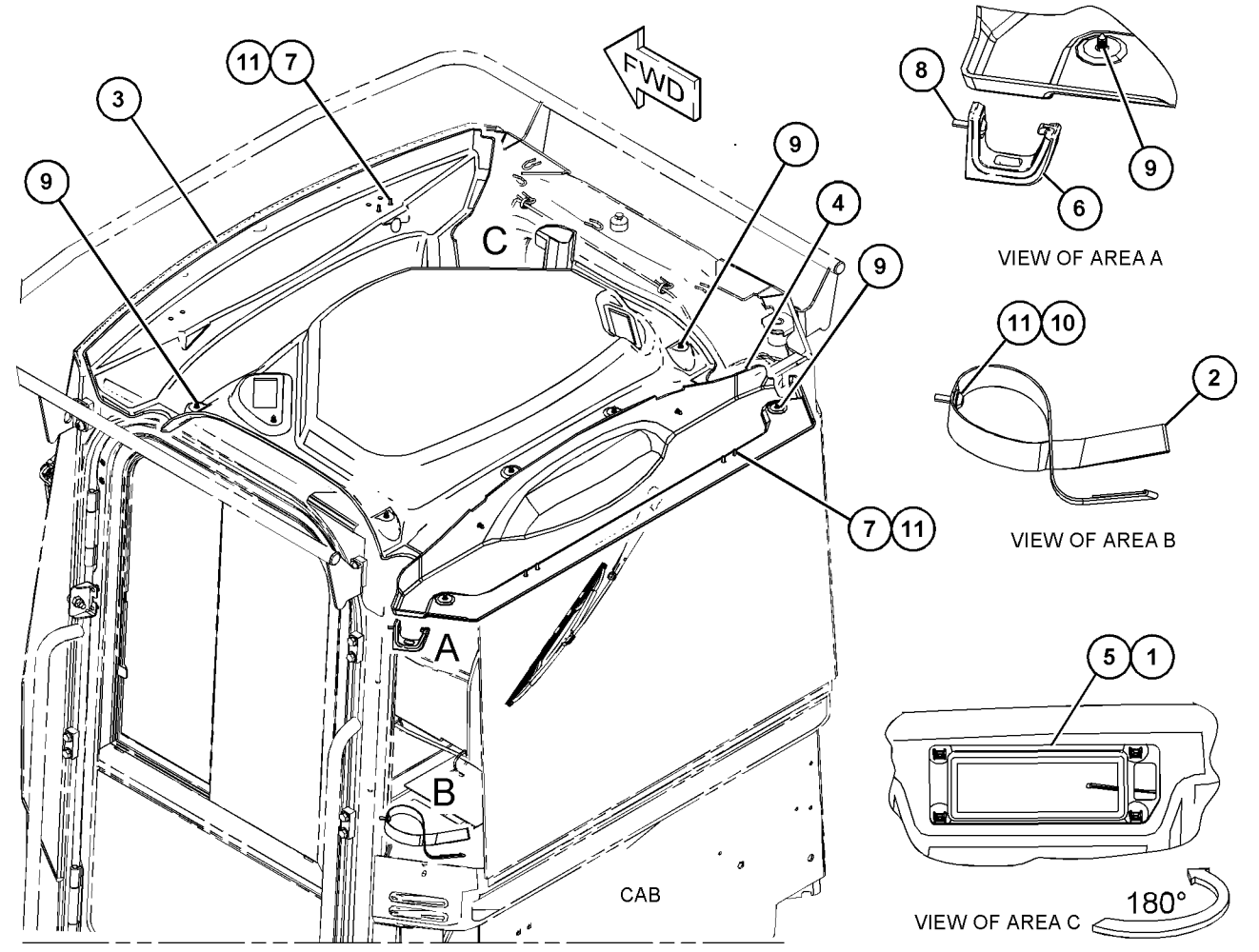

GRAPHIC #1 <END> g06050647

364-9803 LINES GP-AIR CONDITIONER

S/N: TNS1-UP

PART OF 492-4021 HYDRAULIC AR

SMCS-1808 **i06809869**

NOTE	REF NO	GRAPHIC REF	PART NUMBER	QTY	PART NAME 1 2 3 4 5 6 (PRODUCT LEVEL)	SEE PAGE
	1	1,2	**3S-2093**	4	STRAP-CABLE	
	2	2	**5P-3929**	1	COUPLING AS-REFRIGERANT (SELF-SEALING) (LOW SIDE)	
	3	2	**5P-3948**	1	COUPLING AS-REFRIGERANT (SELF-SEALING) (HIGH SIDE)	
	4	2	**392-9315**	1	SPACER (8.5X20X32.5-MM THK)	
	5	1	**149-6371**	1	SWITCH AS-PRESSURE (REFRIGERANT, LOW SIDE)	
		1	**102-8802**	1	KIT-RECEPTACLE (2-PIN)	
					(INCLUDES RECEPTACLE AS & WEDGE)	
		1	**8T-8729**	2	PIN-CONNECTOR (16-GA TO 18-GA)	
	6	1,2	**327-0282**	3	SEAL-INTEGRAL (1/2-IN)	
	7	1	**327-0283**	1	SEAL-INTEGRAL (3/4-IN)	
	8	1	**355-3148**	1	SWITCH AS-PRESSURE (HIGH, LOW) (REFRIGERANT, HIGH SIDE)	
		1	**102-8802**	1	KIT-RECEPTACLE (2-PIN)	
					(INCLUDES RECEPTACLE AS & WEDGE)	
		1	**8T-8729**	2	PIN-CONNECTOR (16-GA TO 18-GA)	
	9	2	**364-9867**	1	BRACKET AS	
	10	2	**499-3886**	1	HOSE AS	
	11	2	**364-9870**	1	BRACKET AS	
	12	2	**499-3887**	1	HOSE AS	
	13	2	**499-3885**	1	HOSE AS	
	14	2	**451-9249**	1	BRACKET AS	
	15	1,2	**067-2551**	11	CLIP	
	16	2	**091-0081**	1	SPACER (10.5X20X10-MM THK)	
M	17	1,2	**178-3336**	4	NUT-HEX FLANGE (M8X1.25-THD)	
	18	2	**1P-7009**	1	CLIP	
M	19	2	**185-9356**	1	STUD (M8X1.25-THD)	
	20	2	**3P-2404**	1	CLIP	
	21	2	**5K-5338**	5	CLIP	
	22	1,2	**6V-1889**	5	CLIP	
	23	2	**6W-6672**	1	SPACER (10.5X20X38-MM THK)	
	24	1,2	**8T-4121**	17	WASHER-HARD (11X21X2.5-MM THK)	
M	25	2	**8T-4136**	5	BOLT (M10X1.5X25-MM)	
M	26	1,2	**8T-4137**	11	BOLT (M10X1.5X20-MM)	
M	27	2	**8T-4179**	2	BOLT (M12X1.75X20-MM)	
M	28	2	**8T-4195**	1	BOLT (M10X1.5X30-MM)	
	29	2	**8T-4223**	2	WASHER-HARD (13.5X25.5X3-MM THK)	
	30	2	**5P-4116**	3	WASHER-HARD (8.8X20.5X2-MM THK)	
M	31	2	**8T-6466**	1	BOLT (M10X1.5X60-MM)	
	32	1	**9X-7378**	2	SEAL-O-RING	
	33	2	**9X-7383**	1	SEAL-O-RING	
	34	2	**9X-7384**	1	SEAL-O-RING	
E	35	2	**8C-5064**		CONDUIT-FLEXIBLE (17.75-MM ID, SPLIT) (51-CM)	
E	35A	2	**8C-5064**		CONDUIT-FLEXIBLE (17.75-MM ID, SPLIT) (22.5-CM)	
M	36	2	**344-5674**	1	NUT (M8X1.25-THD)	
	37	2	**7X-7729**	1	WASHER (11X25X3-MM THK)	

E - ORDER BY THE CENTIMETER
M - METRIC PART

364-9803 **LINES GP-AIR CONDITIONER (**contd.**)** **i06809869**

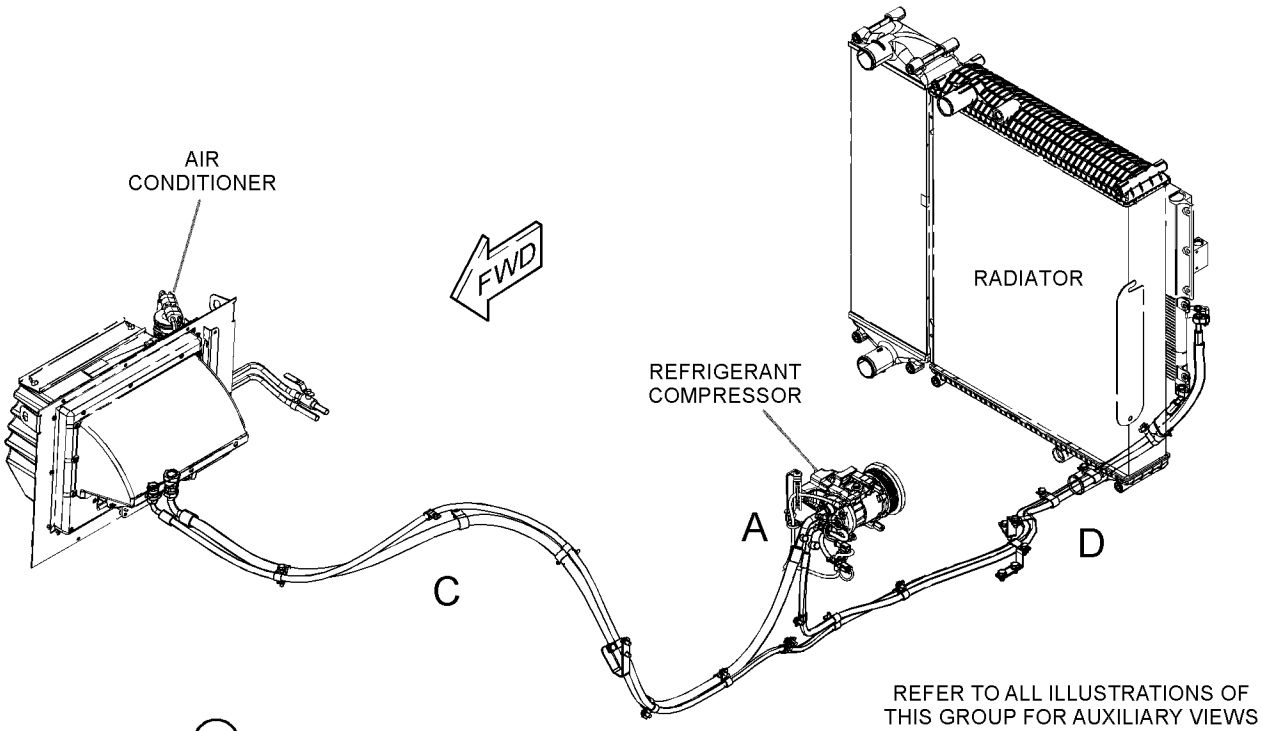

REFER TO ALL ILLUSTRATIONS OF
THIS GROUP FOR AUXILIARY VIEWS

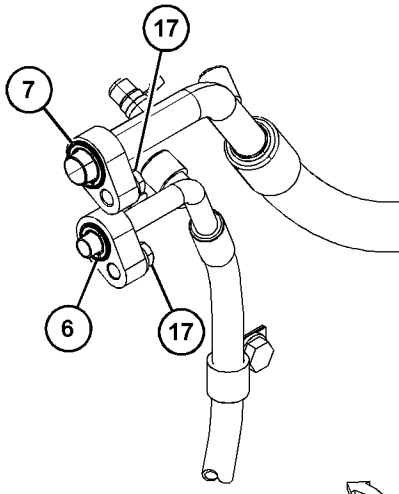

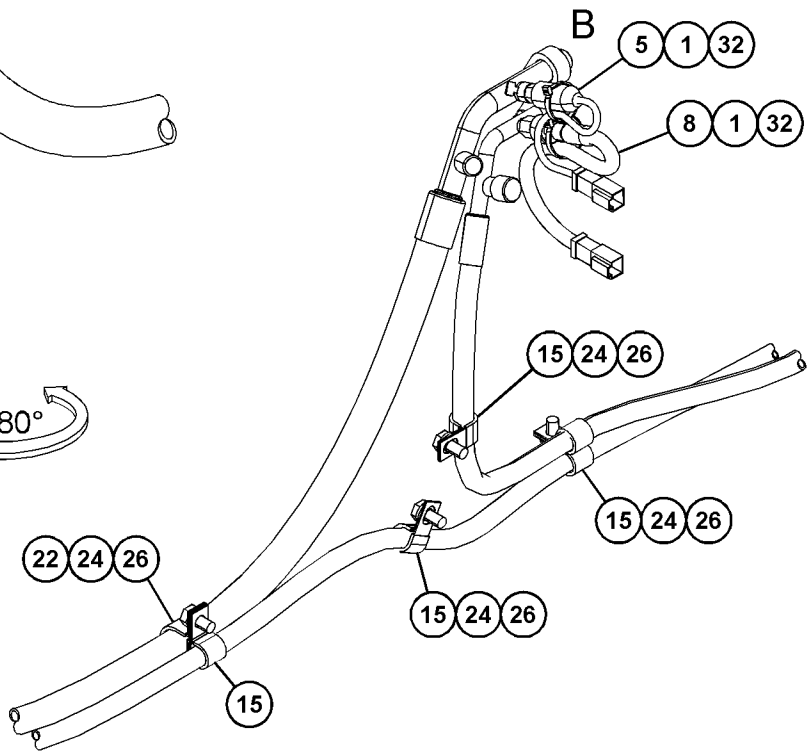

VIEW OF AREA A

GRAPHIC #1 g03834595

364-9803 **LINES GP-AIR CONDITIONER (**contd.**)** **i06809869**

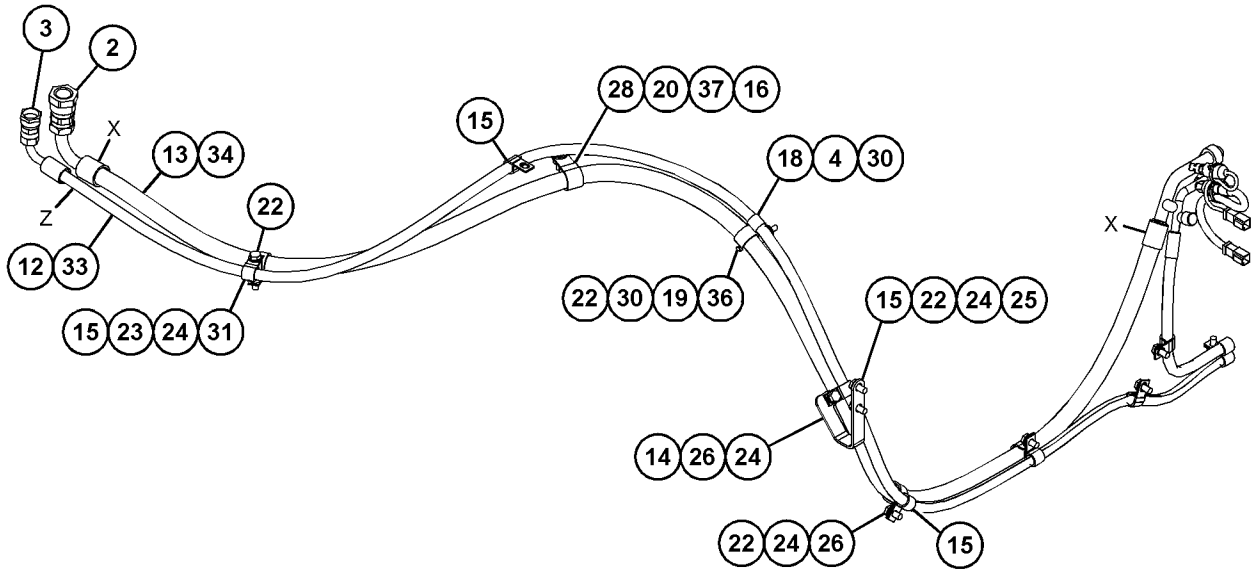

VIEW OF AREA C

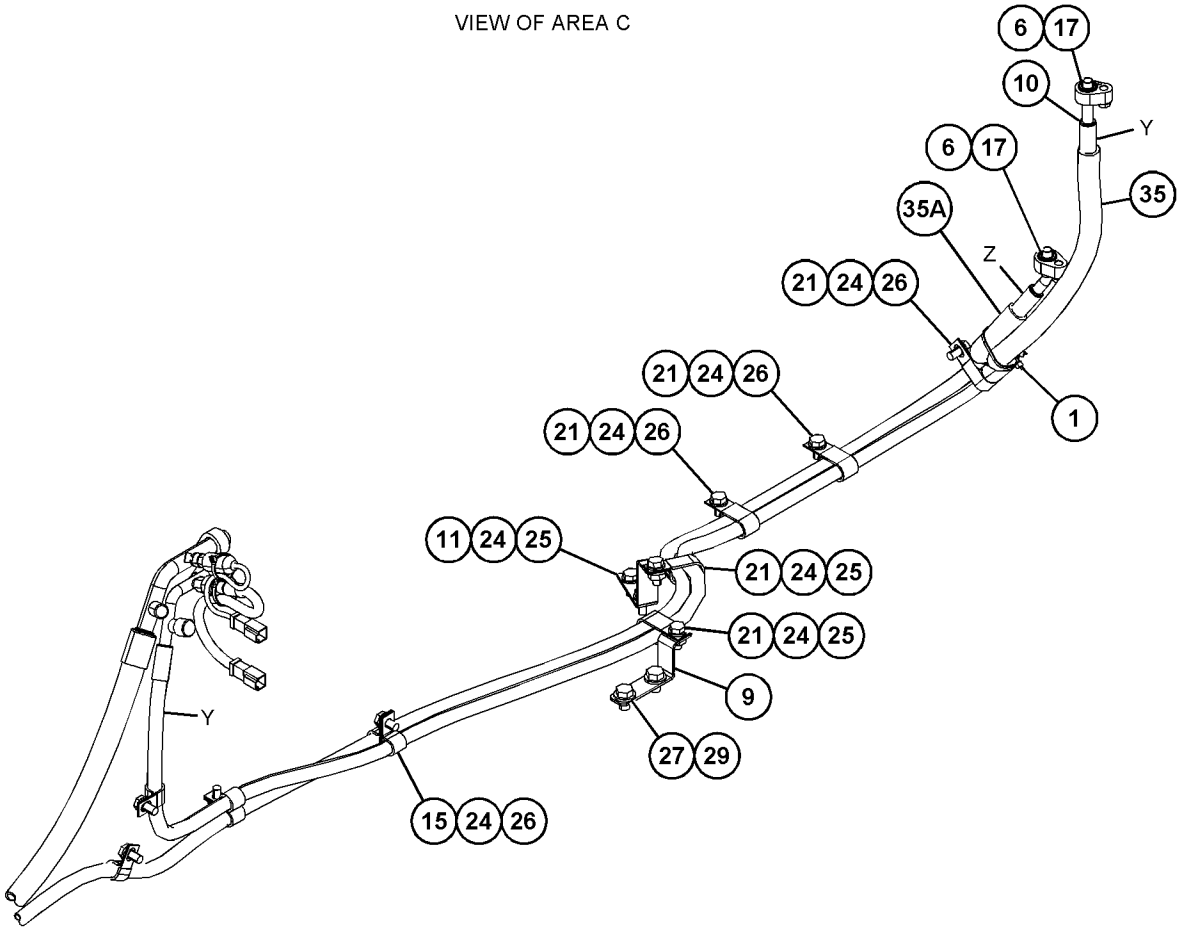

VIEW OF AREA D

GRAPHIC #2 <END> g03834596

415-8197 LINES GP-HEATER

S/N: TNS1-UP

PART OF 492-4021 HYDRAULIC AR

SMCS-1380, 1812, 7304 **i06762228**

NOTE	REF NO	GRAPHIC REF	PART NUMBER	QTY	PART NAME 1 2 3 4 5 6 (PRODUCT LEVEL)	SEE PAGE
	1	1	**7K-1181**	3	STRAP-CABLE (5.72-MM DIA)	
	2	1	**159-1503**	2	CLAMP-HOSE	
	3	1	**177-2215**	1	STRAP-DUAL CLAMP	
	4	1	**211-8073**	4	CAP-PROTECTION	
	5	1	**3E-4321**	4	CLIP	
	6	1	**443-3947**	2	CLAMP-HOSE	
	7	1	**8T-4121**	3	WASHER-HARD (11X21X2.5-MM THK)	
M	8	1	**8T-4196**	3	BOLT (M10X1.5X35-MM)	
E	9	1	**7X-7702**		CONDUIT-FLEXIBLE (23.35-MM ID, SPLIT) (55-CM)	
E	9A	1	**7X-7702**		CONDUIT-FLEXIBLE (23.35-MM ID, SPLIT) (50-CM)	
E	10	1	**5P-0767**		HOSE (223-CM)	
E	10A	1	**5P-0767**		HOSE (217-CM)	

E - ORDER BY THE CENTIMETER
M - METRIC PART

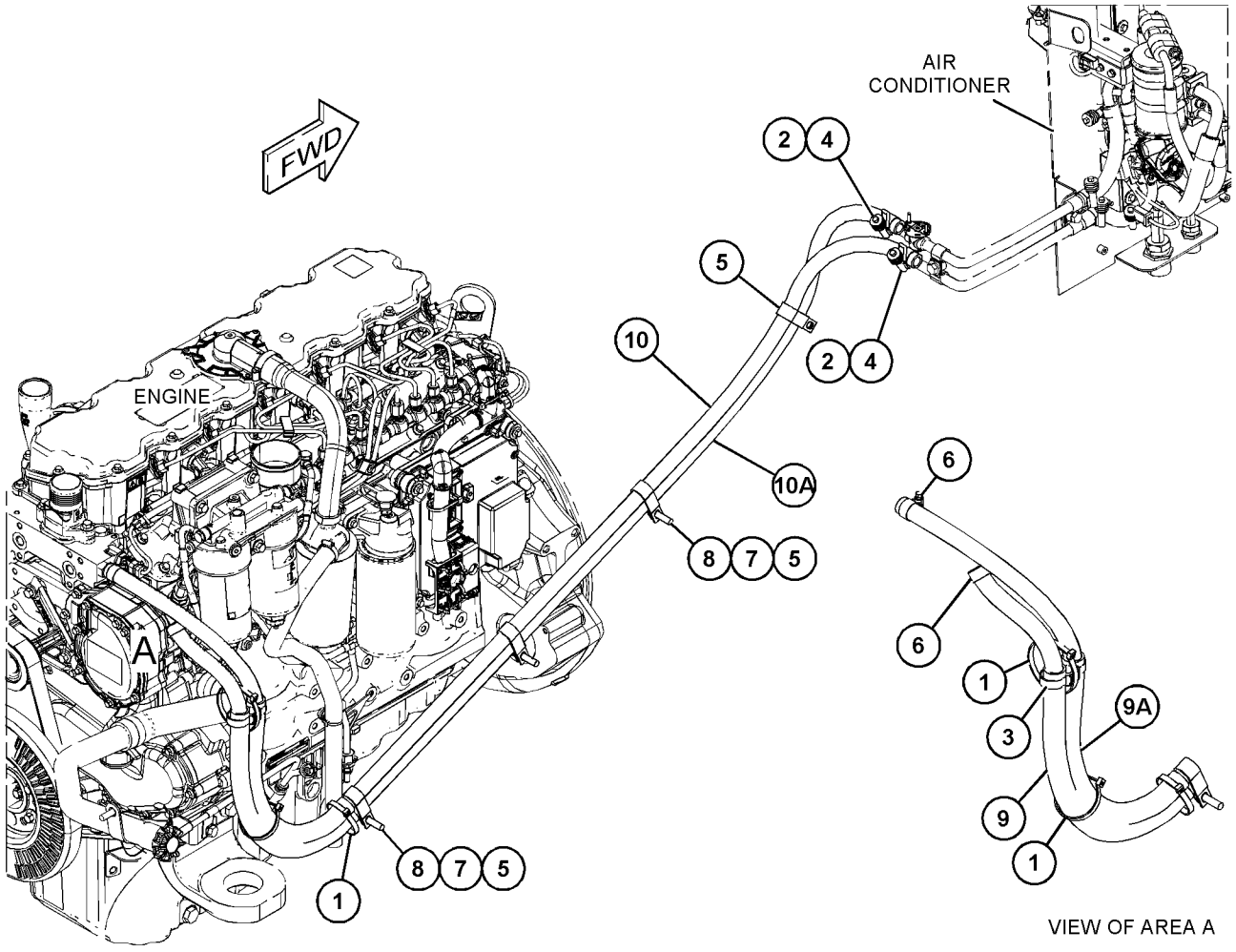

VIEW OF AREA A

GRAPHIC #1 <END> g06047744

6V-1970 LITERATURE GP

S/N: TNS1-UP

PART OF 456-5817 CONFIGURATION AR

SMCS-7300, 7400

i00607038

NOTE	PART NUMBER	QTY	PART NAME 1 2 3 4 5 6 (PRODUCT LEVEL)	SEE PAGE
	5P-8500	2	KEY	
	2Y-3209	2	SEAL-WIRE	

<END>

455-5655 MIRROR GP

S/N: TNS1-UP

PART OF 492-3985 OPERATOR AR

SMCS-7319 **i06674659**

NOTE	REF NO	GRAPHIC REF	PART NUMBER	QTY	PART NAME 1 2 3 4 5 6 (PRODUCT LEVEL)	SEE PAGE
	1	1	**228-6089**	1	PLUG (ROCKER SWITCH)	
	2	1	**302-6392**	1	PLUG	
	3	1	**372-8075**	2	MIRROR AS (REAR VIEW)	
	4	1	**392-3979**	4	BRACKET	
	5	1	**460-1108**	2	BRACKET	
	6	1	**8T-4121**	16	WASHER-HARD (11X21X2.5-MM THK)	
M	7	1	**8T-4133**	4	NUT (M10X1.5-THD)	
M	8	1	**8T-4195**	12	BOLT (M10X1.5X30-MM)	

M - METRIC PART

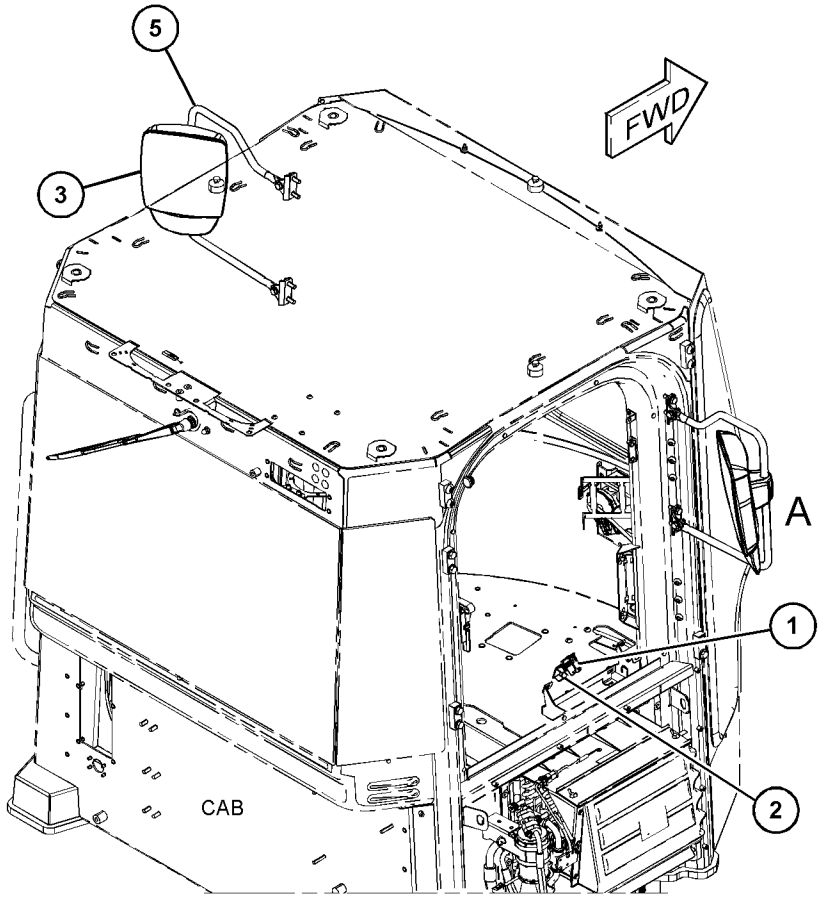

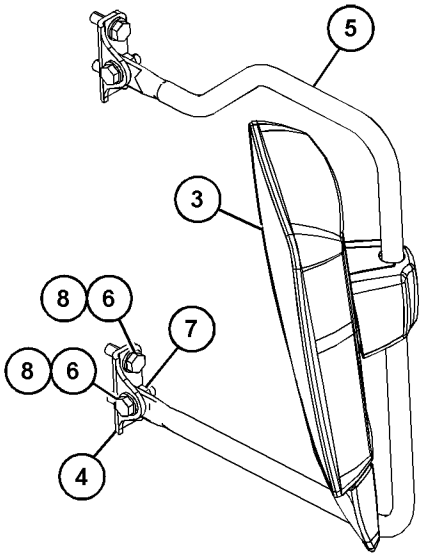

VIEW OF AREA A

GRAPHIC #1 <END> g06047531

366-1983 MIRROR GP-REAR VIEW

S/N: TNS1-UP

PART OF 492-3986 OPERATOR AR

SMCS-7319 **i06729868**

NOTE	REF NO	GRAPHIC REF	PART NUMBER	QTY	PART NAME 1 2 3 4 5 6 (PRODUCT LEVEL)	SEE PAGE
	1	1	**228-6089**	1	PLUG (ROCKER SWITCH)	
	2	1	**302-6392**	1	PLUG	
	3	1	**372-8071**	1	ARM AS-MOUNTING (MIRROR, LH)	
	4	1	**372-8072**	1	ARM AS-MOUNTING (MIRROR, RH)	
	5	1	**372-8075**	2	MIRROR AS (REAR VIEW)	
	6	1	**8T-4121**	8	WASHER-HARD (11X21X2.5-MM THK)	
M	7	1	**8T-4196**	8	BOLT (M10X1.5X35-MM)	

M - METRIC PART

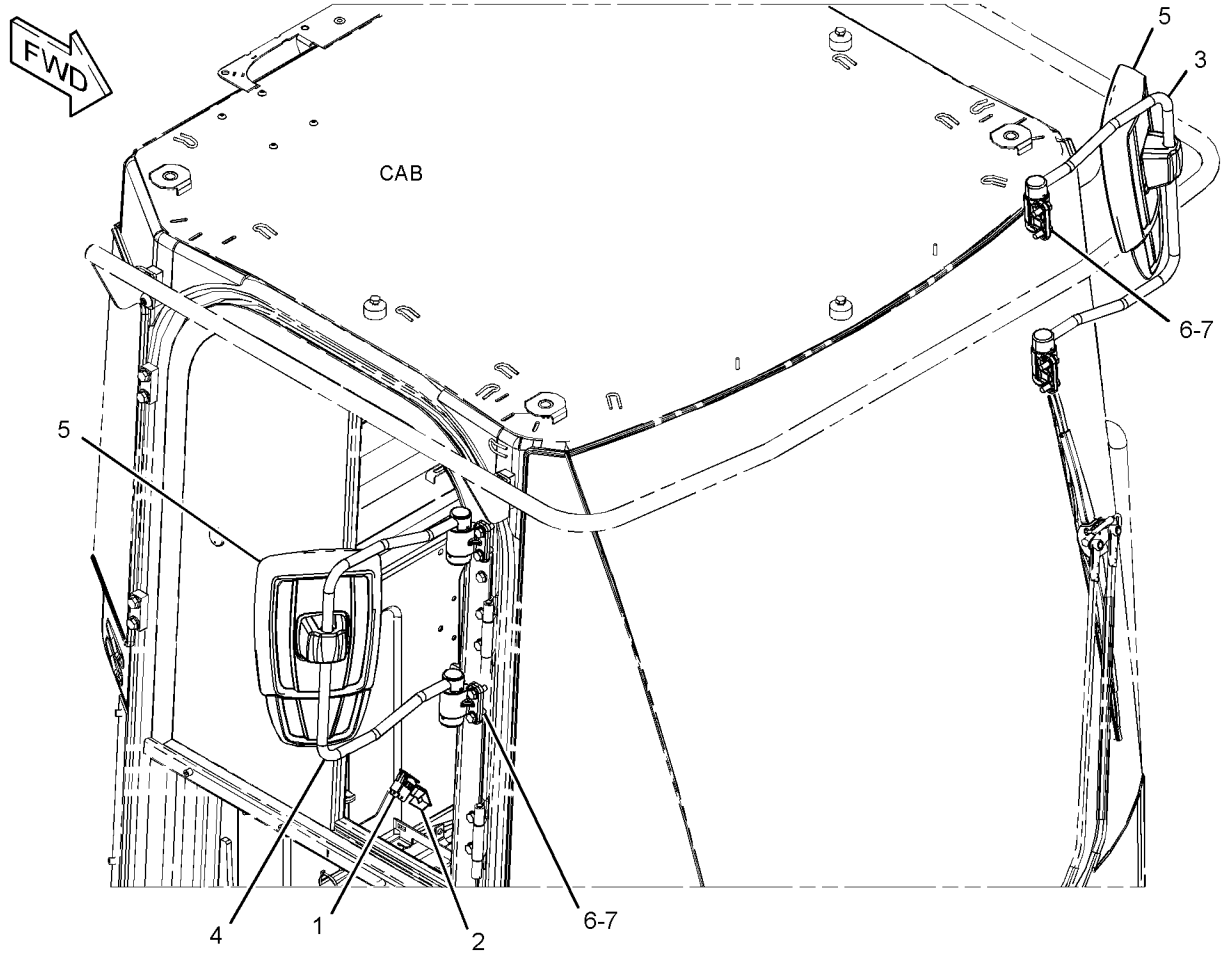

GRAPHIC #1 <END> g03504340

463-0707 MODULE GP-KEYPAD

S/N: TNS1-UP

PART OF 461-2922 CONTROL GP-MONITOR

SMCS-7490 **i06648378**

NOTE	REF NO	GRAPHIC REF	PART NUMBER	QTY	PART NAME 1 2 3 4 5 6 (PRODUCT LEVEL)	SEE PAGE
M	1	1	**8T-2659**	4	LOCKNUT (M4X0.7-THD)	
	2	1	**8F-1326**	4	WASHER (4.2X9.5X0.8-MM THK)	

M - METRIC PART

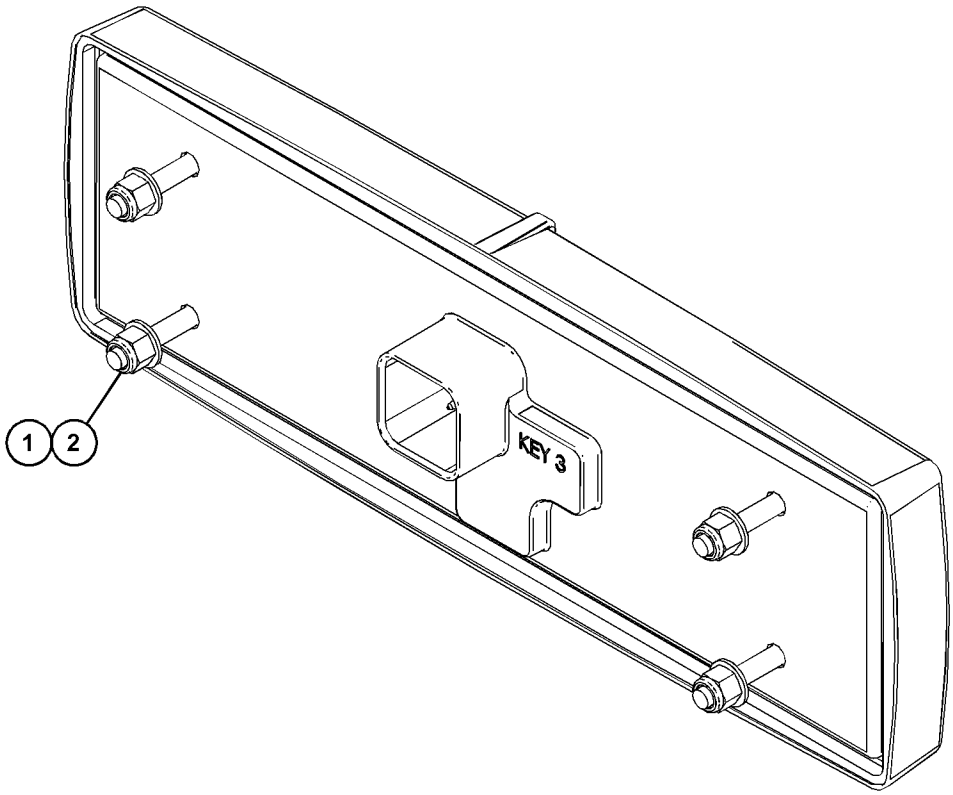

GRAPHIC #1 <END> g06045672

364-1293 MONITOR AR-PAYLOAD—PAYLOAD CONTROL

S/N: TNS1-UP

CANNOT BE USED WITH 364-1295—PAGE: 809

SMCS-7494 **i06709561**

NOTE	PART NUMBER	QTY	PART NAME 1 2 3 4 5 6 (PRODUCT LEVEL)	SEE PAGE
Y	*313-2522*	1	SWITCH GP-PAYLOAD STORE	218
	360-3489	1	SENSOR GP-PRESSURE (LIFT CYLINDER ROD END)	
	3J-1907	1	SEAL-O-RING	
	349-1178	1	SENSOR-PRESSURE (LIFT CYLINDER ROD END)	
	360-3494	1	SENSOR GP-PRESSURE (LIFT CYLINDER HEAD END)	
	3J-1907	1	SEAL-O-RING	
	349-1178	1	SENSOR-PRESSURE (LIFT CYLINDER HEAD END)	
J	*433-2014*	1	CONFIGURATION-PREMIUM	

J - SEE DEALER FOR PRICING, INSTALLATION, AND ACTIVATION OF PREMIUM SOFTWARE
Y - SEPARATE ILLUSTRATION

<END>

364-1295 MONITOR AR-PAYLOAD—AUTODIG

S/N: TNS1-UP

CANNOT BE USED WITH 364-1293—PAGE: 809

SMCS-7494 **i06728631**

NOTE	PART NUMBER	QTY	PART NAME 1 2 3 4 5 6 (PRODUCT LEVEL)	SEE PAGE
Y	*313-2523*	1	CONTROL GP-AUTODIG (SWITCH)	143
Y	*313-2522*	1	SWITCH GP-PAYLOAD STORE	218
	360-3489	1	SENSOR GP-PRESSURE (LIFT CYLINDER ROD END)	
	3J-1907	1	SEAL-O-RING	
	349-1178	1	SENSOR-PRESSURE (LIFT CYLINDER ROD END)	
	360-3494	1	SENSOR GP-PRESSURE (LIFT, HEAD END)	
	3J-1907	1	SEAL-O-RING	
	349-1178	1	SENSOR-PRESSURE (LIFT, HEAD END)	
J	*433-2014*	1	CONFIGURATION-PREMIUM	
J	*214-0113*	1	CONFIGURATION-PREMIUM	

J - DLR INSTALL CONFIG: SEE IRM: EESO3-01
Y - SEPARATE ILLUSTRATION

<END>

370-3813 MONITOR AR-PAYLOAD

S/N: TNS1-UP

CANNOT BE USED WITH 364-1293—PAGE: 809, 364-1295—PAGE: 809, 370-3814—PAGE: 810

SMCS-7494 **i06786428**

NOTE	PART NUMBER	QTY	PART NAME 1 2 3 4 5 6 (PRODUCT LEVEL)	SEE PAGE
Y	*313-2522*	1	SWITCH GP-PAYLOAD STORE	218
	360-3489	1	SENSOR GP-PRESSURE (LIFT CYLINDER ROD END)	
	3J-1907	1	SEAL-O-RING	
	349-1178	1	SENSOR-PRESSURE (LIFT CYLINDER ROD END)	
	360-3494	1	SENSOR GP-PRESSURE (LIFT CYLINDER HEAD END)	
	3J-1907	1	SEAL-O-RING	
	349-1178	1	SENSOR-PRESSURE (LIFT CYLINDER HEAD END)	

Y - SEPARATE ILLUSTRATION

<END>

370-3814 MONITOR AR-PAYLOAD—AUTODIG

S/N: TNS1-UP

CANNOT BE USED WITH 364-1293—PAGE: 809, 364-1295—PAGE: 809, 370-3813—PAGE: 809

SMCS-7494 **i06720333**

NOTE	PART NUMBER	QTY	PART NAME 1 2 3 4 5 6 (PRODUCT LEVEL)	SEE PAGE
Y	*313-2523*	1	CONTROL GP-AUTODIG (SWITCH)	143
Y	*313-2522*	1	SWITCH GP-PAYLOAD STORE	218
	360-3489	1	SENSOR GP-PRESSURE (LIFT CYLINDER ROD END)	
	3J-1907	1	SEAL-O-RING	
	349-1178	1	SENSOR-PRESSURE (LIFT CYLINDER ROD END)	
	360-3494	1	SENSOR GP-PRESSURE (LIFT CYLINDER HEAD END)	
	3J-1907	1	SEAL-O-RING	
	349-1178	1	SENSOR-PRESSURE (LIFT CYLINDER HEAD END)	
J	*214-0113*	1	CONFIGURATION-PREMIUM	

J - DLR INSTALL CONFIG:SEE IRM: EES03-01
Y - SEPARATE ILLUSTRATION

<END>

453-3251 MONITOR AR-PAYLOAD

S/N: TNS1-UP

SMCS-7494 **i06689508**

NOTE	PART NUMBER	QTY	PART NAME 1 2 3 4 5 6 (PRODUCT LEVEL)	SEE PAGE
J	**433-2014**	1	CONFIGURATION-PREMIUM	

J - DLR INSTALL CONFIG: SEE IRM: EES03-01

<END>

517-7121 MONITOR AR-PAYLOAD

S/N: TNS1-UP

PAYLOAD

SMCS-7494 **i06808216**

NOTE	PART NUMBER	QTY	PART NAME 1 2 3 4 5 6 (PRODUCT LEVEL)	SEE PAGE
Y	*360-3489*	1	SENSOR GP-PRESSURE (LIFT CYLINDER ROD END)	206
Y	*360-3494*	1	SENSOR GP-PRESSURE (LIFT CYLINDER HEAD END)	207
Y	*313-2522*	1	SWITCH GP-PAYLOAD STORE	218
J	*517-4683*	1	CONFIGURATION-PREMIUM	

J - DLR INSTALL CONFIG: SEE IRM: EES03-01
Y - SEPARATE ILLUSTRATION

<END>

517-7122 MONITOR AR-PAYLOAD

S/N: TNS1-UP
AUTODIG, PAYLOAD

SMCS-7494 **i06808194**

NOTE	PART NUMBER	QTY	PART NAME 1 2 3 4 5 6 (PRODUCT LEVEL)	SEE PAGE
Y	*313-2523*	1	CONTROL GP-AUTODIG (SWITCH)	143
Y	*360-3489*	1	SENSOR GP-PRESSURE (LIFT CYLINDER ROD END)	206
Y	*360-3494*	1	SENSOR GP-PRESSURE (LIFT CYLINDER HEAD END)	207
Y	*313-2522*	1	SWITCH GP-PAYLOAD STORE	218
J	*214-0113*	1	CONFIGURATION-PREMIUM	
J	*517-4683*	1	CONFIGURATION-PREMIUM	

J - DLR INSTALL CONFIG: SEE IRM: EES03-01
Y - SEPARATE ILLUSTRATION

<END>

517-7123 MONITOR AR-PAYLOAD

S/N: TNS1-UP

SMCS-7494 **i06808191**

NOTE	PART NUMBER	QTY	PART NAME 1 2 3 4 5 6 (PRODUCT LEVEL)	SEE PAGE
J	*517-4683*	1	CONFIGURATION-PREMIUM	

J - DLR INSTALL CONFIG: SEE IRM: EES03-01

<END>

291-0999 MOTOR GP-WINDOW WIPER–CAB

S/N: TNS1-UP

24-VOLT

PART OF 373-2413 MOTOR GP-WINDOW WIPER

SMCS-7305 **i04631634**

NOTE	REF NO	GRAPHIC REF	PART NUMBER	QTY	PART NAME 1 2 3 4 5 6 (PRODUCT LEVEL)	SEE PAGE
	1	1	**102-8805**	1	KIT-RECEPTACLE (6-PIN)	
					(INCLUDES RECEPTACLE AS & WEDGE)	
	2	1	**8T-8737**	1	PLUG-SEAL	
	3	1	**8T-8729**	5	PIN-CONNECTOR (16-GA TO 18-GA)	

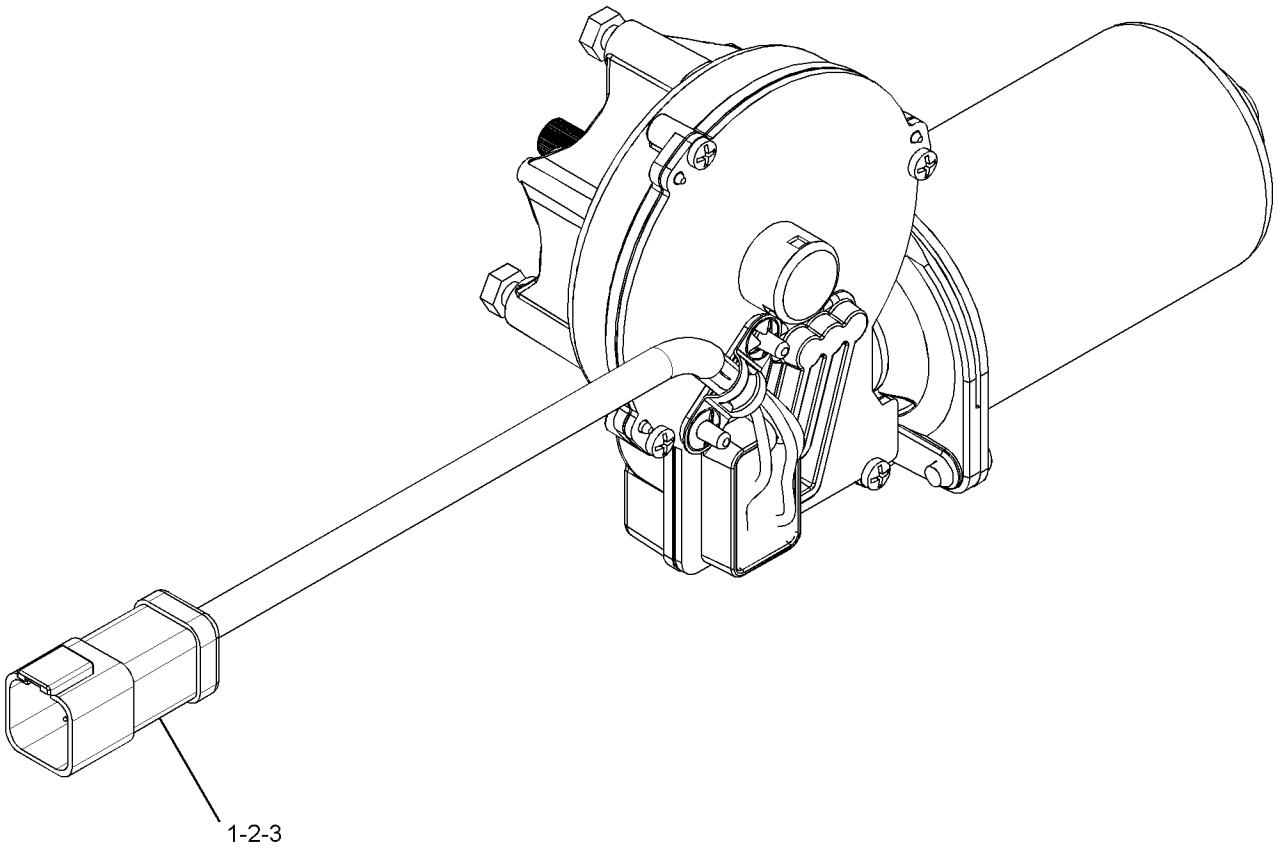

GRAPHIC #1 <END> g02186833

373-2413 MOTOR GP-WINDOW WIPER

S/N: TNS1-UP

PART OF 488-5867 WIPER GP-WINDOW

SMCS-7305 **i04888318**

NOTE	REF NO	GRAPHIC REF	PART NUMBER	QTY	PART NAME 1 2 3 4 5 6 (PRODUCT LEVEL)	SEE PAGE
	1	1	**194-3710**	2	CAP-WIPER	
Y	2	1	**291-0999**	1	MOTOR GP-WINDOW WIPER	812
	3	1	**362-3508**	1	KIT-REPAIR (WINDOW WIPER ARM)	

Y - SEPARATE ILLUSTRATION

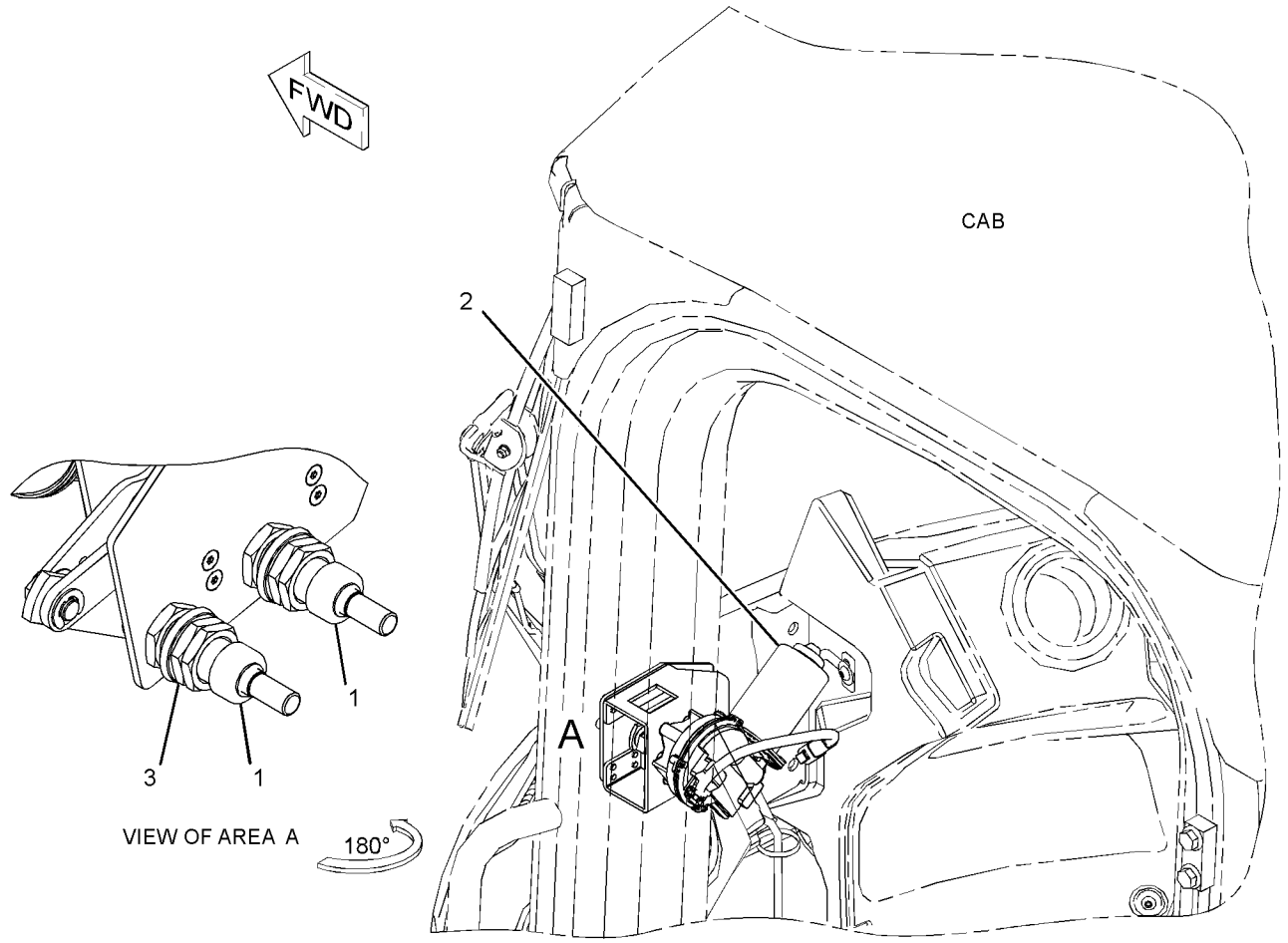

GRAPHIC #1 <END> g03046197

457-3651 MOTOR GP-WINDOW WIPER

S/N: TNS1-UP
24-VOLT
PART OF 488-5867, 496-3368 WIPER GP-WINDOW

SMCS-7305 **i06181771**

NOTE	REF NO	GRAPHIC REF	PART NUMBER	QTY	PART NAME 1 2 3 4 5 6 (PRODUCT LEVEL)	SEE PAGE
	1	1	**8T-8737**	1	PLUG-SEAL	
	2	1	**102-8805**	1	KIT-RECEPTACLE (6-PIN)	
					(INCLUDES RECEPTACLE AS & WEDGE)	
	3	1	**8T-8729**	5	PIN-CONNECTOR (16-GA TO 18-GA)	
	4	1	**263-3823**	1	CAP-WIPER	
	5	1	**3F-9556**	1	LOCKWASHER	
M	6	1	**5C-7261**	1	NUT (M8X1.25-THD)	

M - METRIC PART

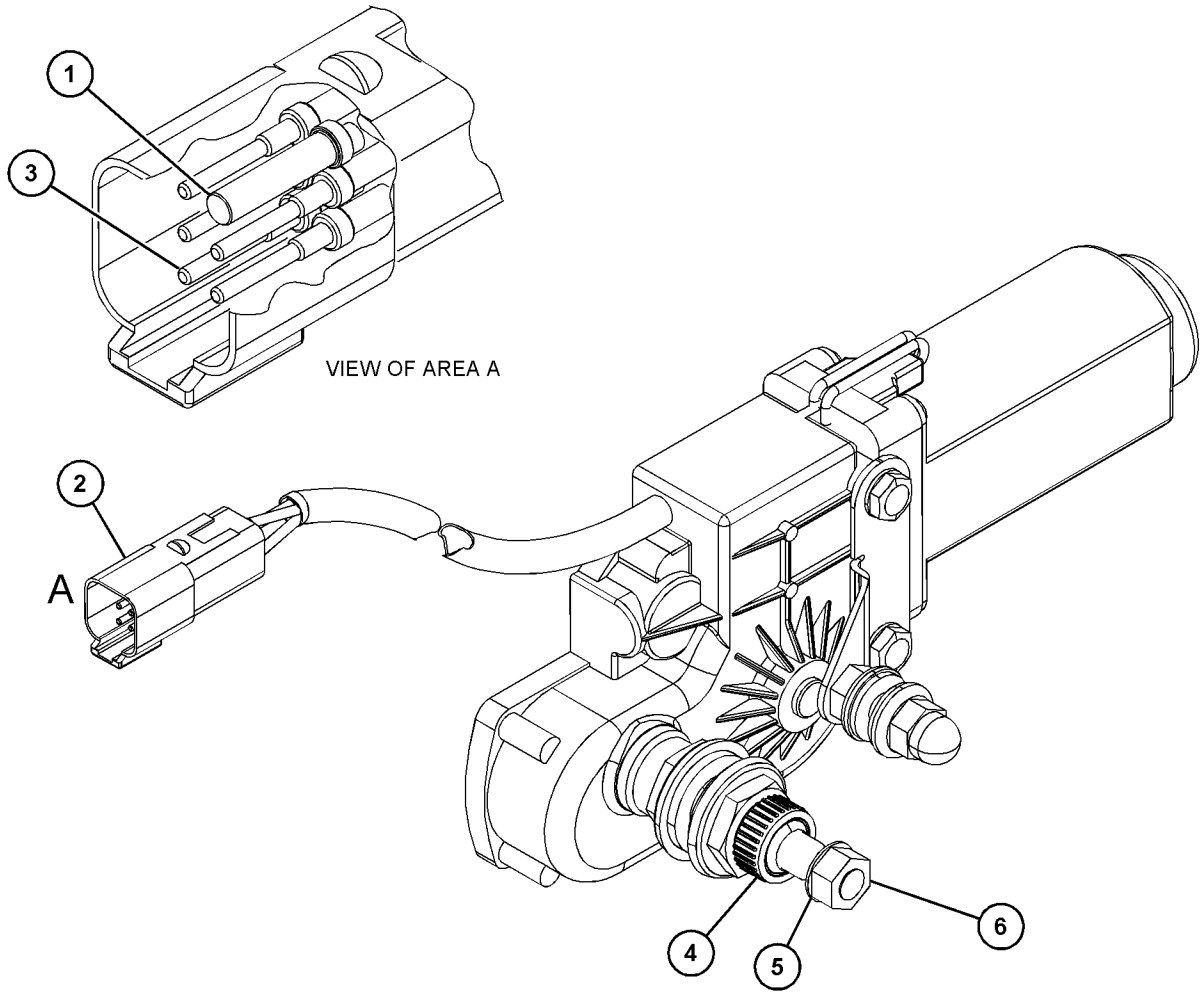

GRAPHIC #1 <END> g03843833

496-3367 MOTOR GP-WINDOW WIPER

S/N: TNS1-UP

PART OF 496-3368 WIPER GP-WINDOW

SMCS-7305 **i06684214**

NOTE	REF NO	GRAPHIC REF	PART NUMBER	QTY	PART NAME 1 2 3 4 5 6 (PRODUCT LEVEL)	SEE PAGE
	1	1	**194-3710**	2	CAP-WIPER	
	2	1	**498-6590**	1	KIT-REPAIR (WINDOW WIPER ARM)	
					(INCLUDES NUTS, SEALS & WASHERS)	
	3	1	**219-6202**	2	SPACER (20.5X28.5X18-MM THK)	
	4	1	**8T-8737**	1	PLUG-SEAL	
	5	1	**8T-8729**	5	PIN-CONNECTOR (16-GA TO 18-GA)	

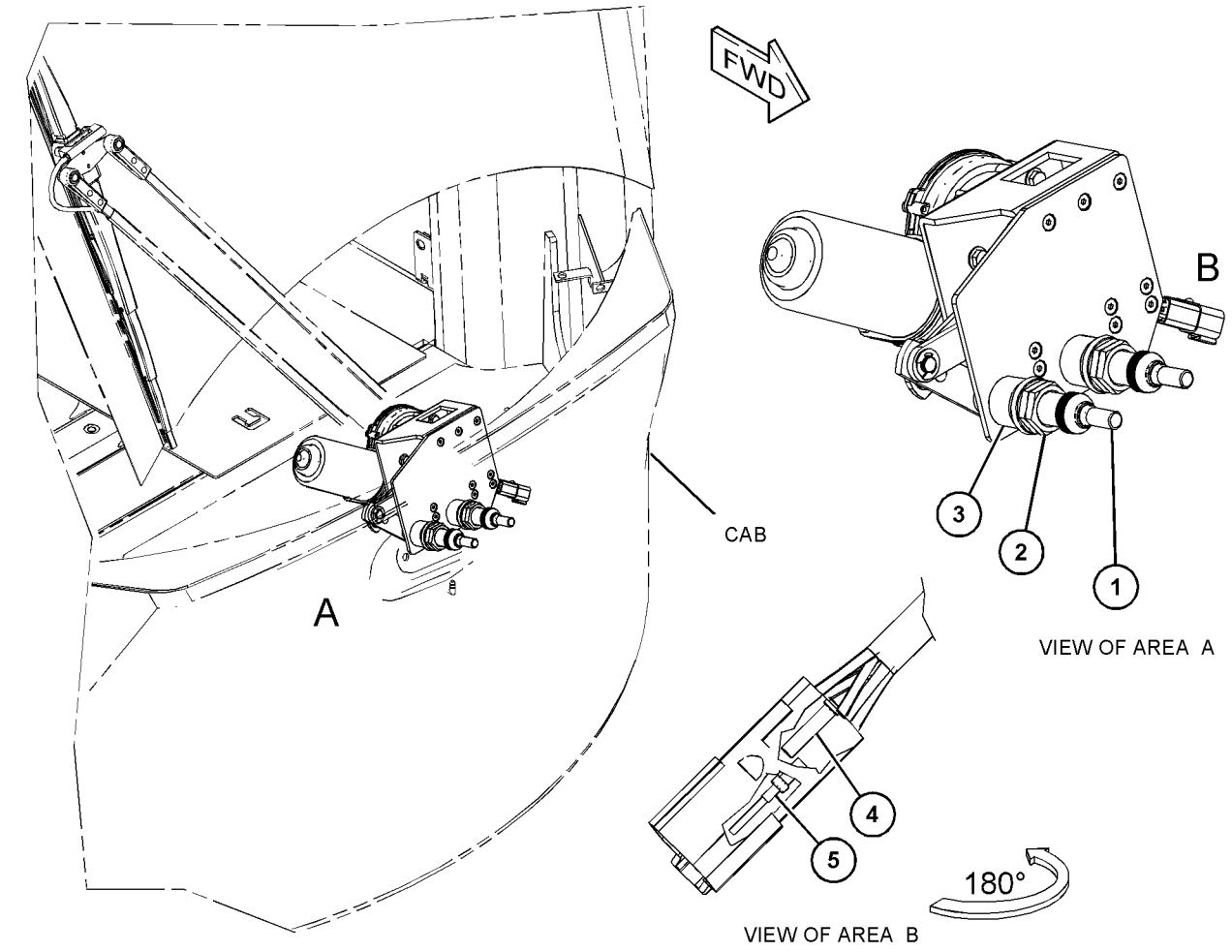

GRAPHIC #1 <END> g06066710

372-1606 MOUNTING GP-CAB—HEAVY-DUTY

S/N: TNS1-UP

PART OF 493-9618 CAB AR-ENCLOSED ROPS

SMCS-7301 **i06752936**

NOTE	REF NO	GRAPHIC REF	PART NUMBER	QTY	PART NAME 1 2 3 4 5 6 (PRODUCT LEVEL)	SEE PAGE
	1	1	**363-4467**	4	MOUNT	
	2	1	**8T-4121**	16	WASHER-HARD (11X21X2.5-MM THK)	
M	3	1	**8T-4195**	16	BOLT (M10X1.5X30-MM)	

M - METRIC PART

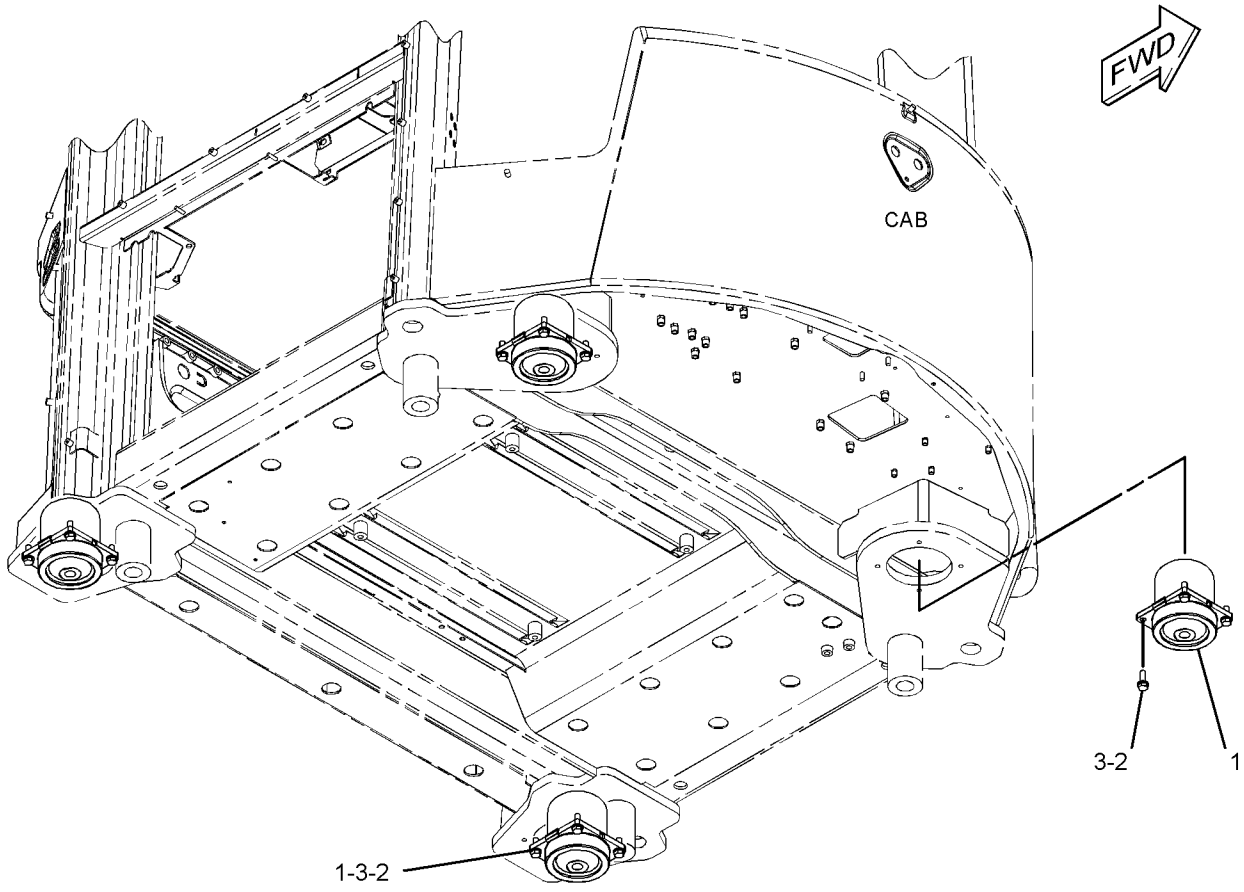

GRAPHIC #1 <END> g03430179

388-3725 MOUNTING GP-CAB

S/N: TNS1-UP

PART OF 455-3941 OPERATOR AR-ENCLOSED ROPS

SMCS-7301 **i05800296**

NOTE	REF NO	GRAPHIC REF	PART NUMBER	QTY	PART NAME 1 2 3 4 5 6 (PRODUCT LEVEL)	SEE PAGE
	1	1	**377-4797**	4	STOP	
M	2	1	**7X-2582**	4	BOLT (M30X3.5X110-MM)	
	3	1	**8T-4121**	2	WASHER-HARD (11X21X2.5-MM THK)	
	4	1	**8T-4123**	4	WASHER (3.62X5.75X0.375-MM THK)	
M	5	1	**8T-4137**	2	BOLT (M10X1.5X20-MM)	
M	6	1	**8T-4141**	4	BOLT (M20X2.5X70-MM)	
	7	1	**9X-8258**	4	WASHER (33X56X6-MM THK)	

M - METRIC PART

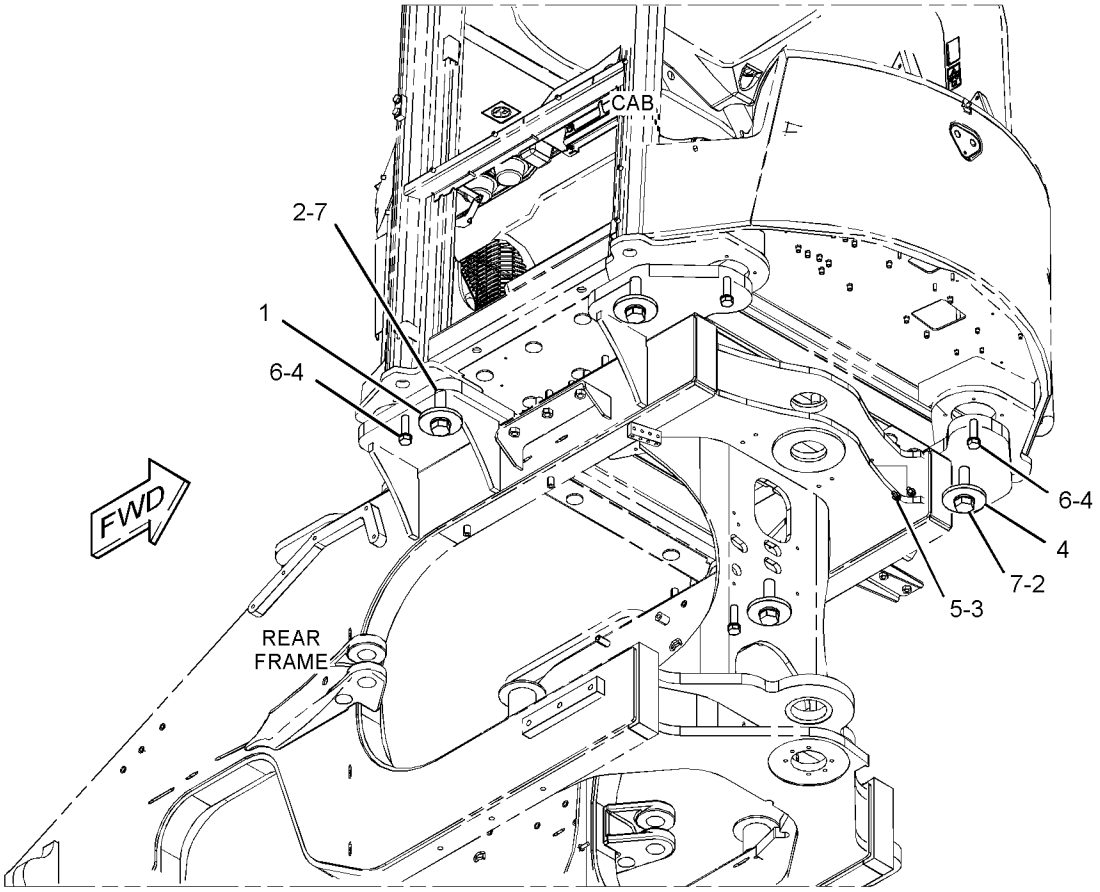

GRAPHIC #1 <END> g03503896

501-0558 MOUNTING GP-CAB

S/N: TNS1-UP

PART OF 493-9616, 493-9617, 493-9619, 503-1906 CAB AR-ENCLOSED ROPS

SMCS-7301 **i06677266**

NOTE	REF NO	GRAPHIC REF	PART NUMBER	QTY	PART NAME 1 2 3 4 5 6 (PRODUCT LEVEL)	SEE PAGE
	1	1	**485-2984**	4	MOUNT AS	
	2	1	**8T-4121**	16	WASHER-HARD (11X21X2.5-MM THK)	
M	3	1	**8T-4186**	16	BOLT (M10X1.5X40-MM)	

M - METRIC PART

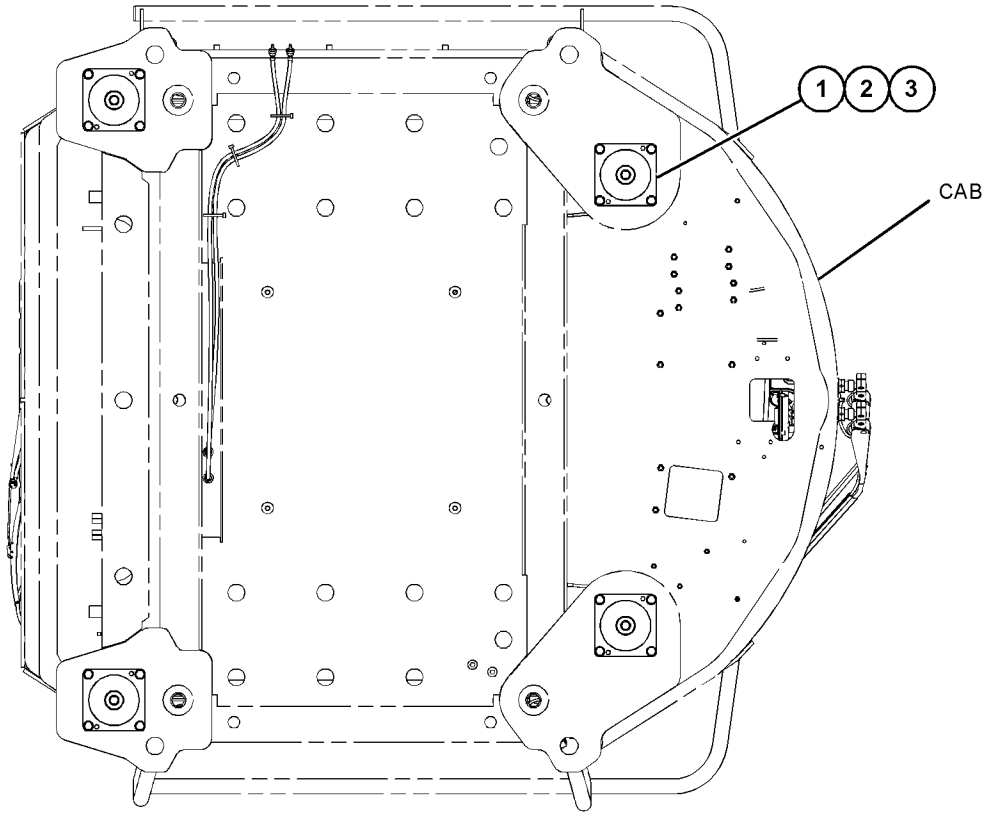

GRAPHIC #1 <END> g06068008

492-3985 OPERATOR AR

S/N: TNS1-UP

PART OF 512-0946 CAB AR, 492-4033, 492-4034 DISTRIBUTION AR

SMCS-7301 **i06809130**

NOTE	PART NUMBER	QTY	PART NAME 1 2 3 4 5 6 (PRODUCT LEVEL)	SEE PAGE
Y	*455-5655*	1	MIRROR GP	806
Y	*503-1904*	1	OPERATOR AR	819

Y - SEPARATE ILLUSTRATION

<END>

492-3986 OPERATOR AR

S/N: TNS1-UP

PART OF 512-0947 CAB AR

SMCS-7301 **i06809136**

NOTE	PART NUMBER	QTY	PART NAME 1 2 3 4 5 6 (PRODUCT LEVEL)	SEE PAGE
Y	*366-1983*	1	MIRROR GP-REAR VIEW	807
Y	*503-1904*	1	OPERATOR AR	819
Y	*372-1609*	1	VISOR GP-CAB	858

Y - SEPARATE ILLUSTRATION

<END>

503-1904 OPERATOR AR

S/N: TNS1-UP

PART OF 492-3985, 492-3986 OPERATOR AR

SMCS-7301 **i06809132**

NOTE	PART NUMBER	QTY	PART NAME 1 2 3 4 5 6 (PRODUCT LEVEL)	SEE PAGE
Y	*371-5010*	1	CONTROL GP-SERVICE BRAKE	571
Y	*459-5277*	1	CONTROL GP-STEERING	764
Y	*460-3596*	1	PANEL GP-INSTRUMENT	820
Y	*397-5171*	1	PEDAL GP-GOVERNOR	822
Y	**490-5982**	1	SEAT GP-SUSPENSION	846
Y	*454-3758*	1	SUPPORT GP-SEAT	848
Y	*502-5907*	1	WIRING GP-CAB (CATALYST)	231
	372-0685	1	FLOOR MAT AS	

Y - SEPARATE ILLUSTRATION

<END>

455-3941 OPERATOR AR-ENCLOSED ROPS

S/N: TNS1-UP

PART OF 456-5788 COMMON AR

SMCS-7301 **i06641531**

NOTE	PART NUMBER	QTY	PART NAME 1 2 3 4 5 6 (PRODUCT LEVEL)	SEE PAGE
Y	*455-3940*	1	CAB AR	750
Y	*388-3724*	1	COVER GP-CAB	768
Y	*388-3725*	1	MOUNTING GP-CAB	817

Y - SEPARATE ILLUSTRATION

<END>

460-3596 PANEL GP-INSTRUMENT

S/N: TNS1-UP

PART OF 503-1904 OPERATOR AR

SMCS-7451 **i06656363**

NOTE	REF NO	GRAPHIC REF	PART NUMBER	QTY	PART NAME 1 2 3 4 5 6 (PRODUCT LEVEL)	SEE PAGE
M	1	1	**172-8591**	2	NUT-SPRING (M6X1-THD)	
	2	1	**114-6658**	18	WASHER (6.5X17X1-MM THK)	
M	3	1	**9X-2044**	6	SCREW-TRUSS HEAD (M6X1X16-MM)	
	4	1	**340-2575**	1	COVER AS (TOP, LH)	
	5	1	**372-0681**	1	DASH	
	6	1	**365-8381**	1	COVER-DASH	
	7	1	**340-2578**	1	COVER-UPPER	
	8	1	**340-2579**	1	COVER-LOWER	
M	9	1	**138-8454**	3	SCREW-TRUSS HEAD (M4X0.7X10-MM)	
M	10	1	**9X-2043**	12	SCREW-TRUSS HEAD (M6X1X14-MM)	

M - METRIC PART

460-3596 **PANEL GP-INSTRUMENT (**contd.**)** **i06656363**

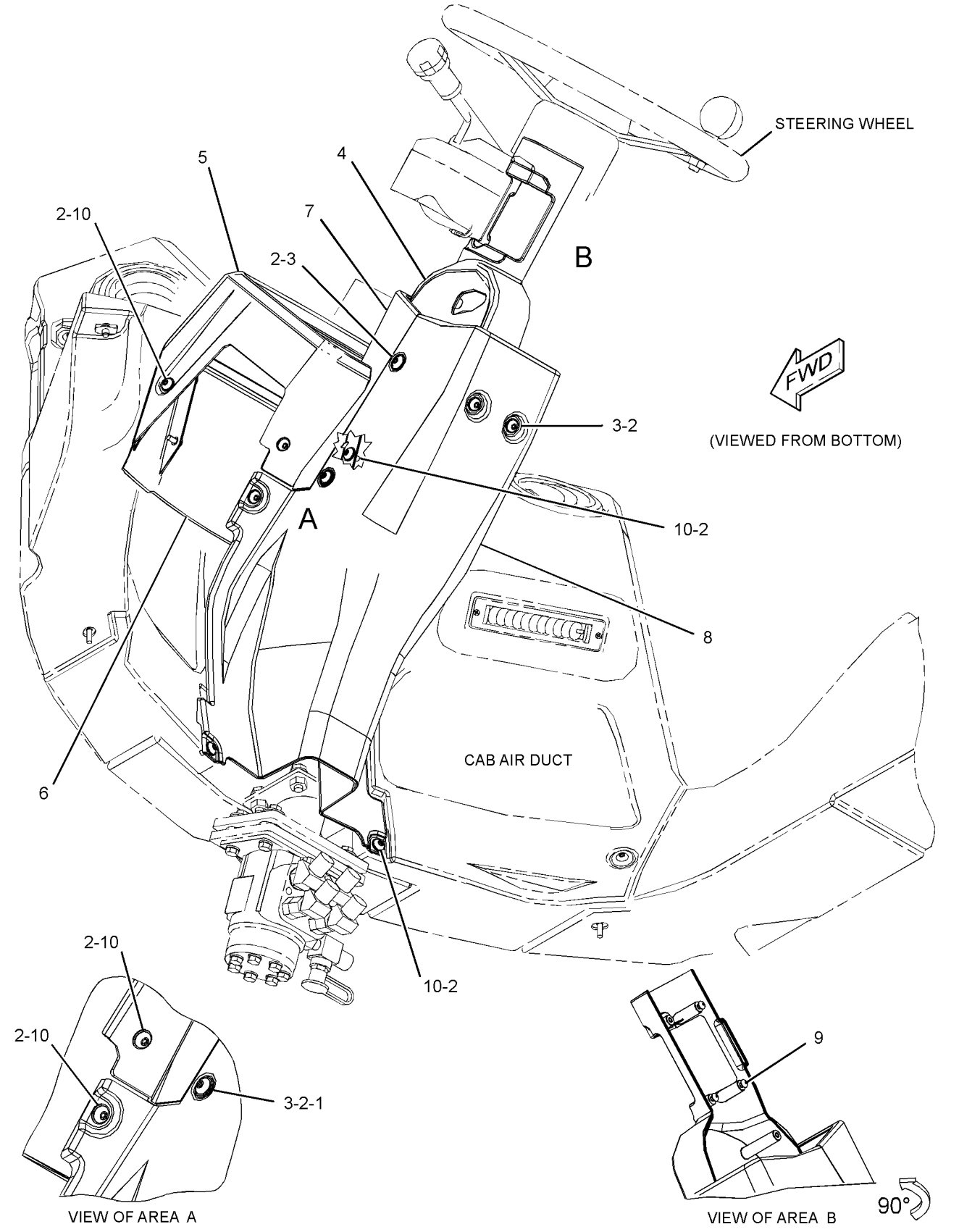

GRAPHIC #1

<END>

g06048227

397-5171 PEDAL GP-GOVERNOR

S/N: TNS1-UP
THROTTLE
PART OF 503-1904 OPERATOR AR

SMCS-1276 **i06781524**

NOTE	REF NO	GRAPHIC REF	PART NUMBER	QTY	PART NAME 1 2 3 4 5 6 (PRODUCT LEVEL)	SEE PAGE
	1	1	**488-5391**	1	PEDAL GP-GOVERNOR (THROTTLE)	
		1	**269-1983**	1	SENSOR GP-POSITION (ROTARY) (THROTTLE)	
		1	**292-9802**	1	COVER	
	2	1	**397-4016**	1	SPACER	
M	3	1	**099-3649**	4	BOLT (M8X1.25X40-MM)	
M	4	1	**8T-4200**	2	BOLT (M8X1.25X16-MM)	
	5	1	**8T-4224**	4	WASHER-HARD (8.8X16X2-MM THK)	

M - METRIC PART

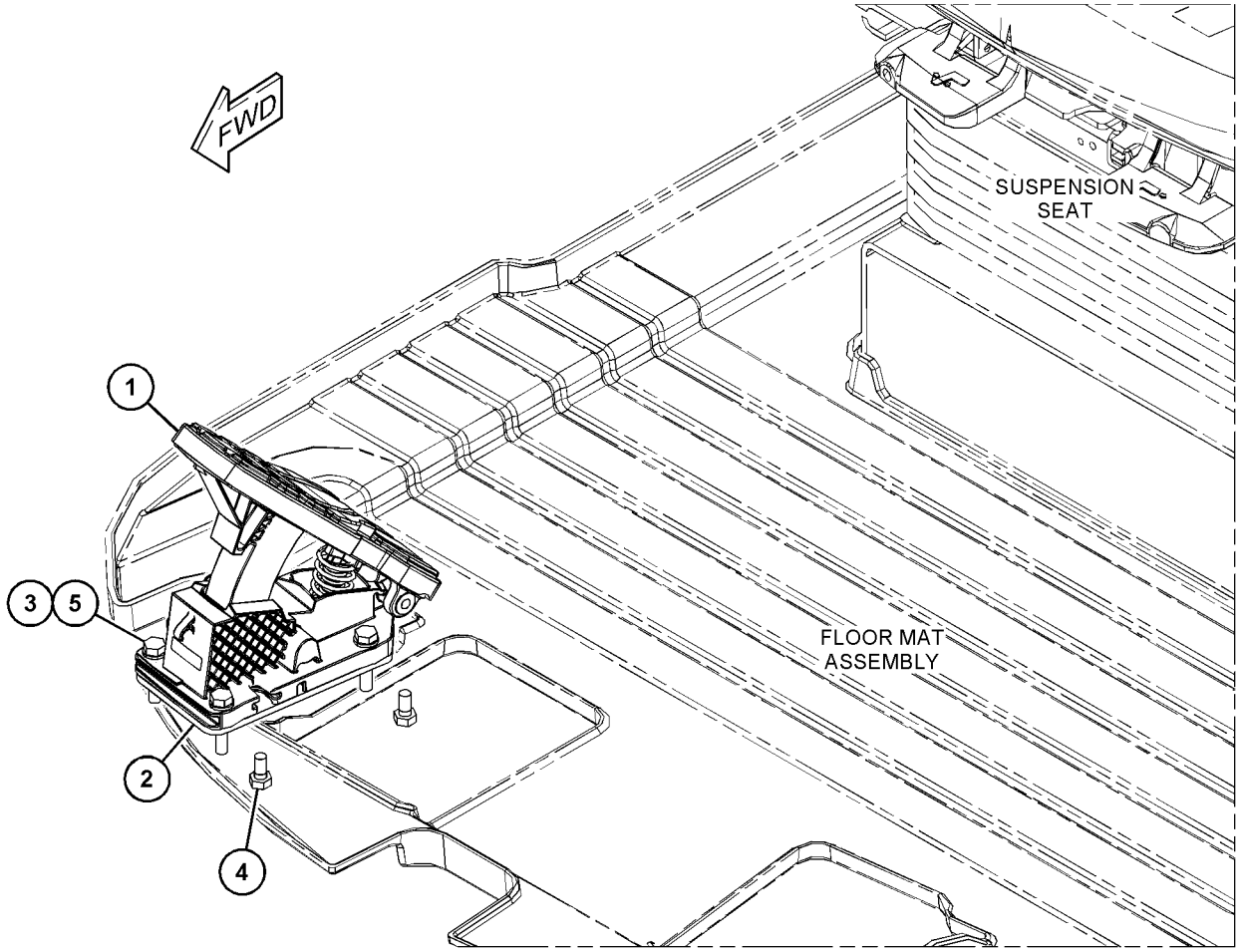

GRAPHIC #1 <END> g03507148

463-8896 PLATFORM AR

S/N: TNS1-UP

OPERATOR

SMCS-7253 **i06796523**

NOTE	PART NUMBER	QTY	PART NAME 1 2 3 4 5 6 (PRODUCT LEVEL)	SEE PAGE
Y	*461-4441*	1	PLATE AS-MOUNTING	525
Y	*367-2606*	1	PLATFORM GP-OPERATOR	826

Y - SEPARATE ILLUSTRATION

<END>

458-8276 PLATFORM GP–REAR

S/N: TNS1-UP

PART OF 456-5790 CHASSIS AR

SMCS-7253 **i06759704**

NOTE	REF NO	GRAPHIC REF	PART NUMBER	QTY	PART NAME 1 2 3 4 5 6 (PRODUCT LEVEL)	SEE PAGE
Y	1	1	*458-8277*	1	SUPPORT GP-PLATFORM	548
	2	1	*458-8282*	1	PLATFORM GP	
		1	**456-5899**	1	SHEET	
		1	**464-4682**	1	SHEET	
	3	1	**198-4778**	4	WASHER-HARD (13.5X30X12-MM THK)	
	4	1	**267-8821**	4	WASHER (17X36X12-MM THK)	
	5	1	**7X-7729**	2	WASHER (11X25X3-MM THK)	
M	6	1	**8T-4184**	4	BOLT (M12X1.75X45-MM)	
M	7	1	**8T-4193**	4	BOLT (M16X2X50-MM)	
M	8	1	**8T-4195**	2	BOLT (M10X1.5X30-MM)	
	9	1	**8T-4222**	6	WASHER-PLATED (11X32X2.5-MM THK)	
M	10	1	**9X-2040**	6	SCREW-TRUSS HEAD (M10X1.5X25-MM)	

M - METRIC PART
Y - SEPARATE ILLUSTRATION

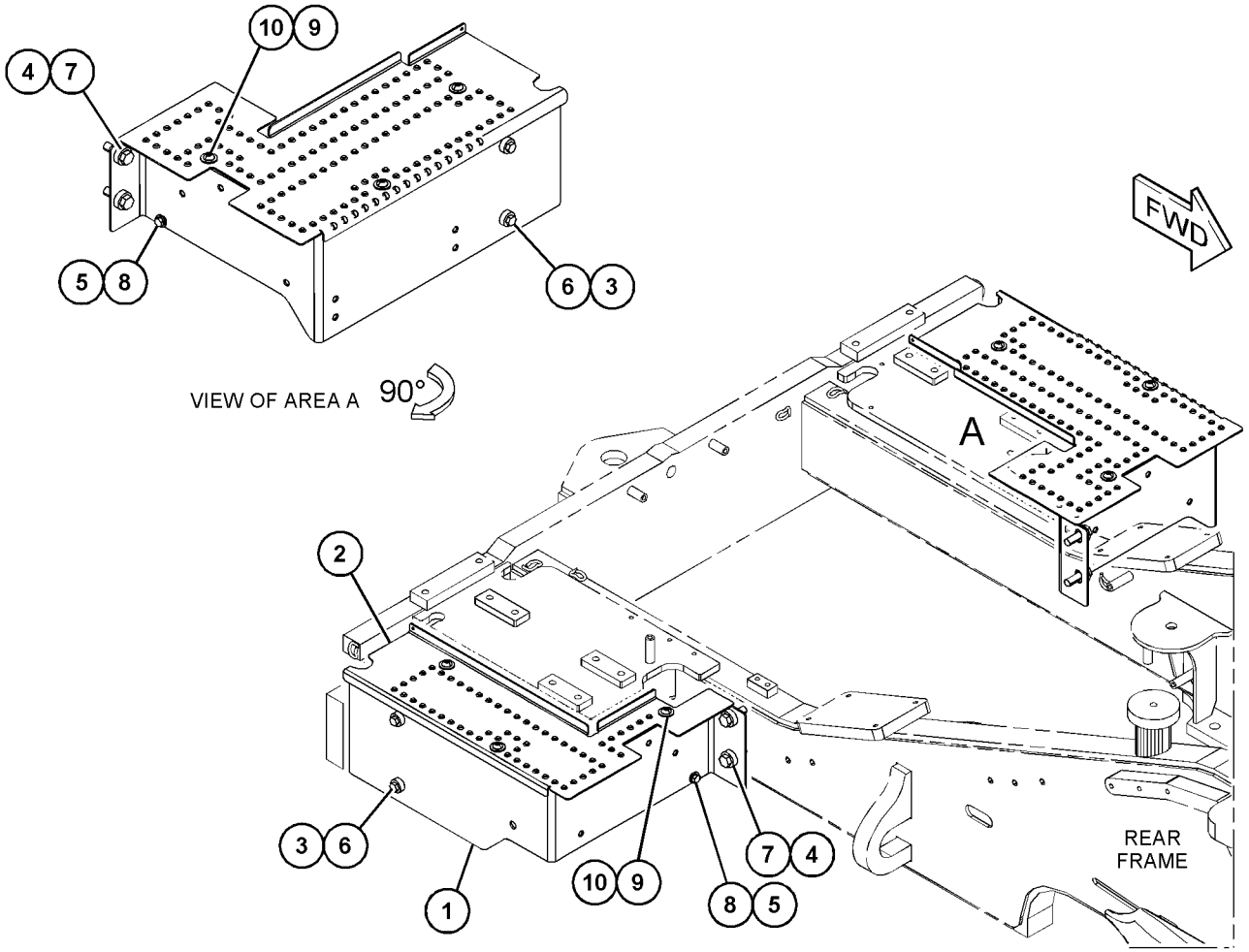

GRAPHIC #1 <END> g06051095

465-0997 PLATFORM GP

S/N: TNS1-UP

PART OF 505-1548 CONTROL AR-FAN

SMCS-7253 **i06779845**

NOTE	REF NO	GRAPHIC REF	PART NUMBER	QTY	PART NAME 1 2 3 4 5 6 (PRODUCT LEVEL)	SEE PAGE
	1	1	**464-4881**	1	PLATE AS	
		1	**7T-1099**	1	LINK	
M		1	**8T-3490**	1	NUT-WELD (M10X1.5-THD)	
M		1	**8T-3612**	3	NUT-WELD (M8X1.25-THD)	
M	2	1	**8T-4195**	3	BOLT (M10X1.5X30-MM)	
	3	1	**8T-4222**	3	WASHER-PLATED (11X32X2.5-MM THK)	

M - METRIC PART

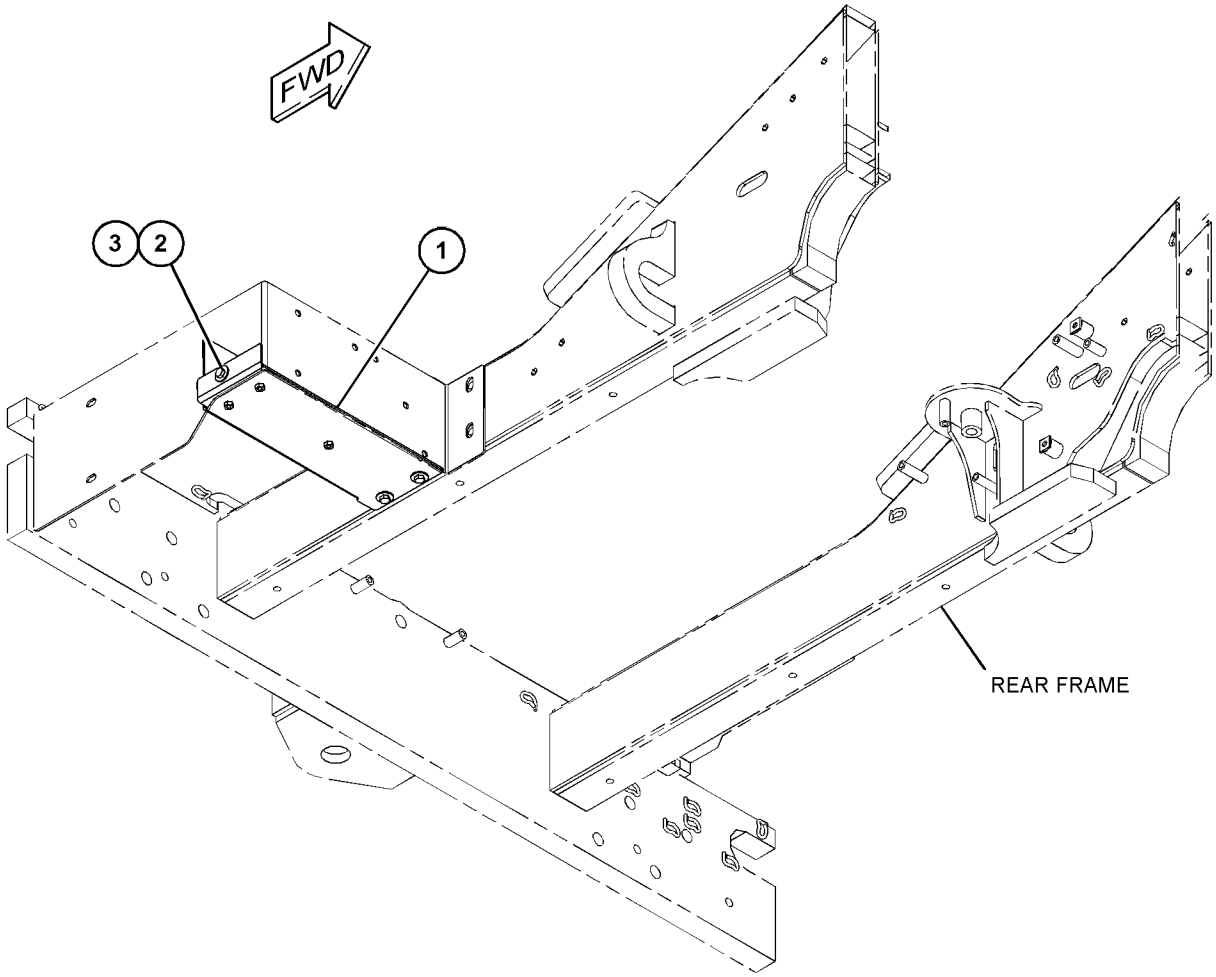

GRAPHIC #1 <END> g03830477

367-2606 PLATFORM GP-OPERATOR

S/N: TNS1-UP

PART OF 463-8896 PLATFORM AR

SMCS-7253 **i05849130**

NOTE	REF NO	GRAPHIC REF	PART NUMBER	QTY	PART NAME 1 2 3 4 5 6 (PRODUCT LEVEL)	SEE PAGE
	1	1	**358-1886**	1	STEP AS	
	2	1	**367-2539**	1	PLATFORM	
	3	1	**380-5240**	4	BRACKET	
M	4	1	**173-8341**	4	SCREW-FLAT HEAD (M12X1.75X60-MM)	
	5	1	**198-4777**	2	WASHER-HARD (11X25X10-MM THK)	
M	6	1	**8T-4136**	2	BOLT (M10X1.5X25-MM)	

M - METRIC PART

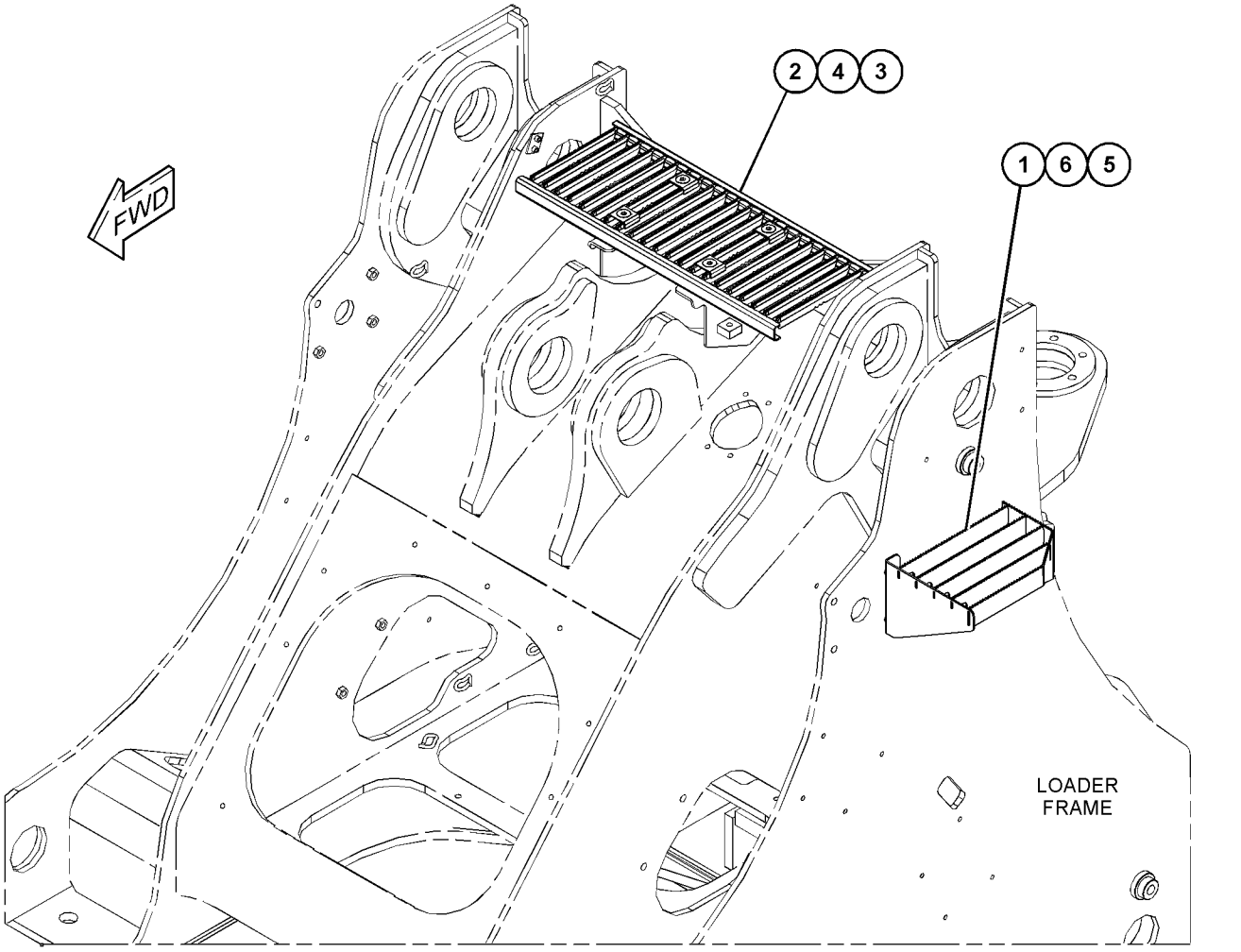

GRAPHIC #1 <END> g03666316

504-2869 PLATFORM GP-OPERATOR

S/N: TNS1-UP

PART OF 492-4020 SPECIAL AR-WHEEL LOADER

SMCS-7253 **i06753338**

NOTE	REF NO	GRAPHIC REF	PART NUMBER	QTY	PART NAME 1 2 3 4 5 6 (PRODUCT LEVEL)	SEE PAGE
Y	1	1	*504-2868*	1	LADDER & WALKWAY GP	490
	2	1	**267-8821**	6	WASHER (17X36X12-MM THK)	
M	3	1	**344-5675**	1	NUT (M10X1.5-THD)	
	4	1	**5P-1076**	11	WASHER-HARD (13.5X30X4-MM THK)	
	5	1	**7X-7729**	22	WASHER (11X25X3-MM THK)	
M	6	1	**8T-4136**	11	BOLT (M10X1.5X25-MM)	
M	7	1	**8T-4139**	6	BOLT (M12X1.75X30-MM)	
M	8	1	**8T-4195**	2	BOLT (M10X1.5X30-MM)	
M	9	1	**8T-4196**	2	BOLT (M10X1.5X35-MM)	
M	10	1	**8T-4956**	5	BOLT (M12X1.75X35-MM)	
M	11	1	**8T-7338**	6	BOLT (M16X2X45-MM)	
M	12	1	**9X-2040**	6	SCREW-TRUSS HEAD (M10X1.5X25-MM)	

M - METRIC PART
Y - SEPARATE ILLUSTRATION

504-2869 **PLATFORM GP-OPERATOR** (contd.) **i06753338**

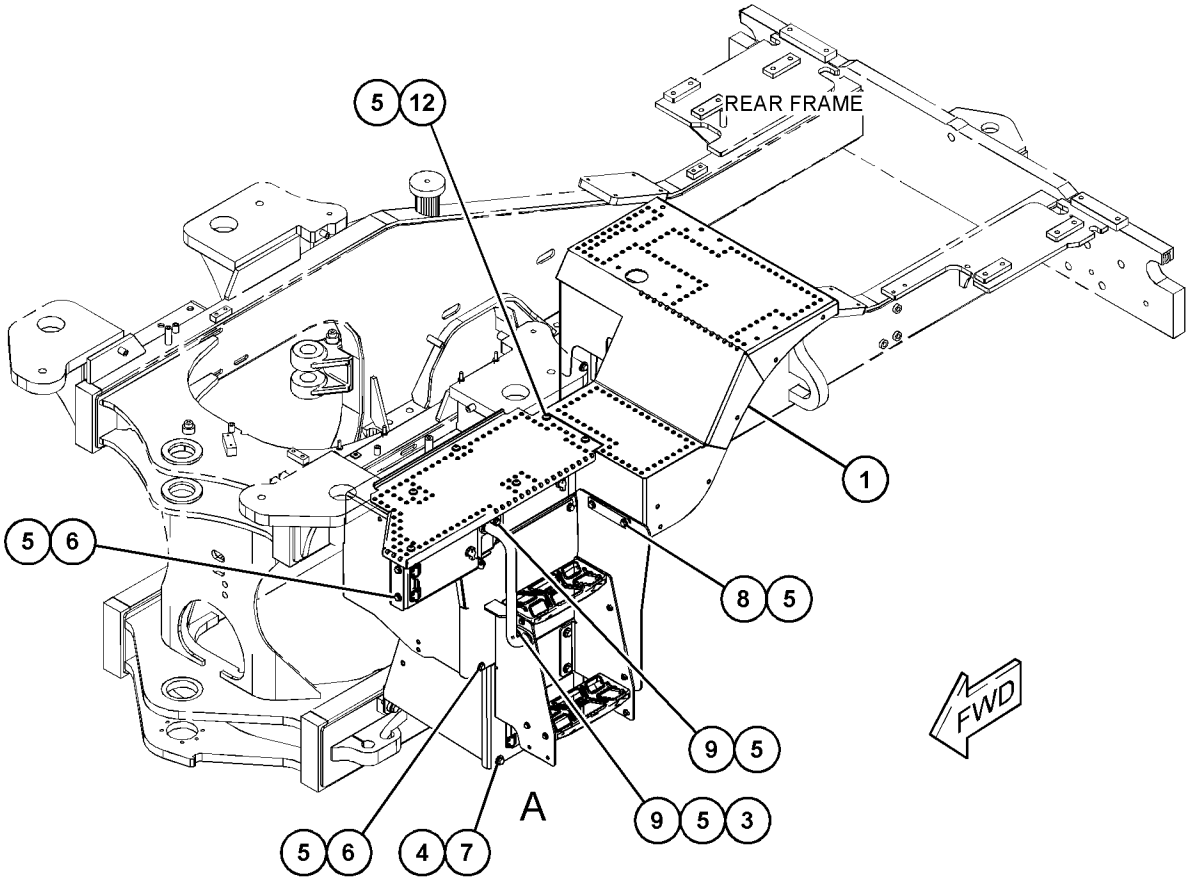

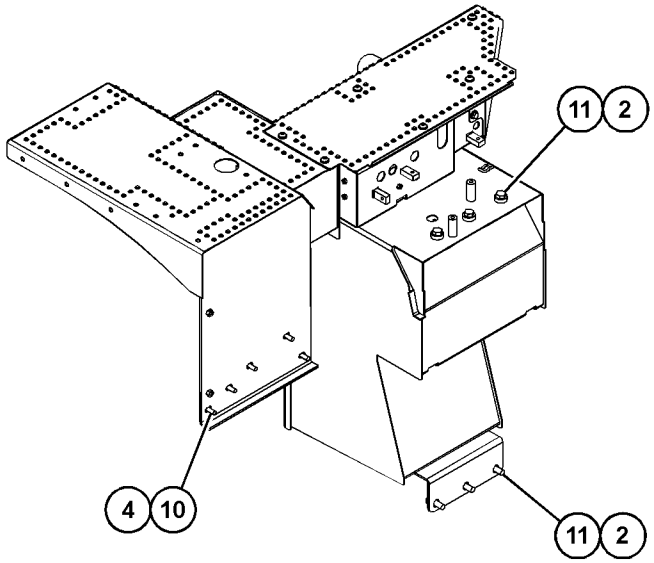

VIEW OF AREA A 180°

GRAPHIC #1 <END> g06121796

504-2871 PLATFORM GP-OPERATOR

S/N: TNS1-UP

PART OF 504-2875 LADDER & WALKWAY GP

SMCS-7253 **i06756792**

NOTE	REF NO	GRAPHIC REF	PART NUMBER	QTY	PART NAME 1 2 3 4 5 6 (PRODUCT LEVEL)	SEE PAGE
M	1	1	**178-7023**	3	BOSS (M10X1.5X30-MM)	
M	2	1	**8T-3490**	20	NUT-WELD (M10X1.5-THD)	

M - METRIC PART

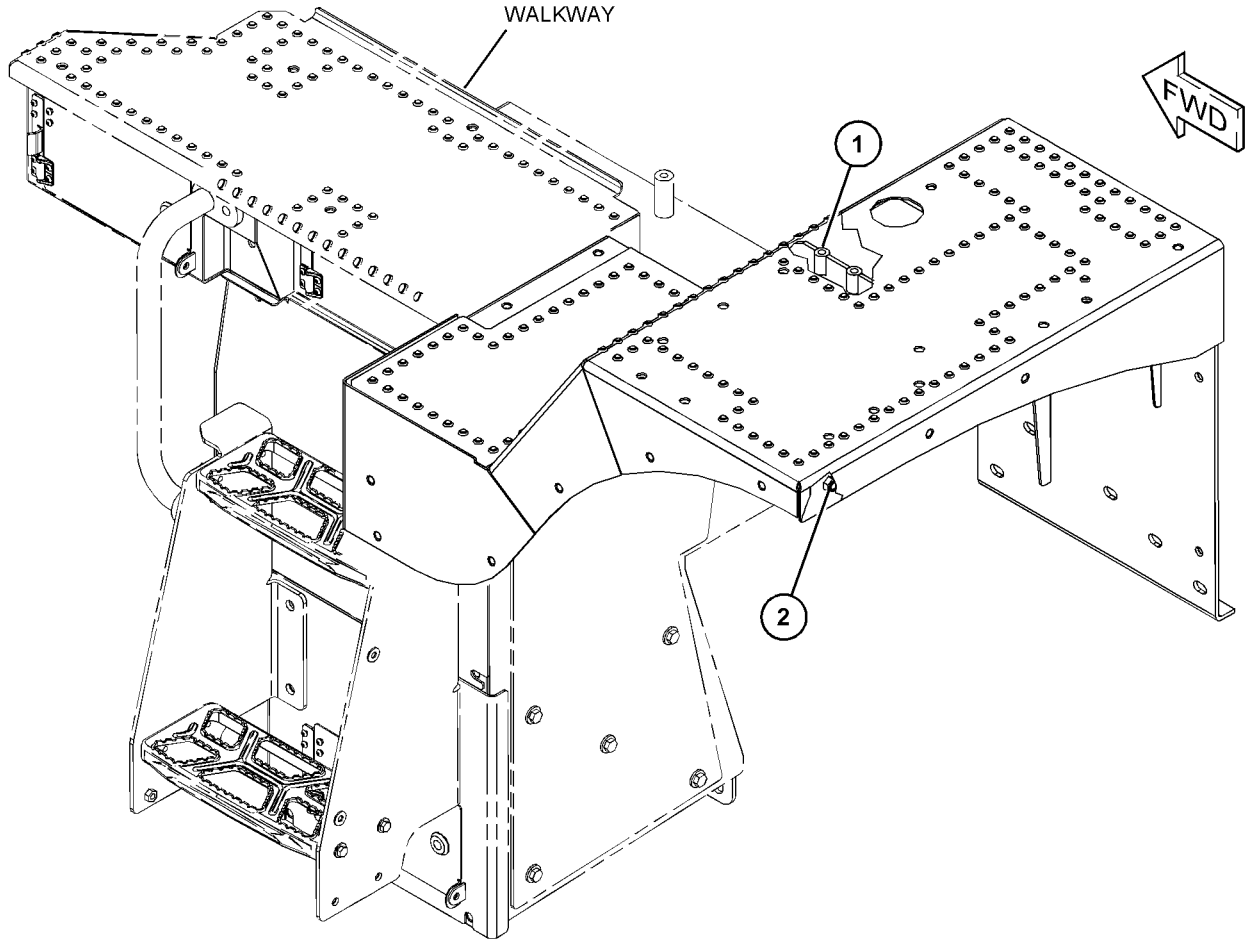

GRAPHIC #1 <END> g06104315

492-3989 PRECLEANER AR-CAB AIR

S/N: TNS1-UP

PRECLEANER

SMCS-7311, 7342

i06809896

NOTE	PART NUMBER	QTY	PART NAME 1 2 3 4 5 6 (PRODUCT LEVEL)	SEE PAGE
Y	*458-0049*	1	COVER GP-CAB	769
Y	*371-5100*	1	PRECLEANER GP	100
Y	*366-0730*	1	ROOF GP-CAB	835

Y - SEPARATE ILLUSTRATION

<END>

372-1599 PRINTER GP-COMPUTER

S/N: TNS1-UP

FOR USE WITH 364-1293—PAGE: 809, 364-1295—PAGE: 809

SMCS-7494, 749P

i06760137

NOTE	REF NO	GRAPHIC REF	PART NUMBER	QTY	PART NAME 1 2 3 4 5 6 (PRODUCT LEVEL)	SEE PAGE
	1	1	**206-1345**	1	STRAP-CABLE	
	2	1	*300-3582*	1	BRACKET GP-MOUNTING (PRINTER)	
		1	**259-4399**	2	BASE	
		1	**270-3311**	1	CLAMP	
	3	1	**317-3727**	1	KIT-PRINTER (ONBOARD)	
		1	**317-3730**	1	PAPER-PRINTER	
	4	1	**346-1083**	1	HARNESS AS-WIRING (PRINTER)	
		1	**102-8805**	1	KIT-RECEPTACLE (6-PIN)	
					(KIT INCLUDES RECEPTACLE AS & WEDGE)	
		1	**8T-8737**	2	PLUG-SEAL	
E		1	**135-5009**		TUBE-HEAT SHRINK (32-MM DIA) (5-CM)	
		1	**9X-3401**	4	PIN-CONNECTOR (16-GA TO 18-GA)	
					—OR—	
		1	**126-1767**	4	PIN-CONNECTOR (14-GA TO 16-GA)	
	5	1	**156-6175**	1	CLIP (LADDER)	
	6	1	**269-2556**	4	SCREW-PAN HEAD (8-32X0.375-IN)	
M	7	1	**3E-8020**	4	SCREW-TRUSS HEAD (M6X1X25-MM)	
	8	1	**7K-1181**	1	STRAP-CABLE (5.72-MM DIA)	

E - ORDER BY THE CENTIMETER
M - METRIC PART

372-1599 **PRINTER GP-COMPUTER (**contd.**)** **i06760137**

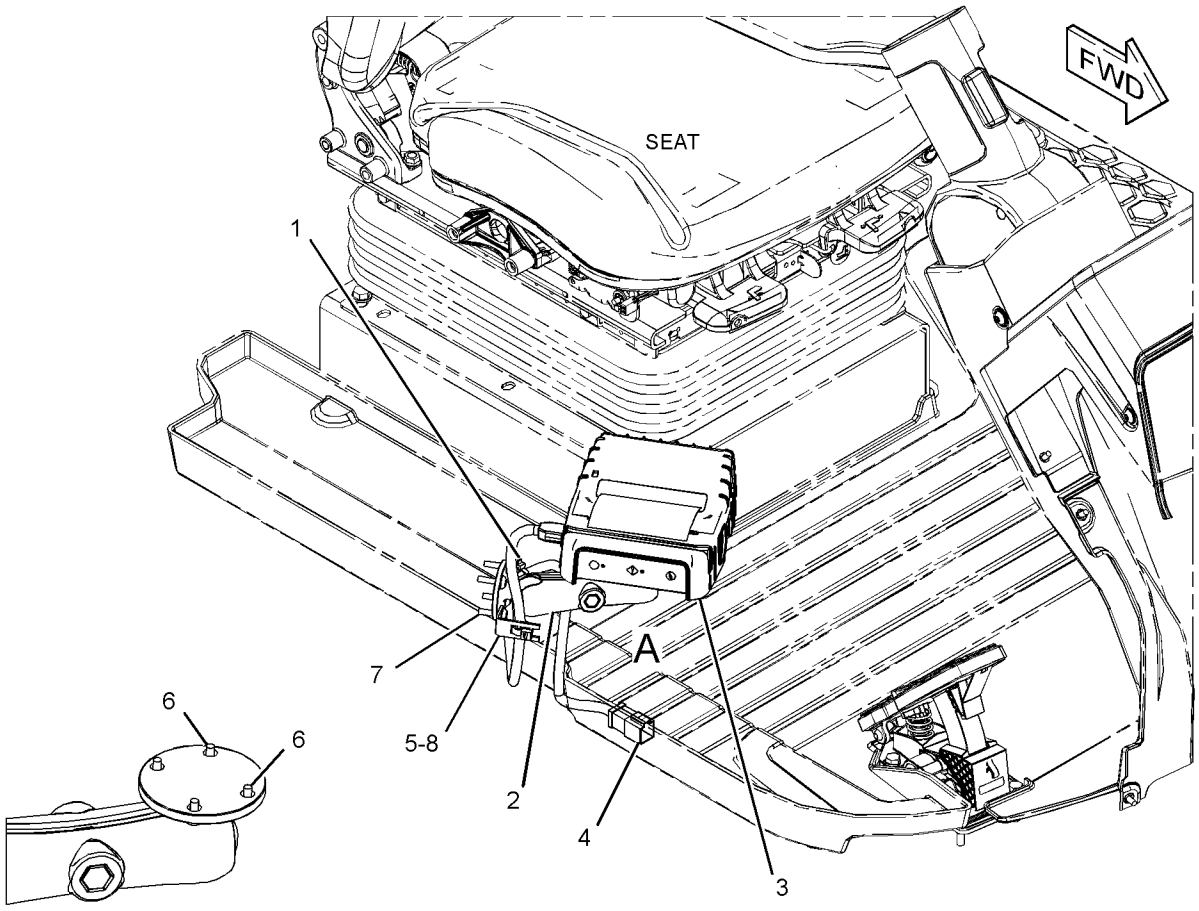

VIEW OF AREA A
(PARTS REMOVED FOR CLARITY)

GRAPHIC #1 <END> g03496757

372-1600 RADIO GP—AM/FM/WB/CD PLAYER

S/N: TNS1-UP

SMCS-7338 **i06760145**

NOTE	REF NO	GRAPHIC REF	PART NUMBER	QTY	PART NAME 1 2 3 4 5 6 (PRODUCT LEVEL)	SEE PAGE
	1	1	**136-5490**	1	BUSHING (RADIO MOUNT)	
	2	1	**7K-1181**	3	STRAP-CABLE (5.72-MM DIA)	
	3	1	**344-5594**	1	HARNESS AS-RADIO (AUXILIARY)	
CY	4	1	*481-6616*	1	RADIO GP (AM/FM/WB/CD/USB/BLUETOOTH)	834
	5	1	**353-1634**	1	HARNESS AS-RADIO (BLUETOOTH)	
	6	1	**349-8642**	1	MICROPHONE	

C - CHANGE FROM PREVIOUS TYPE
Y - SEPARATE ILLUSTRATION

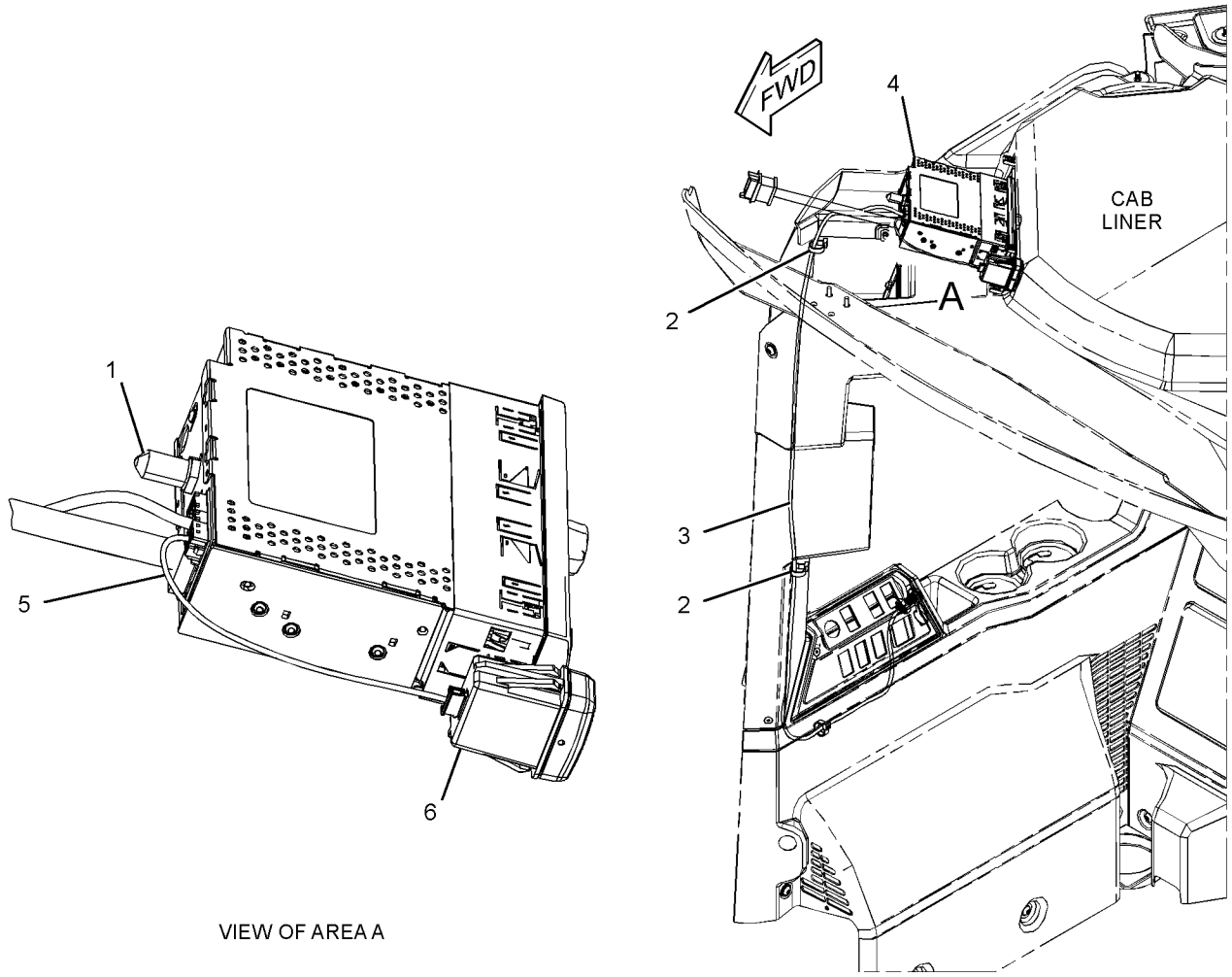

VIEW OF AREA A

GRAPHIC #1 <END> g03715500

481-6616 RADIO GP–AM/FM/WB/CD/USB/BLUETOOTH

S/N: TNS1-UP

PART OF 372-1600 RADIO GP

SMCS-7338 **i06585498**

NOTE	REF NO	GRAPHIC REF	PART NUMBER	QTY	PART NAME 1 2 3 4 5 6 (PRODUCT LEVEL)	SEE PAGE
Y	1	1	**200-5728**	1	HARNESS AS-RADIO (FLANGE)	167
	2	1	**462-9619**	1	RADIO GP (AM/FM/USB/BLUETOOTH)	

Y - SEPARATE ILLUSTRATION

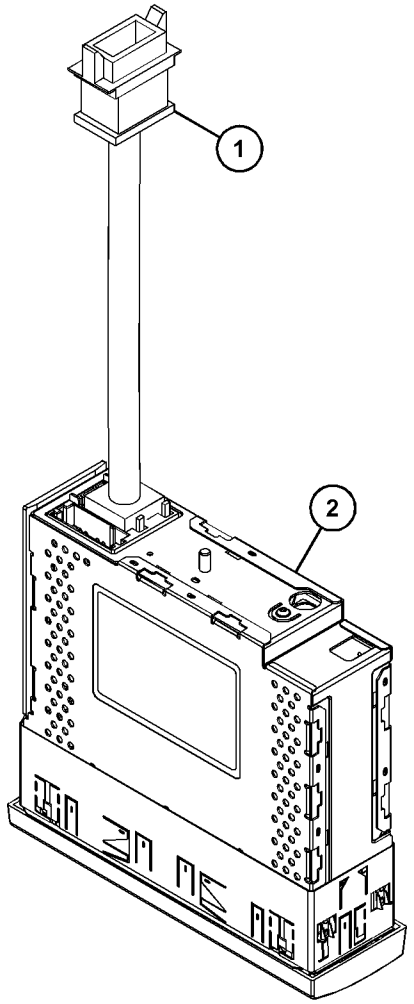

GRAPHIC #1 <END> g06005733

366-0730 ROOF GP-CAB

S/N: TNS1-UP

PART OF 492-3988 CONFIGURATION AR, 492-3989 PRECLEANER AR-CAB AIR

SMCS-7301 **i06779669**

NOTE	REF NO	GRAPHIC REF	PART NUMBER	QTY	PART NAME 1 2 3 4 5 6 (PRODUCT LEVEL)	SEE PAGE
	1	1	**197-5470**	4	GROMMET	
C	2	1	**461-2622**	1	ROOF	
C	3	1	**454-5385**	4	WASHER-HARD (22X76X6-MM THK)	
	4	1	**133-3260**	3	SPACER (11X19X10-MM THK)	
C	5	1	**183-6121**	3	WASHER (10.31X38.1X4.78-MM THK)	
	6	1	**494-7510**	4	SPACER (25.4X40X14-MM THK)	
	7	1	**3P-3839**	3	GROMMET	
C	8	1	**7X-7729**	2	WASHER (11X25X3-MM THK)	
M	9	1	**8T-4195**	5	BOLT (M10X1.5X30-MM)	
M	10	1	**8T-6430**	4	BOLT (M20X2.5X50-MM)	

C - CHANGE FROM PREVIOUS TYPE
M - METRIC PART

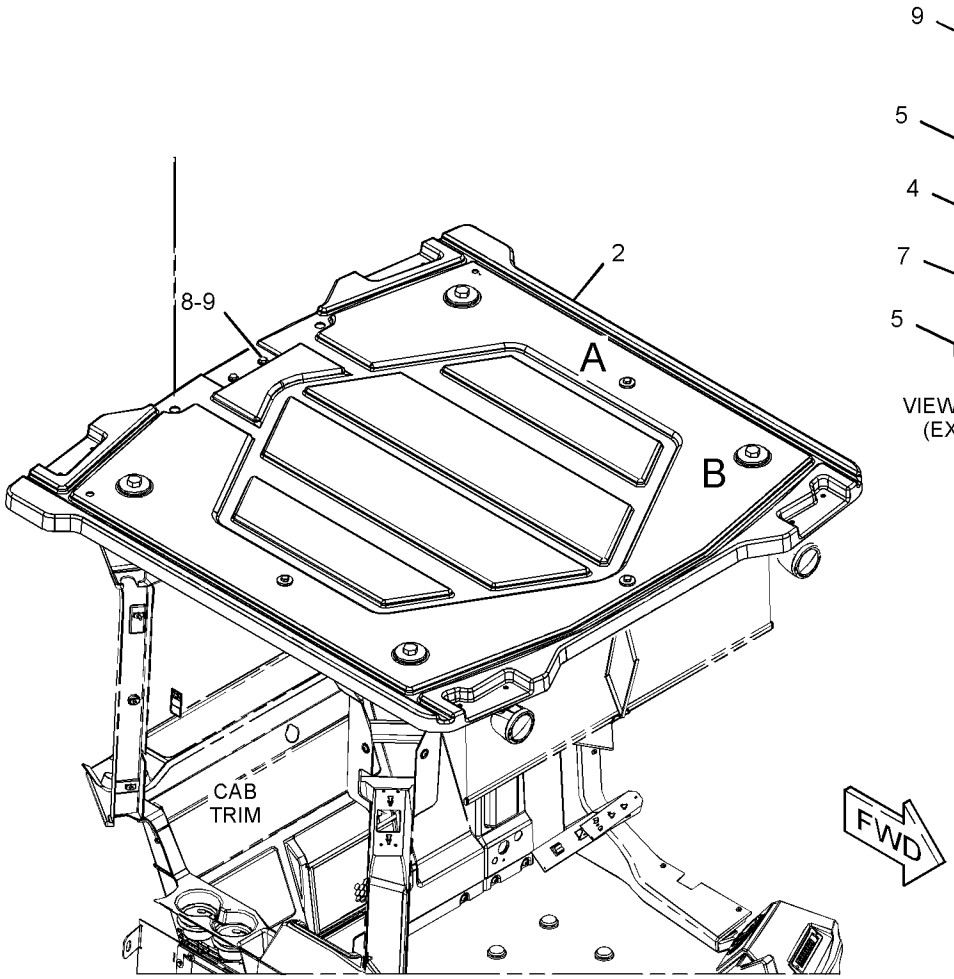

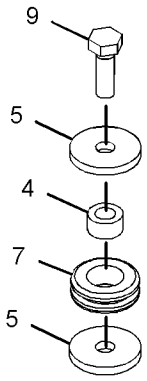

VIEW OF AREA A
(EXPLODED)

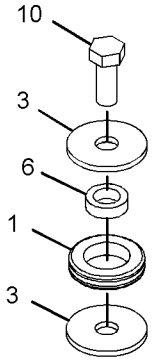

VIEW OF AREA B
(EXPLODED)

GRAPHIC #1 <END> g03842402

444-3238 ROOF GP-CAB

S/N: TNS1-UP

PART OF 505-1521 CONFIGURATION AR

SMCS-7301 **i06781754**

NOTE	REF NO	GRAPHIC REF	PART NUMBER	QTY	PART NAME 1 2 3 4 5 6 (PRODUCT LEVEL)	SEE PAGE
	1	1	**483-0254**	2	BRACKET AS (RH)	
	2	1	**436-1220**	1	ROOF AS	
	3	1	**483-0255**	2	BRACKET AS (LH)	
M	4	1	**8T-6466**	3	BOLT (M10X1.5X60-MM)	
M	5	1	**6V-6317**	12	BOLT (M10X1.5X20-MM)	
M	6	1	**7X-2564**	4	BOLT (M20X2.5X90-MM)	
	7	1	**8T-4121**	12	WASHER-HARD (11X21X2.5-MM THK)	
	8	1	**8T-4226**	3	WASHER-PLATED (10.5X45X3-MM THK)	
	9	1	**8T-5439**	4	WASHER-HARD (21.5X45X6-MM THK)	

M - METRIC PART

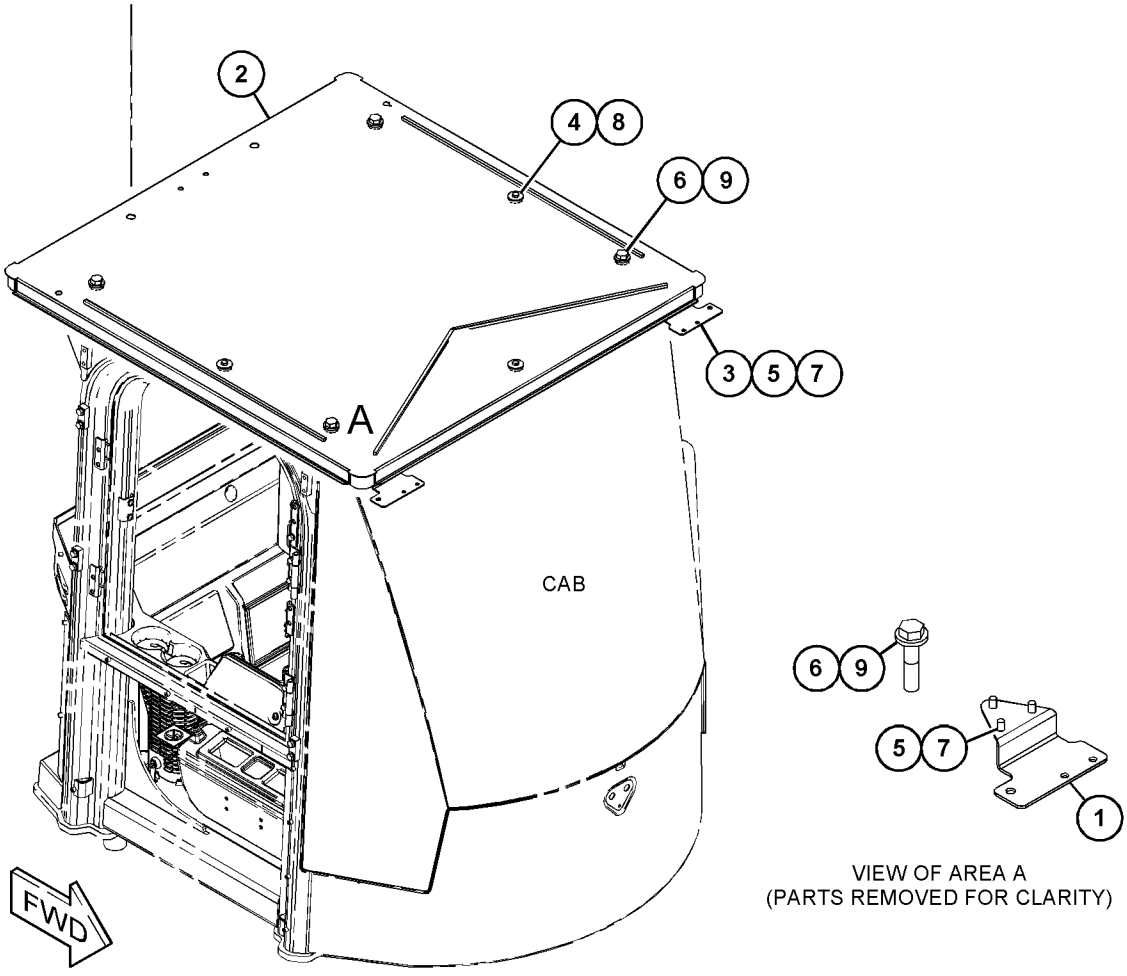

GRAPHIC #1 <END> g06122410

490-3561 ROPS GP-ENCLOSED

S/N: TNS1-UP

PART OF 490-3562 ROPS GP-ENCLOSED

SMCS-7301 **i06782341**

NOTE	REF NO	GRAPHIC REF	PART NUMBER	QTY	PART NAME 1 2 3 4 5 6 (PRODUCT LEVEL)	SEE PAGE
	1	2	**143-2236**	14	LINK	
	2	2	**5P-8245**	12	WASHER-HARD (13.5X25.5X3-MM THK)	
M	3	2	**6V-5215**	3	BOLT (M8X1.25X16-MM)	
M	4	2	**6V-8177**	12	BOLT (M12X1.75X16-MM)	
M	5	2	**7Y-9099**	4	SCREW-TRUSS HEAD (M8X1.25X25-MM)	
M	6	2	**8T-3994**	2	STUD-WELD (M6X1-THD)	
M	7	2	**9R-2672**	2	BOSS-THREADED (M10X1.5-THD)	
	8	1	**5D-9629**	1	ROD	

M - METRIC PART

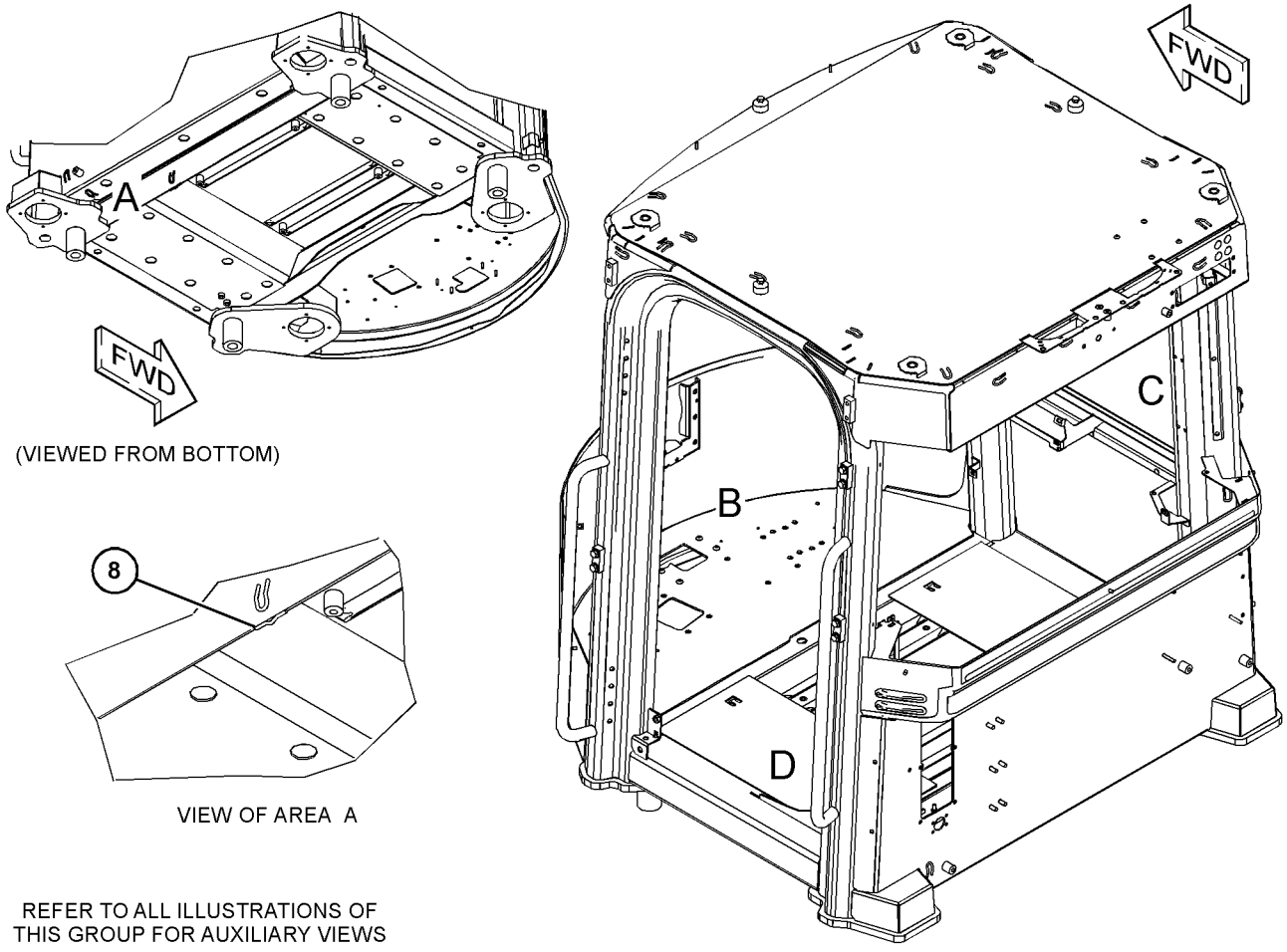

(VIEWED FROM BOTTOM)

VIEW OF AREA A

REFER TO ALL ILLUSTRATIONS OF THIS GROUP FOR AUXILIARY VIEWS

GRAPHIC #1 g06101801

490-3561 **ROPS GP-ENCLOSED** (contd.) **i06782341**

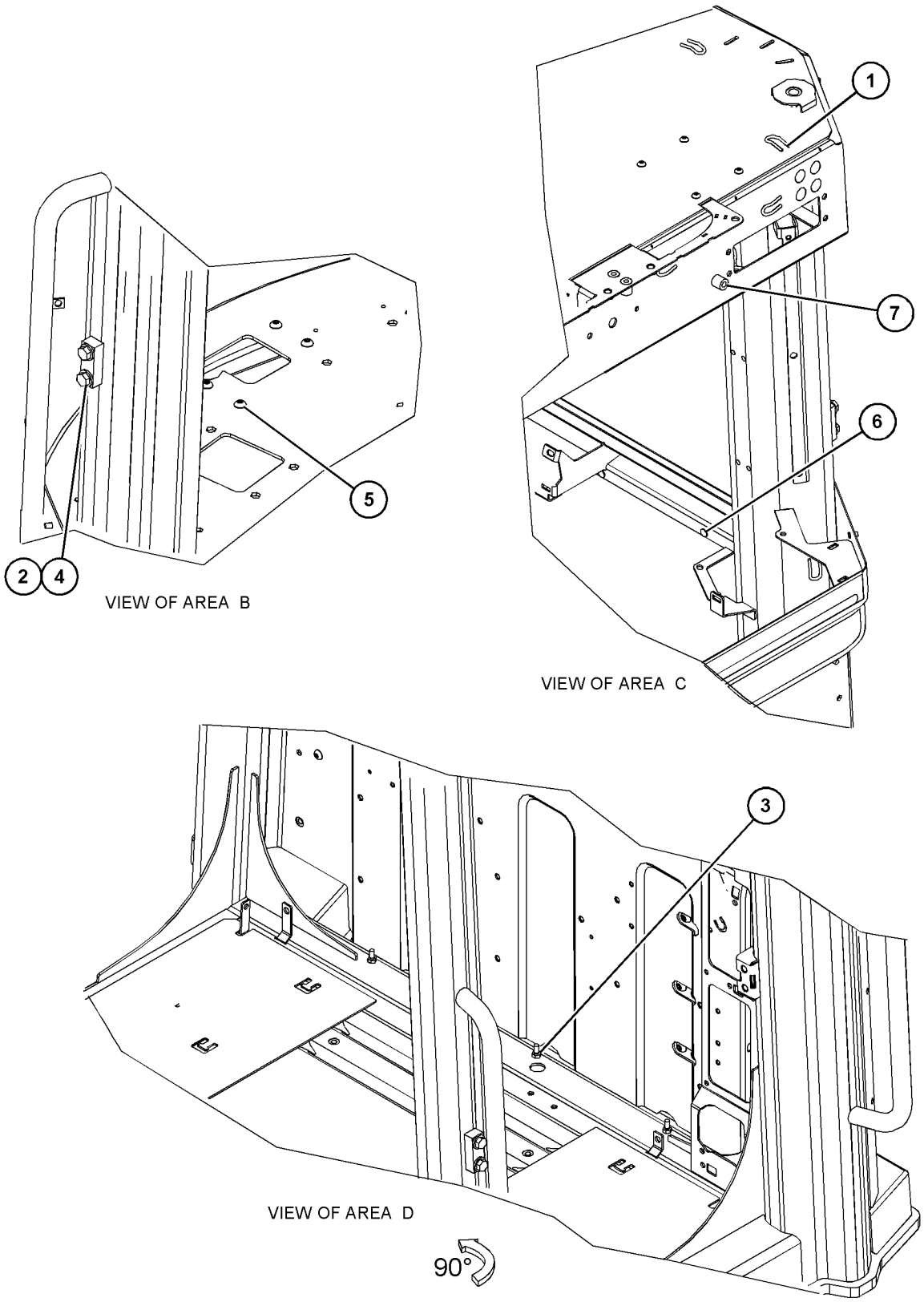

GRAPHIC #2 <END> g06101802

490-3562 ROPS GP-ENCLOSED—CAB

S/N: TNS1-UP

PART OF 493-9616, 493-9617, 493-9618, 493-9619, 503-1906 CAB AR-ENCLOSED ROPS

SMCS-7301 **i06782343**

NOTE	REF NO	GRAPHIC REF	PART NUMBER	QTY	PART NAME 1 2 3 4 5 6 (PRODUCT LEVEL)	SEE PAGE
M	1	1	**359-5377**	14	INSERT-THREADED (M10X1.5-THD)	
M	2	1	**377-4794**	14	INSERT-THREADED (M6X1-THD)	
Y	3	1	**490-3561**	1	ROPS GP-ENCLOSED	837
M	4	1	**170-4057**	35	INSERT-THREADED (M6X1-THD)	
M	5	1	**195-0938**	14	INSERT-THREADED (M8X1.25-THD)	
	6	1	**346-6584**	4	NUT-SPECIAL	

M - METRIC PART
Y - SEPARATE ILLUSTRATION

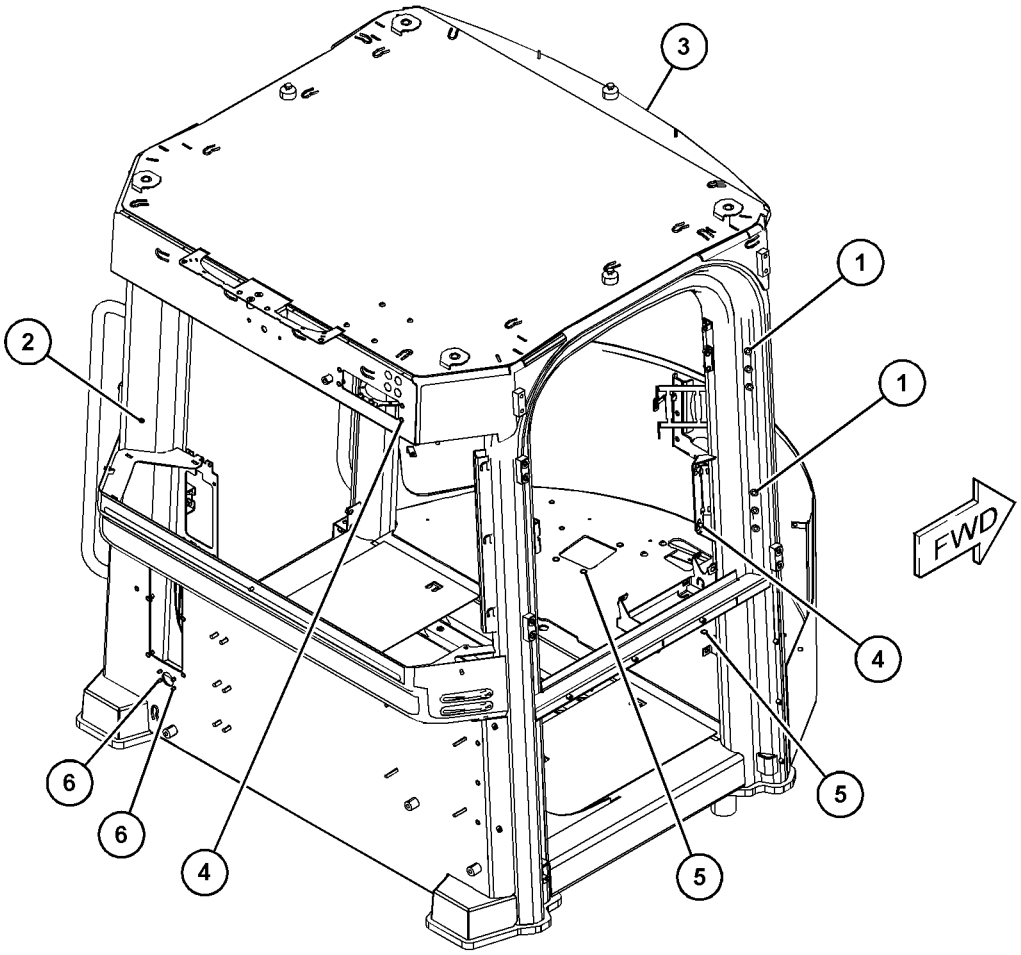

GRAPHIC #1 <END> g06101413

353-5341 SEAT BELT GP

S/N: TNS1-UP

PART OF 443-4183 SEAT BELT GP

SMCS-7327 **i06779792**

NOTE	REF NO	GRAPHIC REF	PART NUMBER	QTY	PART NAME 1 2 3 4 5 6 (PRODUCT LEVEL)	SEE PAGE
	1	1	**0T-0244**	1	BOLT (7/16-20X1.25-IN)	
	2	1	**0T-0489**	1	BOLT (7/16-20X2-IN)	
	3	1	**8T-5360**	3	WASHER (12X22.5X2.5-MM THK)	
	4	1	**275-7803**	1	SPACER (11.7X19.8X25.4-MM THK)	

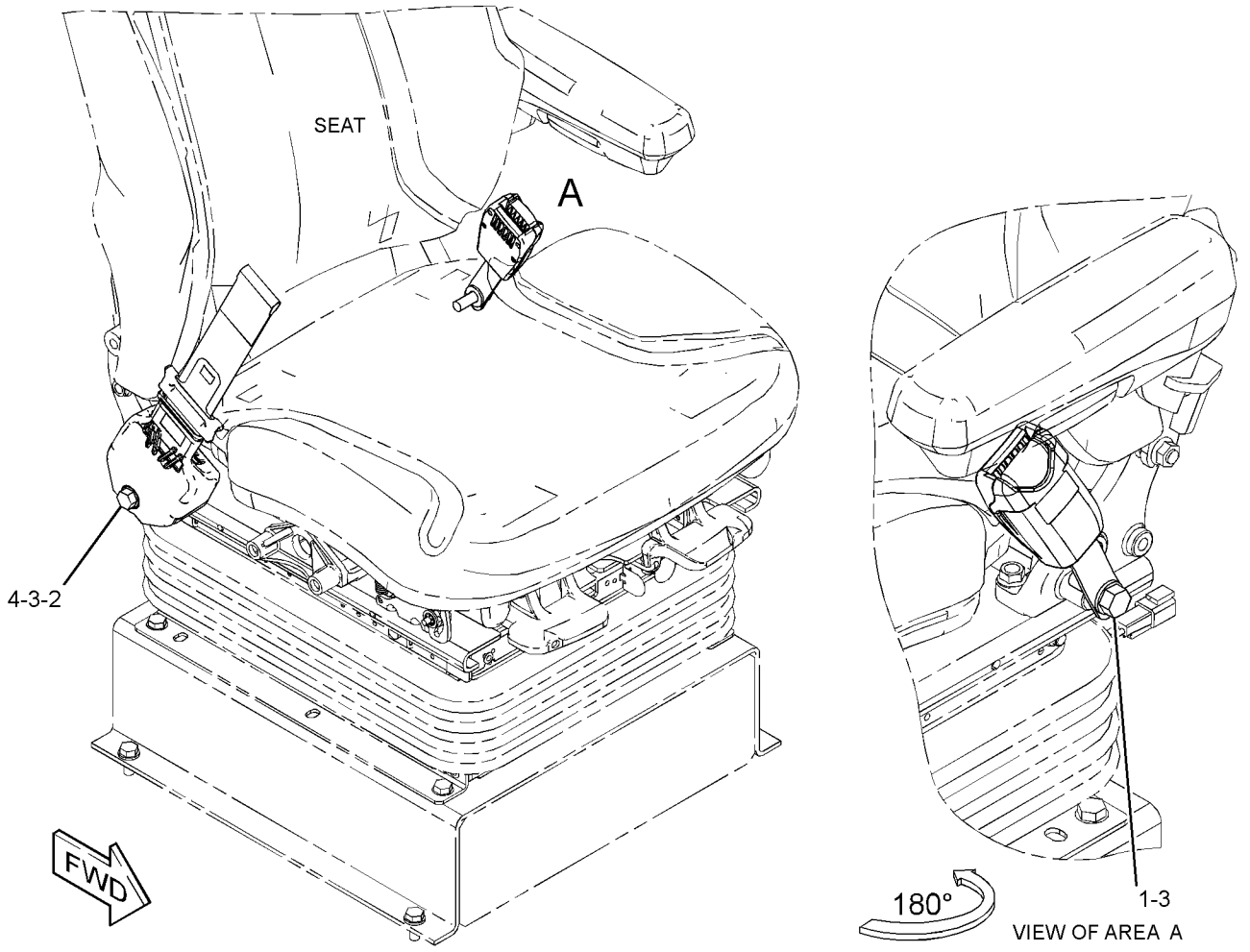

GRAPHIC #1 <END> g02379557

353-5342 SEAT BELT GP

S/N: TNS1-UP

PART OF 443-4184 SEAT BELT GP

SMCS-7327 **i04817237**

NOTE	REF NO	GRAPHIC REF	PART NUMBER	QTY	PART NAME 1 2 3 4 5 6 (PRODUCT LEVEL)	SEE PAGE
	1	1	**0T-0244**	1	BOLT (7/16-20X1.25-IN)	
	2	1	**0T-0489**	1	BOLT (7/16-20X2-IN)	
	3	1	**8T-5360**	3	WASHER (12X22.5X2.5-MM THK)	
	4	1	**275-7803**	1	SPACER (11.7X19.8X25.4-MM THK)	

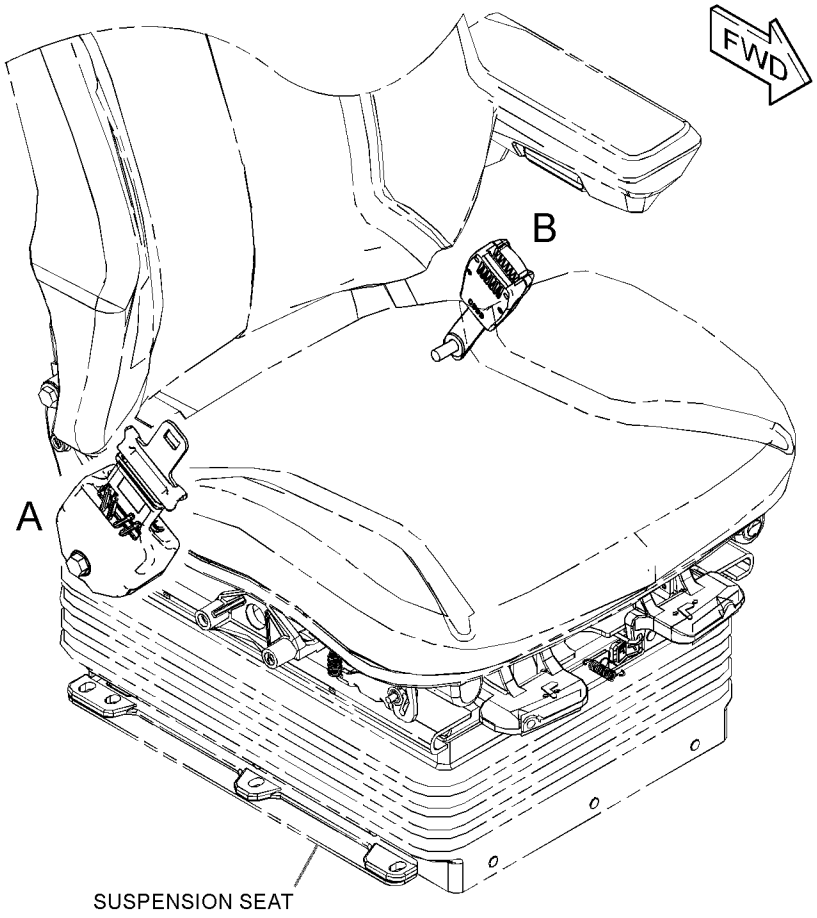

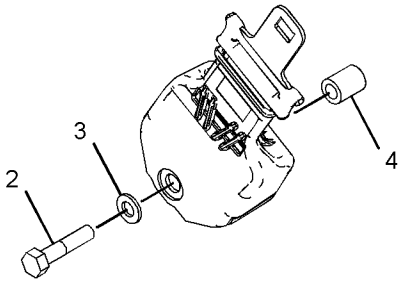

VIEW OF AREA A

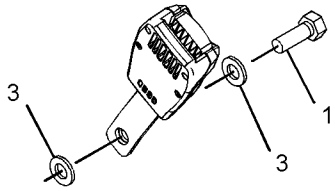

VIEW OF AREA B

GRAPHIC #1 <END> g02383977

443-4183 SEAT BELT GP–RETRACTABLE, 2-IN

S/N: TNS1-UP

PART OF 512-0946 CAB AR, 492-4033, 492-4034 DISTRIBUTION AR

SMCS-7327 **i06726051**

NOTE	REF NO	GRAPHIC REF	PART NUMBER	QTY	PART NAME 1 2 3 4 5 6 (PRODUCT LEVEL)	SEE PAGE
Y	1	1	**353-5341**	1	SEAT BELT GP (RETRACTABLE, 2-IN)	840

Y - SEPARATE ILLUSTRATION

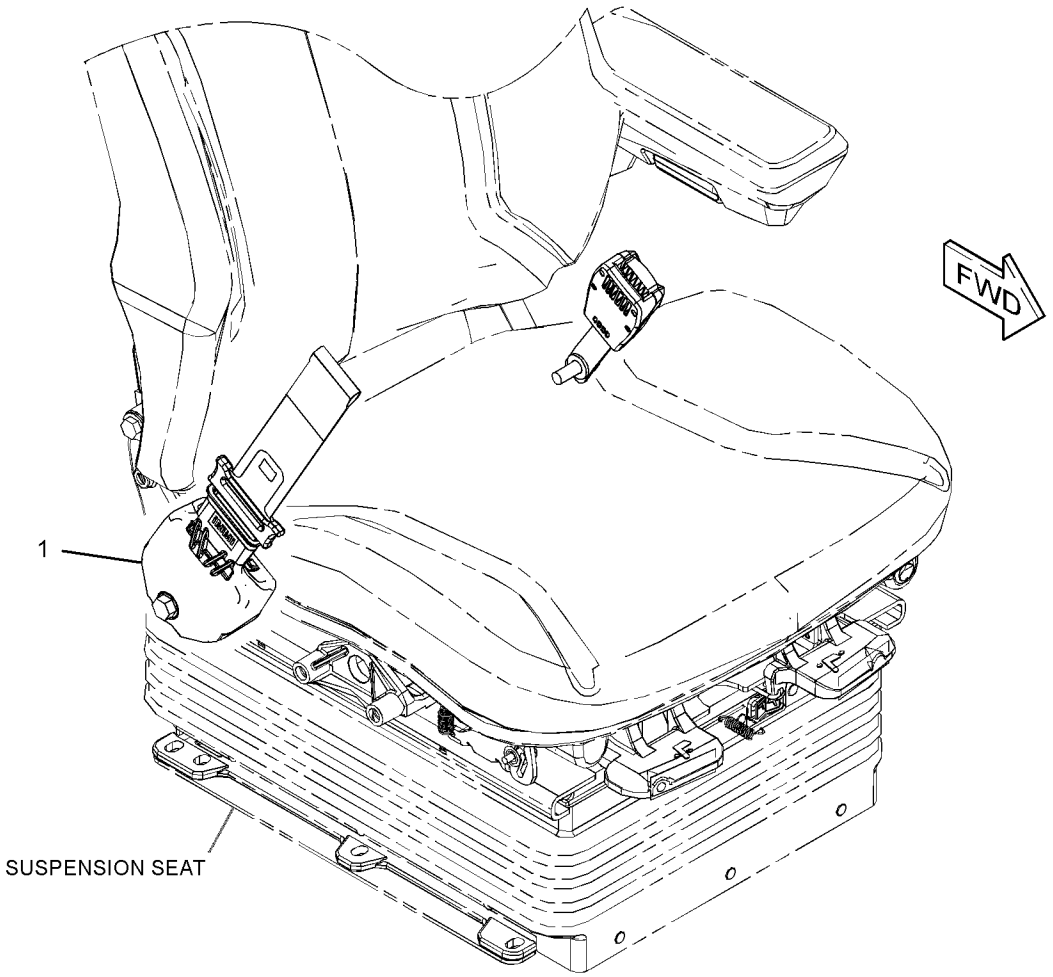

GRAPHIC #1 <END> g03431469

443-4184 SEAT BELT GP—RETRACTABLE, 3-IN

S/N: TNS1-UP

PART OF 512-0947 CAB AR

SMCS-7327 **i06628818**

NOTE	REF NO	GRAPHIC REF	PART NUMBER	QTY	PART NAME 1 2 3 4 5 6 (PRODUCT LEVEL)	SEE PAGE
Y	1	1	**353-5342**	1	SEAT BELT GP (RETRACTABLE, 3-IN)	841

Y - SEPARATE ILLUSTRATION

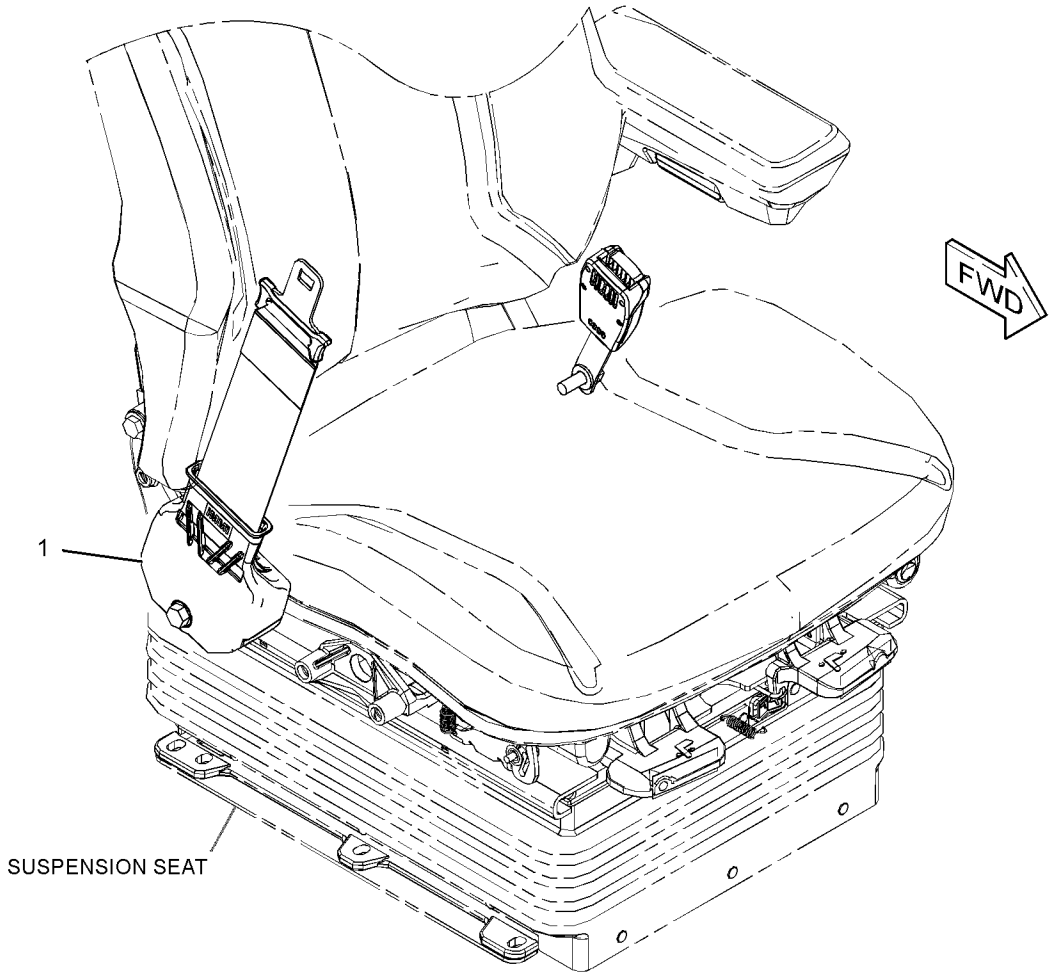

GRAPHIC #1 <END> g03431430

490-5976 SEAT GP

S/N: TNS1-UP
CLOTH
PART OF 490-5982 SEAT GP-SUSPENSION

SMCS-7312 **i06783876**

NOTE	REF NO	GRAPHIC REF	PART NUMBER	QTY	PART NAME 1 2 3 4 5 6 (PRODUCT LEVEL)	SEE PAGE
M	1	1	**8T-4908**	4	BOLT (M8X1.25X25-MM)	
	2	1	**277-8103**	3	PLUG	
	3	1	**349-2602**	1	BRACKET AS	
	4	1	**350-7593**	1	HEADREST AS-SEAT	
	5	1	**355-3016**	1	PLATE AS	
	6	1	**355-3025**	1	PAN AS	
	7	1	**488-2137**	1	KIT-SHAFT	
					(INCLUDES SHAFT, CABLE AS, LEVER, RECLINERS & BOLT)	
	8	1	**389-0879**	1	PAN-SEAT BACK	
	9	1	**488-1670**	1	PAN AS	
	10	1	**153-0088**	3	WASHER-HARD (10.31X20X1.65-MM THK)	
	11	1	**189-1943**	3	LOCKNUT (M10X1.5-THD)	
M	12	1	**238-0251**	4	SCREW-BUTTON HEAD (M10X1.5X25-MM)	
M	13	1	**271-7649**	2	BOLT (M10X1.5X95-MM)	
M	14	1	**299-5675**	3	SCREW-BUTTON HEAD (M10X1.5X30-MM)	
M	15	1	**6V-7744**	4	LOCKNUT (M10X1.5-THD)	
	16	1	**8T-4121**	6	WASHER-HARD (11X21X2.5-MM THK)	
	17	1	**436-1687**	1	KIT-LATCH	
					(INCLUDES BOLTS, LATCHES, RODS, SPRINGS & WASHERS)	
	18	1	**436-1688**	1	KIT-SEAT	
					(INCLUDES RETAINERS, ROD, SPRINGS & WASHERS)	
	19	1	**443-8573**	1	KIT-HANDLE (SEAT ADJUSTMENT)	
					(INCLUDES ROD, LEVERS, RETAINERS, PIN-SPRINGS & WASHERS)	
	20	1	**446-0639**	1	KIT-CUSHION (CLOTH)	
					(INCLUDES TUBES, SPRING CLIPS, CUSHIONS & SCREWS)	

M - METRIC PART

490-5976 **SEAT GP** (contd.) **i06783876**

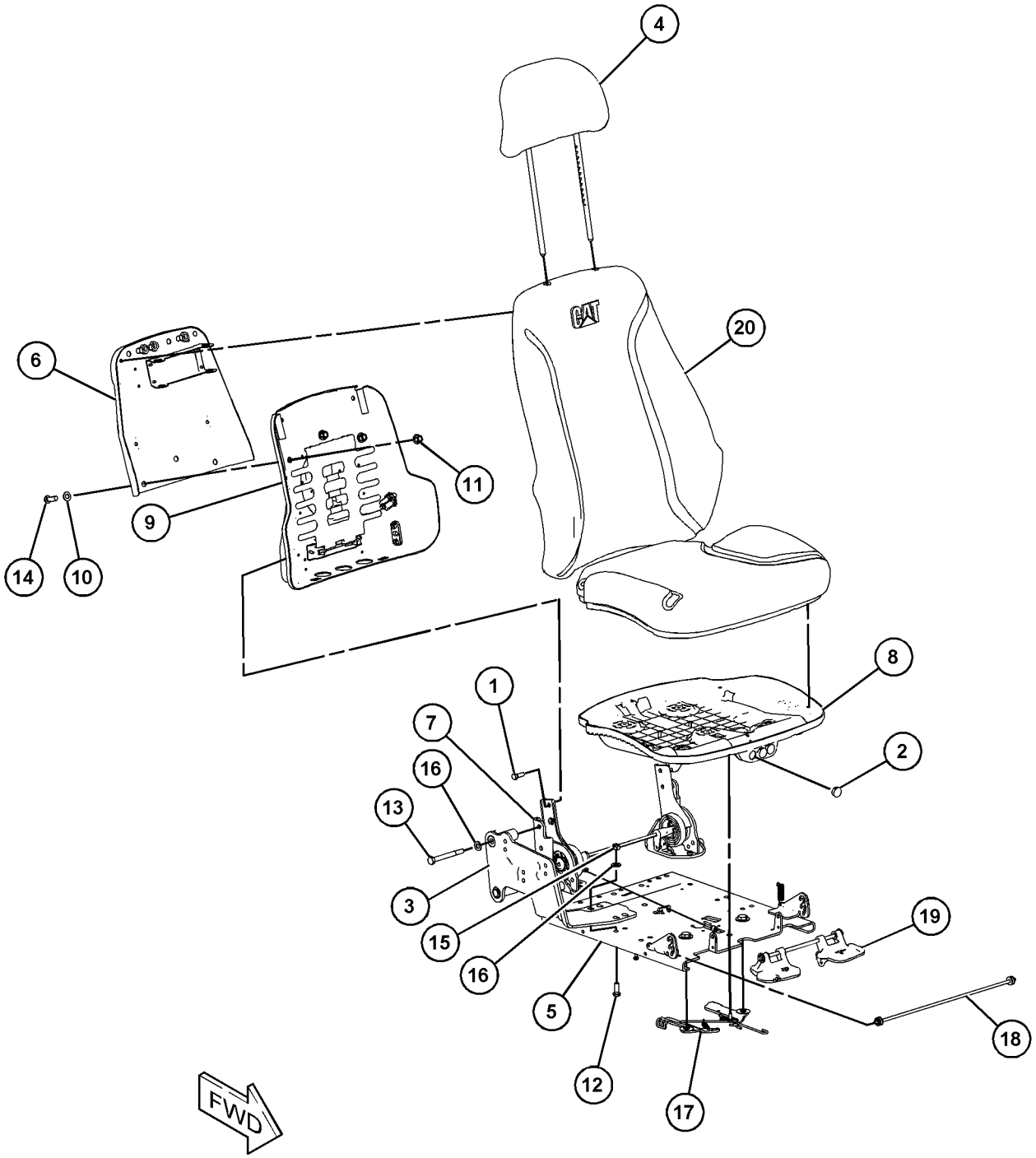

GRAPHIC #1 <END> g06103772

490-5982 SEAT GP-SUSPENSION

S/N: TNS1-UP
24-VOLT. CLOTH
PART OF 503-1904 OPERATOR AR

SMCS-7324, 7336 **i06753192**

NOTE	REF NO	GRAPHIC REF	PART NUMBER	QTY	PART NAME 1 2 3 4 5 6 (PRODUCT LEVEL)	SEE PAGE
Y	1	1	**191-2933**	1	SUSPENSION GP-SEAT (AIR)	849
Y	2	1	**490-5976**	1	SEAT GP	844
M	3	1	**6V-4248**	2	BOLT (M10X1.5X25-MM)	
	4	1	**8T-4121**	2	WASHER-HARD (11X21X2.5-MM THK)	
	5	1	**173-7035**	1	KIT-SLIDER BLOCK (SUSPENSION SEAT)	
					(INCLUDES BOLT, BLOCK-SLIDERS, SETSCREWS & WASHERS)	
Y	6	1	**384-8730**	1	ARMREST GP (LH)	749
	7	1	**498-4463**	1	KIT-LITERATURE HOLDER	
		1	**4K-9429**	6	RIVET-POP	
		1	**5P-7957**	1	LANYARD	
		1	**173-2052**	1	RETAINER	
		1	**178-7907**	1	HOLDER (LITERATURE)	

M - METRIC PART
Y - SEPARATE ILLUSTRATION

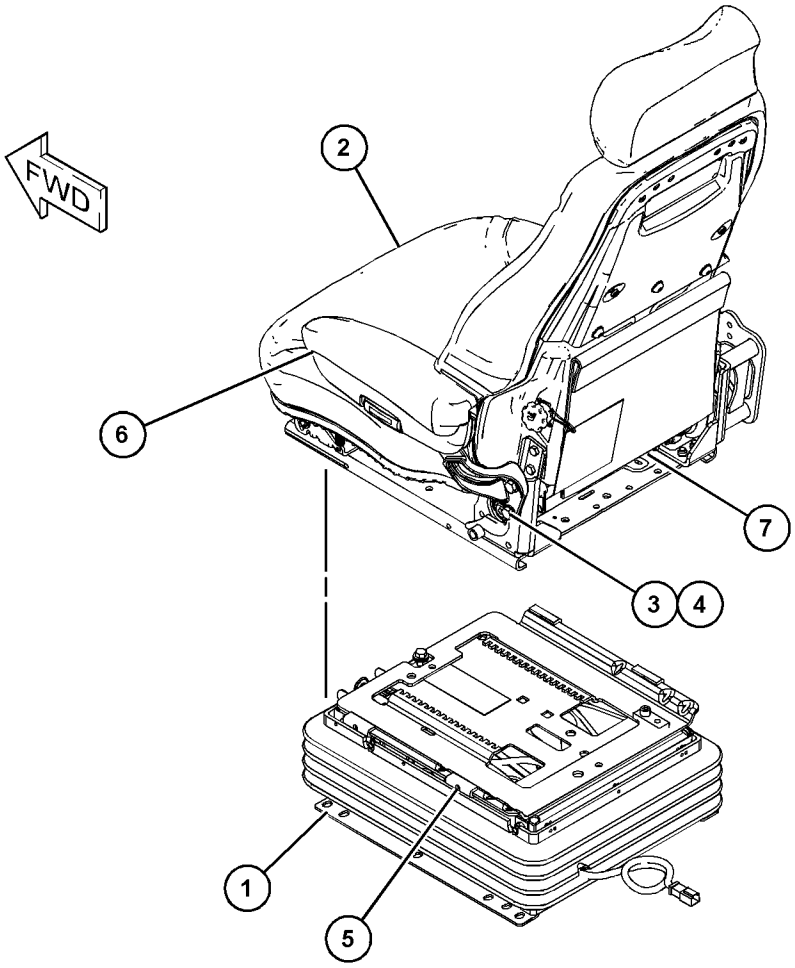

GRAPHIC #1 <END> g06103647

454-4238 SKIRT GP-CAB

S/N: TNS1-UP

PART OF 507-9161 SPECIAL AR-WHEEL LOADER

SMCS-7301 **i06674538**

NOTE	REF NO	GRAPHIC REF	PART NUMBER	QTY	PART NAME 1 2 3 4 5 6 (PRODUCT LEVEL)	SEE PAGE
	1	1	**454-4239**	1	PLATE AS	
M		1	**8T-3490**	4	NUT-WELD (M10X1.5-THD)	
	2	1	**454-4241**	1	PLATE AS	
M		1	**8T-3490**	8	NUT-WELD (M10X1.5-THD)	
	3	1	**454-4243**	1	PLATE	
	4	1	**454-4244**	1	COVER	
	5	1	**454-4245**	1	PLATE AS	
M		1	**8T-3490**	4	NUT-WELD (M10X1.5-THD)	
	6	1	**454-4247**	1	PLATE AS	
M		1	**8T-3490**	8	NUT-WELD (M10X1.5-THD)	
	7	1	**454-7370**	1	PLATE	
	8	1	**454-7371**	1	COVER	
	9	1	**8T-4121**	24	WASHER-HARD (11X21X2.5-MM THK)	
M	10	1	**8T-4136**	24	BOLT (M10X1.5X25-MM)	

M - METRIC PART

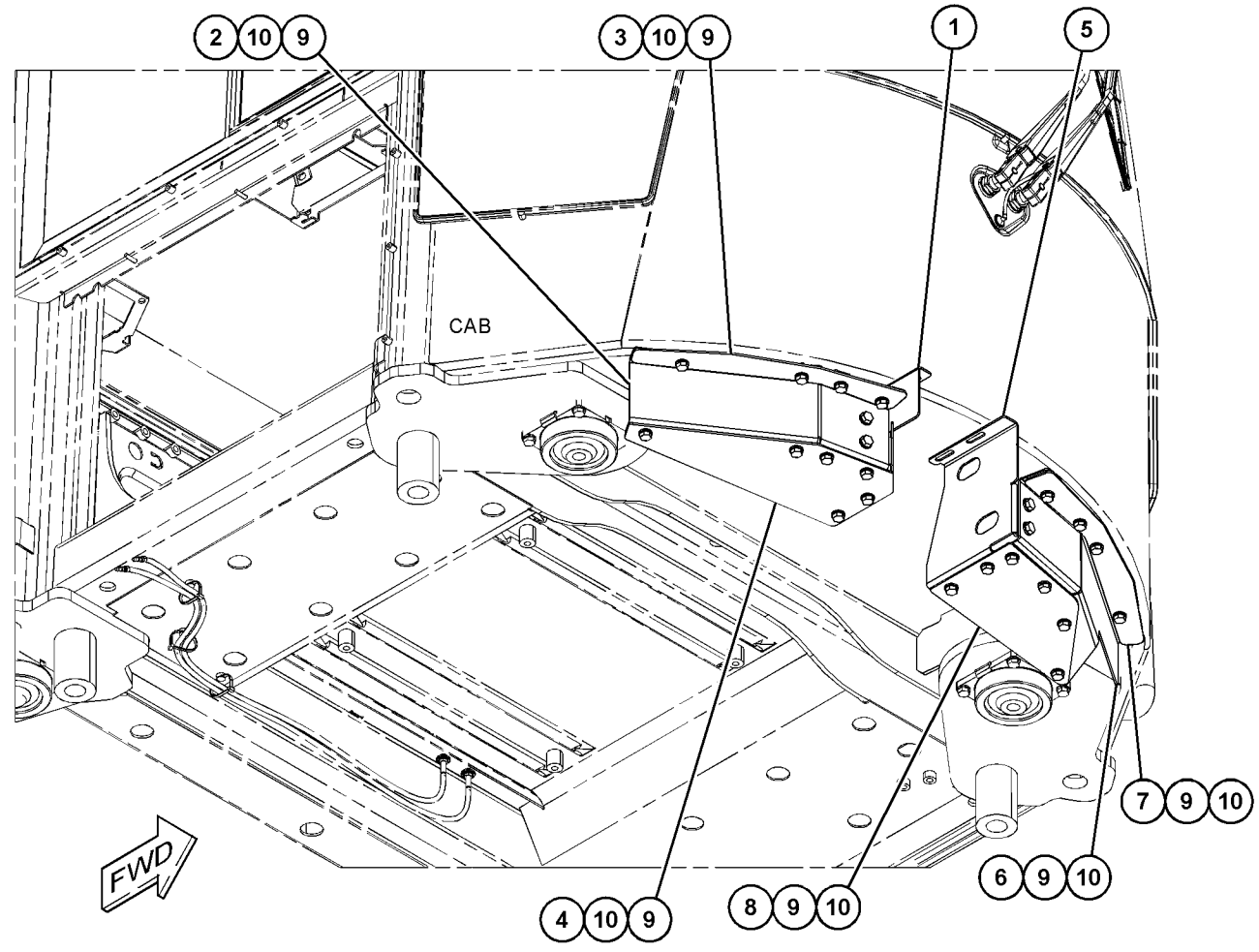

GRAPHIC #1 <END> g03749793

454-3758 SUPPORT GP-SEAT

S/N: TNS1-UP

PART OF 503-1904 OPERATOR AR

SMCS-7321 **i06656413**

NOTE	REF NO	GRAPHIC REF	PART NUMBER	QTY	PART NAME 1 2 3 4 5 6 (PRODUCT LEVEL)	SEE PAGE
	1	1	**464-5013**	1	SUPPORT AS (SEAT)	
	2	1	**8T-4121**	8	WASHER-HARD (11X21X2.5-MM THK)	
M	3	1	**8T-4136**	4	BOLT (M10X1.5X25-MM)	
M	4	1	**8T-4186**	4	BOLT (M10X1.5X40-MM)	

M - METRIC PART

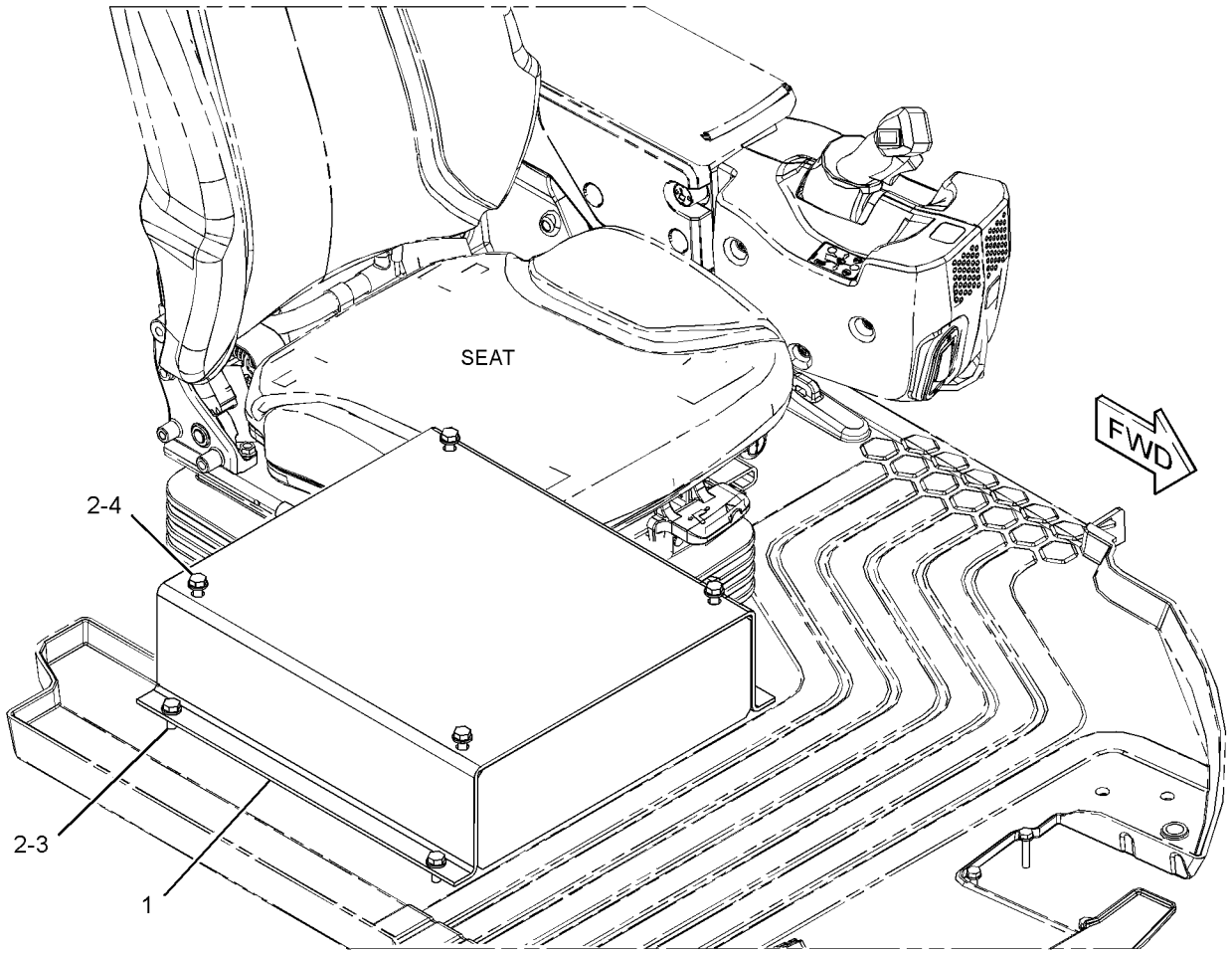

GRAPHIC #1 <END> g03493457

191-2933 SUSPENSION GP-SEAT—AIR

S/N: TNS1-UP

PART OF 490-5982 SEAT GP-SUSPENSION

SMCS-7324 **i06086924**

NOTE	REF NO	GRAPHIC REF	PART NUMBER	QTY	PART NAME 1 2 3 4 5 6 (PRODUCT LEVEL)	SEE PAGE
	1	1	**3P-9900**	5	WASHER (10.5X30X3-MM THK)	
	2	1	**4B-4278**	2	WASHER (10.2X20.5X1.6-MM THK)	
	3	1	**4V-8577**	12	BEARING	
	5	1	**145-0326**	1	FILM-INSTRUCTION (SEAT ADJUSTMENT)	
	6	1	**164-1234**	1	PLATE	
	7	1	**101-0003**	26	FASTENER	
	8	1	**169-7380**	1	BOLT-SOCKET HEAD (3/8-16X0.375-IN)	
	10	1	**192-7752**	4	SHAFT AS	
	11	1	**192-7755**	1	HOUSING AS (LOWER)	
	12	1	**314-5274**	1	SHAFT (INNER)	
	13	1	**192-7767**	1	SCISSORS AS	
	14	1	**192-7783**	1	TOGGLE AS (WIDE)	
	15	1	**192-7787**	1	TOGGLE AS (NARROW)	
	16	1	**192-7790**	1	HOUSING AS (UPPER)	
	17	1	**192-7795**	1	BOOT	
CY	18	1	**433-5754**	1	HARNESS AS-WIRING (SEAT AIR COMPRESSOR)	171
	19	1	**192-7810**	1	SPRING AS-AIR	
		1	**5P-4423**	1	ELBOW	
		1	**163-1135**	1	SPRING	
	20	1	**192-7812**	1	BOLT-SPECIAL	
	21	1	**192-7820**	3	BUMPER	
	22	1	**314-5275**	1	SHAFT (OUTER)	
	25	1	**108-4311**	1	SCREW-MACHINE (3/8-16X0.75-IN)	
	26	1	**2K-4973**	8	LOCKNUT (3/8-16-THD)	
	27	1	**3J-4818**	1	LOCKWASHER (EXTERNAL TOOTH)	
M	28	1	**5C-2890**	3	NUT (M6X1-THD)	
	29	1	**8T-9371**	1	BOLT (3/8-16X0.5-IN)	
E	30	1	**211-5358**		CONDUIT-FLEXIBLE (29-CM)	
E	30A	1	**211-5358**		CONDUIT-FLEXIBLE (43-CM)	
C	32	1	**442-8151**	1	CLIP-CABLE	
C	33	1	**3S-2093**	5	STRAP-CABLE	
					AVAILABLE REPAIR KIT(S):	
			192-7799	1	KIT-AIR VALVE & SWITCH (SUSPENSION SEAT)	
					(INCLUDES KNOB AS, NUT, VALVE, LOCKWASHER & FITTING)	
			192-7848	1	KIT-SHOCK ABSORBER (SUSPENSION SEAT)	
					(INCLUDES LOCKNUT, LOCKWASHER, SHOCK ABSORBER, BEARINGS, WASHER & BOLTS)	
			211-9294	1	KIT-TETHER (SUSPENSION SEAT)	
					(INCLUDES TETHERS)	
AB			**213-5170**	1	KIT-SEAT ADJUSTER (SEAT ADJUSTMENT)	
					(INCLUDES BOLTS, NUTS, ROD, ARM & HOUSING)	
ABY			**212-7779**	1	KIT-SHOCK ABSORBER (SUSPENSION SEAT) (ADJUSTABLE SEAT)	798
AB			**346-4360**	1	KIT-SHOCK ABSORBER (SUSPENSION SEAT) (HEAVY-DUTY)	
					(INCLUDES SHOCK ABSORBER, BEARINGS, WASHERS, BOLTS, LOCKNUT, & LOCKWASHER)	

191-2933 **SUSPENSION GP-SEAT (**contd.**)** **i06086924**

NOTE	REF NO	GRAPHIC REF	PART NUMBER	QTY	PART NAME 1 2 3 4 5 6 (PRODUCT LEVEL)	SEE PAGE
CY			**452-6716**	1	KIT-SEAT AIR COMPRESSOR (SUSPENSION SEAT)	797
					(INCLUDES SCREWS, COMPRESSOR AS, BRACKET, STRAPS & HOSE)	

A - NOT PART OF THIS GROUP
B - USE AS REQUIRED
C - CHANGE FROM PREVIOUS TYPE
E - ORDER BY THE CENTIMETER
M - METRIC PART
Y - SEPARATE ILLUSTRATION

191-2933 **SUSPENSION GP-SEAT (**contd.**)** **i06086924**

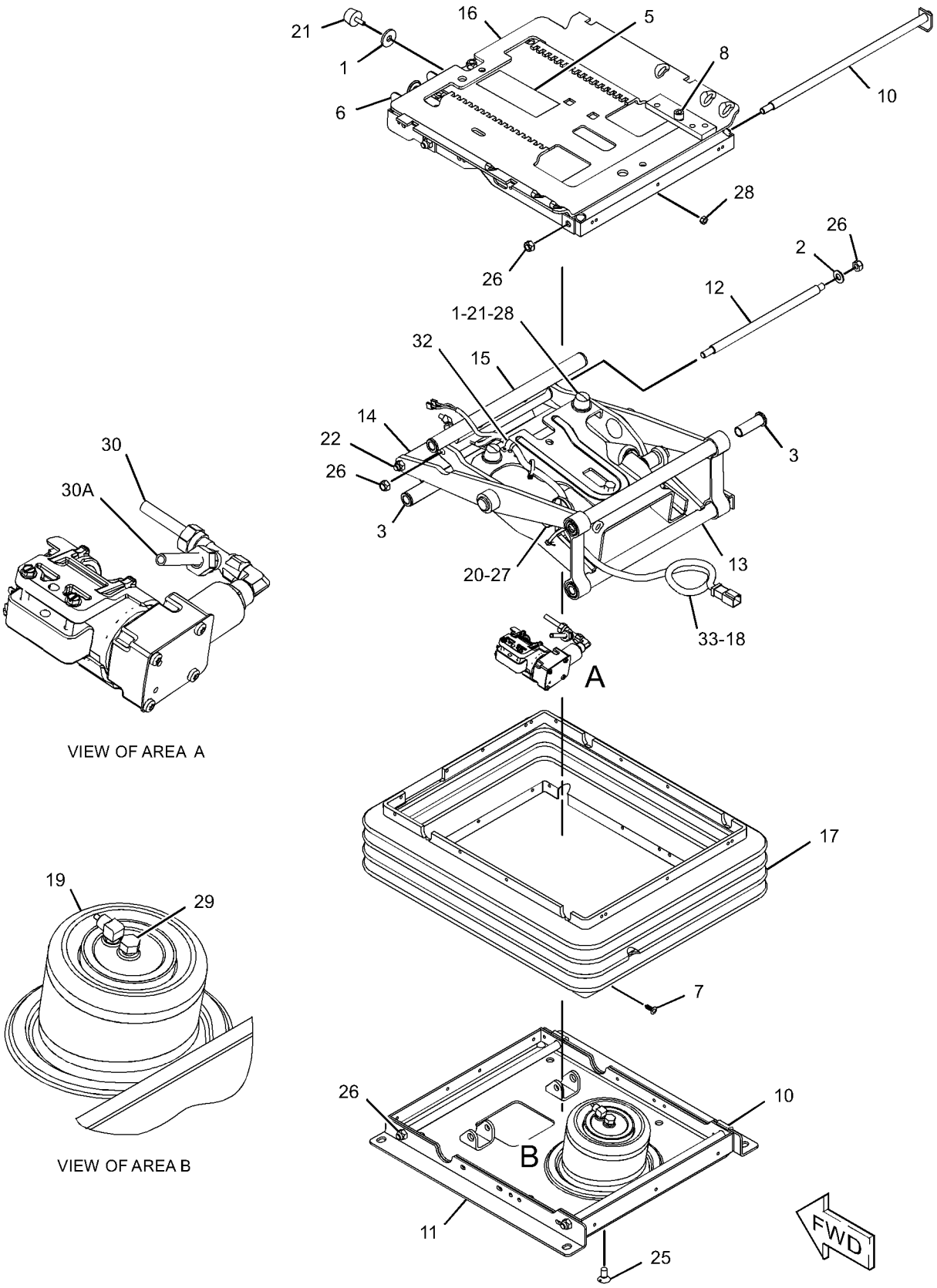

GRAPHIC #1 <END> g03802066

454-7831 TRIM GP-CAB—ROADING

S/N: TNS1-UP

PART OF 464-6673 FENDER AR-ROADING

SMCS-7329 **i06792417**

NOTE	REF NO	GRAPHIC REF	PART NUMBER	QTY	PART NAME 1 2 3 4 5 6 (PRODUCT LEVEL)	SEE PAGE
	1	1	**124-2456**	2	FILM-INSTRUCTION (NO STEP)	
	2	1	**380-5243**	2	BRACKET	
Y	3	1	*389-2890*	1	FENDER GP (LH)	447
Y	4	1	*389-2891*	1	FENDER GP (RH)	448
	5	1	**464-6658**	1	EXTENSION (LH)	
	6	1	**464-6659**	1	EXTENSION (RH)	
	7	1	**505-4749**	1	BRACKET AS	
Y	8	1	*477-8029*	1	GUARD GP-MUD	465
Y	9	1	*477-8030*	1	GUARD GP-MUD	466
	10	1	**505-4748**	1	BRACKET AS	
	11	1	**478-5343**	2	LATCH AS	
	12	1	**482-6304**	1	STRIP AS	
M		1	**8T-3612**	3	NUT-WELD (M8X1.25-THD)	
	13	1	**482-8872**	1	STRIP AS	
M		1	**8T-3612**	3	NUT-WELD (M8X1.25-THD)	
M	14	1	**3T-0851**	6	LOCKNUT (M5X0.8-THD)	
M	15	1	**6V-2314**	6	BOLT (M5X0.8X35-MM)	
	16	1	**7X-0579**	6	WASHER-HARD (8.8X25.5X2-MM THK)	
	17	1	**7X-7729**	6	WASHER (11X25X3-MM THK)	
	18	1	**8T-0328**	12	WASHER-HARD (5.5X10X1-MM THK)	
	19	1	**8T-4121**	6	WASHER-HARD (11X21X2.5-MM THK)	
M	20	1	**8T-4195**	12	BOLT (M10X1.5X30-MM)	
M	21	1	**8T-7547**	6	BOLT (M8X1.25X30-MM)	
	22	1	**9M-5884**	6	BUMPER	
	23	1	**505-4777**	2	BLOCK	
	24	1	**282-2628**	4	BOLT (M8X1.25X30-MM)	
	25	1	**198-4776**	4	WASHER-HARD (8.8X20X8-MM THK)	

M - METRIC PART
Y - SEPARATE ILLUSTRATION

454-7831 **TRIM GP-CAB (**contd.**)** **i06792417**

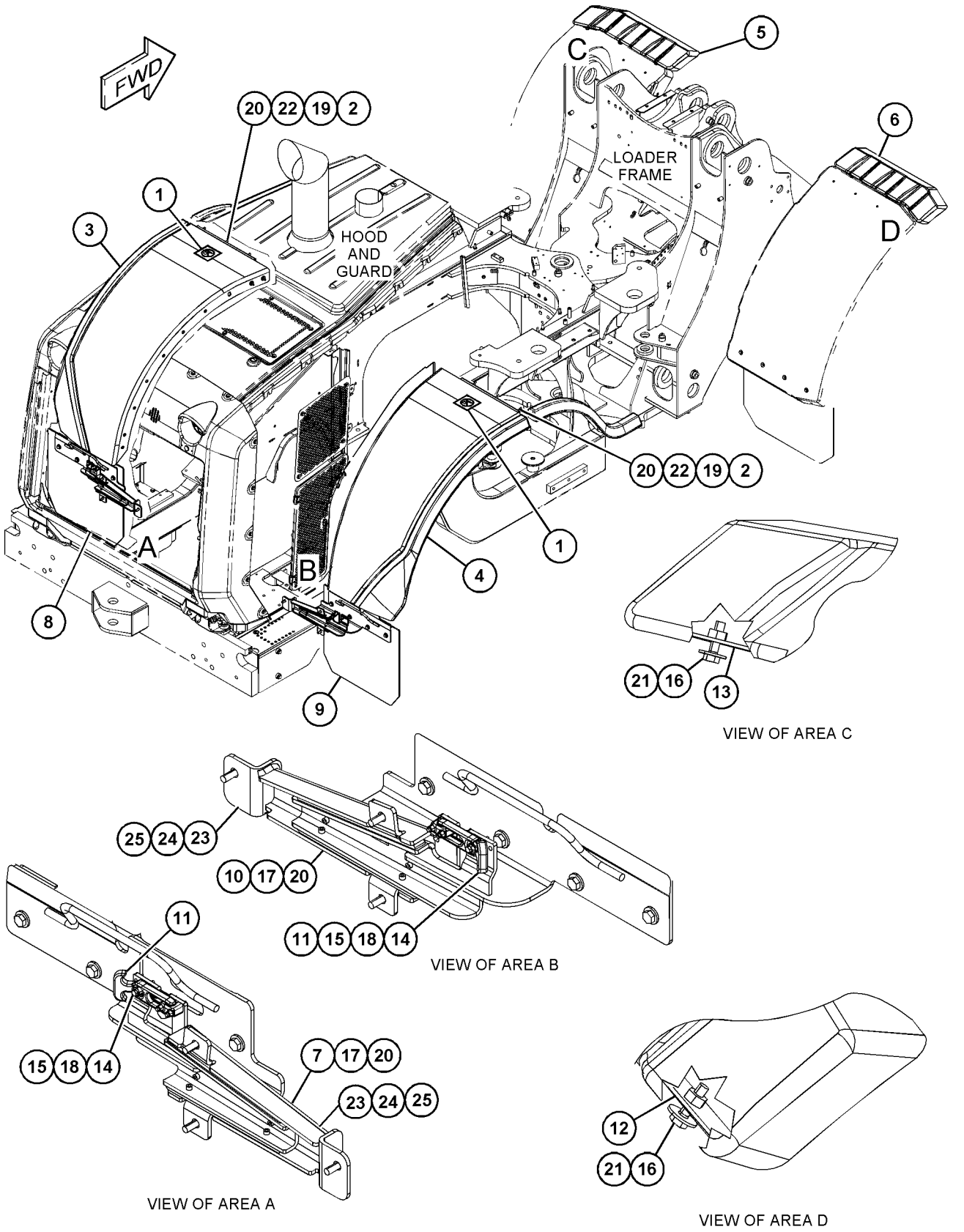

GRAPHIC #1 <END> g06076518

454-9349 TRIM GP-CAB

S/N: TNS1-UP

PART OF 455-3940 CAB AR

SMCS-7329 **i06641562**

NOTE	REF NO	GRAPHIC REF	PART NUMBER	QTY	PART NAME 1 2 3 4 5 6 (PRODUCT LEVEL)	SEE PAGE
	1	1,2	**206-1667**	9	CLIP	
	2	2	**228-6089**	3	PLUG (ROCKER SWITCH)	
	3	1	**296-1210**	1	COVER-FUSE	
	4	1	**334-6089**	1	RECEPTACLE	
	5	1	**334-6090**	1	STUD	
	6	1	**357-2108**	1	PLATE AS	
M		1	**9X-2032**	1	NUT-WELD (M4X0.7-THD)	
	7	2	**365-8366**	1	COVER (WIRING)	
	8	1	**365-8367**	1	COVER (HVAC)	
	9	1	**365-8368**	1	COVER (REAR)	
	10	1	**365-8369**	1	COVER-STORAGE	
	11	1	**365-8371**	1	COVER (ELECTRICAL)	
	12	1	**416-8196**	1	BEZEL (SWITCH)	
	13	1	**481-5938**	1	COVER-CONSOLE	
	14	1,2	**114-6658**	19	WASHER (6.5X17X1-MM THK)	
	15	1	**212-6891**	1	RETAINER	
	16	2	**2V-3726**	1	BUMPER	
M	17	1,2	**172-8591**	26	NUT-SPRING (M6X1-THD)	
	18	1	**4S-8264**	2	RIVET-POP	
	19	2	**9N-0869**	1	WASHER-HARD (8.8X25.5X2-MM THK)	
M	20	1	**9X-2043**	2	SCREW-TRUSS HEAD (M6X1X14-MM)	
M	21	1,2	**9X-2045**	18	SCREW-TRUSS HEAD (M6X1X20-MM)	
M	22	2	**9X-6155**	9	BOLT-SOCKET HEAD (M6X1X16.7-MM)	

M - METRIC PART

454-9349 **TRIM GP-CAB (**contd.**)** **i06641562**

REFER TO ALL ILLUSTRATIONS OF
THIS GROUP FOR AUXILIARY VIEWS

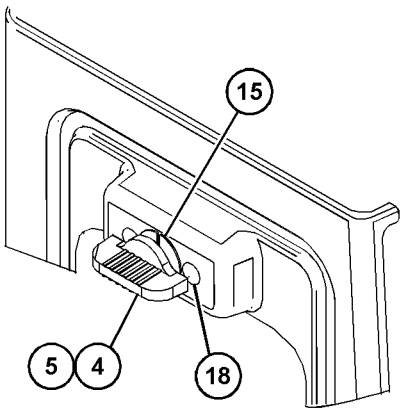

VIEW OF AREA B

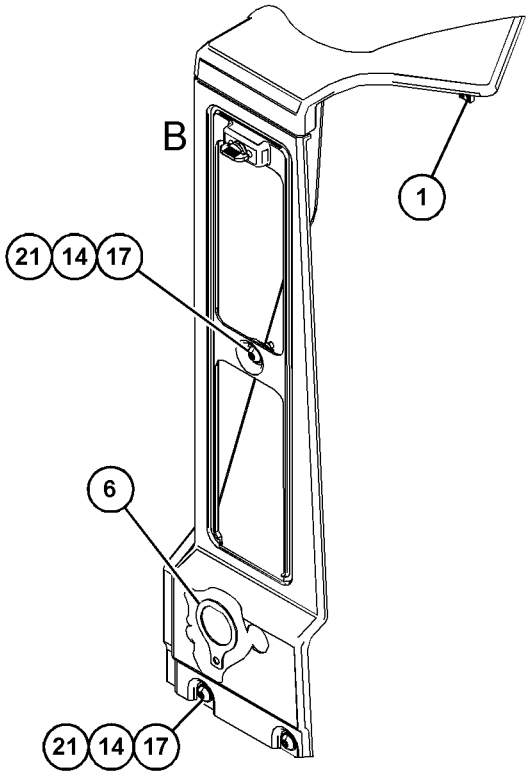

VIEW OF AREA A
(PARTS REMOVED FOR CLARITY)

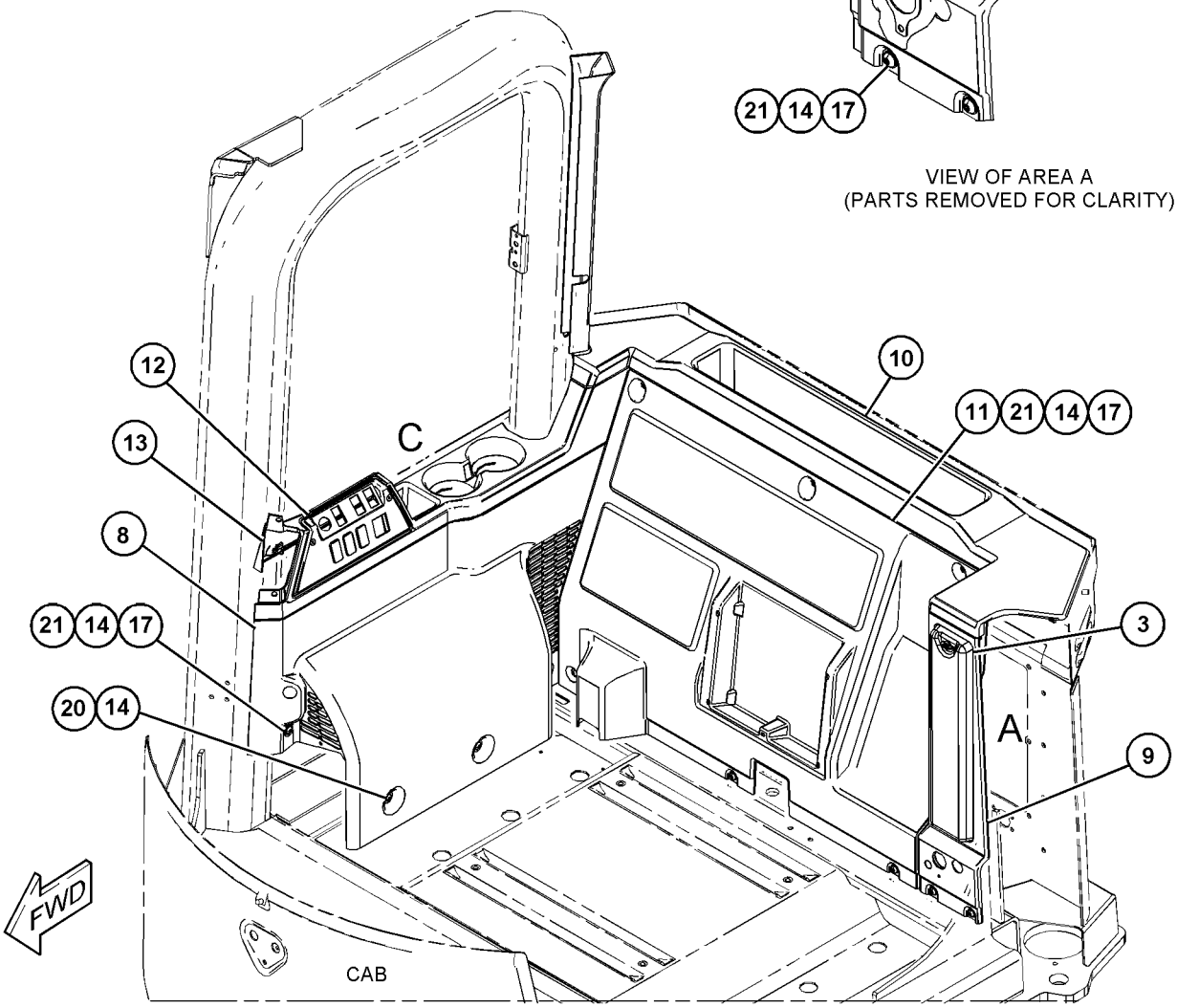

GRAPHIC #1 g06051064

454-9349 **TRIM GP-CAB** (contd.) **i06641562**

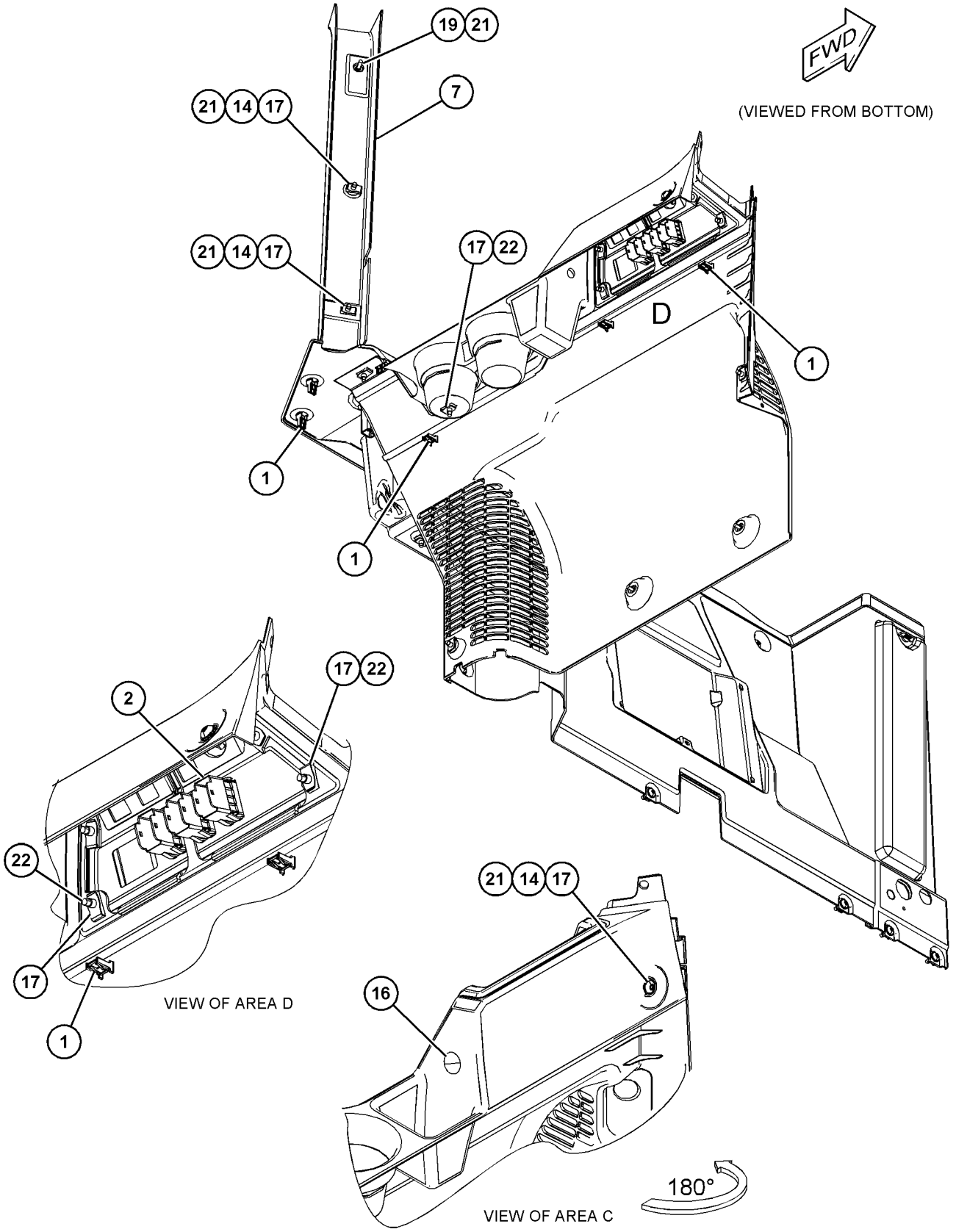

GRAPHIC #2 <END> g06051065

441-4589 VALVE GP-WATER

S/N: TNS1-UP

PART OF 459-3538 AIR CONDITIONER GP

SMCS-1800, 7320

i06641728

NOTE	REF NO	GRAPHIC REF	PART NUMBER	QTY	PART NAME 1 2 3 4 5 6 (PRODUCT LEVEL)	SEE PAGE
M	1	1	**8T-0337**	3	SCREW-MACHINE (M4X0.7X12-MM)	
	2	1	**6V-2687**	8	SCREW-PAN HEAD (10-24X1-IN)	
	3	1	**4M-6582**	2	SEAL-O-RING	
	4	1	**131-3093**	1	BUSHING	
	5	1	**268-8769**	1	VALVE & MOUNTING AS-WATER	
	6	1	**279-0850**	1	ACTUATOR (ELECTRONIC)	

M - METRIC PART

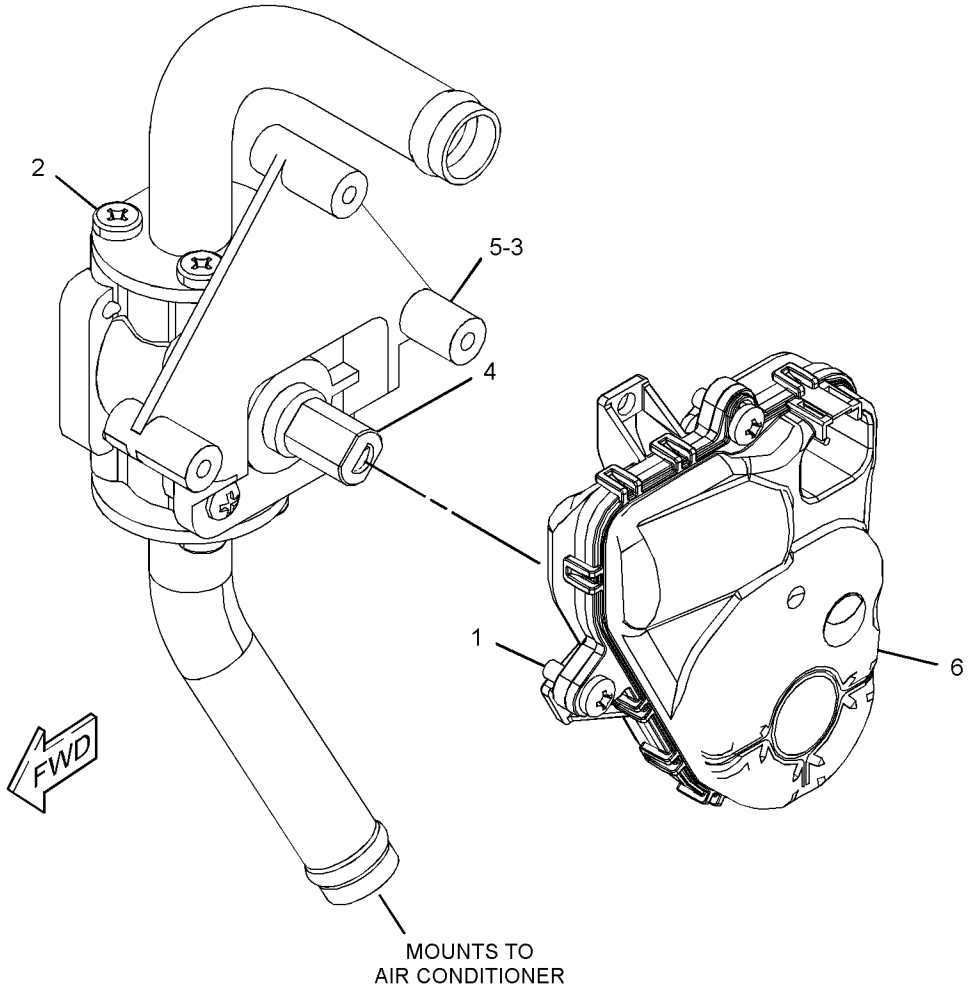

GRAPHIC #1

<END>

g03542763

372-1609 VISOR GP-CAB

S/N: TNS1-UP

PART OF 492-3986 OPERATOR AR

SMCS-7301 **i06605505**

NOTE	REF NO	GRAPHIC REF	PART NUMBER	QTY	PART NAME 1 2 3 4 5 6 (PRODUCT LEVEL)	SEE PAGE
	1	1	**243-3544**	1	VISOR AS (CAB)	
M	2	1	**3E-8020**	4	SCREW-TRUSS HEAD (M6X1X25-MM)	

M - METRIC PART

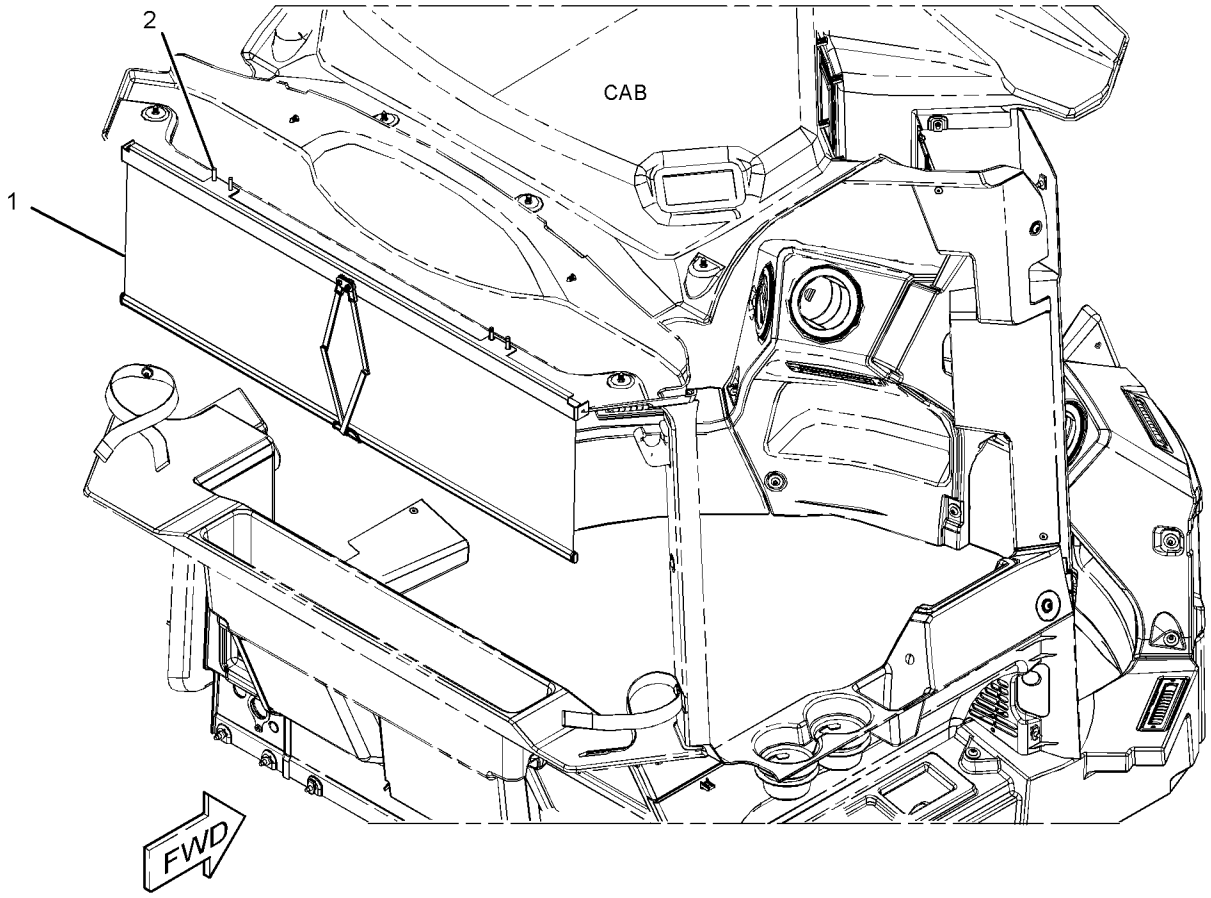

GRAPHIC #1 <END> g03498558

391-5308 VISOR GP-CAB

S/N: TNS1-UP

PART OF 455-3940 CAB AR

SMCS-7301 **i06641635**

NOTE	REF NO	GRAPHIC REF	PART NUMBER	QTY	PART NAME 1 2 3 4 5 6 (PRODUCT LEVEL)	SEE PAGE
	1	1	**392-5588**	1	VISOR AS	
M	2	1	**3E-8020**	4	SCREW-TRUSS HEAD (M6X1X25-MM)	

M - METRIC PART

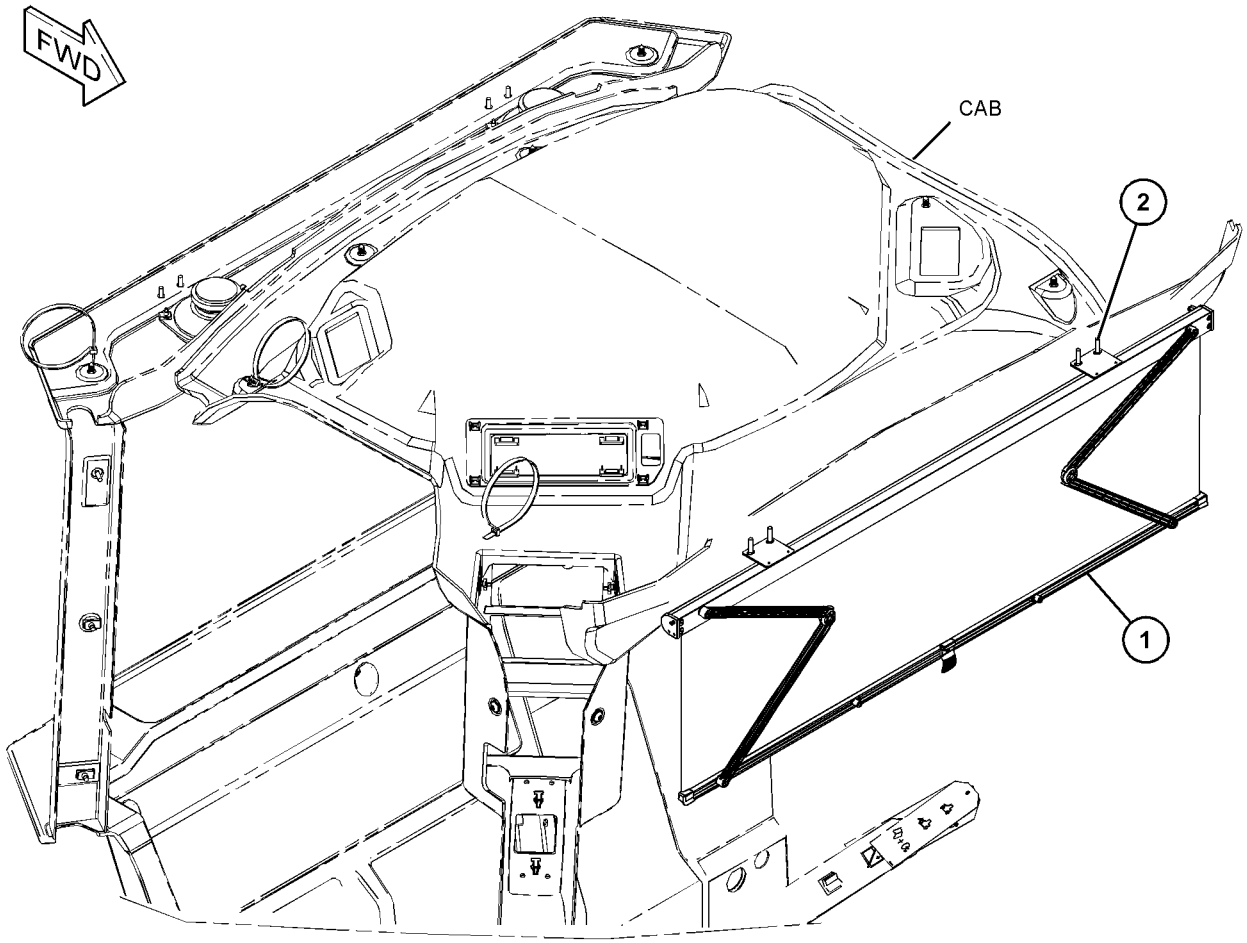

GRAPHIC #1 <END> g06049286

372-2735 WINDOW GP-CAB

S/N: TNS1-UP

PART OF 493-9616, 493-9617 CAB AR-ENCLOSED ROPS

SMCS-7310 **i05753418**

NOTE	REF NO	GRAPHIC REF	PART NUMBER	QTY	PART NAME 1 2 3 4 5 6 (PRODUCT LEVEL)	SEE PAGE
	1	1	**384-9166**	1	GLASS (FRONT, CENTER)	
	2	1	**384-9167**	1	GLASS (FRONT, RH)	
	3	1	**384-9168**	1	GLASS (FRONT, LH)	
E	4	1	**3E-9413**		SEAL (330-CM EACH)	
E	4A	1	**3E-9413**		SEAL (405-CM)	

E - ORDER BY THE CENTIMETER

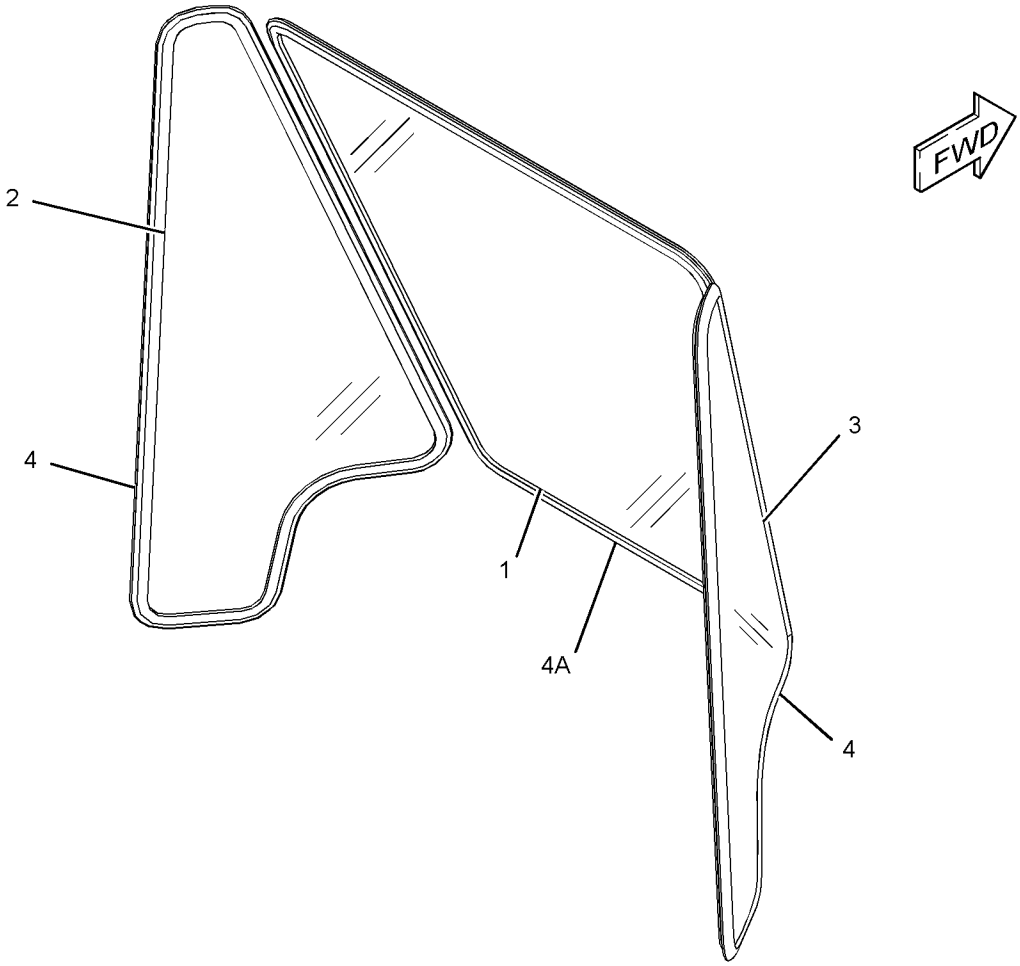

GRAPHIC #1 <END> g03439076

486-9082 WINDOW GP-CAB—FRONT

S/N: TNS1-UP

PART OF 503-1906 CAB AR-ENCLOSED ROPS

SMCS-7310 **i06675621**

NOTE	REF NO	GRAPHIC REF	PART NUMBER	QTY	PART NAME 1 2 3 4 5 6 (PRODUCT LEVEL)	SEE PAGE
	1	1	**110-7524**	26	BUTTON	
	2	1	**486-9083**	1	GLASS-FRONT (LH)	
	3	1	**486-9084**	1	GLASS-FRONT	
	4	1	**486-9085**	1	GLASS-FRONT (RH)	

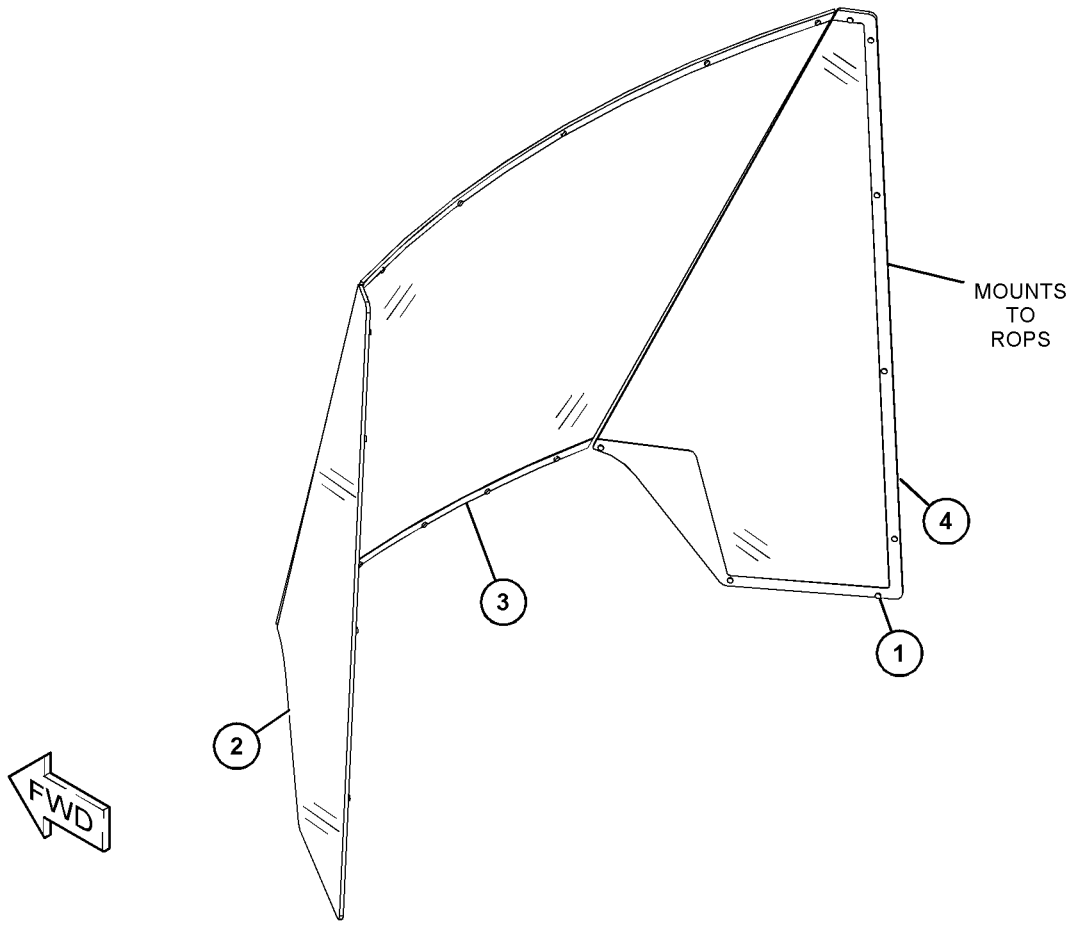

GRAPHIC #1 <END> g06065338

371-6089 WINDOW GP-DOOR–LH

S/N: TNS1-UP

PART OF 502-6446, 502-6447 DOOR GP-CAB

SMCS-7308, 7310

i06807158

NOTE	REF NO	GRAPHIC REF	PART NUMBER	QTY	PART NAME 1 2 3 4 5 6 (PRODUCT LEVEL)	SEE PAGE
	1	1	**425-0300**	1	GUIDE AS	
		1	**348-7783**	2	KIT-SEAL (WEATHERPROOF)	
	2	1	**428-3580**	1	GLASS AS-SLIDING	
		1	**425-0300**	1	GUIDE AS	
		1	**348-7783**	2	KIT-SEAL (WEATHERPROOF)	
	3	1	**428-3585**	1	GLASS-FIXED	
	4	1	**428-3590**	1	LOCK AS	
	5	1	**428-3592**	1	CORNER	
	6	1	**511-4761**	1	KIT-SEAL (WINDOW)	
					(INCLUDES SEAL, STOPS & HIGH PRESSURE SEALS)	

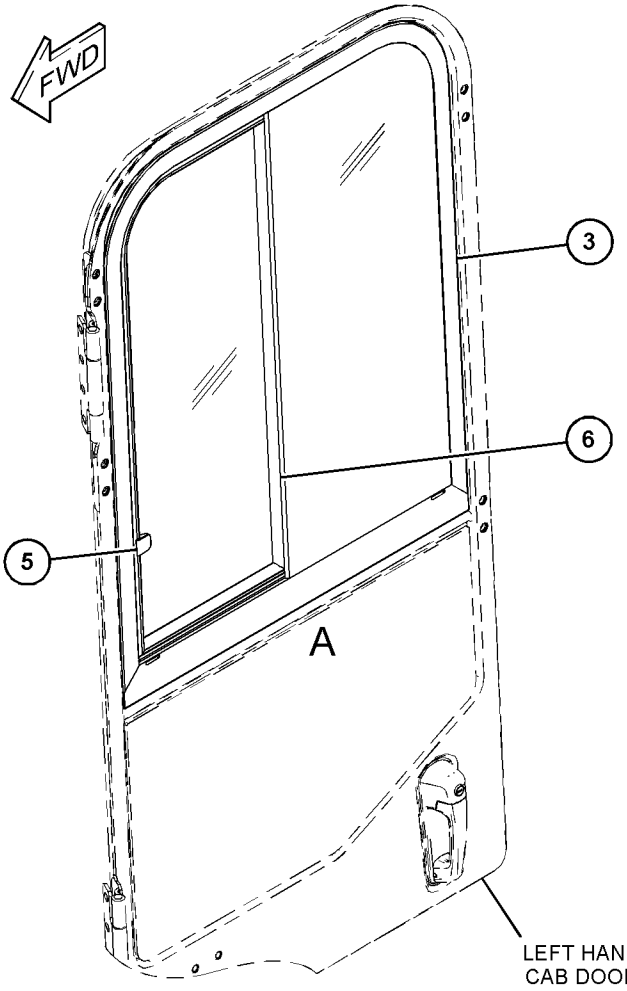

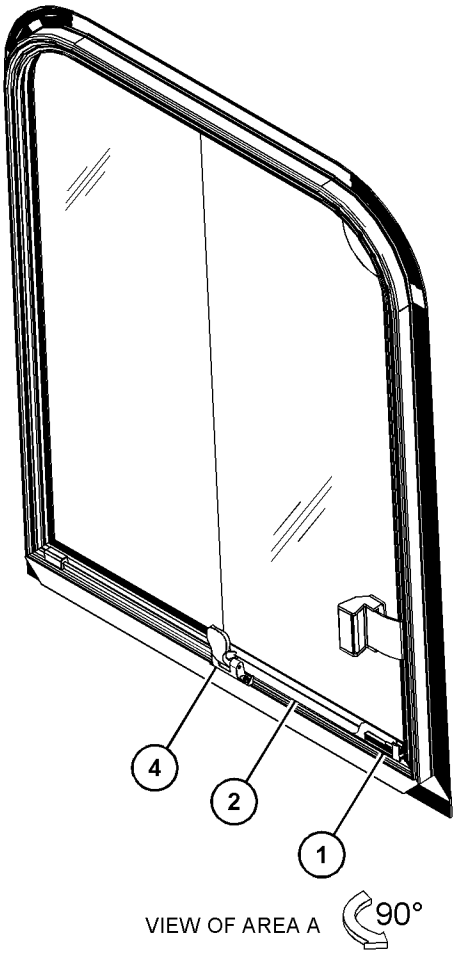

GRAPHIC #1

<END>

g03674923

382-9208 WINDOW GP-DOOR—RH

S/N: TNS1-UP

PART OF 372-3954 DOOR GP-CAB

SMCS-7308, 7310

i06780635

NOTE	REF NO	GRAPHIC REF	PART NUMBER	QTY	PART NAME 1 2 3 4 5 6 (PRODUCT LEVEL)	SEE PAGE
	1	1	**371-4271**	1	LATCH AS	
		1	**126-1052**	1	PIN	
		1	**428-3598**	1	LANYARD AS	
		1	**433-6447**	1	LATCH AS-WINDOW	
	2	1	**511-4761**	1	KIT-SEAL (WINDOW)	
					(KIT ALSO INCLUDES HIGH PRESSURE SEALS, SEALS & STOPS)	
	3	1	**428-3582**	1	GLASS AS-SLIDING	
	3A	1	**425-0300**	1	GUIDE AS	
		1	**348-7783**	2	KIT-SEAL (WEATHERPROOF)	
	4	1	**428-3587**	1	GLASS-FIXED	
	5	1	**428-3590**	1	LOCK AS	
	6	1	**428-3592**	1	CORNER	

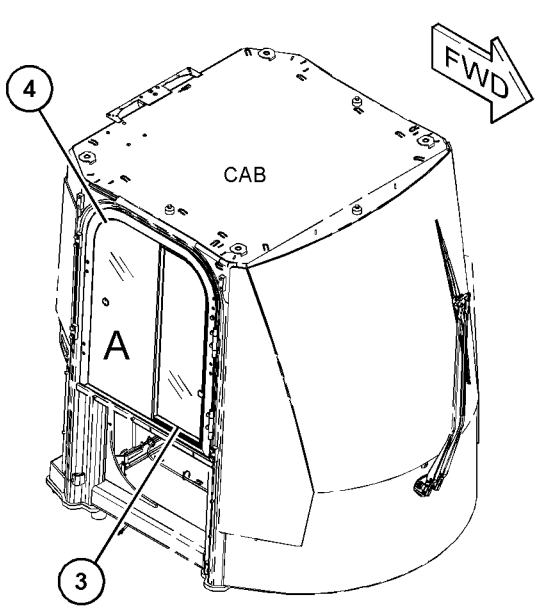

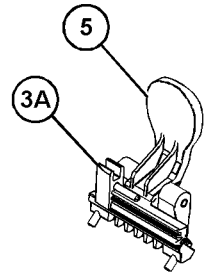

VIEW OF AREA B

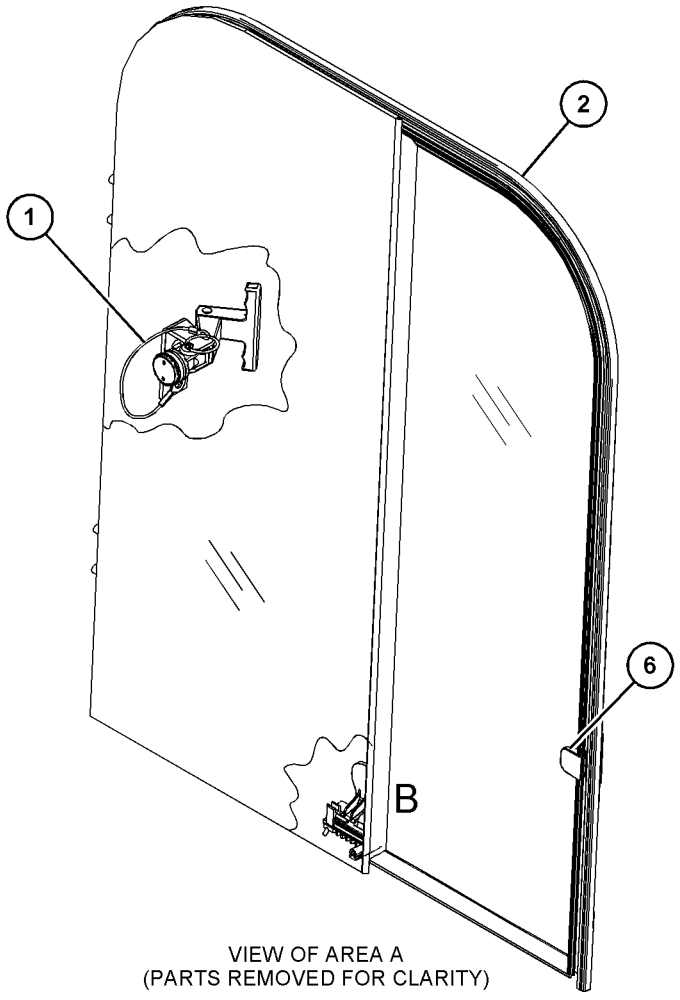

VIEW OF AREA A
(PARTS REMOVED FOR CLARITY)

GRAPHIC #1

<END>

g06104841

392-3980 WINDOW GP-DOOR–LH

S/N: TNS1-UP

PART OF 391-5327 DOOR GP-CAB

SMCS-7308, 7310 **i06659384**

NOTE	REF NO	GRAPHIC REF	PART NUMBER	QTY	PART NAME 1 2 3 4 5 6 (PRODUCT LEVEL)	SEE PAGE
	1	1	**302-2136**	1	CATCH AS	
	2	1	**352-4897**	1	LOCK AS	
	3	1	**392-3985**	1	GLASS-FIXED	
	4	1	**394-5936**	2	SLIDER	
	5	1	**394-5937**	1	PILLAR	
	6	1	**394-5941**	1	RAIL	
	7	1	**425-0261**	1	SEAL	
	8	1	**425-0263**	1	SEAL	
	9	1	**454-4269**	1	GLASS-SLIDING	
E	10	1	**430-4119**		RUBBER (7.5-CM)	
E	10A	1	**430-4119**		RUBBER (2.5-CM EACH)	
E	11	1	**425-0265**		SEAL (114-CM)	
E	12	1	**425-0262**		SEAL (34-CM)	
E	13	1	**425-0260**		SEAL (141-CM)	
E	14	1	**462-3639**		SEAL (85-CM EACH)	

E - ORDER BY THE CENTIMETER

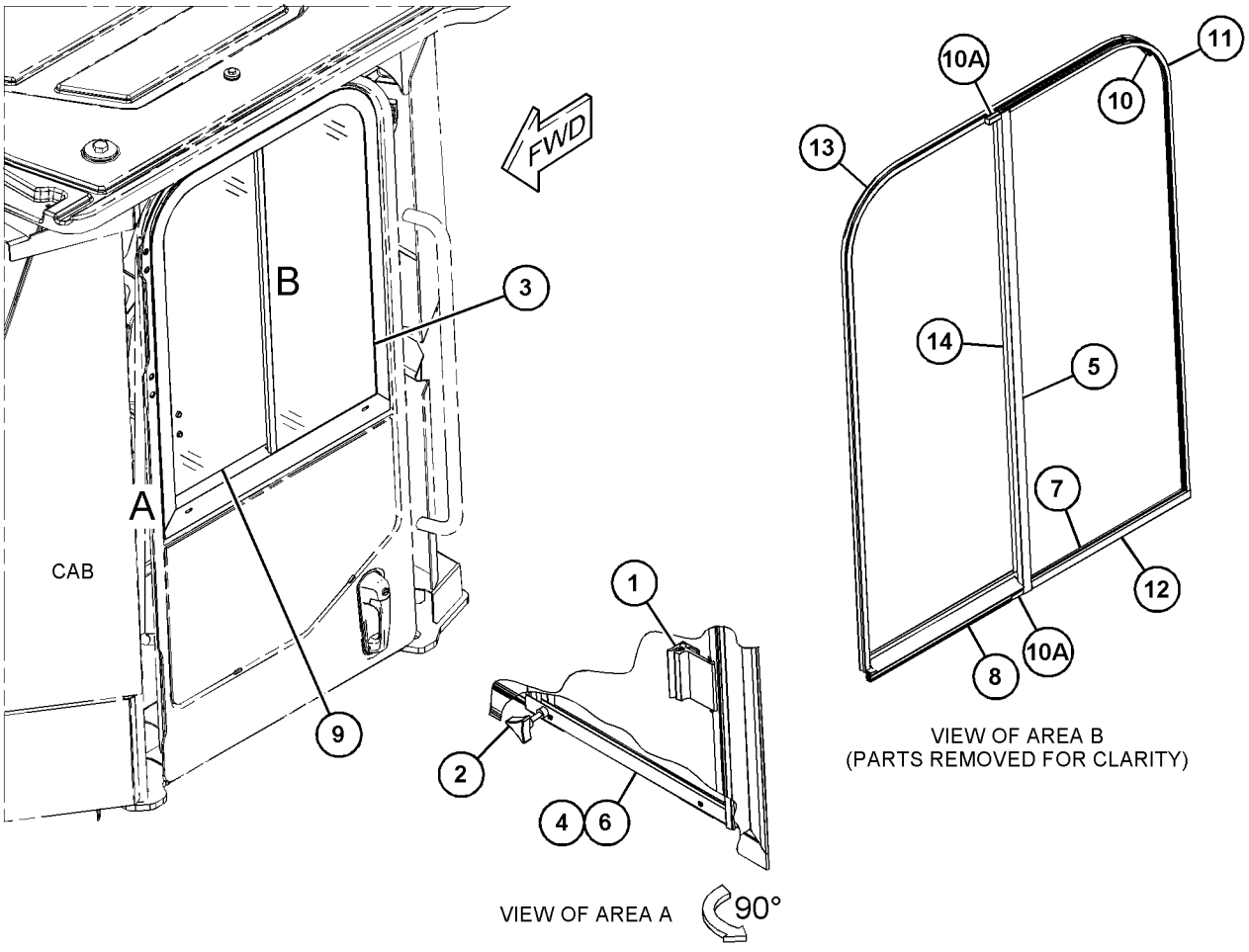

GRAPHIC #1 <END> g06038118

461-3172 WINDOW GP-DOOR

S/N: TNS1-UP

PART OF 461-4302 DOOR GP-CAB

SMCS-7308, 7310 **i06807046**

NOTE	REF NO	GRAPHIC REF	PART NUMBER	QTY	PART NAME 1 2 3 4 5 6 (PRODUCT LEVEL)	SEE PAGE
	1	1	**511-4761**	1	KIT-SEAL (WINDOW)	
					(INCLUDES SEALS & STOPS)	
	2	1	**428-3582**	1	GLASS AS-SLIDING	
	2A	1	**425-0300**	1	GUIDE AS	
		1	**348-7783**	2	KIT-SEAL (WEATHERPROOF) (WINDOW)	
	3	1	**461-4259**	1	GLASS-FIXED	
	4	1	**428-3590**	1	LOCK AS	
	5	1	**428-3592**	1	CORNER	

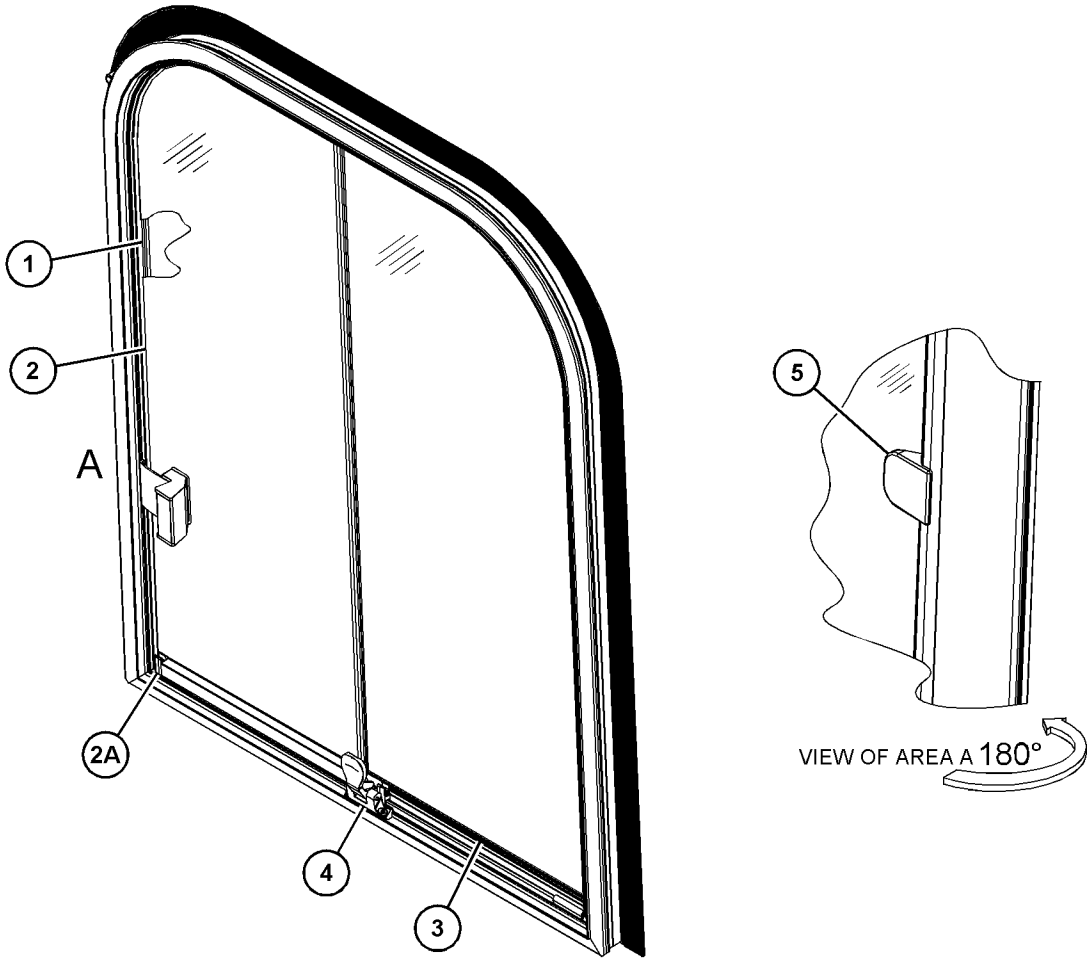

GRAPHIC #1 <END> g03736684

462-0651 WINDOW GP-FRONT

S/N: TNS1-UP

PART OF 493-9618, 493-9619, 503-1906 CAB AR-ENCLOSED ROPS

SMCS-7310, 7340 **i06606653**

NOTE	REF NO	GRAPHIC REF	PART NUMBER	QTY	PART NAME 1 2 3 4 5 6 (PRODUCT LEVEL)	SEE PAGE
	1	1	**110-7524**	16	BUTTON	
	2	1	**291-4819**	1	GLASS-FRONT (RH)	
	3	1	**291-4820**	1	GLASS-FRONT (LH)	
	4	1	**459-7290**	1	GLASS-FRONT	

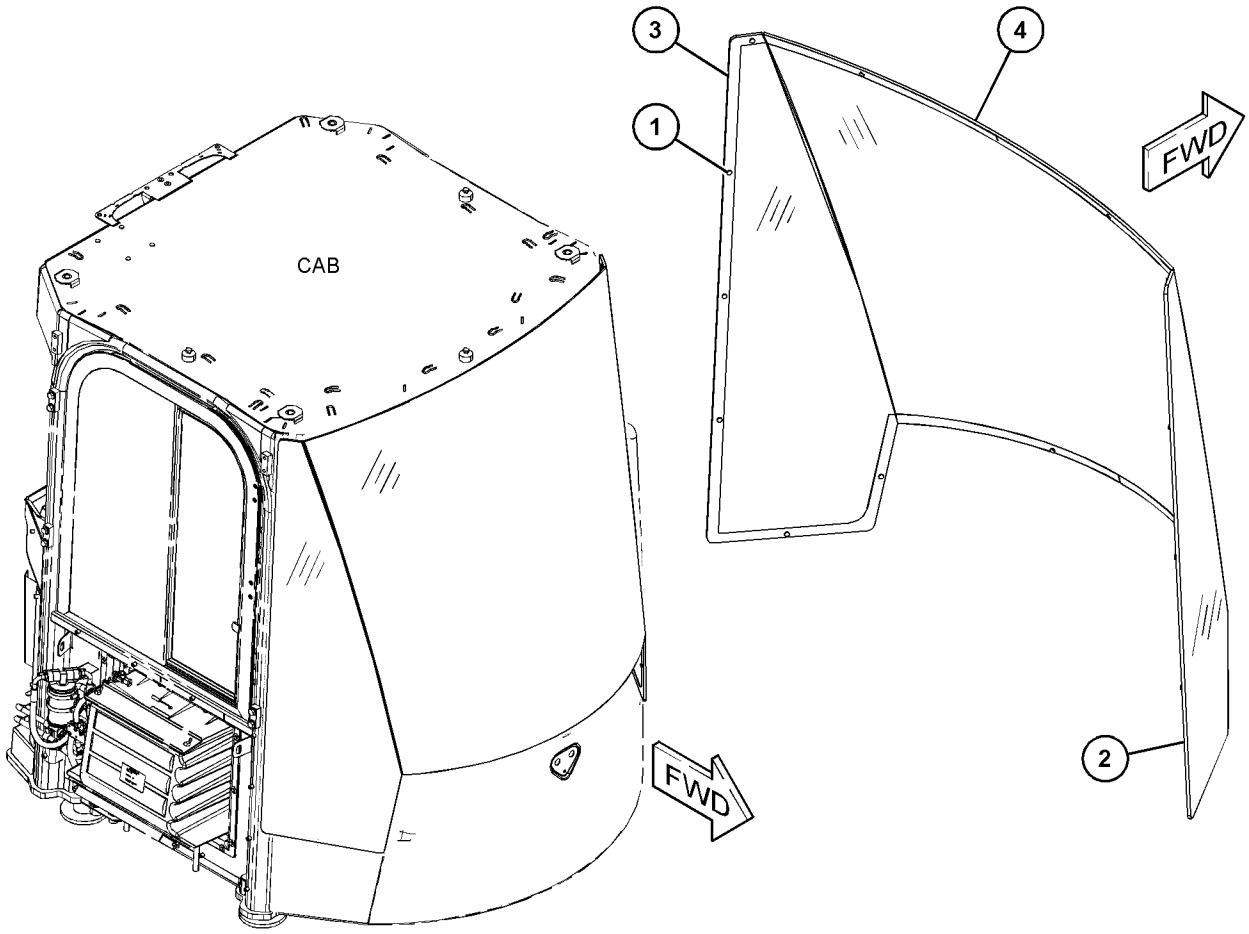

GRAPHIC #1 <END> g03736535

366-0734 WINDOW GP-REAR

S/N: TNS1-UP

PART OF 493-9616, 493-9617, 493-9618, 493-9619, 503-1906 CAB AR-ENCLOSED ROPS

SMCS-7310 **i06691262**

NOTE	REF NO	GRAPHIC REF	PART NUMBER	QTY	PART NAME 1 2 3 4 5 6 (PRODUCT LEVEL)	SEE PAGE
	1	1	**369-8763**	1	GLASS-REAR	
	2	1	**369-8764**	1	GLASS-REAR (RH)	
	3	1	**369-8765**	1	GLASS-REAR (LH)	
E	4	1	**110-7524**	14	BUTTON	

E - ORDER BY THE CENTIMETER

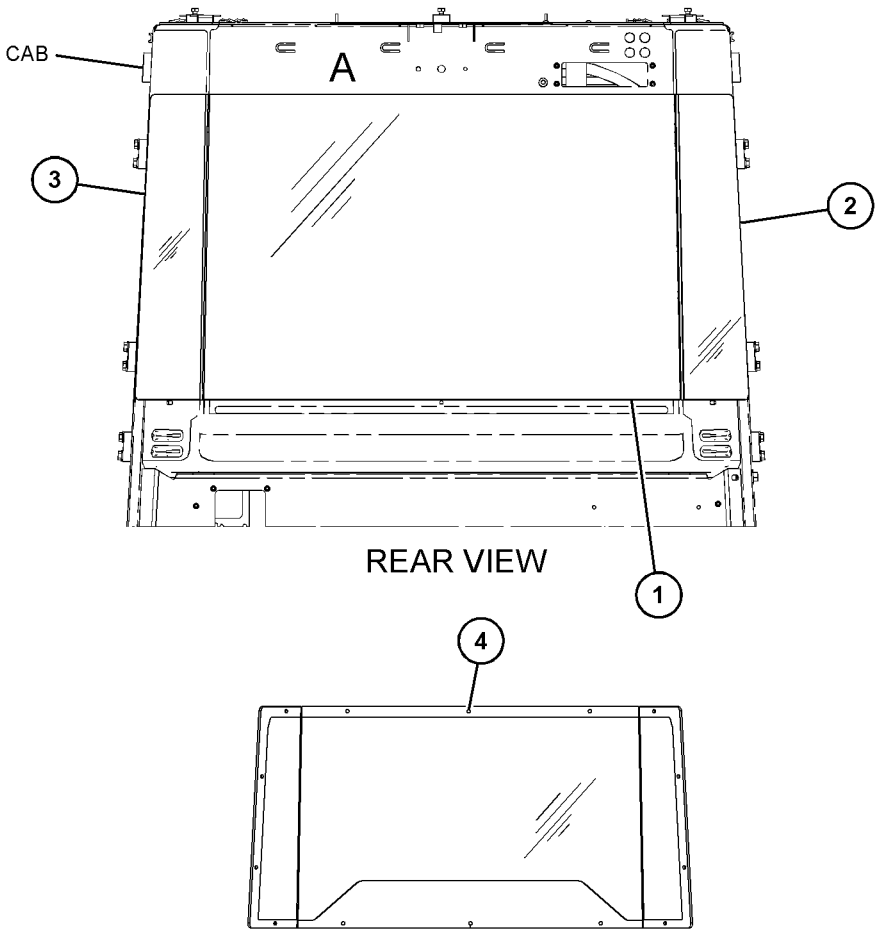

REAR VIEW

VIEW OF AREA A
(ROTATED 180 DEGREES)

GRAPHIC #1 <END> g06010198

488-5867 WIPER GP-WINDOW

S/N: TNS1-UP

PART OF 493-9618, 493-9619, 503-1906 CAB AR-ENCLOSED ROPS

SMCS-7305 **i06782298**

NOTE	REF NO	GRAPHIC REF	PART NUMBER	QTY	PART NAME 1 2 3 4 5 6 (PRODUCT LEVEL)	SEE PAGE
B	1	2	**3S-2093**	26	STRAP-CABLE	
	2	2	**6V-5851**	1	BLADE AS-WIPER (400-MM) (REAR WINDOW)	
	3	2	**8T-5400**	4	CONNECTOR AS	
	4	1	**111-7421**	2	CAP	
	5	2	**152-6641**	1	ARM AS-WINDOW WIPER (REAR)	
E		2	**194-5171**		HOSE (37-CM)	
		2	**305-9192**	1	NOZZLE AS-WASHER	
	6	2	**189-8610**	1	BLADE AS-WIPER (800-MM) (FRONT WINDOW)	
	7	2	**227-7392**	4	WASHER (6.3X10.3X0.4-MM THK)	
Y	8	2	**457-3651**	1	MOTOR GP-WINDOW WIPER (24-VOLT) (REAR)	814
	9	1	**469-5745**	2	VALVE-CHECK (WINDOW WASHER)	
Y	10	2	**373-2414**	1	ARM GP-WINDOW WIPER (WET) (FRONT)	748
Y	11	2	**373-2413**	1	MOTOR GP-WINDOW WIPER (FRONT)	813
M	12	2	**129-3178**	4	LOCKNUT (M6X1-THD)	
M	13	2	**191-8921**	4	BOLT-SOCKET HEAD (M6X1X25-MM)	
	14	2	**1V-3593**	1	CLIP	
E	15	2	**144-0195**		HOSE (231.5-CM)	
E	15A	1	**144-0195**		HOSE (70.7-CM)	
E	15B	1	**144-0195**		HOSE (74-CM)	
E	15C	2	**144-0195**		HOSE (302.4-CM)	
BE	16	1,2	**7X-7927**		TAPE-IDENTIFICATION (LETTER A)	
BE	17	1	**7X-7928**		TAPE-IDENTIFICATION (LETTER B)	

B - USE AS REQUIRED
E - ORDER BY THE CENTIMETER
M - METRIC PART
Y - SEPARATE ILLUSTRATION

488-5867 **WIPER GP-WINDOW (**contd.**)** **i06782298**

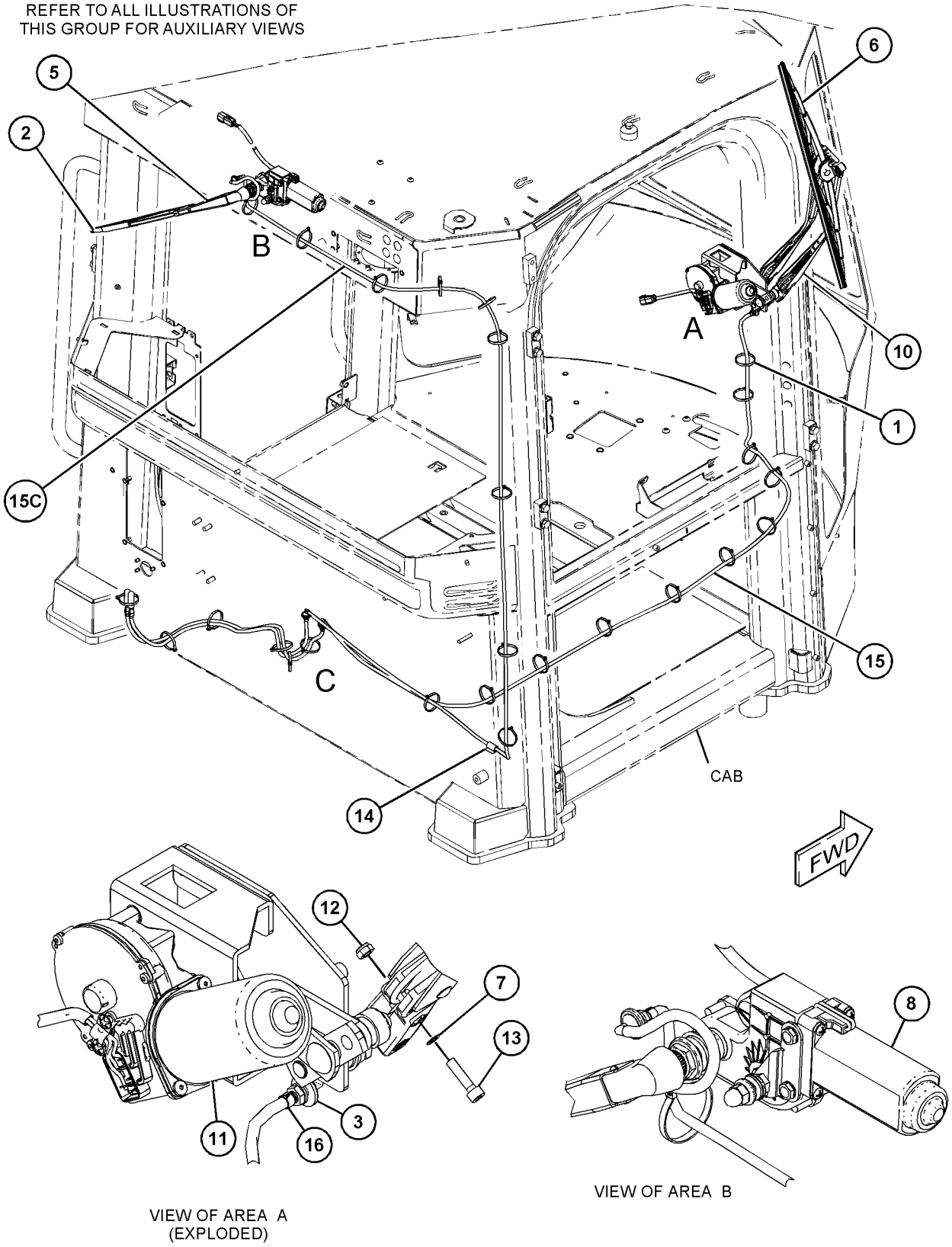

GRAPHIC #1 g06122816

488-5867 **WIPER GP-WINDOW (**contd.**)** **i06782298**

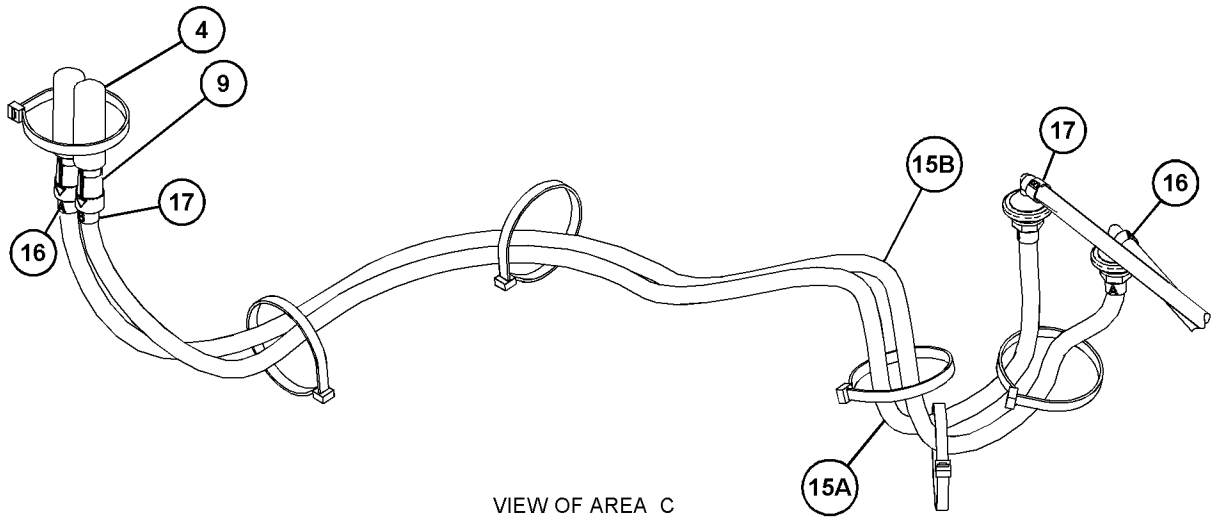

VIEW OF AREA C

GRAPHIC #2 <END> g06122817

496-3368 WIPER GP-WINDOW

S/N: TNS1-UP

PART OF 493-9616, 493-9617 CAB AR-ENCLOSED ROPS

SMCS-7305 **i06782540**

NOTE	REF NO	GRAPHIC REF	PART NUMBER	QTY	PART NAME 1 2 3 4 5 6 (PRODUCT LEVEL)	SEE PAGE
B	1	1	**3S-2093**	28	STRAP-CABLE	
	2	1	**6V-5851**	1	BLADE AS-WIPER (400-MM) (REAR WINDOW)	
	3	1	**8T-5400**	4	CONNECTOR AS	
	4	2	**111-7421**	2	CAP	
	5	1	**152-6641**	1	ARM AS-WINDOW WIPER (REAR)	
E		1	**194-5171**		HOSE (37-CM)	
		1	**305-9192**	1	NOZZLE AS-WASHER	
	6	1	**189-8610**	1	BLADE AS-WIPER (800-MM) (FRONT WINDOW)	
	7	1	**227-7392**	4	WASHER (6.3X10.3X0.4-MM THK)	
Y	8	1	**457-3651**	1	MOTOR GP-WINDOW WIPER (24-VOLT) (REAR)	814
	9	2	**469-5745**	2	VALVE-CHECK (WINDOW WASHER)	
	10	1	*488-5868*	1	ARM GP-WINDOW WIPER (FRONT)	
E		1	**144-0195**		HOSE (106-CM)	
		1	**228-6428**	1	NOZZLE AS	
		1	**488-6396**	1	CLIP	
Y	11	1	*496-3367*	1	MOTOR GP-WINDOW WIPER (FRONT)	815
M	12	1	**129-3178**	4	LOCKNUT (M6X1-THD)	
M	13	1	**191-8921**	4	BOLT-SOCKET HEAD (M6X1X25-MM)	
	14	1	**1V-3593**	1	CLIP	
E	15	1	**144-0195**		HOSE (235-CM)	
E	15A	2	**144-0195**		HOSE (70.7-CM)	
E	15B	2	**144-0195**		HOSE (74-CM)	
E	15C	1	**144-0195**		HOSE (302.6-CM)	
BE	16	1,2	**7X-7927**		TAPE-IDENTIFICATION (LETTER A)	
BE	17	2	**7X-7928**		TAPE-IDENTIFICATION (LETTER B)	

B - USE AS REQUIRED
E - ORDER BY THE CENTIMETER
M - METRIC PART
Y - SEPARATE ILLUSTRATION

496-3368 **WIPER GP-WINDOW (**contd.**)** **i06782540**

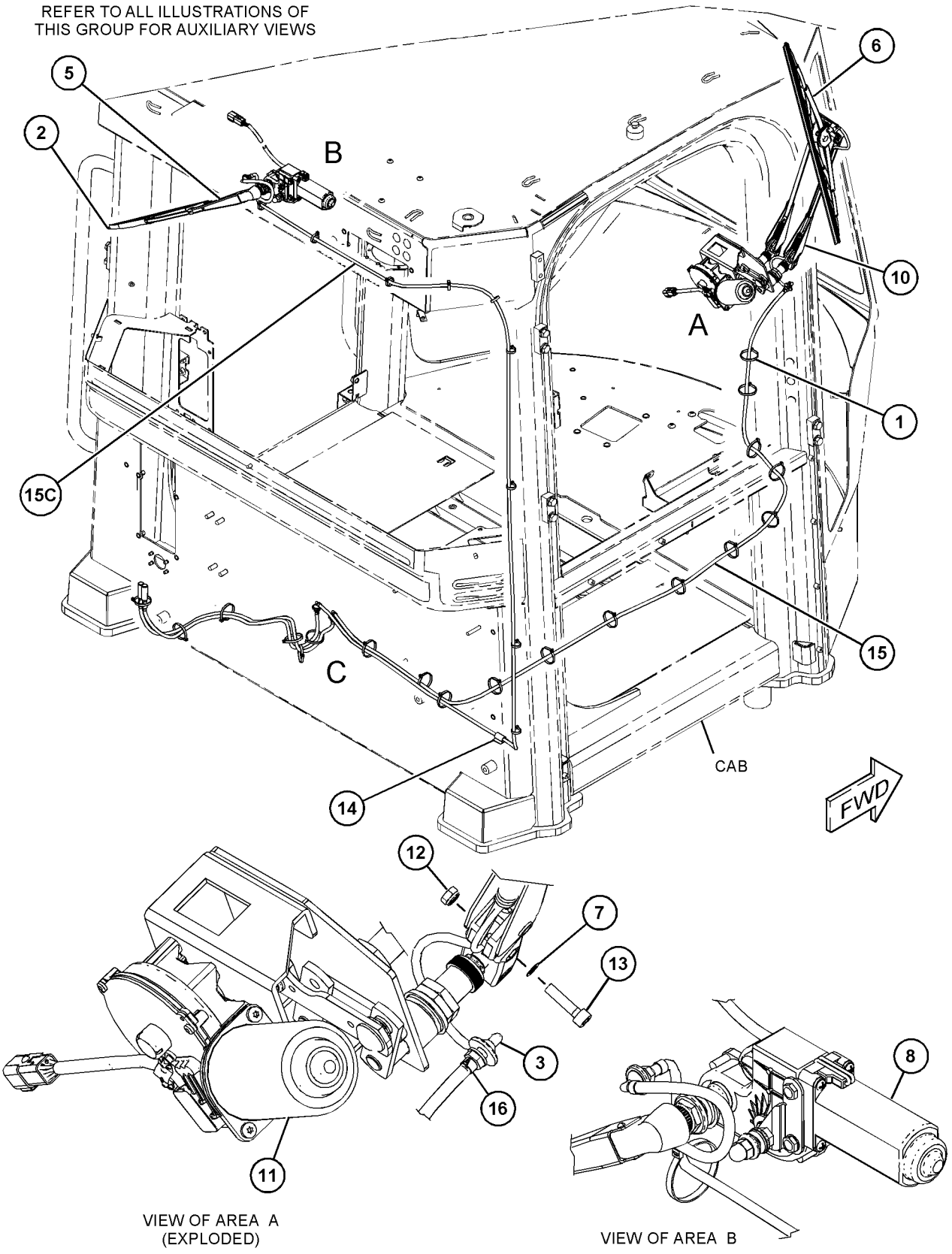

GRAPHIC #1 g06122423

496-3368 **WIPER GP-WINDOW (**contd.**)** **i06782540**

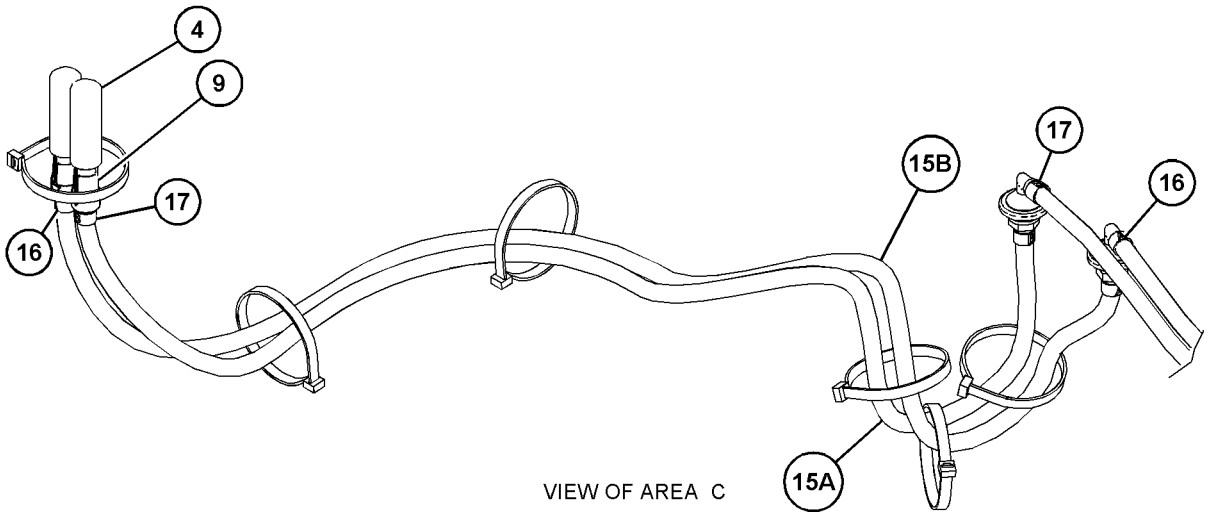

VIEW OF AREA C

GRAPHIC #2 <END> g06122424

257-1766 ADAPTER GP-TIP

S/N: TNS1-UP
K-80
CANNOT BE USED WITH J SIZE TIPS
PART OF 476-2460, 476-2461 DISTRIBUTION AR

SMCS-6803 **i05373653**

NOTE	REF NO	GRAPHIC REF	PART NUMBER	QTY	PART NAME 1 2 3 4 5 6 (PRODUCT LEVEL)	SEE PAGE
	1	1	**2J-5997**	4	LOCKNUT (1-1/4-7-THD)	
	2	1	**8J-2933**	12	NUT (1-8-THD)	
	3	1	**222-1087**	6	ADAPTER-TIP (K-80, 2-STRAP, CENTER)	
	4	1	**222-1088**	1	ADAPTER-TIP (K-80, RH)	
	5	1	**222-1089**	1	ADAPTER-TIP (K-80, LH)	
	6	1	**5P-8136**	12	BOLT-PLOW (1-8X4-IN)	
	7	1	**6V-6535**	2	BOLT-PLOW (1-1/4-7X3.74-IN)	
	8	1	**8T-9079**	2	BOLT-PLOW (1-1/4-7X3.35-IN)	

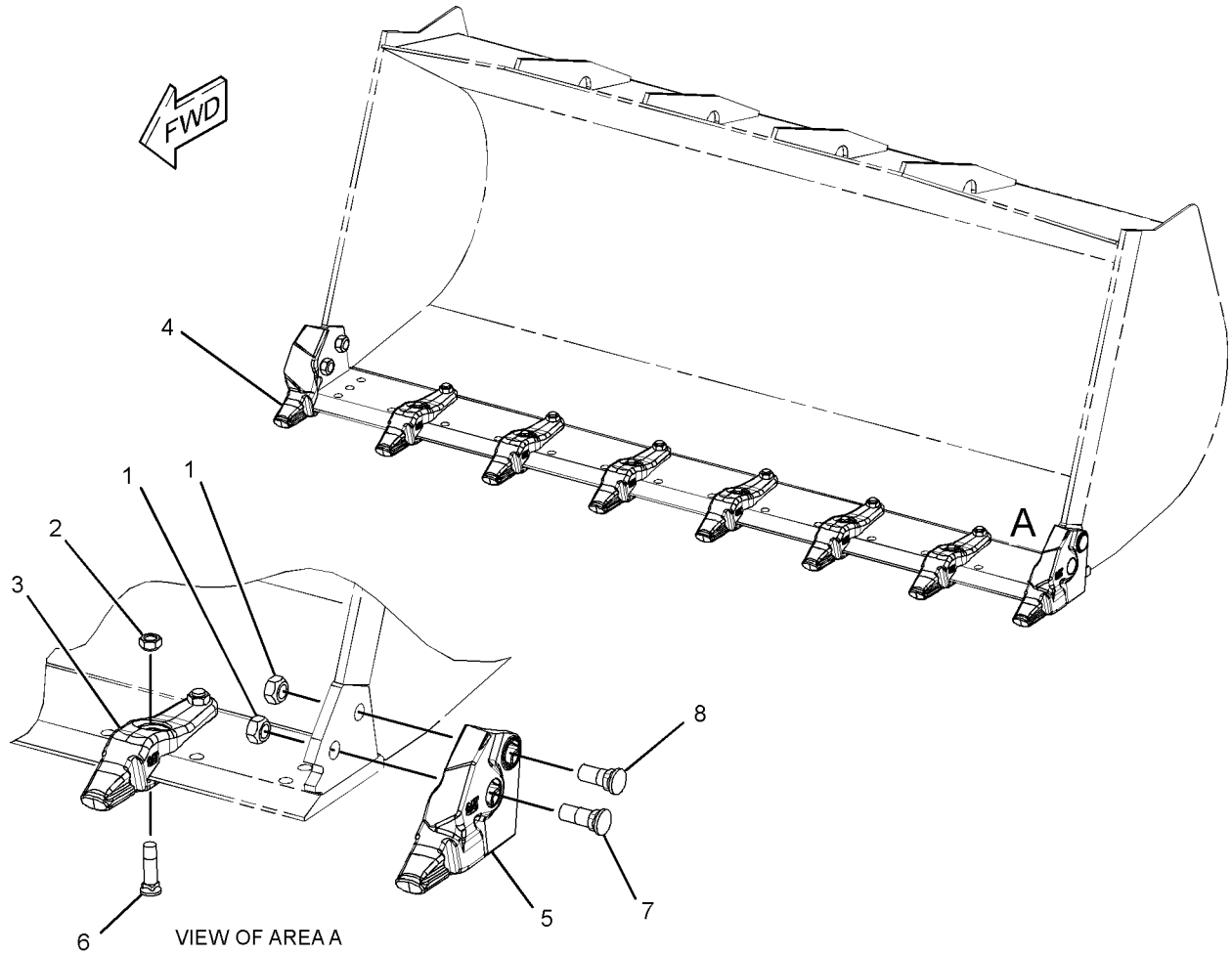

GRAPHIC #1 <END> g02153204

505-4029 ADAPTER-TIP

S/N: TNS1-UP

SMCS-6803 **i06814473**

NOTE	REF NO	GRAPHIC REF	PART NUMBER	QTY	PART NAME 1 2 3 4 5 6 (PRODUCT LEVEL)	SEE PAGE
					(NO SERVICED PARTS)	

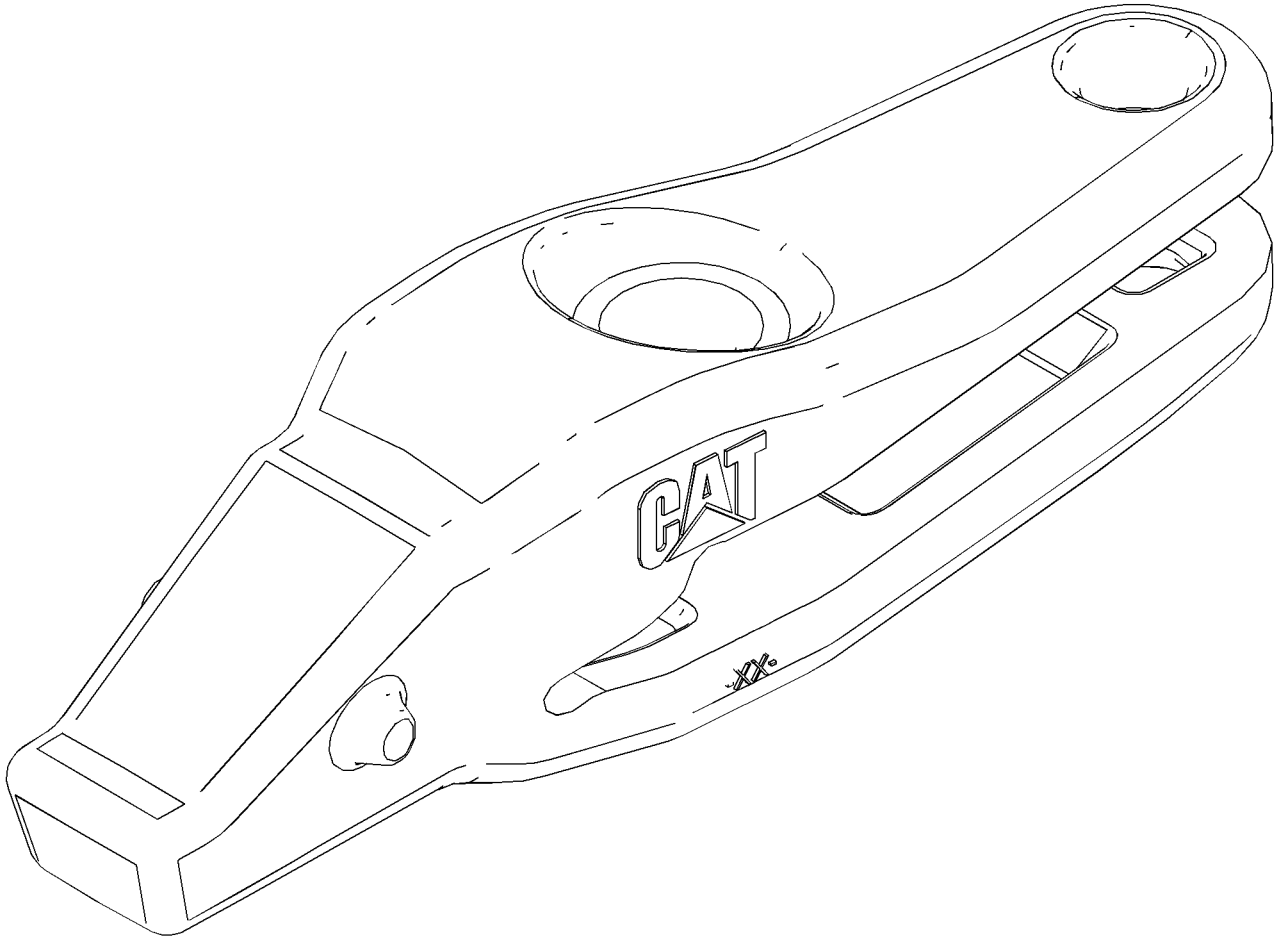

GRAPHIC #1 <END> g06122874

476-2462 BUCKET AR-ROCK

S/N: TNS1-UP

SMCS-6102 **i06687032**

NOTE	PART NUMBER	QTY	PART NAME 1 2 3 4 5 6 (PRODUCT LEVEL)	SEE PAGE
Y	*279-8141*	1	BUCKET GP-ROCK (HEAVY DUTY)	906
Y	*217-4892*	8	TIP GP-PENETRATION (K-90)	923

Y - SEPARATE ILLUSTRATION

<END>

384-5577 BUCKET AS-GENERAL PURPOSE

S/N: TNS1-UP

3.25-CU M (4.25-CU YD). 3.40-CU M (4.5-CU YD) W/BOLT-ON CUTTING EDGES

PART OF 382-9835 BUCKET GP-GENERAL PURPOSE

SMCS-6101 **i05808886**

NOTE	REF NO	GRAPHIC REF	PART NUMBER	QTY	PART NAME 1 2 3 4 5 6 (PRODUCT LEVEL)	SEE PAGE
	1	1	**141-4847**	1	EDGE	
	2	1	**384-5560**	2	PLATE-HOOK	
	3	1	*384-5579*	1	PLATE AS-SIDE (RH)	
	3A	1	**2C-9259**	1	PLATE-IDENTIFICATION (CAT)	
	3B	1	**8E-5300**	1	CORNER (RH)	
	3C	1	**384-5588**	1	PLATE-SIDE BAR	
	3D	1	**384-5589**	1	PLATE-WEAR	
	4	1	*384-5580*	1	PLATE AS-SIDE (LH)	
	4A	1	**2C-9259**	1	PLATE-IDENTIFICATION (CAT)	
	4B	1	**8E-5301**	1	CORNER (LH)	
	4C	1	**384-5588**	1	PLATE-SIDE BAR	
	4D	1	**384-5589**	1	PLATE-WEAR	
	5	1	**384-5583**	2	PLATE-WEAR	
	6	1	**385-0875**	1	PLATE-WEAR	

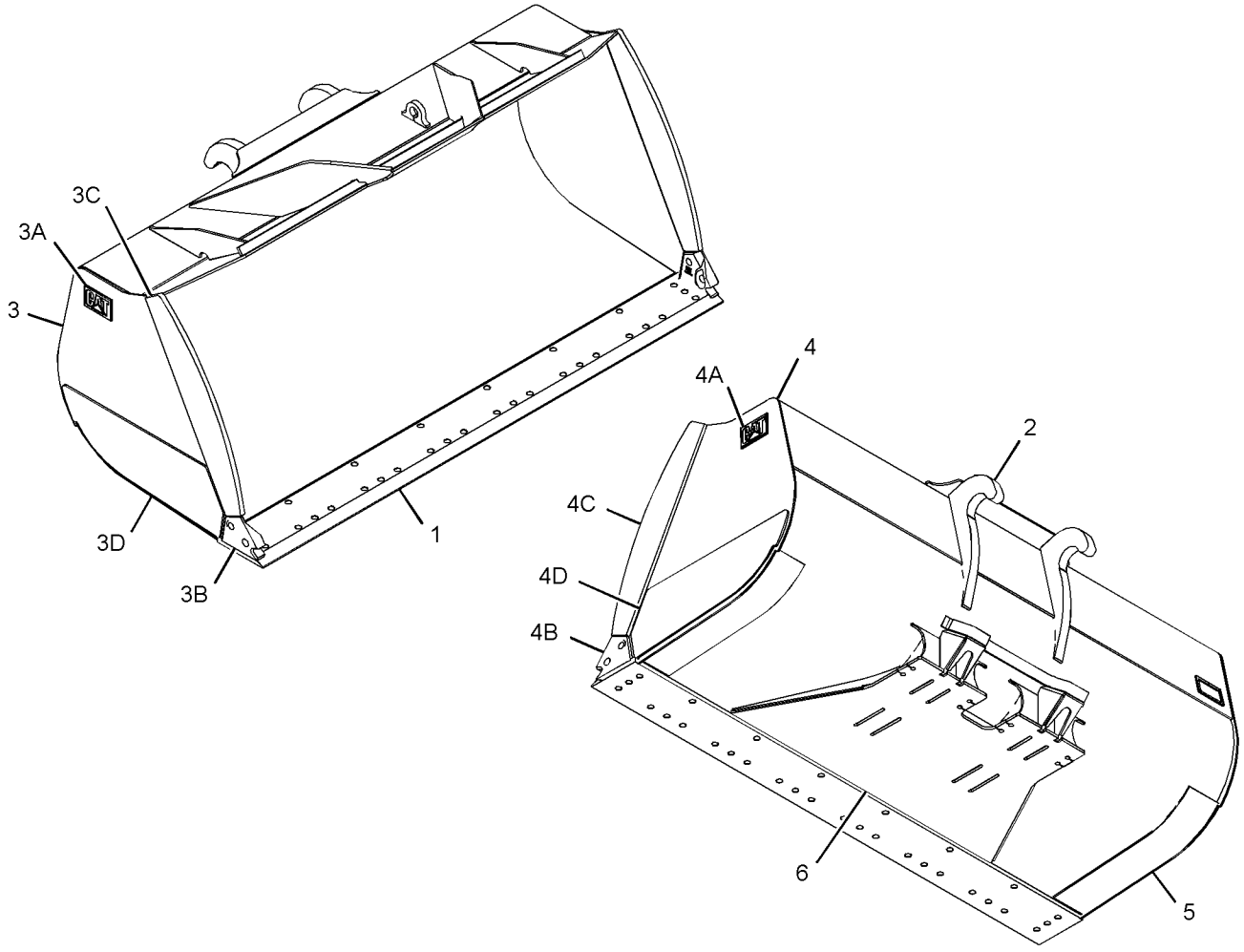

GRAPHIC #1 <END> g03029913

391-4951 BUCKET AS-GENERAL PURPOSE

S/N: TNS1-UP

3.08-CU M (4.0-CU YD) W/ BOLT-ON CUTTING EDGES

PART OF 391-4950 BUCKET GP-GENERAL PURPOSE

SMCS-6101 **i05398680**

NOTE	REF NO	GRAPHIC REF	PART NUMBER	QTY	PART NAME 1 2 3 4 5 6 (PRODUCT LEVEL)	SEE PAGE
	1	1	**391-4976**	2	PLATE-WEAR	
	2	1	**141-4847**	1	EDGE	
	3	1	*391-4958*	1	PLATE AS-HINGE (TILT, RH)	
M	3A	1	**147-7633**	1	BOSS-TAPPED (M20X2.5X38-MM)	
	4	1	**147-2864**	2	PAD-WEAR	
	5	1	*391-4956*	1	PLATE AS-HINGE (LIFT, OUTER, LH)	
M	5A	1	**147-7633**	1	BOSS-TAPPED (M20X2.5X38-MM)	
	6	1	*391-4954*	1	PLATE AS-HINGE (LIFT, OUTER, RH)	
M	6A	1	**147-7633**	1	BOSS-TAPPED (M20X2.5X38-MM)	
	7	1	**384-5568**	2	PLATE-WEAR	
	8	1	*384-5557*	1	PLATE AS-SIDE (LH)	
	8A	1	**2C-9259**	1	PLATE-IDENTIFICATION (CAT)	
	8B	1	**8E-5301**	1	CORNER (LH)	
	8C	1	**384-5573**	1	PLATE-SIDE BAR	
	8D	1	**384-5574**	1	PLATE-WEAR	
	9	1	*384-5556*	1	PLATE AS-SIDE (RH)	
	9A	1	**2C-9259**	1	PLATE-IDENTIFICATION (CAT)	
	9B	1	**8E-5300**	1	CORNER (RH)	
	9C	1	**384-5573**	1	PLATE-SIDE BAR	
	9D	1	**384-5574**	1	PLATE-WEAR	

M - METRIC PART

391-4951 **BUCKET AS-GENERAL PURPOSE (**contd.**)** **i05398680**

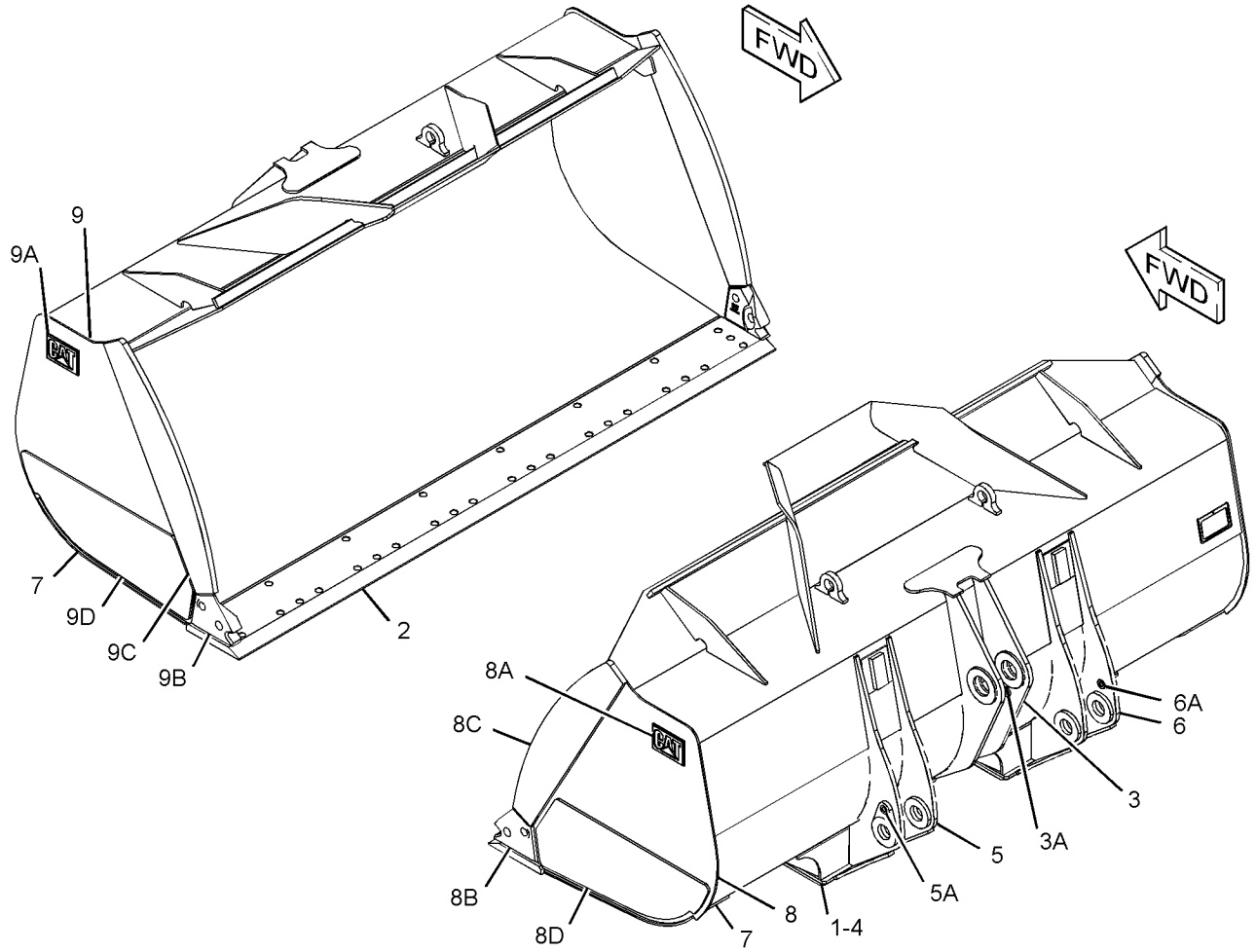

GRAPHIC #1 <END> g03423458

394-8478 BUCKET AS-GENERAL PURPOSE

S/N: TNS1-UP

3.4-CU M (4.5-CU YD) W/ BOLT-ON CUTTING EDGES

PART OF 394-8476 BUCKET GP-GENERAL PURPOSE

SMCS-6101 **i06675137**

NOTE	REF NO	GRAPHIC REF	PART NUMBER	QTY	PART NAME 1 2 3 4 5 6 (PRODUCT LEVEL)	SEE PAGE
	1	1	**141-4847**	1	EDGE	
	2	1	**147-2864**	2	PAD-WEAR	
	3	1	**360-8095**	4	PLATE	
	4	1	*384-5579*	1	PLATE AS-SIDE (RH)	
	4A	1	**2C-9259**	1	PLATE-IDENTIFICATION (CAT)	
	4B	1	**8E-5300**	1	CORNER (RH)	
	4C	1	**384-5588**	1	PLATE-SIDE BAR	
	4D	1	**384-5589**	1	PLATE-WEAR	
	5	1	*384-5580*	1	PLATE AS-SIDE (LH)	
	5A	1	**2C-9259**	1	PLATE-IDENTIFICATION (CAT)	
	5B	1	**8E-5301**	1	CORNER (LH)	
	5C	1	**384-5588**	1	PLATE-SIDE BAR	
	5D	1	**384-5589**	1	PLATE-WEAR	
	6	1	**384-5583**	2	PLATE-WEAR	
	7	1	**391-4954**	1	PLATE AS-HINGE (LIFT, OUTER, RH)	
	8	1	**391-4955**	1	PLATE AS-HINGE (LIFT, INNER, LH)	
	8A	1	**391-4955**	1	PLATE AS-HINGE (LIFT, INNER, RH)	
	9	1	**391-4956**	1	PLATE AS-HINGE (LIFT, OUTER, LH)	
	10	1	**391-4957**	1	PLATE AS-HINGE (TILT, LH)	
	11	1	**391-4958**	1	PLATE AS-HINGE (TILT, RH)	
	12	1	**395-0379**	2	PLATE-WEAR	

394-8478 **BUCKET AS-GENERAL PURPOSE (**contd.**)** **i06675137**

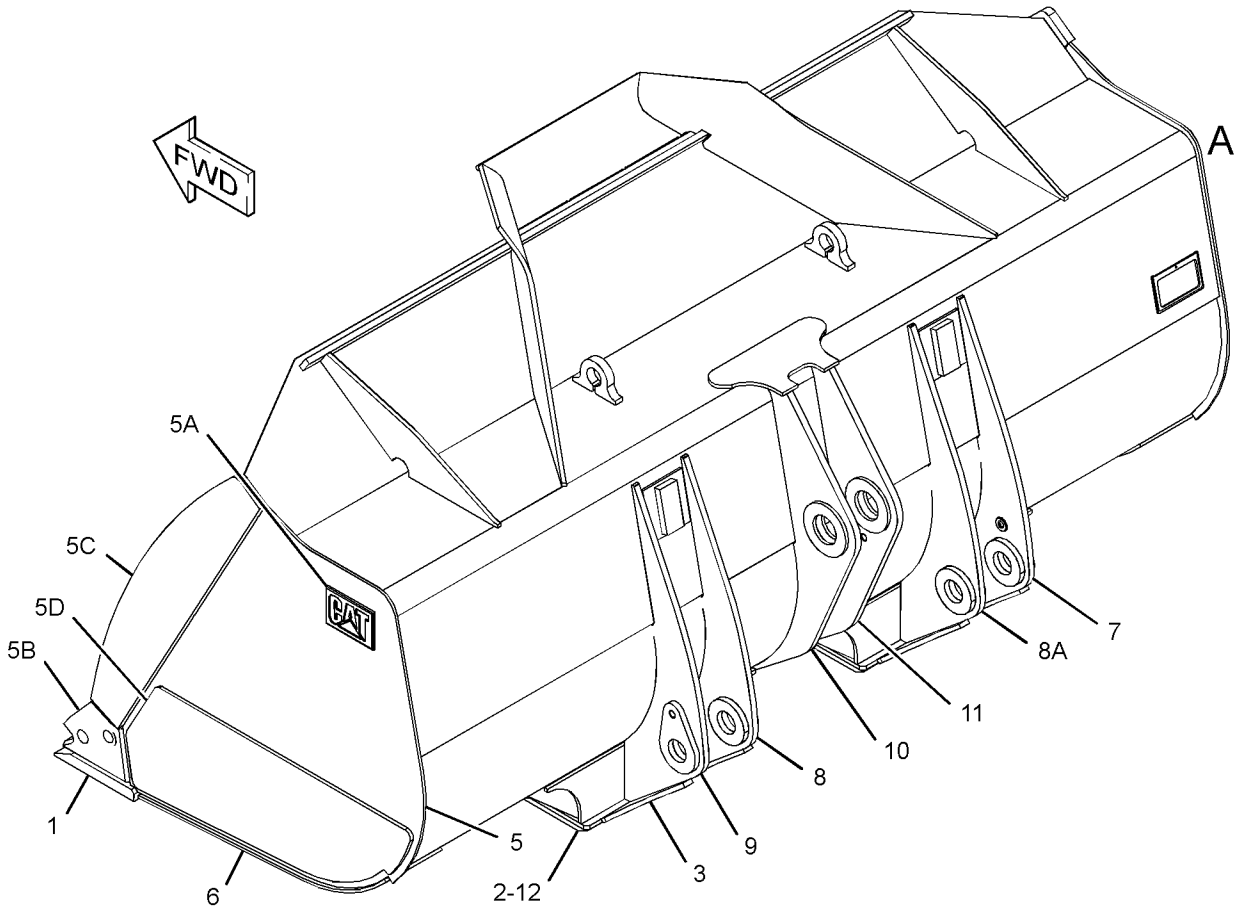

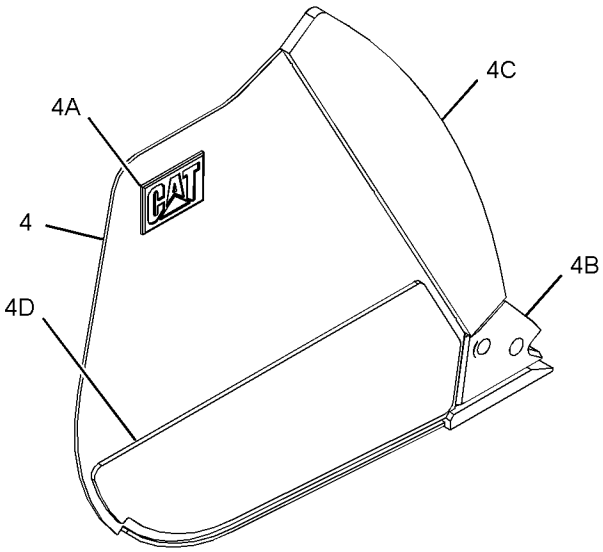

VIEW OF AREA A

90°

GRAPHIC #1 <END> g03370386

395-3266 BUCKET AS-GENERAL PURPOSE

S/N: TNS1-UP

3.3-CU M (4.25-CU YD) W/ BOLT ON EDGES

PART OF 395-3265, 395-3949 BUCKET GP-GENERAL PURPOSE

SMCS-6101 **i06675235**

NOTE	REF NO	GRAPHIC REF	PART NUMBER	QTY	PART NAME 1 2 3 4 5 6 (PRODUCT LEVEL)	SEE PAGE
	1	1	**141-4847**	1	EDGE	
	2	1	**147-2864**	2	PAD-WEAR	
	3	1	*395-3340*	1	PLATE AS-SIDE (RH)	
	3A	1	**2C-9259**	1	PLATE-IDENTIFICATION (CAT)	
	3B	1	**8E-5300**	1	CORNER (RH)	
	3C	1	**384-5588**	1	PLATE-SIDE BAR	
	3D	1	**395-3353**	1	PLATE-WEAR	
	4	1	*395-3341*	1	PLATE AS-SIDE (LH)	
	4A	1	**2C-9259**	1	PLATE-IDENTIFICATION (CAT)	
	4B	1	**8E-5301**	1	CORNER (LH)	
	4C	1	**384-5588**	1	PLATE-SIDE BAR	
	4D	1	**395-3353**	1	PLATE-WEAR	
	5	1	**395-3344**	2	PLATE-WEAR	
	6	1	**395-3348**	2	PLATE-WEAR	

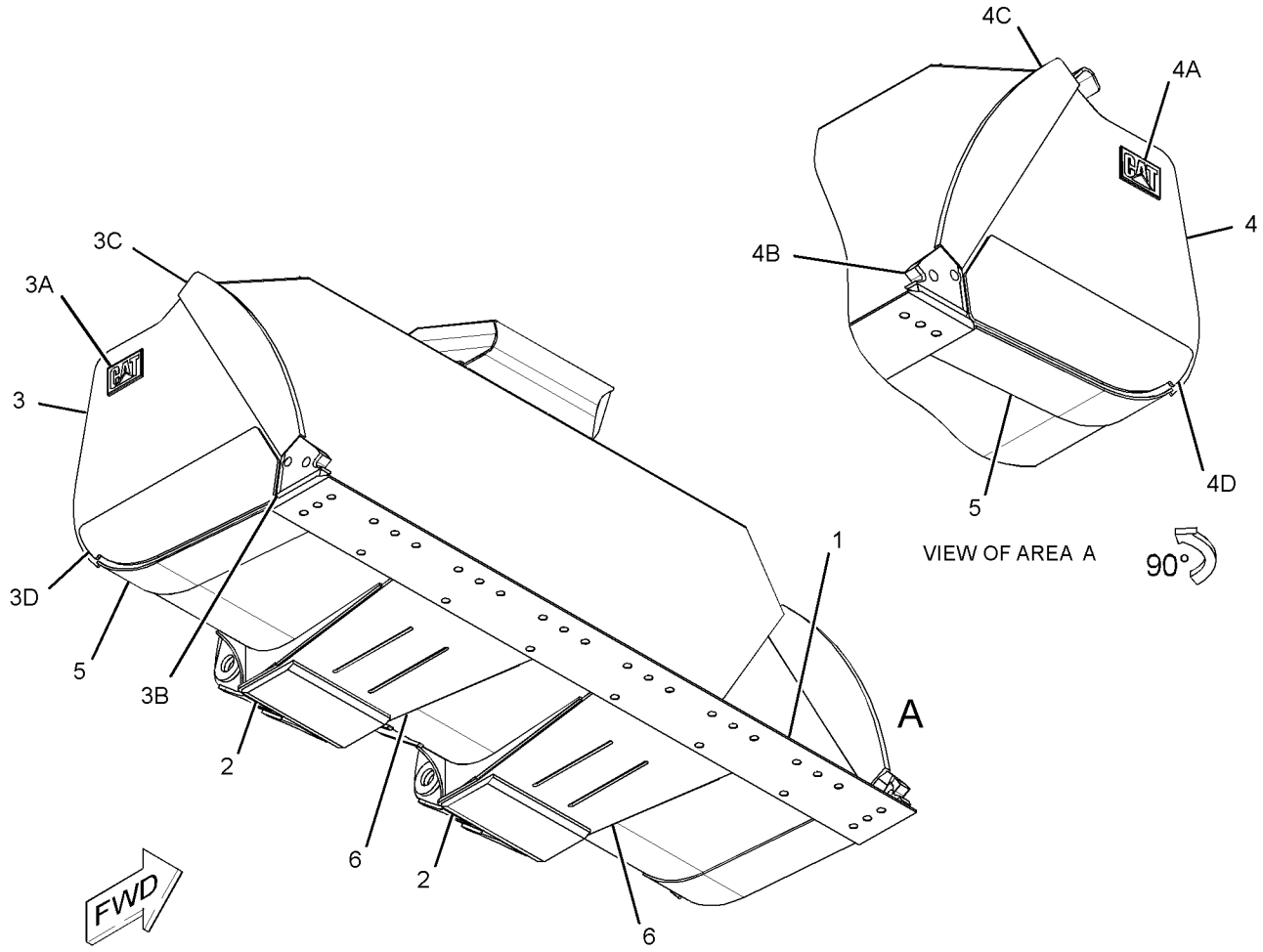

GRAPHIC #1 <END> g03027196

384-6414 BUCKET AS-MATERIAL HANDLING

S/N: TNS1-UP

3.63-CU M (4.75-CU YD). 3.80-CU M (5.00-CU YD) W/BOLT-ON CUTTING EDGES

PART OF 382-9836 BUCKET GP-MATERIAL HANDLING

SMCS-6101 **i05808892**

NOTE	REF NO	GRAPHIC REF	PART NUMBER	QTY	PART NAME 1 2 3 4 5 6 (PRODUCT LEVEL)	SEE PAGE
	1	1	**141-4847**	1	EDGE	
	2	1	*384-6416*	1	PLATE AS-SIDE (RH)	
	2A	1	**2C-9259**	1	PLATE-IDENTIFICATION (CAT)	
	2B	1	**8E-5300**	1	CORNER (RH)	
	2C	1	**384-6461**	1	PLATE-SIDE BAR	
	2D	1	**384-6462**	1	PLATE-WEAR	
	3	1	*384-6417*	1	PLATE AS-SIDE (LH)	
	3A	1	**2C-9259**	1	PLATE-IDENTIFICATION (CAT)	
	3B	1	**8E-5301**	1	CORNER (LH)	
	3C	1	**384-6461**	1	PLATE-SIDE BAR	
	3D	1	**384-6462**	1	PLATE-WEAR	
	4	1	**384-6418**	1	PLATE-WEAR	
	5	1	**384-6419**	2	PLATE-HOOK	
	6	1	**384-6457**	2	PLATE-WEAR	

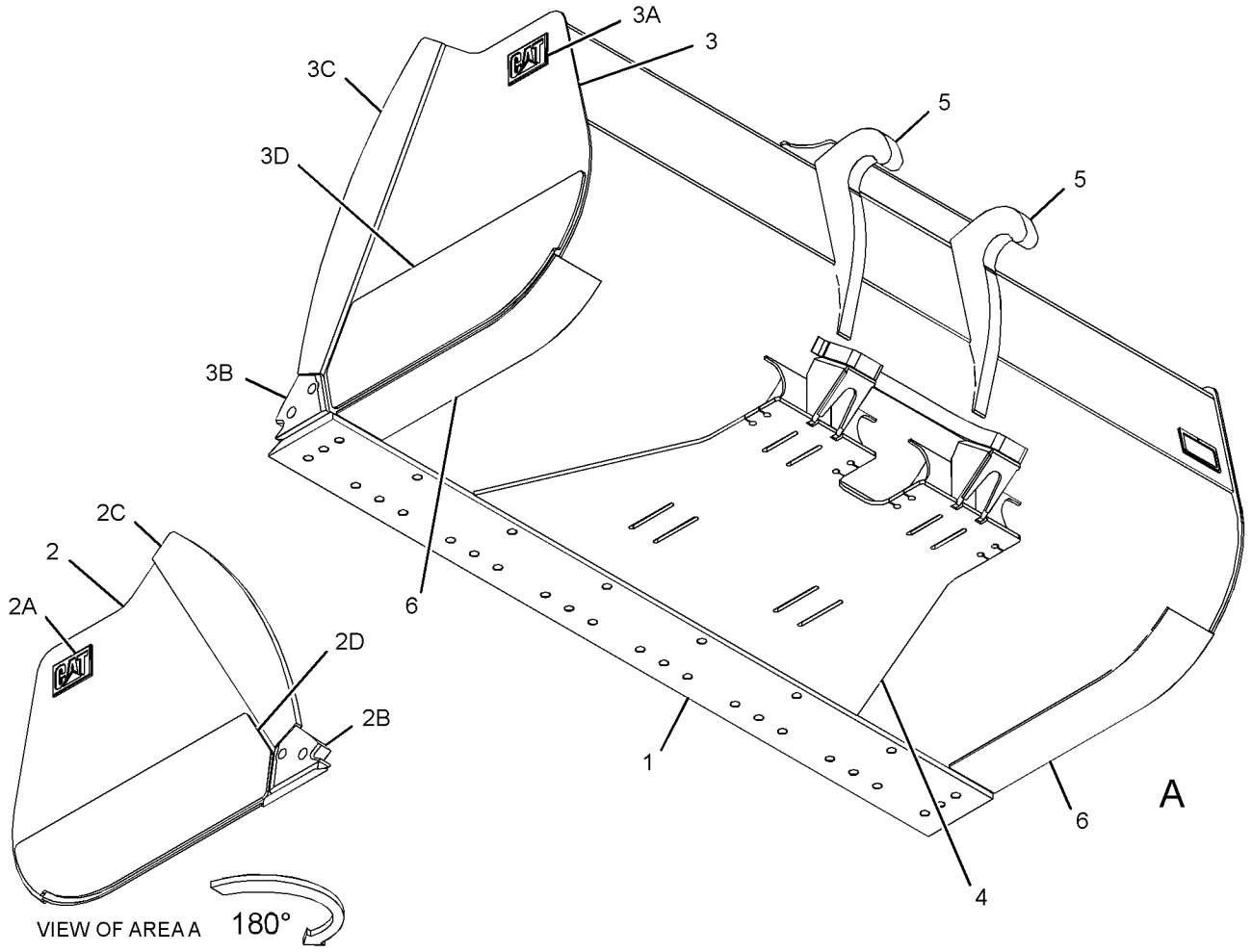

GRAPHIC #1 <END> g03030985

396-1538 BUCKET AS-MATERIAL HANDLING

S/N: TNS1-UP
3.20-CU M(4.25-CU YD) W/ BOLT-ON CUTTING EDGES
PART OF 396-1537 BUCKET GP-MATERIAL HANDLING

SMCS-6101 **i06677179**

NOTE	REF NO	GRAPHIC REF	PART NUMBER	QTY	PART NAME 1 2 3 4 5 6 (PRODUCT LEVEL)	SEE PAGE
	1	1	**415-2477**	2	PLATE-WEAR	
	2	1	**141-4847**	1	EDGE	
	3	1	*415-2467*	1	PLATE AS-SIDE	
	3A	1	**2C-9259**	1	PLATE-IDENTIFICATION (CAT)	
	3B	1	**8E-5301**	1	CORNER (LH)	
	3C	1	**415-2470**	1	PLATE-SIDE BAR	
	3D	1	**415-2471**	1	PLATE-WEAR	
	4	1	**147-2864**	2	PAD-WEAR	
	5	1	*415-2466*	1	PLATE AS-SIDE	
	5A	1	**2C-9259**	1	PLATE-IDENTIFICATION (CAT)	
	5B	1	**8E-5300**	1	CORNER (RH)	
	5C	1	**415-2470**	1	PLATE-SIDE BAR	
	5D	1	**415-2471**	1	PLATE-WEAR	

396-1538 **BUCKET AS-MATERIAL HANDLING (**contd.**)** **i06677179**

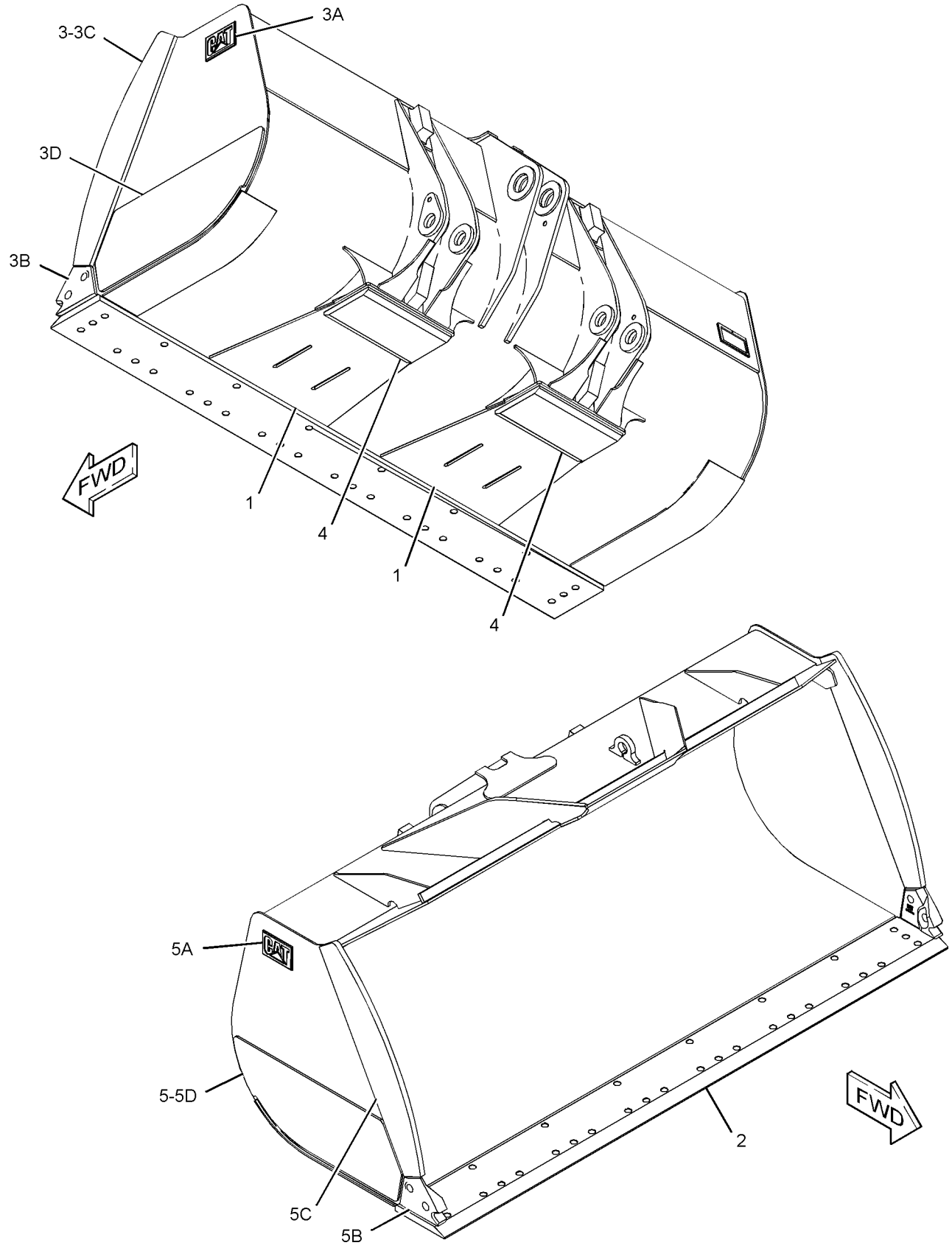

GRAPHIC #1 <END> g03412737

396-1541 BUCKET AS-MATERIAL HANDLING

S/N: TNS1-UP

3.2-CU M (4.2-CU YD). 3.4-CU M (4.5-CU YD) W/ BOLT-ON CUTTING EDGES

PART OF 396-1540 BUCKET GP-MATERIAL HANDLING

SMCS-6101 **i06677236**

NOTE	REF NO	GRAPHIC REF	PART NUMBER	QTY	PART NAME 1 2 3 4 5 6 (PRODUCT LEVEL)	SEE PAGE
	1	1	**415-1818**	2	PLATE-WEAR	
	2	1	**141-4847**	1	EDGE	
	3	1	*415-1809*	1	PLATE AS-SIDE (LH)	
	3A	1	**2C-9259**	1	PLATE-IDENTIFICATION (CAT)	
	3B	1	**8E-5301**	1	CORNER (LH)	
	3C	1	**415-1811**	1	PLATE-SIDE BAR	
	3D	1	**415-1812**	1	PLATE-WEAR	
	4	1	**147-2864**	2	PAD-WEAR	
	5	1	*415-1805*	1	PLATE AS-SIDE (RH)	
	5A	1	**2C-9259**	1	PLATE-IDENTIFICATION (CAT)	
	5B	1	**8E-5300**	1	CORNER (RH)	
	5C	1	**415-1811**	1	PLATE-SIDE BAR	
	5D	1	**415-1812**	1	PLATE-WEAR	
	6	1	*399-0354*	1	PLATE AS-HINGE (TILT, RH)	
M	6A	1	**147-7633**	1	BOSS-TAPPED (M20X2.5X38-MM)	
	7	1	*399-0352*	1	PLATE AS-HINGE (LIFT, OUTER, LH)	
M	7A	1	**147-7633**	1	BOSS-TAPPED (M20X2.5X38-MM)	
	8	1	*399-0347*	1	PLATE AS-HINGE (LIFT, OUTER, RH)	
M	8A	1	**147-7633**	1	BOSS-TAPPED (M20X2.5X38-MM)	

M - METRIC PART

396-1541 **BUCKET AS-MATERIAL HANDLING (**contd.**)** **i06677236**

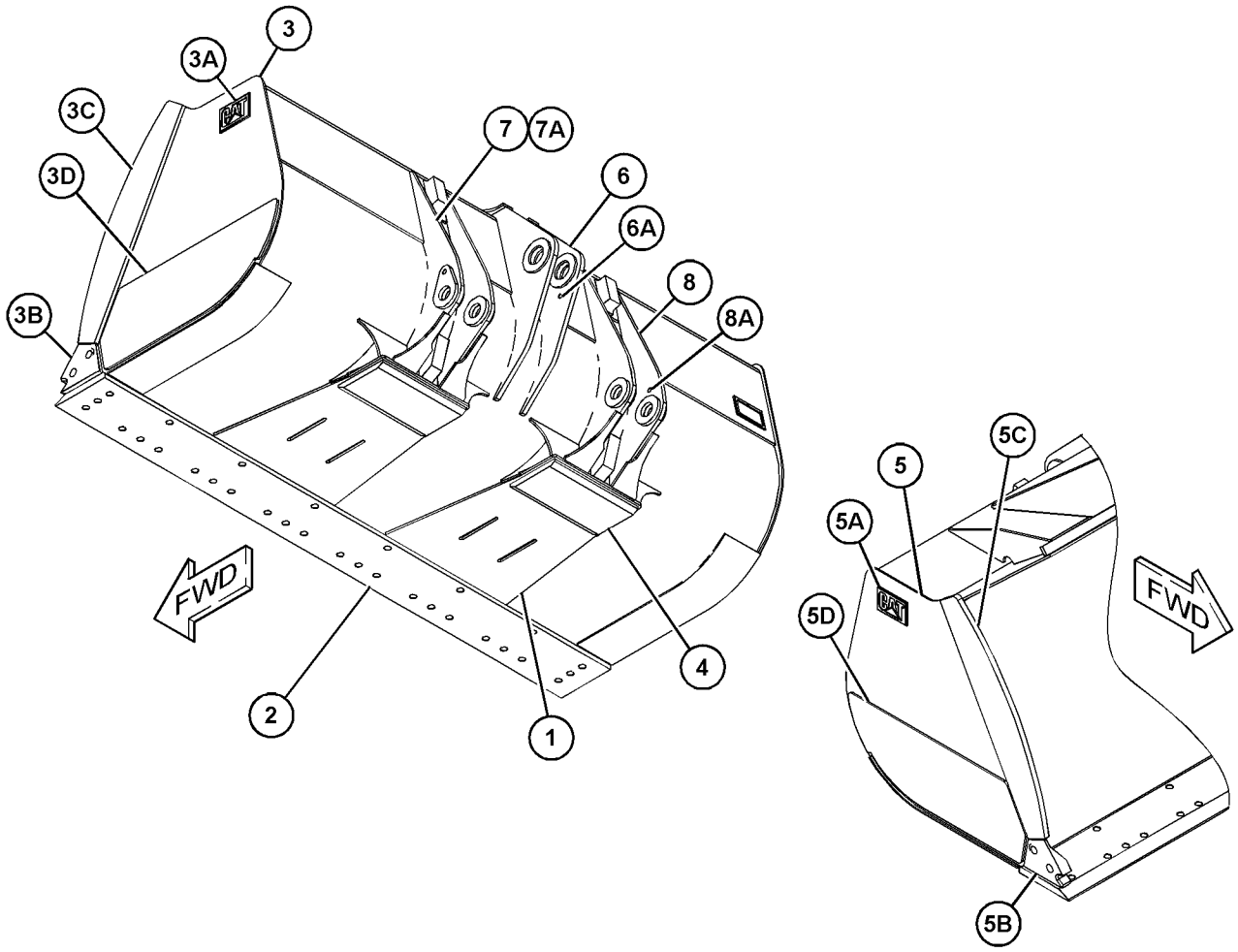

GRAPHIC #1 <END> g03709285

396-1546 BUCKET AS-MATERIAL HANDLING

S/N: TNS1-UP
3.80-CU M (5.00-CU YD) W/ BOLT-ON CUTTING EDGES
PART OF 396-1545 BUCKET GP-MATERIAL HANDLING

SMCS-6101 **i06677176**

NOTE	REF NO	GRAPHIC REF	PART NUMBER	QTY	PART NAME 1 2 3 4 5 6 (PRODUCT LEVEL)	SEE PAGE
	1	1	**399-0356**	2	PLATE-WEAR	
	2	1	**141-4847**	1	EDGE	
	3	1	**384-6457**	2	PLATE-WEAR	
	4	1	**147-2864**	2	PAD-WEAR	
	5	1	*384-6417*	1	PLATE AS-SIDE (LH)	
	5A	1	**2C-9259**	1	PLATE-IDENTIFICATION (CAT)	
	5B	1	**8E-5301**	1	CORNER (LH)	
	5C	1	**384-6461**	1	PLATE-SIDE BAR	
	5D	1	**384-6462**	1	PLATE-WEAR	
	6	1	*384-6416*	1	PLATE AS-SIDE (RH)	
	6A	1	**2C-9259**	1	PLATE-IDENTIFICATION (CAT)	
	6B	1	**8E-5300**	1	CORNER (RH)	
	6C	1	**384-6461**	1	PLATE-SIDE BAR	
	6D	1	**384-6462**	1	PLATE-WEAR	

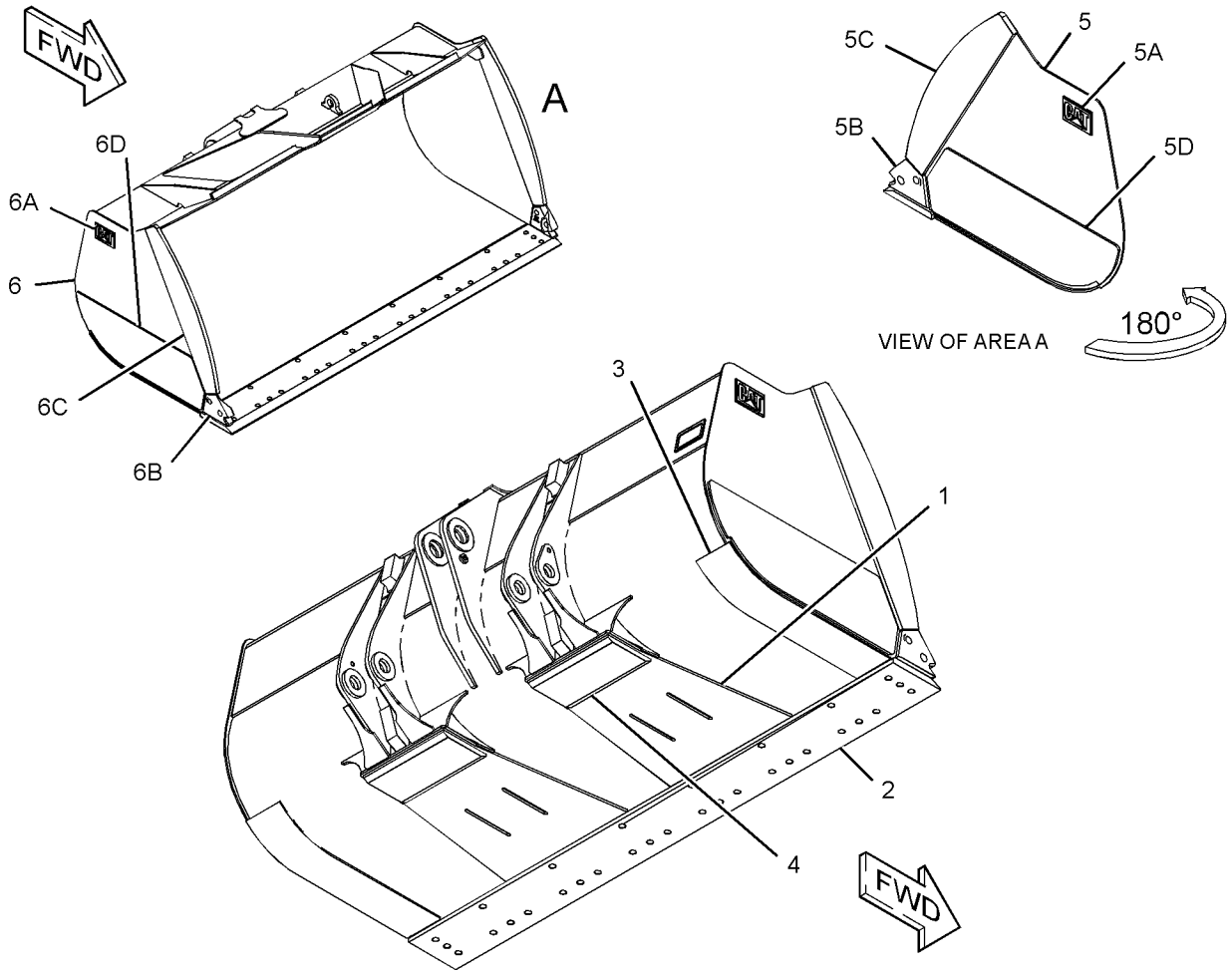

GRAPHIC #1 <END> g03395209

141-9400 BUCKET AS-ROCK

S/N: TNS1-UP
2.9 CU M (3.75 CU YD)
PART OF 130-8288 BUCKET GP-ROCK

SMCS-6102 **i03872742**

NOTE	REF NO	GRAPHIC REF	PART NUMBER	QTY	PART NAME 1 2 3 4 5 6 (PRODUCT LEVEL)	SEE PAGE
	1	1	**141-9048**	1	HINGE AS (LIFT, OUTER, LH)	
	2	1	**141-9049**	1	HINGE AS (LIFT, INNER, LH)	
	3	1	**141-9051**	1	HINGE AS (TILT, LH)	
	4	1	**141-9050**	1	HINGE AS (TILT, RH)	
	5	1	**141-9046**	1	HINGE AS (LIFT, INNER, RH)	
	6	1	**141-9047**	1	HINGE AS (LIFT, OUTER, RH)	
	7	1	**141-8830**	1	BAR	
	8	1	**141-8823**	1	EDGE-CUTTING	
	9	1	**6W-3468**	2	CORNER	
	10	1	**8R-9843**	2	BAR	
	11	1	**9V-2899**	4	PLATE	

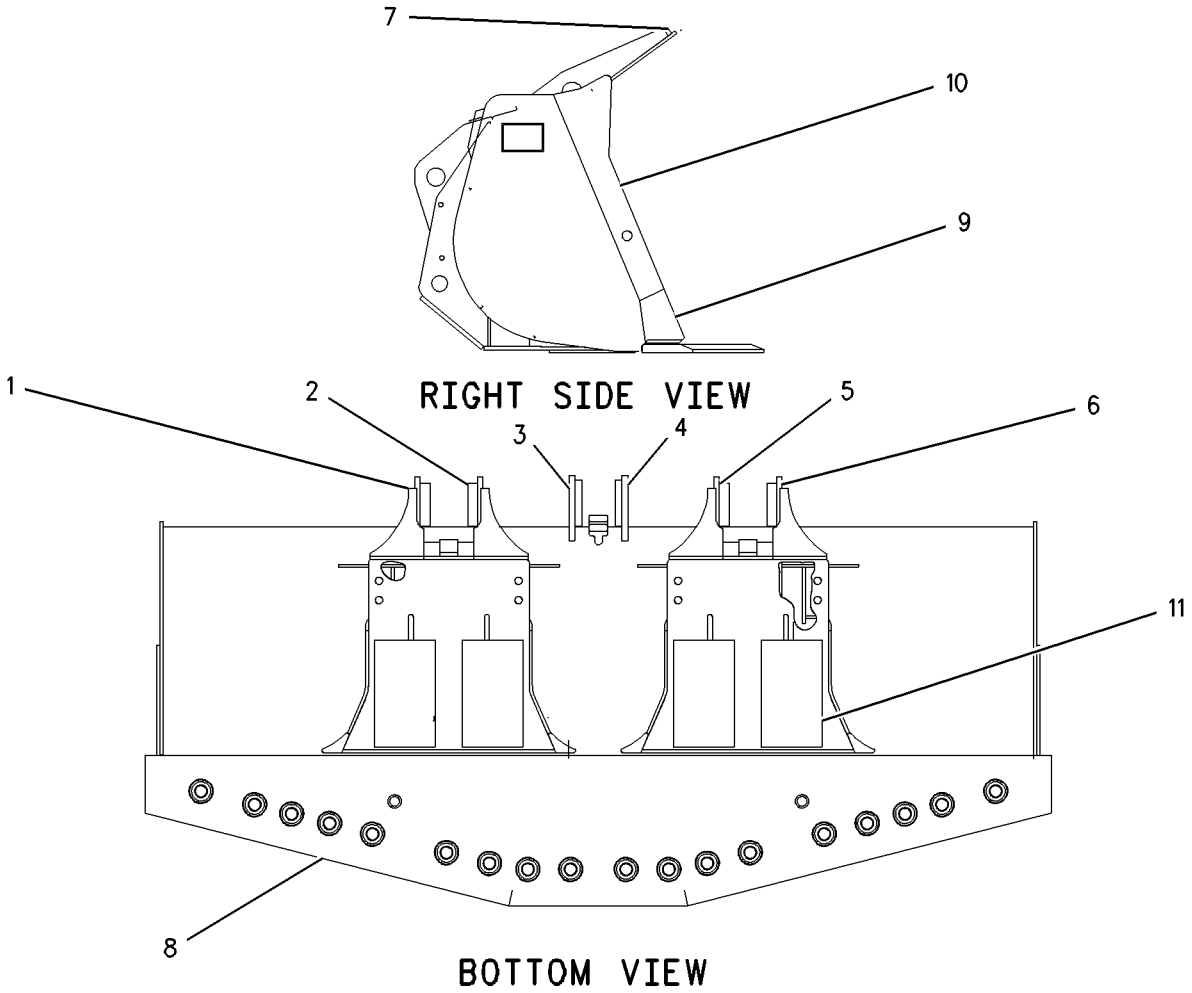

GRAPHIC #1 <END> g00836968

279-8147 BUCKET AS-ROCK

S/N: TNS1-UP
2.9-CU M (3.75-CU YDS)
PART OF 279-8141 BUCKET GP-ROCK

SMCS-6102 **i02595641**

NOTE	REF NO	GRAPHIC REF	PART NUMBER	QTY	PART NAME 1 2 3 4 5 6 (PRODUCT LEVEL)	SEE PAGE
	1	1	**9V-2899**	4	PLATE	
	2	1	**129-3032**	4	PLATE	
	3	1	**141-8830**	1	BAR	
	4	1	**141-9046**	1	HINGE AS (LIFT, INNER, RH)	
	5	1	**141-9047**	1	HINGE AS (LIFT, OUTER, RH)	
	6	1	**141-9048**	1	HINGE AS (LIFT, OUTER, LH)	
	7	1	**141-9049**	1	HINGE AS (LIFT, INNER, LH)	
	8	1	**141-9050**	1	HINGE AS (TILT, RH)	
	9	1	**141-9051**	1	HINGE AS (TILT, LH)	
	10	1	*279-8153*	1	PLATE AS	
	10A	1	**2C-9259**	1	PLATE-IDENTIFICATION (CAT)	
	10B	1	**8R-9843**	1	BAR	
	10C	1	**275-0495**	1	CORNER (LH)	
	11	1	*279-8159*	1	PLATE AS	
	11A	1	**2C-9259**	1	PLATE-IDENTIFICATION (CAT)	
	11B	1	**8R-9843**	1	BAR	
	11C	1	**275-0494**	1	CORNER (RH)	
Y	12	1	**279-8174**	1	EDGE GP-CUTTING	915

Y - SEPARATE ILLUSTRATION

279-8147 **BUCKET AS-ROCK (**contd.**)** **i02595641**

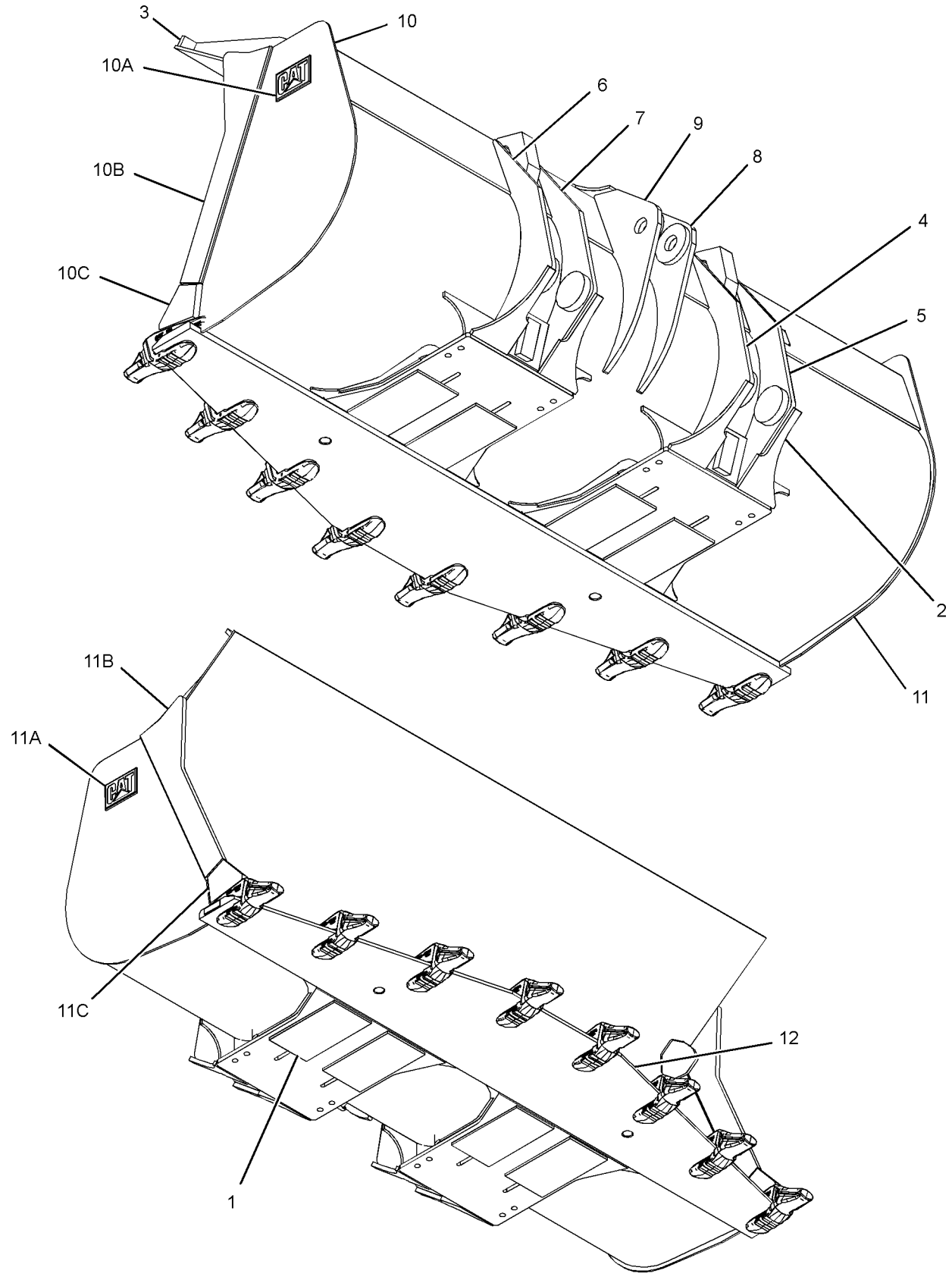

GRAPHIC #1 <END> g01335042

279-8149 BUCKET AS-ROCK

S/N: TNS1-UP
2.9-CU M (3.75-CU YDS)
PART OF 279-8142 BUCKET GP-ROCK

SMCS-6102 **i02548673**

NOTE	REF NO	GRAPHIC REF	PART NUMBER	QTY	PART NAME 1 2 3 4 5 6 (PRODUCT LEVEL)	SEE PAGE
	1	1	**129-3032**	4	PLATE	
	2	1	**141-8762**	4	PLATE	
	3	1	**141-8830**	1	BAR	
	4	1	**141-9046**	1	HINGE AS (LIFT, INNER, RH)	
	5	1	**141-9047**	1	HINGE AS (LIFT, OUTER, RH)	
	6	1	**141-9048**	1	HINGE AS (LIFT, OUTER, LH)	
	7	1	**141-9049**	1	HINGE AS (LIFT, INNER, LH)	
	8	1	**141-9050**	1	HINGE AS (TILT, RH)	
	9	1	**141-9051**	1	HINGE AS (TILT, LH)	
	10	1	**254-7975**	1	PLATE-WEAR	
	11	1	**254-7977**	2	PLATE-WEAR	
Y	16	1	**273-3765**	1	EDGE AS-CUTTING	912
	17	1	*279-8155*	1	PLATE AS (LH)	
	17A	1	**254-7988**	2	PLATE	
	17B	1	**279-8165**	1	BAR (LH)	
	17C	1	**2C-9259**	1	PLATE-IDENTIFICATION (CAT)	
	18	1	*279-8161*	1	PLATE AS (RH)	
	18A	1	**254-7988**	2	PLATE	
	18B	1	**279-8166**	1	BAR (RH)	
	18C	1	**2C-9259**	1	PLATE-IDENTIFICATION (CAT)	

Y - SEPARATE ILLUSTRATION

279-8149 **BUCKET AS-ROCK (**contd.**)** **i02548673**

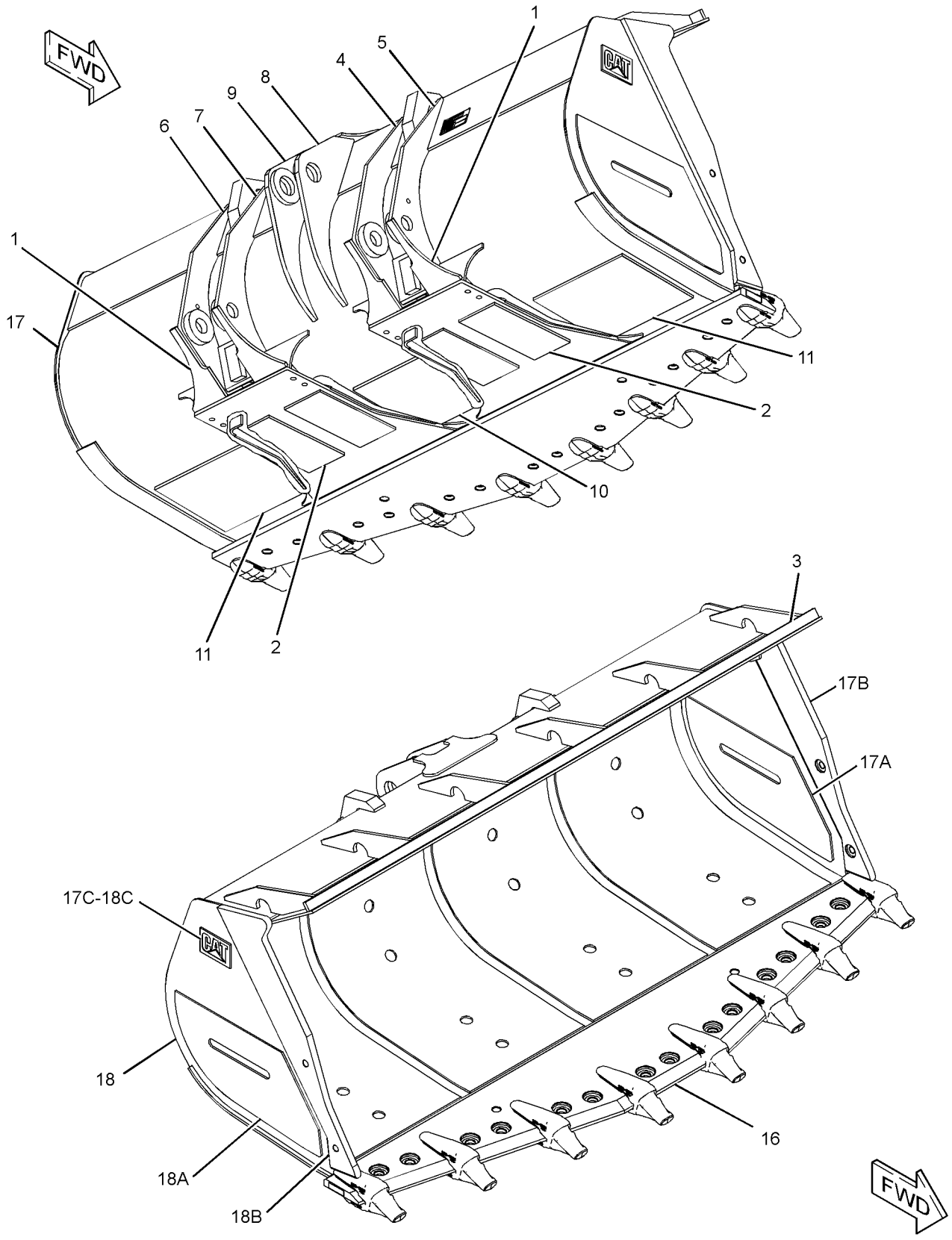

GRAPHIC #1 <END> g01356587

279-8151 BUCKET AS-ROCK

S/N: TNS1-UP
2.7-CU M (3.5-CU YD)
PART OF 279-8145 BUCKET GP-ROCK

SMCS-6102 **i02703617**

NOTE	REF NO	GRAPHIC REF	PART NUMBER	QTY	PART NAME 1 2 3 4 5 6 (PRODUCT LEVEL)	SEE PAGE
	1	1	**129-3032**	4	PLATE	
	2	1	**141-8762**	4	PLATE	
	3	1	**141-8830**	1	BAR	
	4	1	**141-9046**	1	HINGE AS (LIFT, INNER, RH)	
	5	1	**141-9047**	1	HINGE AS (LIFT, OUTER, RH)	
	6	1	**141-9048**	1	HINGE AS (LIFT, OUTER, LH)	
	7	1	**141-9049**	1	HINGE AS (LIFT, INNER, LH)	
	8	1	**141-9050**	1	HINGE AS (TILT, RH)	
	9	1	**141-9051**	1	HINGE AS (TILT, LH)	
	10	1	**254-7975**	1	PLATE-WEAR	
	11	1	**254-7977**	2	PLATE-WEAR	
Y	12	1	**273-3765**	1	EDGE AS-CUTTING	912
	13	1	*279-8157*	1	PLATE AS (LH)	
	13A	1	**2C-9259**	1	PLATE-IDENTIFICATION (CAT)	
	13B	1	**254-7988**	2	PLATE	
	13C	1	**279-8169**	1	BAR	
	14	1	*279-8163*	1	PLATE AS (RH)	
	14A	1	**2C-9259**	1	PLATE-IDENTIFICATION (CAT)	
	14B	1	**254-7988**	2	PLATE	
	14C	1	**279-8170**	1	BAR	

Y - SEPARATE ILLUSTRATION

279-8151 **BUCKET AS-ROCK (**contd.**)** **i02703617**

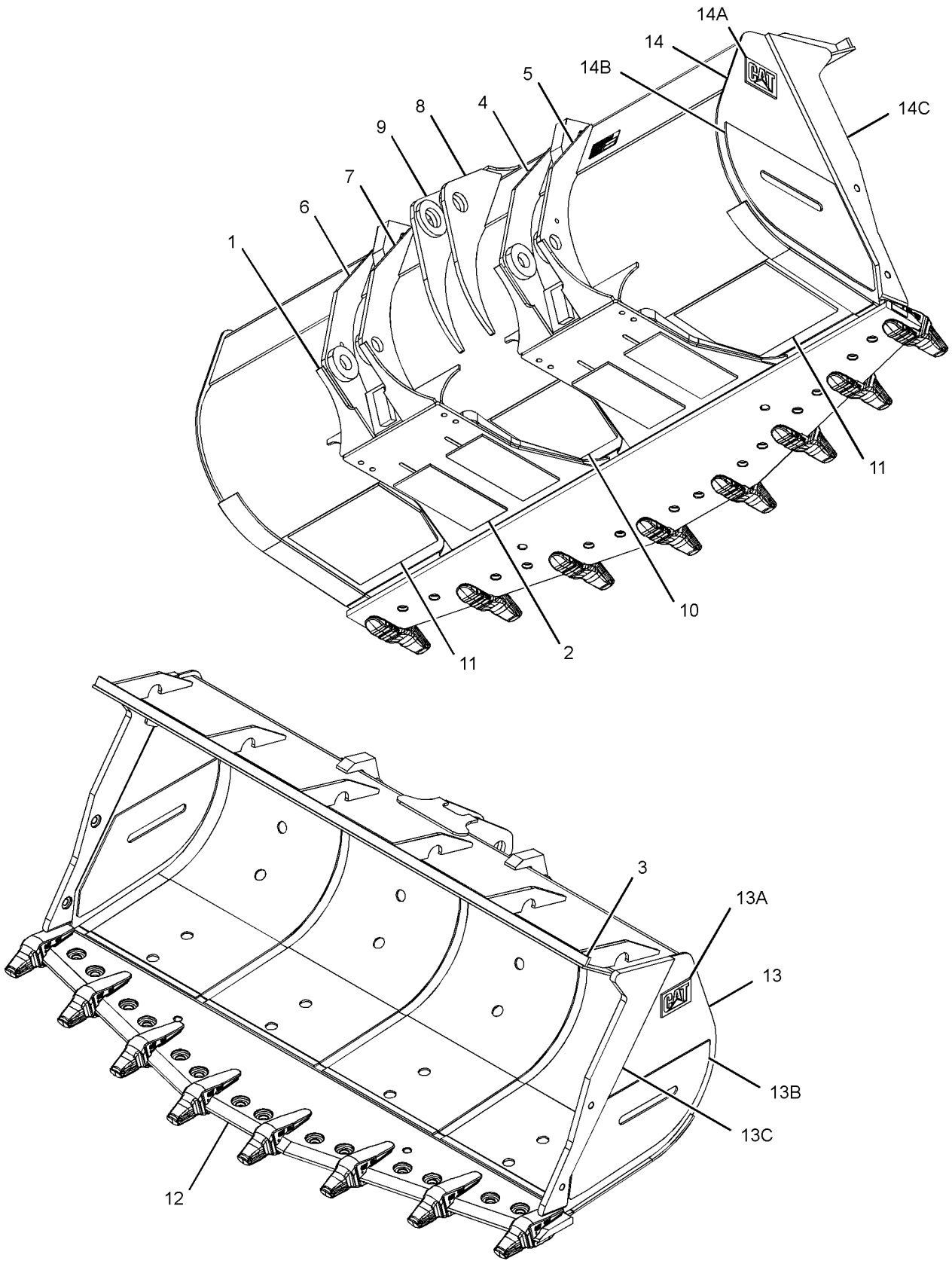

GRAPHIC #1 <END> g01418558

382-9835 BUCKET GP-GENERAL PURPOSE

S/N: TNS1-UP

3.40-CU M (4.50-CU YD) W/BOLT-ON CUTTING EDGES

SMCS-6101 **i05245626**

NOTE	REF NO	GRAPHIC REF	PART NUMBER	QTY	PART NAME 1 2 3 4 5 6 (PRODUCT LEVEL)	SEE PAGE
	1	1	**5P-8248**	8	WASHER-HARD (20X36.5X3.5-MM THK)	
	2	1	**315-0096**	2	PLATE-WEAR	
	3	1	**332-2788**	2	FILM-WARNING (DO NOT LIFT, READ OMM)	
Y	4	1	*384-5577*	1	BUCKET AS-GENERAL PURPOSE	877
	5	1	**2J-3506**	8	NUT-FULL (3/4-10-THD)	
	6	1	**4F-7827**	8	BOLT-PLOW (3/4-10X2.25-IN)	

Y - SEPARATE ILLUSTRATION

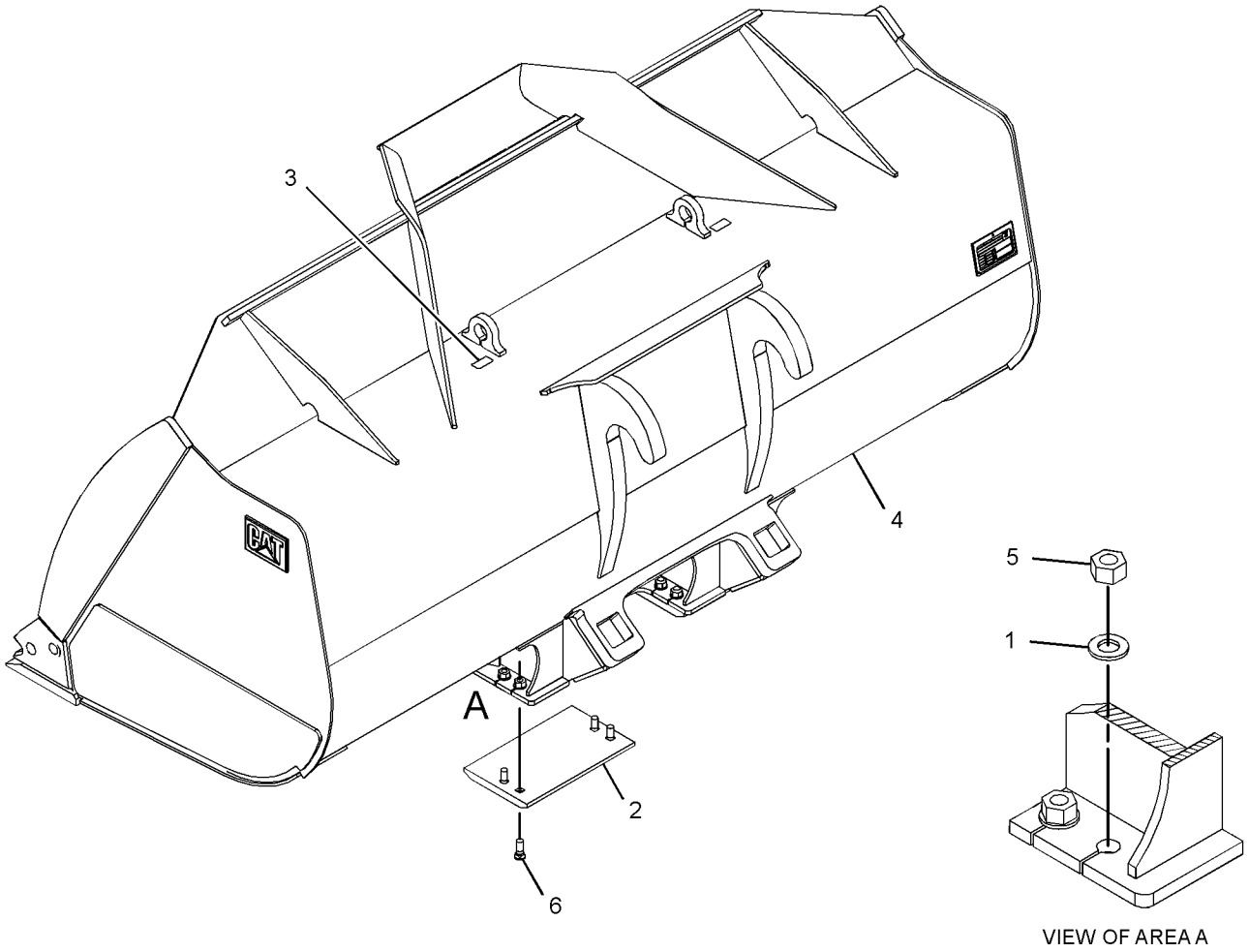

VIEW OF AREA A

GRAPHIC #1 <END> g03029638

391-4950 BUCKET GP-GENERAL PURPOSE

S/N: TNS1-UP

2.87-CU M (3.75-CU YD). 3.1-CU M (4.0-CU YD) W/ BOLT-ON CUTTING EDGES

SMCS-6101 **i06677228**

NOTE	REF NO	GRAPHIC REF	PART NUMBER	QTY	PART NAME 1 2 3 4 5 6 (PRODUCT LEVEL)	SEE PAGE
Y	1	1	*391-4951*	1	BUCKET AS-GENERAL PURPOSE	878
	2	1	**332-2788**	2	FILM-WARNING (DO NOT LIFT, READ OMM)	

Y - SEPARATE ILLUSTRATION

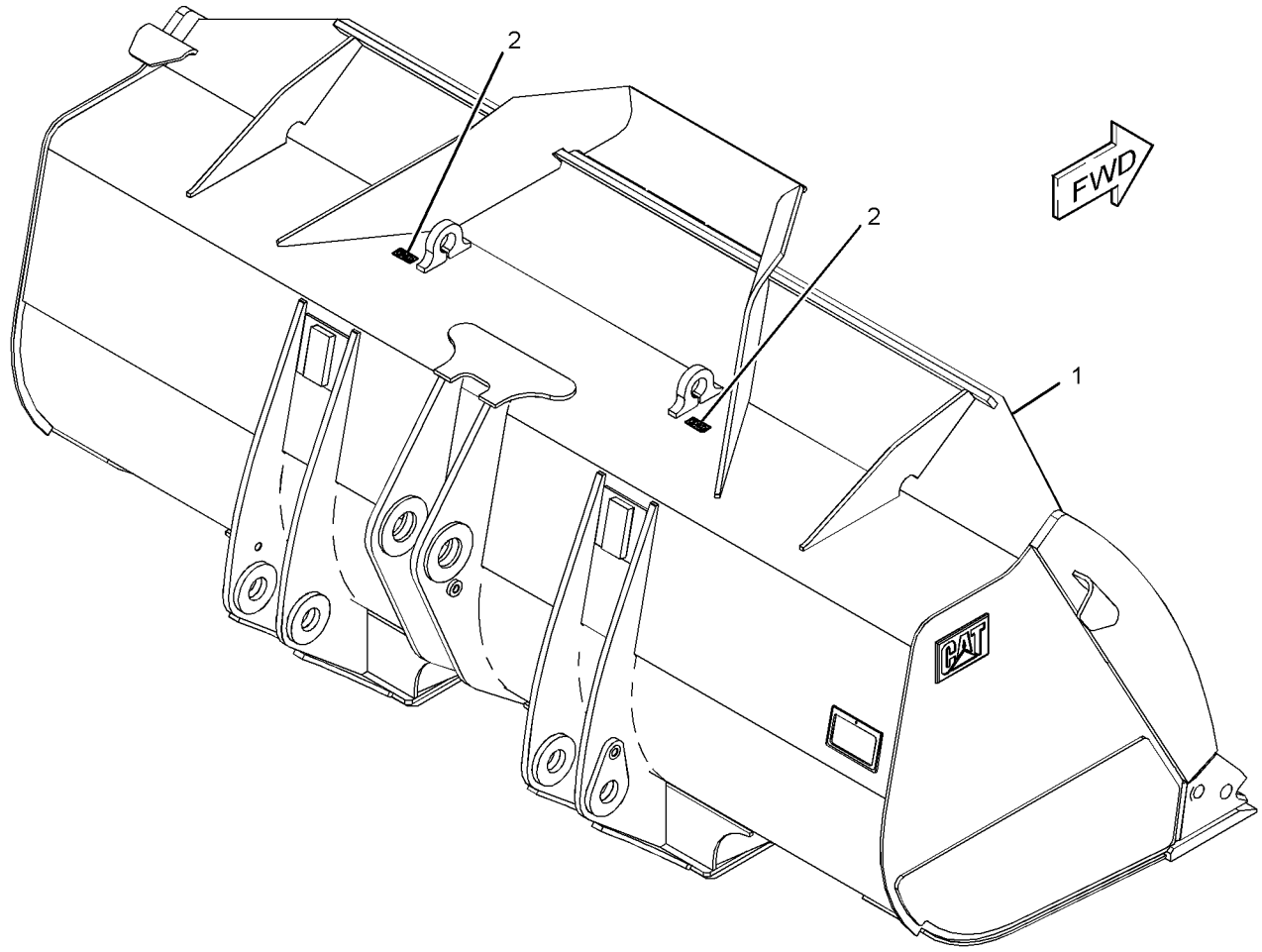

GRAPHIC #1 <END> g03421734

394-8476 BUCKET GP-GENERAL PURPOSE

S/N: TNS1-UP
3.4-CU M (4.5-CU YD) W/ BOLT-ON CUTTING EDGES
PART OF 476-2461 DISTRIBUTION AR

SMCS-6101 **i06677252**

NOTE	REF NO	GRAPHIC REF	PART NUMBER	QTY	PART NAME 1 2 3 4 5 6 (PRODUCT LEVEL)	SEE PAGE
	1	1	**312-5694**	1	SETSCREW (1/4-20X0.25-IN)	
	2	1	**332-2788**	2	FILM-WARNING (DO NOT LIFT, READ OMM)	
Y	3	1	*394-8478*	1	BUCKET AS-GENERAL PURPOSE	880

Y - SEPARATE ILLUSTRATION

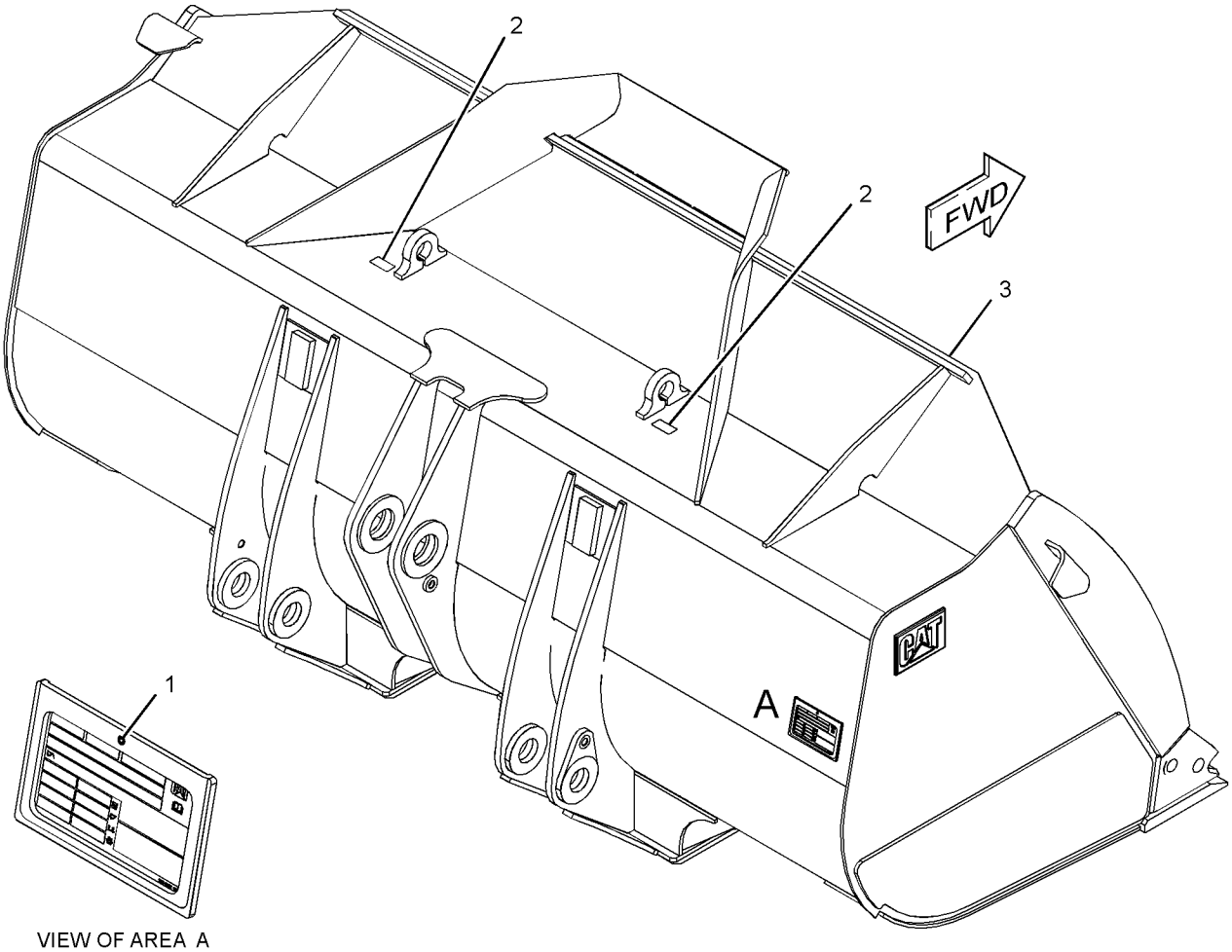

GRAPHIC #1 <END> g03370377

395-3265 BUCKET GP-GENERAL PURPOSE

S/N: TNS1-UP
3.3-CU M (4.25-CU YD) W/ BOLT ON EDGES
PART OF 476-2460 DISTRIBUTION AR

SMCS-6101 **i06674879**

NOTE	REF NO	GRAPHIC REF	PART NUMBER	QTY	PART NAME 1 2 3 4 5 6 (PRODUCT LEVEL)	SEE PAGE
Y	1	1	*395-3266*	1	BUCKET AS-GENERAL PURPOSE	882
	2	1	**332-2788**	2	FILM-WARNING (DO NOT LIFT, READ OMM)	

Y - SEPARATE ILLUSTRATION

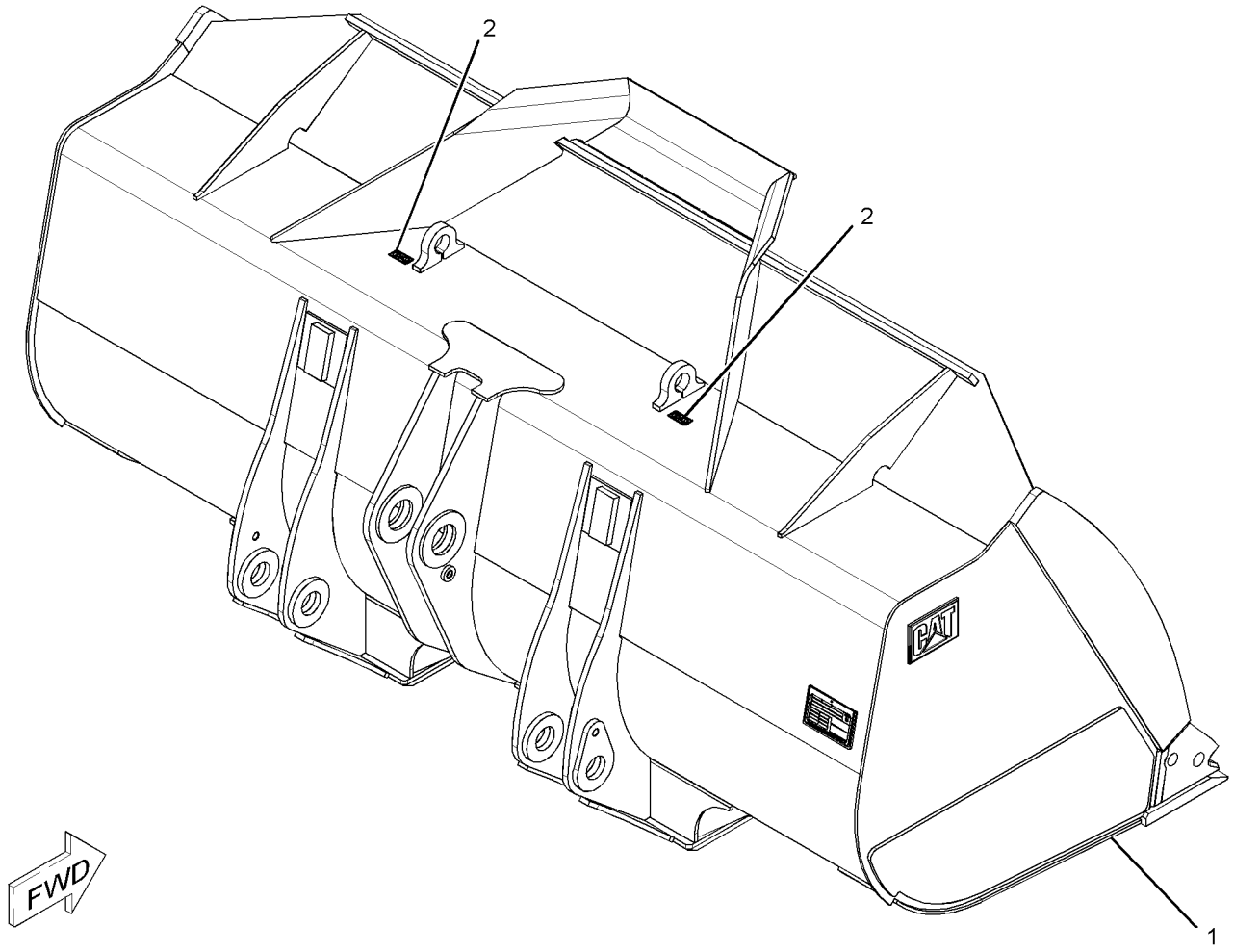

GRAPHIC #1 <END> g03027236

395-3949 BUCKET GP-GENERAL PURPOSE

S/N: TNS1-UP

3.4-CU M (4.5-CU YD). 3.6-CU M (4.75-CU YD) W/ BOLT ON EDGES

SMCS-6101 **i06677235**

NOTE	REF NO	GRAPHIC REF	PART NUMBER	QTY	PART NAME 1 2 3 4 5 6 (PRODUCT LEVEL)	SEE PAGE
Y	1	1	*395-3266*	1	BUCKET AS-GENERAL PURPOSE	882
	2	1	**332-2788**	2	FILM-WARNING (DO NOT LIFT, READ OMM)	

Y - SEPARATE ILLUSTRATION

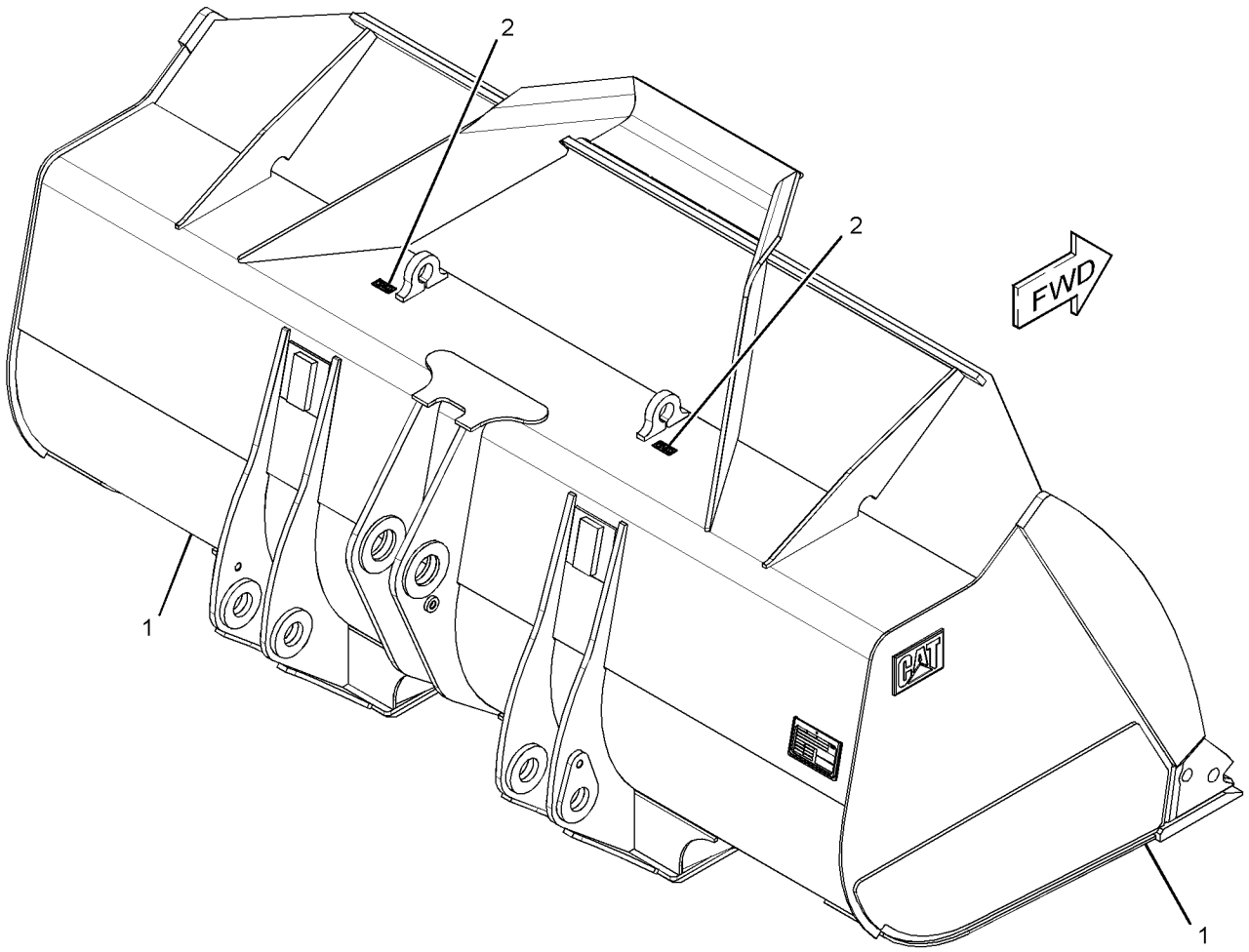

GRAPHIC #1 <END> g03027278

382-9836 BUCKET GP-MATERIAL HANDLING

S/N: TNS1-UP

3.8-CU M (5.00-CU YD) W/BOLT-ON CUTTING EDGES

SMCS-6101 **i06711197**

NOTE	REF NO	GRAPHIC REF	PART NUMBER	QTY	PART NAME 1 2 3 4 5 6 (PRODUCT LEVEL)	SEE PAGE
	1	1	**5P-8248**	8	WASHER-HARD (20X36.5X3.5-MM THK)	
	2	1	**315-0096**	2	PLATE-WEAR	
	3	1	**332-2788**	2	FILM-WARNING (DO NOT LIFT, READ OMM)	
Y	4	1	*384-6414*	1	BUCKET AS-MATERIAL HANDLING	883
	5	1	**2J-3506**	8	NUT-FULL (3/4-10-THD)	
	6	1	**4F-7827**	8	BOLT-PLOW (3/4-10X2.25-IN)	

Y - SEPARATE ILLUSTRATION

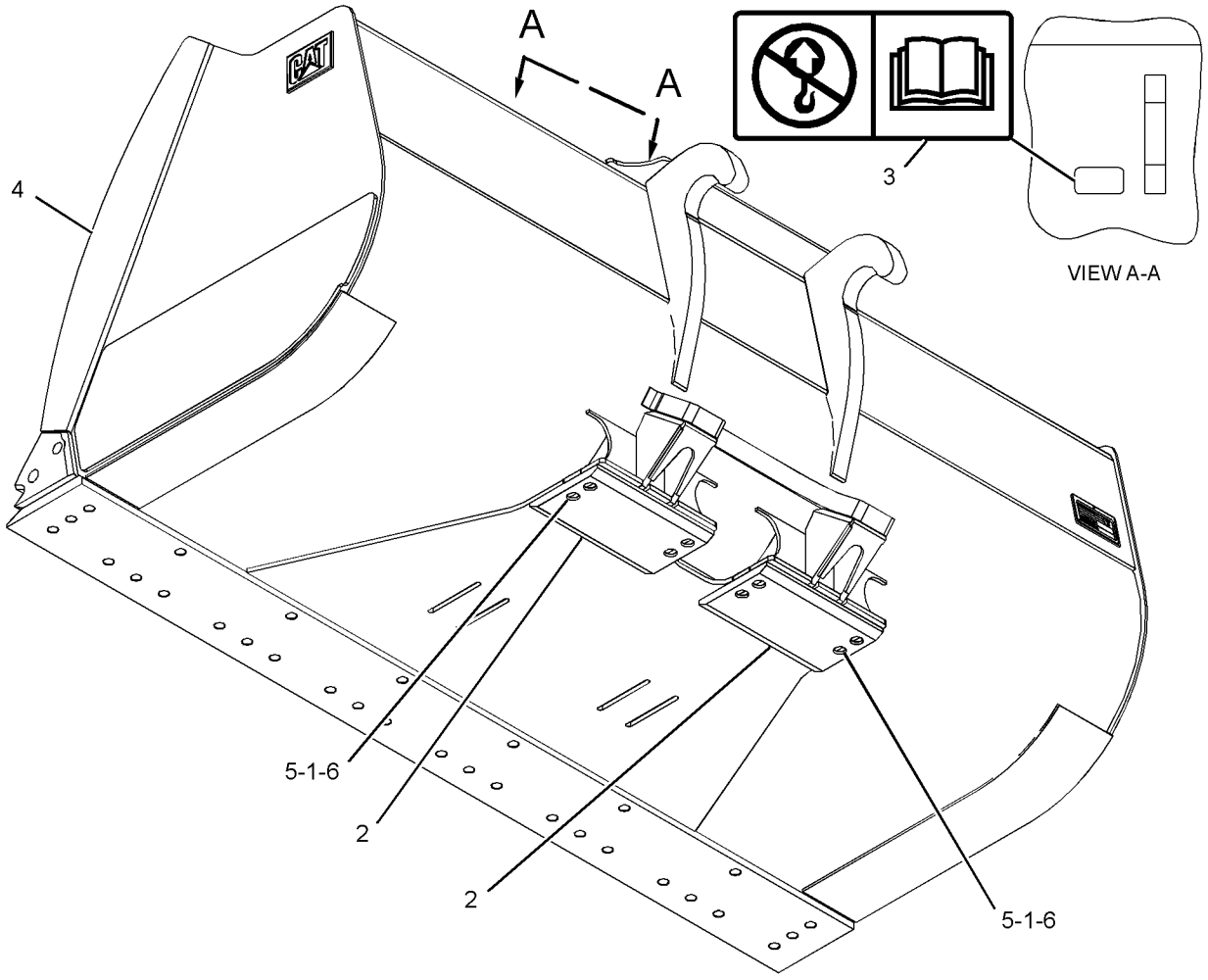

GRAPHIC #1 <END> g03030984

396-1537 BUCKET GP-MATERIAL HANDLING

S/N: TNS1-UP

3.0-CU M(4.0-CU YD). 3.2-CU M (4.25-CU YD) W/ BOLT-ON CUTTING EDGES

SMCS-6101 **i06657342**

NOTE	REF NO	GRAPHIC REF	PART NUMBER	QTY	PART NAME 1 2 3 4 5 6 (PRODUCT LEVEL)	SEE PAGE
Y	1	1	*396-1538*	1	BUCKET AS-MATERIAL HANDLING	884
	2	1	**332-2788**	2	FILM-WARNING (DO NOT LIFT, READ OMM)	

Y - SEPARATE ILLUSTRATION

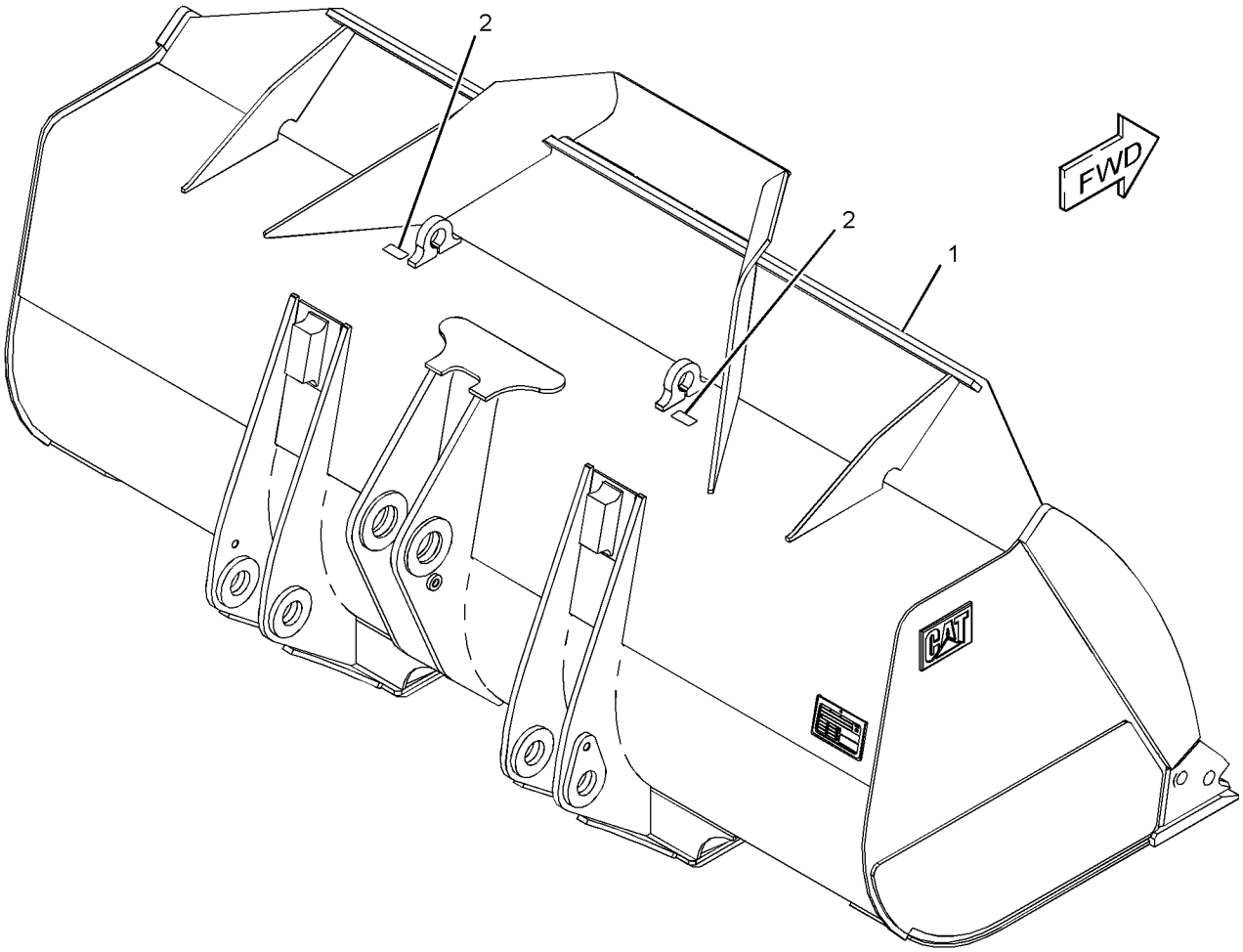

GRAPHIC #1 <END> g03412710

396-1540 BUCKET GP-MATERIAL HANDLING

S/N: TNS1-UP

3.20-CU M (4.20-CU YD). 3.40-CU M (4.50-CU YD) W/ BOLT-ON CUTTING EDGES

SMCS-6101 **i06677334**

NOTE	REF NO	GRAPHIC REF	PART NUMBER	QTY	PART NAME 1 2 3 4 5 6 (PRODUCT LEVEL)	SEE PAGE
	1	1	**137-4234**	1	PLATE-IDENTIFICATION (WORK TOOL)	
	2	1	**332-2788**	2	FILM-WARNING (DO NOT LIFT, READ OMM)	
Y	3	1	*396-1541*	1	BUCKET AS-MATERIAL HANDLING	886
	4	1	**312-5694**	1	SETSCREW (1/4-20X0.25-IN)	

Y - SEPARATE ILLUSTRATION

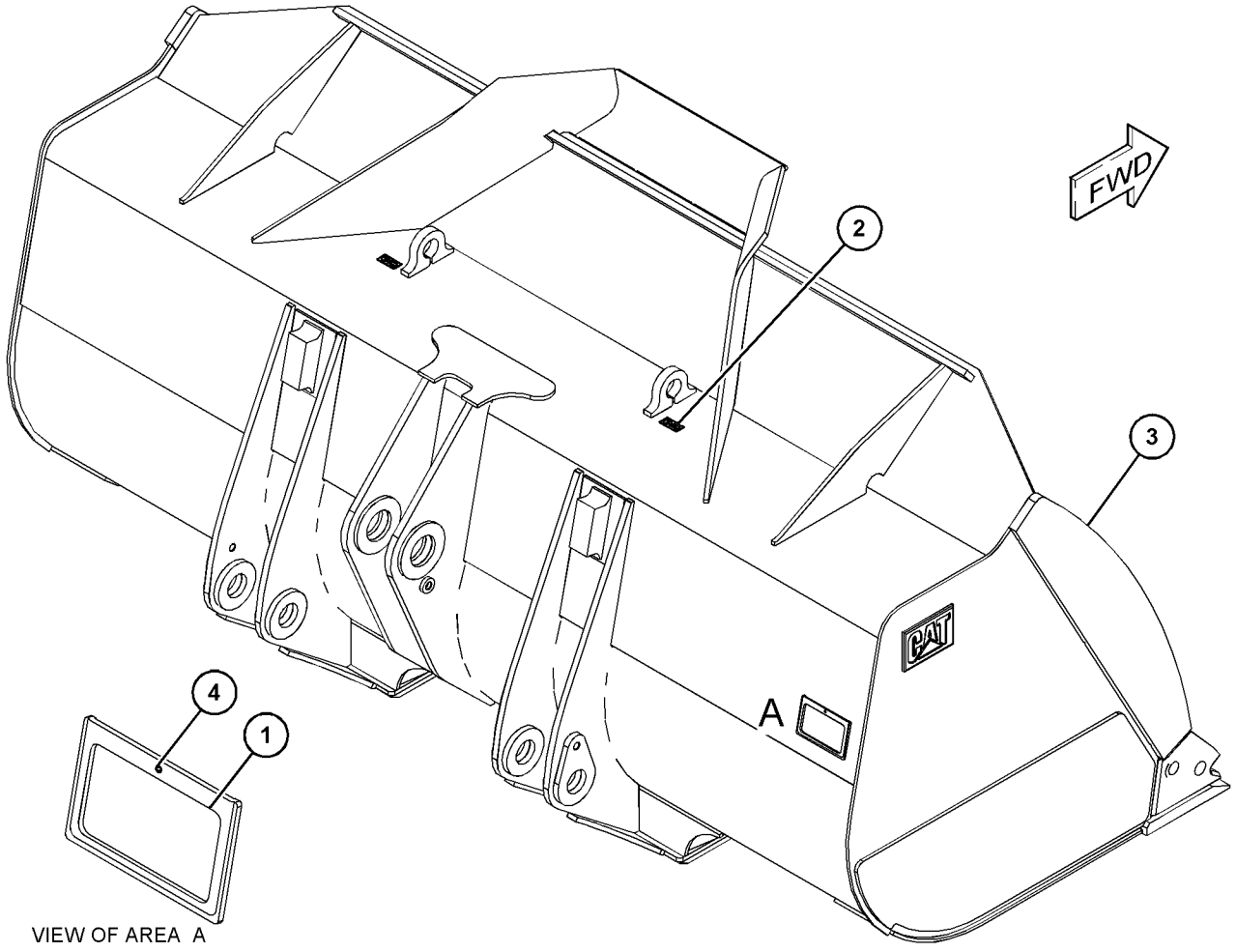

VIEW OF AREA A

GRAPHIC #1 <END> g03714487

396-1545 BUCKET GP-MATERIAL HANDLING

S/N: TNS1-UP

3.63-CU M (4.75-CU YD). 3.80-CU M (5.00-CU YD) W/ BOLT-ON CUTTING EDGES

SMCS-6101 **i06677330**

NOTE	REF NO	GRAPHIC REF	PART NUMBER	QTY	PART NAME 1 2 3 4 5 6 (PRODUCT LEVEL)	SEE PAGE
Y	1	1	*396-1546*	1	BUCKET AS-MATERIAL HANDLING	888
	2	1	**332-2788**	2	FILM-WARNING (DO NOT LIFT, READ OMM)	

Y - SEPARATE ILLUSTRATION

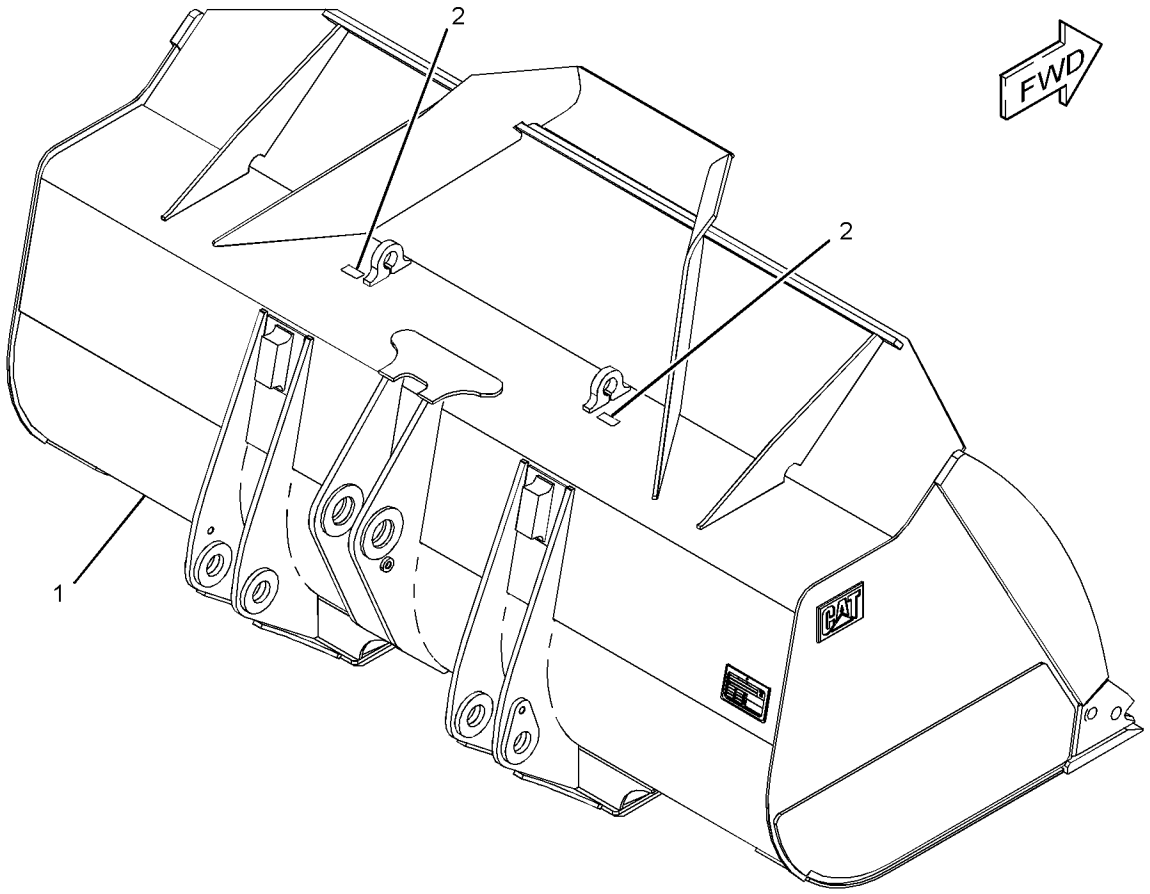

GRAPHIC #1 <END> g03395078

130-8288 BUCKET GP-ROCK

S/N: TNS1-UP

2.9-CU M (3.75-CU YD)

SMCS-6102 **i06677437**

NOTE	REF NO	GRAPHIC REF	PART NUMBER	QTY	PART NAME 1 2 3 4 5 6 (PRODUCT LEVEL)	SEE PAGE
	1	1	**9W-6747**	2	PLATE-WEAR	
Y	2	1	**141-9400**	1	BUCKET AS-ROCK	889
	4	1	**2J-3506**	8	NUT-FULL (3/4-10-THD)	
	5	1	**4F-7827**	8	BOLT-PLOW (3/4-10X2.25-IN)	
	6	1	**5P-8248**	8	WASHER-HARD (20X36.5X3.5-MM THK)	
Y	7	1	*109-9015*	1	EDGE GP-CUTTING	913

Y - SEPARATE ILLUSTRATION

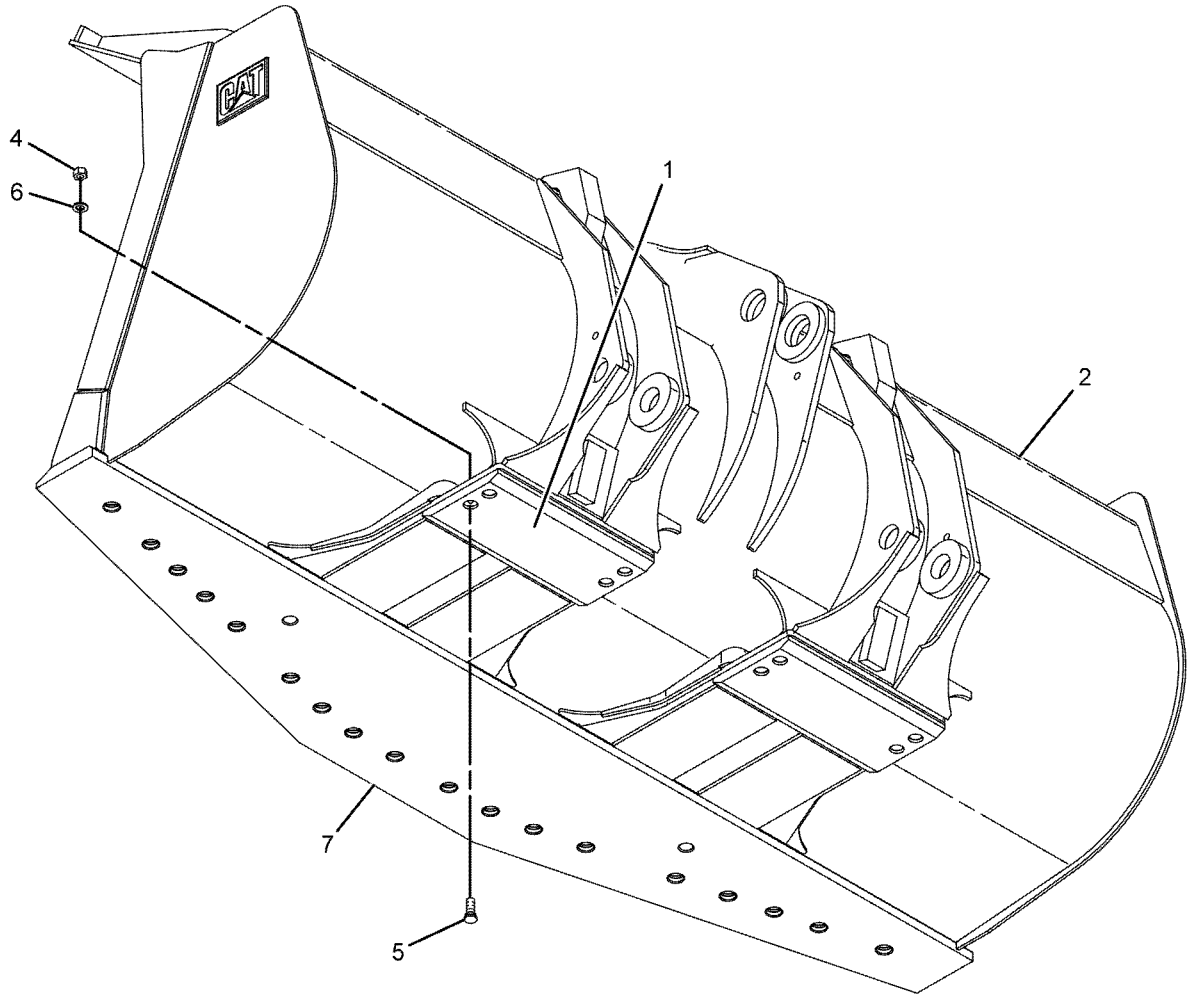

GRAPHIC #1 <END> g01082930

279-8141 BUCKET GP-ROCK

S/N: TNS1-UP
2.9-CU M (3.75-CU YDS)
PART OF 476-2462 BUCKET AR-ROCK

SMCS-6102 **i06675962**

NOTE	REF NO	GRAPHIC REF	PART NUMBER	QTY	PART NAME 1 2 3 4 5 6 (PRODUCT LEVEL)	SEE PAGE
	1	1	**9W-6747**	2	PLATE-WEAR	
Y	2	1	**279-8147**	1	BUCKET AS-ROCK	890
	3	1	**2J-3506**	8	NUT-FULL (3/4-10-THD)	
	4	1	**4F-7827**	8	BOLT-PLOW (3/4-10X2.25-IN)	
	5	1	**5P-8248**	8	WASHER-HARD (20X36.5X3.5-MM THK)	

Y - SEPARATE ILLUSTRATION

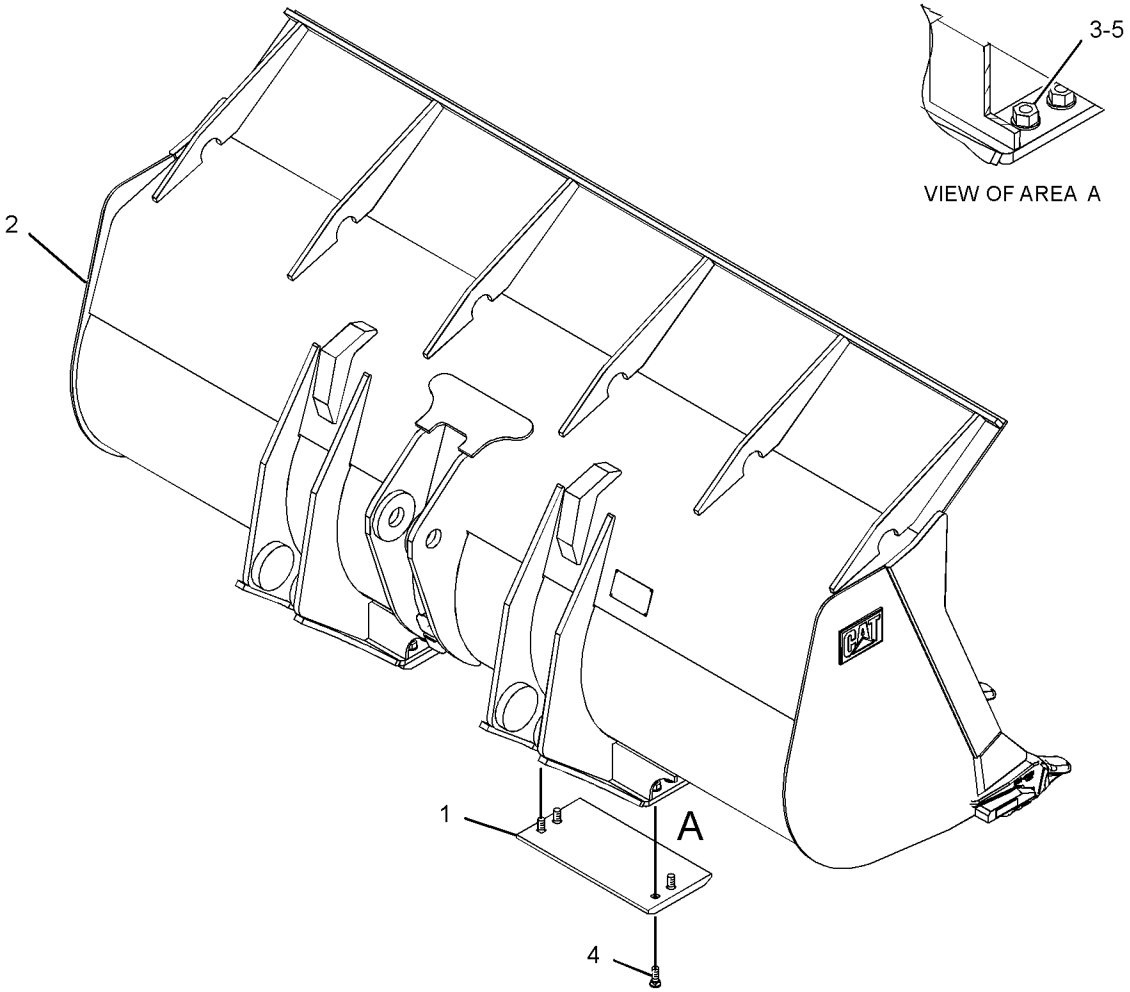

GRAPHIC #1 <END> g01334825

279-8142 BUCKET GP-ROCK

S/N: TNS1-UP

2.9-CU M (3.8-CU YDS)

SMCS-6102 **i06677230**

NOTE	REF NO	GRAPHIC REF	PART NUMBER	QTY	PART NAME 1 2 3 4 5 6 (PRODUCT LEVEL)	SEE PAGE
	1	1	**9W-6747**	2	PLATE-WEAR	
Y	2	1	*109-9052*	1	PROTECTOR GP-SIDE BAR	918
Y	3	1	*229-7146*	8	TIP GP-HEAVY PENETRATION	922
Y	4	1	*273-3761*	1	EDGE GP-CUTTING	914
Y	5	1	**279-8149**	1	BUCKET AS-ROCK	892
	6	1	**2J-3506**	8	NUT-FULL (3/4-10-THD)	
	7	1	**4F-7827**	8	BOLT-PLOW (3/4-10X2.25-IN)	
	8	1	**5P-8248**	8	WASHER-HARD (20X36.5X3.5-MM THK)	

PARTS SHOWN IN GRAPHIC(S) WITHOUT A REFERENCE NUMBER ARE NOT SERVICED SEPARATELY

Y - SEPARATE ILLUSTRATION

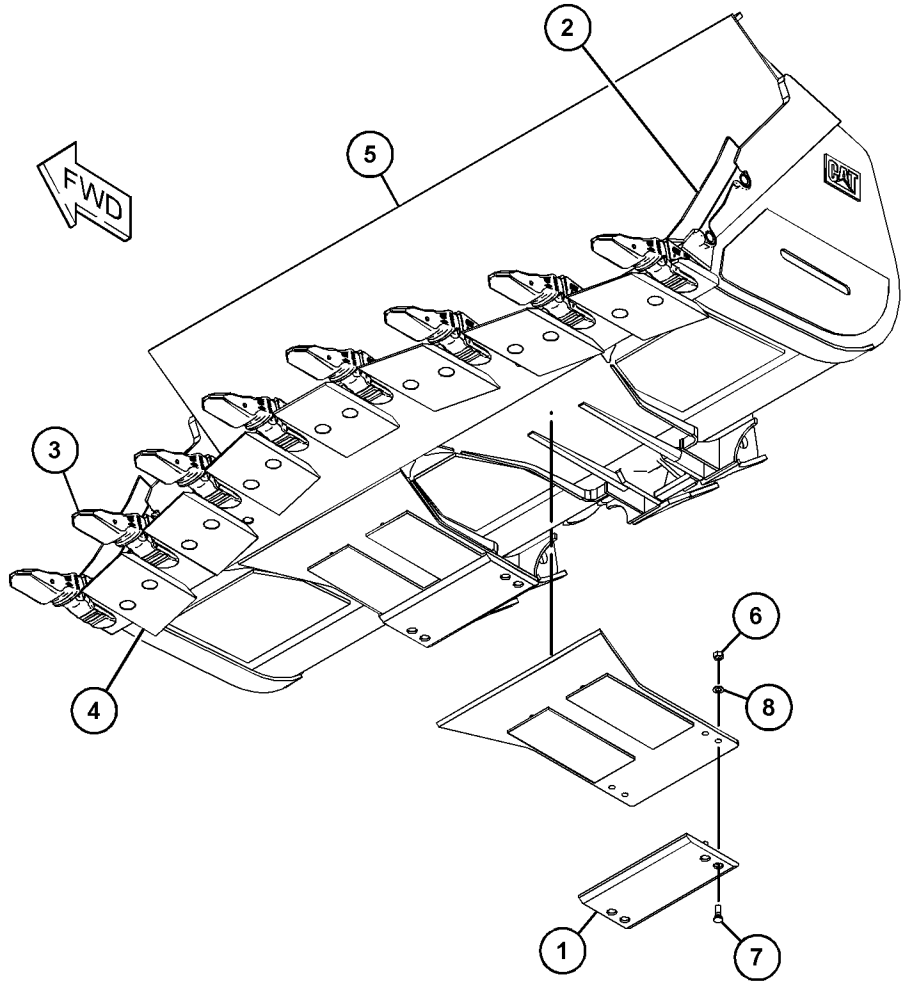

GRAPHIC #1 <END> g03722797

279-8145 BUCKET GP-ROCK

S/N: TNS1-UP

2.7-CU M (3.5-CU YD)

SMCS-6102 **i06677242**

NOTE	REF NO	GRAPHIC REF	PART NUMBER	QTY	PART NAME 1 2 3 4 5 6 (PRODUCT LEVEL)	SEE PAGE
	1	1	**9W-6747**	2	PLATE-WEAR	
Y	2	1	*109-9052*	1	PROTECTOR GP-SIDE BAR	918
Y	3	1	*229-7146*	8	TIP GP-HEAVY PENETRATION	922
Y	4	1	*273-3761*	1	EDGE GP-CUTTING	914
Y	5	1	**279-8151**	1	BUCKET AS-ROCK	894
	6	1	**2J-3506**	8	NUT-FULL (3/4-10-THD)	
	7	1	**4F-7827**	8	BOLT-PLOW (3/4-10X2.25-IN)	
	8	1	**5P-8248**	8	WASHER-HARD (20X36.5X3.5-MM THK)	

PARTS SHOWN IN GRAPHIC(S) WITHOUT A REFERENCE NUMBER ARE NOT SERVICED SEPARATELY

Y - SEPARATE ILLUSTRATION

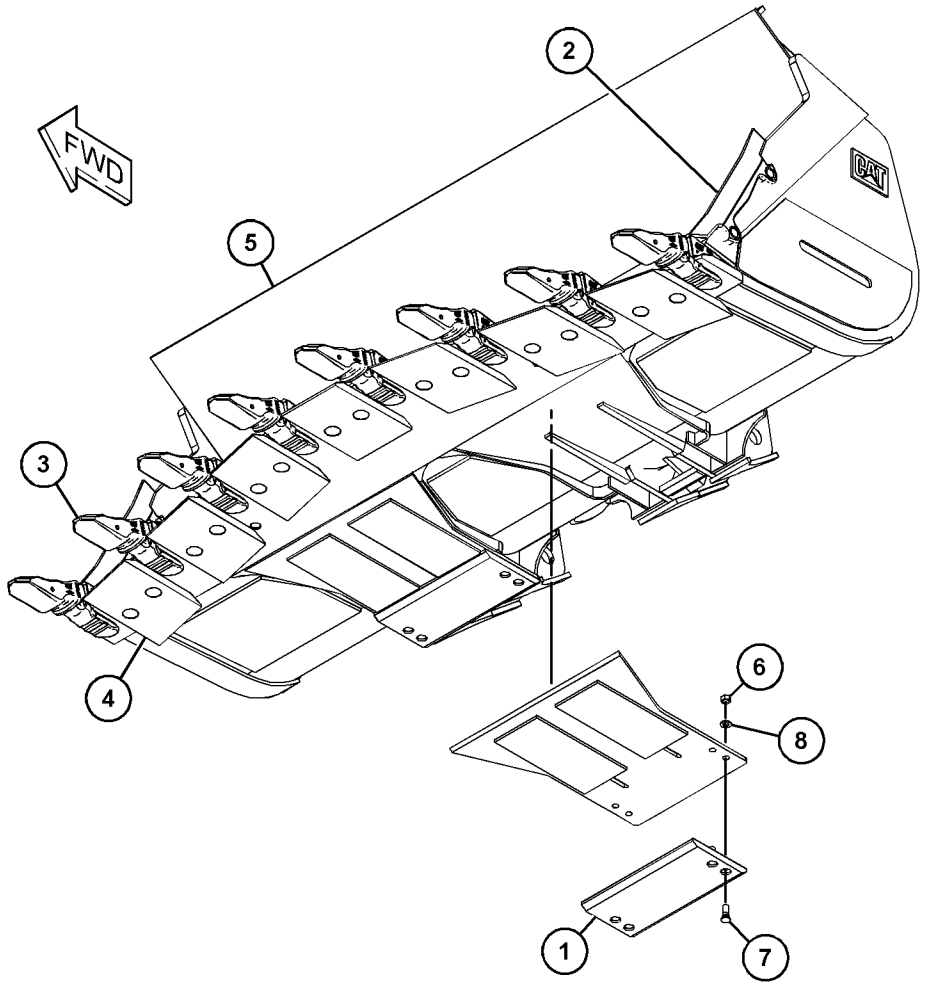

GRAPHIC #1 <END> g03722777

463-8873 COUPLER AR-QUICK

S/N: TNS1-UP

SMCS-6129 **i06797179**

NOTE	PART NUMBER	QTY	PART NAME 1 2 3 4 5 6 (PRODUCT LEVEL)	SEE PAGE
Y	*463-5399*	1	BOSS GP-LIFT ARM	738
Y	*461-4446*	1	BOSS GP-LOADER FRAME	414
Y	*436-7024*	1	LINES GP-COUPLER (REAR)	609
Y	*460-9973*	1	LINES GP-COUPLER (STANDARD LIFT, FRONT)	612
Y	*427-4963*	1	SWITCH GP-QUICK COUPLER	219

Y - SEPARATE ILLUSTRATION

<END>

310-9391 COUPLER GP-QUICK

S/N: TNS1-UP

FOR USE WITH MACHINE / COUPLER COMPATIBLE WORK TOOL ATTACHMENTS

SMCS-6129 **i06723285**

NOTE	REF NO	GRAPHIC REF	PART NUMBER	QTY	PART NAME 1 2 3 4 5 6 (PRODUCT LEVEL)	SEE PAGE
	1	1	**3B-8489**	2	FITTING-GREASE (1/8-27 PTF)	
	2	1	**192-5881**	4	PIN	
	3	1	**295-5619**	1	FILM-WARNING (HAND CRUSH HAZARD, READ OMM)	
CY	4	1	**452-2509**	2	CYLINDER GP-COUPLER	591
	5	1	**312-4181**	2	WEDGE AS	
I	6	1	**323-5871**	2	HOSE AS	
	7	1	**323-7089**	1	FRAME AS	
M		1	**9R-2640**	1	BOSS (M12X1.75X25-MM)	
M		1	**147-7633**	1	BOSS-TAPPED (M20X2.5X38-MM)	
I	8	1	**135-4061**	2	HOSE AS	
	9	1	**148-8316**	6	CONNECTOR AS	
					(EACH INCLUDES)	
		1	**3J-7354**	1	SEAL-O-RING	
		1	**4J-5477**	1	SEAL-O-RING	
		1	**6V-8647**	1	CONNECTOR	
	10	1	**3B-4631**	4	PIN-COTTER	
	11	1	**7G-2950**	3	CLIP (SLOT)	
	12	1	**7G-2951**	3	CLIP (TAB)	
M	13	1	**8T-4179**	3	BOLT (M12X1.75X20-MM)	
	14	1	**8T-4223**	3	WASHER-HARD (13.5X25.5X3-MM THK)	

C - CHANGE FROM PREVIOUS TYPE
I - REFER TO HYDRAULIC INFORMATION SYSTEM
M - METRIC PART
Y - SEPARATE ILLUSTRATION

310-9391 **COUPLER GP-QUICK (**contd.**)** **i06723285**

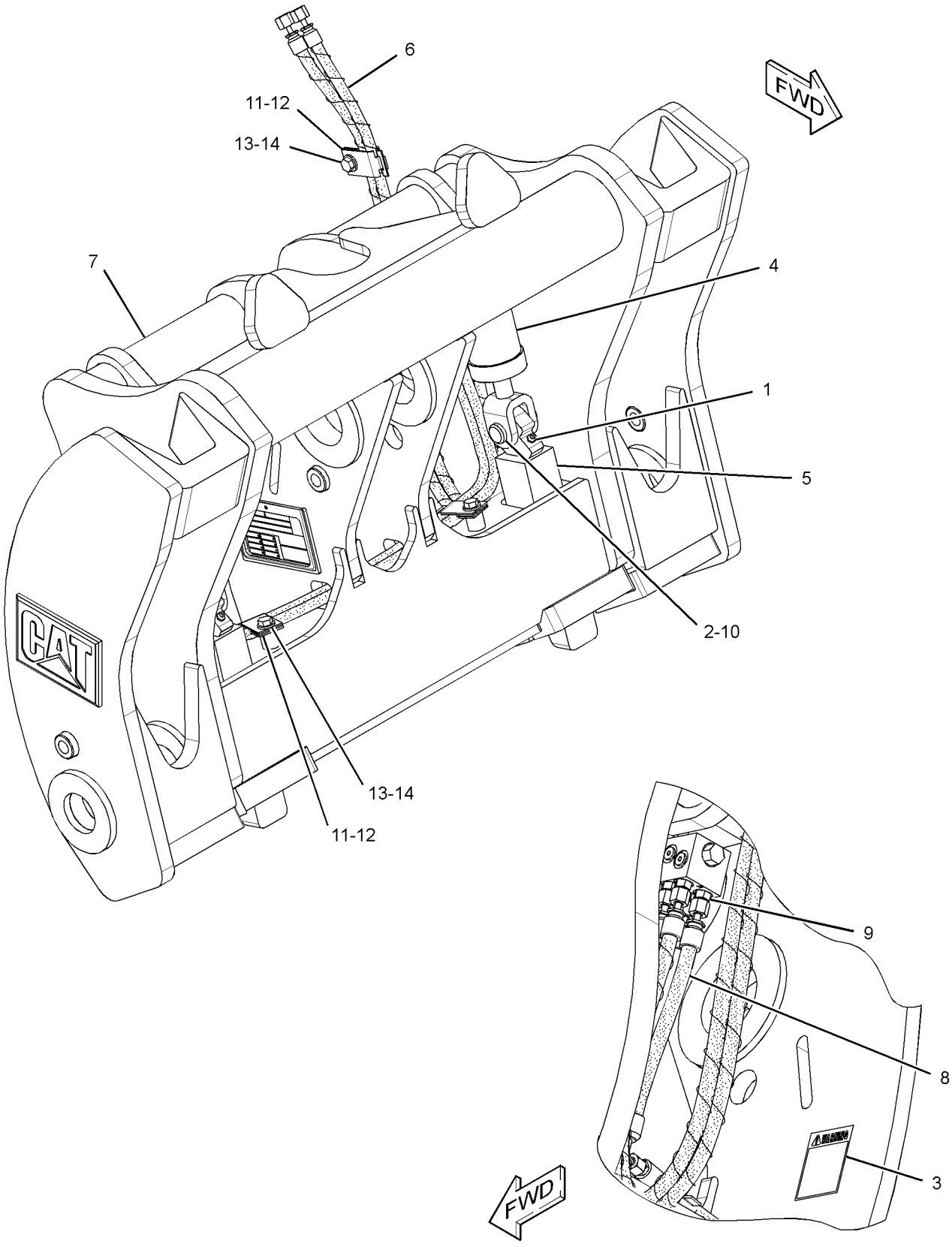

GRAPHIC #1 <END> g02511236

273-3765 EDGE AS-CUTTING

S/N: TNS1-UP

PART OF 279-8149, 279-8151 BUCKET AS-ROCK

SMCS-6801 **i02548676**

NOTE	REF NO	GRAPHIC REF	PART NUMBER	QTY	PART NAME 1 2 3 4 5 6 (PRODUCT LEVEL)	SEE PAGE
	1	1	**199-9741**	8	SHIM	
	2	1	**222-1094**	2	ADAPTER-TIP (K-90, 2-STRAP, CENTER)	
	3	1	**222-1095**	3	ADAPTER-TIP (K-90, 2-STRAP, RH)	
	4	1	**222-1096**	3	ADAPTER-TIP (K-90, 2-STRAP, LH)	
	5	1	**273-3762**	1	EDGE	

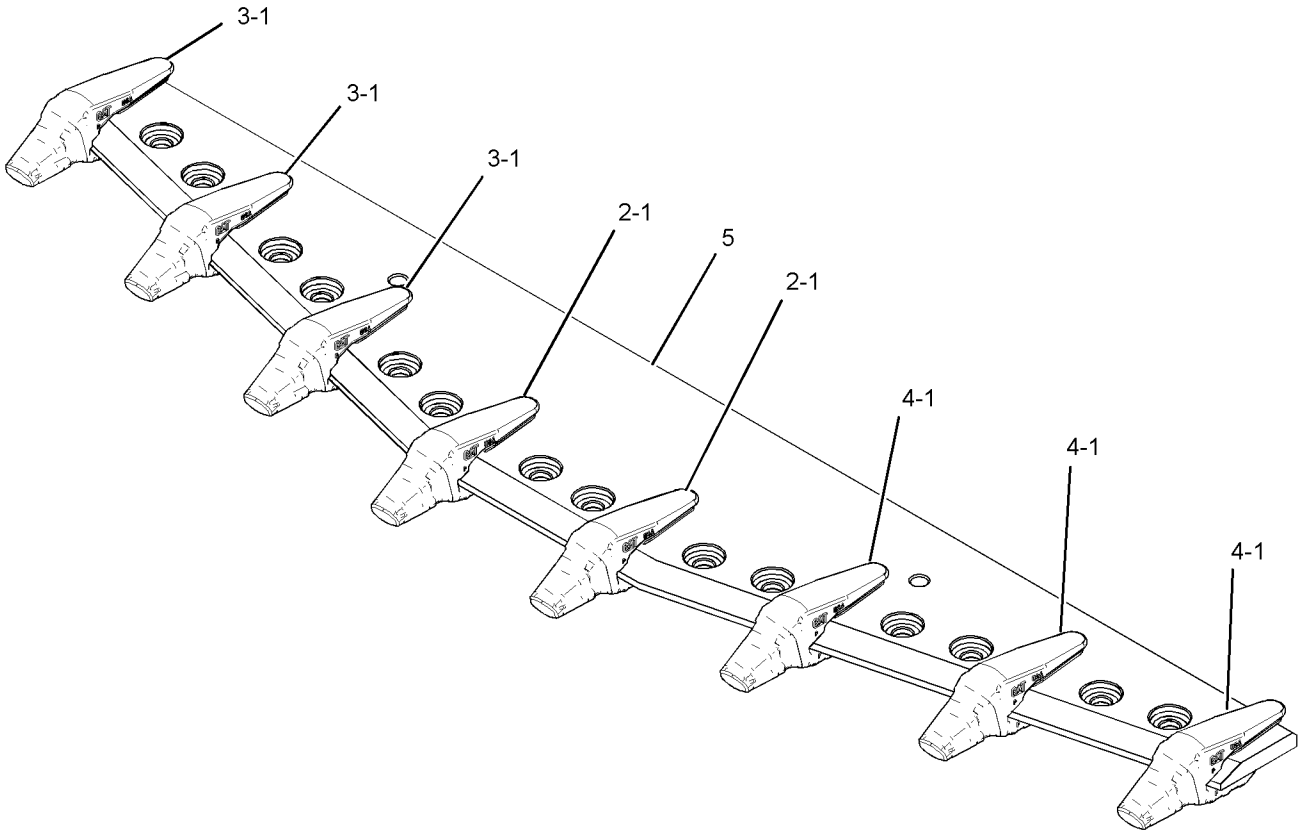

GRAPHIC #1 <END> g01293191

109-9015 EDGE GP-CUTTING

S/N: TNS1-UP

PART OF 130-8288 BUCKET GP-ROCK

SMCS-6801 **i00911860**

NOTE	PART NUMBER	QTY	PART NAME 1 2 3 4 5 6 (PRODUCT LEVEL)	SEE PAGE
	8T-9079	18	BOLT-PLOW (1-1/4-7X3.35-IN)	
	132-1089	1	EDGE-CUTTING	
	7T-5961	1	EDGE-CUTTING (LH)	
	109-9016	1	EDGE-CUTTING (LH)	
	7T-5963	1	EDGE-CUTTING (RH)	
	109-9017	1	EDGE-CUTTING (RH)	
	3K-9770	18	NUT-FULL (1-1/4-7-THD)	
	4K-0684	18	WASHER-HARD (34X55X6-MM THK)	

<END>

139-9229 EDGE GP-CUTTING

S/N: TNS1-UP

SMCS-6801 **i06760011**

NOTE	PART NUMBER	QTY	PART NAME 1 2 3 4 5 6 (PRODUCT LEVEL)	SEE PAGE
	4F-4042	12	BOLT-PLOW (1-8X3-IN)	
	139-9230	2	EDGE-CUTTING	
	4T-8101	2	EDGE-END	
	2J-3507	12	NUT-FULL (1-8-THD)	

<END>

273-3761 EDGE GP-CUTTING

S/N: TNS1-UP

PART OF 279-8142, 279-8145 BUCKET GP-ROCK

SMCS-6801 **i02548843**

NOTE	REF NO	GRAPHIC REF	PART NUMBER	QTY	PART NAME 1 2 3 4 5 6 (PRODUCT LEVEL)	SEE PAGE
	1	1	**4T-3015**	1	EDGE-SEGMENT	
	2	1	**4T-9123**	3	EDGE-SEGMENT (LH)	
	3	1	**4T-9124**	3	EDGE-SEGMENT (RH)	
	4	1	**3K-9770**	14	NUT-FULL (1-1/4-7-THD)	
	5	1	**4K-0684**	14	WASHER-HARD (34X55X6-MM THK)	
	6	1	**8T-9079**	14	BOLT-PLOW (1-1/4-7X3.35-IN)	

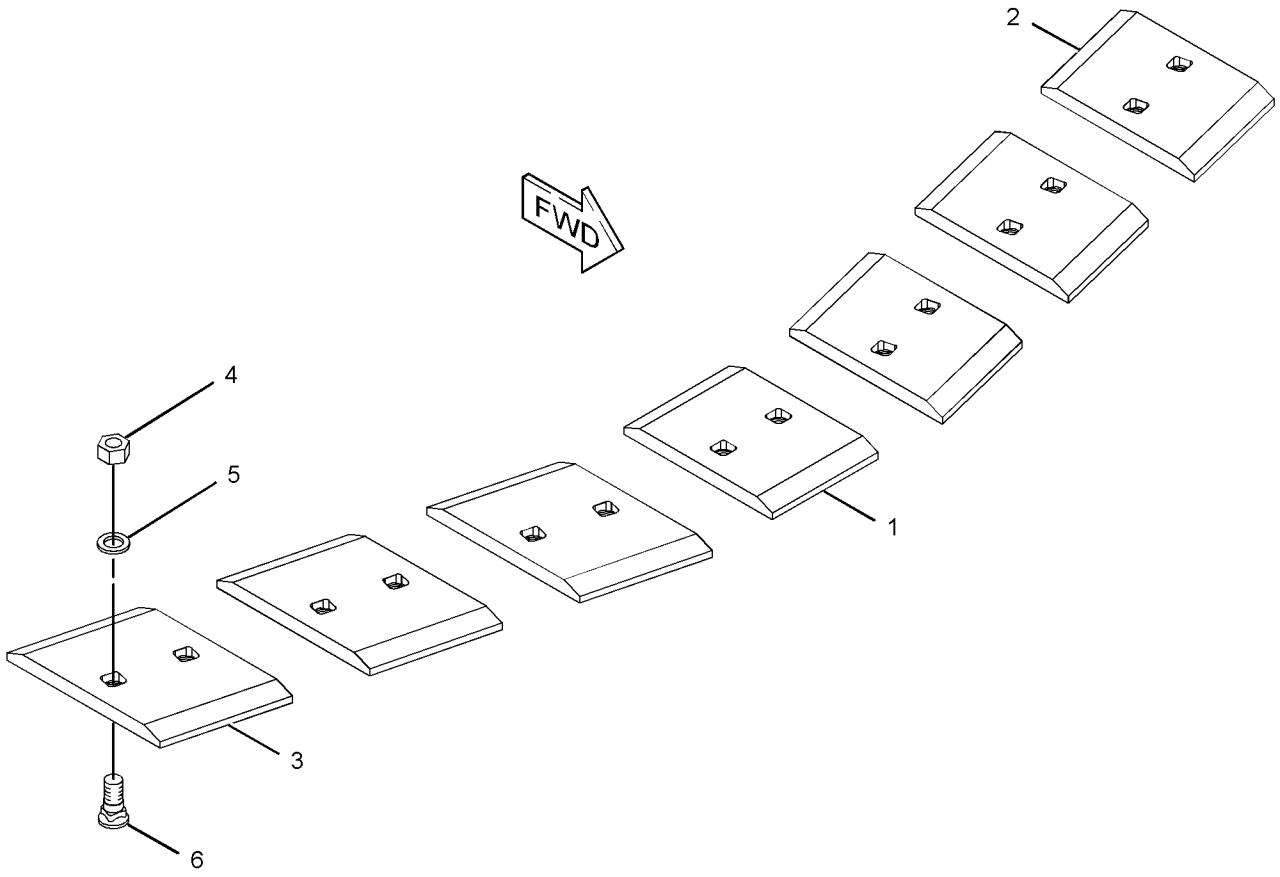

GRAPHIC #1 <END> g01211127

279-8174 EDGE GP-CUTTING

S/N: TNS1-UP

PART OF 279-8147 BUCKET AS-ROCK

SMCS-6801 **i02548230**

NOTE	REF NO	GRAPHIC REF	PART NUMBER	QTY	PART NAME 1 2 3 4 5 6 (PRODUCT LEVEL)	SEE PAGE
	1	1	**8P-9770**	1	PLATE	
	2	1	**142-9406**	1	EDGE-CUTTING	
	3	1	**199-9741**	8	SHIM	
	4	1	**222-1094**	2	ADAPTER-TIP (K-90, 2-STRAP, CENTER)	
	5	1	**222-1095**	3	ADAPTER-TIP (K-90, 2-STRAP, RH)	
	6	1	**222-1096**	3	ADAPTER-TIP (K-90, 2-STRAP, LH)	

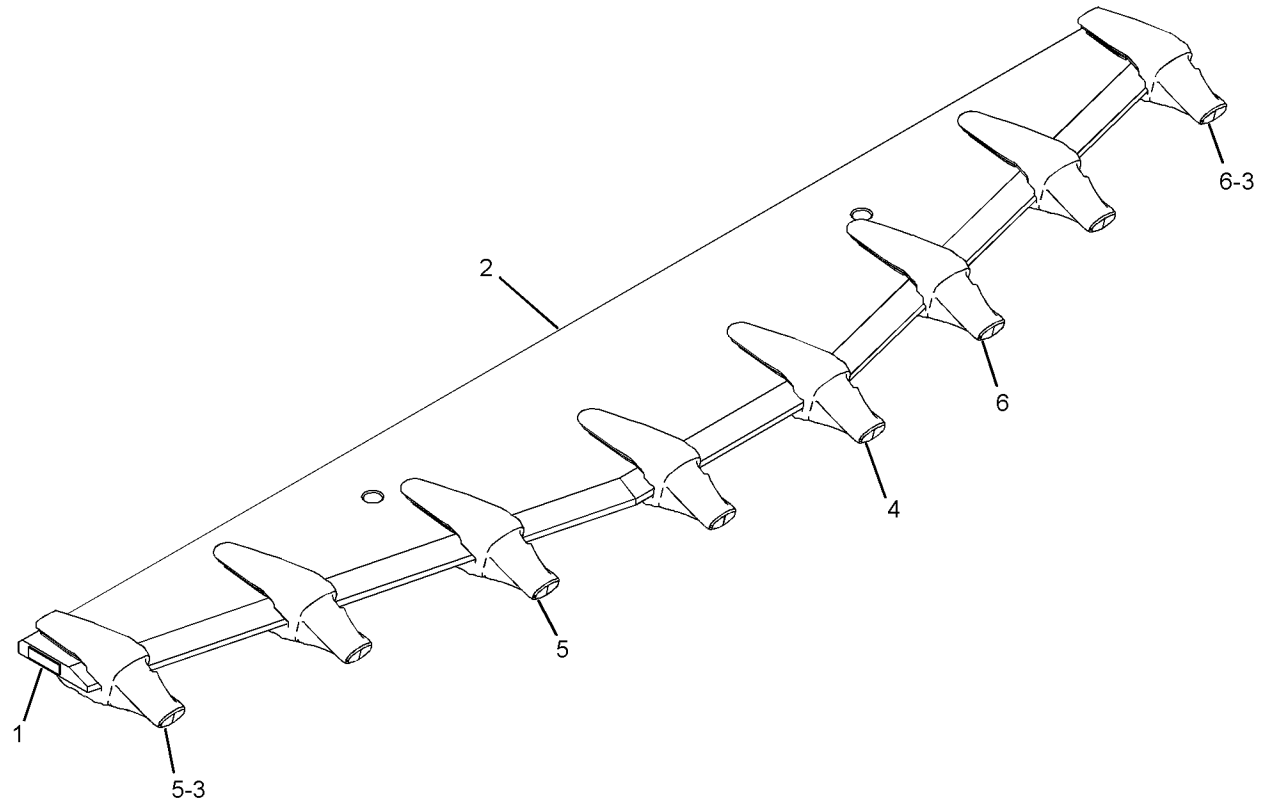

GRAPHIC #1 <END> g01285304

107-3394 EDGE GP-SEGMENT

S/N: TNS1-UP

PART OF 476-2460, 476-2461 DISTRIBUTION AR

SMCS-6818 **i06760013**

NOTE	PART NUMBER	QTY	PART NAME 1 2 3 4 5 6 (PRODUCT LEVEL)	SEE PAGE
	4F-4042	14	BOLT-PLOW (1-8X3-IN)	
	132-4715	5	EDGE-SEGMENT	
	257-1762	2	EDGE-SEGMENT	
	2J-3507	14	NUT-FULL (1-8-THD)	

<END>

361-1437 PROTECTOR GP-LINKAGE

S/N: TNS1-UP

SMCS-5063 **i06760091**

NOTE	REF NO	GRAPHIC REF	PART NUMBER	QTY	PART NAME 1 2 3 4 5 6 (PRODUCT LEVEL)	SEE PAGE
	1	1	**456-5130**	1	BAR	
M	2	1	**8T-4131**	1	NUT (M20X2.5-THD)	
	3	1	**8T-5439**	1	WASHER-HARD (21.5X45X6-MM THK)	

M - METRIC PART

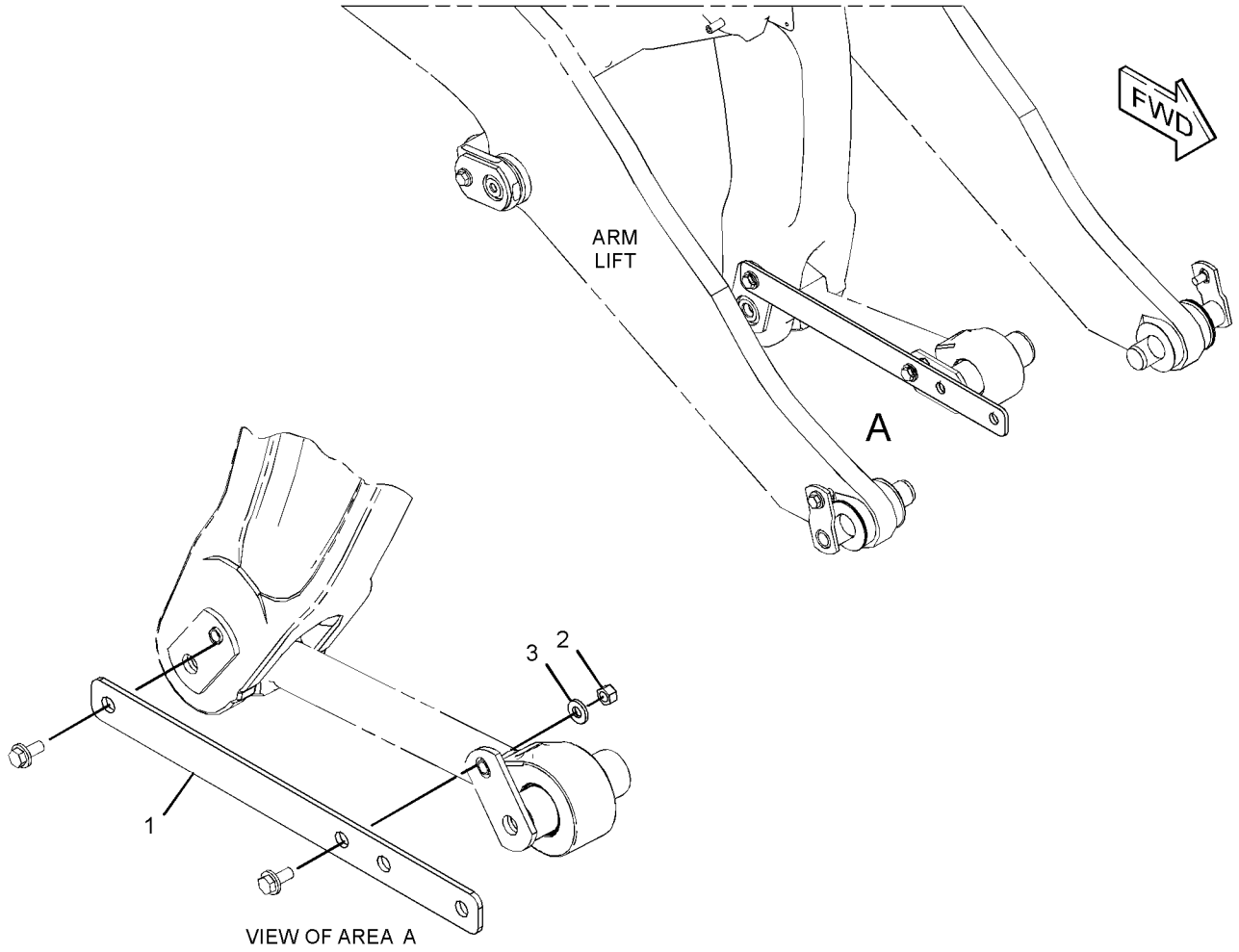

GRAPHIC #1 <END> g03684562

109-9052 PROTECTOR GP-SIDE BAR

S/N: TNS1-UP

PART OF 279-8142, 279-8145 BUCKET GP-ROCK

SMCS-6102, 6817

i02549578

NOTE	PART NUMBER	QTY	PART NAME 1 2 3 4 5 6 (PRODUCT LEVEL)	SEE PAGE
	8J-4143	2	PROTECTOR-SIDE BAR	
	9J-8441	4	PIN	
	8E-5559	4	RETAINER AS	
			(EACH INCLUDES)	
	8E-4743	1	RETAINER	
			<END>	

345-0387 TIP GP-ABRASION—HEAVY-DUTY

S/N: TNS1-UP

K-110

SMCS-6805 **i06136418**

NOTE	REF NO	GRAPHIC REF	PART NUMBER	QTY	PART NAME 1 2 3 4 5 6 (PRODUCT LEVEL)	SEE PAGE
	1	1	**470-7974**	1	TIP-HEAVY ABRASION (K-110)	
	2	1	**309-1119**	1	RETAINER	

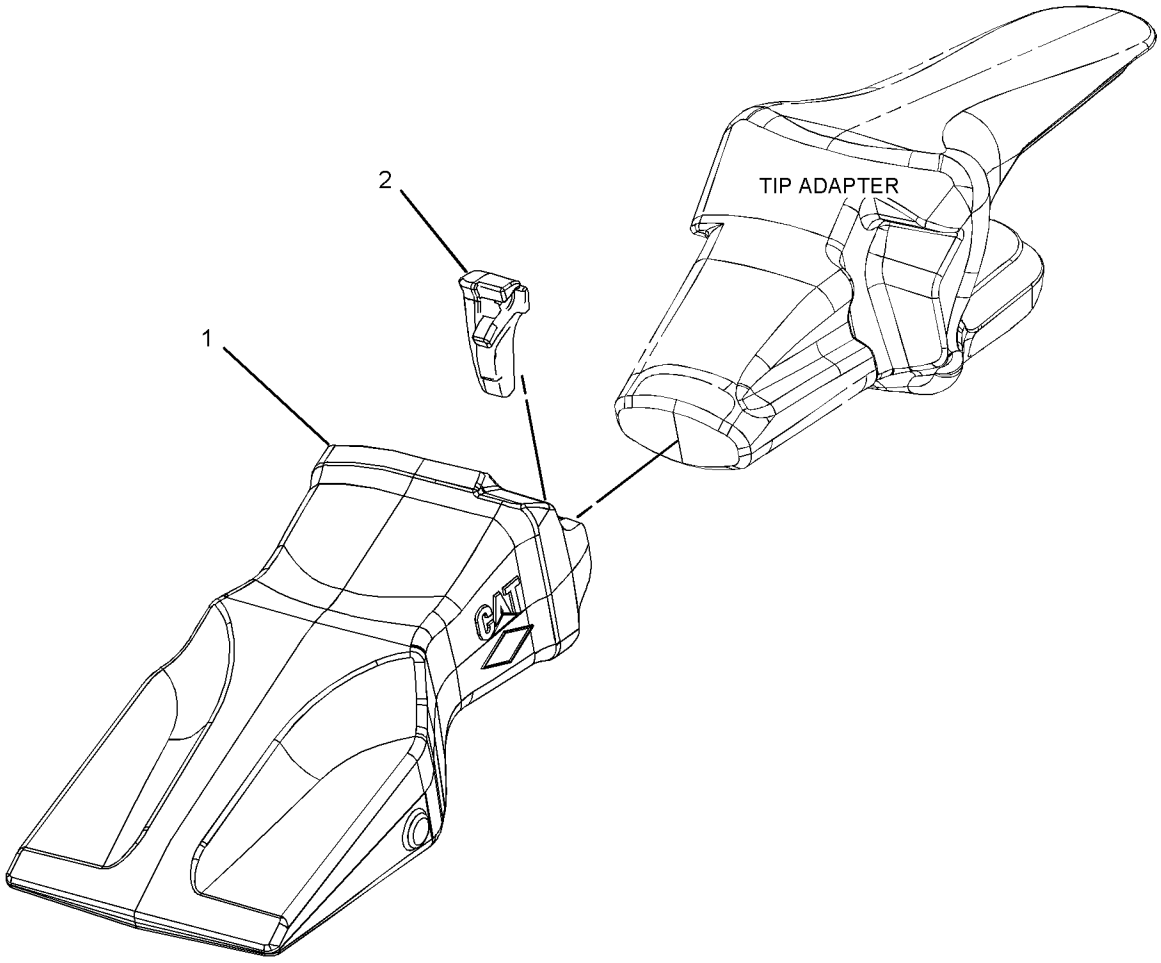

GRAPHIC #1 <END> g02809020

229-6964 TIP GP-EXTRA-DUTY

S/N: TNS1-UP

K-80

SMCS-6805 **i05265700**

NOTE	REF NO	GRAPHIC REF	PART NUMBER	QTY	PART NAME 1 2 3 4 5 6 (PRODUCT LEVEL)	SEE PAGE
	1	1	**220-9081**	1	TIP-EXTRA-DUTY (K-80)	
	2	1	**220-9090**	1	RETAINER-G.E.T. (K-80, K-90, K-100)	

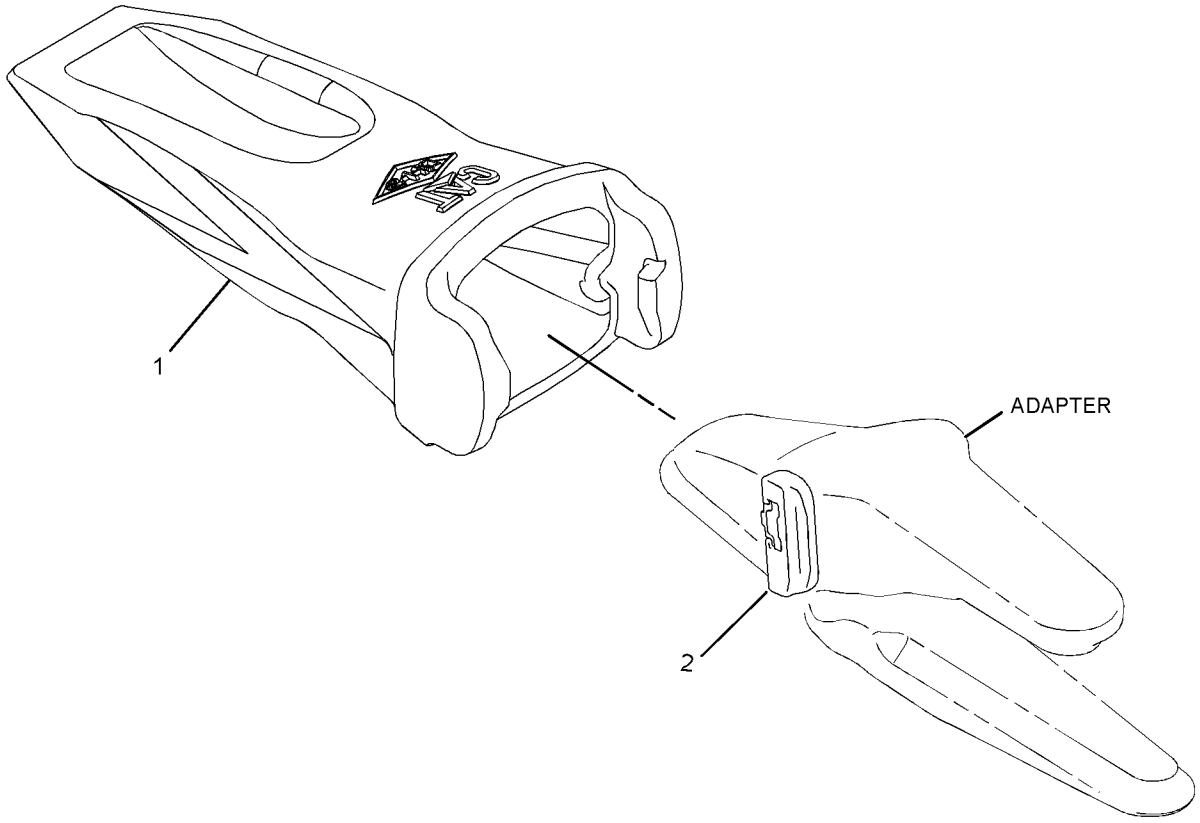

GRAPHIC #1 <END> g01276033

229-6969 TIP GP-GENERAL PURPOSE

S/N: TNS1-UP

K-80

SMCS-6805 **i06093291**

NOTE	REF NO	GRAPHIC REF	PART NUMBER	QTY	PART NAME 1 2 3 4 5 6 (PRODUCT LEVEL)	SEE PAGE
	1	1	**475-5473**	1	TIP-BUCKET (K-80)	
	2	1	**220-9090**	1	RETAINER-G.E.T. (K-80, K-90, K-100)	

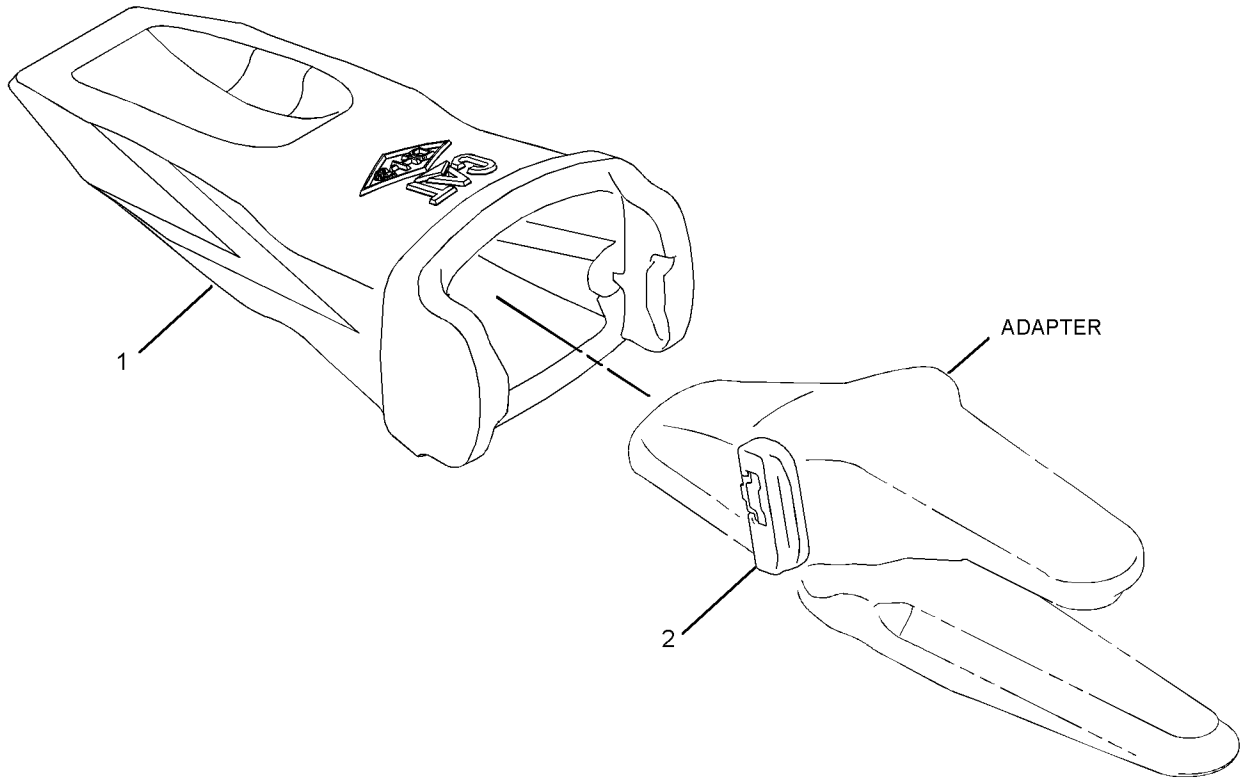

GRAPHIC #1 <END> g01275715

229-7146 TIP GP-HEAVY PENETRATION

S/N: TNS1-UP

K-90

PART OF 279-8142, 279-8145 BUCKET GP-ROCK

SMCS-6805 **i06516084**

NOTE	REF NO	GRAPHIC REF	PART NUMBER	QTY	PART NAME 1 2 3 4 5 6 (PRODUCT LEVEL)	SEE PAGE
	1	1	**220-9090**	1	RETAINER-G.E.T. (K-80, K-90, K-100)	
	2	1	**475-5486**	1	TIP-HEAVY PENETRATION	

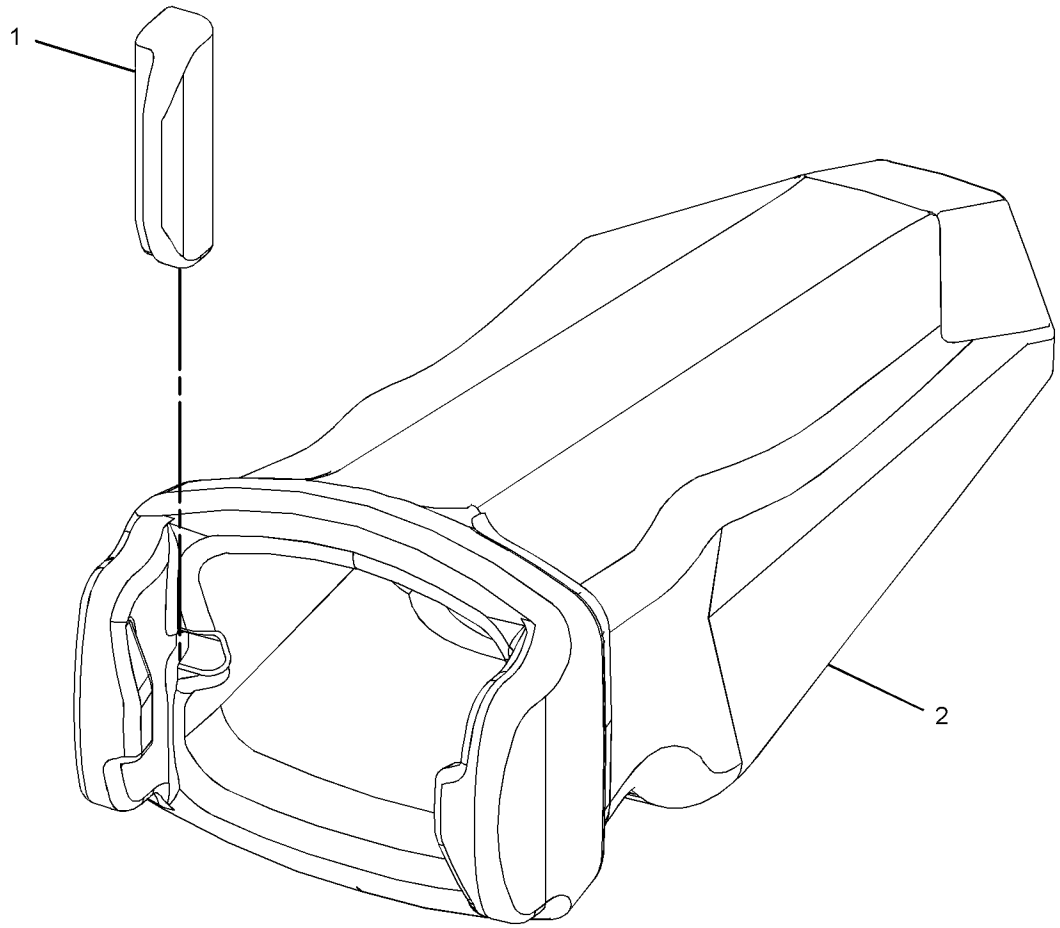

GRAPHIC #1 <END> g01275068

217-4892 TIP GP-PENETRATION

S/N: TNS1-UP

K-90

PART OF 476-2462 BUCKET AR-ROCK

SMCS-6805 **i06821111**

NOTE	REF NO	GRAPHIC REF	PART NUMBER	QTY	PART NAME 1 2 3 4 5 6 (PRODUCT LEVEL)	SEE PAGE
	1	1	**220-9090**	1	RETAINER-G.E.T. (K-80, K-90, K-100)	
	2	1	**475-5481**	1	TIP-PENETRATION (K-90)	

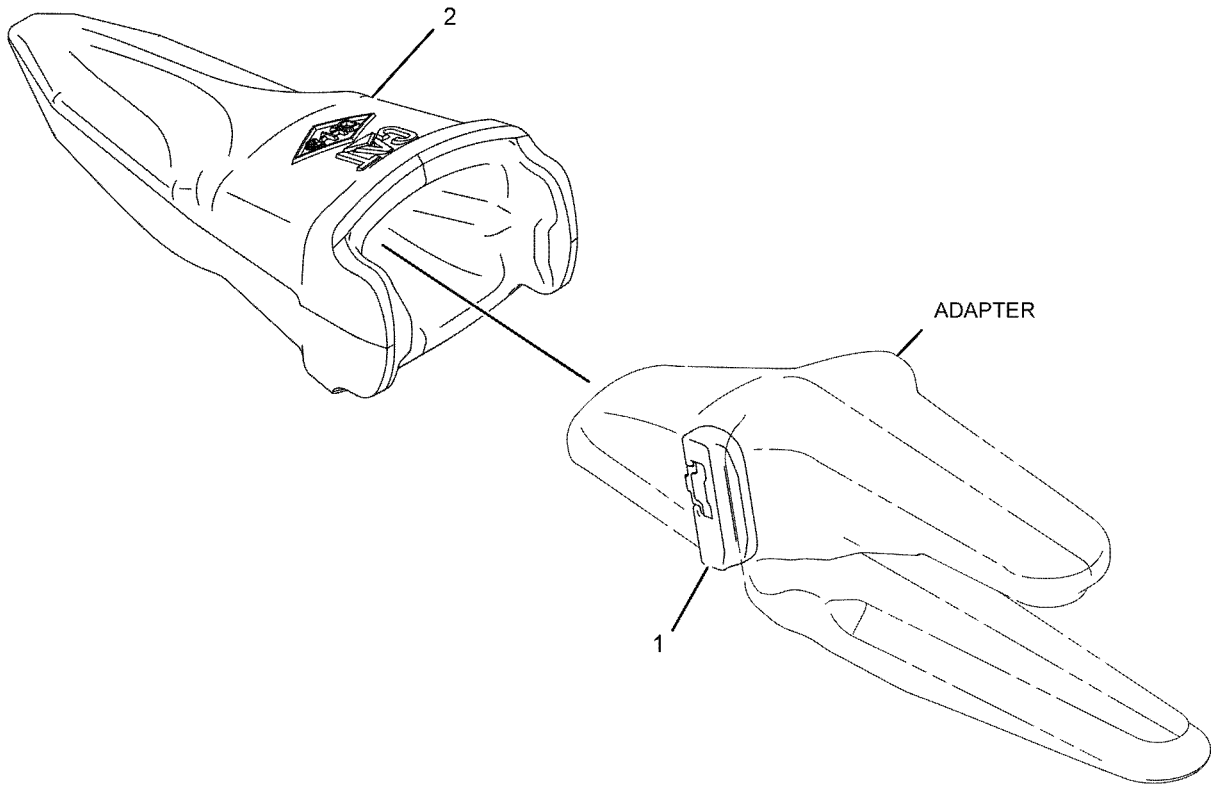

GRAPHIC #1 <END> g01074482

229-6965 TIP GP-PENETRATION

S/N: TNS1-UP

K-80

PART OF 476-2460, 476-2461 DISTRIBUTION AR

SMCS-6805 **i06165024**

NOTE	REF NO	GRAPHIC REF	PART NUMBER	QTY	PART NAME 1 2 3 4 5 6 (PRODUCT LEVEL)	SEE PAGE
	1	1	**475-5469**	1	TIP-PENETRATION (K-80) (K-80)	
	2	1	**220-9090**	1	RETAINER-G.E.T. (K-80, K-90, K-100)	

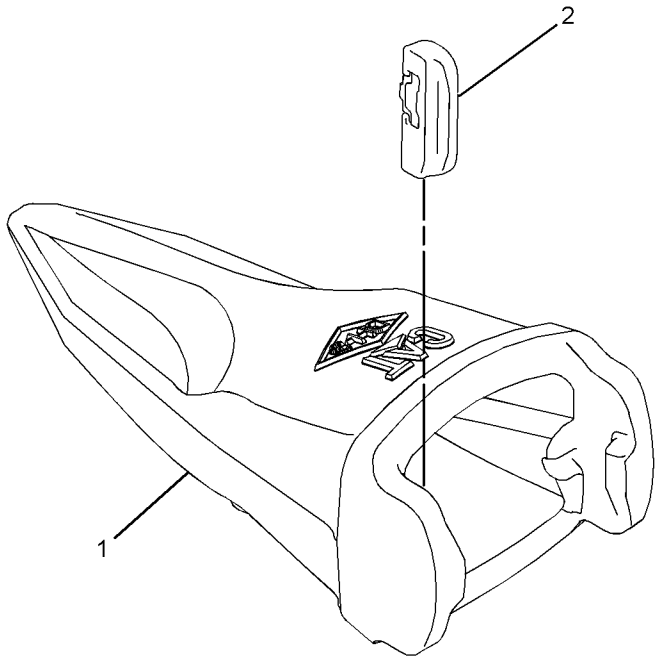

GRAPHIC #1 <END> g01276177

441-9230 BOX AS-SERVICE CENTER

S/N: TNS1-UP

PART OF 441-9228 SUPPORT GP-VALVE & FILTER

SMCS-7513 **i06781726**

NOTE	REF NO	GRAPHIC REF	PART NUMBER	QTY	PART NAME 1 2 3 4 5 6 (PRODUCT LEVEL)	SEE PAGE
C	1	1	**490-3758**	1	DOOR AS-ACCESS	
M		1	**8T-3597**	4	NUT-WELD (M12X1.75-THD)	
		1	**331-1679**	3	HINGE AS (RH)	
	2	1	**7T-1099**	1	LINK	
M	3	1	**9R-4595**	1	BOSS (M12X1.75X30-MM)	
M	4	1	**9R-2613**	2	BOSS-WELD (M10X1.5X25-MM)	
M	5	1	**8Y-4489**	1	BOSS (M10X1.5-THD)	
M	6	1	**8T-3597**	6	NUT-WELD (M12X1.75-THD)	
M	7	1	**8T-3490**	31	NUT-WELD (M10X1.5-THD)	
M	8	1	**7Y-6338**	1	BOSS (M10X1.5X70-MM)	

C - CHANGE FROM PREVIOUS TYPE
M - METRIC PART

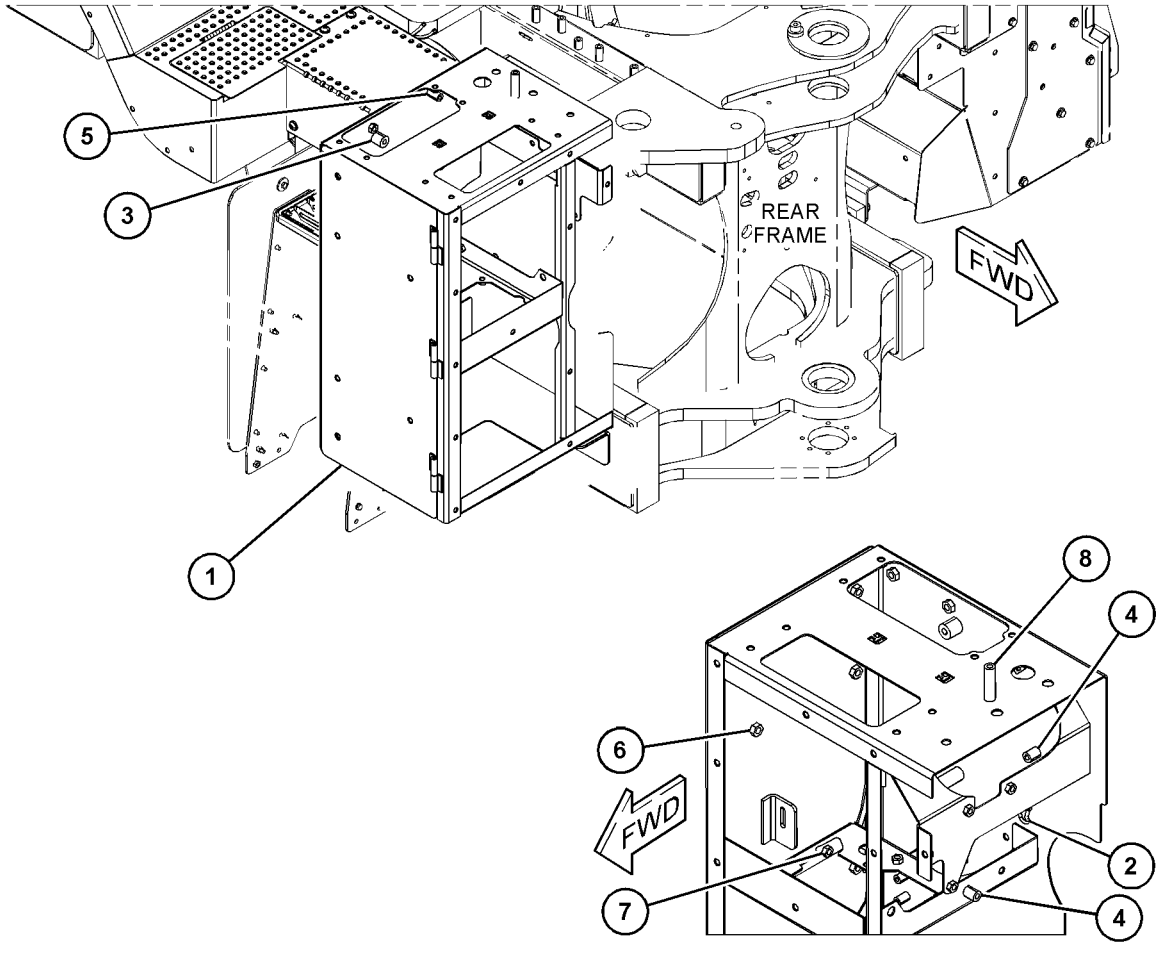

GRAPHIC #1 <END> g06101001

373-3930 FILM GP

S/N: TNS1-UP

PART OF 499-1654 CONVERSION AR-MACHINE

SMCS-7405, 7557

i06657439

NOTE	PART NUMBER	QTY	PART NAME 1 2 3 4 5 6 (PRODUCT LEVEL)	SEE PAGE
Y	*466-7409*	1	FILM GP	932
	466-0903	1	FILM-WARNING (SEAT BELT)	
			(ON LH A-POST CENTERED ON POST JUST BELOW UNIVERSAL WARNING FILM)	
	228-2616	1	FILM-WARNING (UNIVERSAL, READ OMM)	
			(ON LH A-POST, CENTERED ON POST BELOW THE NO WELD NO DRILL WARNING FILM)	
	274-4284	1	FILM-WARNING (EXPLOSION, RADIO PRODUCT LINK)	
			(ON LH A-POST, CENTERED ON POST JUST BELOW THE SEATBELT WARNING FILM)	
	450-7011	1	FILM-WARNING (FALL HAZARD, LANYARD, READ OMM)	
			(ON RH OF THE LEFT FRONT HANDRAIL MOUNTING BRACKET JUST ABOVE THE TIE OFF LOCATION)	
Y - SEPARATE ILLUSTRATION				
			<END>	

390-0060 FILM GP

S/N: E7A1-UP
EMISSIONS
PART OF 435-8541 ENGINE AR-PRIMARY

SMCS-7405, 7557

i06810336

NOTE	REF NO	GRAPHIC REF	PART NUMBER	QTY	PART NAME 1 2 3 4 5 6 (PRODUCT LEVEL)	SEE PAGE
	1	1	**450-9772**	1	PLATE-IDENTIFICATION (CAT C2.2)	
	2	1	**326-9053**	1	FILM-WARNING (DO NOT SPRAY, READ OMM)	
	3	1	**346-8219**	2	FILM-WARNING (UNIVERSAL WARNING)	
	4	1	**355-3486**	1	STRIP-ADHESIVE	

390-0060 **FILM GP (**contd.**)** **i06810336**

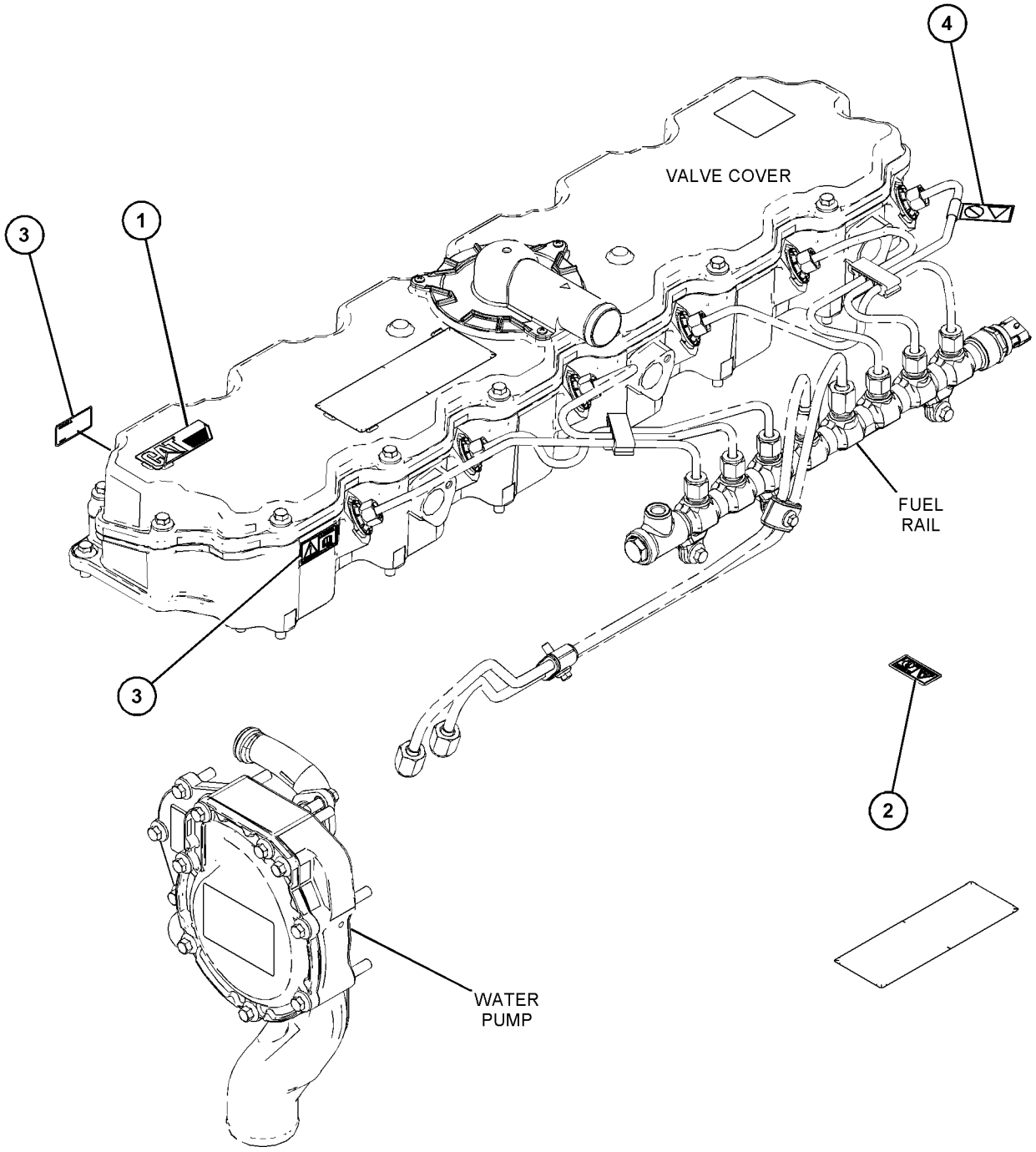

GRAPHIC #1 <END> g06031680

415-5625 FILM GP

S/N: E7A1-UP

PART OF 435-8541 ENGINE AR-PRIMARY

SMCS-7405, 7557 **i06041161**

NOTE	REF NO	GRAPHIC REF	PART NUMBER	QTY	PART NAME 1 2 3 4 5 6 (PRODUCT LEVEL)	SEE PAGE
	1	1	**451-7225**	1	FILM-IDENTIFICATION (CAT)	

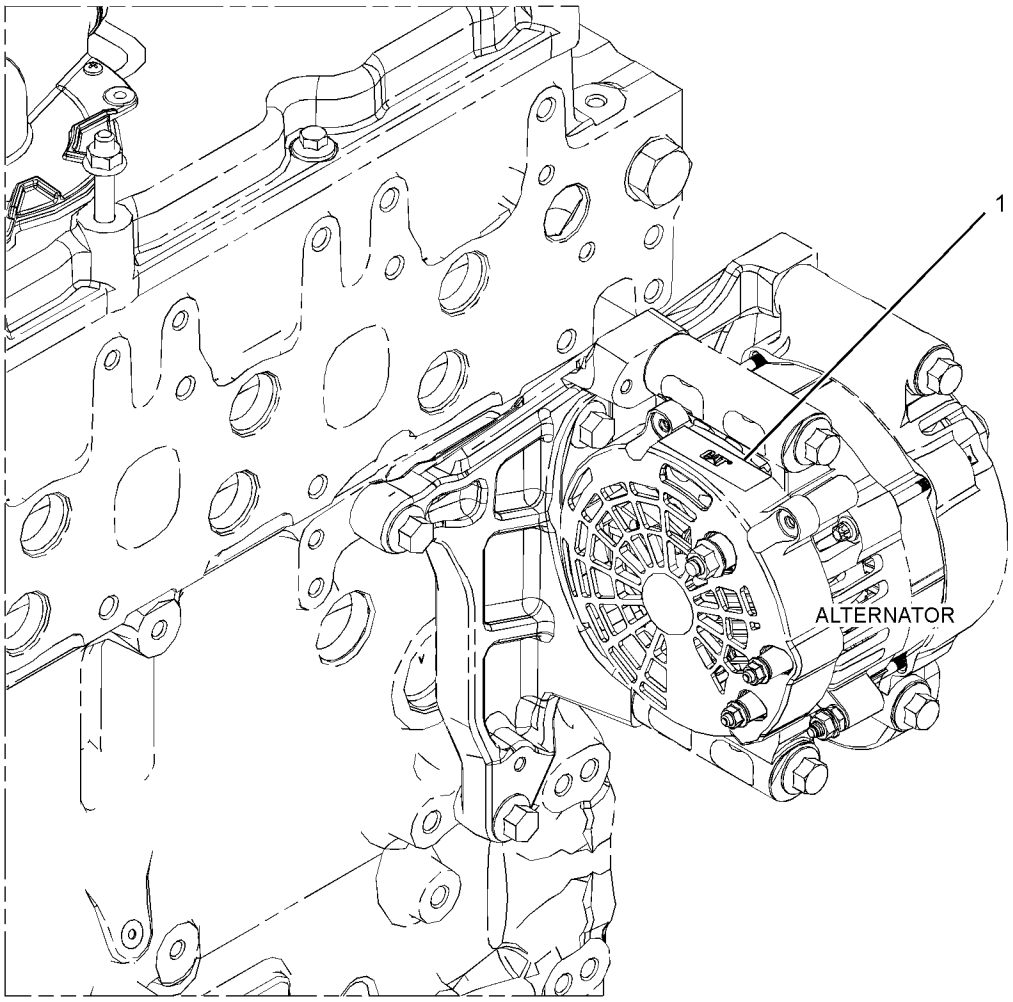

GRAPHIC #1 <END> g02675436

454-0180 FILM GP

S/N: TNS1-UP

PART OF 456-5817 CONFIGURATION AR

SMCS-7405, 7557

i06797168

NOTE	REF NO	GRAPHIC REF	PART NUMBER	QTY	PART NAME 1 2 3 4 5 6 (PRODUCT LEVEL)	SEE PAGE
	1	1	**454-0181**	1	FILM-IDENTIFICATION (CAT 950L, RH)	
	2	1	**454-0182**	1	FILM-IDENTIFICATION (CAT 950L, LH)	
	3	1	**365-6193**	1	FILM-IDENTIFICATION (CAT)	

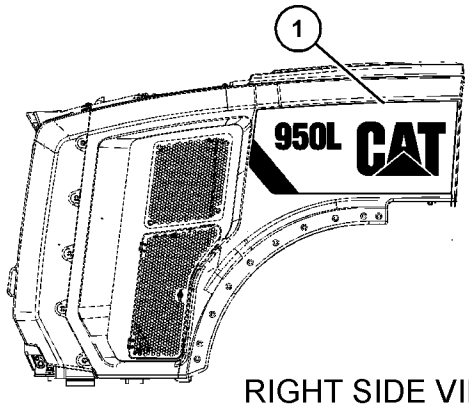

RIGHT SIDE VIEW

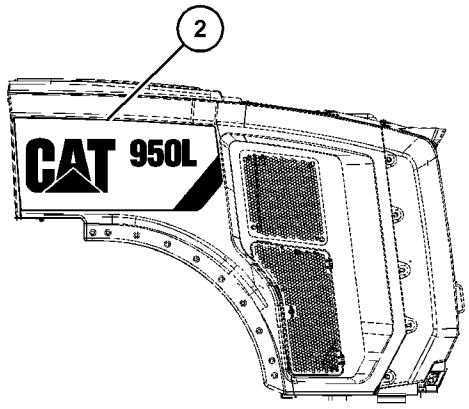

LEFT SIDE VIEW

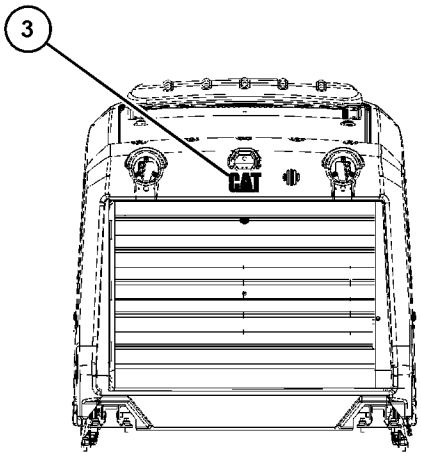

REAR VIEW

GRAPHIC #1 <END> g06048787

463-8878 FILM GP

S/N: TNS1-UP

PART OF 456-5817 CONFIGURATION AR

SMCS-7405, 7557

i06796511

NOTE	PART NUMBER	QTY	PART NAME 1 2 3 4 5 6 (PRODUCT LEVEL)	SEE PAGE
	7X-3229	4	FILM-IDENTIFICATION (LIFT EYE, TIE-DOWN LOCATION)	
			(2- ON REAR FRAME, CENTERED WITH OPENING OF D-LINK) (2- ON LIFT EYE REINFORCEMENT PLATE, 15MM AWAY FROM BACK EDGE OF PLATE & 40-MM AWAY FROM BOTTOM EDGE OF PLATE)	
	469-5861	2	FILM-INSTRUCTION (LUBRICATION POINTS)	
			(1- ON OUTSIDE OF HYDRAULIC SERVICE CENTER DOOR, CENTERED BETWEEN TOP RUNGS) (1- ON INSIDE OF HYDRAULIC SERVICE CENTER DOOR 10-MM DOWN FROM TOP, 123-MM AWAY FROM HINGED EDGE OF DOOR)	
	224-0672	1	FILM-WARNING (HIGH PRESSURE, READ OMM, INTL)	
			(BELOW CRUSH WARNING FILM ON RH SIDE OF MACHINE)	
	226-1240	2	FILM-WARNING (CRUSH HAZARD, STAY BACK, INTL)	
			(ON SIDE FACE OF NEEF APPROX 50-MM FROM BACK EDGE OF FRAME & APPROX 95-MM FROM BOTTOM OF FRAME TO BOTTOM EDGE OF FILM ON BOTH SIDES)	
	226-1274	1	FILM-WARNING (CRUSH HAZARD, READ OMM, INTL)	
			(ON LH SIDE OF FRONT FRAME BELOW CRUSH WARNING FILM)	
	374-9551	1	FILM-WARNING (ROPS, FOPS, READ OMM)	
			(ON LH A-POST, SURFACE FACING FRONT WINDOW. CENTERED ON POST, ALIGNED WITH TOP OF DOOR HINGE)	
	444-5639	2	FILM-WARNING (LEAK DETECTION, READ OMM)	
			(ON INSIDE SURFACE ON BOTH SIDES OF NEEF 120-MM AWAY FROM FRONT EDGE OF NEEF, BOTTOM EDGE 100-MM UP FROM VALVE SHELF SURFACE)	
			<END>	

466-7409 FILM GP

S/N: TNS1-UP

PART OF 373-3930 FILM GP

SMCS-7405, 7557 **i06151295**

NOTE	REF NO	GRAPHIC REF	PART NUMBER	QTY	PART NAME 1 2 3 4 5 6 (PRODUCT LEVEL)	SEE PAGE
	1	1	**421-1156**	1	FILM-IDENTIFICATION (CAT)	

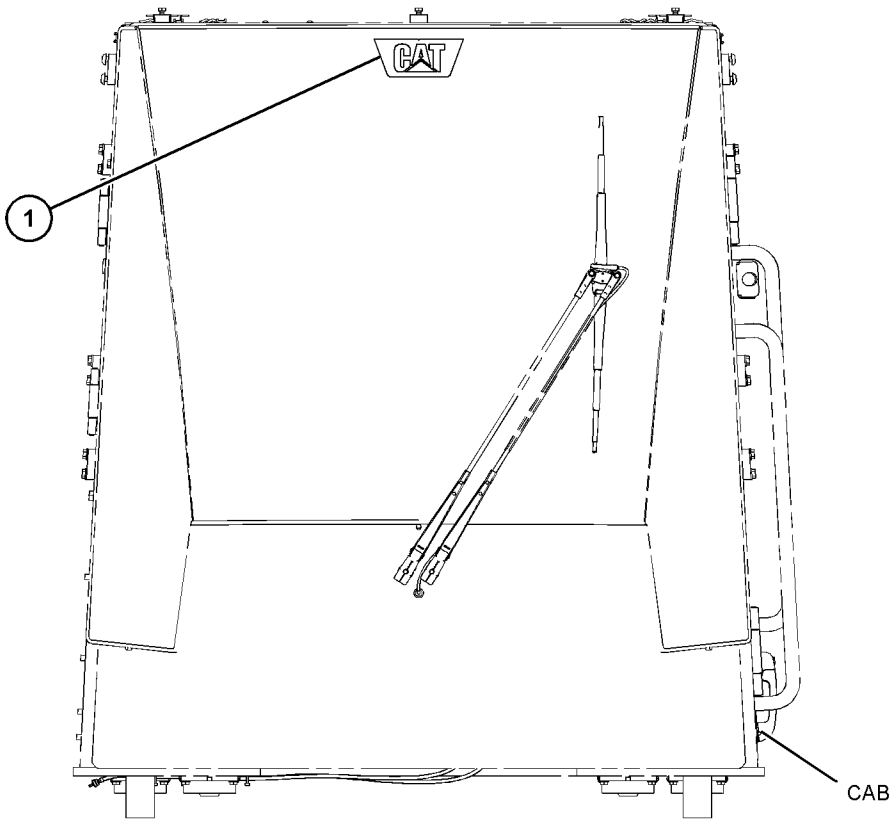

FRONT VIEW

GRAPHIC #1 <END> g06014508

468-0170 FILM GP

S/N: TNS1-UP

FOR USE WITH SCRAP HANDLER

SMCS-7405, 7557

i06711408

NOTE	REF NO	GRAPHIC REF	PART NUMBER	QTY	PART NAME 1 2 3 4 5 6 (PRODUCT LEVEL)	SEE PAGE
	1	1	**468-0164**	2	FILM-IDENTIFICATION (SCRAP HANDLER)	

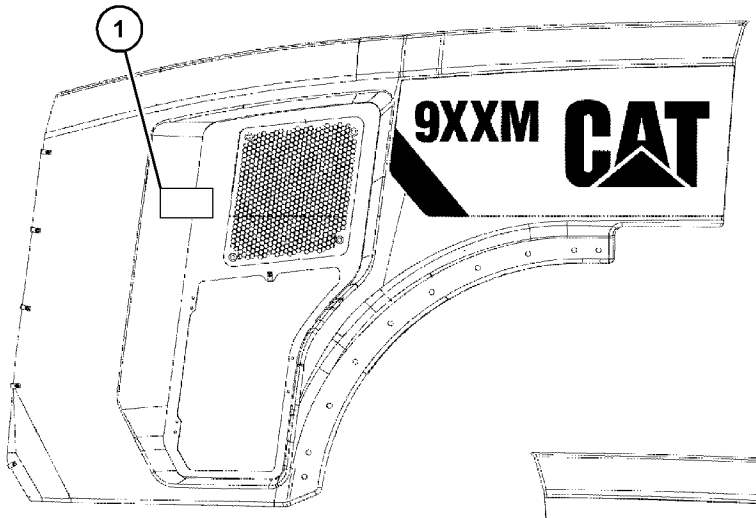

RIGHT SIDE VIEW

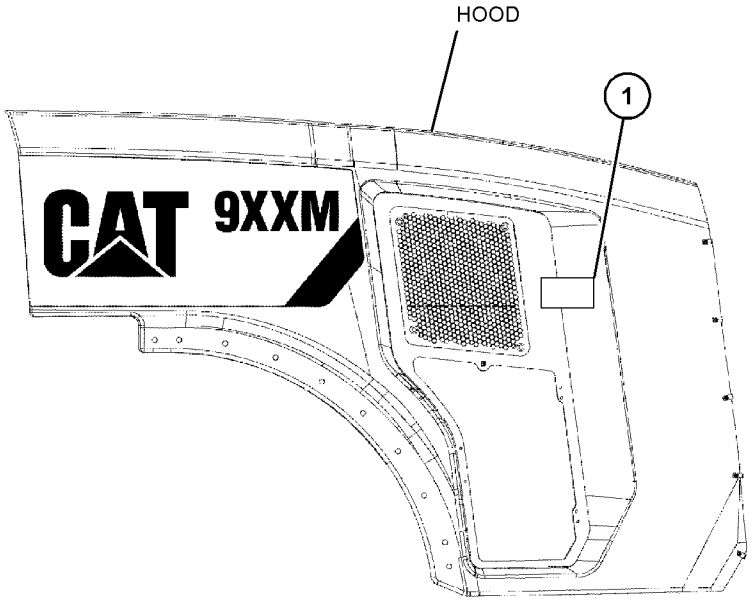

LEFT SIDE VIEW

GRAPHIC #1

<END>

g03845006

468-0171 FILM GP

S/N: TNS1-UP

FOR USE WITH WASTE HANDLER

SMCS-7405, 7557

i06721545

NOTE	REF NO	GRAPHIC REF	PART NUMBER	QTY	PART NAME 1 2 3 4 5 6 (PRODUCT LEVEL)	SEE PAGE
	1	1	**468-0165**	2	FILM-INFORMATION (WASTE HANDLER)	

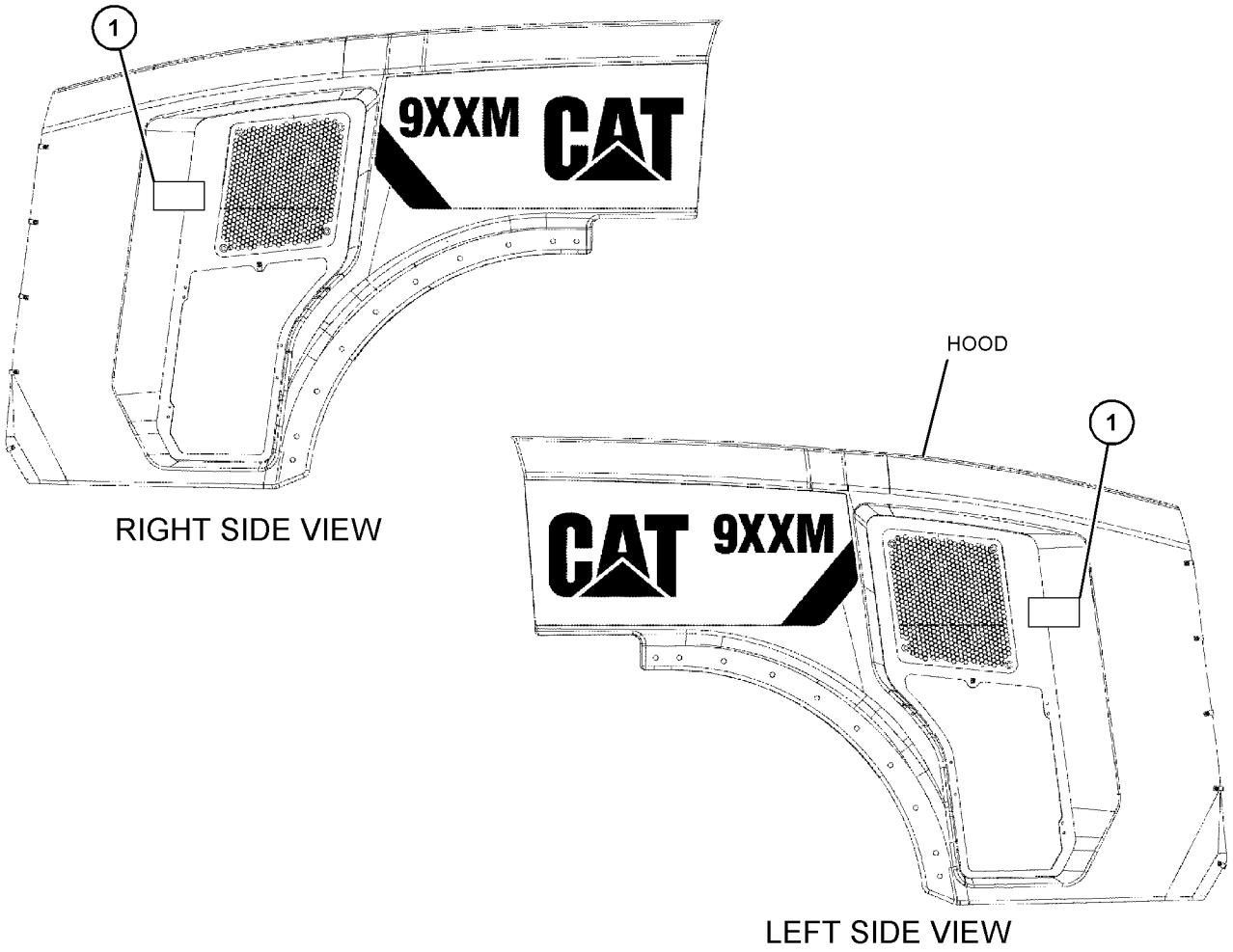

GRAPHIC #1

<END>

g03845006

484-9694 FILM GP-INTERNATIONAL—VARIABLE PITCH FAN

S/N: TNS1-UP

PART OF 505-1548 CONTROL AR-FAN

SMCS-7405, 7557

i06779828

NOTE	REF NO	GRAPHIC REF	PART NUMBER	QTY	PART NAME 1 2 3 4 5 6 (PRODUCT LEVEL)	SEE PAGE
	1	1	**442-6378**	2	FILM-WARNING (FLYING DEBRIS, READ OMM)	

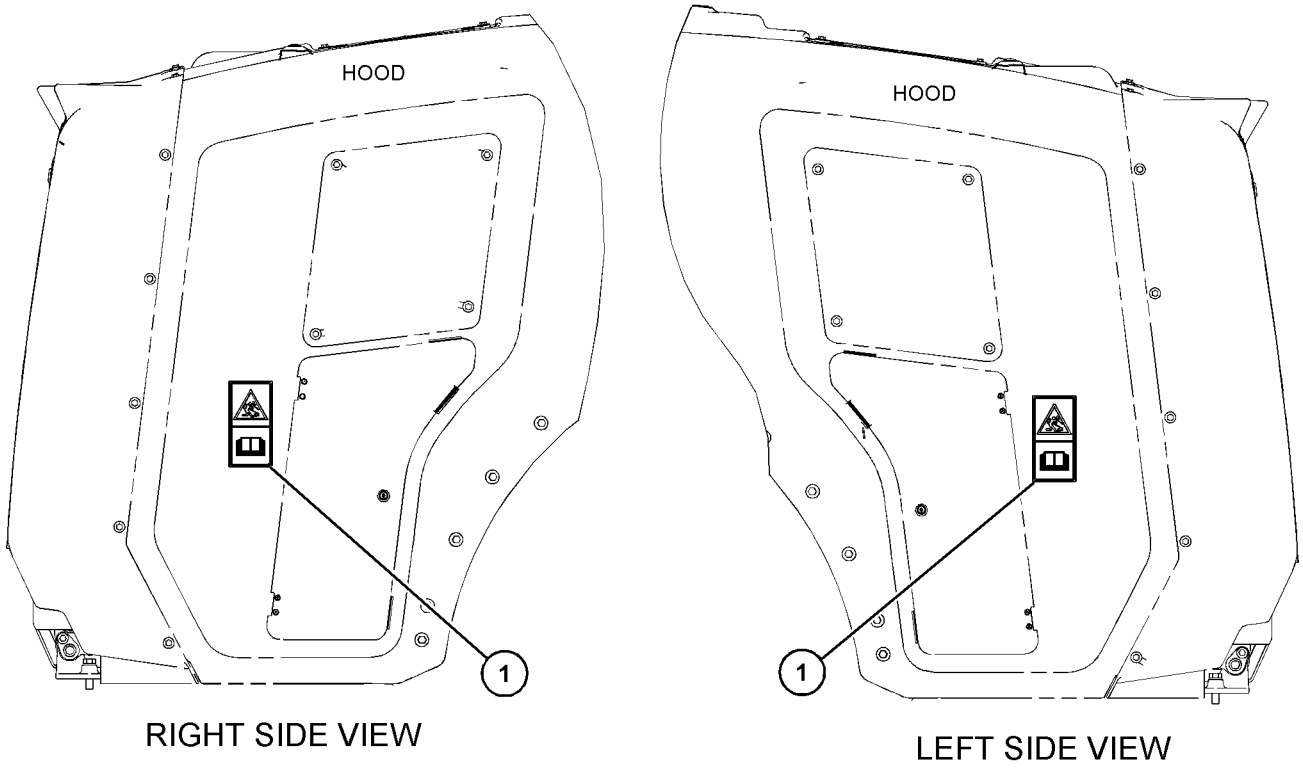

RIGHT SIDE VIEW

LEFT SIDE VIEW

GRAPHIC #1

<END>

g06030245

489-0460 LINES GP-DIAGNOSTIC

S/N: TNS1-UP

PART OF 492-4021 HYDRAULIC AR

SMCS-7554 **i06811086**

NOTE	REF NO	GRAPHIC REF	PART NUMBER	QTY	PART NAME 1 2 3 4 5 6 (PRODUCT LEVEL)	SEE PAGE
	1	1	**2P-1279**	11	LOCKNUT (9/16-18-THD)	
	2	1	**4E-2289**	1	ANGLE AS	
	3	1	**7K-1181**	10	STRAP-CABLE (5.72-MM DIA)	
	4	1	*148-8325*	2	CONNECTOR AS	
					(EACH INCLUDES)	
		1	**3J-1907**	1	SEAL-O-RING	
		1	**4J-5477**	1	SEAL-O-RING	
		1	**6V-8641**	1	CONNECTOR	
	5	1	*148-8351*	1	ELBOW AS	
		1	**4J-5477**	1	SEAL-O-RING	
		1	**6V-9849**	1	ELBOW	
	6	1	*148-8368*	7	ELBOW AS	
					(EACH INCLUDES)	
		1	**3J-1907**	1	SEAL-O-RING	
		1	**4J-5477**	1	SEAL-O-RING	
		1	**6V-8627**	1	ELBOW	
	7	1	*164-5567*	11	COUPLER AS-QUICK DISCONNECT (MALE)	
					(EACH INCLUDES)	
		1	**6V-3965**	1	FITTING (QUICK DISCONNECT)	
		1	**214-7568**	1	SEAL-O-RING	
	8	1	*169-5863*	11	ADAPTER AS	
					(EACH INCLUDES)	
		1	**4J-5477**	1	SEAL-O-RING	
		1	**7X-7945**	1	ADAPTER (9/16-18-THD)	
	9	1	**197-6453**	1	BRACKET AS	
M		1	**8T-3490**	1	NUT-WELD (M10X1.5-THD)	
	10	1	**324-3459**	1	PLATE AS	
M	11	1	**344-5675**	1	NUT (M10X1.5-THD)	
	12	1	**372-3658**	1	BRACKET AS	
M		1	**8T-3490**	1	NUT-WELD (M10X1.5-THD)	
	13	1	**452-7162**	1	BRACKET AS	
		1	**9C-4935**	1	PLATE	
	14	1	**489-0454**	1	HOSE AS	
	15	1	**511-0272**	1	HOSE AS	
	16	1	**511-0273**	1	HOSE AS	
	17	1	**511-0274**	1	HOSE AS	
	18	1	**511-0275**	1	HOSE AS	
	19	1	**511-0276**	1	HOSE AS	
	20	1	**511-0277**	1	HOSE AS	
	21	1	**511-0278**	1	HOSE AS	
	22	1	**511-0279**	1	HOSE AS	
	23	1	**511-0280**	1	HOSE AS	
	24	1	**206-2423**	3	SADDLE	
	25	1	**4D-7388**	4	CLIP	
	26	1	**6V-0852**	11	CAP-DUST	
M	27	1	**7X-2549**	1	BOLT (M12X1.75X100-MM)	
	28	1	**8T-4121**	11	WASHER-HARD (11X21X2.5-MM THK)	
M	29	1	**8T-4136**	9	BOLT (M10X1.5X25-MM)	

489-0460 **LINES GP-DIAGNOSTIC (**contd.**)** **i06811086**

NOTE	REF NO	GRAPHIC REF	PART NUMBER	QTY	PART NAME 1 2 3 4 5 6 (PRODUCT LEVEL)	SEE PAGE
	30	1	**8T-7971**	1	WASHER-HARD (13.5X25.5X5-MM THK)	
	31	1	**9X-8582**	3	CLIP	

M - METRIC PART

489-0460 **LINES GP-DIAGNOSTIC (**contd.**)** **i06811086**

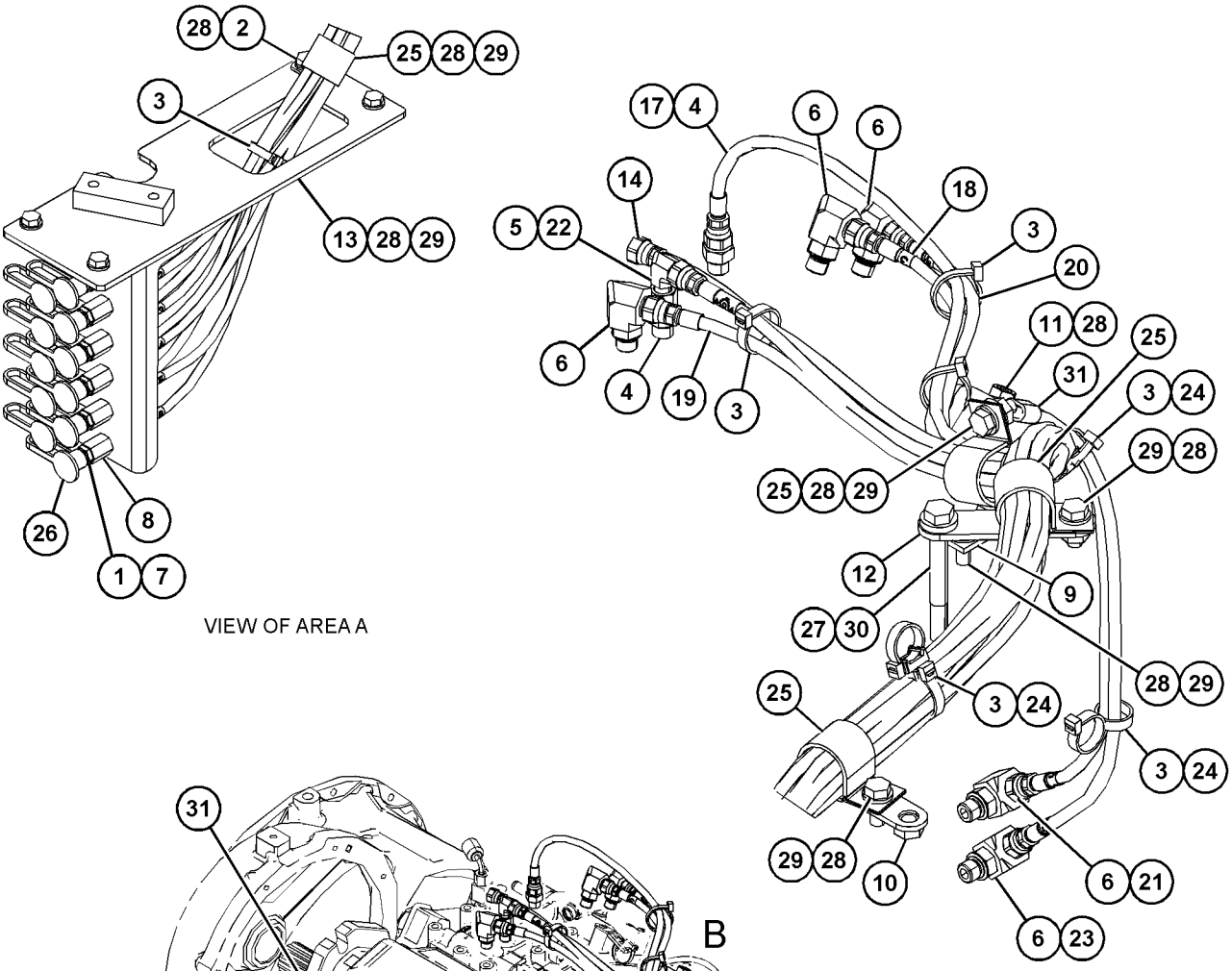

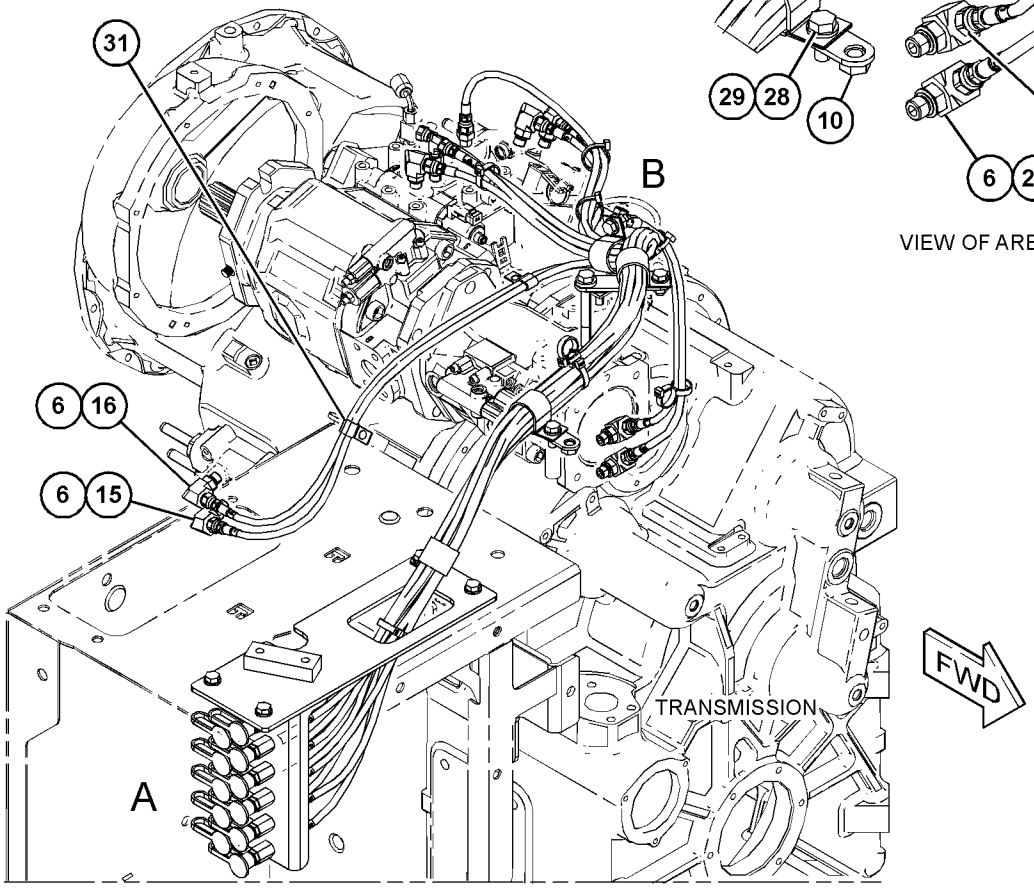

GRAPHIC #1 <END> g06129492

439-3509 PLATE & FILM GP

S/N: TNS1-UP

PART OF 456-5817 CONFIGURATION AR

SMCS-7405, 7557 **i06759826**

NOTE	PART NUMBER	QTY	PART NAME 1 2 3 4 5 6 (PRODUCT LEVEL)	SEE PAGE
M	**8T-4179**	4	BOLT (M12X1.75X20-MM)	
			(ON FRONT FRAME, IN PLACE OF WINDOW CLEANING PLATFORM, WHEN IT IS NOT ORDERED)	
	353-7106	1	FILM-IDENTIFICATION (GREASE POINTS)	
			(ON FRONT FACE OF HYDRAULIC SERVICE CENTER, 40-MM OUTBOARD FROM INSIDE EDGE & BOTTOM SURFACE IN-LINE WITH AXIS OF INBOARD FASTENER MOUNTING BOX ASSEMBLY-HYDRAULIC)	
	381-1819	1	FILM-IDENTIFICATION (PORT)	
			(ON INSIDE OF HYDRAULIC SERVICE CENTER DOOR 10-MM DOWN FROM TOP, 36-MM AWAY FROM HINGED EDGE OF DOOR)	
	438-5944	1	FILM-IDENTIFICATION (GREASE PRESSURE PORTS)	
			(ON INSIDE LEFT PLATE OF NEEF TOP EDGE ALIGNED WITH DIFFERENTIAL LOCK VALVE & 25-MM REARWARD OF VALVE)	
	444-8663	1	FILM-IDENTIFICATION (GREASE POINTS, READ OMM)	
			(FILM UNDER GREASE FITTING BLOCK ON RH OF FRONT FRAME)	
	455-1084	1	FILM-IDENTIFICATION (CAT)	
			(ON INSIDE OF ELECTRICAL DISCONNECT DOOR, CENTERED VERTICALLY & 15-MM AWAY FROM DOOR LATCH)	
	8C-5346	1	FILM-IDENTIFICATION (HYDRAULIC OIL FILTER)	
			(CENTERED ON HYDRAULIC OIL FILTER, 50-MM FROM BOTTOM OF DRAIN PLUG)	
	363-8055	1	FILM-INFORMATION (BELT ROUTING)	
			(ON ENGINE BELT GUARD CENTERED BELOW ENTANGLEMENT WARNING FILM)	
	146-6747	2	FILM-INFORMATION (24-VOLT)	
			((1) ON OUTSIDE OF BATTERY BOX COVER, CENTERED ON COVER & APPROX 90-MM FROM TOP) ((1) INSIDE JUMP START RECEPTACLE BOX BELOW FILM WARNING)	
	449-9226	1	FILM-INFORMATION (CAT SATO)	
			(ON FRONT FACE OF BATTERY BOX CENTERED ABOVE THE TRANSMISSION OIL FILL, APPROX 95-MM FROM BOTTOM EDGE OF BOX)	
	468-8049	1	FILM-INFORMATION (ENGINE OIL, READ OMM)	
			(ON ENGINE SHIELD SUPPORT BRACKET CENTERED BELOW ENGINE OIL FILL NECK)	
	3E-1552	1	FILM-INSTRUCTION (TRANSMISSION FILTER)	
			(TO TRANSMISSION FILTER, 70-MM FROM BOTTOM OF D DRAIN PLUG)	
	124-2456	2	FILM-INSTRUCTION (NO STEP)	
			(ON TOP OF FILM PARALLEL TO RIB IN HOOD PANEL BUT OFFSET BY 10-MM FROM ROUND OF RIB; ALIGN REAR EDGE OF FILM WITH CENTER OF AIR INLET HOLE)	
A	**4P-6236**	1	PLATE-SERIAL NUMBER (ENGINE)	
			(ON ENGINE BLOCK)	
	239-6986	1	PLATE-SERIAL NUMBER (MACHINE)	
			(ALIGN LEFT EDGE OF PIN PLATE WITH LEFT EDGE OF PIN STAMPING OF NON ENGINE END FRAME & BOTTOM OF PIN PLATE IS LOCATED 15-MM ABOVE TOP OF PIN STAMPING)	
	193-5914	6	PLUG	

439-3509 **PLATE & FILM GP (**contd.**)** **i06759826**

NOTE	PART NUMBER	QTY	PART NAME 1 2 3 4 5 6 (PRODUCT LEVEL)	SEE PAGE
			((3) IN PLACE ON THE LH FRONT FRAME IN PLACE OF LIFT SENSOR BRACKET) ((2) IN PLACE ON SIDE STEP OF WINDOW CLEANING PLATFORM WHEN ATTACHMENT IS NOT ORDERED) ((1) IN REAR OF CAB IN PLACE OF AFTERTREATMENT ECM)	
	9R-1499	2	REFLECTOR (RED)	
			(TO BE CENTERED IN RECESSES OF COUNTERWEIGHT)	
	8T-4223	4	WASHER-HARD (13.5X25.5X3-MM THK)	
			(ON FRONT FRAME, IN PLACE OF WINDOW CLEANING PLATFORM, WHEN IT IS NOT ORDERED)	
A - NOT PART OF THIS GROUP M - METRIC PART				
			<END>	

454-4493 PLATE & FILM GP

S/N: TNS1-UP

PART OF 455-3940 CAB AR

SMCS-7405, 7557

i06683375

NOTE	REF NO	GRAPHIC REF	PART NUMBER	QTY	PART NAME 1 2 3 4 5 6 (PRODUCT LEVEL)	SEE PAGE
	1	2	**201-2733**	2	FILM-INFORMATION (INPUT/OUTPUT)	
	2	2	**299-7880**	1	FILM-INSTRUCTION (NO STEP)	
	3	2	**345-0351**	1	FILM-IDENTIFICATION (IGNITION SWITCH)	
	4	2	**448-2831**	1	FILM-INSTRUCTION (AIR CONDITIONER, READ MAN)	
	5	2	**466-3275**	1	FILM-WARNING (NO WELD, NO DRILL, READ OMM)	

454-4493 **PLATE & FILM GP** (contd.) **i06683375**

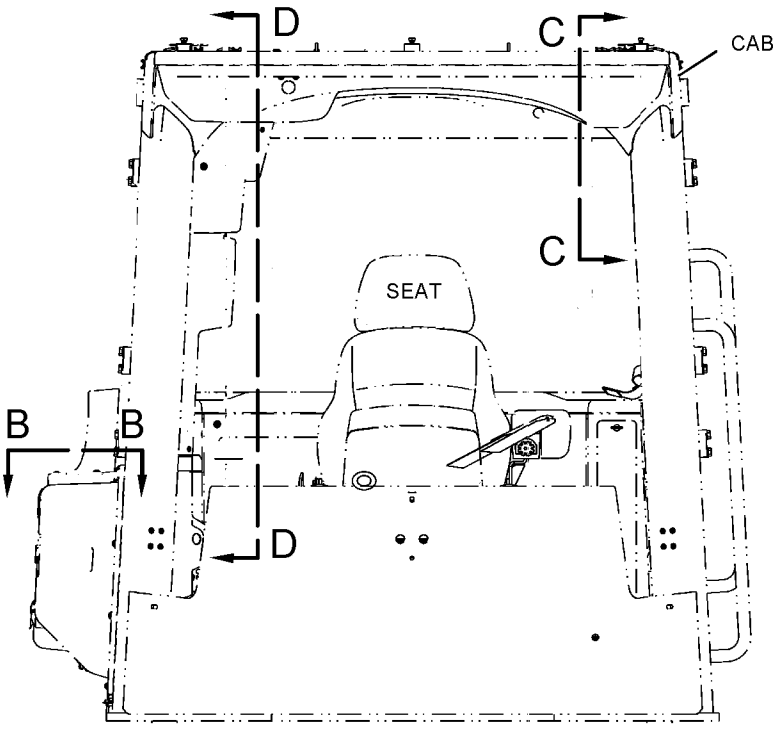

FRONT VIEW

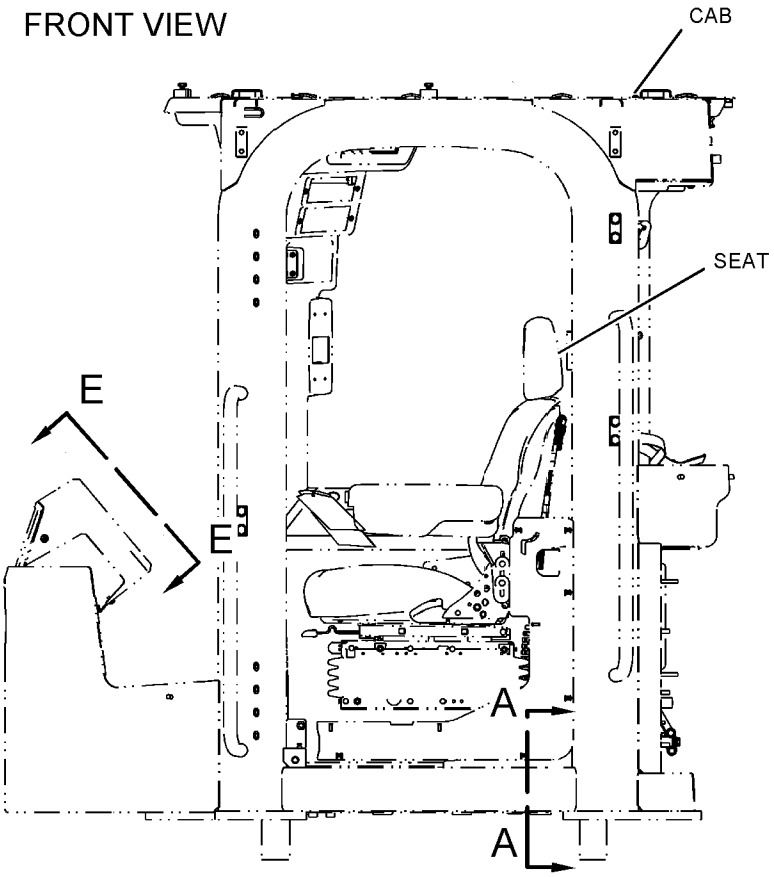

LEFT SIDE VIEW

REFER TO ALL ILLUSTRATIONS OF THIS GROUP FOR AUXILIARY VIEWS

GRAPHIC #1

g06049542

454-4493 **PLATE & FILM GP (**contd.**)** **i06683375**

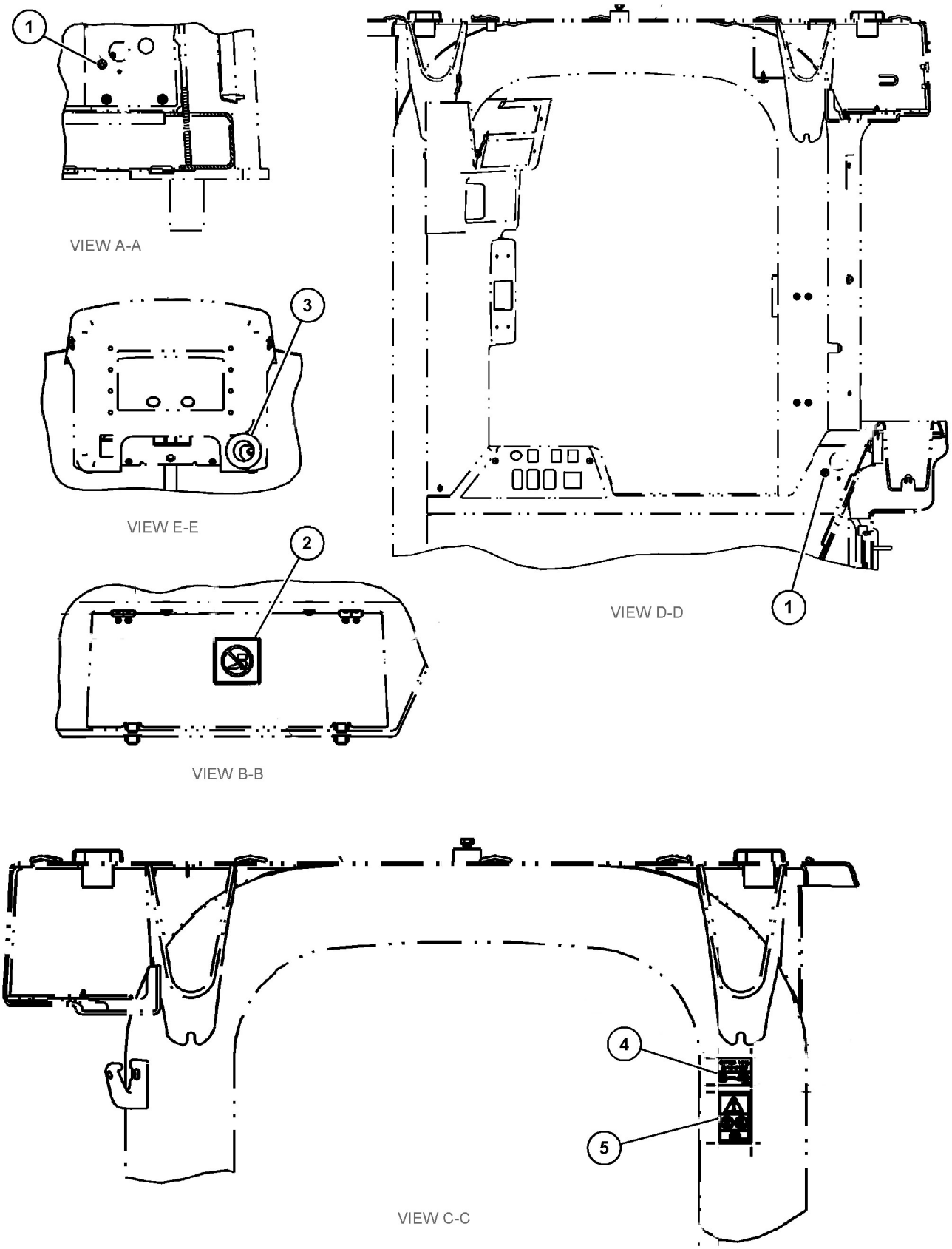

GRAPHIC #2 <END> g06049562

354-8706 PLATE-SERIAL NUMBER

S/N: TNS1-UP

SMCS-7557 **i06656237**

NOTE	REF NO	GRAPHIC REF	PART NUMBER	QTY	PART NAME 1 2 3 4 5 6 (PRODUCT LEVEL)	SEE PAGE
					(NO SERVICED PARTS)	

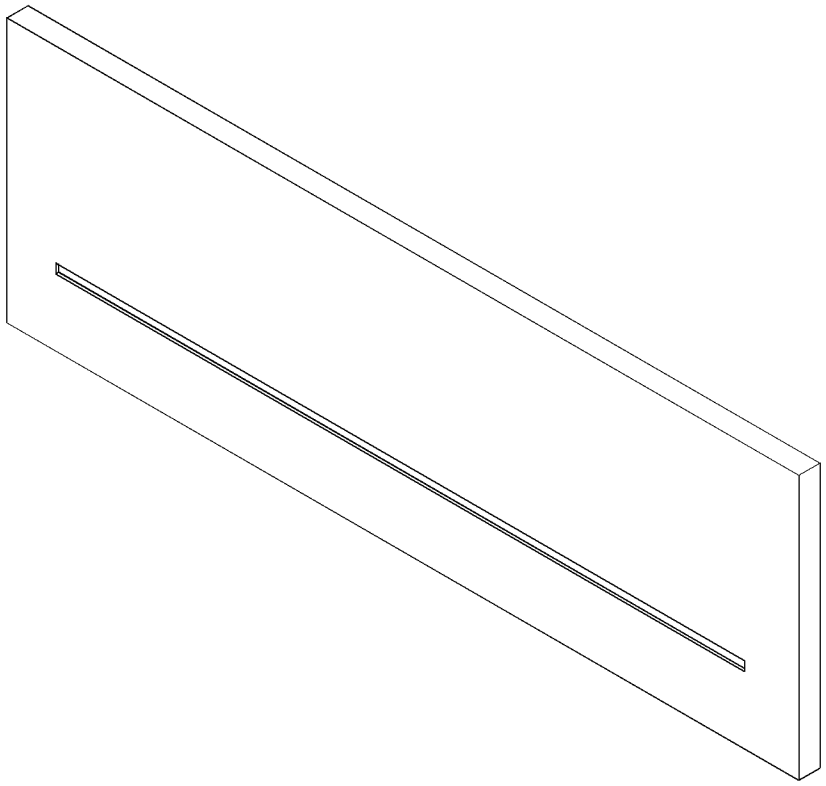

GRAPHIC #1 <END> g06065710

PART NUMBER INDEX

Part	Page
0	
0S-1594	311
0S-1603	22
0T-0244	840
	841
0T-0489	840
	841
1	
1B-2578	216
1B-3925	485
1B-8704	646
1D-4639	596
1F-7567	612
1H-1023	679
1H-3244	135
1H-7339	712
	714
1J-9671	565
	574
	678
	716
1K-6853	354
	356
	361
	364
	369
	373
	376
	379
1K-6985	712
	714
1L-3768	646
1L-5072	312
1L-7518	329
	331
	334
1M-4986	136
1M-6119	135
	136
1M-6120	135
	136
1N-7057	339
1P-0810	135
	136
	156
	159
	161
	162
	164
	165
	166
	167
	168
	170
	171
	225
	227
	260
	506
	556
1P-3702	681
1P-3703	629
	633
	724
1P-3704	618
	625
	631
	633
1P-3705	621
1P-3707	321
	325
1P-4278	68
	87
1P-4578	621
	631
	660
1P-4584	621
1P-5767	618
1P-7009	801
1S-0668	712
	714
1S-0994	62
	114
	621
	716
1S-7252	135
1S-9593	102
1S-9937	80
1T-0043	291
1T-0936	398
	635
	637
1T-1356	398
1T-1639	291
1U-2218	596
1U-8846	342
1V-3593	868
	871
1V-6688	531
	533
1W-6735	24
1W-9589	191
	194
2	
2B-2404	504
2C-9259	877
	878
	880
	882
	883
	884
	886
	888
	890
	892
	894
2D-2443	392
2D-2507	406
2D-2508	406
2D-2509	406
2D-2511	392
	►406
2D-2751	174
	232
	795
	796
2D-4867	710
	711
2D-6235	798
2D-6642	798
2D-9454	329
	331
	334
	336
2D-9455	329
	331
	334
	336
2G-8096	769
2H-3088	329
	334
2H-3922	214
2H-6184	291
2J-3506	896
	901
	905
	906
	907
	908
2J-3507	913
	916
2J-5997	874
2J-7686	594
2J-7761	312
2K-4973	798
	849
2K-8257	642
2K-9295	352
	360
	363
	366
	369
2L-8050	159
	210
2L-8051	159
2L-8052	155
	159
2L-8054	232
2L-8058	159
	210
2L-8060	155
	159
2L-8061	232
2L-8066	159
2L-8069	155
	159
	168
2L-8071	166
2L-8076	159
	263
2L-8077	164
2L-8079	155
	249
2M-0344	354
	356
	358
	372
	375
	378
2M-9780	129
	131
	354
	356
	358
	372
	375
	378
	620
	635
	637
	640
	652
	676
	678
	692
	709
	712
	714
	716
	719
	730
2P-1279	619
	936
2P-1293	62
	608
2P-1373	342
	344
	346
	348
	350
	354
	356
	358
	372
	375
	378
2P-8421	290
2P-8986	291
2P-8987	340
2R-1866	609
2R-1920	739
2S-2596	679
	728
	730
2S-4078	60
	671
2V-1771	136
2V-3726	854
2V-9404	352
	360
	363
	366
	369
	372
	375
	378
2W-9533	480
2Y-3209	805
2Y-5429	87
2Y-5829	232
3	
3B-2062	456
3B-4124	352
	360
	363
	366
	369
3B-4508	764
3B-4611	550
	551
3B-4617	456
3B-4618	53
3B-4631	910
3B-6552	503
3B-8485	508
3B-8486	500
3B-8488	508
3B-8489	396
	436
	479
	485
	503
	710
	711
	740
	910
3D-2239	406
3D-2824	60
	61
	129
	290
	320
	321

► PRIMARY REFERENCE

PART NUMBER INDEX

Part	Page
	324
	325
	381
	382
	389
	390
	572
	616
	619
	620
	627
	629
	654
	660
	716
	725
	730
	734
3D-4603	654
3E-1552	939
3E-2310	290
	303
3E-3371	155
	244
3E-3377	155
	159
3E-3383	159
	165
3E-3805	769
3E-4096	68
	83
3E-4315	394
	395
	396
3E-4321	62
	383
	804
3E-4352	550
	551
	791
3E-4353	774
	779
	783
3E-4356	331
	334
3E-5001	283
	285
	288
3E-5169	244
3E-5226	155
	168
3E-5464	746
3E-6602	769
3E-6754	137
3E-6909	383
	672
3E-7403	720
3E-8020	481
	800
	831
	858
	859
3E-8320	135
3E-9413	860
3F-5792	654
3F-5950	485
3F-6166	508
3F-9556	217
	814
3G-7624	592
	593
3G-8054	721
3G-8057	721
3G-8779	594
	740
3H-0442	404
	580
	684
	694
3J-1877	200
3J-1907	68
	87
	131
	206
	207
	269
	290
	295
	303
	305
	320
	324
	387
	402
	572
	573
	574
	609
	612
	619
	620
	627
	639
	654
	666
	667
	669
	671
	673
	674
	677
	679
	683
	684
	688
	693
	694
	697
	716
	719
	720
	728
	730
	809
	810
	936
3J-4818	798
	849
3J-7354	61
	62
	68
	320
	324
	565
	572
	573
	580
	619
	620
	635
	637
	652
	654
	664
	666
	669
	671
	673
	679
	681
	683
	688
	693
	700
	701
	703
	704
	719
	720
	730
	764
	910
3J-7479	728
3J-7719	291
3J-9449	596
3K-0360	19
	60
	62
	225
	227
	283
	285
	288
	303
	305
	308
	310
	382
	385
	387
	572
	574
	582
	583
	619
	635
	637
	640
	648
	650
	654
	678
	703
	704
	706
	712
	714
	720
	725
	730
	764
3K-2876	485
3K-9770	913
	914
3L-0594	537
	538
	539
3N-0759	366
3P-1210	652
3P-1932	62
3P-2404	801
3P-3839	835
3P-5903	721
3P-5904	721
3P-7832	283
	285
	288
3P-9900	849
3S-0004	646
3S-2093	114
	135
	164
	174
	195
	225
	227
	232
	240
	241
	244
	249
	255
	263
	266
	267
	305
	308
	385
	508
	572
	716
	724
	764
	798
	801
	849
	868
	871
3S-6049	136
3S-6050	136
3S-9233	342
	350
	354
	356
	358
	360
	363
	366
	369
	372
	375
	378
	683
	688
	693
3T-0851	487
	499
	852
3T-0852	137
	263
3T-6541	348
	366
3V-2333	735
3V-2431	714
3V-4791	137
	263

4

4B-4158	654
4B-4277	232
4B-4278	849
4B-9373	336
4B-9374	336
4B-9782	312
	730
4D-1248	136
4D-1326	216
4D-6988	137
4D-7388	68
	321
	325
	936
4D-7733	574

PART NUMBER INDEX

Part	Page
	721
4D-7794	200
	265
	266
4D-9517	87
4D-9986	172
	173
4E-1384	57
4E-2289	936
4E-3273	394
4E-5724	135
4E-5985	394
4E-6986	395
4E-8534	352
	360
	363
	366
	369
	372
	375
	378
4E-8951	568
4E-9324	394
	395
	396
4F-2294	215
	217
4F-4042	913
	916
4F-6464	128
4F-7827	896
	901
	905
	906
	907
	908
4F-9652	352
	360
	363
	366
	369
	372
	375
	378
4H-3001	481
4H-6112	87
4I-0472	114
4I-6994	432
4I-7077	453
4J-0519	728
4J-0520	614
	618
	625
	631
	633
	716
	721
	724
	730
	733
4J-0522	608
	614
	621
	631
	681
4J-0528	721
4J-2506	354
	356
	358
	372
	375
	378
4J-5267	629
4J-5309	683
	688
	693
4J-5477	87
	131
	295
	619
	620
	621
	666
	669
	671
	673
	719
	720
	910
	936
4J-7533	404
	500
	580
	639
	679
	683
	688
	693
4J-8996	676
4J-8997	681
4K-0684	913
	914
4K-1388	678
4K-2039	706
4K-6781	485
4K-8864	225
4K-9429	846
4L-3641	137
	263
4L-6499	216
4M-0189	646
4M-6582	857
4M-7470	550
	551
4M-8973	500
	503
4N-0684	602
4P-6236	939
4P-7428	244
	255
4P-7581	114
	225
	227
	232
	241
	244
	251
	255
	266
	267
	308
	321
	325
	609
4P-8134	255
	266
	308
4S-1962	137
	321
	325
	385
4S-4455	697
4S-5565	714
4S-8264	854
4S-8598	290
4T-0370	485
4T-0932	678
4T-0933	678
4T-0935	678
4T-0946	678
4T-1700	703
4T-3015	914
4T-4509	703
4T-5073	678
4T-8101	913
4T-9123	914
4T-9124	914
4V-8577	849
4V-8674	735
5	
5A-3604	654
5B-0935	504
5C-2874	441
	442
5C-2890	57
	210
	251
	520
	744
	754
	756
	791
	849
5C-7261	57
	157
	175
	176
	232
	754
	756
	764
	814
5C-9553	244
	263
	774
	779
	783
5D-1026	109
	114
5D-9629	444
	837
5F-3106	642
5F-3144	291
5F-9757	87
	531
	533
5G-2003	481
5G-3676	508
	621
5G-6973	478
5G-7636	398
5G-8480	421
	422
5H-2730	318
5H-2767	676
5H-3193	730
5H-4020	614
5I-3333	482
5I-4200	167
	169
5J-2722	728
5J-2974	318
	730
5K-0983	485
5K-1568	312
5K-1787	597
5K-2298	504
5K-5338	801
5K-9090	320
	321
	324
	325
	588
	616
	619
	620
	625
	629
	666
	671
	673
5K-9242	504
5K-9243	504
5L-4759	342
	350
	354
	356
	358
	360
	363
	366
	369
	372
	375
	378
5L-7200	220
5M-2057	679
5M-2894	291
5M-6214	361
	364
	370
	436
	503
	504
	712
	714
5P-0537	774
	778
5P-0600	79
5P-0767	109
	310
	744
	804
5P-1076	141
	225
	227
	460
	490
	492
	494
	562
	563
	578
	588
	614
	631
	633
	667
	669
	672
	674
	792
	793
	827
5P-1506	158
5P-2766	155
5P-2957	568
5P-3119	342
	344
	346
	348
	350

► PRIMARY REFERENCE

PART NUMBER INDEX

Part	Page
	354
	356
	358
	372
	375
	378
5P-3422	500
	504
	508
5P-3454	231
5P-3455	159
5P-3629	398
5P-3741	500
5P-3928	744
5P-3929	801
5P-3948	801
5P-4106	744
5P-4115	137
5P-4116	62
	68
	87
	93
	137
	255
	263
	409
	464
	495
	496
	497
	498
	529
	537
	538
	539
	550
	551
	662
	764
	773
	775
	779
	783
	801
5P-4295	574
5P-4423	849
5P-4484	344
	346
	348
	352
5P-4571	155
	171
	220
5P-4961	318
5P-5148	261
5P-5461	504
5P-5463	504
5P-5602	568
5P-5630	211
5P-5637	519
	524
	542
	543
5P-5689	232
5P-6129	746
5P-6300	635
	637
5P-6629	261
5P-7175	318
5P-7462	609
5P-7463	609
5P-7464	62
5P-7465	62
	308
5P-7466	625
5P-7467	625
5P-7468	244
	318
	588
	625
5P-7469	244
	318
	588
	625
5P-7470	621
5P-7471	621
5P-7848	769
5P-7857	405
5P-7957	846
5P-7958	43
5P-8112	625
5P-8136	874
5P-8182	621
5P-8245	291
	837
5P-8247	313
	342
	344
	346
	348
	350
	352
	354
	356
	358
	360
	363
	366
	369
	372
	375
	378
5P-8248	896
	901
	905
	906
	907
	908
5P-8250	596
5P-8309	57
	76
5P-8334	394
	395
	396
5P-8444	244
	318
	588
	621
5P-8500	805
5P-8939	697
5P-9085	500
	508
5P-9186	405
5P-9212	53
5P-9436	620
5P-9806	291
5T-5682	393
5T-8417	512
5T-9033	508
5V-0353	740
5V-0354	740
5V-1386	740
5V-1508	740
5V-1511	740
5V-6152	241
5V-6153	241
5V-8780	57
5V-9155	39
5V-9221	621
5W-1636	500
	508
5W-1992	746
5W-2005	746
5W-9420	701

6

Part	Page
6A-5277	165
6B-4370	329
	331
	334
6C-5304	342
	344
	346
	348
	350
	352
	354
	356
	358
	360
	363
	366
	369
	372
	375
	378
6C-7875	519
	520
	522
	524
6C-8882	397
6C-9038	141
6C-9149	461
	462
6D-4244	66
	381
	383
6D-4246	137
6D-5801	124
6D-8305	574
6E-0381	582
6E-1637	679
6E-3518	678
6E-4288	727
6E-4431	678
6E-4701	639
	666
	669
	671
	673
	►677
6E-5066	580
	664
6E-5200	703
6E-5289	730
6E-5291	730
6E-5397	730
6E-6129	640
6E-6528	699
	700
6F-0253	143
	218
6F-3930	406
6F-5188	312
6F-5559	354
	356
	358
	372
	375
	378
6F-7045	214
6H-5139	312
6H-9049	500
	508
	529
6I-0217	12
	27
	33
	40
	51
	72
	101
	118
	123
6I-0254	27
	72
6I-0260	27
	33
	39
	40
	51
	52
	92
	118
	127
6I-0292	196
6I-0293	196
6I-0363	33
6I-0454	27
6I-0456	149
6I-0563	101
6I-0572	33
	341
	515
	516
	517
6I-0593	118
6I-0594	52
	123
6I-0631	120
	121
6I-0645	27
6I-0654	30
	123
	253
	258
6I-0839	72
6I-0917	92
6I-1090	47
6I-1418	232
6I-1497	45
6I-4200	118
6I-4681	33
6I-9248	313
6I-9249	313
6J-2419	683
	693
6J-2680	619
6J-3134	654
	683
	693
6J-3958	500
6J-4568	734
6J-6506	730
6J-6516	730
6J-6517	730
6K-6307	683
	693
6K-6967	508
6K-8178	621
6K-8987	391
6L-3616	504
6M-5062	706

► PRIMARY REFERENCE

PART NUMBER INDEX

Part	Page
6N-1604	172
	173
6P-0699	531
	533
6P-5560	769
6R-7943	652
6S-3002	654
6S-6646	555
6S-8620	114
6T-3631	244
6T-3632	244
6T-3633	244
6T-6052	730
6T-6505	165
6T-6506	165
6V-0292	137
	245
6V-0357	683
	693
6V-0400	633
6V-0491	155
	165
6V-0683	609
6V-0826	621
6V-0852	62
	131
	291
	303
	305
	321
	325
	574
	622
	639
	664
	765
	936
6V-0974	721
6V-1230	114
6V-1249	255
6V-1720	290
6V-1820	291
6V-1889	801
6V-1970	2
	▶805
6V-2313	568
6V-2314	852
6V-2366	231
6V-2394	296
	298
	300
6V-2496	793
6V-2686	211
6V-2687	232
	746
	857
6V-3251	68
6V-3265	265
6V-3378	68
6V-3838	405
6V-3940	291
6V-3965	61
	131
	290
	303
	305
	320
	324
	573
	619
	639
	664
	764
	936
6V-4248	846
6V-5048	318
	327
	328
6V-5142	692
6V-5192	654
6V-5215	837
6V-5217	291
6V-5218	341
6V-5230	398
6V-5393	683
	688
	693
6V-5555	681
6V-5556	703
	704
6V-5657	594
6V-5686	342
	344
	346
	348
	350
	352
	354
	356
	358
	360
	363
	366
	369
	372
	375
	378
6V-5696	291
6V-5839	291
	398
	775
	779
	783
6V-5842	291
6V-5851	868
	871
6V-6317	836
6V-6339	700
6V-6535	874
6V-6604	487
6V-6716	244
6V-7238	19
	310
6V-7357	53
	55
	75
	245
	251
	408
	796
6V-7359	62
	308
6V-7607	684
	694
6V-7636	774
	778
	782
6V-7687	600
	778
6V-7723	659
6V-7728	146
6V-7732	352
	360
	363
	366
	369
	372
	375
	378
6V-7744	57
	600
	844
6V-8076	68
6V-8077	303
	305
	620
	639
6V-8177	837
6V-8210	329
	331
	334
	336
6V-8225	152
6V-8237	594
6V-8352	699
6V-8378	135
	216
	217
6V-8397	60
	61
	131
	290
	303
	305
	320
	324
	382
	508
	529
	572
	573
	574
	609
	612
	619
	620
	627
	639
	666
	669
	671
	673
	677
	683
	684
	693
	694
	697
	719
	720
	764
6V-8398	60
	61
	305
	382
	383
	389
	390
	403
	572
	573
	619
	620
	621
	666
	669
	673
	716
	720
	725
6V-8400	60
6V-8467	642
6V-8625	382
	619
	725
6V-8626	131
6V-8627	87
	936
6V-8628	666
	669
	673
6V-8633	389
	390
6V-8634	305
	764
6V-8635	320
	324
	671
6V-8636	131
	303
	305
	572
	609
	612
	619
	666
	669
	673
	720
6V-8637	60
6V-8638	114
6V-8639	720
6V-8641	131
	295
	936
6V-8642	114
	131
	719
6V-8647	619
	910
6V-8714	320
	324
	629
6V-8716	60
	666
	669
	673
6V-8721	716
6V-8722	574
	720
6V-8723	114
	382
6V-8724	131
	305
	572
	609
	627
	666
	669
	671
	673
	684
	694
	697
6V-8781	572
	619
	671
6V-8782	60
	572
6V-8785	619
6V-8801	567
6V-8836	437
6V-8934	619
6V-8945	621
6V-8979	621
6V-8981	382

▶ PRIMARY REFERENCE

PART NUMBER INDEX

Part	Page
	621
6V-8983	60
6V-8987	305
6V-8989	627
6V-8994	573
6V-8996	627
6V-9001	619
	720
6V-9004	716
6V-9005	385
6V-9006	60
6V-9007	60
	619
	627
	725
6V-9008	320
	324
	588
	616
	666
	671
	673
6V-9010	671
6V-9161	573
6V-9168	305
	508
	574
6V-9169	62
	383
	574
	622
6V-9170	627
6V-9182	60
6V-9200	572
6V-9508	720
6V-9510	65
	66
6V-9511	625
6V-9632	232
	437
	545
	744
6V-9746	60
	61
	381
	382
	608
	619
	620
	625
	627
	666
	669
	673
	716
	724
	725
6V-9828	622
6V-9829	612
	622
	667
	669
	674
6V-9830	574
	622
6V-9833	320
	324
6V-9835	295
6V-9836	619
	666
	669
	673
6V-9838	65
6V-9843	572
6V-9844	572
6V-9847	320
	324
6V-9849	720
	936
6V-9850	60
	609
6V-9853	60
6V-9854	671
6V-9872	61
	671
	764
6V-9873	619
	666
	669
	673
6V-9876	303
	720
	764
6W-1638	329
	331
	334
	336
6W-2888	608
6W-2890	608
6W-3468	889
6W-4126	394
	395
	396
6W-5817	456
6W-5818	456
6W-6672	225
	227
	245
	801
6Y-0373	300
6Y-0809	290
6Y-1031	352
	360
	363
	366
	369
6Y-1032	352
	360
	363
	366
	369
6Y-1758	300
6Y-2538	342
	344
	346
	348
	350
	354
	356
	358
	372
	375
	378
6Y-4638	290
6Y-8265	296
	298
	300
6Y-8288	300
6Y-8289	300
6Y-8506	290
6Y-8512	296
	298
	300

7

Part	Page
7B-1597	43
	612
7C-4616	27
7D-1553	716
7D-5252	406
7D-6922	798
7D-7111	103
7D-7469	393
7D-8348	485
7D-8349	485
7E-7606	24
7F-6998	795
7G-2950	910
7G-2951	910
7G-3832	629
7G-3833	629
7G-3834	629
7G-7053	261
7G-8839	485
	710
	711
7I-1024	381
	383
	501
	509
	625
7I-2272	232
	404
	708
7I-8663	719
7J-0204	635
	637
	683
	693
7J-1089	730
7J-4321	730
7J-8209	291
7J-8210	339
7J-8611	87
7J-9108	60
	61
	65
	66
	131
	382
	572
	574
	621
	627
	719
	720
	721
7J-9933	640
	678
7K-1181	60
	65
	66
	68
	87
	114
	152
	155
	159
	172
	173
	174
	191
	192
	199
	225
	227
	232
	238
	241
	244
	249
	251
	255
	260
	261
	263
	265
	266
	267
	320
	324
	382
	385
	500
	508
	529
	556
	609
	616
	618
	619
	625
	716
	719
	795
	796
	804
	831
	833
	936
7K-3176	744
7K-3304	744
7K-5634	312
7K-9205	740
7K-9209	740
7K-9210	740
7K-9212	740
7K-9218	740
7L-6326	291
7M-8485	60
	61
	290
	317
	320
	324
	342
	344
	346
	348
	350
	352
	354
	356
	358
	360
	363
	366
	369
	372
	375
	378
	588
	616
	619
	625
	640
	666
	669
	671
	673
	676

PART NUMBER INDEX

Part	Page
	679
	683
	688
	693
	728
7M-9910	775
7N-0296	211
7N-0718	135
	►214
7N-2059	211
7N-7221	220
7N-9801	224
7R-2750	155
7R-2751	155
7S-1912	383
7S-3916	508
	574
	622
	716
7S-3919	508
	574
	622
	716
7S-8158	340
7T-0093	164
	168
7T-0094	159
7T-1099	419
	420
	421
	422
	444
	452
	453
	482
	540
	559
	671
	825
	925
7T-2671	500
7T-4532	753
7T-5961	913
7T-5963	913
7T-6496	635
	637
7T-6799	222
7T-9356	290
7T-9987	136
7T-9988	136
	137
7U-4891	137
7U-4892	137
7V-3791	331
	336
7V-5628	266
7V-6571	255
	574
7V-9791	555
7W-2632	149
7W-4669	49
7X-0474	57
7X-0515	53
	55
	57
7X-0550	468
7X-0579	57
	87
	93
	114
	261
	408
	447
	448
	449
	456
	487
	515
	516
	517
	786
	852
7X-0583	467
7X-0584	619
7X-0608	157
	232
7X-0613	555
7X-0618	439
	550
	551
7X-0620	216
7X-0632	57
7X-0818	199
	232
7X-0838	572
7X-2454	128
	602
7X-2459	305
	572
	666
	669
	673
7X-2533	255
7X-2534	266
	500
7X-2537	529
7X-2539	114
7X-2543	131
	721
7X-2545	383
7X-2549	485
	936
7X-2552	43
	429
7X-2554	128
7X-2556	662
7X-2563	526
7X-2564	394
	500
	836
7X-2575	392
7X-2581	427
7X-2582	817
7X-2622	32
7X-3229	931
7X-3391	462
	616
7X-3392	614
7X-4743	62
	622
7X-6315	144
	231
7X-7702	804
7X-7715	572
7X-7729	43
	53
	55
	57
	62
	75
	76
	77
	83
	87
	93
	137
	200
	261
	310
	321
	325
	383
	391
	409
	425
	426
	437
	438
	449
	458
	465
	466
	467
	468
	469
	473
	475
	487
	490
	492
	494
	500
	508
	523
	531
	533
	547
	549
	553
	561
	564
	574
	588
	600
	602
	609
	614
	616
	622
	625
	631
	633
	644
	645
	697
	716
	791
	801
	824
	827
	835
	852
7X-7877	456
	765
7X-7898	519
	524
7X-7920	129
7X-7927	868
	871
7X-7928	868
	871
7X-7945	620
	936
7X-7958	68
7Y-1528	341
7Y-1976	69
7Y-2522	414
	453
	483
	737
7Y-3173	220
	777
7Y-4538	633
7Y-5074	115
	601
7Y-5116	592
	593
7Y-5217	654
7Y-5497	531
	533
7Y-6338	444
	925
7Y-8171	531
	533
7Y-9099	837
8	
8B-6127	609
	612
8B-6342	342
	344
	346
	348
	350
	354
	356
	358
	373
	376
	379
8B-6343	342
	344
	346
	348
	350
	354
	356
	358
	372
	375
	378
8B-7216	654
8B-9294	588
8C-2926	291
	646
8C-3205	629
8C-3206	614
	618
	625
	631
	633
	660
	716
	721
	724
	730
8C-3226	681
8C-3445	48
8C-3446	62
	320
	324
8C-3447	321
	325
8C-3451	62
8C-3979	300
8C-5064	801
8C-5346	939
8C-5607	146
8C-5608	146
8C-5917	135
8C-6364	765
8C-6915	508
8C-6959	115

► PRIMARY REFERENCE

PART NUMBER INDEX

Part	Page
8C-6965	654
8C-8400	381
	382
8C-8417	627
8C-8422	291
	346
	348
	350
	352
	354
	356
	358
	361
	364
	367
	370
	373
	376
8C-8514	144
	568
8C-8550	300
8C-8988	720
	764
8C-8989	382
8C-8992	141
8D-3791	512
8D-6542	451
8E-1279	300
8E-3416	296
	298
	300
8E-3433	300
8E-3435	296
8E-4743	918
8E-5261	290
8E-5300	877
	878
	880
	882
	883
	884
	886
	888
8E-5301	877
	878
	880
	882
	883
	884
	886
	888
8E-5380	291
8E-5559	918
8E-5735	300
8E-5737	300
8E-5742	300
8E-8317	296
	298
	300
8E-8321	300
8E-8652	300
8E-8653	298
8E-8654	296
	298
	300
8F-1326	808
8F-1434	135
	216
	217
8F-3469	683
	688
	693
8F-6230	654
8F-9206	730
8F-9516	592
	593
8H-5303	214
8H-5306	214
8H-7521	291
	654
8J-0101	654
8J-0331	678
8J-0412	652
8J-1689	592
	593
8J-2933	874
8J-4143	918
8J-4869	352
	360
	363
	366
	369
	372
	375
	378
8J-6815	730
8K-1207	313
8K-4691	631
	633
8L-2786	33
	584
8L-3837	567
8L-8413	135
	136
	137
	797
8M-2031	398
8M-2771	195
8M-2773	227
	303
	305
8M-7160	290
8M-8489	646
8N-2622	220
8P-6364	451
8P-7857	398
8P-8555	398
8P-9770	915
8R-0721	574
8R-2916	764
8R-2918	764
8R-3695	251
	754
	756
8R-7783	453
8R-9843	889
	890
8S-0023	62
8S-0024	62
8S-0948	115
	137
8S-1783	453
	482
8S-2634	135
8S-7169	318
8T-0120	61
8T-0122	135
8T-0197	61
8T-0251	296
	298
	300
8T-0271	398
8T-0328	129
	135
	232
	765
	795
	852
8T-0336	342
	344
	346
	348
	350
	352
	358
	360
	363
	366
	369
	373
	376
	379
8T-0337	746
	857
8T-0358	340
8T-0372	329
	334
	395
8T-0375	313
8T-0389	137
	179
	180
	181
	182
	531
8T-0404	60
	382
	572
8T-0655	352
	360
	363
	366
	369
	373
	376
	379
8T-0656	32
8T-0667	594
8T-1158	227
8T-1160	55
8T-1788	594
8T-1791	596
8T-1887	62
	137
	500
8T-1888	62
	137
	500
8T-1889	65
	66
	137
	263
	305
	622
	629
	697
8T-1890	65
	66
	137
	263
	305
	622
	629
	697
8T-1905	574
8T-2353	671
8T-2444	487
8T-2503	652
8T-2561	79
8T-2659	808
8T-2899	568
8T-2925	283
	285
	288
8T-3016	87
8T-3282	352
	360
	363
	366
	369
	373
	376
	379
8T-3490	53
	55
	59
	61
	68
	77
	87
	93
	131
	135
	200
	244
	308
	320
	321
	324
	325
	382
	421
	422
	437
	444
	449
	458
	465
	466
	487
	490
	503
	508
	529
	531
	533
	540
	541
	543
	545
	548
	551
	559
	573
	588
	600
	602
	609
	614
	616
	620
	621
	627
	643
	716
	744
	773
	774
	778
	782
	792
	825
	829
	847
	925
	936

PART NUMBER INDEX

Part	Page
8T-3597	421
	422
	443
	444
	460
	508
	525
	526
	588
	633
	666
	669
	673
	775
	778
	782
	925
8T-3612	59
	61
	200
	232
	409
	448
	449
	456
	464
	495
	496
	531
	533
	540
	602
	825
	852
8T-3647	449
8T-3727	352
	360
	363
	366
	369
8T-3991	775
8T-3994	837
8T-4121	43
	53
	55
	62
	65
	66
	68
	83
	87
	115
	131
	137
	189
	191
	192
	194
	199
	200
	211
	225
	227
	232
	238
	241
	245
	255
	261
	263
	265
	266
	267
	303
	305
	308
	318
	321
	325
	381
	383
	385
	449
	459
	477
	480
	500
	503
	504
	508
	529
	537
	574
	588
	599
	602
	609
	612
	614
	616
	618
	622
	625
	627
	629
	631
	633
	643
	644
	645
	660
	672
	697
	716
	721
	724
	725
	728
	730
	733
	744
	765
	773
	792
	793
	801
	804
	806
	807
	816
	817
	818
	836
	844
	846
	847
	848
	852
	936
8T-4122	43
	141
8T-4123	32
	391
	485
	642
	817
8T-4131	391
	394
	917
8T-4132	53
	55
	199
8T-4133	211
	318
	425
	426
	458
	546
	564
	602
	806
8T-4136	43
	53
	55
	57
	62
	66
	68
	83
	93
	115
	131
	137
	200
	227
	245
	255
	261
	263
	266
	306
	318
	321
	325
	383
	391
	449
	458
	469
	487
	490
	492
	494
	500
	504
	508
	529
	547
	549
	553
	574
	588
	599
	602
	609
	614
	622
	627
	629
	631
	633
	644
	645
	697
	716
	721
	724
	725
	728
	801
	826
	827
	847
	848
	936
8T-4137	62
	87
	137
	189
	191
	192
	194
	199
	225
	227
	232
	241
	245
	255
	265
	266
	303
	306
	308
	310
	321
	325
	383
	385
	437
	458
	477
	480
	494
	500
	503
	504
	508
	523
	574
	609
	612
	622
	643
	672
	721
	724
	744
	765
	773
	801
	817
8T-4138	100
	124
	520
	522
	684
	688
	694
	744
	754
	756
	775
	779
	783
8T-4139	62
	225
	228
	245
	255
	383
	460
	485
	490
	492
	494

► PRIMARY REFERENCE

PART NUMBER INDEX

Part	Page
	550
	551
	552
	553
	562
	563
	578
	609
	614
	631
	633
	660
	667
	670
	672
	674
	725
	827
8T-4140	461
	462
	555
8T-4141	817
8T-4145	679
	684
	694
8T-4167	392
	602
8T-4171	23
	520
	522
8T-4172	574
8T-4176	485
	721
8T-4177	62
8T-4178	609
	616
	622
8T-4179	232
	245
	801
	910
	939
8T-4181	98
	99
8T-4182	425
	426
	445
	509
	716
8T-4183	468
	485
	566
	588
	600
	602
	622
	642
8T-4184	622
	633
	824
8T-4185	137
	245
	261
	381
	383
	529
	574
	622
8T-4186	53
	95
	137
	189
	192
	325
	385
	509
	574
	622
	629
	793
	818
	848
8T-4189	93
	137
	251
	341
	497
	498
	662
8T-4190	427
8T-4191	241
	263
	266
	523
	612
8T-4192	115
	255
	614
	667
	670
	672
	674
	710
	711
	792
	793
8T-4193	32
	642
	824
8T-4194	95
	321
	325
	608
	618
	662
8T-4195	32
	43
	53
	55
	57
	62
	77
	83
	87
	95
	200
	241
	245
	308
	318
	409
	440
	449
	467
	468
	487
	500
	574
	599
	602
	609
	614
	622
	697
	716
	721
	724
	792
	793
	801
	806
	816
	824
	825
	827
	835
	852
8T-4196	57
	62
	68
	93
	245
	255
	459
	465
	466
	473
	475
	494
	501
	503
	523
	531
	533
	537
	574
	588
	600
	614
	618
	622
	625
	627
	629
	631
	633
	644
	645
	660
	716
	721
	730
	804
	807
	827
8T-4200	172
	173
	195
	211
	220
	255
	261
	501
	555
	664
	822
8T-4205	245
	251
	754
	756
8T-4222	83
	440
	445
	487
	824
	825
8T-4223	53
	55
	62
	115
	232
	245
	255
	318
	321
	325
	383
	470
	474
	485
	509
	552
	553
	566
	574
	588
	600
	602
	608
	609
	614
	618
	619
	629
	631
	633
	642
	644
	645
	660
	681
	721
	725
	749
	794
	801
	910
	940
8T-4224	43
	55
	172
	173
	175
	176
	195
	199
	200
	211
	220
	251
	255
	263
	308
	341
	480
	501
	529
	571
	602
	622
	664
	744
	754
	756
	765
	822
8T-4226	53
	55
	57
	77
	325
	449
	515
	516
	517
	622

PART NUMBER INDEX

Part	Page
	836
8T-4241	655
8T-4244	439
	602
	608
	764
	782
8T-4646	308
8T-4648	633
8T-4779	467
	468
8T-4780	740
8T-4821	602
8T-4896	32
8T-4908	62
	137
	261
	408
	464
	487
	515
	516
	517
	844
8T-4910	321
	325
	588
	622
	721
8T-4935	189
	192
8T-4956	53
	55
	318
	460
	494
	509
	562
	563
	574
	614
	622
	629
	633
	644
	645
	672
	749
	827
8T-4967	478
8T-4970	232
	432
8T-4971	199
	200
8T-4983	62
	318
8T-4984	721
8T-5005	574
	631
	730
8T-5093	55
8T-5353	290
	295
8T-5360	840
	841
8T-5372	55
	443
	559
8T-5400	868
	871
8T-5436	721
8T-5439	394
	501
	740
	836
	917
8T-5460	740
8T-6356	625
8T-6383	199
8T-6430	835
8T-6466	53
	55
	57
	65
	66
	69
	225
	228
	245
	318
	385
	531
	533
	574
	616
	622
	629
	631
	633
	721
	730
	733
	801
	836
8T-6684	321
	325
	616
8T-6685	622
	716
8T-6703	321
	325
8T-6745	594
8T-6869	115
	308
8T-6876	305
	720
8T-6902	775
	779
	783
8T-6912	87
	765
8T-6974	241
	556
8T-7087	625
8T-7338	57
	494
	547
	549
	827
8T-7524	701
8T-7525	648
	650
	652
8T-7546	720
8T-7547	43
	57
	69
	87
	175
	176
	409
	447
	448
	495
	496
	497
	498
	531
	533
	535
	536
	852
8T-7568	596
8T-7877	529
8T-7934	53
	95
	574
	616
8T-7968	389
8T-7971	53
	55
	937
8T-8442	648
	650
	652
	699
8T-8549	775
8T-8729	167
	179
	180
	183
	189
	192
	217
	222
	223
	224
	244
	261
	664
	767
	801
	812
	814
	815
8T-8730	215
	568
	664
	767
8T-8737	129
	147
	148
	155
	158
	159
	161
	162
	164
	165
	166
	167
	168
	169
	170
	171
	179
	180
	222
	225
	249
	260
	714
	759
	760
	761
	762
	812
	814
	815
	831
8T-8902	764
8T-8987	671
8T-9005	786
8T-9079	874
	913
	914
8T-9371	849
8T-9515	398
	648
	650
8T-9532	701
8T-9597	648
	650
8T-9655	114
	231
8T-9658	643
8T-9757	135
8V-0622	135
8V-1412	396
8W-8528	135
8X-5963	412
8X-7853	413
	452
8X-9618	231
8Y-3925	453
	482
8Y-4489	444
	925
9	
9B-7233	220
9C-0093	740
9C-4935	416
	738
	739
	936
9C-5344	318
9C-6016	313
	315
	316
9C-6041	342
	344
	346
	348
	350
	352
	354
	356
	358
	360
	363
	366
	369
	373
	376
	379
9C-6313	352
	360
	363
	366
	369
9C-6809	418
	452
	453
9C-7907	740
9C-7929	419
	420
	444
	453
	738
9C-8287	329
	331
	334

► PRIMARY REFERENCE

PART NUMBER INDEX

Part	Page
	336
9C-8419	342
	344
	346
	348
	350
	354
	356
	358
	373
	376
	379
9C-9446	453
9D-3769	137
9F-5644	214
9G-0003	135
9G-0004	135
9G-2673	746
9G-3695	767
9G-5127	318
9G-5315	342
	344
	346
	350
	352
	354
	356
	358
	360
	363
	369
	372
	375
	378
9G-9154	135
9J-5550	594
9J-5754	635
	637
9J-7099	594
	596
9J-8441	918
9J-9821	730
9K-7951	406
9M-1328	712
	714
9M-1974	233
	291
	341
	730
9M-2008	339
9M-2904	798
9M-4995	503
9M-5024	342
	344
	346
	348
	350
	352
	354
	356
	358
	360
	363
	366
	369
	373
	376
	379
9M-5884	852
9M-7394	312
9M-7958	39
9M-7959	744
9M-8406	115
	261
	318
	744
9N-0869	233
	765
	854
9P-4898	622
9P-6571	135
9P-7121	103
9R-1499	940
9R-2613	321
	420
	444
	483
	500
	540
	736
	925
9R-2640	541
	792
	910
9R-2672	420
	453
	837
9R-2821	738
9R-3761	420
9R-4595	444
	925
9R-5008	535
	536
9R-9866	420
9S-1812	504
9S-4167	124
9S-4180	679
	683
	688
	693
9S-4181	342
	344
	346
	348
	350
	352
	354
	356
	358
	360
	363
	366
	369
	372
	375
	378
	683
	688
	693
9S-4182	327
	683
	688
	693
9S-4183	60
	654
	660
	730
9S-4185	33
	385
	712
	714
9S-4190	354
	356
	358
	372
	375
	378
	635
	637
	712
	714
9S-4191	327
	402
	654
	666
	669
	673
	683
	688
	693
	728
9S-6154	730
9S-7712	504
9S-8001	404
	580
	639
	679
9S-8002	124
	328
	580
	591
	652
	654
	664
	679
	681
	700
	730
9S-8003	678
9S-8004	290
	387
	679
	683
	688
	693
9S-8005	387
	648
	650
	654
9S-8006	114
	652
	676
	730
9S-8007	635
	637
	683
	693
9S-8008	129
	290
9S-8752	311
9S-9334	640
9T-1573	▶678
	679
9T-7202	678
9T-7220	730
9T-8672	730
9U-1793	460
9U-2331	795
9U-2332	796
9U-4431	795
	796
9U-8263	795
9U-9322	300
9V-0453	456
9V-2429	329
	334
9V-2899	889
	890
9W-0852	100
	220
	244
	643
	746
9W-2109	652
9W-2110	652
9W-6747	905
	906
	907
	908
9W-7783	654
	683
	693
9W-9271	298
9W-9278	296
	298
	300
9W-9399	296
	298
	300
9W-9436	296
	298
	300
9W-9952	662
9X-1046	233
	795
9X-1386	183
	714
9X-1813	164
	169
	204
	261
9X-2027	352
	360
	363
	367
	369
	373
	376
	379
	679
9X-2032	87
	443
	559
	746
	854
9X-2038	53
	55
	189
	192
	220
	408
	437
	481
	487
	520
	522
	769
	779
	783
	800
9X-2039	438
	492
	564
	773
	775
	777
	779
	783
9X-2040	494
	540
	564
	775
	779
	783
	824
	827

▶ PRIMARY REFERENCE

PART NUMBER INDEX

Part	Page
9X-2041	561
	564
	775
	779
	783
9X-2042	220
	779
	783
9X-2043	251
	437
	768
	769
	786
	820
	854
9X-2044	189
	192
	195
	231
	754
	756
	773
	779
	783
	820
9X-2045	147
	148
	189
	192
	197
	233
	754
	756
	786
	800
	854
9X-2046	769
9X-2085	573
9X-2289	61
9X-2372	225
9X-2373	227
9X-2480	622
9X-2488	744
	746
9X-2538	60
9X-2546	654
9X-2614	320
	324
9X-2619	329
	331
	334
	336
9X-2620	329
	331
	334
	336
9X-3401	114
	129
	155
	158
	159
	161
	162
	164
	165
	168
	170
	171
	203
	204
	208
	220
	238
	249
	263
	759
	760
	761
	762
	831
9X-3402	143
	155
	158
	159
	161
	162
	163
	164
	165
	166
	167
	168
	169
	170
	171
	218
	225
	227
	238
	249
	260
9X-3465	179
	180
9X-3598	592
	593
9X-3959	49
9X-4244	175
	176
9X-4609	291
9X-5632	137
9X-6032	597
	764
9X-6155	197
	775
	778
	782
	854
9X-6165	146
	233
	251
	744
9X-6381	684
	694
9X-6395	678
	703
9X-6421	775
	779
	783
9X-6579	622
9X-6611	712
	714
9X-7345	261
9X-7378	801
9X-7383	744
	801
9X-7384	744
	801
9X-8243	158
9X-8250	62
	65
	627
9X-8256	23
	57
	75
	98
	99
	100
	152
	189
	192
	199
	200
	241
	245
	266
	432
	499
	501
	520
	522
	556
	622
	679
	775
	779
	783
	791
	796
9X-8257	32
	128
	427
	429
	566
	642
9X-8258	391
	427
	429
	817
9X-8267	124
9X-8582	501
	937
9X-8979	648
	650
	652
9X-9825	136

0

Part	Page
030-0060	329
	331
	334
	336
030-0061	329
	331
	334
	336
030-1705	136
030-4606	660
031-0249	774
033-5879	584
033-6033	327
	584
033-6034	405
033-6043	699
	700
033-6783	620
033-8248	503
067-2551	43
	61
	573
	621
	721
	801
067-6043	15
067-6070	210
067-6135	11
	14
067-6179	27
067-6823	15
	49
077-3241	317
081-5645	666
	669
	673
081-5648	131
085-7329	774
085-7356	131
	573
	666
	669
	673
085-8091	629
	679
090-8247	526
	548
090-9555	778
	782
091-0081	241
	261
	500
	629
	801
091-1735	414
	420
091-9035	65
	66
	321
	325
	385
	529
	616
	720
095-0673	352
	354
	358
	360
	363
	369
	372
	375
	378
095-1513	404
	684
	694
095-1586	403
095-1671	327
	328
095-1750	403
	583
095-1751	403
	692
096-1349	251
096-3831	640
	679
096-4034	746
096-4833	232
096-6166	430
	431
	612
	697
	703
096-6467	740
097-7234	155
	171
099-3649	537
	538
	539
	571
	822
099-6418	127

► PRIMARY REFERENCE

PART NUMBER INDEX

Part	Page
1	
100-3253	179
	180
	181
	182
100-3254	179
	180
	181
	182
100-3255	179
	180
	181
	182
100-3751	27
100-4003	52
100-4458	118
100-4830	101
	258
100-4838	746
100-4841	29
100-8010	679
	728
100-8011	679
101-0003	849
101-3129	68
	308
	503
	573
	621
	716
101-3895	12
	27
101-4845	637
101-7178	9
101-7396	200
101-7397	654
101-9161	767
102-2244	714
102-8801	159
	161
	170
	249
	767
102-8802	100
	102
	133
	155
	159
	168
	171
	183
	208
	217
	224
	238
	261
	263
	555
	598
	643
	746
	753
	801
102-8803	155
	168
	203
	204
	244
102-8804	114
	155
	158
	159
	189
	192
	714
102-8805	159
	165
	170
	171
	179
	180
	220
	222
	244
	664
	812
	814
	831
102-9542	395
102-9909	52
102-9941	26
103-5705	12
	51
103-8133	155
104-2091	786
104-7336	300
104-8903	60
105-2740	92
105-3482	602
105-3486	774
105-6117	568
105-8034	231
106-0430	572
106-1139	736
106-4175	485
106-8715	381
	382
106-9586	341
107-0269	730
107-2348	90
107-3394	3
	▶916
107-6032	231
107-8265	61
108-2949	136
108-4311	849
108-5157	703
108-5471	774
	778
	782
108-6709	500
	508
109-1645	244
109-9015	905
	▶913
109-9016	913
109-9017	913
109-9052	907
	908
	▶918
110-0203	155
110-2023	609
	667
	669
	671
	673
110-6269	452
110-6844	158
110-7524	861
	866
	867
110-8152	774
111-0859	20
	134
111-4627	786
111-7421	868
	871
111-9916	▶403
	404
	708
112-1817	612
	697
112-5344	57
112-6646	754
	756
112-7704	210
112-8293	79
113-0693	726
113-3438	509
113-4676	588
113-5304	340
113-8129	51
	72
113-8490	231
113-8491	231
113-8492	231
114-0623	403
114-5157	798
114-6658	197
	778
	782
	800
	820
	854
114-8843	170
	225
	227
115-1326	340
115-1653	395
115-4968	555
115-5669	427
	429
116-0118	199
	244
	255
	261
116-5763	78
116-8026	736
117-1385	227
117-5268	726
117-7629	506
117-7631	506
	527
	556
117-7634	506
117-8929	774
118-0275	95
118-7313	555
118-8267	485
118-8270	485
118-8271	485
118-8275	485
118-8276	485
118-8586	714
118-9587	441
	442
119-2325	629
119-3662	164
	165
	166
	167
	168
119-6220	620
119-9706	778
	782
120-4394	648
	650
	652
121-1029	559
	671
121-3307	73
	74
121-4405	612
	697
121-9870	778
	782
	786
122-8353	318
123-2169	303
	639
123-2899	50
123-3202	200
123-3827	53
	55
123-4003	352
	360
	363
	366
	369
	372
	375
	378
123-4750	609
	683
	693
123-7615	155
123-9624	679
123-9694	231
124-0065	482
124-0174	87
124-2456	852
	939
124-3019	135
124-3536	34
124-3815	39
	101
	202
	253
	258
124-4884	795
124-8909	324
125-1393	703
125-3295	568
125-5006	453
	482
125-7874	155
	158
	159
	161
	162
	163
	164
	166
	167
	170
	171
	238
	249
125-7875	155
	158
	159
	164
	166
125-7876	169
125-8176	423
	424
	559
125-8534	265
125-9738	415
126-1052	863
126-1767	155
	158
	159
	161
	162

▶ PRIMARY REFERENCE

PART NUMBER INDEX

Part	Page
	164
	165
	168
	170
	171
	203
	204
	208
	220
	238
	249
	263
	753
	831
126-1768	143
	155
	158
	159
	161
	162
	163
	164
	165
	166
	167
	168
	169
	170
	171
	218
	225
	227
	238
	249
	260
126-1774	159
126-2565	508
126-6872	131
126-8472	487
126-8473	730
127-2170	232
	773
	774
	778
	782
127-3361	9
127-4833	588
127-6513	485
127-6514	485
127-8889	600
127-9323	227
	244
	382
128-4123	155
128-5016	155
129-3032	890
	892
	894
129-3178	868
	871
129-3180	749
129-7927	654
129-7979	654
129-8222	▶727
	730
130-0099	429
130-3515	179
	180
130-5300	114
	189
	192
	211
	232
	238
	241
	244
	255
	261
	263
	308
	643
	664
	765
130-8288	▶905
130-9984	61
	136
131-3093	857
131-3540	447
	448
	538
	539
131-3987	754
	756
131-6143	79
132-1089	913
132-1805	263
132-1829	▶133
	231
132-4715	916
132-4907	596
132-5152	61
132-5789	61
	225
	227
	232
	238
	241
	244
	249
	251
	255
	261
	263
	308
	385
	609
	716
132-6964	525
132-7534	341
132-8502	535
	536
133-1011	27
133-3260	835
133-5545	637
	684
	694
	695
	709
133-6934	136
	381
	382
	508
	573
	621
133-9469	90
134-2540	164
	232
134-3079	485
134-3355	135
134-4126	144
	231
134-5245	463
134-9569	220
135-4061	910
135-5009	831
135-5935	726
136-1953	746
136-4184	200
136-5490	833
136-9371	740
136-9380	740
137-2255	774
	779
	782
137-4234	903
137-6617	32
137-6627	32
137-6645	225
	227
137-8400	580
	▶709
138-1509	290
	▶317
138-1510	317
138-1645	283
	285
	288
138-8454	232
	769
	771
	820
138-8885	798
138-8886	798
139-2840	652
139-3785	77
139-9229	▶913
139-9230	913
141-0709	712
	714
141-1232	387
141-2759	231
141-4847	877
	878
	880
	882
	883
	884
	886
	888
141-6518	437
141-8762	892
	894
141-8823	889
141-8830	889
	890
	892
	894
141-9046	889
	890
	892
	894
141-9047	889
	890
	892
	894
141-9048	889
	890
	892
	894
141-9049	889
	890
	892
	894
141-9050	889
	890
	892
	894
141-9051	889
	890
	892
	894
141-9400	▶889
	905
142-1657	255
142-3331	135
142-3953	136
	238
142-8977	387
142-9406	915
143-1284	499
143-2236	837
144-0195	868
	871
144-0367	621
144-4613	382
144-8344	445
144-8976	616
145-0326	849
145-4911	22
145-6669	97
146-1892	568
146-6581	719
146-6747	939
147-0385	68
147-1445	155
	249
147-1446	155
147-1689	339
147-2864	878
	880
	882
	884
	886
	888
147-5835	592
	593
147-7633	878
	886
	910
148-1928	290
148-3072	453
148-3483	635
	637
	701
148-7841	313
148-8309	290
148-8315	131
	719
148-8316	619
	910
148-8317	320
	324
	629
148-8318	305
	764
148-8325	131
	295
	936
148-8326	61
	671
	764
148-8327	60
148-8328	389
	390
148-8335	320
	324
	671
148-8336	131
	303
	305
	572
	609
	612
	619
	666
	669

▶ PRIMARY REFERENCE

PART NUMBER INDEX

Part	Page
	673
	719
148-8339	60
	666
	669
	673
148-8340	720
148-8347	60
	619
	627
	725
148-8351	720
	936
148-8352	671
148-8353	619
	720
148-8357	320
	324
	588
	616
	666
	671
	673
148-8360	60
148-8361	572
148-8362	321
	325
	616
148-8363	303
	720
	764
148-8364	382
	619
	725
148-8365	305
	720
148-8366	305
148-8367	60
	609
148-8368	87
	936
148-8369	666
	669
	673
148-8371	720
	764
148-8372	716
148-8374	382
148-8375	382
	621
148-8376	60
148-8378	131
	305
	572
	609
	627
	666
	669
	671
	673
	697
148-8382	60
	382
	572
148-8384	621
148-8390	131
148-8391	671
148-8392	60
148-8406	640
148-8407	402
	666
	669
	673
	683
	688
	693
	728
148-8408	60
	660
	730
148-8409	129
	290
148-8410	354
	356
	358
	372
	375
	378
	635
	637
148-8411	385
148-8413	619
148-8422	625
148-8424	764
148-8428	60
	572
148-8431	619
148-8433	619
	666
	669
	673
148-8434	572
148-8435	572
	619
	671
148-8443	305
	572
	666
	669
	673
148-8445	320
	324
148-8446	65
149-0231	712
	714
149-0668	220
149-2612	244
149-2906	764
149-4993	135
149-5452	573
149-5933	541
149-6371	801
149-7738	621
	716
	724
149-9112	283
	285
	288
150-3036	574
150-3055	588
150-3071	621
150-4027	290
	303
150-4037	572
150-4042	671
150-4043	619
	666
	669
	673
150-4047	671
150-4048	574
	720
150-4651	283
	285
	288
150-5430	608
150-5968	295
151-2184	608
151-4809	313
	315
	316
151-5145	320
151-5520	128
	468
151-6282	746
152-3411	719
152-6641	868
	871
153-0088	844
153-5710	135
153-6232	61
153-6237	716
153-6238	60
153-6241	382
153-6242	61
153-6270	620
153-6281	135
153-9301	98
	99
154-4563	220
154-6626	609
154-8079	777
	795
154-8262	220
155-0576	149
	643
155-2255	155
	158
	159
	161
	165
	166
	167
	170
155-2256	155
	249
155-2257	170
155-2258	155
	158
	159
	161
	166
155-2259	155
155-2260	156
	158
	159
	162
	166
	169
	260
155-2265	147
	148
	156
155-2270	156
	158
	159
	161
	162
	164
	165
	166
	167
	171
	215
	225
	227
	238
	568
	664
155-2271	156
	159
	163
	164
	165
	167
	225
	227
	260
	767
155-2274	156
	158
	159
	165
	166
	168
	170
	260
155-3502	720
155-3624	683
	688
	693
155-9125	648
	650
155-9127	648
	650
155-9137	648
	650
156-0283	531
	533
	535
	536
156-1151	331
	336
156-1153	331
	336
156-1817	736
156-4281	572
156-6175	251
	831
157-0670	68
157-8510	60
158-3028	596
158-9065	592
	593
158-9956	580
	►582
159-0268	740
159-0269	740
159-1503	621
	804
159-8047	136
159-8049	135
	136
	263
159-8050	135
	136
159-8329	114
159-9322	155
	156
	159
	249
159-9539	141
160-2245	155
160-2247	159
160-3518	167
160-7689	159
160-7690	156
	159
161-6149	583
	637
	709
161-6154	582
161-6161	583
	637
	709
161-7147	712

► PRIMARY REFERENCE

PART NUMBER INDEX

Part	Page
	714
161-7614	112
161-9820	9
	134
162-0177	290
	679
	683
	688
	693
162-2222	124
162-2480	465
	466
	544
	599
162-7120	427
	429
162-7209	594
162-8264	666
	669
	673
162-9112	61
	321
	325
162-9728	68
163-1135	849
163-1137	798
163-3343	608
163-7988	545
163-9662	738
164-1234	849
164-2108	402
	407
164-4180	342
	344
	346
	348
	350
	352
	354
	356
	358
	360
	363
	366
	369
	372
	375
	378
	683
	688
	693
164-5567	61
	131
	290
	303
	305
	320
	324
	572
	619
	639
	764
	936
164-5581	625
164-5590	62
	320
	324
164-5619	676
	730
164-5624	573
164-6874	131
	573
	666
	669
	673
164-7468	118
	134
164-7908	720
165-2273	310
165-4931	303
	305
	620
	639
165-4934	720
165-4935	65
	66
165-9286	592
	593
166-5229	156
167-3692	156
	164
167-3693	159
	162
168-1968	131
168-2197	652
168-2203	652
168-3378	659
168-3379	659
168-3381	659
168-3382	659
168-3384	659
168-3385	659
168-3504	652
168-7317	652
168-8772	795
169-0705	156
	170
169-1616	692
169-1617	692
169-4273	572
169-5863	620
	936
169-7380	849
169-7397	62
169-7409	627
169-8323	506
	527
	556
170-1807	290
170-4057	839
170-5632	87
	430
	431
170-8553	625
170-9844	592
	593
170-9860	592
	593
171-2205	135
171-2215	135
171-4046	786
171-4047	786
171-5349	208
172-3511	143
	218
172-8037	167
172-8039	167
172-8591	93
	197
	779
	783
	786
	820
	854
173-1016	124
173-2052	846
173-3993	404
	639
	679
173-7035	846
173-7225	573
173-7431	298
	300
173-8341	826
174-0503	156
	164
174-3085	456
174-6381	423
	424
	559
174-7876	191
	194
174-8131	220
	443
	559
	764
174-8663	456
174-9994	648
	650
	652
175-4168	144
175-4291	175
	176
175-9079	625
176-8234	96
	97
176-9237	318
177-2215	804
177-8839	62
177-9645	156
	168
177-9648	156
177-9653	168
177-9656	168
178-3336	744
	801
178-3620	508
	716
178-5210	318
178-5572	774
	777
	778
	782
178-7023	490
	829
178-7907	846
179-7400	124
180-6213	652
183-1343	213
183-6121	791
	835
183-7263	679
	681
	730
183-7264	68
183-7595	580
	▶584
184-0982	774
	778
184-0983	213
184-2472	231
184-6636	244
184-6892	382
185-0884	15
185-1860	163
185-1861	156
	162
	169
185-2245	60
185-9356	801
186-3735	102
	133
186-5107	797
187-0541	583
187-7331	128
187-8675	231
187-9630	679
187-9762	283
	285
	288
188-2461	87
	▶102
188-7536	124
188-7541	124
188-8726	61
189-1943	844
189-8610	868
	871
189-8624	584
190-1125	531
	533
190-6507	652
190-6616	57
190-8494	391
190-9821	627
191-1782	114
191-1783	114
191-2276	487
191-2933	846
	▶849
191-5114	796
191-7581	648
	650
191-7582	648
	650
191-7583	648
	650
191-8921	868
	871
191-9247	584
	706
192-0573	654
192-1023	317
192-4744	291
192-5017	135
	156
	508
	573
	719
192-5881	910
192-7470	652
192-7752	849
192-7755	849
192-7767	849
192-7783	849
192-7787	849
192-7790	849
192-7795	849
192-7799	849
192-7810	849
192-7811	798
192-7812	798
	849
192-7813	798
192-7820	849
192-7848	849
193-2200	290
193-3068	313
	315
	316
193-5914	939
194-2554	61
194-2555	61
194-3710	813
	815
194-5171	748

PART NUMBER INDEX

Part	Page
	868
	871
194-5226	163
194-5227	163
194-9472	648
	650
194-9473	648
	650
194-9474	648
	650
194-9479	658
194-9480	658
194-9481	658
195-0936	774
	779
	782
195-0938	839
195-2186	39
195-3699	774
	779
	783
195-9245	12
196-2412	155
196-2413	156
196-6723	616
196-8488	396
197-3295	614
197-4566	574
197-5470	835
197-6453	308
	724
	936
197-7996	395
198-2914	584
	706
198-3899	621
198-4766	87
198-4776	62
	852
198-4777	321
	325
	508
	546
	621
	716
	826
198-4778	588
	662
	672
	824
198-4780	555
	662
198-4781	432
	526
198-5351	648
	650
199-9252	202
199-9267	202
199-9741	912
	915
199-9751	18
	202

2

Part	Page
200-2217	568
200-2218	568
200-2219	568
200-2220	568
200-5728	▶167
	834
200-6282	692
200-6345	321
	325
201-0418	726
201-1531	143
201-2733	941
201-5555	220
201-8357	508
	573
201-8476	313
201-8477	313
202-0308	391
202-2762	609
	621
202-5397	156
	162
	169
203-9007	232
204-1297	156
	162
	169
204-1611	260
	382
204-2281	244
	255
	508
	716
	720
204-3975	642
204-6195	160
204-8000	244
	255
	508
205-2357	389
205-7048	754
	756
206-1345	163
	232
	746
	831
206-1667	197
	775
	778
	783
	800
	854
206-1826	127
206-2423	62
	65
	66
	87
	267
	305
	382
	385
	508
	574
	616
	618
	621
	625
	716
	720
	936
206-2724	616
206-5017	227
206-8818	660
206-9295	327
207-0649	627
207-7434	679
207-8218	635
	637
	683
	693
208-3778	796
208-6176	456
	487
208-7472	393
208-8469	210
208-9287	118
209-0229	313
209-0230	313
209-0746	800
209-4578	83
209-4580	83
209-8296	744
209-9219	16
210-8958	168
	225
	227
211-0052	164
	232
211-5004	600
211-5358	849
211-8071	68
211-8073	43
	62
	68
	81
	85
	86
	93
	109
	114
	321
	325
	804
211-9032	227
211-9294	849
211-9336	568
212-0907	714
212-6027	584
212-6891	854
212-6934	68
	83
212-7779	▶798
	849
212-7780	798
212-7783	798
212-8834	421
	422
213-3745	131
213-4754	798
213-5170	849
213-8433	591
214-0113	809
	810
	811
214-7568	62
	114
	131
	290
	303
	305
	320
	324
	327
	573
	584
	620
	639
	664
	764
	936
214-9186	774
	777
	778
	782
	791
214-9453	220
215-4639	405
216-8994	591
216-9058	591
216-9059	591
216-9633	48
216-9797	620
217-0099	149
217-0162	586
	587
217-3311	714
217-3681	313
	315
	316
217-3875	650
217-4892	876
	▶923
217-5449	244
217-6885	68
217-9039	163
	210
	253
	258
218-0728	487
218-2373	402
	407
218-4935	164
	167
219-6202	815
220-0229	261
220-7925	270
	274
	282
220-9081	920
220-9090	920
	921
	922
	923
	924
221-3525	136
	263
221-9208	103
221-9963	584
222-1087	874
222-1088	874
222-1089	874
222-1094	912
	915
222-1095	912
	915
222-1096	912
	915
222-3487	436
	500
	508
222-3785	586
	587
222-4737	679
	683
	688
	693
222-5765	586
	587
222-6869	320
	324
222-9151	321
	325
	599
223-3925	290
224-0672	931
224-2734	156
224-2735	156
224-4530	635
224-5132	565

▶ PRIMARY REFERENCE

PART NUMBER INDEX

Part	Page
224-5152	565
224-7262	586
	587
224-9222	716
	724
225-4820	701
225-4821	701
225-6948	683
	688
	693
225-7738	72
225-7739	72
225-7741	72
225-7944	51
225-8019	72
225-8524	90
225-8526	90
225-8858	15
226-1240	931
226-1274	931
226-6583	68
227-5509	387
227-6731	156
227-7392	868
	871
228-2616	926
228-4947	202
228-5009	129
	255
228-6052	179
	180
228-6054	179
	180
228-6056	179
	180
228-6089	230
	231
	251
	806
	807
	854
228-6428	748
	871
228-7080	609
228-7089	43
	45
	114
228-7090	114
228-7091	114
228-7093	385
228-7100	93
	118
	205
	714
229-3177	244
229-5336	131
229-6964	▶920
229-6965	3
	▶924
229-6969	▶921
229-7146	907
	908
	▶922
230-0940	660
230-4009	156
	162
	164
230-4011	163
	164
230-4013	156
	158
	160
	161
	169
	170
230-4014	129
	223
230-5008	156
230-5010	156
	162
	251
230-5011	162
230-7058	612
230-7732	255
230-8094	33
230-9174	135
231-2295	156
	169
232-0928	459
232-0929	459
232-1322	16
	18
232-1693	253
	258
232-3317	268
232-3666	27
232-3751	51
232-7449	16
232-7596	15
232-7597	15
232-7599	15
233-2300	66
233-4880	658
233-9161	443
	559
234-4869	683
	688
	693
234-5013	▶209
	402
235-2404	652
235-2474	385
235-4123	156
	162
	169
235-9822	53
	55
236-0483	342
	344
	346
	348
	350
	352
	354
	356
	358
	360
	363
	366
	369
	372
	375
	378
236-2541	296
	298
	300
236-4545	211
236-4616	220
236-6717	124
236-9832	683
	688
	693
237-0227	158
	161
	170
237-0947	591
237-8180	382
	▶387
237-8181	387
237-8183	387
237-8260	387
237-9878	726
237-9960	227
238-0251	844
238-5080	93
	114
	209
	385
	662
238-5081	114
238-5082	620
238-5084	385
238-8245	163
238-8247	163
238-8288	92
238-8292	91
238-9842	684
	694
239-0605	580
	▶692
239-0617	404
239-0618	580
239-1134	211
	▶224
239-3291	266
239-5157	404
	684
	694
	695
239-5195	580
239-6336	684
	694
	695
239-6986	939
239-7352	156
239-7356	156
240-4695	683
	693
240-7874	170
241-0037	565
241-6157	118
	714
241-6185	620
241-6207	61
241-6208	620
241-6215	68
241-8368	▶215
	231
242-0588	179
	180
242-1555	231
242-5206	774
	779
	783
242-7014	506
242-7955	679
242-9514	714
242-9515	714
243-1935	500
243-2289	325
	621
243-3416	53
	55
243-3544	858
243-4506	158
243-4509	156
	249
245-1042	164
245-1043	163
245-1044	163
	164
245-1045	164
245-1048	163
	164
245-7434	156
	162
	169
245-8472	604
245-8842	114
245-9791	594
246-0435	487
	535
	536
246-0616	53
246-3290	189
	192
246-4361	110
246-5613	596
246-5614	596
246-7854	455
246-8889	620
247-1606	341
247-4928	110
	113
247-6050	▶124
	126
247-7054	650
247-8920	654
248-0833	342
	350
	354
	356
	358
	360
	363
	366
	369
	372
	375
	378
248-2841	198
	231
248-3317	594
249-4134	199
	200
250-0394	321
	325
250-1416	719
250-1417	719
250-1457	320
	324
250-1458	320
	324
250-1467	719
250-2320	468
250-2321	468
251-1198	231
251-2139	500
251-3104	739
251-3268	635
	▶705
	707
251-4162	261
251-8248	160
252-1607	211
252-1862	774
	778
	782
252-1863	774
	778
	782
252-8073	43
253-3376	580
254-3571	631
254-3633	253
	258

▶ PRIMARY REFERENCE

PART NUMBER INDEX

Part	Page
254-7975	892
	894
254-7977	892
	894
254-7988	892
	894
255-2752	▶222
	231
256-6453	93
	209
	385
	662
256-6454	202
257-1762	916
257-1766	3
	▶874
257-8414	580
	▶583
257-8471	765
258-5652	398
259-1286	231
259-4399	831
259-5507	648
	650
259-7138	342
	350
	354
	356
	358
	360
	363
	366
	369
	372
	375
	378
260-0215	453
260-1555	172
260-1556	173
260-1566	172
260-1569	173
260-6728	759
	760
	761
	762
260-8636	660
260-8733	▶311
	398
260-9210	93
260-9219	114
261-3223	167
263-2875	398
263-2876	398
263-3823	814
264-0575	342
	344
	346
	348
	350
	354
	356
	358
264-3518	114
264-3617	157
264-4297	225
	227
264-7033	169
265-3930	340
265-5287	296
	298
	300
265-7724	1
	▶172
265-9683	592
	593
266-1466	▶203
	568
266-2337	199
	200
	▶204
266-7837	658
266-7838	658
267-0339	1
	▶173
267-5243	231
267-7207	163
	164
267-8821	461
	462
	494
	547
	549
	824
	827
267-9572	163
	164
268-1623	500
	508
268-1645	720
268-1646	720
268-5577	398
268-6497	218
268-8769	857
269-1983	822
269-2556	831
269-2890	774
	778
	782
269-2892	774
	778
	782
269-7250	200
270-2679	231
270-3311	831
270-7836	681
271-2360	388
271-2510	707
271-7312	231
	232
271-7649	844
271-8680	334
271-9096	329
	331
	334
	336
272-2379	144
272-2843	156
	170
272-7239	231
273-3761	907
	908
	▶914
273-3762	912
273-3765	892
	894
	▶912
273-5711	41
274-1931	35
274-1935	21
274-3780	164
	170
274-3781	158
	170
274-3784	156
274-4284	926
274-6217	707
274-7452	652
275-0494	890
275-0495	890
275-0529	200
275-2428	210
275-2431	210
275-7803	840
	841
275-9891	45
276-1151	164
276-1242	168
276-1326	321
	325
276-1786	136
	263
276-1816	714
276-5436	211
276-5600	15
276-5602	15
276-5603	16
	202
276-7278	136
	263
276-7391	14
276-7394	14
276-7476	34
276-8116	17
276-8117	17
276-8123	38
276-8133	38
276-8134	18
276-9200	36
276-9201	36
276-9206	36
276-9207	36
276-9230	36
277-0116	24
277-0587	22
277-0588	22
277-1873	114
	267
277-1974	40
277-1975	40
277-2500	52
277-2503	52
277-2525	51
277-2526	51
277-2537	51
277-3012	27
277-3013	27
277-4223	26
277-4302	18
277-4409	210
277-4490	31
277-4993	112
277-5067	108
277-5307	36
277-8103	844
277-8863	683
	693
277-9938	46
	111
277-9940	46
278-0017	101
278-2076	739
278-5111	36
278-5112	36
278-5113	36
278-5125	11
278-5126	11
278-5170	108
278-5203	149
278-5856	500
279-0850	857
279-2619	652
279-3393	648
	650
279-4346	313
279-8141	876
	▶906
279-8142	▶907
279-8145	▶908
279-8147	▶890
	906
279-8149	▶892
	907
279-8151	▶894
	908
279-8153	890
279-8155	892
279-8157	894
279-8159	890
279-8161	892
279-8163	894
279-8165	892
279-8166	892
279-8169	894
279-8170	894
279-8174	890
	▶915
279-9651	30
279-9652	30
280-0440	761
	762
280-1911	▶36
	38
280-1912	36
280-1913	36
280-1914	36
280-2709	231
280-2710	231
280-7870	648
	650
	652
	699
280-8618	777
281-3136	761
	762
281-5898	620
281-5977	114
281-8744	50
281-8803	164
281-8804	163
281-8811	156
282-0918	652
282-0919	652
282-2628	852
282-8229	89
282-8827	604
	635
	637
	640
	683
	688
	693
283-4662	24
283-6447	231
283-8301	24
	31
283-8302	31
284-1010	683
	688
	693
284-1011	683
	688
	693
284-3623	251
285-0150	761
	762
285-3692	774

▶ PRIMARY REFERENCE

PART NUMBER INDEX

Part	Page
	778
	782
285-7415	231
286-0015	39
286-0123	123
286-0693	68
286-2890	111
	112
	113
286-7851	91
287-3049	382
287-5279	135
	573
287-7340	283
	285
	288
287-7341	320
	324
287-8597	24
288-6974	24
289-4141	398
290-1993	258
290-2287	746
	789
290-2288	746
290-5562	69
	114
290-5664	158
	160
	167
	244
291-0999	▶812
	813
291-2275	114
291-4819	866
291-4820	866
291-5203	321
	325
291-6517	27
291-6521	27
291-6522	27
291-6523	27
291-6524	27
291-6526	26
291-6528	26
291-6529	26
291-6531	644
	645
291-9146	746
292-2893	163
	509
292-2896	163
	509
292-3462	92
292-8061	604
	640
	683
	688
	693
292-9802	822
293-3609	283
	285
	288
293-5263	734
293-6151	744
293-7589	43
293-8350	652
	700
293-9737	26
294-5076	719
295-0993	683
	688
	693
295-2343	329
	331
	334
295-4670	111
	113
295-5619	910
295-6661	18
295-8961	164
296-1210	854
296-3724	786
296-3725	786
296-4292	395
296-5270	573
296-5662	719
	▶734
296-6748	769
296-6750	769
296-6751	769
296-6752	769
296-9937	540
297-1546	305
	720
297-2513	▶392
297-3211	329
	331
	334
	336
297-7987	318
297-8752	▶223
	244
297-9080	537
	538
	539
299-3204	769
299-3205	100
299-3206	100
299-3210	769
299-5511	38
299-5675	844
299-5744	231
299-6082	263
299-7880	941
299-9092	136

3

Part	Page
300-3582	831
300-6714	764
300-7318	535
	536
301-2980	244
302-2136	864
302-6392	774
	778
	782
	806
	807
302-6780	26
302-8727	746
302-9147	786
303-2243	▶200
	605
	607
303-4649	263
303-5977	586
	587
304-0295	352
	360
	363
	366
	369
	372
	375
	378
304-0297	352
	366
304-2746	398
304-3750	329
	331
	334
	336
304-6792	129
304-9129	642
305-4563	640
305-9192	868
	871
306-2337	40
307-1570	283
	285
	288
307-2246	283
	285
	288
307-7313	55
308-9131	53
	55
	408
	541
	542
	543
	559
308-9568	620
309-1119	919
309-2996	290
309-4069	83
309-5127	719
309-5131	114
309-6678	38
309-9886	157
310-0674	164
	231
310-1899	740
310-5742	684
	694
310-6270	487
310-7267	652
310-7300	672
310-9391	▶910
311-2939	283
311-3475	136
	263
311-6183	164
311-8193	716
	724
311-8739	260
311-9316	596
311-9318	596
312-2684	662
312-4181	910
312-4319	283
	285
	288
312-4320	283
	285
	288
312-4321	283
	285
	288
312-5694	898
	903
312-6458	53
	55
312-8629	584
	706
313-2522	▶218
	809
	810
	811
313-2523	▶143
	809
	810
	811
313-5646	388
313-7668	679
	683
	684
	688
	693
	694
	▶706
314-4018	753
314-5274	849
314-5275	849
314-9350	411
314-9351	411
315-0096	896
	901
315-0180	136
	263
316-1438	584
316-9351	39
	95
	163
	240
	241
	248
317-3727	831
317-3730	831
317-5482	34
317-5485	14
317-5486	14
317-8141	73
318-0820	305
318-1179	▶208
	308
319-6219	385
319-7428	397
320-1291	9
	▶753
320-3060	202
320-3062	202
320-3063	205
320-5177	352
	366
322-0819	774
	779
	783
322-4474	746
322-7212	746
323-2092	398
323-2093	398
323-4495	573
323-5871	910
323-7089	910
323-7347	253
	258
323-9292	▶608
323-9293	608
323-9533	402
	407
324-3459	936
324-6266	158
324-6267	160
324-7871	55
325-1242	83
325-4471	▶175
	189
325-9335	398
326-8796	244
326-9053	927

PART NUMBER INDEX

Part	Page
327-0136	160
327-0282	744
	746
	801
327-0283	744
	746
	801
327-5802	311
327-5803	311
327-5804	311
327-6195	174
328-5932	▶759
	761
328-5933	▶760
	762
328-8425	136
329-0238	746
329-0418	208
329-3356	95
	244
	681
	720
329-3734	157
	158
	160
	161
	167
	168
	169
	170
	171
	238
	249
329-3796	29
329-5087	200
329-5788	712
	714
329-5790	712
	714
329-5792	712
	714
329-8587	74
329-9931	744
330-1725	9
330-3356	231
330-5623	654
330-5624	654
330-5635	654
330-9723	118
	714
331-0290	34
331-1134	93
	▶205
331-1679	444
	925
331-4226	170
331-6835	15
332-1985	694
332-1987	684
	688
332-2155	143
	218
332-2788	896
	897
	898
	899
	900
	901
	902
	903
	904
332-3578	764
332-4695	514
	515
	516
	517
332-4910	78
332-5669	705
332-7865	253
	258
333-8242	684
	688
	694
334-2578	73
334-6089	854
334-6090	854
335-2474	662
335-5365	231
335-5462	73
	74
335-6983	746
335-8611	90
335-9214	81
335-9250	726
335-9388	500
336-0000	4
	5
	▶487
337-0048	263
337-0790	78
337-6324	10
337-7325	81
	89
337-9078	▶216
	263
339-3230	440
339-3231	440
339-3505	▶176
	185
	186
339-8538	409
	496
339-8780	14
339-8810	487
339-9637	38
340-0508	93
	385
	662
340-1427	▶96
	98
340-1455	79
340-1456	79
340-1489	654
340-1502	▶97
	99
340-2575	820
340-2578	820
340-2579	820
340-2580	443
	559
340-2581	443
	559
340-2655	654
340-7161	231
341-0107	627
341-0108	627
341-0117	529
341-0118	529
341-0119	620
341-0120	620
342-6502	35
342-6510	35
342-7206	650
342-7627	341
342-7631	341
342-7632	270
	272
	278
	280
	▶341
342-9549	654
342-9671	135
344-1686	227
344-3455	▶179
	191
344-3456	▶180
	191
344-5081	134
344-5594	833
344-5673	189
	192
	500
	520
	522
	556
	779
	783
344-5674	137
	199
	261
	495
	496
	497
	498
	529
	535
	536
	801
344-5675	57
	65
	66
	68
	75
	76
	87
	95
	137
	241
	244
	255
	261
	263
	265
	267
	325
	383
	492
	494
	503
	533
	574
	609
	620
	625
	660
	697
	716
	720
	827
	936
344-7391	131
	666
	669
	673
	716
345-0351	941
345-0387	▶919
345-1237	68
345-1979	97
345-3155	773
345-3753	716
345-7725	470
	474
	794
345-9028	7
	▶22
346-0006	123
346-0007	123
346-0220	7
	▶42
346-1067	▶198
	590
346-1083	831
346-1510	7
	▶31
346-1540	453
346-1657	740
346-2911	7
	▶49
346-2999	9
346-3800	▶703
	704
346-3811	774
	779
	782
346-4360	849
346-4709	38
346-4788	85
	86
346-4791	85
	86
346-5193	594
346-5199	594
346-5201	594
346-6584	839
346-8219	927
346-8340	662
346-8414	573
346-8565	305
347-1668	261
347-4163	43
347-4734	241
	244
347-8645	113
348-1047	327
348-3432	▶82
	789
	790
348-4637	253
	258
348-5339	697
348-5974	652
	▶699
348-7783	862
	863
	865
348-8607	33
349-1178	206
	207
	809
	810
349-2593	754
	756
349-2600	754
	756
349-2602	844
349-5784	592
	593
349-5934	74
349-5935	73
349-6093	764
349-6097	327
349-6239	69
349-6258	▶78
	79
349-6266	78

▶ PRIMARY REFERENCE

PART NUMBER INDEX

Part	Page
349-6847	112
349-7059	103
349-8642	833
349-8844	620
350-1115	764
350-1547	764
350-5720	232
350-7593	844
350-7735	103
350-8742	20
350-9186	388
350-9189	388
350-9190	388
351-0290	620
351-1724	35
351-2548	354
	356
	358
	372
	375
	378
351-3525	308
351-4749	33
351-8206	52
351-9048	69
351-9918	175
	176
352-2557	764
352-2734	664
352-3588	535
	536
352-3964	232
	253
	258
352-3966	232
352-3968	232
	255
352-3970	244
352-4145	769
352-4897	864
352-6099	768
352-6110	339
352-6111	339
352-6112	296
	298
352-6114	298
352-6115	298
352-6116	300
352-6118	402
352-9954	679
352-9956	679
353-1634	833
353-2638	45
353-5192	200
353-5341	▶840
	842
353-5342	▶841
	843
353-7106	939
353-7957	500
354-1627	397
354-4032	296
	298
	300
354-4754	72
354-7553	296
354-7569	308
	▶407
354-7571	407
354-8322	24
	45
354-8706	▶944
355-0319	625
355-0632	114
355-1142	271
	272
	273
	279
	280
	281
	▶313
355-1143	313
355-1148	313
	315
	316
355-1150	313
355-1151	313
355-1152	279
	280
	281
	▶331
355-1153	277
	278
	282
	▶315
355-1154	315
355-1156	313
355-1210	331
	336
355-1790	744
355-1791	746
355-1793	744
355-3016	844
355-3025	844
355-3148	801
355-3486	927
355-5288	499
355-8920	296
	298
	300
355-8941	453
355-9789	313
355-9981	▶268
	269
356-1219	163
356-3181	57
356-3418	271
	272
	273
	▶334
356-3661	329
	334
356-5129	580
356-8486	620
356-8561	684
	688
	694
357-1577	392
	▶401
357-1578	▶339
	401
357-1589	▶340
	401
357-1591	298
357-2108	854
357-2646	26
357-4432	684
	694
357-4621	620
357-5988	▶398
	401
357-7399	103
357-7449	398
357-7450	398
357-7451	398
357-7453	398
357-7454	398
357-8939	300
357-9710	398
358-1205	356
358-1208	342
	344
	346
	348
	354
	356
	372
	375
358-1404	352
	360
	363
	366
	369
	372
	375
	378
358-1742	103
358-1745	103
358-1765	129
358-1815	409
	496
358-1818	▶472
	473
358-1819	472
358-1820	472
358-1823	473
358-1886	826
358-2416	508
358-3182	726
358-4889	224
358-5287	290
358-6701	352
	360
	363
	366
358-7769	296
	298
358-7784	290
358-7786	290
358-7788	290
358-7793	407
358-7794	402
359-4661	684
	688
	694
359-4662	684
	694
359-4663	684
	688
	694
359-4894	398
359-5377	839
359-6706	710
	711
	▶712
359-9310	701
360-0262	290
360-0293	733
360-0306	▶719
	727
360-0309	5
	6
	▶318
360-0310	▶385
	605
360-0315	▶503
	605
360-0323	▶716
	727
360-0324	▶725
	727
360-0338	1
	▶616
360-0357	274
	275
	276
	277
	▶381
360-0361	▶724
	727
360-0370	719
360-0371	719
360-0374	719
360-0377	719
360-0384	719
360-0415	61
360-1413	648
	650
	▶700
360-1564	34
360-1978	14
360-2691	95
360-2791	654
360-2924	453
360-3489	▶206
	809
	810
	811
360-3491	654
360-3494	▶207
	809
	810
	811
360-3495	654
360-3496	654
360-3499	654
360-3677	635
	637
360-3680	635
	637
360-3681	635
	637
360-3690	68
360-6838	398
360-8095	880
360-8958	▶104
	105
360-8960	104
360-9855	342
	344
	346
	348
	350
	352
	354
	356
	358
	360
	363
	366
	369
	372
	375
	378
360-9856	271
	272
	273
	275
	276
	277
	▶381
360-9857	283
	288
360-9858	352
	360
	363

▶ PRIMARY REFERENCE

PART NUMBER INDEX

Part	Page
	366
	369
	372
	375
	378
361-1045	174
361-1437	▶917
361-2566	764
361-3199	96
	97
361-3994	646
361-4001	646
361-5941	616
	▶707
361-6287	231
361-6288	231
361-6722	398
361-6725	398
361-6731	398
361-7165	750
	▶786
362-0720	604
362-0722	654
362-1181	98
	99
362-1182	98
	99
362-3508	813
362-5412	104
	105
362-9554	642
	▶646
362-9689	105
363-0559	14
363-1610	684
	688
	694
363-1613	635
	637
363-2687	684
	694
363-2692	684
	694
363-2697	684
	694
363-3919	277
	278
	282
	▶336
363-3920	270
	274
	▶329
363-4123	129
363-4467	816
363-5813	39
363-5911	764
363-6423	764
363-7241	646
363-7282	646
363-7284	646
363-7286	646
363-7287	646
363-8055	939
363-8109	398
364-0087	596
364-1293	▶809
364-1295	▶809
364-1995	103
364-2561	285
364-2562	277
	278
	282
	▶285
364-2634	676
364-2931	654
364-3085	283
	285
	288
364-3086	283
	285
	288
364-5145	14
364-7254	135
364-7276	▶225
	274
	275
	276
364-7285	▶263
	727
364-7295	▶227
	276
	277
364-7301	191
	194
364-7306	191
	194
364-7315	225
364-7316	225
364-7317	227
364-7318	227
364-8277	772
364-8480	▶439
	554
364-8483	712
	714
364-8630	648
	650
364-8631	648
	650
	▶658
364-8938	100
364-8939	100
364-9781	68
364-9794	53
364-9803	605
	▶801
364-9806	1
	▶310
364-9814	75
364-9846	83
364-9867	801
364-9870	801
364-9876	87
364-9954	53
365-0036	68
365-0077	32
365-0084	8
	▶43
365-0086	8
	▶109
365-0087	8
	▶89
365-0088	114
365-0089	8
	▶95
365-0092	81
365-0094	95
365-0095	95
365-0097	8
	▶81
365-0099	43
365-0102	1
	▶211
365-0105	93
365-0106	85
365-0111	▶85
	590
365-0112	4
	5
	▶80
365-0120	▶98
365-0121	▶99
365-0132	8
	▶32
365-0133	85
	86
365-0145	93
365-0146	93
365-0151	43
365-0153	▶79
	93
365-0163	43
365-0164	86
365-0165	8
	▶93
365-0166	8
	▶114
365-0167	114
365-0170	23
365-0171	8
	▶23
365-0172	95
365-0174	85
	86
365-0175	89
365-0178	114
365-0179	114
365-0182	43
365-0183	▶86
	590
365-0351	79
365-2565	710
	711
365-5823	46
365-6193	930
365-8361	800
365-8362	800
365-8363	800
365-8366	854
365-8367	854
365-8368	854
365-8369	854
365-8371	854
365-8373	800
365-8379	786
365-8381	820
365-8427	227
365-8999	604
365-9261	654
365-9646	791
366-0729	▶451
	750
366-0730	2
	830
	▶835
366-0732	▶470
	471
366-0733	750
	▶795
366-0734	751
	752
	▶867
366-1983	▶807
	819
366-4535	774
366-4698	68
366-4865	754
366-4866	756
366-4869	244
366-4972	703
	704
366-5768	283
	285
	288
366-5769	283
	285
	288
366-8395	654
367-0286	573
367-2178	782
367-2299	397
	▶411
367-2480	538
367-2481	244
	408
	470
	474
	487
	794
367-2539	826
367-2560	496
	497
367-2561	496
	497
367-2562	495
	498
367-2563	495
	498
367-2599	535
	536
367-2602	446
	▶473
367-2606	823
	▶826
367-2611	5
	▶547
367-2660	654
	▶701
367-3340	91
367-5213	230
367-6002	635
	637
367-6003	635
	637
367-6004	635
	637
367-7557	▶604
	654
367-8532	585
	637
	664
367-8969	620
367-9027	4
	5
	▶467
367-9029	467
367-9033	467
367-9037	467
	468
367-9496	▶679
	681
368-0214	290
	295
368-0571	769
368-2317	728
368-2318	728
368-2319	728
368-2369	158
368-3145	210
368-4198	643
368-5063	290
368-5096	684
	694
368-6468	▶312
	318
368-8010	336

▶ PRIMARY REFERENCE

PART NUMBER INDEX

Part	Page
368-8559	▶46
	101
369-1255	10
369-1658	92
369-3186	34
369-6073	567
369-6074	567
369-6810	26
369-7304	7
	▶34
369-7506	598
369-7799	108
369-8763	867
369-8764	867
369-8765	867
369-9949	773
370-0933	654
370-2229	275
	277
	▶459
370-3813	▶809
370-3814	▶810
370-5513	121
370-5516	120
370-5517	120
370-5518	120
370-5520	▶120
	127
370-5753	263
370-5764	684
	688
	694
370-8376	104
370-9074	531
	533
370-9075	531
	533
370-9892	714
370-9894	797
371-0443	592
	593
371-1624	754
	756
371-1691	283
	285
	288
371-1784	679
	▶704
371-2180	712
371-2223	▶570
	571
371-2241	▶183
	195
371-2478	7
	▶29
371-2480	7
	▶38
371-2537	7
	▶149
371-2541	8
	▶213
371-2554	7
	▶35
371-2684	123
371-2691	123
371-2735	7
	▶30
371-2745	8
	▶48
371-4271	863
371-4429	512
371-4430	1
	▶512
371-4745	305
	▶708
371-5010	▶571
	819
371-5086	270
	271
	272
	273
	274
	▶566
371-5099	100
371-5100	▶100
	830
371-6088	774
371-6089	778
	782
	▶862
371-7263	123
371-7337	▶270
	274
371-7338	275
	▶277
371-7344	▶270
	275
371-7345	▶270
	276
371-7346	▶271
	276
371-7347	▶272
	277
371-7349	▶273
	277
371-7350	▶274
	275
371-7351	275
	▶278
371-7352	276
	▶278
371-7353	275
	▶278
371-7356	276
	▶279
371-7357	277
	▶280
371-7359	277
	▶281
371-7382	271
	▶354
371-7383	272
	▶356
371-7385	273
	▶358
371-7386	274
	▶342
371-7387	278
	▶360
371-7388	278
	▶363
371-7389	278
	▶366
371-7390	277
	▶369
371-7392	279
	▶372
371-7393	280
	▶375
371-7395	281
	▶378
371-8298	20
371-9511	774
	778
	782
371-9520	774
371-9522	778
	782
372-0613	392
	▶394
372-0671	244
372-0677	786
372-0681	820
372-0685	819
372-0686	769
372-0984	744
372-1260	754
	756
372-1597	184
	▶185
372-1599	▶831
372-1600	▶833
372-1603	750
	▶796
372-1606	752
	▶816
372-1608	184
	▶186
372-1609	819
	▶858
372-1866	▶141
	195
372-1867	141
372-2017	662
372-2158	797
372-2297	7
	▶72
372-2735	751
	▶860
372-3632	61
372-3639	503
372-3658	936
372-3670	620
372-3679	620
372-3689	573
372-3720	320
	324
372-3723	320
	324
372-3724	320
	324
372-3896	751
	▶791
372-3897	▶481
	750
372-3947	751
	752
	▶792
372-3948	752
	▶793
372-3954	752
	▶773
372-4665	439
372-4667	439
372-5042	773
	774
	778
	782
372-5156	43
372-5157	43
372-5158	43
372-5320	508
372-6021	453
372-6382	163
372-6646	▶482
	727
372-6784	642
372-7280	778
	782
372-7820	437
372-8071	807
372-8072	807
372-8075	806
	807
372-8368	136
372-8372	263
372-8373	263
373-2103	24
373-2413	▶813
	868
373-2414	▶748
	868
373-2761	78
373-3607	7
	▶50
373-3930	3
	▶926
373-4052	▶397
373-4053	▶397
373-4057	▶397
373-4064	▶392
	397
373-4066	▶392
373-4068	392
	▶393
373-4070	393
373-4446	795
373-6682	270
	271
	272
	273
	274
	279
	280
	281
	▶288
373-6683	283
	285
	288
373-6685	278
	280
	▶389
373-7808	504
373-8619	596
373-8734	594
373-9483	635
374-1872	561
	564
374-1901	453
374-2640	149
374-3585	778
	782
374-3586	778
	782
374-4555	394
	▶396
374-4755	▶265
	276
	277
374-4756	▶168
	265
374-5482	274
	275
	276
	▶710
374-5483	276
	277
	▶711
374-6300	7
	▶14
374-7093	7
	▶20
374-7094	7
	▶9
374-7463	157

▶ PRIMARY REFERENCE

PART NUMBER INDEX

Part	Page
	158
	160
	164
	166
	167
	170
	171
374-7464	158
	160
	162
	166
374-7465	160
	167
374-7466	157
	158
	166
374-7467	157
374-7468	170
374-9551	931
374-9656	712
	714
374-9657	712
	714
374-9878	▶730
	733
375-0098	7
	▶21
375-0276	283
	285
	288
375-0400	712
375-0482	127
375-0483	127
375-0895	531
	533
375-0909	445
375-1154	712
375-1440	712
375-2647	▶122
	123
375-2649	127
375-2801	269
	▶565
375-2814	573
375-2924	276
	▶483
375-3749	53
375-3750	55
375-3788	684
	688
	694
375-4479	7
	▶10
375-4606	7
	▶26
375-4645	7
	▶27
375-5944	754
	756
375-6801	382
375-6988	127
375-7235	764
375-7531	24
375-8254	122
375-8558	394
	▶395
375-8559	395
376-0631	730
376-0898	652
376-0900	652
	▶659
376-1286	▶597
	660
376-1288	597
376-1575	329
	331
	334
	336
376-2198	620
376-2200	620
376-2204	318
376-3127	329
	334
376-4074	14
376-4078	14
376-4761	12
376-6403	107
376-6405	107
376-6409	122
376-6410	122
376-6411	122
376-6629	550
376-6947	354
	358
376-6949	352
	366
376-6952	342
	344
	346
	348
	350
	352
	354
	356
	358
	360
	363
	366
	369
	372
	375
	378
376-7694	567
376-7695	567
376-7696	567
376-7773	▶417
	554
376-8751	631
376-8804	620
376-9204	136
377-0399	17
377-0400	17
377-0647	778
	782
377-1293	253
	258
377-1465	391
377-1468	270
	272
	▶390
377-3141	798
377-4754	792
377-4794	839
377-4797	817
377-4801	793
377-4802	793
377-4803	793
377-5645	141
377-5647	141
377-5988	112
377-6932	163
377-9255	20
377-9563	87
377-9564	87
377-9577	87
377-9581	87
378-0582	7
	▶24
378-0595	7
	▶33
378-1147	597
378-1149	597
378-1150	597
378-1491	597
378-4323	725
	▶726
378-5706	397
378-8166	7
	▶19
378-8283	7
	▶51
379-0216	402
	407
379-8450	470
379-9411	487
	▶555
379-9413	555
379-9414	555
379-9436	487
379-9441	487
	▶514
380-1619	53
	55
380-1792	231
380-1887	220
380-3725	751
	752
	▶794
380-5223	473
	475
380-5240	826
380-5243	852
380-5252	490
	492
380-5932	394
380-8064	231
380-8065	231
380-8484	660
380-9615	12
381-1603	231
381-1819	939
381-2621	244
381-6686	199
381-7714	631
381-7774	573
381-9252	27
382-2001	114
382-3077	160
	164
382-9155	773
382-9160	773
382-9208	773
	▶863
382-9835	▶896
382-9836	▶901
383-1382	12
383-2925	517
383-2926	515
383-2927	516
383-2928	514
383-2930	487
	▶515
383-2931	542
383-2940	487
	▶516
383-2941	543
383-2950	487
	▶517
383-2951	541
383-2959	540
383-3563	774
	778
	782
383-3581	▶15
	16
383-3725	710
	711
383-7557	676
384-1628	409
	495
384-2286	91
384-3887	227
384-3888	202
384-5313	▶17
	18
384-5556	878
384-5557	878
384-5560	877
384-5568	878
384-5573	878
384-5574	878
384-5577	▶877
	896
384-5579	877
	880
384-5580	877
	880
384-5583	877
	880
384-5588	877
	880
	882
384-5589	877
	880
384-6414	▶883
	901
384-6416	883
	888
384-6417	883
	888
384-6418	883
384-6419	883
384-6457	883
	888
384-6461	883
	888
384-6462	883
	888
384-7567	210
384-8728	749
384-8730	▶749
	846
384-8750	683
	684
	693
	694
	705
384-9166	860
384-9167	860
384-9168	860
384-9450	573
384-9453	719
384-9456	573
384-9469	61
384-9470	305
384-9474	382
384-9478	719
384-9480	381
384-9481	620
384-9484	716
384-9499	620
384-9501	61
384-9520	382
384-9529	620
384-9530	620
384-9532	719

▶ PRIMARY REFERENCE

PART NUMBER INDEX

Part	Page
384-9533	719
384-9536	503
384-9537	503
384-9542	573
384-9543	573
384-9544	573
384-9550	740
385-0875	877
385-1398	110
385-1450	43
385-2572	7
	▶18
385-3544	▶397
385-7261	303
	▶404
385-7511	100
385-8001	7
	▶134
385-8201	174
386-1864	110
386-2097	78
386-2737	113
386-2971	122
386-2976	122
386-3819	122
386-5249	320
	324
386-5265	764
386-7382	▶1
386-7383	▶1
387-4617	61
387-9631	136
388-0536	12
388-1563	726
388-3724	▶768
	819
388-3725	▶817
	819
388-4274	773
388-4493	684
	688
	694
388-4707	18
388-4766	1
	▶485
388-4769	485
388-4771	485
388-4773	485
388-5576	321
	325
	452
	453
	482
	736
	739
389-0447	177
389-0871	414
	452
	453
	482
389-0879	844
389-1079	327
	328
389-1956	▶474
	751
389-2886	447
389-2887	448
389-2888	447
389-2889	448
389-2890	▶447
	852
389-2891	▶448
	852
389-2923	447
389-2935	409
	496
389-2957	447
389-2958	448
389-2989	409
	495
389-2993	409
	495
389-3007	539
389-3863	253
	258
389-4097	303
	639
389-4203	620
389-5708	183
389-5775	118
389-5784	118
389-6081	87
	▶643
389-8169	726
390-0060	7
	▶927
390-0579	2
	▶8
390-0755	118
390-0854	7
	▶16
390-4378	468
390-7372	553
390-7373	553
390-7626	92
390-8555	520
	522
390-8559	520
	522
390-8738	118
391-0842	136
391-0844	136
391-0845	136
391-1817	118
391-4339	232
391-4496	232
391-4811	7
	▶123
391-4889	232
391-4950	▶897
391-4951	▶878
	897
391-4954	878
	880
391-4955	880
391-4956	878
	880
391-4957	880
391-4958	878
	880
391-4976	878
391-5308	750
	▶859
391-5327	752
	▶774
391-5346	775
391-5523	7
	▶92
391-5771	517
391-5780	▶441
	487
391-5781	441
391-5782	▶442
	487
391-5783	442
391-5784	5
	6
	▶456
391-5785	515
	516
391-5801	487
	▶540
391-5802	487
	▶541
391-5803	487
	▶542
391-5804	487
	▶543
391-6943	573
391-6959	616
391-6961	318
391-6966	719
391-6967	719
391-6969	719
391-6970	719
391-6976	305
391-6983	318
391-6984	318
391-6989	725
391-6991	716
391-6998	503
391-7000	627
391-7230	225
	227
391-7816	600
391-7817	600
392-0736	518
	521
392-0737	519
	524
392-3979	806
392-3980	774
	▶864
392-3985	864
392-4634	189
	192
392-5579	769
392-5581	769
392-5588	859
392-9262	398
392-9315	801
392-9385	6
	▶478
393-0072	428
	▶429
393-0073	429
393-0074	429
393-0755	320
	324
	▶327
393-1842	199
393-1844	136
393-1869	255
393-2034	127
393-2035	127
393-4006	24
393-5078	6
	▶458
393-5130	643
393-5467	121
393-5468	121
393-7694	7
	▶91
394-0525	▶121
	127
394-1108	643
394-2467	▶169
	230
394-2474	3
	▶230
394-3964	276
	277
	▶418
394-4451	134
394-5936	864
394-5937	864
394-5941	864
394-8476	3
	▶898
394-8478	▶880
	898
394-8568	684
	694
394-9639	7
	▶127
395-0110	7
	▶202
395-0112	7
	▶196
395-0114	7
	▶210
395-0379	880
395-0393	714
395-0394	711
	▶714
395-0395	714
395-1633	120
	121
395-1802	11
395-2550	▶531
	590
395-2551	▶533
	590
395-2552	531
	▶535
395-2553	535
395-2554	533
	▶536
395-2555	536
395-2556	535
	536
395-2956	458
395-3265	3
	▶899
395-3266	▶882
	899
	900
395-3316	329
	331
	334
	336
395-3340	882
395-3341	882
395-3344	882
395-3348	882
395-3353	882
395-3949	▶900
395-4301	2
	▶153
395-8606	621
396-1537	▶902
396-1538	▶884
	902
396-1540	▶903
396-1541	▶886
	903
396-1545	▶904
396-1546	▶888
	904
396-2102	113
396-2617	7
	▶11
396-3891	350
	358
	378
396-3892	369

▶ PRIMARY REFERENCE

PART NUMBER INDEX

Part	Page
396-3895	342
	344
	348
	350
396-4306	87
396-4307	87
396-4852	684
	694
396-5692	701
396-9028	716
	▶728
396-9626	▶107
	108
397-2326	574
397-4016	822
397-5171	819
	▶822
397-5830	▶544
	546
397-5831	544
	▶545
397-5832	544
397-5833	544
397-7875	423
	424
397-9301	644
	645
397-9397	637
398-0940	▶217
	244
398-2917	570
398-6226	127
398-6790	558
399-0347	886
399-0352	886
399-0354	886
399-0356	888
399-1570	749
399-4332	▶468
399-4333	468
399-4334	468
399-5055	644
	▶648
399-6193	516
399-6194	515
399-6195	517
399-6196	517
399-6975	559
399-8294	340

4

Part	Page
415-1789	520
	522
415-1805	886
415-1809	886
415-1811	886
415-1812	886
415-1818	886
415-2466	884
415-2467	884
415-2470	884
415-2471	884
415-2477	884
415-5625	7
	▶929
415-7493	641
	▶644
415-7495	605
	▶662
415-7497	644
	645
415-7499	719
415-7500	719
415-7501	61
415-7502	61
415-7504	61
415-7507	61
415-7882	469
415-7928	6
	▶469
415-8191	83
415-8192	1
	▶83
415-8193	83
415-8194	83
415-8195	1
	▶68
415-8196	83
415-8197	605
	▶804
415-8198	83
415-8199	83
415-8203	68
415-8206	59
	▶75
415-8207	4
	5
	▶73
415-8209	59
	▶76
415-8210	76
415-8214	75
416-1234	27
416-1370	701
416-1372	701
416-4796	609
	▶664
416-5060	424
416-5061	424
416-5062	424
416-5237	73
	74
416-5238	73
	74
416-5388	▶163
	253
	258
416-6472	96
	97
416-6474	97
416-6970	8
	▶101
416-7096	458
416-7098	458
416-7124	701
416-7427	701
416-7727	91
416-8196	854
416-8444	437
416-8448	437
416-8460	437
416-8471	437
416-8908	7
	▶108
416-9577	3
	▶437
416-9589	437
417-0322	33
417-3325	639
417-3615	701
417-4722	▶144
	146
417-5202	290
	▶295
417-5204	290
417-7782	50
418-0207	774
	778
	782
418-0210	774
	778
	782
418-0928	7
	▶253
418-1201	296
	298
	300
418-5468	▶290
	401
418-6609	342
	344
	346
	348
	350
	352
	354
	356
	358
	360
	363
	366
	369
	372
	375
	378
418-7684	27
418-7892	1
	▶408
418-7893	408
418-7900	75
418-8023	136
418-8025	▶135
	727
418-8028	136
418-8029	136
418-8030	▶261
	605
418-8038	▶266
	605
	607
418-8553	40
419-0998	290
419-0999	339
419-3280	324
419-3282	320
	324
419-3291	61
419-3292	61
419-3606	51
	▶52
419-3607	52
419-3608	52
419-4936	▶103
	129
419-5574	716
420-2371	101
420-3001	77
420-3003	59
420-3006	59
420-3010	1
	▶57
420-3015	57
	▶59
420-4284	763
	▶772
420-5767	714
420-9432	290
420-9572	▶90
	101
421-1156	932
421-5684	▶105
	106
421-6497	405
421-8199	402
	▶405
422-1629	487
422-1649	541
422-1653	487
422-1654	487
422-1670	189
	192
422-1675	774
422-3662	▶170
	308
422-7715	90
422-9033	▶296
	401
422-9034	▶298
	401
422-9035	▶300
	401
423-0861	308
	▶402
423-1786	635
	637
423-1787	635
	637
423-1982	318
423-2603	774
423-3286	53
	55
423-6238	55
423-8524	126
424-0045	646
424-0566	39
424-0896	300
424-0897	300
424-3214	39
424-4914	219
424-5167	283
	285
	288
424-7149	296
	298
	300
424-7150	300
424-7152	296
424-7153	298
424-7154	300
424-7156	300
425-0196	7
	▶39
425-0197	7
	▶41
425-0260	864
425-0261	864
425-0262	864
425-0263	864
425-0265	864
425-0300	862
	863
	865
425-7103	27
426-0593	▶74
426-2831	774
426-3292	7
	▶106
426-3312	7
	▶118
426-4823	585
	637
	664
426-4824	664

PART NUMBER INDEX

Part	Page
426-5351	559
426-5380	▶177
	187
	188
426-5409	774
426-5412	774
	778
	782
427-0323	385
427-0324	385
427-0332	61
427-0333	61
427-0343	719
427-0344	385
427-0346	724
427-0347	724
427-0354	573
427-0355	61
427-0361	305
427-0362	573
427-0363	573
427-0364	503
427-0366	320
	324
427-0370	61
427-4963	▶219
	909
427-9771	210
428-3580	862
428-3582	863
	865
428-3585	862
428-3587	863
428-3590	862
	863
	865
428-3592	862
	863
	865
428-3598	863
428-7042	39
428-7563	492
	564
428-8645	327
	▶328
430-4119	864
430-5327	415
	452
	453
	739
430-5328	414
	453
	667
	669
	674
430-6686	39
430-8807	664
430-8811	664
430-8831	▶518
	523
430-8857	551
430-9006	645
	▶650
431-3852	746
431-3853	746
431-3854	746
431-3855	746
431-3856	746
431-3857	746
431-3858	746
431-3863	746
431-3865	746
431-3867	746
431-3868	746
431-4263	487
431-4886	660
431-8802	635
	637
431-9793	258
432-0095	55
432-0112	55
432-3596	83
432-5661	▶635
	694
432-6738	444
433-1316	▶110
	118
433-2014	809
	810
433-2039	39
433-5754	▶171
	849
433-6397	408
433-6447	863
433-6560	129
433-8091	519
433-8092	518
	▶519
433-8093	520
433-8094	518
	▶520
433-8098	▶521
	523
433-8099	521
	▶522
433-8100	▶523
	554
433-8102	521
	▶524
433-8104	524
433-8108	522
433-9549	232
433-9550	232
433-9791	654
433-9792	655
434-0687	4
	5
	▶641
434-0691	142
	▶145
434-0693	4
	5
	142
	▶145
435-4500	101
435-8541	4
	5
	▶7
436-0521	38
436-1195	7
	▶12
436-1220	836
436-1542	774
	778
	782
436-1687	844
436-1688	844
436-2350	128
	▶129
436-2351	1
	▶128
436-2368	449
436-2370	433
	434
	435
436-2371	▶433
	446
436-2372	▶434
	446
436-2373	▶435
	446
436-3443	598
436-3444	61
	▶598
436-5945	57
436-5961	566
	▶567
436-6464	290
436-6569	316
436-6571	270
	274
	▶316
436-6944	▶255
	605
436-6946	▶164
	255
436-7001	607
	▶631
436-7003	605
	▶642
436-7004	▶572
	605
436-7006	▶60
	605
436-7007	605
	607
	▶697
436-7008	▶504
	605
	607
436-7009	▶131
	727
436-7013	274
	275
	276
	▶639
436-7024	▶609
	909
436-7028	276
	277
	▶303
436-7029	276
	277
	▶305
436-7030	276
	277
	▶382
436-7052	629
436-7058	614
436-7061	614
436-7062	614
436-7063	61
436-7065	621
436-7117	631
	633
436-7120	631
	633
436-7121	631
	633
436-7135	614
436-7148	621
436-7149	621
436-7162	609
436-7182	697
436-7184	621
436-7185	621
436-7187	303
436-7197	697
436-7200	621
436-8983	124
436-9070	295
436-9104	213
437-1311	290
437-3713	1
437-3714	▶453
	455
437-3721	1
	▶455
437-4170	101
437-4490	520
	522
	524
437-7789	559
437-7858	443
	559
437-7860	559
437-9766	598
438-0890	443
	559
438-5702	1
	▶452
438-5742	▶427
	428
438-5743	427
	▶430
438-5746	430
438-5944	939
438-8223	255
439-0688	774
	778
	782
439-3509	2
	▶939
440-2105	147
	▶150
440-5388	136
441-3485	719
	▶733
441-4588	746
441-4589	746
	▶857
441-9228	▶550
	552
441-9230	550
	▶925
442-0646	114
	▶126
442-2479	597
442-6378	935
442-7199	148
	▶151
442-8151	849
442-8465	▶111
	118
442-8569	118
443-2250	▶551
	553
443-2251	▶444
	551
443-3947	68
	310
	804
443-4183	4
	5
	750
	▶842
443-4184	750
	▶843
443-4188	5
	▶789
443-4189	6
	▶790
443-6362	152
443-8462	174
443-8573	844
443-9475	34

PART NUMBER INDEX

Part	Page
443-9873	754
	756
444-2665	391
444-3238	3
	▶836
444-5639	931
444-6523	179
	180
444-6933	61
444-8663	939
445-1714	53
445-4982	640
445-4983	▶640
	681
445-4988	671
	▶681
445-6109	▶676
	684
	688
	694
445-8805	637
445-9256	7
	▶45
446-0368	774
	778
	782
446-0639	844
446-1268	196
446-4834	▶578
	590
446-5834	452
	453
	482
446-5835	417
446-8300	184
	▶189
446-8945	527
447-1484	55
447-1503	660
447-3742	566
447-5613	734
447-7206	124
447-8195	▶660
	662
447-8926	423
	424
	▶443
447-8927	443
448-2831	941
448-4307	579
	▶585
448-4308	573
	▶579
449-0902	2
	▶153
449-3342	59
	▶77
449-3343	77
449-7301	150
449-7303	151
449-9226	939
449-9543	76
450-1004	405
450-1842	758
	▶771
450-2572	313
	315
	316
450-3850	68
450-5460	627
450-5465	320
	324
450-5467	320
	324
450-5469	320
	324
450-5470	321
	325
450-5472	321
450-5474	1
	▶645
450-5480	616
450-5485	716
450-5486	716
450-5491	573
450-5493	719
450-5494	719
450-5499	719
450-5500	719
450-7011	471
	926
450-7571	249
450-9772	927
451-1550	487
451-1558	425
	426
451-5876	673
	▶693
451-5878	666
	▶683
451-6644	684
	694
451-7225	929
451-8019	157
451-9131	684
	688
	694
451-9249	801
452-2509	▶591
	910
452-3986	300
452-3988	340
452-4023	79
452-6716	▶797
	850
452-7158	573
452-7159	621
452-7162	936
452-7164	382
452-7165	382
452-7166	382
452-7167	382
452-7169	382
452-7170	382
452-7171	382
452-7174	719
452-7181	382
452-7183	716
452-9704	92
453-0862	76
453-1743	650
453-3251	▶810
453-8404	68
453-8409	68
453-9676	8
454-0180	2
	▶930
454-0181	930
454-0182	930
454-0228	555
454-0230	441
	442
454-0658	778
454-3758	819
	▶848
454-4238	6
	▶847
454-4239	847
454-4241	847
454-4243	847
454-4244	847
454-4245	847
454-4247	847
454-4269	864
454-4493	750
	▶941
454-5263	599
454-5385	791
	835
454-7370	847
454-7371	847
454-7758	449
454-7800	495
	496
	497
	498
	538
	539
454-7820	446
	▶449
454-7823	▶440
	446
454-7830	▶445
	446
454-7831	446
	▶852
454-7850	446
	▶475
454-7851	475
	▶476
454-7852	476
454-7853	476
454-9349	750
	▶854
454-9350	750
	▶800
455-0704	163
	164
	170
455-0705	156
	158
	160
	161
	163
	164
	169
	170
455-0706	156
455-0707	156
	157
	162
	251
455-0708	156
455-0709	156
	162
	164
455-0949	▶637
	684
455-1084	939
455-1846	642
	▶652
455-1861	761
	762
455-3113	12
455-3940	▶750
	819
455-3941	2
	▶819
455-5655	▶806
	819
455-5822	637
455-8046	342
	344
	346
	348
	350
	354
	356
	358
455-9568	232
455-9580	231
455-9584	231
456-0584	591
456-5130	917
456-5788	▶2
	4
	5
456-5790	▶1
	2
456-5791	2
	▶758
456-5805	▶274
456-5817	▶2
456-5818	4
	5
	▶727
456-5848	428
	▶526
456-5849	428
	▶432
456-5896	464
456-5897	464
456-5899	824
456-7022	398
456-8327	232
457-0033	129
457-3651	▶814
	868
	871
457-5588	▶169
	266
457-6743	▶181
	194
457-6744	▶182
	194
458-0049	2
	▶769
	830
458-2253	3
	▶580
458-3745	253
	258
458-7842	447
	448
458-8276	1
	▶824
458-8277	▶548
	824
458-8278	548
458-8279	548
458-8281	432
458-8282	824
458-8287	526
458-8290	464
458-8673	754
	▶761
458-8674	756
	▶762
458-9155	142
	145
	▶146
458-9156	145
	▶147
458-9157	145
	▶148

▶ PRIMARY REFERENCE

PART NUMBER INDEX

Part	Page
458-9159	145
	▶174
458-9160	142
	145
	▶249
459-0561	566
459-0653	68
459-0654	68
459-0661	621
459-0786	144
459-3537	▶744
	750
459-3538	744
	▶746
459-3539	746
459-4225	744
459-4226	744
459-4227	744
459-5277	▶764
	819
459-7290	866
459-7604	430
	431
460-1108	806
460-1766	621
460-2433	142
	145
	▶153
460-3064	448
460-3065	447
460-3526	771
460-3596	819
	▶820
460-3921	▶586
	588
460-3922	▶587
	588
460-7427	778
	782
460-7446	184
	▶187
460-9971	612
460-9972	612
460-9973	▶612
	909
460-9976	612
460-9977	609
460-9978	61
460-9984	573
460-9997	573
461-0007	631
461-0010	609
461-0020	588
461-2622	835
461-2922	758
	▶763
461-3172	777
	▶865
461-4259	865
461-4302	751
	752
	▶777
461-4432	431
461-4441	▶525
	823
461-4442	525
461-4444	▶412
	606
461-4445	▶413
	606
461-4446	▶414
	909
461-4450	391
461-6791	▶220
	771
461-7393	232
461-7569	187
461-8042	266
462-0651	752
	▶866
462-1019	764
	▶767
462-1171	42
462-2235	210
462-3639	864
462-4373	▶165
	746
462-5196	744
462-6225	778
	782
462-6685	7
	▶47
462-6970	3
	▶269
462-6972	614
462-6978	614
462-6982	614
462-6983	614
462-7010	504
462-7011	504
462-7012	504
462-7013	504
462-7015	609
462-7017	629
462-7018	629
462-7019	629
462-7020	629
462-7023	131
462-7024	621
462-7025	606
	▶666
462-9619	834
463-0707	763
	▶808
463-1125	▶87
	590
463-1126	87
463-1127	87
463-5367	740
463-5397	606
	▶737
463-5399	▶738
	909
463-5433	513
	▶740
	743
463-8075	321
	325
463-8076	321
	325
463-8080	616
463-8093	500
463-8112	▶65
	554
463-8113	▶66
	554
463-8118	716
463-8122	61
463-8679	669
	▶688
463-8849	2
	▶392
463-8850	4
	5
	▶275
463-8851	▶275
463-8852	▶275
463-8853	▶276
463-8854	▶276
463-8856	▶277
463-8857	▶277
463-8869	▶727
463-8873	▶909
463-8878	2
	▶931
463-8879	4
	▶428
463-8880	2
	▶605
463-8893	5
	▶428
463-8896	▶823
464-0919	453
464-0927	▶415
	590
464-1111	197
464-1468	▶238
	590
464-1470	238
464-2483	▶471
464-4682	824
464-4881	825
464-5013	848
464-6658	852
464-6659	852
464-6660	449
464-6669	449
464-6672	4
	5
	▶446
464-6673	▶446
464-6676	▶446
464-6689	446
	▶537
464-7203	427
	▶431
464-7899	▶112
	118
465-0997	590
	▶825
465-1634	305
465-4951	526
465-4983	6
	▶416
465-4984	6
	▶460
465-4985	6
	▶599
465-5966	778
465-5970	782
465-5987	778
	782
465-6092	599
	▶600
465-6093	600
465-6574	425
465-6575	▶425
	487
465-6580	▶426
	487
465-6581	426
465-6593	441
	442
465-6957	460
465-6960	460
465-6961	460
465-6962	460
465-8122	▶546
	554
465-8745	605
	▶633
466-0903	926
466-1621	800
466-1902	▶199
	605
	607
466-2421	▶178
	192
466-3275	941
466-3745	▶391
	392
466-3770	642
	▶654
466-4381	764
466-6946	600
466-6972	633
466-6973	633
466-7409	926
	▶932
466-8176	460
466-8748	270
	▶344
466-8751	270
	▶346
466-8752	▶274
	275
466-8753	274
	▶348
466-8754	274
	▶282
466-9427	145
	▶153
466-9428	145
	▶154
467-0997	352
	360
	363
	366
	369
	372
	375
	378
467-0998	352
	360
	363
	366
	369
	372
	375
	378
467-2513	151
467-2726	68
467-4367	66
467-4368	65
	66
467-4369	66
467-5351	777
467-9056	95
468-0164	933
468-0165	934
468-0170	▶933
468-0171	▶934
468-0572	▶142
468-5066	270
	▶350
468-5070	282
	▶352
468-8049	939
468-8952	746
469-0801	346
469-0883	283
	285
	288
469-0896	342
	344
	346

▶ PRIMARY REFERENCE

PART NUMBER INDEX

Part	Page
	348
	350
	354
	356
	358
469-0897	354
	356
	358
469-0898	352
	366
469-0899	372
	375
	378
469-5033	47
469-5745	868
	871
469-5750	650
469-5861	931
469-9149	487
469-9205	296
	298
	300
469-9206	300
470-1447	296
	298
	300
470-7974	919
470-8038	34
471-3702	500
	508
471-8184	2
	▶153
472-4943	7
	▶258
472-8285	114
473-9079	748
473-9080	748
473-9799	189
	▶191
474-7583	778
	782
475-5469	924
475-5473	921
475-5481	923
475-5486	922
475-8095	774
	778
	782
475-9728	75
475-9824	774
476-2460	▶3
476-2461	▶3
476-2462	▶876
476-2947	123
477-2641	2
	▶154
477-2642	2
	▶154
477-6040	465
477-6041	465
	466
477-7801	▶197
	750
477-8024	465
	466
477-8029	▶465
	852
477-8030	▶466
	852
477-8110	466
477-8142	448
478-1591	448
478-5343	499
	852
478-5464	744
478-5991	740
479-1920	537
	▶538
479-1921	537
	▶539
479-2800	465
	466
479-2801	465
	466
479-3050	555
479-3085	650
479-3260	441
	442
479-7391	474
479-8936	153
	772
479-9394	184
	▶188
480-2073	▶240
	241
480-2074	▶158
	240
480-2083	▶241
	605
480-2084	▶244
	605
480-2089	244
	▶248
480-2090	▶159
	248
480-3046	303
	639
480-5894	153
480-6338	646
481-1153	178
481-4049	662
481-5565	794
481-5786	627
481-5787	627
481-5789	627
481-5790	588
481-5938	854
481-6616	833
	▶834
482-6304	852
482-8138	150
482-8159	151
482-8872	852
482-9215	▶594
	607
482-9218	▶596
	605
482-9221	594
482-9224	596
483-0254	836
483-0255	836
483-2480	▶167
	261
483-2811	559
483-9445	6
	▶461
483-9446	461
484-1271	539
484-2858	539
484-5573	▶171
	267
484-7200	▶113
	118
484-9694	590
	▶935
485-1920	59
485-1964	547
	▶552
485-1970	▶495
	552
485-2088	490
	▶496
485-2201	490
	492
	▶558
485-2205	558
	▶559
485-2208	559
485-2212	448
485-2575	492
	▶497
485-2592	▶498
	553
485-2603	549
	▶553
485-2626	6
	▶549
485-2984	818
485-8807	6
	▶409
486-0884	68
486-2308	▶184
486-2311	▶184
486-4041	775
	778
486-6463	7
	▶40
486-6649	▶152
	796
486-9082	752
	▶861
486-9083	861
486-9084	861
486-9085	861
486-9154	778
486-9155	775
	778
	782
487-1747	260
487-3413	59
487-5854	152
	▶168
487-7761	181
	182
487-7762	181
	182
487-8662	408
487-8663	408
488-1670	844
488-2137	844
488-3022	566
488-3907	100
488-5391	822
488-5867	752
	▶868
488-5868	871
488-6374	▶419
	513
488-6396	871
488-7054	462
488-8987	6
	▶462
488-9549	662
488-9551	662
488-9569	590
	▶627
488-9572	▶527
	529
488-9578	500
	▶506
488-9581	508
	▶556
489-0447	621
489-0449	618
489-0451	621
489-0452	621
489-0453	621
489-0454	936
489-0455	633
489-0460	605
	▶936
489-3220	▶260
	513
489-4697	▶592
	605
	607
489-4698	592
	593
489-4699	592
490-0662	598
490-3561	▶837
	839
490-3562	751
	752
	▶839
490-3700	550
	551
490-3758	925
490-5976	▶844
	846
490-5982	819
	▶846
490-8319	475
490-8846	441
	442
491-2079	605
	607
	▶735
491-2080	735
	▶736
491-2141	513
	▶739
491-2383	154
491-6700	184
	▶192
491-6701	192
	▶194
491-6705	▶165
	192
491-6708	▶161
	244
491-6932	360
	363
	369
	372
	375
	378
491-6934	360
	363
	369
	372
	375
	378
491-7467	▶195
491-7468	195
491-8257	487
491-9530	53
	55
	▶388
492-3670	▶420
	513
492-3985	4
	5
	750
	▶819
492-3986	750

▶ PRIMARY REFERENCE

PART NUMBER INDEX

Part	Page
	▶819
492-3988	▶2
	4
	5
	750
492-3989	▶830
492-3994	750
	▶751
492-4020	4
	669
	5
	673
	▶5
492-4021	5
	6
	▶605
492-4022	4
	5
	▶606
492-4023	▶606
492-4025	▶606
492-4028	4
	5
	▶607
492-4031	4
	5
	▶743
492-4033	▶4
492-4034	▶5
492-9946	556
492-9960	506
492-9963	556
492-9964	500
492-9965	556
492-9970	508
492-9971	508
492-9975	508
492-9994	529
492-9996	506
	556
492-9997	508
492-9998	419
	420
493-0001	556
493-0008	506
	556
493-0009	513
	▶529
493-0010	527
	556
493-0016	506
493-0017	556
493-5904	735
493-9616	▶751
493-9617	▶751
493-9618	▶752
493-9619	▶752
494-5014	609
494-5015	609
494-5016	609
494-5019	629
494-5020	629
494-5021	605
	607
	▶629
494-5022	621
494-5024	▶320
	554
494-5025	554
	▶618
494-5030	606
	▶669
494-5322	593
494-5323	▶593
	605
	607
494-6824	59
494-7017	154
494-7510	835
494-8149	545
494-8154	456
494-9472	671
494-9478	671
494-9479	666
	669
	673
494-9482	671
494-9483	671
494-9484	671
495-4520	633
495-5300	688
495-5314	714
495-6107	5
	▶602
495-6191	602
495-6192	602
495-6193	602
495-6194	602
495-6195	602
495-6196	602
495-6197	602
495-6198	602
495-6587	792
	793
495-8029	81
495-9704	▶513
495-9794	197
496-3367	▶815
	871
496-3368	751
	▶871
497-9002	660
498-0140	310
498-1649	500
498-1657	500
498-1658	500
498-2919	592
	593
498-4463	846
498-6590	815
499-1654	▶3
	4
	5
499-3175	232
499-3486	▶568
	570
499-3487	570
499-3885	801
499-3886	801
499-3887	801
499-4657	449
499-4658	449
499-5524	449
499-6958	506
	527
	556
499-6966	153
499-8426	53
499-8429	55

5

500-0589	▶499
	519
	524
500-0703	388
500-0714	602
500-3625	508
500-3630	508
500-3634	500
500-3677	▶500
	513
500-3681	▶508
	513
500-3682	556
500-3683	500
500-3685	500
500-3686	500
500-3687	500
500-3688	500
500-5120	232
500-6257	449
501-0558	751
	752
	▶818
501-1071	▶267
	606
501-3064	▶53
	590
501-3065	▶55
	590
501-3976	782
501-8916	68
501-9116	68
501-9117	68
501-9118	68
502-0276	▶162
	251
502-1344	501
502-3810	153
502-3813	154
502-3816	153
502-5784	▶308
	401
502-5906	▶155
	232
502-5907	▶231
	819
502-6446	751
	752
	▶778
502-6447	752
	▶782
502-6857	68
502-9875	▶166
	232
503-1904	▶819
503-1906	4
	5
	751
	▶752
503-3072	360
	363
	370
503-3073	372
	375
	378
504-0368	360
	369
504-0371	363
504-0373	372
	378
504-0374	375
504-1655	561
504-1656	▶561
	562
504-1657	5
	▶562
504-2015	6
	▶563
504-2786	438
504-2864	490
504-2866	▶421
	423
504-2867	▶423
	490
504-2868	▶490
	827
504-2869	5
	▶827
504-2871	492
	▶829
504-2873	▶422
	424
504-2874	▶424
	492
504-2875	▶492
	494
504-2876	6
	▶494
504-2882	232
504-7384	527
504-7385	527
504-7386	527
504-7387	527
504-7388	527
504-7389	527
504-7390	527
504-7391	527
504-7392	527
504-7393	527
504-7394	527
504-7395	527
504-7396	527
504-7397	527
504-7398	527
504-7399	527
504-7400	527
504-7401	527
504-7403	527
504-7404	527
504-7405	527
505-0113	514
505-1521	▶3
505-1547	4
	5
	▶590
505-1548	▶590
505-4029	▶875
505-4748	852
505-4749	852
505-4777	852
505-5229	606
	▶671
505-5230	671
505-5231	606
	▶614
505-5232	614
505-5233	614
505-5242	▶463
	606
505-5243	463
	▶464
505-6022	464
505-7955	463
506-3489	▶184
506-3504	▶477
	743
506-5902	▶251
	754
	756
506-8479	4
	5
	▶754
506-8480	▶756

PART NUMBER INDEX

Part	Page	Part	Page	Part	Page	Part	Page
507-2433	83						
507-2556	529						
507-6190	▶605						
507-9161	▶6						
508-0786	53						
	55						
508-1550	590						
	▶601						
508-1574	321						
	325						
508-1577	625						
508-1578	625						
508-7627	4						
	5						
	▶554						
508-7629	▶554						
508-7631	▶554						
508-7684	▶673						
510-2592	▶438						
	743						
511-0265	▶588						
	606						
511-0266	588						
511-0268	605						
	▶619						
511-0269	▶324						
	554						
511-0270	321						
	325						
511-0271	554						
	▶625						
511-0272	936						
511-0273	936						
511-0274	936						
511-0275	936						
511-0276	936						
511-0277	936						
511-0278	936						
511-0279	936						
511-0280	936						
511-0281	629						
511-0282	629						
511-0283	▶436						
	743						
511-0284	▶479						
	513						
511-2488	458						
511-4761	862						
	863						
	865						
512-0946	▶750						
512-0947	▶750						
512-3287	564						
512-3288	563						
	▶564						
512-6100	▶480						
	743						
513-7163	529						
514-1252	153						
515-8976	▶142						
515-8977	▶142						
517-4683	810						
	811						
517-7121	▶810						
517-7122	▶811						
517-7123	▶811						
518-0952	712						
	714						



©2016 Caterpillar
All Rights Reserved

CAT, CATERPILLAR, their respective logos, “Caterpillar Yellow”, and the POWER EDGE trade dress as well as corporate and product identity used herein, are trademarks of Caterpillar and may not be used without permission.