CATERPILLAR®

SEBP4455-17
May 2009

RUTHZIL TRATOR COMERCIAL DE PEÇAS LTDA 11 97083-6812 ROLANDO CITRANGULO

Parts Manual

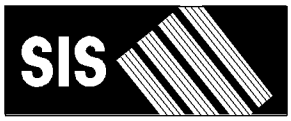

See "General Information" for New Parts Manual Features.

953D TRACK-TYPE LOADER

LBP1-Up (Machine)
C6E1-Up (Engine)
9JW1-Up (Ripper)

Powered By C6.6 Engine
This Parts Manual is also available in .PDF format on Compact Disc(CD-ROM)-Caterpillar Form No. SERP4455-17

Product and Dealer Information

Note: For product identification plate locations, see the section “Product Identification Information” in the Operation and Maintenance Manual.

Delivery Date: _____

Product Information

Model: _____

Product Identification Number: _____

Engine Serial Number: _____

Transmission Serial Number: _____

Generator Serial Number: _____

Attachment Serial Numbers: _____

Attachment Information: _____

Customer Equipment Number: _____

Dealer Equipment Number: _____

Dealer Information

Name: _____ Branch: _____

Address: _____

_____

_____

	Dealer Contact	Phone Number	Hours
Sales:	_____	_____	_____
Parts:	_____	_____	_____
Service:	_____	_____	_____

MEMORANDA

TABLE OF CONTENTS

Name	Page
GENERAL INFORMATION	A5
REPAIR ALTERNATIVES	A8
SUPPLEMENTAL COOLANT ADDITIVES	A9
MAINTENANCE PARTS	A10
INDEX	A14
MACHINE ARRANGEMENT	1
CHASSIS AR	1
GENERAL AR	1
ENGINE ARRANGEMENT	2
ENGINE AR-PRIMARY	2
INSTALLATION AR-ENGINE	3
BASIC ENGINE	4
CAMSHAFT GP	4
COVER GP-ENGINE	5
COVER GP-VALVE MECHANISM	7
CRANKSHAFT GP	20
CYLINDER BLOCK GP	21
CYLINDER HEAD AS	25
CYLINDER HEAD GP	29
DRAIN GP-ENGINE OIL	33
FLYWHEEL GP	34
GUARD GP-BELT	35
HOUSING GP-FLYWHEEL	36
HOUSING GP-FRONT	38
LIFTING GP-ENGINE	40
MOUNTING GP-ENGINE	42
MOUNTING GP-ENGINE & XMSN	43
PAN GP-OIL	44
PISTON & ROD GP	50
PLUG GP-ENGINE	51
PULLEY GP-CRANKSHAFT	52
ROCKER ARM GP	53
VALVE MECHANISM GP	55
LUBRICATION SYSTEM	57
BREATHER GP	57
FILLER GP-ENGINE OIL	58
FILTER GP-ENGINE OIL	62
OIL CHANGE GP-HIGH SPEED	63
PUMP GP-ENGINE OIL	64
VALVE GP-FLUID SAMPLING	65
COOLING SYSTEM	66
COOLER GP-ENGINE OIL	66
FITTING GP-WATER LINES	69
FRAME GP-RADIATOR	70
LINES GP-WATER	72
PUMP GP-WATER	77
RADIATOR & HYD OIL COOLER GP	81
REGULATOR GP-TEMPERATURE	87
TANK GP-COOLANT	88
AIR INLET AND EXHAUST SYSTEM	89
AIR CLEANER GP	89
LINES GP-AIR	92
MANIFOLD GP-INLET	94
MUFFLER GP	96
PIPE GP-EXHAUST	100
PRECLEANER GP	101
SHIELD GP-AIR CLEANER	105
TURBOCHARGER GP	106
FUEL SYSTEM	115
ADAPTER GP-FAST FILL FUEL	115
CAP GP-FUEL FILLER	117
FILTER GP-FUEL	118
FILTER GP-WATER SEP & FUEL	119
INJECTOR GP-FUEL	120
LINES GP-FUEL	122
PUMP & MTG GP-UNIT INJ HYD	132
PUMP GP-FUEL INJECTION	133
PUMP GP-FUEL PRIMING	150
PUMP GP-FUEL PRM & WATER SEP	153
TANK AS-FUEL	156
TANK GP-FUEL	157
ELECTRICAL AND STARTING SYSTEM	164
ALARM GP	164
ALTERNATOR GP-CHARGING	165
BLOCK GP-JUNCTION	170
CIRCUIT BREAKER GP	171
CONTROL & MTG GP-ELECTRONIC	173
CONTROL GP-UNPROGRAMMED	178
ELECTRONICS AR-MACHINE	179
ELECTRONICS GP-COMMUNICATION	179
ELECTRONICS GP-MACHINE	179
ELECTRONICS GP-MONITOR	180
GLOW PLUG GP	186
HEATER GP-JACKET WATER	188
INSTALLATION AR-COMMUNICATION	190
INSTALLATION GP-COMMUNICATION	194
INSTALLATION GP-SECURITY	197
LAMP GP-FLOOD	199
LAMP GP-WARNING BEACON	201
LIGHTING GP-FLOOD	202
LIGHTING GP-WARNING BEACON	204
RADIO GP-COMMUNICATION	205
SENSOR GP-LIQUID LEVEL	206
SENSOR GP-POSITION	207
SENSOR GP-SPEED	208
SENSOR GP-TEMPERATURE	211
STARTING AID GP-ETHER	212

TABLE OF CONTENTS

Name	Page
STARTING MOTOR GP-ELECTRIC	215
SWITCH GP-DISCONNECT	218
SWITCH GP-MAGNETIC	219
SWITCH GP-TOGGLE	220
VALVE GP-ETHER STARTING	221
WIRING GP-AIR CONDITIONER	222
WIRING GP-CAB	223
WIRING GP-CAB TILT	244
WIRING GP-CHASSIS	246
WIRING GP-CONTROL	254
WIRING GP-ELECTRIC STARTING	261
WIRING GP-ENGINE	267
POWER TRAIN	271
ACTUATOR GP-PUMP	271
COUPLING GP-PUMP	272
FILTER GP-OIL	273
FINAL DRIVE & BRAKE GP	274
HEAD GP-MOTOR	283
HEAD GP-PUMP	285
LINES GP-CHARGE PRESSURE	287
LINES GP-HYDROSTATIC	291
LINES GP-POWER TRAIN OIL	295
MOTOR & MOUNTING GP	297
MOTOR GP-PISTON	298
POWER TRAIN AR	300
PUMP & MTG GP-POWER TRAIN	301
PUMP GP-CHARGE	302
PUMP GP-PISTON	304
ROTATING GP-MOTOR	309
ROTATING GP-PUMP	312
SEGMENT GP-SPROCKET	316
VALVE & MTG GP-CONTROL	318
VALVE GP-CHECK	320
VALVE GP-FLUSHING	321
VALVE GP-MOTOR CONTROL	322
VALVE GP-PUMP CONTROL	323
VALVE GP-RELIEF	325
FRAME AND BODY	326
BAR GP-STRIKER	326
BUMPER GP	327
COUNTERWEIGHT & MOUNTING GP	328
COUNTERWEIGHT GP	329
COVER GP-ACCESS	330
DOOR GP-ACCESS	331
FENDER GP	333
FRAME GP-LOADER	339
GRILL GP-RADIATOR	340
GUARD GP-BOTTOM	341
GUARD GP-ENGINE	342
GUARD GP-FRONT	348
GUARD GP-IDLER	355
GUARD GP-LIGHTING	357
GUARD GP-LINES	358
GUARD GP-REAR	360
HITCH GP	361
HOOD & GUARD GP	364
HOOD AR	364
HOOD GP	365
HOOD GP-ENGINE	367
INSTALLATION GP-RADIATOR	371
PANEL GP-ENCLOSURE	372
PLATE GP-FRAME	375
PLUG GP-BUMPER	377
STEP GP	378
TILT GP-PLATFORM	380
UNDERCARRIAGE	386
ADJUSTMENT GP-HYDRAULIC TRACK	386
BAR GP-EQUALIZER	387
CAP GP-TRACK ROLLER	389
FRAME GP-TRACK ROLLER	390
GUARD GP-TRACK GUIDE	392
GUARD GP-TRACK ROLLER	394
IDLER GP-FRONT	395
LINK AS-TRACK	400
LINK AS-TRACK BOX	401
PIVOT BAR GP	407
ROLLER GP-TRACK CARRIER	408
ROLLER GP-TRACK-SINGLE FLANGE	409
SCRAPER GP-IDLER	410
TRACK ADJUSTER & RECOIL GP	412
TRACK GP	413
UNDERCARRIAGE AR	414
STEERING AND BRAKING SYSTEM	415
KIT-HYDRAULIC CONTROL	415
LINES GP-BRAKE	416
MANIFOLD & VALVE GP	417
VALVE GP-SOLENOID	418
HYDRAULIC SYSTEM	419
ACCUMULATOR GP-HYDRAULIC	419
ACTUATOR GP-HYDRAULIC	421
CONTROL AR-HYDRAULIC	422
CYLINDER GP-BUCKET	423
CYLINDER GP-CAB TILT	425
CYLINDER GP-LIFT	426
CYLINDER GP-RIPPER	429
CYLINDER GP-TILT	430
HYDRAULIC AR	432
HYDRAULIC AR-2 VALVE	432
HYDRAULIC AR-3 VALVE	433
HYDRAULIC AR-4 VALVE	434
LINES GP-BUCKET CYLINDER	435
LINES GP-FRONT	439
LINES GP-LIFT CYLINDER	443
LINES GP-PUMP	446

TABLE OF CONTENTS

Name	Page
LINES GP-REAR ATTACHMENT	449
LINES GP-RIPPER	454
LINES GP-TILT CYLINDER	456
MANIFOLD GP-CONTROL & SOLENOID	458
MANIFOLD GP-CONTROL	459
MANIFOLD GP-VALVE	462
MOUNTING GP-CYLINDER	463
MOUNTING GP-HYDRAULIC TANK	464
MOUNTING GP-PUMP	466
MOUNTING GP-VALVE	467
PUMP & LINES GP	468
PUMP GP-HAND	471
PUMP GP-PISTON	472
TANK GP-HYDRAULIC	474
VALVE GP-BANK 2	476
VALVE GP-BANK 3	478
VALVE GP-BANK 4	483
VALVE GP-CONTROL	485
VALVE GP-MANUAL	499
VALVE GP-PILOT	500
VALVE GP-PUMP CONTROL	501
VALVE GP-RELIEF	502
VALVE GP-SOLENOID	505
IMPLEMENTS	508
CONTROL GP-BUCKET	508
OPERATOR STATION	511
ACCESSORY GP-CAB	511
ADJUSTER GP-SEAT	528
AIR CONDITIONER & MOUNTING GP	529
AIR CONDITIONER GP	541
ARM GP-SEAT SUSPENSION	545
ARMREST GP	548
BOX GP-STORAGE	550
BRACE GP-CAB LIFT	551
BRACKET GP-MOUNTING	552
CAB AR	558
CAB GP	558
COMPRESSOR GP-REFRIGERANT	561
CONDENSER GP-REFRIGERANT	563
CONTROL & MTG GP-ELHYD	565
CONTROL & MTG GP-JOYSTICK	567
CONTROL GP-BUCKET & RIPPER	574
CONTROL GP-DIRECTION & SPEED	575
CONTROL GP-HANDLE	577
CONTROL GP-HYDRAULIC	581
CONTROL GP-HYDRAULIC HAND	582
CONTROL GP-JOYSTICK	583
CONTROL GP-PEDAL	589
CONTROL GP-STEERING	593
CONTROL GP-UNPRGMED MONITOR	595
COVER GP-ACCESS	596
COVER GP-CAB	597
COVER GP-CONSOLE	604
COVER GP-DASH	605
DASH GP	606
DOOR GP-ACCESS	610
DOOR GP-CAB	612
DUCT GP-CAB AIR	620
ENCLOSURE GP-CAB	621
HEATER GP-CAB	624
INSTALLATION GP-CAB	625
INSTALLATION GP-RADIO	643
INSULATION GP-WEATHER	646
KIT-CAB	648
LATCH GP	649
LINES GP-AIR CONDITIONER	651
LINES GP-HEATER	659
MOTOR GP-WINDOW WIPER	660
MOUNTING GP-ROPS	661
PAN GP-BACKREST	663
PAN GP-SEAT	666
RADIO GP	668
RECLINER GP-SEAT	674
SCREEN GP-CAB	675
SEAT BELT GP	678
SEAT GP	679
SEAT GP-SUSPENSION	683
SUPPORT GP-HYDRAULIC CONTROL	686
SUPPORT GP-SEAT	688
SUPPORT GP-STEERING CONTROL	691
SUSPENSION GP-SEAT	693
TANK GP-WINDOW WASHER	698
WINDOW AS-FRONT	699
WINDOW GP	702
WINDOW GP-CAB	704
WIPER GP-WINDOW	707
WORK TOOLS	714
BUCKET AS-GENERAL PURPOSE	714
BUCKET GP-MULTIPURPOSE	718
BULLDOZER GP	721
EDGE GP-BIT & CUTTING	723
EDGE GP-SEGMENT	724
GUARD GP-RIPPER	725
MOUNTING GP-RIPPER	726
RIPPER AR	729
RIPPER GP	730
TIP GP-EXTRA-DUTY	731
TIP GP-PENETRATION	732
TOOTH GP-LONG	733
TOOTH GP-RIPPER	735
SERVICE EQUIPMENT AND SUPPLIES	736
BOX GP-TOOL	736
FILM GP	737
LINES GP-DIAGNOSTIC	740

TABLE OF CONTENTS

Name	Page	Name	Page
PLATE & FILM GP	744		
PART NUMBER INDEX	B1		

GENERAL INFORMATION

1. MACHINE IDENTIFICATION

Caterpillar machines are identified by Product Identification Numbers (PIN). Some components included in a machine may be identified by Serial Numbers (S/N). Typical components that will be serialized include engines, transmissions, bulldozers, and rippers. The machine and engine are further identified by arrangement numbers and in some cases modification numbers. These numbers are shown on the product identification plate(s) and on the master plate in the operator's compartment.

Caterpillar dealers need all of these numbers to determine accurate parts identification.

SIS *New Feature*

Effective First Quarter 2001 the Caterpillar Product Identification Number (PIN) changed from 8 to 17 characters. In an effort to provide uniform equipment identification, Caterpillar and other construction equipment manufacturers are moving to comply with the latest version of the product identification numbering standard. Non-road machine PINs are defined by ISO 10261. The new PIN format will apply to all Caterpillar machines and generator sets. The PIN plates and frame marking will display the 17 character PIN. The new format will look like the following:

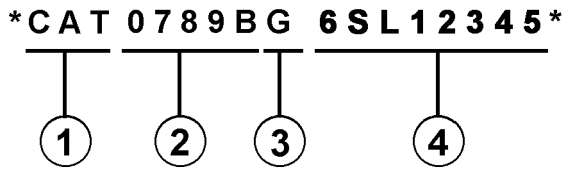

Where:

1. Caterpillar's World Manufacturing Code (characters 1-3)

2. Machine Descriptor (characters 4-8)

3. Check Character (character 9)

4. Machine Indicator Section (MIS) or Product Sequence Number (characters 10-17). These were previously referred to as the Serial Number.

Machines and generator sets produced before First Quarter 2001 will maintain their 8 character PIN format.

Components such as engines, transmissions, axles, etc. and work tools will continue to use an 8 character Serial Number (S/N).

2. ORDERING PARTS

WARNING

When replacement parts are required for this product Caterpillar recommends using Caterpillar replacement parts or parts with equivalent specifications including, but not limited to, physical dimensions, type, strength and material.

Failure to heed this warning can lead to premature failures, product damage, personal injury or death.

Quality Caterpillar replacement parts are available from Caterpillar dealers throughout the world. Their parts inventories are up to date and include all parts normally required to protect your investment in Caterpillar machines. Dealers may offer repair kits or remanufactured parts to allow selection of the most effective repair alternative for a particular situation. When ordering parts, your order should specify the quantity, part number, part name, and the serial number/product identification number of the machine for which the parts are needed.

3. PARTS MANUAL ORGANIZATION

Product information in this manual is presented as "information elements" that represent all of the components for the specific model. Engine Arrangement and Seat Group are examples of information elements. The information elements are organized alphabetically by part name and secondarily by part number within each major section of the manual.

4. TABLE OF CONTENTS

A table of contents (TOC) is found at the beginning of the manual. The TOC lists each section of the manual with a complete list of all information elements organized as they appear in the manual. Page numbers are provided for quick reference to detailed parts identification illustrations and serviceable consist lists.

5. MAINTENANCE PARTS INDEX

The Maintenance Parts Index, located near the beginning of the manual, references most frequently used maintenance part numbers, providing description, quantity, usage and page number. This information is organized alphabetically by part description.

6. INDEX

The index located near the front of the manual is an alphabetical listing of all information elements included in the manual. Page numbers are provided for quick reference to detailed parts identification illustrations and serviceable consist lists.

7. PART NUMBER INDEX

A numerical index listing all part numbers and the corresponding page number(s) appears at the back of the manual.

8. CAPTIONS

Captions located at the beginning of each information element identify the part number and part name along with additional descriptive information. PIN and S/N information found in each caption should be used to select correct information for a specific machine. Field replacement options, identification of optional attachment components, and where used ("part of") information is also provided.

The first line of a caption is shown in larger type font to indicate the beginning of an information element. Captions for additional pages that may be required to illustrate an information element will be shown in standard type font and will include the term *(contd.)* .

9. NON-SERVICED PARTS

In some instances it is necessary to display non-serviced parts that are a link to a lower level serviceable consist lists. These non-serviced part numbers are shown in *italic* type indicating that they are not available.

10. PARTS LIST REFERENCE NUMBERS

Numbers shown in the Ref No column correspond to numbers used in the associated graphic(s). An alphabetic suffix may be added to a reference number to identify lower level consist items. Numbers shown in the Graphic Ref column refer to the graphic number identifier displayed in the lower left corner of each illustration. The Graphic Ref number may be used in combination with the item Ref No to determine the correct part number. There may be intentional omission of a Ref No in a consist list as information is updated to reflect the latest serviceable part numbers.

11. INDENTED PART NAMES

When a part name is indented in a parts list, it is part of (included in) the group or assembly under which it is indented.

12. ILLUSTRATION REFERENCE LETTERS

When necessary, illustrations contain reference letters (A, B, C etc.) that are intended to track lines and harnesses from one point to another. They are also used to show where to reconnect illustrations that have been separated.

13. ABBREVIATIONS AND SYMBOLS

O.D. – Outside Diameter
I.D. – Inside Diameter
A – Not Part Of This Group
B – Use As Required
C – Change From Previous Type
D – Order By The Meter
E – Order By The Centimeter
F – Not Shown
G – Order By The Inch
I – Refer To Hydraulic Information System
M – Metric Part
R – Remfg Part May Be Available
Y – Separate Illustration
Z – Not Serviced Separately

SIS *New Feature*

14. DESCRIPTION OF TYPE CHANGES

Type - A type is defined as any configuration change that requires an additional Information Element for an Arrangement, Group, or Assembly. If serial number breaks for types are not available, a type # (Type 1, Type 2, etc.) will be displayed in the caption. These "type" changes are identified with a "C" note (change from previous type) in the Parts List. Only the "types" that apply to this Parts Manual will be included. Additional types may exist causing "C" notes to appear on an Information Element when no other types are shown.

15.<END>

This symbol indicates the end of an information element.

NOTE:

Continuing improvement and advancement of product design may cause changes to your machine which may not be included in this publication. Whenever a question arises regarding your caterpillar product or this publication, please consult your caterpillar dealer for the latest available information.

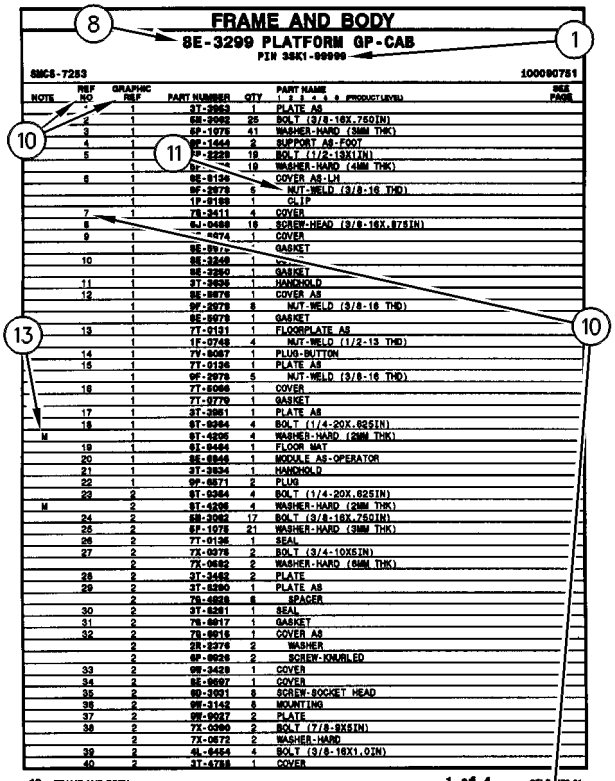

FRAME AND BODY

8E-3299 PLATFORM GP-CAB

PIN 3SK1-99999

SMCS-7253 100090751

NOTE	REF NO	GRAPHIC REF	PART NUMBER	QTY	PART NAME 1 2 3 4 5 6 (PRODUCT LEVEL)	SEE PAGE
	*	1	3T-3953	1	PLATE AS	
	2	1	6E-2992	25	BOLT (3/8-16X.750IN)	
	3	1	6F-1976	41	WASHER-HARD (3MM THK)	
	4	1	9F-1444	2	SUPPORT AS-FOOT	
	5	1	7P-2229	18	BOLT (1/2-13X1IN)	
		1	6F-	18	WASHER-HARD (4MM THK)	
	6	1	6E-6136		COVER AS-LH	
		1	9F-2978	6	NUT-WELD (3/8-16 THD)	
		1	1P-0188	1	CLIP	
	7	1	7S-3411	4	COVER	
	8	1	9J-0498	18	SCREW-HEAD (3/8-16X.875IN)	
	9	1	-4474	1	COVER	
		1	9E-897		GASKET	
	10	1	6E-3249	1		
		1	6E-3250	1	GASKET	
	11	1	3T-3638	1	HANDHOLD	
	12	1	9E-9979	1	COVER AS	
		1	9F-2978	8	NUT-WELD (3/8-16 THD)	
		1	9E-9978	1	GASKET	
	13	1	7T-0131	1	FLOORPLATE AS	
		1	1F-0748	4	NUT-WELD (1/2-13 THD)	
	14	1	7V-9067	1	PLUG-BUTTON	
	15	1	7T-0136	1	PLATE AS	
		1	9F-2978	5	NUT-WELD (3/8-16 THD)	
	16	1	7T-9066	1	COVER	
		1	7T-9779	1	GASKET	
	17	1	3T-3951	1	PLATE AS	
	18	1	6T-9264	4	BOLT (1/4-20X.625IN)	
M		1	9T-4295	4	WASHER-HARD (2MM THK)	
	19	1	6L-9494	1	FLOOR MAT	
	20	1	8E-6846	1	MODULE AS-OPERATOR	
	21	1	3T-3934	1	HANDHOLD	
	22	1	9F-6671	2	PLUG	
	23	2	6T-9264	4	BOLT (1/4-20X.625IN)	
M		2	9T-4295	4	WASHER-HARD (2MM THK)	
	24	2	6E-3062	17	BOLT (3/8-16X.750IN)	
	26	2	6F-1976	21	WASHER-HARD (3MM THK)	
	26	2	7T-0135	1	SEAL	
	27	2	7X-0975	2	BOLT (3/4-10X5IN)	
		2	7X-0682	2	WASHER-HARD (6MM THK)	
	28	2	3T-3452	2	PLATE	
	29	2	3T-3290	1	PLATE AS	
		2	7S-4828	8	SPACER	
	30	2	3T-9281	1	SEAL	
	31	2	7S-9817	1	GASKET	
	32	2	7S-9815	1	COVER AS	
		2	2R-3276	2	WASHER	
		2	6F-9926	2	SCREW-KNURLED	
	33	2	9W-3429	1	COVER	
	34	2	8E-9897	1	COVER	
	35	2	6D-3931	8	SCREW-SOCKET HEAD	
	36	2	9W-3142	8	MOUNTING	
	37	2	9W-9927	2	PLATE	
	38	2	7X-0990	2	BOLT (7/8-9X5IN)	
		2	7X-0672	2	WASHER-HARD	
	39	2	4L-6454	4	BOLT (3/8-16X1.0IN)	
	40	2	3T-4788	1	COVER	

12 FRAME AND BODY 1 of 4 SELP4570-01

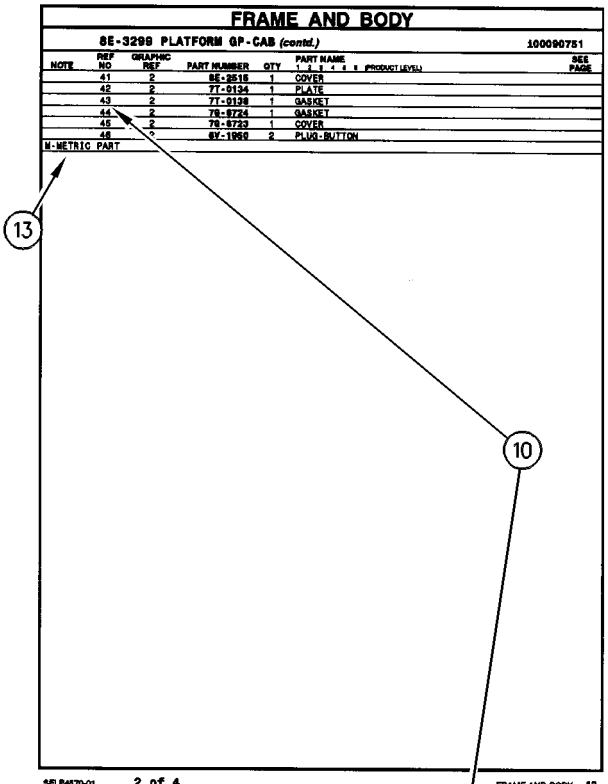

FRAME AND BODY

8E-3299 PLATFORM GP-CAB (contd.) 100090751

NOTE	REF NO	GRAPHIC REF	PART NUMBER	QTY	PART NAME 1 2 3 4 5 6 (PRODUCT LEVEL)	SEE PAGE
	41	2	6E-2516	1	COVER	
	42	2	7T-0134	1	PLATE	
	43	2	7T-0138	1	GASKET	
	44	2	7S-9724	1	GASKET	
	45	2	7S-9723	1	COVER	
	46	2	6V-1950	2	PLUG-BUTTON	

M-METRIC PART

SELP4570-01 2 of 4 FRAME AND BODY 13

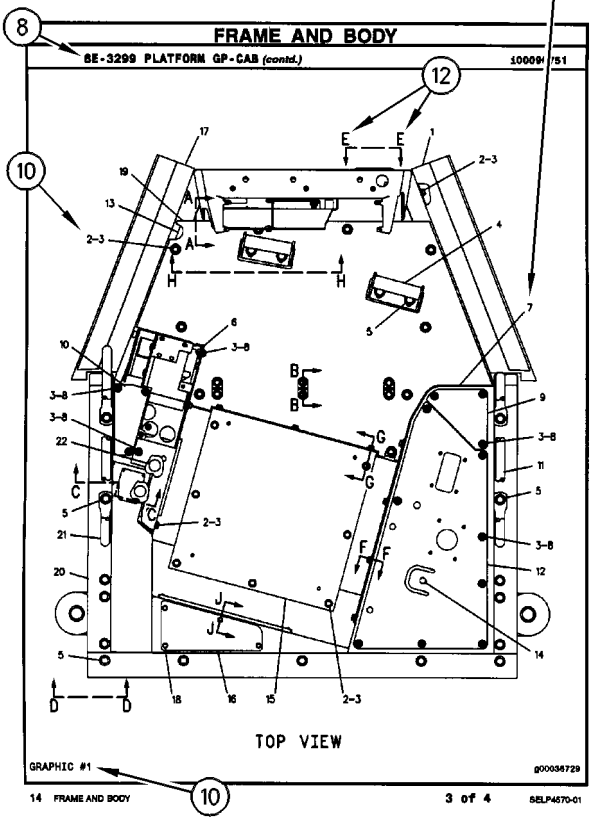

FRAME AND BODY

8E-3299 PLATFORM GP-CAB (contd.) 100090751

TOP VIEW

GRAPHIC #1 g00036729

14 FRAME AND BODY 3 of 4 SELP4570-01

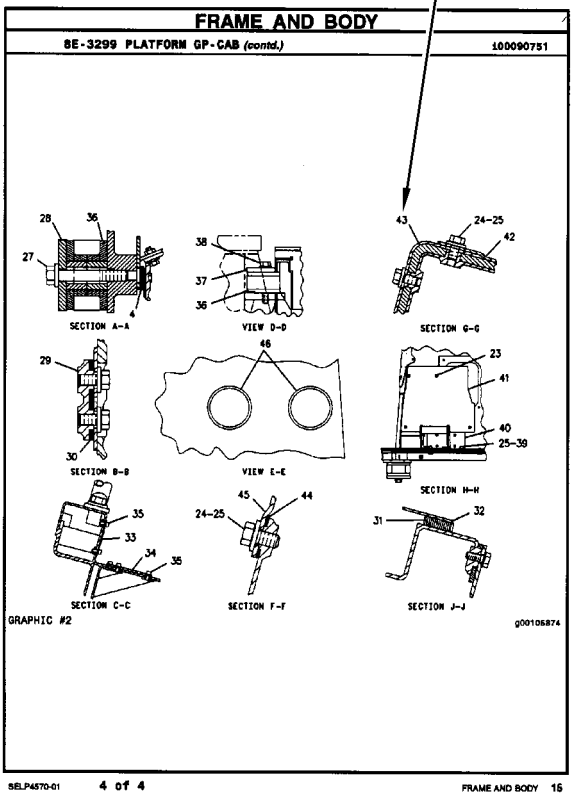

FRAME AND BODY

8E-3299 PLATFORM GP-CAB (contd.) 100090751

SECTION A-A

VIEW D-D

SECTION G-G

SECTION B-B

VIEW E-E

SECTION H-H

SECTION C-C

SECTION F-F

SECTION J-J

GRAPHIC #2 g00105874

SELP4570-01 4 of 4 FRAME AND BODY 16

REPAIR ALTERNATIVES

REMANUFACTURED COMPONENTS

As an option when making repairs consider Caterpillar Remanufactured Components. Components that are available through the Caterpillar Remanufactured Program are identified three ways in the parts book:

- with the letter R in the note field of the parts list
- with an R* at the beginning of the first line of the caption
- with an *R at the end of the first line of the caption

Typical components included in the Remanufacturing Program include:

ALTERNATORS
CONNECTING RODS
CRANKSHAFTS - UNDERSIZE
CRANKSHAFTS - UPGRADE TO NEW
CYLINDER HEADS
ELECTRONIC CONTROL MODULES (ECM)
ELECTRONIC SENSORS
FUEL INJECTORS
FUEL NOZZLES
FUEL PUMPS
GOVERNORS
OIL PUMPS
PISTONS
SHORT BLOCKS
STARTERS
TURBOCHARGERS - COMPLETE
TURBOCHARGER CARTRIDGES
WATER PUMPS

Caterpillar Remanufactured engines for many engine arrangements are also available.

SUPPLEMENTAL COOLANT ADDITIVES

CUSTOMER BENEFITS:

Protects against cavitation, foam, erosion, corrosion, and scale buildup in cooling systems.

- Provides measured coolant conditioner.

DESCRIPTION:

Additives deplete from the coolant with normal operation. For this reason, Supplemental Coolant Additives (SCA) must be added to all heavy duty coolants at regular intervals. In addition, when not using a fully formulated, pre-charged antifreeze, like Caterpillar's DEAC, an initial charge of SCA must be added to the cooling system. The amount of SCA added to the system is dependent on the capacity of the system.

The SCA for initial fill is provided as a liquid. SCA's for maintenance intervals are available in liquid form and as a spin-on element. (No Spin-on available for 3600 Family of Engines)

NOTE:

The amount of SCA added at initial fill is not the same as the amount added at maintenance intervals.

The coolant additive elements can be used with any ethylene or propylene glycol type antifreeze which meets ASTM D4985 or ASTM D5345 Specifications.

NOTE:

For use with standard heavy duty coolant only, not for use with Extended Life Coolant.

PARTS NEEDED:

Cooling System Capacity		Liquid SCA at Initial Fill	Liquid SCA at Maintenance*	Spin-on SCA Maintenance Element*
Liters	Gallons			
22-30	(6-8)	3P-2044 (1)	6V-3542 (1)	111-2370 (1)
30-38	(8-10)	3P-2044 (1) 6V-3542 (1)	111-2372 (1)	111-2369 (1)
38-49	(10-13)	3P-2044 (1) 8T-1589 (1)	111-2372 (1)	111-2369 (1)
49-64	(13-17)	3P-2044 (2)	8T-1589 (1)	9N-3368 (1)
64-83	(17-22)	3P-2044 (2) 8T-1589 (1)	111-2372 (1) 6V-3542 (1)	111-2371 (1)
83-114	(22-30)	3P-2044 (3) 8T-1589 (1)	3P-2044 (1)	9N-3718 (1)
114-163	(30-43)	3P-2044 (5)	3P-2044 (1) 6V-3542 (1)	111-2371 (2)
163-242	(43-64)	3P-2044 (8)	3P-2044 (2)	9N-3718 (2)

** Normal maintenance period is 250 hrs. See your Operation and Maintenance Manual for complete coolant maintenance instructions.*

( ) Indicates quantity required.

MAINTENANCE PARTS

DESCRIPTION	PART NUMBER	QTY	WHERE USED	PAGE
AIR INLET AND EXHAUST SYSTEM				
FILTER ELEMENT AS-AIR (PRIMARY)	252-5001	1	AIR CLEANER GP	89
		1	AIR CLEANER GP	91
FILTER ELEMENT AS-AIR (SECONDARY)	252-5002	1	AIR CLEANER GP	89
		1	AIR CLEANER GP	91
BASIC ENGINE				
BREATHER (CRANKCASE)	298-4547	1	COVER GP-VALVE MECHANISM	16
FILTER ELEMENT-BREATHER (CRANKCASE)	185-3159	1	COVER GP-VALVE MECHANISM	7
		1	COVER GP-VALVE MECHANISM	10
		1	COVER GP-VALVE MECHANISM	13
GASKET-COVER (VALVE MECHANISM)	317-3064	1	COVER GP-VALVE MECHANISM	16
		1	COVER GP-VALVE MECHANISM	18
GASKET-VALVE COVER	278-4693	1	COVER GP-VALVE MECHANISM	7
		1	COVER GP-VALVE MECHANISM	10
		1	COVER GP-VALVE MECHANISM	13
GLOW PLUG	299-6953	6	PLUG GP-ENGINE	51
PLUG-DRAIN (ENGINE OIL PAN)	294-8576	1	PAN GP-OIL	44
		1	PAN GP-OIL	46
		1	PAN GP-OIL	48
COOLING SYSTEM				
CAP AS-COOLANT TANK	251-3227	1	TANK GP-COOLANT	88
GASKET-WATER REGULATOR (TEMPERATURE)	281-8744	1	REGULATOR GP-TEMPERATURE	87
REGULATOR AS-WATER TEMPERATURE (CONNECTOR INCLUDED)	277-2974	1	REGULATOR GP-TEMPERATURE	87

MAINTENANCE PARTS

DESCRIPTION	PART NUMBER	QTY	WHERE USED	PAGE
ELECTRICAL AND STARTING SYSTEM				
BATTERY (12-VOLT, MAINTENANCE FREE, WET)	9X-3404	2	WIRING GP-ELECTRIC STARTING	262
		2	WIRING GP-ELECTRIC STARTING	265
BELT-DRIVE	9X-8139	1	LAMP GP-WARNING BEACON	201
CIRCUIT BREAKER AS (105-AMPERE) (ALTERNATOR)	171-2212	2	CIRCUIT BREAKER GP	171
CIRCUIT BREAKER AS (15-AMPERE) (AIR CONDITIONER)	280-2709	2	WIRING GP-CAB	223
		2	WIRING GP-CAB	229
		2	WIRING GP-CAB	235
CIRCUIT BREAKER AS (15-AMPERE) (FUEL INJECTION)	280-2709	1	WIRING GP-CAB	229
		1	WIRING GP-CAB	235
CIRCUIT BREAKER AS (20-AMPERE) (AIR CONDITIONER, BLOWER)	280-2710	1	WIRING GP-CAB	223
		1	WIRING GP-CAB	229
		1	WIRING GP-CAB	235
FUSE (10-AMPERE)	113-8490	13	WIRING GP-CAB	223
		13	WIRING GP-CAB	229
		13	WIRING GP-CAB	235
FUSE (15-AMPERE)	113-8491	15	WIRING GP-CAB	223
		15	WIRING GP-CAB	229
		15	WIRING GP-CAB	235
GLOW PLUG	292-9881	6	GLOW PLUG GP	187
GLOW PLUG (24-VOLT)	226-8770	6	GLOW PLUG GP	186
KEY (BATTERY DISCONNECT)	8H-5306	1	SWITCH GP-DISCONNECT	218
KEY AS-ELECTRONIC (SECURITY) (GRAY)	206-5165		INSTALLATION GP-SECURITY	197
KEY AS-ELECTRONIC (SECURITY) (YELLOW)	206-5162	1	INSTALLATION GP-SECURITY	197
LAMP (24-VOLT, 10-WATT)	259-1286	1	WIRING GP-CAB	223
		1	WIRING GP-CAB	229
		1	WIRING GP-CAB	235
		1	WIRING GP-CAB	240
LAMP (24-VOLT, 70-WATT)	9X-7849	1	LAMP GP-WARNING BEACON	201
LAMP-HALOGEN (24-VOLT, 65-WATT)	9X-3463	1	LAMP GP-FLOOD	199
		1	LAMP GP-FLOOD	200
ENGINE ARRANGEMENT				
BELT-SERPENTINE (ALTERNATOR)	277-8713	1	INSTALLATION AR-ENGINE	3

MAINTENANCE PARTS

DESCRIPTION	PART NUMBER	QTY	WHERE USED	PAGE
FUEL SYSTEM				
CAP-FUEL FILLER (LOCKABLE)	276-1243	1	CAP GP-FUEL FILLER	117
FILTER AS-FUEL (ULTRA HIGH EFFICIENCY)	319-0844	1	FILTER GP-FUEL	118
FILTER AS-FUEL (ULTRA HIGH EFFICIENCY) (SECONDARY)	306-9199	1	FILTER GP-FUEL	118
FILTER AS-WATER SEP & FUEL	326-1644	1	FILTER GP-WATER SEP & FUEL	119
FILTER ELEMENT-BREATHER (FUEL CAP)	279-9876	1	CAP GP-FUEL FILLER	117
GASKET (PRIMING PUMP/COVER) (FUEL PRIMING PUMP)	9Y-8389	1	PUMP GP-FUEL PRIMING	150
STRAINER-FUEL	304-6608	1	TANK GP-FUEL	158
		1	TANK GP-FUEL	161
HYDRAULIC SYSTEM				
BREATHER (HYDRAULIC TANK)	183-3873	1	MOUNTING GP-HYDRAULIC TANK	464
CAP-FILLER (HYDRAULIC TANK)	5K-1568	1	TANK GP-HYDRAULIC	474
FILTER ELEMENT-OIL (FLOW REGULATOR) (OUTLET MANIFOLD)	227-1197	1	MANIFOLD GP-VALVE	462
PLUG-BREATHER	1P-2943	1	MOUNTING GP-PUMP	466
PLUG-DRAIN (HYDRAULIC TANK)	9J-7031	1	TANK GP-HYDRAULIC	474
SCREEN-SUCTION (HYDRAULIC TANK) (HYDRAULIC FAN OIL)	142-8929	1	TANK GP-HYDRAULIC	474
SCREEN-SUCTION (HYDRAULIC TANK) (HYDROSTATIC PUMP OIL)	142-8929	1	TANK GP-HYDRAULIC	474
SCREEN-SUCTION (HYDRAULIC TANK) (IMPLEMENT OIL)	322-9703	1	TANK GP-HYDRAULIC	474
STRAINER (HYDRAULIC TANK FILL)	9J-3047	1	TANK GP-HYDRAULIC	474
LUBRICATION SYSTEM				
BREATHER AS (CRANKCASE)	273-5711	1	BREATHER GP	57
CAP AS	8W-3214	1	OIL CHANGE GP-HIGH SPEED	63
CAP-OIL FILLER (ENGINE)	130-9888	1	FILLER GP-ENGINE OIL	58
		1	FILLER GP-ENGINE OIL	60
FILTER-ENGINE OIL	269-8325	1	FILTER GP-ENGINE OIL	62

MAINTENANCE PARTS

DESCRIPTION	PART NUMBER	QTY	WHERE USED	PAGE
OPERATOR STATION				
BLADE AS-WIPER (450-MM) (REAR CAB WINDOW)	6V-5853	1	WIPER GP-WINDOW	707
BLADE AS-WIPER (450-MM) (REAR)	6V-5853	1	ACCESSORY GP-CAB	522
		1	ACCESSORY GP-CAB	524
BLADE AS-WIPER (650-MM) (FRONT CAB WINDOW)	134-1935	1	WIPER GP-WINDOW	707
BLADE AS-WIPER (650-MM) (FRONT)	134-1935	1	ACCESSORY GP-CAB	522
		1	ACCESSORY GP-CAB	524
CAP-VENTED (WINDOW WASHER RESERVOIR)	209-4482	1	TANK GP-WINDOW WASHER	698
FILTER ELEMENT-CAB AIR (STANDARD EFFICIENCY)	209-8217	1	AIR CONDITIONER GP	541
FILTER GP-CAB AIR (STANDARD EFFICIENCY)	266-7765	1	AIR CONDITIONER & MOUNTING GP	529
		1	AIR CONDITIONER & MOUNTING GP	532
		1	AIR CONDITIONER & MOUNTING GP	535
		1	AIR CONDITIONER & MOUNTING GP	537
RECEIVER-REFRIGERANT DRYER	257-3227	1	AIR CONDITIONER & MOUNTING GP	529
		1	AIR CONDITIONER & MOUNTING GP	532
		1	AIR CONDITIONER & MOUNTING GP	535
		1	AIR CONDITIONER & MOUNTING GP	537
		1	AIR CONDITIONER & MOUNTING GP	539
SCREEN-FILTER (WINDOW WASHER RESERVOIR)	8T-5913	2	TANK GP-WINDOW WASHER	698
SEAT BELT GP (RETRACTABLE)	272-2272	1	SEAT GP-SUSPENSION	684
		1	SEAT GP-SUSPENSION	685
POWER TRAIN				
FILTER-OIL (ADVANCED EFFICIENCY)	1G-8878	1	FILTER GP-OIL	273
FILTER-OIL (FIRE RESISTANT FLUID)	156-0214	1	FILTER GP-OIL	273
FILTER-OIL (ULTRA HIGH EFFICIENCY)	102-2828	1	FILTER GP-OIL	273
PLUG-MAGNETIC (FINAL DRIVE OIL DRAIN)	3S-9182	2	FINAL DRIVE & BRAKE GP	274
		2	FINAL DRIVE & BRAKE GP	277
		2	FINAL DRIVE & BRAKE GP	280
	6V-0439	2	FINAL DRIVE & BRAKE GP	274
		2	FINAL DRIVE & BRAKE GP	277
		2	FINAL DRIVE & BRAKE GP	280
PLUG-MAGNETIC (FINAL DRIVE, OIL CHECK)	6V-0439	2	FINAL DRIVE & BRAKE GP	274
		2	FINAL DRIVE & BRAKE GP	277
		2	FINAL DRIVE & BRAKE GP	280
PLUG-MAGNETIC (FINAL DRIVE, OIL FILL)	6V-0439	2	FINAL DRIVE & BRAKE GP	274
		2	FINAL DRIVE & BRAKE GP	277
		2	FINAL DRIVE & BRAKE GP	280
SCREEN-FILTER (PUMP CONTROL VALVE)	236-5157	1	VALVE GP-PUMP CONTROL	323
UNDERCARRIAGE				
PLUG-MAGNETIC (RECOIL SPRING, OIL FILL)	6V-0439	2	FRAME GP-TRACK ROLLER	390

INDEX

Name	Page
A	
ACCESSORY GP-CAB	511, 512, 517, 522, 524, 526
ACCUMULATOR GP-HYDRAULIC–CHARGED	419
ACCUMULATOR GP-HYDRAULIC–UNCHARGED	420
ACCUMULATOR-REFRIGERANT	529, 532, 535, 537, 539
ACTUATOR GP-HYDRAULIC	421
ACTUATOR GP-PUMP–HYDROSTATIC DRIVE	271
ADAPTER GP-FAST FILL FUEL	115
ADAPTER GP-OIL PAN DRAIN	44, 46, 48
ADAPTER-FAST FILL FUEL	115
ADJUSTER GP-SEAT	528
ADJUSTMENT GP-HYDRAULIC TRACK	386
AIR CLEANER GP	89, 90, 91
AIR CONDITIONER & MOUNTING GP–CAB	529, 532, 535, 537, 539
AIR CONDITIONER GP	541
ALARM GP	164
ALTERNATOR GP-CHARGING	165, 166, 168
ARM GP-SEAT SUSPENSION–CENTER	545
ARM GP-SEAT SUSPENSION–OUTER, LH	547
ARM GP-SEAT SUSPENSION–OUTER, RH	546
ARMREST GP–RH	548
B	
BAR GP-EQUALIZER	387
BAR GP-STRIKER	326
BASE GP-VALVE COVER & INJ HARN	16, 18
BATTERY (12-VOLT, MAINTENANCE FREE, WET)	262, 265
BELT-DRIVE	201
BELT-SERPENTINE (ALTERNATOR)	3
BLADE AS-WIPER (450-MM) (REAR CAB WINDOW)	707
BLADE AS-WIPER (450-MM) (REAR)	522, 524
BLADE AS-WIPER (650-MM) (FRONT CAB WINDOW)	707
BLADE AS-WIPER (650-MM) (FRONT)	522, 524
BLOCK GP-JUNCTION (BATTERY)	170
BLOCK GP-JUNCTION–BATTERY	170
BOX GP-STORAGE (SHOVEL)	550
BOX GP-STORAGE–SHOVEL	550
BOX GP-TOOL	512, 517, 649, 736
BRACE GP-CAB LIFT	551
BRACKET GP-MOUNTING–LH	552, 555
BREATHER (CRANKCASE)	16
BREATHER (HYDRAULIC TANK)	464
BREATHER AS (CRANKCASE)	57
BREATHER GP–CRANKCASE	57
BUCKET AS-GENERAL PURPOSE	714
BUCKET AS-GENERAL PURPOSE–FLUSH MOUNTED TEETH	716
BUCKET GP-MULTIPURPOSE	718, 720
BULLDOZER GP	721
BUMPER GP	327
C	
CAB AR	558
CAB GP	558, 559, 560
CAMSHAFT GP	4
CAP AS	63
CAP AS-COOLANT TANK	88
CAP GP-FUEL FILLER (LOCKABLE, VENTED)	161
CAP GP-FUEL FILLER–VENTED, LOCKABLE	117
CAP GP-TRACK ROLLER–SYSTEMONE	389
CAP-FILLER (HYDRAULIC TANK)	474
CAP-FUEL FILLER (LOCKABLE)	117
CAP-OIL FILLER (ENGINE)	58, 60
CAP-VENTED (WINDOW WASHER RESERVOIR)	698
CHASSIS AR	1
CIRCUIT BREAKER AS (105-AMPERE) (ALTERNATOR)	171

INDEX

Name	Page
CIRCUIT BREAKER AS (15-AMPERE) (AIR CONDITIONER)	223, 229, 235
CIRCUIT BREAKER AS (15-AMPERE) (FUEL INJECTION)	229, 235
CIRCUIT BREAKER AS (20-AMPERE) (AIR CONDITIONER, BLOWER)	223, 229, 235
CIRCUIT BREAKER GP	171
COMPRESSOR GP-REFRIGERANT	561, 562
CONDENSER GP-REFRIGERANT	563
CONTROL & MTG GP-ELECTRONIC– BUCKET, RIPPER	175, 176
CONTROL & MTG GP-ELECTRONIC– RIPPER	173, 174
CONTROL & MTG GP-ELHYD– HYDROSTATIC DRIVE, STEERING	565
CONTROL & MTG GP-JOYSTICK–BUCKET	567, 571, 572
CONTROL & MTG GP-JOYSTICK– MULTIPURPOSE BUCKET	569
CONTROL AR-HYDRAULIC– HYDROSTATIC DRIVE, BRAKE	422
CONTROL GP-BUCKET	508
CONTROL GP-BUCKET & RIPPER	574
CONTROL GP-DIRECTION & SPEED– HYDROSTATIC DRIVE	575
CONTROL GP-ENGINE ELECTRONIC	140
CONTROL GP-HANDLE–BUCKET TILT, DUMP– BUCKET LIFT, LOWER	579
CONTROL GP-HANDLE– HYDROSTATIC DRIVE	578
CONTROL GP-HANDLE–RIPPER	577, 580
CONTROL GP-HYDRAULIC HAND–2-LEVER– BUCKET	582
CONTROL GP-HYDRAULIC– HYDROSTATIC DRIVE, STEERING	581
CONTROL GP-JOYSTICK–BUCKET	585, 586
CONTROL GP-JOYSTICK– HYDROSTATIC DRIVE	588
CONTROL GP-JOYSTICK– MULTIPURPOSE BUCKET	583, 584
CONTROL GP-JOYSTICK–RIPPER	587
CONTROL GP-PEDAL–BRAKE	591
CONTROL GP-PEDAL– SPEED OVERRIDE, BRAKE	590
CONTROL GP-PEDAL–STEERING, BRAKE	589
CONTROL GP-STEERING	593
CONTROL GP-UNPRGMED MONITOR– MESSENGER	595
CONTROL GP-UNPROGRAMMED (BUCKET, RIPPER)	175, 176
CONTROL GP-UNPROGRAMMED (ENGINE)	134
CONTROL GP-UNPROGRAMMED (MACHINE)	179, 223, 229
CONTROL GP-UNPROGRAMMED (POWER TRAIN)	241
CONTROL GP-UNPROGRAMMED (PRODUCT LINK 300)	178
CONTROL GP-UNPROGRAMMED (RIPPER)	173, 174
CONTROL GP-UNPROGRAMMED– PRODUCT LINK 300	178
COOLANT HEATER LINES	659
COOLER GP-ENGINE OIL	66
CORE AS-AFTERCOOLER	81, 84
CORE AS-OIL COOLER (HYDRAULIC OIL)	81, 84
CORE AS-RADIATOR	81, 84
COUNTERWEIGHT & MOUNTING GP	328
COUNTERWEIGHT GP	329
COUPLING GP-FLEXIBLE	272
COUPLING GP-PUMP	272
COVER GP-ACCESS–RH	330, 596
COVER GP-CAB	597, 600, 602
COVER GP-CONSOLE–RH	604
COVER GP-DASH	605
COVER GP-ENGINE–PTO	5, 6
COVER GP-FRAME	390
COVER GP-VALVE MECHANISM	7, 10, 13, 16, 18
CRANKSHAFT GP	20
CYLINDER BLOCK GP	21, 23
CYLINDER GP-BUCKET–MULTIPURPOSE	423
CYLINDER GP-CAB TILT	425
CYLINDER GP-LIFT–BUCKET	426

INDEX

Name	Page
	427
CYLINDER GP-RIPPER	429
CYLINDER GP-TILT–BUCKET	430
CYLINDER HEAD AS	25
	27
CYLINDER HEAD GP	29
	31

D

DASH GP	606
	608
DOOR GP-ACCESS–LH	331
	611
DOOR GP-ACCESS–RH	332
	610
DOOR GP-CAB–LH	614
	618
DOOR GP-CAB–RH	612
	616
DRAIN GP-ENGINE OIL	33
DUCT GP-CAB AIR	620

E

EDGE GP-BIT & CUTTING	723
EDGE GP-SEGMENT	724
ELECTRONICS AR-MACHINE	179
ELECTRONICS GP-COMMUNICATION–PRODUCT LINK 300	179
ELECTRONICS GP-MACHINE	179
	180
ELECTRONICS GP-MONITOR	180
	181
	182
	183
	184
	185
ENCLOSURE GP-CAB	621
ENGINE AR-PRIMARY	2
EXTENSION GP-BACKREST (CLOTH)	684
	685

F

FENDER GP	333
	334
FENDER GP–LH	336
	338
FENDER GP–RH	335
FILLER GP-ENGINE OIL	58
	60
FILM GP	737
	738
FILM-FUSE PANEL	229
	237
	241
FILM-IDENTIFICATION	541
	563
FILM-IDENTIFICATION (ALTERNATE EXIT)	638
	641
FILM-IDENTIFICATION (ALTERNATOR)	171
FILM-IDENTIFICATION (ARROW, SUN VISOR)	512
	517
	625
	632
FILM-IDENTIFICATION (ARTICULATION LOCK)	638
	641
	748
FILM-IDENTIFICATION (BIODEGRADABLE HYDRAULIC OIL)	747
FILM-IDENTIFICATION (BUCKET CYLINDER)	432
FILM-IDENTIFICATION (BUCKET, RIPPER CYL LOCKOUT)	433
	434
FILM-IDENTIFICATION (CATERPILLAR)	699
	700
	702
	703
FILM-IDENTIFICATION (CATERPILLAR) (FRONT WINDOW)	701
FILM-IDENTIFICATION (DIRECTION, SPEED)	575
FILM-IDENTIFICATION (FUSE PANEL)	223
FILM-IDENTIFICATION (GENERATOR, ELECTRICAL POWER)	171
FILM-IDENTIFICATION (IGNITION SWITCH)	197
FILM-IDENTIFICATION (OPERATOR CONTROLS, BUCKET)	433
FILM-IDENTIFICATION (POWER RECEPTACLE, 12-VOLT)	223
	229
	235
	240
FILM-IDENTIFICATION (PRESSURE TEST)	741
FILM-IDENTIFICATION (SECURITY)	638
	641
	748
FILM-IDENTIFICATION (SERIAL NUMBER)	693
FILM-IDENTIFICATION (SWITCH PANEL, LH)	512
	625
	632
FILM-IDENTIFICATION (SWITCH PANEL, RH)	512
	517
	625
	632
FILM-IDENTIFICATION (TERMINAL)	171
FILM-INFORMATION (ARMREST ADJUSTMENT)	686

INDEX

Name	Page
	691
FILM-INFORMATION (INPUT/OUTPUT)	223
	229
	235
	240
FILM-INFORMATION (PRODUCT LINK, READ OMM)	192
FILM-INFORMATION (STARTING MOTOR)	217
FILM-INSTRUCTION (BATTERY DISCONNECT)	744
FILM-INSTRUCTION (BUCKET CONTROLS)	583
	586
	738
FILM-INSTRUCTION (BUCKET CONTROLS) (MULTIPURPOSE)	738
FILM-INSTRUCTION (CAB TILT, READ OMM)	380
	383
FILM-INSTRUCTION (CAB UNLOCK)	638
	641
	748
FILM-INSTRUCTION (CONDENSATE PUMP)	151
FILM-INSTRUCTION (CONSOLE TILT)	565
	575
FILM-INSTRUCTION (HVAC WATER, DRAINING, FILLING)	541
FILM-INSTRUCTION (KEY START SWITCH)	223
	229
	240
FILM-INSTRUCTION (MACHINE SECURITY, CONSOLE)	738
FILM-INSTRUCTION (MAXIMUM COOLANT LEVEL)	88
FILM-INSTRUCTION (MINIMUM COOLANT LEVEL)	88
FILM-INSTRUCTION (OPERATOR CONTROLS)	567
FILM-INSTRUCTION (RIPPER CONTROL)	173
	174
	587
FILM-INSTRUCTION (SEAT ADJUSTMENT)	693
FILM-NOTICE (BUCKET CORNER GUARD SYSTEM)	714
	718
FILM-NOTICE (LIFT EYE LOCATION)	720
FILM-SPEED	581
	738
FILM-WARNING (ACCUMULATOR PRESSURE)	447
FILM-WARNING (DO NOT LIFT)	638
	641
FILM-WARNING (HIGH PRESSURE CYLINDER)	420
FILM-WARNING (HIGH PRESSURE, READ OMM)	746
FILM-WARNING (PRODUCT LINK 300, U.S.)	738
	745
FILM-WARNING (PRODUCT LINK, READ OMM)	738
	746
FILM-WARNING (ROPS, FOPS, READ OMM)	638
	641
FILTER AS-FUEL (ULTRA HIGH EFFICIENCY)	118
FILTER AS-FUEL (ULTRA HIGH EFFICIENCY) (SECONDARY)	118
FILTER AS-WATER SEP & FUEL	119
FILTER ELEMENT AS-AIR (PRIMARY)	89
	91
FILTER ELEMENT AS-AIR (SECONDARY)	89
	91
FILTER ELEMENT-BREATHER (CRANKCASE)	7
	10
	13
FILTER ELEMENT-BREATHER (FUEL CAP)	117
FILTER ELEMENT-CAB AIR (STANDARD EFFICIENCY)	541
FILTER ELEMENT-OIL (FLOW REGULATOR) (OUTLET MANIFOLD)	462
FILTER GP-CAB AIR (STANDARD EFFICIENCY)	529
	532
	535
	537
FILTER GP-ENGINE OIL	62
FILTER GP-FUEL	118
FILTER GP-OIL–HYDRAULIC, HYDROSTATIC DRIVE	273
FILTER GP-WATER SEP & FUEL	119
FILTER-ENGINE OIL	62
FILTER-OIL (ADVANCED EFFICIENCY)	273
FILTER-OIL (FIRE RESISTANT FLUID)	273
FILTER-OIL (ULTRA HIGH EFFICIENCY)	273
FINAL DRIVE & BRAKE GP	274
FINAL DRIVE & BRAKE GP–HEAVY-DUTY	277
	280
FITTING GP-WATER LINES	69
FLOOR MAT	522
	524
	526
	597
FLYWHEEL GP	34
FRAME GP-LOADER	339
FRAME GP-RADIATOR	70
FRAME GP-TRACK ROLLER	390
FUSE (10-AMPERE)	223
	229
	235
FUSE (15-AMPERE)	223
	229
	235

INDEX

Name	Page
G	
GASKET (PRIMING PUMP/COVER) (FUEL PRIMING PUMP)	150
GASKET-COVER (VALVE MECHANISM)	16 18
GASKET-VALVE COVER	7 10 13
GASKET-WATER REGULATOR (TEMPERATURE)	87
GAUGE AS-OIL LEVEL (DIPSTICK) (ENGINE)	48
GAUGE-LIQUID LEVEL (SIGHT GLASS) (HYDRAULIC TANK)	474
GENERAL AR	1
GLOW PLUG	51 187
GLOW PLUG (24-VOLT)	186
GLOW PLUG GP	186 187
GRILL GP-RADIATOR	340
GUARD GP-BELT–ALTERNATOR, COMPRESSOR	35
GUARD GP-BOTTOM	341
GUARD GP-ENGINE	342 344 346
GUARD GP-FRONT	352 354
GUARD GP-FRONT–HYDRAULIC TANK	348 349 350 351 353
GUARD GP-IDLER	355
GUARD GP-IDLER–ENHANCED EXTENDED WEAR LIFE	356
GUARD GP-LIGHTING	357
GUARD GP-LINES–LIFT	358 359
GUARD GP-REAR	360
GUARD GP-RIPPER	725
GUARD GP-SEAL	277 280
GUARD GP-TRACK GUIDE	392 393
GUARD GP-TRACK ROLLER	394
H	
HANDLE GP-MODULAR	584 585
HARNESS AS-CAB	223 234 244
HARNESS AS-CAB (INSTRUMENT PANEL)	231 236 241
HARNESS AS-CAB (MAIN POWER RELAY)	229 235 241
HARNESS AS-CHASSIS	246 250
HARNESS AS-CONTROL	176 194 254 259
HARNESS AS-ENGINE	267 269
HARNESS AS-HEATER & AIR COND	224 563
HARNESS AS-MOTOR	222
HARNESS AS-MOTOR (BLOWER)	541
HARNESS AS-RADIO	671 672 673
HARNESS AS-SENSOR	256 257 571
HARNESS AS-SOLENOID	173 174 175 267
HARNESS AS-SWITCH (LIFT KICKOUT)	251
HARNESS AS-SWITCH (TILT KICKOUT)	251
HARNESS AS-VALVE (SEAT AIR COMPRESSOR)	693
HARNESS AS-WIRING (INJECTOR)	7 10 13 16 18
HARNESS AS-WIRING (JOYSTICK)	258
HEAD GP-MOTOR–HYDROSTATIC DRIVE, LH	283
HEAD GP-MOTOR–HYDROSTATIC DRIVE, RH	284
HEAD GP-PUMP–HYDROSTATIC DRIVE, LH	285
HEAD GP-PUMP–HYDROSTATIC DRIVE, RH	286
HEATER GP-CAB	624
HEATER GP-JACKET WATER	188 189
HITCH GP	361 362 363
HOOD & GUARD GP	364
HOOD AR–PRECLEANER	364
HOOD GP	365 366
HOOD GP-ENGINE	367

INDEX

Name	Page
	369
HOUSING GP-FLYWHEEL	36
HOUSING GP-FRONT	38
HYDRAULIC AR	432
HYDRAULIC AR-2 VALVE	432
HYDRAULIC AR-3 VALVE	433
HYDRAULIC AR-4 VALVE	434

I

IDLER GP-FRONT–ENHANCED EXTENDED WEAR LIFE	399
IDLER GP-FRONT–LH	395
IDLER GP-FRONT–RH	397
INDICATOR AS-AIR FILTER CHANGE	90
INJECTOR GP-FUEL	120
	121
INSTALLATION AR-COMMUNICATION–PRODUCT LINK 321SR	190
	192
INSTALLATION AR-ENGINE	3
INSTALLATION GP-CAB	625
	632
	638
	641
INSTALLATION GP-COMMUNICATION	196
INSTALLATION GP-COMMUNICATION–PRODUCT LINK 321SR	194
INSTALLATION GP-RADIATOR	371
INSTALLATION GP-RADIO	643
	644
	645
INSTALLATION GP-SECURITY	197
INSULATION GP-WEATHER	646
	647

K

KEY (BATTERY DISCONNECT)	218
KEY AS-ELECTRONIC (SECURITY) (GRAY)	197
KEY AS-ELECTRONIC (SECURITY) (YELLOW)	197
KIT-CAB	648
KIT-HYDRAULIC CONTROL–RETROFIT	415
KIT-PUMP ROTATING GROUP	312
	314
KIT-SENSOR (AIR PRESSURE)	134
	139
	144
KIT-SENSOR (AIR TEMPERATURE)	139
	144
KIT-SENSOR (COOLANT TEMPERATURE)	134
	139
	144
KIT-SENSOR (ENGINE OIL PRESSURE)	134
	139
	144
KIT-SENSOR (ENGINE SPEED)	134
	139
	144
KIT-SENSOR (FUEL RAIL PRESSURE)	134
KIT-SENSOR (INTAKE AIR TEMPERATURE)	134

L

LAMP (24-VOLT, 10-WATT)	223
	229
	235
	240
LAMP (24-VOLT, 70-WATT)	201
LAMP GP-DOME (24-VOLT)	223
	229
	235
	240
LAMP GP-FLOOD	199
	200
LAMP GP-WARNING BEACON	201
LAMP-HALOGEN (24-VOLT, 65-WATT)	199
	200
LATCH GP	649
LIFTING GP-ENGINE	40
	41
LIGHTING GP-FLOOD–CAB	203
LIGHTING GP-FLOOD–CAB FRONT, REAR	202
LIGHTING GP-WARNING BEACON	204
LINES GP-AIR	92
LINES GP-AIR CONDITIONER	651
	653
	655
	657
LINES GP-BRAKE	416
LINES GP-BUCKET CYLINDER	435
	437
LINES GP-CHARGE PRESSURE	287
	289
LINES GP-DIAGNOSTIC–REMOTE CONTROL	740
LINES GP-FRONT	439
	441
LINES GP-FUEL	122
	124
	128
LINES GP-HEATER	659
LINES GP-HYDROSTATIC	291
	293
LINES GP-LIFT CYLINDER	443
LINES GP-POWER TRAIN OIL	295
LINES GP-PUMP–IMPLEMENT	446
LINES GP-REAR ATTACHMENT	449
	451

INDEX

Name	Page
LINES GP-RIPPER	454
LINES GP-TILT CYLINDER	456
LINES GP-WATER	72
	75
LINK AS-TRACK BOX–LINK BOX	401
	403
	405
LINK AS-TRACK BOX–LINK BOX, OFFSET	402
	404
	406
LINK AS-TRACK–SYSTEMONE	400

M

MANIFOLD & VALVE GP–RETURN MANIFOLD–HYDROSTATIC DRIVE	417
MANIFOLD GP-CONTROL & SOLENOID–IMPLEMENT CONTROL VALVE–IMPLEMENT PILOT OIL	458
MANIFOLD GP-CONTROL (INLET)	460
MANIFOLD GP-CONTROL–DEMAND FAN	459
MANIFOLD GP-CONTROL–INLET	460
MANIFOLD GP-CONTROL–REVERSING FAN	461
MANIFOLD GP-EXHAUST	106
MANIFOLD GP-INLET–AIR	94
	95
MANIFOLD GP-VALVE–OUTLET	462
MODULE GP-INTERFACE (KEY)	197
MOTOR & MOUNTING GP–HYDROSTATIC DRIVE	297
MOTOR GP-GEAR (BASIC)	84
MOTOR GP-PISTON–HYDROSTATIC DRIVE, LH	298
MOTOR GP-PISTON–HYDROSTATIC DRIVE, RH	299
MOTOR GP-WINDOW WIPER (24-VOLT, 2-SPEED) (FRONT)	660
MOTOR GP-WINDOW WIPER–FRONT	660
MOUNTING GP-CYLINDER	463
MOUNTING GP-ENGINE	42
MOUNTING GP-ENGINE & XMSN	43
MOUNTING GP-HYDRAULIC TANK	464
MOUNTING GP-PUMP–HYDROSTATIC DRIVE	466
MOUNTING GP-RIPPER	726
	727
MOUNTING GP-ROPS	661
	662
MOUNTING GP-VALVE–CONTROL	467
MUFFLER GP	96
	98

O

OIL CHANGE GP-HIGH SPEED–ENGINE	63
ORIFICE AS-AIR CONDITIONER	529
	532
	535
	537
	539

P

PADLOCK GP	550
	675
PAN GP-BACKREST–CLOTH	663
PAN GP-BACKREST–CLOTH, HEATED	664
PAN GP-BACKREST–LUMBAR	665
PAN GP-OIL	44
	46
	48
PAN GP-SEAT–CLOTH	666
PAN GP-SEAT–CLOTH, HEATED	667
PANEL GP-CAB (LH)	621
PANEL GP-CAB (RH)	621
PANEL GP-ENCLOSURE–LH	373
PANEL GP-ENCLOSURE–RH	372
PANEL GP-INSTRUMENT	223
PIPE GP-EXHAUST–SHORT	100
PISTON & ROD GP	50
PIVOT BAR GP	407
PLATE & FILM GP	744
	748
PLATE & FILM GP–BIODEGRADABLE HYDRAULIC OIL	747
PLATE & FILM GP–INTERNATIONAL	746
PLATE & FILM GP–NACD	745
PLATE GP-FRAME	375
	376
PLATE-IDENTIFICATION (ENGINE STOP, RUN)	246
	250
PLATE-IDENTIFICATION (SEQUENCE)	512
	517
	738
PLATE-SERIAL NUMBER (MULTIPURPOSE BUCKET)	720
PLATE-SERIAL NUMBER (RIPPER)	729
PLATE-WARNING (HIGH PRESSURE, READ OMM)	745
PLUG GP (DUST)	267
PLUG GP-BUMPER	377
PLUG GP-ENGINE	51
PLUG-BREATHER	466
PLUG-DRAIN (ENGINE OIL PAN)	44
	46
	48
PLUG-DRAIN (HYDRAULIC TANK)	474
PLUG-MAGNETIC (FINAL DRIVE OIL DRAIN)	274
	277

INDEX

Name	Page
	280
PLUG-MAGNETIC (FINAL DRIVE, OIL CHECK)	274, 277, 280
PLUG-MAGNETIC (FINAL DRIVE, OIL FILL)	274, 277, 280
PLUG-MAGNETIC (RECOIL SPRING, OIL FILL)	390
POWER TRAIN AR	300
PRECLEANER GP	104
PRECLEANER GP (CAB AIR)	102
PRECLEANER GP–CAB	102
PRECLEANER GP–TURBINE	101
PROTECTION GP-FUEL SYSTEM	118, 124, 128, 135, 140, 145
PULLEY GP-CRANKSHAFT	52
PUMP & LINES GP–HYDRAULIC FAN	468
PUMP & MTG GP-POWER TRAIN–HYDROSTATIC DRIVE	301
PUMP & MTG GP-UNIT INJ HYD	132
PUMP GP-CHARGE–HYDROSTATIC DRIVE, LH	302
PUMP GP-CHARGE–HYDROSTATIC DRIVE, RH	303
PUMP GP-ENGINE OIL	64
PUMP GP-FUEL INJECTION	133, 134, 139, 144, 149
PUMP GP-FUEL PRIMING	151
PUMP GP-FUEL PRIMING–MANUAL	150
PUMP GP-FUEL PRM & WATER SEP–ELECTRIC	153, 154
PUMP GP-FUEL TRANSFER	132, 133, 149
PUMP GP-GEAR (HYDRAULIC FAN)	468
PUMP GP-HAND–CAB TILT	471
PUMP GP-PISTON–HYDROSTATIC DRIVE	304
PUMP GP-PISTON–HYDROSTATIC DRIVE, LH	305
PUMP GP-PISTON–HYDROSTATIC DRIVE, RH	307
PUMP GP-PISTON–IMPLEMENT	472
PUMP GP-WATER	77, 79
RADIATOR & HYD OIL COOLER GP	81, 84
RADIO GP–AM/FM/WB CD PLAYER	668, 669, 670
RADIO GP–AM/FM/WB/CD PLAYER	671
RADIO GP–NACD	672, 673
RADIO GP-COMMUNICATION–PRODUCT LINK 121SR	205
RECEIVER-REFRIGERANT DRYER	529, 532, 535, 537, 539
RECLINER GP-SEAT	674
REGULATOR AS-VOLTAGE (24-VOLT) (ALTERNATOR)	165
REGULATOR AS-WATER TEMPERATURE (CONNECTOR INCLUDED)	87
REGULATOR GP-TEMPERATURE	87
RELAY AS (24-VOLT)	223, 229, 235, 240
RELAY AS (24-VOLT) (CONDENSER BLOWER MOTOR)	563
RELAY AS (24-VOLT) (JUMPER)	234
RELAY AS (24-VOLT) (PRECLEANER)	222
RIPPER AR	729
RIPPER GP	730
ROCKER ARM GP	53
ROLLER GP-TRACK CARRIER–SYSTEMONE	408
ROLLER GP-TRACK-SINGLE FLANGE–SYSTEMONE	409
ROTATING GP-MOTOR–HYDROSTATIC DRIVE	309, 311
ROTATING GP-PUMP (IMPLEMENT PISTON PUMP)	472
ROTATING GP-PUMP–HYDROSTATIC DRIVE, LH	312
ROTATING GP-PUMP–HYDROSTATIC DRIVE, RH	314
SCRAPER GP-IDLER	410
SCRAPER GP-IDLER–ENHANCED EXTENDED WEAR LIFE	411
SCREEN GP-CAB–WINDSHIELD	675
SCREEN-FILTER (PUMP CONTROL VALVE)	323

R

S

INDEX

Name	Page
SCREEN-FILTER (WINDOW WASHER RESERVOIR)	698
SCREEN-SUCTION (HYDRAULIC TANK) (HYDRAULIC FAN OIL)	474
SCREEN-SUCTION (HYDRAULIC TANK) (HYDROSTATIC PUMP OIL)	474
SCREEN-SUCTION (HYDRAULIC TANK) (IMPLEMENT OIL)	474
SEAL GP-DUO-CONE	277
	280
SEAT BELT GP (RETRACTABLE)	684
	685
SEAT BELT GP–RETRACTABLE	678
SEAT GP–CLOTH	679
SEAT GP–CLOTH, HEATED	681
SEAT GP-SUSPENSION–CLOTH, AIR	683
	684
SEAT GP-SUSPENSION– CLOTH, HEATED, AIR	683
	685
SEGMENT GP-SPROCKET	316
	317
SEGMENT-EDGE	724
SENDER AS-FUEL LEVEL	158
SENSOR AS-LIQUID LEVEL (WATER SEPARATOR)	206
SENSOR AS-TEMPERATURE (HYDRAULIC TANK OIL)	474
SENSOR GP-LIQUID LEVEL	206
SENSOR GP-LIQUID LEVEL (WATER SEPARATOR)	154
SENSOR GP-POSITION	207
SENSOR GP-POSITION (JOYSTICK)	588
SENSOR GP-POSITION (LIFT CYLINDER)	427
SENSOR GP-POSITION (TILT)	430
SENSOR GP-PRESSURE (HYDROSTATIC DRIVE)	246
	250
SENSOR GP-SPEED	145
	208
	209
	210
SENSOR GP-SPEED (ENGINE)	267
SENSOR GP-SPEED (SECONDARY, TIMING)	132
	133
	149
SENSOR GP-SPEED (TRACK, LH)	246
	250
SENSOR GP-SPEED (TRACK, RH)	246
	250
SENSOR GP-TEMPERATURE	211
SENSOR GP-TEMPERATURE (AIR CONDITIONER)	541
SENSOR GP-TEMPERATURE (FUEL)	154
SENSOR-PRESSURE (FUEL)	139
	144
SERVICE GP-COMMUNICATION (PRODUCT LINK 300)	179
SERVICE GP-MONITOR	181
	182
	184
	185
SHIELD GP-AIR CLEANER	105
SOFTWARE GP-COMMUNICATION (PRODUCT LINK 300)	179
SOFTWARE GP-MACHINE	180
SOFTWARE GP-MONITOR	181
	182
	183
	184
	185
SOLENOID AS (HYDROSTATIC PUMP)	323
SOLENOID AS (PILOT VALVE)	322
SOLENOID AS (WASTEGATE)	106
	109
	112
STARTING AID GP-ETHER	212
	214
STARTING MOTOR GP-ELECTRIC	215
	216
	217
STEP GP	378
	379
STRAINER (HYDRAULIC TANK FILL)	474
STRAINER-FUEL	158
	161
SUPPORT GP-HYDRAULIC CONTROL–RH	686
SUPPORT GP-SEAT–SUSPENSION	688
SUPPORT GP-STEERING CONTROL–LH	691
SUSPENSION GP-SEAT–AIR	693
SWITCH (SEAT ADJUSTMENT)	667
SWITCH AS-LIMIT (HYDRAULIC LOCKOUT)	254
	258
	259
SWITCH AS-LIMIT (SEAT ADJUSTMENT)	666
	667
SWITCH AS-PRESSURE (COMPRESSOR, HIGH SIDE)	653
	655
SWITCH AS-PRESSURE (COMPRESSOR, LOW SIDE)	653
	655
SWITCH AS-PUSH BUTTON (HORN)	254
SWITCH AS-ROCKER (24-VOLT) (AUTOMATIC REVERSING FAN)	488
SWITCH AS-ROCKER (24-VOLT) (FRONT FLOODLIGHTS)	223
	229
	240

INDEX

Name	Page
SWITCH AS-ROCKER (AIR CONDITIONER ON, OFF)	223, 229, 240
SWITCH AS-ROCKER (FRONT, REAR FLOODLIGHTS)	202
SWITCH AS-ROCKER (HYDRAULIC LOCKOUT)	223, 240
SWITCH AS-ROCKER (IMPLEMENT LOCKOUT)	229
SWITCH AS-ROCKER (LIFT, TILT KICKOUT)	223, 229, 240
SWITCH AS-ROCKER (PARKING BRAKE ON, OFF)	223, 229, 240
SWITCH AS-ROCKER (THROTTLE SWITCH)	229, 240
SWITCH AS-ROCKER (THROTTLE)	223
SWITCH AS-ROCKER (WARNING BEACON)	204
SWITCH AS-ROCKER (WIPER, WASHER, FRONT)	223, 229
SWITCH AS-ROCKER (WIPER, WASHER, REAR)	223, 229
SWITCH AS-ROCKER (WORK MODE)	254
SWITCH AS-ROTARY (WIPER, WASHER) (REAR)	240
SWITCH AS-START (KEY)	223, 229, 240
SWITCH GP-DISCONNECT–BATTERY	218
SWITCH GP-MAGNETIC–MAIN POWER RELAY–MAIN RELAY	219
SWITCH GP-PRESSURE	273
SWITCH GP-TOGGLE (GROUND LEVEL SHUTDOWN)	246, 250
SWITCH GP-TOGGLE–FUEL PRIMING PUMP	220
SWITCH GP-WIPER (24-VOLT, INTERMITTENT) (FRONT WIPER)	240
SWITCH GP-WIPER (24-VOLT, INTERMITTENT) (FRONT)	240
SWITCH-FUEL	154

T

Name	Page
TANK AS-FUEL	156
TANK GP-COOLANT	88
TANK GP-FUEL	160, 161
TANK GP-FUEL–FAST FILL	157
	158
	163
TANK GP-HYDRAULIC	474
TANK GP-WINDOW WASHER	698
TILT GP-PLATFORM	380, 383
TIP GP-EXTRA-DUTY–K-80	731
TIP GP-PENETRATION–K-80	732
TOOTH GP-LONG–K-80	734
TOOTH GP-LONG–K-80, EXTRA-DUTY	733
TOOTH GP-RIPPER	735
TRACK ADJUSTER & RECOIL GP	412
TRACK GP–2-REQUIRED, SYSTEMONE	413
TURBOCHARGER GP	106, 109, 112

U

Name	Page
UNDERCARRIAGE AR	414

V

Name	Page
VALVE & MTG GP-CONTROL–HYDROSTATIC DRIVE	318
VALVE AS-RELIEF	144
VALVE GP-BANK 2–BUCKET LIFT, TILT	476, 477
VALVE GP-BANK 3–BUCKET CONTROL	478
VALVE GP-BANK 3–BUCKET CONTROL, RIPPER	479, 480, 481, 482
VALVE GP-BANK 4–BUCKET CONTROL, RIPPER	483, 484
VALVE GP-CAB HEATER	624
VALVE GP-CHECK	283, 284, 320
VALVE GP-CONTROL–BUCKET LIFT	492, 496
VALVE GP-CONTROL–BUCKET TILT	491, 495
VALVE GP-CONTROL–HYDRAULIC FAN	485
VALVE GP-CONTROL–MULTIPURPOSE BUCKET	493, 497
VALVE GP-CONTROL–REVERSING FAN	488
VALVE GP-CONTROL–RIPPER	494, 498
VALVE GP-DIVERTER (HYDRAULIC FAN, AUTO REVERSING)	461
VALVE GP-ETHER STARTING	221

INDEX

Name	Page
VALVE GP-FLOW CONTROL (AUXILIARY, INLET) (OUTLET MANIFOLD)	462
VALVE GP-FLUID SAMPLING (ENGINE OIL)	72
VALVE GP-FLUID SAMPLING–ENGINE OIL	65
VALVE GP-FLUSHING–HYDROSTATIC DRIVE	321
VALVE GP-MANUAL–DEAD ENGINE LOWER	499
VALVE GP-MOTOR CONTROL–HYDROSTATIC DRIVE	322
VALVE GP-PILOT–JOYSTICK–HYDROSTATIC DRIVE	500
VALVE GP-PUMP CONTROL–PRESSURE, FLOW COMPENSATOR	323
VALVE GP-PUMP CONTROL–PRESSURE, FLOW COMPENSATOR–IMPLEMENT	501
VALVE GP-RELIEF (HYDRAULIC FAN, AUTO REVERSING)	461
VALVE GP-RELIEF (LOAD SENSING SIGNAL)	462
VALVE GP-RELIEF (PUMP HEAD)	285
	286
VALVE GP-RELIEF–CHARGE PRESSURE–HYDROSTATIC DRIVE	325
VALVE GP-RELIEF–IMPLEMENT PILOT OIL	502
	503
	504
VALVE GP-SOLENOID	418
	421
	505
	506
VALVE GP-SOLENOID (24 VDC) (WITHOUT HARDWARE)	507
VALVE GP-SOLENOID (24-VOLT) (DEMAND FAN)	459
VALVE GP-SOLENOID (24-VOLT) (HYDRAULIC FAN, AUTO REVERSING)	461
VALVE GP-SOLENOID (BRAKE RELEASE)	417
VALVE GP-SOLENOID (HYDROSTATIC PRESSURE CUTOFF)	417
VALVE GP-SOLENOID (INLET MANIFOLD)	460
VALVE GP-SOLENOID (PILOT PROPORTIONING)	458
VALVE GP-SOLENOID–WITH HARDWARE	507
VALVE MECHANISM GP	55
VISOR GP-CAB	512
	517
	625
	632

W

Name	Page
WATER SEP & FUEL PRM PUMP GP	153
	154
WINDOW AS-FRONT–SEALED	699
	700
	701
WINDOW GP–CAB	702
	703
WINDOW GP-CAB–SEALED	704
	705
	706
WIPER GP-WINDOW	707
	710
WIPER GP-WINDOW–REAR	712
WIRING GP-AIR CONDITIONER	222
WIRING GP-CAB	223
	229
	234
	235
	240
WIRING GP-CAB TILT	244
WIRING GP-CHASSIS	246
	250
WIRING GP-CONTROL	254
WIRING GP-CONTROL–HYDROSTATIC DRIVE	258
	259
WIRING GP-CONTROL–JOYSTICK	257
WIRING GP-CONTROL–MULTIPURPOSE BUCKET	256
WIRING GP-ELECTRIC STARTING	261
	264
WIRING GP-ENGINE	267
	269

MACHINE ARRANGEMENT

240-6225 CHASSIS AR

S/N: LBP1-UP

PART OF 240-6223 GENERAL AR

SMCS-7000 **i02940089**

NOTE	PART NUMBER	QTY	PART NAME 1 2 3 4 5 6 (PRODUCT LEVEL)	SEE PAGE
Y	*276-3550*	1	CONTROL GP-BUCKET	508
Y	*245-5697*	1	FENDER GP	333
Y	*276-3511*	1	FRAME GP-LOADER	339
Y	*271-9064*	1	GUARD GP-ENGINE	342
Y	*276-3513*	1	GUARD GP-BOTTOM	341
Y	*275-0763*	1	GUARD GP-FRONT (HYDRAULIC TANK)	348
Y	*242-7496*	1	PLATE & FILM GP	744
Y	*279-8883*	1	STEP GP	379
Y	*242-7490*	1	WIRING GP-CHASSIS	246
Y	*242-7491*	1	WIRING GP-ELECTRIC STARTING	261
Y	*279-3983*	1	WIRING GP-ENGINE	267

Y-SEPARATE ILLUSTRATION

<END>

240-6223 GENERAL AR

S/N: LBP1-UP

SMCS-7000 **i02651569**

NOTE	PART NUMBER	QTY	PART NAME 1 2 3 4 5 6 (PRODUCT LEVEL)	SEE PAGE
Y	*258-7787*	1	CAB AR	558
Y	*240-6225*	1	CHASSIS AR	1
Y	*253-3394*	1	ELECTRONICS AR-MACHINE	179
Y	**242-1357**	1	ENGINE AR-PRIMARY	2
Y	*240-6228*	1	HYDRAULIC AR	432
Y	*240-6227*	1	INSTALLATION AR-ENGINE	3
Y	*240-6226*	1	POWER TRAIN AR	300

Y-SEPARATE ILLUSTRATION

<END>

ENGINE ARRANGEMENT

242-1357 ENGINE AR-PRIMARY

S/N: C6E1-UP
116 BRAKE KW (155 BHP) AT 2000 RPM
PART OF 240-6223 GENERAL AR

SMCS-1000 **i02941160**

NOTE	PART NUMBER	QTY	PART NAME 1 2 3 4 5 6 (PRODUCT LEVEL)	SEE PAGE
Y	*277-6080*	1	ALTERNATOR GP-CHARGING	166
Y	*280-2050*	1	BREATHER GP (CRANKCASE)	57
			S/N: C6E1-495	
Y	*279-8837*	1	CAMSHAFT GP	4
Y	*277-2976*	1	REGULATOR GP-TEMPERATURE (CONNECTOR INCLUDED)	87
Y	*277-2504*	1	COOLER GP-ENGINE OIL	66
Y	*277-4224*	1	COVER GP-ENGINE	5
Y	*280-2024*	1	COVER GP-VALVE MECHANISM	7
			S/N: C6E1-495	
Y	*305-8963*	1	COVER GP-VALVE MECHANISM	10
			S/N: C6E496-UP	
Y	*279-8762*	1	CRANKSHAFT GP	20
Y	*279-8711*	1	CYLINDER BLOCK GP	21
Y	*279-8821*	1	CYLINDER HEAD GP	29
Y	*288-4011*	1	FITTING GP-WATER LINES	69
Y	*277-1973*	1	FILLER GP-ENGINE OIL	58
			S/N: C6E1-616	
Y	*307-1843*	1	FILLER GP-ENGINE OIL	60
			S/N: C6E617-UP	
Y	*277-2912*	1	FILTER GP-ENGINE OIL	62
Y	*305-7294*	1	FILTER GP-FUEL (PRIMARY AND SECONDARY)	118
Y	*305-7299*	1	LINES GP-FUEL	124
Y	*279-9255*	1	FLYWHEEL GP	34
Y	*277-4410*	1	GLOW PLUG GP	186
			S/N: C6E1-408	
Y	*299-6957*	1	PLUG GP-ENGINE (HEATER)	51
			S/N: C6E409-UP	
Y	*279-8846*	1	HOUSING GP-FLYWHEEL	36
Y	*277-3014*	1	HOUSING GP-FRONT	38
Y	*279-9653*	1	LIFTING GP-ENGINE	41
Y	*280-1292*	1	MANIFOLD GP-INLET	94
Y	*277-4541*	1	MOUNTING GP-ENGINE	42
Y	*288-3579*	1	PAN GP-OIL	44
			S/N: C6E1-495	
Y	*305-7297*	1	PAN GP-OIL	46
			S/N: C6E496-UP	
Y	*279-8780*	1	PISTON & ROD GP	50
Y	*274-1929*	1	PULLEY GP-CRANKSHAFT	52
Y	*277-4262*	1	PUMP GP-ENGINE OIL	64
Y	*278-5319*	1	PUMP GP-FUEL INJECTION	134
			S/N: C6E1-495	
Y	*310-0658*	1	PUMP GP-FUEL INJECTION	139
			S/N: C6E496-UP	
Y	*277-2939*	1	PUMP GP-WATER	77
Y	**301-2744**	1	STARTING MOTOR GP-ELECTRIC	215
Y	*280-2458*	1	TURBOCHARGER GP	106
			S/N: C6E1-495	
Y	*305-5970*	1	TURBOCHARGER GP	109
			S/N: C6E496-UP	
Y	*277-4694*	1	VALVE GP-FLUID SAMPLING (ENGINE OIL)	65
Y	*279-8825*	1	VALVE MECHANISM GP	55
Y	*305-8977*	1	WIRING GP-ENGINE	269
	277-6990	1	CYLINDER BLOCK GP (SHORT)	
	288-4010	1	ELECTRONICS GP-ENGINE RATINGS	

Y-SEPARATE ILLUSTRATION

ENGINE ARRANGEMENT

240-6227 INSTALLATION AR-ENGINE

S/N: LBP1-UP

PART OF 240-6223 GENERAL AR

SMCS-1000 **i03526948**

NOTE	PART NUMBER	QTY	PART NAME 1 2 3 4 5 6 (PRODUCT LEVEL)	SEE PAGE
Y	*242-9496*	1	AIR CLEANER GP	90
Y	*243-2156*	1	COMPRESSOR GP-REFRIGERANT	562
Y	*243-2150*	1	GUARD GP-BELT	35
Y	*275-0348*	1	INSTALLATION GP-RADIATOR	371
Y	*256-3464*	1	LIFTING GP-ENGINE	40
Y	*242-8156*	1	LINES GP-AIR	92
Y	*242-7489*	1	LINES GP-FUEL	122
Y	*271-7688*	1	LINES GP-WATER	72
Y	*249-3722*	1	MOUNTING GP-ENGINE & XMSN	43
Y	*256-3451*	1	MUFFLER GP	96
Y	*240-8551*	1	PIPE GP-EXHAUST	100
Y	*301-2710*	1	PUMP GP-FUEL PRM & WATER SEP	154
Y	*274-6027*	1	RADIATOR & HYD OIL COOLER GP	81
Y	*251-4063*	1	STARTING AID GP-ETHER	212
Y	*301-2768*	1	STARTING MOTOR GP-ELECTRIC	216
Y	*270-4206*	1	TANK GP-COOLANT	88
	277-8713	1	BELT-SERPENTINE (ALTERNATOR)	

Y-SEPARATE ILLUSTRATION

BASIC ENGINE

279-8837 CAMSHAFT GP

S/N: C6E1-UP

PART OF 242-1357 ENGINE AR-PRIMARY

SMCS-1210, 1211, 1212 **i03568646**

NOTE	REF NO	GRAPHIC REF	PART NUMBER	QTY	PART NAME 1 2 3 4 5 6 (PRODUCT LEVEL)	SEE PAGE
	1	1	**347-1132**	1	CAMSHAFT AS	
	1A	1	**1B-8736**	1	KEY-WOODRUFF	
	2	1	**278-5125**	12	TAPPET	
	3	1	**278-5126**	12	PUSHROD	

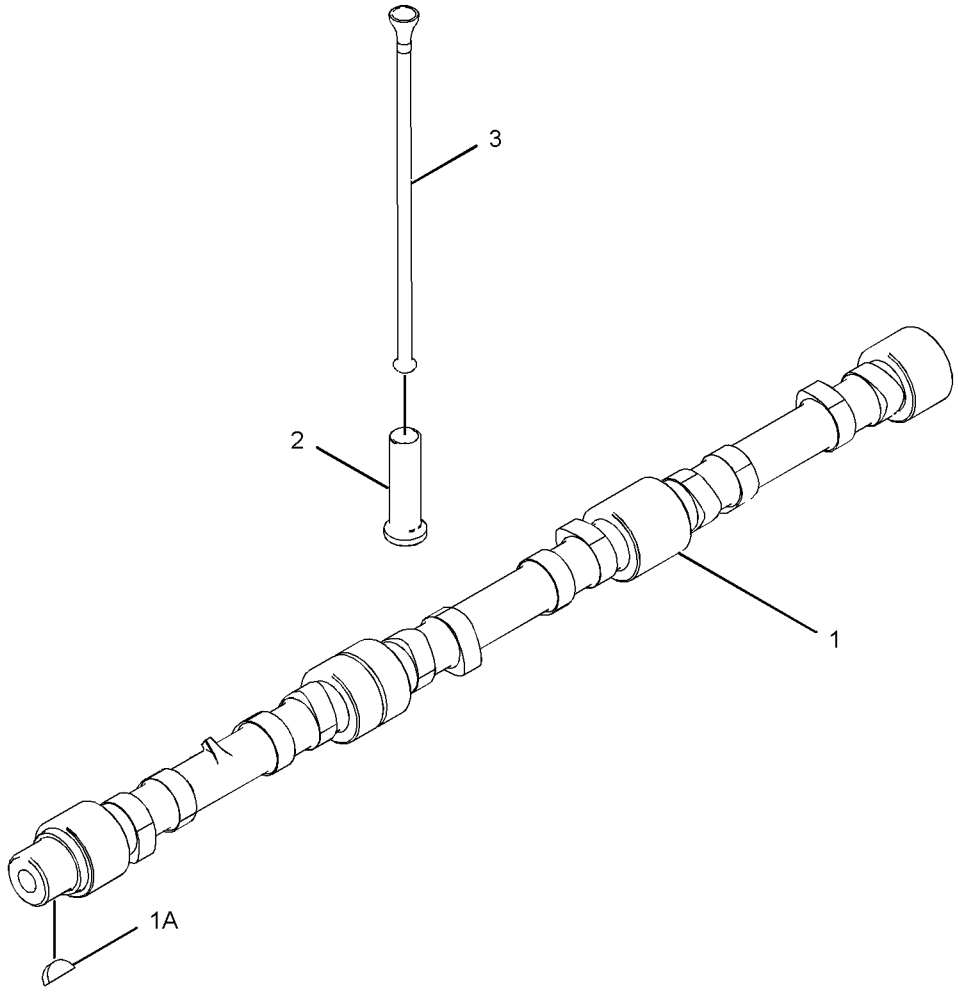

GRAPHIC #1 **<END>** g01296603

277-4224 COVER GP-ENGINE–PTO

S/N: C6E1-6519

PART OF 242-1357 ENGINE AR-PRIMARY

SMCS-1000 **i02386552**

NOTE	REF NO	GRAPHIC REF	PART NUMBER	QTY	PART NAME 1 2 3 4 5 6 (PRODUCT LEVEL)	SEE PAGE
	1	1	**209-5502**	1	COVER AS (POWER TAKE-OFF)	
	2	1	**209-5503**	1	SEAL-COVER	
	3	1	**111-8222**	5	BOLT (M8X16-MM)	
M	4	1	**100-4830**	1	BOLT (M10X1.5X20-MM)	
	5	1	**277-4223**	1	PLUG	

M-METRIC PART

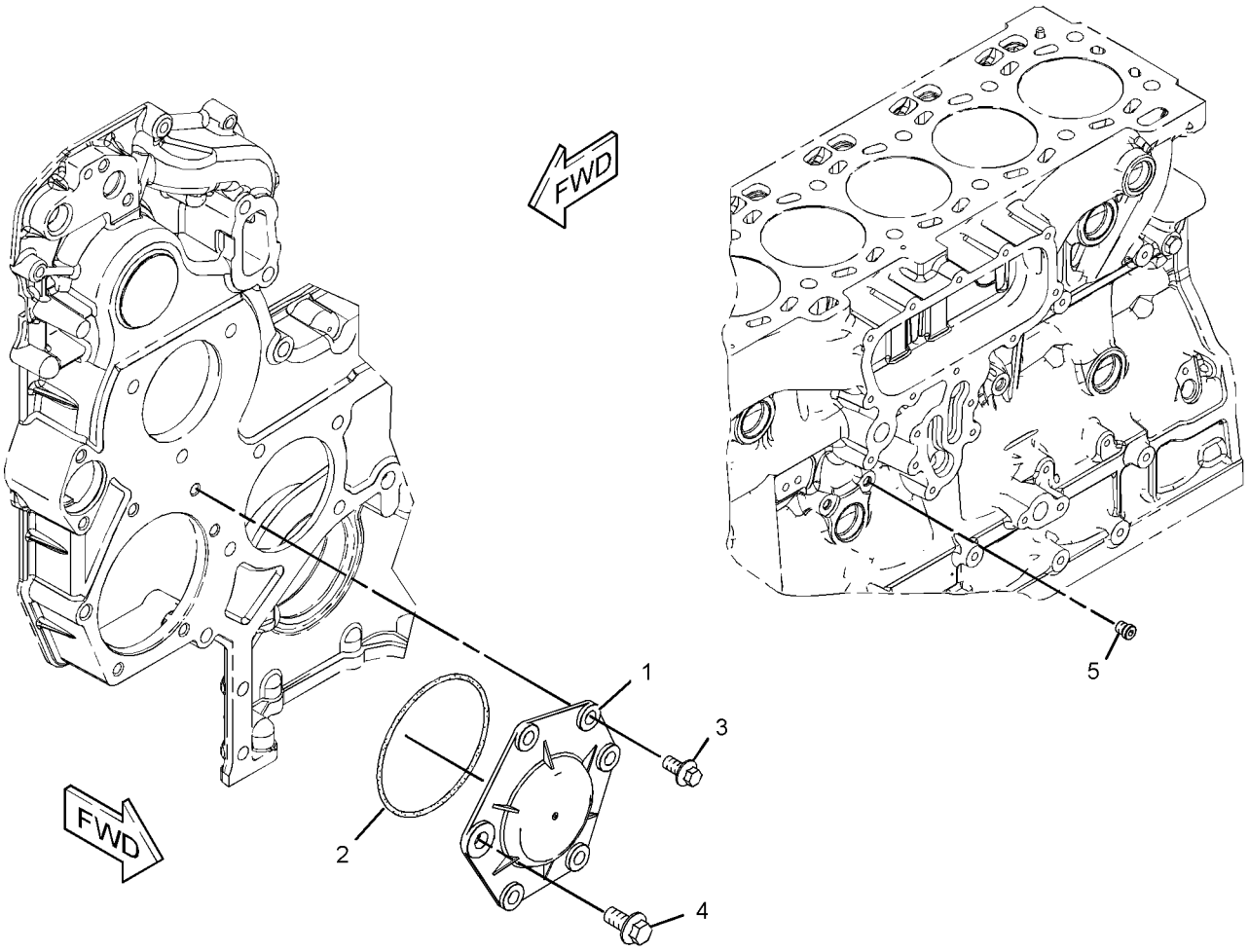

GRAPHIC #1 **<END>** g01195577

BASIC ENGINE

277-4224 COVER GP-ENGINE–PTO

S/N: C6E6520-UP

PART OF 242-1357 ENGINE AR-PRIMARY

SMCS-1000 **i03255874**

NOTE	REF NO	GRAPHIC REF	PART NUMBER	QTY	PART NAME 1 2 3 4 5 6 (PRODUCT LEVEL)	SEE PAGE
C	1	1	**329-7854**	1	PLATE AS	
	1A	1	**329-7856**	1	SEAL-O-RING	
	2	1	**111-8222**	5	BOLT (M8X16-MM)	
M	3	1	**100-4830**	1	BOLT (M10X1.5X20-MM)	
	4	1	**277-4223**	1	PLUG	

C-CHANGE FROM PREVIOUS TYPE
M-METRIC PART

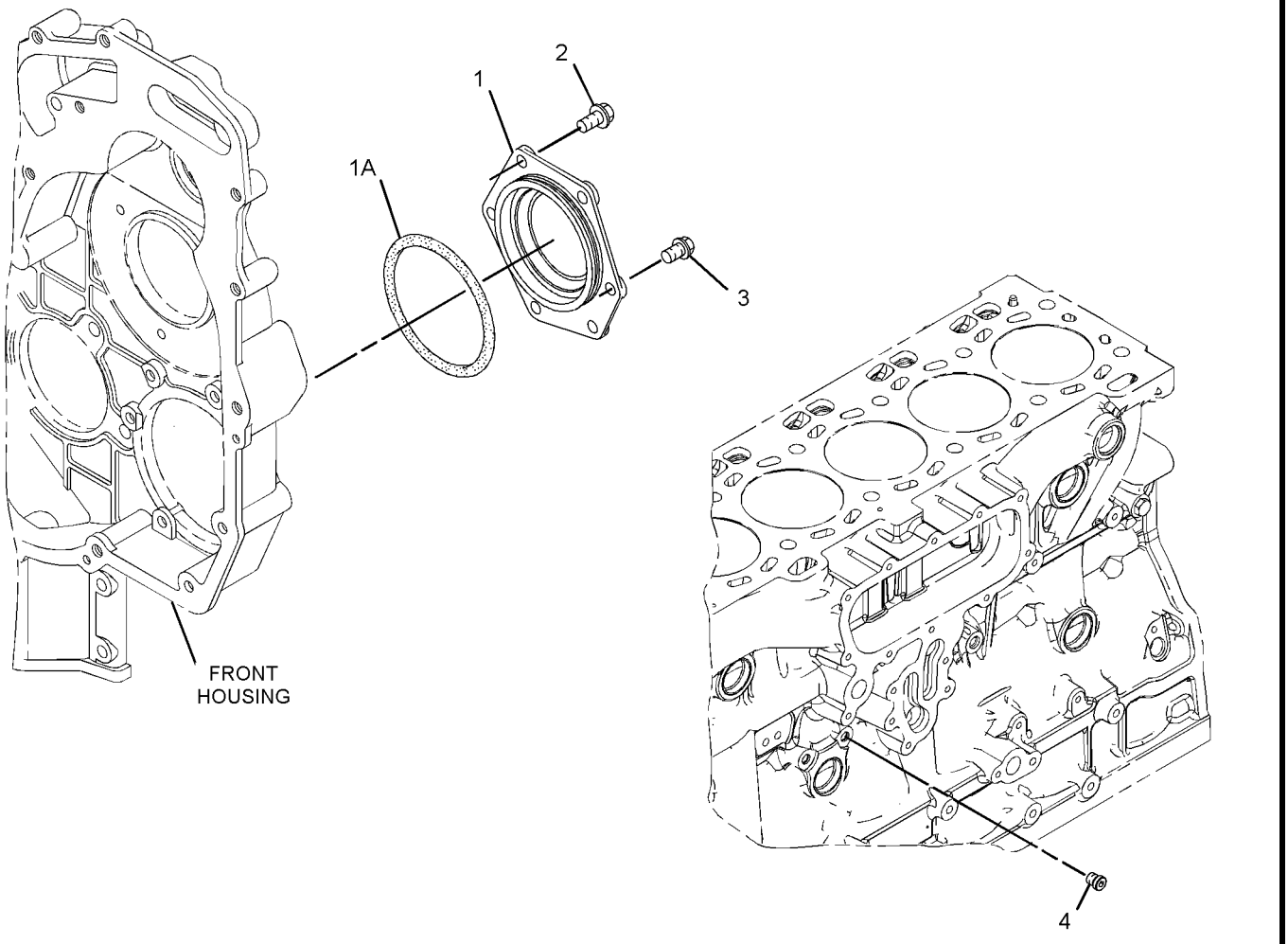

GRAPHIC #1 **<END>** g01682857

BASIC ENGINE

280-2024 COVER GP-VALVE MECHANISM

S/N: C6E1-495

PART OF 242-1357 ENGINE AR-PRIMARY

SMCS-1107, 1120 **i03542777**

NOTE	REF NO	GRAPHIC REF	PART NUMBER	QTY	PART NAME 1 2 3 4 5 6 (PRODUCT LEVEL)	SEE PAGE
C	1	1	**295-1000**	1	COVER GP-VALVE MECHANISM	
	3	1	**295-1041**	1	ADAPTER	
	4	1	**278-4693**	1	GASKET-VALVE COVER	
	5	1	**278-4694**	1	BREATHER AS (CRANKCASE)	
	5A	2	**185-3159**	1	FILTER ELEMENT-BREATHER (CRANKCASE)	
	5B	2	**160-0526**	1	SEAL-O-RING	
	5C	2	**124-0506**	1	SEAL	
	6	1	**277-5030**	1	SEAL-O-RING	
	7	1	**295-1042**	4	SCREW-TAPPING	
	8	1	**277-5031**	15	BOLT-SPECIAL (SHOULDER)	
	9	1	**300-3965**	1	HOUSING AS	
	9A	1	**277-5063**	1	GASKET-COVER (BASE)	
	9B	1	**285-1975**	3	HARNESS AS-WIRING (INJECTOR)	
	9C	1	**277-5064**	3	SEAL-O-RING	
	9D	1	**277-5065**	3	CLIP	
	9E	1	**277-5066**	14	BOLT-SPECIAL (SHOULDER)	
	10	1	**277-5067**	6	SLEEVE	
	11	1	**234-3587**	1	HOSE-BREATHER (CRANKCASE)	
	12	1	**5D-1026**	2	CLAMP-HOSE	
	13	1	**280-2017**	1	HOSE	
	14	1	**2S-3440**	2	CLAMP-HOSE	
	15	1	**280-2020**	1	BREATHER AS (CRANKCASE)	
	16	1	**6I-4374**	2	BOLT (M8X1.25X60-MM)	
	17	1	**280-2023**	1	HOSE	
	18	1	**278-5927**	1	TUBE-BREATHER	
	19	1	**277-5094**	1	COVER AS	
	19A	1	**277-5096**	1	SEAL-O-RING	
M	20	1	**6I-0217**	1	BOLT (M8X1.25X20-MM)	

C-CHANGE FROM PREVIOUS TYPE
M-METRIC PART

280-2024 **COVER GP-VALVE MECHANISM** *(contd.)* **i03542777**

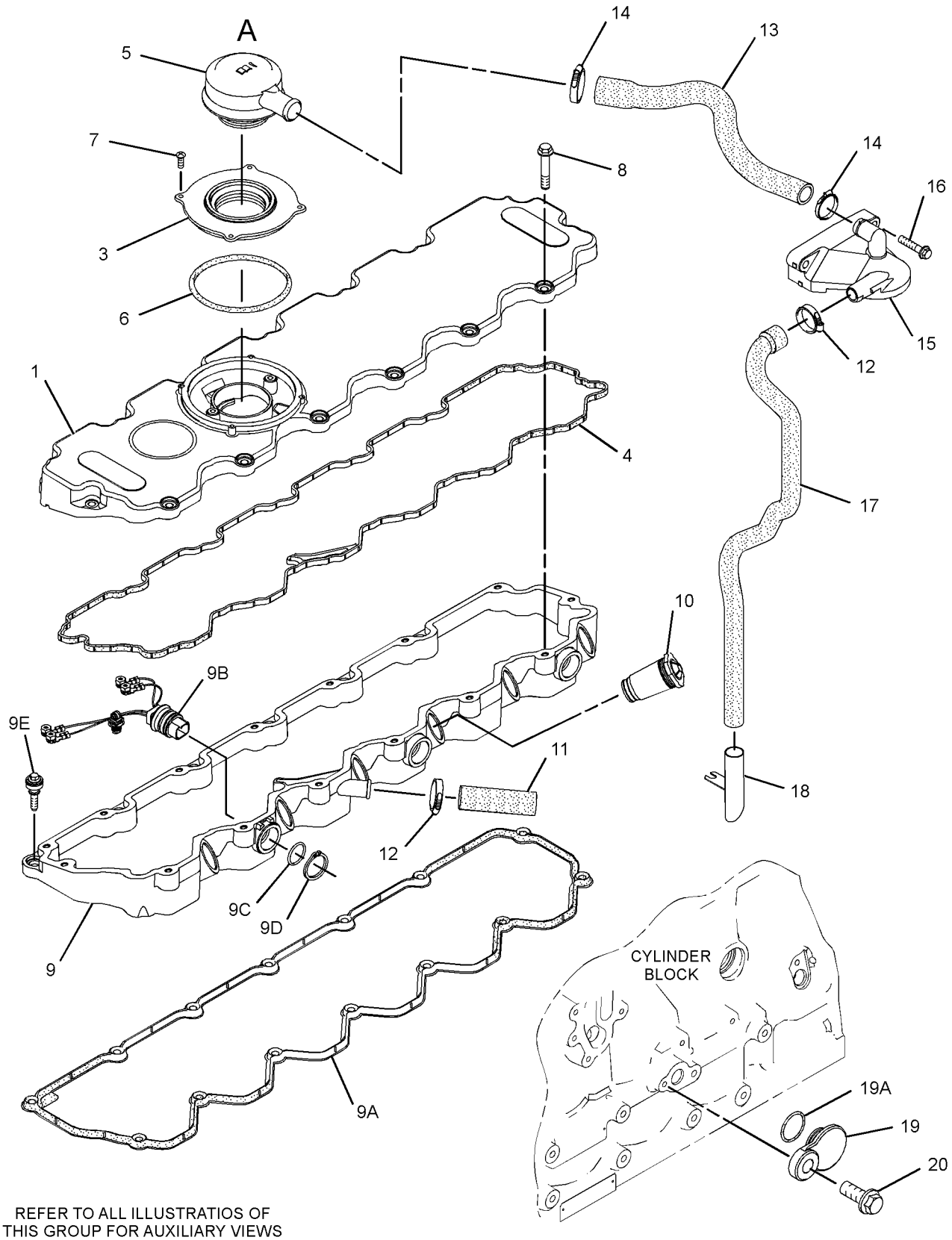

REFER TO ALL ILLUSTRATIOS OF THIS GROUP FOR AUXILIARY VIEWS

GRAPHIC #1

g01363245

280-2024 **COVER GP-VALVE MECHANISM** *(contd.)* **i03542777**

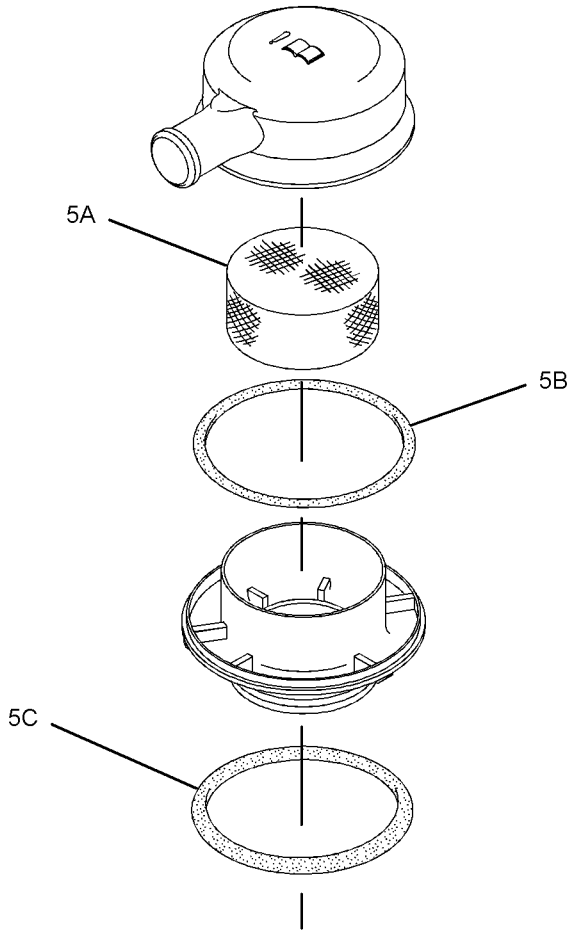

VIEW OF AREA A

GRAPHIC #2 **<END>** g01363246

BASIC ENGINE

305-8963 COVER GP-VALVE MECHANISM

S/N: C6E496-1544

PART OF 242-1357 ENGINE AR-PRIMARY

SMCS-1107, 1120 **i03542778**

NOTE	REF NO	GRAPHIC REF	PART NUMBER	QTY	PART NAME 1 2 3 4 5 6 (PRODUCT LEVEL)	SEE PAGE
M	1	1	**6I-0217**	1	BOLT (M8X1.25X20-MM)	
	2	1	**6I-0291**	1	NUT (M8X1.25-THD)	
	3	1	**103-1066**	2	CLAMP-HOSE	
M	4	1	**124-3815**	1	BOLT (M8X16X1.25-MM)	
	5	1	**228-8960**	1	CLIP	
	6	1	**277-5031**	15	BOLT-SPECIAL (SHOULDER)	
	7	1	**277-5067**	6	SLEEVE	
	8	1	**277-5094**	1	COVER AS	
	8A	1	**277-5096**	1	SEAL-O-RING	
	9	1	**278-5927**	1	TUBE-BREATHER	
	10	1	**295-1000**	1	COVER GP-VALVE MECHANISM	
	10A	1	**277-5030**	1	SEAL-O-RING	
	10B	1	**278-4693**	1	GASKET-VALVE COVER	
	10C	1	**295-1041**	1	ADAPTER	
	10D	1	**295-1042**	4	SCREW-TAPPING	
	10E	1	**278-4694**	1	BREATHER AS (CRANKCASE)	
	10F	2	**124-0506**	1	SEAL	
	10G	2	**160-0526**	1	SEAL-O-RING	
	10H	2	**185-3159**	1	FILTER ELEMENT-BREATHER (CRANKCASE)	
	11	1	**300-3965**	1	HOUSING AS	
	11A	1	**277-5063**	1	GASKET-COVER (VALVE)	
	11B	1	**277-5064**	3	SEAL-O-RING	
	11C	1	**277-5065**	3	CLIP	
	11D	1	**277-5066**	14	BOLT-SPECIAL (SHOULDER)	
	11E	1	**285-1975**	3	HARNESS AS-WIRING (INJECTOR)	
	12	1	**305-8964**	1	HOSE-BREATHER	

M-METRIC PART

305-8963 **COVER GP-VALVE MECHANISM** *(contd.)* **i03542778**

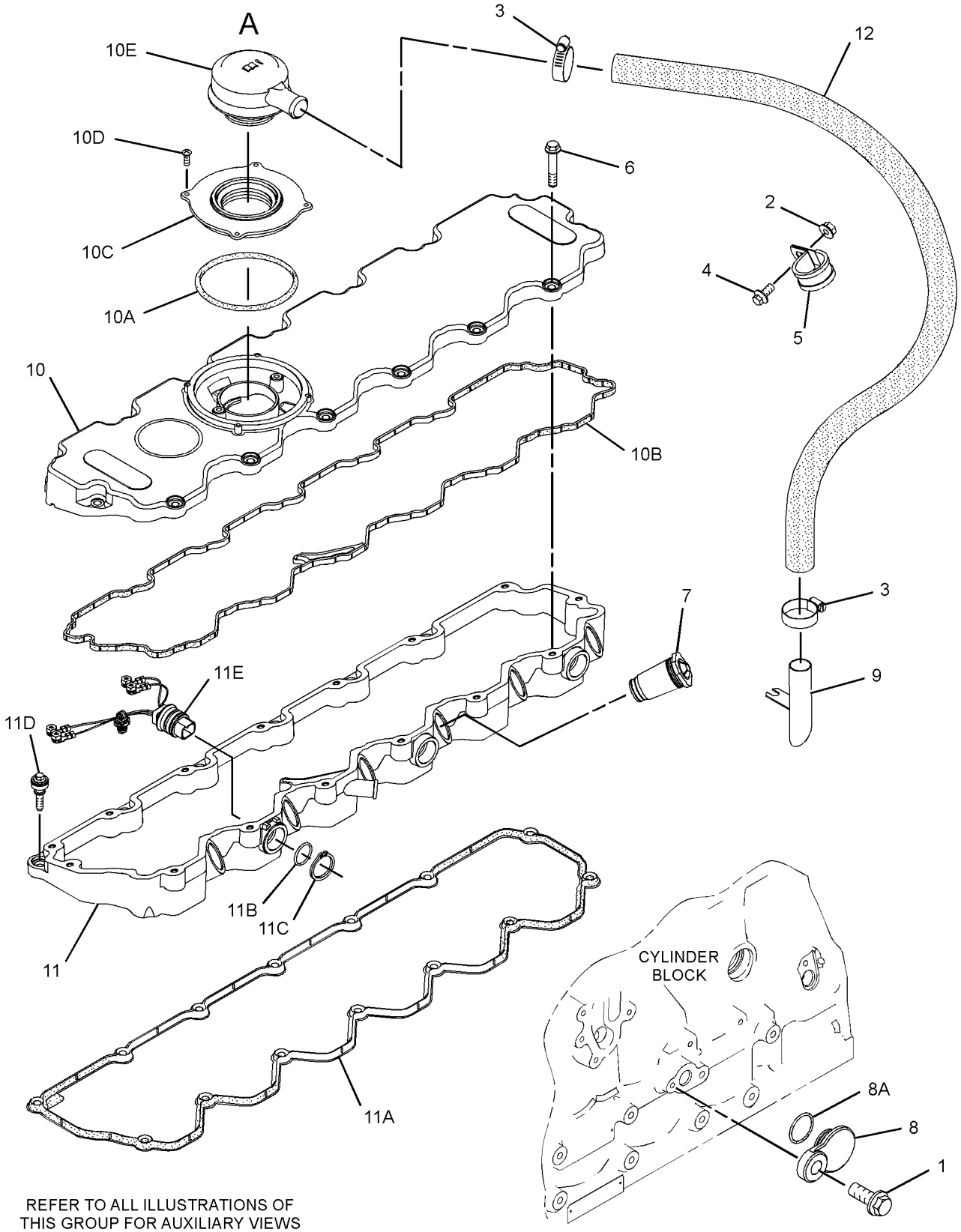

GRAPHIC #1 g01348652

305-8963 **COVER GP-VALVE MECHANISM** *(contd.)* **i03542778**

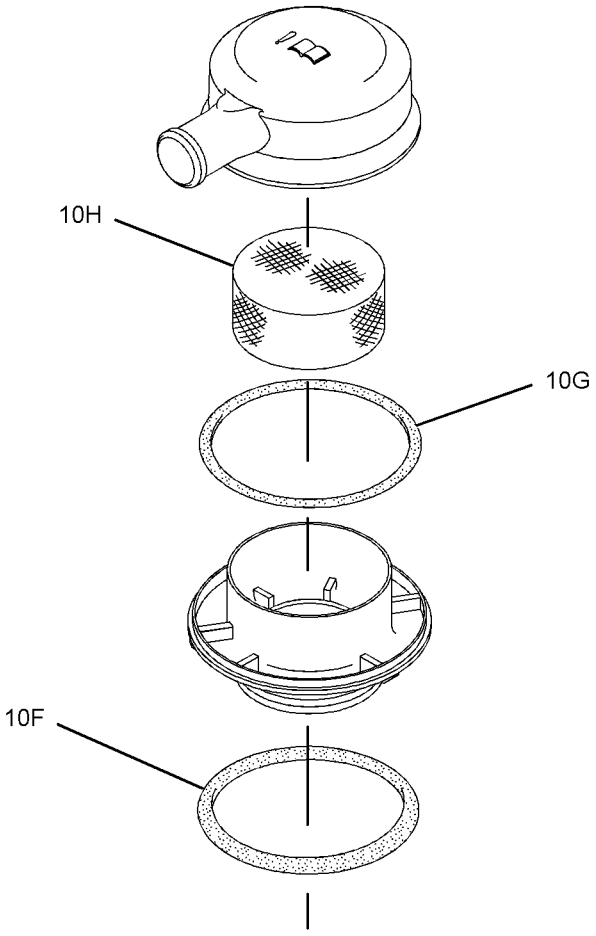

VIEW OF AREA A

GRAPHIC #2 **<END>** g01348654

305-8963 COVER GP-VALVE MECHANISM

S/N: C6E1545-2839

PART OF 242-1357 ENGINE AR-PRIMARY

SMCS-1107, 1120 **i03542781**

NOTE	REF NO	GRAPHIC REF	PART NUMBER	QTY	PART NAME 1 2 3 4 5 6 (PRODUCT LEVEL)	SEE PAGE
M	1	1	**6I-0217**	1	BOLT (M8X1.25X20-MM)	
	2	1	**6I-0291**	1	NUT (M8X1.25-THD)	
	3	1	**103-1066**	2	CLAMP-HOSE	
M	4	1	**124-3815**	1	BOLT (M8X16X1.25-MM)	
	5	1	**228-8960**	1	CLIP	
C	6	1	**277-5031**	9	BOLT-SPECIAL (SHOULDER)	
	7	1	**277-5067**	6	SLEEVE	
	8	1	**277-5094**	1	COVER AS	
	8A	1	**277-5096**	1	SEAL-O-RING	
	9	1	**278-5927**	1	TUBE-BREATHER	
	10	1	**295-1000**	1	COVER GP-VALVE MECHANISM	
	10A	1	**317-3580**	1	SEAL-O-RING	
	10B	1	**278-4693**	1	GASKET-VALVE COVER	
	10C	1	**300-3907**	1	ADAPTER	
	10D	1	**295-1042**	4	SCREW-TAPPING	
	10E	1	**278-4694**	1	BREATHER AS (CRANKCASE)	
	10F	2	**124-0506**	1	SEAL	
	10G	2	**160-0526**	1	SEAL-O-RING	
	10H	2	**185-3159**	1	FILTER ELEMENT-BREATHER (CRANKCASE)	
C	11	1	**312-3084**	1	COVER AS-CYLINDER HEAD	
	11A	1	**309-6664**	1	GASKET-COVER (VALVE)	
	11B	1	**277-5064**	3	SEAL-O-RING	
	11C	1	**277-5065**	3	CLIP	
	11E	1	**285-1975**	3	HARNESS AS-WIRING (INJECTOR)	
	12	1	**305-8964**	1	HOSE-BREATHER	
C	13	1	**298-4550**	6	BOLT-SPECIAL (SHOULDER)	

C-CHANGE FROM PREVIOUS TYPE
M-METRIC PART

305-8963 **COVER GP-VALVE MECHANISM** *(contd.)* **i03542781**

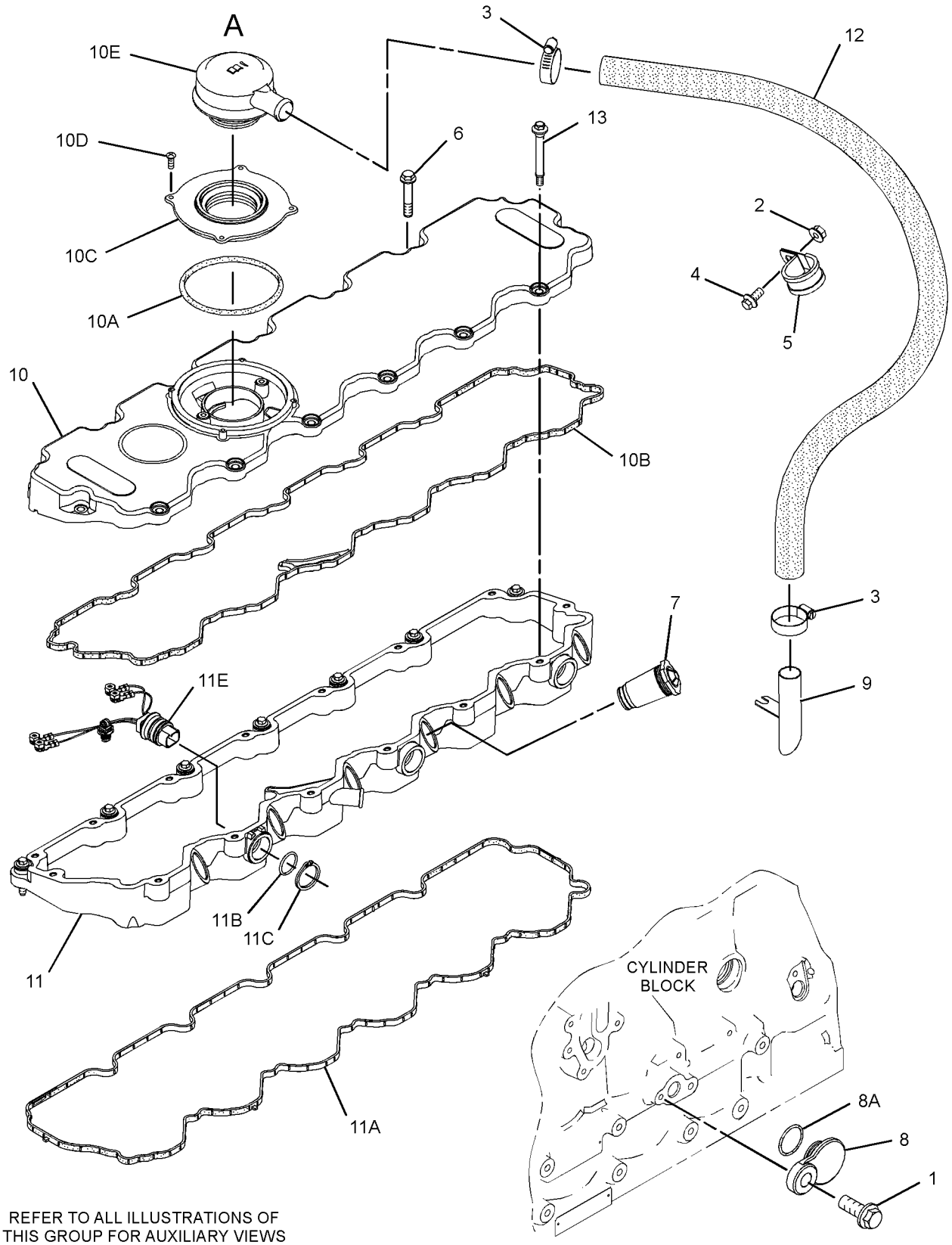

REFER TO ALL ILLUSTRATIONS OF THIS GROUP FOR AUXILIARY VIEWS

GRAPHIC #1

g01476781

305-8963 **COVER GP-VALVE MECHANISM** *(contd.)* **i03542781**

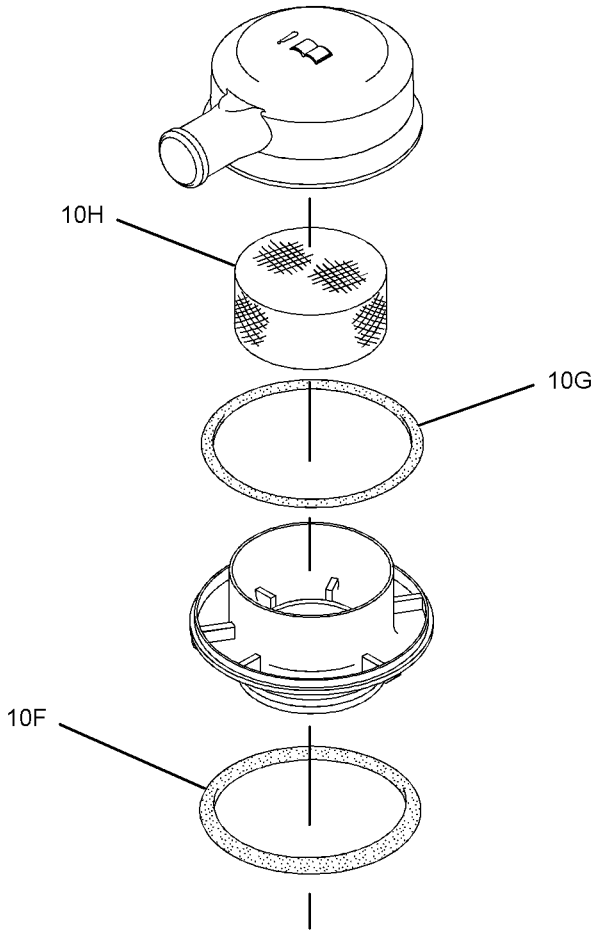

VIEW OF AREA A

GRAPHIC #2 **<END>** g01348654

BASIC ENGINE

305-8963 COVER GP-VALVE MECHANISM

S/N: C6E2840-6975

PART OF 242-1357 ENGINE AR-PRIMARY

SMCS-1107, 1120 **i03542780**

NOTE	REF NO	GRAPHIC REF	PART NUMBER	QTY	PART NAME 1 2 3 4 5 6 (PRODUCT LEVEL)	SEE PAGE
M	1	1	**6I-0217**	1	BOLT (M8X1.25X20-MM)	
	2	1	**6I-0291**	1	NUT (M8X1.25-THD)	
C	3	1	**032-9020**	1	CLIP	
M	4	1	**124-3815**	1	BOLT (M8X16X1.25-MM)	
C	5	1	**127-8281**	1	CLIP	
	6	1	**277-5031**	9	BOLT-SPECIAL (SHOULDER)	
	7	1	**277-5067**	6	SLEEVE	
	8	1	**277-5094**	1	COVER AS	
	8A	1	**277-5096**	1	SEAL-O-RING	
C	9	1	**7C-1281**	1	BRACKET	
C	10	1	**317-3065**	1	COVER GP-VALVE MECHANISM	
	10A	1	**317-3064**	1	GASKET-COVER (VALVE MECHANISM)	
	10B	1	**295-1042**	4	SCREW-TAPPING	
	10C	1	**326-7288**	1	BREATHER (CRANKCASE)	
	10D	1	**298-4547**	1	BREATHER (CRANKCASE)	
	10E	1	**326-7289**	1	SEAL-O-RING	
C	11	1	**317-2717**	1	BASE GP-VALVE COVER & INJ HARN	
	11A	1	**309-6664**	1	GASKET-COVER	
	11B	1	**277-5064**	3	SEAL-O-RING	
	11C	1	**277-5065**	3	CLIP	
	11E	1	**285-1975**	3	HARNESS AS-WIRING (INJECTOR)	
C	12	1	**320-9921**	1	HOSE	
	13	1	**298-4550**	6	BOLT-SPECIAL (SHOULDER)	
C	14	1	**162-1565**	1	SPRING (CRANKCASE BREATHER HOSE)	

C-CHANGE FROM PREVIOUS TYPE
M-METRIC PART

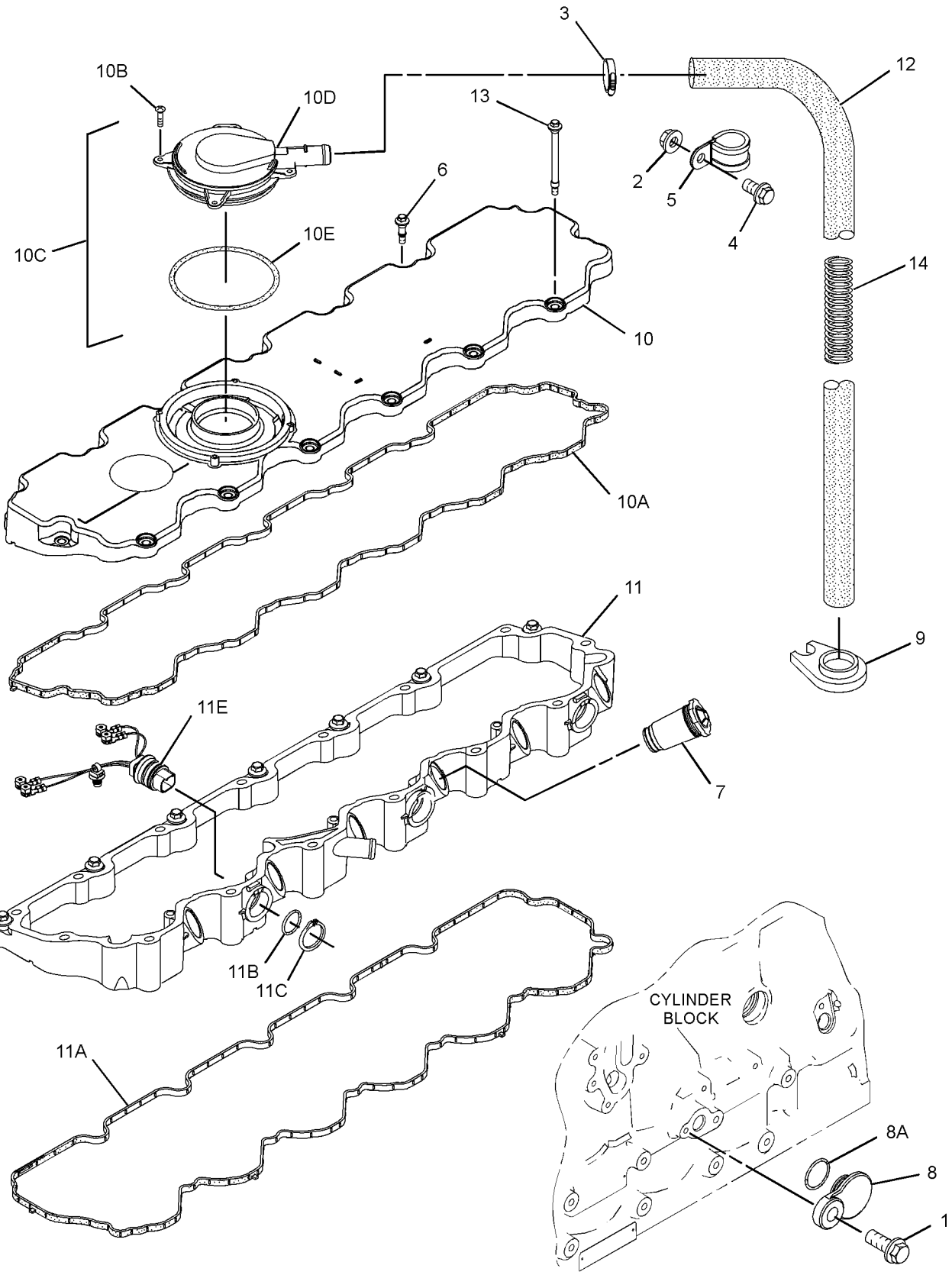

GRAPHIC #1 **<END>** g01521931

BASIC ENGINE

305-8963 COVER GP-VALVE MECHANISM

S/N: C6E6976-UP

PART OF 242-1357 ENGINE AR-PRIMARY

SMCS-1107, 1120 **i03334840**

NOTE	REF NO	GRAPHIC REF	PART NUMBER	QTY	PART NAME 1 2 3 4 5 6 (PRODUCT LEVEL)	SEE PAGE
	1	1	**6I-0291**	1	NUT (M8X1.25-THD)	
	3	1	**032-9020**	1	CLIP	
M	4	1	**124-3815**	1	BOLT (M8X16X1.25-MM)	
	5	1	**127-8281**	1	CLIP	
	6	1	**277-5031**	9	BOLT-SPECIAL (SHOULDER)	
	7	1	**277-5067**	6	SLEEVE	
	9	1	**7C-1281**	1	BRACKET	
	10	1	**317-3065**	1	COVER GP-VALVE MECHANISM	
	10A	1	**317-3064**	1	GASKET-COVER (VALVE MECHANISM)	
	11	1	**317-2717**	1	BASE GP-VALVE COVER & INJ HARN	
	11A	1	**309-6664**	1	GASKET-COVER	
	11B	1	**277-5064**	3	SEAL-O-RING	
	11C	1	**277-5065**	3	CLIP	
	11E	1	**285-1975**	3	HARNESS AS-WIRING (INJECTOR)	
	12	1	**320-9921**	1	HOSE	
	13	1	**298-4550**	6	BOLT-SPECIAL (SHOULDER)	
	14	1	**162-1565**	1	SPRING (CRANKCASE BREATHER HOSE)	

M-METRIC PART

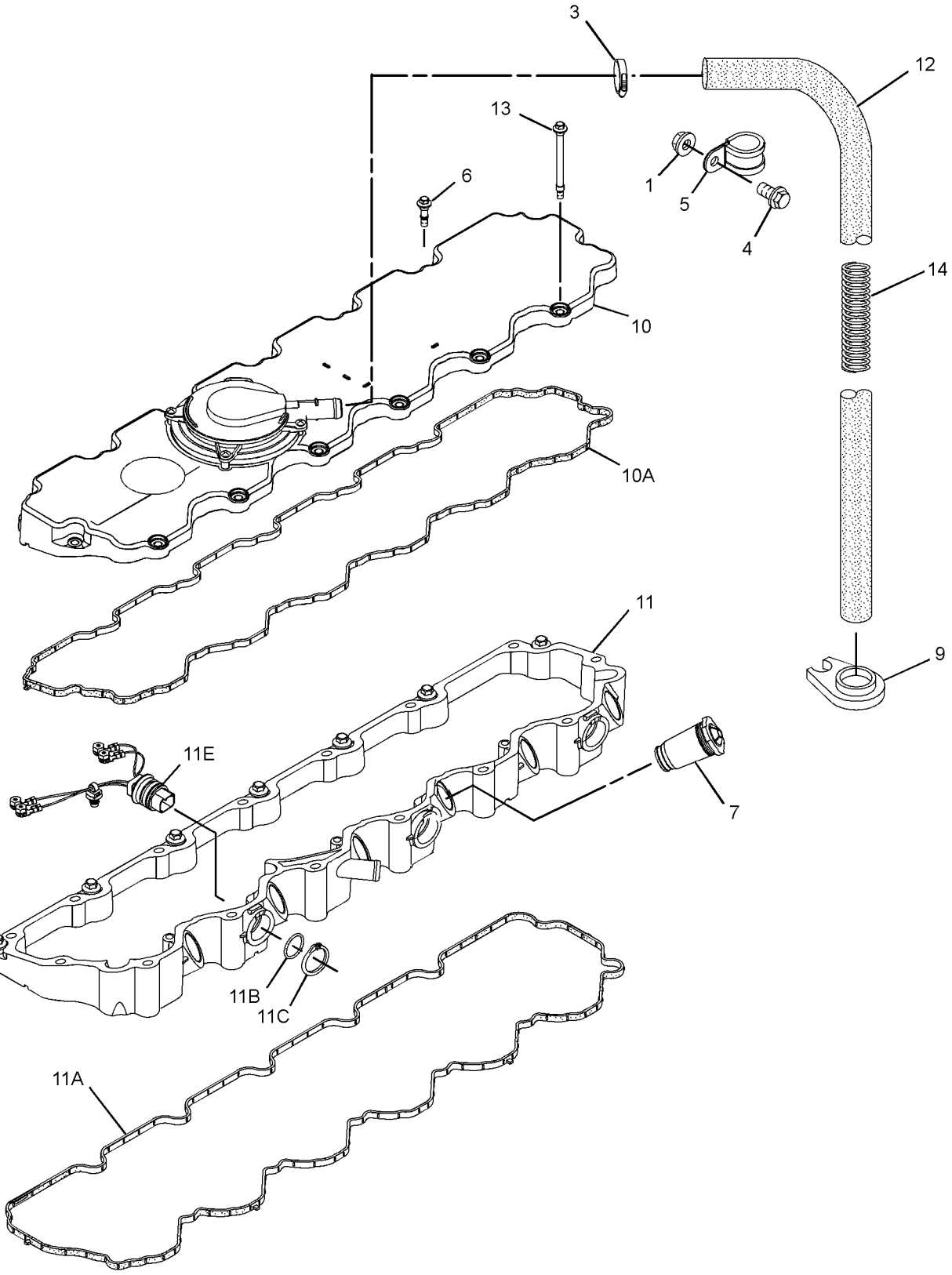

GRAPHIC #1 **<END>** g01728601

BASIC ENGINE

279-8762 CRANKSHAFT GP

S/N: C6E1-UP

PART OF 242-1357 ENGINE AR-PRIMARY

SMCS-1202 **i02713590**

NOTE	REF NO	GRAPHIC REF	PART NUMBER	QTY	PART NAME 1 2 3 4 5 6 (PRODUCT LEVEL)	SEE PAGE
	1	1	**276-7387**	1	CRANKSHAFT AS	
	1A	1	**1B-8736**	1	KEY-WOODRUFF	
	1B	1	**225-8839**	1	DOWEL	
	1C	1	**276-7388**	1	KIT-BEARING (CRANKSHAFT, MAIN)	
	1D	1	**276-7389**	1	KIT-BEARING (CRANKSHAFT, CONNECTING ROD)	
	1E	1	**276-7390**	2	WASHER-THRUST	
	1F	1	**276-7391**	1	GEAR (34-TEETH)	
	2	1	**276-7393**	1	RING-TIMING	
	3	1	**276-7394**	3	BOLT	

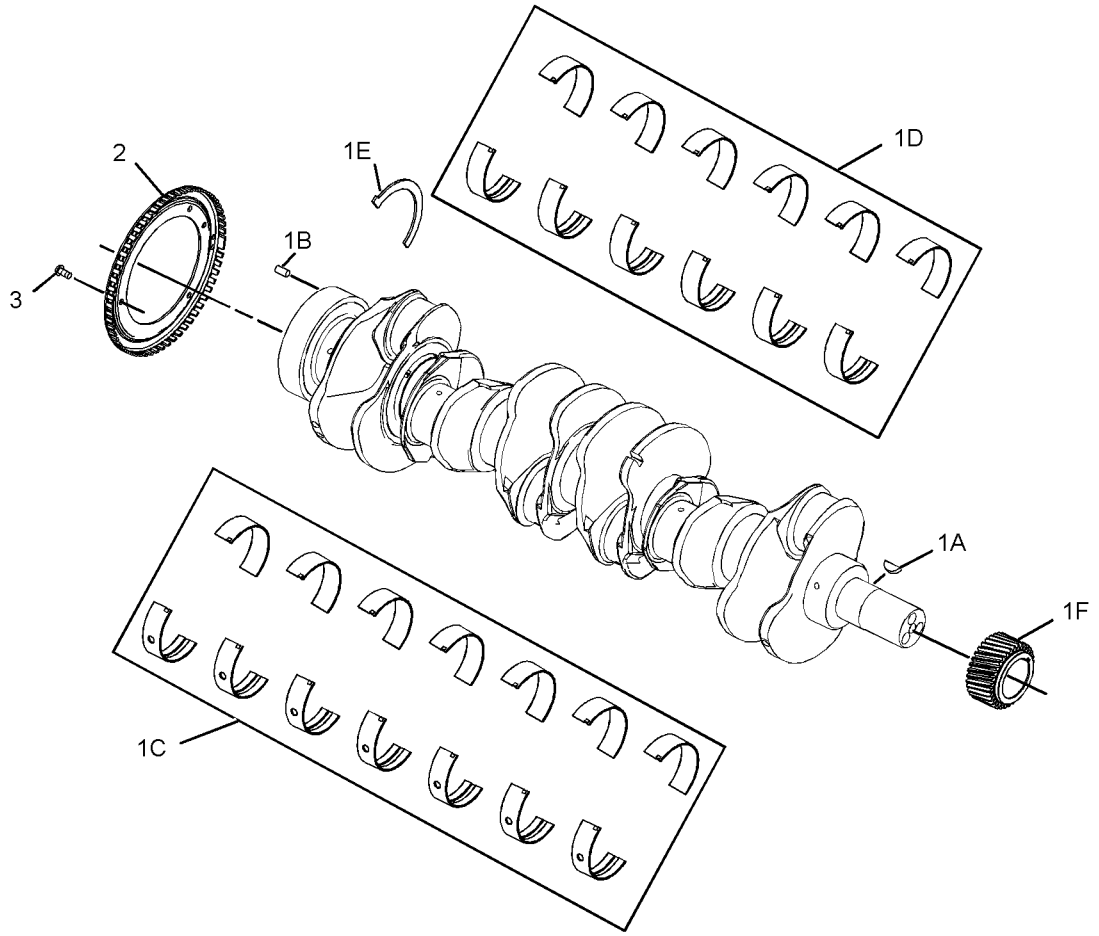

GRAPHIC #1 **<END>** g01366865

BASIC ENGINE

279-8711 CYLINDER BLOCK GP

S/N: C6E1-UP

PART OF 242-1357 ENGINE AR-PRIMARY

SMCS-1201 **i02721507**

NOTE	REF NO	GRAPHIC REF	PART NUMBER	QTY	PART NAME 1 2 3 4 5 6 (PRODUCT LEVEL)	SEE PAGE
	1	1	**292-0886**	1	HOUSING-REAR	
M	2	1	**209-9219**	8	BOLT (M8X1.25X16-MM)	
Y	3	1	**306-6845**	1	CYLINDER BLOCK GP	23

M-METRIC PART
Y-SEPARATE ILLUSTRATION

279-8711 **CYLINDER BLOCK GP** *(contd.)* **i02721507**

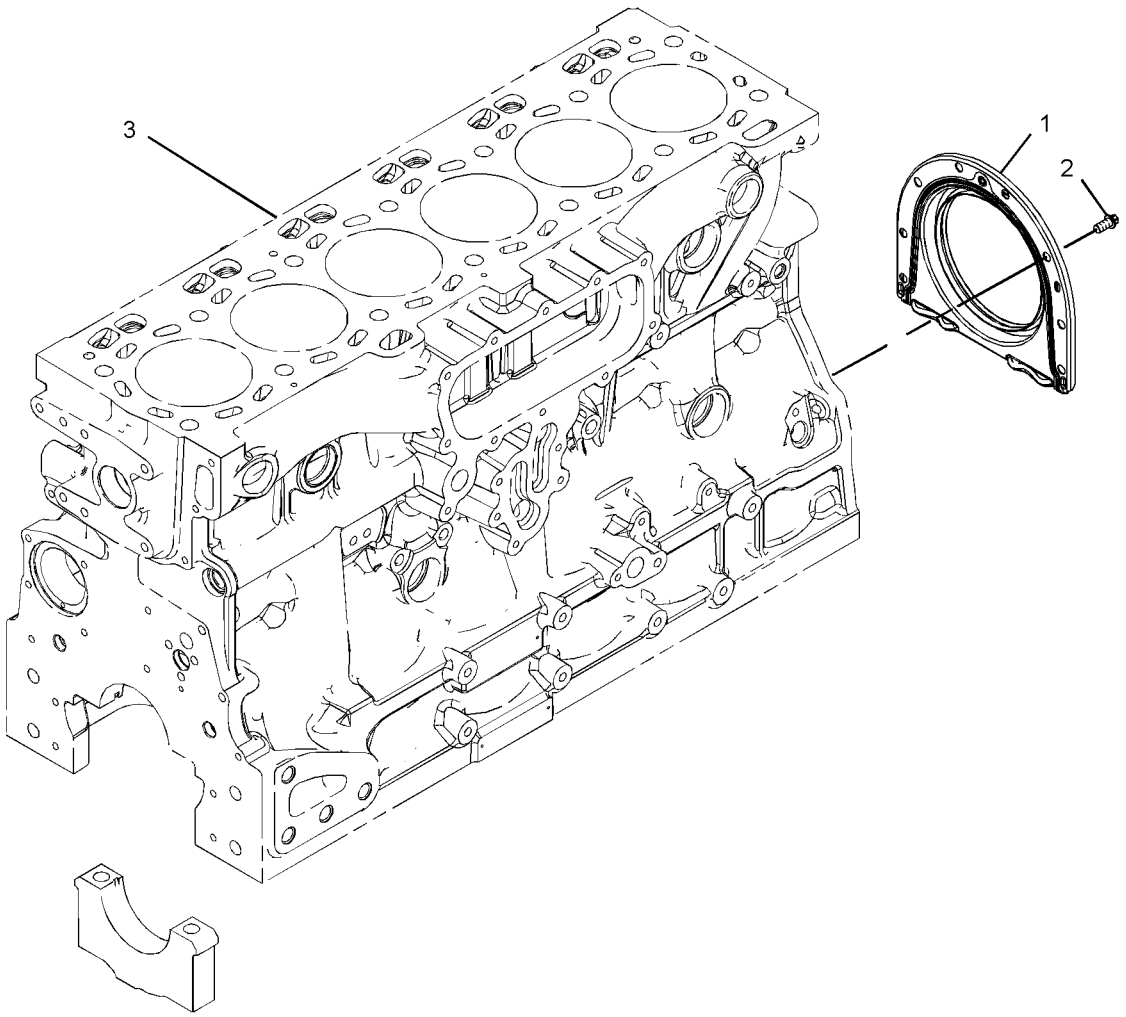

GRAPHIC #1 **<END>** g01365648

306-6845 CYLINDER BLOCK GP

S/N: C6E1-UP

PART OF 279-8711 CYLINDER BLOCK GP

SMCS-1201 **i02702174**

NOTE	REF NO	GRAPHIC REF	PART NUMBER	QTY	PART NAME 1 2 3 4 5 6 (PRODUCT LEVEL)	SEE PAGE
	1	1	**2B-0858**	1	PLUG-PIPE	
	2	1	**067-6043**	5	PLUG-SIDE	
M	3	1	**100-4841**	6	BOLT (M6X1X10-MM)	
	4	1	**185-0884**	2	DOWEL	
	5	1	**225-8858**	1	PLUG	
	6	1	**232-1322**	1	PLUG	
	7	1	**232-7596**	1	PLUG	
	8	1	**232-7597**	2	PLUG	
	9	1	**232-7599**	2	PLUG	
	10	1	**276-5600**	14	BOLT-SPECIAL (BEARING CAP)	
	11	1	**276-5601**	1	BUSHING-CAMSHAFT	
	12	1	**276-5602**	6	PLUG-CORE	
	13	1	**276-5603**	1	SEAL-O-RING	
	14	1	**276-5604**	1	DOWEL	
	15	1	**276-5605**	6	JET AS-PISTON COOLING	

M-METRIC PART

306-6845 **CYLINDER BLOCK GP** *(contd.)* **i02702174**

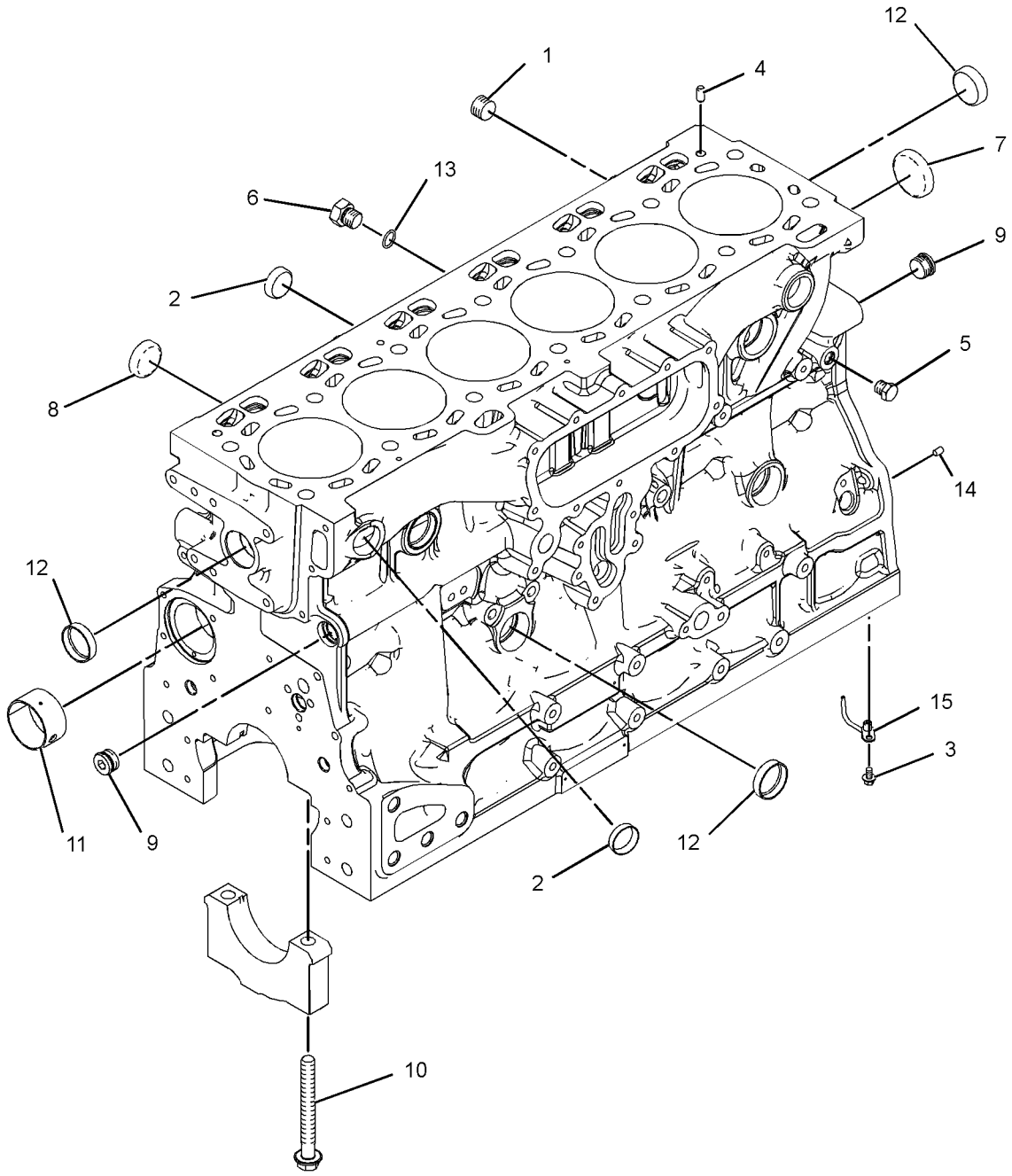

GRAPHIC #1 **<END>** g01339916

276-8115 CYLINDER HEAD AS

S/N: C6E1-1544

PART OF 279-8821 CYLINDER HEAD GP

SMCS-1100, 1101, 1103, 1104, 1105, 1106, 1108, 1109, 1115, 1117, 1121, 1124, 1125

i03419082

NOTE	REF NO	GRAPHIC REF	PART NUMBER	QTY	PART NAME 1 2 3 4 5 6 (PRODUCT LEVEL)	SEE PAGE
	1	1	**2B-0858**	2	PLUG-PIPE	
	2	1	**199-9751**	1	SEAL-O-RING	
	3	1	**232-1322**	1	PLUG	
	4	1	**276-8116**	6	PLUG-CORE	
	5	1	**276-8117**	13	PLUG-CORE	
	6	1	**295-6661**	1	PLUG	
	7	1	**309-6678**	12	VALVE-INLET	
	8	1	**276-8123**	48	RETAINER	
	9	1	**339-9637**	12	VALVE-EXHAUST	
	10	1	**299-5511**	24	SEAL-VALVE STEM	
	11	1	**276-8132**	24	SPRING-VALVE	
	12	1	**276-8133**	24	CAP-VALVE	

276-8115 CYLINDER HEAD AS *(contd.)* i03419082

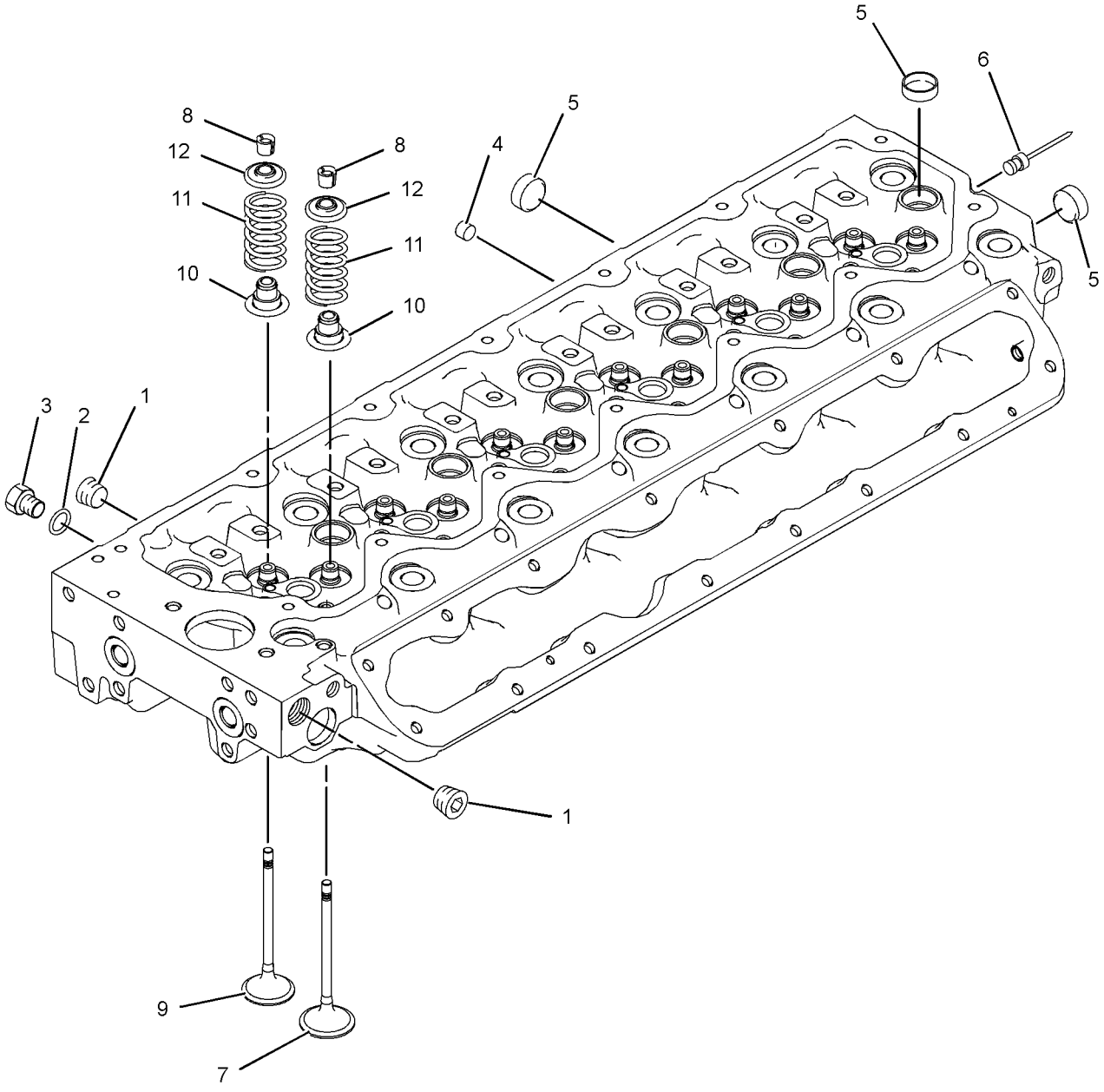

GRAPHIC #1 **<END>** g01235535

309-6663 CYLINDER HEAD AS

S/N: C6E1545-UP

PART OF 279-8821 CYLINDER HEAD GP

SMCS-1100, 1101, 1103, 1104, 1105, 1106, 1108, 1109, 1115, 1117, 1121, 1124, 1125

i03419107

NOTE	REF NO	GRAPHIC REF	PART NUMBER	QTY	PART NAME 1 2 3 4 5 6 (PRODUCT LEVEL)	SEE PAGE
	1	1	**2B-0858**	2	PLUG-PIPE	
	2	1	**199-9751**	1	SEAL-O-RING	
	3	1	**232-1322**	1	PLUG	
	4	1	**276-8116**	6	PLUG-CORE	
	5	1	**276-8117**	13	PLUG-CORE	
	6	1	**276-8123**	48	RETAINER	
	7	1	**339-9637**	12	VALVE-EXHAUST	
J	8	1	**276-8132**	24	SPRING-VALVE	
	9	1	**276-8133**	24	CAP-VALVE	
	10	1	**295-6661**	1	PLUG	
	11	1	**299-5511**	24	SEAL-VALVE STEM	
	12	1	**309-6678**	12	VALVE-INLET	

J-SERVICED IN PAIRS

309-6663 CYLINDER HEAD AS *(contd.)* **i03419107**

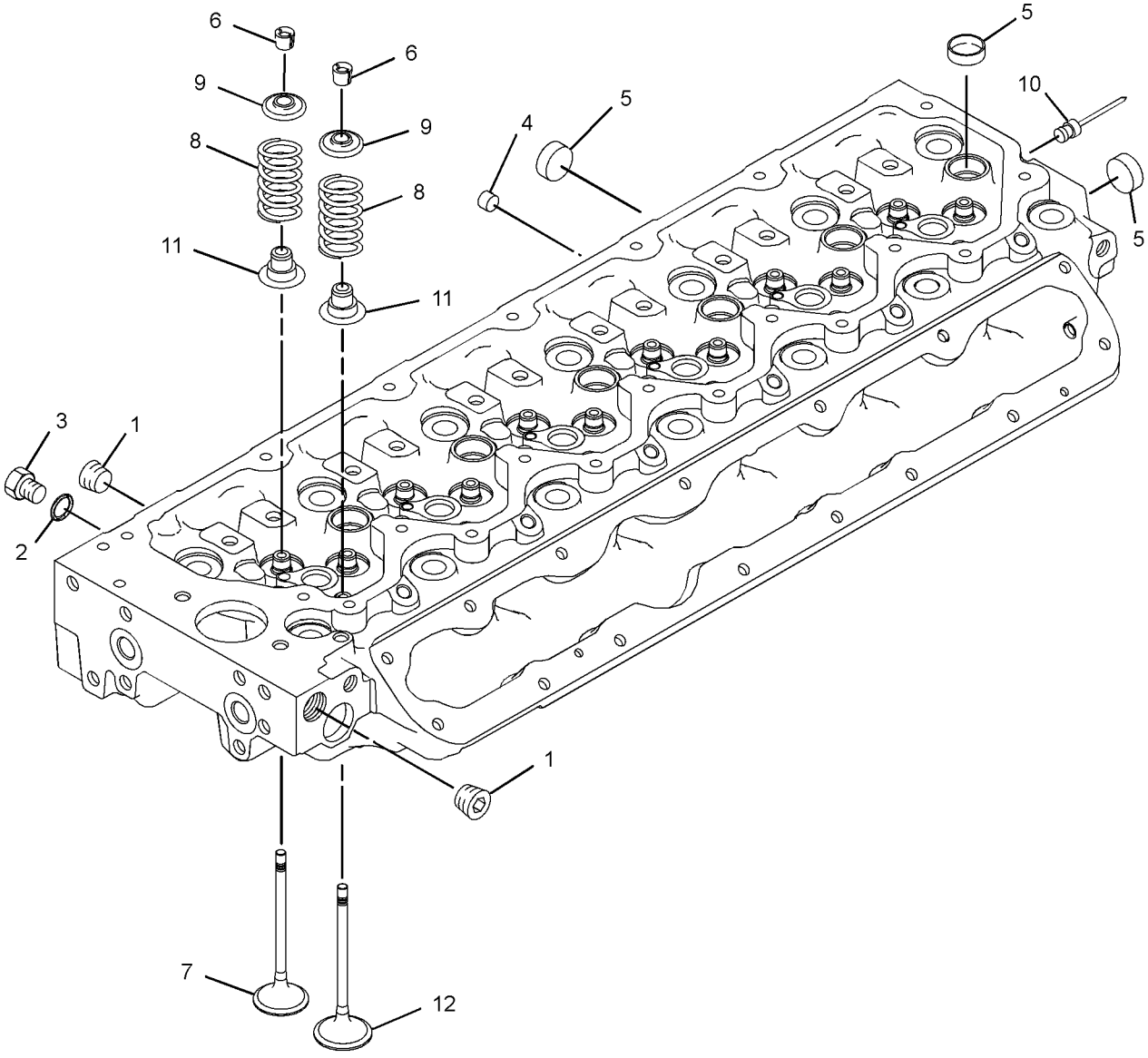

GRAPHIC #1 **<END>** g01400657

279-8821 CYLINDER HEAD GP

S/N: C6E1-1544

PART OF 242-1357 ENGINE AR-PRIMARY

SMCS-1100, 1101 **i02408128**

NOTE	REF NO	GRAPHIC REF	PART NUMBER	QTY	PART NAME 1 2 3 4 5 6 (PRODUCT LEVEL)	SEE PAGE
Y	1	1	**276-8115**	1	CYLINDER HEAD AS	25
	2	1	**276-8134**	14	BOLT-SPECIAL (CYLINDER HEAD)	
	3	1	**176-3141**	1	GASKET-HEAD	

Y-SEPARATE ILLUSTRATION

279-8821 **CYLINDER HEAD GP** *(contd.)* **i02408128**

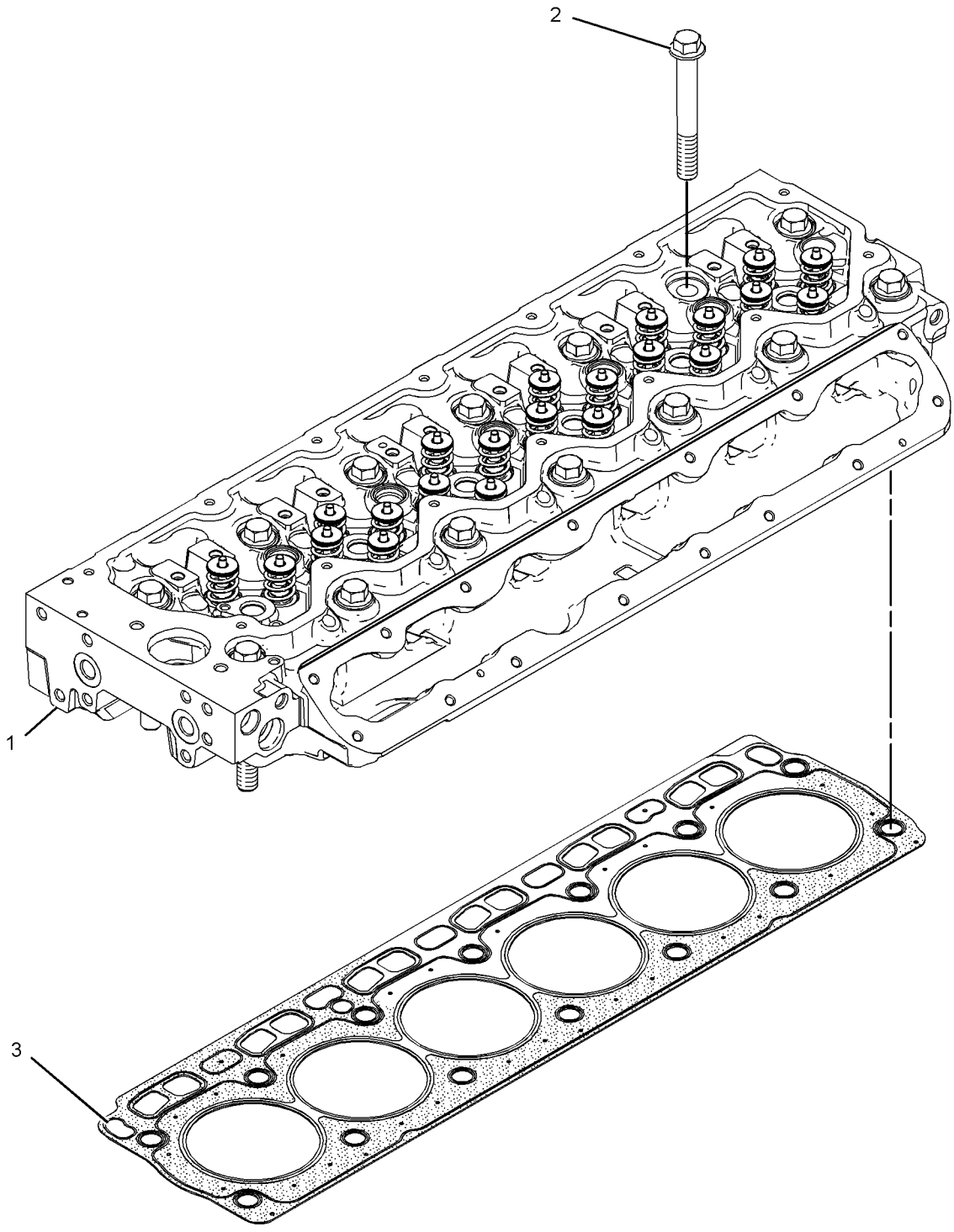

GRAPHIC #1 **<END>** g01291481

BASIC ENGINE

279-8821 CYLINDER HEAD GP

S/N: C6E1545-UP

PART OF 242-1357 ENGINE AR-PRIMARY

SMCS-1100, 1101 **i02783158**

NOTE	REF NO	GRAPHIC REF	PART NUMBER	QTY	PART NAME 1 2 3 4 5 6 (PRODUCT LEVEL)	SEE PAGE
CY	1	1	**309-6663**	1	CYLINDER HEAD AS	27
	2	1	**276-8134**	14	BOLT-SPECIAL (CYLINDER HEAD)	
	3	1	**176-3141**	1	GASKET-HEAD	

C-CHANGE FROM PREVIOUS TYPE
Y-SEPARATE ILLUSTRATION

279-8821 **CYLINDER HEAD GP** *(contd.)* **i02783158**

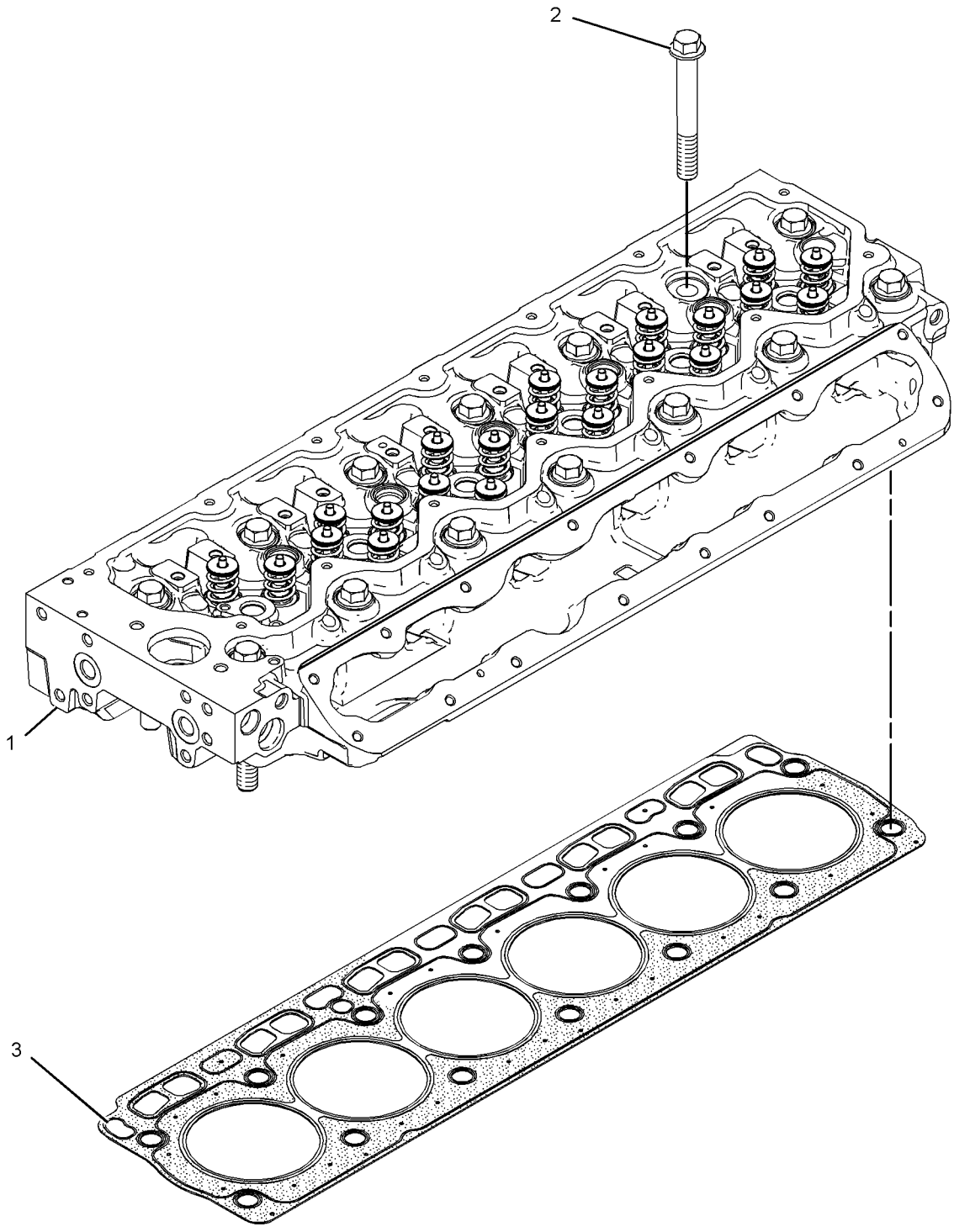

GRAPHIC #1 **<END>** g01291481

239-0099 DRAIN GP-ENGINE OIL

S/N: LBP1-UP
CANNOT BE USED WITH CHANGE GP-HIGH SPEED OIL
AN ATTACHMENT

SMCS-1302 **i03561981**

NOTE	REF NO	GRAPHIC REF	PART NUMBER	QTY	PART NAME 1 2 3 4 5 6 (PRODUCT LEVEL)	SEE PAGE
	1	1	**5D-1026**	1	CLAMP-HOSE	
	2	1	**6D-3534**	1	CONNECTOR-HOSE	
E	3	1	**136-1953**		HOSE (30-CM)	

E-ORDER BY THE CENTIMETER

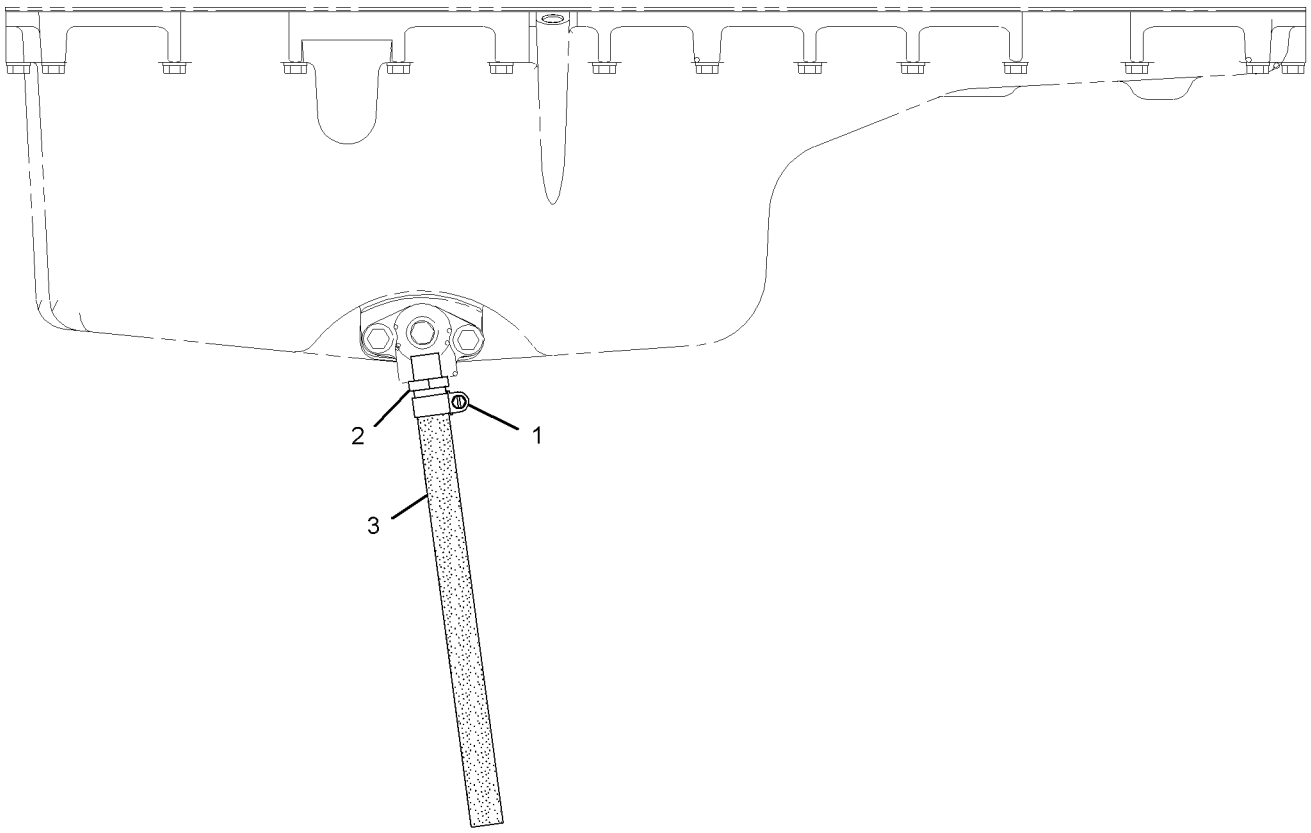

LEFT SIDE VIEW

GRAPHIC #1 **<END>** g01032137

BASIC ENGINE

279-9255 FLYWHEEL GP

S/N: C6E1-UP

PART OF 242-1357 ENGINE AR-PRIMARY

SMCS-1156 **i02902904**

NOTE	REF NO	GRAPHIC REF	PART NUMBER	QTY	PART NAME 1 2 3 4 5 6 (PRODUCT LEVEL)	SEE PAGE
	1	1	**320-3669**	1	FLYWHEEL AS	
	1A	1	**277-0588**	1	GEAR-STARTING MOTOR RING	
	2	1	**5P-8245**	12	WASHER-HARD (13.5X25.5X3-MM THK)	
	3	1	**279-9254**	12	BOLT	

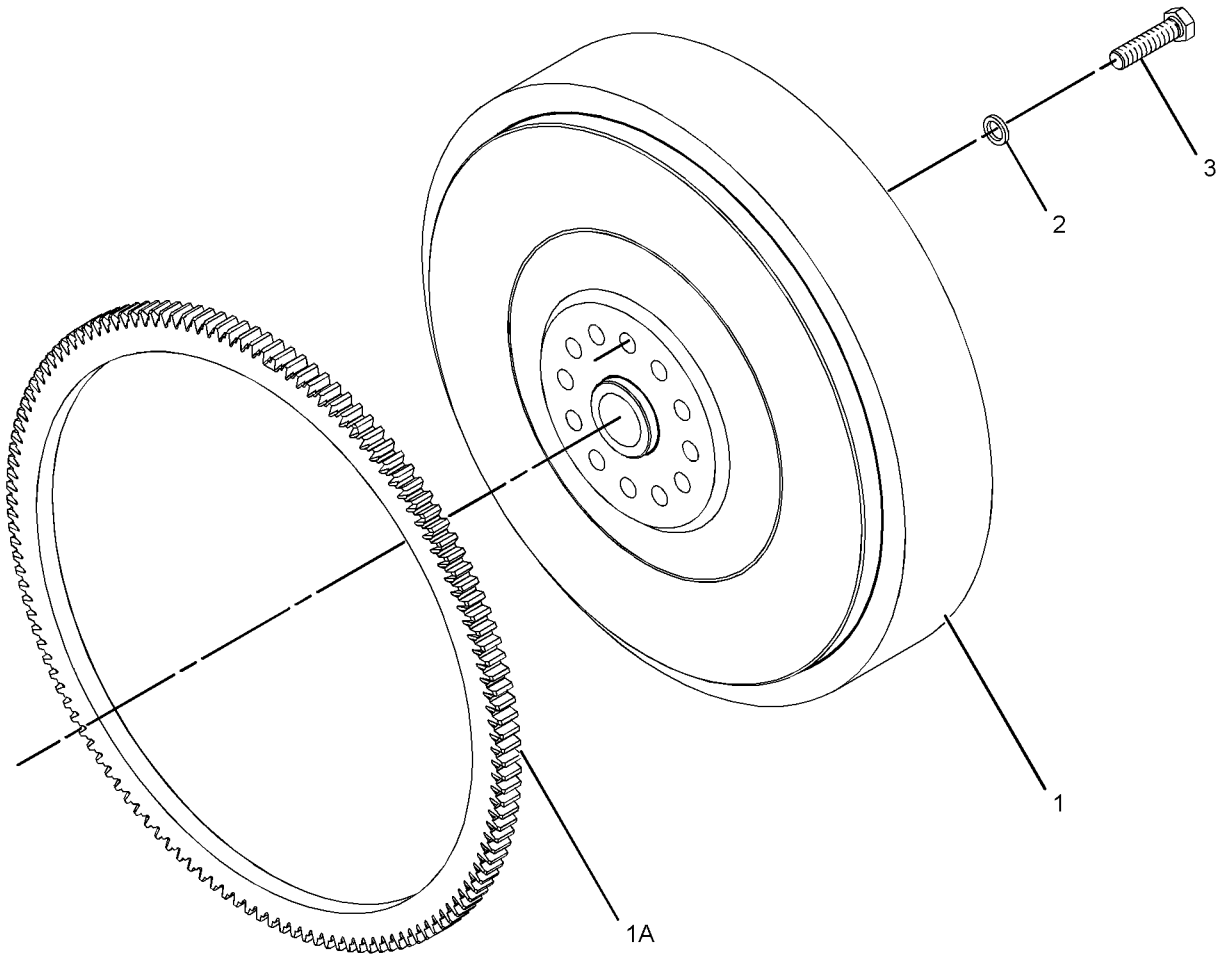

GRAPHIC #1 **<END>** g01194047

243-2150 GUARD GP-BELT–ALTERNATOR, COMPRESSOR

S/N: LBP1-UP

PART OF 240-6227 INSTALLATION AR-ENGINE

SMCS-7174 **i03052384**

NOTE	REF NO	GRAPHIC REF	PART NUMBER	QTY	PART NAME 1 2 3 4 5 6 (PRODUCT LEVEL)	SEE PAGE
	1	1	**243-2151**	1	GUARD AS	
M	2	1	**5C-7261**	2	NUT (M8X1.25-THD)	
	3	1	**5P-4116**	2	WASHER-HARD (8.8X20.5X2-MM THK)	
	4	1	**8T-4224**	5	WASHER-HARD (8.8X16X2-MM THK)	
M	5	1	**8T-7547**	3	BOLT (M8X1.25X30-MM)	

M-METRIC PART

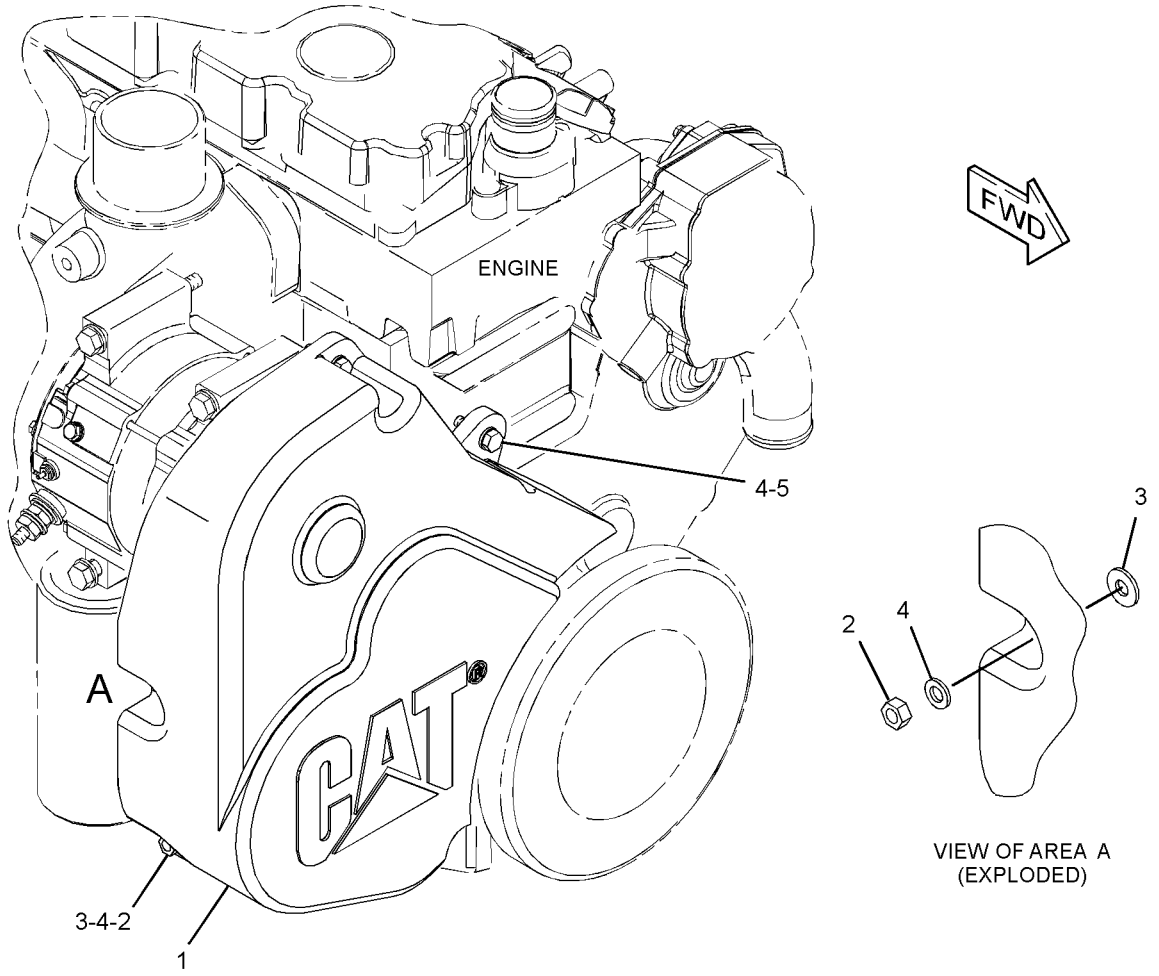

GRAPHIC #1 **<END>** g01393658

BASIC ENGINE

279-8846 HOUSING GP-FLYWHEEL

S/N: C6E1-UP

PART OF 242-1357 ENGINE AR-PRIMARY

SMCS-1157 **i03385342**

NOTE	REF NO	GRAPHIC REF	PART NUMBER	QTY	PART NAME 1 2 3 4 5 6 (PRODUCT LEVEL)	SEE PAGE
	1	1	**284-0071**	1	HOUSING-FLYWHEEL	
	2	1	**336-0693**	1	COVER	
M	3	1	**102-9941**	3	BOLT (M12X1.75X25-MM)	
	4	1	**277-0118**	1	SEAL	
	5	1	**288-6974**	4	BOLT	
	6	1	**288-6975**	2	BOLT	
	7	1	**277-0121**	2	PLUG	
	9	1	**287-8597**	2	DOWEL	
F			**283-4662**	2	BOLT-FLANGE HEAD	

F-NOT SHOWN
M-METRIC PART

279-8846 **HOUSING GP-FLYWHEEL** *(contd.)* **i03385342**

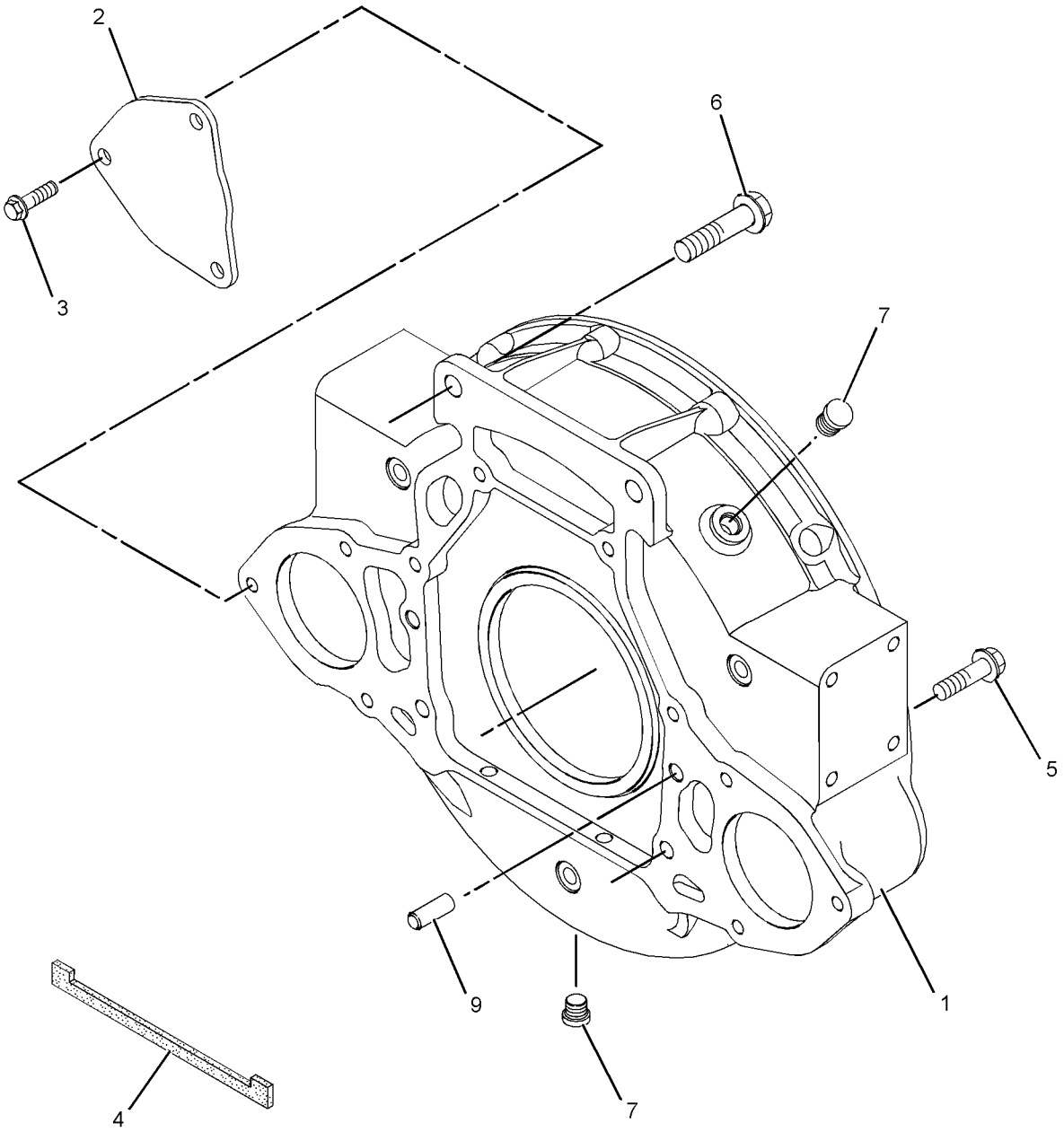

GRAPHIC #1 **<END>** g01330993

BASIC ENGINE

277-3014 HOUSING GP-FRONT

S/N: C6E1-UP

PART OF 242-1357 ENGINE AR-PRIMARY

SMCS-1151, 1162 **i03528245**

NOTE	REF NO	GRAPHIC REF	PART NUMBER	QTY	PART NAME 1 2 3 4 5 6 (PRODUCT LEVEL)	SEE PAGE
	1	1	**326-5063**	1	HOUSING-FRONT	
	2	1	**277-3012**	1	GASKET-COVER	
	3	1	**277-3013**	1	SEAL	
M	4	1	**6I-0217**	6	BOLT (M8X1.25X20-MM)	
M	5	1	**6I-0645**	4	BOLT (M8X1.25X25-MM)	
M	6	1	**101-3895**	2	BOLT (M8X1.25X35-MM)	
C	7	1	**251-4336**	1	GEAR AS-IDLER (73-TEETH)	
CM	8	1	**6I-0650**	3	BOLT (M10X1.5X65-MM)	
	9	1	**216-8634**	1	GEAR-CAMSHAFT (68-TEETH)	
	10	1	**1B-8736**	1	KEY-WOODRUFF	
	11	1	**133-1011**	1	WASHER	
	12	1	**067-6179**	1	DOWEL	
	13	1	**232-3666**	1	WASHER-THRUST	
M	14	1	**124-3815**	9	BOLT (M8X16X1.25-MM)	
M	15	1	**100-3751**	5	BOLT (M8X1.25X65-MM)	
M	16	1	**100-4830**	1	BOLT (M10X1.5X20-MM)	
	17	1	**7C-4616**	1	BOLT (M12X1.75X45-MM)	
C	18	1	**324-0444**	1	HUB-IDLER GEAR	
C	19	1	**295-1711**	1	PLATE-RETAINING	
	20	1	**226-8767**	1	COVER AS-FRONT	
	20A	1	**226-8766**	1	GASKET-COVER	

C-CHANGE FROM PREVIOUS TYPE
M-METRIC PART

277-3014 **HOUSING GP-FRONT** *(contd.)* **i03528245**

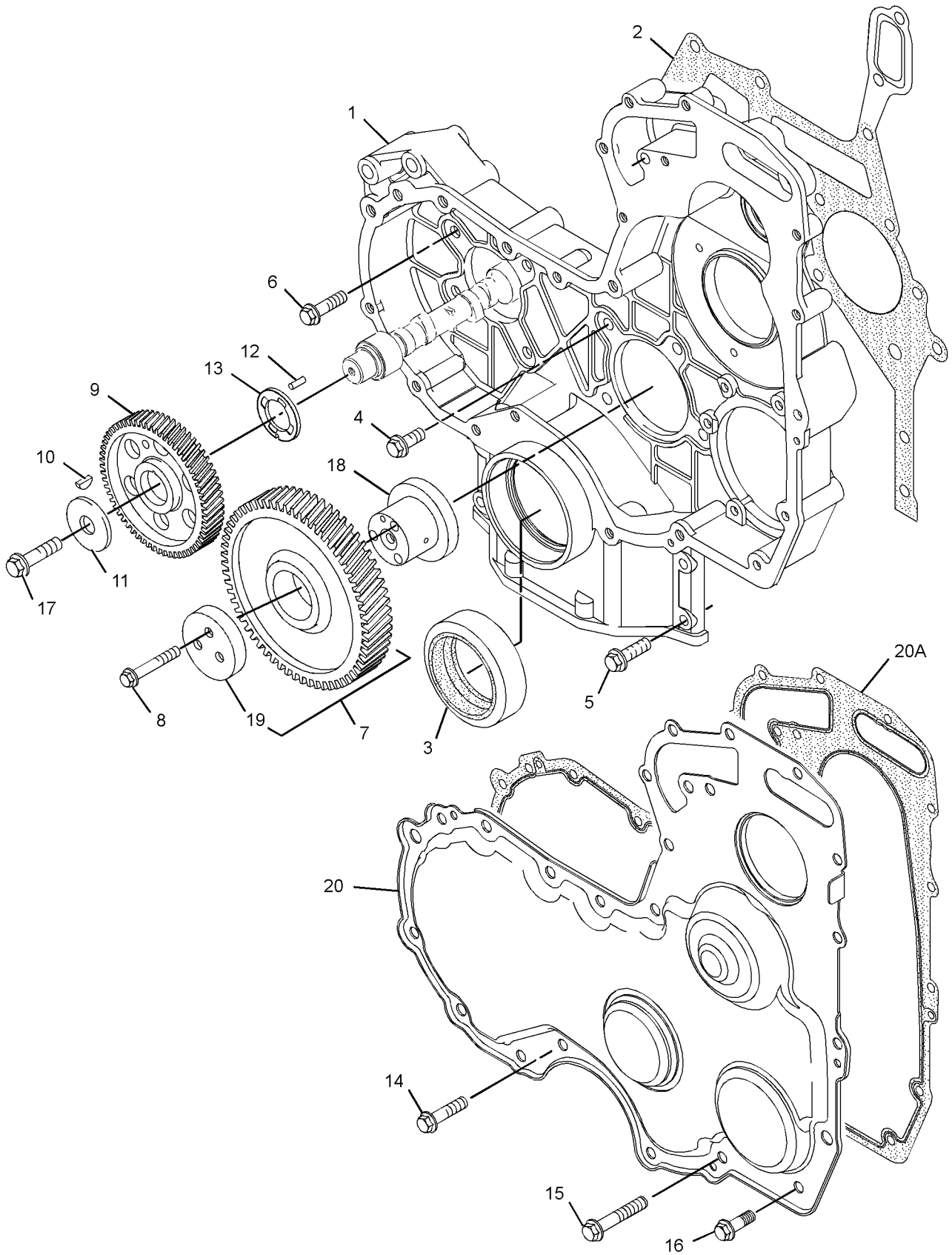

GRAPHIC #1 **<END>** g01386855

256-3464 LIFTING GP-ENGINE

S/N: LBP1-UP

PART OF 240-6227 INSTALLATION AR-ENGINE

SMCS-1122 **i02548273**

NOTE	REF NO	GRAPHIC REF	PART NUMBER	QTY	PART NAME 1 2 3 4 5 6 (PRODUCT LEVEL)	SEE PAGE
	1	1	**290-5623**	1	PLATE	
	2	1	**290-5624**	1	SPACER	
	3	1	**8T-4121**	4	WASHER-HARD (11X21X2.5-MM THK)	
M	4	1	**8T-4186**	4	BOLT (M10X1.5X40-MM)	

M-METRIC PART

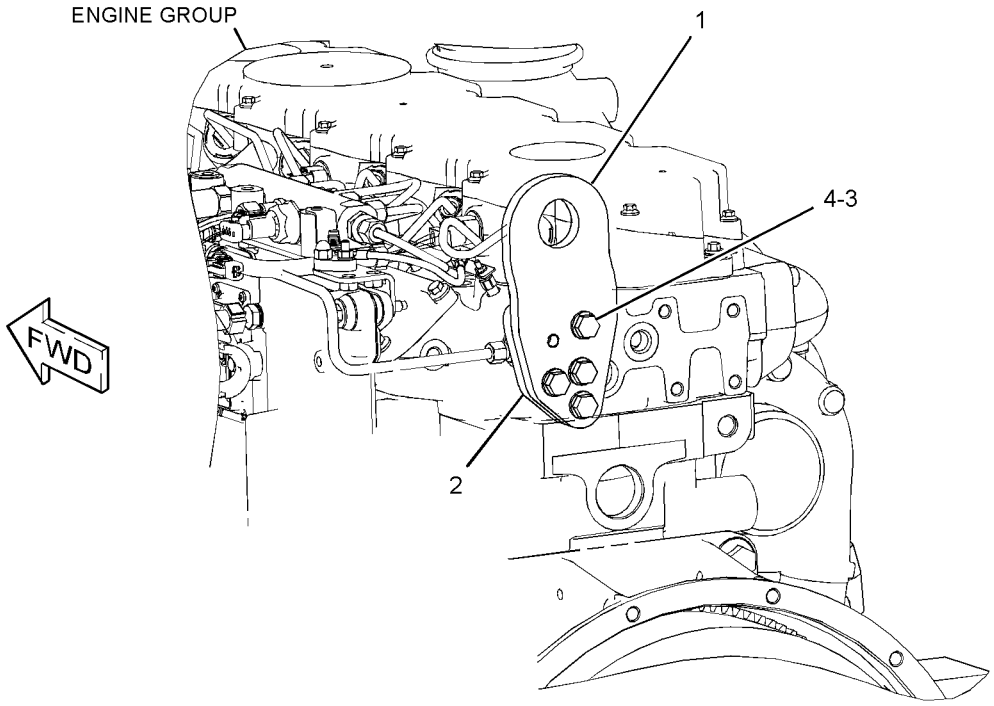

GRAPHIC #1 **<END>** g01286222

BASIC ENGINE

279-9653 LIFTING GP-ENGINE

S/N: C6E1-UP

PART OF 242-1357 ENGINE AR-PRIMARY

SMCS-1122 **i02389600**

NOTE	REF NO	GRAPHIC REF	PART NUMBER	QTY	PART NAME 1 2 3 4 5 6 (PRODUCT LEVEL)	SEE PAGE
	1	1	**279-9651**	1	PLATE-LIFTING	
M	2	1	**6I-0654**	4	BOLT (M10X1.5X25-MM)	
	3	1	**279-9652**	1	PLATE-LIFTING	

M-METRIC PART

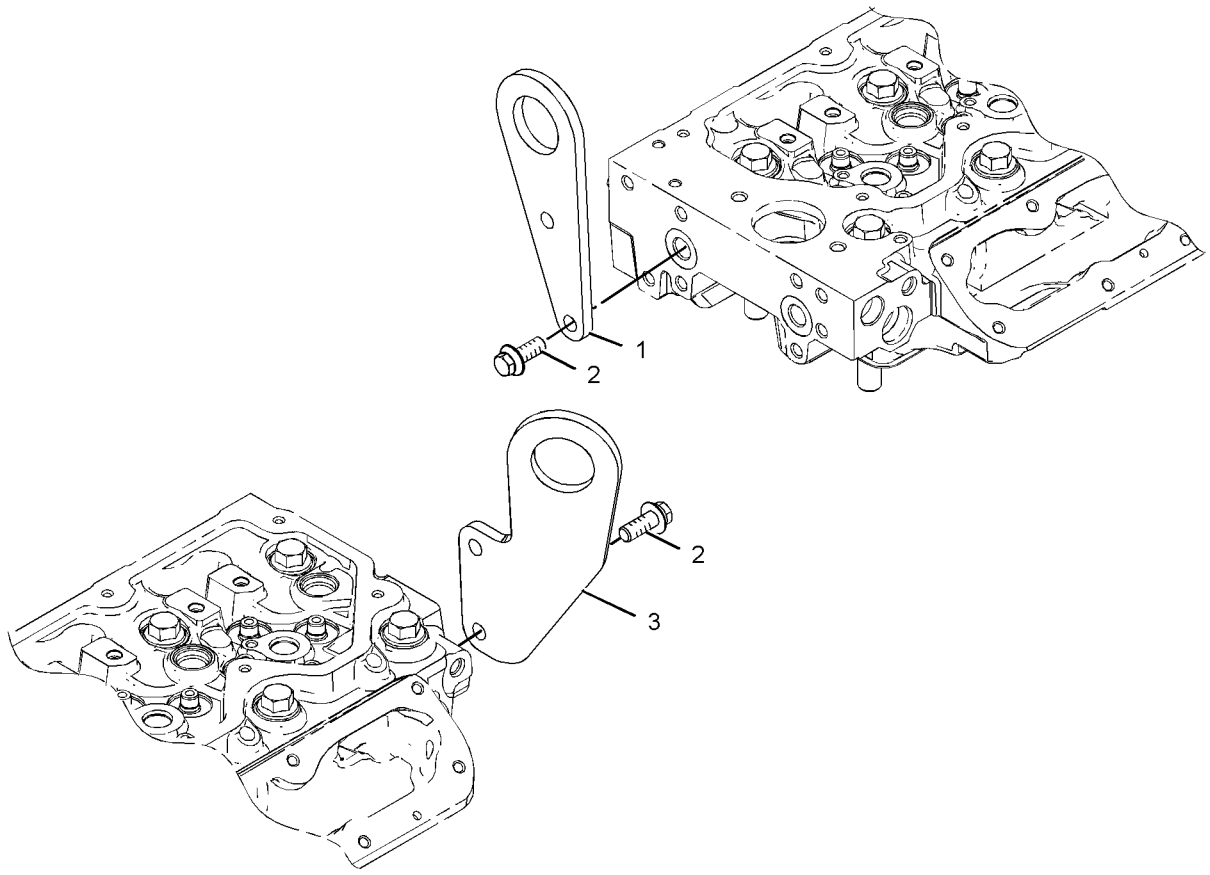

GRAPHIC #1 **<END>** g01195531

BASIC ENGINE

277-4541 MOUNTING GP-ENGINE

S/N: C6E1-UP

PART OF 242-1357 ENGINE AR-PRIMARY

SMCS-1152, 1153, 1154 **i02438381**

NOTE	REF NO	GRAPHIC REF	PART NUMBER	QTY	PART NAME 1 2 3 4 5 6 (PRODUCT LEVEL)	SEE PAGE
	1	1	**277-4490**	2	BRACKET-MOUNTING	
	2	1	**283-8302**	6	BOLT	
	3	1	**283-8301**	2	BOLT	

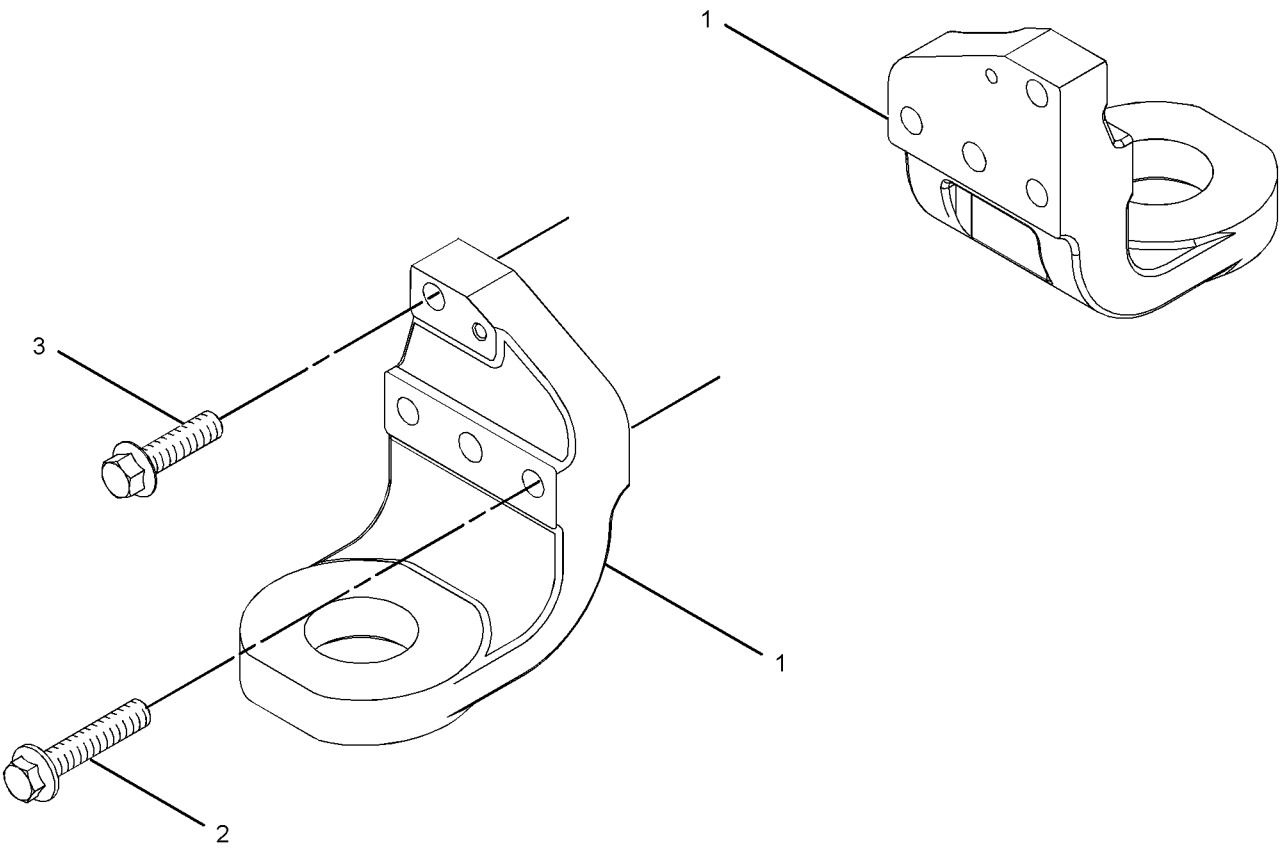

GRAPHIC #1 **<END>** g01193978

249-3722 MOUNTING GP-ENGINE & XMSN

S/N: LBP1-UP

PART OF 240-6227 INSTALLATION AR-ENGINE

SMCS-1152, 1153, 1154 **i02369410**

NOTE	REF NO	GRAPHIC REF	PART NUMBER	QTY	PART NAME 1 2 3 4 5 6 (PRODUCT LEVEL)	SEE PAGE
	1	1	**9W-6582**	4	SLEEVE	
	2	1	**9W-9930**	4	MOUNT AS	
	3	1	**243-2147**	2	SUPPORT-ENGINE	
M	4	1	**7X-2554**	4	BOLT (M16X2X70-MM)	
M	5	1	**7X-2555**	4	BOLT (M16X2X80-MM)	
	6	1	**8T-4123**	4	WASHER (22X35X3.5-MM THK)	
M	7	1	**8T-6381**	4	BOLT (M20X2.5X120-MM)	
	8	1	**9W-6584**	4	WASHER (20.5X114X10-MM THK)	
	9	1	**9X-8257**	8	WASHER (17.5X30X3.5-MM THK)	

M-METRIC PART

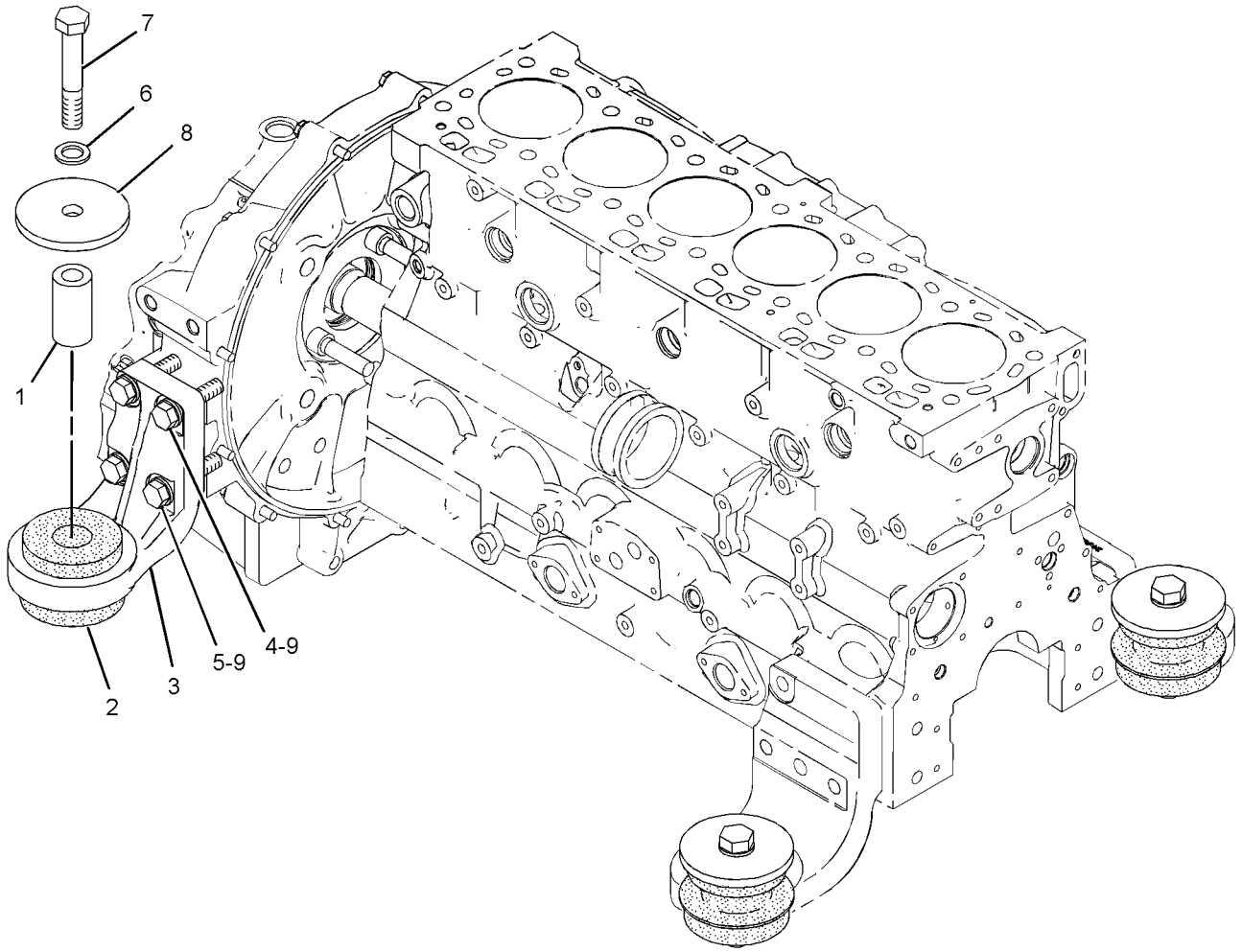

GRAPHIC #1 **<END>** g01188573

BASIC ENGINE

288-3579 PAN GP-OIL

S/N: C6E1-495

PART OF 242-1357 ENGINE AR-PRIMARY

SMCS-1302 **i03365542**

NOTE	REF NO	GRAPHIC REF	PART NUMBER	QTY	PART NAME 1 2 3 4 5 6 (PRODUCT LEVEL)	SEE PAGE
M	1	1	**6I-0260**	2	BOLT (M8X1.25X25-MM)	
	2	1	**6I-0572**	1	BOLT (M8X1.25X20-MM)	
M	3	1	**6I-0654**	2	BOLT (M10X1.5X25-MM)	
J	4	1	**275-9888**	28	BOLT-SPECIAL	
J	5	1	**275-9889**	2	BOLT-SPECIAL	
	6	1	**276-0142**	6	BOLT-SPECIAL (TORX)	
	7	1	**275-9897**	1	BRACKET	
	8	1	**6I-4681**	1	GASKET	
	9	1	**275-9884**	1	GASKET	
	10	1	**280-1383**	1	GASKET	
	11	1	**282-2748**	1	GAUGE AS-OIL LEVEL (DIPSTICK) (ENGINE)	
	11A	1	**275-9891**	2	SEAL-O-RING	
	12	1	**289-8725**	1	PAN-OIL (ENGINE)	
L	14	1	**102-9690**	1	PLUG	
	15	1	**6I-1497**	1	SEAL	
	16	1	**251-8338**	1	TUBE AS	
	16A	1	**6I-4079**	1	NUT	
	17	1	**280-1384**	1	TUBE-OIL SUCTION	
	17A	1	**236-5511**	1	CLIP-PIPE	
	18	1	**326-1015**	1	VALVE GP-DRAIN	
	18A	1	**326-5054**	1	SEAL-O-RING	
	18B	1	**294-8576**	1	PLUG-DRAIN (ENGINE OIL PAN)	
	19	1	**286-7847**	1	ADAPTER GP-OIL PAN DRAIN	

J-SERVICED AS COMPLETE SET ONLY
L-USED AT OPTIONAL DIPSTICK LOCATIONS
M-METRIC PART

288-3579 **PAN GP-OIL** *(contd.)* **i03365542**

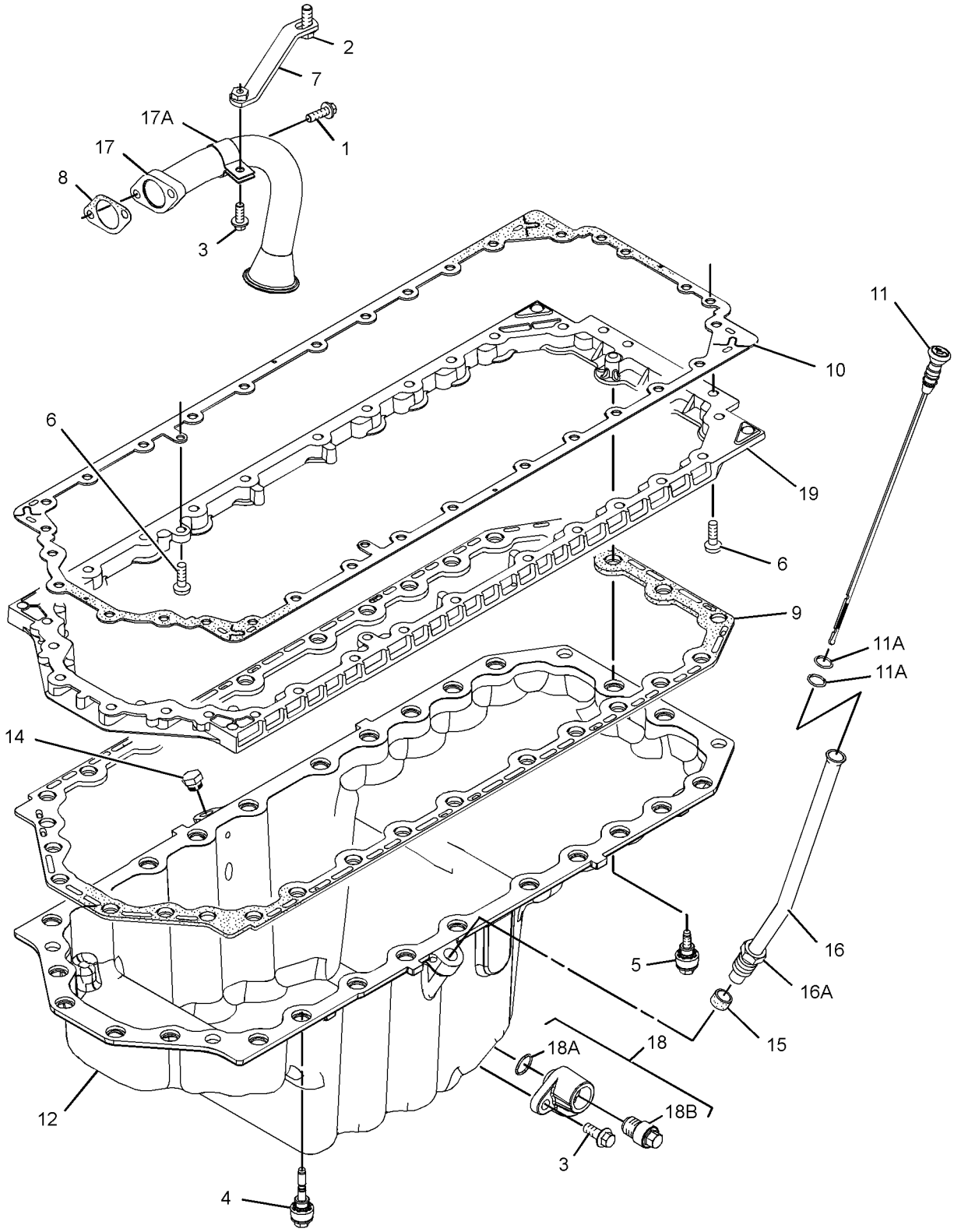

GRAPHIC #1 **<END>** g01771494

BASIC ENGINE

305-7297 PAN GP-OIL

S/N: C6E496-6838

PART OF 242-1357 ENGINE AR-PRIMARY

SMCS-1302 **i03126063**

NOTE	REF NO	GRAPHIC REF	PART NUMBER	QTY	PART NAME 1 2 3 4 5 6 (PRODUCT LEVEL)	SEE PAGE
M	1	1	**6I-0260**	2	BOLT (M8X1.25X25-MM)	
	2	1	**6I-0289**	1	PLUG	
	3	1	**6I-0572**	1	BOLT (M8X1.25X20-MM)	
M	4	1	**6I-0654**	2	BOLT (M10X1.5X25-MM)	
	5	1	**6I-1497**	1	SEAL	
	6	1	**6I-4681**	1	GASKET	
	7	1	**251-8336**	1	TUBE AS	
	8	1	**275-9884**	1	GASKET	
	9	1	**275-9897**	1	BRACKET	
	10	1	**276-0142**	6	BOLT-SPECIAL (TORX)	
	11	1	**280-1383**	1	GASKET	
	12	1	**280-1384**	1	TUBE-OIL SUCTION	
	12A	1	**236-5511**	1	CLIP-PIPE	
	13	1	**282-2748**	1	GAUGE AS-OIL LEVEL (DIPSTICK) (ENGINE)	
	13A	1	**275-9891**	2	SEAL-O-RING	
	14	1	**286-7847**	1	ADAPTER GP-OIL PAN DRAIN	
	15	1	**289-8725**	1	PAN-OIL	
	16	1	**326-1015**	1	VALVE GP-DRAIN (ENGINE OIL PAN)	
	16A	1	**326-5054**	1	SEAL-O-RING	
	16B	1	**294-8576**	1	PLUG-DRAIN (ENGINE OIL PAN)	
	17	1	**305-7298**	1	BRACKET	
J	18	1	**275-9888**	28	BOLT-SPECIAL	
J	19	1	**275-9889**	2	BOLT-SPECIAL	

J-SERVICE AS A COMPLETE SET ONLY
M-METRIC PART

305-7297 **PAN GP-OIL** *(contd.)* **i03126063**

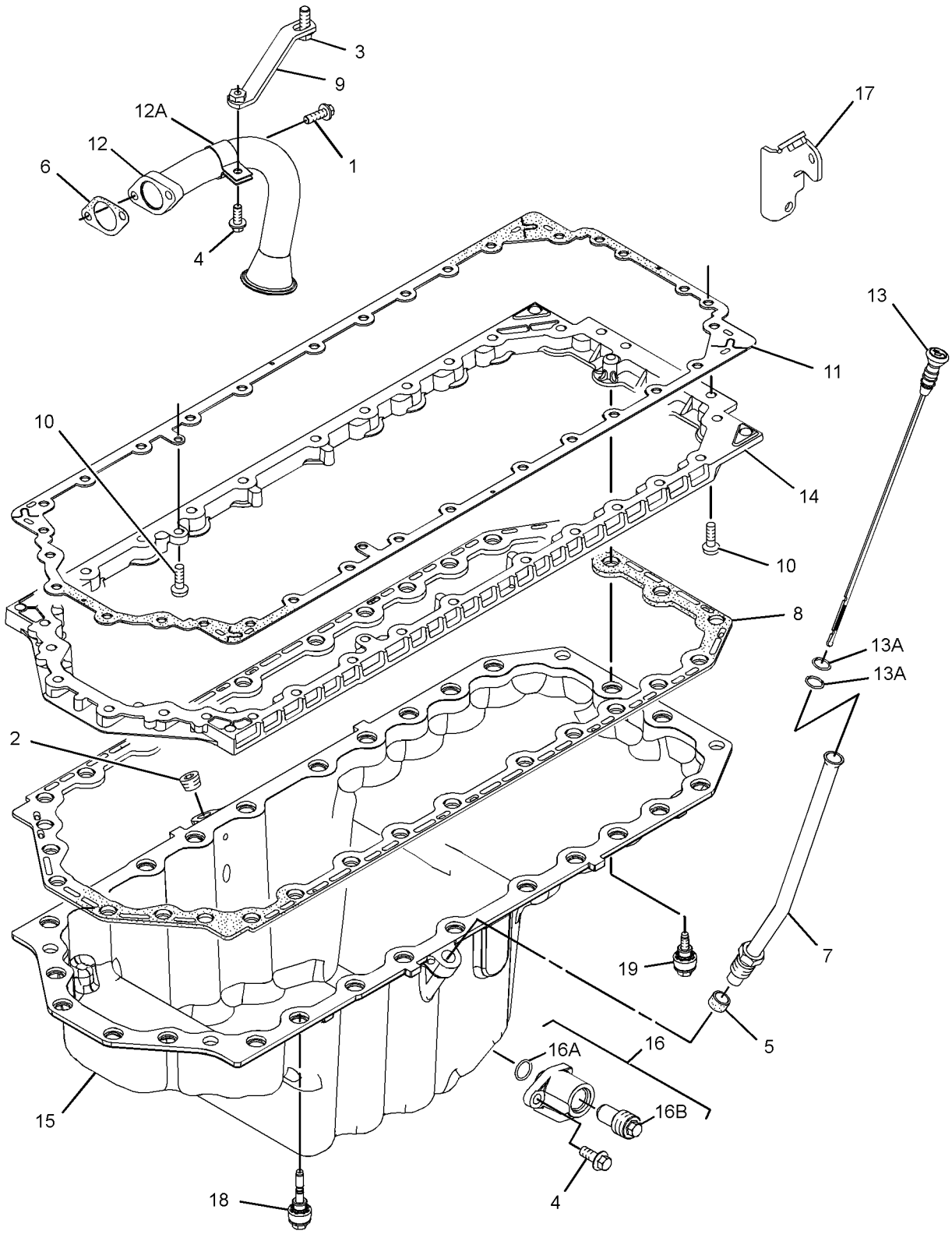

GRAPHIC #1 **<END>** g01747494

BASIC ENGINE

305-7297 PAN GP-OIL

S/N: C6E6839-UP

PART OF 242-1357 ENGINE AR-PRIMARY

SMCS-1302 **i03415384**

NOTE	REF NO	GRAPHIC REF	PART NUMBER	QTY	PART NAME 1 2 3 4 5 6 (PRODUCT LEVEL)	SEE PAGE
M	1	1	**6I-0260**	2	BOLT (M8X1.25X25-MM)	
	2	1	**102-9690**	1	PLUG	
	3	1	**6I-0572**	1	BOLT (M8X1.25X20-MM)	
M	4	1	**6I-0654**	2	BOLT (M10X1.5X25-MM)	
	5	1	**6I-1497**	1	SEAL	
	6	1	**6I-4681**	1	GASKET	
	7	1	**251-8336**	1	TUBE AS	
	8	1	**275-9884**	1	GASKET	
	9	1	**275-9897**	1	BRACKET	
	10	1	**276-0142**	6	BOLT-SPECIAL (TORX)	
	11	1	**280-1383**	1	GASKET	
	12	1	**280-1384**	1	TUBE-OIL SUCTION	
	12A	1	**236-5511**	1	CLIP-PIPE	
	13	1	**282-2748**	1	GAUGE AS-OIL LEVEL (DIPSTICK) (ENGINE)	
	13A	1	**275-9891**	2	SEAL-O-RING	
	14	1	**286-7847**	1	ADAPTER GP-OIL PAN DRAIN	
	15	1	**289-8725**	1	PAN-OIL	
	16	1	**326-1015**	1	VALVE GP-DRAIN (ENGINE OIL PAN)	
	16A	1	**326-5054**	1	SEAL-O-RING	
	16B	1	**294-8576**	1	PLUG-DRAIN (ENGINE OIL PAN)	
C	17	1	**329-0064**	1	BRACKET	
J	18	1	**275-9888**	28	BOLT-SPECIAL	
J	19	1	**275-9889**	2	BOLT-SPECIAL	

C-CHANGE FROM PREVIOUS TYPE
J-SERVICE AS A COMPLETE SET ONLY
M-METRIC PART

305-7297 **PAN GP-OIL** *(contd.)* **i03415384**

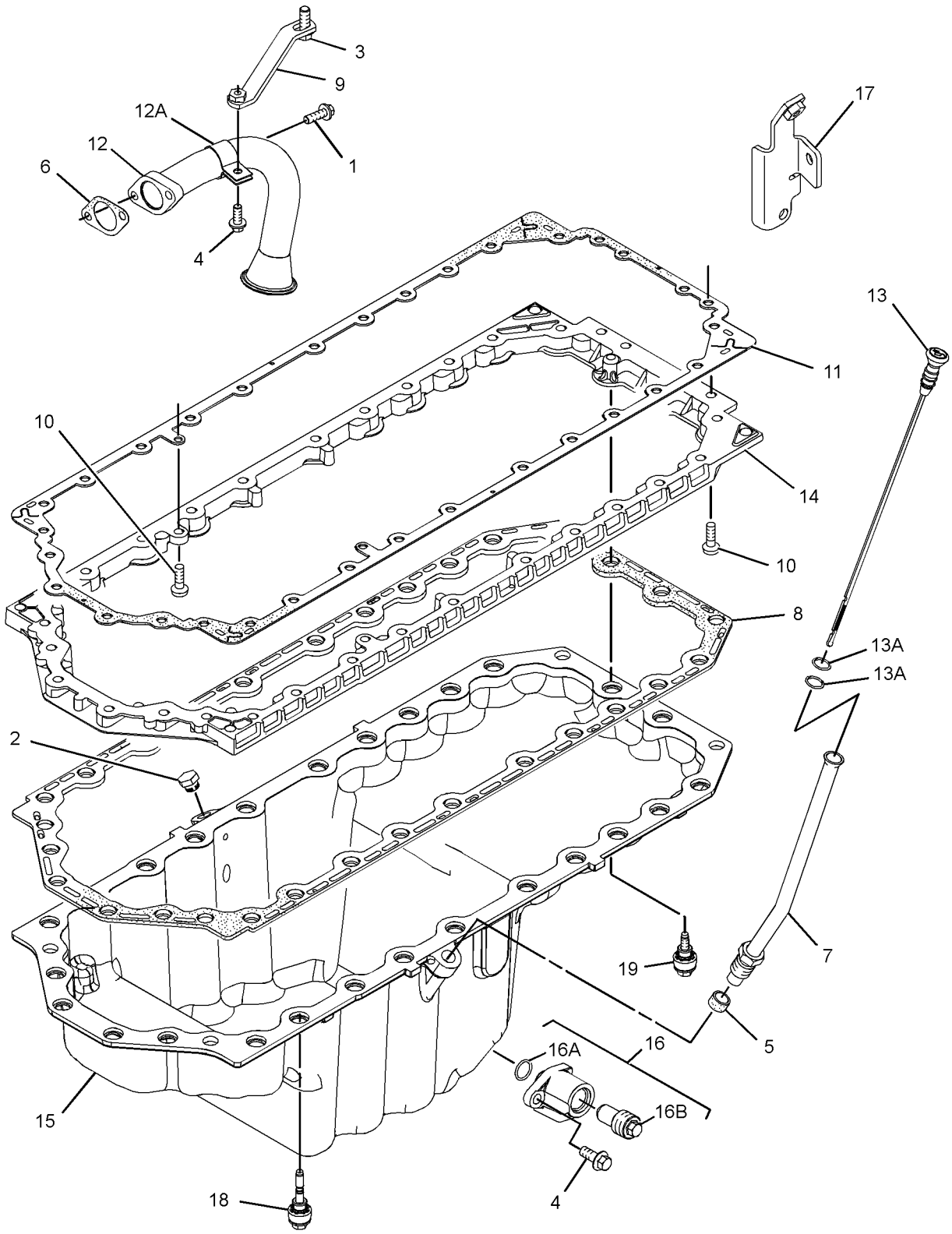

GRAPHIC #1 **<END>** g01809714

279-8780 PISTON & ROD GP

S/N: C6E1-UP

PART OF 242-1357 ENGINE AR-PRIMARY

SMCS-1214, 1218, 1225 **i02408127**

NOTE	REF NO	GRAPHIC REF	PART NUMBER	QTY	PART NAME 1 2 3 4 5 6 (PRODUCT LEVEL)	SEE PAGE
	1	1	**276-7475**	6	PISTON AS	
					(EACH INCLUDES)	
	2	1	**124-3536**	2	RING-RETAINING	
	3	1	**276-7476**	6	KIT-PISTON RING	
BJ	4	1	**276-7479**	6	ROD AS (F)	
					—OR—	
BJ			**276-7481**	6	ROD AS (L)	
					—OR—	
BJ			**276-7483**	6	ROD AS (J)	
					(EACH ROD AS INCLUDES)	
	5	1	**225-5439**	2	BOLT-SPECIAL (CONNECTING ROD)	
	6	1	**276-7478**	1	BUSHING	

B-USE AS REQUIRED
J-ENSURE THAT CORRECT ROD LENGTH IS FITTED

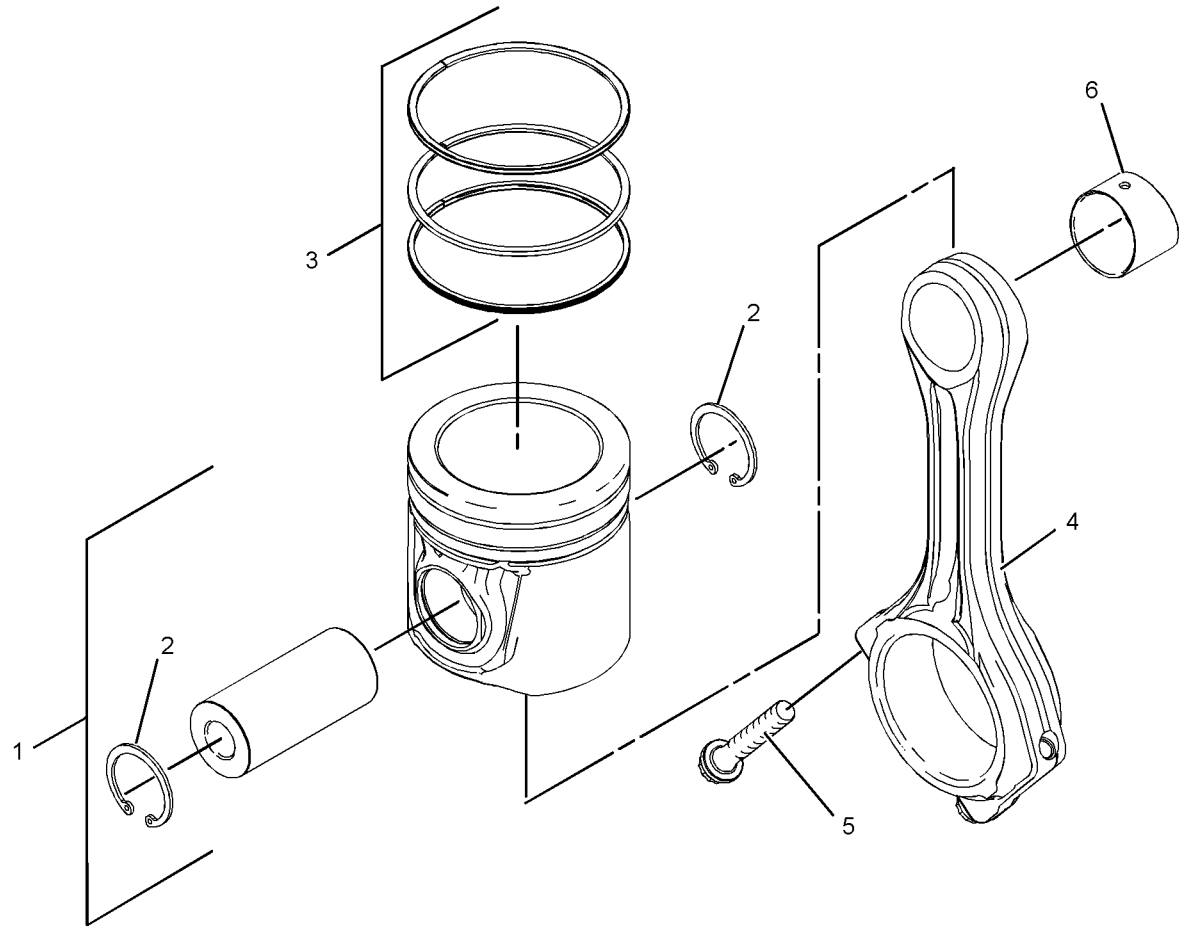

GRAPHIC #1 **<END>** g01214328

299-6957 PLUG GP-ENGINE

S/N: C6E409-UP

PART OF 242-1357 ENGINE AR-PRIMARY

SMCS-1000 **i02686878**

NOTE	REF NO	GRAPHIC REF	PART NUMBER	QTY	PART NAME 1 2 3 4 5 6 (PRODUCT LEVEL)	SEE PAGE
	1	1	**299-6953**	6	GLOW PLUG	

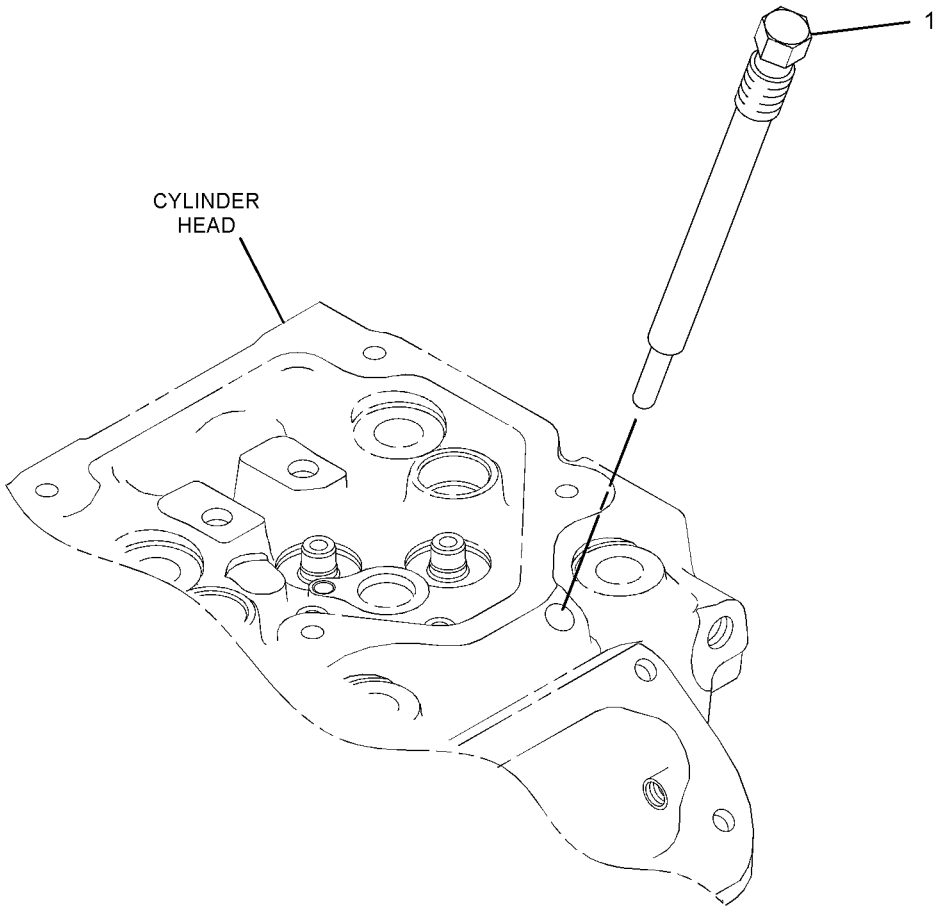

GRAPHIC #1 **<END>** g01313044

274-1929 PULLEY GP-CRANKSHAFT

S/N: C6E1-UP

PART OF 242-1357 ENGINE AR-PRIMARY

SMCS-1205 **i02386480**

NOTE	REF NO	GRAPHIC REF	PART NUMBER	QTY	PART NAME 1 2 3 4 5 6 (PRODUCT LEVEL)	SEE PAGE
	1	1	**274-1930**	1	DAMPER	
	2	1	**274-1931**	1	PULLEY	
	3	1	**274-1932**	1	HUB	
	4	1	**274-1933**	1	BLOCK	
	5	1	**274-1934**	3	BOLT-SPECIAL (TORX)	
	6	1	**274-1935**	6	BOLT	

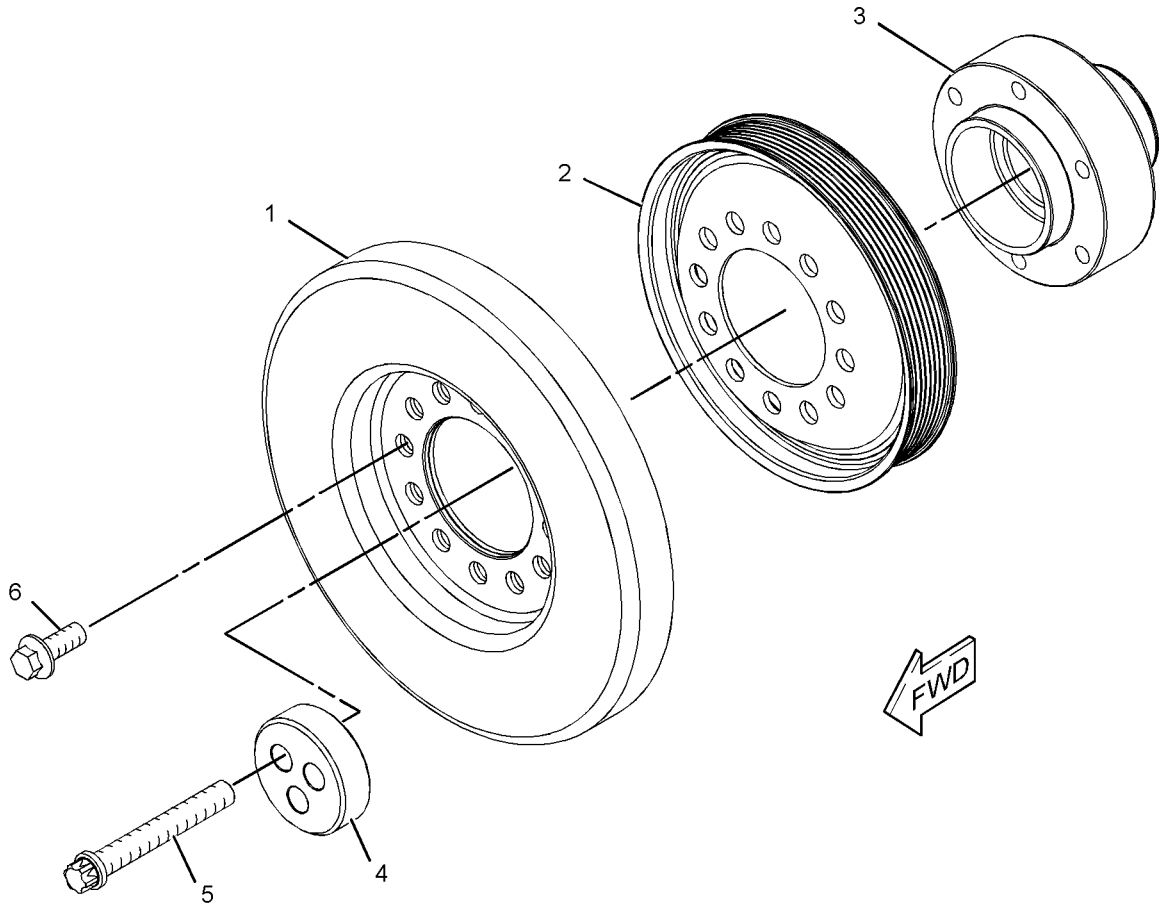

GRAPHIC #1 **<END>** g01193502

280-1911 ROCKER ARM GP

S/N: C6E1-UP

PART OF 279-8825 VALVE MECHANISM GP

SMCS-1102, 1123 **i02419833**

NOTE	REF NO	GRAPHIC REF	PART NUMBER	QTY	PART NAME 1 2 3 4 5 6 (PRODUCT LEVEL)	SEE PAGE
	1	1	**276-9201**	1	CLIP	
	2	1	**276-9206**	5	SPRING-SHAFT	
	3	1	**276-9207**	1	SPRING-SHAFT	
	4	1	**277-5307**	1	SHAFT AS-ROCKER ARM	
	4A	1	**276-9200**	1	PLUG-SHAFT END	
	5	1	**278-5111**	6	ROCKER ARM AS	
					(EACH INCLUDES)	
	5A	1	**276-9230**	1	NUT	
	5B	1	**278-5113**	1	ADJUSTING SCREW (TORX)	
	6	1	**278-5112**	6	ROCKER ARM AS	
					(EACH INCLUDES)	
	6A	1	**276-9230**	1	NUT	
	6B	1	**278-5113**	1	ADJUSTING SCREW (TORX)	
	7	1	**280-1912**	6	BRACKET	
	8	1	**280-1913**	6	RETAINER	
	9	1	**280-1914**	12	BOLT (M8X1.25X55-MM)	

280-1911 **ROCKER ARM GP** ***(contd.)*** **i02419833**

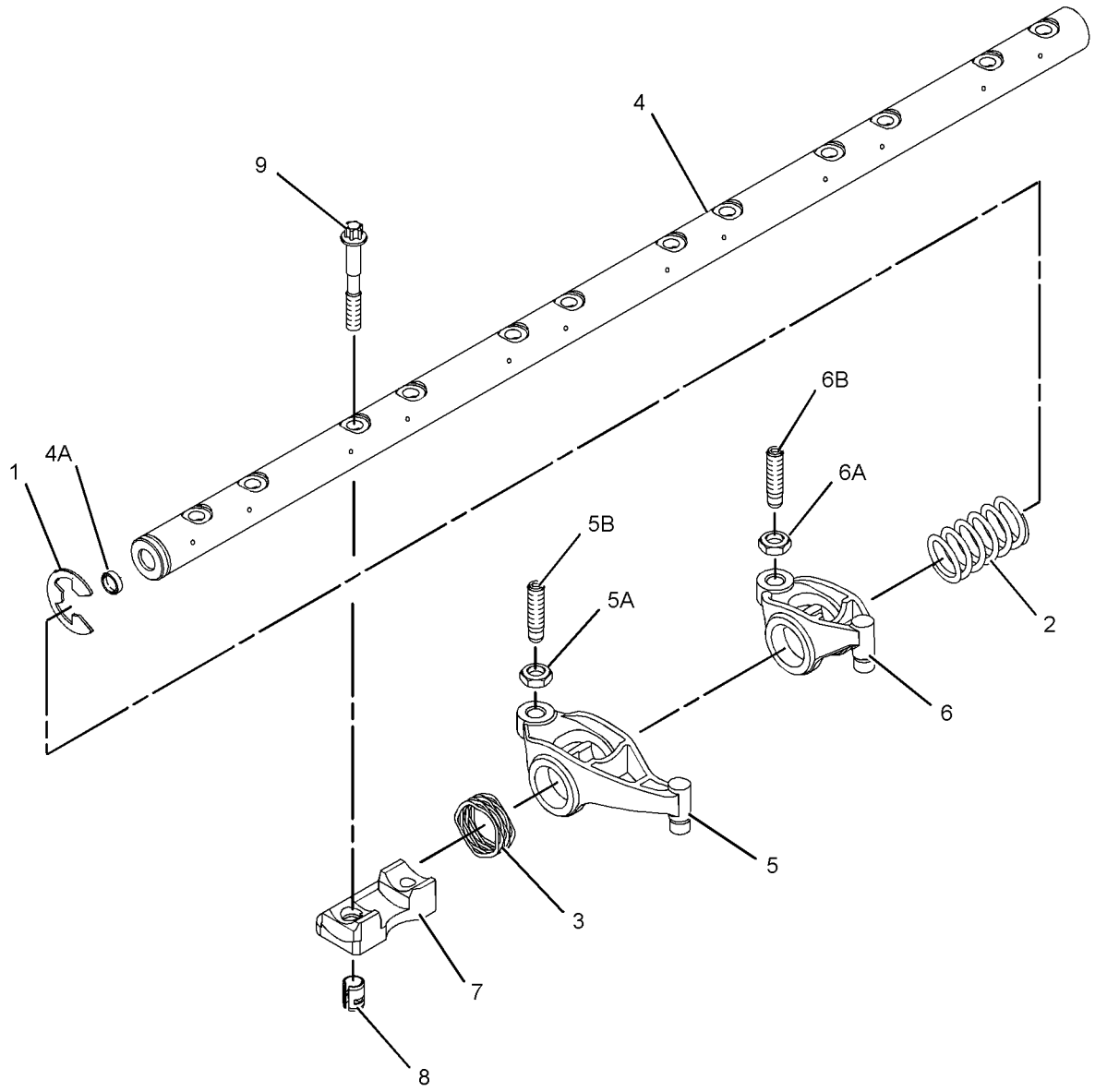

GRAPHIC #1 **<END>** g01235750

279-8825 VALVE MECHANISM GP

S/N: C6E1-UP

PART OF 242-1357 ENGINE AR-PRIMARY

SMCS-1102, 1121, 1123 **i03592493**

NOTE	REF NO	GRAPHIC REF	PART NUMBER	QTY	PART NAME 1 2 3 4 5 6 (PRODUCT LEVEL)	SEE PAGE
	1	1	**339-3397**	12	LINK	
Y	2	1	**280-1911**	1	ROCKER ARM GP	53

Y-SEPARATE ILLUSTRATION

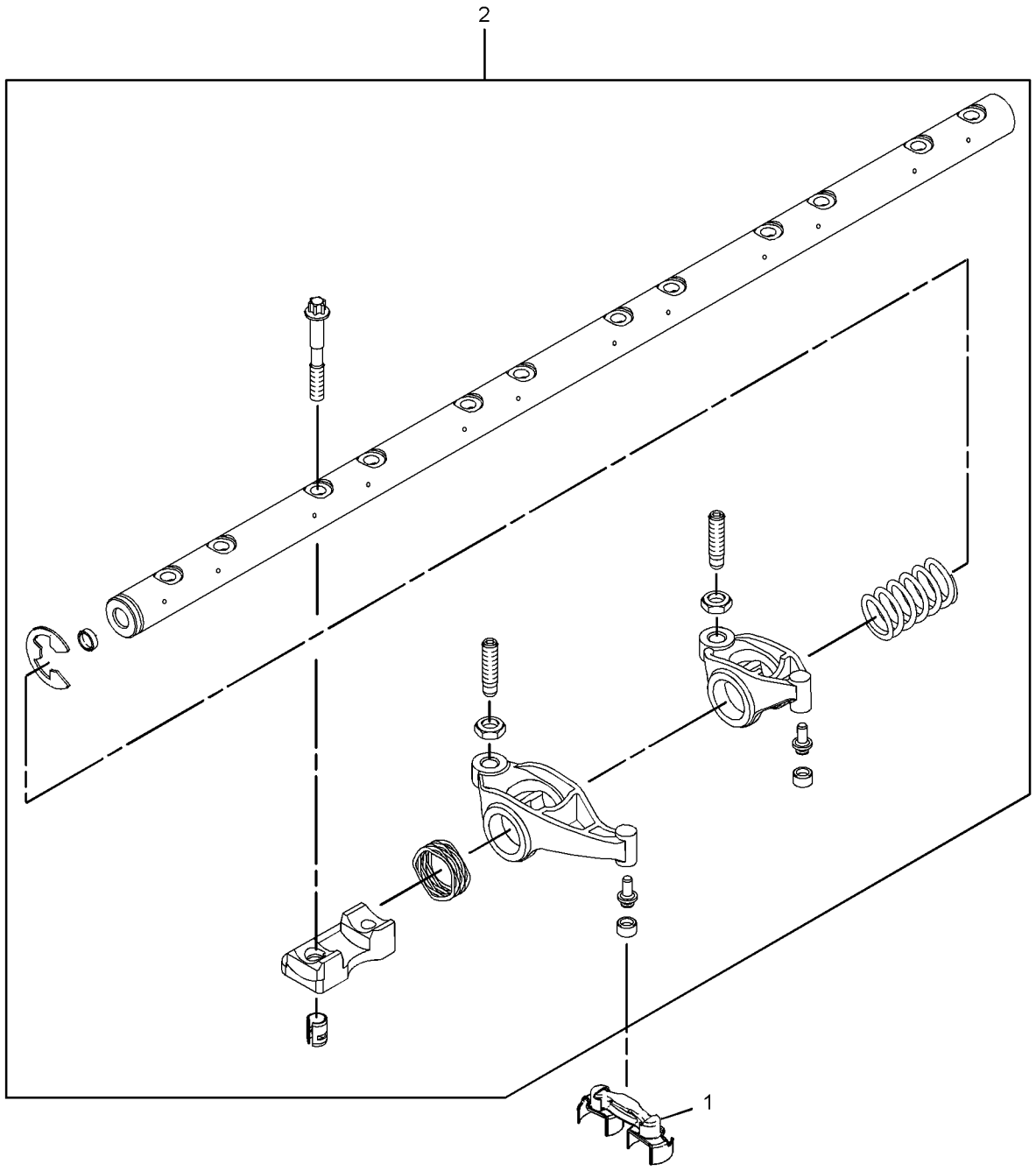

GRAPHIC #1 **<END>** g01923253

280-2050 BREATHER GP–CRANKCASE

S/N: C6E1-495

PART OF 242-1357 ENGINE AR-PRIMARY

SMCS-1317 **i03086220**

NOTE	REF NO	GRAPHIC REF	PART NUMBER	QTY	PART NAME 1 2 3 4 5 6 (PRODUCT LEVEL)	SEE PAGE
	1	1	**273-5711**	1	BREATHER AS (CRANKCASE)	

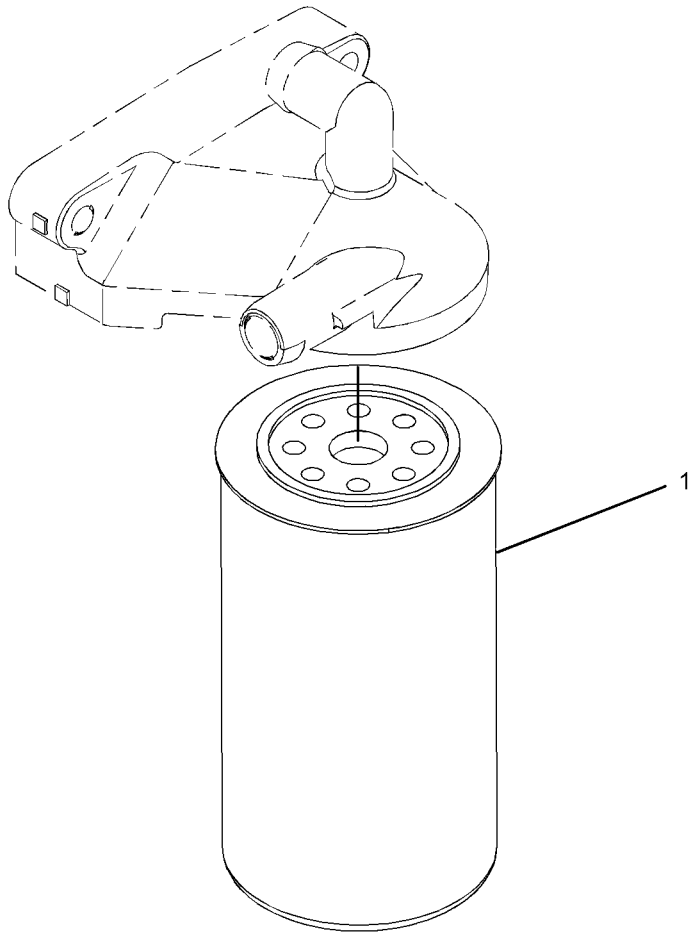

GRAPHIC #1 **<END>** g01567973

LUBRICATION SYSTEM

277-1973 FILLER GP-ENGINE OIL

S/N: C6E1-615

PART OF 242-1357 ENGINE AR-PRIMARY

SMCS-1316 **i02896494**

NOTE	REF NO	GRAPHIC REF	PART NUMBER	QTY	PART NAME 1 2 3 4 5 6 (PRODUCT LEVEL)	SEE PAGE
	1	1	**321-2383**	1	FILLER GP-ENGINE OIL	
	1A	1	**306-2337**	1	SEAL-O-RING	
	1B	1	**130-9888**	1	CAP-OIL FILLER (ENGINE)	
	1C	1	**113-1504**	1	SEAL-O-RING	
	2	1	**6I-4374**	1	BOLT (M8X1.25X60-MM)	
M	3	1	**6I-0254**	1	BOLT (M8X1.25X30-MM)	
	4	1	**277-1974**	1	PLATE AS	
	4A	1	**277-1975**	1	SEAL-O-RING	
M	5	1	**6I-0217**	2	BOLT (M8X1.25X20-MM)	

M-METRIC PART

277-1973 **FILLER GP-ENGINE OIL** *(contd.)* **i02896494**

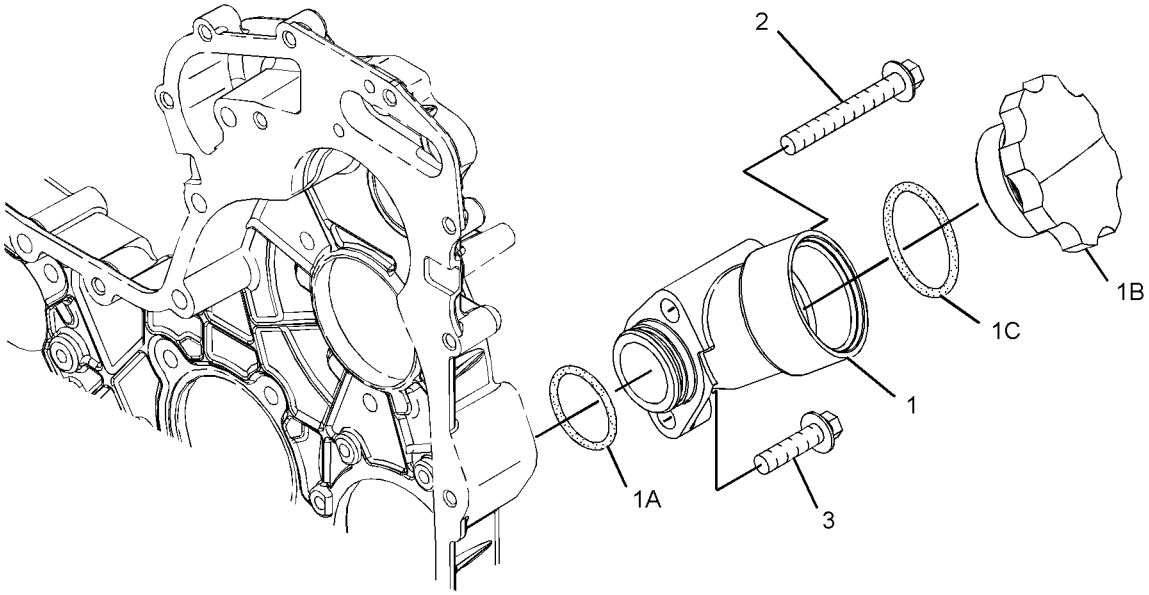

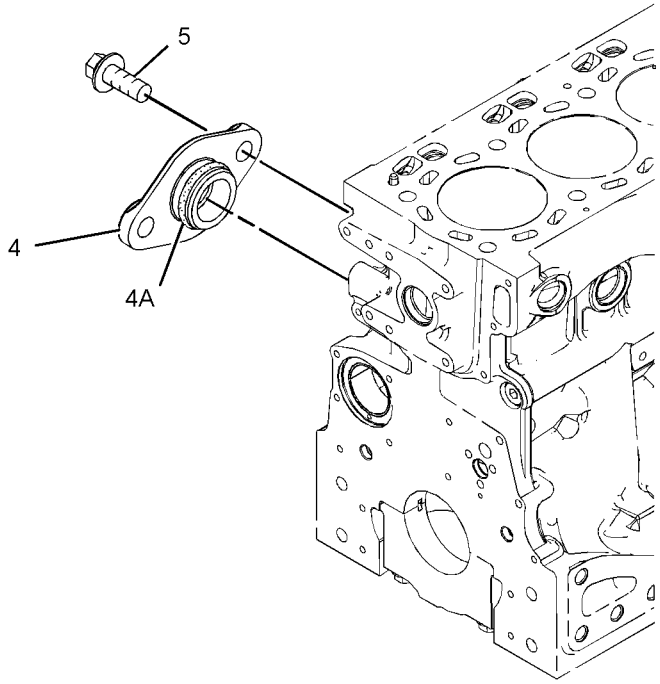

GRAPHIC #1 **<END>** g01208924

LUBRICATION SYSTEM

307-1843 FILLER GP-ENGINE OIL

S/N: C6E617-UP

PART OF 242-1357 ENGINE AR-PRIMARY

SMCS-1316 **i02680997**

NOTE	REF NO	GRAPHIC REF	PART NUMBER	QTY	PART NAME 1 2 3 4 5 6 (PRODUCT LEVEL)	SEE PAGE
M	1	1	**6I-0217**	2	BOLT (M8X1.25X20-MM)	
M	2	1	**6I-0254**	1	BOLT (M8X1.25X30-MM)	
M	3	1	**6I-0260**	2	BOLT (M8X1.25X25-MM)	
	4	1	**6I-4374**	1	BOLT (M8X1.25X60-MM)	
	5	1	**277-1974**	1	PLATE AS	
	5A	1	**277-1975**	1	SEAL-O-RING	
	6	1	**280-1430**	1	GASKET	
	7	1	**288-6982**	1	ADAPTER AS	
	7A	1	**6I-1201**	1	SEAL-O-RING	
	8	1	**305-2527**	1	FILLER AS-OIL	
	8A	1	**130-9888**	1	CAP-OIL FILLER (ENGINE)	
	8B	1	**113-1504**	1	SEAL-O-RING	

M-METRIC PART

307-1843 **FILLER GP-ENGINE OIL** *(contd.)* **i02680997**

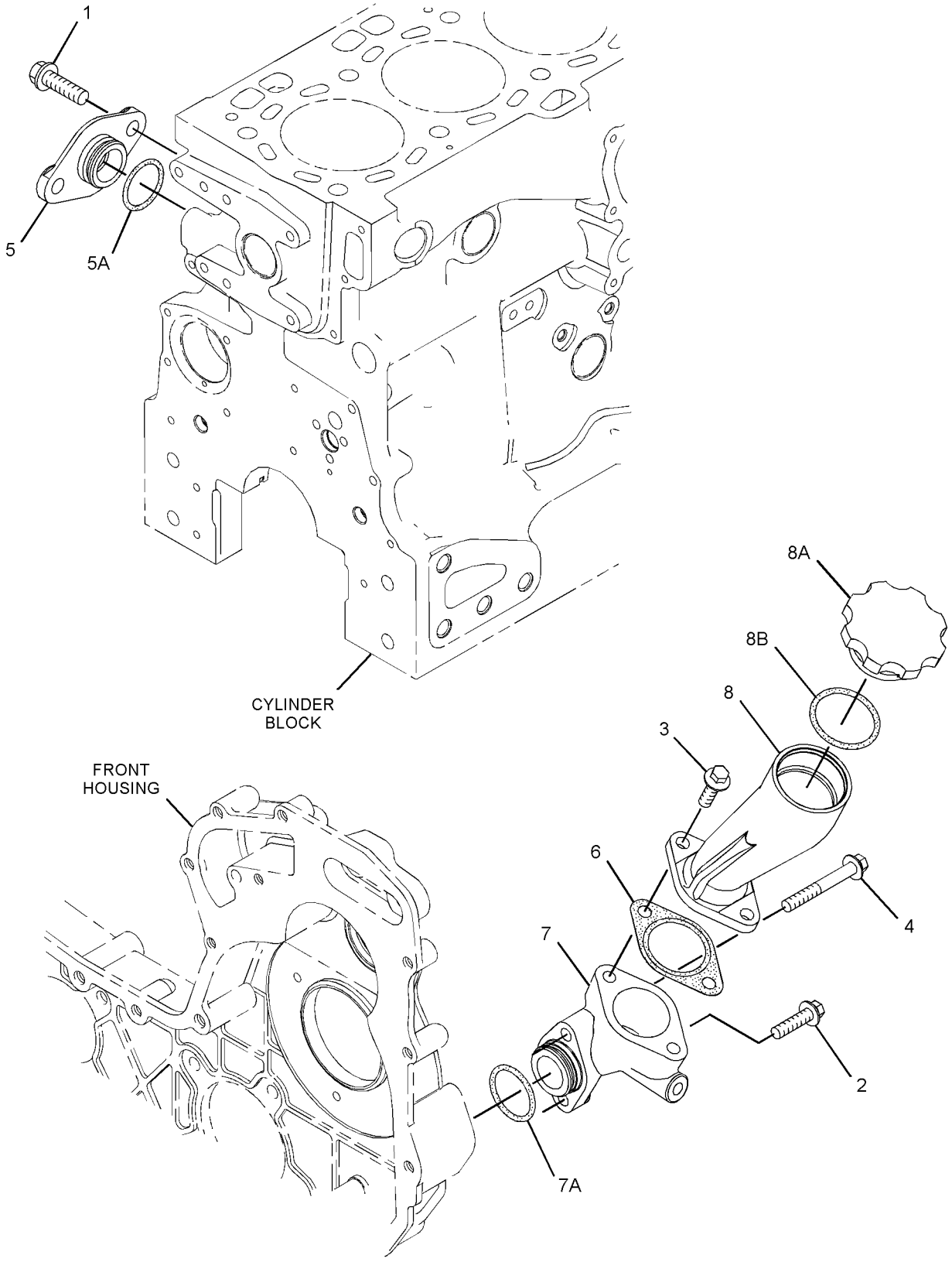

GRAPHIC #1 **<END>** g01353028

LUBRICATION SYSTEM

277-2912 FILTER GP-ENGINE OIL

S/N: C6E1-UP

PART OF 242-1357 ENGINE AR-PRIMARY

SMCS-1308 **i03327303**

NOTE	REF NO	GRAPHIC REF	PART NUMBER	QTY	PART NAME 1 2 3 4 5 6 (PRODUCT LEVEL)	SEE PAGE
	1	1	**269-8325**	1	FILTER-ENGINE OIL	

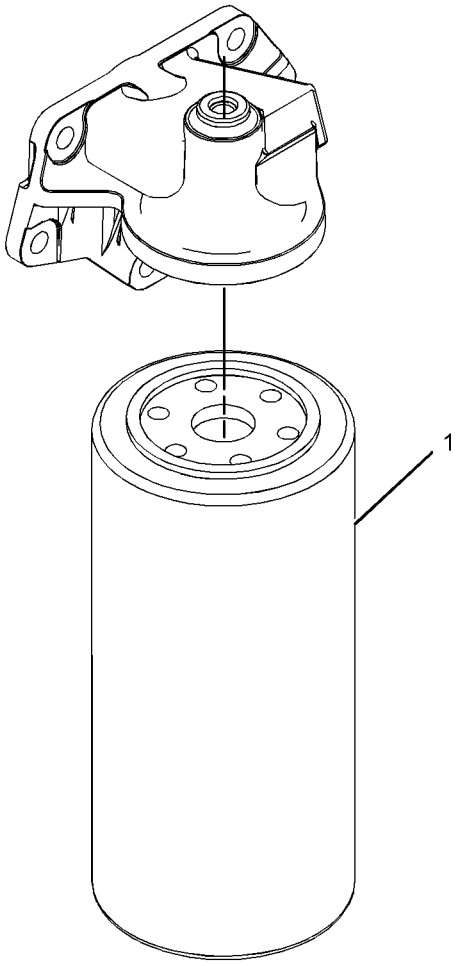

GRAPHIC #1 **<END>** g01198493

276-3448 OIL CHANGE GP-HIGH SPEED—ENGINE

S/N: LBP1-UP
AN ATTACHMENT

SMCS-1325 **i02665231**

NOTE	REF NO	GRAPHIC REF	PART NUMBER	QTY	PART NAME 1 2 3 4 5 6 (PRODUCT LEVEL)	SEE PAGE
	1	1	**8T-5373**	1	COUPLER-MALE	
	2	1	**8W-3214**	1	CAP AS	
	3	1	**143-5052**	1	BRACKET	
I	4	1	**277-8702**	1	HOSE AS	
	5	1	**281-2471**	1	PLATE	
	6	1	*148-8327*	1	CONNECTOR AS	
		1	**6V-8637**	1	CONNECTOR	
		1	**3D-2824**	1	SEAL-O-RING	
		1	**6V-9746**	1	SEAL-O-RING	
	7	1	**2P-1293**	1	LOCKNUT (1-3/16-12-THD)	
	8	1	**3E-7430**	1	PLUG-PIPE	
	9	1	**6V-1889**	1	CLIP	
	10	1	**6V-9746**	1	SEAL-O-RING	
	11	1	**8T-4121**	6	WASHER-HARD (11X21X2.5-MM THK)	
M	12	1	**8T-4133**	1	NUT (M10X1.5-THD)	
M	13	1	**8T-4136**	1	BOLT (M10X1.5X25-MM)	
M	14	1	**8T-4137**	1	BOLT (M10X1.5X20-MM)	
M	15	1	**8T-4195**	3	BOLT (M10X1.5X30-MM)	

I-REFER TO HYDRAULIC INFORMATION SYSTEM
M-METRIC PART

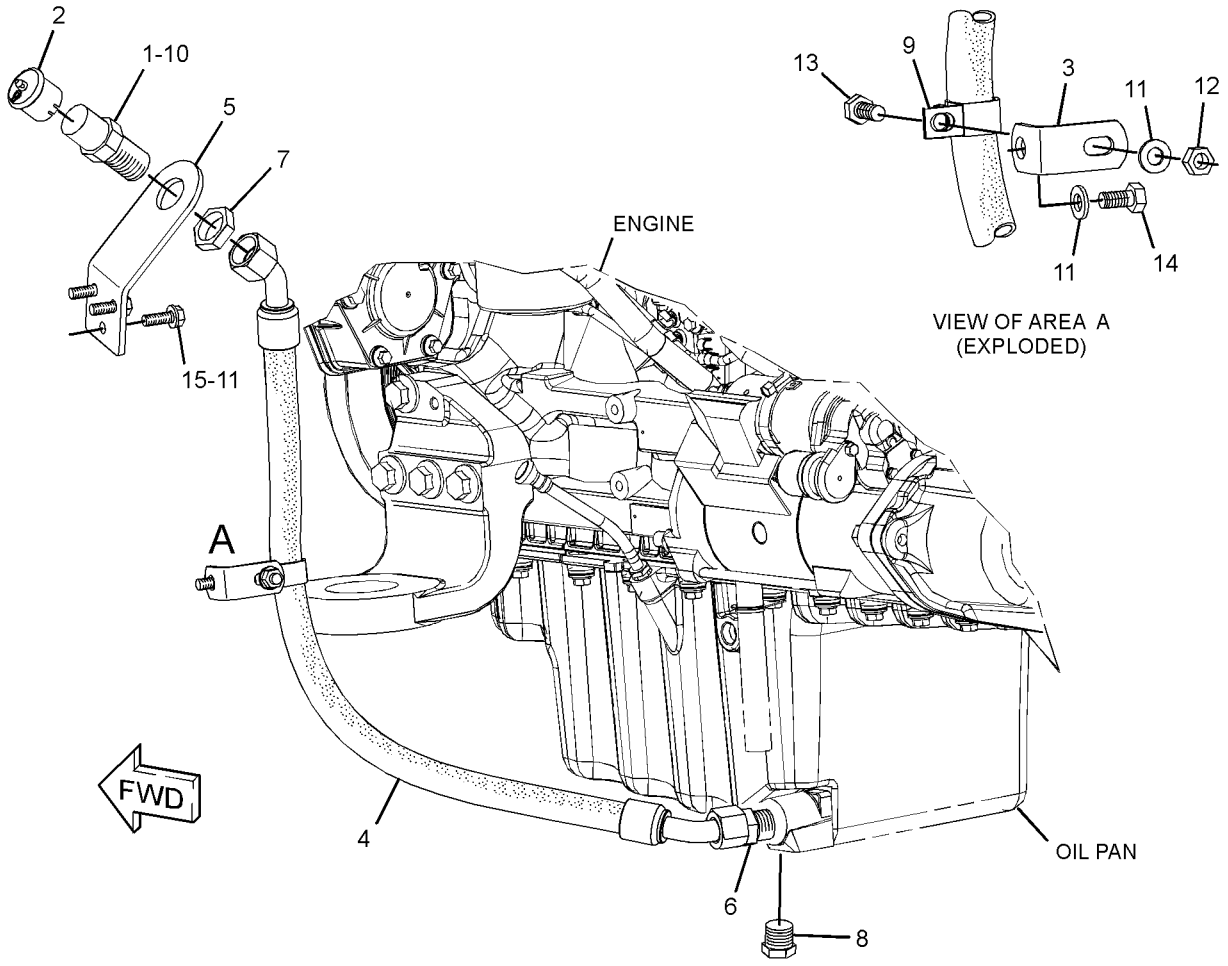

GRAPHIC #1 **<END>** g01344615

LUBRICATION SYSTEM

277-4262 PUMP GP-ENGINE OIL

S/N: C6E1-UP

PART OF 242-1357 ENGINE AR-PRIMARY

SMCS-1304 **i02751974**

NOTE	REF NO	GRAPHIC REF	PART NUMBER	QTY	PART NAME 1 2 3 4 5 6 (PRODUCT LEVEL)	SEE PAGE
	1	1	**312-4545**	1	PUMP-OIL (ENGINE)	
	2	1	**6I-1090**	4	BOLT (M8X1.25X40-MM)	

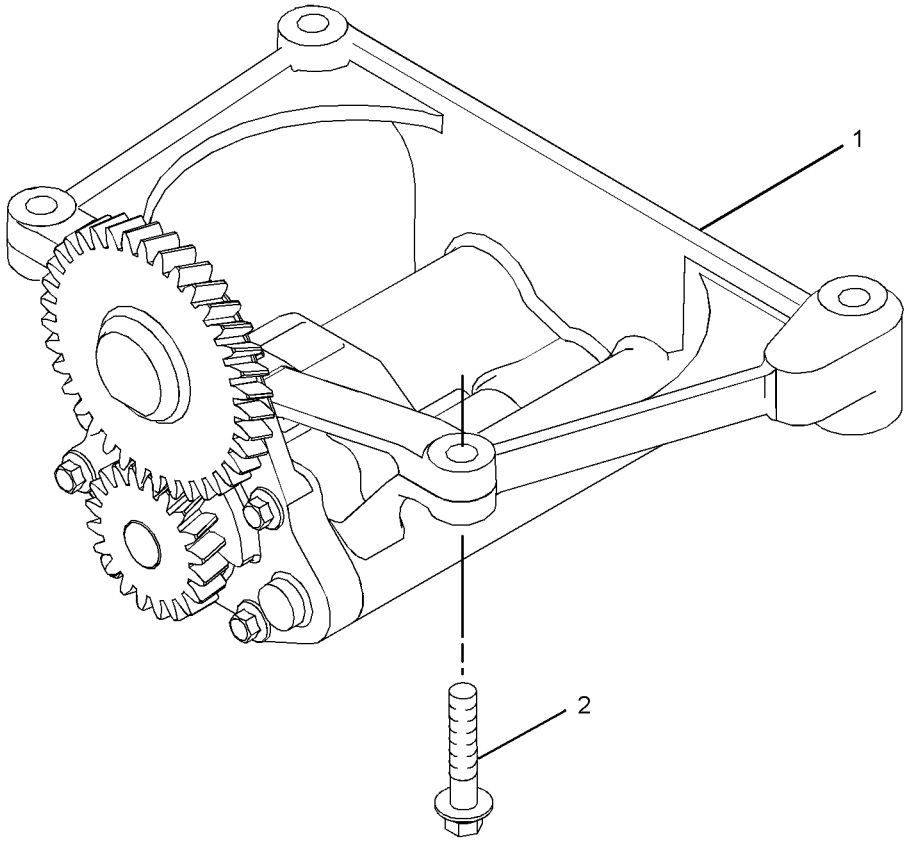

GRAPHIC #1 **<END>** g01380671

277-4694 VALVE GP-FLUID SAMPLING–ENGINE OIL

S/N: C6E1-UP

PART OF 242-1357 ENGINE AR-PRIMARY

SMCS-1318, 1325, 7542 **i02790074**

NOTE	REF NO	GRAPHIC REF	PART NUMBER	QTY	PART NAME 1 2 3 4 5 6 (PRODUCT LEVEL)	SEE PAGE
	1	1	**216-9633**	1	VALVE AS-FLUID SAMPLING	
	2	1	**8C-3445**	1	CAP-DUST	
	3	1	**232-3861**	1	PLUG (BLANKING)	
	4	1	**199-9267**	1	SEAL-O-RING	

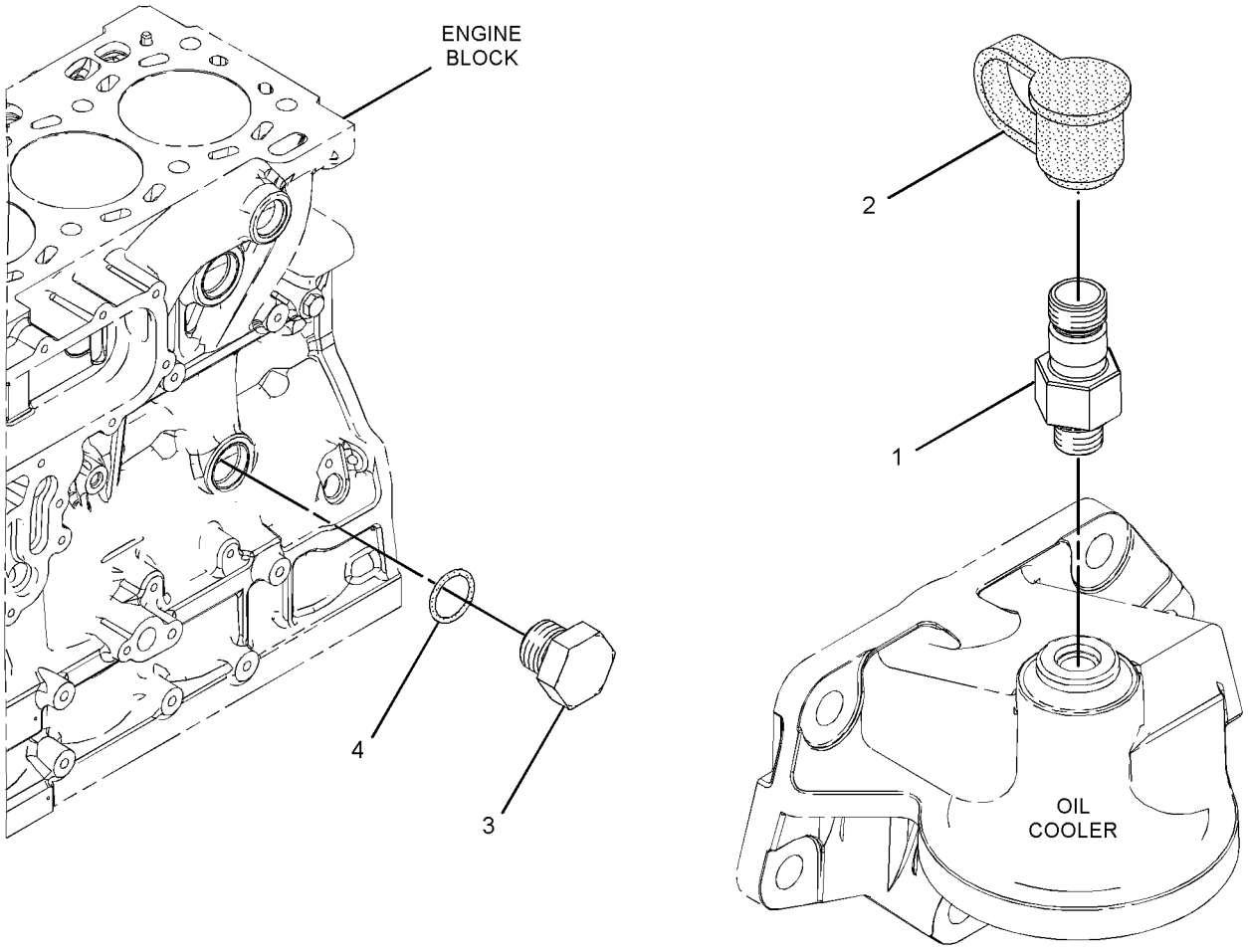

GRAPHIC #1 **<END>** g01198300

277-2504 COOLER GP-ENGINE OIL

S/N: C6E1-UP

PART OF 242-1357 ENGINE AR-PRIMARY

SMCS-1378 **i03011274**

NOTE	REF NO	GRAPHIC REF	PART NUMBER	QTY	PART NAME 1 2 3 4 5 6 (PRODUCT LEVEL)	SEE PAGE
M	1	1	**6I-0217**	8	BOLT (M8X1.25X20-MM)	
M	2	1,2	**6I-0260**	10	BOLT (M8X1.25X25-MM)	
	3	2	**6I-4709**	3	BOLT (M8X1.25X100-MM)	
M	4	2	**100-3751**	5	BOLT (M8X1.25X65-MM)	
	5	2	**295-8610**	1	COOLER AS-ENGINE OIL (ENGINE)	
M	5A	2	**6I-0260**	3	BOLT (M8X1.25X25-MM)	
	5B	2	**6I-0594**	4	NUT (M10X1.5-THD)	
	5C	2	**101-3917**	4	WASHER	
	5D	2	**101-7547**	4	WASHER	
	5E	2	**231-1455**	2	STUD	
	5F	2	**277-2500**	1	GASKET	
	5G	2	**277-2502**	2	STUD	
	5H	2	**277-2503**	3	PLUG	
	5J	2	**295-8613**	1	COOLER-OIL (ENGINE)	
	5K	2	**295-8615**	2	GASKET	
	6	1	**225-7944**	2	GASKET	
	7	1	**277-2538**	1	GASKET	
	8	2	**277-2526**	1	GASKET-FILTER	
	9	2	**277-2525**	1	HEAD AS-OIL FILTER	
	10	1	**232-3751**	2	PLATE (BLANKING)	
	11	1	**277-2537**	1	PLATE	

M-METRIC PART

277-2504 **COOLER GP-ENGINE OIL** *(contd.)* **i03011274**

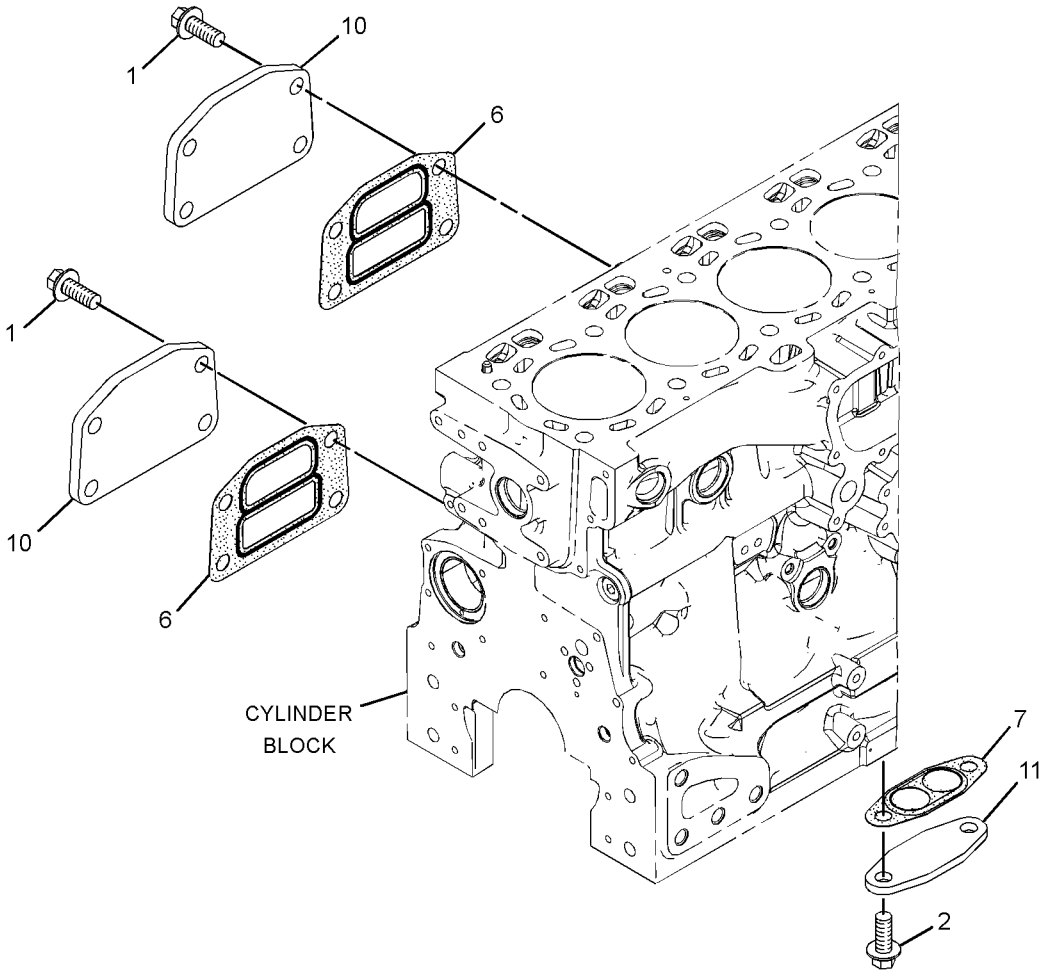

GRAPHIC #1 g01324633

277-2504 **COOLER GP-ENGINE OIL** *(contd.)* **i03011274**

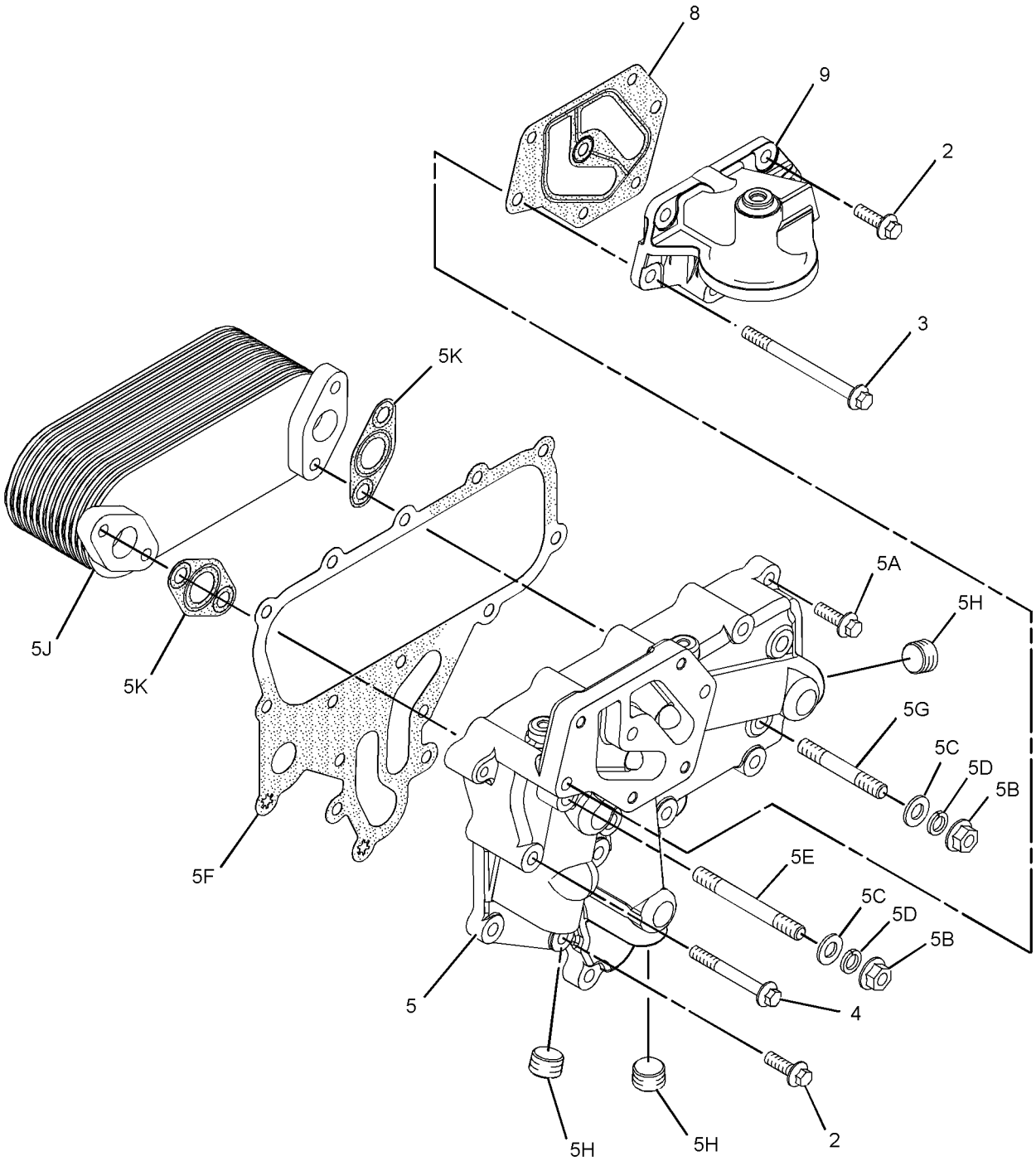

GRAPHIC #2 **<END>** g01324634

288-4011 FITTING GP-WATER LINES

S/N: C6E1-UP

PART OF 242-1357 ENGINE AR-PRIMARY

SMCS-1380 **i02564746**

NOTE	REF NO	GRAPHIC REF	PART NUMBER	QTY	PART NAME 1 2 3 4 5 6 (PRODUCT LEVEL)	SEE PAGE
	1	1	**2B-0858**	2	PLUG-PIPE	
	2	1	**134-3856**	2	ELBOW	

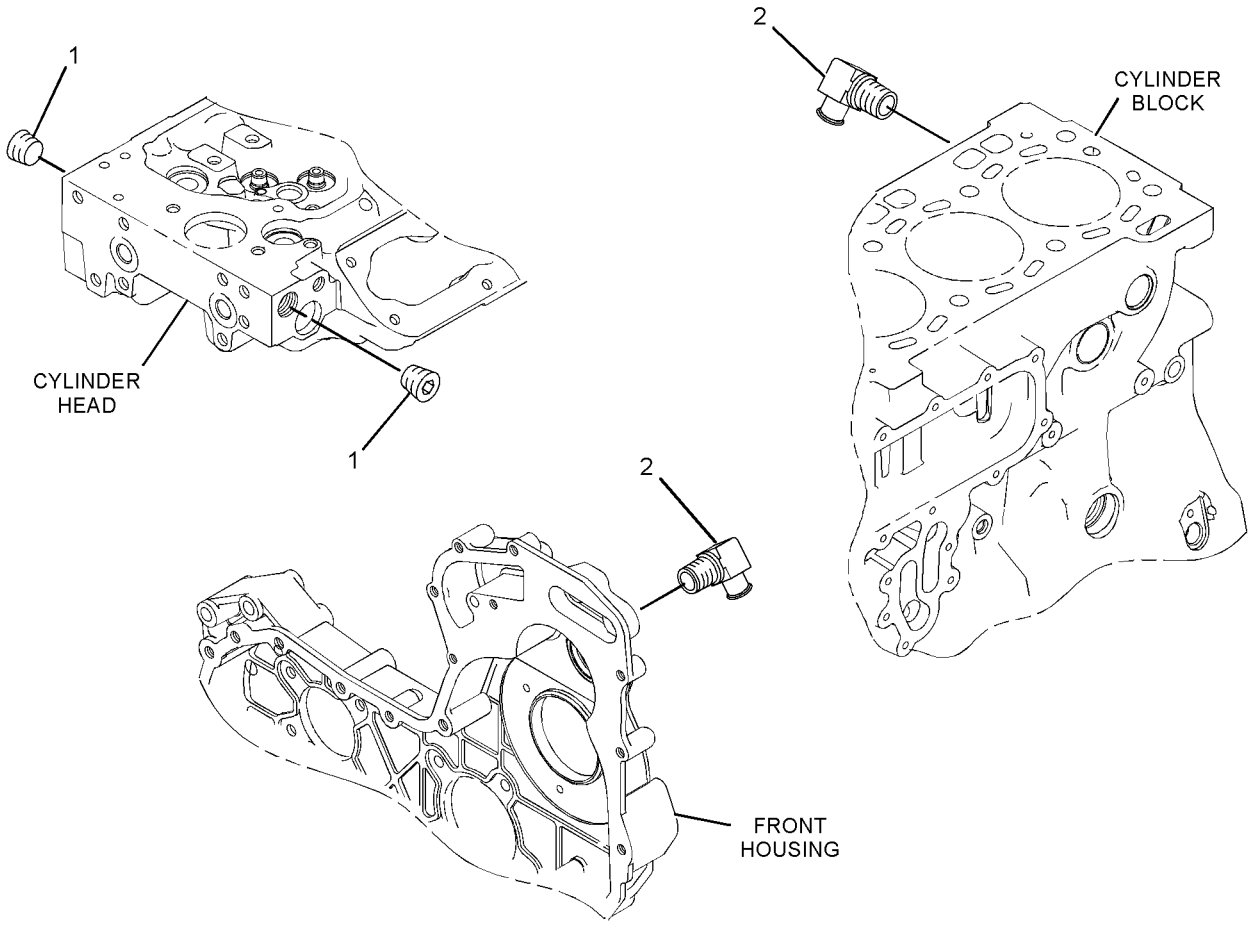

GRAPHIC #1 **<END>** g01291358

COOLING SYSTEM

255-4762 FRAME GP-RADIATOR

S/N: LBP1-UP

PART OF 274-6027 RADIATOR & HYD OIL COOLER GP

SMCS-1353, 7272 **i02847536**

NOTE	REF NO	GRAPHIC REF	PART NUMBER	QTY	PART NAME 1 2 3 4 5 6 (PRODUCT LEVEL)	SEE PAGE
	1	1	**4B-4909**	1	SPRING	
	2	1	**255-4763**	1	FRAME AS	
	3	1	**255-4764**	1	DOOR AS	
	4	1	**259-8036**	2	HINGE AS	
					(EACH INCLUDES)	
		1	**9R-3171**	1	FITTING	
	5	1	**284-8746**	1	SEAL	
	6	1	**285-0585**	2	PLATE AS	
	7	1	**285-0586**	2	CONE	
	8	1	**287-5705**	4	WASHER-SPRING	
	9	1	**295-0065**	1	PLATE	
	10	1	**295-0066**	1	ROD	
	11	1	**296-6499**	2	LATCH AS	
					(EACH INCLUDES)	
		1	**9X-8257**	2	WASHER (17.5X30X3.5-MM THK)	
M		1	**098-5747**	2	NUT (M16X2-THD)	
M		1	**161-7615**	1	NUT (M22X1.5-THD)	
	12	1	**296-7900**	2	PAWL	
	13	1	**301-5786**	1	CLIP-SPRING	
M	14	1	**095-1207**	2	NUT (M12X1.75-THD)	
	15	1	**2G-7859**	1	SPACER (0.453X0.626X1.094-IN)	
	16	1	**4S-8264**	1	RIVET-POP	
	17	1	**7X-0578**	1	WASHER-HARD (10.2X32X2.5-MM THK)	
	18	1	**8T-4121**	4	WASHER-HARD (11X21X2.5-MM THK)	
M	19	1	**8T-4186**	6	BOLT (M10X1.5X40-MM)	
M	20	1	**8T-4137**	4	BOLT (M10X1.5X20-MM)	
M	21	1	**8T-4171**	2	BOLT (M6X1X12-MM)	
M	22	1	**8T-4194**	2	BOLT (M12X1.75X50-MM)	
M	23	1	**8T-4196**	6	BOLT (M10X1.5X35-MM)	
	24	1	**090-8865**	1	SPACER (17X40X3-MM THK)	
M	26	1	**8T-6912**	1	BOLT (M8X1.25X50-MM)	
	27	1	**9X-8256**	2	WASHER (6.6X12X2-MM THK)	
	28	1	**7X-0772**	2	WASHER-HARD (10.2X25.5X2.5-MM THK)	
	29	1	**198-4777**	12	WASHER-HARD (11X25X10-MM THK)	

M-METRIC PART

255-4762 **FRAME GP-RADIATOR** *(contd.)* **i02847536**

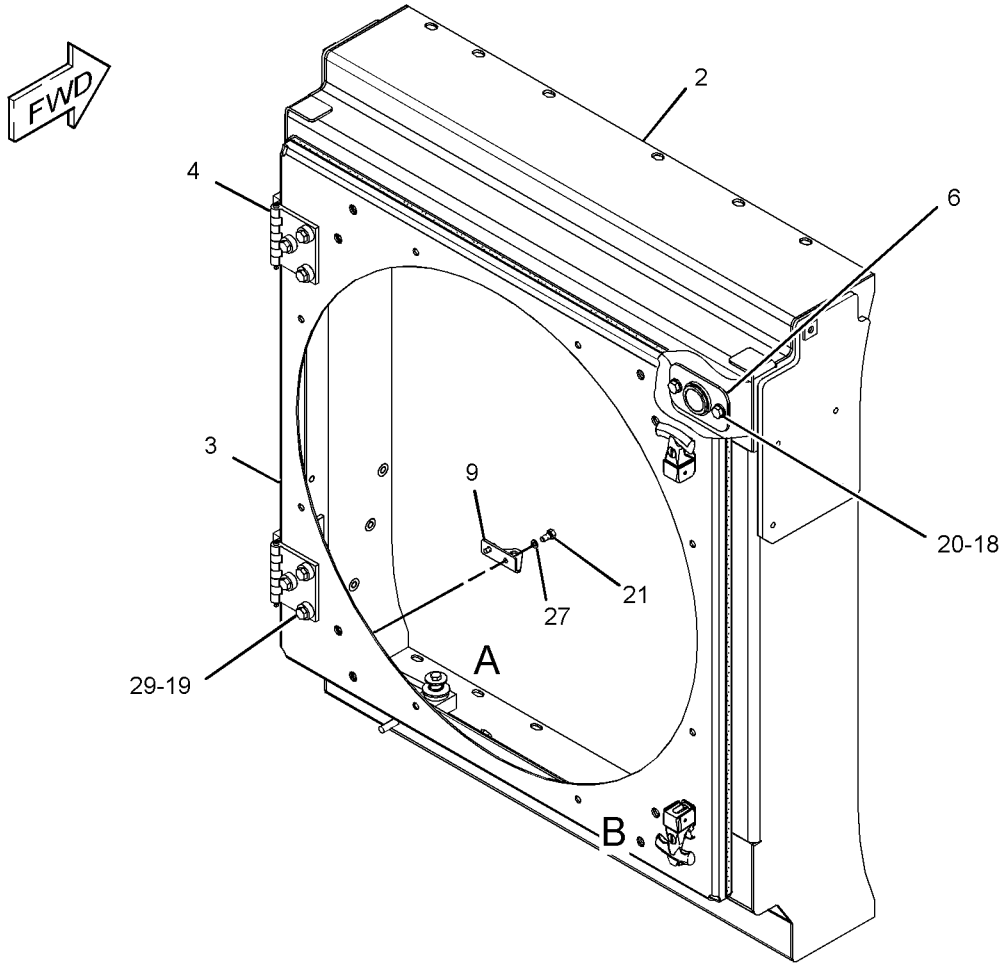

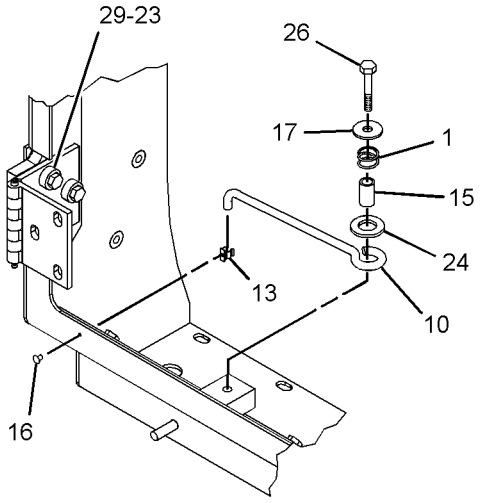

VIEW OF AREA A
(DOOR REMOVED)

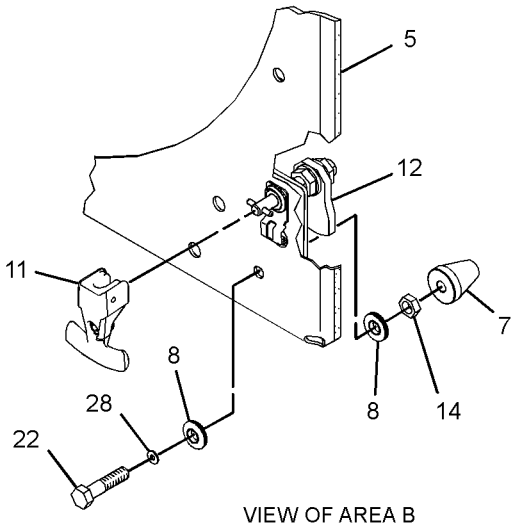

VIEW OF AREA B
(EXPLODED)

GRAPHIC #1 **<END>** g01429074

COOLING SYSTEM

271-7688 LINES GP-WATER

S/N: LBP1-UP

PART OF 240-6227 INSTALLATION AR-ENGINE

SMCS-1355, 1380, 1393 **i02957904**

NOTE	REF NO	GRAPHIC REF	PART NUMBER	QTY	PART NAME 1 2 3 4 5 6 (PRODUCT LEVEL)	SEE PAGE
	1	1	**5D-1026**	1	CLAMP-HOSE	
	2	1	**6V-9208**	1	ELBOW (90-DEG)	
	3	2	**7M-6425**	2	CLIP	
	4	1	**7X-7958**	2	CLAMP-HOSE	
	5	1	**8T-0154**	2	CLAMP-HOSE	
	6	2	**127-5447**	2	SPACER (10.5X20X12-MM THK)	
	7	1	*150-3030*	1	ELBOW AS	
		1	**7X-1448**	1	ELBOW	
		1	**3J-1907**	1	SEAL-O-RING	
	8	1	**157-0670**	1	CAP-DUST	
	9	2	*164-5597*	1	CONNECTOR AS	
		2	**8C-6868**	1	CONNECTOR	
		2	**6V-8397**	1	SEAL-O-RING	
M	10	2	**176-9237**	3	STUD (M10X1.5X18-MM, M10X1.5X37-MM)	
	11	1	**122-3608**	1	CLIP	
	12	2	**261-1937**	1	HOSE	
	13	1	**261-1938**	1	HOSE	
	14	2	**277-8707**	1	TUBE AS	
	15	1	**306-6035**	1	TUBE AS	
	16	1	**280-3090**	1	HOSE	
	17	1	**285-3429**	1	VALVE AS-DRAIN (ENGINE BLOCK, RADIATOR COOLANT)	
		1	**2L-6726**	1	RING-RETAINING	
	18	1,2	**033-8248**	6	CLIP	
	19	2	**144-8344**	2	SPACER (11X19X20-MM THK)	
	20	1	**154-9024**	1	VALVE GP-FLUID SAMPLING (ENGINE OIL)	
	21	1	**1P-3702**	1	SEAL-RECTANGULAR	
	22	1	**2M-9780**	1	SEAL-O-RING	
	24	1	**5P-4116**	2	WASHER-HARD (8.8X20.5X2-MM THK)	
	25	2	**7C-4355**	3	CLIP	
	26	1,2	**8S-0948**	2	CLIP	
	27	1,2	**8T-4121**	13	WASHER-HARD (11X21X2.5-MM THK)	
M	28	1,2	**8T-4133**	4	NUT (M10X1.5-THD)	
M	29	1,2	**8T-4136**	3	BOLT (M10X1.5X25-MM)	
M	30	2	**8T-4137**	2	BOLT (M10X1.5X20-MM)	
M	31	2	**8T-4186**	1	BOLT (M10X1.5X40-MM)	
M	32	2	**8T-6466**	1	BOLT (M10X1.5X60-MM)	
	33	1,2	**8T-6703**	6	CLAMP-HOSE	
M	34	1	**8T-7547**	2	BOLT (M8X1.25X30-MM)	
	35	2	**9W-1991**	1	SPACER (10.7X17.1X40-MM THK)	
E	36	1	**6V-8523**		HOSE (19-CM)	
E	37	2	**9X-2133**		HOSE (93-CM)	
E	38	2	**136-1953**		HOSE (57-CM)	
E	39	2	**8I-1362**		HOSE (151-CM)	
E	40	2	**8C-3681**		HOSE (212-CM)	
	41	1	**5P-4961**	2	CLAMP-HOSE	

E-ORDER BY THE CENTIMETER
M-METRIC PART

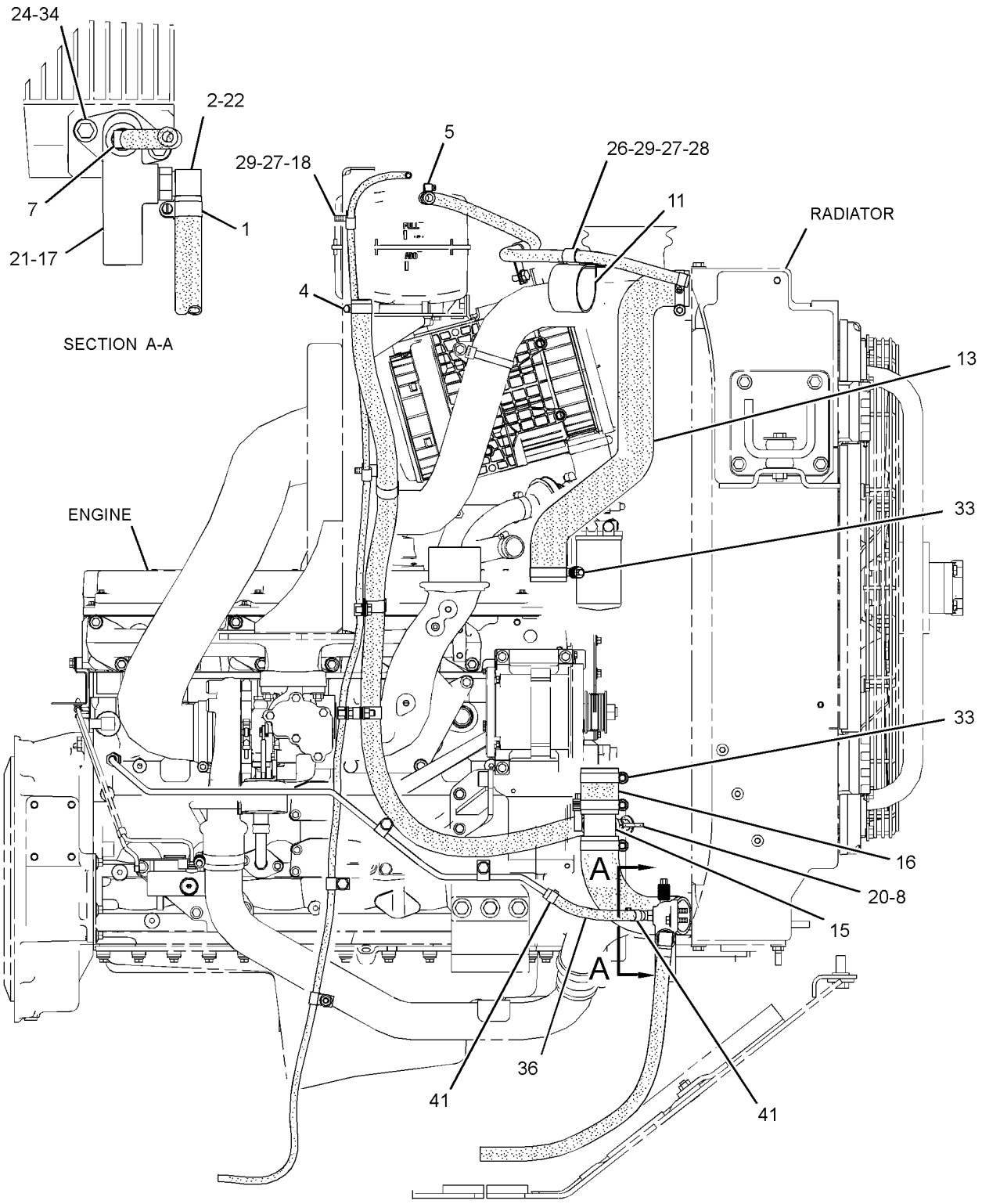

LEFT SIDE VIEW

GRAPHIC #1 g01481734

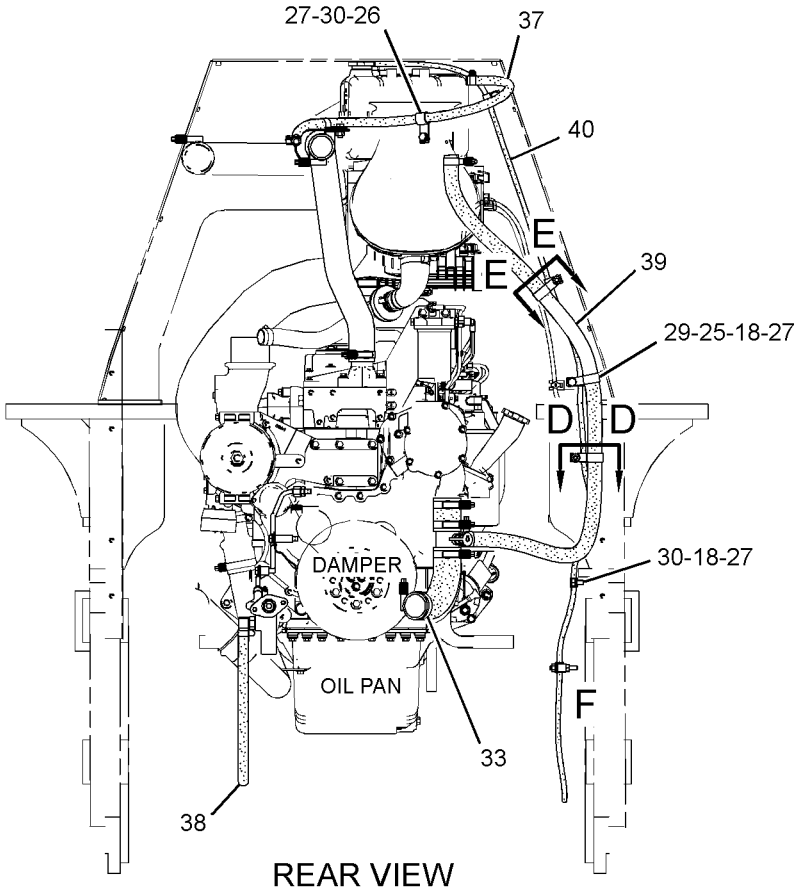

REAR VIEW

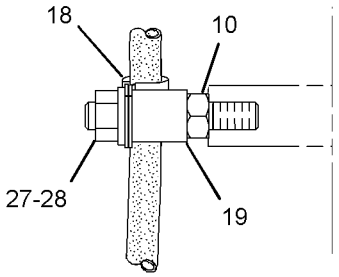

VIEW OF AREA F

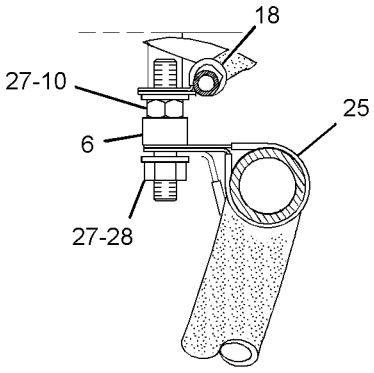

SECTION D-D

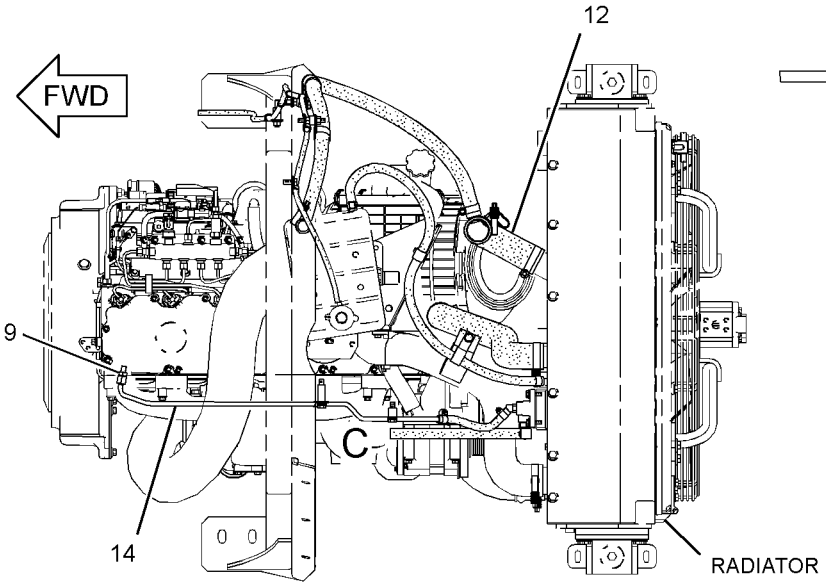

TOP VIEW

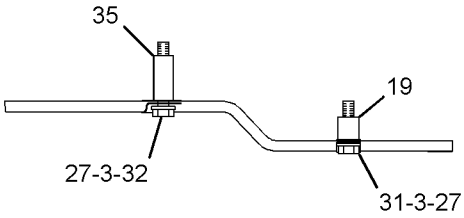

VIEW OF AREA C

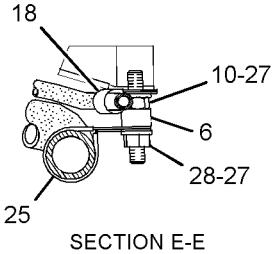

SECTION E-E

GRAPHIC #2 **<END>** g01481735

271-8890 LINES GP-WATER

S/N: LBP1-UP

PART OF 240-6226 POWER TRAIN AR

SMCS-1355, 1380, 1393 **i02675885**

NOTE	REF NO	GRAPHIC REF	PART NUMBER	QTY	PART NAME 1 2 3 4 5 6 (PRODUCT LEVEL)	SEE PAGE
	1	1	**201-3386**	2	CLIP (SLOT)	
	2	1	**201-3387**	1	CLIP (TAB)	
I	3	1	**246-2210**	1	HOSE AS	
	4	1	**270-3704**	1	PLATE	
	5	1	**271-8891**	1	TUBE AS	
	6	1	**271-8892**	1	TUBE AS	
I	7	1	**282-7890**	1	HOSE AS	
	8	1	**286-6938**	1	BRACKET AS	
	9	1	*148-8356*	1	ELBOW AS	
		1	**6V-9009**	1	ELBOW	
		1	**2S-4078**	1	SEAL-O-RING	
		1	**6V-8400**	1	SEAL-O-RING	
	10	1	*153-6238*	1	ELBOW AS	
		1	**6V-9006**	1	ELBOW	
		1	**2S-4078**	1	SEAL-O-RING	
		1	**6V-8400**	1	SEAL-O-RING	
	11	1	**198-4777**	1	WASHER-HARD (11X25X10-MM THK)	
	12	1	**198-4780**	2	WASHER-HARD (17.5X32X8-MM THK)	
	13	1	**5P-1076**	1	WASHER-HARD (13.5X30X4-MM THK)	
	14	1	**6H-6429**	2	CLAMP	
	15	1	**6V-8400**	2	SEAL-O-RING	
M	16	1	**7X-2553**	2	BOLT (M16X2X40-MM)	
	17	1	**8S-0023**	1	CLIP (SLOT)	
	18	1	**8S-0024**	1	CLIP (TAB)	
	19	1	**8T-4121**	5	WASHER-HARD (11X21X2.5-MM THK)	
M	20	1	**8T-4133**	3	NUT (M10X1.5-THD)	
M	21	1	**8T-4183**	1	BOLT (M12X1.75X40-MM)	
	22	1	**8T-4223**	1	WASHER-HARD (13.5X25.5X3-MM THK)	
M	23	1	**8T-4244**	1	NUT (M12X1.75-THD)	
M	24	1	**8T-6466**	1	BOLT (M10X1.5X60-MM)	

I-REFER TO HYDRAULIC INFORMATION SYSTEM
M-METRIC PART

271-8890 **LINES GP-WATER** *(contd.)* **i02675885**

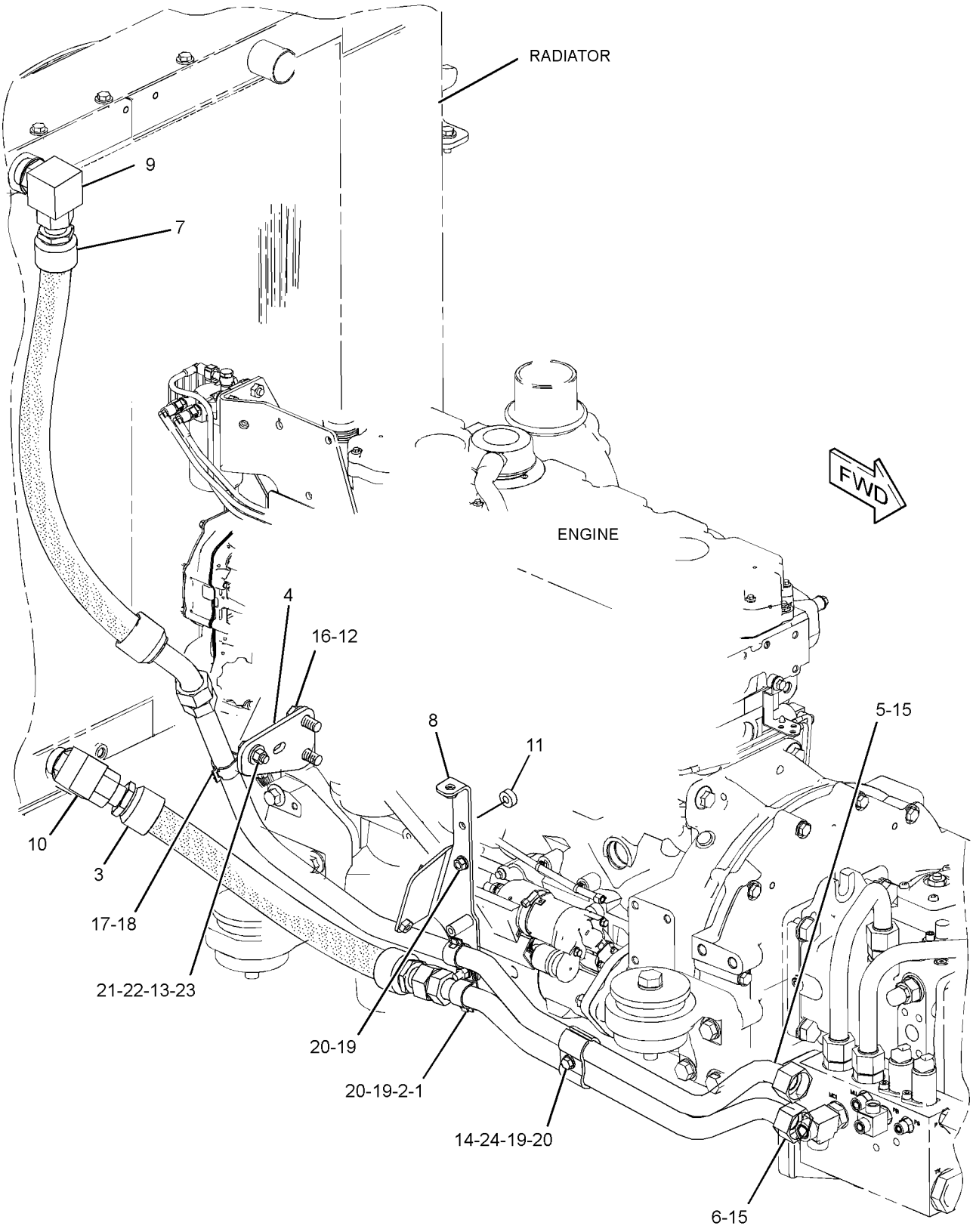

GRAPHIC #1 **<END>** g01335126

COOLING SYSTEM

277-2939 PUMP GP-WATER

S/N: C6E1-UP

PART OF 242-1357 ENGINE AR-PRIMARY

TYPE 1

SMCS-1361 **i02713429**

NOTE	REF NO	GRAPHIC REF	PART NUMBER	QTY	PART NAME 1 2 3 4 5 6 (PRODUCT LEVEL)	SEE PAGE
	1	1	**307-9843**	1	PUMP GP-WATER	
	1A	1	**287-7430**	1	GASKET-COVER	
	1B	1	**225-8019**	1	GASKET	
	1C	1	**278-3242**	2	BOLT-FLANGE HEAD	
M	5	1	**6I-0254**	2	BOLT (M8X1.25X30-MM)	
	6	1	**113-8129**	7	BOLT (M8X75-MM)	
	7	1	**277-2925**	1	CONNECTION AS	
	7A	1	**225-7738**	1	SEAL-O-RING	
	7B	1	**277-2923**	1	GASKET	
M	10	1	**6I-0217**	2	BOLT (M8X1.25X20-MM)	

M-METRIC PART

277-2939 **PUMP GP-WATER** *(contd.)* **i02713429**

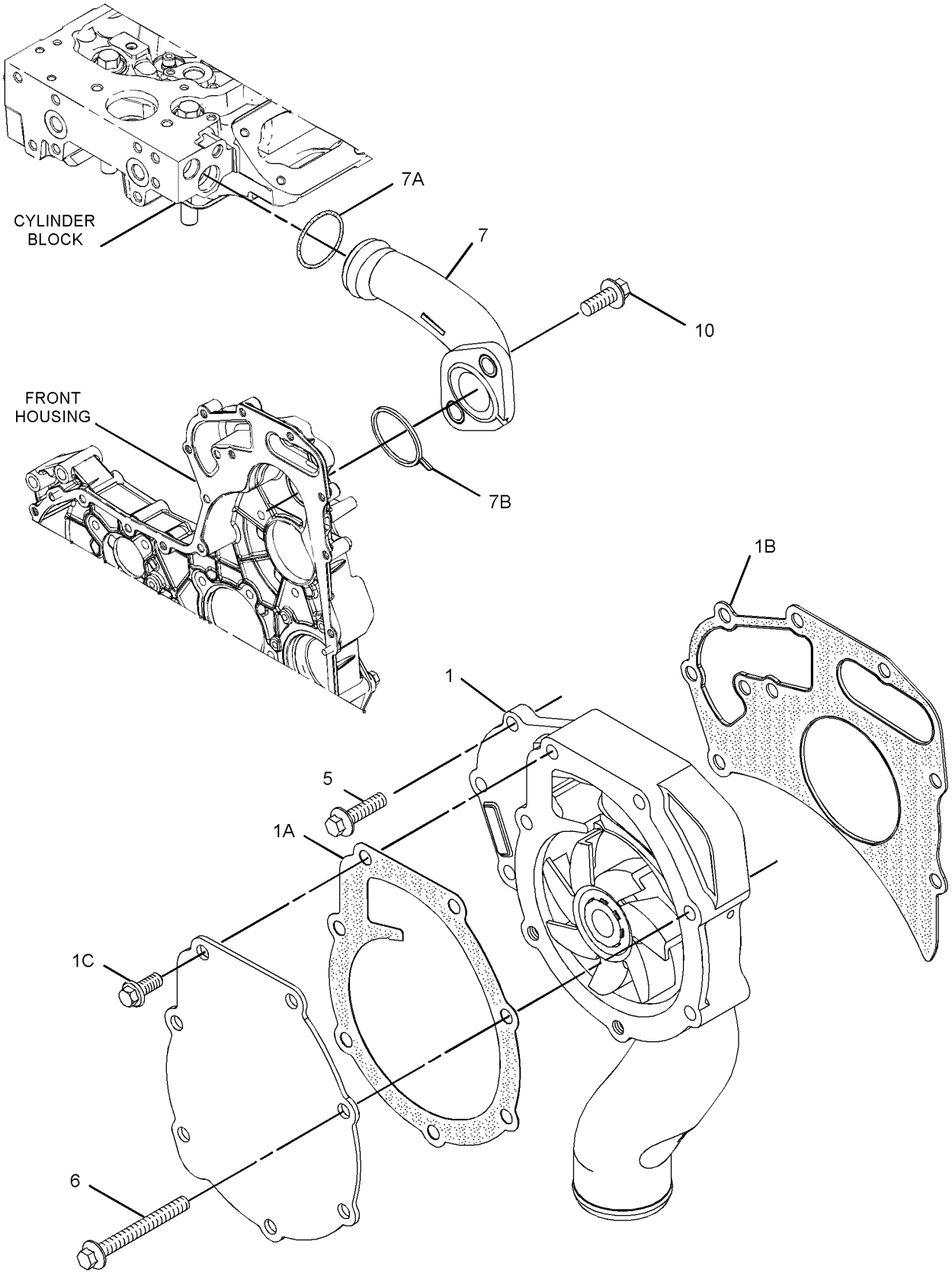

GRAPHIC #1 **<END>** g01365038

277-2939 PUMP GP-WATER

S/N: C6E1-UP

PART OF 242-1357 ENGINE AR-PRIMARY

TYPE 2

SMCS-1361 **i02996379**

NOTE	REF NO	GRAPHIC REF	PART NUMBER	QTY	PART NAME 1 2 3 4 5 6 (PRODUCT LEVEL)	SEE PAGE
C	1	1	**322-9662**	1	PUMP GP-WATER	
	1A	1	**225-8019**	1	GASKET	
M	5	1	**6I-0254**	2	BOLT (M8X1.25X30-MM)	
	6	1	**113-8129**	7	BOLT (M8X75-MM)	
	7	1	**277-2925**	1	CONNECTION AS	
	7A	1	**225-7738**	1	SEAL-O-RING	
	7B	1	**277-2923**	1	GASKET	
M	10	1	**6I-0217**	2	BOLT (M8X1.25X20-MM)	

C-CHANGE FROM PREVIOUS TYPE
M-METRIC PART

277-2939 **PUMP GP-WATER** *(contd.)* **i02996379**

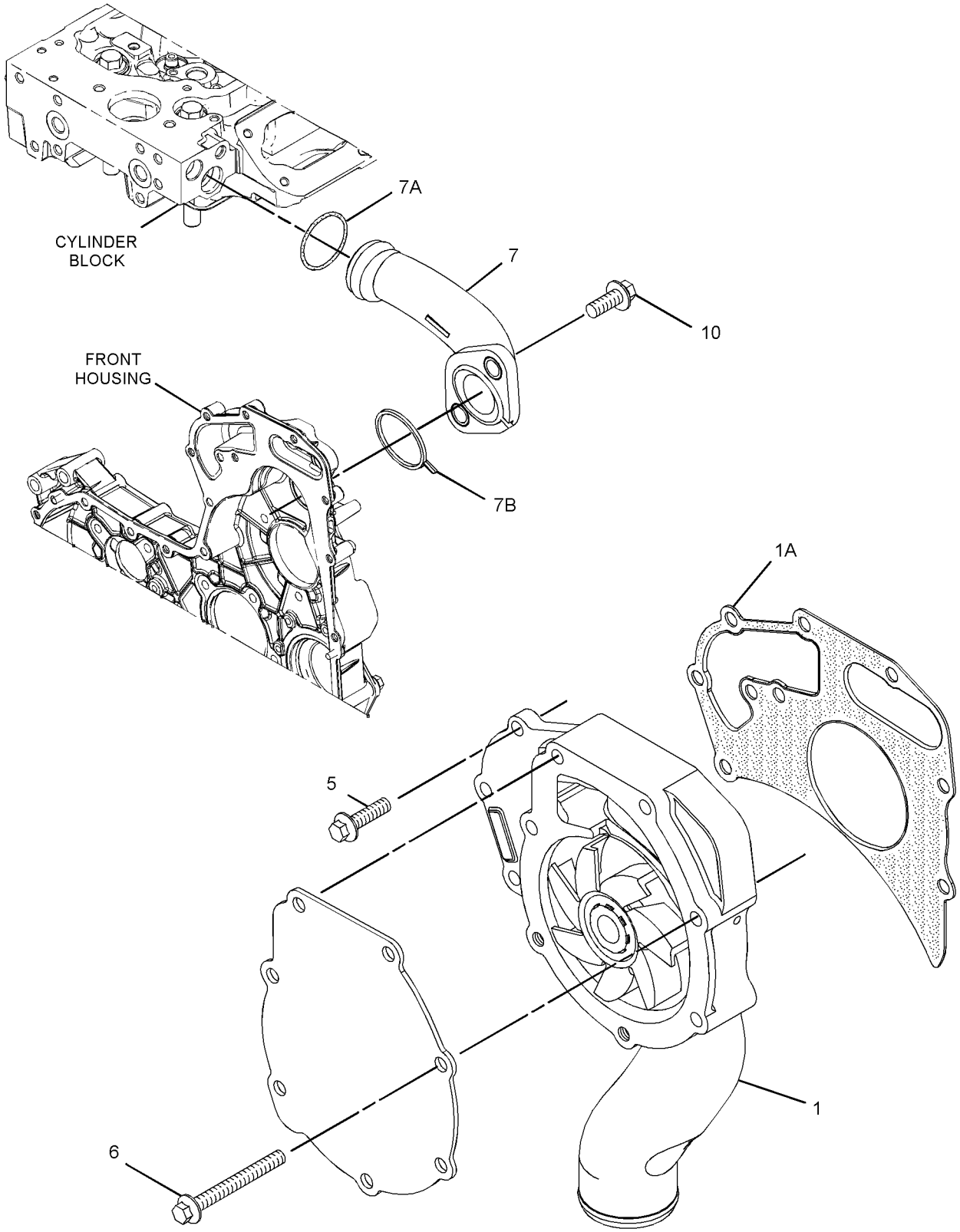

GRAPHIC #1 **<END>** g01521481

COOLING SYSTEM

274-6027 RADIATOR & HYD OIL COOLER GP

S/N: LBP1-434

PART OF 240-6227 INSTALLATION AR-ENGINE

SMCS-1353, 1374 **i02742435**

NOTE	REF NO	GRAPHIC REF	PART NUMBER	QTY	PART NAME 1 2 3 4 5 6 (PRODUCT LEVEL)	SEE PAGE
	1	1,2	**187-7331**	4	MOUNT-RUBBER	
	2	2	**241-8534**	1	SPIDER AS (8-BLADE)	
Y	3	1	*255-4762*	1	FRAME GP-RADIATOR	70
	4	1	**255-4765**	1	GUARD AS-FAN (EXTERNAL)	
	5	1	**305-3289**	1	GUARD AS-FAN (INTERNAL)	
	6	1	**255-4767**	1	SUPPORT AS-FAN	
	7	1	**255-4768**	1	ADAPTER-FAN	
	8	2	**263-0193**	1	BRACKET AS	
	9	2	**263-1232**	2	PLATE AS	
	10	1	**264-7088**	6	SPACER (10.5X14X12.5-MM THK)	
	11	2	**266-2070**	1	CORE AS-OIL COOLER (HYDRAULIC OIL)	
	12	2	**266-2071**	1	CORE AS-RADIATOR	
	13	2	**266-2072**	1	CORE AS-AFTERCOOLER	
		2	**5M-6213**	2	PLUG-PIPE	
	14	1,2	**308-4183**	2	BRACKET AS	
	15	1,2	**308-4182**	2	PLATE AS	
	16	1	**279-3208**	1	SPACER	
J	17	1	**280-7283**	1	MOTOR GP-GEAR	
		1	**3B-4508**	1	LOCKWASHER	
		1	**6B-6684**	1	NUT-FULL (1/2-20-THD)	
M	18	1	**118-9573**	2	BOLT-12 POINT HEAD (M10X1.5X35-MM)	
M	19	2	**227-6715**	1	STUD (M10X1.5X30-MM)	
	20	1	**198-4778**	8	WASHER-HARD (13.5X30X12-MM THK)	
	21	1	**5P-4116**	8	WASHER-HARD (8.8X20.5X2-MM THK)	
	22	1,2	**151-5520**	4	WASHER (17X56X5-MM THK)	
	23	1,2	**7X-7729**	18	WASHER (11X25X3-MM THK)	
M	24	1,2	**118-7313**	2	BOLT (M16X2X70-MM)	
	25	2	**8T-4121**	6	WASHER-HARD (11X21X2.5-MM THK)	
M	26	2	**8T-4136**	6	BOLT (M10X1.5X25-MM)	
M	27	1	**8T-4185**	4	BOLT (M10X1.5X50-MM)	
M	28	1,2	**8T-4195**	17	BOLT (M10X1.5X30-MM)	
M	29	1	**8T-4908**	8	BOLT (M8X1.25X25-MM)	
M	30	1	**8T-4184**	8	BOLT (M12X1.75X45-MM)	
D	31	1	**8T-6936**		SEAL (1-M EACH)	
D	31A	1,2	**8T-6936**		SEAL (1.2-M EACH)	
	32	1,2	**198-4777**	8	WASHER-HARD (11X25X10-MM THK)	
M	33	2	**8T-4196**	4	BOLT (M10X1.5X35-MM)	
					AVAILABLE REPAIR KIT(S):	
J			**287-6595**	1	KIT-SEAL (GEAR MOTOR)	
					(INCLUDES PRESSURE BALANCE SEAL, SEAL-O-RING & SHAFT SEAL)	

D-ORDER BY THE METER
J-KIT MARKED J SERVICES PARTS MARKED J
M-METRIC PART
Y-SEPARATE ILLUSTRATION

274-6027 **RADIATOR & HYD OIL COOLER GP** *(contd.)* **i02742435**

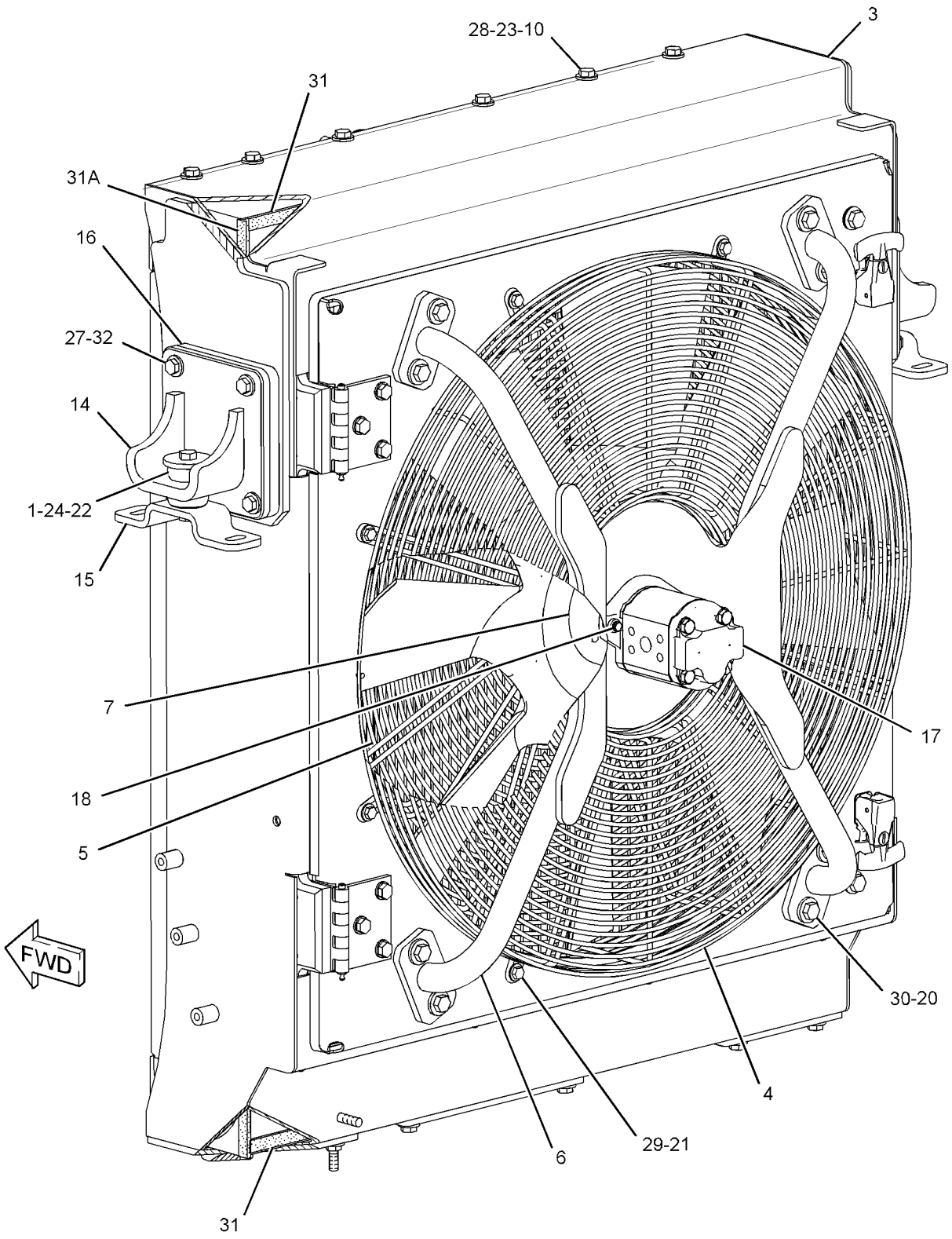

GRAPHIC #1 g01381204

274-6027 **RADIATOR & HYD OIL COOLER GP** *(contd.)* **i02742435**

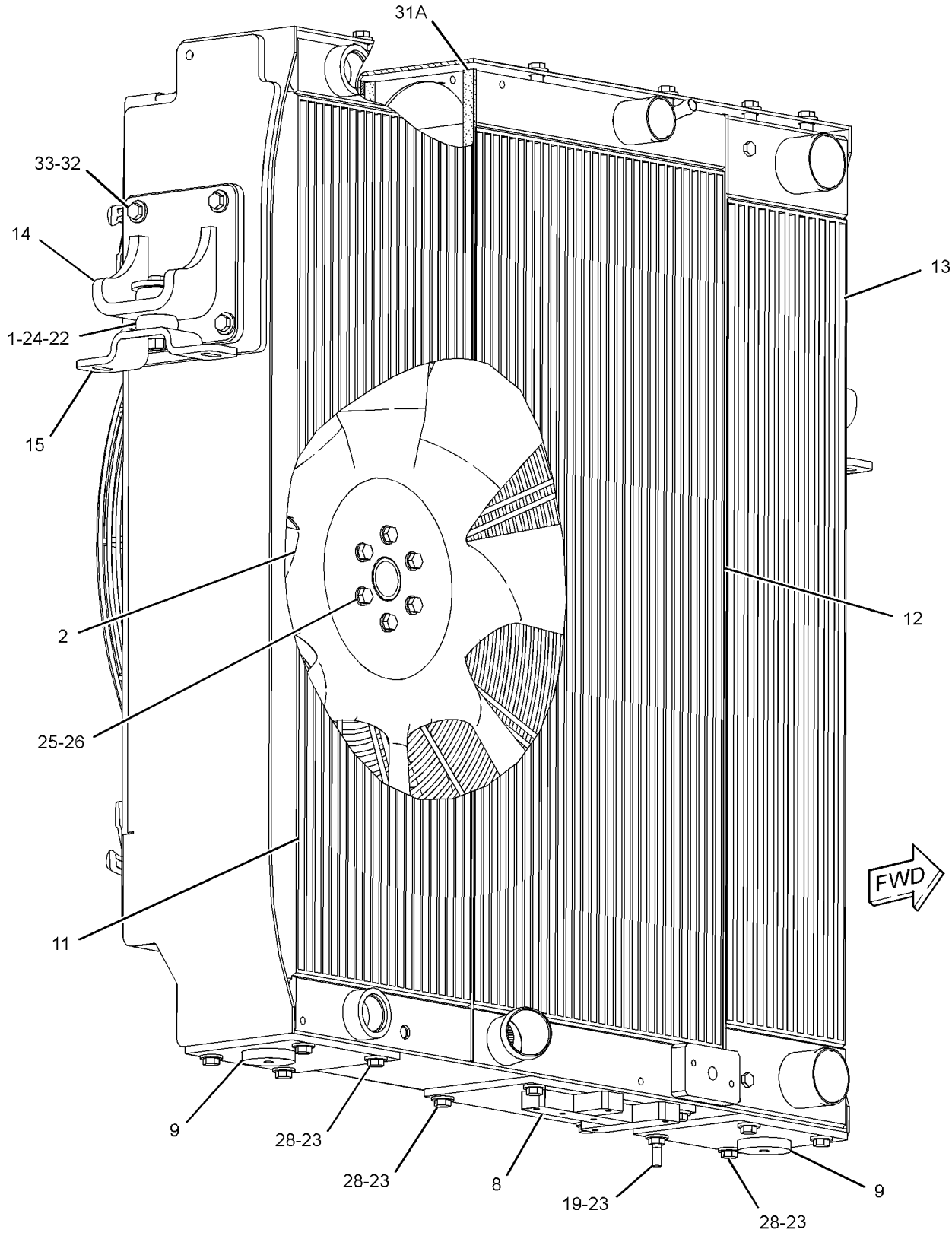

GRAPHIC #2 **<END>** g01381205

COOLING SYSTEM

274-6027 RADIATOR & HYD OIL COOLER GP

S/N: LBP435-UP

PART OF 240-6227 INSTALLATION AR-ENGINE

SMCS-1353, 1374 **i02896487**

NOTE	REF NO	GRAPHIC REF	PART NUMBER	QTY	PART NAME 1 2 3 4 5 6 (PRODUCT LEVEL)	SEE PAGE
	1	1,2	**187-7331**	4	MOUNT-RUBBER	
	2	2	**241-8534**	1	SPIDER AS (8-BLADE)	
Y	3	1	*255-4762*	1	FRAME GP-RADIATOR	70
	4	1	**255-4765**	1	GUARD AS-FAN (EXTERNAL)	
	5	1	**305-3289**	1	GUARD AS-FAN (INTERNAL)	
	6	1	**255-4767**	1	SUPPORT AS-FAN	
	7	1	**255-4768**	1	ADAPTER-FAN	
	8	2	**263-0193**	1	BRACKET AS	
	9	2	**263-1232**	2	PLATE AS	
	10	1	**264-7088**	6	SPACER (10.5X14X12.5-MM THK)	
	11	2	**266-2070**	1	CORE AS-OIL COOLER (HYDRAULIC OIL)	
	12	2	**266-2071**	1	CORE AS-RADIATOR	
	13	2	**266-2072**	1	CORE AS-AFTERCOOLER	
		2	**5M-6213**	2	PLUG-PIPE	
	14	1,2	**308-4183**	2	BRACKET AS	
	15	1,2	**308-4182**	2	PLATE AS	
	16	1	**279-3208**	1	SPACER	
CJ	17	1	**307-3175**	1	MOTOR GP-GEAR (BASIC)	
		1	**3B-4508**	1	LOCKWASHER	
		1	**6B-6684**	1	NUT-FULL (1/2-20-THD)	
M	18	1	**118-9573**	2	BOLT-12 POINT HEAD (M10X1.5X35-MM)	
M	19	2	**227-6715**	1	STUD (M10X1.5X30-MM)	
	20	1	**198-4778**	8	WASHER-HARD (13.5X30X12-MM THK)	
	21	1	**5P-4116**	8	WASHER-HARD (8.8X20.5X2-MM THK)	
	22	1,2	**151-5520**	4	WASHER (17X56X5-MM THK)	
	23	1,2	**7X-7729**	18	WASHER (11X25X3-MM THK)	
M	24	1,2	**118-7313**	2	BOLT (M16X2X70-MM)	
	25	2	**8T-4121**	6	WASHER-HARD (11X21X2.5-MM THK)	
M	26	2	**8T-4136**	6	BOLT (M10X1.5X25-MM)	
M	27	1	**8T-4185**	4	BOLT (M10X1.5X50-MM)	
M	28	1,2	**8T-4195**	17	BOLT (M10X1.5X30-MM)	
M	29	1	**8T-4908**	8	BOLT (M8X1.25X25-MM)	
M	30	1	**8T-4184**	8	BOLT (M12X1.75X45-MM)	
D	31	1	**8T-6936**		SEAL (1-M EACH)	
D	31A	1,2	**8T-6936**		SEAL (1.2-M EACH)	
	32	1,2	**198-4777**	8	WASHER-HARD (11X25X10-MM THK)	
M	33	2	**8T-4196**	4	BOLT (M10X1.5X35-MM)	
					AVAILABLE REPAIR KIT(S):	
J			**287-6595**	1	KIT-SEAL (GEAR MOTOR)	
					(INCLUDES PRESSURE BALANCE SEALS, SEAL-O-RINGS & SHAFT SEAL)	

C-CHANGE FROM PREVIOUS TYPE
D-ORDER BY THE METER
J-KIT MARKED J SERVICES PARTS MARKED J
M-METRIC PART
Y-SEPARATE ILLUSTRATION

274-6027 **RADIATOR & HYD OIL COOLER GP** *(contd.)* **i02896487**

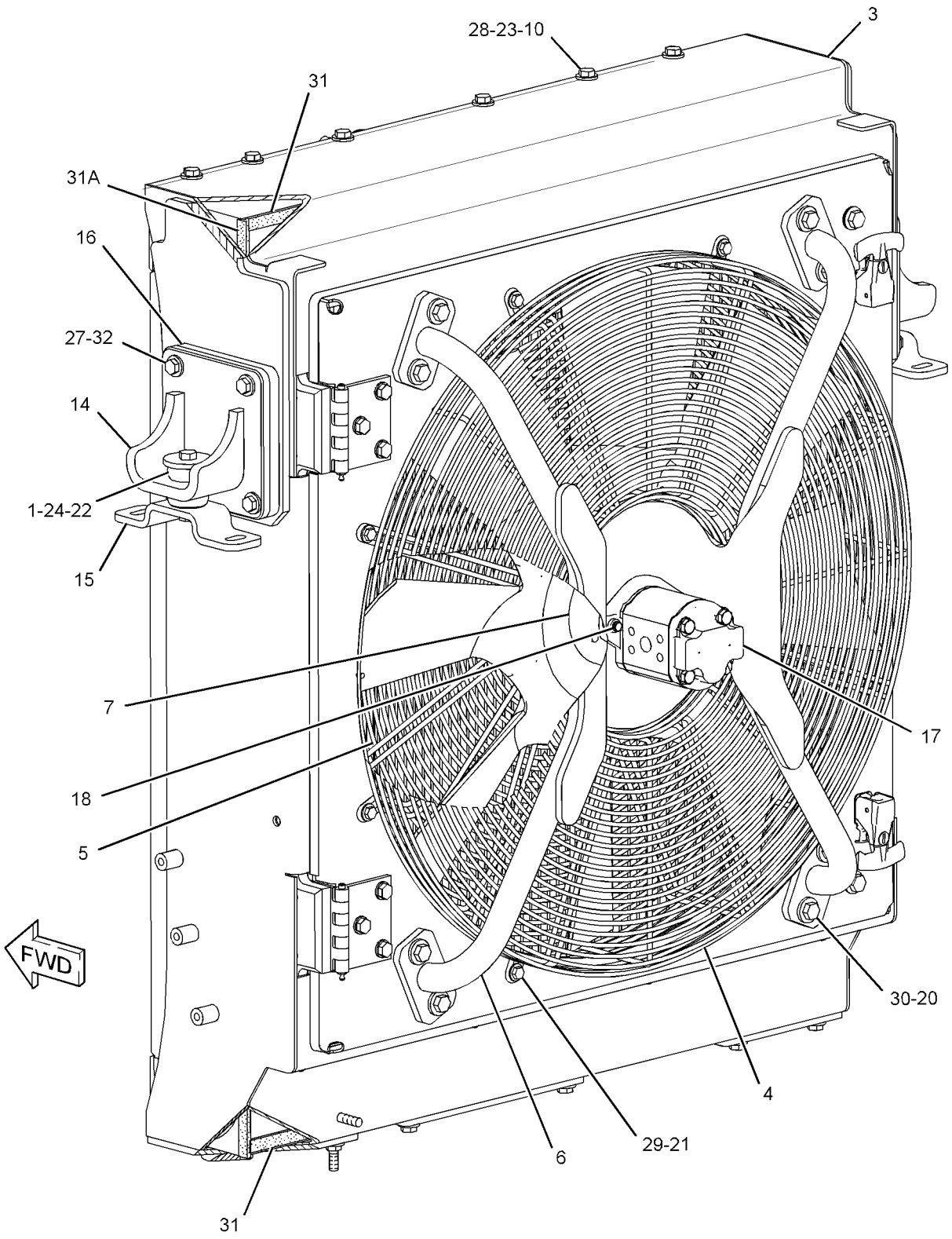

GRAPHIC #1 g01381204

274-6027 **RADIATOR & HYD OIL COOLER GP** *(contd.)* **i02896487**

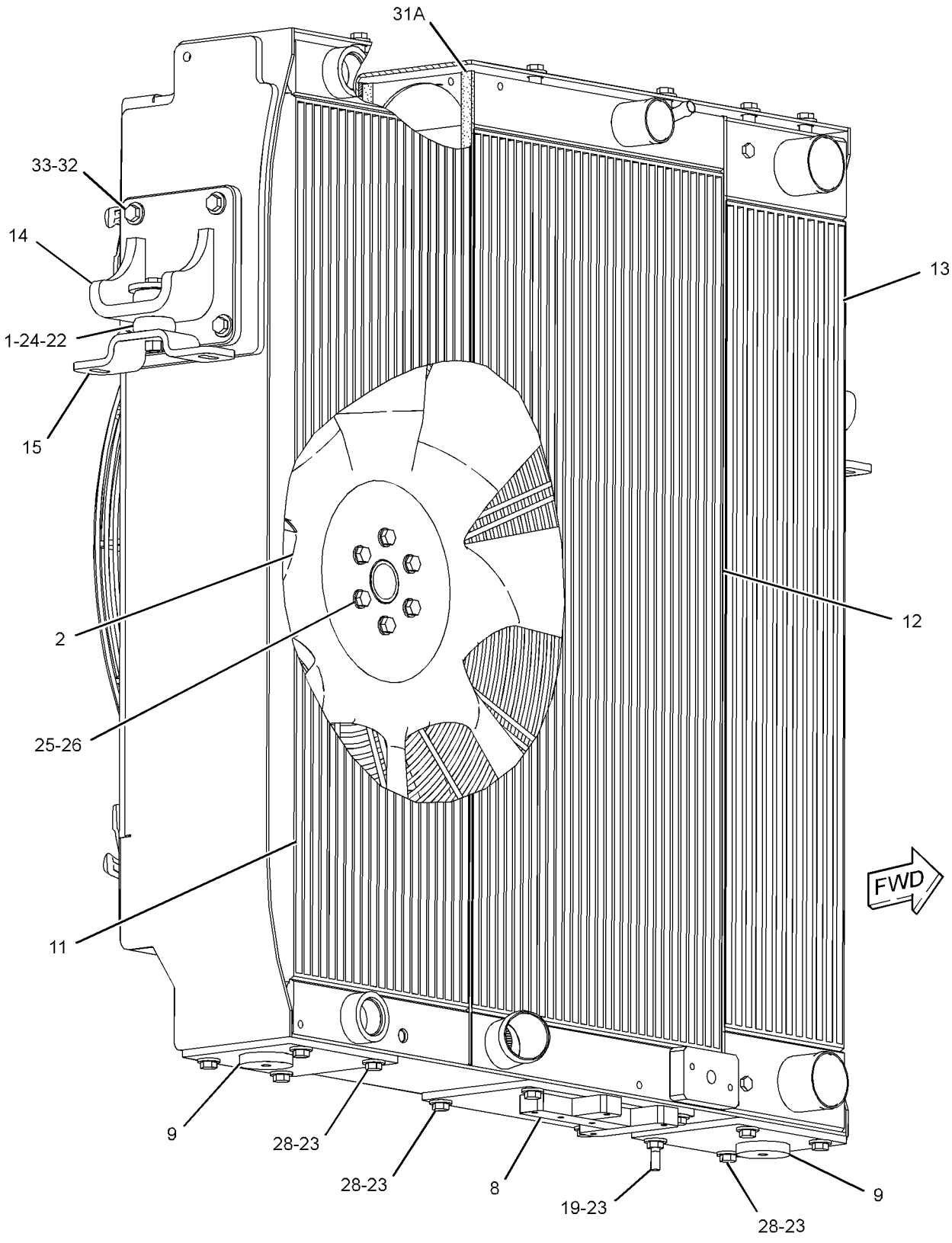

GRAPHIC #2 **<END>** g01381205

277-2976 REGULATOR GP-TEMPERATURE

S/N: C6E1-UP

PART OF 242-1357 ENGINE AR-PRIMARY

SMCS-1355 **i03010129**

NOTE	REF NO	GRAPHIC REF	PART NUMBER	QTY	PART NAME 1 2 3 4 5 6 (PRODUCT LEVEL)	SEE PAGE
	1	1	**277-2974**	1	REGULATOR AS-WATER TEMPERATURE (CONNECTOR INCLUDED)	
					(INCLUDES WATER TEMPERATURE REGULATOR)	
	2	1	**281-8744**	1	GASKET-WATER REGULATOR (TEMPERATURE)	
	3	1	**123-2899**	2	BOLT (M10X1.5X40-MM)	

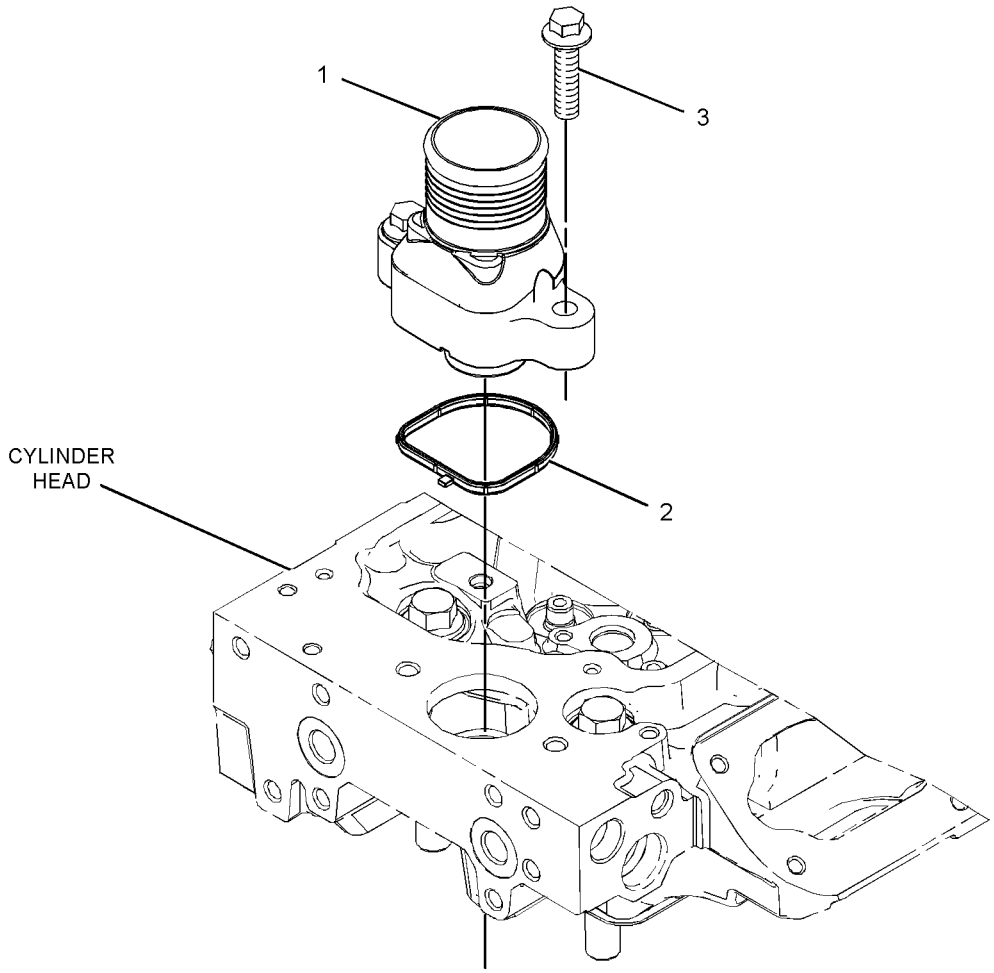

GRAPHIC #1 **<END>** g01195539

COOLING SYSTEM

270-4206 TANK GP-COOLANT

S/N: LBP1-UP

PART OF 240-6227 INSTALLATION AR-ENGINE

SMCS-1377 **i02655699**

NOTE	REF NO	GRAPHIC REF	PART NUMBER	QTY	PART NAME 1 2 3 4 5 6 (PRODUCT LEVEL)	SEE PAGE
	1	1	**277-4837**	1	TANK GP-COOLANT	
		1	**251-3227**	1	CAP AS-COOLANT TANK	
	2	1	**301-3004**	1	FILM-INSTRUCTION (MAXIMUM COOLANT LEVEL)	
	3	1	**301-3005**	1	FILM-INSTRUCTION (MINIMUM COOLANT LEVEL)	
M	4	1	**8T-4200**	4	BOLT (M8X1.25X16-MM)	
	5	1	**8T-4224**	4	WASHER-HARD (8.8X16X2-MM THK)	

M-METRIC PART

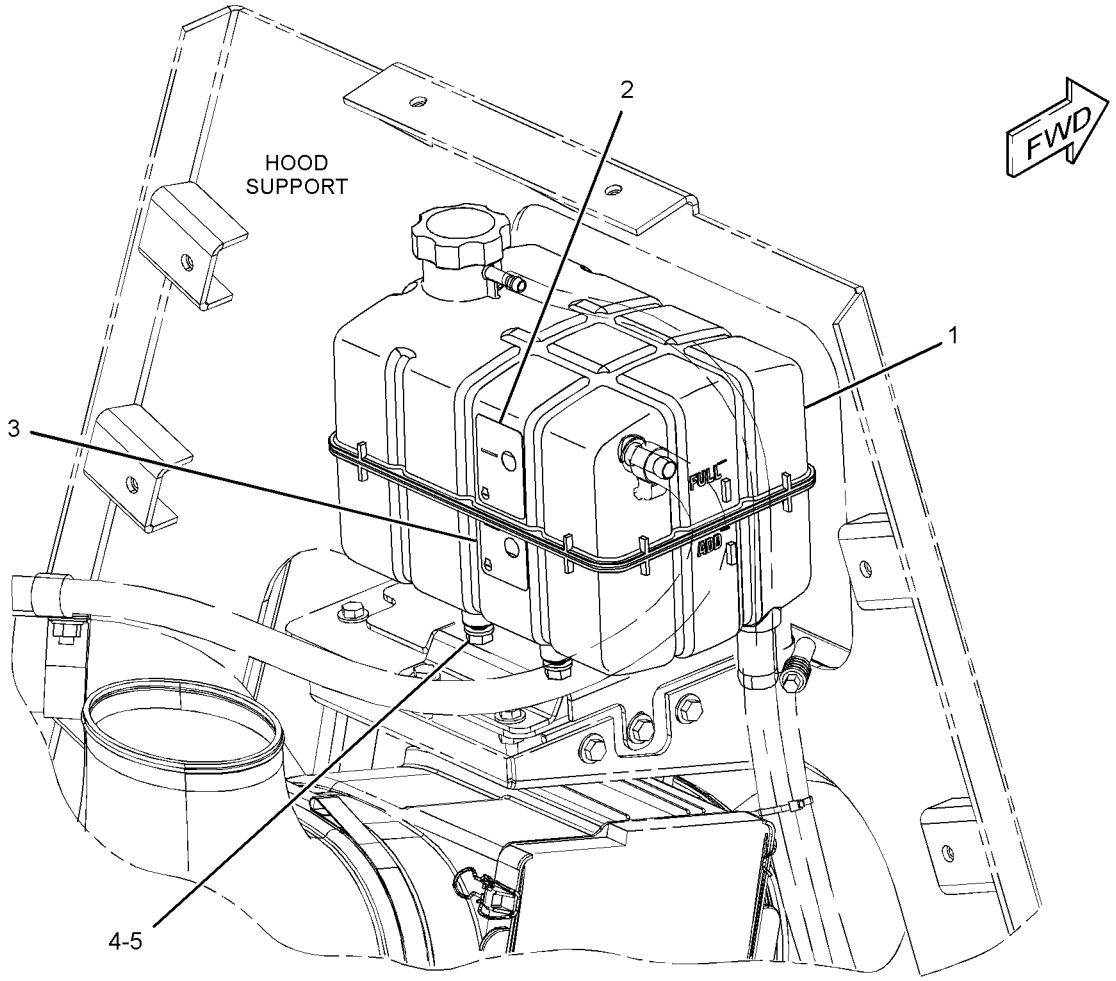

GRAPHIC #1 **<END>** g01341441

240-8552 AIR CLEANER GP

S/N: LBP1-UP

PART OF 242-9496 AIR CLEANER GP

FIELD REPLACEMENT ORDER 266-9247—PAGE 91

SMCS-1051, 1054 **i02837795**

NOTE	REF NO	GRAPHIC REF	PART NUMBER	QTY	PART NAME 1 2 3 4 5 6 (PRODUCT LEVEL)	SEE PAGE
M	1	1	**244-1432**	1	BOLT-TEE (M10X1X80.8-MM)	
	2	1	**252-5001**	1	FILTER ELEMENT AS-AIR (PRIMARY)	
	3	1	**252-5002**	1	FILTER ELEMENT AS-AIR (SECONDARY)	
	4	1	**252-5003**	1	FRAME (AIR CLEANER ELEMENT)	
	5	1	**252-5004**	1	COVER	

M-METRIC PART

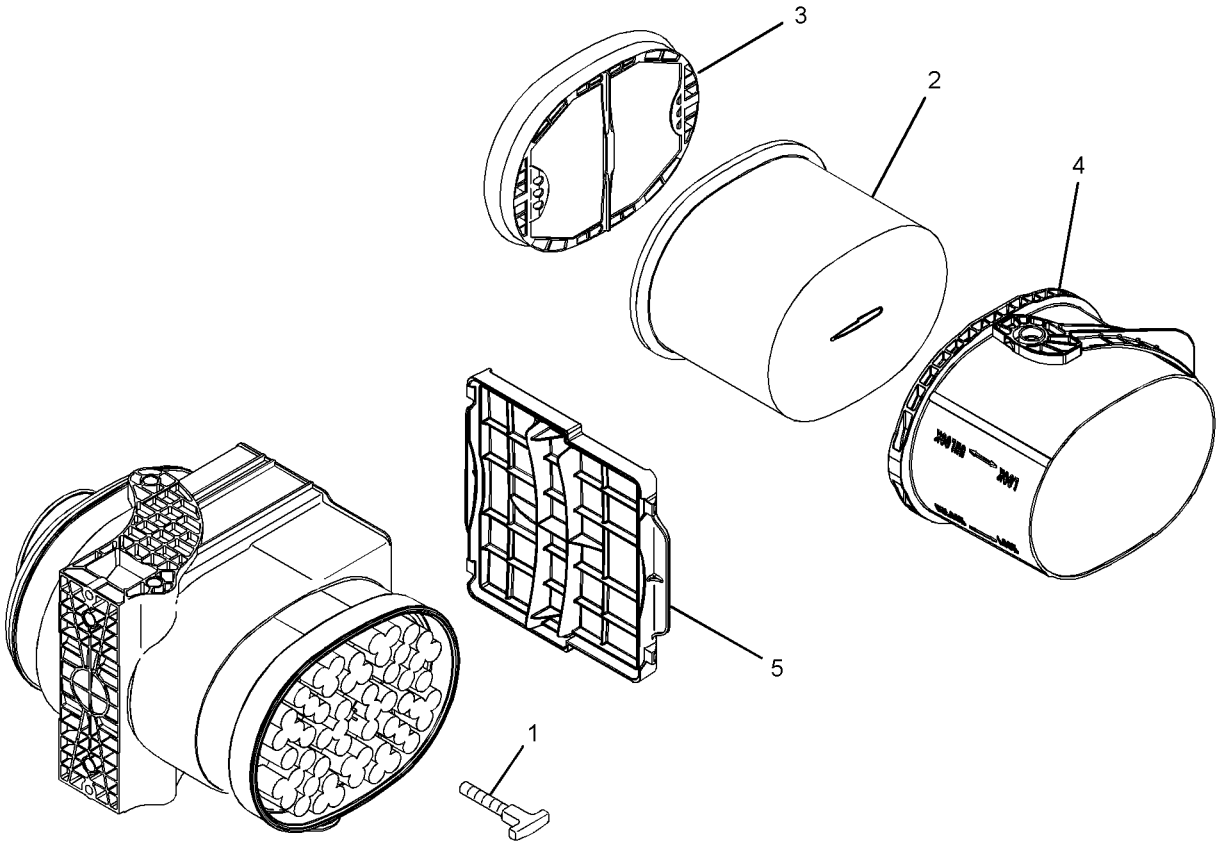

GRAPHIC #1 **<END>** g01191292

AIR INLET AND EXHAUST SYSTEM

242-9496 AIR CLEANER GP

S/N: LBP1-UP

PART OF 240-6227 INSTALLATION AR-ENGINE

SMCS-1051, 1054 **i02678527**

NOTE	REF NO	GRAPHIC REF	PART NUMBER	QTY	PART NAME 1 2 3 4 5 6 (PRODUCT LEVEL)	SEE PAGE
Y	1	1	*240-8552*	1	AIR CLEANER GP	89
	2	1	**296-2735**	1	INDICATOR AS-AIR FILTER CHANGE	
M	3	1	**8T-4189**	3	BOLT (M8X1.25X20-MM)	
	4	1	**8T-4224**	3	WASHER-HARD (8.8X16X2-MM THK)	

M-METRIC PART
Y-SEPARATE ILLUSTRATION

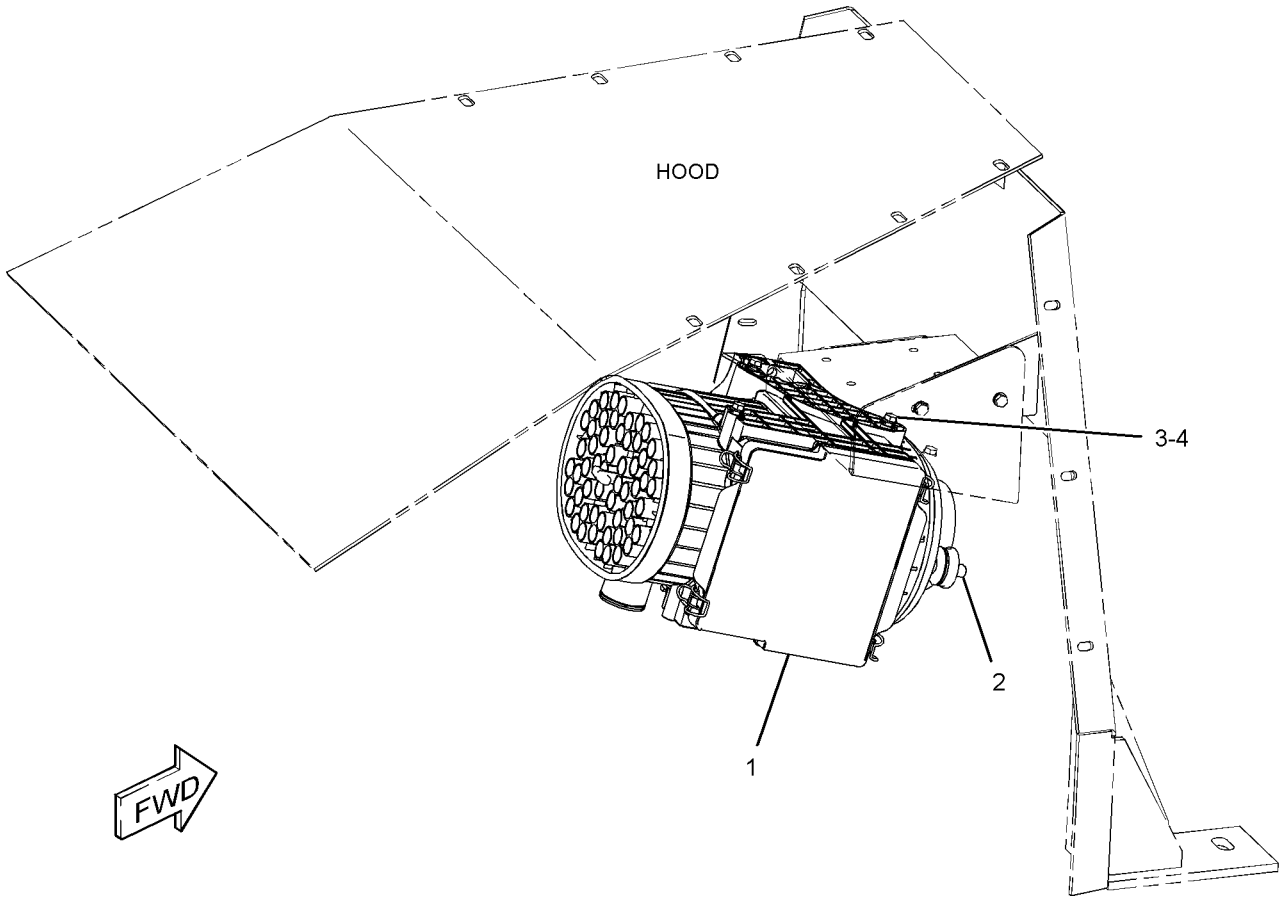

GRAPHIC #1 **<END>** g01335698

AIR INLET AND EXHAUST SYSTEM

266-9247 AIR CLEANER GP

S/N: LBP1-UP

METAL THREADED INSERTS IN ALL MOUNTING HOLES

FIELD REPLACEMENT FOR 240-8552—PAGE 89

SMCS-1051, 1054 **i03026382**

NOTE	REF NO	GRAPHIC REF	PART NUMBER	QTY	PART NAME 1 2 3 4 5 6 (PRODUCT LEVEL)	SEE PAGE
M	1	1	**244-1432**	1	BOLT-TEE (M10X1X80.8-MM)	
	2	1	**252-5001**	1	FILTER ELEMENT AS-AIR (PRIMARY)	
	3	1	**252-5002**	1	FILTER ELEMENT AS-AIR (SECONDARY)	
	4	1	**252-5003**	1	FRAME (AIR CLEANER ELEMENT)	
	5	1	**252-5004**	1	COVER	

M-METRIC PART

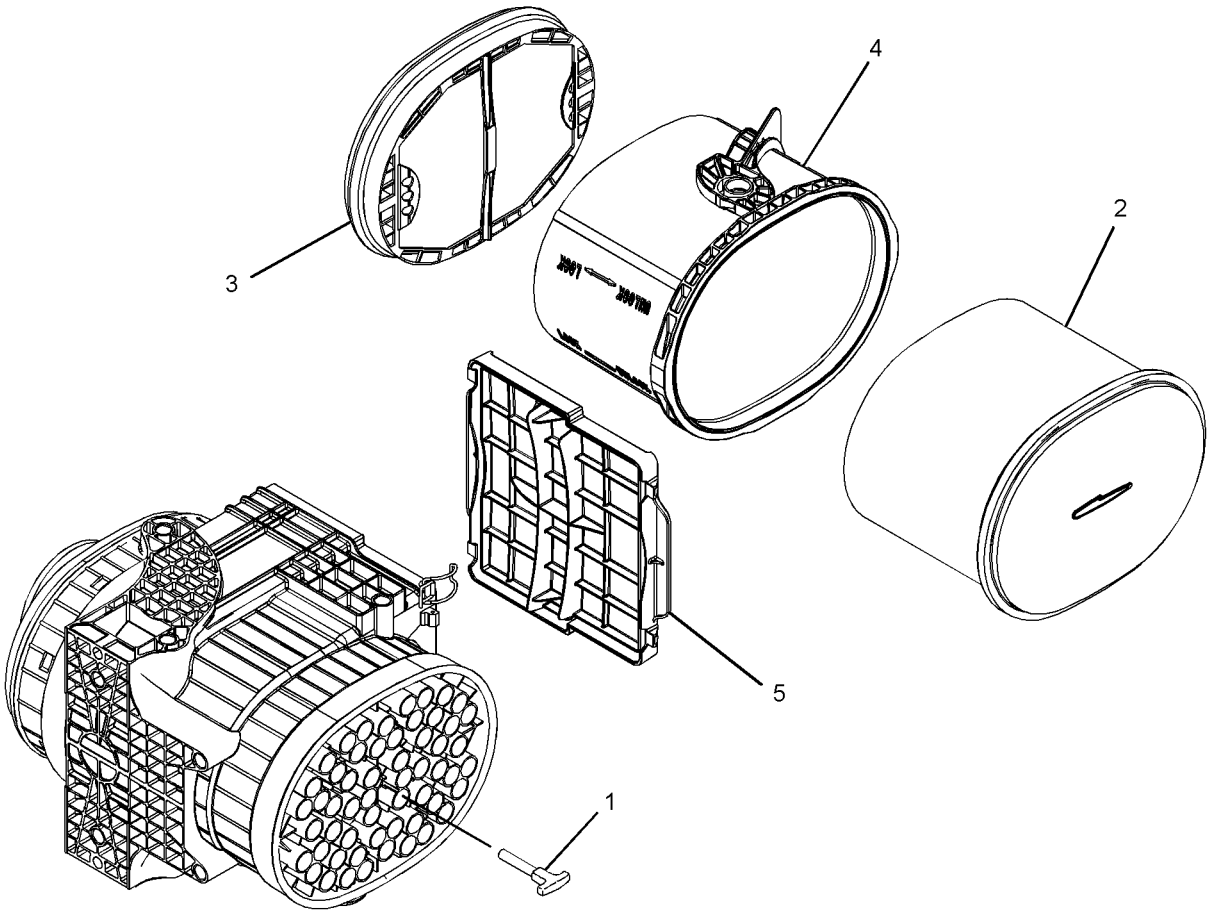

GRAPHIC #1 **<END>** g01201753

AIR INLET AND EXHAUST SYSTEM

242-8156 LINES GP-AIR

S/N: LBP1-UP

PART OF 240-6227 INSTALLATION AR-ENGINE

SMCS-1071 **i02769506**

NOTE	REF NO	GRAPHIC REF	PART NUMBER	QTY	PART NAME 1 2 3 4 5 6 (PRODUCT LEVEL)	SEE PAGE
	1	1	**2S-3440**	3	CLAMP-HOSE	
	2	1	**5P-0597**	1	CLAMP-HOSE	
	3	1	**5P-2230**	1	CLAMP-HOSE	
	4	1	**109-5351**	1	HOSE	
	5	1	**184-5394**	2	CLIP	
	6	1	**203-7607**	1	HOSE	
	7	1	**247-9730**	1	VALVE AS-CHECK (AIR CLEANER)	
	8	1	**252-1577**	1	HOSE	
	9	1	**260-0634**	1	TUBE	
	10	1	**267-6426**	1	HOSE	
	11	1	**267-6443**	1	TUBE AS	
	12	1	**277-8716**	1	BRACKET AS	
	13	1	**290-5659**	1	ELBOW-AIR INLET	
	14	1	**290-5660**	1	HOSE-AIR	
	15	1	**6V-5632**	1	HOSE (31.75-CM)	
	16	1	**301-2714**	1	HOSE	
	17	1	**139-1398**	1	CLIP	
	18	1	**208-7448**	3	CLAMP	
	19	1	**209-4573**	1	CLAMP-V BAND	
	20	1	**209-4580**	1	CLAMP	
	21	1	**215-4012**	1	CLAMP	
	22	1	**216-4983**	3	CLAMP	
	23	1	**247-1925**	1	CLAMP	
	24	1	**5P-4116**	3	WASHER-HARD (8.8X20.5X2-MM THK)	
	25	1	**8T-4121**	4	WASHER-HARD (11X21X2.5-MM THK)	
M	26	1	**8T-4136**	1	BOLT (M10X1.5X25-MM)	
M	27	1	**8T-4189**	3	BOLT (M8X1.25X20-MM)	
M	28	1	**8T-4195**	3	BOLT (M10X1.5X30-MM)	

M-METRIC PART

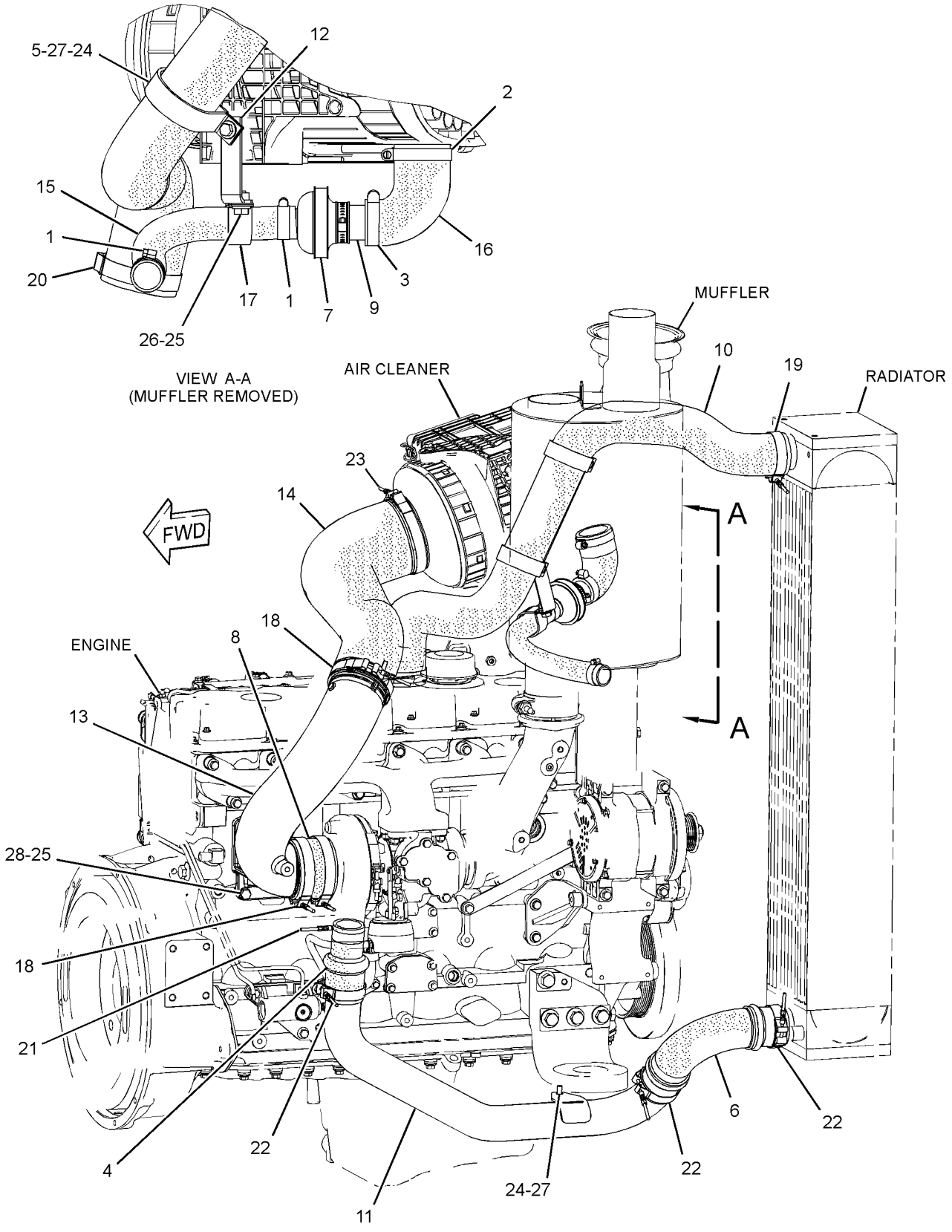

GRAPHIC #1 **<END>** g01341643

280-1292 MANIFOLD GP-INLET–AIR

S/N: C6E1-UP
PART OF 242-1357 ENGINE AR-PRIMARY
TYPE 1

SMCS-1058 **i02612650**

NOTE	REF NO	GRAPHIC REF	PART NUMBER	QTY	PART NAME 1 2 3 4 5 6 (PRODUCT LEVEL)	SEE PAGE
	1	1	**295-0912**	1	COVER AS	
	1A	1	**295-0913**	1	SEAL	
	1B	1	**295-0914**	2	DOWEL	
M	2	1	**6I-0645**	19	BOLT (M8X1.25X25-MM)	
	3	1	**280-1291**	1	ELBOW AS	
	4	1	**234-3030**	1	GASKET	
	5	1	**9F-2247**	1	PLUG-PIPE	

M-METRIC PART

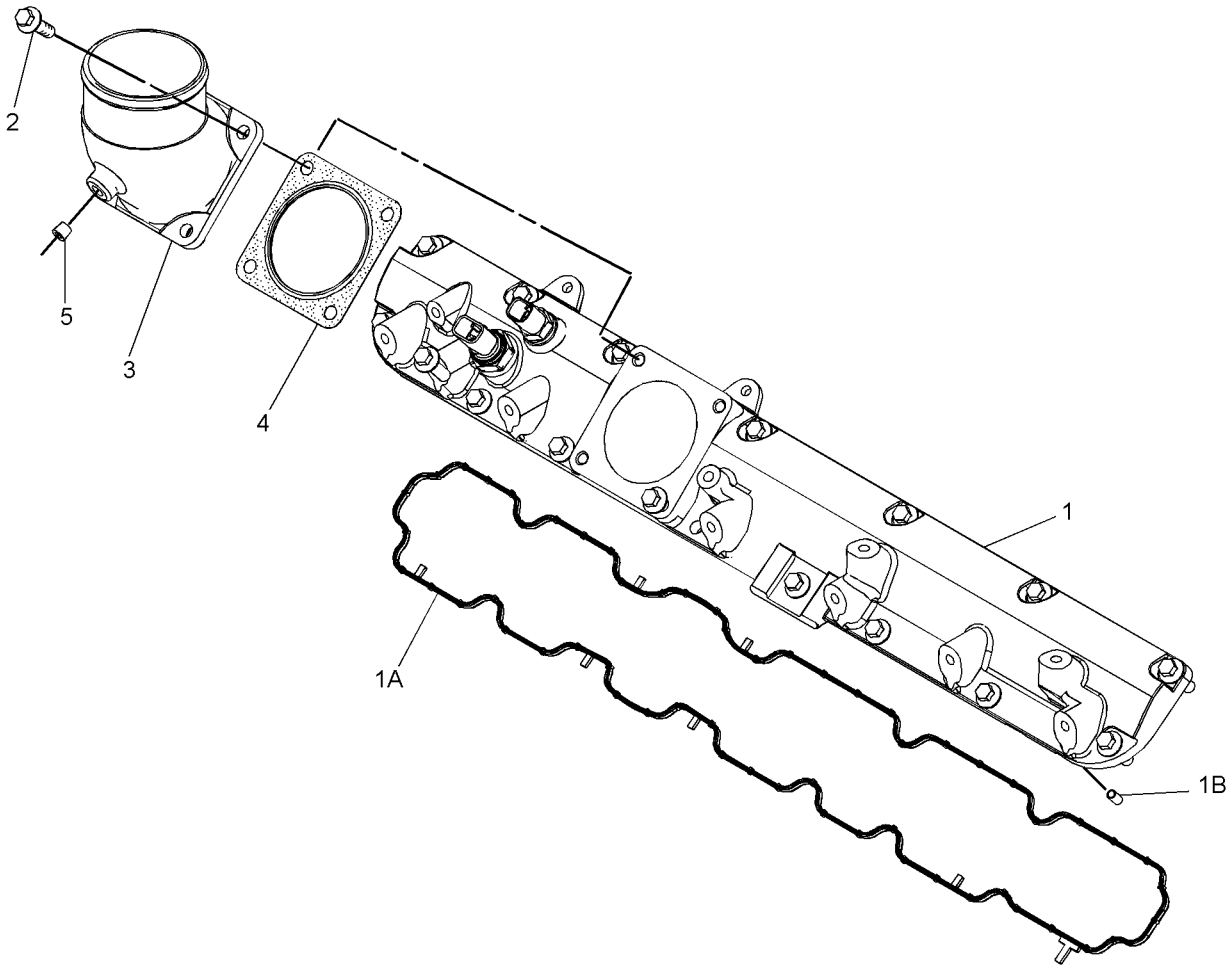

GRAPHIC #1 **<END>** g01270887

280-1292 MANIFOLD GP-INLET–AIR

S/N: C6E1-UP
PART OF 242-1357 ENGINE AR-PRIMARY
TYPE 2

SMCS-1058 **i03419091**

NOTE	REF NO	GRAPHIC REF	PART NUMBER	QTY	PART NAME 1 2 3 4 5 6 (PRODUCT LEVEL)	SEE PAGE
	1	1	**295-0912**	1	COVER AS	
	1A	1	**278-5128**	1	GASKET-MANIFOLD	
	1B	1	**277-4302**	2	DOWEL	
M	2	1	**6I-0645**	19	BOLT (M8X1.25X25-MM)	
C	3	1	**317-2684**	1	ELBOW GP-AIR INLET	
	3A	1	**238-8288**	1	GASKET-INLET	
	3B	1	**292-3462**	1	PLUG	

C-CHANGE FROM PREVIOUS TYPE
M-METRIC PART

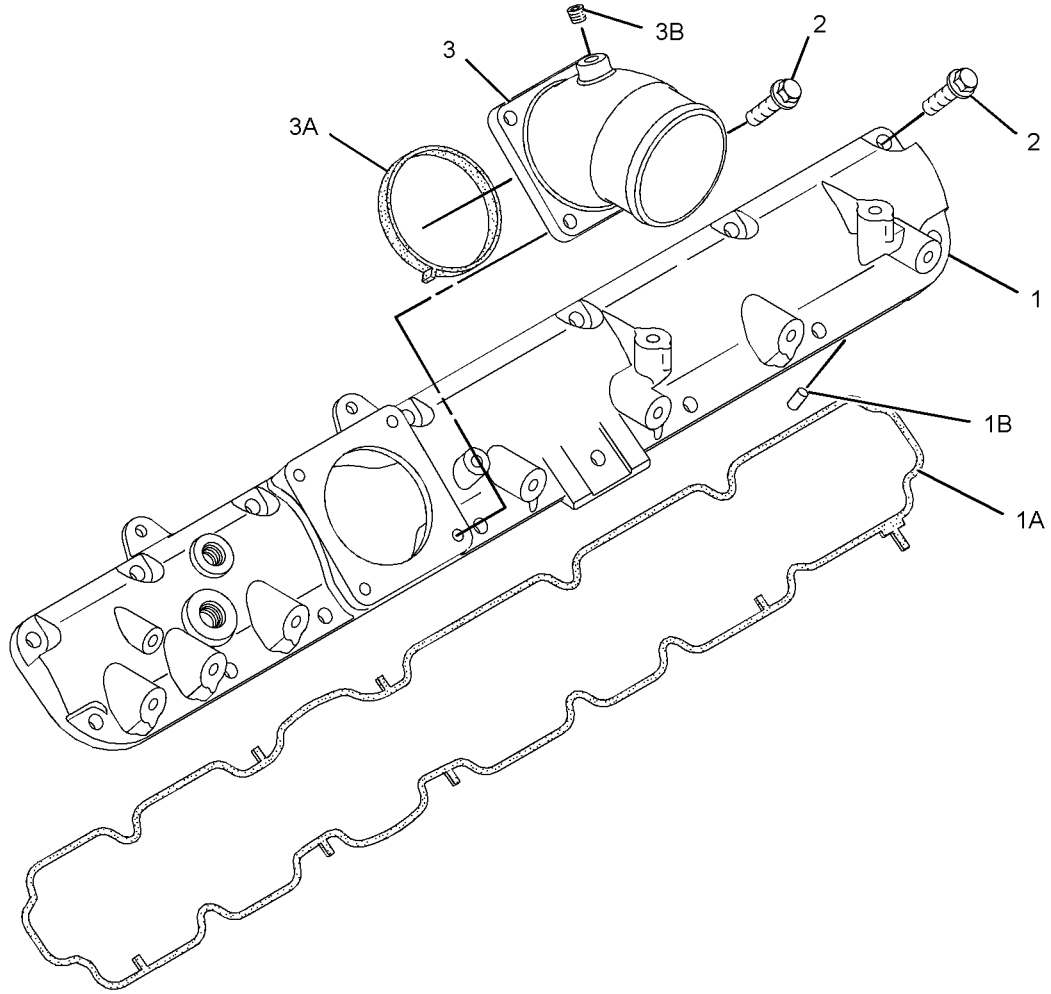

GRAPHIC #1 **<END>** g01636745

AIR INLET AND EXHAUST SYSTEM

256-3451 MUFFLER GP

S/N: LBP1-426

PART OF 240-6227 INSTALLATION AR-ENGINE

SMCS-1062 **i02656354**

NOTE	REF NO	GRAPHIC REF	PART NUMBER	QTY	PART NAME 1 2 3 4 5 6 (PRODUCT LEVEL)	SEE PAGE
	1	1	**290-5642**	1	MUFFLER AS	
	1A	1	**9Y-8315**	1	CLAMP-PIPE	
	2	1	**290-5651**	1	PLATE AS	
	3	1	**301-2735**	1	SHIELD	
	4	1	**198-4777**	3	WASHER-HARD (11X25X10-MM THK)	
	5	1	**7X-7729**	2	WASHER (11X25X3-MM THK)	
	6	1	**8T-4121**	2	WASHER-HARD (11X21X2.5-MM THK)	
M	7	1	**8T-4191**	2	BOLT (M10X1.5X16-MM)	
M	8	1	**8T-4195**	3	BOLT (M10X1.5X30-MM)	
M	9	1	**8T-4196**	5	BOLT (M10X1.5X35-MM)	
	10	1	**8T-7934**	3	WASHER-HARD (11X21X5-MM THK)	

M-METRIC PART

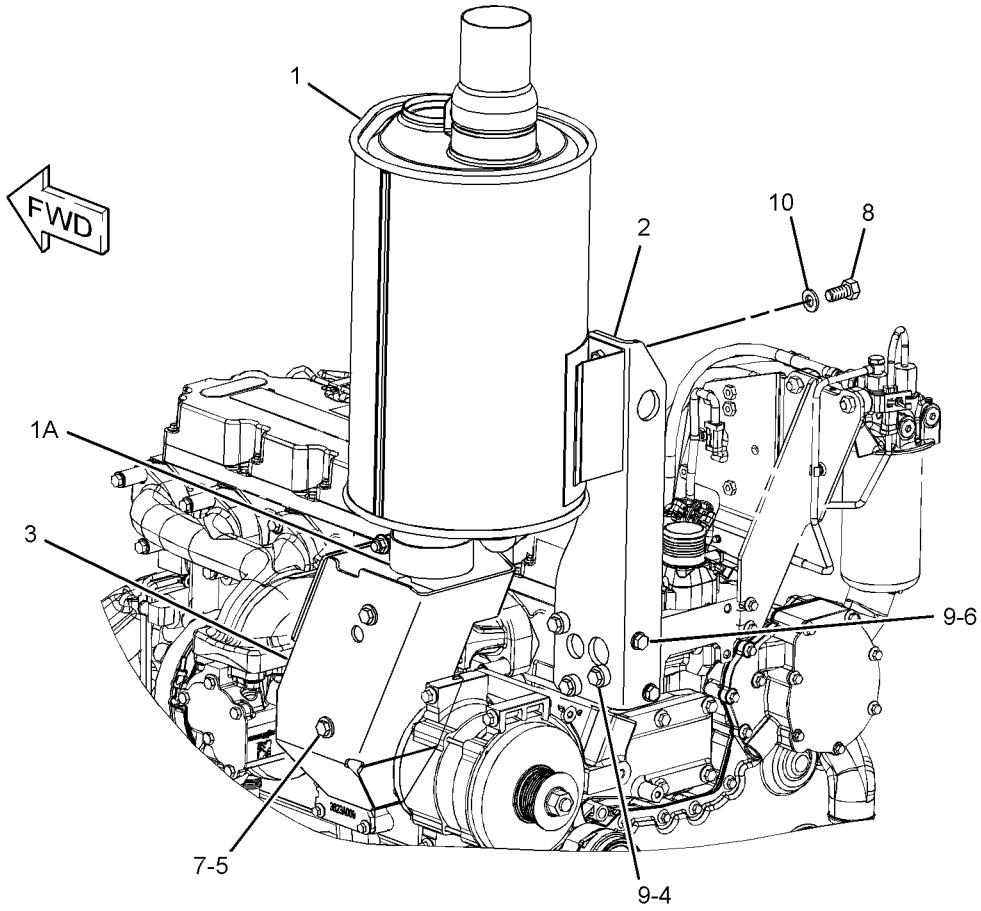

GRAPHIC #1 **<END>** g01349130

AIR INLET AND EXHAUST SYSTEM

256-3451 MUFFLER GP

S/N: LBP427-UP

PART OF 240-6227 INSTALLATION AR-ENGINE

SMCS-1062 **i02906392**

NOTE	REF NO	GRAPHIC REF	PART NUMBER	QTY	PART NAME 1 2 3 4 5 6 (PRODUCT LEVEL)	SEE PAGE
	1	1	**290-5642**	1	MUFFLER AS	
	1A	1	**9Y-8315**	1	CLAMP-PIPE	
	2	1	**290-5651**	1	PLATE AS	
	3	1	**301-2735**	1	SHIELD	
	4	1	**198-4777**	3	WASHER-HARD (11X25X10-MM THK)	
C	5	1	**3B-4507**	2	LOCKWASHER	
	6	1	**8T-4121**	2	WASHER-HARD (11X21X2.5-MM THK)	
CM	7	1	**8T-4137**	2	BOLT (M10X1.5X20-MM)	
M	8	1	**8T-4195**	3	BOLT (M10X1.5X30-MM)	
M	9	1	**8T-4196**	5	BOLT (M10X1.5X35-MM)	
	10	1	**8T-7934**	3	WASHER-HARD (11X21X5-MM THK)	

C-CHANGE FROM PREVIOUS TYPE
M-METRIC PART

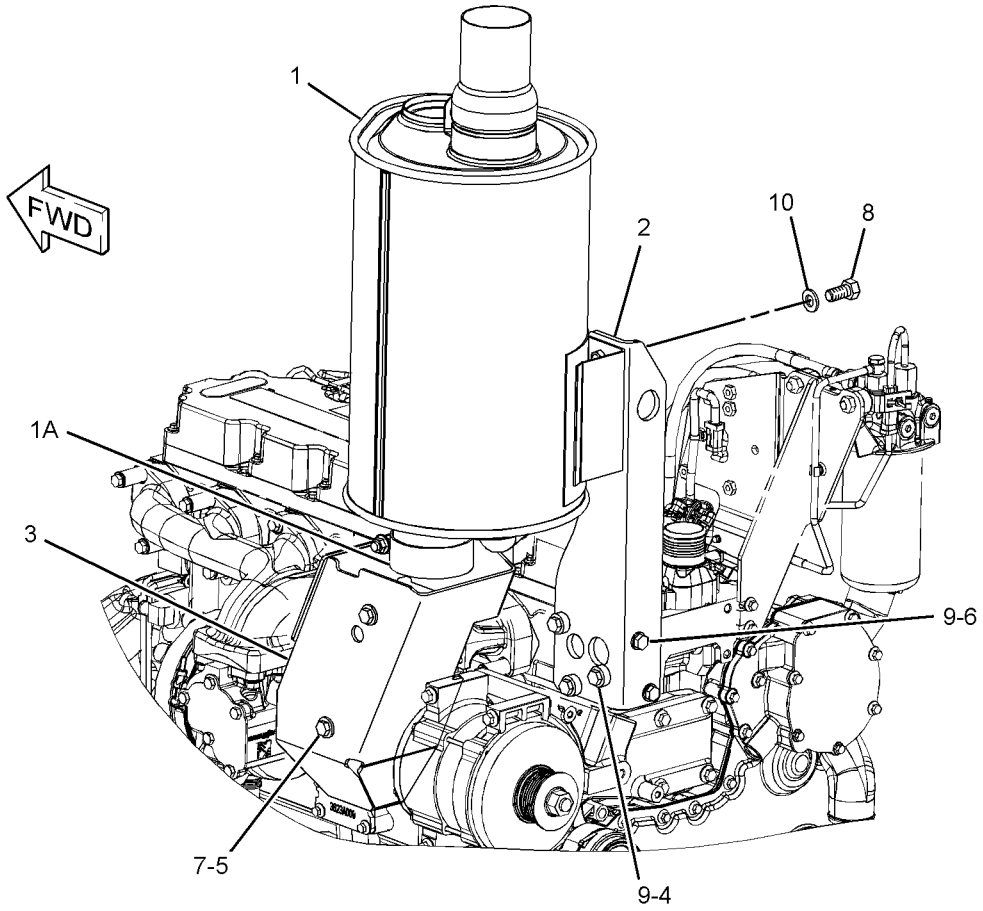

GRAPHIC #1 **<END>** g01349130

AIR INLET AND EXHAUST SYSTEM

240-8551 PIPE GP-EXHAUST–SHORT

S/N: LBP1-UP

PART OF 240-6227 INSTALLATION AR-ENGINE

SMCS-1061 **i02654387**

NOTE	REF NO	GRAPHIC REF	PART NUMBER	QTY	PART NAME 1 2 3 4 5 6 (PRODUCT LEVEL)	SEE PAGE
	1	1	**243-2153**	1	PIPE	
	2	1	**294-3067**	1	CLAMP-PIPE	

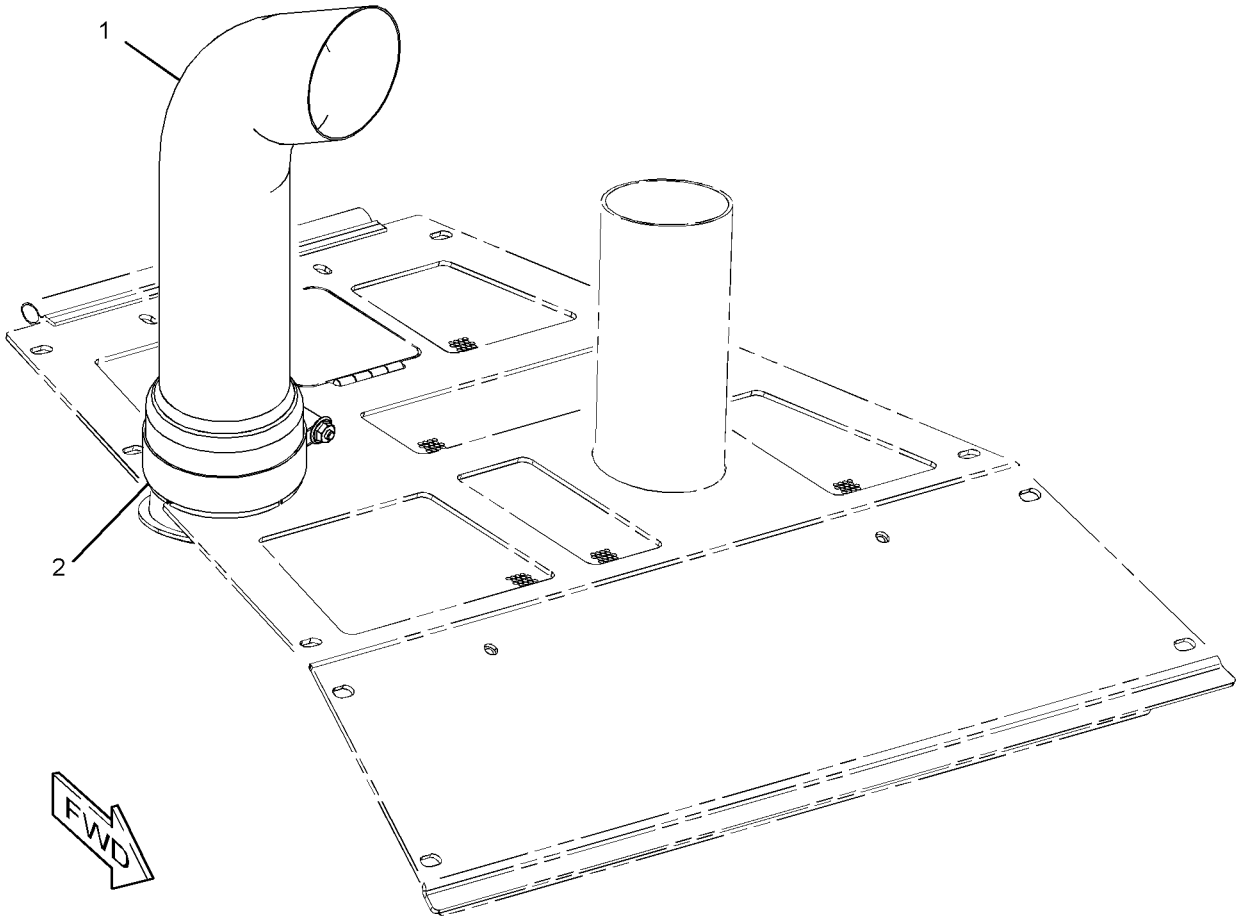

GRAPHIC #1 **<END>** g01342166

AIR INLET AND EXHAUST SYSTEM

256-3455 PRECLEANER GP—TURBINE

S/N: LBP1-UP

AN ATTACHMENT

SMCS-1055 **i03586880**

NOTE	PART NUMBER	QTY	PART NAME 1 2 3 4 5 6 (PRODUCT LEVEL)	SEE PAGE
	070-0195	1	PRECLEANER AS	
	174-5414	1	CLAMP	
	153-1276	1	KIT-SCREEN (TURBINE PRECLEANER)	
			(INCLUDES SCREEN, CLAMP, SCREWS & TUBE)	

<END>

AIR INLET AND EXHAUST SYSTEM

292-3566 PRECLEANER GP–CAB

S/N: LBP1-UP

AN ATTACHMENT

SMCS-1055 **i02880532**

NOTE	REF NO	GRAPHIC REF	PART NUMBER	QTY	PART NAME 1 2 3 4 5 6 (PRODUCT LEVEL)	SEE PAGE
D	1	1	**5P-9119**		GASKET-TAPE (ADHESIVE BACKED) (0.1-M)	
	2	1	**232-3583**	1	PRECLEANER GP (CAB AIR)	
		1	**197-1932**	1	MOTOR AS-BLOWER (24-VOLT, CAB AIR)	
		1	**102-8802**	1	KIT-RECEPTACLE (2-PIN)	
					(INCLUDES RECEPTICALE AS & WEDGE)	
		1	**9W-0852**	2	PIN-CONNECTOR (14-GA)	
	3	1	**235-0320**	1	CAP AS-AIR CLEANER (PRECLEANER)	
		1	**3E-7404**	1	CLAMP-HOSE	
	4	1	**294-4415**	1	BRACKET AS	
	5	1	**294-4416**	1	DUCT AS-AIR	
	6	1	**294-4417**	1	DUCT AS-AIR	
	7	1	**294-4420**	1	CLAMP-BAND	
	8	1	**294-4421**	1	SEAL	
	9	1	**294-4422**	1	COVER	
Y	10	1	*298-1201*	1	WIRING GP-AIR CONDITIONER (PRECLEANER)	222
M	11	1	**117-5645**	4	BOLT (M6X1X20-MM)	
	12	1	**198-4775**	2	WASHER-HARD (6.6X15X6-MM THK)	
	13	1	**2D-2751**	1	GROMMET	
M	14	1	**5C-9553**	2	BOLT (M6X1X16-MM)	
	15	1	**9X-6165**	4	WASHER (6.5X22X2.5-MM THK)	
	16	1	**9X-6654**	1	CLAMP-HOSE	

D-ORDER BY THE METER
M-METRIC PART
Y-SEPARATE ILLUSTRATION

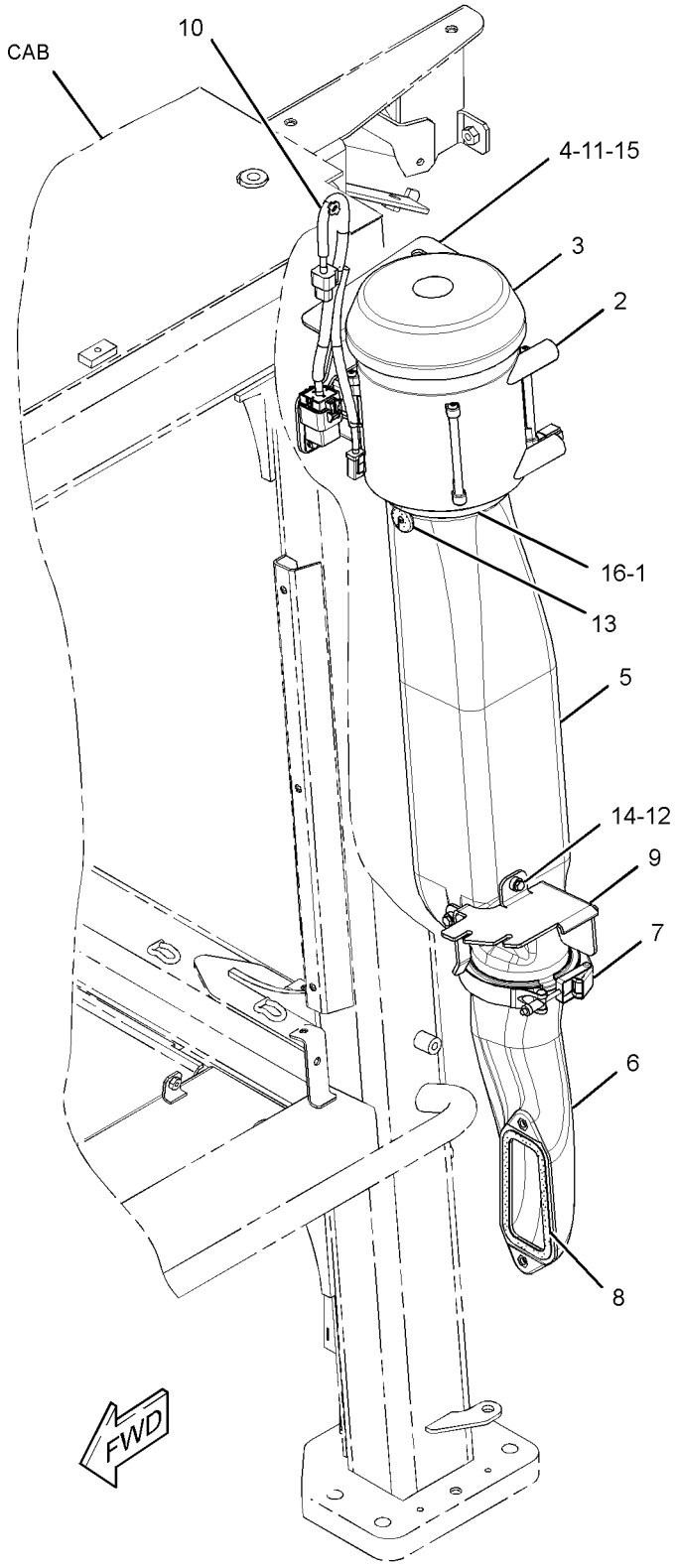

GRAPHIC #1 **<END>** g01438288

AIR INLET AND EXHAUST SYSTEM

301-2716 PRECLEANER GP

S/N: LBP1-UP
PART OF 301-7850 HOOD AR
AN ATTACHMENT

SMCS-1055 **i02819949**

NOTE	REF NO	GRAPHIC REF	PART NUMBER	QTY	PART NAME 1 2 3 4 5 6 (PRODUCT LEVEL)	SEE PAGE
	1	1	**256-3467**	1	CLAMP	
	2	1	**258-8527**	1	PRECLEANER GP	
	2A	1	**174-5415**	1	CLAMP	
	2B	1	**176-8234**	1	CLAMP	
	3	1	**307-8645**	1	DUCT AS	
	3A	1	**249-5512**	1	SEAL	
		1	**267-6411**	1	DUCT	

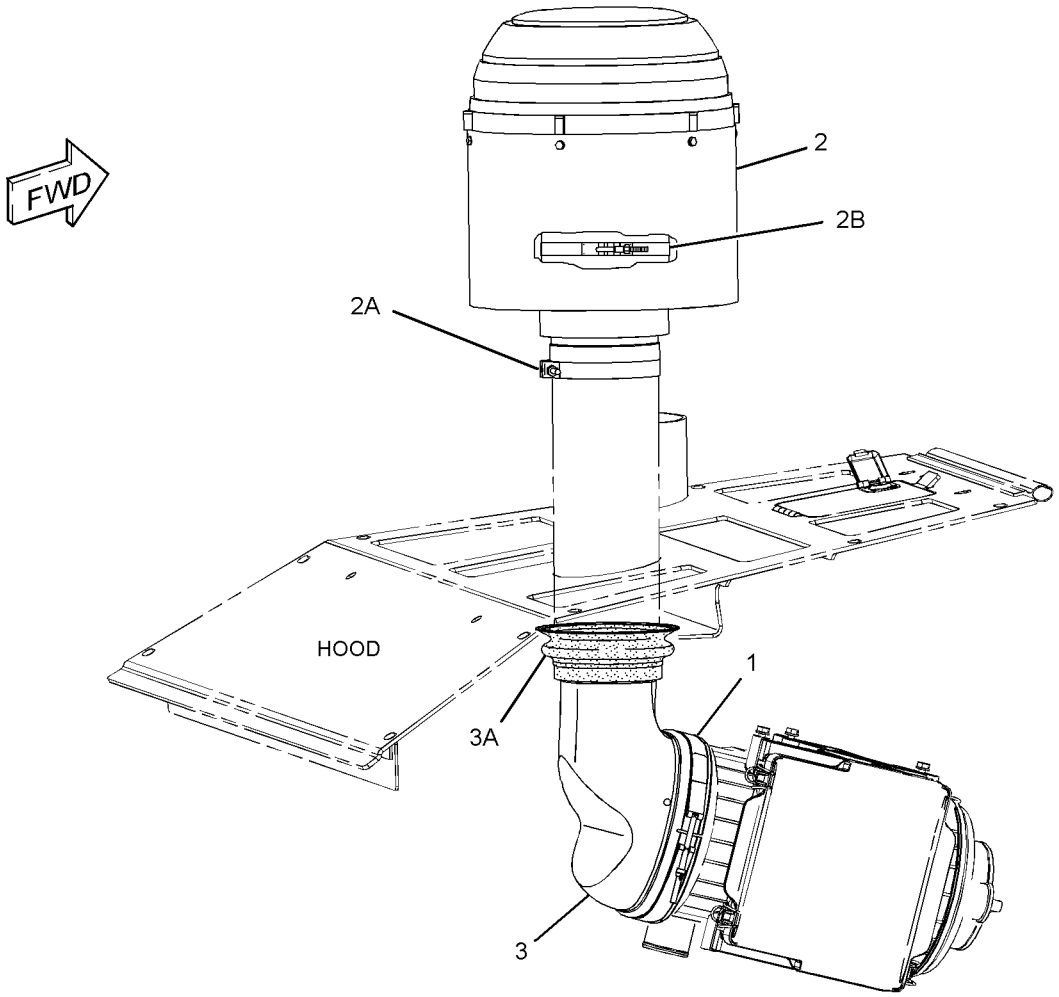

GRAPHIC #1 **<END>** g01419889

AIR INLET AND EXHAUST SYSTEM

277-8717 SHIELD GP-AIR CLEANER

S/N: LBP1-UP

PART OF 301-7849 HOOD & GUARD GP

AN ATTACHMENT

SMCS-1051 **i02664931**

NOTE	REF NO	GRAPHIC REF	PART NUMBER	QTY	PART NAME 1 2 3 4 5 6 (PRODUCT LEVEL)	SEE PAGE
	1	1	**256-3467**	1	CLAMP	
	2	1	**267-6434**	1	SHIELD	

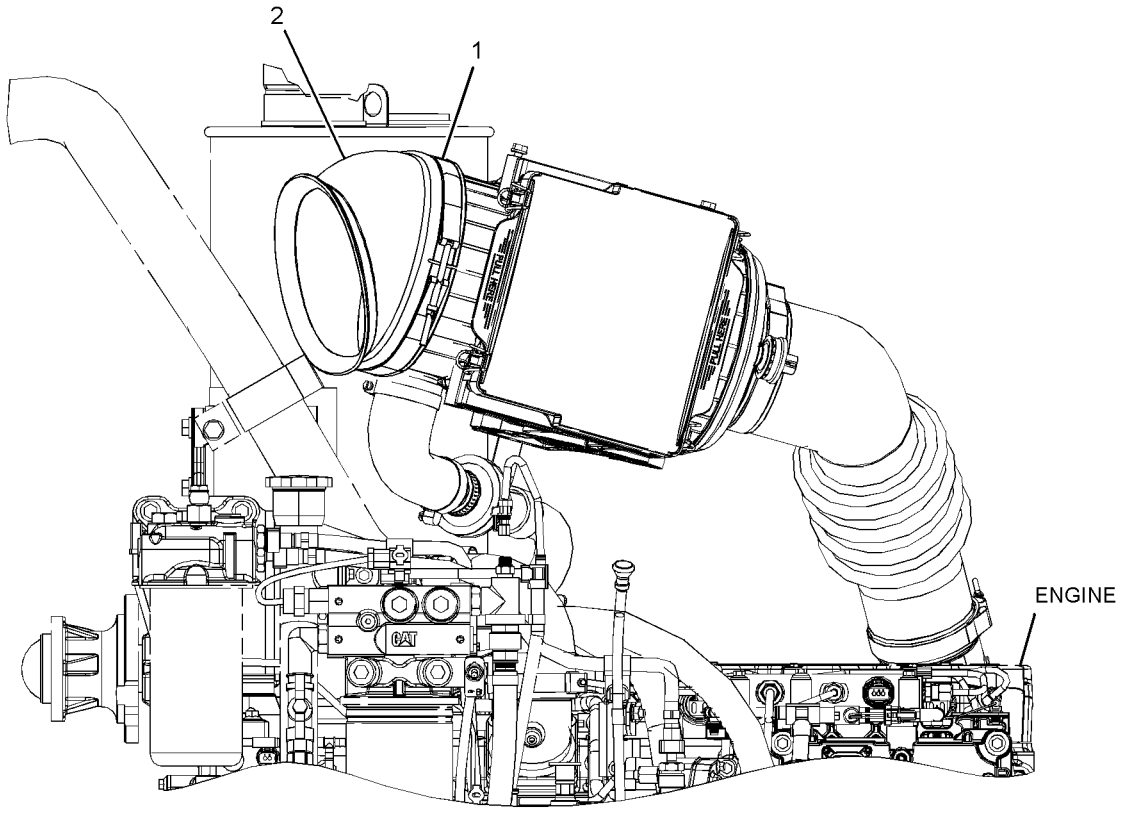

RIGHT SIDE VIEW

GRAPHIC #1 **<END>** g01343796

AIR INLET AND EXHAUST SYSTEM

280-2458 TURBOCHARGER GP

S/N: C6E1-495

PART OF 242-1357 ENGINE AR-PRIMARY

SMCS-1052, 1053 **i02870365**

NOTE	REF NO	GRAPHIC REF	PART NUMBER	QTY	PART NAME 1 2 3 4 5 6 (PRODUCT LEVEL)	SEE PAGE
	1	2	**315-9810**	1	TURBOCHARGER	
	1A	2	**277-9602**	1	CLAMP	
	1B	2	**277-9603**	1	CLAMP	
	2	2	**278-0316**	5	CLIP	
	4	2	**292-4829**	1	BRACKET	
	5	2	**9Y-9381**	1	WASHER-HARD	
	6	2	**6I-0817**	1	ADAPTER	
	7	2	**280-2443**	1	TUBE AS	
	7A	2	**4B-8774**	1	NUT-FLARED	
	7B	2	**032-8047**	2	FERRULE	
	7C	2	**035-8014**	1	NUT (7/16-IN)	
	8	1	**295-5423**	1	TUBE AS	
	8A	1	**4B-8774**	1	NUT-FLARED	
	8B	1	**032-8047**	1	FERRULE	
	8C	1	**300-6520**	1	HOSE AS	
	8D	1	**107-2348**	2	CLIP	
CM	9	2	**6I-0593**	2	BOLT (M10X1.5X30-MM)	
M	10	2	**6I-0654**	2	BOLT (M10X1.5X25-MM)	
	11	1	**280-2407**	1	TUBE AS-TURBOCHARGER	
M	11A	1	**277-9938**	1	BOLT-SPECIAL (BANJO)	
	11B	1	**277-9939**	2	WASHER	
	11C	1	**277-9940**	1	SEAL-O-RING	
M	15	1	**6I-0217**	3	BOLT (M8X1.25X20-MM)	
	16	1	**280-2420**	1	TUBE AS-TURBOCHARGER	
	17	1	**278-0016**	1	GASKET	
	18	1	**278-0017**	1	GASKET	
	19	1	**280-2423**	1	ELBOW-EXHAUST	
	20	1	**067-6007**	1	PLUG	
	21	1	**210-6842**	3	BOLT-FLANGE HEAD	
	22	1	**280-2424**	1	ADAPTER	
	23	1	**288-2357**	1	MANIFOLD GP-EXHAUST	
	24	1	**279-9361**	2	GASKET-EXHAUST	
	25	1	**238-8292**	8	BOLT-FLANGE HEAD	
	26	1	**286-7851**	8	SPACER	
	27	1	**278-0361**	4	BOLT (M10X1.5X45-MM)	
	28	2	**278-0310**	1	SOLENOID AS (WASTEGATE)	
	29	2	**280-2441**	1	BRACKET	
	30	2	**6I-0563**	4	NUT (M10X1.5-THD)	
	31	2	**141-8589**	1	GASKET	
	32	2	**147-5553**	4	STUD	

C-CHANGE FROM PREVIOUS TYPE
M-METRIC PART

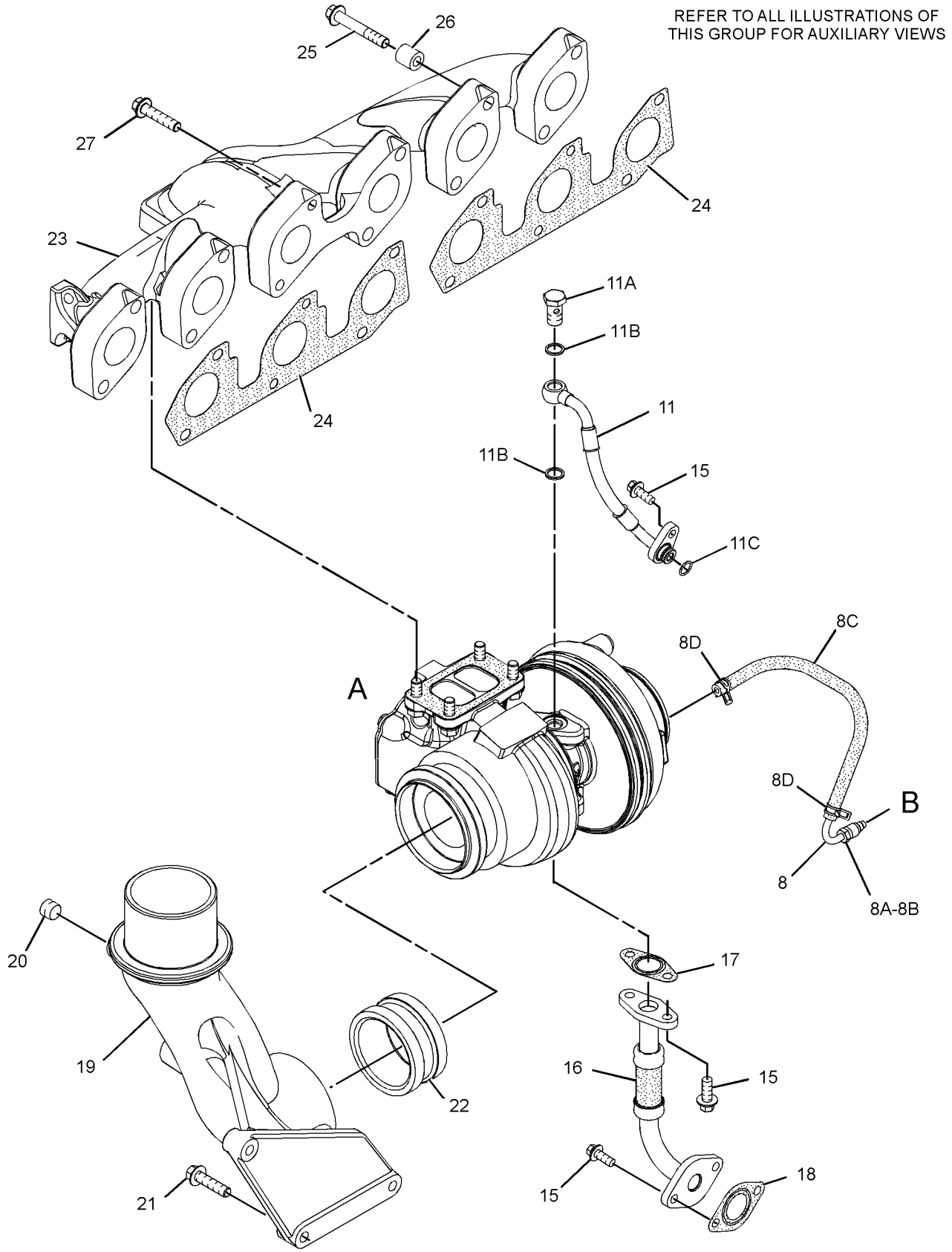

GRAPHIC #1

g01422206

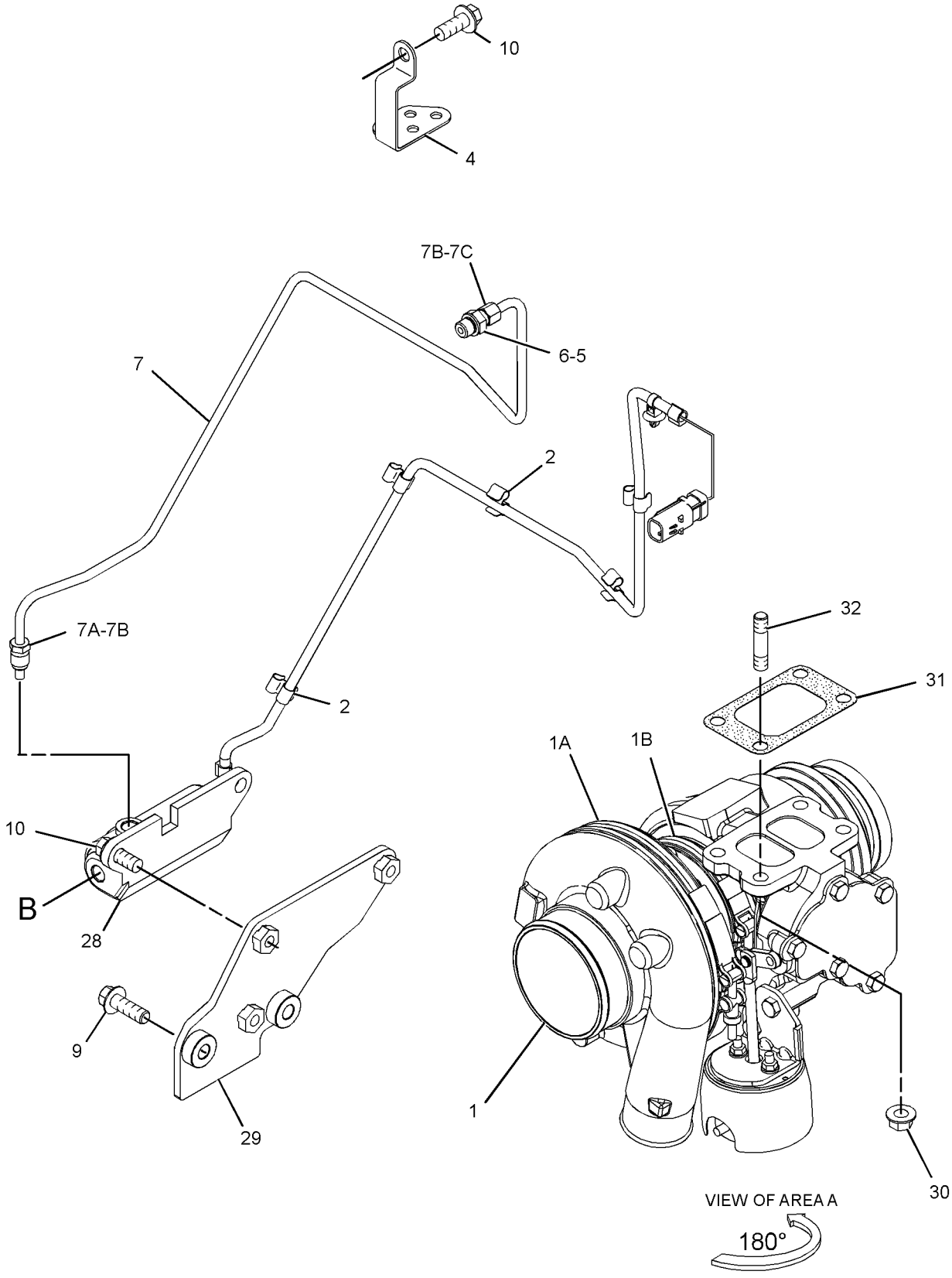

GRAPHIC #2 **<END>** g01423437

AIR INLET AND EXHAUST SYSTEM

305-5970 TURBOCHARGER GP

S/N: C6E496-3474

PART OF 242-1357 ENGINE AR-PRIMARY

SMCS-1052, 1053 **i03185922**

NOTE	REF NO	GRAPHIC REF	PART NUMBER	QTY	PART NAME 1 2 3 4 5 6 (PRODUCT LEVEL)	SEE PAGE
M	1	1	**6I-0217**	5	BOLT (M8X1.25X20-MM)	
M	3	2	**6I-0654**	2	BOLT (M10X1.5X25-MM)	
	4	2	**6I-0817**	1	ADAPTER	
	5	2	**9Y-9381**	1	WASHER-HARD	
	6	1	**067-6007**	1	PLUG	
	7	1	**210-6842**	3	BOLT-FLANGE HEAD	
	8	1	**238-8292**	12	BOLT-FLANGE HEAD	
M	9	2	**100-4830**	2	BOLT (M10X1.5X20-MM)	
	10	1	**278-0016**	1	GASKET	
	11	1	**278-0017**	1	GASKET	
	12	2	**278-0310**	1	SOLENOID AS (WASTEGATE)	
	14	1	**279-9361**	2	GASKET-EXHAUST	
	15	1	**280-2407**	1	TUBE AS-TURBOCHARGER	
M	15A	1	**277-9938**	1	BOLT-SPECIAL (BANJO)	
	15B	1	**277-9939**	2	WASHER	
	15C	1	**277-9940**	1	SEAL-O-RING	
	16	1	**280-2420**	1	TUBE AS-TURBOCHARGER	
	17	1	**280-2423**	1	ELBOW-EXHAUST	
	18	1	**280-2424**	1	ADAPTER	
	19	2	**330-9599**	1	BRACKET	
	20	2	**280-2443**	1	TUBE AS	
	20A	2	**035-8014**	1	NUT (7/16-IN)	
	20B	2	**032-8047**	2	FERRULE	
	20C	2	**4B-8774**	1	NUT-FLARED	
	21	1	**286-7851**	12	SPACER	
	22	1	**328-8709**	1	MANIFOLD-EXHAUST	
	23	2	**295-5423**	1	TUBE AS	
	23A	2	**4B-8774**	1	NUT-FLARED	
	23B	2	**032-8047**	1	FERRULE	
	23C	2	**300-6520**	1	HOSE AS	
	23D	2	**107-2348**	2	CLIP	
	24	2	**303-2116**	5	CLIP	
	25	1	**315-9810**	1	TURBOCHARGER	
	25A	1	**277-9603**	1	CLAMP	
	25B	1	**277-9602**	1	CLAMP	
	26	1	**141-8589**	1	GASKET	
	27	1	**147-5553**	4	STUD	
	28	1	**6I-0563**	4	NUT (M10X1.5-THD)	

M-METRIC PART

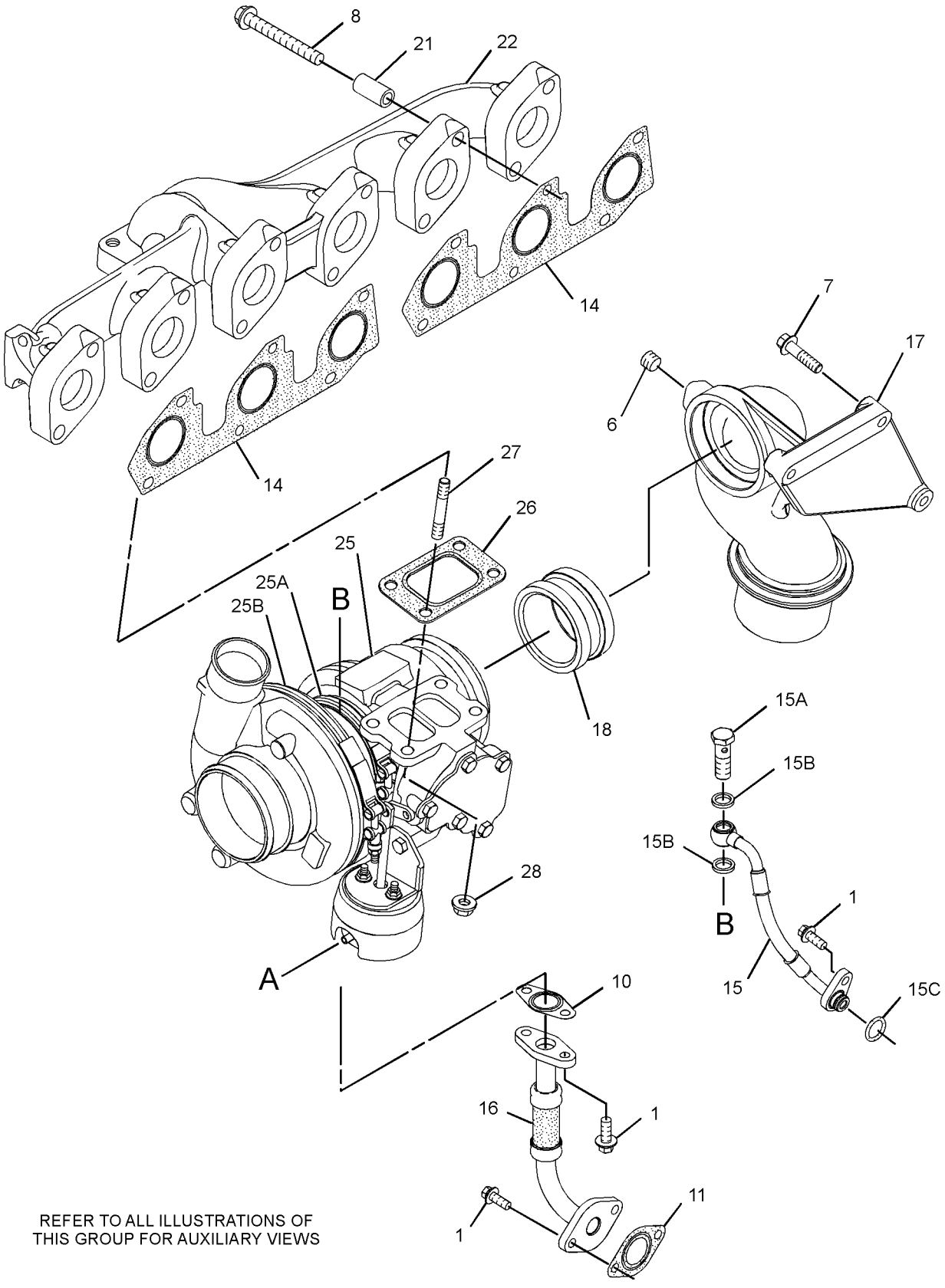

GRAPHIC #1

g01804293

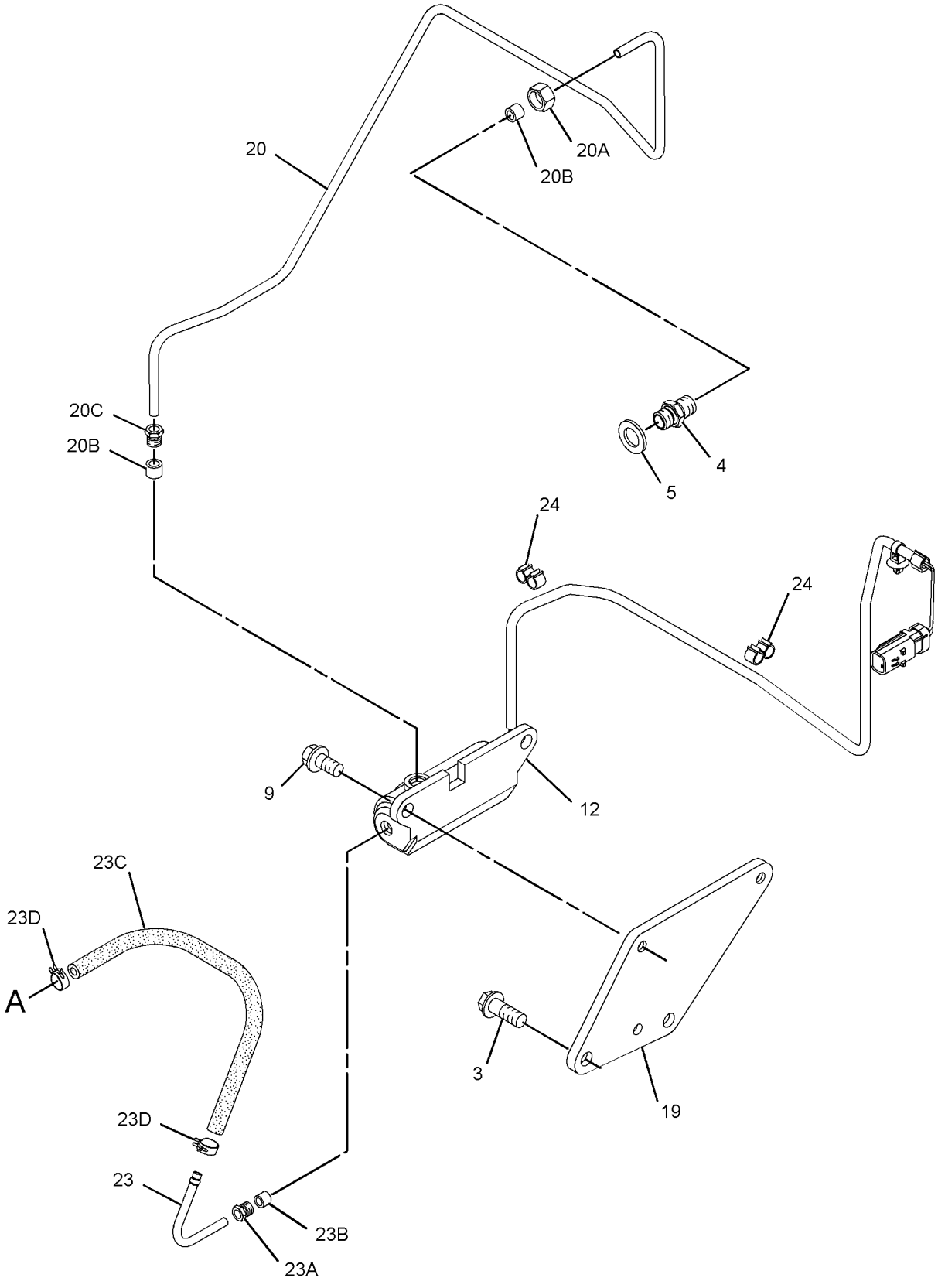

GRAPHIC #2 **<END>** g01804294

AIR INLET AND EXHAUST SYSTEM

305-5970 TURBOCHARGER GP

S/N: C6E3475-UP

PART OF 242-1357 ENGINE AR-PRIMARY

SMCS-1052, 1053 **i03185923**

NOTE	REF NO	GRAPHIC REF	PART NUMBER	QTY	PART NAME 1 2 3 4 5 6 (PRODUCT LEVEL)	SEE PAGE
M	1	1	**6I-0217**	5	BOLT (M8X1.25X20-MM)	
M	3	2	**6I-0654**	2	BOLT (M10X1.5X25-MM)	
	4	2	**6I-0817**	1	ADAPTER	
	5	2	**9Y-9381**	1	WASHER-HARD	
	6	1	**067-6007**	1	PLUG	
	7	1	**210-6842**	3	BOLT-FLANGE HEAD	
	8	1	**238-8292**	12	BOLT-FLANGE HEAD	
M	9	2	**100-4830**	2	BOLT (M10X1.5X20-MM)	
	10	1	**278-0016**	1	GASKET	
	11	1	**278-0017**	1	GASKET	
	12	2	**278-0310**	1	SOLENOID AS (WASTEGATE)	
	14	1	**279-9361**	2	GASKET-EXHAUST	
	15	1	**280-2407**	1	TUBE AS-TURBOCHARGER	
M	15A	1	**277-9938**	1	BOLT-SPECIAL (BANJO)	
	15B	1	**277-9939**	2	WASHER	
	15C	1	**277-9940**	1	SEAL-O-RING	
	16	1	**280-2420**	1	TUBE AS-TURBOCHARGER	
C	17	1	**320-2345**	1	ELBOW	
	18	1	**280-2424**	1	ADAPTER	
	19	2	**330-9599**	1	BRACKET	
	20	2	**280-2443**	1	TUBE AS	
	20A	2	**035-8014**	1	NUT (7/16-IN)	
	20B	2	**032-8047**	2	FERRULE	
	20C	2	**4B-8774**	1	NUT-FLARED	
	21	1	**286-7851**	12	SPACER	
	22	1	**328-8709**	1	MANIFOLD-EXHAUST	
	23	2	**295-5423**	1	TUBE AS	
	23A	2	**4B-8774**	1	NUT-FLARED	
	23B	2	**032-8047**	1	FERRULE	
	23C	2	**300-6520**	1	HOSE AS	
	23D	2	**107-2348**	2	CLIP	
	24	2	**303-2116**	6	CLIP	
	25	1	**315-9810**	1	TURBOCHARGER	
	25A	1	**277-9603**	1	CLAMP	
	25B	1	**277-9602**	1	CLAMP	
	26	1	**141-8589**	1	GASKET	
	27	1	**147-5553**	4	STUD	
	28	1	**6I-0563**	4	NUT (M10X1.5-THD)	

C-CHANGE FROM PREVIOUS TYPE
M-METRIC PART

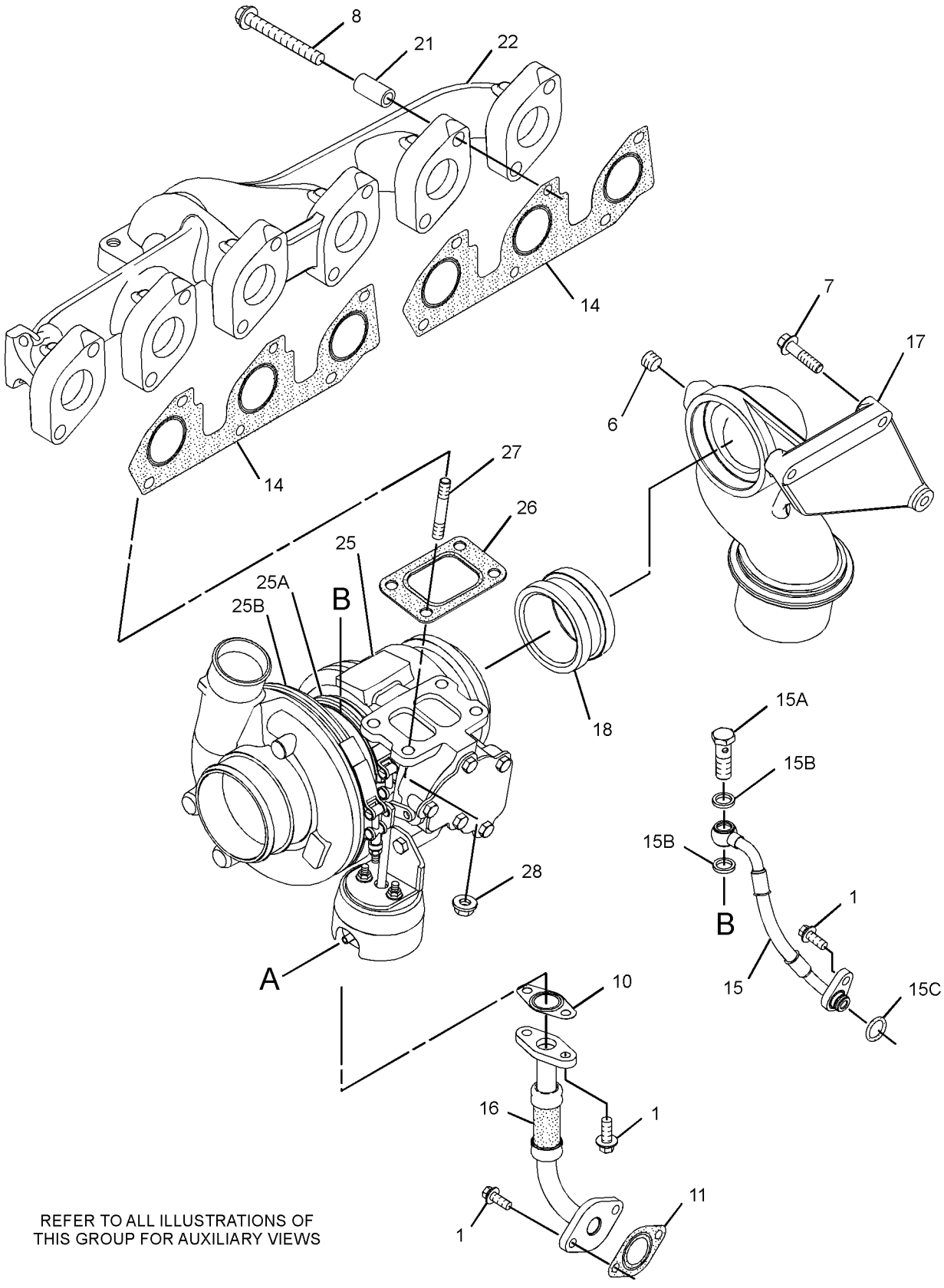

GRAPHIC #1 g01804293

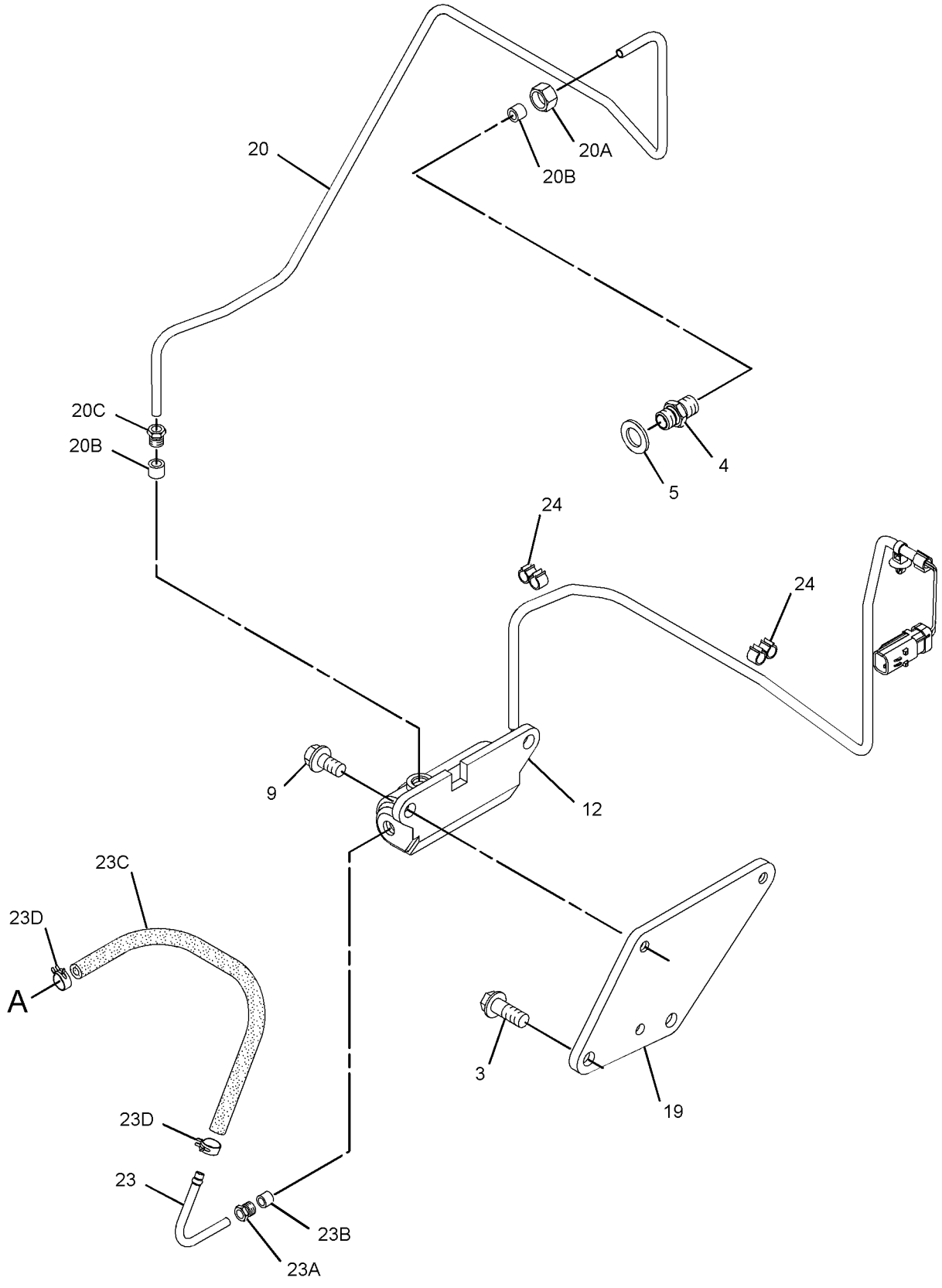

GRAPHIC #2 **<END>** g01804294

281-0647 ADAPTER GP-FAST FILL FUEL

S/N: LBP1-UP
PART OF 253-8441 TANK GP-FUEL
AN ATTACHMENT

SMCS-1710 **i02675569**

NOTE	REF NO	GRAPHIC REF	PART NUMBER	QTY	PART NAME 1 2 3 4 5 6 (PRODUCT LEVEL)	SEE PAGE
	1	1	**8T-6703**	2	CLAMP-HOSE	
	2	1	**9D-0630**	1	CAP-DUST	
	3	1	**124-2463**	1	ADAPTER-FAST FILL FUEL	
	4	1	**281-0645**	2	TUBE AS	
	5	1	**281-4114**	2	PLATE AS	
					(EACH INCLUDES)	
M		1	**8T-3490**	1	NUT-WELD (M10X1.5-THD)	
	6	1	**299-5118**	1	PLATE AS	
	7	1	**299-5119**	1	HOSE	
	8	1	**299-8018**	1	VENT AS	
	9	1	**301-4133**	1	HOSE AS	
	10	1	**301-4840**	1	VALVE AS-TANK	
M		1	**8T-0309**	4	SCREW-MACHINE (M4X0.7X10-MM)	
		1	**221-7693**	1	VALVE (FAST FILL FUEL)	
	11	1	**104-3173**	2	CLIP	
	12	1	**164-5612**	2	CONNECTOR AS	
					(EACH INCLUDES)	
		1	**8T-6988**	1	CONNECTOR	
		1	**1J-9671**	1	SEAL-O-RING	
		1	**4J-5477**	1	SEAL-O-RING	
	13	1	**171-9073**	1	CLIP	
	14	1	**1H-8128**	1	SEAL-O-RING	
	15	1	**1P-4582**	4	FLANGE-HALF	
	16	1	**4J-0527**	2	SEAL-O-RING	
	17	1	**4P-7581**	1	CLIP	
	18	1	**4P-8134**	1	CLIP	
	19	1	**5H-6734**	1	SEAL-O-RING	
	20	1	**7X-7729**	5	WASHER (11X25X3-MM THK)	
	21	1	**8T-4121**	14	WASHER-HARD (11X21X2.5-MM THK)	
M	22	1	**8T-4136**	6	BOLT (M10X1.5X25-MM)	
M	23	1	**8T-4137**	2	BOLT (M10X1.5X20-MM)	
M	24	1	**8T-4183**	4	BOLT (M12X1.75X40-MM)	
M	25	1	**8T-4184**	4	BOLT (M12X1.75X45-MM)	
M	26	1	**8T-4191**	3	BOLT (M10X1.5X16-MM)	
M	27	1	**8T-4195**	8	BOLT (M10X1.5X30-MM)	
	28	1	**8T-4223**	8	WASHER-HARD (13.5X25.5X3-MM THK)	
B	29	1	**185-3983**		SEALANT-GASKET	

B-USE AS REQUIRED
M-METRIC PART

281-0647 **ADAPTER GP-FAST FILL FUEL** *(contd.)* **i02675569**

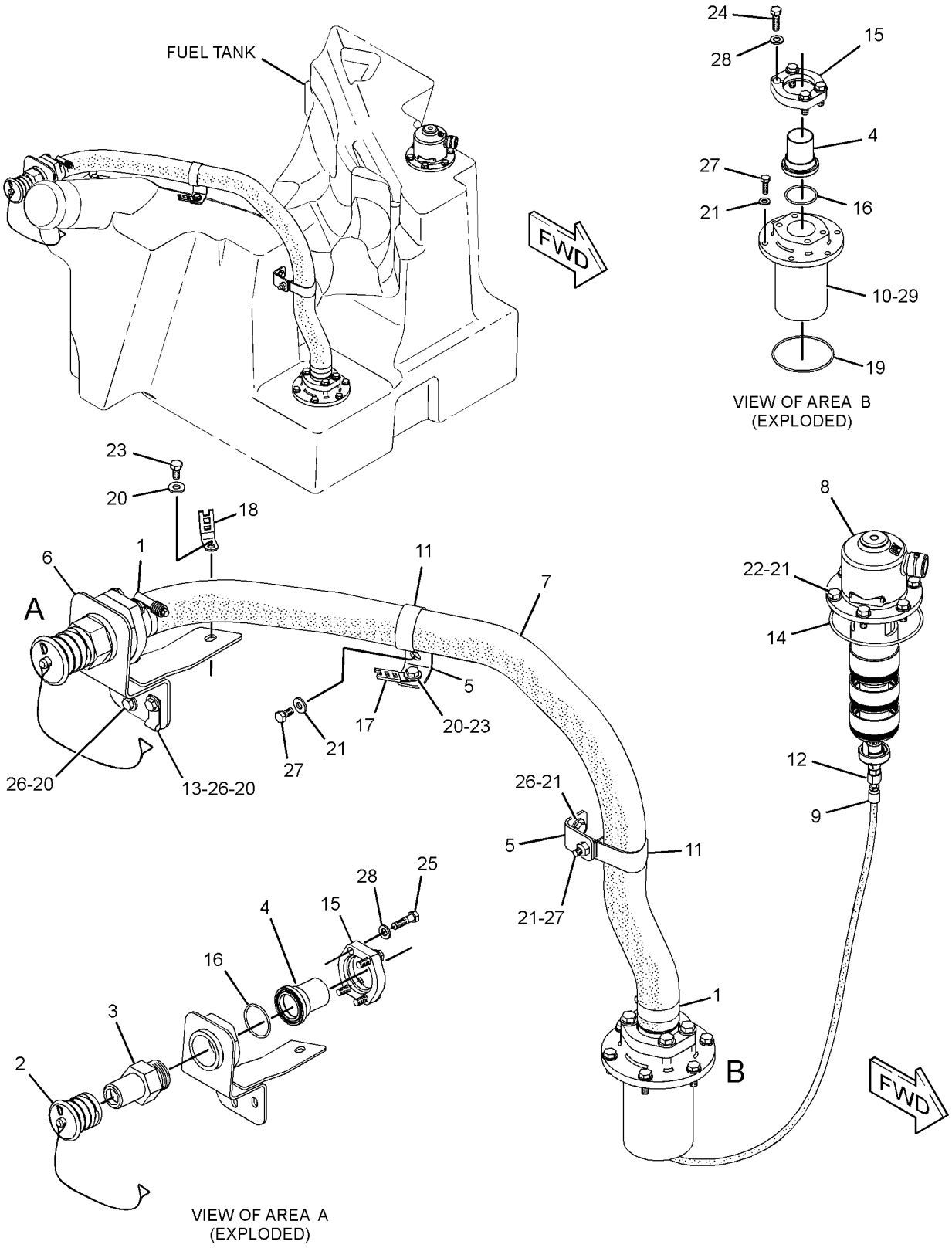

GRAPHIC #1 **<END>** g01340382

306-4998 CAP GP-FUEL FILLER–VENTED, LOCKABLE

S/N: LBP1-UP

PART OF 253-8441, 275-1043 TANK GP-FUEL

AN ATTACHMENT

SMCS-1273 **i02737727**

NOTE	REF NO	GRAPHIC REF	PART NUMBER	QTY	PART NAME 1 2 3 4 5 6 (PRODUCT LEVEL)	SEE PAGE
	1	1	**276-1243**	1	CAP-FUEL FILLER (LOCKABLE)	
		1	**279-9876**	1	FILTER ELEMENT-BREATHER (FUEL CAP)	
	2	1	**278-5689**	1	BOOT-FUEL CAP	

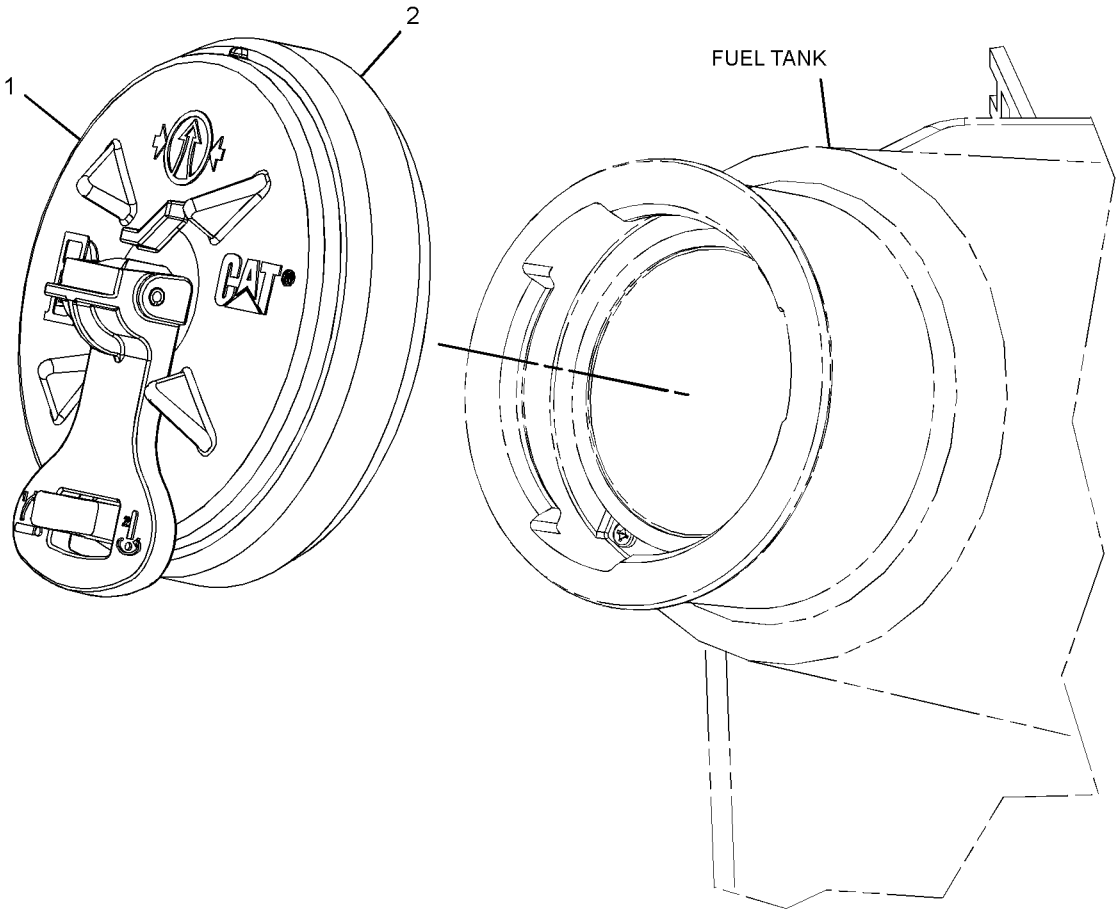

GRAPHIC #1 **<END>** g01373813

305-7294 FILTER GP-FUEL

S/N: C6E1-UP

PART OF 242-1357 ENGINE AR-PRIMARY

SMCS-1261 **i03612753**

NOTE	REF NO	GRAPHIC REF	PART NUMBER	QTY	PART NAME 1 2 3 4 5 6 (PRODUCT LEVEL)	SEE PAGE
	1	1	**343-5937**	1	FILTER AS-FUEL	
	1A	1	**319-0844**	1	FILTER AS-FUEL (ULTRA HIGH EFFICIENCY)	
	2	1	**343-5938**	1	FILTER AS-FUEL	
	2A	1	**306-9199**	1	FILTER AS-FUEL (ULTRA HIGH EFFICIENCY) (SECONDARY)	
F			**278-4138**	2	PROTECTION GP-FUEL SYSTEM	

F-NOT SHOWN

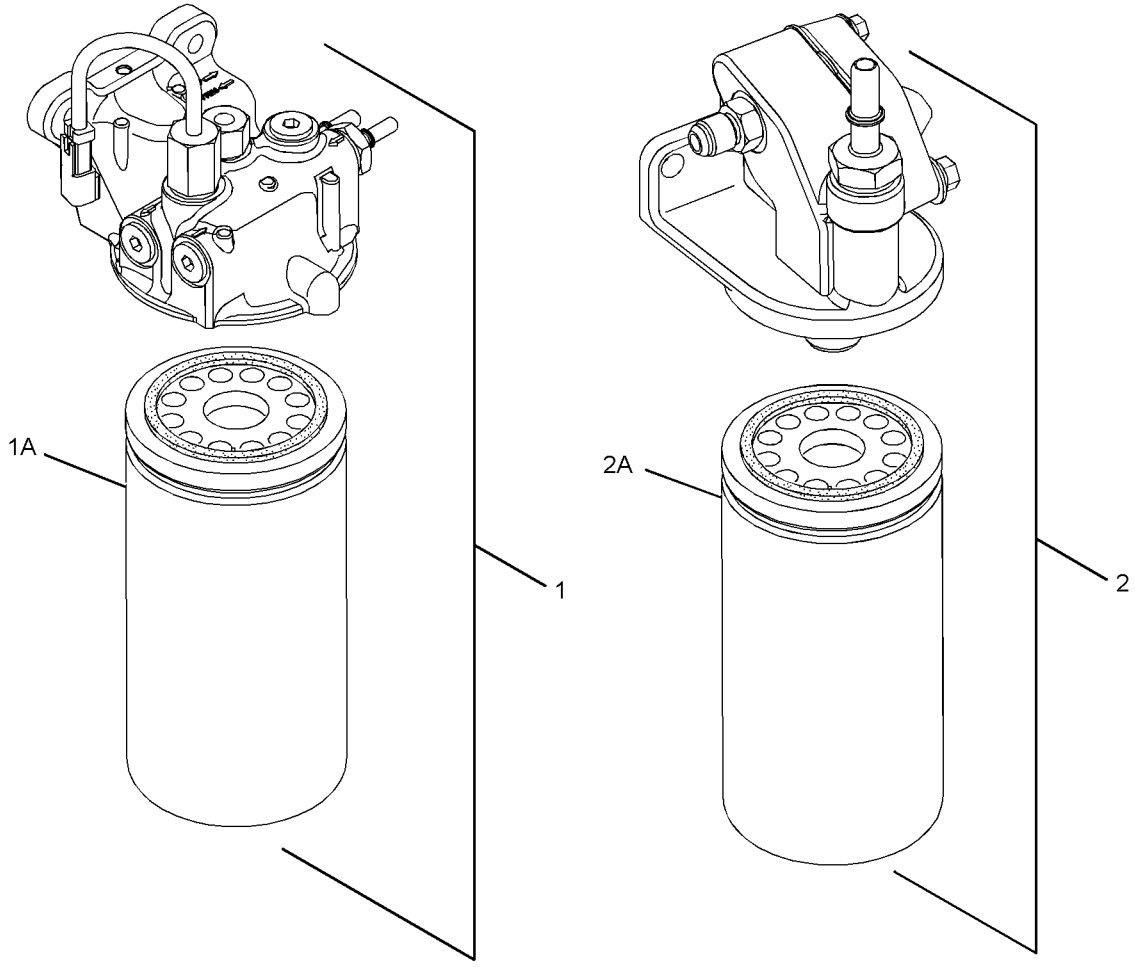

GRAPHIC #1 **<END>** g01910233

174-9570 FILTER GP-WATER SEP & FUEL

S/N: LBP1-UP

PART OF 212-3657 PUMP GP-FUEL PRM & WATER SEP

SMCS-1261, 1263 **i03586903**

NOTE	REF NO	GRAPHIC REF	PART NUMBER	QTY	PART NAME 1 2 3 4 5 6 (PRODUCT LEVEL)	SEE PAGE
	1	1	**326-1644**	1	FILTER AS-WATER SEP & FUEL	
	1A	1	**220-8678**	1	SEAL-RING	
	2	1	**270-5320**	1	BOWL AS	

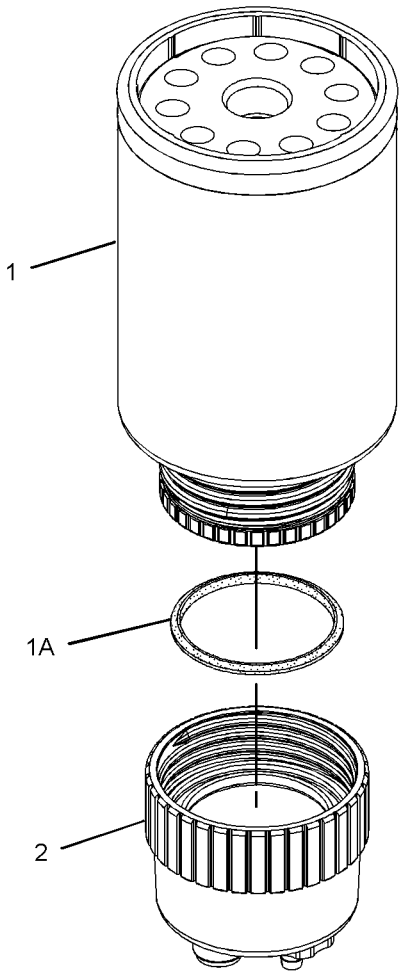

GRAPHIC #1

<END>

g01179858

282-0480 INJECTOR GP-FUEL

S/N: C6E1-UP

PART OF 278-5319 PUMP GP-FUEL INJECTION

SMCS-1254, 1290 **i02783187**

NOTE	REF NO	GRAPHIC REF	PART NUMBER	QTY	PART NAME 1 2 3 4 5 6 (PRODUCT LEVEL)	SEE PAGE
	1	1	**274-1639**	1	SEAL	
	2	1	**287-7637**	1	WASHER	

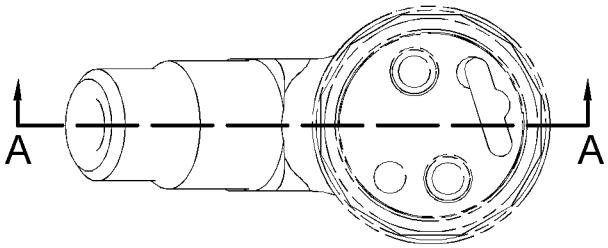

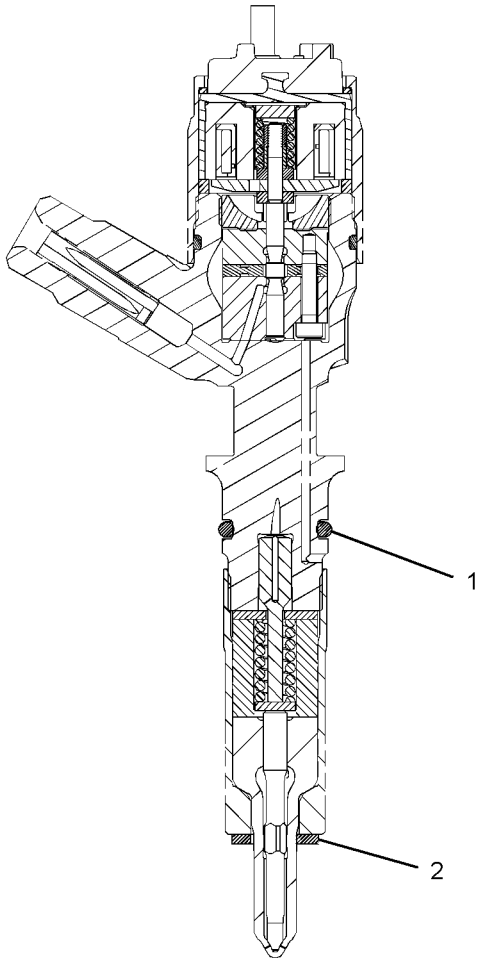

SECTION A-A

GRAPHIC #1 **<END>** g01306918

FUEL SYSTEM

321-3600 INJECTOR GP-FUEL

S/N: C6E496-UP

PART OF 310-0658 PUMP GP-FUEL INJECTION

SMCS-1254, 1290 **i03133303**

NOTE	REF NO	GRAPHIC REF	PART NUMBER	QTY	PART NAME 1 2 3 4 5 6 (PRODUCT LEVEL)	SEE PAGE
	1	1	**287-7637**	1	WASHER	
	2	1	**274-1639**	1	SEAL	

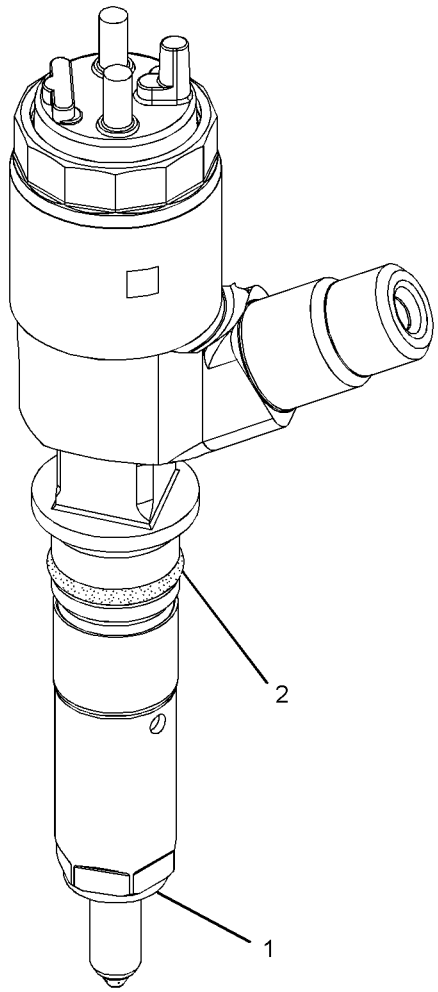

GRAPHIC #1 **<END>** g01321917

FUEL SYSTEM

242-7489 LINES GP-FUEL

S/N: LBP1-UP

PART OF 240-6227 INSTALLATION AR-ENGINE

SMCS-1274 **i02741044**

NOTE	REF NO	GRAPHIC REF	PART NUMBER	QTY	PART NAME 1 2 3 4 5 6 (PRODUCT LEVEL)	SEE PAGE
M	1	1	**176-9237**	1	STUD (M10X1.5X18-MM, M10X1.5X37-MM)	
	2	1	**223-1395**	1	BRACKET AS	
M		1	**8T-5413**	1	STUD-WELD (M10X1.5X25-MM OAL)	
	3	1	**256-1028**	1	BRACKET AS	
M		1	**8T-3490**	1	NUT-WELD (M10X1.5-THD)	
		1	**124-6998**	1	PLATE	
	4	1	**267-6417**	1	CONNECTOR	
	5	1	*268-1531*	1	ELBOW AS	
		1	**2M-9780**	1	SEAL-O-RING	
		1	**268-1530**	1	ELBOW	
	6	1	**277-8697**	1	HOSE AS	
	7	1	**277-8698**	1	HOSE AS	
	8	1	**281-5882**	1	VALVE-BALL (FUEL TANK DRAIN)	
	9	1	**1P-7009**	1	CLIP	
	10	1	**3K-0360**	2	SEAL-O-RING	
	11	1	**5K-8451**	5	CLIP	
	12	1	**8T-4121**	7	WASHER-HARD (11X21X2.5-MM THK)	
M	13	1	**8T-4133**	1	NUT (M10X1.5-THD)	
M	14	1	**8T-4136**	2	BOLT (M10X1.5X25-MM)	
M	15	1	**8T-4137**	3	BOLT (M10X1.5X20-MM)	
	16	1	**9M-8406**	2	CLIP	

M-METRIC PART

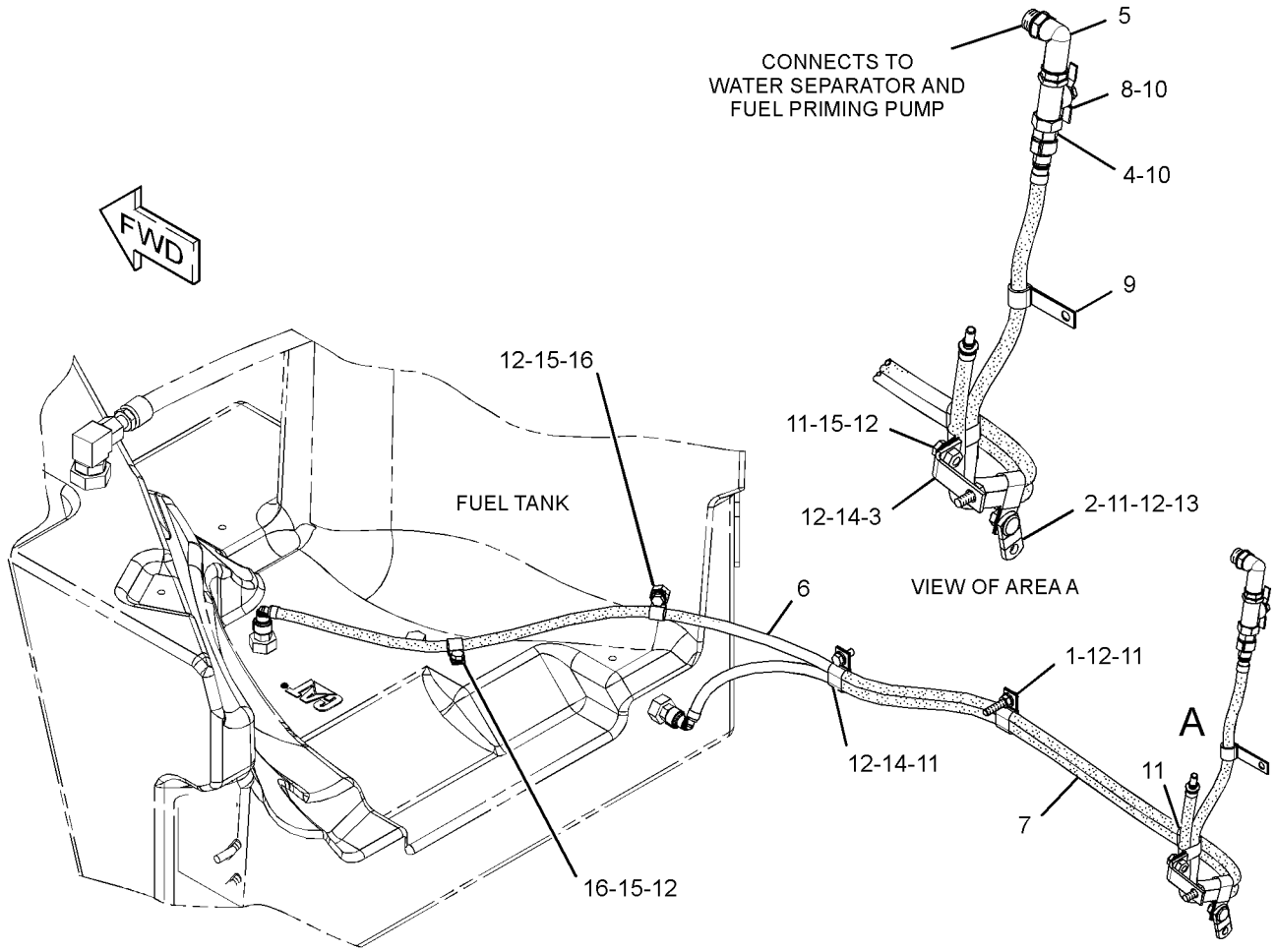

GRAPHIC #1 **<END>** g01383685

FUEL SYSTEM

305-7299 LINES GP-FUEL

S/N: C6E1-6838

PART OF 242-1357 ENGINE AR-PRIMARY

SMCS-1274 **i03385382**

NOTE	REF NO	GRAPHIC REF	PART NUMBER	QTY	PART NAME 1 2 3 4 5 6 (PRODUCT LEVEL)	SEE PAGE
M	1	1,3	**6I-0260**	4	BOLT (M8X1.25X25-MM)	
M	2	1,2	**6I-0654**	3	BOLT (M10X1.5X25-MM)	
M	3	3	**100-3751**	1	BOLT (M8X1.25X65-MM)	
	5	1	**111-0859**	2	BOLT (M10X1.5X35-MM)	
M	6	2,3	**124-3815**	3	BOLT (M8X16X1.25-MM)	
	7	1,2	**216-9752**	4	WASHER	
	8	3	**6I-0456**	1	BOLT (M8X1.25X45-MM)	
	9	1,2	**277-6165**	2	CONNECTION-FUEL	
	10	2	**278-0314**	1	SPACER	
	11	3	**285-3555**	1	CLIP	
	12	1,2	**295-4670**	2	BOLT-SPECIAL (BANJO)	
	13	2	**293-9820**	1	BRACKET	
	14	2	**302-5695**	1	BRACKET AS	
	14A	2	**298-4576**	1	CLIP	
	15	3	**305-7302**	1	TUBE	
	16	3	**305-7303**	1	TUBE	
	17	3	**305-7304**	1	TUBE	
	18	1	**305-7305**	1	TUBE	
	19	1	**305-7306**	1	BRACKET AS	
	19A	1	**232-1115**	3	CLIP-PIPE	
	20	1	**305-7307**	1	BRACKET AS	
	20A	1	**232-1115**	2	CLIP-PIPE	
	21	2	**305-7308**	1	TUBE	
	22	2	**305-7309**	1	BRACKET AS	
	22A	2	**232-1115**	4	CLIP-PIPE	
	23	3	**320-4729**	1	BRACKET	
	24	1	**305-7311**	1	BRACKET AS	
	24A	1	**232-1115**	3	CLIP-PIPE	
	25	1	**317-7147**	1	CLIP	
F			**278-4138**	5	PROTECTION GP-FUEL SYSTEM	

F-NOT SHOWN
M-METRIC PART

305 - 7299 **LINES GP-FUEL** *(contd.)* **i03385382**

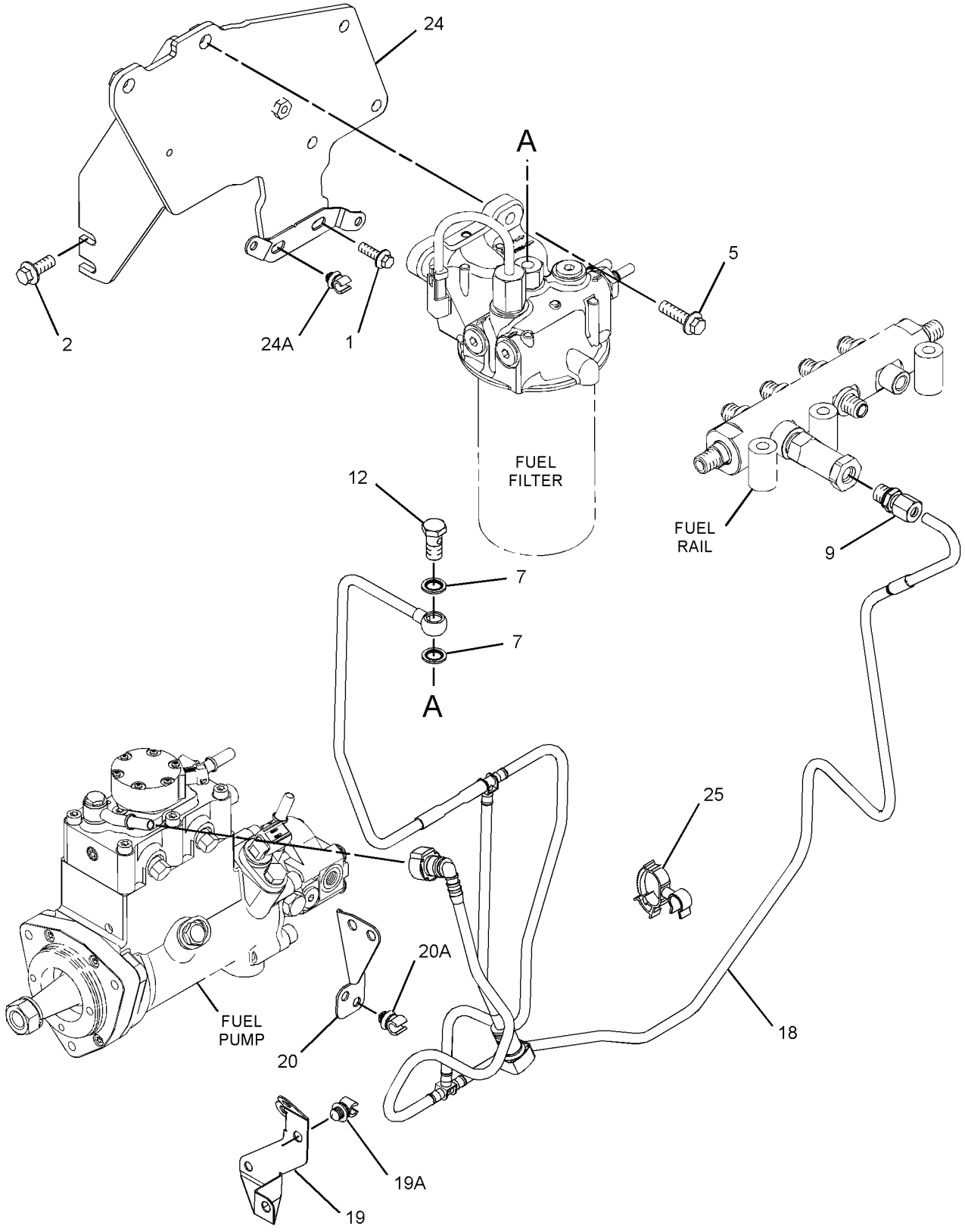

GRAPHIC #1 g01495993

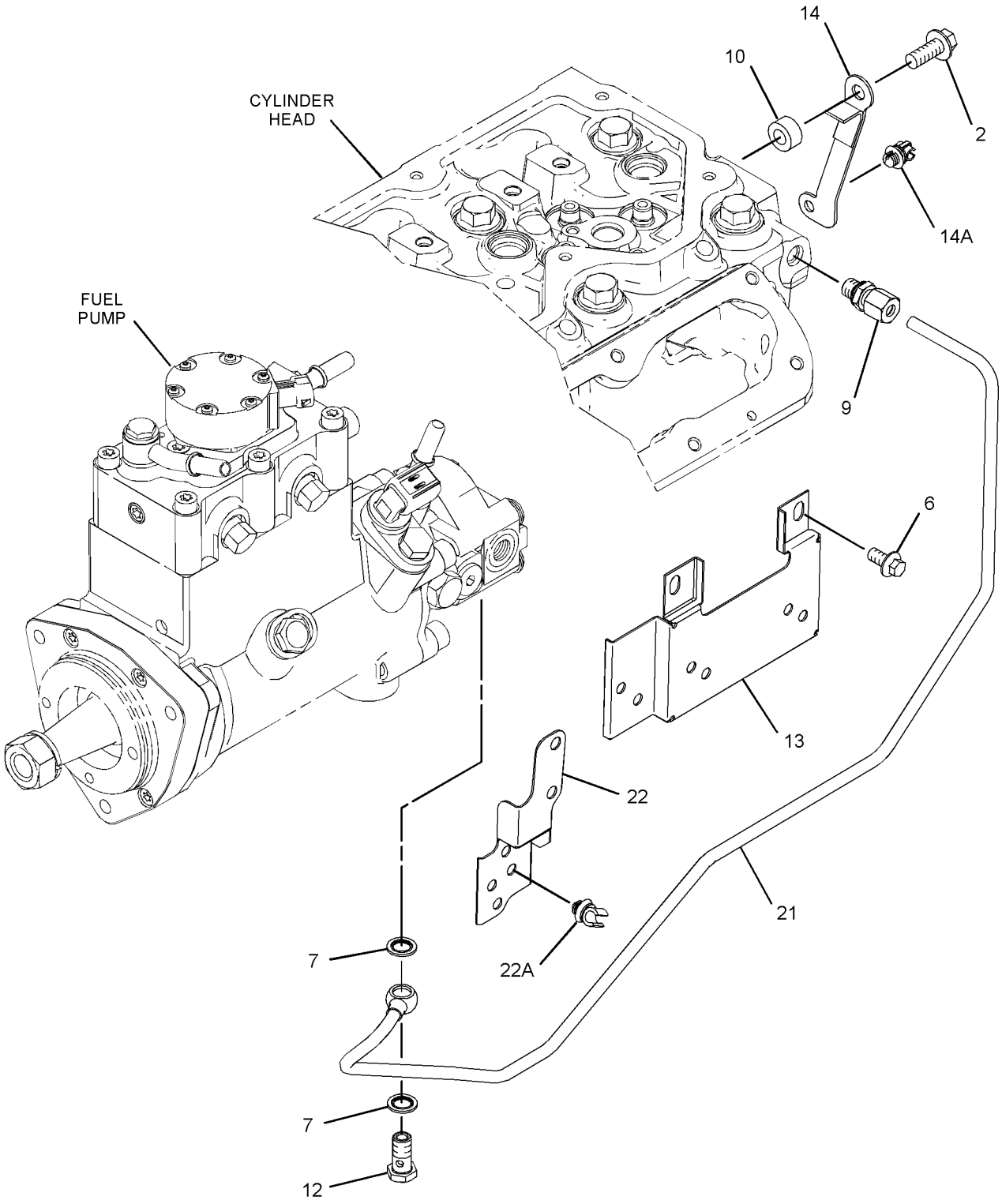

GRAPHIC #2 g01348152

305 - 7299 **LINES GP-FUEL** *(contd.)* **i03385382**

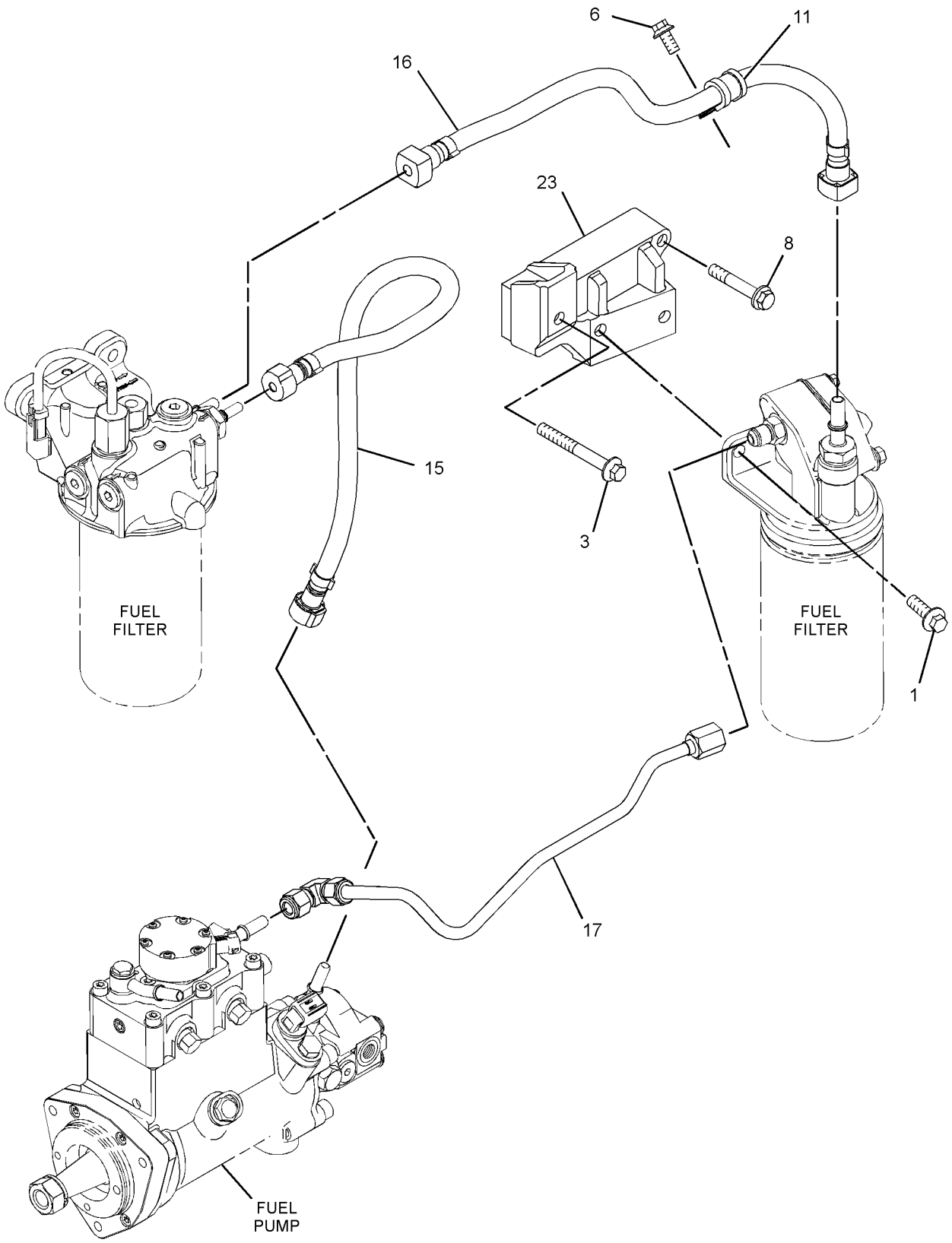

GRAPHIC #3 **<END>** g01496015

FUEL SYSTEM

305-7299 LINES GP-FUEL

S/N: C6E6839-UP

PART OF 242-1357 ENGINE AR-PRIMARY

SMCS-1274 **i03553565**

NOTE	REF NO	GRAPHIC REF	PART NUMBER	QTY	PART NAME 1 2 3 4 5 6 (PRODUCT LEVEL)	SEE PAGE
M	1	1,3	**6I-0260**	6	BOLT (M8X1.25X25-MM)	
M	2	2	**6I-0654**	1	BOLT (M10X1.5X25-MM)	
M	3	3	**100-3751**	1	BOLT (M8X1.25X65-MM)	
	5	1	**111-0859**	2	BOLT (M10X1.5X35-MM)	
M	6	2,3	**124-3815**	3	BOLT (M8X16X1.25-MM)	
	8	3	**6I-0456**	1	BOLT (M8X1.25X45-MM)	
	9	1,2	**277-6165**	2	CONNECTION-FUEL	
	10	2	**278-0314**	1	SPACER	
	11	3	**285-3555**	1	CLIP	
	12	1,2	**295-4670**	2	BOLT-SPECIAL (BANJO)	
	13	2	**293-9820**	1	BRACKET	
	13A	2	**232-1115**	6	CLIP-PIPE	
	14	2	**302-5695**	1	BRACKET AS	
	14A	2	**298-4576**	1	CLIP	
C	15	3	**329-0060**	1	TUBE	
C	16	3	**329-0061**	1	TUBE	
	17	3	**305-7304**	1	TUBE	
C	18	1	**329-0062**	1	TUBE	
	19	1	**305-7306**	1	BRACKET AS	
	19A	1	**232-1115**	3	CLIP-PIPE	
	20	1	**305-7307**	1	BRACKET AS	
	20A	1	**232-1115**	2	CLIP-PIPE	
	21	2	**305-7308**	1	TUBE	
	22	2	**305-7309**	1	BRACKET AS	
	22A	2	**232-1115**	4	CLIP-PIPE	
	23	3	**320-4729**	1	BRACKET	
C	24	1	**329-0063**	1	BRACKET	
C	26	1,2	**286-2890**	4	WASHER	
	27	3	**337-9558**	1	SLEEVE	
	28	3	**339-8785**	1	ISOLATOR-RUBBER	
	29	3	**329-0064**	1	BRACKET	
	30	1	**238-8028**	1	TIE-CABLE	
F			**278-4138**	5	PROTECTION GP-FUEL SYSTEM	

C-CHANGE FROM PREVIOUS TYPE
F-NOT SHOWN
M-METRIC PART

305 - 7299 **LINES GP-FUEL** *(contd.)* **i03553565**

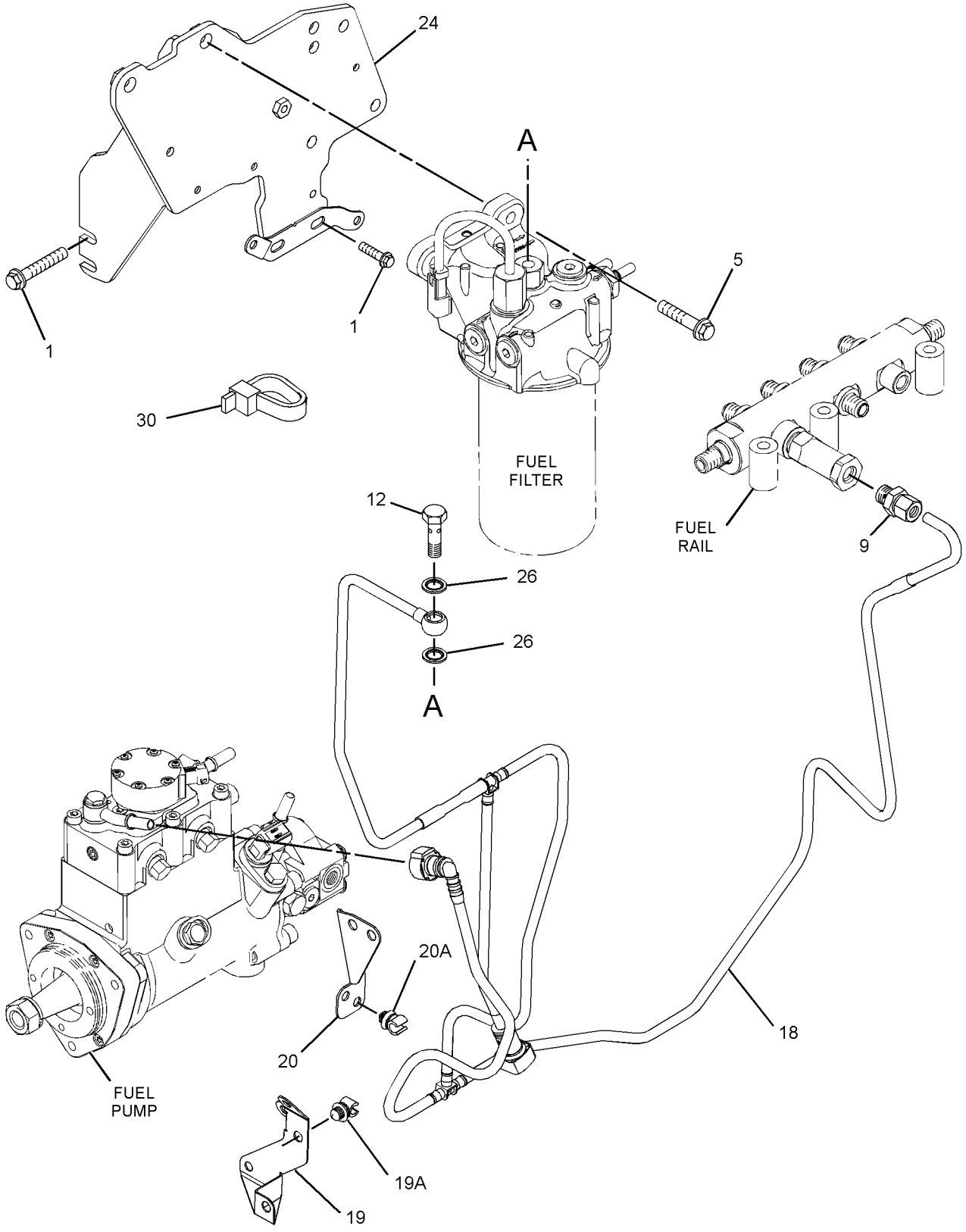

GRAPHIC #1 g01913215

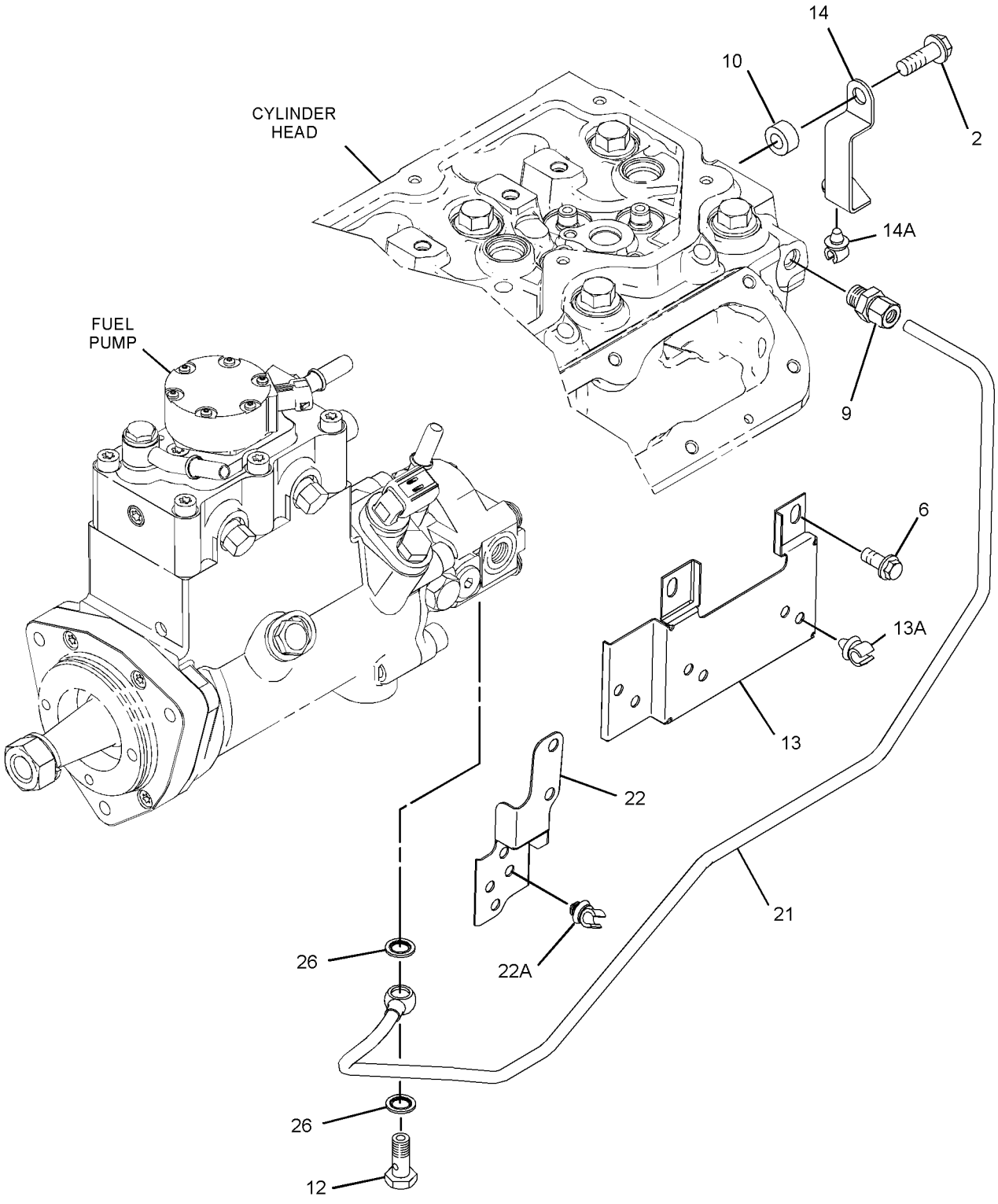

GRAPHIC #2

g01913216

305 - 7299 **LINES GP-FUEL** *(contd.)* **i03553565**

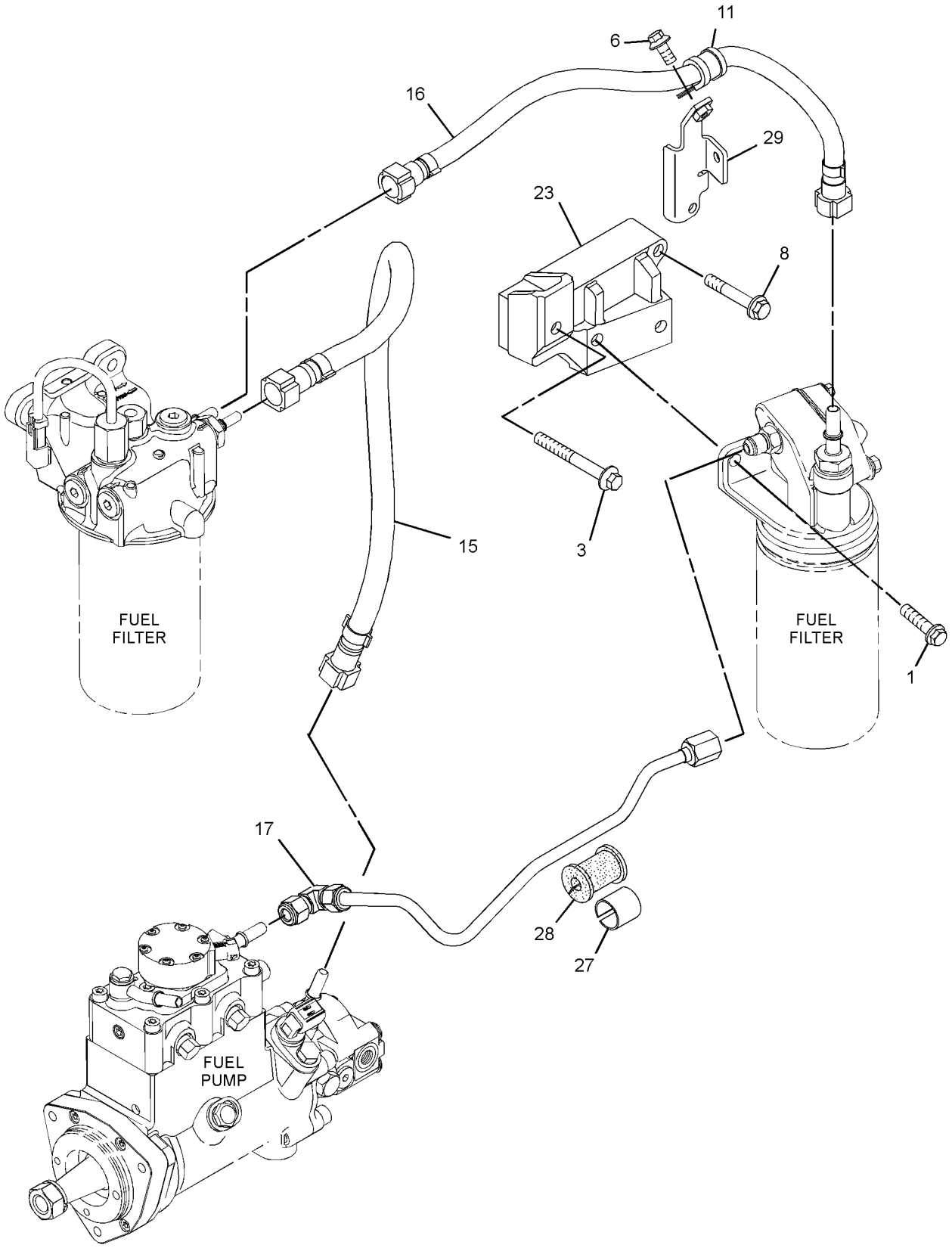

GRAPHIC #3 **<END>** g01913217

291-5919 PUMP & MTG GP-UNIT INJ HYD*R

S/N: C6E496-UP

PART OF 310-0658 PUMP GP-FUEL INJECTION

SMCS-1714 **i03079024**

NOTE	REF NO	GRAPHIC REF	PART NUMBER	QTY	PART NAME 1 2 3 4 5 6 (PRODUCT LEVEL)	SEE PAGE
	1	1	**228-0172**	1	FITTING-FUEL	
	2	1	**228-7100**	3	SEAL-O-RING	
	3	1	**247-6019**	1	SEAL	
	4	1	**248-1066**	1	FITTING-FUEL	
	5	1	**293-0249**	1	PUMP GP-FUEL TRANSFER	
	6	1	**294-3031**	1	BOLT	
	7	1	**294-3032**	1	WASHER	
	8	1	**295-0189**	1	CONNECTOR AS	
	9	1	**295-4801**	1	NUT	
	10	1	**296-3542**	1	LOCKWASHER	
	11	1	**117-1385**	1	SEAL-O-RING	
M	12	1	**5A-3604**	5	BOLT-SOCKET HEAD (M8X1.25X25-MM)	
	13	1	**6D-7889**	1	SEAL-O-RING	
	14	1	**8L-2779**	4	SEAL-O-RING	
M	15	1	**8T-4200**	1	BOLT (M8X1.25X16-MM)	
	16	1	**238-0120**	1	SENSOR GP-SPEED (SECONDARY, TIMING)	

M-METRIC PART

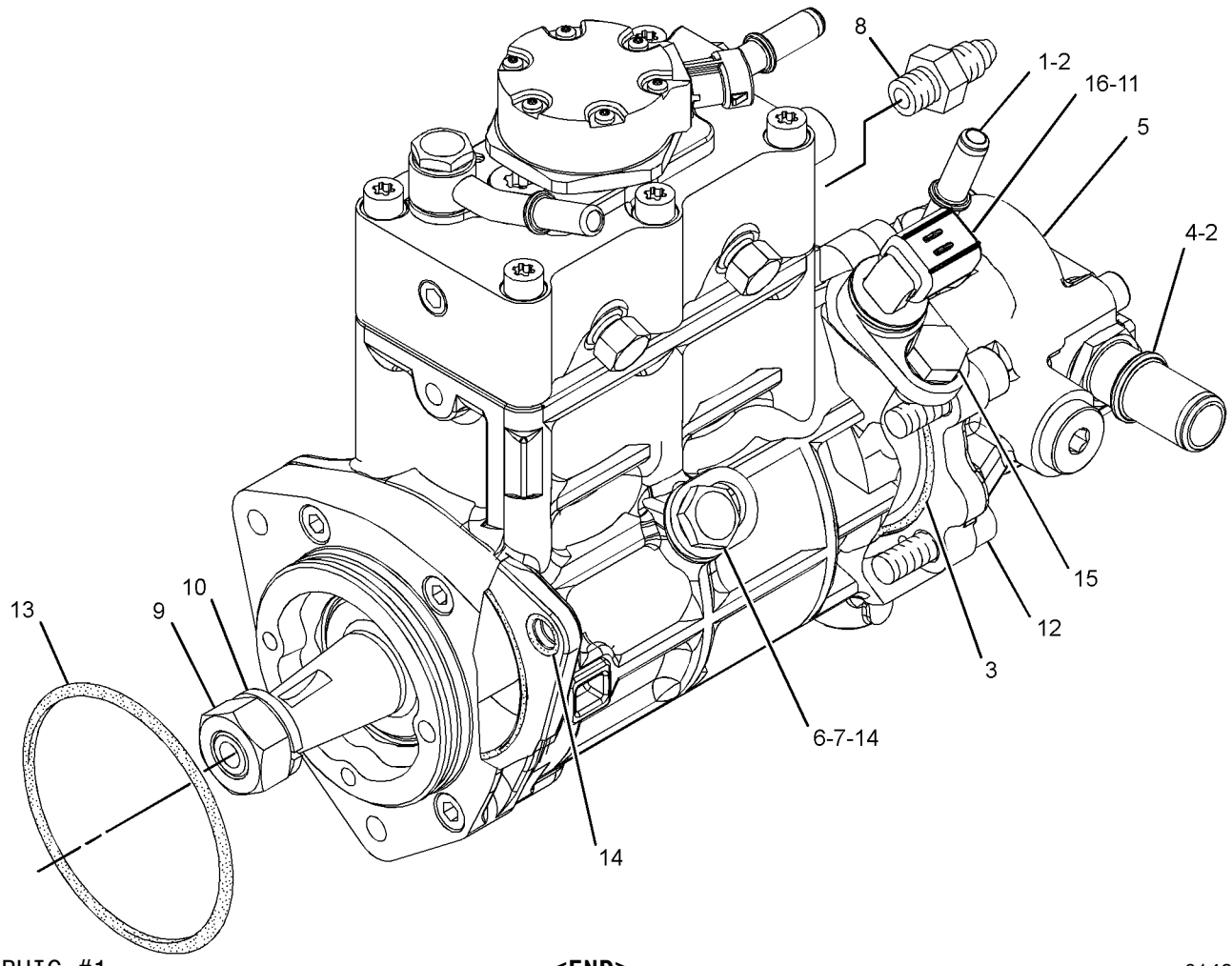

GRAPHIC #1 **<END>** g01490295

276-8398 PUMP GP-FUEL INJECTION

S/N: C6E1-UP

PART OF 278-5319 PUMP GP-FUEL INJECTION

SMCS-1251, 1290 **i03322767**

NOTE	REF NO	GRAPHIC REF	PART NUMBER	QTY	PART NAME 1 2 3 4 5 6 (PRODUCT LEVEL)	SEE PAGE
	1	1	**228-7100**	1	SEAL-O-RING	
	2	1	**238-0120**	1	SENSOR GP-SPEED (SECONDARY, TIMING)	
	3	1	**247-6019**	1	SEAL	
	4	1	**248-1066**	1	FITTING-FUEL	
	5	1	**293-0249**	1	PUMP GP-FUEL TRANSFER	
	6	1	**117-1385**	1	SEAL-O-RING	
M	7	1	**5A-3604**	5	BOLT-SOCKET HEAD (M8X1.25X25-MM)	
	8	1	**6D-7889**	1	SEAL-O-RING	
M	9	1	**8T-4200**	1	BOLT (M8X1.25X16-MM)	

M-METRIC PART

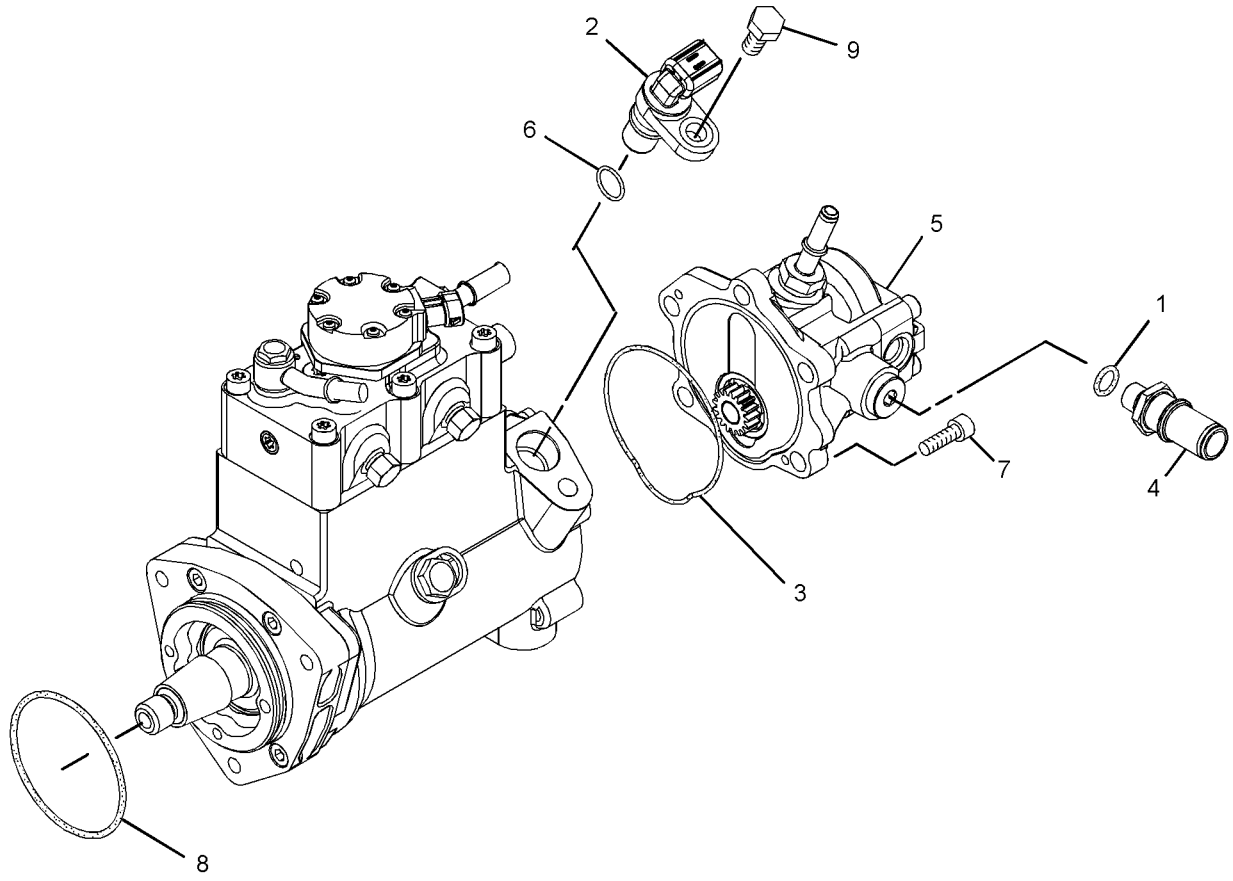

GRAPHIC #1 **<END>** g01427445

FUEL SYSTEM

278-5319 PUMP GP-FUEL INJECTION

S/N: C6E1-495

PART OF 242-1357 ENGINE AR-PRIMARY

SMCS-1251, 1290 **i02715378**

NOTE	REF NO	GRAPHIC REF	PART NUMBER	QTY	PART NAME 1 2 3 4 5 6 (PRODUCT LEVEL)	SEE PAGE
M	1	1,2	**6I-0217**	4	BOLT (M8X1.25X20-MM)	
CM	2	1	**6I-0254**	4	BOLT (M8X1.25X30-MM)	
	3	2	**6I-0456**	4	BOLT (M8X1.25X45-MM)	
C	4	1	**6I-4793**	1	BOLT (M8X1.25X50-MM)	
	5	2	**7W-2632**	1	WASHER (8.5X16.8X1.6-MM THK)	
R	6	2	**286-3683**	1	CONTROL GP-UNPROGRAMMED (ENGINE)	
M	7	1,3	**124-3815**	1	BOLT (M8X16X1.25-MM)	
	8	2	**155-0576**	8	MOUNT-ISOLATION	
	9	1	**216-9752**	2	WASHER	
	10	2	**217-0099**	4	SPACER (8.2X25X2-MM THK)	
	11	1	**225-8524**	1	BOLT-SPECIAL (BANJO)	
	12	1	**230-8989**	1	GEAR-FUEL PUMP (68-TEETH)	
	15	1	**265-8125**	1	RAIL AS-FUEL	
Y	17	1	**276-8398**	1	PUMP GP-FUEL INJECTION	133
	18	1	**278-5168**	6	CLAMP-INJECTOR	
	19	1	**278-5180**	2	CLIP	
	20	1	**292-0848**	1	TUBE	
	21	2	**278-5201**	1	CONNECTION	
	22	2	**278-5203**	4	SPACER	
	23	2	**293-9901**	1	BRACKET	
	24	2	**278-5209**	1	BRACKET	
	25	2	**278-5210**	1	BOLT	
	27	3	**278-5225**	1	KIT-SENSOR (ENGINE OIL PRESSURE)	
	27A	3	**278-5226**	1	SEAL-O-RING	
	28	3	**278-5228**	1	KIT-SENSOR (ENGINE SPEED)	
	28A	3	**278-5227**	1	SEAL-O-RING	
	29	3	**278-5272**	1	KIT-SENSOR (INTAKE AIR TEMPERATURE)	
	29A	3	**278-5226**	1	SEAL-O-RING	
	30	3	**278-5273**	1	KIT-SENSOR (AIR PRESSURE)	
	30A	3	**199-9252**	1	SEAL-O-RING	
	31	3	**278-5307**	1	KIT-SENSOR (COOLANT TEMPERATURE)	
	31A	3	**199-9267**	1	SEAL-O-RING	
	32	1	**278-5308**	1	KIT-SENSOR (FUEL RAIL PRESSURE)	
	32A	1	**278-5309**	1	WASHER	
C	33	1	**280-1889**	4	CLAMP	
C	34	1	**280-1890**	4	CLAMP	
C	35	1	**280-1891**	4	ISOLATOR	
	37	1	**282-3233**	1	BRACKET	
	38	1	**282-3234**	1	BRACKET	
	40	1	**232-3149**	6	WASHER (8.35X16.85X1.55-MM THK)	
	41	1	**278-5170**	6	BOLT	
	42	2	**278-5202**	2	SEAL-O-RING	
	44	1	**290-3911**	1	TUBE-FUEL INJECTION (CYL NO. 1)	
	45	1	**290-3912**	1	TUBE-FUEL INJECTION (CYL NO. 2)	
	46	1	**290-3913**	1	TUBE-FUEL INJECTION (CYL NO. 3)	
	47	1	**290-3914**	1	TUBE-FUEL INJECTION (CYL NO. 4)	
	48	1	**290-3915**	1	TUBE-FUEL INJECTION (CYL NO. 5)	
	49	1	**290-3916**	1	TUBE-FUEL INJECTION (CYL NO. 6)	
	50	1	**290-3910**	1	TUBE-FUEL INJECTION	
Y	51	1	**282-0480**	6	INJECTOR GP-FUEL	120
	52	1	**287-6839**	1	BOLT	
	53	2	**268-6677**	1	BRACKET AS	
		2	**260-3718**	1	BRACKET	
	53A	2	**260-3939**	1	SCREW-HEX HEAD	
	54	2	**268-6678**	1	BRACKET AS	
		2	**260-3719**	1	BRACKET	

278-5319 **PUMP GP-FUEL INJECTION** *(contd.)* **i02715378**

NOTE	REF NO	GRAPHIC REF	PART NUMBER	QTY	PART NAME 1 2 3 4 5 6 (PRODUCT LEVEL)	SEE PAGE
	54A	2	**260-3939**	1	SCREW-HEX HEAD	
C	55	1	**300-2940**	1	BRACKET	
C	56	1	**241-4291**	4	SCREW	
C	57	1	**6I-4374**	2	BOLT (M8X1.25X60-MM)	
FM			**6I-0260**	1	BOLT (M8X1.25X25-MM)	
FM			**101-3895**	1	BOLT (M8X1.25X35-MM)	
F			**278-4138**	4	PROTECTION GP-FUEL SYSTEM	

C-CHANGE FROM PREVIOUS TYPE
F-NOT SHOWN
M-METRIC PART
R-REMFG PART MAY BE AVAILABLE
Y-SEPARATE ILLUSTRATION

278-5319 **PUMP GP-FUEL INJECTION** *(contd.)* **i02715378**

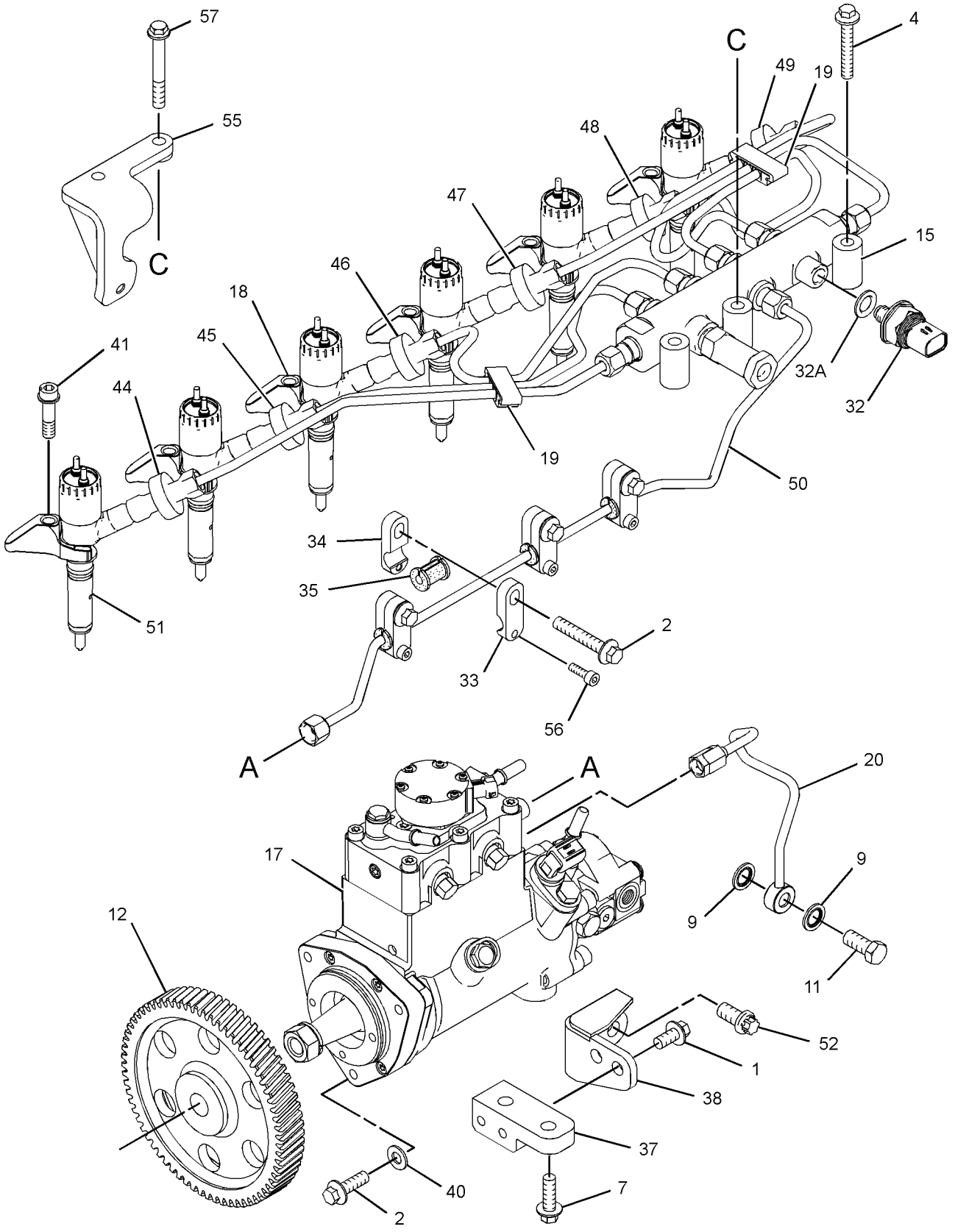

GRAPHIC #1 g01366480

278-5319 **PUMP GP-FUEL INJECTION** *(contd.)* **i02715378**

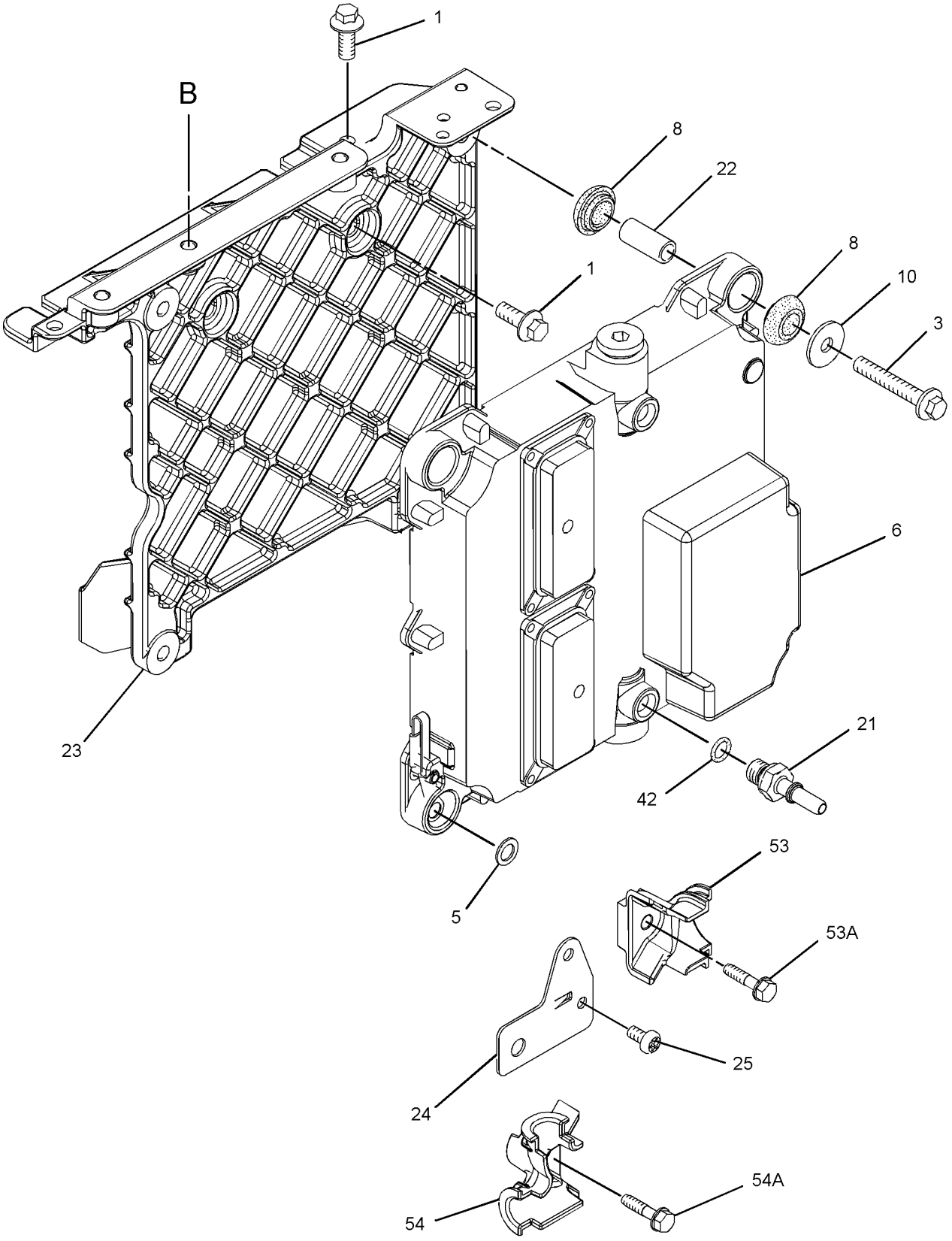

GRAPHIC #2 g01353550

278-5319 **PUMP GP-FUEL INJECTION** *(contd.)* **i02715378**

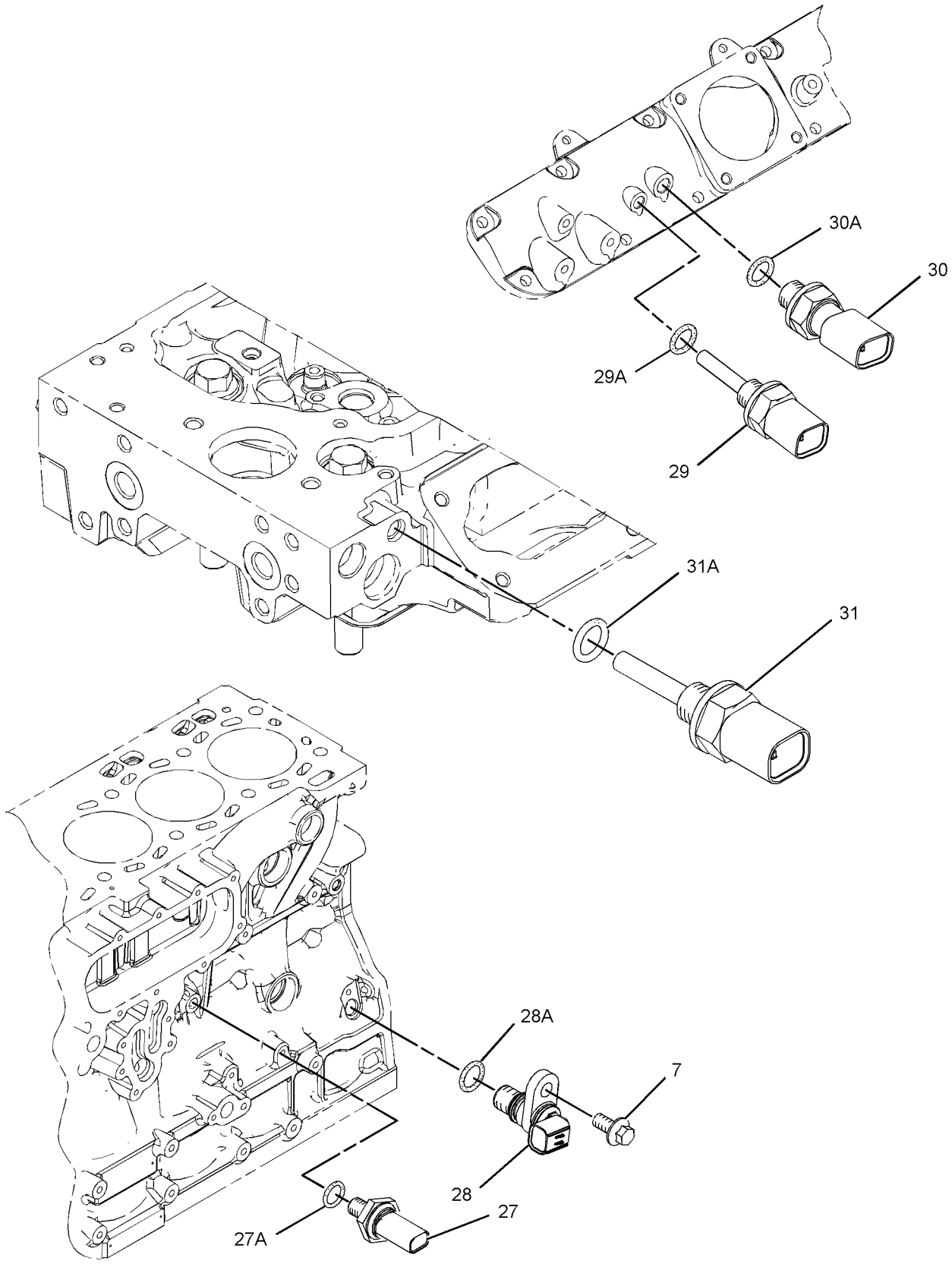

GRAPHIC #3 **<END>** g01218530

310-0658 PUMP GP-FUEL INJECTION

S/N: C6E496-3159

PART OF 242-1357 ENGINE AR-PRIMARY

SMCS-1251, 1290 **i03081206**

NOTE	REF NO	GRAPHIC REF	PART NUMBER	QTY	PART NAME 1 2 3 4 5 6 (PRODUCT LEVEL)	SEE PAGE
M	1	1	**6I-0217**	6	BOLT (M8X1.25X20-MM)	
M	2	2	**6I-0254**	4	BOLT (M8X1.25X30-MM)	
M	3	1	**6I-0260**	4	BOLT (M8X1.25X25-MM)	
	4	1	**6I-0456**	4	BOLT (M8X1.25X45-MM)	
	5	2	**6I-4374**	2	BOLT (M8X1.25X60-MM)	
	6	2	**6I-4793**	1	BOLT (M8X1.25X50-MM)	
	7	1	**7W-2632**	1	WASHER (8.5X16.8X1.6-MM THK)	
M	8	1	**101-3895**	1	BOLT (M8X1.25X35-MM)	
M	9	3	**124-3815**	1	BOLT (M8X16X1.25-MM)	
	10	1	**160-0162**	2	WASHER	
	11	1	**217-0099**	4	SPACER (8.2X25X2-MM THK)	
	12	2	**217-9039**	1	STRAP-CABLE	
	13	1	**225-8524**	1	BOLT-SPECIAL (BANJO)	
	14	1	**230-8989**	1	GEAR-FUEL PUMP (68-TEETH)	
	15	1	**232-3149**	3	WASHER (8.35X16.85X1.55-MM THK)	
	16	2	**241-4291**	4	SCREW	
	17	1	**268-6677**	1	BRACKET AS	
	17A	1	**260-3939**	1	SCREW-HEX HEAD	
	18	1	**268-6678**	1	BRACKET AS	
	18A	1	**260-3939**	1	SCREW-HEX HEAD	
	19	2	**278-5168**	6	CLAMP-INJECTOR	
	20	2	**278-5170**	6	BOLT	
	21	2	**278-5180**	2	CLIP	
	22	1	**278-5203**	4	SPACER	
	23	3	**278-5225**	1	KIT-SENSOR (ENGINE OIL PRESSURE)	
	23A	3	**199-9267**	1	SEAL-O-RING	
	24	3	**278-5272**	1	KIT-SENSOR (AIR TEMPERATURE)	
	24A	3	**278-5226**	1	SEAL-O-RING	
	25	3	**278-5273**	1	KIT-SENSOR (AIR PRESSURE)	
	25A	3	**199-9252**	1	SEAL-O-RING	
	26	3	**278-5307**	1	KIT-SENSOR (COOLANT TEMPERATURE)	
	26A	3	**199-9267**	1	SEAL-O-RING	
	27	2	**311-6342**	1	SENSOR-PRESSURE (FUEL)	
	27A	2	**309-8006**	1	WASHER	
	28	2	**330-3685**	4	CLAMP	
	29	2	**330-3687**	4	CLAMP	
	30	2	**330-5467**	4	ISOLATOR	
	31	1	**287-6838**	1	BRACKET	
	32	1	**287-6839**	2	BOLT	
	33	2	**290-3910**	1	TUBE-FUEL INJECTION	
	34	2	**290-3911**	1	TUBE-FUEL INJECTION (CYL NO. 1)	
	35	2	**290-3912**	1	TUBE-FUEL INJECTION (CYL NO. 2)	
	36	2	**290-3913**	1	TUBE-FUEL INJECTION (CYL NO. 3)	
	37	2	**290-3914**	1	TUBE-FUEL INJECTION (CYL NO. 4)	
	38	2	**290-3915**	1	TUBE-FUEL INJECTION (CYL NO. 5)	
	39	2	**290-3916**	1	TUBE-FUEL INJECTION (CYL NO. 6)	
YR	40	1	**291-5919**	1	PUMP & MTG GP-UNIT INJ HYD	132
	41	1	**321-1270**	1	TUBE-OIL	
CY	42	2	**321-3600**	6	INJECTOR GP-FUEL	121
	43	1	**293-9901**	1	BRACKET	
	44	2	**300-2940**	1	BRACKET	
	45	1	**300-6714**	8	MOUNT	
C	46	2	**311-6632**	1	RAIL AS-FUEL	
	47	1	**310-7918**	1	BRACKET-SUPPORT	
	48	3	**311-3858**	1	KIT-SENSOR (ENGINE SPEED)	
	48A	3	**274-1639**	1	SEAL	

310-0658 **PUMP GP-FUEL INJECTION** *(contd.)* **i03081206**

NOTE	REF NO	GRAPHIC REF	PART NUMBER	QTY	PART NAME 1 2 3 4 5 6 (PRODUCT LEVEL)	SEE PAGE
R	49	1	**286-3686**	1	CONTROL GP-ENGINE ELECTRONIC	
F			**278-4138**	4	PROTECTION GP-FUEL SYSTEM	

C-CHANGE FROM PREVIOUS TYPE
F-NOT SHOWN
M-METRIC PART
R-REMFG PART MAY BE AVAILABLE
Y-SEPARATE ILLUSTRATION

310-0658 **PUMP GP-FUEL INJECTION** *(contd.)* **i03081206**

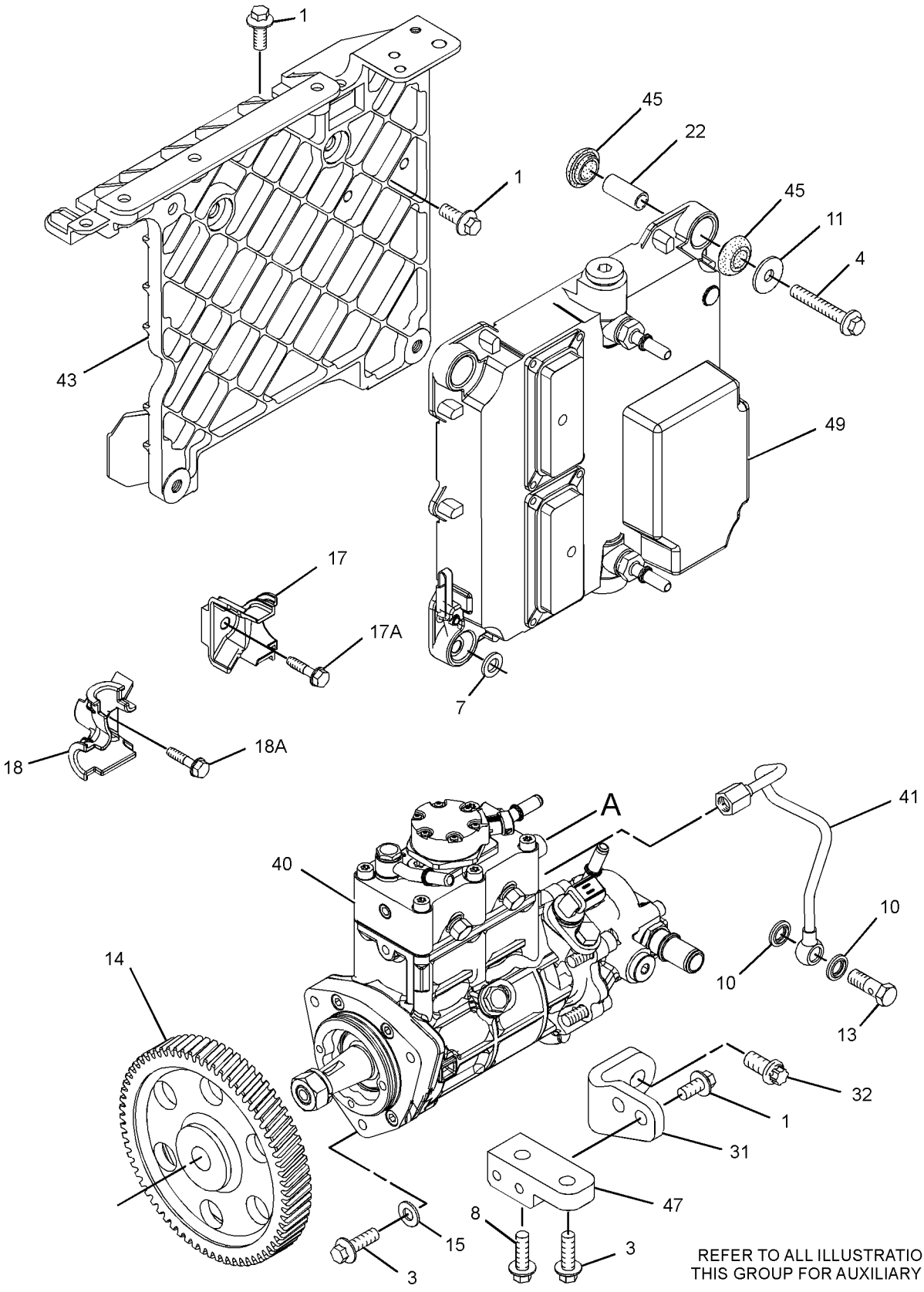

REFER TO ALL ILLUSTRATIONS OF THIS GROUP FOR AUXILIARY VIEWS

GRAPHIC #1

g01643233

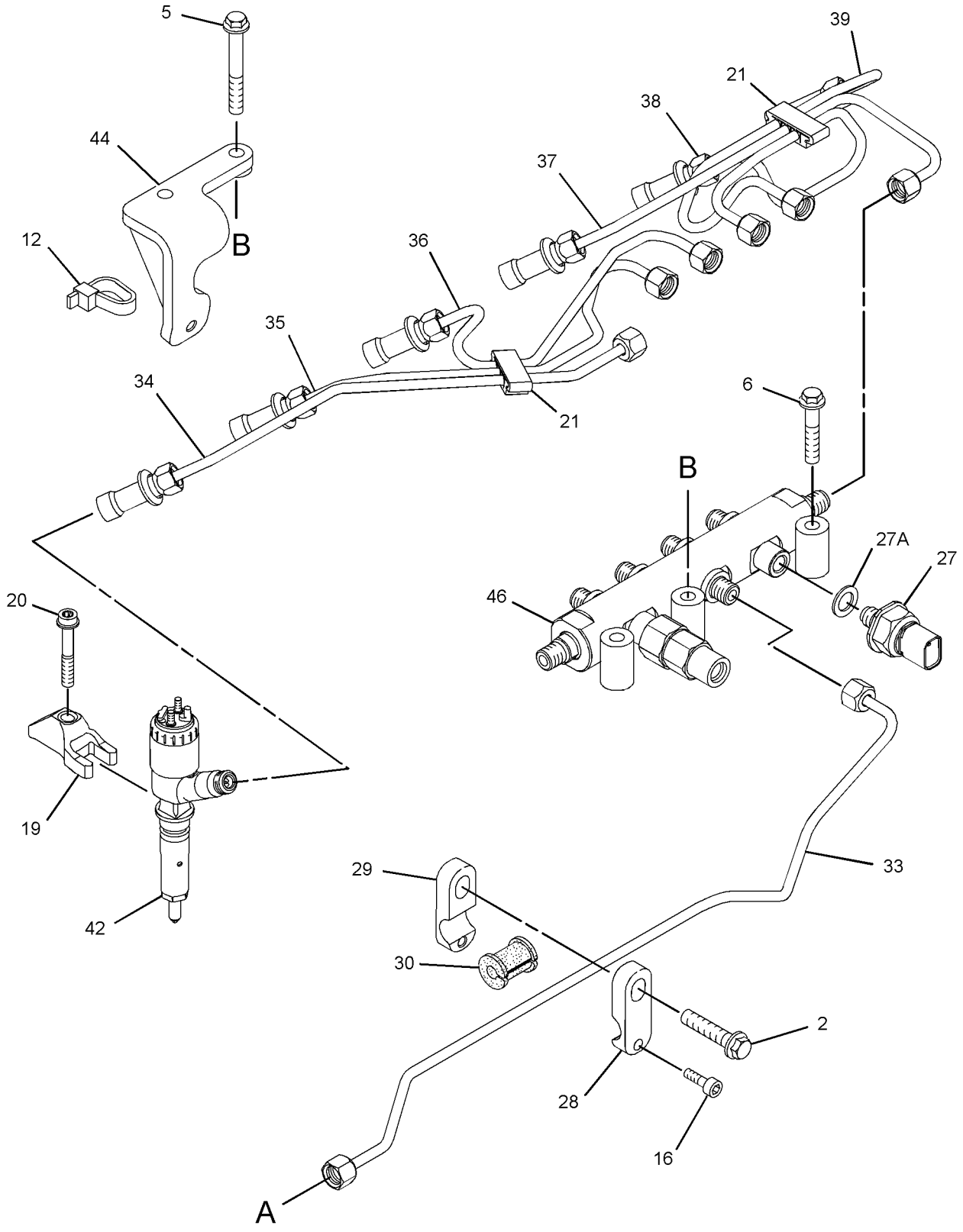

GRAPHIC #2

g01643234

310-0658 **PUMP GP-FUEL INJECTION** *(contd.)* **i03081206**

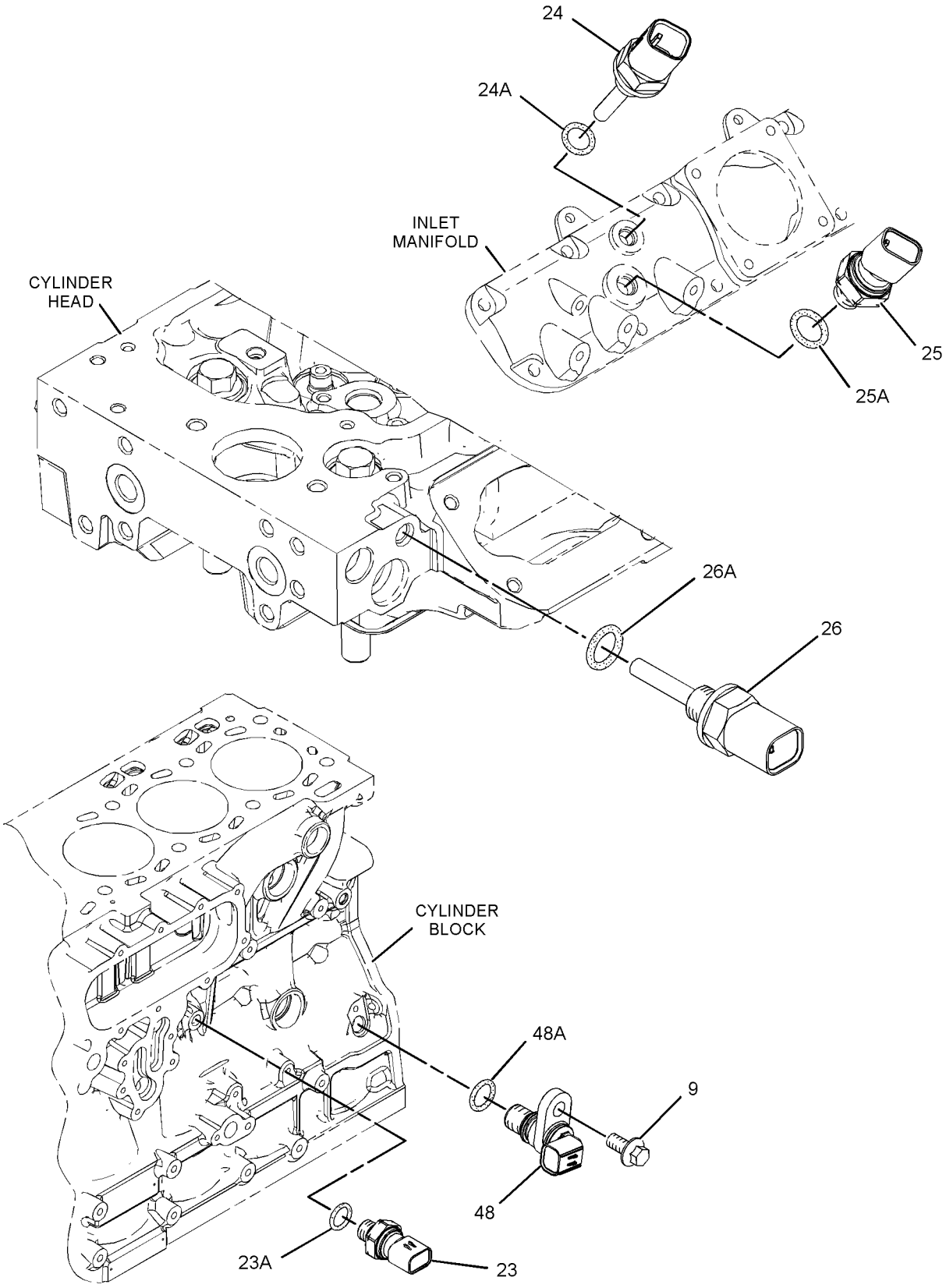

GRAPHIC #3 **<END>** g01401439

FUEL SYSTEM

310-0658 PUMP GP-FUEL INJECTION

S/N: C6E3160-UP

PART OF 242-1357 ENGINE AR-PRIMARY

SMCS-1251, 1290 **i03345989**

NOTE	REF NO	GRAPHIC REF	PART NUMBER	QTY	PART NAME 1 2 3 4 5 6 (PRODUCT LEVEL)	SEE PAGE
M	1	1	**6I-0217**	6	BOLT (M8X1.25X20-MM)	
M	2	2	**6I-0254**	4	BOLT (M8X1.25X30-MM)	
M	3	1	**6I-0260**	4	BOLT (M8X1.25X25-MM)	
	4	1	**6I-0456**	4	BOLT (M8X1.25X45-MM)	
	5	2	**6I-4374**	2	BOLT (M8X1.25X60-MM)	
	6	2	**6I-4793**	1	BOLT (M8X1.25X50-MM)	
	7	1	**7W-2632**	1	WASHER (8.5X16.8X1.6-MM THK)	
M	8	1	**101-3895**	1	BOLT (M8X1.25X35-MM)	
M	9	3	**124-3815**	1	BOLT (M8X16X1.25-MM)	
	10	1	**160-0162**	2	WASHER	
	11	1	**217-0099**	4	SPACER (8.2X25X2-MM THK)	
	12	2	**217-9039**	1	STRAP-CABLE	
	13	1	**225-8524**	1	BOLT-SPECIAL (BANJO)	
	14	1	**230-8989**	1	GEAR-FUEL PUMP (68-TEETH)	
	15	1	**232-3149**	3	WASHER (8.35X16.85X1.55-MM THK)	
	16	2	**241-4291**	4	SCREW	
	17	1	**268-6677**	1	BRACKET AS	
	17A	1	**260-3939**	1	SCREW-HEX HEAD	
	18	1	**268-6678**	1	BRACKET AS	
	18A	1	**260-3939**	1	SCREW-HEX HEAD	
	19	2	**278-5168**	6	CLAMP-INJECTOR	
	20	2	**278-5170**	6	BOLT	
	21	2	**278-5180**	2	CLIP	
	22	1	**278-5203**	4	SPACER	
	23	3	**278-5225**	1	KIT-SENSOR (ENGINE OIL PRESSURE)	
	23A	3	**199-9267**	1	SEAL-O-RING	
	24	3	**278-5272**	1	KIT-SENSOR (AIR TEMPERATURE)	
	24A	3	**278-5226**	1	SEAL-O-RING	
	25	3	**278-5273**	1	KIT-SENSOR (AIR PRESSURE)	
	25A	3	**199-9252**	1	SEAL-O-RING	
	26	3	**278-5307**	1	KIT-SENSOR (COOLANT TEMPERATURE)	
	26A	3	**199-9267**	1	SEAL-O-RING	
	27	2	**311-6342**	1	SENSOR-PRESSURE (FUEL)	
	27A	2	**309-8006**	1	WASHER	
	28	2	**330-3685**	4	CLAMP	
	29	2	**330-3687**	4	CLAMP	
	30	2	**330-5467**	4	ISOLATOR	
	31	1	**287-6838**	1	BRACKET	
	32	1	**287-6839**	2	BOLT	
	33	2	**336-8180**	1	TUBE-FUEL INJECTION	
	34	2	**336-8174**	1	TUBE-FUEL INJECTION (CYL NO. 1)	
	35	2	**336-8175**	1	TUBE-FUEL INJECTION (CYL NO. 2)	
	36	2	**336-8176**	1	TUBE-FUEL INJECTION (CYL NO. 3)	
	37	2	**336-8177**	1	TUBE-FUEL INJECTION (CYL NO. 4)	
	38	2	**336-8178**	1	TUBE-FUEL INJECTION (CYL NO. 5)	
	39	2	**336-8179**	1	TUBE-FUEL INJECTION (CYL NO. 6)	
YR	40	1	**317-8021**	1	PUMP GP-FUEL INJECTION	149
	41	1	**321-1270**	1	TUBE-OIL	
CYR	42	2	**321-3600**	6	INJECTOR GP-FUEL	121
	43	1	**293-9901**	1	BRACKET	
	44	2	**300-2940**	1	BRACKET	
	45	1	**300-6714**	8	MOUNT	
C	46	2	**311-6632**	1	RAIL AS-FUEL	
	46A	2	**305-5291**	1	VALVE AS-RELIEF	
	47	1	**310-7918**	1	BRACKET-SUPPORT	
	48	3	**311-3858**	1	KIT-SENSOR (ENGINE SPEED)	

310-0658 **PUMP GP-FUEL INJECTION** *(contd.)* **i03345989**

NOTE	REF NO	GRAPHIC REF	PART NUMBER	QTY	PART NAME 1 2 3 4 5 6 (PRODUCT LEVEL)	SEE PAGE
	48A	3	**274-1639**	1	SEAL	
		3	**238-0120**	1	SENSOR GP-SPEED	
	49	1	**331-7540**	1	CONTROL GP-UNPROGRAMMED	
F			**278-4138**	4	PROTECTION GP-FUEL SYSTEM	

C-CHANGE FROM PREVIOUS TYPE
F-NOT SHOWN
M-METRIC PART
R-REMFG PART MAY BE AVAILABLE
Y-SEPARATE ILLUSTRATION

310-0658 **PUMP GP-FUEL INJECTION** *(contd.)* **i03345989**

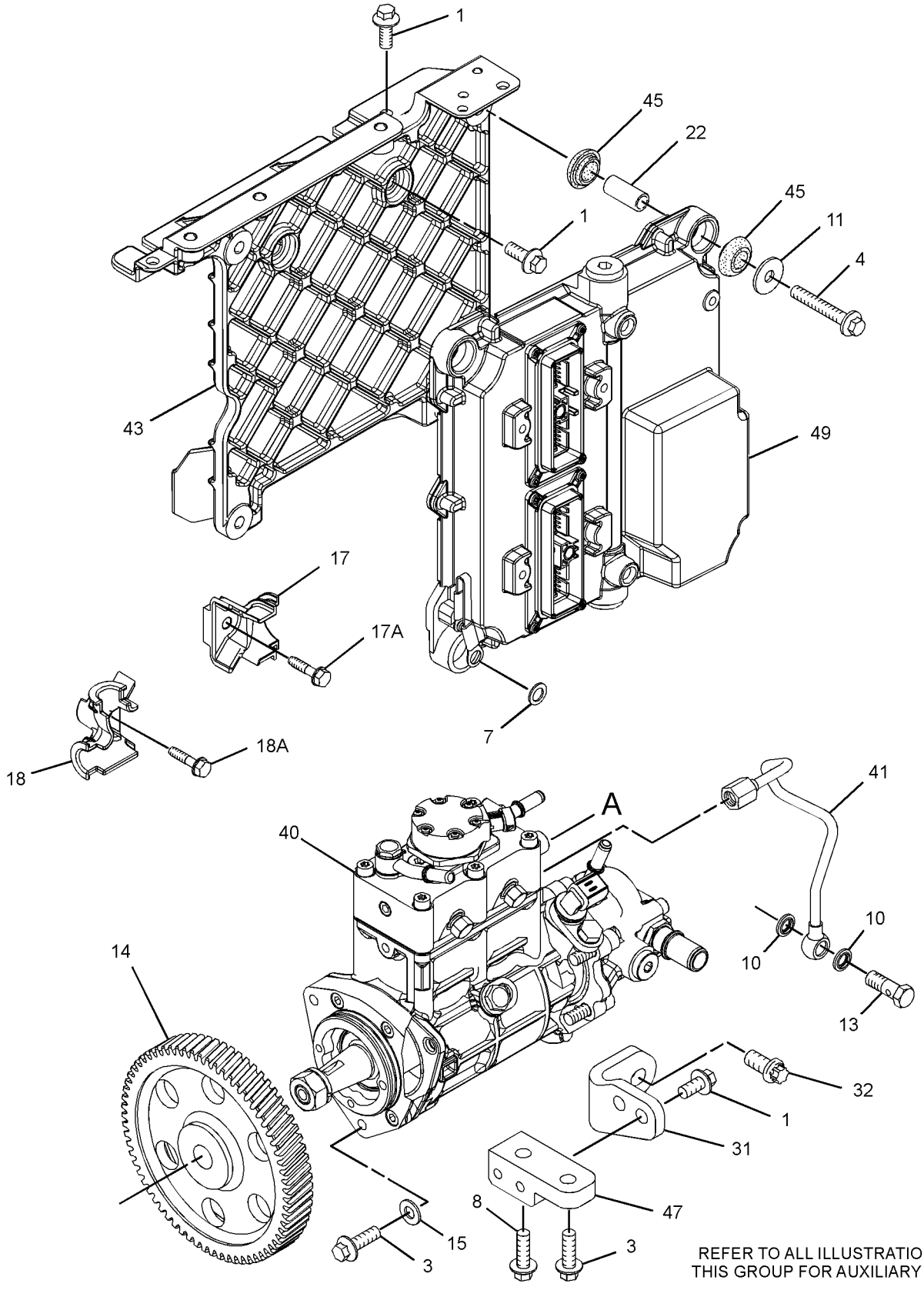

REFER TO ALL ILLUSTRATIONS OF THIS GROUP FOR AUXILIARY VIEWS

GRAPHIC #1

g01827254

310-0658 **PUMP GP-FUEL INJECTION** *(contd.)* **i03345989**

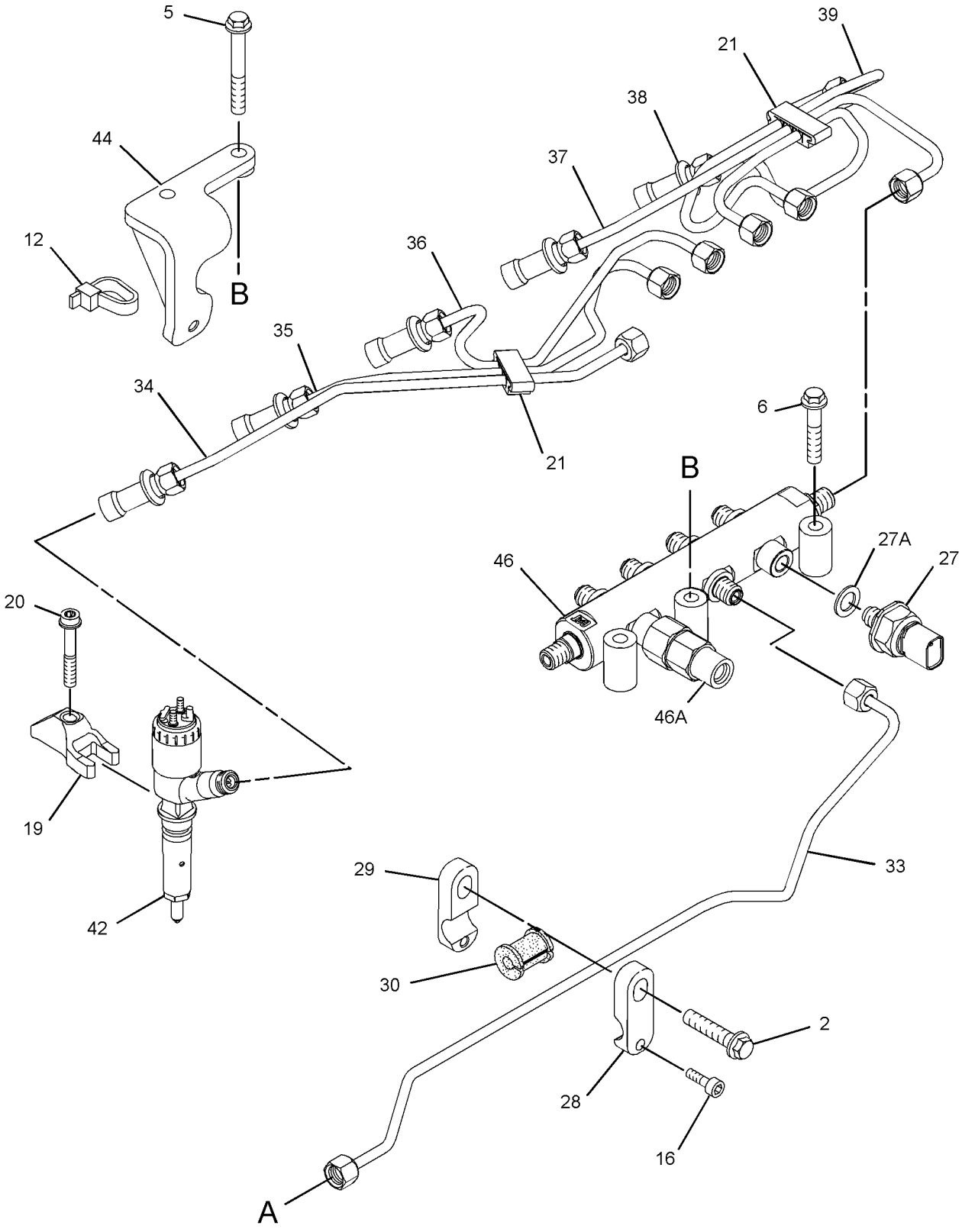

GRAPHIC #2 g01827255

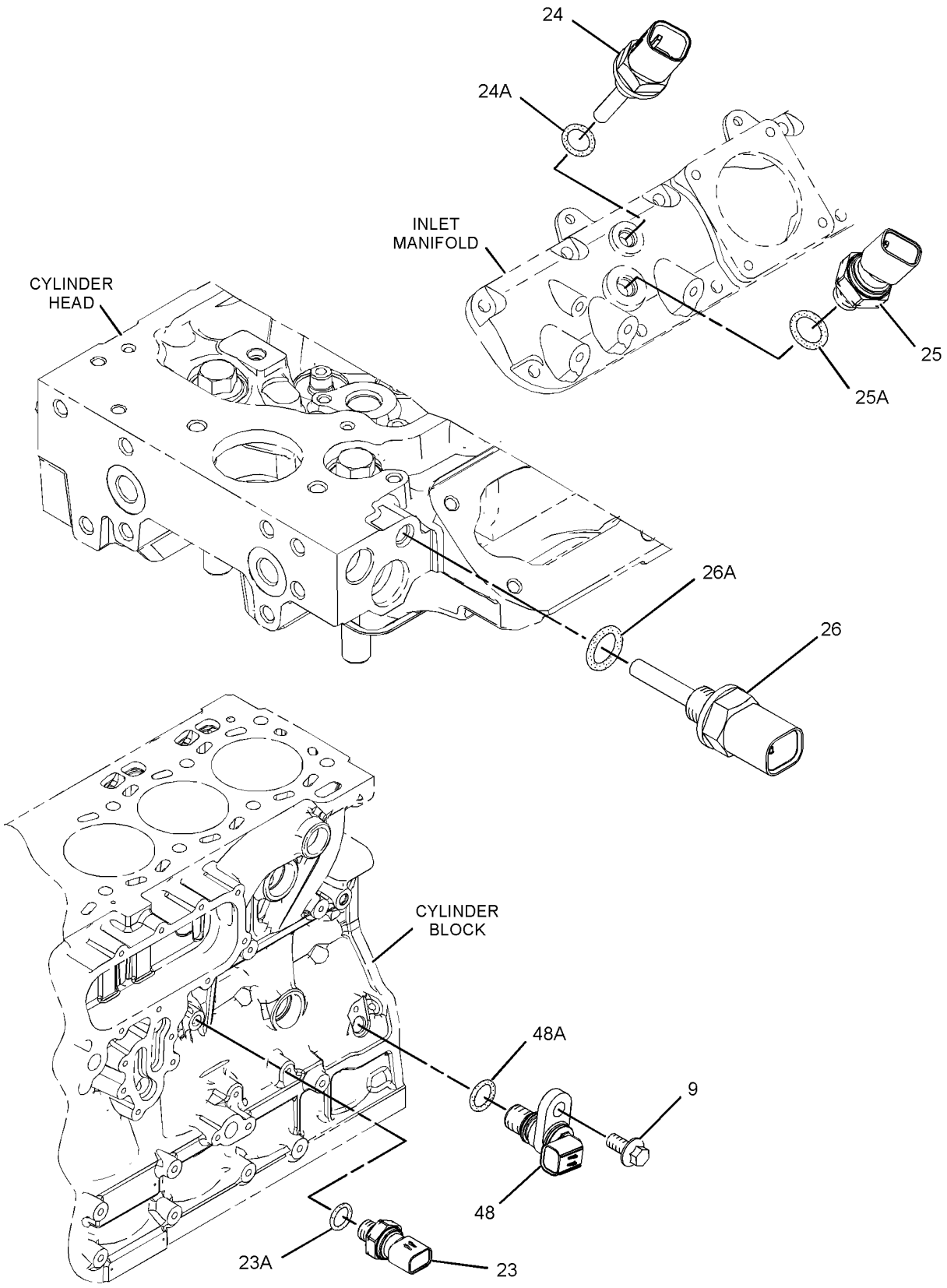

GRAPHIC #3 **<END>** g01401439

317-8021 PUMP GP-FUEL INJECTION*R

S/N: C6E496-UP

PART OF 310-0658 PUMP GP-FUEL INJECTION

SMCS-1251, 1290 **i03490648**

NOTE	REF NO	GRAPHIC REF	PART NUMBER	QTY	PART NAME 1 2 3 4 5 6 (PRODUCT LEVEL)	SEE PAGE
	1	1	**228-0172**	1	FITTING-FUEL	
	2	1	**228-7100**	2	SEAL-O-RING	
	3	1	**238-0120**	1	SENSOR GP-SPEED (SECONDARY, TIMING)	
	4	1	**247-6019**	1	SEAL	
	5	1	**248-1066**	1	FITTING-FUEL	
	6	1	**293-0249**	1	PUMP GP-FUEL TRANSFER	
	7	1	**295-4801**	1	NUT	
	8	1	**296-3542**	1	LOCKWASHER	
	9	1	**117-1385**	1	SEAL-O-RING	
M	10	1	**5A-3604**	5	BOLT-SOCKET HEAD (M8X1.25X25-MM)	
	11	1	**334-2932**	1	SEAL-O-RING	
	12	1	**8L-2779**	4	SEAL-O-RING	
M	13	1	**8T-4200**	1	BOLT (M8X1.25X16-MM)	

M-METRIC PART

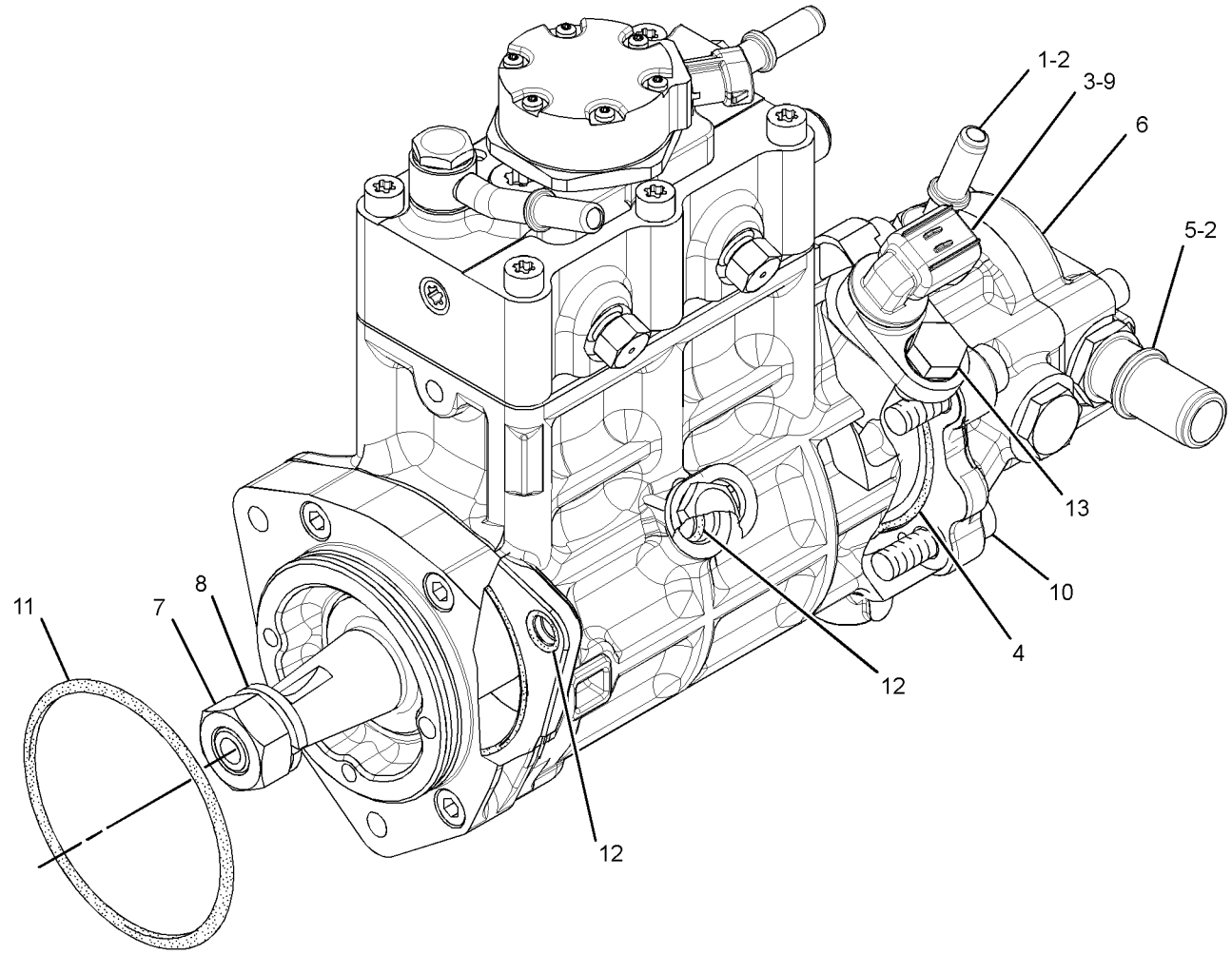

GRAPHIC #1 **<END>** g01701813

183-2824 PUMP GP-FUEL PRIMING–MANUAL

S/N: LBP1-UP
PART OF 280-9403 PUMP GP-FUEL PRIMING
AN ATTACHMENT

SMCS-1258 **i03086264**

NOTE	REF NO	GRAPHIC REF	PART NUMBER	QTY	PART NAME 1 2 3 4 5 6 (PRODUCT LEVEL)	SEE PAGE
	1	1	**9Y-8389**	1	GASKET (PRIMING PUMP/COVER) (FUEL PRIMING PUMP)	
	2	1	**183-2823**	1	PUMP AS-FUEL PRIMING	
		1	**229-3218**	2	VALVE AS (FUEL PRIMING PUMP)	
		1	**061-7539**	1	SEAL-O-RING	
	3	1	**8T-4205**	1	WASHER-HARD (7.2X14.5X2-MM THK)	
M	4	1	**8T-7547**	1	BOLT (M8X1.25X30-MM)	
M	5	1	**8T-4971**	1	BOLT (M6X1X30-MM)	
	6	1	**8T-4224**	1	WASHER-HARD (8.8X16X2-MM THK)	

M-METRIC PART

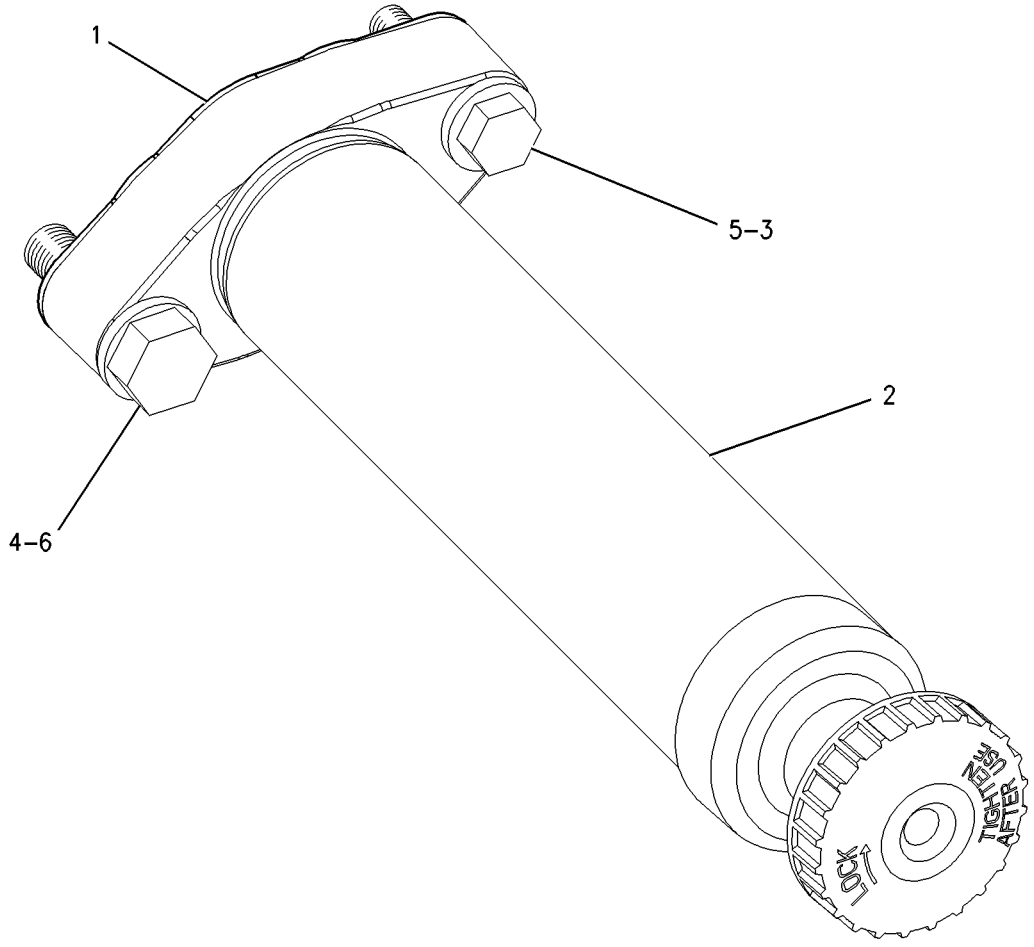

GRAPHIC #1 **<END>** g00671522

FUEL SYSTEM

280-9403 PUMP GP-FUEL PRIMING

S/N: LBP1-UP

AN ATTACHMENT

SMCS-1258 **i02786477**

NOTE	REF NO	GRAPHIC REF	PART NUMBER	QTY	PART NAME 1 2 3 4 5 6 (PRODUCT LEVEL)	SEE PAGE
	1	1	**1P-4278**	1	CLAMP-HOSE	
	2	1	**8T-0376**	1	VALVE (DRAIN)	
Y	3	1	*183-2824*	1	PUMP GP-FUEL PRIMING (MANUAL)	150
	4	1	**253-1669**	1	FILM-INSTRUCTION (CONDENSATE PUMP)	
	5	1	**280-0324**	1	BRACKET AS	
	6	1	**303-2169**	1	ADAPTER AS-DRAIN	
	7	1	**303-5940**	1	HOSE AS	
	9	1	*148-8326*	1	CONNECTOR AS	
		1	**6V-9872**	1	CONNECTOR	
		1	**3J-7354**	1	SEAL-O-RING	
		1	**6V-8397**	1	SEAL-O-RING	
	10	1	*148-8336*	1	CONNECTOR AS	
		1	**6V-8636**	1	CONNECTOR	
		1	**3J-1907**	1	SEAL-O-RING	
		1	**6V-8397**	1	SEAL-O-RING	
	11	1	**2M-9780**	1	SEAL-O-RING	
	12	1	**6K-8178**	1	CLIP	
	13	1	**8T-4121**	3	WASHER-HARD (11X21X2.5-MM THK)	
M	14	1	**8T-4136**	3	BOLT (M10X1.5X25-MM)	
	15	1	**9M-8406**	3	CLIP	
D	16	1	**5P-5991**		HOSE (0.7-M)	

D-ORDER BY THE METER
M-METRIC PART
Y-SEPARATE ILLUSTRATION

280-9403 **PUMP GP-FUEL PRIMING** *(contd.)* **i02786477**

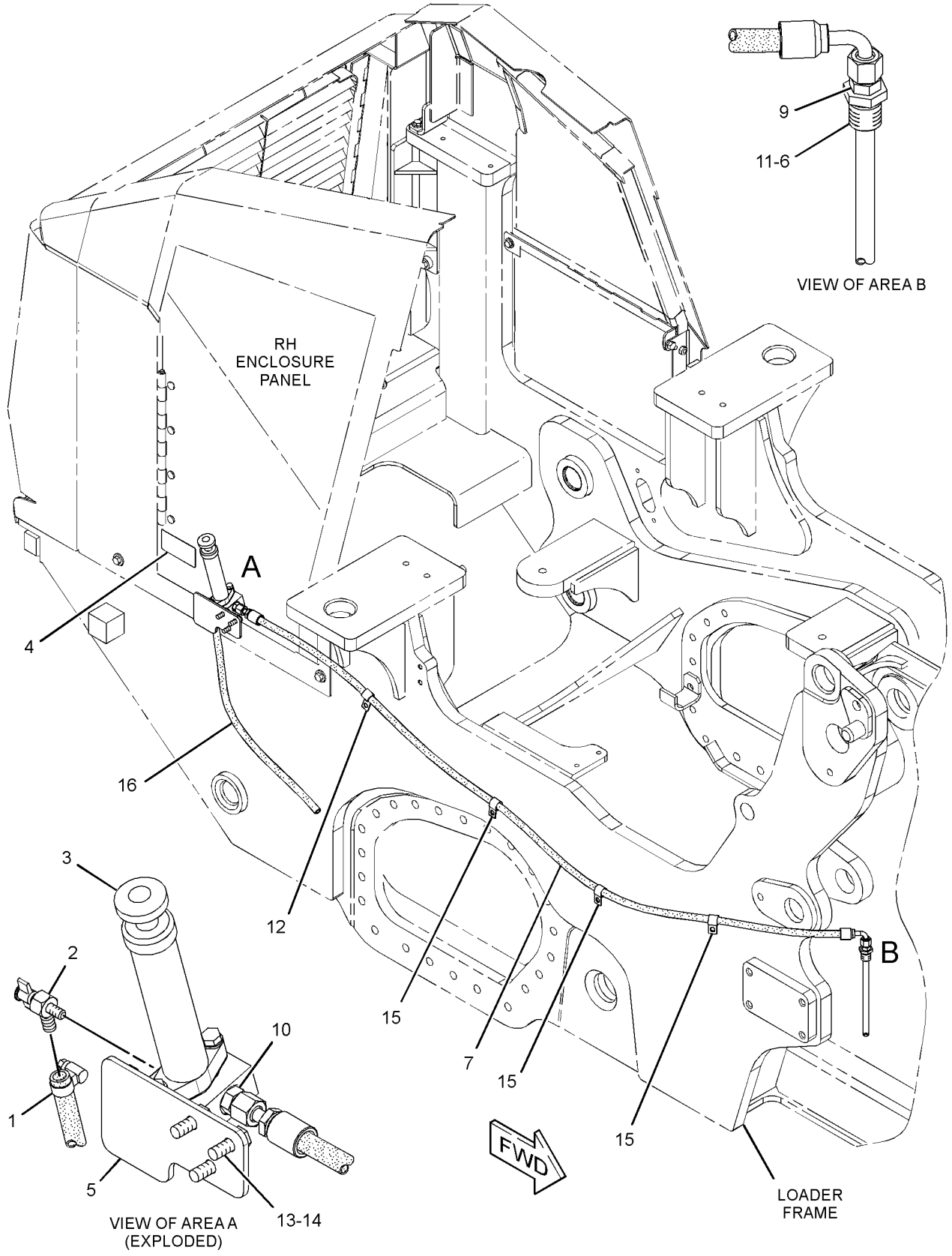

GRAPHIC #1 **<END>** g01424712

212-3657 PUMP GP-FUEL PRM & WATER SEP–ELECTRIC

S/N: LBP1-UP

PART OF 301-2710 PUMP GP-FUEL PRM & WATER SEP

SMCS-1258, 1261, 1263 **i01906285**

NOTE	REF NO	GRAPHIC REF	PART NUMBER	QTY	PART NAME 1 2 3 4 5 6 (PRODUCT LEVEL)	SEE PAGE
Y	1	1	*174-9570*	1	FILTER GP-WATER SEP & FUEL	119
	2	1	**217-8339**	1	PUMP AS-FUEL PRIMING (24-VOLT)	

Y-SEPARATE ILLUSTRATION

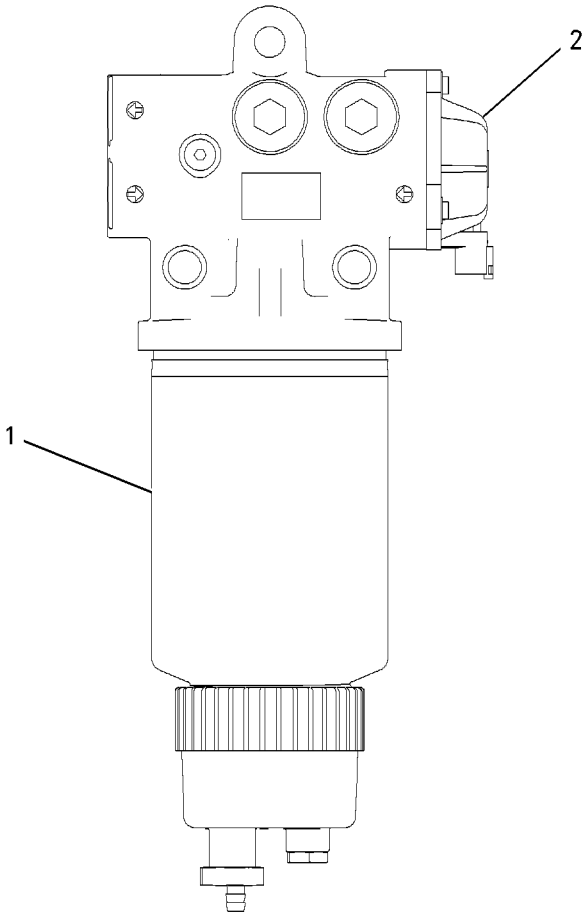

GRAPHIC #1 **<END>** g00875466

301-2710 PUMP GP-FUEL PRM & WATER SEP—ELECTRIC

S/N: LBP1-UP

PART OF 240-6227 INSTALLATION AR-ENGINE

SMCS-1258, 1261, 1263 **i03156406**

NOTE	REF NO	GRAPHIC REF	PART NUMBER	QTY	PART NAME 1 2 3 4 5 6 (PRODUCT LEVEL)	SEE PAGE
	1	1	**3S-2093**	3	STRAP-CABLE	
	2	1	**7K-1181**	6	STRAP-CABLE	
	3	1	**9L-6331**	1	BRACKET	
Y	4	1	**102-2240**	1	SENSOR GP-TEMPERATURE (FUEL)	211
	5	1	*161-9916*	1	ADAPTER AS	
		1	**2M-9780**	1	SEAL-O-RING	
		1	**6V-7420**	1	ADAPTER	
Y	6	1	**165-5970**	1	SWITCH GP-TOGGLE (FUEL PRIMING PUMP)	220
Y	7	1	**178-2345**	1	SENSOR GP-LIQUID LEVEL (WATER SEPARATOR)	206
	8	1	**206-2423**	1	SADDLE	
	9	1	**209-7659**	1	PLATE-INFORMATION (FUEL PRIMING PUMP ON, OFF)	
Y	10	1	**212-3657**	1	PUMP GP-FUEL PRM & WATER SEP (ELECTRIC)	153
	11	1	**232-1374**	1	BRACKET	
	12	1	**232-1376**	2	SPACER (8.5X12.7X139.1-MM THK)	
	13	1	**254-7864**	1	HOSE AS	
	14	1	**256-3454**	1	CONNECTOR	
	15	1	*268-1563*	1	TEE AS	
		1	**2M-9780**	1	SEAL-O-RING	
		1	**268-1562**	1	TEE	
	16	1	**315-5494**	1	BOLT (M8X1.25X180-MM)	
	17	1	**329-6683**	1	SWITCH-FUEL	
	18	1	*162-6802*	1	ELBOW AS	
		1	**3J-7354**	1	SEAL-O-RING	
		1	**151-5145**	1	ELBOW	
	19	1	**191-1782**	1	SPACER (8.5X12.7X38.2-MM THK)	
	20	1	**198-4776**	3	WASHER-HARD (8.8X20X8-MM THK)	
	21	1	**1P-4278**	1	CLAMP-HOSE	
	22	1	**3K-0360**	1	SEAL-O-RING	
	23	1	**4P-7581**	1	CLIP	
	24	1	**4P-8134**	1	CLIP	
M	25	1	**5C-7261**	1	NUT (M8X1.25-THD)	
	26	1	**5P-4116**	4	WASHER-HARD (8.8X20.5X2-MM THK)	
	27	1	**6D-3479**	3	CLIP	
	28	1	**6V-4589**	2	SEAL-O-RING	
	29	1	**7X-0579**	3	WASHER-HARD (8.8X25.5X2-MM THK)	
	30	1	**8T-4121**	2	WASHER-HARD (11X21X2.5-MM THK)	
M	31	1	**8T-4133**	1	NUT (M10X1.5-THD)	
M	32	1	**8T-4189**	1	BOLT (M8X1.25X20-MM)	
M	33	1	**8T-4195**	1	BOLT (M10X1.5X30-MM)	
M	34	1	**8T-6869**	1	BOLT (M8X1.25X60-MM)	
M	35	1	**8T-7352**	1	BOLT (M8X1.25X160-MM)	
	36	1	**8T-9655**	8	MOUNT-ISOLATION	
	37	1	**9S-8006**	1	PLUG-O-RING	
D	38	1	**5P-5991**		HOSE (0.5-M)	

D-ORDER BY THE METER
M-METRIC PART
Y-SEPARATE ILLUSTRATION

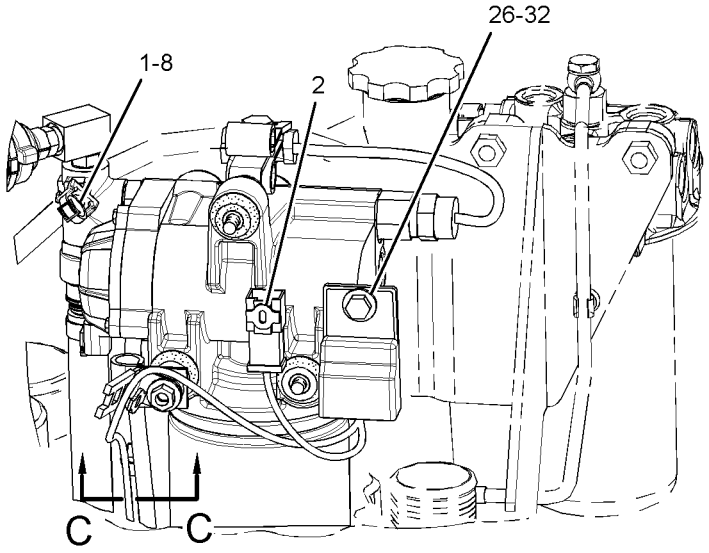

RIGHT SIDE VIEW OF ENGINE

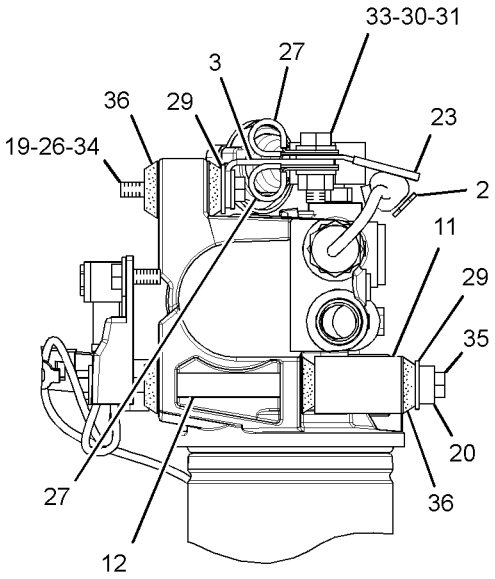

VIEW B-B

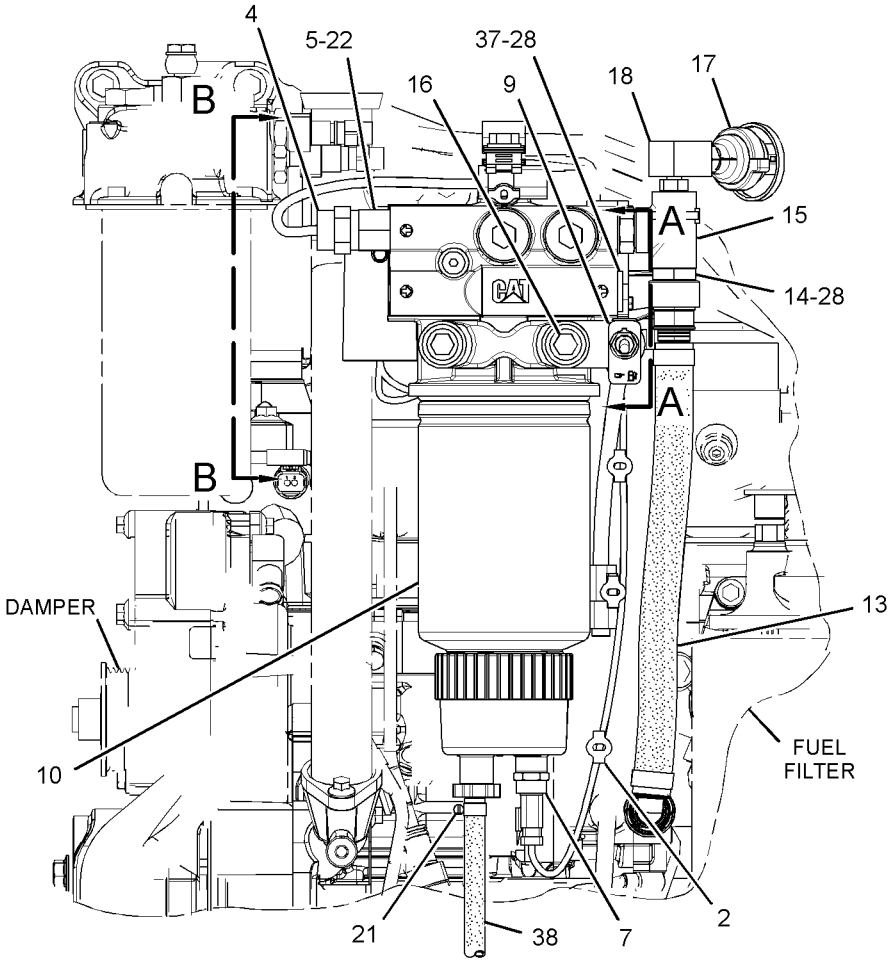

LEFT SIDE VIEW OF ENGINE

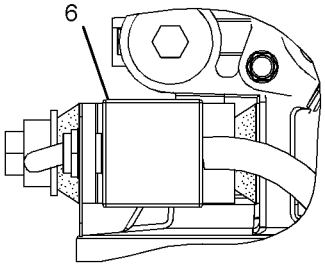

SECTION A-A

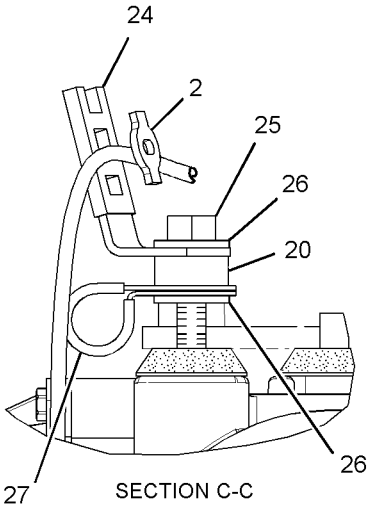

SECTION C-C

GRAPHIC #1 **<END>** g01523128

FUEL SYSTEM

303-1475 TANK AS-FUEL

S/N: LBP1-UP
324-L (85.6-US GAL)
PART OF 275-1043 TANK GP-FUEL
AN ATTACHMENT

SMCS-1273 **i02694375**

NOTE	REF NO	GRAPHIC REF	PART NUMBER	QTY	PART NAME 1 2 3 4 5 6 (PRODUCT LEVEL)	SEE PAGE
	1	1	**194-6523**	1	ADAPTER	
	2	1	**216-0906**	1	PLUG AS	
		1	**3J-1907**	1	SEAL-O-RING	
	3	1	**303-1474**	1	ADAPTER AS	
	4	1	**3K-0360**	1	SEAL-O-RING	
	5	1	**8C-6438**	1	SCREW-PAN HEAD (6-20X12.7-MM)	

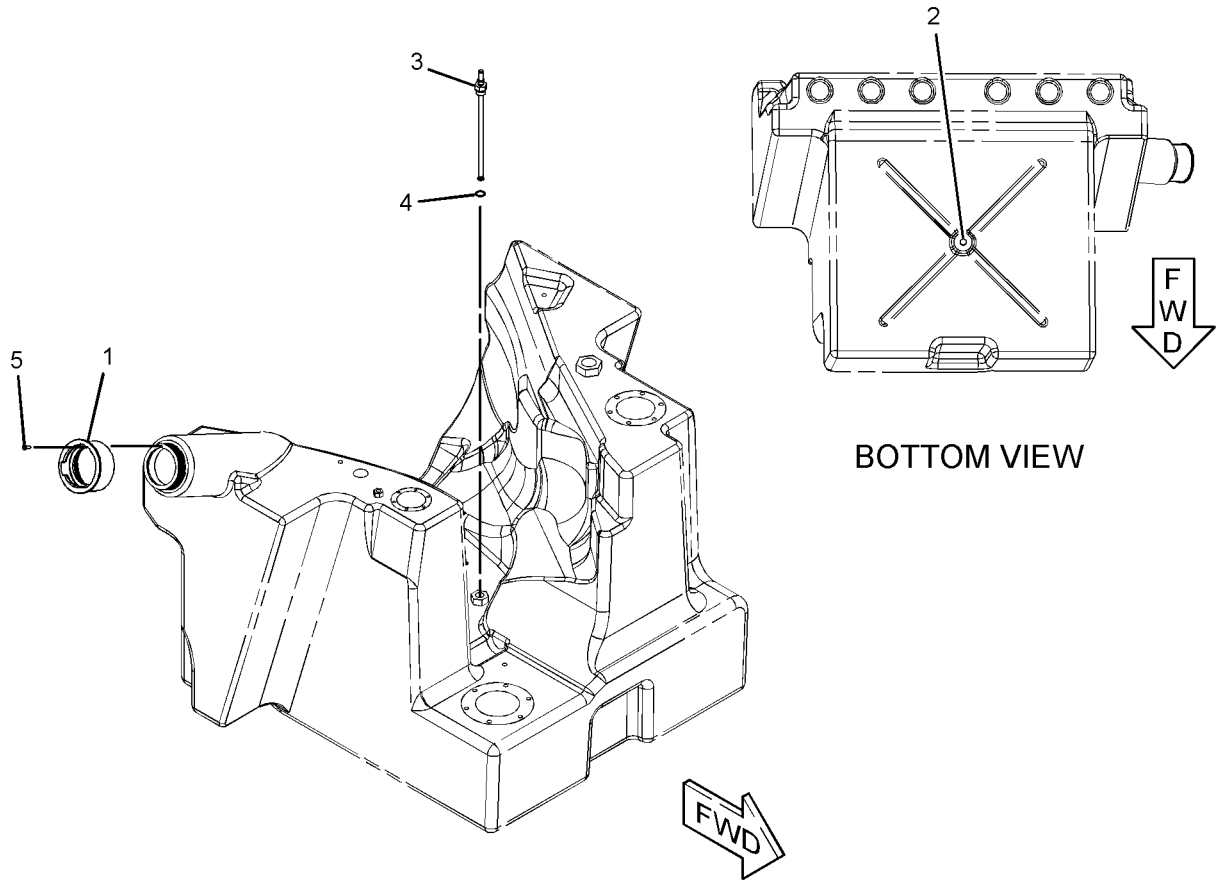

GRAPHIC #1 **<END>** g01345073

251-5506 TANK GP-FUEL–FAST FILL

S/N: LBP1-UP
324-L (85.6-US GAL)
CANNOT BE USED WITH STANDARD FUEL TANK GP, RE-FUELING PUMP AN ATTACHMENT

SMCS-1273 **i03586940**

NOTE	REF NO	GRAPHIC REF	PART NUMBER	QTY	PART NAME 1 2 3 4 5 6 (PRODUCT LEVEL)	SEE PAGE
Y	1	1	*253-8441*	1	TANK GP-FUEL (FAST FILL)	158
	2	1	**299-3194**	1	BRACKET	
	3	1	**299-3195**	1	BRACKET	
I	4	1	**301-6921**	1	HOSE AS	
	5	1	**303-1477**	1	BRACKET	
	6	1	**303-5939**	1	PLATE	
	7	1	**039-8557**	6	WASHER (13X26X6-MM THK)	
M	8	1	**8T-4183**	6	BOLT (M12X1.75X40-MM)	

I-REFER TO HYDRAULIC INFORMATION SYSTEM
M-METRIC PART
Y-SEPARATE ILLUSTRATION

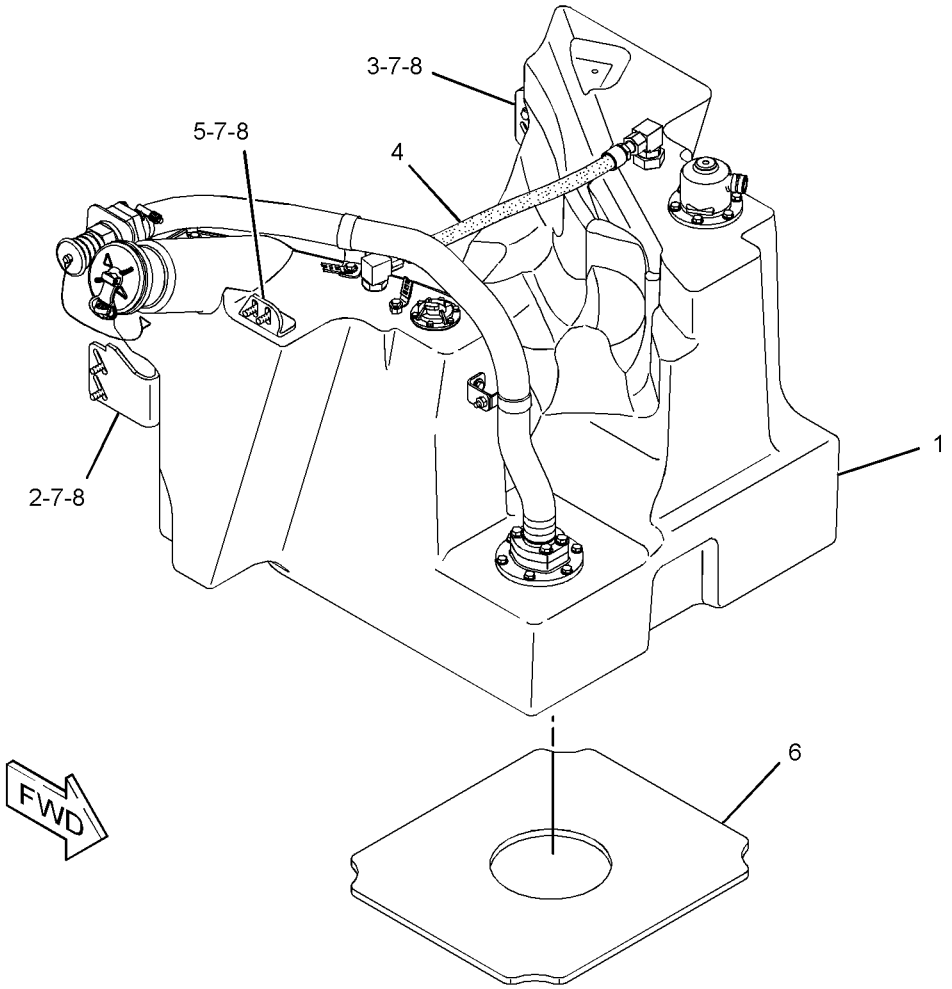

GRAPHIC #1 **<END>** g01340255

253-8441 TANK GP-FUEL–FAST FILL

S/N: LBP1-UP
324-L (85.6-US GAL)
PART OF 251-5506 TANK GP-FUEL
AN ATTACHMENT

SMCS-1273 **i03586942**

NOTE	REF NO	GRAPHIC REF	PART NUMBER	QTY	PART NAME 1 2 3 4 5 6 (PRODUCT LEVEL)	SEE PAGE
	1	1	**304-6608**	1	STRAINER-FUEL	
	2	1	**267-6417**	1	CONNECTOR	
Y	3	1	*281-0647*	1	ADAPTER GP-FAST FILL FUEL	115
Y	4	1	**306-4998**	1	CAP GP-FUEL FILLER (LOCKABLE, VENTED)	117
Y	5	1	**303-1479**	1	TANK GP-FUEL (FAST FILL)	163
	6	1	**320-7426**	1	SENDER AS-FUEL LEVEL	
		1	**186-3735**	2	PIN-CONNECTOR (16-GA TO 18-GA)	
		1	**230-4012**	1	RECEPTACLE AS-CONNECTOR (2-PIN)	
	7	1	*148-8360*	2	ELBOW AS	
					(EACH INCLUDES)	
		1	**6V-9182**	1	ELBOW	
		1	**6V-9746**	1	SEAL-O-RING	
		1	**7M-8485**	1	SEAL-O-RING	
	8	1	*148-8410*	1	PLUG AS	
		1	**9S-4190**	1	PLUG-O-RING	
		1	**2M-9780**	1	SEAL-O-RING	
	9	1	**3K-0360**	1	SEAL-O-RING	
	10	1	**4P-8134**	2	CLIP	
M	11	1	**5C-9553**	6	BOLT (M6X1X16-MM)	
	12	1	**6C-3060**	1	GASKET	
	14	1	**8T-4121**	2	WASHER-HARD (11X21X2.5-MM THK)	
M	15	1	**8T-4191**	2	BOLT (M10X1.5X16-MM)	
	16	1	**9X-8256**	6	WASHER (6.6X12X2-MM THK)	

M-METRIC PART
Y-SEPARATE ILLUSTRATION

253-8441 **TANK GP-FUEL** *(contd.)* **i03586942**

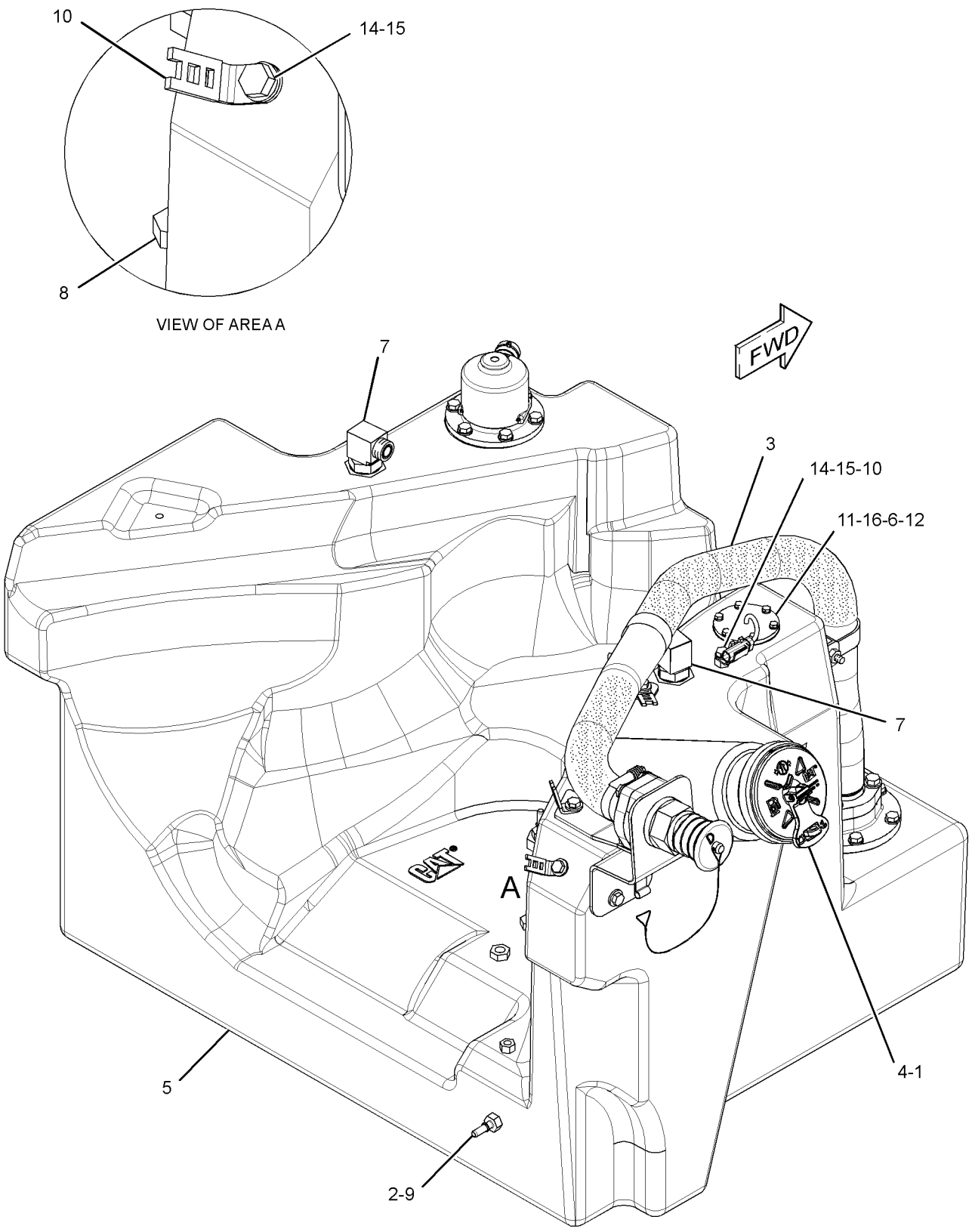

GRAPHIC #1 **<END>** g01451787

FUEL SYSTEM

275-1042 TANK GP-FUEL

S/N: LBP1-UP
324-L (85.6-US GAL)
CANNOT BE USED WITH 251-5506—PAGE 157
AN ATTACHMENT

SMCS-1273 **i02665140**

NOTE	REF NO	GRAPHIC REF	PART NUMBER	QTY	PART NAME 1 2 3 4 5 6 (PRODUCT LEVEL)	SEE PAGE
Y	1	1	*275-1043*	1	TANK GP-FUEL	161
	2	1	**299-3194**	1	BRACKET	
	3	1	**299-3195**	1	BRACKET	
I	4	1	**301-6921**	1	HOSE AS	
	5	1	**303-1477**	1	BRACKET	
	6	1	**303-5939**	1	PLATE	
	7	1	**039-8557**	6	WASHER (13X26X6-MM THK)	
M	8	1	**8T-4183**	6	BOLT (M12X1.75X40-MM)	

I-REFER TO HYDRAULIC INFORMATION SYSTEM
M-METRIC PART
Y-SEPARATE ILLUSTRATION

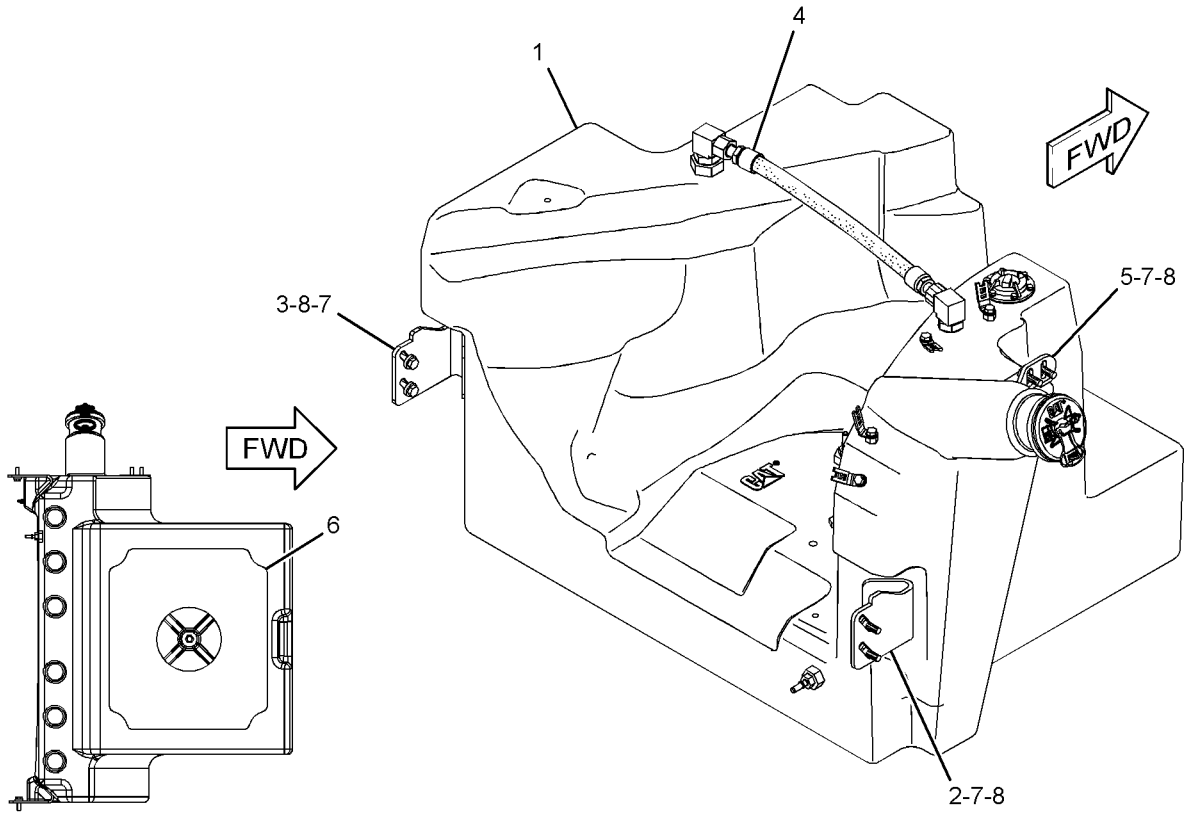

BOTTOM VIEW

GRAPHIC #1 **<END>** g01344120

FUEL SYSTEM

275-1043 TANK GP-FUEL

S/N: LBP1-UP
324-L (85.6-US GAL)
PART OF 275-1042 TANK GP-FUEL
AN ATTACHMENT

SMCS-1273 **i02913113**

NOTE	REF NO	GRAPHIC REF	PART NUMBER	QTY	PART NAME 1 2 3 4 5 6 (PRODUCT LEVEL)	SEE PAGE
	1	1	**304-6608**	1	STRAINER-FUEL	
	2	1	**267-6417**	1	CONNECTOR	
Y	3	1	**306-4998**	1	CAP GP-FUEL FILLER (LOCKABLE, VENTED)	117
Y	4	1	**303-1475**	1	TANK AS-FUEL	156
	5	1	**320-7426**	1	SENDER AS-FUEL LEVEL	
		1	**186-3735**	2	PIN-CONNECTOR (16-GA TO 18-GA)	
		1	**230-4012**	1	RECEPTACLE AS-CONNECTOR (2-PIN)	
	6	1	*148-8360*	2	ELBOW AS	
					(EACH INCLUDES)	
		1	**6V-9182**	1	ELBOW	
		1	**6V-9746**	1	SEAL-O-RING	
		1	**7M-8485**	1	SEAL-O-RING	
	7	1	*148-8410*	1	PLUG AS	
		1	**2M-9780**	1	SEAL-O-RING	
		1	**9S-4190**	1	PLUG-O-RING	
	8	1	**3K-0360**	1	SEAL-O-RING	
	9	1	**4P-7581**	1	CLIP	
	10	1	**4P-8134**	3	CLIP	
M	11	1	**5C-9553**	6	BOLT (M6X1X16-MM)	
	12	1	**6C-3060**	1	GASKET	
	14	1	**8T-4121**	4	WASHER-HARD (11X21X2.5-MM THK)	
M	15	1	**8T-4191**	4	BOLT (M10X1.5X16-MM)	
	16	1	**9X-8256**	6	WASHER (6.6X12X2-MM THK)	

M-METRIC PART
Y-SEPARATE ILLUSTRATION

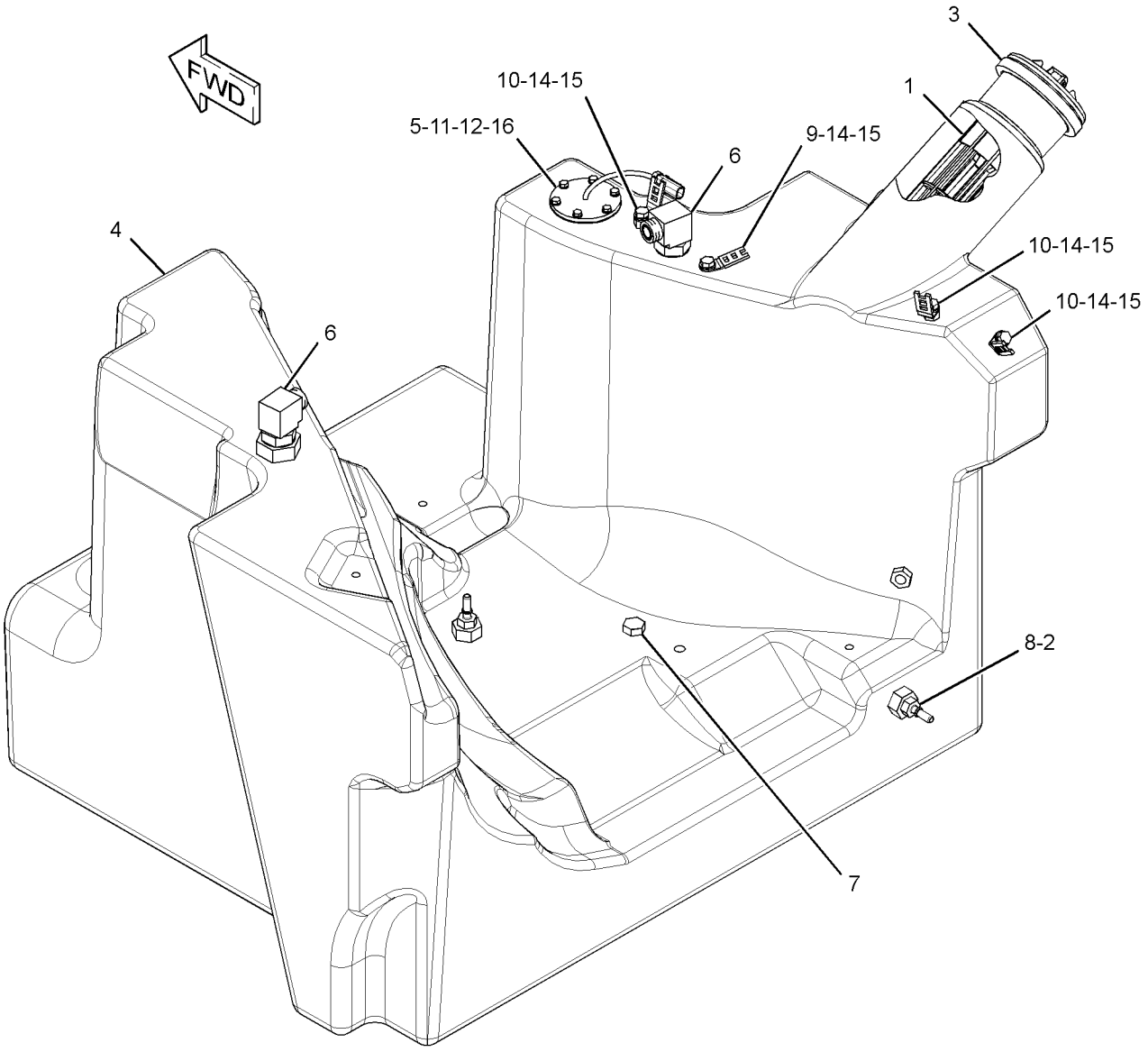

GRAPHIC #1 **<END>** g01451737

303-1479 TANK GP-FUEL–FAST FILL

S/N: LBP1-UP
324-L (85.6-GAL)
PART OF 253-8441 TANK GP-FUEL
AN ATTACHMENT

SMCS-1273 **i02662818**

NOTE	REF NO	GRAPHIC REF	PART NUMBER	QTY	PART NAME 1 2 3 4 5 6 (PRODUCT LEVEL)	SEE PAGE
	1	1	**194-6523**	1	ADAPTER (FUEL CAP)	
	2	1	**216-0906**	1	PLUG AS	
		1	**3J-1907**	1	SEAL-O-RING	
	3	1	**303-1474**	1	ADAPTER AS	
	4	1	**3K-0360**	1	SEAL-O-RING	
	5	1	**8C-6438**	1	SCREW-PAN HEAD (6-20X12.7-MM)	

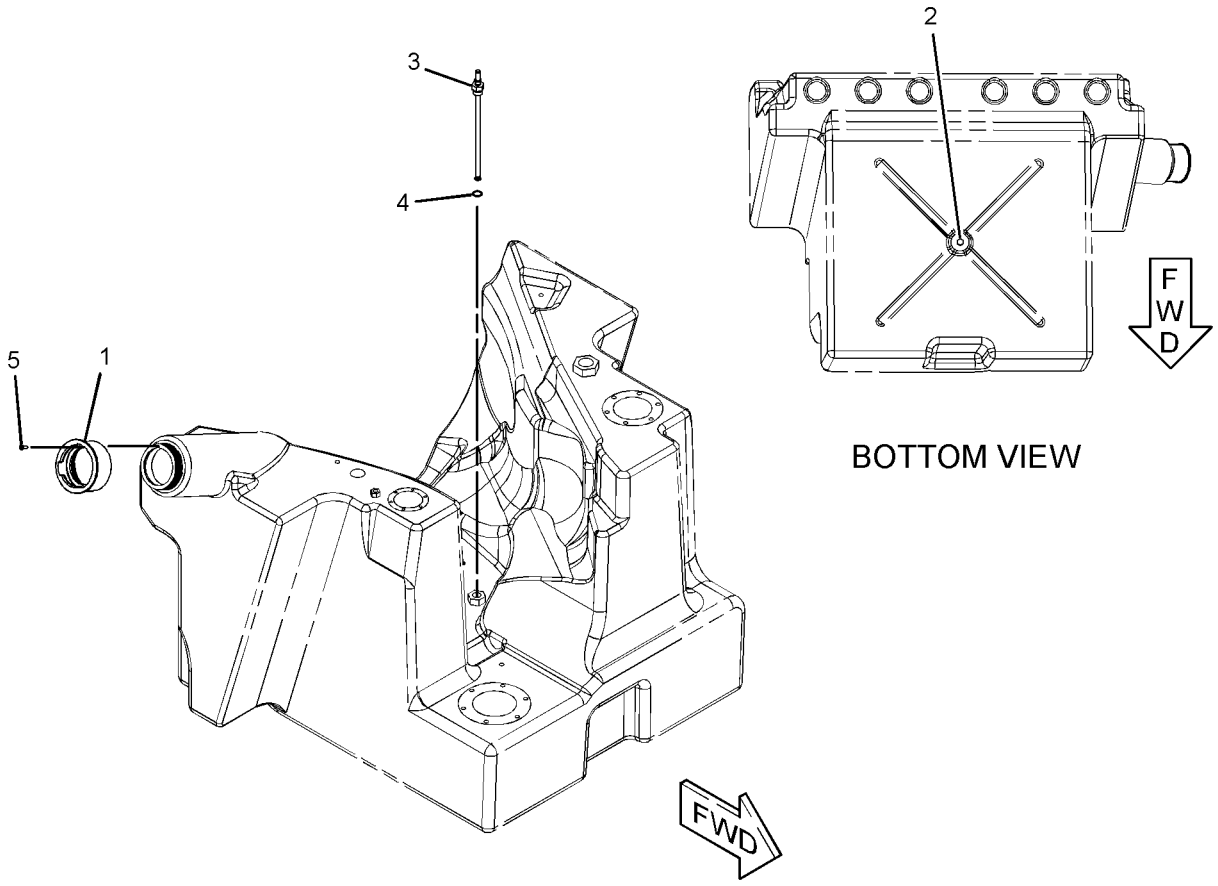

GRAPHIC #1 **<END>** g01345073

3E-6328 ALARM GP

S/N: LBP1-UP
24-VOLT
PART OF 242-7492, 308-0604, 334-5104 WIRING GP-CAB

SMCS-7400, 7402, 7407 **i01995637**

NOTE	REF NO	GRAPHIC REF	PART NUMBER	QTY	PART NAME 1 2 3 4 5 6 (PRODUCT LEVEL)	SEE PAGE
	1	1	**102-8802**	1	KIT-RECEPTACLE (2-PIN)	
					(INCLUDES RECEPTACLE AS & WEDGE)	
	2	1	**3E-3365**	1	WEDGE-RECEPTACLE LOCK (2-PIN)	
	3	1	**186-3735**	2	PIN-CONNECTOR (16-GA TO 18-GA)	

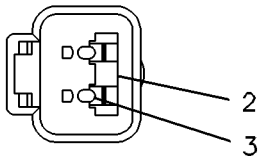

VIEW A–A

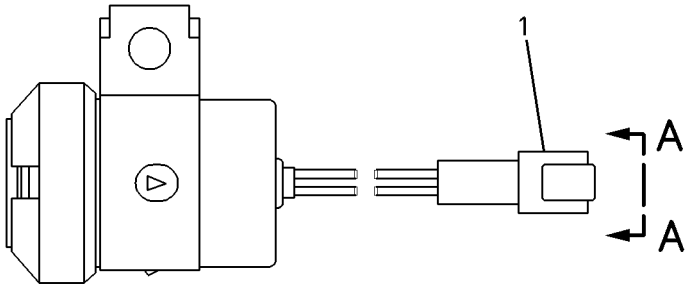

GRAPHIC #1 **<END>** g00083162

226-7683 ALTERNATOR GP-CHARGING

S/N: C6E1-UP
24-VOLT, 95-AMPERE
PART OF 277-6080 ALTERNATOR GP-CHARGING

SMCS-1405 **i02475247**

NOTE	REF NO	GRAPHIC REF	PART NUMBER	QTY	PART NAME 1 2 3 4 5 6 (PRODUCT LEVEL)	SEE PAGE
	1	1	**228-9656**	1	FRAME AS-DRIVE END	
	2	1	**5S-7349**	1	BOLT (1/4-20X0.5-IN)	
	3	1	**185-2639**	1	FAN AS	
	4	1	**1H-3244**	1	LOCKWASHER	
	5	1	**228-9655**	1	FRAME AS-ALTERNATOR	
	6	1	**2K-4821**	1	LOCKNUT (5/8-18-THD)	
	7	1	**5P-8247**	1	WASHER-HARD (17X32X3.5-MM THK)	
	8	1	**228-9657**	1	COVER AS	
	9	1	**8T-4205**	1	WASHER-HARD (7.2X14.5X2-MM THK)	
	10	1	**185-2647**	1	GROMMET	
	11	1	**9L-6770**	1	CAP-DUST	
	12	1	**205-0626**	1	STATOR AS-ALTERNATOR	
	13	1	**185-2638**	2	COLLAR	
	14	1	**185-2654**	1	PLATE	
	15	1	**185-2650**	1	ROTOR AS	
	16	1	**185-2644**	1	COIL AS	
	17	1	**185-2648**	1	REGULATOR AS-VOLTAGE (24-VOLT) (ALTERNATOR)	
	18	1	**6V-8189**	1	NUT (5/16-18-THD)	
	19	1	**8T-4224**	1	WASHER-HARD (8.8X16X2-MM THK)	
	20	1	**3F-9556**	1	LOCKWASHER	
					AVAILABLE REPAIR KIT(S):	
			185-2655	1	KIT-BEARING (ALTERNATOR)	
			185-2658	1	KIT-HARDWARE (ALTERNATOR)	
			199-8436	1	KIT-TERMINAL (ALTERNATOR)	
			199-7891	1	KIT-TERMINAL (ALTERNATOR)	

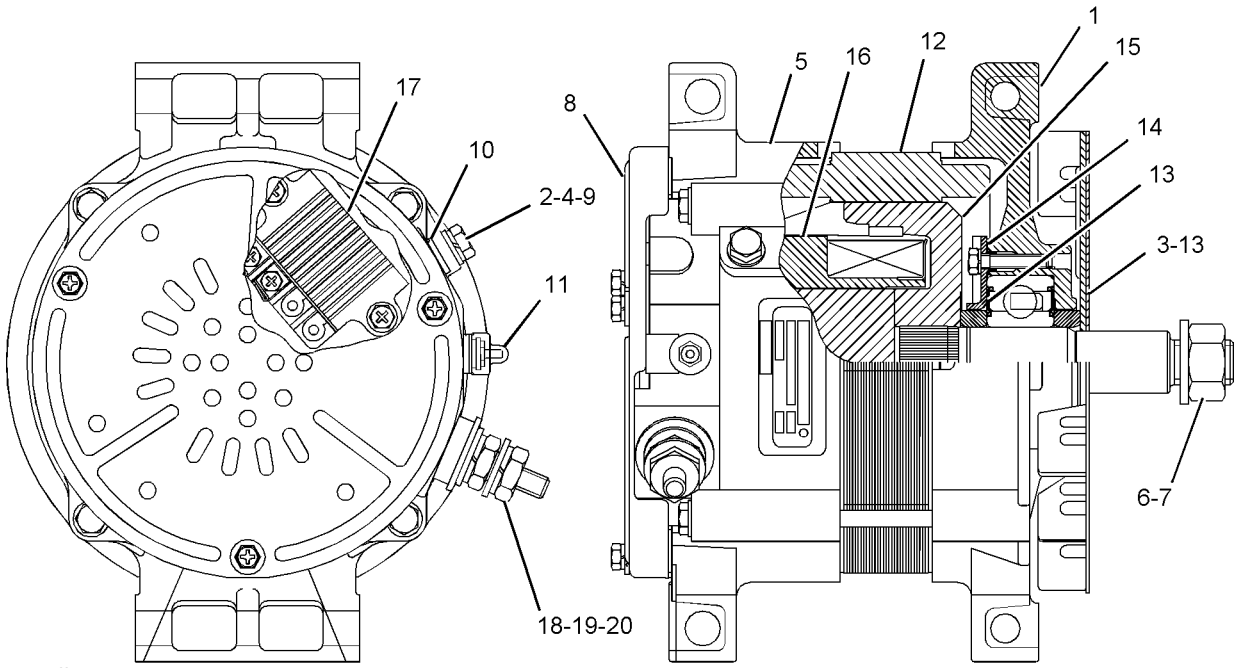

GRAPHIC #1 **<END>** g01088551

ELECTRICAL AND STARTING SYSTEM

277-6080 ALTERNATOR GP-CHARGING

S/N: C6E1-273
24-VOLT, 95-AMPERE
PART OF 242-1357 ENGINE AR-PRIMARY

SMCS-1405 **i02475251**

NOTE	REF NO	GRAPHIC REF	PART NUMBER	QTY	PART NAME 1 2 3 4 5 6 (PRODUCT LEVEL)	SEE PAGE
Y	1	1	**226-7683**	1	ALTERNATOR GP-CHARGING (24-VOLT, 95-AMPERE)	165
	2	1	**6I-4200**	1	BOLT (M10X1.5X16-MM)	
	3	1	**277-6079**	1	STRAP-GROUNDING	
M	4	1	**6I-0654**	3	BOLT (M10X1.5X25-MM)	
	5	1	**277-6073**	1	PULLEY-ALTERNATOR	
	6	1	**277-6074**	1	BRACKET	
	7	1	**103-0050**	4	BOLT (M10X1.5X100-MM)	
M	8	1	**6I-0593**	5	BOLT (M10X1.5X30-MM)	
	9	1	**277-6075**	2	BOLT	
	10	1	**7X-0591**	2	WASHER-HARD (17X29X3-MM THK)	
	11	1	**220-1209**	1	BELT TENSIONER	
	12	1	**277-6077**	1	BOLT	
	13	1	**101-3917**	1	WASHER	
	14	1	**277-6078**	1	BRACKET	

M-METRIC PART
Y-SEPARATE ILLUSTRATION

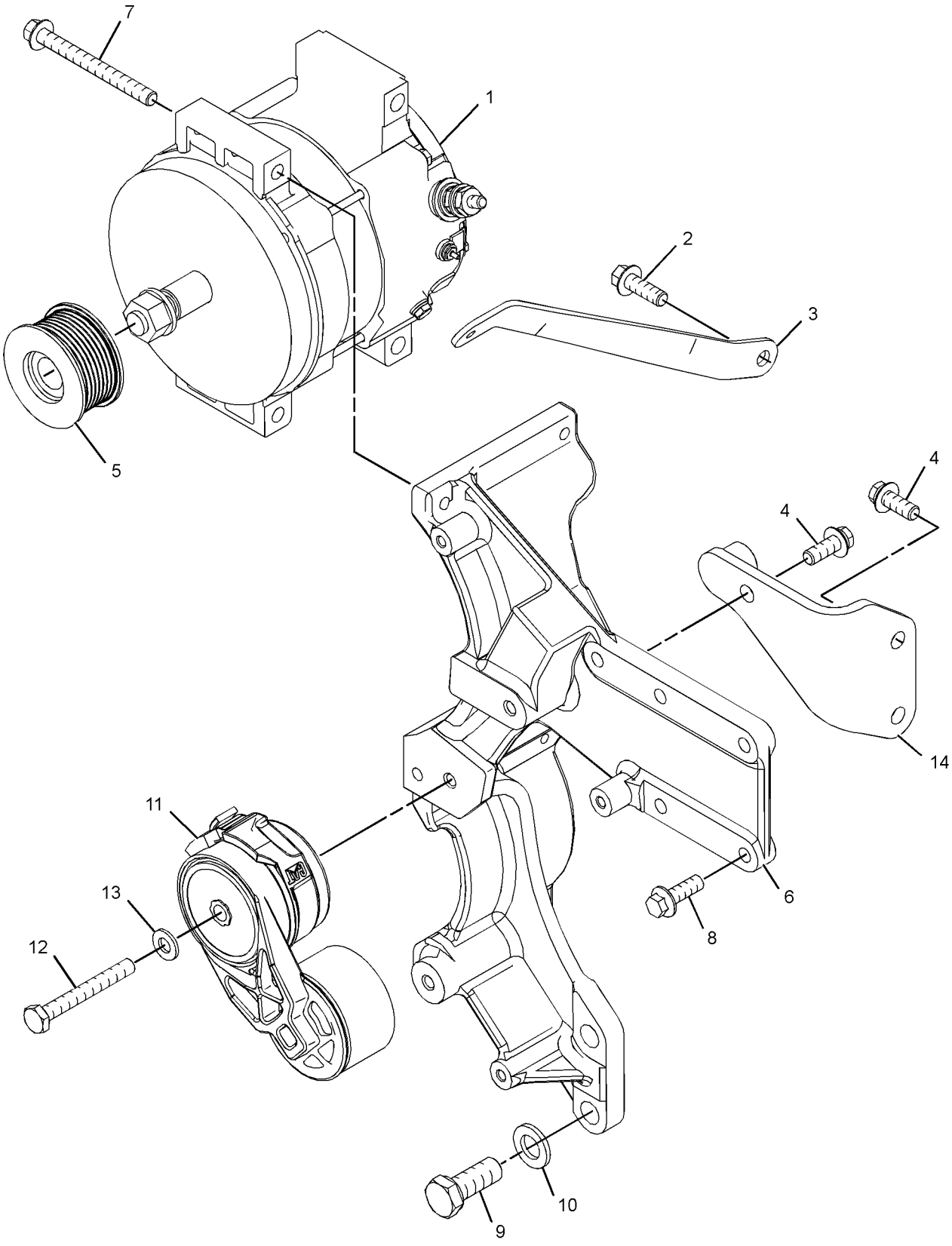

GRAPHIC #1 **<END>** g01213223

ELECTRICAL AND STARTING SYSTEM

277-6080 ALTERNATOR GP-CHARGING

S/N: C6E274-UP
24-VOLT, 95-AMPERE
PART OF 242-1357 ENGINE AR-PRIMARY

SMCS-1405 **i03259081**

NOTE	REF NO	GRAPHIC REF	PART NUMBER	QTY	PART NAME 1 2 3 4 5 6 (PRODUCT LEVEL)	SEE PAGE
M	1	1	**6I-0593**	5	BOLT (M10X1.5X30-MM)	
M	2	1	**6I-0654**	3	BOLT (M10X1.5X25-MM)	
	3	1	**6I-4200**	1	BOLT (M10X1.5X16-MM)	
	4	1	**7X-0591**	2	WASHER-HARD (17X29X3-MM THK)	
	5	1	**164-7468**	4	BOLT (M10X1.5X95-MM)	
	6	1	**261-0376**	1	BELT TENSIONER	
Y	7	1	**226-7683**	1	ALTERNATOR GP-CHARGING (24-VOLT, 95-AMPERE)	165
	8	1	**320-2868**	1	BRACKET	
	9	1	**277-6073**	1	PULLEY-ALTERNATOR	
	10	1	**277-6075**	2	BOLT	
	11	1	**277-6078**	1	BRACKET	
	12	1	**295-0585**	1	STRAP	

M-METRIC PART
Y-SEPARATE ILLUSTRATION

277-6080 **ALTERNATOR GP-CHARGING** *(contd.)* **i03259081**

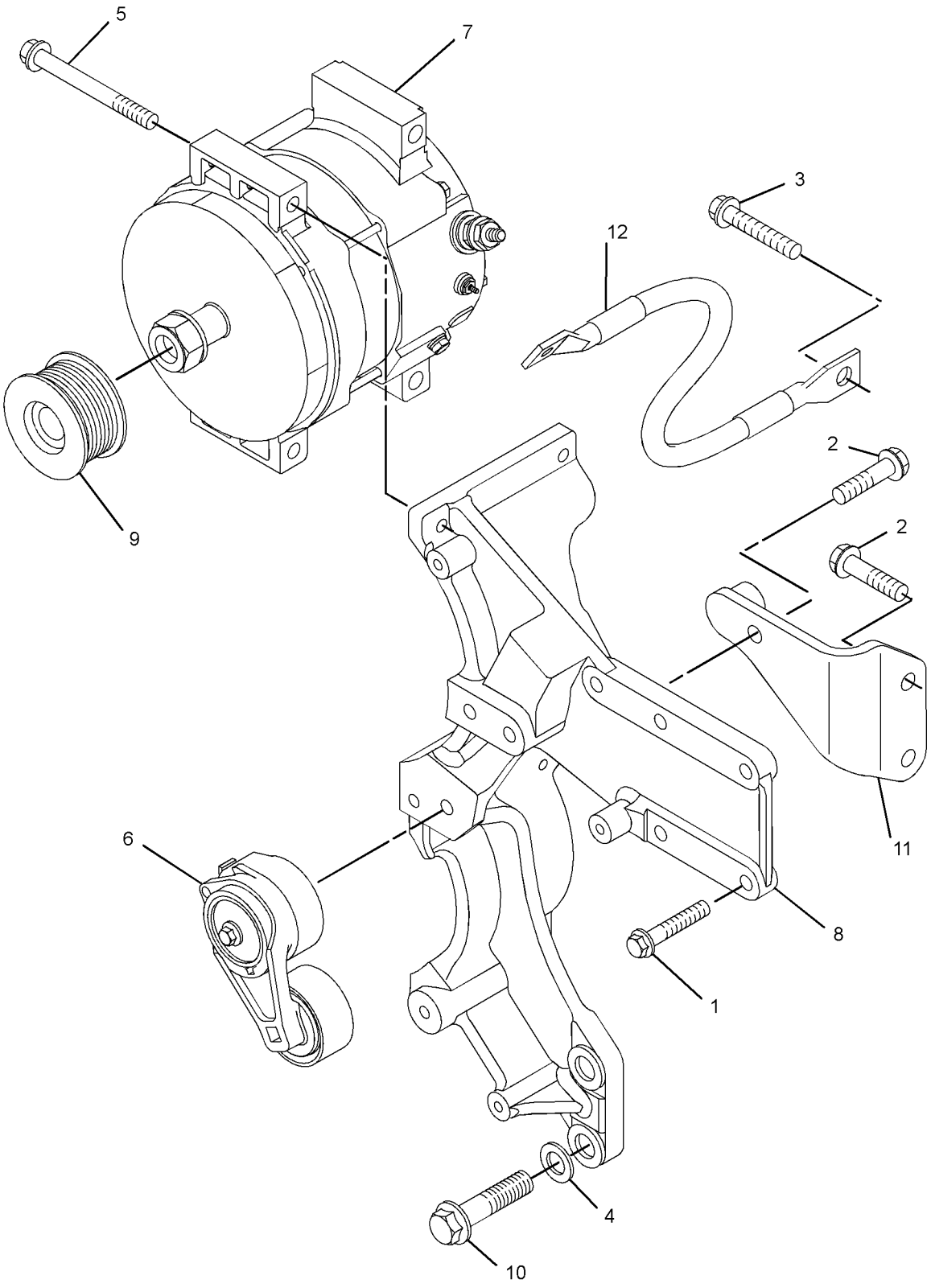

GRAPHIC #1 **<END>** g01453191

9W-0742 BLOCK GP-JUNCTION–BATTERY

S/N: LBP1-UP

PART OF 242-7491 WIRING GP-ELECTRIC STARTING

SMCS-7426 **i02387778**

NOTE	REF NO	GRAPHIC REF	PART NUMBER	QTY	PART NAME 1 2 3 4 5 6 (PRODUCT LEVEL)	SEE PAGE
	1	1	**8C-6358**	1	BLOCK GP-JUNCTION (BATTERY)	
		1	**1D-5117**	3	NUT-JAM (1/2-13-THD)	
		1	**8T-3519**	3	BOLT-BRONZE (1/2-13X2-IN)	
	2	1	**7F-0560**	6	WASHER (0.516X0.938X0.101-IN THK)	
D	3	1	**6V-2722**		TUBE-HEAT SHRINK (0.1-M)	
	4	1	**8T-3518**	6	NUT-FULL (1/2-13-THD)	

D-ORDER BY THE METER

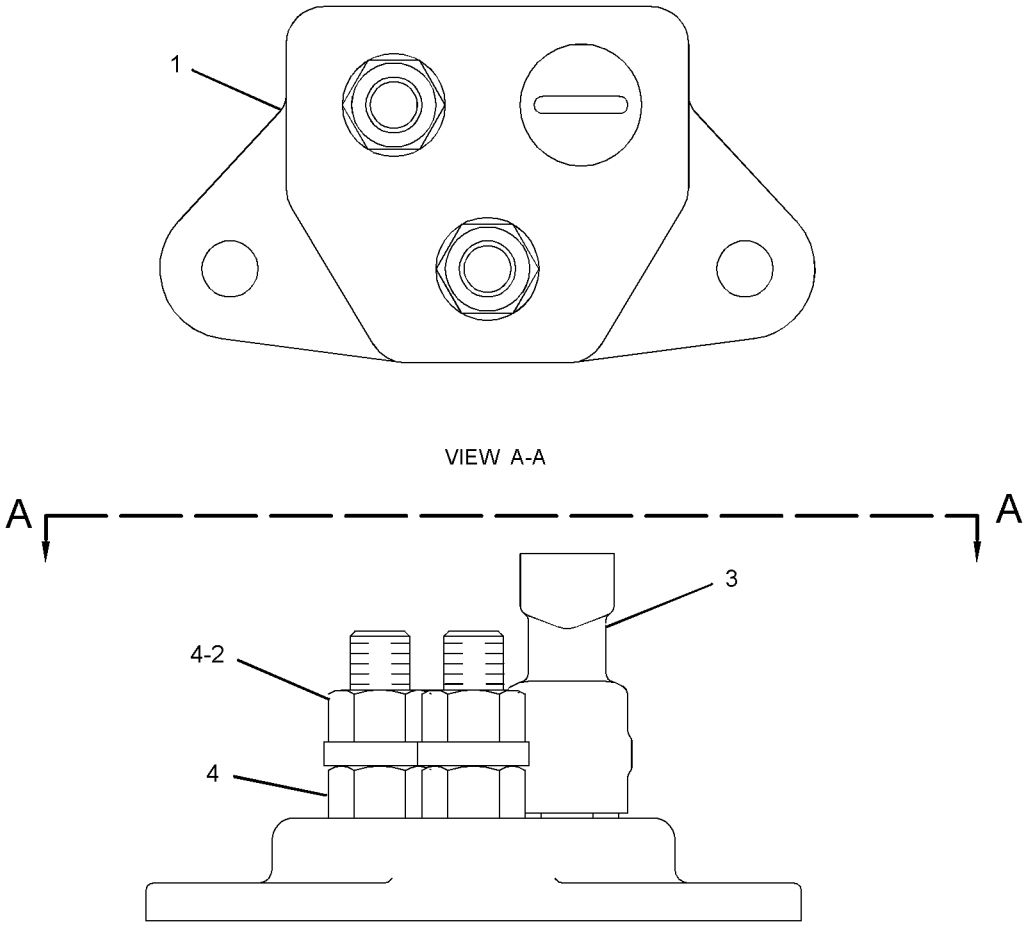

GRAPHIC #1 **<END>** g01195251

ELECTRICAL AND STARTING SYSTEM

254-3477 CIRCUIT BREAKER GP

S/N: LBP1-UP

PART OF 240-6230, 307-4279, 334-6680 CAB GP

SMCS-1420 **i02701743**

NOTE	REF NO	GRAPHIC REF	PART NUMBER	QTY	PART NAME 1 2 3 4 5 6 (PRODUCT LEVEL)	SEE PAGE
	1	1	**131-4731**	1	GASKET	
	2	1	**171-2212**	2	CIRCUIT BREAKER AS (105-AMPERE) (ALTERNATOR)	
					(EACH INCLUDES)	
		1	**6V-8187**	2	NUT (1/4-28-THD)	
		1	**8T-4205**	2	WASHER-HARD (7.2X14.5X2-MM THK)	
		1	**253-2111**	2	LOCKWASHER	
	3	1	**173-1614**	1	FILM-IDENTIFICATION (ALTERNATOR)	
	4	1	**220-9909**	1	GROMMET	
Y	5	1	**241-8368**	1	SWITCH GP-MAGNETIC (24-VOLT) (MAIN RELAY)	219
	6	1	**245-5808**	1	CABLE AS	
E		1	**8C-3056**		CABLE (2-GA, RED) (25-CM)	
		1	**030-1709**	2	TERMINAL-RING (FOR 1/4-IN BOLT)	
		1	**131-4725**	1	RECEPTACLE AS (2-PIN)	
	7	1	**245-5821**	1	STRIP	
	8	1	**245-5824**	1	COVER	
	9	1	**245-8823**	1	FILM-IDENTIFICATION (GENERATOR, ELECTRICAL POWER)	
	10	1	**253-9557**	2	BLOCK AS	
	11	1	**260-0596**	2	GASKET	
	12	1	**281-4499**	1	STRIP	
	13	1	**281-4500**	1	STRIP	
	14	1	**282-8746**	1	FILM-IDENTIFICATION (TERMINAL)	
	15	1	**292-3311**	1	PANEL AS	
M	16	1	**5C-2890**	2	NUT (M6X1-THD)	
M	17	1	**5C-9553**	2	BOLT (M6X1X16-MM)	
M	18	1	**6R-7943**	4	SCREW (M5X0.8X15-MM)	
	19	1	**6V-7978**	4	SCREW-MACHINE (10-32X0.375-IN)	
M	20	1	**8T-4200**	6	BOLT (M8X1.25X16-MM)	
	21	1	**8T-4205**	4	WASHER-HARD (7.2X14.5X2-MM THK)	
	22	1	**8T-4224**	6	WASHER-HARD (8.8X16X2-MM THK)	
M	23	1	**8T-7852**	4	BOLT (M4X0.7X10-MM)	

E-ORDER BY THE CENTIMETER
M-METRIC PART
Y-SEPARATE ILLUSTRATION

254-3477 **CIRCUIT BREAKER GP** *(contd.)* **i02701743**

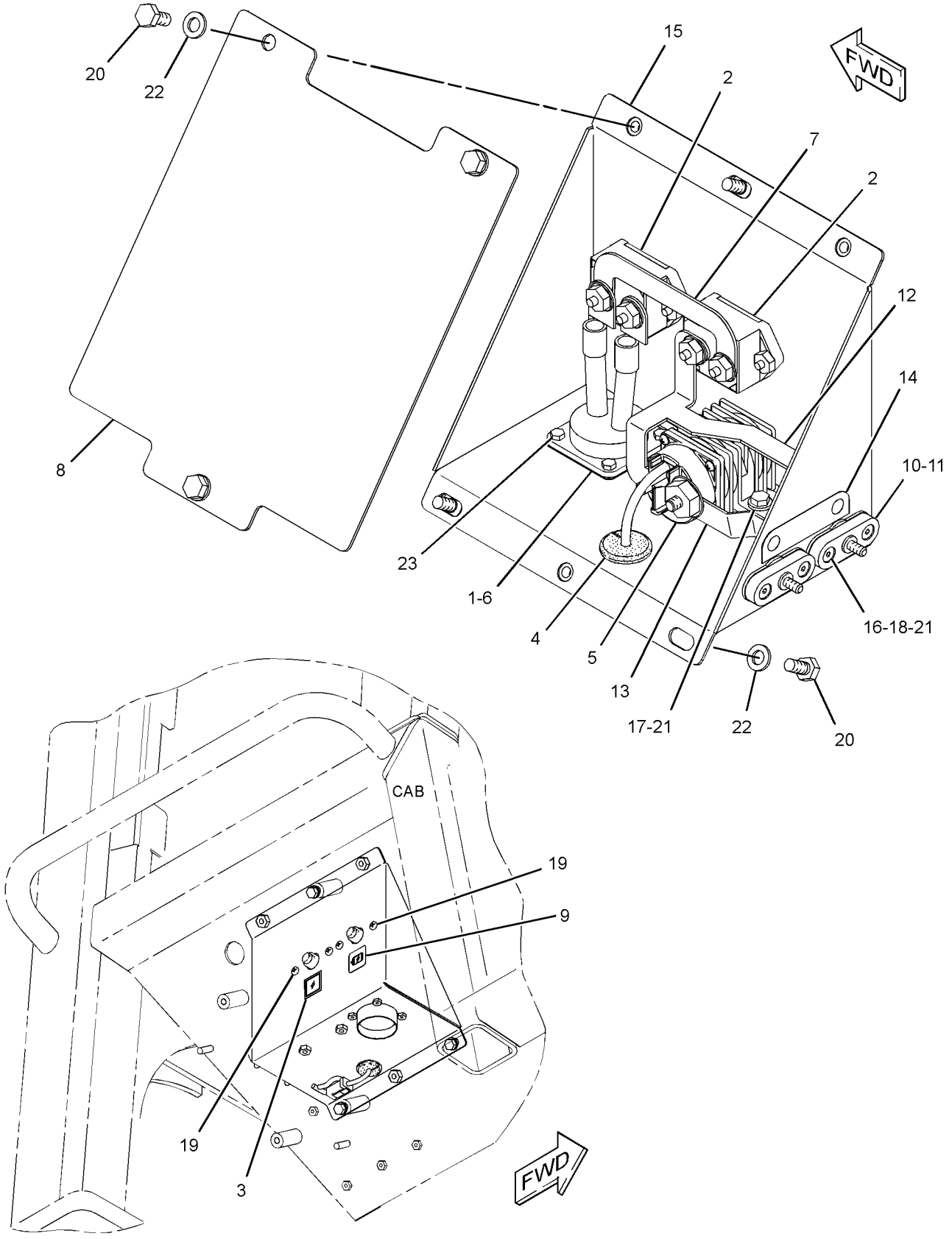

GRAPHIC #1 **<END>** g01343728

255-3939 CONTROL & MTG GP-ELECTRONIC–RIPPER

S/N: LBP1-295

PART OF 252-0242 HYDRAULIC AR-3 VALVE, 252-0243 HYDRAULIC AR-4 VALVE AN ATTACHMENT

SMCS-1901, 3168 **i02663925**

NOTE	REF NO	GRAPHIC REF	PART NUMBER	QTY	PART NAME 1 2 3 4 5 6 (PRODUCT LEVEL)	SEE PAGE
	1	1	**7K-1181**	2	STRAP-CABLE	
Y	2	1	**252-4559**	1	CONTROL GP-HANDLE (RIPPER)	577
	3	1	**283-9265**	1	FILM-INSTRUCTION (RIPPER CONTROL)	
	4	1	**294-4424**	1	HARNESS AS-SOLENOID	
		1	**230-4009**	1	PLUG AS-CONNECTOR (12-PIN)	
		1	**231-2296**	1	PLUG AS-CONNECTOR (8-PIN)	
		1	**167-3693**	1	PLUG AS-CONNECTOR (31-PIN)	
R	5	1	**300-3631**	1	CONTROL GP-UNPROGRAMMED (RIPPER)	
	6	1	**4P-7581**	2	CLIP	
M	7	1	**7X-2534**	2	BOLT (M6X1X50-MM)	
	8	1	**8T-4205**	2	WASHER-HARD (7.2X14.5X2-MM THK)	
M	9	1	**9X-2045**	4	SCREW-TRUSS HEAD (M6X1X20-MM)	

M-METRIC PART
R-REMFG PART MAY BE AVAILABLE
Y-SEPARATE ILLUSTRATION

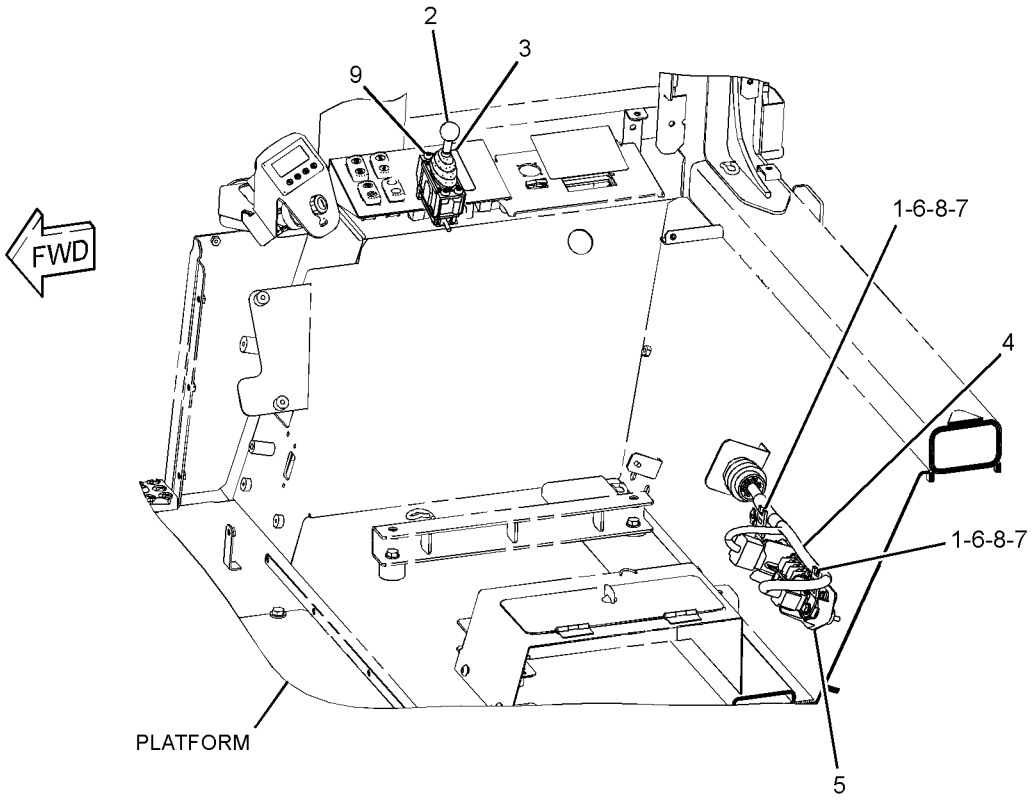

GRAPHIC #1 **<END>** g01340746

255-3939 CONTROL & MTG GP-ELECTRONIC—RIPPER

S/N: LBP296-699

PART OF 252-0242 HYDRAULIC AR-3 VALVE, 252-0243 HYDRAULIC AR-4 VALVE AN ATTACHMENT

SMCS-1901, 3168 **i02819087**

NOTE	REF NO	GRAPHIC REF	PART NUMBER	QTY	PART NAME 1 2 3 4 5 6 (PRODUCT LEVEL)	SEE PAGE
	1	1	**7K-1181**	2	STRAP-CABLE	
CY	2	1	**307-4673**	1	CONTROL GP-HANDLE (RIPPER)	580
	3	1	**283-9265**	1	FILM-INSTRUCTION (RIPPER CONTROL)	
	4	1	**294-4424**	1	HARNESS AS-SOLENOID	
		1	**230-4009**	1	PLUG AS-CONNECTOR (12-PIN)	
		1	**231-2296**	1	PLUG AS-CONNECTOR (8-PIN)	
		1	**167-3693**	1	PLUG AS-CONNECTOR (31-PIN)	
R	5	1	**300-3631**	1	CONTROL GP-UNPROGRAMMED (RIPPER)	
	6	1	**4P-7581**	2	CLIP	
M	7	1	**7X-2534**	2	BOLT (M6X1X50-MM)	
	8	1	**8T-4205**	2	WASHER-HARD (7.2X14.5X2-MM THK)	
M	9	1	**9X-2045**	4	SCREW-TRUSS HEAD (M6X1X20-MM)	

C-CHANGE FROM PREVIOUS TYPE
M-METRIC PART
R-REMFG PART MAY BE AVAILABLE
Y-SEPARATE ILLUSTRATION

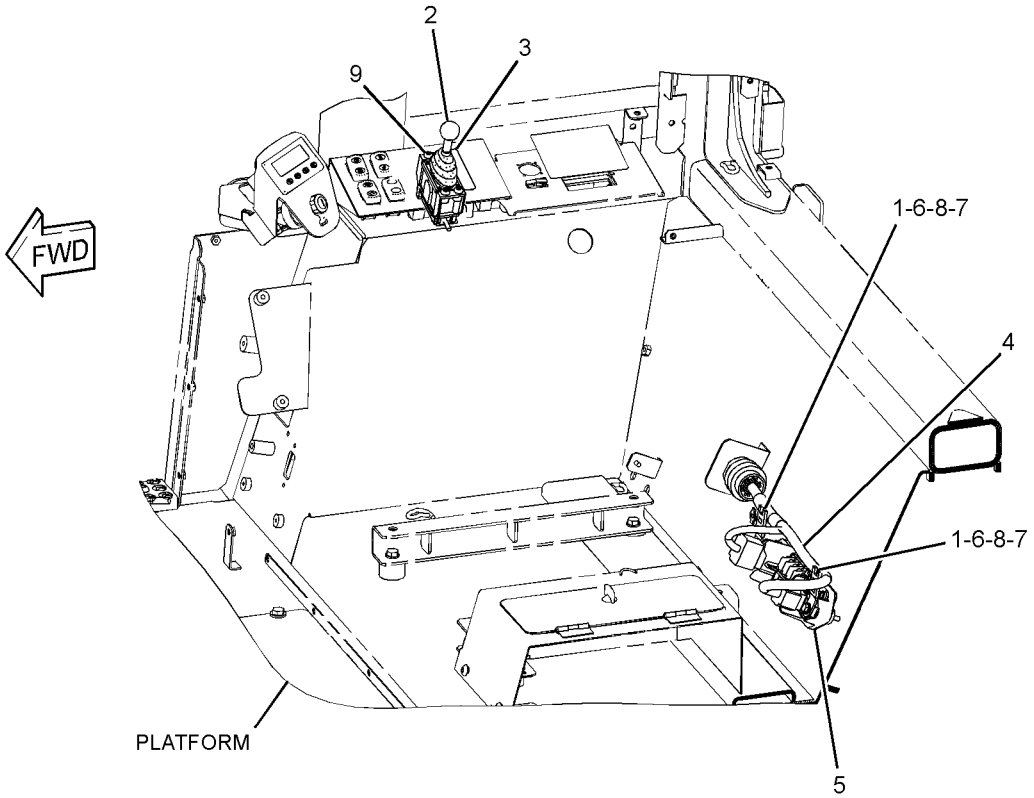

GRAPHIC #1 **<END>** g01340746

294-4418 CONTROL & MTG GP-ELECTRONIC—BUCKET, RIPPER

S/N: LBP1-699
PART OF 252-0241 HYDRAULIC AR-3 VALVE
AN ATTACHMENT

SMCS-1901, 3168 **i03106638**

NOTE	REF NO	GRAPHIC REF	PART NUMBER	QTY	PART NAME 1 2 3 4 5 6 (PRODUCT LEVEL)	SEE PAGE
	1	1	**7K-1181**	2	STRAP-CABLE	
	2	1	**294-4424**	1	HARNESS AS-SOLENOID	
		1	**167-3693**	1	PLUG AS-CONNECTOR (31-PIN)	
		1	**230-4009**	1	PLUG AS-CONNECTOR (12-PIN)	
		1	**231-2296**	1	PLUG AS-CONNECTOR (8-PIN)	
R	3	1	**300-3631**	1	CONTROL GP-UNPROGRAMMED (BUCKET, RIPPER)	
	4	1	**4P-7581**	2	CLIP	
M	5	1	**7X-2534**	2	BOLT (M6X1X50-MM)	
	6	1	**8T-4205**	2	WASHER-HARD (7.2X14.5X2-MM THK)	

M-METRIC PART
R-REMFG PART MAY BE AVAILABLE

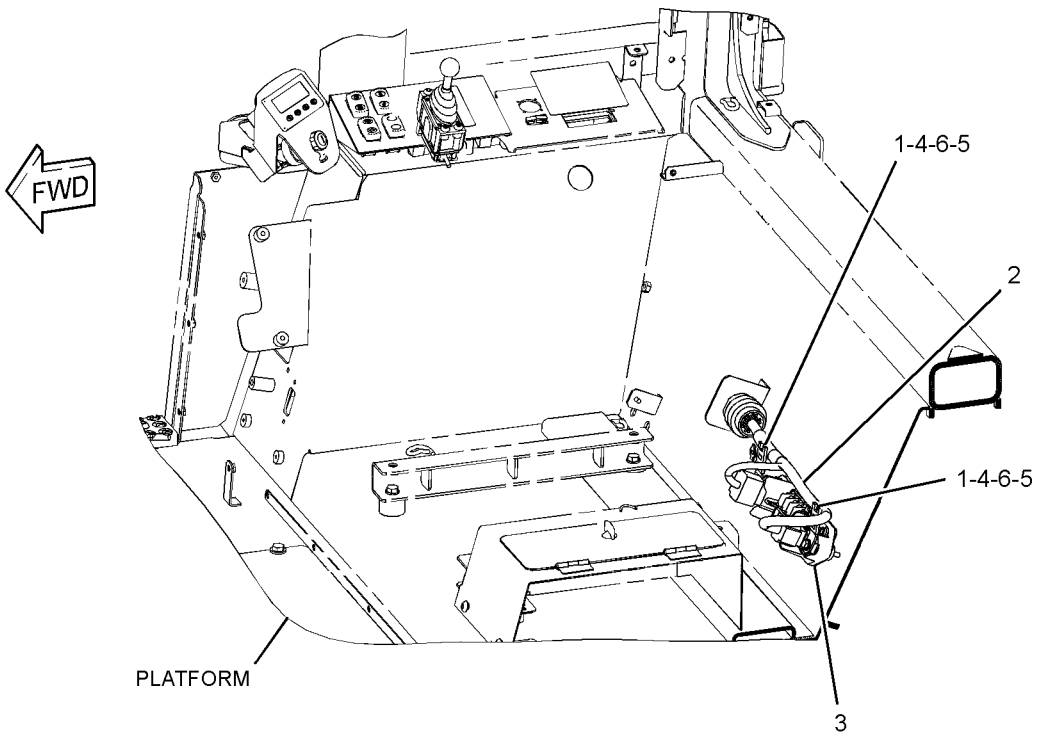

GRAPHIC #1 **<END>** g01340696

308-0606 CONTROL & MTG GP-ELECTRONIC—BUCKET, RIPPER

S/N: LBP700-UP

PART OF 316-3216 CONTROL GP-BUCKET & RIPPER, 252-0241 HYDRAULIC AR-3 VALVE AN ATTACHMENT

SMCS-1901, 3168 **i03462782**

NOTE	REF NO	GRAPHIC REF	PART NUMBER	QTY	PART NAME 1 2 3 4 5 6 (PRODUCT LEVEL)	SEE PAGE
	1	1	**6I-1418**	4	SPACER (8.2X12.7X28.7-MM THK)	
	2	1	**7K-1181**	1	STRAP-CABLE	
	3	1	**155-0576**	8	MOUNT-ISOLATION	
	4	1	**311-0263**	1	CONTROL GP-UNPROGRAMMED (BUCKET, RIPPER)	
	5	1	**339-5272**	1	HARNESS AS-CONTROL	
		1	**8T-8737**	44	PLUG-SEAL	
		1	**9X-3402**	57	SOCKET-CONNECTOR (16-GA TO 18-GA)	
		1	**9X-6772**	2	STRAP-CABLE	
E		1	**119-3662**		TUBE-HEAT SHRINK (7-CM)	
E		1	**125-7875**		TUBE-HEAT SHRINK (5-CM)	
		1	**126-1774**	1	COVER-CONNECTOR	
		1	**160-7689**	1	PLUG AS-CONNECTOR (70-PIN)	
		1	**159-9322**	1	SEAL-O-RING	
		1	**167-3693**	1	PLUG AS-CONNECTOR (31-PIN)	
	6	1	**4P-7581**	1	CLIP	
	7	1	**7X-0579**	8	WASHER-HARD (8.8X25.5X2-MM THK)	
	8	1	**8T-4224**	2	WASHER-HARD (8.8X16X2-MM THK)	
M	9	1	**8T-6912**	4	BOLT (M8X1.25X50-MM)	
FY			*326-1849*	1	ELECTRONICS GP-MACHINE (RIPPER)	180

E-ORDER BY THE CENTIMETER
F-NOT SHOWN
M-METRIC PART
Y-SEPARATE ILLUSTRATION

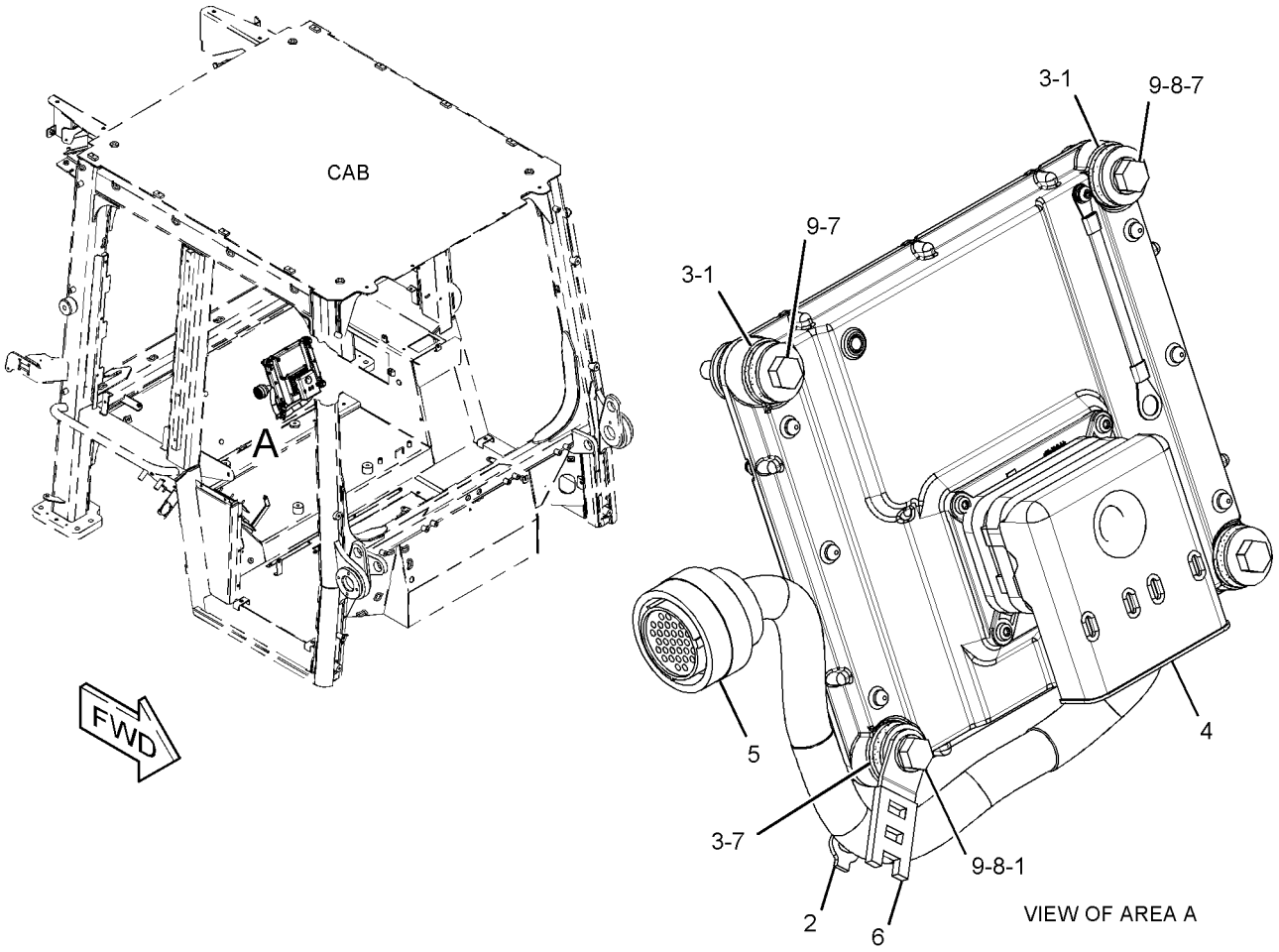

GRAPHIC #1 **<END>** g01805614

239-9954 CONTROL GP-UNPROGRAMMED–PRODUCT LINK 300

S/N: LBP1-UP

PART OF 309-5907 INSTALLATION AR-COMMUNICATION, 254-3479 INSTALLATION GP-COMMUNICATION AN ATTACHMENT

SMCS-1408, 3030, 5700 **i02933833**

NOTE	REF NO	GRAPHIC REF	PART NUMBER	QTY	PART NAME 1 2 3 4 5 6 (PRODUCT LEVEL)	SEE PAGE
	1	1	**285-1133**	1	CONTROL GP-UNPROGRAMMED (PRODUCT LINK 300)	
	1A	1	**7X-6315**	1	STRAP AS-GROUND	
	1B	1	**126-7574**	1	SCREW-PAN HEAD (8-32X9.52-MM)	
	1C	1	**134-4126**	1	WASHER (4.52X8.28X0.76-MM THK)	

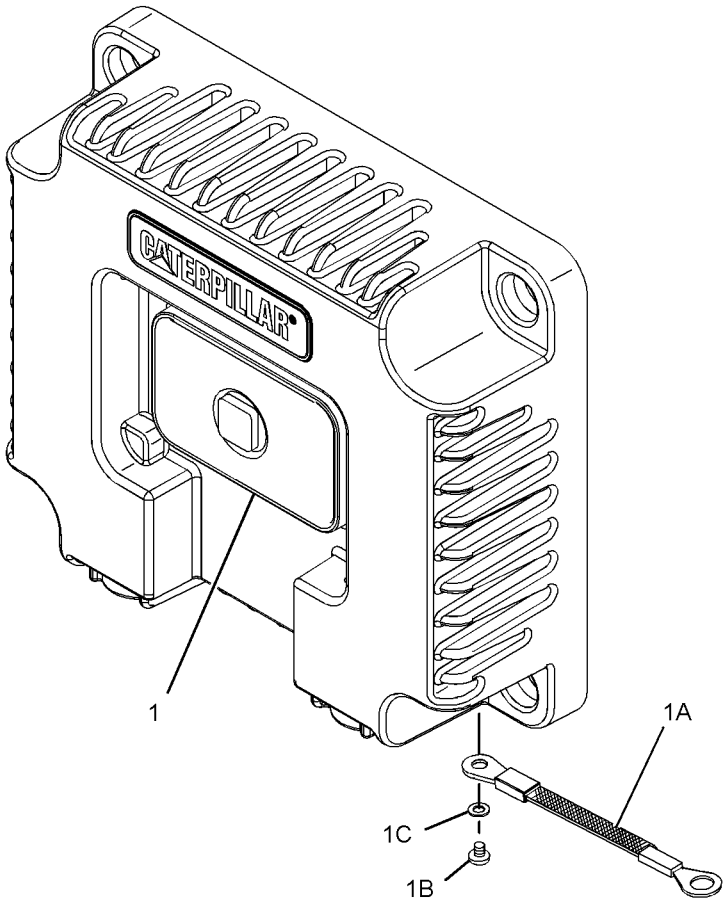

GRAPHIC #1 **<END>** g01447497

253-3394 ELECTRONICS AR-MACHINE

S/N: LBP1-UP

PART OF 240-6223 GENERAL AR

SMCS-7610, 7620 **i02674758**

NOTE	PART NUMBER	QTY	PART NAME 1 2 3 4 5 6 (PRODUCT LEVEL)	SEE PAGE
Y	*253-3407*	1	ELECTRONICS GP-MACHINE	179
Y-SEPARATE ILLUSTRATION				

<END>

262-2043 ELECTRONICS GP-COMMUNICATION–

PRODUCT LINK 300

S/N: LBP1-UP

PART OF 309-5907 INSTALLATION AR-COMMUNICATION, 254-3479 INSTALLATION GP-COMMUNICATION

AN ATTACHMENT

SMCS-7606, 7610, 7620 **i03504284**

NOTE	PART NUMBER	QTY	PART NAME 1 2 3 4 5 6 (PRODUCT LEVEL)	SEE PAGE
	330-3409	1	SOFTWARE GP-COMMUNICATION (PRODUCT LINK 300)	
			-OR-	
	330-3410	1	SERVICE GP-COMMUNICATION (PRODUCT LINK 300)	
			(OPTIONAL SERVICE REPLACEMENT) (INCLUDES CONTROL GP & SOFTWARE)	
	7X-6315	1	STRAP AS-GROUND	
	126-7574	1	SCREW-PAN HEAD (8-32X9.52-MM)	
	134-4126	1	WASHER (4.52X8.28X0.76-MM THK)	

<END>

253-3407 ELECTRONICS GP-MACHINE

S/N: LBP1-UP

PART OF 253-3394 ELECTRONICS AR-MACHINE

SMCS-7610, 7620 **i03581160**

NOTE	PART NUMBER	QTY	PART NAME 1 2 3 4 5 6 (PRODUCT LEVEL)	SEE PAGE
	342-4836	1	SOFTWARE GP-MACHINE	
			-OR-	
R	**304-5687**	1	CONTROL GP-UNPROGRAMMED (MACHINE)	
			-OR-	
	342-4837	1	SERVICE GP-MACHINE	
			(OPTIONAL SERVICE REPLACEMENT) (INCLUDES CONTROL GP & SOFTWARE)	
R-REMFG PART MAY BE AVAILABLE				

<END>

326-1849 ELECTRONICS GP-MACHINE

S/N: LBP700-UP
PART OF 308-0606 CONTROL & MTG GP-ELECTRONIC
AN ATTACHMENT

SMCS-7610, 7620 **i03591481**

NOTE	PART NUMBER	QTY	PART NAME 1 2 3 4 5 6 (PRODUCT LEVEL)	SEE PAGE
	327-4449	1	SOFTWARE GP-MACHINE	

<END>

294-7829 ELECTRONICS GP-MONITOR

S/N: LBP1-UP
ENGLISH, FRENCH, SPANISH
CANNOT BE USED WITH ANY OTHER MESSENGER LANGUAGE
AN ATTACHMENT

SMCS-7490, 7610, 7620 **i03018898**

NOTE	PART NUMBER	QTY	PART NAME 1 2 3 4 5 6 (PRODUCT LEVEL)	SEE PAGE
	322-9213	1	SOFTWARE GP-MONITOR	
			-OR-	
	322-9214	1	SERVICE GP-MONITOR	
			(OPTIONAL SERVICE REPLACEMENT)(INCLUDES CONTROL GP & SOFTWARE)	

<END>

294-7830 ELECTRONICS GP-MONITOR

S/N: LBP1-UP
ENGLISH, PORTUGUESE, SPANISH
CANNOT BE USED WITH ANY OTHER MESSENGER LANGUAGE
AN ATTACHMENT

SMCS-7490, 7610, 7620 **i03018899**

NOTE	PART NUMBER	QTY	PART NAME 1 2 3 4 5 6 (PRODUCT LEVEL)	SEE PAGE
	322-9215	1	SOFTWARE GP-MONITOR	
			-OR-	
	322-9216	1	SERVICE GP-MONITOR	
			(OPTIONAL SERVICE REPLACEMENT)(INCLUDES CONTROL GP & SOFTWARE)	

<END>

294-7831 ELECTRONICS GP-MONITOR

S/N: LBP1-UP
ENGLISH, GERMAN, CZECH
CANNOT BE USED WITH ANY OTHER MESSENGER LANGUAGE
AN ATTACHMENT

SMCS-7490, 7610, 7620 **i03018901**

NOTE	PART NUMBER	QTY	PART NAME 1 2 3 4 5 6 (PRODUCT LEVEL)	SEE PAGE
	322-9217	1	SOFTWARE GP-MONITOR	
			-OR-	
	322-9218	1	SERVICE GP-MONITOR	
			(OPTIONAL SERVICE REPLACEMENT)(INCLUDES CONTROL GP & SOFTWARE)	

<END>

294-7832 ELECTRONICS GP-MONITOR

S/N: LBP1-UP
ENGLISH, GERMAN, FRENCH
CANNOT BE USED WITH ANY OTHER MESSENGER LANGUAGE
AN ATTACHMENT

SMCS-7490, 7610, 7620 **i03018906**

NOTE	PART NUMBER	QTY	PART NAME 1 2 3 4 5 6 (PRODUCT LEVEL)	SEE PAGE
	322-9219	1	SOFTWARE GP-MONITOR	
			-OR-	
	322-9220	1	SERVICE GP-MONITOR	
			(OPTIONAL SERVICE REPLACEMENT)(INCLUDES CONTROL GP & SOFTWARE)	

<END>

294-7833 ELECTRONICS GP-MONITOR

S/N: LBP1-UP
ENGLISH, ITALIAN, FRENCH
CANNOT BE USED WITH ANY OTHER MESSENGER LANGUAGE
AN ATTACHMENT

SMCS-7490, 7610, 7620 **i03586980**

NOTE	PART NUMBER	QTY	PART NAME 1 2 3 4 5 6 (PRODUCT LEVEL)	SEE PAGE
	322-9221	1	SOFTWARE GP-MONITOR	
			-OR-	
	322-9222	1	SERVICE GP-MONITOR	
			(OPTIONAL SERVICE REPLACEMENT)(INCLUDES CONTROL GP & SOFTWARE)	

<END>

294-7834 ELECTRONICS GP-MONITOR

S/N: LBP1-UP
ENGLISH, DUTCH, FRENCH
CANNOT BE USED WITH ANY OTHER MESSENGER LANGUAGE
AN ATTACHMENT

SMCS-7490, 7610, 7620 **i03587002**

NOTE	PART NUMBER	QTY	PART NAME 1 2 3 4 5 6 (PRODUCT LEVEL)	SEE PAGE
	322-9223	1	SOFTWARE GP-MONITOR	
			-OR-	
	322-9224	1	SERVICE GP-MONITOR	
			(OPTIONAL SERVICE REPLACEMENT)(INCLUDES CONTROL GP & SOFTWARE)	

<END>

294-7835 ELECTRONICS GP-MONITOR

S/N: LBP1-UP
ENGLISH, ARABIC, HEBREW
CANNOT BE USED WITH ANY OTHER MESSENGER LANGUAGE
AN ATTACHMENT

SMCS-7490, 7610, 7620 **i03018957**

NOTE	PART NUMBER	QTY	PART NAME 1 2 3 4 5 6 (PRODUCT LEVEL)	SEE PAGE
	322-9225	1	SOFTWARE GP-MONITOR	
			-OR-	
	322-9226	1	SERVICE GP-MONITOR	
			(OPTIONAL SERVICE REPLACEMENT)(INCLUDES CONTROL GP & SOFTWARE)	

<END>

294-7836 ELECTRONICS GP-MONITOR

S/N: LBP1-UP
ENGLISH, GERMAN, ITALIAN
CANNOT BE USED WITH ANY OTHER MESSENGER LANGUAGE
AN ATTACHMENT

SMCS-7490, 7610, 7620 **i03018958**

NOTE	PART NUMBER	QTY	PART NAME 1 2 3 4 5 6 (PRODUCT LEVEL)	SEE PAGE
	322-9227	1	SOFTWARE GP-MONITOR	
			-OR-	
	322-9228	1	SERVICE GP-MONITOR	
			(OPTIONAL SERVICE REPLACEMENT)(INCLUDES CONTROL GP & SOFTWARE)	

<END>

294-7837 ELECTRONICS GP-MONITOR

S/N: LBP1-UP
ENGLISH, GERMAN, DUTCH
CANNOT BE USED WITH ANY OTHER MESSENGER LANGUAGE
AN ATTACHMENT

SMCS-7490, 7610, 7620 **i03587003**

NOTE	PART NUMBER	QTY	PART NAME 1 2 3 4 5 6 (PRODUCT LEVEL)	SEE PAGE
	322-9229	1	SOFTWARE GP-MONITOR	
			-OR-	
	322-9230	1	SERVICE GP-MONITOR	
			(OPTIONAL SERVICE REPLACEMENT)(INCLUDES CONTROL GP & SOFTWARE)	

<END>

294-7838 ELECTRONICS GP-MONITOR

S/N: LBP1-UP
ENGLISH, RUSSIAN, LATVIAN
CANNOT BE USED WITH ANY OTHER MESSENGER LANGUAGE
AN ATTACHMENT

SMCS-7490, 7610, 7620 **i03094957**

NOTE	PART NUMBER	QTY	PART NAME 1 2 3 4 5 6 (PRODUCT LEVEL)	SEE PAGE
	322-9231	1	SOFTWARE GP-MONITOR	
			-OR-	
	322-9232	1	SERVICE GP-MONITOR	
			(OPTIONAL SERVICE REPLACEMENT)(INCLUDES CONTROL GP & SOFTWARE)	

<END>

294-7839 ELECTRONICS GP-MONITOR

S/N: LBP1-UP
ENGLISH, NORWEGIAN, SWEDISH
CANNOT BE USED WITH ANY OTHER MESSENGER LANGUAGE
AN ATTACHMENT

SMCS-7490, 7610, 7620 **i03094958**

NOTE	PART NUMBER	QTY	PART NAME 1 2 3 4 5 6 (PRODUCT LEVEL)	SEE PAGE
	322-9233	1	SOFTWARE GP-MONITOR	
			-OR-	
	322-9234	1	SERVICE GP-MONITOR	
			(OPTIONAL SERVICE REPLACEMENT)(INCLUDES CONTROL GP & SOFTWARE)	

<END>

ELECTRICAL AND STARTING SYSTEM

294-7840 ELECTRONICS GP-MONITOR

S/N: LBP1-UP
ENGLISH, POLISH, RUSSIAN
CANNOT BE USED WITH ANY OTHER MESSENGER LANGUAGE
AN ATTACHMENT

SMCS-7490, 7610, 7620 **i03094959**

NOTE	PART NUMBER	QTY	PART NAME 1 2 3 4 5 6 (PRODUCT LEVEL)	SEE PAGE
	322-9235	1	SOFTWARE GP-MONITOR	
			-OR-	
	322-9236	1	SERVICE GP-MONITOR	
			(OPTIONAL SERVICE REPLACEMENT)(INCLUDES CONTROL GP & SOFTWARE)	

<END>

294-7841 ELECTRONICS GP-MONITOR

S/N: LBP1-UP
ENGLISH, GREEK, TURKISH
CANNOT BE USED WITH ANY OTHER MESSENGER LANGUAGE
AN ATTACHMENT

SMCS-7490, 7610, 7620 **i03019189**

NOTE	PART NUMBER	QTY	PART NAME 1 2 3 4 5 6 (PRODUCT LEVEL)	SEE PAGE
	322-9237	1	SOFTWARE GP-MONITOR	
			-OR-	
	322-9238	1	SERVICE GP-MONITOR	
			(OPTIONAL SERVICE REPLACEMENT)(INCLUDES CONTROL GP & SOFTWARE)	

<END>

294-7842 ELECTRONICS GP-MONITOR

S/N: LBP1-UP
ENGLISH, FINNISH, SWEDISH
CANNOT BE USED WITH ANY OTHER MESSENGER LANGUAGE
AN ATTACHMENT

SMCS-7490, 7610, 7620 **i03019190**

NOTE	PART NUMBER	QTY	PART NAME 1 2 3 4 5 6 (PRODUCT LEVEL)	SEE PAGE
	322-9239	1	SOFTWARE GP-MONITOR	
			-OR-	
	322-9240	1	SERVICE GP-MONITOR	
			(OPTIONAL SERVICE REPLACEMENT)(INCLUDES CONTROL GP & SOFTWARE)	

<END>

294-7843 ELECTRONICS GP-MONITOR

S/N: LBP1-UP
ENGLISH, GREEK, SERBIAN
CANNOT BE USED WITH ANY OTHER MESSENGER LANGUAGE
AN ATTACHMENT

SMCS-7490, 7610, 7620 **i03019191**

NOTE	PART NUMBER	QTY	PART NAME 1 2 3 4 5 6 (PRODUCT LEVEL)	SEE PAGE
	322-9241	1	SOFTWARE GP-MONITOR	
			-OR-	
	322-9242	1	SERVICE GP-MONITOR	
			(OPTIONAL SERVICE REPLACEMENT)(INCLUDES CONTROL GP & SOFTWARE)	

<END>

294-7844 ELECTRONICS GP-MONITOR

S/N: LBP1-UP
ENGLISH, DANISH, DUTCH
CANNOT BE USED WITH ANY OTHER MESSENGER LANGUAGE
AN ATTACHMENT

SMCS-7490, 7610, 7620 **i03019192**

NOTE	PART NUMBER	QTY	PART NAME 1 2 3 4 5 6 (PRODUCT LEVEL)	SEE PAGE
	322-9243	1	SOFTWARE GP-MONITOR	
			-OR-	
	322-9244	1	SERVICE GP-MONITOR	
			(OPTIONAL SERVICE REPLACEMENT)(INCLUDES CONTROL GP & SOFTWARE)	

<END>

294-7845 ELECTRONICS GP-MONITOR

S/N: LBP1-UP
ENGLISH, INDONESIAN, JAPANESE
CANNOT BE USED WITH ANY OTHER MESSENGER LANGUAGE
AN ATTACHMENT

SMCS-7490, 7610, 7620 **i03019193**

NOTE	PART NUMBER	QTY	PART NAME 1 2 3 4 5 6 (PRODUCT LEVEL)	SEE PAGE
	322-9245	1	SOFTWARE GP-MONITOR	
			-OR-	
	322-9246	1	SERVICE GP-MONITOR	
			(OPTIONAL SERVICE REPLACEMENT)(INCLUDES CONTROL GP & SOFTWARE)	

<END>

277-4410 GLOW PLUG GP

S/N: C6E1-311

PART OF 242-1357 ENGINE AR-PRIMARY

SMCS-1412 **i02548338**

NOTE	REF NO	GRAPHIC REF	PART NUMBER	QTY	PART NAME 1 2 3 4 5 6 (PRODUCT LEVEL)	SEE PAGE
	1	1	**226-8770**	6	GLOW PLUG (24-VOLT)	
	2	1	**277-4407**	1	BAR AS	
	2A	1	**277-4408**	1	CABLE AS	
M	2B	1	**5C-2890**	1	NUT (M6X1-THD)	
	4	1	**275-2428**	1	INSULATOR	
M	5	1	**5C-2890**	2	NUT (M6X1-THD)	
	6	1	**277-4409**	1	CAP	
	7	1	**067-6269**	6	FERRULE	
	8	1	**100-4838**	1	BOLT (M6X20-MM)	
	9	1	**283-4693**	12	SEAL-O-RING	

M-METRIC PART

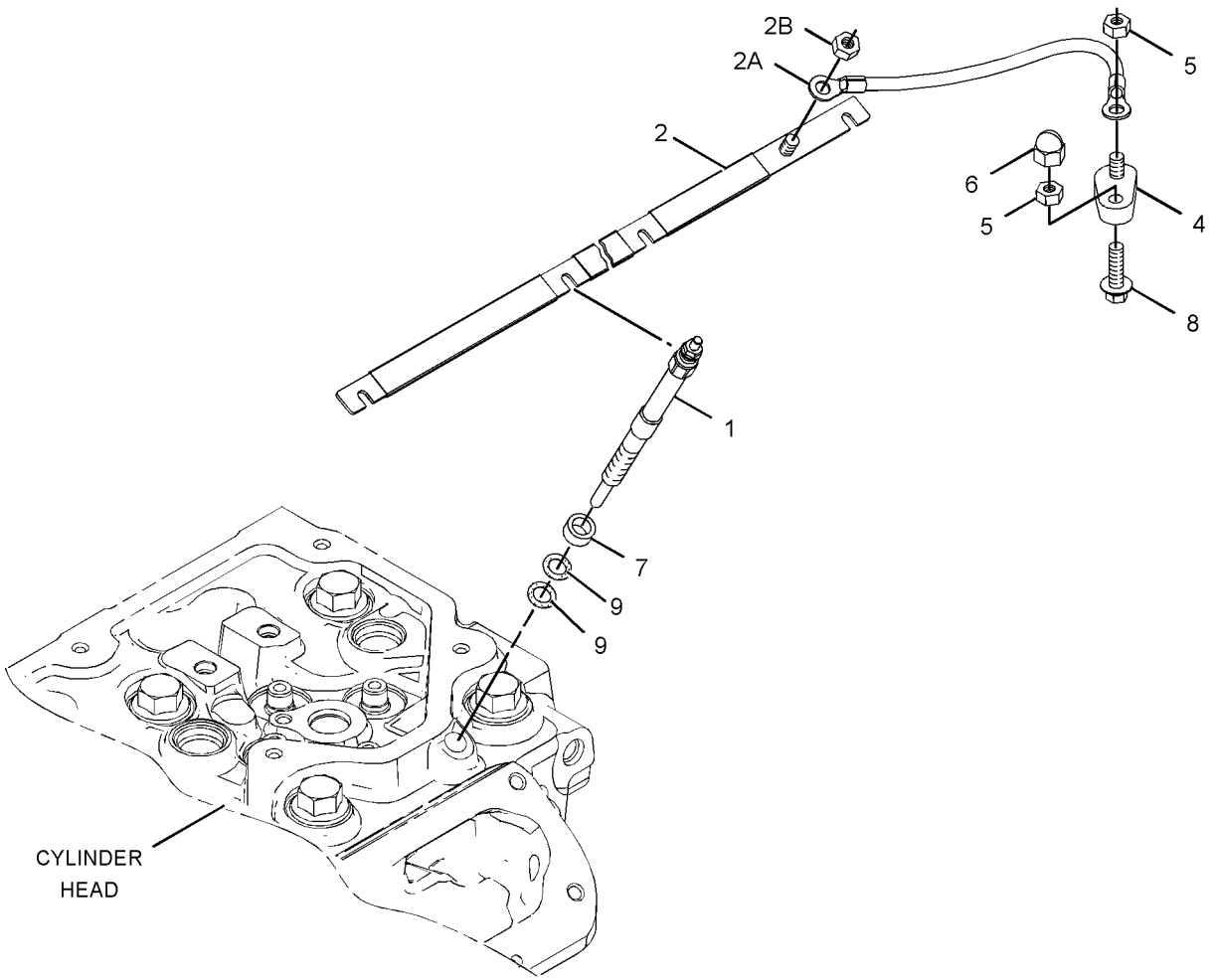

GRAPHIC #1 **<END>** g01279988

277-4410 GLOW PLUG GP

S/N: C6E312-408

PART OF 242-1357 ENGINE AR-PRIMARY

SMCS-1412 **i03092224**

NOTE	REF NO	GRAPHIC REF	PART NUMBER	QTY	PART NAME 1 2 3 4 5 6 (PRODUCT LEVEL)	SEE PAGE
C	1	1	**292-9881**	6	GLOW PLUG	
	2	1	**316-9073**	1	CABLE GP (GLOW PLUG)	
	2A	1	**277-4408**	1	CABLE AS	
M	2B	1	**5C-2890**	1	NUT (M6X1-THD)	
	4	1	**275-2428**	1	INSULATOR	
M	5	1	**5C-2890**	2	NUT (M6X1-THD)	
	6	1	**277-4409**	1	CAP	
	8	1	**100-4838**	1	BOLT (M6X20-MM)	

C-CHANGE FROM PREVIOUS TYPE
M-METRIC PART

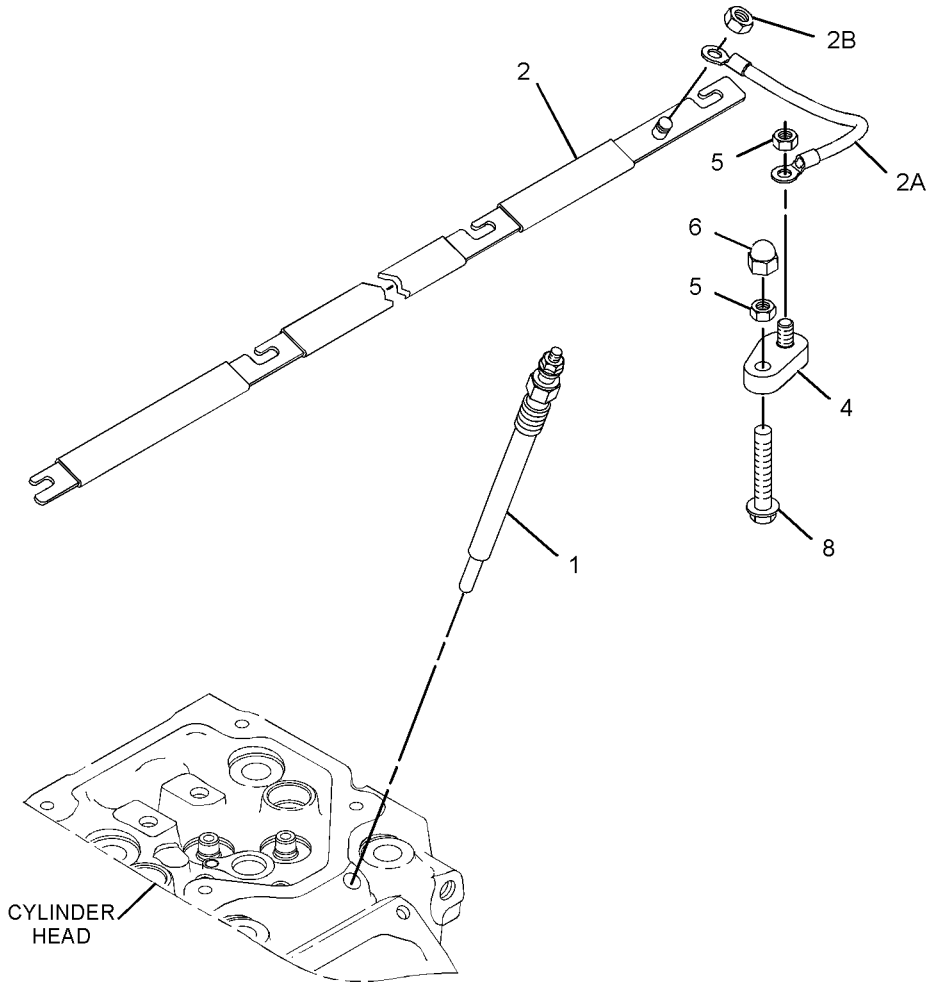

GRAPHIC #1 **<END>** g01636787

256-3468 HEATER GP-JACKET WATER

S/N: LBP1-UP
120-VOLT, 1000-WATT
CANNOT BE USED WITH 256-3469—PAGE 189
AN ATTACHMENT

SMCS-1383 **i02665122**

NOTE	REF NO	GRAPHIC REF	PART NUMBER	QTY	PART NAME 1 2 3 4 5 6 (PRODUCT LEVEL)	SEE PAGE
	1	1	**3S-2093**	9	STRAP-CABLE	
	2	1	**260-1555**	1	ELEMENT AS-JACKET WATER HEATER (120-VOLT, 1000-WATT)	
		1	**4D-9986**	1	SEAL-O-RING	
	3	1	**260-1566**	1	CORD AS-HEATER	
	4	1	**302-1266**	1	COVER-PROTECTION	
	5	1	**198-4776**	1	WASHER-HARD (8.8X20X8-MM THK)	
	6	1	**4P-8134**	1	CLIP	
M	7	1	**8T-4200**	1	BOLT (M8X1.25X16-MM)	
	8	1	**8T-4224**	2	WASHER-HARD (8.8X16X2-MM THK)	
M	9	1	**8T-7547**	1	BOLT (M8X1.25X30-MM)	

M-METRIC PART

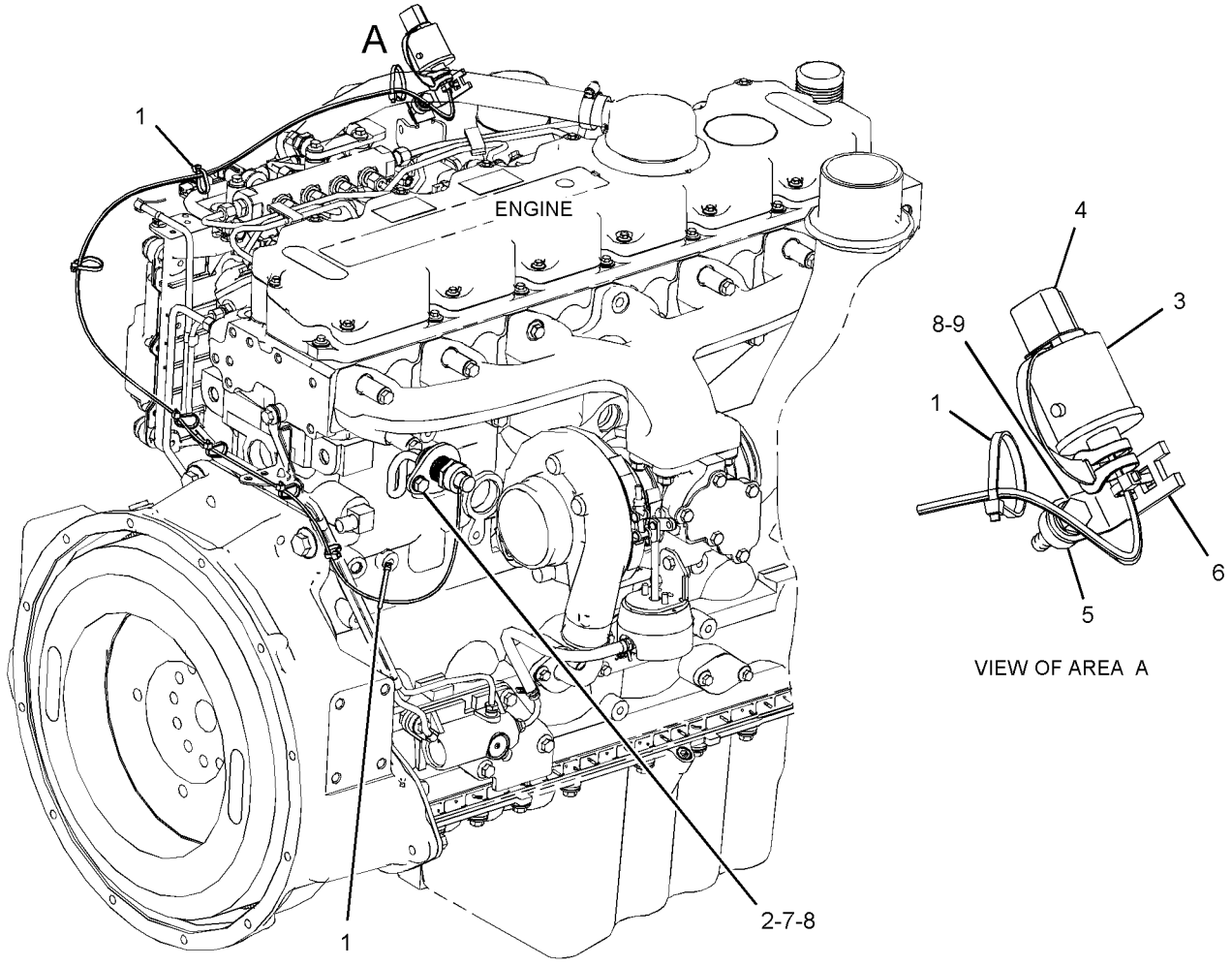

GRAPHIC #1 **<END>** g01341580

256-3469 HEATER GP-JACKET WATER

S/N: LBP1-UP
240-VOLT, 1000-WATT
CANNOT BE USED WITH 256-3468—PAGE 188
AN ATTACHMENT

SMCS-1383 **i03436908**

NOTE	REF NO	GRAPHIC REF	PART NUMBER	QTY	PART NAME 1 2 3 4 5 6 (PRODUCT LEVEL)	SEE PAGE
	1	1	**3S-2093**	9	STRAP-CABLE	
	2	1	**260-1556**	1	ELEMENT AS-JACKET WATER HEATER (240-VOLT, 1000-WATT)	
		1	**4D-9986**	1	SEAL-O-RING	
	3	1	**260-1569**	1	CORD AS-HEATER	
	4	1	**198-4776**	1	WASHER-HARD (8.8X20X8-MM THK)	
	5	1	**4P-8134**	1	CLIP	
M	6	1	**8T-4200**	1	BOLT (M8X1.25X16-MM)	
	7	1	**8T-4224**	2	WASHER-HARD (8.8X16X2-MM THK)	
M	8	1	**8T-7547**	1	BOLT (M8X1.25X30-MM)	
	9	1	**302-1266**	1	COVER-PROTECTION	

M-METRIC PART

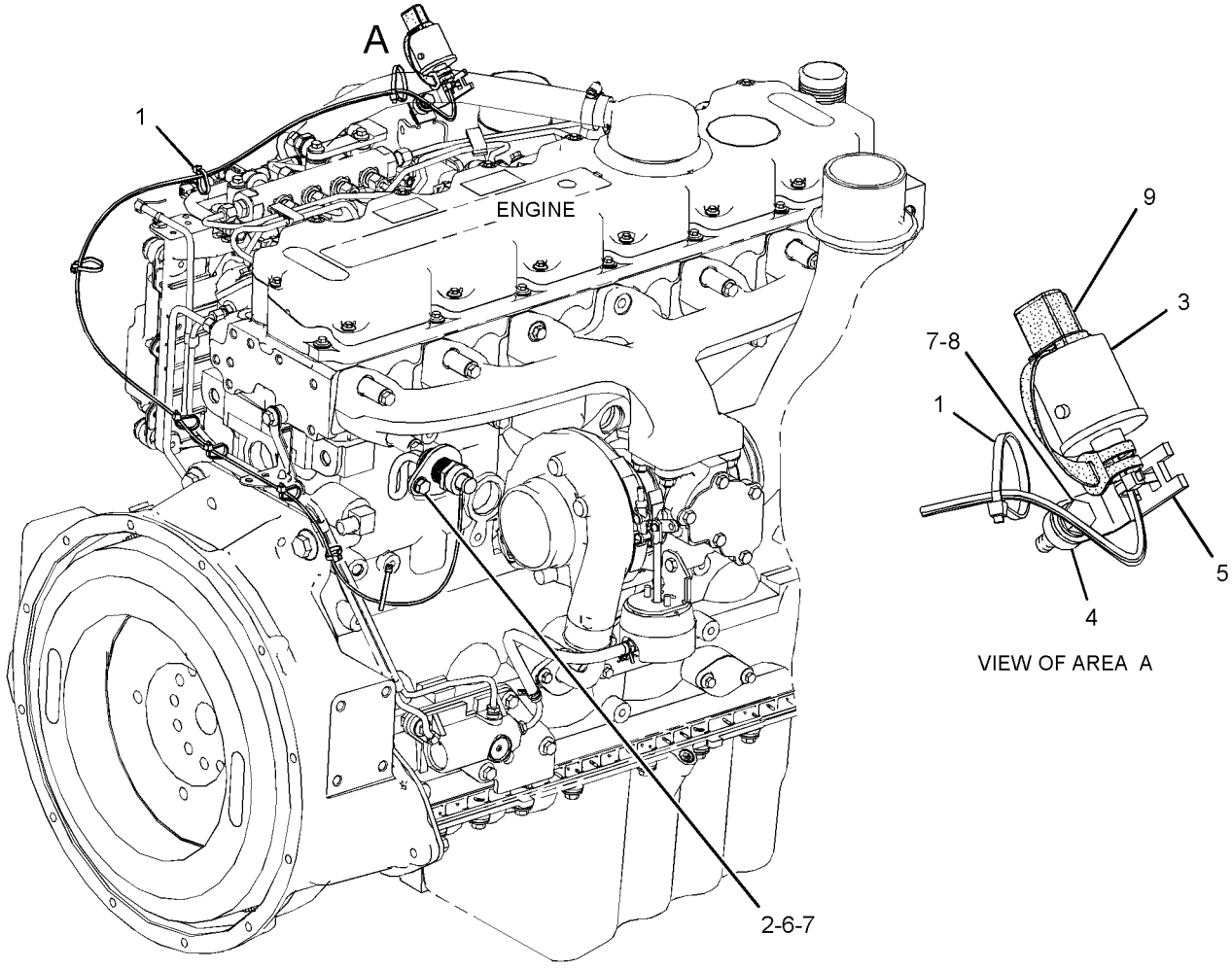

GRAPHIC #1 **<END>** g01863276

309-5907 INSTALLATION AR-COMMUNICATION–

PRODUCT LINK 321SR

S/N: LBP1-699

AN ATTACHMENT

SMCS-7606 **i02911668**

NOTE	REF NO	GRAPHIC REF	PART NUMBER	QTY	PART NAME 1 2 3 4 5 6 (PRODUCT LEVEL)	SEE PAGE
	1	1	**7K-1181**	3	STRAP-CABLE	
	2	1	**8C-5607**	8	MOUNT-ISOLATION	
	3	1	**8C-5608**	4	SPACER (6.5X9.5X25.4-MM THK)	
Y	4	1	**239-9954**	1	CONTROL GP-UNPROGRAMMED (PRODUCT LINK 300)	178
Y	5	1	**263-9088**	1	RADIO GP-COMMUNICATION (PRODUCT LINK 121SR)	205
	6	1	**268-0958**	1	PLATE AS	
	7	1	**284-8531**	1	ANTENNA AS (MAGNETIC MOUNT, PRODUCT LINK)	
		1	**301-0589**	1	ANTENNA (FLEXIBLE)	
	8	1	**3V-4791**	1	GROMMET	
	9	1	**5P-4116**	2	WASHER-HARD (8.8X20.5X2-MM THK)	
M	10	1	**8C-8451**	4	BOLT (M6X1X40-MM)	
M	11	1	**8T-4138**	4	BOLT (M6X1X20-MM)	
M	12	1	**8T-4189**	2	BOLT (M8X1.25X20-MM)	
	13	1	**9X-6165**	4	WASHER (6.5X22X2.5-MM THK)	
	14	1	**9X-6381**	4	WASHER (6.5X12.5X1.6-MM THK)	
Y	15	1	**262-2043**	1	ELECTRONICS GP-COMMUNICATION (PRODUCT LINK 300)	179

M-METRIC PART
Y-SEPARATE ILLUSTRATION

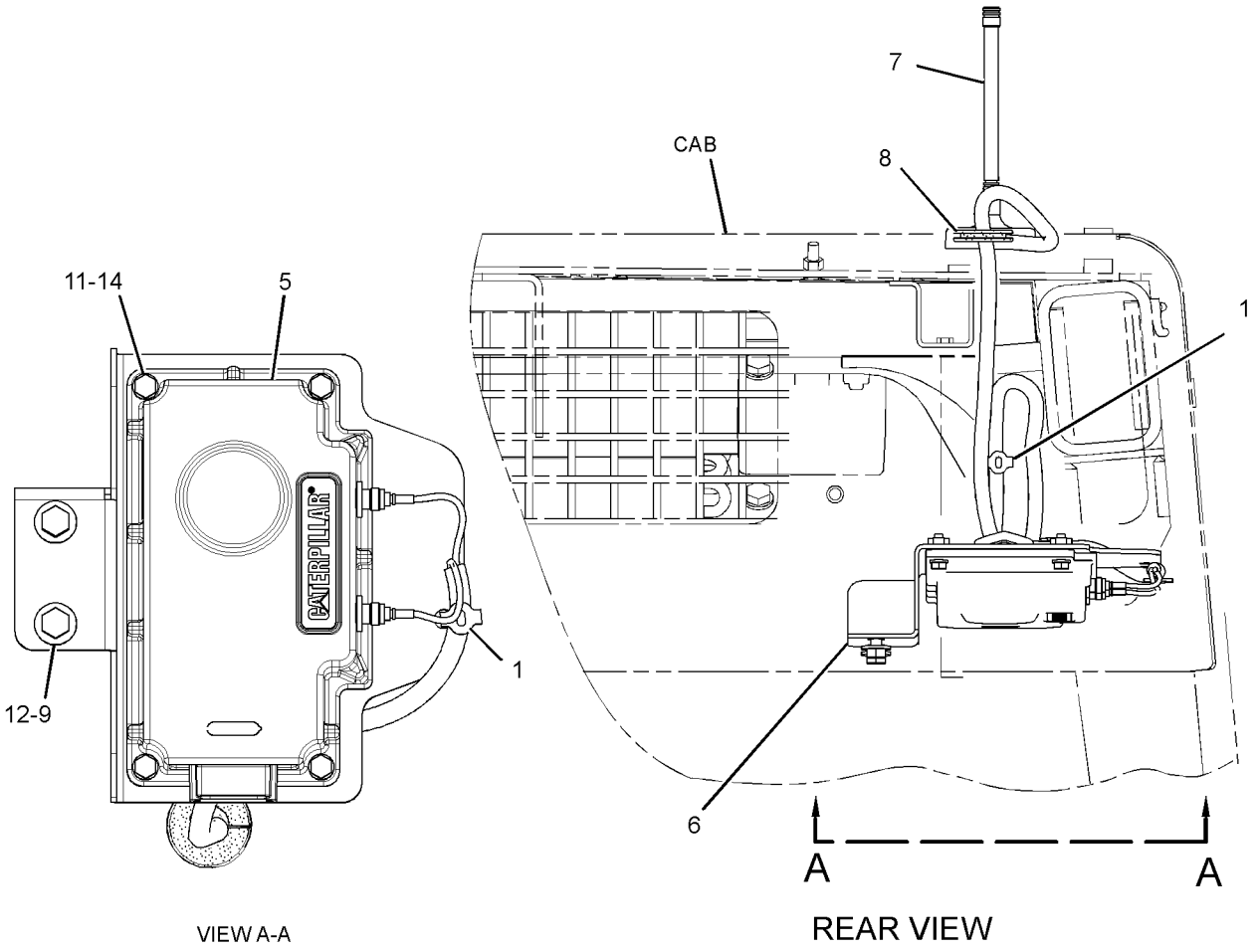

VIEW A-A

REAR VIEW

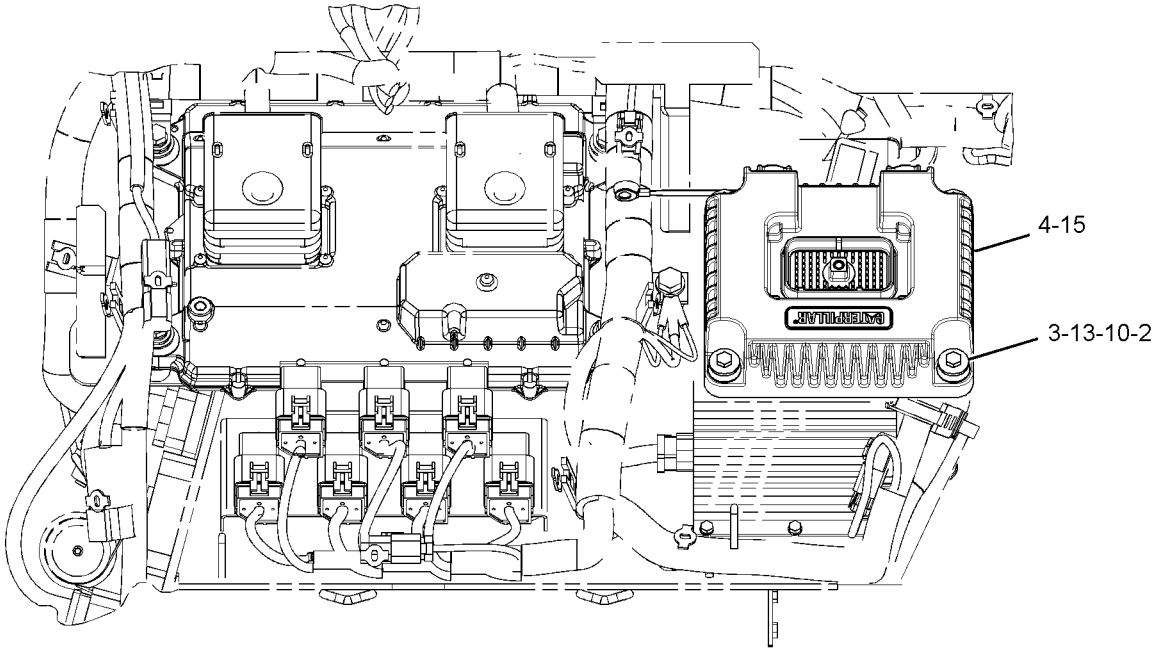

(VIEW INSIDE CAB ON RIGHT CONSOLE)

GRAPHIC #1 **<END>** g01526408

309-5907 INSTALLATION AR-COMMUNICATION–

PRODUCT LINK 321SR

S/N: LBP700-UP

AN ATTACHMENT

SMCS-7606 **i03030180**

NOTE	REF NO	GRAPHIC REF	PART NUMBER	QTY	PART NAME 1 2 3 4 5 6 (PRODUCT LEVEL)	SEE PAGE
C	1	1	**7K-1181**	4	STRAP-CABLE	
	2	1	**8C-5607**	8	MOUNT-ISOLATION	
	3	1	**8C-5608**	4	SPACER (6.5X9.5X25.4-MM THK)	
Y	4	1	**239-9954**	1	CONTROL GP-UNPROGRAMMED (PRODUCT LINK 300)	178
Y	5	1	**263-9088**	1	RADIO GP-COMMUNICATION (PRODUCT LINK 121SR)	205
	6	1	**268-0958**	1	PLATE AS	
C	7	1	**310-2392**	1	ANTENNA AS (MAGNETIC MOUNT, PRODUCT LINK)	
		1	**301-0589**	1	ANTENNA (FLEXIBLE)	
	8	1	**3V-4791**	1	GROMMET	
	9	1	**5P-4116**	2	WASHER-HARD (8.8X20.5X2-MM THK)	
M	10	1	**8C-8451**	4	BOLT (M6X1X40-MM)	
M	11	1	**8T-4138**	4	BOLT (M6X1X20-MM)	
M	12	1	**8T-4189**	2	BOLT (M8X1.25X20-MM)	
	13	1	**9X-6165**	4	WASHER (6.5X22X2.5-MM THK)	
	14	1	**9X-6381**	4	WASHER (6.5X12.5X1.6-MM THK)	
Y	15	1	*262-2043*	1	ELECTRONICS GP-COMMUNICATION (PRODUCT LINK 300)	179
	16	1	**307-0047**	1	FILM-INFORMATION (PRODUCT LINK, READ OMM)	

C-CHANGE FROM PREVIOUS TYPE
M-METRIC PART
Y-SEPARATE ILLUSTRATION

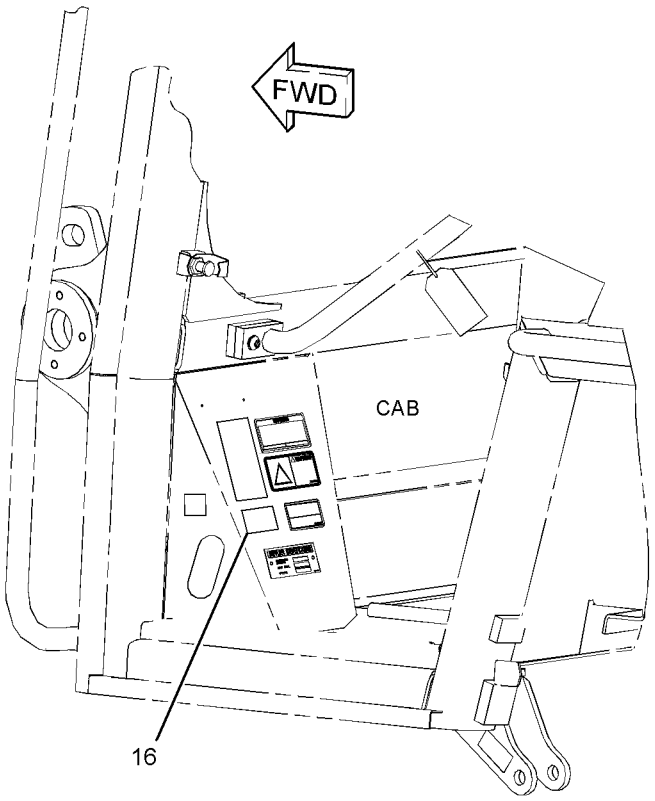

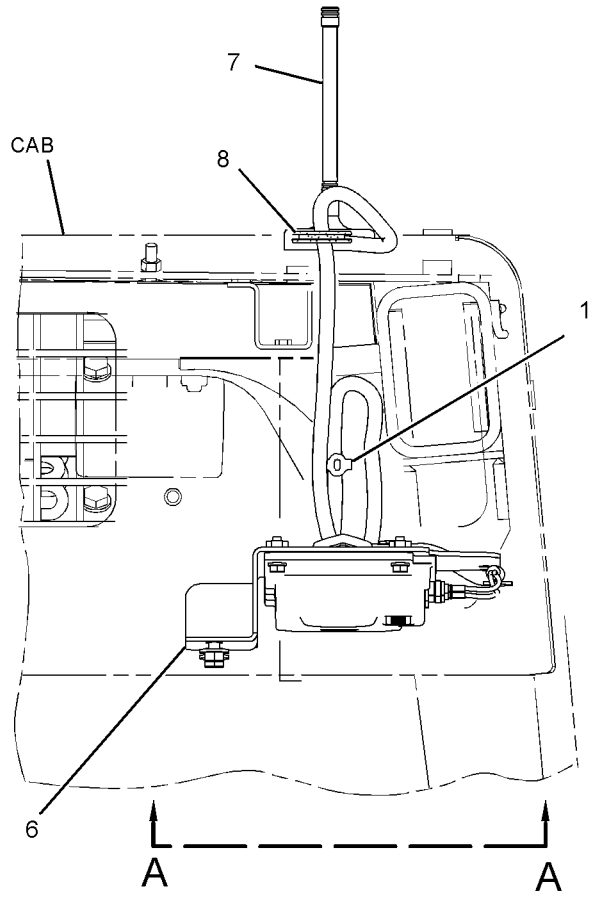

REAR VIEW

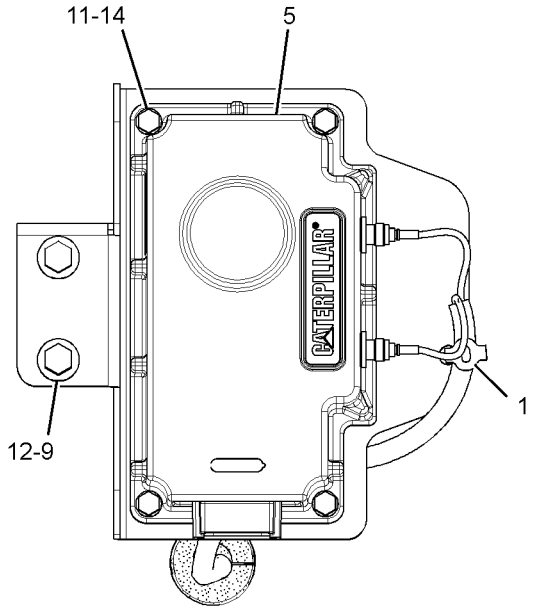

VIEW A-A

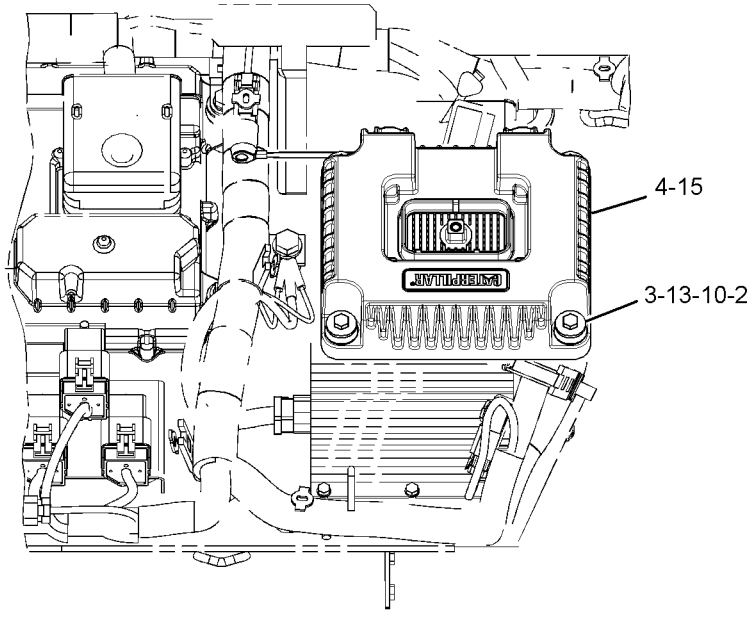

(VIEW INSIDE CAB ON RIGHT CONSOLE)

GRAPHIC #1 **<END>** g01536473

254-3479 INSTALLATION GP-COMMUNICATION–

PRODUCT LINK 321SR

S/N: LBP1-UP

AN ATTACHMENT

SMCS-7606 **i03587062**

NOTE	REF NO	GRAPHIC REF	PART NUMBER	QTY	PART NAME 1 2 3 4 5 6 (PRODUCT LEVEL)	SEE PAGE
	1	1	**7K-1181**	3	STRAP-CABLE	
	2	1	**8C-5607**	8	MOUNT-ISOLATION	
	3	1	**8C-5608**	4	SPACER (6.5X9.5X25.4-MM THK)	
Y	4	1	**239-9954**	1	CONTROL GP-UNPROGRAMMED (PRODUCT LINK 300)	178
	5	1	**263-7802**	1	ANTENNA AS (MAGNETIC MOUNT, PRODUCT LINK)	
		1	**223-4296**	1	ANTENNA (FLEXIBLE)	
Y	6	1	**263-9088**	1	RADIO GP-COMMUNICATION (PRODUCT LINK 121SR)	205
	7	1	**268-0958**	1	PLATE AS	
	8	1	**292-6856**	1	HARNESS AS-CONTROL	
		1	**126-1774**	1	COVER-CONNECTOR	
		1	**9X-6772**	2	STRAP-CABLE	
		1	**160-7690**	1	PLUG AS-CONNECTOR (70-PIN)	
		1	**230-4009**	1	PLUG AS-CONNECTOR (12-PIN)	
		1	**230-5010**	1	PLUG AS-CONNECTOR (6-PIN)	
	9	1	**3V-4791**	1	GROMMET	
	10	1	**5P-4116**	2	WASHER-HARD (8.8X20.5X2-MM THK)	
M	11	1	**8C-8451**	4	BOLT (M6X1X40-MM)	
M	12	1	**8T-4138**	4	BOLT (M6X1X20-MM)	
M	13	1	**8T-4189**	2	BOLT (M8X1.25X20-MM)	
	14	1	**9X-6165**	4	WASHER (6.5X22X2.5-MM THK)	
	15	1	**9X-6381**	4	WASHER (6.5X12.5X1.6-MM THK)	
FY			*262-2043*	1	ELECTRONICS GP-COMMUNICATION (PRODUCT LINK 300)	179

F-NOT SHOWN
M-METRIC PART
Y-SEPARATE ILLUSTRATION

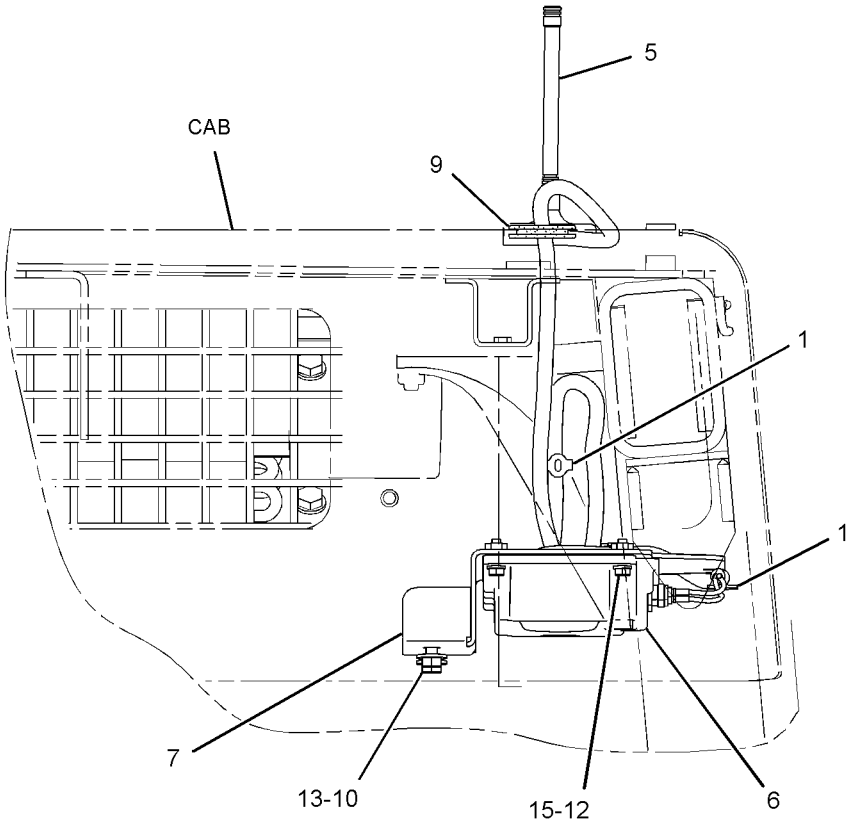

REAR VIEW

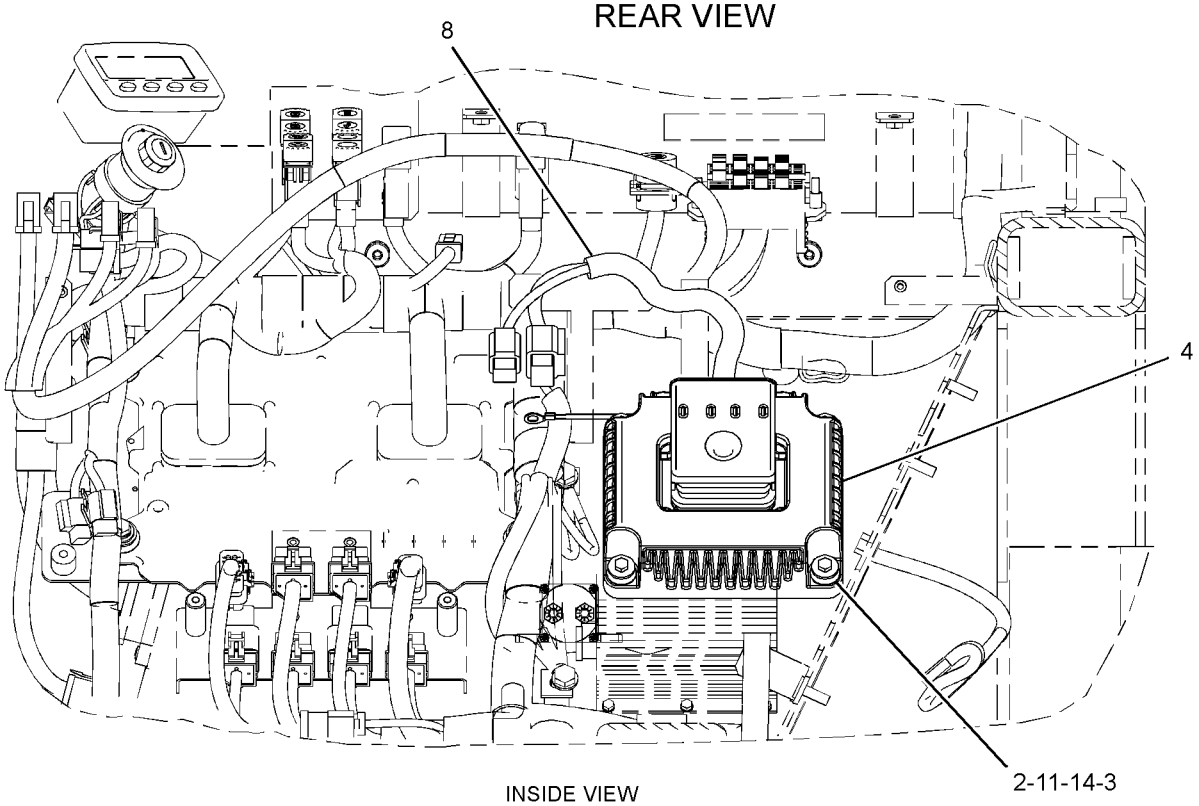

INSIDE VIEW
(CAB)

GRAPHIC #1 **<END>** g01344892

310-6789 INSTALLATION GP-COMMUNICATION

S/N: LBP1-UP
WITHOUT PRODUCT LINK
PART OF 327-7801 WIRING GP-CAB
CANNOT BE USED WITH 309-5907—PAGE 190
AN ATTACHMENT

SMCS-7606 **i02897258**

NOTE	REF NO	GRAPHIC REF	PART NUMBER	QTY	PART NAME 1 2 3 4 5 6 (PRODUCT LEVEL)	SEE PAGE
	1	1	**310-6786**	1	BRACKET AS	
		1	**310-6787**	1	GASKET	
	2	1	**310-6788**	1	PLATE AS	
M	3	1	**5C-9553**	4	BOLT (M6X1X16-MM)	
	4	1	**8T-4205**	4	WASHER-HARD (7.2X14.5X2-MM THK)	

M-METRIC PART

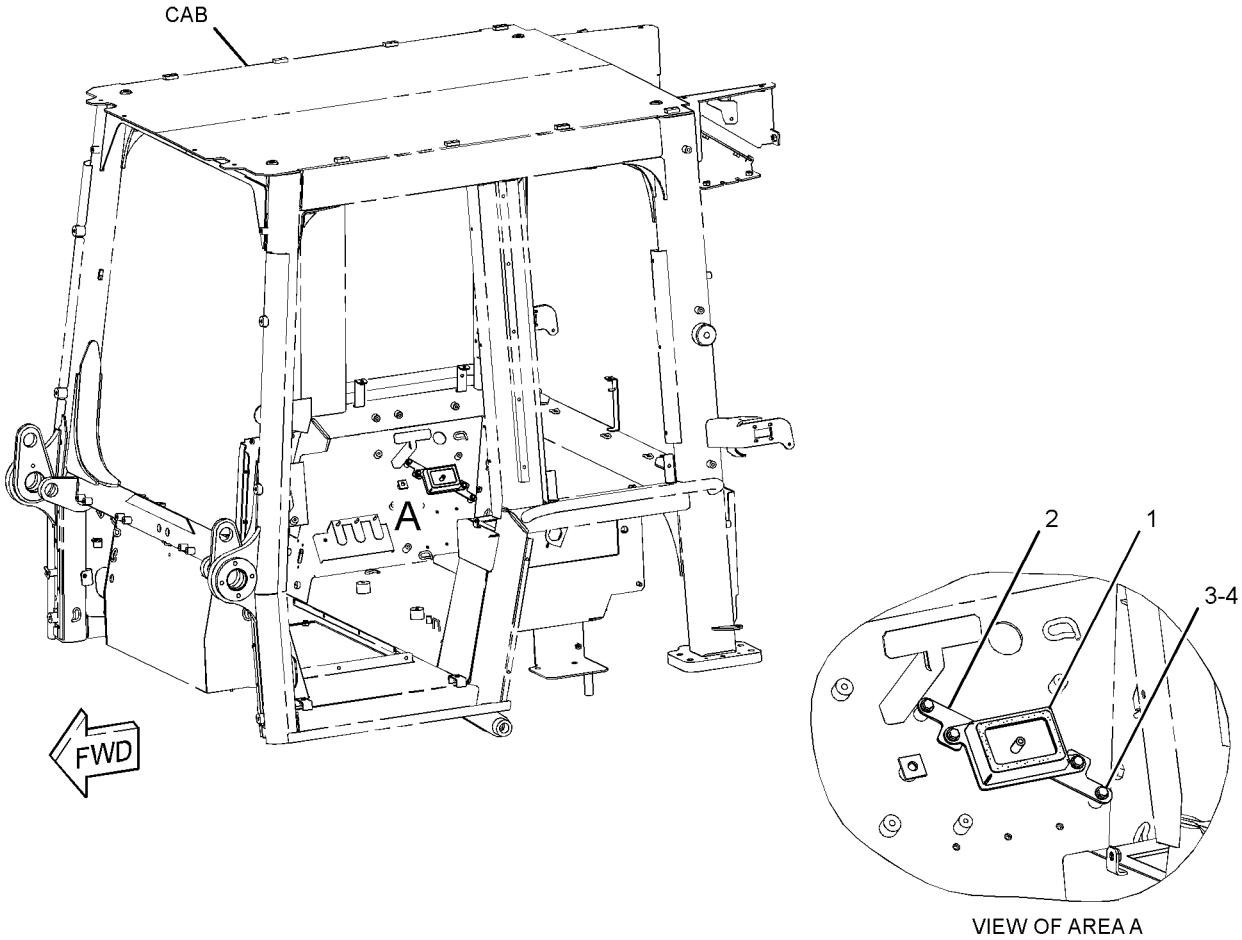

VIEW OF AREA A

GRAPHIC #1 **<END>** g01447952

254-3480 INSTALLATION GP-SECURITY

S/N: LBP1-UP
AN ATTACHMENT

SMCS-7631 **i03095105**

NOTE	REF NO	GRAPHIC REF	PART NUMBER	QTY	PART NAME 1 2 3 4 5 6 (PRODUCT LEVEL)	SEE PAGE
	1	1	**8C-5607**	4	MOUNT-ISOLATION	
	2	1	**8C-5608**	2	SPACER (6.5X9.5X25.4-MM THK)	
	4	1	**205-8257**	1	COIL AS (EXCITER)	
D		1	**5P-5677**		WIRE (18-GA, BLACK) (0.4-M)	
		1	**186-3735**	2	PIN-CONNECTOR (16-GA TO 18-GA)	
	4A	1	**198-5389**	1	FILM-IDENTIFICATION (IGNITION SWITCH)	
	4B	1	**102-8802**	1	KIT-RECEPTACLE (2-PIN)	
					(INCLUDES RECEPTACLE AS & WEDGE)	
	5	1	**218-0404**	1	MODULE GP-INTERFACE (KEY)	
M	7	1	**7X-2533**	2	BOLT (M6X1X35-MM)	
	8	1	**9X-6165**	2	WASHER (6.5X22X2.5-MM THK)	
	9	1	**206-5162**	1	KEY AS-ELECTRONIC (SECURITY) (YELLOW)	
					—OR—	
		1	**206-5165**		KEY AS-ELECTRONIC (SECURITY) (GRAY)	
	10	1	**219-6314**	1	KEY RING (IDENTIFICATION)	

D-ORDER BY THE METER
M-METRIC PART

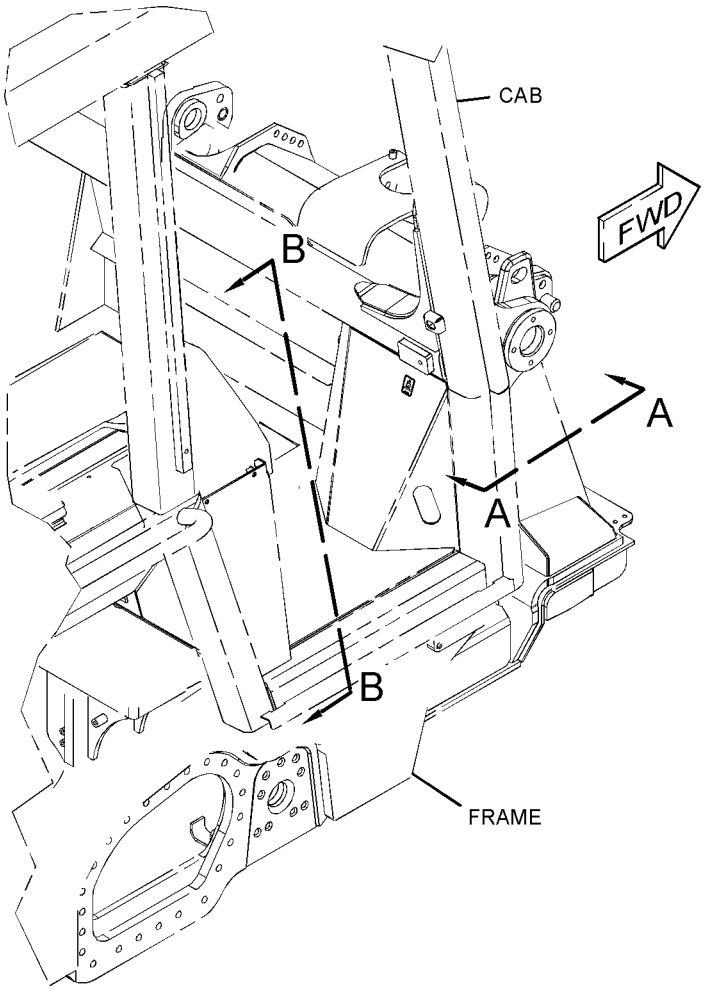

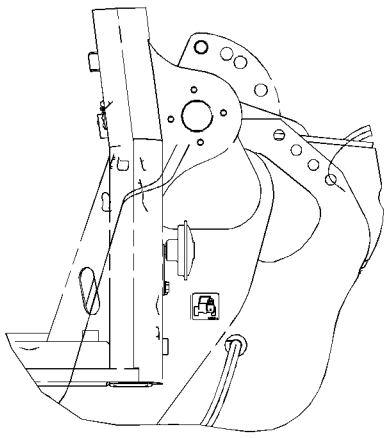

VIEW A-A

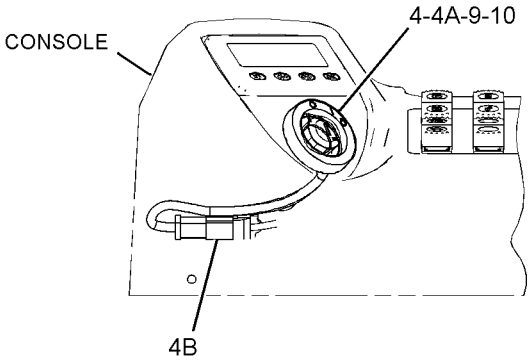

LEFT SIDE VIEW

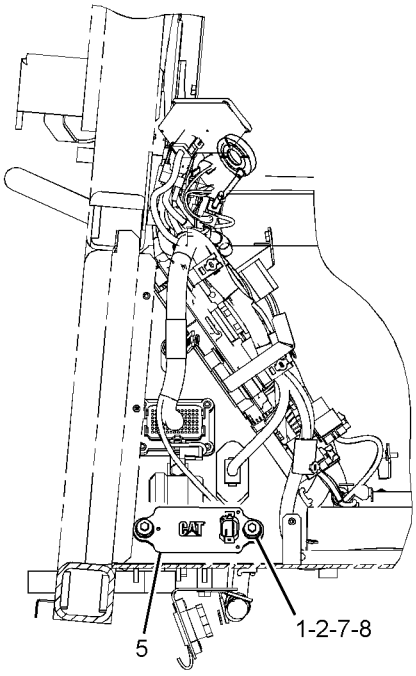

SECTION B-B

GRAPHIC #1 **<END>** g01351202

219-6487 LAMP GP-FLOOD

S/N: LBP1-UP
24-VOLT, 65-WATT
PART OF 254-3478 LIGHTING GP-FLOOD
AN ATTACHMENT

SMCS-1434 **i03016777**

NOTE	REF NO	GRAPHIC REF	PART NUMBER	QTY	PART NAME 1 2 3 4 5 6 (PRODUCT LEVEL)	SEE PAGE
	1	1	**9X-3463**	1	LAMP-HALOGEN (24-VOLT, 65-WATT)	
M	2	1	**8T-6912**	1	BOLT (M8X1.25X50-MM)	
M	3	1	**6V-9189**	1	LOCKNUT (M8X1.25-THD)	
	4	1	**8T-4224**	2	WASHER-HARD (8.8X16X2-MM THK)	
	5	1	**9X-4244**	2	SCREW-SPECIAL	
	7	1	**202-6614**	1	LENS AS	
	8	1	**175-4292**	1	BODY AS	
	9	1	**164-7556**	1	BRACKET (LAMP RETAINING)	
	10	1	**175-4291**	1	BRACKET AS	

M-METRIC PART

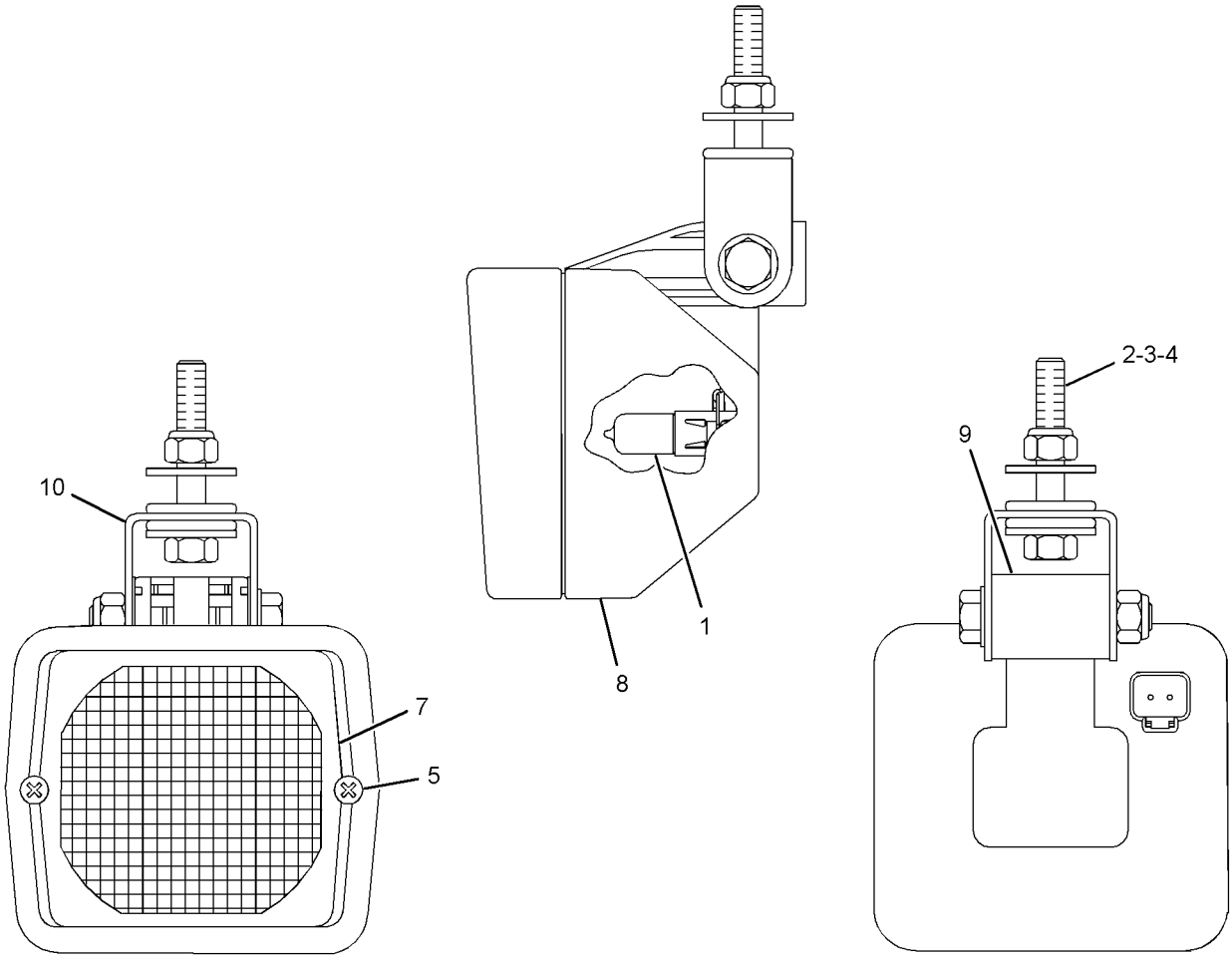

GRAPHIC #1 **<END>** g01538676

ELECTRICAL AND STARTING SYSTEM

219-6488 LAMP GP-FLOOD

S/N: LBP1-UP
24-VOLT
PART OF 308-0605 LIGHTING GP-FLOOD, 242-7492 WIRING GP-CAB

SMCS-1434 **i02956268**

NOTE	REF NO	GRAPHIC REF	PART NUMBER	QTY	PART NAME 1 2 3 4 5 6 (PRODUCT LEVEL)	SEE PAGE
	1	1	**9X-3463**	1	LAMP-HALOGEN (24-VOLT, 65-WATT)	
M	2	1	**8T-6912**	1	BOLT (M8X1.25X50-MM)	
M	3	1	**6V-9189**	1	LOCKNUT (M8X1.25-THD)	
	4	1	**8T-4224**	2	WASHER-HARD (8.8X16X2-MM THK)	
	5	1	**9X-4244**	2	SCREW-SPECIAL	
	7	1	**202-6611**	1	LENS AS	
	8	1	**175-4292**	1	BODY AS	
	9	1	**164-7556**	1	BRACKET (LAMP RETAINING)	
	10	1	**175-4291**	1	BRACKET AS	

M-METRIC PART

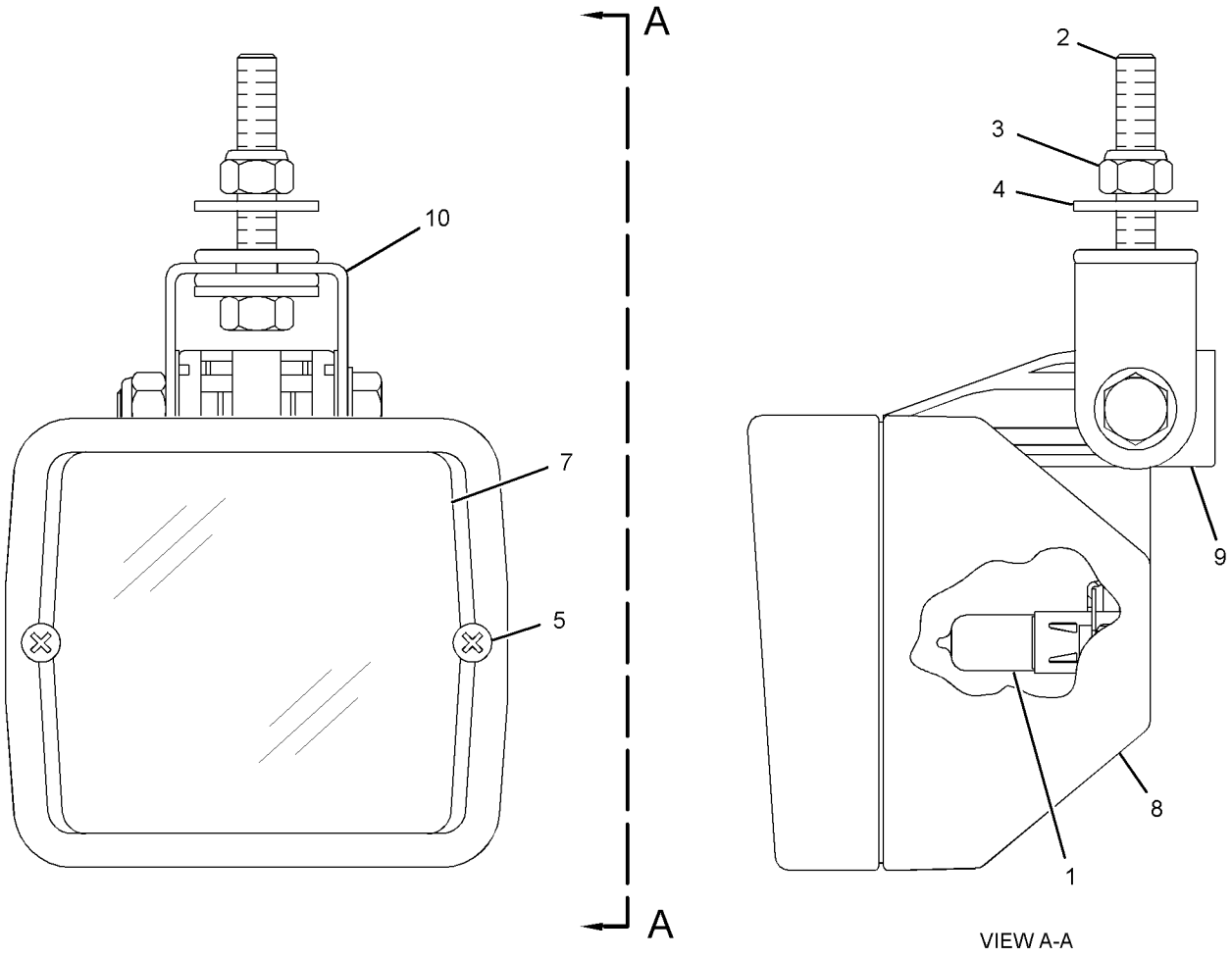

GRAPHIC #1 **<END>** g01523638

302-4254 LAMP GP-WARNING BEACON

S/N: LBP1-UP
24-VOLT
PART OF 254-3481 LIGHTING GP-WARNING BEACON
AN ATTACHMENT

SMCS-1431 **i03095133**

NOTE	REF NO	GRAPHIC REF	PART NUMBER	QTY	PART NAME 1 2 3 4 5 6 (PRODUCT LEVEL)	SEE PAGE
	1	1	**9X-8121**	1	LENS (AMBER, WARNING BEACON)	
	2	1	**9X-7849**	1	LAMP (24-VOLT, 70-WATT)	
	3	1	**9X-8139**	1	BELT-DRIVE	
	4	1	**102-8802**	1	KIT-RECEPTACLE (2-PIN)	
					(INCLUDES RECEPTACLE AS & WEDGE)	
	5	1	**186-3735**	2	PIN-CONNECTOR (16-GA TO 18-GA)	

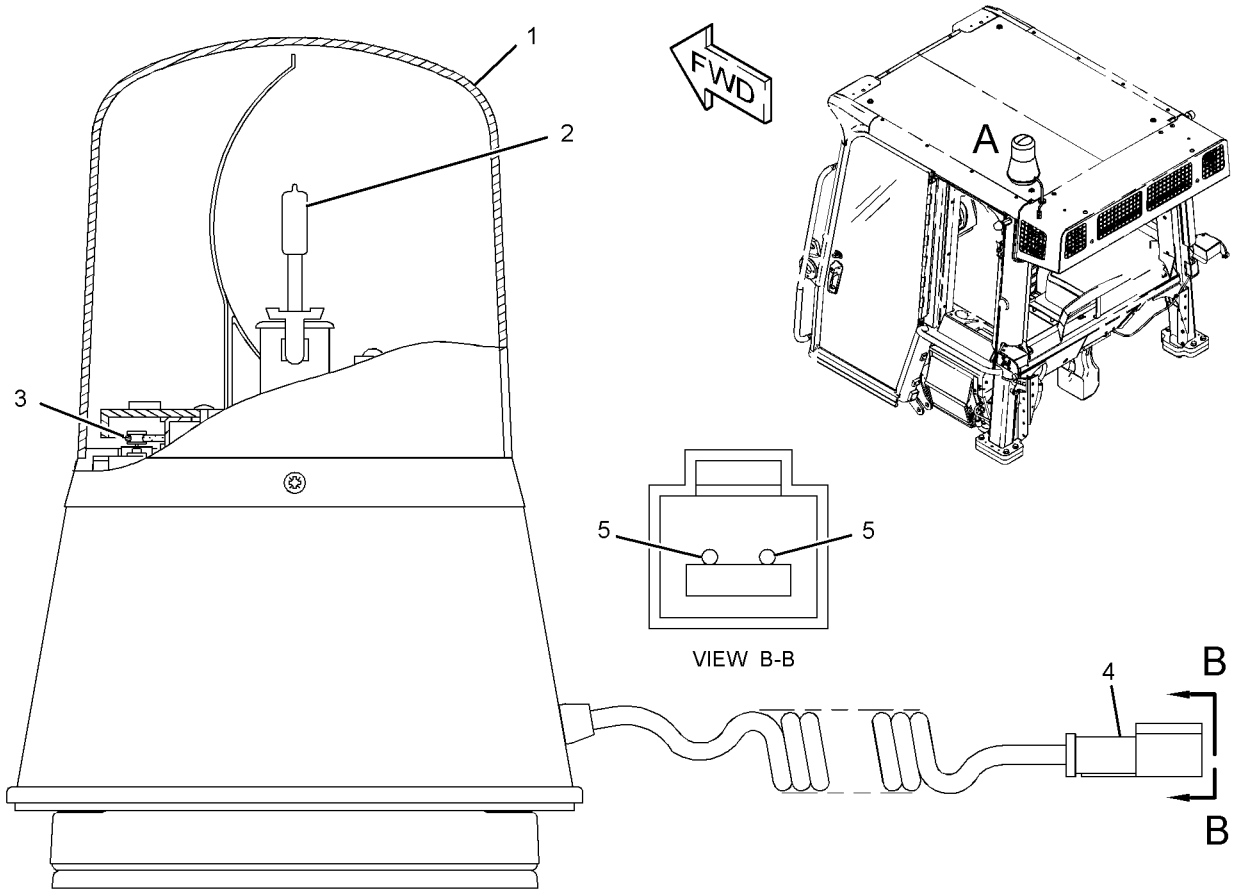

SECTION VIEW OF AREA A

GRAPHIC #1 **<END>** g01345196

254-3478 LIGHTING GP-FLOOD—CAB FRONT, REAR

S/N: LBP1-UP

AN ATTACHMENT

SMCS-1434 **i02665540**

NOTE	REF NO	GRAPHIC REF	PART NUMBER	QTY	PART NAME 1 2 3 4 5 6 (PRODUCT LEVEL)	SEE PAGE
Y	1	1	**219-6487**	4	LAMP GP-FLOOD (24-VOLT, 65-WATT)	199
	2	1	**251-5848**	1	SWITCH AS-ROCKER (FRONT, REAR FLOODLIGHTS)	
	3	1	**8T-4224**	4	WASHER-HARD (8.8X16X2-MM THK)	

Y-SEPARATE ILLUSTRATION

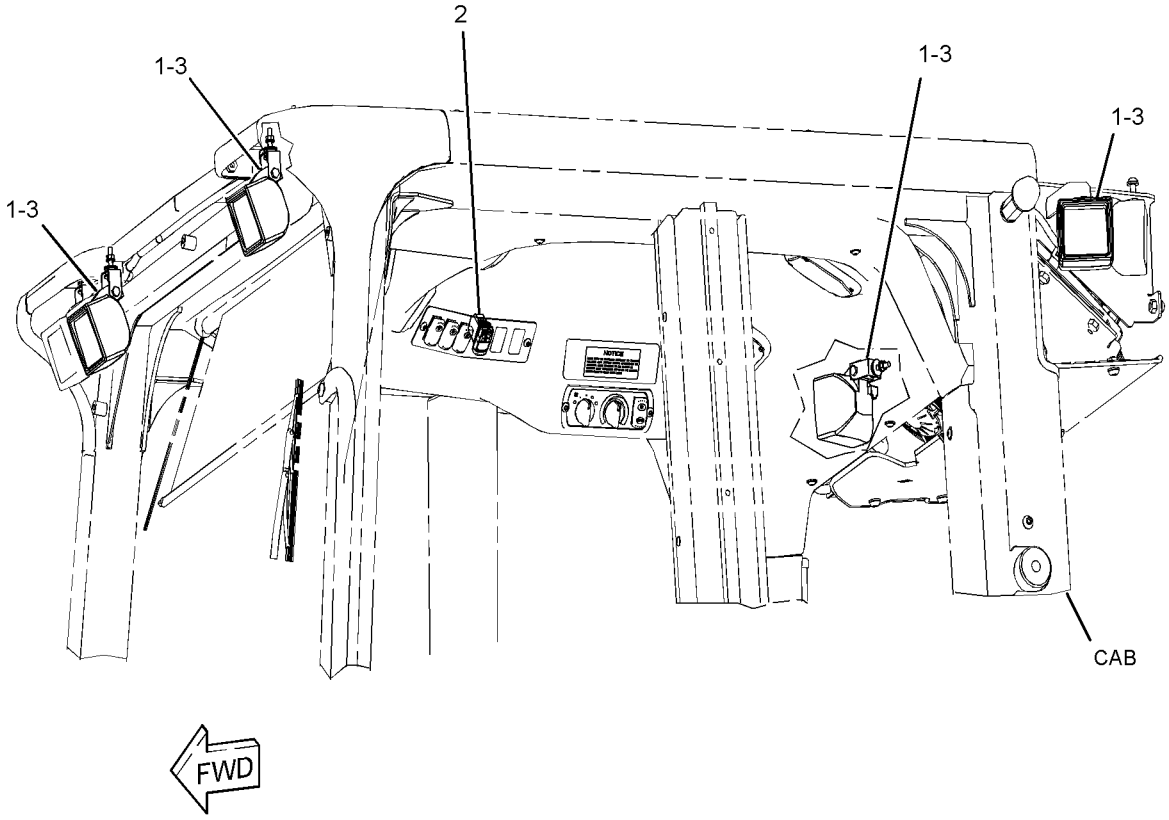

GRAPHIC #1 **<END>** g01344417

308-0605 LIGHTING GP-FLOOD–CAB

S/N: LBP700-UP

PART OF 307-4279, 334-6680 CAB GP

SMCS-1434 **i03095168**

NOTE	REF NO	GRAPHIC REF	PART NUMBER	QTY	PART NAME 1 2 3 4 5 6 (PRODUCT LEVEL)	SEE PAGE
Y	1	1	**219-6488**	4	LAMP GP-FLOOD (24-VOLT)	200

Y-SEPARATE ILLUSTRATION

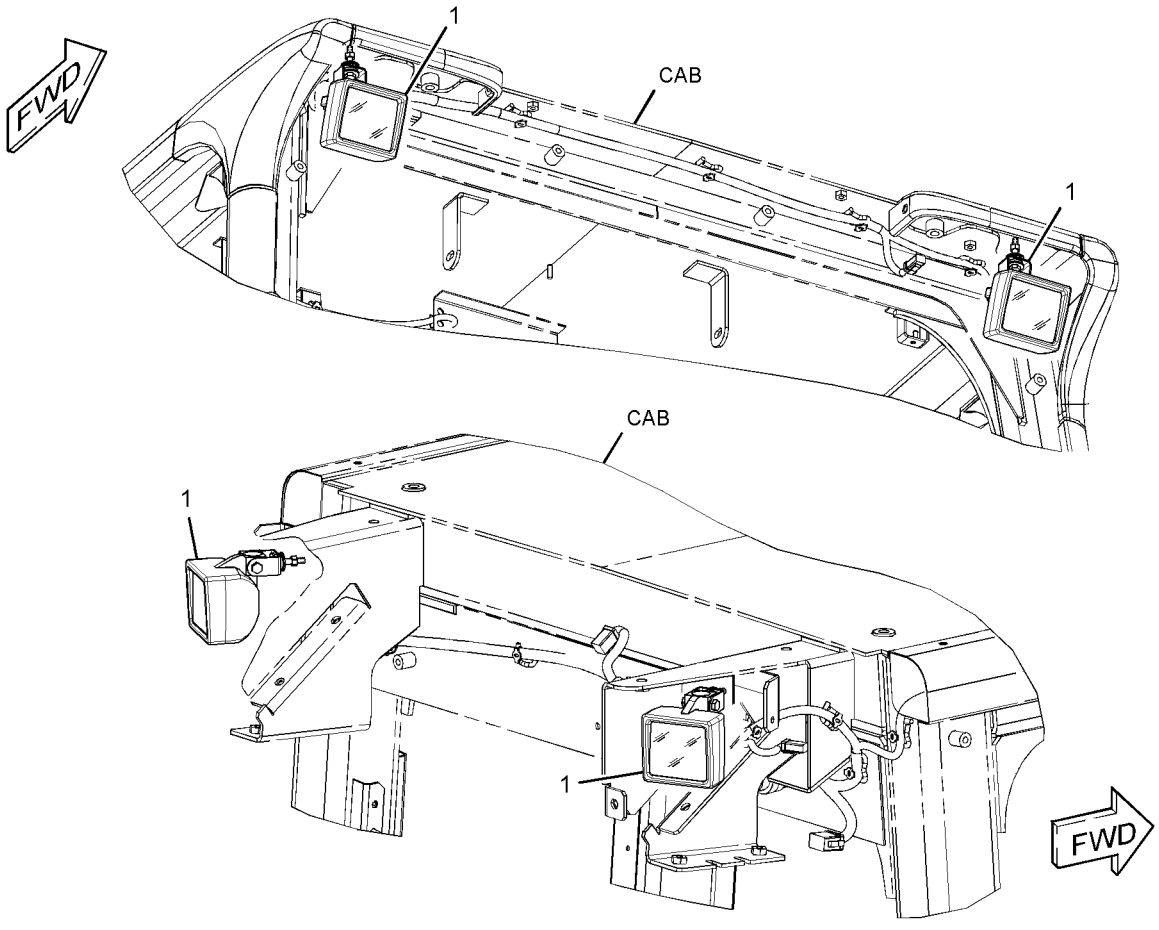

GRAPHIC #1 **<END>** g01454137

254-3481 LIGHTING GP-WARNING BEACON

S/N: LBP1-UP

AN ATTACHMENT

SMCS-1431 **i02665580**

NOTE	REF NO	GRAPHIC REF	PART NUMBER	QTY	PART NAME 1 2 3 4 5 6 (PRODUCT LEVEL)	SEE PAGE
	1	1	**237-9736**	1	SWITCH AS-ROCKER (WARNING BEACON)	
Y	2	1	**302-4254**	1	LAMP GP-WARNING BEACON (24-VOLT)	201
	3	1	**3V-4791**	1	GROMMET	

Y-SEPARATE ILLUSTRATION

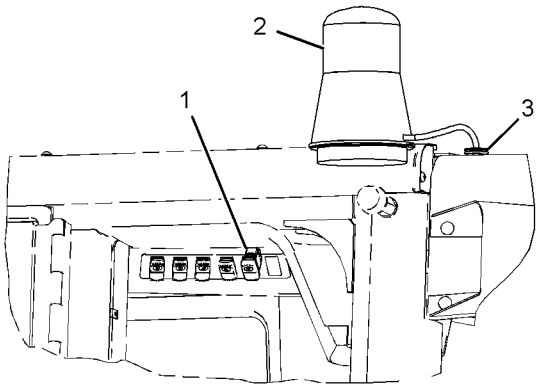

VIEW A-A

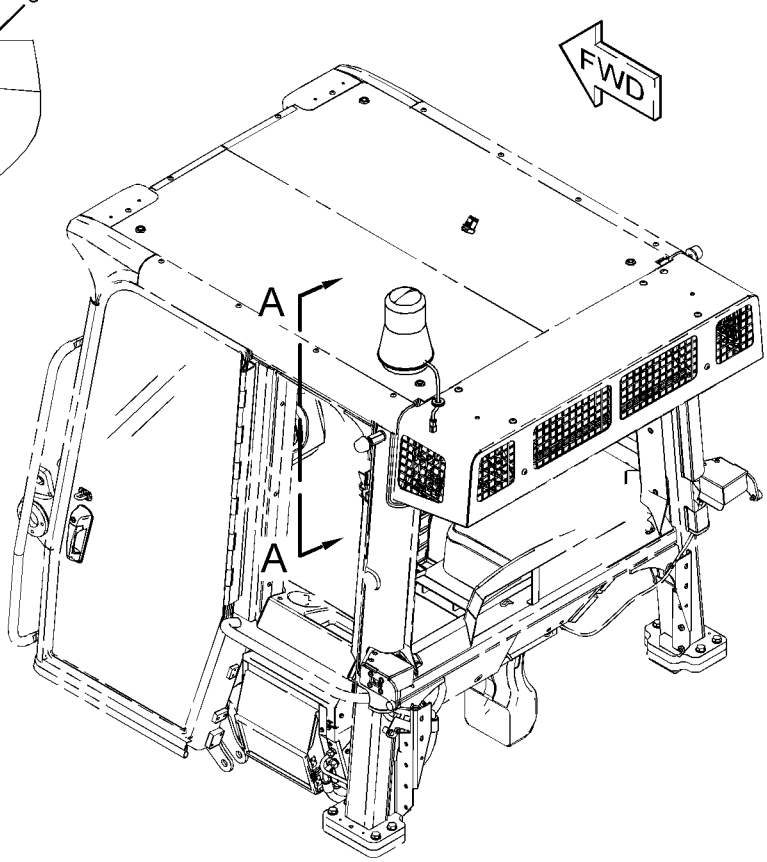

GRAPHIC #1 **<END>** g01344338

263-9088 RADIO GP-COMMUNICATION–PRODUCT LINK 121SR

S/N: LBP1-UP

PART OF 309-5907 INSTALLATION AR-COMMUNICATION, 254-3479 INSTALLATION GP-COMMUNICATION AN ATTACHMENT

SMCS-733T **i03212280**

NOTE	PART NUMBER	QTY	PART NAME 1 2 3 4 5 6 (PRODUCT LEVEL)	SEE PAGE
			(NO SERVICED PARTS)	

<END>

178-2345 SENSOR GP-LIQUID LEVEL

S/N: LBP1-UP

PART OF 301-2710 PUMP GP-FUEL PRM & WATER SEP

SMCS-7422 **i02549139**

NOTE	REF NO	GRAPHIC REF	PART NUMBER	QTY	PART NAME 1 2 3 4 5 6 (PRODUCT LEVEL)	SEE PAGE
	1	1	**178-2334**	1	PROBE AS-LIQUID LEVEL (WATER SEPARATOR)	
	1A	1	**3J-1907**	1	SEAL-O-RING	
	2	1	**178-2335**	1	SENSOR AS-LIQUID LEVEL (WATER SEPARATOR)	
		1	**102-8804**	1	KIT-RECEPTACLE (4-PIN)	
					(INCLUDES RECEPTACLE AS & WEDGE)	
		1	**155-2270**	1	KIT-CONNECTING PLUG (2-PIN)	
					(INCLUDES PLUG AS, WEDGE, & INTERFACE SEAL)	
		1	**186-3735**	4	PIN-CONNECTOR (16-GA TO 18-GA)	
		1	**186-3736**	2	SOCKET-CONNECTOR (16-GA TO 18-GA)	

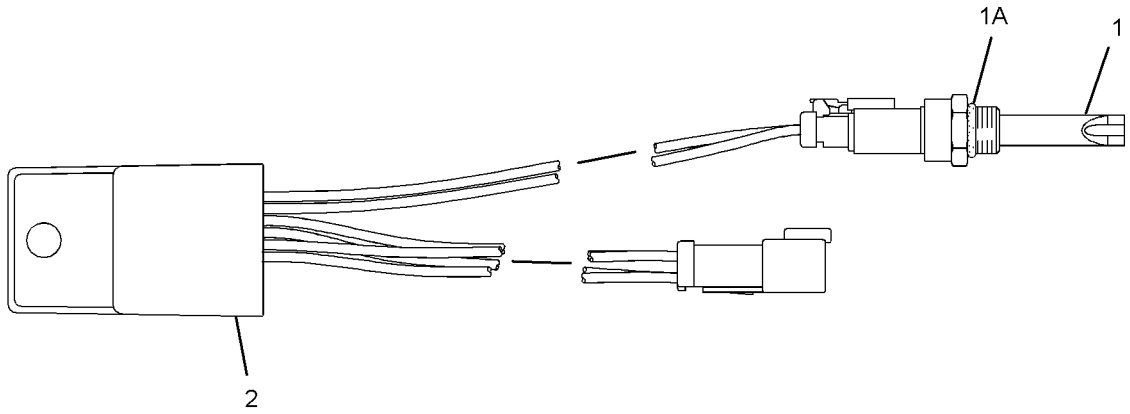

GRAPHIC #1 **<END>** g01285011

266-1467 SENSOR GP-POSITION

S/N: LBP1-UP

PART OF 280-9179 CONTROL GP-PEDAL, 257-6176 CONTROL GP-STEERING AN ATTACHMENT

SMCS-1408 **i03600041**

NOTE	REF NO	GRAPHIC REF	PART NUMBER	QTY	PART NAME 1 2 3 4 5 6 (PRODUCT LEVEL)	SEE PAGE
	1	1	**9X-3401**	3	PIN-CONNECTOR (16-GA TO 18-GA)	
					—OR—	
		1	**126-1767**	3	PIN-CONNECTOR (14-GA)	
	2	1	**102-8803**	1	KIT-RECEPTACLE (3-PIN)	
					(INCLUDES RECEPTACLE AS & WEDGE)	
	3	1	**3E-3371**	1	WEDGE-RECEPTACLE LOCK (3-PIN)	

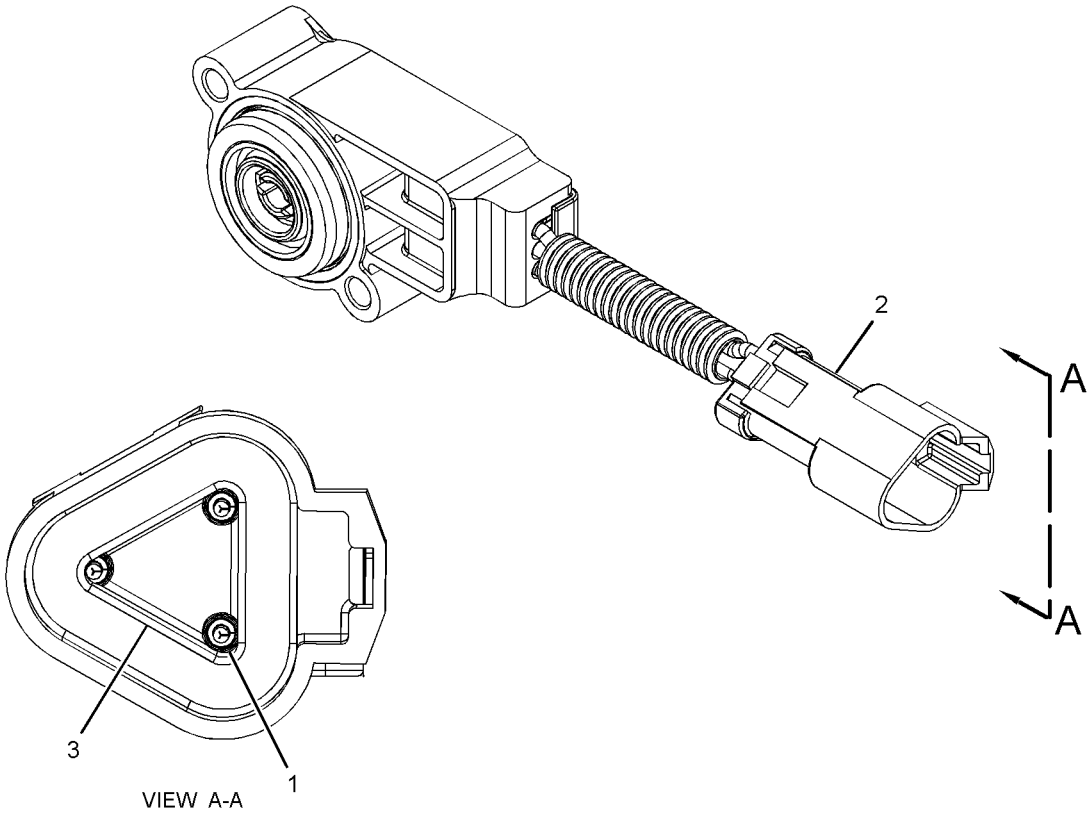

GRAPHIC #1 **<END>** g01514049

183-4584 SENSOR GP-SPEED

S/N: LBP1-699

PART OF 242-7490 WIRING GP-CHASSIS

SMCS-1912 **i01884915**

NOTE	REF NO	GRAPHIC REF	PART NUMBER	QTY	PART NAME 1 2 3 4 5 6 (PRODUCT LEVEL)	SEE PAGE
	1	1	**6J-2245**	1	SEAL-O-RING	

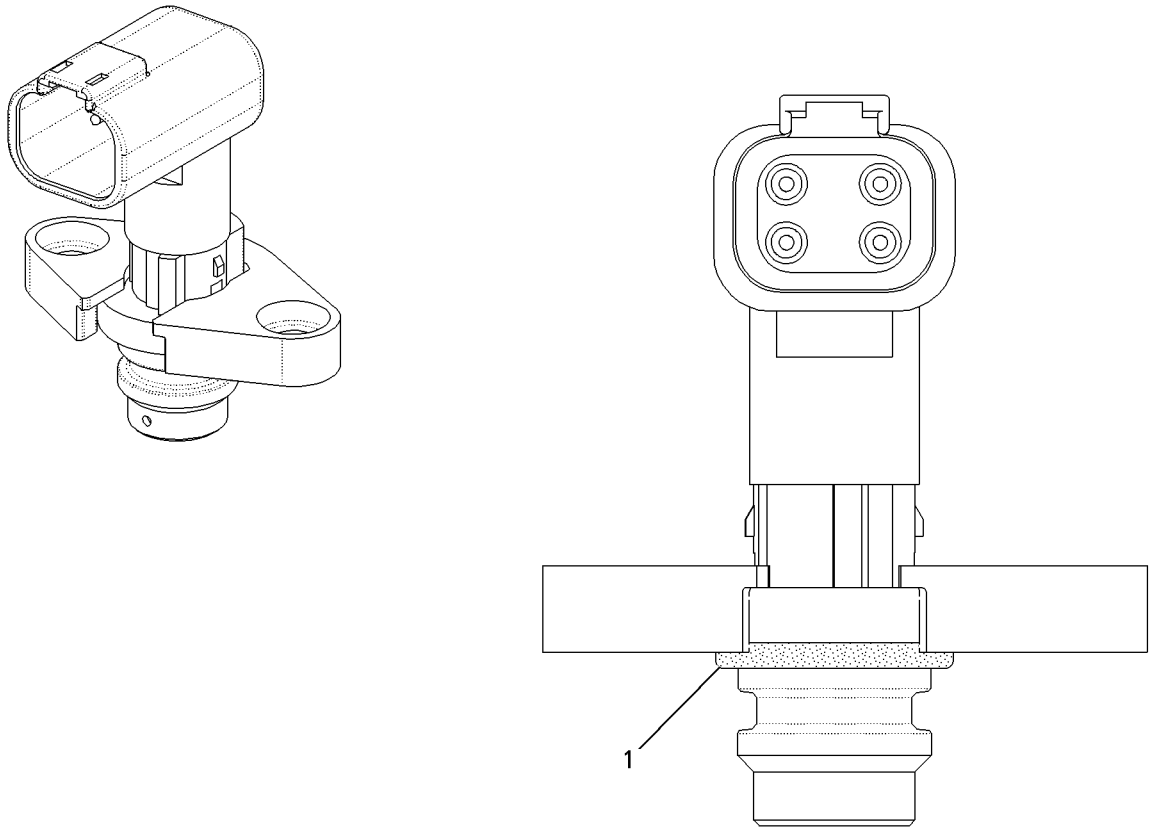

GRAPHIC #1 **<END>** g00835873

262-4806 SENSOR GP-SPEED

S/N: LBP1-UP

PART OF 279-3983 WIRING GP-ENGINE

SMCS-1912 **i02837104**

NOTE	REF NO	GRAPHIC REF	PART NUMBER	QTY	PART NAME 1 2 3 4 5 6 (PRODUCT LEVEL)	SEE PAGE
	1	1	**171-5349**	1	STRAP-MARKER	
	2	1	**230-4012**	1	RECEPTACLE AS-CONNECTOR (2-PIN)	
	3	1	**9X-3401**	2	PIN-CONNECTOR (16-GA TO 18-GA)	
E	4	1	**9X-1386**		SLEEVE (14-CM)	

E-ORDER BY THE CENTIMETER

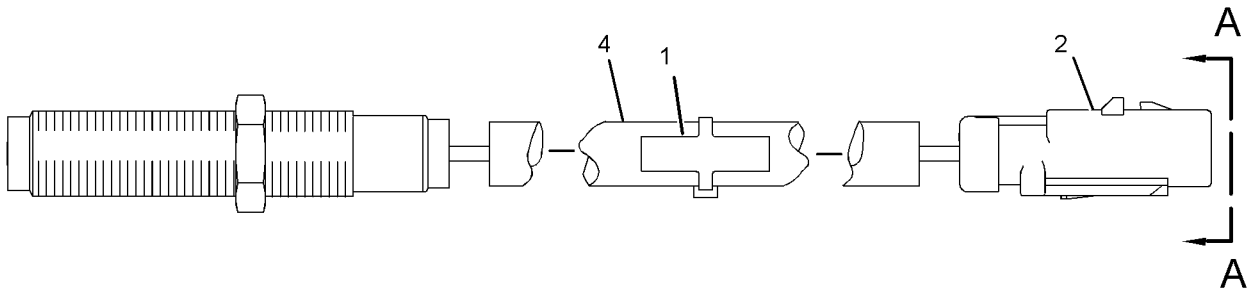

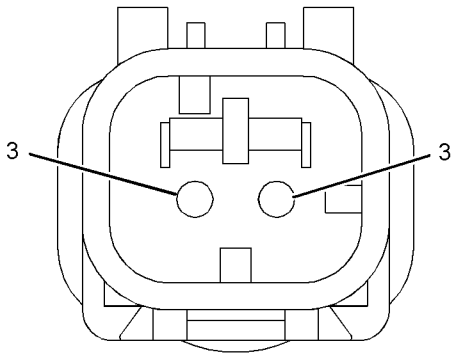

VIEW A-A

GRAPHIC #1 **<END>** g01395142

ELECTRICAL AND STARTING SYSTEM

319-6491 SENSOR GP-SPEED

S/N: LBP700-UP

PART OF 242-7490 WIRING GP-CHASSIS

SMCS-1912 **i02920060**

NOTE	REF NO	GRAPHIC REF	PART NUMBER	QTY	PART NAME 1 2 3 4 5 6 (PRODUCT LEVEL)	SEE PAGE
	1	1	**6J-2245**	1	SEAL-O-RING	

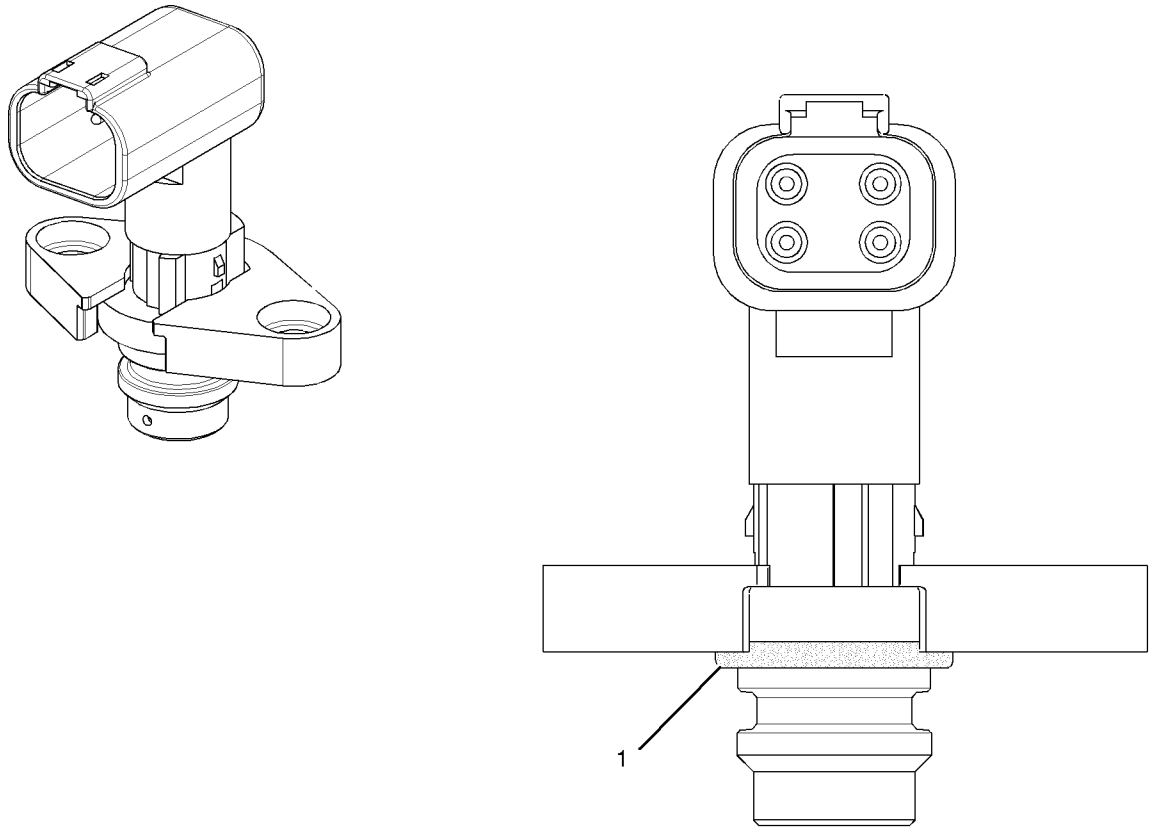

GRAPHIC #1 **<END>** g01031645

102-2240 SENSOR GP-TEMPERATURE

S/N: LBP1-UP

PART OF 301-2710 PUMP GP-FUEL PRM & WATER SEP

SMCS-1408, 1906, 1921, 1922, 7400 **i02969021**

NOTE	REF NO	GRAPHIC REF	PART NUMBER	QTY	PART NAME 1 2 3 4 5 6 (PRODUCT LEVEL)	SEE PAGE
E	1	1	**9X-1813**		SLEEVE (31-CM)	
	3	1	**102-8803**	1	KIT-RECEPTACLE (3-PIN)	
					(INCLUDES RECEPTACLE AS & WEDGE)	
	4	1	**186-3735**	3	PIN-CONNECTOR (16-GA TO 18-GA)	

E-ORDER BY THE CENTIMETER

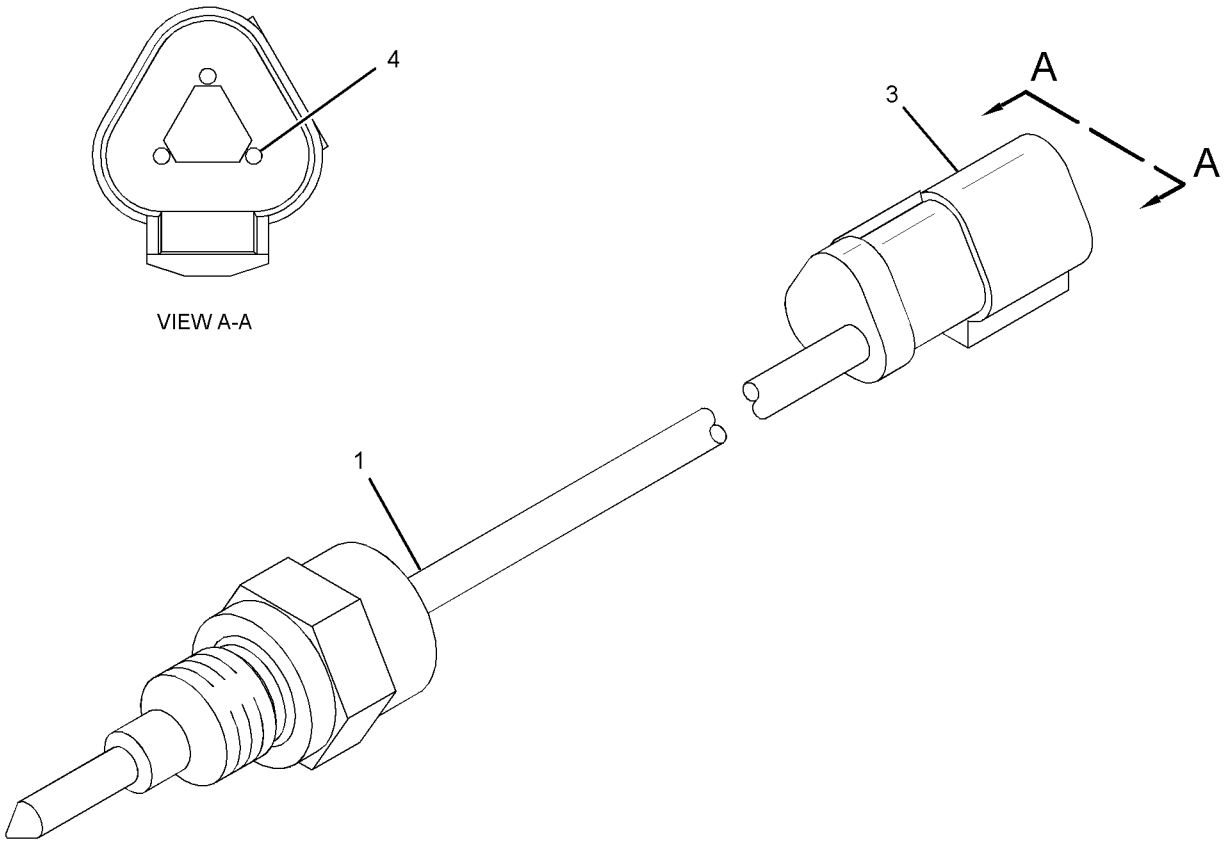

GRAPHIC #1 **<END>** g01511113

251-4063 STARTING AID GP-ETHER

S/N: LBP1-UP

PART OF 240-6227 INSTALLATION AR-ENGINE

SMCS-1456 **i02942961**

NOTE	REF NO	GRAPHIC REF	PART NUMBER	QTY	PART NAME 1 2 3 4 5 6 (PRODUCT LEVEL)	SEE PAGE
	1	1	**3S-2093**	6	STRAP-CABLE	
	2	1	**7C-7241**	4	MOUNT-FLEXIBLE	
	3	1	**7K-1181**	1	STRAP-CABLE	
	4	1	**127-7443**	1	ATOMIZER AS	
		1	**236-4545**	1	NUT-SLEEVE (5/16-24-THD)	
Y	5	1	**252-1590**	1	STARTING AID GP-ETHER	214
	6	1	**267-6419**	1	PLATE AS	
		1	**7T-1099**	2	LINK	
	7	1	**276-5438**	1	FITTING AS	
		1	**236-4545**	1	NUT-SLEEVE (5/16-24-THD)	
	8	1	**290-5652**	1	TUBE	
	9	1	**4D-7388**	1	CLIP	
M	10	1	**5C-7261**	8	NUT (M8X1.25-THD)	
	11	1	**8T-4121**	3	WASHER-HARD (11X21X2.5-MM THK)	
M	12	1	**8T-4137**	2	BOLT (M10X1.5X20-MM)	
M	13	1	**8T-4186**	1	BOLT (M10X1.5X40-MM)	
	14	1	**8T-4224**	4	WASHER-HARD (8.8X16X2-MM THK)	
	15	1	**5P-4116**	4	WASHER-HARD (8.8X20.5X2-MM THK)	
A			**7N-0296**	1	CYLINDER AS-ETHER	
					(MUST BE PROCURED LOCALLY FROM YOUR CATERPILLAR DEALER)	

A-NOT PART OF THIS GROUP
M-METRIC PART
Y-SEPARATE ILLUSTRATION

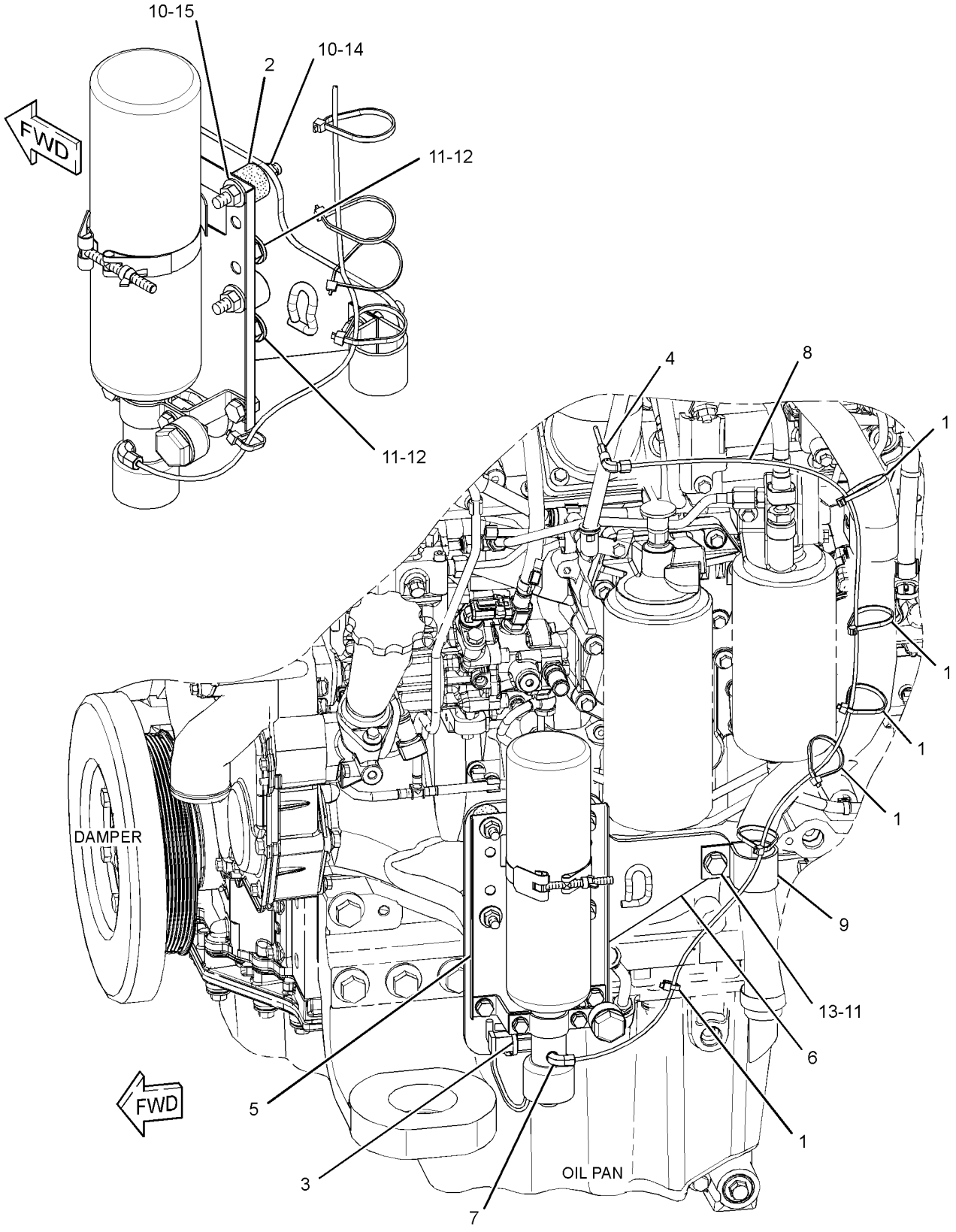

GRAPHIC #1 **<END>** g01426839

ELECTRICAL AND STARTING SYSTEM

252-1590 STARTING AID GP-ETHER

S/N: LBP1-UP

PART OF 251-4063 STARTING AID GP-ETHER

SMCS-1456 **i02702042**

NOTE	REF NO	GRAPHIC REF	PART NUMBER	QTY	PART NAME 1 2 3 4 5 6 (PRODUCT LEVEL)	SEE PAGE
Y	1	1	**239-1134**	1	VALVE GP-ETHER STARTING (24-VOLT)	221
	2	1	**276-6596**	1	CLAMP	
	3	1	**303-2179**	1	MOUNTING PLATE	
M	4	1	**5C-7261**	2	NUT (M8X1.25-THD)	
M	5	1	**8T-4200**	2	BOLT (M8X1.25X16-MM)	
	6	1	**8T-4224**	4	WASHER-HARD (8.8X16X2-MM THK)	

M-METRIC PART
Y-SEPARATE ILLUSTRATION

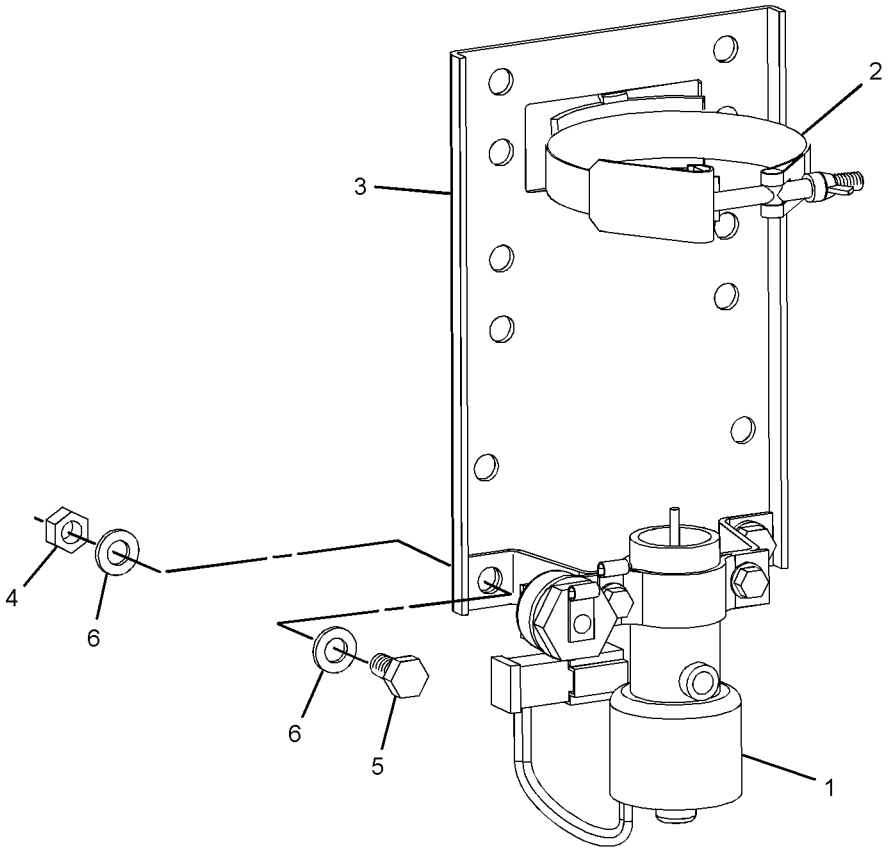

GRAPHIC #1 **<END>** g01346248

301-2744 STARTING MOTOR GP-ELECTRIC

S/N: C6E1-UP

PART OF 242-1357 ENGINE AR-PRIMARY

SMCS-1453 **i02752768**

NOTE	REF NO	GRAPHIC REF	PART NUMBER	QTY	PART NAME 1 2 3 4 5 6 (PRODUCT LEVEL)	SEE PAGE
M	1	1	**6I-0233**	3	NUT (M12X1.75-THD)	
	2	1	**183-1343**	3	STUD	
	3	1	**290-5728**	1	GASKET	
Y	4	1	*307-4441*	1	STARTING MOTOR GP-ELECTRIC	217

M-METRIC PART
Y-SEPARATE ILLUSTRATION

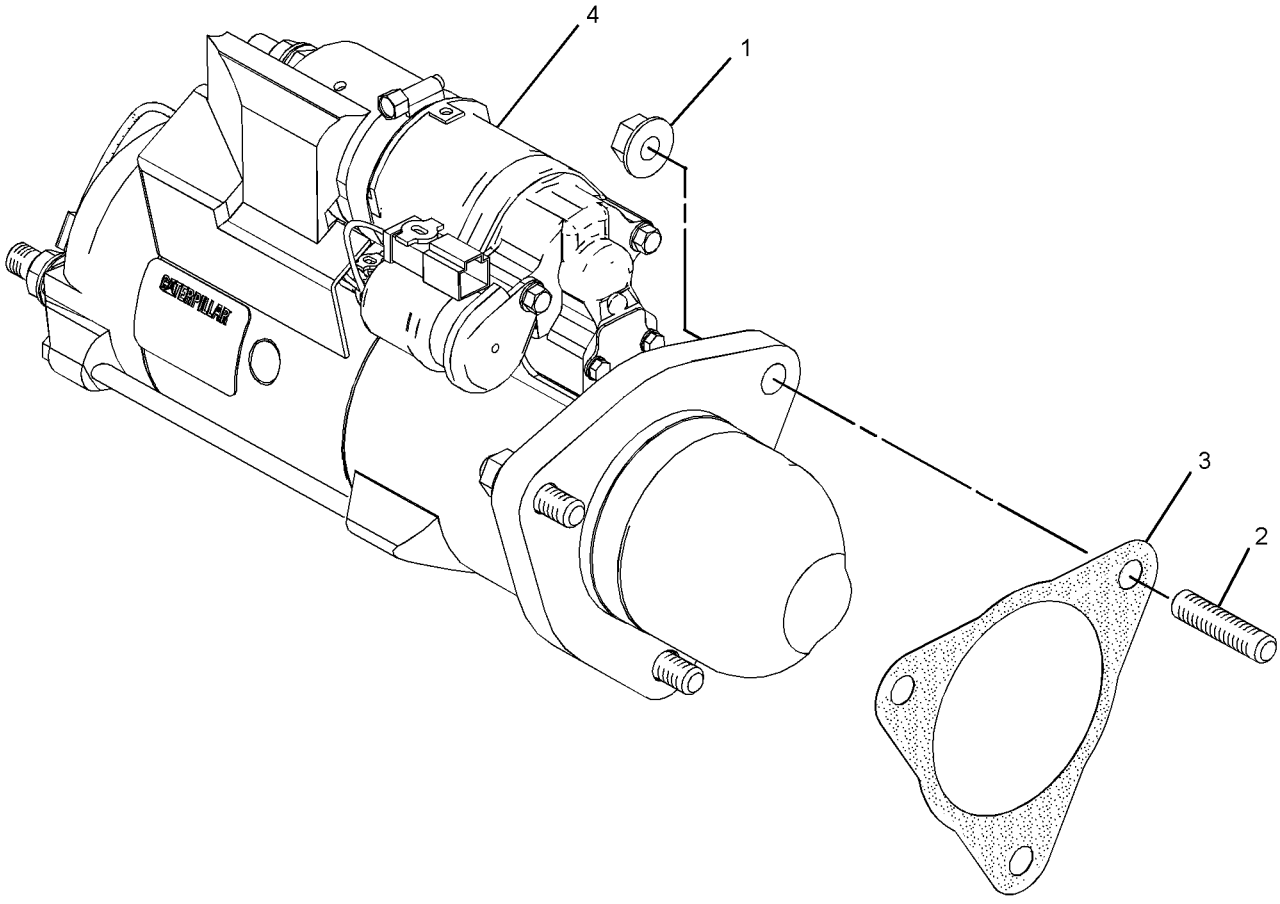

GRAPHIC #1 **<END>** g01378299

ELECTRICAL AND STARTING SYSTEM

301-2768 STARTING MOTOR GP-ELECTRIC

S/N: LBP1-UP

PART OF 240-6227 INSTALLATION AR-ENGINE

SMCS-1453 **i03493768**

NOTE	REF NO	GRAPHIC REF	PART NUMBER	QTY	PART NAME 1 2 3 4 5 6 (PRODUCT LEVEL)	SEE PAGE
M	1	1	**6I-0233**	3	NUT (M12X1.75-THD)	
	2	1	**183-1343**	3	STUD	
	3	1	**290-5728**	1	GASKET	
	4	1	**330-3123**	1	STARTING MOTOR GP-ELECTRIC	
		1	**102-8802**	1	KIT-RECEPTACLE (2-PIN)	
					(INCLUDES RECEPTACLE AS & WEDGE)	

M-METRIC PART

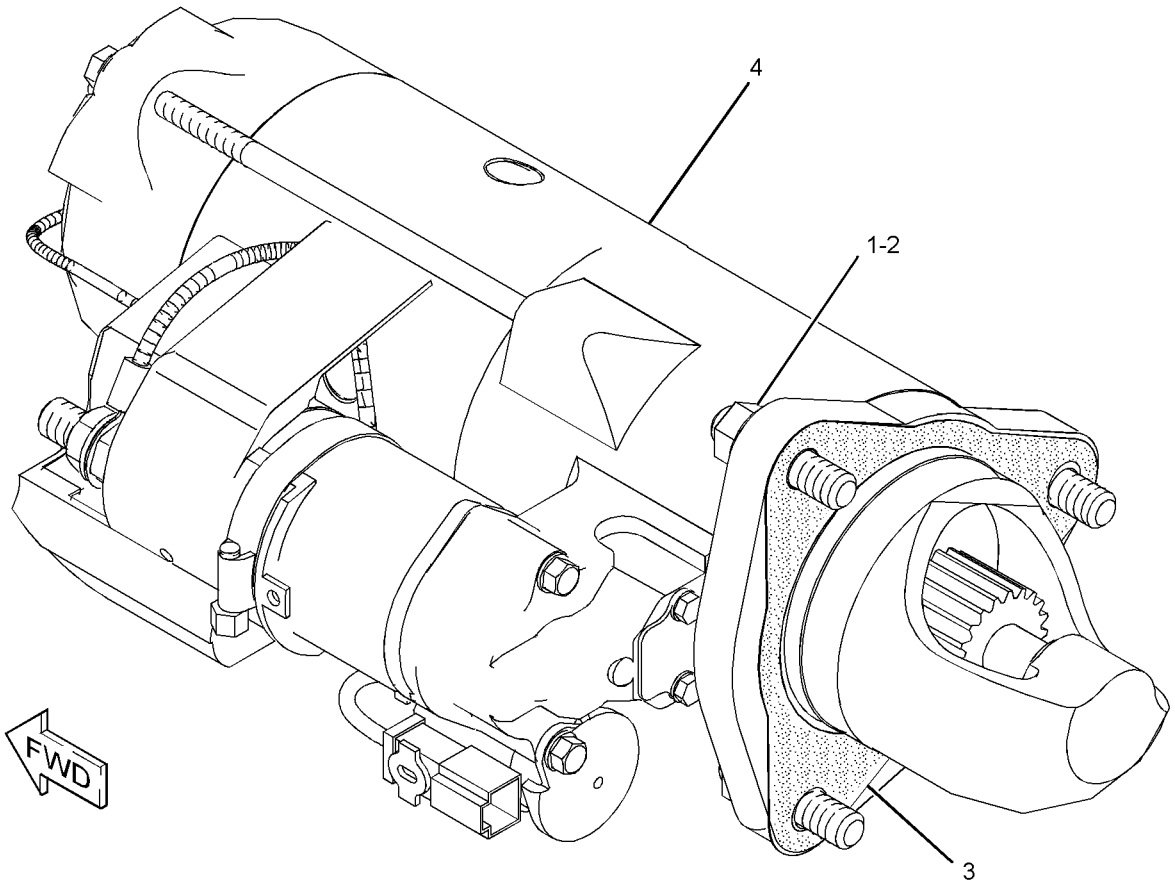

GRAPHIC #1 **<END>** g01832174

ELECTRICAL AND STARTING SYSTEM

307-4441 STARTING MOTOR GP-ELECTRIC

S/N: C6E1-UP

PART OF 301-2744 STARTING MOTOR GP-ELECTRIC

SMCS-1453 **i03587120**

NOTE	REF NO	GRAPHIC REF	PART NUMBER	QTY	PART NAME 1 2 3 4 5 6 (PRODUCT LEVEL)	SEE PAGE
	1	1	**102-8802**	1	KIT-RECEPTACLE (2-PIN)	
					(INCLUDES RECEPTACLE AS & WEDGE)	
	2	1	**3S-2093**	1	STRAP-CABLE	
	3	1	**7K-1181**	1	STRAP-CABLE	
	4	1	**9X-3401**	2	PIN-CONNECTOR (16-GA TO 18-GA)	
					—OR—	
		1	**126-1767**	2	PIN-CONNECTOR (14-GA)	
	5	1	**277-1833**	1	STARTING MOTOR GP-ELECTRIC	
	6	1	**309-8470**	1	FILM-INFORMATION (STARTING MOTOR)	

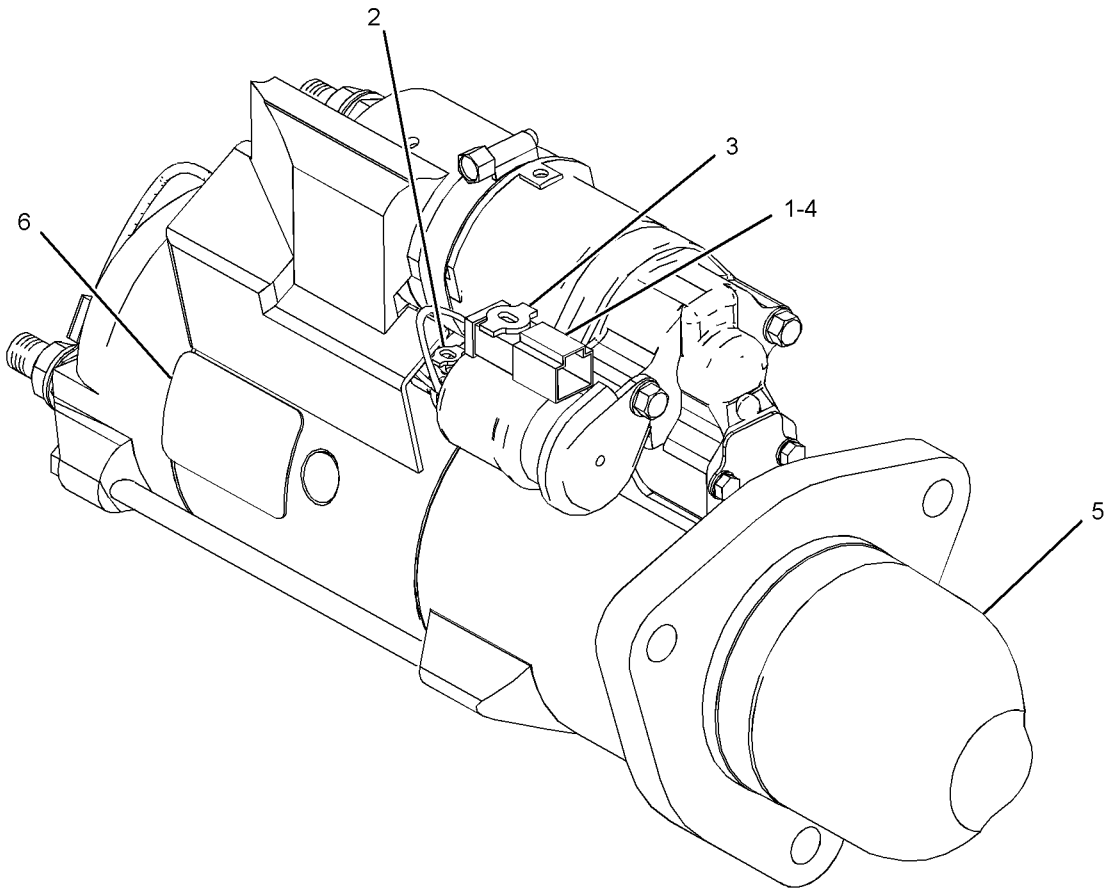

GRAPHIC #1 **<END>** g01379337

7N-0718 SWITCH GP-DISCONNECT–BATTERY

S/N: LBP1-UP

PART OF 242-7491 WIRING GP-ELECTRIC STARTING

SMCS-1411 **i02960143**

NOTE	REF NO	GRAPHIC REF	PART NUMBER	QTY	PART NAME 1 2 3 4 5 6 (PRODUCT LEVEL)	SEE PAGE
	1	1	**2H-3922**	2	LOCKWASHER	
	2	1	**8H-5303**	1	NUT (3/4-16-THD)	
	3	1	**9F-5644**	2	LOCKWASHER	
	4	1	**6F-7045**	2	NUT-FULL (3/8-24-THD)	
	5	1	**8H-5306**	1	KEY (BATTERY DISCONNECT)	

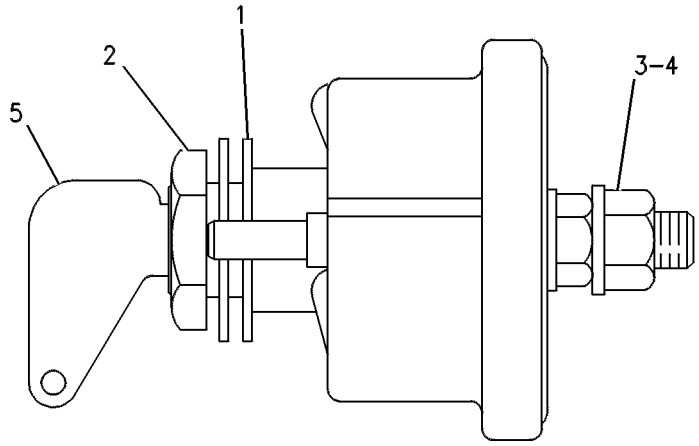

GRAPHIC #1 **<END>** g00246536

241-8368 SWITCH GP-MAGNETIC—MAIN POWER RELAY—

MAIN RELAY
S/N: LBP1-UP
24-VOLT
PART OF 254-3477 CIRCUIT BREAKER GP

SMCS-7499 **i02290580**

NOTE	REF NO	GRAPHIC REF	PART NUMBER	QTY	PART NAME 1 2 3 4 5 6 (PRODUCT LEVEL)	SEE PAGE
	1	1	**155-2270**	1	KIT-CONNECTING PLUG (2-PIN)	
					(INCLUDES PLUG AS, WEDGE & INTERFACE SEAL)	
	2	1	**4F-2294**	2	NUT-JAM (5/16-24-THD)	
	3	1	**186-3736**	2	SOCKET-CONNECTOR (16-GA TO 18-GA)	

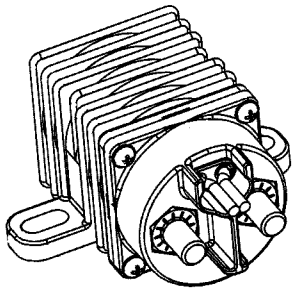

ISOMETRIC VIEW

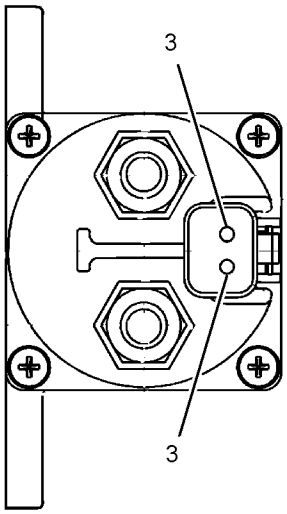

VIEW A-A

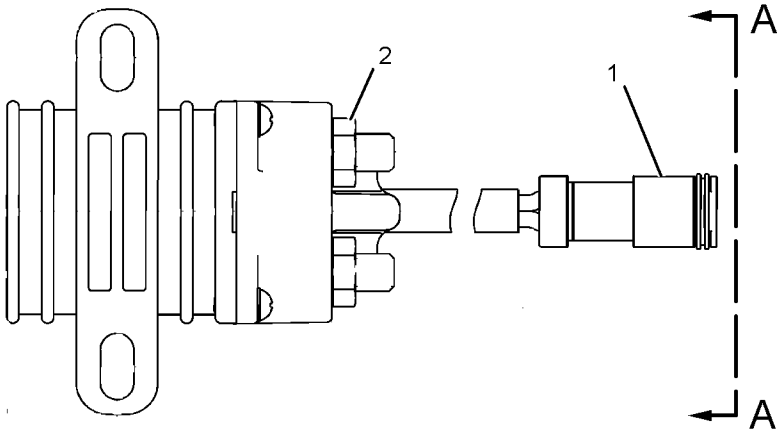

GRAPHIC #1 **<END>** g01077362

ELECTRICAL AND STARTING SYSTEM

165-5970 SWITCH GP-TOGGLE–FUEL PRIMING PUMP

S/N: LBP1-UP

PART OF 301-2710 PUMP GP-FUEL PRM & WATER SEP

SMCS-7332 **i01481120**

NOTE	REF NO	GRAPHIC REF	PART NUMBER	QTY	PART NAME 1 2 3 4 5 6 (PRODUCT LEVEL)	SEE PAGE
	1	1	**6T-3631**	2	NUT-HEX (15/32-32-THD)	
	2	1	**6T-3632**	1	LOCKWASHER	
	3	1	**6T-3633**	1	RING-LOCKING	
	4	1	**102-8803**	1	KIT-RECEPTACLE (3-PIN)	
					(INCLUDES RECEPTACLE AS AND WEDGE)	
	5	1	**3E-3371**	1	WEDGE-RECEPTACLE LOCK (3-PIN)	
	6	1	**186-3735**	3	PIN-CONNECTOR (16-GA TO 18-GA)	

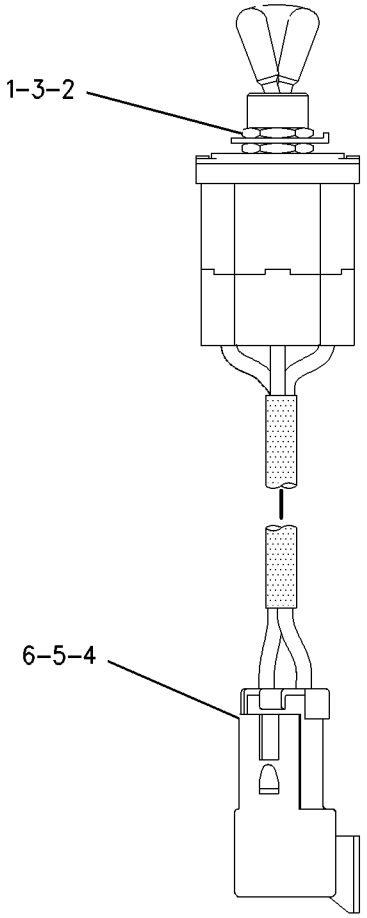

GRAPHIC #1 **<END>** g00749466

239-1134 VALVE GP-ETHER STARTING

S/N: LBP1-UP
24-VOLT
PART OF 252-1590 STARTING AID GP-ETHER

SMCS-1456 **i02743309**

NOTE	REF NO	GRAPHIC REF	PART NUMBER	QTY	PART NAME 1 2 3 4 5 6 (PRODUCT LEVEL)	SEE PAGE
	1	1	**7N-9801**	1	GASKET	
	2	1	**102-8802**	1	KIT-RECEPTACLE (2-PIN)	
					(INCLUDES RECEPTACLE AS & WEDGE)	
	3	1	**186-3735**	2	PIN-CONNECTOR (16-GA TO 18-GA)	

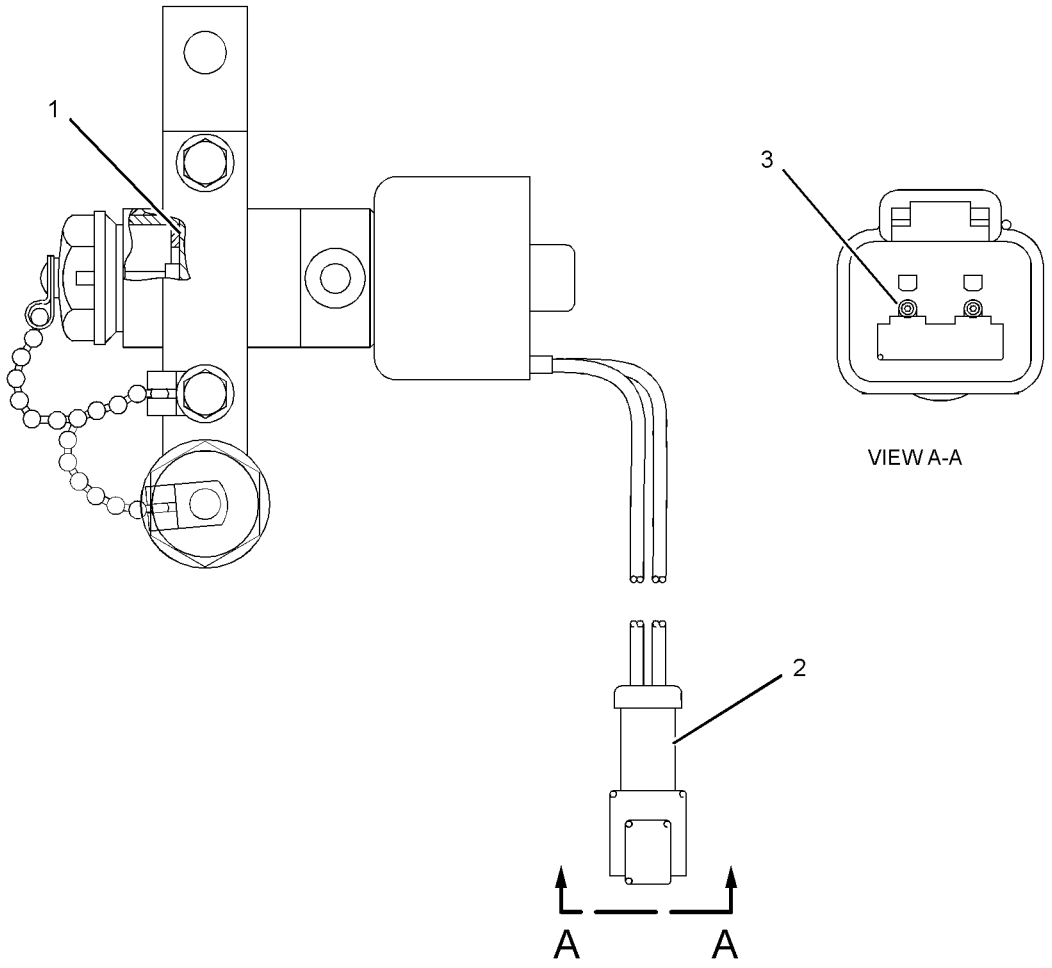

GRAPHIC #1 **<END>** g01375620

298-1201 WIRING GP-AIR CONDITIONER

S/N: LBP1-UP
PART OF 292-3566 PRECLEANER GP
AN ATTACHMENT

SMCS-1408, 7320 **i02880539**

NOTE	REF NO	GRAPHIC REF	PART NUMBER	QTY	PART NAME 1 2 3 4 5 6 (PRODUCT LEVEL)	SEE PAGE
	1	1	**3E-5239**	1	RELAY AS (24-VOLT) (PRECLEANER)	
	2	1	**7K-1181**	1	STRAP-CABLE	
	3	1	**298-1202**	1	HARNESS AS-MOTOR	
M	4	1	**5C-2890**	1	NUT (M6X1-THD)	
M	5	1	**5C-9553**	1	BOLT (M6X1X16-MM)	
	6	1	**9X-8256**	2	WASHER (6.6X12X2-MM THK)	

M-METRIC PART

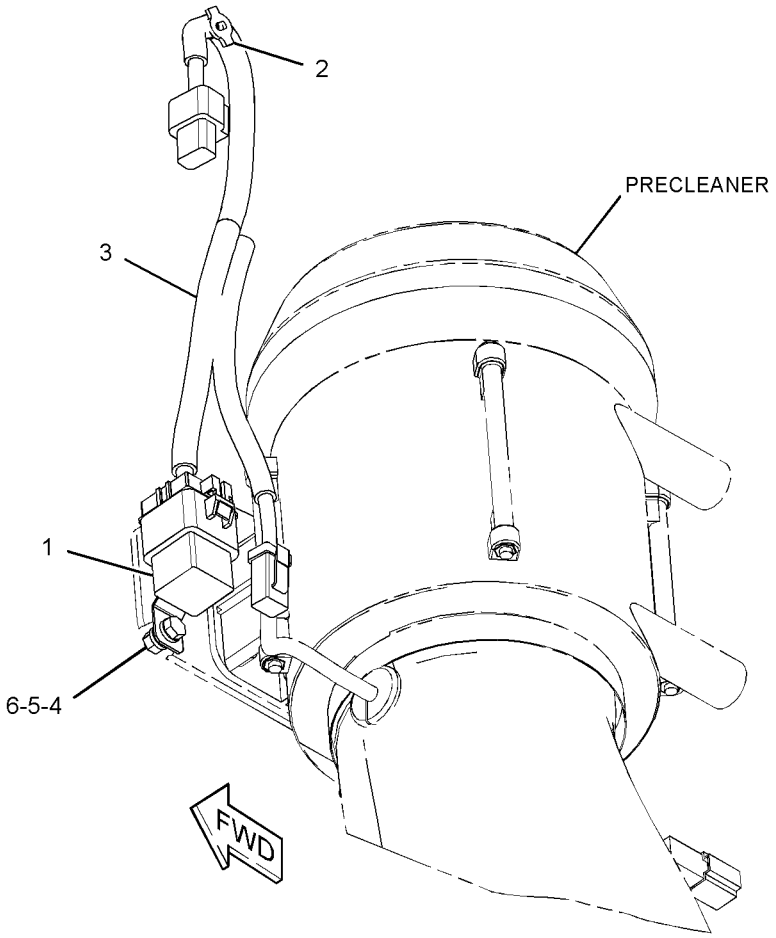

GRAPHIC #1 **<END>** g01437802

242-7492 WIRING GP-CAB

S/N: LBP1-699

PART OF 240-6230 CAB GP

SMCS-1408, 7301 **i03587127**

NOTE	REF NO	GRAPHIC REF	PART NUMBER	QTY	PART NAME 1 2 3 4 5 6 (PRODUCT LEVEL)	SEE PAGE
	1	2	**3E-5239**	6	RELAY AS (24-VOLT)	
Y	2	2	**3E-6328**	1	ALARM GP (24-VOLT) (ACTION)	164
	3	2	**6I-1418**	4	SPACER (8.2X12.7X28.7-MM THK)	
B	4	1,2,3	**7K-1181**	100	STRAP-CABLE	
	5	1	**107-6032**	1	LAMP GP-DOME (24-VOLT)	
		1	**259-1286**	1	LAMP (24-VOLT, 10-WATT)	
J	6	2	**110-7887**	1	SWITCH AS-START (KEY)	
		2	**7T-6799**	1	NUT-MOUNTING (1-32-THD)	
		2	**186-3735**	4	PIN-CONNECTOR (16-GA TO 18-GA)	
		2	**102-8804**	1	KIT-RECEPTACLE (4-PIN)	
					(INCLUDES RECEPTACLE AS & WEDGE)	
	7	2	**116-7471**	1	PULLER-MINIFUSE	
	8	1,2	**117-2311**	2	SOCKET-AUXILIARY POWER (12-VOLT)	
M	9	2	**120-0091**	4	BOLT (M3X0.5X10-MM)	
	10	1,2	**169-2876**	2	FILM-IDENTIFICATION (POWER RECEPTACLE, 12-VOLT)	
	11	2	**201-2733**	1	FILM-INFORMATION (INPUT/OUTPUT)	
	12	2	**209-0381**	1	CONVERTER-POWER (24-VOLT TO 12-VOLT)	
	13	2	**218-0651**	1	FILM-INSTRUCTION (KEY START SWITCH)	
Y	14	1	**219-6488**	4	LAMP GP-FLOOD (24-VOLT)	200
	15	1	**220-9908**	1	GROMMET	
	16	2	**222-7890**	1	SWITCH AS-ROCKER (PARKING BRAKE ON, OFF)	
	17	2	**227-1989**	1	PLATE	
	18	1	**228-6089**	6	PLUG (ROCKER SWITCH)	
	19	3	**234-5925**	1	GASKET	
	20	2	**236-4619**	1	SWITCH AS-ROCKER (LIFT, TILT KICKOUT)	
	21	2	**249-5481**	1	SWITCH AS-ROCKER (THROTTLE)	
	22	1	**251-1191**	1	SWITCH AS-ROCKER (WIPER, WASHER, FRONT)	
	23	1	**251-1194**	1	SWITCH AS-ROCKER (WIPER, WASHER, REAR)	
	24	1	**251-1195**	1	SWITCH AS-ROCKER (24-VOLT) (FRONT FLOODLIGHTS)	
	25	2	**251-1197**	1	SWITCH AS-ROCKER (HYDRAULIC LOCKOUT)	
R	26	2	**262-1408**	1	CONTROL GP-UNPROGRAMMED (MACHINE)	
	27	1	**265-7981**	1	SWITCH AS-ROCKER (AIR CONDITIONER ON, OFF)	
	28	1	**267-5243**	1	PANEL AS	
		1	**271-7312**	1	KNOB (TEMPERATURE CONTROL)	
		1	**285-7415**	1	KNOB (BLOWER FAN SPEED)	
	29	2	**283-1440**	1	PLATE AS	
M		2	**6V-9632**	2	NUT-WELD (M6X1-THD)	
	30	2	**287-3254**	1	PANEL GP-INSTRUMENT	
	31	2	**293-2867**	1	FILM-IDENTIFICATION (FUSE PANEL)	
	32	1	**294-4427**	1	HARNESS AS-CAB	
	32A	2	**113-8490**	13	FUSE (10-AMPERE)	
	32B	2	**113-8491**	15	FUSE (15-AMPERE)	
	32C	2	**280-2709**	2	CIRCUIT BREAKER AS (15-AMPERE) (AIR CONDITIONER)	
	32D	2	**280-2710**	1	CIRCUIT BREAKER AS (20-AMPERE) (AIR CONDITIONER, BLOWER)	
		1	**102-8802**	3	KIT-RECEPTACLE (2-PIN)	
		1	**102-8804**	1	KIT-RECEPTACLE (4-PIN)	
		1	**102-8806**	2	KIT-RECEPTACLE (8-PIN)	
					(EACH KIT INCLUDES RECEPTACLE AS & WEDGE)	
		1	**3E-7990**	1	RECEPTACLE AS-CONNECTOR (12-PIN)	
		1	**7T-0094**	3	SOCKET-CONNECTOR	
		1	**7X-6222**	1	PLUG AS-CONNECTOR (24-PIN)	
		1	**3E-4367**	1	RING-RETAINING	
M		1	**3E-8558**	1	BOLT (M5X0.8X39.37-MM)	

242-7492 **WIRING GP-CAB** ***(contd.)*** **i03587127**

NOTE	REF NO	GRAPHIC REF	PART NUMBER	QTY	PART NAME 1 2 3 4 5 6 (PRODUCT LEVEL)	SEE PAGE
		1	**9X-3265**	2	SEAL-CONNECTOR (24-PIN)	
		1	**8N-0869**	2	COVER-TERMINAL (RED)	
		1	**8T-8737**	182	PLUG-SEAL	
		1	**9W-1951**	1	RECEPTACLE-CONNECTOR (9-PIN)	
		1	**9X-1054**	6	PLUG AS-CONNECTOR (4-PIN)	
		1	**9X-6772**	4	STRAP-CABLE	
E		1	**119-3662**		TUBE-HEAT SHRINK (39-CM)	
		1	**124-9636**	1	BLOCK-MINIFUSE	
E		1	**125-7874**		TUBE-HEAT SHRINK (5.72-MM DIA) (155-CM)	
E		1	**125-7875**		TUBE-HEAT SHRINK (85-CM)	
		1	**9X-3402**	206	SOCKET-CONNECTOR (16-GA TO 18-GA)	
		1	**126-1774**	2	COVER-CONNECTOR	
		1	**128-4249**	2	LOCKWASHER	
		1	**134-2540**	1	JUMPER-PLUG-IN (3-PIN)	
		1	**144-1636**	158	PIN-CONNECTOR (14-GA TO 18-GA)	
		1	**147-1445**	1	PLUG AS-CONNECTOR (70-PIN)	
		1	**159-9322**	1	SEAL-O-RING	
		1	**147-1446**	1	PLUG AS-CONNECTOR (70-PIN)	
		1	**159-9322**	1	SEAL-O-RING	
		1	**155-2255**	1	KIT-CONNECTING PLUG (12-PIN)	
		1	**155-2265**	3	KIT-CONNECTING PLUG (8-PIN)	
		1	**155-2260**	5	KIT-CONNECTING PLUG (3-PIN)	
		1	**155-2270**	4	KIT-CONNECTING PLUG (2-PIN)	
		1	**155-2271**	2	KIT-CONNECTING PLUG (4-PIN)	
		1	**155-2274**	3	KIT-CONNECTING PLUG (6-PIN)	
					(EACH KIT INCLUDES PLUG AS, WEDGE, & INTERFACE SEAL)	
		1	**167-3692**	2	RECEPTACLE AS-CONNECTOR (31-PIN)	
		1	**167-3693**	1	PLUG AS-CONNECTOR (31-PIN)	
		1	**177-9656**	1	KIT-CONNECTING PLUG (4-PIN)	
					(INCLUDES PLUG AS & WEDGE)	
		1	**185-1860**	66	PLUG	
		1	**185-1861**	5	SEAL-WIRE	
		1	**202-5397**	39	PLUG	
		1	**211-0052**	2	NUT (11/16-18-THD)	
		1	**214-4208**	1	RECEPTACLE AS-CONNECTOR (70-PIN)	
		1	**245-7434**	11	KIT-CONNECTING PLUG (10-PIN)	
					(EACH KIT INCLUDES PLUG AS, WIRE ASSEMBLIES, & PLUGS)	
		1	**230-4009**	3	PLUG AS-CONNECTOR (12-PIN)	
					(EACH INCLUDES)	
		1	**264-7034**	1	SEAL-CONNECTOR	
		1	**230-4010**	1	RECEPTACLE AS-CONNECTOR (12-PIN)	
		1	**230-4011**	3	PLUG AS-CONNECTOR (2-PIN)	
					(EACH INCLUDES)	
		1	**264-7029**	1	SEAL-CONNECTOR	
		1	**230-4012**	1	RECEPTACLE AS-CONNECTOR (2-PIN)	
		1	**230-5010**	3	PLUG AS-CONNECTOR (6-PIN)	
					(EACH INCLUDES)	
		1	**264-7032**	1	SEAL-CONNECTOR	
		1	**230-5011**	2	RECEPTACLE AS-CONNECTOR (6-PIN)	
		1	**264-5425**	1	CAP AS-PROTECTION	
		1	**8C-6354**	1	CAP-RECEPTACLE	
E		1	**125-7875**		TUBE-HEAT SHRINK (3-CM)	
D		1	**5P-5677**		WIRE (18-GA, BLACK) (0.2-M)	
	33	1	**297-9340**	1	HARNESS AS-HEATER & AIR COND	
		1	**102-8802**	5	KIT-RECEPTACLE (2-PIN)	
		1	**102-8801**	1	KIT-RECEPTACLE (12-PIN)	
					(EACH KIT INCLUDES RECEPTACLE AS & WEDGE)	
		1	**8T-8737**	38	PLUG-SEAL	

242-7492 **WIRING GP-CAB** *(contd.)* **i03587127**

NOTE	REF NO	GRAPHIC REF	PART NUMBER	QTY	PART NAME 1 2 3 4 5 6 (PRODUCT LEVEL)	SEE PAGE
E		1	**125-7874**		TUBE-HEAT SHRINK (5.72-MM DIA) (10-CM)	
E		1	**125-7875**		TUBE-HEAT SHRINK (20-CM)	
		1	**9X-3402**	54	SOCKET-CONNECTOR (16-GA TO 18-GA)	
		1	**144-1636**	3	PIN-CONNECTOR (14-GA TO 18-GA)	
		1	**155-2255**	1	KIT-CONNECTING PLUG (12-PIN)	
		1	**155-2270**	9	KIT-CONNECTING PLUG (2-PIN)	
		1	**155-2274**	1	KIT-CONNECTING PLUG (6-PIN)	
					(EACH KIT INCLUDES PLUG AS, WEDGE, & INTERFACE SEAL)	
		1	**167-3693**	1	PLUG AS-CONNECTOR (31-PIN)	
		1	**230-4013**	1	PLUG AS-CONNECTOR (3-PIN)	
		1	**230-4014**	1	RECEPTACLE AS-CONNECTOR (3-PIN)	
	34	3	**302-4788**	1	BRACKET AS	
M		3	**8T-3490**	1	NUT-WELD (M10X1.5-THD)	
	35	1	**2V-8259**	1	GROMMET	
	36	2,3	**4P-7581**	3	CLIP	
	37	1,2,3	**4P-8134**	11	CLIP	
M	38	2	**5C-2890**	2	NUT (M6X1-THD)	
M	39	1	**5C-7261**	3	NUT (M8X1.25-THD)	
M	40	2	**7X-0818**	4	BOLT (M8X1.25X45-MM)	
M	41	2	**8C-8451**	2	BOLT (M6X1X40-MM)	
	42	3	**8M-2784**	1	GROMMET	
M	43	2	**8T-0325**	6	BOLT (M5X0.8X14-MM)	
	44	2	**8T-0328**	6	WASHER-HARD (5.5X10X1-MM THK)	
	45	1,2,3	**8T-4121**	6	WASHER-HARD (11X21X2.5-MM THK)	
M	46	2	**8T-4127**	12	SCREW-MACHINE (M5X0.8X20-MM)	
M	47	3	**8T-4137**	2	BOLT (M10X1.5X20-MM)	
M	48	3	**8T-4138**	4	BOLT (M6X1X20-MM)	
M	49	2,3	**8T-4171**	6	BOLT (M6X1X12-MM)	
M	50	1,2	**8T-4189**	5	BOLT (M8X1.25X20-MM)	
M	51	1,2	**8T-4191**	4	BOLT (M10X1.5X16-MM)	
M	52	3	**8T-4199**	1	BOLT (M8X1.25X12-MM)	
	53	2,3	**8T-4205**	4	WASHER-HARD (7.2X14.5X2-MM THK)	
	54	1,2,3	**8T-4224**	10	WASHER-HARD (8.8X16X2-MM THK)	
	55	2	**8T-9655**	8	MOUNT-ISOLATION	
	56	3	**9M-8406**	1	CLIP	
	57	2	**9N-0869**	4	WASHER-HARD (8.8X25.5X2-MM THK)	
M	58	1	**9X-2045**	4	SCREW-TRUSS HEAD (M6X1X20-MM)	
	59	2,3	**9X-8256**	10	WASHER (6.6X12X2-MM THK)	
E	60	2	**103-2543**		SEAL (3-CM)	

B-USE AS REQUIRED
D-ORDER BY THE METER
E-ORDER BY THE CENTIMETER
J-REQUIRES KEY 5P-8500
M-METRIC PART
R-REMFG PART MAY BE AVAILABLE
Y-SEPARATE ILLUSTRATION

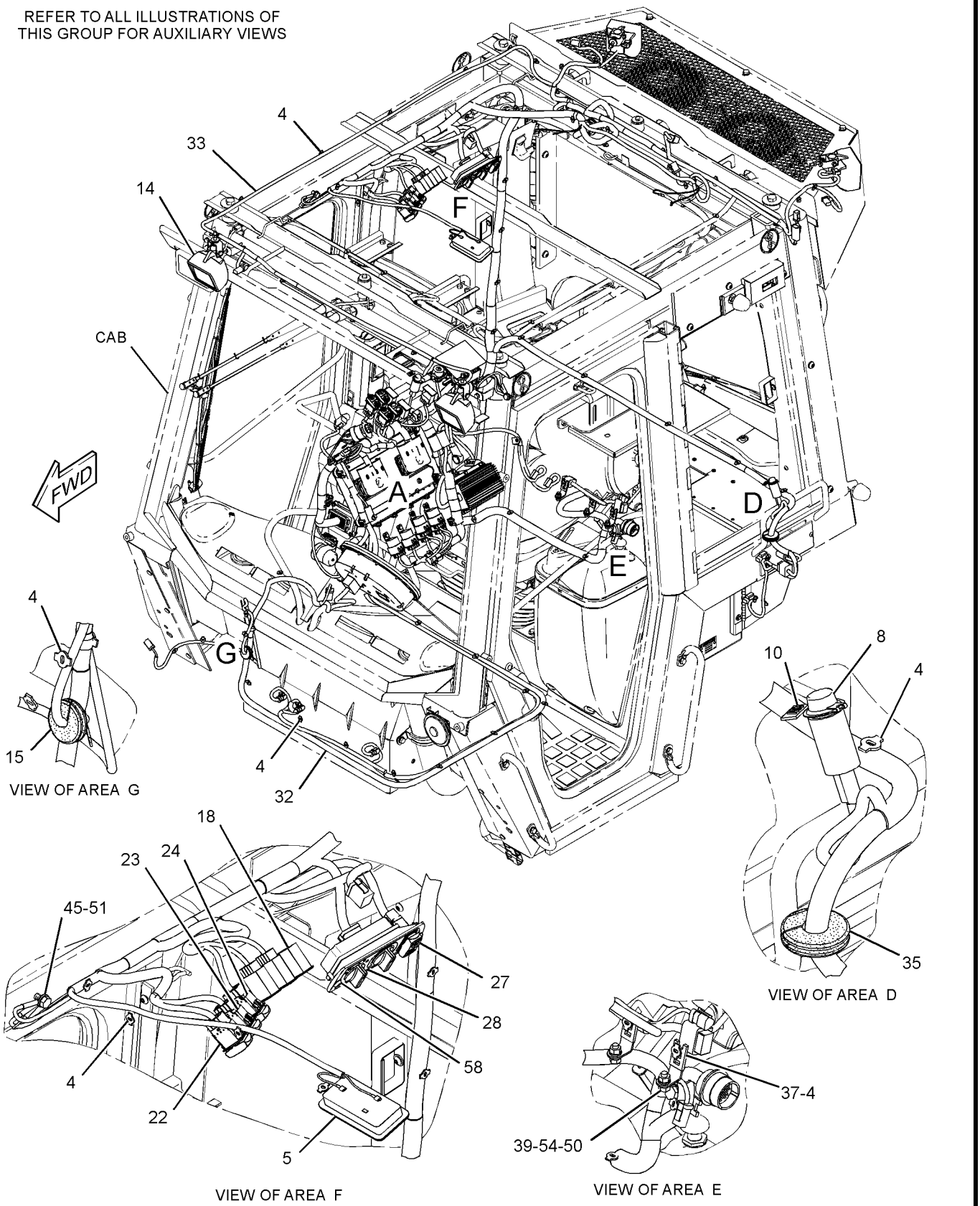

GRAPHIC #1

g01342472

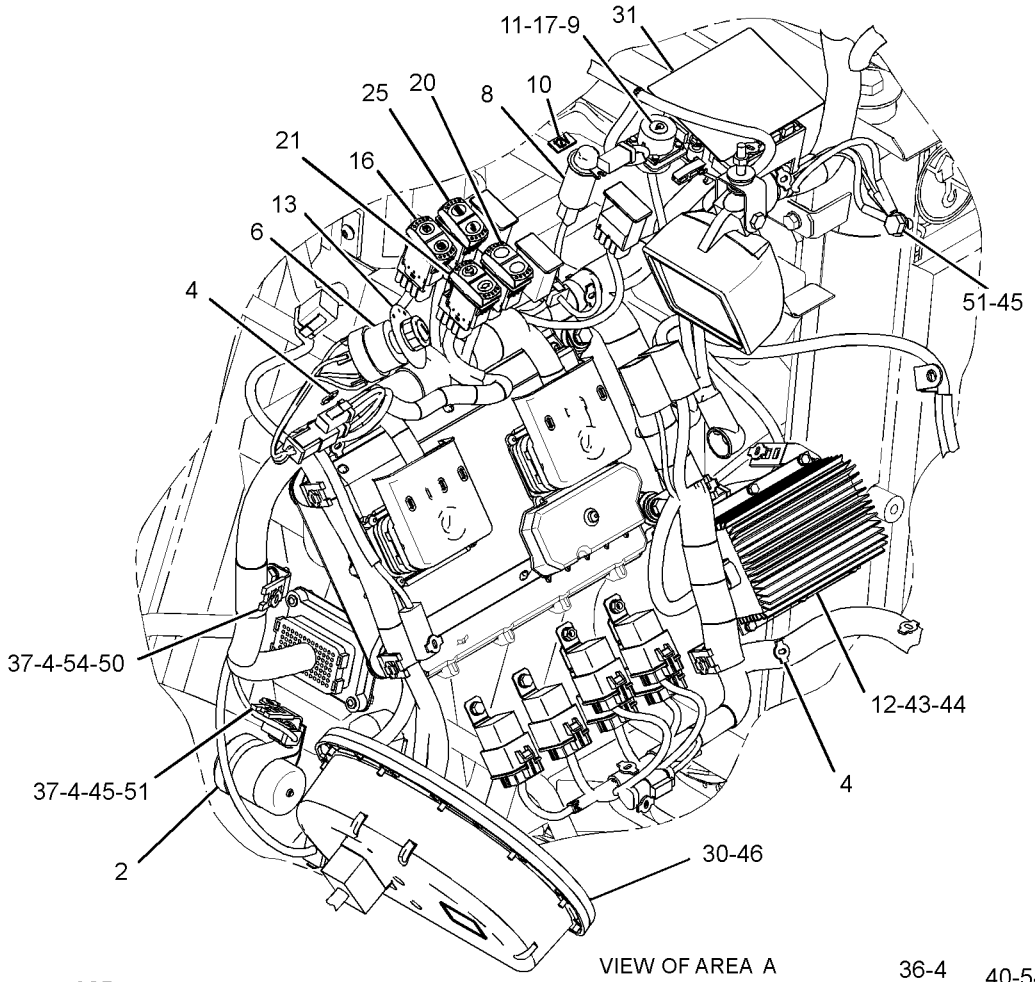

VIEW OF AREA A

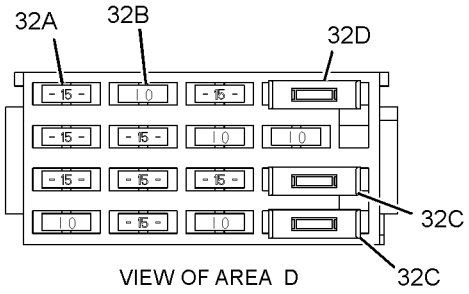

VIEW OF AREA D

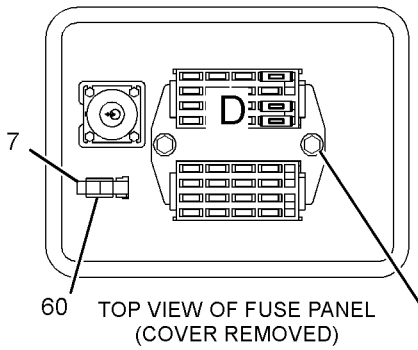

TOP VIEW OF FUSE PANEL
(COVER REMOVED)

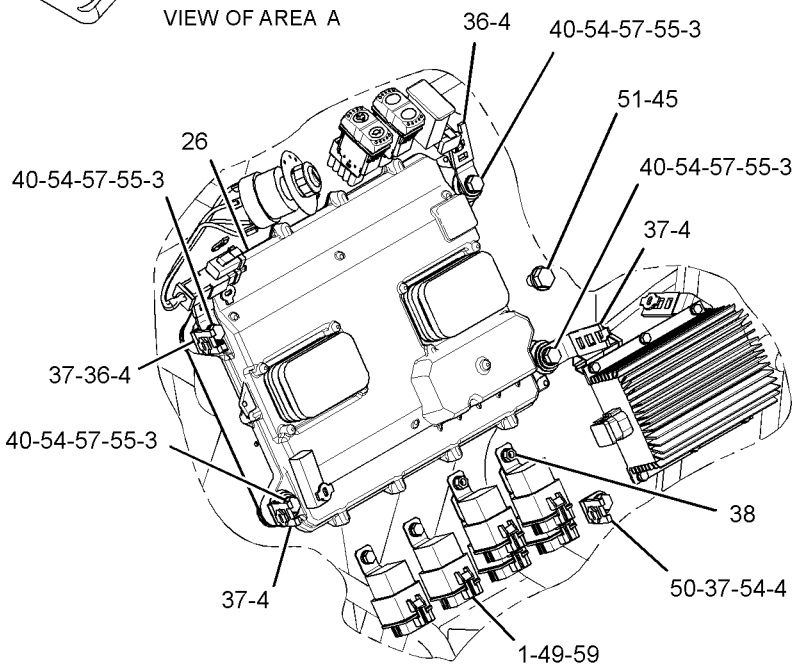

VIEW OF AREA A
(WITHOUT HARNESS ASSEMBLY)

GRAPHIC #2 g01892355

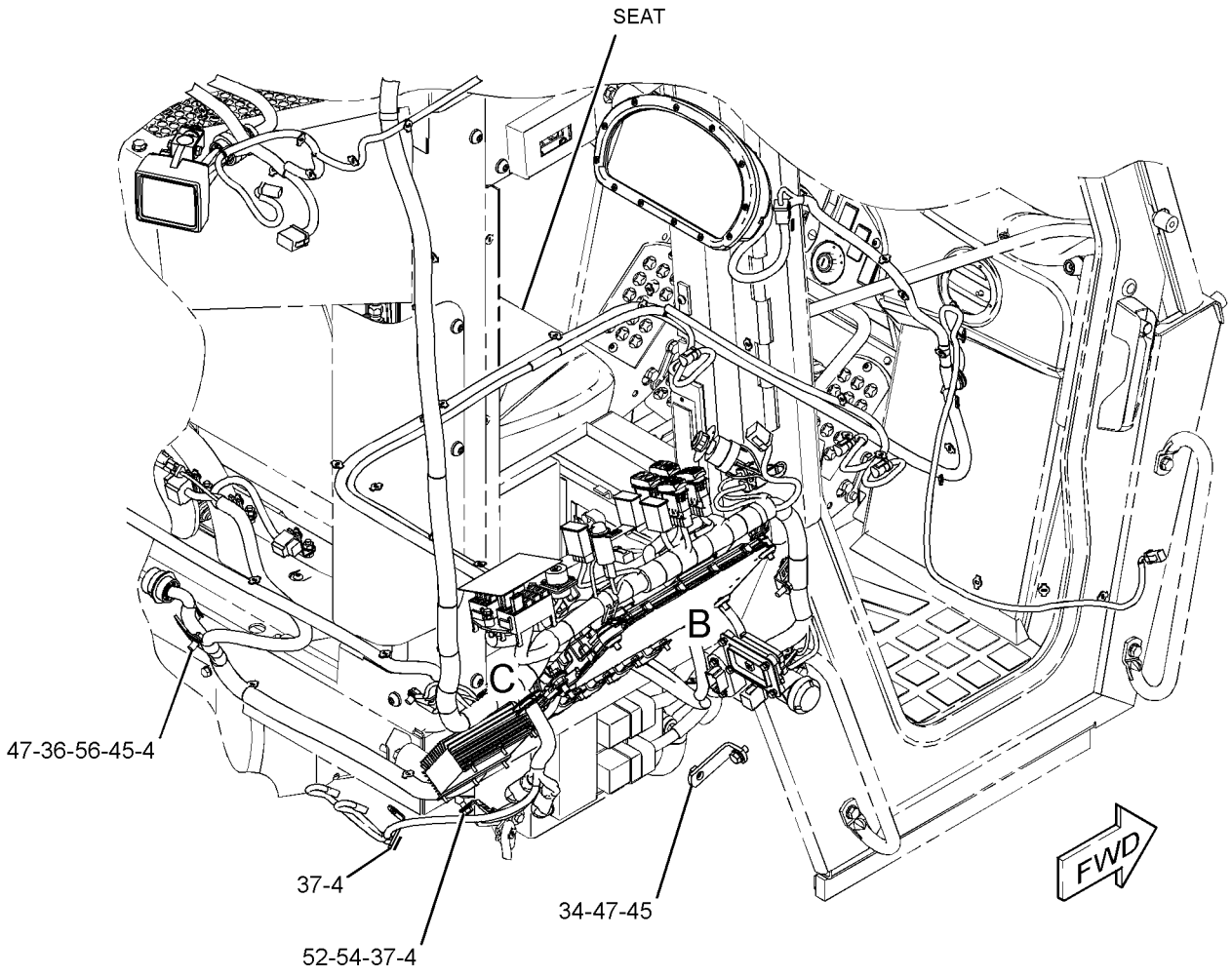

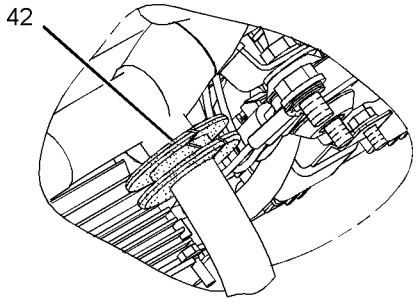

VIEW OF AREA C

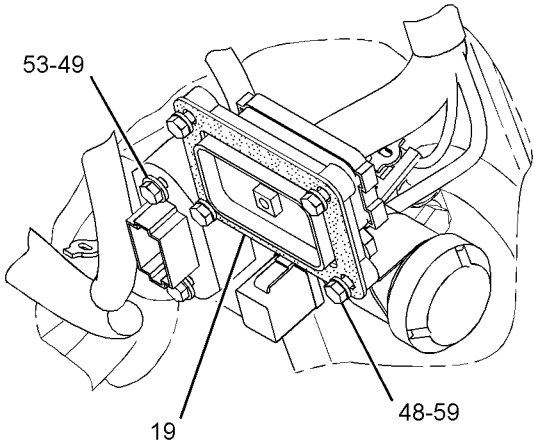

VIEW OF AREA B

GRAPHIC #3 **<END>** g01342476

ELECTRICAL AND STARTING SYSTEM

308-0604 WIRING GP-CAB

S/N: LBP700-907

PART OF 307-4279 CAB GP

SMCS-1408, 7301 **i03558443**

NOTE	REF NO	GRAPHIC REF	PART NUMBER	QTY	PART NAME 1 2 3 4 5 6 (PRODUCT LEVEL)	SEE PAGE
	1	2	**3E-5239**	7	RELAY AS (24-VOLT)	
Y	2	2	**3E-6328**	1	ALARM GP (24-VOLT) (ACTION)	164
	3	1	**3S-2093**	5	STRAP-CABLE	
	4	2	**6I-1418**	4	SPACER (8.2X12.7X28.7-MM THK)	
	5	1,2	**7K-1181**	97	STRAP-CABLE	
	6	1	**107-6032**	1	LAMP GP-DOME (24-VOLT)	
		1	**259-1286**	1	LAMP (24-VOLT, 10-WATT)	
	7	2	**110-7887**	1	SWITCH AS-START (KEY)	
		2	**102-8804**	1	KIT-RECEPTACLE (4-PIN)	
					(INCLUDES RECEPTACLE AS & WEDGE)	
		2	**8T-8729**	1	PIN-CONNECTOR (16-GA TO 18-GA)	
		2	**7T-6799**	1	NUT-MOUNTING (1-32-THD)	
		2	**186-3735**	4	PIN-CONNECTOR (16-GA TO 18-GA)	
	8	2	**116-7471**	1	PULLER-MINIFUSE	
	9	1,2	**117-2311**	2	SOCKET-AUXILIARY POWER (12-VOLT)	
M	10	2	**120-0091**	4	BOLT (M3X0.5X10-MM)	
	11	1,2	**169-2876**	2	FILM-IDENTIFICATION (POWER RECEPTACLE, 12-VOLT)	
	12	2	**201-2733**	1	FILM-INFORMATION (INPUT/OUTPUT)	
	13	2	**209-0381**	1	CONVERTER-POWER (24-VOLT TO 12-VOLT)	
	14	2	**218-0651**	1	FILM-INSTRUCTION (KEY START SWITCH)	
	15	2	**222-7890**	1	SWITCH AS-ROCKER (PARKING BRAKE ON, OFF)	
	16	2	**227-1989**	1	PLATE	
	17	2	**228-6089**	6	PLUG (ROCKER SWITCH)	
	18	2	**234-5925**	1	GASKET	
	19	2	**236-4619**	1	SWITCH AS-ROCKER (LIFT, TILT KICKOUT)	
	20	2	**249-5481**	1	SWITCH AS-ROCKER (THROTTLE SWITCH)	
	21	2	**251-1191**	1	SWITCH AS-ROCKER (WIPER, WASHER, FRONT)	
	22	2	**251-1194**	1	SWITCH AS-ROCKER (WIPER, WASHER, REAR)	
	23	2	**251-1195**	1	SWITCH AS-ROCKER (24-VOLT) (FRONT FLOODLIGHTS)	
	24	2	**251-1197**	1	SWITCH AS-ROCKER (IMPLEMENT LOCKOUT)	
R	25	2	**262-1408**	1	CONTROL GP-UNPROGRAMMED (MACHINE)	
	26	2	**265-7981**	1	SWITCH AS-ROCKER (AIR CONDITIONER ON, OFF)	
	27	2	**267-5243**	1	PANEL AS	
		2	**271-7312**	1	KNOB (TEMPERATURE CONTROL)	
		2	**285-7415**	1	KNOB (BLOWER FAN SPEED)	
	28	2	**283-1440**	1	PLATE AS	
M		2	**6V-9632**	2	NUT-WELD (M6X1-THD)	
	29	1	**313-2154**	1	MODULE GP-DISPLAY	
	30	1	**321-0614**	1	FILM-FUSE PANEL	
	31	2	**302-4788**	1	BRACKET AS	
		2	**4W-3277**	1	BRACKET	
M		2	**8T-3490**	1	NUT-WELD (M10X1.5-THD)	
	32	1	**308-0603**	1	HARNESS AS-CAB (MAIN POWER RELAY)	
	32A	2	**113-8490**	13	FUSE (10-AMPERE)	
	32B	2	**113-8491**	15	FUSE (15-AMPERE)	
	32C	2	**280-2709**	2	CIRCUIT BREAKER AS (15-AMPERE) (AIR CONDITIONER)	
	32D	2	**280-2709**	1	CIRCUIT BREAKER AS (15-AMPERE) (FUEL INJECTION)	
	32E	2	**280-2710**	1	CIRCUIT BREAKER AS (20-AMPERE) (AIR CONDITIONER, BLOWER)	
		1	**102-8802**	3	KIT-RECEPTACLE (2-PIN)	
		1	**102-8804**	1	KIT-RECEPTACLE (4-PIN)	
		1	**102-8806**	2	KIT-RECEPTACLE (8-PIN)	
					(EACH KIT INCLUDES RECEPTACLE AS & WEDGE)	

308-0604 **WIRING GP-CAB** *(contd.)* **i03558443**

NOTE	REF NO	GRAPHIC REF	PART NUMBER	QTY	PART NAME 1 2 3 4 5 6 (PRODUCT LEVEL)	SEE PAGE
		1	**3E-7990**	1	RECEPTACLE AS-CONNECTOR (12-PIN)	
		1	**7T-0094**	3	SOCKET-CONNECTOR	
		1	**7X-6222**	1	PLUG AS-CONNECTOR (24-PIN)	
		1	**3E-4367**	1	RING-RETAINING	
M		1	**3E-8558**	1	BOLT (M5X0.8X39.37-MM)	
		1	**9X-3265**	2	SEAL-CONNECTOR (24-PIN)	
		1	**8N-0869**	2	COVER-TERMINAL (RED)	
		1	**8T-8737**	228	PLUG-SEAL	
		1	**9W-1951**	1	RECEPTACLE-CONNECTOR (9-PIN)	
		1	**9X-1054**	7	PLUG AS-CONNECTOR (4-PIN)	
		1	**9X-6772**	6	STRAP-CABLE	
E		1	**119-3662**		TUBE-HEAT SHRINK (59-CM)	
		1	**124-9636**	2	BLOCK-MINIFUSE	
		1	**124-9637**	2	LOCK-MINIFUSE	
E		1	**125-7874**		TUBE-HEAT SHRINK (5.72-MM DIA) (160-CM)	
E		1	**125-7875**		TUBE-HEAT SHRINK (70-CM)	
		1	**9X-3402**	221	SOCKET-CONNECTOR (16-GA TO 18-GA)	
		1	**126-1774**	3	COVER-CONNECTOR	
		1	**128-4249**	2	LOCKWASHER	
		1	**134-2540**	1	JUMPER-PLUG-IN (3-PIN)	
		1	**144-1636**	139	PIN-CONNECTOR (14-GA TO 18-GA)	
		1	**147-1445**	1	PLUG AS-CONNECTOR (70-PIN)	
		1	**159-9322**	1	SEAL-O-RING	
		1	**147-1446**	1	PLUG AS-CONNECTOR (70-PIN)	
		1	**159-9322**	1	SEAL-O-RING	
		1	**155-2255**	1	KIT-CONNECTING PLUG (12-PIN)	
		1	**155-2265**	3	KIT-CONNECTING PLUG (8-PIN)	
		1	**155-2260**	5	KIT-CONNECTING PLUG (3-PIN)	
		1	**155-2270**	5	KIT-CONNECTING PLUG (2-PIN)	
		1	**155-2271**	2	KIT-CONNECTING PLUG (4-PIN)	
		1	**155-2274**	3	KIT-CONNECTING PLUG (6-PIN)	
					(EACH KIT INCLUDES PLUG AS, WEDGE, & INTERFACE SEAL)	
		1	**160-7690**	1	PLUG AS-CONNECTOR (70-PIN)	
		1	**159-9322**	1	SEAL-O-RING	
		1	**167-3692**	1	RECEPTACLE AS-CONNECTOR (31-PIN)	
		1	**167-3693**	1	PLUG AS-CONNECTOR (31-PIN)	
		1	**177-9656**	1	KIT-CONNECTING PLUG (4-PIN)	
					(INCLUDES PLUG AS & WEDGE)	
		1	**185-1860**	66	PLUG	
		1	**185-1861**	5	SEAL-WIRE	
		1	**202-5397**	39	PLUG	
		1	**211-0052**	2	NUT (11/16-18-THD)	
		1	**214-4208**	1	RECEPTACLE AS-CONNECTOR (70-PIN)	
		1	**245-7434**	11	KIT-CONNECTING PLUG (10-PIN)	
					(EACH KIT INCLUDES PLUG CONNECTOR, WIRE ASSEMBLIES, & PLUGS)	
		1	**230-4009**	2	PLUG AS-CONNECTOR (12-PIN)	
					(EACH INCLUDES)	
		1	**264-7034**	1	SEAL-CONNECTOR	
		1	**230-4011**	3	PLUG AS-CONNECTOR (2-PIN)	
					(EACH INCLUDES)	
		1	**264-7029**	1	SEAL-CONNECTOR	
		1	**230-4012**	1	RECEPTACLE AS-CONNECTOR (2-PIN)	
		1	**230-5010**	2	PLUG AS-CONNECTOR (6-PIN)	
					(EACH INCLUDES)	
		1	**264-7032**	1	SEAL-CONNECTOR	
		1	**230-5011**	1	RECEPTACLE AS-CONNECTOR (6-PIN)	
		1	**240-7193**	1	RESISTOR AS (500-OHM, 2-WATT)	

308-0604 **WIRING GP-CAB** ***(contd.)*** **i03558443**

NOTE	REF NO	GRAPHIC REF	PART NUMBER	QTY	PART NAME 1 2 3 4 5 6 (PRODUCT LEVEL)	SEE PAGE
		1	**102-8802**	1	KIT-RECEPTACLE (2-PIN)	
					(INCLUDES RECEPTACLE AS & WEDGE)	
		1	**9X-3401**	2	PIN-CONNECTOR (16-GA TO 18-GA)	
		1	**264-5425**	1	CAP AS-PROTECTION	
D		1	**5P-5677**		WIRE (18-GA, BLACK) (0.2-M)	
		1	**8C-6354**	1	CAP-RECEPTACLE	
E		1	**125-7875**		TUBE-HEAT SHRINK (3-CM)	
	33	1	**310-2358**	1	HARNESS AS-CAB (INSTRUMENT PANEL)	
		1	**102-8802**	5	KIT-RECEPTACLE (2-PIN)	
		1	**102-8801**	1	KIT-RECEPTACLE (12-PIN)	
					(EACH KIT INCLUDES RECEPTACLE AS & WEDGE)	
		1	**8T-8737**	44	PLUG-SEAL	
E		1	**119-3662**		TUBE-HEAT SHRINK (7-CM)	
E		1	**125-7874**		TUBE-HEAT SHRINK (5.72-MM DIA) (10-CM)	
E		1	**125-7875**		TUBE-HEAT SHRINK (15-CM)	
		1	**9X-3402**	48	SOCKET-CONNECTOR (16-GA TO 18-GA)	
		1	**144-1636**	3	PIN-CONNECTOR (14-GA TO 18-GA)	
		1	**155-2255**	1	KIT-CONNECTING PLUG (12-PIN)	
		1	**155-2270**	9	KIT-CONNECTING PLUG (2-PIN)	
		1	**155-2274**	1	KIT-CONNECTING PLUG (6-PIN)	
					(EACH KIT INCLUDES PLUG AS, WEDGE, & INTERFACE SEAL)	
		1	**167-3693**	1	PLUG AS-CONNECTOR (31-PIN)	
		1	**230-4013**	1	PLUG AS-CONNECTOR (3-PIN)	
		1	**264-7030**	1	SEAL-CONNECTOR	
		1	**230-4014**	1	RECEPTACLE AS-CONNECTOR (3-PIN)	
	34	1	**133-9379**	1	GROMMET	
	35	1	**2V-8259**	1	GROMMET	
	36	2	**4P-7581**	3	CLIP	
	37	2	**4P-8134**	11	CLIP	
M	38	2	**5C-2890**	3	NUT (M6X1-THD)	
M	39	2	**5C-7261**	3	NUT (M8X1.25-THD)	
M	40	2	**7I-2272**	6	BOLT (M5X0.8X12-MM)	
M	41	2	**7X-0818**	4	BOLT (M8X1.25X45-MM)	
M	42	2	**8C-8451**	2	BOLT (M6X1X40-MM)	
	43	2	**8T-0328**	6	WASHER-HARD (5.5X10X1-MM THK)	
	44	1,2	**8T-4121**	7	WASHER-HARD (11X21X2.5-MM THK)	
M	45	1	**8T-4127**	12	SCREW-MACHINE (M5X0.8X20-MM)	
M	46	1,2	**8T-4137**	3	BOLT (M10X1.5X20-MM)	
M	47	2	**8T-4138**	4	BOLT (M6X1X20-MM)	
M	48	2	**8T-4171**	6	BOLT (M6X1X12-MM)	
M	49	2	**8T-4189**	5	BOLT (M8X1.25X20-MM)	
M	50	1,2	**8T-4191**	4	BOLT (M10X1.5X16-MM)	
M	51	2	**8T-4199**	1	BOLT (M8X1.25X12-MM)	
	52	2	**8T-4205**	4	WASHER-HARD (7.2X14.5X2-MM THK)	
	53	2	**8T-4224**	10	WASHER-HARD (8.8X16X2-MM THK)	
	54	2	**8T-9655**	8	MOUNT-ISOLATION	
	55	2	**9M-8406**	1	CLIP	
	56	2	**7X-0579**	4	WASHER-HARD (8.8X25.5X2-MM THK)	
M	57	2	**9X-2045**	2	SCREW-TRUSS HEAD (M6X1X20-MM)	
	58	1	**9X-7373**	1	GROMMET	
	59	2	**9X-8256**	11	WASHER (6.6X12X2-MM THK)	
E	60	2	**103-2543**		SEAL (3-CM)	
Y	61	2	*304-4001*	1	CONTROL GP-UNPRGMED MONITOR (MESSENGER)	595

D-ORDER BY THE METER
E-ORDER BY THE CENTIMETER
M-METRIC PART
R-REMFG PART MAY BE AVAILABLE
Y-SEPARATE ILLUSTRATION

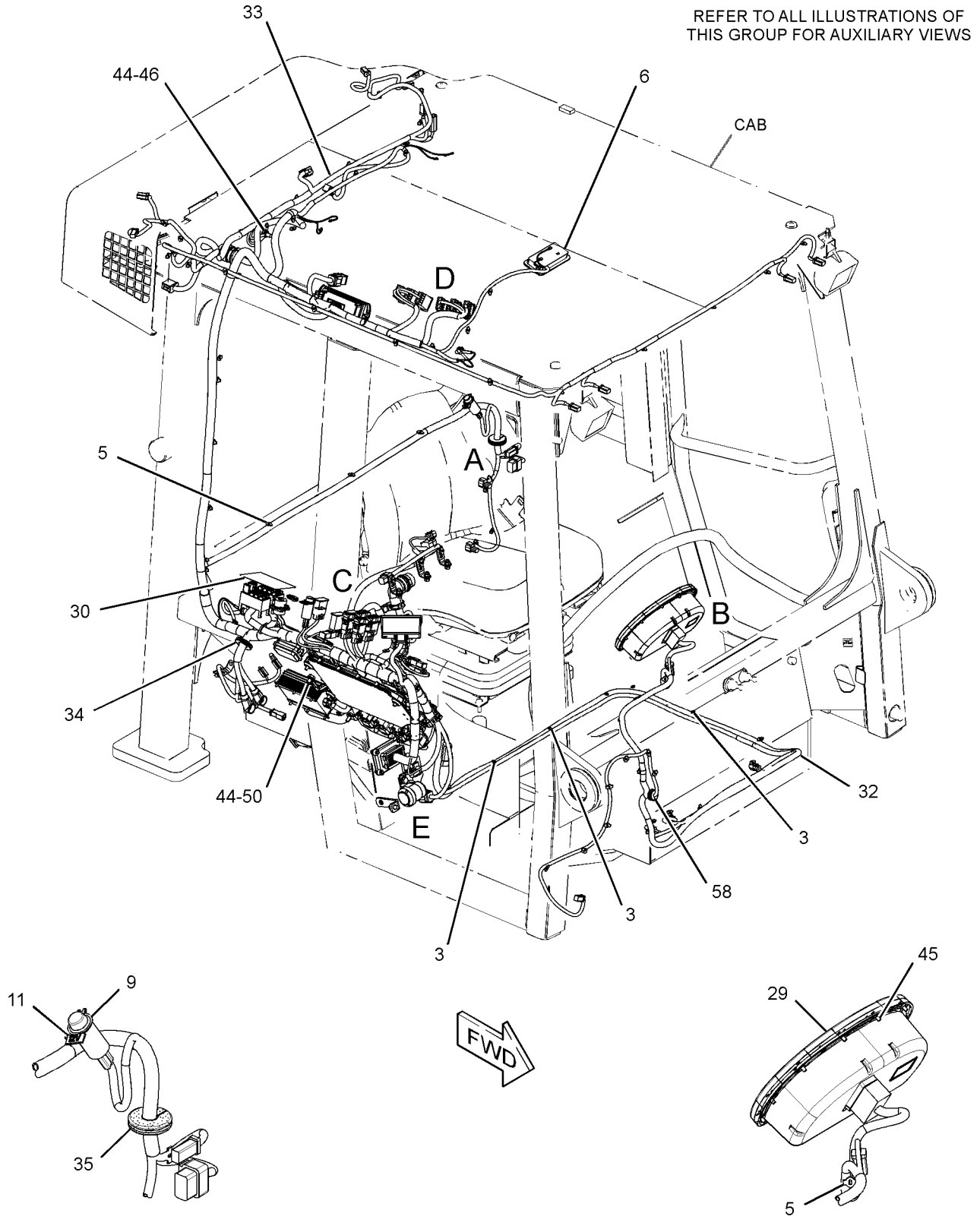

GRAPHIC #1

g01591353

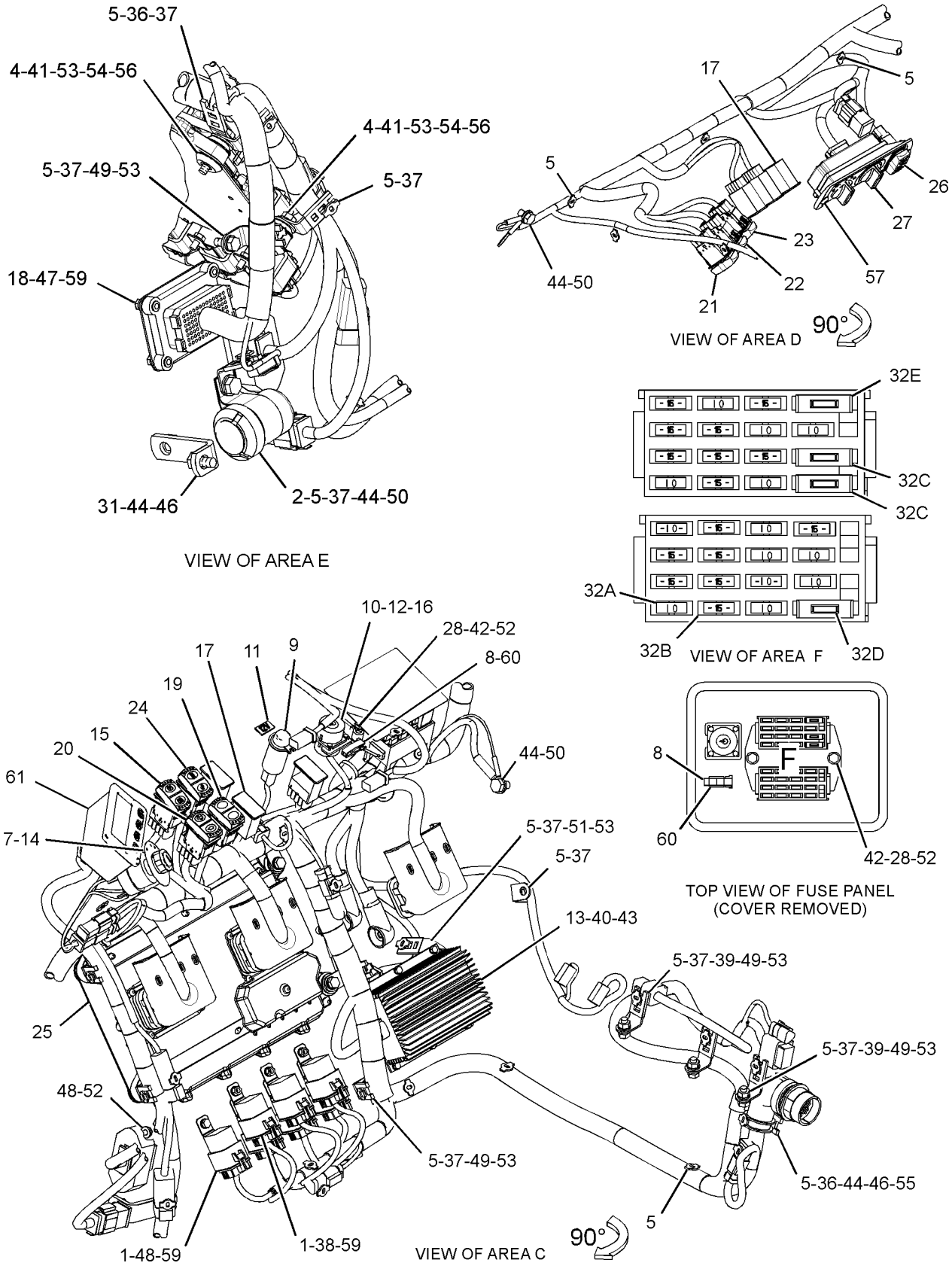

GRAPHIC #2 **<END>** g01892793

323-8127 WIRING GP-CAB

S/N: LBP1-UP
HYDROSTATIC DRIVE, STEERING
PART OF 321-3446 KIT-HYDRAULIC CONTROL
AN ATTACHMENT

SMCS-1408, 7301 **i03095219**

NOTE	REF NO	GRAPHIC REF	PART NUMBER	QTY	PART NAME 1 2 3 4 5 6 (PRODUCT LEVEL)	SEE PAGE
	1	1	**3E-5239**	1	RELAY AS (24-VOLT) (JUMPER)	
	2	1	**7K-1181**	13	STRAP-CABLE	
	3	1	**323-8126**	1	HARNESS AS-CAB	
M	4	1	**5C-2890**	1	NUT (M6X1-THD)	
	5	1	**9X-8256**	1	WASHER (6.6X12X2-MM THK)	

M-METRIC PART

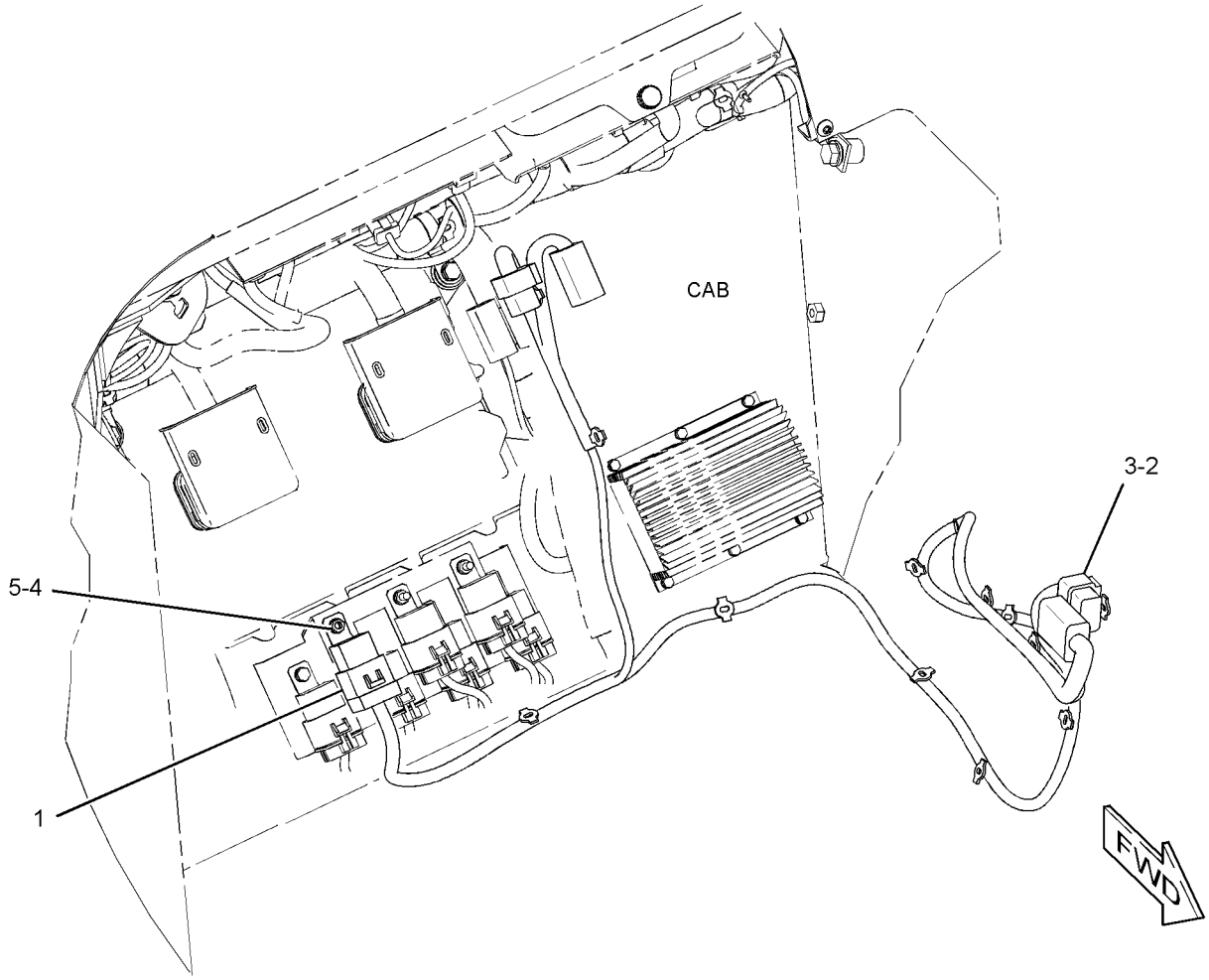

GRAPHIC #1 **<END>** g01538657

327-7801 WIRING GP-CAB

S/N: LBP1-UP

PART OF 327-7790 CAB GP

SMCS-1408, 7301 **i03558441**

NOTE	REF NO	GRAPHIC REF	PART NUMBER	QTY	PART NAME 1 2 3 4 5 6 (PRODUCT LEVEL)	SEE PAGE
	1	1	**3E-5239**	7	RELAY AS (24-VOLT)	
	2	2	**3S-2093**	5	STRAP-CABLE	
	3	1	**6I-1418**	4	SPACER (8.2X12.7X28.7-MM THK)	
	4	2	**7K-1181**	97	STRAP-CABLE	
	5	1,2	**8T-8737**	52	PLUG-SEAL	
	6	2	**107-6032**	1	LAMP GP-DOME (24-VOLT)	
		2	**259-1286**	1	LAMP (24-VOLT, 10-WATT)	
	7	1	**116-7471**	1	PULLER-MINIFUSE	
	8	2	**117-2311**	1	SOCKET-AUXILIARY POWER (12-VOLT)	
M	9	1	**120-0091**	4	BOLT (M3X0.5X10-MM)	
	10	1	**126-1773**	1	CAP-CONNECTOR	
	11	2	**166-0100**	2	SPACER (6.3X10X25-MM THK)	
	12	2	**169-2876**	1	FILM-IDENTIFICATION (POWER RECEPTACLE, 12-VOLT)	
	13	1	**201-2733**	1	FILM-INFORMATION (INPUT/OUTPUT)	
	14	1	**227-1989**	1	PLATE	
	15	1	**234-5925**	1	GASKET	
	16	2	**274-3774**	5	CAP-CONNECTOR	
	17	1	**274-3775**	4	CAP-CONNECTOR	
	18	2	**274-3777**	2	CAP-CONNECTOR	
	19	1	**283-1440**	1	PLATE AS	
M		1	**6V-9632**	2	NUT-WELD (M6X1-THD)	
	20	1	**308-0603**	1	HARNESS AS-CAB (MAIN POWER RELAY)	
	20A	1	**113-8490**	13	FUSE (10-AMPERE)	
	20B	1	**113-8491**	15	FUSE (15-AMPERE)	
	20C	1	**280-2709**	2	CIRCUIT BREAKER AS (15-AMPERE) (AIR CONDITIONER)	
	20D	1	**280-2709**	1	CIRCUIT BREAKER AS (15-AMPERE) (FUEL INJECTION)	
	20E	1	**280-2710**	1	CIRCUIT BREAKER AS (20-AMPERE) (AIR CONDITIONER, BLOWER)	
		1	**102-8802**	3	KIT-RECEPTACLE (2-PIN)	
		1	**102-8804**	1	KIT-RECEPTACLE (4-PIN)	
		1	**102-8806**	2	KIT-RECEPTACLE (8-PIN)	
					(EACH KIT INCLUDES RECEPTACLE AS & WEDGE)	
		1	**3E-7990**	1	RECEPTACLE AS-CONNECTOR (12-PIN)	
		1	**7T-0094**	3	SOCKET-CONNECTOR	
		1	**7X-6222**	1	PLUG AS-CONNECTOR (24-PIN)	
		1	**3E-4367**	1	RING-RETAINING	
M		1	**3E-8558**	1	BOLT (M5X0.8X39.37-MM)	
		1	**9X-3265**	2	SEAL-CONNECTOR (24-PIN)	
		1	**8N-0869**	2	COVER-TERMINAL (RED)	
		1	**8T-8737**	228	PLUG-SEAL	
		1	**9W-1951**	1	RECEPTACLE-CONNECTOR (9-PIN)	
		1	**9X-1054**	7	PLUG AS-CONNECTOR (4-PIN)	
		1	**9X-6772**	6	STRAP-CABLE	
E		1	**119-3662**		TUBE-HEAT SHRINK (59-CM)	
		1	**124-9636**	2	BLOCK-MINIFUSE	
		1	**124-9637**	2	LOCK-MINIFUSE	
E		1	**125-7874**		TUBE-HEAT SHRINK (5.72-MM DIA) (160-CM)	
E		1	**125-7875**		TUBE-HEAT SHRINK (70-CM)	
		1	**9X-3402**	221	SOCKET-CONNECTOR (16-GA TO 18-GA)	
		1	**126-1774**	3	COVER-CONNECTOR	
		1	**128-4249**	2	LOCKWASHER	
		1	**134-2540**	1	JUMPER-PLUG-IN (3-PIN)	
		1	**144-1636**	139	PIN-CONNECTOR (14-GA TO 18-GA)	
		1	**147-1445**	1	PLUG AS-CONNECTOR (70-PIN)	

327-7801 **WIRING GP-CAB** ***(contd.)*** **i03558441**

NOTE	REF NO	GRAPHIC REF	PART NUMBER	QTY	PART NAME 1 2 3 4 5 6 (PRODUCT LEVEL)	SEE PAGE
		1	**159-9322**	1	SEAL-O-RING	
		1	**147-1446**	1	PLUG AS-CONNECTOR (70-PIN)	
		1	**159-9322**	1	SEAL-O-RING	
		1	**155-2255**	1	KIT-CONNECTING PLUG (12-PIN)	
		1	**155-2265**	3	KIT-CONNECTING PLUG (8-PIN)	
		1	**155-2260**	5	KIT-CONNECTING PLUG (3-PIN)	
		1	**155-2270**	5	KIT-CONNECTING PLUG (2-PIN)	
		1	**155-2271**	2	KIT-CONNECTING PLUG (4-PIN)	
		1	**155-2274**	3	KIT-CONNECTING PLUG (6-PIN)	
					(EACH KIT INCLUDES PLUG AS, WEDGE, & INTERFACE SEAL)	
		1	**160-7690**	1	PLUG AS-CONNECTOR (70-PIN)	
		1	**159-9322**	1	SEAL-O-RING	
		1	**167-3692**	1	RECEPTACLE AS-CONNECTOR (31-PIN)	
		1	**167-3693**	1	PLUG AS-CONNECTOR (31-PIN)	
		1	**177-9656**	1	KIT-CONNECTING PLUG (4-PIN)	
					(INCLUDES PLUG AS & WEDGE)	
		1	**185-1860**	66	PLUG	
		1	**185-1861**	5	SEAL-WIRE	
		1	**202-5397**	39	PLUG	
		1	**211-0052**	2	NUT (11/16-18-THD)	
		1	**214-4208**	1	RECEPTACLE AS-CONNECTOR (70-PIN)	
		1	**245-7434**	11	KIT-CONNECTING PLUG (10-PIN)	
					(EACH KIT INCLUDES PLUG CONNECTOR, WIRE ASSEMBLIES, & PLUGS)	
		1	**230-4009**	2	PLUG AS-CONNECTOR (12-PIN)	
					(EACH INCLUDES)	
		1	**264-7034**	1	SEAL-CONNECTOR	
		1	**230-4011**	3	PLUG AS-CONNECTOR (2-PIN)	
					(EACH INCLUDES)	
		1	**264-7029**	1	SEAL-CONNECTOR	
		1	**230-4012**	1	RECEPTACLE AS-CONNECTOR (2-PIN)	
		1	**230-5010**	2	PLUG AS-CONNECTOR (6-PIN)	
					(EACH INCLUDES)	
		1	**264-7032**	1	SEAL-CONNECTOR	
		1	**230-5011**	1	RECEPTACLE AS-CONNECTOR (6-PIN)	
		1	**240-7193**	1	RESISTOR AS (500-OHM, 2-WATT)	
		1	**102-8802**	1	KIT-RECEPTACLE (2-PIN)	
					(INCLUDES RECEPTACLE AS & WEDGE)	
		1	**9X-3401**	2	PIN-CONNECTOR (16-GA TO 18-GA)	
		1	**264-5425**	1	CAP AS-PROTECTION	
D		1	**5P-5677**		WIRE (18-GA, BLACK) (0.2-M)	
		1	**8C-6354**	1	CAP-RECEPTACLE	
E		1	**125-7875**		TUBE-HEAT SHRINK (3-CM)	
	21	1	**310-2358**	1	HARNESS AS-CAB (INSTRUMENT PANEL)	
		1	**102-8802**	5	KIT-RECEPTACLE (2-PIN)	
		1	**102-8801**	1	KIT-RECEPTACLE (12-PIN)	
					(EACH KIT INCLUDES RECEPTACLE AS & WEDGE)	
		1	**8T-8737**	44	PLUG-SEAL	
E		1	**119-3662**		TUBE-HEAT SHRINK (7-CM)	
E		1	**125-7874**		TUBE-HEAT SHRINK (5.72-MM DIA) (10-CM)	
E		1	**125-7875**		TUBE-HEAT SHRINK (15-CM)	
		1	**9X-3402**	48	SOCKET-CONNECTOR (16-GA TO 18-GA)	
		1	**144-1636**	3	PIN-CONNECTOR (14-GA TO 18-GA)	
		1	**155-2255**	1	KIT-CONNECTING PLUG (12-PIN)	
		1	**155-2270**	9	KIT-CONNECTING PLUG (2-PIN)	
		1	**155-2274**	1	KIT-CONNECTING PLUG (6-PIN)	
					(EACH KIT INCLUDES PLUG AS, WEDGE, & INTERFACE SEAL)	
		1	**167-3693**	1	PLUG AS-CONNECTOR (31-PIN)	

327-7801 **WIRING GP-CAB** ***(contd.)*** **i03558441**

NOTE	REF NO	GRAPHIC REF	PART NUMBER	QTY	PART NAME 1 2 3 4 5 6 (PRODUCT LEVEL)	SEE PAGE
		1	**230-4013**	1	PLUG AS-CONNECTOR (3-PIN)	
		1	**264-7030**	1	SEAL-CONNECTOR	
		1	**230-4014**	1	RECEPTACLE AS-CONNECTOR (3-PIN)	
Y	22	2	*310-6789*	1	INSTALLATION GP-COMMUNICATION (WITHOUT PRODUCT LINK)	196
	23	1	**321-0614**	1	FILM-FUSE PANEL	
	24	2	**133-9379**	1	GROMMET	
	25	1	*155-2252*	1	PLUG AS-CONNECTOR (12-PIN)	
		1	**155-2255**	1	KIT-CONNECTING PLUG (12-PIN)	
					(INCLUDES PLUG AS, WEDGE, & INTERFACE SEAL)	
	26	2	*155-2269*	1	PLUG AS-CONNECTOR (2-PIN)	
		2	**155-2270**	1	KIT-CONNECTING PLUG (2-PIN)	
					(INCLUDES PLUG AS, WEDGE, & INTERFACE SEAL)	
	27	2	*177-9649*	1	RECEPTACLE AS	
		2	**177-9651**	1	LOCK	
		2	**177-9652**	1	SEAL-RECEPTACLE	
		2	**177-9653**	1	KIT-RECEPTACLE (4-PIN)	
					(INCLUDES RECEPTACLE AS & WEDGE)	
	28	2	**230-4010**	2	RECEPTACLE AS-CONNECTOR (12-PIN)	
	29	2	**230-4012**	2	RECEPTACLE AS-CONNECTOR (2-PIN)	
	30	1	**230-5011**	1	RECEPTACLE AS-CONNECTOR (6-PIN)	
	31	2	**2V-8259**	1	GROMMET	
	32	1	**4P-7581**	3	CLIP	
	33	1	**4P-8134**	7	CLIP	
M	34	1	**5C-2890**	3	NUT (M6X1-THD)	
	35	1	**7X-0579**	4	WASHER-HARD (8.8X25.5X2-MM THK)	
M	36	1	**7X-0818**	4	BOLT (M8X1.25X45-MM)	
M	37	1	**8C-8451**	2	BOLT (M6X1X40-MM)	
	38	2	**8T-4121**	5	WASHER-HARD (11X21X2.5-MM THK)	
M	39	1	**8T-4137**	2	BOLT (M10X1.5X20-MM)	
M	40	1	**8T-4138**	4	BOLT (M6X1X20-MM)	
M	41	1	**8T-4171**	6	BOLT (M6X1X12-MM)	
M	42	2	**8T-4189**	2	BOLT (M8X1.25X20-MM)	
M	43	2	**8T-4191**	3	BOLT (M10X1.5X16-MM)	
M	44	2	**8T-4199**	1	BOLT (M8X1.25X12-MM)	
	45	1	**8T-4205**	4	WASHER-HARD (7.2X14.5X2-MM THK)	
	46	1	**8T-4224**	7	WASHER-HARD (8.8X16X2-MM THK)	
	47	1	**8T-9655**	8	MOUNT-ISOLATION	
	48	1	**9M-8406**	1	CLIP	
	49	2	**9X-7373**	1	GROMMET	
	50	1	**9X-8256**	11	WASHER (6.6X12X2-MM THK)	
E	51	1	**103-2543**		SEAL (3-CM)	

D-ORDER BY THE METER
E-ORDER BY THE CENTIMETER
M-METRIC PART
Y-SEPARATE ILLUSTRATION

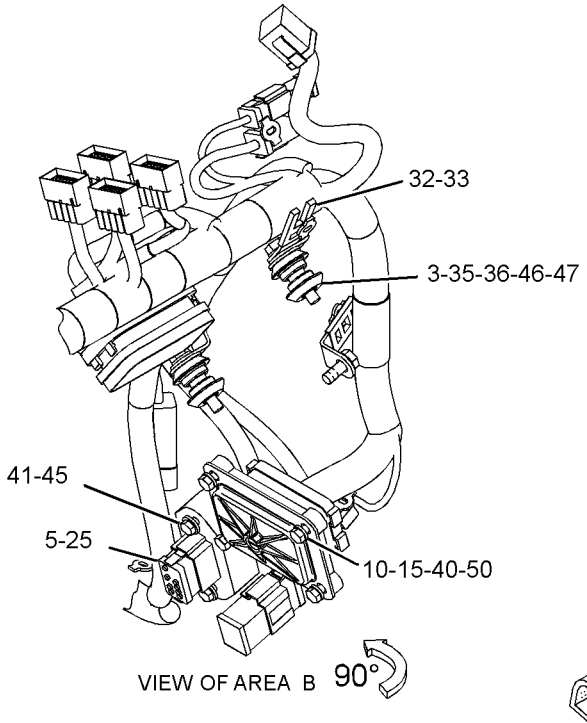

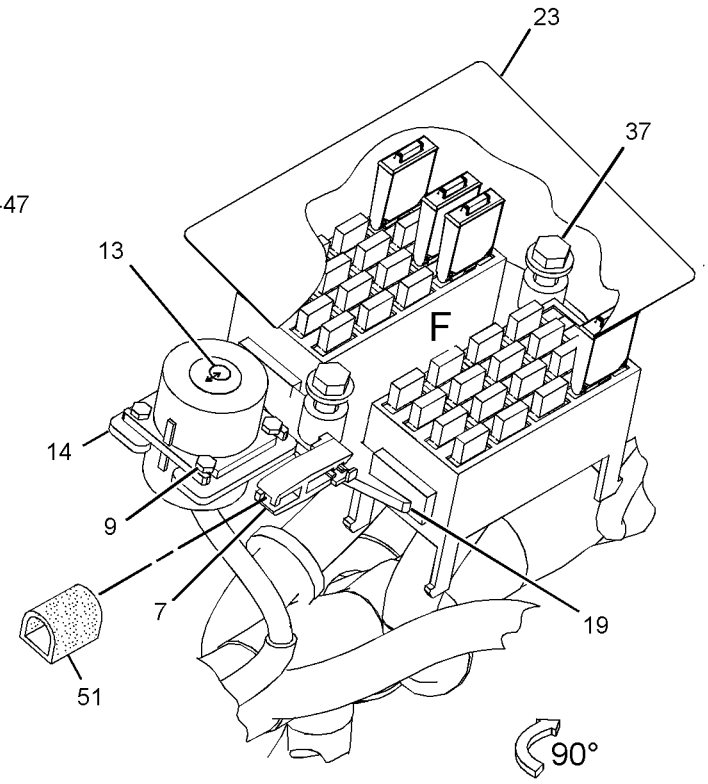

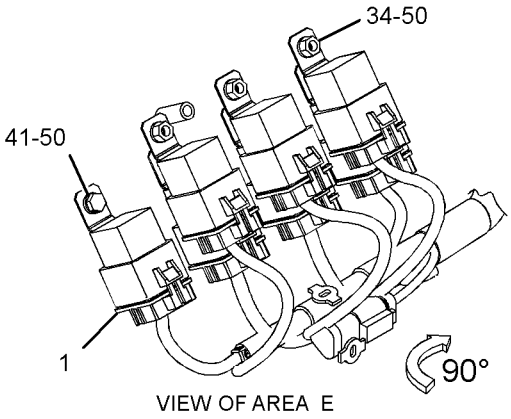

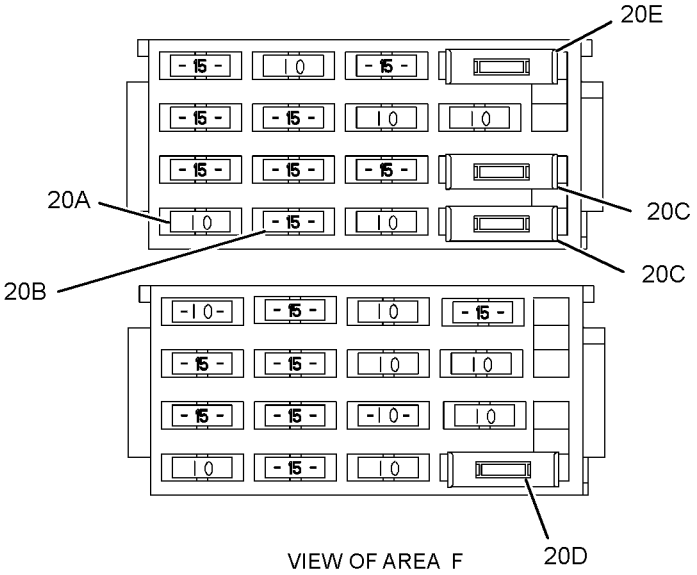

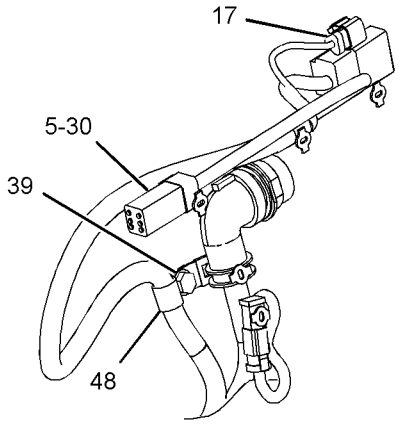

GRAPHIC #1

g01893356

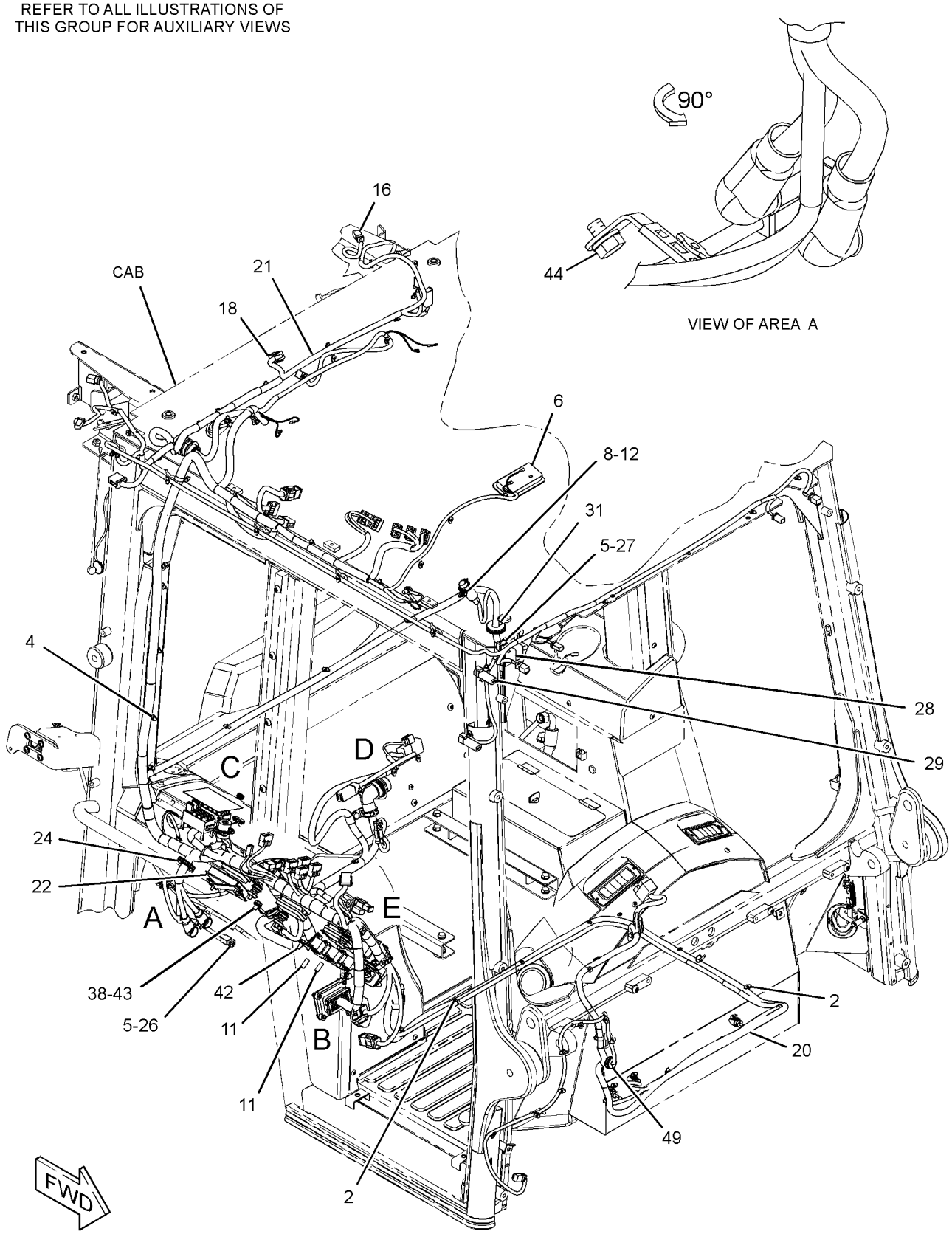

GRAPHIC #2

<END>

g01713974

ELECTRICAL AND STARTING SYSTEM

334-5104 WIRING GP-CAB

S/N: LBP918-UP

PART OF 334-6680 CAB GP

SMCS-1408, 7301 **i03485781**

NOTE	REF NO	GRAPHIC REF	PART NUMBER	QTY	PART NAME 1 2 3 4 5 6 (PRODUCT LEVEL)	SEE PAGE
	1	2	**3E-5239**	7	RELAY AS (24-VOLT)	
Y	2	1	**3E-6328**	1	ALARM GP (24-VOLT) (ACTION)	164
	3	1	**3S-2093**	5	STRAP-CABLE	
	4	2	**6I-1418**	4	SPACER (8.2X12.7X28.7-MM THK)	
	5	1,2	**7K-1181**	99	STRAP-CABLE	
	6	2	**8T-9655**	8	MOUNT-ISOLATION	
	7	1	**107-6032**	1	LAMP GP-DOME (24-VOLT)	
		1	**259-1286**	1	LAMP (24-VOLT, 10-WATT)	
	8	1	**110-7885**	1	KNOB AS-WIPER SWITCH (WIPER, WASHER, REAR)	
		1	**014-0816**	1	SETSCREW (8-32X0.5-IN)	
	9	2	**110-7887**	1	SWITCH AS-START (KEY)	
		2	**7T-6799**	1	NUT-MOUNTING (1-32-THD)	
		2	**102-8804**	1	KIT-RECEPTACLE (4-PIN)	
					(INCLUDES RECEPTACLE AS & WEDGE)	
		2	**186-3735**	4	PIN-CONNECTOR (16-GA TO 18-GA)	
	10	1	**112-6174**	1	SWITCH AS-ROTARY (WIPER, WASHER) (REAR)	
		1	**2H-3920**	1	LOCKWASHER	
		1	**6V-8369**	1	NUT (7/16-28-THD)	
		1	**186-3735**	6	PIN-CONNECTOR (16-GA TO 18-GA)	
		1	**8T-8737**	2	PLUG-SEAL	
		1	**102-8806**	1	KIT-RECEPTACLE (8-PIN)	
					(INCLUDES RECEPTACLE AS & WEDGE)	
	11	2	**116-7471**	1	PULLER-MINIFUSE	
	12	1,2	**117-2311**	2	SOCKET-AUXILIARY POWER (12-VOLT)	
M	13	2	**120-0091**	4	BOLT (M3X0.5X10-MM)	
	14	1,2	**169-2876**	2	FILM-IDENTIFICATION (POWER RECEPTACLE, 12-VOLT)	
	15	2	**201-2733**	1	FILM-INFORMATION (INPUT/OUTPUT)	
	16	2	**209-0381**	1	CONVERTER-POWER (24-VOLT TO 12-VOLT)	
	17	2	**218-0651**	1	FILM-INSTRUCTION (KEY START SWITCH)	
	18	2	**222-7890**	1	SWITCH AS-ROCKER (PARKING BRAKE ON, OFF)	
	19	2	**227-1989**	1	PLATE	
	20	1,2	**228-6089**	5	PLUG (ROCKER SWITCH)	
	21	2	**234-5925**	1	GASKET	
	22	2	**236-4619**	1	SWITCH AS-ROCKER (LIFT, TILT KICKOUT)	
	23	2	**249-5481**	1	SWITCH AS-ROCKER (THROTTLE SWITCH)	
	24	1	**251-1195**	1	SWITCH AS-ROCKER (24-VOLT) (FRONT FLOODLIGHTS)	
	25	2	**251-1197**	1	SWITCH AS-ROCKER (HYDRAULIC LOCKOUT)	
	26	1	**265-7981**	1	SWITCH AS-ROCKER (AIR CONDITIONER ON, OFF)	
	27	1	**267-5243**	1	PANEL AS	
		1	**271-7312**	1	KNOB (TEMPERATURE CONTROL)	
		1	**285-7415**	1	KNOB (BLOWER FAN SPEED)	
	28	1	**275-7764**	1	SWITCH GP-WIPER (24-VOLT, INTERMITTENT) (FRONT WIPER)	
		1	**7T-9302**	1	KNOB AS-WIPER SWITCH (FRONT)	
		1	**014-0816**	1	SETSCREW (8-32X0.5-IN)	
		1	**275-7741**	1	SWITCH GP-WIPER (24-VOLT, INTERMITTENT) (FRONT)	
		1	**2H-3920**	1	LOCKWASHER	
		1	**6V-8369**	1	NUT (7/16-28-THD)	
		1	**8T-8737**	2	PLUG-SEAL	
		1	**102-8806**	1	KIT-RECEPTACLE (8-PIN)	
					(INCLUDES RECEPTACLE AS & WEDGE)	
		1	**186-3735**	6	PIN-CONNECTOR (16-GA TO 18-GA)	
	29	2	**283-1440**	1	PLATE AS	
M		2	**6V-9632**	2	NUT-WELD (M6X1-THD)	

334-5104 **WIRING GP-CAB** ***(contd.)*** **i03485781**

NOTE	REF NO	GRAPHIC REF	PART NUMBER	QTY	PART NAME 1 2 3 4 5 6 (PRODUCT LEVEL)	SEE PAGE
	30	2	**302-4788**	1	BRACKET AS	
		2	**4W-3277**	1	BRACKET	
M		2	**8T-3490**	1	NUT-WELD (M10X1.5-THD)	
Y	31	2	*304-4001*	1	CONTROL GP-UNPRGMED MONITOR (MESSENGER)	595
R	32	1	**304-5687**	1	CONTROL GP-UNPROGRAMMED (POWER TRAIN)	
	33	1	**313-2154**	1	MODULE GP-DISPLAY	
	34	1	**321-0614**	1	FILM-FUSE PANEL	
	35	1	**333-0203**	1	HARNESS AS-CAB (MAIN POWER RELAY)	
	36	1	**334-5105**	1	HARNESS AS-CAB (INSTRUMENT PANEL)	
	37	2	**133-9379**	1	GROMMET	
	38	1	**2V-8259**	1	GROMMET	
	39	1,2	**4P-7581**	3	CLIP	
	40	1,2	**4P-8134**	10	CLIP	
M	41	2	**5C-2890**	3	NUT (M6X1-THD)	
M	42	1	**5C-7261**	3	NUT (M8X1.25-THD)	
M	43	2	**7I-2272**	6	BOLT (M5X0.8X12-MM)	
	44	2	**7X-0579**	4	WASHER-HARD (8.8X25.5X2-MM THK)	
M	45	2	**7X-0818**	4	BOLT (M8X1.25X45-MM)	
M	46	2	**8C-8451**	2	BOLT (M6X1X40-MM)	
	47	2	**8T-0328**	6	WASHER-HARD (5.5X10X1-MM THK)	
	48	1,2	**8T-4121**	7	WASHER-HARD (11X21X2.5-MM THK)	
M	49	1	**8T-4127**	12	SCREW-MACHINE (M5X0.8X20-MM)	
M	50	1,2	**8T-4137**	3	BOLT (M10X1.5X20-MM)	
M	51	2	**8T-4138**	4	BOLT (M6X1X20-MM)	
M	52	2	**8T-4171**	6	BOLT (M6X1X12-MM)	
M	53	1,2	**8T-4189**	5	BOLT (M8X1.25X20-MM)	
M	54	1,2	**8T-4191**	4	BOLT (M10X1.5X16-MM)	
M	55	2	**8T-4199**	1	BOLT (M8X1.25X12-MM)	
	56	2	**8T-4205**	4	WASHER-HARD (7.2X14.5X2-MM THK)	
	57	1,2	**8T-4224**	10	WASHER-HARD (8.8X16X2-MM THK)	
	58	1	**9M-8406**	1	CLIP	
M	59	1	**9X-2045**	2	SCREW-TRUSS HEAD (M6X1X20-MM)	
	60	1	**9X-7373**	1	GROMMET	
	61	2	**9X-8256**	11	WASHER (6.6X12X2-MM THK)	
E	62	2	**103-2543**		SEAL (3-CM)	

E-ORDER BY THE CENTIMETER
M-METRIC PART
R-REMFG PART MAY BE AVAILABLE
Y-SEPARATE ILLUSTRATION

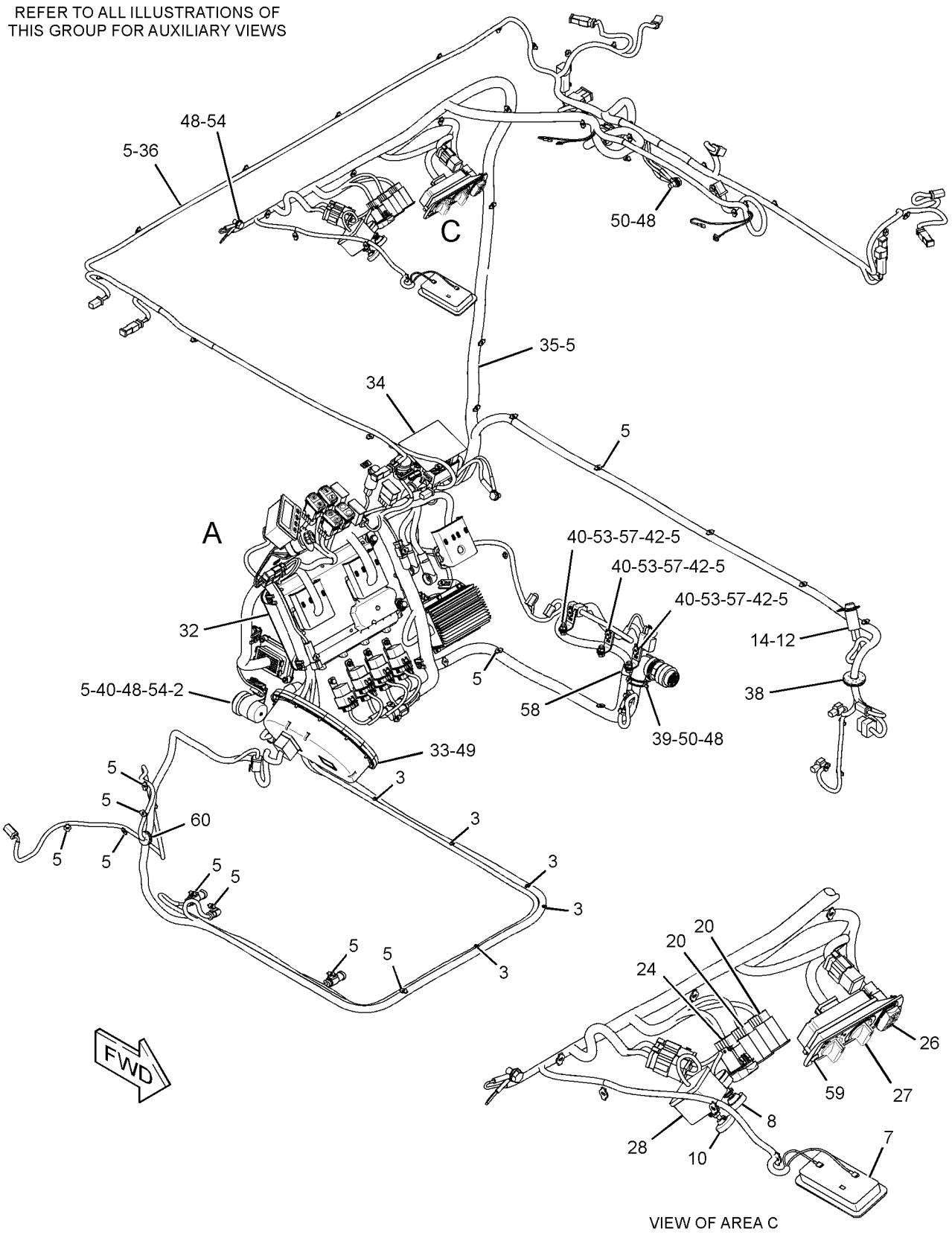

GRAPHIC #1 g01827873

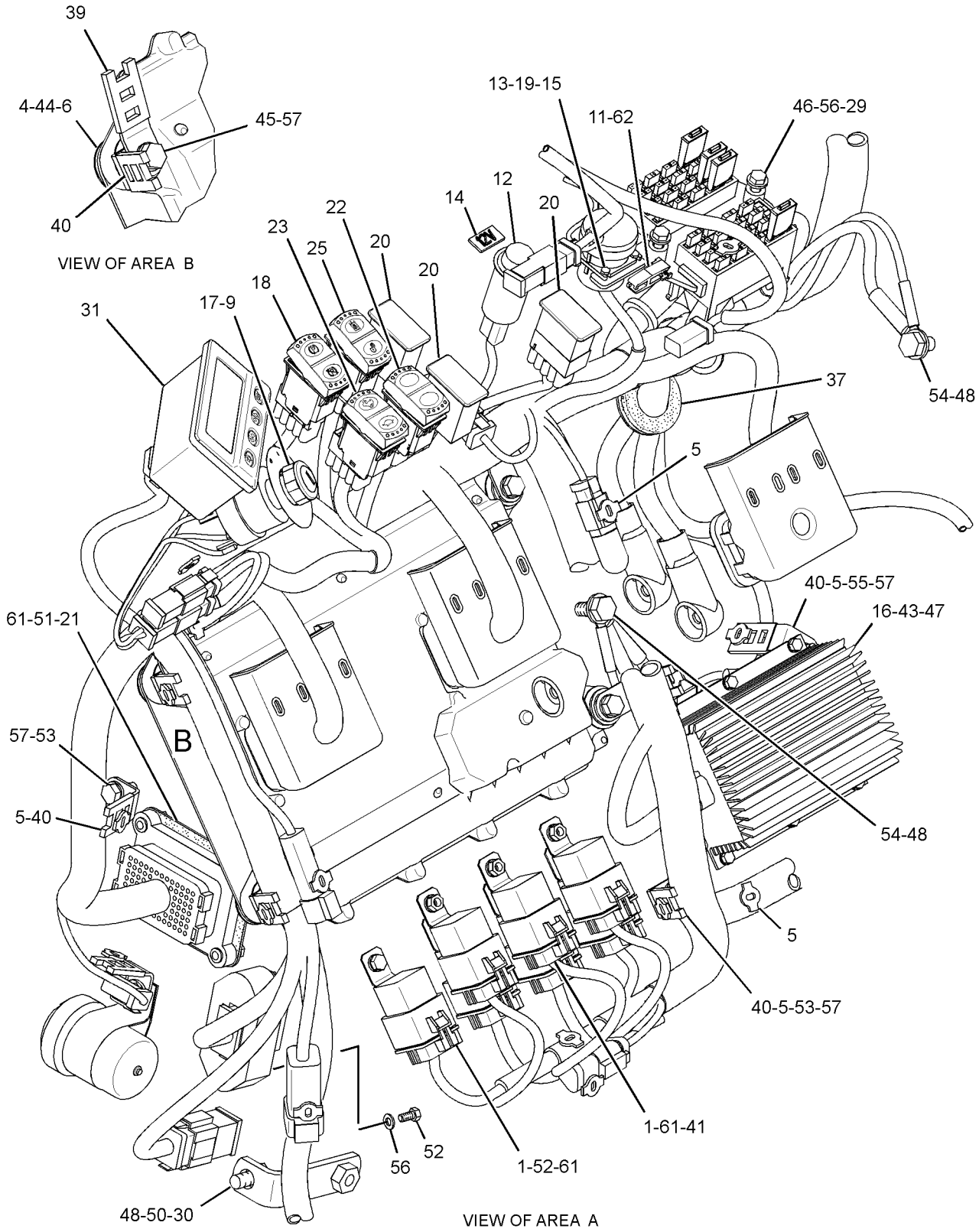

GRAPHIC #2 **<END>** g01827874

302-5696 WIRING GP-CAB TILT

S/N: LBP1-UP
PART OF 279-8104 TILT GP-PLATFORM
AN ATTACHMENT

SMCS-1408 **i02863478**

NOTE	REF NO	GRAPHIC REF	PART NUMBER	QTY	PART NAME 1 2 3 4 5 6 (PRODUCT LEVEL)	SEE PAGE
	1	1	**7K-1181**	2	STRAP-CABLE	
	2	1	**166-0100**	2	SPACER (6.3X10X25-MM THK)	
	3	1	**285-5822**	1	BRACKET AS	
M		1	**9X-2032**	4	NUT-WELD (M4X0.7-THD)	
	4	1	**289-9559**	1	HARNESS AS-CAB	
		1	**9X-6772**	2	STRAP-CABLE	
		1	**126-1774**	1	COVER-CONNECTOR	
		1	**131-4725**	2	RECEPTACLE AS (2-PIN)	
		1	**214-4208**	2	RECEPTACLE AS-CONNECTOR (70-PIN)	
		1	**131-4726**	1	PLUG AS-CONNECTOR (2-PIN)	
		1	**160-7689**	1	PLUG AS-CONNECTOR (70-PIN)	
	5	1	**131-4730**	1	CAP AS-PROTECTION	
	6	1	**4P-7581**	1	CLIP	
	7	1	**4P-8134**	1	CLIP	
	8	1	**8T-0328**	2	WASHER-HARD (5.5X10X1-MM THK)	
M	9	1	**8T-0352**	2	BOLT (M5X0.8X45-MM)	
	10	1	**8T-4121**	3	WASHER-HARD (11X21X2.5-MM THK)	
M	11	1	**8T-4138**	4	BOLT (M6X1X20-MM)	
M	12	1	**8T-4191**	1	BOLT (M10X1.5X16-MM)	
M	13	1	**8T-4195**	2	BOLT (M10X1.5X30-MM)	
M	14	1	**8T-7852**	8	BOLT (M4X0.7X10-MM)	
	15	1	**9X-8256**	4	WASHER (6.6X12X2-MM THK)	

M-METRIC PART

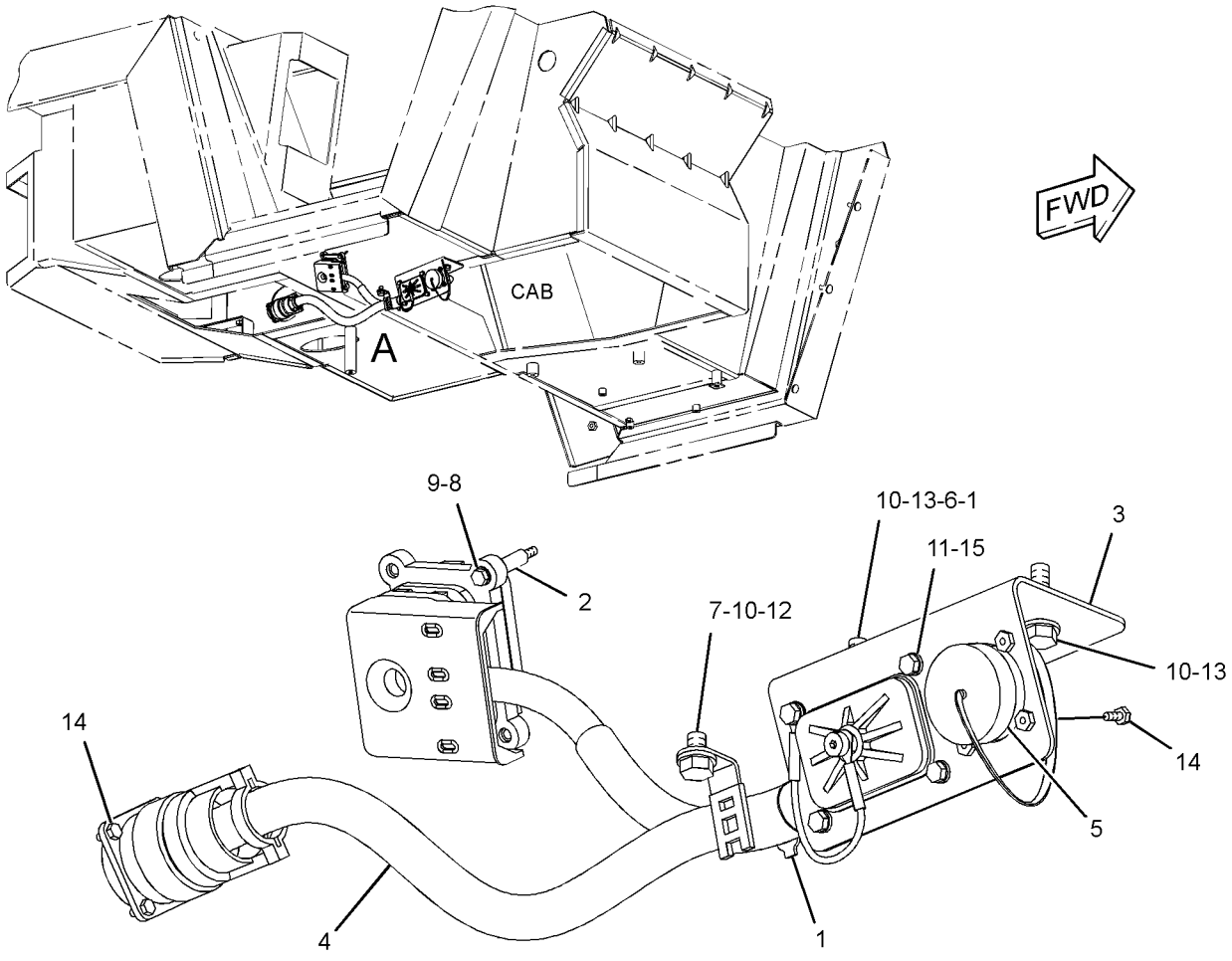

VIEW OF AREA A

GRAPHIC #1 **<END>** g01426433

ELECTRICAL AND STARTING SYSTEM

242-7490 WIRING GP-CHASSIS

S/N: LBP1-699

PART OF 240-6225 CHASSIS AR

SMCS-1408 **i03587186**

NOTE	REF NO	GRAPHIC REF	PART NUMBER	QTY	PART NAME 1 2 3 4 5 6 (PRODUCT LEVEL)	SEE PAGE
	1	2	**125-7484**	1	SPACER (11X25X36-MM THK)	
	2	1	**3E-5169**	1	GUARD-SWITCH (GROUND LEVEL SHUTDOWN)	
	3	2	**7G-1060**	1	STRAP AS-GROUND	
	4	1,2	**7K-1181**	76	STRAP-CABLE	
	5	2	**127-5447**	1	SPACER (10.5X20X12-MM THK)	
	6	1	**131-0359**	1	PLATE-IDENTIFICATION (ENGINE STOP, RUN)	
	7	1	**158-6634**	1	SWITCH GP-TOGGLE (GROUND LEVEL SHUTDOWN)	
		1	**6T-3631**	2	NUT-HEX (15/32-32-THD)	
		1	**6T-3632**	1	LOCKWASHER	
		1	**6T-3633**	1	RING-LOCKING	
		1	**186-3735**	3	PIN-CONNECTOR (16-GA TO 18-GA)	
		1	**9G-3695**	1	PLUG	
		1	**102-8804**	1	KIT-RECEPTACLE (4-PIN)	
					(INCLUDES RECEPTACLE AS & WEDGE)	
	8	1	**174-7876**	1	HORN AS (24-VOLT, LOW TONE)	
		1	**177-9853**	1	RECEPTACLE AS (2-PIN)	
		1	**178-3586**	1	LOCK	
Y	9	1	**183-4584**	1	SENSOR GP-SPEED (TRACK, LH)	208
Y	9A	2	**183-4584**	1	SENSOR GP-SPEED (TRACK, RH)	208
	10	2	**204-2281**	2	STRAP-TIE	
	11	2	**206-2423**	2	SADDLE	
	12	2	**218-4935**	1	SUPPRESSOR-ARC	
	13	1	**220-0229**	1	ALARM AS (BACKUP)	
D		1	**5P-5623**		WIRE-ELECTRICAL (16-GA, BLACK) (0.4-M EACH)	
		1	**102-8802**	1	KIT-RECEPTACLE (2-PIN)	
					(INCLUDES RECEPTACLE AS & WEDGE)	
		1	**186-3735**	2	PIN-CONNECTOR (16-GA TO 18-GA)	
E		1	**9X-1813**		SLEEVE (31-CM)	
	14	1	**261-0420**	1	SENSOR GP-PRESSURE (HYDROSTATIC DRIVE)	
	15	1	**294-4428**	1	HARNESS AS-CHASSIS	
G		1	**9X-2383**		HOSE (87-IN)	
E		1	**8C-3056**		CABLE (2-GA, RED) (598-CM)	
		1	**110-8769**	1	WIRE AS	
		1	**102-8802**	5	KIT-RECEPTACLE (2-PIN)	
					(INCLUDES RECEPTACLE AS & WEDGE)	
		1	**8T-8827**	1	BOOT (RED)	
		1	**9X-6772**	2	STRAP-CABLE	
		1	**126-1774**	1	COVER-CONNECTOR	
		1	**134-2540**	1	JUMPER-PLUG-IN (3-PIN)	
		1	**155-2255**	1	KIT-CONNECTING PLUG (12-PIN)	
		1	**155-2260**	1	KIT-CONNECTING PLUG (3-PIN)	
		1	**155-2270**	20	KIT-CONNECTING PLUG (2-PIN)	
		1	**155-2271**	5	KIT-CONNECTING PLUG (4-PIN)	
					(EACH INCLUDES PLUG AS, WEDGE, & INTERFACE SEAL)	
		1	**160-7689**	1	PLUG AS-CONNECTOR (70-PIN)	
		1	**230-4009**	1	PLUG AS-CONNECTOR (12-PIN)	
		1	**131-4726**	1	PLUG AS-CONNECTOR (2-PIN)	
		1	**230-4011**	5	PLUG AS-CONNECTOR (2-PIN)	
		1	**230-4013**	1	PLUG AS-CONNECTOR (3-PIN)	
		1	**230-5008**	2	PLUG AS-CONNECTOR (4-PIN)	
		1	**230-5010**	1	PLUG AS-CONNECTOR (6-PIN)	
		1	**237-0227**	1	PLUG AS-CONNECTOR (3-PIN)	
		1	**245-1042**	1	PLUG AS-CONNECTOR (64-PIN)	
		1	**230-4012**	1	RECEPTACLE AS-CONNECTOR (2-PIN)	
		1	**230-4014**	1	RECEPTACLE AS-CONNECTOR (3-PIN)	

242-7490 **WIRING GP-CHASSIS** *(contd.)* **i03587186**

NOTE	REF NO	GRAPHIC REF	PART NUMBER	QTY	PART NAME 1 2 3 4 5 6 (PRODUCT LEVEL)	SEE PAGE
		1	**230-5009**	1	RECEPTACLE AS-CONNECTOR (4-PIN)	
		1	**245-1044**	2	LOCK-CONNECTOR	
		1	**245-1045**	1	COVER	
		1	**218-4935**	1	SUPPRESSOR-ARC	
	16	2	**298-5802**	1	CLAMP AS	
	18	2	**204-8000**	2	MOUNT (TIE WRAP)	
	19	2	**207-5370**	1	CLIP	
	20	1	**3J-1907**	1	SEAL-O-RING	
	21	2	**4D-7388**	1	CLIP	
	22	2	**4P-7429**	1	CLIP	
	23	1,2	**4P-7581**	9	CLIP	
	24	1,2	**4P-8134**	9	CLIP	
M	25	1	**5C-7261**	2	NUT (M8X1.25-THD)	
	26	1	**5P-4116**	6	WASHER-HARD (8.8X20.5X2-MM THK)	
	27	1	**5P-6629**	1	GROMMET	
	29	2	**7C-4354**	2	CLIP	
	30	2	**7D-7233**	1	CLIP	
	31	1,2	**8M-2773**	5	CLIP	
M	32	1,2	**8T-0267**	4	BOLT-SOCKET HEAD (M6X1X12-MM)	
	33	1,2	**8T-4121**	27	WASHER-HARD (11X21X2.5-MM THK)	
M	34	2	**8T-4133**	2	NUT (M10X1.5-THD)	
M	35	1,2	**8T-4137**	16	BOLT (M10X1.5X20-MM)	
M	37	2	**8T-4179**	1	BOLT (M12X1.75X20-MM)	
M	39	1	**8T-4189**	2	BOLT (M8X1.25X20-MM)	
M	40	1,2	**8T-4191**	5	BOLT (M10X1.5X16-MM)	
M	41	2	**8T-4195**	1	BOLT (M10X1.5X30-MM)	
M	42	1	**8T-4200**	2	BOLT (M8X1.25X16-MM)	
	43	2	**8T-4223**	1	WASHER-HARD (13.5X25.5X3-MM THK)	
M	45	2	**8T-6466**	1	BOLT (M10X1.5X60-MM)	
	46	1,2	**9M-8406**	2	CLIP	
	47	2	**9W-1991**	1	SPACER (10.7X17.1X40-MM THK)	
	48	1	**9X-7373**	1	GROMMET	
	49	1	**5P-9085**	2	CLIP	
M	50	2	**197-7481**	1	STUD (M10X1.5X18-MM, M10X1.5X57-MM)	

D-ORDER BY THE METER
E-ORDER BY THE CENTIMETER
G-ORDER BY THE INCH
M-METRIC PART
Y-SEPARATE ILLUSTRATION

242-7490 **WIRING GP-CHASSIS** *(contd.)* **i03587186**

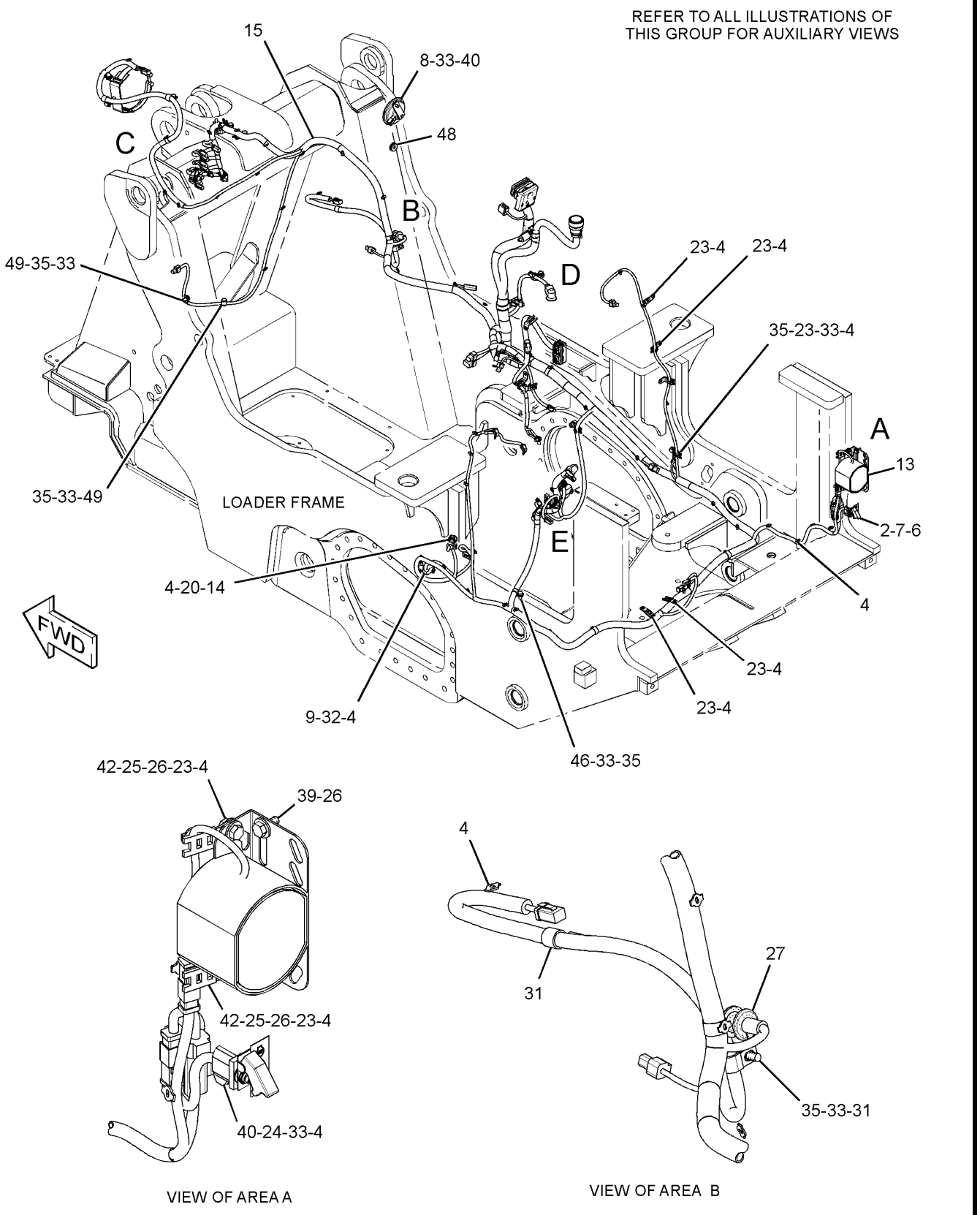

GRAPHIC #1 g01448341

242-7490 **WIRING GP-CHASSIS** *(contd.)* **i03587186**

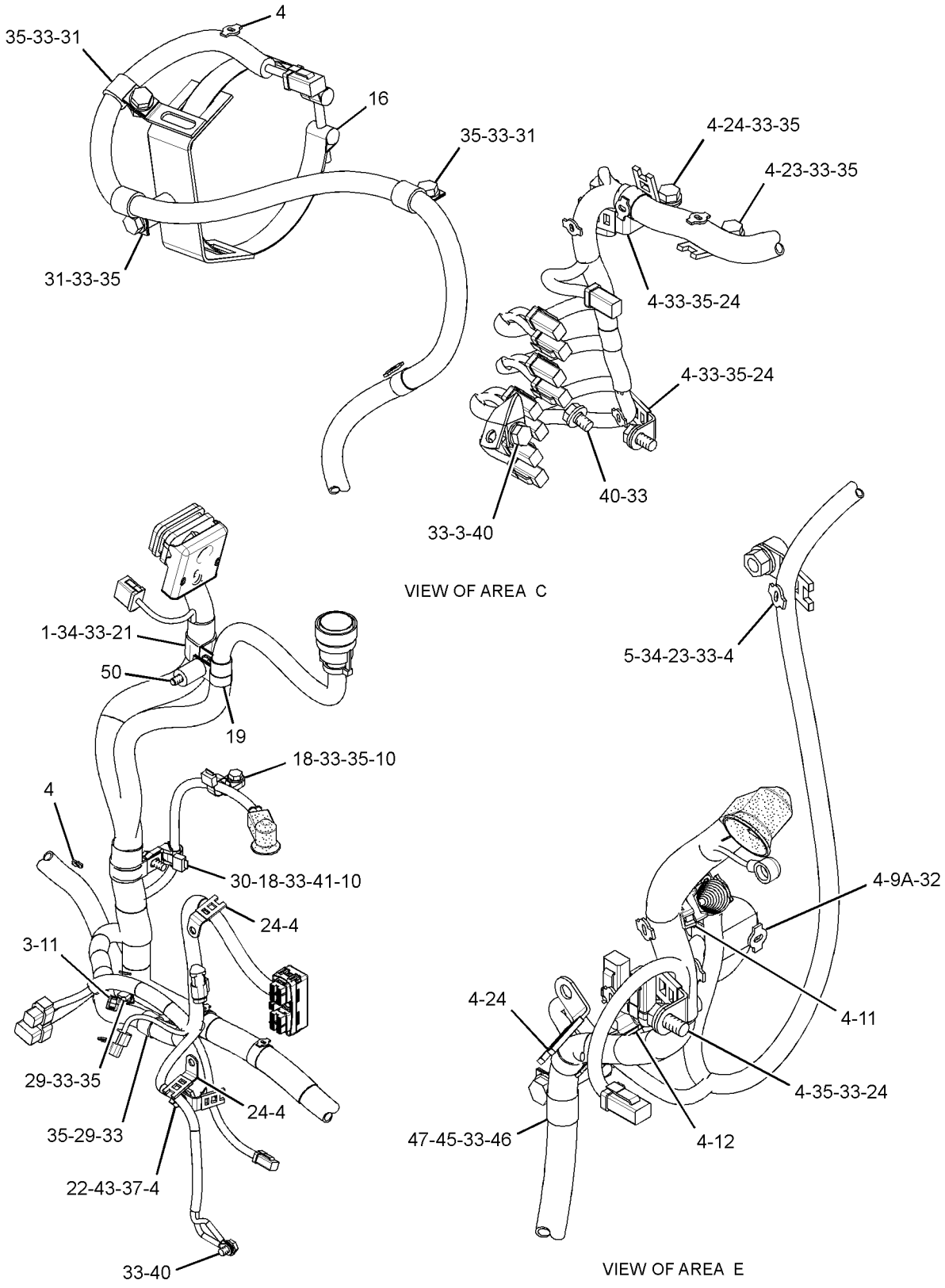

GRAPHIC #2 **<END>** g01448342

ELECTRICAL AND STARTING SYSTEM

242-7490 WIRING GP-CHASSIS

S/N: LBP700-UP

PART OF 240-6225 CHASSIS AR

SMCS-1408 **i03587187**

NOTE	REF NO	GRAPHIC REF	PART NUMBER	QTY	PART NAME 1 2 3 4 5 6 (PRODUCT LEVEL)	SEE PAGE
	1	2	**091-9035**	1	SPACER (11X25X20-MM THK)	
	2	2	**3E-5169**	1	GUARD-SWITCH (GROUND LEVEL SHUTDOWN)	
	3	2	**7G-1060**	1	STRAP AS-GROUND	
	4	1,2	**7K-1181**	76	STRAP-CABLE	
	5	1	**127-5447**	1	SPACER (10.5X20X12-MM THK)	
	6	2	**131-0359**	1	PLATE-IDENTIFICATION (ENGINE STOP, RUN)	
	7	2	**158-6634**	1	SWITCH GP-TOGGLE (GROUND LEVEL SHUTDOWN)	
		2	**6T-3631**	2	NUT-HEX (15/32-32-THD)	
		2	**6T-3632**	1	LOCKWASHER	
		2	**6T-3633**	1	RING-LOCKING	
		2	**186-3735**	3	PIN-CONNECTOR (16-GA TO 18-GA)	
		2	**9G-3695**	1	PLUG	
		2	**102-8804**	1	KIT-RECEPTACLE (4-PIN)	
					(INCLUDES RECEPTACLE AS & WEDGE)	
	8	1	**174-7876**	1	HORN AS (24-VOLT, LOW TONE)	
		1	**177-9853**	1	RECEPTACLE AS (2-PIN)	
		1	**178-3586**	1	LOCK	
Y	9	1	**319-6491**	1	SENSOR GP-SPEED (TRACK, LH)	210
Y	9A	2	**319-6491**	1	SENSOR GP-SPEED (TRACK, RH)	210
	10	2	**204-2281**	2	STRAP-TIE	
	11	2	**206-2423**	2	SADDLE	
	12	2	**218-4935**	1	SUPPRESSOR-ARC	
	13	2	**220-0229**	1	ALARM AS (BACKUP)	
D		2	**5P-5623**		WIRE-ELECTRICAL (16-GA, BLACK) (0.4-M EACH)	
		2	**102-8802**	1	KIT-RECEPTACLE (2-PIN)	
					(INCLUDES RECEPTACLE AS & WEDGE)	
		2	**186-3735**	2	PIN-CONNECTOR (16-GA TO 18-GA)	
BE		2	**9X-1813**		SLEEVE (31-CM)	
	14	1	**261-0420**	1	SENSOR GP-PRESSURE (HYDROSTATIC DRIVE)	
C	15	1	**315-5846**	1	HARNESS AS-CHASSIS	
	16	1	**298-5802**	1	CLAMP AS	
	18	2	**204-8000**	3	MOUNT (TIE WRAP)	
	19	2	**207-5370**	1	CLIP	
	20	1	**3J-1907**	1	SEAL-O-RING	
	21	2	**4D-7388**	1	CLIP	
C	22	1,2	**4P-7429**	2	CLIP	
	23	1,2	**4P-7581**	9	CLIP	
	24	1,2	**4P-8134**	9	CLIP	
M	25	2	**5C-7261**	2	NUT (M8X1.25-THD)	
	26	2	**5P-4116**	6	WASHER-HARD (8.8X20.5X2-MM THK)	
	27	1	**5P-6629**	1	GROMMET	
	29	2	**7C-4354**	2	CLIP	
	31	1	**8M-2773**	5	CLIP	
M	32	1,2	**8T-0267**	4	BOLT-SOCKET HEAD (M6X1X12-MM)	
	33	1,2	**8T-4121**	27	WASHER-HARD (11X21X2.5-MM THK)	
M	34	1,2	**8T-4133**	2	NUT (M10X1.5-THD)	
M	35	1,2	**8T-4137**	16	BOLT (M10X1.5X20-MM)	
M	37	2	**8T-4179**	1	BOLT (M12X1.75X20-MM)	
M	39	2	**8T-4189**	2	BOLT (M8X1.25X20-MM)	
M	40	1,2	**8T-4191**	5	BOLT (M10X1.5X16-MM)	
M	41	2	**8T-4195**	1	BOLT (M10X1.5X30-MM)	
M	42	2	**8T-4200**	2	BOLT (M8X1.25X16-MM)	
	43	2	**8T-4223**	1	WASHER-HARD (13.5X25.5X3-MM THK)	
M	45	2	**8T-6466**	1	BOLT (M10X1.5X60-MM)	
	46	1,2	**9M-8406**	2	CLIP	
	47	2	**9W-1991**	1	SPACER (10.7X17.1X40-MM THK)	

242-7490 **WIRING GP-CHASSIS** *(contd.)* **i03587187**

NOTE	REF NO	GRAPHIC REF	PART NUMBER	QTY	PART NAME 1 2 3 4 5 6 (PRODUCT LEVEL)	SEE PAGE
	48	1	**9X-7373**	1	GROMMET	
	49	1	**5P-9085**	2	CLIP	
M	50	2	**197-7481**	1	STUD (M10X1.5X18-MM, M10X1.5X57-MM)	
C	51	1	**315-5850**	1	HARNESS AS-SWITCH (TILT KICKOUT)	
C	52	1	**315-5848**	1	HARNESS AS-SWITCH (LIFT KICKOUT)	
C	53	1	**6S-1066**	1	GROMMET	
C	54	1	**3D-5279**	1	GROMMET	
	55	2	**193-3973**	1	STRAP-CABLE	
	56	2	**8T-2525**	1	GROMMET	
	57	2	**5P-7469**	1	CLIP (TAB)	
	58	2	**5P-7468**	1	CLIP (SLOT)	

B-USE AS REQUIRED
C-CHANGE FROM PREVIOUS TYPE
D-ORDER BY THE METER
E-ORDER BY THE CENTIMETER
M-METRIC PART
Y-SEPARATE ILLUSTRATION

242-7490 **WIRING GP-CHASSIS** *(contd.)* **i03587187**

REFER TO ALL ILLUSTRATIONS OF
THIS GROUP FOR AUXILIARY VIEWS

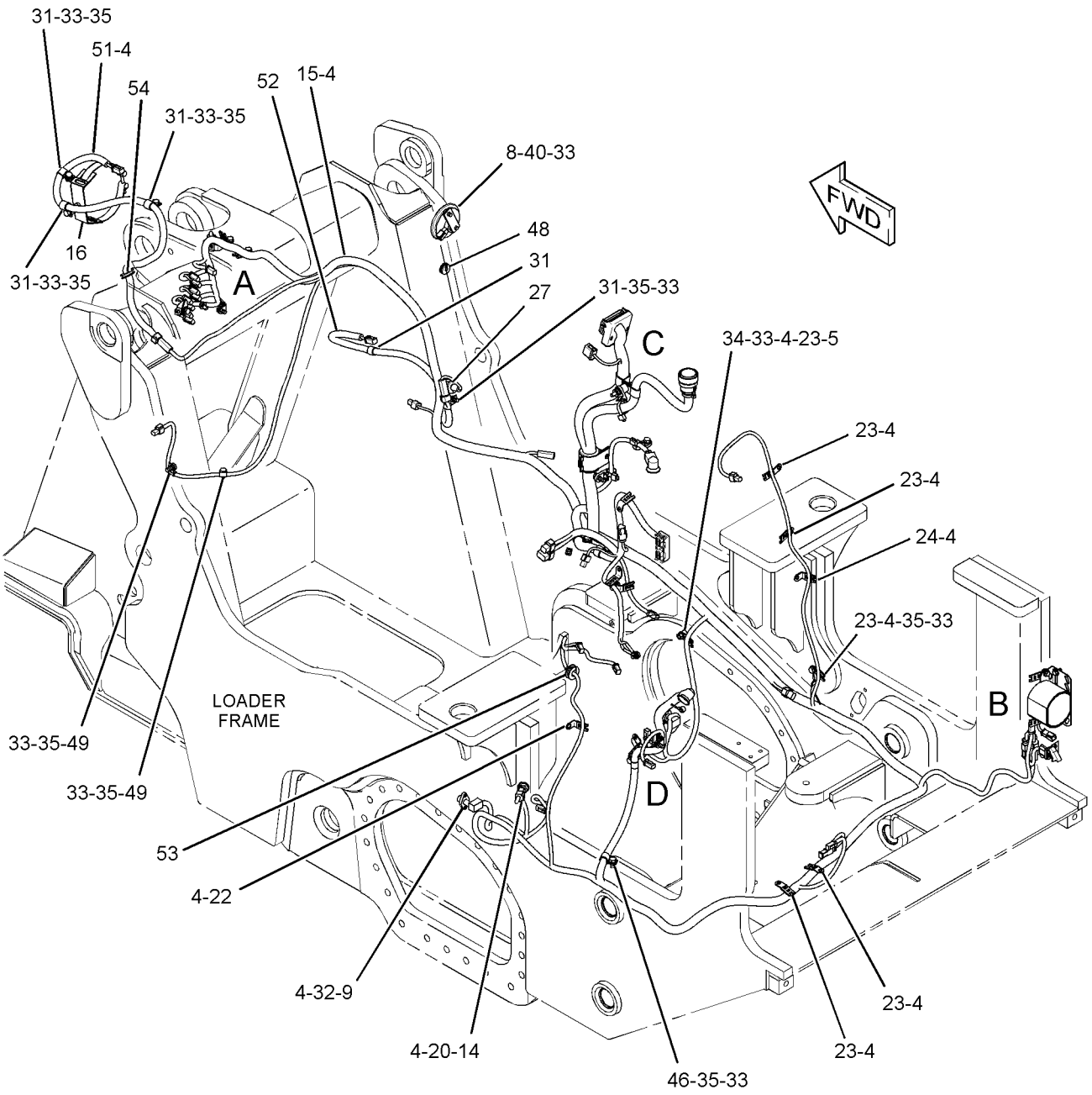

GRAPHIC #1 g01523223

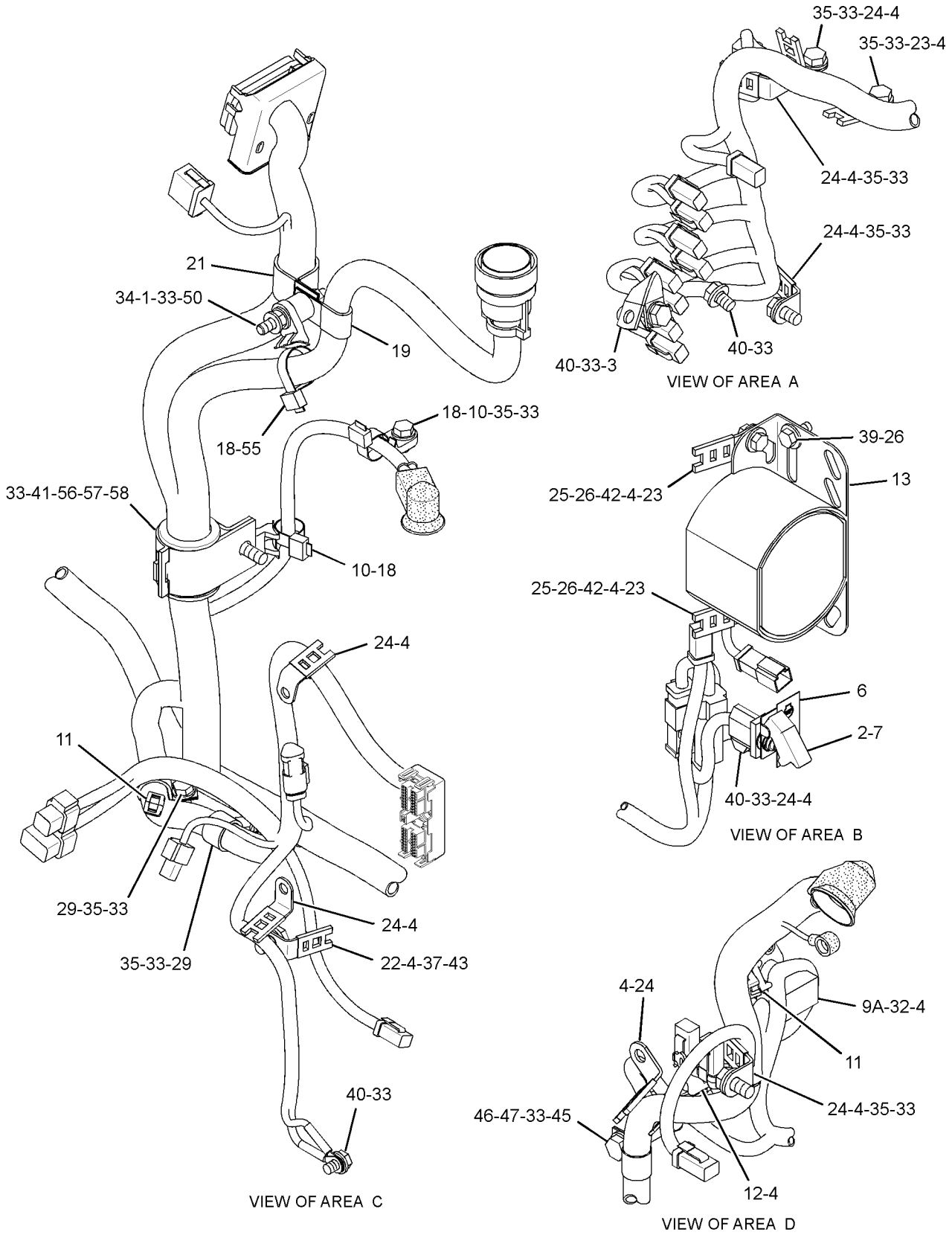

GRAPHIC #2 **<END>** g01524049

280-9449 WIRING GP-CONTROL

S/N: LBP1-UP
PART OF 268-9350 CONTROL GP-DIRECTION & SPEED
AN ATTACHMENT

SMCS-1408 **i03540050**

NOTE	REF NO	GRAPHIC REF	PART NUMBER	QTY	PART NAME 1 2 3 4 5 6 (PRODUCT LEVEL)	SEE PAGE
	1	1	**7K-1181**	6	STRAP-CABLE	
	2	1	**9G-7101**	1	SPACER (10.5X20X30-MM THK)	
	3	1	**116-0118**	1	CLIP	
M	4	1	**162-6556**	1	LOCKNUT (M6X1-THD)	
	5	1	**183-4274**	1	BRACKET	
	6	1	**189-0135**	1	SWITCH AS-LIMIT (HYDRAULIC LOCKOUT)	
		1	**3E-3371**	1	WEDGE-RECEPTACLE LOCK (3-PIN)	
		1	**186-3735**	3	PIN-CONNECTOR (16-GA TO 18-GA)	
		1	**102-8803**	1	KIT-RECEPTACLE (3-PIN)	
					(INCLUDES RECEPTACLE AS & WEDGE)	
Y	7	1	**247-0741**	1	VALVE GP-PILOT (HYDROSTATIC DRIVE)	500
	8	1	**263-1491**	1	SWITCH AS-ROCKER (WORK MODE)	
	9	1	**283-6947**	1	SWITCH AS-PUSH BUTTON (HORN)	
		1	**6F-0253**	1	LOCKWASHER	
		1	**172-3511**	1	NUT (5/8-24-THD)	
		1	**9X-3402**	3	SOCKET-CONNECTOR (16-GA TO 18-GA)	
		1	**155-2260**	1	KIT-CONNECTING PLUG (3-PIN)	
					(INCLUDES PLUG AS, WEDGE, & INTERFACE SEAL)	
	10	1	**325-7500**	1	HARNESS AS-CONTROL	
M	11	1	**112-6646**	4	LOCKNUT (M6X1-THD)	
	12	1	**198-4775**	1	WASHER-HARD (6.6X15X6-MM THK)	
	13	1	**1P-7326**	2	WASHER (4.32X9.52X1.52-MM THK)	
	14	1	**4D-9517**	1	CLIP	
	15	1	**6D-3479**	2	CLIP	
M	16	1	**6V-9505**	2	SCREW-MACHINE (M3X0.5X25-MM)	
	17	1	**9X-2026**	1	WASHER (6.5X17X1-MM THK)	

M-METRIC PART
Y-SEPARATE ILLUSTRATION

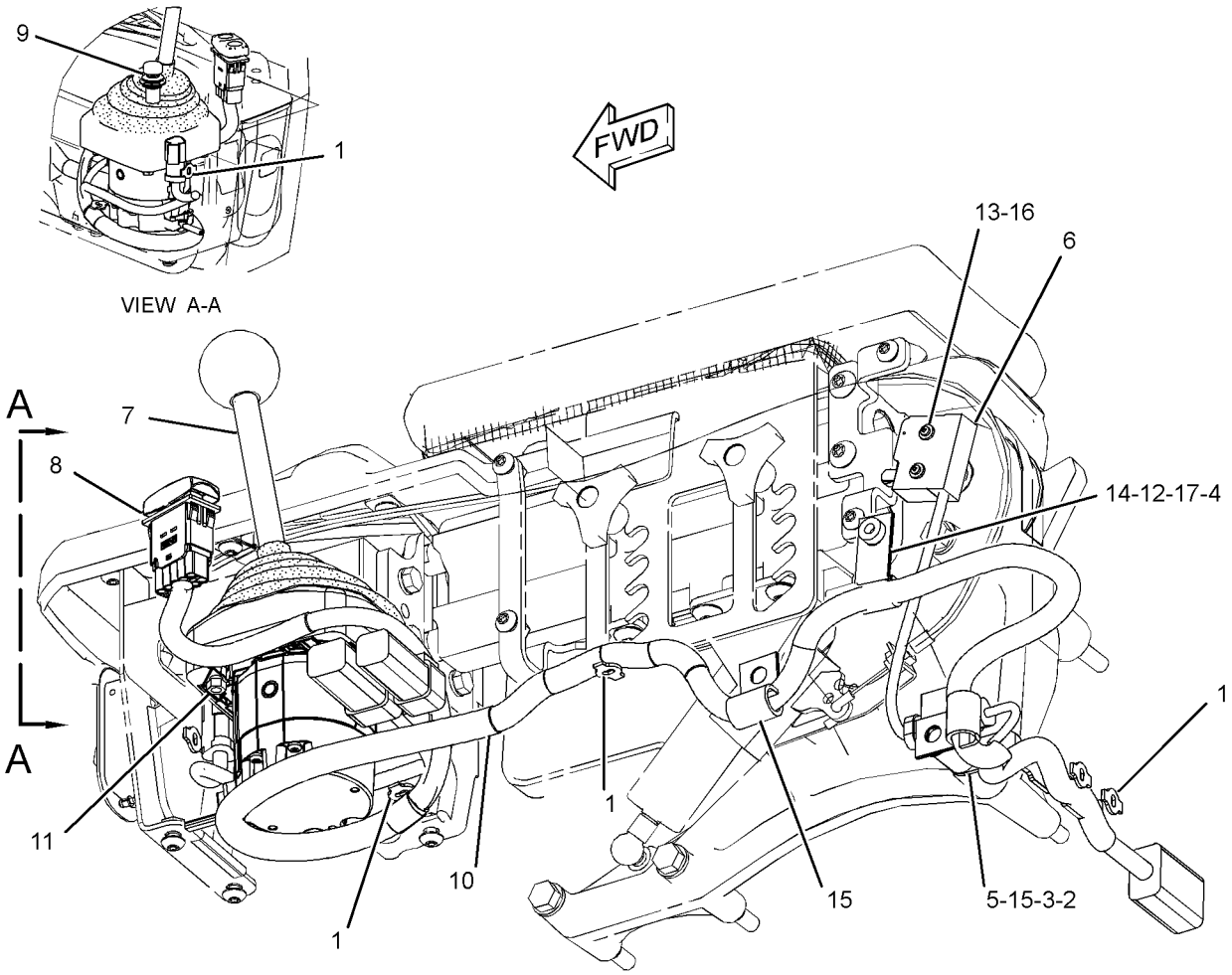

GRAPHIC #1 **<END>** g01534498

280-9675 WIRING GP-CONTROL—MULTIPURPOSE BUCKET

S/N: LBP1-UP
PART OF 280-9450 CONTROL & MTG GP-JOYSTICK
AN ATTACHMENT

SMCS-1408 **i02667011**

NOTE	REF NO	GRAPHIC REF	PART NUMBER	QTY	PART NAME 1 2 3 4 5 6 (PRODUCT LEVEL)	SEE PAGE
	1	1	**7K-1181**	9	STRAP-CABLE	
Y	2	1	**259-5673**	1	CONTROL GP-JOYSTICK (MULTIPURPOSE BUCKET)	584
	3	1	**297-9525**	1	HARNESS AS-SENSOR	
		1	**230-4010**	1	RECEPTACLE AS-CONNECTOR (12-PIN)	
		1	**230-5011**	2	RECEPTACLE AS-CONNECTOR (6-PIN)	
		1	**102-8804**	2	KIT-RECEPTACLE (4-PIN)	
					(EACH INCLUDES RECEPTACLE AS & WEDGE)	
		1	**230-4009**	1	PLUG AS-CONNECTOR (12-PIN)	
		1	**230-5010**	1	PLUG AS-CONNECTOR (6-PIN)	
		1	**155-2271**	2	KIT-CONNECTING PLUG (4-PIN)	
					(EACH INCLUDES PLUG AS, WEDGE, & INTERFACE SEAL)	
M	4	1	**112-6646**	4	LOCKNUT (M6X1-THD)	
	5	1	**4P-7581**	2	CLIP	

M-METRIC PART
Y-SEPARATE ILLUSTRATION

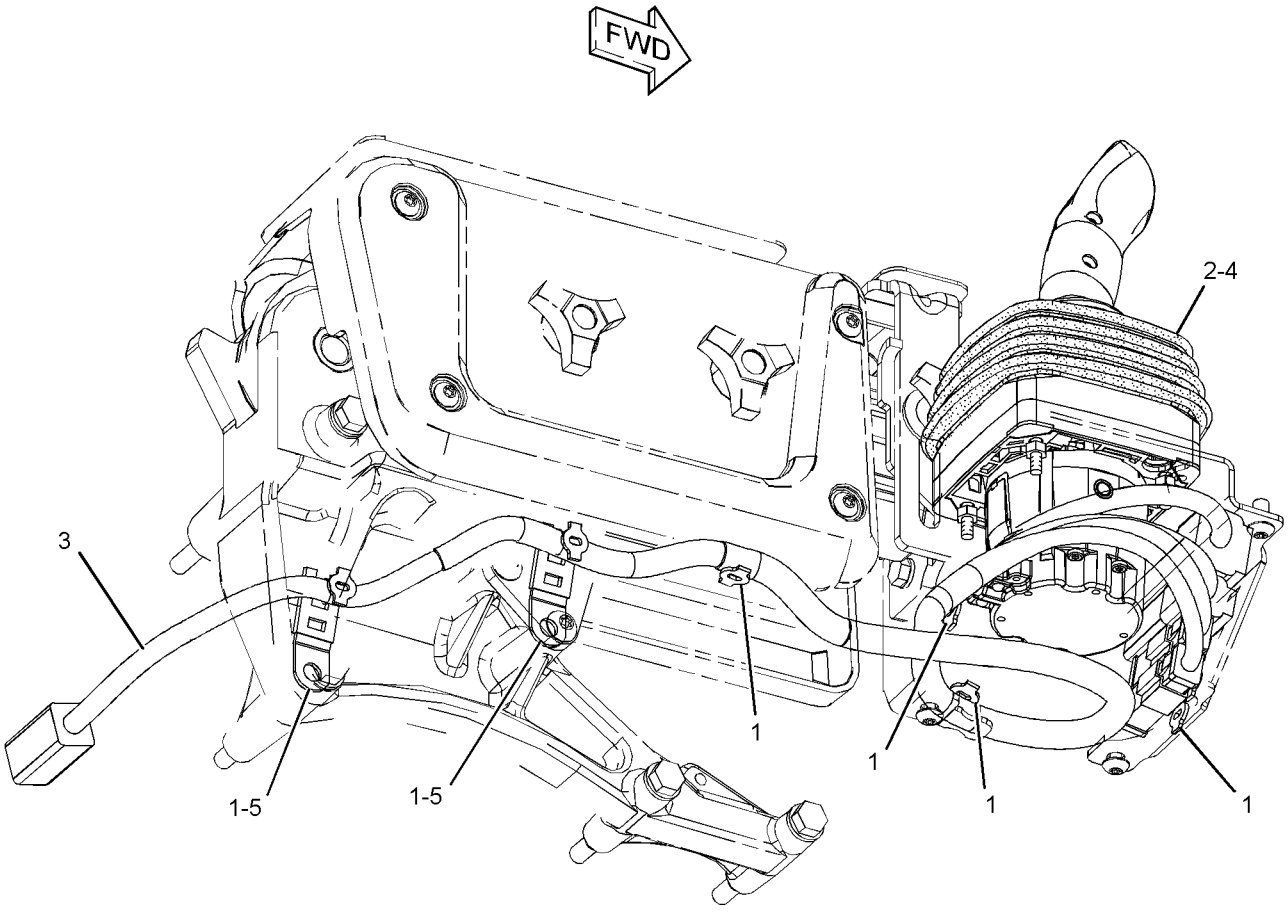

GRAPHIC #1 **<END>** g01342590

282-6699 WIRING GP-CONTROL–JOYSTICK

S/N: LBP1-UP

PART OF 282-6698 CONTROL & MTG GP-JOYSTICK

AN ATTACHMENT

SMCS-1408 **i02665139**

NOTE	REF NO	GRAPHIC REF	PART NUMBER	QTY	PART NAME 1 2 3 4 5 6 (PRODUCT LEVEL)	SEE PAGE
	1	1	**7K-1181**	9	STRAP-CABLE	
Y	2	1	*282-3145*	1	CONTROL GP-JOYSTICK (BUCKET)	585
	3	1	**297-9525**	1	HARNESS AS-SENSOR	
		1	**102-8804**	2	KIT-RECEPTACLE (4-PIN)	
					(EACH INCLUDES RECEPTACLE AS & WEDGE)	
		1	**155-2271**	2	KIT-CONNECTING PLUG (4-PIN)	
					(EACH INCLUDES PLUG AS, WEDGE, & INTERFACE SEAL)	
		1	**230-4009**	1	PLUG AS-CONNECTOR (12-PIN)	
		1	**230-5010**	1	PLUG AS-CONNECTOR (6-PIN)	
		1	**230-4010**	1	RECEPTACLE AS-CONNECTOR (12-PIN)	
		1	**230-5011**	2	RECEPTACLE AS-CONNECTOR (6-PIN)	
M	4	1	**112-6646**	4	LOCKNUT (M6X1-THD)	
	5	1	**4P-7581**	2	CLIP	

M-METRIC PART
Y-SEPARATE ILLUSTRATION

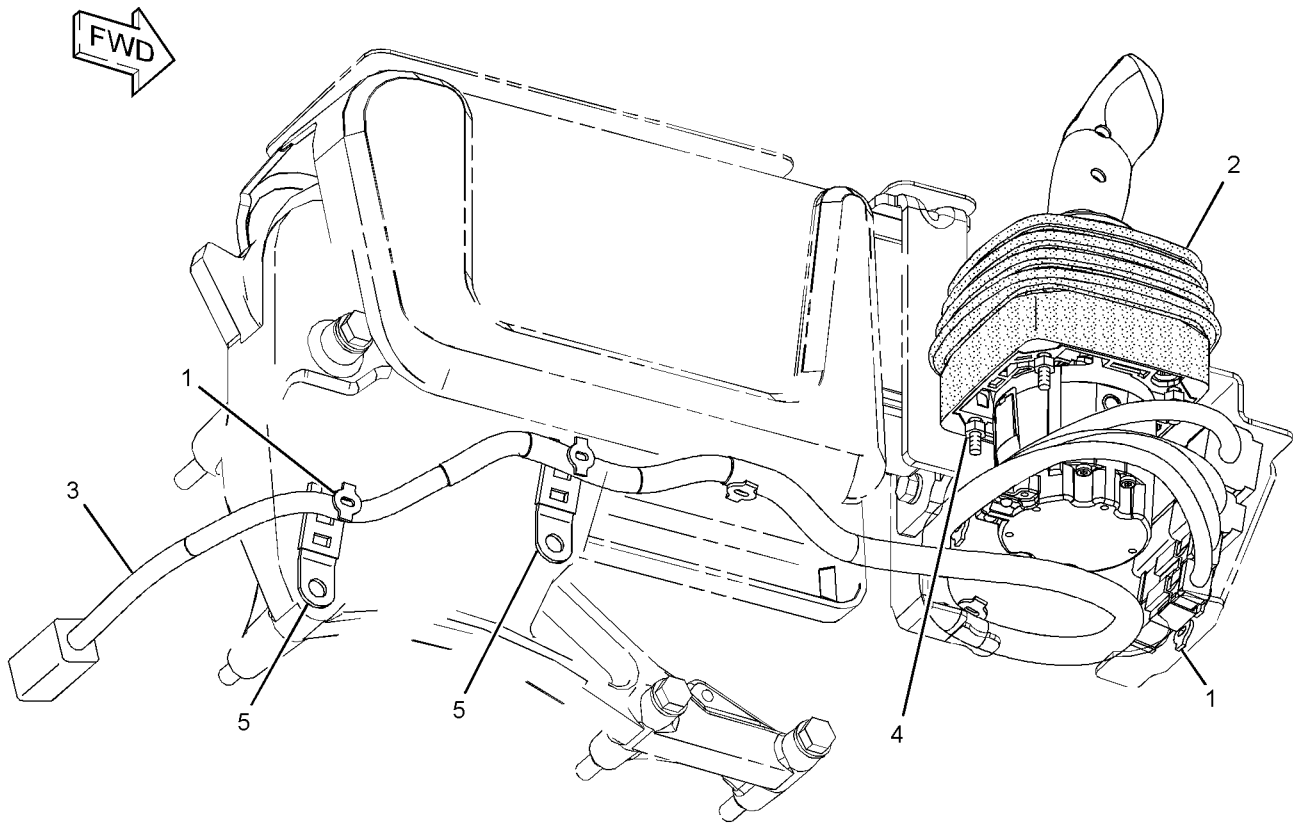

GRAPHIC #1 **<END>** g01341612

309-5906 WIRING GP-CONTROL–HYDROSTATIC DRIVE

S/N: LBP1-UP
PART OF 296-8319 CONTROL & MTG GP-ELHYD
AN ATTACHMENT
TYPE 1

SMCS-1408 **i03106724**

NOTE	REF NO	GRAPHIC REF	PART NUMBER	QTY	PART NAME 1 2 3 4 5 6 (PRODUCT LEVEL)	SEE PAGE
	1	1	**7K-1181**	8	STRAP-CABLE	
	2	1	**189-0135**	1	SWITCH AS-LIMIT (HYDRAULIC LOCKOUT)	
		1	**3E-3371**	1	WEDGE-RECEPTACLE LOCK (3-PIN)	
		1	**102-8803**	1	KIT-RECEPTACLE (3-PIN)	
					(INCLUDES RECEPTACLE AS & WEDGE)	
		1	**186-3735**	3	PIN-CONNECTOR (16-GA TO 18-GA)	
M	3	1	**112-6646**	4	LOCKNUT (M6X1-THD)	
	4	1	**1P-7326**	2	WASHER (4.32X9.52X1.52-MM THK)	
	5	1	**298-1292**	1	HARNESS AS-WIRING (JOYSTICK)	
Y	6	1	*304-4162*	1	CONTROL GP-JOYSTICK (HYDROSTATIC DRIVE)	588
	7	1	**4P-7581**	1	CLIP	
	8	1	**6D-3479**	1	CLIP	
M	9	1	**6V-9505**	2	SCREW-MACHINE (M3X0.5X25-MM)	

M-METRIC PART
Y-SEPARATE ILLUSTRATION

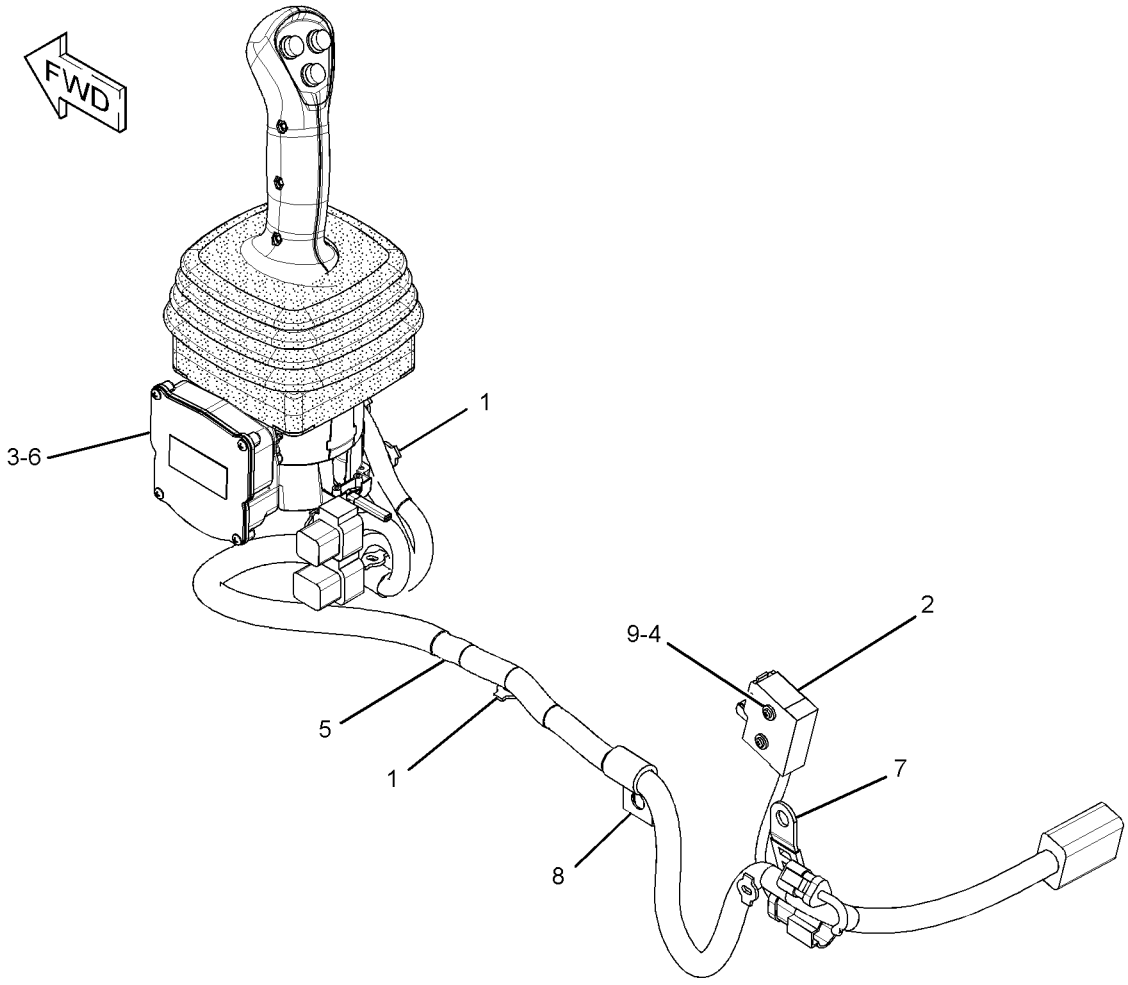

GRAPHIC #1 **<END>** g01470401

309-5906 WIRING GP-CONTROL—HYDROSTATIC DRIVE

S/N: LBP1-UP
PART OF 296-8319 CONTROL & MTG GP-ELHYD
AN ATTACHMENT
TYPE 2

SMCS-1408 **i03327980**

NOTE	REF NO	GRAPHIC REF	PART NUMBER	QTY	PART NAME 1 2 3 4 5 6 (PRODUCT LEVEL)	SEE PAGE
C	1	1	**7K-1181**	9	STRAP-CABLE	
C	2	1	**9G-7101**	1	SPACER (10.5X20X30-MM THK)	
C	3	1	**116-0118**	1	CLIP	
CM	4	1	**162-6556**	1	LOCKNUT (M6X1-THD)	
C	5	1	**183-4274**	1	BRACKET	
	6	1	**189-0135**	1	SWITCH AS-LIMIT (HYDRAULIC LOCKOUT)	
		1	**3E-3371**	1	WEDGE-RECEPTACLE LOCK (3-PIN)	
		1	**102-8803**	1	KIT-RECEPTACLE (3-PIN)	
					(INCLUDES RECEPTACLE AS & WEDGE)	
		1	**186-3735**	3	PIN-CONNECTOR (16-GA TO 18-GA)	
C	7	1	**325-7500**	1	HARNESS AS-CONTROL	
M	8	1	**112-6646**	4	LOCKNUT (M6X1-THD)	
C	9	1	**198-4775**	1	WASHER-HARD (6.6X15X6-MM THK)	
	10	1	**1P-7326**	2	WASHER (4.32X9.52X1.52-MM THK)	
Y	11	1	*304-4162*	1	CONTROL GP-JOYSTICK (HYDROSTATIC DRIVE)	588
C	12	1	**4D-9517**	1	CLIP	
C	13	1	**6D-3479**	2	CLIP	
M	14	1	**6V-9505**	2	SCREW-MACHINE (M3X0.5X25-MM)	
C	15	1	**9X-2026**	1	WASHER (6.5X17X1-MM THK)	

C-CHANGE FROM PREVIOUS TYPE
M-METRIC PART
Y-SEPARATE ILLUSTRATION

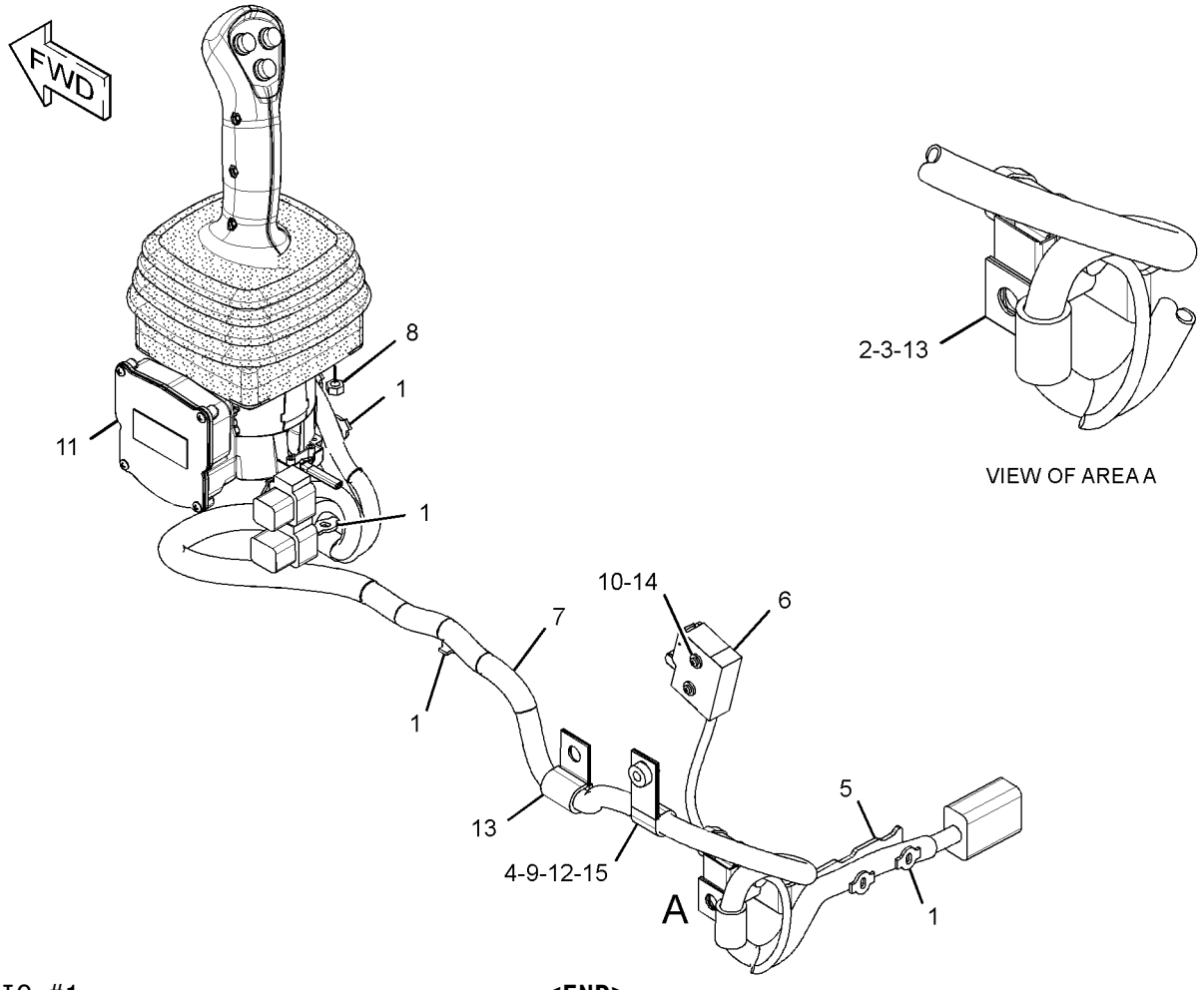

GRAPHIC #1 **<END>** g01761213

242-7491 WIRING GP-ELECTRIC STARTING

S/N: LBP1-699

PART OF 240-6225 CHASSIS AR

SMCS-1408, 1453 **i03587188**

NOTE	REF NO	GRAPHIC REF	PART NUMBER	QTY	PART NAME 1 2 3 4 5 6 (PRODUCT LEVEL)	SEE PAGE
	1	1	**2G-8767**	6	WASHER (10.5X60X3-MM THK)	
	2	1	**6G-2256**	3	CLAMP	
	3	1	**6G-2263**	3	SPACER (10.5X19X28.5-MM THK)	
	4	1	**7K-1181**	2	STRAP-CABLE	
Y	5	1	**7N-0718**	1	SWITCH GP-DISCONNECT (BATTERY)	218
	6	1	**306-6687**	1	STRAP AS	
	7	1	**127-5447**	2	SPACER (10.5X20X12-MM THK)	
	8	1	**149-1964**	1	CABLE AS	
		1	**1S-7252**	1	TERMINAL-CABLE (00-GA, 3/8-IN BOLT)	
E		1	**5P-0747**		CABLE (00-GA, BLACK) (53-CM)	
		1	**7N-5274**	1	COVER-TERMINAL (BLACK)	
		1	**3S-6050**	1	TERMINAL AS-BATTERY (NEGATIVE)	
		1	**1M-6119**	1	BOLT (5/16-18X1.375-IN)	
		1	**1M-6120**	1	NUT (5/16-18-THD)	
		1	**037-5197**	1	BOOT	
M	9	1	**176-9237**	1	STUD (M10X1.5X18-MM, M10X1.5X37-MM)	
	10	1	**206-2423**	1	SADDLE	
	11	1	**267-7282**	1	KNOB	
	12	1	**315-3426**	1	PLATE AS	
	13	1	**283-8289**	1	CABLE AS	
		1	**1S-7252**	2	TERMINAL-CABLE (00-GA, 3/8-IN BOLT)	
E		1	**5P-0747**		CABLE (00-GA, BLACK) (23-CM)	
	14	1	**286-0034**	1	BRACKET AS	
	15	1	**296-6476**	1	CABLE AS	
E		1	**5P-0761**		CABLE (00-GA, RED) (33-CM)	
		1	**7N-5274**	1	COVER-TERMINAL (BLACK)	
		1	**3S-6050**	1	TERMINAL AS-BATTERY (NEGATIVE)	
		1	**1M-6119**	1	BOLT (5/16-18X1.375-IN)	
		1	**1M-6120**	1	NUT (5/16-18-THD)	
		1	*290-1219*	1	TERMINAL AS-BATTERY (POSITIVE)	
		1	**1M-6119**	1	BOLT (5/16-18X1.375-IN)	
		1	**1M-6120**	1	NUT (5/16-18-THD)	
		1	**290-2077**	1	COVER-TERMINAL (RED)	
	16	1	**297-2561**	1	BRACKET AS	
	17	1	**302-8175**	1	HOLD DOWN AS	
	18	1	**302-8176**	1	HOLD DOWN AS	
	19	1	**302-8180**	1	CABLE AS	
E		1	**5P-0761**		CABLE (00-GA, RED) (33-CM)	
		1	**1S-7251**	1	TERMINAL-CABLE (00-GA, 1/2-IN BOLT)	
		1	**8N-0869**	1	COVER-TERMINAL (RED)	
		1	**8N-1725**	1	COVER-TERMINAL (RED)	
		1	**3S-6049**	1	TERMINAL AS-BATTERY (POSITIVE)	
		1	**1M-6119**	1	BOLT (5/16-18X1.375-IN)	
		1	**1M-6120**	1	NUT (5/16-18-THD)	
	20	1	**302-8181**	1	CABLE AS	
E		1	**5P-0747**		CABLE (00-GA, BLACK) (71-CM)	
		1	**1S-7251**	2	TERMINAL-CABLE (00-GA, 1/2-IN BOLT)	
	21	1	**302-8182**	1	CABLE AS	
E		1	**5P-0761**		CABLE (00-GA, RED) (162-CM)	
		1	**1S-7251**	1	TERMINAL-CABLE (00-GA, 1/2-IN BOLT)	
		1	**8N-0869**	1	COVER-TERMINAL (RED)	
		1	**9X-9120**	1	BOOT (RED)	
		1	**9X-9825**	1	TERMINAL-CABLE (00-GA, 1/2-IN BOLT)	
	22	1	**302-8655**	2	ROD	
	23	1	**302-8656**	1	COVER AS-BATTERY	
		1	**7X-7729**	2	WASHER (11X25X3-MM THK)	

242-7491 **WIRING GP-ELECTRIC STARTING** *(contd.)* **i03587188**

NOTE	REF NO	GRAPHIC REF	PART NUMBER	QTY	PART NAME 1 2 3 4 5 6 (PRODUCT LEVEL)	SEE PAGE
	24	1	**198-4778**	8	WASHER-HARD (13.5X30X12-MM THK)	
	25	1	**204-2281**	3	STRAP-TIE	
	26	1	**204-8000**	3	MOUNT (TIE WRAP)	
M	27	1	**6V-7744**	2	LOCKNUT (M10X1.5-THD)	
	28	1	**7X-7729**	7	WASHER (11X25X3-MM THK)	
	29	1	**8T-4121**	7	WASHER-HARD (11X21X2.5-MM THK)	
M	30	1	**8T-4133**	2	NUT (M10X1.5-THD)	
M	31	1	**8T-4136**	1	BOLT (M10X1.5X25-MM)	
M	32	1	**8T-4137**	6	BOLT (M10X1.5X20-MM)	
M	33	1	**8T-4183**	4	BOLT (M12X1.75X40-MM)	
M	34	1	**8T-4185**	3	BOLT (M10X1.5X50-MM)	
M	35	1	**8T-4956**	4	BOLT (M12X1.75X35-MM)	
Y	36	1	**9W-0742**	1	BLOCK GP-JUNCTION (BATTERY)	170
	37	1	**9X-3404**	2	BATTERY (12-VOLT, MAINTENANCE FREE, WET)	

E-ORDER BY THE CENTIMETER
M-METRIC PART
Y-SEPARATE ILLUSTRATION

242-7491 **WIRING GP-ELECTRIC STARTING** *(contd.)* **i03587188**

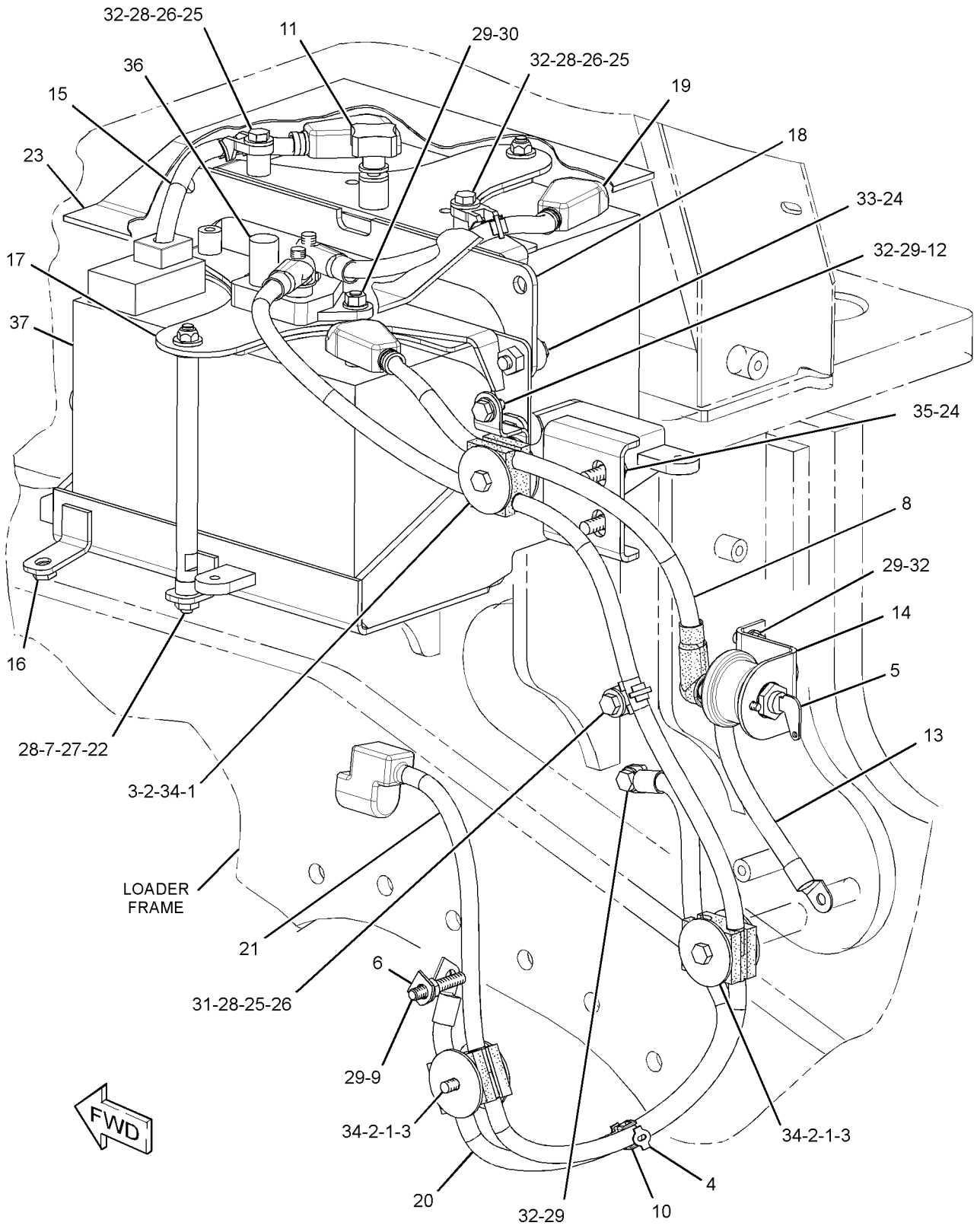

GRAPHIC #1 **<END>** g01446966

ELECTRICAL AND STARTING SYSTEM

242-7491 WIRING GP-ELECTRIC STARTING

S/N: LBP700-UP

PART OF 240-6225 CHASSIS AR

SMCS-1408, 1453 **i03587189**

NOTE	REF NO	GRAPHIC REF	PART NUMBER	QTY	PART NAME 1 2 3 4 5 6 (PRODUCT LEVEL)	SEE PAGE
	1	1	**2G-8767**	6	WASHER (10.5X60X3-MM THK)	
	2	1	**6G-2256**	3	CLAMP	
	3	1	**6G-2263**	3	SPACER (10.5X19X28.5-MM THK)	
	4	1	**7K-1181**	2	STRAP-CABLE	
Y	5	1	**7N-0718**	1	SWITCH GP-DISCONNECT (BATTERY)	218
	6	1	**306-6687**	1	STRAP AS	
	7	1	**127-5447**	2	SPACER (10.5X20X12-MM THK)	
	8	1	**149-1964**	1	CABLE AS	
		1	**1S-7252**	1	TERMINAL-CABLE (00-GA, 3/8-IN BOLT)	
E		1	**5P-0747**		CABLE (00-GA, BLACK) (53-CM)	
		1	**7N-5274**	1	COVER-TERMINAL (BLACK)	
		1	**3S-6050**	1	TERMINAL AS-BATTERY (NEGATIVE)	
		1	**1M-6119**	1	BOLT (5/16-18X1.375-IN)	
		1	**1M-6120**	1	NUT (5/16-18-THD)	
		1	**037-5197**	1	BOOT	
M	9	1	**176-9237**	1	STUD (M10X1.5X18-MM, M10X1.5X37-MM)	
	10	1	**206-2423**	1	SADDLE	
	11	1	**267-7282**	1	KNOB	
	12	1	**315-3426**	1	PLATE AS	
	13	1	**283-8289**	1	CABLE AS	
		1	**1S-7252**	2	TERMINAL-CABLE (00-GA, 3/8-IN BOLT)	
E		1	**5P-0747**		CABLE (00-GA, BLACK) (23-CM)	
	14	1	**286-0034**	1	BRACKET AS	
	15	1	**296-6476**	1	CABLE AS	
E		1	**5P-0761**		CABLE (00-GA, RED) (33-CM)	
		1	**7N-5274**	1	COVER-TERMINAL (BLACK)	
		1	**3S-6050**	1	TERMINAL AS-BATTERY (NEGATIVE)	
		1	**1M-6119**	1	BOLT (5/16-18X1.375-IN)	
		1	**1M-6120**	1	NUT (5/16-18-THD)	
		1	*290-1219*	1	TERMINAL AS-BATTERY (POSITIVE)	
		1	**1M-6119**	1	BOLT (5/16-18X1.375-IN)	
		1	**1M-6120**	1	NUT (5/16-18-THD)	
		1	**290-2077**	1	COVER-TERMINAL (RED)	
C	16	1	**316-2199**	1	BRACKET AS	
C	17	1	**316-3219**	1	HOLD DOWN AS	
C	18	1	**316-3220**	1	HOLD DOWN AS	
	19	1	**302-8180**	1	CABLE AS	
E		1	**5P-0761**		CABLE (00-GA, RED) (33-CM)	
		1	**1S-7251**	1	TERMINAL-CABLE (00-GA, 1/2-IN BOLT)	
		1	**8N-0869**	1	COVER-TERMINAL (RED)	
		1	**8N-1725**	1	COVER-TERMINAL (RED)	
		1	**3S-6049**	1	TERMINAL AS-BATTERY (POSITIVE)	
		1	**1M-6119**	1	BOLT (5/16-18X1.375-IN)	
		1	**1M-6120**	1	NUT (5/16-18-THD)	
	20	1	**302-8181**	1	CABLE AS	
E		1	**5P-0747**		CABLE (00-GA, BLACK) (71-CM)	
		1	**1S-7251**	2	TERMINAL-CABLE (00-GA, 1/2-IN BOLT)	
	21	1	**302-8182**	1	CABLE AS	
E		1	**5P-0761**		CABLE (00-GA, RED) (162-CM)	
		1	**1S-7251**	1	TERMINAL-CABLE (00-GA, 1/2-IN BOLT)	
		1	**8N-0869**	1	COVER-TERMINAL (RED)	
		1	**9X-9120**	1	BOOT (RED)	
		1	**9X-9825**	1	TERMINAL-CABLE (00-GA, 1/2-IN BOLT)	
	22	1	**302-8655**	2	ROD	
	23	1	**302-8656**	1	COVER AS-BATTERY	
		1	**7X-7729**	2	WASHER (11X25X3-MM THK)	

242-7491 **WIRING GP-ELECTRIC STARTING** *(contd.)* **i03587189**

NOTE	REF NO	GRAPHIC REF	PART NUMBER	QTY	PART NAME 1 2 3 4 5 6 (PRODUCT LEVEL)	SEE PAGE
	24	1	**198-4778**	8	WASHER-HARD (13.5X30X12-MM THK)	
	25	1	**204-2281**	3	STRAP-TIE	
	26	1	**204-8000**	3	MOUNT (TIE WRAP)	
M	27	1	**6V-7744**	2	LOCKNUT (M10X1.5-THD)	
	28	1	**7X-7729**	7	WASHER (11X25X3-MM THK)	
	29	1	**8T-4121**	7	WASHER-HARD (11X21X2.5-MM THK)	
M	30	1	**8T-4133**	2	NUT (M10X1.5-THD)	
M	31	1	**8T-4136**	1	BOLT (M10X1.5X25-MM)	
M	32	1	**8T-4137**	6	BOLT (M10X1.5X20-MM)	
M	33	1	**8T-4183**	4	BOLT (M12X1.75X40-MM)	
M	34	1	**8T-4185**	3	BOLT (M10X1.5X50-MM)	
M	35	1	**8T-4956**	4	BOLT (M12X1.75X35-MM)	
Y	36	1	**9W-0742**	1	BLOCK GP-JUNCTION (BATTERY)	170
	37	1	**9X-3404**	2	BATTERY (12-VOLT, MAINTENANCE FREE, WET)	

C-CHANGE FROM PREVIOUS TYPE
E-ORDER BY THE CENTIMETER
M-METRIC PART
Y-SEPARATE ILLUSTRATION

242-7491 **WIRING GP-ELECTRIC STARTING** *(contd.)* **i03587189**

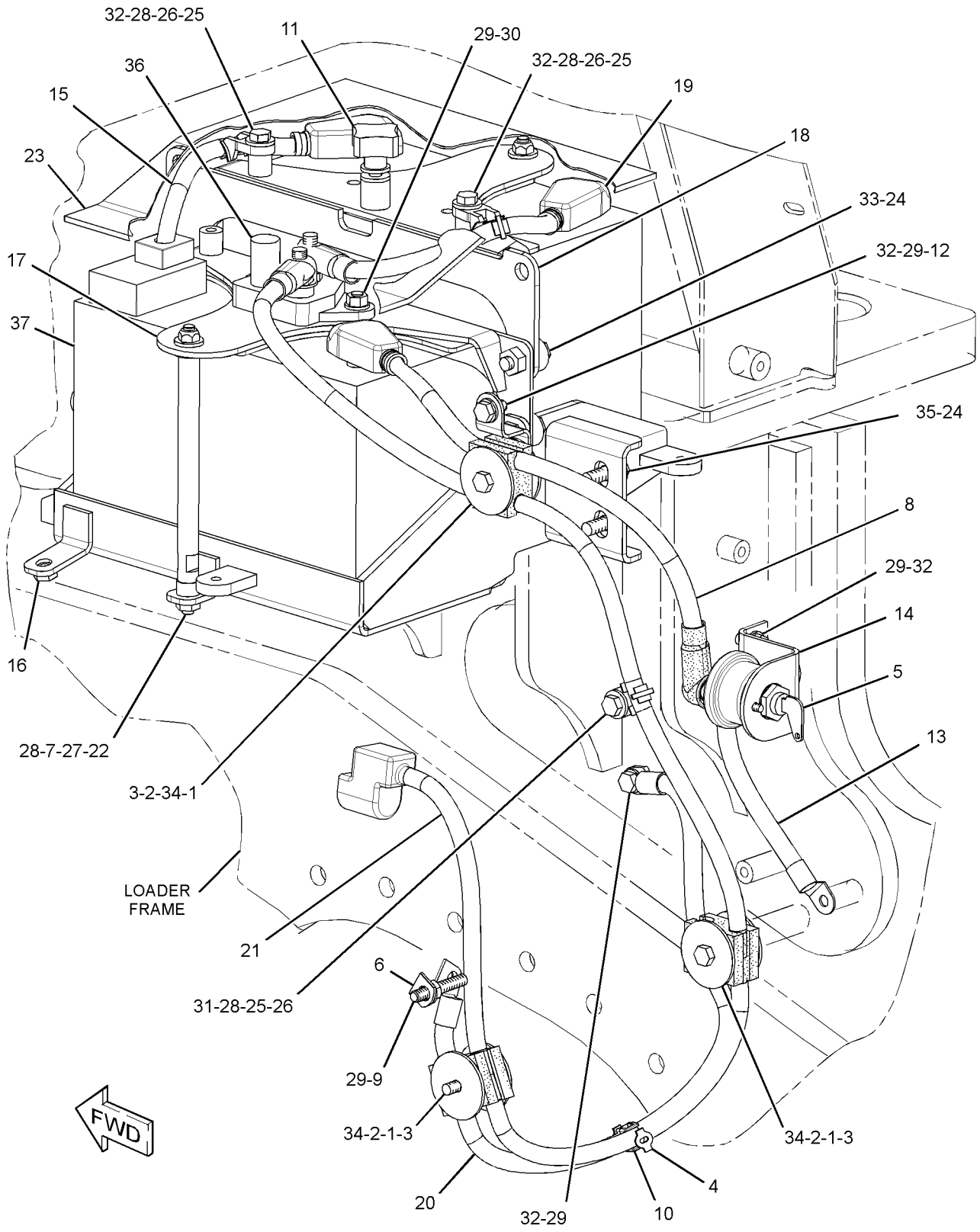

GRAPHIC #1 **<END>** g01481954

ELECTRICAL AND STARTING SYSTEM

279-3983 WIRING GP-ENGINE

S/N: LBP1-UP

PART OF 240-6225 CHASSIS AR

SMCS-1408 **i02758650**

NOTE	REF NO	GRAPHIC REF	PART NUMBER	QTY	PART NAME 1 2 3 4 5 6 (PRODUCT LEVEL)	SEE PAGE
	1	1	**7K-1181**	23	STRAP-CABLE	
	2	1	**141-3983**	1	SPACER (11X19X48-MM THK)	
	3	1	**206-2423**	2	SADDLE	
	4	1	**220-5946**	1	CLIP	
Y	5	1	**262-4806**	1	SENSOR GP-SPEED (ENGINE)	209
	6	1	**294-4429**	1	HARNESS AS-SOLENOID	
		1	**230-5009**	1	RECEPTACLE AS-CONNECTOR (4-PIN)	
		1	**155-2260**	1	KIT-CONNECTING PLUG (3-PIN)	
		1	**155-2270**	2	KIT-CONNECTING PLUG (2-PIN)	
					(EACH INCLUDES PLUG AS, WEDGE, & INTERFACE SEAL)	
	7	1	**294-4430**	1	HARNESS AS-ENGINE	
		1	**264-5425**	1	CAP AS-PROTECTION	
		1	**140-7684**	1	RECEPTACLE AS-CONNECTOR (3-PIN)	
		1	**230-4010**	1	RECEPTACLE AS-CONNECTOR (12-PIN)	
		1	**230-5011**	1	RECEPTACLE AS-CONNECTOR (6-PIN)	
		1	**9W-1951**	1	RECEPTACLE-CONNECTOR (9-PIN)	
		1	**155-2270**	6	KIT-CONNECTING PLUG (2-PIN)	
					(EACH INCLUDES PLUG AS, WEDGE, & INTERFACE SEAL)	
	8	1	**310-9997**	1	PLUG GP (DUST)	
		1	**155-2260**	1	KIT-CONNECTING PLUG (3-PIN)	
					(INCLUDES PLUG AS , WEDGE & INTERFACE SEAL)	
		1	**8T-8737**	2	PLUG-SEAL	
E		1	**125-7875**		TUBE-HEAT SHRINK (6-CM)	
		1	**2L-8076**	1	TERMINAL (14-GA TO 16-GA, NO. 10 SCREW)	
	9	1	**033-8248**	1	CLIP	
M	10	1	**095-0723**	8	SCREW (M3X0.5X10-MM)	
	11	1	**4P-7581**	2	CLIP	
	12	1	**4P-8134**	4	CLIP	
	13	1	**5P-4116**	1	WASHER-HARD (8.8X20.5X2-MM THK)	
	14	1	**5P-9297**	1	CLIP	
	15	1	**8T-1889**	1	CLIP (SLOT)	
	16	1	**8T-1890**	1	CLIP (TAB)	
	17	1	**8T-4121**	8	WASHER-HARD (11X21X2.5-MM THK)	
M	18	1	**8T-4133**	1	NUT (M10X1.5-THD)	
M	19	1	**8T-4136**	1	BOLT (M10X1.5X25-MM)	
M	20	1	**8T-4137**	5	BOLT (M10X1.5X20-MM)	
M	21	1	**8T-4195**	1	BOLT (M10X1.5X30-MM)	
M	22	1	**8T-6870**	1	BOLT (M8X1.25X70-MM)	

E-ORDER BY THE CENTIMETER
M-METRIC PART
Y-SEPARATE ILLUSTRATION

279-3983 **WIRING GP-ENGINE** *(contd.)* **i02758650**

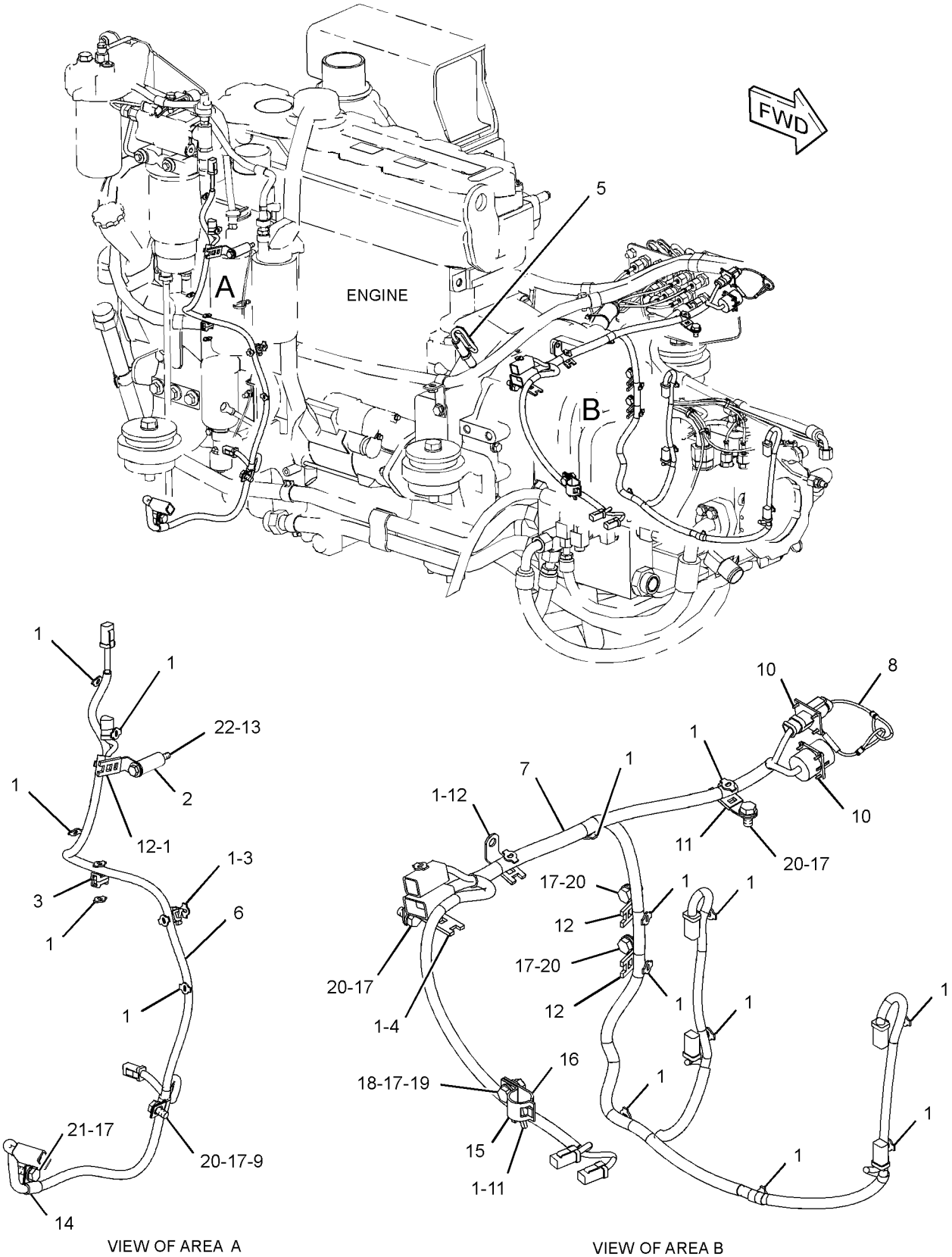

GRAPHIC #1 **<END>** g01424232

305-8977 WIRING GP-ENGINE

S/N: C6E1-UP

PART OF 242-1357 ENGINE AR-PRIMARY

SMCS-1408 **i02770482**

NOTE	REF NO	GRAPHIC REF	PART NUMBER	QTY	PART NAME 1 2 3 4 5 6 (PRODUCT LEVEL)	SEE PAGE
	1	1	**217-9039**	2	STRAP-CABLE	
	2	1	**278-5210**	1	BOLT	
	3	1	**293-1880**	1	BRACKET	
	4	1	**304-5166**	1	HARNESS AS-ENGINE	
	5	1	**304-5167**	1	HARNESS AS-ENGINE	
	6	1	**305-8978**	1	BRACKET	
	7	1	**305-8979**	1	BRACKET	
	8	1	**305-8980**	1	BRACKET	
	9	1	**311-2732**	4	TIE-CABLE	
	10	1	**311-2752**	1	RIVET	

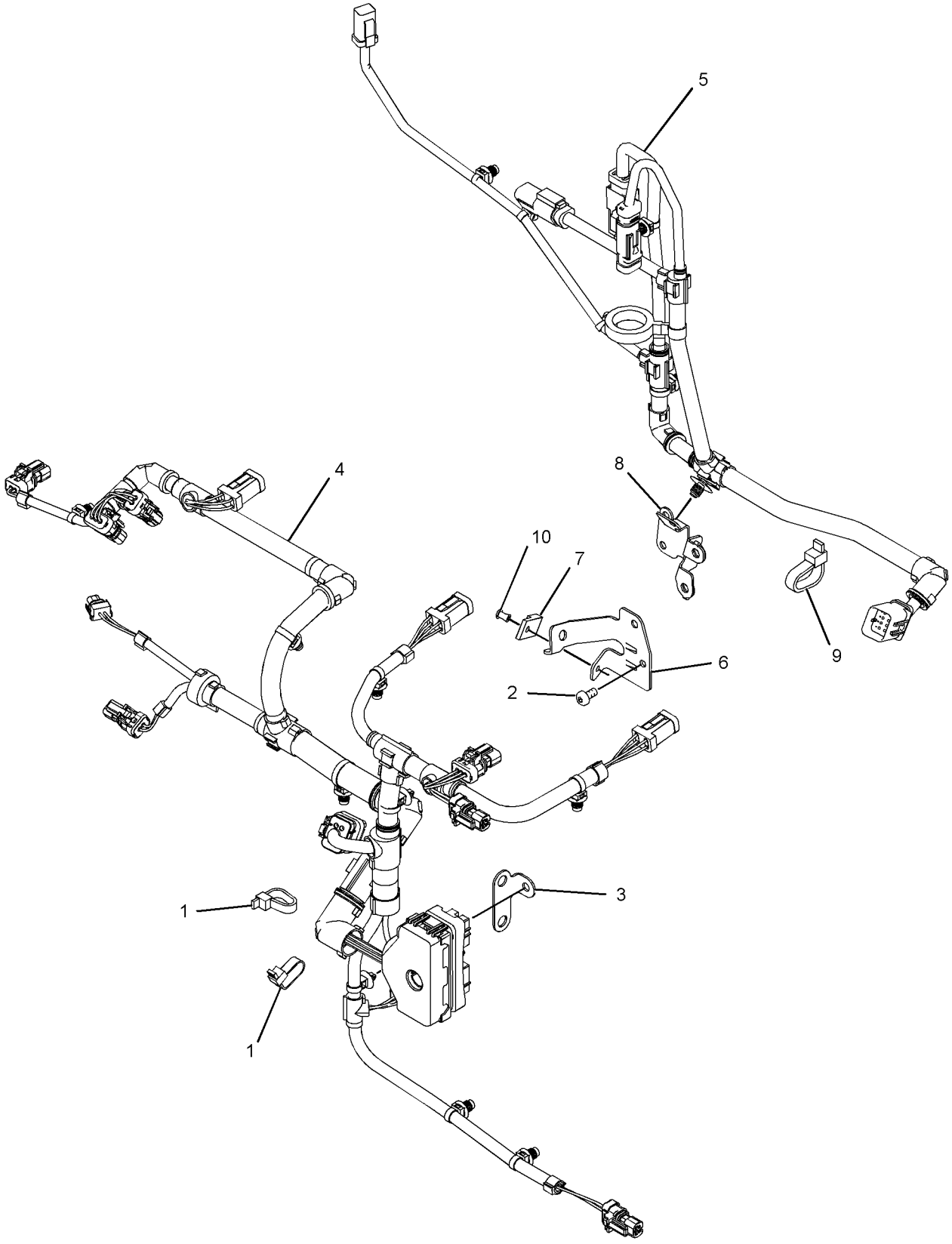

GRAPHIC #1 **<END>** g01456665

278-4439 ACTUATOR GP-PUMP—HYDROSTATIC DRIVE

S/N: LBP1-UP

PART OF 261-3629, 261-3630 PUMP GP-PISTON

SMCS-5078 **i02938823**

NOTE	REF NO	GRAPHIC REF	PART NUMBER	QTY	PART NAME 1 2 3 4 5 6 (PRODUCT LEVEL)	SEE PAGE
M	1	1	**8T-1158**	8	BOLT-SOCKET HEAD (M8X1.25X20-MM)	
	2	1	**278-4452**	1	KIT-CARTRIDGE (PUMP CONTROL VALVE)	
	3	1	**6V-8398**	1	SEAL-O-RING	
M	4	1	**161-7614**	1	NUT (M16X1.5-THD)	
	5	1	**119-7844**	2	SEAL-O-RING	
	6	1	**153-2163**	2	RING	
	7	1	**153-2160**	1	COVER	
	8	1	**153-2159**	1	COVER	
	9	1	**153-2162**	2	RING	

M-METRIC PART

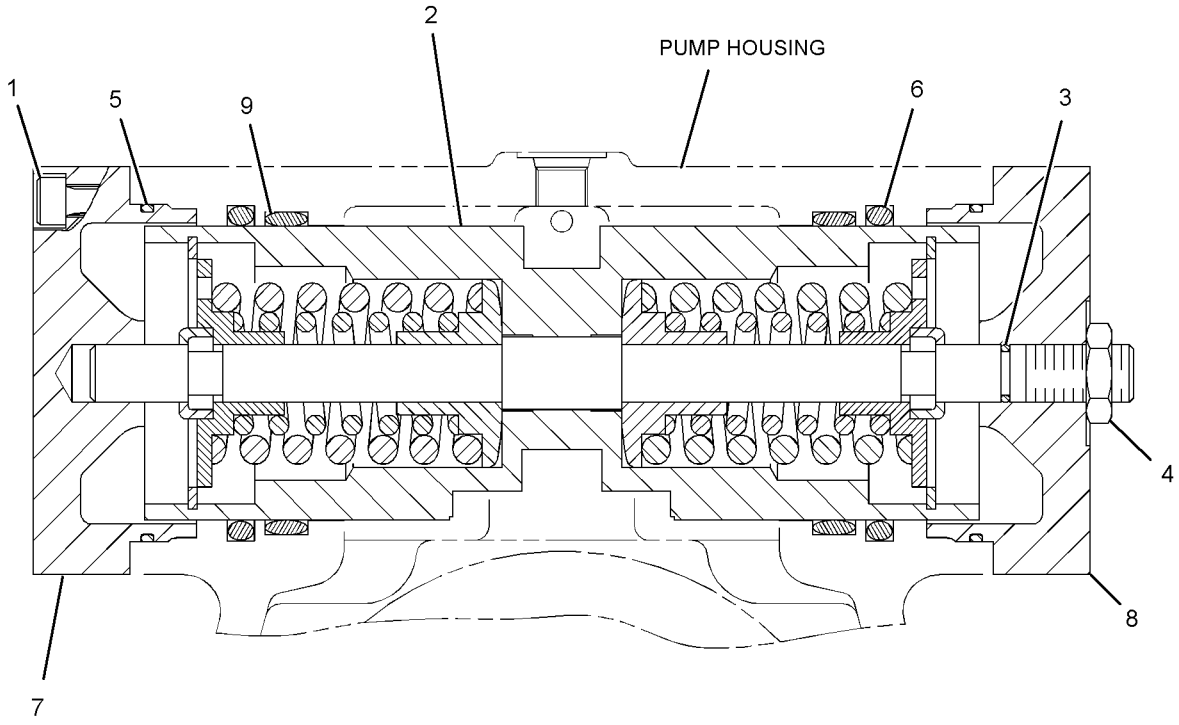

GRAPHIC #1 **<END>** g01303914

206-7255 COUPLING GP-PUMP

S/N: LBP1-UP

PART OF 240-6226 POWER TRAIN AR

SMCS-3108, 5062 **i02906445**

NOTE	REF NO	GRAPHIC REF	PART NUMBER	QTY	PART NAME 1 2 3 4 5 6 (PRODUCT LEVEL)	SEE PAGE
	1	1	**252-0235**	1	COUPLING GP-FLEXIBLE	
M	2	1	**190-2787**	4	BOLT-SOCKET HEAD (M16X2X60-MM)	

M-METRIC PART

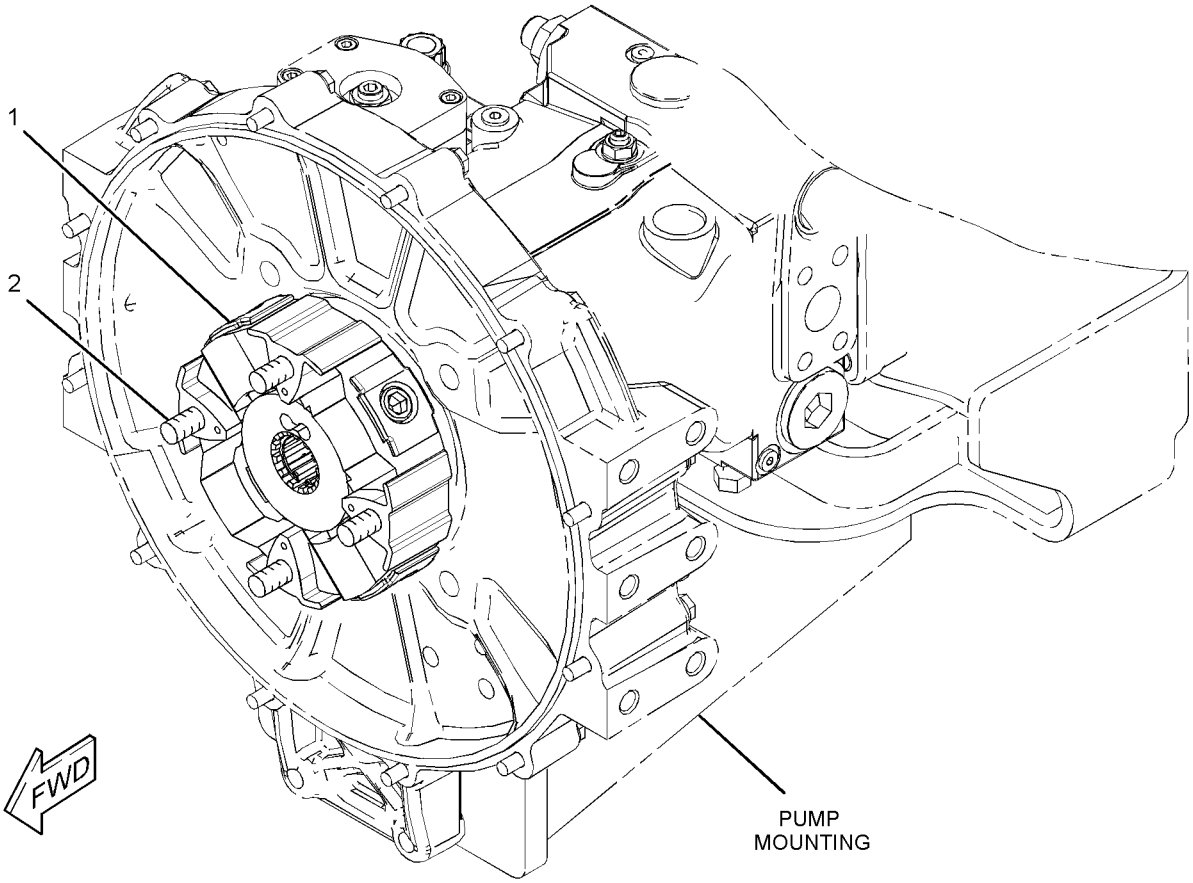

GRAPHIC #1 **<END>** g01456506

302-7298 FILTER GP-OIL—HYDRAULIC, HYDROSTATIC DRIVE

S/N: LBP1-UP

PART OF 271-8879 LINES GP-CHARGE PRESSURE

SMCS-3004, 3067 **i03095416**

NOTE	REF NO	GRAPHIC REF	PART NUMBER	QTY	PART NAME 1 2 3 4 5 6 (PRODUCT LEVEL)	SEE PAGE
	1	1	**1G-8878**	1	FILTER-OIL (ADVANCED EFFICIENCY)	
					—OR—	
		1	**102-2828**	1	FILTER-OIL (ULTRA HIGH EFFICIENCY)	
					—OR—	
		1	**156-0214**	1	FILTER-OIL (FIRE RESISTANT FLUID)	
	2	1	**6V-0852**	1	CAP-DUST	
	3	1	**6V-3965**	1	FITTING (QUICK DISCONNECT)	
	4	1	**227-6744**	1	SWITCH GP-PRESSURE	
	4A	1	**5F-9144**	1	SEAL-O-RING	
	4B	1	**3J-1907**	1	SEAL-O-RING	
		1	**102-8802**	1	KIT-RECEPTACLE (2-PIN)	
					(INCLUDES RECEPTACLE AS & WEDGE)	
		1	**186-3735**	2	PIN-CONNECTOR (16-GA TO 18-GA)	
E		1	**9X-1813**		SLEEVE (14-CM)	
	5	1	**3J-1907**	1	SEAL-O-RING	

E-ORDER BY THE CENTIMETER

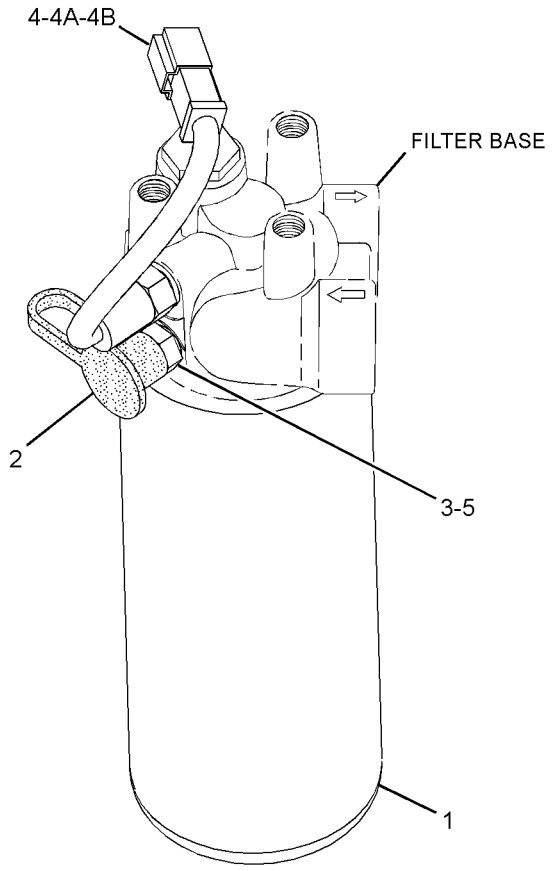

GRAPHIC #1 **<END>** g01415335

POWER TRAIN

242-7503 FINAL DRIVE & BRAKE GP

S/N: LBP1-UP

CANNOT BE USED WITH WIDE GUAGE EQUIPMENT & HEAVY DUTY FINAL DRIVE & BRAKE GP AN ATTACHMENT

SMCS-4050, 4056 **i03590841**

NOTE	REF NO	GRAPHIC REF	PART NUMBER	QTY	PART NAME 1 2 3 4 5 6 (PRODUCT LEVEL)	SEE PAGE
	1	1	**1B-3978**	12	CUP-BEARING (TAPERED ROLLER)	
	2	1	**1B-3980**	12	CONE-BEARING (TAPERED ROLLER)	
	3	1	**3S-9182**	2	PLUG-MAGNETIC (FINAL DRIVE OIL DRAIN)	
	4	1	**3W-5159**	6	PLATE-PARKING BRAKE	
	5	1	**3W-5436**	2	BUTTON-THRUST	
	6	1	**3W-5447**	2	COVER	
	7	1	**3W-5451**	2	PISTON	
	8	1	**3W-5928**	2	SEAL AS	
	9	1	**5F-0585**	4	CONE-BEARING (TAPERED ROLLER)	
	10	1	**5F-0589**	4	CUP-BEARING (TAPERED ROLLER)	
	11	1	**6V-0327**	4	CUP-BEARING (TAPERED ROLLER)	
	12	1	**6V-0328**	4	CONE-BEARING (TAPERED ROLLER)	
	13	1	**6V-0439**	2	PLUG-MAGNETIC (FINAL DRIVE, OIL FILL)	
	13A	1	**6V-0439**	2	PLUG-MAGNETIC (FINAL DRIVE, OIL CHECK)	
	13B	1	**6V-0439**	2	PLUG-MAGNETIC (FINAL DRIVE OIL DRAIN)	
	14	1	**7P-9571**	6	PLUG	
	15	1	**8G-1258**	2	PLATE-PRESSURE	
	16	1	**8G-1259**	2	RING-LOCK	
	17	1	**8G-4392**	4	SPRING-DISC	
	18	1	**8G-4565**	6	GEAR-PLANETARY (30-TEETH)	
	19	1	**8G-4568**	2	GEAR-RING (74-TEETH)	
	20	1	**8G-4569**	2	RING	
	21	1	*8T-6379*	2	SEAL AS	
					(EACH INCLUDES)	
		1	**7J-8956**	1	SEAL-O-RING	
		1	**8T-6378**	1	SEAL-RING	
	22	1	**9G-5343**	2	SEAL GP-DUO-CONE	
					(EACH INCLUDES)	
		1	**1M-9011**	2	RING-TORIC	
	23	1	**170-8714**	8	DISC-FRICTION	
	24	1	**239-1250**	1	CASE-FINAL DRIVE (RH)	
	25	1	**239-1251**	1	CASE-FINAL DRIVE (LH)	
	26	1	**239-1253**	2	HUB-RING GEAR	
	27	1	**239-1254**	2	PLATE-RETAINER	
	28	1	**239-4478**	2	HOUSING	
	29	1	**239-4481**	2	RETAINER	
	30	1	**243-1455**	6	SHAFT	
	31	1	**246-8424**	2	SPINDLE	
	32	1	**246-8425**	2	SHAFT-SUN GEAR	
	33	1	**246-8426**	2	HUB	
	34	1	**246-8428**	2	CARRIER AS	
					(EACH INCLUDES)	
M		1	**6V-3532**	6	BOLT (M20X2.5X60-MM)	
		1	**8T-3282**	6	WASHER-HARD (22X35X3.5-MM THK)	
	35	1	**246-8430**	2	GEAR (72-TEETH)	
	36	1	**246-8431**	2	GEAR-INPUT (13-TEETH)	
	37	1	**246-8432**	2	RING	
	38	1	**247-2574**	2	SHAFT	
	39	1	**2K-2939**	2	SEAL-O-RING	
	40	1	**2S-4078**	6	SEAL-O-RING	
	41	1	**5P-4920**	2	RACE & ROLLER AS	
	42	1	**5P-4921**	2	RACE-BEARING OUTER	
	43	1	**5P-8245**	18	WASHER-HARD (13.5X25.5X3-MM THK)	
	44	1	**5P-9147**	2	SEAL-O-RING	
	45	1	**5S-3676**	4	SEAL-O-RING	

242-7503 FINAL DRIVE & BRAKE GP *(contd.)* i03590841

NOTE	REF NO	GRAPHIC REF	PART NUMBER	QTY	PART NAME 1 2 3 4 5 6 (PRODUCT LEVEL)	SEE PAGE
	46	1	**6V-2452**	6	DOWEL	
M	47	1	**6V-3823**	18	BOLT (M12X1.75X60-MM)	
M	48	1	**6V-6317**	12	BOLT (M10X1.5X20-MM)	
	49	1	**7D-7519**	2	SEAL-O-RING	
M	50	1	**7X-2564**	8	BOLT (M20X2.5X90-MM)	
	51	1	**8T-4123**	8	WASHER (22X35X3.5-MM THK)	
M	52	1	**8T-4137**	12	BOLT (M10X1.5X20-MM)	
M	53	1	**8T-4140**	58	BOLT (M16X2X60-MM)	
M	54	1	**8T-4141**	38	BOLT (M20X2.5X70-MM)	
M	55	1	**8T-4176**	16	BOLT (M12X1.75X90-MM)	
	56	1	**8T-5439**	38	WASHER-HARD (21.5X45X6-MM THK)	
	57	1	**8T-7971**	16	WASHER-HARD (13.5X25.5X5-MM THK)	
	58	1	**9X-8257**	58	WASHER (17.5X30X3.5-MM THK)	
B	59	1	**6V-6640**		SEALANT	

QUANTITIES SHOWN ARE THOSE REQUIRED FOR BOTH LH AND RH SIDES
B-USE AS REQUIRED
M-METRIC PART

242-7503 FINAL DRIVE & BRAKE GP *(contd.)* i03590841

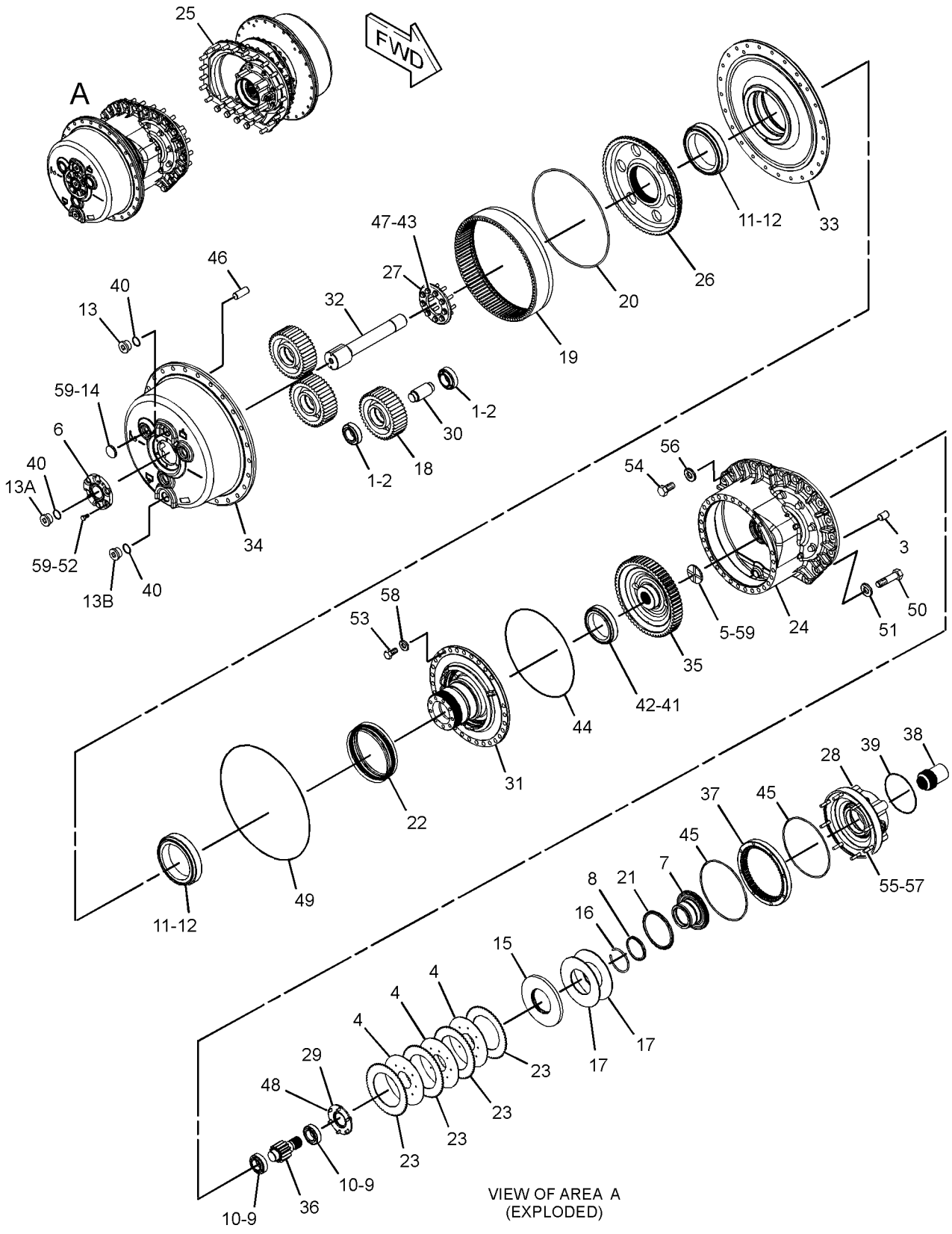

VIEW OF AREA A
(EXPLODED)

GRAPHIC #1 **<END>** g01919695

283-5417 FINAL DRIVE & BRAKE GP—HEAVY-DUTY

S/N: LBP1-UP

REPLACED BY 306-5800—PAGE 280. CANNOT BE USED WITH WIDE GAUGE EQUIPMENT, STANDARD DRIVE GP-BRAKE

AN ATTACHMENT

SMCS-4050, 4056 **i02663634**

NOTE	REF NO	GRAPHIC REF	PART NUMBER	QTY	PART NAME 1 2 3 4 5 6 (PRODUCT LEVEL)	SEE PAGE
	1	1	**1B-3978**	12	CUP-BEARING (TAPERED ROLLER)	
	2	1	**1B-3980**	12	CONE-BEARING (TAPERED ROLLER)	
	3	1	**3S-9182**	2	PLUG-MAGNETIC (FINAL DRIVE OIL DRAIN)	
	4	1	**3W-5159**	6	PLATE-PARKING BRAKE	
	5	1	**3W-5436**	2	BUTTON-THRUST	
	6	1	**3W-5447**	2	COVER	
	7	1	**3W-5451**	2	PISTON	
	8	1	**3W-5928**	2	SEAL AS	
					(EACH INCLUDES)	
		1	**5F-0149**	1	SEAL-O-RING	
		1	**5J-7852**	1	SEAL	
	9	1	**5F-0585**	4	CONE-BEARING (TAPERED ROLLER)	
	10	1	**5F-0589**	4	CUP-BEARING (TAPERED ROLLER)	
	11	1	**6V-0327**	4	CUP-BEARING (TAPERED ROLLER)	
	12	1	**6V-0328**	4	CONE-BEARING (TAPERED ROLLER)	
	13	1	**6V-0439**	2	PLUG-MAGNETIC (FINAL DRIVE, OIL FILL)	
	13A	1	**6V-0439**	2	PLUG-MAGNETIC (FINAL DRIVE, OIL CHECK)	
	13B	1	**6V-0439**	2	PLUG-MAGNETIC (FINAL DRIVE OIL DRAIN)	
	14	1	**6Y-0859**	2	SEAL GP-DUO-CONE	
					(EACH INCLUDES)	
		1	**1M-9011**	2	RING-TORIC	
	15	1	**7P-9571**	6	PLUG	
	16	1	**8G-1258**	2	PLATE-PRESSURE	
	17	1	**8G-1259**	2	RING-LOCK	
	18	1	**8G-4392**	4	SPRING-DISC	
	19	1	**8G-4565**	6	GEAR-PLANETARY (30-TEETH)	
	20	1	**8G-4568**	2	GEAR-RING (74-TEETH)	
	21	1	**8G-4569**	2	RING	
	22	1	*8T-6379*	2	SEAL AS	
					(EACH INCLUDES)	
		1	**7J-8956**	1	SEAL-O-RING	
		1	**8T-6378**	1	SEAL-RING	
	23	1	**170-8714**	8	DISC-FRICTION	
	24	1	**239-1250**	1	CASE-FINAL DRIVE (RH)	
	25	1	**239-1251**	1	CASE-FINAL DRIVE (LH)	
	26	1	**239-1253**	2	HUB-RING GEAR	
	27	1	**239-1254**	2	PLATE-RETAINER	
	28	1	**239-4478**	2	HOUSING	
	29	1	**239-4481**	2	RETAINER	
	30	1	**243-1455**	6	SHAFT	
	31	1	**246-8424**	2	SPINDLE	
	32	1	**246-8425**	2	SHAFT-SUN GEAR	
	33	1	**246-8426**	2	HUB	
	34	1	**246-8428**	2	CARRIER AS	
					(EACH INCLUDES)	
M		1	**6V-3532**	6	BOLT (M20X2.5X60-MM)	
		1	**8T-3282**	6	WASHER-HARD (22X35X3.5-MM THK)	
	35	1	**246-8430**	2	GEAR (72-TEETH)	
	36	1	**246-8431**	2	GEAR-INPUT (13-TEETH)	
	37	1	**246-8432**	2	RING	
	38	1	**247-2574**	2	SHAFT	
	39	1	**275-6350**	1	GUARD GP-SEAL	
		1	**281-3044**	2	GUARD AS	
	40	1	**2K-2939**	2	SEAL-O-RING	

283-5417 **FINAL DRIVE & BRAKE GP** *(contd.)* **i02663634**

NOTE	REF NO	GRAPHIC REF	PART NUMBER	QTY	PART NAME 1 2 3 4 5 6 (PRODUCT LEVEL)	SEE PAGE
	41	1	**2S-4078**	6	SEAL-O-RING	
	42	1	**5P-4920**	2	RACE & ROLLER AS	
	43	1	**5P-4921**	2	RACE-BEARING OUTER	
	44	1	**5P-8245**	18	WASHER-HARD (13.5X25.5X3-MM THK)	
	45	1	**5P-9147**	2	SEAL-O-RING	
	46	1	**5S-3676**	4	SEAL-O-RING	
	47	1	**6V-2452**	6	DOWEL	
M	48	1	**6V-3823**	18	BOLT (M12X1.75X60-MM)	
M	49	1	**6V-6317**	12	BOLT (M10X1.5X20-MM)	
	50	1	**7D-7519**	2	SEAL-O-RING	
M	51	1	**7X-2554**	58	BOLT (M16X2X70-MM)	
M	52	1	**7X-2564**	8	BOLT (M20X2.5X90-MM)	
	53	1	**8T-4123**	8	WASHER (22X35X3.5-MM THK)	
M	54	1	**8T-4137**	12	BOLT (M10X1.5X20-MM)	
M	55	1	**8T-4141**	38	BOLT (M20X2.5X70-MM)	
M	56	1	**8T-4176**	16	BOLT (M12X1.75X90-MM)	
	57	1	**8T-5439**	38	WASHER-HARD (21.5X45X6-MM THK)	
	58	1	**8T-7971**	16	WASHER-HARD (13.5X25.5X5-MM THK)	
	59	1	**9X-8257**	58	WASHER (17.5X30X3.5-MM THK)	
B	60	1	**6V-5765**		SEALANT	

B-USE AS REQUIRED
M-METRIC PART

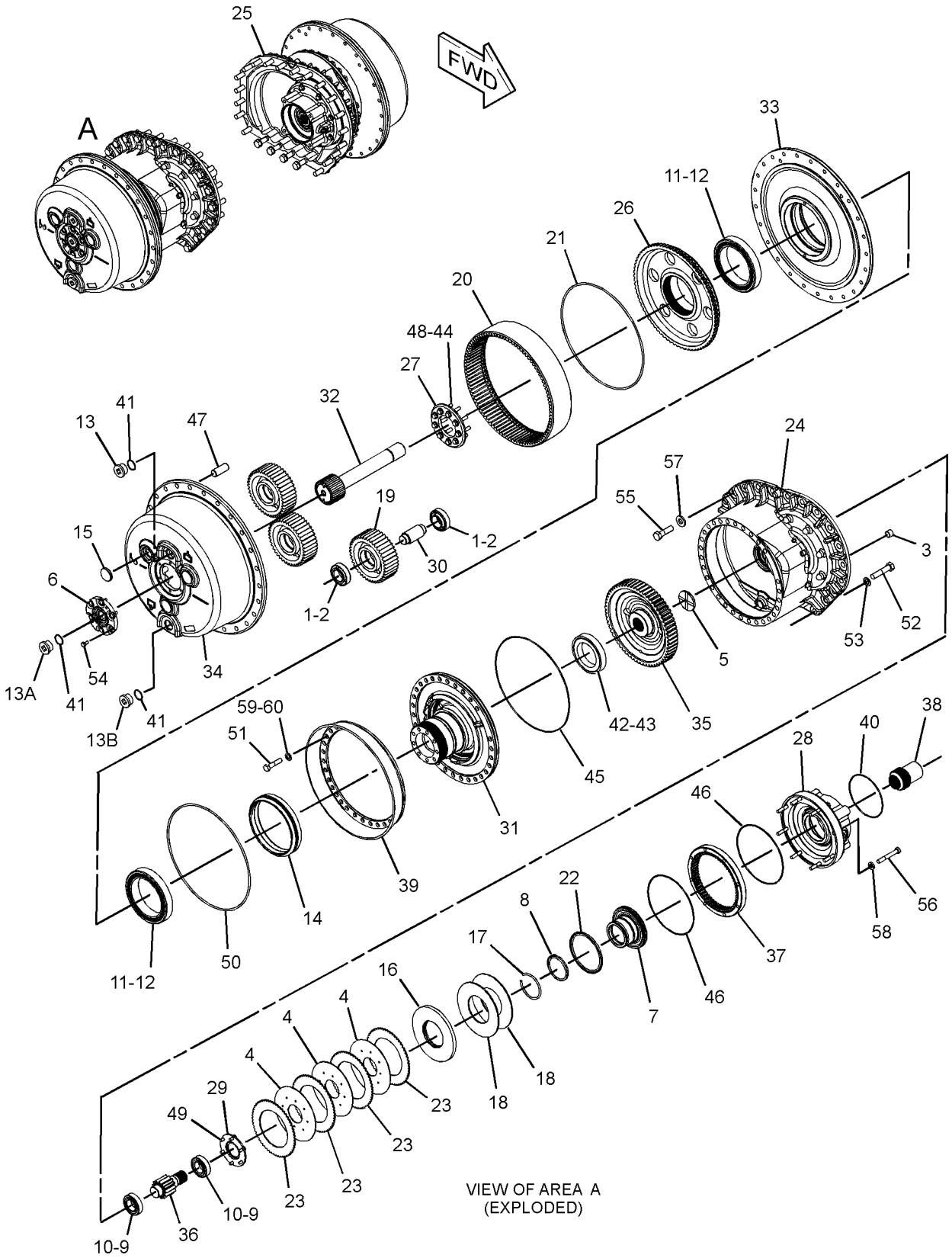

GRAPHIC #1 **<END>** g01350537

306-5800 FINAL DRIVE & BRAKE GP—HEAVY-DUTY

S/N: LBP1-UP

CANNOT BE USED WITH WIDE GUAGE MODIFICATION

AN ATTACHMENT

SMCS-4050, 4056 **i03587201**

NOTE	REF NO	GRAPHIC REF	PART NUMBER	QTY	PART NAME 1 2 3 4 5 6 (PRODUCT LEVEL)	SEE PAGE
	1	1	**1B-3978**	12	CUP-BEARING (TAPERED ROLLER)	
	2	1	**1B-3980**	12	CONE-BEARING (TAPERED ROLLER)	
	3	2	**3S-9182**	2	PLUG-MAGNETIC (FINAL DRIVE OIL DRAIN)	
	4	2	**3W-5159**	6	PLATE-PARKING BRAKE	
	5	2	**3W-5436**	2	BUTTON-THRUST	
	6	1	**3W-5447**	2	COVER	
	7	2	**3W-5451**	2	PISTON	
	8	2	**3W-5928**	2	SEAL AS	
					(EACH INCLUDES)	
		2	**5F-0149**	1	SEAL-O-RING	
		2	**5J-7852**	1	SEAL	
	9	2	**5F-0585**	4	CONE-BEARING (TAPERED ROLLER)	
	10	2	**5F-0589**	4	CUP-BEARING (TAPERED ROLLER)	
	11	1	**6V-0327**	4	CUP-BEARING (TAPERED ROLLER)	
	12	1	**6V-0328**	4	CONE-BEARING (TAPERED ROLLER)	
	13	1	**6V-0439**	2	PLUG-MAGNETIC (FINAL DRIVE, OIL FILL)	
	13A	1	**6V-0439**	2	PLUG-MAGNETIC (FINAL DRIVE, OIL CHECK)	
	13B	1	**6V-0439**	2	PLUG-MAGNETIC (FINAL DRIVE OIL DRAIN)	
	14	1	**6Y-0859**	2	SEAL GP-DUO-CONE	
					(EACH INCLUDES)	
		1	**1M-9011**	2	RING-TORIC	
	15	1	**7P-9571**	6	PLUG	
	16	2	**8G-1258**	2	PLATE-PRESSURE	
	17	2	**8G-1259**	2	RING-LOCK	
	18	2	**8G-4392**	4	SPRING-DISC	
	19	1	**8G-4565**	6	GEAR-PLANETARY (30-TEETH)	
	20	1	**8G-4568**	2	GEAR-RING (74-TEETH)	
	21	1	**8G-4569**	2	RING	
	22	2	*8T-6379*	2	SEAL AS	
					(EACH INCLUDES)	
		2	**7J-8956**	1	SEAL-O-RING	
		2	**8T-6378**	1	SEAL-RING	
	23	2	**170-8714**	8	DISC-FRICTION	
	24	2	**239-1250**	1	CASE-FINAL DRIVE (RH)	
	25	2	**239-1251**	1	CASE-FINAL DRIVE (LH)	
	26	1	**239-1253**	2	HUB-RING GEAR	
	27	1	**239-1254**	2	PLATE-RETAINER	
	28	2	**239-4478**	2	HOUSING	
	29	2	**239-4481**	2	RETAINER	
	30	1	**243-1455**	6	SHAFT	
	31	1	**246-8424**	2	SPINDLE	
	32	1	**246-8425**	2	SHAFT-SUN GEAR	
	33	1	**246-8428**	2	CARRIER AS	
					(EACH INCLUDES)	
M		1	**6V-3532**	6	BOLT (M20X2.5X60-MM)	
		1	**8T-3282**	6	WASHER-HARD (22X35X3.5-MM THK)	
	34	2	**246-8430**	2	GEAR (72-TEETH)	
	35	2	**246-8431**	2	GEAR-INPUT (13-TEETH)	
	36	2	**246-8432**	2	RING	
	37	2	**247-2574**	2	SHAFT	
	38	1	*275-6350*	1	GUARD GP-SEAL	
		1	**281-3044**	2	GUARD AS	
	39	1	**317-0680**	2	HUB-SPROCKET	
	40	2	**2K-2939**	2	SEAL-O-RING	
	41	1	**2S-4078**	6	SEAL-O-RING	

306-5800 **FINAL DRIVE & BRAKE GP** *(contd.)* **i03587201**

NOTE	REF NO	GRAPHIC REF	PART NUMBER	QTY	PART NAME 1 2 3 4 5 6 (PRODUCT LEVEL)	SEE PAGE
	42	2	**5P-4920**	2	RACE & ROLLER AS	
	43	2	**5P-4921**	2	RACE-BEARING OUTER	
	44	1	**5P-8245**	18	WASHER-HARD (13.5X25.5X3-MM THK)	
	45	1	**5P-9147**	2	SEAL-O-RING	
	46	2	**5S-3676**	4	SEAL-O-RING	
	47	1	**6V-2452**	6	DOWEL	
M	48	1	**6V-3823**	18	BOLT (M12X1.75X60-MM)	
M	49	2	**6V-6317**	12	BOLT (M10X1.5X20-MM)	
	50	1	**7D-7519**	2	SEAL-O-RING	
M	51	1	**7X-2554**	58	BOLT (M16X2X70-MM)	
M	52	2	**7X-2564**	8	BOLT (M20X2.5X90-MM)	
	53	2	**8T-4123**	8	WASHER (22X35X3.5-MM THK)	
M	54	1	**8T-4137**	12	BOLT (M10X1.5X20-MM)	
M	55	2	**8T-4141**	38	BOLT (M20X2.5X70-MM)	
M	56	2	**8T-4176**	16	BOLT (M12X1.75X90-MM)	
	57	2	**8T-5439**	38	WASHER-HARD (21.5X45X6-MM THK)	
	58	2	**8T-7971**	16	WASHER-HARD (13.5X25.5X5-MM THK)	
	59	1	**9X-8257**	58	WASHER (17.5X30X3.5-MM THK)	

M-METRIC PART

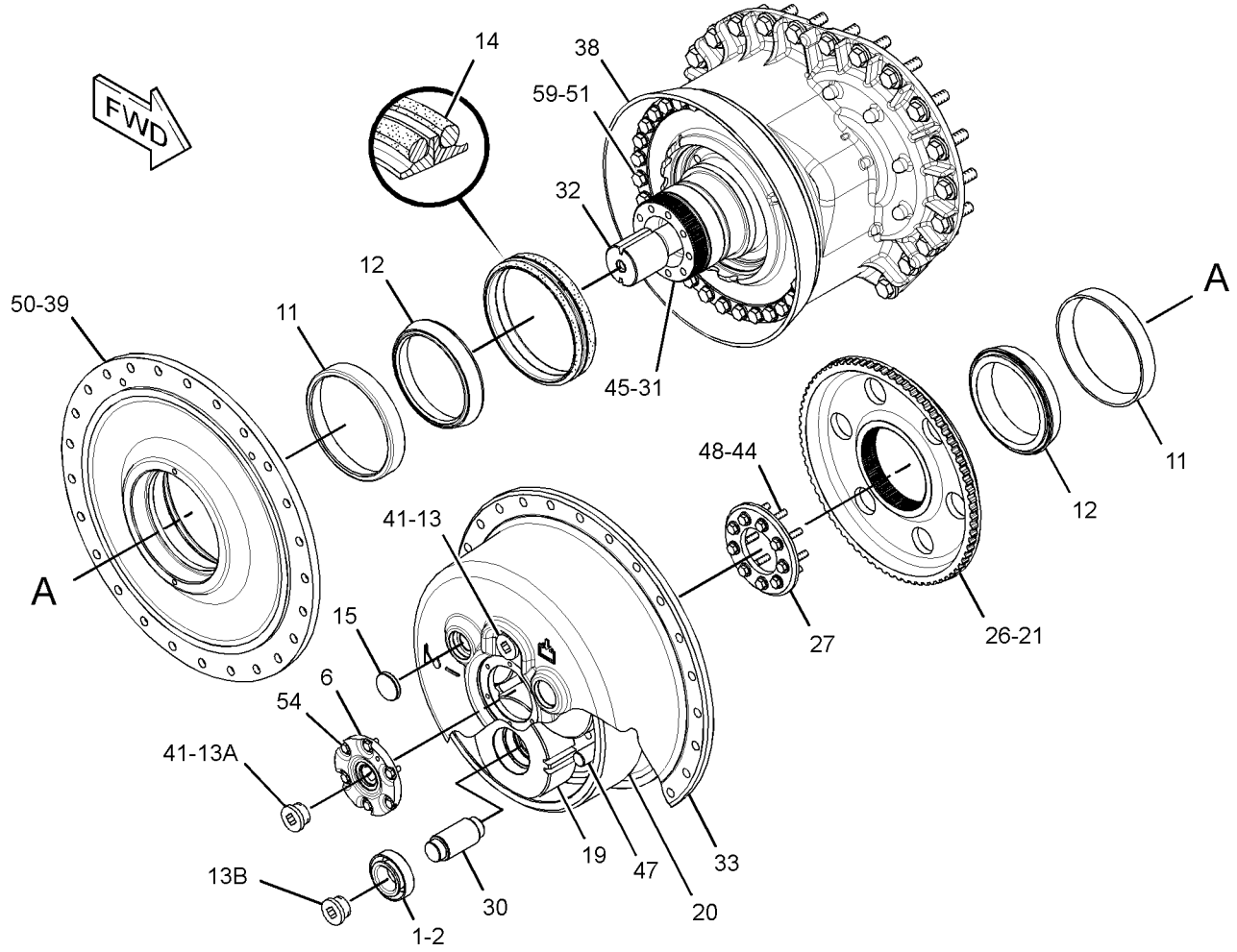

GRAPHIC #1 g01917296

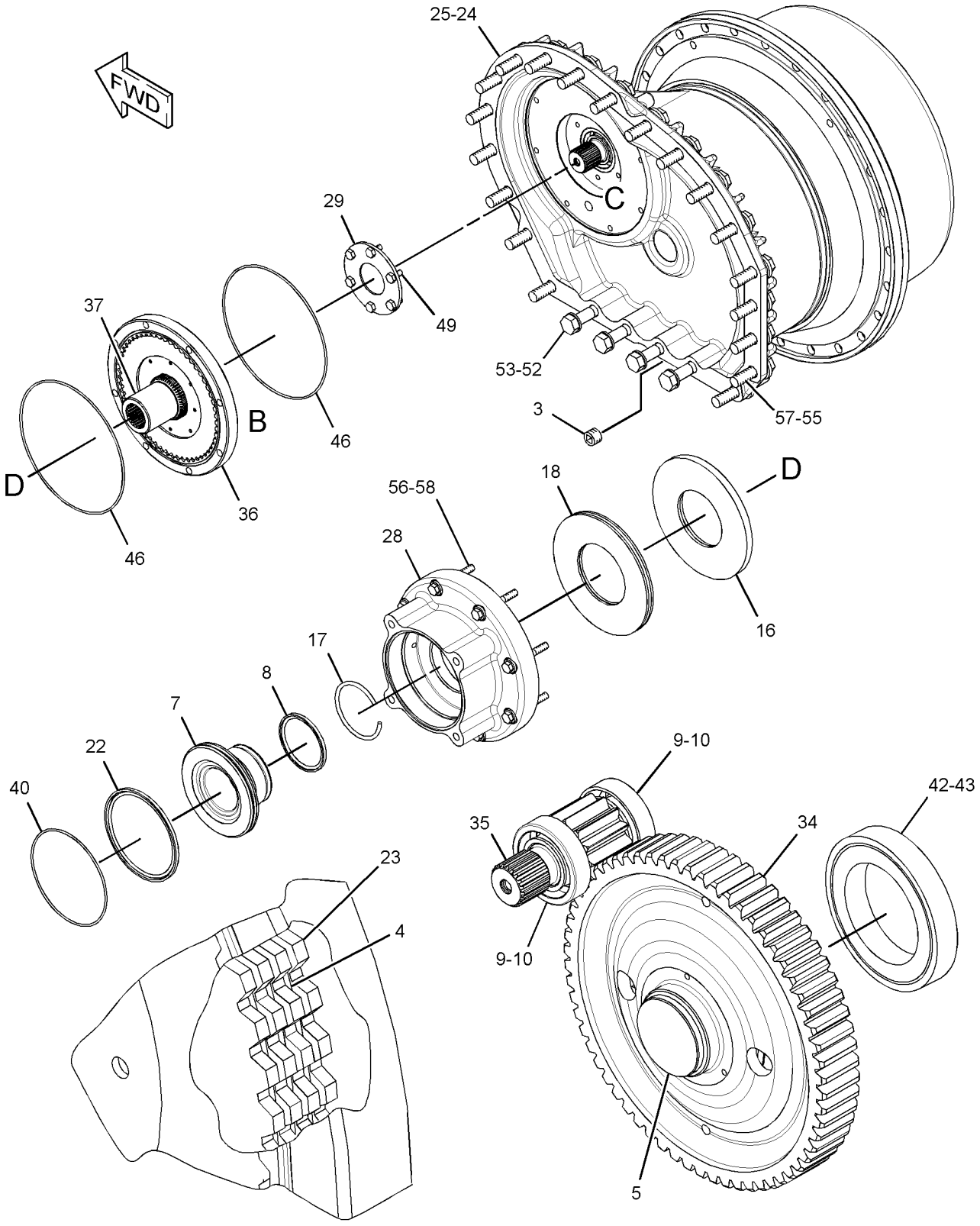

VIEW OF AREA B

VIEW OF AREA C
(FINAL DRIVE CASE REMOVED FOR CLARITY)

GRAPHIC #2 **<END>** g01622248

278-8935 HEAD GP-MOTOR—HYDROSTATIC DRIVE, LH

S/N: LBP1-UP

PART OF 243-6639 MOTOR GP-PISTON

SMCS-3202, 5058 **i02652585**

NOTE	REF NO	GRAPHIC REF	PART NUMBER	QTY	PART NAME 1 2 3 4 5 6 (PRODUCT LEVEL)	SEE PAGE
Y	1	1	**278-8936**	1	VALVE GP-MOTOR CONTROL (HYDROSTATIC DRIVE)	322
Y	2	1	**278-8937**	1	VALVE GP-FLUSHING (HYDROSTATIC DRIVE)	321
	3	1	**9S-8004**	1	PLUG-O-RING	
	4	1	**124-9882**	1	TRUNNION	
	5	1	**124-9881**	1	PISTON	
	6	1	**135-7454**	1	PISTON	
M	7	1	**125-2205**	1	BOLT-SHALLOW HEAD (M14X1.5X25-MM)	
	8	1	**124-9884**	1	PIN-THREADED	
	9	1	**3E-6760**	6	SEAL-O-RING	
M	10	1	**6V-8201**	8	BOLT-SOCKET HEAD (M16X2X45-MM)	
	11	1	**120-4394**	1	PLUG-BREAK OFF	
	12	1	**123-0698**	2	PLUG	
	13	1	**123-5787**	2	SEAT	
	14	1	**3J-1907**	1	SEAL-O-RING	
Y	15	1	**301-7890**	2	VALVE GP-CHECK	320
M	16	1	**8T-7811**	4	BOLT-SOCKET HEAD (M12X1.75X50-MM)	
	17	1	**061-7540**	1	SEAL-O-RING	
	18	1	**135-7455**	3	SEAL	
	19	1	**7X-2906**	2	PIN	

M-METRIC PART
Y-SEPARATE ILLUSTRATION

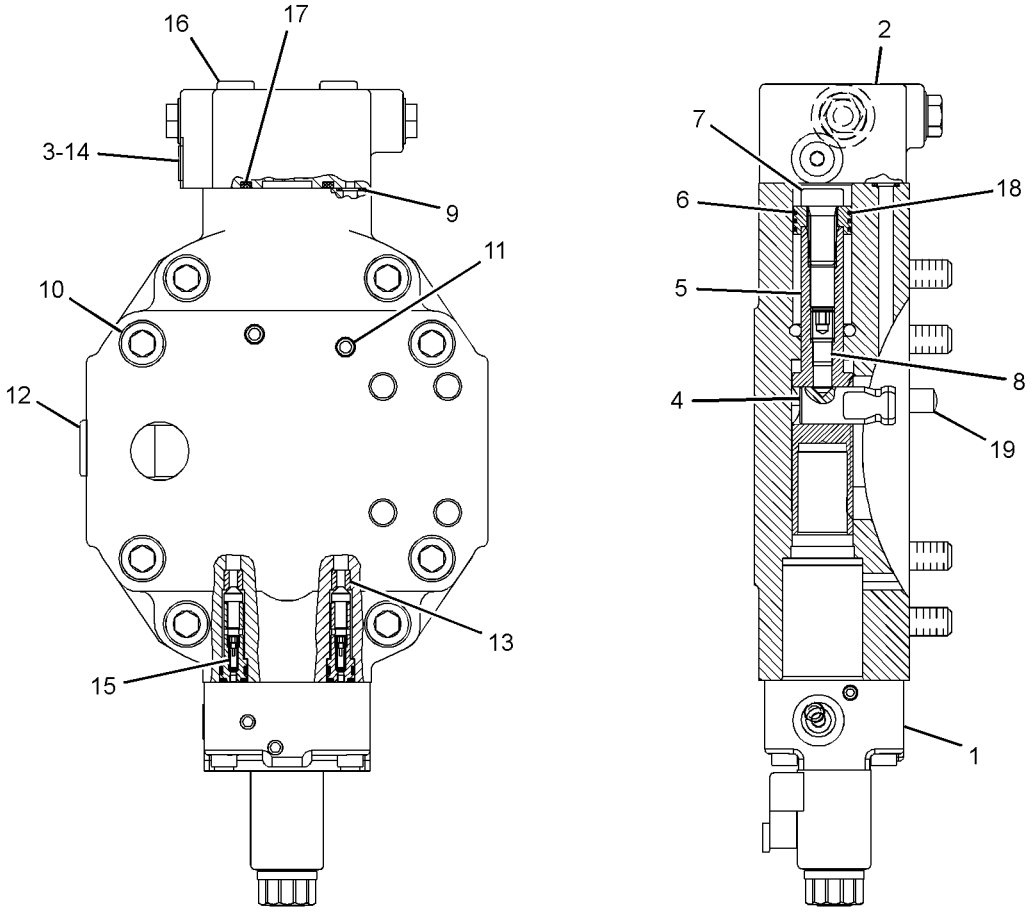

GRAPHIC #1 **<END>** g01331245

279-0543 HEAD GP-MOTOR—HYDROSTATIC DRIVE, RH

S/N: LBP1-UP

PART OF 243-6640 MOTOR GP-PISTON

SMCS-3202, 5058 **i02652587**

NOTE	REF NO	GRAPHIC REF	PART NUMBER	QTY	PART NAME 1 2 3 4 5 6 (PRODUCT LEVEL)	SEE PAGE
Y	1	1	**278-8936**	1	VALVE GP-MOTOR CONTROL (HYDROSTATIC DRIVE)	322
Y	2	1	**278-8937**	1	VALVE GP-FLUSHING (HYDROSTATIC DRIVE)	321
	3	1	**9S-8004**	1	PLUG-O-RING	
	4	1	**124-9882**	1	TRUNNION	
	5	1	**124-9881**	1	PISTON	
	6	1	**135-7454**	1	PISTON	
M	7	1	**125-2205**	1	BOLT-SHALLOW HEAD (M14X1.5X25-MM)	
	8	1	**124-9884**	1	PIN-THREADED	
	9	1	**3E-6760**	6	SEAL-O-RING	
M	10	1	**6V-8201**	8	BOLT-SOCKET HEAD (M16X2X45-MM)	
	11	1	**120-4394**	1	PLUG-BREAK OFF	
	12	1	**123-0698**	2	PLUG	
	13	1	**123-5787**	2	SEAT	
	14	1	**3J-1907**	1	SEAL-O-RING	
Y	15	1	**301-7890**	2	VALVE GP-CHECK	320
M	16	1	**8T-7811**	4	BOLT-SOCKET HEAD (M12X1.75X50-MM)	
	17	1	**061-7540**	1	SEAL-O-RING	
	18	1	**135-7455**	3	SEAL	
	19	1	**7X-2906**	2	PIN	

M-METRIC PART
Y-SEPARATE ILLUSTRATION

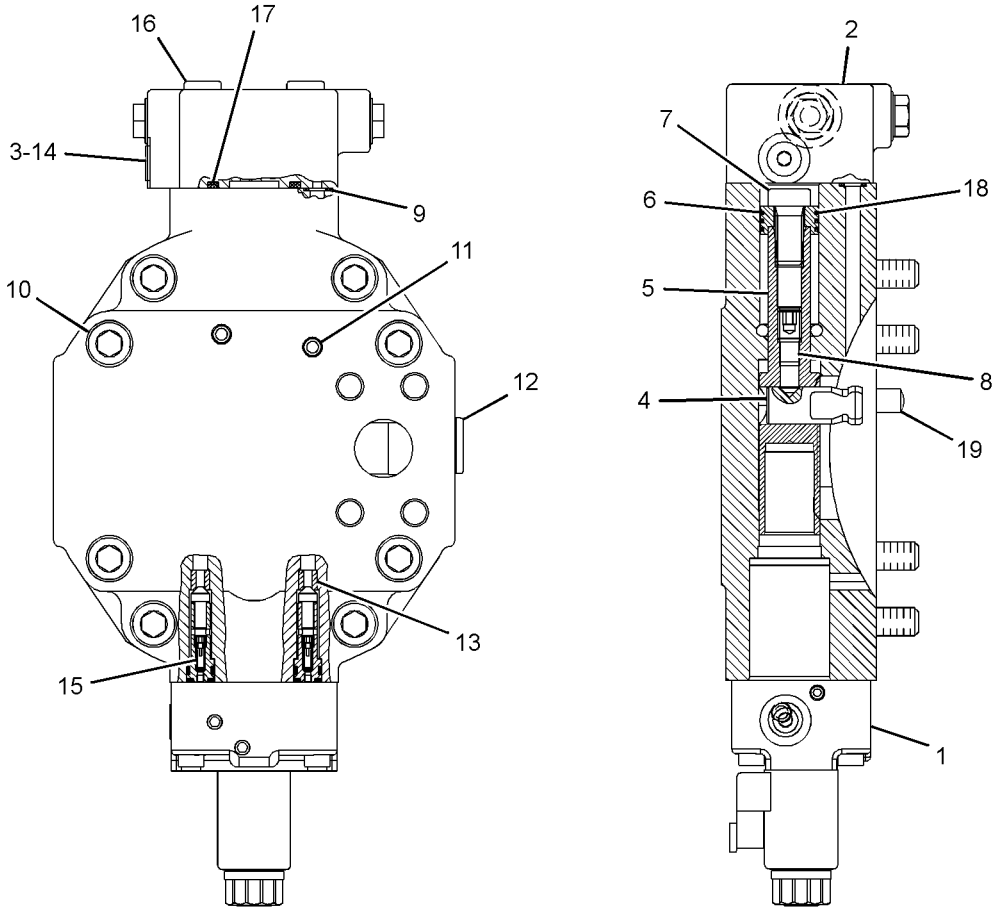

GRAPHIC #1 **<END>** g01331258

278-4440 HEAD GP-PUMP—HYDROSTATIC DRIVE, LH

S/N: LBP1-UP

PART OF 261-3629 PUMP GP-PISTON

SMCS-3202, 5070 **i02590978**

NOTE	REF NO	GRAPHIC REF	PART NUMBER	QTY	PART NAME 1 2 3 4 5 6 (PRODUCT LEVEL)	SEE PAGE
J	1	1	**1G-7407**	2	VALVE GP-RELIEF (PUMP HEAD)	
					(EACH INCLUDES)	
		1	**123-7556**	1	CAP	
Y	2	1	**6E-4402**	1	VALVE GP-RELIEF (CHARGE PRESSURE)	325
M	3	1	**3E-8008**	4	BOLT-SOCKET HEAD (M16X2X90-MM)	
	4	1	**2P-1692**	1	SEAL-O-RING	
	5	1	**9S-8002**	2	PLUG-O-RING	
	6	1	**6V-8398**	1	SEAL-O-RING	
	7	1	**126-1597**	1	BEARING	
	8	1	**126-1598**	1	BUSHING	
	9	1	**120-4394**	1	PLUG-BREAK OFF	
	10	1	**144-9101**	1	PLUG-BREAK OFF	
	11	1	**3J-7354**	2	SEAL-O-RING	
					AVAILABLE REPAIR KIT(S):	
J			**145-0905**	1	KIT-SEAL (PUMP HEAD RELIEF VALVE)	

J-KIT MARKED J SERVICES PART(S) MARKED J
M-METRIC PART
Y-SEPARATE ILLUSTRATION

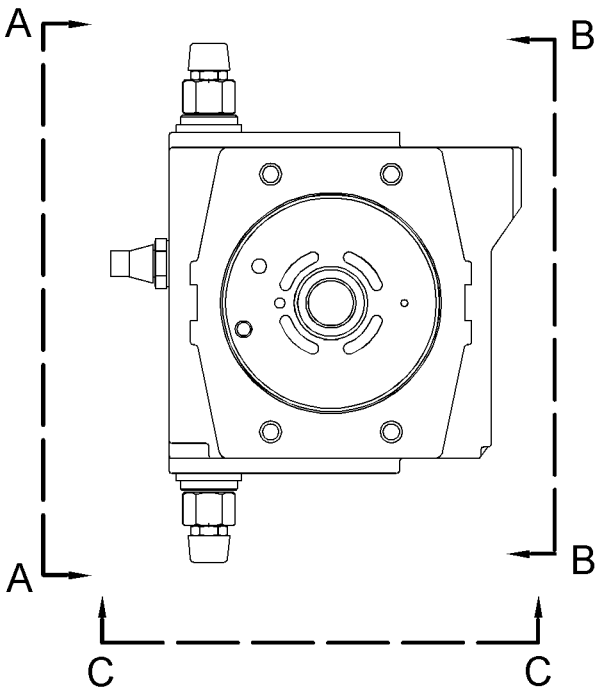

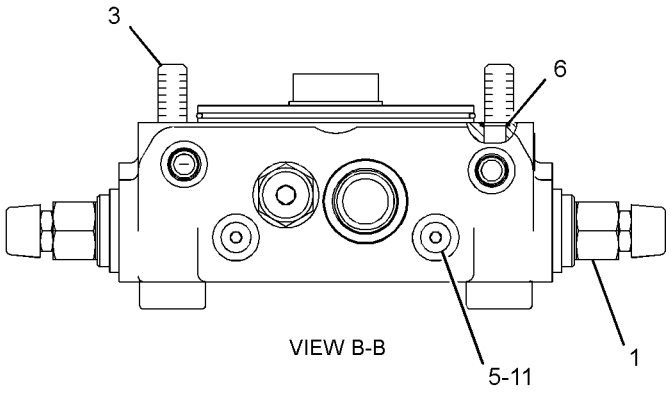

VIEW B-B

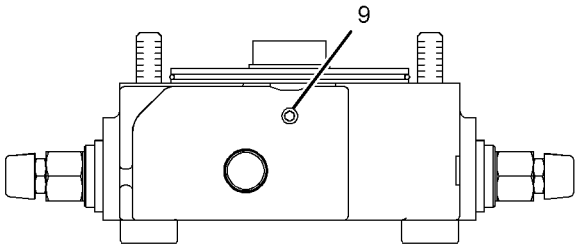

VIEW A-A

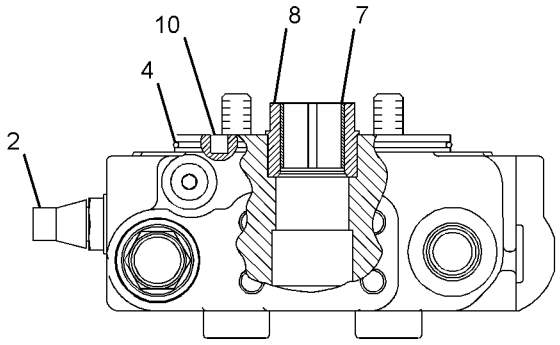

VIEW C-C

GRAPHIC #1 **<END>** g01304317

278-4441 HEAD GP-PUMP—HYDROSTATIC DRIVE, RH

S/N: LBP1-UP

PART OF 261-3630 PUMP GP-PISTON

SMCS-3202, 5070 **i02607098**

NOTE	REF NO	GRAPHIC REF	PART NUMBER	QTY	PART NAME 1 2 3 4 5 6 (PRODUCT LEVEL)	SEE PAGE
J	1	1	**1G-7407**	2	VALVE GP-RELIEF (PUMP HEAD)	
					(EACH INCLUDES)	
		1	**123-7556**	1	CAP	
Y	2	1	**6E-4402**	1	VALVE GP-RELIEF (CHARGE PRESSURE)	325
M	3	1	**3E-8008**	4	BOLT-SOCKET HEAD (M16X2X90-MM)	
	4	1	**2P-1692**	1	SEAL-O-RING	
	5	1	**9S-8002**	2	PLUG-O-RING	
	6	1	**6V-8398**	1	SEAL-O-RING	
	7	1	**126-1597**	1	BEARING	
	8	1	**126-1598**	1	BUSHING	
	9	1	**120-4394**	1	PLUG-BREAK OFF	
	10	1	**144-9101**	1	PLUG-BREAK OFF	
	11	1	**3J-7354**	2	SEAL-O-RING	
	12	1	**126-1477**	1	BUSHING-COUPLING	
					AVAILABLE REPAIR KIT(S):	
J			**145-0905**	1	KIT-SEAL (PUMP HEAD RELIEF VALVE)	

J-KIT MARKED J SERVICES PART(S) MARKED J
M-METRIC PART
Y-SEPARATE ILLUSTRATION

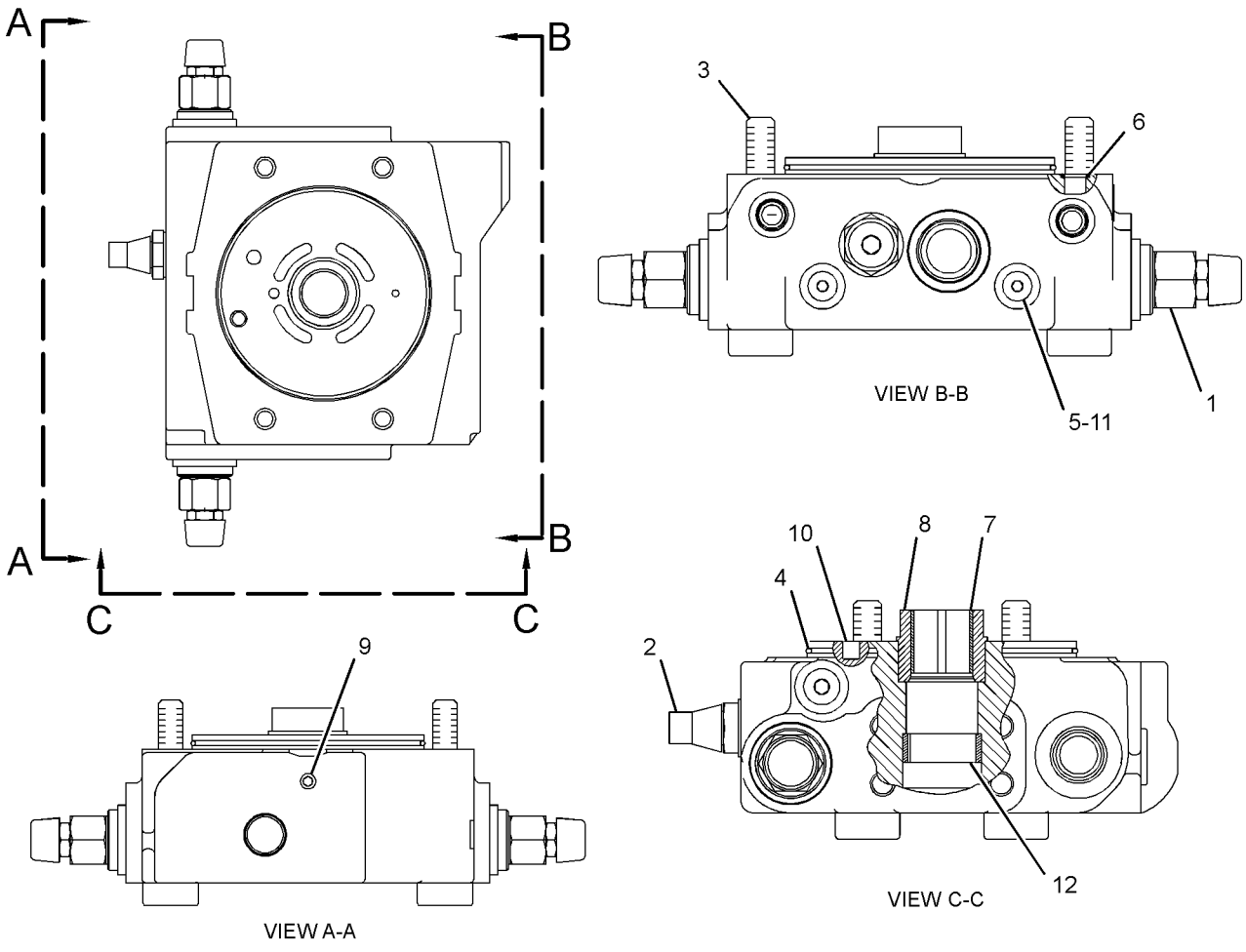

GRAPHIC #1 **<END>** g01304376

POWER TRAIN

271-8879 LINES GP-CHARGE PRESSURE

S/N: LBP1-699

PART OF 240-6226 POWER TRAIN AR

SMCS-3016 **i03590839**

NOTE	REF NO	GRAPHIC REF	PART NUMBER	QTY	PART NAME 1 2 3 4 5 6 (PRODUCT LEVEL)	SEE PAGE
M	1	1	**176-9237**	1	STUD (M10X1.5X18-MM, M10X1.5X37-MM)	
	2	1	**177-2215**	2	STRAP-DUAL CLAMP	
Y	3	1	**302-7298**	2	FILTER GP-OIL (HYDRAULIC, HYDROSTATIC DRIVE)	273
	4	1	**269-4970**	2	ADAPTER	
I	5	1	**271-8880**	1	HOSE AS	
I	6	1	**271-8882**	1	HOSE AS	
	7	1	**271-8883**	1	BRACKET AS	
	8	1	**277-7013**	1	ELBOW	
	9	1	**277-7014**	1	ELBOW	
	10	1	**278-4145**	1	HOSE	
	11	1	**281-4484**	1	PLATE AS	
	12	1	*297-7917*	1	ELBOW AS	
		1	**297-7916**	1	ELBOW	
		1	**2S-4078**	1	SEAL-O-RING	
	13	1	**299-4405**	1	BRACKET	
	14	1	**299-5002**	1	HOSE AS	
	15	1	**299-5852**	2	STRAP-CABLE	
	16	1	**299-5853**	2	STRAP-CABLE	
	17	1	*148-8327*	3	CONNECTOR AS	
					(EACH INCLUDES)	
		1	**6V-8637**	1	CONNECTOR	
		1	**3D-2824**	1	SEAL-O-RING	
		1	**6V-9746**	1	SEAL-O-RING	
	18	1	*164-5606*	1	CONNECTOR AS	
		1	**8T-0078**	1	CONNECTOR	
		1	**3D-2824**	1	SEAL-O-RING	
		1	**6V-9746**	1	SEAL-O-RING	
	19	1	**198-4777**	12	WASHER-HARD (11X25X10-MM THK)	
	20	1	**4P-8134**	2	CLIP	
	21	1	**5D-0718**	1	CLIP	
	22	1	**6V-1889**	1	CLIP	
	23	1	**6V-3378**	1	CLIP	
	24	1	**7K-1181**	2	STRAP-CABLE	
M	25	1	**8T-4186**	1	BOLT (M10X1.5X40-MM)	
	26	1	**8T-4121**	5	WASHER-HARD (11X21X2.5-MM THK)	
M	27	1	**8T-4133**	2	NUT (M10X1.5-THD)	
M	28	1	**8T-4185**	1	BOLT (M10X1.5X50-MM)	
M	29	1	**8T-4182**	5	BOLT (M10X1.5X45-MM)	
M	30	1	**8T-4196**	6	BOLT (M10X1.5X35-MM)	
	31	1	**8T-4983**	2	CLAMP-HOSE	
	32	1	**032-3237**	1	SPACER (10.93X19.05X25.4-MM THK)	

I-REFER TO HYDRAULIC INFORMATION SYSTEM
M-METRIC PART
Y-SEPARATE ILLUSTRATION

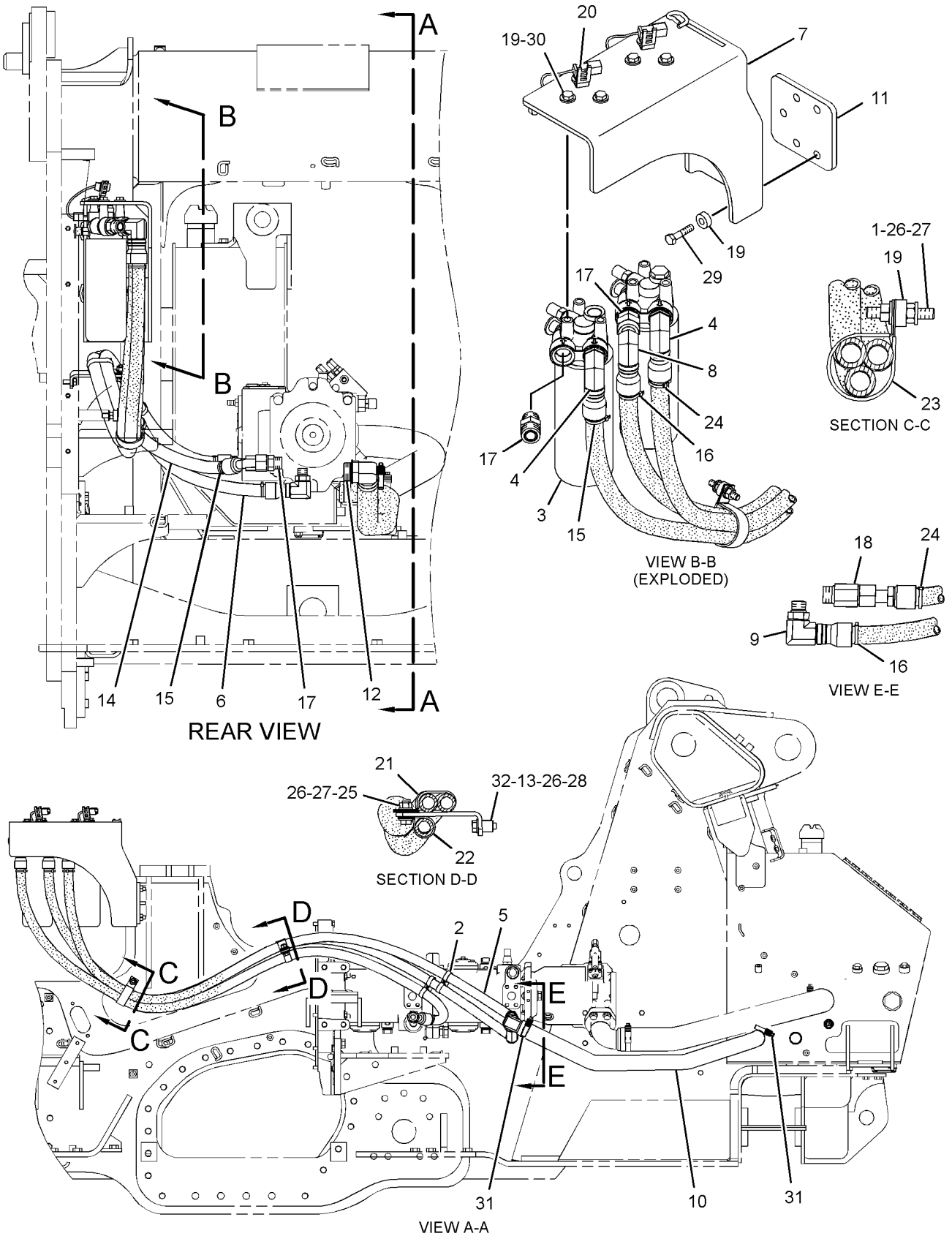

GRAPHIC #1

<END>

g01380907

271-8879 LINES GP-CHARGE PRESSURE

S/N: LBP700-UP

PART OF 240-6226 POWER TRAIN AR

SMCS-3016 **i03591422**

NOTE	REF NO	GRAPHIC REF	PART NUMBER	QTY	PART NAME 1 2 3 4 5 6 (PRODUCT LEVEL)	SEE PAGE
M	1	1	**176-9237**	1	STUD (M10X1.5X18-MM, M10X1.5X37-MM)	
	2	1	**177-2215**	2	STRAP-DUAL CLAMP	
Y	3	1	**302-7298**	2	FILTER GP-OIL (HYDRAULIC, HYDROSTATIC DRIVE)	273
	4	1	**269-4970**	2	ADAPTER	
I	5	1	**271-8880**	1	HOSE AS	
I	6	1	**271-8882**	1	HOSE AS	
	7	1	**317-4099**	1	BRACKET AS	
	8	1	**277-7013**	1	ELBOW	
	9	1	**277-7014**	1	ELBOW	
	10	1	**278-4145**	1	HOSE	
	11	1	**281-4484**	1	PLATE AS	
	12	1	*297-7917*	1	ELBOW AS	
		1	**297-7916**	1	ELBOW	
		1	**2S-4078**	1	SEAL-O-RING	
	13	1	**299-4405**	1	BRACKET	
	14	1	**299-5002**	1	HOSE AS	
	17	1	*148-8327*	3	CONNECTOR AS	
					(EACH INCLUDES)	
		1	**6V-8637**	1	CONNECTOR	
		1	**3D-2824**	1	SEAL-O-RING	
		1	**6V-9746**	1	SEAL-O-RING	
	18	1	*164-5606*	1	CONNECTOR AS	
		1	**8T-0078**	1	CONNECTOR	
		1	**3D-2824**	1	SEAL-O-RING	
		1	**6V-9746**	1	SEAL-O-RING	
	19	1	**198-4777**	12	WASHER-HARD (11X25X10-MM THK)	
	20	1	**4P-8134**	2	CLIP	
	21	1	**5D-0718**	1	CLIP	
	22	1	**6V-1889**	1	CLIP	
	23	1	**6V-3378**	1	CLIP	
M	25	1	**8T-4186**	1	BOLT (M10X1.5X40-MM)	
	26	1	**8T-4121**	5	WASHER-HARD (11X21X2.5-MM THK)	
M	27	1	**8T-4133**	2	NUT (M10X1.5-THD)	
M	28	1	**8T-4185**	1	BOLT (M10X1.5X50-MM)	
M	29	1	**8T-4182**	5	BOLT (M10X1.5X45-MM)	
M	30	1	**8T-4196**	6	BOLT (M10X1.5X35-MM)	
	31	1	**8T-4983**	2	CLAMP-HOSE	
	32	1	**032-3237**	1	SPACER (10.93X19.05X25.4-MM THK)	

I-REFER TO HYDRAULIC INFORMATION SYSTEM
M-METRIC PART
Y-SEPARATE ILLUSTRATION

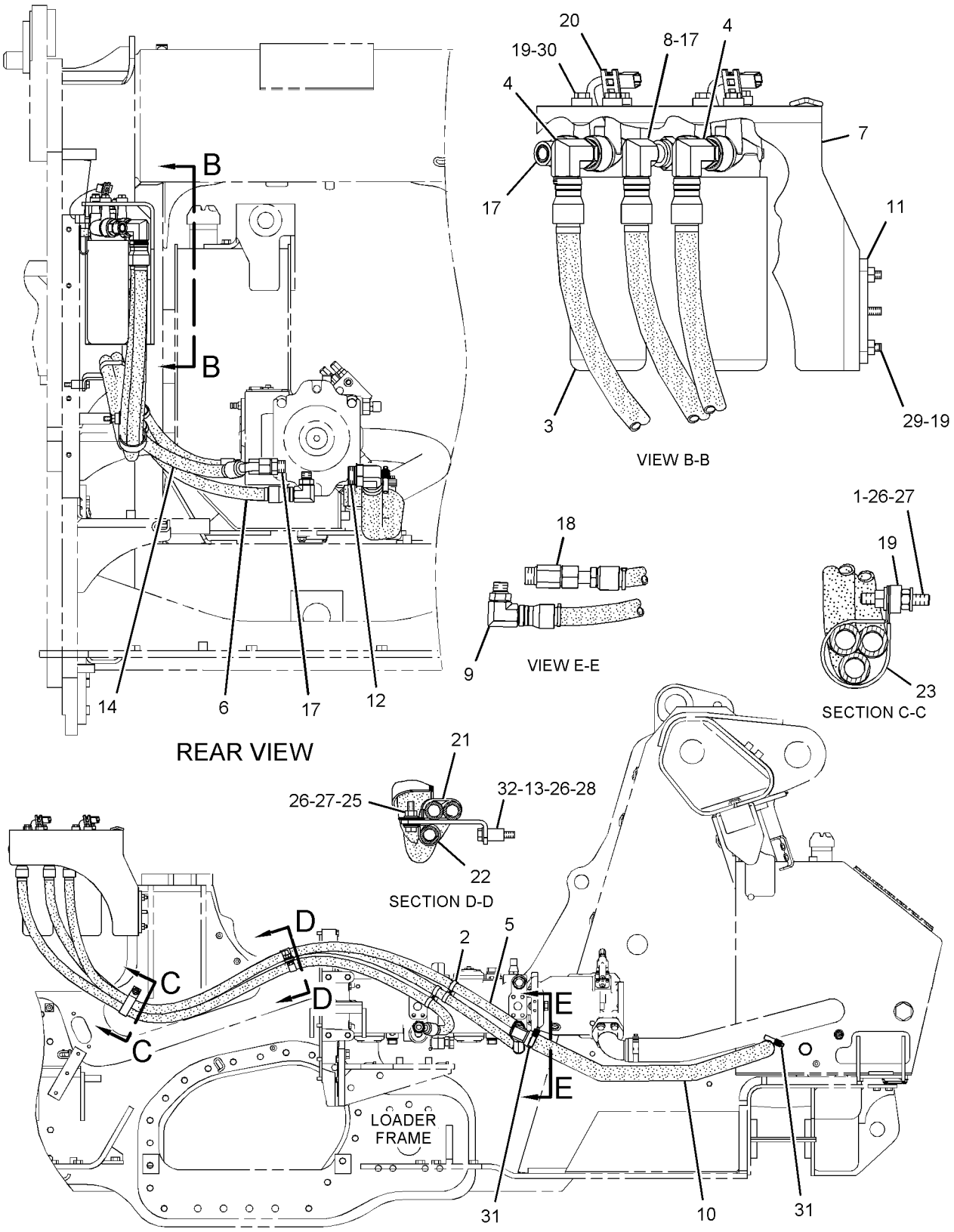

GRAPHIC #1 **<END>** g01626805

271-7082 LINES GP-HYDROSTATIC

S/N: LBP1-UP

PART OF 240-6226 POWER TRAIN AR

SMCS-3154 **i02741314**

NOTE	REF NO	GRAPHIC REF	PART NUMBER	QTY	PART NAME 1 2 3 4 5 6 (PRODUCT LEVEL)	SEE PAGE
I	1	1	**124-0829**	1	HOSE AS	
	2	1	*148-8443*	1	TEE AS	
		1	**7X-2459**	1	TEE-O-RING	
		1	**3J-1907**	1	SEAL-O-RING	
		1	**6V-8397**	1	SEAL-O-RING	
I	3	1	**271-7102**	1	HOSE AS	
I	4	1	**310-2716**	1	HOSE AS	
I	5	1	**271-7104**	1	HOSE AS	
I	6	1	**271-7105**	1	HOSE AS	
	7	1	**272-6386**	1	SPACER	
	8	1	*148-8378*	1	ELBOW AS	
		1	**6V-8724**	1	ELBOW	
		1	**3J-1907**	1	SEAL-O-RING	
		1	**6V-8397**	1	SEAL-O-RING	
	9	1	**1P-3703**	5	SEAL-RECTANGULAR	
	10	1	**1P-3704**	4	SEAL-RECTANGULAR	
	11	1	**1P-5767**	8	FLANGE-HALF	
	12	1	**6V-0400**	8	FLANGE-HALF	
M	13	1	**8T-4184**	12	BOLT (M12X1.75X45-MM)	
M	14	1	**8T-4194**	16	BOLT (M12X1.75X50-MM)	
	15	1	**8T-4223**	32	WASHER-HARD (13.5X25.5X3-MM THK)	
M	16	1	**8T-4648**	4	BOLT (M12X1.75X70-MM)	

I-REFER TO HYDRAULIC INFORMATION SYSTEM
M-METRIC PART

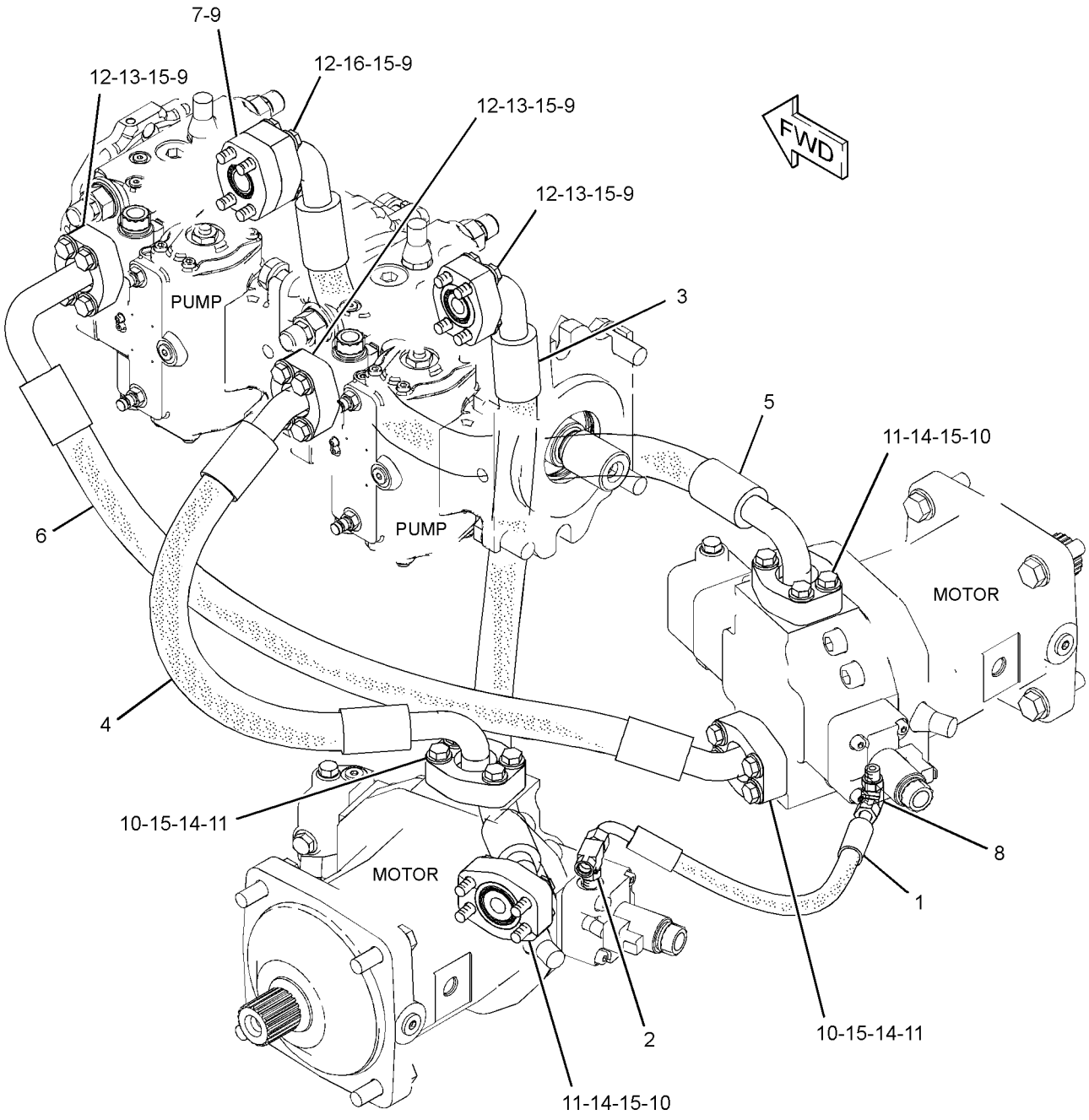

GRAPHIC #1 **<END>** g01333948

271-9168 LINES GP-HYDROSTATIC

S/N: LBP1-UP

PART OF 240-6226 POWER TRAIN AR

SMCS-3154 **i02741496**

NOTE	REF NO	GRAPHIC REF	PART NUMBER	QTY	PART NAME 1 2 3 4 5 6 (PRODUCT LEVEL)	SEE PAGE
I	1	1	**191-6084**	1	HOSE AS	
	2	1	**200-6345**	2	MOUNT (DUAL SWIVEL)	
	3	1	**204-2281**	4	STRAP-TIE	
	4	1	**271-9169**	1	TUBE AS	
	5	1	**271-9170**	1	TUBE AS	
Y	6	1	**281-1680**	1	VALVE & MTG GP-CONTROL (HYDROSTATIC DRIVE)	318
I	7	1	**284-2971**	1	HOSE AS	
	8	1	**284-2973**	1	BRACKET AS	
	9	1	*287-7325*	1	TEE AS	
		1	**287-7324**	1	TEE	
		1	**3K-0360**	1	SEAL-O-RING	
		1	**6V-8397**	1	SEAL-O-RING	
		1	**6V-8398**	1	SEAL-O-RING	
	10	1	*287-7327*	1	TEE AS	
		1	**287-7326**	1	TEE-SWIVEL	
		1	**6V-8397**	1	SEAL-O-RING	
		1	**6V-8398**	1	SEAL-O-RING	
	11	1	**298-7675**	1	BRACKET AS	
I	12	1	**304-3670**	1	HOSE AS	
	13	1	*148-8317*	2	CONNECTOR AS	
					(EACH INCLUDES)	
		1	**6V-8714**	1	CONNECTOR	
		1	**3D-2824**	1	SEAL-O-RING	
		1	**5K-9090**	1	SEAL-O-RING	
	14	1	*148-8327*	2	CONNECTOR AS	
					(EACH INCLUDES)	
		1	**6V-8637**	1	CONNECTOR	
		1	**3D-2824**	1	SEAL-O-RING	
		1	**6V-9746**	1	SEAL-O-RING	
	15	1	*148-8356*	1	ELBOW AS	
		1	**6V-9009**	1	ELBOW	
		1	**2S-4078**	1	SEAL-O-RING	
		1	**6V-8400**	1	SEAL-O-RING	
	16	1	*150-4037*	1	TEE AS	
		1	**6V-9844**	1	TEE-SWIVEL	
		1	**6V-8398**	2	SEAL-O-RING	
	17	1	**198-4777**	3	WASHER-HARD (11X25X10-MM THK)	
	18	1	**198-4778**	3	WASHER-HARD (13.5X30X12-MM THK)	
	19	1	**198-4781**	1	WASHER-HARD (22X40X10-MM THK)	
	20	1	**5P-7470**	1	CLIP (SLOT)	
	21	1	**5P-7471**	1	CLIP (TAB)	
	22	1	**5P-8182**	1	GROMMET	
	23	1	**7X-7729**	3	WASHER (11X25X3-MM THK)	
	24	1	**8T-4123**	1	WASHER (22X35X3.5-MM THK)	
M	25	1	**8T-4133**	3	NUT (M10X1.5-THD)	
M	26	1	**8T-4141**	1	BOLT (M20X2.5X70-MM)	
M	27	1	**8T-4194**	3	BOLT (M12X1.75X50-MM)	
	28	1	**8T-4223**	1	WASHER-HARD (13.5X25.5X3-MM THK)	
M	29	1	**8T-4244**	1	NUT (M12X1.75-THD)	
M	30	1	**8T-6685**	3	BOLT (M10X1.5X110-MM)	

I-REFER TO HYDRAULIC INFORMATION SYSTEM
M-METRIC PART
Y-SEPARATE ILLUSTRATION

271-9168 **LINES GP-HYDROSTATIC** *(contd.)* **i02741496**

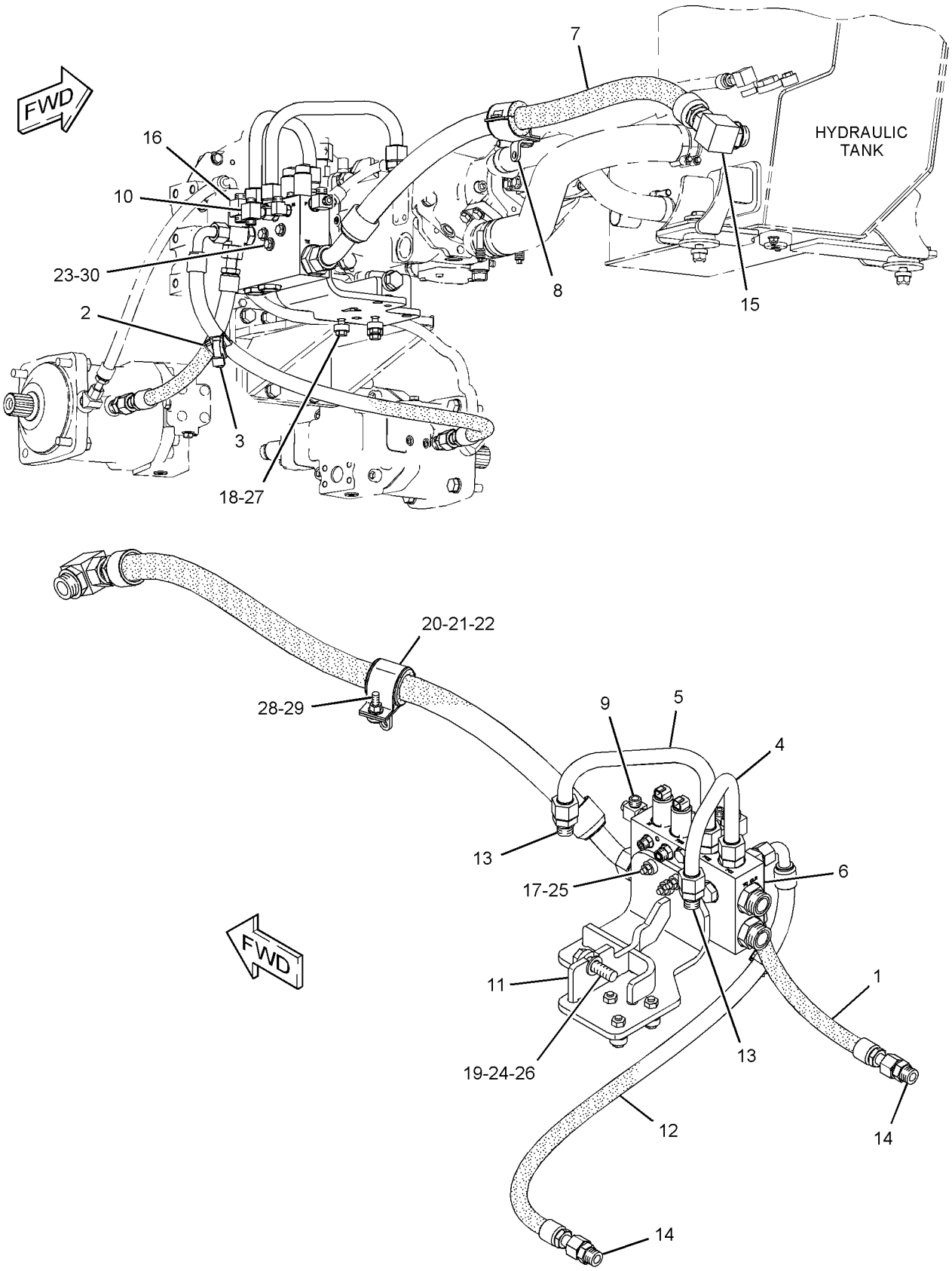

GRAPHIC #1 **<END>** g01334996

272-9222 LINES GP-POWER TRAIN OIL

S/N: LBP1-UP

PART OF 240-6226 POWER TRAIN AR

SMCS-3016 **i03587208**

NOTE	REF NO	GRAPHIC REF	PART NUMBER	QTY	PART NAME 1 2 3 4 5 6 (PRODUCT LEVEL)	SEE PAGE
	1	1	**185-4026**	1	VALVE GP-CHECK	
		1	**3K-0360**	1	SEAL-O-RING	
		1	**6V-8398**	1	SEAL-O-RING	
	2	1	**287-2962**	1	TUBE AS	
	3	1	**287-2963**	1	TUBE AS	
	4	1	**287-2964**	1	TUBE AS	
I	5	1	**289-9765**	1	HOSE AS	
I	6	1	**289-9766**	1	HOSE AS	
	7	1	*148-8336*	2	CONNECTOR AS	
					(EACH INCLUDES)	
		1	**6V-8636**	1	CONNECTOR	
		1	**3J-1907**	1	SEAL-O-RING	
		1	**6V-8397**	1	SEAL-O-RING	
	8	1	*148-8444*	1	TEE AS-SWIVEL	
		1	**6V-9837**	1	TEE-SWIVEL	
		1	**6V-8398**	2	SEAL-O-RING	
	9	1	*150-3037*	2	ELBOW AS	
					(EACH INCLUDES)	
		1	**8T-2530**	1	ELBOW	
		1	**3K-0360**	1	SEAL-O-RING	
		1	**7J-9108**	1	SEAL-O-RING	
	10	1	**1S-0994**	1	CLIP	
M	11	1	**5C-2890**	1	NUT (M6X1-THD)	
M	12	1	**6V-7357**	1	BOLT (M6X1X25-MM)	
	13	1	**7E-2707**	2	CLIP	
	14	1	**8T-4121**	1	WASHER-HARD (11X21X2.5-MM THK)	
M	15	1	**8T-4133**	1	NUT (M10X1.5-THD)	
	16	1	**9X-8256**	2	WASHER (6.6X12X2-MM THK)	
	17	1	**9R-0824**	1	SPACER (6.83X10.29X6.5-MM THK)	

I-REFER TO HYDRAULIC INFORMATION SYSTEM
M-METRIC PART

272-9222 **LINES GP-POWER TRAIN OIL** *(contd.)* **i03587208**

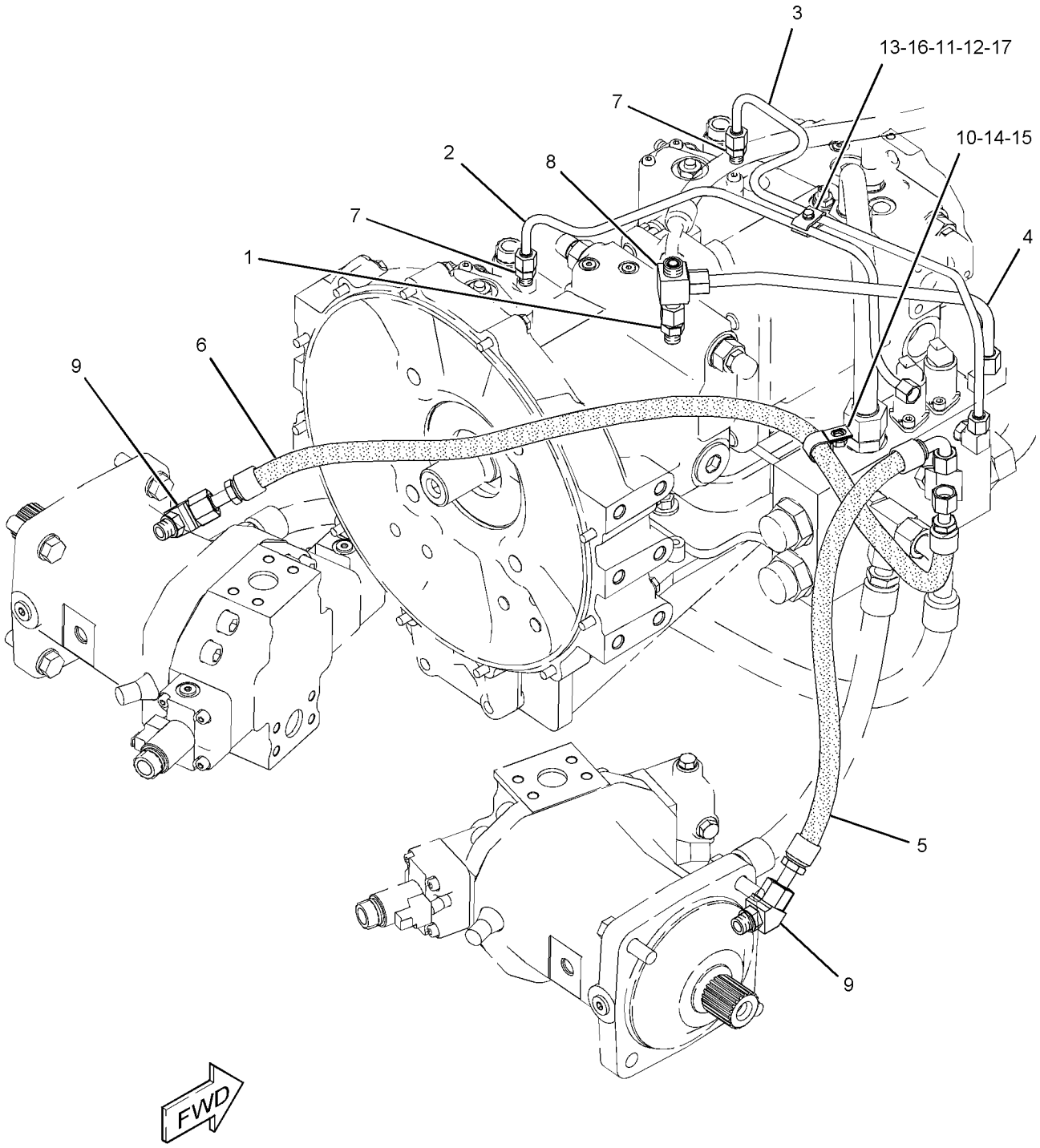

GRAPHIC #1 **<END>** g01374250

236-2123 MOTOR & MOUNTING GP—HYDROSTATIC DRIVE

S/N: LBP1-UP

PART OF 240-6226 POWER TRAIN AR

SMCS-5058 **i02648769**

NOTE	REF NO	GRAPHIC REF	PART NUMBER	QTY	PART NAME 1 2 3 4 5 6 (PRODUCT LEVEL)	SEE PAGE
Y	1	1	**243-6639**	1	MOTOR GP-PISTON (HYDROSTATIC DRIVE, LH)	298
Y	2	1	**243-6640**	1	MOTOR GP-PISTON (HYDROSTATIC DRIVE, RH)	299
	3	1	**2K-2939**	2	SEAL-O-RING	
M	4	1	**8T-4140**	8	BOLT (M16X2X60-MM)	
	5	1	**9X-8257**	8	WASHER (17.5X30X3.5-MM THK)	

M-METRIC PART
Y-SEPARATE ILLUSTRATION

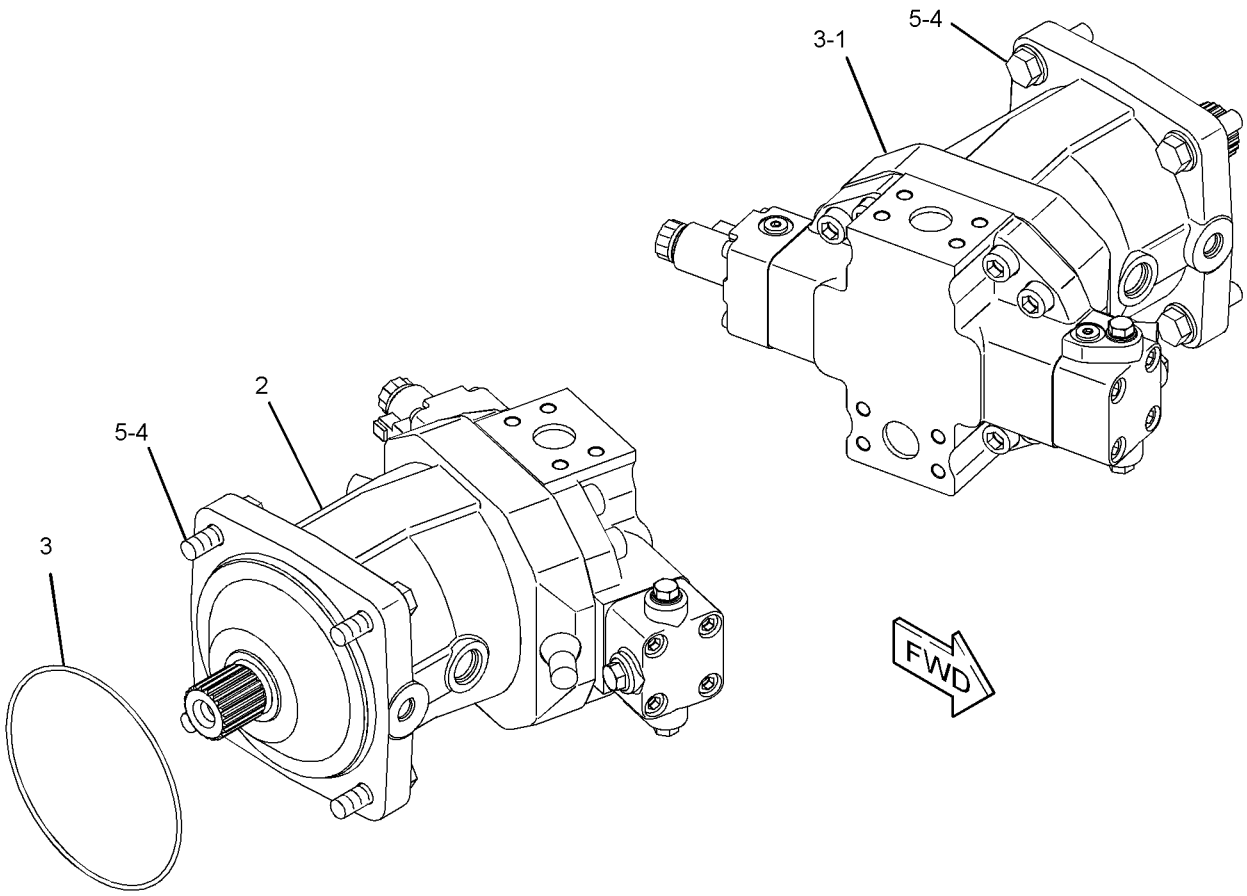

GRAPHIC #1 **<END>** g01185896

243-6639 MOTOR GP-PISTON—HYDROSTATIC DRIVE, LH

S/N: LBP1-UP

PART OF 236-2123 MOTOR & MOUNTING GP

SMCS-5058 **i02650486**

NOTE	REF NO	GRAPHIC REF	PART NUMBER	QTY	PART NAME 1 2 3 4 5 6 (PRODUCT LEVEL)	SEE PAGE
	1	1	**3J-0634**	1	SEAL-O-RING	
M	2	1	**6E-3283**	2	LOCKNUT	
M	3	1	**9X-8483**	1	SETSCREW-SOCKET (M12X1.75X80-MM)	
M	4	1	**125-1379**	1	SETSCREW-SOCKET (M12X1.75-THD)	
	5	1	**9S-8008**	1	PLUG-O-RING	
	6	1	**3K-0360**	1	SEAL-O-RING	
	7	1	**9S-8005**	2	PLUG-O-RING	
	8	1	**2M-9780**	2	SEAL-O-RING	
	9	1	**2W-1145**	1	RING-RETAINING	
	10	1	**124-9914**	1	SHIM (3-MM THK)	
	11	1	**124-9913**	1	SEAL-SHAFT	
Y	12	1	**278-8935**	1	HEAD GP-MOTOR (HYDROSTATIC DRIVE, LH)	283
Y	13	1	**278-8934**	1	ROTATING GP-MOTOR (HYDROSTATIC DRIVE)	311

M-METRIC PART
Y-SEPARATE ILLUSTRATION

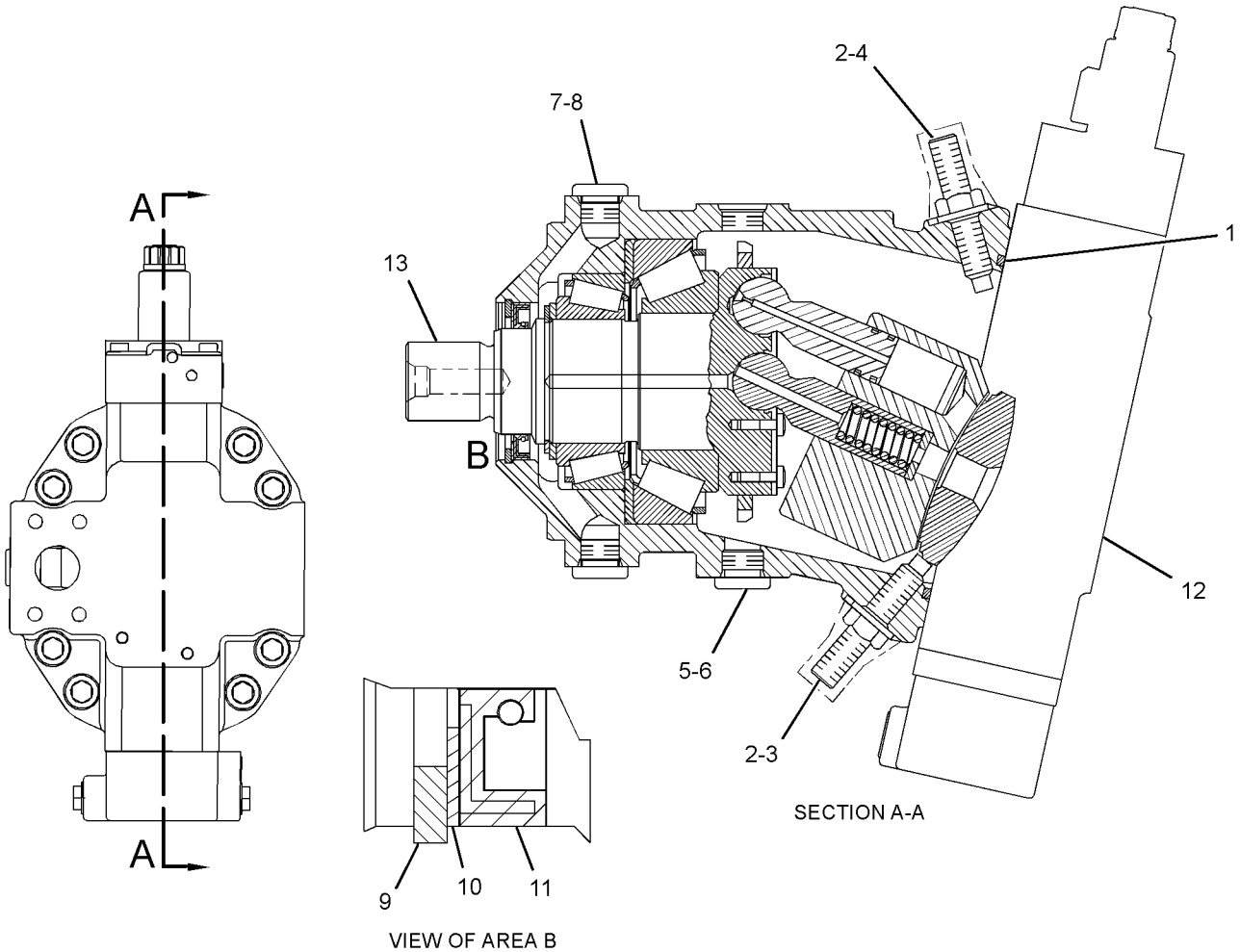

GRAPHIC #1 **<END>** g01328354

243-6640 MOTOR GP-PISTON—HYDROSTATIC DRIVE, RH

S/N: LBP1-UP

PART OF 236-2123 MOTOR & MOUNTING GP

SMCS-5058 **i02650479**

NOTE	REF NO	GRAPHIC REF	PART NUMBER	QTY	PART NAME 1 2 3 4 5 6 (PRODUCT LEVEL)	SEE PAGE
	1	1	**3J-0634**	1	SEAL-O-RING	
M	2	1	**6E-3283**	2	LOCKNUT	
M	3	1	**9X-8483**	1	SETSCREW-SOCKET (M12X1.75X80-MM)	
M	4	1	**125-1379**	1	SETSCREW-SOCKET (M12X1.75-THD)	
	5	1	**9S-8008**	1	PLUG-O-RING	
	6	1	**3K-0360**	1	SEAL-O-RING	
	7	1	**9S-8005**	2	PLUG-O-RING	
	8	1	**2M-9780**	2	SEAL-O-RING	
	9	1	**2W-1145**	1	RING-RETAINING	
	10	1	**124-9914**	1	SHIM (3-MM THK)	
	11	1	**124-9913**	1	SEAL-SHAFT	
Y	12	1	**279-0543**	1	HEAD GP-MOTOR (HYDROSTATIC DRIVE, RH)	284
Y	13	1	**278-8934**	1	ROTATING GP-MOTOR (HYDROSTATIC DRIVE)	311

M-METRIC PART
Y-SEPARATE ILLUSTRATION

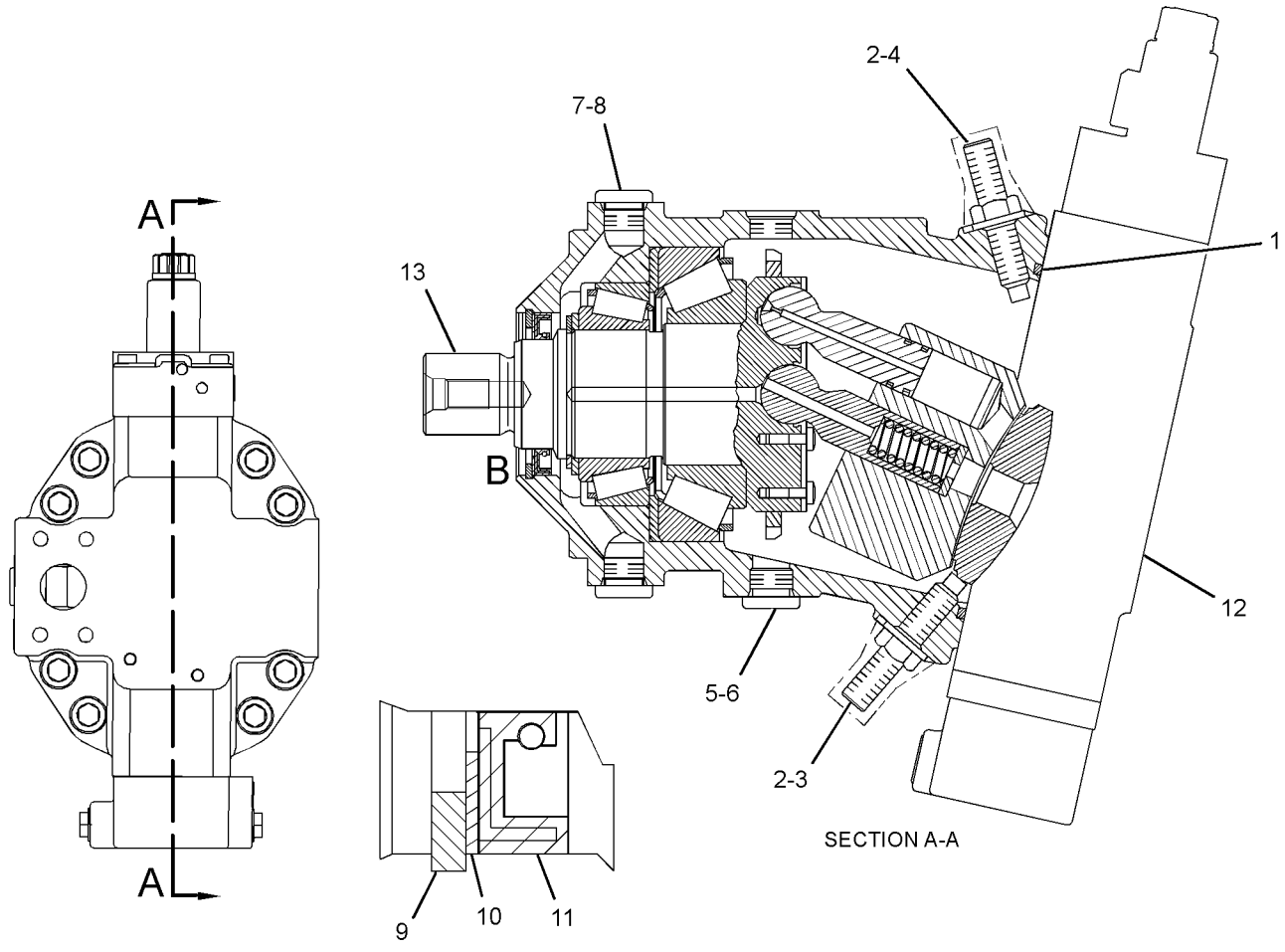

GRAPHIC #1 **<END>** g01328413

POWER TRAIN

240-6226 POWER TRAIN AR

S/N: LBP1-UP

PART OF 240-6223 GENERAL AR

SMCS-3000, 4000 **i02997887**

NOTE	PART NUMBER	QTY	PART NAME 1 2 3 4 5 6 (PRODUCT LEVEL)	SEE PAGE
Y	*206-7255*	1	COUPLING GP-PUMP	272
Y	*271-8879*	1	LINES GP-CHARGE PRESSURE	287
Y	*274-4262*	1	LINES GP-DIAGNOSTIC	740
Y	*271-9168*	1	LINES GP-HYDROSTATIC (DRAIN)	293
Y	*271-7082*	1	LINES GP-HYDROSTATIC (SUPPLY)	291
Y	*272-9222*	1	LINES GP-POWER TRAIN OIL	295
Y	*271-8890*	1	LINES GP-WATER	75
Y	*236-2123*	1	MOTOR & MOUNTING GP	297
Y	*274-7769*	1	MOUNTING GP-PUMP (HYDROSTATIC DRIVE)	466
Y	*273-5561*	1	PUMP & LINES GP	468
Y	*260-4497*	1	PUMP & MTG GP-POWER TRAIN	301
Y	*215-7172*	2	SEGMENT GP-SPROCKET	316

Y-SEPARATE ILLUSTRATION

<END>

260-4497 PUMP & MTG GP-POWER TRAIN–HYDROSTATIC DRIVE

S/N: LBP1-UP

PART OF 240-6226 POWER TRAIN AR

SMCS-3203 **i02652852**

NOTE	REF NO	GRAPHIC REF	PART NUMBER	QTY	PART NAME 1 2 3 4 5 6 (PRODUCT LEVEL)	SEE PAGE
Y	1	1	**243-6637**	1	PUMP GP-PISTON (HYDROSTATIC DRIVE)	304
	2	1	**8T-4123**	4	WASHER (22X35X3.5-MM THK)	
M	3	1	**8T-6430**	4	BOLT (M20X2.5X50-MM)	

M-METRIC PART
Y-SEPARATE ILLUSTRATION

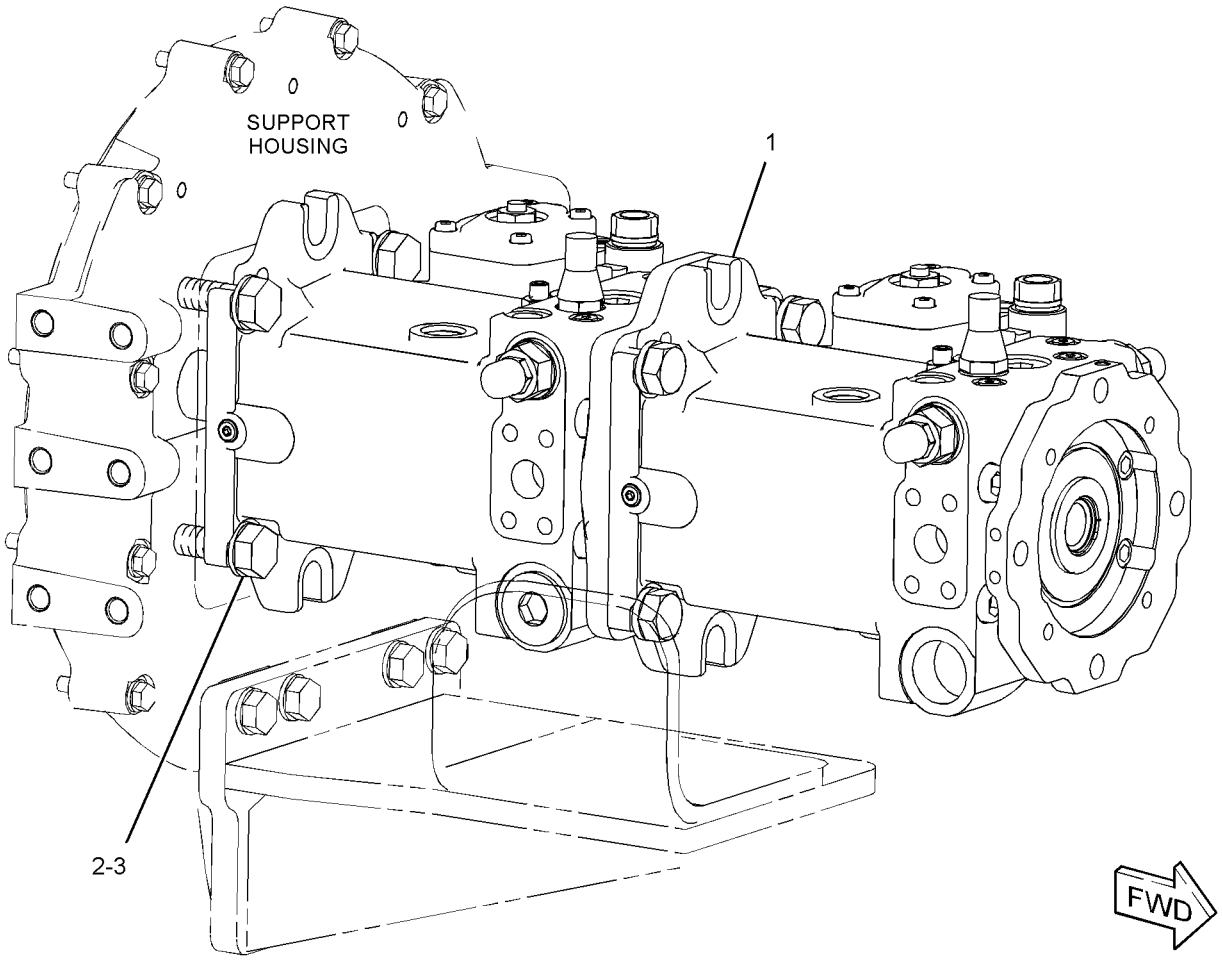

GRAPHIC #1 **<END>** g01336602

278-4448 PUMP GP-CHARGE—HYDROSTATIC DRIVE, LH

S/N: LBP1-UP

PART OF 261-3629 PUMP GP-PISTON

SMCS-3203, 3204 **i02592887**

NOTE	REF NO	GRAPHIC REF	PART NUMBER	QTY	PART NAME 1 2 3 4 5 6 (PRODUCT LEVEL)	SEE PAGE
	1	1	**8H-7521**	2	SEAL-O-RING	
	2	1	**278-8284**	2	COUPLING	
M	3	1	**8T-3957**	4	BOLT-SOCKET HEAD (M12X1.75X30-MM)	
	4	1	**7D-9014**	1	SEAL-O-RING	
	5	1	**145-5311**	1	SPACER	
	6	1	**8T-5049**	1	SEAL-O-RING	

M-METRIC PART

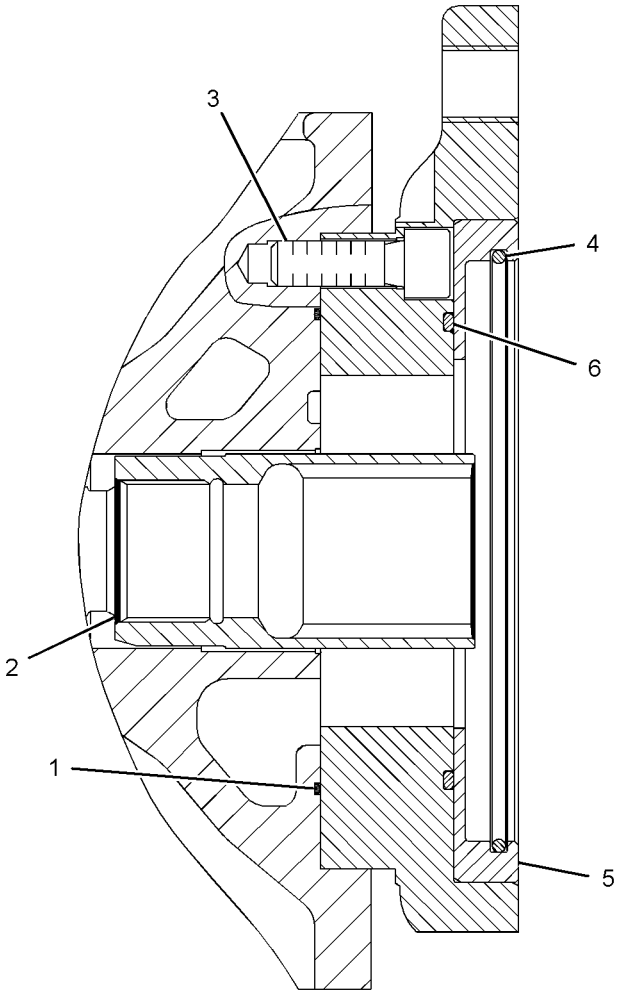

GRAPHIC #1 **<END>** g01304352

278-4449 PUMP GP-CHARGE—HYDROSTATIC DRIVE, RH

S/N: LBP1-UP

PART OF 261-3630 PUMP GP-PISTON

SMCS-3203, 3204 **i02592930**

NOTE	REF NO	GRAPHIC REF	PART NUMBER	QTY	PART NAME 1 2 3 4 5 6 (PRODUCT LEVEL)	SEE PAGE
	1	1	**8H-7521**	2	SEAL-O-RING	
	2	1	**270-5239**	1	PLATE-WEAR	
	3	1	**8T-5049**	1	SEAL-O-RING	
	4	1	**278-8283**	1	COUPLING	
	5	1	**117-7296**	1	KEY-SHAFT	
M	6	1	**8T-3957**	4	BOLT-SOCKET HEAD (M12X1.75X30-MM)	
	7	1	**126-1477**	1	BUSHING-COUPLING	
	8	1	**246-5804**	2	PLUG	
	9	1	**7J-6285**	1	SEAL-O-RING	
	10	1	**278-8282**	1	SPACER-SPECIAL	

M-METRIC PART

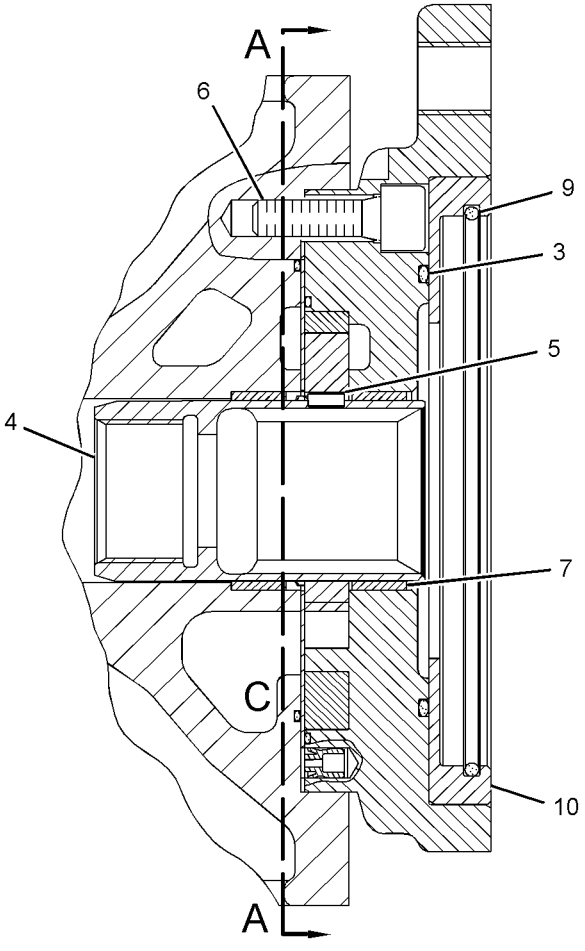

SECTION B-B

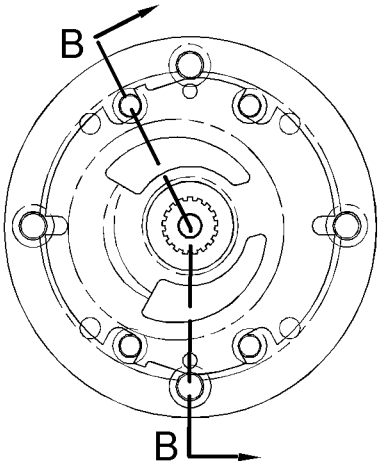

SECTION A-A

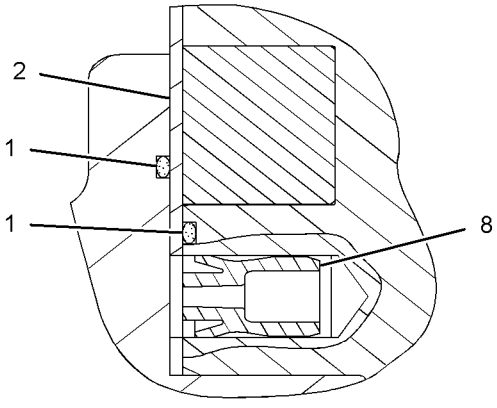

VIEW OF AREA C

GRAPHIC #1 **<END>** g01304419

243-6637 PUMP GP-PISTON—HYDROSTATIC DRIVE

S/N: LBP1-UP

PART OF 260-4497 PUMP & MTG GP-POWER TRAIN

SMCS-3203, 5070 **i02864061**

NOTE	REF NO	GRAPHIC REF	PART NUMBER	QTY	PART NAME 1 2 3 4 5 6 (PRODUCT LEVEL)	SEE PAGE
Y	1	1	**261-3629**	1	PUMP GP-PISTON (HYDROSTATIC DRIVE, LH)	305
Y	2	1	**261-3630**	1	PUMP GP-PISTON (HYDROSTATIC DRIVE, RH)	307
M	3	1	**7Y-5221**	4	BOLT-SOCKET HEAD (M20X2.5X45-MM)	
	4	1	**8T-4123**	4	WASHER (22X35X3.5-MM THK)	
	5	1	**2K-8257**	1	SEAL-O-RING	

M-METRIC PART
Y-SEPARATE ILLUSTRATION

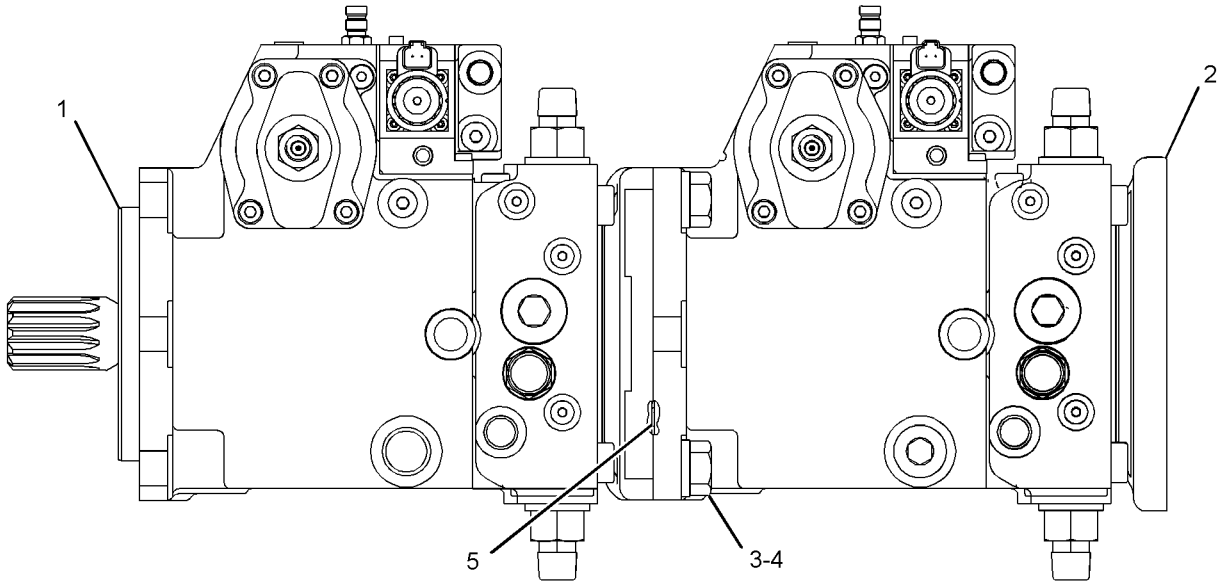

GRAPHIC #1 **<END>** g01428806

261-3629 PUMP GP-PISTON—HYDROSTATIC DRIVE, LH

S/N: LBP1-UP

PART OF 243-6637 PUMP GP-PISTON

SMCS-3203, 5070 **i02964850**

NOTE	REF NO	GRAPHIC REF	PART NUMBER	QTY	PART NAME 1 2 3 4 5 6 (PRODUCT LEVEL)	SEE PAGE
	1	1	**9T-3928**	4	PLUG AS	
					(EACH INCLUDES)	
		1	**187-8001**	1	SEAL	
	2	1	**9S-8004**	5	PLUG-O-RING	
	3	1	**126-1638**	2	PIN-JOINT	
Y	4	1	**278-4442**	1	VALVE GP-PUMP CONTROL (PRESSURE, FLOW COMPENSATOR) (HYDROSTATIC DRIVE)	323
	5	1	**167-6805**	2	PIN	
Y	6	1	**278-4437**	1	ROTATING GP-PUMP (HYDROSTATIC DRIVE, LH)	312
	7	1	**112-4628**	2	SCREW	
	8	1	**123-7574**	1	SCREW-LOCK	
	9	1	**126-1661**	1	PLUG	
	10	1	**123-7582**	1	PIN-THREADED	
Y	11	1	**278-4448**	1	PUMP GP-CHARGE (HYDROSTATIC DRIVE, LH)	302
	12	1	**6V-8978**	1	SEAL-O-RING	
	13	1	**123-7575**	1	SCREW-LOCK	
	14	1	**112-4629**	1	SCREW	
Y	15	1	**278-4440**	1	HEAD GP-PUMP (HYDROSTATIC DRIVE, LH)	285
M	16	1	**1G-3176**	1	SCREW-LOCK (M8-THD)	
	17	1	**6E-4350**	1	PIN	
Y	18	1	**278-4439**	1	ACTUATOR GP-PUMP (HYDROSTATIC DRIVE)	271
M	19	1	**6E-4385**	1	LOCKNUT (M12X1.5-THD)	

M-METRIC PART
Y-SEPARATE ILLUSTRATION

261-3629 PUMP GP-PISTON *(contd.)* **i02964850**

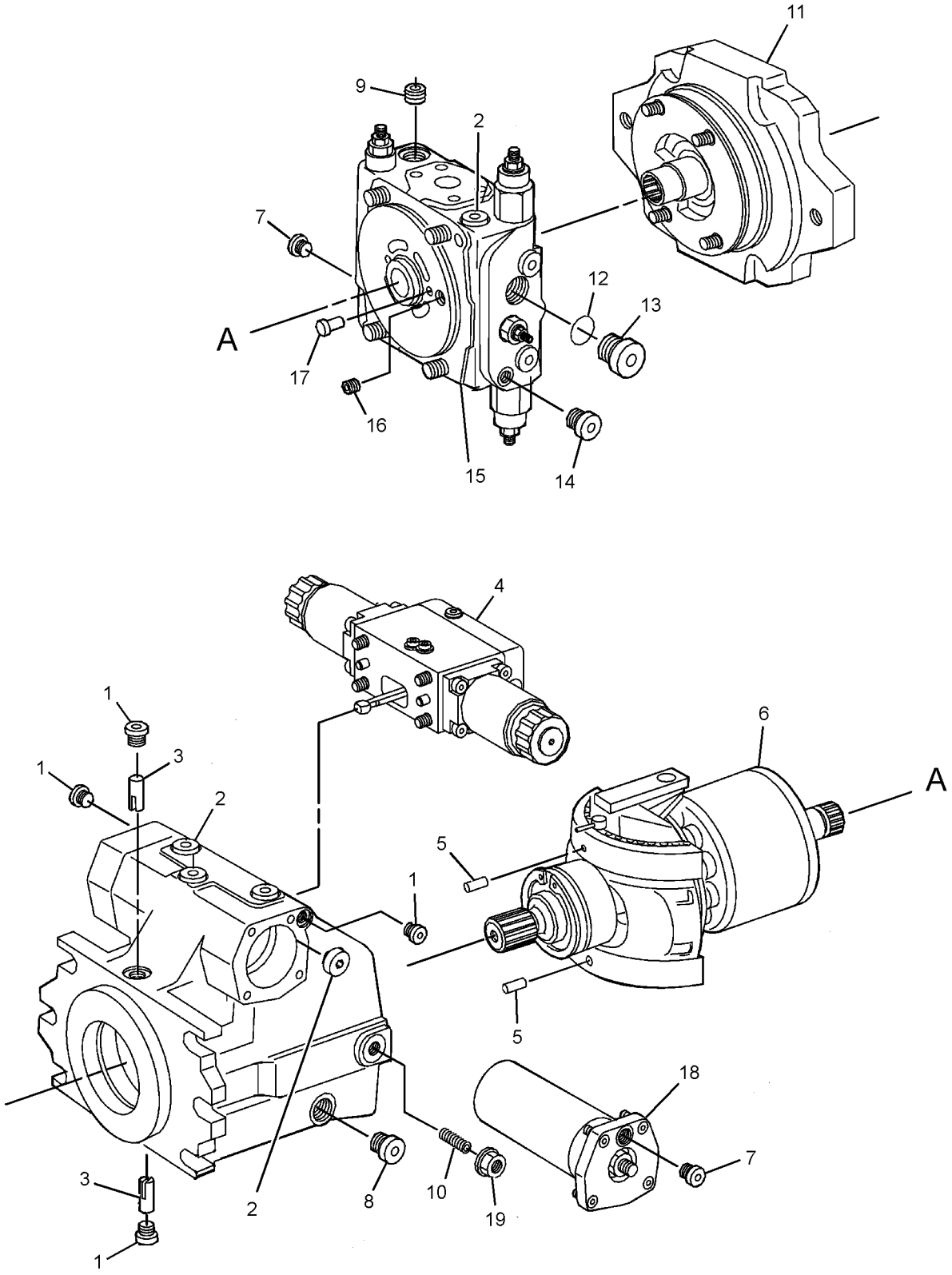

GRAPHIC #1 **<END>** g01302905

261-3630 PUMP GP-PISTON—HYDROSTATIC DRIVE, RH

S/N: LBP1-UP

PART OF 243-6637 PUMP GP-PISTON

SMCS-3203, 5070 **i02964981**

NOTE	REF NO	GRAPHIC REF	PART NUMBER	QTY	PART NAME 1 2 3 4 5 6 (PRODUCT LEVEL)	SEE PAGE
	1	1	**9T-3928**	4	PLUG AS	
					(EACH INCLUDES)	
		1	**187-8001**	1	SEAL	
	2	1	**9S-8004**	5	PLUG-O-RING	
	3	1	**126-1638**	2	PIN-JOINT	
Y	4	1	**278-4442**	1	VALVE GP-PUMP CONTROL (PRESSURE, FLOW COMPENSATOR) (HYDROSTATIC DRIVE)	323
	5	1	**167-6805**	2	PIN	
Y	6	1	*278-4438*	1	ROTATING GP-PUMP (HYDROSTATIC DRIVE, RH)	314
	7	1	**112-4628**	2	SCREW	
	8	1	**123-7574**	1	SCREW-LOCK	
	9	1	**126-1661**	1	PLUG	
	10	1	**123-7582**	1	PIN-THREADED	
Y	11	1	**278-4449**	1	PUMP GP-CHARGE (HYDROSTATIC DRIVE, RH)	303
	12	1	**6V-8978**	1	SEAL-O-RING	
	13	1	**123-7575**	1	SCREW-LOCK	
	14	1	**112-4629**	1	SCREW	
Y	15	1	**278-4441**	1	HEAD GP-PUMP (HYDROSTATIC DRIVE, RH)	286
M	16	1	**1G-3176**	1	SCREW-LOCK (M8-THD)	
	17	1	**6E-4350**	1	PIN	
Y	18	1	**278-4439**	1	ACTUATOR GP-PUMP (HYDROSTATIC DRIVE)	271
M	19	1	**6E-4385**	1	LOCKNUT (M12X1.5-THD)	

M-METRIC PART
Y-SEPARATE ILLUSTRATION

261-3630 PUMP GP-PISTON *(contd.)* i02964981

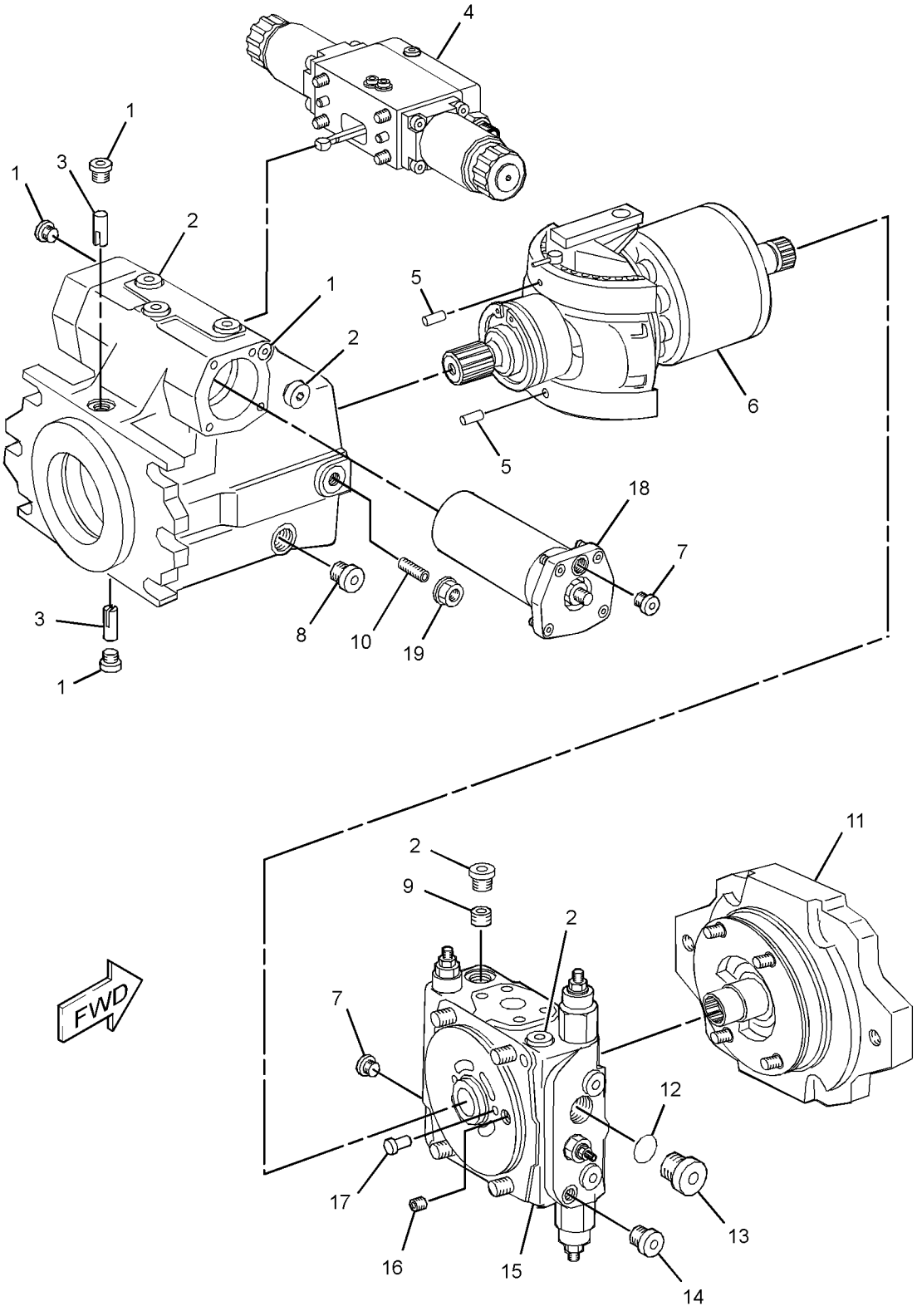

GRAPHIC #1 **<END>** g01303277

191-0885 ROTATING GP-MOTOR—HYDROSTATIC DRIVE

S/N: LBP1-UP

PART OF 278-8934 ROTATING GP-MOTOR

SMCS-5058 **i02645618**

NOTE	REF NO	GRAPHIC REF	PART NUMBER	QTY	PART NAME 1 2 3 4 5 6 (PRODUCT LEVEL)	SEE PAGE
	1	1	**191-1393**	1	BARREL-CYLINDER	
	2	1	**191-1394**	1	PLATE-CONTROL	
	3	1	**191-1395**	1	PIN	
	4	1	**191-1396**	7	PISTON AS	
					(EACH INCLUDES)	
		1	**191-1398**	2	RING-PISTON	
B	5	1	**124-9855**	1	SHIM (4.5-MM THK)	
B	6	1	**124-9856**	1	SHIM (4.6-MM THK)	
B	7	1	**124-9857**	1	SHIM (4.7-MM THK)	
B	8	1	**124-9858**	1	SHIM (4.8-MM THK)	
B	9	1	**124-9859**	1	SHIM (4.9-MM THK)	
B	10	1	**124-9860**	1	SHIM (5-MM THK)	
	11	1	**124-9861**	1	SPRING	
	12	1	**191-1397**	1	PLATE-RETAINING	
	13	1	**252-0706**	7	SCREW-PAN HEAD (M8X1.25X20-MM)	

B-USE AS REQUIRED

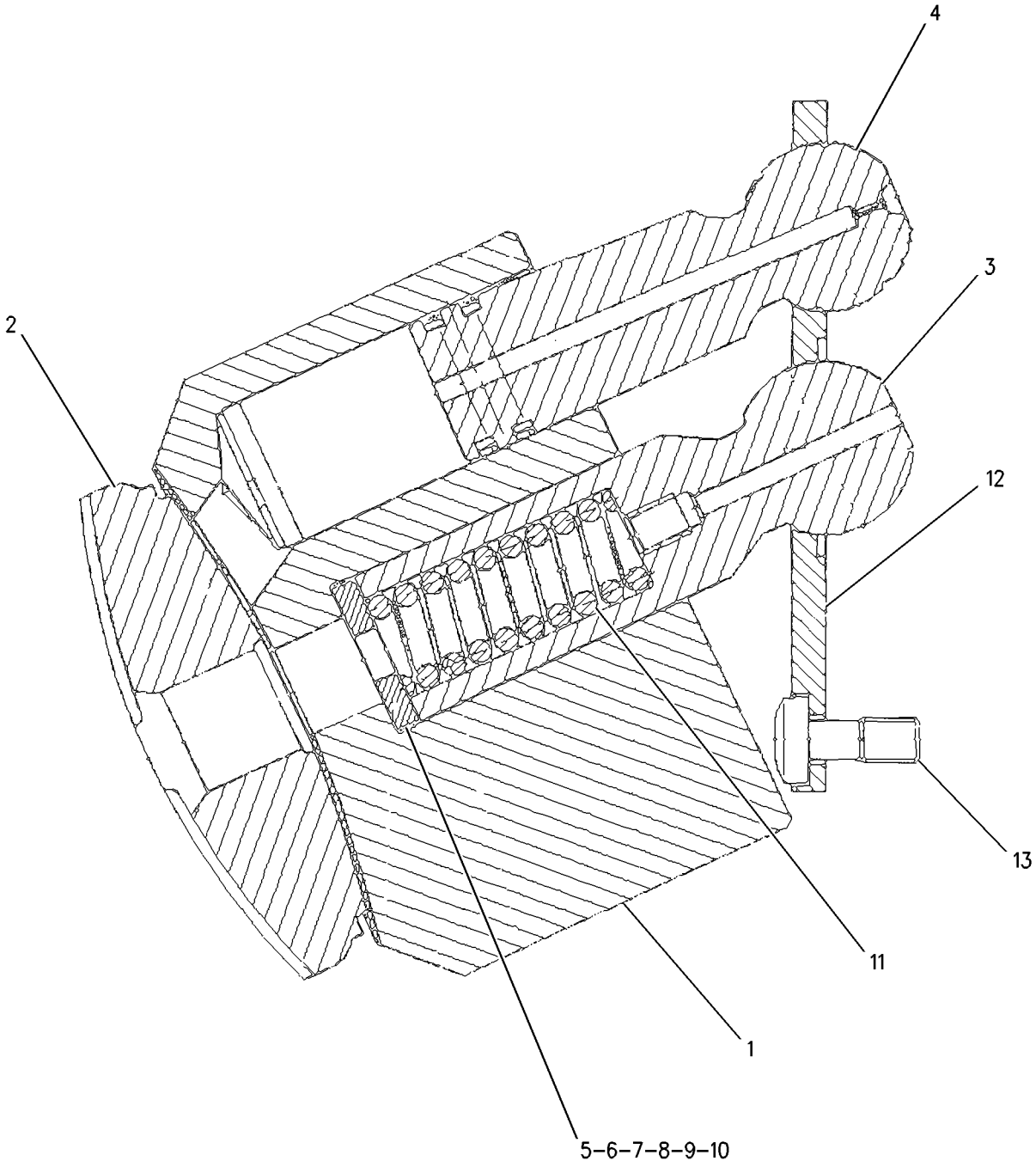

GRAPHIC #1 **<END>** g00713987

278-8934 ROTATING GP-MOTOR—HYDROSTATIC DRIVE

S/N: LBP1-UP

PART OF 243-6639, 243-6640 MOTOR GP-PISTON

SMCS-5058 **i02801489**

NOTE	REF NO	GRAPHIC REF	PART NUMBER	QTY	PART NAME 1 2 3 4 5 6 (PRODUCT LEVEL)	SEE PAGE
J	1	1	**191-1956**	1	KIT-BEARING (ROTATING GROUP)	
					(INCLUDES BEARINGS, SPACER, SHIM, & RETAINING RING)	
Y	2	1	**191-0885**	1	ROTATING GP-MOTOR (HYDROSTATIC DRIVE)	309
J	3	1	**095-0929**	1	RING-RETAINING	
	4	1	**278-4977**	1	SHAFT-DRIVE	
	5	1	**252-0706**	7	SCREW-PAN HEAD (M8X1.25X20-MM)	
B	6	1	**124-9855**	1	SHIM (4.5-MM THK)	
B	7	1	**124-9856**	1	SHIM (4.6-MM THK)	
B	8	1	**124-9857**	1	SHIM (4.7-MM THK)	
B	9	1	**124-9858**	1	SHIM (4.8-MM THK)	
B	10	1	**124-9859**	1	SHIM (4.9-MM THK)	
B	11	1	**124-9860**	1	SHIM (5-MM THK)	
					PARTS SHOWN IN GRAPHIC(S) WITHOUT A REFERENCE NUMBER ARE NOT SERVICED SEPARATELY	

B-USE AS REQUIRED
J-KIT MARKED J INCLUDES PART(S) MARKED J
Y-SEPARATE ILLUSTRATION

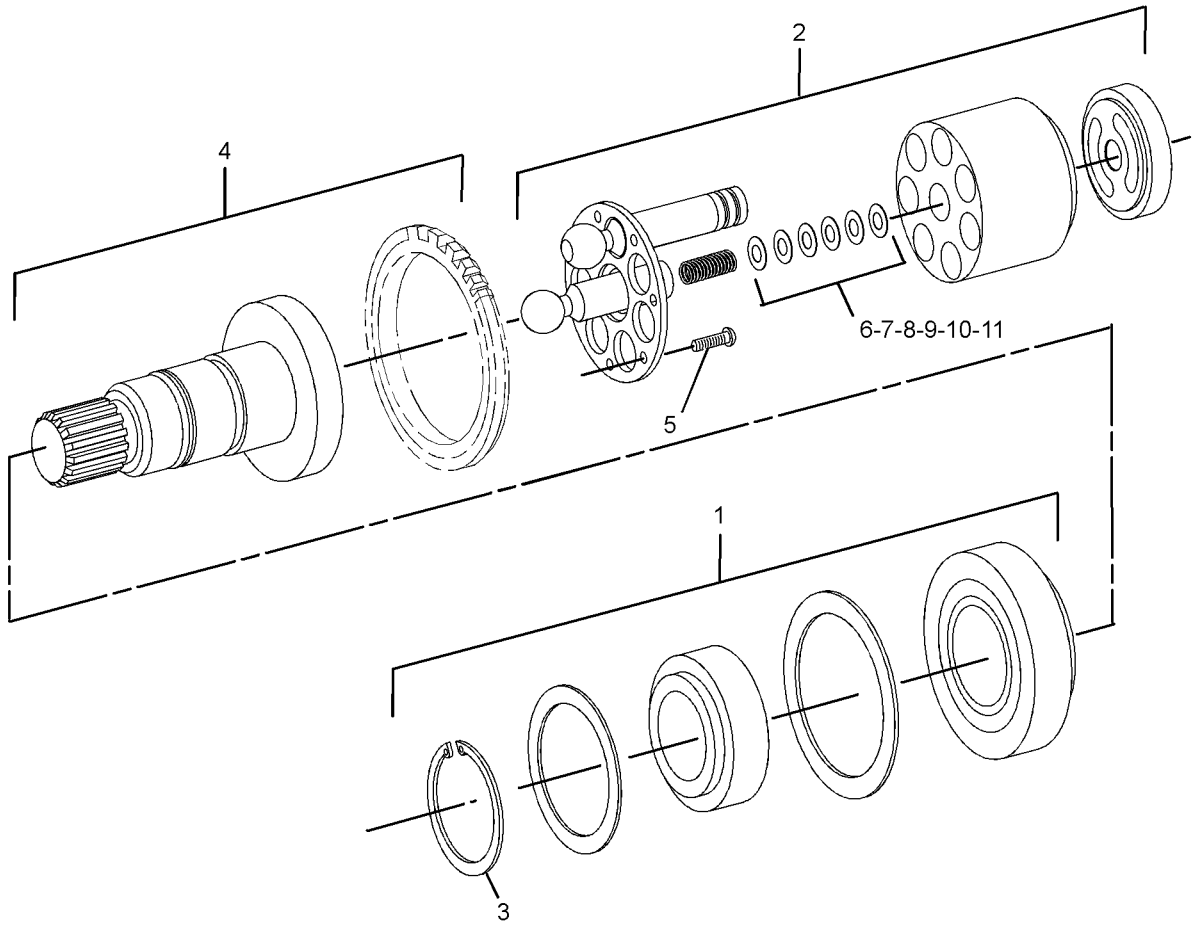

GRAPHIC #1 **<END>** g01412482

278-4437 ROTATING GP-PUMP—HYDROSTATIC DRIVE, LH

S/N: LBP1-UP

PART OF 261-3629 PUMP GP-PISTON

SMCS-3203, 5070 **i02830603**

NOTE	REF NO	GRAPHIC REF	PART NUMBER	QTY	PART NAME 1 2 3 4 5 6 (PRODUCT LEVEL)	SEE PAGE
	1	1	**159-9854**	2	RING-RETAINING	
	2	1	**126-1420**	1	SEAL-SHAFT	
	3	1	**142-9439**	1	BEARING AS	
	4	1	**6V-5201**	1	RING-RETAINING	
	5	1	**278-4464**	1	PLATE	
J	6	1	**114-4270**	1	RING-RETAINING	
J	7	1	**135-8054**	2	SHIM	
J	8	1	**262-7293**	1	KIT-PUMP ROTATING GROUP	
J	9	1	**126-1401**	1	SPRING SET	
BJ	10	1	**126-1405**	1	SHIM (1.2-MM THK)	
BJ	11	1	**126-1406**	1	SHIM (1-MM THK)	
BJ	12	1	**126-1407**	1	SHIM (0.8-MM THK)	
BJ	13	1	**126-1408**	1	SHIM (0.6-MM THK)	
	14	1	**126-1403**	1	PLATE-ADJUSTMENT	
	15	1	**278-4976**	1	SHAFT-DRIVE	
	16	1	**6E-0719**	2	ROD	
	17	1	**126-1413**	1	LINER-BEARING	
	18	1	**126-1419**	1	BEARING-CRADLE	
	19	1	**126-1402**	1	SWASHPLATE	

PARTS SHOWN IN GRAPHIC(S) WITHOUT A REFERENCE NUMBER ARE NOT SERVICED SEPARATELY

B-USE AS REQUIRED
J-KIT MARKED J INCLUDES PART(S) MARKED J

278-4437 **ROTATING GP-PUMP** *(contd.)* **i02830603**

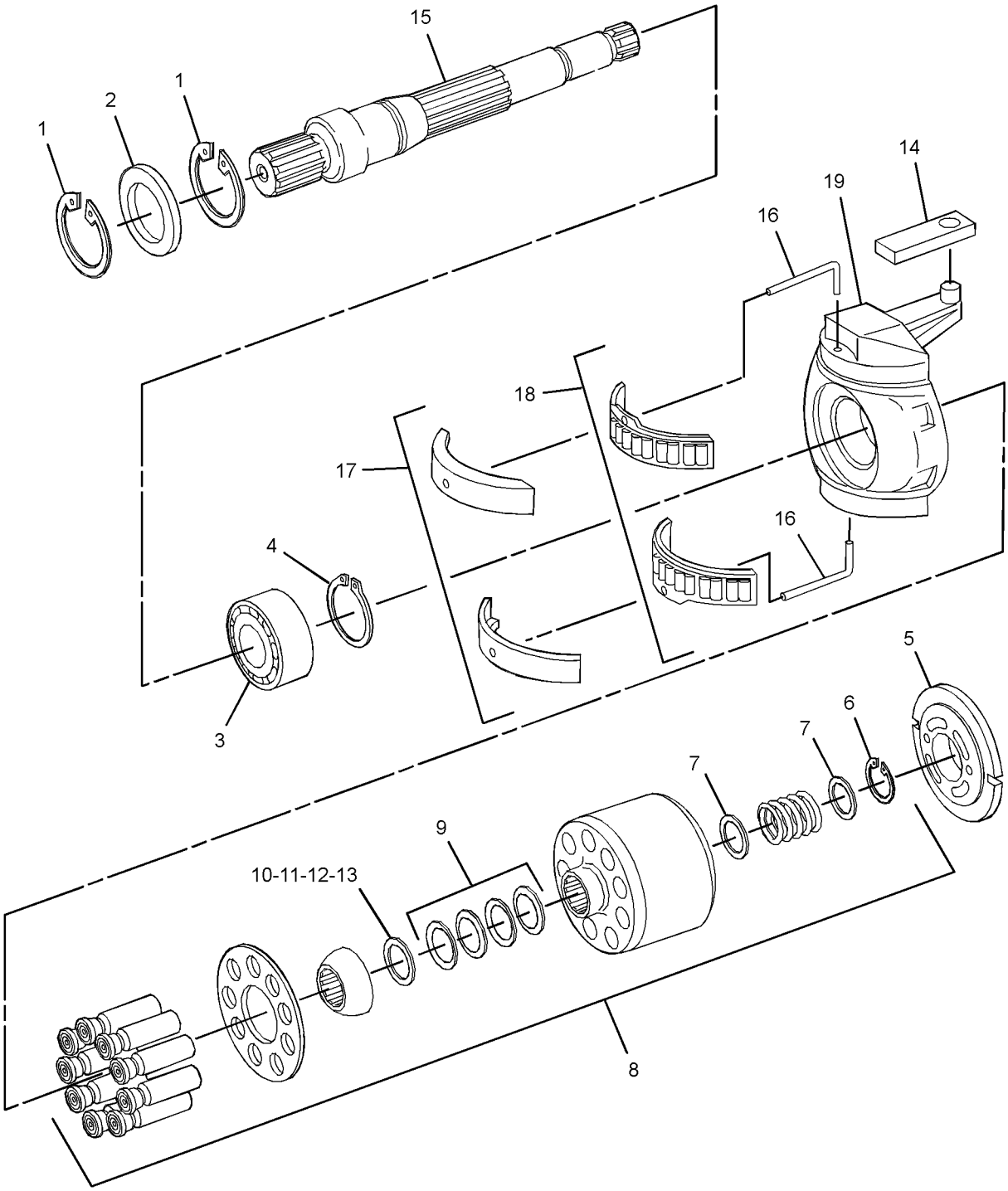

GRAPHIC #1 **<END>** g01411838

278-4438 ROTATING GP-PUMP—HYDROSTATIC DRIVE, RH

S/N: LBP1-UP

PART OF 261-3630 PUMP GP-PISTON

SMCS-3203, 5070 **i02830632**

NOTE	REF NO	GRAPHIC REF	PART NUMBER	QTY	PART NAME 1 2 3 4 5 6 (PRODUCT LEVEL)	SEE PAGE
	1	1	**159-9854**	2	RING-RETAINING	
	2	1	**126-1420**	1	SEAL-SHAFT	
	3	1	**142-9439**	1	BEARING AS	
	4	1	**6V-5201**	1	RING-RETAINING	
	5	1	**278-4464**	1	PLATE	
J	6	1	**114-4270**	1	RING-RETAINING	
J	7	1	**135-8054**	2	SHIM	
J	8	1	**262-7293**	1	KIT-PUMP ROTATING GROUP	
J	9	1	**126-1401**	1	SPRING SET	
BJ	10	1	**126-1405**	1	SHIM (1.2-MM THK)	
BJ	11	1	**126-1406**	1	SHIM (1-MM THK)	
BJ	12	1	**126-1407**	1	SHIM (0.8-MM THK)	
BJ	13	1	**126-1408**	1	SHIM (0.6-MM THK)	
	14	1	**126-1403**	1	PLATE-ADJUSTMENT	
	15	1	**145-5927**	1	SHAFT	
	16	1	**6E-0719**	2	ROD	
	17	1	**126-1413**	1	LINER-BEARING	
	18	1	**126-1419**	1	BEARING-CRADLE	
	19	1	**126-1402**	1	SWASHPLATE	

PARTS SHOWN IN GRAPHIC(S) WITHOUT A REFERENCE NUMBER ARE NOT SERVICED SEPARATELY

B-USE AS REQUIRED
J-KIT MARKED J INCLUDES PART(S) MARKED J

278-4438 **ROTATING GP-PUMP** *(contd.)* **i02830632**

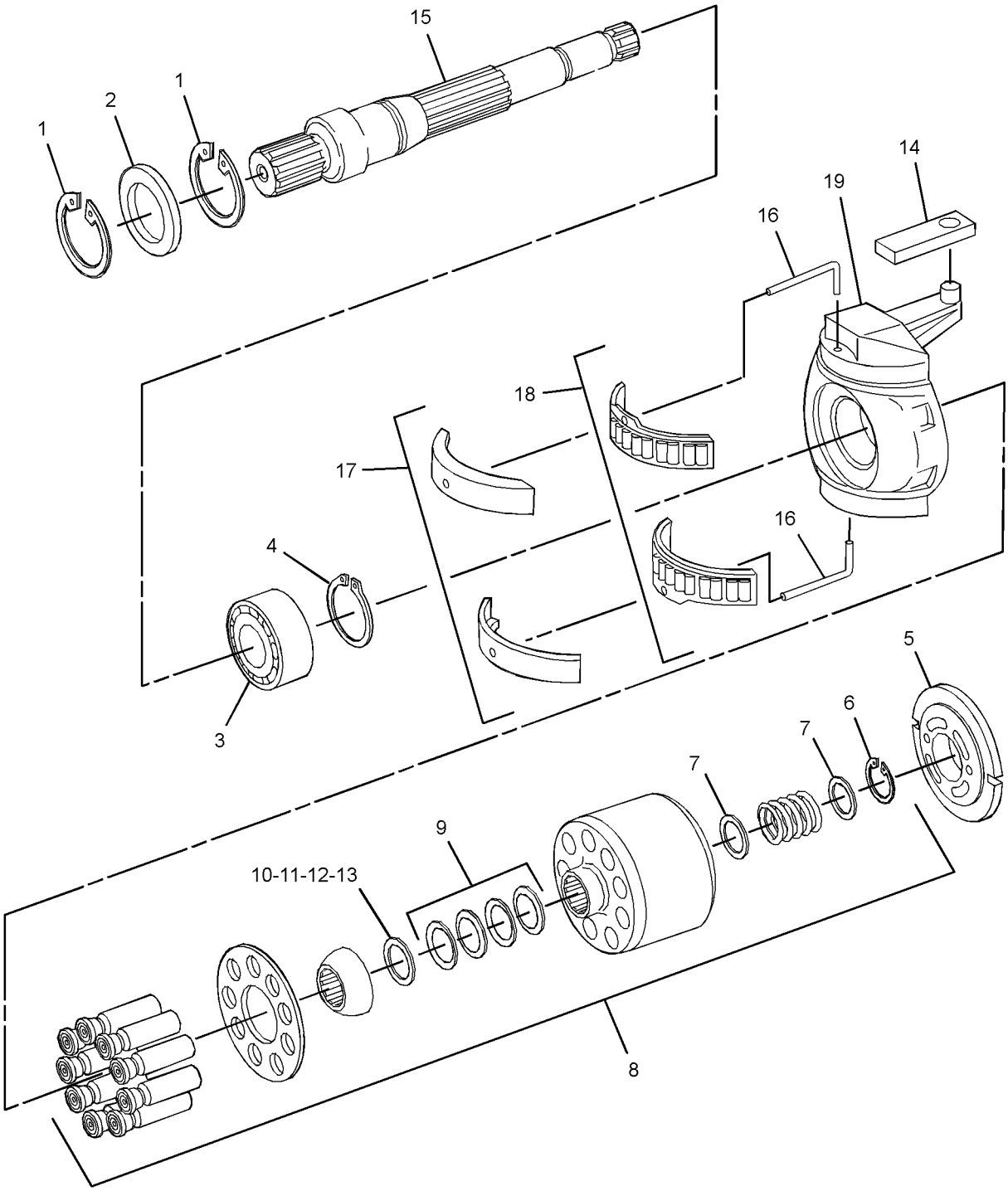

GRAPHIC #1 **<END>** g01411838

215-7172 SEGMENT GP-SPROCKET

S/N: LBP758-UP

PART OF 240-6226 POWER TRAIN AR

SMCS-4155 **i01919947**

NOTE	REF NO	GRAPHIC REF	PART NUMBER	QTY	PART NAME 1 2 3 4 5 6 (PRODUCT LEVEL)	SEE PAGE
	1	1	**196-4672**	25	NUT-SQUARE (M16X1.5 THD)	
	2	1	**197-9672**	5	SEGMENT-SPROCKET	
	3	1	**197-9674**	25	BOLT (M16X1.5X60MM)	

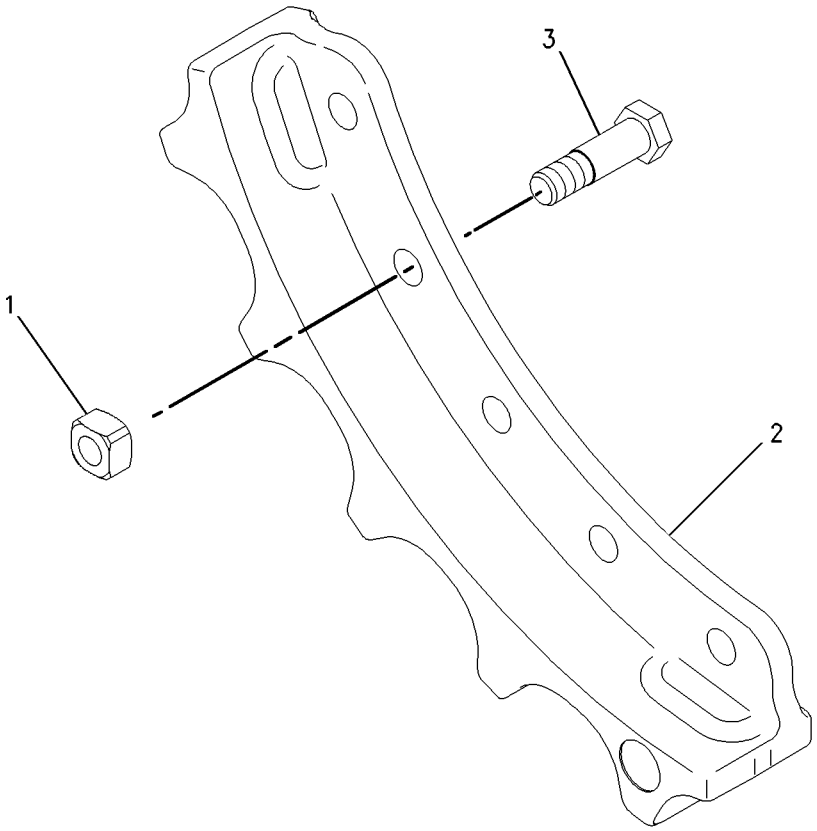

GRAPHIC #1 **<END>** g01002034

278-2372 SEGMENT GP-SPROCKET

S/N: LBP1-757

PART OF 240-6226 POWER TRAIN AR

SMCS-4155 **i02659446**

NOTE	REF NO	GRAPHIC REF	PART NUMBER	QTY	PART NAME 1 2 3 4 5 6 (PRODUCT LEVEL)	SEE PAGE
	1	1	**6V-0937**	25	BOLT (5/8-18X2.1-IN)	
	2	1	**197-9672**	5	SEGMENT-SPROCKET	

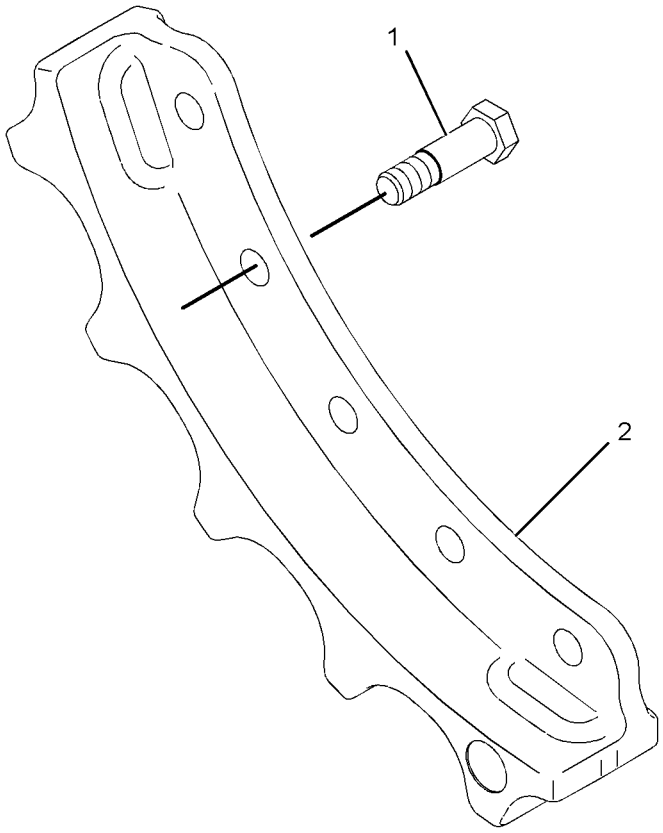

GRAPHIC #1 **<END>** g01340830

281-1680 VALVE & MTG GP-CONTROL—HYDROSTATIC DRIVE

S/N: LBP1-UP

PART OF 271-9168 LINES GP-HYDROSTATIC

SMCS-5051 **i02654331**

NOTE	REF NO	GRAPHIC REF	PART NUMBER	QTY	PART NAME 1 2 3 4 5 6 (PRODUCT LEVEL)	SEE PAGE
	1	1	*219-9654*	1	CONNECTOR AS	
		1	**109-3657**	1	CONNECTOR	
		1	**6K-6307**	1	SEAL-O-RING	
		1	**6V-8400**	1	SEAL-O-RING	
Y	2	1	**267-6709**	1	MANIFOLD & VALVE GP (HYDROSTATIC DRIVE)	417
	3	1	*148-8334*	2	CONNECTOR AS	
					(EACH INCLUDES)	
		1	**8T-3611**	1	CONNECTOR	
		1	**2S-4078**	1	SEAL-O-RING	
		1	**6V-8400**	1	SEAL-O-RING	
	4	1	*148-8335*	2	CONNECTOR AS	
					(EACH INCLUDES)	
		1	**6V-8635**	1	CONNECTOR	
		1	**5K-9090**	1	SEAL-O-RING	
		1	**7M-8485**	1	SEAL-O-RING	
	5	1	*148-8336*	1	CONNECTOR AS	
		1	**6V-8636**	1	CONNECTOR	
		1	**3J-1907**	1	SEAL-O-RING	
		1	**6V-8397**	1	SEAL-O-RING	
	6	1	*148-8340*	3	CONNECTOR AS	
					(EACH INCLUDES)	
		1	**6V-8639**	1	CONNECTOR	
		1	**3K-0360**	1	SEAL-O-RING	
		1	**6V-8398**	1	SEAL-O-RING	
	7	1	*148-8378*	1	ELBOW AS (90-DEG)	
		1	**6V-8724**	1	ELBOW (90-DEG)	
		1	**3J-1907**	1	SEAL-O-RING	
		1	**6V-8397**	1	SEAL-O-RING	
	8	1	*148-8411*	1	PLUG AS	
		1	**9S-4185**	1	PLUG-O-RING	
		1	**3K-0360**	1	SEAL-O-RING	
	9	1	*164-5574*	1	TEE AS	
		1	**6V-8784**	1	TEE-FACE SEAL	
		1	**3D-2824**	1	SEAL-O-RING	
		1	**6V-9746**	2	SEAL-O-RING	
	10	1	**5P-9436**	1	PLUG	

Y-SEPARATE ILLUSTRATION

281-1680 VALVE & MTG GP-CONTROL *(contd.)* **i02654331**

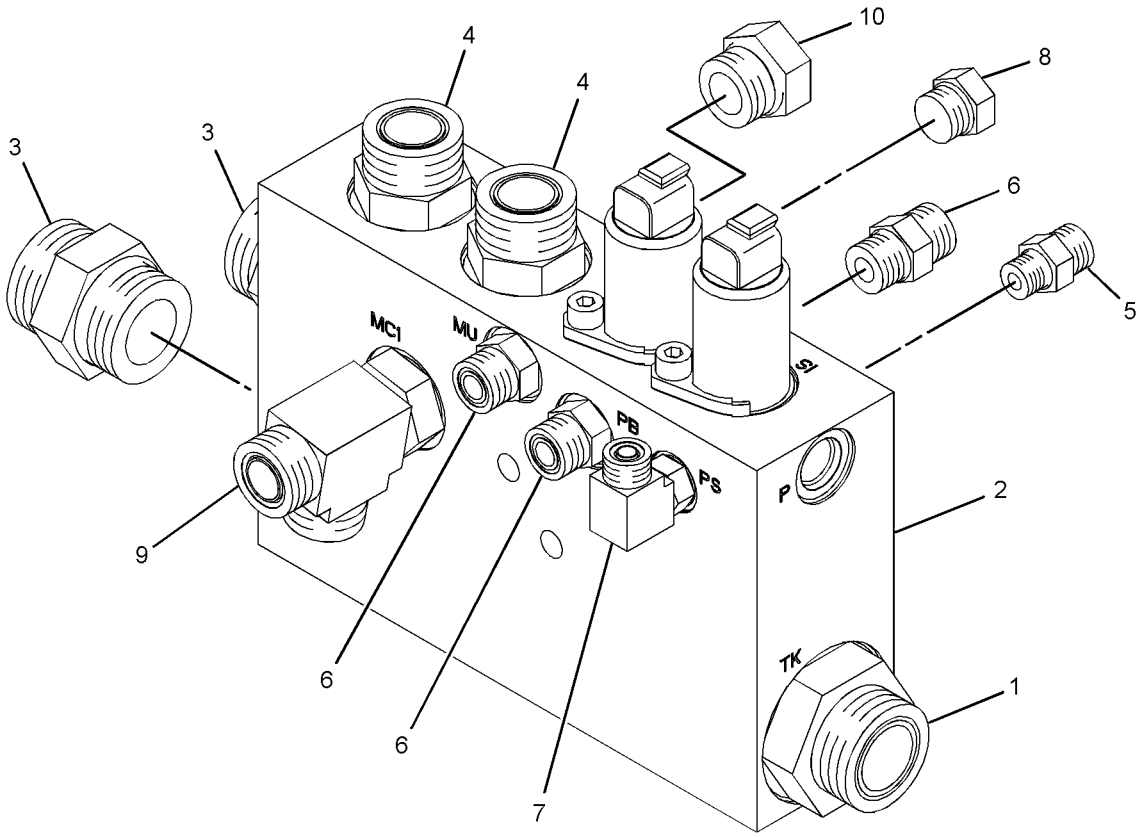

GRAPHIC #1 **<END>** g01341645

301-7890 VALVE GP-CHECK

S/N: LBP1-UP

PART OF 278-8935, 279-0543 HEAD GP-MOTOR

SMCS-5067 **i02652586**

NOTE	REF NO	GRAPHIC REF	PART NUMBER	QTY	PART NAME 1 2 3 4 5 6 (PRODUCT LEVEL)	SEE PAGE
	1	1	**033-6039**	1	SEAL-O-RING	
	2	1	**242-0262**	1	RING-BACKUP	
	3	1	**269-4676**	1	SEAL-O-RING	

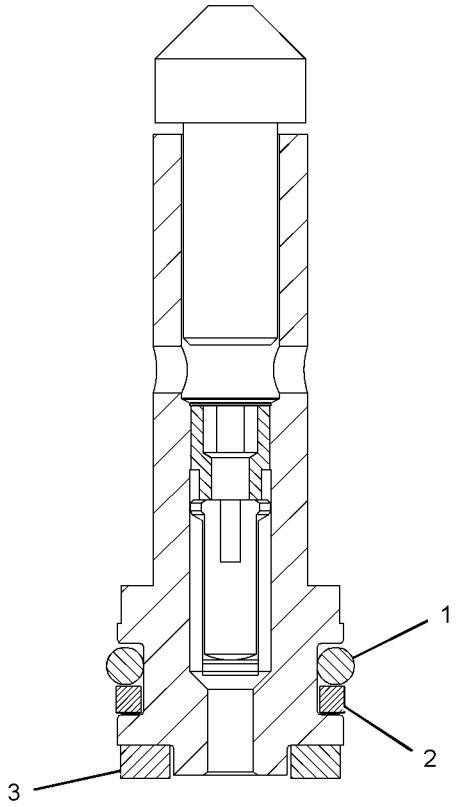

GRAPHIC #1 **<END>** g01332617

278-8937 VALVE GP-FLUSHING—HYDROSTATIC DRIVE

S/N: LBP1-UP

PART OF 278-8935, 279-0543 HEAD GP-MOTOR

SMCS-5066 **i02645627**

NOTE	REF NO	GRAPHIC REF	PART NUMBER	QTY	PART NAME 1 2 3 4 5 6 (PRODUCT LEVEL)	SEE PAGE
	1	1	**125-4572**	1	RING-RETAINING	
	2	1	**109-4441**	1	PLUG	
	3	1	**124-9901**	1	SPRING	
	4	1	**124-9904**	1	SHIM (1-MM THK)	
	5	1	**124-9905**	1	SHIM (0.3-MM THK)	
	6	1	**124-9906**	1	SHIM (0.5-MM THK)	
	7	1	**6V-8351**	1	SEAL-O-RING	
	8	1	**124-9896**	1	VALVE-PISTON	
	9	1	**279-0354**	1	ORIFICE	
M	10	1	**8T-7811**	4	BOLT-SOCKET HEAD (M12X1.75X50-MM)	
	11	1	**124-9894**	1	HOUSING	
	12	1	**124-9895**	1	PISTON	
	13	1	**124-9899**	2	SPACER	
	14	1	**107-3117**	2	SEAL-O-RING	
	15	1	**124-9900**	2	SPRING	
	16	1	**124-9891**	2	PLUG	
	17	1	**9S-8004**	1	PLUG-O-RING	
	18	1	**3J-1907**	1	SEAL-O-RING	
	19	1	**061-7540**	1	SEAL-O-RING	

M-METRIC PART

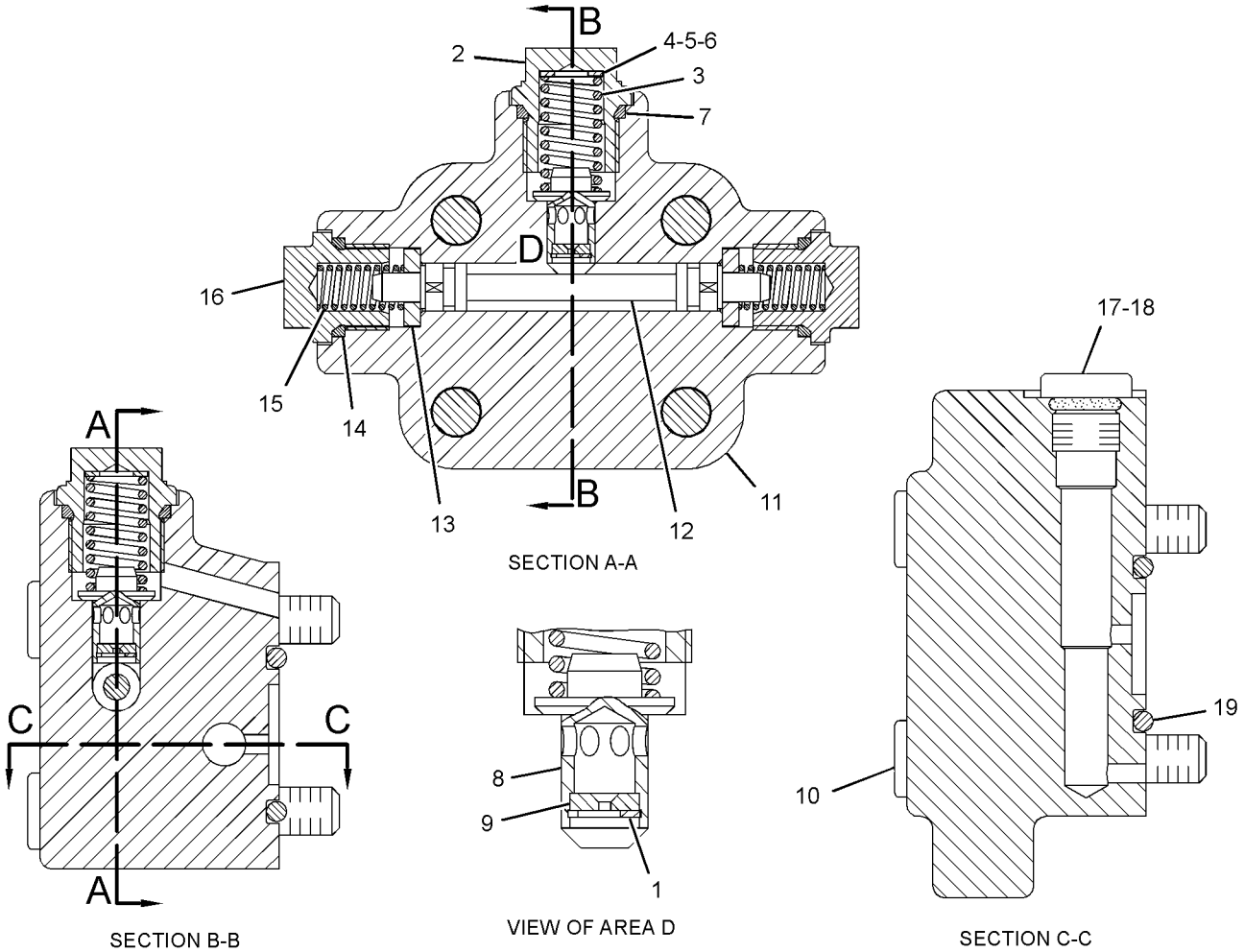

GRAPHIC #1

<END>

g01328254

278-8936 VALVE GP-MOTOR CONTROL—HYDROSTATIC DRIVE

S/N: LBP1-UP

PART OF 278-8935, 279-0543 HEAD GP-MOTOR

SMCS-5455 **i02645622**

NOTE	REF NO	GRAPHIC REF	PART NUMBER	QTY	PART NAME 1 2 3 4 5 6 (PRODUCT LEVEL)	SEE PAGE
M	1	1	**8T-0338**	4	BOLT-SOCKET HEAD (M8X1.25X45-MM)	
	2	1	**9S-8004**	1	PLUG-O-RING	
	3	1	**3J-1907**	1	SEAL-O-RING	
M	4	1	**145-8746**	1	SCREW	
	5	1	**9T-3853**	1	LOCKNUT	
	6	1	**095-0933**	1	RING-RETAINING	
	7	1	**6V-1250**	1	SEAL-O-RING	
	8	1	**242-0814**	1	PIN	
	9	1	**124-9888**	1	SPRING	
	10	1	**242-9251**	1	SPRING-COLLAR	
	11	1	**124-9948**	1	RETAINER	
	12	1	**124-9887**	1	BUSHING	
	13	1	**124-9945**	1	BUSHING	
	14	1	**120-4394**	1	PLUG-BREAK OFF	
	15	1	**123-9769**	1	PLUG	
	16	1	**257-4210**	1	HOUSING	
	17	1	**269-4669**	1	SOLENOID AS (PILOT VALVE)	
		1	**217-3875**	1	SEAL-O-RING	

M-METRIC PART

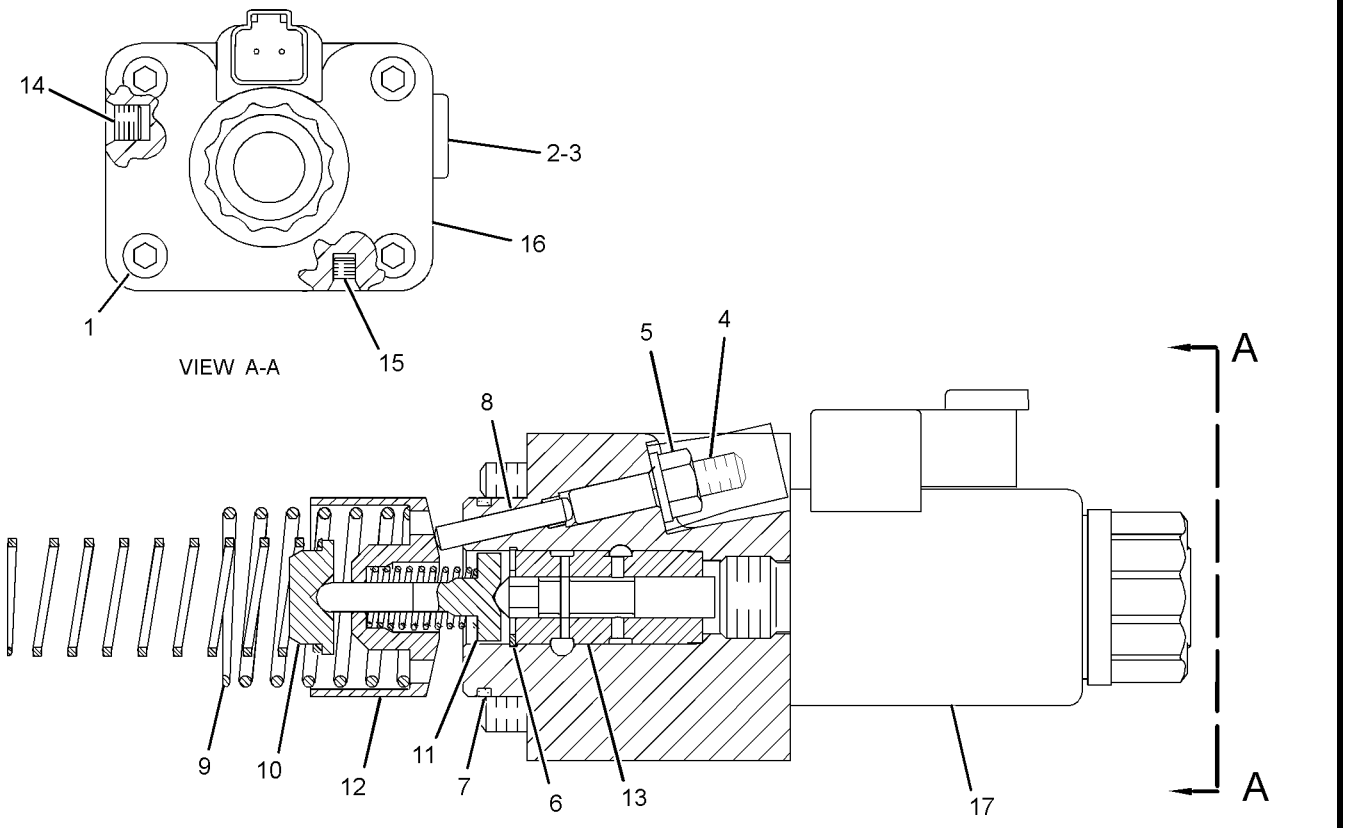

GRAPHIC #1 **<END>** g01328435

278-4442 VALVE GP-PUMP CONTROL–
PRESSURE, FLOW COMPENSATOR
S/N: LBP1-UP
PART OF 261-3629, 261-3630 PUMP GP-PISTON

SMCS-5455 **i03587216**

NOTE	REF NO	GRAPHIC REF	PART NUMBER	QTY	PART NAME 1 2 3 4 5 6 (PRODUCT LEVEL)	SEE PAGE
M	1	1	**6V-5683**	2	BOLT (M6X1X16-MM)	
	2	1	**269-4669**	2	SOLENOID AS (HYDROSTATIC PUMP)	
					(EACH INCLUDES)	
		1	**217-3875**	1	SEAL-O-RING	
	3	1	**196-4250**	2	SPACER	
	4	1	**6V-8400**	1	SEAL-O-RING	
	5	1	**9S-8004**	1	PLUG-O-RING	
	6	1	**236-5157**	1	SCREEN-FILTER (PUMP CONTROL VALVE)	
	7	1	**262-7701**	1	GASKET	
M	8	1	**143-6020**	4	BOLT-SOCKET HEAD (M6X1X75-MM)	
	9	1	**095-1750**	2	SEAL-O-RING	
M	10	1	**196-9444**	8	BOLT-SOCKET HEAD (M5XO.8X10-MM)	
	11	1	**6V-8398**	2	SEAL-O-RING	
	12	1	**6V-5586**	1	SEAL-O-RING	
	13	1	**196-4254**	2	SPRING	
	14	1	**202-6535**	1	PIN	
	15	1	**085-7539**	2	SEAL-O-RING	
	16	1	**6M-5062**	3	SEAL-O-RING	
	17	1	**3J-1907**	1	SEAL-O-RING	
	18	1	**8F-9538**	1	SEAL-O-RING	
	19	1	**215-8011**	1	BOLT-SPECIAL	
	20	1	**144-9101**	1	PLUG-BREAK OFF	
	21	1	**215-8010**	1	SHIM (3-MM THK)	
	22	1	**324-2713**	1	SPACER-SPECIAL	

M-METRIC PART

278-4442 VALVE GP-PUMP CONTROL *(contd.)* i03587216

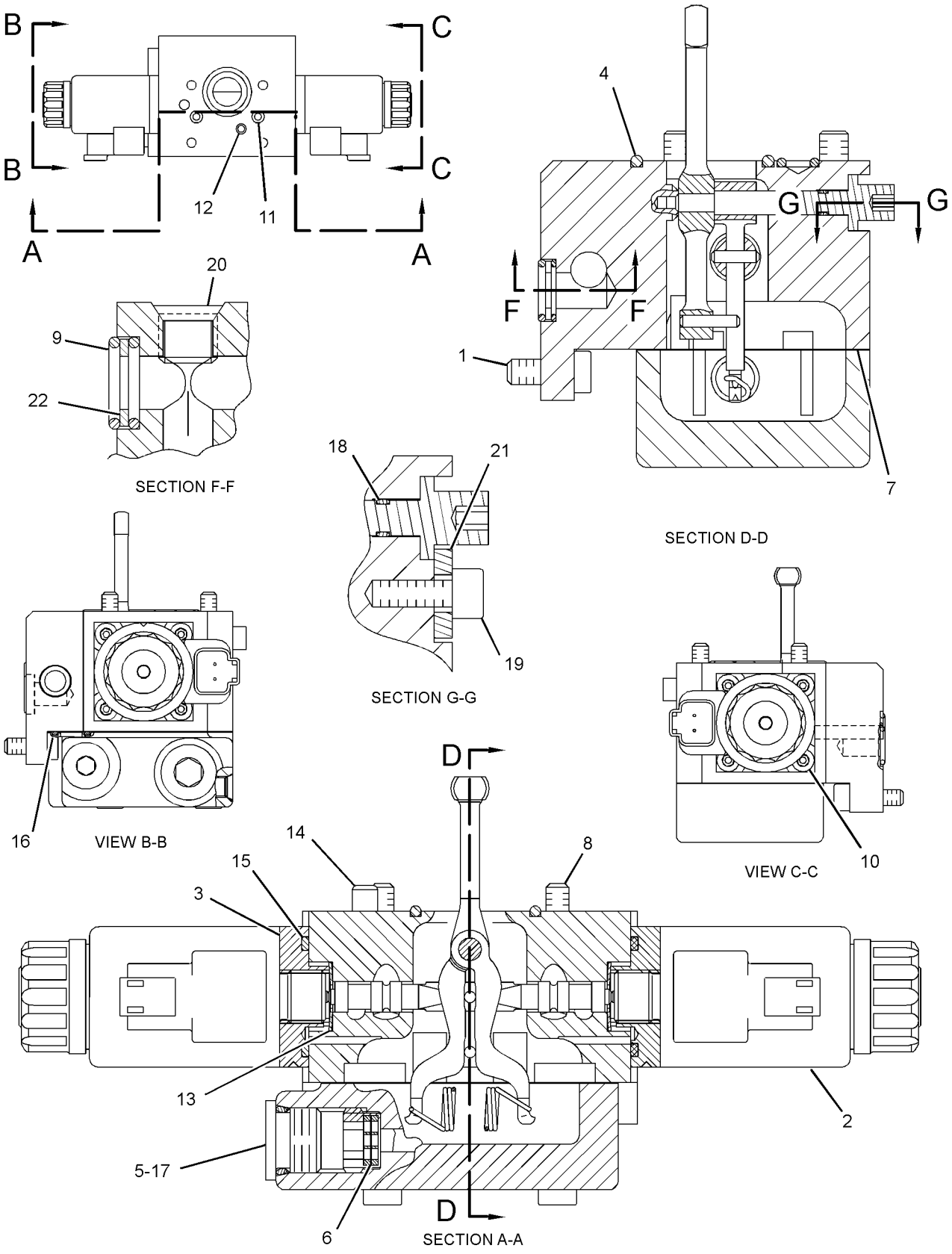

GRAPHIC #1 **<END>** g01520315

6E-4402 VALVE GP-RELIEF–CHARGE PRESSURE–
HYDROSTATIC DRIVE
S/N: LBP1-UP
PART OF 278-4440, 278-4441 HEAD GP-PUMP

SMCS-3133, 3182 **i02591004**

NOTE	REF NO	GRAPHIC REF	PART NUMBER	QTY	PART NAME 1 2 3 4 5 6 (PRODUCT LEVEL)	SEE PAGE
	1	1	**202-2342**	1	SPRING	
	2	1	**6E-4404**	1	VALVE-POPPET	
	3	1	**183-8410**	1	SCREW	
	4	1	**6E-4403**	1	PLUG	
M	5	1	**6E-4240**	1	NUT-SEALING (M10X1-THD)	
	6	1	**6V-8352**	1	SEAL-O-RING	
	7	1	**167-7715**	1	RETAINER-SPRING	

M-METRIC PART

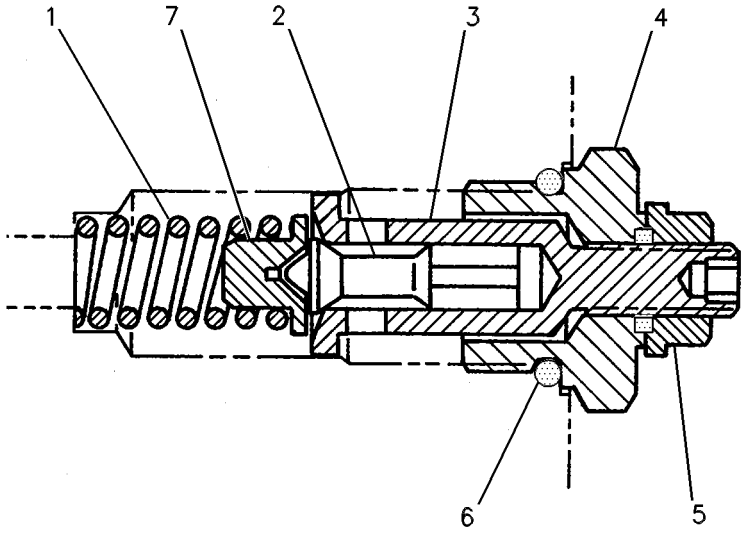

GRAPHIC #1 **<END>** g00252131

275-6395 BAR GP-STRIKER

S/N: LBP1-UP
CANNOT BE USED WITH RIPPER AR, LIGHT & HEAVY COUNTERWEIGHT AR & LIFTING EYE AR
AN ATTACHMENT

SMCS-7180 **i02861846**

NOTE	REF NO	GRAPHIC REF	PART NUMBER	QTY	PART NAME 1 2 3 4 5 6 (PRODUCT LEVEL)	SEE PAGE
	1	1	**2G-2885**	4	WASHER (20.6X114.3X12-MM THK)	
	2	1	**298-5981**	1	BAR AS-STRIKER (RH)	
	3	1	**298-5982**	1	BAR AS-STRIKER (LH)	
	4	1	**298-5983**	4	PIN	
	5	1	**298-5985**	4	SPACER (26X90X18-MM THK)	
	6	1	**298-5986**	4	SPACER (72X105X16-MM THK)	
	7	1	**298-5987**	4	SPACER (64X143X12-MM THK)	
M	8	1	**7X-2576**	4	BOLT (M24X3X70-MM)	
M	9	1	**8T-6430**	4	BOLT (M20X2.5X50-MM)	
M	10	1	**8T-4190**	1	BOLT (M16X2X25-MM)	
	11	1	**9X-8257**	1	WASHER (17.5X30X3.5-MM THK)	

M-METRIC PART

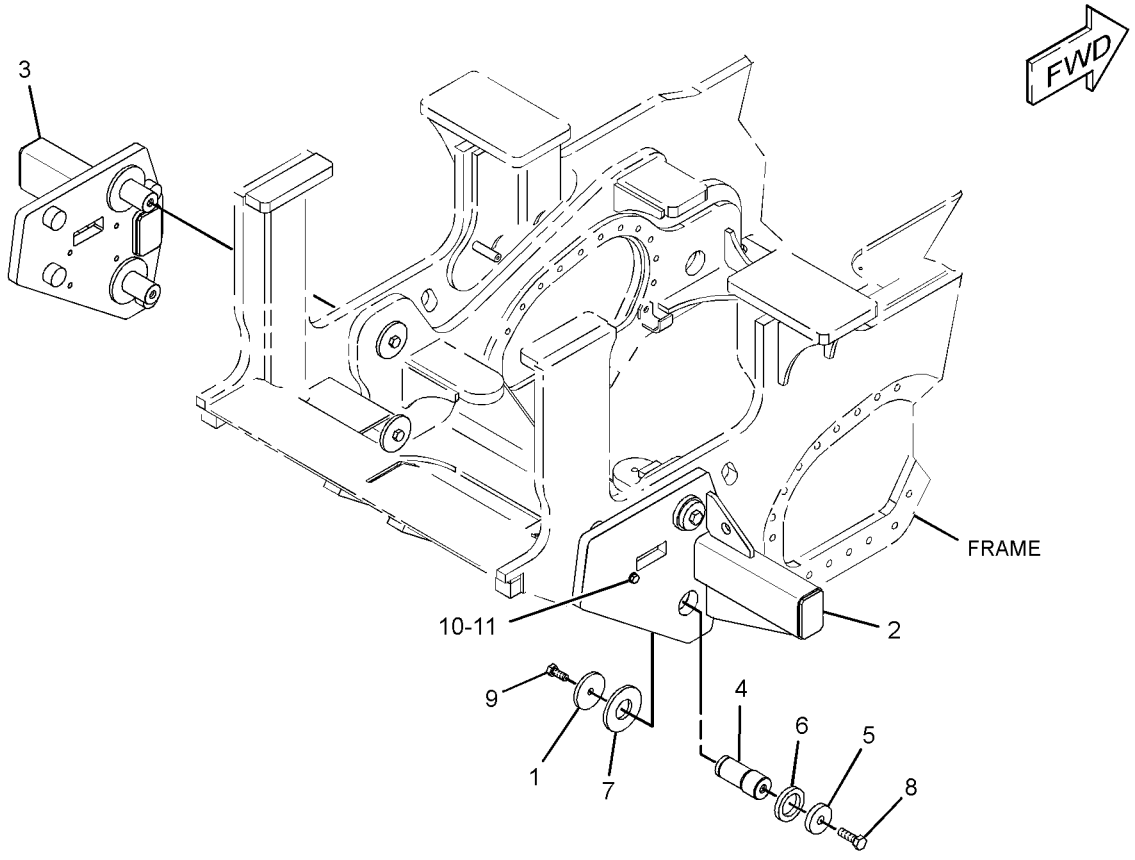

GRAPHIC #1 **<END>** g01429068

271-1470 BUMPER GP

S/N: LBP1-UP

CANNOT BE USED WITH RIPPER AR & HITCH GP WITH DRAWBAR AN ATTACHMENT

SMCS-7156 **i03127821**

NOTE	REF NO	GRAPHIC REF	PART NUMBER	QTY	PART NAME 1 2 3 4 5 6 (PRODUCT LEVEL)	SEE PAGE
	1	1	**271-1465**	1	BUMPER AS	
	2	1	**6C-9149**	8	WASHER (22X50X10-MM THK)	
M	3	1	**7X-2563**	6	BOLT (M20X2.5X60-MM)	
M	4	1	**7X-2569**	2	BOLT (M20X2.5X200-MM)	
M	5	1	**8T-4139**	2	BOLT (M12X1.75X30-MM)	
	6	1	**8T-4223**	2	WASHER-HARD (13.5X25.5X3-MM THK)	

M-METRIC PART

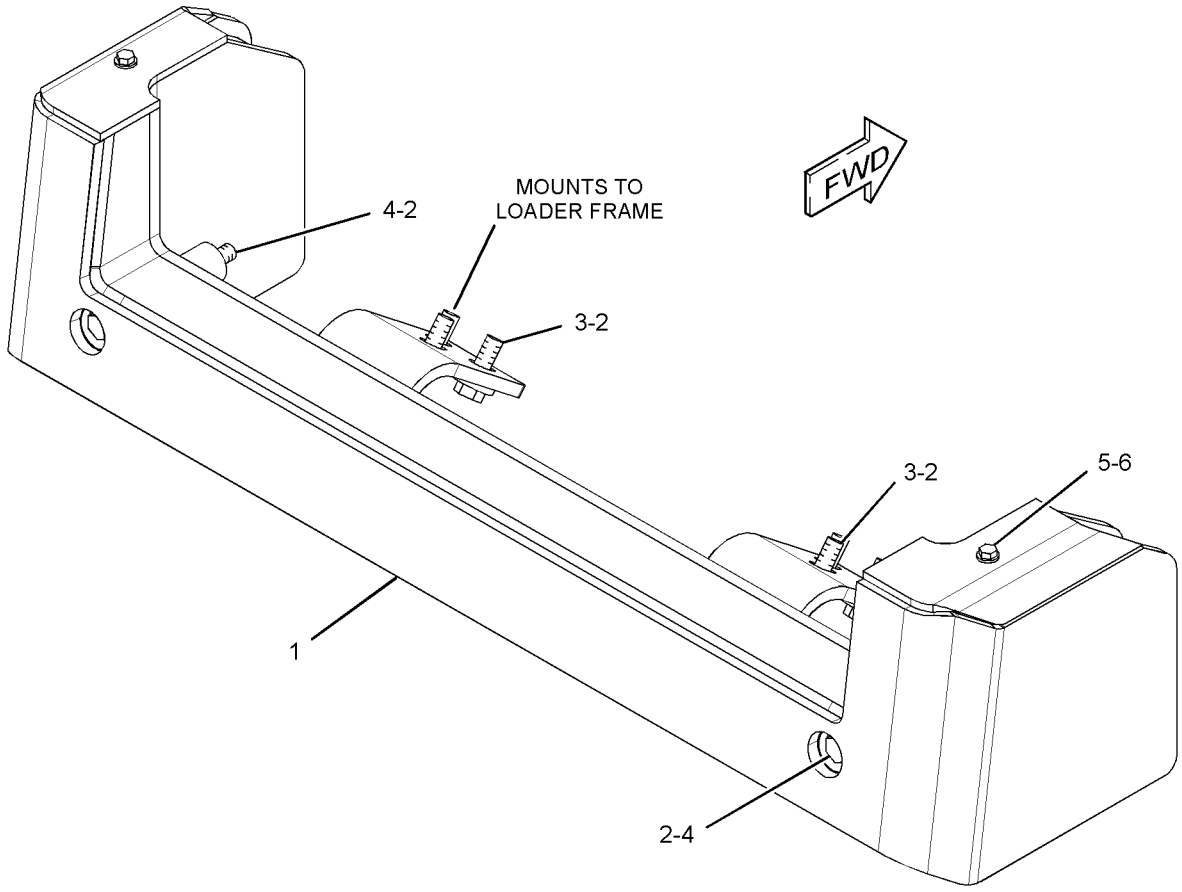

GRAPHIC #1 **<END>** g01423507

280-2395 COUNTERWEIGHT & MOUNTING GP

S/N: LBP1-UP
122-KG (269-LB)
FOR USE WITH STRIKER BAR GP OR COUNTERWEIGHT GP
AN ATTACHMENT

SMCS-7056 **i02848928**

NOTE	REF NO	GRAPHIC REF	PART NUMBER	QTY	PART NAME 1 2 3 4 5 6 (PRODUCT LEVEL)	SEE PAGE
	1	1	**298-5984**	4	PIN	
	2	1	**298-6789**	4	PLATE	
M	3	1	**7X-2552**	4	BOLT (M16X2X30-MM)	
	4	1	**8T-4121**	4	WASHER-HARD (11X21X2.5-MM THK)	
M	5	1	**8T-4137**	4	BOLT (M10X1.5X20-MM)	
	6	1	**9X-8257**	4	WASHER (17.5X30X3.5-MM THK)	

M-METRIC PART

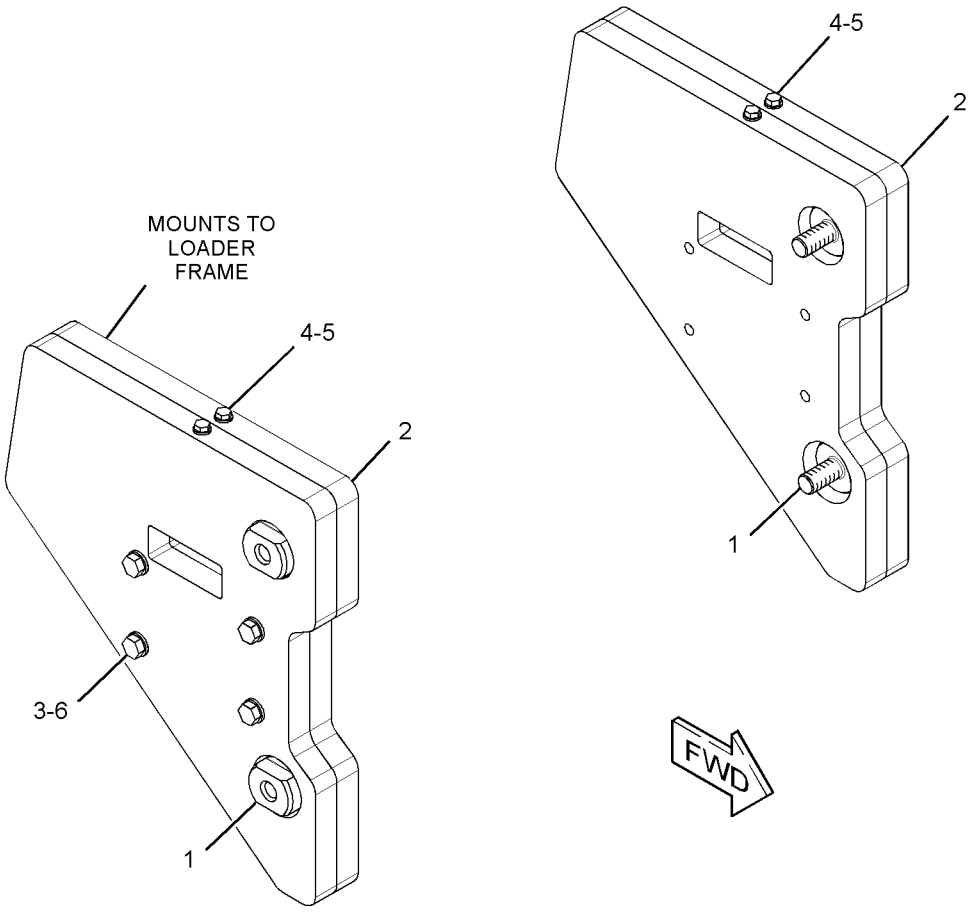

GRAPHIC #1 **<END>** g01423762

251-5932 COUNTERWEIGHT GP

S/N: LBP1-UP
253.3-KG (558.4-LB)
FOR USE WITH COUNTERWEIGHT & MOUNTING GP. CANNOT BE USED WITH STRIKER BAR GP, RIPPER AR
AN ATTACHMENT

SMCS-7056 **i02844673**

NOTE	REF NO	GRAPHIC REF	PART NUMBER	QTY	PART NAME 1 2 3 4 5 6 (PRODUCT LEVEL)	SEE PAGE
	1	1	**7X-2622**	4	WASHER (22X115X10-MM THK)	
	2	1	**298-5983**	4	PIN	
	3	1	**298-5985**	4	SPACER (26X90X18-MM THK)	
	4	1	**298-5986**	4	SPACER (72X105X16-MM THK)	
	5	1	**298-5987**	4	SPACER (64X143X12-MM THK)	
	6	1	**298-6787**	2	PLATE	
	7	1	**298-6788**	2	PLATE	
M	8	1	**7X-2576**	4	BOLT (M24X3X70-MM)	
M	9	1	**8T-6430**	4	BOLT (M20X2.5X50-MM)	
M	10	1	**7X-2552**	4	BOLT (M16X2X30-MM)	
	11	1	**8T-4121**	4	WASHER-HARD (11X21X2.5-MM THK)	
M	12	1	**8T-4137**	4	BOLT (M10X1.5X20-MM)	
	13	1	**9X-8257**	4	WASHER (17.5X30X3.5-MM THK)	

M-METRIC PART

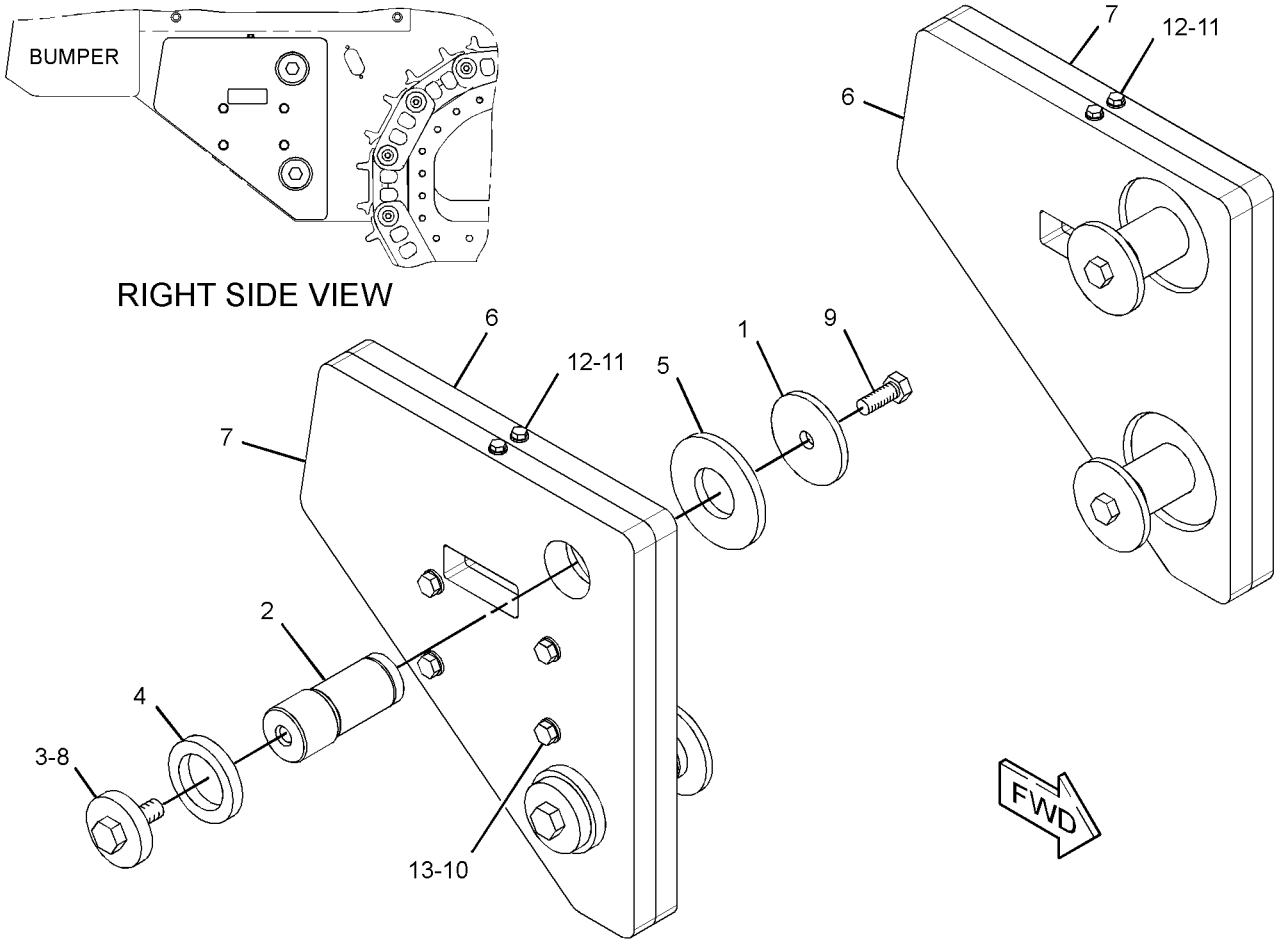

GRAPHIC #1 **<END>** g01423390

254-8605 COVER GP-ACCESS–RH

S/N: LBP1-UP

PART OF 284-9766 COVER GP-ACCESS

SMCS-726A **i02658808**

NOTE	REF NO	GRAPHIC REF	PART NUMBER	QTY	PART NAME 1 2 3 4 5 6 (PRODUCT LEVEL)	SEE PAGE
	1	1	**147-5630**	2	RETAINER	
	2	1	**263-9413**	1	SEAL	
	3	1	**282-5002**	1	HINGE AS	
	4	1	**294-3153**	1	KNOB	
M	5	1	**271-9408**	2	SCREW-TRUSS HEAD (M5X0.8X10-MM)	
	6	1	**3E-4288**	1	SEAL-O-RING	
M	7	1	**5C-2874**	2	NUT (M5X0.8-THD)	

M-METRIC PART

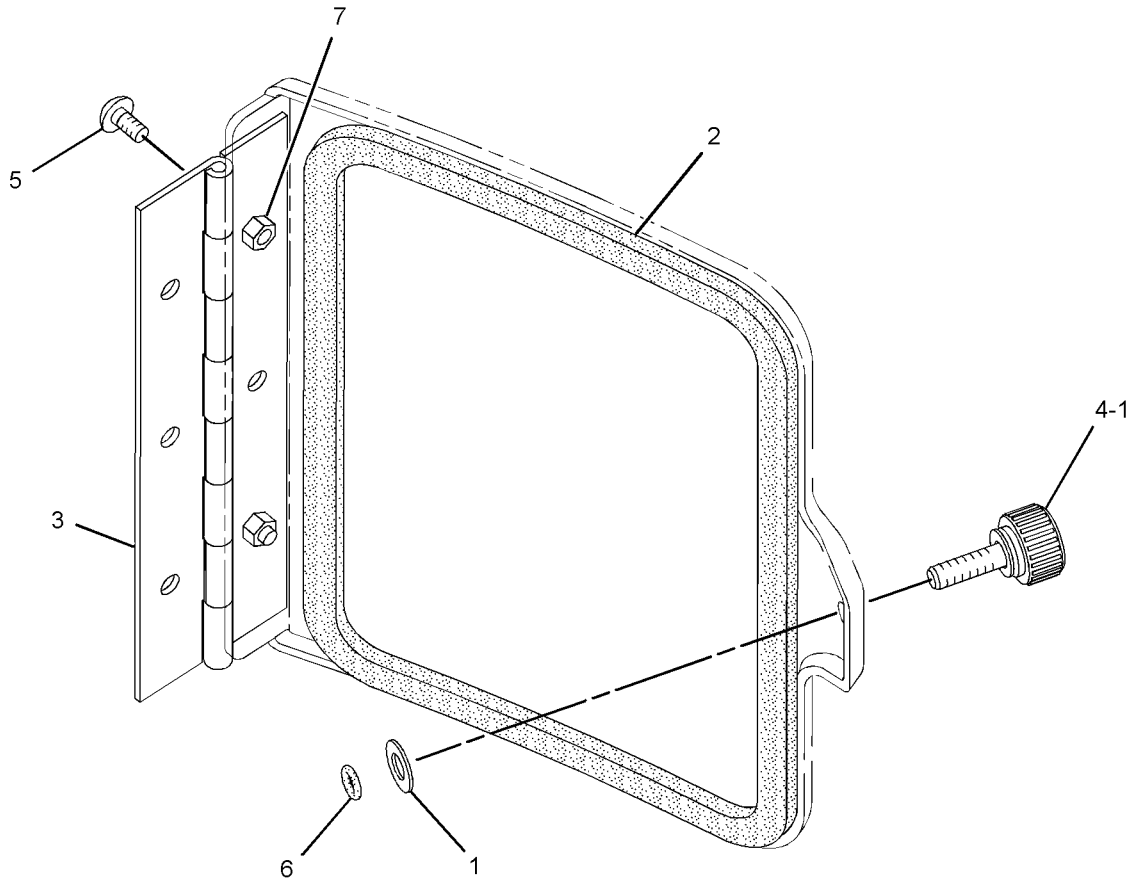

GRAPHIC #1 **<END>** g01338708

273-7316 DOOR GP-ACCESS–LH

S/N: LBP1-UP
PART OF 271-9073 PANEL GP-ENCLOSURE
AN ATTACHMENT

SMCS-7273 **i02672576**

NOTE	REF NO	GRAPHIC REF	PART NUMBER	QTY	PART NAME 1 2 3 4 5 6 (PRODUCT LEVEL)	SEE PAGE
	1	1	**271-9240**	1	DOOR AS (LH)	
	2	1	**273-3621**	1	HINGE AS	
J	3	1	**274-1923**	1	LOCK AS	
M	4	1	**5C-2890**	4	NUT (M6X1-THD)	
	5	1	**7X-7729**	3	WASHER (11X25X3-MM THK)	
M	6	1	**8T-4133**	3	NUT (M10X1.5-THD)	
	7	1	**9X-8256**	4	WASHER (6.6X12X2-MM THK)	
E	8	1	**222-5093**		SEAL (58.4-CM)	
E	8A	1	**222-5093**		SEAL (49.8-CM)	
E	8B	1	**222-5093**		SEAL (46.2-CM)	
E	8C	1	**222-5093**		SEAL (23.4-CM)	
E	8D	1	**222-5093**		SEAL (3.9-CM)	

E-ORDER BY THE CENTIMETER
J-REQUIRES 5P8500 KEY
M-METRIC PART

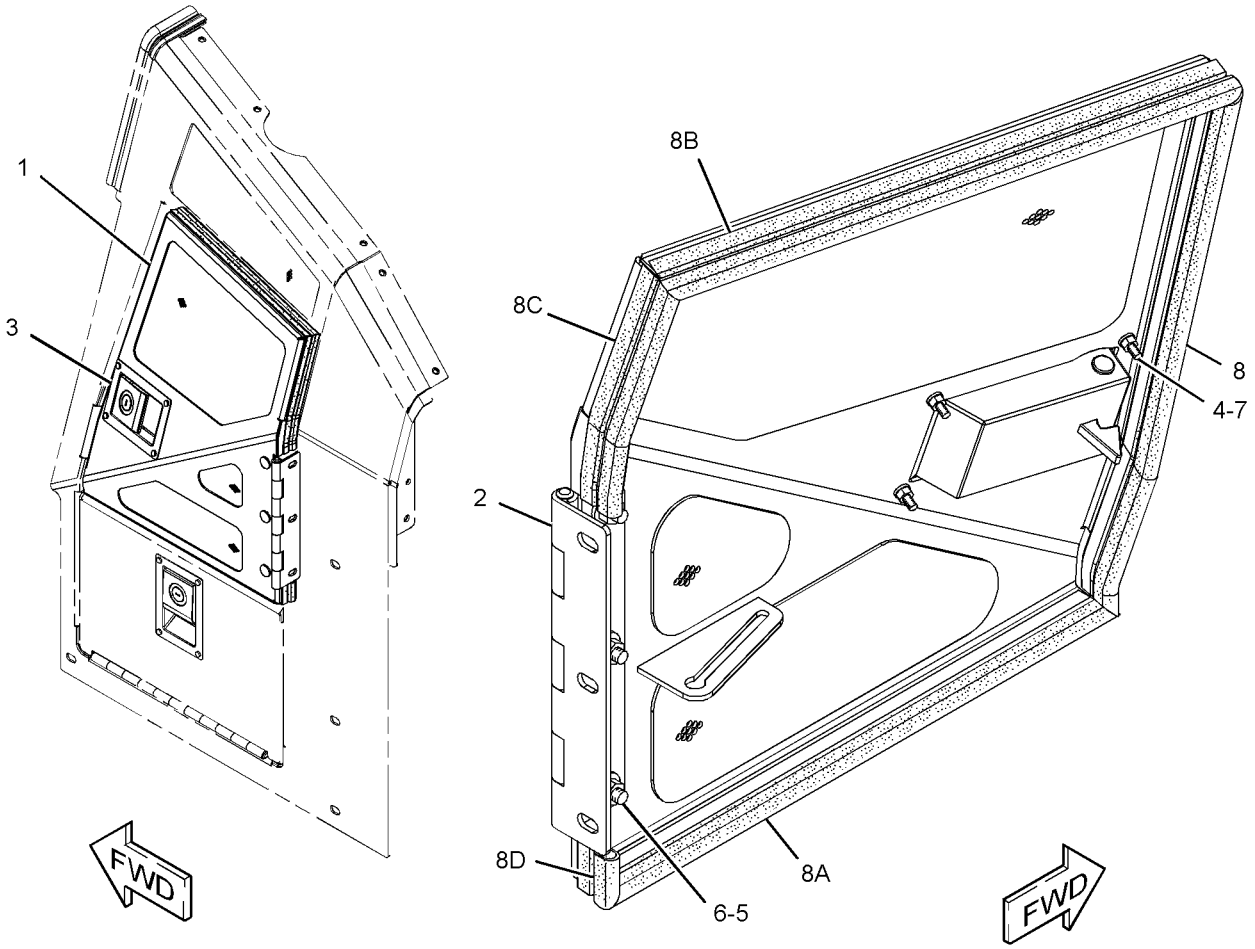

GRAPHIC #1 **<END>** g01335077

FRAME AND BODY

273-7317 DOOR GP-ACCESS–RH

S/N: LBP1-UP
PART OF 271-9072 PANEL GP-ENCLOSURE
AN ATTACHMENT

SMCS-7273 **i02883640**

NOTE	REF NO	GRAPHIC REF	PART NUMBER	QTY	PART NAME 1 2 3 4 5 6 (PRODUCT LEVEL)	SEE PAGE
	1	1	**271-9241**	1	DOOR AS (RH)	
	2	1	**273-3620**	1	HINGE AS	
J	3	1	**274-1923**	1	LOCK AS	
	5	1	**1U-7684**	2	HOLDER AS (GREASE GUN)	
M	6	1	**5C-2890**	4	NUT (M6X1-THD)	
M	7	1	**5C-7261**	2	NUT (M8X1.25-THD)	
	8	1	**7X-7729**	4	WASHER (11X25X3-MM THK)	
M	9	1	**8T-4133**	4	NUT (M10X1.5-THD)	
	10	1	**9X-8256**	4	WASHER (6.6X12X2-MM THK)	
E	11	1	**222-5093**		SEAL (84-CM)	
E	11A	1	**222-5093**		SEAL (51-CM)	
E	11B	1	**222-5093**		SEAL (48-CM)	
E	11C	1	**222-5093**		SEAL (33-CM)	
E	11D	1	**222-5093**		SEAL (13-CM)	
	12	1	**142-9088**	2	PLATE	

E-ORDER BY THE CENTIMETER
J-REQUIRES 5P-8500 KEY
M-METRIC PART

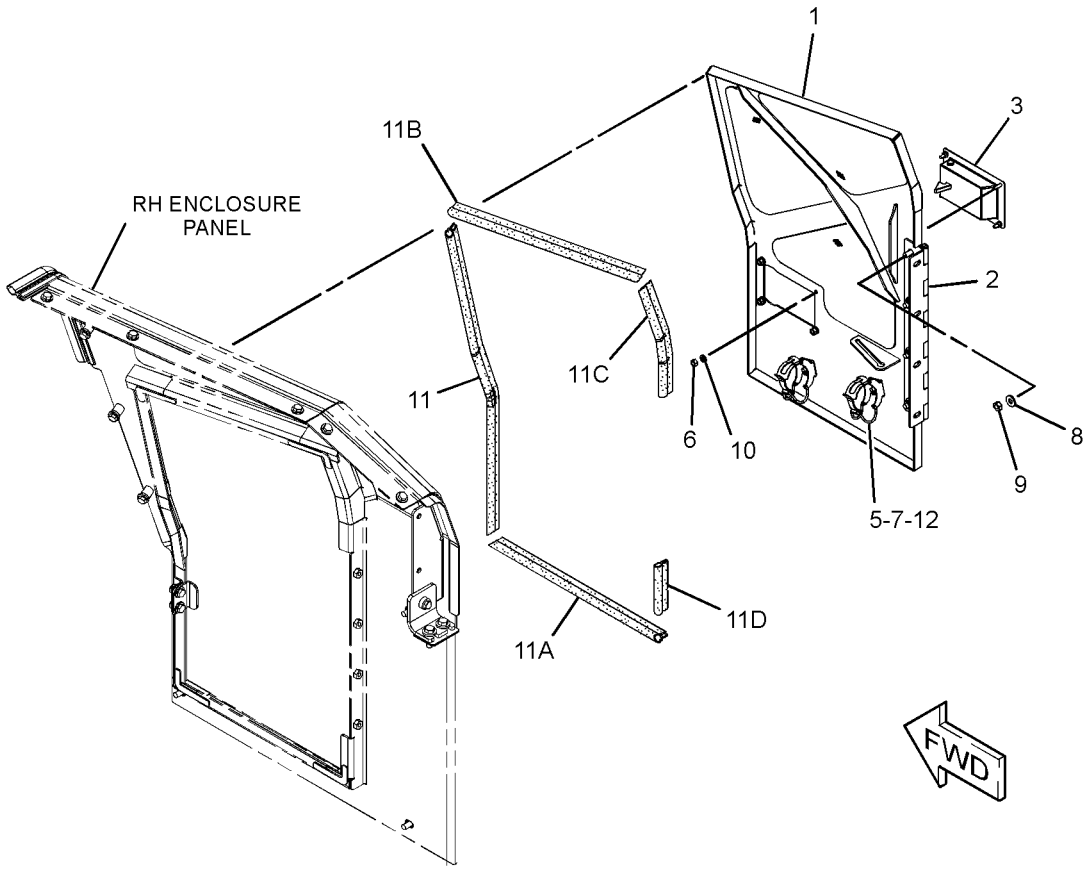

GRAPHIC #1 **<END>** g01441145

FRAME AND BODY

245-5697 FENDER GP

S/N: LBP1-699

PART OF 240-6225 CHASSIS AR

SMCS-7252 **i02672785**

NOTE	REF NO	GRAPHIC REF	PART NUMBER	QTY	PART NAME 1 2 3 4 5 6 (PRODUCT LEVEL)	SEE PAGE
	1	1	**253-7835**	1	BRACKET AS	
	2	1	**283-0565**	1	BRACKET AS	
Y	3	1	**293-6452**	1	FENDER GP (RH)	335
Y	4	1	**293-6453**	1	FENDER GP (LH)	336
	5	1	**099-3600**	12	WASHER (12.7X30X4-MM THK)	
	6	1	**198-4778**	6	WASHER-HARD (13.5X30X12-MM THK)	
M	7	1	**8T-4139**	10	BOLT (M12X1.75X30-MM)	
M	8	1	**8T-4956**	8	BOLT (M12X1.75X35-MM)	

M-METRIC PART
Y-SEPARATE ILLUSTRATION

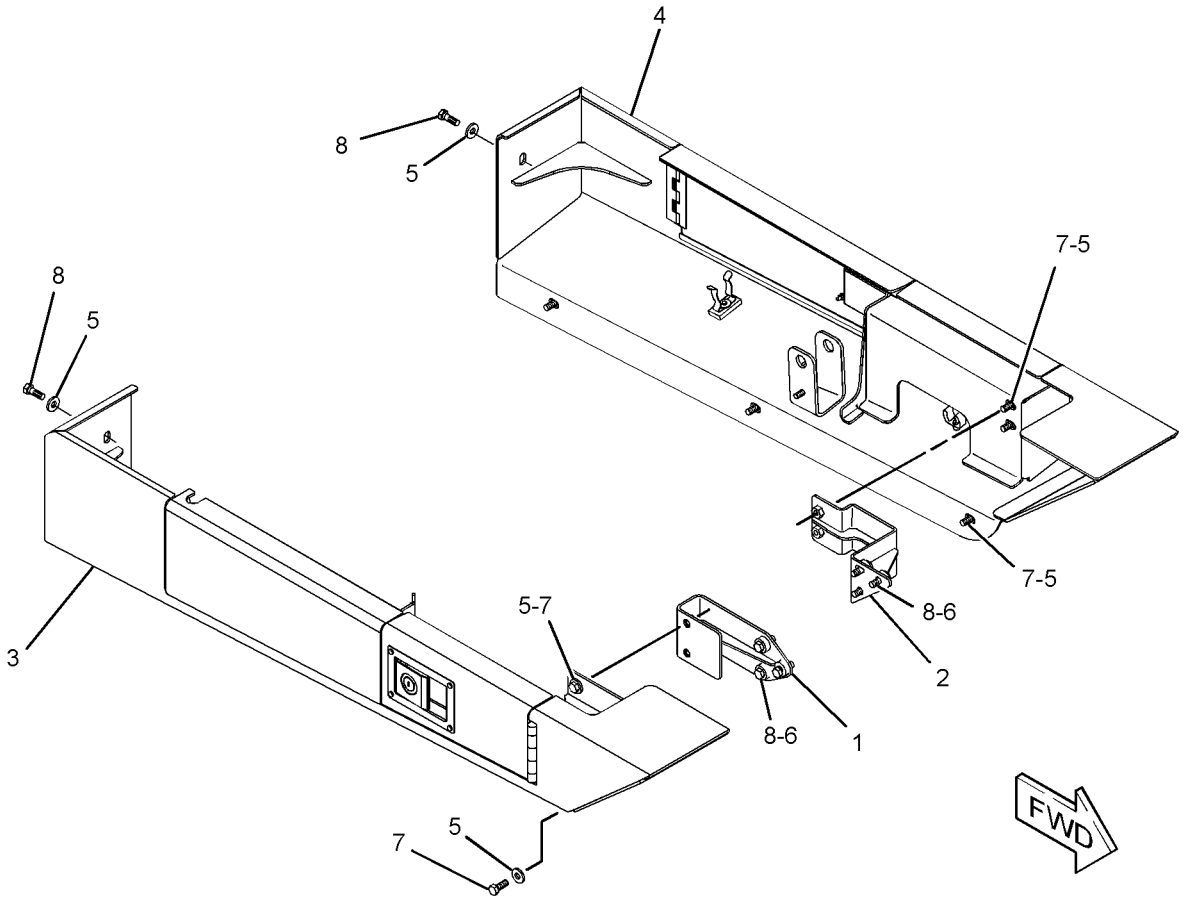

GRAPHIC #1 **<END>** g01335592

245-5697 FENDER GP

S/N: LBP700-UP

PART OF 240-6225 CHASSIS AR

SMCS-7252 **i02916278**

NOTE	REF NO	GRAPHIC REF	PART NUMBER	QTY	PART NAME 1 2 3 4 5 6 (PRODUCT LEVEL)	SEE PAGE
	1	1	**253-7835**	1	BRACKET AS	
	2	1	**283-0565**	1	BRACKET AS	
Y	3	1	**293-6452**	1	FENDER GP (RH)	335
CY	4	1	**316-9449**	1	FENDER GP (LH)	338
	5	1	**099-3600**	12	WASHER (12.7X30X4-MM THK)	
	6	1	**198-4778**	6	WASHER-HARD (13.5X30X12-MM THK)	
M	7	1	**8T-4139**	10	BOLT (M12X1.75X30-MM)	
M	8	1	**8T-4956**	8	BOLT (M12X1.75X35-MM)	

C-CHANGE FROM PREVIOUS TYPE
M-METRIC PART
Y-SEPARATE ILLUSTRATION

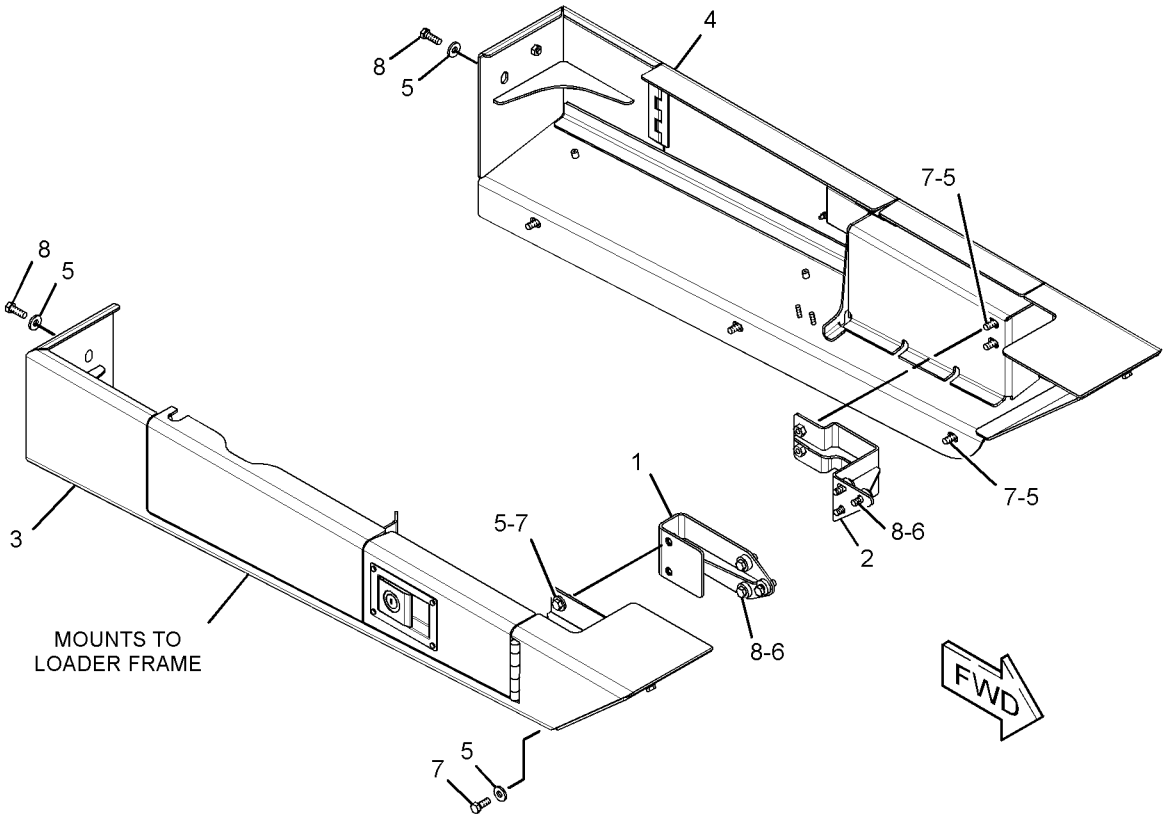

GRAPHIC #1 **<END>** g01456897

FRAME AND BODY

293-6452 FENDER GP–RH

S/N: LBP1-UP

PART OF 245-5697 FENDER GP

SMCS-7252 **i02900976**

NOTE	REF NO	GRAPHIC REF	PART NUMBER	QTY	PART NAME 1 2 3 4 5 6 (PRODUCT LEVEL)	SEE PAGE
B	1	1	**216-0143**	2	SHIM (1-MM THK)	
	2	1	**267-9928**	1	BRACKET	
J	3	1	**274-1923**	1	LOCK AS	
	4	1	**293-6454**	1	FENDER AS (RH)	
	5	1	**293-6455**	1	PANEL AS	
	6	1	**316-9437**	1	PLATE	
M	7	1	**131-3540**	1	LOCKNUT (M8X1.25-THD)	
M	8	1	**5C-2890**	4	NUT (M6X1-THD)	
	9	1	**7X-7729**	4	WASHER (11X25X3-MM THK)	
	10	1	**8T-4121**	2	WASHER-HARD (11X21X2.5-MM THK)	
M	11	1	**8T-4136**	1	BOLT (M10X1.5X25-MM)	
M	12	1	**8T-4137**	4	BOLT (M10X1.5X20-MM)	
M	13	1	**8T-4195**	1	BOLT (M10X1.5X30-MM)	
	14	1	**8T-4224**	1	WASHER-HARD (8.8X16X2-MM THK)	
	15	1	**9X-8256**	4	WASHER (6.6X12X2-MM THK)	

B-USE AS REQUIRED
J-REQUIRES CORPORATE KEY
M-METRIC PART

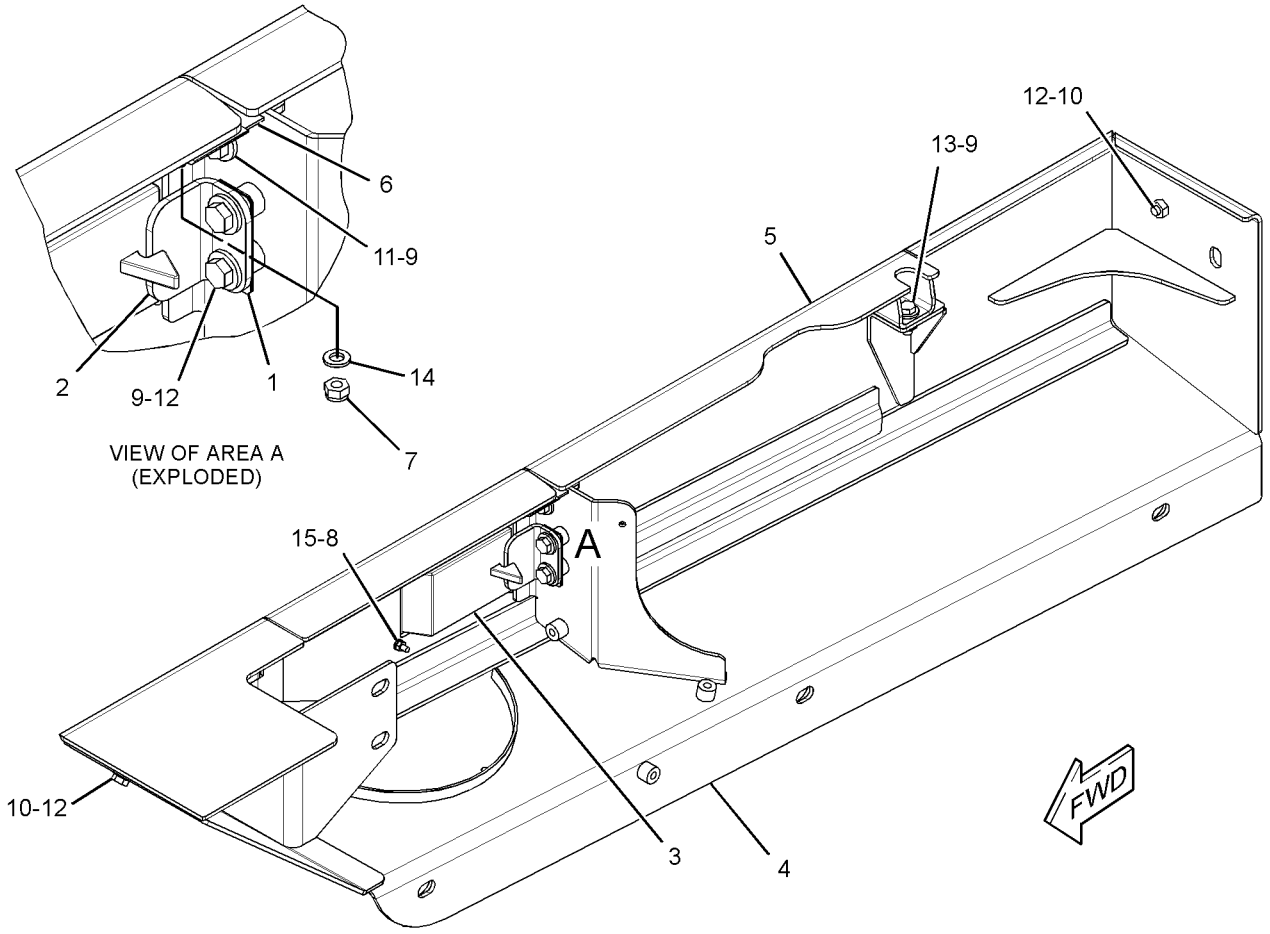

GRAPHIC #1 **<END>** g01446084

FRAME AND BODY

293-6453 FENDER GP–LH

S/N: LBP1-699

PART OF 245-5697 FENDER GP

SMCS-7252 **i02652075**

NOTE	REF NO	GRAPHIC REF	PART NUMBER	QTY	PART NAME 1 2 3 4 5 6 (PRODUCT LEVEL)	SEE PAGE
B	1	1	**216-0143**	2	SHIM (1-MM THK)	
	2	1	**271-9247**	1	BRACKET	
J	3	1	**274-1923**	1	LOCK AS	
	4	1	**282-1674**	1	CLIP	
	5	1	**293-6456**	1	FENDER AS (LH)	
	6	1	**296-6489**	1	CLIP	
	7	1	**089-7960**	1	WASHER (5.3X25X1.6-MM THK)	
M	8	1	**116-6952**	2	BOLT (M4X0.7X10-MM)	
	9	1	**4B-4863**	1	WASHER (4.7X11X1.2-MM THK)	
M	10	1	**6V-8225**	4	NUT (M6X1-THD)	
	11	1	**7X-7729**	2	WASHER (11X25X3-MM THK)	
M	12	1	**8T-4137**	2	BOLT (M10X1.5X20-MM)	
	13	1	**9X-8256**	4	WASHER (6.6X12X2-MM THK)	

B-USE AS REQUIRED
J-REQUIRES 5P-8500 KEY
M-METRIC PART

293-6453 FENDER GP *(contd.)* **i02652075**

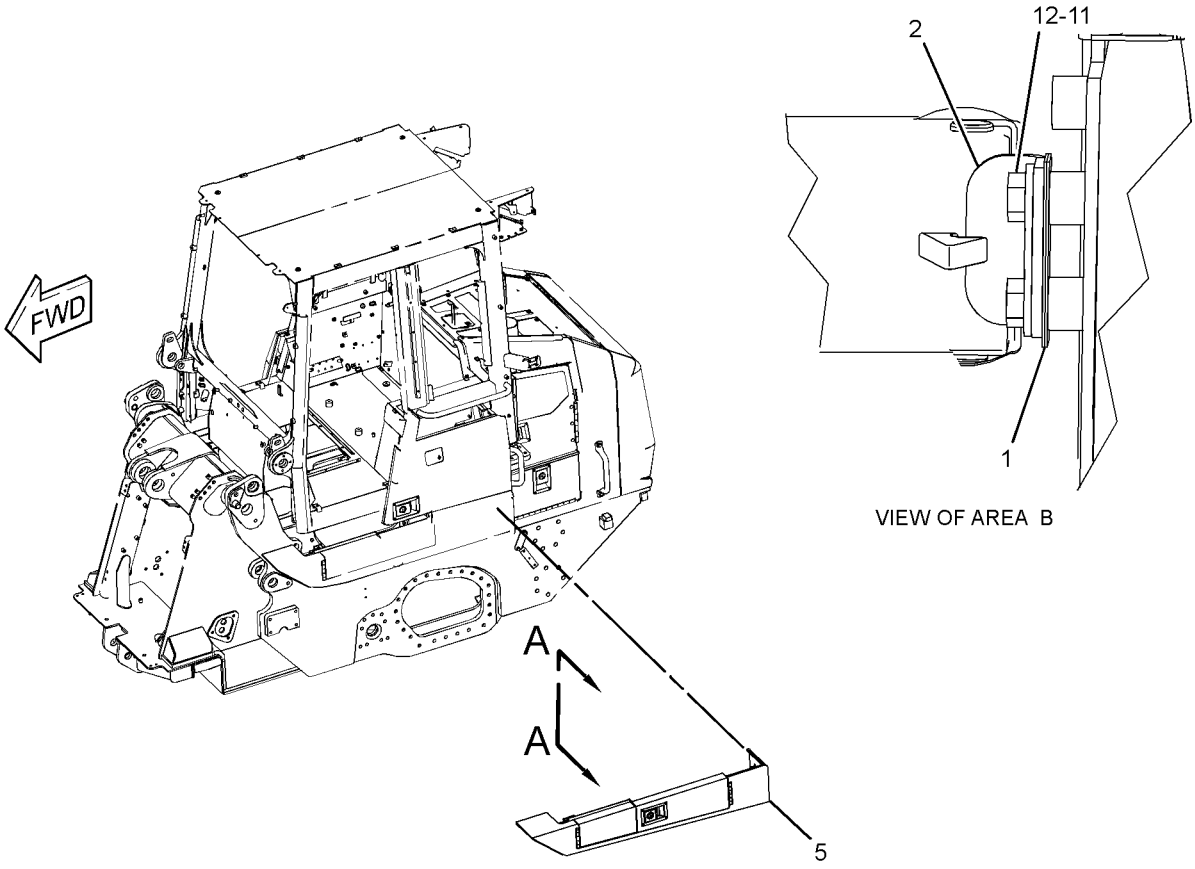

VIEW OF AREA B

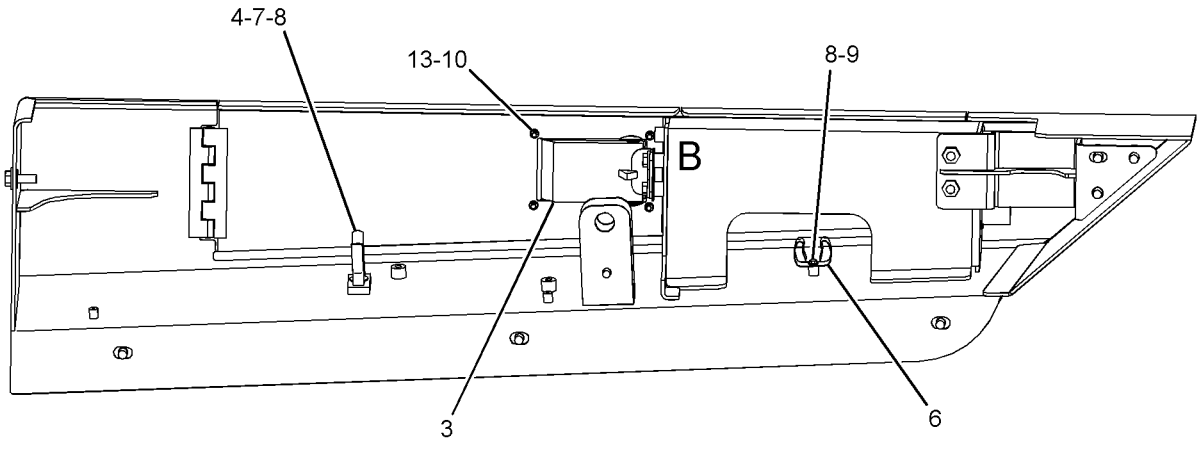

VIEW A-A

GRAPHIC #1 **<END>** g01345550

316-9449 FENDER GP–LH

S/N: LBP700-UP

PART OF 245-5697 FENDER GP

SMCS-7252 **i02916279**

NOTE	REF NO	GRAPHIC REF	PART NUMBER	QTY	PART NAME 1 2 3 4 5 6 (PRODUCT LEVEL)	SEE PAGE
B	1	1	**216-0143**	2	SHIM (1-MM THK)	
	2	1	**271-9247**	1	BRACKET	
	3	1	**274-1923**	1	LOCK AS	
	4	1	**316-9437**	2	PLATE	
M	5	1	**131-3540**	2	LOCKNUT (M8X1.25-THD)	
M	6	1	**5C-2890**	4	NUT (M6X1-THD)	
	7	1	**7X-7729**	2	WASHER (11X25X3-MM THK)	
	8	1	**8T-4121**	2	WASHER-HARD (11X21X2.5-MM THK)	
M	9	1	**8T-4137**	4	BOLT (M10X1.5X20-MM)	
	10	1	**8T-4224**	2	WASHER-HARD (8.8X16X2-MM THK)	
	11	1	**9X-8256**	4	WASHER (6.6X12X2-MM THK)	

B-USE AS REQUIRED
M-METRIC PART

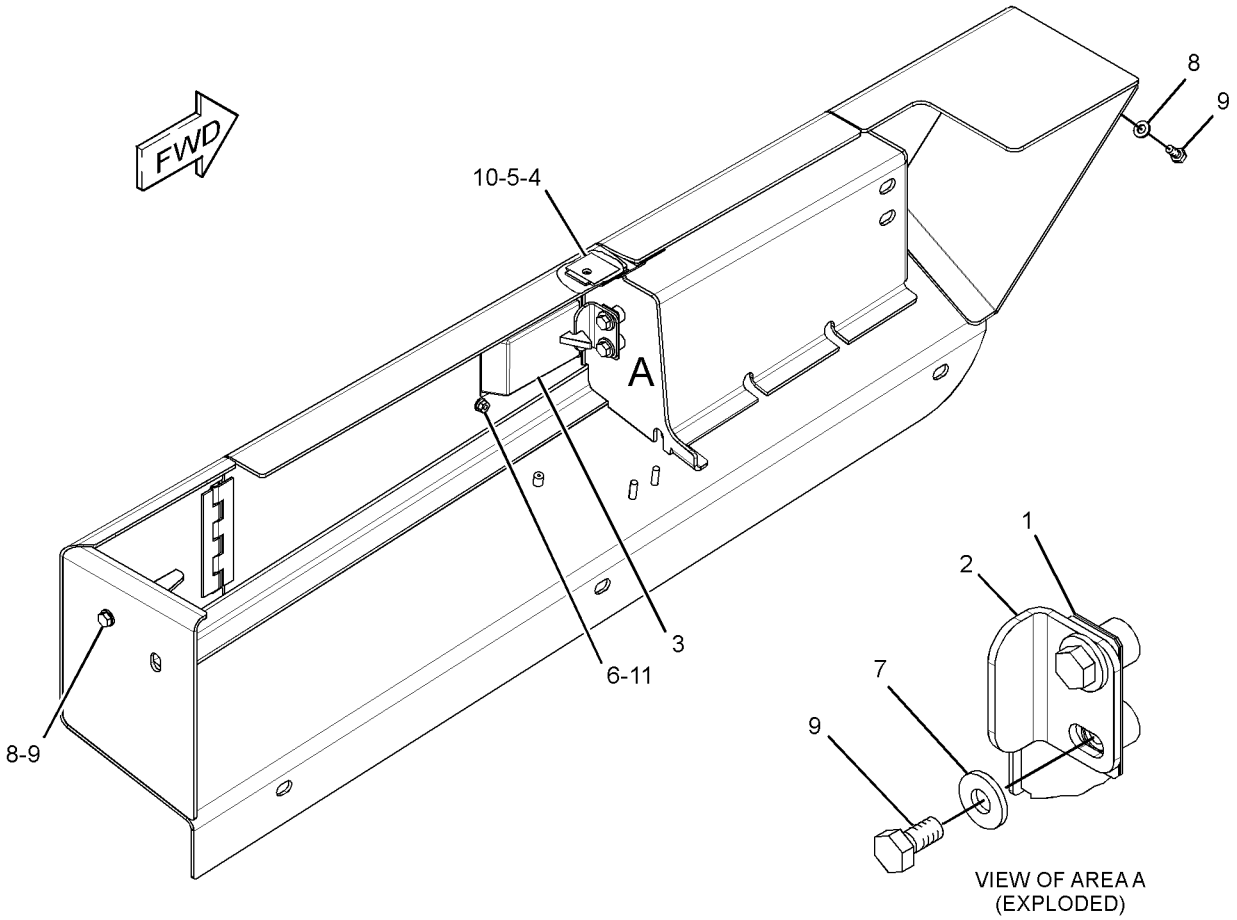

GRAPHIC #1 **<END>** g01473472

FRAME AND BODY

276-3511 FRAME GP-LOADER

S/N: LBP1-UP

PART OF 240-6225 CHASSIS AR

SMCS-7054 **i02652905**

NOTE	REF NO	GRAPHIC REF	PART NUMBER	QTY	PART NAME 1 2 3 4 5 6 (PRODUCT LEVEL)	SEE PAGE
	1	1	**4B-4098**	8	PLUG-CUP	
	2	1	**5P-0998**	2	PLUG-SEAL	
	3	1	**6H-3616**	4	PLUG-PROTECTION	
	4	1	**276-3512**	1	FRAME AS	
	5	1	**279-8881**	1	COVER AS	
	6	1	**8T-4121**	2	WASHER-HARD (11X21X2.5-MM THK)	
M	7	1	**8T-4137**	2	BOLT (M10X1.5X20-MM)	

M-METRIC PART

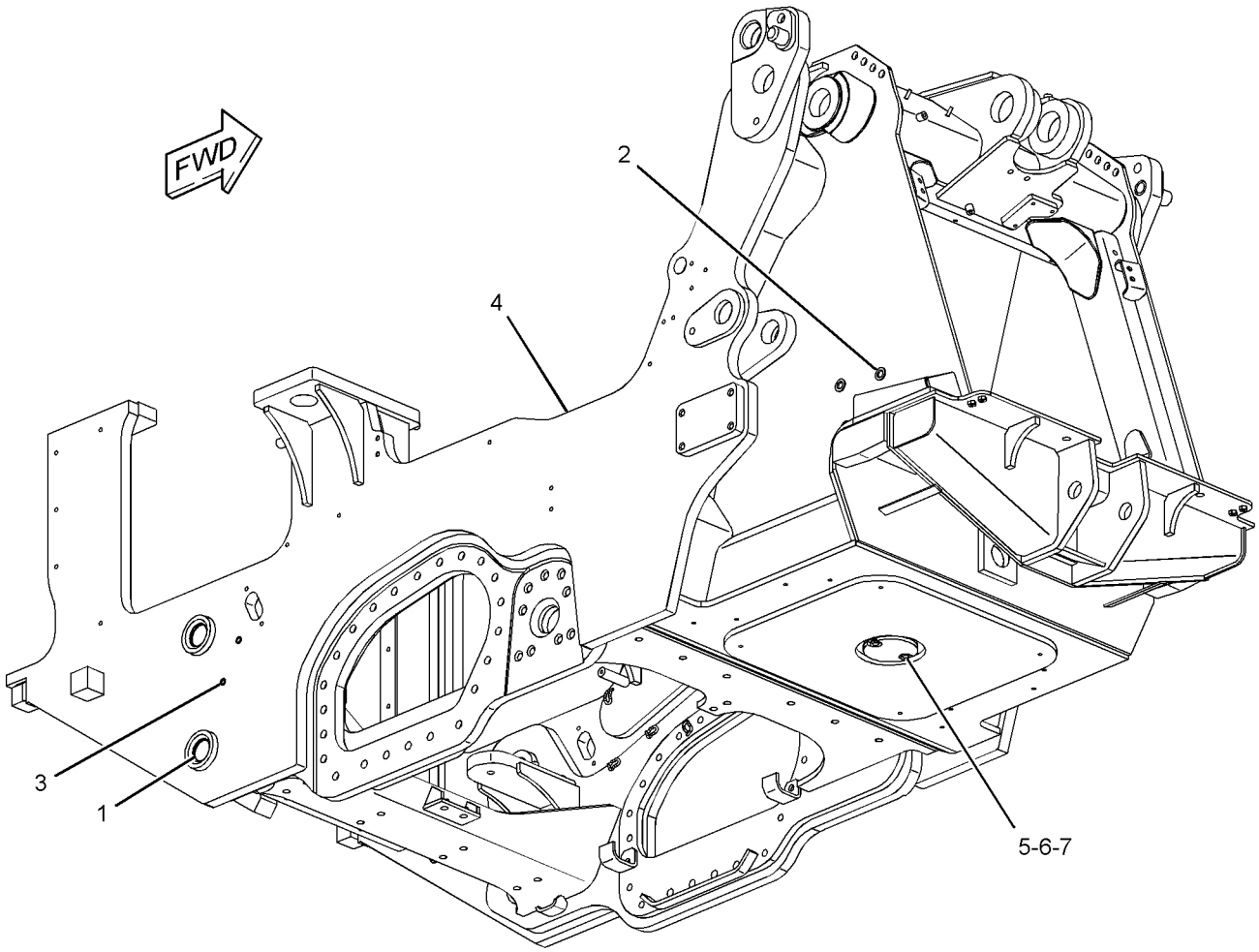

GRAPHIC #1 **<END>** g01337118

FRAME AND BODY

271-9065 GRILL GP-RADIATOR

S/N: LBP427-UP

PART OF 271-9064 GUARD GP-ENGINE

SMCS-7170 **i02896169**

NOTE	REF NO	GRAPHIC REF	PART NUMBER	QTY	PART NAME 1 2 3 4 5 6 (PRODUCT LEVEL)	SEE PAGE
	1	1	**271-9166**	1	BRACKET AS	
	2	1	**283-4888**	1	BRACKET AS	
M		1	**8T-3490**	2	NUT-WELD (M10X1.5-THD)	
	3	1	**288-9575**	1	HINGE-SPRING	
	4	1	**293-4770**	1	PLATE AS	
	5	1	**296-6495**	1	PAWL	
C	6	1	**296-6499**	1	LATCH AS	
M		1	**098-5747**	2	NUT (M16X2-THD)	
M		1	**161-7615**	1	NUT (M22X1.5-THD)	
		1	**9X-8257**	2	WASHER (17.5X30X3.5-MM THK)	
C	7	1	**316-2209**	1	GRILL AS	
C	8	1	**198-4776**	2	WASHER-HARD (8.8X20X8-MM THK)	
M	9	1	**5C-7261**	4	NUT (M8X1.25-THD)	
	10	1	**7X-7729**	4	WASHER (11X25X3-MM THK)	
C	11	1	**8T-4121**	2	WASHER-HARD (11X21X2.5-MM THK)	
M	12	1	**8T-4136**	4	BOLT (M10X1.5X25-MM)	
CM	13	1	**8T-4137**	2	BOLT (M10X1.5X20-MM)	
C	14	1	**8T-4224**	2	WASHER-HARD (8.8X16X2-MM THK)	

C-CHANGE FROM PREVIOUS TYPE
M-METRIC PART

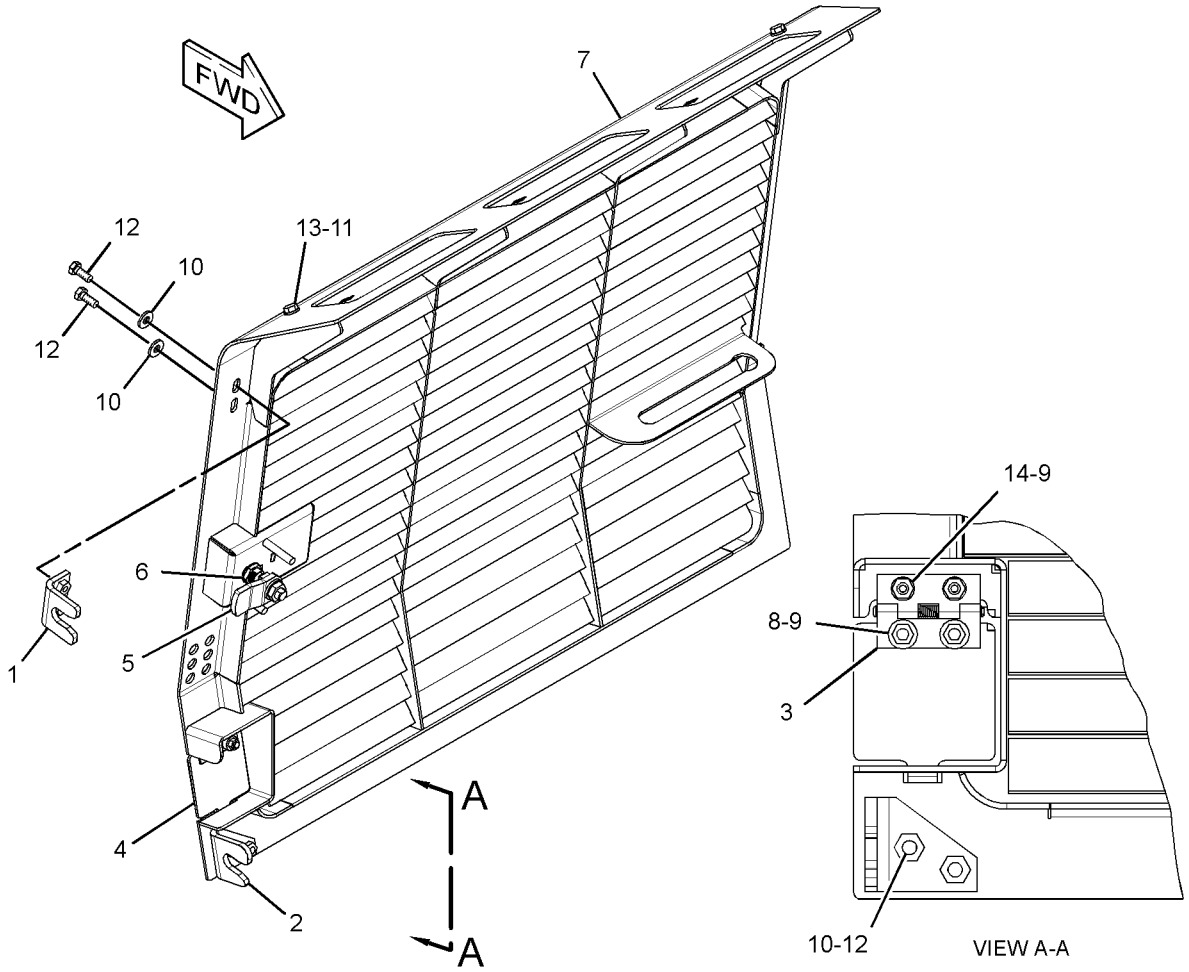

GRAPHIC #1 **<END>** g01456126

276-3513 GUARD GP-BOTTOM

S/N: LBP1-UP

PART OF 240-6225 CHASSIS AR

SMCS-7153 **i03140149**

NOTE	REF NO	GRAPHIC REF	PART NUMBER	QTY	PART NAME 1 2 3 4 5 6 (PRODUCT LEVEL)	SEE PAGE
	1	1	**3W-1573**	26	SPACER (19.05X28.57X9.5-MM THK)	
	2	1	**255-4897**	2	PLATE	
	3	1	**279-8870**	1	GUARD AS	
	4	1	**279-8871**	1	SUPPORT AS	
	5	1	**279-8872**	1	PLATE AS	
	6	1	**279-8873**	1	PLATE AS	
	7	1	**279-8875**	2	HINGE AS	
	8	1	**291-9736**	2	HINGE AS	
	9	1	**7X-0583**	26	WASHER-HARD (17X45X6-MM THK)	
	10	1	**8T-4121**	4	WASHER-HARD (11X21X2.5-MM THK)	
M	11	1	**8T-4195**	8	BOLT (M10X1.5X30-MM)	
M	12	1	**8T-7338**	30	BOLT (M16X2X45-MM)	
	13	1	**9X-8257**	4	WASHER (17.5X30X3.5-MM THK)	
	14	1	**8R-8847**	4	RETAINER-SPRING	
	15	1	**198-4777**	4	WASHER-HARD (11X25X10-MM THK)	
	16	1	**328-0449**	4	PLATE	

M-METRIC PART

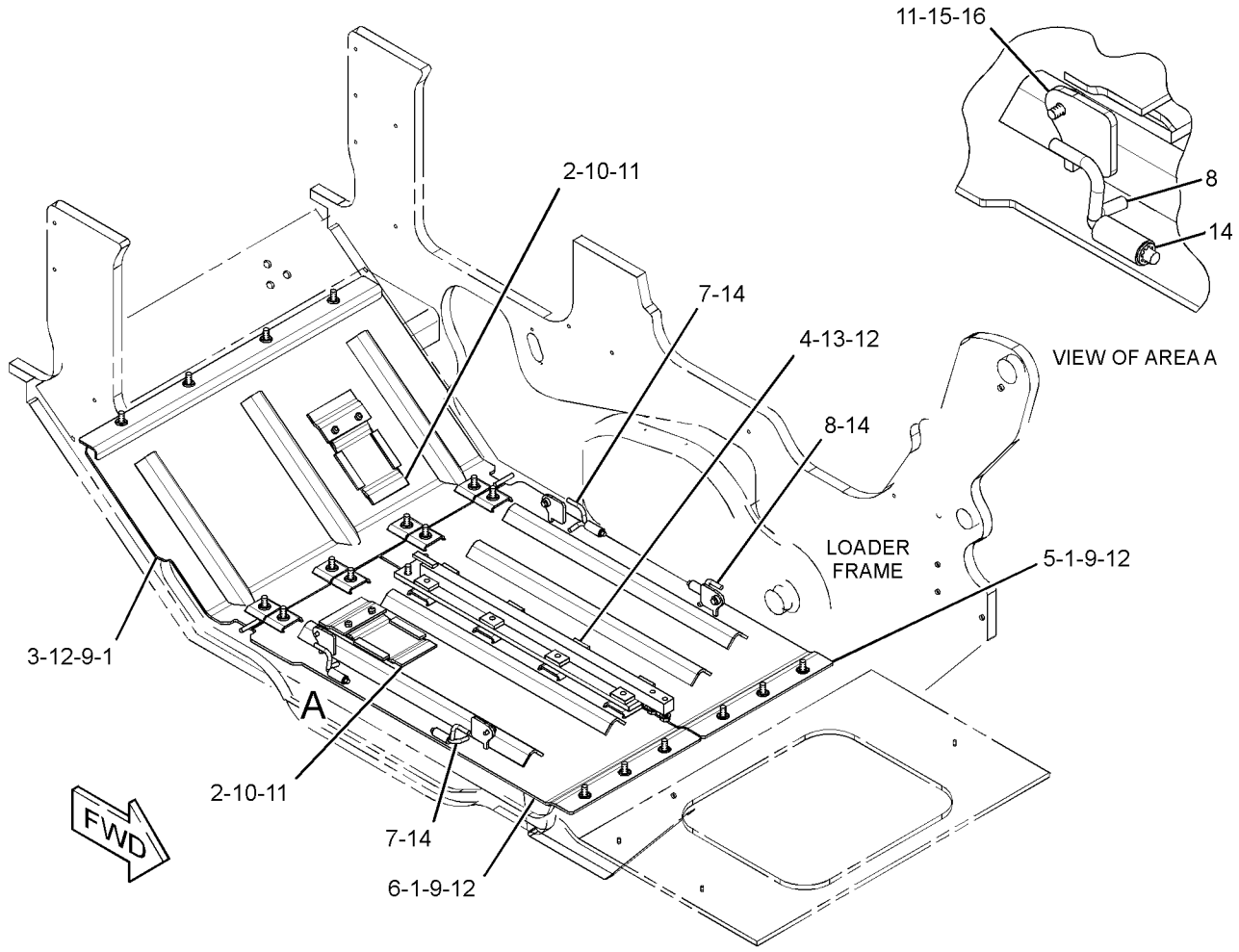

GRAPHIC #1 **<END>** g01619927

FRAME AND BODY

271-9064 GUARD GP-ENGINE

S/N: LBP1-408, 410

PART OF 240-6225 CHASSIS AR

SMCS-7154 **i02652122**

NOTE	REF NO	GRAPHIC REF	PART NUMBER	QTY	PART NAME 1 2 3 4 5 6 (PRODUCT LEVEL)	SEE PAGE
	1	1	**271-9955**	1	HINGE AS	
M		1	**8T-3490**	4	NUT-WELD (M10X1.5-THD)	
	2	1	**283-9662**	2	PLATE AS	
					(EACH INCLUDES)	
M		1	**8T-3597**	3	NUT-WELD (M12X1.75-THD)	
	3	1	**290-0242**	1	BRACKET AS	
	4	1	**293-4767**	2	SPACER (13X22X50.8-MM THK)	
	5	1	**297-7632**	1	GUARD AS (LH)	
	6	1	**297-7638**	1	GUARD AS (RH)	
	7	1	**297-7640**	2	BRACKET	
B	8	1	**298-6793**	10	SHIM (0.8-MM THK) (0.8-MM THK)	
	9	1	**198-4778**	16	WASHER-HARD (13.5X30X12-MM THK)	
	10	1	**5P-1076**	4	WASHER-HARD (13.5X30X4-MM THK)	
	11	1	**5P-4116**	3	WASHER-HARD (8.8X20.5X2-MM THK)	
	12	1	**7X-7729**	10	WASHER (11X25X3-MM THK)	
M	13	1	**8T-4184**	8	BOLT (M12X1.75X45-MM)	
M	14	1	**8T-4186**	4	BOLT (M10X1.5X40-MM)	
M	15	1	**8T-4194**	2	BOLT (M12X1.75X50-MM)	
M	16	1	**8T-4195**	6	BOLT (M10X1.5X30-MM)	
M	17	1	**8T-4908**	3	BOLT (M8X1.25X25-MM)	
M	18	1	**8T-4910**	6	BOLT (M12X1.75X60-MM)	
M	19	1	**8T-6868**	2	BOLT (M12X1.75X80-MM)	

B-USE AS REQUIRED
M-METRIC PART

271-9064 **GUARD GP-ENGINE** *(contd.)* **i02652122**

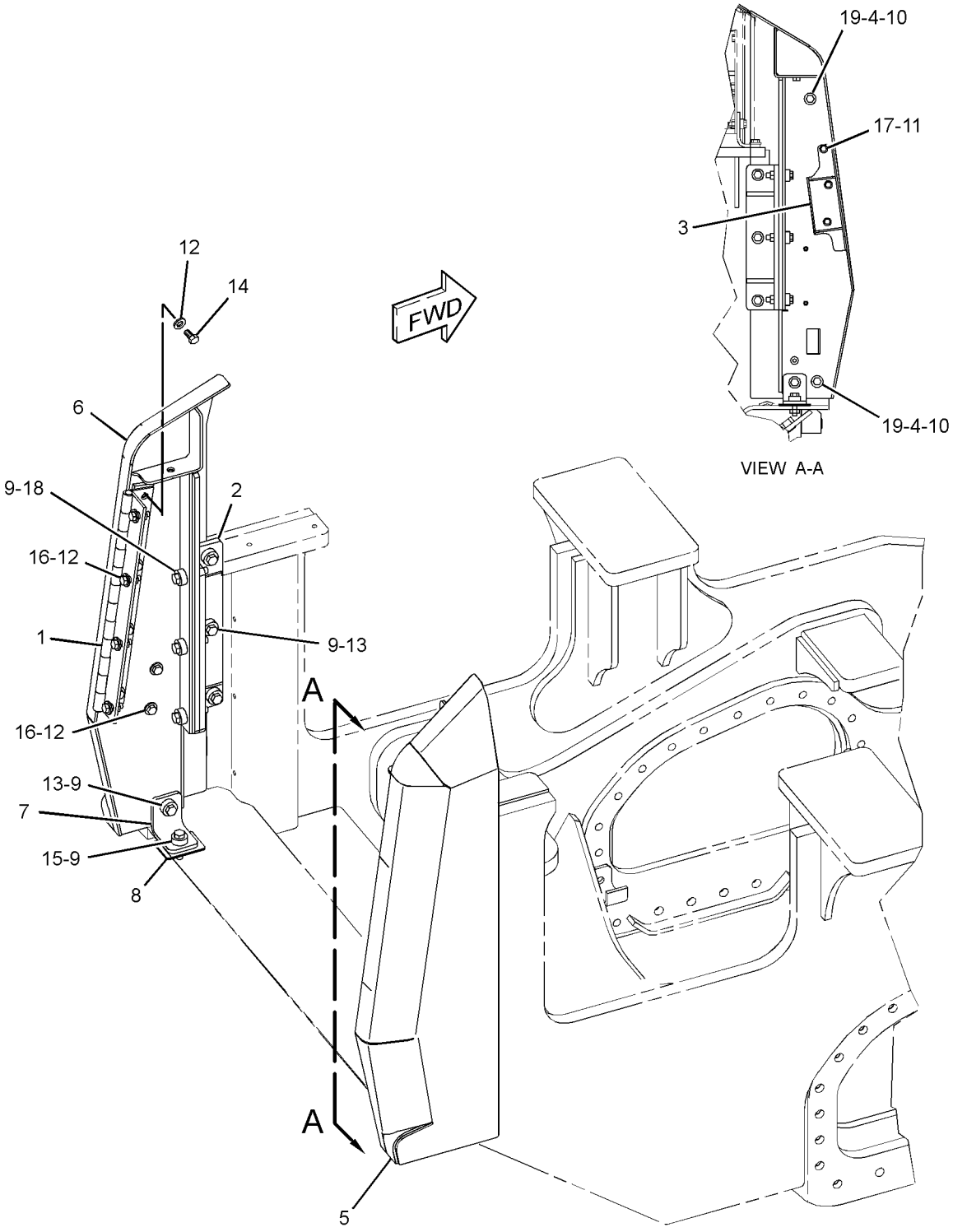

GRAPHIC #1 **<END>** g01341253

FRAME AND BODY

271-9064 GUARD GP-ENGINE

S/N: LBP409, 411-426

PART OF 240-6225 CHASSIS AR

SMCS-7154 **i02897117**

NOTE	REF NO	GRAPHIC REF	PART NUMBER	QTY	PART NAME 1 2 3 4 5 6 (PRODUCT LEVEL)	SEE PAGE
	1	1	**271-9955**	1	HINGE AS	
M		1	**8T-3490**	4	NUT-WELD (M10X1.5-THD)	
	2	1	**283-9662**	2	PLATE AS	
	3	1	**290-0242**	1	BRACKET AS	
	4	1	**293-4767**	2	SPACER (13X22X50.8-MM THK)	
C	5	1	**313-2395**	1	GUARD AS (LH)	
C	6	1	**313-2394**	1	GUARD AS (RH)	
	7	1	**297-7640**	2	BRACKET	
B	8	1	**298-6793**	10	SHIM (0.8-MM THK) (0.8-MM THK)	
	9	1	**198-4778**	16	WASHER-HARD (13.5X30X12-MM THK)	
	10	1	**5P-1076**	4	WASHER-HARD (13.5X30X4-MM THK)	
	11	1	**5P-4116**	3	WASHER-HARD (8.8X20.5X2-MM THK)	
	12	1	**7X-7729**	10	WASHER (11X25X3-MM THK)	
M	13	1	**8T-4184**	8	BOLT (M12X1.75X45-MM)	
M	14	1	**8T-4186**	4	BOLT (M10X1.5X40-MM)	
M	15	1	**8T-4194**	2	BOLT (M12X1.75X50-MM)	
M	16	1	**8T-4195**	6	BOLT (M10X1.5X30-MM)	
M	17	1	**8T-4908**	3	BOLT (M8X1.25X25-MM)	
M	18	1	**8T-4910**	6	BOLT (M12X1.75X60-MM)	
M	19	1	**8T-6868**	2	BOLT (M12X1.75X80-MM)	

B-USE AS REQUIRED
C-CHANGE FROM PREVIOUS TYPE
M-METRIC PART

271-9064 **GUARD GP-ENGINE** *(contd.)* **i02897117**

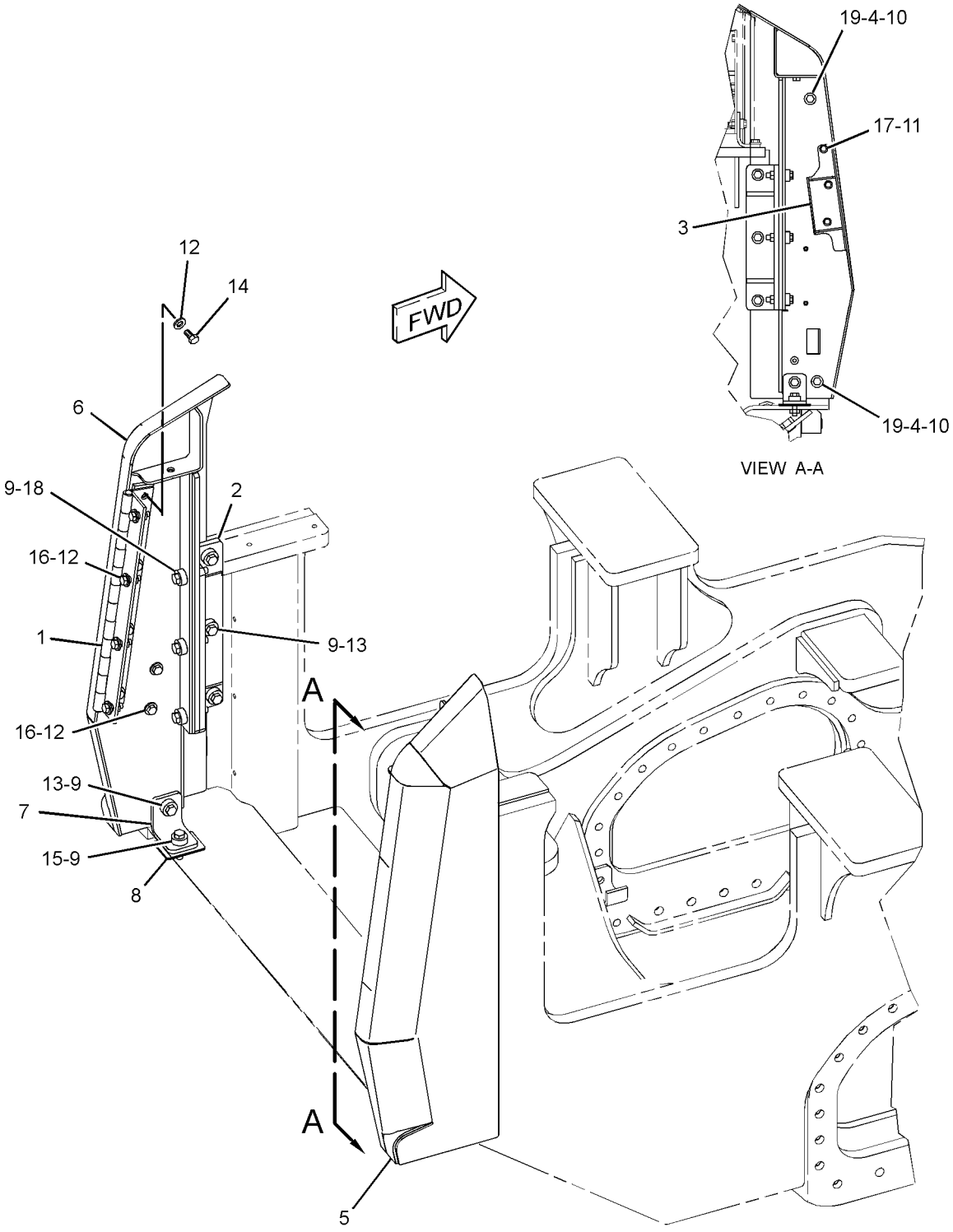

GRAPHIC #1 **<END>** g01341253

271-9064 GUARD GP-ENGINE

S/N: LBP427-UP

PART OF 240-6225 CHASSIS AR

SMCS-7154 **i02903180**

NOTE	REF NO	GRAPHIC REF	PART NUMBER	QTY	PART NAME 1 2 3 4 5 6 (PRODUCT LEVEL)	SEE PAGE
Y	1	1	*271-9065*	1	GRILL GP-RADIATOR	340
	2	1	**271-9955**	1	HINGE AS	
M		1	**8T-3490**	4	NUT-WELD (M10X1.5-THD)	
	3	1	**283-9662**	2	PLATE AS	
	4	1	**290-0242**	1	BRACKET AS	
	5	1	**293-4767**	2	SPACER (13X22X50.8-MM THK)	
	6	1	**297-7640**	2	BRACKET	
B	7	1	**298-6793**	10	SHIM (0.8-MM THK)	
C	8	1	**304-4351**	1	ROD AS	
	9	1	**313-2394**	1	GUARD AS (RH)	
C	10	1	**316-2210**	1	GUARD AS (LH)	
C	11	1	**096-7033**	1	PIN-COTTER	
	12	1	**198-4778**	16	WASHER-HARD (13.5X30X12-MM THK)	
	13	1	**5P-1076**	4	WASHER-HARD (13.5X30X4-MM THK)	
	14	1	**5P-4116**	3	WASHER-HARD (8.8X20.5X2-MM THK)	
C	15	1	**7X-0549**	1	WASHER-HARD (28X52.5X8-MM THK)	
C	16	1	**7X-7729**	8	WASHER (11X25X3-MM THK)	
C	17	1	**8T-4121**	2	WASHER-HARD (11X21X2.5-MM THK)	
CM	18	1	**8T-4137**	2	BOLT (M10X1.5X20-MM)	
CM	19	1	**8T-4184**	6	BOLT (M12X1.75X45-MM)	
M	20	1	**8T-4186**	4	BOLT (M10X1.5X40-MM)	
CM	21	1	**8T-4194**	4	BOLT (M12X1.75X50-MM)	
CM	22	1	**8T-4195**	4	BOLT (M10X1.5X30-MM)	
M	23	1	**8T-4908**	3	BOLT (M8X1.25X25-MM)	
M	24	1	**8T-4910**	6	BOLT (M12X1.75X60-MM)	
M	25	1	**8T-6868**	2	BOLT (M12X1.75X80-MM)	

B-USE AS REQUIRED
C-CHANGE FROM PREVIOUS TYPE
M-METRIC PART
Y-SEPARATE ILLUSTRATION

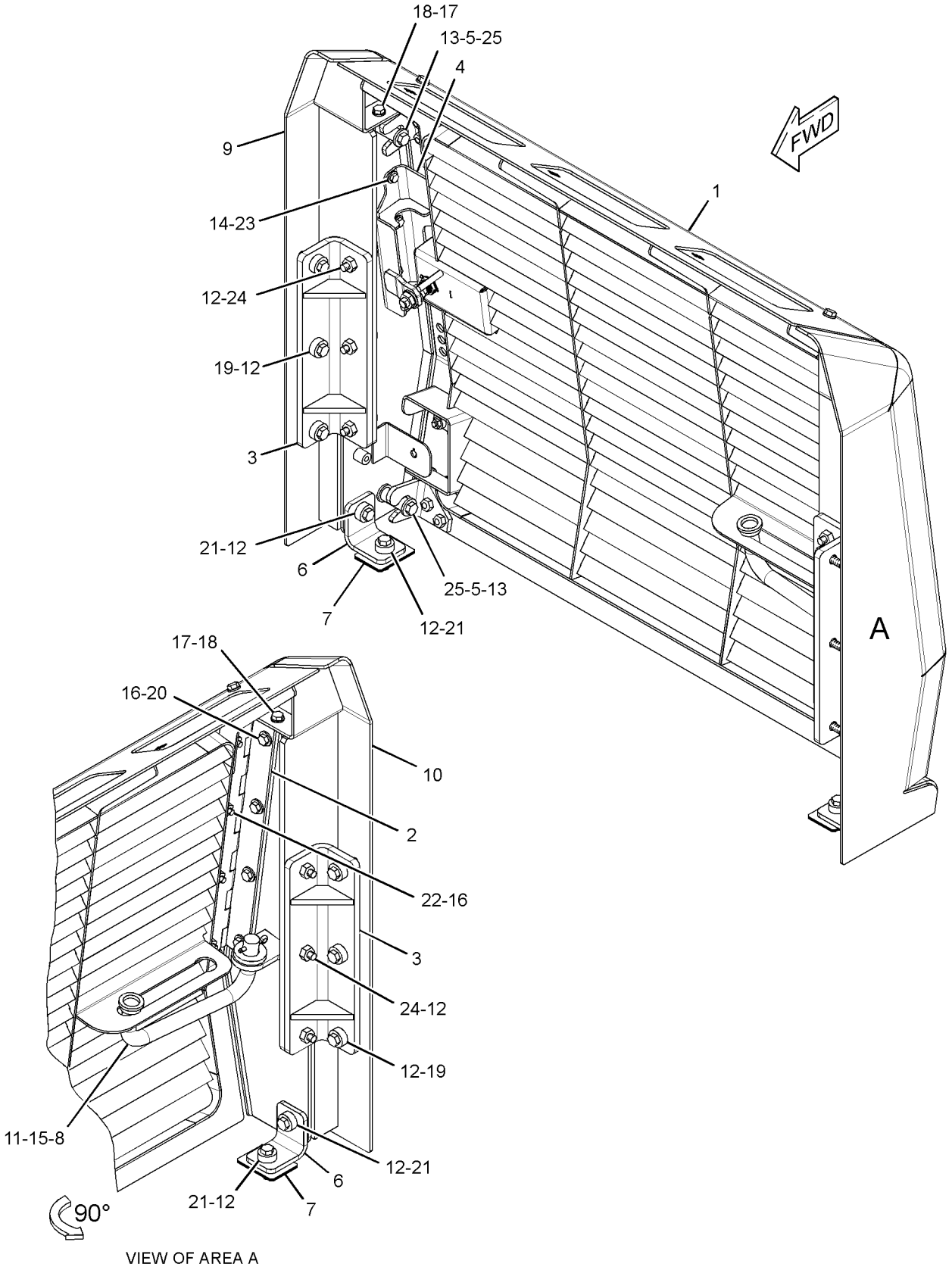

VIEW OF AREA A

GRAPHIC #1 **<END>** g01456507

275-0763 GUARD GP-FRONT—HYDRAULIC TANK

S/N: LBP1-377

PART OF 240-6225 CHASSIS AR

SMCS-7167 **i03527222**

NOTE	REF NO	GRAPHIC REF	PART NUMBER	QTY	PART NAME 1 2 3 4 5 6 (PRODUCT LEVEL)	SEE PAGE
	1	1	**280-0404**	1	COVER	
	2	1	**280-1288**	1	BRACKET AS (RH)	
	3	1	**280-1289**	1	BRACKET AS (LH)	
	4	1	**280-1290**	1	COVER AS-ACCESS	
Y	5	1	**282-9406**	1	GUARD GP-FRONT (HYDRAULIC TANK)	353
	6	1	**299-6013**	2	STRIP	
	7	1	**299-6014**	1	BAFFLE	
	8	1	**198-4777**	4	WASHER-HARD (11X25X10-MM THK)	
M	9	1	**5C-7261**	2	NUT (M8X1.25-THD)	
	10	1	**5P-4116**	4	WASHER-HARD (8.8X20.5X2-MM THK)	
	11	1	**7X-7729**	14	WASHER (11X25X3-MM THK)	
M	12	1	**8T-4186**	4	BOLT (M10X1.5X40-MM)	
M	13	1	**8T-4195**	16	BOLT (M10X1.5X30-MM)	
M	14	1	**8T-7547**	2	BOLT (M8X1.25X30-MM)	

M-METRIC PART
Y-SEPARATE ILLUSTRATION

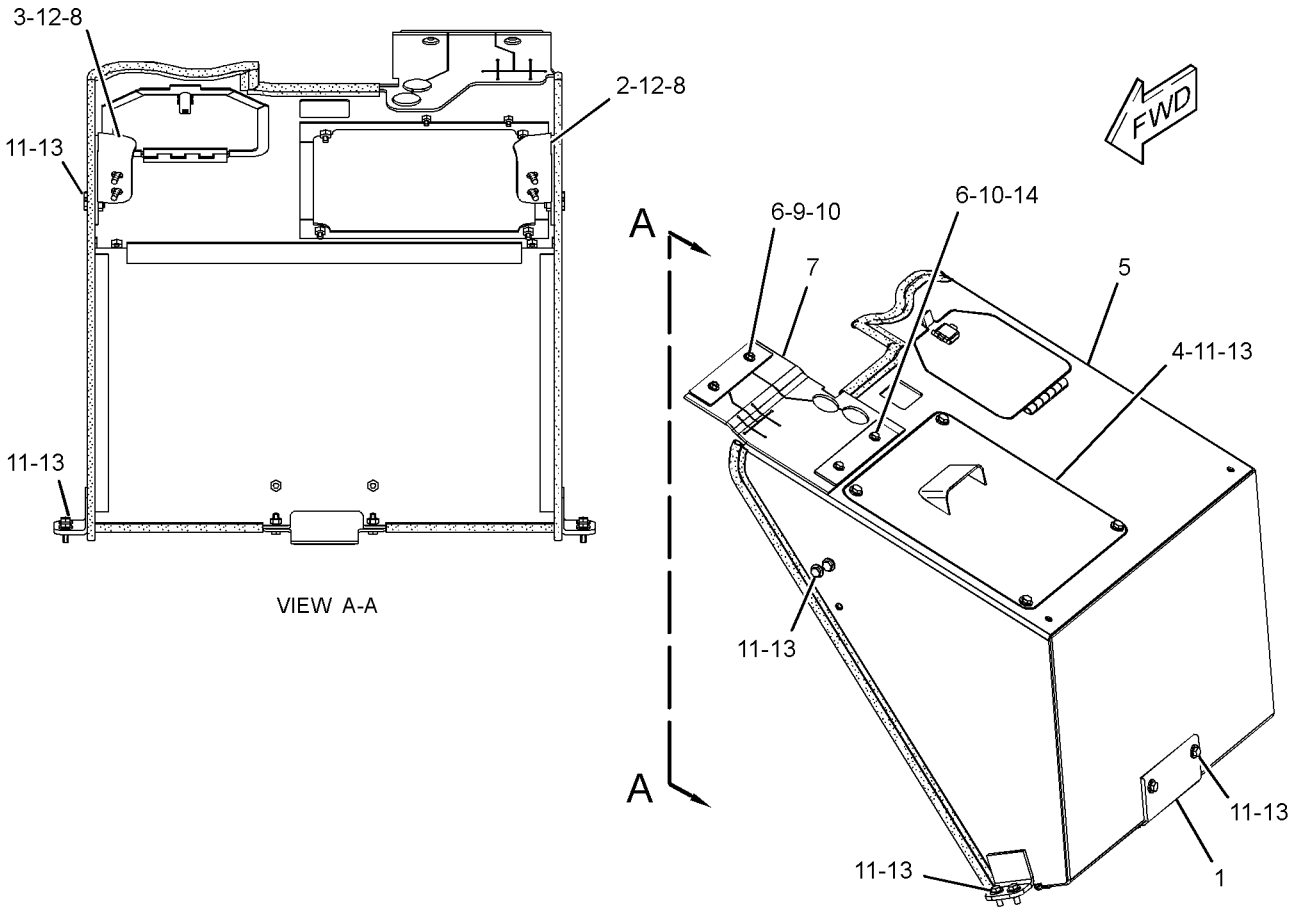

GRAPHIC #1 **<END>** g01856433

275-0763 GUARD GP-FRONT–HYDRAULIC TANK

S/N: LBP378-699

PART OF 240-6225 CHASSIS AR

SMCS-7167 **i03527223**

NOTE	REF NO	GRAPHIC REF	PART NUMBER	QTY	PART NAME 1 2 3 4 5 6 (PRODUCT LEVEL)	SEE PAGE
	1	1	**280-0404**	1	COVER	
	2	1	**280-1288**	1	BRACKET AS (RH)	
	3	1	**280-1289**	1	BRACKET AS (LH)	
	4	1	**280-1290**	1	COVER AS-ACCESS	
Y	5	1	**282-9406**	1	GUARD GP-FRONT (HYDRAULIC TANK)	353
	6	1	**299-6013**	2	STRIP	
	8	1	**198-4777**	4	WASHER-HARD (11X25X10-MM THK)	
M	9	1	**5C-7261**	2	NUT (M8X1.25-THD)	
	10	1	**5P-4116**	4	WASHER-HARD (8.8X20.5X2-MM THK)	
	11	1	**7X-7729**	16	WASHER (11X25X3-MM THK)	
M	12	1	**8T-4186**	4	BOLT (M10X1.5X40-MM)	
M	13	1	**8T-4195**	16	BOLT (M10X1.5X30-MM)	
M	14	1	**8T-7547**	2	BOLT (M8X1.25X30-MM)	

M-METRIC PART
Y-SEPARATE ILLUSTRATION

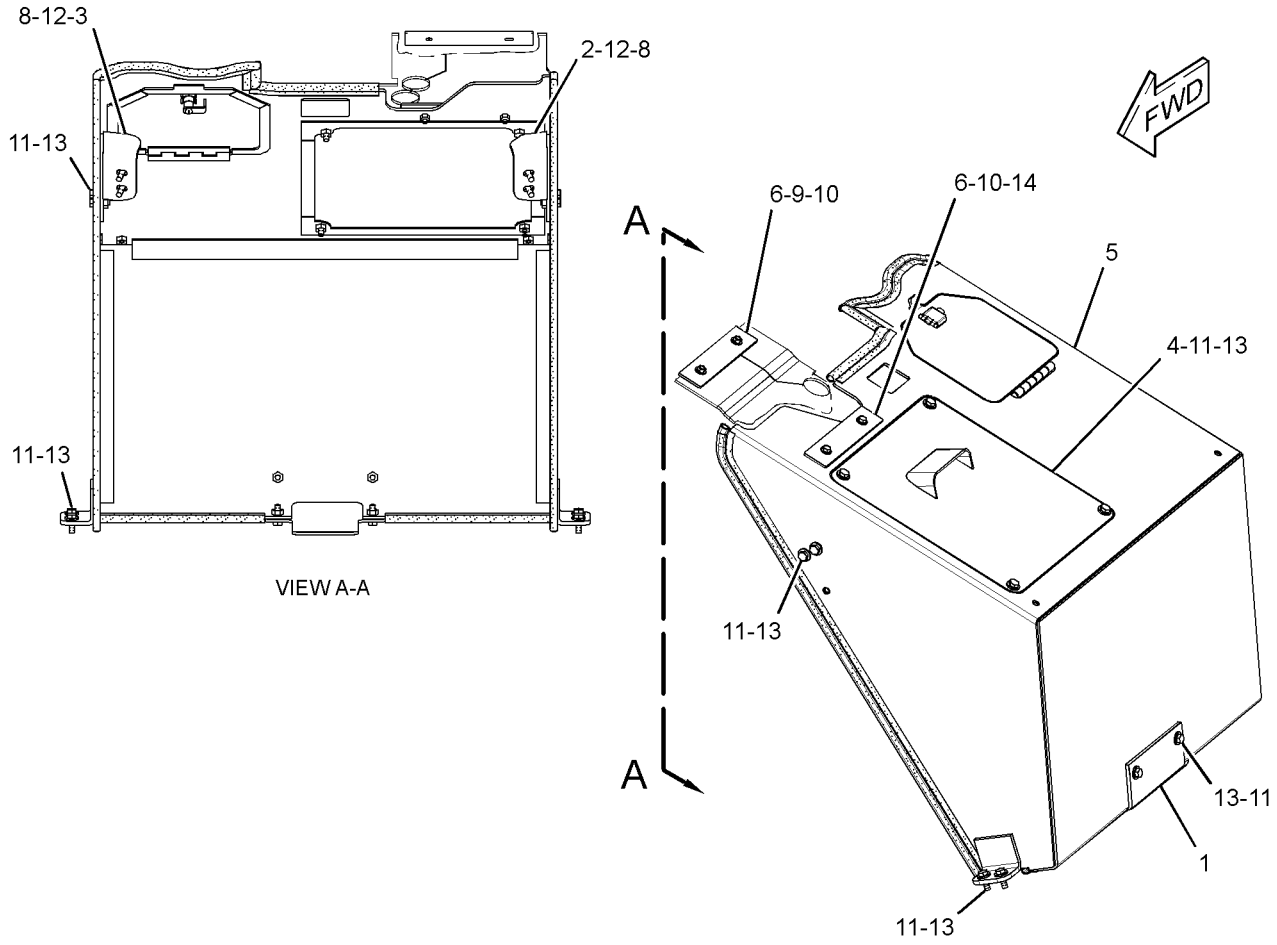

GRAPHIC #1 **<END>** g01856454

FRAME AND BODY

275-0763 GUARD GP-FRONT—HYDRAULIC TANK

S/N: LBP700-816

PART OF 240-6225 CHASSIS AR

SMCS-7167 **i03527224**

NOTE	REF NO	GRAPHIC REF	PART NUMBER	QTY	PART NAME 1 2 3 4 5 6 (PRODUCT LEVEL)	SEE PAGE
	1	1	**280-0404**	1	COVER	
	2	1	**280-1288**	1	BRACKET AS (RH)	
	3	1	**280-1289**	1	BRACKET AS (LH)	
	4	1	**280-1290**	1	COVER AS-ACCESS	
C	5	1	**299-6013**	4	STRIP	
C	6	1	**316-2198**	1	BAFFLE AS	
CY	7	1	*316-9447*	1	GUARD GP-FRONT	354
	8	1	**198-4777**	4	WASHER-HARD (11X25X10-MM THK)	
CM	9	1	**5C-7261**	4	NUT (M8X1.25-THD)	
C	10	1	**5P-4116**	8	WASHER-HARD (8.8X20.5X2-MM THK)	
	11	1	**7X-7729**	16	WASHER (11X25X3-MM THK)	
C	12	1	**8T-4121**	1	WASHER-HARD (11X21X2.5-MM THK)	
CM	13	1	**8T-4137**	1	BOLT (M10X1.5X20-MM)	
M	14	1	**8T-4186**	4	BOLT (M10X1.5X40-MM)	
M	15	1	**8T-4195**	16	BOLT (M10X1.5X30-MM)	
CM	16	1	**8T-7547**	4	BOLT (M8X1.25X30-MM)	

C-CHANGE FROM PREVIOUS TYPE
M-METRIC PART
Y-SEPARATE ILLUSTRATION

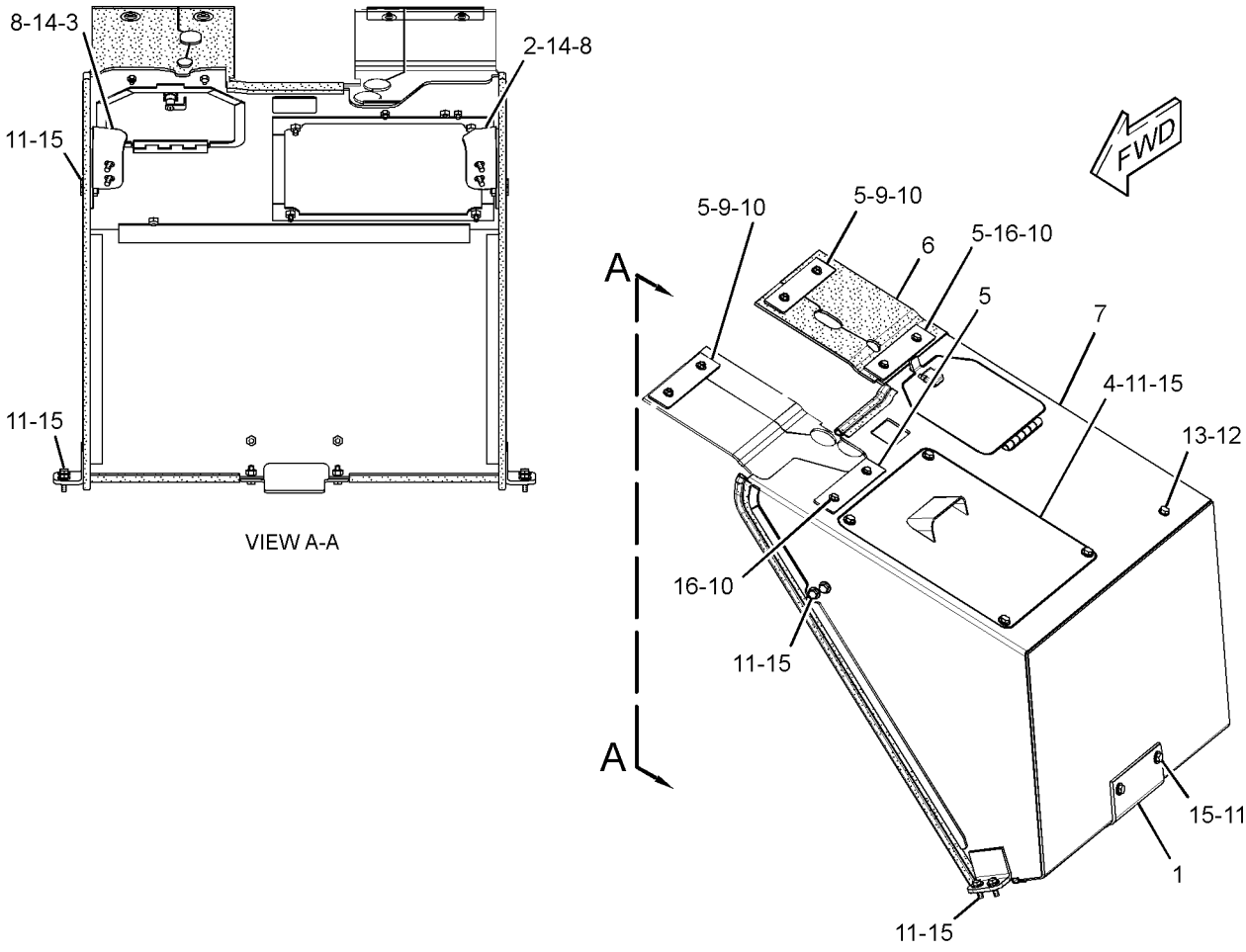

GRAPHIC #1 **<END>** g01856513

275-0763 GUARD GP-FRONT—HYDRAULIC TANK

S/N: LBP817-UP

PART OF 240-6225 CHASSIS AR

SMCS-7167 **i03527221**

NOTE	REF NO	GRAPHIC REF	PART NUMBER	QTY	PART NAME 1 2 3 4 5 6 (PRODUCT LEVEL)	SEE PAGE
	1	1	**280-0404**	1	COVER	
	2	1	**280-1288**	1	BRACKET AS (RH)	
	3	1	**280-1289**	1	BRACKET AS (LH)	
	4	1	**280-1290**	1	COVER AS-ACCESS	
	5	1	**299-6013**	4	STRIP	
	6	1	**316-2198**	1	BAFFLE AS	
Y	7	1	*316-9447*	1	GUARD GP-FRONT	354
	8	1	**198-4777**	4	WASHER-HARD (11X25X10-MM THK)	
	9	1	**5P-4116**	8	WASHER-HARD (8.8X20.5X2-MM THK)	
	10	1	**7X-7729**	16	WASHER (11X25X3-MM THK)	
	11	1	**8T-4121**	1	WASHER-HARD (11X21X2.5-MM THK)	
M	12	1	**8T-4137**	1	BOLT (M10X1.5X20-MM)	
M	13	1	**8T-4186**	12	BOLT (M10X1.5X40-MM)	
M	14	1	**8T-4195**	8	BOLT (M10X1.5X30-MM)	
CM	15	1	**8T-7547**	8	BOLT (M8X1.25X30-MM)	

C-CHANGE FROM PREVIOUS TYPE
M-METRIC PART
Y-SEPARATE ILLUSTRATION

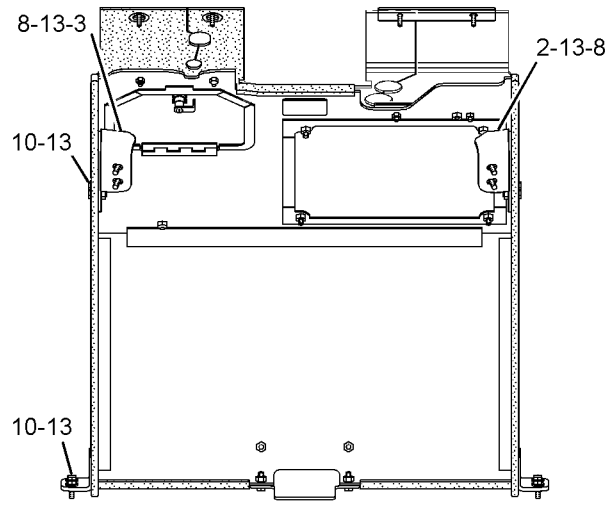

VIEW A-A

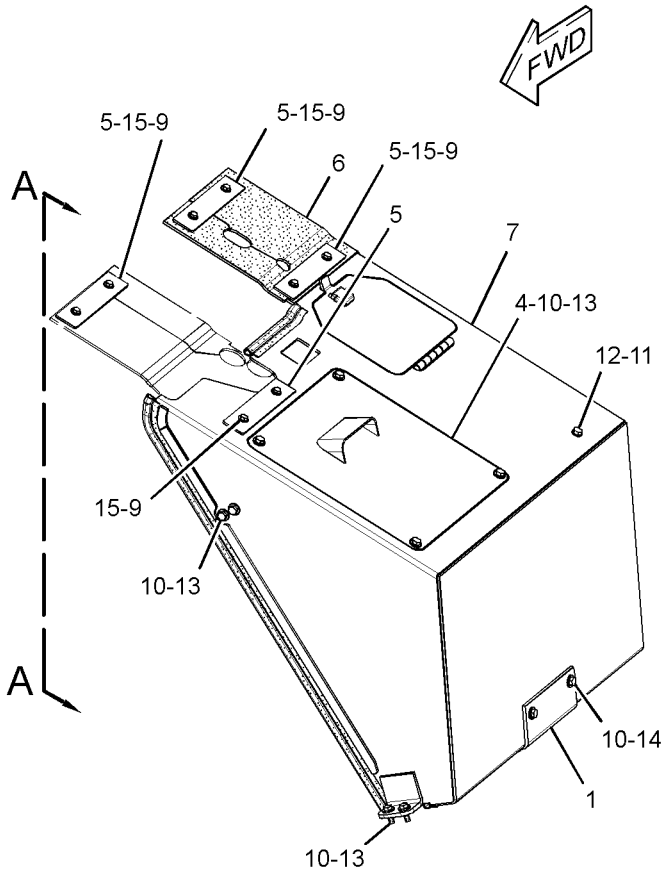

GRAPHIC #1 **<END>** g01856413

282-9344 GUARD GP-FRONT

S/N: LBP1-UP
PART OF 252-0241 HYDRAULIC AR-3 VALVE, 252-0243 HYDRAULIC AR-4 VALVE AN ATTACHMENT

SMCS-7167 **i02663107**

NOTE	REF NO	GRAPHIC REF	PART NUMBER	QTY	PART NAME 1 2 3 4 5 6 (PRODUCT LEVEL)	SEE PAGE
	1	1	**247-1719**	3	COLLAR	
	2	1	**282-9405**	1	GUARD AS	
	3	1	**5P-1076**	3	WASHER-HARD (13.5X30X4-MM THK)	
M	4	1	**8T-4179**	3	BOLT (M12X1.75X20-MM)	

M-METRIC PART

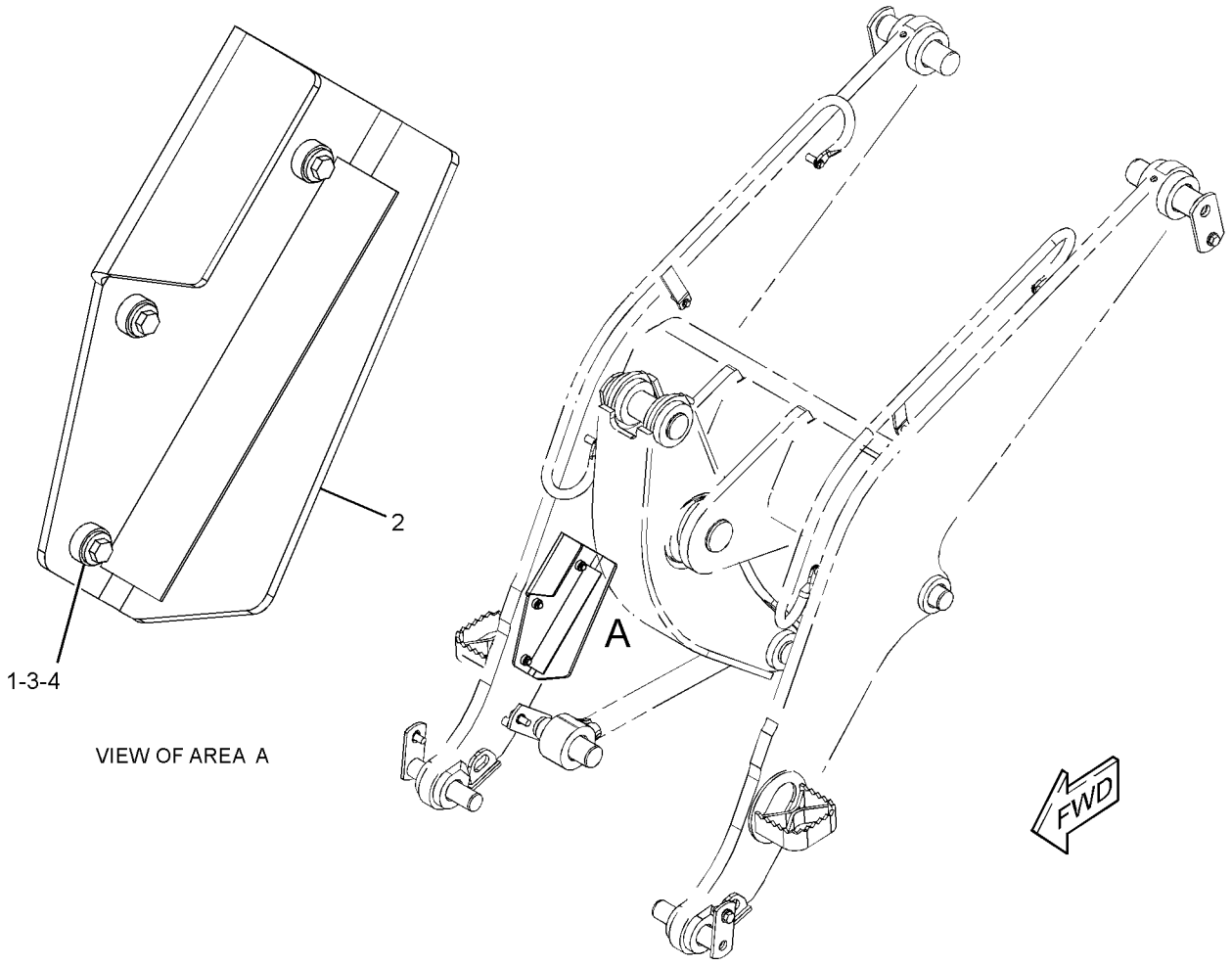

VIEW OF AREA A

GRAPHIC #1 **<END>** g01344234

282-9406 GUARD GP-FRONT–HYDRAULIC TANK

S/N: LBP1-699

PART OF 275-0763 GUARD GP-FRONT

SMCS-7167 **i02849616**

NOTE	REF NO	GRAPHIC REF	PART NUMBER	QTY	PART NAME 1 2 3 4 5 6 (PRODUCT LEVEL)	SEE PAGE
	1	1	**226-0294**	1	LOCK AS	
	2	1	**155-9321**	1	CAP AS	
	3	1	**275-0764**	1	GUARD AS	
	4	1	**286-3462**	1	CAM-LATCH	
M	5	1	**3E-4320**	4	SCREW (M3X0.5X10-MM)	
E	6	1	**221-8310**		SEAL (12-CM)	
E	6A	1	**221-8310**		SEAL (26-CM)	
E	6B	1	**221-8310**		SEAL (98-CM)	
E	6C	1	**221-8310**		SEAL (140-CM)	
E	6D	1	**221-8310**		SEAL (32-CM EACH)	

E-ORDER BY THE CENTIMETER
M-METRIC PART

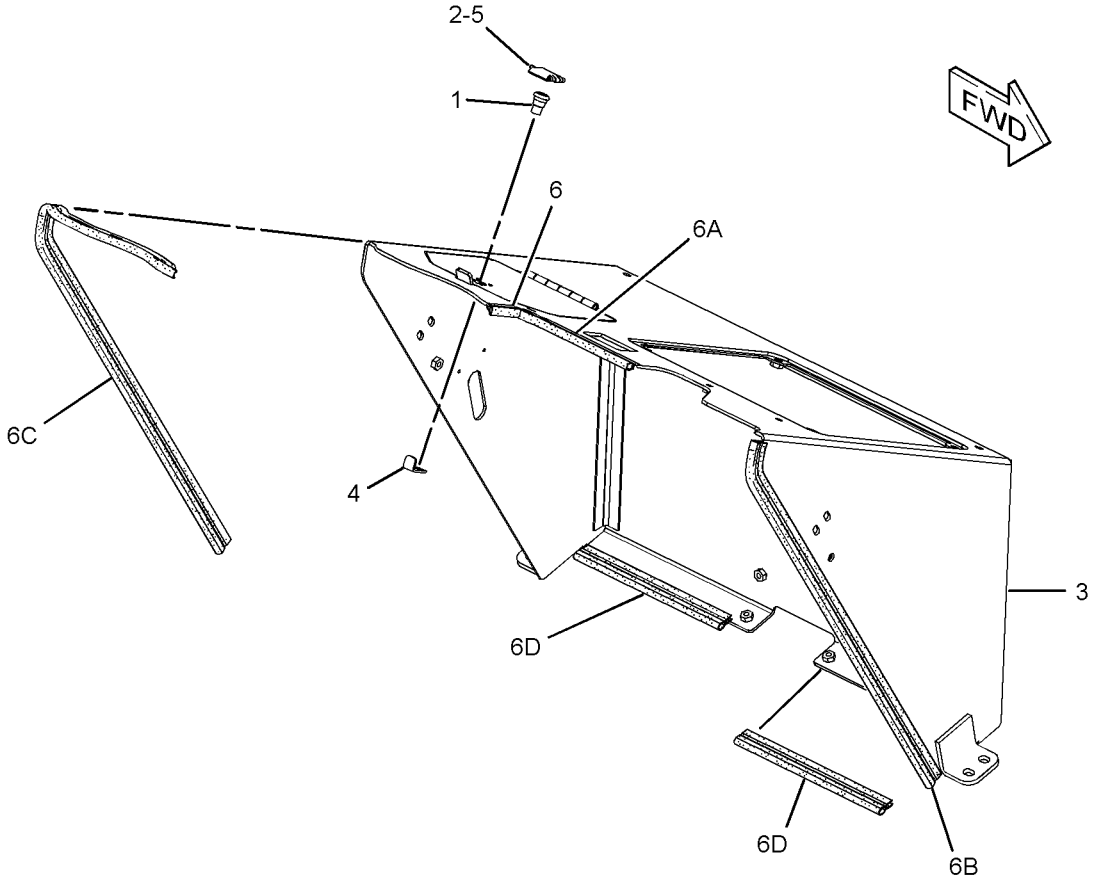

GRAPHIC #1 **<END>** g01335140

FRAME AND BODY

316-9447 GUARD GP-FRONT

S/N: LBP700-UP

PART OF 275-0763 GUARD GP-FRONT

SMCS-7167 **i02954979**

NOTE	REF NO	GRAPHIC REF	PART NUMBER	QTY	PART NAME 1 2 3 4 5 6 (PRODUCT LEVEL)	SEE PAGE
	1	1	**155-9321**	1	CAP AS	
	2	1	**316-9446**	1	GUARD AS	
M	3	1	**3E-4320**	4	SCREW (M3X0.5X10-MM)	
	4	1	**226-0294**	1	LOCK AS	
	5	1	**286-3462**	1	CAM-LATCH	
E	6	1	**221-8310**		SEAL (25-CM)	
E	6A	1	**221-8310**		SEAL (32-CM EACH)	
E	6B	1	**221-8310**		SEAL (98-CM EACH)	

E-ORDER BY THE CENTIMETER
M-METRIC PART

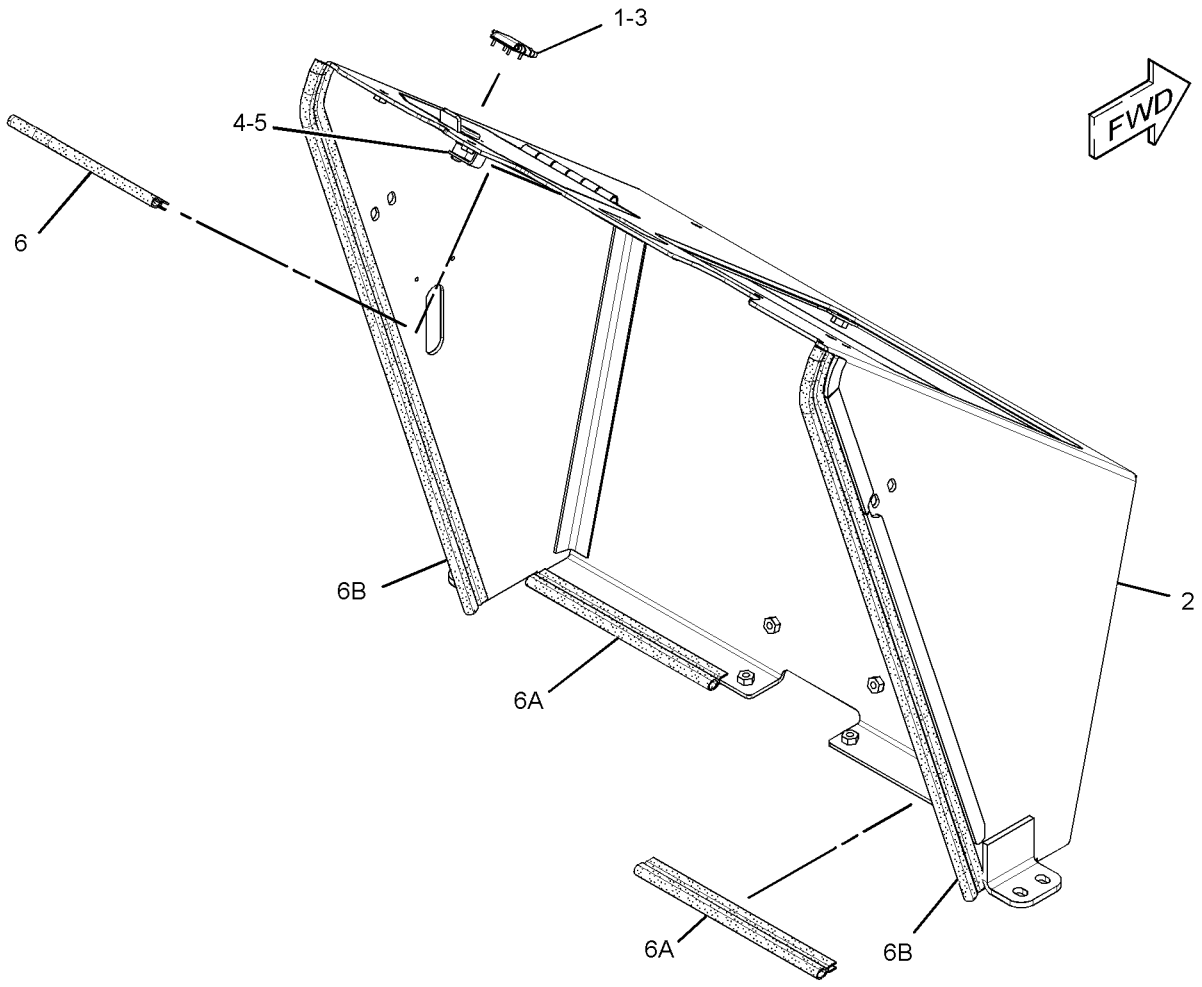

GRAPHIC #1 **<END>** g01503973

FRAME AND BODY

279-8834 GUARD GP-IDLER

S/N: LBP1-UP
CANNOT BE USED WITH SCRAPER GP-IDLER
AN ATTACHMENT

SMCS-7169 **i02663032**

NOTE	REF NO	GRAPHIC REF	PART NUMBER	QTY	PART NAME 1 2 3 4 5 6 (PRODUCT LEVEL)	SEE PAGE
	1	1	**261-7105**	2	GUARD AS-IDLER	
					(EACH INCLUDES)	
M		1	**8T-3597**	2	NUT-WELD (M12X1.75-THD)	
	2	1	**261-7110**	2	GUARD AS (INNER, RH; OUTER, LH)	
	3	1	**261-7111**	2	GUARD AS (INNER, LH; OUTER, RH)	
	4	1	**279-8833**	2	GUARD AS	
	5	1	**5P-1076**	32	WASHER-HARD (13.5X30X4-MM THK)	
M	6	1	**8T-4139**	12	BOLT (M12X1.75X30-MM)	
M	7	1	**8T-4192**	12	BOLT (M12X1.75X25-MM)	
M	8	1	**8T-4194**	8	BOLT (M12X1.75X50-MM)	

QUANTITIES SHOWN ARE THOSE REQUIRED FOR BOTH LH AND RH SIDES
M-METRIC PART

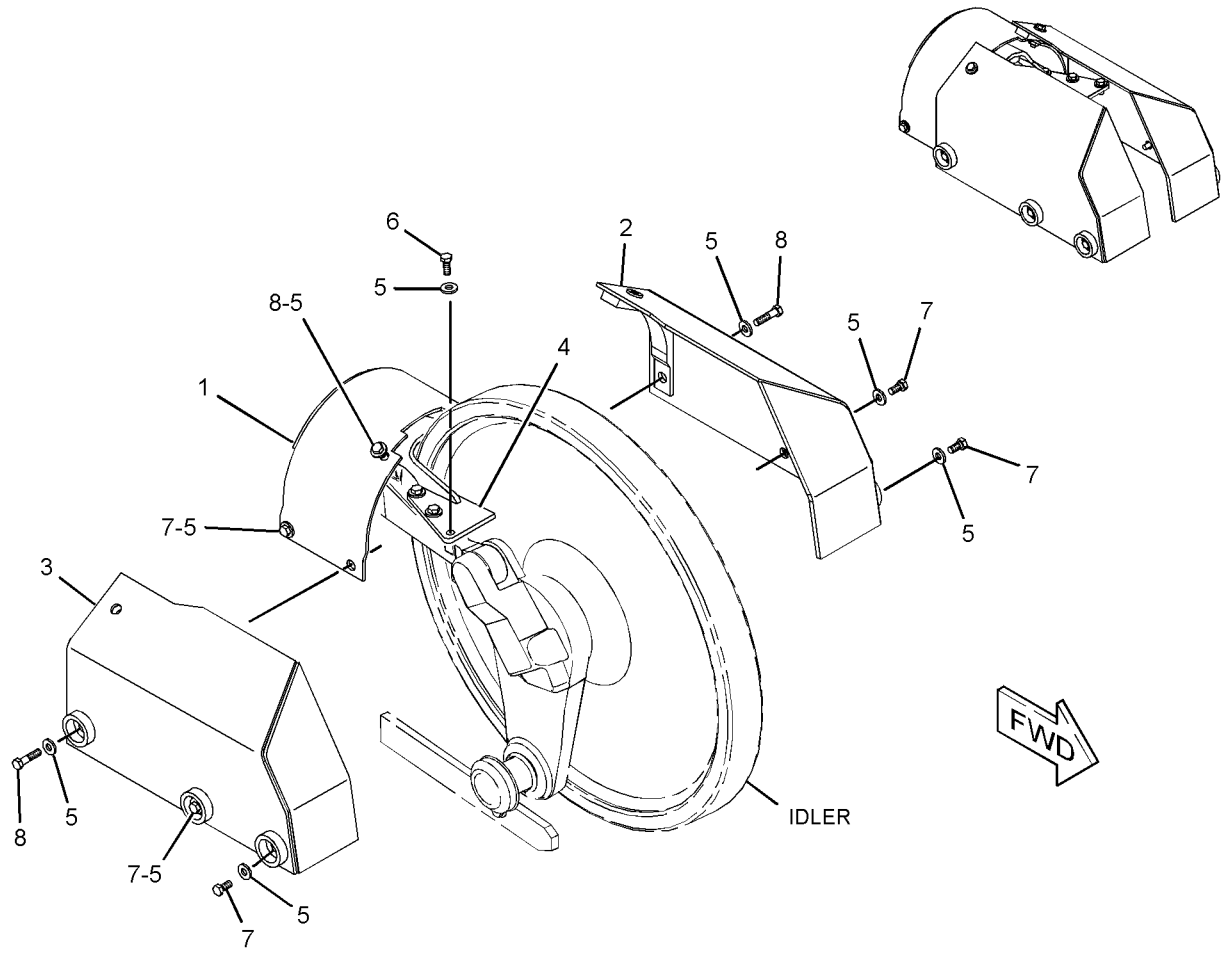

GRAPHIC #1 **<END>** g01339878

308-6518 GUARD GP-IDLER—ENHANCED EXTENDED WEAR LIFE

S/N: LBP1-UP

CANNOT BE USED WITH 308-6189—PAGE 411

AN ATTACHMENT

SMCS-7169 **i03587294**

NOTE	REF NO	GRAPHIC REF	PART NUMBER	QTY	PART NAME 1 2 3 4 5 6 (PRODUCT LEVEL)	SEE PAGE
	1	1	**8Y-2429**	2	GUARD AS	
	2	1	**261-7105**	2	GUARD AS-IDLER	
					(EACH INCLUDES)	
M		1	**8T-3597**	2	NUT-WELD (M12X1.75-THD)	
	3	1	**264-7098**	2	GUARD AS-IDLER (INNER, RH; OUTER, LH)	
	4	1	**264-7099**	2	GUARD AS-IDLER (INNER, LH; OUTER, RH)	
	5	1	**5P-1076**	32	WASHER-HARD (13.5X30X4-MM THK)	
M	6	1	**8T-4139**	12	BOLT (M12X1.75X30-MM)	
M	7	1	**8T-4192**	12	BOLT (M12X1.75X25-MM)	
M	8	1	**8T-4194**	8	BOLT (M12X1.75X50-MM)	

QUANTITIES SHOWN ARE THOSE REQUIRED FOR BOTH LH AND RH SIDES
M-METRIC PART

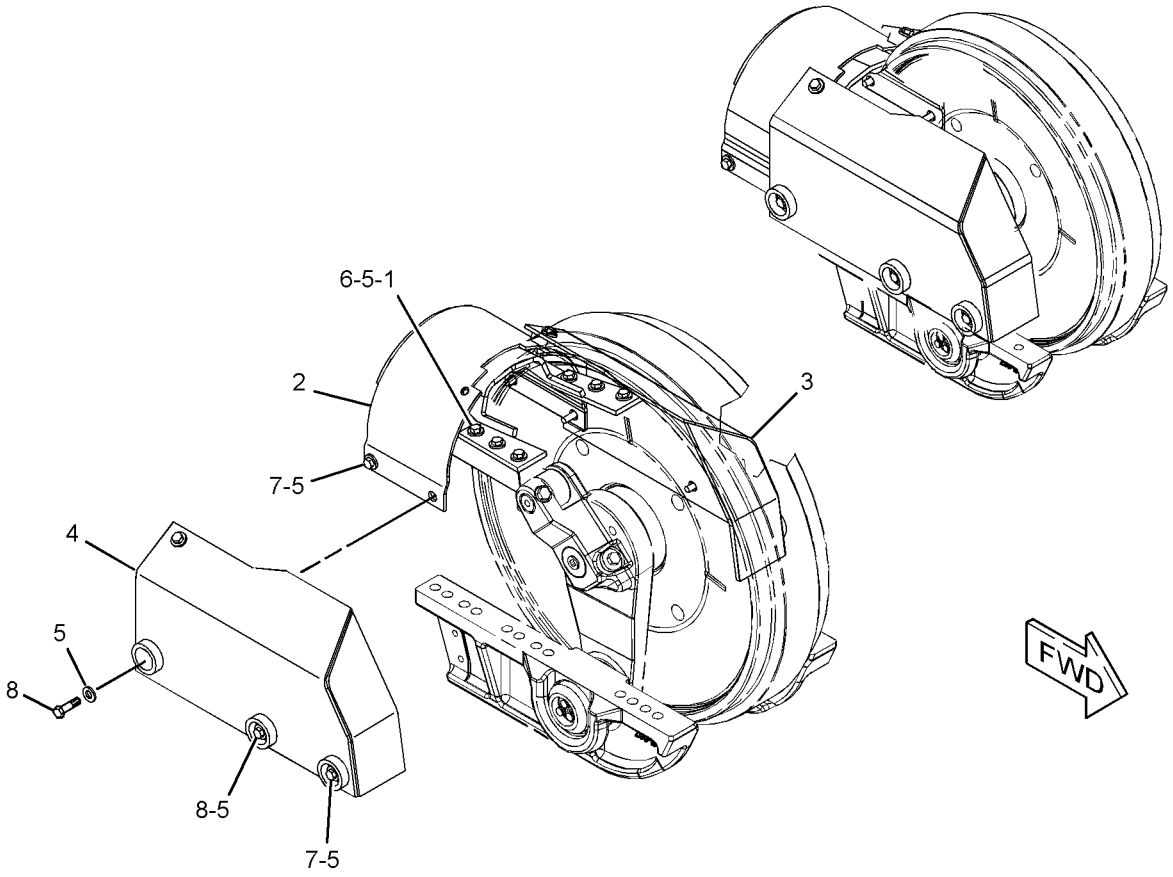

GRAPHIC #1 **<END>** g01357375

256-7406 GUARD GP-LIGHTING

S/N: LBP1-UP
AN ATTACHMENT

SMCS-715L **i02665217**

NOTE	REF NO	GRAPHIC REF	PART NUMBER	QTY	PART NAME 1 2 3 4 5 6 (PRODUCT LEVEL)	SEE PAGE
	1	1	**261-7414**	1	GUARD-LIGHT (RH)	
	2	1	**283-1402**	1	GUARD-LIGHT (LH)	
M	3	1	**9X-2041**	4	SCREW-TRUSS HEAD (M10X1.5X20-MM)	

M-METRIC PART

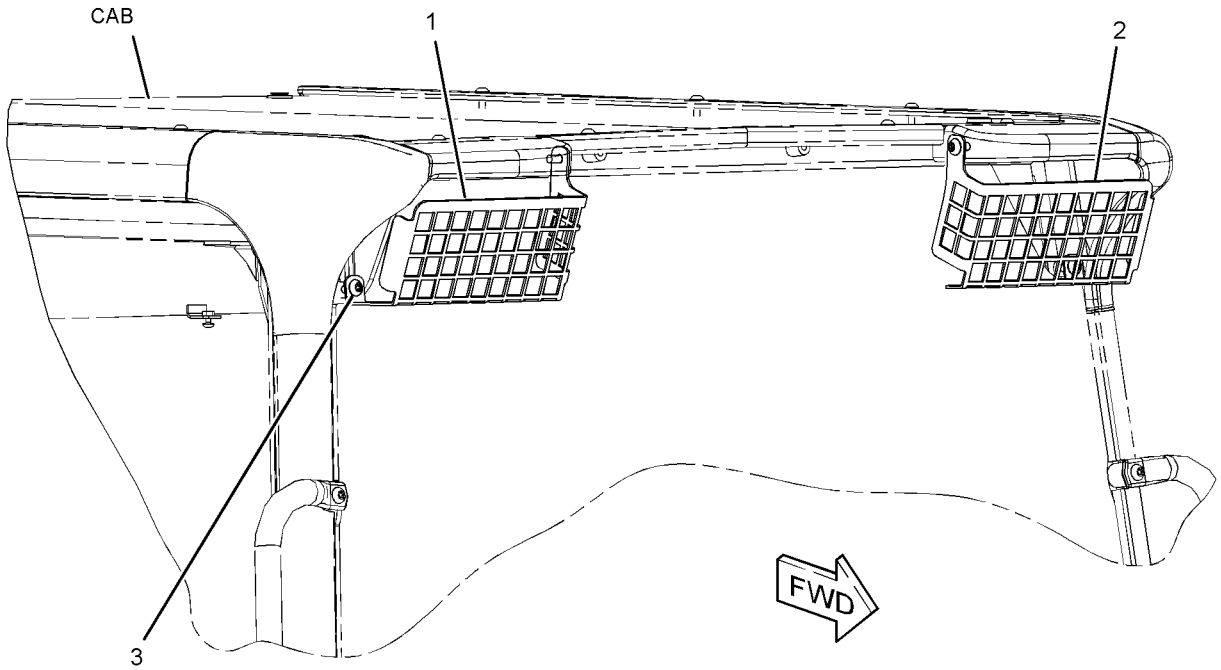

GRAPHIC #1 **<END>** g01345119

256-7614 GUARD GP-LINES–LIFT

S/N: LBP1-912
AN ATTACHMENT

SMCS-7167 **i02665850**

NOTE	REF NO	GRAPHIC REF	PART NUMBER	QTY	PART NAME 1 2 3 4 5 6 (PRODUCT LEVEL)	SEE PAGE
	1	1	**298-2350**	1	GUARD AS (LH)	
	2	1	**298-2351**	1	GUARD AS (RH)	
	3	1	**305-2154**	1	BRACKET	
	4	1	**305-2155**	1	BRACKET	
	5	1	**305-2156**	2	BRACKET AS	
	6	1	**198-4778**	2	WASHER-HARD (13.5X30X12-MM THK)	
	7	1	**5P-1076**	4	WASHER-HARD (13.5X30X4-MM THK)	
	8	1	**7X-7729**	8	WASHER (11X25X3-MM THK)	
M	9	1	**8T-4136**	4	BOLT (M10X1.5X25-MM)	
M	10	1	**8T-4183**	6	BOLT (M12X1.75X40-MM)	
M	11	1	**8T-4195**	4	BOLT (M10X1.5X30-MM)	

M-METRIC PART

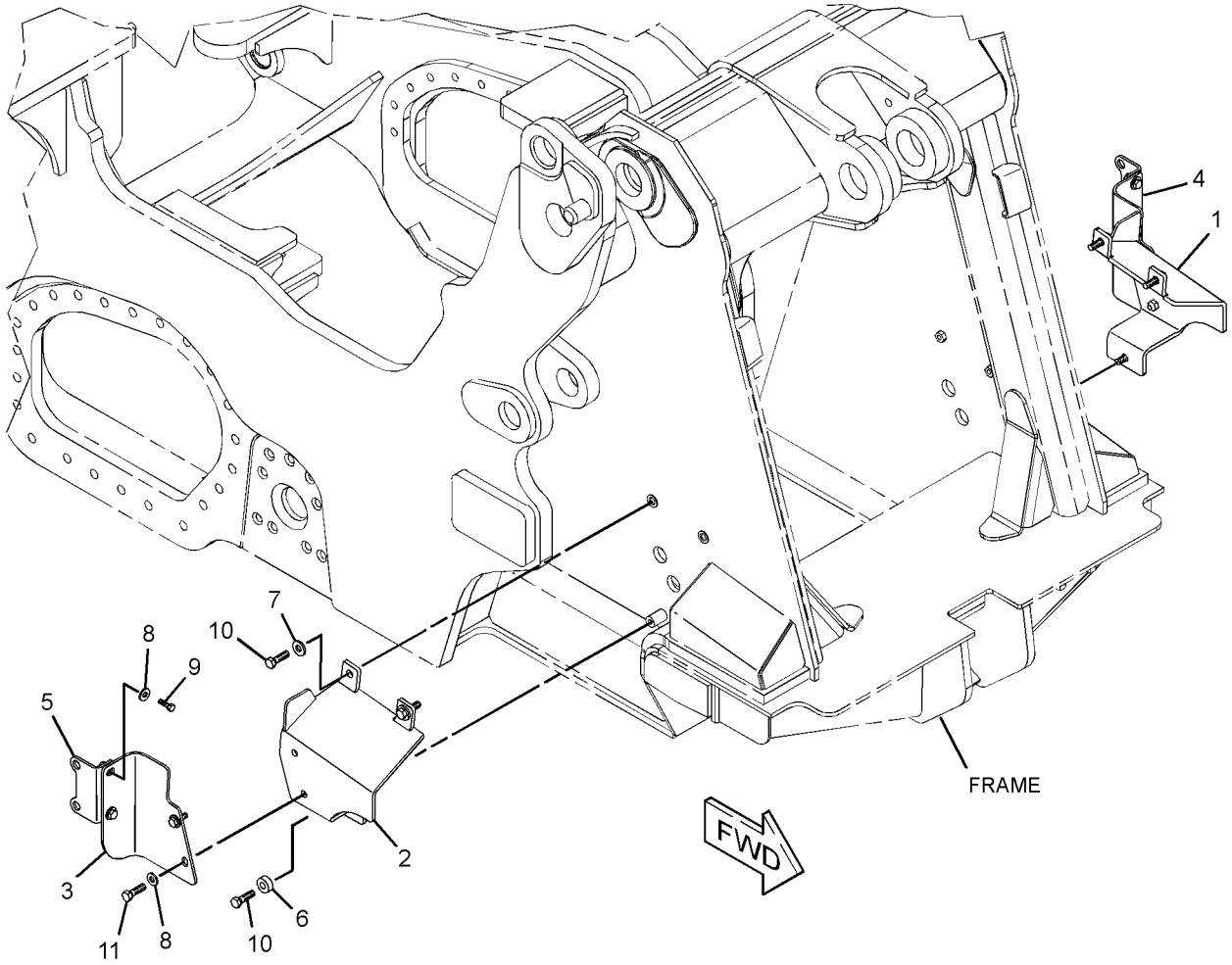

GRAPHIC #1 **<END>** g01344711

256-7614 GUARD GP-LINES–LIFT

S/N: LBP913-UP
AN ATTACHMENT

SMCS-7167 **i03486300**

NOTE	REF NO	GRAPHIC REF	PART NUMBER	QTY	PART NAME 1 2 3 4 5 6 (PRODUCT LEVEL)	SEE PAGE
C	1	1	**331-8840**	1	GUARD AS (LH)	
M		1	**8T-3490**	3	NUT-WELD (M10X1.5-THD)	
C	2	1	**331-8847**	1	GUARD AS (RH)	
M		1	**8T-3490**	3	NUT-WELD (M10X1.5-THD)	
C	3	1	**331-8854**	1	BRACKET AS	
C	4	1	**334-8046**	1	BRACKET AS	
	5	1	**198-4778**	2	WASHER-HARD (13.5X30X12-MM THK)	
	6	1	**5P-1076**	4	WASHER-HARD (13.5X30X4-MM THK)	
C	7	1	**7X-7729**	6	WASHER (11X25X3-MM THK)	
M	8	1	**8T-4183**	6	BOLT (M12X1.75X40-MM)	
CM	9	1	**8T-4195**	6	BOLT (M10X1.5X30-MM)	

C-CHANGE FROM PREVIOUS TYPE
M-METRIC PART

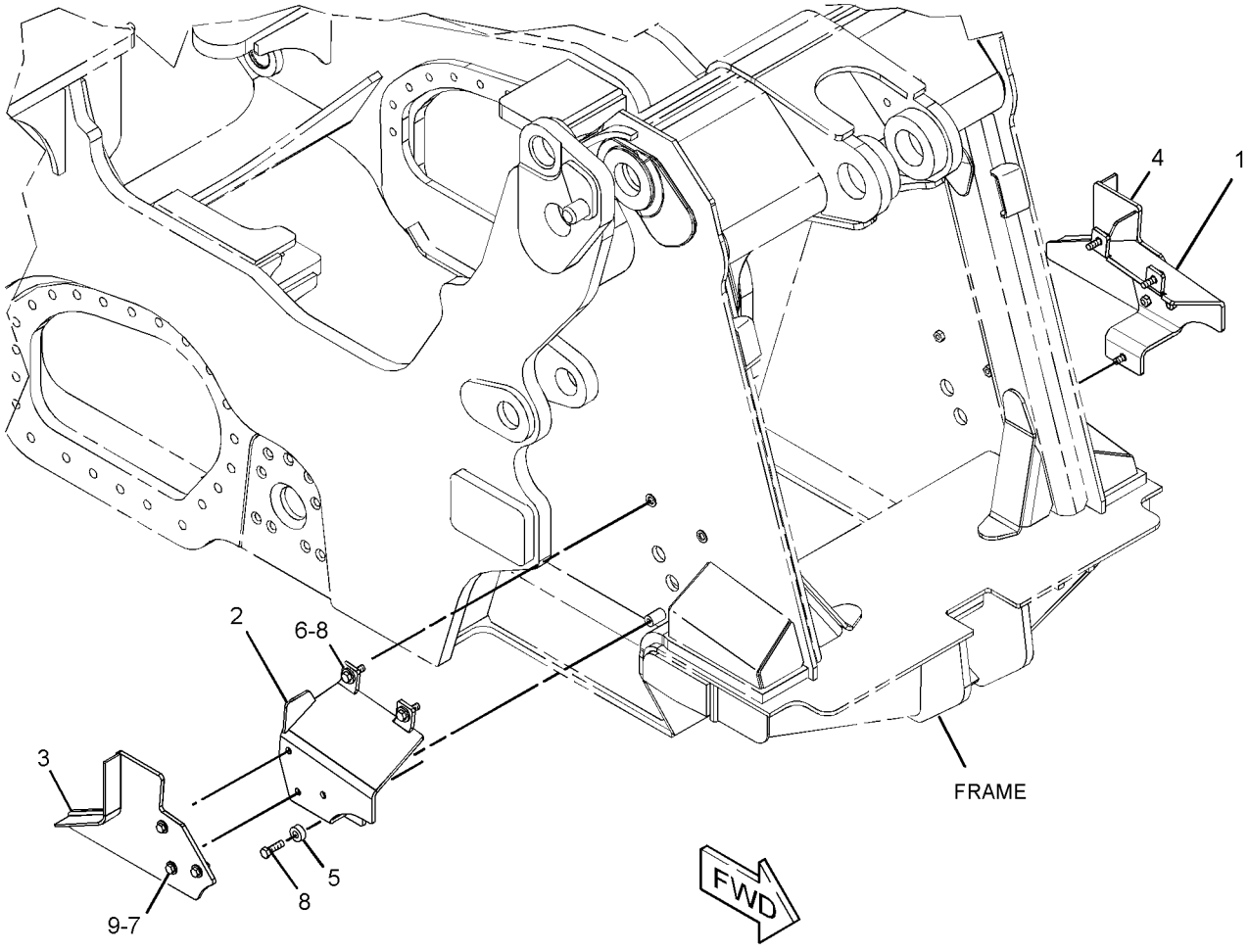

GRAPHIC #1 **<END>** g01844677

FRAME AND BODY

317-6137 GUARD GP-REAR

S/N: LBP1-UP

CANNOT BE USED WITH RIPPER AR, HYDRAULIC AR-2 BANK, HYDRAULIC AR-3 BANK AN ATTACHMENT

SMCS-7150 **i02895762**

NOTE	REF NO	GRAPHIC REF	PART NUMBER	QTY	PART NAME 1 2 3 4 5 6 (PRODUCT LEVEL)	SEE PAGE
	1	1	**315-8113**	2	BRACKET	
M	2	1	**8T-4139**	4	BOLT (M12X1.75X30-MM)	
	3	1	**8T-4223**	4	WASHER-HARD (13.5X25.5X3-MM THK)	

M-METRIC PART

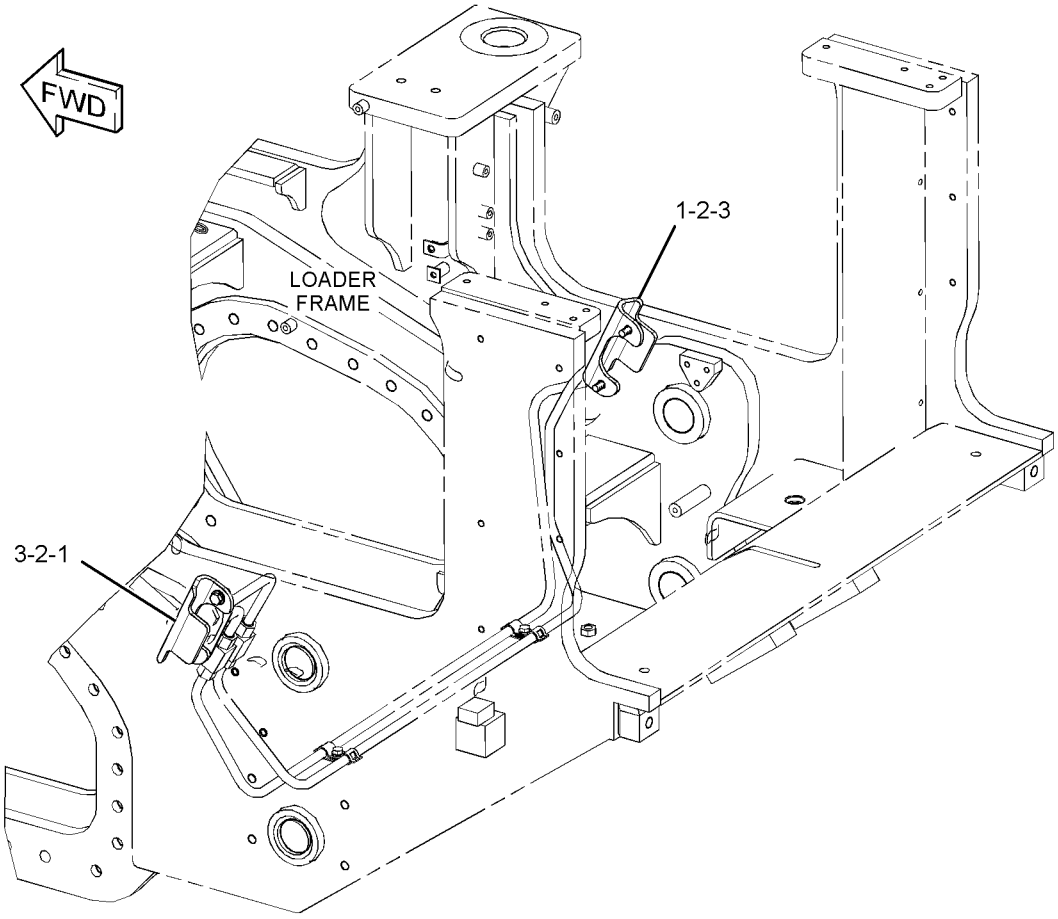

GRAPHIC #1 **<END>** g01442055

FRAME AND BODY

253-9237 HITCH GP

S/N: LBP1-UP

AN ATTACHMENT

SMCS-7100, 7106, 7116, 7117 **i02665817**

NOTE	REF NO	GRAPHIC REF	PART NUMBER	QTY	PART NAME 1 2 3 4 5 6 (PRODUCT LEVEL)	SEE PAGE
	1	1	**8Y-9228**	1	HITCH AS	
M	2	1	**7X-2575**	4	BOLT (M24X3X60-MM)	
	3	1	**8T-4167**	4	WASHER-HARD (26X44X4-MM THK)	

M-METRIC PART

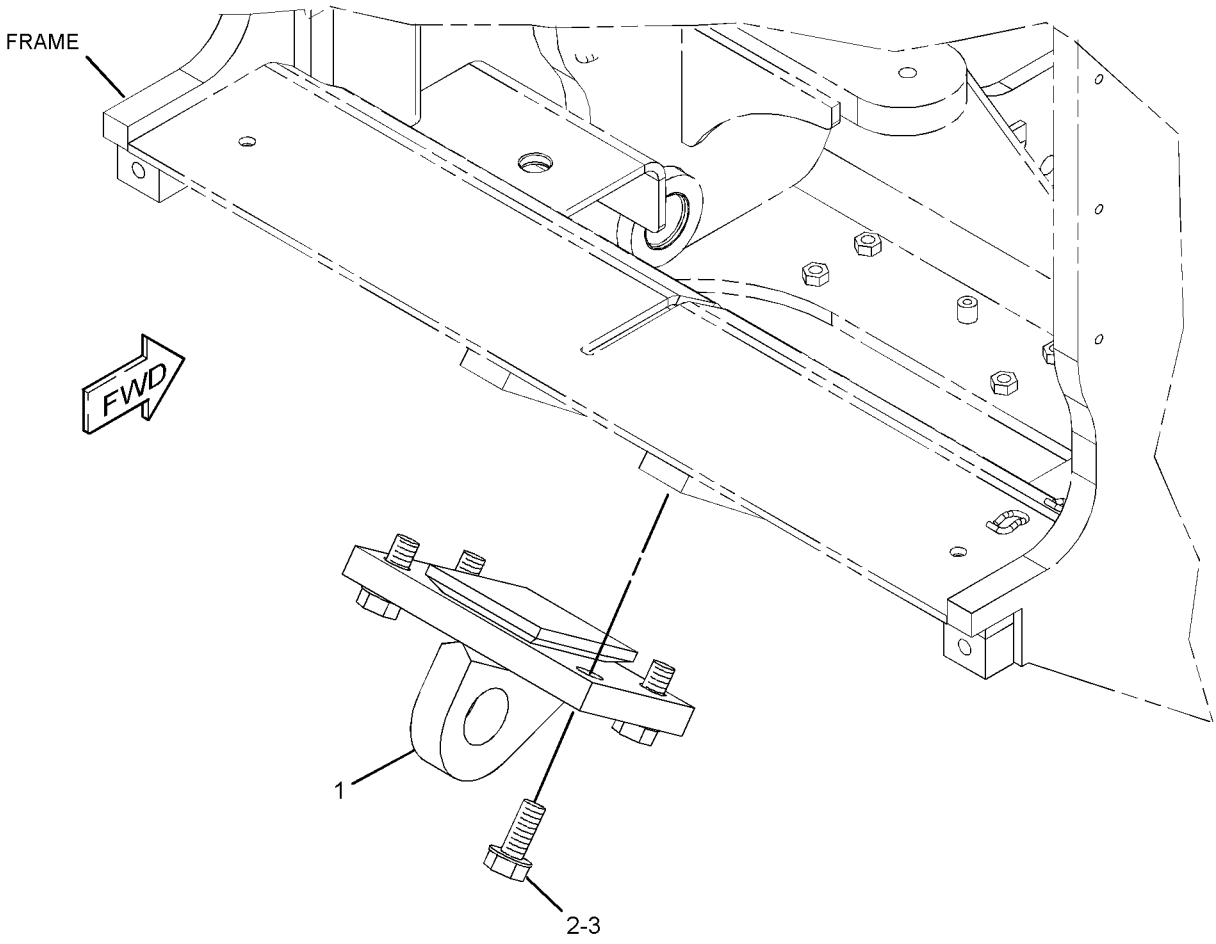

GRAPHIC #1 **<END>** g01344661

FRAME AND BODY

256-7613 HITCH GP

S/N: LBP1-UP

REPLACED BY 277-0525—PAGE 363. CANNOT BE USED WITH RIPPER & STANDARD HITCH AN ATTACHMENT

SMCS-7100, 7106, 7116, 7117 **i02665599**

NOTE	REF NO	GRAPHIC REF	PART NUMBER	QTY	PART NAME 1 2 3 4 5 6 (PRODUCT LEVEL)	SEE PAGE
	1	1	**1M-4980**	1	PIN-DRAWBAR	
	2	1	**281-7026**	1	HITCH AS	
	3	1	**281-7049**	1	BRACKET AS	
	4	1	**3B-5319**	1	PIN-COTTER	
M	5	1	**7X-2575**	4	BOLT (M24X3X60-MM)	
	6	1	**8T-4167**	8	WASHER-HARD (26X44X4-MM THK)	
M	7	1	**8T-5878**	4	BOLT (M24X3X80-MM)	

M-METRIC PART

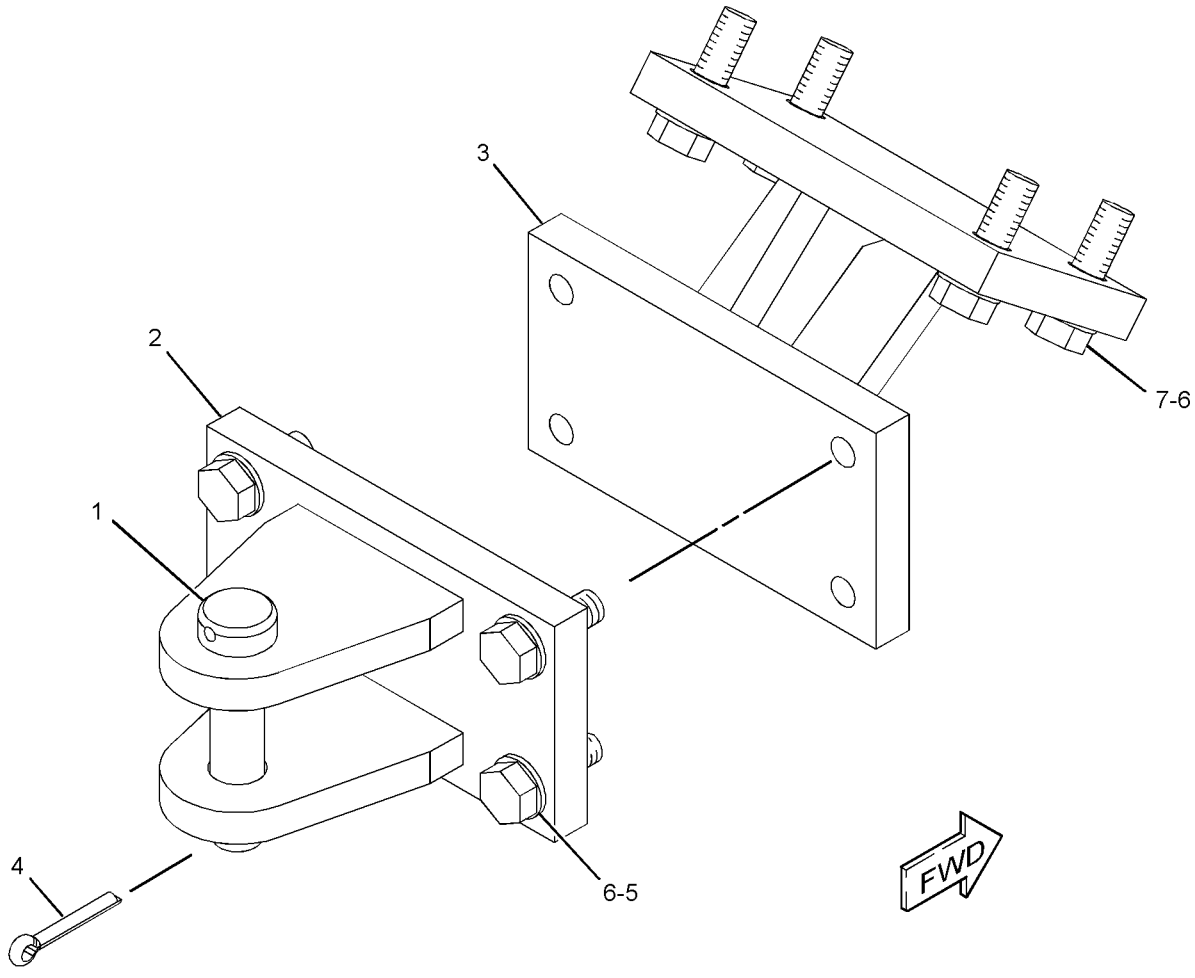

GRAPHIC #1 **<END>** g01342238

277-0525 HITCH GP

S/N: LBP1-UP
CANNOT BE USED WITH RIPPER AR, HEAVY-DUTY BUMPER
AN ATTACHMENT

SMCS-7100, 7106, 7116, 7117 **i02739100**

NOTE	REF NO	GRAPHIC REF	PART NUMBER	QTY	PART NAME 1 2 3 4 5 6 (PRODUCT LEVEL)	SEE PAGE
	1	1	**7B-0863**	1	LATCH-PIN	
	2	1	**9S-8184**	1	PIN AS-DRAWBAR	
	3	1	**277-0526**	1	HITCH AS	
M	4	1	**8T-4140**	1	BOLT (M16X2X60-MM)	
	5	1	**8T-4167**	4	WASHER-HARD (26X44X4-MM THK)	
M	6	1	**8T-4778**	1	LOCKNUT (M16X2-THD)	
M	7	1	**8T-5878**	4	BOLT (M24X3X80-MM)	

M-METRIC PART

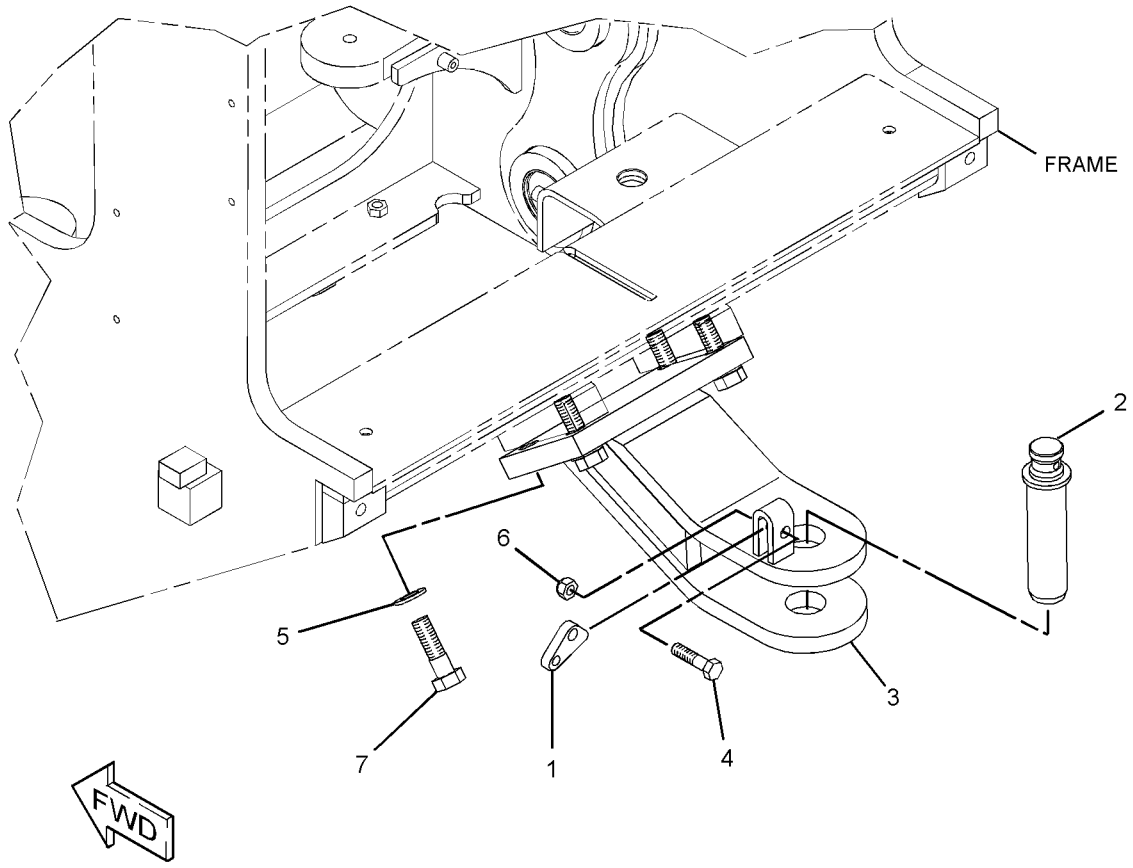

GRAPHIC #1 **<END>** g01355297

301-7849 HOOD & GUARD GP

S/N: LBP1-UP
CANNOT BE USED WITH 301-7850—PAGE 364
AN ATTACHMENT

SMCS-7251 **i02940353**

NOTE	PART NUMBER	QTY	PART NAME 1 2 3 4 5 6 (PRODUCT LEVEL)	SEE PAGE
Y	*316-9439*	1	HOOD GP-ENGINE	369
Y	*277-8717*	1	SHIELD GP-AIR CLEANER	105
Y-SEPARATE ILLUSTRATION				

<END>

301-7850 HOOD AR—PRECLEANER

S/N: LBP1-UP
CANNOT BE USED WITH 301-7849—PAGE 364
AN ATTACHMENT

SMCS-7251 **i02940351**

NOTE	PART NUMBER	QTY	PART NAME 1 2 3 4 5 6 (PRODUCT LEVEL)	SEE PAGE
Y	*316-9438*	1	HOOD GP-ENGINE	367
Y	*301-2716*	1	PRECLEANER GP	104
Y-SEPARATE ILLUSTRATION				

<END>

293-0654 HOOD GP

S/N: LBP1-UP
WITH PRECLEANER
PART OF 316-9438 HOOD GP-ENGINE
AN ATTACHMENT

SMCS-7251 **i02849136**

NOTE	REF NO	GRAPHIC REF	PART NUMBER	QTY	PART NAME 1 2 3 4 5 6 (PRODUCT LEVEL)	SEE PAGE
	1	1	**155-9321**	1	CAP AS	
	2	1	**281-5528**	1	BAFFLE	
	3	1	**293-0655**	1	HOOD AS	
	4	1	**310-3216**	1	PLATE-STRIP	
M	5	1	**3E-4320**	4	SCREW (M3X0.5X10-MM)	
	6	1	**5P-4116**	4	WASHER-HARD (8.8X20.5X2-MM THK)	
M	7	1	**8T-4189**	4	BOLT (M8X1.25X20-MM)	
	8	1	**226-0294**	1	LOCK AS	
	9	1	**286-3462**	1	CAM-LATCH	
E	10	1	**280-7618**		SEAL (43-CM)	
	11	1	**8T-4121**	3	WASHER-HARD (11X21X2.5-MM THK)	
M	12	1	**8T-4137**	3	BOLT (M10X1.5X20-MM)	

E-ORDER BY THE CENTIMETER
M-METRIC PART

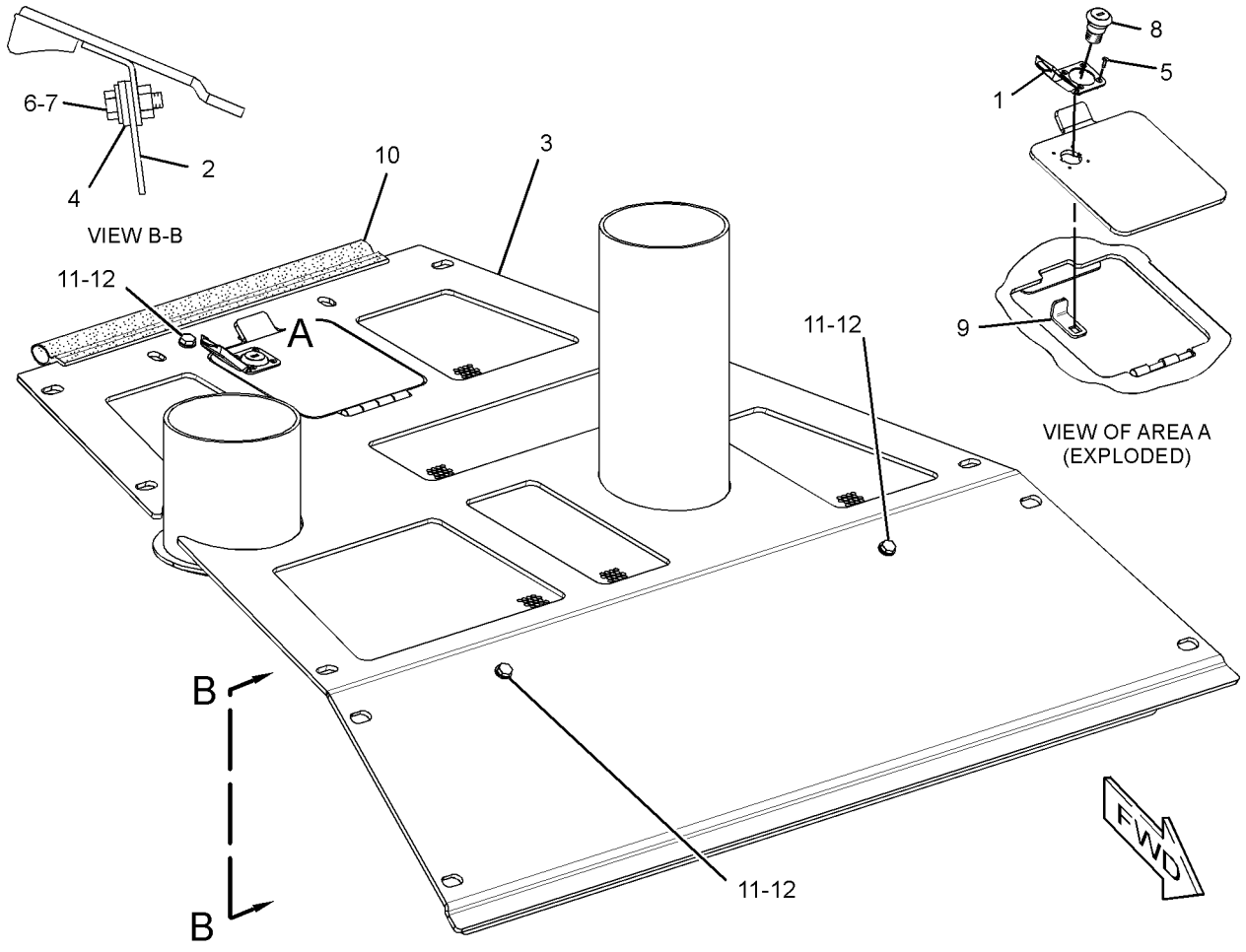

GRAPHIC #1 **<END>** g01423891

FRAME AND BODY

293-6457 HOOD GP

S/N: LBP1-UP
PART OF 316-9439 HOOD GP-ENGINE
AN ATTACHMENT

SMCS-7251 **i02849141**

NOTE	REF NO	GRAPHIC REF	PART NUMBER	QTY	PART NAME 1 2 3 4 5 6 (PRODUCT LEVEL)	SEE PAGE
	1	1	**155-9321**	1	CAP AS	
	2	1	**281-5528**	1	BAFFLE	
	3	1	**293-6458**	1	HOOD AS	
	4	1	**310-3216**	1	PLATE-STRIP	
M	5	1	**3E-4320**	4	SCREW (M3X0.5X10-MM)	
	6	1	**5P-4116**	4	WASHER-HARD (8.8X20.5X2-MM THK)	
M	7	1	**8T-4189**	4	BOLT (M8X1.25X20-MM)	
	8	1	**226-0294**	1	LOCK AS (CYLINDER)	
	9	1	**286-3462**	1	CAM-LATCH	
E	10	1	**280-7618**		SEAL (43-CM)	
	11	1	**8T-4121**	3	WASHER-HARD (11X21X2.5-MM THK)	
M	12	1	**8T-4137**	3	BOLT (M10X1.5X20-MM)	

E-ORDER BY THE CENTIMETER
M-METRIC PART

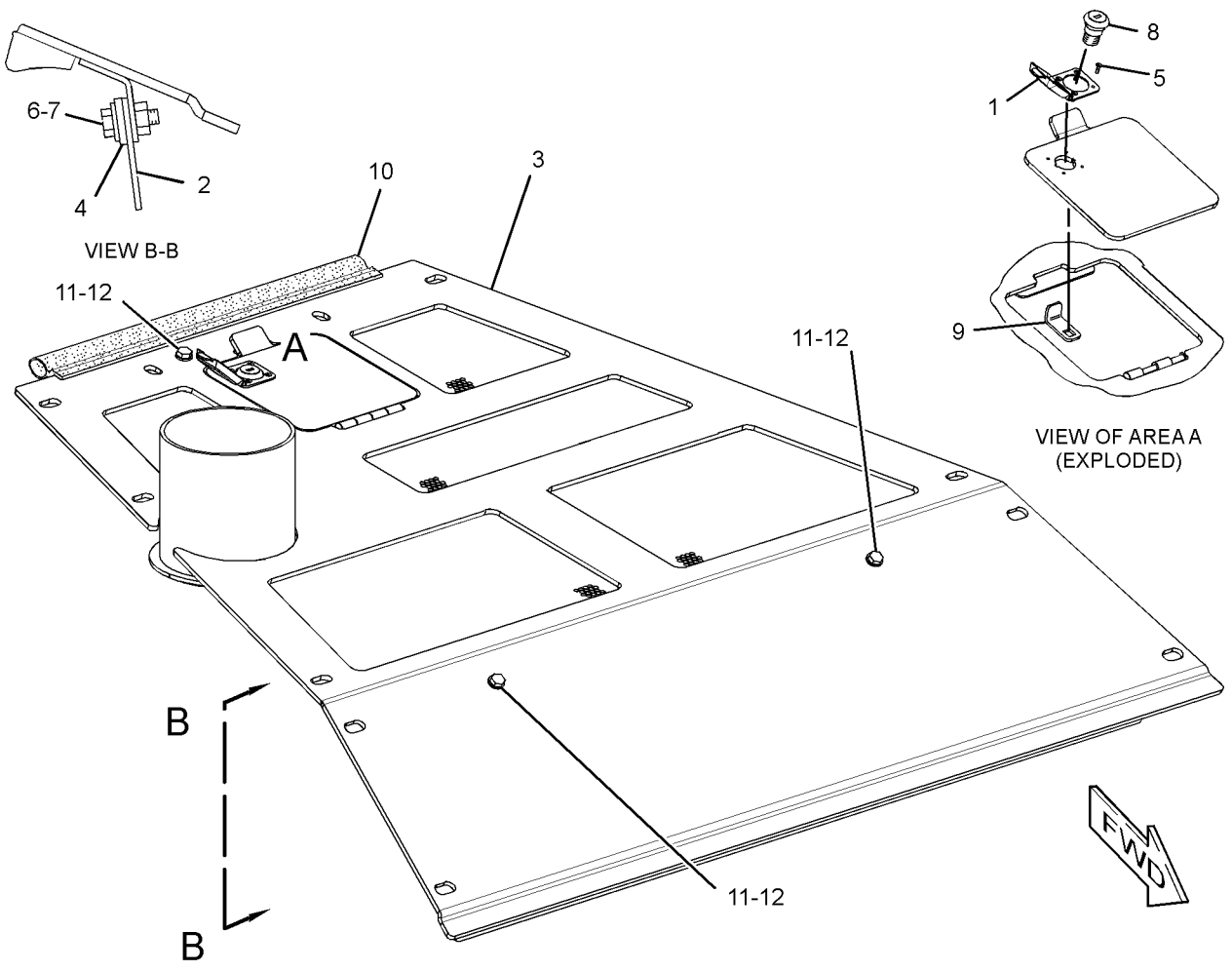

GRAPHIC #1 **<END>** g01423846

316-9438 HOOD GP-ENGINE

S/N: LBP1-UP
PART OF 301-7850 HOOD AR
AN ATTACHMENT

SMCS-7251 **i03422686**

NOTE	REF NO	GRAPHIC REF	PART NUMBER	QTY	PART NAME 1 2 3 4 5 6 (PRODUCT LEVEL)	SEE PAGE
Y	1	1	**271-9072**	1	PANEL GP-ENCLOSURE (RH)	372
Y	2	1	**271-9073**	1	PANEL GP-ENCLOSURE (LH)	373
	3	1	**271-9226**	1	SUPPORT AS	
	4	1	**271-9228**	1	SUPPORT AS	
	5	1	**273-6325**	1	HANDLE	
Y	6	1	*293-0654*	1	HOOD GP	365
	7	1	**293-0656**	1	HANDLE	
	8	1	**297-7639**	2	BRACKET	
B	9	1	**298-6794**	10	SHIM (0.8-MM THK)	
	10	1	**198-4777**	8	WASHER-HARD (11X25X10-MM THK)	
	11	1	**198-4780**	4	WASHER-HARD (17.5X32X8-MM THK)	
	12	1	**5P-1076**	11	WASHER-HARD (13.5X30X4-MM THK)	
	13	1	**7X-7729**	15	WASHER (11X25X3-MM THK)	
M	14	1	**8T-4136**	11	BOLT (M10X1.5X25-MM)	
M	15	1	**8T-4139**	7	BOLT (M12X1.75X30-MM)	
M	16	1	**8T-4183**	4	BOLT (M12X1.75X40-MM)	
M	17	1	**8T-4186**	2	BOLT (M10X1.5X40-MM)	
M	19	1	**8T-4193**	4	BOLT (M16X2X50-MM)	
M	20	1	**8T-4195**	8	BOLT (M10X1.5X30-MM)	
M	21	1	**8T-6466**	2	BOLT (M10X1.5X60-MM)	

B-USE AS REQUIRED
M-METRIC PART
Y-SEPARATE ILLUSTRATION

316-9438 **HOOD GP-ENGINE** *(contd.)* **i03422686**

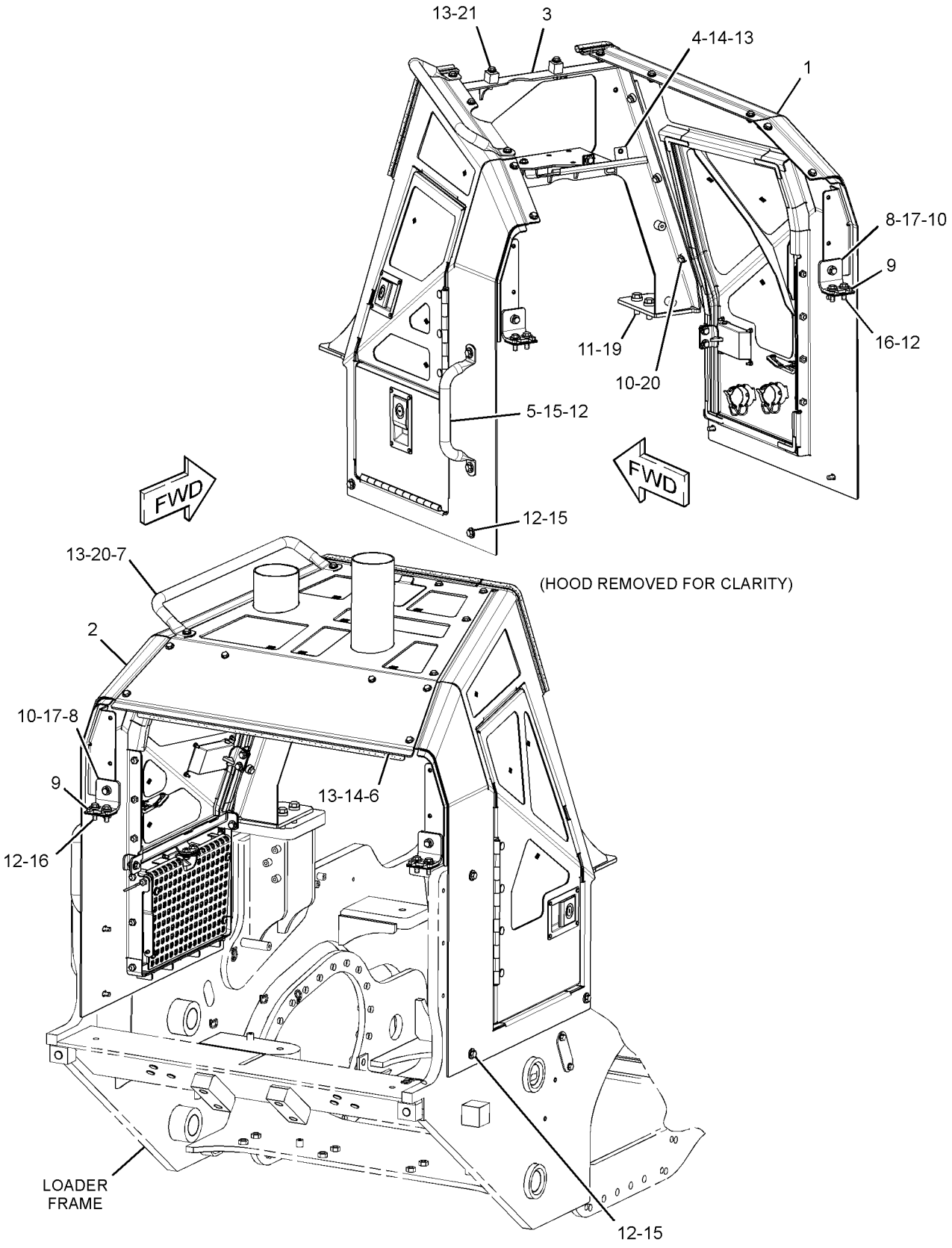

GRAPHIC #1 **<END>** g01776562

316-9439 HOOD GP-ENGINE

S/N: LBP1-UP
PART OF 301-7849 HOOD & GUARD GP
AN ATTACHMENT

SMCS-7251 **i03128308**

NOTE	REF NO	GRAPHIC REF	PART NUMBER	QTY	PART NAME 1 2 3 4 5 6 (PRODUCT LEVEL)	SEE PAGE
Y	1	1	**271-9072**	1	PANEL GP-ENCLOSURE (RH)	372
Y	2	1	**271-9073**	1	PANEL GP-ENCLOSURE (LH)	373
	3	1	**271-9226**	1	SUPPORT AS	
	4	1	**271-9228**	1	SUPPORT AS	
	5	1	**273-6325**	1	HANDLE	
	6	1	**293-0656**	1	HANDLE	
Y	7	1	*293-6457*	1	HOOD GP	366
	8	1	**297-7639**	2	BRACKET	
B	9	1	**298-6794**	10	SHIM (0.8-MM THK)	
	10	1	**198-4777**	8	WASHER-HARD (11X25X10-MM THK)	
	11	1	**198-4780**	4	WASHER-HARD (17.5X32X8-MM THK)	
	12	1	**5P-1076**	11	WASHER-HARD (13.5X30X4-MM THK)	
	13	1	**7X-7729**	15	WASHER (11X25X3-MM THK)	
M	14	1	**8T-4136**	11	BOLT (M10X1.5X25-MM)	
M	15	1	**8T-4139**	7	BOLT (M12X1.75X30-MM)	
M	16	1	**8T-4183**	4	BOLT (M12X1.75X40-MM)	
M	17	1	**8T-4186**	2	BOLT (M10X1.5X40-MM)	
M	19	1	**8T-4193**	4	BOLT (M16X2X50-MM)	
M	20	1	**8T-4195**	8	BOLT (M10X1.5X30-MM)	
M	21	1	**8T-6466**	2	BOLT (M10X1.5X60-MM)	

B-USE AS REQUIRED
M-METRIC PART
Y-SEPARATE ILLUSTRATION

316-9439 **HOOD GP-ENGINE** *(contd.)* **i03128308**

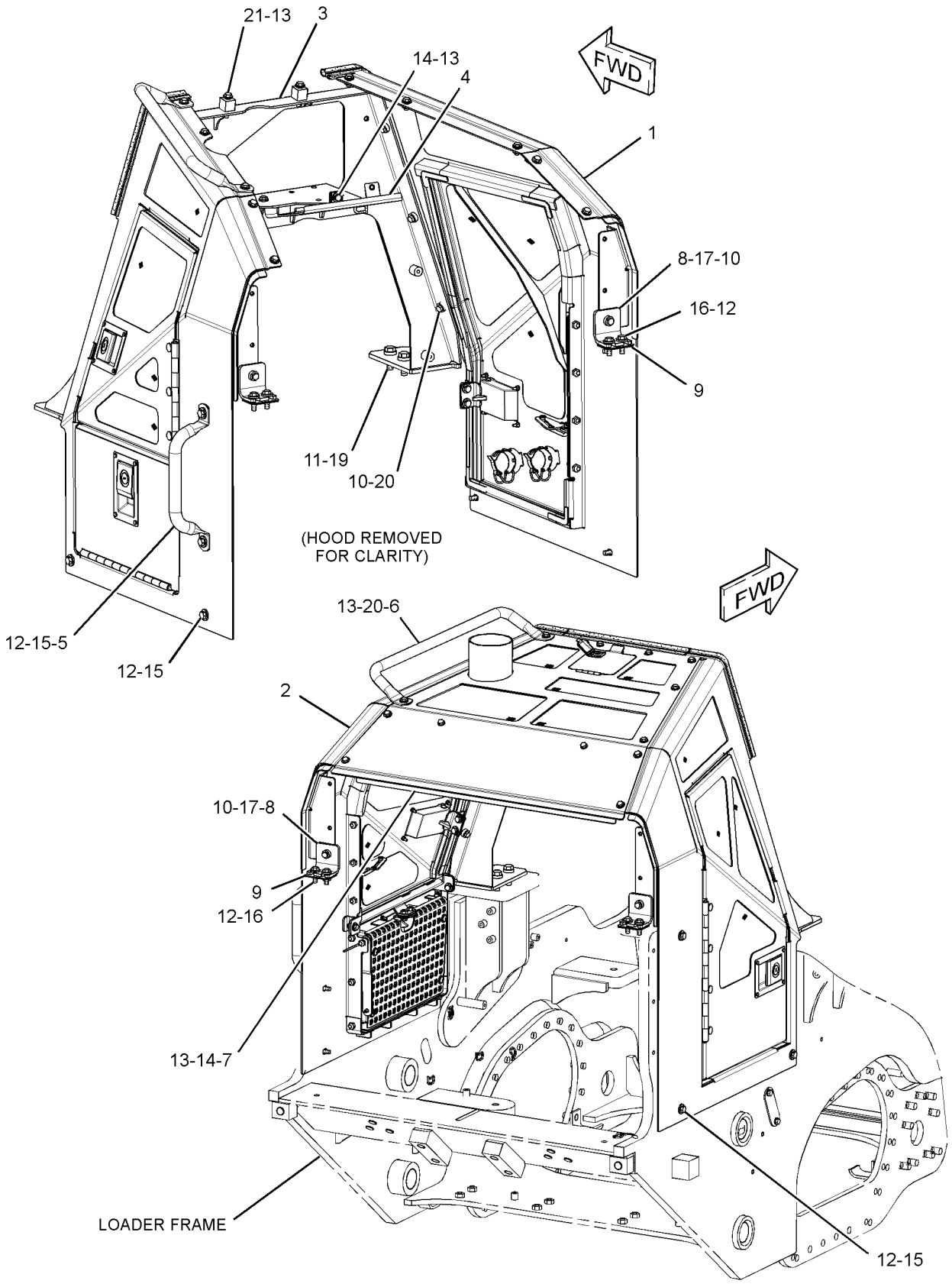

GRAPHIC #1 **<END>** g01621540

275-0348 INSTALLATION GP-RADIATOR

S/N: LBP1-UP

PART OF 240-6227 INSTALLATION AR-ENGINE

SMCS-1353 **i02655957**

NOTE	REF NO	GRAPHIC REF	PART NUMBER	QTY	PART NAME 1 2 3 4 5 6 (PRODUCT LEVEL)	SEE PAGE
	1	1	**112-4159**	2	MOUNTING AS	
	2	1	**265-0670**	1	PLATE-STRIP	
	3	1	**265-0671**	1	BAFFLE	
	4	1	**280-3092**	2	PLATE-STRIP	
	5	1	**289-9924**	1	BAFFLE	
	6	1	**289-9926**	1	BAFFLE	
	7	1	**297-5866**	2	PLATE-STRIP	
	8	1	**198-4778**	4	WASHER-HARD (13.5X30X12-MM THK)	
	9	1	**7G-8839**	2	SPACER (13.5X57X6-MM THK)	
M	10	1	**7Y-7992**	2	BOLT (M12X1.75X75-MM)	
M	11	1	**8T-4183**	4	BOLT (M12X1.75X40-MM)	
	12	1	**8T-4224**	14	WASHER-HARD (8.8X16X2-MM THK)	
M	13	1	**8T-4908**	14	BOLT (M8X1.25X25-MM)	

M-METRIC PART

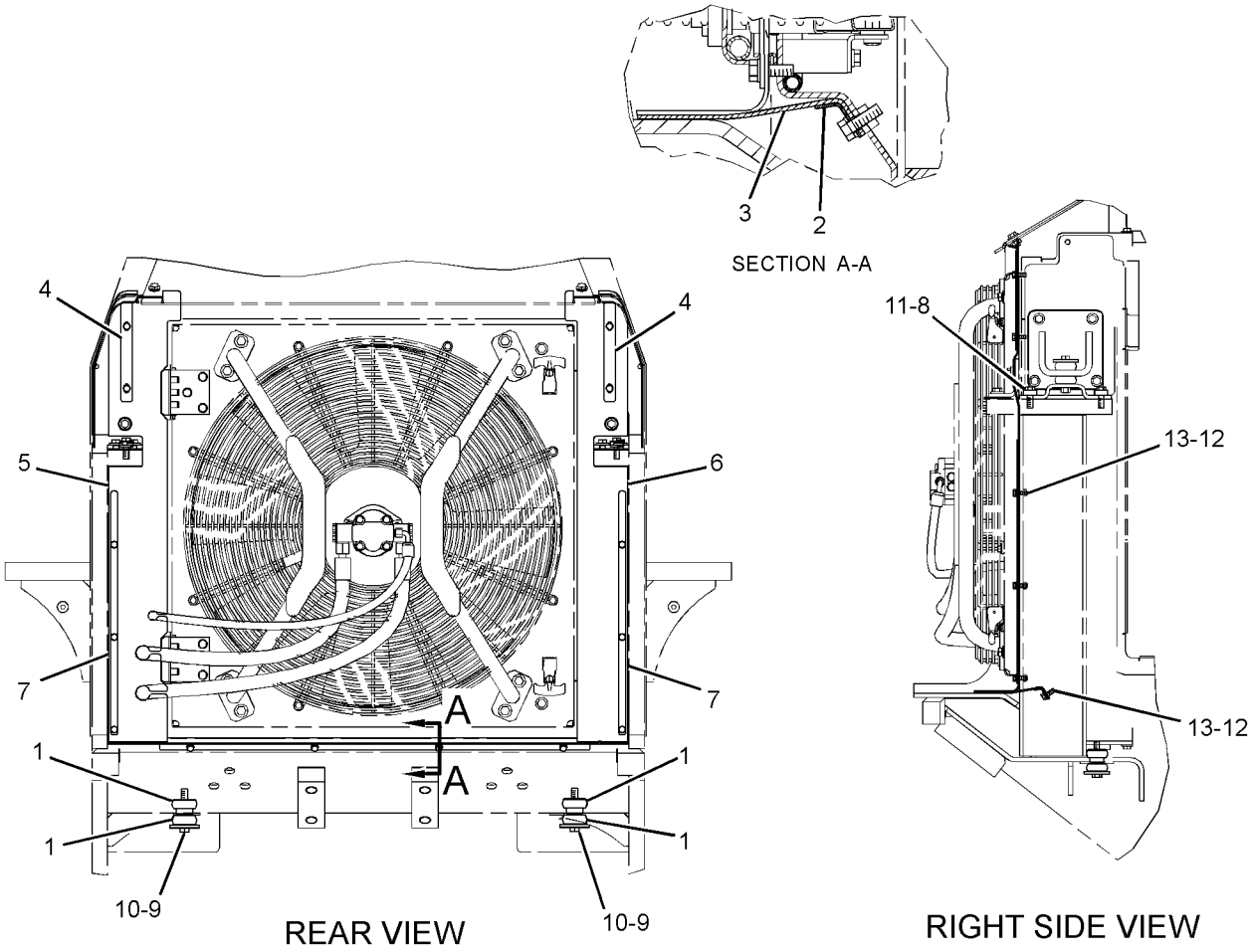

GRAPHIC #1 **<END>** g01335877

FRAME AND BODY

271-9072 PANEL GP-ENCLOSURE–RH

S/N: LBP1-UP
PART OF 316-9438, 316-9439 HOOD GP-ENGINE
AN ATTACHMENT

SMCS-7251, 7267 **i02883611**

NOTE	REF NO	GRAPHIC REF	PART NUMBER	QTY	PART NAME 1 2 3 4 5 6 (PRODUCT LEVEL)	SEE PAGE
	1	1	**6V-9197**	1	LOCK PIN	
B	2	1	**216-0143**	2	SHIM (1-MM THK)	
	3	1	**271-9074**	1	PANEL AS (RH)	
	4	1	**271-9247**	1	BRACKET	
Y	5	1	**273-7317**	1	DOOR GP-ACCESS (RH)	332
	6	1	**278-2220**	1	ROD AS	
	7	1	**297-7636**	1	BRACKET	
	8	1	**7X-7729**	7	WASHER (11X25X3-MM THK)	
M	9	1	**8T-4136**	6	BOLT (M10X1.5X25-MM)	
E	10	1	**280-7618**		SEAL (44-CM)	

B-USE AS REQUIRED
E-ORDER BY THE CENTIMETER
M-METRIC PART
Y-SEPARATE ILLUSTRATION

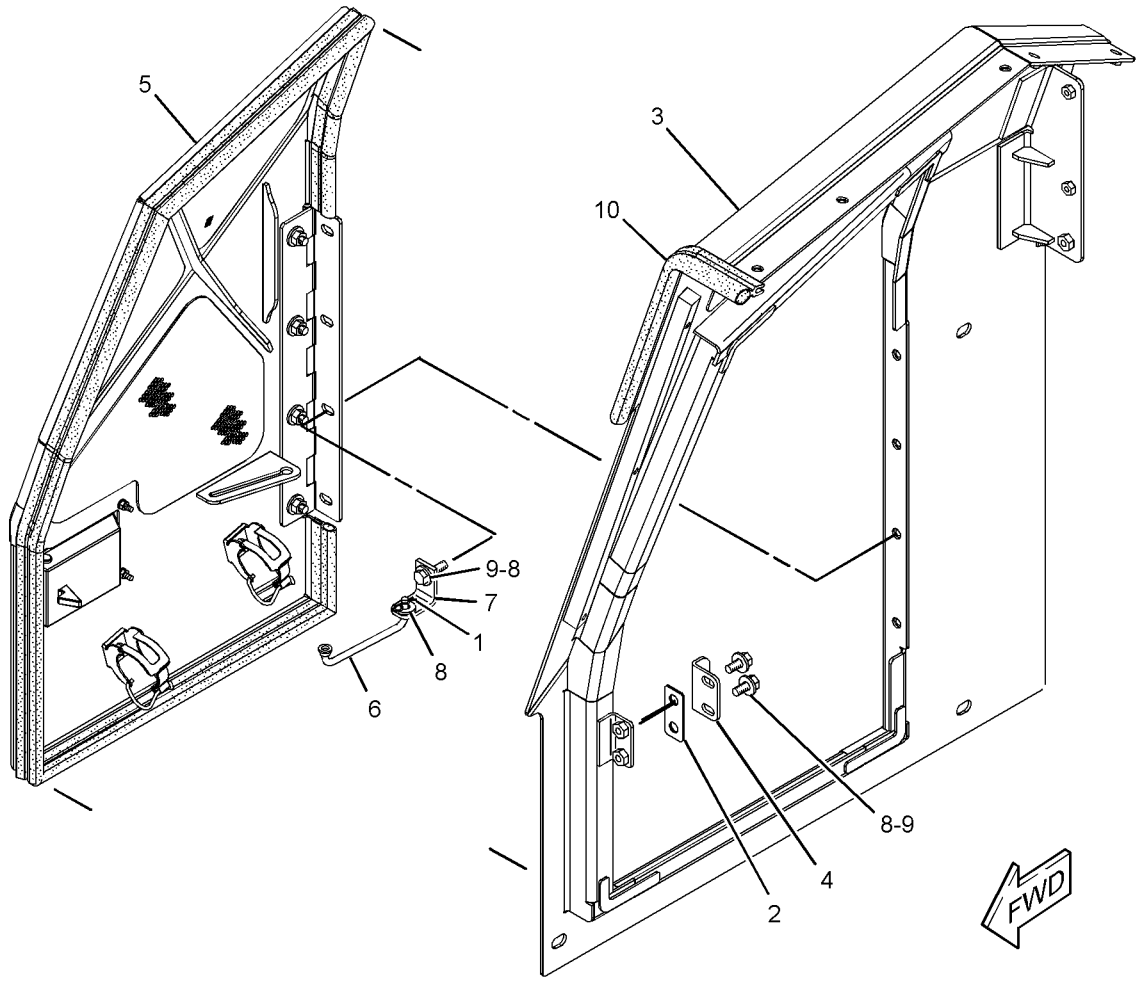

GRAPHIC #1 **<END>** g01334983

271-9073 PANEL GP-ENCLOSURE—LH

S/N: LBP1-UP
PART OF 316-9438, 316-9439 HOOD GP-ENGINE
AN ATTACHMENT

SMCS-7251, 7267 **i02883612**

NOTE	REF NO	GRAPHIC REF	PART NUMBER	QTY	PART NAME 1 2 3 4 5 6 (PRODUCT LEVEL)	SEE PAGE
	1	1	**4B-4909**	1	SPRING	
	2	1	**6V-9197**	1	LOCK PIN	
B	3	1	**216-0143**	6	SHIM (1-MM THK)	
	4	1	**271-9075**	1	PANEL AS (LH)	
	5	1	**271-9247**	2	BRACKET	
Y	6	1	*273-4275*	1	STEP GP	378
	7	1	**273-4278**	1	PLATE AS	
Y	8	1	**273-7316**	1	DOOR GP-ACCESS (LH)	331
	9	1	**278-2220**	1	ROD AS	
	10	1	**280-0422**	2	SEAL	
	11	1	**280-7887**	2	PLATE	
	12	1	**284-1495**	1	PLATE AS	
	13	1	**297-7636**	1	BRACKET	
	14	1	**144-8344**	1	SPACER (11X19X20-MM THK)	
	15	1	**7X-7729**	15	WASHER (11X25X3-MM THK)	
	16	1	**8T-4121**	6	WASHER-HARD (11X21X2.5-MM THK)	
M	17	1	**8T-4136**	18	BOLT (M10X1.5X25-MM)	
M	18	1	**8T-4186**	1	BOLT (M10X1.5X40-MM)	
M	19	1	**8T-4195**	1	BOLT (M10X1.5X30-MM)	
	20	1	**9R-2860**	1	SPACER (11X16.5X11-MM THK)	
E	21	1	**280-7618**		SEAL (44-CM)	

B-USE AS REQUIRED
E-ORDER BY THE CENTIMETER
M-METRIC PART
Y-SEPARATE ILLUSTRATION

271-9073 PANEL GP-ENCLOSURE *(contd.)* i02883612

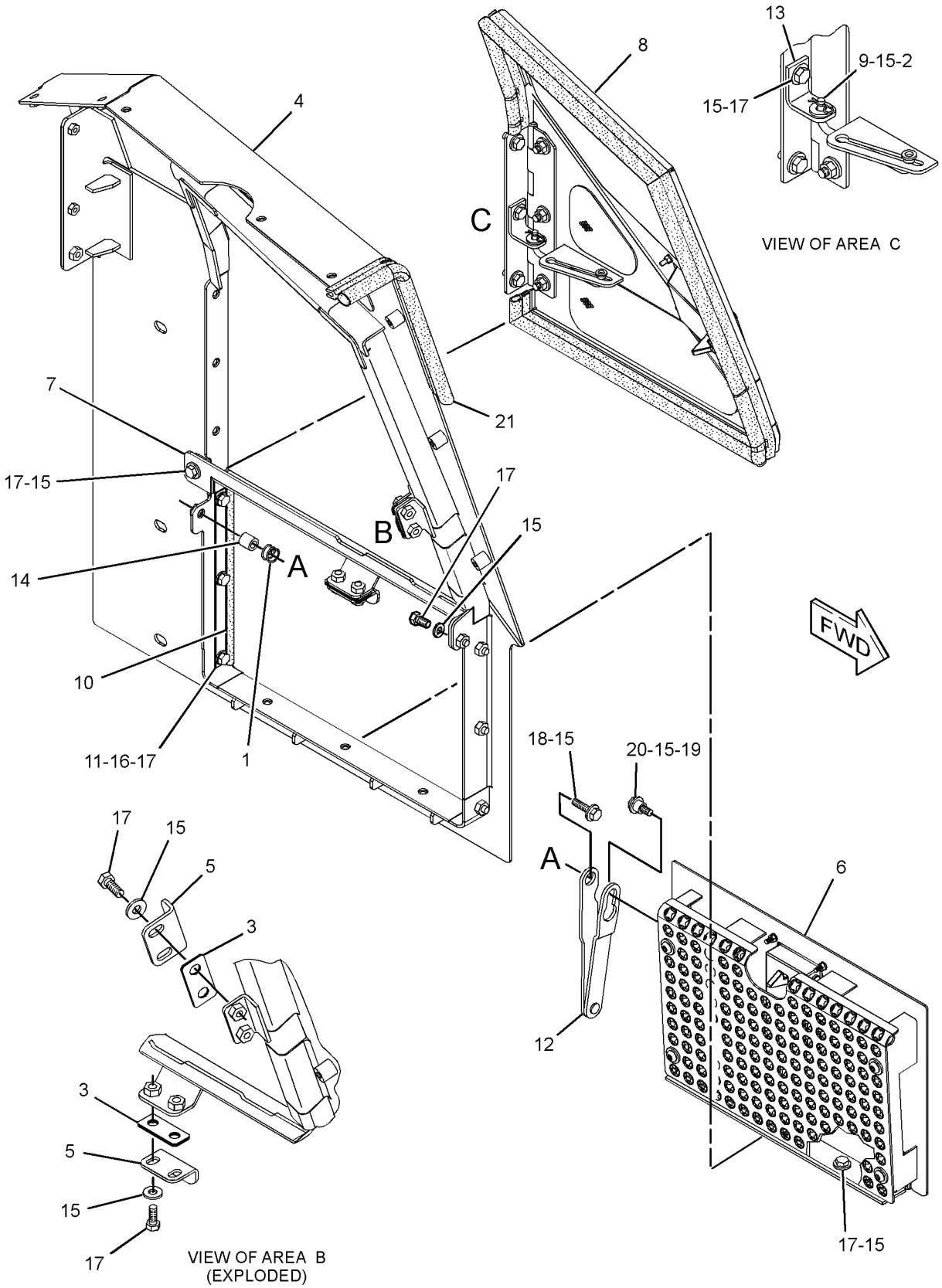

GRAPHIC #1 **<END>** g01335095

290-1967 PLATE GP-FRAME

S/N: LBP1-UP
PART OF 252-0240 HYDRAULIC AR-2 VALVE, 252-0241, 252-0242 HYDRAULIC AR-3 VALVE, 252-0243 HYDRAULIC AR-4 VALVE AN ATTACHMENT

SMCS-7051 **i03140200**

NOTE	REF NO	GRAPHIC REF	PART NUMBER	QTY	PART NAME 1 2 3 4 5 6 (PRODUCT LEVEL)	SEE PAGE
	1	1	**299-3154**	2	PLATE	
	2	1	**303-1478**	1	BRACKET	
	3	1	**039-8557**	2	WASHER (13X26X6-MM THK)	
M	4	1	**8T-4183**	2	BOLT (M12X1.75X40-MM)	
M	5	1	**8T-4192**	4	BOLT (M12X1.75X25-MM)	
	6	1	**5P-1076**	4	WASHER-HARD (13.5X30X4-MM THK)	

M-METRIC PART

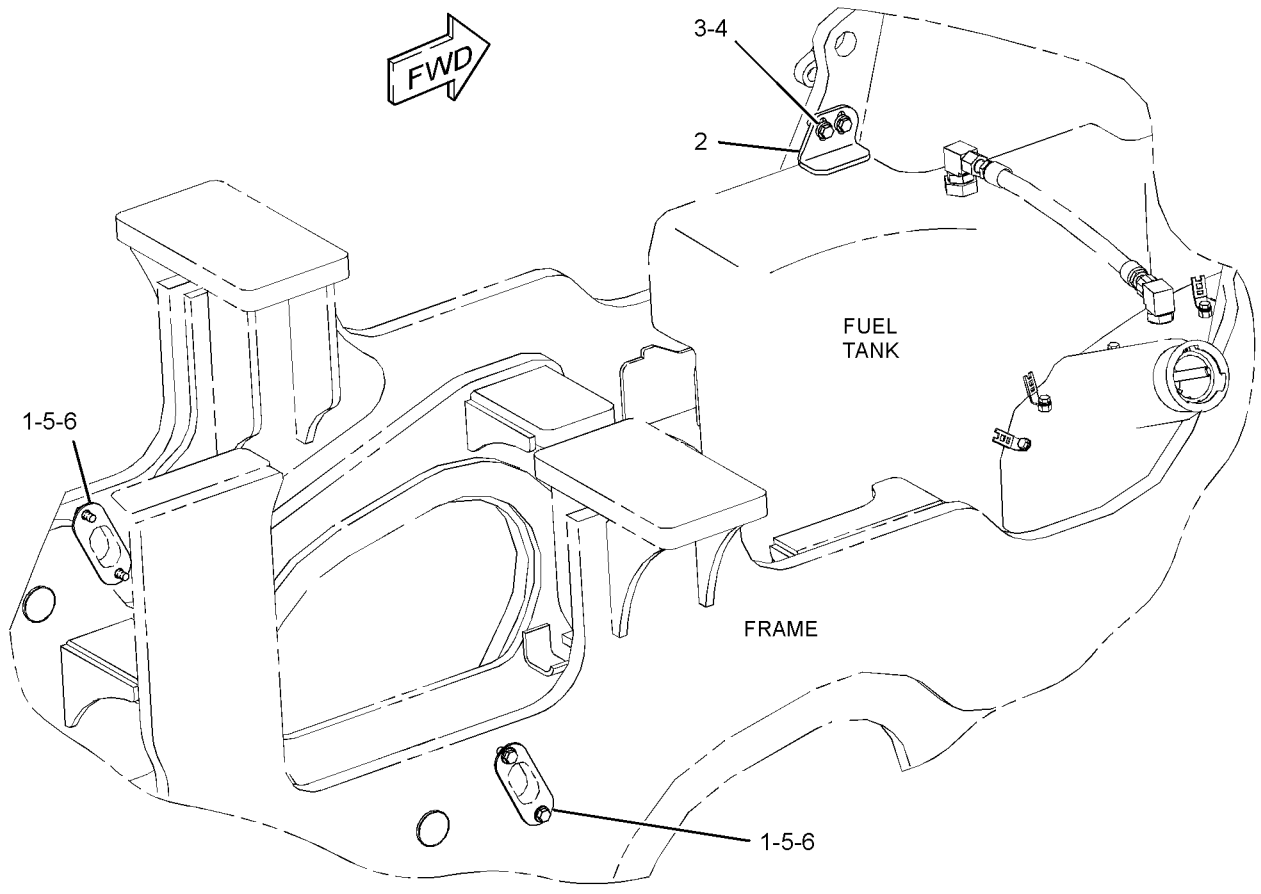

GRAPHIC #1 **<END>** g01341503

290-1968 PLATE GP-FRAME

S/N: LBP1-UP

PART OF 252-0242 HYDRAULIC AR-3 VALVE, 252-0243 HYDRAULIC AR-4 VALVE AN ATTACHMENT

SMCS-7051 **i02664982**

NOTE	REF NO	GRAPHIC REF	PART NUMBER	QTY	PART NAME 1 2 3 4 5 6 (PRODUCT LEVEL)	SEE PAGE
	1	1	**299-3155**	2	PLATE	
M	2	1	**8T-4192**	4	BOLT (M12X1.75X25-MM)	
	3	1	**8T-4223**	4	WASHER-HARD (13.5X25.5X3-MM THK)	

M-METRIC PART

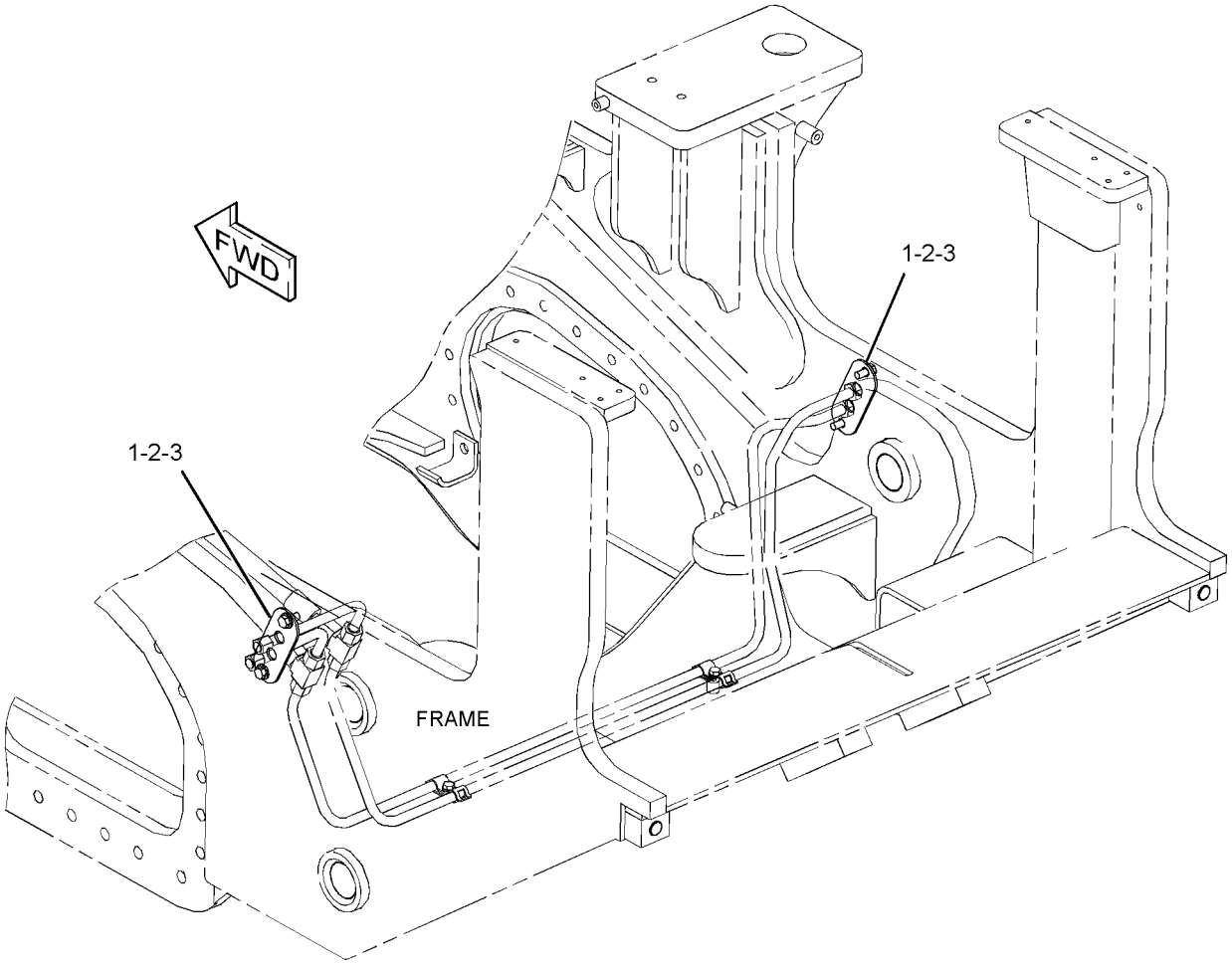

GRAPHIC #1 **<END>** g01341258

299-6015 PLUG GP-BUMPER

S/N: LBP1-UP
CANNOT BE USED WITH BUMPER GP AND RIPPER AR
AN ATTACHMENT

SMCS-7156 **i02663526**

NOTE	REF NO	GRAPHIC REF	PART NUMBER	QTY	PART NAME 1 2 3 4 5 6 (PRODUCT LEVEL)	SEE PAGE
	1	1	**193-5917**	2	PLUG	
	2	1	**2Y-5564**	6	PLUG-BUTTON	

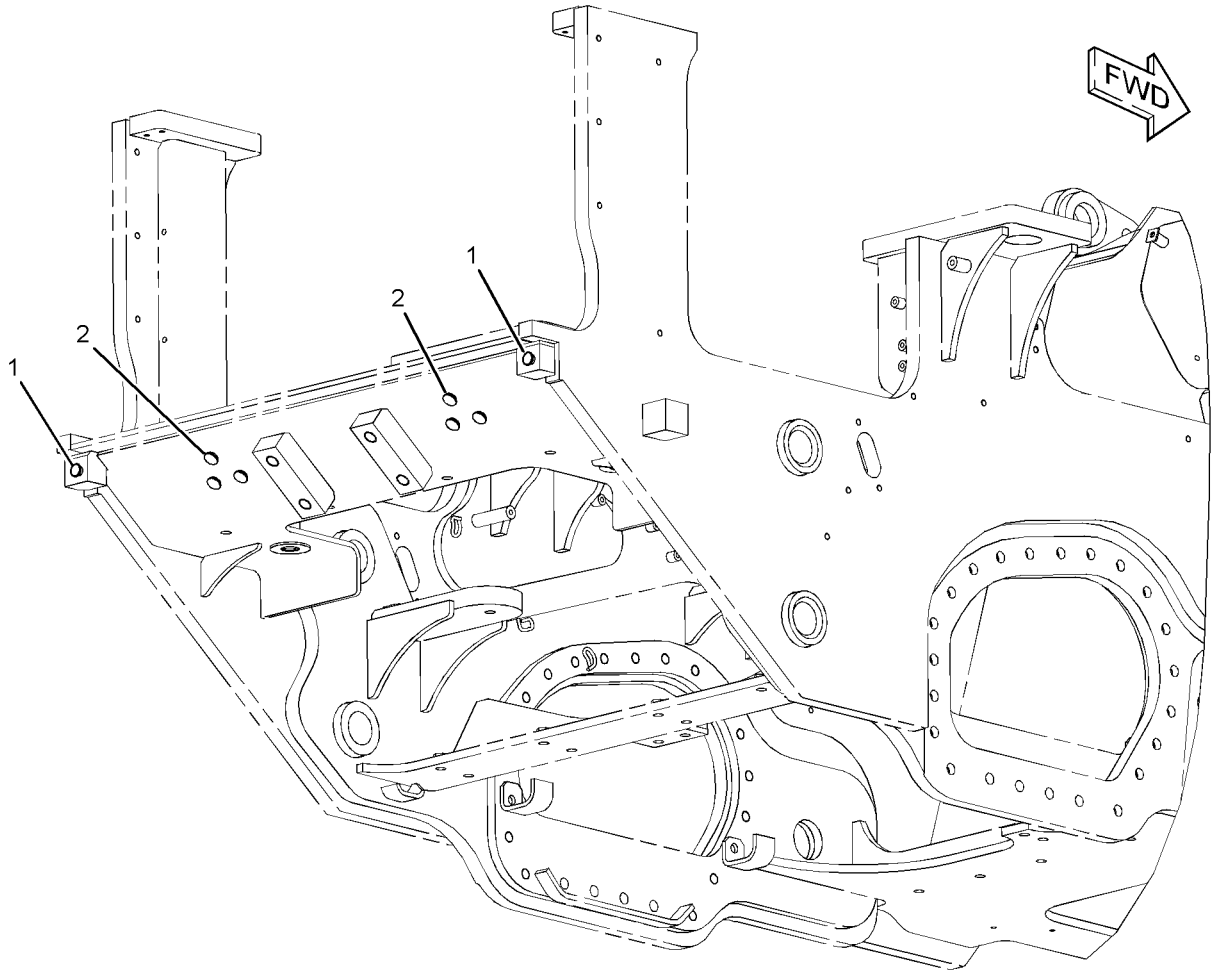

GRAPHIC #1 **<END>** g01340743

273-4275 STEP GP

S/N: LBP1-UP
PART OF 271-9073 PANEL GP-ENCLOSURE
AN ATTACHMENT

SMCS-7254 **i02652030**

NOTE	REF NO	GRAPHIC REF	PART NUMBER	QTY	PART NAME 1 2 3 4 5 6 (PRODUCT LEVEL)	SEE PAGE
	1	1	**271-9218**	1	STEP AS (LH)	
M		1	**8T-3490**	5	NUT-WELD (M10X1.5-THD)	
		1	**273-4941**	1	HINGE AS	
	2	1	**273-4276**	1	PLATE	
J	3	1	**274-1923**	1	LOCK AS	
M	4	1	**5C-2890**	4	NUT (M6X1-THD)	
	5	1	**7X-7729**	4	WASHER (11X25X3-MM THK)	
M	6	1	**8C-8585**	4	SCREW-BUTTON HEAD (M10X1.5X20-MM)	
	7	1	**9X-8256**	4	WASHER (6.6X12X2-MM THK)	

J-(REQUIRES 5P-8500 KEY)
M-METRIC PART

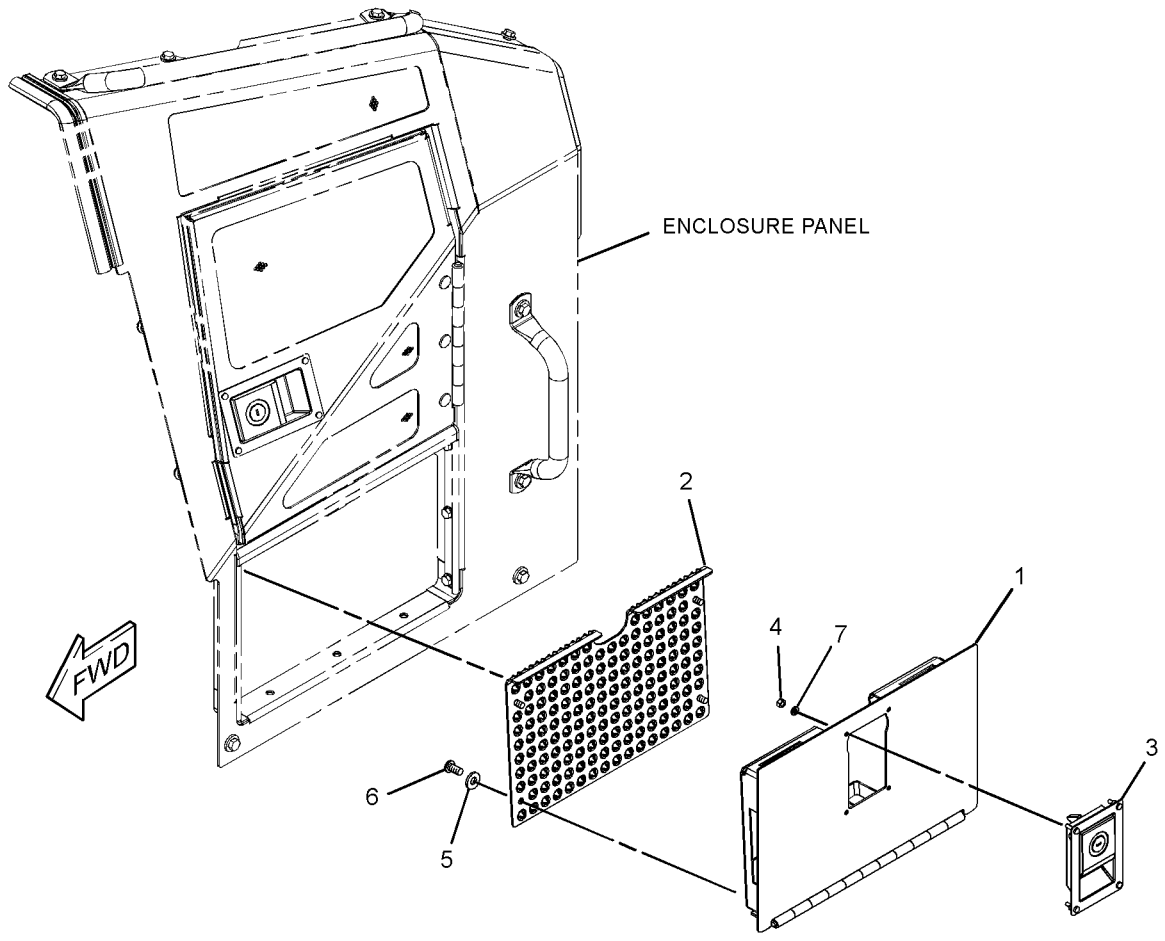

GRAPHIC #1 **<END>** g01334803

FRAME AND BODY

279-8883 STEP GP

S/N: LBP1-UP

PART OF 240-6225 CHASSIS AR

SMCS-7254 **i02676291**

NOTE	REF NO	GRAPHIC REF	PART NUMBER	QTY	PART NAME 1 2 3 4 5 6 (PRODUCT LEVEL)	SEE PAGE
	1	1	**279-8884**	1	STEP AS	
M	2	1	**099-0169**	4	BOLT (M16X2X55-MM)	
	3	1	**9X-8257**	4	WASHER (17.5X30X3.5-MM THK)	

M-METRIC PART

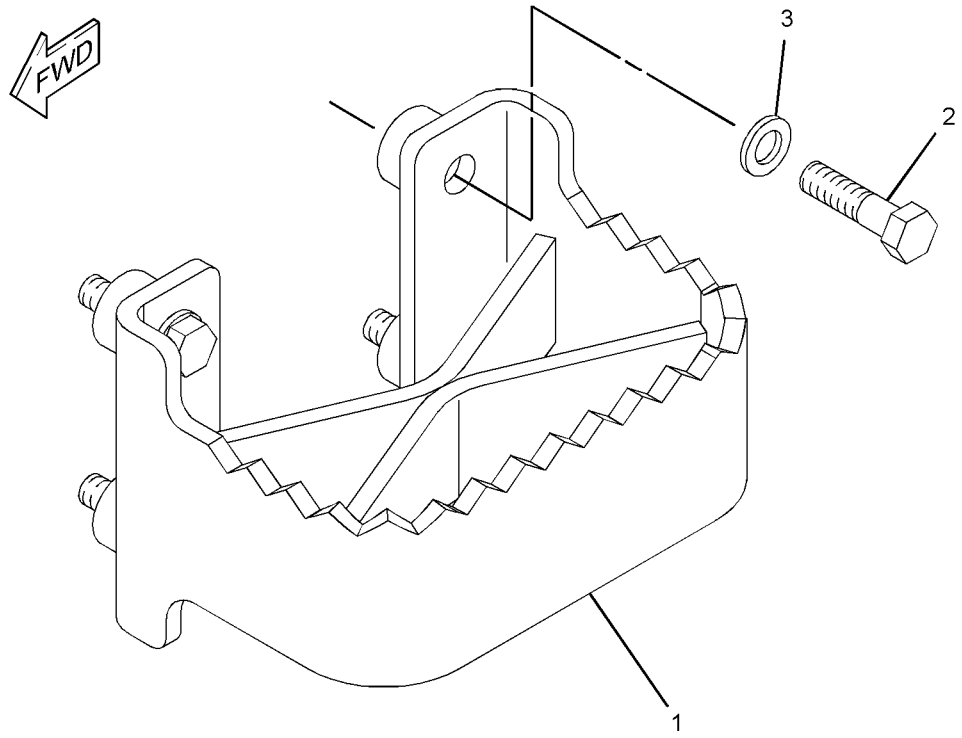

GRAPHIC #1 **<END>** g01340190

FRAME AND BODY

279-8104 TILT GP-PLATFORM

S/N: LBP1-699
AN ATTACHMENT

SMCS-7341 **i03587342**

NOTE	REF NO	GRAPHIC REF	PART NUMBER	QTY	PART NAME 1 2 3 4 5 6 (PRODUCT LEVEL)	SEE PAGE
	1	2	**123-8828**	1	CONNECTOR AS	
		2	**8T-7876**	1	SEAL-O-RING	
	2	1,2	**167-1192**	2	CLIP	
	3	1	**202-0949**	1	STRAP AS	
	4	2	**279-1540**	1	PIN-DETENT	
	5	2	**281-4517**	1	PLATE	
Y	6	2	**282-4076**	1	PUMP GP-HAND (CAB TILT)	471
	7	2	**286-2309**	1	PIN	
	8	2	**306-9119**	1	BRACKET AS	
	9	2	**293-0699**	2	PLATE AS	
					(EACH INCLUDES)	
M		2	**8T-3612**	1	NUT-WELD (M8X1.25-THD)	
	10	2	**293-4766**	1	PIN	
Y	11	1	**294-5575**	1	CYLINDER GP-CAB TILT	425
	12	1	**294-8051**	1	HANDLE	
	13	1	**295-4074**	1	PIN AS	
I	14	1	**312-8303**	1	HOSE AS	
	15	1	**312-8305**	1	HOSE AS	
Y	17	1	*302-5696*	1	WIRING GP-CAB TILT	244
	18	2	**302-7780**	1	BRACKET AS	
M		2	**8T-5413**	1	STUD-WELD (M10X1.5X25-MM OAL)	
	19	2	**123-8829**	1	ELBOW AS	
		2	**4J-5477**	1	SEAL-O-RING	
		2	**8T-7876**	1	SEAL-O-RING	
	20	1,2	**198-4776**	3	WASHER-HARD (8.8X20X8-MM THK)	
	21	2	**198-4777**	4	WASHER-HARD (11X25X10-MM THK)	
	22	1,2	**4B-4863**	2	WASHER (4.7X11X1.2-MM THK)	
	23	1,2	**4J-5477**	3	SEAL-O-RING	
M	24	2	**5C-7261**	2	NUT (M8X1.25-THD)	
	25	2	**5K-8451**	1	CLIP	
M	26	1,2	**6V-5698**	2	SCREW-BUTTON HEAD (M4X0.7X10-MM)	
	27	2	**8T-4121**	2	WASHER-HARD (11X21X2.5-MM THK)	
M	28	2	**8T-4133**	1	NUT (M10X1.5-THD)	
M	29	2	**6V-7357**	2	BOLT (M6X1X25-MM)	
M	30	2	**8T-4189**	2	BOLT (M8X1.25X20-MM)	
M	31	2	**8T-4195**	4	BOLT (M10X1.5X30-MM)	
	32	2	**8T-4224**	2	WASHER-HARD (8.8X16X2-MM THK)	
	33	2	**9X-8256**	2	WASHER (6.6X12X2-MM THK)	
	34	2	**277-8376**	1	FILM-INSTRUCTION (CAB TILT, READ OMM)	
J	36	2	**244-9631**		SEAL (2-DM)	
E	37	2	**118-0021**		SEAL (7.5-CM)	
E	37A	2	**118-0021**		SEAL (5.5-CM)	
	38	2	**160-9925**	1	LANYARD	
	39	2	**198-4775**	2	WASHER-HARD (6.6X15X6-MM THK)	
M	40	1	**8T-7547**	1	BOLT (M8X1.25X30-MM)	
	41	2	**5P-7958**	1	SLEEVE-CABLE SPLICE	

E-ORDER BY THE CENTIMETER
I-REFER TO HYDRAULIC INFORMATION SYSTEM
J-ORDER BY THE DECIMETER
M-METRIC PART
Y-SEPARATE ILLUSTRATION

REFER TO ALL ILLUSTRATIONS OF
THIS GROUP FOR AUXILIARY VIEWS

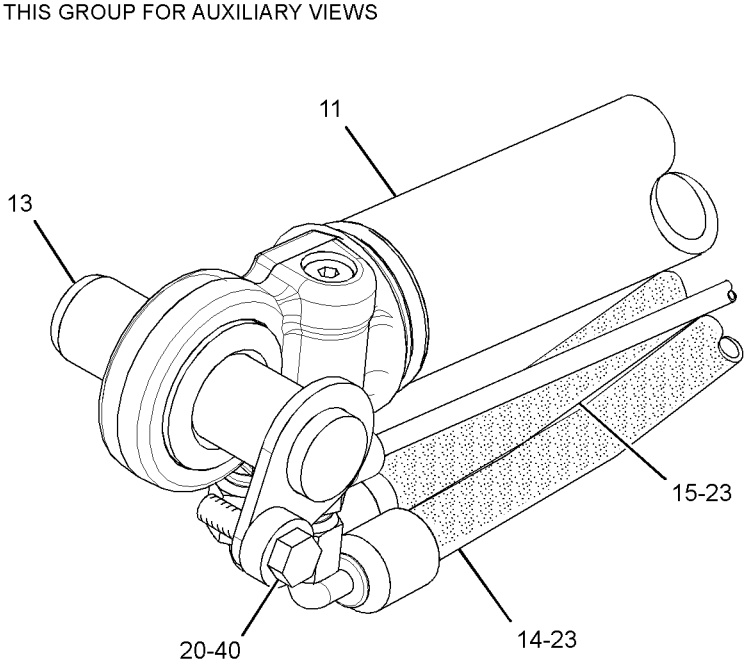

VIEW OF AREA A

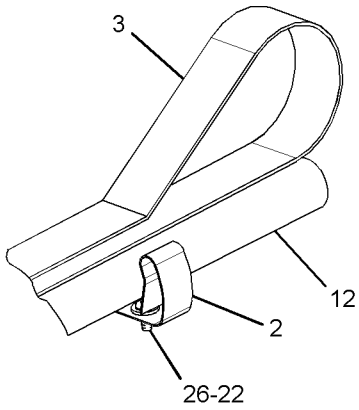

VIEW OF AREA B

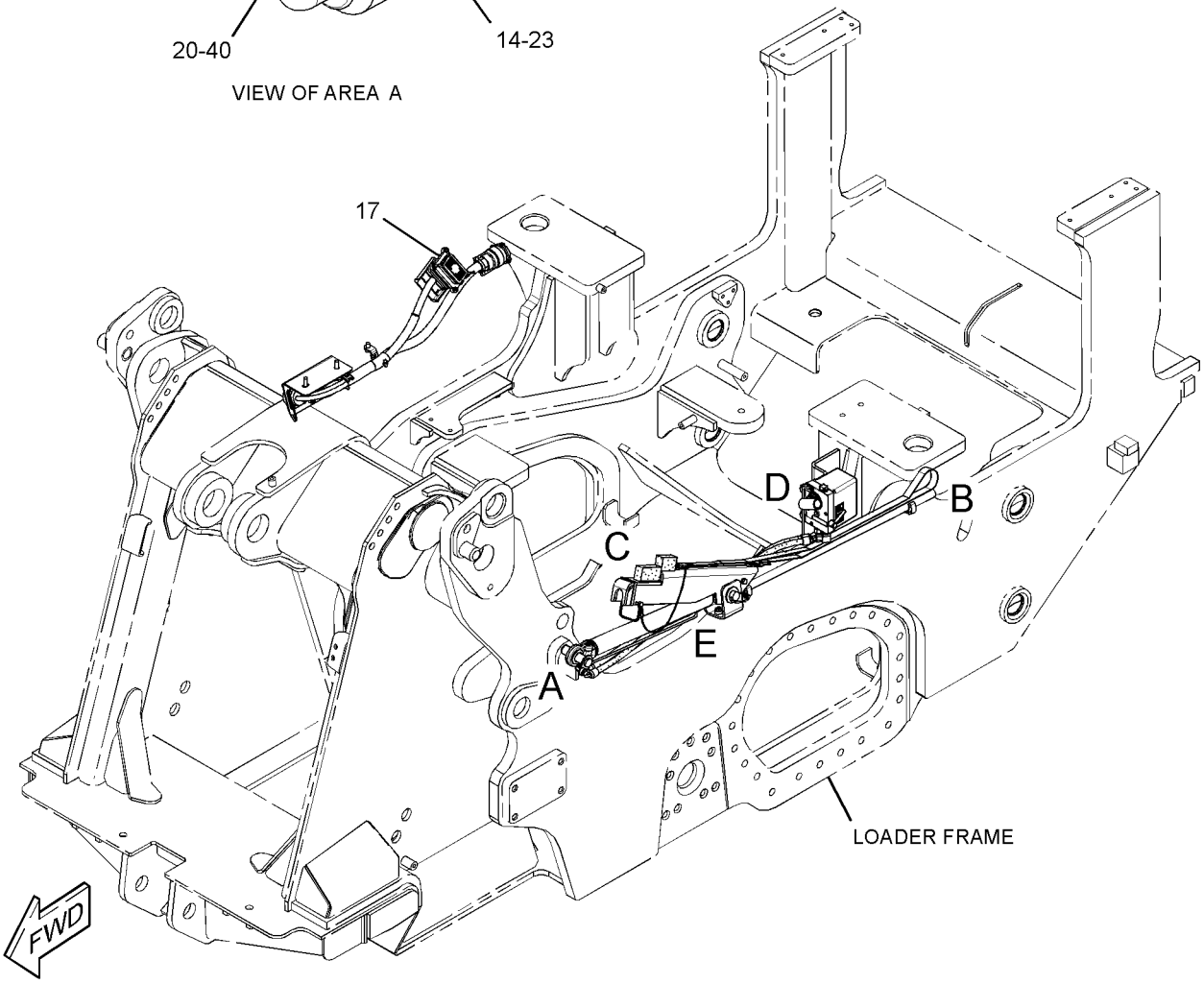

GRAPHIC #1 g01433337

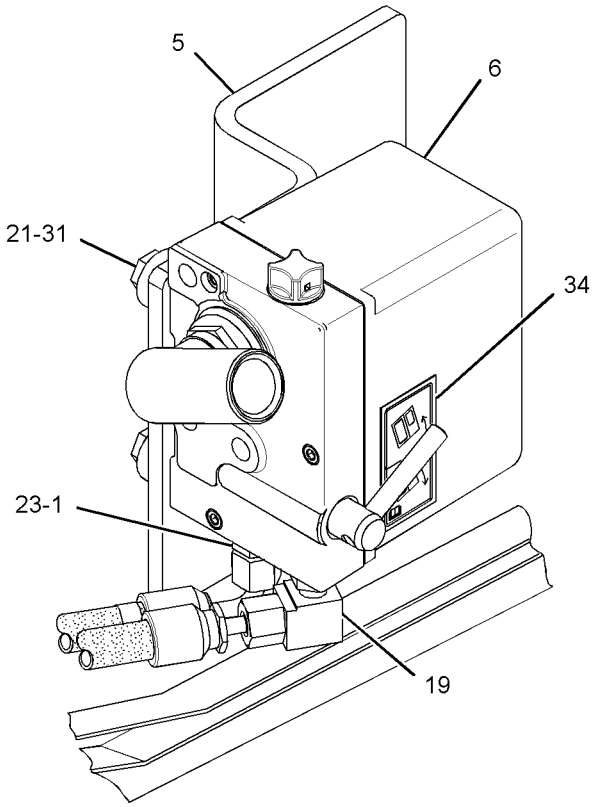

VIEW OF AREA D

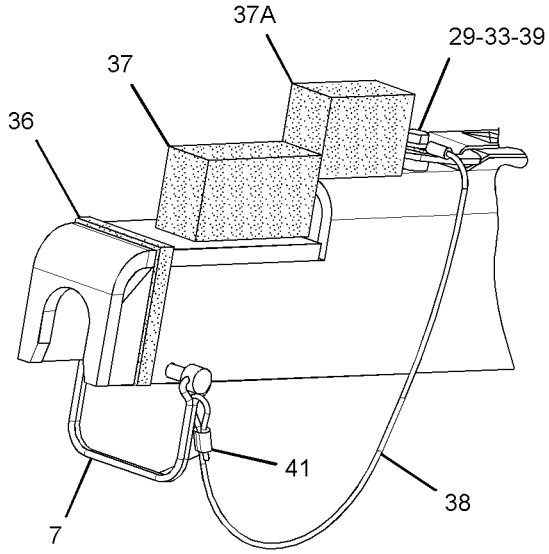

VIEW OF AREA C

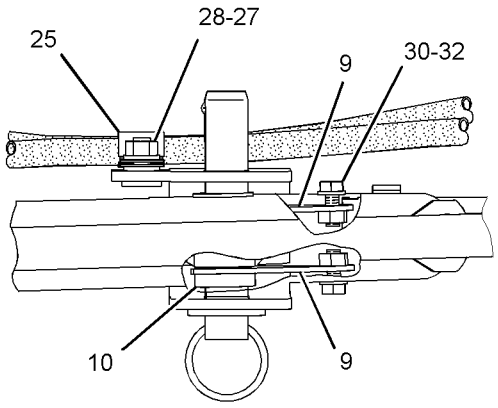

VIEW F-F

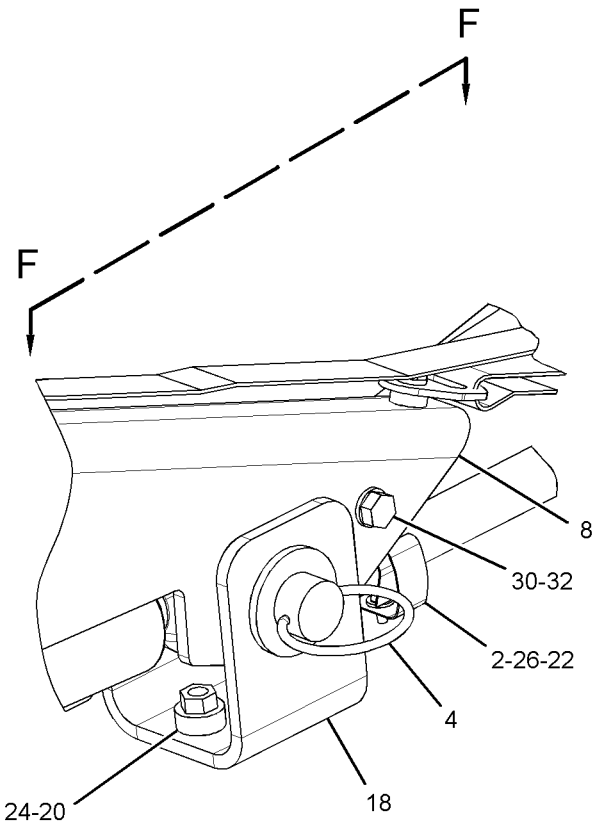

VIEW OF AREA E

GRAPHIC #2 **<END>** g01433338

FRAME AND BODY

279-8104 TILT GP-PLATFORM

S/N: LBP700-UP
AN ATTACHMENT

SMCS-7341 **i03587343**

NOTE	REF NO	GRAPHIC REF	PART NUMBER	QTY	PART NAME 1 2 3 4 5 6 (PRODUCT LEVEL)	SEE PAGE
C	1	2	**123-8828**	2	CONNECTOR AS	
					(EACH INCLUDES)	
		2	**8T-7876**	1	SEAL-O-RING	
	2	1	**167-1192**	2	CLIP	
	3	1	**202-0949**	1	STRAP AS	
	4	2	**279-1540**	1	PIN-DETENT	
	5	2	**281-4517**	1	PLATE	
Y	6	2	**282-4076**	1	PUMP GP-HAND (CAB TILT)	471
	7	2	**286-2309**	1	PIN	
	8	2	**306-9119**	1	BRACKET AS	
	9	2	**293-0699**	2	PLATE AS	
					(EACH INCLUDES)	
M		2	**8T-3612**	1	NUT-WELD (M8X1.25-THD)	
	10	2	**293-4766**	1	PIN	
Y	11	1	**294-5575**	1	CYLINDER GP-CAB TILT	425
	12	1	**294-8051**	1	HANDLE	
	13	1	**295-4074**	1	PIN AS	
	15	1	**312-8305**	1	HOSE AS	
Y	17	1	*302-5696*	1	WIRING GP-CAB TILT	244
	18	2	**302-7780**	1	BRACKET AS	
M		2	**8T-5413**	1	STUD-WELD (M10X1.5X25-MM OAL)	
	20	1,2	**198-4776**	3	WASHER-HARD (8.8X20X8-MM THK)	
	21	2	**198-4777**	4	WASHER-HARD (11X25X10-MM THK)	
	22	1	**4B-4863**	2	WASHER (4.7X11X1.2-MM THK)	
C	23	1,2	**4J-5477**	4	SEAL-O-RING	
M	24	2	**5C-7261**	2	NUT (M8X1.25-THD)	
	25	2	**5K-8451**	1	CLIP	
M	26	1	**6V-5698**	2	SCREW-BUTTON HEAD (M4X0.7X10-MM)	
	27	2	**8T-4121**	2	WASHER-HARD (11X21X2.5-MM THK)	
M	28	2	**8T-4133**	1	NUT (M10X1.5-THD)	
M	29	2	**6V-7357**	2	BOLT (M6X1X25-MM)	
M	30	2	**8T-4189**	2	BOLT (M8X1.25X20-MM)	
M	31	2	**8T-4195**	4	BOLT (M10X1.5X30-MM)	
	32	2	**8T-4224**	2	WASHER-HARD (8.8X16X2-MM THK)	
	33	2	**9X-8256**	2	WASHER (6.6X12X2-MM THK)	
	34	2	**277-8376**	1	FILM-INSTRUCTION (CAB TILT, READ OMM)	
J	36	2	**244-9631**		SEAL (2-DM)	
E	37	2	**118-0021**		SEAL (7.5-CM)	
E	37A	2	**118-0021**		SEAL (5.5-CM)	
	38	2	**160-9925**	1	LANYARD	
	39	2	**198-4775**	2	WASHER-HARD (6.6X15X6-MM THK)	
M	40	1	**8T-7547**	1	BOLT (M8X1.25X30-MM)	
	41	2	**5P-7958**	1	SLEEVE-CABLE SPLICE	
CI	42	1	**312-8304**	1	HOSE AS	

C-CHANGE FROM PREVIOUS TYPE
E-ORDER BY THE CENTIMETER
I-REFER TO HYDRAULIC INFORMATION SYSTEM
J-ORDER BY THE DECIMETER
M-METRIC PART
Y-SEPARATE ILLUSTRATION

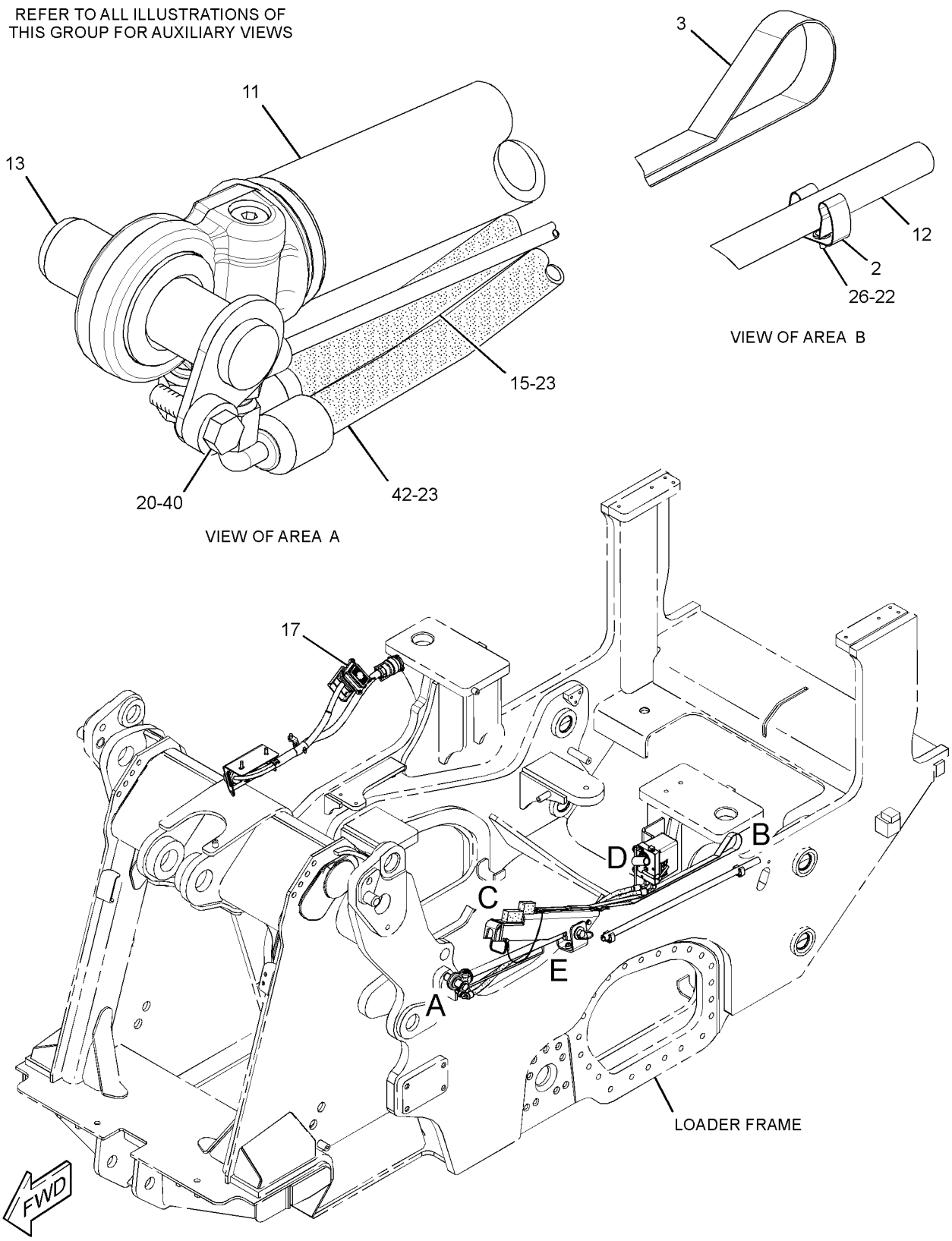

GRAPHIC #1 g01482013

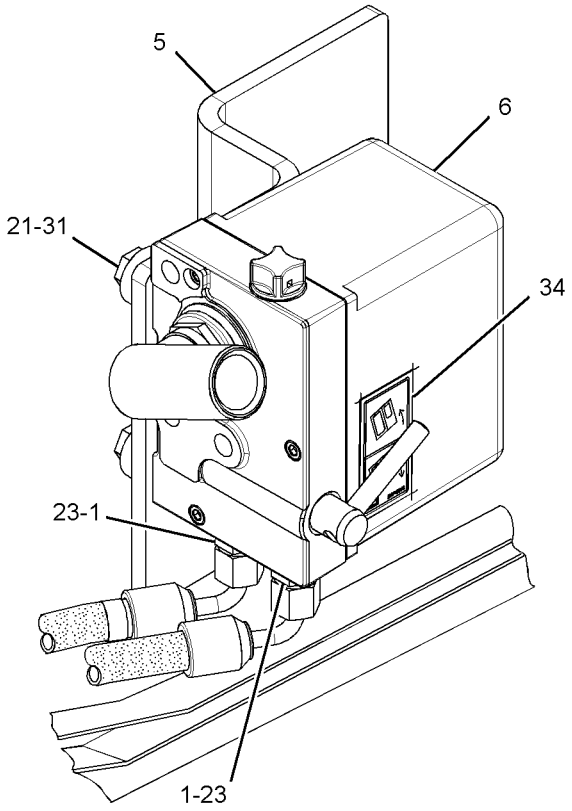

VIEW OF AREA D

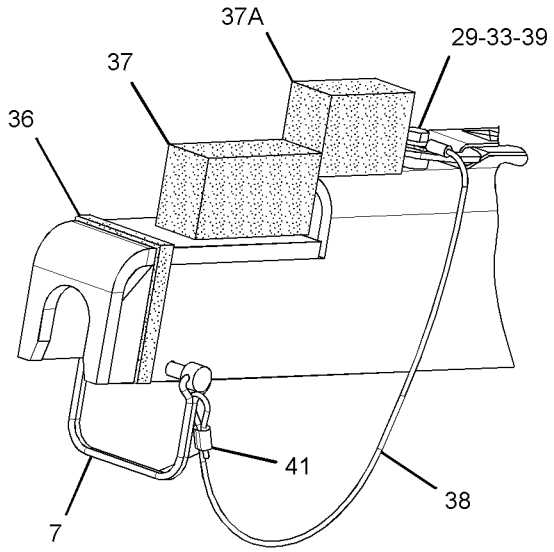

VIEW OF AREA C

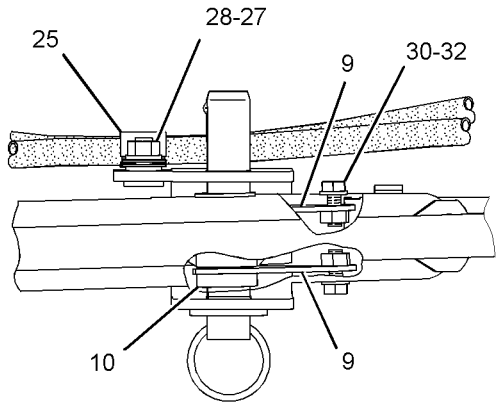

VIEW F-F

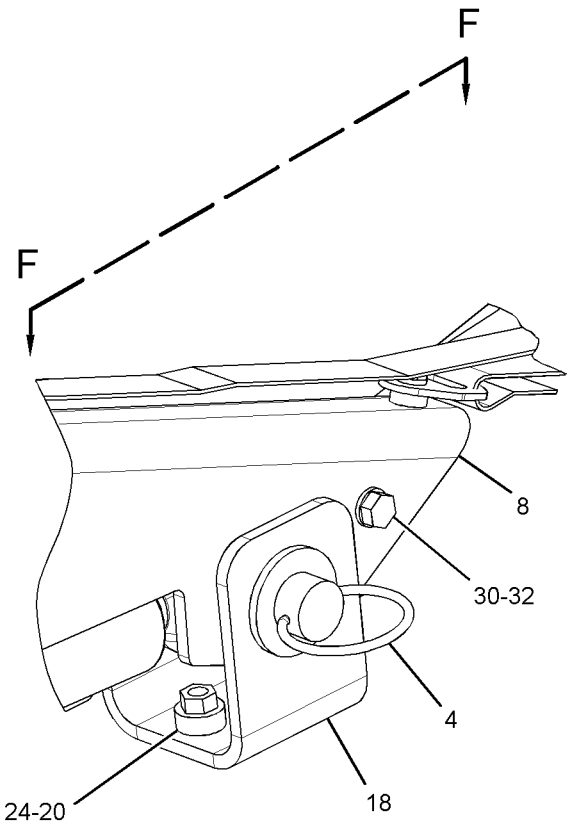

VIEW OF AREA E

GRAPHIC #2 **<END>** g01482014

236-7889 ADJUSTMENT GP-HYDRAULIC TRACK

S/N: LBP1-UP
PART OF 307-9859 TRACK ADJUSTER & RECOIL GP
AN ATTACHMENT

SMCS-4157 **i03590963**

NOTE	REF NO	GRAPHIC REF	PART NUMBER	QTY	PART NAME 1 2 3 4 5 6 (PRODUCT LEVEL)	SEE PAGE
R	1	1	**3W-7515**	1	CYLINDER AS	
	1A	1	**7P-7736**	1	BEARING-SLEEVE	
	2	1	**3W-7519**	1	PISTON AS	
	3	1	**3W-7522**	1	GUARD	
	4	1	**7K-9201**	2	SEAL-LIP TYPE	
	5	1	**7P-7245**	1	VALVE (CYLINDER PRESSURE)	
	6	1	**7P-7333**	1	SEAL AS	
	7	1	**2J-6274**	1	SEAL-O-RING	
	8	1	**5G-9672**	1	PLATE	
	9	1	**8T-4121**	2	WASHER-HARD (11X21X2.5-MM THK)	
M	10	1	**8T-4195**	2	BOLT (M10X1.5X30-MM)	

M-METRIC PART
R-REMFG PART MAY BE AVAILABLE

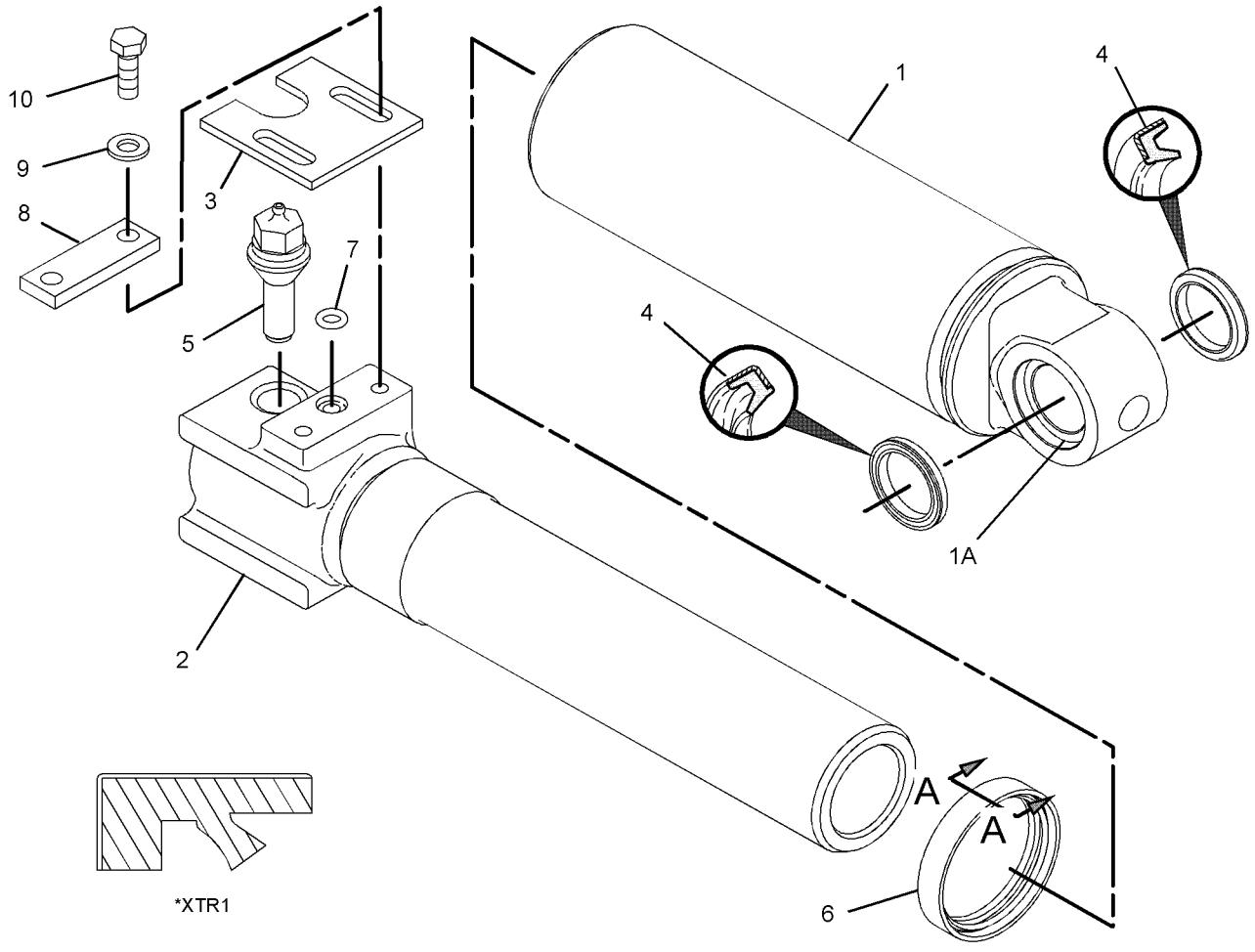

GRAPHIC #1 **<END>** g01916954

UNDERCARRIAGE

3W-7561 BAR GP-EQUALIZER

S/N: LBP1-UP

PART OF 240-6229 UNDERCARRIAGE AR

AN ATTACHMENT

SMCS-7206 **i02959804**

NOTE	REF NO	GRAPHIC REF	PART NUMBER	QTY	PART NAME 1 2 3 4 5 6 (PRODUCT LEVEL)	SEE PAGE
	1	1	**3B-8489**	2	FITTING-GREASE	
	2	1	**3W-7559**	2	PIN AS	
	3	1	**3W-7562**	1	BAR AS	
	3A	1	**7P-6596**	2	BEARING-SLEEVE	
	4	1	**5G-9677**	1	PLATE	
	5	1	**7J-3216**	2	BEARING	
	6	1	**7P-6984**	1	PIN	
	7	1	**7X-3151**	1	WASHER (17.5X63.5X9.6-MM THK)	
	8	1	**8E-5450**	4	SEAL	
	9	1	**313-6254**	2	HOUSING AS	
	10	1	**313-6255**	2	PAD AS	
	11	1	**5L-4751**	4	RING-RETAINING	
	12	1	**7K-9205**	2	SEAL-LIP TYPE	
M	13	1	**7X-2562**	2	BOLT (M20X2.5X45-MM)	
	14	1	**8T-4122**	1	WASHER-HARD (17X32X3.5-MM THK)	
M	15	1	**8T-4139**	2	BOLT (M12X1.75X30-MM)	
	16	1	**8T-4223**	2	WASHER-HARD (13.5X25.5X3-MM THK)	
	17	1	**8T-5439**	2	WASHER-HARD (21.5X45X6-MM THK)	
	18	1	**8T-9393**	1	BOLT (5/8-11X1.5-IN)	
	19	1	**9K-9731**	2	SPACER (20.4X28.5X14.2-MM THK)	

M-METRIC PART

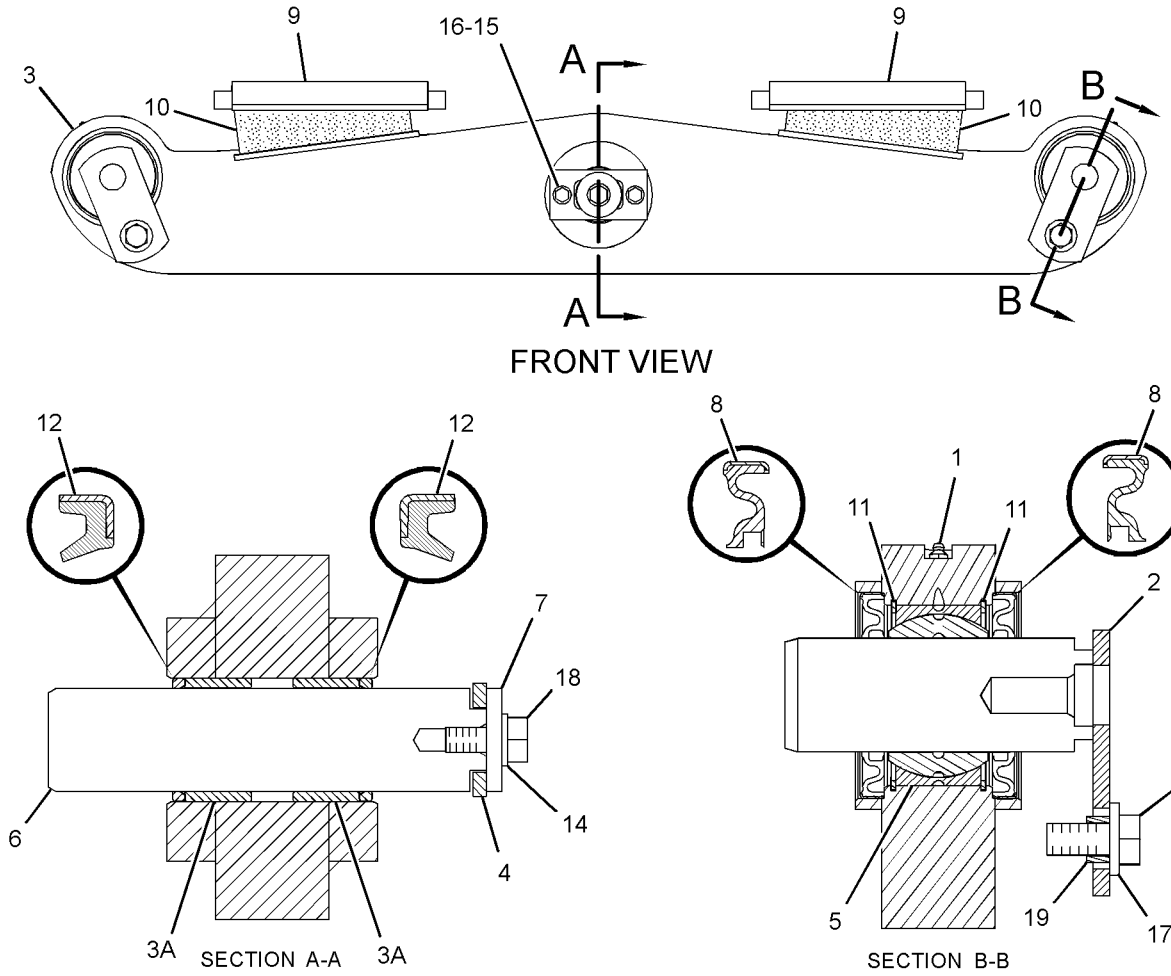

GRAPHIC #1 **<END>** g01524017

223-9102 CAP GP-TRACK ROLLER—SYSTEMONE

S/N: LBP1-UP

PART OF 240-6229 UNDERCARRIAGE AR

AN ATTACHMENT

SMCS-4180 **i02511687**

NOTE	PART NUMBER	QTY	PART NAME 1 2 3 4 5 6 (PRODUCT LEVEL)	SEE PAGE
M	**8T-0281**	4	BOLT (M16X2X80-MM)	
	223-9110	2	CAP-TRACK ROLLER	
	5P-8247	4	WASHER-HARD (17X32X3.5-MM THK)	

M-METRIC PART

<END>

UNDERCARRIAGE

252-6116 FRAME GP-TRACK ROLLER

S/N: LBP1-UP

PART OF 240-6229 UNDERCARRIAGE AR

AN ATTACHMENT

SMCS-4151 **i03590901**

NOTE	REF NO	GRAPHIC REF	PART NUMBER	QTY	PART NAME 1 2 3 4 5 6 (PRODUCT LEVEL)	SEE PAGE
	1	1	**6V-0439**	2	PLUG-MAGNETIC (RECOIL SPRING, OIL FILL)	
	2	1	**8Y-1963**	2	BRACKET	
	3	1	**254-5262**	1	FRAME AS-TRACK ROLLER (LH)	
	3A	1	**221-3187**	1	BEARING-SLEEVE	
	3B	1	**221-3198**	1	BEARING-SLEEVE	
	4	1	**254-5264**	1	FRAME AS-TRACK ROLLER (RH)	
	4A	1	**221-3187**	1	BEARING-SLEEVE	
	4B	1	**221-3198**	1	BEARING-SLEEVE	
	5	1	**277-7713**	2	COVER GP-FRAME	
					(EACH INCLUDES)	
		1	**3W-7482**	1	SEAL	
		1	**7B-3028**	8	SCREW-DRIVE (NO 4X3/16-IN)	
	6	1	**2S-4078**	2	SEAL-O-RING	
	7	1	**3K-0360**	2	SEAL-O-RING	
	9	1	**8T-4122**	12	WASHER-HARD (17X32X3.5-MM THK)	
M	10	1	**8T-4139**	4	BOLT (M12X1.75X30-MM)	
M	11	1	**8T-4193**	8	BOLT (M16X2X50-MM)	
	12	1	**8T-4223**	4	WASHER-HARD (13.5X25.5X3-MM THK)	
M	13	1	**7X-2555**	4	BOLT (M16X2X80-MM)	
	14	1	**9S-4185**	2	PLUG-O-RING	

M-METRIC PART

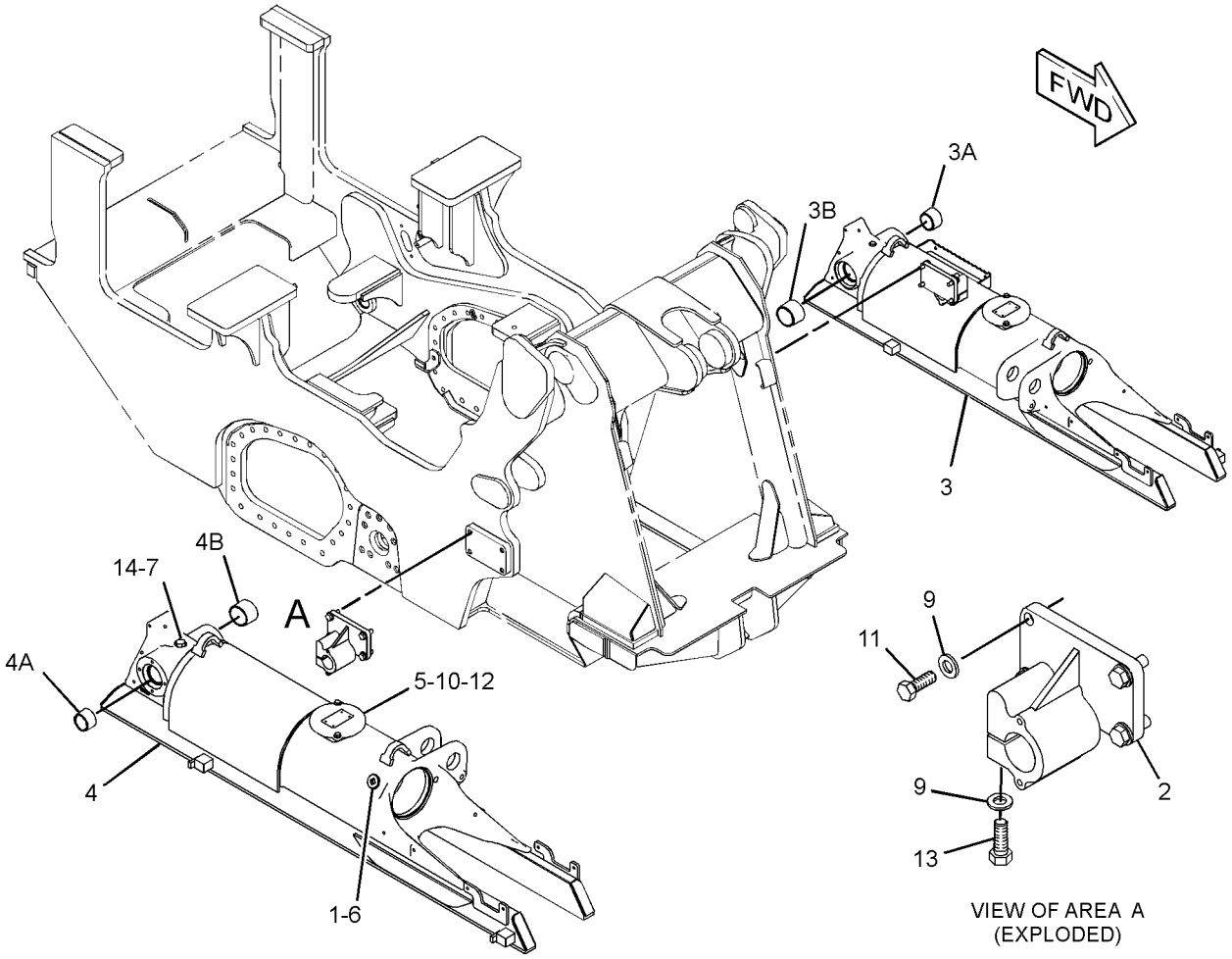

GRAPHIC #1 **<END>** g01917121

252-6115 GUARD GP-TRACK GUIDE

S/N: LBP1-314
PART OF 240-6229 UNDERCARRIAGE AR
AN ATTACHMENT

SMCS-4177 **i02662167**

NOTE	REF NO	GRAPHIC REF	PART NUMBER	QTY	PART NAME 1 2 3 4 5 6 (PRODUCT LEVEL)	SEE PAGE
	1	1	**8Y-1990**	2	PLATE AS	
	2	1	**8Y-1993**	2	PLATE	
	3	1	**8Y-1994**	2	PLATE	
	4	1	**254-5288**	2	GUARD	
	5	1	**254-5289**	2	GUARD	
M	6	1	**7X-2475**	8	BOLT (M16X2X130-MM)	
	7	1	**8T-4122**	16	WASHER-HARD (17X32X3.5-MM THK)	
M	8	1	**8T-4139**	18	BOLT (M12X1.75X30-MM)	
M	9	1	**8T-4140**	8	BOLT (M16X2X60-MM)	
M	10	1	**8T-4192**	8	BOLT (M12X1.75X25-MM)	
	11	1	**8T-4223**	26	WASHER-HARD (13.5X25.5X3-MM THK)	

QUANTITIES SHOWN ARE THOSE REQUIRED FOR BOTH LH AND RH SIDES
M-METRIC PART

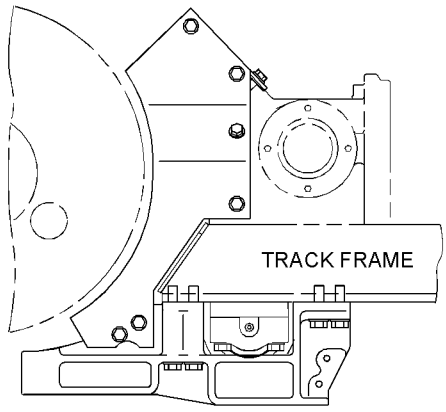

RIGHT SIDE VIEW

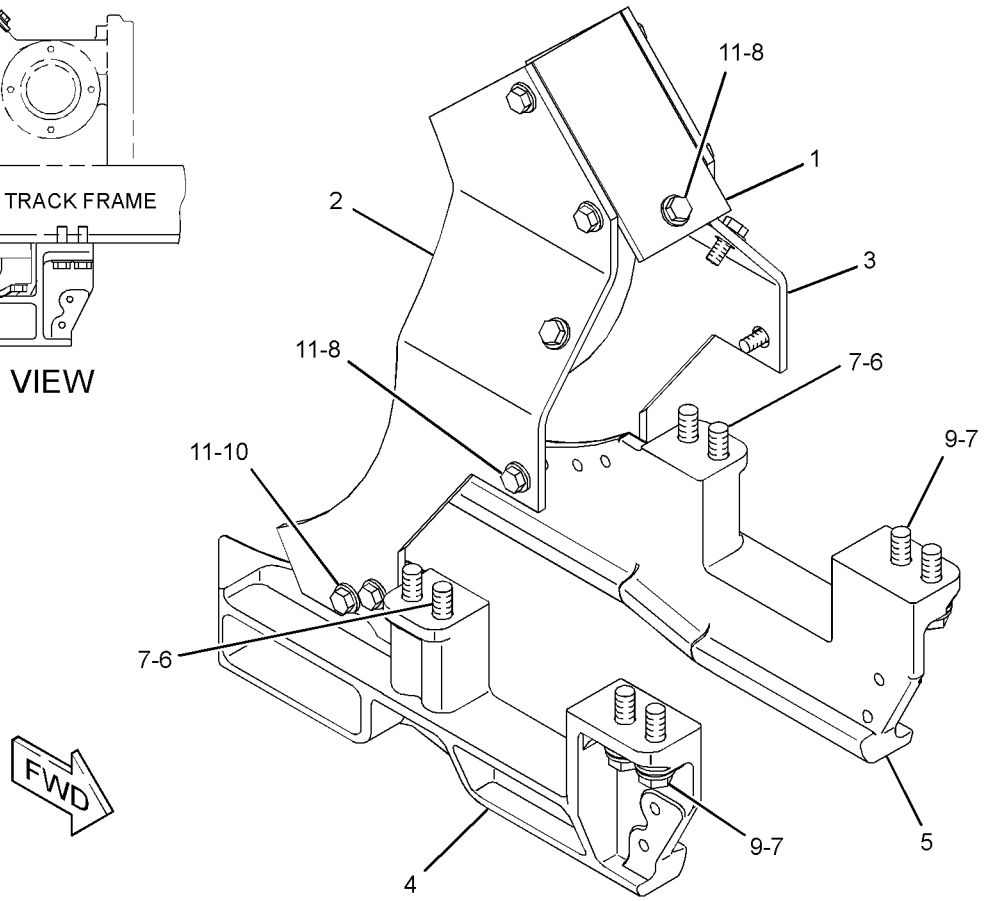

GRAPHIC #1 **<END>** g01338112

252-6115 GUARD GP-TRACK GUIDE

S/N: LBP315-UP
PART OF 240-6229 UNDERCARRIAGE AR
AN ATTACHMENT

SMCS-4177 **i02813522**

NOTE	REF NO	GRAPHIC REF	PART NUMBER	QTY	PART NAME 1 2 3 4 5 6 (PRODUCT LEVEL)	SEE PAGE
C	1	1	**310-8312**	2	PLATE AS	
C	2	1	**310-8310**	2	PLATE	
C	3	1	**310-8311**	2	PLATE	
	4	1	**254-5288**	2	GUARD	
	5	1	**254-5289**	2	GUARD	
M	6	1	**7X-2475**	8	BOLT (M16X2X130-MM)	
	7	1	**8T-4122**	16	WASHER-HARD (17X32X3.5-MM THK)	
M	8	1	**8T-4139**	18	BOLT (M12X1.75X30-MM)	
M	9	1	**8T-4140**	8	BOLT (M16X2X60-MM)	
M	10	1	**8T-4192**	8	BOLT (M12X1.75X25-MM)	
	11	1	**8T-4223**	26	WASHER-HARD (13.5X25.5X3-MM THK)	

C-CHANGE FROM PREVIOUS TYPE
M-METRIC PART

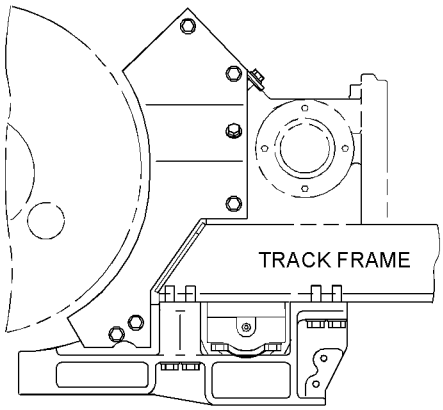

RIGHT SIDE VIEW

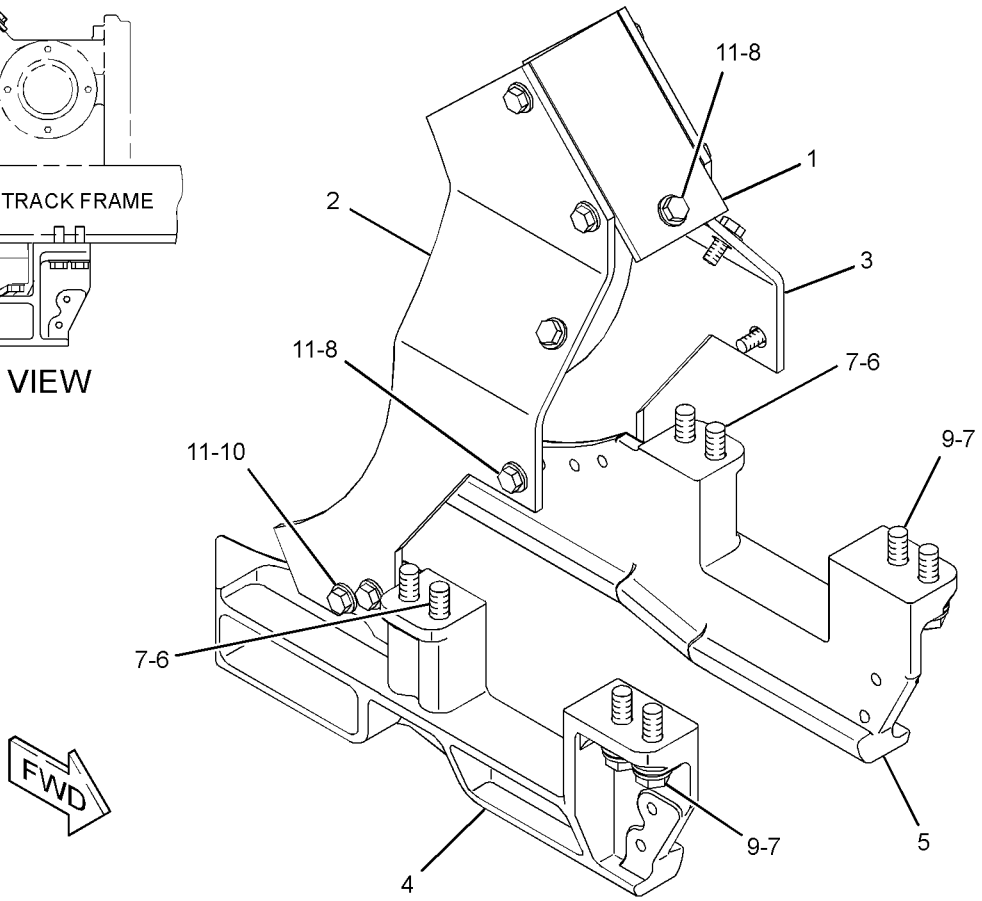

GRAPHIC #1 **<END>** g01338112

UNDERCARRIAGE

254-5287 GUARD GP-TRACK ROLLER

S/N: LBP1-UP

AN ATTACHMENT

SMCS-7152 **i02666293**

NOTE	REF NO	GRAPHIC REF	PART NUMBER	QTY	PART NAME 1 2 3 4 5 6 (PRODUCT LEVEL)	SEE PAGE
	1	1	**8Y-2281**	8	ROD	
	2	1	**254-5290**	2	GUARD AS	
	3	1	**254-5291**	2	GUARD AS	
	4	1	**259-6864**	8	PLATE	
	5	1	**7P-7368**	8	SPACER (24.31X33.4X249-MM THK)	
	6	1	**8T-4122**	32	WASHER-HARD (17X32X3.5-MM THK)	
M	7	1	**8T-4132**	16	NUT (M16X2-THD)	
	8	1	**8T-4223**	16	WASHER-HARD (13.5X25.5X3-MM THK)	
M	9	1	**8T-4779**	16	BOLT (M16X2X35-MM)	
M	10	1	**8T-4956**	16	BOLT (M12X1.75X35-MM)	

QUANTITIES SHOWN ARE THOSE REQUIRED FOR BOTH LH AND RH SIDES
M-METRIC PART

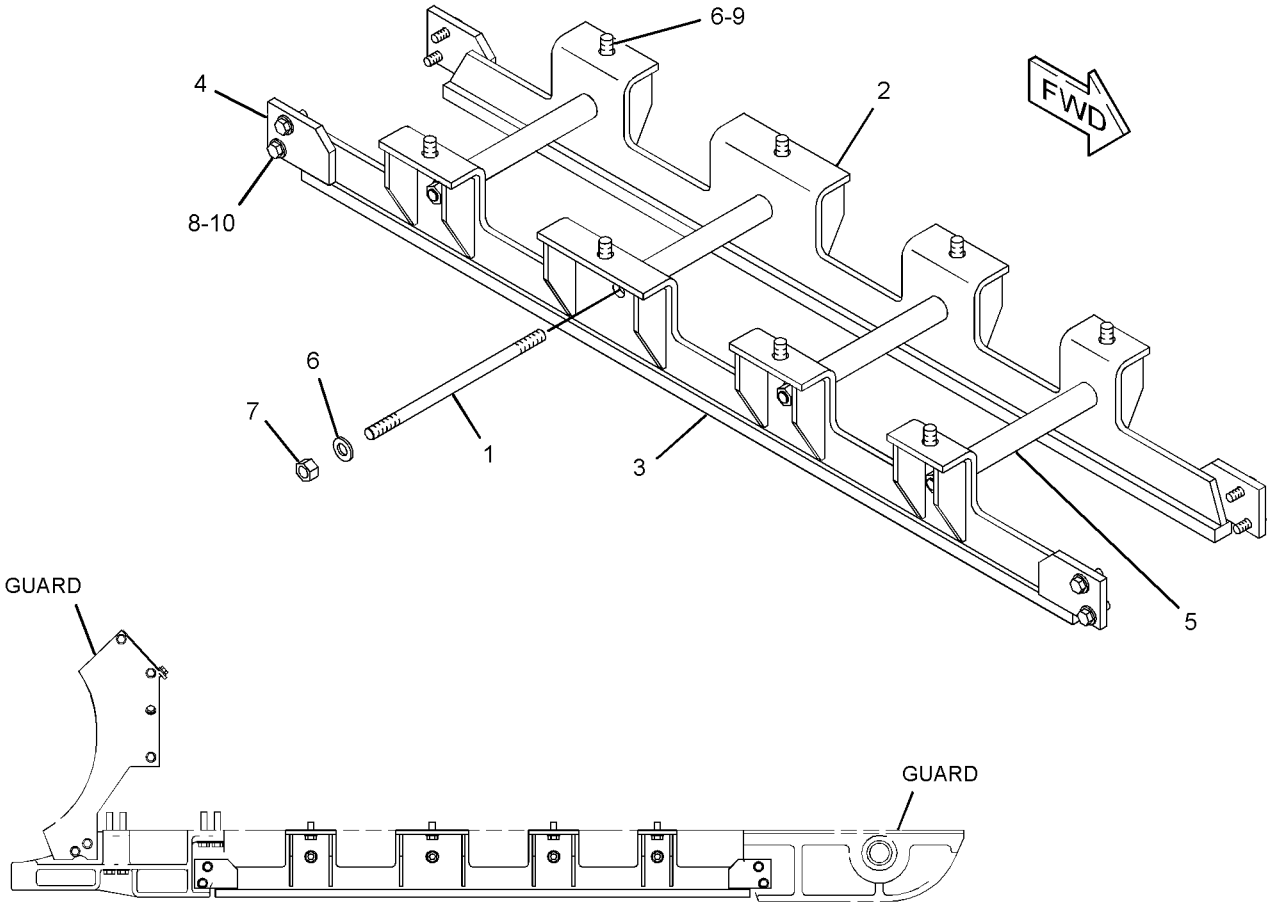

RIGHT SIDE VIEW

GRAPHIC #1 **<END>** g01342702

UNDERCARRIAGE

307-9836 IDLER GP-FRONT—LH

S/N: LBP1-UP
ENHANCED EXTENDED WEAR LIFE
PART OF 308-6186 IDLER GP-FRONT
AN ATTACHMENT

SMCS-4159 **i02705052**

NOTE	REF NO	GRAPHIC REF	PART NUMBER	QTY	PART NAME 1 2 3 4 5 6 (PRODUCT LEVEL)	SEE PAGE
R	1	1	**2M-2858**	2	SEAL GP-DUO-CONE	
					(EACH INCLUDES)	
		1	**1M-3097**	2	RING-SEALING	
	2	1	**2P-0347**	1	PLUG	
	3	1	**3B-8489**	2	FITTING-GREASE	
	4	1	**3P-8272**	2	BUSHING AS-IDLER	
					(EACH INCLUDES)	
		1	**8P-6652**	1	BEARING AS	
		1	**9B-2289**	2	PIN	
	5	1	**5M-5000**	2	LOCK-PIN	
	6	1	**7P-7428**	2	PIN	
	7	1	**7T-3501**	1	IDLER AS	
	8	1	**8G-0935**	2	CAP	
	9	1	**8Y-1968**	1	YOKE AS	
		1	**7P-7235**	2	BEARING-SLEEVE	
	10	1	**166-0613**	1	SHAFT-TRACK IDLER	
	11	1	**255-1075**	1	GUARD AS	
		1	**3W-8409**	2	BEARING	
		1	**255-1077**	1	GUARD	
	12	1	**255-1076**	1	GUARD AS	
	12A	1	**3W-8409**	2	BEARING	
		1	**255-1078**	1	GUARD	
	13	1	**279-9322**	1	LINK AS	
	14	1	**279-9325**	1	LINK AS	
	15	1	**1H-6227**	2	SEAL-O-RING	
	16	1	**1S-8947**	1	SEAL-O-RING	
	17	1	**4J-8982**	4	SEAL-LIP TYPE	
	18	1	**6J-2515**	6	BOLT-12 POINT HEAD (1/2-13X2.25-IN)	
	19	1	**7F-8268**	2	SEAL-O-RING	
	20	1	**7K-9203**	4	SEAL-LIP TYPE	
	21	1	**7X-0311**	2	BOLT (7/16-14X2.25-IN)	
	22	1	**7X-0563**	2	WASHER-HARD (12X35X8-MM THK)	
	23	1	**8G-0932**	4	SPRING-DISC	
	24	1	**8T-4223**	4	WASHER-HARD (13.5X25.5X3-MM THK)	
M	25	1	**8T-4244**	2	NUT (M12X1.75-THD)	
M	26	1	**8T-4648**	2	BOLT (M12X1.75X70-MM)	
	27	1	**8T-4896**	12	WASHER-HARD (10.2X18.5X2.5-MM THK)	
	28	1	**9B-7237**	12	BOLT (3/8-16X1.25-IN)	

M-METRIC PART
R-REMFG PART MAY BE AVAILABLE

307-9836 **IDLER GP-FRONT** *(contd.)* **i02705052**

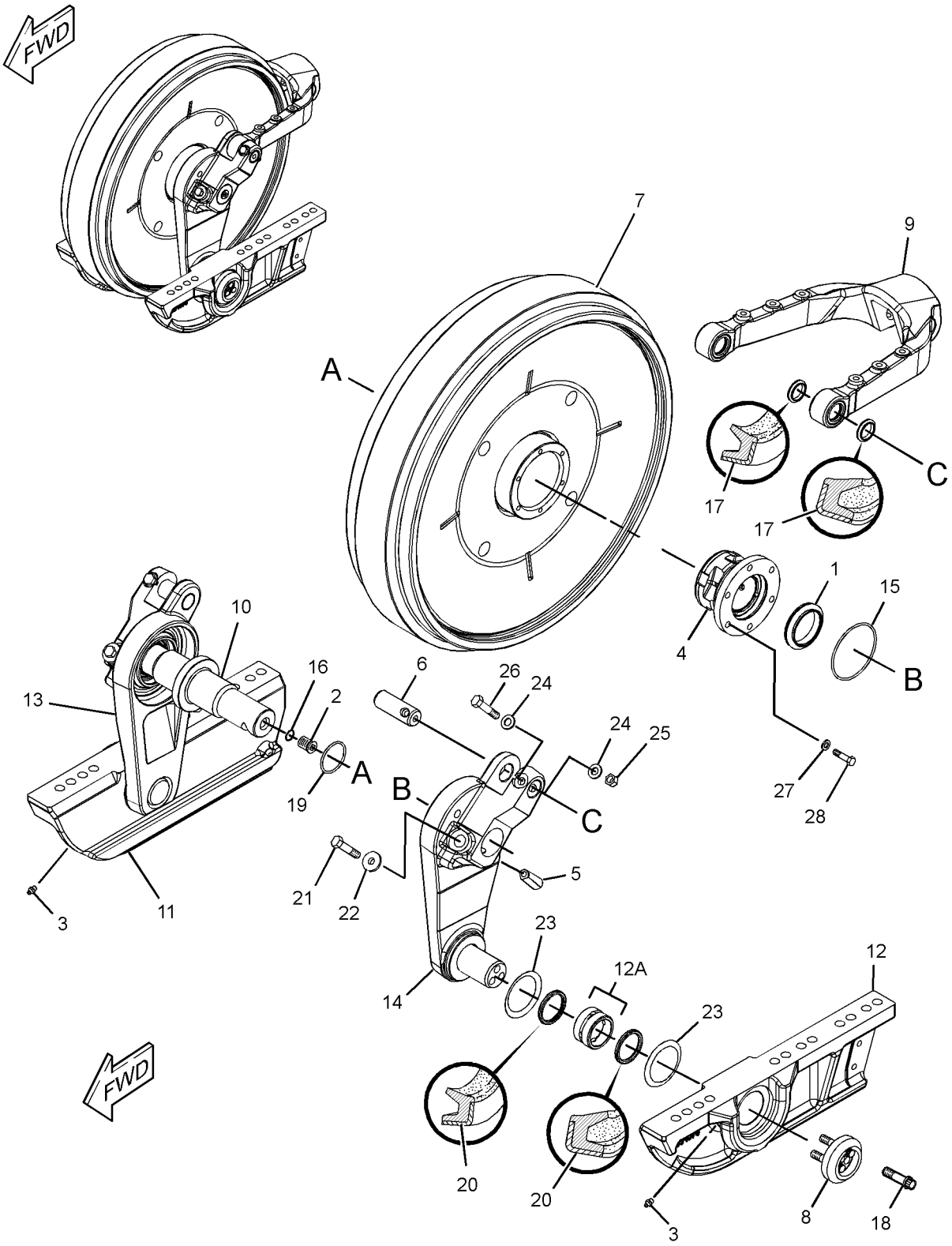

GRAPHIC #1 **<END>** g01356902

UNDERCARRIAGE

307-9837 IDLER GP-FRONT—RH

S/N: LBP1-UP
ENHANCED EXTENDED WEAR LIFE
PART OF 308-6186 IDLER GP-FRONT
AN ATTACHMENT

SMCS-4159 **i02703340**

NOTE	REF NO	GRAPHIC REF	PART NUMBER	QTY	PART NAME 1 2 3 4 5 6 (PRODUCT LEVEL)	SEE PAGE
R	1	1	**2M-2858**	2	SEAL GP-DUO-CONE	
					(EACH INCLUDES)	
		1	**1M-3097**	2	RING-SEALING	
	2	1	**2P-0347**	1	PLUG	
	3	1	**3B-8489**	2	FITTING-GREASE	
	4	1	**3P-8272**	2	BUSHING AS-IDLER	
					(EACH INCLUDES)	
		1	**8P-6652**	1	BEARING AS	
		1	**9B-2289**	2	PIN	
	5	1	**5M-5000**	2	LOCK-PIN	
	6	1	**7P-7428**	2	PIN	
	7	1	**7T-3501**	1	IDLER AS	
	8	1	**8G-0935**	2	CAP	
	9	1	**8Y-1968**	1	YOKE AS	
		1	**7P-7235**	2	BEARING-SLEEVE	
	10	1	**166-0613**	1	SHAFT-TRACK IDLER	
	11	1	**255-1075**	1	GUARD AS	
		1	**3W-8409**	2	BEARING	
		1	**255-1077**	1	GUARD	
	12	1	**255-1076**	1	GUARD AS	
	12A	1	**3W-8409**	2	BEARING	
		1	**255-1078**	1	GUARD	
	13	1	**279-9322**	1	LINK AS	
	14	1	**279-9325**	1	LINK AS	
	15	1	**1H-6227**	2	SEAL-O-RING	
	16	1	**1S-8947**	1	SEAL-O-RING	
	17	1	**4J-8982**	4	SEAL-LIP TYPE	
	18	1	**6J-2515**	6	BOLT-12 POINT HEAD (1/2-13X2.25-IN)	
	19	1	**7F-8268**	2	SEAL-O-RING	
	20	1	**7K-9203**	4	SEAL-LIP TYPE	
	21	1	**7X-0311**	2	BOLT (7/16-14X2.25-IN)	
	22	1	**7X-0563**	2	WASHER-HARD (12X35X8-MM THK)	
	23	1	**8G-0932**	4	SPRING-DISC	
	24	1	**8T-4223**	4	WASHER-HARD (13.5X25.5X3-MM THK)	
M	25	1	**8T-4244**	2	NUT (M12X1.75-THD)	
M	26	1	**8T-4648**	2	BOLT (M12X1.75X70-MM)	
	27	1	**8T-4896**	12	WASHER-HARD (10.2X18.5X2.5-MM THK)	
	28	1	**9B-7237**	12	BOLT (3/8-16X1.25-IN)	

M-METRIC PART
R-REMFG PART MAY BE AVAILABLE

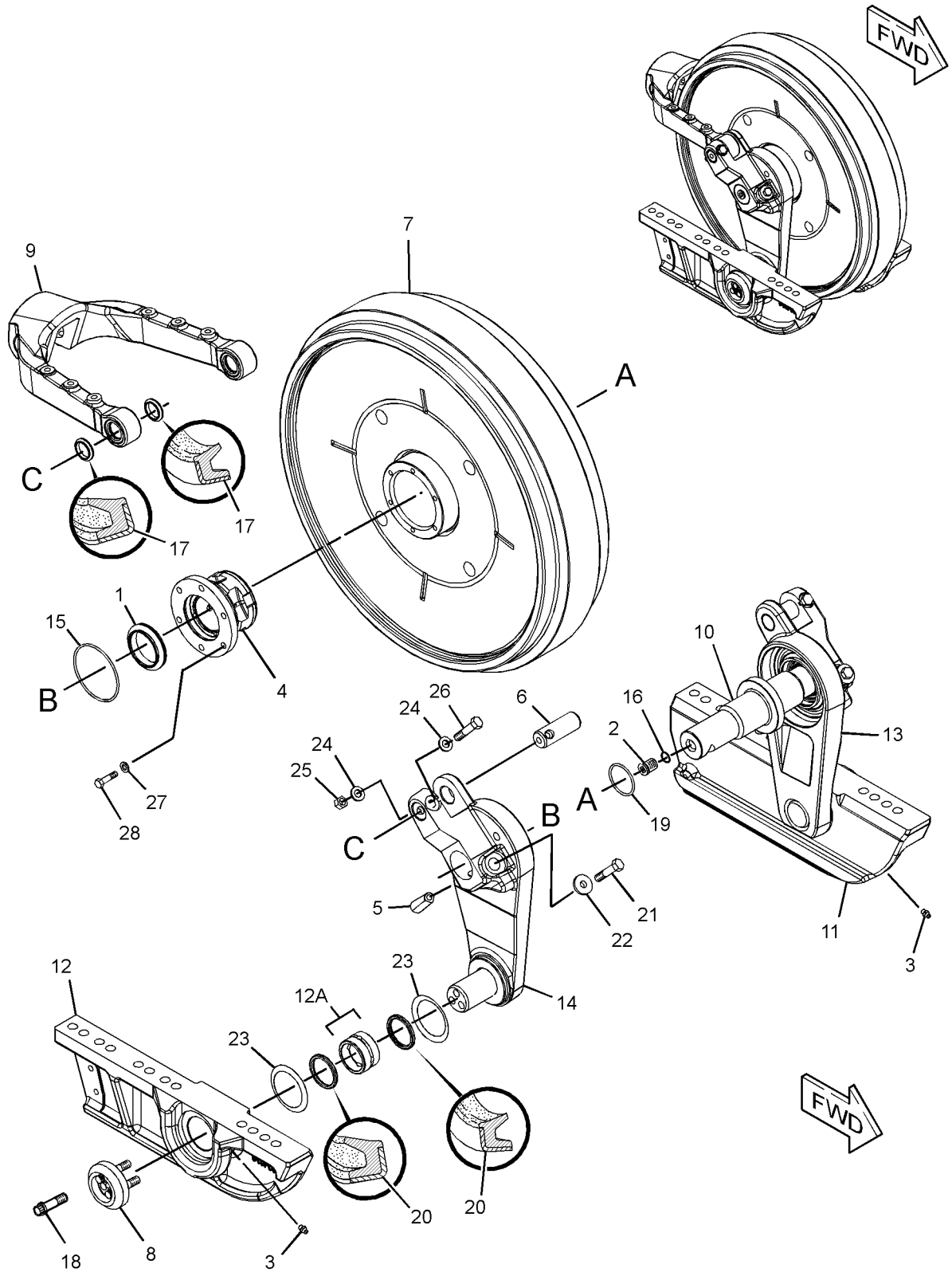

GRAPHIC #1 **<END>** g01356913

UNDERCARRIAGE

308-6186 IDLER GP-FRONT—ENHANCED EXTENDED WEAR LIFE

S/N: LBP1-UP

AN ATTACHMENT

SMCS-4159 **i02703325**

NOTE	REF NO	GRAPHIC REF	PART NUMBER	QTY	PART NAME 1 2 3 4 5 6 (PRODUCT LEVEL)	SEE PAGE
Y	1	1	*307-9836*	1	IDLER GP-FRONT (LH)	395
Y	2	1	*307-9837*	1	IDLER GP-FRONT (RH)	397
	3	1	**8T-4122**	24	WASHER-HARD (17X32X3.5-MM THK)	
M	4	1	**8T-4140**	24	BOLT (M16X2X60-MM)	

M-METRIC PART
Y-SEPARATE ILLUSTRATION

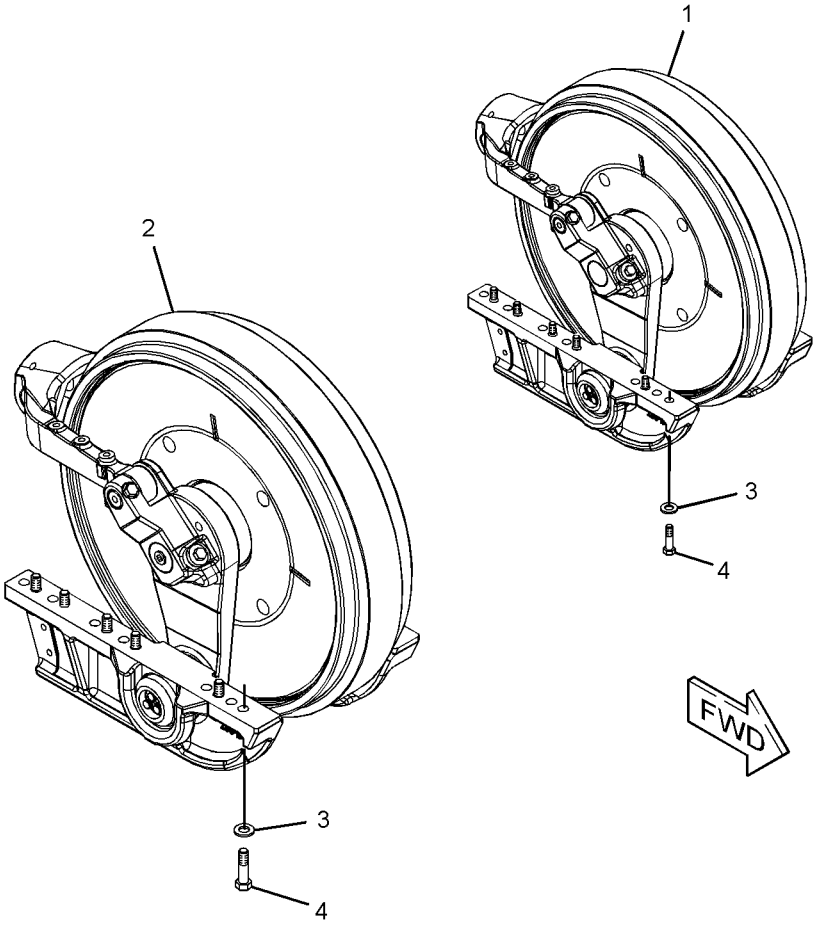

GRAPHIC #1 **<END>** g01356313

243-0499 LINK AS-TRACK–SYSTEMONE

S/N: LBP1-UP
37-JOINTS. SEALED, LUBRICATED
PART OF 244-4535, 300-3661, 300-3662 TRACK GP
FOR USE WITH SYSTEMONE ROLLERS, GUARDS, GUIDESTRIPS, & SHOES
AN ATTACHMENT

SMCS-4169, 4171 **i02711812**

NOTE	REF NO	GRAPHIC REF	PART NUMBER	QTY	PART NAME 1 2 3 4 5 6 (PRODUCT LEVEL)	SEE PAGE
	1	1	**235-2501**	34	LINK-TRACK	
Y	2	1	**235-2509**	17	LINK AS-TRACK BOX	401
Y	3	1	**243-0500**	1	LINK AS-TRACK BOX (LINK BOX, OFFSET)	402

Y-SEPARATE ILLUSTRATION

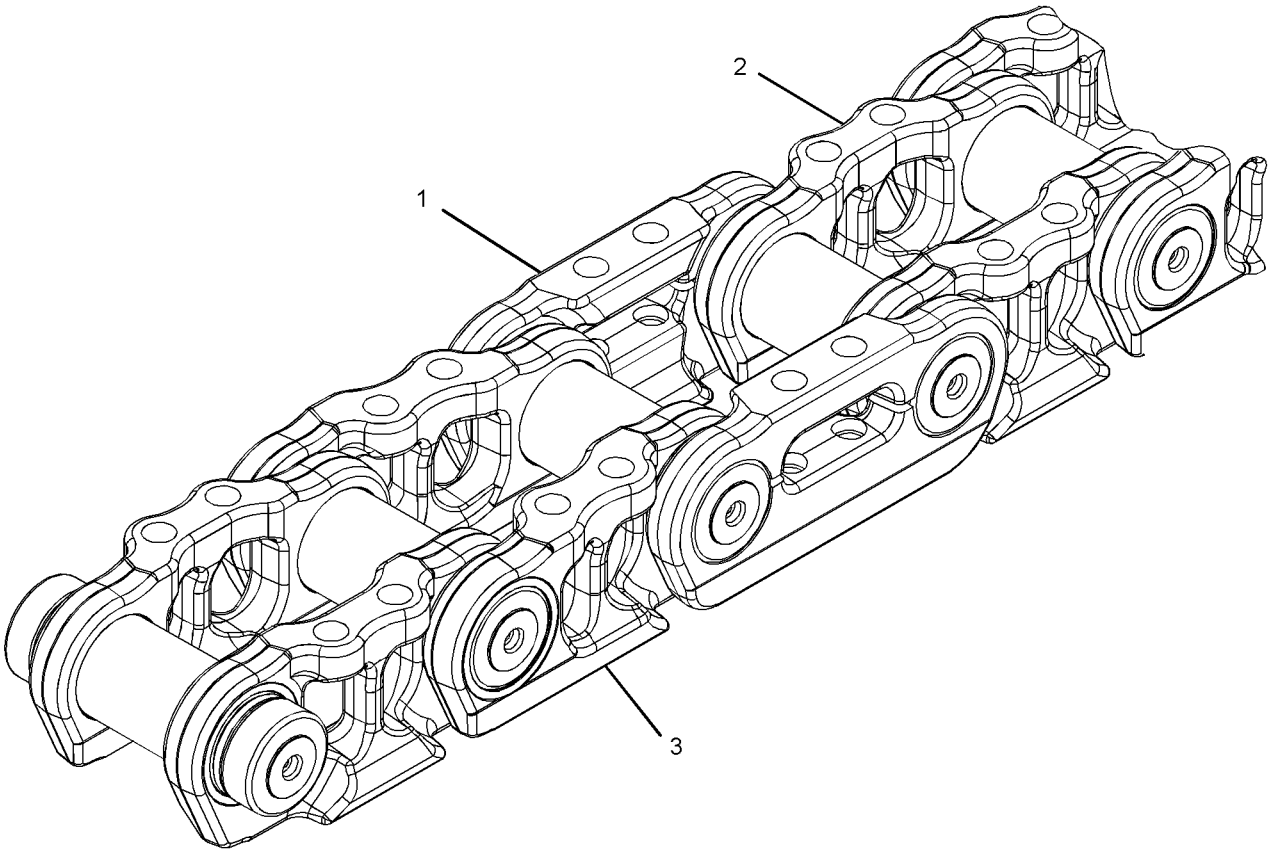

GRAPHIC #1 **<END>** g01197335

235-2509 LINK AS-TRACK BOX—LINK BOX

S/N: LBP1-UP

SEALED, LUBRICATED, FOR FIELD REPLACEMENT OF LINK BOX THAT IS MORE THAN 40% WORN, ORDER 264-9764 LINK AS, FOR FIELD REPLACEMENT OF LINK BOX THAT IS LESS THAN 40% WORN, ORDER 298-2723 LINK AS
PART OF 243-0499 LINK AS-TRACK, 243-0500 LINK AS-TRACK BOX
AN ATTACHMENT

SMCS-4169 **i02837997**

NOTE	REF NO	GRAPHIC REF	PART NUMBER	QTY	PART NAME 1 2 3 4 5 6 (PRODUCT LEVEL)	SEE PAGE
	1	1	**235-2501**	2	LINK-TRACK	
	2	1	*235-2507*	2	CARTRIDGE AS-TRACK LINK	
					(EACH INCLUDES)	
		1	**6Y-0473**	2	PLUG-CLEAR	
		1	**9G-1642**	2	STOPPER-RUBBER	

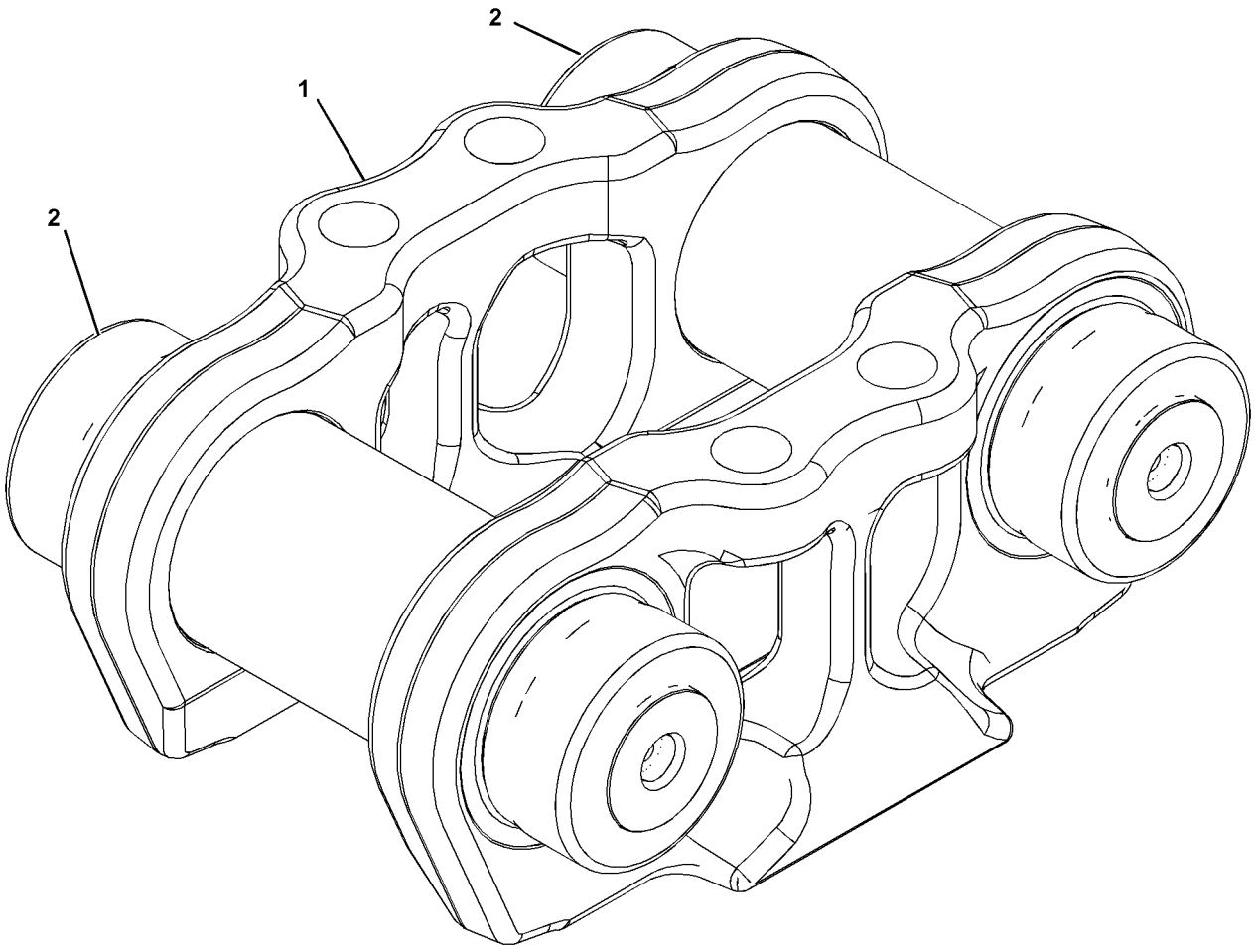

GRAPHIC #1 **<END>** g01378067

243-0500 LINK AS-TRACK BOX—LINK BOX, OFFSET

S/N: LBP1-UP

SEALED, LUBRICATED, FOR FIELD REPLACEMENT OF LINK BOX THAT IS MORE THAN 40% WORN, ORDER 264-9769 LINK AS, FOR FIELD REPLACEMENT OF LINK BOX THAT IS LESS THAN 40% WORN, ORDER 298-2724 LINK AS

PART OF 243-0499 LINK AS-TRACK

AN ATTACHMENT

SMCS-4169 **i02837970**

NOTE	REF NO	GRAPHIC REF	PART NUMBER	QTY	PART NAME 1 2 3 4 5 6 (PRODUCT LEVEL)	SEE PAGE
Y	1	1	**235-2509**	1	LINK AS-TRACK BOX	401
	2	1	*235-2507*	1	CARTRIDGE AS-TRACK LINK	
		1	**6Y-0473**	2	PLUG-CLEAR	
		1	**9G-1642**	2	STOPPER-RUBBER	
					PARTS SHOWN IN GRAPHIC(S) WITHOUT A REFERENCE NUMBER ARE NOT SERVICED SEPARATELY	

Y-SEPARATE ILLUSTRATION

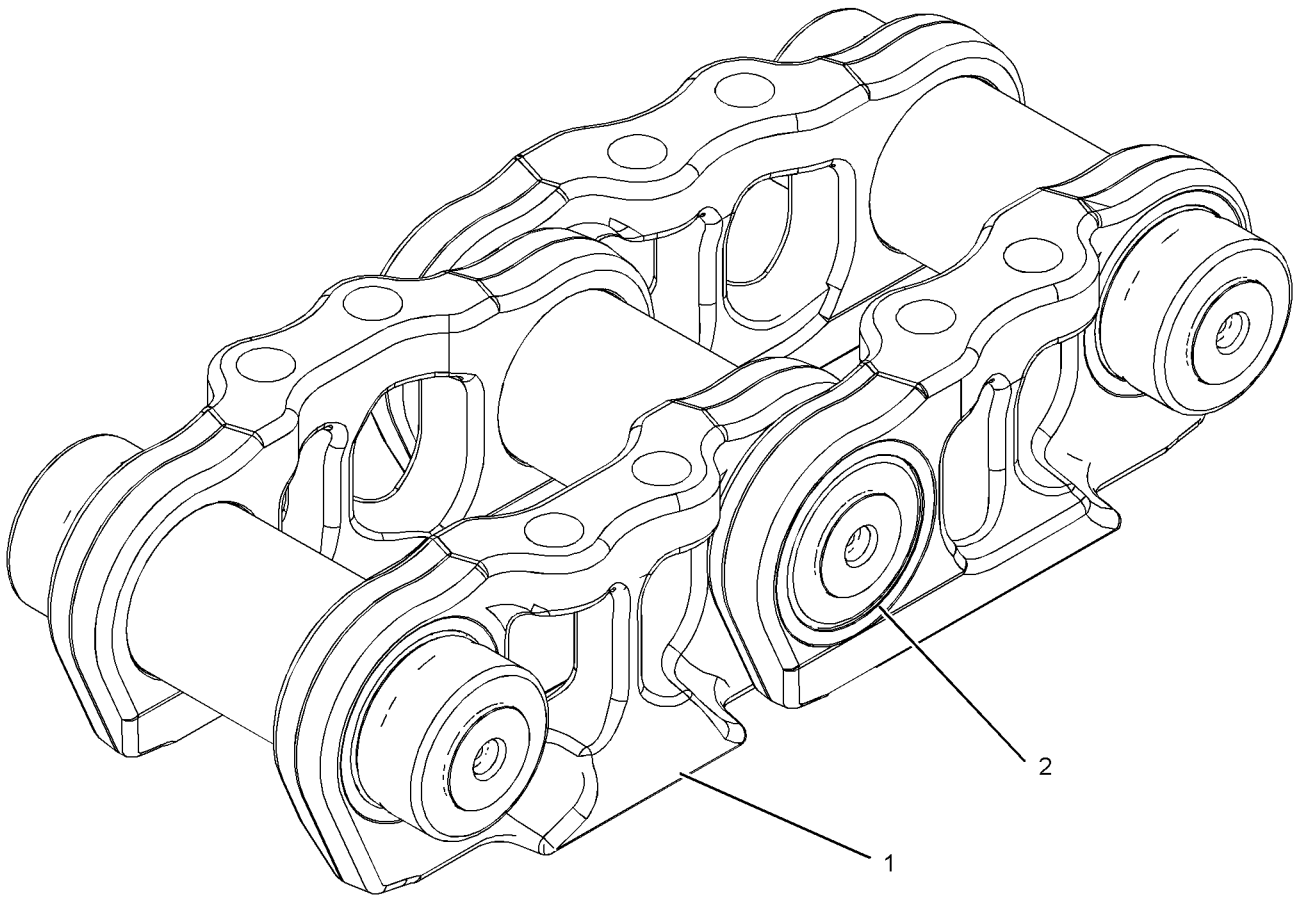

GRAPHIC #1 **<END>** g01415180

264-9764 LINK AS-TRACK BOX—LINK BOX

S/N: LBP1-UP
70% WORN. SEALED, LUBRICATED
FIELD REPLACEMENT FOR 235-2509—PAGE 401 LINK AS THAT IS MORE THAN 40% WORN :
FOR 298-2723—PAGE 405 LINK AS THAT IS MORE THAN 40% WORN
FIELD INSTALLATION

SMCS-4169 **i02844342**

NOTE	REF NO	GRAPHIC REF	PART NUMBER	QTY	PART NAME 1 2 3 4 5 6 (PRODUCT LEVEL)	SEE PAGE
	1	1	*298-2722*	2	CARTRIDGE AS-TRACK LINK	
					(EACH INCLUDES)	
		1	**6Y-0473**	2	PLUG-CLEAR	
		1	**9G-1642**	2	STOPPER-RUBBER	
					PARTS SHOWN IN GRAPHIC(S) WITHOUT A REFERENCE NUMBER ARE NOT SERVICED SEPARATELY	

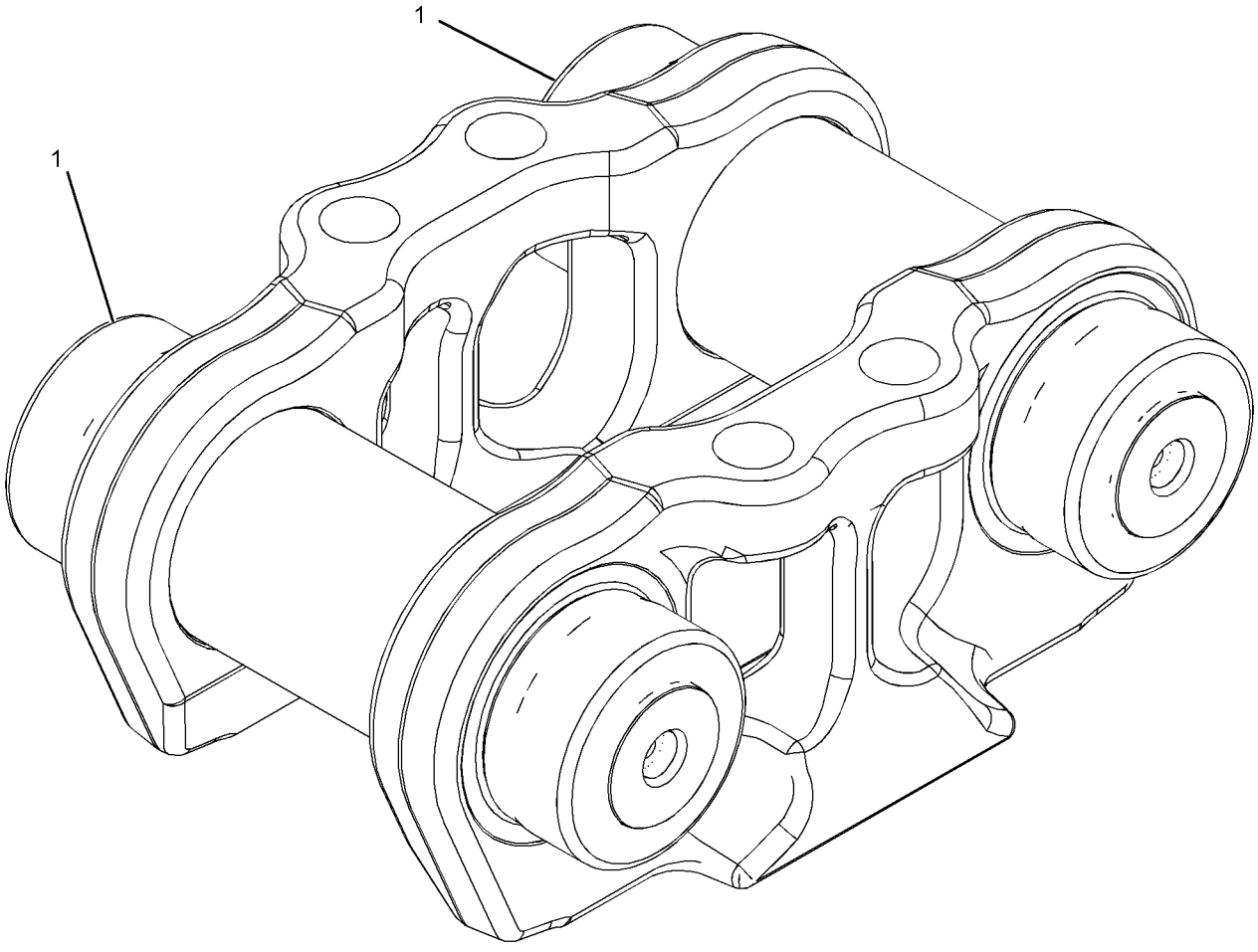

GRAPHIC #1 **<END>** g01416784

264-9769 LINK AS-TRACK BOX—LINK BOX, OFFSET

S/N: LBP1-UP
70% WORN. SEALED, LUBRICATED
FIELD REPLACEMENT FOR 298-2724—PAGE 406 LINK AS THAT IS MORE THAN 40% WORN :
FOR 243-0500—PAGE 402 LINK AS THAT IS MORE THAN 40% WORN
FIELD INSTALLATION

SMCS-4169 **i02841191**

NOTE	REF NO	GRAPHIC REF	PART NUMBER	QTY	PART NAME 1 2 3 4 5 6 (PRODUCT LEVEL)	SEE PAGE
	1	1	*298-2722*	1	CARTRIDGE AS-TRACK LINK	
		1	**6Y-0473**	2	PLUG-CLEAR	
		1	**9G-1642**	2	STOPPER-RUBBER	
					PARTS SHOWN IN GRAPHIC(S) WITHOUT A REFERENCE NUMBER ARE NOT SERVICED SEPARATELY	

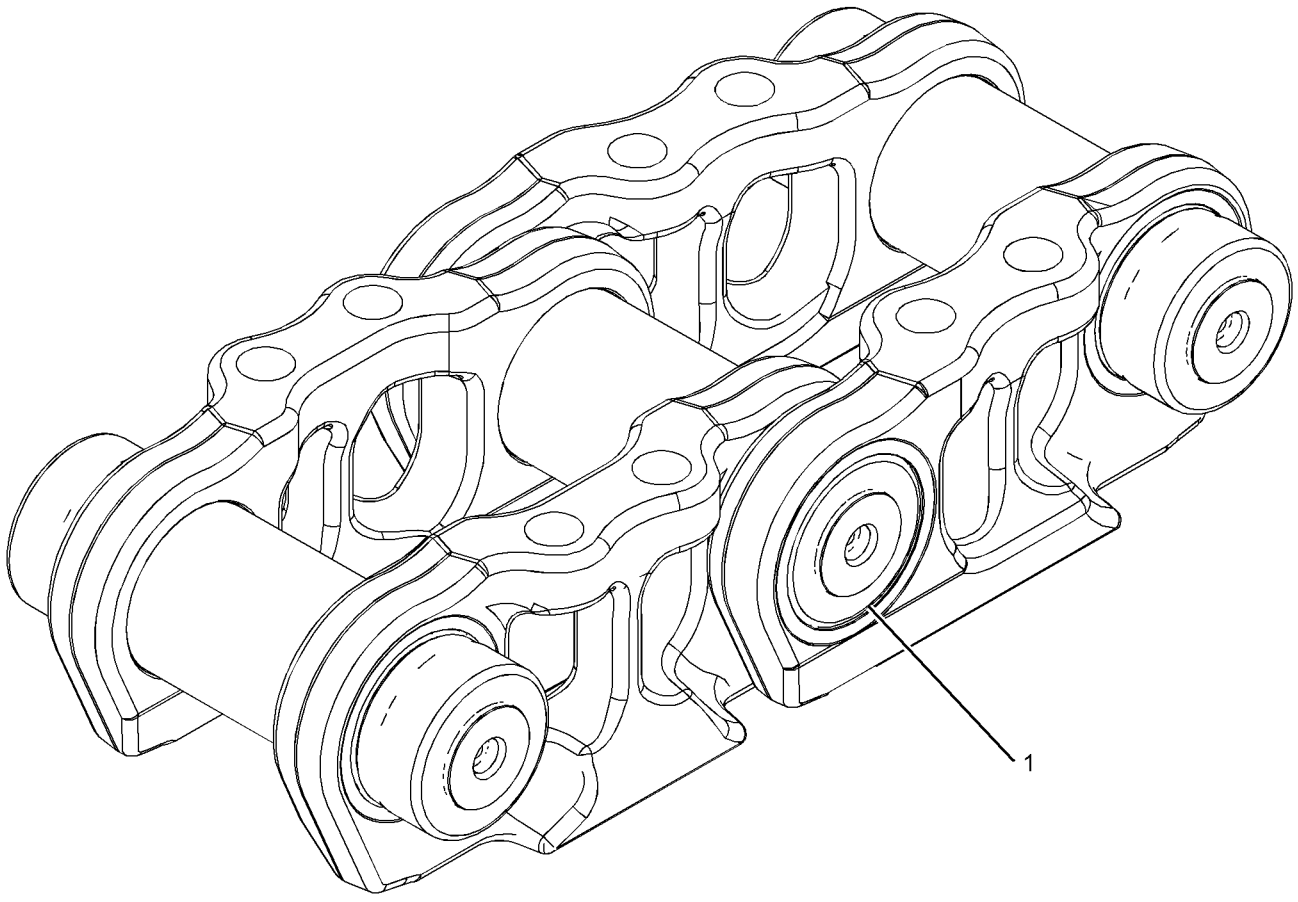

GRAPHIC #1 **<END>** g01416892

298-2723 LINK AS-TRACK BOX—LINK BOX

S/N: LBP1-UP

SEALED, LUBRICATED, FOR FIELD REPLACEMENT OF LINK BOX THAT IS MORE THAN 40% WORN, ORDER 264-9764 LINK AS

PART OF 298-2724 LINK AS-TRACK BOX

FIELD REPLACEMENT FOR 235-2509—PAGE 401 LINK AS THAT IS LESS THAN 40% WORN

FIELD INSTALLATION

SMCS-4169 **i02837984**

NOTE	REF NO	GRAPHIC REF	PART NUMBER	QTY	PART NAME 1 2 3 4 5 6 (PRODUCT LEVEL)	SEE PAGE
	1	1	**235-2501**	2	LINK-TRACK	
	2	1	*298-2722*	2	CARTRIDGE AS-TRACK LINK	
					(EACH INCLUDES)	
		1	**6Y-0473**	2	PLUG-CLEAR	
		1	**9G-1642**	2	STOPPER-RUBBER	

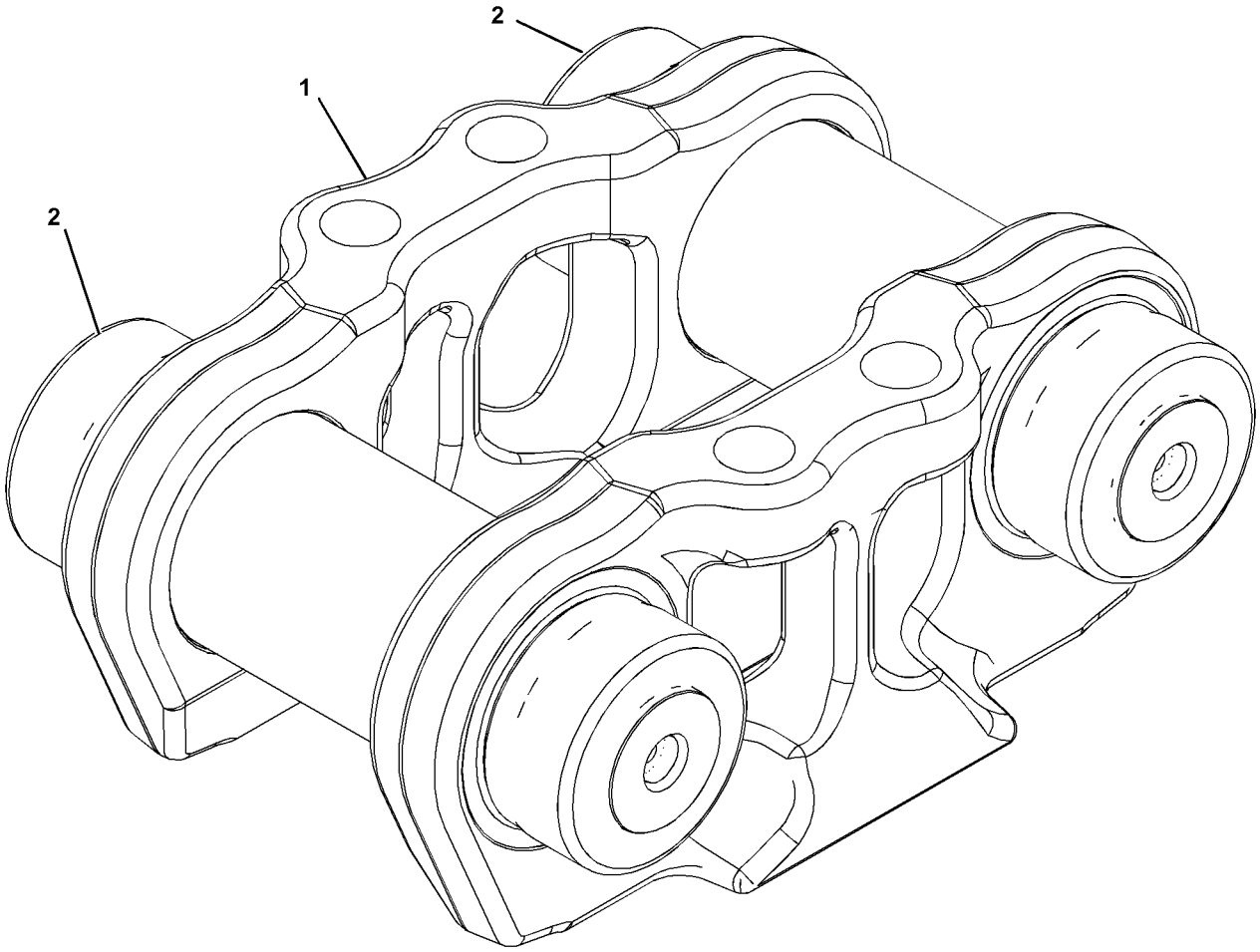

GRAPHIC #1 **<END>** g01378067

298-2724 LINK AS-TRACK BOX—LINK BOX, OFFSET

S/N: LBP1-UP

SEALED, LUBRICATED, FOR FIELD REPLACEMENT OF LINK BOX THAT IS MORE THAN 40% WORN, ORDER 264-9769 LINK AS

FIELD REPLACEMENT FOR 243-0500—PAGE 402 LINK AS THAT IS LESS THAN 40% WORN

FIELD INSTALLATION

SMCS-4169 **i02837974**

NOTE	REF NO	GRAPHIC REF	PART NUMBER	QTY	PART NAME 1 2 3 4 5 6 (PRODUCT LEVEL)	SEE PAGE
Y	1	1	**298-2723**	1	LINK AS-TRACK BOX	405
	2	1	*298-2722*	1	CARTRIDGE AS-TRACK LINK	
		1	**6Y-0473**	2	PLUG-CLEAR	
		1	**9G-1642**	2	STOPPER-RUBBER	
					PARTS SHOWN IN GRAPHIC(S) WITHOUT A REFERENCE NUMBER ARE NOT SERVICED SEPARATELY	

Y-SEPARATE ILLUSTRATION

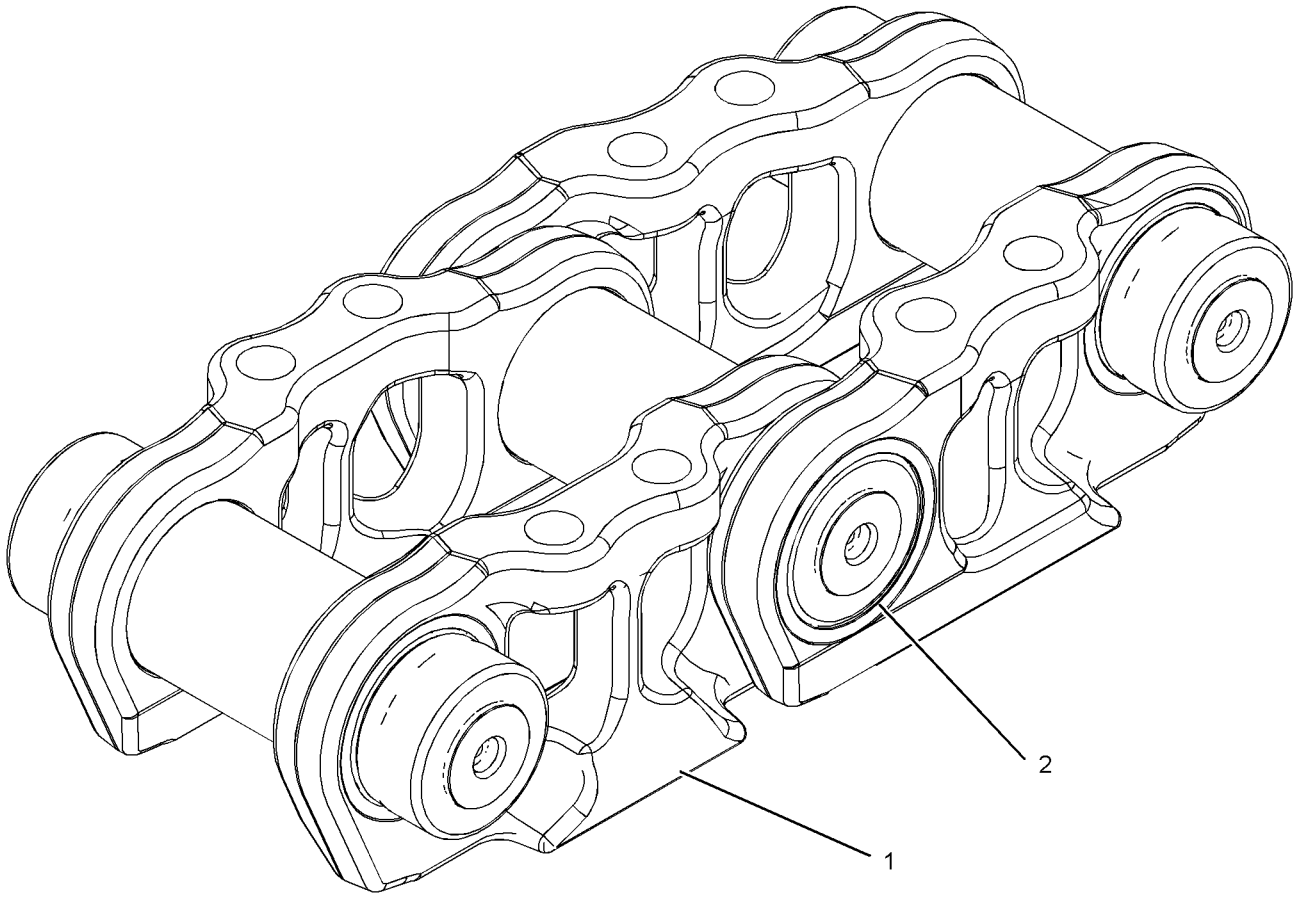

GRAPHIC #1 **<END>** g01415180

UNDERCARRIAGE

279-8885 PIVOT BAR GP

S/N: LBP1-UP
PART OF 240-6229 UNDERCARRIAGE AR
AN ATTACHMENT

SMCS-4153 **i02662383**

NOTE	REF NO	GRAPHIC REF	PART NUMBER	QTY	PART NAME 1 2 3 4 5 6 (PRODUCT LEVEL)	SEE PAGE
	1	1	**3W-7549**	2	PLATE	
	2	1	**5Q-6023**	2	SHAFT AS	
					(EACH INCLUDES)	
		1	**5Q-5391**	1	RING	
	3	1	**255-1171**	2	COVER	
	4	1	**266-5291**	2	SEAL-FOOTBALL	
	5	1	**2H-3928**	2	SEAL-O-RING	
M	6	1	**7X-2563**	18	BOLT (M20X2.5X60-MM)	
	7	1	**8T-4123**	18	WASHER (22X35X3.5-MM THK)	
M	8	1	**8T-4183**	8	BOLT (M12X1.75X40-MM)	
M	9	1	**8T-4192**	6	BOLT (M12X1.75X25-MM)	
	10	1	**8T-4223**	8	WASHER-HARD (13.5X25.5X3-MM THK)	

QUANTITIES SHOWN ARE THOSE REQUIRED FOR BOTH LH AND RH SIDES
M-METRIC PART

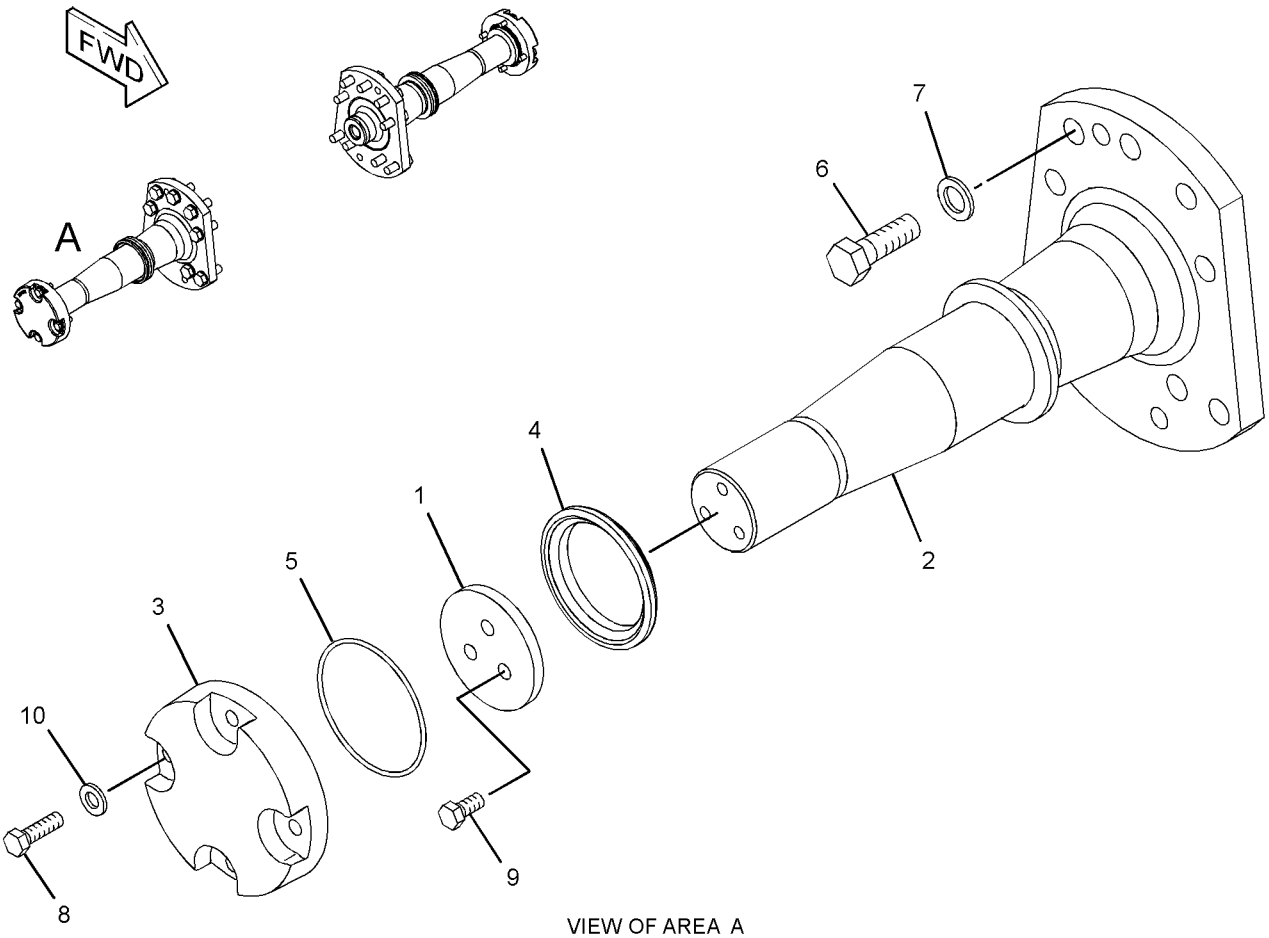

VIEW OF AREA A
(EXPLODED)

GRAPHIC #1 **<END>** g01340110

UNDERCARRIAGE

229-5446 ROLLER GP-TRACK CARRIER—SYSTEMONE

S/N: LBP1-UP

PART OF 240-6229 UNDERCARRIAGE AR

AN ATTACHMENT

SMCS-4154 **i02794834**

NOTE	REF NO	GRAPHIC REF	PART NUMBER	QTY	PART NAME 1 2 3 4 5 6 (PRODUCT LEVEL)	SEE PAGE
					(INDIVIDUAL PARTS ARE NOT SERVICED SEPARATELY)	

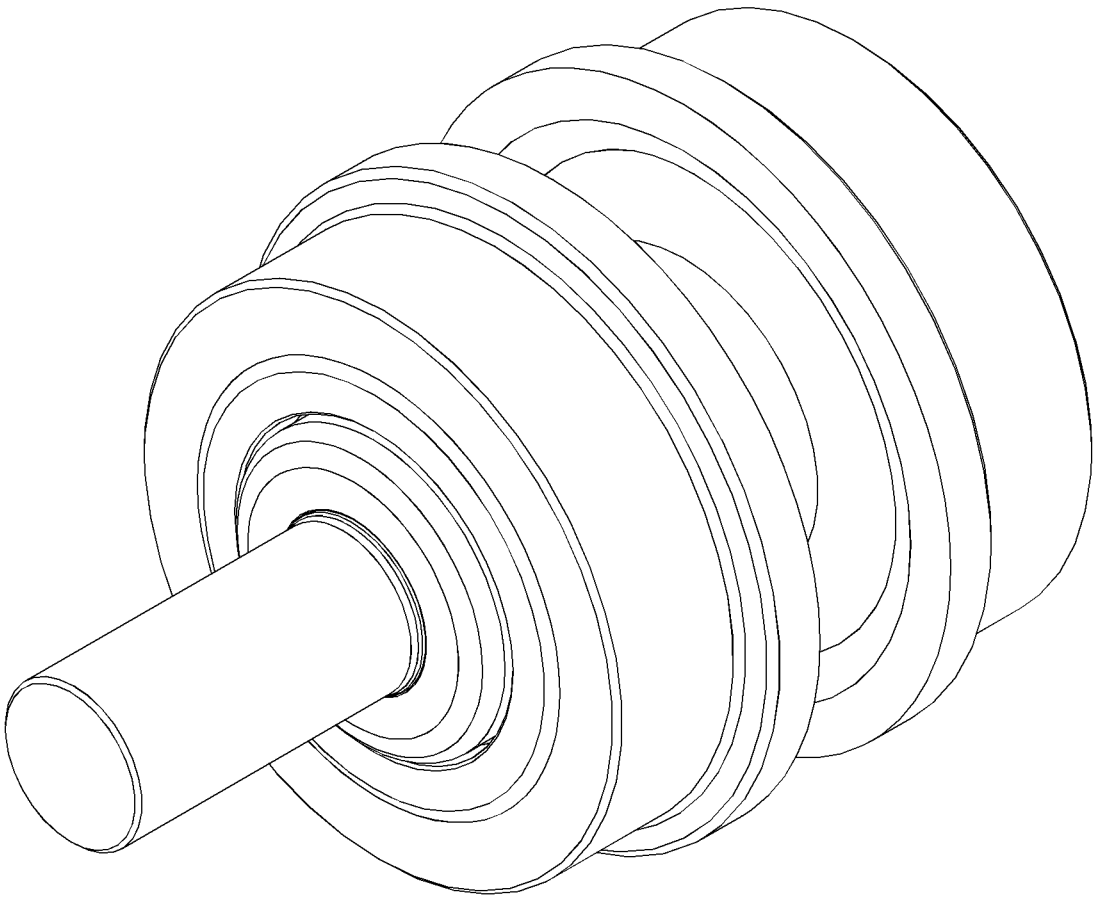

GRAPHIC #1 **<END>** g01395978

UNDERCARRIAGE

240-9557 ROLLER GP-TRACK-SINGLE FLANGE—SYSTEMONE

S/N: LBP1-UP

PART OF 240-6229 UNDERCARRIAGE AR

AN ATTACHMENT

SMCS-4180 **i02794851**

NOTE	REF NO	GRAPHIC REF	PART NUMBER	QTY	PART NAME 1 2 3 4 5 6 (PRODUCT LEVEL)	SEE PAGE
					(INDIVIDUAL PARTS ARE NOT SERVICED SEPARATELY)	

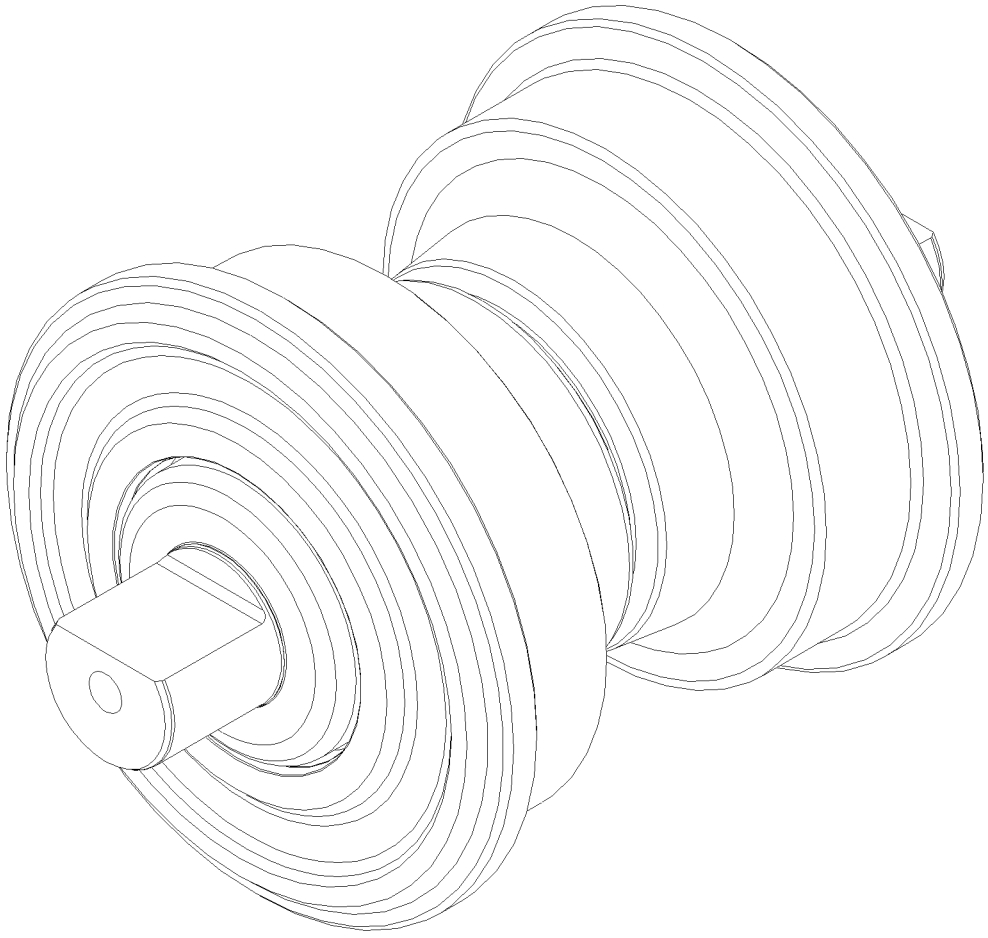

GRAPHIC #1 **<END>** g01395989

UNDERCARRIAGE

259-2479 SCRAPER GP-IDLER

S/N: LBP1-UP
CANNOT BE USED WITH GUARD GP-IDLER
AN ATTACHMENT

SMCS-4152 **i02666057**

NOTE	REF NO	GRAPHIC REF	PART NUMBER	QTY	PART NAME 1 2 3 4 5 6 (PRODUCT LEVEL)	SEE PAGE
	1	1	**280-1417**	4	PLATE	
M	2	1	**8T-4139**	12	BOLT (M12X1.75X30-MM)	
	3	1	**8T-4223**	12	WASHER-HARD (13.5X25.5X3-MM THK)	

M-METRIC PART

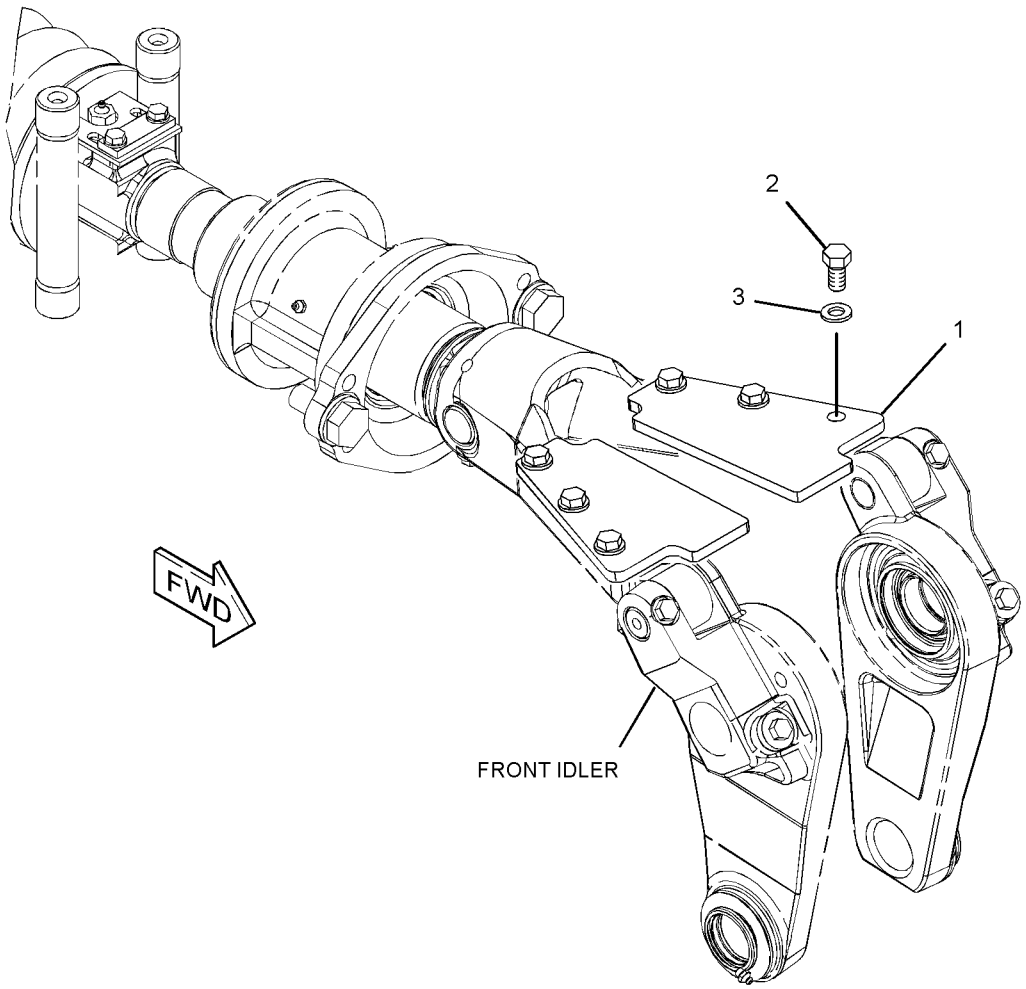

GRAPHIC #1 **<END>** g01345183

308-6189 SCRAPER GP-IDLER—ENHANCED EXTENDED WEAR LIFE

S/N: LBP1-UP

CANNOT BE USED WITH 308-6518—PAGE 356

AN ATTACHMENT

SMCS-4152 **i02706002**

NOTE	REF NO	GRAPHIC REF	PART NUMBER	QTY	PART NAME 1 2 3 4 5 6 (PRODUCT LEVEL)	SEE PAGE
	1	1	**7P-7732**	4	GUARD	
M	2	1	**8T-4139**	12	BOLT (M12X1.75X30-MM)	
	3	1	**8T-4223**	12	WASHER-HARD (13.5X25.5X3-MM THK)	

QUANTITIES SHOWN ARE THOSE REQUIRED FOR BOTH LH AND RH SIDES
M-METRIC PART

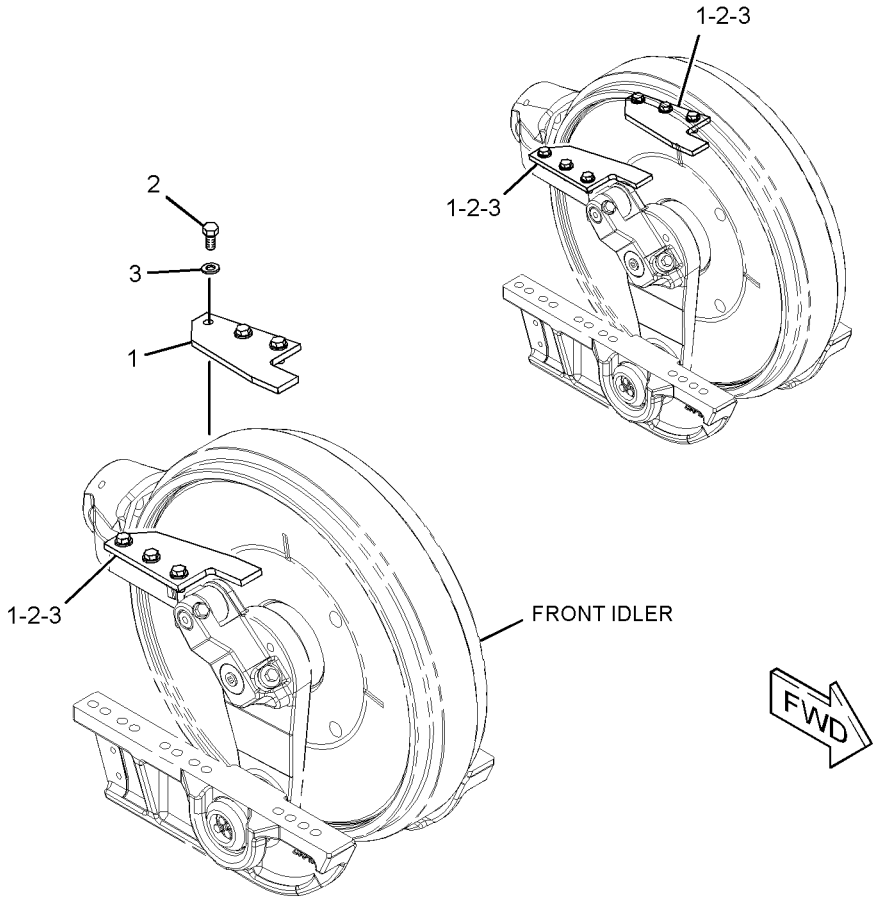

GRAPHIC #1 **<END>** g01357332

UNDERCARRIAGE

307-9859 TRACK ADJUSTER & RECOIL GP

S/N: LBP1-UP
PART OF 240-6229 UNDERCARRIAGE AR
AN ATTACHMENT

SMCS-4157, 4158 **i02926973**

NOTE	REF NO	GRAPHIC REF	PART NUMBER	QTY	PART NAME 1 2 3 4 5 6 (PRODUCT LEVEL)	SEE PAGE
	1	1	**3B-8489**	4	FITTING-GREASE	
	2	1	**3W-7486**	2	BULKHEAD AS	
					(EACH INCLUDES)	
		1	**3J-2988**	2	SEAL-LIP TYPE	
		1	**3W-7514**	1	RETAINER	
		1	**9G-9086**	2	BEARING	
	4	1	**3W-7523**	2	SUPPORT	
	5	1	**7X-0466**	4	BOLT (1-14X2.25-IN)	
	6	1	**231-3667**	2	SPRING	
Y	7	1	**236-7889**	2	ADJUSTMENT GP-HYDRAULIC TRACK	386
	8	1	**278-4653**	4	PIN	
	10	1	**7P-7733**	2	PIN	
	11	1	**4S-7762**	2	SEAL-O-RING	
	12	1	**8T-5361**	4	WASHER-HARD (28X49X5-MM THK)	
M	13	1	**8T-6868**	2	BOLT (M12X1.75X80-MM)	

M-METRIC PART
Y-SEPARATE ILLUSTRATION

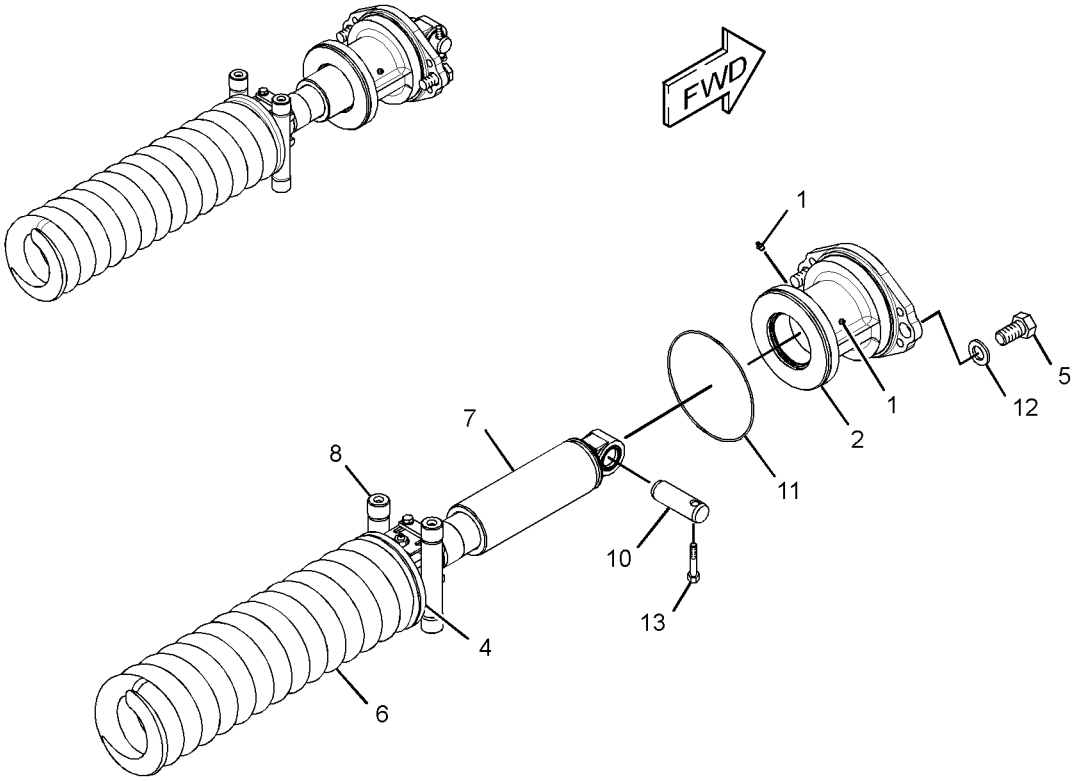

GRAPHIC #1 **<END>** g01456895

UNDERCARRIAGE

244-4535 TRACK GP—2-REQUIRED, SYSTEMONE

S/N: LBP1-UP

380-MM (15-IN) DOUBLE GROUSER SHOE. SEALED, LUBRICATED
FOR USE WITH SYSTEMONE ROLLERS, GUARDS
AN ATTACHMENT

SMCS-4170 **i02322960**

NOTE	PART NUMBER	QTY	PART NAME 1 2 3 4 5 6 (PRODUCT LEVEL)	SEE PAGE
Y	**243-0499**	1	LINK GP-TRACK (SYSTEMONE)	400
M	**6Y-0846**	148	BOLT-TRACK (M20X1.5X63-MM)	
	235-2501	2	LINK-TRACK	
M	**9W-3361**	148	NUT-TRACK (M20X1.5-THD)	
	244-4534	37	SHOE-TRACK	

M-METRIC PART
Y-SEPARATE ILLUSTRATION

<END>

300-3661 TRACK GP—2-REQUIRED, SYSTEMONE

S/N: LBP1-UP

480-MM (18.9-IN) DOUBLE GROUSER SHOE. SEALED, LUBRICATED, CENTER HOLE
FOR USE WITH SYSTEMONE ROLLERS, GUARDS, & GUIDESTRIPS
AN ATTACHMENT

SMCS-4170 **i02664449**

NOTE	PART NUMBER	QTY	PART NAME 1 2 3 4 5 6 (PRODUCT LEVEL)	SEE PAGE
Y	**243-0499**	1	LINK GP-TRACK (SYSTEMONE)	400
M	**6Y-0846**	148	BOLT-TRACK (M20X1.5X63-MM)	
	235-2501	2	LINK-TRACK	
M	**9W-3361**	148	NUT-TRACK (M20X1.5-THD)	
	300-3660	37	SHOE-TRACK	

M-METRIC PART
Y-SEPARATE ILLUSTRATION

<END>

300-3662 TRACK GP—2-REQUIRED, SYSTEMONE

S/N: LBP1-UP

480-MM (18.9-IN) DOUBLE GROUSER SHOE, 37-SECTION. SEALED, LUBRICATED
FOR USE WITH SYSTEMONE ROLLERS, GUARDS & GUIDESTRIPS
AN ATTACHMENT

SMCS-4170 **i02664605**

NOTE	PART NUMBER	QTY	PART NAME 1 2 3 4 5 6 (PRODUCT LEVEL)	SEE PAGE
Y	**243-0499**	1	LINK GP-TRACK (SYSTEMONE)	400
M	**6Y-0846**	148	BOLT-TRACK (M20X1.5X63-MM)	
	235-2501	2	LINK-TRACK	
M	**9W-3361**	148	NUT-TRACK (M20X1.5-THD)	
	300-3658	37	SHOE-TRACK	

M-METRIC PART
Y-SEPARATE ILLUSTRATION

<END>

240-6229 UNDERCARRIAGE AR

S/N: LBP1-UP
CANNOT BE USED WITH WIDE GAUGE EQUIPMENT
AN ATTACHMENT

SMCS-4150 **i02962598**

NOTE	REF NO	GRAPHIC REF	PART NUMBER	QTY	PART NAME 1 2 3 4 5 6 (PRODUCT LEVEL)	SEE PAGE
Y	1	1	*3W-7561*	1	BAR GP-EQUALIZER	387
Y	2	1	*223-9102*	12	CAP GP-TRACK ROLLER (SYSTEMONE)	389
Y	3	1	**229-5446**	2	ROLLER GP-TRACK CARRIER (SYSTEMONE)	408
Y	4	1	**240-9557**	12	ROLLER GP-TRACK-SINGLE FLANGE (SYSTEMONE)	409
Y	5	1	*252-6115*	1	GUARD GP-TRACK GUIDE	392
Y	6	1	*252-6116*	1	FRAME GP-TRACK ROLLER	390
Y	7	1	*272-9697*	1	LINES GP-BRAKE	416
Y	8	1	*279-8885*	1	PIVOT BAR GP	407
Y	9	1	*307-9859*	1	TRACK ADJUSTER & RECOIL GP	412

Y-SEPARATE ILLUSTRATION

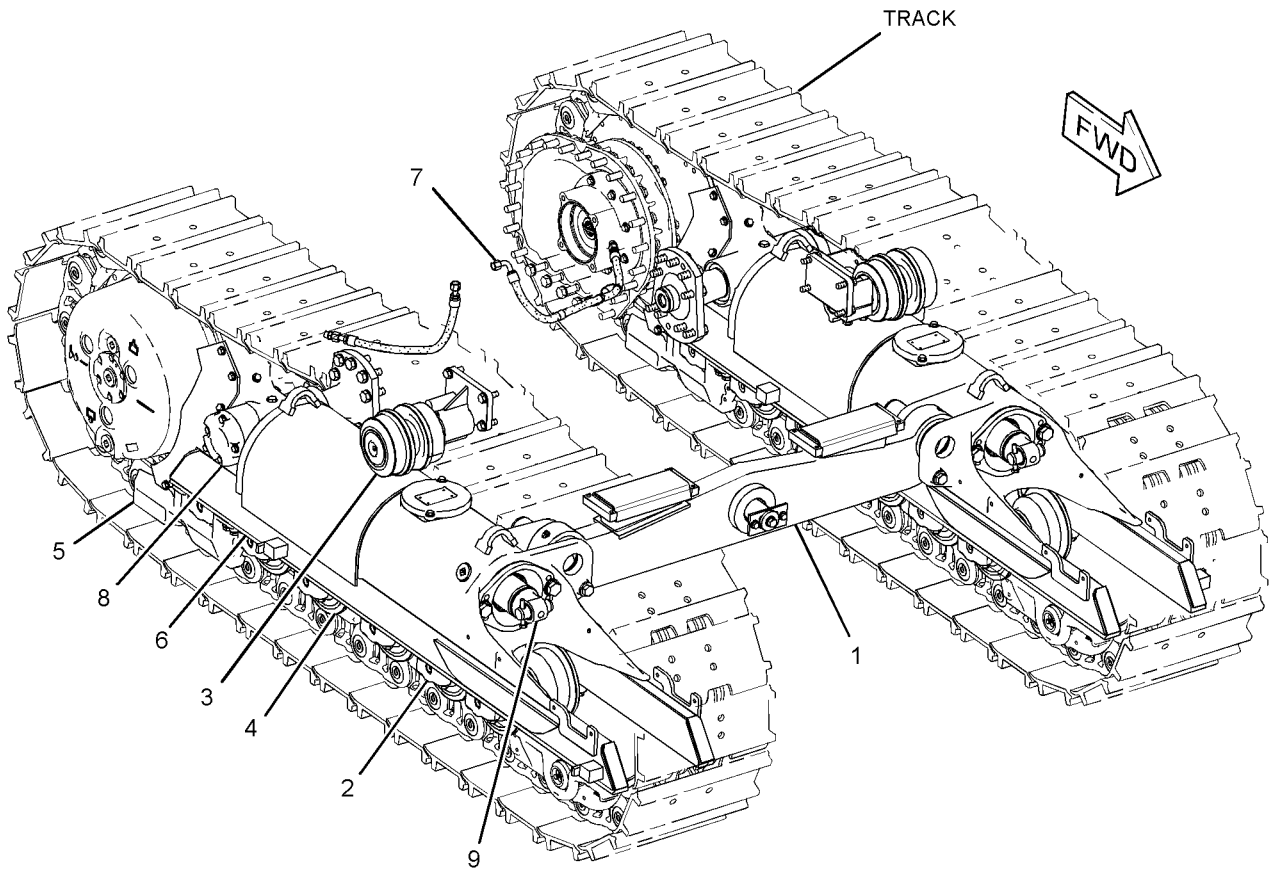

GRAPHIC #1 **<END>** g01513876

STEERING AND BRAKING SYSTEM

321-3446 KIT-HYDRAULIC CONTROL–RETROFIT

S/N: LBP1-UP

AN ATTACHMENT

SMCS-4005, 4120, 4343 **i03096021**

NOTE	REF NO	GRAPHIC REF	PART NUMBER	QTY	PART NAME 1 2 3 4 5 6 (PRODUCT LEVEL)	SEE PAGE
Y	1	1	**303-4017**	1	CONTROL GP-HYDRAULIC (HYDROSTATIC DRIVE, STEERING)	581
Y	2	1	*323-8127*	1	WIRING GP-CAB (HYDROSTATIC DRIVE, STEERING)	234

Y-SEPARATE ILLUSTRATION

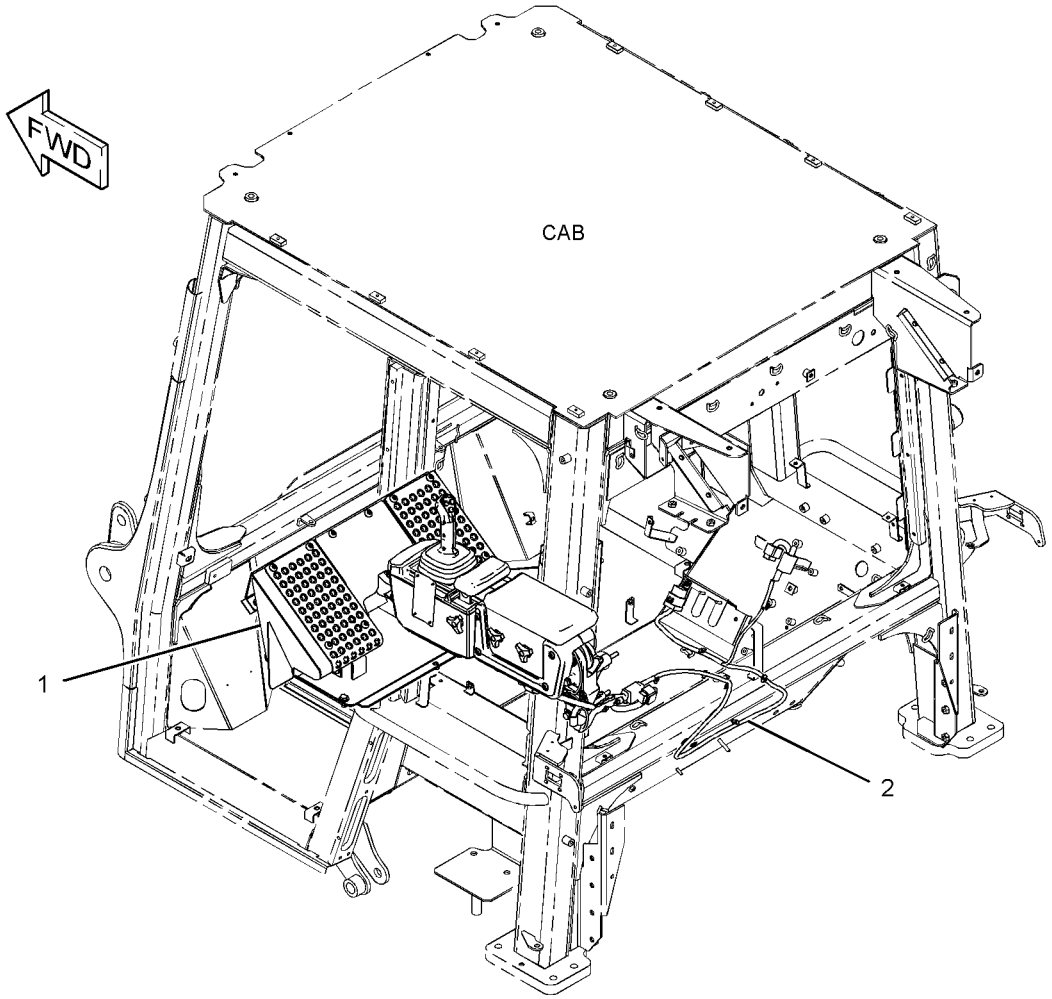

GRAPHIC #1 **<END>** g01536737

272-9697 LINES GP-BRAKE

S/N: LBP1-UP
PART OF 240-6229 UNDERCARRIAGE AR
AN ATTACHMENT

SMCS-4257 **i02662385**

NOTE	REF NO	GRAPHIC REF	PART NUMBER	QTY	PART NAME 1 2 3 4 5 6 (PRODUCT LEVEL)	SEE PAGE
	1	1	**177-2215**	2	STRAP-DUAL CLAMP	
I	2	1	**242-0180**	1	HOSE AS	
I	3	1	**301-4825**	1	HOSE AS	
	4	1	*148-8340*	2	CONNECTOR AS	
					(EACH INCLUDES)	
		1	**6V-8639**	1	CONNECTOR	
		1	**3K-0360**	1	SEAL-O-RING	
		1	**6V-8398**	1	SEAL-O-RING	
	5	1	**1S-0994**	1	CLIP	

I-REFER TO HYDRAULIC INFORMATION SYSTEM

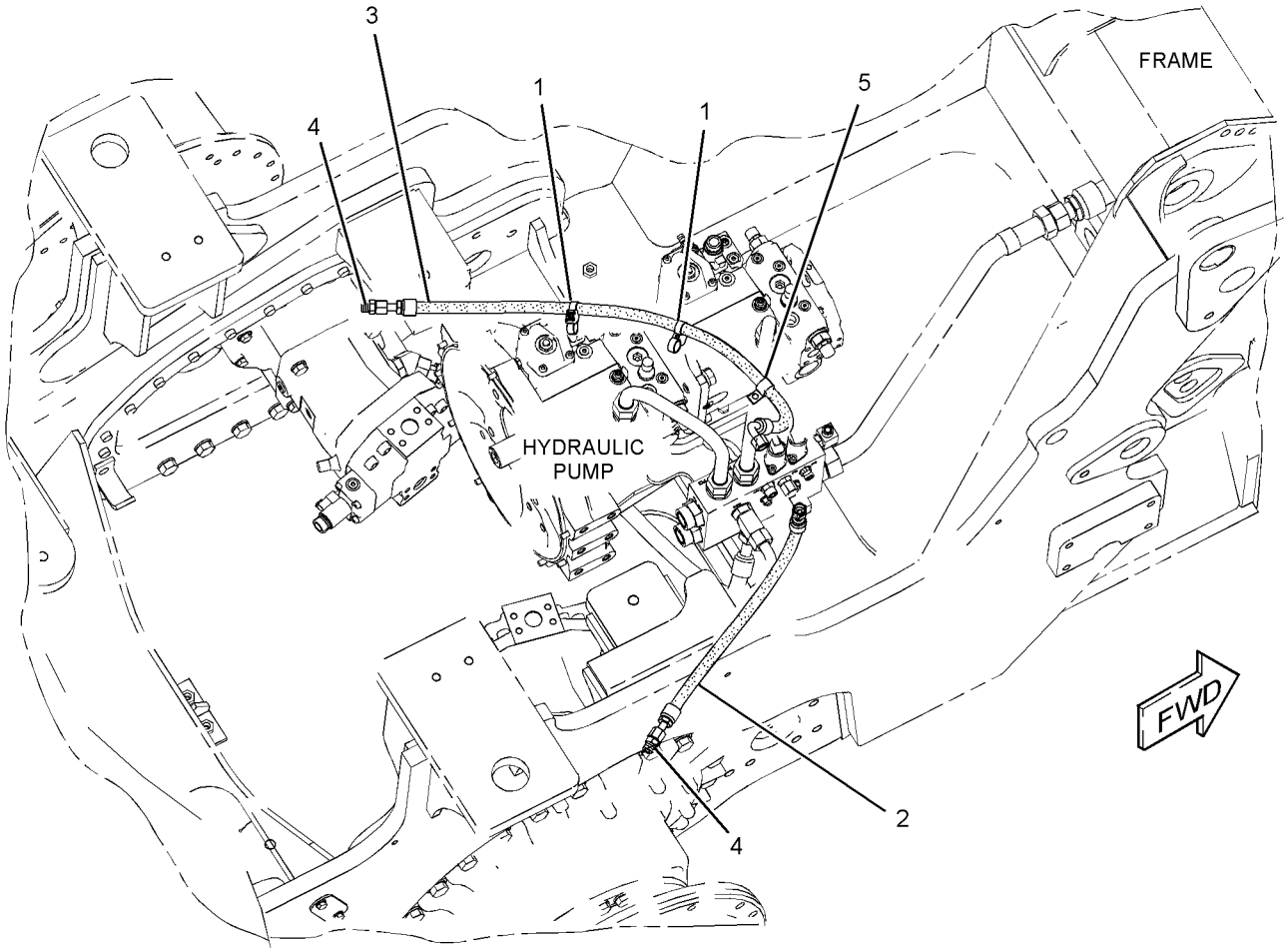

GRAPHIC #1 **<END>** g01342247

267-6709 MANIFOLD & VALVE GP–RETURN MANIFOLD–HYDROSTATIC DRIVE

S/N: LBP1-UP

PART OF 281-1680 VALVE & MTG GP-CONTROL

SMCS-3206, 5479 **i03491680**

NOTE	REF NO	GRAPHIC REF	PART NUMBER	QTY	PART NAME 1 2 3 4 5 6 (PRODUCT LEVEL)	SEE PAGE
	1	1	**105-4593**	2	POPPET	
	2	1	**212-6603**	2	PLUG AS	
					(EACH INCLUDES)	
		1	**6V-8978**	1	SEAL-O-RING	
	3	1	**212-6604**	2	SPRING	
	4	1	**245-1181**	2	FLANGE	
Y	5	1	**252-2237**	1	VALVE GP-SOLENOID (BRAKE RELEASE)	418
Y	5A	1	**252-2237**	1	VALVE GP-SOLENOID (HYDROSTATIC PRESSURE CUTOFF)	418
	6	1	**267-6708**	1	MANIFOLD	
M	7	1	**8T-1158**	2	BOLT-SOCKET HEAD (M8X1.25X20-MM)	

M-METRIC PART
Y-SEPARATE ILLUSTRATION

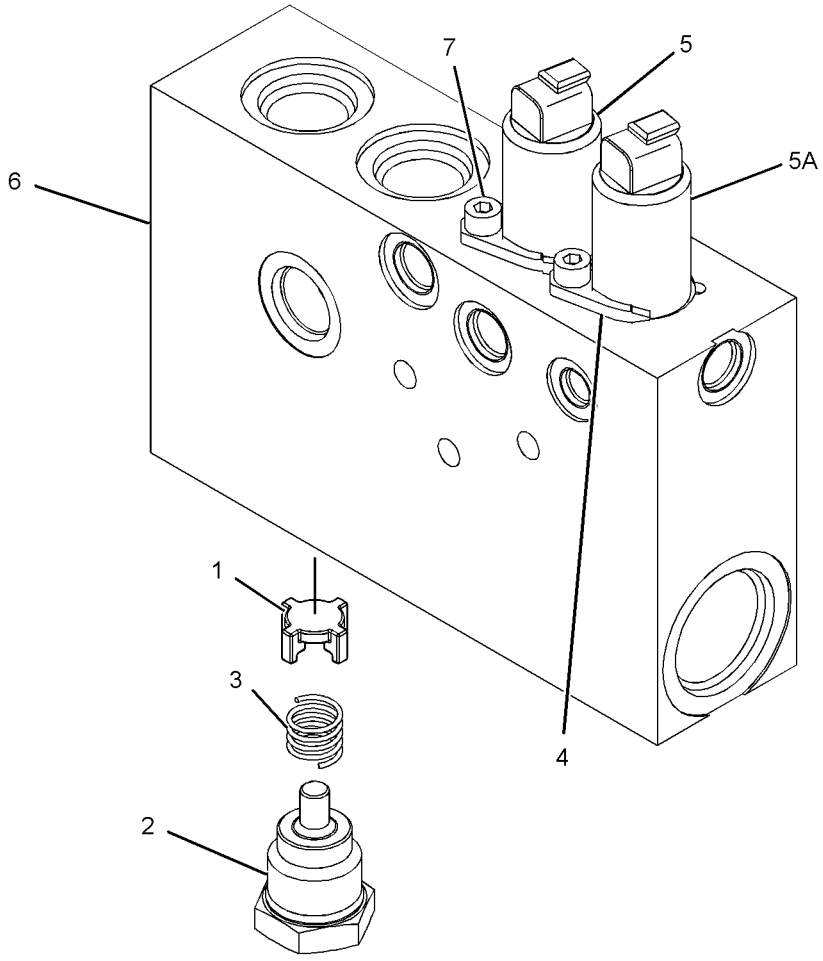

GRAPHIC #1 **<END>** g01293554

252-2237 VALVE GP-SOLENOID

S/N: LBP1-UP
24-VOLT
PART OF 267-6709 MANIFOLD & VALVE GP

SMCS-5479 **i03021085**

NOTE	REF NO	GRAPHIC REF	PART NUMBER	QTY	PART NAME 1 2 3 4 5 6 (PRODUCT LEVEL)	SEE PAGE
	1	1	**245-1181**	1	FLANGE	
					AVAILABLE REPAIR KIT(S):	
			245-1912	1	KIT-SEAL (SOLENOID VALVE)	
					(INCLUDES SEALS)	

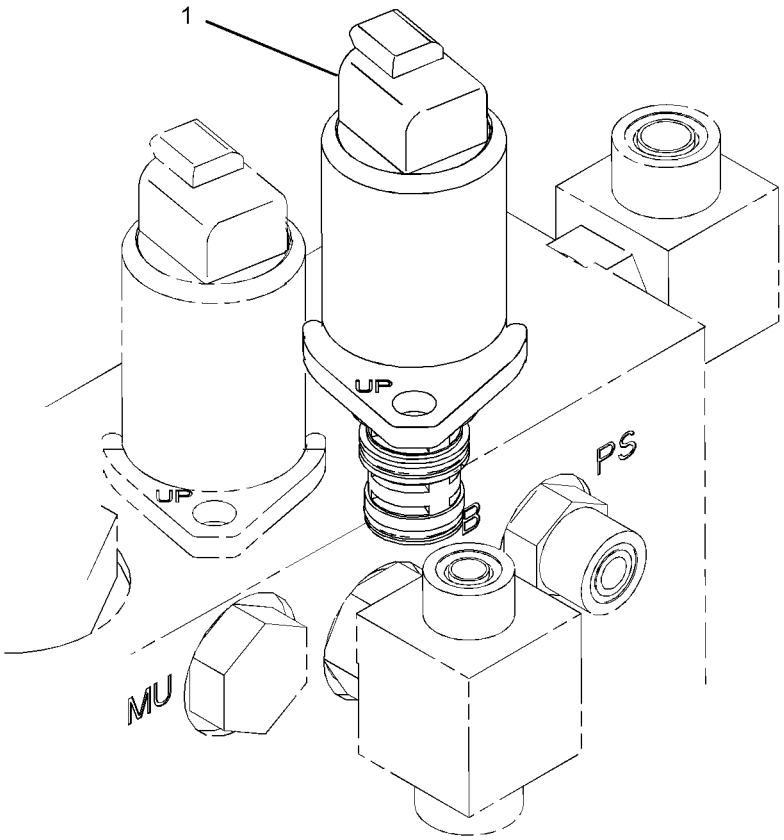

GRAPHIC #1 **<END>** g01199604

160-2669 ACCUMULATOR GP-HYDRAULIC–CHARGED

S/N: LBP1-UP

PART OF 274-6619 LINES GP-PUMP

FIELD REPLACEMENT ORDER 180-9419–PAGE 420

SMCS-5077 **i01915764**

NOTE	PART NUMBER	QTY	PART NAME 1 2 3 4 5 6 (PRODUCT LEVEL)	SEE PAGE
			(NO SERVICED PARTS)	

<END>

180-9419 ACCUMULATOR GP-HYDRAULIC—UNCHARGED

S/N: LBP1-UP

FIELD REPLACEMENT FOR 160-2669—PAGE 419

SMCS-5077 **i01915792**

NOTE	REF NO	GRAPHIC REF	PART NUMBER	QTY	PART NAME 1 2 3 4 5 6 (PRODUCT LEVEL)	SEE PAGE
	1	1	**159-4700**	1	FILM-WARNING (HIGH PRESSURE CYLINDER)	
	2	1	**161-6879**	1	CAP (ACCUMULATOR)	
	3	1	**161-6880**	1	CORE	

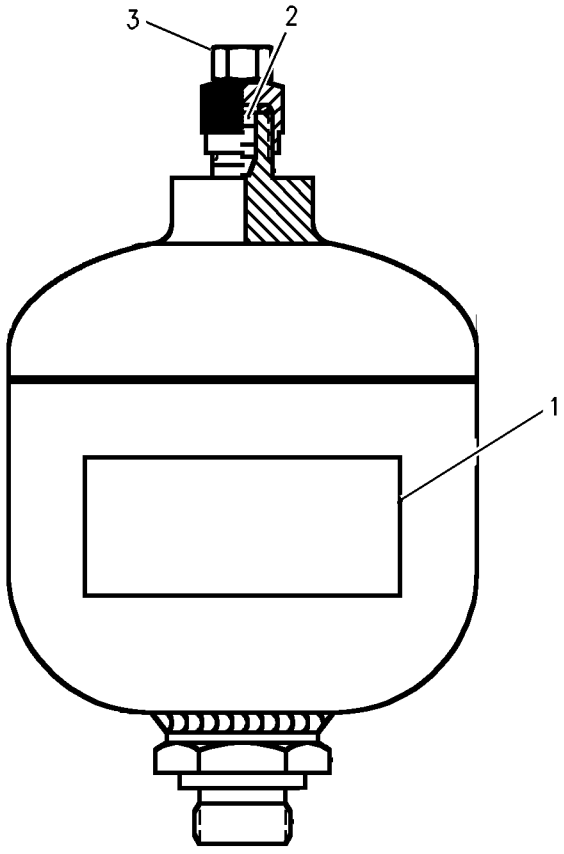

GRAPHIC #1 **<END>** g00999476

302-8157 ACTUATOR GP-HYDRAULIC

S/N: LBP700-UP

PART OF 320-3625, 320-3626, 320-3627, 320-3628 VALVE GP-CONTROL

AN ATTACHMENT

SMCS-5078 **i03587401**

NOTE	REF NO	GRAPHIC REF	PART NUMBER	QTY	PART NAME 1 2 3 4 5 6 (PRODUCT LEVEL)	SEE PAGE
Y	1	1	**302-8149**	1	VALVE GP-SOLENOID	507
Y	1A	1	**302-8149**	1	VALVE GP-SOLENOID	507
	2	1	**5F-9144**	3	SEAL-O-RING	
	3	1	**5D-6543**	1	SEAL-O-RING	
	4	1	**211-5255**	4	BOLT-SOCKET HEAD (M5X0.8X55-MM)	
M	5	1	**8T-5433**	3	BOLT-SOCKET HEAD (M3X0.5X1.5-MM)	

M-METRIC PART
Y-SEPARATE ILLUSTRATION

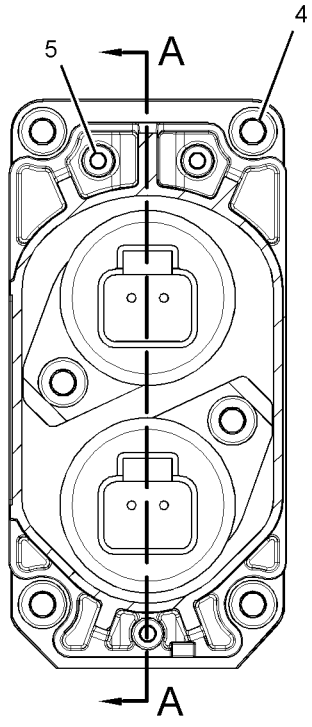

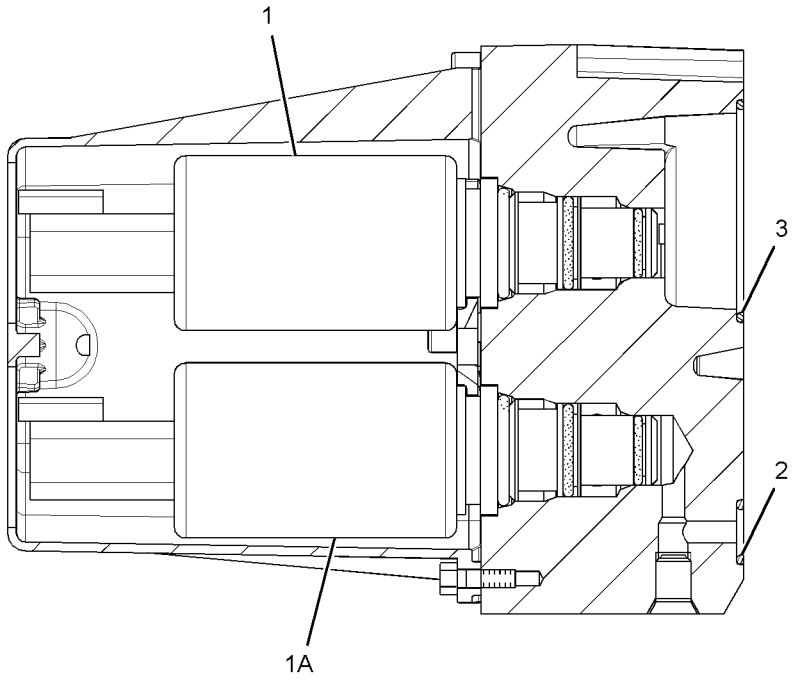

SECTION A-A

GRAPHIC #1 **<END>** g01561635

HYDRAULIC SYSTEM

257-7612 CONTROL AR-HYDRAULIC—HYDROSTATIC DRIVE, BRAKE

S/N: LBP1-UP

AN ATTACHMENT

SMCS-5050, 5063 **i02665627**

NOTE	PART NUMBER	QTY	PART NAME 1 2 3 4 5 6 (PRODUCT LEVEL)	SEE PAGE
Y	**268-9350**	1	CONTROL GP-DIRECTION & SPEED (HYDROSTATIC DRIVE)	575
Y	*257-6175*	1	CONTROL GP-PEDAL (STEERING, BRAKE)	589

Y-SEPARATE ILLUSTRATION

<END>

292-9044 CYLINDER GP-BUCKET—MULTIPURPOSE

S/N: LBP1-UP
101.6-MM(4.0-IN)BORE X 270-MM(10.6-IN)STROKE
PART OF 283-7888 BUCKET GP-MULTIPURPOSE
AN ATTACHMENT

SMCS-5457 **i02741503**

NOTE	REF NO	GRAPHIC REF	PART NUMBER	QTY	PART NAME 1 2 3 4 5 6 (PRODUCT LEVEL)	SEE PAGE
	1	1	**4T-9384**	1	ROD AS	
	1A	1	**7J-9688**	1	BEARING-SLEEVE	
	2	1	**4T-9386**	1	CYLINDER AS	
	2A	1	**4B-4626**	4	LUG (3/8-16-THD)	
	2B	1	**4T-9862**	1	CAP AS	
	2C	1	**8J-5667**	1	BEARING-SLEEVE	
	2D	1	**8J-8489**	2	BOSS	
	2E	1	**9T-7045**	2	BOSS	
	3	1	**7J-6461**	1	CROWN	
	4	1	**7J-6469**	1	PISTON	
	5	1	**9T-9258**	1	HEAD AS	
	6	1	**167-2195**	1	SEAL AS-BUFFER	
	7	1	**167-2304**	1	SEAL-U-CUP	
	8	1	**1H-8128**	1	SEAL-O-RING	
	9	1	**229-9382**	1	SEAL-WIPER	
	10	1	**2K-6830**	1	RING-BACKUP	
	11	1	**4T-5613**	1	RING-WEAR	
	12	1	**5B-9385**	1	BOLT (1-14X2.5-IN)	
	13	1	**8C-9160**	1	SEAL AS	
	14	1	**5P-8250**	1	WASHER (28X49X5-MM THK)	
	15	1	**6J-2797**	1	RING-WEAR	

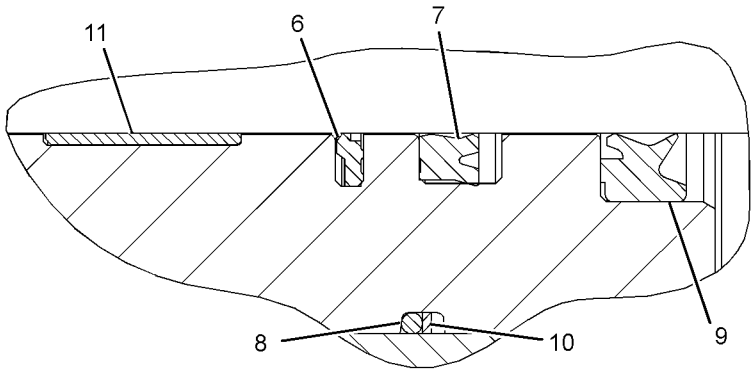

VIEW OF AREA A

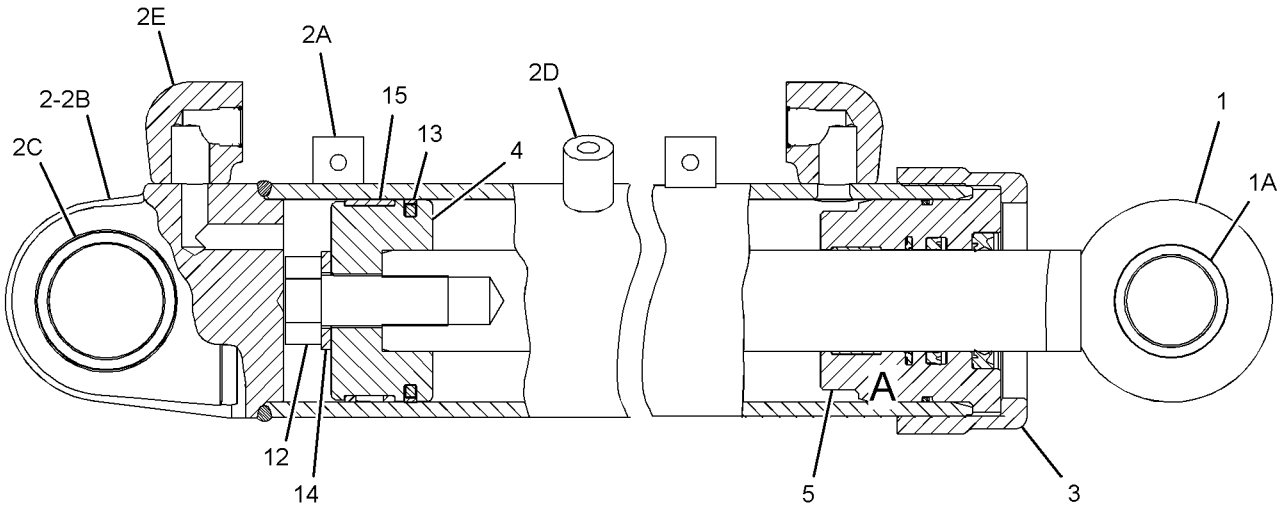

GRAPHIC #1 **<END>** g01339836

294-5575 CYLINDER GP-CAB TILT

S/N: LBP1-UP
40-MM (1.57-IN) BORE X 372-MM (14.65-IN) STROKE
PART OF 279-8104 TILT GP-PLATFORM
AN ATTACHMENT

SMCS-5104 **i02662866**

NOTE	PART NUMBER	QTY	PART NAME 1 2 3 4 5 6 (PRODUCT LEVEL)	SEE PAGE
			NO BREAKDOWN OF SERVICEABLE PARTS AVAILABLE AT TIME OF PUBLICATION	

<END>

248-8788 CYLINDER GP-LIFT–BUCKET

S/N: LBP1-UP
115-MM (4.5-IN) BORE X 711-MM (28-IN) STROKE
PART OF 240-6228 HYDRAULIC AR

SMCS-5102 **i02811625**

NOTE	REF NO	GRAPHIC REF	PART NUMBER	QTY	PART NAME 1 2 3 4 5 6 (PRODUCT LEVEL)	SEE PAGE
	1	1	**248-8789**	1	CYLINDER AS	
	1A	1	**281-1679**	1	BEARING	
	2	1	**248-8790**	1	ROD AS	
	3	1	**309-6527**	1	PISTON	
	4	1	**266-9976**	1	HEAD	
	5	1	**146-0742**	1	RING-WEAR	
	6	1	**9X-3589**	1	SEAL AS	
	7	1	**146-0744**	1	RING-WEAR	
	8	1	**167-2204**	1	SEAL AS-BUFFER	
	9	1	**167-2314**	1	SEAL-U-CUP	
	10	1	**175-7902**	1	SEAL-O-RING	
	11	1	**1K-7095**	1	RING-BACKUP	
	12	1	**227-1148**	1	SEAL-WIPER	
	13	1	**2H-3928**	1	SEAL-O-RING	
	14	1	**5J-5731**	1	LOCKNUT (1-3/4-12-THD)	

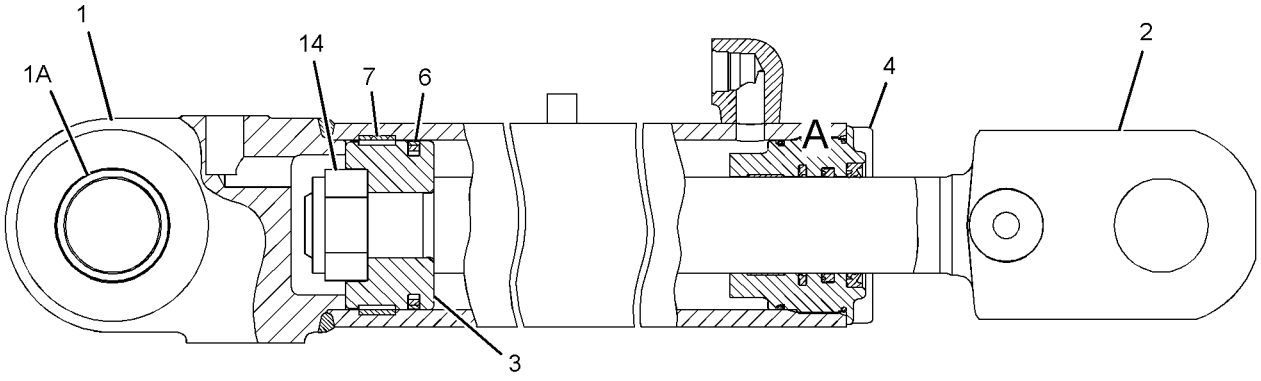

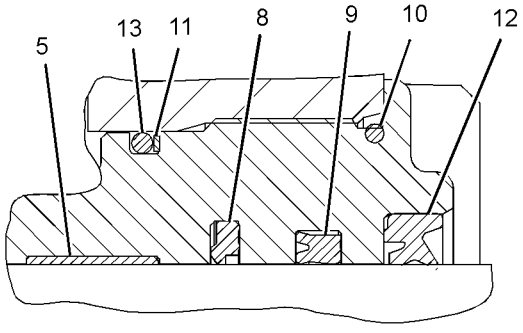

VIEW OF AREA A

GRAPHIC #1 **<END>** g01336275

HYDRAULIC SYSTEM

252-6337 CYLINDER GP-LIFT–BUCKET

S/N: LBP1-UP
115-MM (4.5-IN) BORE X 711-MM (28-IN) STROKE
PART OF 240-6228 HYDRAULIC AR

SMCS-5102 **i02962893**

NOTE	REF NO	GRAPHIC REF	PART NUMBER	QTY	PART NAME 1 2 3 4 5 6 (PRODUCT LEVEL)	SEE PAGE
E	1	1	**9X-1386**		SLEEVE (7-CM EACH)	
	2	1	**102-2244**	1	GROMMET	
	3	1	**212-0907**	1	PLATE-CONNECTOR	
	4	1	**217-3312**	1	MAGNET	
	5	1	**246-9113**	1	RETAINER	
	6	1	**252-6341**	1	CYLINDER AS	
	6A	1	**281-1679**	1	BEARING	
		1	**095-0879**	1	PIN-SPRING	
	7	1	**252-6344**	1	ROD AS	
	8	1	**309-6527**	1	PISTON	
	9	1	**252-6363**	1	SENSOR GP-POSITION (LIFT CYLINDER)	
		1	**9X-3401**	3	PIN-CONNECTOR (16-GA TO 18-GA)	
	10	1	**266-9976**	1	HEAD	
	11	1	**276-1816**	1	GUARD	
	12	1	**102-8804**	1	KIT-RECEPTACLE (4-PIN)	
					(INCLUDES RECEPTACLE AS & WEDGE)	
	13	1	**146-0742**	1	RING-WEAR	
	14	1	**9X-3589**	1	SEAL AS	
	15	1	**146-0744**	1	RING-WEAR	
	16	1	**167-2204**	1	SEAL AS-BUFFER	
	17	1	**167-2314**	1	SEAL-U-CUP	
	18	1	**175-7902**	1	SEAL-O-RING	
	19	1	**188-2199**	1	SEAL-O-RING	
	20	1	**1K-7095**	1	RING-BACKUP	
	21	1	**215-1942**	1	RING-BACKUP	
	22	1	**227-1148**	1	SEAL-WIPER	
	23	1	**2H-3928**	1	SEAL-O-RING	
	24	1	**3V-2431**	2	WASHER (10.2X16X2-MM THK)	
	25	1	**5J-5731**	1	LOCKNUT (1-3/4-12-THD)	
M	26	1	**6V-8223**	1	SETSCREW-SOCKET (M10X1.5X16-MM)	
	27	1	**8T-8737**	1	PLUG-SEAL	
M	28	1	**105-3478**	2	BOLT-SOCKET HEAD (M10X1.5X35-MM)	

E-ORDER BY THE CENTIMETER
M-METRIC PART

252-6337 CYLINDER GP-LIFT *(contd.)* i02962893

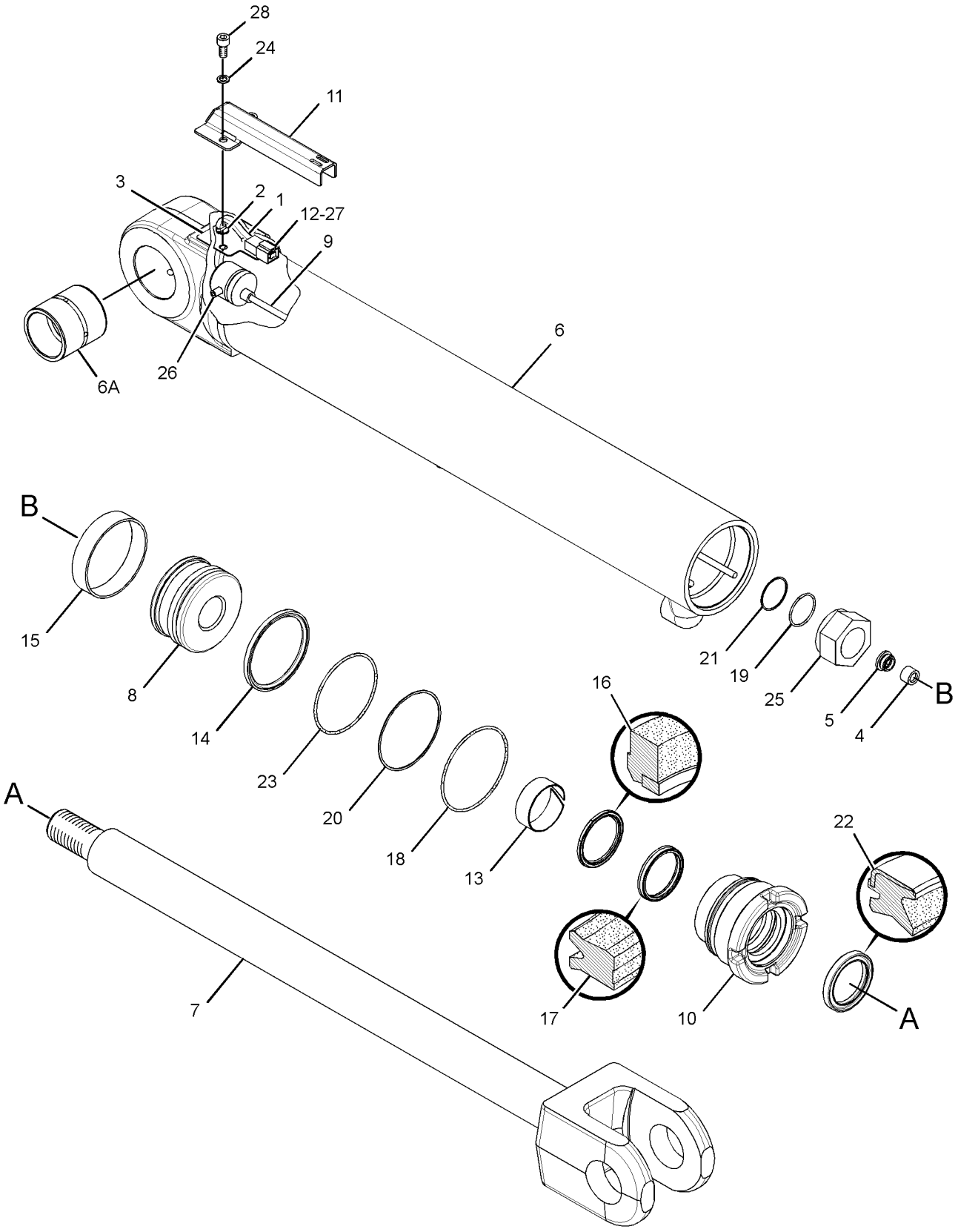

GRAPHIC #1 **<END>** g01385621

286-0814 CYLINDER GP-RIPPER

S/N: 9JW1-UP
101.6-MM (4.0-IN) BORE X 270-MM (10.6-IN) STROKE
PART OF 256-7612 RIPPER AR
AN ATTACHMENT

SMCS-5352, 5356 **i02741441**

NOTE	REF NO	GRAPHIC REF	PART NUMBER	QTY	PART NAME 1 2 3 4 5 6 (PRODUCT LEVEL)	SEE PAGE
	1	1	**3G-1292**	1	CYLINDER AS	
	2	1	**3G-1294**	1	ROD AS	
	3	1	**7J-6461**	1	CROWN	
	4	1	**7J-6469**	1	PISTON	
	5	1	**9T-9258**	1	HEAD AS	
		1	**229-9382**	1	SEAL-WIPER	
	6	1	**167-2195**	1	SEAL AS-BUFFER	
	7	1	**167-2304**	1	SEAL-U-CUP	
	8	1	**1H-8128**	1	SEAL-O-RING	
	9	1	**229-9382**	1	SEAL-WIPER	
	10	1	**2K-6830**	1	RING-BACKUP	
	11	1	**2M-9780**	1	SEAL-O-RING	
	12	1	**4T-5613**	1	RING-WEAR	
	13	1	**8C-9160**	1	SEAL AS	
	14	1	**6J-2797**	1	RING-WEAR	
	15	1	**7J-5639**	1	BOLT-LOCKING (1-14X2.5-IN)	
	16	1	**8J-7415**	1	WASHER-HARD (28X51X4.5-MM THK)	
	17	1	**9S-4190**	1	PLUG-O-RING	

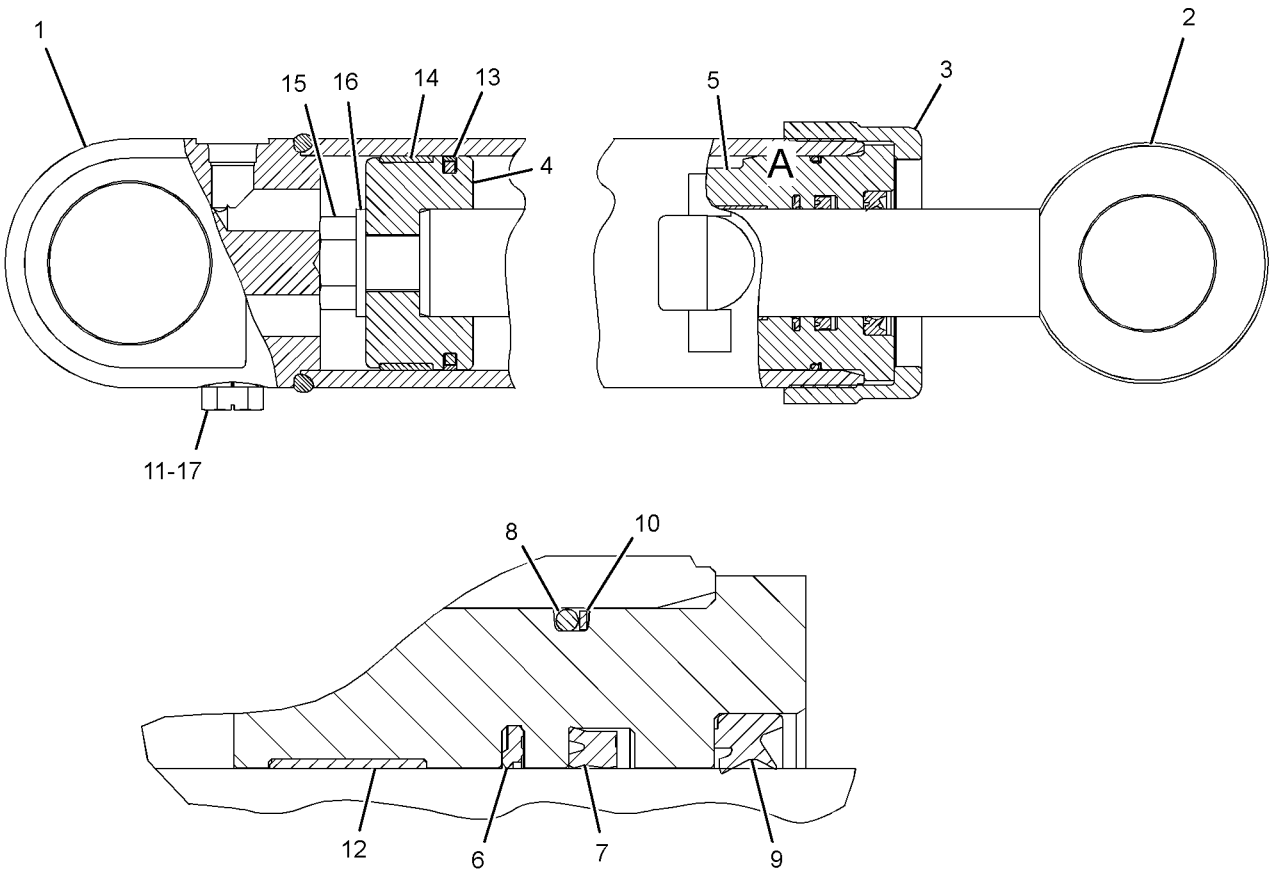

VIEW OF AREA A

GRAPHIC #1 **<END>** g01344092

269-6483 CYLINDER GP-TILT–BUCKET

S/N: LBP1-UP
140-MM (5.5-IN) BORE X 478-MM (18.8-IN) STROKE
PART OF 240-6228 HYDRAULIC AR

SMCS-5104 **i02975800**

NOTE	REF NO	GRAPHIC REF	PART NUMBER	QTY	PART NAME 1 2 3 4 5 6 (PRODUCT LEVEL)	SEE PAGE
	1	1	**102-8804**	1	KIT-RECEPTACLE (4-PIN)	
					(INCLUDES RECEPTACLE AS & WEDGE)	
	2	1	**102-2244**	1	GROMMET	
	3	1	**167-2210**	1	SEAL AS-BUFFER	
	4	1	**212-0907**	1	PLATE-CONNECTOR	
	5	1	**214-1639**	1	MAGNET	
	6	1	**233-0622**	1	SEAL-WIPER	
	7	1	**234-2503**	1	WASHER-SPECIAL	
	8	1	**243-3177**	1	RETAINER	
	9	1	**252-7813**	1	SENSOR GP-POSITION (TILT)	
		1	**9X-3401**	3	PIN-CONNECTOR (16-GA TO 18-GA)	
	10	1	**269-6476**	1	PISTON	
	11	1	**269-6482**	1	HEAD	
	12	1	**269-6484**	1	CYLINDER AS	
	12A	1	**281-1678**	1	BEARING	
	13	1	**269-6488**	1	ROD AS	
	13A	1	**281-1678**	1	BEARING	
	14	1	**276-1816**	1	GUARD	
	15	1	**167-2322**	1	SEAL-U-CUP	
	16	1	**188-2199**	1	SEAL-O-RING	
	17	1	**215-1942**	1	RING-BACKUP	
	18	1	**265-9683**	1	RING-WEAR	
	20	1	**3V-2431**	2	WASHER (10.2X16X2-MM THK)	
	21	1	**4J-4606**	1	RING-WEAR	
	22	1	**5J-3488**	1	LOCKNUT (2-1/4-12-THD)	
M	23	1	**6V-8223**	1	SETSCREW-SOCKET (M10X1.5X16-MM)	
	24	1	**6V-8237**	4	WASHER (26X44X4-MM THK)	
	25	1	**8J-1688**	1	SEAL-O-RING	
	26	1	**8J-1689**	1	RING-BACKUP	
M	27	1	**8T-0666**	4	BOLT (M24X3X90-MM)	
	28	1	**8T-8737**	1	PLUG-SEAL	
M	29	1	**105-3478**	2	BOLT-SOCKET HEAD (M10X1.5X35-MM)	
	30	1	**9X-3598**	1	SEAL AS	
E	31	1	**9X-1386**		SLEEVE (15-CM)	

E-ORDER BY THE CENTIMETER
M-METRIC PART

269-6483 CYLINDER GP-TILT *(contd.)* **i02975800**

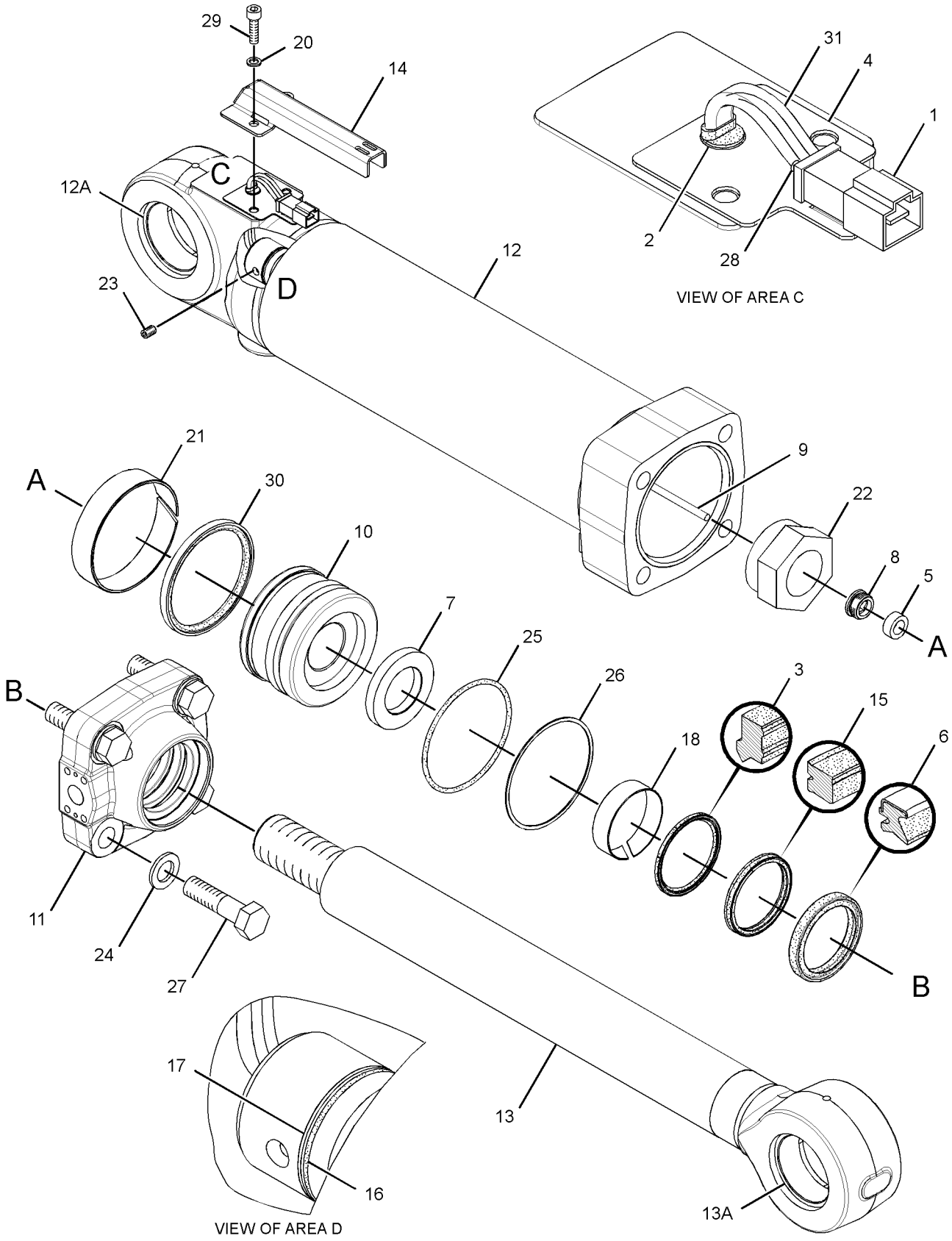

GRAPHIC #1 **<END>** g01667794

HYDRAULIC SYSTEM

240-6228 HYDRAULIC AR

S/N: LBP1-UP

PART OF 240-6223 GENERAL AR

SMCS-5051, 5057, 5073, 5115 **i02656303**

NOTE	PART NUMBER	QTY	PART NAME 1 2 3 4 5 6 (PRODUCT LEVEL)	SEE PAGE
Y	**248-8788**	1	CYLINDER GP-LIFT	426
Y	**252-6337**	1	CYLINDER GP-LIFT	427
Y	**269-6483**	1	CYLINDER GP-TILT	430
Y	*275-6306*	1	LINES GP-LIFT CYLINDER	443
Y	*274-6619*	1	LINES GP-PUMP	446
Y	*242-8217*	1	LINES GP-TILT CYLINDER	456
Y	*253-4895*	1	MOUNTING GP-VALVE	467
Y	*242-8965*	1	MOUNTING GP-HYDRAULIC TANK	464
Y	**280-2053**	1	TANK GP-HYDRAULIC	474
Y-SEPARATE ILLUSTRATION				

<END>

252-0240 HYDRAULIC AR-2 VALVE

S/N: LBP1-UP

AN ATTACHMENT

SMCS-5051 **i03176923**

NOTE	PART NUMBER	QTY	PART NAME 1 2 3 4 5 6 (PRODUCT LEVEL)	SEE PAGE
Y	*290-1967*	1	PLATE GP-FRAME	375
Y	**247-1753**	1	VALVE GP-BANK 2 (BUCKET LIFT, TILT)	476
			—OR—	
Y	**309-1567**	1	VALVE GP-BANK 2 (BUCKET LIFT, TILT)	477
	310-3217	1	BAFFLE	
			S/N: LBP1-699	
	323-1602	1	BAFFLE	
			S/N: LBP700-UP	
	299-4697	1	FILM-IDENTIFICATION (BUCKET CYLINDER)	
			(ON SIDE OF IMPLEMENT VALVE)	
Y-SEPARATE ILLUSTRATION				

<END>

HYDRAULIC SYSTEM

252-0241 HYDRAULIC AR-3 VALVE

S/N: LBP1-UP
FOR USE WITH FRONT HYDRAULIC LINES
AN ATTACHMENT

SMCS-5051 **i03587425**

NOTE	PART NUMBER	QTY	PART NAME 1 2 3 4 5 6 (PRODUCT LEVEL)	SEE PAGE
Y	*294-4418*	1	CONTROL & MTG GP-ELECTRONIC (BUCKET, RIPPER)	175
			S/N: LBP1-699	
Y	*308-0606*	1	CONTROL & MTG GP-ELECTRONIC (BUCKET, RIPPER)	176
			S/N: LBP700-UP	
Y	*282-9344*	1	GUARD GP-FRONT	352
Y	*282-2301*	1	LINES GP-FRONT	439
Y	*290-1967*	1	PLATE GP-FRAME	375
Y	**247-1749**	1	VALVE GP-BANK 3 (BUCKET CONTROL, RIPPER)	478
			—OR—	
Y	**309-1568**	1	VALVE GP-BANK 3 (BUCKET CONTROL, RIPPER)	481
	310-3217	1	BAFFLE	
			S/N: LBP1-699	
	323-1603	1	BAFFLE	
			S/N: LBP700-UP	
	294-0895	1	FILM-IDENTIFICATION (OPERATOR CONTROLS, BUCKET)	
			(ON SIDE OF IMPLEMENT VALVE)	

Y-SEPARATE ILLUSTRATION

<END>

252-0242 HYDRAULIC AR-3 VALVE

S/N: LBP1-UP
FOR USE WITH REAR HYDRAULIC LINES
AN ATTACHMENT

SMCS-5051 **i03587426**

NOTE	PART NUMBER	QTY	PART NAME 1 2 3 4 5 6 (PRODUCT LEVEL)	SEE PAGE
Y	*255-3939*	1	CONTROL & MTG GP-ELECTRONIC (RIPPER)	173
			S/N: LBP1-699	
Y	*316-3216*	1	CONTROL GP-BUCKET & RIPPER	574
			S/N: LBP700-UP	
Y	*252-9870*	1	LINES GP-REAR ATTACHMENT	449
Y	*290-1968*	1	PLATE GP-FRAME	376
			—OR—	
Y	*290-1967*	1	PLATE GP-FRAME	375
Y	**252-5067**	1	VALVE GP-BANK 3 (BUCKET CONTROL, RIPPER)	479
			S/N: LBP1-822	
Y	**309-1569**	1	VALVE GP-BANK 3 (BUCKET CONTROL, RIPPER)	482
			S/N: LBP823-UP	
	310-3217	1	BAFFLE	
			S/N: LBP1-699	
	323-1602	1	BAFFLE	
			S/N: LBP700-UP	
	294-0896	1	FILM-IDENTIFICATION (BUCKET, RIPPER CYL LOCKOUT)	
			(ON SIDE OF IMPLEMENT VALVE)	

Y-SEPARATE ILLUSTRATION

<END>

HYDRAULIC SYSTEM

252-0243 HYDRAULIC AR-4 VALVE

S/N: LBP1-UP
FOR USE WITH FRONT & REAR HYDRAULIC LINES
AN ATTACHMENT

SMCS-5051 **i03587866**

NOTE	PART NUMBER	QTY	PART NAME 1 2 3 4 5 6 (PRODUCT LEVEL)	SEE PAGE
Y	*255-3939*	1	CONTROL & MTG GP-ELECTRONIC (BUCKET, RIPPER)	173
			S/N: LBP1-699	
Y	*316-3216*	1	CONTROL GP-BUCKET & RIPPER (BUCKET, RIPPER)	574
			S/N: LBP700-UP	
Y	*282-9344*	1	GUARD GP-FRONT	352
Y	*282-2301*	1	LINES GP-FRONT	439
Y	*252-9870*	1	LINES GP-REAR ATTACHMENT	449
Y	*290-1968*	1	PLATE GP-FRAME	376
			—OR—	
Y	*290-1967*	1	PLATE GP-FRAME	375
Y	**247-1750**	1	VALVE GP-BANK 4 (BUCKET CONTROL, RIPPER)	483
			—OR—	
Y	**309-1570**	1	VALVE GP-BANK 4 (BUCKET CONTROL, RIPPER)	484
	310-3219	1	BAFFLE	
			S/N: LBP1-699	
	323-1603	1	BAFFLE	
			S/N: LBP700-UP	
	294-0897	1	FILM-IDENTIFICATION (BUCKET, RIPPER CYL LOCKOUT)	
			(ON UPPER LH CORNER OF VALVE BRACKET)	

Y-SEPARATE ILLUSTRATION

<END>

HYDRAULIC SYSTEM

279-1956 LINES GP-BUCKET CYLINDER

S/N: LBP1-376

PART OF 283-7888 BUCKET GP-MULTIPURPOSE

AN ATTACHMENT

SMCS-5057 **i02778794**

NOTE	REF NO	GRAPHIC REF	PART NUMBER	QTY	PART NAME 1 2 3 4 5 6 (PRODUCT LEVEL)	SEE PAGE
	1	1	**5B-0651**	4	FITTING-STRAIGHT	
	2	1	**6K-4939**	4	CLIP	
	3	1	**6W-9917**	2	CLAMP	
	4	1	**6W-9918**	2	CLAMP	
	5	1	**9V-8595**	2	GUARD	
	6	1	**279-1957**	1	TUBE AS	
	7	1	**279-1958**	1	TUBE AS	
	8	1	**279-1959**	4	TUBE AS	
I	9	1	**279-1965**	1	HOSE AS	
I	10	1	**283-7606**	2	HOSE AS	
I	11	1	**283-7607**	1	HOSE AS	
	12	1	**283-7608**	1	PLATE	
	13	1	**283-7609**	1	PLATE	
I	14	1	**285-3433**	2	HOSE AS	
	15	1	**108-9528**	2	CLIP (SLOT)	
	16	1	**5P-7467**	2	CLIP (TAB)	
	17	1	**3K-0360**	4	SEAL-O-RING	
	18	1	**9B-7237**	2	BOLT (3/8-16X1.25-IN)	
	19	1	**5M-3062**	12	BOLT (3/8-16X0.75-IN)	
	20	1	**5P-1075**	8	WASHER-HARD (10.2X22.5X3-MM THK)	
	21	1	**6K-4938**	4	CLIP	
	22	1	**6V-9746**	2	SEAL-O-RING	
	23	1	**7J-9108**	8	SEAL-O-RING	
	25	1	**8T-4223**	10	WASHER-HARD (13.5X25.5X3-MM THK)	
	26	1	**8T-4896**	6	WASHER-HARD (10.2X18.5X2.5-MM THK)	
	27	1	**8T-8917**	2	BOLT (1/2-13X1.25-IN)	
	28	1	**8T-9383**	4	BOLT (1/2-13X0.75-IN)	
	29	1	**8T-9384**	4	BOLT (1/2-13X0.875-IN)	
	30	1	**8T-2561**	2	WASHER-HARD (10.5X28.5X5-MM THK)	

I-REFER TO HYDRAULIC INFORMATION SYSTEM

279-1956 **LINES GP-BUCKET CYLINDER** *(contd.)* **i02778794**

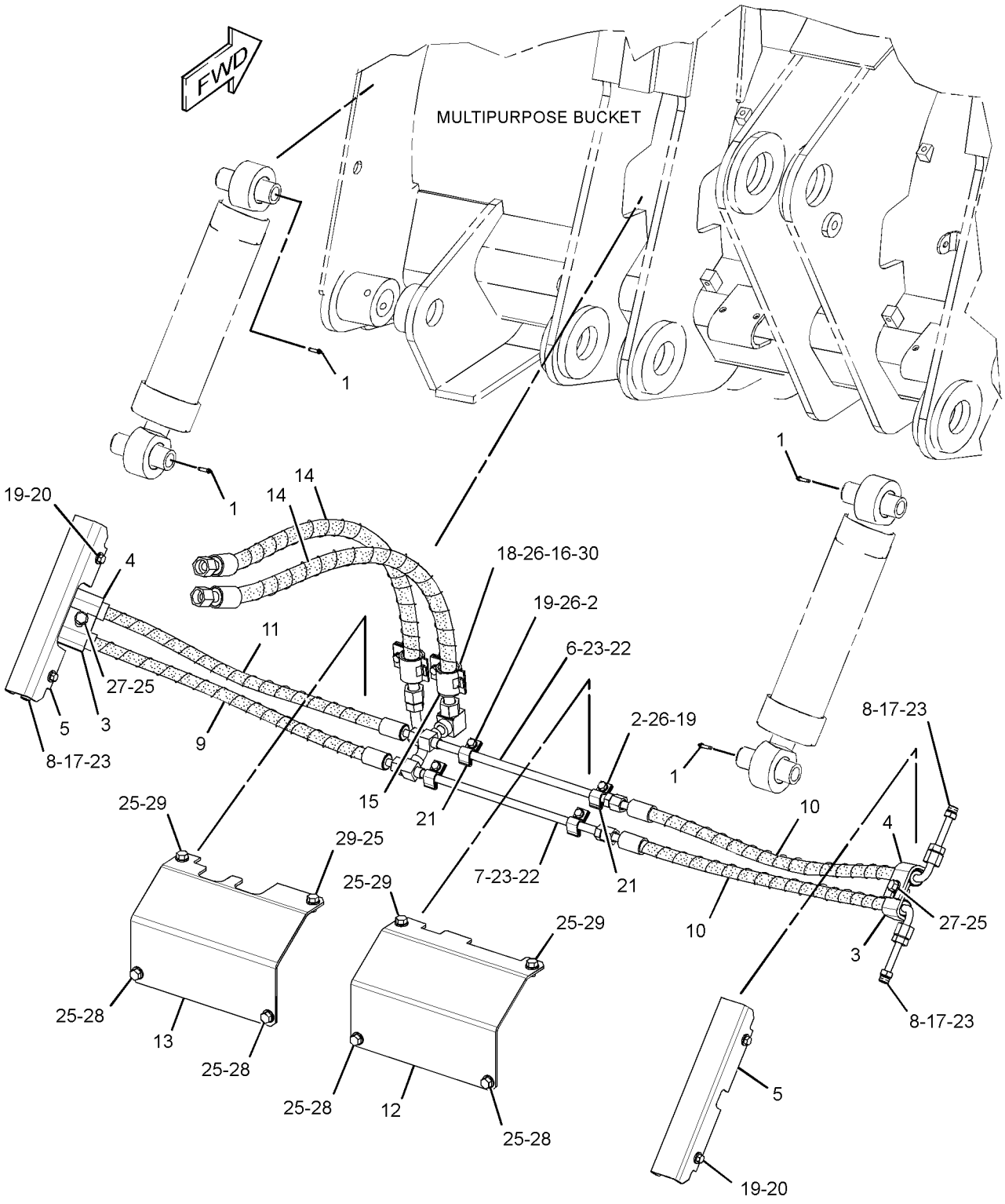

GRAPHIC #1 **<END>** g01432371

HYDRAULIC SYSTEM

279-1956 LINES GP-BUCKET CYLINDER

S/N: LBP377-UP
PART OF 283-7888 BUCKET GP-MULTIPURPOSE
AN ATTACHMENT

SMCS-5057 **i02894508**

NOTE	REF NO	GRAPHIC REF	PART NUMBER	QTY	PART NAME 1 2 3 4 5 6 (PRODUCT LEVEL)	SEE PAGE
	1	1	**5B-0651**	4	FITTING-STRAIGHT	
	2	1	**6K-4939**	4	CLIP	
	3	1	**6W-9917**	2	CLAMP	
	4	1	**6W-9918**	2	CLAMP	
	5	1	**9V-8595**	2	GUARD	
	6	1	**279-1959**	4	TUBE AS	
	7	1	**283-7608**	1	PLATE	
	8	1	**283-7609**	1	PLATE	
CI	9	1	**285-3433**	1	HOSE AS	
C	10	1	**312-4595**	1	TUBE AS	
C	11	1	**312-4596**	1	TUBE AS	
CI	12	1	**312-4597**	1	HOSE AS	
CI	13	1	**312-5074**	1	HOSE AS	
CI	14	1	**313-2463**	3	HOSE AS	
	15	1	**108-9528**	2	CLIP (SLOT)	
C	16	1	**198-4777**	8	WASHER-HARD (11X25X10-MM THK)	
C	17	1	**198-4778**	10	WASHER-HARD (13.5X30X12-MM THK)	
	18	1	**3K-0360**	4	SEAL-O-RING	
C	19	1	**5C-6565**	4	BOLT (1/2-13X1.125-IN)	
	20	1	**5P-7467**	2	CLIP (TAB)	
	21	1	**6K-4938**	4	CLIP	
	22	1	**6V-9746**	2	SEAL-O-RING	
	23	1	**7J-9108**	8	SEAL-O-RING	
C	25	1	**8T-2502**	14	BOLT (3/8-16X1.125-IN)	
	26	1	**8T-4896**	6	WASHER-HARD (10.2X18.5X2.5-MM THK)	
C	27	1	**8T-8919**	6	BOLT (1/2-13X1.75-IN)	

C-CHANGE FROM PREVIOUS TYPE
I-REFER TO HYDRAULIC INFORMATION SYSTEM

279-1956 LINES GP-BUCKET CYLINDER *(contd.)* i02894508

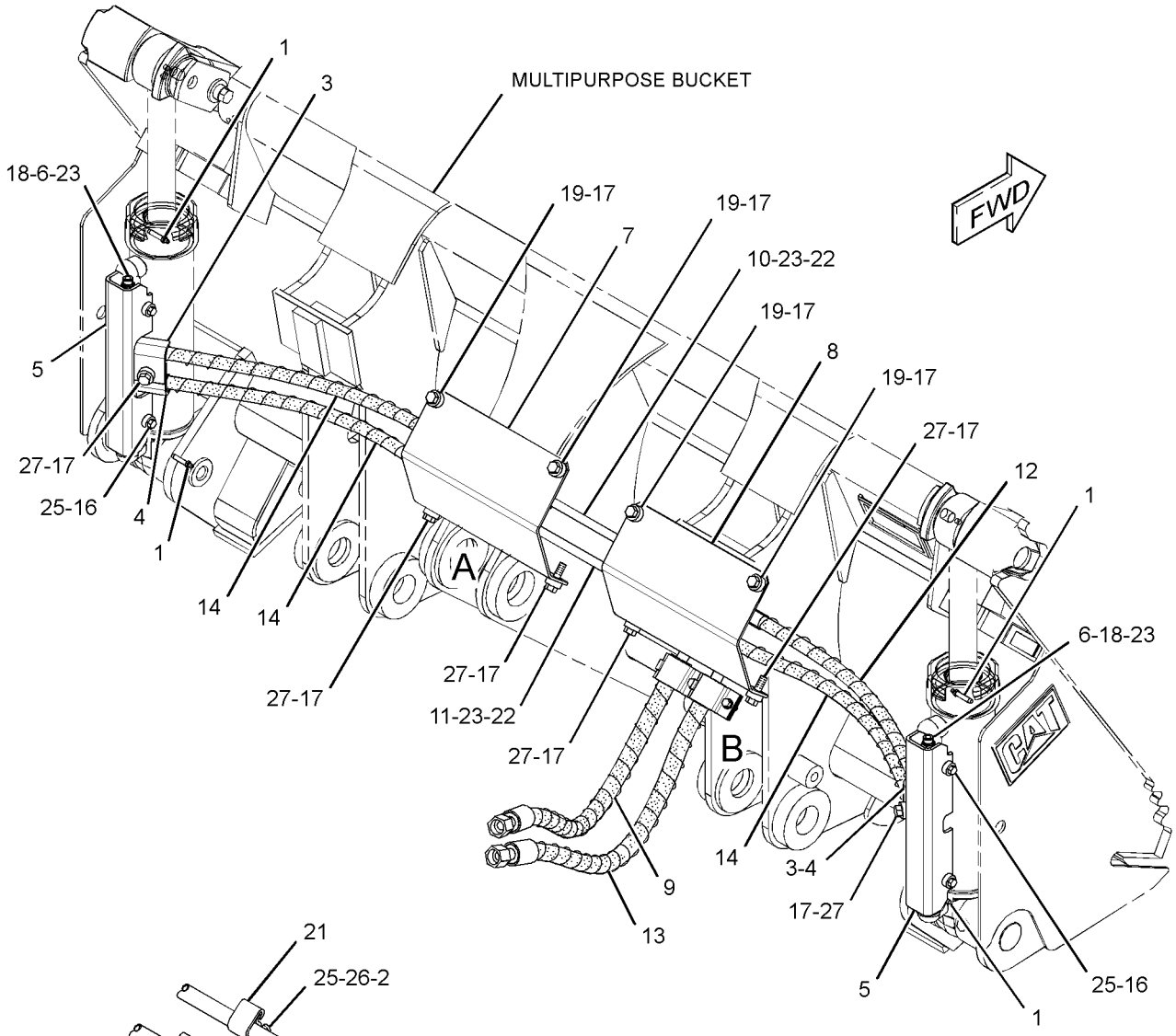

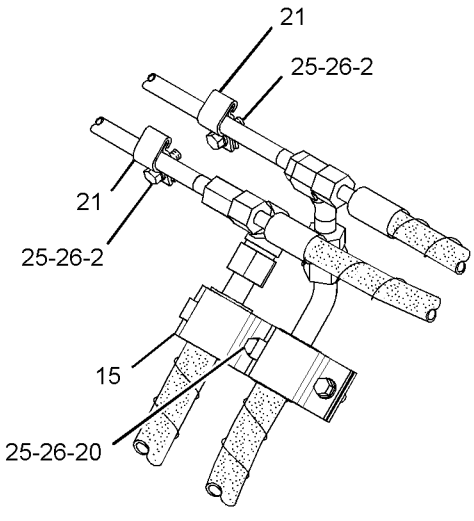

VIEW OF AREA B
(PLATE REMOVED FOR CLARITY)

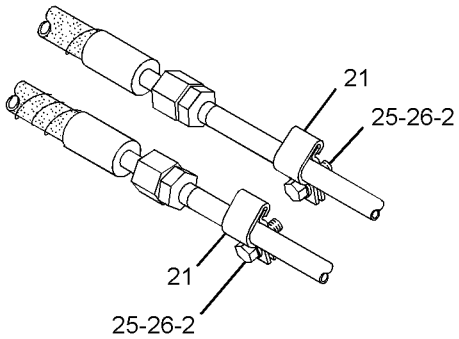

VIEW OF AREA A
(PLATE REMOVED FOR CLARITY)

GRAPHIC #1 **<END>** g01445089

HYDRAULIC SYSTEM

282-2301 LINES GP-FRONT

S/N: LBP1-837

PART OF 252-0241 HYDRAULIC AR-3 VALVE, 252-0243 HYDRAULIC AR-4 VALVE AN ATTACHMENT

SMCS-5057 **i02663087**

NOTE	REF NO	GRAPHIC REF	PART NUMBER	QTY	PART NAME 1 2 3 4 5 6 (PRODUCT LEVEL)	SEE PAGE
	1	1	**097-4896**	1	SPACER (12X20X23-MM THK)	
M	2	1	**197-7481**	1	STUD (M10X1.5X18-MM, M10X1.5X57-MM)	
	3	1	**282-4904**	1	TUBE AS	
	4	1	**282-4905**	1	TUBE AS	
I	5	1	**296-7899**	2	HOSE AS	
	6	1	**297-5051**	1	TUBE AS	
	7	1	**297-5052**	1	TUBE AS	
	8	1	*148-8317*	2	CONNECTOR AS	
					(EACH INCLUDES)	
		1	**3D-2824**	1	SEAL-O-RING	
		1	**5K-9090**	1	SEAL-O-RING	
		1	**6V-8714**	1	CONNECTOR	
	9	1	*155-3624*	1	PLUG AS	
		1	**3J-7354**	1	SEAL-O-RING	
		1	**9S-4182**	1	PLUG-O-RING	
	10	1	**198-4777**	1	WASHER-HARD (11X25X10-MM THK)	
	11	1	**5K-2697**	2	CLIP	
	12	1	**6V-9746**	6	SEAL-O-RING	
	13	1	**8T-1889**	4	CLIP (SLOT)	
	14	1	**8T-1890**	4	CLIP (TAB)	
	15	1	**8T-4121**	4	WASHER-HARD (11X21X2.5-MM THK)	
M	16	1	**8T-4133**	1	NUT (M10X1.5-THD)	
M	17	1	**8T-4186**	1	BOLT (M10X1.5X40-MM)	
M	18	1	**8T-4195**	1	BOLT (M10X1.5X30-MM)	

I-REFER TO HYDRAULIC INFORMATION SYSTEM
M-METRIC PART

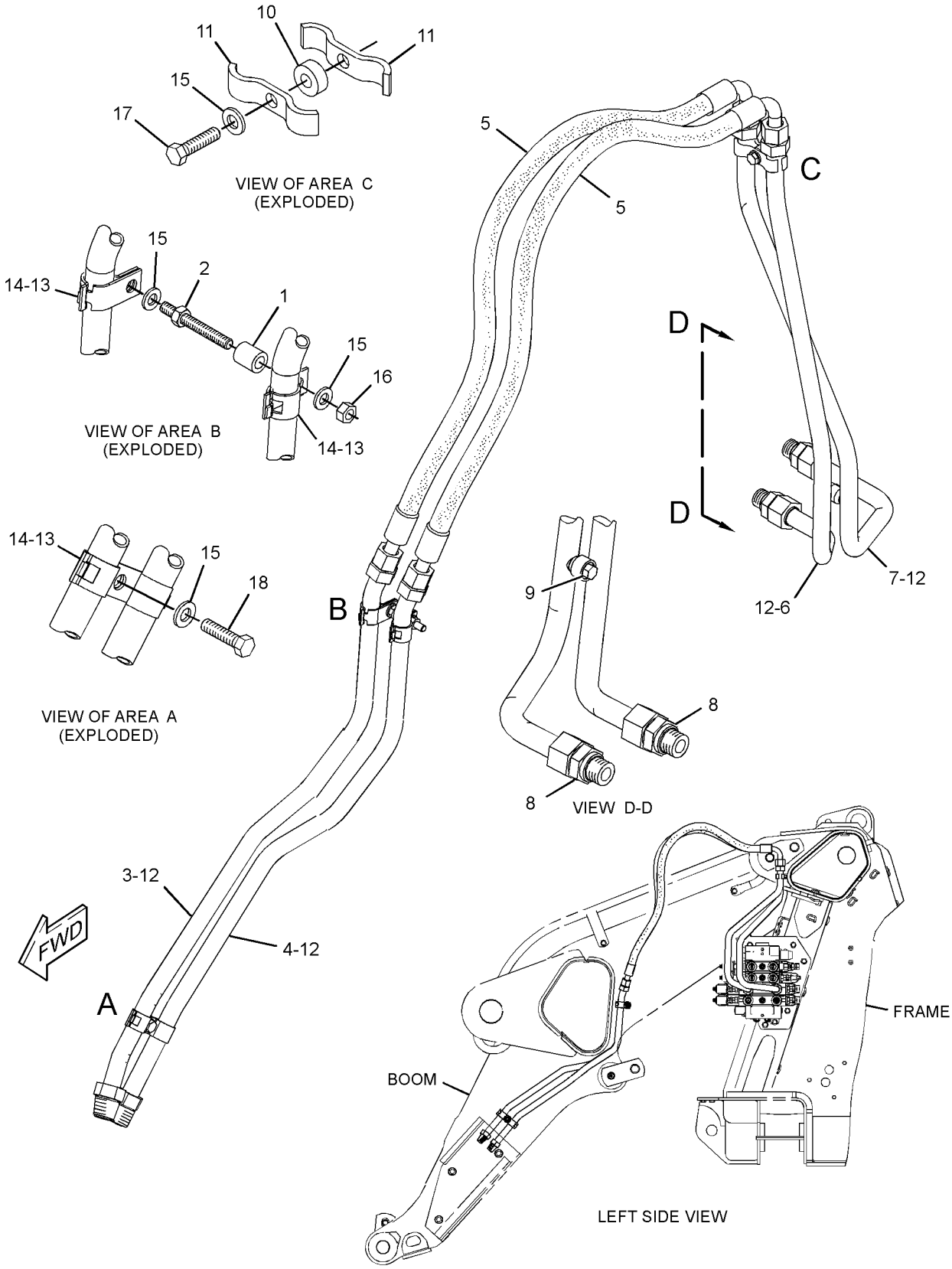

GRAPHIC #1 **<END>** g01344307

HYDRAULIC SYSTEM

282-2301 LINES GP-FRONT

S/N: LBP838-UP

PART OF 252-0241 HYDRAULIC AR-3 VALVE, 252-0243 HYDRAULIC AR-4 VALVE AN ATTACHMENT

SMCS-5057 **i03180120**

NOTE	REF NO	GRAPHIC REF	PART NUMBER	QTY	PART NAME 1 2 3 4 5 6 (PRODUCT LEVEL)	SEE PAGE
	1	1	**097-4896**	1	SPACER (12X20X23-MM THK)	
M	2	1	**197-7481**	1	STUD (M10X1.5X18-MM, M10X1.5X57-MM)	
	3	1	**282-4904**	1	TUBE AS	
	4	1	**282-4905**	1	TUBE AS	
CI	5	1	**324-4616**	2	HOSE AS	
C	6	1	**324-4597**	1	TUBE AS	
C	7	1	**324-4595**	1	TUBE AS	
	8	1	*148-8317*	2	CONNECTOR AS	
					(EACH INCLUDES)	
		1	**3D-2824**	1	SEAL-O-RING	
		1	**5K-9090**	1	SEAL-O-RING	
		1	**6V-8714**	1	CONNECTOR	
	9	1	*155-3624*	1	PLUG AS	
		1	**3J-7354**	1	SEAL-O-RING	
		1	**9S-4182**	1	PLUG-O-RING	
	10	1	**198-4777**	1	WASHER-HARD (11X25X10-MM THK)	
	11	1	**5K-2697**	2	CLIP	
	12	1	**6V-9746**	6	SEAL-O-RING	
	13	1	**8T-1889**	4	CLIP (SLOT)	
	14	1	**8T-1890**	4	CLIP (TAB)	
	15	1	**8T-4121**	4	WASHER-HARD (11X21X2.5-MM THK)	
M	16	1	**8T-4133**	1	NUT (M10X1.5-THD)	
M	17	1	**8T-4186**	1	BOLT (M10X1.5X40-MM)	
M	18	1	**8T-4195**	1	BOLT (M10X1.5X30-MM)	

C-CHANGE FROM PREVIOUS TYPE
I-REFER TO HYDRAULIC INFORMATION SYSTEM
M-METRIC PART

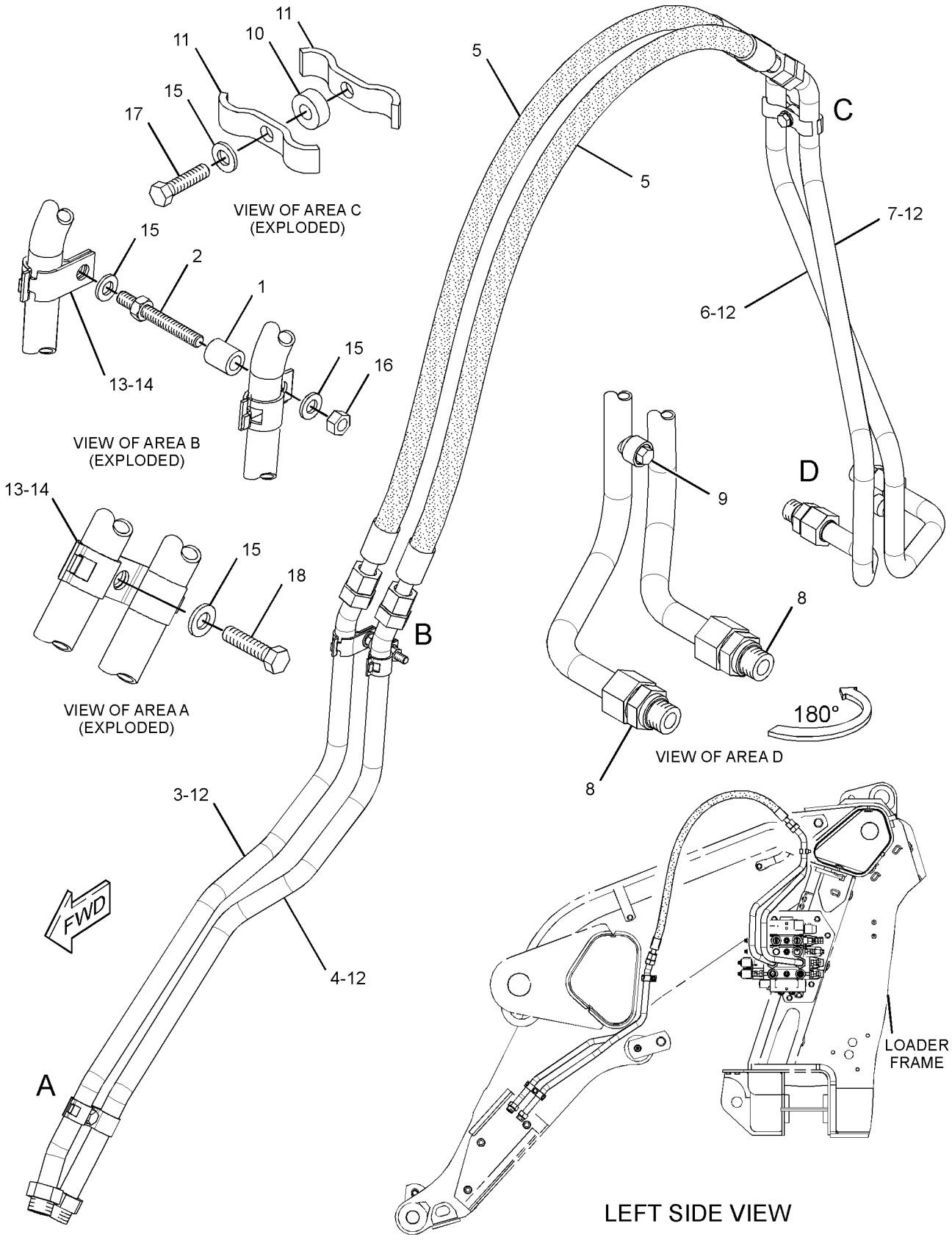

GRAPHIC #1

<END>

g01647790

HYDRAULIC SYSTEM

275-6306 LINES GP-LIFT CYLINDER

S/N: LBP1-UP

PART OF 240-6228 HYDRAULIC AR

SMCS-5057, 5102 **i02768239**

NOTE	REF NO	GRAPHIC REF	PART NUMBER	QTY	PART NAME 1 2 3 4 5 6 (PRODUCT LEVEL)	SEE PAGE
Y	1	2	**112-1817**	1	VALVE GP-MANUAL (DEAD ENGINE LOWER)	499
	2	2	**230-7058**	1	BRACKET	
	3	2	**260-2656**	2	BLOCK	
I	4	2	**295-9737**	1	HOSE AS	
I	5	2	**296-5226**	1	HOSE AS	
I	6	1,2	**296-6432**	2	HOSE AS	
I	7	2	**298-3481**	2	HOSE AS	
	8	2	**298-6818**	1	TUBE AS	
	9	2	**298-6819**	1	TUBE AS	
	10	2	**298-6820**	1	TUBE AS	
	11	1	**298-6821**	1	TUBE AS	
	12	1	*298-6825*	1	CONNECTOR AS	
		1	**298-6823**	1	CONNECTOR	
		1	**3D-2824**	1	SEAL-O-RING	
		1	**5K-9090**	1	SEAL-O-RING	
	13	1	*298-6826*	1	CONNECTOR AS	
		1	**298-6824**	1	CONNECTOR	
		1	**3D-2824**	1	SEAL-O-RING	
		1	**5K-9090**	1	SEAL-O-RING	
	14	1	**311-8482**	1	TUBE AS	
	15	1	**311-8483**	1	TUBE AS	
I	16	1,2	**311-8485**	2	HOSE AS	
	17	2	**096-6166**	4	WASHER-HARD (4.5X9X1-MM THK)	
	18	1	*148-8317*	2	CONNECTOR AS	
					(EACH INCLUDES)	
		1	**6V-8714**	1	CONNECTOR	
		1	**3D-2824**	1	SEAL-O-RING	
		1	**5K-9090**	1	SEAL-O-RING	
	19	1	*148-8340*	1	CONNECTOR AS	
		1	**6V-8639**	1	CONNECTOR	
		1	**3K-0360**	1	SEAL-O-RING	
		1	**6V-8398**	1	SEAL-O-RING	
	20	2	*148-8347*	2	ELBOW AS	
					(EACH INCLUDES)	
		2	**6V-9007**	1	ELBOW	
		2	**3D-2824**	1	SEAL-O-RING	
		2	**6V-9746**	1	SEAL-O-RING	
	21	1,2	*148-8352*	5	ELBOW AS	
					(EACH INCLUDES)	
		1,2	**6V-9854**	1	ELBOW	
		1,2	**5K-9090**	1	SEAL-O-RING	
	22	2	*148-8435*	1	TEE AS	
		2	**6V-8781**	1	TEE-FACE SEAL	
		2	**3J-1907**	1	SEAL-O-RING	
		2	**6V-8397**	2	SEAL-O-RING	
	23	2	*164-5624*	1	ELBOW AS	
		2	**9X-2085**	1	ELBOW (45-DEG)	
		2	**3J-1907**	1	SEAL-O-RING	
		2	**6V-8398**	1	SEAL-O-RING	
	24	2	**198-4777**	4	WASHER-HARD (11X25X10-MM THK)	
	25	2	**301-7791**	2	CLIP (SLOT)	
	26	2	**301-7792**	2	CLIP (TAB)	
	27	2	**1P-3703**	2	SEAL-RECTANGULAR	
	28	2	**5K-2697**	2	CLIP	
	29	1,2	**5K-9090**	8	SEAL-O-RING	
	30	2	**5P-7466**	2	CLIP (SLOT)	

275-6306 **LINES GP-LIFT CYLINDER** *(contd.)* **i02768239**

NOTE	REF NO	GRAPHIC REF	PART NUMBER	QTY	PART NAME 1 2 3 4 5 6 (PRODUCT LEVEL)	SEE PAGE
	31	2	**5P-7467**	2	CLIP (TAB)	
	32	2	**5P-8112**	2	GROMMET	
	33	2	**6V-8398**	1	SEAL-O-RING	
	34	2	**6V-9172**	4	NUT (1-7/16-12-THD)	
	35	1	**6V-9746**	2	SEAL-O-RING	
	36	2	**6V-9829**	1	CAP AS	
	37	2	**7X-7729**	3	WASHER (11X25X3-MM THK)	
M	38	2	**8T-0285**	4	SCREW-MACHINE (M4X0.7X12-MM)	
	39	2	**8T-1889**	4	CLIP (SLOT)	
	40	2	**8T-1890**	4	CLIP (TAB)	
	41	2	**8T-4121**	16	WASHER-HARD (11X21X2.5-MM THK)	
M	42	2	**8T-4133**	2	NUT (M10X1.5-THD)	
M	43	2	**8T-4136**	2	BOLT (M10X1.5X25-MM)	
M	44	2	**8T-4137**	4	BOLT (M10X1.5X20-MM)	
M	45	2	**8T-4139**	2	BOLT (M12X1.75X30-MM)	
M	46	2	**8T-4185**	3	BOLT (M10X1.5X50-MM)	
	47	2	**8T-4223**	2	WASHER-HARD (13.5X25.5X3-MM THK)	
M	48	2	**8T-5005**	8	BOLT (M10X1.5X70-MM)	

I-REFER TO HYDRAULIC INFORMATION SYSTEM
M-METRIC PART
Y-SEPARATE ILLUSTRATION

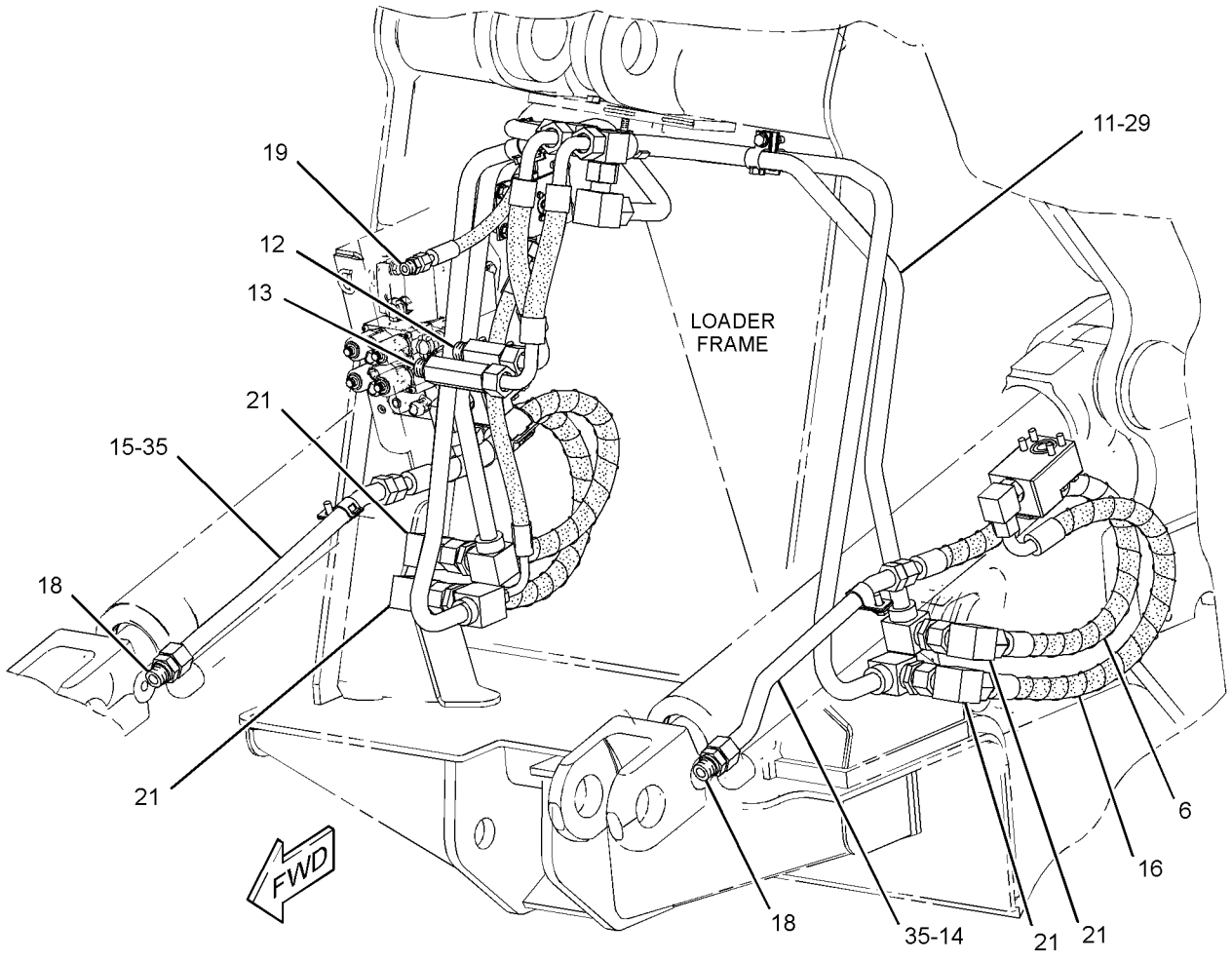

GRAPHIC #1 g01395802

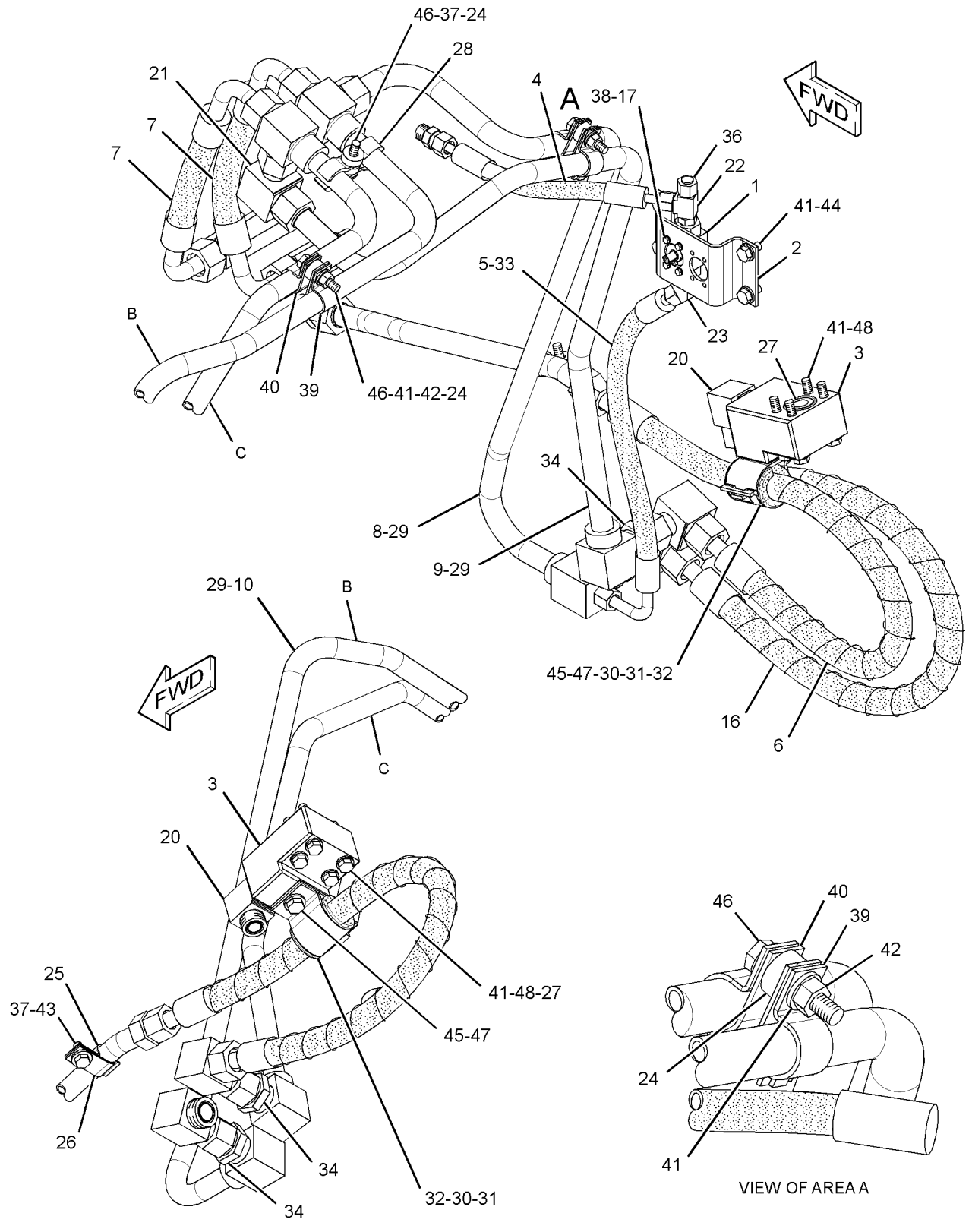

GRAPHIC #2 **<END>** g01395797

HYDRAULIC SYSTEM

274-6619 LINES GP-PUMP–IMPLEMENT

S/N: LBP1-UP

PART OF 240-6228 HYDRAULIC AR

SMCS-5057 **i03441720**

NOTE	REF NO	GRAPHIC REF	PART NUMBER	QTY	PART NAME 1 2 3 4 5 6 (PRODUCT LEVEL)	SEE PAGE
	1	1	**9J-3866**	1	ADAPTER	
	2	1	**138-7500**	3	SPACER (11X25X50-MM THK)	
	3	1	**144-0367**	2	CLAMP-HOSE	
Y	4	1	*160-2669*	1	ACCUMULATOR GP-HYDRAULIC (CHARGED)	419
	5	1	**173-8073**	1	SPACER (11X25X20-MM THK)	
I	6	1	**217-3307**	1	HOSE AS	
Y	7	1	**252-2679**	1	PUMP GP-PISTON (IMPLEMENT)	472
	8	1	**252-5720**	1	HOSE	
I	9	1	**265-7268**	1	HOSE AS	
	10	1	**265-7286**	1	PLATE	
	11	1	**270-4350**	1	VALVE AS-CHECK (HYDRAULIC TANK)	
		1	**5K-9090**	1	SEAL-O-RING	
		1	**7M-8485**	1	SEAL-O-RING	
	12	1	**282-1825**	1	TUBE AS	
I	13	1	**283-6670**	1	HOSE AS	
I	14	1	**283-6671**	1	HOSE AS	
I	15	1	**199-7647**	1	HOSE AS	
I	16	1	**297-4638**	1	HOSE AS	
	17	1	**302-8586**	1	HOSE AS	
M	18	1	**101-3129**	1	STUD (M10X1.5-THD)	
	19	1	*148-8317*	1	CONNECTOR AS	
		1	**6V-8714**	1	CONNECTOR	
		1	**3D-2824**	1	SEAL-O-RING	
		1	**5K-9090**	1	SEAL-O-RING	
	20	1	*148-8326*	1	CONNECTOR AS	
		1	**6V-9872**	1	CONNECTOR	
		1	**3J-7354**	1	SEAL-O-RING	
		1	**6V-8397**	1	SEAL-O-RING	
	21	1	*148-8336*	3	CONNECTOR AS	
					(EACH INCLUDES)	
		1	**6V-8636**	1	CONNECTOR	
		1	**3J-1907**	1	SEAL-O-RING	
		1	**6V-8397**	1	SEAL-O-RING	
	22	1	*148-8338*	1	CONNECTOR AS	
		1	**8T-0075**	1	CONNECTOR	
		1	**3J-1907**	1	SEAL-O-RING	
		1	**6V-8397**	1	SEAL-O-RING	
	23	1	*148-8357*	1	ELBOW AS	
		1	**6V-9008**	1	ELBOW	
		1	**5K-9090**	1	SEAL-O-RING	
		1	**7M-8485**	1	SEAL-O-RING	
	24	1	*148-8364*	1	ELBOW AS	
		1	**6V-8625**	1	ELBOW	
		1	**3K-0360**	1	SEAL-O-RING	
		1	**6V-8398**	1	SEAL-O-RING	
	25	1	*148-8365*	1	ELBOW AS	
		1	**8T-6876**	1	ELBOW	
		1	**3J-1907**	1	SEAL-O-RING	
		1	**6V-8398**	1	SEAL-O-RING	
	26	1	*164-6872*	1	TEE AS	
		1	**115-8634**	1	TEE-O-RING	
		1	**2M-9780**	1	SEAL-O-RING	
		1	**6V-8398**	2	SEAL-O-RING	
	27	1	*184-2420*	1	ADAPTER AS	
		1	**3E-7401**	1	ADAPTER	
		1	**6V-8397**	1	SEAL-O-RING	

274-6619 **LINES GP-PUMP** ***(contd.)*** **i03441720**

NOTE	REF NO	GRAPHIC REF	PART NUMBER	QTY	PART NAME 1 2 3 4 5 6 (PRODUCT LEVEL)	SEE PAGE
	28	1	**1P-3709**	1	SEAL-RECTANGULAR	
	29	1	**1S-0994**	3	CLIP	
	30	1	**3K-0360**	1	SEAL-O-RING	
	31	1	**4J-0520**	2	SEAL-O-RING	
	32	1	**5P-2369**	1	CLIP	
	33	1	**6V-9168**	1	NUT (11/16-16-THD)	
	34	1	**7X-3392**	4	WASHER-HARD (13.5X22.5X3-MM THK)	
	35	1	**7X-7729**	2	WASHER (11X25X3-MM THK)	
	36	1	**8C-3206**	2	FLANGE-HALF	
	37	1	**8T-4121**	6	WASHER-HARD (11X21X2.5-MM THK)	
M	38	1	**8T-4133**	2	NUT (M10X1.5-THD)	
M	39	1	**8T-4172**	2	BOLT (M10X1.5X80-MM)	
M	40	1	**8T-4183**	4	BOLT (M12X1.75X40-MM)	
M	41	1	**8T-4185**	1	BOLT (M10X1.5X50-MM)	
M	42	1	**8T-5005**	5	BOLT (M10X1.5X70-MM)	
M	43	1	**8T-7338**	2	BOLT (M16X2X45-MM)	
	44	1	**8T-7934**	4	WASHER-HARD (11X21X5-MM THK)	
	45	1	**9X-8257**	2	WASHER (17.5X30X3.5-MM THK)	
	46	1	**255-1195**	1	FILM-WARNING (ACCUMULATOR PRESSURE)	
	47	1	**7J-6285**	1	SEAL-O-RING	

I-REFER TO HYDRAULIC INFORMATION SYSTEM
M-METRIC PART
Y-SEPARATE ILLUSTRATION

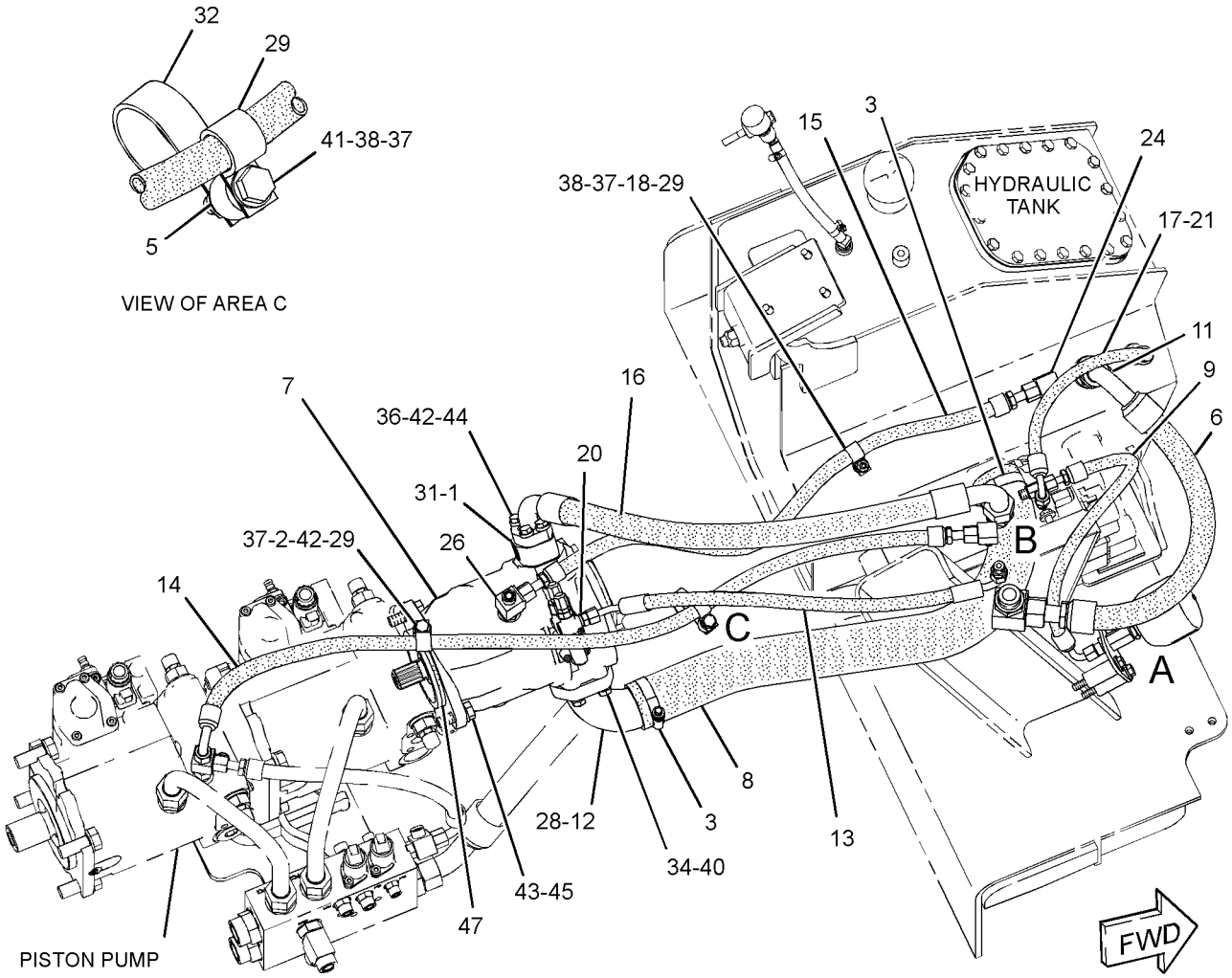

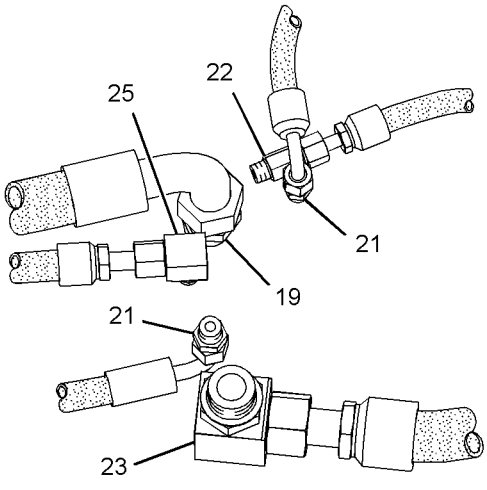

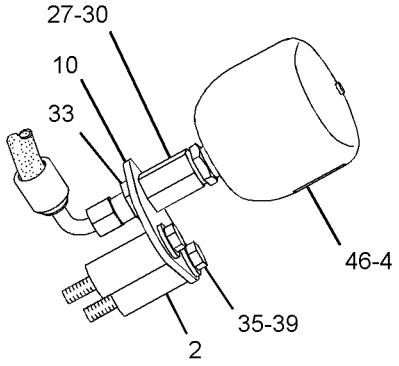

GRAPHIC #1 **<END>** g01864462

HYDRAULIC SYSTEM

252-9870 LINES GP-REAR ATTACHMENT

S/N: LBP1-UP
PART OF 252-0242 HYDRAULIC AR-3 VALVE, 252-0243 HYDRAULIC AR-4 VALVE AN ATTACHMENT
TYPE 1

SMCS-5057 **i03587883**

NOTE	REF NO	GRAPHIC REF	PART NUMBER	QTY	PART NAME 1 2 3 4 5 6 (PRODUCT LEVEL)	SEE PAGE
Y	1	1	**112-1817**	1	VALVE GP-MANUAL (DEAD ENGINE LOWER)	499
M	2	1	**176-9237**	1	STUD (M10X1.5X18-MM, M10X1.5X37-MM)	
I	3	1	**282-8765**	1	HOSE AS	
	4	1	**283-6286**	1	TUBE AS	
	5	1	**295-5827**	1	TUBE AS	
	6	1	**295-5828**	1	TUBE AS	
I	7	1	**310-5150**	1	HOSE AS	
	8	1	*296-5730*	1	TEE AS	
		1	**295-4100**	1	TEE	
		1	**3D-2824**	1	SEAL-O-RING	
		1	**6V-8397**	1	SEAL-O-RING	
		1	**6V-9746**	1	SEAL-O-RING	
	9	1	**298-1212**	1	BRACKET AS	
	10	1	**298-6321**	1	TUBE AS	
	11	1	**298-6322**	1	TUBE AS	
	12	1	**298-6323**	1	TUBE AS	
	13	1	**298-6324**	1	TUBE AS	
	14	1	**039-8557**	2	WASHER (13X26X6-MM THK)	
	15	1	**096-6166**	4	WASHER-HARD (4.5X9X1-MM THK)	
	16	1	*148-8327*	1	CONNECTOR AS	
		1	**6V-8637**	1	CONNECTOR	
		1	**3D-2824**	1	SEAL-O-RING	
		1	**6V-9746**	1	SEAL-O-RING	
	17	1	*148-8378*	2	ELBOW AS	
					(EACH INCLUDES)	
		1	**6V-8724**	1	ELBOW	
		1	**3J-1907**	1	SEAL-O-RING	
		1	**6V-8397**	1	SEAL-O-RING	
	18	1	**3K-3042**	2	CLAMP	
	19	1	**6V-8398**	4	SEAL-O-RING	
	20	1	**6V-9169**	4	NUT-BULKHEAD (13/16-16-THD)	
	21	1	**6V-9746**	2	SEAL-O-RING	
	22	1	**6V-9830**	4	CAP AS	
	23	1	**7G-3832**	1	GROMMET	
	24	1	**7G-3833**	1	CLIP (TAB)	
	25	1	**7G-3834**	1	CLIP (SLOT)	
	26	1	**7J-9108**	4	SEAL-O-RING	
	27	1	**7X-7729**	2	WASHER (11X25X3-MM THK)	
M	28	1	**8T-0285**	4	SCREW-MACHINE (M4X0.7X12-MM)	
	29	1	**8T-1889**	2	CLIP (SLOT)	
	30	1	**8T-1890**	2	CLIP (TAB)	
	31	1	**8T-4121**	9	WASHER-HARD (11X21X2.5-MM THK)	
M	32	1	**8T-4133**	3	NUT (M10X1.5-THD)	
M	33	1	**8T-4136**	2	BOLT (M10X1.5X25-MM)	
M	34	1	**8T-4183**	2	BOLT (M12X1.75X40-MM)	
M	35	1	**8T-4195**	2	BOLT (M10X1.5X30-MM)	
M	36	1	**8T-4196**	1	BOLT (M10X1.5X35-MM)	
	37	1	**9R-1005**	2	CLIP (SLOT)	
	38	1	**9R-7802**	2	CLIP (SLOT)	
	39	1	**9R-7803**	2	CLIP (TAB)	
I	40	1	**310-2715**	1	HOSE AS	
	41	1	**198-4777**	1	WASHER-HARD (11X25X10-MM THK)	
	42	1	**149-7738**	2	CLIP	
M	43	1	**8T-4182**	1	BOLT (M10X1.5X45-MM)	

252-9870 **LINES GP-REAR ATTACHMENT** *(contd.)* **i03587883**

I-REFER TO HYDRAULIC INFORMATION SYSTEM
M-METRIC PART
Y-SEPARATE ILLUSTRATION

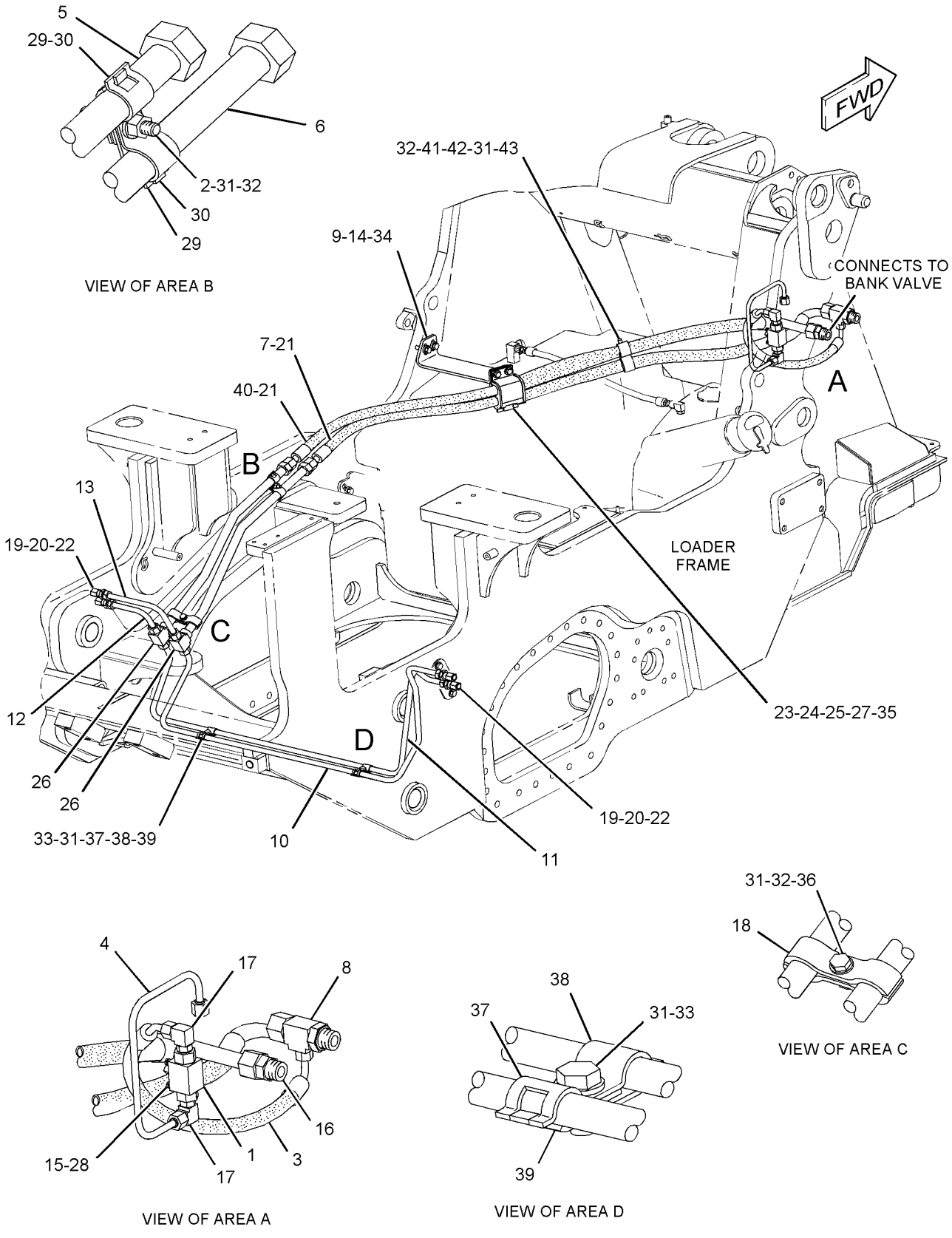

GRAPHIC #1 **<END>** g01414252

HYDRAULIC SYSTEM

252-9870 LINES GP-REAR ATTACHMENT

S/N: LBP1-UP

PART OF 252-0242 HYDRAULIC AR-3 VALVE, 252-0243 HYDRAULIC AR-4 VALVE AN ATTACHMENT

TYPE 2

SMCS-5057 **i03587884**

NOTE	REF NO	GRAPHIC REF	PART NUMBER	QTY	PART NAME 1 2 3 4 5 6 (PRODUCT LEVEL)	SEE PAGE
Y	1	1	**112-1817**	1	VALVE GP-MANUAL (DEAD ENGINE LOWER)	499
M	2	1	**176-9237**	1	STUD (M10X1.5X18-MM, M10X1.5X37-MM)	
I	3	1	**282-8765**	1	HOSE AS	
	4	1	**283-6286**	1	TUBE AS	
	5	1	**295-5827**	1	TUBE AS	
	6	1	**295-5828**	1	TUBE AS	
I	7	1	**310-5150**	1	HOSE AS	
	8	1	*296-5730*	1	TEE AS	
		1	**295-4100**	1	TEE	
		1	**3D-2824**	1	SEAL-O-RING	
		1	**6V-8397**	1	SEAL-O-RING	
		1	**6V-9746**	1	SEAL-O-RING	
	9	1	**298-1212**	1	BRACKET AS	
C	10	1	**321-6103**	1	TUBE AS	
C	11	1	**321-6102**	1	TUBE AS	
C	12	1	**321-6100**	1	TUBE AS	
C	13	1	**321-6101**	1	TUBE AS	
	14	1	**039-8557**	2	WASHER (13X26X6-MM THK)	
	15	1	**096-6166**	4	WASHER-HARD (4.5X9X1-MM THK)	
	16	1	*148-8327*	1	CONNECTOR AS	
		1	**6V-8637**	1	CONNECTOR	
		1	**3D-2824**	1	SEAL-O-RING	
		1	**6V-9746**	1	SEAL-O-RING	
	17	1	*148-8378*	2	ELBOW AS	
					(EACH INCLUDES)	
		1	**6V-8724**	1	ELBOW	
		1	**3J-1907**	1	SEAL-O-RING	
		1	**6V-8397**	1	SEAL-O-RING	
	18	1	**3K-3042**	2	CLAMP	
	21	1	**6V-9746**	2	SEAL-O-RING	
	23	1	**7G-3832**	1	GROMMET	
	24	1	**7G-3833**	1	CLIP (TAB)	
	25	1	**7G-3834**	1	CLIP (SLOT)	
C	26	1	**7J-9108**	8	SEAL-O-RING	
	27	1	**7X-7729**	2	WASHER (11X25X3-MM THK)	
M	28	1	**8T-0285**	4	SCREW-MACHINE (M4X0.7X12-MM)	
	29	1	**8T-1889**	2	CLIP (SLOT)	
	30	1	**8T-1890**	2	CLIP (TAB)	
	31	1	**8T-4121**	9	WASHER-HARD (11X21X2.5-MM THK)	
M	32	1	**8T-4133**	3	NUT (M10X1.5-THD)	
M	33	1	**8T-4136**	2	BOLT (M10X1.5X25-MM)	
M	34	1	**8T-4183**	2	BOLT (M12X1.75X40-MM)	
M	35	1	**8T-4195**	2	BOLT (M10X1.5X30-MM)	
M	36	1	**8T-4196**	1	BOLT (M10X1.5X35-MM)	
	37	1	**9R-1005**	2	CLIP (SLOT)	
	38	1	**9R-7802**	2	CLIP (SLOT)	
	39	1	**9R-7803**	2	CLIP (TAB)	
I	40	1	**310-2715**	1	HOSE AS	
	41	1	**198-4777**	1	WASHER-HARD (11X25X10-MM THK)	
	42	1	**149-7738**	2	CLIP	
M	43	1	**8T-4182**	1	BOLT (M10X1.5X45-MM)	
C	44	1	**5P-1076**	4	WASHER-HARD (13.5X30X4-MM THK)	
CM	45	1	**8T-4192**	4	BOLT (M12X1.75X25-MM)	

252-9870 LINES GP-REAR ATTACHMENT *(contd.)* i03587884

NOTE	REF NO	GRAPHIC REF	PART NUMBER	QTY	PART NAME 1 2 3 4 5 6 (PRODUCT LEVEL)	SEE PAGE
C	46	1	*148-8411*	4	PLUG AS	
					(EACH INCLUDES)	
		1	**3K-0360**	1	SEAL-O-RING	
		1	**9S-4185**	1	PLUG-O-RING	
C	47	1	**321-6104**	2	MANIFOLD	

C-CHANGE FROM PREVIOUS TYPE
I-REFER TO HYDRAULIC INFORMATION SYSTEM
M-METRIC PART
Y-SEPARATE ILLUSTRATION

252-9870 **LINES GP-REAR ATTACHMENT** *(contd.)* **i03587884**

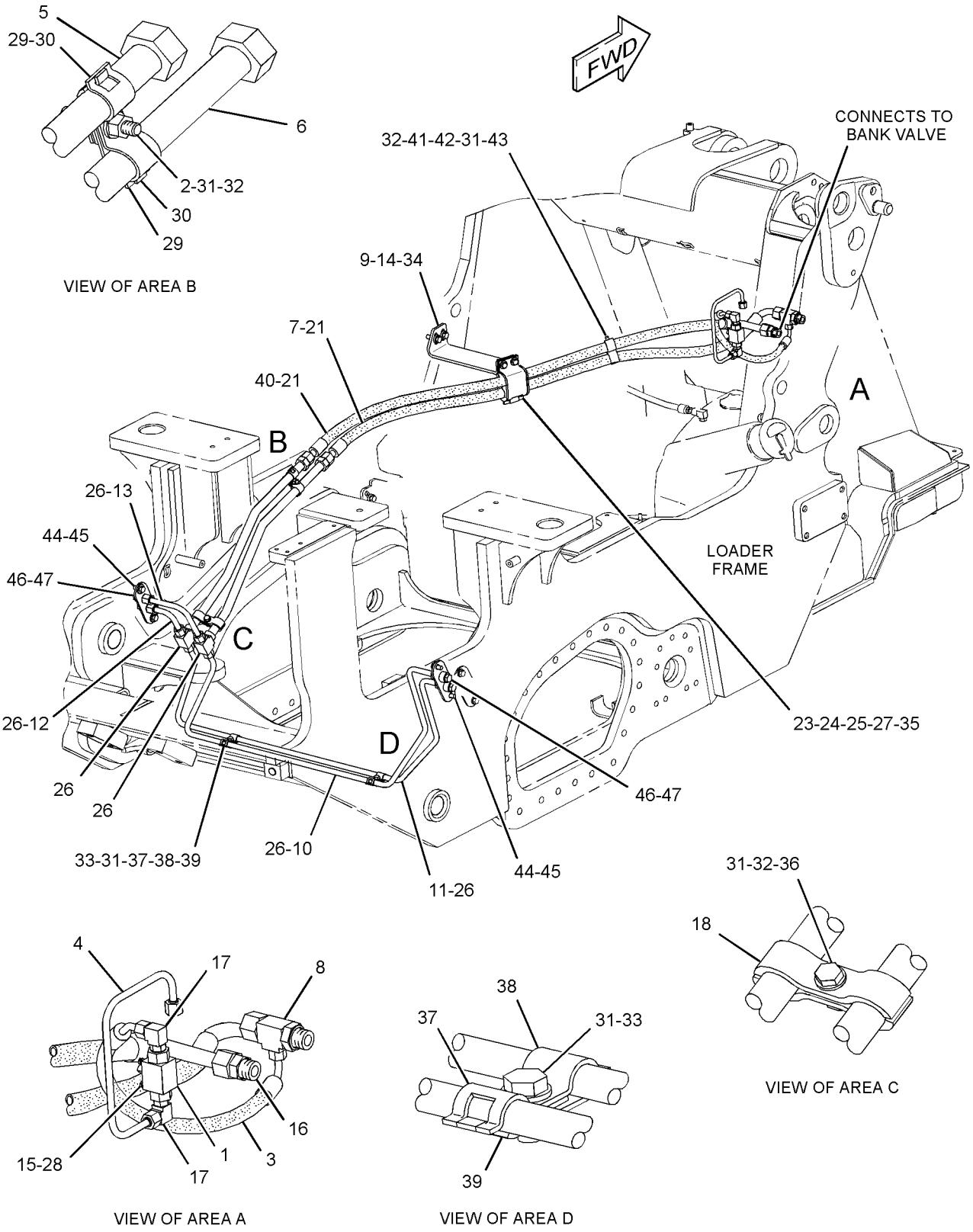

GRAPHIC #1 **<END>** g01799195

HYDRAULIC SYSTEM

279-2040 LINES GP-RIPPER

S/N: 9JW1-UP
PART OF 256-7612 RIPPER AR
AN ATTACHMENT

SMCS-5057, 5352, 5356 **i03472841**

NOTE	REF NO	GRAPHIC REF	PART NUMBER	QTY	PART NAME 1 2 3 4 5 6 (PRODUCT LEVEL)	SEE PAGE
	1	1	*164-5608*	4	CONNECTOR AS	
					(EACH INCLUDES)	
		1	**3K-0360**	1	SEAL-O-RING	
		1	**6V-8398**	1	SEAL-O-RING	
		1	**8T-1687**	1	CONNECTOR	
	2	1	**223-1395**	2	BRACKET AS	
	3	1	**279-3212**	1	TUBE AS (LH)	
	4	1	**279-3213**	1	TUBE AS (RH)	
I	5	1	**335-3953**	4	HOSE AS	
	6	1	*148-8345*	2	CONNECTOR AS	
					(EACH INCLUDES)	
		1	**6V-8638**	1	CONNECTOR	
		1	**2M-9780**	1	SEAL-O-RING	
		1	**6V-8398**	1	SEAL-O-RING	
	7	1	*148-8390*	2	ELBOW AS	
					(EACH INCLUDES)	
		1	**6V-8626**	1	ELBOW	
		1	**2M-9780**	1	SEAL-O-RING	
		1	**7J-9108**	1	SEAL-O-RING	
	8	1	**6V-8398**	2	SEAL-O-RING	
	9	1	**8T-1889**	4	CLIP (SLOT)	
	10	1	**8T-1890**	4	CLIP (TAB)	
	11	1	**8T-4121**	8	WASHER-HARD (11X21X2.5-MM THK)	
M	12	1	**8T-4133**	4	NUT (M10X1.5-THD)	
M	13	1	**8T-4137**	2	BOLT (M10X1.5X20-MM)	
M	14	1	**8T-4195**	2	BOLT (M10X1.5X30-MM)	
	15	1	**9R-1004**	2	CLIP (TAB)	
	16	1	**9R-1005**	2	CLIP (SLOT)	

I-REFER TO HYDRAULIC INFORMATION SYSTEM
M-METRIC PART

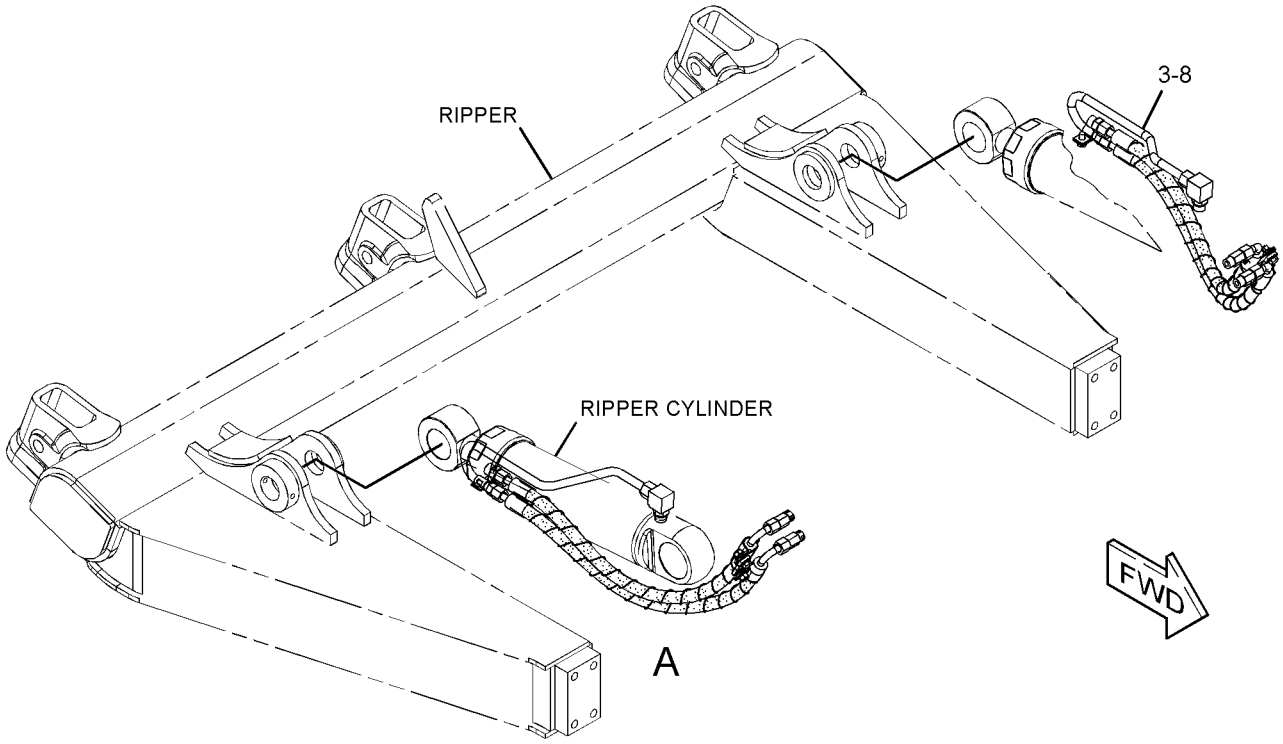

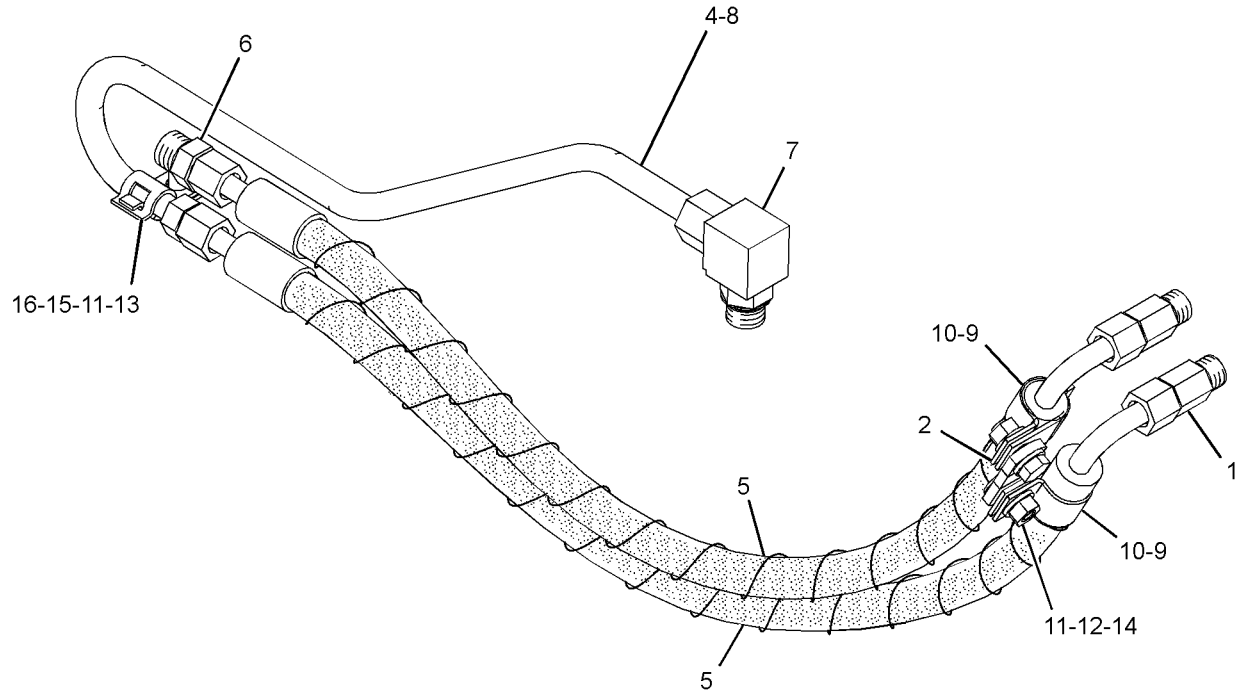

VIEW OF AREA A

GRAPHIC #1 **<END>** g01841118

HYDRAULIC SYSTEM

242-8217 LINES GP-TILT CYLINDER

S/N: LBP1-UP

PART OF 240-6228 HYDRAULIC AR

SMCS-5057, 5104 **i02656330**

NOTE	REF NO	GRAPHIC REF	PART NUMBER	QTY	PART NAME 1 2 3 4 5 6 (PRODUCT LEVEL)	SEE PAGE
	1	1	**154-2302**	1	SPACER (11X20X15-MM THK)	
I	2	1	**295-9742**	1	HOSE AS	
I	3	1	**295-9743**	1	HOSE AS	
	4	1	**298-5118**	1	TUBE AS	
	5	1	**298-5119**	1	TUBE AS	
	6	1	**298-5121**	1	TUBE AS	
	7	1	**299-6960**	1	BRACKET AS	
	8	1	*148-8317*	2	CONNECTOR AS	
					(EACH INCLUDES)	
		1	**6V-8714**	1	CONNECTOR	
		1	**3D-2824**	1	SEAL-O-RING	
		1	**5K-9090**	1	SEAL-O-RING	
	9	1	*171-6725*	1	ELBOW AS	
		1	**8T-6451**	1	ELBOW	
		1	**3D-2824**	1	SEAL-O-RING	
	10	1	**4J-0520**	1	SEAL-O-RING	
	11	1	**5K-9090**	3	SEAL-O-RING	
	12	1	**7X-7729**	2	WASHER (11X25X3-MM THK)	
	13	1	**8C-3206**	2	FLANGE-HALF	
	14	1	**8T-1889**	4	CLIP (SLOT)	
	15	1	**8T-1890**	4	CLIP (TAB)	
	16	1	**8T-4121**	7	WASHER-HARD (11X21X2.5-MM THK)	
M	17	1	**8T-4133**	1	NUT (M10X1.5-THD)	
M	18	1	**8T-4136**	2	BOLT (M10X1.5X25-MM)	
M	19	1	**8T-4186**	6	BOLT (M10X1.5X40-MM)	

I-REFER TO HYDRAULIC INFORMATION SYSTEM
M-METRIC PART

242-8217 **LINES GP-TILT CYLINDER** *(contd.)* **i02656330**

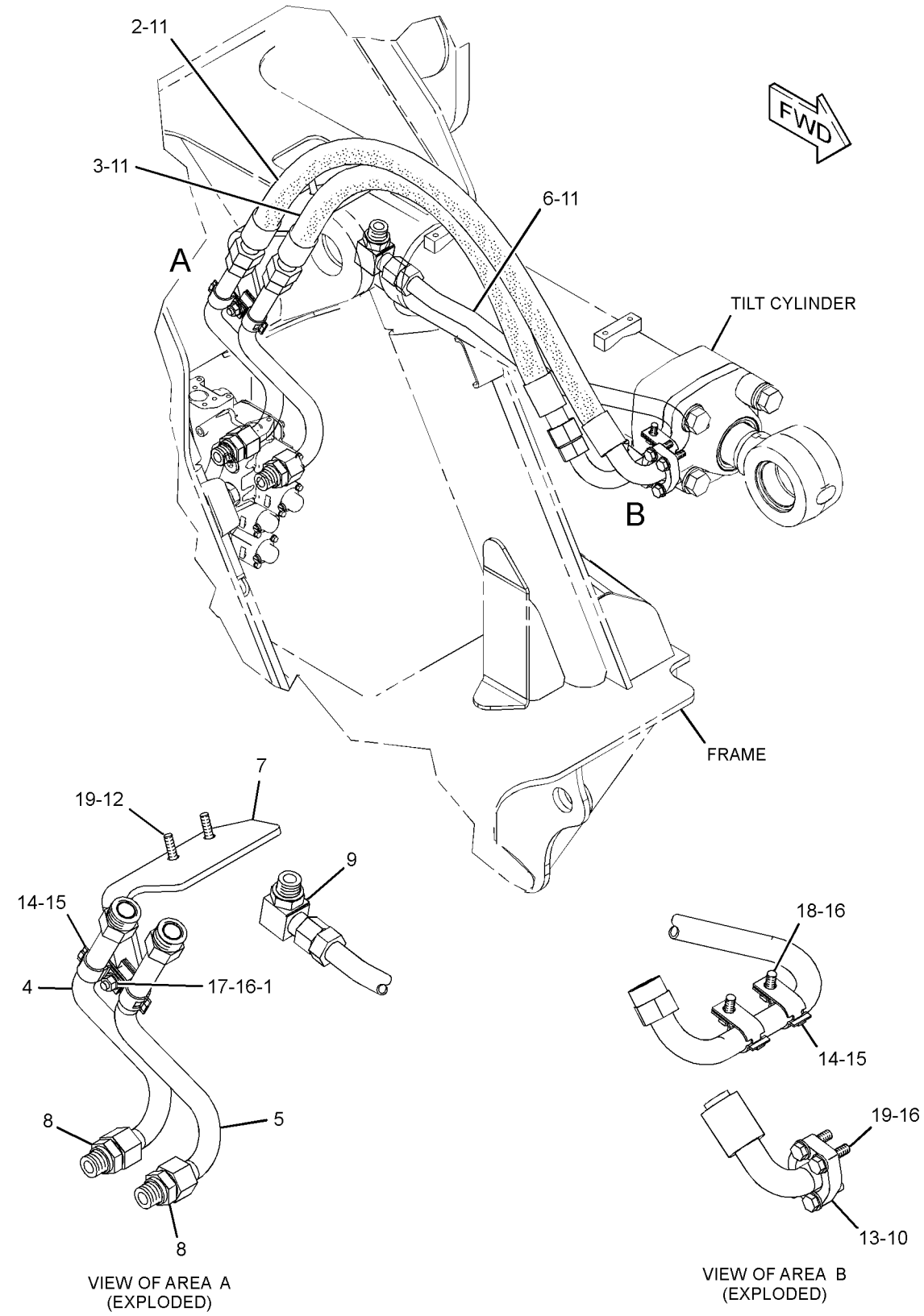

GRAPHIC #1 **<END>** g01336796

266-2273 MANIFOLD GP-CONTROL & SOLENOID–

IMPLEMENT CONTROL VALVE–IMPLEMENT PILOT OIL

S/N: LBP1-UP

24-VOLT DC

PART OF 270-2611, 270-2612, 270-2613, 270-2614 VALVE GP-CONTROL

AN ATTACHMENT

SMCS-5264, 5479 **i02704067**

NOTE	REF NO	GRAPHIC REF	PART NUMBER	QTY	PART NAME 1 2 3 4 5 6 (PRODUCT LEVEL)	SEE PAGE
Z	1	1		2	PLUG	
Z	2	1		1	PLUG	
Z	3	1		1	SPOOL	
Z	4	1		1	MANIFOLD	
Y	5	1	**189-8898**	2	VALVE GP-SOLENOID (PILOT PROPORTIONING)	505
Z	6	1		1	SPRING	

Y-SEPARATE ILLUSTRATION
Z-NOT SERVICED SEPARATELY

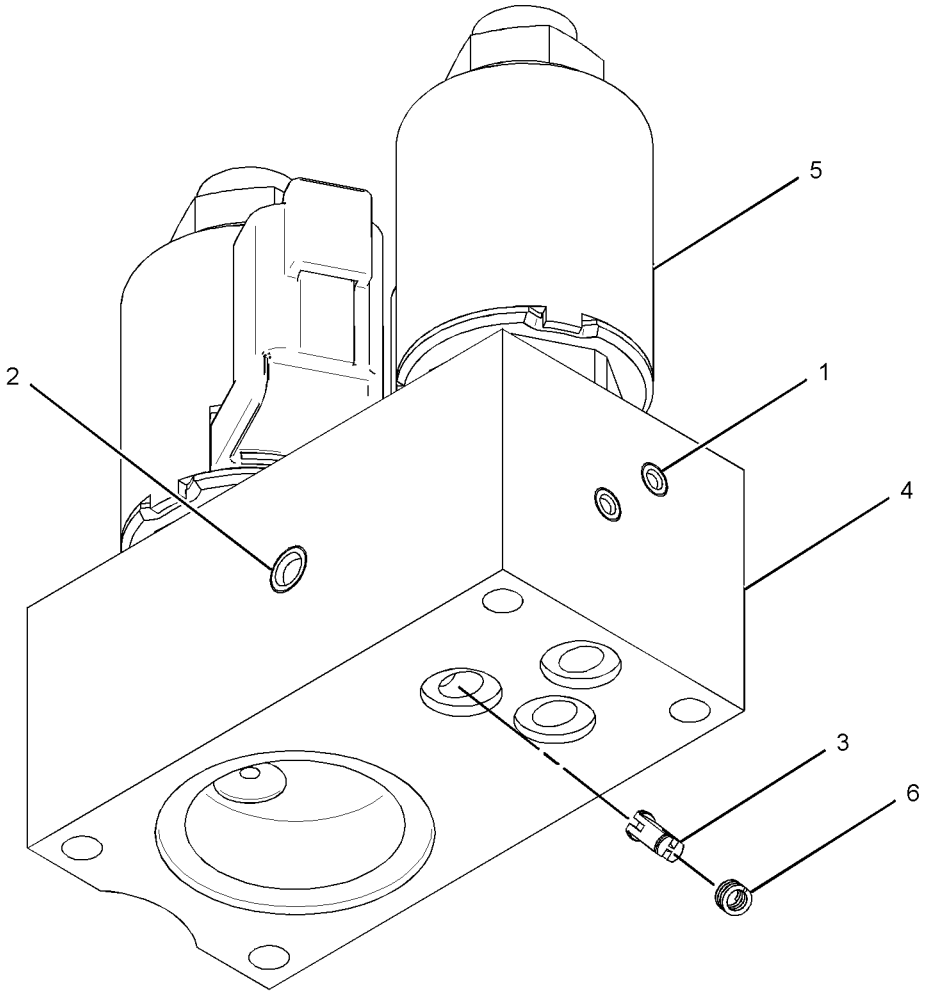

GRAPHIC #1 **<END>** g01308326

252-7008 MANIFOLD GP-CONTROL–DEMAND FAN

S/N: LBP1-UP
PART OF 256-8619 VALVE GP-CONTROL
AN ATTACHMENT

SMCS-5264 **i02395106**

NOTE	REF NO	GRAPHIC REF	PART NUMBER	QTY	PART NAME 1 2 3 4 5 6 (PRODUCT LEVEL)	SEE PAGE
Y	1	1	**211-2092**	1	VALVE GP-SOLENOID (24-VOLT) (DEMAND FAN)	506
	2	1	**177-3868**	1	VALVE GP-CHECK	

Y-SEPARATE ILLUSTRATION

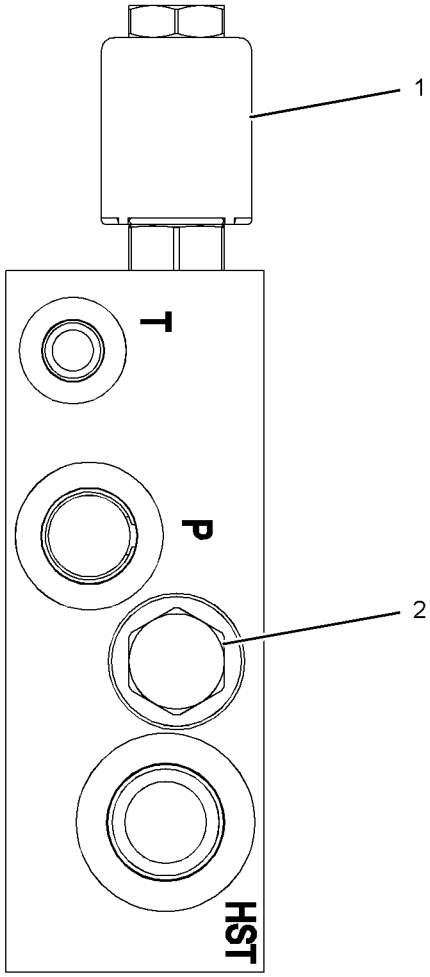

GRAPHIC #1 **<END>** g01200978

HYDRAULIC SYSTEM

270-2610 MANIFOLD GP-CONTROL–INLET

S/N: LBP1-UP

PART OF 247-1753, 309-1567 VALVE GP-BANK 2, 247-1749, 252-5067, 309-1568, 309-1569 VALVE GP-BANK 3, 247-1750, 309-1570 VALVE GP-BANK 4 AN ATTACHMENT

SMCS-5264 **i02825839**

NOTE	REF NO	GRAPHIC REF	PART NUMBER	QTY	PART NAME 1 2 3 4 5 6 (PRODUCT LEVEL)	SEE PAGE
M	1	1	**8T-1158**	1	BOLT-SOCKET HEAD (M8X1.25X20-MM)	
J	2	1	**221-4486**	1	VALVE GP-SOLENOID (INLET MANIFOLD)	
	2A	1	**212-0061**	1	FLANGE	
	3	1	**257-0440**	1	MANIFOLD GP-CONTROL (INLET)	
					AVAILABLE REPAIR KIT(S):	
J			**200-2371**	1	KIT-SEAL (SOLENOID VALVE)	
					(INCLUDES SEAL-O-RINGS)	

J-KIT MARKED J SERVICES PART MARKED J
M-METRIC PART

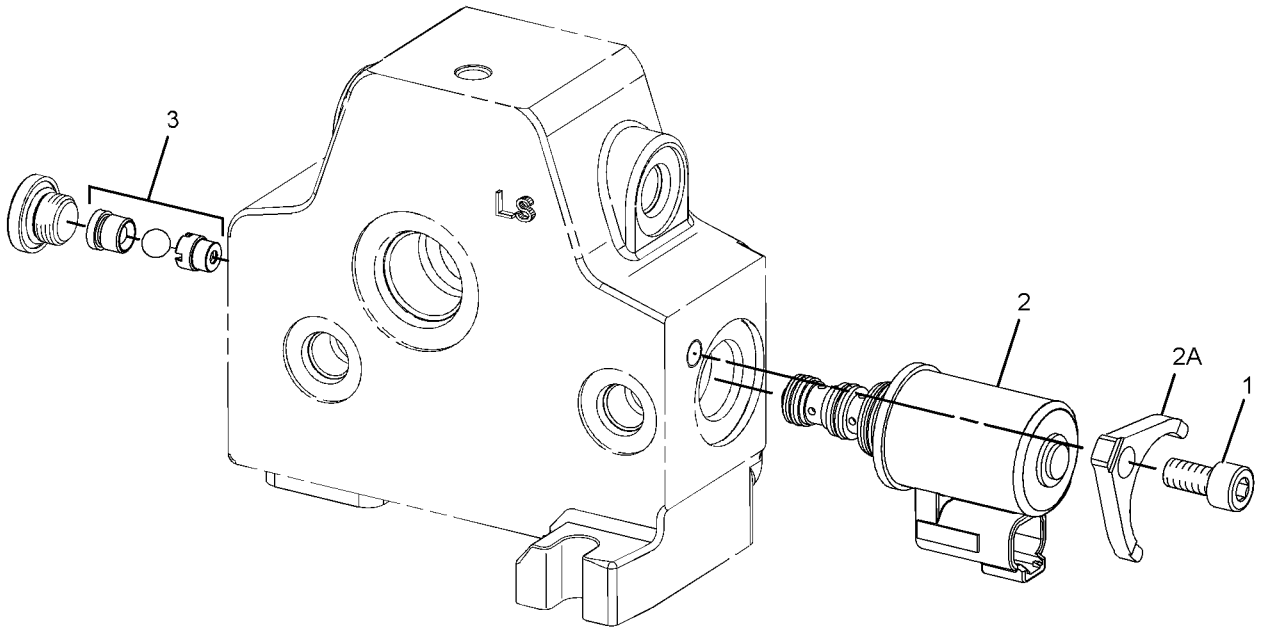

GRAPHIC #1 **<END>** g01340362

291-9652 MANIFOLD GP-CONTROL–REVERSING FAN

S/N: LBP1-UP
PART OF 256-8620 VALVE GP-CONTROL
AN ATTACHMENT

SMCS-5264 **i02665764**

NOTE	REF NO	GRAPHIC REF	PART NUMBER	QTY	PART NAME 1 2 3 4 5 6 (PRODUCT LEVEL)	SEE PAGE
Y	1	1	**211-2092**	1	VALVE GP-SOLENOID (24-VOLT) (HYDRAULIC FAN, AUTO REVERSING)	506
	2	1	**241-5895**	1	VALVE GP-SOLENOID (24-VOLT) (HYDRAULIC FAN, AUTO REVERSING)	
		1	**250-6148**	1	COIL AS (24-VOLT)	
J	3	1	**252-7010**	1	VALVE GP-DIVERTER (HYDRAULIC FAN, AUTO REVERSING)	
	4	1	**177-3868**	1	VALVE GP-CHECK	
H	5	1	**208-0886**	1	VALVE GP-RELIEF (HYDRAULIC FAN, AUTO REVERSING)	
					AVAILABLE REPAIR KIT(S):	
H			**120-9051**	1	KIT-SEAL (FAN MOTOR)	
					(INCLUDES SEALS & RINGS)	
J			**254-4493**	1	KIT-SEAL (DIVERTER VALVE)	
					(INCLUDES O-RINGS & BACK-UP RINGS)	

H-KIT MARKED H SERVICES PART(S) MARKED H
J-KIT MARKED J SERVICES PART(S) MARKED J
Y-SEPARATE ILLUSTRATION

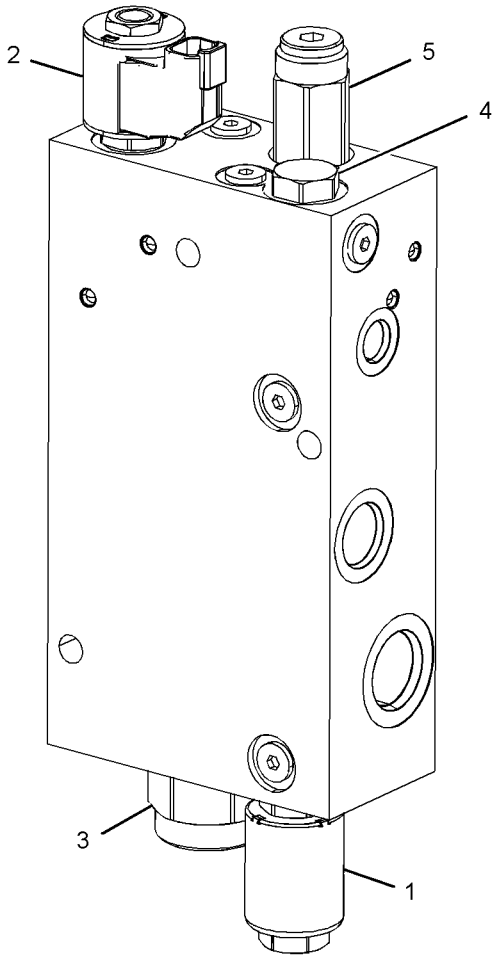

GRAPHIC #1 **<END>** g01344427

270-2609 MANIFOLD GP-VALVE–OUTLET

S/N: LBP1-UP

PART OF 247-1753, 309-1567 VALVE GP-BANK 2, 247-1749, 252-5067, 309-1568, 309-1569 VALVE GP-BANK 3, 247-1750, 309-1570 VALVE GP-BANK 4 AN ATTACHMENT

SMCS-5264 **i02663323**

NOTE	REF NO	GRAPHIC REF	PART NUMBER	QTY	PART NAME 1 2 3 4 5 6 (PRODUCT LEVEL)	SEE PAGE
	1	1	**227-1184**	1	VALVE GP-RELIEF (LOAD SENSING SIGNAL)	
	2	1	**227-1185**	1	VALVE GP-FLOW CONTROL (AUXILIARY, INLET) (OUTLET MANIFOLD)	
	3	1	**227-1197**	1	FILTER ELEMENT-OIL (FLOW REGULATOR) (OUTLET MANIFOLD)	
	4	1	**227-1198**	1	KIT-SEAL (FLOW CONTROL VALVE) (OUTLET MANIFOLD)	
					(INCLUDES SEAL-O-RINGS & RING BACK-UP)	
	5	1	**227-1199**	1	KIT-SEAL (LOAD SENSING SIGNAL RELIEF) (OUTLET MANIFOLD)	
					(INCLUDES SEAL-O-RINGS & RING BACK-UP)	
	6	1	**299-7210**	1	KIT-REGULATOR (OUTLET MANIFOLD)	
					(INCLUDES SEAL-O-RING)	
	7	1	**257-0468**	1	CAP-PROTECTION	

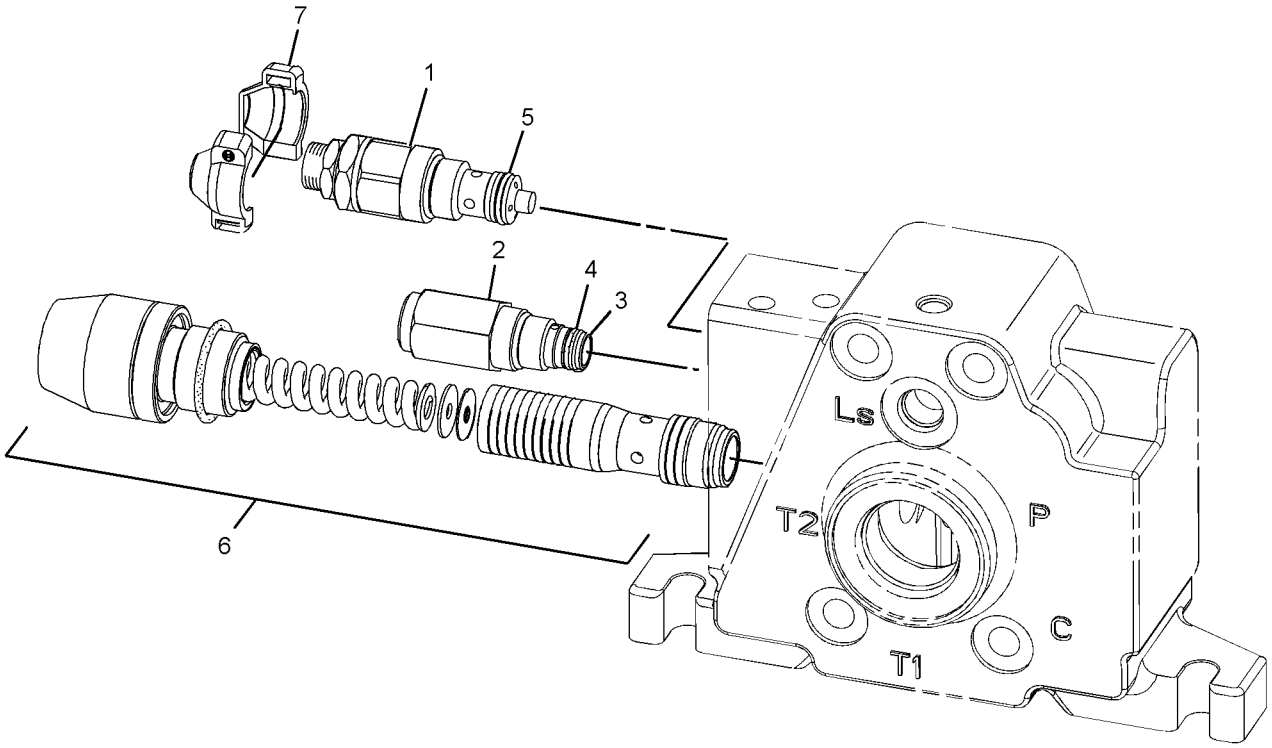

GRAPHIC #1 **<END>** g01343869

8V-7370 MOUNTING GP-CYLINDER

S/N: LBP1-UP
PART OF 283-7888 BUCKET GP-MULTIPURPOSE
AN ATTACHMENT

SMCS-6068, 7562 **i02664848**

NOTE	REF NO	GRAPHIC REF	PART NUMBER	QTY	PART NAME 1 2 3 4 5 6 (PRODUCT LEVEL)	SEE PAGE
	1	1	**9V-1097**	2	PIN AS	
	2	1	**1K-6872**	2	LOCKNUT (1/2-13-THD)	
C	3	1	**7K-9202**	4	SEAL-LIP TYPE	
C	4	1	**7K-9204**	4	SEAL-LIP TYPE	
	5	1	**7X-0333**	2	BOLT (1/2-13X4.75-IN)	
	6	1	**7X-0583**	2	WASHER-HARD (17X45X6-MM THK)	
	7	1	**8S-1069**	2	WASHER (0.656X1.125X0.5-IN THK)	
	8	1	**8T-4223**	2	WASHER-HARD (13.5X25.5X3-MM THK)	
	9	1	**8T-9393**	2	BOLT (5/8-11X1.5-IN)	
	10	1	**8V-7965**	2	PIN	

C-CHANGE FROM PREVIOUS TYPE

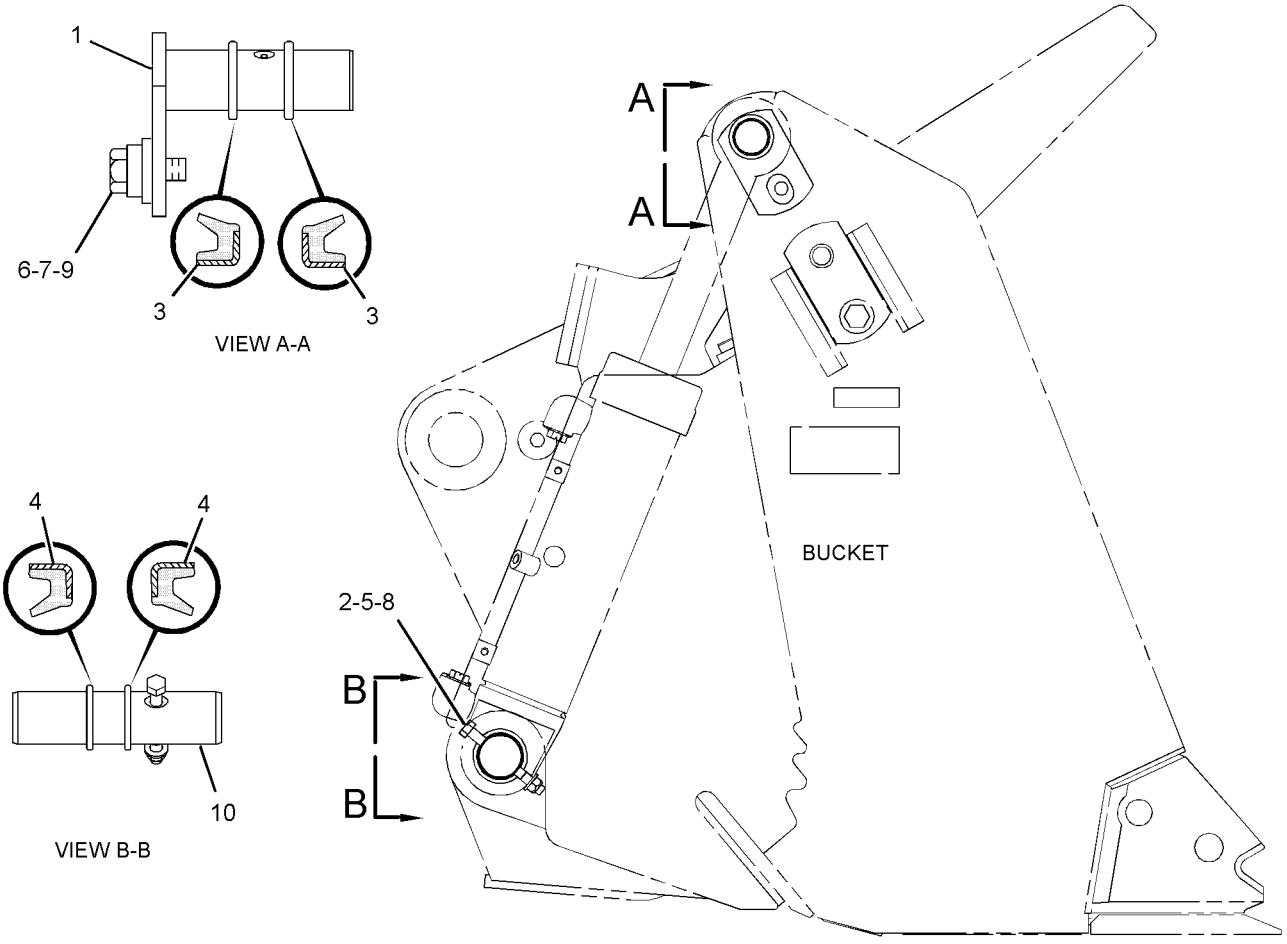

GRAPHIC #1 **<END>** g01345332

HYDRAULIC SYSTEM

242-8965 MOUNTING GP-HYDRAULIC TANK

S/N: LBP1-UP

PART OF 240-6228 HYDRAULIC AR

SMCS-5056 **i02840257**

NOTE	REF NO	GRAPHIC REF	PART NUMBER	QTY	PART NAME 1 2 3 4 5 6 (PRODUCT LEVEL)	SEE PAGE
	1	1	**8G-0841**	3	MOUNT AS	
	2	1	**095-1386**	2	CLAMP-HOSE	
	3	1	**2B-0941**	1	SPACER (10.5X19X19-MM THK)	
	4	1	*150-3030*	1	ELBOW AS	
		1	**7X-1448**	1	ELBOW	
		1	**3J-1907**	1	SEAL-O-RING	
	5	1	**183-3873**	1	BREATHER (HYDRAULIC TANK)	
	6	1	**245-4824**	3	WASHER-HARD (16.2X58.2X6.2-MM THK)	
	7	1	**278-0875**	2	WASHER (16.2X80X6-MM THK)	
	8	1	**278-0880**	1	BRACKET AS	
	9	1	**279-1532**	1	WASHER (16.2X80X10-MM THK)	
	10	1	**280-2453**	1	HOSE	
	11	1	**198-4777**	3	WASHER-HARD (11X25X10-MM THK)	
	12	1	**198-4780**	3	WASHER-HARD (17.5X32X8-MM THK)	
	13	1	**3B-6488**	1	COUPLING-PIPE	
	14	1	**5P-4566**	1	ELBOW	
	15	1	**8M-2773**	1	CLIP	
	16	1	**9X-2027**	1	WASHER (11X18X2-MM THK)	
M	17	1	**8T-4185**	1	BOLT (M10X1.5X50-MM)	
M	18	1	**8T-4173**	3	BOLT (M16X2X110-MM)	
M	19	1	**8T-4186**	3	BOLT (M10X1.5X40-MM)	
M	20	1	**8T-4778**	3	LOCKNUT (M16X2-THD)	

M-METRIC PART

242-8965 **MOUNTING GP-HYDRAULIC TANK** *(contd.)* **i02840257**

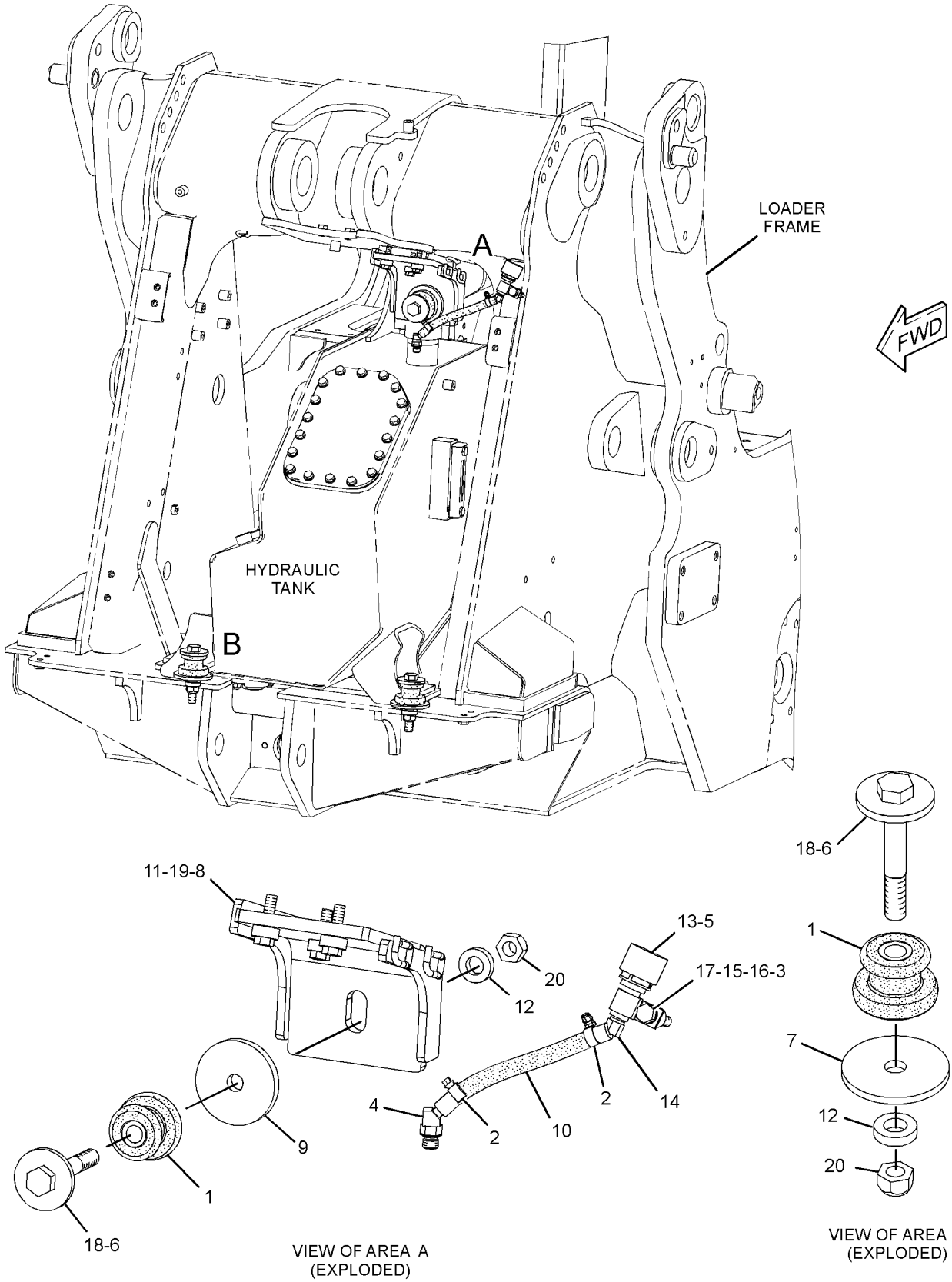

GRAPHIC #1 **<END>** g01424387

HYDRAULIC SYSTEM

274-7769 MOUNTING GP-PUMP–HYDROSTATIC DRIVE

S/N: LBP1-UP

PART OF 240-6226 POWER TRAIN AR

SMCS-3203, 5062, 5070 **i02713205**

NOTE	REF NO	GRAPHIC REF	PART NUMBER	QTY	PART NAME 1 2 3 4 5 6 (PRODUCT LEVEL)	SEE PAGE
	1	1	**1P-2943**	1	PLUG-BREATHER	
	2	1	**249-3973**	1	HOUSING	
	3	1	**274-7770**	1	BRACKET AS	
	4	1	**8T-4121**	12	WASHER-HARD (11X21X2.5-MM THK)	
M	5	1	**8T-7338**	6	BOLT (M16X2X45-MM)	
M	6	1	**8T-4198**	4	BOLT (M10X1.5X100-MM)	
M	7	1	**8T-6466**	8	BOLT (M10X1.5X60-MM)	
	8	1	**9X-8257**	6	WASHER (17.5X30X3.5-MM THK)	

M-METRIC PART

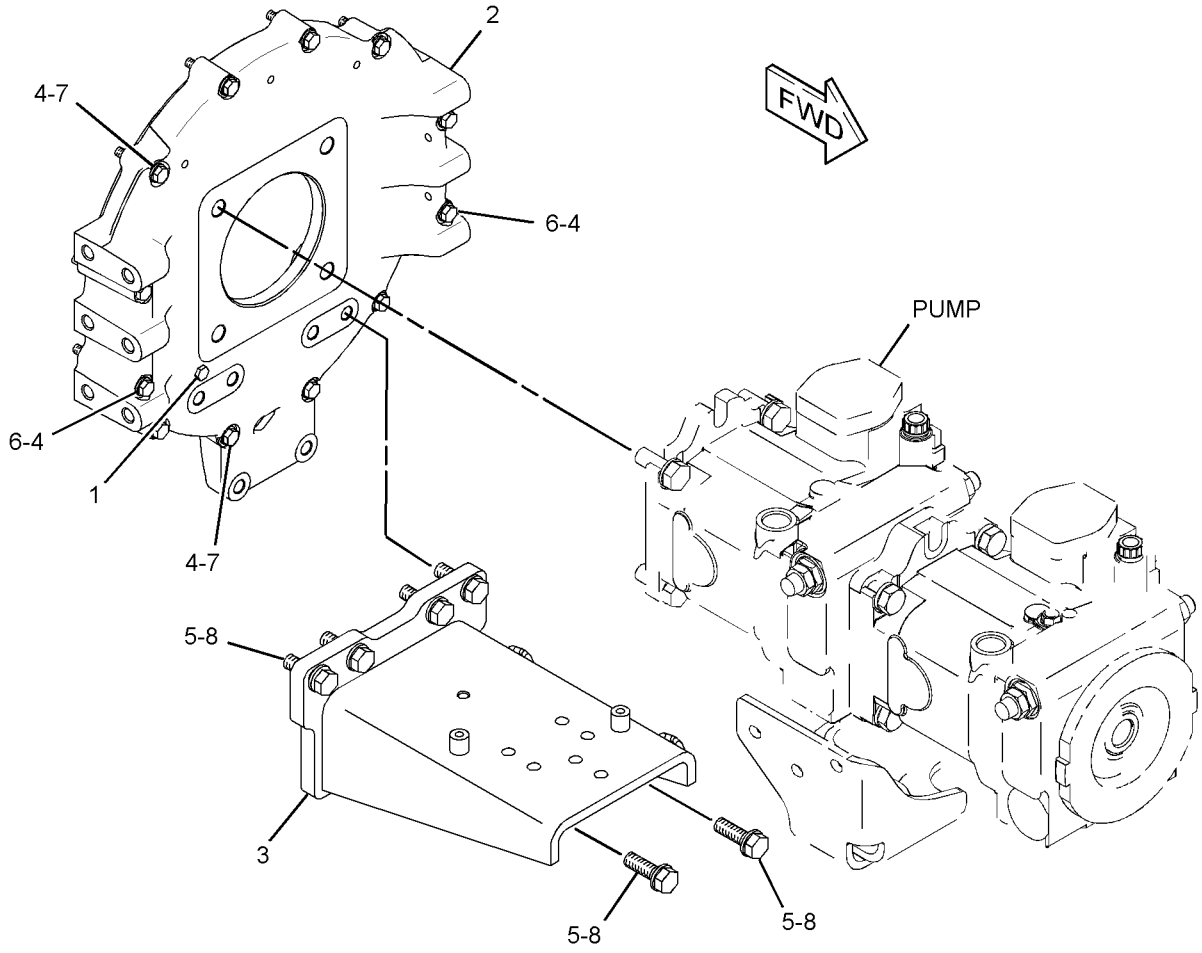

GRAPHIC #1 **<END>** g01336806

253-4895 MOUNTING GP-VALVE–CONTROL

S/N: LBP1-UP

PART OF 240-6228 HYDRAULIC AR

SMCS-5051 **i02674901**

NOTE	REF NO	GRAPHIC REF	PART NUMBER	QTY	PART NAME 1 2 3 4 5 6 (PRODUCT LEVEL)	SEE PAGE
	1	1	**299-0057**	1	BRACKET AS	
	2	1	**198-4777**	7	WASHER-HARD (11X25X10-MM THK)	
M	3	1	**8T-4186**	4	BOLT (M10X1.5X40-MM)	
M	4	1	**8T-6466**	3	BOLT (M10X1.5X60-MM)	

M-METRIC PART

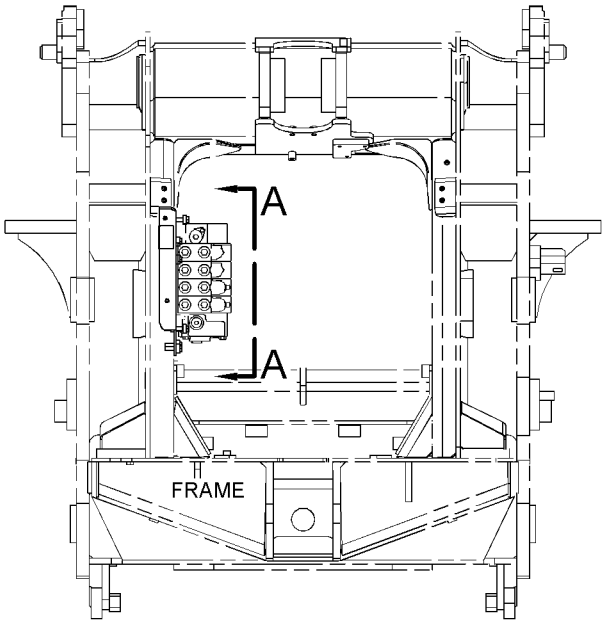

FRONT VIEW

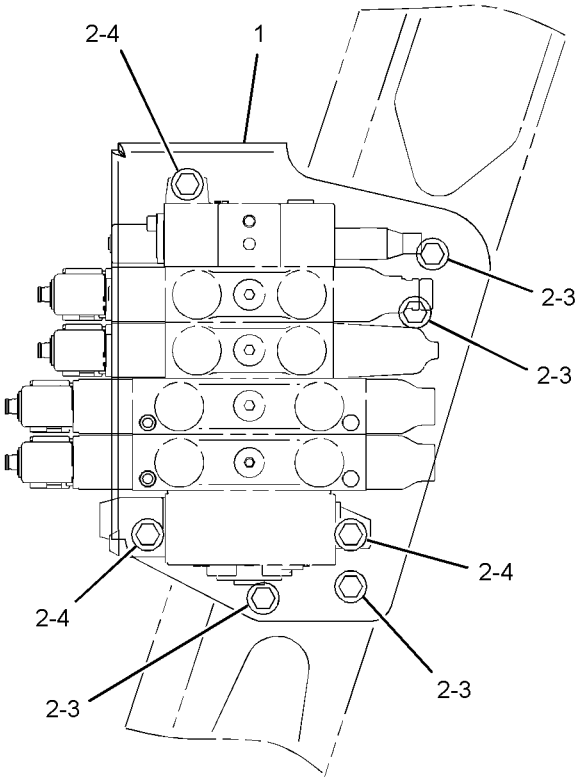

VIEW A-A

GRAPHIC #1 **<END>** g01336522

HYDRAULIC SYSTEM

273-5561 PUMP & LINES GP—HYDRAULIC FAN

S/N: LBP1-UP

PART OF 240-6226 POWER TRAIN AR

SMCS-5057, 5084 **i02741341**

NOTE	REF NO	GRAPHIC REF	PART NUMBER	QTY	PART NAME 1 2 3 4 5 6 (PRODUCT LEVEL)	SEE PAGE
	1	1	**138-7500**	1	SPACER (11X25X50-MM THK)	
	2	2	**139-1773**	2	ELBOW	
	3	1	**223-1395**	1	BRACKET AS	
W	4	1	**251-9555**	1	PUMP GP-GEAR (HYDRAULIC FAN)	
	5	1	**263-8727**	2	BRACKET AS	
	6	1	**266-2058**	1	SPACER	
I	7	1	**273-5562**	1	HOSE AS	
	8	1	**278-4144**	1	HOSE	
	9	1	**278-4147**	1	TUBE AS	
I	10	2	**279-4343**	1	HOSE AS	
	11	1	**283-0557**	1	PLATE AS	
M		1	**8T-3490**	1	NUT-WELD (M10X1.5-THD)	
I	12	2	**176-6755**	1	HOSE AS	
	13	2	**298-5884**	1	HOSE AS	
I	14	2	**298-5885**	1	HOSE AS	
	15	2	*148-8316*	1	CONNECTOR AS	
		2	**6V-8647**	1	CONNECTOR	
		2	**3J-7354**	1	SEAL-O-RING	
		2	**4J-5477**	1	SEAL-O-RING	
	16	1	**149-7738**	3	CLIP	
	17	1,2	**198-4777**	4	WASHER-HARD (11X25X10-MM THK)	
	18	1	**1P-3705**	1	SEAL-RECTANGULAR	
	19	1,2	**4J-5267**	6	SEAL-O-RING	
	20	1	**6V-1889**	2	CLIP	
	21	2	**7J-9108**	2	SEAL-O-RING	
	22	1	**7X-7729**	2	WASHER (11X25X3-MM THK)	
	23	1,2	**8C-3205**	6	FLANGE-HALF	
	24	2	**8M-2773**	1	CLIP	
	25	1	**8T-1887**	1	CLIP (SLOT)	
	26	1	**8T-1888**	1	CLIP (TAB)	
	27	1,2	**8T-4121**	29	WASHER-HARD (11X21X2.5-MM THK)	
M	28	1	**8T-4133**	4	NUT (M10X1.5-THD)	
M	29	1	**8T-4136**	3	BOLT (M10X1.5X25-MM)	
M	30	1	**8T-4178**	1	BOLT (M10X1.5X90-MM)	
M	31	1	**8T-4183**	2	BOLT (M12X1.75X40-MM)	
M	32	2	**8T-4185**	8	BOLT (M10X1.5X50-MM)	
M	33	2	**8T-4186**	8	BOLT (M10X1.5X40-MM)	
M	34	1,2	**8T-4195**	2	BOLT (M10X1.5X30-MM)	
	35	1	**8T-4223**	2	WASHER-HARD (13.5X25.5X3-MM THK)	
	36	1	**8T-4983**	2	CLAMP-HOSE	
M	37	1	**8T-5005**	4	BOLT (M10X1.5X70-MM)	
M	38	1	**8T-6466**	4	BOLT (M10X1.5X60-MM)	
	39	2	*304-8026*	1	TEE AS	
		2	**6V-9746**	1	SEAL-O-RING	
		2	**304-8025**	1	TEE	
	40	2	**8C-3451**	1	CAP-DUST	
	41	2	*164-5590*	1	VALVE AS-FLUID SAMPLING	
		2	**3J-7354**	1	SEAL-O-RING	
		2	**8C-3446**	1	VALVE-FLUID SAMPLING	
					AVAILABLE REPAIR KIT(S):	
W			**287-6607**	1	KIT-SEAL (GEAR PUMP)	
					(INCLUDES SEALS, BACK-UP STRIPS, SEAL-O-RINGS, & RETAINING RING)	

I-REFER TO HYDRAULIC INFORMATION SYSTEM
M-METRIC PART
W-KIT MARKED W SERVICES PART(S) MARKED W

REFER TO ALL ILLUSTRATIONS OF
THIS GROUP FOR AUXILIARY VIEWS

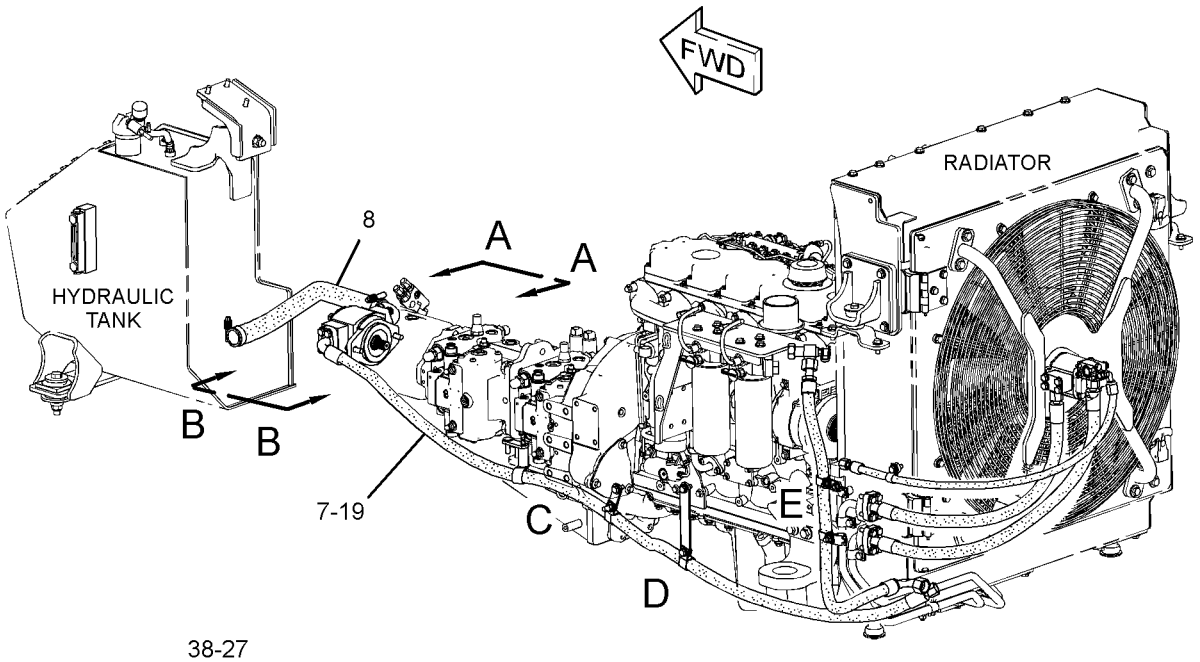

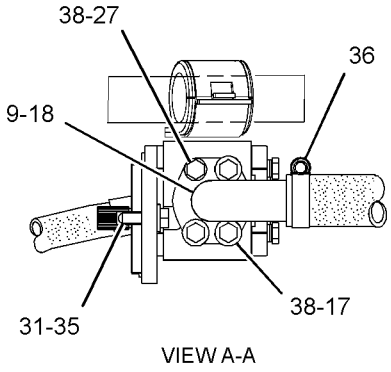

VIEW A-A

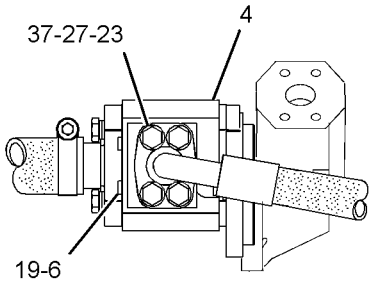

VIEW B-B

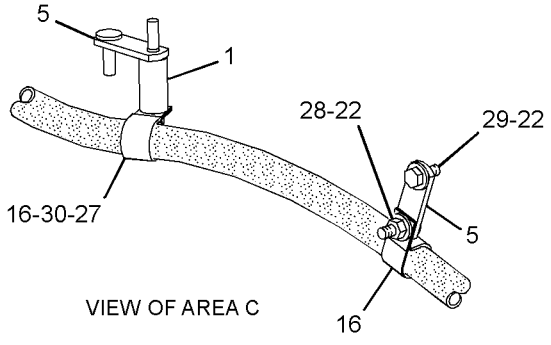

VIEW OF AREA C

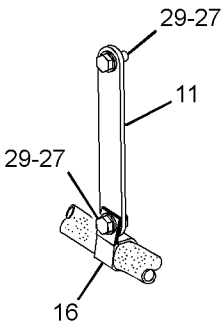

VIEW OF AREA D

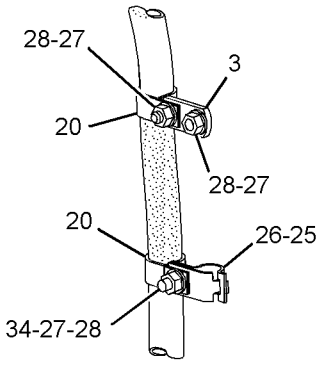

VIEW OF AREA E

GRAPHIC #1 g01380542

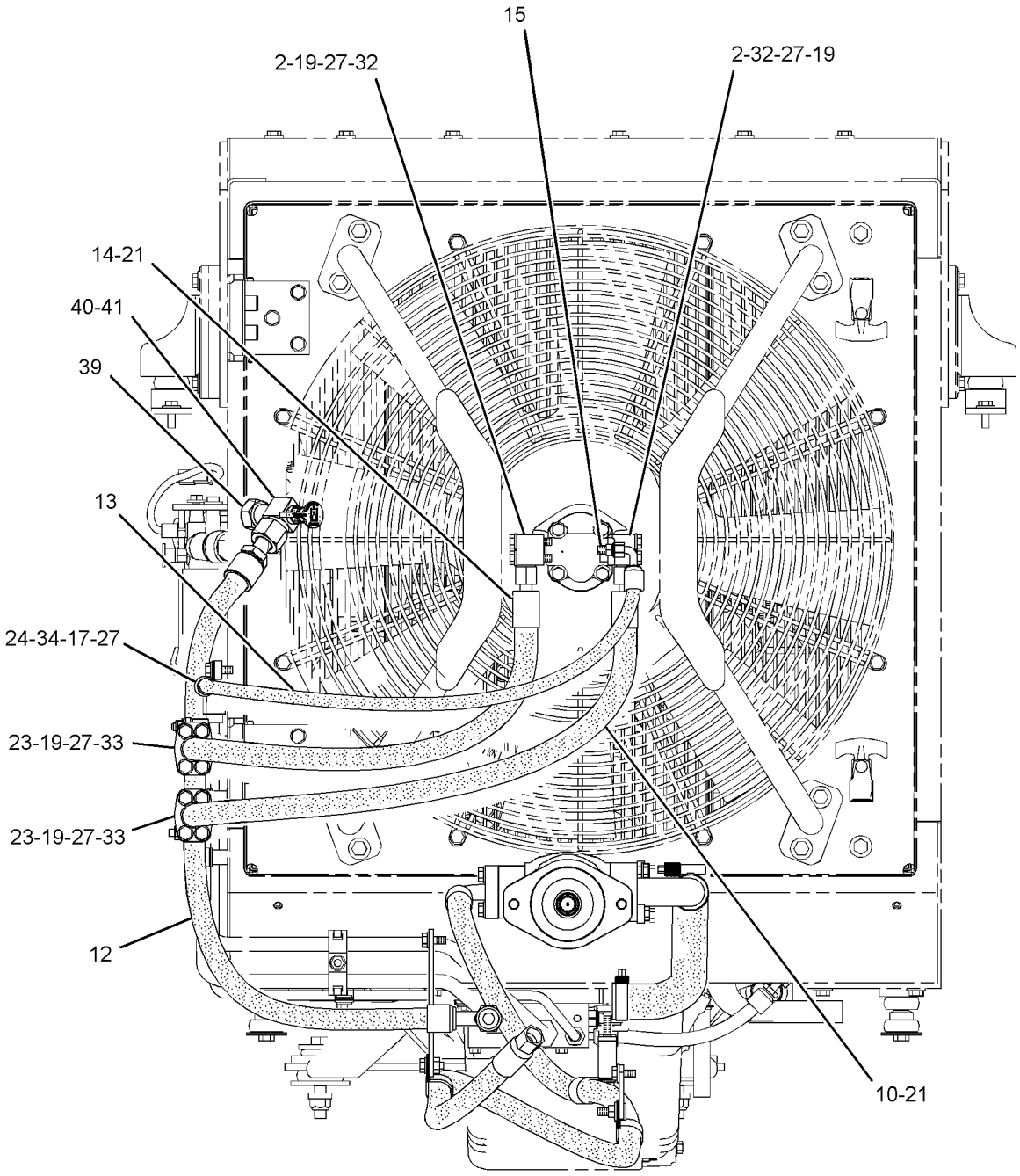

REAR VIEW

GRAPHIC #2 **<END>** g01380544

HYDRAULIC SYSTEM

282-4076 PUMP GP-HAND–CAB TILT

S/N: LBP1-UP

PART OF 279-8104 TILT GP-PLATFORM

AN ATTACHMENT

SMCS-0615 **i02662847**

NOTE	PART NUMBER	QTY	PART NAME 1 2 3 4 5 6 (PRODUCT LEVEL)	SEE PAGE
			NO BREAKDOWN OF SERVICEABLE PARTS AVAILABLE AT TIME OF PUBLICATION	

<END>

HYDRAULIC SYSTEM

252-2679 PUMP GP-PISTON–IMPLEMENT

S/N: LBP1-UP

PART OF 274-6619 LINES GP-PUMP

SMCS-5070 **i02704069**

NOTE	REF NO	GRAPHIC REF	PART NUMBER	QTY	PART NAME 1 2 3 4 5 6 (PRODUCT LEVEL)	SEE PAGE
	1	1	**180-6213**	1	RING-RETAINING	
	2	1	**6E-4003**	2	BEARING	
	3	1	**280-0954**	1	ROTATING GP-PUMP (IMPLEMENT PISTON PUMP)	
	4	1	**3E-6769**	4	SEAL-O-RING	
M	5	1	**095-9805**	4	BOLT-SOCKET HEAD (M14X2X40-MM)	
	6	1	**1P-6872**	1	CUP-BEARING	
	7	1	**8C-7110**	1	CONE-BEARING	
Y	8	1	**285-7612**	1	VALVE GP-PUMP CONTROL (PRESSURE, FLOW COMPENSATOR) (IMPLEMENT)	501
	9	1	**6E-4000**	1	SPACER (25.5X35X3-MM THK)	
	10	1	**3E-6770**	1	SEAL-O-RING	
	11	1	**6E-3264**	1	CYLINDER	
	12	1	**6E-3265**	1	SPRING	
	13	1	**6E-3263**	1	PISTON	
	14	1	**9S-8006**	1	PLUG-O-RING	
	15	1	**2M-9780**	1	SEAL-O-RING	
	16	1	**280-0957**	1	SHAFT-DRIVE	
	17	1	**8J-0412**	1	CUP-BEARING	
	18	1	**3P-1210**	1	CONE-BEARING	
	19	1	**6E-4004**	1	SEAL-SHAFT	
	20	1	**305-1988**	1	SWASHPLATE AS	
	21	1	**120-5727**	1	PISTON-CONTROL	
	22	1	**120-5729**	1	GUIDE-PISTON	
	23	1	**9X-8979**	1	DOWEL	
M	24	1	**6V-8200**	2	BOLT-SOCKET HEAD (M12X1.75X35-MM)	
	25	1	**280-0958**	1	COUPLING-SHAFT	
	26	1	**118-3122**	1	SEAL-O-RING	
	27	1	**8T-4223**	2	WASHER-HARD (13.5X25.5X3-MM THK)	
	28	1	**284-1172**	1	SPACER	
M	29	1	**8T-8442**	4	BOLT-SOCKET HEAD (M6X1X30-MM)	
	30	1	**280-7870**	1	GASKET	

M-METRIC PART
Y-SEPARATE ILLUSTRATION

252-2679 **PUMP GP-PISTON** *(contd.)* **i02704069**

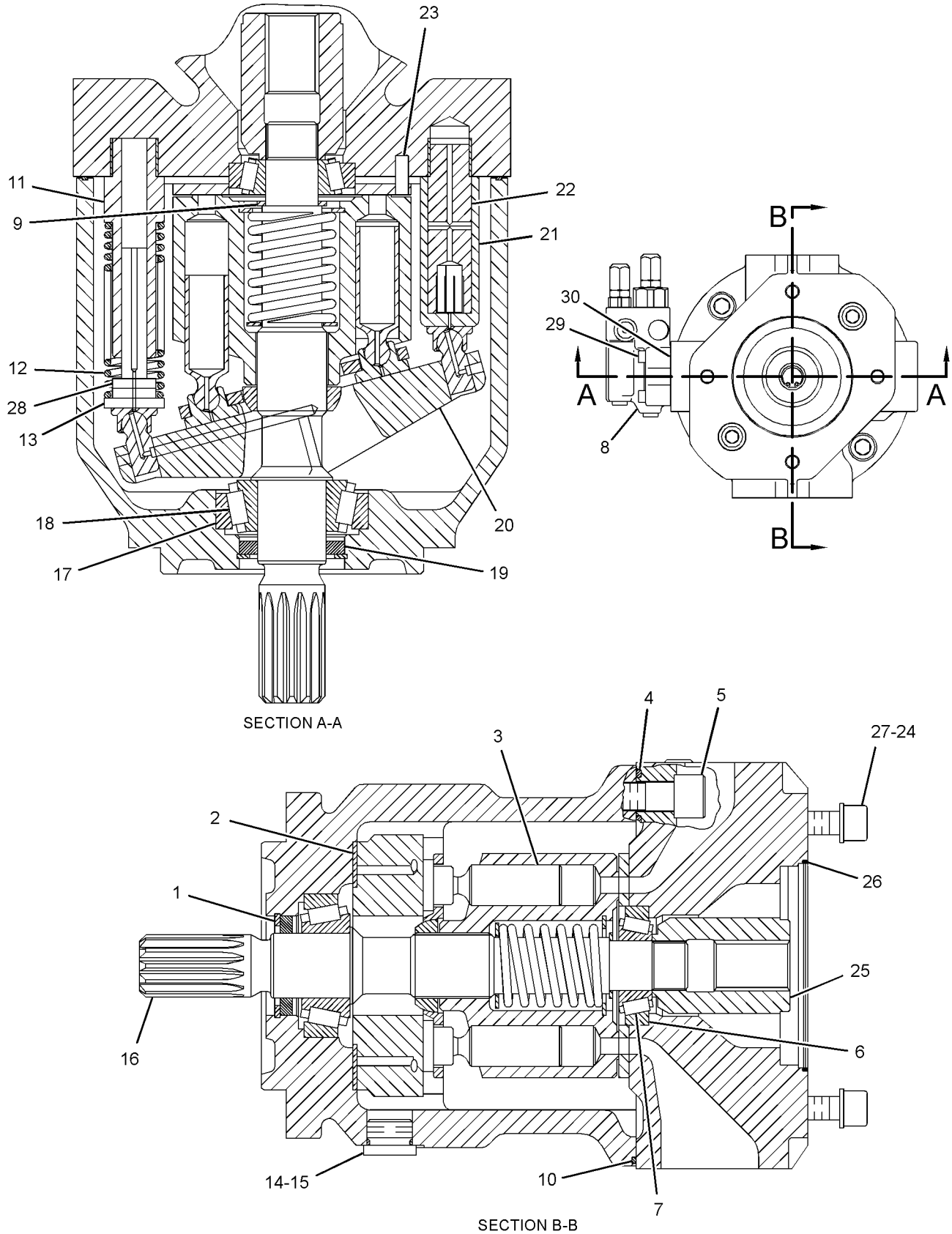

GRAPHIC #1 **<END>** g01340804

HYDRAULIC SYSTEM

280-2053 TANK GP-HYDRAULIC

S/N: LBP1-UP

PART OF 240-6228 HYDRAULIC AR

SMCS-5056 **i03321201**

NOTE	REF NO	GRAPHIC REF	PART NUMBER	QTY	PART NAME 1 2 3 4 5 6 (PRODUCT LEVEL)	SEE PAGE
	1	1	**1U-2827**	1	GUIDE-VALVE	
	2	1	**6H-5139**	1	PLATE-PRESSURE	
	3	1	**7B-3039**	1	SPRING	
	4	1	**8J-8782**	1	BODY-DRAIN VALVE	
	5	1	**8J-8783**	1	VALVE	
	6	1	**8T-3298**	1	SEAL-RECTANGULAR	
	7	1	**9J-3047**	1	STRAINER (HYDRAULIC TANK FILL)	
	8	1	**9J-7031**	1	PLUG-DRAIN (HYDRAULIC TANK)	
	9	1	**142-8929**	1	SCREEN-SUCTION (HYDRAULIC TANK) (HYDROSTATIC PUMP OIL)	
	9A	1	**142-8929**	1	SCREEN-SUCTION (HYDRAULIC TANK) (HYDRAULIC FAN OIL)	
	10	1	**322-9703**	1	SCREEN-SUCTION (HYDRAULIC TANK) (IMPLEMENT OIL)	
	11	1	**256-6453**	1	SENSOR AS-TEMPERATURE (HYDRAULIC TANK OIL)	
	12	1	**269-1844**	1	GASKET	
	13	1	**269-1845**	1	COVER	
	15	1	**282-2408**	1	PLATE	
	16	1	**282-8424**	1	GAUGE-LIQUID LEVEL (SIGHT GLASS) (HYDRAULIC TANK)	
	17	1	**3G-0361**	1	GASKET	
	18	1	**3K-0360**	1	SEAL-O-RING	
	19	1	**4B-9782**	1	BALL	
	20	1	**5K-1568**	1	CAP-FILLER (HYDRAULIC TANK)	
	21	1	**5M-2057**	1	SEAL-O-RING	
	22	1	**6V-5839**	3	WASHER (11X21X2.5-MM THK)	
M	23	1	**6V-7732**	2	BOLT (M10X1.5X25-MM)	
M	24	1	**6V-7744**	3	LOCKNUT (M10X1.5-THD)	
	25	1	**8T-4121**	20	WASHER-HARD (11X21X2.5-MM THK)	
M	26	1	**8T-4137**	18	BOLT (M10X1.5X20-MM)	
	27	1	**9H-6454**	1	GASKET	

M-METRIC PART

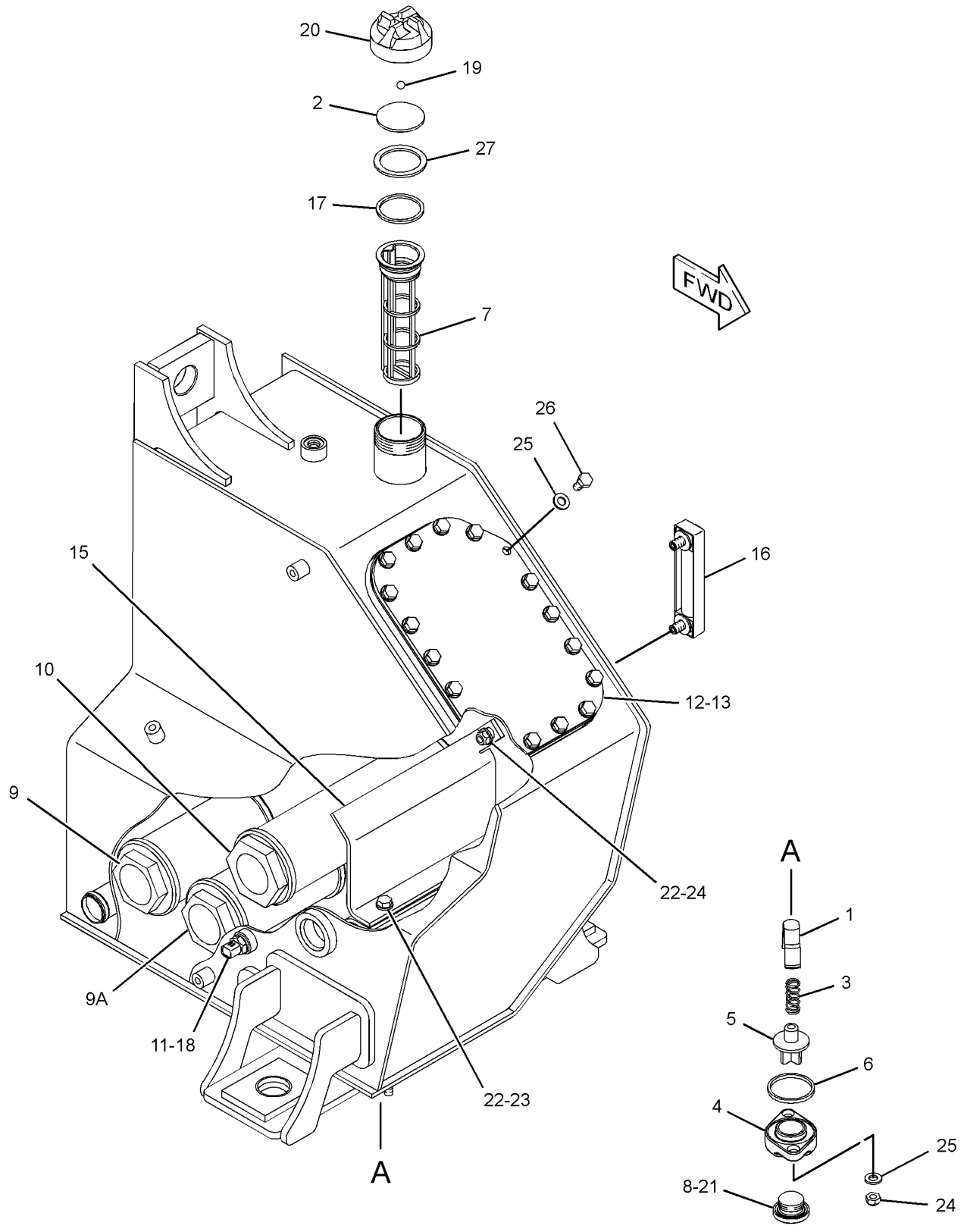

GRAPHIC #1 **<END>** g01339301

247-1753 VALVE GP-BANK 2–BUCKET LIFT, TILT

S/N: LBP1-UP
PART OF 252-0240 HYDRAULIC AR-2 VALVE
AN ATTACHMENT

SMCS-5051 **i02957135**

NOTE	REF NO	GRAPHIC REF	PART NUMBER	QTY	PART NAME 1 2 3 4 5 6 (PRODUCT LEVEL)	SEE PAGE
Y	1	1	**270-2610**	1	MANIFOLD GP-CONTROL (INLET)	460
Y	2	1	**270-2611**	1	VALVE GP-CONTROL (BUCKET TILT)	491
Y	3	1	**270-2612**	1	VALVE GP-CONTROL (BUCKET LIFT)	492
Y	4	1	**270-2609**	1	MANIFOLD GP-VALVE (OUTLET)	462
	5	1	**257-0449**	1	KIT-FASTENER (BANK VALVE)	
					(INCLUDES LOCKNUTS AND TIE RODS)	
	6	1	**4J-5309**	12	SEAL-O-RING	
	7	1	**6V-5326**	3	SEAL-O-RING	
	8	1	**6V-8978**	3	SEAL-O-RING	

Y-SEPARATE ILLUSTRATION

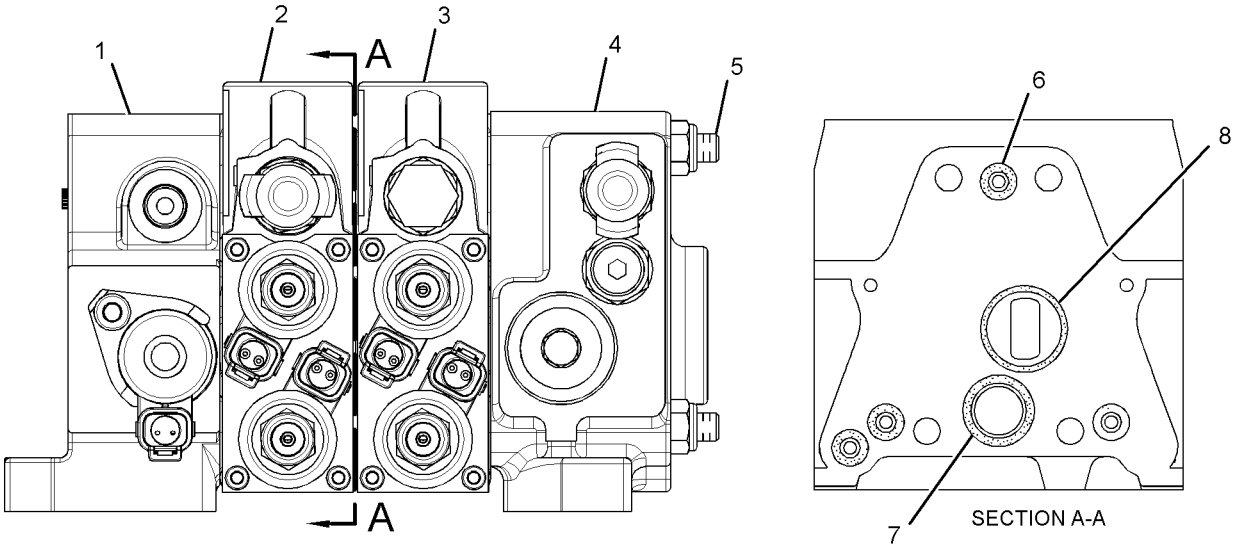

GRAPHIC #1 **<END>** g01458005

309-1567 VALVE GP-BANK 2–BUCKET LIFT, TILT

S/N: LBP700-UP

PART OF 252-0240 HYDRAULIC AR-2 VALVE

AN ATTACHMENT

SMCS-5051 **i03177720**

NOTE	REF NO	GRAPHIC REF	PART NUMBER	QTY	PART NAME 1 2 3 4 5 6 (PRODUCT LEVEL)	SEE PAGE
Y	1	1	**270-2610**	1	MANIFOLD GP-CONTROL (INLET)	460
Y	2	1	**320-3625**	1	VALVE GP-CONTROL (BUCKET TILT)	495
Y	3	1	**320-3626**	1	VALVE GP-CONTROL (BUCKET LIFT)	496
Y	4	1	**270-2609**	1	MANIFOLD GP-VALVE (OUTLET)	462
	5	1	**257-0449**	1	KIT-FASTENER	
					(INCLUDES LOCKNUTS & TIERODS)	
	6	1	**4J-5309**	12	SEAL-O-RING	
	7	1	**6V-5326**	3	SEAL-O-RING	
	8	1	**6V-8978**	3	SEAL-O-RING	

Y-SEPARATE ILLUSTRATION

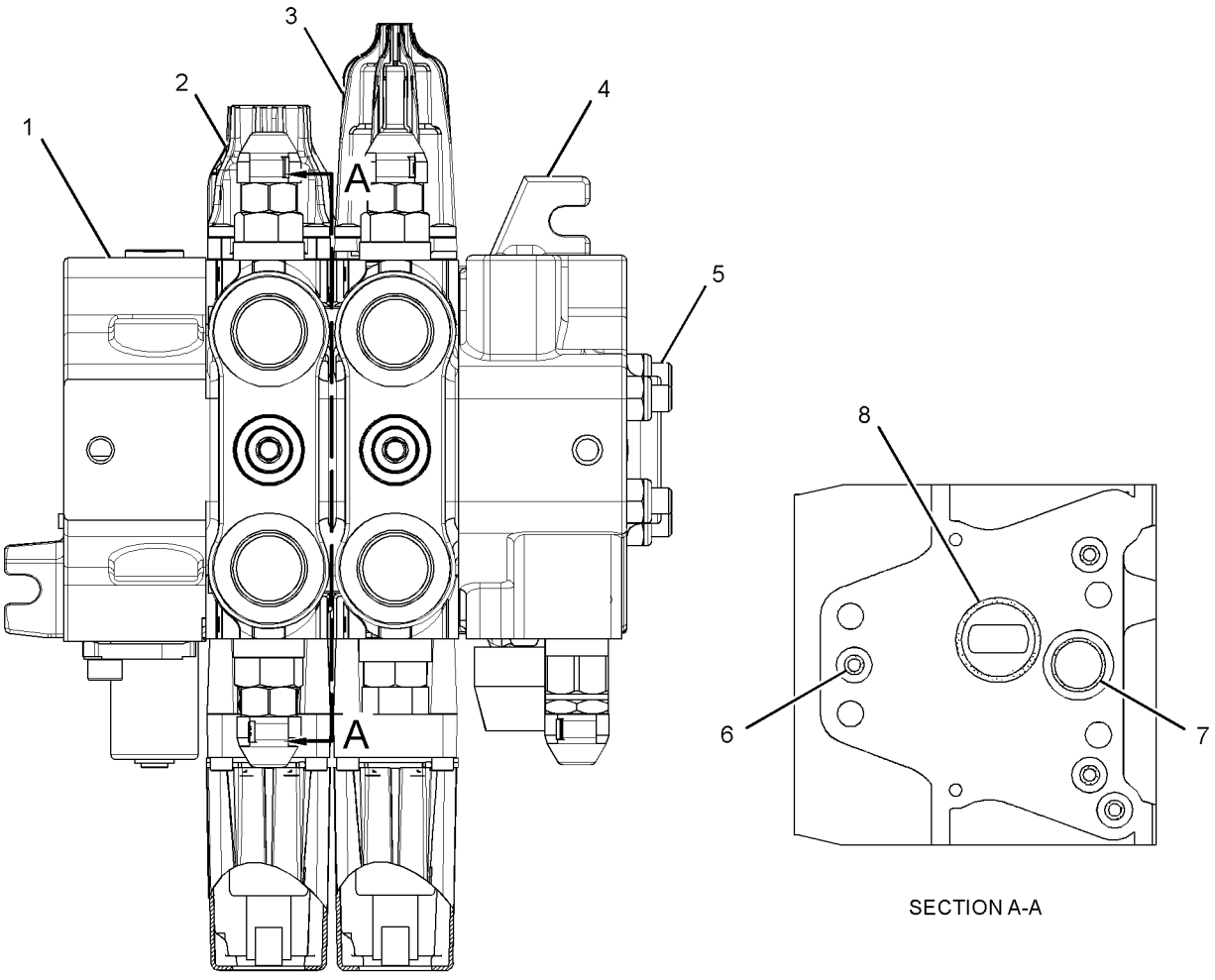

SECTION A-A

GRAPHIC #1 **<END>** g01650373

247-1749 VALVE GP-BANK 3–BUCKET CONTROL

S/N: LBP1-UP
PART OF 252-0241 HYDRAULIC AR-3 VALVE
AN ATTACHMENT

SMCS-5051 **i03587920**

NOTE	REF NO	GRAPHIC REF	PART NUMBER	QTY	PART NAME 1 2 3 4 5 6 (PRODUCT LEVEL)	SEE PAGE
Y	1	1	**270-2610**	1	MANIFOLD GP-CONTROL (INLET)	460
Y	2	1	**270-2611**	1	VALVE GP-CONTROL (BUCKET TILT)	491
Y	3	1	**270-2612**	1	VALVE GP-CONTROL (BUCKET LIFT)	492
Y	4	1	**270-2613**	1	VALVE GP-CONTROL (MULTIPURPOSE BUCKET)	493
Y	5	1	**270-2609**	1	MANIFOLD GP-VALVE (OUTLET)	462
	6	1	**257-0443**	1	KIT-FASTENER (BANK VALVE)	
					(INCLUDES LOCKNUTS & TIE RODS)	
	7	1	**4J-5309**	16	SEAL-O-RING	
	8	1	**6V-5326**	4	SEAL-O-RING	
	9	1	**6V-8978**	4	SEAL-O-RING	

Y-SEPARATE ILLUSTRATION

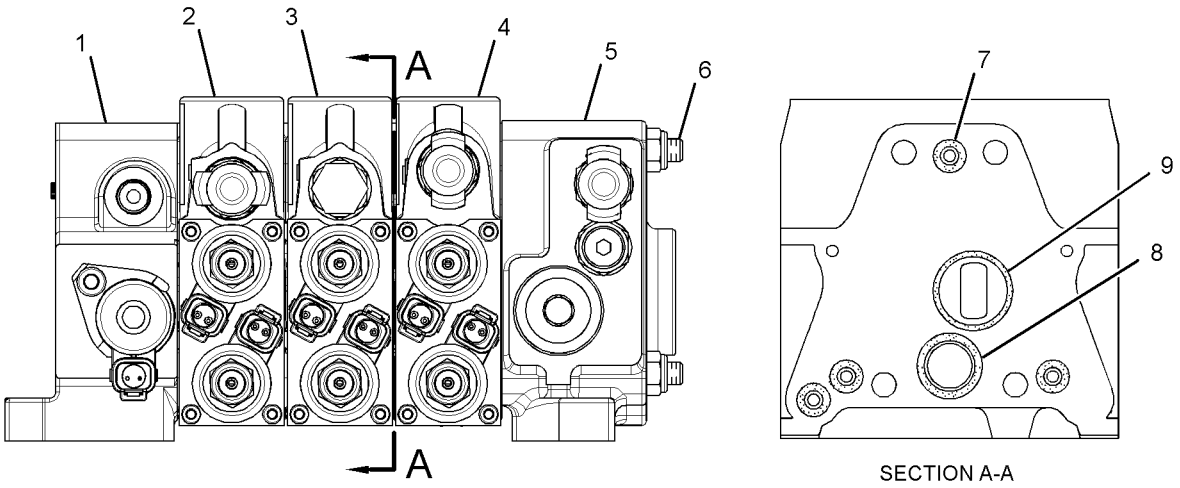

SECTION A-A

GRAPHIC #1 **<END>** g01457443

252-5067 VALVE GP-BANK 3—BUCKET CONTROL, RIPPER

S/N: LBP1-UP

PART OF 252-0242 HYDRAULIC AR-3 VALVE

AN ATTACHMENT

SMCS-5051 **i02664814**

NOTE	REF NO	GRAPHIC REF	PART NUMBER	QTY	PART NAME 1 2 3 4 5 6 (PRODUCT LEVEL)	SEE PAGE
Y	1	1	**270-2610**	1	MANIFOLD GP-CONTROL (INLET)	460
Y	2	1	**270-2611**	1	VALVE GP-CONTROL (BUCKET TILT)	491
Y	3	1	**270-2612**	1	VALVE GP-CONTROL (BUCKET LIFT)	492
Y	4	1	**270-2614**	1	VALVE GP-CONTROL (RIPPER)	494
Y	5	1	**270-2609**	1	MANIFOLD GP-VALVE (OUTLET)	462
	6	1	**257-0443**	1	KIT-FASTENER	
					(INCLUDES TIE-RODS & LOCKNUTS)	
	7	1	**4J-5309**	16	SEAL-O-RING	
	8	1	**6V-5326**	4	SEAL-O-RING	
	9	1	**6V-8978**	4	SEAL-O-RING	

Y-SEPARATE ILLUSTRATION

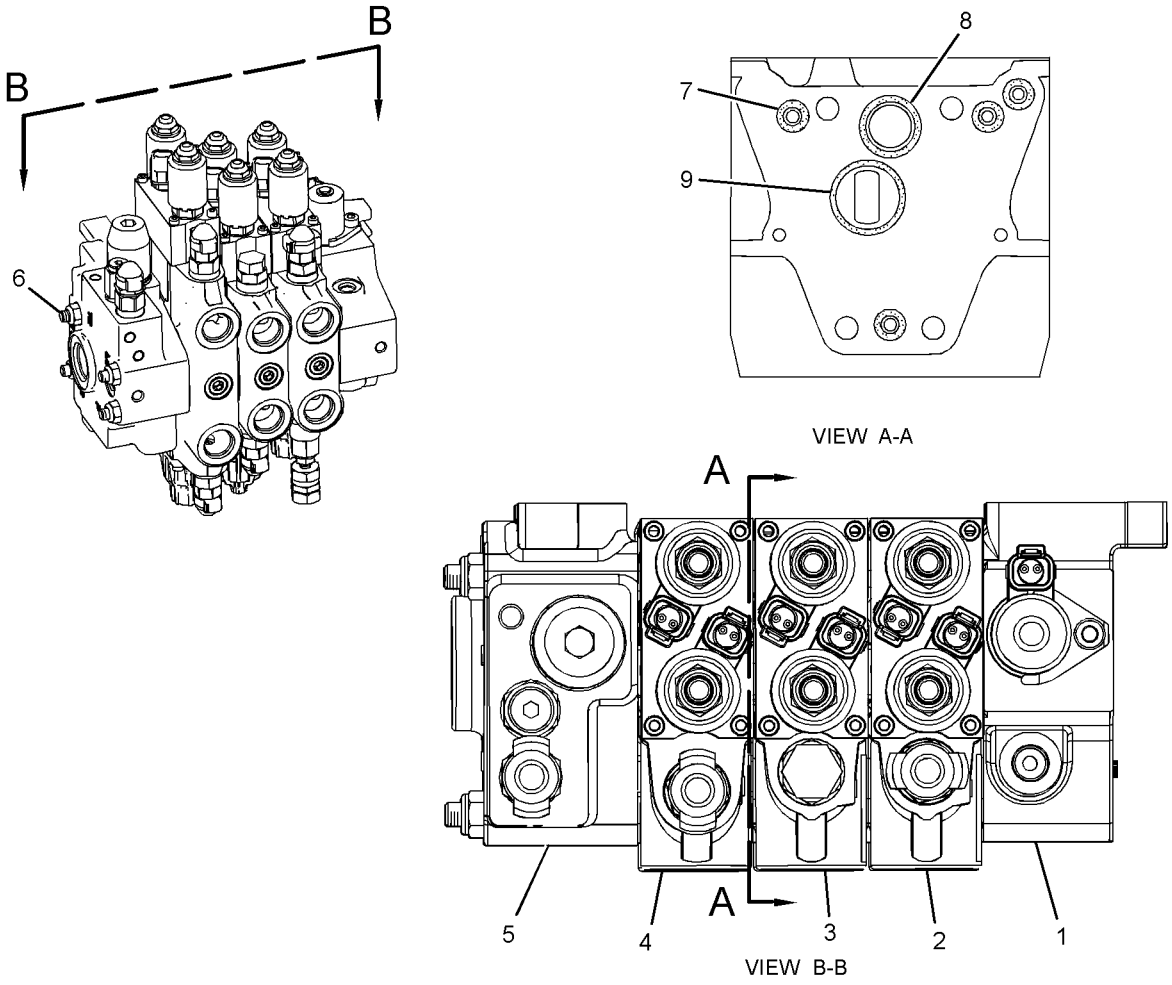

GRAPHIC #1 **<END>** g01345236

252-5067 VALVE GP-BANK 3—BUCKET CONTROL, RIPPER

S/N: LBP1-822
PART OF 252-0242 HYDRAULIC AR-3 VALVE
AN ATTACHMENT

SMCS-5051 **i02921125**

NOTE	REF NO	GRAPHIC REF	PART NUMBER	QTY	PART NAME 1 2 3 4 5 6 (PRODUCT LEVEL)	SEE PAGE
Y	1	1	**270-2610**	1	MANIFOLD GP-CONTROL (INLET)	460
Y	2	1	**270-2611**	1	VALVE GP-CONTROL (BUCKET TILT)	491
Y	3	1	**270-2612**	1	VALVE GP-CONTROL (BUCKET LIFT)	492
Y	4	1	**270-2614**	1	VALVE GP-CONTROL (RIPPER)	494
Y	5	1	**270-2609**	1	MANIFOLD GP-VALVE (OUTLET)	462
	6	1	**257-0443**	1	KIT-FASTENER	
					(INCLUDES TIE-RODS & LOCKNUTS)	
	7	1	**4J-5309**	16	SEAL-O-RING	
	8	1	**6V-5326**	4	SEAL-O-RING	
	9	1	**6V-8978**	4	SEAL-O-RING	

Y-SEPARATE ILLUSTRATION

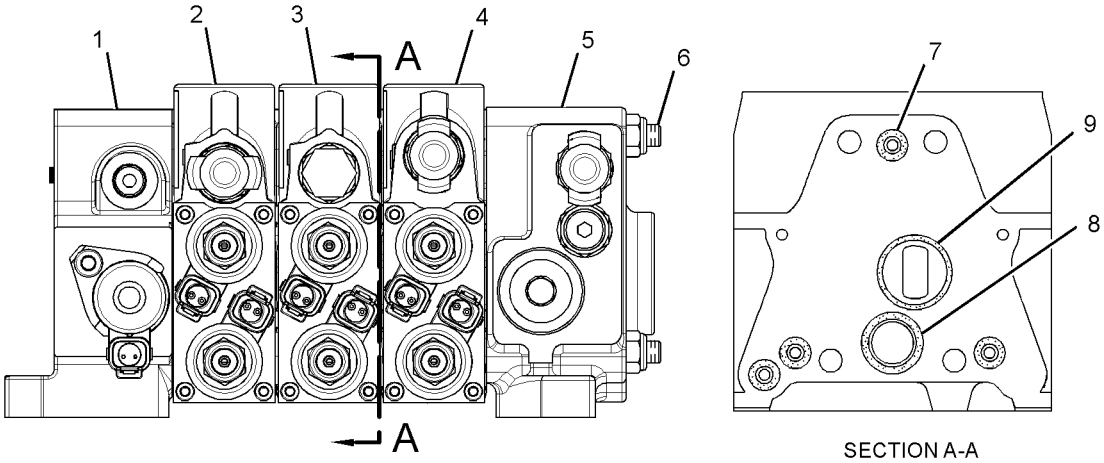

SECTION A-A

GRAPHIC #1 **<END>** g01461145

309-1568 VALVE GP-BANK 3—BUCKET CONTROL, RIPPER

S/N: LBP700-UP

PART OF 252-0241 HYDRAULIC AR-3 VALVE

AN ATTACHMENT

SMCS-5051 **i03485680**

NOTE	REF NO	GRAPHIC REF	PART NUMBER	QTY	PART NAME 1 2 3 4 5 6 (PRODUCT LEVEL)	SEE PAGE
Y	1	1	**270-2610**	1	MANIFOLD GP-CONTROL (INLET)	460
Y	2	1	**320-3625**	1	VALVE GP-CONTROL (BUCKET TILT)	495
Y	3	1	**320-3626**	1	VALVE GP-CONTROL (BUCKET LIFT)	496
Y	4	1	**320-3627**	1	VALVE GP-CONTROL (RIPPER)	497
Y	5	1	**270-2609**	1	MANIFOLD GP-VALVE (OUTLET)	462
	6	1	**257-0443**	1	KIT-FASTENER	
					(INCLUDES LOCK NUTS & TIE RODS)	
	7	1	**4J-5309**	16	SEAL-O-RING	
	8	1	**6V-5326**	4	SEAL-O-RING	
	9	1	**6V-8978**	4	SEAL-O-RING	

Y-SEPARATE ILLUSTRATION

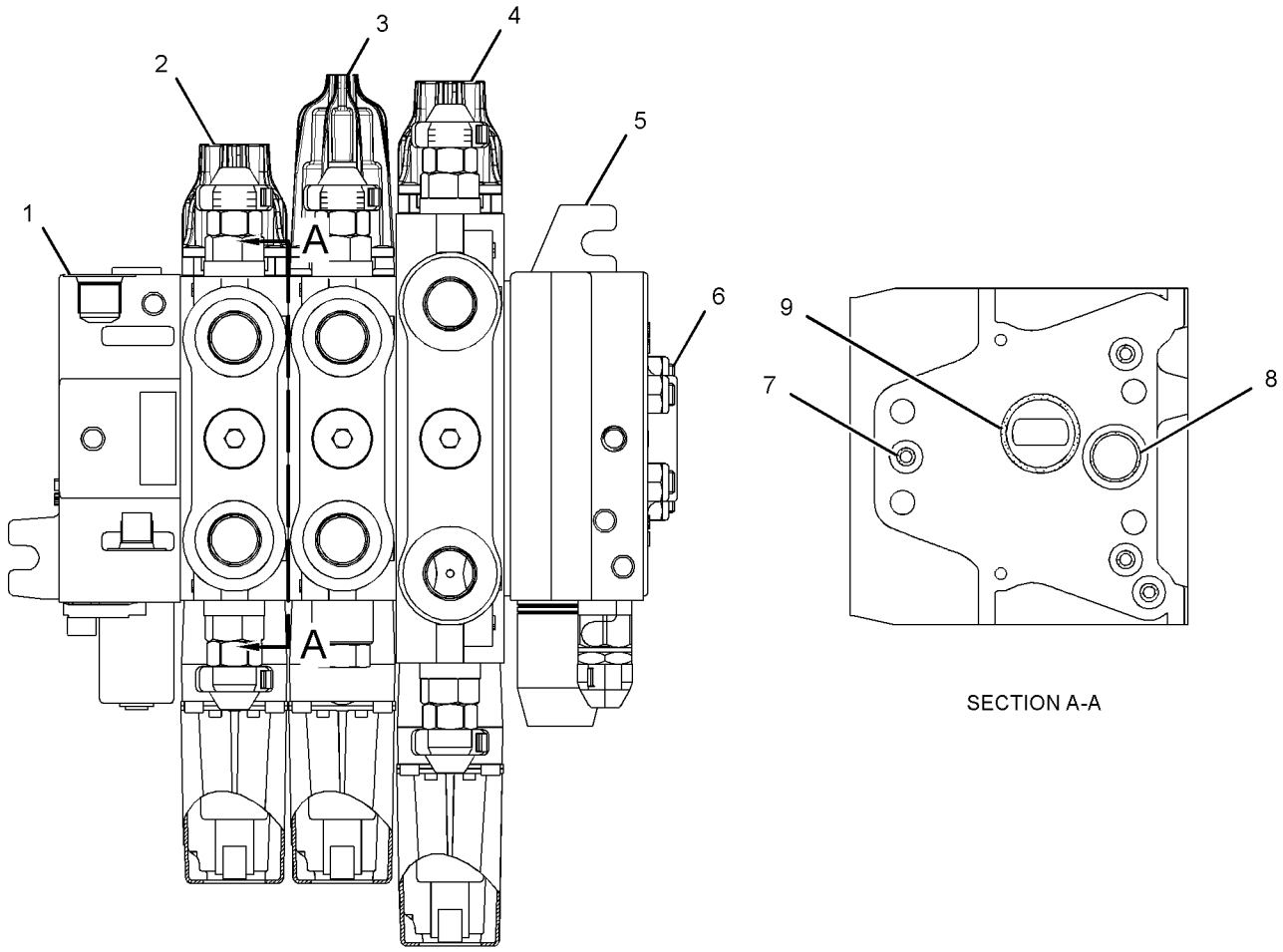

SECTION A-A

GRAPHIC #1 **<END>** g01590757

HYDRAULIC SYSTEM

309-1569 VALVE GP-BANK 3—BUCKET CONTROL, RIPPER

S/N: LBP823-UP

PART OF 252-0242 HYDRAULIC AR-3 VALVE

AN ATTACHMENT

SMCS-5051 **i03044845**

NOTE	REF NO	GRAPHIC REF	PART NUMBER	QTY	PART NAME 1 2 3 4 5 6 (PRODUCT LEVEL)	SEE PAGE
Y	1	1	**270-2610**	1	MANIFOLD GP-CONTROL (INLET)	460
Y	2	1	**320-3625**	1	VALVE GP-CONTROL (BUCKET TILT)	495
Y	3	1	**320-3626**	1	VALVE GP-CONTROL (BUCKET LIFT)	496
Y	4	1	**320-3628**	1	VALVE GP-CONTROL (RIPPER)	498
Y	5	1	**270-2609**	1	MANIFOLD GP-VALVE (OUTLET)	462
	6	1	**257-0443**	1	KIT-FASTENER	
					(INCLUDES LOCK NUTS & TIE RODS)	
	7	1	**4J-5309**	16	SEAL-O-RING	
	8	1	**6V-5326**	4	SEAL-O-RING	
	9	1	**6V-8978**	4	SEAL-O-RING	

Y-SEPARATE ILLUSTRATION

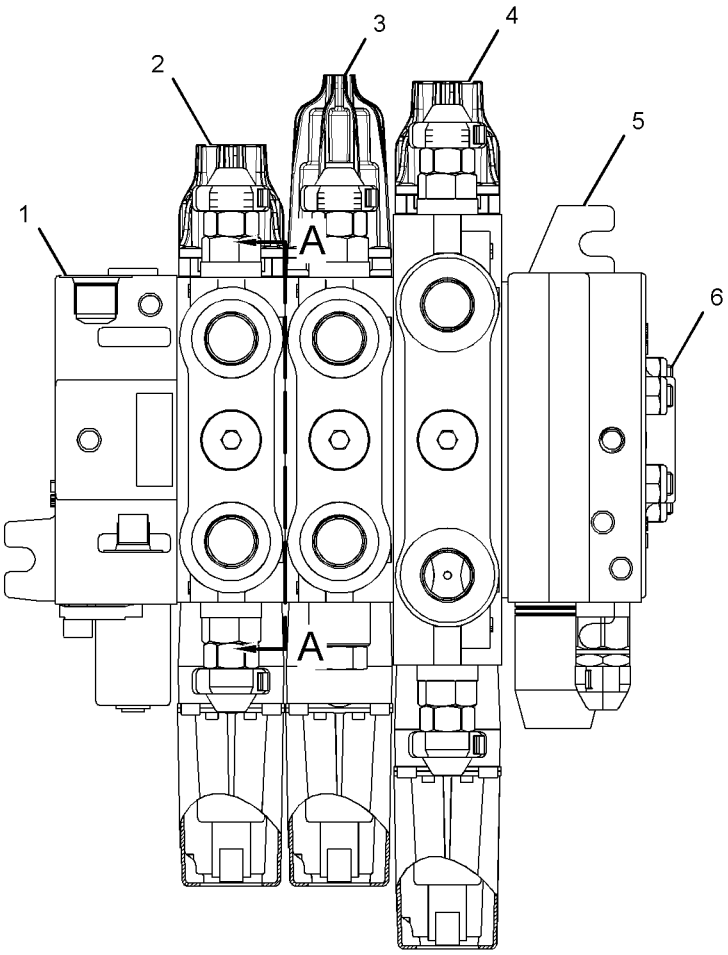

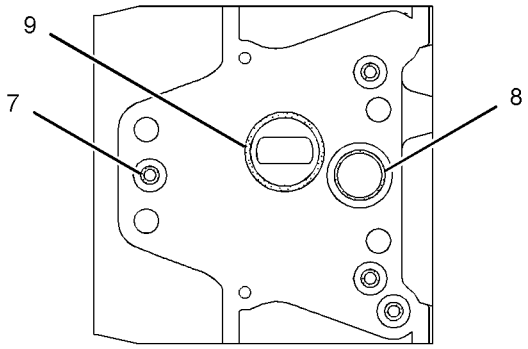

SECTION A-A

GRAPHIC #1 **<END>** g01590757

247-1750 VALVE GP-BANK 4—BUCKET CONTROL, RIPPER

S/N: LBP1-UP

PART OF 252-0243 HYDRAULIC AR-4 VALVE

AN ATTACHMENT

SMCS-5051 **i03588040**

NOTE	REF NO	GRAPHIC REF	PART NUMBER	QTY	PART NAME 1 2 3 4 5 6 (PRODUCT LEVEL)	SEE PAGE
Y	1	1	**270-2610**	1	MANIFOLD GP-CONTROL (INLET)	460
Y	2	1	**270-2611**	1	VALVE GP-CONTROL (BUCKET TILT)	491
Y	3	1	**270-2612**	1	VALVE GP-CONTROL (BUCKET LIFT)	492
Y	4	1	**270-2613**	1	VALVE GP-CONTROL (MULTIPURPOSE BUCKET)	493
Y	5	1	**270-2614**	1	VALVE GP-CONTROL (RIPPER)	494
Y	6	1	**270-2609**	1	MANIFOLD GP-VALVE (OUTLET)	462
	7	1	**257-0444**	1	KIT-FASTENER	
					(INCLUDES LOCKNUTS & TIE RODS)	
	8	1	**4J-5309**	20	SEAL-O-RING	
	9	1	**6V-5326**	5	SEAL-O-RING	
	10	1	**6V-8978**	5	SEAL-O-RING	

Y-SEPARATE ILLUSTRATION

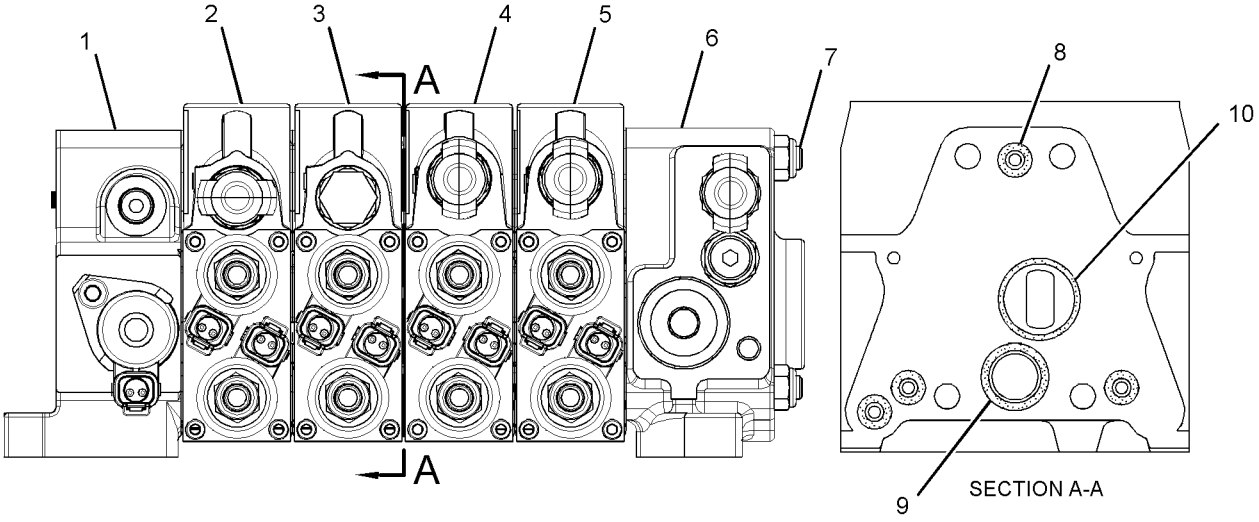

GRAPHIC #1 **<END>** g01457450

309-1570 VALVE GP-BANK 4—BUCKET CONTROL, RIPPER

S/N: LBP700-UP
PART OF 252-0243 HYDRAULIC AR-4 VALVE
AN ATTACHMENT

SMCS-5051 **i03178080**

NOTE	REF NO	GRAPHIC REF	PART NUMBER	QTY	PART NAME 1 2 3 4 5 6 (PRODUCT LEVEL)	SEE PAGE
Y	1	1	**270-2610**	1	MANIFOLD GP-CONTROL (INLET)	460
Y	2	1	**320-3625**	1	VALVE GP-CONTROL (BUCKET TILT)	495
Y	3	1	**320-3626**	1	VALVE GP-CONTROL (BUCKET LIFT)	496
Y	4	1	**320-3627**	1	VALVE GP-CONTROL (MULTIPURPOSE BUCKET)	497
Y	5	1	**320-3628**	1	VALVE GP-CONTROL (RIPPER)	498
Y	6	1	**270-2609**	1	MANIFOLD GP-VALVE (OUTLET)	462
	7	1	**257-0444**	1	KIT-FASTENER	
M		1	**8T-0389**	4	LOCKNUT (M10X1.5-THD)	
	8	1	**4J-5309**	20	SEAL-O-RING	
	9	1	**6V-5326**	5	SEAL-O-RING	
	10	1	**6V-8978**	5	SEAL-O-RING	

M-METRIC PART
Y-SEPARATE ILLUSTRATION

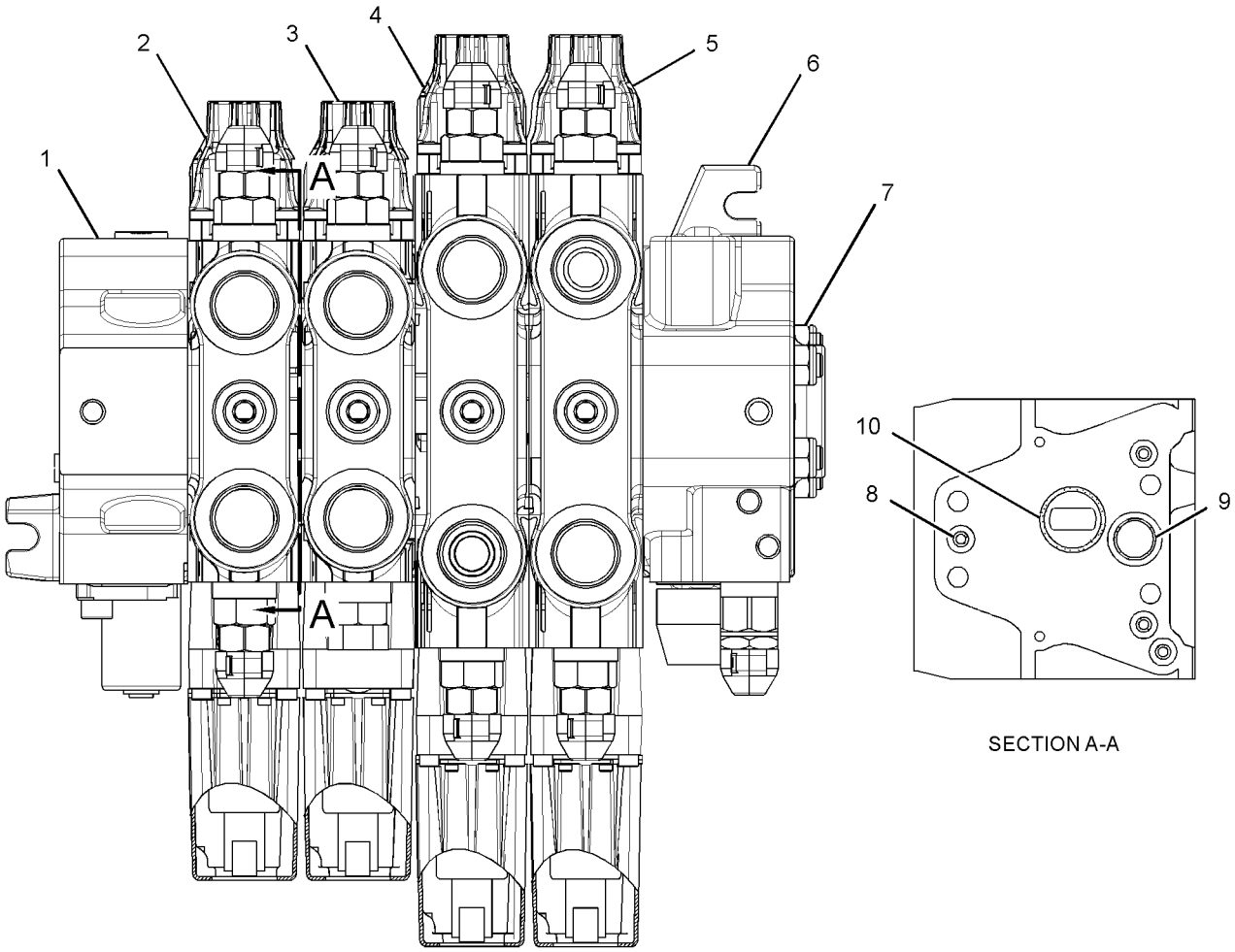

SECTION A-A

GRAPHIC #1 **<END>** g01650153

256-8619 VALVE GP-CONTROL—HYDRAULIC FAN

S/N: LBP1-UP

CANNOT BE USED WITH VALVE GP-CONTROL (REVERSIBLE FAN)

AN ATTACHMENT

SMCS-5051 **i02665404**

NOTE	REF NO	GRAPHIC REF	PART NUMBER	QTY	PART NAME 1 2 3 4 5 6 (PRODUCT LEVEL)	SEE PAGE
	1	2	**201-8338**	2	CLIP (SLOT)	
	2	2	**201-8339**	1	CLIP (TAB)	
I	3	1	**212-7568**	1	HOSE AS	
	4	1	**261-7832**	1	TUBE AS	
	5	1	**261-7833**	1	TUBE AS	
	6	1	**261-7834**	1	TUBE AS	
M	7	1	**101-3129**	1	STUD (M10X1.5-THD)	
	8	2	*148-8322*	1	CONNECTOR AS	
		2	**6V-8640**	1	CONNECTOR	
		2	**2M-9780**	1	SEAL-O-RING	
		2	**6V-9746**	1	SEAL-O-RING	
	9	1,2	*148-8327*	2	CONNECTOR AS	
					(EACH INCLUDES)	
		1,2	**6V-8637**	1	CONNECTOR	
		1,2	**3D-2824**	1	SEAL-O-RING	
		1,2	**6V-9746**	1	SEAL-O-RING	
	10	1	*148-8336*	1	CONNECTOR AS	
		1	**6V-8636**	1	CONNECTOR	
		1	**3J-1907**	1	SEAL-O-RING	
		1	**6V-8397**	1	SEAL-O-RING	
	11	1	*150-3036*	1	ELBOW AS	
		1	**8T-1905**	1	ELBOW	
		1	**3J-1907**	1	SEAL-O-RING	
		1	**6V-8397**	1	SEAL-O-RING	
	12	2	*150-4043*	1	CONNECTOR AS	
		2	**6V-9873**	1	CONNECTOR	
		2	**3J-1907**	1	SEAL-O-RING	
		2	**6V-8398**	1	SEAL-O-RING	
	13	1	*155-3504*	1	ELBOW AS	
		1	**6V-9003**	1	ELBOW	
		1	**2M-9780**	1	SEAL-O-RING	
		1	**7J-9108**	1	SEAL-O-RING	
	14	2	**198-4777**	1	WASHER-HARD (11X25X10-MM THK)	
Y	15	1	**252-7008**	1	MANIFOLD GP-CONTROL (DEMAND FAN)	459
	16	1	**6V-8398**	1	SEAL-O-RING	
	17	1,2	**8T-1885**	2	CLIP (SLOT)	
	18	1,2	**8T-1886**	2	CLIP (TAB)	
	19	1	**8T-1887**	2	CLIP (SLOT)	
	20	1	**8T-1888**	2	CLIP (TAB)	
M	21	2	**8T-3647**	3	BOLT (M8X1.25X80-MM)	
	22	1,2	**8T-4121**	5	WASHER-HARD (11X21X2.5-MM THK)	
M	23	2	**8T-4133**	2	NUT (M10X1.5-THD)	
M	24	1	**8T-4136**	2	BOLT (M10X1.5X25-MM)	
	25	2	**8T-4224**	3	WASHER-HARD (8.8X16X2-MM THK)	
	26	2	**8T-7934**	1	WASHER-HARD (11X21X5-MM THK)	

I-REFER TO HYDRAULIC INFORMATION SYSTEM
M-METRIC PART
Y-SEPARATE ILLUSTRATION

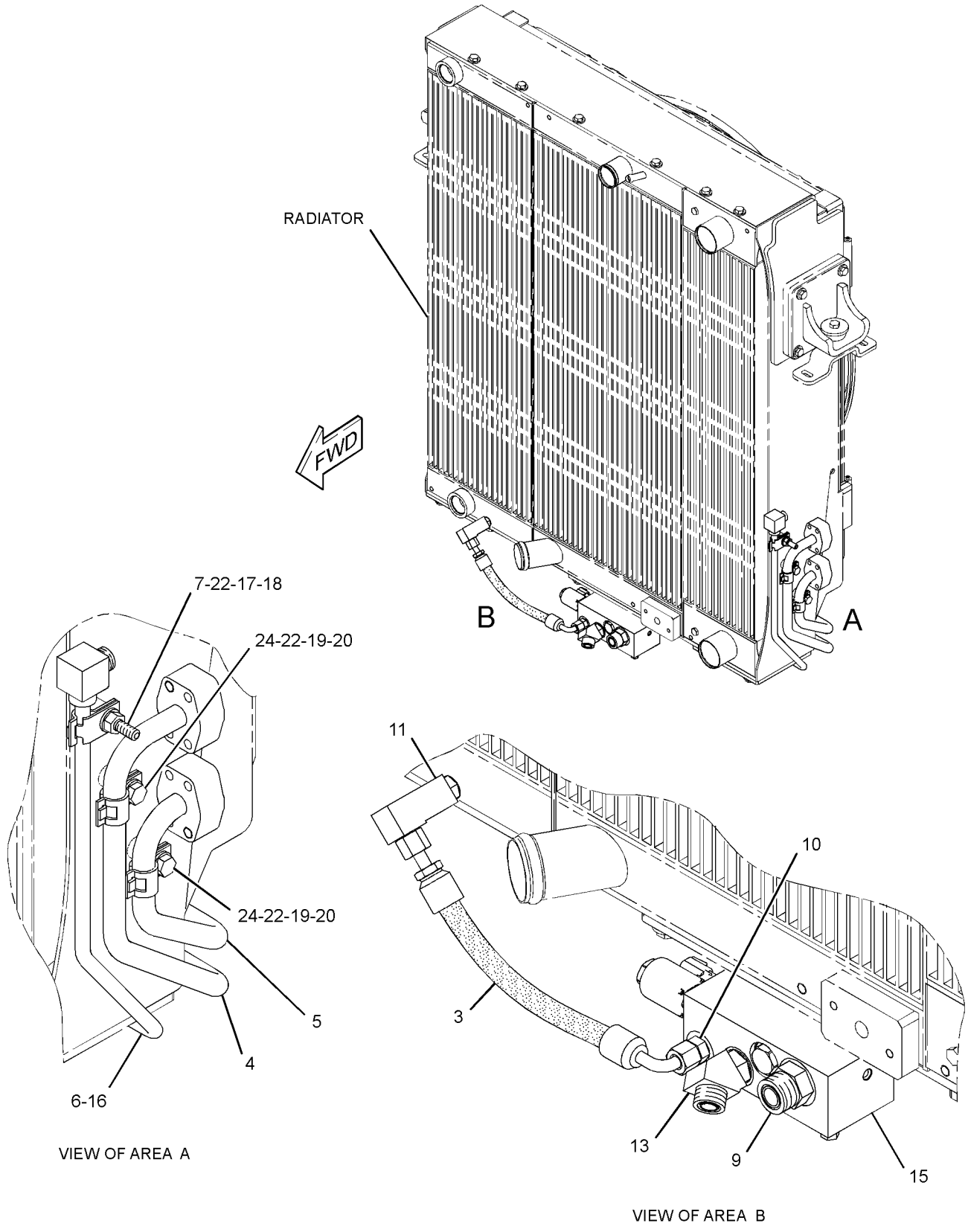

GRAPHIC #1 g01341174

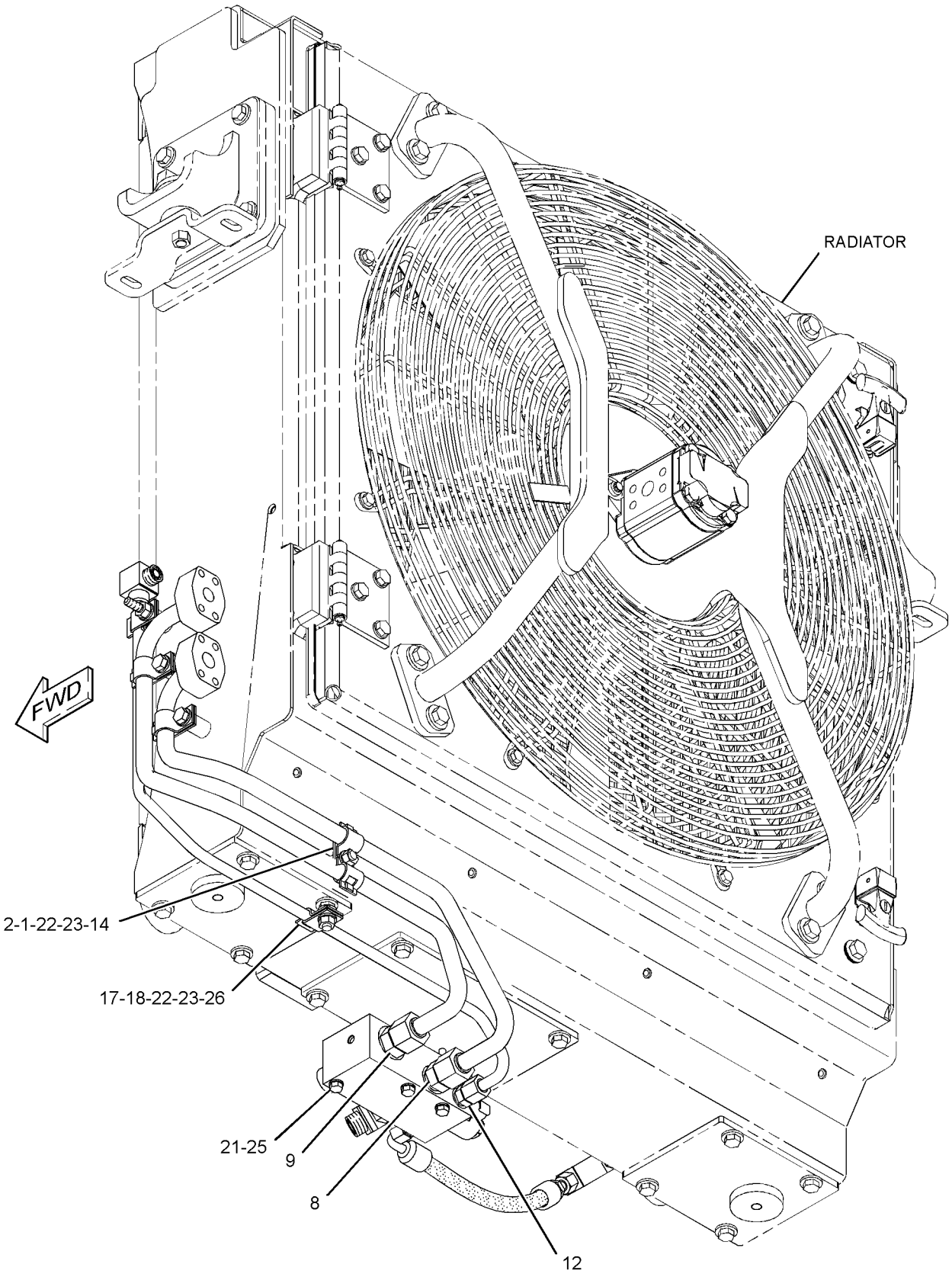

GRAPHIC #2 **<END>** g01341175

HYDRAULIC SYSTEM

256-8620 VALVE GP-CONTROL—REVERSING FAN

S/N: LBP1-UP
CANNOT BE USED WITH VALVE GP-CONTROL(STANDARD FAN)
AN ATTACHMENT

SMCS-5051 **i02706450**

NOTE	REF NO	GRAPHIC REF	PART NUMBER	QTY	PART NAME 1 2 3 4 5 6 (PRODUCT LEVEL)	SEE PAGE
	1	2	**201-8338**	2	CLIP (SLOT)	
	2	2	**201-8339**	1	CLIP (TAB)	
I	3	1	**212-7568**	1	HOSE AS	
	4	1	**261-4762**	1	TUBE AS	
	5	1	**261-4763**	1	TUBE AS	
	6	1	**261-4764**	1	TUBE AS	
Y	7	1	**291-9652**	1	MANIFOLD GP-CONTROL (REVERSING FAN)	461
M	8	1	**101-3129**	1	STUD (M10X1.5-THD)	
	9	2	*148-8322*	1	CONNECTOR AS	
		2	**6V-8640**	1	CONNECTOR	
		2	**2M-9780**	1	SEAL-O-RING	
		2	**6V-9746**	1	SEAL-O-RING	
	10	1,2	*148-8327*	2	CONNECTOR AS	
					(EACH INCLUDES)	
		1,2	**6V-8637**	1	CONNECTOR	
		1,2	**3D-2824**	1	SEAL-O-RING	
		1,2	**6V-9746**	1	SEAL-O-RING	
	11	1	*148-8336*	1	CONNECTOR AS	
		1	**6V-8636**	1	CONNECTOR	
		1	**3J-1907**	1	SEAL-O-RING	
		1	**6V-8397**	1	SEAL-O-RING	
	12	1	*150-3036*	1	ELBOW AS	
		1	**8T-1905**	1	ELBOW	
		1	**3J-1907**	1	SEAL-O-RING	
		1	**6V-8397**	1	SEAL-O-RING	
	13	2	*150-4043*	1	CONNECTOR AS	
		2	**6V-9873**	1	CONNECTOR	
		2	**3J-1907**	1	SEAL-O-RING	
		2	**6V-8398**	1	SEAL-O-RING	
	14	1	*155-3504*	1	ELBOW AS	
		1	**6V-9003**	1	ELBOW	
		1	**2M-9780**	1	SEAL-O-RING	
		1	**7J-9108**	1	SEAL-O-RING	
	15	2	**198-4777**	1	WASHER-HARD (11X25X10-MM THK)	
	16	1	**236-4623**	1	SWITCH AS-ROCKER (24-VOLT) (AUTOMATIC REVERSING FAN)	
	17	1	**6V-8398**	1	SEAL-O-RING	
	18	1,2	**8T-1885**	2	CLIP (SLOT)	
	19	1,2	**8T-1886**	2	CLIP (TAB)	
	20	1	**8T-1887**	2	CLIP (SLOT)	
	21	1	**8T-1888**	2	CLIP (TAB)	
M	22	2	**8T-3647**	3	BOLT (M8X1.25X80-MM)	
	23	1,2	**8T-4121**	5	WASHER-HARD (11X21X2.5-MM THK)	
M	24	2	**8T-4133**	2	NUT (M10X1.5-THD)	
M	25	1	**8T-4136**	3	BOLT (M10X1.5X25-MM)	
	26	2	**8T-4224**	3	WASHER-HARD (8.8X16X2-MM THK)	
	27	2	**8T-7934**	1	WASHER-HARD (11X21X5-MM THK)	

I-REFER TO HYDRAULIC INFORMATION SYSTEM
M-METRIC PART
Y-SEPARATE ILLUSTRATION

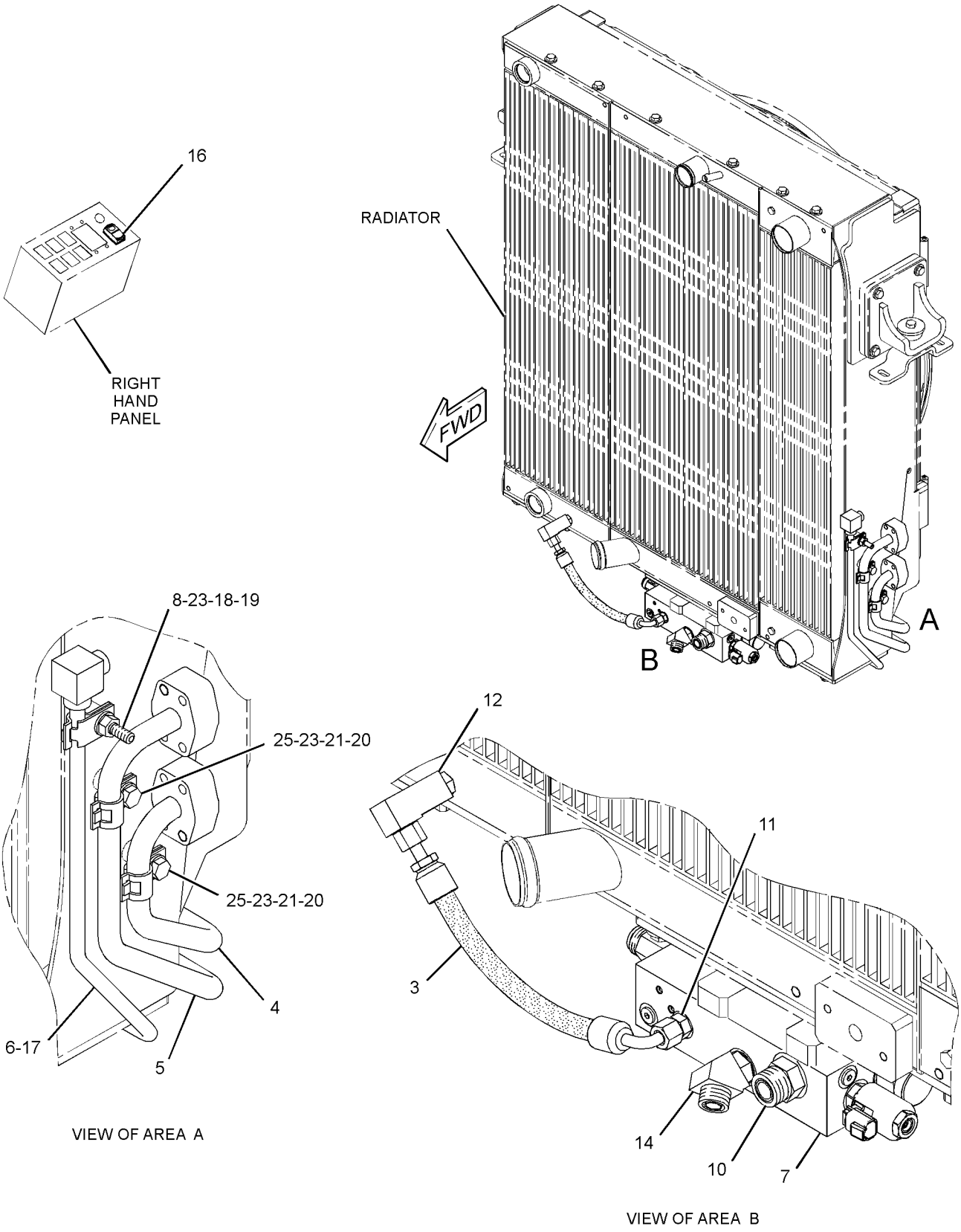

GRAPHIC #1 g01341110

256-8620 **VALVE GP-CONTROL** *(contd.)* **i02706450**

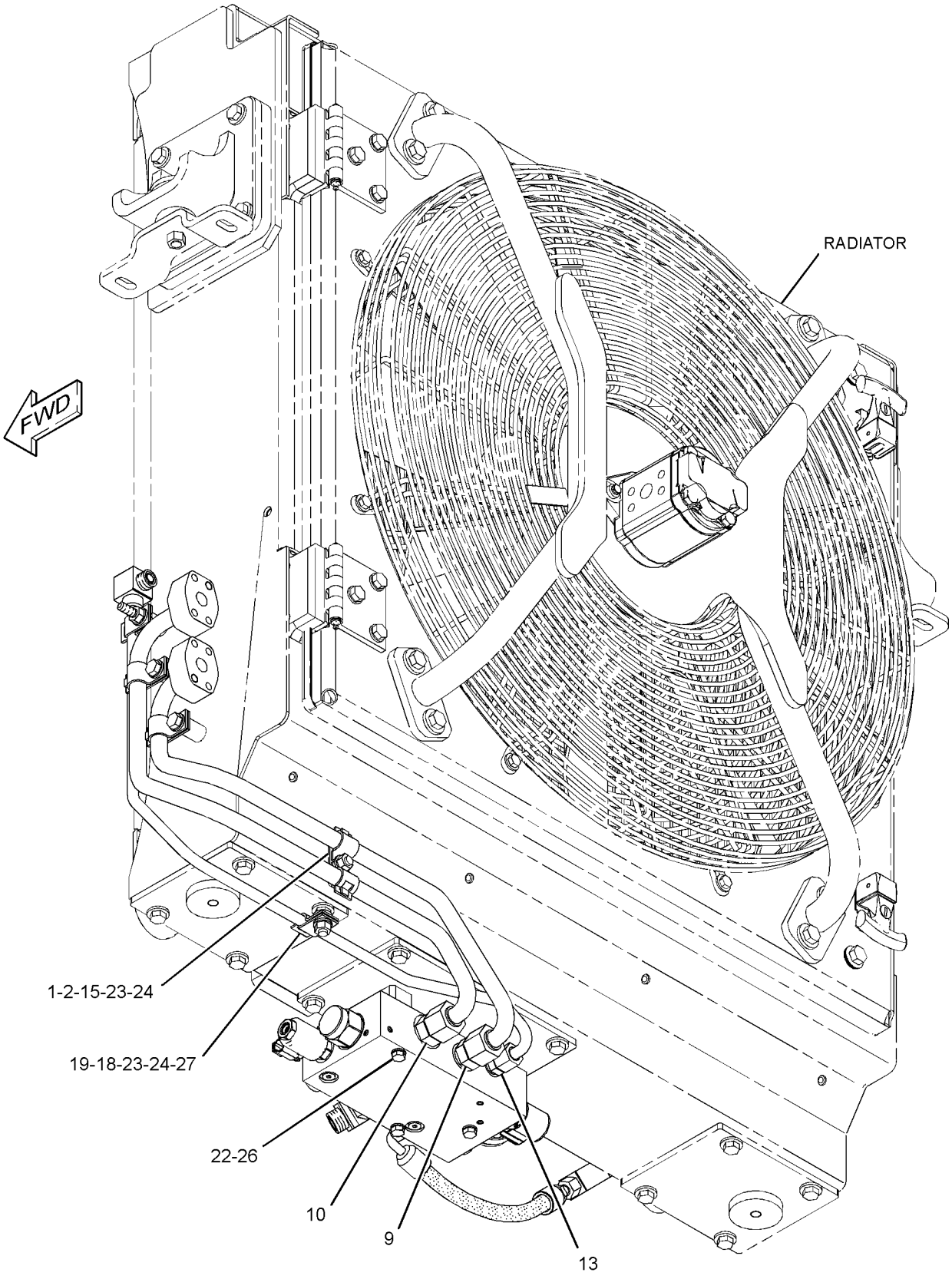

GRAPHIC #2 **<END>** g01341111

270-2611 VALVE GP-CONTROL—BUCKET TILT

S/N: LBP1-UP

PART OF 247-1753 VALVE GP-BANK 2, 247-1749, 252-5067 VALVE GP-BANK 3, 247-1750 VALVE GP-BANK 4

AN ATTACHMENT

SMCS-5051 **i02946418**

NOTE	REF NO	GRAPHIC REF	PART NUMBER	QTY	PART NAME 1 2 3 4 5 6 (PRODUCT LEVEL)	SEE PAGE
	1	1	**257-7734**	1	KIT-COVER (CONTROL VALVE)	
					(INCLUDES COVER, PLUG, SPRING, RETAINER, BOLTS & SEAL)	
Y	2	1	**266-3592**	1	VALVE GP-RELIEF (IMPLEMENT PILOT OIL)	503
	3	1	**227-1186**	2	VALVE AS-CHECK	
	4	1	**257-7722**	1	KIT-COMPENSATOR (CONTROL VALVE)	
		1	**6V-7970**	1	SEAL-O-RING	
					(KIT ALSO INCLUDES PLUG, SEAL, & COMPENSATOR)	
Y	5	1	**266-2273**	1	MANIFOLD & SOLENOID GP-CONTROL (IMPLEMENT CONTROL VALVE)	458
	6	1	**5F-9144**	3	SEAL-O-RING	
	7	1	**5D-6543**	1	SEAL-O-RING	
	8	1	**211-5255**	4	BOLT-SOCKET HEAD (M5X0.8X55-MM)	
	9	1	**257-0468**	2	CAP-PROTECTION	
Y	10	1	**266-3594**	1	VALVE GP-RELIEF (IMPLEMENT PILOT OIL)	504

Y-SEPARATE ILLUSTRATION

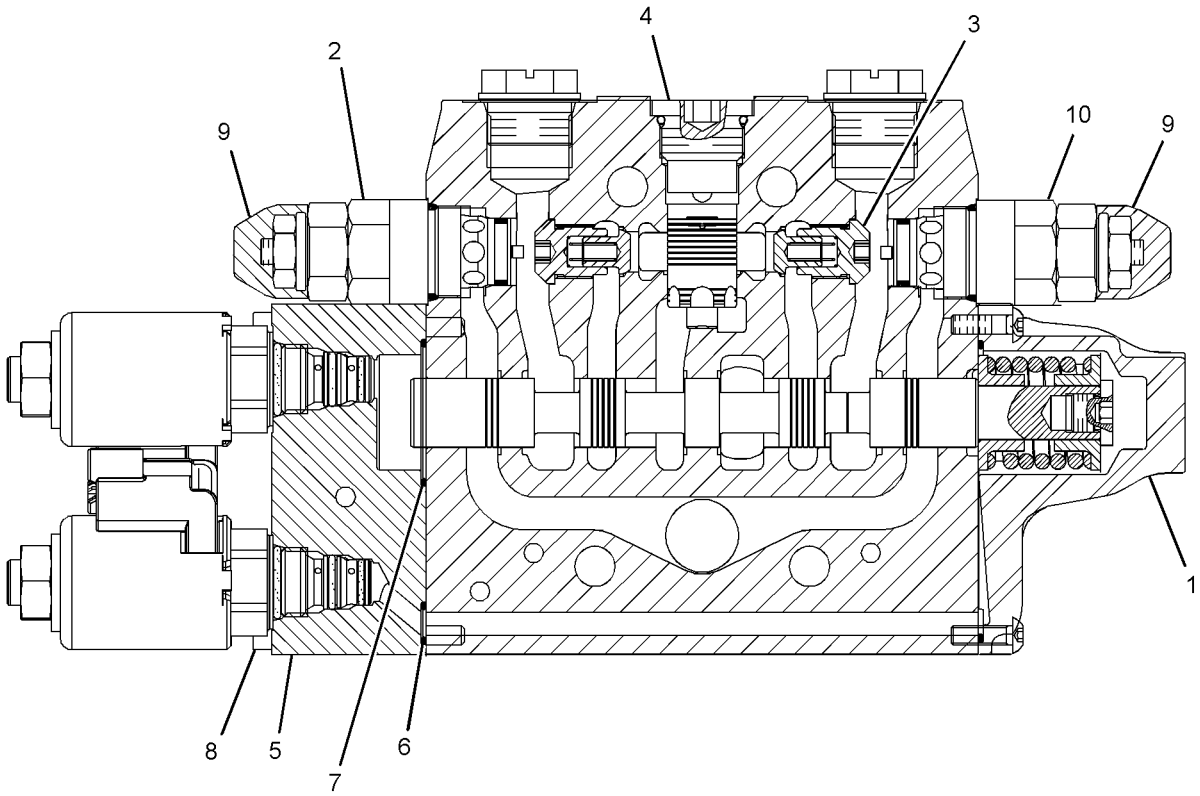

GRAPHIC #1 **<END>** g01460608

270-2612 VALVE GP-CONTROL–BUCKET LIFT

S/N: LBP1-UP
PART OF 247-1753 VALVE GP-BANK 2, 247-1749, 252-5067 VALVE GP-BANK 3, 247-1750 VALVE GP-BANK 4
AN ATTACHMENT

SMCS-5051 **i02663686**

NOTE	REF NO	GRAPHIC REF	PART NUMBER	QTY	PART NAME 1 2 3 4 5 6 (PRODUCT LEVEL)	SEE PAGE
	1	1	**257-7735**	1	KIT-COVER (CONTROL VALVE)	
					(INCLUDES BOLTS & SEAL)	
Y	2	1	**257-7732**	1	VALVE GP-RELIEF (IMPLEMENT PILOT OIL)	502
Y	3	1	**266-3594**	1	VALVE GP-RELIEF (IMPLEMENT PILOT OIL)	504
	4	1	**227-1186**	2	VALVE AS-CHECK	
	5	1	**257-7722**	1	KIT-COMPENSATOR (CONTROL VALVE)	
					(INCLUDES PLUG, SEAL, & COMPENSATOR)	
Y	6	1	**266-2273**	1	MANIFOLD & SOLENOID GP-CONTROL (IMPLEMENT CONTROL VALVE)	458
	7	1	**5F-9144**	3	SEAL-O-RING	
	8	1	**5D-6543**	1	SEAL-O-RING	
	9	1	**211-5255**	4	BOLT-SOCKET HEAD (M5X0.8X55-MM)	
	10	1	**257-0468**	1	CAP-PROTECTION	

Y-SEPARATE ILLUSTRATION

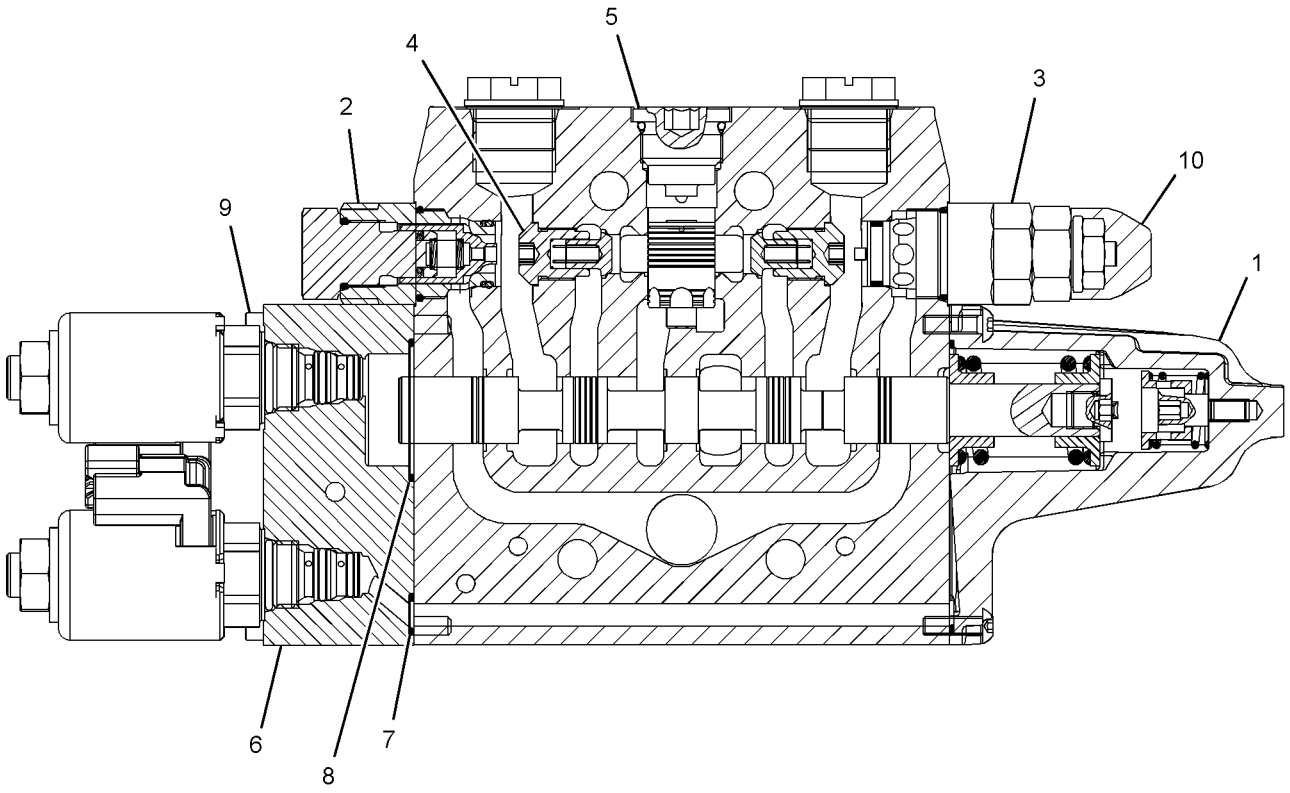

GRAPHIC #1 **<END>** g01344246

270-2613 VALVE GP-CONTROL–MULTIPURPOSE BUCKET

S/N: LBP1-UP

PART OF 247-1749 VALVE GP-BANK 3, 247-1750 VALVE GP-BANK 4

AN ATTACHMENT

SMCS-5051 **i03588073**

NOTE	REF NO	GRAPHIC REF	PART NUMBER	QTY	PART NAME 1 2 3 4 5 6 (PRODUCT LEVEL)	SEE PAGE
	1	1	**257-7734**	1	KIT-COVER (CONTROL VALVE)	
					(INCLUDES BOLTS & SEAL)	
	2	1	**257-7730**	1	KIT-POPPET (CONTROL VALVE)	
Y	3	1	**266-3592**	2	VALVE GP-RELIEF (IMPLEMENT PILOT OIL)	503
	4	1	**257-7733**	1	VALVE GP-CHECK	
		1	**122-9250**	1	SEAL-O-RING	
	5	1	**257-7729**	1	PLUG GP-CONTROL VALVE	
		1	**122-9250**	1	SEAL-O-RING	
Y	6	1	**266-2273**	1	MANIFOLD & SOLENOID GP-CONTROL (IMPLEMENT CONTROL VALVE)	458
	7	1	**5F-9144**	3	SEAL-O-RING	
	8	1	**5D-6543**	1	SEAL-O-RING	
	9	1	**211-5255**	4	BOLT-SOCKET HEAD (M5X0.8X55-MM)	
	10	1	**257-0468**	2	CAP-PROTECTION	
	11	1	**257-7722**	1	KIT-COMPENSATOR (CONTROL VALVE)	
					(INCLUDES PLUG, SEAL, & COMPENSATOR)	

Y-SEPARATE ILLUSTRATION

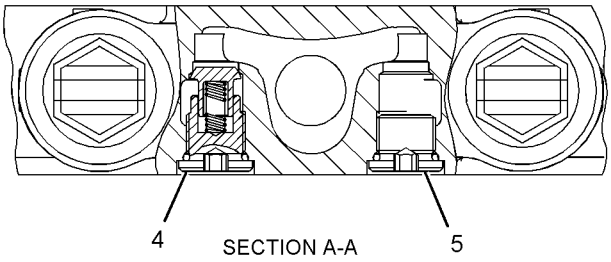

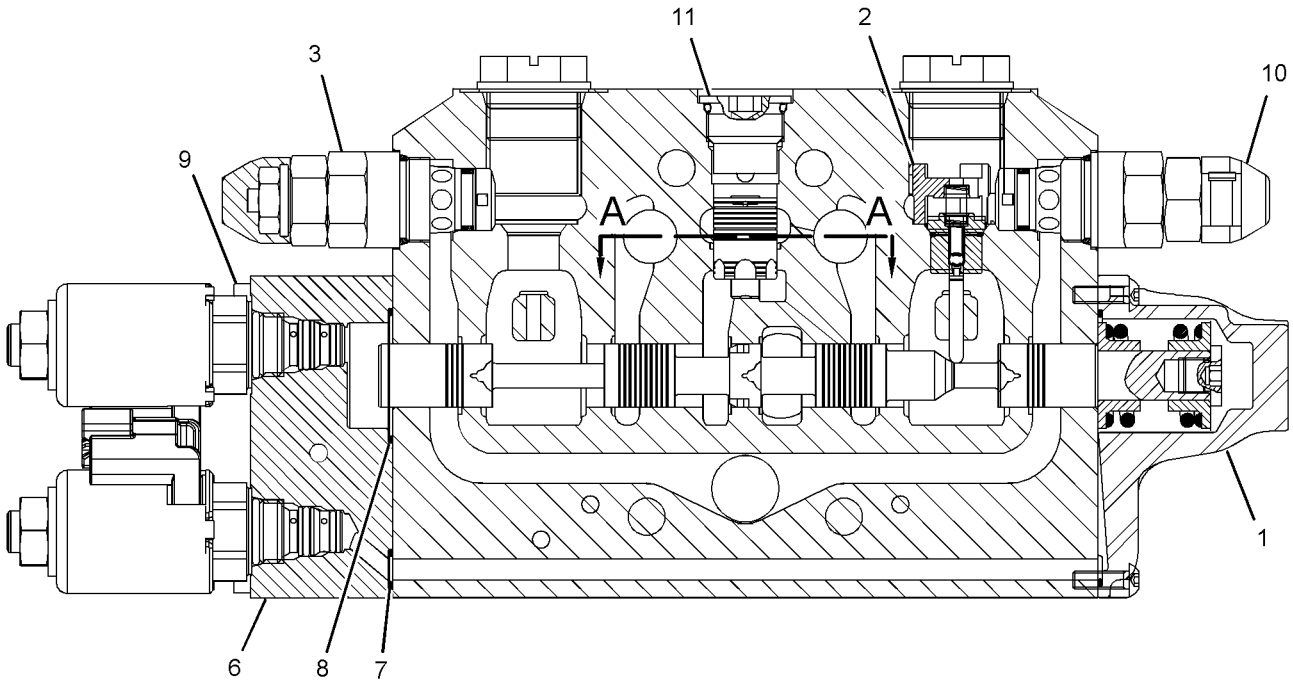

GRAPHIC #1 **<END>** g01344211

270-2614 VALVE GP-CONTROL–RIPPER

S/N: LBP1-UP

PART OF 252-5067 VALVE GP-BANK 3, 247-1750 VALVE GP-BANK 4

AN ATTACHMENT

SMCS-5051 **i03588077**

NOTE	REF NO	GRAPHIC REF	PART NUMBER	QTY	PART NAME 1 2 3 4 5 6 (PRODUCT LEVEL)	SEE PAGE
	1	1	**257-7734**	1	KIT-COVER (CONTROL VALVE)	
					(INCLUDES BOLTS & SEAL)	
	2	1	**257-7730**	1	KIT-POPPET (CONTROL VALVE)	
Y	3	1	**266-3592**	2	VALVE GP-RELIEF (IMPLEMENT PILOT OIL)	503
	4	1	**257-7733**	1	VALVE GP-CHECK	
		1	**122-9250**	1	SEAL-O-RING	
	5	1	**257-7729**	1	PLUG GP-CONTROL VALVE	
		1	**122-9250**	1	SEAL-O-RING	
Y	6	1	**266-2273**	1	MANIFOLD & SOLENOID GP-CONTROL (IMPLEMENT CONTROL VALVE)	458
	7	1	**5F-9144**	3	SEAL-O-RING	
	8	1	**5D-6543**	1	SEAL-O-RING	
	9	1	**211-5255**	4	BOLT-SOCKET HEAD (M5X0.8X55-MM)	
	10	1	**257-0468**	2	CAP-PROTECTION	
	11	1	**257-7722**	1	KIT-COMPENSATOR (CONTROL VALVE)	
					(INCLUDES PLUG, SEAL, & COMPENSATOR)	

Y-SEPARATE ILLUSTRATION

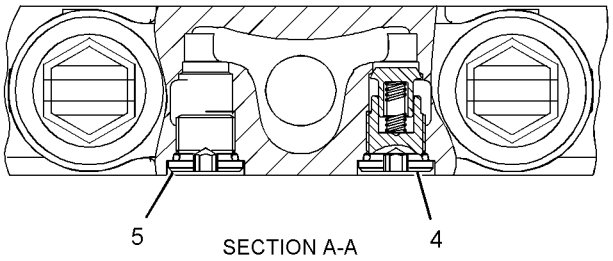

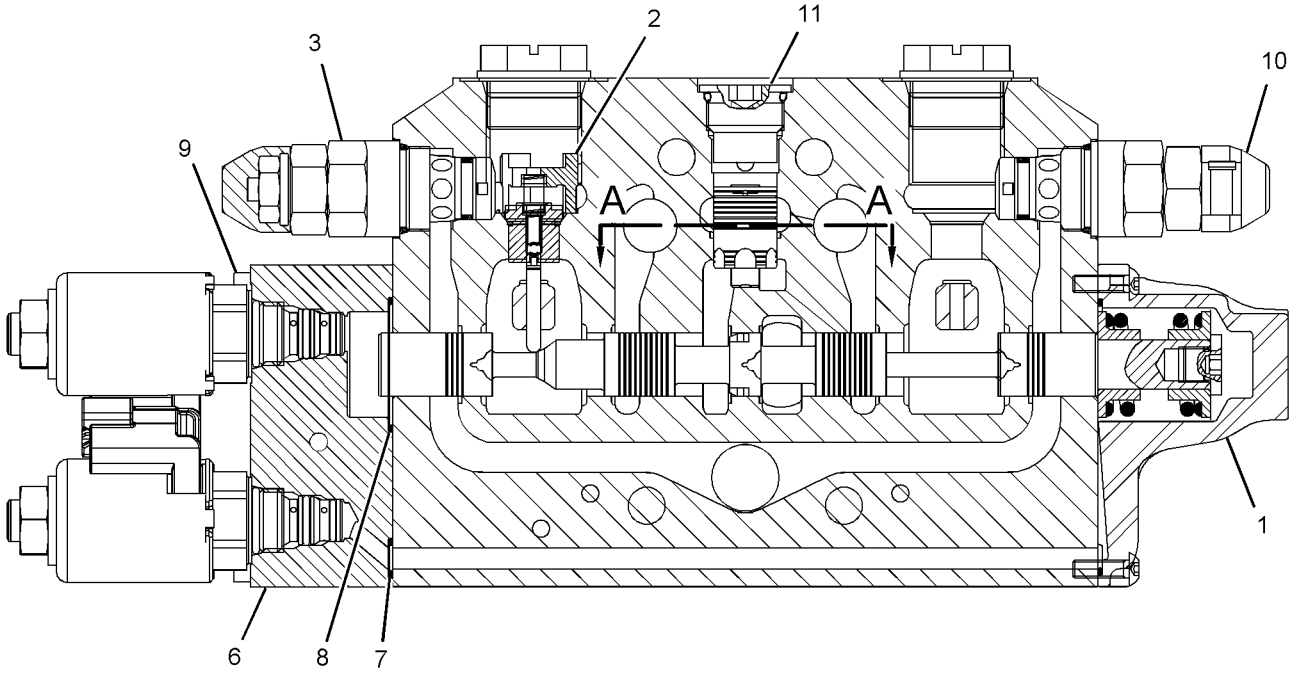

GRAPHIC #1 **<END>** g01344144

320-3625 VALVE GP-CONTROL–BUCKET TILT

S/N: LBP700-UP

PART OF 309-1567 VALVE GP-BANK 2, 309-1568, 309-1569 VALVE GP-BANK 3, 309-1570 VALVE GP-BANK 4

AN ATTACHMENT

SMCS-5051 **i03044847**

NOTE	REF NO	GRAPHIC REF	PART NUMBER	QTY	PART NAME 1 2 3 4 5 6 (PRODUCT LEVEL)	SEE PAGE
	1	1	**257-7734**	1	KIT-COVER (CONTROL VALVE)	
					(INCLUDES BOLTS-SOCKET HEAD, SEAL-O-RING, COVER, PLUG, SPRING & RETAINERS)	
	2	1	**257-7722**	1	KIT-COMPENSATOR (CONTROL VALVE)	
					(INCLUDES SEAL-O-RING)	
	3	1	**227-1186**	2	VALVE AS-CHECK	
Y	4	1	**302-8157**	1	ACTUATOR GP-HYDRAULIC	421
Y	5	1	**266-3592**	1	VALVE GP-RELIEF	503
Y	6	1	**266-3594**	1	VALVE GP-RELIEF	504
	7	1	**257-0468**	2	CAP-PROTECTION	

Y-SEPARATE ILLUSTRATION

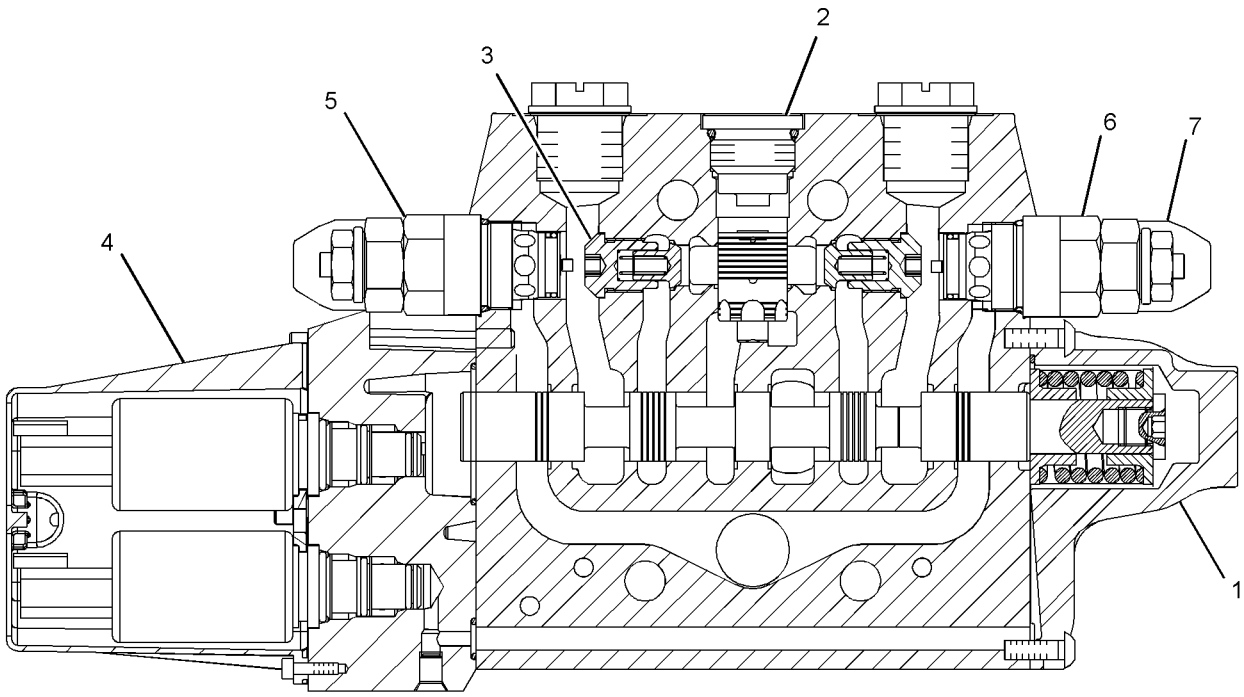

GRAPHIC #1 **<END>** g01636785

320-3626 VALVE GP-CONTROL–BUCKET LIFT

S/N: LBP700-UP

PART OF 309-1567 VALVE GP-BANK 2, 309-1568, 309-1569 VALVE GP-BANK 3, 309-1570 VALVE GP-BANK 4 AN ATTACHMENT

SMCS-5051 **i03044849**

NOTE	REF NO	GRAPHIC REF	PART NUMBER	QTY	PART NAME 1 2 3 4 5 6 (PRODUCT LEVEL)	SEE PAGE
	1	1	**257-7735**	1	KIT-COVER (CONTROL VALVE)	
					(INCLUDES BOLTS, SEAL-O-RING, PLUG, SPRINGS & RETAINERS)	
	2	1	**257-7722**	1	KIT-COMPENSATOR (CONTROL VALVE)	
					(INCLUDES SEAL-O-RINGS)	
	3	1	**227-1186**	2	VALVE AS-CHECK	
Y	4	1	**302-8157**	1	ACTUATOR GP-HYDRAULIC	421
Y	5	1	**257-7732**	1	VALVE GP-RELIEF	502
Y	6	1	**266-3594**	1	VALVE GP-RELIEF	504
	7	1	**257-0468**	1	CAP-PROTECTION	

Y-SEPARATE ILLUSTRATION

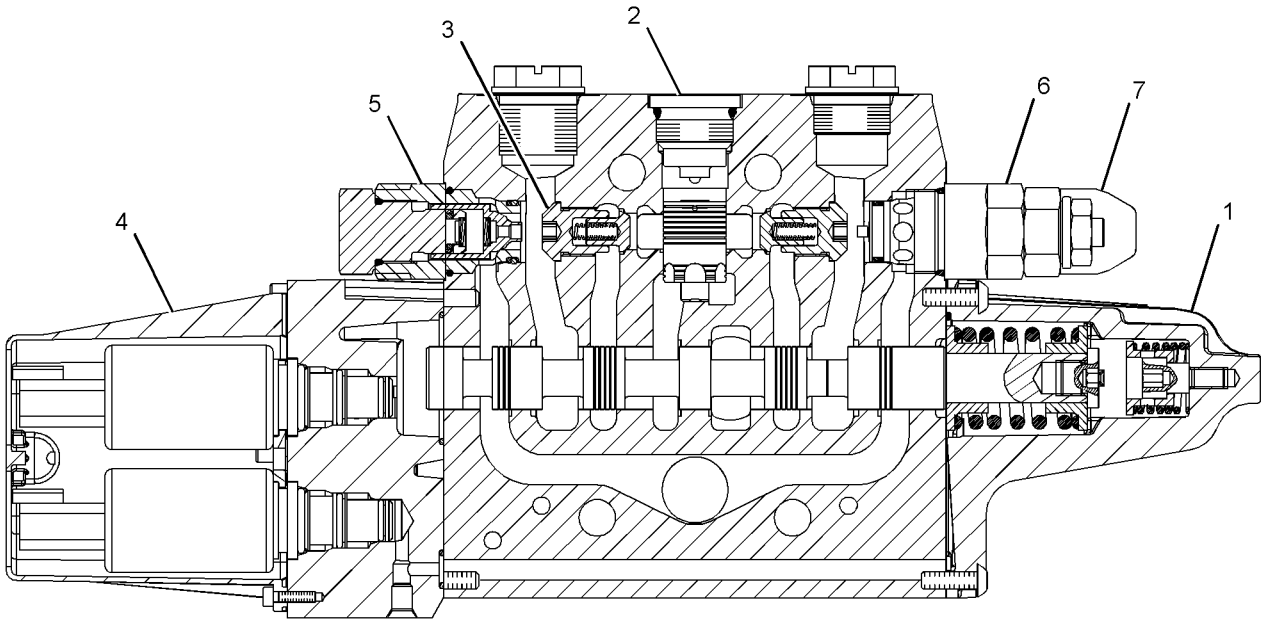

GRAPHIC #1 **<END>** g01636786

320-3627 VALVE GP-CONTROL—MULTIPURPOSE BUCKET

S/N: LBP700-UP

PART OF 309-1568 VALVE GP-BANK 3, 309-1570 VALVE GP-BANK 4

AN ATTACHMENT

SMCS-5051 **i03588081**

NOTE	REF NO	GRAPHIC REF	PART NUMBER	QTY	PART NAME 1 2 3 4 5 6 (PRODUCT LEVEL)	SEE PAGE
	1	1	**257-7734**	1	KIT-COVER (CONTROL VALVE)	
M		1	**8C-8580**	6	BOLT-SOCKET HEAD (M5X0.8X16-MM)	
		1	**219-1897**	1	SEAL-O-RING	
	2	1	**257-7722**	1	KIT-COMPENSATOR (CONTROL VALVE)	
		1	**6V-7970**	1	SEAL-O-RING	
	3	1	**257-7730**	1	KIT-POPPET (CONTROL VALVE)	
	4	1	**257-7729**	1	PLUG GP-CONTROL VALVE	
		1	**122-9250**	1	SEAL-O-RING	
	5	1	**257-7733**	1	VALVE GP-CHECK	
		1	**122-9250**	1	SEAL-O-RING	
Y	6	1	**302-8157**	1	ACTUATOR GP-HYDRAULIC	421
Y	7	1	**266-3592**	2	VALVE GP-RELIEF (IMPLEMENT PILOT OIL)	503
	8	1	**257-0468**	2	CAP-PROTECTION	

M-METRIC PART
Y-SEPARATE ILLUSTRATION

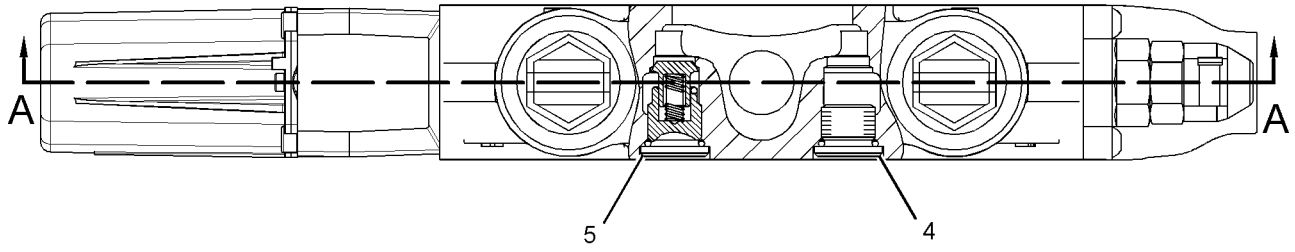

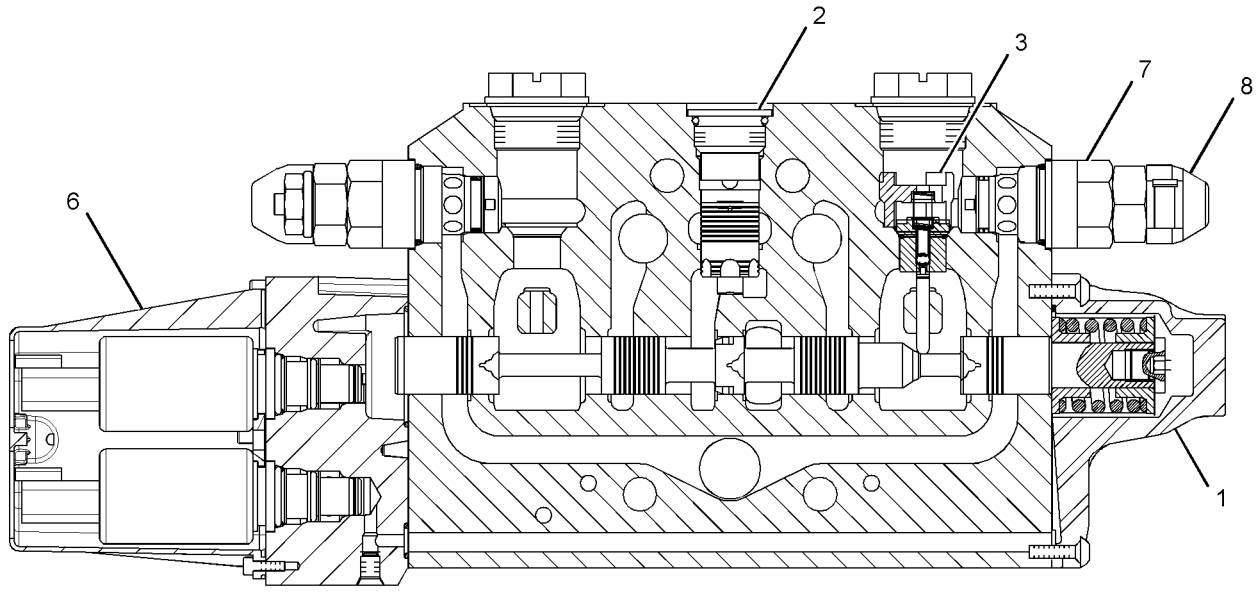

SECTION A-A

GRAPHIC #1 **<END>** g01628633

320-3628 VALVE GP-CONTROL–RIPPER

S/N: LBP700-UP

PART OF 309-1569 VALVE GP-BANK 3, 309-1570 VALVE GP-BANK 4

AN ATTACHMENT

SMCS-5051 **i03588082**

NOTE	REF NO	GRAPHIC REF	PART NUMBER	QTY	PART NAME 1 2 3 4 5 6 (PRODUCT LEVEL)	SEE PAGE
	1	1	**257-7734**	1	KIT-COVER (CONTROL VALVE)	
					(INCLUDES BOLTS, SEAL-O-RING, COVER, PLUG, SPRING & RETAINERS)	
	2	1	**257-7722**	1	KIT-COMPENSATOR (CONTROL VALVE)	
					(INCLUDES SEAL-O-RING)	
	3	1	**257-7730**	1	KIT-POPPET (CONTROL VALVE)	
					(INCLUDES POPPET AS & PINS)	
	4	1	**257-7729**	1	PLUG GP-CONTROL VALVE	
		1	**122-9250**	1	SEAL-O-RING	
	5	1	**257-7733**	1	VALVE GP-CHECK	
		1	**122-9250**	1	SEAL-O-RING	
Y	6	1	**302-8157**	1	ACTUATOR GP-HYDRAULIC	421
Y	7	1	**266-3592**	2	VALVE GP-RELIEF (IMPLEMENT PILOT OIL)	503
	8	1	**257-0468**	2	CAP-PROTECTION	

Y-SEPARATE ILLUSTRATION

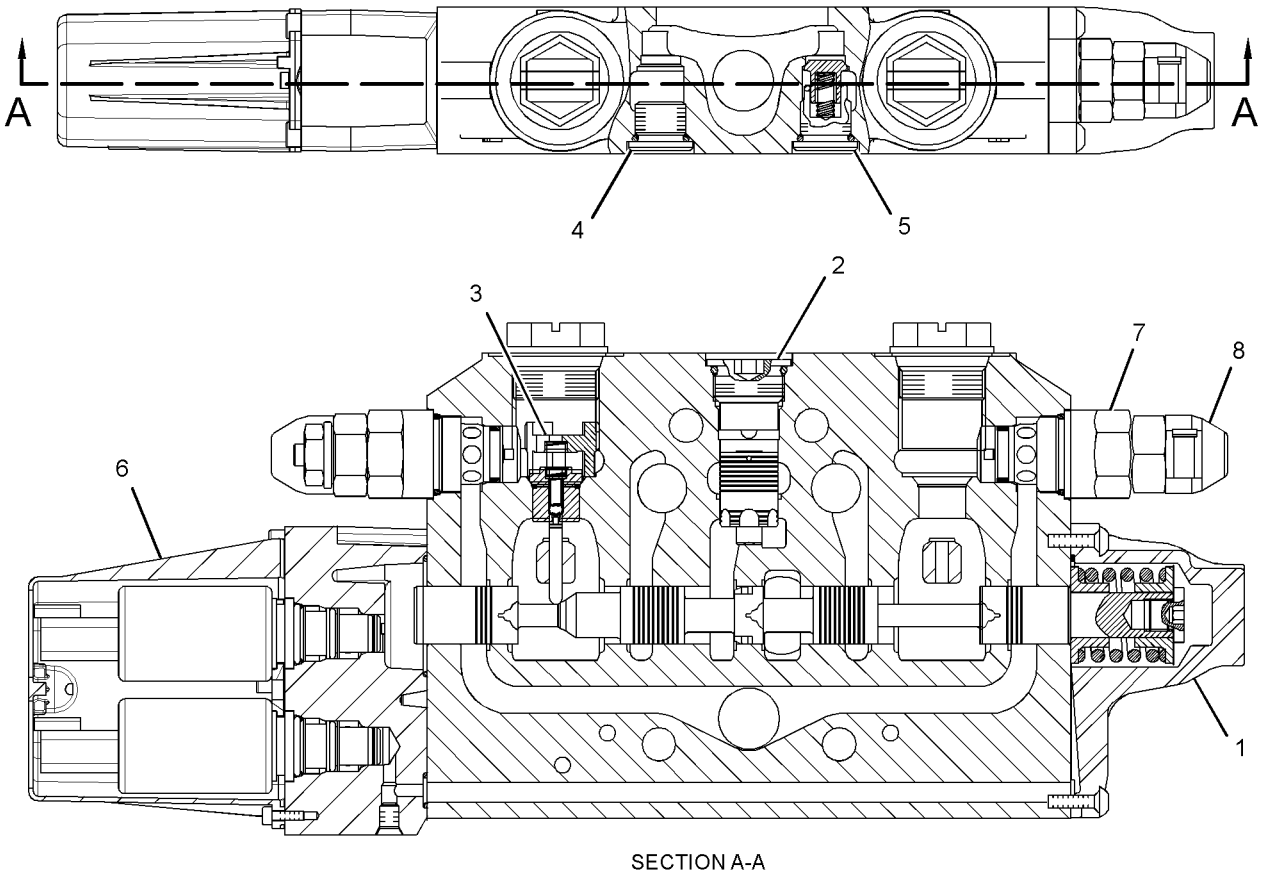

SECTION A-A

GRAPHIC #1 **<END>** g01636789

112-1817 VALVE GP-MANUAL—DEAD ENGINE LOWER

S/N: LBP1-UP

PART OF 275-6306 LINES GP-LIFT CYLINDER, 252-9870 LINES GP-REAR ATTACHMENT

ALSO AN ATTACHMENT

SMCS-5147 **i02697445**

NOTE	PART NUMBER	QTY	PART NAME 1 2 3 4 5 6 (PRODUCT LEVEL)	SEE PAGE
J	*202-0671*	1	VALVE GP-MANUAL (DEAD ENGINE LOWER)	
			—OR—	
J	*202-0673*	1	VALVE GP-MANUAL (DEAD ENGINE LOWER)	
			—OR—	
J	*202-0674*	1	VALVE GP-MANUAL (DEAD ENGINE LOWER)	
			AVAILABLE REPAIR KIT(S):	
J	**112-9861**	1	KIT-SEAL (DEAD ENGINE LOWER)	
			(INCLUDES SEALS, CONNECTOR O-RINGS, THRUST RING, STEM O-RING)	

J-KIT MARKED J SERVICES PARTS MARKED J

<END>

247-0741 VALVE GP-PILOT–JOYSTICK–HYDROSTATIC DRIVE

S/N: LBP1-UP
PART OF 280-9449 WIRING GP-CONTROL
AN ATTACHMENT

SMCS-5059 **i02912059**

NOTE	REF NO	GRAPHIC REF	PART NUMBER	QTY	PART NAME 1 2 3 4 5 6 (PRODUCT LEVEL)	SEE PAGE
	1	1	**281-3136**	1	RECEPTACLE AS-CONNECTOR (6-PIN)	
	2	1	**186-3735**	6	PIN-CONNECTOR (16-GA TO 18-GA)	
	3	1	**317-4251**	1	BOOT	
M	4	1	**280-0440**	4	STUD-MOUNTING (M6X1-THD)	

M-METRIC PART

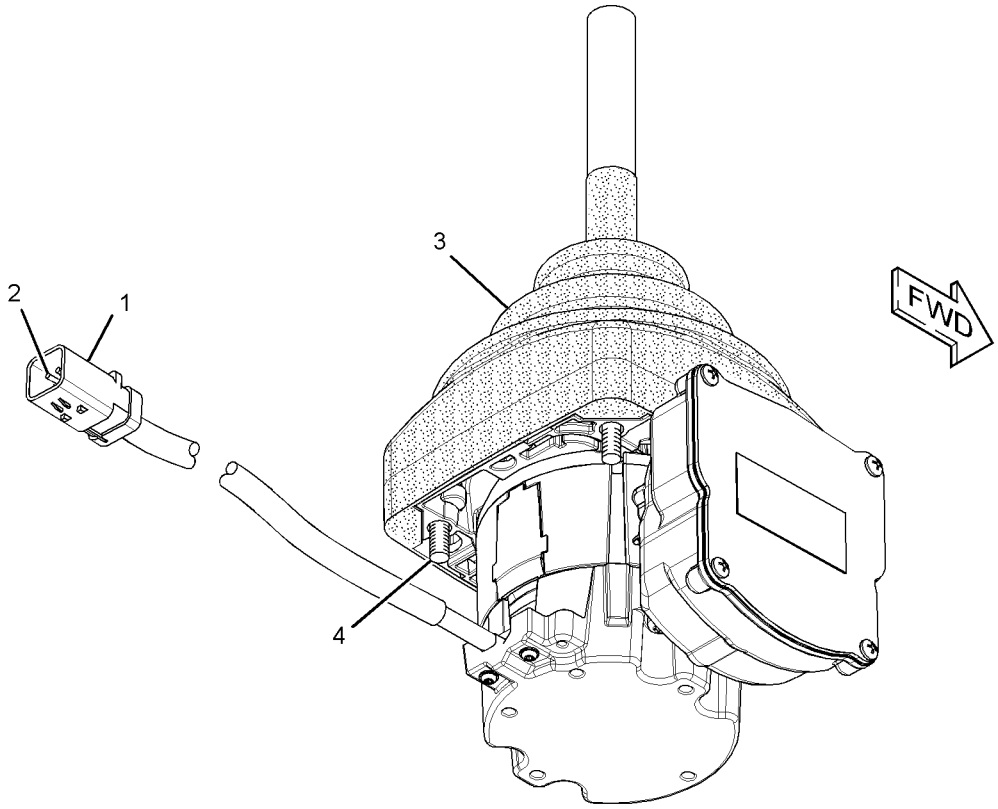

GRAPHIC #1 **<END>** g01456893

285-7612 VALVE GP-PUMP CONTROL–PRESSURE, FLOW COMPENSATOR–IMPLEMENT

S/N: LBP1-UP

PART OF 252-2679 PUMP GP-PISTON

SMCS-5455 **i02660913**

NOTE	REF NO	GRAPHIC REF	PART NUMBER	QTY	PART NAME 1 2 3 4 5 6 (PRODUCT LEVEL)	SEE PAGE
M	1	1	**8T-8442**	4	BOLT-SOCKET HEAD (M6X1X30-MM)	
	2	1	**280-7870**	1	GASKET	
J	3	1	**6E-6528**	2	SEAL	
	4	1	**9S-8002**	1	PLUG-O-RING	
	5	1	**3J-7354**	1	SEAL-O-RING	
J	6	1	**033-6043**	1	SEAL-O-RING	
J	7	1	**6V-6339**	1	SEAL-O-RING	
					AVAILABLE REPAIR KIT(S):	
J			**293-8350**	1	KIT-SEAL (FLOW COMPENSATOR)	
					(INCLUDES O-RINGS & BACK-UP RINGS)	

J-KIT MARKED J SERVICES PART(S) MARKED J
M-METRIC PART

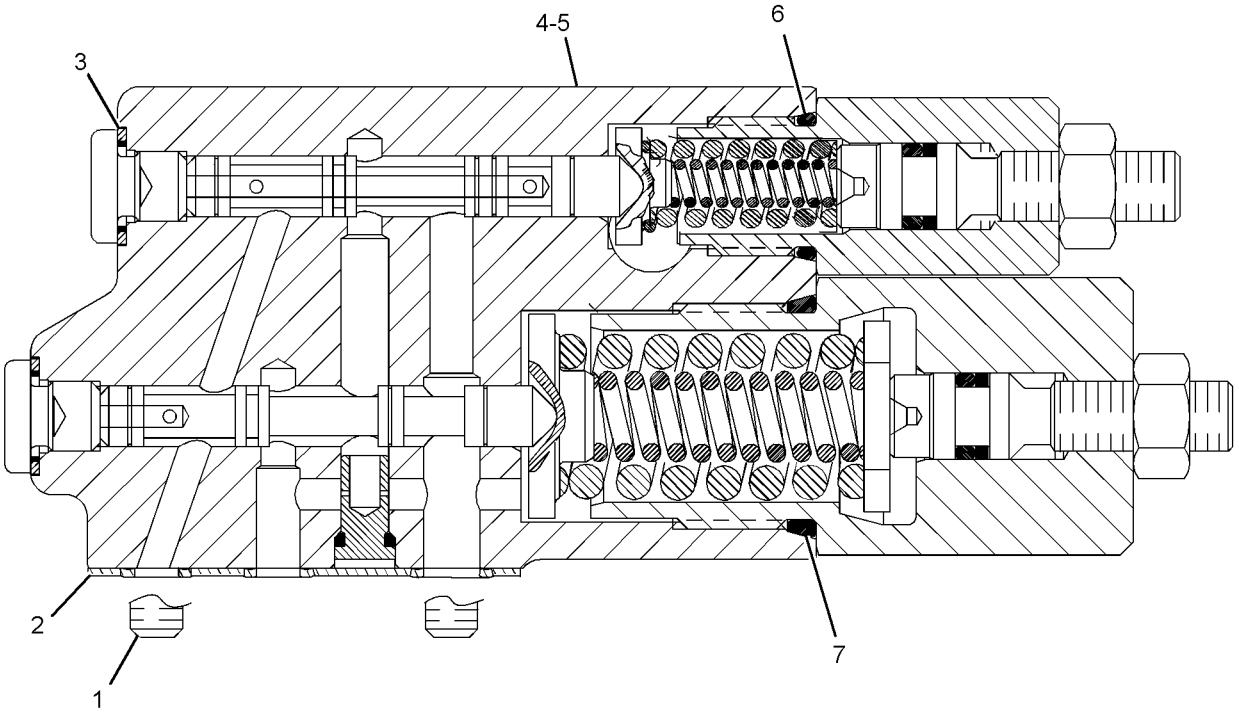

GRAPHIC #1 **<END>** g01341581

257-7732 VALVE GP-RELIEF–IMPLEMENT PILOT OIL

S/N: LBP1-UP

PART OF 270-2612, 320-3626 VALVE GP-CONTROL

AN ATTACHMENT

SMCS-5069, 5117 **i02581855**

NOTE	REF NO	GRAPHIC REF	PART NUMBER	QTY	PART NAME 1 2 3 4 5 6 (PRODUCT LEVEL)	SEE PAGE
	1	1	**169-1616**	1	RING-BACKUP	
	2	1	**095-1751**	1	SEAL-O-RING	
	3	1	**8J-2413**	1	SEAL-O-RING	

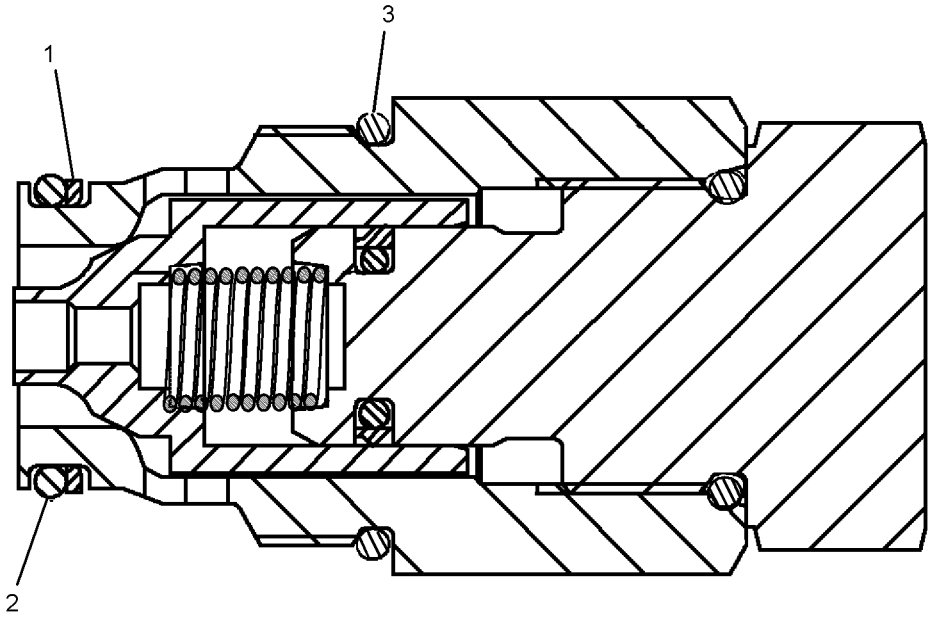

GRAPHIC #1 **<END>** g01296837

266-3592 VALVE GP-RELIEF–IMPLEMENT PILOT OIL

S/N: LBP1-UP

PART OF 270-2611, 270-2613, 270-2614, 320-3625, 320-3627, 320-3628 VALVE GP-CONTROL AN ATTACHMENT

SMCS-5069, 5117 **i02663653**

NOTE	REF NO	GRAPHIC REF	PART NUMBER	QTY	PART NAME 1 2 3 4 5 6 (PRODUCT LEVEL)	SEE PAGE
	1	1	**169-1616**	1	RING-BACKUP	
	2	1	**095-1751**	1	SEAL-O-RING	
	3	1	**8J-2413**	1	SEAL-O-RING	

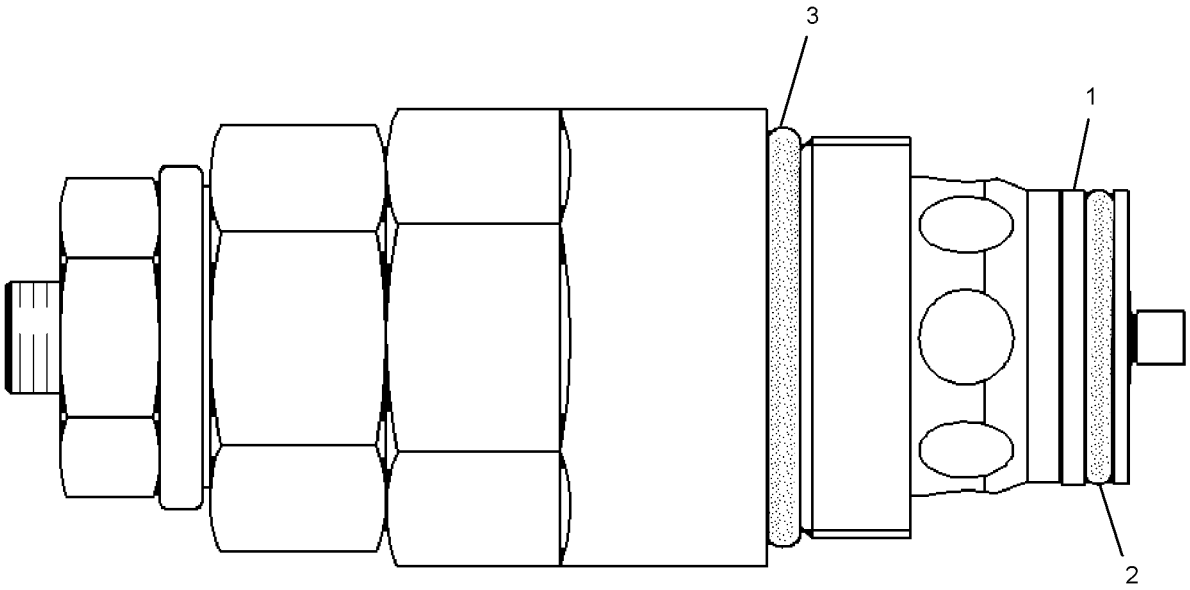

GRAPHIC #1 **<END>** g01303317

266-3594 VALVE GP-RELIEF–IMPLEMENT PILOT OIL

S/N: LBP1-UP

PART OF 270-2611, 270-2612, 320-3625, 320-3626 VALVE GP-CONTROL AN ATTACHMENT

SMCS-5069, 5117 **i02663669**

NOTE	REF NO	GRAPHIC REF	PART NUMBER	QTY	PART NAME 1 2 3 4 5 6 (PRODUCT LEVEL)	SEE PAGE
	1	1	**169-1616**	1	RING-BACKUP	
	2	1	**095-1751**	1	SEAL-O-RING	
	3	1	**8J-2413**	1	SEAL-O-RING	

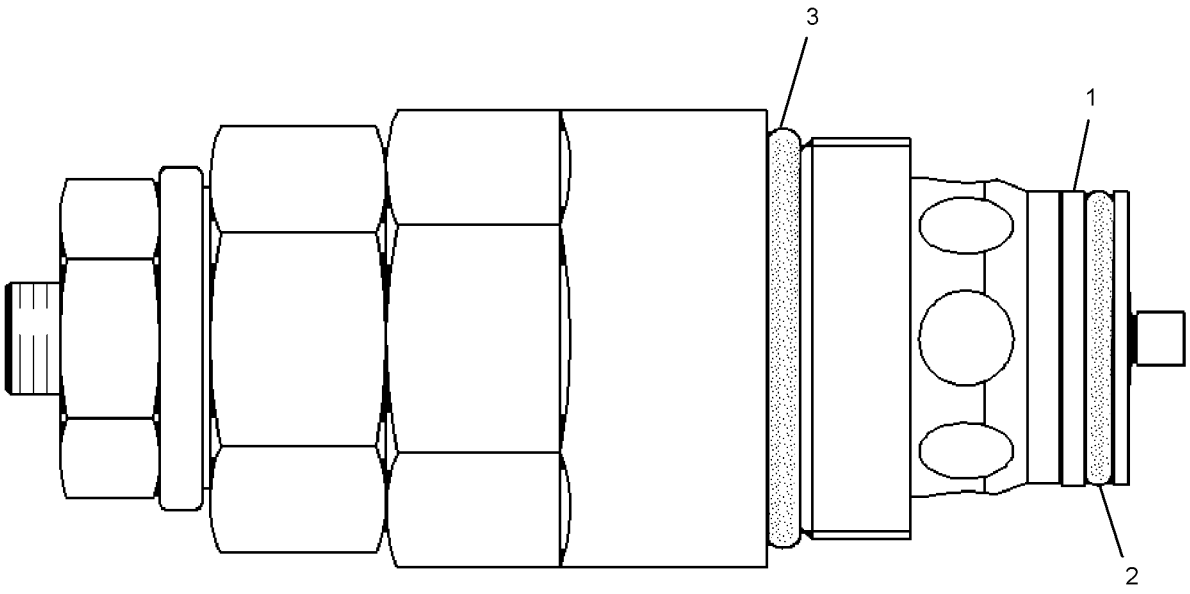

GRAPHIC #1 **<END>** g01303317

189-8898 VALVE GP-SOLENOID

S/N: LBP1-UP
24-VOLT
PART OF 266-2273 MANIFOLD & SOLENOID GP-CONTROL
AN ATTACHMENT

SMCS-5479 **i02730865**

NOTE	REF NO	GRAPHIC REF	PART NUMBER	QTY	PART NAME 1 2 3 4 5 6 (PRODUCT LEVEL)	SEE PAGE
	1	1	**226-9622**	1	COIL AS-SOLENOID (24-VOLT)	
	2	1	**164-2108**	1	WASHER (13.03X25.4X2.38-MM THK)	
	3	1	**218-2373**	1	NUT (1/2-28-THD)	
					PARTS SHOWN IN GRAPHIC(S) WITHOUT A REFERENCE NUMBER ARE NOT SERVICED SEPARATELY	

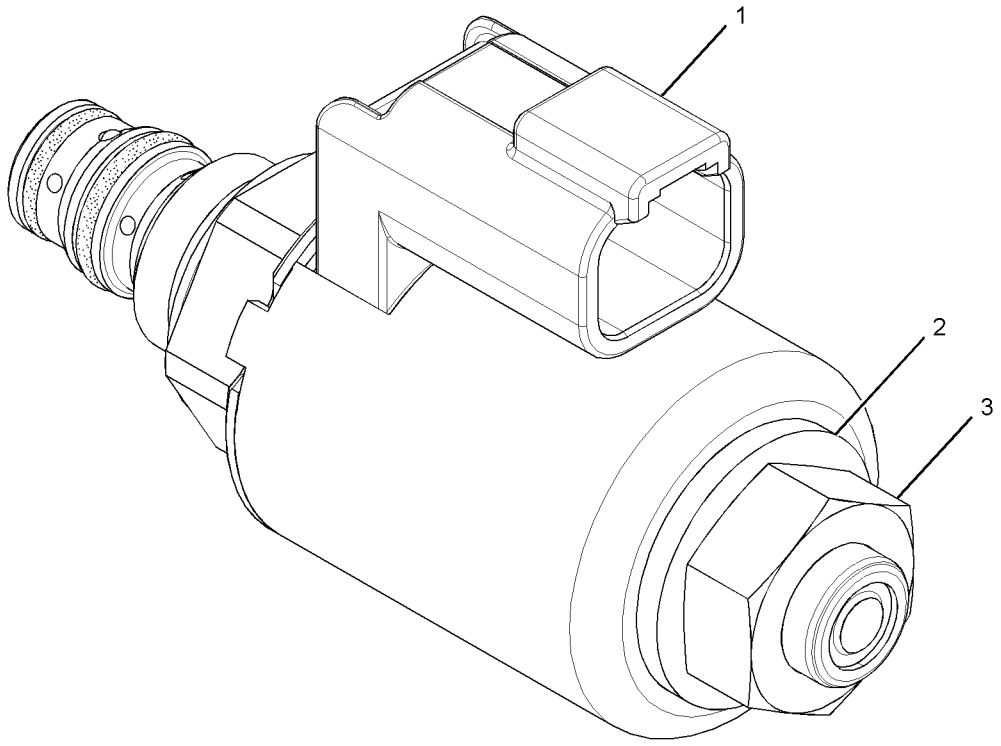

GRAPHIC #1 **<END>** g01388058

HYDRAULIC SYSTEM

211-2092 VALVE GP-SOLENOID

S/N: LBP1-UP
24-VOLT
PART OF 252-7008, 291-9652 MANIFOLD GP-CONTROL
AN ATTACHMENT

SMCS-5479 **i02395107**

NOTE	REF NO	GRAPHIC REF	PART NUMBER	QTY	PART NAME 1 2 3 4 5 6 (PRODUCT LEVEL)	SEE PAGE
	1	1	**123-3132**	1	RING-BACKUP	
	2	1	**8L-2779**	1	SEAL-O-RING	
	3	1	**230-0913**	1	COIL AS	
	4	1	**033-6028**	1	SEAL-O-RING	

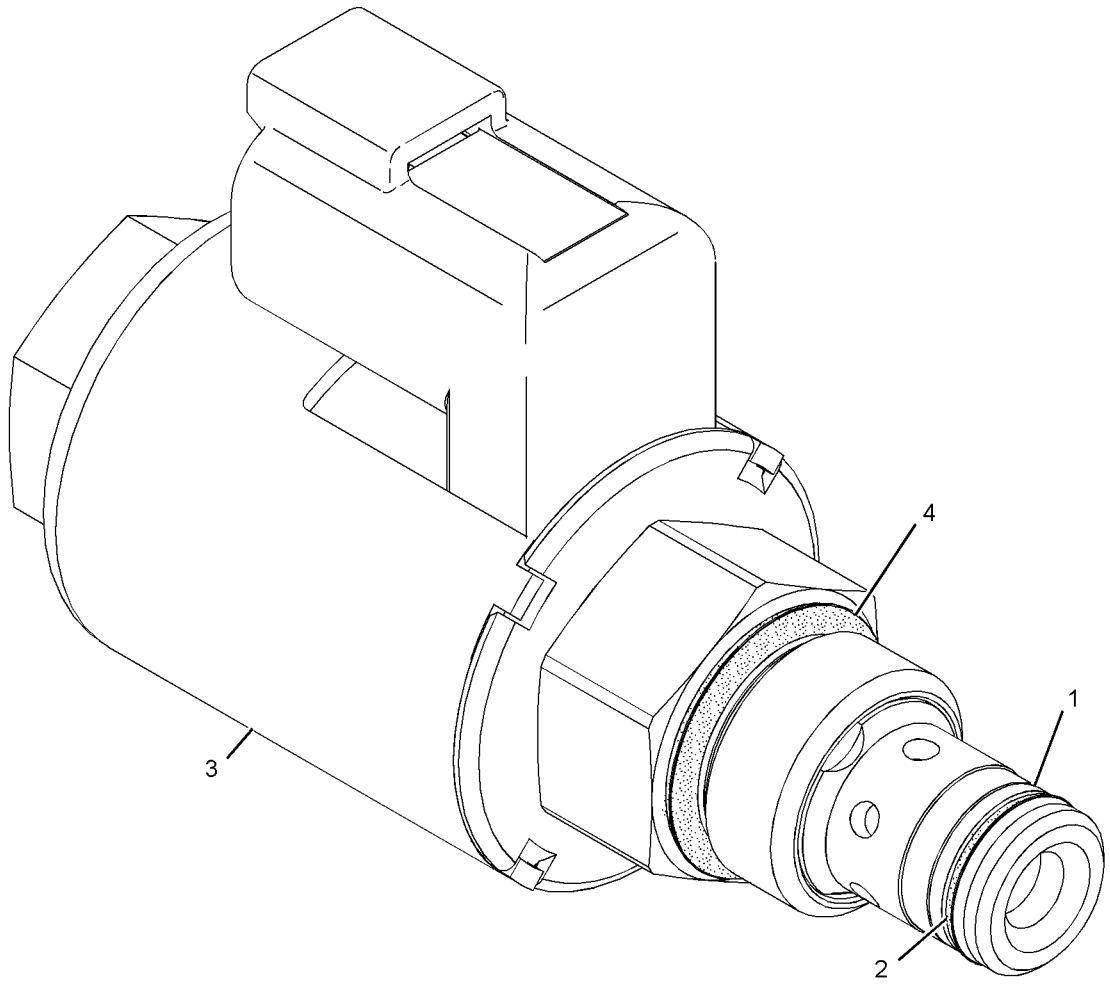

GRAPHIC #1 **<END>** g01181806

302-8149 VALVE GP-SOLENOID—WITH HARDWARE

S/N: LBP700-UP
24-VOLT
PART OF 302-8157 ACTUATOR GP-HYDRAULIC
AN ATTACHMENT

SMCS-5479 **i02995325**

NOTE	REF NO	GRAPHIC REF	PART NUMBER	QTY	PART NAME 1 2 3 4 5 6 (PRODUCT LEVEL)	SEE PAGE
	1	1	**324-3294**	1	VALVE GP-SOLENOID (24 VDC) (WITHOUT HARDWARE)	

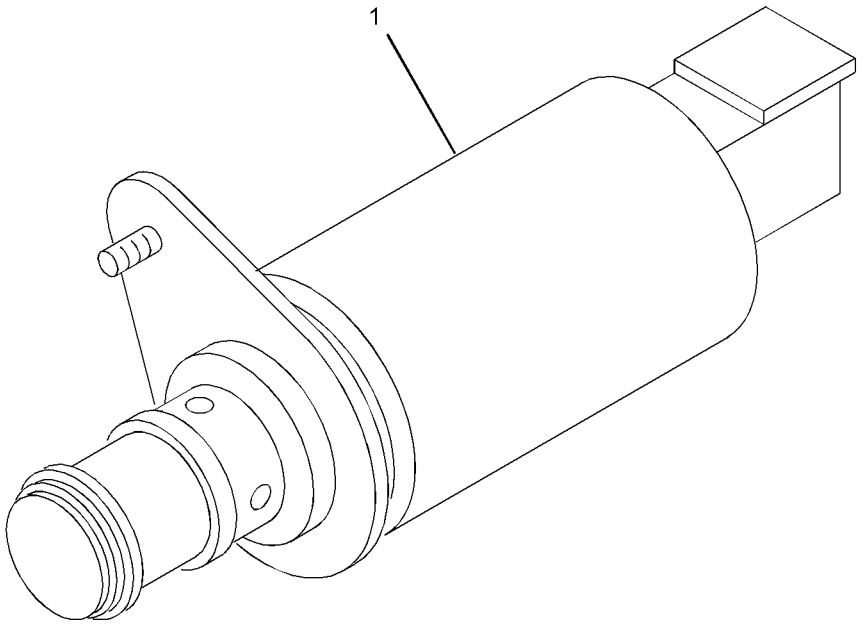

GRAPHIC #1 **<END>** g01519941

IMPLEMENTS

276-3550 CONTROL GP-BUCKET

S/N: LBP1-UP

PART OF 240-6225 CHASSIS AR

SMCS-6107 **i03127841**

NOTE	REF NO	GRAPHIC REF	PART NUMBER	QTY	PART NAME 1 2 3 4 5 6 (PRODUCT LEVEL)	SEE PAGE
	1	1,2	**3B-8489**	9	FITTING-GREASE	
	2	1	**3W-9849**	1	LINK & BEARING AS	
	2A	1	**7P-3466**	2	BEARING-SLEEVE	
B	3	2	**7P-6832**	8	WASHER (58X125X1.6-MM THK)	
	4	1	**8G-1098**	2	PIN AS	
	5	1	**8G-1105**	1	PIN AS	
	6	1,2	**8G-4027**	2	PIN AS	
	8	1	**8G-8331**	1	PIN AS	
B	9	2	**300-9137**	12	WASHER	
B	10	2	**300-9135**	6	WASHER	
	11	1	**269-6707**	1	ARM & BEARING AS-LIFT	
	11A	1	**7P-3454**	2	BEARING-SLEEVE	
	11B	2	**8G-4022**	2	BEARING	
	11C	2	**277-0554**	2	BEARING	
		1	**6H-3615**	2	PLUG-PROTECTION	
	12	1	**277-0514**	1	HANDLE AS (RH)	
	13	1	**277-0516**	1	HANDLE AS (LH)	
	14	1	**277-0550**	1	LINK & BEARING AS	
	14A	2	**277-0566**	1	BEARING	
	15	2	**277-0555**	2	PIN AS	
	16	2	**277-0557**	2	PIN AS	
	17	2	**277-0559**	2	PIN AS	
	18	2	**277-0564**	1	PIN AS	
	19	2	**2D-4867**	2	FITTING-GREASE	
	20	1	**5B-0651**	2	FITTING-STRAIGHT	
	21	2	**7K-9204**	4	SEAL-LIP TYPE	
	22	1,2	**7K-9205**	8	SEAL-LIP TYPE	
	23	1	**7K-9208**	4	SEAL-LIP TYPE	
	24	2	**7K-9209**	4	SEAL-LIP TYPE	
	25	2	**7K-9210**	4	SEAL-LIP TYPE	
	26	2	**7K-9216**	2	SEAL-LIP TYPE	
B	27	2	**7P-6833**	8	WASHER (58X125X3-MM THK)	
M	28	1	**8T-4186**	6	BOLT (M10X1.5X40-MM)	
M	31	1,2	**8T-6430**	13	BOLT (M20X2.5X50-MM)	
	32	1,2	**9K-9731**	13	SPACER (20.4X28.5X14.2-MM THK)	
	33	1,2	**8T-5439**	13	WASHER-HARD (21.5X45X6-MM THK)	
	34	1	**198-4777**	6	WASHER-HARD (11X25X10-MM THK)	

B-USE AS REQUIRED
M-METRIC PART

276-3550 **CONTROL GP-BUCKET** *(contd.)* **i03127841**

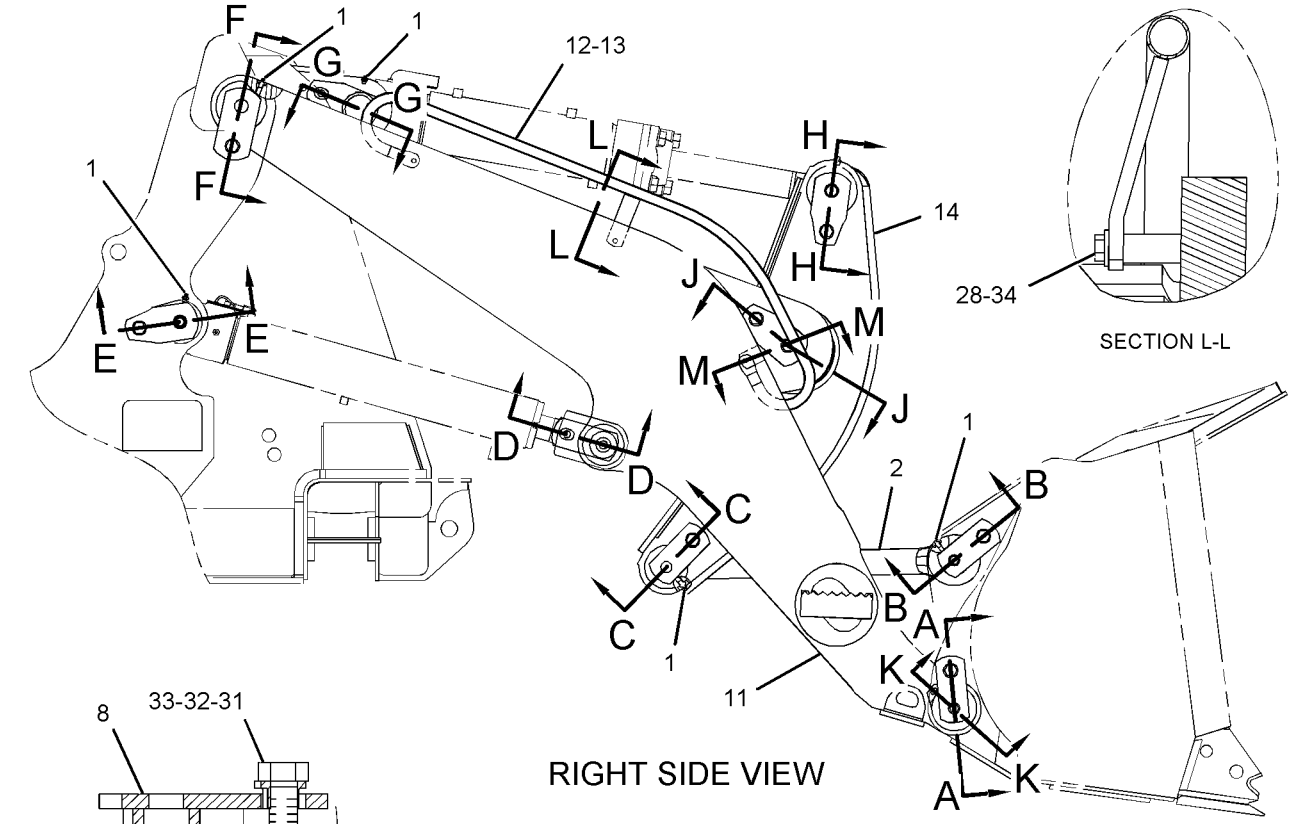

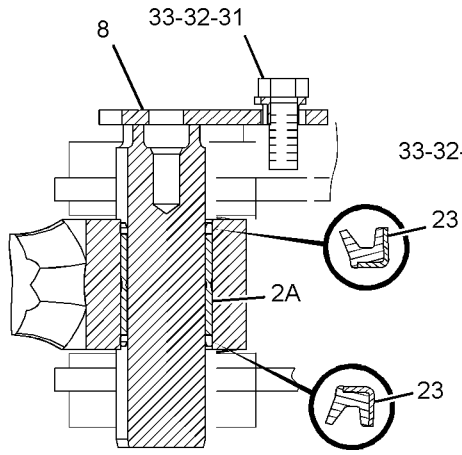

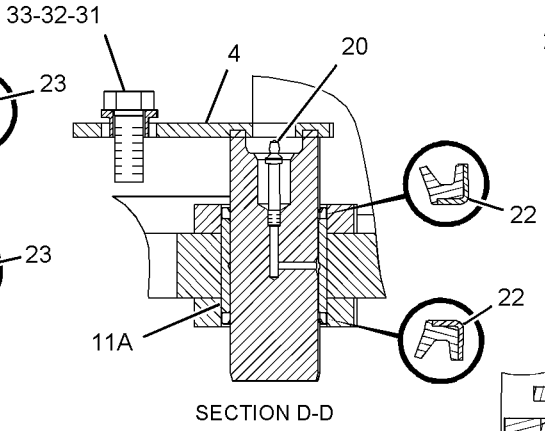

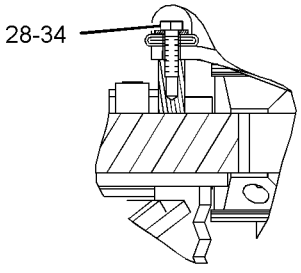

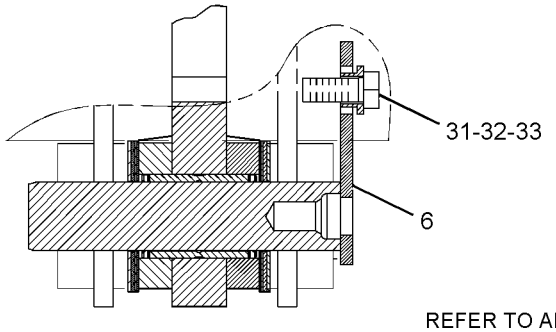

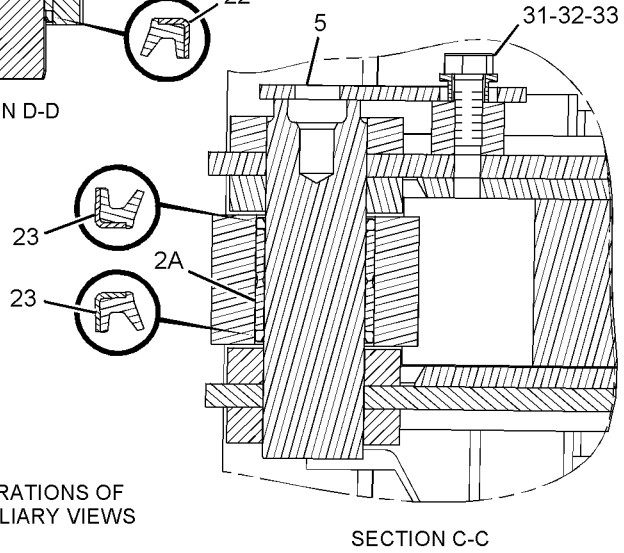

REFER TO ALL ILLUSTRATIONS OF THIS GROUP FOR AUXILIARY VIEWS

GRAPHIC #1

g01433835

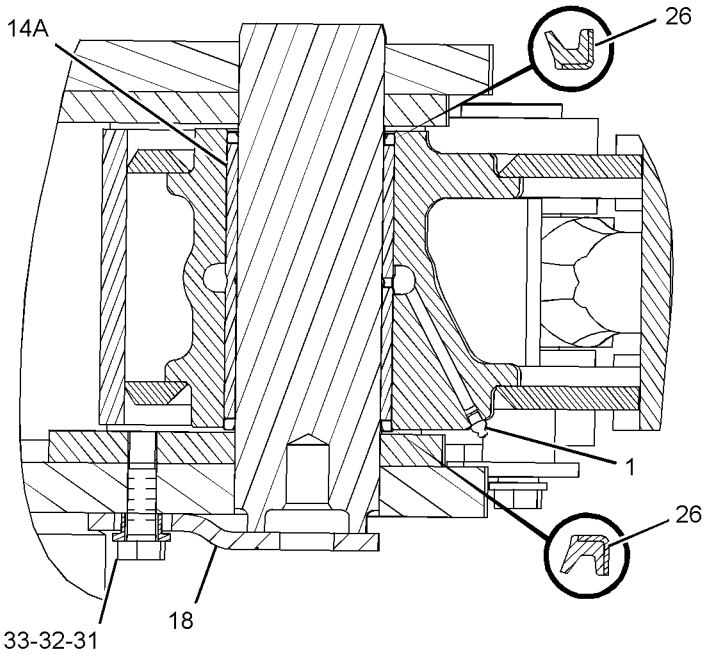

SECTION J-J

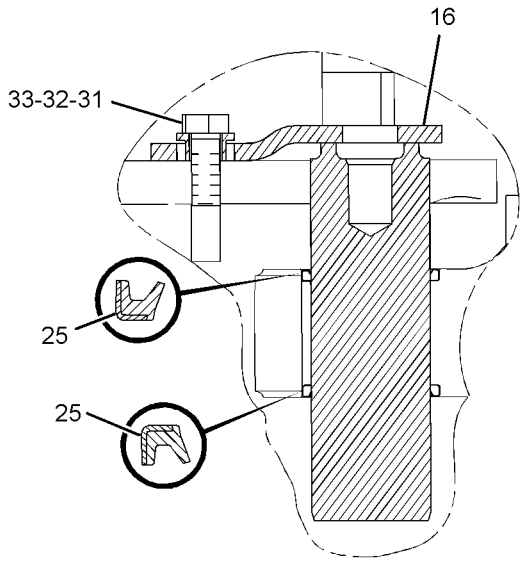

SECTION G-G

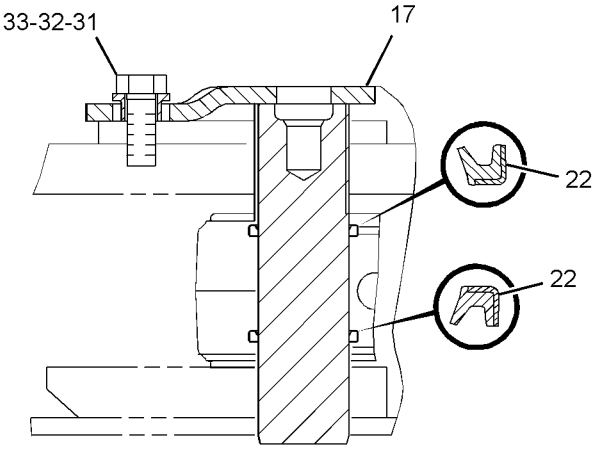

SECTION E-E

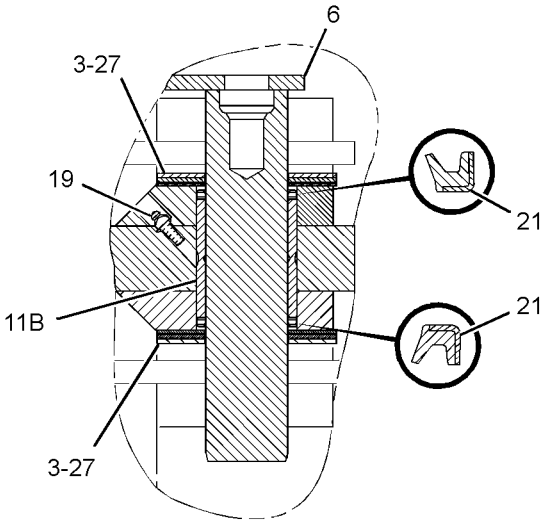

SECTION K-K

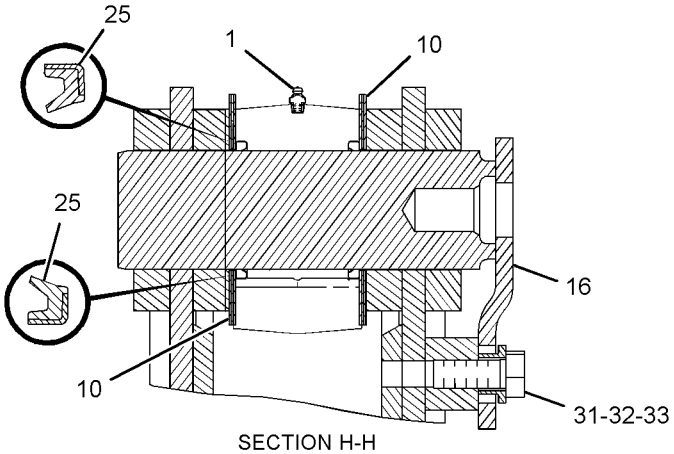

SECTION H-H

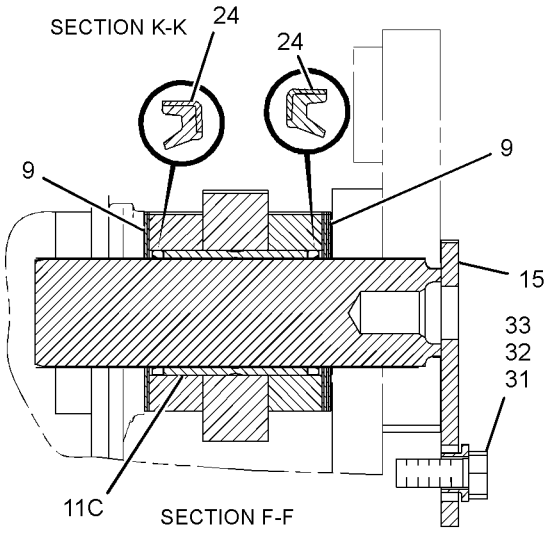

SECTION F-F

GRAPHIC #2 **<END>** g01433845

OPERATOR STATION

307-4287 ACCESSORY GP-CAB

S/N: LBP700-UP

PART OF 307-4279, 334-6680 CAB GP

SMCS-7301 **i02917848**

NOTE	REF NO	GRAPHIC REF	PART NUMBER	QTY	PART NAME 1 2 3 4 5 6 (PRODUCT LEVEL)	SEE PAGE
Y	1	1	*307-4296*	1	ACCESSORY GP-CAB (INCLUDES FLOORPLATE, COVERS)	512
Y	2	1	*307-4297*	1	ACCESSORY GP-CAB (INCLUDES MATS, WIPER BLADES)	522

Y-SEPARATE ILLUSTRATION

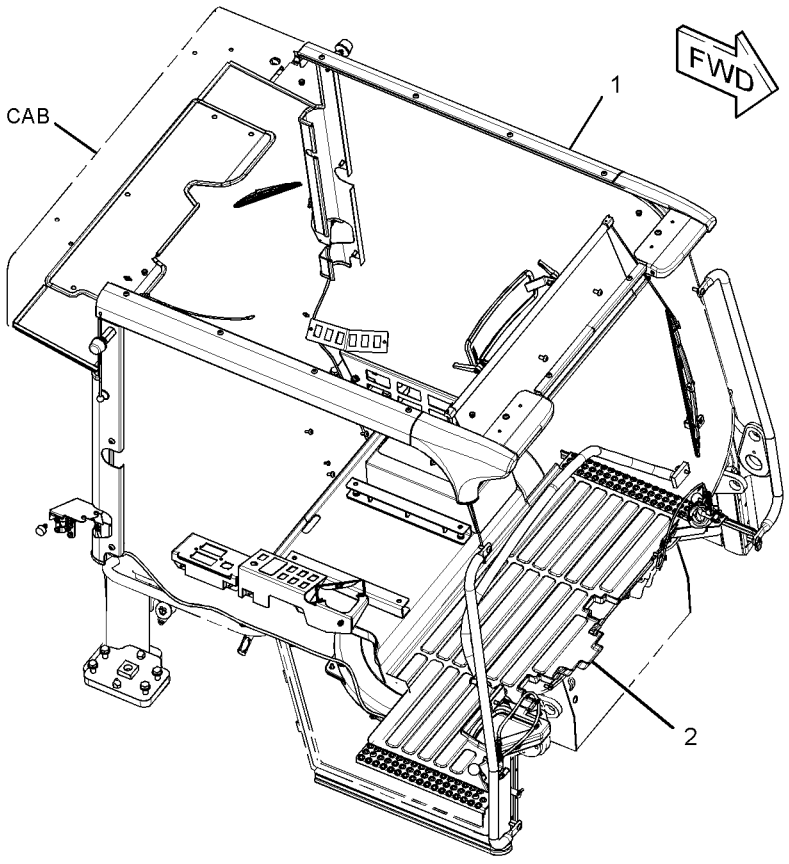

GRAPHIC #1 **<END>** g01517214

OPERATOR STATION

307-4296 ACCESSORY GP-CAB

S/N: LBP700-917

PART OF 307-4287 ACCESSORY GP-CAB

SMCS-7301 **i02961334**

NOTE	REF NO	GRAPHIC REF	PART NUMBER	QTY	PART NAME 1 2 3 4 5 6 (PRODUCT LEVEL)	SEE PAGE
	1	1	**5P-6875**	1	MIRROR (2-POINT MOUNT)	
	2	1,2	**7K-1181**	25	STRAP-CABLE	
	3	2	**8M-7758**	2	RIVET-POP	
	4	3	**9R-4872**	2	CLIP	
	6	3	**124-0597**	2	KNOB	
	7	1	**147-5630**	2	RETAINER	
	8	2	**164-9968**	1	PLATE-IDENTIFICATION (SEQUENCE)	
M	9	3	**179-4324**	2	LOCKNUT (M5X0.8-THD)	
	10	1,2	**252-8230**	4	DOWEL	
	11	1,2	**252-8231**	2	PLATE AS	
	12	2	**254-8594**	1	COVER	
	13	2	**254-8617**	1	HANDLE	
	14	2	**254-8621**	1	PLATE	
	15	1	**254-8628**	1	COVER	
	16	1	**257-6157**	1	PLATE	
	17	2	**257-6188**	1	SEAL	
	18	1,2	**257-6215**	2	CHANNEL AS	
	19	1	**257-6228**	1	COVER AS	
	20	1	**257-6229**	1	COVER AS	
	21	1	**257-6239**	1	PLATE	
	22	2	**257-6245**	1	GRID	
	23	2	*261-7268*	1	VISOR GP-CAB	
M		2	**6V-9669**	4	SCREW-MACHINE (M3X0.5X8-MM)	
M		2	**107-3786**	2	BOLT (M4X0.7X12-MM)	
		2	**254-8629**	1	VISOR	
		2	**283-1400**	1	FILM-IDENTIFICATION (ARROW, SUN VISOR)	
	24	3	**261-7382**	1	LEVER AS	
	25	2	**263-9431**	1	FLOORPLATE	
M	26	1,2	**268-0960**	2	NUT (M12X1.75-THD)	
	27	3	**283-1409**	2	PIVOT	
	28	2	**283-1419**	1	SEAL	
	29	2	**283-1420**	1	HANDLE	
	30	3	**283-5546**	1	LEVER AS	
	31	1	**284-9815**	8	SCREW-TRUSS HEAD (M8X1.25X10-MM)	
	32	1	**284-9829**	2	STUD	
	33	2	**284-9830**	1	PLATE AS	
	34	1	**289-1074**	1	PANEL	
	35	1,2	**289-1081**	2	CABLE AS	
	36	3	**289-1082**	2	TURNBUCKLE	
	37	1	**289-1106**	1	FILM-IDENTIFICATION (SWITCH PANEL, LH)	
	38	1	**289-1107**	1	FILM-IDENTIFICATION (SWITCH PANEL, RH)	
	39	3	**289-1132**	2	SPRING	
	40	1	**289-1133**	1	BRACKET	
	41	3	**294-3144**	2	LATCH AS	
	42	1,2	**295-5742**	2	STRIKER AS	
	43	1	**303-4027**	1	CHANNEL	
	44	1	**307-4347**	1	BRACKET AS	
	45	3	**307-4348**	1	COVER	
	46	3	**307-4349**	1	COVER	
	47	2	*312-0005*	1	BOX GP-TOOL	
		2	**188-8846**	1	LATCH AS	
		2	**312-0006**	1	TOOL BOX AS	
		2	**312-0009**	1	SEAL	
M	49	1,2	**127-2170**	13	SCREW-TRUSS HEAD (M8X1.25X20-MM)	
M	50	1,2	**317-1118**	8	BOLT (M16X2X70-MM)	
	51	3	**2U-2552**	8	LOCKWASHER	

307-4296 **ACCESSORY GP-CAB** ***(contd.)*** **i02961334**

NOTE	REF NO	GRAPHIC REF	PART NUMBER	QTY	PART NAME 1 2 3 4 5 6 (PRODUCT LEVEL)	SEE PAGE
M	52	3	**3E-8020**	8	SCREW-TRUSS HEAD (M6X1X25-MM)	
M	53	3	**5C-2874**	8	NUT (M5X0.8-THD)	
M	54	2,3	**5C-2890**	10	NUT (M6X1-THD)	
M	55	1	**5C-7261**	1	NUT (M8X1.25-THD)	
M	56	1	**5C-9553**	2	BOLT (M6X1X16-MM)	
	57	3	**5P-4115**	16	WASHER-HARD (7.2X19X2-MM THK)	
	58	1	**5P-4116**	2	WASHER-HARD (8.8X20.5X2-MM THK)	
M	59	3	**6V-4298**	2	BOLT (M5X0.8X16-MM)	
	60	3	**7X-0620**	10	WASHER-HARD (5.5X13X1.6-MM THK)	
	61	2	**7X-7729**	3	WASHER (11X25X3-MM THK)	
	62	1,2	**8T-4121**	8	WASHER-HARD (11X21X2.5-MM THK)	
	63	1,2	**8T-4122**	8	WASHER-HARD (17X32X3.5-MM THK)	
M	64	1,2	**8T-4136**	9	BOLT (M10X1.5X25-MM)	
M	65	1	**8T-4200**	3	BOLT (M8X1.25X16-MM)	
	66	2	**8T-4205**	2	WASHER-HARD (7.2X14.5X2-MM THK)	
	67	1,3	**8T-4224**	6	WASHER-HARD (8.8X16X2-MM THK)	
	68	1,2	**8Y-6385**	2	SHIELD-STRIKER	
M	69	2	**9X-2039**	4	SCREW-TRUSS HEAD (M10X1.5X35-MM)	
M	70	1,2	**9X-2041**	8	SCREW-TRUSS HEAD (M10X1.5X20-MM)	
M	71	1	**9X-2042**	2	SCREW-TRUSS HEAD (M6X1X12-MM)	
M	72	2,3	**9X-2044**	6	SCREW-TRUSS HEAD (M6X1X16-MM)	
	73	1	**9X-6381**	2	WASHER (6.5X12.5X1.6-MM THK)	
	74	2	**9Z-7719**	2	HOUSING	

M-METRIC PART

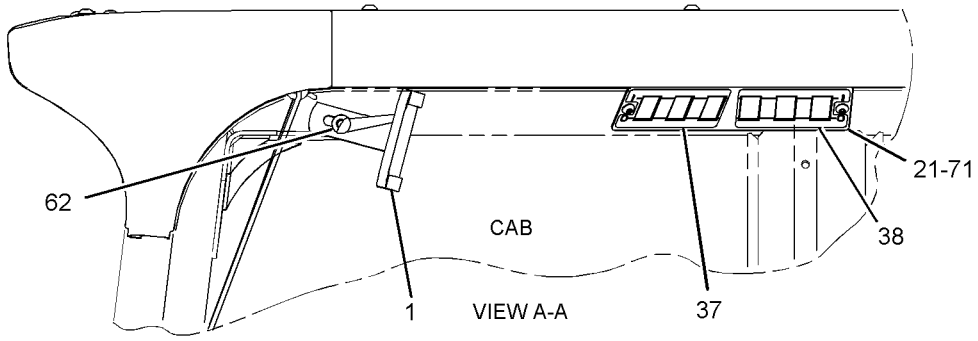

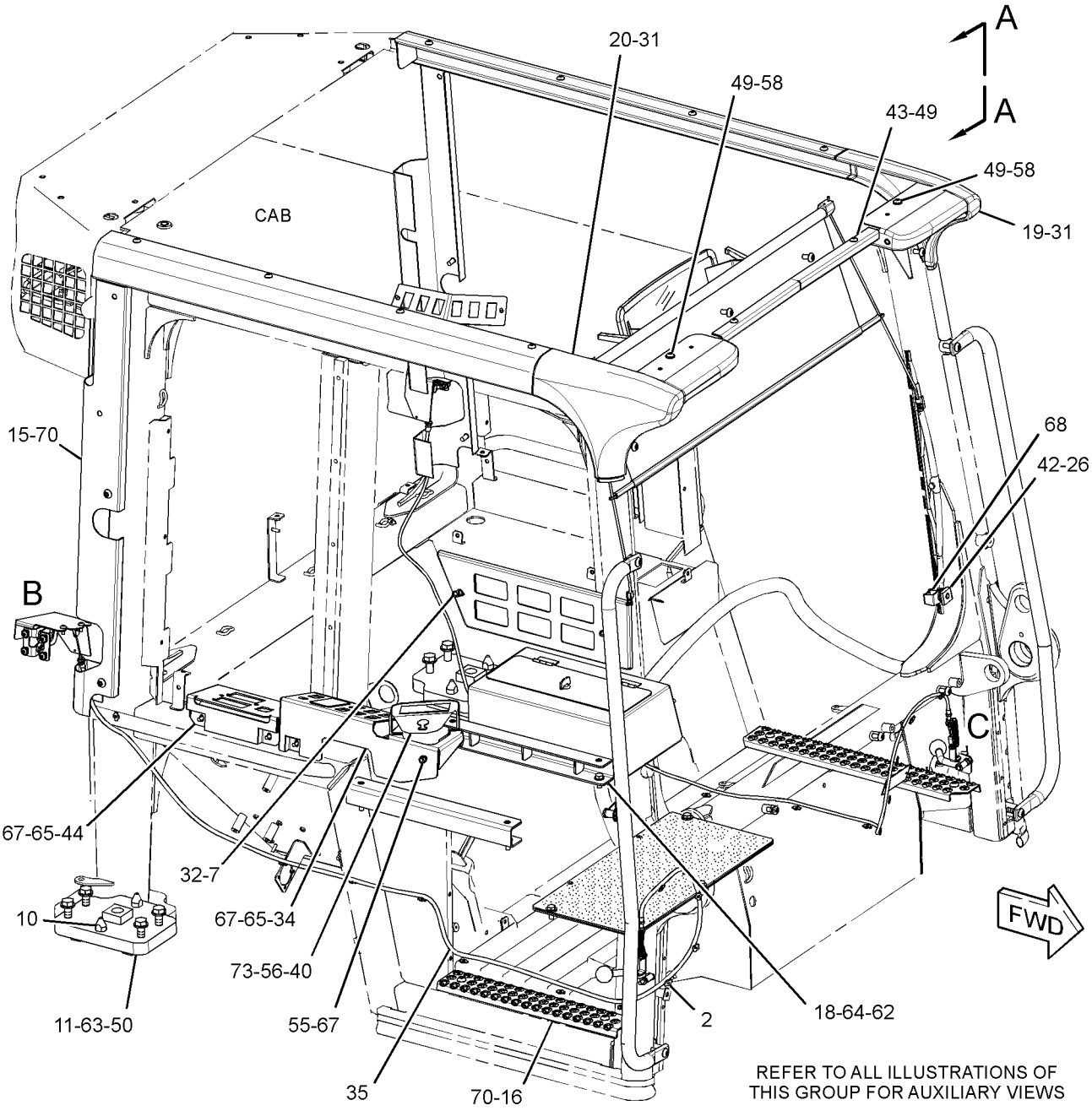

REFER TO ALL ILLUSTRATIONS OF THIS GROUP FOR AUXILIARY VIEWS

GRAPHIC #1

g01527196

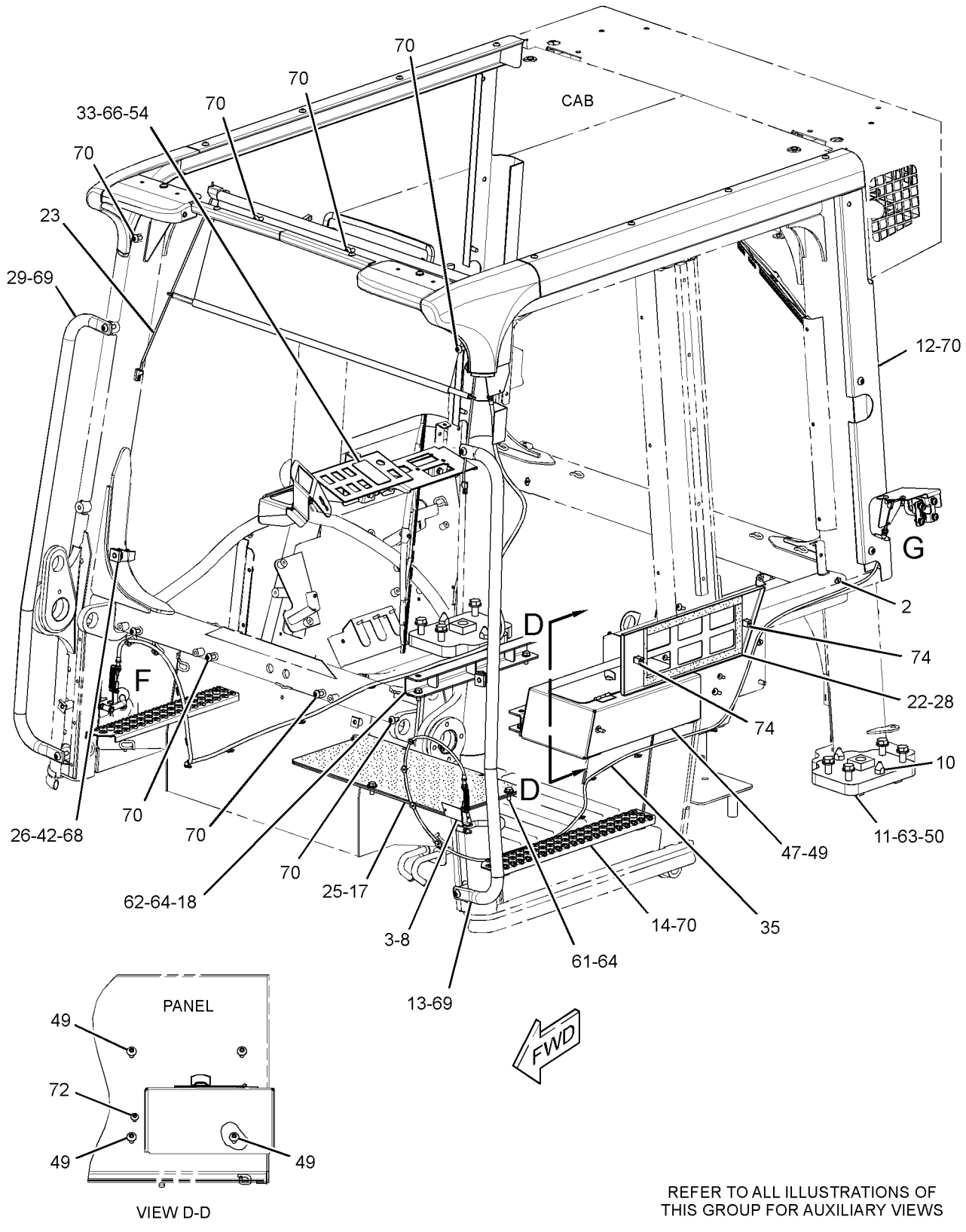

REFER TO ALL ILLUSTRATIONS OF THIS GROUP FOR AUXILIARY VIEWS

GRAPHIC #2

g01527197

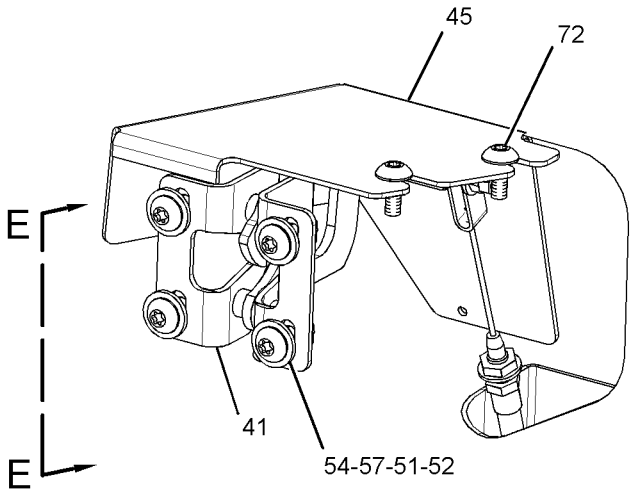

VIEW OF AREA B

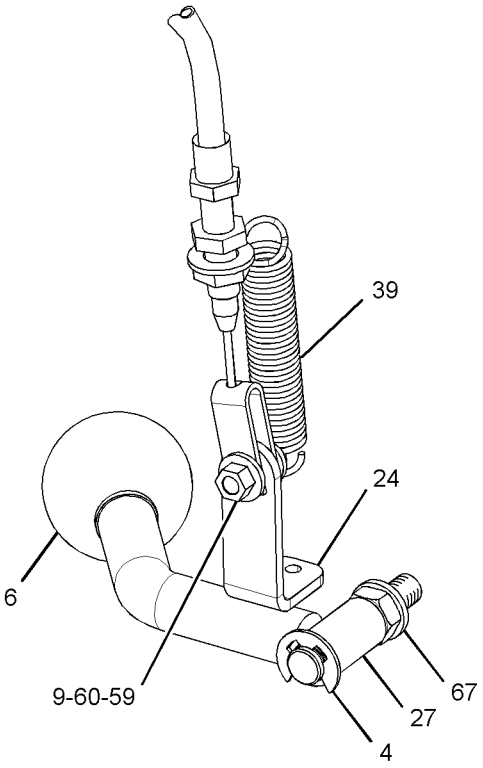

VIEW OF AREA C

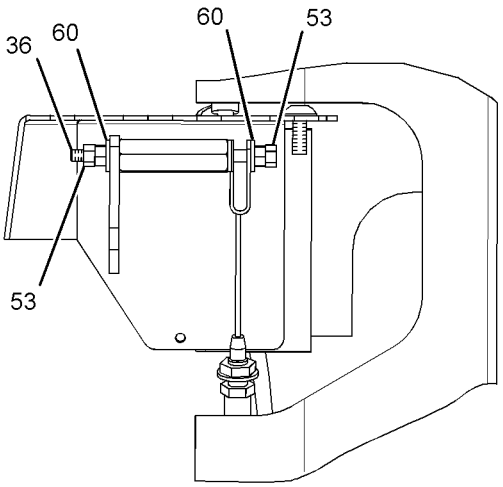

VIEW E-E
(LATCH REMOVED FOR CLARITY)

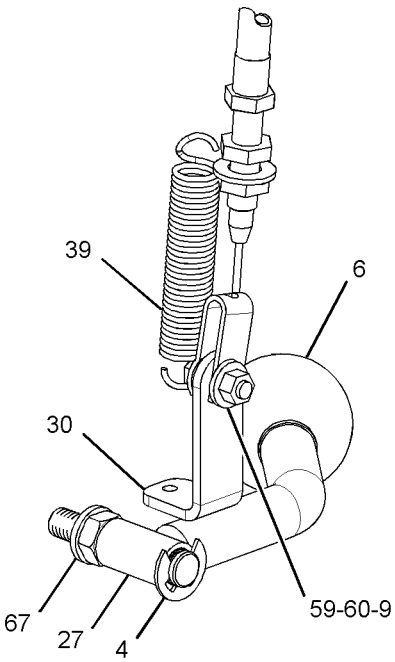

VIEW OF AREA F

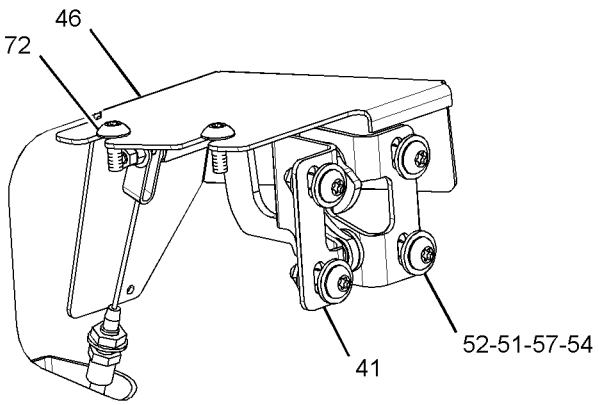

VIEW OF AREA G

GRAPHIC #3 **<END>** g01527198

OPERATOR STATION

307-4296 ACCESSORY GP-CAB

S/N: LBP918-UP

PART OF 307-4287 ACCESSORY GP-CAB

SMCS-7301 **i03588100**

NOTE	REF NO	GRAPHIC REF	PART NUMBER	QTY	PART NAME 1 2 3 4 5 6 (PRODUCT LEVEL)	SEE PAGE
	1	1	**5P-6875**	1	MIRROR (2-POINT MOUNT)	
	2	1,2	**7K-1181**	25	STRAP-CABLE	
	3	2	**8M-7758**	2	RIVET-POP	
	4	3	**9R-4872**	2	CLIP	
	6	3	**124-0597**	2	KNOB	
	7	1	**147-5630**	2	RETAINER	
	8	2	**164-9968**	1	PLATE-IDENTIFICATION (SEQUENCE)	
M	9	3	**179-4324**	2	LOCKNUT (M5X0.8-THD)	
	10	1,2	**252-8230**	4	DOWEL	
	11	1,2	**252-8231**	2	PLATE AS	
	12	2	**254-8594**	1	COVER	
	13	2	**254-8617**	1	HANDLE	
	14	2	**254-8621**	1	PLATE	
	15	1	**254-8628**	1	COVER	
	16	1	**257-6157**	1	PLATE	
	17	2	**257-6188**	1	SEAL	
	18	1,2	**257-6215**	2	CHANNEL AS	
	19	1	**257-6228**	1	COVER AS	
	20	1	**257-6229**	1	COVER AS	
C	21	1	**334-6684**	1	PLATE AS	
	22	2	**257-6245**	1	GRID	
	23	2	*261-7268*	1	VISOR GP-CAB	
M		2	**6V-9669**	4	SCREW-MACHINE (M3X0.5X8-MM)	
M		2	**107-3786**	2	BOLT (M4X0.7X12-MM)	
		2	**254-8629**	1	VISOR	
		2	**283-1400**	1	FILM-IDENTIFICATION (ARROW, SUN VISOR)	
	24	3	**261-7382**	1	LEVER AS	
	25	2	**263-9431**	1	FLOORPLATE	
M	26	1,2	**268-0960**	2	NUT (M12X1.75-THD)	
	27	3	**283-1409**	2	PIVOT	
	28	2	**283-1419**	1	SEAL	
	29	2	**283-1420**	1	HANDLE	
	30	3	**283-5546**	1	LEVER AS	
	31	1	**284-9815**	8	SCREW-TRUSS HEAD (M8X1.25X10-MM)	
	32	1	**284-9829**	2	STUD	
	33	2	**284-9830**	1	PLATE AS	
	34	1	**289-1074**	1	PANEL	
	35	1,2	**289-1081**	2	CABLE AS	
	36	3	**289-1082**	2	TURNBUCKLE	
	38	1	**289-1107**	1	FILM-IDENTIFICATION (SWITCH PANEL, RH)	
	39	3	**289-1132**	2	SPRING	
	40	1	**289-1133**	1	BRACKET	
	41	3	**294-3144**	2	LATCH AS	
	42	1,2	**295-5742**	2	STRIKER AS	
	43	1	**303-4027**	1	CHANNEL	
	44	1	**307-4347**	1	BRACKET AS	
	45	3	**307-4348**	1	COVER	
	46	3	**307-4349**	1	COVER	
	47	2	*312-0005*	1	BOX GP-TOOL	
		2	**188-8846**	1	LATCH AS	
		2	**312-0006**	1	TOOL BOX AS	
		2	**312-0009**	1	SEAL	
M	49	1,2	**127-2170**	13	SCREW-TRUSS HEAD (M8X1.25X20-MM)	
M	50	1,2	**317-1118**	8	BOLT (M16X2X70-MM)	
	51	3	**2U-2552**	8	LOCKWASHER	
M	52	3	**3E-8020**	8	SCREW-TRUSS HEAD (M6X1X25-MM)	

307-4296 **ACCESSORY GP-CAB** *(contd.)* **i03588100**

NOTE	REF NO	GRAPHIC REF	PART NUMBER	QTY	PART NAME 1 2 3 4 5 6 (PRODUCT LEVEL)	SEE PAGE
M	53	3	**5C-2874**	8	NUT (M5X0.8-THD)	
M	54	2,3	**5C-2890**	10	NUT (M6X1-THD)	
M	55	1	**5C-7261**	1	NUT (M8X1.25-THD)	
M	56	1	**5C-9553**	2	BOLT (M6X1X16-MM)	
	57	3	**5P-4115**	16	WASHER-HARD (7.2X19X2-MM THK)	
	58	1	**5P-4116**	2	WASHER-HARD (8.8X20.5X2-MM THK)	
M	59	3	**6V-4298**	2	BOLT (M5X0.8X16-MM)	
	60	3	**7X-0620**	10	WASHER-HARD (5.5X13X1.6-MM THK)	
	61	2	**7X-7729**	3	WASHER (11X25X3-MM THK)	
	62	1,2	**8T-4121**	8	WASHER-HARD (11X21X2.5-MM THK)	
	63	1,2	**8T-4122**	8	WASHER-HARD (17X32X3.5-MM THK)	
M	64	1,2	**8T-4136**	9	BOLT (M10X1.5X25-MM)	
M	65	1	**8T-4200**	3	BOLT (M8X1.25X16-MM)	
	66	2	**8T-4205**	2	WASHER-HARD (7.2X14.5X2-MM THK)	
	67	1,3	**8T-4224**	6	WASHER-HARD (8.8X16X2-MM THK)	
	68	1,2	**8Y-6385**	2	SHIELD-STRIKER	
M	69	2	**9X-2039**	4	SCREW-TRUSS HEAD (M10X1.5X35-MM)	
M	70	1,2	**9X-2041**	8	SCREW-TRUSS HEAD (M10X1.5X20-MM)	
M	71	1	**9X-2042**	2	SCREW-TRUSS HEAD (M6X1X12-MM)	
M	72	2,3	**9X-2044**	6	SCREW-TRUSS HEAD (M6X1X16-MM)	
	73	1	**9X-6381**	2	WASHER (6.5X12.5X1.6-MM THK)	
	74	2	**9Z-7719**	2	HOUSING	

C-CHANGE FROM PREVIOUS TYPE
M-METRIC PART

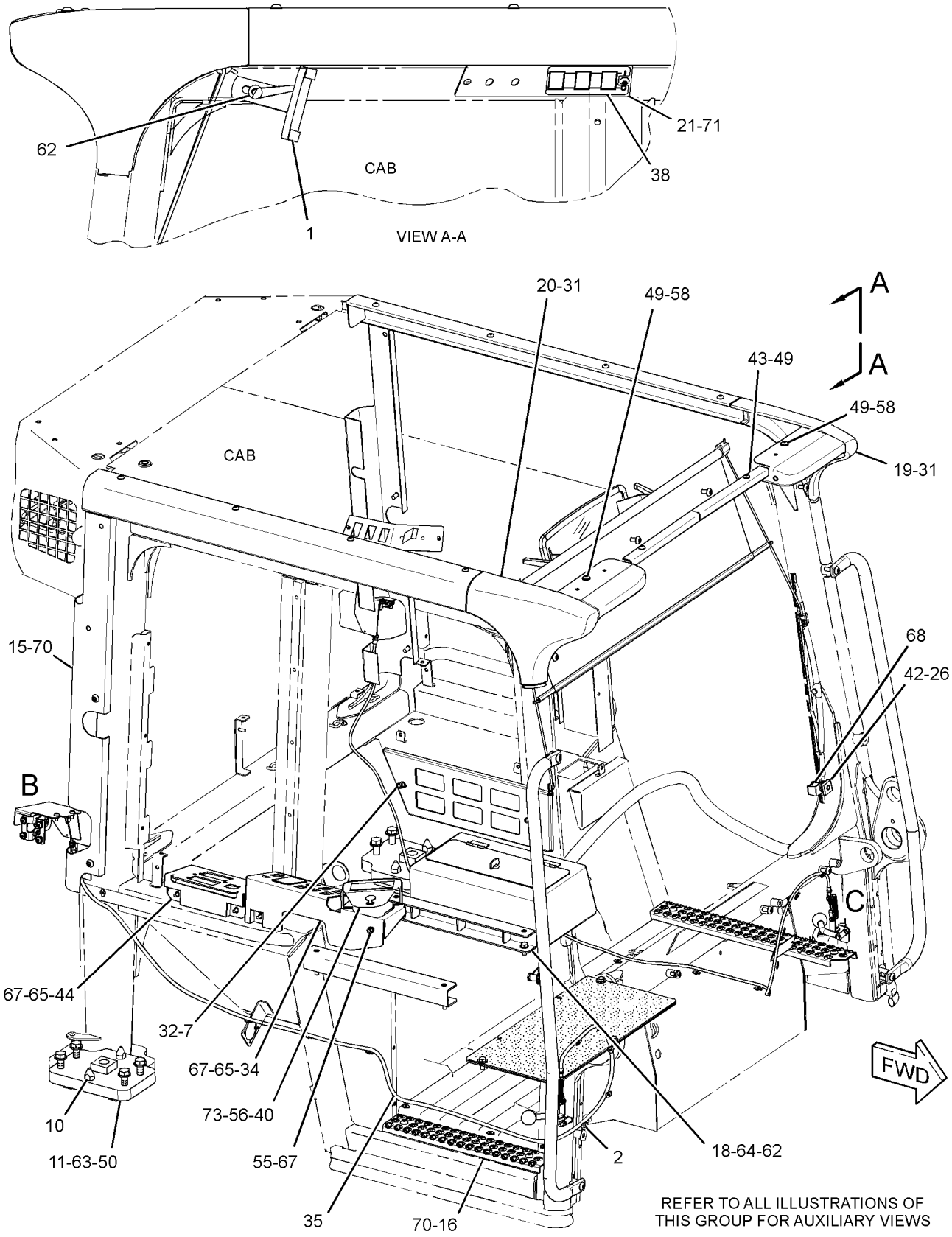

GRAPHIC #1

g01864713

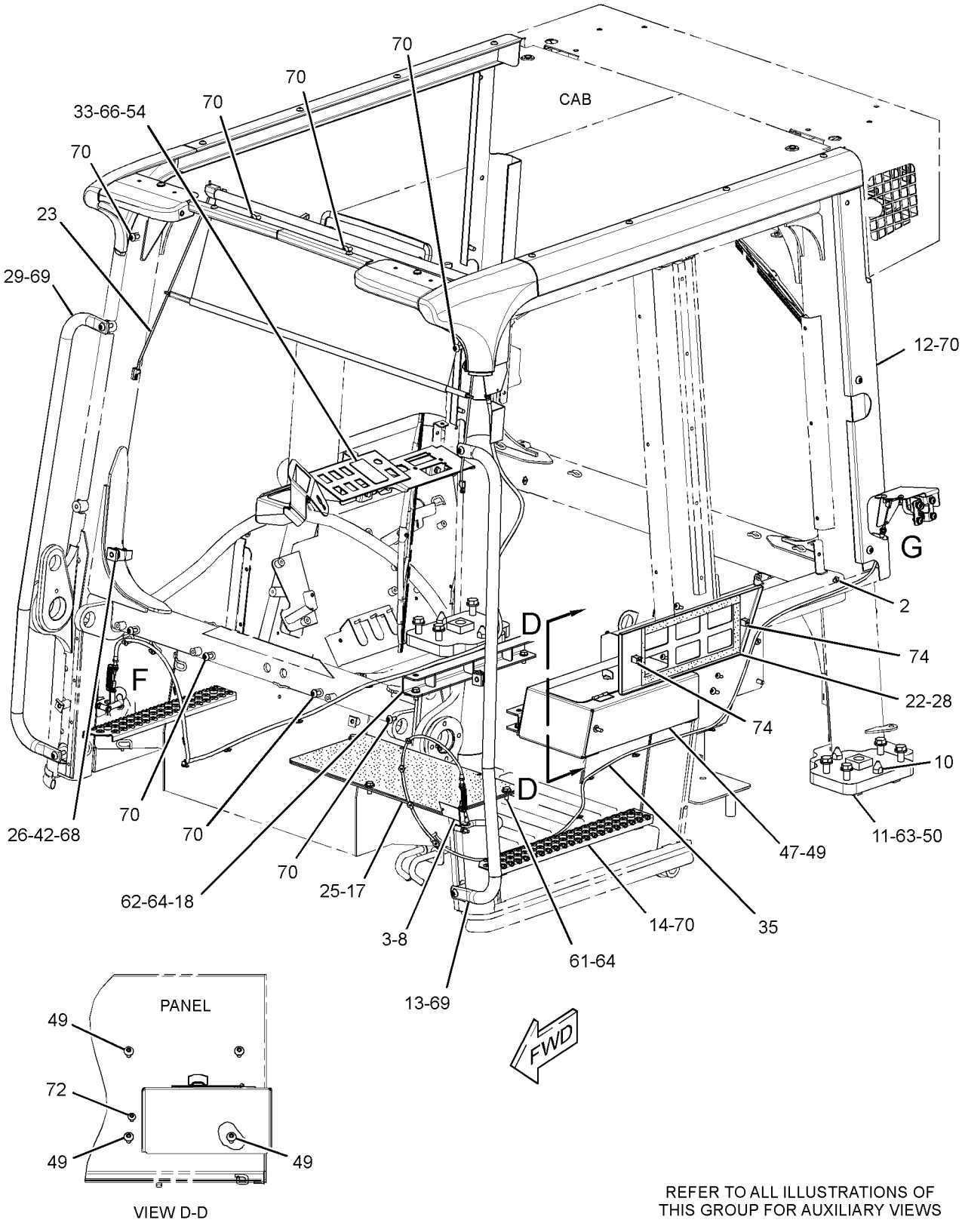

REFER TO ALL ILLUSTRATIONS OF THIS GROUP FOR AUXILIARY VIEWS

GRAPHIC #2

g01527197

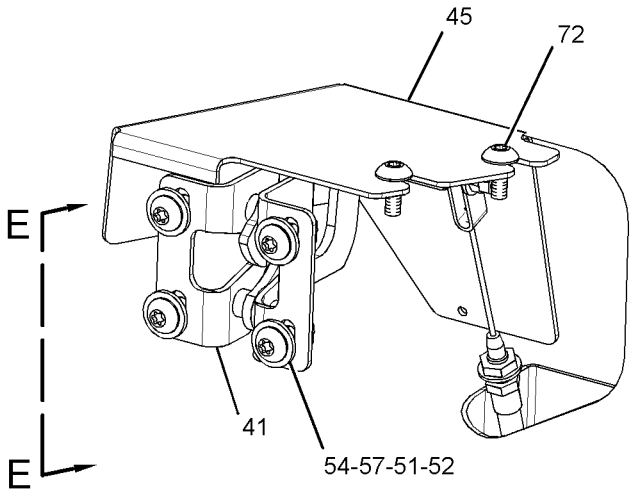

VIEW OF AREA B

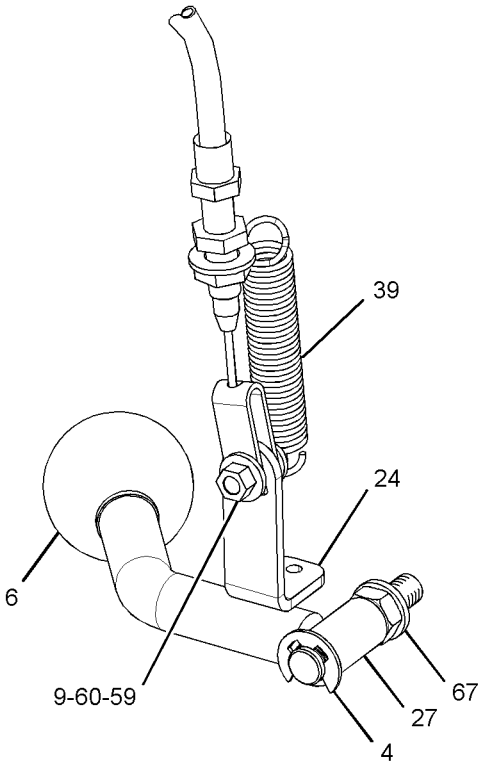

VIEW OF AREA C

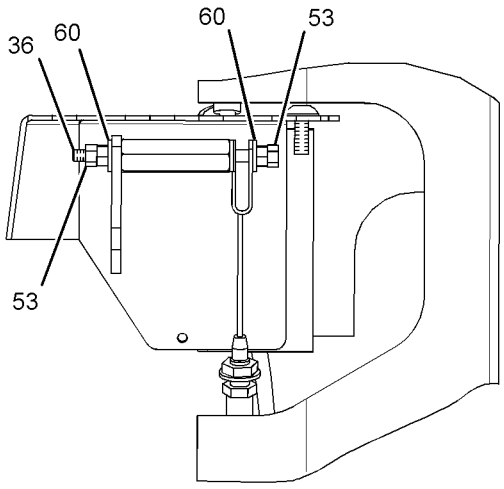

VIEW E-E
(LATCH REMOVED FOR CLARITY)

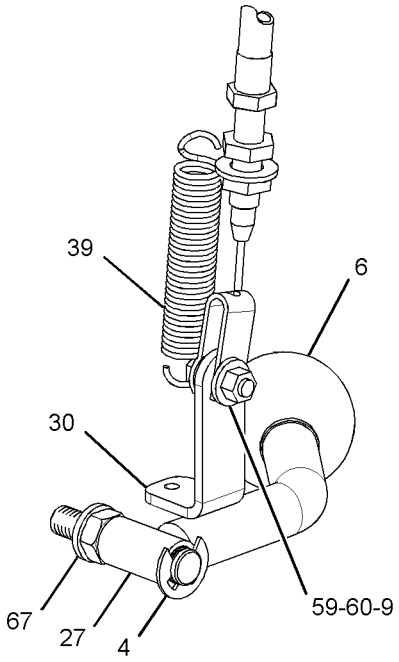

VIEW OF AREA F

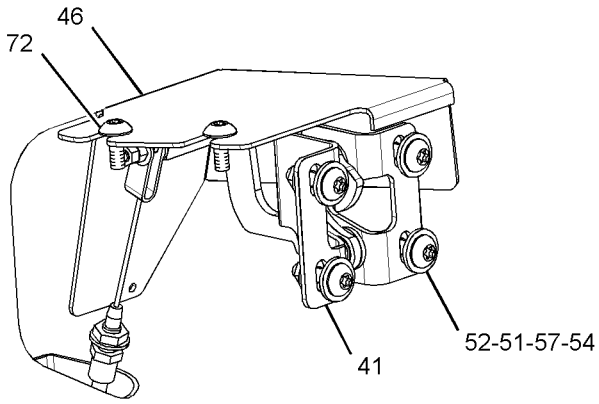

VIEW OF AREA G

GRAPHIC #3 **<END>** g01527198

OPERATOR STATION

307-4297 ACCESSORY GP-CAB

S/N: LBP700-917

PART OF 307-4287 ACCESSORY GP-CAB

SMCS-7301 **i03097100**

NOTE	REF NO	GRAPHIC REF	PART NUMBER	QTY	PART NAME 1 2 3 4 5 6 (PRODUCT LEVEL)	SEE PAGE
	1	1	**6V-5853**	1	BLADE AS-WIPER (450-MM) (REAR)	
	2	1	**127-0506**	2	BUMPER AS	
	3	1	**134-1935**	1	BLADE AS-WIPER (650-MM) (FRONT)	
	4	1	**143-2397**	2	CAP	
	5	1	**254-8606**	1	FLOOR MAT	
	6	1	**254-8609**	1	FLOOR MAT	
	7	1	**257-6269**	1	DUCT-AIR	
	8	1	**263-9432**	1	ANTENNA AS	
	9	1	**268-0959**	1	HANDRAIL	
	10	1	**281-1298**	1	GROMMET	
	11	1	**283-1392**	2	BUMPER	
	12	1	**283-1408**	2	SPACER	
	13	1	**283-1414**	1	SEAL	
	14	1	**283-1415**	1	SEAL	
	15	1	**283-5529**	1	COVER	
	16	1	**294-3141**	1	SEAL	
	17	1	**294-3142**	1	SEAL	
	18	1	**294-3150**	4	CAP	
	19	1	**294-3159**	2	BOOT	
	20	1	**303-4036**	1	SEAL	
M	21	1	**5C-7261**	2	NUT (M8X1.25-THD)	
	22	1	**5P-4116**	6	WASHER-HARD (8.8X20.5X2-MM THK)	
	23	1	**7X-7729**	2	WASHER (11X25X3-MM THK)	
	24	1	**8T-4121**	4	WASHER-HARD (11X21X2.5-MM THK)	
M	25	1	**8T-4133**	2	NUT (M10X1.5-THD)	
M	26	1	**8T-4186**	1	BOLT (M10X1.5X40-MM)	
M	27	1	**8T-4195**	2	BOLT (M10X1.5X30-MM)	
	28	1	**8T-4224**	2	WASHER-HARD (8.8X16X2-MM THK)	
M	29	1	**8T-7547**	5	BOLT (M8X1.25X30-MM)	
E	30	1	**289-1073**		SEAL (5-CM EACH)	
E	31	1	**222-5093**		SEAL (80.5-CM)	
E	31A	1	**222-5093**		SEAL (74.5)	
E	32	1	**289-1080**		SEAL (145.5-CM EACH)	
E	32A	1	**289-1080**		SEAL (141-CM EACH)	
E	33	1	**289-1072**		SEAL (56.5-CM)	
E	33A	1	**289-1072**		SEAL (9.7-CM EACH)	
E	33B	1	**289-1072**		SEAL (14.3-CM EACH)	
E	33C	1	**289-1072**		SEAL (32.5-CM)	
E	33D	1	**289-1072**		SEAL (19.2-CM EACH)	
E	33E	1	**289-1072**		SEAL (26-CM)	
E	33F	1	**289-1072**		SEAL (238-CM)	
E	33G	1	**289-1072**		SEAL (32.5-CM)	
E	33H	1	**289-1072**		SEAL (42-CM)	
E	33J	1	**289-1072**		SEAL (40-CM)	
E	33K	1	**289-1072**		SEAL (13.5-CM)	

E-ORDER BY THE CENTIMETER
M-METRIC PART

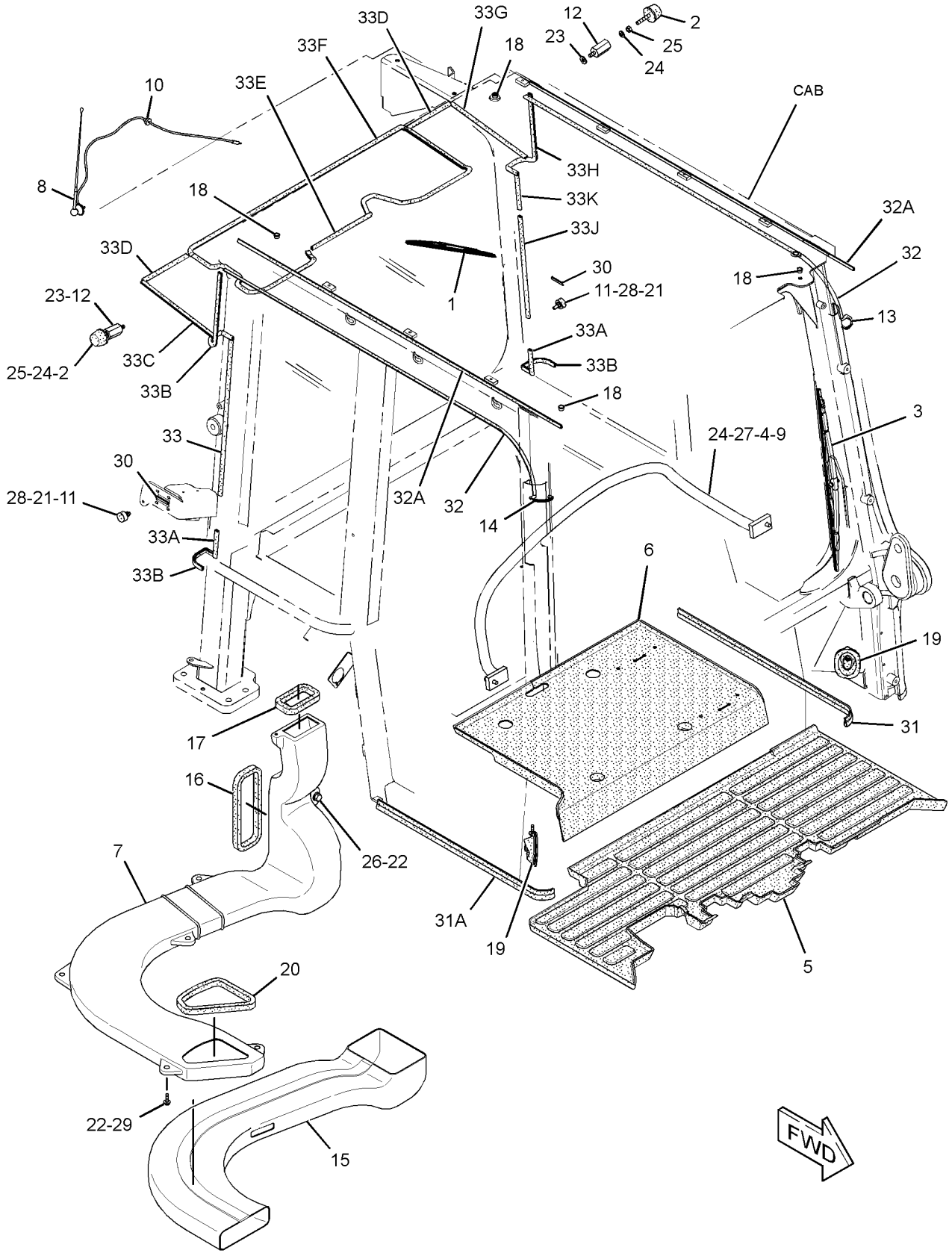

GRAPHIC #1 **<END>** g01537696

OPERATOR STATION

307-4297 ACCESSORY GP-CAB

S/N: LBP918-UP

PART OF 307-4287 ACCESSORY GP-CAB

SMCS-7301 **i03485923**

NOTE	REF NO	GRAPHIC REF	PART NUMBER	QTY	PART NAME 1 2 3 4 5 6 (PRODUCT LEVEL)	SEE PAGE
	1	1	**6V-5853**	1	BLADE AS-WIPER (450-MM) (REAR)	
	2	1	**127-0506**	2	BUMPER AS	
	3	1	**134-1935**	1	BLADE AS-WIPER (650-MM) (FRONT)	
C	4	1	**143-2397**	4	CAP	
C	5	1	**334-6687**	1	FLOOR MAT	
C	6	1	**334-6688**	1	FLOOR MAT	
	7	1	**257-6269**	1	DUCT-AIR	
	8	1	**263-9432**	1	ANTENNA AS	
	9	1	**268-0959**	1	HANDRAIL	
	10	1	**281-1298**	1	GROMMET	
	11	1	**283-1392**	2	BUMPER	
	12	1	**283-1408**	2	SPACER	
	13	1	**283-1414**	1	SEAL	
	14	1	**283-1415**	1	SEAL	
	15	1	**283-5529**	1	COVER	
	16	1	**294-3141**	1	SEAL	
	17	1	**294-3142**	1	SEAL	
	18	1	**294-3150**	4	CAP	
	19	1	**294-3159**	2	BOOT	
	20	1	**303-4036**	1	SEAL	
M	21	1	**5C-7261**	2	NUT (M8X1.25-THD)	
	22	1	**5P-4116**	6	WASHER-HARD (8.8X20.5X2-MM THK)	
	23	1	**7X-7729**	2	WASHER (11X25X3-MM THK)	
C	24	1	**8T-4121**	6	WASHER-HARD (11X21X2.5-MM THK)	
M	25	1	**8T-4133**	2	NUT (M10X1.5-THD)	
M	26	1	**8T-4186**	1	BOLT (M10X1.5X40-MM)	
M	27	1	**8T-4195**	2	BOLT (M10X1.5X30-MM)	
	28	1	**8T-4224**	2	WASHER-HARD (8.8X16X2-MM THK)	
M	29	1	**8T-7547**	5	BOLT (M8X1.25X30-MM)	
E	30	1	**289-1073**		SEAL (5-CM EACH)	
E	31	1	**222-5093**		SEAL (80.5-CM)	
E	31A	1	**222-5093**		SEAL (74.5)	
E	32	1	**289-1080**		SEAL (145.5-CM EACH)	
E	32A	1	**289-1080**		SEAL (141-CM EACH)	
E	33	1	**289-1072**		SEAL (56.5-CM)	
E	33A	1	**289-1072**		SEAL (9.7-CM EACH)	
E	33B	1	**289-1072**		SEAL (14.3-CM EACH)	
E	33C	1	**289-1072**		SEAL (32.5-CM)	
E	33D	1	**289-1072**		SEAL (19.2-CM EACH)	
E	33E	1	**289-1072**		SEAL (26-CM)	
E	33F	1	**289-1072**		SEAL (238-CM)	
E	33G	1	**289-1072**		SEAL (32.5-CM)	
E	33H	1	**289-1072**		SEAL (42-CM)	
E	33J	1	**289-1072**		SEAL (40-CM)	
E	33K	1	**289-1072**		SEAL (13.5-CM)	
CM	34	1	**8T-4191**	2	BOLT (M10X1.5X16-MM)	
CM	35	1	**9X-2044**	2	SCREW-TRUSS HEAD (M6X1X16-MM)	
C	36	1	**9X-7373**	1	GROMMET	

C-CHANGE FROM PREVIOUS TYPE
E-ORDER BY THE CENTIMETER
M-METRIC PART

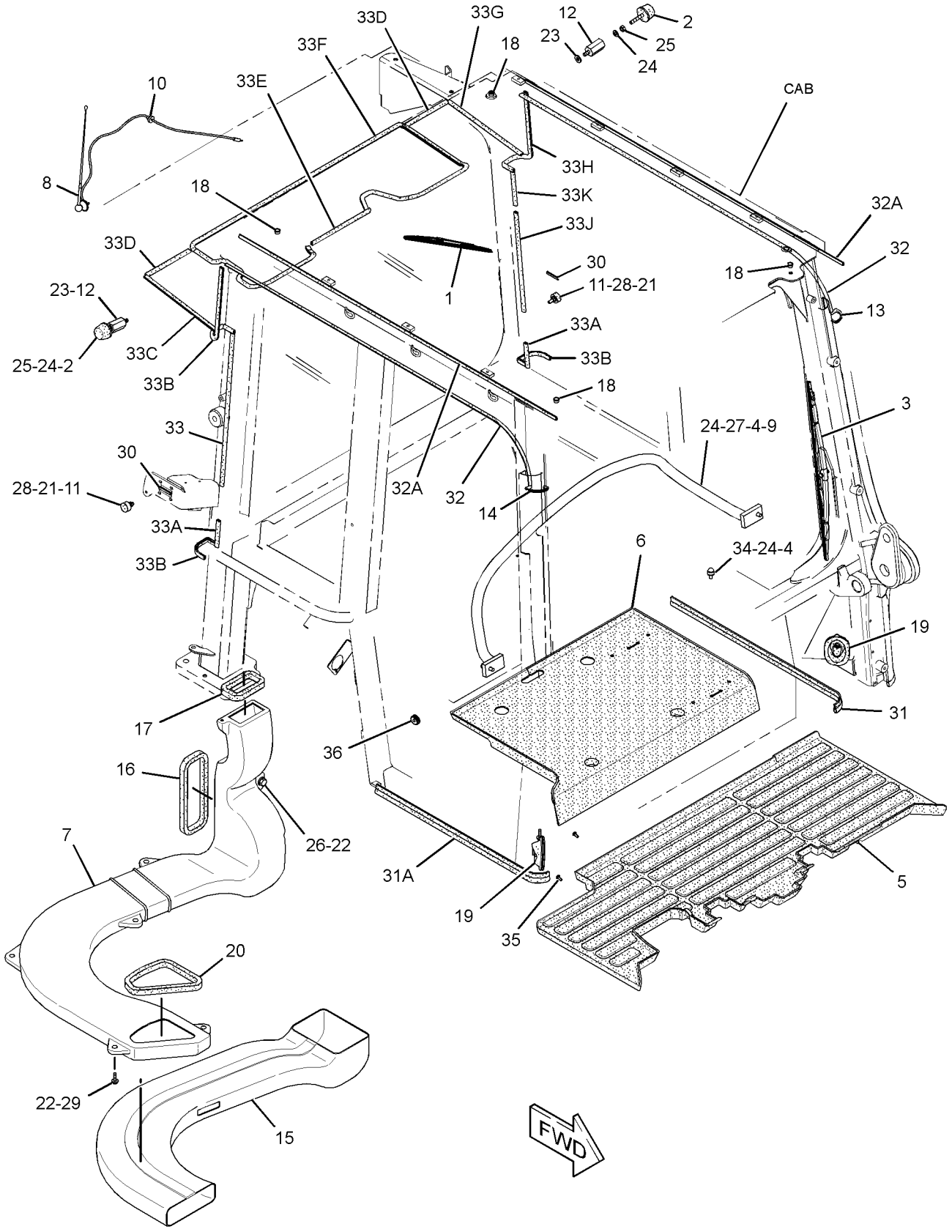

GRAPHIC #1 **<END>** g01833635

OPERATOR STATION

327-7799 ACCESSORY GP-CAB

S/N: LBP1-UP

PART OF 327-7790 CAB GP

SMCS-7301 **i03326981**

NOTE	REF NO	GRAPHIC REF	PART NUMBER	QTY	PART NAME 1 2 3 4 5 6 (PRODUCT LEVEL)	SEE PAGE
	1	1	**254-8606**	1	FLOOR MAT	
	2	1	**254-8609**	1	FLOOR MAT	
	3	1	**257-6269**	1	DUCT-AIR	
	4	1	**263-9432**	1	ANTENNA AS	
	5	1	**281-1298**	1	GROMMET	
	6	1	**283-5529**	1	COVER	
	7	1	**294-3141**	1	SEAL	
	8	1	**294-3142**	1	SEAL	
	9	1	**294-3150**	4	CAP	
	10	1	**294-3159**	2	BOOT	
	11	1	**303-4036**	1	SEAL	
	12	1	**5P-4116**	6	WASHER-HARD (8.8X20.5X2-MM THK)	
M	13	1	**8T-4186**	1	BOLT (M10X1.5X40-MM)	
M	14	1	**8T-7547**	5	BOLT (M8X1.25X30-MM)	
E	15	1	**222-5093**		SEAL (75-CM)	
E	15A	1	**222-5093**		SEAL (81-CM)	

E-ORDER BY THE CENTIMETER
M-METRIC PART

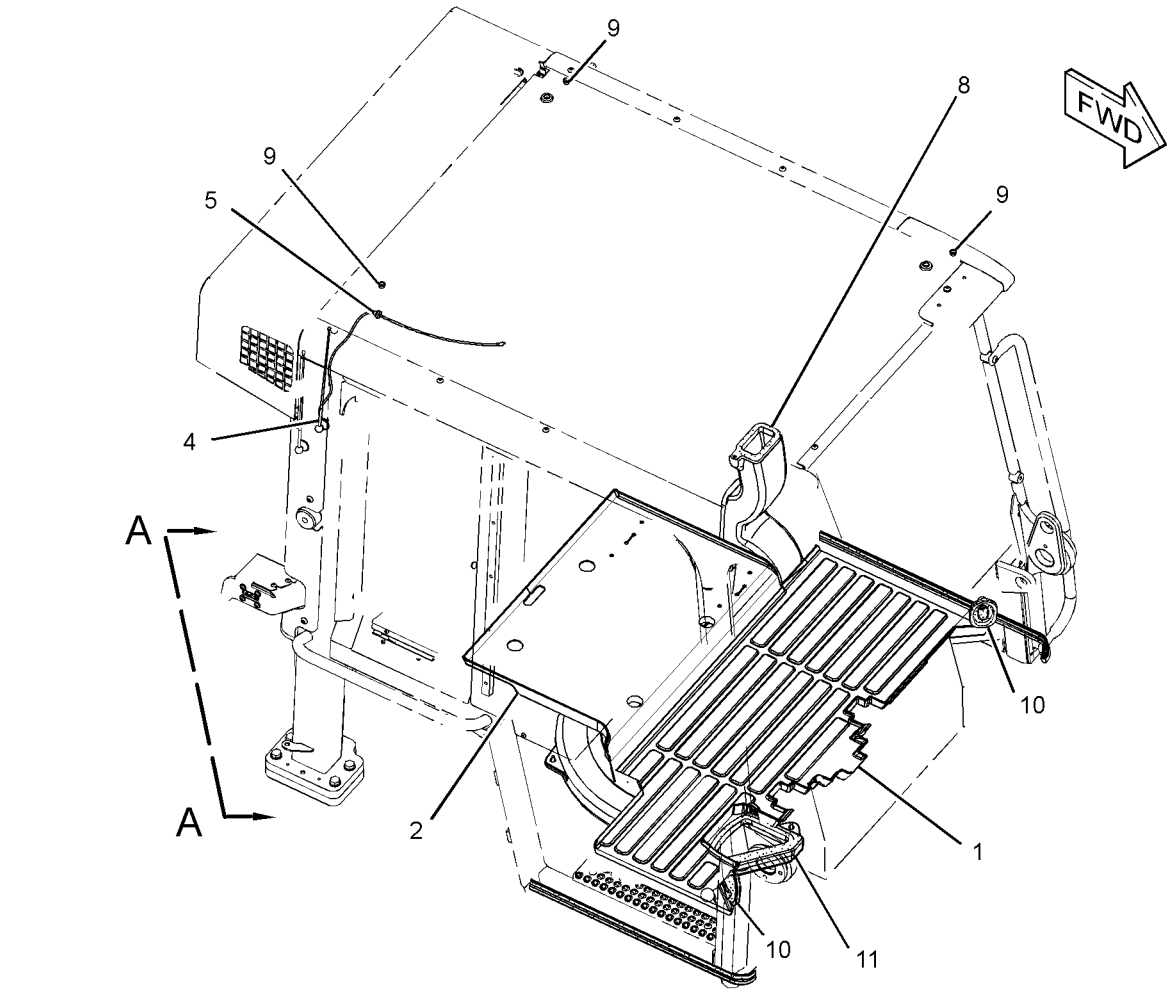

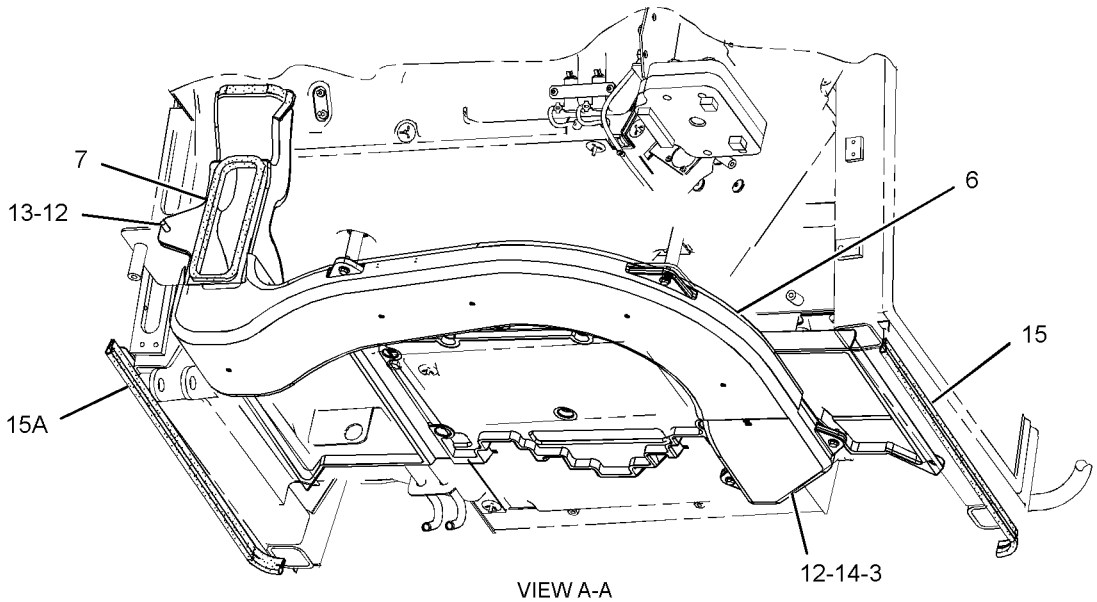

VIEW A-A

GRAPHIC #1 **<END>** g01710594

OPERATOR STATION

294-7779 ADJUSTER GP-SEAT

S/N: LBP1-UP
PART OF 295-4434, 295-4435 SEAT GP
AN ATTACHMENT

SMCS-7321 **i02677926**

NOTE	REF NO	GRAPHIC REF	PART NUMBER	QTY	PART NAME 1 2 3 4 5 6 (PRODUCT LEVEL)	SEE PAGE
	1	1	**4B-4276**	2	WASHER (7X16X1.6-MM THK)	
	2	1	**4V-8256**	2	SPRING	
	3	1	**132-0338**	4	WASHER-PLASTIC (13X31.7X0.8-MM THK)	
	4	1	**249-2844**	2	WASHER (12.7X31.7X1-MM THK)	
	5	1	**262-0779**	1	LATCH	
	6	1	**262-0780**	1	LATCH	
	7	1	**262-0781**	1	ROD	
	8	1	**262-0785**	1	LEVER	
	9	1	**262-0786**	2	BOLT-SHOULDER (3/8-16X0.49-IN)	
	10	1	**262-0787**	1	ROD	
	11	1	**293-2915**	1	LEVER	
	12	1	**293-9380**	1	ROD	
	13	1	**293-9381**	1	PLATE AS	
	14	1	**5V-1496**	2	RETAINER	
	15	1	**7Y-0468**	2	PIN-SPRING	

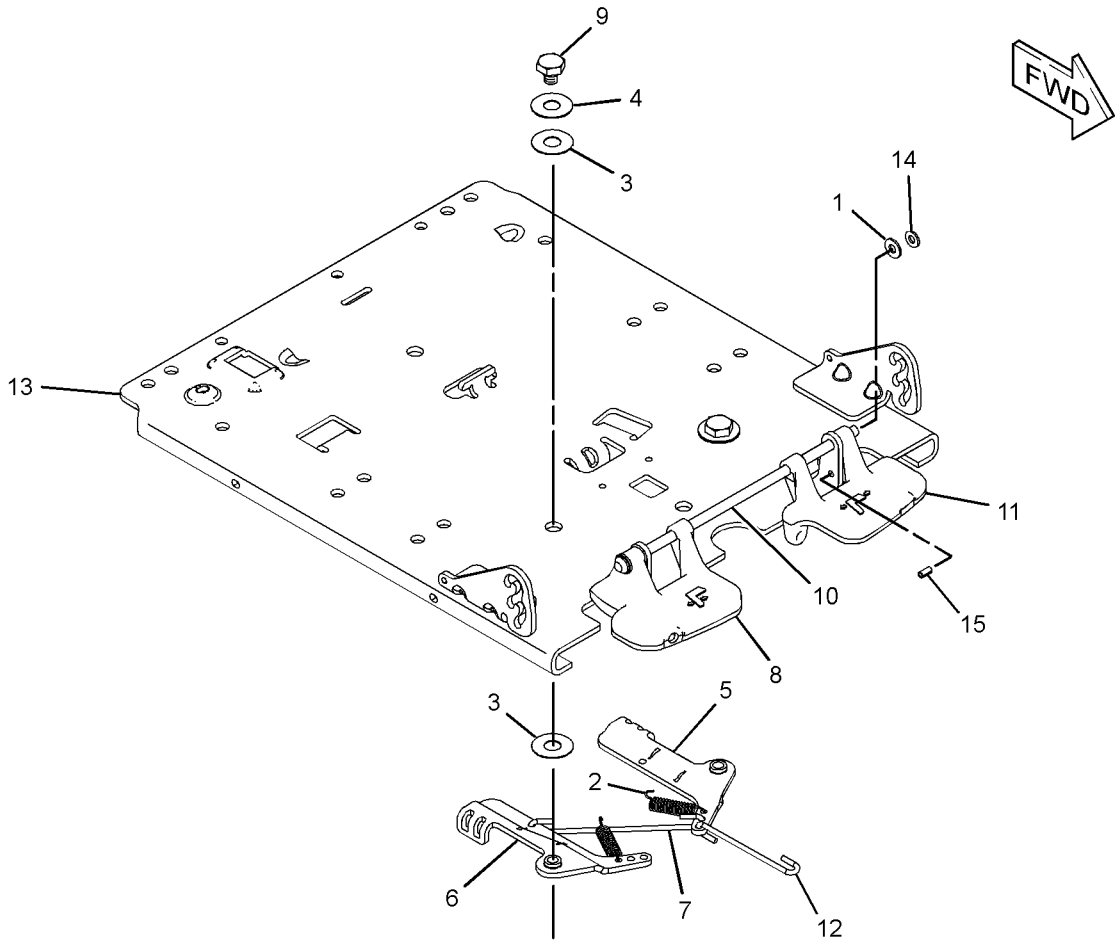

GRAPHIC #1 **<END>** g01346021

OPERATOR STATION

251-1926 AIR CONDITIONER & MOUNTING GP—CAB

S/N: LBP1-378

PART OF 240-6230 CAB GP

SMCS-7320 **i02659102**

NOTE	REF NO	GRAPHIC REF	PART NUMBER	QTY	PART NAME 1 2 3 4 5 6 (PRODUCT LEVEL)	SEE PAGE
	1	1	**170-0235**	1	ACCUMULATOR-REFRIGERANT	
	2	2	**257-3227**	1	RECEIVER-REFRIGERANT DRYER	
		2	**189-1707**	1	ORIFICE AS-AIR CONDITIONER	
	3	2	**257-6269**	1	DUCT-AIR	
	4	2	**266-7765**	1	FILTER GP-CAB AIR (STANDARD EFFICIENCY)	
Y	5	1	*267-6281*	1	LINES GP-HEATER	659
Y	6	1	*276-5575*	1	LINES GP-AIR CONDITIONER	651
Y	7	2	*279-8843*	1	AIR CONDITIONER GP	541
	8	2	**283-5529**	1	COVER	
	9	1	**284-9758**	1	GUARD AS	
Y	10	1	**287-0554**	1	CONDENSER GP-REFRIGERANT	563
	11	1	**289-1135**	1	SEAL	
	12	2	**294-3138**	1	GRID	
	13	2	**294-3141**	1	SEAL	
	14	2	**294-3142**	1	SEAL	
	15	2	**294-3164**	2	PLATE	
	16	2	**109-1633**	1	CLIP (SLOT)	
	17	2	**109-1634**	1	CLIP (TAB)	
	18	1	**4P-8134**	2	CLIP	
	19	2	**5P-4116**	6	WASHER-HARD (8.8X20.5X2-MM THK)	
	20	2	**7X-7729**	10	WASHER (11X25X3-MM THK)	
	21	1,2	**8T-4121**	5	WASHER-HARD (11X21X2.5-MM THK)	
M	22	2	**8T-4133**	3	NUT (M10X1.5-THD)	
M	23	2	**8T-4139**	1	BOLT (M12X1.75X30-MM)	
M	24	2	**8T-4186**	1	BOLT (M10X1.5X40-MM)	
M	25	2	**8T-4189**	1	BOLT (M8X1.25X20-MM)	
M	26	1,2	**8T-4195**	6	BOLT (M10X1.5X30-MM)	
	27	2	**8T-4223**	1	WASHER-HARD (13.5X25.5X3-MM THK)	
M	28	2	**8T-7547**	5	BOLT (M8X1.25X30-MM)	
M	29	1,2	**9X-2039**	10	SCREW-TRUSS HEAD (M10X1.5X35-MM)	
M	30	2	**9X-2040**	1	SCREW-TRUSS HEAD (M10X1.5X25-MM)	
	31	1	**9X-6654**	2	CLAMP-HOSE	
E	32	1	**289-1072**		SEAL (20-CM EACH)	
E	32A	1	**289-1072**		SEAL (33-CM EACH)	
E	33	2	**283-1417**		SEAL (26-CM)	
E	33A	2	**283-1417**		SEAL (238-CM)	

E-ORDER BY THE CENTIMETER
M-METRIC PART
Y-SEPARATE ILLUSTRATION

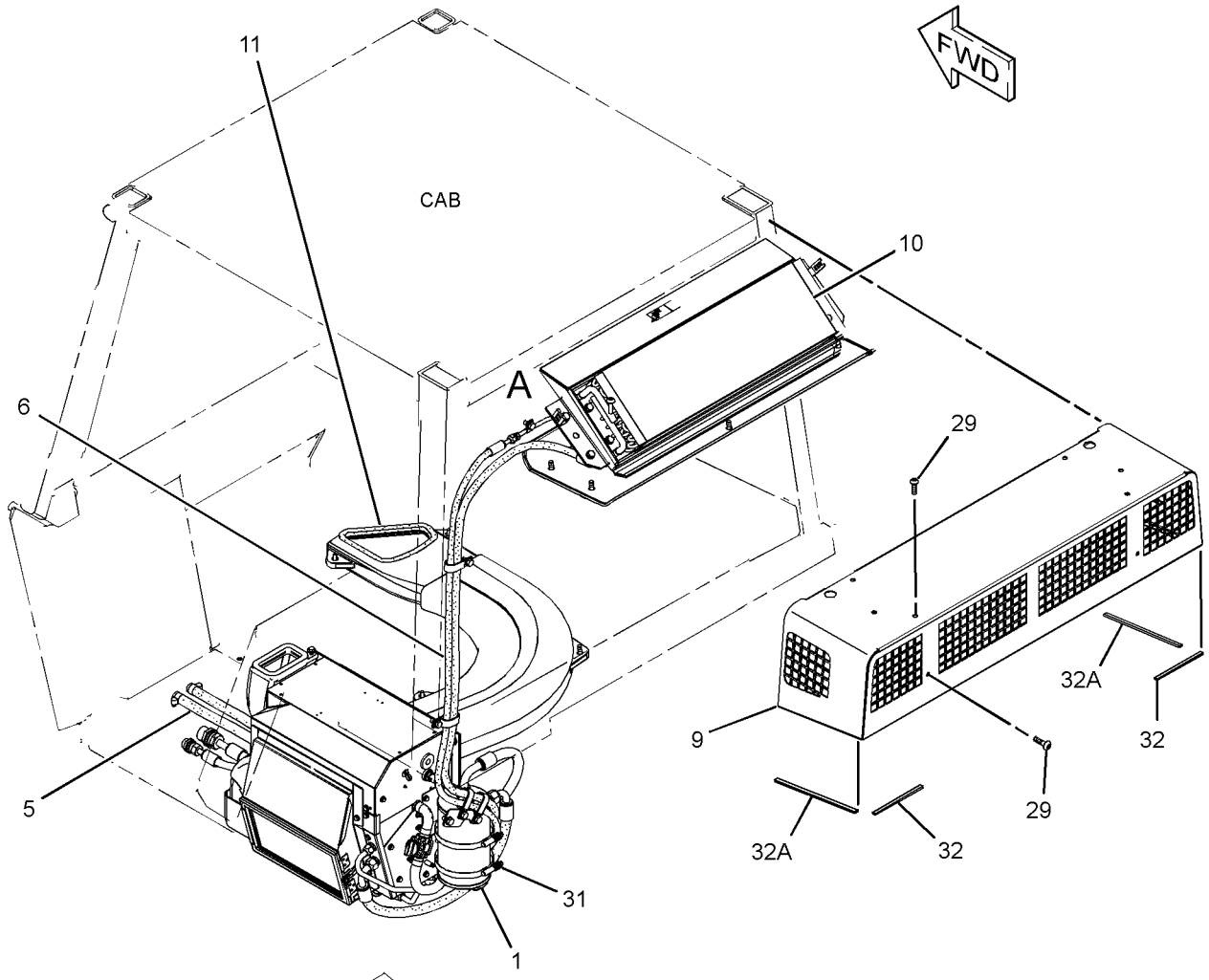

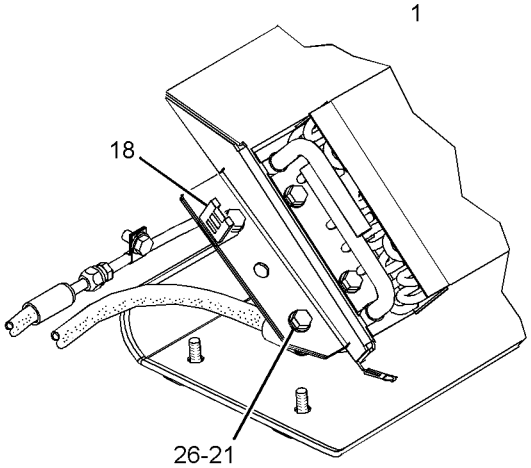

VIEW OF AREA A

REFER TO ALL ILLUSTRATIONS OF THIS GROUP FOR AUXILIARY VIEWS

GRAPHIC #1

g01337133

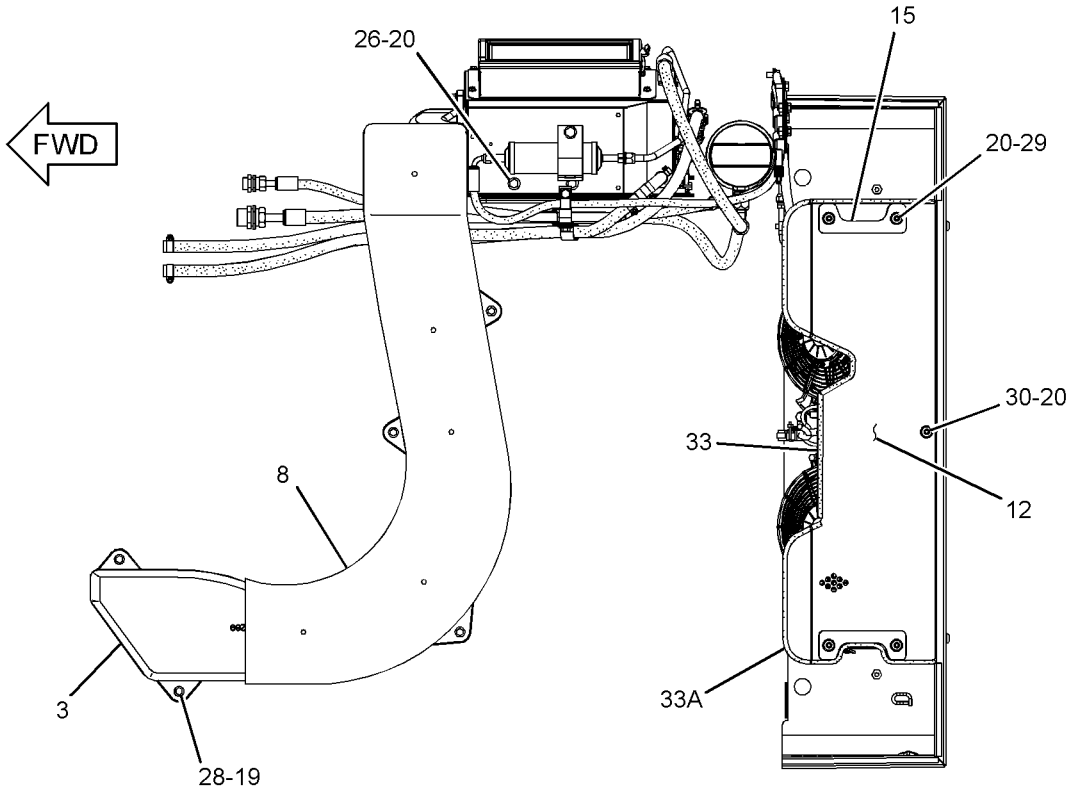

BOTTOM VIEW

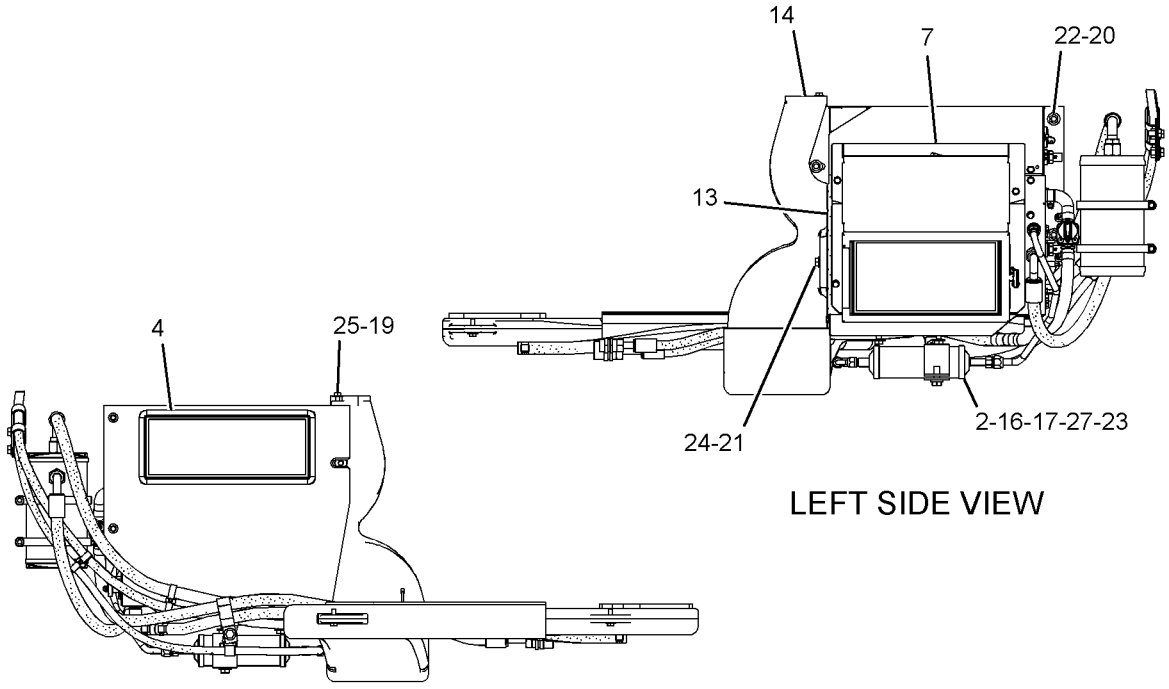

LEFT SIDE VIEW

RIGHT SIDE VIEW

GRAPHIC #2 **<END>** g01337598

OPERATOR STATION

251-1926 AIR CONDITIONER & MOUNTING GP—CAB

S/N: LBP379-699

PART OF 240-6230 CAB GP

SMCS-7320 **i03097170**

NOTE	REF NO	GRAPHIC REF	PART NUMBER	QTY	PART NAME 1 2 3 4 5 6 (PRODUCT LEVEL)	SEE PAGE
	1	1	**170-0235**	1	ACCUMULATOR-REFRIGERANT	
	2	2	**257-3227**	1	RECEIVER-REFRIGERANT DRYER	
		2	**189-1707**	1	ORIFICE AS-AIR CONDITIONER	
	3	2	**257-6269**	1	DUCT-AIR	
	4	2	**266-7765**	1	FILTER GP-CAB AIR (STANDARD EFFICIENCY)	
Y	5	1	*267-6281*	1	LINES GP-HEATER	659
Y	6	1	*276-5575*	1	LINES GP-AIR CONDITIONER	651
Y	7	2	*279-8843*	1	AIR CONDITIONER GP	541
	8	2	**283-5529**	1	COVER	
	9	1	**284-9758**	1	GUARD AS	
Y	10	1	**287-0554**	1	CONDENSER GP-REFRIGERANT	563
	11	1	**289-1135**	1	SEAL	
	12	2	**294-3138**	1	GRID	
	13	2	**294-3141**	1	SEAL	
	14	2	**294-3142**	1	SEAL	
	15	2	**294-3164**	2	PLATE	
	16	2	**109-1633**	1	CLIP (SLOT)	
	17	2	**109-1634**	1	CLIP (TAB)	
	18	1	**4P-8134**	2	CLIP	
	19	2	**5P-4116**	6	WASHER-HARD (8.8X20.5X2-MM THK)	
	20	2	**7X-7729**	10	WASHER (11X25X3-MM THK)	
	21	1,2	**8T-4121**	5	WASHER-HARD (11X21X2.5-MM THK)	
M	22	2	**8T-4133**	3	NUT (M10X1.5-THD)	
M	23	2	**8T-4139**	1	BOLT (M12X1.75X30-MM)	
M	24	2	**8T-4186**	1	BOLT (M10X1.5X40-MM)	
M	25	2	**8T-4189**	1	BOLT (M8X1.25X20-MM)	
M	26	1,2	**8T-4195**	6	BOLT (M10X1.5X30-MM)	
	27	2	**8T-4223**	1	WASHER-HARD (13.5X25.5X3-MM THK)	
M	28	2	**8T-7547**	5	BOLT (M8X1.25X30-MM)	
M	29	1,2	**9X-2039**	10	SCREW-TRUSS HEAD (M10X1.5X35-MM)	
M	30	2	**9X-2040**	1	SCREW-TRUSS HEAD (M10X1.5X25-MM)	
	31	1	**9X-6654**	2	CLAMP-HOSE	
E	32	1	**289-1072**		SEAL (20-CM EACH)	
E	32A	1	**289-1072**		SEAL (33-CM EACH)	
E	33	2	**283-1417**		SEAL (26-CM)	
E	33A	2	**283-1417**		SEAL (238-CM)	
C	34	2	**7K-1181**	5	STRAP-CABLE	
C	35	2	**307-4341**	4	TUBE AS	
					(EACH INCLUDES)	
		2	**306-4010**	1	FITTING-DRAIN	
J		2	**267-8575**		TUBE (5-DM)	

C-CHANGE FROM PREVIOUS TYPE
E-ORDER BY THE CENTIMETER
J-ORDER BY THE DECIMETER
M-METRIC PART
Y-SEPARATE ILLUSTRATION

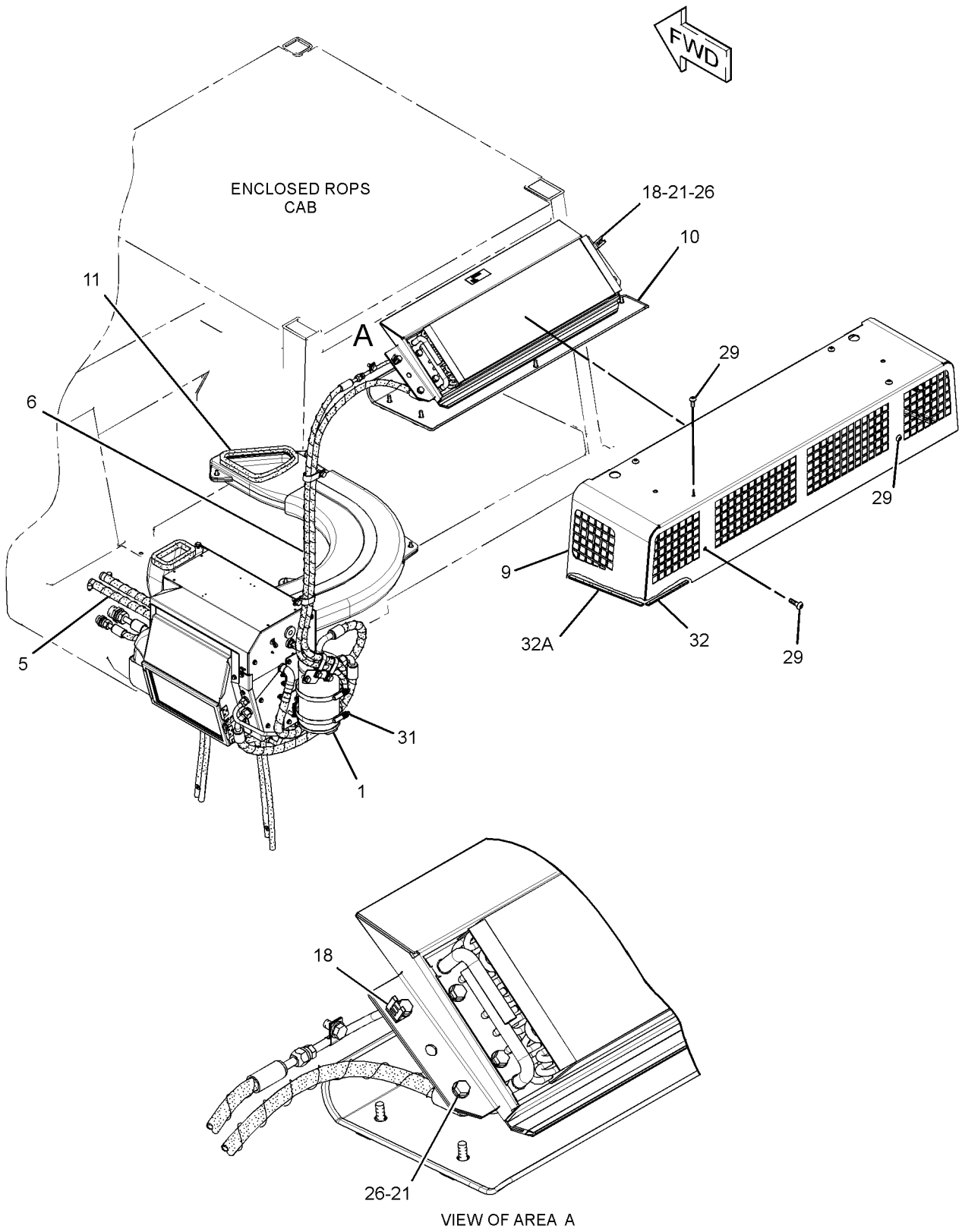

GRAPHIC #1 g01446080

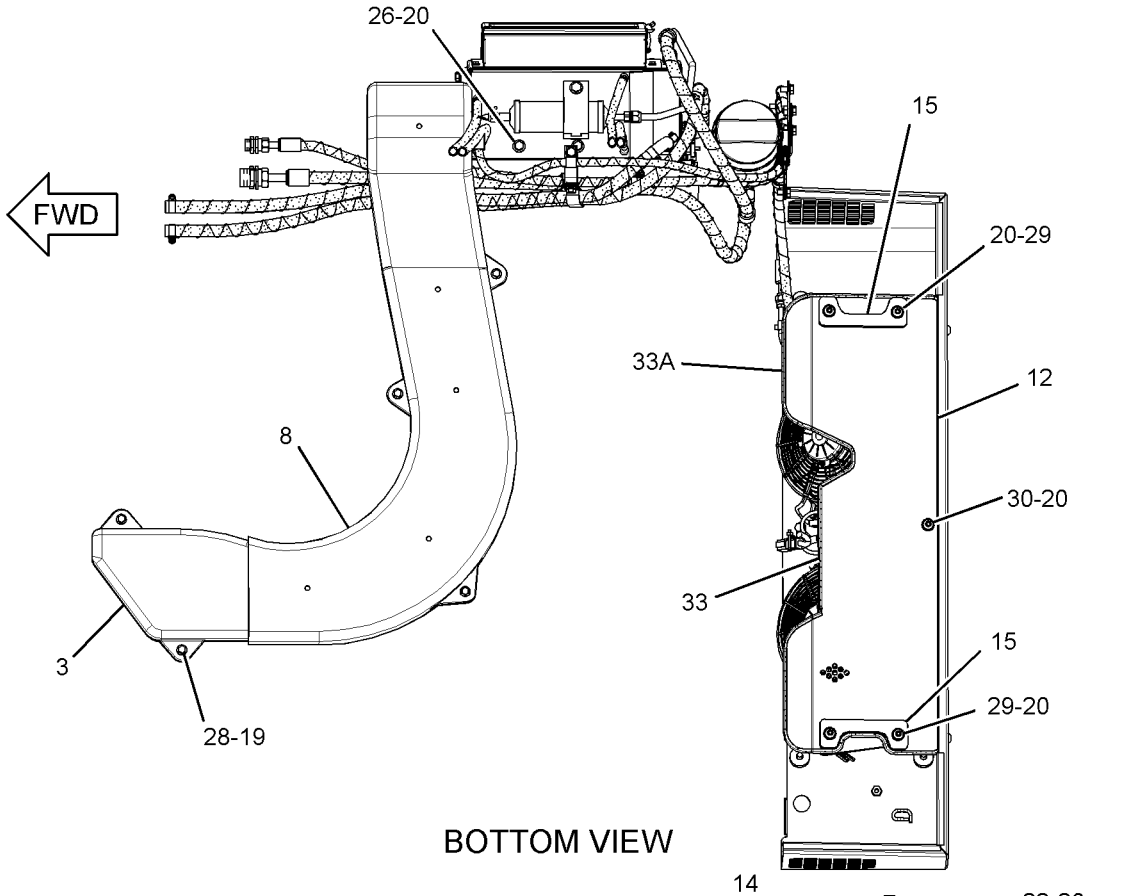

BOTTOM VIEW

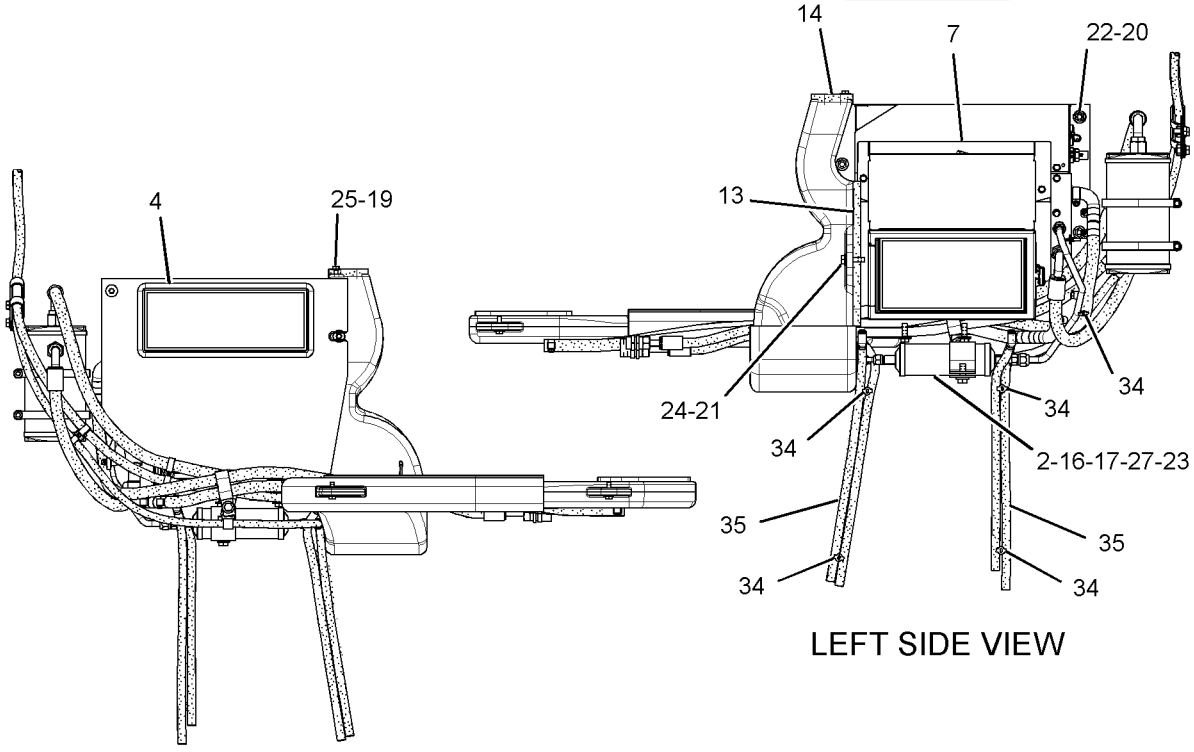

LEFT SIDE VIEW

RIGHT SIDE VIEW

GRAPHIC #2 **<END>** g01446081

OPERATOR STATION

307-4286 AIR CONDITIONER & MOUNTING GP—CAB

S/N: LBP700-917

PART OF 307-4279 CAB GP

SMCS-7320 **i03475586**

NOTE	REF NO	GRAPHIC REF	PART NUMBER	QTY	PART NAME 1 2 3 4 5 6 (PRODUCT LEVEL)	SEE PAGE
	1	1	**257-3227**	1	RECEIVER-REFRIGERANT DRYER	
		1	**189-1707**	1	ORIFICE AS-AIR CONDITIONER	
	2	1	**266-7765**	1	FILTER GP-CAB AIR (STANDARD EFFICIENCY)	
Y	3	1	*267-6281*	1	LINES GP-HEATER	659
	4	1	**274-5909**	1	ACCUMULATOR-REFRIGERANT	
Y	5	1	**279-8843**	1	AIR CONDITIONER GP	541
	6	1	**284-9758**	1	GUARD AS	
Y	7	1	**287-0554**	1	CONDENSER GP-REFRIGERANT	563
	8	1	**294-3138**	1	GRID	
Y	9	1	*303-4037*	1	LINES GP-AIR CONDITIONER	657
	10	1	**303-4040**	2	PLATE	
	11	1	**109-1633**	1	CLIP (SLOT)	
	12	1	**109-1634**	1	CLIP (TAB)	
	13	1	**4P-8134**	2	CLIP	
	14	1	**7X-7729**	10	WASHER (11X25X3-MM THK)	
	15	1	**8T-4121**	4	WASHER-HARD (11X21X2.5-MM THK)	
M	16	1	**8T-4133**	3	NUT (M10X1.5-THD)	
M	17	1	**8T-4139**	1	BOLT (M12X1.75X30-MM)	
M	18	1	**8T-4195**	6	BOLT (M10X1.5X30-MM)	
	19	1	**8T-4223**	1	WASHER-HARD (13.5X25.5X3-MM THK)	
	20	1	**8T-6726**	2	CLAMP-HOSE	
M	21	1	**9X-2039**	10	SCREW-TRUSS HEAD (M10X1.5X35-MM)	
M	22	1	**9X-2040**	1	SCREW-TRUSS HEAD (M10X1.5X25-MM)	
	23	1	**307-4341**	4	TUBE AS	
	24	1	**7K-1181**	5	STRAP-CABLE	

M-METRIC PART
Y-SEPARATE ILLUSTRATION

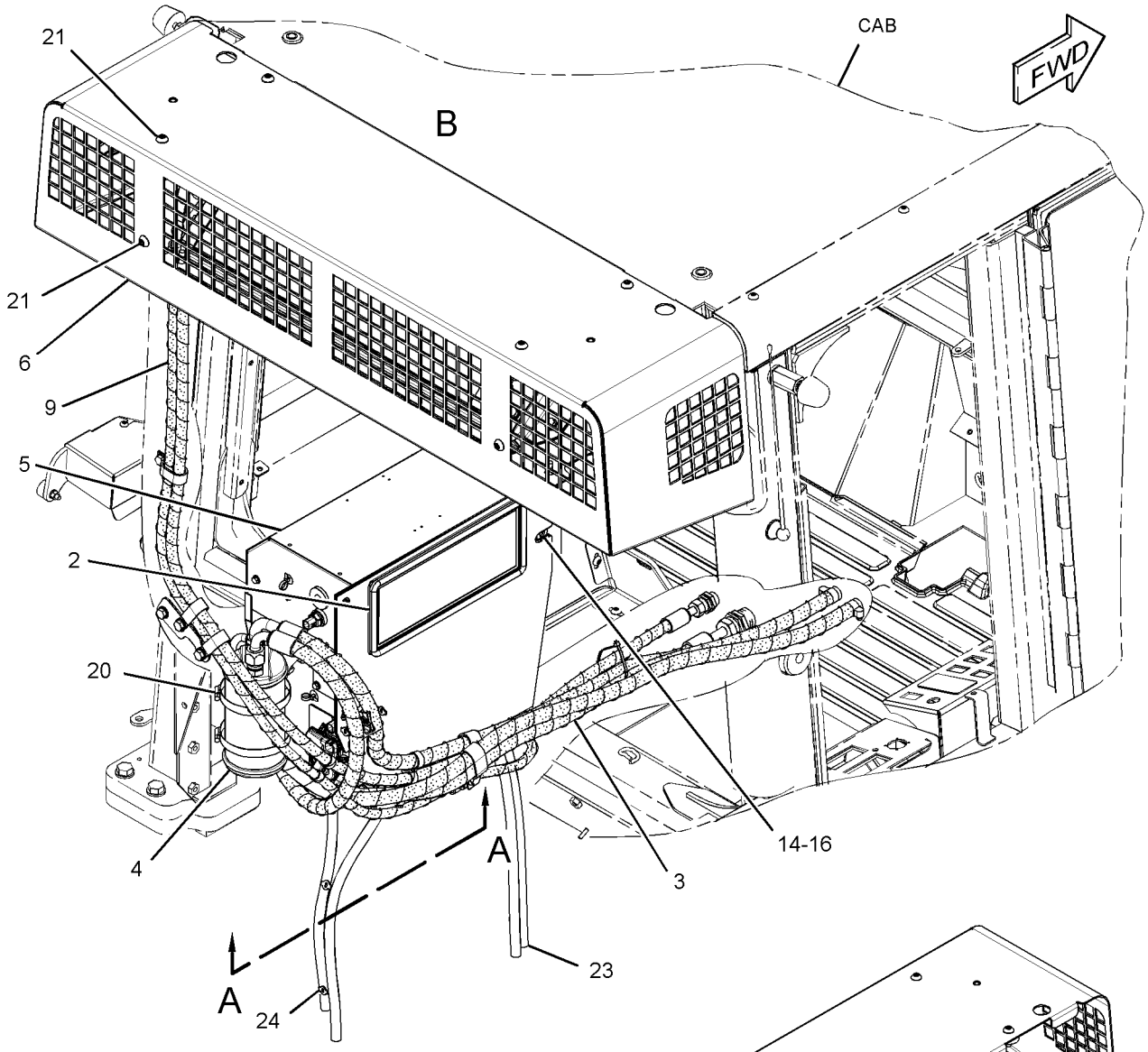

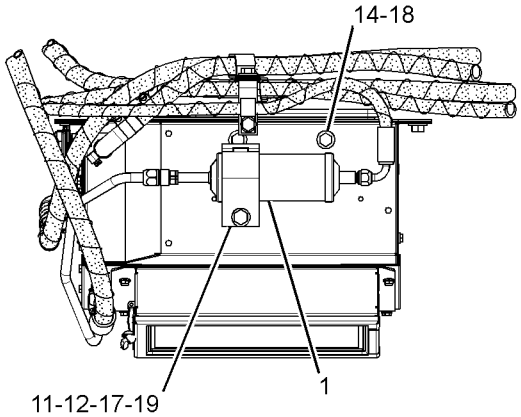

VIEW A-A

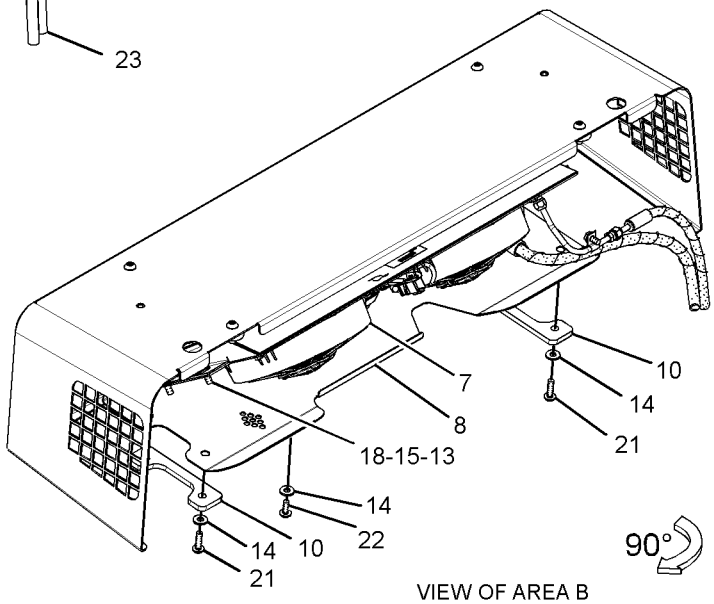

VIEW OF AREA B
(EXPLODED)

GRAPHIC #1 **<END>** g01825795

OPERATOR STATION

307-4286 AIR CONDITIONER & MOUNTING GP—CAB

S/N: LBP918-UP

PART OF 334-6680 CAB GP

SMCS-7320 **i03491164**

NOTE	REF NO	GRAPHIC REF	PART NUMBER	QTY	PART NAME 1 2 3 4 5 6 (PRODUCT LEVEL)	SEE PAGE
	1	1	**257-3227**	1	RECEIVER-REFRIGERANT DRYER	
		1	**189-1707**	1	ORIFICE AS-AIR CONDITIONER	
	2	1	**266-7765**	1	FILTER GP-CAB AIR (STANDARD EFFICIENCY)	
Y	3	1	*267-6281*	1	LINES GP-HEATER	659
	4	1	**274-5909**	1	ACCUMULATOR-REFRIGERANT	
Y	5	1	**279-8843**	1	AIR CONDITIONER GP	541
C	6	1	**334-6691**	1	GUARD AS-AIR CONDITIONER	
M		1	**8T-3490**	2	NUT-WELD (M10X1.5-THD)	
		1	**9F-6445**	3	NUT-WELD (1/4-20-THD)	
Y	7	1	**287-0554**	1	CONDENSER GP-REFRIGERANT	563
C	8	1	**334-6693**	1	GRID AS	
M		1	**8T-3490**	1	NUT-WELD (M10X1.5-THD)	
Y	9	1	*303-4037*	1	LINES GP-AIR CONDITIONER	657
	10	1	**303-4040**	2	PLATE	
	11	1	**109-1633**	1	CLIP (SLOT)	
	12	1	**109-1634**	1	CLIP (TAB)	
	13	1	**4P-8134**	2	CLIP	
	14	1	**7X-7729**	10	WASHER (11X25X3-MM THK)	
	15	1	**8T-4121**	4	WASHER-HARD (11X21X2.5-MM THK)	
M	16	1	**8T-4133**	3	NUT (M10X1.5-THD)	
M	17	1	**8T-4139**	1	BOLT (M12X1.75X30-MM)	
M	18	1	**8T-4195**	6	BOLT (M10X1.5X30-MM)	
	19	1	**8T-4223**	1	WASHER-HARD (13.5X25.5X3-MM THK)	
	20	1	**8T-6726**	2	CLAMP-HOSE	
M	21	1	**9X-2039**	10	SCREW-TRUSS HEAD (M10X1.5X35-MM)	
M	22	1	**9X-2040**	1	SCREW-TRUSS HEAD (M10X1.5X25-MM)	
	23	1	**307-4341**	4	TUBE AS	
	24	1	**7K-1181**	5	STRAP-CABLE	

C-CHANGE FROM PREVIOUS TYPE
M-METRIC PART
Y-SEPARATE ILLUSTRATION

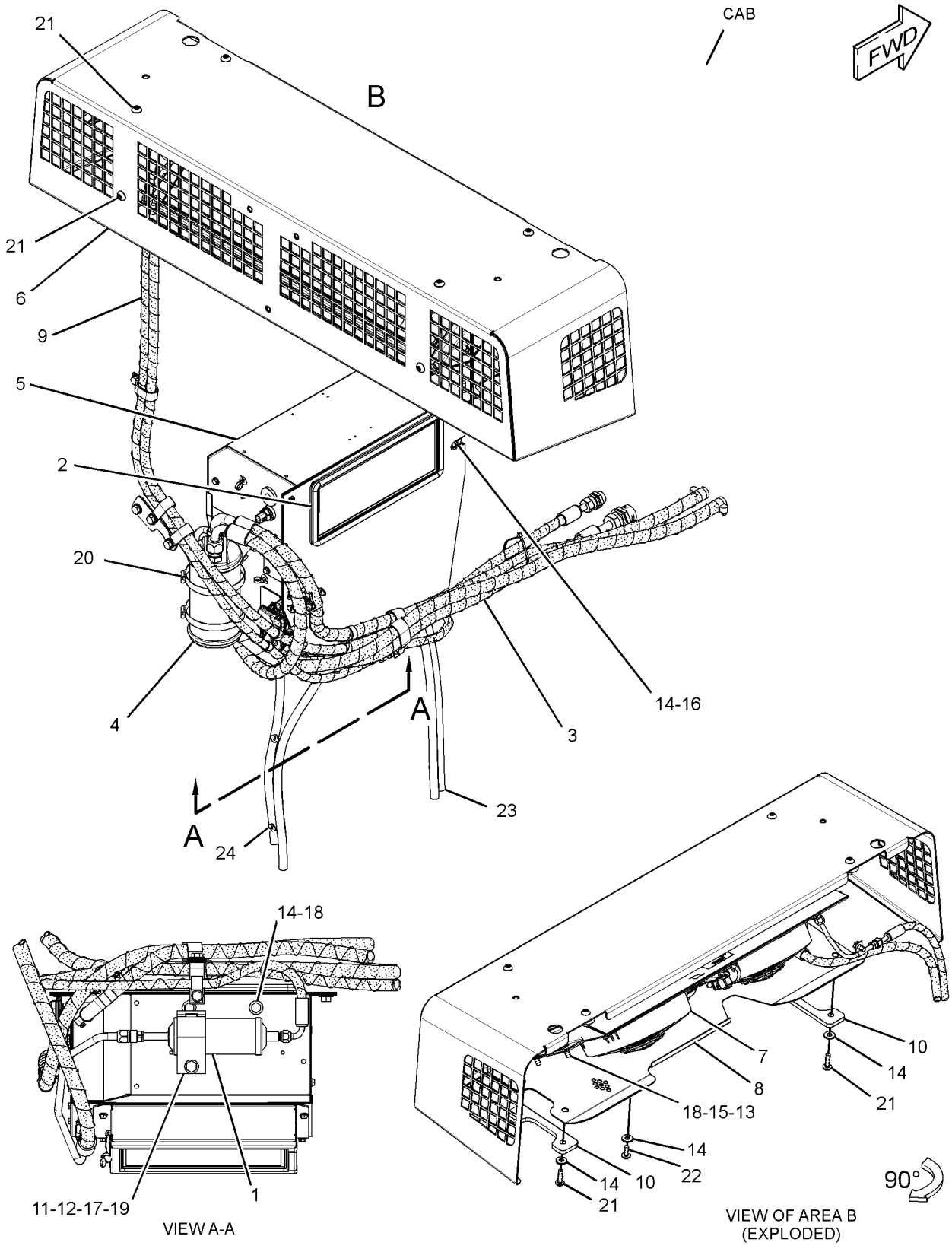

GRAPHIC #1 **<END>** g01834693

OPERATOR STATION

327-7797 AIR CONDITIONER & MOUNTING GP—CAB

S/N: LBP1-UP

PART OF 327-7790 CAB GP

SMCS-7320 **i03326888**

NOTE	REF NO	GRAPHIC REF	PART NUMBER	QTY	PART NAME 1 2 3 4 5 6 (PRODUCT LEVEL)	SEE PAGE
	1	1	**7K-1181**	5	STRAP-CABLE	
	2	1	**257-3227**	1	RECEIVER-REFRIGERANT DRYER	
		1	**189-1707**	1	ORIFICE AS-AIR CONDITIONER	
Y	3	1	*267-6281*	1	LINES GP-HEATER	659
	4	1	**274-5909**	1	ACCUMULATOR-REFRIGERANT	
Y	5	1	*303-4037*	1	LINES GP-AIR CONDITIONER	657
	6	1	**307-4341**	4	TUBE AS	
	7	1	**109-1633**	1	CLIP (SLOT)	
	8	1	**109-1634**	1	CLIP (TAB)	
M	9	1	**8T-4139**	1	BOLT (M12X1.75X30-MM)	
	10	1	**8T-4223**	1	WASHER-HARD (13.5X25.5X3-MM THK)	
	11	1	**8T-6726**	2	CLAMP-HOSE	

M-METRIC PART
Y-SEPARATE ILLUSTRATION

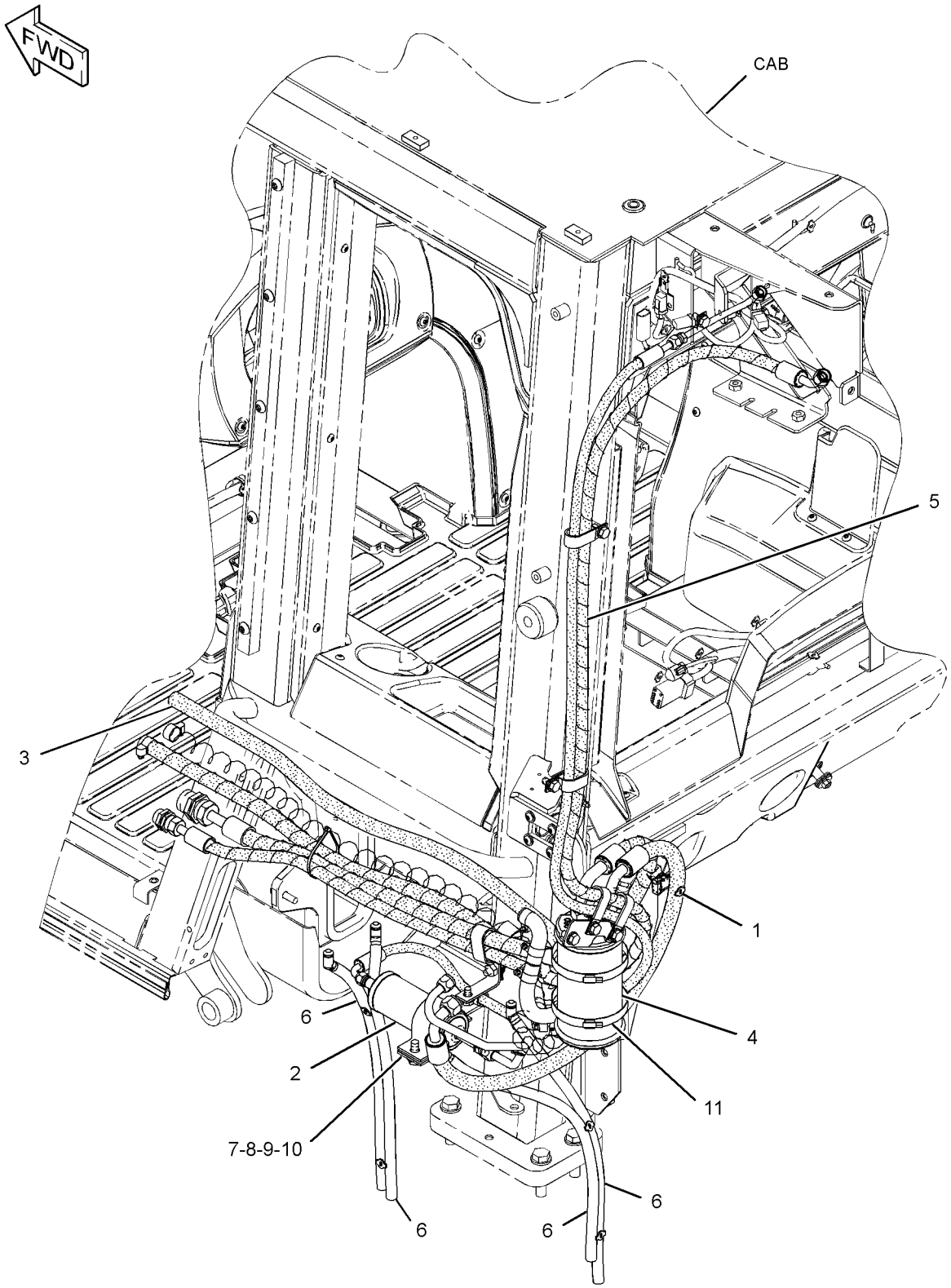

GRAPHIC #1 **<END>** g01718093

OPERATOR STATION

279-8843 AIR CONDITIONER GP

S/N: LBP1-UP

PART OF 251-1926, 307-4286 AIR CONDITIONER & MOUNTING GP

SMCS-7320 **i03194815**

NOTE	REF NO	GRAPHIC REF	PART NUMBER	QTY	PART NAME 1 2 3 4 5 6 (PRODUCT LEVEL)	SEE PAGE
	1	1	**3E-5464**	1	THERMOSTAT (HVAC)	
	2	2	**3S-2093**	3	STRAP-CABLE	
	3	2	**8C-3756**	1	FILM-IDENTIFICATION	
	4	2	**111-4015**	1	GROMMET	
	5	2	**4P-7581**	1	CLIP	
	6	2	**131-3093**	1	BUSHING	
	7	1	**133-8714**	1	GROMMET	
	8	2	**134-3518**	2	TIE-PUSH MOUNT	
	9	1	**209-8217**	1	FILTER ELEMENT-CAB AIR (STANDARD EFFICIENCY)	
	10	2	**248-6772**	2	SCREW-MACHINE (8-16X7.75-IN)	
	11	1	**255-6210**	1	COIL AS-EVAPORATOR	
	12	1	**256-0761**	1	CASE AS-AIR CONDITIONER	
	13	1	**256-0762**	1	PLATE AS	
	14	1	**256-0768**	1	PLATE AS	
M		1	**6V-9632**	6	NUT-WELD (M6X1-THD)	
M		1	**9X-2032**	2	NUT-WELD (M4X0.7-THD)	
	15	1	**256-0770**	1	PLATE AS	
	16	2	**256-6454**	2	SENSOR GP-TEMPERATURE (AIR CONDITIONER)	
	17	1	**262-2814**	1	PLATE AS	
J	18	1	**262-2815**	1	GASKET	
J	19	1	**262-2816**	1	GASKET	
	20	2	**275-6707**	2	GROMMET	
	21	2	**277-7112**	1	PLATE	
	22	1	**277-7113**	1	PLATE AS	
J	23	2	**277-9958**	1	GASKET	
J	24	2	**277-9959**	1	GASKET	
J	25	2	**277-9960**	1	GASKET	
J	26	2	**277-9962**	1	GASKET	
J	27	1	**277-9963**	1	GASKET	
J	28	2	**277-9964**	1	GASKET	
	29	2	**277-9966**	1	PLATE AS	
Y	30	2	*277-9969*	1	HEATER GP-CAB	624
	31	2	**318-0815**	1	PLATE AS	
	32	2	**278-3354**	1	FILM-INSTRUCTION (HVAC WATER, DRAINING, FILLING)	
	33	2	**279-0850**	1	ACTUATOR (ELECTRONIC)	
	34	1	**279-8835**	1	BLOWER AS	
	35	2	**281-0334**	1	HARNESS AS-MOTOR (BLOWER)	
		2	**6T-6505**	7	HOUSING-RECEPTACLE (BLADE, POSITIVE LOCK)	
		2	**230-4010**	1	RECEPTACLE AS-CONNECTOR (12-PIN)	
		2	**177-9653**	1	KIT-RECEPTACLE (4-PIN)	
					(INCLUDES RECEPTACLE AS & WEDGE)	
		2	**177-9648**	1	KIT-CONNECTING PLUG (2-PIN)	
					(INCLUDES PLUG AS & WEDGE)	
		2	**155-2271**	1	KIT-CONNECTING PLUG (4-PIN)	
					(INCLUDES PLUG AS, WEDGE, & INTERFACE SEAL)	
	36	2	*282-3476*	1	RESISTOR AS	
		2	**280-9453**	3	SCREW-SELF-TAPPING (NO 6X0.375-IN)	
		2	**282-3481**	1	PLATE AS	
	37	2	**282-3653**	1	BRACKET	
M	38	2	**283-8651**	7	BOLT (M4X0.7X10-MM)	
	39	2	**096-6166**	4	WASHER-HARD (4.5X9X1-MM THK)	
	40	1	**3B-4501**	2	LOCKWASHER	
M	41	1,2	**5C-9553**	21	BOLT (M6X1X16-MM)	
	42	1	**8C-8514**	2	SCREW-MACHINE (8-32X0.375-IN)	
	43	1,2	**8T-4121**	2	WASHER-HARD (11X21X2.5-MM THK)	

279-8843 AIR CONDITIONER GP *(contd.)* i03194815

NOTE	REF NO	GRAPHIC REF	PART NUMBER	QTY	PART NAME 1 2 3 4 5 6 (PRODUCT LEVEL)	SEE PAGE
M	44	1,2	**8T-4137**	2	BOLT (M10X1.5X20-MM)	
	45	1,2	**8T-4205**	21	WASHER-HARD (7.2X14.5X2-MM THK)	
D	46	2	**6V-2496**		SEAL (0.2-M EACH)	
D	46A	1	**6V-2496**		SEAL (0.3-M)	
D	46B	1	**6V-2496**		SEAL (0.1-M EACH)	
D	46C	1	**6V-2496**		SEAL (0.3-M EACH)	
J	47	1	**153-6932**	1	GASKET	
					AVAILABLE REPAIR KIT(S):	
J			**285-8553**	1	KIT-GASKET (AIR CONDITIONER)	

D-ORDER BY THE METER
J-KIT MARKED J SERVICES PARTS MARKED J
M-METRIC PART
Y-SEPARATE ILLUSTRATION

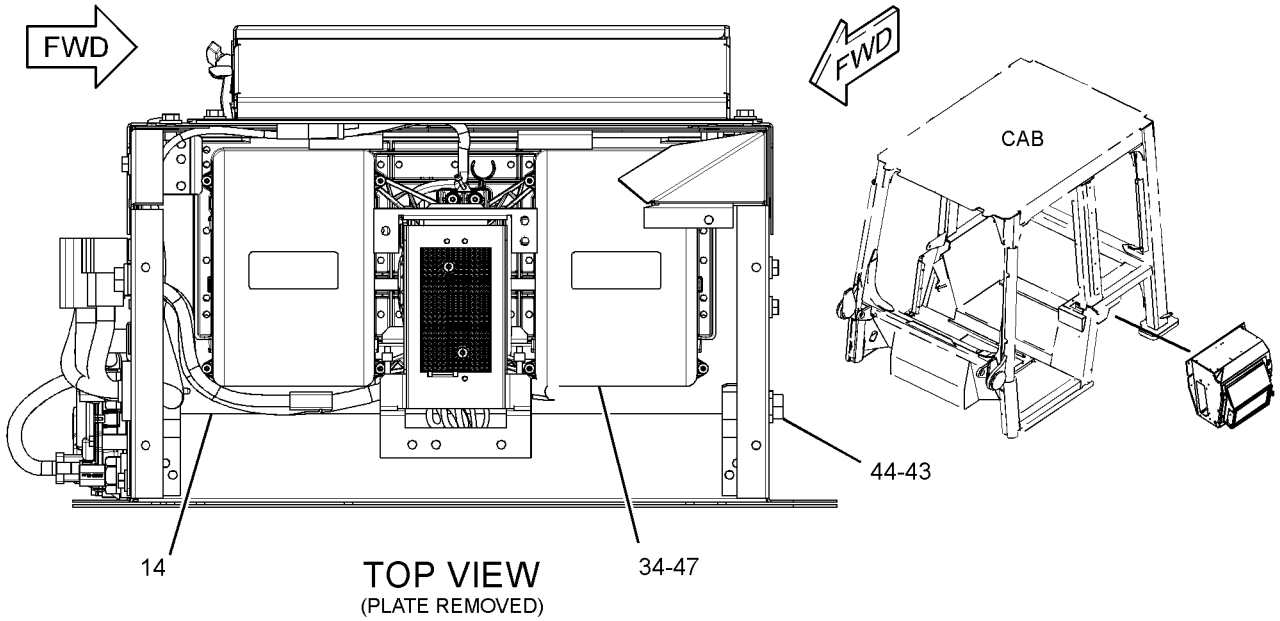

TOP VIEW
(PLATE REMOVED)

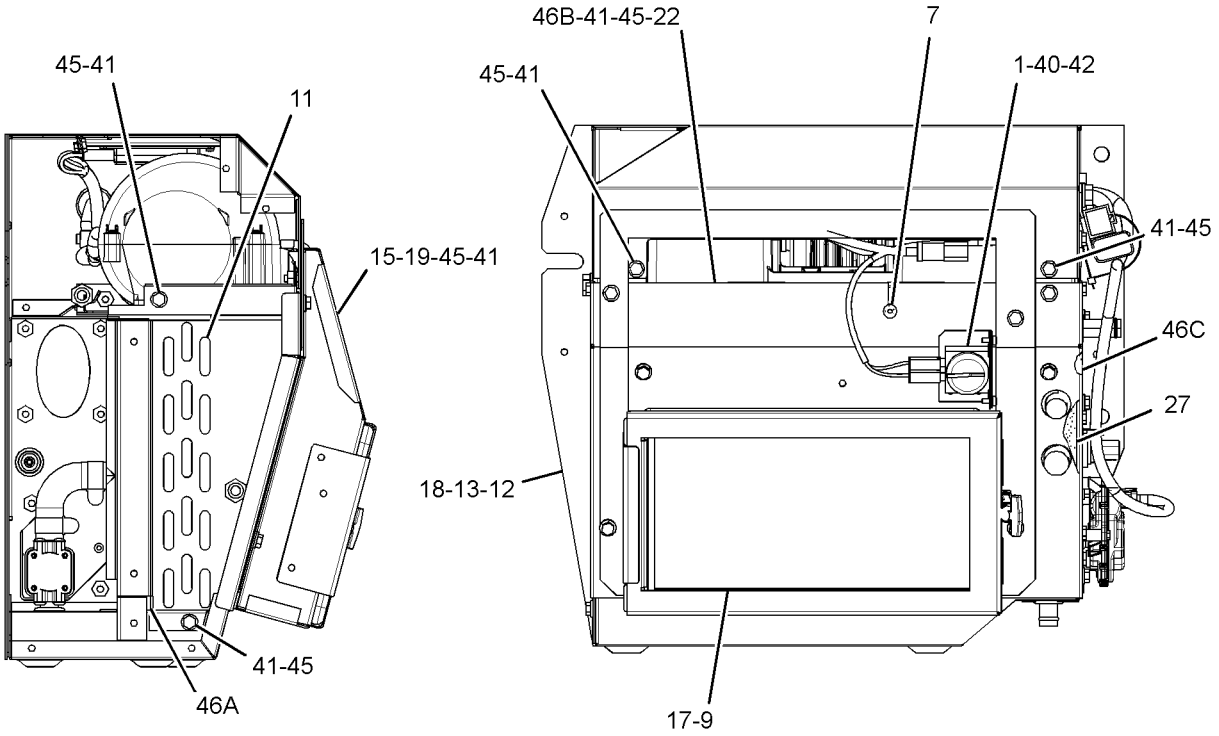

FRONT VIEW
(PLATE REMOVED)

LEFT SIDE VIEW
(PLATE REMOVED)

GRAPHIC #1 g01641874

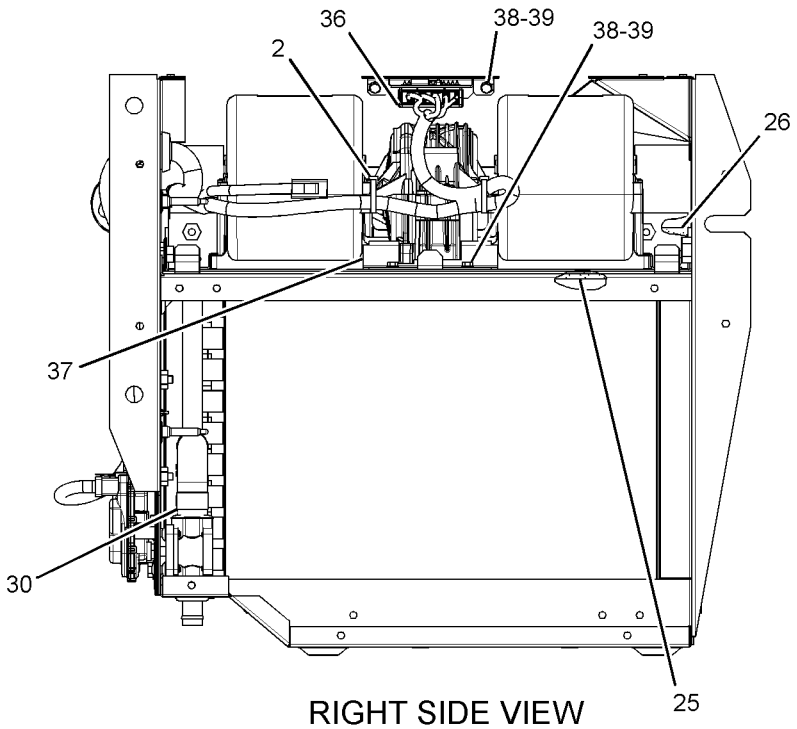

RIGHT SIDE VIEW
(PLATE REMOVED)

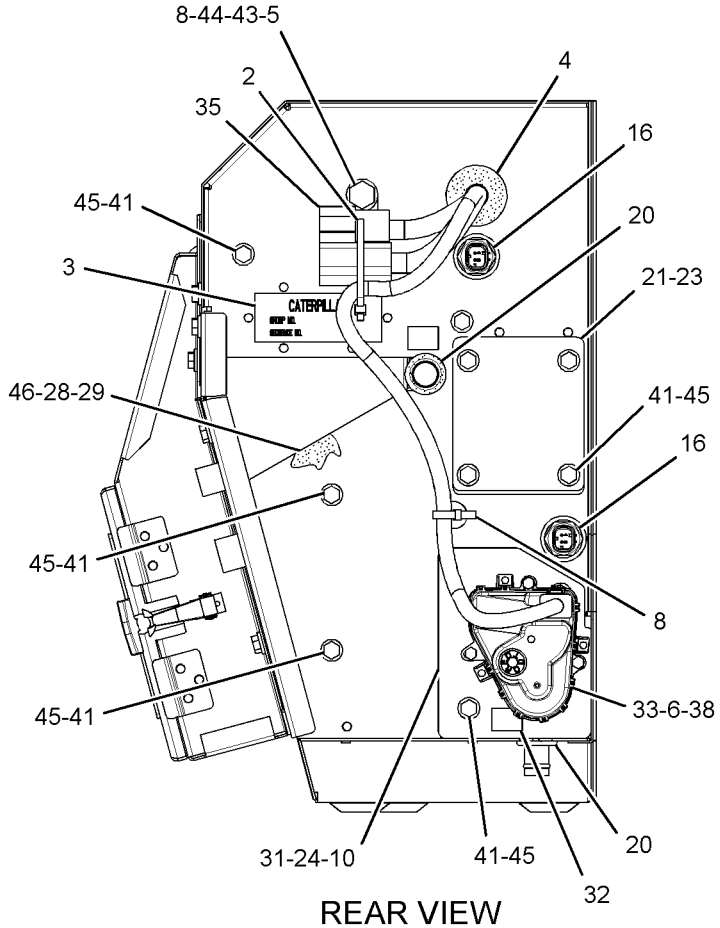

REAR VIEW
(PLATE REMOVED)

GRAPHIC #2 **<END>** g01455327

291-7980 ARM GP-SEAT SUSPENSION–CENTER

S/N: LBP1-UP

PART OF 298-2818 SUSPENSION GP-SEAT

AN ATTACHMENT

SMCS-7324 **i03095521**

NOTE	REF NO	GRAPHIC REF	PART NUMBER	QTY	PART NAME 1 2 3 4 5 6 (PRODUCT LEVEL)	SEE PAGE
	1	1	**291-7981**	1	ARM AS (INNER, RH)	
	2	1	**291-7984**	1	ARM AS (INNER, LH)	
	3	1	**291-7986**	1	PLATE AS	
	4	1	**291-7989**	2	PLATE	
	5	1	**291-7990**	2	BEARING	
	6	1	**291-7992**	1	SHAFT	
	7	1	**291-8030**	1	SPACER (19.3X25.4X225-MM THK)	
	8	1	**291-9310**	2	BELT-TETHER	
	9	1	**313-2794**	1	CLIP	
	10	1	**2B-2695**	4	BOLT (5/16-18X0.875-IN)	
	11	1	**6V-8189**	4	NUT (5/16-18-THD)	
	12	1	**6V-8801**	4	NUT (3/8-16-THD)	
	13	1	**7X-0289**	4	BOLT (3/8-16X1.875-IN)	
	14	1	**8T-4896**	8	WASHER-HARD (10.2X18.5X2.5-MM THK)	
	15	1	**9S-5282**	4	WASHER-HARD (8.8X14.5X2-MM THK)	

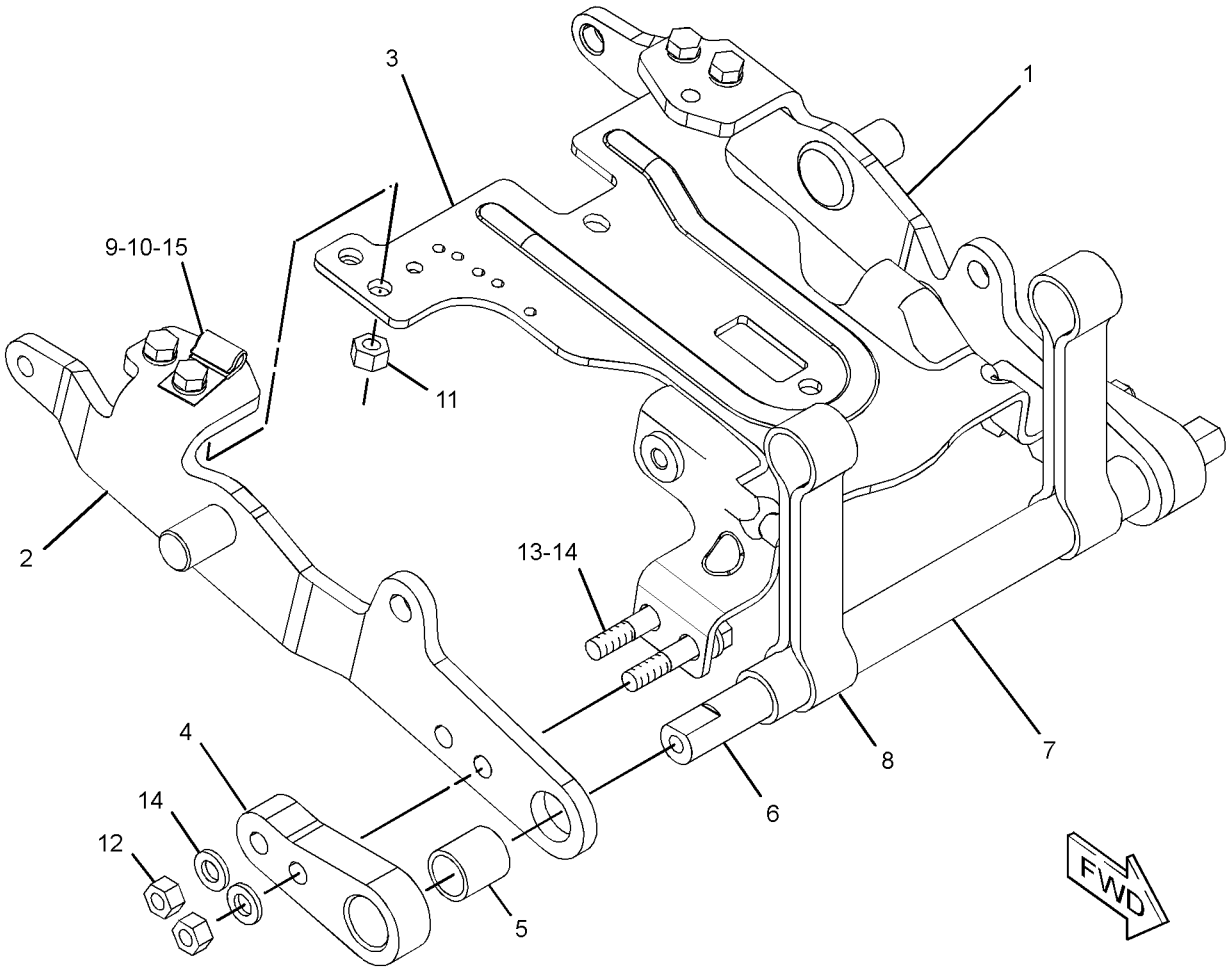

GRAPHIC #1 **<END>** g01580513

OPERATOR STATION

291-8004 ARM GP-SEAT SUSPENSION—OUTER, RH

S/N: LBP1-UP

PART OF 298-2818 SUSPENSION GP-SEAT

AN ATTACHMENT

SMCS-7324 **i03095640**

NOTE	REF NO	GRAPHIC REF	PART NUMBER	QTY	PART NAME 1 2 3 4 5 6 (PRODUCT LEVEL)	SEE PAGE
	1	1	**291-7990**	1	BEARING	
	2	1	**291-8005**	1	ARM AS (OUTER, RH)	
	3	1	**291-8008**	1	SPACER	
M	4	1	**5C-7261**	2	NUT (M8X1.25-THD)	
M	5	1	**8T-4197**	2	BOLT (M8X1.25X40-MM)	
	6	1	**8T-4224**	4	WASHER-HARD (8.8X16X2-MM THK)	

M-METRIC PART

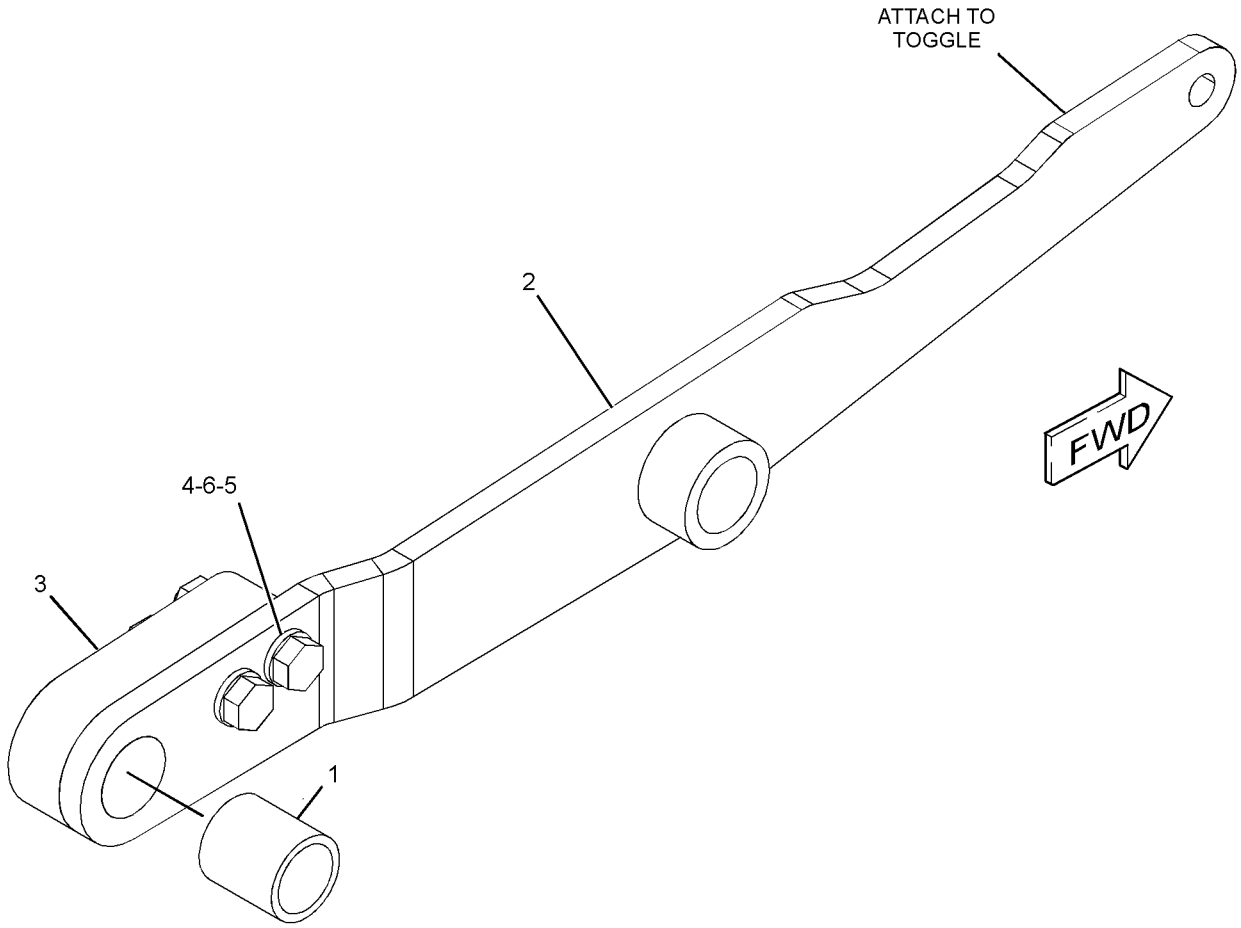

GRAPHIC #1 **<END>** g01578696

OPERATOR STATION

291-8011 ARM GP-SEAT SUSPENSION–OUTER, LH

S/N: LBP1-UP

PART OF 298-2818 SUSPENSION GP-SEAT

AN ATTACHMENT

SMCS-7324 **i03095680**

NOTE	REF NO	GRAPHIC REF	PART NUMBER	QTY	PART NAME 1 2 3 4 5 6 (PRODUCT LEVEL)	SEE PAGE
	1	1	**291-7990**	1	BEARING	
	2	1	**291-8008**	1	SPACER	
	3	1	**291-8012**	1	ARM (OUTER, LH)	
M	4	1	**5C-7261**	2	NUT (M8X1.25-THD)	
M	5	1	**8T-4197**	2	BOLT (M8X1.25X40-MM)	
	6	1	**8T-4224**	4	WASHER-HARD (8.8X16X2-MM THK)	

M-METRIC PART

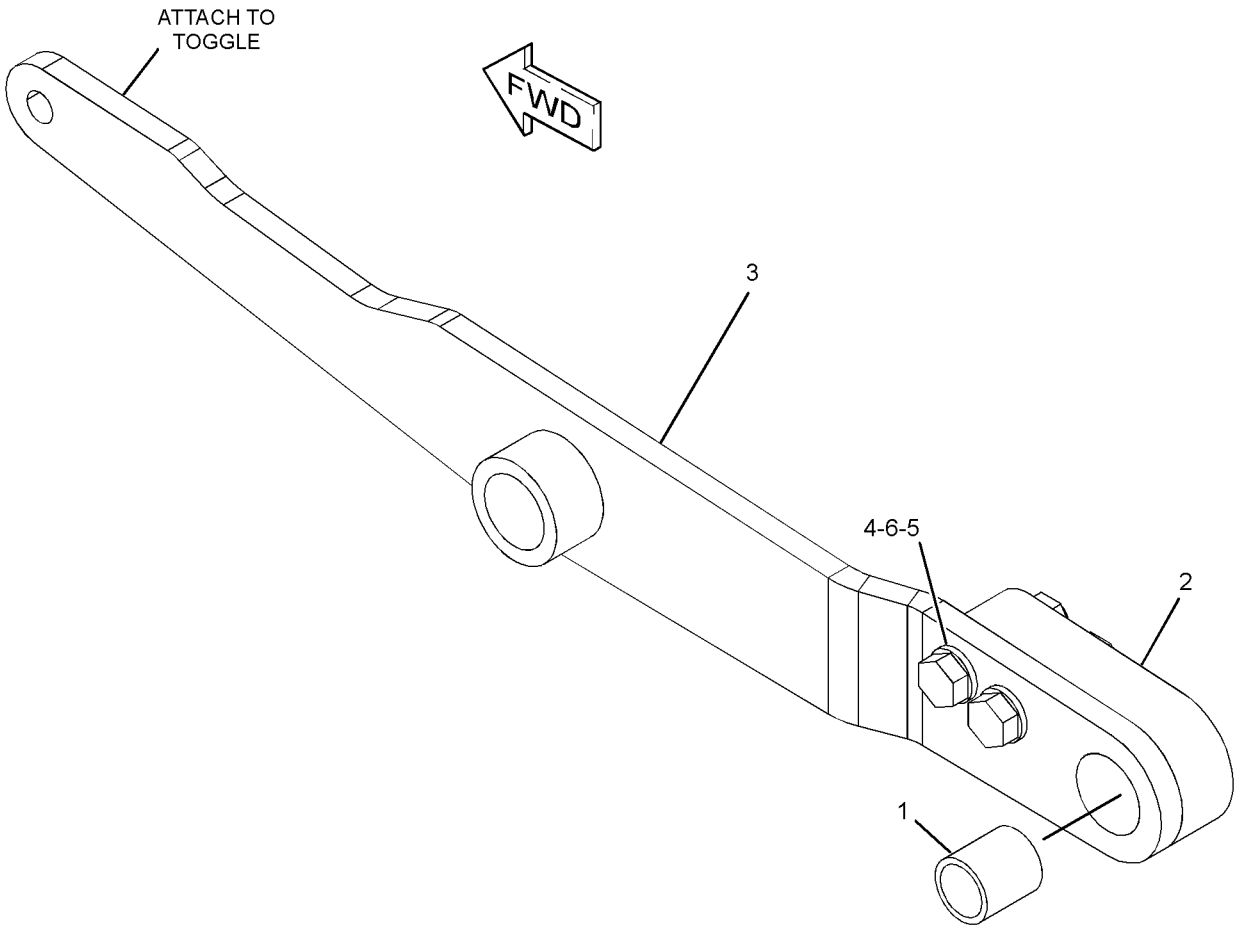

GRAPHIC #1 **<END>** g01578695

OPERATOR STATION

284-7054 ARMREST GP–RH

S/N: LBP1-UP
NO TILT
PART OF 268-9349, 280-9450, 282-6698 CONTROL & MTG GP-JOYSTICK
AN ATTACHMENT

SMCS-7307, 7312 **i02957122**

NOTE	REF NO	GRAPHIC REF	PART NUMBER	QTY	PART NAME 1 2 3 4 5 6 (PRODUCT LEVEL)	SEE PAGE
	1	1	**253-8798**	2	KNOB	
	2	1	**268-9382**	1	BRACKET	
	3	1	**282-2034**	1	CUSHION AS (RH)	
	4	1	**282-2036**	1	CUSHION AS	
	5	1	**282-6689**	1	COVER	
	6	1	**282-6691**	1	COVER (RH)	
	7	1	**282-6701**	1	BRACKET AS (RH)	
	8	1	**282-6707**	1	BRACKET AS	
	9	1	**282-6709**	1	BRACKET AS	
Y	10	1	**284-7055**	1	SUPPORT GP-HYDRAULIC CONTROL (RH)	686
	11	1	**284-7648**	1	BRACKET	
M	12	1	**127-2170**	9	SCREW-TRUSS HEAD (M8X1.25X20-MM)	
	13	1	**7X-0578**	2	WASHER-HARD (10.2X32X2.5-MM THK)	
M	14	1	**7X-2546**	1	BOLT (M10X1.5X180-MM)	
	15	1	**8T-4121**	4	WASHER-HARD (11X21X2.5-MM THK)	
M	16	1	**8T-4178**	2	BOLT (M10X1.5X90-MM)	
M	17	1	**8T-6685**	1	BOLT (M10X1.5X110-MM)	
M	18	1	**9X-2041**	1	SCREW-TRUSS HEAD (M10X1.5X20-MM)	
M	19	1	**9X-2042**	4	SCREW-TRUSS HEAD (M6X1X12-MM)	
M	20	1	**9X-2043**	2	SCREW-TRUSS HEAD (M6X1X14-MM)	
M	21	1	**9X-2044**	4	SCREW-TRUSS HEAD (M6X1X16-MM)	
M	22	1	**9X-2045**	2	SCREW-TRUSS HEAD (M6X1X20-MM)	
	23	1	**314-3472**	1	SPACER (10.67X17.46X12-MM THK)	

M-METRIC PART
Y-SEPARATE ILLUSTRATION

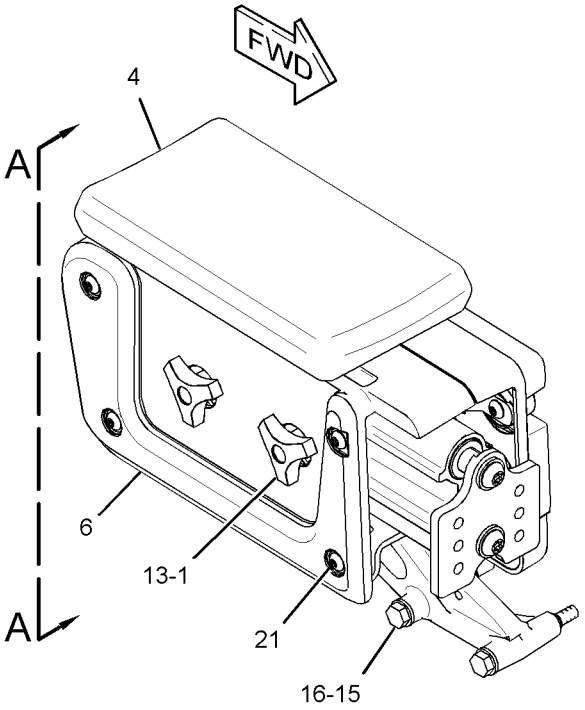

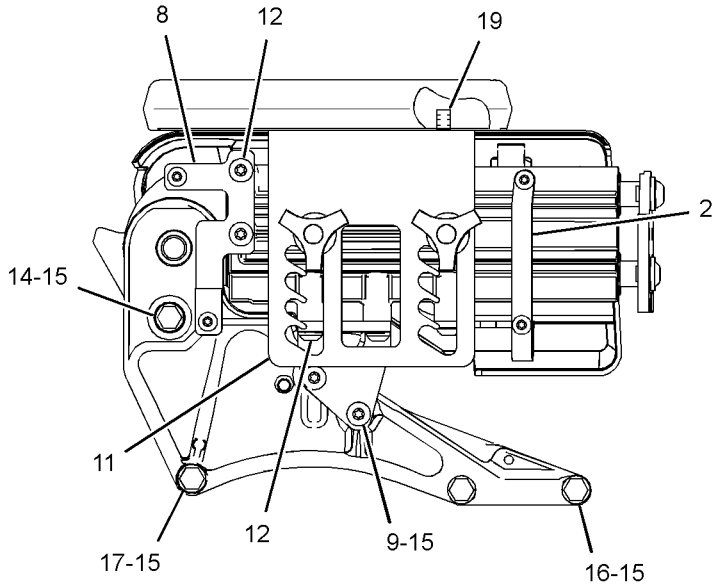

VIEW A-A
(COVER REMOVED)

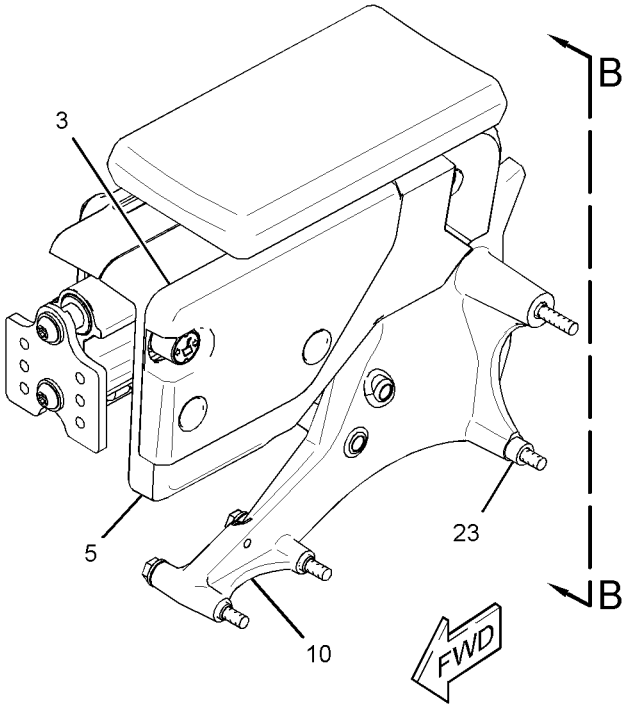

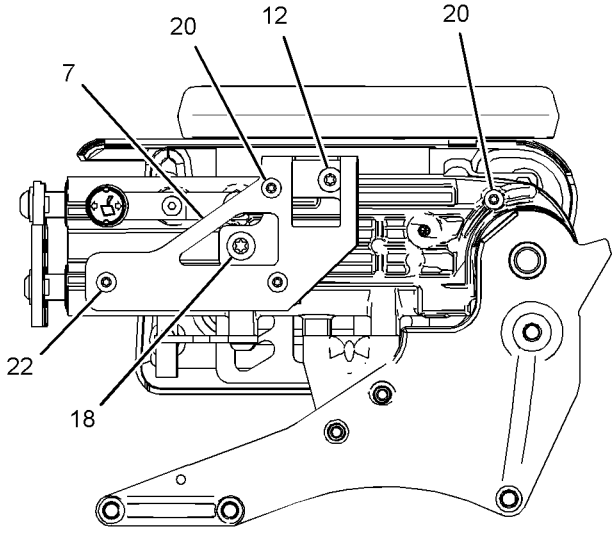

VIEW B-B
(COVER REMOVED)

GRAPHIC #1 **<END>** g01414585

OPERATOR STATION

310-3220 BOX GP-STORAGE—SHOVEL

S/N: LBP1-UP

AN ATTACHMENT

SMCS-7268 **i02901059**

NOTE	REF NO	GRAPHIC REF	PART NUMBER	QTY	PART NAME 1 2 3 4 5 6 (PRODUCT LEVEL)	SEE PAGE
	1	1	**246-2641**	1	PADLOCK GP	
		1	**5P-8500**	1	KEY	
	2	1	*304-5564*	1	BOX GP-STORAGE (SHOVEL)	
		1	**5G-2881**	1	SHAFT	
		1	**6H-5829**	2	RING-RETAINING	
		1	**9M-3835**	1	LATCH-RUBBER	
		1	**304-5566**	1	BOX AS-STORAGE	

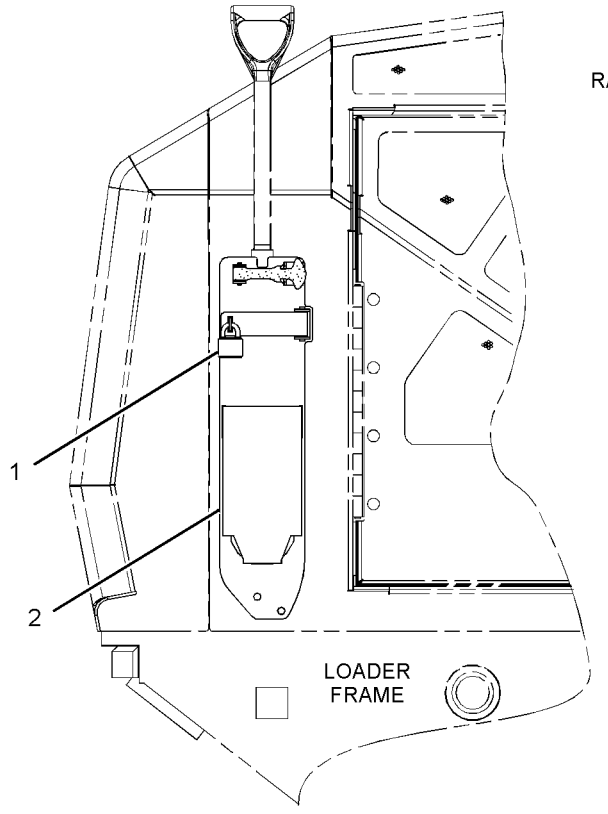

RIGHT SIDE VIEW
(FOR 953D)

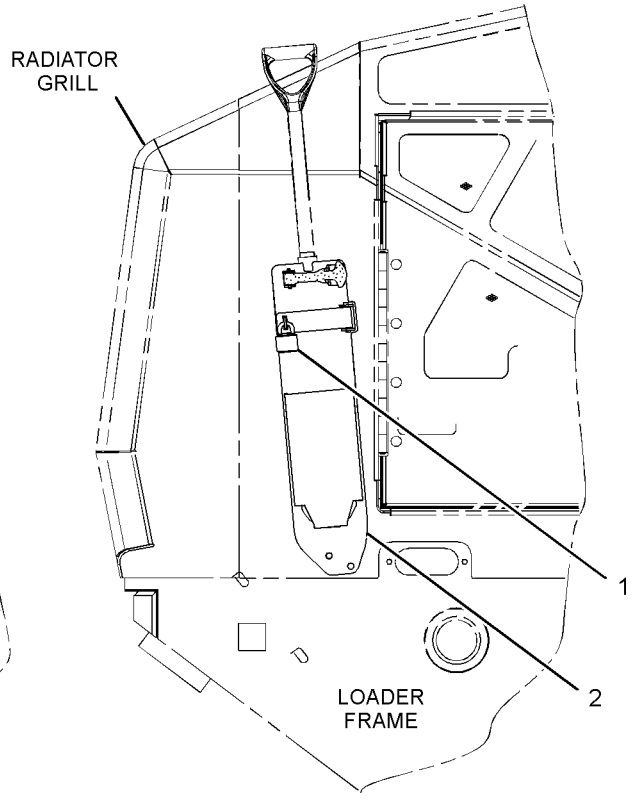

RIGHT SIDE VIEW
(FOR 963D)

GRAPHIC #1 **<END>** g01444688

294-1999 BRACE GP-CAB LIFT

S/N: LBP1-UP

CANNOT BE USED WITH 279-8104—PAGE 380

AN ATTACHMENT

SMCS-730L **i02665339**

NOTE	REF NO	GRAPHIC REF	PART NUMBER	QTY	PART NAME 1 2 3 4 5 6 (PRODUCT LEVEL)	SEE PAGE
	1	1	**279-1540**	1	PIN-DETENT	
	2	1	**289-8323**	1	BAR AS	
	3	1	**295-4074**	1	PIN AS	
	4	1	**302-6721**	1	BRACKET	
	5	1	**198-4776**	2	WASHER-HARD (8.8X20X8-MM THK)	
M	6	1	**5C-7261**	2	NUT (M8X1.25-THD)	
M	7	1	**8T-4189**	1	BOLT (M8X1.25X20-MM)	
	8	1	**8T-4224**	1	WASHER-HARD (8.8X16X2-MM THK)	

M-METRIC PART

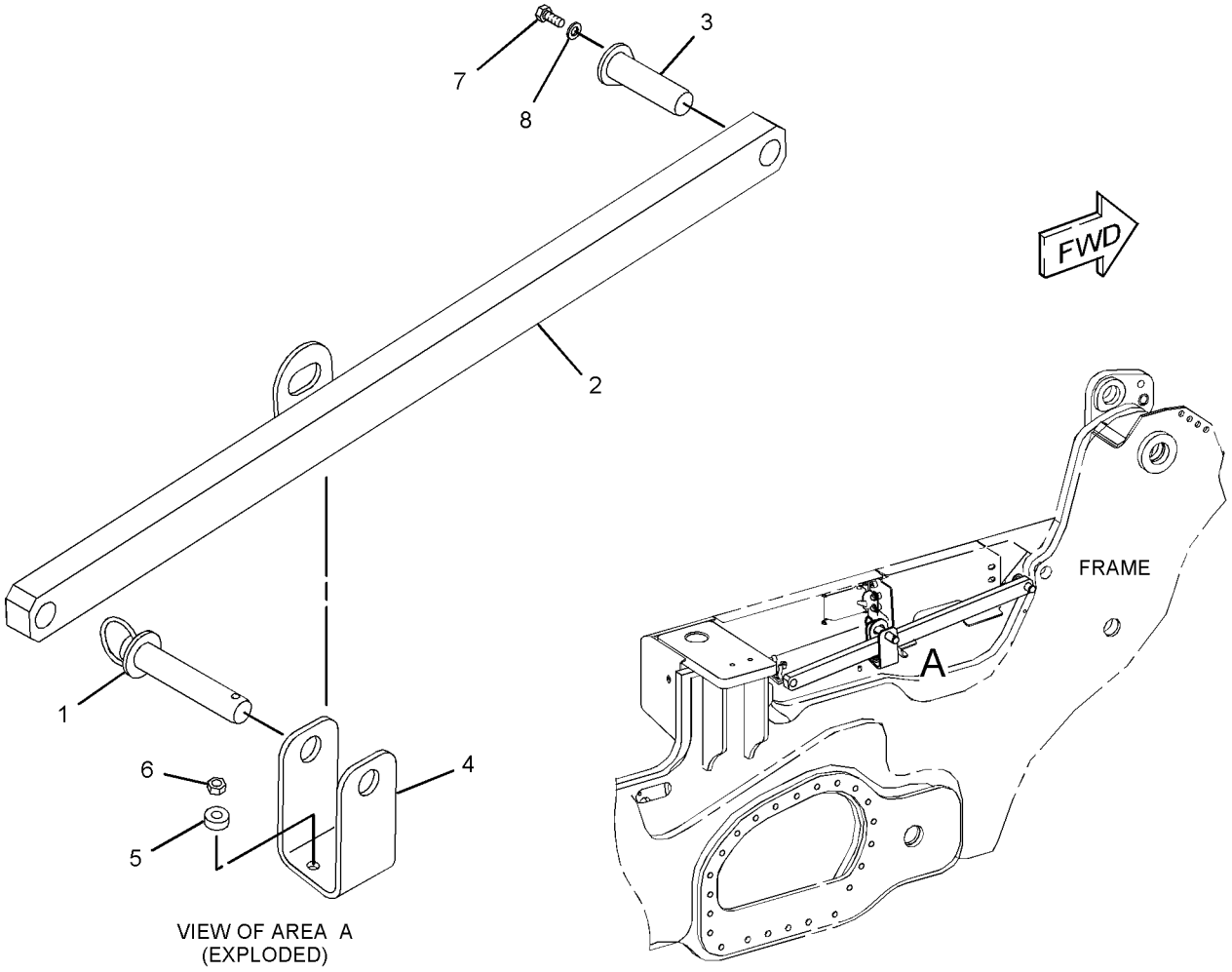

VIEW OF AREA A
(EXPLODED)

GRAPHIC #1 **<END>** g01345050

OPERATOR STATION

286-8238 BRACKET GP-MOUNTING—LH

S/N: LBP1-UP
WITH TILT
PART OF 268-9350 CONTROL GP-DIRECTION & SPEED
AN ATTACHMENT

SMCS-7301 **i03022586**

NOTE	REF NO	GRAPHIC REF	PART NUMBER	QTY	PART NAME 1 2 3 4 5 6 (PRODUCT LEVEL)	SEE PAGE
	1	1	**8W-1784**	1	STOP	
	2	1	**247-1913**	2	STUD-BALL	
	3	2	**253-8798**	2	KNOB	
	4	2	**268-9636**	1	BRACKET	
	5	2	**268-9637**	1	STRIKER	
	6	1	**268-9649**	1	STRUT	
	7	2	**282-2031**	1	LATCH AS	
	8	1	**282-2035**	1	CUSHION AS (LH)	
	9	1	**282-2037**	1	CUSHION AS	
	10	1	**282-6690**	1	COVER	
	11	2	**282-6692**	1	COVER (LH)	
	12	2	**282-6694**	1	BRACKET	
	13	1	**282-6702**	1	BRACKET AS (LH)	
	14	2	**282-6708**	1	BRACKET AS	
	15	2	**282-6710**	1	BRACKET AS	
	16	2	**284-7649**	1	BRACKET	
	17	1	**286-0602**	1	BUSHING	
Y	18	1	*289-2078*	1	SUPPORT GP-STEERING CONTROL (LH)	691
M	19	1,2	**127-2170**	7	SCREW-TRUSS HEAD (M8X1.25X20-MM)	
M	20	2	**179-7262**	2	SCREW-FLAT HEAD (M8X1.25X40-MM)	
	21	2	**198-2970**	1	LOCKNUT (3/8-16-THD)	
M	22	1	**7X-2546**	1	BOLT (M10X1.5X180-MM)	
	23	1,2	**8T-4121**	4	WASHER-HARD (11X21X2.5-MM THK)	
M	24	2	**8T-4178**	2	BOLT (M10X1.5X90-MM)	
	25	1	**8T-4224**	2	WASHER-HARD (8.8X16X2-MM THK)	
M	26	1	**7X-2545**	1	BOLT (M10X1.5X150-MM)	
M	27	1	**9X-2041**	1	SCREW-TRUSS HEAD (M10X1.5X20-MM)	
M	28	2	**9X-2042**	4	SCREW-TRUSS HEAD (M6X1X12-MM)	
M	29	1	**9X-2043**	2	SCREW-TRUSS HEAD (M6X1X14-MM)	
M	30	2	**9X-2044**	3	SCREW-TRUSS HEAD (M6X1X16-MM)	
M	31	1	**9X-2045**	2	SCREW-TRUSS HEAD (M6X1X20-MM)	
	32	2	**7X-0578**	2	WASHER-HARD (10.2X32X2.5-MM THK)	
M	33	2	**9X-2046**	1	SCREW-TRUSS HEAD (M6X1X35-MM)	

M-METRIC PART
Y-SEPARATE ILLUSTRATION

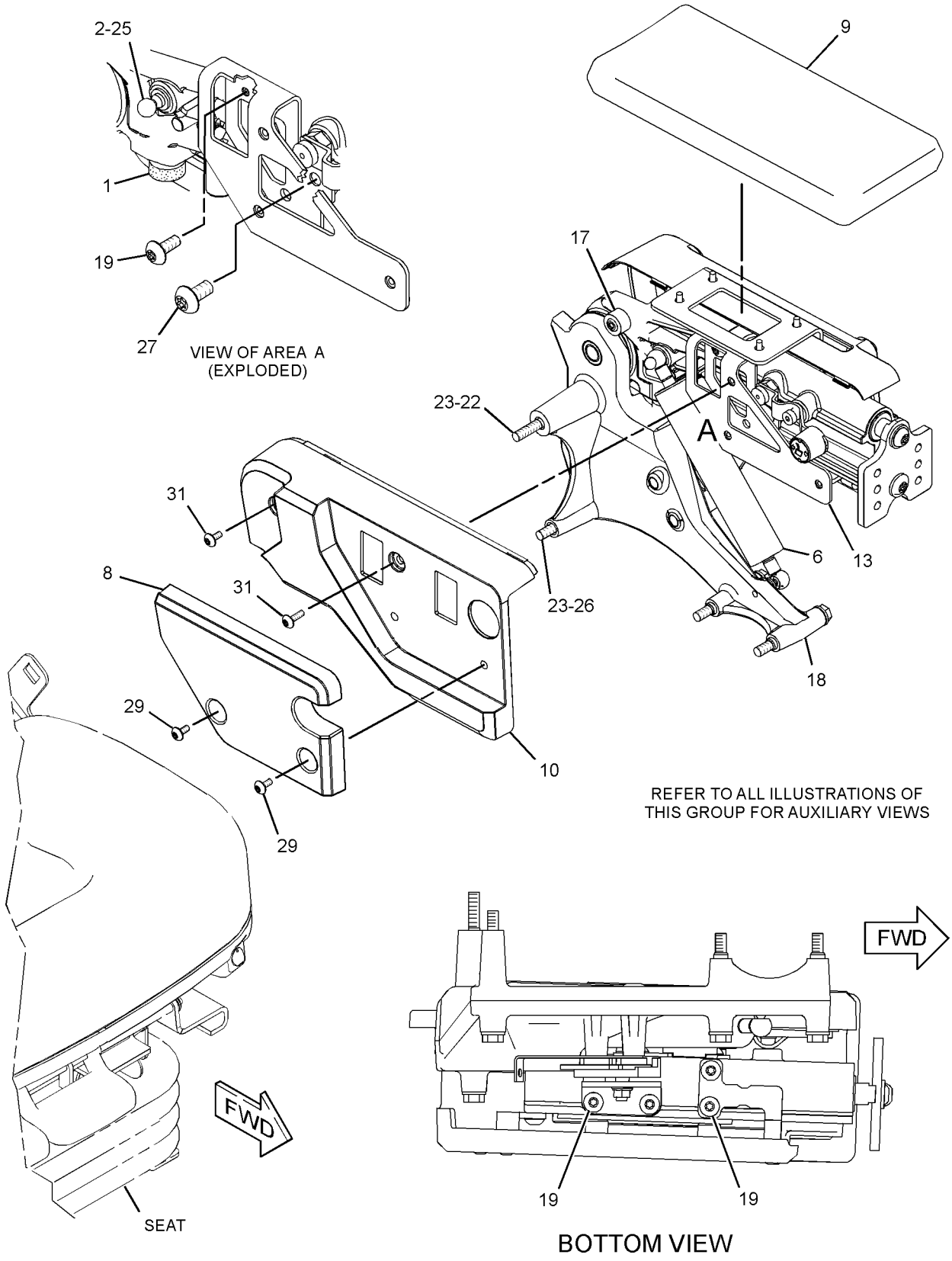

GRAPHIC #1

g01342925

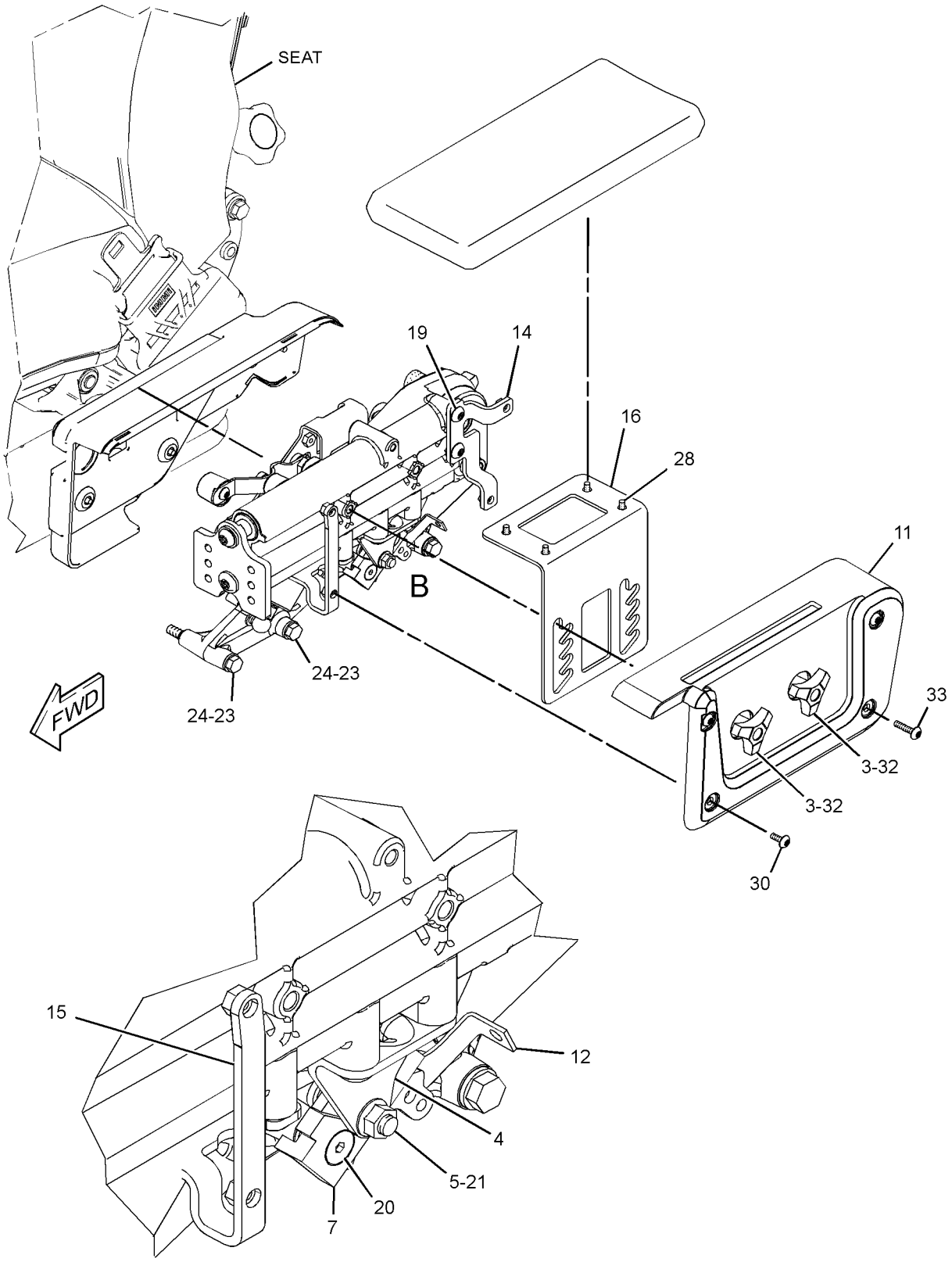

VIEW OF AREA B

GRAPHIC #2 **<END>** g01533836

OPERATOR STATION

296-8302 BRACKET GP-MOUNTING—LH

S/N: LBP1-UP
WITH TILT
PART OF 296-8319 CONTROL & MTG GP-ELHYD
AN ATTACHMENT

SMCS-7301 **i03294668**

NOTE	REF NO	GRAPHIC REF	PART NUMBER	QTY	PART NAME 1 2 3 4 5 6 (PRODUCT LEVEL)	SEE PAGE
	1	1	**8W-1784**	1	STOP	
	2	2	**247-1913**	2	STUD-BALL	
	3	1	**253-8798**	2	KNOB	
	4	2	**268-9636**	1	BRACKET	
	5	2	**268-9637**	1	STRIKER	
	6	2	**268-9649**	1	STRUT	
	7	2	**282-2031**	1	LATCH AS	
	8	1	**282-2035**	1	CUSHION AS (LH)	
	9	1	**282-2036**	1	CUSHION AS	
	10	1	**282-6690**	1	COVER	
	11	1	**282-6692**	1	COVER (LH)	
	12	2	**282-6694**	1	BRACKET	
	13	1	**282-6702**	1	BRACKET AS (LH)	
	14	1	**282-6708**	1	BRACKET AS	
	15	2	**282-6710**	1	BRACKET AS	
	16	1	**284-7649**	1	BRACKET	
Y	17	1	*289-2078*	1	SUPPORT GP-STEERING CONTROL (LH)	691
	18	1	**321-5226**	1	BUSHING	
M	19	1,2	**127-2170**	7	SCREW-TRUSS HEAD (M8X1.25X20-MM)	
M	20	2	**179-7262**	2	SCREW-FLAT HEAD (M8X1.25X40-MM)	
	21	2	**198-2970**	1	LOCKNUT (3/8-16-THD)	
	22	1	**7X-0578**	2	WASHER-HARD (10.2X32X2.5-MM THK)	
M	23	1	**7X-2546**	1	BOLT (M10X1.5X180-MM)	
	24	1	**8T-4121**	4	WASHER-HARD (11X21X2.5-MM THK)	
M	25	1	**8T-4178**	2	BOLT (M10X1.5X90-MM)	
	26	2	**8T-4224**	2	WASHER-HARD (8.8X16X2-MM THK)	
M	27	1	**7X-2545**	1	BOLT (M10X1.5X150-MM)	
M	28	1	**9X-2041**	1	SCREW-TRUSS HEAD (M10X1.5X20-MM)	
M	29	1	**9X-2042**	4	SCREW-TRUSS HEAD (M6X1X12-MM)	
M	30	1	**9X-2043**	2	SCREW-TRUSS HEAD (M6X1X14-MM)	
M	31	1	**9X-2044**	3	SCREW-TRUSS HEAD (M6X1X16-MM)	
M	32	1	**9X-2045**	2	SCREW-TRUSS HEAD (M6X1X20-MM)	
M	33	1	**9X-2046**	1	SCREW-TRUSS HEAD (M6X1X35-MM)	

M-METRIC PART
Y-SEPARATE ILLUSTRATION

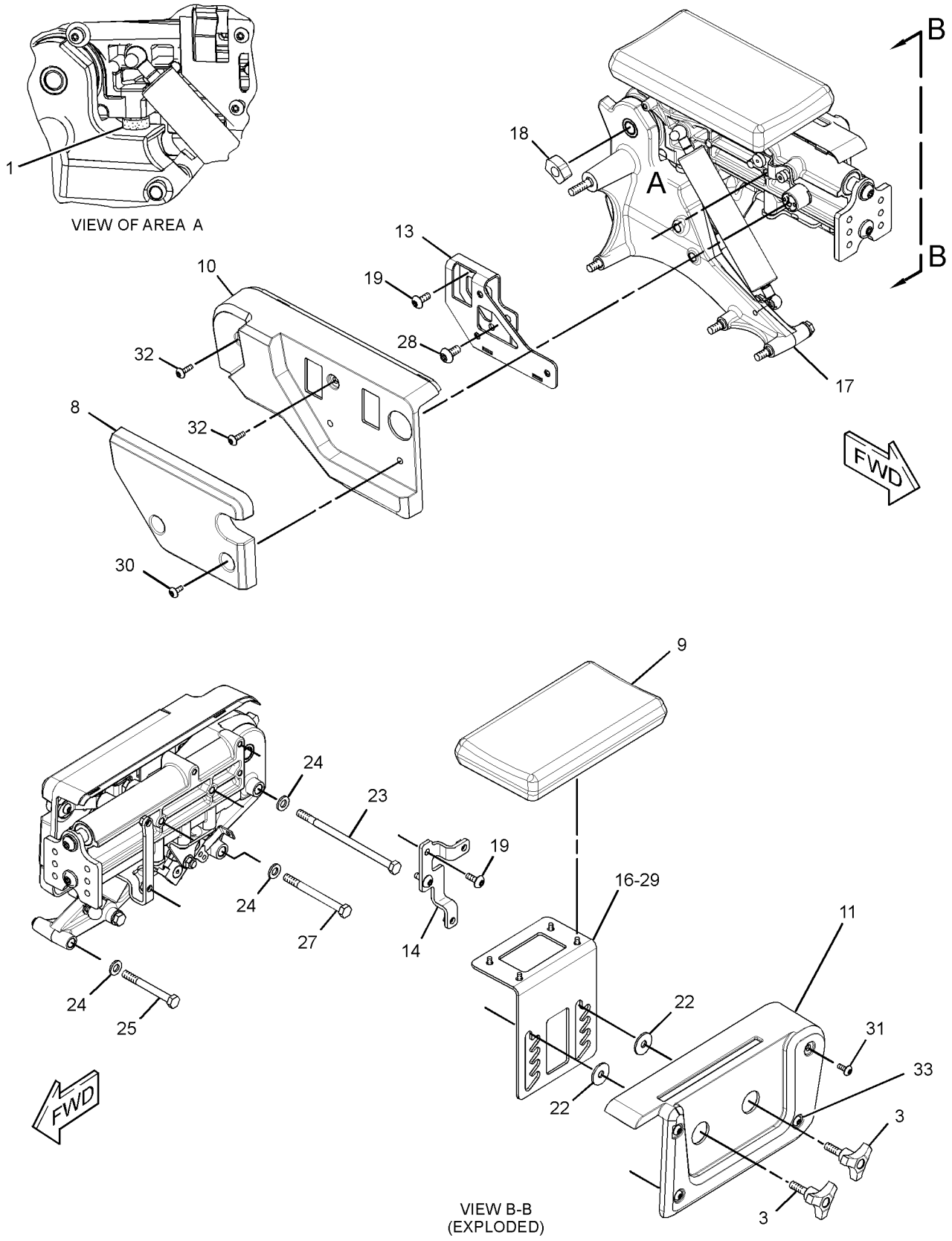

GRAPHIC #1 g01698393

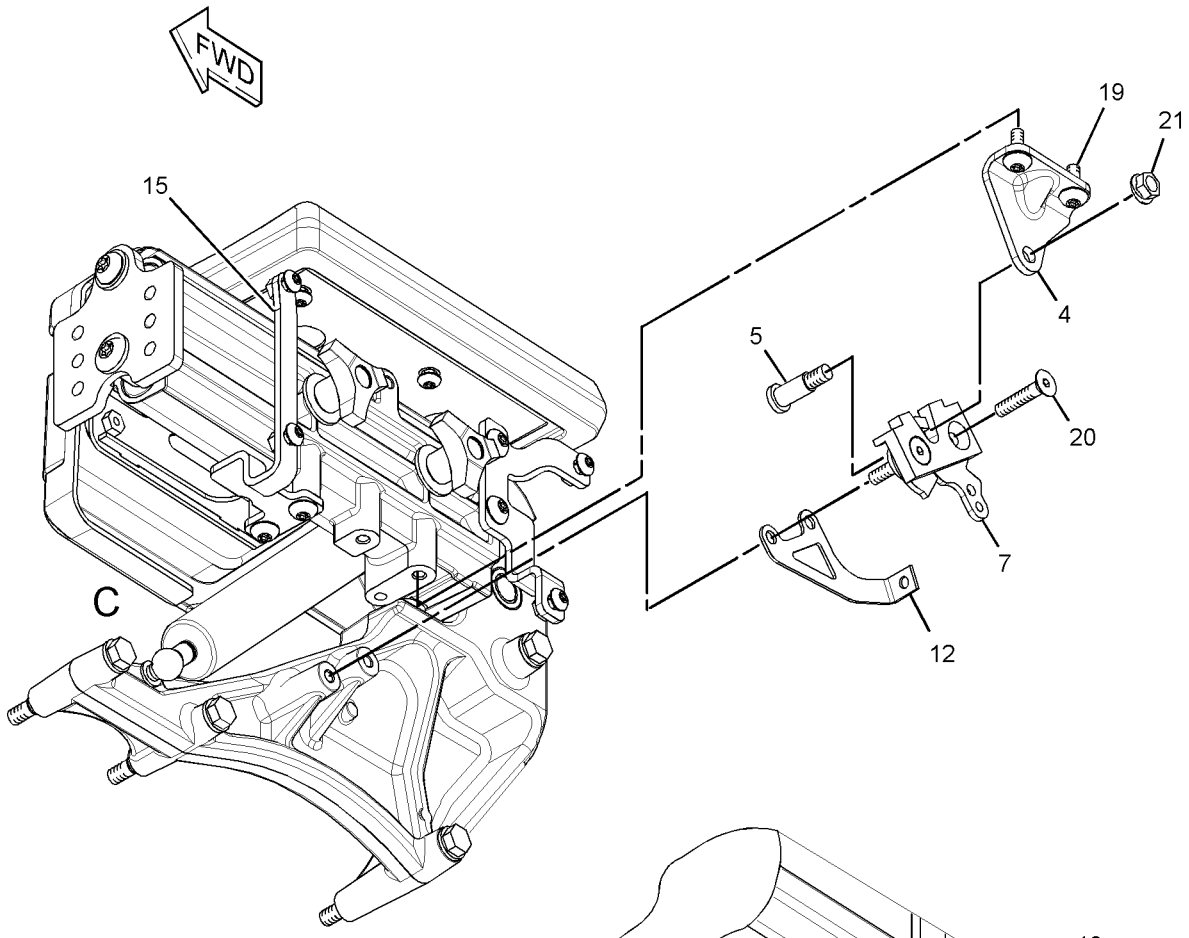

(COVER REMOVED FOR CLARITY)

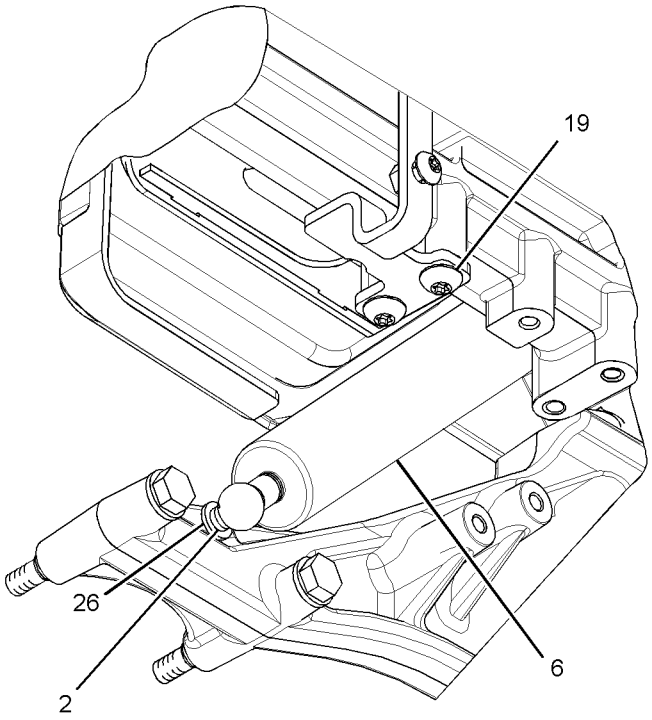

VIEW OF AREA C

GRAPHIC #2 **<END>** g01526766

OPERATOR STATION

258-7787 CAB AR

S/N: LBP1-UP

PART OF 240-6223 GENERAL AR

SMCS-7301 **i03485702**

NOTE	PART NUMBER	QTY	PART NAME 1 2 3 4 5 6 (PRODUCT LEVEL)	SEE PAGE
Y	*240-6230*	1	CAB GP	558
			S/N: LBP1-699	
Y	*307-4279*	1	CAB GP	559
			S/N: LBP700-917	
Y	*334-6680*	1	CAB GP	560
			S/N: LBP918-UP	
Y	*290-4417*	1	ENCLOSURE GP-CAB	621
Y	*279-1552*	1	INSTALLATION GP-CAB	638
			S/N: LBP1-827	
Y	*321-3421*	1	INSTALLATION GP-CAB	641
			S/N: LBP828-UP	
Y	*278-0895*	1	LINES GP-AIR CONDITIONER	653
Y	*251-1929*	1	MOUNTING GP-ROPS	661

Y-SEPARATE ILLUSTRATION

<END>

240-6230 CAB GP

S/N: LBP1-699

PART OF 258-7787 CAB AR

SMCS-7301 **i02658112**

NOTE	PART NUMBER	QTY	PART NAME 1 2 3 4 5 6 (PRODUCT LEVEL)	SEE PAGE
Y	*251-1926*	1	AIR CONDITIONER & MOUNTING GP	529
Y	*254-3477*	1	CIRCUIT BREAKER GP	171
Y	*251-1924*	1	COVER GP-CAB	597
Y	*251-1921*	1	DOOR GP-CAB (RH)	612
Y	*251-1922*	1	DOOR GP-CAB (LH)	614
Y	*251-1927*	1	INSTALLATION GP-CAB	625
Y	*251-1928*	1	INSTALLATION GP-RADIO	643
Y	*251-1925*	1	INSULATION GP-WEATHER	646
Y	*251-1923*	1	WIPER GP-WINDOW	707
Y	*242-7492*	1	WIRING GP-CAB	223
	251-1920	1	CAB AS	

Y-SEPARATE ILLUSTRATION

<END>

OPERATOR STATION

307-4279 CAB GP

S/N: LBP700-917

PART OF 258-7787 CAB AR

SMCS-7301 **i03097220**

NOTE	PART NUMBER	QTY	PART NAME 1 2 3 4 5 6 (PRODUCT LEVEL)	SEE PAGE
Y	*307-4287*	1	ACCESSORY GP-CAB	511
Y	*307-4286*	1	AIR CONDITIONER & MOUNTING GP	535
Y	*254-3477*	1	CIRCUIT BREAKER GP	171
Y	*307-4284*	1	COVER GP-CAB	600
Y	*307-4281*	1	DOOR GP-CAB (RH)	616
Y	*307-4282*	1	DOOR GP-CAB (LH)	618
Y	*307-4288*	1	INSTALLATION GP-RADIO	644
Y	*307-4285*	1	INSULATION GP-WEATHER	647
Y	*308-0605*	1	LIGHTING GP-FLOOD	203
Y	*307-4283*	1	WIPER GP-WINDOW	710
Y	*308-0604*	1	WIRING GP-CAB	229
	321-3440	1	CAB AS-ROPS	

Y-SEPARATE ILLUSTRATION

<END>

327-7790 CAB GP

S/N: LBP1-UP

PART OF 327-7787 KIT-CAB

SMCS-7301 **i03588141**

NOTE	PART NUMBER	QTY	PART NAME 1 2 3 4 5 6 (PRODUCT LEVEL)	SEE PAGE
Y	*327-7799*	1	ACCESSORY GP-CAB	526
Y	*327-7797*	1	AIR CONDITIONER & MOUNTING GP	539
Y	*327-7795*	1	COVER GP-CAB	602
Y	*327-7800*	1	INSTALLATION GP-RADIO	645
Y	*307-4285*	1	INSULATION GP-WEATHER	647
Y	*327-7798*	1	LATCH GP (CAB)	649
Y	*327-7794*	1	WIPER GP-WINDOW (REAR)	712
Y	*327-7801*	1	WIRING GP-CAB	235
	321-3440	1	CAB AS-ROPS	

Y-SEPARATE ILLUSTRATION

<END>

OPERATOR STATION

334-6680 CAB GP

S/N: LBP918-UP

PART OF 258-7787 CAB AR

SMCS-7301 **i03485721**

NOTE	PART NUMBER	QTY	PART NAME 1 2 3 4 5 6 (PRODUCT LEVEL)	SEE PAGE
Y	*307-4287*	1	ACCESSORY GP-CAB	511
Y	*307-4286*	1	AIR CONDITIONER & MOUNTING GP	535
Y	*254-3477*	1	CIRCUIT BREAKER GP	171
Y	*307-4284*	1	COVER GP-CAB	600
Y	*307-4281*	1	DOOR GP-CAB (RH)	616
Y	*307-4282*	1	DOOR GP-CAB (LH)	618
Y	*307-4288*	1	INSTALLATION GP-RADIO	644
Y	*307-4285*	1	INSULATION GP-WEATHER	647
Y	*308-0605*	1	LIGHTING GP-FLOOD	203
Y	*307-4283*	1	WIPER GP-WINDOW	710
Y	*334-5104*	1	WIRING GP-CAB	240
	334-6700	1	CAB AS-ROPS	

Y-SEPARATE ILLUSTRATION

<END>

OPERATOR STATION

183-5106 COMPRESSOR GP-REFRIGERANT

S/N: LBP1-UP

PART OF 243-2156 COMPRESSOR GP-REFRIGERANT

SMCS-1802 **i02876948**

NOTE	REF NO	GRAPHIC REF	PART NUMBER	QTY	PART NAME 1 2 3 4 5 6 (PRODUCT LEVEL)	SEE PAGE
	1	1	**126-1767**	2	PIN-CONNECTOR (14-GA)	
	2	1	**102-8802**	1	KIT-RECEPTACLE (2-PIN)	
					(INCLUDES RECEPTACLE AS & WEDGE)	
	3	1	**314-4018**	1	VALVE AS	
		1	**9X-7378**	1	SEAL-O-RING	
	4	1	**7T-4532**	1	PLUG AS	
	5	1	**9X-7385**	2	SEAL-O-RING	

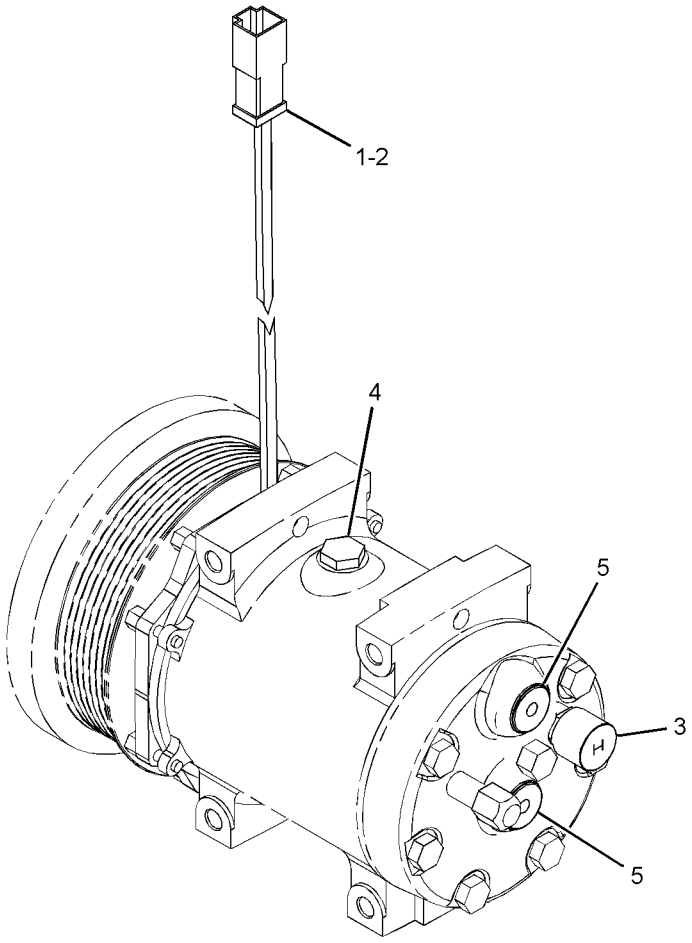

GRAPHIC #1 **<END>** g01419732

OPERATOR STATION

243-2156 COMPRESSOR GP-REFRIGERANT

S/N: LBP1-UP

PART OF 240-6227 INSTALLATION AR-ENGINE

SMCS-1802 **i02857382**

NOTE	REF NO	GRAPHIC REF	PART NUMBER	QTY	PART NAME 1 2 3 4 5 6 (PRODUCT LEVEL)	SEE PAGE
	1	1	**3S-2093**	2	STRAP-CABLE	
Y	2	1	**183-5106**	1	COMPRESSOR GP-REFRIGERANT	561
M	3	1	**255-1281**	2	BOLT-FLANGE HEAD (M8X1.25X100-MM)	
M	4	1	**315-5492**	2	STUD (M8X1.25X130-MM)	
	5	1	**4P-7581**	1	CLIP	
	6	1	**4P-8134**	1	CLIP	
	7	1	**8T-4224**	2	WASHER-HARD (8.8X16X2-MM THK)	
H	8	1	**310-8320**		CONDUIT (1-DM)	

H-ORDER BY THE DECIMETER
M-METRIC PART
Y-SEPARATE ILLUSTRATION

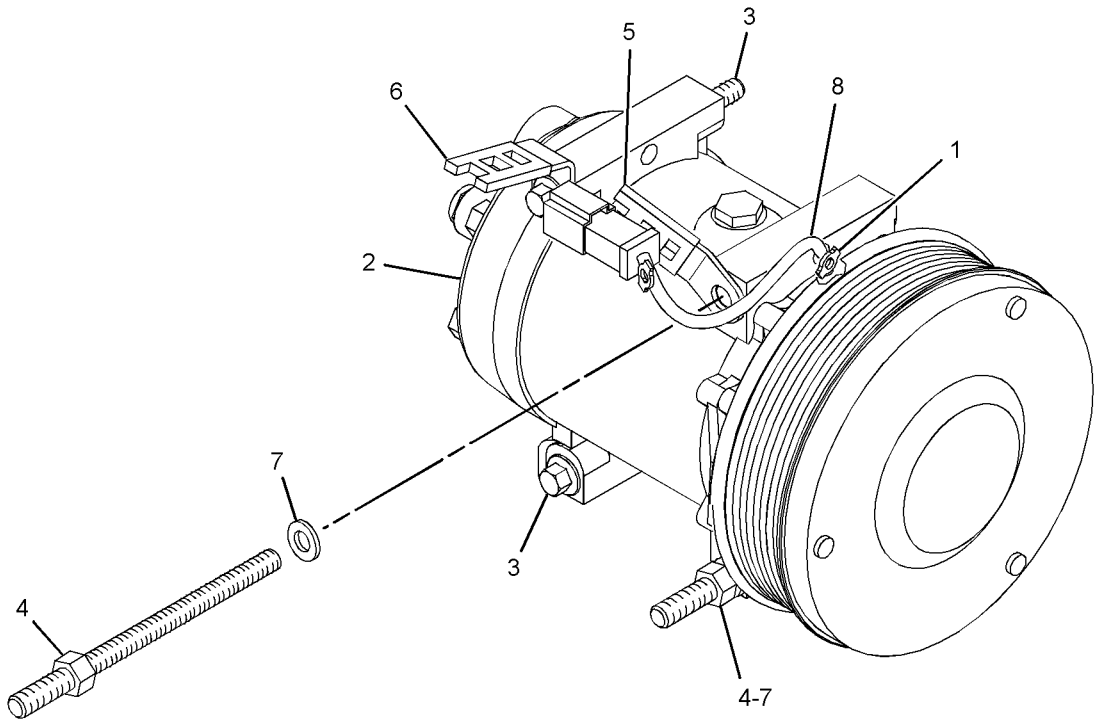

GRAPHIC #1 **<END>** g01423503

OPERATOR STATION

287-0554 CONDENSER GP-REFRIGERANT

S/N: LBP1-UP

PART OF 251-1926, 307-4286 AIR CONDITIONER & MOUNTING GP

SMCS-1805 **i03021395**

NOTE	REF NO	GRAPHIC REF	PART NUMBER	QTY	PART NAME 1 2 3 4 5 6 (PRODUCT LEVEL)	SEE PAGE
	1	1	**3E-5239**	2	RELAY AS (24-VOLT) (CONDENSER BLOWER MOTOR)	
	2	1	**3S-2093**	2	STRAP-CABLE	
	3	1	**8C-3756**	1	FILM-IDENTIFICATION	
	4	1	**304-3715**	2	FAN AS-CONDENSER (24-VOLT, 5-BLADE)	
	5	1	**175-2539**	1	CASE AS	
	6	1	**199-7698**	1	COIL AS (CONDENSER)	
	7	1	**287-0553**	1	HARNESS AS-HEATER & AIR COND	
		1	**9X-1054**	2	PLUG AS-CONNECTOR (4-PIN)	
		1	**155-2270**	2	KIT-CONNECTING PLUG (2-PIN)	
					(EACH INCLUDES PLUG AS, WEDGE, & INTERFACE SEAL)	
		1	**102-8805**	1	KIT-RECEPTACLE (6-PIN)	
					(INCLUDES RECEPTACLE AS & WEDGE)	
	8	1	**4P-8134**	1	CLIP	
M	9	1	**5C-2890**	1	NUT (M6X1-THD)	
	10	1	**8T-4121**	8	WASHER-HARD (11X21X2.5-MM THK)	
M	11	1	**8T-4137**	8	BOLT (M10X1.5X20-MM)	
M	12	1	**8T-4138**	1	BOLT (M6X1X20-MM)	
	13	1	**8T-4205**	2	WASHER-HARD (7.2X14.5X2-MM THK)	
	14	1	**8T-4224**	8	WASHER-HARD (8.8X16X2-MM THK)	
M	15	1	**8T-4908**	8	BOLT (M8X1.25X25-MM)	
E	16	1	**126-8472**		SEAL (79-CM)	
D	17	1	**5P-5673**		SEAL (0.8-M EACH)	
D	17A	1,1	**5P-5673**		SEAL (0.2-M EACH)	

D-ORDER BY THE METER
E-ORDER BY THE CENTIMETER
M-METRIC PART

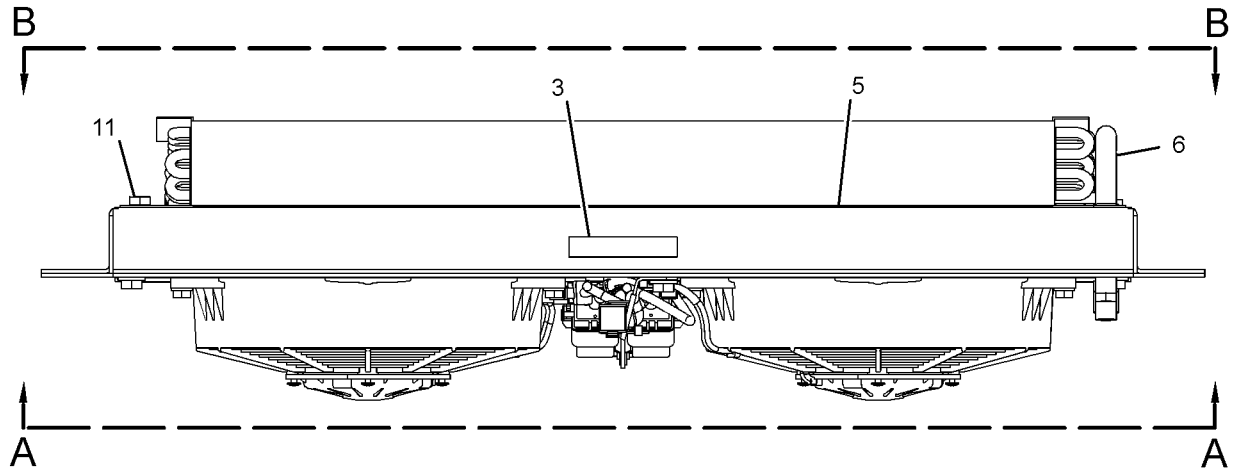

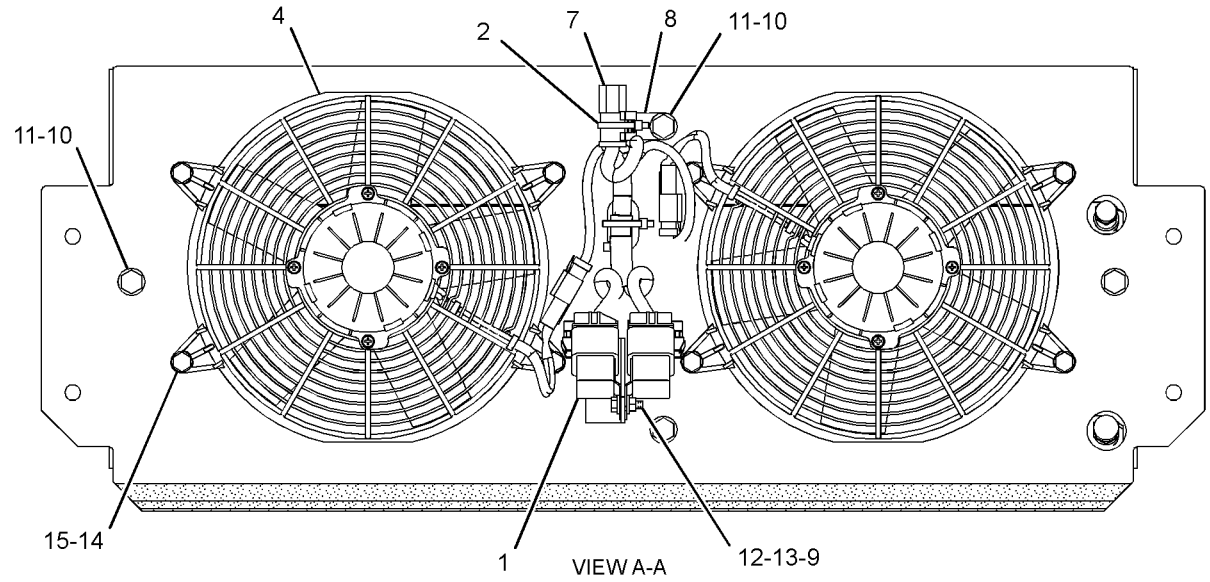

VIEW A-A

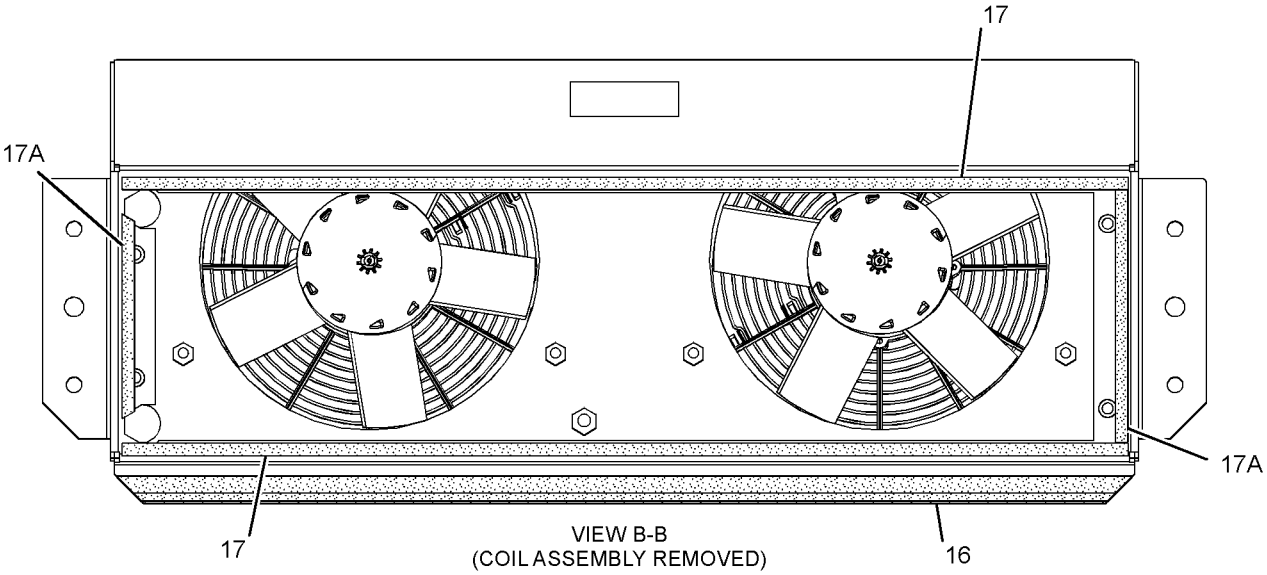

VIEW B-B
(COIL ASSEMBLY REMOVED)

GRAPHIC #1 **<END>** g01338300

296-8319 CONTROL & MTG GP-ELHYD–
HYDROSTATIC DRIVE, STEERING
S/N: LBP1-UP
PART OF 303-4017 CONTROL GP-HYDRAULIC
AN ATTACHMENT

SMCS-5702 **i03588180**

NOTE	REF NO	GRAPHIC REF	PART NUMBER	QTY	PART NAME 1 2 3 4 5 6 (PRODUCT LEVEL)	SEE PAGE
	1	1	**137-6723**	2	SCREW-FLAT HEAD (6-32X0.5-IN)	
	2	1	**253-8798**	1	KNOB	
	3	1	**280-9440**	1	CUSHION AS	
M		1	**6V-9632**	2	NUT-WELD (M6X1-THD)	
	4	1	**280-9441**	1	BRACKET	
	5	1	**280-9443**	1	BRACKET AS	
M		1	**8T-3490**	1	NUT-WELD (M10X1.5-THD)	
	6	1	**282-2030**	1	LEVER AS	
	7	1	**290-0813**	2	FILM-INSTRUCTION (CONSOLE TILT)	
Y	8	1	*296-8302*	1	BRACKET GP-MOUNTING (LH)	555
	9	1	**296-8316**	1	BRACKET AS	
	10	1	**296-8318**	1	COVER AS	
	11	1	**307-2102**	1	COVER AS	
Y	12	1	*309-5906*	1	WIRING GP-CONTROL (HYDROSTATIC DRIVE)	258
M	13	1	**6V-3940**	4	BOLT (M8X1.25X25-MM)	
	14	1	**7X-0578**	1	WASHER-HARD (10.2X32X2.5-MM THK)	
	15	1	**9M-1974**	4	WASHER-HARD (8.8X16X2-MM THK)	
M	16	1	**9X-2043**	8	SCREW-TRUSS HEAD (M6X1X14-MM)	
D	17	1	**6V-3987**		SEAL (0.1-M EACH)	
D	17A	1	**6V-3987**		SEAL (0.2-M)	
M	18	1	**142-0485**	1	NUT (M10X1.5-THD)	

D-ORDER BY THE METER
M-METRIC PART
Y-SEPARATE ILLUSTRATION

296-8319 CONTROL & MTG GP-ELHYD *(contd.)* i03588180

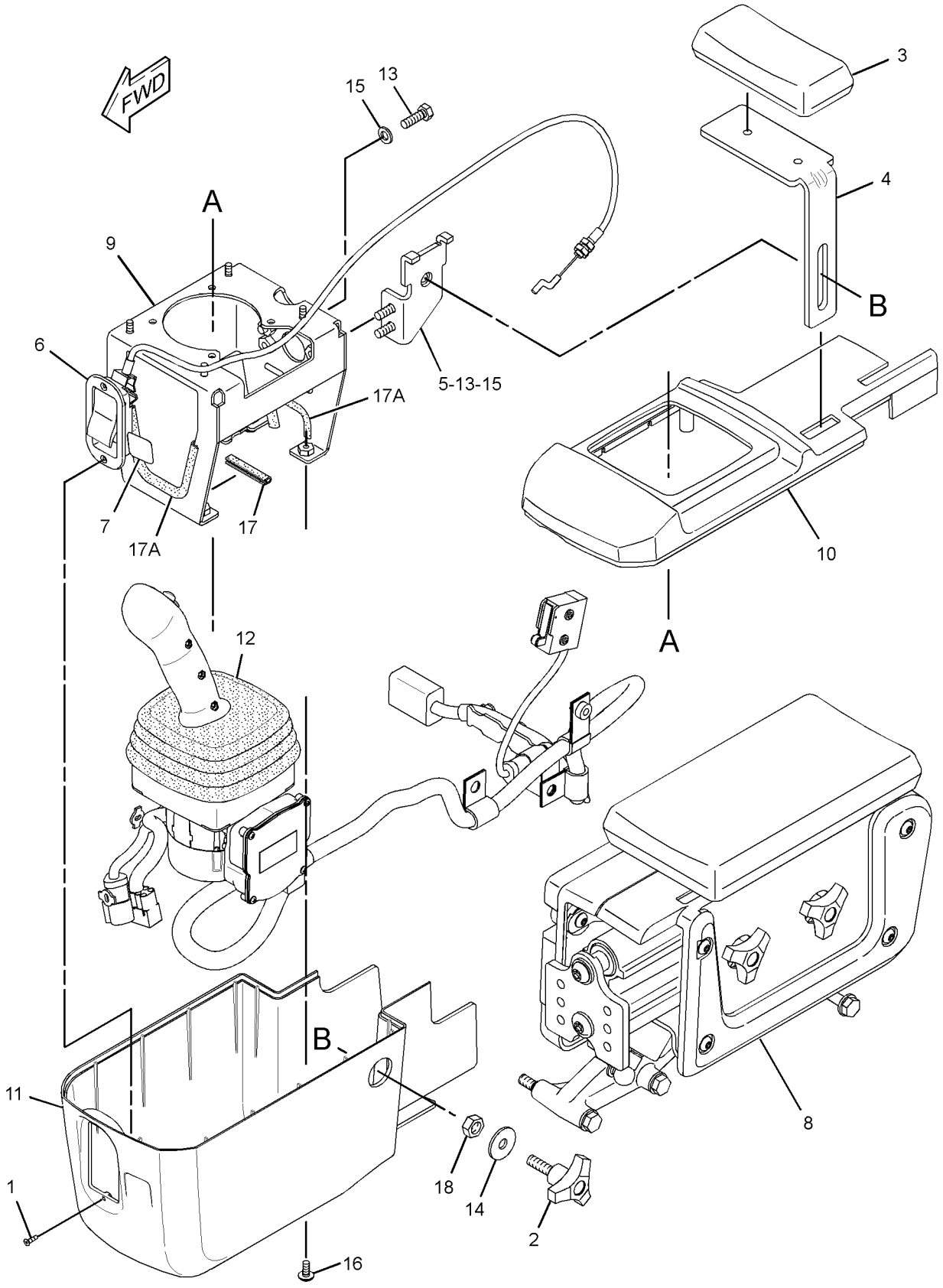

GRAPHIC #1 **<END>** g01536562

268-9349 CONTROL & MTG GP-JOYSTICK–BUCKET

S/N: LBP1-UP
RH, WITH CONSOLE COVERS
PART OF 253-8445 CONTROL GP-HYDRAULIC HAND
AN ATTACHMENT

SMCS-5063, 5705 **i03097243**

NOTE	REF NO	GRAPHIC REF	PART NUMBER	QTY	PART NAME 1 2 3 4 5 6 (PRODUCT LEVEL)	SEE PAGE
	1	1	**280-9440**	1	CUSHION AS	
	2	1	**280-9441**	1	BRACKET	
	3	1	**280-9442**	1	BRACKET AS	
	4	1	**280-9444**	1	KNOB	
	5	1	**280-9672**	1	BRACKET AS	
	6	1	**280-9897**	1	COVER	
	7	1	**282-6697**	1	FILM-INSTRUCTION (OPERATOR CONTROLS)	
Y	8	1	*284-7054*	1	ARMREST GP (RH)	548
	9	1	**292-8114**	1	COVER AS	
Y	10	1	*280-9673*	1	CONTROL & MTG GP-JOYSTICK (BUCKET)	571
M	11	1	**6V-3940**	4	BOLT (M8X1.25X25-MM)	
	12	1	**7X-0578**	1	WASHER-HARD (10.2X32X2.5-MM THK)	
	13	1	**9M-1974**	4	WASHER-HARD (8.8X16X2-MM THK)	
M	14	1	**9X-2043**	9	SCREW-TRUSS HEAD (M6X1X14-MM)	
D	15	1	**6V-3987**		SEAL (0.1-M EACH)	

D-ORDER BY THE METER
M-METRIC PART
Y-SEPARATE ILLUSTRATION

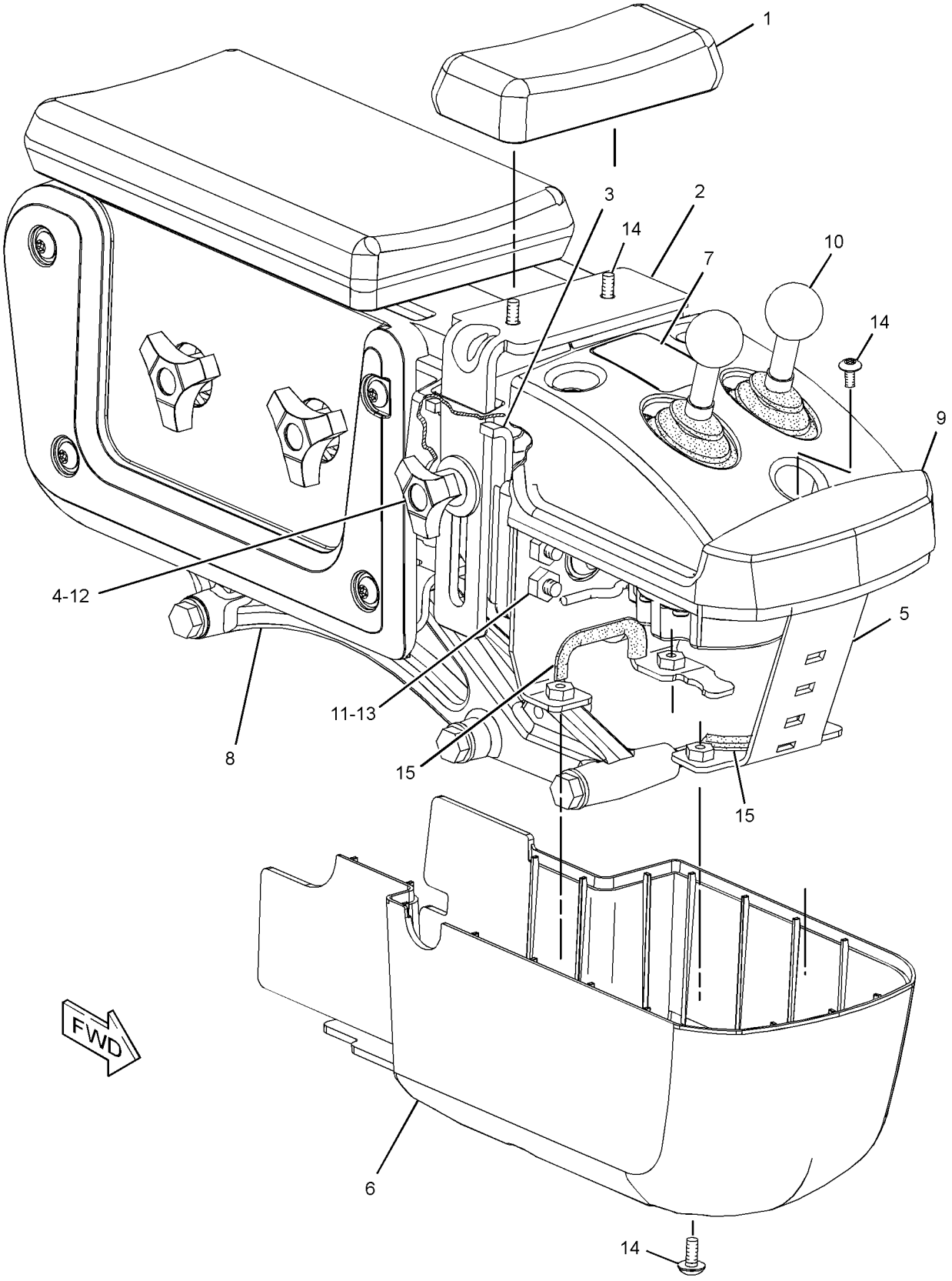

GRAPHIC #1 **<END>** g01349844

280-9450 CONTROL & MTG GP-JOYSTICK–

MULTIPURPOSE BUCKET
S/N: LBP1-UP
ELECTROHYDRAULIC
PART OF 253-8444 CONTROL GP-JOYSTICK
AN ATTACHMENT

SMCS-5063, 5705 **i02666954**

NOTE	REF NO	GRAPHIC REF	PART NUMBER	QTY	PART NAME 1 2 3 4 5 6 (PRODUCT LEVEL)	SEE PAGE
	1	1	**280-9440**	1	CUSHION AS	
	2	1	**280-9441**	1	BRACKET	
	3	1	**280-9442**	1	BRACKET AS	
	4	1	**280-9444**	1	KNOB	
	5	1	**280-9897**	1	COVER	
	6	1	**282-2028**	1	BRACKET AS	
	7	1	**282-2029**	1	COVER	
Y	8	1	*280-9675*	1	WIRING GP-CONTROL	256
Y	9	1	*284-7054*	1	ARMREST GP (RH)	548
M	10	1	**6V-3940**	4	BOLT (M8X1.25X25-MM)	
	11	1	**7X-0578**	1	WASHER-HARD (10.2X32X2.5-MM THK)	
	12	1	**9M-1974**	4	WASHER-HARD (8.8X16X2-MM THK)	
M	13	1	**9X-2043**	10	SCREW-TRUSS HEAD (M6X1X14-MM)	
D	14	1	**6V-3987**		SEAL (0.07-M EACH)	

D-ORDER BY THE METER
M-METRIC PART
Y-SEPARATE ILLUSTRATION

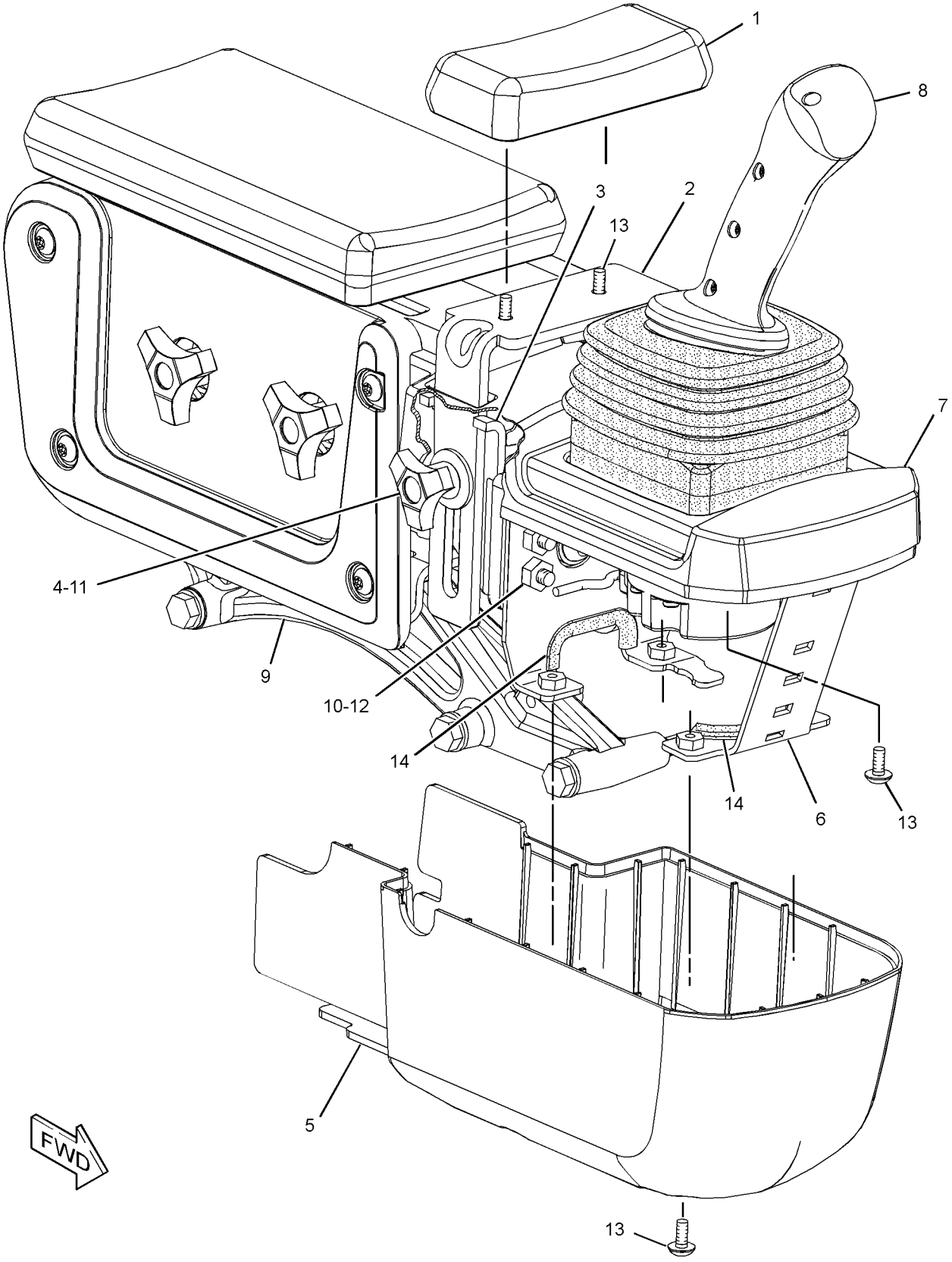

GRAPHIC #1 **<END>** g01342498

OPERATOR STATION

280-9673 CONTROL & MTG GP-JOYSTICK–BUCKET

S/N: LBP1-UP

PART OF 268-9349 CONTROL & MTG GP-JOYSTICK

AN ATTACHMENT

SMCS-5063, 5705 **i02944509**

NOTE	REF NO	GRAPHIC REF	PART NUMBER	QTY	PART NAME 1 2 3 4 5 6 (PRODUCT LEVEL)	SEE PAGE
	1	1	**7K-1181**	9	STRAP-CABLE	
Y	2	1	**307-4671**	1	CONTROL GP-HANDLE (BUCKET LIFT, LOWER)	579
Y	2A	1	**307-4671**	1	CONTROL GP-HANDLE (BUCKET DUMP, TILT BACK)	579
	3	1	**297-9525**	1	HARNESS AS-SENSOR	
		1	**102-8804**	2	KIT-RECEPTACLE (4-PIN)	
					(INCLUDES RECEPTACLE AS & WEDGE)	
		1	**155-2271**	2	KIT-CONNECTING PLUG (4-PIN)	
					(INCLUDES PLUG AS, WEDGE,& INTERFACE SEAL)	
		1	**230-4009**	1	PLUG AS-CONNECTOR (12-PIN)	
		1	**230-5010**	1	PLUG AS-CONNECTOR (6-PIN)	
		1	**230-4010**	1	RECEPTACLE AS-CONNECTOR (12-PIN)	
		1	**230-5011**	2	RECEPTACLE AS-CONNECTOR (6-PIN)	
	4	1	**4P-7581**	2	CLIP	
M	5	1	**9X-2045**	8	SCREW-TRUSS HEAD (M6X1X20-MM)	

M-METRIC PART
Y-SEPARATE ILLUSTRATION

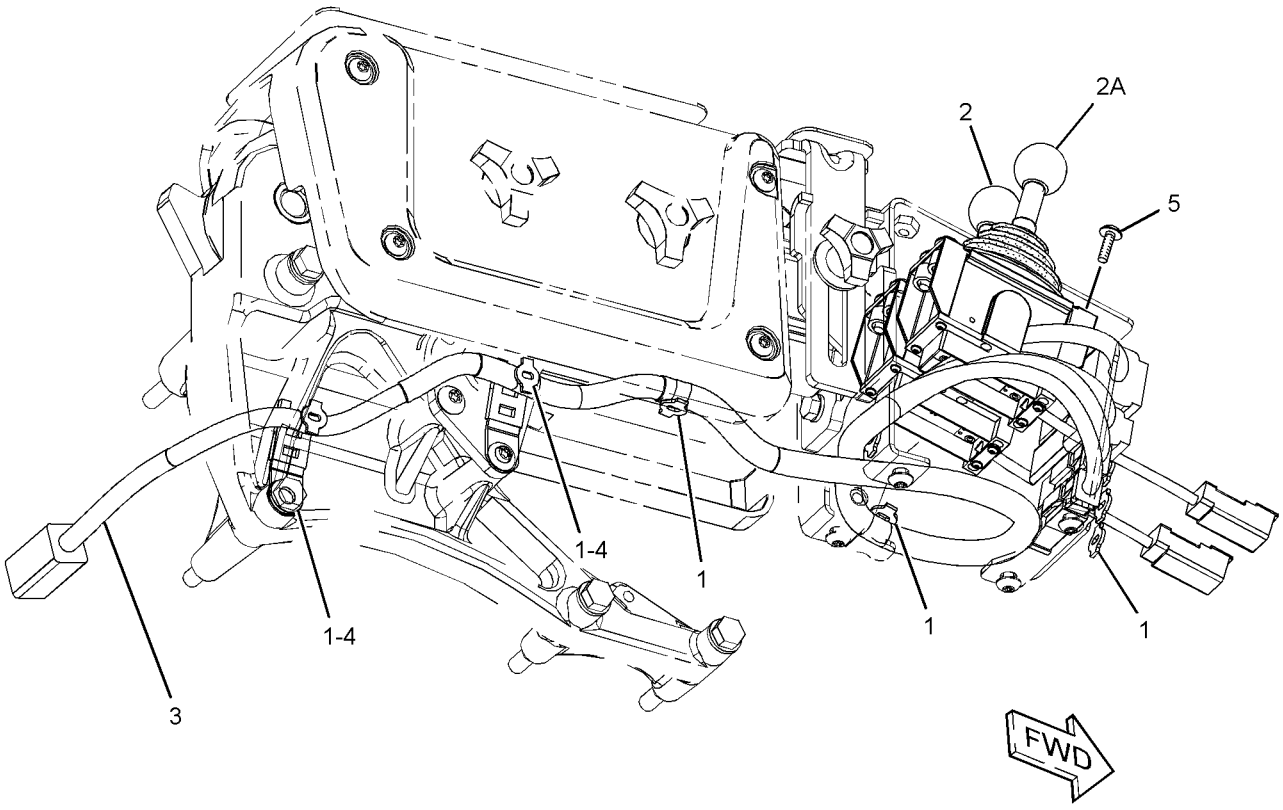

GRAPHIC #1 **<END>** g01350410

OPERATOR STATION

282-6698 CONTROL & MTG GP-JOYSTICK—BUCKET

S/N: LBP1-UP
ELECTROHYDRAULIC
PART OF 284-9764 CONTROL GP-JOYSTICK
AN ATTACHMENT

SMCS-5063, 5705 **i03102201**

NOTE	REF NO	GRAPHIC REF	PART NUMBER	QTY	PART NAME 1 2 3 4 5 6 (PRODUCT LEVEL)	SEE PAGE
	1	1	**280-9440**	1	CUSHION AS	
	2	1	**280-9441**	1	BRACKET	
	3	1	**280-9442**	1	BRACKET AS	
	4	1	**280-9444**	1	KNOB	
	5	1	**280-9897**	1	COVER	
	6	1	**282-2028**	1	BRACKET AS	
	7	1	**282-2029**	1	COVER	
Y	8	1	*282-6699*	1	WIRING GP-CONTROL (JOYSTICK)	257
Y	9	1	*284-7054*	1	ARMREST GP (RH)	548
M	10	1	**6V-3940**	4	BOLT (M8X1.25X25-MM)	
	11	1	**7X-0578**	1	WASHER-HARD (10.2X32X2.5-MM THK)	
	12	1	**9M-1974**	4	WASHER-HARD (8.8X16X2-MM THK)	
M	13	1	**9X-2043**	10	SCREW-TRUSS HEAD (M6X1X14-MM)	
D	14	1	**6V-3987**		SEAL (0.07-M EACH)	

D-ORDER BY THE METER
M-METRIC PART
Y-SEPARATE ILLUSTRATION

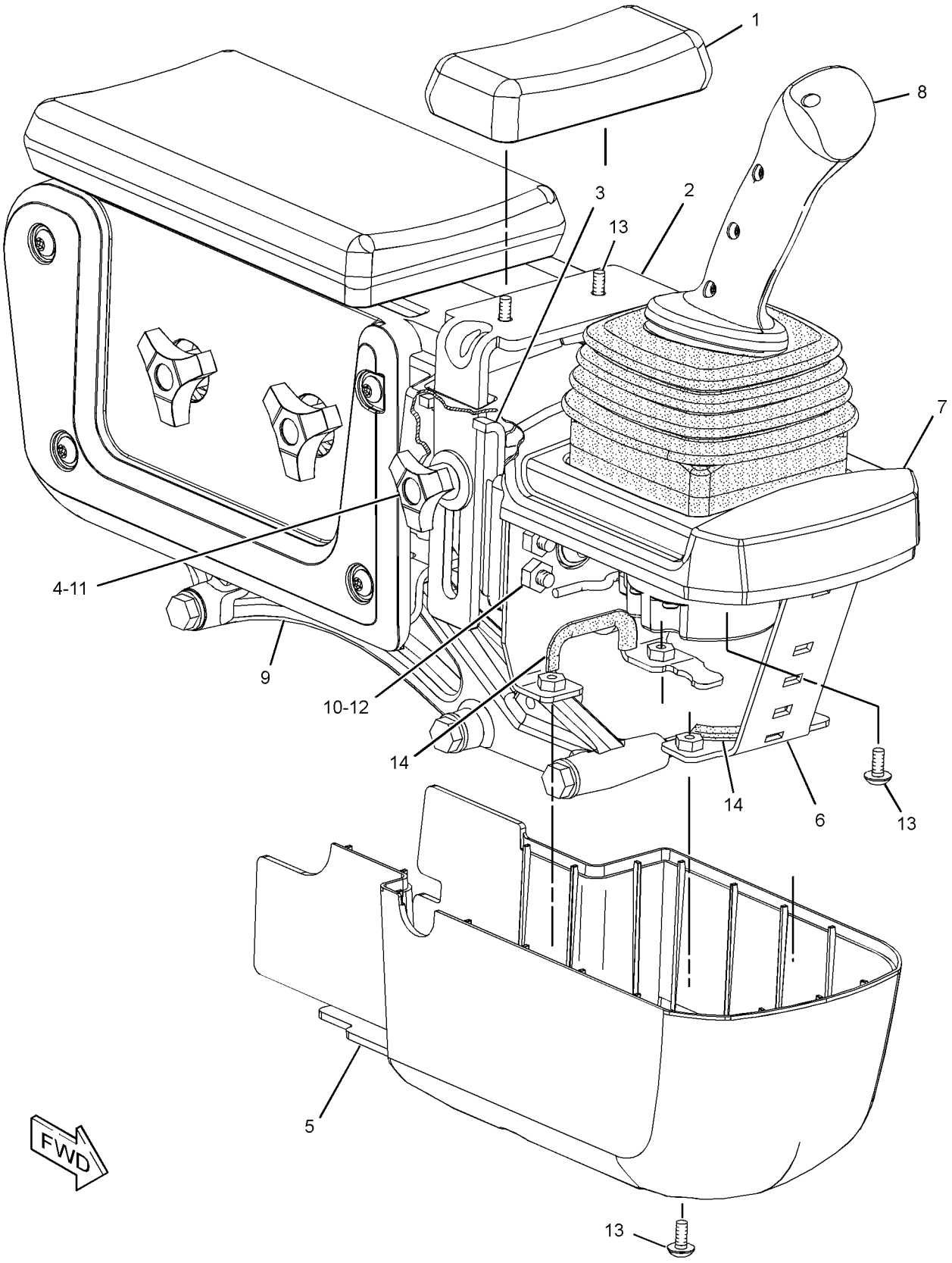

GRAPHIC #1 **<END>** g01342498

OPERATOR STATION

316-3216 CONTROL GP-BUCKET & RIPPER

S/N: LBP700-UP

PART OF 252-0242 HYDRAULIC AR-3 VALVE, 252-0243 HYDRAULIC AR-4 VALVE AN ATTACHMENT

SMCS-5357, 5700, 5705 **i03096369**

NOTE	REF NO	GRAPHIC REF	PART NUMBER	QTY	PART NAME 1 2 3 4 5 6 (PRODUCT LEVEL)	SEE PAGE
Y	1	1	*292-3543*	1	CONTROL GP-JOYSTICK (RIPPER)	587
Y	2	1	*308-0606*	1	CONTROL & MTG GP-ELECTRONIC (BUCKET, RIPPER)	176

Y-SEPARATE ILLUSTRATION

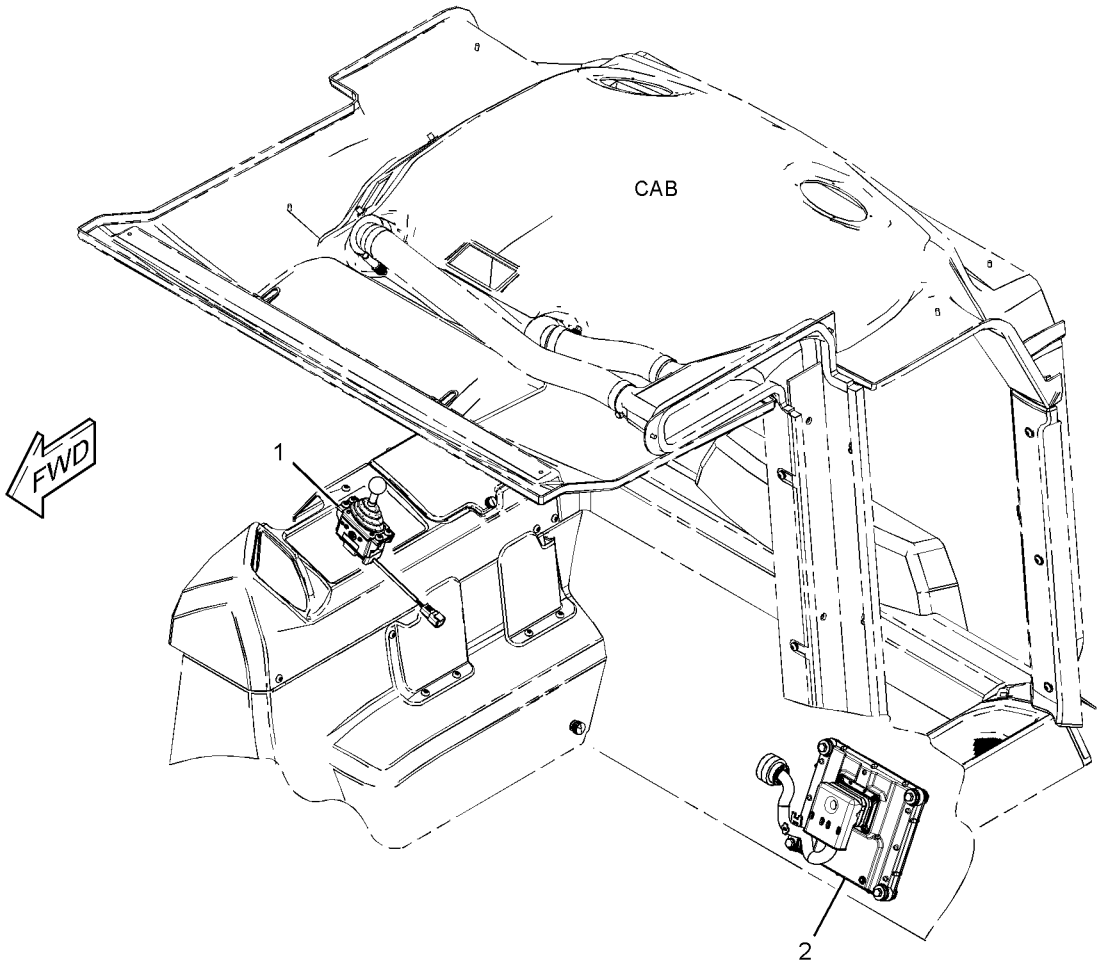

GRAPHIC #1 **<END>** g01454159

OPERATOR STATION

268-9350 CONTROL GP-DIRECTION & SPEED–

HYDROSTATIC DRIVE

S/N: LBP1-UP

PART OF 257-7612 CONTROL AR-HYDRAULIC

AN ATTACHMENT

SMCS-5705 **i02665743**

NOTE	REF NO	GRAPHIC REF	PART NUMBER	QTY	PART NAME 1 2 3 4 5 6 (PRODUCT LEVEL)	SEE PAGE
	1	1	**137-6723**	2	SCREW-FLAT HEAD (6-32X0.5-IN)	
	2	1	**280-9445**	1	COVER AS (CONSOLE, LH TOP)	
	3	1	**280-9446**	1	COVER AS (CONSOLE, LH BOTTOM)	
	4	1	**280-9447**	1	BRACKET AS	
	5	1	**280-9448**	1	FILM-IDENTIFICATION (DIRECTION, SPEED)	
Y	6	1	*280-9449*	1	WIRING GP-CONTROL	254
	7	1	**282-2030**	1	LEVER AS	
Y	8	1	*286-8238*	1	BRACKET GP-MOUNTING	552
	9	1	**290-0813**	2	FILM-INSTRUCTION (CONSOLE TILT)	
M	10	1	**6V-3940**	4	BOLT (M8X1.25X25-MM)	
	11	1	**8J-1256**	1	CLIP	
	12	1	**8T-4229**	1	KNOB	
	13	1	**9M-1974**	4	WASHER-HARD (8.8X16X2-MM THK)	
M	14	1	**9X-2043**	8	SCREW-TRUSS HEAD (M6X1X14-MM)	
D	15	1	**6V-3987**		SEAL (0.1-M)	
D	15A	1	**6V-3987**		SEAL (0.2-M EACH)	

D-ORDER BY THE METER
M-METRIC PART
Y-SEPARATE ILLUSTRATION

268-9350 CONTROL GP-DIRECTION & SPEED *(contd.)* i02665743

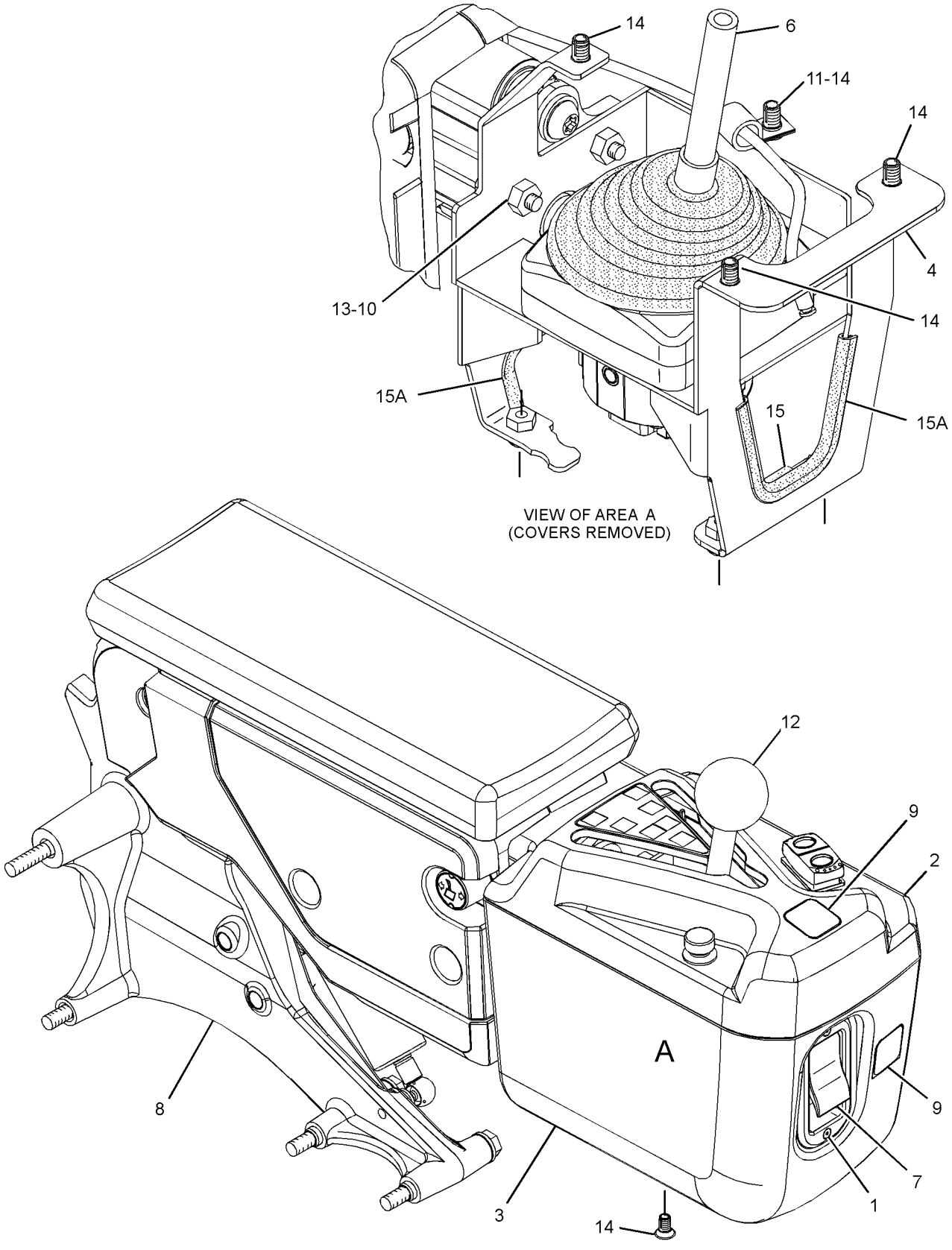

GRAPHIC #1 **<END>** g01351110

OPERATOR STATION

252-4559 CONTROL GP-HANDLE–RIPPER

S/N: LBP1-295

PART OF 255-3939 CONTROL & MTG GP-ELECTRONIC

AN ATTACHMENT

SMCS-5705 **i03588300**

NOTE	REF NO	GRAPHIC REF	PART NUMBER	QTY	PART NAME 1 2 3 4 5 6 (PRODUCT LEVEL)	SEE PAGE
	1	1	**151-9274**	1	KIT-RECEPTACLE (4-PIN)	
					(INCLUDES RECEPTACLE AS & WEDGE)	
	2	1	**278-8974**	1	KNOB	
	3	1	**278-8965**	1	BOOT	
	4	1	**278-8967**	1	RETAINER-BOOT	
M	5	1	**278-8970**	4	SCREW (M3X10X6-MM)	

M-METRIC PART

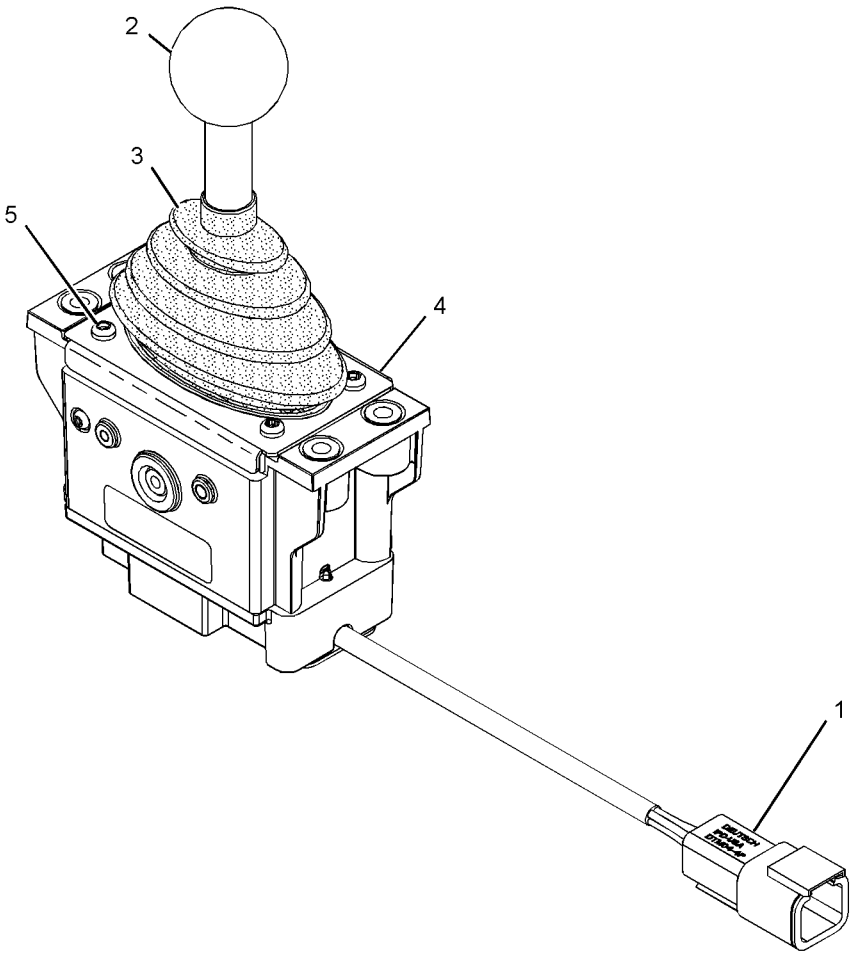

GRAPHIC #1 **<END>** g01195083

OPERATOR STATION

306-2126 CONTROL GP-HANDLE—HYDROSTATIC DRIVE

S/N: LBP1-UP

PART OF 304-4162 CONTROL GP-JOYSTICK

AN ATTACHMENT

SMCS-5705 **i02937074**

NOTE	REF NO	GRAPHIC REF	PART NUMBER	QTY	PART NAME 1 2 3 4 5 6 (PRODUCT LEVEL)	SEE PAGE
	1	1	**260-6727**	1	RECEPTACLE AS	
	2	1	**186-3735**	7	PIN-CONNECTOR (16-GA TO 18-GA)	
	3	1	**8T-8737**	1	PLUG-SEAL	
	4	1	**252-6934**	1	GROMMET	
	5	1	**220-8355**	1	CAP-PUSH BUTTON (BLACK)	
	6	1	**144-0331**	2	CAP-PUSH BUTTON (YELLOW)	

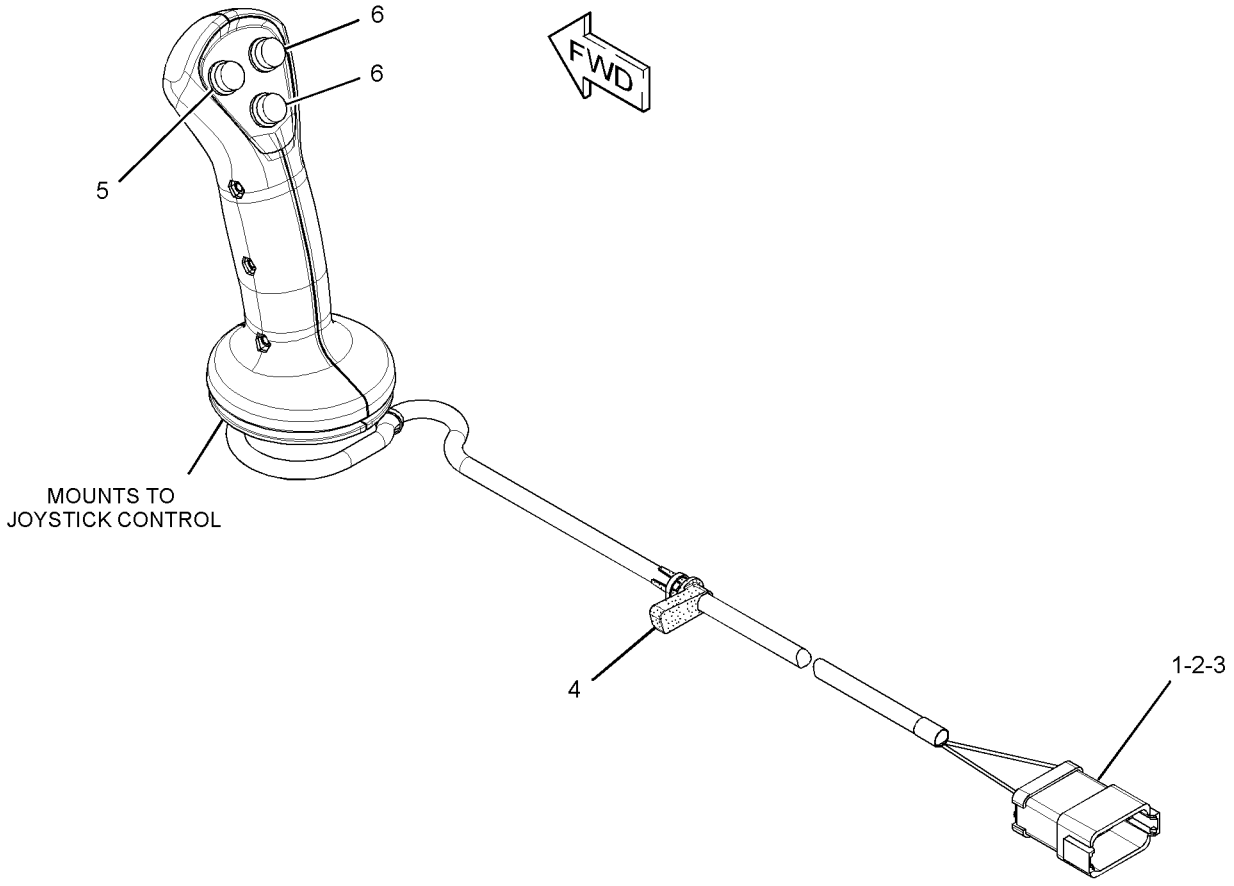

GRAPHIC #1 **<END>** g01457353

307-4671 CONTROL GP-HANDLE–BUCKET TILT, DUMP–BUCKET LIFT, LOWER

S/N: LBP1-UP

PART OF 280-9673 CONTROL & MTG GP-JOYSTICK

AN ATTACHMENT

SMCS-5705 **i02684446**

NOTE	REF NO	GRAPHIC REF	PART NUMBER	QTY	PART NAME 1 2 3 4 5 6 (PRODUCT LEVEL)	SEE PAGE
	1	1	**151-9274**	1	KIT-RECEPTACLE (4-PIN)	
					(INCLUDES RECEPTACLE AS & WEDGE)	
	2	1	**278-8974**	1	KNOB	
	3	1	**278-8965**	1	BOOT	
	4	1	**278-8967**	1	RETAINER-BOOT	
M	5	1	**278-8970**	4	SCREW (M3X10X6-MM)	

M-METRIC PART

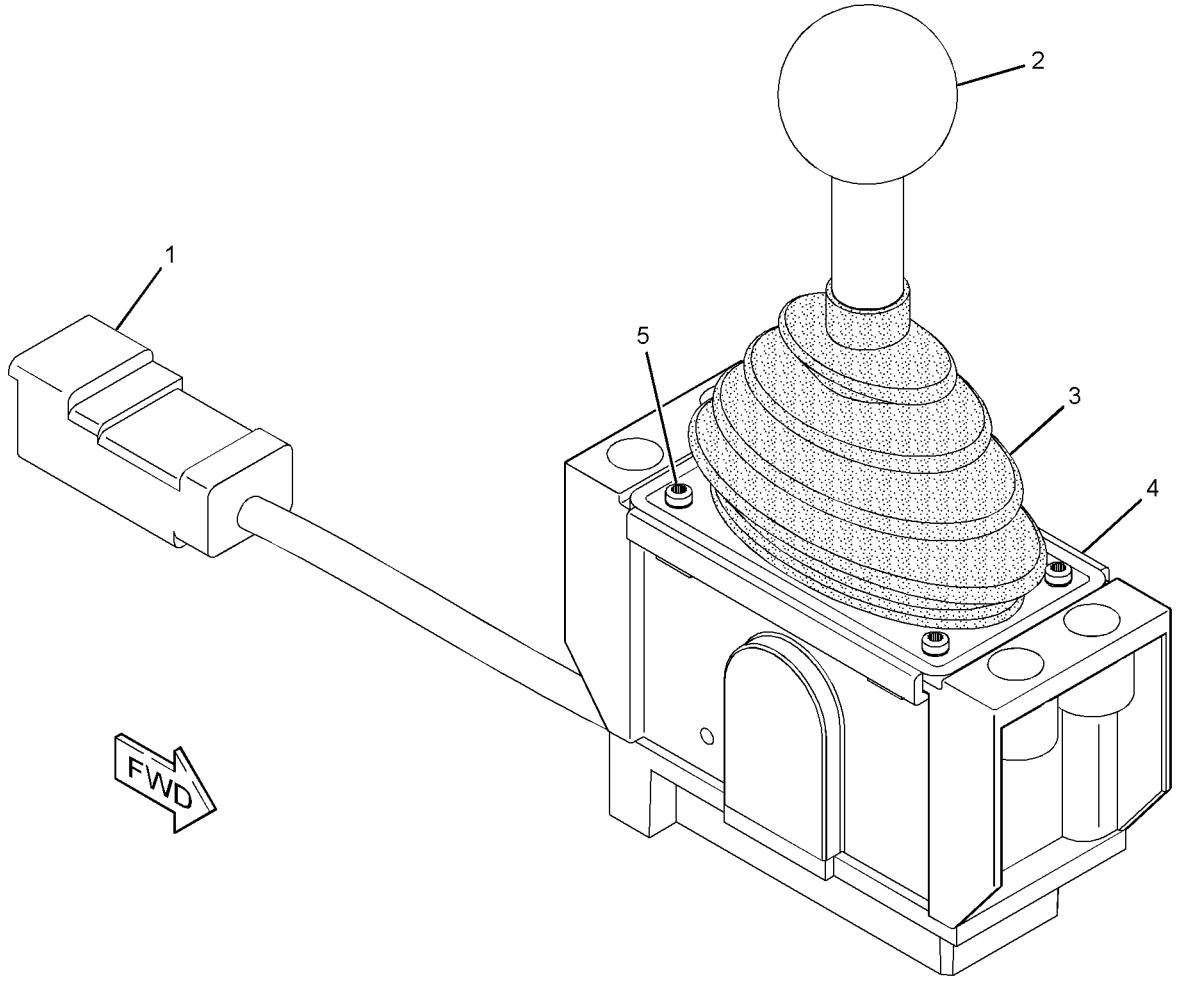

GRAPHIC #1 **<END>** g01352836

OPERATOR STATION

307-4673 CONTROL GP-HANDLE–RIPPER

S/N: LBP296-UP

PART OF 255-3939 CONTROL & MTG GP-ELECTRONIC, 292-3543 CONTROL GP-JOYSTICK

AN ATTACHMENT

SMCS-5705 **i02814073**

NOTE	REF NO	GRAPHIC REF	PART NUMBER	QTY	PART NAME 1 2 3 4 5 6 (PRODUCT LEVEL)	SEE PAGE
	1	1	**151-9274**	1	KIT-RECEPTACLE (4-PIN)	
					(INCLUDES RECEPTACLE AS & WEDGE)	
	2	1	**278-8974**	1	KNOB	
	3	1	**278-8965**	1	BOOT	
	4	1	**278-8967**	1	RETAINER-BOOT	
M	5	1	**278-8970**	4	SCREW (M3X10X6-MM)	

M-METRIC PART

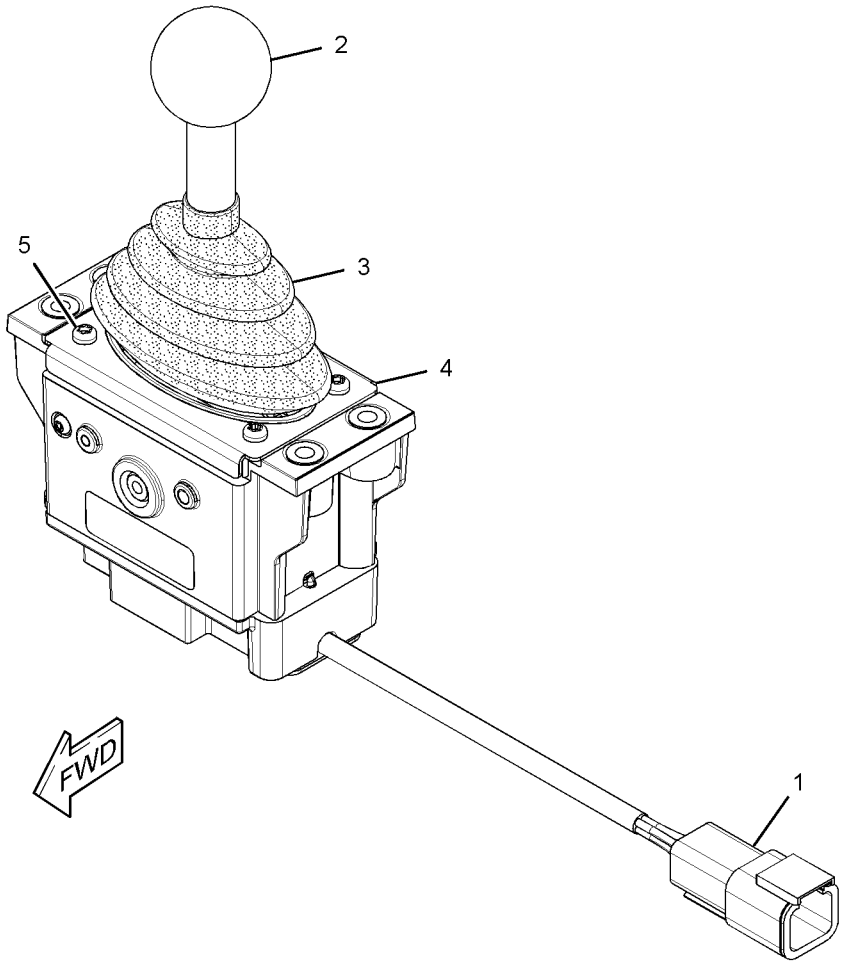

GRAPHIC #1 **<END>** g01416075

303-4017 CONTROL GP-HYDRAULIC–
HYDROSTATIC DRIVE, STEERING
S/N: LBP1-UP
PART OF 321-3446 KIT-HYDRAULIC CONTROL
CANNOT BE USED WITH 257-7612–PAGE 422
AN ATTACHMENT

SMCS-5063 **i03102220**

NOTE	REF NO	GRAPHIC REF	PART NUMBER	QTY	PART NAME 1 2 3 4 5 6 (PRODUCT LEVEL)	SEE PAGE
	1	1	**8M-7758**	4	RIVET-POP	
Y	2	1	**296-8319**	1	CONTROL & MTG GP-ELHYD (HYDROSTATIC DRIVE, STEERING)	565
Y	3	1	*307-4324*	1	CONTROL GP-PEDAL (BRAKE)	591
	4	1	**309-9091**	1	FILM-SPEED	

Y-SEPARATE ILLUSTRATION

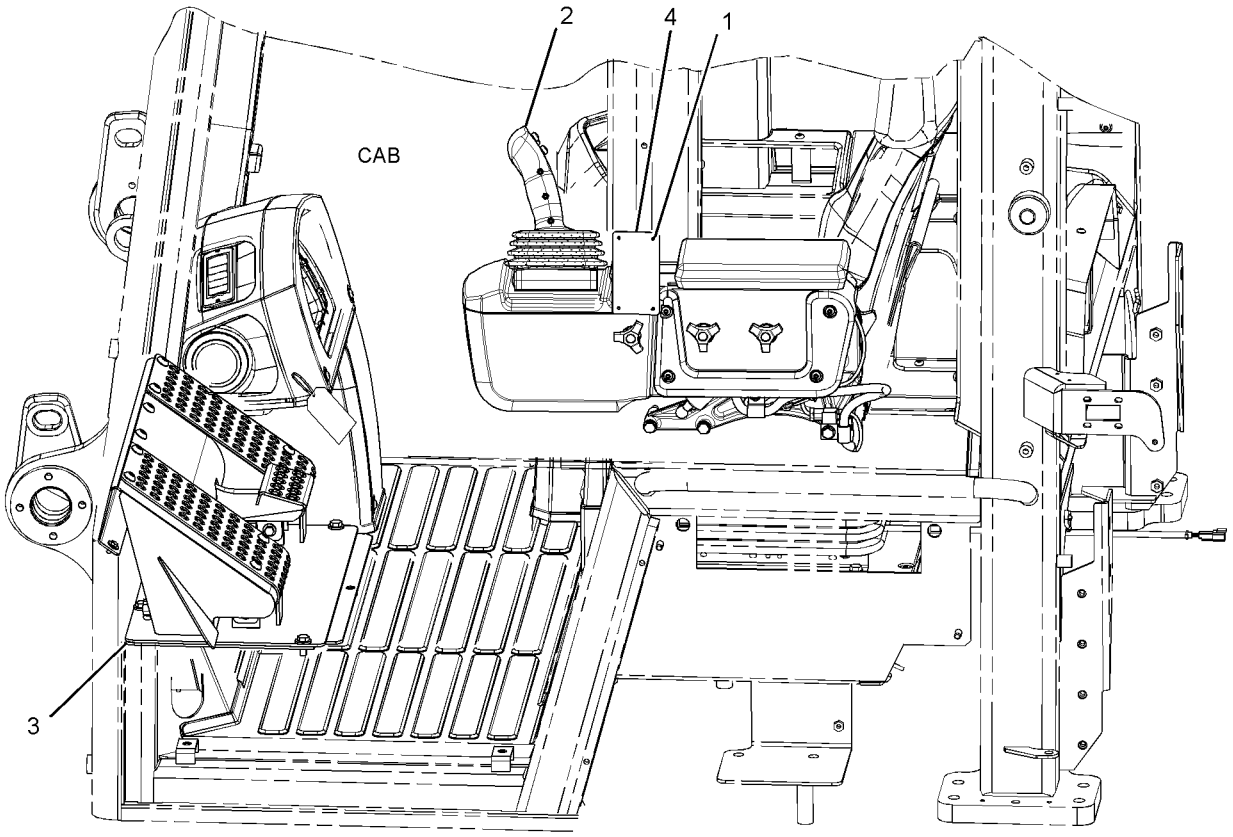

LEFT SIDE VIEW

GRAPHIC #1 **<END>** g01514448

OPERATOR STATION

253-8445 CONTROL GP-HYDRAULIC HAND–2-LEVER–BUCKET

S/N: LBP1-UP

CANNOT BE USED WITH 253-8444–PAGE 583

AN ATTACHMENT

SMCS-5063 **i03097300**

NOTE	REF NO	GRAPHIC REF	PART NUMBER	QTY	PART NAME 1 2 3 4 5 6 (PRODUCT LEVEL)	SEE PAGE
Y	1	1	**268-9349**	1	CONTROL & MTG GP-JOYSTICK (RH, WITH CONSOLE COVERS) (BUCKET)	567

Y-SEPARATE ILLUSTRATION

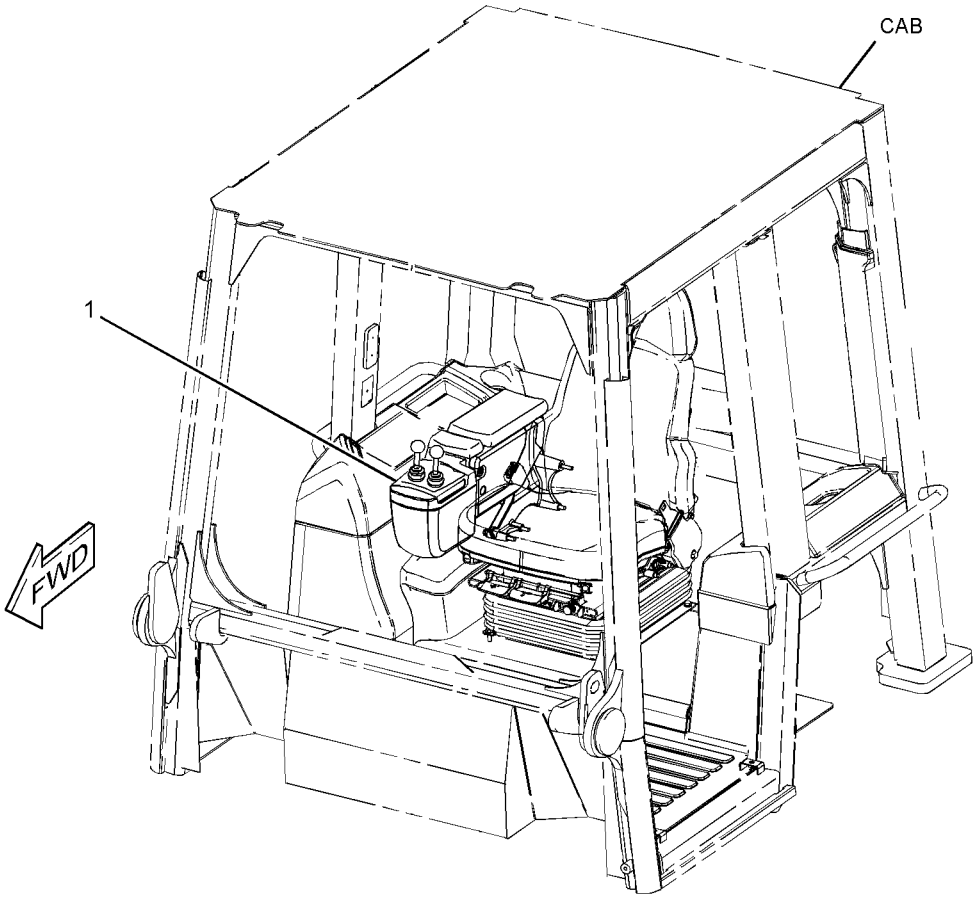

GRAPHIC #1 **<END>** g01342504

OPERATOR STATION

253-8444 CONTROL GP-JOYSTICK—MULTIPURPOSE BUCKET

S/N: LBP1-UP
ELECTROHYDRAULIC
CANNOT BE USED WITH 253-8445—PAGE 582
AN ATTACHMENT

SMCS-5705 **i02668070**

NOTE	PART NUMBER	QTY	PART NAME 1 2 3 4 5 6 (PRODUCT LEVEL)	SEE PAGE
Y	*280-9450*	1	CONTROL & MTG GP-JOYSTICK (ELECTROHYDRAULIC) (BUCKET)	569
	282-8719	1	FILM-INSTRUCTION (BUCKET CONTROLS)	
			(ON RH CONSOLE NEAR BUCKET CONTROL)	

Y-SEPARATE ILLUSTRATION

<END>

259-5673 CONTROL GP-JOYSTICK–MULTIPURPOSE BUCKET

S/N: LBP1-UP
ELECTROHYDRAULIC
PART OF 280-9675 WIRING GP-CONTROL
AN ATTACHMENT

SMCS-5705 **i03588433**

NOTE	REF NO	GRAPHIC REF	PART NUMBER	QTY	PART NAME 1 2 3 4 5 6 (PRODUCT LEVEL)	SEE PAGE
	1	1	**279-2508**	1	HANDLE GP-MODULAR	
	1A	1	**8T-8737**	8	PLUG-SEAL	
	1B	1	**186-3735**	4	PIN-CONNECTOR (16-GA TO 18-GA)	
	1C	1	**260-6728**	1	RECEPTACLE AS-CONNECTOR (12-PIN)	
	2	1	**289-4961**	1	BASE AS-JOYSTICK	
	2A	1	**186-3735**	6	PIN-CONNECTOR (16-GA TO 18-GA)	
M	2B	1	**280-0440**	4	STUD-MOUNTING (M6X1-THD)	
	2C	1	**281-3136**	1	RECEPTACLE AS-CONNECTOR (6-PIN)	
	3	1	**285-0150**	1	BOOT	
M	4	1	**213-7489**	3	SCREW (M4X25-MM)	
M	5	1	**178-9983**	3	LOCKNUT (M4X0.7-THD)	

M-METRIC PART

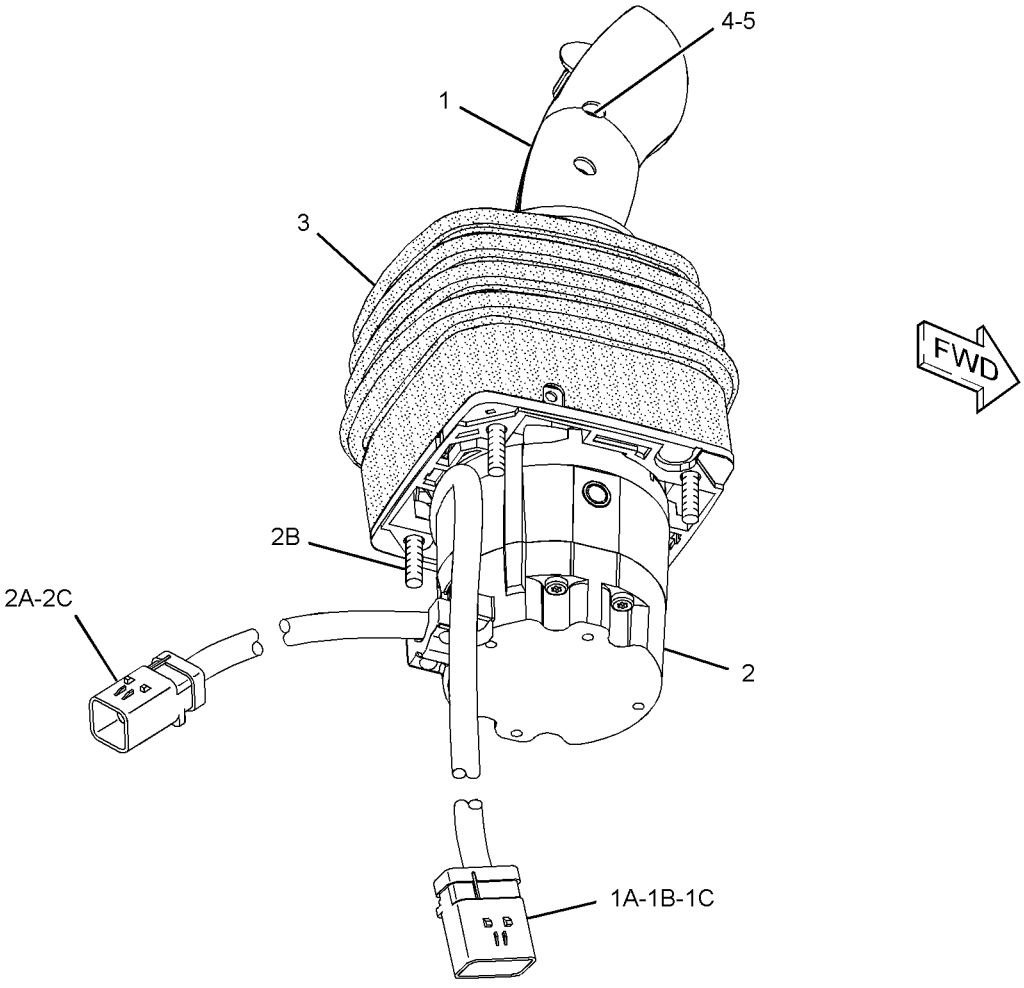

GRAPHIC #1 **<END>** g01341637

282-3145 CONTROL GP-JOYSTICK–BUCKET

S/N: LBP1-UP
ELECTROHYDRAULIC
PART OF 282-6699 WIRING GP-CONTROL
AN ATTACHMENT

SMCS-5705 **i02665194**

NOTE	REF NO	GRAPHIC REF	PART NUMBER	QTY	PART NAME 1 2 3 4 5 6 (PRODUCT LEVEL)	SEE PAGE
	1	1	**271-3100**	1	HANDLE GP-MODULAR	
	2	1	**289-4961**	1	BASE AS-JOYSTICK	
	2A	1	**186-3735**	6	PIN-CONNECTOR (16-GA TO 18-GA)	
M	2B	1	**280-0440**	4	STUD-MOUNTING (M6X1-THD)	
	2C	1	**281-3136**	1	RECEPTACLE AS-CONNECTOR (6-PIN)	
	3	1	**285-0150**	1	BOOT	
M	4	1	**213-7489**	3	SCREW (M4X25-MM)	
M	5	1	**178-9983**	3	LOCKNUT (M4X0.7-THD)	

M-METRIC PART

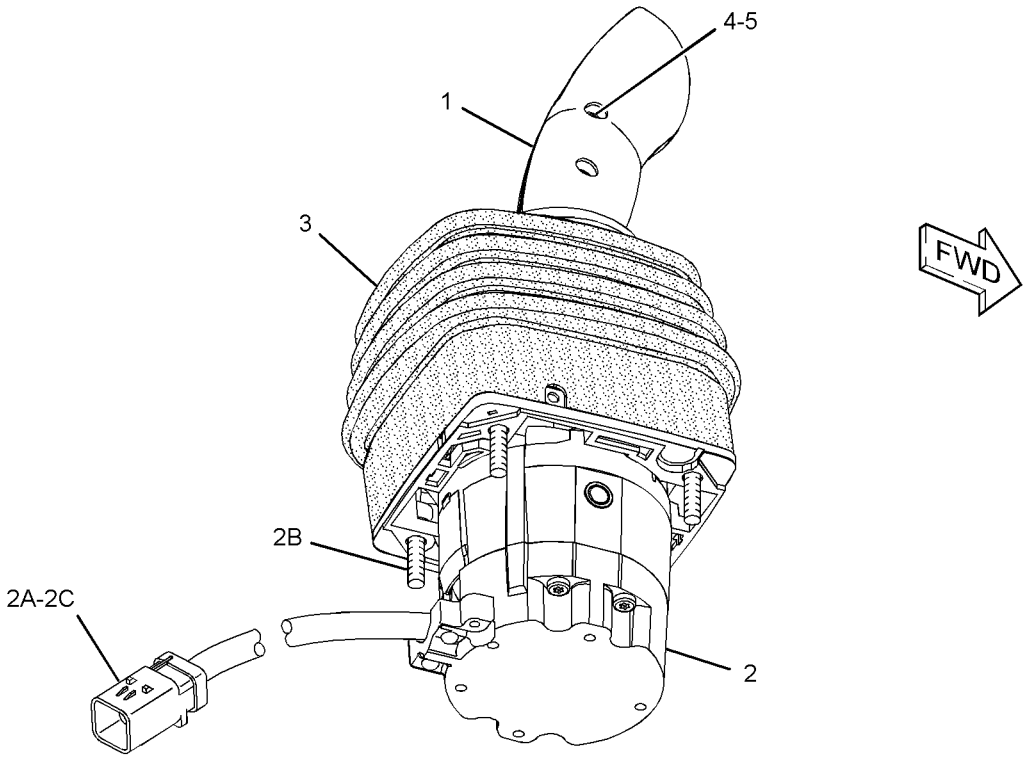

GRAPHIC #1 **<END>** g01342800

OPERATOR STATION

284-9764 CONTROL GP-JOYSTICK–BUCKET

S/N: LBP1-UP
ELECTROHYDRAULIC
CANNOT BE USED WITH 253-8445–PAGE 582, 253-8444–PAGE 583
AN ATTACHMENT

SMCS-5705 **i02664959**

NOTE	REF NO	GRAPHIC REF	PART NUMBER	QTY	PART NAME 1 2 3 4 5 6 (PRODUCT LEVEL)	SEE PAGE
Y	1	1	*282-6698*	1	CONTROL & MTG GP-JOYSTICK (ELECTROHYDRAULIC)	572
	2	1	**286-0200**	1	FILM-INSTRUCTION (BUCKET CONTROLS)	

Y-SEPARATE ILLUSTRATION

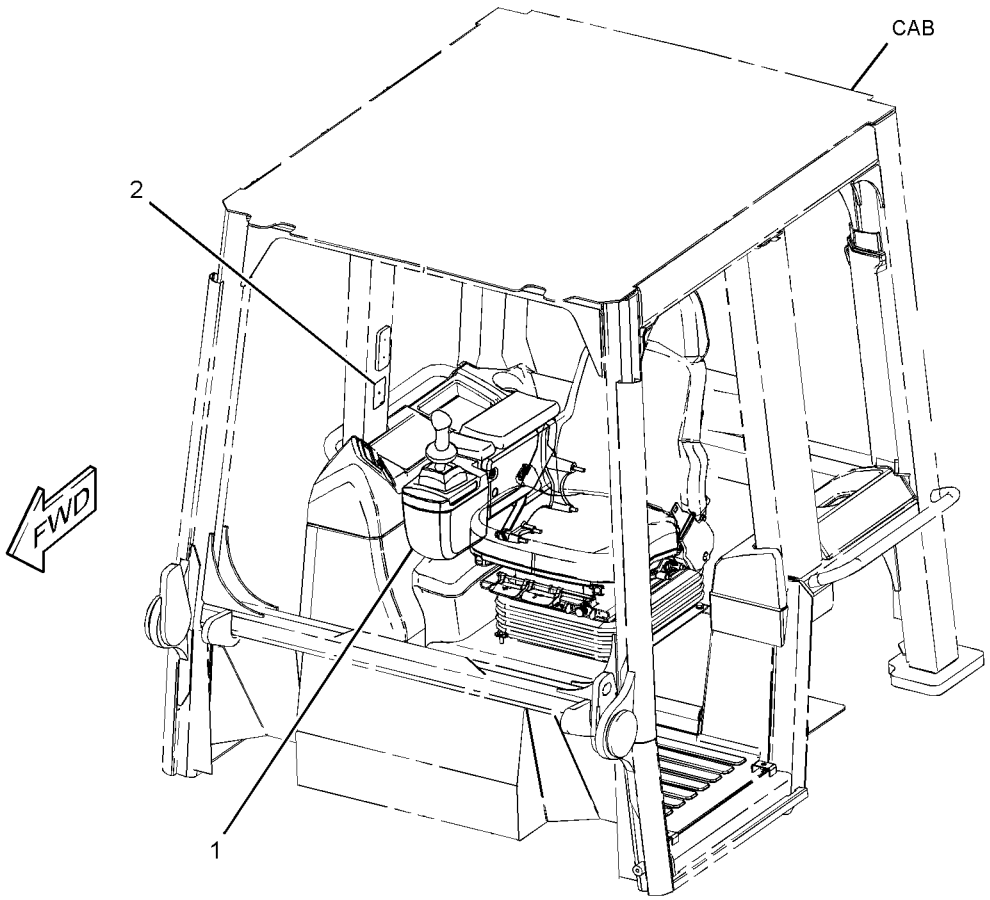

GRAPHIC #1 **<END>** g01340597

OPERATOR STATION

292-3543 CONTROL GP-JOYSTICK–RIPPER

S/N: LBP700-UP

PART OF 316-3216 CONTROL GP-BUCKET & RIPPER

AN ATTACHMENT

SMCS-5705 **i03097322**

NOTE	REF NO	GRAPHIC REF	PART NUMBER	QTY	PART NAME 1 2 3 4 5 6 (PRODUCT LEVEL)	SEE PAGE
	1	1	**283-9265**	1	FILM-INSTRUCTION (RIPPER CONTROL)	
Y	2	1	**307-4673**	1	CONTROL GP-HANDLE (RIPPER)	580
M	3	1	**9X-2045**	4	SCREW-TRUSS HEAD (M6X1X20-MM)	

M-METRIC PART
Y-SEPARATE ILLUSTRATION

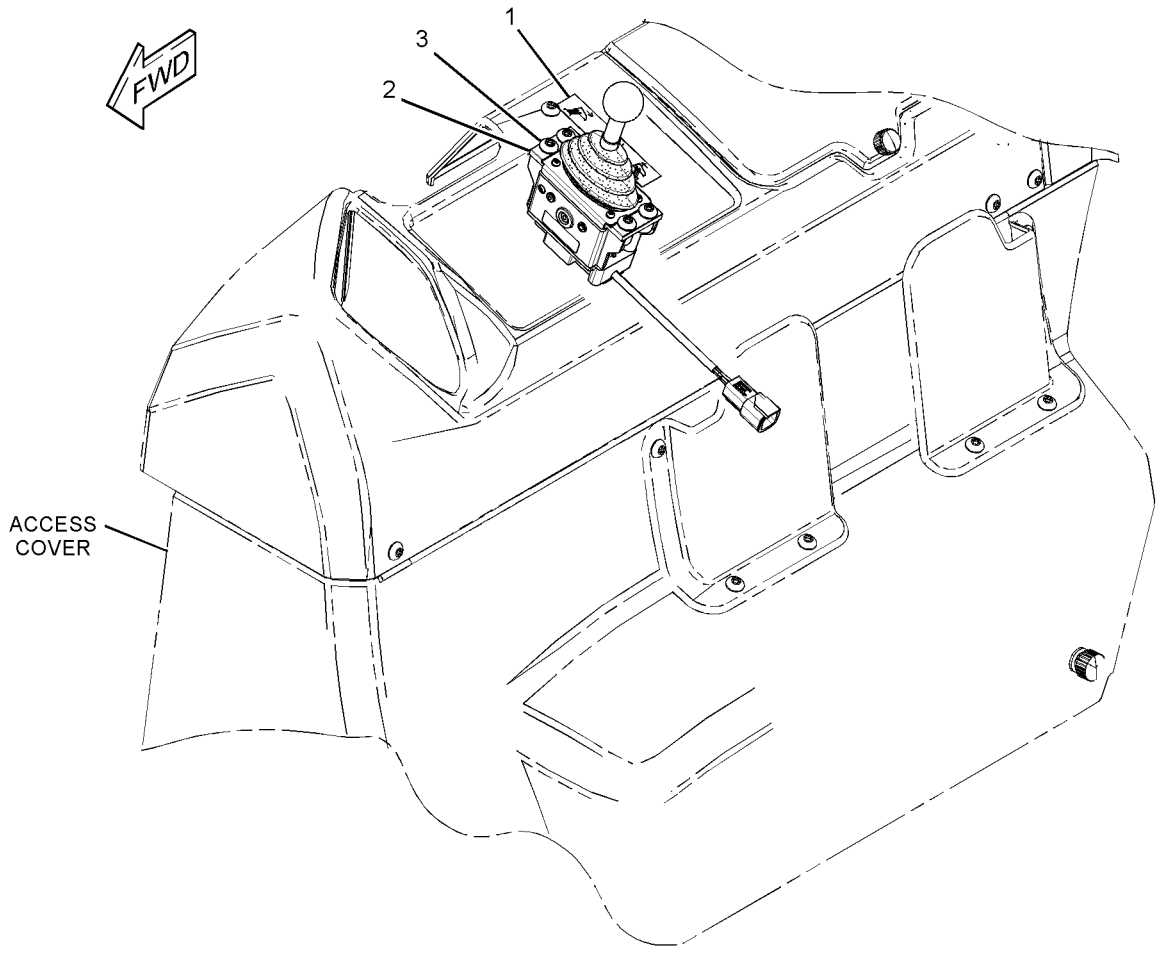

GRAPHIC #1 **<END>** g01453920

OPERATOR STATION

304-4162 CONTROL GP-JOYSTICK—HYDROSTATIC DRIVE

S/N: LBP1-UP
PART OF 309-5906 WIRING GP-CONTROL
AN ATTACHMENT

SMCS-5705 **i03097341**

NOTE	REF NO	GRAPHIC REF	PART NUMBER	QTY	PART NAME 1 2 3 4 5 6 (PRODUCT LEVEL)	SEE PAGE
Y	1	1	*306-2126*	1	CONTROL GP-HANDLE (HYDROSTATIC DRIVE)	578
	2	1	**306-2127**	1	SENSOR GP-POSITION (JOYSTICK)	
		1	**186-3735**	6	PIN-CONNECTOR (16-GA TO 18-GA)	
M		1	**280-0440**	4	STUD-MOUNTING (M6X1-THD)	
		1	**281-3136**	1	RECEPTACLE AS-CONNECTOR (6-PIN)	
	3	1	**285-0150**	1	BOOT	
M	4	1	**213-7489**	3	SCREW (M4X25-MM)	
M	5	1	**178-9983**	3	LOCKNUT (M4X0.7-THD)	
	6	1	**260-6727**	1	RECEPTACLE AS	
	7	1	**281-3136**	1	RECEPTACLE AS-CONNECTOR (6-PIN)	
	8	1	**186-3735**	13	PIN-CONNECTOR (16-GA TO 18-GA)	
	9	1	**8T-8737**	1	PLUG-SEAL	
M	10	1	**280-0440**	4	STUD-MOUNTING (M6X1-THD)	
	11	1	**144-0331**	2	CAP-PUSH BUTTON (YELLOW) (UPSHIFT,DOWNSHIFT)	
	12	1	**220-8355**	1	CAP-PUSH BUTTON (BLACK) (HORN)	

M-METRIC PART
Y-SEPARATE ILLUSTRATION

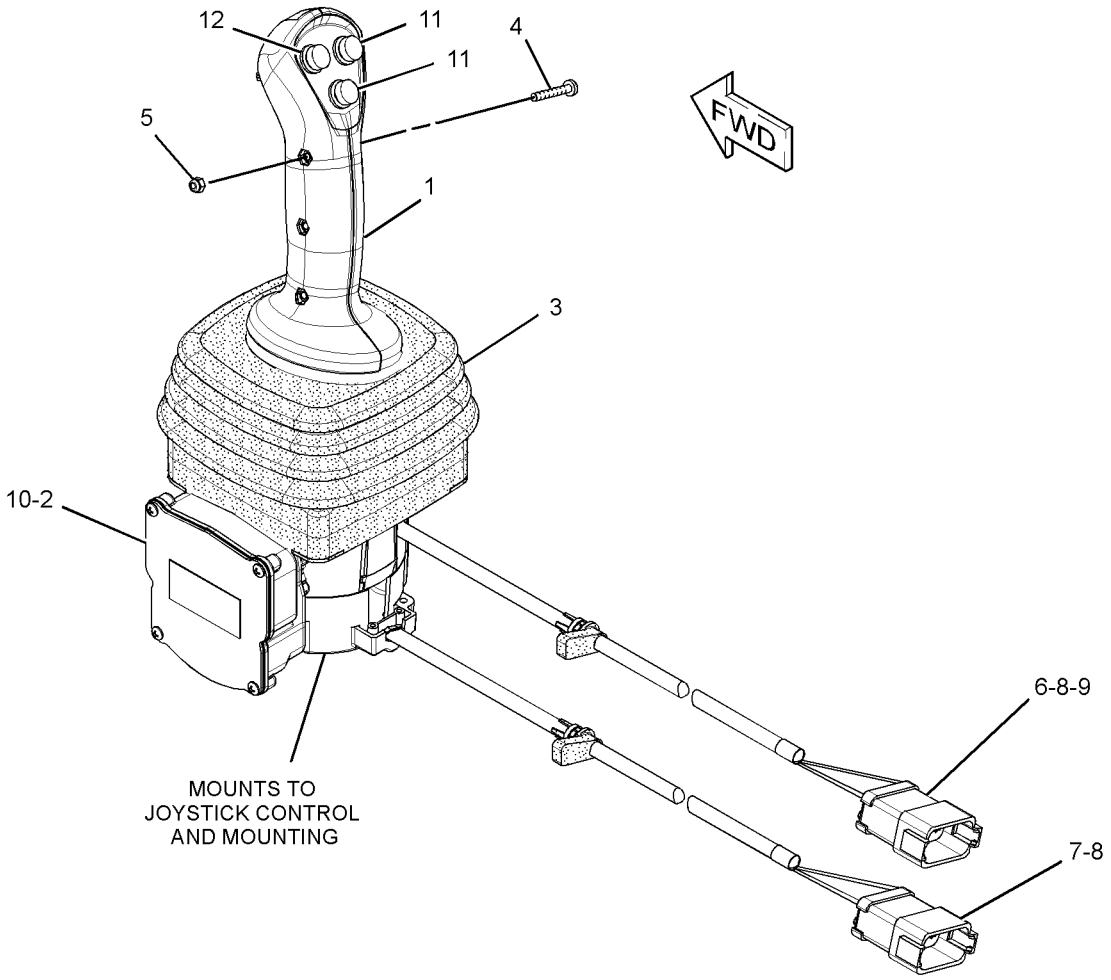

GRAPHIC #1 **<END>** g01525242

OPERATOR STATION

257-6175 CONTROL GP-PEDAL–STEERING, BRAKE

S/N: LBP1-UP

PART OF 257-7612 CONTROL AR-HYDRAULIC

AN ATTACHMENT

SMCS-4343, 5910 **i02665656**

NOTE	REF NO	GRAPHIC REF	PART NUMBER	QTY	PART NAME 1 2 3 4 5 6 (PRODUCT LEVEL)	SEE PAGE
Y	1	1	*257-6176*	1	CONTROL GP-STEERING	593
	2	1	**257-6181**	1	SEAL	
Y	3	1	*280-9179*	1	CONTROL GP-PEDAL (SPEED OVERRIDE, BRAKE)	590

Y-SEPARATE ILLUSTRATION

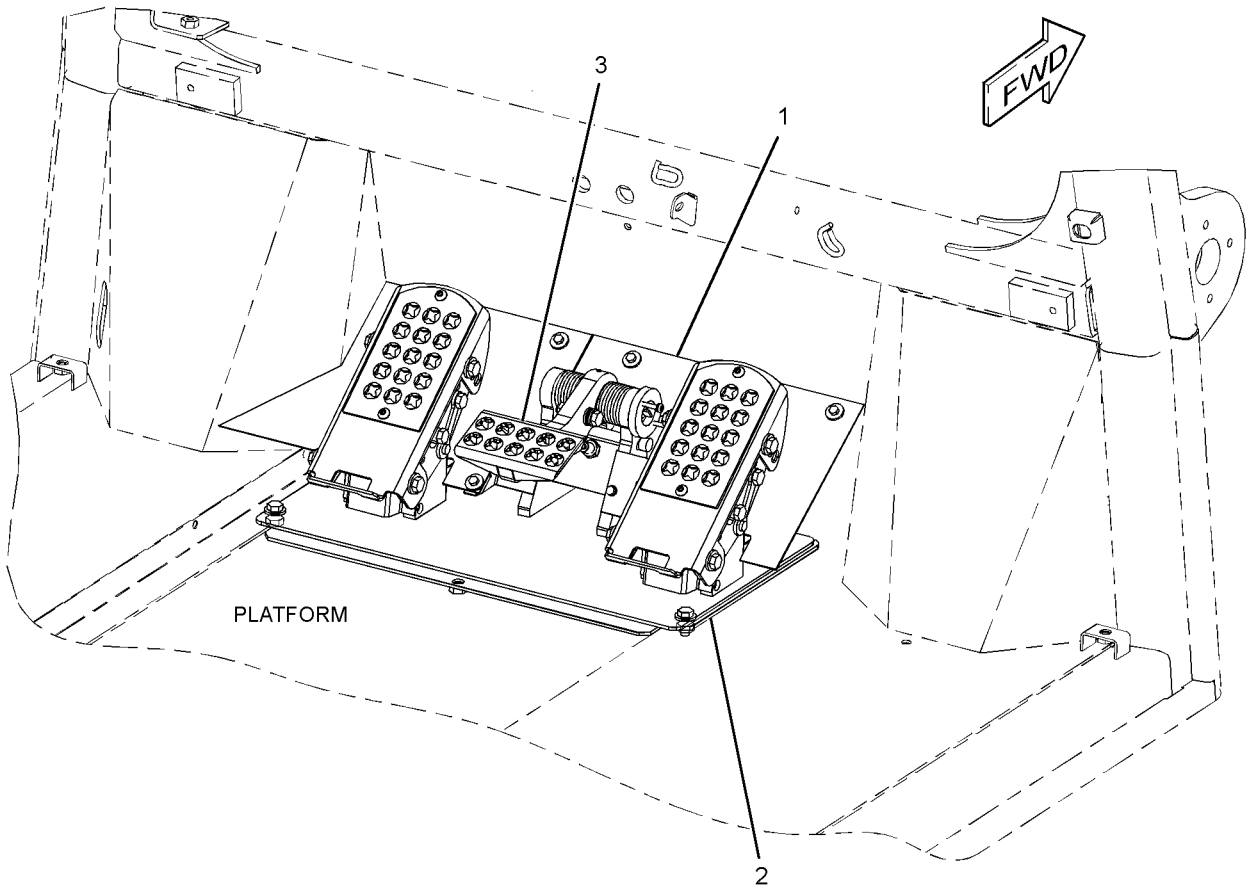

GRAPHIC #1 **<END>** g01342347

OPERATOR STATION

280-9179 CONTROL GP-PEDAL—SPEED OVERRIDE, BRAKE

S/N: LBP1-UP

PART OF 257-6175, 307-4324 CONTROL GP-PEDAL

AN ATTACHMENT

SMCS-4343, 5910 **i02665720**

NOTE	REF NO	GRAPHIC REF	PART NUMBER	QTY	PART NAME 1 2 3 4 5 6 (PRODUCT LEVEL)	SEE PAGE
	1	1	**5P-9209**	2	BEARING AS-NEEDLE	
M	2	1	**114-3349**	2	SCREW-PAN HEAD (M5X0.8X30-MM)	
	3	1	**123-6170**	1	SPRING (LH)	
	4	1	**123-6171**	1	SPRING (RH)	
	5	1	**158-2232**	1	PIN	
	6	1	**159-3419**	1	PEDAL AS-BRAKE	
	7	1	**165-0051**	1	SHAFT	
Y	8	1	**266-1467**	1	SENSOR GP-POSITION (ROTARY) (SPEED OVERRIDE, BRAKE)	207
	9	1	**1D-5117**	1	NUT-JAM (1/2-13-THD)	
	10	1	**2K-9183**	1	PIN-SPRING	
	11	1	**3W-3321**	1	PLUNGER AS	
	12	1	**6V-0894**	1	SEAL-O-RING	
	13	1	**8T-0328**	2	WASHER-HARD (5.5X10X1-MM THK)	
	14	1	**8T-4121**	4	WASHER-HARD (11X21X2.5-MM THK)	
M	15	1	**8T-4133**	1	NUT (M10X1.5-THD)	
M	16	1	**8T-4185**	1	BOLT (M10X1.5X50-MM)	

M-METRIC PART
Y-SEPARATE ILLUSTRATION

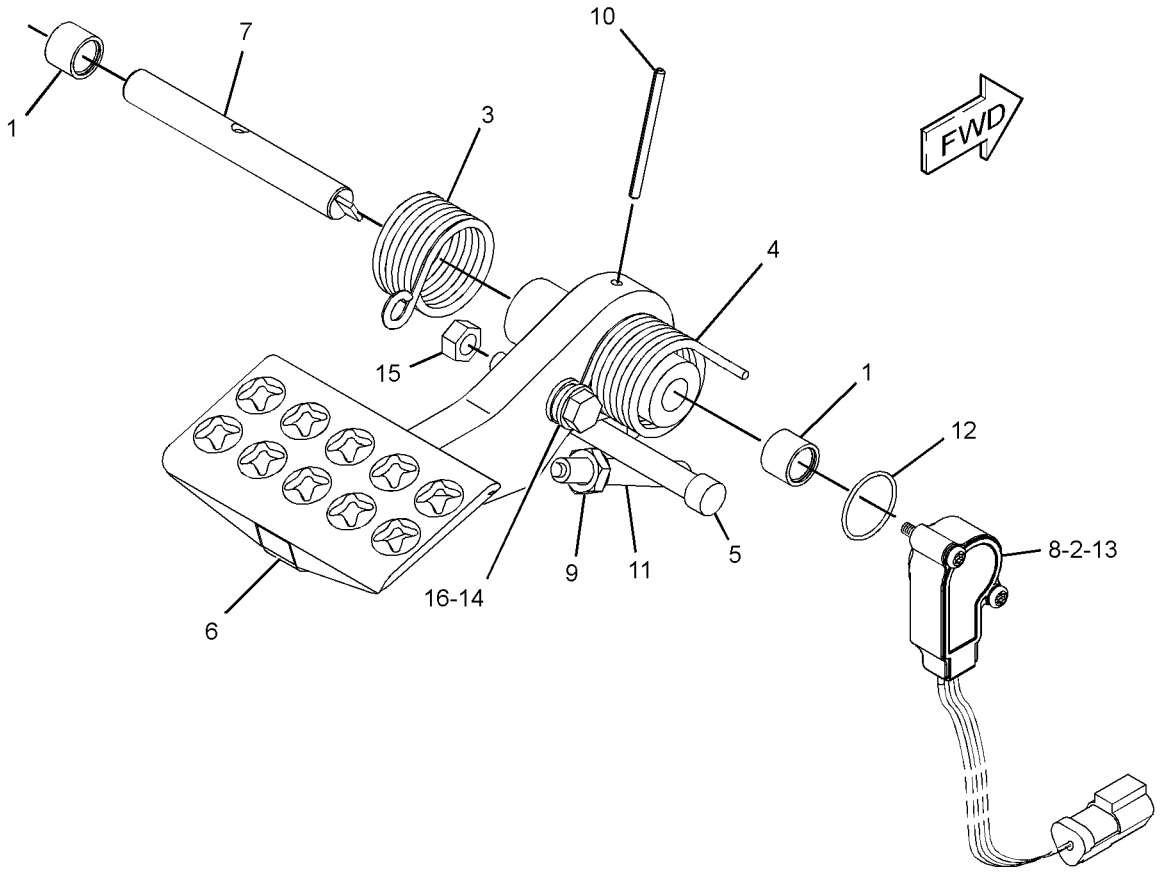

GRAPHIC #1 **<END>** g01344357

307-4324 CONTROL GP-PEDAL–BRAKE

S/N: LBP1-UP

PART OF 303-4017 CONTROL GP-HYDRAULIC

AN ATTACHMENT

SMCS-4343, 5910 **i03294671**

NOTE	REF NO	GRAPHIC REF	PART NUMBER	QTY	PART NAME 1 2 3 4 5 6 (PRODUCT LEVEL)	SEE PAGE
	1	1	**206-7893**	2	BOLT (M6X1X12-MM)	
	2	1	**257-6181**	1	SEAL	
Y	3	1	*280-9179*	1	CONTROL GP-PEDAL (SPEED OVERRIDE, BRAKE)	590
	4	1	**307-4325**	1	SUPPORT AS	
	5	1	**307-4327**	1	PLATE AS	
	6	1	**307-4329**	1	FOOTREST AS (LH)	
	7	1	**307-4330**	1	FOOTREST AS (RH)	
	8	1	**307-4331**	2	PLATE	
	9	1	**307-4342**	1	COVER	
	10	1	**102-8803**	2	KIT-RECEPTACLE (3-PIN)	
					(EACH INCLUDES RECEPTACLE AS & WEDGE)	
M	11	1	**5C-9553**	4	BOLT (M6X1X16-MM)	
	12	1	**5P-4115**	4	WASHER-HARD (7.2X19X2-MM THK)	
	13	1	**5P-4116**	4	WASHER-HARD (8.8X20.5X2-MM THK)	
	14	1	**7X-7729**	4	WASHER (11X25X3-MM THK)	
M	15	1	**8T-4136**	4	BOLT (M10X1.5X25-MM)	
M	16	1	**8T-4189**	4	BOLT (M8X1.25X20-MM)	
M	17	1	**9X-2041**	10	SCREW-TRUSS HEAD (M10X1.5X20-MM)	
	18	1	**9X-8256**	2	WASHER (6.6X12X2-MM THK)	

M-METRIC PART
Y-SEPARATE ILLUSTRATION

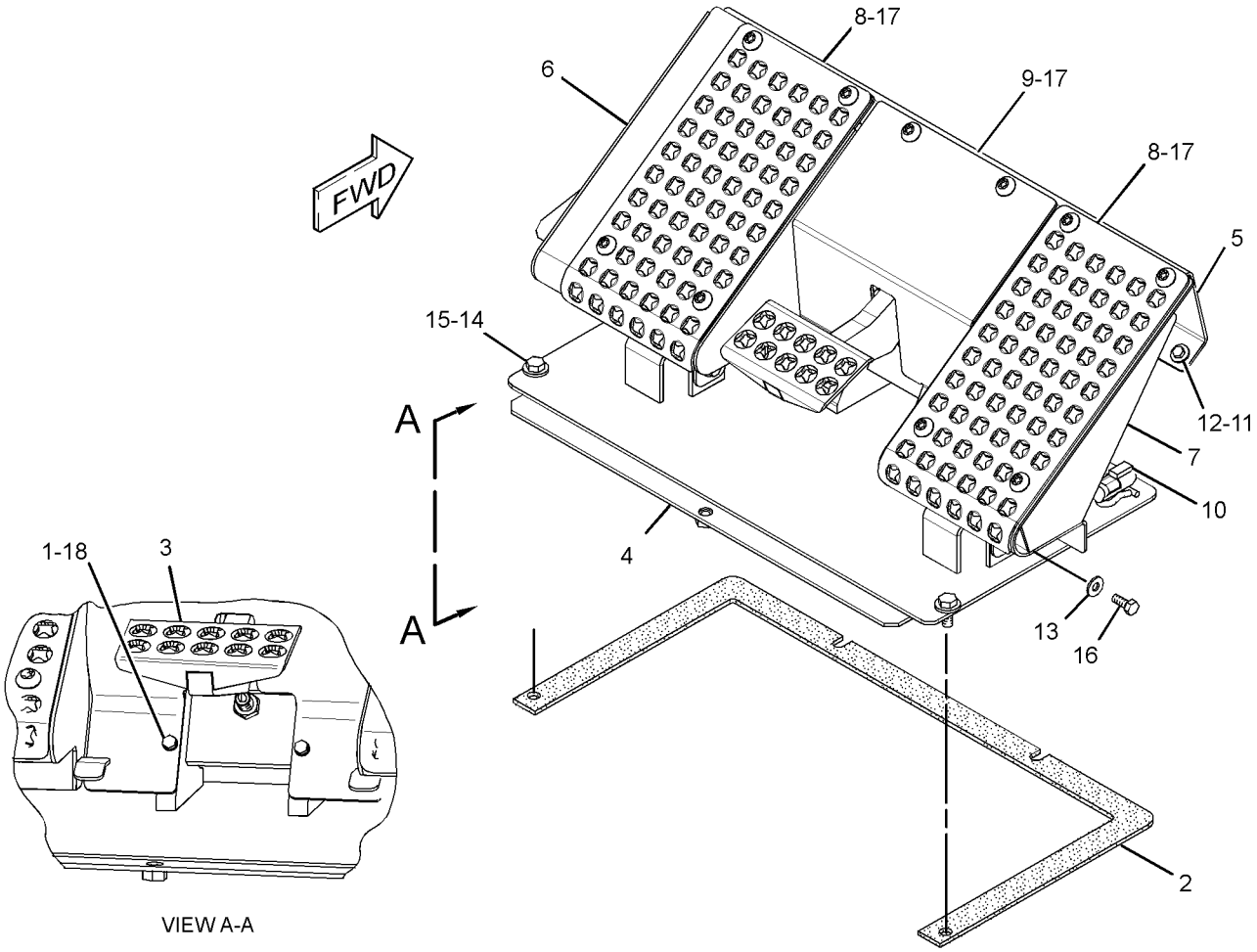

VIEW A-A

GRAPHIC #1 **<END>** g01679982

OPERATOR STATION

257-6176 CONTROL GP-STEERING

S/N: LBP1-UP

PART OF 257-6175 CONTROL GP-PEDAL

AN ATTACHMENT

SMCS-4135 **i02720124**

NOTE	REF NO	GRAPHIC REF	PART NUMBER	QTY	PART NAME 1 2 3 4 5 6 (PRODUCT LEVEL)	SEE PAGE
	1	1	**5P-9209**	4	BEARING AS-NEEDLE	
M	2	1	**114-3349**	4	SCREW-PAN HEAD (M5X0.8X30-MM)	
	3	1	**123-6190**	4	SPACER (10.2X16X16-MM THK)	
	4	1	**126-8165**	2	PLATE	
	5	1	**126-8166**	2	PLATE	
M	6	1	**134-5245**	4	BOLT (M10X1.5X30-MM)	
	7	1	**158-9955**	2	PLATE	
	8	1	**165-0050**	2	SHAFT	
	9	1	**165-5010**	4	SPRING	
	10	1	**206-7893**	2	BOLT (M6X1X12-MM)	
	11	1	**257-6177**	1	FLOORPLATE AS	
		1	**158-2229**	2	SUPPORT AS-STEERING COLUMN	
		1	**158-2231**	1	SUPPORT AS-BRAKE	
	12	1	**262-5630**	2	PLATE AS	
	13	1	**262-5634**	2	SHAFT AS	
Y	14	1	**266-1467**	2	SENSOR GP-POSITION (ROTARY) (STEERING CONTROL)	207
	15	1	**279-0127**	1	PLATE	
	16	1	**294-3183**	1	PLATE AS	
	17	1	**294-3184**	1	PLATE AS	
	18	1	**294-3185**	1	PLATE	
	19	1	**294-3186**	2	PEDAL AS	
M	20	1	**5C-9553**	6	BOLT (M6X1X16-MM)	
	21	1	**5P-4115**	8	WASHER-HARD (7.2X19X2-MM THK)	
	22	1	**6V-0894**	2	SEAL-O-RING	
	23	1	**7X-7729**	4	WASHER (11X25X3-MM THK)	
	24	1	**8T-0328**	4	WASHER-HARD (5.5X10X1-MM THK)	
	25	1	**8T-4121**	10	WASHER-HARD (11X21X2.5-MM THK)	
M	26	1	**8T-4133**	2	NUT (M10X1.5-THD)	
M	27	1	**8T-4136**	4	BOLT (M10X1.5X25-MM)	
M	28	1	**8T-4137**	10	BOLT (M10X1.5X20-MM)	
M	29	1	**9X-2042**	12	SCREW-TRUSS HEAD (M6X1X12-MM)	

M-METRIC PART
Y-SEPARATE ILLUSTRATION

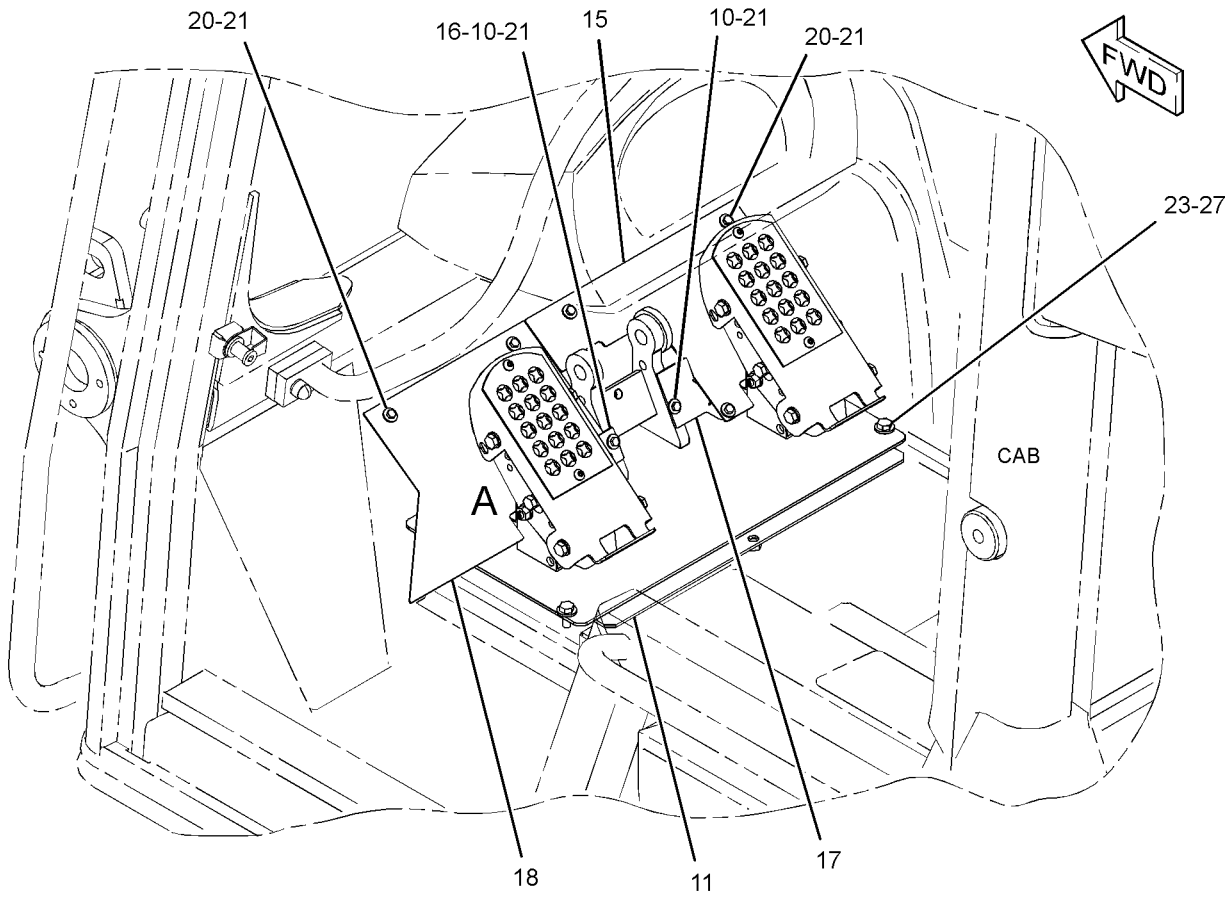

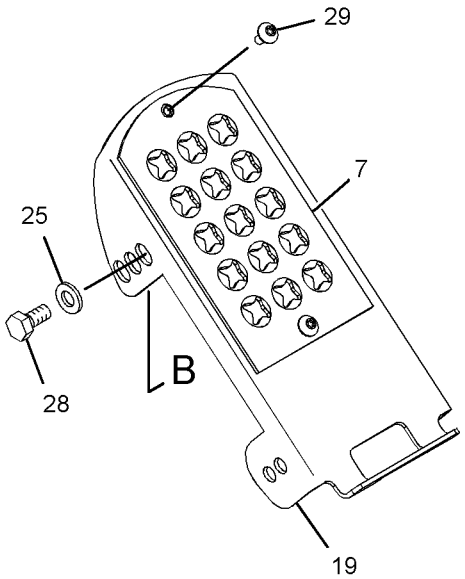

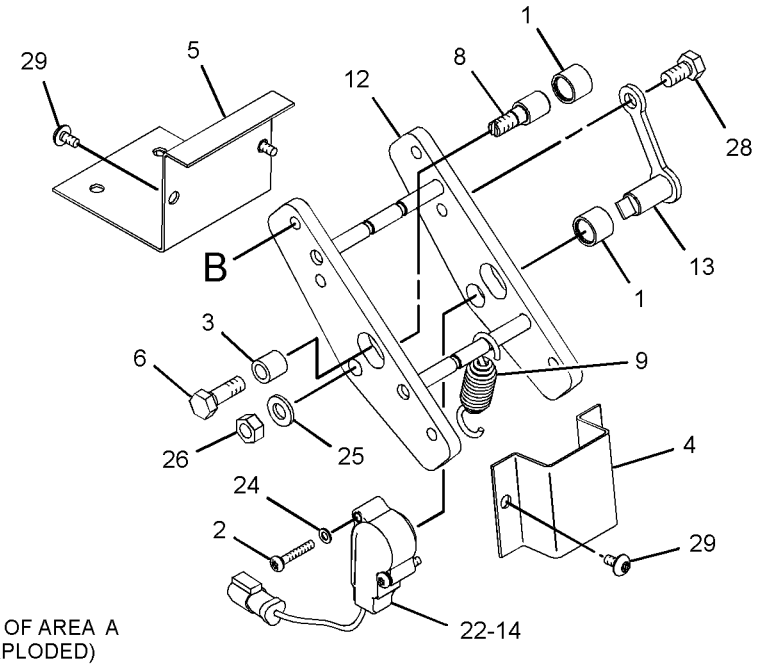

VIEW OF AREA A
(EXPLODED)

GRAPHIC #1 **<END>** g01344770

304-4001 CONTROL GP-UNPRGMED MONITOR—MESSENGER

S/N: LBP700-UP
PART OF 308-0604, 334-5104 WIRING GP-CAB
CANNOT BE USED WITH 304-6586—PAGE 604
ALSO AN ATTACHMENT

SMCS-7610 **i02662421**

NOTE	REF NO	GRAPHIC REF	PART NUMBER	QTY	PART NAME 1 2 3 4 5 6 (PRODUCT LEVEL)	SEE PAGE
	1	1	**239-5025**	1	CONTROL GP-UNPRGMED MONITOR (MESSENGER)	

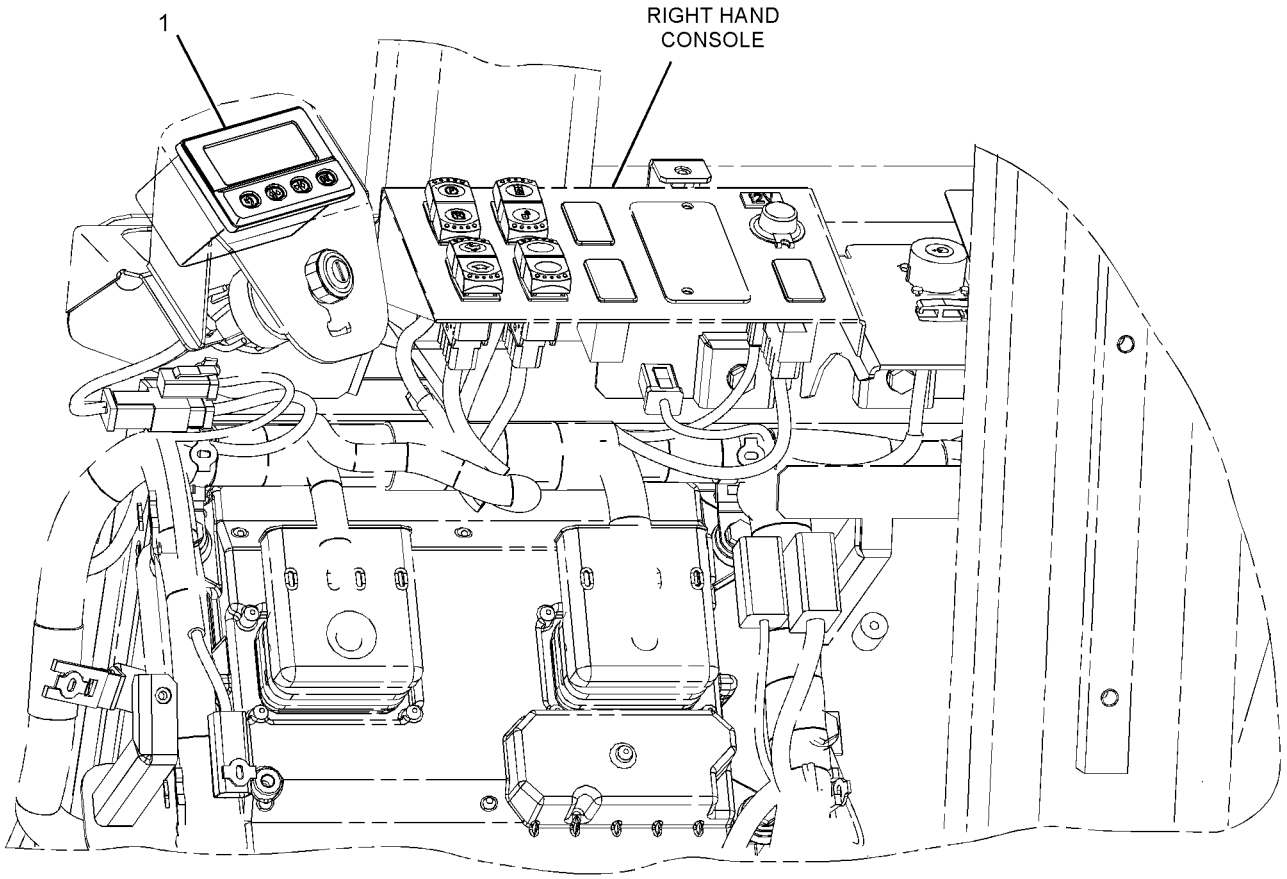

CAB
(INSIDE VIEW)

GRAPHIC #1 **<END>** g01340389

OPERATOR STATION

284-9766 COVER GP-ACCESS–RH

S/N: LBP1-UP

PART OF 251-1924, 307-4284, 327-7795 COVER GP-CAB

SMCS-726A **i02940205**

NOTE	REF NO	GRAPHIC REF	PART NUMBER	QTY	PART NAME 1 2 3 4 5 6 (PRODUCT LEVEL)	SEE PAGE
Y	1	1	*254-8605*	1	COVER GP-ACCESS (RH)	330
	2	1	**312-0037**	1	COVER AS	
		1	**8M-7758**	2	RIVET-POP	
M	3	1	**271-9408**	2	SCREW-TRUSS HEAD (M5X0.8X10-MM)	
M	4	1	**5C-2874**	2	NUT (M5X0.8-THD)	

M-METRIC PART
Y-SEPARATE ILLUSTRATION

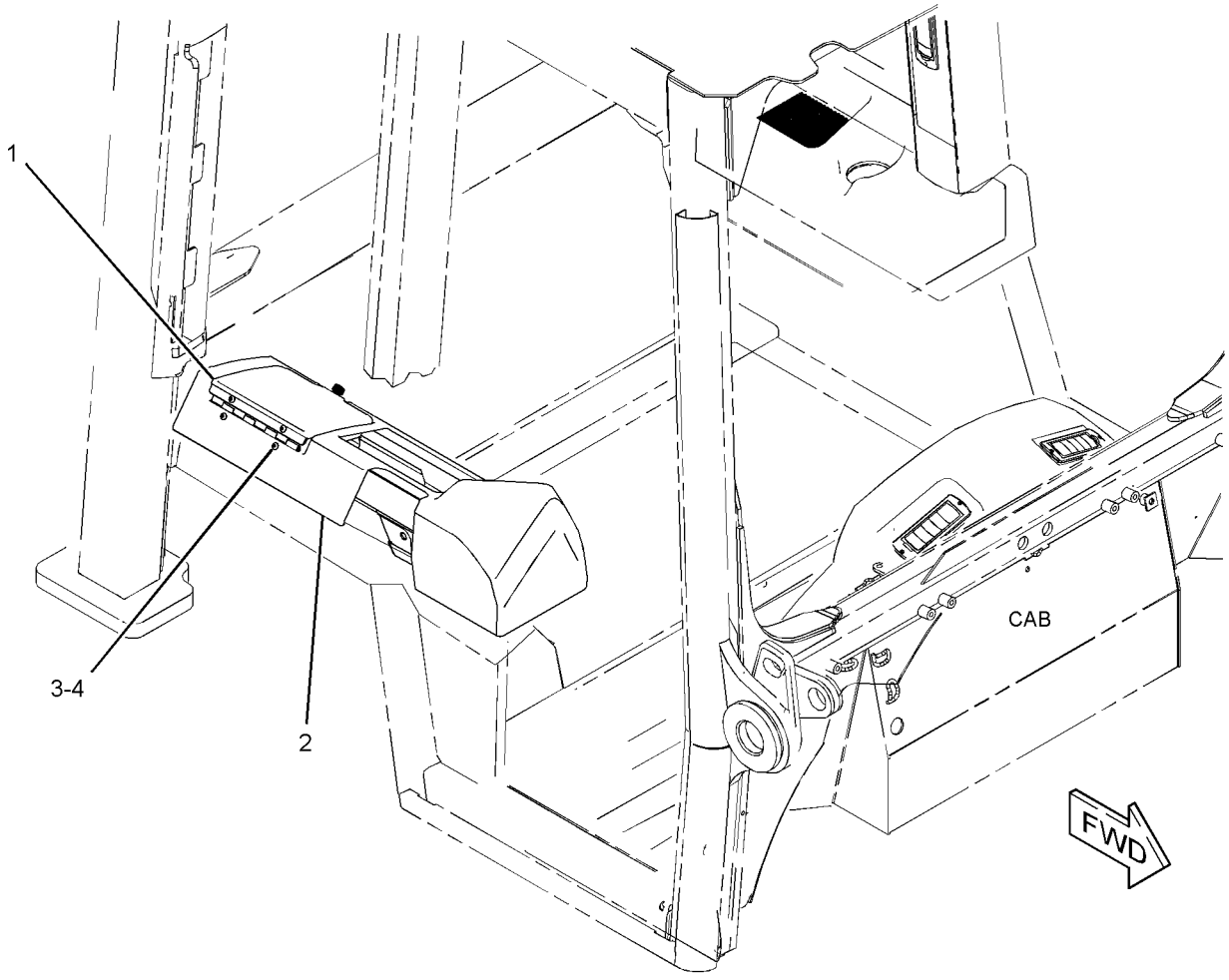

GRAPHIC #1 **<END>** g01338840

OPERATOR STATION

251-1924 COVER GP-CAB

S/N: LBP1-699

PART OF 240-6230 CAB GP

SMCS-7301 **i02707658**

NOTE	REF NO	GRAPHIC REF	PART NUMBER	QTY	PART NAME 1 2 3 4 5 6 (PRODUCT LEVEL)	SEE PAGE
	1	1	**6V-8928**	1	HOOK-COAT	
	2	1	**158-5001**	1	FASTENER-HOOK & LOOP	
	3	1	**223-0455**	2	LOUVER AS	
	4	2	**240-2169**	1	RETAINER	
	5	1	**254-8602**	1	COVER	
	6	1	**294-3192**	1	COVER	
	7	2	**254-8606**	1	FLOOR MAT	
	8	1	**254-8609**	1	FLOOR MAT	
	9	2	**254-8611**	1	COVER-POST (RH)	
	10	1	**254-8612**	1	HEADLINER AS	
	11	1	**257-6141**	2	LOUVER	
	12	1	**257-6142**	2	TUBE	
	13	1	**282-4887**	1	COVER AS-DASH	
	14	1	**282-4889**	1	DUCT AS	
	15	2	**282-4900**	1	BOX-DOCUMENTS	
	16	2	**282-4901**	1	BOX-DOCUMENTS	
	17	1	**282-5005**	1	MAT	
	18	2	**282-5006**	1	SEAL	
	19	1	**282-5007**	1	COVER-POST (LH)	
	20	2	**283-5528**	1	PANEL	
	21	2	**283-5559**	1	KNOB	
Y	22	1	**284-9766**	1	COVER GP-ACCESS (RH)	596
Y	23	1	**294-3127**	1	DASH GP	606
	24	2	**294-3175**	3	WASHER (INSULATION FASTENER)	
	25	1	**104-2091**	10	SCREW-FLAT HEAD (NO 6X0.5-IN)	
M	26	1	**3E-8020**	1	SCREW-TRUSS HEAD (M6X1X25-MM)	
M	27	1	**5C-2890**	2	NUT (M6X1-THD)	
	29	1	**8T-4983**	4	CLAMP-HOSE	
	30	1,2	**9X-2038**	23	WASHER (7X19X2-MM THK)	
M	31	1	**9X-2042**	4	SCREW-TRUSS HEAD (M6X1X12-MM)	
M	32	1,2	**9X-2044**	49	SCREW-TRUSS HEAD (M6X1X16-MM)	
L	33	2	**294-3155**		SEAL (11-DM)	
L	34	2	**294-3154**		SEAL (10.8-DM)	
L	34A	2	**294-3154**		SEAL (9.7-DM)	
E	35	1	**283-5557**		TUBE (64-CM)	
E	35A	1	**283-5557**		TUBE (23-CM)	

E-ORDER BY THE CENTIMETER
L-ORDER BY THE DECIMETER
M-METRIC PART
Y-SEPARATE ILLUSTRATION

REFER TO ALL ILLUSTRATIONS OF
THIS GROUP FOR AUXILIARY VIEWS

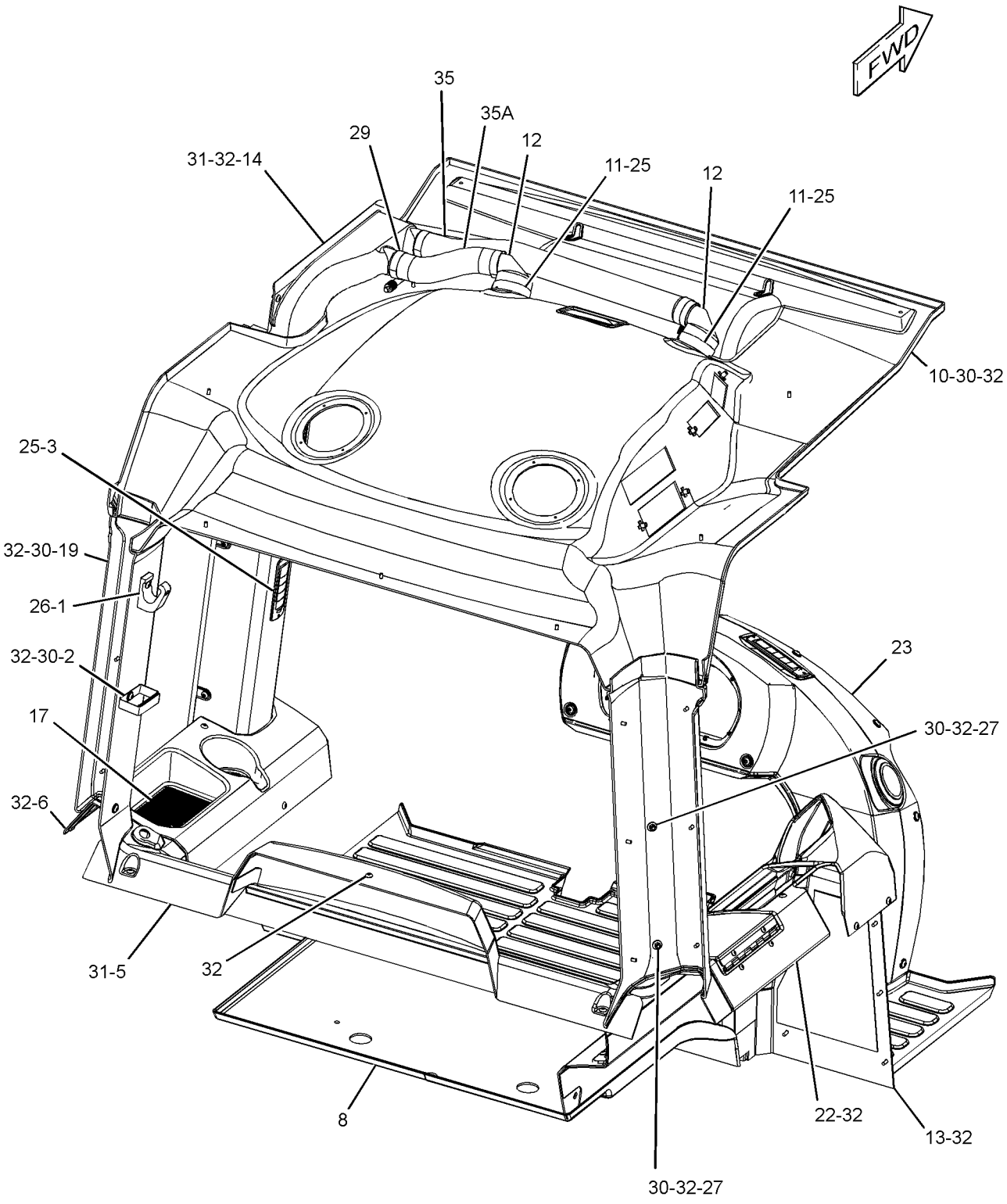

GRAPHIC #1

g01342667

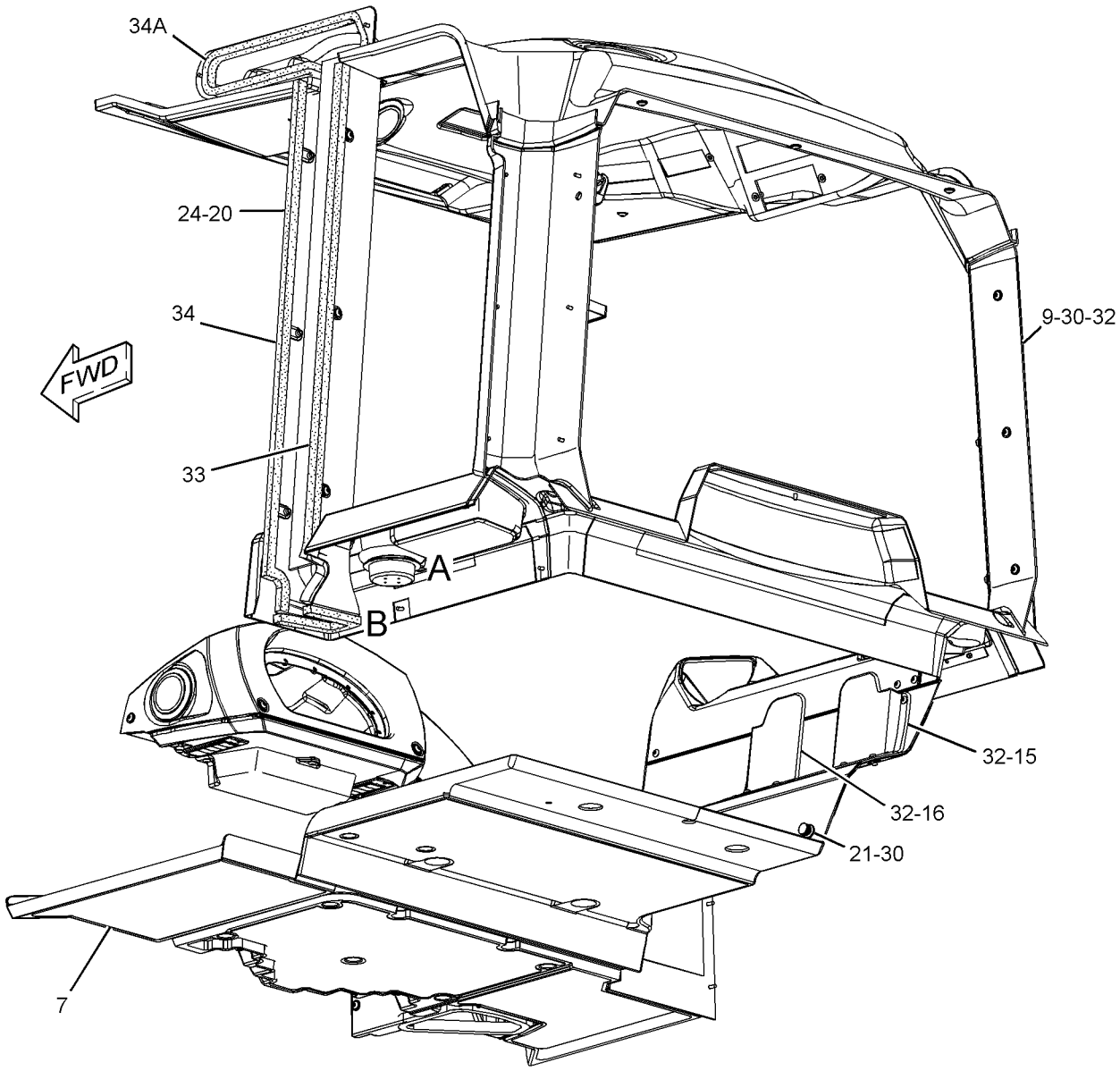

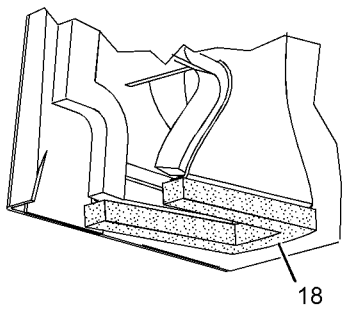

VIEW OF AREA B

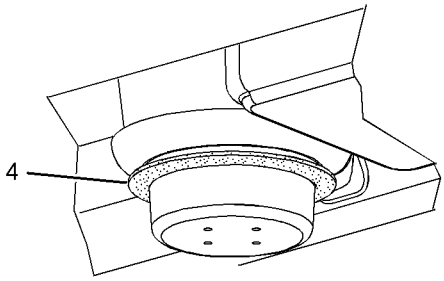

VIEW OF AREA A

GRAPHIC #2 **<END>** g01346899

OPERATOR STATION

307-4284 COVER GP-CAB

S/N: LBP700-UP

PART OF 307-4279, 334-6680 CAB GP

SMCS-7301 **i03586371**

NOTE	REF NO	GRAPHIC REF	PART NUMBER	QTY	PART NAME 1 2 3 4 5 6 (PRODUCT LEVEL)	SEE PAGE
	1	1	**6V-8928**	1	HOOK-COAT	
	2	1	**8Y-6388**	2	LOUVER AS-VENT	
	3	1	**158-5001**	1	FASTENER-HOOK & LOOP	
	4	1	**240-2169**	1	RETAINER	
	5	1	**254-8602**	1	COVER	
	6	1	**257-6141**	2	LOUVER	
	7	1	**257-6142**	2	TUBE	
	8	1	**282-4900**	1	BOX-DOCUMENTS	
	9	1	**282-4901**	1	BOX-DOCUMENTS	
	10	1	**282-5005**	1	MAT	
	11	1	**282-5006**	1	SEAL	
	12	1	**283-5528**	1	PANEL	
	13	1	**283-5559**	1	KNOB	
Y	14	1	*284-9766*	1	COVER GP-ACCESS (RH)	596
Y	15	1	**294-3127**	1	DASH GP	606
	16	1	**294-3175**	3	WASHER (INSULATION FASTENER)	
	17	1	**294-3192**	1	COVER (LH)	
	18	1	**307-4344**	1	COVER-POST (RH)	
	19	1	**307-4345**	1	COVER-POST (LH)	
	20	1	**312-0014**	1	DUCT AS (LH)	
	21	1	**334-6689**	1	COVER AS (RH)	
	22	1	**334-6690**	1	HEADLINER AS	
	23	1	**104-2091**	10	SCREW-FLAT HEAD (NO 6X0.5-IN)	
M	24	1	**3E-8020**	1	SCREW-TRUSS HEAD (M6X1X25-MM)	
	25	1	**8T-4983**	4	CLAMP-HOSE	
	26	1	**9X-2038**	16	WASHER (7X19X2-MM THK)	
M	27	1	**9X-2042**	4	SCREW-TRUSS HEAD (M6X1X12-MM)	
M	28	1	**9X-2044**	44	SCREW-TRUSS HEAD (M6X1X16-MM)	
J	29	1	**294-3155**		SEAL (11-DM)	
J	30	1	**294-3154**		SEAL (10.8-DM)	
J	30A	1	**294-3154**		SEAL (9.7-DM)	
E	31	1	**283-5557**		TUBE (64-CM)	
E	31A	1	**283-5557**		TUBE (23-CM)	

E-ORDER BY THE CENTIMETER
J-ORDER BY THE DECIMETER
M-METRIC PART
Y-SEPARATE ILLUSTRATION

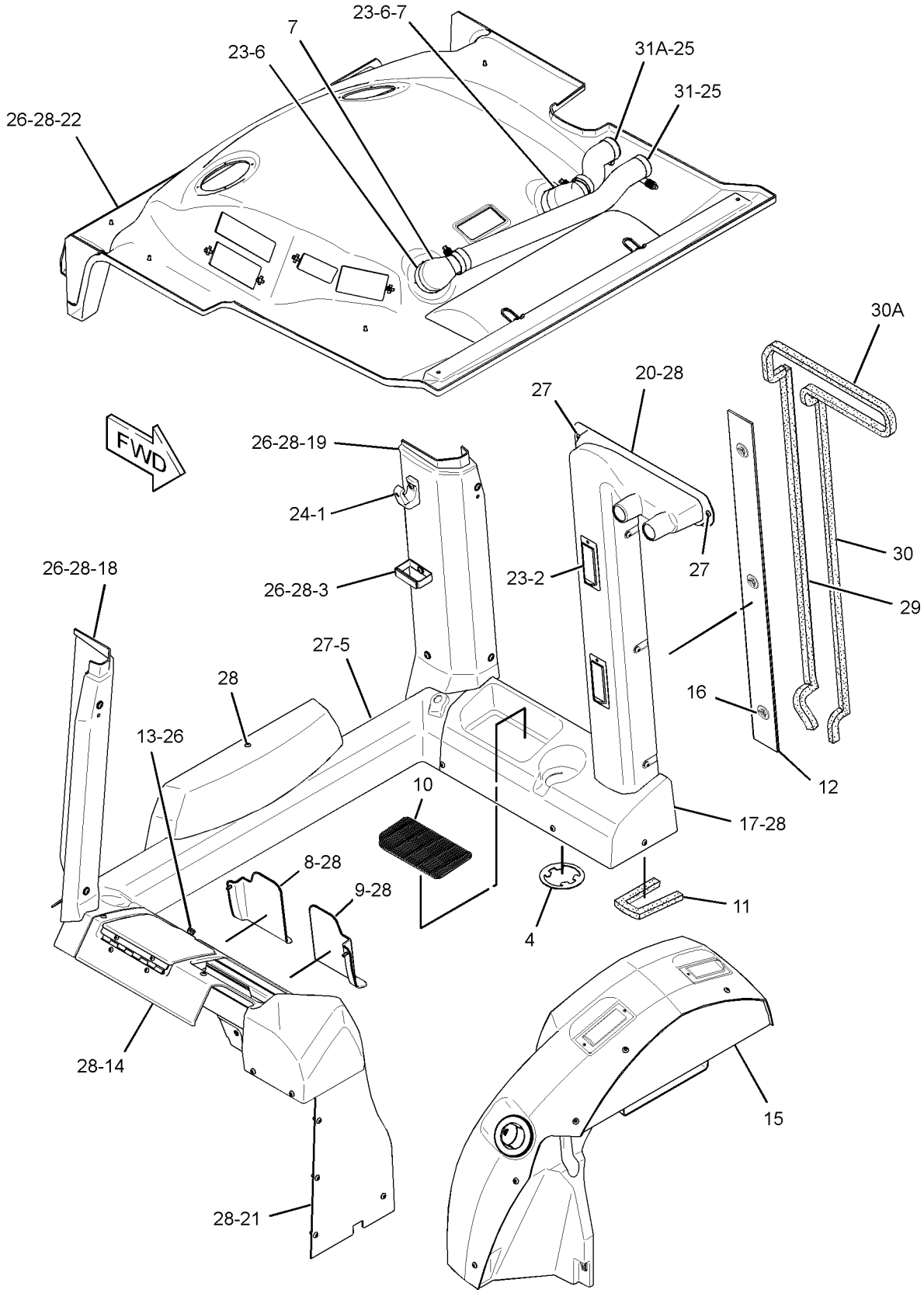

GRAPHIC #1 **<END>** g01865653

OPERATOR STATION

327-7795 COVER GP-CAB

S/N: LBP1-UP

PART OF 327-7790 CAB GP

SMCS-7301 **i03586368**

NOTE	REF NO	GRAPHIC REF	PART NUMBER	QTY	PART NAME 1 2 3 4 5 6 (PRODUCT LEVEL)	SEE PAGE
	1	1	**6V-8928**	1	HOOK-COAT	
	2	1	**158-5001**	1	FASTENER-HOOK & LOOP	
	3	1	**8Y-6388**	2	LOUVER AS-VENT	
	4	1	**240-2169**	1	RETAINER	
	5	1	**254-8602**	1	COVER	
	6	1	**257-6141**	2	LOUVER	
	7	1	**257-6142**	2	TUBE	
	8	1	**282-4887**	1	COVER AS-DASH (RH)	
	9	1	**282-4900**	1	BOX-DOCUMENTS	
	10	1	**282-4901**	1	BOX-DOCUMENTS	
	11	1	**282-5006**	1	SEAL	
	12	1	**283-5528**	1	PANEL	
	13	1	**283-5559**	1	KNOB	
Y	14	1	*284-9766*	1	COVER GP-ACCESS (RH)	596
	15	1	**294-3175**	3	WASHER (INSULATION FASTENER)	
	16	1	**294-3192**	1	COVER	
	17	1	**307-4344**	1	COVER-POST (RH)	
	18	1	**307-4345**	1	COVER-POST (LH)	
	19	1	**307-4350**	1	HEADLINER AS	
	20	1	**312-0014**	1	DUCT AS (LH)	
Y	21	1	**327-7817**	1	DASH GP	608
	22	1	**104-2091**	10	SCREW-FLAT HEAD (NO 6X0.5-IN)	
M	23	1	**3E-8020**	1	SCREW-TRUSS HEAD (M6X1X25-MM)	
	24	1	**8T-4983**	4	CLAMP-HOSE	
	25	1	**9X-2038**	16	WASHER (7X19X2-MM THK)	
M	26	1	**9X-2042**	4	SCREW-TRUSS HEAD (M6X1X12-MM)	
M	27	1	**9X-2044**	44	SCREW-TRUSS HEAD (M6X1X16-MM)	
J	28	1	**294-3155**		SEAL (11-DM)	
J	29	1	**294-3154**		SEAL (10-DM)	
J	29A	1	**294-3154**		SEAL (11-DM)	
E	30	1	**283-5557**		TUBE (64-CM)	
E	30A	1	**283-5557**		TUBE (23-CM)	

E-ORDER BY THE CENTIMETER
J-ORDER BY THE DECIMETER
M-METRIC PART
Y-SEPARATE ILLUSTRATION

327-7795 **COVER GP-CAB** *(contd.)* **i03586368**

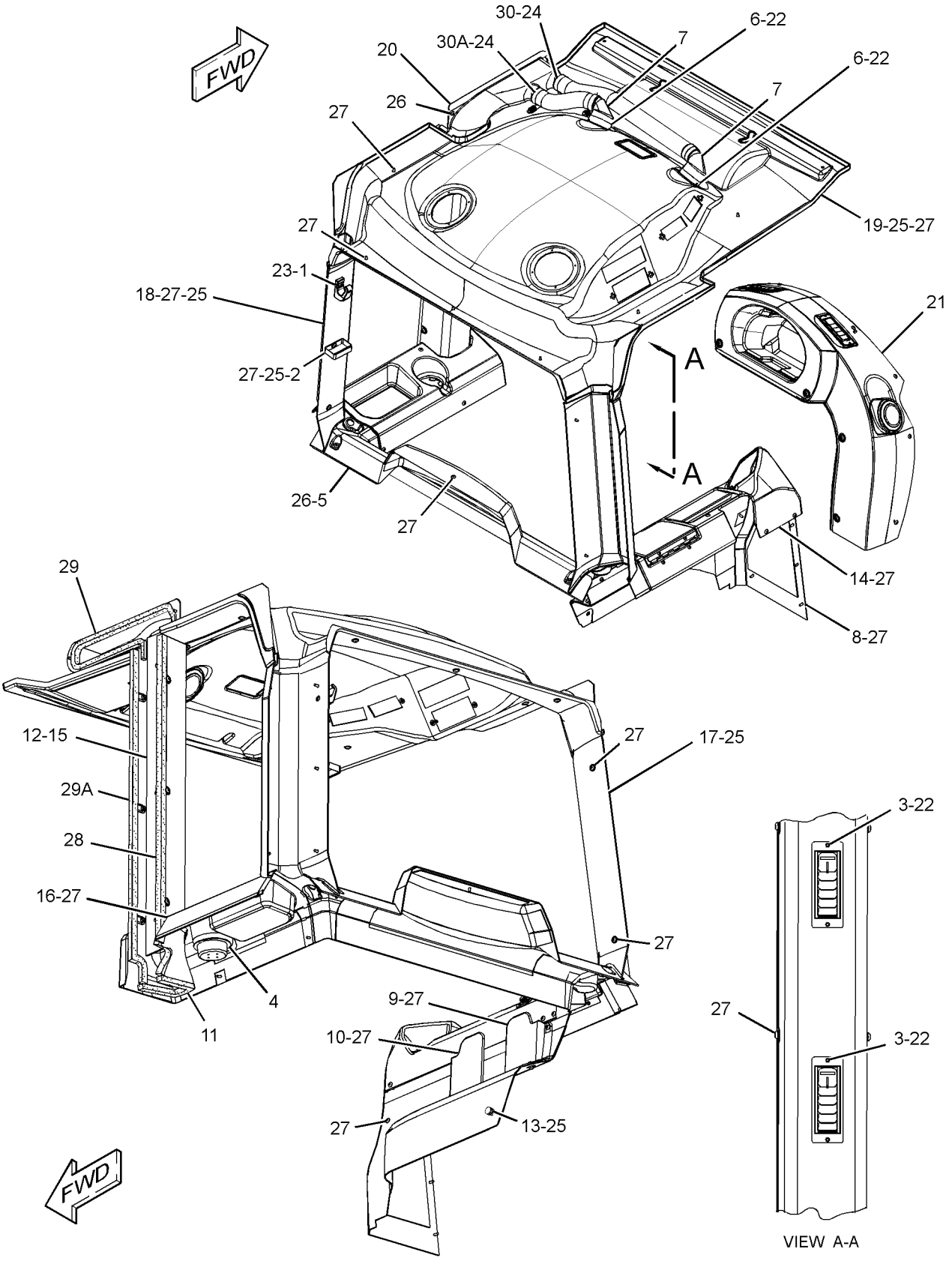

GRAPHIC #1 **<END>** g01915973

OPERATOR STATION

304-6586 COVER GP-CONSOLE—RH

S/N: LBP1-UP
CANNOT BE USED WITH 304-4001—PAGE 595
AN ATTACHMENT

SMCS-5258 **i02662438**

NOTE	REF NO	GRAPHIC REF	PART NUMBER	QTY	PART NAME 1 2 3 4 5 6 (PRODUCT LEVEL)	SEE PAGE
	1	1	**7K-1181**	1	STRAP-CABLE	
	2	1	**8T-8737**	8	PLUG-SEAL	
	3	1	**256-4710**	1	COVER	
	4	1	**102-8806**	1	KIT-RECEPTACLE (8-PIN)	
					(INCLUDES RECEPTACLE AS & WEDGE)	

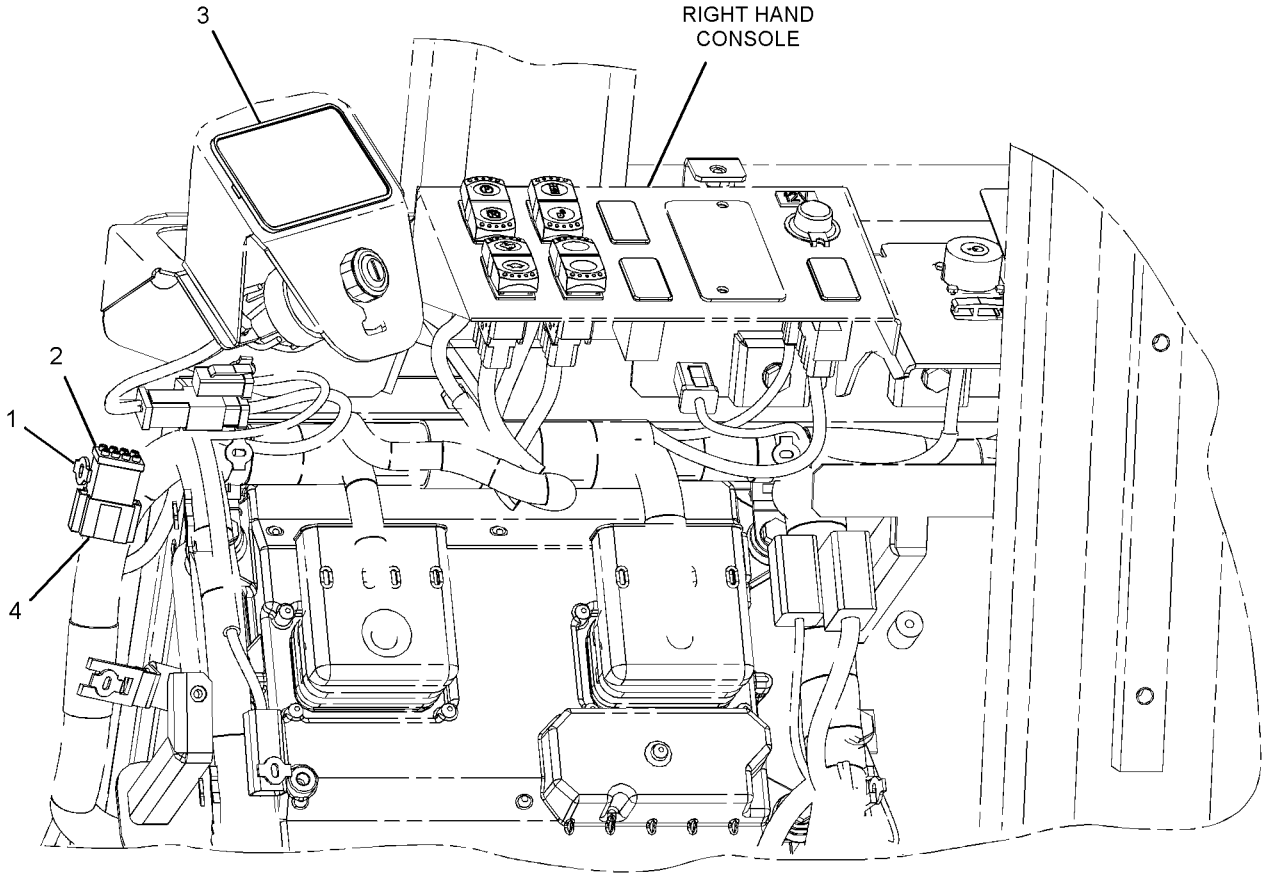

CAB
(INSIDE VIEW)

GRAPHIC #1 **<END>** g01340690

OPERATOR STATION

294-3132 COVER GP-DASH

S/N: LBP1-UP

PART OF 294-3127, 327-7817 DASH GP

SMCS-7314 **i03586400**

NOTE	REF NO	GRAPHIC REF	PART NUMBER	QTY	PART NAME 1 2 3 4 5 6 (PRODUCT LEVEL)	SEE PAGE
	1	1	**8Y-6388**	2	LOUVER AS-VENT	
	2	1	**164-8473**	2	LOUVER AS	
	3	1	**283-5517**	1	COVER-DASH	
	4	1	**104-2091**	12	SCREW-FLAT HEAD (NO 6X0.5-IN)	
E	5	1	**289-1080**		SEAL (88-CM)	
E	5A	1	**289-1080**		SEAL (30-CM)	

E-ORDER BY THE CENTIMETER

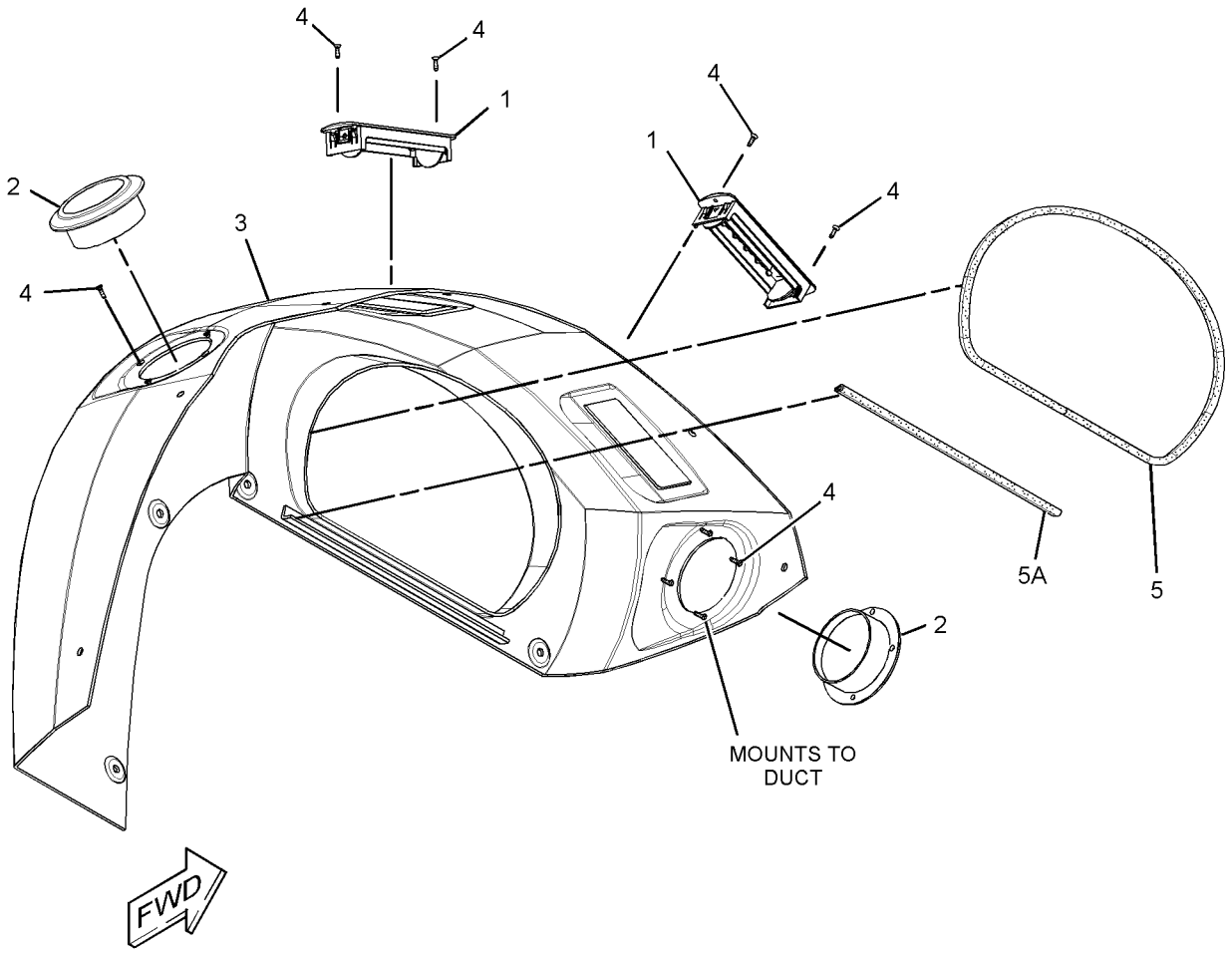

GRAPHIC #1 **<END>** g01915915

OPERATOR STATION

294-3127 DASH GP

S/N: LBP1-UP

PART OF 251-1924, 307-4284 COVER GP-CAB

SMCS-7314 **i03609185**

NOTE	REF NO	GRAPHIC REF	PART NUMBER	QTY	PART NAME 1 2 3 4 5 6 (PRODUCT LEVEL)	SEE PAGE
	1	1	**8Y-6388**	2	LOUVER AS-VENT	
	2	1	**283-5519**	1	COVER	
	3	1	**284-9769**	2	CLIP	
Y	4	1	*294-3128*	1	DUCT GP-CAB AIR (DASH)	620
Y	5	1	*294-3132*	1	COVER GP-DASH	605
	6	1	**104-2091**	4	SCREW-FLAT HEAD (NO 6X0.5-IN)	
	7	1	**198-4775**	2	WASHER-HARD (6.6X15X6-MM THK)	
M	8	1	**3E-8020**	2	SCREW-TRUSS HEAD (M6X1X25-MM)	
	9	1	**9X-2038**	2	WASHER (7X19X2-MM THK)	
M	10	1	**9X-2045**	13	SCREW-TRUSS HEAD (M6X1X20-MM)	
M	11	1	**9X-2046**	2	SCREW-TRUSS HEAD (M6X1X35-MM)	

M-METRIC PART
Y-SEPARATE ILLUSTRATION

294-3127 DASH GP *(contd.)* **i03609185**

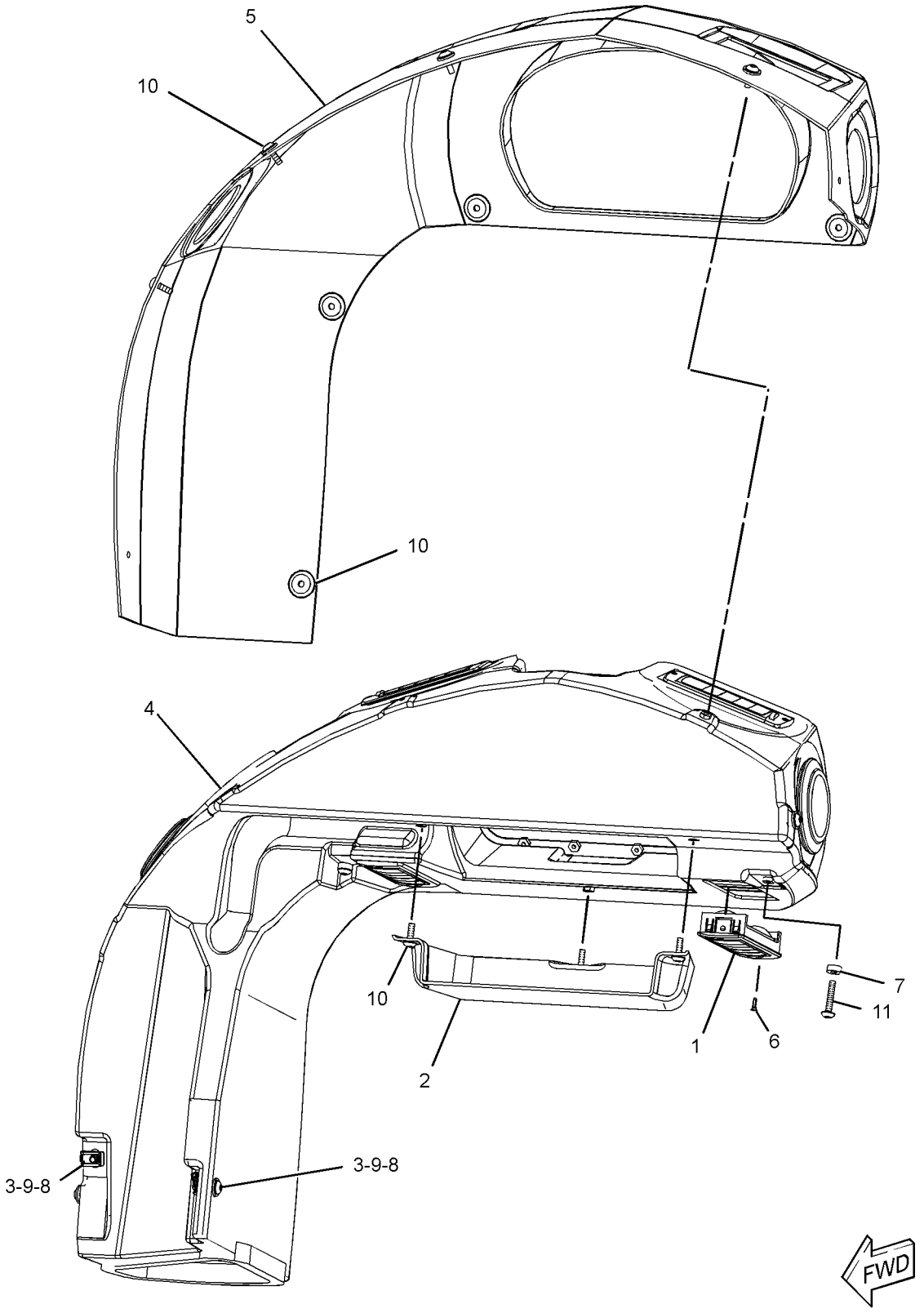

GRAPHIC #1 **<END>** g01829995

OPERATOR STATION

327-7817 DASH GP

S/N: LBP1-UP

PART OF 327-7795 COVER GP-CAB

SMCS-7314 **i03327502**

NOTE	REF NO	GRAPHIC REF	PART NUMBER	QTY	PART NAME 1 2 3 4 5 6 (PRODUCT LEVEL)	SEE PAGE
	1	1	**223-0455**	2	LOUVER AS	
	2	1	**283-5519**	1	COVER	
	3	1	**284-9769**	2	CLIP	
Y	4	1	*294-3132*	1	COVER GP-DASH	605
	5	1	*327-7818*	1	DUCT AS	
	5A	1	**283-5518**	1	DUCT	
	5B	1	**294-3191**	1	SEAL	
E	5C	1	**294-3193**		SEAL (36-CM)	
E	5D	1	**294-3193**		SEAL (46-CM EACH)	
E	5E	1	**294-3193**		SEAL (50-CM)	
	6	1	**104-2091**	4	SCREW-FLAT HEAD (NO 6X0.5-IN)	
	7	1	**198-4775**	2	WASHER-HARD (6.6X15X6-MM THK)	
M	8	1	**3E-8020**	2	SCREW-TRUSS HEAD (M6X1X25-MM)	
	9	1	**9X-2038**	2	WASHER (7X19X2-MM THK)	
M	10	1	**9X-2045**	13	SCREW-TRUSS HEAD (M6X1X20-MM)	
M	11	1	**9X-2046**	2	SCREW-TRUSS HEAD (M6X1X35-MM)	

E-ORDER BY THE CENTIMETER
M-METRIC PART
Y-SEPARATE ILLUSTRATION

327-7817 DASH GP *(contd.)* **i03327502**

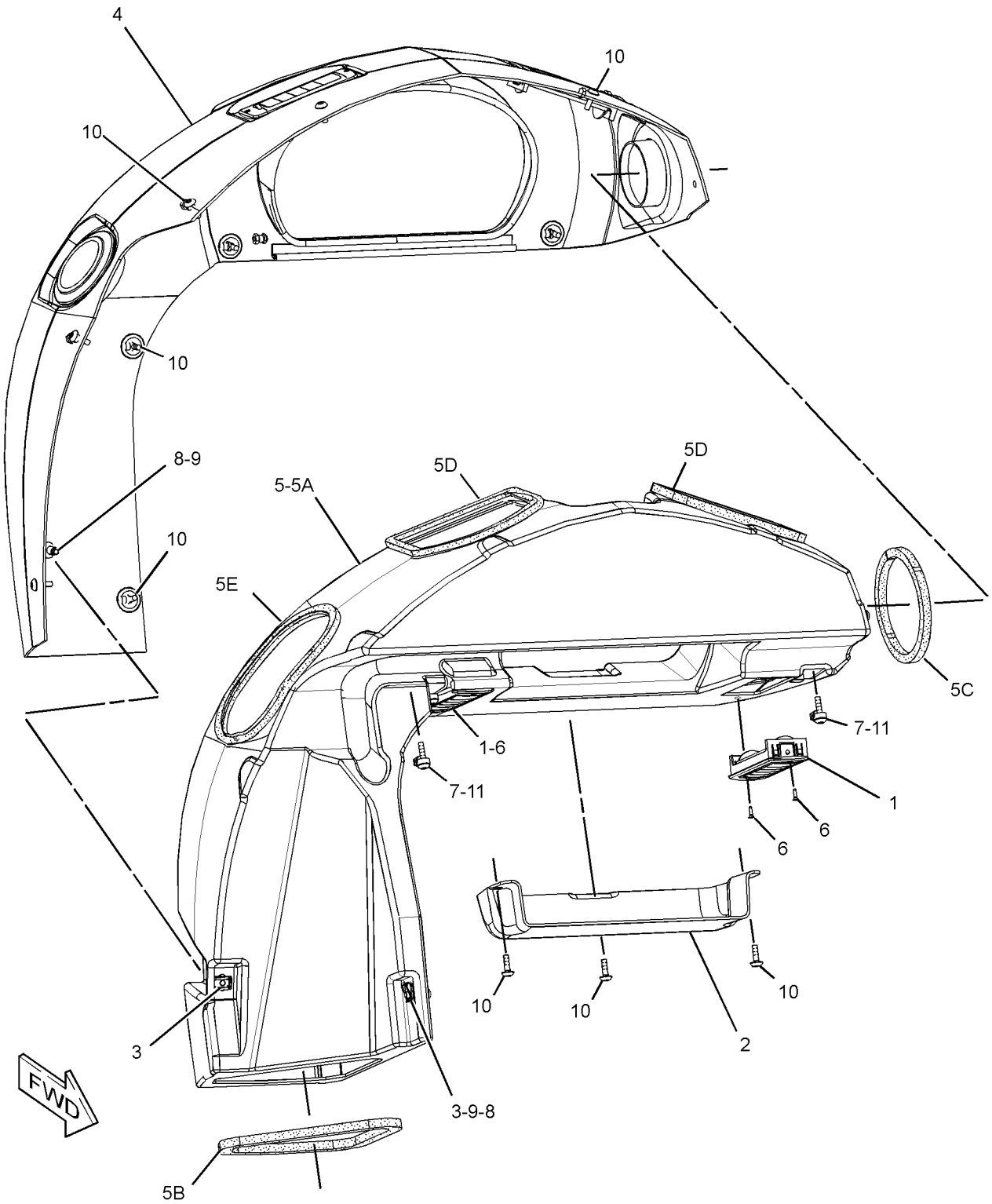

GRAPHIC #1 **<END>** g01721314

OPERATOR STATION

290-4412 DOOR GP-ACCESS–RH

S/N: LBP1-UP

PART OF 290-4417 ENCLOSURE GP-CAB

SMCS-7273 **i02768165**

NOTE	REF NO	GRAPHIC REF	PART NUMBER	QTY	PART NAME 1 2 3 4 5 6 (PRODUCT LEVEL)	SEE PAGE
	1	1	**4I-8019**	1	SUPPORT	
	2	1	**268-1027**	1	HINGE AS	
J	3	1	**274-1923**	1	LOCK AS	
	4	1	**290-4413**	1	DOOR AS-ACCESS (RH)	
	5	1	**198-4777**	4	WASHER-HARD (11X25X10-MM THK)	
M	6	1	**5C-2890**	4	NUT (M6X1-THD)	
M	7	1	**8T-4133**	4	NUT (M10X1.5-THD)	
M	8	1	**8T-4171**	2	BOLT (M6X1X12-MM)	
	9	1	**9X-8256**	6	WASHER (6.6X12X2-MM THK)	
	10	1	**310-3064**	1	SEAL	
	11	1	**310-3063**	1	SEAL	

J-REQUIRES CORPORATE KEY
M-METRIC PART

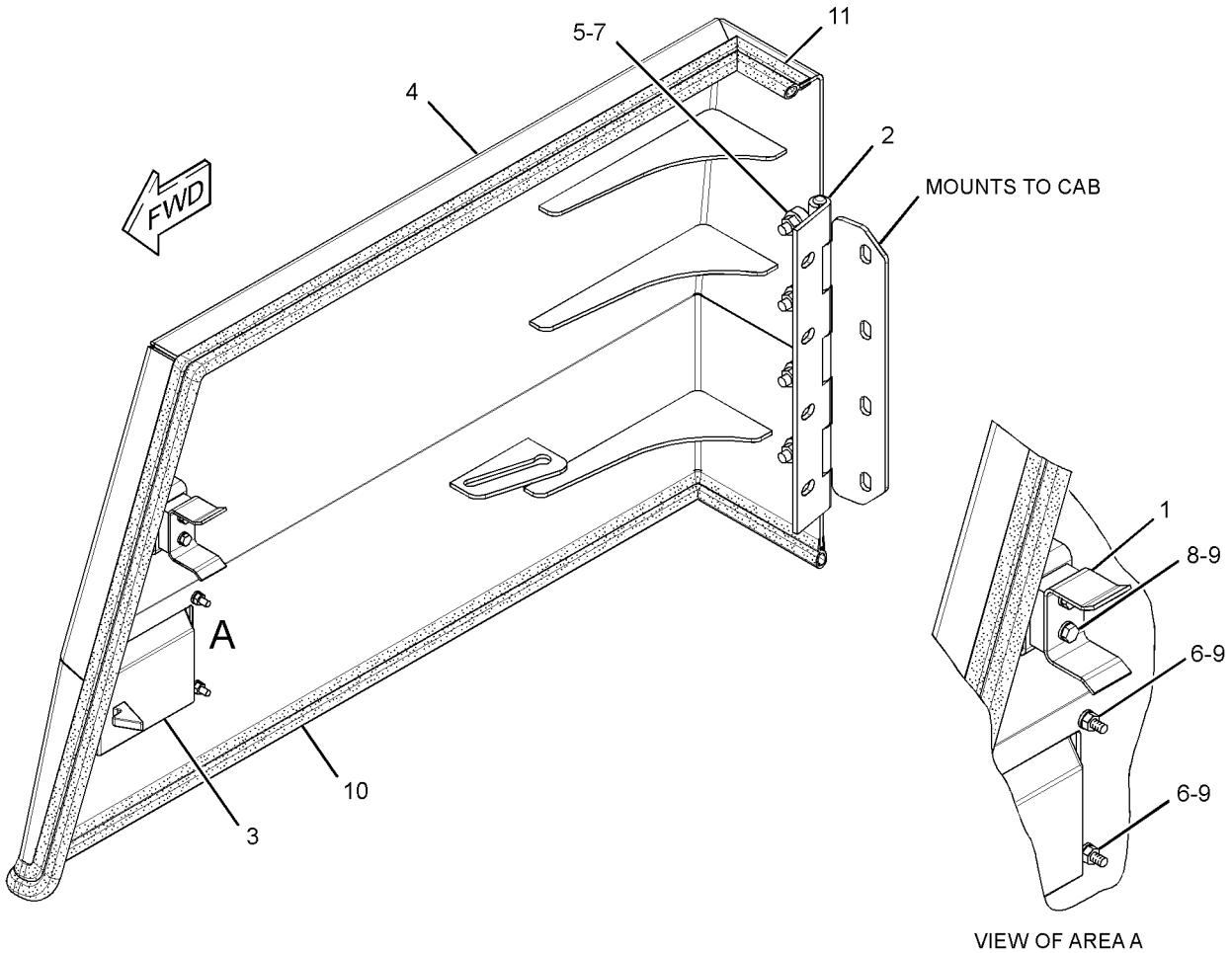

GRAPHIC #1 **<END>** g01393608

OPERATOR STATION

290-4414 DOOR GP-ACCESS–LH

S/N: LBP1-UP

PART OF 290-4417 ENCLOSURE GP-CAB

SMCS-7273 **i02768166**

NOTE	REF NO	GRAPHIC REF	PART NUMBER	QTY	PART NAME 1 2 3 4 5 6 (PRODUCT LEVEL)	SEE PAGE
	1	1	**4I-8019**	1	SUPPORT	
	2	1	**268-1027**	1	HINGE AS	
J	3	1	**274-1923**	1	LOCK AS	
	4	1	**290-4415**	1	DOOR AS-ACCESS (LH)	
	5	1	**198-4777**	4	WASHER-HARD (11X25X10-MM THK)	
M	6	1	**5C-2890**	4	NUT (M6X1-THD)	
M	7	1	**8T-4133**	4	NUT (M10X1.5-THD)	
M	8	1	**8T-4171**	2	BOLT (M6X1X12-MM)	
	9	1	**9X-8256**	6	WASHER (6.6X12X2-MM THK)	
	10	1	**310-3063**	1	SEAL	
	11	1	**310-3062**	1	SEAL	

J-REQUIRES CORPORATE KEY
M-METRIC PART

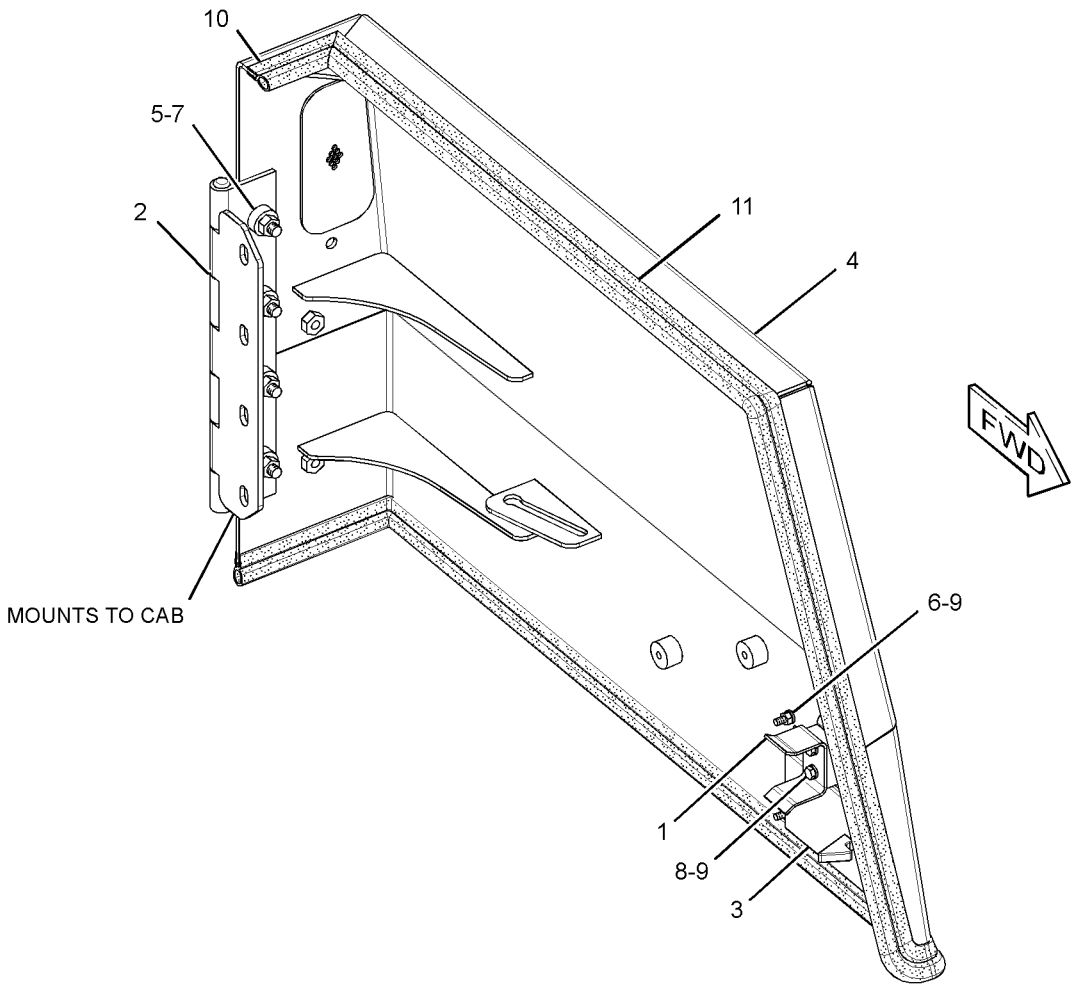

GRAPHIC #1 **<END>** g01393610

OPERATOR STATION

251-1921 DOOR GP-CAB—RH

S/N: LBP1-699

PART OF 240-6230 CAB GP

SMCS-7308 **i02658466**

NOTE	REF NO	GRAPHIC REF	PART NUMBER	QTY	PART NAME 1 2 3 4 5 6 (PRODUCT LEVEL)	SEE PAGE
	1	1	**143-2397**	2	CAP	
	2	1	**185-2114**	1	PLATE	
J	3	1	**252-1862**	1	HANDLE AS	
	4	1	**252-1863**	1	GASKET	
	5	1	**252-1865**	1	LATCH AS (RH)	
	6	1	**252-8286**	2	SPACER (6.5X10.5X11.5-MM THK)	
	7	1	**252-8296**	1	SEAL	
	8	1	**252-8297**	1	WINDOW (DOOR, RH)	
	9	1	**253-1817**	1	SPACER (6.5X14.5X12-MM THK)	
	10	1	**254-8590**	1	DOOR AS-CAB (RH)	
	11	1	**257-6170**	1	SPACER (6.5X14X7.5-MM THK)	
	12	1	**257-6205**	2	SPACER (10.5X14.5X12-MM THK)	
	13	1	**257-6206**	1	SPACER (14X18X12-MM THK)	
	14	1	**258-3697**	1	WASHER-NYLON (7X20X2-MM THK)	
	15	1	**263-9369**	1	SEAL	
	16	1	**263-9371**	1	U-BOLT	
	17	1	**263-9418**	1	COVER	
	18	1	**294-3143**	1	SPACER	
	19	1	**156-8315**	5	SCREW-PAN HEAD (10-16X0.5-IN)	
	20	1	**8T-4121**	2	WASHER-HARD (11X21X2.5-MM THK)	
M	21	1	**8T-4133**	4	NUT (M10X1.5-THD)	
M	22	1	**8T-4971**	3	BOLT (M6X1X30-MM)	
M	23	1	**8T-9534**	1	BOLT (M6X1X50-MM)	
M	24	1	**9X-2040**	5	SCREW-TRUSS HEAD (M10X1.5X25-MM)	
M	25	1	**9X-2045**	4	SCREW-TRUSS HEAD (M6X1X20-MM)	
	26	1	**9X-8256**	3	WASHER (6.6X12X2-MM THK)	

J-REQUIRES 5P-8500 KEY
M-METRIC PART

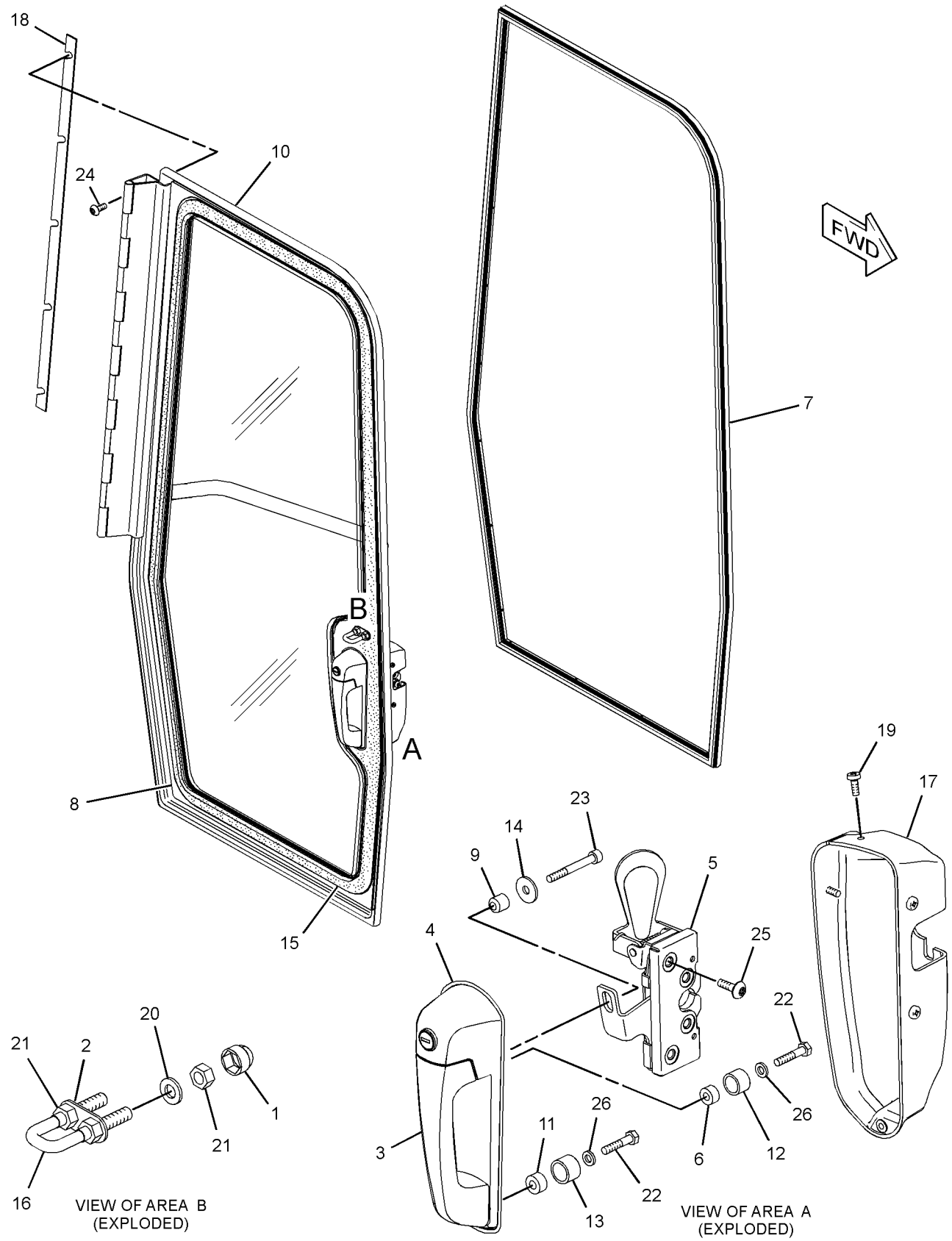

GRAPHIC #1

<END>

g01337723

OPERATOR STATION

251-1922 DOOR GP-CAB—LH

S/N: LBP1-699

PART OF 240-6230 CAB GP

SMCS-7308 **i02658519**

NOTE	REF NO	GRAPHIC REF	PART NUMBER	QTY	PART NAME 1 2 3 4 5 6 (PRODUCT LEVEL)	SEE PAGE
	1	1	**143-2397**	2	CAP	
	2	1	**185-2114**	1	PLATE	
J	3	1	**252-1862**	1	HANDLE AS	
	4	1	**252-1863**	1	GASKET	
	5	1	**252-1864**	1	LATCH AS (LH)	
	6	1	**252-8284**	1	WINDOW (DOOR, LH)	
	7	1	**252-8286**	2	SPACER (6.5X10.5X11.5-MM THK)	
	8	1	**253-1817**	1	SPACER (6.5X14.5X12-MM THK)	
	9	1	**254-8589**	1	DOOR AS-CAB (LH)	
	10	1	**257-6170**	1	SPACER (6.5X14X7.5-MM THK)	
	11	1	**257-6205**	2	SPACER (10.5X14.5X12-MM THK)	
	12	1	**257-6206**	1	SPACER (14X18X12-MM THK)	
	13	1	**258-3697**	1	WASHER-NYLON (7X20X2-MM THK)	
	14	1	**263-9355**	1	SEAL	
	15	1	**263-9369**	1	SEAL	
	16	1	**263-9371**	1	U-BOLT	
	17	1	**263-9417**	1	COVER	
	18	1	**294-3143**	1	SPACER	
	19	1	**156-8315**	5	SCREW-PAN HEAD (10-16X0.5-IN)	
	20	1	**8T-4121**	2	WASHER-HARD (11X21X2.5-MM THK)	
M	21	1	**8T-4133**	4	NUT (M10X1.5-THD)	
M	22	1	**8T-4971**	3	BOLT (M6X1X30-MM)	
M	23	1	**8T-9534**	1	BOLT (M6X1X50-MM)	
M	24	1	**9X-2040**	5	SCREW-TRUSS HEAD (M10X1.5X25-MM)	
M	25	1	**9X-2045**	4	SCREW-TRUSS HEAD (M6X1X20-MM)	
	26	1	**9X-8256**	3	WASHER (6.6X12X2-MM THK)	

J-REQUIRES 5P-8500 KEY
M-METRIC PART

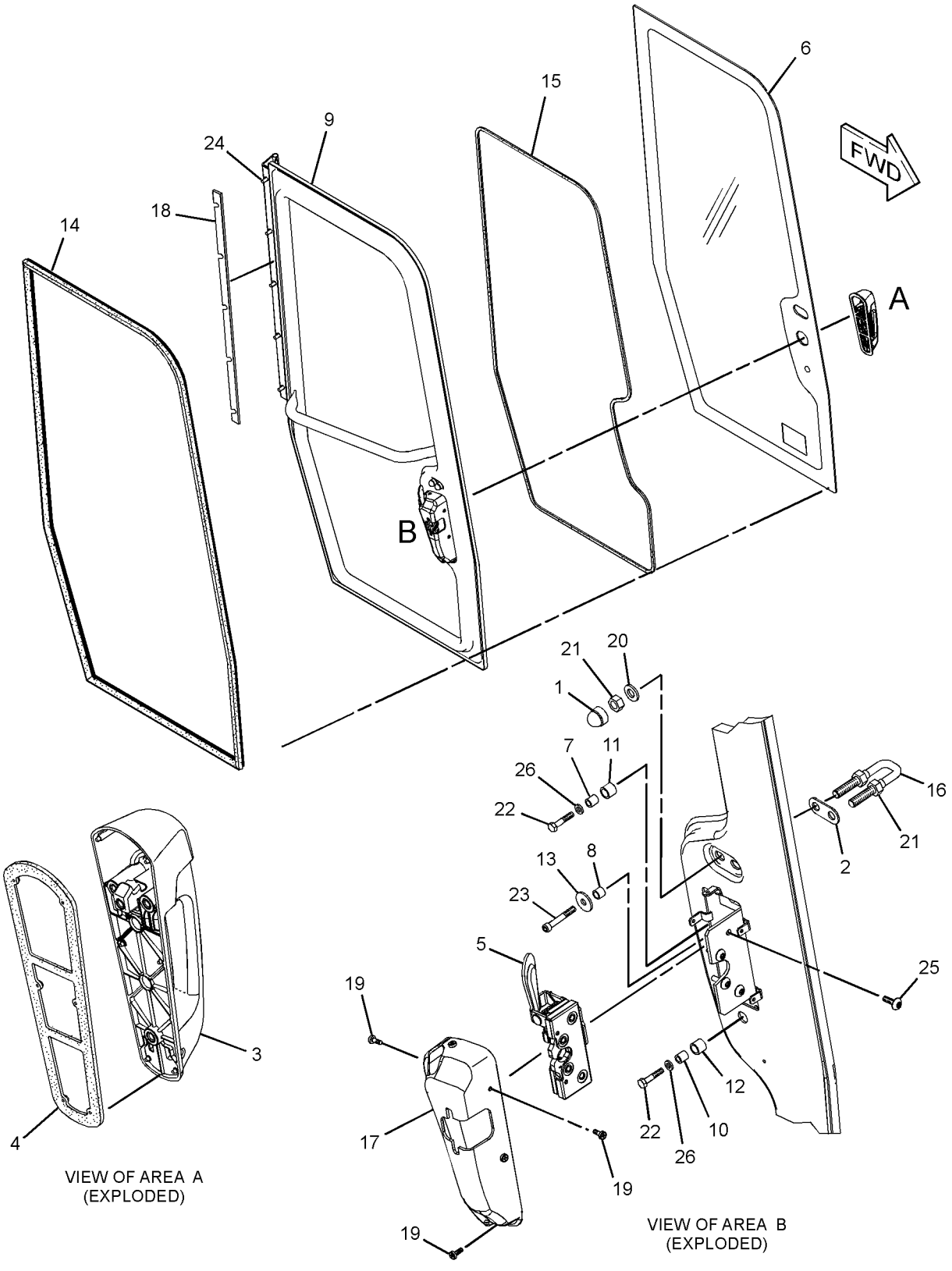

GRAPHIC #1 **<END>** g01338756

OPERATOR STATION

307-4281 DOOR GP-CAB—RH

S/N: LBP700-UP

PART OF 307-4279, 334-6680 CAB GP

SMCS-7308 **i02917206**

NOTE	REF NO	GRAPHIC REF	PART NUMBER	QTY	PART NAME 1 2 3 4 5 6 (PRODUCT LEVEL)	SEE PAGE
	1	1	**143-2397**	2	CAP	
	2	1	**185-2114**	1	PLATE	
J	3	1	**252-1862**	1	HANDLE AS	
	4	1	**252-1863**	1	GASKET	
	5	1	**252-1865**	1	LATCH AS (RH)	
	6	1	**252-8286**	2	SPACER (6.5X10.5X11.5-MM THK)	
	7	1	**252-8296**	1	SEAL	
	8	1	**252-8297**	1	WINDOW (DOOR, RH)	
	9	1	**253-1817**	1	SPACER (6.5X14.5X12-MM THK)	
	10	1	**254-8590**	1	DOOR AS-CAB (RH)	
	11	1	**257-6170**	1	SPACER (6.5X14X7.5-MM THK)	
	12	1	**257-6205**	2	SPACER (10.5X14.5X12-MM THK)	
	13	1	**257-6206**	1	SPACER (14X18X12-MM THK)	
	14	1	**258-3697**	1	WASHER-NYLON (7X20X2-MM THK)	
	15	1	**263-9369**	1	SEAL	
	16	1	**263-9371**	1	U-BOLT	
	17	1	**263-9418**	1	COVER	
	18	1	**156-8315**	5	SCREW-PAN HEAD (10-16X0.5-IN)	
	19	1	**8T-4121**	2	WASHER-HARD (11X21X2.5-MM THK)	
M	20	1	**8T-4133**	4	NUT (M10X1.5-THD)	
M	21	1	**8T-4971**	3	BOLT (M6X1X30-MM)	
M	22	1	**8T-9534**	1	BOLT (M6X1X50-MM)	
M	23	1	**9X-2040**	5	SCREW-TRUSS HEAD (M10X1.5X25-MM)	
M	24	1	**9X-2045**	4	SCREW-TRUSS HEAD (M6X1X20-MM)	
	25	1	**9X-8256**	3	WASHER (6.6X12X2-MM THK)	

J-REQUIRES CORPORATE KEY
M-METRIC PART

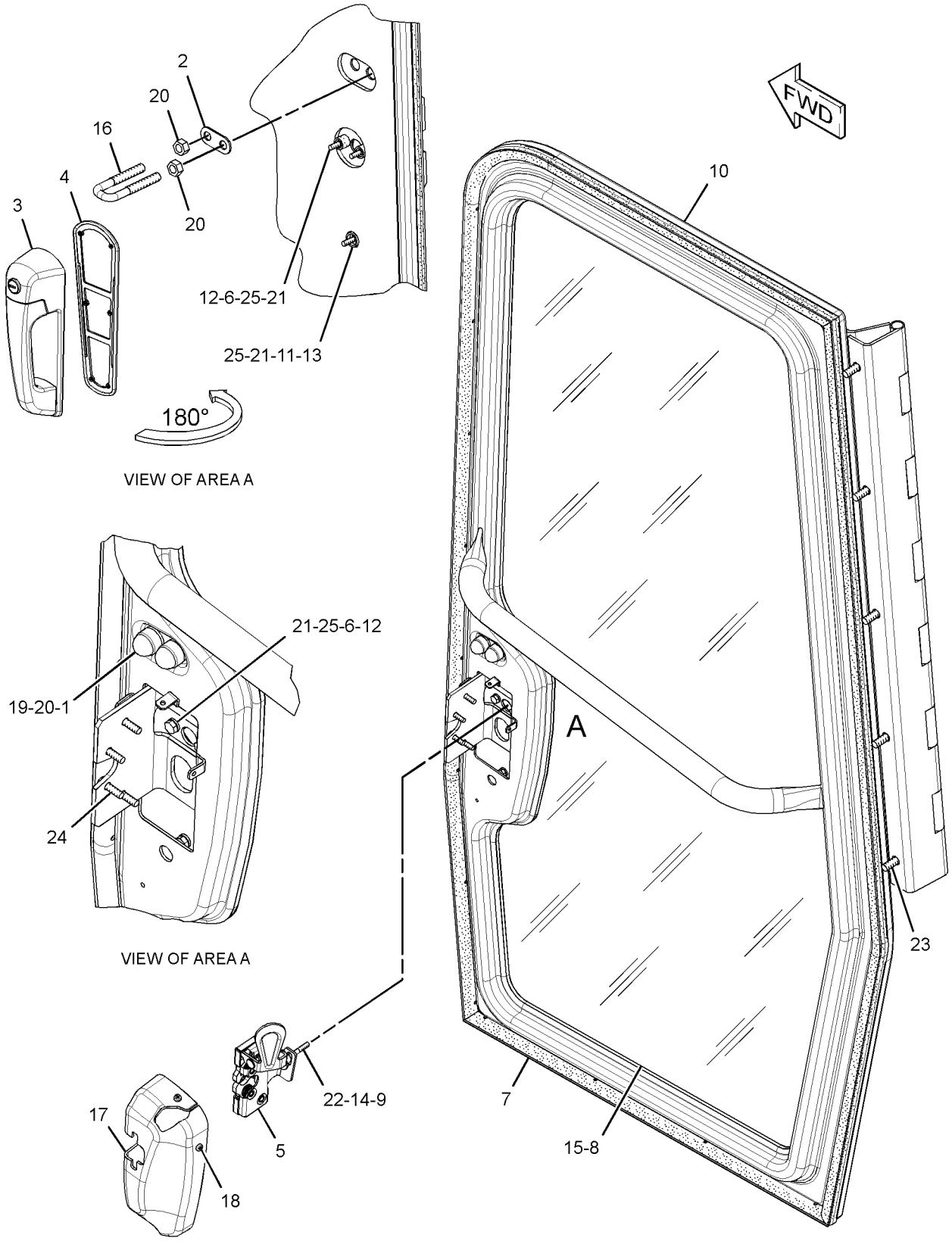

GRAPHIC #1 **<END>** g01458726

OPERATOR STATION

307-4282 DOOR GP-CAB—LH

S/N: LBP700-UP

PART OF 307-4279, 334-6680 CAB GP

SMCS-7308 **i02917304**

NOTE	REF NO	GRAPHIC REF	PART NUMBER	QTY	PART NAME 1 2 3 4 5 6 (PRODUCT LEVEL)	SEE PAGE
	1	1	**143-2397**	2	CAP	
	2	1	**185-2114**	1	PLATE	
J	3	1	**252-1862**	1	HANDLE AS	
	4	1	**252-1863**	1	GASKET	
	5	1	**252-1864**	1	LATCH AS (LH)	
	6	1	**252-8284**	1	WINDOW (DOOR, LH)	
	7	1	**252-8286**	2	SPACER (6.5X10.5X11.5-MM THK)	
	8	1	**253-1817**	1	SPACER (6.5X14.5X12-MM THK)	
	9	1	**254-8589**	1	DOOR AS-CAB (LH)	
	10	1	**257-6170**	1	SPACER (6.5X14X7.5-MM THK)	
	11	1	**257-6205**	2	SPACER (10.5X14.5X12-MM THK)	
	12	1	**257-6206**	1	SPACER (14X18X12-MM THK)	
	13	1	**258-3697**	1	WASHER-NYLON (7X20X2-MM THK)	
	14	1	**263-9355**	1	SEAL	
	15	1	**263-9369**	1	SEAL	
	16	1	**263-9371**	1	U-BOLT	
	17	1	**263-9417**	1	COVER	
	18	1	**156-8315**	5	SCREW-PAN HEAD (10-16X0.5-IN)	
	19	1	**8T-4121**	2	WASHER-HARD (11X21X2.5-MM THK)	
M	20	1	**8T-4133**	4	NUT (M10X1.5-THD)	
M	21	1	**8T-4971**	3	BOLT (M6X1X30-MM)	
M	22	1	**8T-9534**	1	BOLT (M6X1X50-MM)	
M	23	1	**9X-2040**	5	SCREW-TRUSS HEAD (M10X1.5X25-MM)	
M	24	1	**9X-2045**	4	SCREW-TRUSS HEAD (M6X1X20-MM)	
	25	1	**9X-8256**	3	WASHER (6.6X12X2-MM THK)	

J-REQUIRES CORPORATE KEY
M-METRIC PART

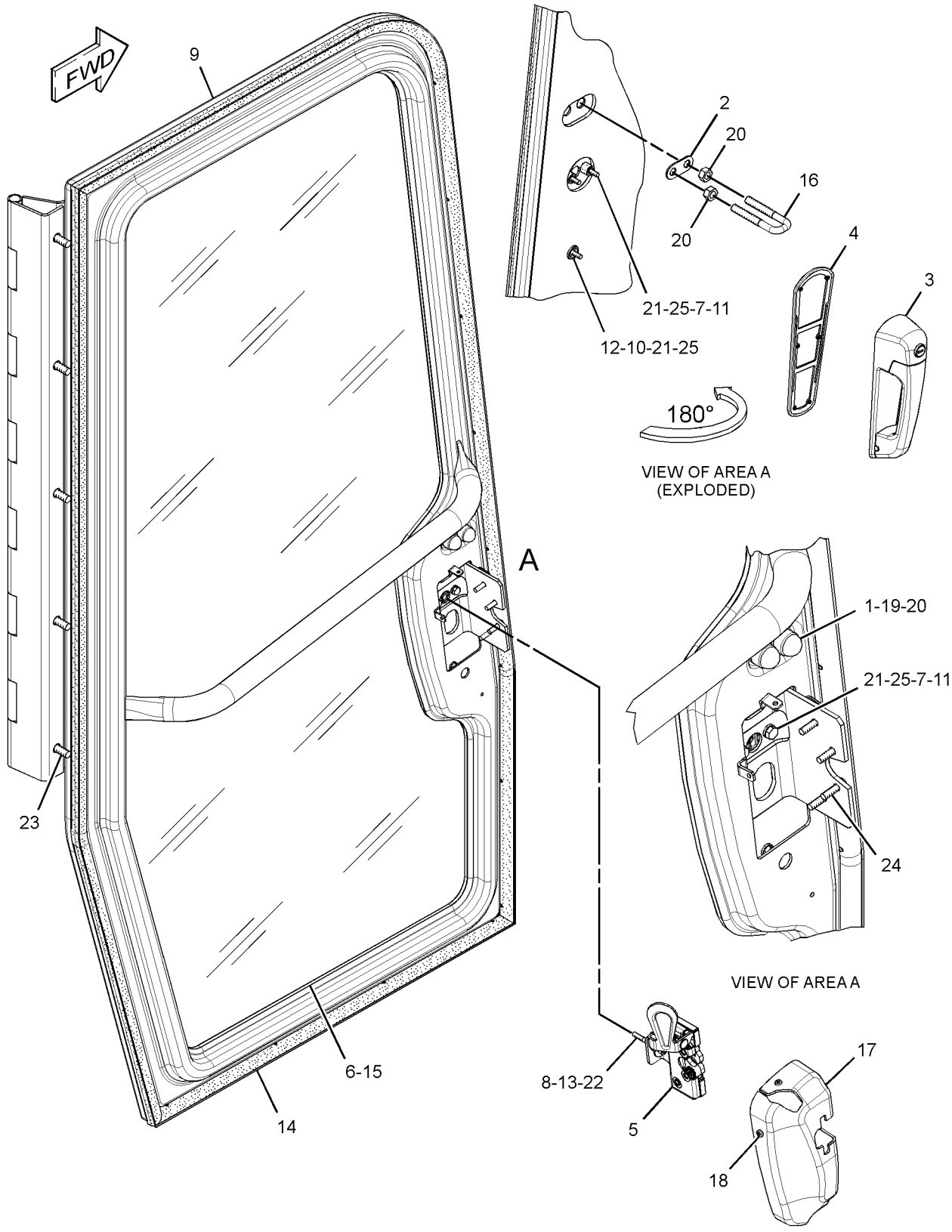

GRAPHIC #1 **<END>** g01459098

OPERATOR STATION

294-3128 DUCT GP-CAB AIR

S/N: LBP1-UP

PART OF 294-3127 DASH GP

SMCS-734D **i02693091**

NOTE	REF NO	GRAPHIC REF	PART NUMBER	QTY	PART NAME 1 2 3 4 5 6 (PRODUCT LEVEL)	SEE PAGE
	1	1	**283-5518**	1	DUCT	
	2	1	**284-9812**	1	PLATE AS	
M		1	**8T-8874**	12	NUT-WELD (M5X0.8-THD)	
	3	1	**294-3191**	1	SEAL	
	4	1	**9X-2038**	4	WASHER (7X19X2-MM THK)	
M	5	1	**9X-2045**	4	SCREW-TRUSS HEAD (M6X1X20-MM)	
E	6	1	**294-3193**		SEAL (46-CM EACH)	
E	6A	1	**294-3193**		SEAL (50-CM)	
E	6B	1	**294-3193**		SEAL (36-CM)	

E-ORDER BY THE CENTIMETER
M-METRIC PART

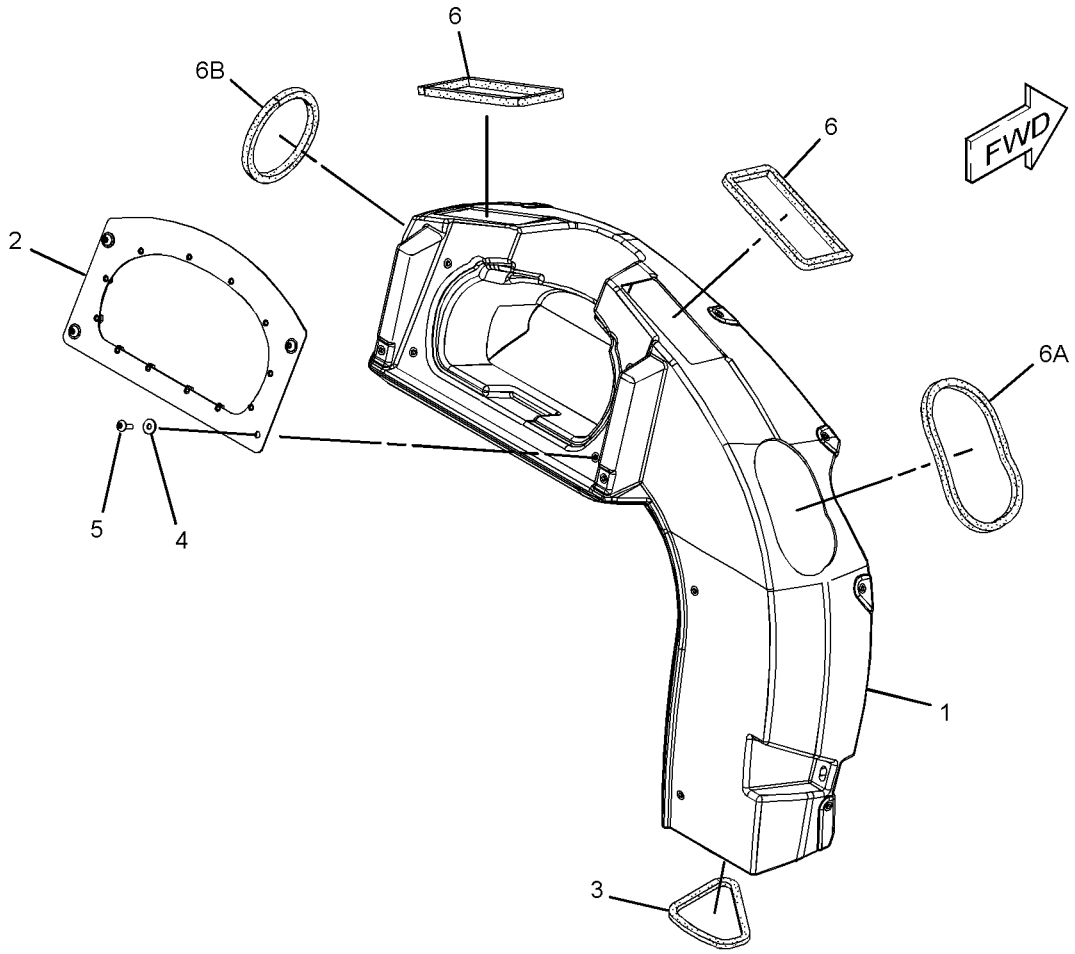

GRAPHIC #1 **<END>** g01351390

OPERATOR STATION

290-4417 ENCLOSURE GP-CAB

S/N: LBP1-UP

PART OF 258-7787 CAB AR

SMCS-7301 **i03365500**

NOTE	REF NO	GRAPHIC REF	PART NUMBER	QTY	PART NAME 1 2 3 4 5 6 (PRODUCT LEVEL)	SEE PAGE
	1	1	**6I-6033**	2	STOP	
	2	2	**6V-9197**	2	LOCK PIN	
	3	2	**7X-0603**	2	WASHER-HARD (9.9X35X2.5-MM THK)	
	4	1	**277-4411**	1	BRACKET AS	
M		1	**6V-9632**	2	NUT-WELD (M6X1-THD)	
	5	1	*281-0033*	1	PANEL GP-CAB (RH)	
		1	**268-1029**	1	PLATE AS (RH)	
		1	**310-3066**	1	SEAL	
		1	**310-3067**	1	SEAL	
	6	1	*281-0034*	1	PANEL GP-CAB (LH)	
		1	**268-1028**	1	PLATE AS (LH)	
		1	**310-3065**	1	SEAL	
		1	**310-3066**	1	SEAL	
	7	2	**283-5560**	1	BRACKET AS	
M		2	**6V-9632**	2	NUT-WELD (M6X1-THD)	
B	8	1	**283-5568**	4	SHIM (1-MM THK)	
	9	1	**289-1077**	1	BRACKET	
	10	2	**289-1083**	1	BRACKET	
Y	11	1	*290-4412*	1	DOOR GP-ACCESS (RH)	610
Y	12	1	*290-4414*	1	DOOR GP-ACCESS (LH)	611
	13	2	**297-2562**	2	SPACER	
	14	2	**298-6795**	1	HANDLE	
	15	2	**299-6020**	1	HANDLE AS	
	16	2	**299-6021**	1	BRACKET AS	
	17	2	**300-2953**	1	DUCT AS-AIR	
	18	2	**301-9695**	1	SEAL	
	19	2	**303-0260**	2	ROD AS	
M	20	2	**5C-7261**	2	NUT (M8X1.25-THD)	
	22	2	**5P-4116**	4	WASHER-HARD (8.8X20.5X2-MM THK)	
	23	1,2	**7X-7729**	28	WASHER (11X25X3-MM THK)	
M	24	2	**8T-4133**	6	NUT (M10X1.5-THD)	
M	25	1,2	**8T-4136**	4	BOLT (M10X1.5X25-MM)	
M	26	2	**8T-4137**	8	BOLT (M10X1.5X20-MM)	
M	28	2	**8T-4186**	8	BOLT (M10X1.5X40-MM)	
M	29	2	**8T-4189**	2	BOLT (M8X1.25X20-MM)	
M	30	1,2	**6V-7357**	8	BOLT (M6X1X25-MM)	
M	31	2	**8T-6912**	2	BOLT (M8X1.25X50-MM)	
	32	1	**9X-8256**	4	WASHER (6.6X12X2-MM THK)	
E	33	2	**293-6459**		SEAL (88-CM)	
	34	1,2	**198-4775**	4	WASHER-HARD (6.6X15X6-MM THK)	

B-USE AS REQUIRED
E-ORDER BY THE CENTIMETER
M-METRIC PART
Y-SEPARATE ILLUSTRATION

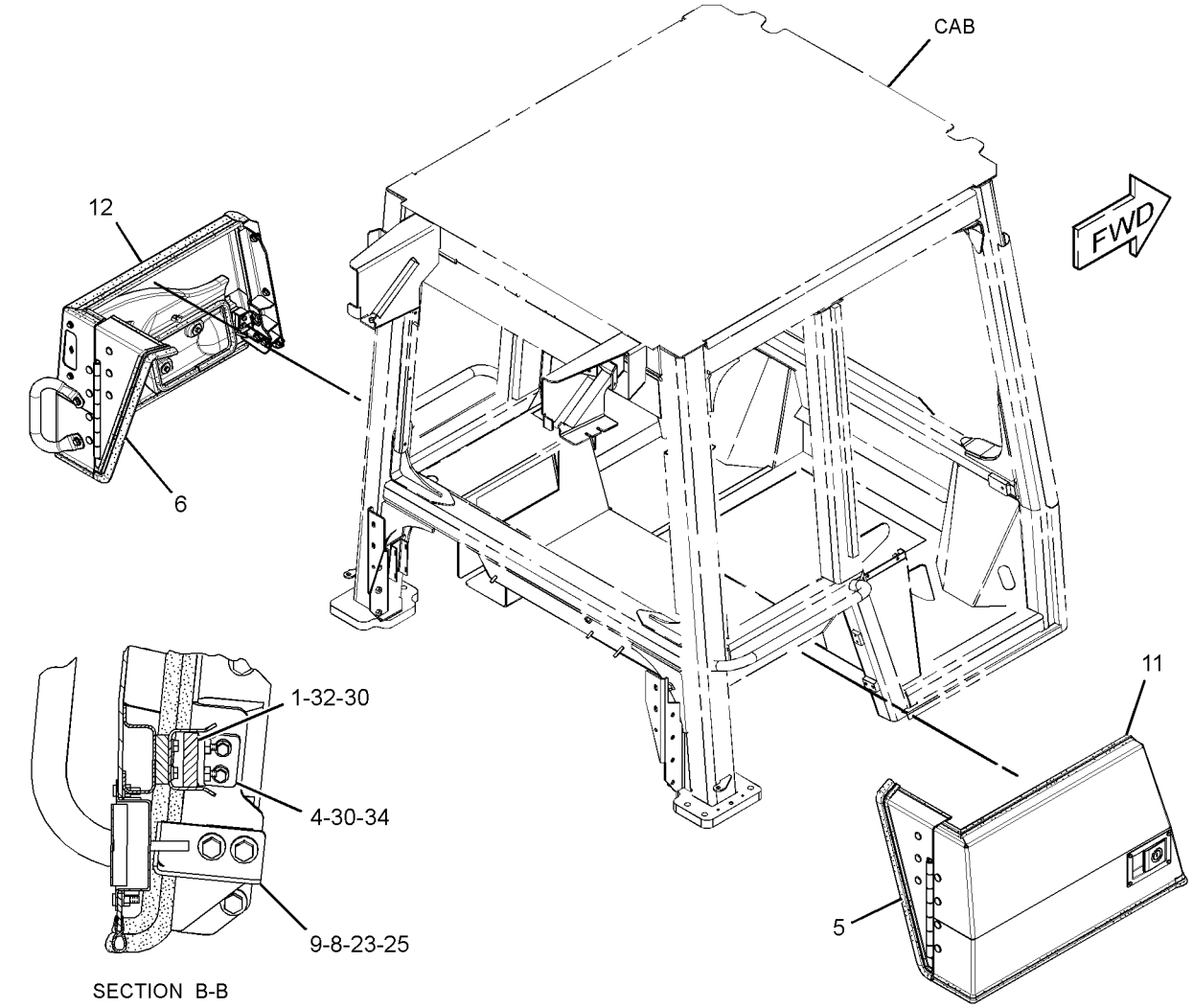

SECTION B-B

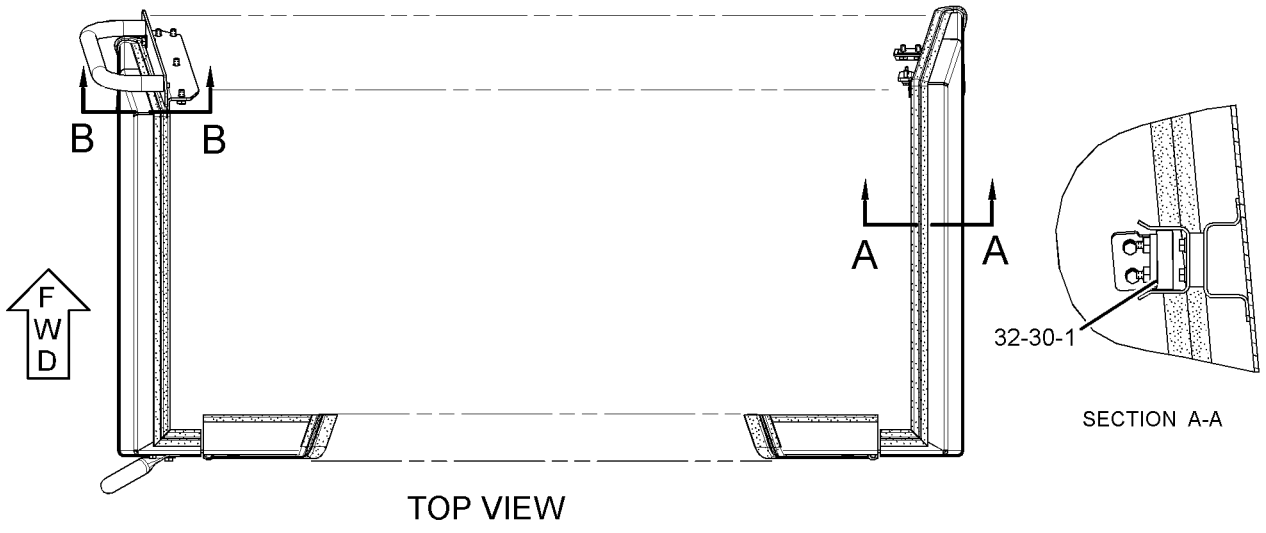

SECTION A-A

TOP VIEW

GRAPHIC #1

g01647522

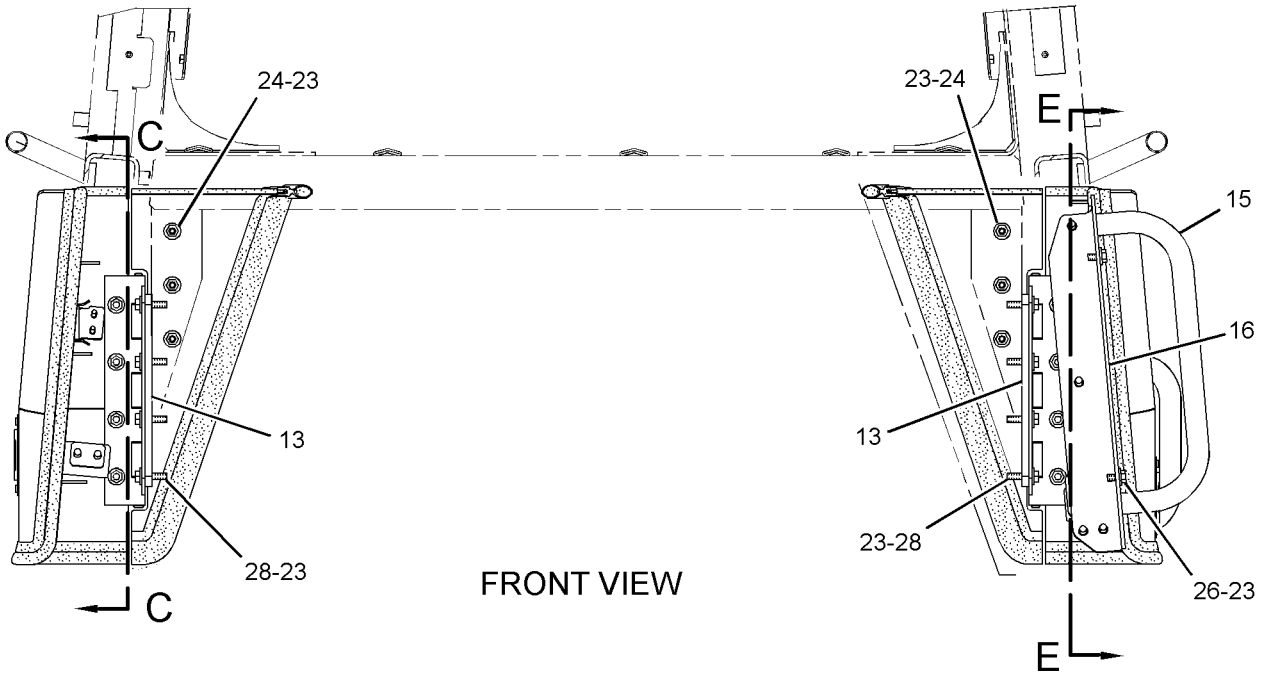

FRONT VIEW

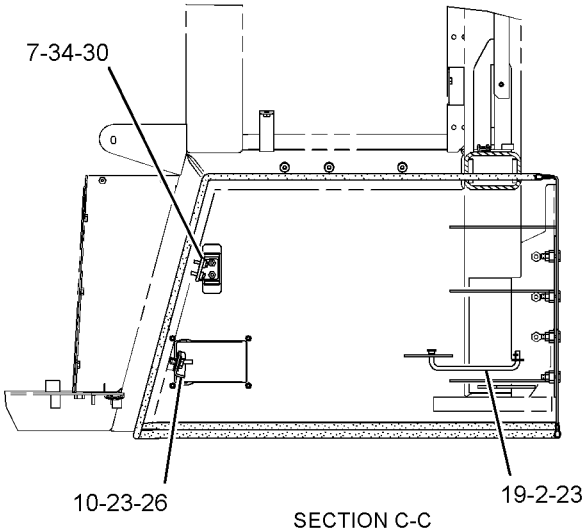

SECTION C-C

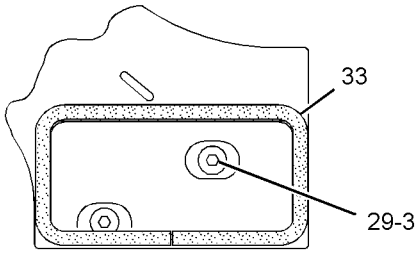

VIEW OF AREA D

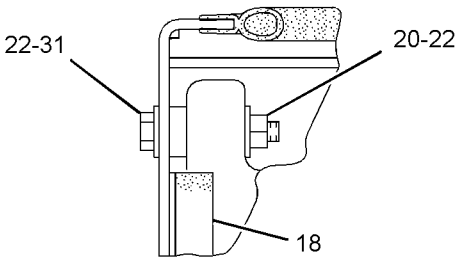

VIEW OF AREA F

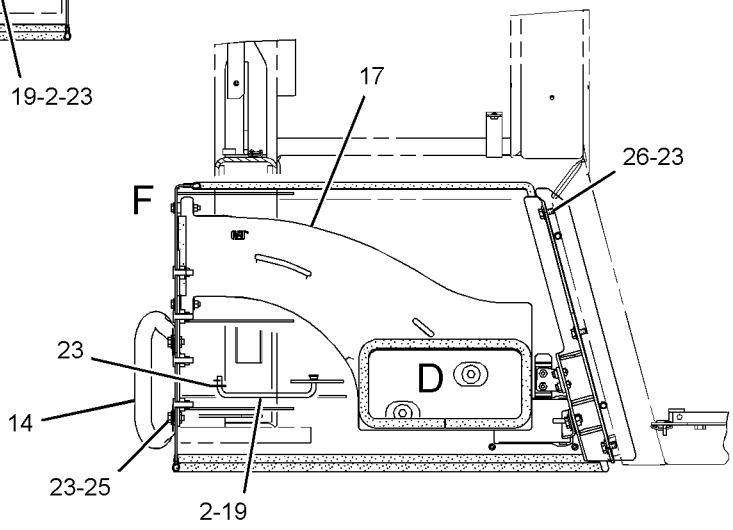

SECTION E-E

GRAPHIC #2 **<END>** g01737214

OPERATOR STATION

277-9969 HEATER GP-CAB

S/N: LBP1-UP

PART OF 279-8843 AIR CONDITIONER GP

SMCS-7304 **i02841576**

NOTE	REF NO	GRAPHIC REF	PART NUMBER	QTY	PART NAME 1 2 3 4 5 6 (PRODUCT LEVEL)	SEE PAGE
	1	1	**8T-0154**	2	CLAMP-HOSE	
	2	1	**277-9968**	1	VALVE GP-CAB HEATER	
	3	1	**287-6657**	1	COIL AS-HEATER	
	4	1	**291-3803**	1	HOSE	

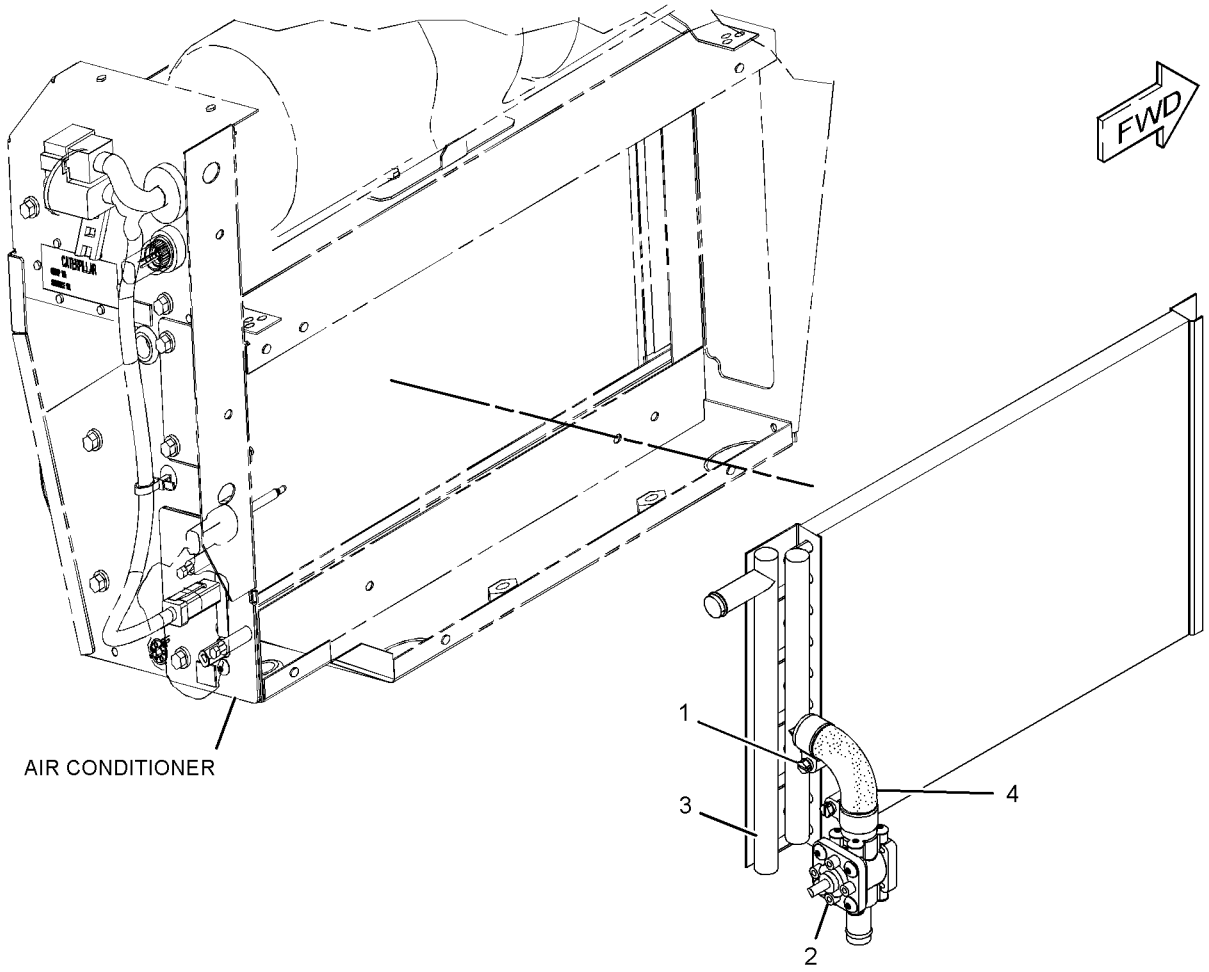

GRAPHIC #1 **<END>** g01417376

OPERATOR STATION

251-1927 INSTALLATION GP-CAB

S/N: LBP1-342

PART OF 240-6230 CAB GP

SMCS-1265, 4284, 7301 **i02707669**

NOTE	REF NO	GRAPHIC REF	PART NUMBER	QTY	PART NAME 1 2 3 4 5 6 (PRODUCT LEVEL)	SEE PAGE
	1	1	**5P-6875**	1	MIRROR (2-POINT MOUNT)	
	2	1,2	**7K-1181**	25	STRAP-CABLE	
	4	3	**9R-4872**	2	CLIP	
	5	3	**124-0597**	2	KNOB	
	6	5	**127-0506**	2	BUMPER AS	
	7	1,3	**143-2397**	4	CAP	
M	9	3	**179-4324**	2	LOCKNUT (M5X0.8-THD)	
	10	1,2	**252-8230**	4	DOWEL	
	11	1,2	**252-8231**	2	PLATE AS	
	12	2	**254-8594**	1	COVER	
	13	5	**254-8617**	1	HANDLE	
	14	2	**254-8621**	1	PLATE	
	15	1	**254-8628**	1	COVER	
	16	1	**257-6157**	1	PLATE	
	17	5	**257-6188**	1	SEAL	
	18	5	**257-6215**	2	CHANNEL AS	
	19	1	**257-6228**	1	COVER AS	
	20	1	**257-6229**	1	COVER AS	
	21	3	**257-6239**	1	PLATE	
	22	3	**257-6245**	1	GRID	
	23	5	**261-7268**	1	VISOR GP-CAB	
		5	**283-1400**	1	FILM-IDENTIFICATION (ARROW, SUN VISOR)	
		5	**254-8629**	1	VISOR	
M		5	**6V-9669**	4	SCREW-MACHINE (M3X0.5X8-MM)	
M		5	**107-3786**	2	BOLT (M4X0.7X12-MM)	
	24	3	**261-7382**	1	LEVER AS	
	25	4	**263-9372**	1	COVER (LH)	
	26	5	**263-9431**	1	FLOORPLATE	
	27	3	**268-0955**	2	WASHER-HARD (6.4X12.5X0.76-MM THK)	
	28	3	**268-0956**	2	WASHER-HARD (7.5X13X0.51-MM THK)	
	29	3	**268-0959**	1	HANDRAIL	
M	30	2,3	**268-0960**	2	NUT (M12X1.75-THD)	
	31	5	**283-1392**	2	BUMPER	
	32	5	**283-1408**	2	SPACER	
	33	3	**283-1409**	2	PIVOT	
	34	4	**283-1412**	1	COVER	
	35	1	**283-1414**	1	SEAL	
	36	1	**283-1415**	1	SEAL	
	37	3	**283-1419**	1	SEAL	
	38	5	**283-1420**	1	HANDLE (RH)	
	39	3	**283-5546**	1	LEVER AS	
Y	40	3	*283-5571*	1	BOX GP-TOOL	736
	41	1	**284-9815**	8	SCREW-TRUSS HEAD (M8X1.25X10-MM)	
	42	3	**284-9829**	2	STUD	
	43	2	**284-9830**	1	PLATE AS	
M		2	**8T-4130**	2	STUD (M6X1X18-MM)	
	44	1	**289-1074**	1	PANEL	
	45	1	**289-1079**	1	CHANNEL	
	46	1,2	**289-1081**	2	CABLE AS	
	47	5	**289-1082**	2	TURNBUCKLE	
	48	3	**289-1106**	1	FILM-IDENTIFICATION (SWITCH PANEL, LH)	
	49	3	**289-1107**	1	FILM-IDENTIFICATION (SWITCH PANEL, RH)	
	50	3	**289-1132**	2	SPRING	
	51	1	**289-1133**	1	BRACKET	
	52	4	**294-3144**	2	LATCH AS	
	53	2	**294-3150**	4	CAP	

251-1927 **INSTALLATION GP-CAB** *(contd.)* **i02707669**

NOTE	REF NO	GRAPHIC REF	PART NUMBER	QTY	PART NAME 1 2 3 4 5 6 (PRODUCT LEVEL)	SEE PAGE
	54	1	**294-3151**	1	BRACKET AS	
	55	5	**294-3159**	2	BOOT	
	56	2,3	**295-5742**	2	STRIKER AS	
M	57	1,3,4	**127-2170**	11	SCREW-TRUSS HEAD (M8X1.25X20-MM)	
	58	4	**2U-2552**	8	LOCKWASHER	
M	59	4	**3E-8020**	8	SCREW-TRUSS HEAD (M6X1X25-MM)	
M	60	5	**5C-2874**	8	NUT (M5X0.8-THD)	
M	61	1,3,5	**5C-7261**	3	NUT (M8X1.25-THD)	
M	62	1	**5C-9553**	2	BOLT (M6X1X16-MM)	
	63	4	**5P-4115**	16	WASHER-HARD (7.2X19X2-MM THK)	
	64	1	**5P-4116**	2	WASHER-HARD (8.8X20.5X2-MM THK)	
M	65	3	**6V-4298**	2	BOLT (M5X0.8X16-MM)	
M	66	2,4	**6V-8225**	10	NUT (M6X1-THD)	
	67	5	**7X-0515**	2	WASHER-HARD (17X35X5-MM THK)	
	68	3,5	**7X-0620**	10	WASHER-HARD (5.5X13X1.6-MM THK)	
	69	5	**7X-7729**	3	WASHER (11X25X3-MM THK)	
M	70	1,2	**8T-0357**	8	BOLT (M16X2X70-MM)	
	71	1,3,5	**8T-4121**	12	WASHER-HARD (11X21X2.5-MM THK)	
	72	1,2	**8T-4122**	8	WASHER-HARD (17X32X3.5-MM THK)	
M	73	1,5	**8T-4133**	4	NUT (M10X1.5-THD)	
M	74	1,5	**8T-4136**	9	BOLT (M10X1.5X25-MM)	
M	75	3	**8T-4195**	2	BOLT (M10X1.5X30-MM)	
M	76	1	**8T-4200**	3	BOLT (M8X1.25X16-MM)	
	77	2	**8T-4205**	2	WASHER-HARD (7.2X14.5X2-MM THK)	
	78	1,3,5	**8T-4224**	8	WASHER-HARD (8.8X16X2-MM THK)	
	79	2,3	**8Y-6385**	2	SHIELD-STRIKER	
M	80	5	**9X-2039**	4	SCREW-TRUSS HEAD (M10X1.5X35-MM)	
M	81	1,2	**9X-2041**	8	SCREW-TRUSS HEAD (M10X1.5X20-MM)	
M	82	3	**9X-2042**	2	SCREW-TRUSS HEAD (M6X1X12-MM)	
M	83	4	**9X-2044**	6	SCREW-TRUSS HEAD (M6X1X16-MM)	
	84	1	**9X-6381**	2	WASHER (6.5X12.5X1.6-MM THK)	
	85	3	**9Z-7719**	2	HOUSING	
E	86	4	**289-1073**		SEAL (5.5-CM EACH)	
E	87	1	**280-7618**		SEAL (75-CM)	
E	87A	2	**280-7618**		SEAL (80-CM)	
E	88	1	**289-1072**		SEAL (9.7-CM EACH)	
E	88A	2	**289-1072**		SEAL (42-CM EACH)	
E	88B	2	**289-1072**		SEAL (14.3-CM EACH)	
E	89	2	**289-1080**		SEAL (141-CM EACH)	
E	89A	2	**289-1080**		SEAL (145.5-CM EACH)	

E-ORDER BY THE CENTIMETER
M-METRIC PART
Y-SEPARATE ILLUSTRATION

REFER TO ALL ILLUSTRATIONS OF
THIS GROUP FOR AUXILIARY VIEWS

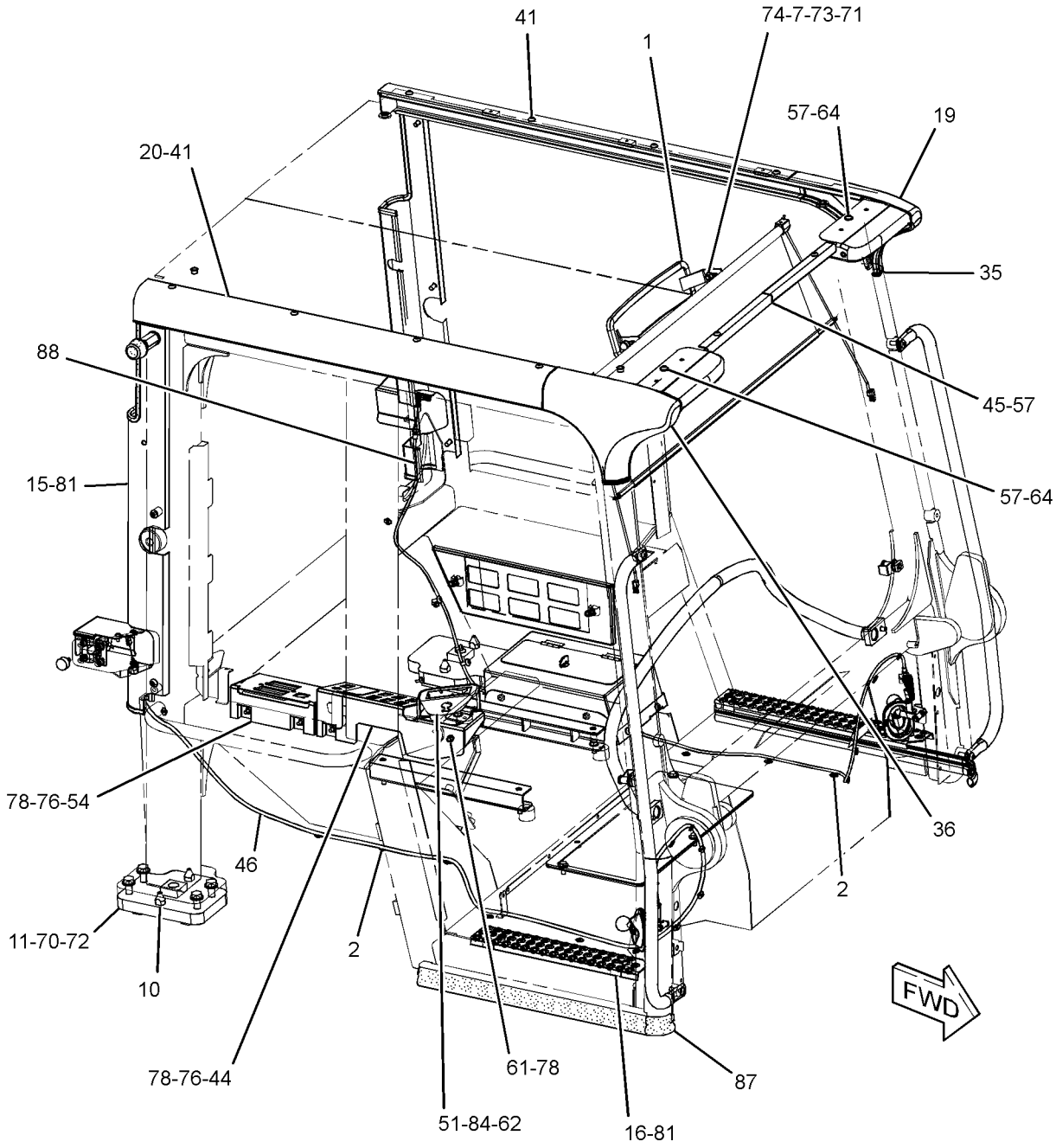

GRAPHIC #1 g01351878

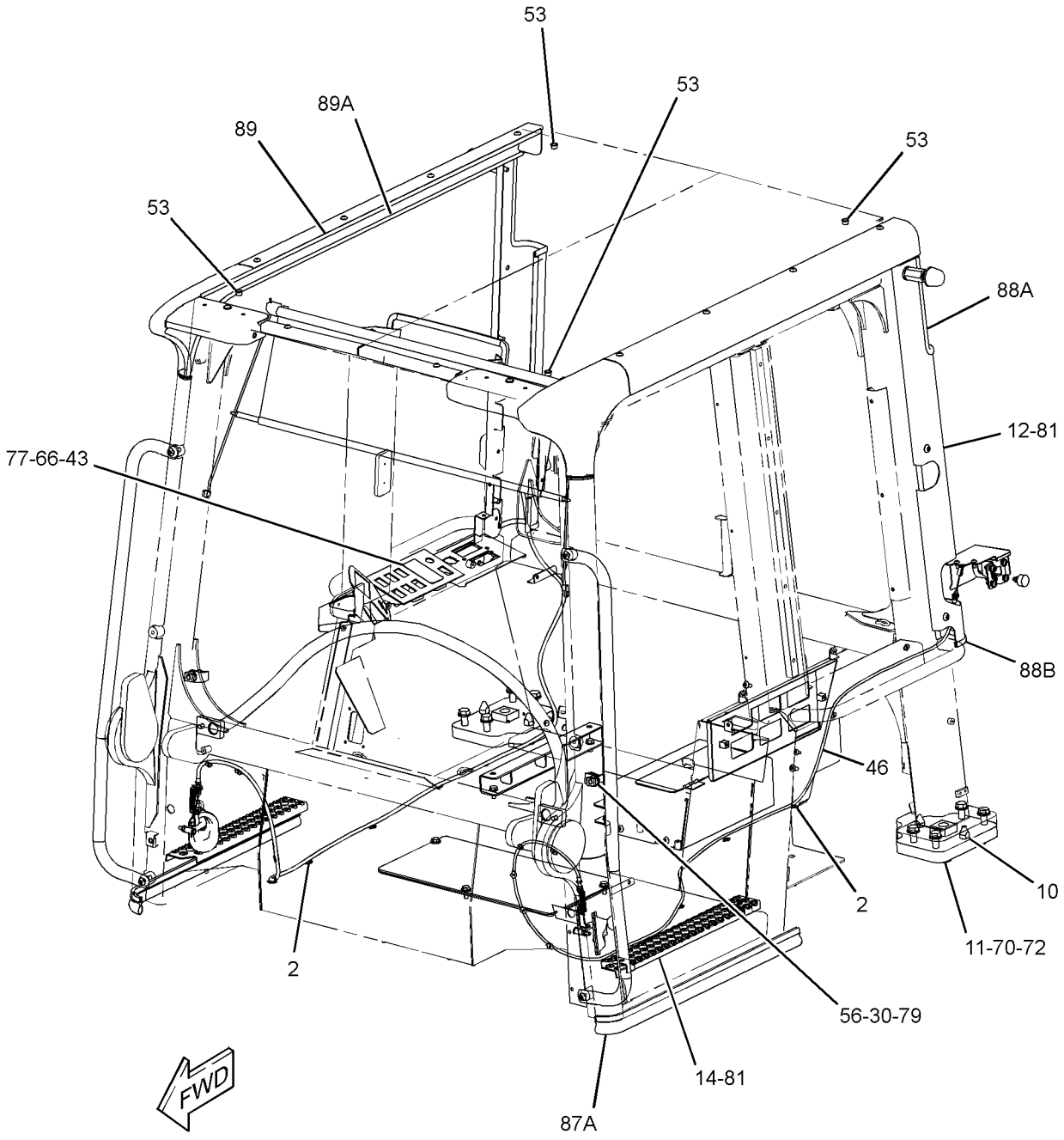

GRAPHIC #2 g01351879

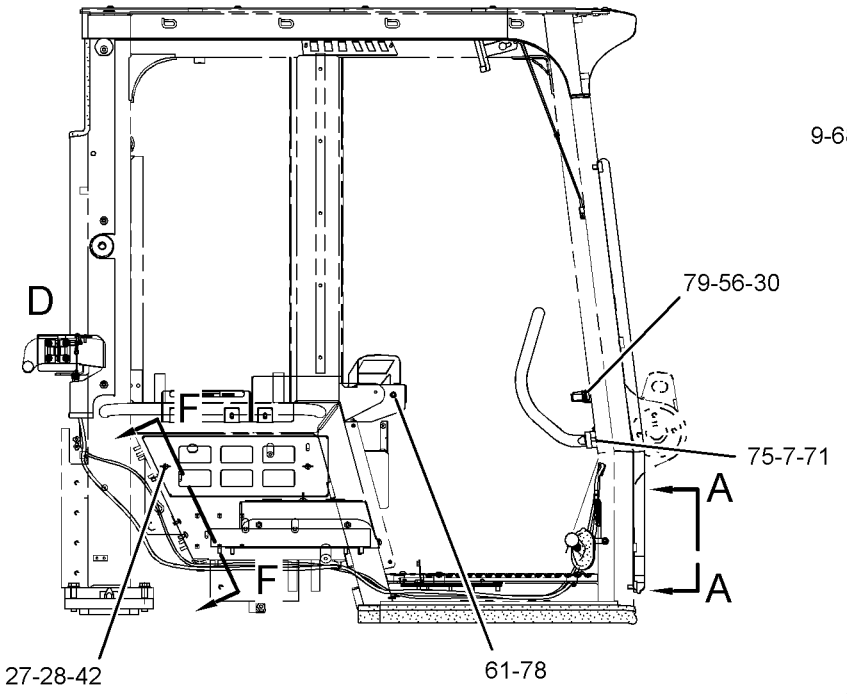

RIGHT SIDE VIEW

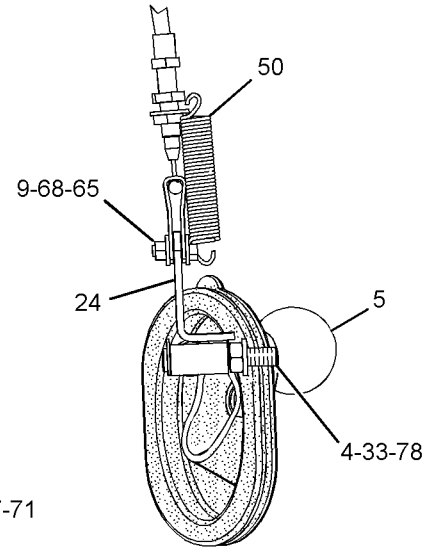

VIEW A-A

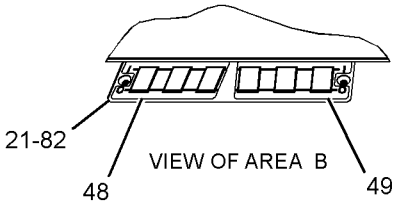

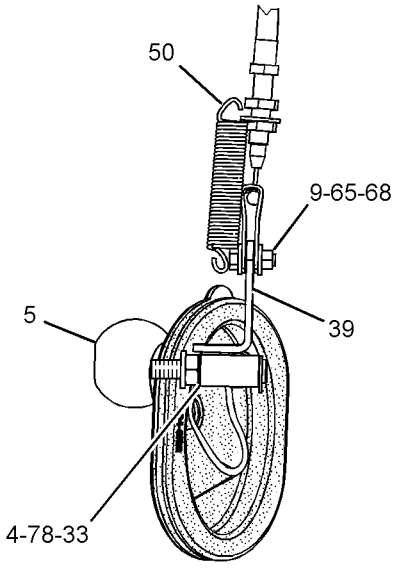

VIEW C-C

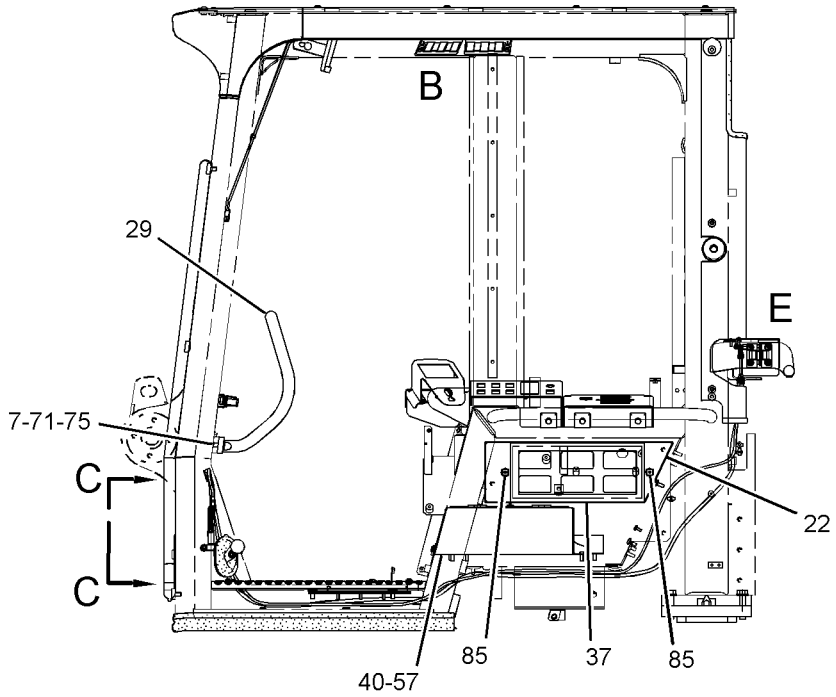

LEFT SIDE VIEW

REFER TO ALL ILLUSTRATIONS OF THIS GROUP FOR AUXILIARY VIEWS

GRAPHIC #3

g01351881

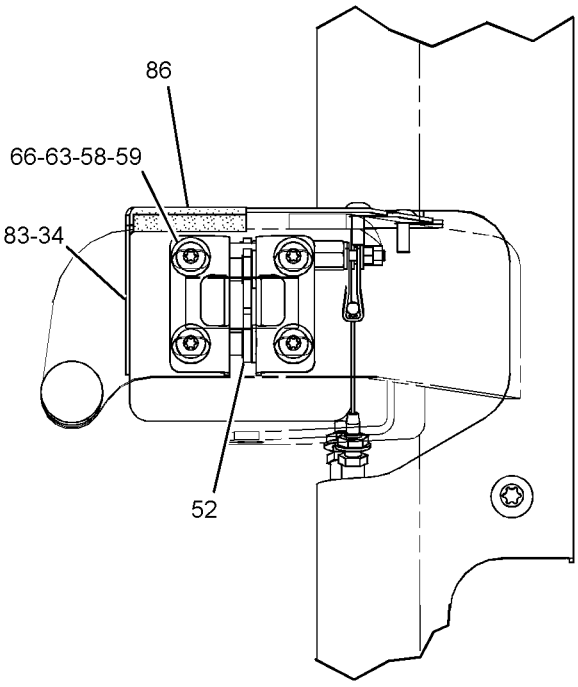

VIEW OF AREA D

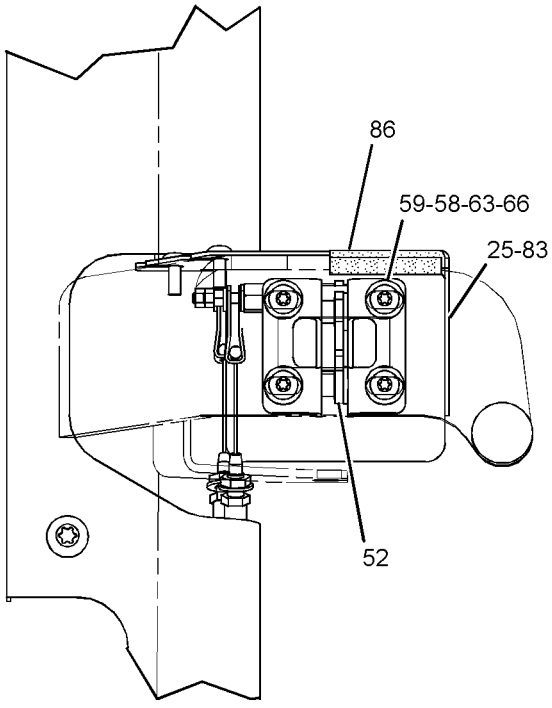

VIEW OF AREA E

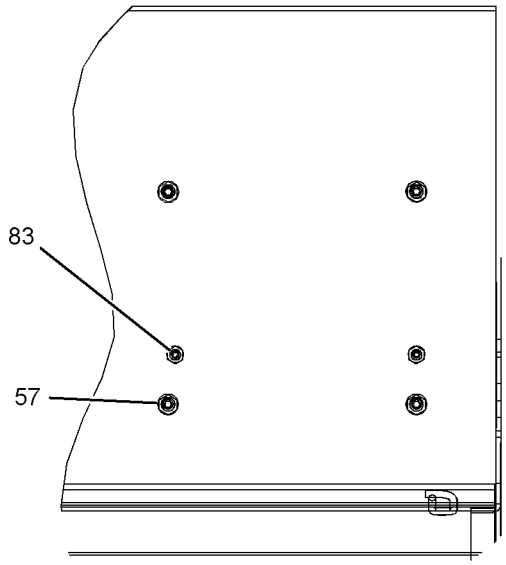

VIEW F-F

GRAPHIC #4

g01351882

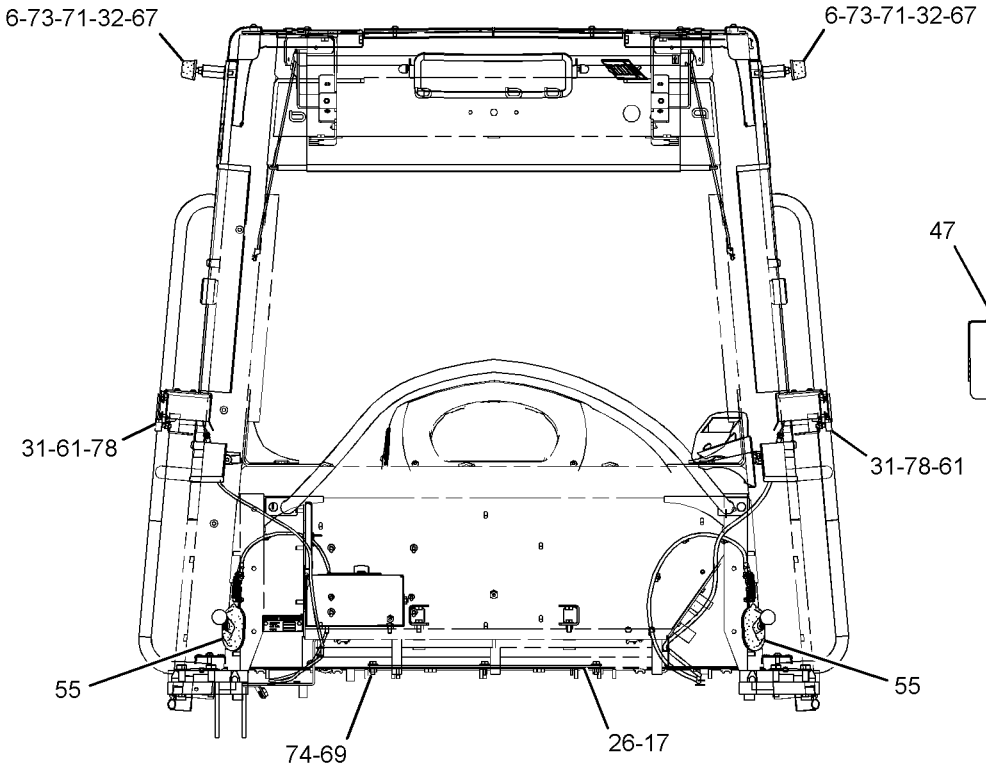

REAR VIEW

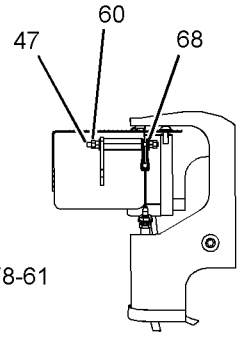

SECTION G-G

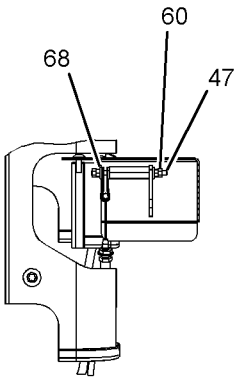

SECTION H-H

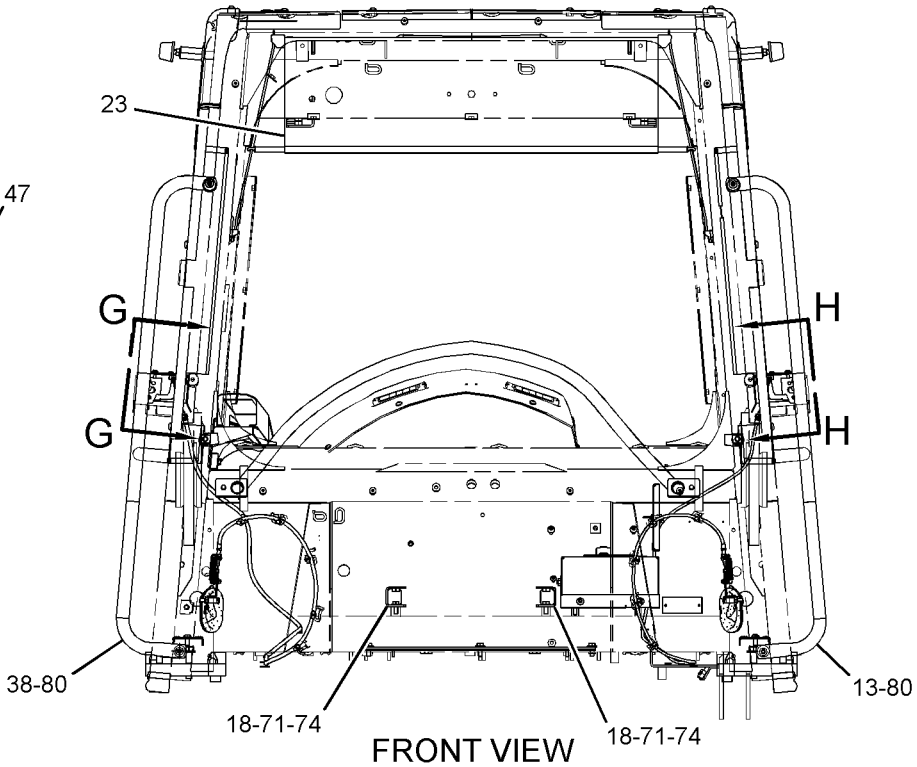

FRONT VIEW

GRAPHIC #5 **<END>** g01351884

OPERATOR STATION

251-1927 INSTALLATION GP-CAB

S/N: LBP343-452

PART OF 240-6230 CAB GP

SMCS-1265, 4284, 7301 **i02895070**

NOTE	REF NO	GRAPHIC REF	PART NUMBER	QTY	PART NAME 1 2 3 4 5 6 (PRODUCT LEVEL)	SEE PAGE
	1	2	**5P-6875**	1	MIRROR (2-POINT MOUNT)	
	2	1,2	**7K-1181**	25	STRAP-CABLE	
	4	4	**9R-4872**	2	CLIP	
	5	4	**124-0597**	2	KNOB	
	6	3	**127-0506**	2	BUMPER AS	
	7	2,4	**143-2397**	4	CAP	
M	9	4	**179-4324**	2	LOCKNUT (M5X0.8-THD)	
	10	1,2	**252-8230**	4	DOWEL	
	11	1,2	**252-8231**	2	PLATE AS	
	12	1	**254-8594**	1	COVER	
	13	3	**254-8617**	1	HANDLE	
	14	1	**254-8621**	1	PLATE	
	15	2	**254-8628**	1	COVER	
	16	2	**257-6157**	1	PLATE	
	17	3	**257-6188**	1	SEAL	
	18	3	**257-6215**	2	CHANNEL AS	
	19	2	**257-6228**	1	COVER AS	
	20	1	**257-6229**	1	COVER AS	
	21	4	**257-6239**	1	PLATE	
	22	4	**257-6245**	1	GRID	
	23	3	**261-7268**	1	VISOR GP-CAB	
		3	**283-1400**	1	FILM-IDENTIFICATION (ARROW, SUN VISOR)	
		3	**254-8629**	1	VISOR	
M		3	**6V-9669**	4	SCREW-MACHINE (M3X0.5X8-MM)	
M		3	**107-3786**	2	BOLT (M4X0.7X12-MM)	
	24	4	**261-7382**	1	LEVER AS	
	25	1	**263-9372**	1	COVER (LH)	
	26	3	**263-9431**	1	FLOORPLATE	
C	27	4	**147-5630**	2	RETAINER	
	29	4	**268-0959**	1	HANDRAIL	
M	30	4	**268-0960**	2	NUT (M12X1.75-THD)	
	31	3	**283-1392**	2	BUMPER	
	32	3	**283-1408**	2	SPACER	
	33	4	**283-1409**	2	PIVOT	
	34	2	**283-1412**	1	COVER	
	35	2	**283-1414**	1	SEAL	
	36	1	**283-1415**	1	SEAL	
	37	4	**283-1419**	1	SEAL	
	38	3	**283-1420**	1	HANDLE (RH)	
	39	4	**283-5546**	1	LEVER AS	
C	40	4	**303-4025**	1	TOOL BOX	
	41	1,2	**284-9815**	8	SCREW-TRUSS HEAD (M8X1.25X10-MM)	
	42	4	**284-9829**	2	STUD	
	43	1	**284-9830**	1	PLATE AS	
M		1	**8T-4130**	2	STUD (M6X1X18-MM)	
	44	2	**289-1074**	1	PANEL	
C	45	2	**303-4027**	1	CHANNEL	
	46	1,2	**289-1081**	2	CABLE AS	
	47	3	**289-1082**	2	TURNBUCKLE	
	48	4	**289-1106**	1	FILM-IDENTIFICATION (SWITCH PANEL, LH)	
	49	4	**289-1107**	1	FILM-IDENTIFICATION (SWITCH PANEL, RH)	
	50	4	**289-1132**	2	SPRING	
	51	2	**289-1133**	1	BRACKET	
	52	1,2	**294-3144**	2	LATCH AS	
	53	1	**294-3150**	4	CAP	
C	54	2	**294-3194**	1	BRACKET AS	

251-1927 **INSTALLATION GP-CAB** *(contd.)* **i02895070**

NOTE	REF NO	GRAPHIC REF	PART NUMBER	QTY	PART NAME 1 2 3 4 5 6 (PRODUCT LEVEL)	SEE PAGE
	55	3	**294-3159**	2	BOOT	
	56	4	**295-5742**	2	STRIKER AS	
CM	57	2,4	**127-2170**	13	SCREW-TRUSS HEAD (M8X1.25X20-MM)	
	58	1,2	**2U-2552**	8	LOCKWASHER	
M	59	1,2	**3E-8020**	8	SCREW-TRUSS HEAD (M6X1X25-MM)	
M	60	3	**5C-2874**	8	NUT (M5X0.8-THD)	
M	61	2,3,4	**5C-7261**	3	NUT (M8X1.25-THD)	
M	62	2	**5C-9553**	2	BOLT (M6X1X16-MM)	
	63	1,2	**5P-4115**	16	WASHER-HARD (7.2X19X2-MM THK)	
	64	2	**5P-4116**	2	WASHER-HARD (8.8X20.5X2-MM THK)	
M	65	4	**6V-4298**	2	BOLT (M5X0.8X16-MM)	
M	66	1,2	**6V-8225**	10	NUT (M6X1-THD)	
	67	3	**7X-0515**	2	WASHER-HARD (17X35X5-MM THK)	
	68	3,4	**7X-0620**	10	WASHER-HARD (5.5X13X1.6-MM THK)	
	69	3	**7X-7729**	3	WASHER (11X25X3-MM THK)	
M	70	1,2	**8T-0357**	8	BOLT (M16X2X70-MM)	
	71	2,3,4	**8T-4121**	12	WASHER-HARD (11X21X2.5-MM THK)	
	72	1,2	**8T-4122**	8	WASHER-HARD (17X32X3.5-MM THK)	
M	73	2,3	**8T-4133**	4	NUT (M10X1.5-THD)	
M	74	2,3	**8T-4136**	9	BOLT (M10X1.5X25-MM)	
M	75	4	**8T-4195**	2	BOLT (M10X1.5X30-MM)	
M	76	2	**8T-4200**	3	BOLT (M8X1.25X16-MM)	
	77	1	**8T-4205**	2	WASHER-HARD (7.2X14.5X2-MM THK)	
	78	2,3,4	**8T-4224**	8	WASHER-HARD (8.8X16X2-MM THK)	
	79	4	**8Y-6385**	2	SHIELD-STRIKER	
M	80	3	**9X-2039**	4	SCREW-TRUSS HEAD (M10X1.5X35-MM)	
M	81	1,2	**9X-2041**	8	SCREW-TRUSS HEAD (M10X1.5X20-MM)	
M	82	4	**9X-2042**	2	SCREW-TRUSS HEAD (M6X1X12-MM)	
M	83	1,2,4	**9X-2044**	6	SCREW-TRUSS HEAD (M6X1X16-MM)	
	84	2	**9X-6381**	2	WASHER (6.5X12.5X1.6-MM THK)	
	85	4	**9Z-7719**	2	HOUSING	
E	86	1,2	**289-1073**		SEAL (5.5-CM EACH)	
E	87	2	**280-7618**		SEAL (75-CM)	
E	87A	1	**280-7618**		SEAL (80-CM)	
E	88	2	**289-1072**		SEAL (9.7-CM EACH)	
E	88A	1	**289-1072**		SEAL (42-CM EACH)	
E	88B	1	**289-1072**		SEAL (14.3-CM EACH)	
CE	88C	3	**289-1072**		SEAL (38.5-CM EACH)	
CE	88D	1	**289-1072**		SEAL (49-CM EACH)	
CE	88E	3	**289-1072**		SEAL (28.5-CM EACH)	
E	89	1	**289-1080**		SEAL (141-CM EACH)	
E	89A	1	**289-1080**		SEAL (145.5-CM EACH)	

C-CHANGE FROM PREVIOUS TYPE
E-ORDER BY THE CENTIMETER
M-METRIC PART

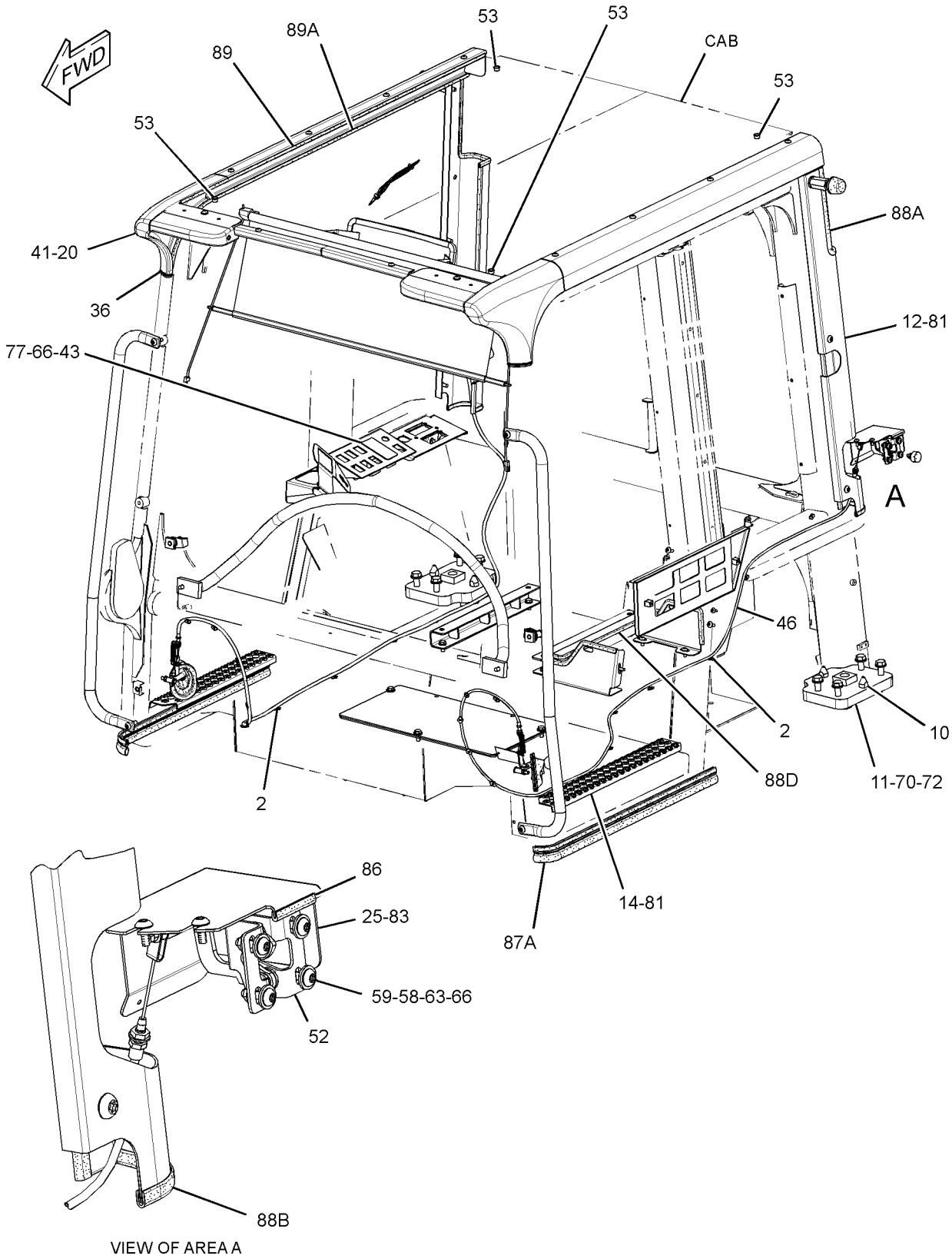

VIEW OF AREA A

GRAPHIC #1

g01527267

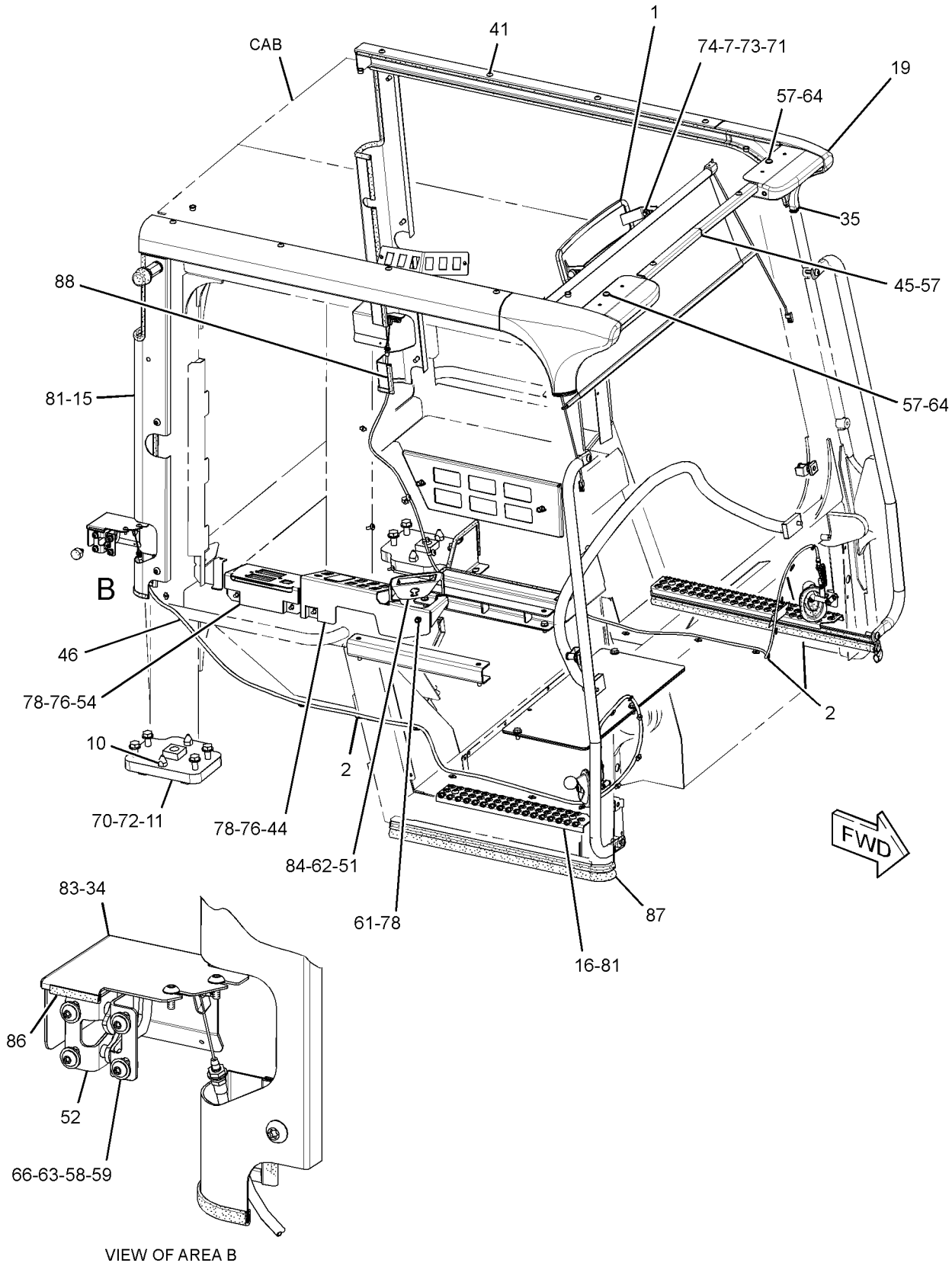

GRAPHIC #2

g01527268

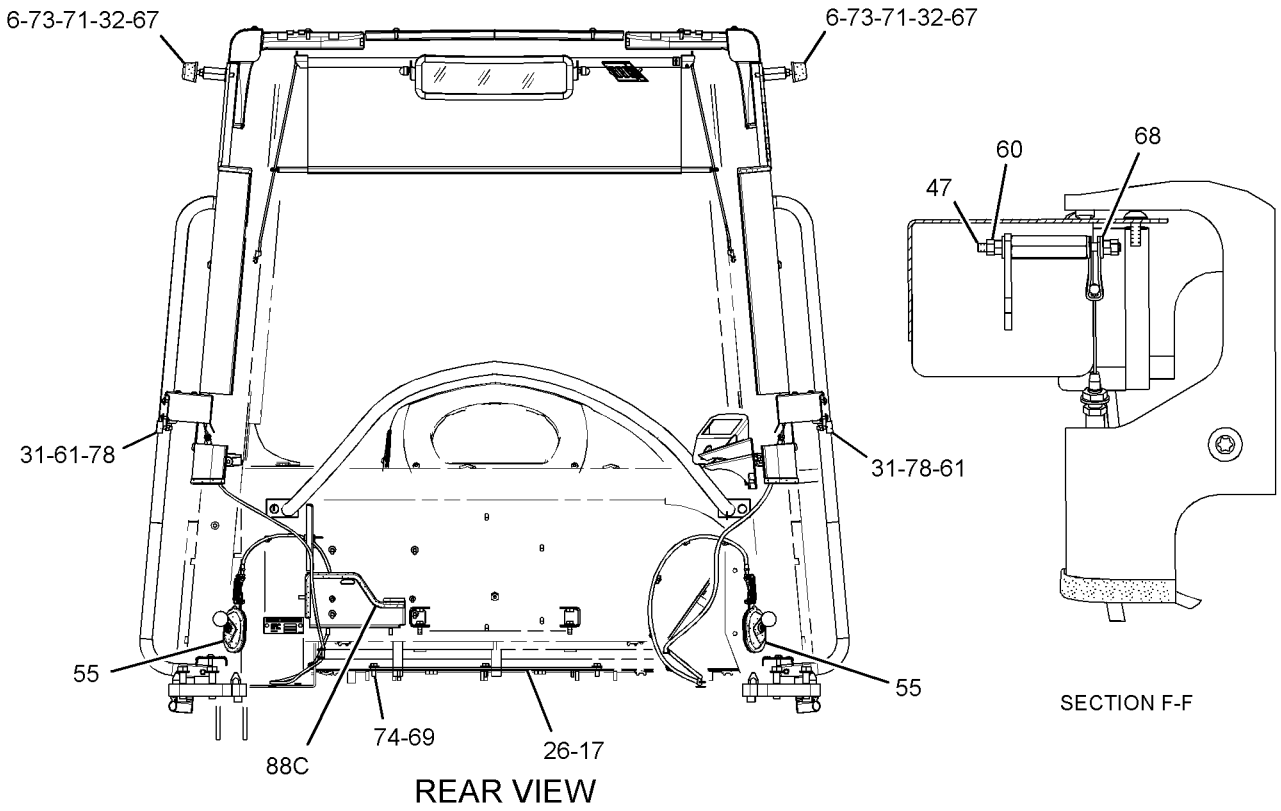

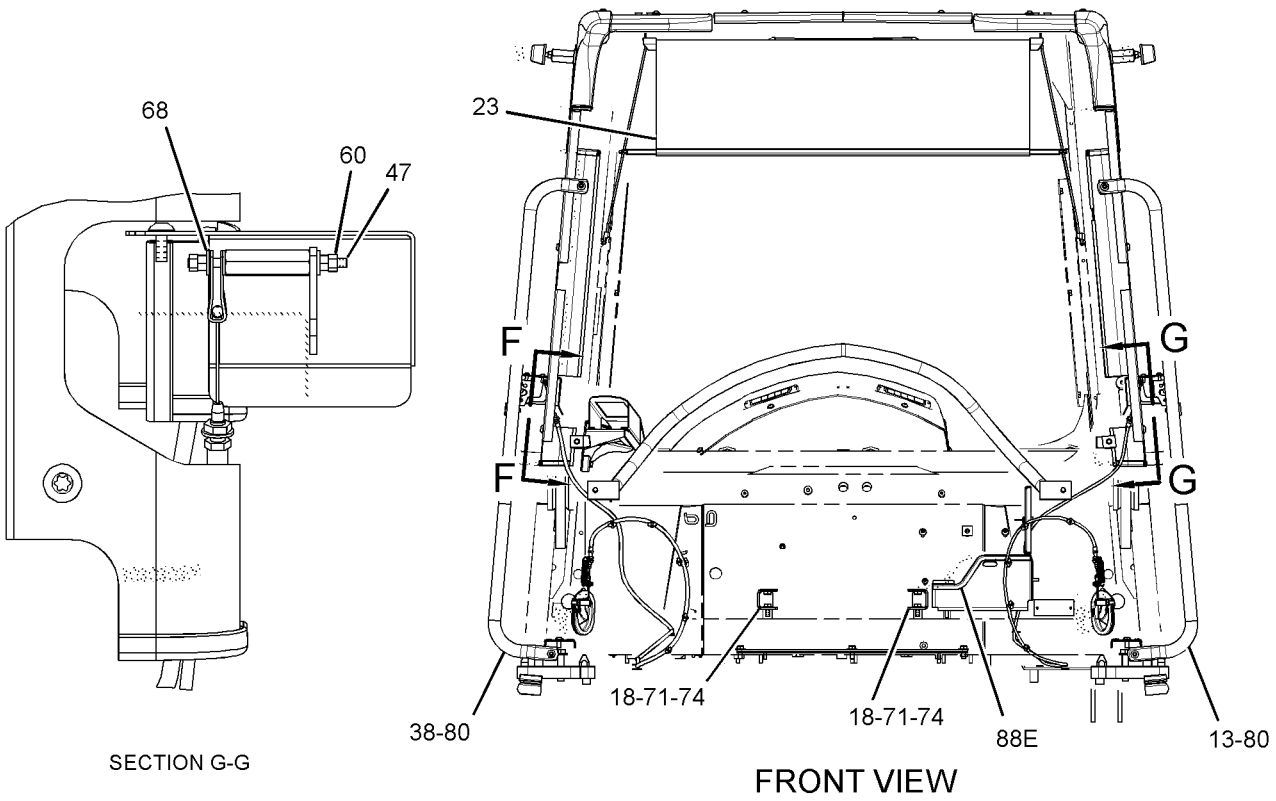

GRAPHIC #3 g01527269

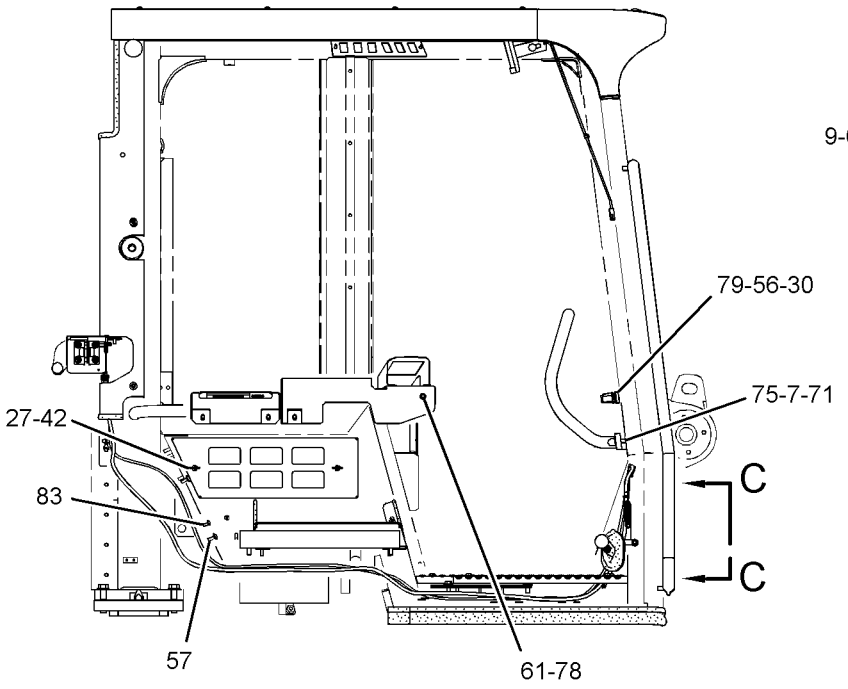

RIGHT SIDE VIEW

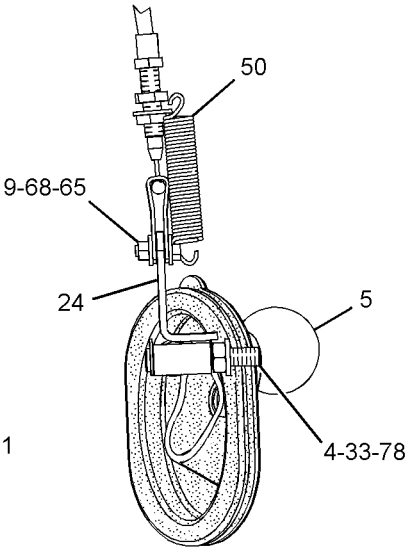

VIEW D-D

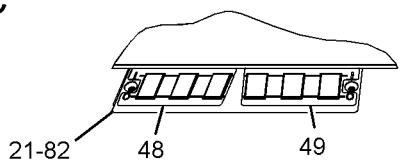

VIEW OF AREA E

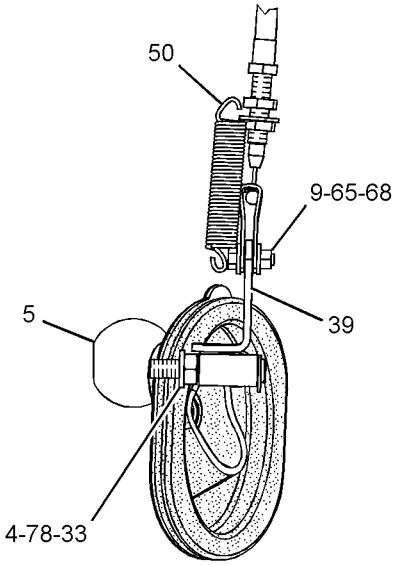

VIEW C-C

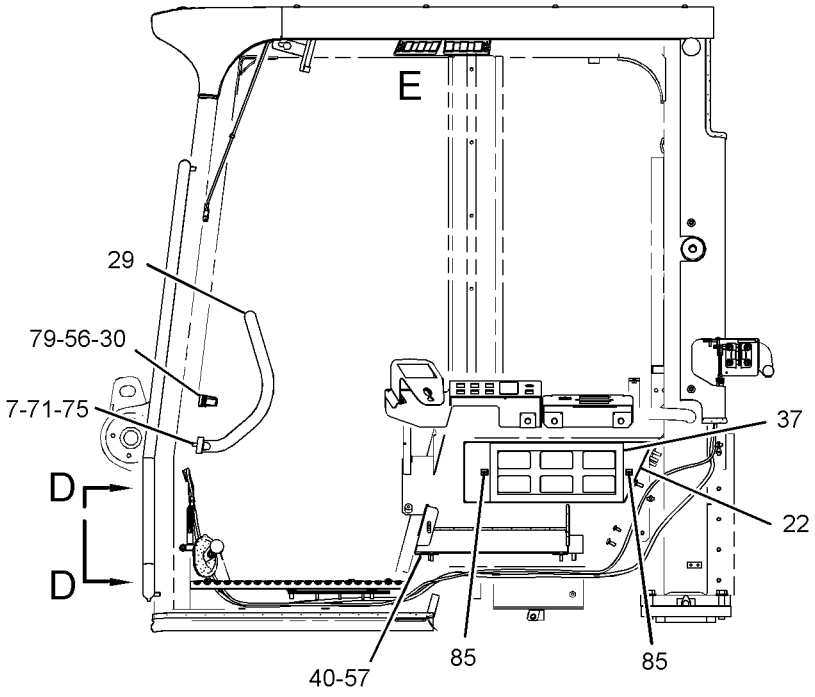

LEFT SIDE VIEW

GRAPHIC #4 **<END>** g01527271

OPERATOR STATION

279-1552 INSTALLATION GP-CAB

S/N: LBP1-827

PART OF 258-7787 CAB AR

SMCS-1265, 4284, 7301 **i02813617**

NOTE	REF NO	GRAPHIC REF	PART NUMBER	QTY	PART NAME 1 2 3 4 5 6 (PRODUCT LEVEL)	SEE PAGE
	1	1,2	**8T-7038**	4	FILM-WARNING (DO NOT LIFT)	
	2	2	**147-0526**	2	PLUG	
	3	2	**219-0305**	1	FILM-WARNING (NO WELD, NO DRILL, READ OMM)	
	4	1,2	**220-3261**	2	FILM-INSTRUCTION (CAB UNLOCK)	
	6	2	**310-6272**	1	FILM-IDENTIFICATION (ARTICULATION LOCK)	
	7	2	**283-1435**	1	FILM-IDENTIFICATION (SECURITY)	
	8	2	**289-1087**	2	PLATE	
	9	2	**289-1146**	1	BAFFLE	
	10	2	**289-1147**	1	BAFFLE	
	11	2	**289-1148**	1	BAFFLE AS	
		2	**9M-5732**	8	RIVET-POP	
	12	2	**294-3126**	1	BAFFLE AS	
		2	**9M-5732**	8	RIVET-POP	
	13	1	**302-6303**	1	FILM-IDENTIFICATION (ALTERNATE EXIT)	
	14	2	**110-6393**	1	PLATE-INSTRUCTION (AIR CONDITIONER)	
	16	2	**281-1561**	1	FILM-WARNING (ROPS, FOPS, READ OMM)	
	17	2	**8T-4121**	4	WASHER-HARD (11X21X2.5-MM THK)	
M	18	2	**8T-4137**	4	BOLT (M10X1.5X20-MM)	
M	19	2	**8T-4200**	8	BOLT (M8X1.25X16-MM)	
	20	2	**8T-4224**	8	WASHER-HARD (8.8X16X2-MM THK)	

M-METRIC PART

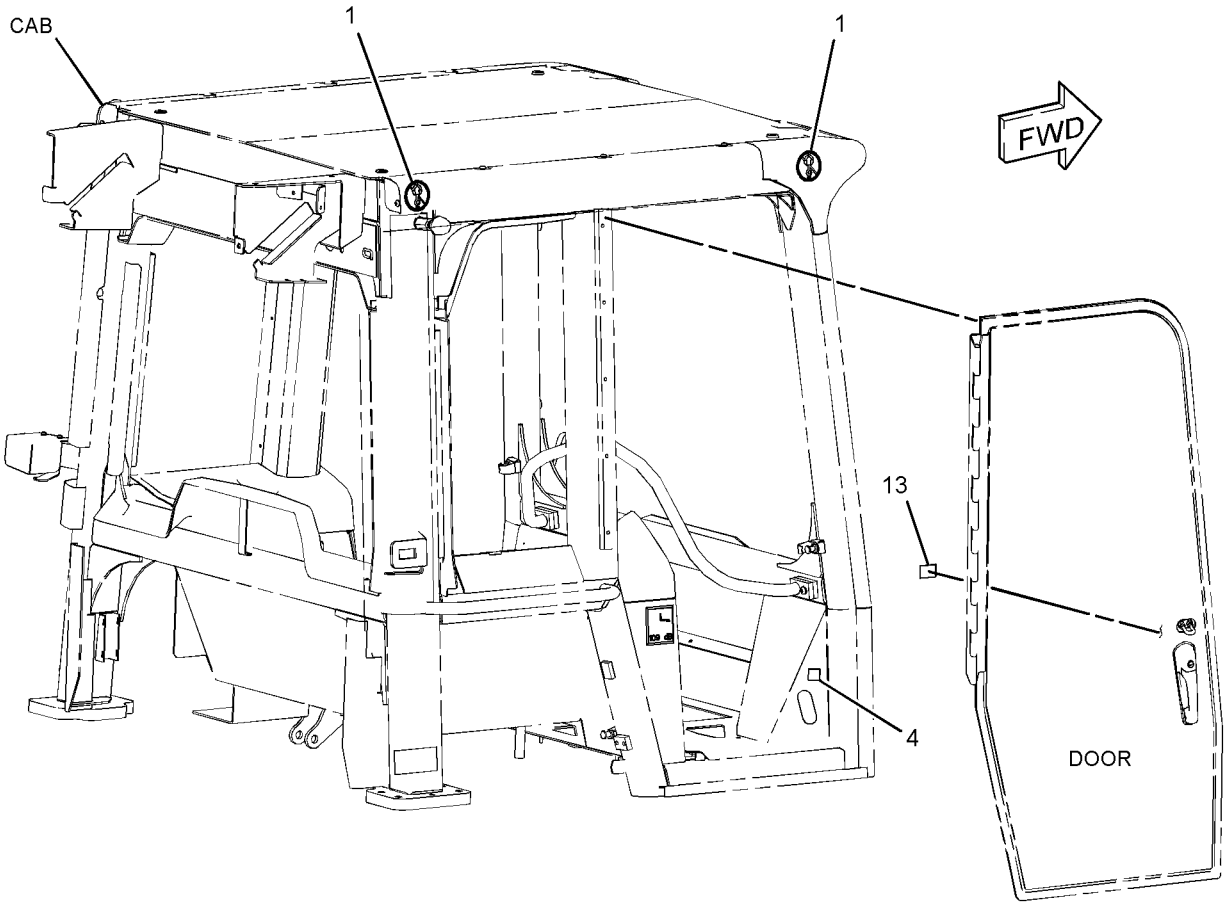

GRAPHIC #1 g01407069

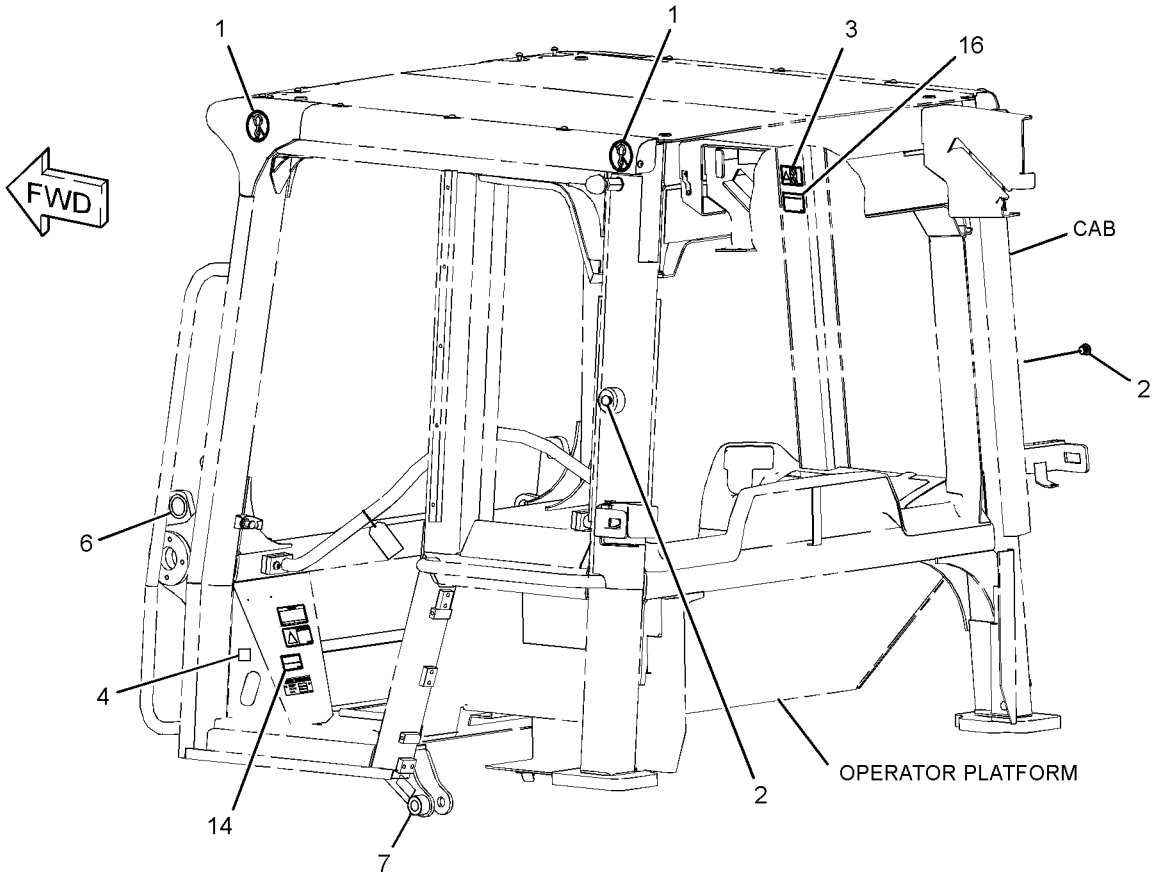

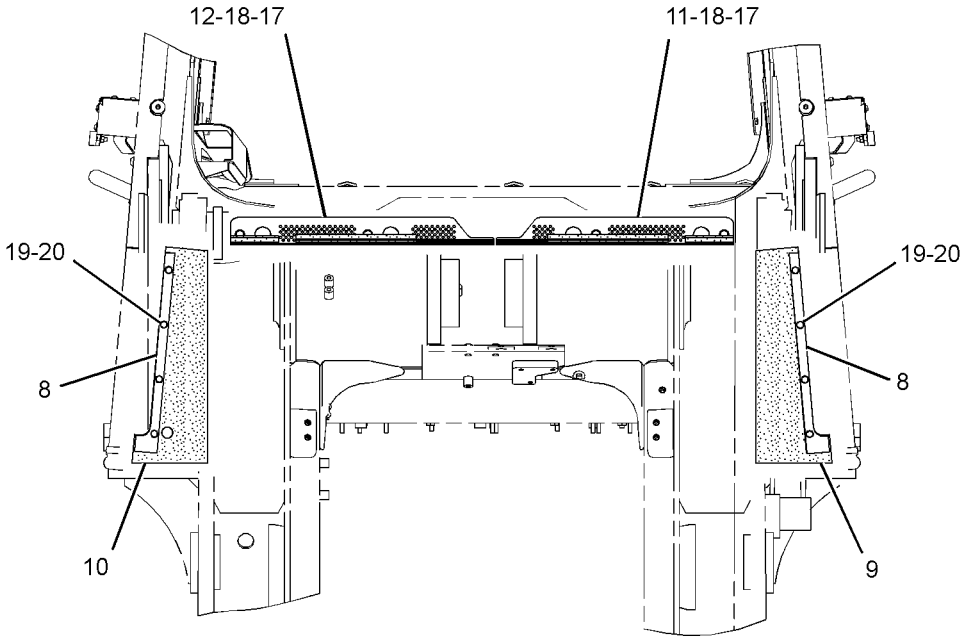

FRONT VIEW

GRAPHIC #2 **<END>** g01407064

OPERATOR STATION

321-3421 INSTALLATION GP-CAB

S/N: LBP828-UP

PART OF 258-7787 CAB AR

SMCS-1265, 4284, 7301 **i03044880**

NOTE	REF NO	GRAPHIC REF	PART NUMBER	QTY	PART NAME 1 2 3 4 5 6 (PRODUCT LEVEL)	SEE PAGE
	1	1,2	**8T-7038**	4	FILM-WARNING (DO NOT LIFT)	
	2	1	**147-0526**	2	PLUG	
	3	1	**219-0305**	1	FILM-WARNING (NO WELD, NO DRILL, READ OMM)	
	4	1,2	**220-3261**	2	FILM-INSTRUCTION (CAB UNLOCK)	
	5	1	**235-0346**	1	TAG-ANTIFREEZE (EXTENDED LIFE COOLANT)	
	6	1	**283-1435**	1	FILM-IDENTIFICATION (SECURITY)	
	7	2	**289-1148**	1	BAFFLE AS	
	8	2	**294-3126**	1	BAFFLE AS	
	9	1	**302-6303**	1	FILM-IDENTIFICATION (ALTERNATE EXIT)	
	10	1	**310-6272**	1	FILM-IDENTIFICATION (ARTICULATION LOCK)	
	11	2	**321-3402**	2	PLATE	
	12	2	**321-3403**	1	BAFFLE	
	13	2	**321-3404**	1	BAFFLE	
	14	1	**110-6393**	1	PLATE-INSTRUCTION (AIR CONDITIONER)	
	16	1	**281-1561**	1	FILM-WARNING (ROPS, FOPS, READ OMM)	
	17	2	**5P-4116**	8	WASHER-HARD (8.8X20.5X2-MM THK)	
	18	2	**7X-7729**	4	WASHER (11X25X3-MM THK)	
M	19	2	**8T-4137**	4	BOLT (M10X1.5X20-MM)	
M	20	2	**8T-4200**	8	BOLT (M8X1.25X16-MM)	

M-METRIC PART

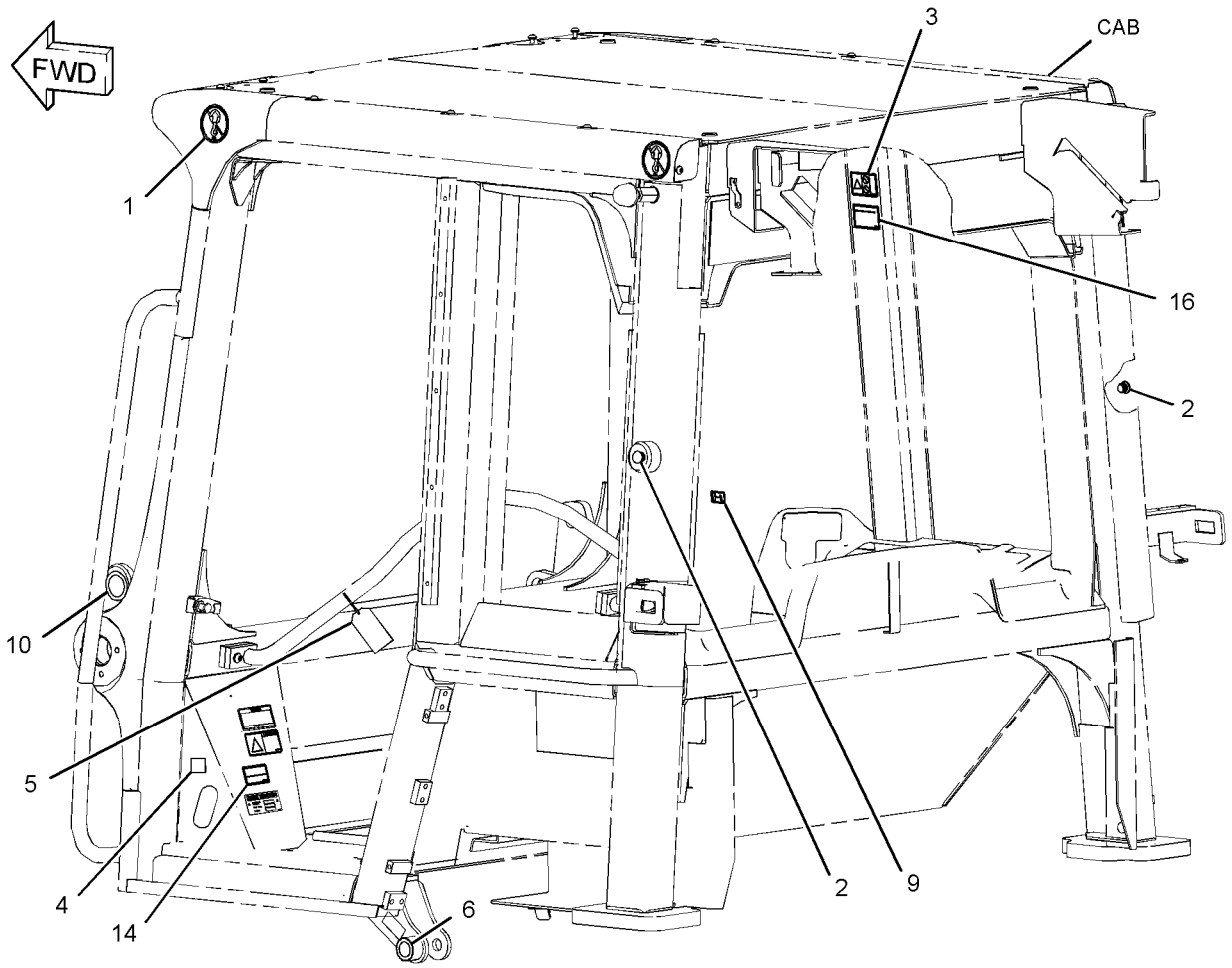

GRAPHIC #1 g01596736

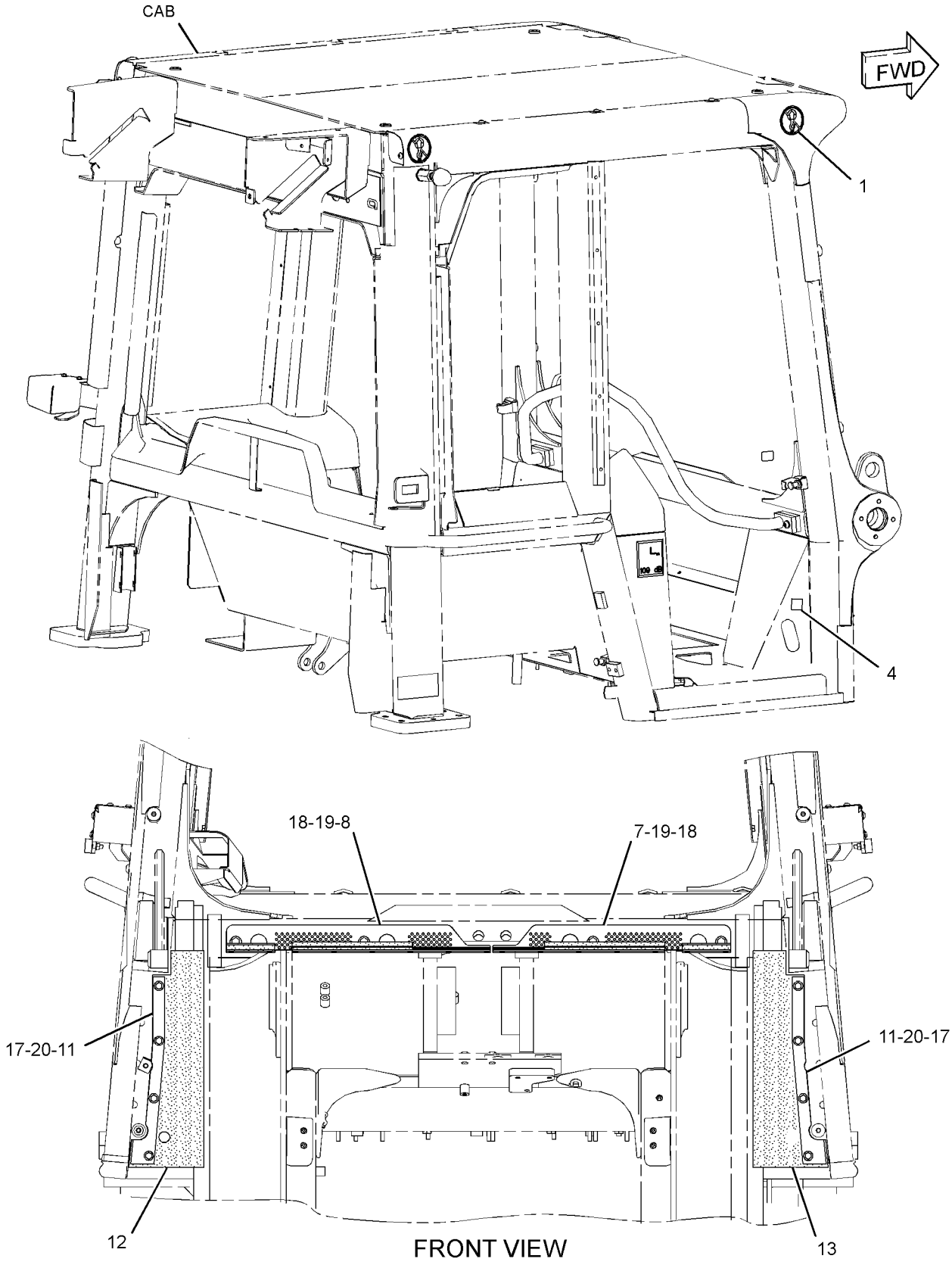

GRAPHIC #2

<END>

g01596737

OPERATOR STATION

251-1928 INSTALLATION GP-RADIO

S/N: LBP1-699

PART OF 240-6230 CAB GP

SMCS-7338 **i02659704**

NOTE	REF NO	GRAPHIC REF	PART NUMBER	QTY	PART NAME 1 2 3 4 5 6 (PRODUCT LEVEL)	SEE PAGE
	1	1	**6T-7695**	2	SPEAKER AS-RADIO	
	2	1	**9U-8263**	1	COVER	
	3	1	**101-3055**	2	COVER-SPEAKER	
	4	1	**263-9432**	1	ANTENNA AS	
	5	1	**281-1298**	1	GROMMET	
	6	1	**283-1398**	8	CLIP	
M	7	1	**294-3133**	8	SCREW (7-19X25-MM)	

M-METRIC PART

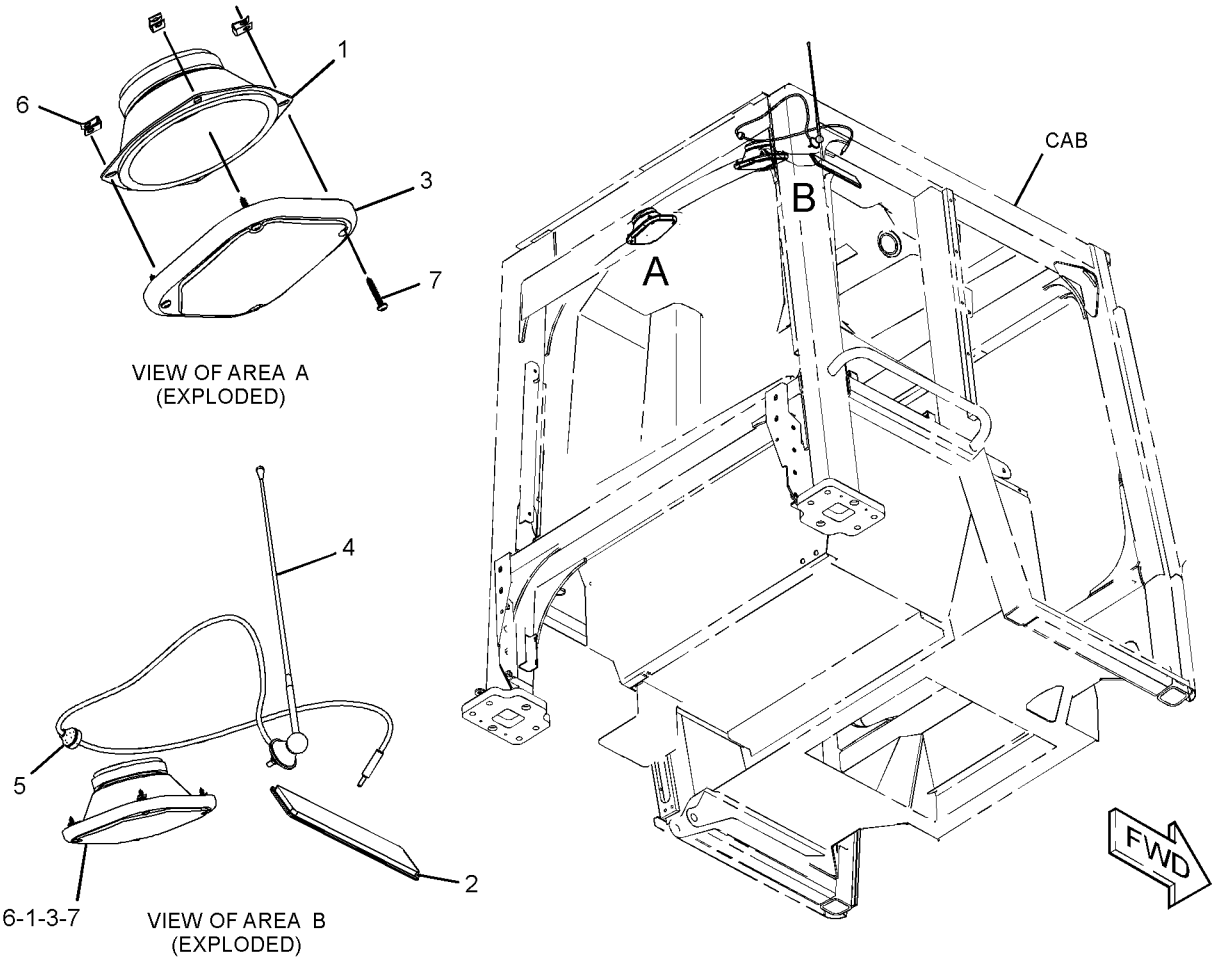

GRAPHIC #1 **<END>** g01337671

OPERATOR STATION

307-4288 INSTALLATION GP-RADIO

S/N: LBP700-UP

PART OF 307-4279, 334-6680 CAB GP

SMCS-7338 **i02917957**

NOTE	REF NO	GRAPHIC REF	PART NUMBER	QTY	PART NAME 1 2 3 4 5 6 (PRODUCT LEVEL)	SEE PAGE
	1	1	**6T-7695**	2	SPEAKER AS-RADIO	
	2	1	**9U-8263**	1	COVER	
	3	1	**101-3055**	2	COVER-SPEAKER	
	4	1	**283-1398**	8	CLIP	
M	5	1	**294-3133**	8	SCREW (7-19X25-MM)	

M-METRIC PART

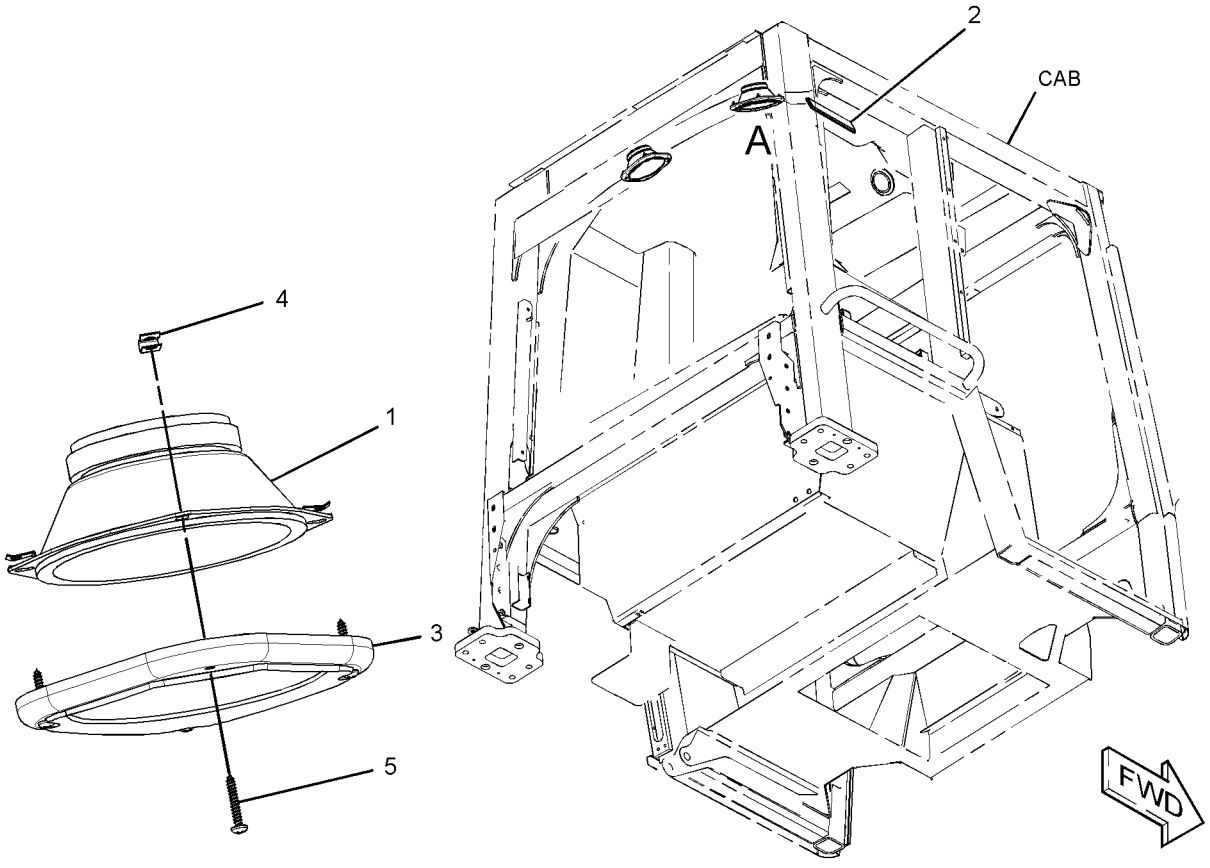

VIEW OF AREA A
(EXPLODED)

GRAPHIC #1 **<END>** g01453868

OPERATOR STATION

327-7800 INSTALLATION GP-RADIO

S/N: LBP1-UP

PART OF 327-7790 CAB GP

SMCS-7338 **i03327004**

NOTE	REF NO	GRAPHIC REF	PART NUMBER	QTY	PART NAME 1 2 3 4 5 6 (PRODUCT LEVEL)	SEE PAGE
	1	1	**6T-7695**	2	SPEAKER AS-RADIO	
	2	1	**101-3055**	2	COVER-SPEAKER	
	3	1	**283-1398**	8	CLIP	
M	4	1	**294-3133**	8	SCREW (7-19X25-MM)	

M-METRIC PART

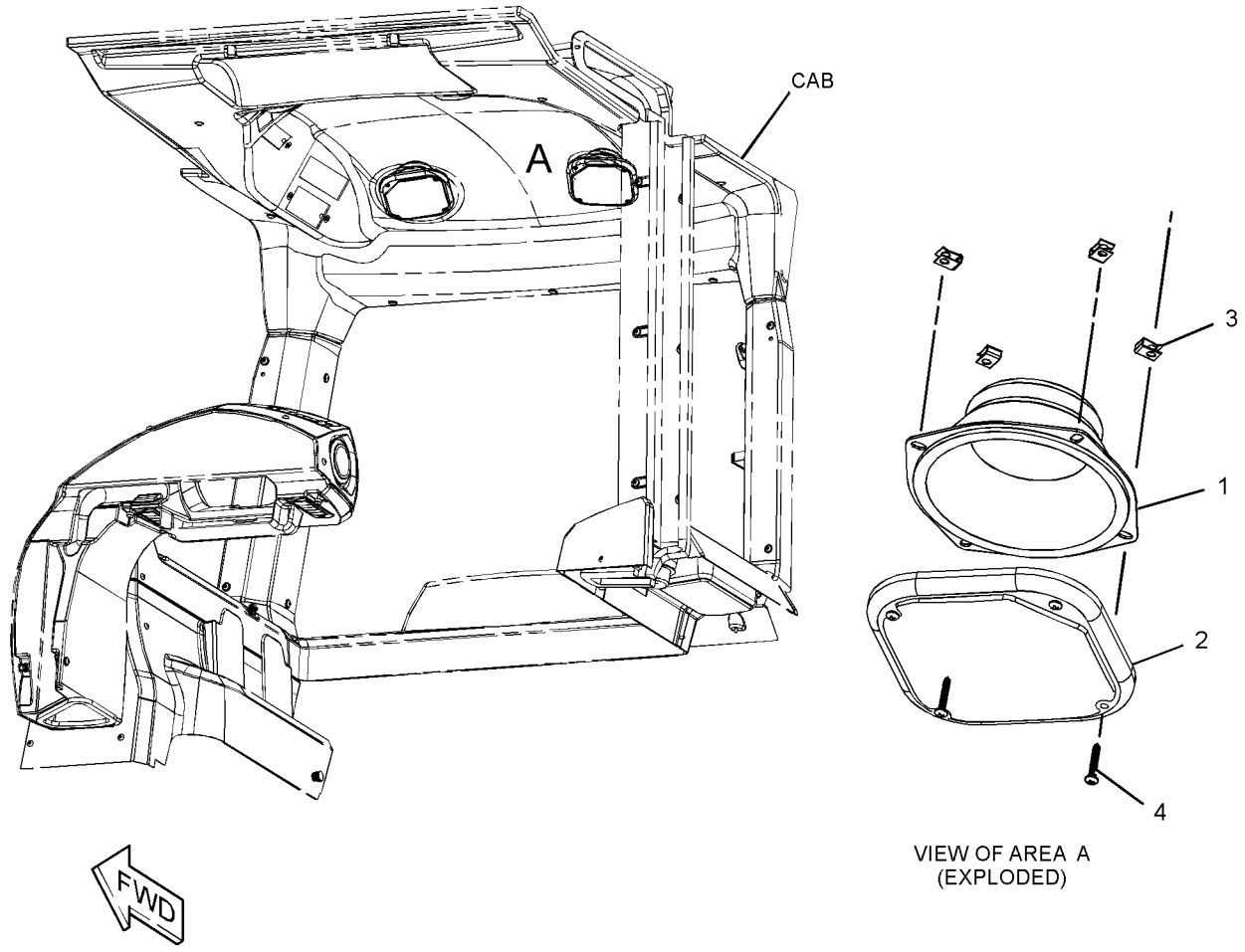

GRAPHIC #1 **<END>** g01710485

OPERATOR STATION

251-1925 INSULATION GP-WEATHER

S/N: LBP1-699

PART OF 240-6230 CAB GP

SMCS-7329 **i02909397**

NOTE	REF NO	GRAPHIC REF	PART NUMBER	QTY	PART NAME 1 2 3 4 5 6 (PRODUCT LEVEL)	SEE PAGE
	1	1	**294-3169**	1	INSULATION AS (ROOF)	
	2	1	**294-3170**	1	INSULATION AS (LH)	
	3	1	**294-3171**	1	INSULATION AS (RH)	
	4	1	**312-0010**	1	INSULATION	
	5	1	**294-3173**	1	INSULATION	
	6	1	**294-3174**	1	INSULATION	
	7	1	**294-3175**	45	WASHER (INSULATION FASTENER) (INSULATION)	
	8	1	**294-3190**	1	INSULATION	
	9	1	**312-0011**	1	INSULATION	

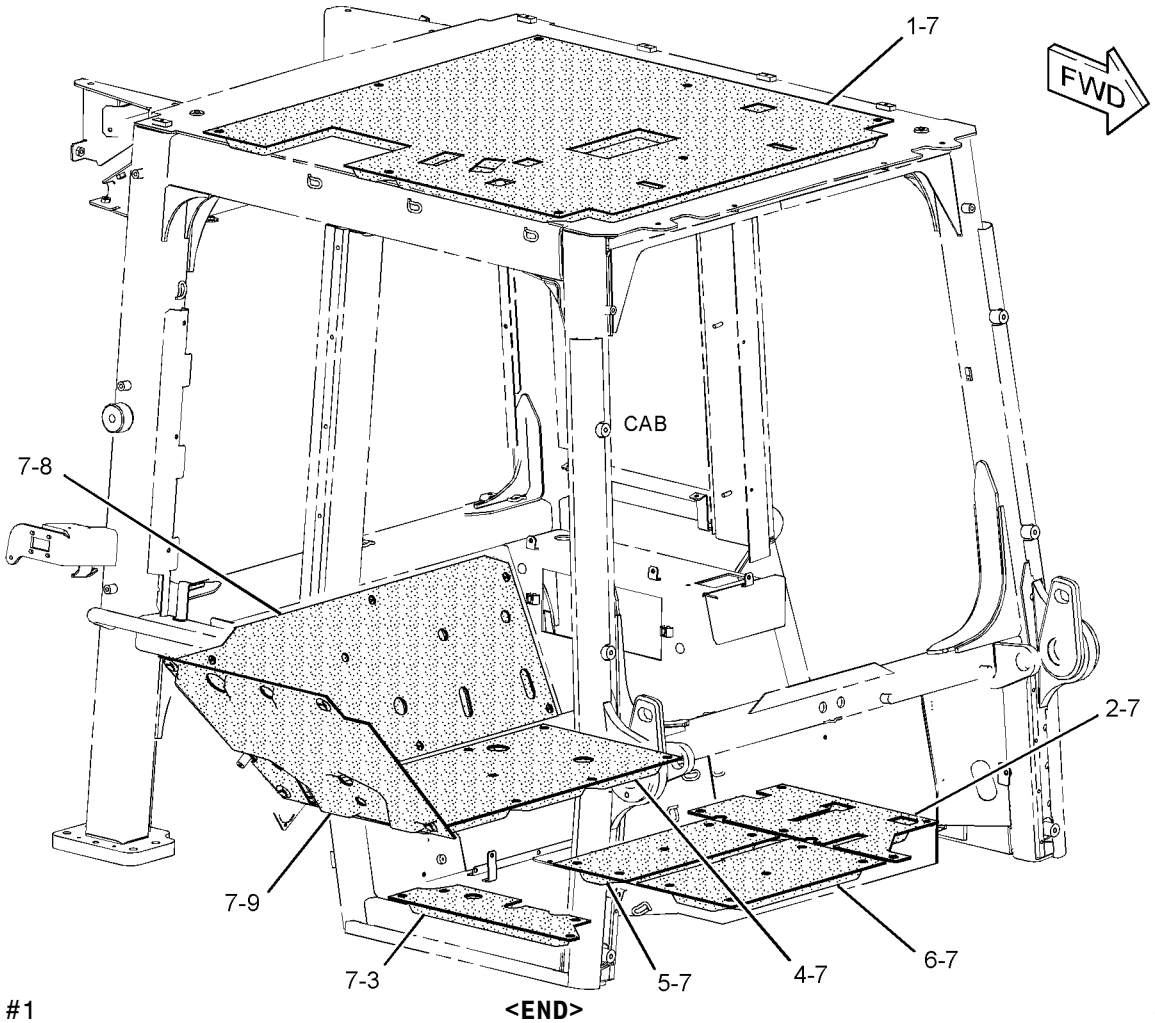

GRAPHIC #1 **<END>** g01456508

OPERATOR STATION

307-4285 INSULATION GP-WEATHER

S/N: LBP700-UP

PART OF 307-4279, 327-7790, 334-6680 CAB GP

SMCS-7329 **i02917820**

NOTE	REF NO	GRAPHIC REF	PART NUMBER	QTY	PART NAME 1 2 3 4 5 6 (PRODUCT LEVEL)	SEE PAGE
	1	1	**294-3169**	1	INSULATION AS (ROOF)	
	2	1	**294-3170**	1	INSULATION AS (LH)	
	3	1	**294-3171**	1	INSULATION AS (RH)	
	4	1	**294-3173**	1	INSULATION	
	5	1	**294-3174**	1	INSULATION	
	6	1	**294-3175**	45	WASHER (INSULATION FASTENER)	
	7	1	**294-3190**	1	INSULATION	
	8	1	**312-0010**	1	INSULATION	
	9	1	**312-0011**	1	INSULATION	

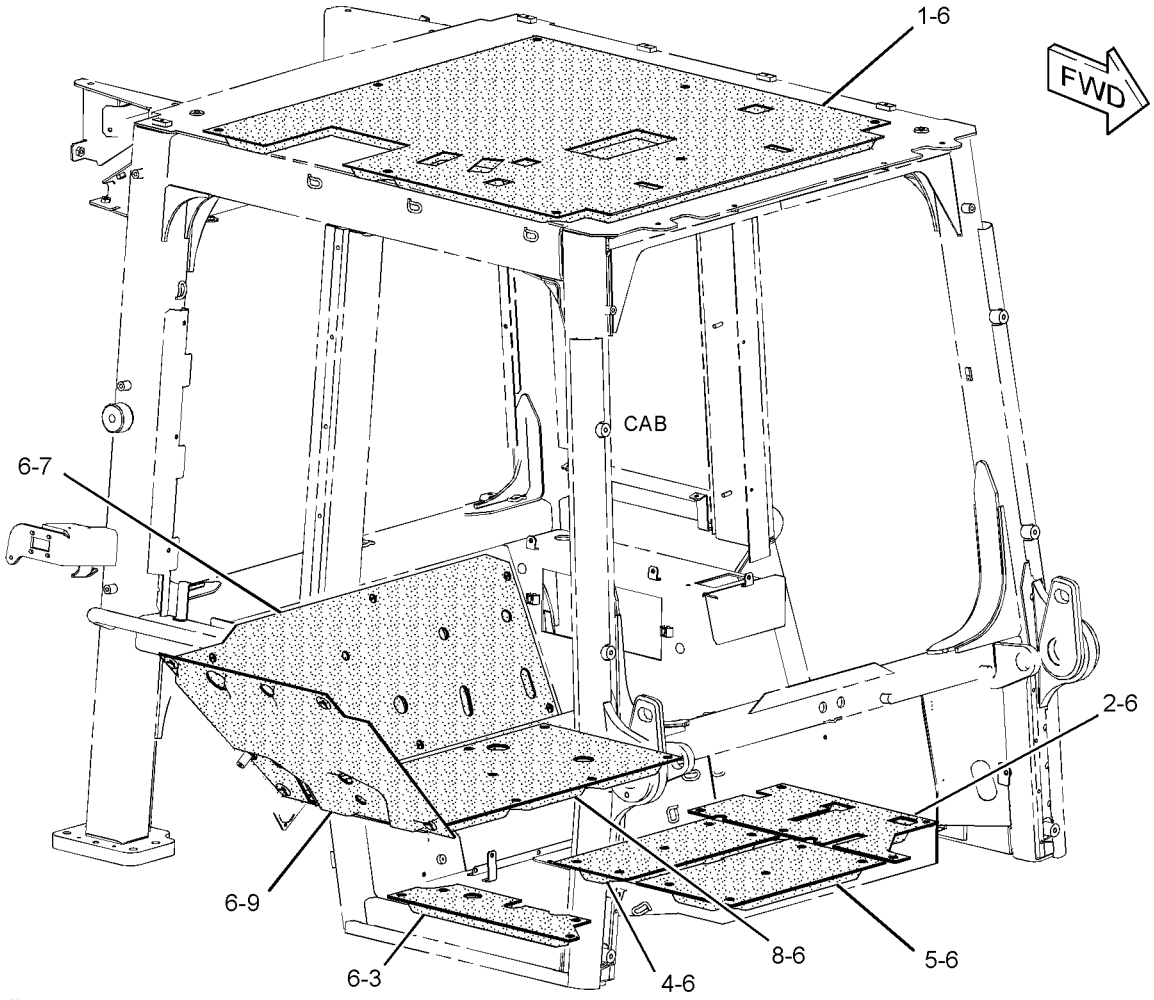

GRAPHIC #1 **<END>** g01453891

OPERATOR STATION

327-7787 KIT-CAB

S/N: LBP1-UP

CANNOT BE USED WITH STEEL MILL AR

FIELD INSTALLATION

SMCS-7301 **i03326721**

NOTE	PART NUMBER	QTY	PART NAME 1 2 3 4 5 6 (PRODUCT LEVEL)	SEE PAGE
Y	*327-7790*	1	CAB GP	559
Y	*327-7805*	1	FILM GP	738
Y	*327-7788*	1	MOUNTING GP-ROPS	662
Y	*327-7789*	1	PLATE & FILM GP	748
Y	*257-0627*	1	WINDOW GP-CAB	704

Y-SEPARATE ILLUSTRATION

<END>

OPERATOR STATION

327-7798 LATCH GP

S/N: LBP1-UP

PART OF 327-7790 CAB GP

SMCS-7308 **i03326921**

NOTE	REF NO	GRAPHIC REF	PART NUMBER	QTY	PART NAME 1 2 3 4 5 6 (PRODUCT LEVEL)	SEE PAGE
	1	1	**7K-1181**	25	STRAP-CABLE	
	2	1	**9R-4872**	2	CLIP	
	3	1	**124-0597**	2	KNOB	
M	4	1	**179-4324**	2	LOCKNUT (M5X0.8-THD)	
	5	1	**257-6215**	2	CHANNEL AS	
					(EACH INCLUDES)	
M		1	**8T-3490**	2	NUT-WELD (M10X1.5-THD)	
	6	1	**261-7382**	1	LEVER AS	
M	7	1	**268-0960**	2	NUT (M12X1.75-THD)	
	8	1	**283-1409**	2	PIVOT	
	9	1	**283-5546**	1	LEVER AS	
	10	1	**289-1081**	2	CABLE AS	
	11	1	**289-1082**	2	TURNBUCKLE	
	12	1	**289-1132**	2	SPRING	
	13	1	**294-3144**	2	LATCH AS	
	14	1	**295-5742**	2	STRIKER AS	
	15	1	**307-4347**	1	BRACKET AS	
	16	1	*312-0005*	1	BOX GP-TOOL	
		1	**312-0006**	1	TOOL BOX AS	
		1	**188-8846**	1	LATCH AS	
		1	**312-0009**	1	SEAL	
	17	1	**321-3420**	2	LEVER	
M	18	1	**107-3786**	2	BOLT (M4X0.7X12-MM)	
M	19	1	**127-2170**	9	SCREW-TRUSS HEAD (M8X1.25X20-MM)	
	20	1	**2U-2552**	8	LOCKWASHER	
M	21	1	**317-1118**	8	BOLT (M16X2X70-MM)	
M	22	1	**3E-8020**	8	SCREW-TRUSS HEAD (M6X1X25-MM)	
M	23	1	**5C-2874**	8	NUT (M5X0.8-THD)	
M	24	1	**5C-2890**	8	NUT (M6X1-THD)	
	25	1	**5P-4115**	16	WASHER-HARD (7.2X19X2-MM THK)	
M	26	1	**6V-4298**	2	BOLT (M5X0.8X16-MM)	
	27	1	**7X-0620**	10	WASHER-HARD (5.5X13X1.6-MM THK)	
	28	1	**8T-4121**	10	WASHER-HARD (11X21X2.5-MM THK)	
	29	1	**8T-4122**	8	WASHER-HARD (17X32X3.5-MM THK)	
M	30	1	**8T-4136**	4	BOLT (M10X1.5X25-MM)	
M	31	1	**8T-4195**	4	BOLT (M10X1.5X30-MM)	
M	32	1	**8T-4200**	2	BOLT (M8X1.25X16-MM)	
	33	1	**8T-4224**	4	WASHER-HARD (8.8X16X2-MM THK)	
	34	1	**8Y-6385**	2	SHIELD-STRIKER	
M	35	1	**9X-2041**	14	SCREW-TRUSS HEAD (M10X1.5X20-MM)	
M	36	1	**9X-2044**	2	SCREW-TRUSS HEAD (M6X1X16-MM)	

M-METRIC PART

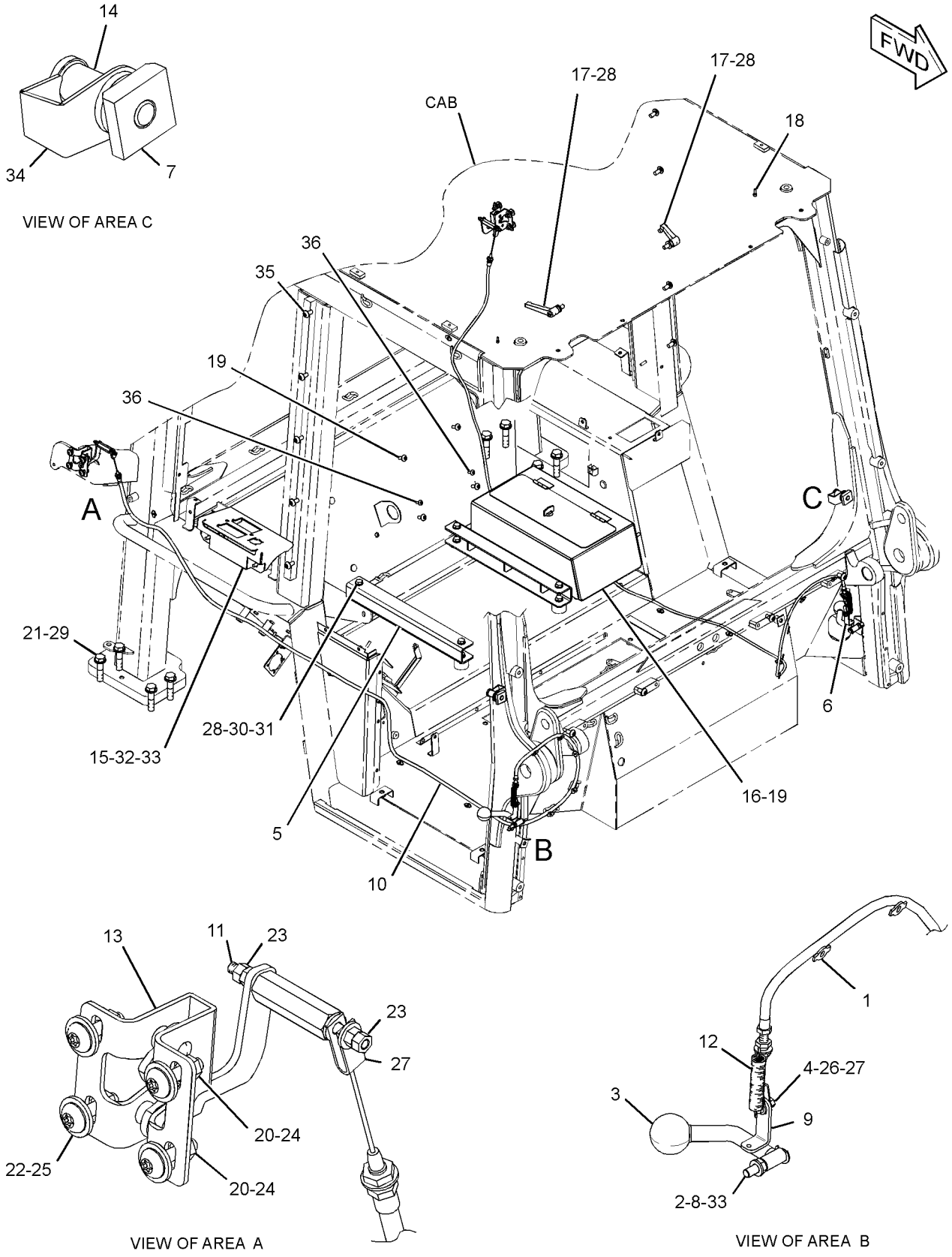

GRAPHIC #1 **<END>** g01731913

OPERATOR STATION

276-5575 LINES GP-AIR CONDITIONER

S/N: LBP1-699

PART OF 251-1926 AIR CONDITIONER & MOUNTING GP

SMCS-1808 **i02659286**

NOTE	REF NO	GRAPHIC REF	PART NUMBER	QTY	PART NAME 1 2 3 4 5 6 (PRODUCT LEVEL)	SEE PAGE
	1	1	**3S-2093**	1	STRAP-CABLE	
	2	1	**5P-4106**	1	NUT (1-7/16-THD)	
	3	1	**7K-3304**	1	NUT-JAM (1-20-THD)	
	4	1	**177-2215**	2	STRAP-DUAL CLAMP	
	5	1	**256-1028**	1	BRACKET AS	
I	6	1	**276-5570**	1	HOSE AS	
I	7	1	**276-5571**	1	HOSE AS	
I	8	1	**276-5572**	1	HOSE AS	
	9	1	**284-9813**	1	TUBE AS	
I	10	1	**284-9816**	1	HOSE AS	
	11	1	**289-1134**	1	TUBE AS	
	12	1	**294-3137**	1	PLATE AS	
M		1	**8T-3490**	2	NUT-WELD (M10X1.5-THD)	
	13	1	**1F-7567**	1	CLIP	
	14	1	**3E-4321**	4	CLIP	
	15	1	**5D-0718**	1	CLIP	
	16	1	**5P-3928**	1	COUPLING AS-REFRIGERANT (SELF SEALING)	
		1	**107-4395**	1	VALVE AS	
		1	**107-4396**	1	GASKET	
	17	1	**7K-3176**	1	COUPLING AS-REFRIGERANT (SELF SEALING)	
		1	**107-4393**	1	VALVE AS	
		1	**107-4394**	1	GASKET	
	18	1	**8T-4121**	7	WASHER-HARD (11X21X2.5-MM THK)	
M	19	1	**8T-4137**	7	BOLT (M10X1.5X20-MM)	
	20	1	**9M-8406**	1	CLIP	
	21	1	**9X-7380**	3	SEAL-O-RING	
	22	1	**9X-7381**	3	SEAL-O-RING	
	23	1	**9X-7382**	1	SEAL-O-RING	
	24	1	**9X-7383**	3	SEAL-O-RING	
	25	1	**9X-7384**	1	SEAL-O-RING	

I-REFER TO HYDRAULIC INFORMATION SYSTEM
M-METRIC PART

276-5575 **LINES GP-AIR CONDITIONER** *(contd.)* **i02659286**

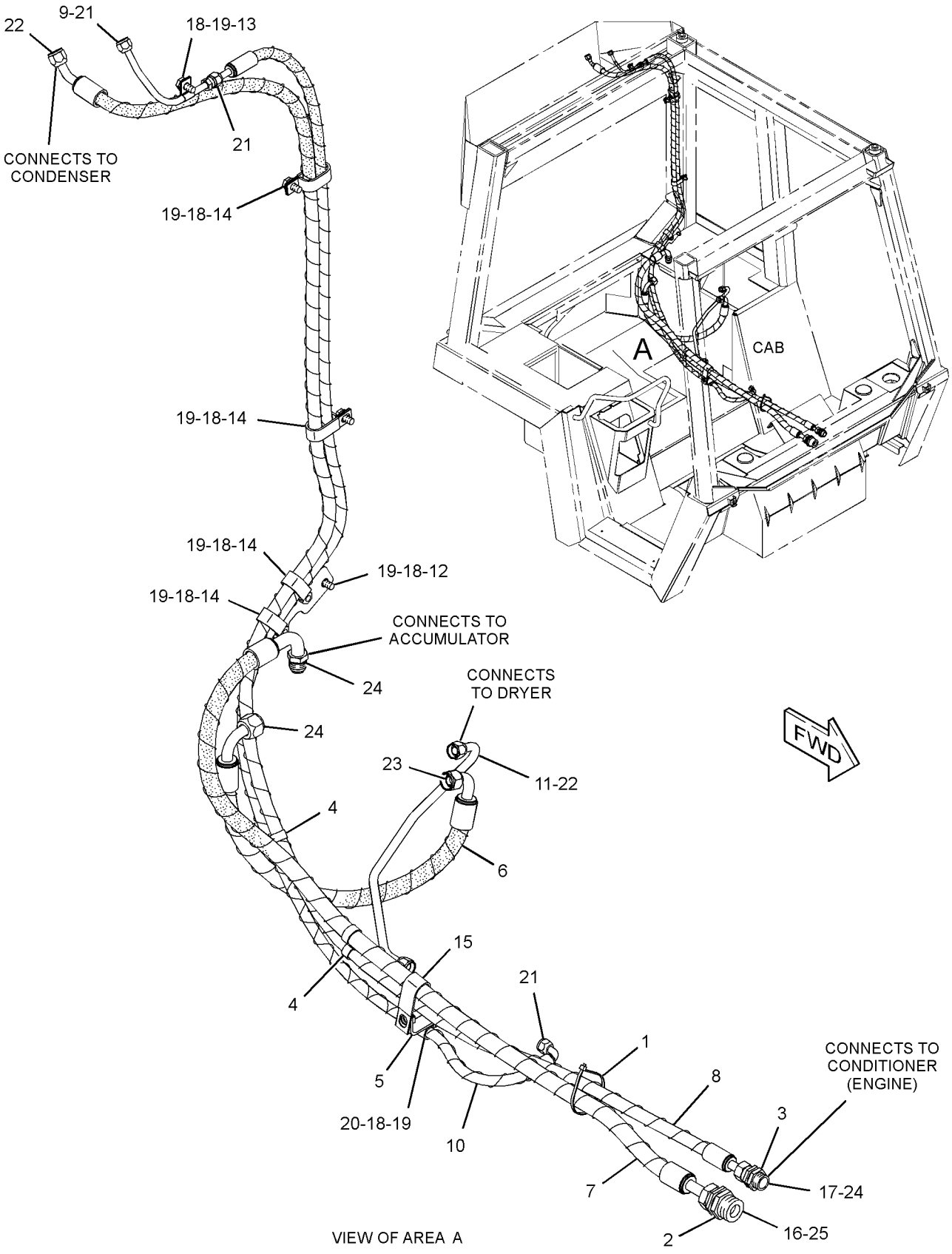

GRAPHIC #1 **<END>** g01338007

OPERATOR STATION

278-0895 LINES GP-AIR CONDITIONER

S/N: LBP1-373

PART OF 258-7787 CAB AR

SMCS-1808 **i02661493**

NOTE	REF NO	GRAPHIC REF	PART NUMBER	QTY	PART NAME 1 2 3 4 5 6 (PRODUCT LEVEL)	SEE PAGE
	1	1	**1P-6356**	1	PLATE	
	2	1	**5P-3929**	1	COUPLING AS-REFRIGERANT	
		1	**8F-9206**	1	SEAL-O-RING	
		1	**107-4397**	1	VALVE AS	
	3	1	**5P-3948**	1	COUPLING AS-REFRIGERANT	
		1	**7F-8607**	1	SEAL-O-RING	
		1	**107-4399**	1	VALVE AS	
	4	1	**7K-1181**	9	STRAP-CABLE	
	5	1	**8T-0154**	4	CLAMP-HOSE	
	6	1	**114-5333**	1	SWITCH AS-PRESSURE (COMPRESSOR, HIGH SIDE)	
		1	**102-8802**	1	KIT-RECEPTACLE (2-PIN)	
					(INCLUDES RECEPTACLE AS & WEDGE)	
		1	**186-3735**	2	PIN-CONNECTOR (16-GA TO 18-GA)	
E		1	**9X-1386**		SLEEVE (25-CM)	
	7	1	**149-6371**	1	SWITCH AS-PRESSURE (COMPRESSOR, LOW SIDE)	
		1	**102-8802**	1	KIT-RECEPTACLE (2-PIN)	
					(INCLUDES RECEPTACELE AS & WEDGE)	
		1	**186-3735**	2	PIN-CONNECTOR (16-GA TO 18-GA)	
	8	1	**177-2215**	1	STRAP-DUAL CLAMP	
	9	1	**187-8661**	1	FITTING AS-AIR CONDITIONER	
		1	**3E-4051**	1	CAP-SEAL	
		1	**3E-4057**	1	VALVE AS	
		1	**172-4880**	1	CAP-SEAL	
		1	**180-7180**	1	CORE-VALVE	
		1	**180-7181**	1	BODY-VALVE	
	10	1	**206-2423**	2	SADDLE	
	11	1	**256-1028**	1	BRACKET AS	
	12	1	**283-5522**	1	BRACKET AS	
	13	1	**289-1123**	1	BRACKET AS	
I	14	1	**289-1136**	1	HOSE AS	
I	15	1	**289-1137**	1	HOSE AS	
	16	1	**294-3160**	4	TUBE AS	
	17	1	**223-3490**	1	CLIP	
	18	1	**3E-4066**	1	FITTING AS-AIR CONDITIONER	
		1	**3E-4052**	1	CAP-SEAL (HIGH SIDE CHARGE PORT)	
		1	**3E-4058**	1	VALVE AS	
	19	1	**3E-4321**	1	CLIP	
	20	1	**4P-8134**	1	CLIP	
	21	1	**6V-1228**	1	CLIP	
	22	1	**8M-2773**	2	CLIP	
	23	1	**8S-0948**	2	CLIP	
	24	1	**8T-4121**	7	WASHER-HARD (11X21X2.5-MM THK)	
M	25	1	**8T-4179**	1	BOLT (M12X1.75X20-MM)	
M	26	1	**8T-4195**	7	BOLT (M10X1.5X30-MM)	
	27	1	**8T-4223**	1	WASHER-HARD (13.5X25.5X3-MM THK)	
M	28	1	**8T-6466**	1	BOLT (M10X1.5X60-MM)	
	29	1	**8T-7934**	1	WASHER-HARD (11X21X5-MM THK)	
	30	1	**9X-7378**	2	SEAL-O-RING	
	31	1	**9X-7381**	1	SEAL-O-RING	
	32	1	**9X-7382**	1	SEAL-O-RING	
	33	1	**9X-7383**	1	SEAL-O-RING	
	34	1	**9X-7384**	1	SEAL-O-RING	
	35	1	**9X-7385**	2	SEAL-O-RING	
	36	1	**9X-8250**	5	CLIP	
E	37	1	**5P-0767**		HOSE (248-CM)	
E	37A	1	**5P-0767**		HOSE (109-CM)	

278-0895 **LINES GP-AIR CONDITIONER** *(contd.)* **i02661493**

E-ORDER BY THE CENTIMETER
I-REFER TO HYDRAULIC INFORMATION SYSTEM
M-METRIC PART

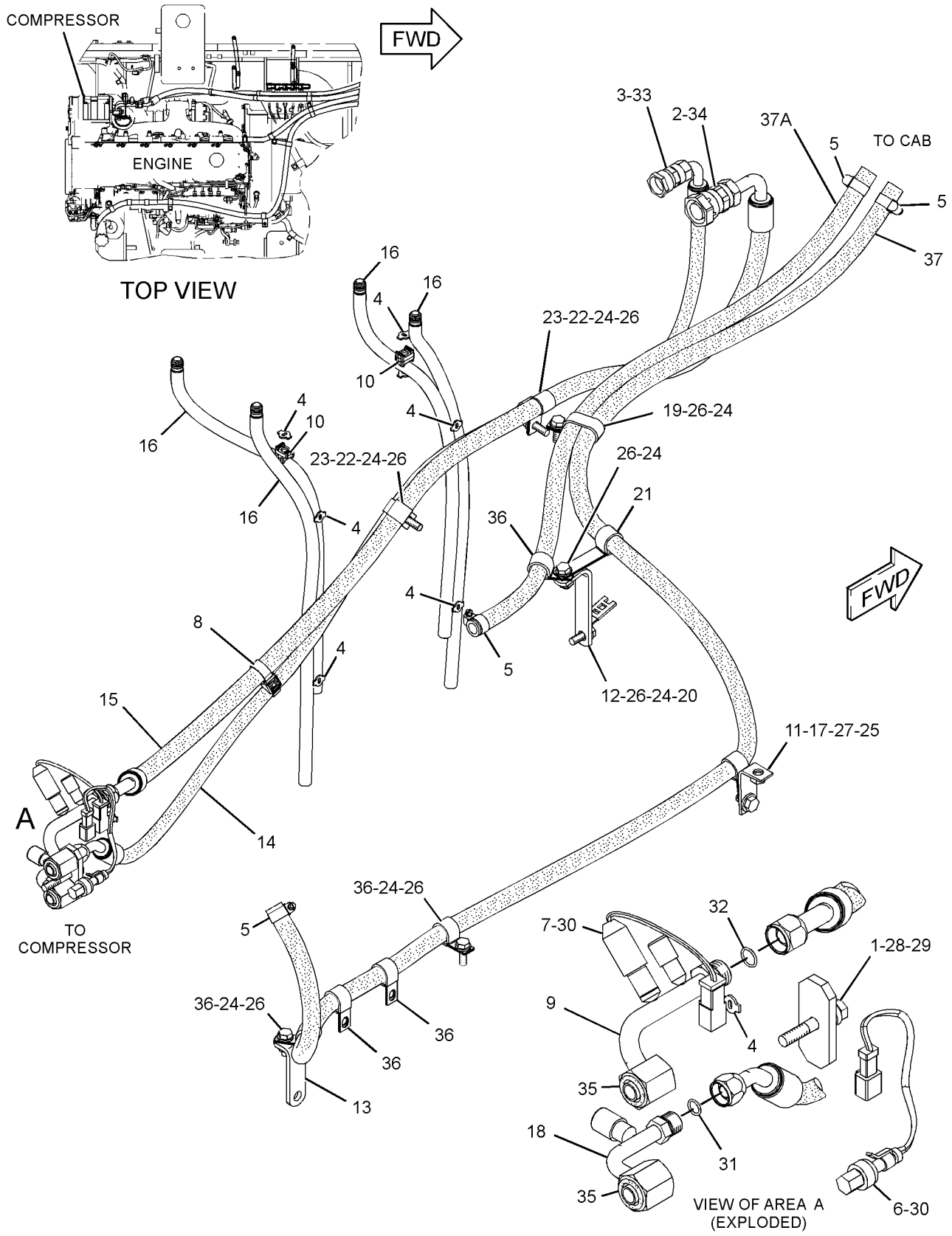

GRAPHIC #1 **<END>** g01339249

OPERATOR STATION

278-0895 LINES GP-AIR CONDITIONER

S/N: LBP374-UP

PART OF 258-7787 CAB AR

SMCS-1808 **i02856981**

NOTE	REF NO	GRAPHIC REF	PART NUMBER	QTY	PART NAME 1 2 3 4 5 6 (PRODUCT LEVEL)	SEE PAGE
	1	1	**1P-6356**	1	PLATE	
	2	1	**5P-3929**	1	COUPLING AS-REFRIGERANT	
		1	**8F-9206**	1	SEAL-O-RING	
		1	**107-4397**	1	VALVE AS	
	3	1	**5P-3948**	1	COUPLING AS-REFRIGERANT	
		1	**7F-8607**	1	SEAL-O-RING	
		1	**107-4399**	1	VALVE AS	
C	4	1	**7K-1181**	1	STRAP-CABLE	
	5	1	**8T-0154**	4	CLAMP-HOSE	
	6	1	**114-5333**	1	SWITCH AS-PRESSURE (COMPRESSOR, HIGH SIDE)	
		1	**102-8802**	1	KIT-RECEPTACLE (2-PIN)	
					(INCLUDES RECEPTACLE AS & WEDGE)	
		1	**186-3735**	2	PIN-CONNECTOR (16-GA TO 18-GA)	
E		1	**9X-1386**		SLEEVE (25-CM)	
	7	1	**149-6371**	1	SWITCH AS-PRESSURE (COMPRESSOR, LOW SIDE)	
		1	**102-8802**	1	KIT-RECEPTACLE (2-PIN)	
					(INCLUDES RECEPTACELE AS & WEDGE)	
		1	**186-3735**	2	PIN-CONNECTOR (16-GA TO 18-GA)	
	8	1	**177-2215**	1	STRAP-DUAL CLAMP	
	9	1	**187-8661**	1	FITTING AS-AIR CONDITIONER	
		1	**3E-4051**	1	CAP-SEAL	
		1	**3E-4057**	1	VALVE AS	
		1	**172-4880**	1	CAP-SEAL	
		1	**180-7180**	1	CORE-VALVE	
	10	1	**283-5522**	1	BRACKET AS	
C	11	1	**303-4047**	1	BRACKET AS	
CI	12	1	**307-4336**	1	HOSE AS	
CI	13	1	**307-4337**	1	HOSE AS	
C	14	1	**223-3490**	2	CLIP	
	15	1	**3E-4066**	1	FITTING AS-AIR CONDITIONER	
		1	**3E-4052**	1	CAP-SEAL (HIGH SIDE CHARGE PORT)	
		1	**3E-4058**	1	VALVE AS	
	16	1	**3E-4321**	1	CLIP	
	17	1	**4P-8134**	1	CLIP	
C	18	1	**6V-1228**	2	CLIP	
	19	1	**8M-2773**	2	CLIP	
	20	1	**8T-4121**	7	WASHER-HARD (11X21X2.5-MM THK)	
M	21	1	**8T-4179**	1	BOLT (M12X1.75X20-MM)	
M	22	1	**8T-4195**	7	BOLT (M10X1.5X30-MM)	
	23	1	**8T-4223**	1	WASHER-HARD (13.5X25.5X3-MM THK)	
M	24	1	**8T-6466**	1	BOLT (M10X1.5X60-MM)	
	25	1	**8T-7934**	1	WASHER-HARD (11X21X5-MM THK)	
	26	1	**9X-7378**	2	SEAL-O-RING	
	27	1	**9X-7381**	1	SEAL-O-RING	
	28	1	**9X-7382**	1	SEAL-O-RING	
	29	1	**9X-7383**	1	SEAL-O-RING	
	30	1	**9X-7384**	1	SEAL-O-RING	
	31	1	**9X-7385**	2	SEAL-O-RING	
	32	1	**9X-8250**	5	CLIP	
CE	33	1	**5P-0767**		HOSE (246-CM)	
CE	33A	1	**5P-0767**		HOSE (112-CM)	

C-CHANGE FROM PREVIOUS TYPE
E-ORDER BY THE CENTIMETER
I-REFER TO HYDRAULIC INFORMATION SYSTEM
M-METRIC PART

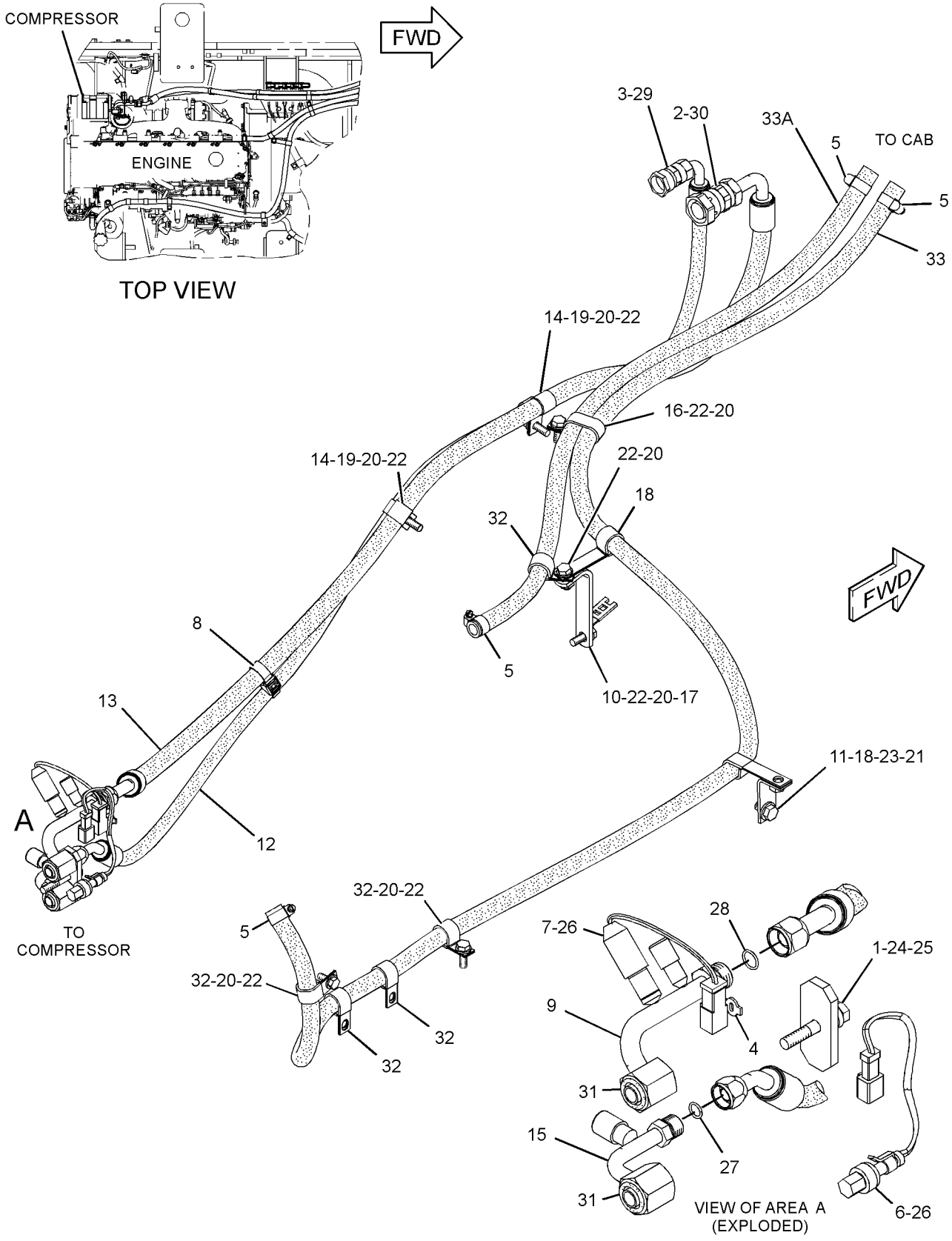

GRAPHIC #1 **<END>** g01425577

303-4037 LINES GP-AIR CONDITIONER

S/N: LBP700-UP

PART OF 307-4286, 327-7797 AIR CONDITIONER & MOUNTING GP

SMCS-1808 **i02917838**

NOTE	REF NO	GRAPHIC REF	PART NUMBER	QTY	PART NAME 1 2 3 4 5 6 (PRODUCT LEVEL)	SEE PAGE
	1	1	**3S-2093**	1	STRAP-CABLE	
	2	1	**5P-4106**	1	NUT (1-7/16-THD)	
	3	1	**7K-1181**	2	STRAP-CABLE	
	4	1	**7K-3304**	1	NUT-JAM (1-20-THD)	
	5	1	**177-2215**	2	STRAP-DUAL CLAMP	
	6	1	**200-6345**	1	MOUNT (DUAL SWIVEL)	
	7	1	**256-1028**	1	BRACKET AS	
M		1	**8T-3490**	1	NUT-WELD (M10X1.5-THD)	
		1	**124-6998**	1	PLATE	
I	8	1	**276-5572**	1	HOSE AS	
	9	1	**284-9813**	1	TUBE AS	
I	10	1	**284-9816**	1	HOSE AS	
	11	1	**289-1134**	1	TUBE AS	
	12	1	**294-3137**	1	PLATE AS	
M		1	**8T-3490**	2	NUT-WELD (M10X1.5-THD)	
I	13	1	**303-4038**	1	HOSE AS	
I	14	1	**303-4039**	1	HOSE AS	
	15	1	**1F-7567**	1	CLIP	
	16	1	**3E-4321**	4	CLIP	
	17	1	**5D-0718**	1	CLIP	
	18	1	**5P-3928**	1	COUPLING AS-REFRIGERANT (SELF SEALING)	
		1	**107-4395**	1	VALVE AS	
		1	**107-4396**	1	GASKET	
	19	1	**6D-4246**	1	CLIP	
	20	1	**7K-3176**	1	COUPLING AS-REFRIGERANT (SELF SEALING)	
		1	**107-4393**	1	VALVE AS	
		1	**107-4394**	1	GASKET	
	21	1	**8T-4121**	7	WASHER-HARD (11X21X2.5-MM THK)	
M	22	1	**8T-4137**	7	BOLT (M10X1.5X20-MM)	
	23	1	**9X-7380**	3	SEAL-O-RING	
	24	1	**9X-7381**	3	SEAL-O-RING	
	25	1	**9X-7382**	1	SEAL-O-RING	
	26	1	**9X-7383**	3	SEAL-O-RING	
	27	1	**9X-7384**	1	SEAL-O-RING	

I-REFER TO HYDRAULIC INFORMATION SYSTEM
M-METRIC PART

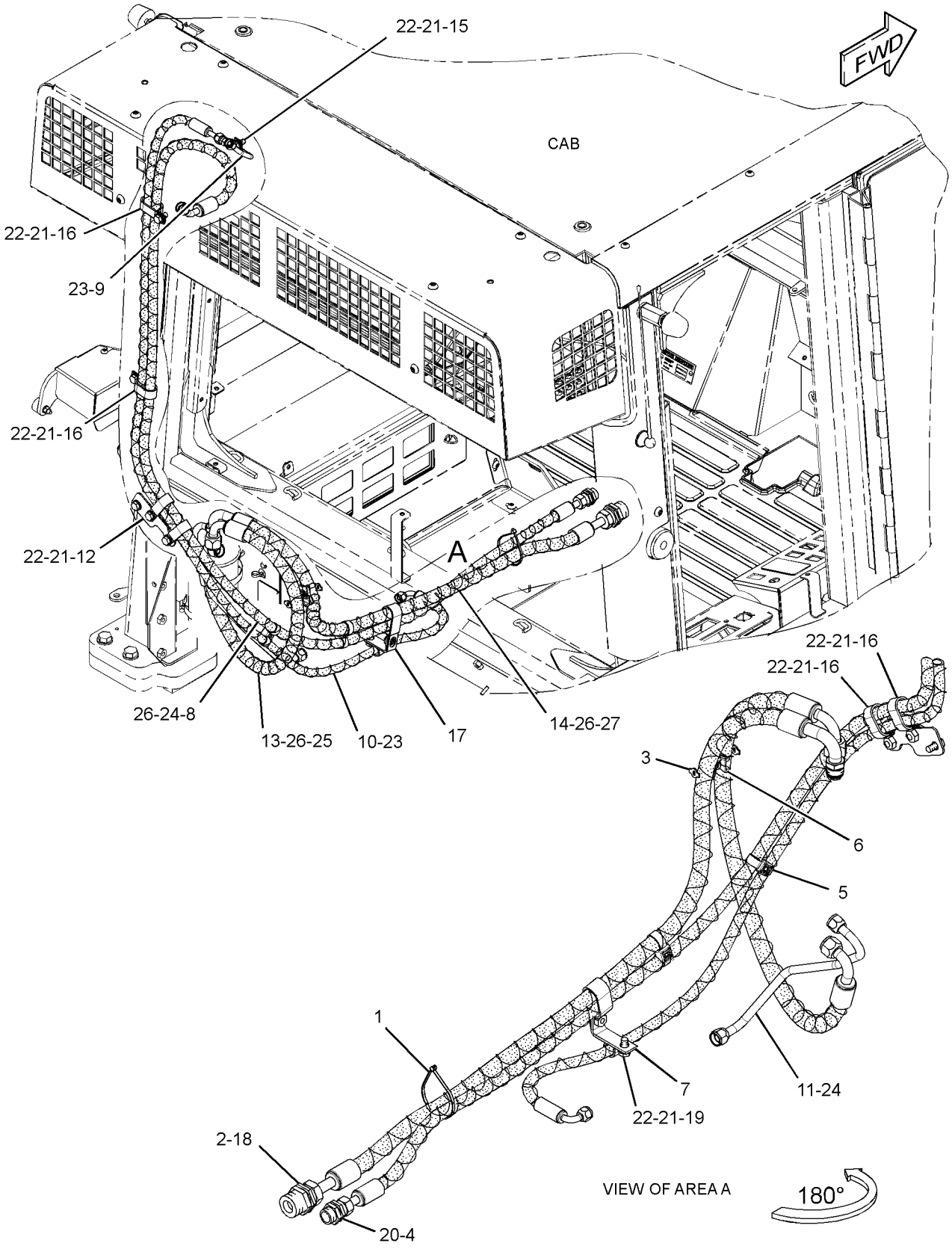

GRAPHIC #1 **<END>** g01457973

OPERATOR STATION

267-6281 LINES GP-HEATER

S/N: LBP1-UP

PART OF 251-1926, 307-4286, 327-7797 AIR CONDITIONER & MOUNTING GP

SMCS-7304 **i02778810**

NOTE	REF NO	GRAPHIC REF	PART NUMBER	QTY	PART NAME 1 2 3 4 5 6 (PRODUCT LEVEL)	SEE PAGE
	1	1	**5U-5745**	1	CONNECTOR-HOSE	
	2	1	**6W-0058**	2	ELBOW-HOSE	
	3	1	**8T-0154**	8	CLAMP-HOSE	
E	4	1	**7X-7702**		CONDUIT-FLEXIBLE (136.6-CM)	
E	4A	1	**7X-7702**		CONDUIT-FLEXIBLE (96.4-CM)	
E	5	1	**136-1953**		HOSE (141.6-CM)	
E	5A	1	**136-1953**		HOSE (101.4-CM)	
	6	1	**5D-0718**	1	CLIP	
	7	1	**7X-7729**	1	WASHER (11X25X3-MM THK)	
M	8	1	**8T-4195**	1	BOLT (M10X1.5X30-MM)	

E-ORDER BY THE CENTIMETER
M-METRIC PART

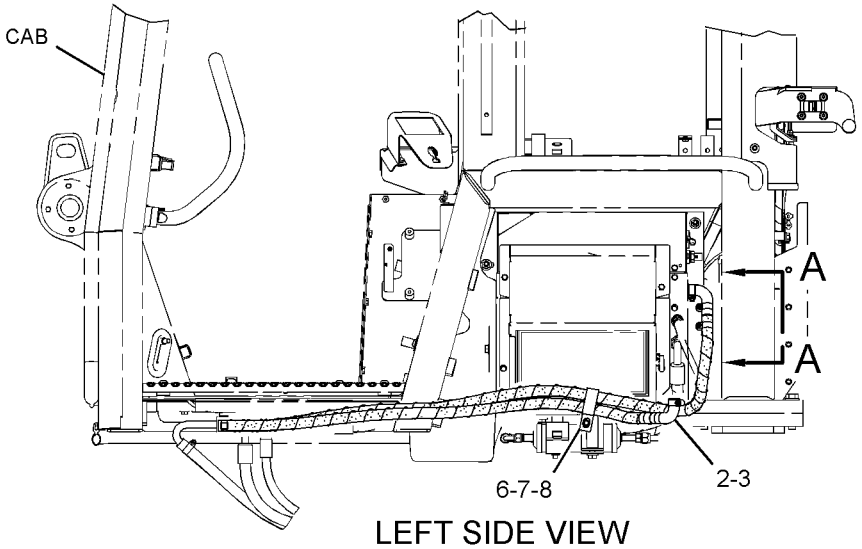

LEFT SIDE VIEW

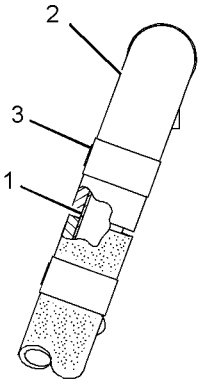

VIEW A-A

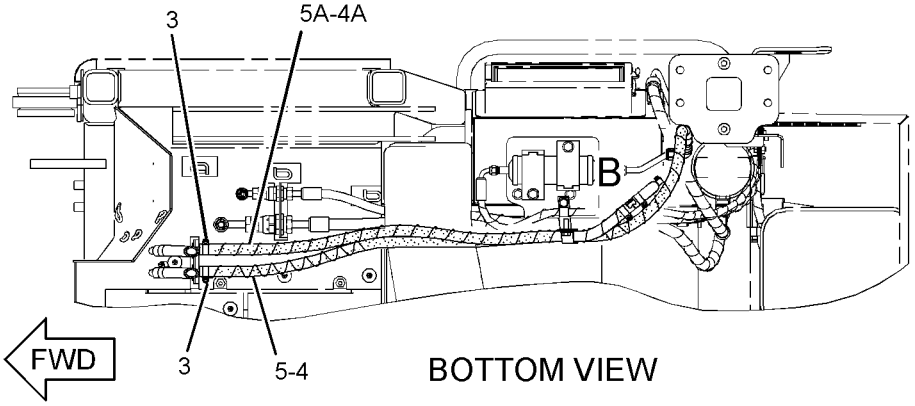

BOTTOM VIEW

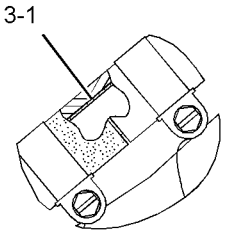

VIEW OF AREA B

GRAPHIC #1 **<END>** g01404943

OPERATOR STATION

146-6149 MOTOR GP-WINDOW WIPER–FRONT

S/N: LBP1-UP

PART OF 251-1923, 307-4283 WIPER GP-WINDOW

SMCS-7305 **i02017801**

NOTE	REF NO	GRAPHIC REF	PART NUMBER	QTY	PART NAME 1 2 3 4 5 6 (PRODUCT LEVEL)	SEE PAGE
	4	1	**135-0611**	1	MOTOR GP-WINDOW WIPER (24-VOLT, 2-SPEED) (FRONT)	
	4A	1	**8T-8737**	1	PLUG-SEAL	
	4B	1	**102-8805**	1	KIT-RECEPTACLE (6-PIN)	
					(INCLUDES RECEPTACLE AS & WEDGE)	
	4C	1	**186-3735**	5	PIN-CONNECTOR (16-GA TO 18-GA)	
	5	1	**3F-9556**	2	LOCKWASHER	
M	6	1	**5C-7261**	2	NUT (M8X1.25-THD)	

M-METRIC PART

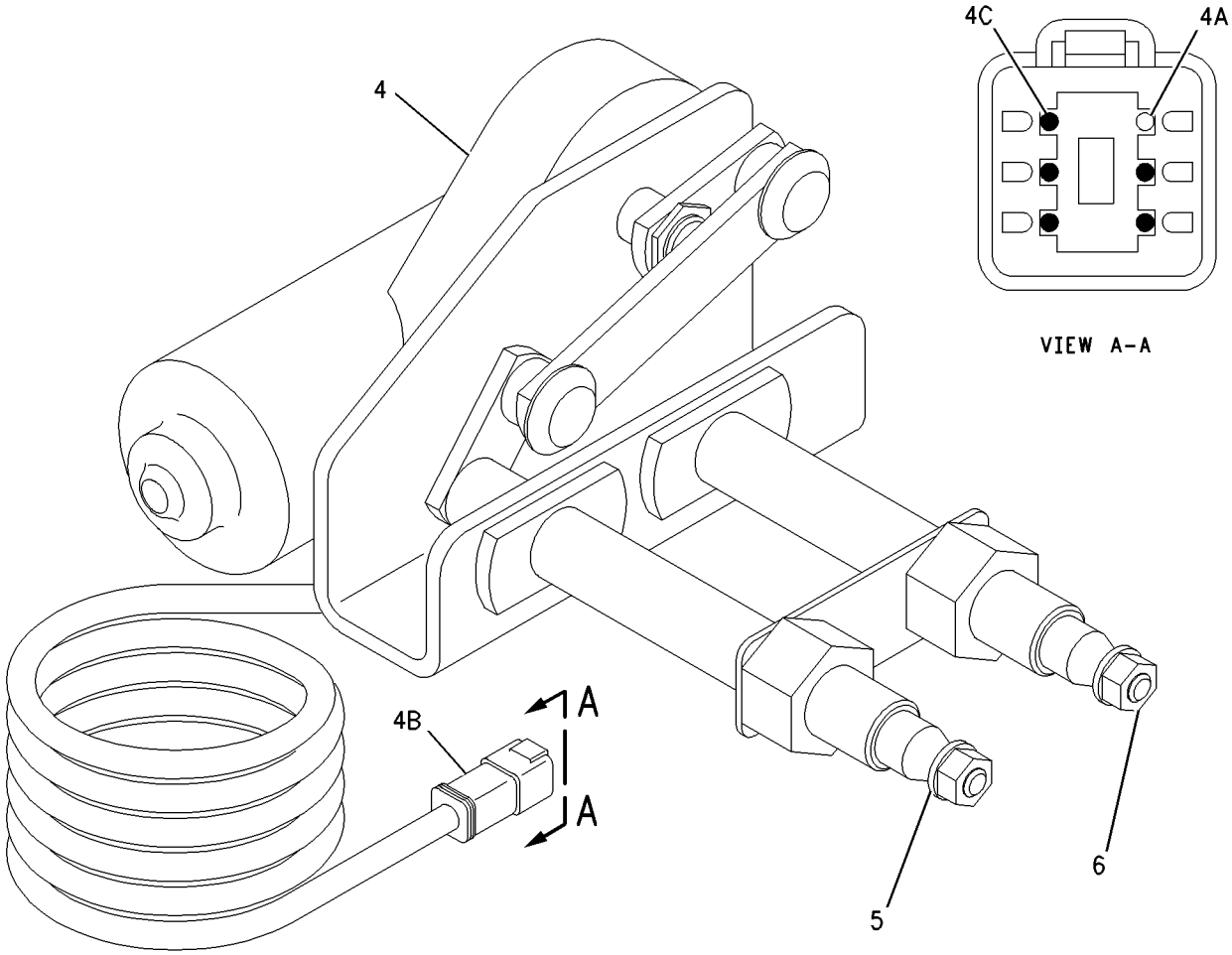

GRAPHIC #1 **<END>** g01002597

OPERATOR STATION

251-1929 MOUNTING GP-ROPS

S/N: LBP1-UP

PART OF 258-7787 CAB AR

SMCS-7266 **i02996133**

NOTE	REF NO	GRAPHIC REF	PART NUMBER	QTY	PART NAME 1 2 3 4 5 6 (PRODUCT LEVEL)	SEE PAGE
	1	1	**117-8131**	4	MOUNT AS (CAB)	
	2	1	**126-1595**	2	WASHER (32X134X12-MM THK)	
	3	1	**144-2179**	2	SLEEVE	
	4	1	**321-3396**	2	PIN	
	5	1	**279-1544**	2	WASHER-SPECIAL	
	6	1	**279-1546**	2	WASHER-SPECIAL (72X140X5-MM THK)	
	7	1	**283-1381**	2	WASHER-SPECIAL (44X100X6-MM THK)	
	8	1	**283-1401**	2	SPACER (39X100X7-MM THK)	
	9	1	**284-0662**	2	BUSHING-FLANGE	
	10	1	**3S-1349**	2	WASHER-HARD (31X52.5X6-MM THK)	
M	11	1	**8C-3236**	2	BOLT (M30X3.5X160-MM)	
M	12	1	**8T-4139**	4	BOLT (M12X1.75X30-MM)	
	13	1	**8T-4223**	4	WASHER-HARD (13.5X25.5X3-MM THK)	

M-METRIC PART

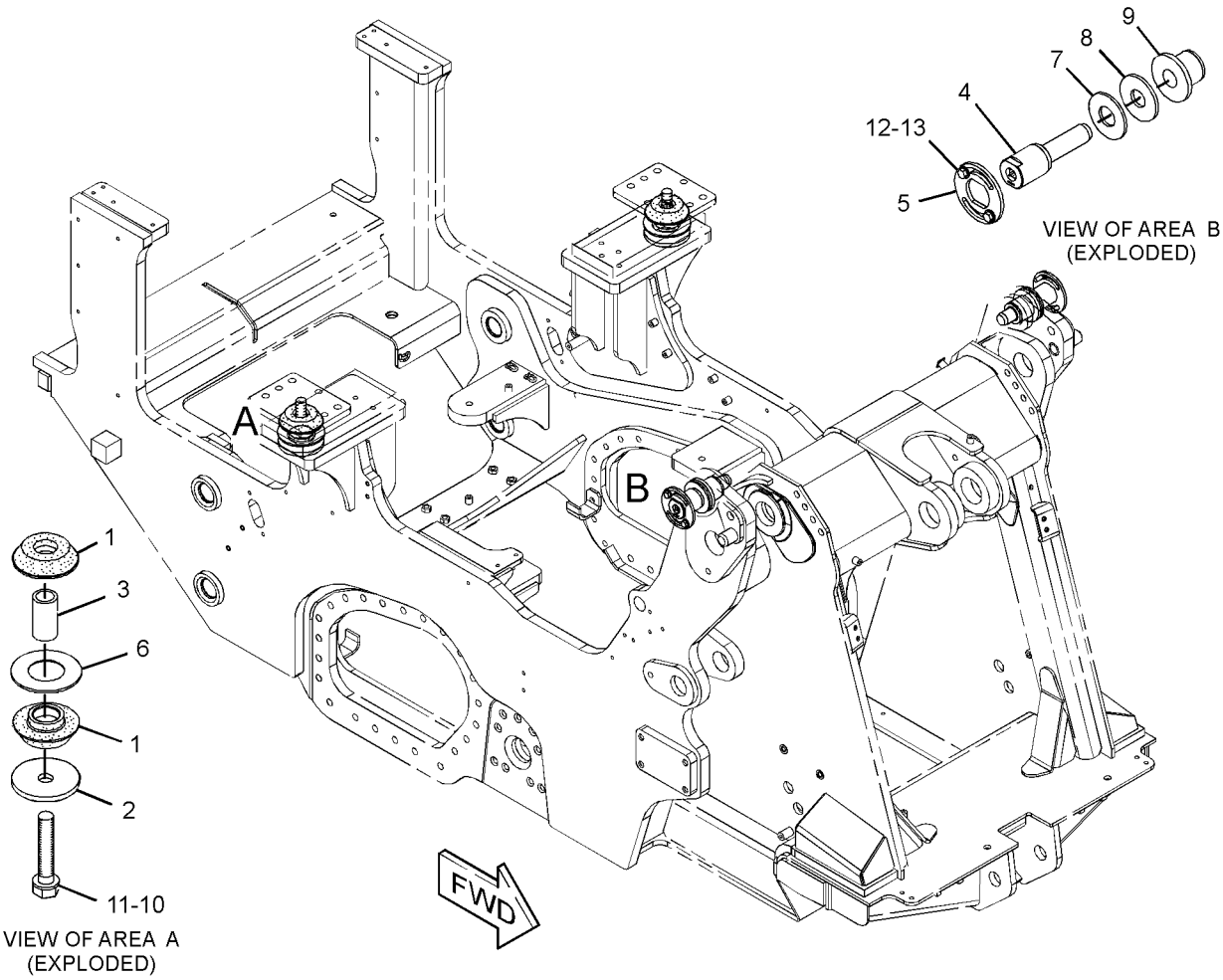

GRAPHIC #1 **<END>** g01340980

OPERATOR STATION

327-7788 MOUNTING GP-ROPS

S/N: LBP1-UP

PART OF 327-7787 KIT-CAB

SMCS-7266 **i03326761**

NOTE	REF NO	GRAPHIC REF	PART NUMBER	QTY	PART NAME 1 2 3 4 5 6 (PRODUCT LEVEL)	SEE PAGE
	1	1	**279-1544**	2	WASHER-SPECIAL	
	2	1	**321-3396**	2	PIN	
M	3	1	**8T-4139**	4	BOLT (M12X1.75X30-MM)	
	4	1	**8T-4223**	4	WASHER-HARD (13.5X25.5X3-MM THK)	

M-METRIC PART

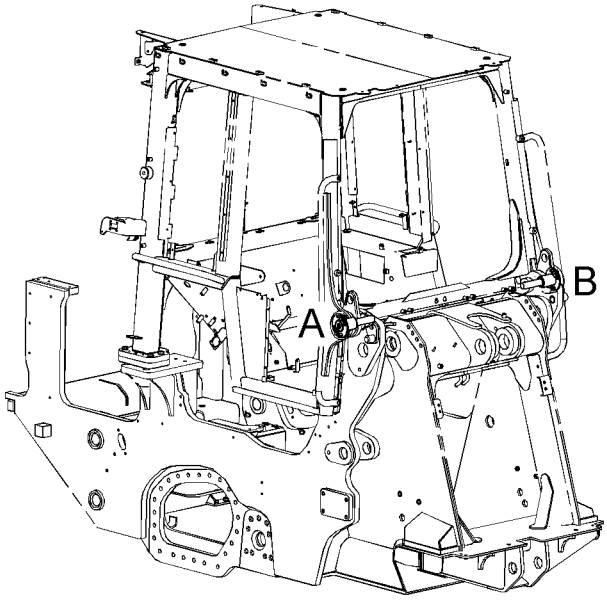

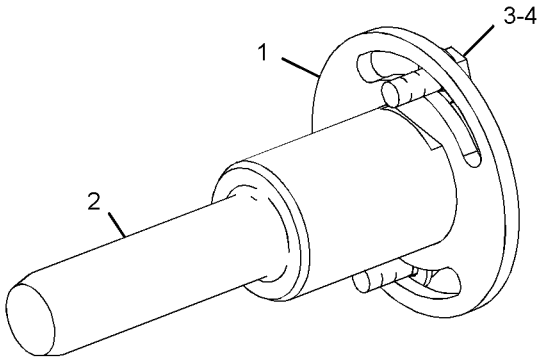

VIEW OF AREA A

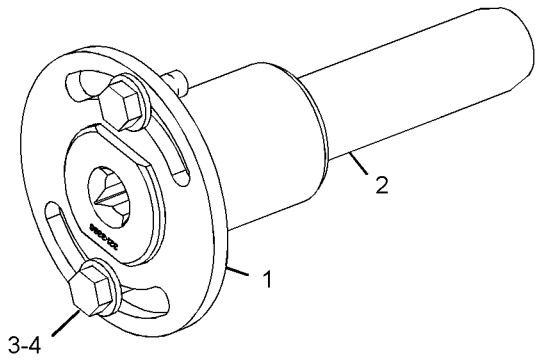

VIEW OF AREA B

GRAPHIC #1 **<END>** g01708395

OPERATOR STATION

278-8515 PAN GP-BACKREST–CLOTH

S/N: LBP1-UP
PART OF 295-4434 SEAT GP
AN ATTACHMENT

SMCS-7312 **i02594072**

NOTE	REF NO	GRAPHIC REF	PART NUMBER	QTY	PART NAME 1 2 3 4 5 6 (PRODUCT LEVEL)	SEE PAGE
	1	1	**164-4883**	1	KNOB-LUMBAR	
Y	2	1	*292-6402*	1	PAN GP-BACKREST (LUMBAR)	665
	3	1	**218-2529**	3	PLUG	
	4	1	**278-7528**	1	CUSHION AS-BACK (CLOTH)	
	5	1	**5P-0537**	2	WASHER-HARD (7.2X14.5X2-MM THK)	
	6	1	**6V-8969**	2	SCREW-BUTTON HEAD (1/4-20X0.5-IN)	
	7	1	**8T-7566**	1	PIN-SPRING	

Y-SEPARATE ILLUSTRATION

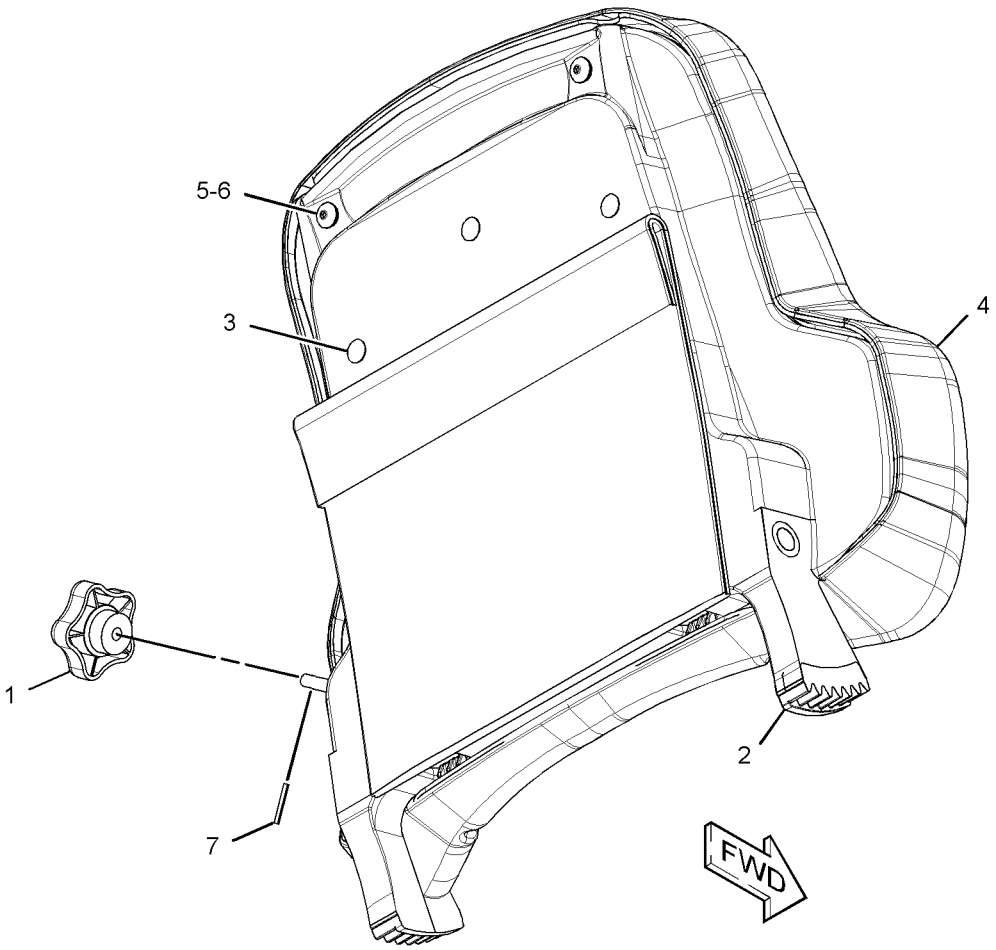

GRAPHIC #1 **<END>** g01304380

OPERATOR STATION

278-8516 PAN GP-BACKREST—CLOTH, HEATED

S/N: LBP1-UP
24-VOLT
PART OF 295-4435 SEAT GP
AN ATTACHMENT

SMCS-7312 **i03097409**

NOTE	REF NO	GRAPHIC REF	PART NUMBER	QTY	PART NAME 1 2 3 4 5 6 (PRODUCT LEVEL)	SEE PAGE
	1	1	**164-4883**	1	KNOB-LUMBAR	
	2	1	**218-2529**	3	PLUG	
	3	1	**276-3063**	1	CUSHION AS-BACK (CLOTH, HEATED)	
Y	4	1	*292-6402*	1	PAN GP-BACKREST (LUMBAR)	665
	5	1	**5P-0537**	2	WASHER-HARD (7.2X14.5X2-MM THK)	
	6	1	**6V-8969**	2	SCREW-BUTTON HEAD (1/4-20X0.5-IN)	
	7	1	**8T-7566**	1	PIN-SPRING	

Y-SEPARATE ILLUSTRATION

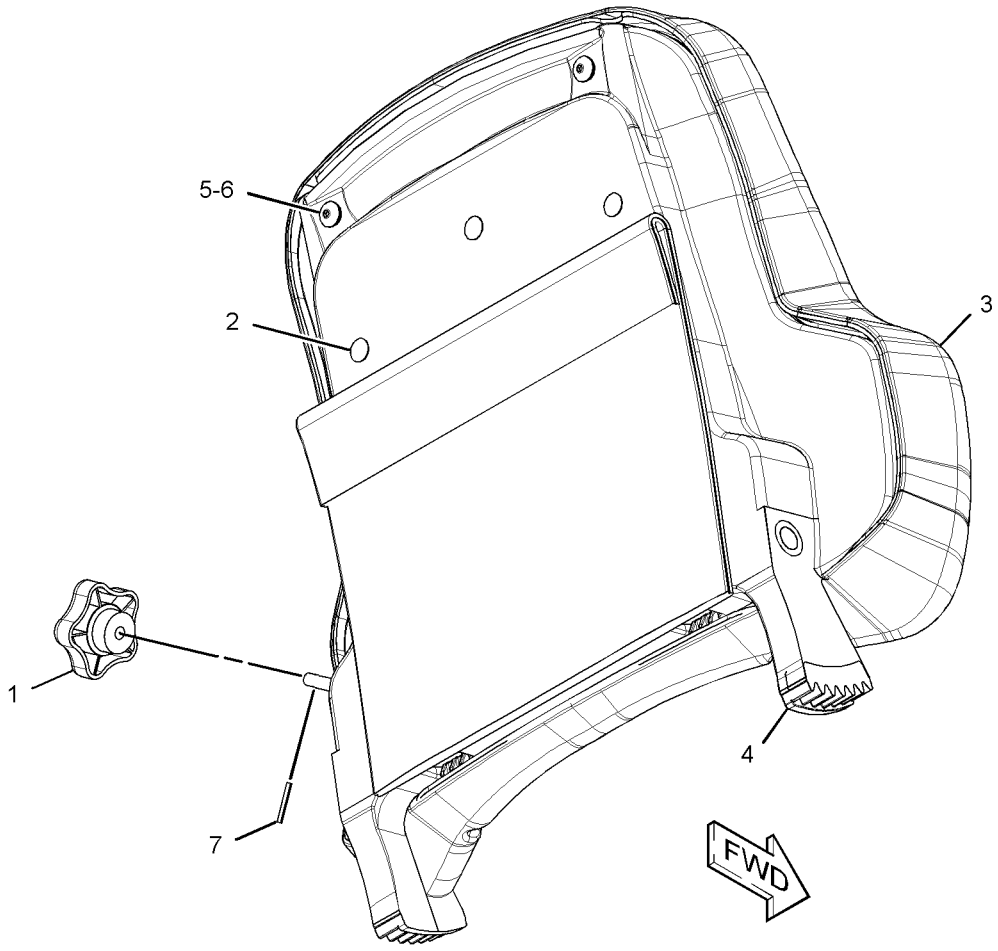

GRAPHIC #1 **<END>** g01304391

292-6402 PAN GP-BACKREST–LUMBAR

S/N: LBP1-UP

PART OF 278-8515, 278-8516 PAN GP-BACKREST

AN ATTACHMENT

SMCS-7312 **i03095784**

NOTE	REF NO	GRAPHIC REF	PART NUMBER	QTY	PART NAME 1 2 3 4 5 6 (PRODUCT LEVEL)	SEE PAGE
	1	1	**5P-7957**	1	LANYARD	
	2	1	**136-1543**	1	PLATE AS-LUMBAR	
	3	1	**173-2052**	1	RETAINER	
	4	1	**178-7907**	1	HOLDER	
	5	1	**261-5694**	1	PAN AS-BACKREST	
	6	1	**322-3161**	1	SPRING	
	7	1	**4K-9429**	8	RIVET-POP	

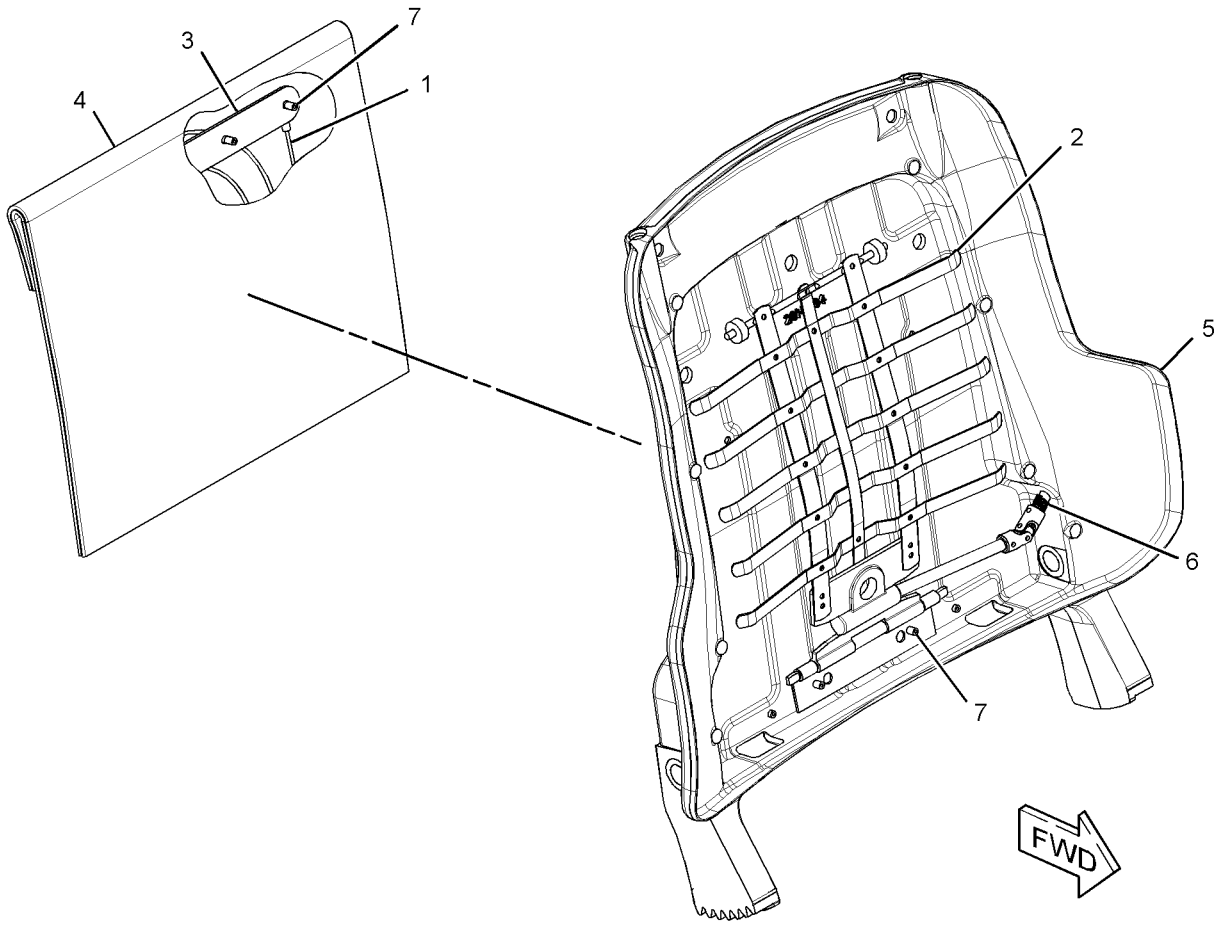

GRAPHIC #1 **<END>** g01577333

OPERATOR STATION

295-4475 PAN GP-SEAT–CLOTH

S/N: LBP1-UP
PART OF 295-4434 SEAT GP
AN ATTACHMENT

SMCS-7312 **i03098210**

NOTE	REF NO	GRAPHIC REF	PART NUMBER	QTY	PART NAME 1 2 3 4 5 6 (PRODUCT LEVEL)	SEE PAGE
	1	1	**216-0814**	1	SWITCH AS-LIMIT (SEAT ADJUSTMENT)	
	2	1	**294-7139**	1	PAN GP-SEAT	
M	2A	1	**127-2170**	6	SCREW-TRUSS HEAD (M8X1.25X20-MM)	
M	2B	1	**5C-7261**	6	NUT (M8X1.25-THD)	
	2C	1	**8T-4224**	6	WASHER-HARD (8.8X16X2-MM THK)	
M	3	1	**7Y-7388**	6	SCREW-BUTTON HEAD (M5X0.8X12-MM)	
	4	1	**267-5159**	1	SPRING	
	5	1	**267-5160**	1	PLATE	
	6	1	**277-8103**	1	PLUG	
	7	1	**277-8589**	1	CUSHION AS-SEAT (CLOTH)	

M-METRIC PART

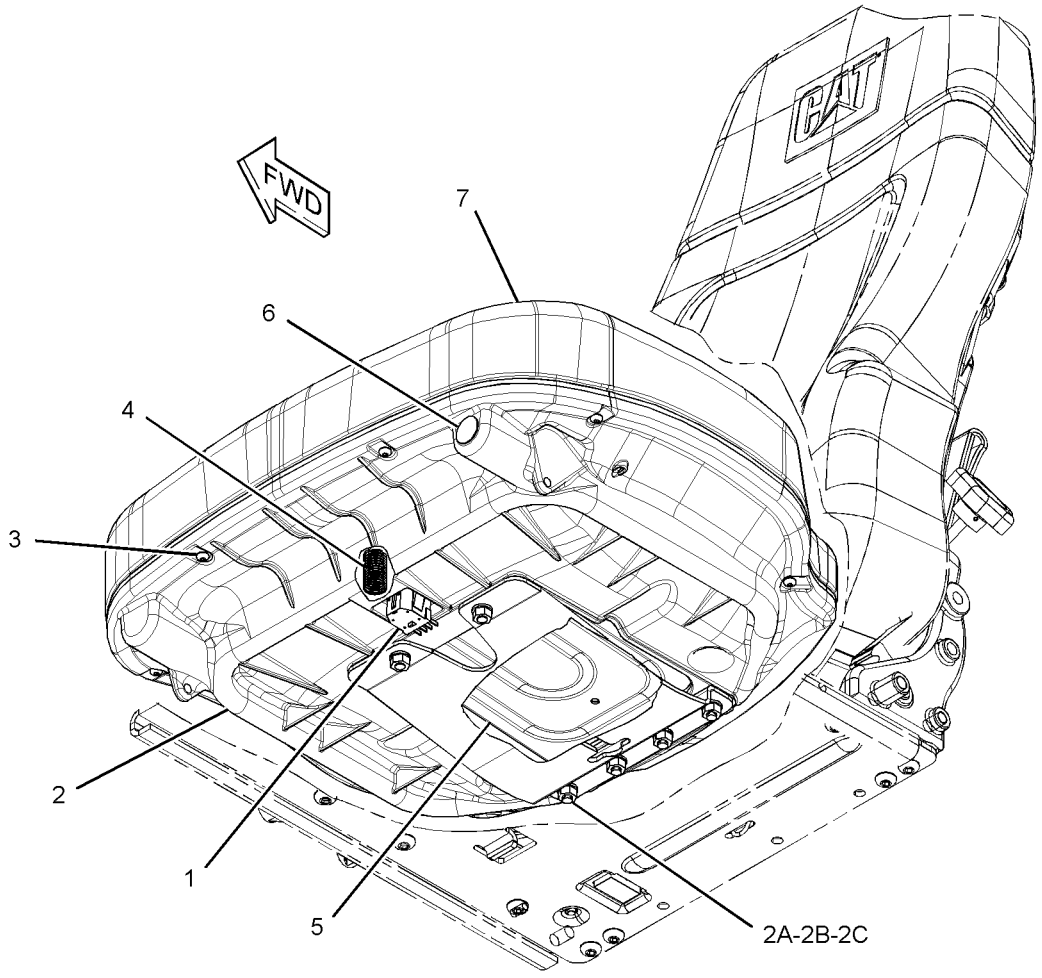

GRAPHIC #1 **<END>** g01581335

295-4476 PAN GP-SEAT–CLOTH, HEATED

S/N: LBP1-UP
24-VOLT
PART OF 295-4435 SEAT GP
AN ATTACHMENT

SMCS-7312 **i03098242**

NOTE	REF NO	GRAPHIC REF	PART NUMBER	QTY	PART NAME 1 2 3 4 5 6 (PRODUCT LEVEL)	SEE PAGE
	1	1	**216-0814**	1	SWITCH AS-LIMIT (SEAT ADJUSTMENT)	
	2	1	**267-5157**	1	CUSHION AS-SEAT (CLOTH, HEATED)	
		1	**267-5156**	1	CARRIER AS	
	3	1	**267-5159**	1	SPRING	
	4	1	**267-5160**	1	PLATE	
	5	1	**277-8102**	1	SWITCH (SEAT ADJUSTMENT)	
	6	1	**294-7139**	1	PAN GP-SEAT	
M	6A	1	**127-2170**	6	SCREW-TRUSS HEAD (M8X1.25X20-MM)	
M	6B	1	**5C-7261**	6	NUT (M8X1.25-THD)	
	6C	1	**8T-4224**	6	WASHER-HARD (8.8X16X2-MM THK)	
M	7	1	**7Y-7388**	6	SCREW-BUTTON HEAD (M5X0.8X12-MM)	

M-METRIC PART

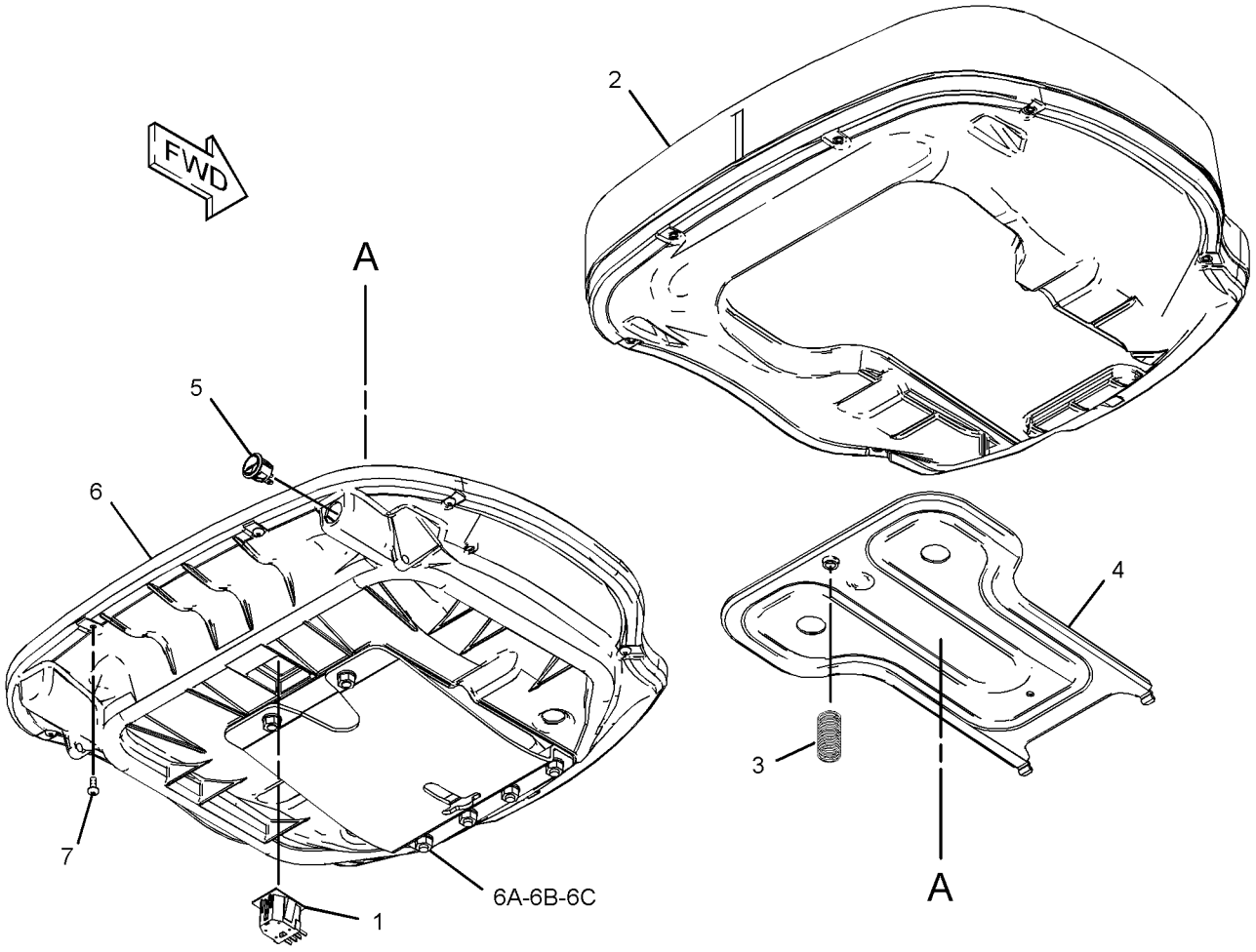

GRAPHIC #1 **<END>** g01581173

OPERATOR STATION

284-8953 RADIO GP—AM/FM/WB CD PLAYER

S/N: LBP1-UP

PART OF 294-2006 RADIO GP

AN ATTACHMENT

SMCS-7338 **i02662864**

NOTE	REF NO	GRAPHIC REF	PART NUMBER	QTY	PART NAME 1 2 3 4 5 6 (PRODUCT LEVEL)	SEE PAGE
	1	1	**142-9681**	1	KNOB-SELECT (RADIO)	
	2	1	**192-7054**	1	SLEEVE	

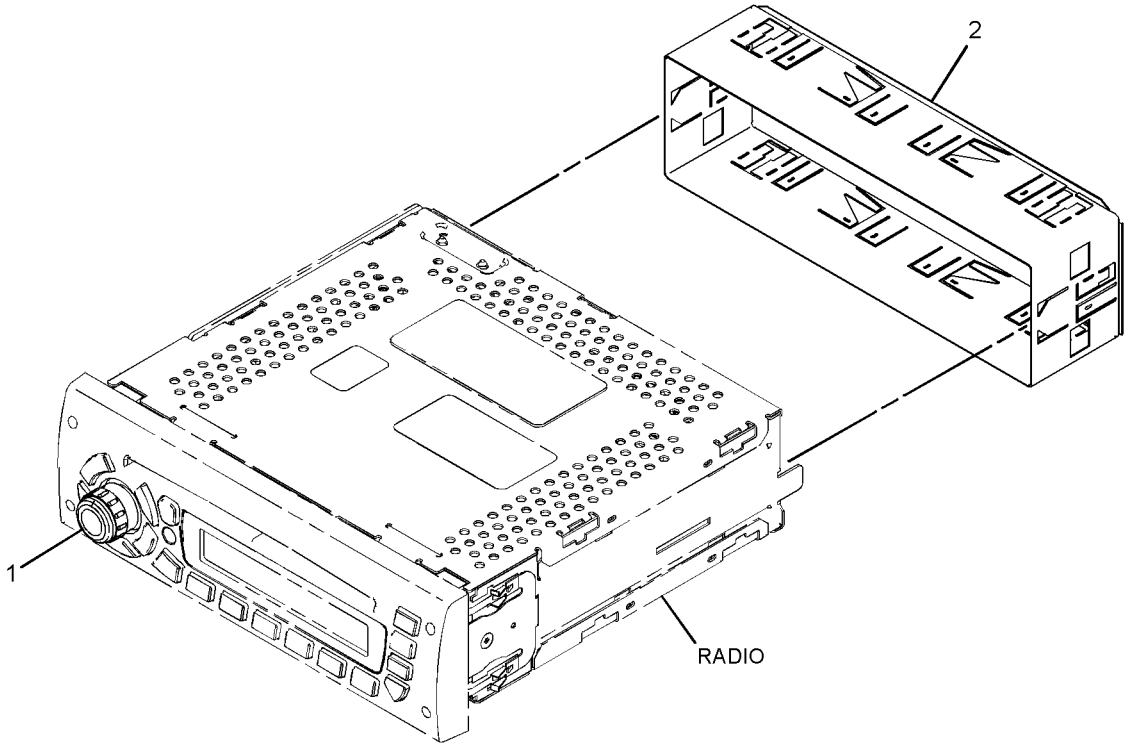

GRAPHIC #1 **<END>** g01340230

284-8954 RADIO GP–AM/FM/WB CD PLAYER

S/N: LBP1-UP
XM SATELLITE
PART OF 303-1462 RADIO GP
AN ATTACHMENT

SMCS-7338 **i02567360**

NOTE	REF NO	GRAPHIC REF	PART NUMBER	QTY	PART NAME 1 2 3 4 5 6 (PRODUCT LEVEL)	SEE PAGE
	1	1	**142-9681**	1	KNOB-SELECT (RADIO)	
	2	1	**192-7054**	1	SLEEVE	

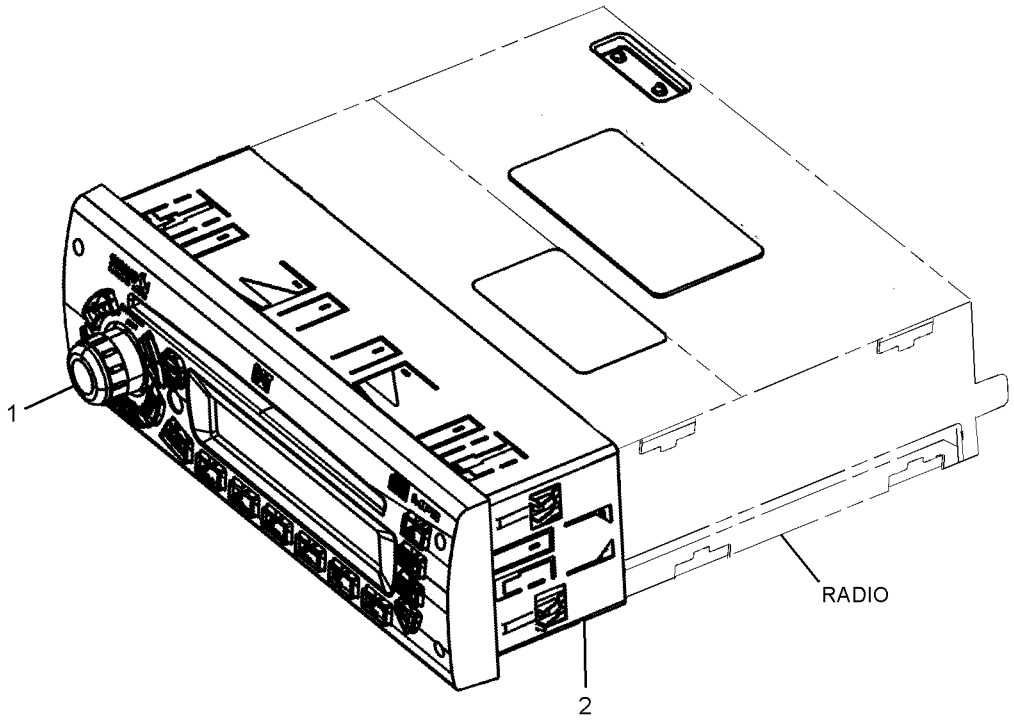

GRAPHIC #1 **<END>** g01289710

OPERATOR STATION

284-8955 RADIO GP–AM/FM/WB CD PLAYER

S/N: LBP1-UP
SIRIUS SATELLITE
PART OF 303-1463 RADIO GP
AN ATTACHMENT

SMCS-7338 **i02567379**

NOTE	REF NO	GRAPHIC REF	PART NUMBER	QTY	PART NAME 1 2 3 4 5 6 (PRODUCT LEVEL)	SEE PAGE
	1	1	**142-9681**	1	KNOB-SELECT (RADIO)	
	2	1	**192-7054**	1	SLEEVE	

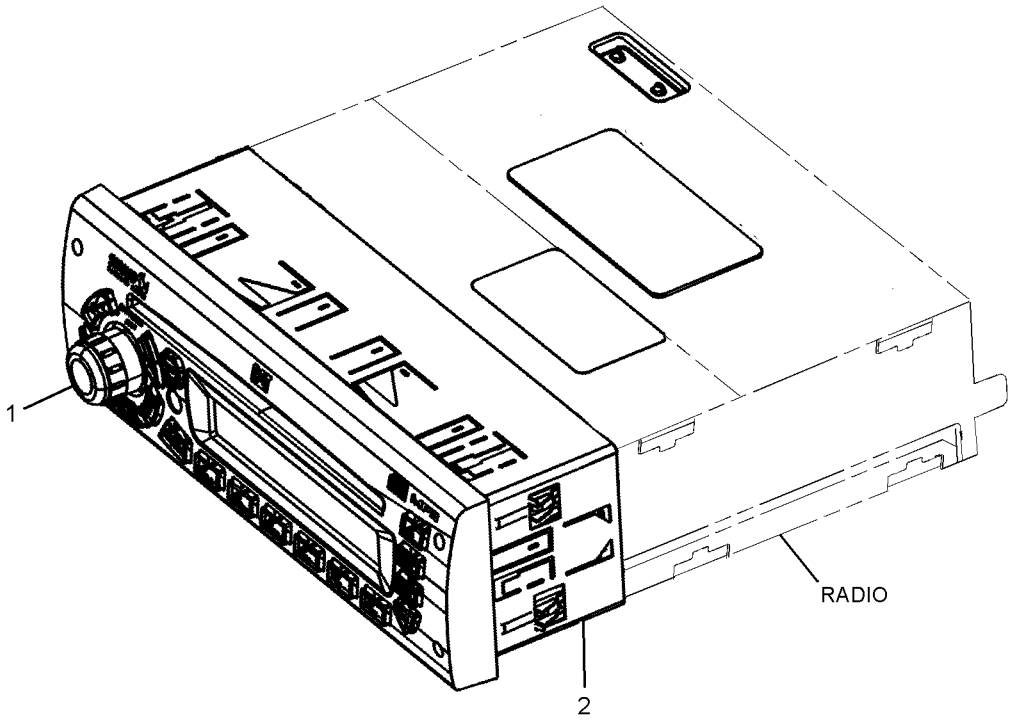

GRAPHIC #1 **<END>** g01289705

OPERATOR STATION

294-2006 RADIO GP–AM/FM/WB/CD PLAYER

S/N: LBP1-UP

CANNOT BE USED WITH CANOPY AR

AN ATTACHMENT

SMCS-7338 **i02662819**

NOTE	REF NO	GRAPHIC REF	PART NUMBER	QTY	PART NAME 1 2 3 4 5 6 (PRODUCT LEVEL)	SEE PAGE
	1	1	**137-8165**	1	BUMPER	
	2	1	**200-5728**	1	HARNESS AS-RADIO	
		1	**172-8039**	1	TERMINAL (RADIO)	
		1	**172-8037**	1	CONNECTOR (RADIO)	
		1	**160-3518**	1	KIT-RECEPTACLE (8-PIN)	
					(INCLUDES RECEPTACLE AS & WEDGE)	
Y	3	1	**284-8953**	1	RADIO GP (AM/FM/WB CD PLAYER)	668

Y-SEPARATE ILLUSTRATION

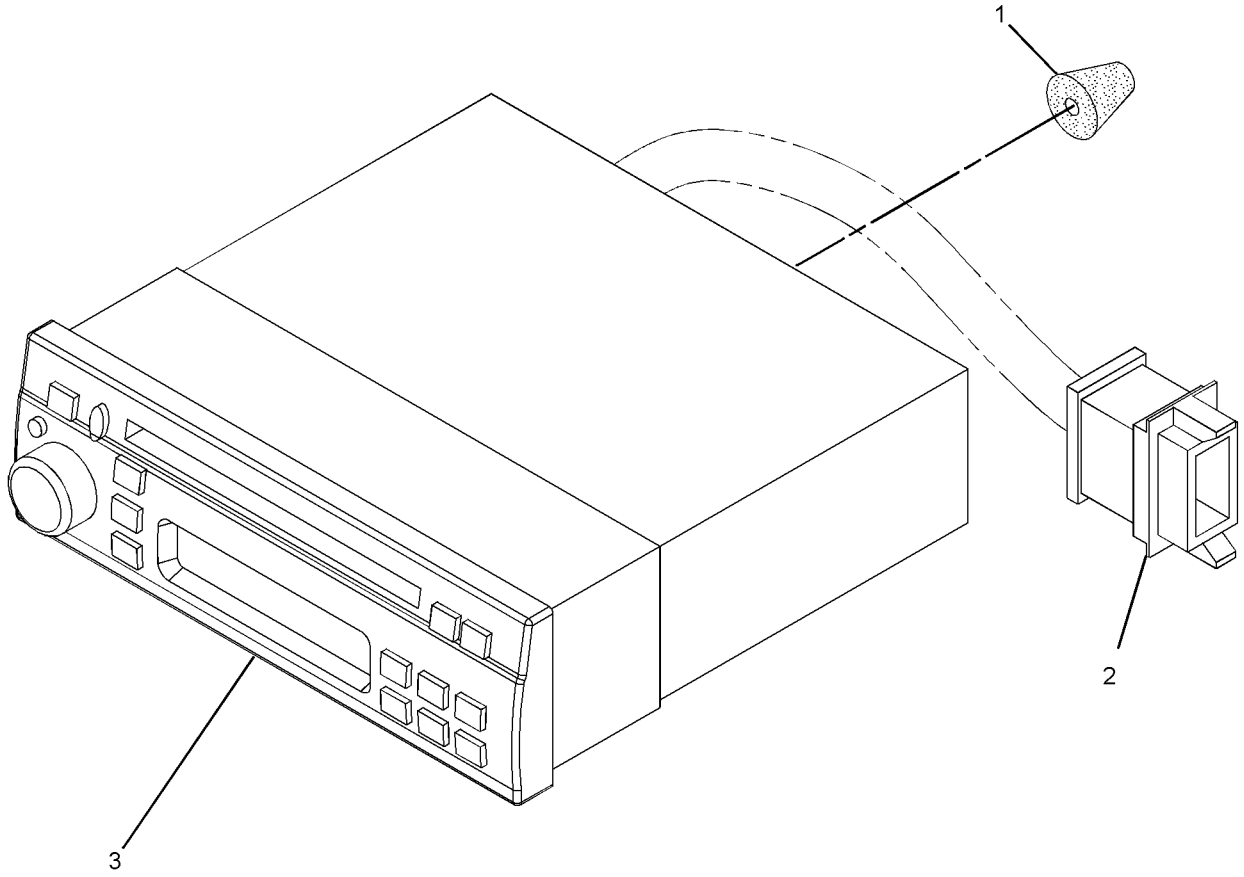

GRAPHIC #1 **<END>** g01290559

OPERATOR STATION

303-1462 RADIO GP–NACD

S/N: LBP1-UP
XM SATELLITE
AN ATTACHMENT

SMCS-7338 **i03016718**

NOTE	REF NO	GRAPHIC REF	PART NUMBER	QTY	PART NAME 1 2 3 4 5 6 (PRODUCT LEVEL)	SEE PAGE
	1	1	**7K-1181**	2	STRAP-CABLE	
	2	1	**8T-8557**	2	RIVET-POP	
Y	3	1	**284-8954**	1	RADIO GP (AM/FM/WB/XM/CD PLAYER)	669
	4	1	**284-9055**	1	ANTENNA AS	
	5	1	**326-3251**	1	PLATE	
	6	1	**7X-7729**	1	WASHER (11X25X3-MM THK)	
M	7	1	**9X-2039**	1	SCREW-TRUSS HEAD (M10X1.5X35-MM)	
	8	1	**200-5728**	1	HARNESS AS-RADIO	

M-METRIC PART
Y-SEPARATE ILLUSTRATION

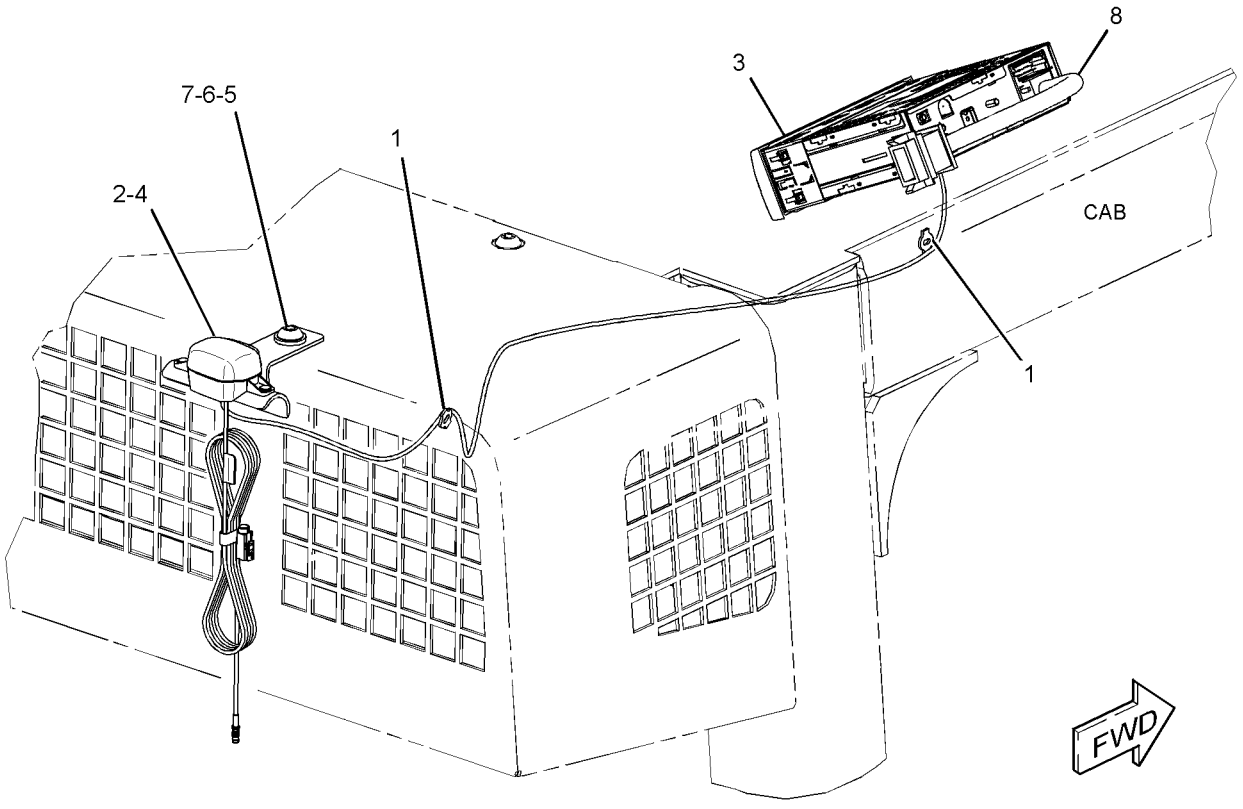

GRAPHIC #1 **<END>** g01534335

OPERATOR STATION

303-1463 RADIO GP–NACD

S/N: LBP1-UP
SIRIUS SATELLITE
AN ATTACHMENT

SMCS-7338 **i03016719**

NOTE	REF NO	GRAPHIC REF	PART NUMBER	QTY	PART NAME 1 2 3 4 5 6 (PRODUCT LEVEL)	SEE PAGE
	1	1	**7K-1181**	2	STRAP-CABLE	
	2	1	**8T-8557**	2	RIVET-POP	
Y	3	1	**284-8955**	1	RADIO GP (AM/FM/WB/SIRIUS/CD PLAYER)	670
	4	1	**284-9055**	1	ANTENNA AS	
	5	1	**326-3251**	1	PLATE	
	6	1	**7X-7729**	1	WASHER (11X25X3-MM THK)	
M	7	1	**9X-2039**	1	SCREW-TRUSS HEAD (M10X1.5X35-MM)	
	8	1	**200-5728**	1	HARNESS AS-RADIO	

M-METRIC PART
Y-SEPARATE ILLUSTRATION

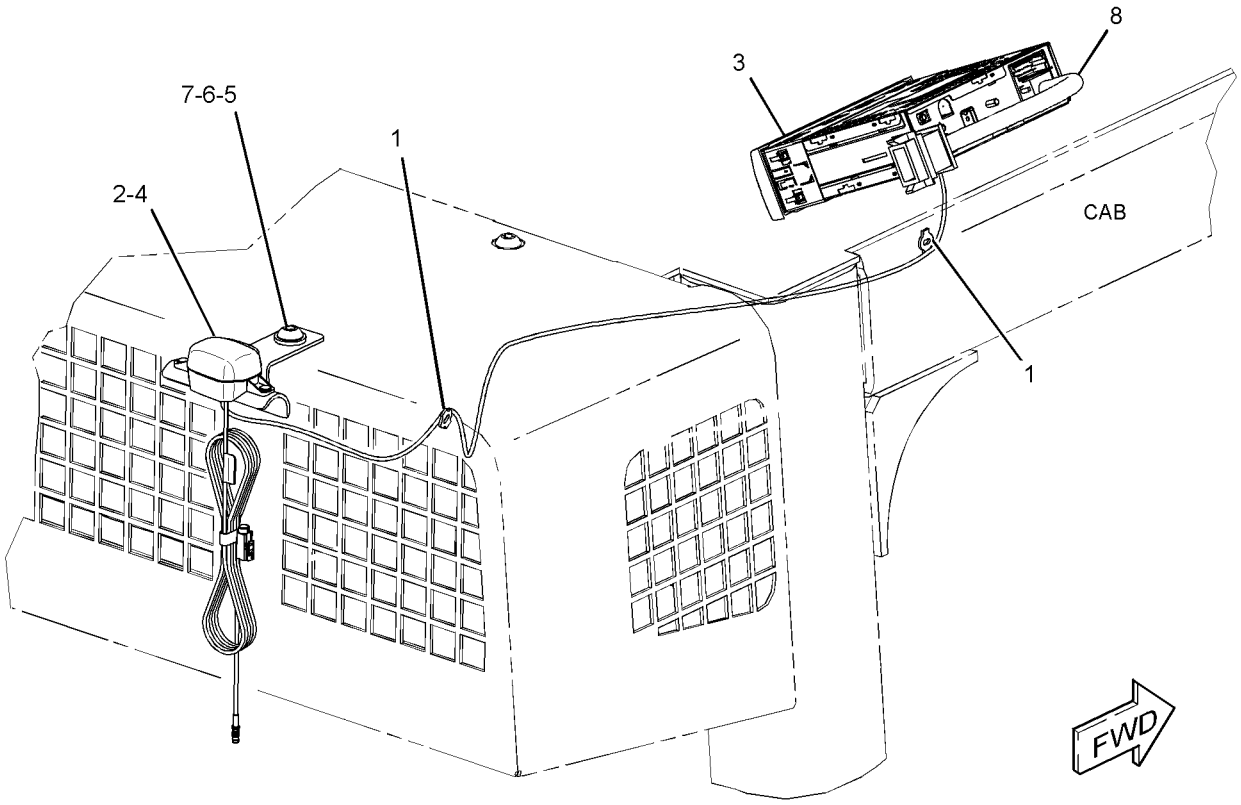

GRAPHIC #1 **<END>** g01534335

OPERATOR STATION

262-0766 RECLINER GP-SEAT

S/N: LBP1-UP
PART OF 295-4434, 295-4435 SEAT GP
AN ATTACHMENT

SMCS-7312 **i02583147**

NOTE	REF NO	GRAPHIC REF	PART NUMBER	QTY	PART NAME 1 2 3 4 5 6 (PRODUCT LEVEL)	SEE PAGE
	1	1	**262-0767**	1	BRACKET AS (LH)	
	2	1	**262-0769**	1	BRACKET AS (RH)	
					(EACH BRACKET AS INCLUDES)	
		1	**262-0771**	1	BEARING AS	
	3	1	**262-0772**	1	SHAFT AS	
		1	**282-0557**	1	SPRING	
		1	**2K-9111**	2	PIN-SPRING	
		1	**8T-0277**	1	PIN-SPRING	
		1	**3E-4333**	1	KEY-WOODRUFF	
		1	**256-4959**	1	SLIDER AS	
		1	**262-0789**	1	CABLE AS	

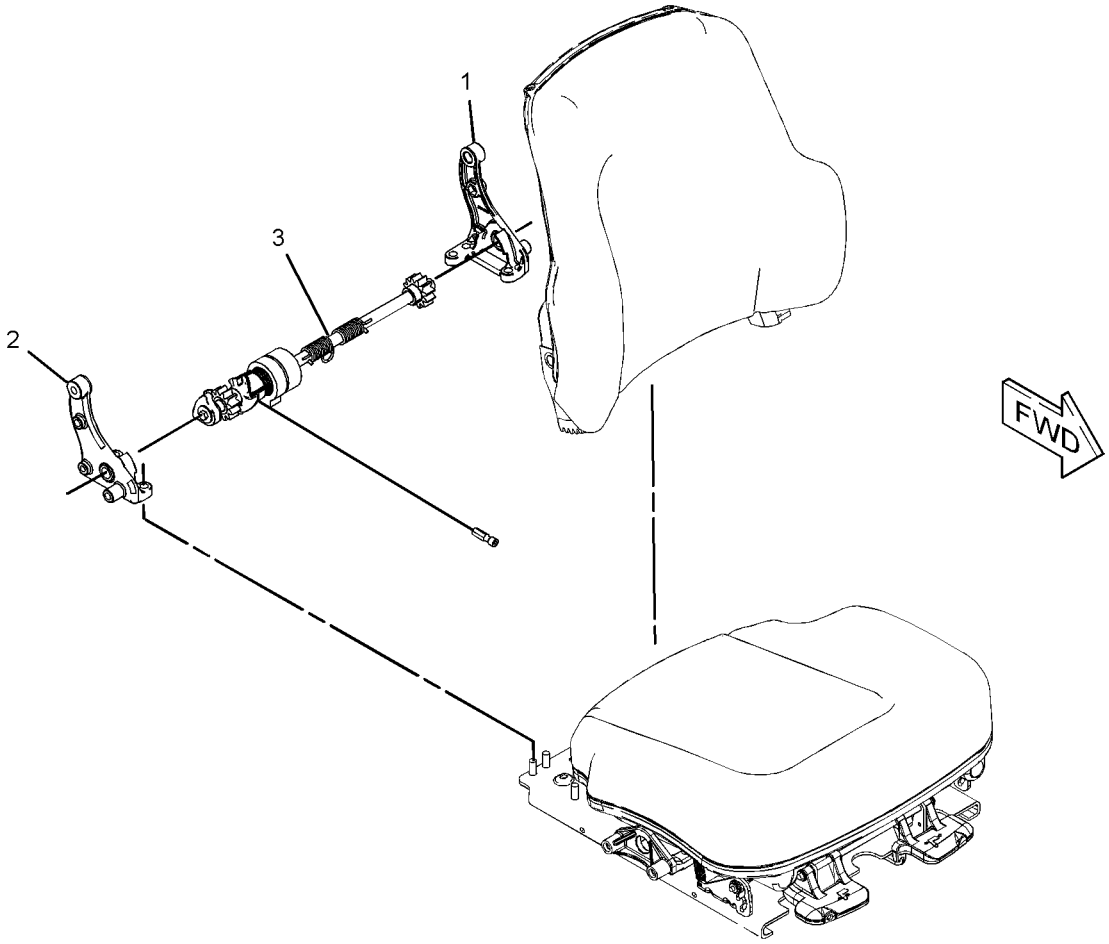

GRAPHIC #1 **<END>** g01303028

OPERATOR STATION

256-7248 SCREEN GP-CAB—WINDSHIELD

S/N: LBP1-UP
CANNOT BE USED WITH GUARD GP-LIGHTING
AN ATTACHMENT

SMCS-7165, 7301 **i03486647**

NOTE	REF NO	GRAPHIC REF	PART NUMBER	QTY	PART NAME 1 2 3 4 5 6 (PRODUCT LEVEL)	SEE PAGE
	1	2	**131-9030**	1	GROMMET	
	2	1	**246-2641**	1	PADLOCK GP	
		1	**5P-8500**	1	KEY	
	3	1	**8T-9496**	2	LOCKNUT (9/16-18-THD)	
	4	1	**127-0506**	1	BUMPER AS	
	5	1	**175-6222**	1	LATCH AS (BLACK)	
		1	**8Y-4000**	1	LATCH AS (T-BAR, COMPARTMENT) (YELLOW)	
	6	2	**268-0799**	1	PAWL	
	7	2	**287-7460**	2	PLATE	
	8	1	**287-7564**	1	SCREEN AS (CAB)	
	9	2	**287-7565**	1	BOSS	
	10	2	**287-7567**	1	BRACKET AS (RH)	
M		2	**6R-7943**	2	SCREW (M5X0.8X15-MM)	
	11	2	**287-7569**	1	BRACKET AS (LH)	
M		2	**6R-7943**	2	SCREW (M5X0.8X15-MM)	
	12	1	**294-3582**	1	BRACKET	
	13	1	**198-4766**	2	WASHER-HARD (11X25X10-MM THK)	
	14	2	**287-7461**	1	ROD	
M	15	2	**7X-2619**	1	BOLT (M6X1X10-MM)	
	16	2	**7X-7729**	2	WASHER (11X25X3-MM THK)	
	17	1,2	**8T-4121**	8	WASHER-HARD (11X21X2.5-MM THK)	
M	18	1	**8T-4133**	3	NUT (M10X1.5-THD)	
M	19	2	**8T-4139**	4	BOLT (M12X1.75X30-MM)	
M	20	2	**8T-4186**	2	BOLT (M10X1.5X40-MM)	
M	21	1,2	**8T-4195**	6	BOLT (M10X1.5X30-MM)	
	22	2	**8T-4223**	4	WASHER-HARD (13.5X25.5X3-MM THK)	
M	23	2	**8T-4970**	1	BOLT (M6X1X14-MM)	
M	24	2	**9X-2039**	4	SCREW-TRUSS HEAD (M10X1.5X35-MM)	
	25	2	**9X-6165**	1	WASHER (6.5X22X2.5-MM THK)	
	26	2	**9X-8256**	1	WASHER (6.6X12X2-MM THK)	

M-METRIC PART

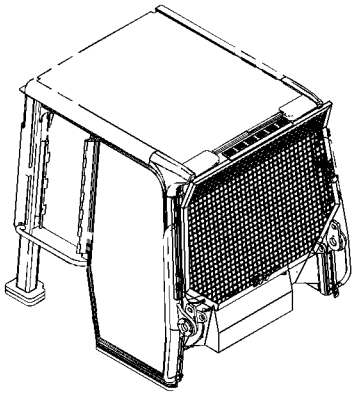



REFER TO ALL ILLUSTRATIONS OF
THIS GROUP FOR AUXILIARY VIEWS

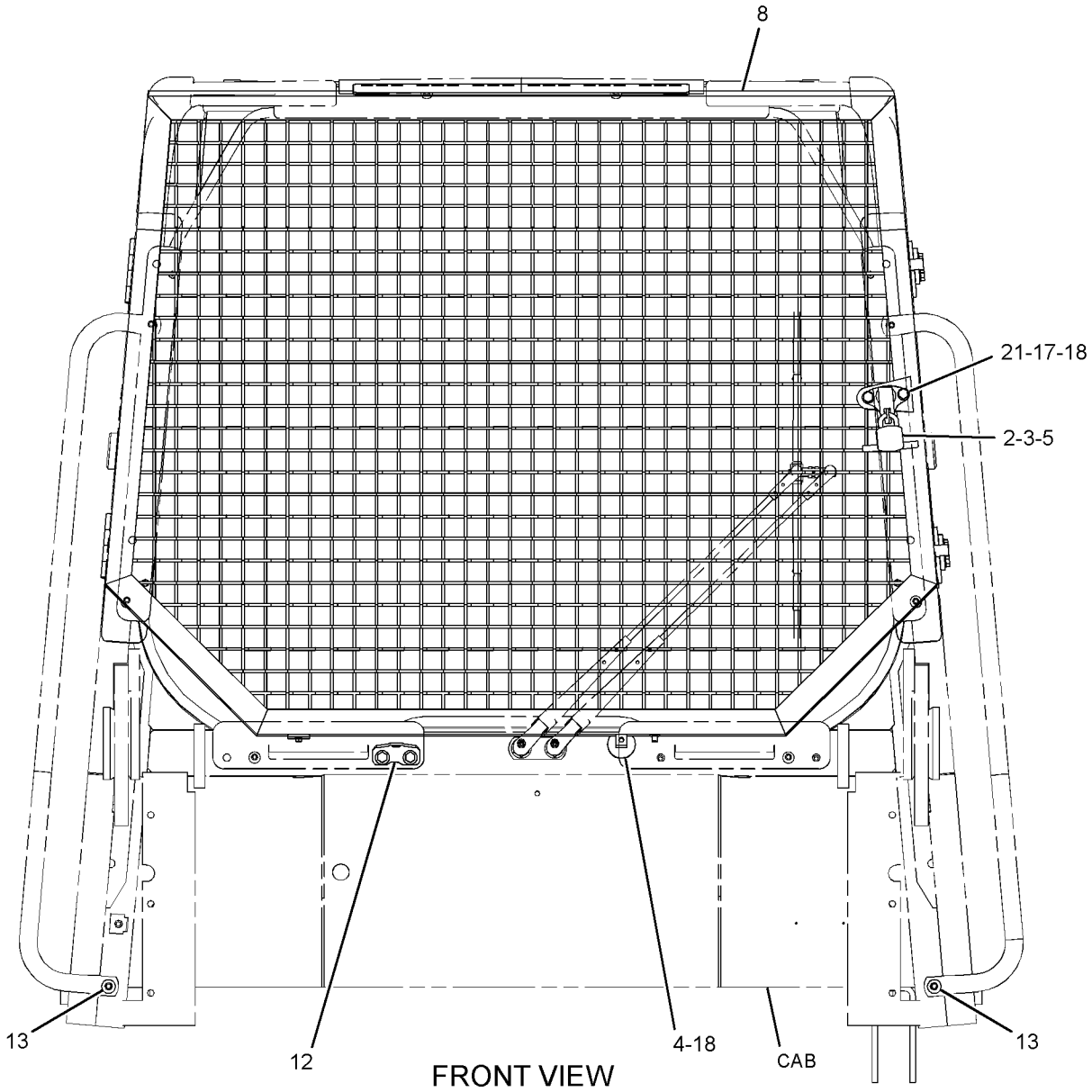

GRAPHIC #1

g01344840

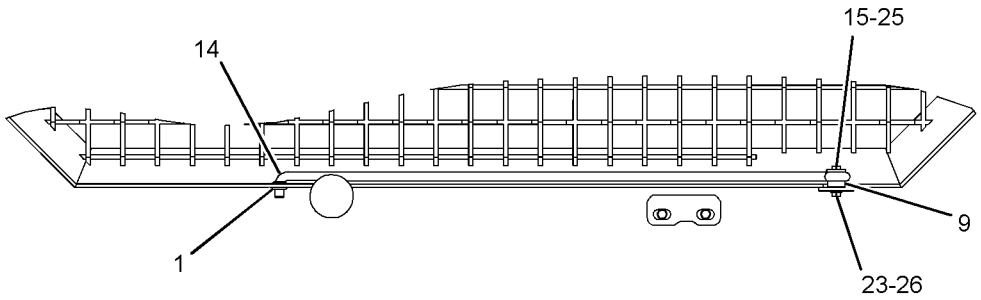

VIEW A-A

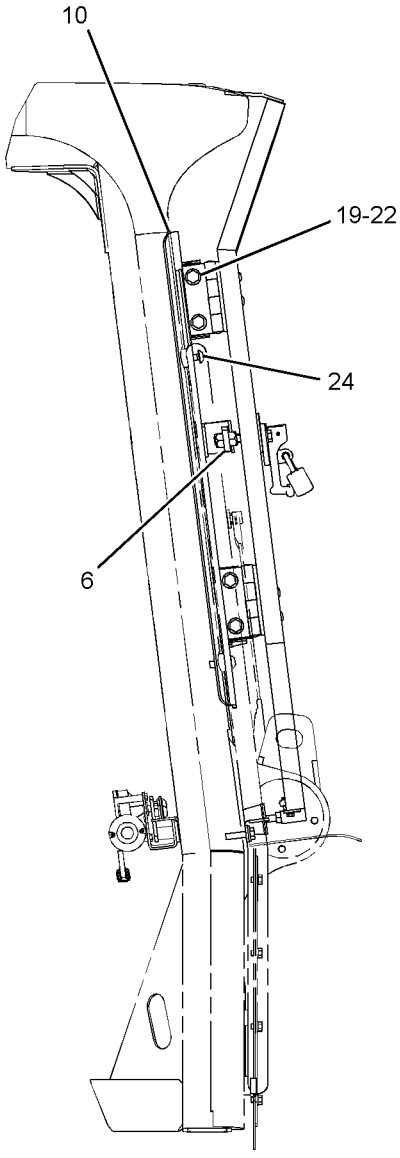

RIGHT SIDE VIEW

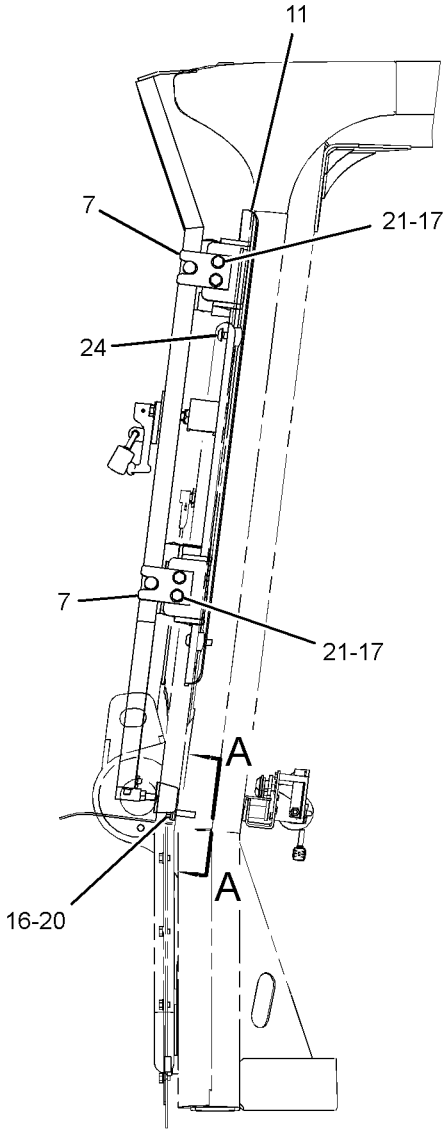

LEFT SIDE VIEW

GRAPHIC #2 **<END>** g01344841

OPERATOR STATION

272-2272 SEAT BELT GP–RETRACTABLE

S/N: LBP1-UP

PART OF 255-8847, 255-8848 SEAT GP-SUSPENSION

AN ATTACHMENT

SMCS-7327 **i02583118**

NOTE	REF NO	GRAPHIC REF	PART NUMBER	QTY	PART NAME 1 2 3 4 5 6 (PRODUCT LEVEL)	SEE PAGE
	1	1	**275-7803**	1	SPACER (11.7X19.8X25.4-MM THK)	
	2	1	**0T-0489**	2	BOLT (7/16-20X2-IN)	
	3	1	**8T-5360**	2	WASHER (12X22.5X2.5-MM THK)	

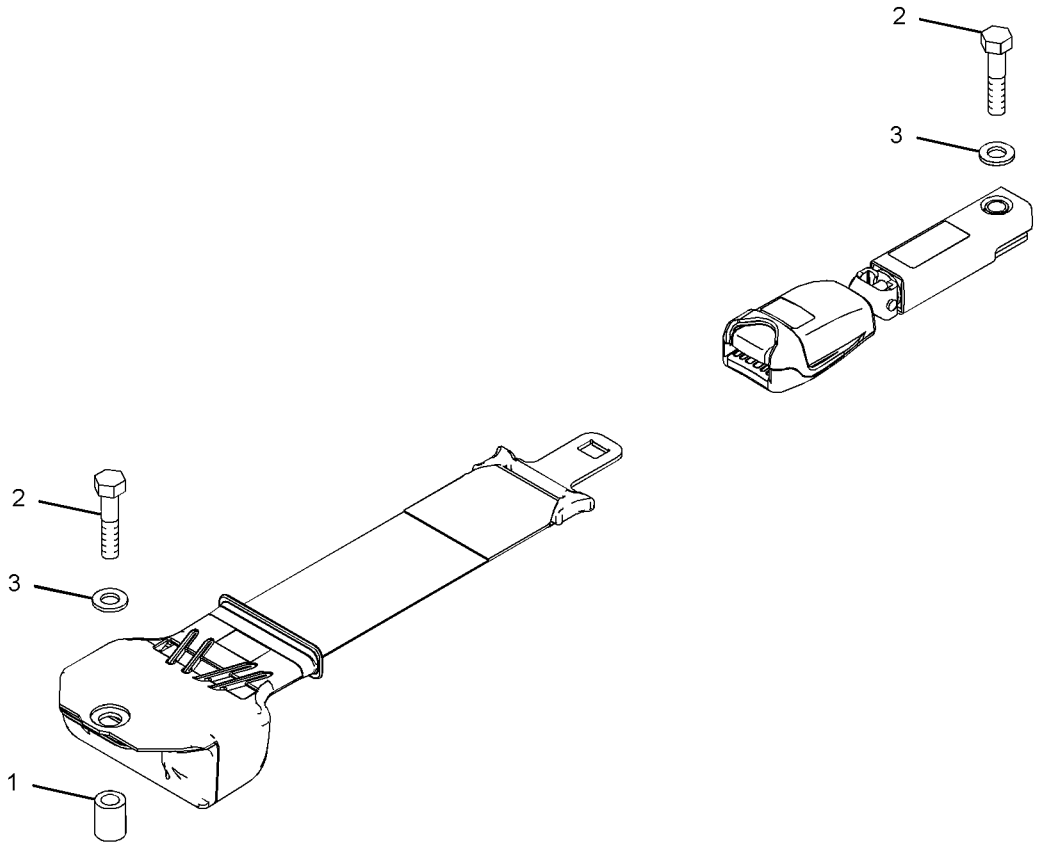

GRAPHIC #1 **<END>** g01303780

OPERATOR STATION

295-4434 SEAT GP–CLOTH

S/N: LBP1-UP
MANUAL TILT
PART OF 255-8847 SEAT GP-SUSPENSION
AN ATTACHMENT

SMCS-7312 **i03139145**

NOTE	REF NO	GRAPHIC REF	PART NUMBER	QTY	PART NAME 1 2 3 4 5 6 (PRODUCT LEVEL)	SEE PAGE
	1	1	**143-1288**	6	LOCKNUT-FLANGE (3/8-16-THD)	
	2	1	**171-1230**	6	SCREW-BUTTON HEAD (3/8-16X1-IN)	
Y	3	1	*262-0766*	1	RECLINER GP-SEAT	674
	4	1	**267-5147**	2	BRACKET	
	5	1	**267-9319**	1	STOP	
	6	1	**276-3642**	1	SHAFT	
	7	1	**276-3644**	1	NUT-SPECIAL	
Y	8	1	*278-8515*	1	PAN GP-BACKREST (CLOTH)	663
	9	1	**293-9379**	1	ROD	
	10	1	**293-9665**	2	SPRING	
Y	11	1	*294-7779*	1	ADJUSTER GP-SEAT	528
Y	12	1	*295-4475*	1	PAN GP-SEAT (CLOTH)	666
	13	1	**295-6472**	4	WASHER (7X19X2-MM THK)	
	14	1	**031-0214**	1	BOLT-LOCKING (1/4-20X0.5-IN)	
	15	1	**101-2867**	1	WASHER-HARD (7.2X25X2-MM THK)	
	16	1	**200-8790**	2	WASHER-HARD (7.2X17.5X2-MM THK)	
M	17	1	**2Y-5829**	1	NUT (M10X1.5-THD)	
	18	1	**5V-1496**	2	RETAINER	
	19	1	**6F-7418**	1	BOLT-SOCKET HEAD (5/16-18X1.25-IN)	
M	20	1	**8C-8585**	8	SCREW-BUTTON HEAD (M10X1.5X20-MM)	
	21	1	**8T-4121**	2	WASHER-HARD (11X21X2.5-MM THK)	
M	22	1	**8T-4196**	2	BOLT (M10X1.5X35-MM)	

M-METRIC PART
Y-SEPARATE ILLUSTRATION

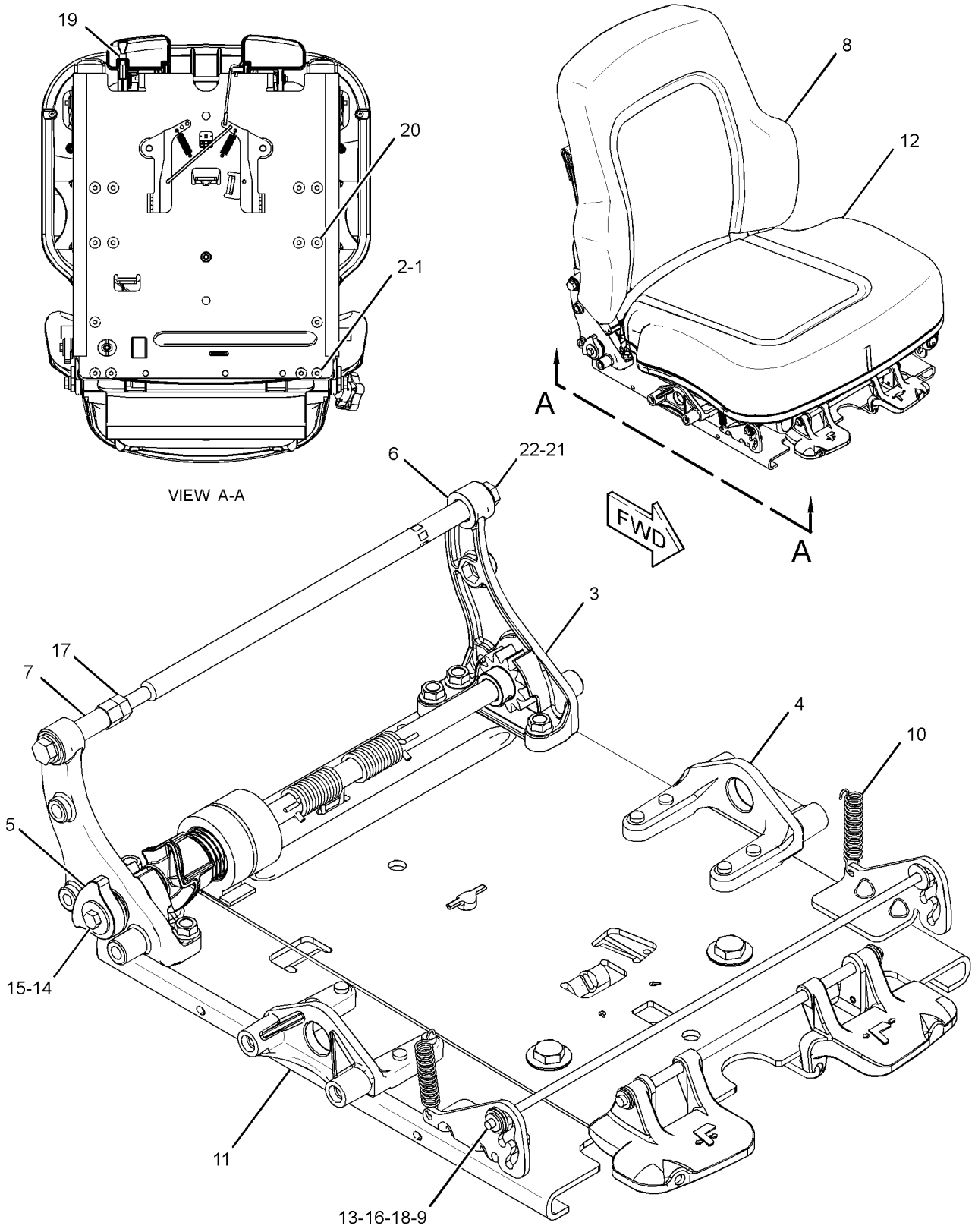

BACK REST AND SEAT PAN REMOVED

GRAPHIC #1 **<END>** g01304000

OPERATOR STATION

295-4435 SEAT GP—CLOTH, HEATED

S/N: LBP1-UP
24-VOLT. MANUAL TILT
PART OF 255-8848 SEAT GP-SUSPENSION
AN ATTACHMENT

SMCS-7312 **i03097480**

NOTE	REF NO	GRAPHIC REF	PART NUMBER	QTY	PART NAME 1 2 3 4 5 6 (PRODUCT LEVEL)	SEE PAGE
	1	1	**143-1288**	6	LOCKNUT-FLANGE (3/8-16-THD)	
	2	1	**171-1230**	6	SCREW-BUTTON HEAD (3/8-16X1-IN)	
Y	3	1	*262-0766*	1	RECLINER GP-SEAT	674
	4	1	**267-5147**	2	BRACKET	
	5	1	**267-9319**	1	STOP	
	6	1	**276-3642**	1	SHAFT	
	7	1	**276-3644**	1	NUT-SPECIAL	
Y	8	1	*278-8516*	1	PAN GP-BACKREST (CLOTH, HEATED)	664
	9	1	**293-9379**	1	ROD	
	10	1	**293-9665**	2	SPRING	
Y	11	1	*294-7779*	1	ADJUSTER GP-SEAT	528
Y	12	1	*295-4476*	1	PAN GP-SEAT (CLOTH, HEATED)	667
	13	1	**295-6472**	4	WASHER (7X19X2-MM THK)	
	14	1	**031-0214**	1	BOLT-LOCKING (1/4-20X0.5-IN)	
	15	1	**101-2867**	1	WASHER-HARD (7.2X25X2-MM THK)	
	16	1	**200-8790**	2	WASHER-HARD (7.2X17.5X2-MM THK)	
M	17	1	**2Y-5829**	1	NUT (M10X1.5-THD)	
	18	1	**5V-1496**	2	RETAINER	
	19	1	**6F-7418**	1	BOLT-SOCKET HEAD (5/16-18X1.25-IN)	
M	20	1	**8C-8585**	8	SCREW-BUTTON HEAD (M10X1.5X20-MM)	
	21	1	**8T-4121**	2	WASHER-HARD (11X21X2.5-MM THK)	
M	22	1	**8T-4196**	2	BOLT (M10X1.5X35-MM)	

M-METRIC PART
Y-SEPARATE ILLUSTRATION

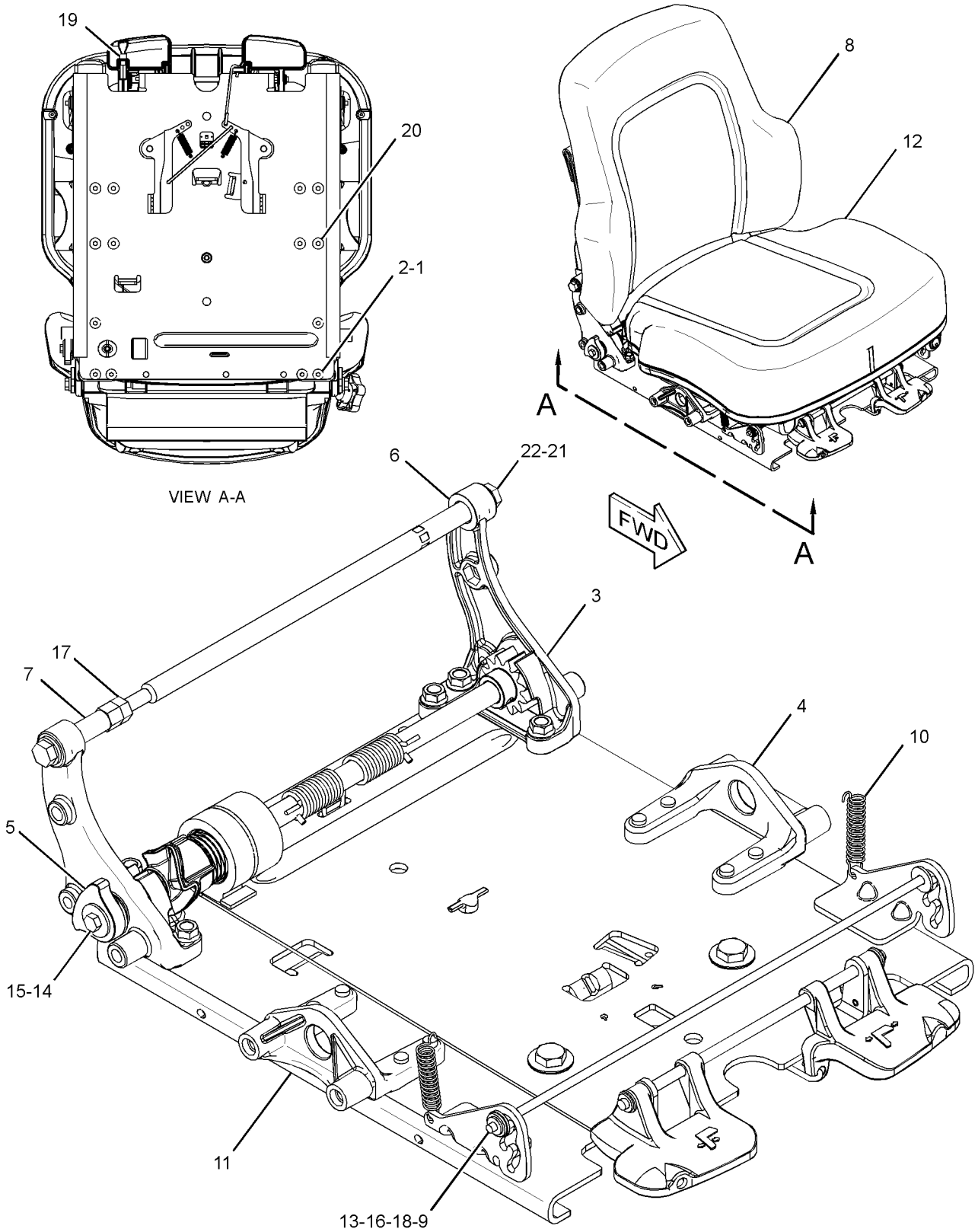

BACK REST AND SEAT PAN REMOVED

GRAPHIC #1 **<END>** g01304000

253-8442 SEAT GP-SUSPENSION—CLOTH, AIR

S/N: LBP1-UP
CANNOT BE USED WITH 253-8443—PAGE 683
AN ATTACHMENT

SMCS-7324, 7336 **i03097486**

NOTE	PART NUMBER	QTY	PART NAME 1 2 3 4 5 6 (PRODUCT LEVEL)	SEE PAGE
Y	*255-8847*	1	SEAT GP-SUSPENSION (CLOTH, AIR)	684
M	**8T-4195**	4	BOLT (M10X1.5X30-MM)	
	8T-4121	4	WASHER-HARD (11X21X2.5-MM THK)	

M-METRIC PART
Y-SEPARATE ILLUSTRATION

<END>

253-8443 SEAT GP-SUSPENSION—CLOTH, HEATED, AIR

S/N: LBP1-UP
CANNOT BE USED WITH 253-8442—PAGE 683
AN ATTACHMENT

SMCS-7324, 7336 **i03588628**

NOTE	PART NUMBER	QTY	PART NAME 1 2 3 4 5 6 (PRODUCT LEVEL)	SEE PAGE
Y	**255-8848**	1	SEAT GP-SUSPENSION (CLOTH, HEATED, AIR)	685
M	**8T-4195**	4	BOLT (M10X1.5X30-MM)	
	8T-4121	4	WASHER-HARD (11X21X2.5-MM THK)	

M-METRIC PART
Y-SEPARATE ILLUSTRATION

<END>

OPERATOR STATION

255-8847 SEAT GP-SUSPENSION—CLOTH, AIR

S/N: LBP1-UP
PART OF 253-8442 SEAT GP-SUSPENSION
AN ATTACHMENT

SMCS-7324, 7336 **i03588634**

NOTE	REF NO	GRAPHIC REF	PART NUMBER	QTY	PART NAME 1 2 3 4 5 6 (PRODUCT LEVEL)	SEE PAGE
	1	1	**173-5787**	4	SETSCREW (1/4-20-THD)	
	2	1	**203-7703**	2	WASHER-HARD (10.2X22.22X2.38-MM THK)	
	3	1	**229-1494**	1	EXTENSION GP-BACKREST (CLOTH)	
Y	4	1	**272-2272**	1	SEAT BELT GP (RETRACTABLE)	678
Y	5	1	**295-4434**	1	SEAT GP (CLOTH)	679
Y	6	1	**298-2818**	1	SUSPENSION GP-SEAT (AIR)	693
	7	1	**4F-4879**	1	BOLT (3/8-16X0.5-IN)	
					AVAILABLE REPAIR KIT(S):	
			173-7035	1	KIT-SLIDER BLOCK (SUSPENSION SEAT)	
					(INCLUDES WASHERS, BOLT, SLIDER BLOCKS, & SETSCREWS)	

Y-SEPARATE ILLUSTRATION

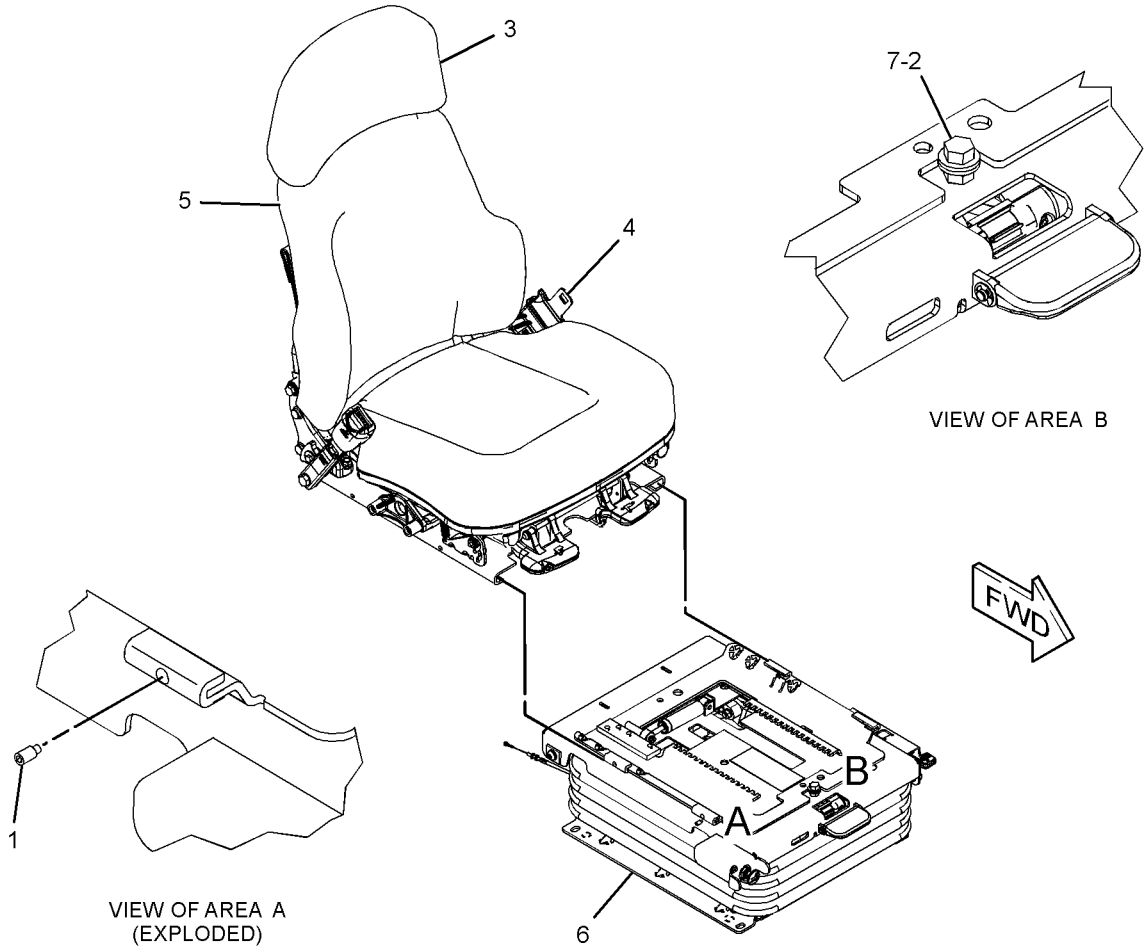

GRAPHIC #1 **<END>** g01346499

255-8848 SEAT GP-SUSPENSION—CLOTH, HEATED, AIR

S/N: LBP1-UP

PART OF 253-8443 SEAT GP-SUSPENSION

AN ATTACHMENT

SMCS-7324, 7336 **i03588640**

NOTE	REF NO	GRAPHIC REF	PART NUMBER	QTY	PART NAME 1 2 3 4 5 6 (PRODUCT LEVEL)	SEE PAGE
	1	1	**173-5787**	4	SETSCREW (1/4-20-THD)	
	2	1	**203-7703**	2	WASHER-HARD (10.2X22.22X2.38-MM THK)	
	3	1	**229-1494**	1	EXTENSION GP-BACKREST (CLOTH)	
Y	4	1	**272-2272**	1	SEAT BELT GP (RETRACTABLE)	678
Y	5	1	**295-4435**	1	SEAT GP (CLOTH, HEATED)	681
Y	6	1	**298-2818**	1	SUSPENSION GP-SEAT (AIR)	693
	7	1	**4F-4879**	1	BOLT (3/8-16X0.5-IN)	
					AVAILABLE REPAIR KIT(S):	
			173-7035	1	KIT-SLIDER BLOCK (SUSPENSION SEAT)	
					(INCLUDES BOLT, BLOCK-SLIDERS, SETSCREWS, & WASHERS)	

Y-SEPARATE ILLUSTRATION

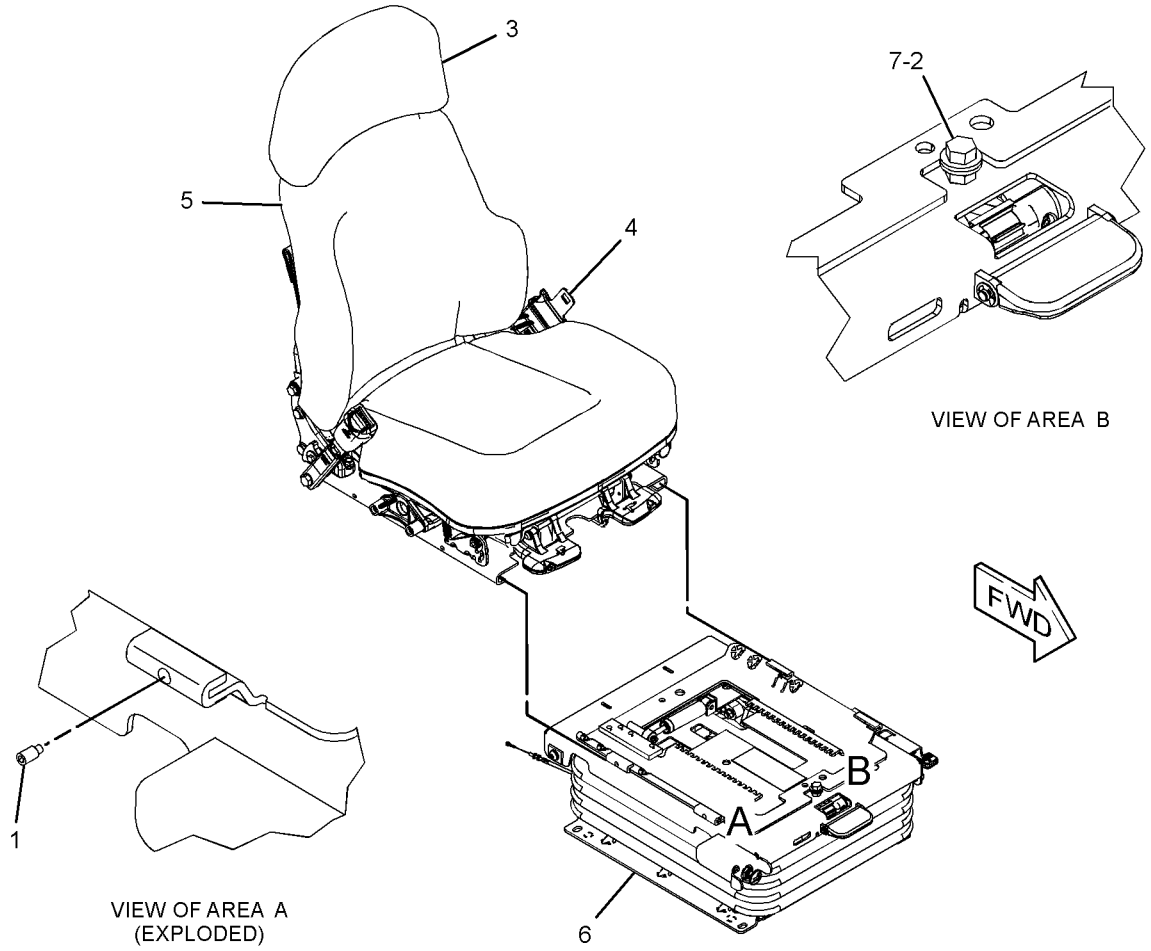

GRAPHIC #1 **<END>** g01346490

OPERATOR STATION

284-7055 SUPPORT GP-HYDRAULIC CONTROL–RH

S/N: LBP1-UP
PART OF 284-7054 ARMREST GP
AN ATTACHMENT

SMCS-5258 **i02583019**

NOTE	REF NO	GRAPHIC REF	PART NUMBER	QTY	PART NAME 1 2 3 4 5 6 (PRODUCT LEVEL)	SEE PAGE
	1	1	**1W-7117**	2	DOWEL-HOLLOW	
	2	1	**161-2398**	2	SEAL-LIP TYPE	
	3	1	**244-2095**	1	ROD	
	4	1	**244-2109**	1	ROD-ADJUSTMENT	
	5	1	**244-2115**	1	PIN	
	6	1	**266-3214**	1	PIN	
	7	1	**267-9552**	2	SPACER (19X76X.8-MM THK)	
	8	1	**267-9553**	1	SPACER (7X12.5X6.5-MM THK)	
	9	1	**267-9554**	2	BEARING	
	10	1	**267-9555**	2	BEARING	
	11	1	**267-9556**	2	BEARING	
	12	1	**267-9834**	1	PLATE	
	13	1	**280-3512**	1	HOUSING	
	14	1	**280-3514**	1	SUPPORT-ARM	
	15	1	**282-2032**	2	PLUG-ORIFICE	
	16	1	**282-2033**	1	BUTTON-PUSH	
	17	1	**282-6695**	1	BRACKET	
	18	1	**289-2073**	1	FILM-INFORMATION (ARMREST ADJUSTMENT)	
	19	1	**3E-4353**	2	WASHER-HARD (11X25X3-MM THK)	
	20	1	**7D-7453**	1	SETSCREW (1/4-20-THD)	
	21	1	**7D-9708**	1	BOLT-SHOULDER (5/16-18X0.88-IN)	
M	22	1	**9X-2040**	2	SCREW-TRUSS HEAD (M10X1.5X25-MM)	
M	23	1	**9X-2043**	1	SCREW-TRUSS HEAD (M6X1X14-MM)	

M-METRIC PART

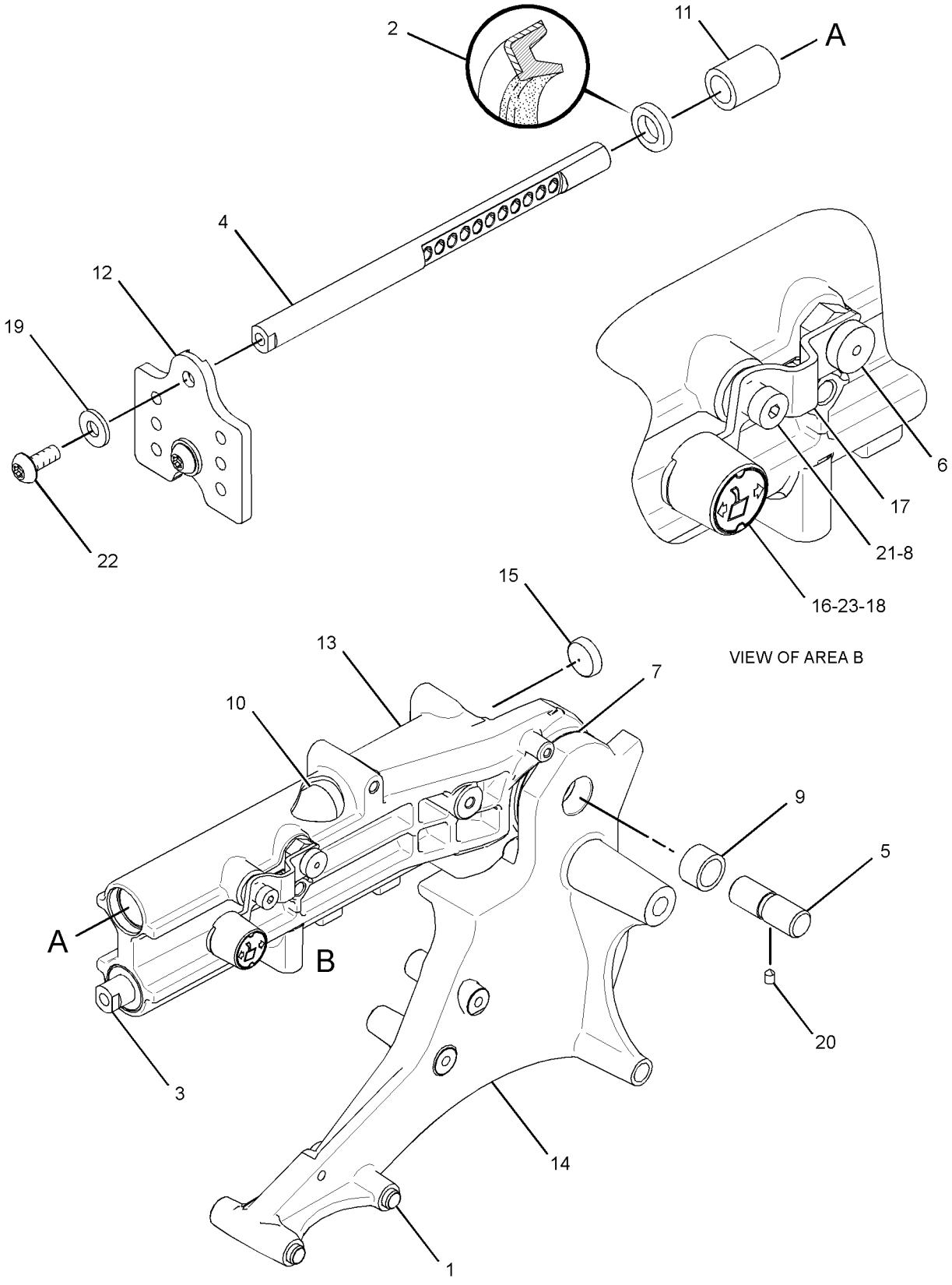

GRAPHIC #1 **<END>** g01305265

OPERATOR STATION

298-2819 SUPPORT GP-SEAT—SUSPENSION

S/N: LBP1-UP

PART OF 298-2818 SUSPENSION GP-SEAT

AN ATTACHMENT

SMCS-7321, 7324 **i03127968**

NOTE	REF NO	GRAPHIC REF	PART NUMBER	QTY	PART NAME 1 2 3 4 5 6 (PRODUCT LEVEL)	SEE PAGE
	1	1	**5B-3180**	1	NUT (5/16-18-THD)	
M	2	2	**322-6576**	4	BOLT-SOCKET HEAD (10-32X7.9-MM)	
	3	2	**127-0540**	2	ROD-THREADED (3/8-17X1.5-IN)	
	4	2	**298-2820**	1	HOUSING AS-UPPER	
	5	1	**298-2826**	1	HOUSING AS (LATERAL ISOLATOR)	
		1	**2K-4973**	1	LOCKNUT (3/8-16-THD)	
	6	1	**298-2833**	1	KIT-DAMPER	
	7	1	**298-2836**	1	STUD (5/16-18X1.25-IN)	
	8	1	**298-2837**	1	SHAFT AS	
	9	1	**298-2841**	1	KNOB	
	10	1	**298-2842**	1	LINK	
	11	1	**323-7359**	2	ROD	
	12	1	**4V-2264**	4	NUT-PUSH	
	13	1	**322-2086**	1	SHAFT	
	14	1	**037-4426**	2	RETAINER	
	15	1	**298-2847**	1	LEVER	
	16	1	**298-2848**	1	SPRING	
	17	2	**298-2849**	2	SHAFT	
	18	2	**298-2850**	2	GUIDE	
	19	2	**298-2851**	2	SPRING	
	20	2	**298-2852**	2	BUSHING	
	21	2	**143-1237**	2	BUMPER	
	22	2	**298-2854**	2	RETAINER	
	23	1,2	**2K-4973**	3	LOCKNUT (3/8-16-THD)	
	24	2	**3E-8043**	2	SCREW (3/8-16X0.75-IN)	
	25	1	**4B-2049**	1	NUT (10-32-THD)	
M	26	2	**5C-2890**	3	NUT (M6X1-THD)	
	27	1	**7W-4313**	1	WASHER (5X11X1.5-MM THK)	
	28	1,2	**8T-4896**	3	WASHER-HARD (10.2X18.5X2.5-MM THK)	
	29	2	**8T-5360**	2	WASHER (12X22.5X2.5-MM THK)	
	30	1	**8T-7566**	1	PIN-SPRING	
	31	2	**3P-9900**	1	WASHER (10.5X30X3-MM THK)	
	32	2	**192-7820**	1	BUMPER	
	33	1	**323-8561**	4	WASHER (4.19X12.7X1.9-MM THK)	

M-METRIC PART

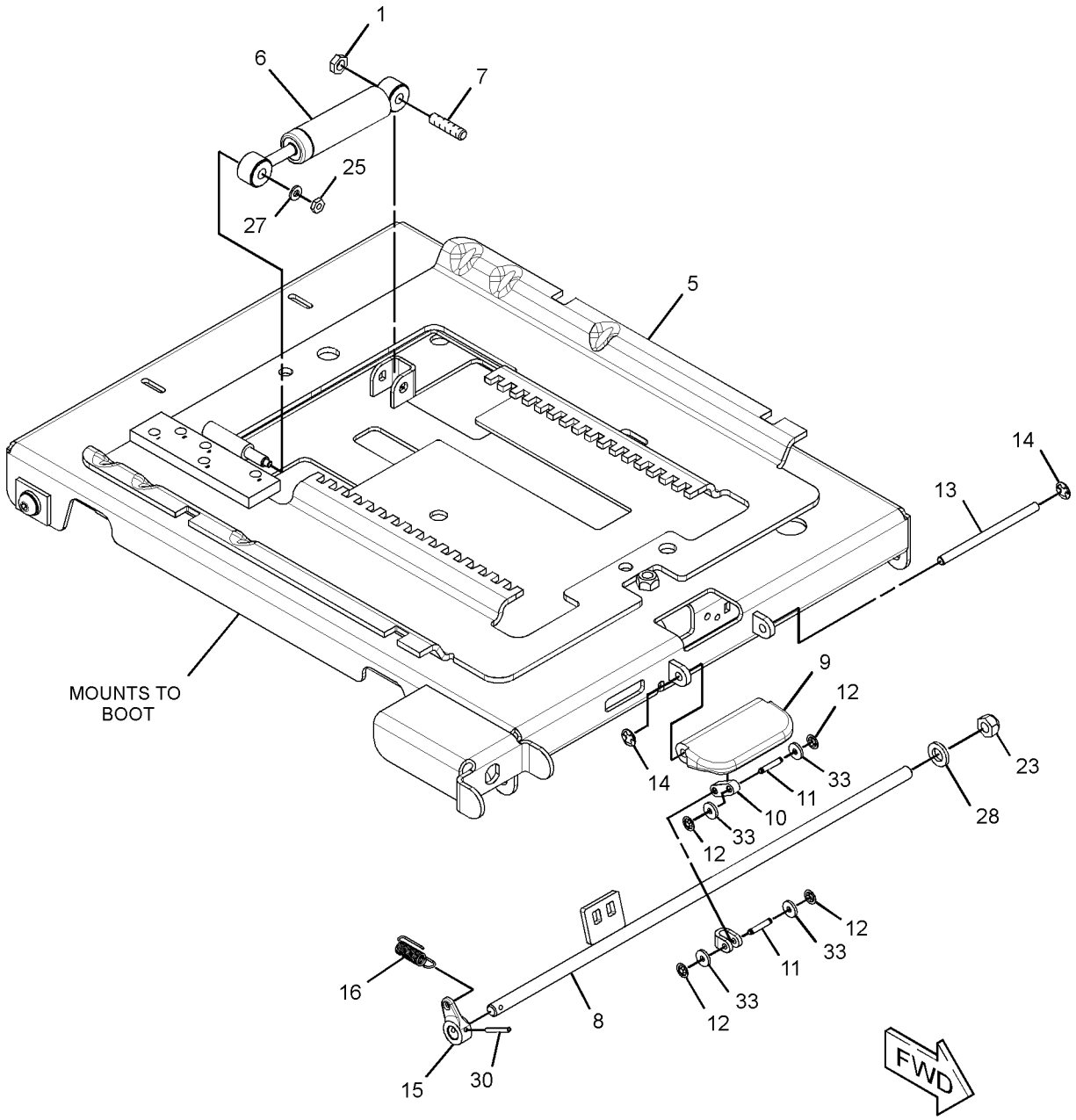

GRAPHIC #1 g01611216

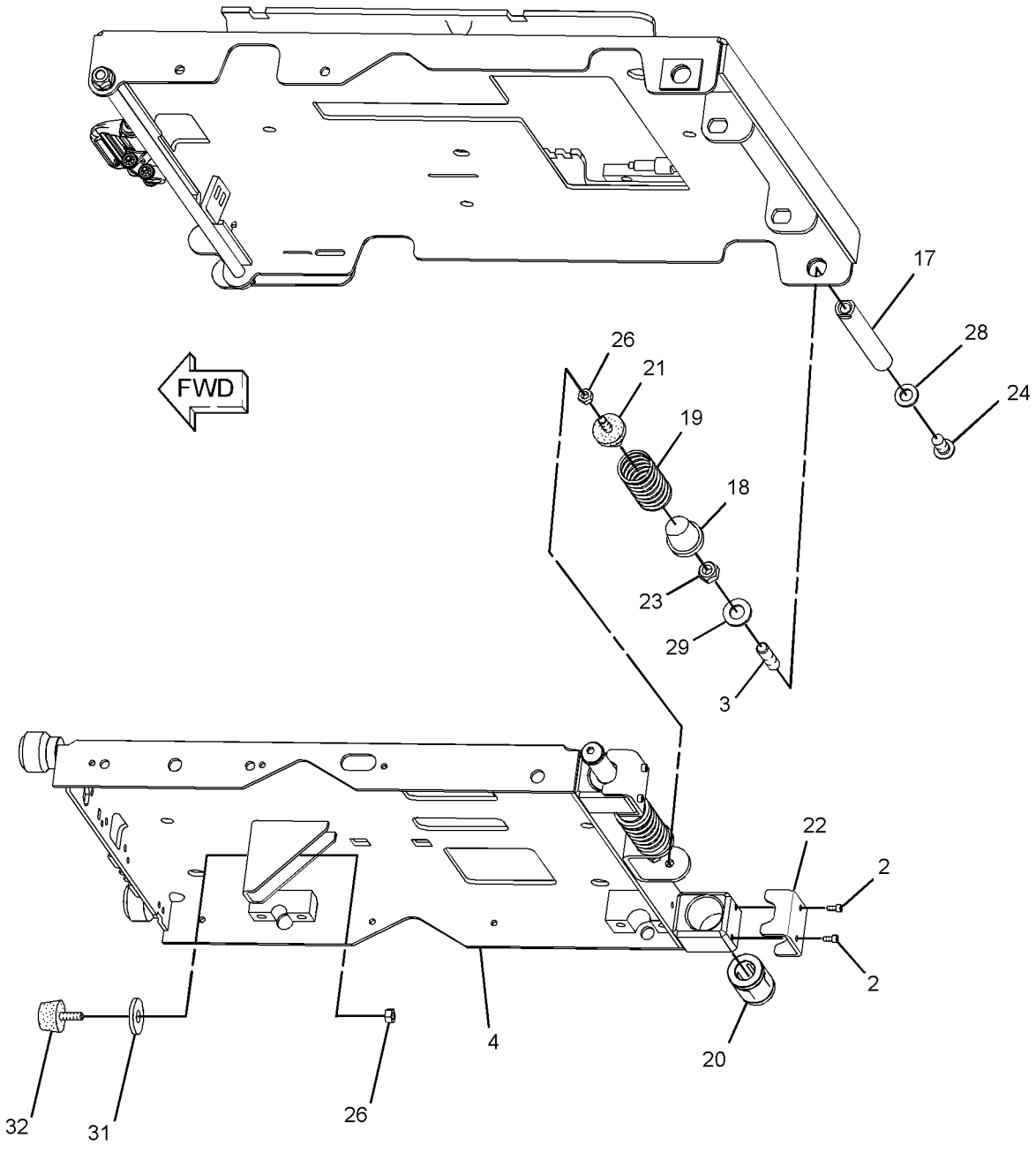

GRAPHIC #2 **<END>** g01611217

OPERATOR STATION

289-2078 SUPPORT GP-STEERING CONTROL—LH

S/N: LBP1-UP

PART OF 286-8238, 296-8302 BRACKET GP-MOUNTING

AN ATTACHMENT

SMCS-5258 **i03320821**

NOTE	REF NO	GRAPHIC REF	PART NUMBER	QTY	PART NAME 1 2 3 4 5 6 (PRODUCT LEVEL)	SEE PAGE
	1	1	**1W-7117**	2	DOWEL-HOLLOW	
	2	1	**161-2398**	2	SEAL-LIP TYPE	
	3	1	**244-2095**	1	ROD	
	4	1	**244-2109**	1	ROD-ADJUSTMENT	
	5	1	**244-2115**	1	PIN	
	6	1	**266-3214**	1	PIN	
	7	1	**267-9552**	2	SPACER (19X76X.8-MM THK)	
	8	1	**267-9553**	1	SPACER (7X12.5X6.5-MM THK)	
	9	1	**267-9554**	2	BEARING	
	10	1	**267-9555**	2	BEARING	
	11	1	**267-9556**	2	BEARING	
	12	1	**267-9834**	1	PLATE	
	13	1	**280-3513**	1	HOUSING	
	14	1	**6F-9974**	2	PLUG-CORE	
	15	1	**282-2033**	1	BUTTON-PUSH	
	16	1	**282-6695**	1	BRACKET	
	17	1	**289-2073**	1	FILM-INFORMATION (ARMREST ADJUSTMENT)	
	18	1	**289-2075**	1	SUPPORT-ARM	
	19	1	**3E-4353**	2	WASHER-HARD (11X25X3-MM THK)	
	20	1	**7D-7453**	1	SETSCREW (1/4-20-THD)	
	21	1	**7D-9708**	1	BOLT-SHOULDER (5/16-18X0.88-IN)	
M	22	1	**9X-2040**	2	SCREW-TRUSS HEAD (M10X1.5X25-MM)	
M	23	1	**9X-2043**	1	SCREW-TRUSS HEAD (M6X1X14-MM)	

M-METRIC PART

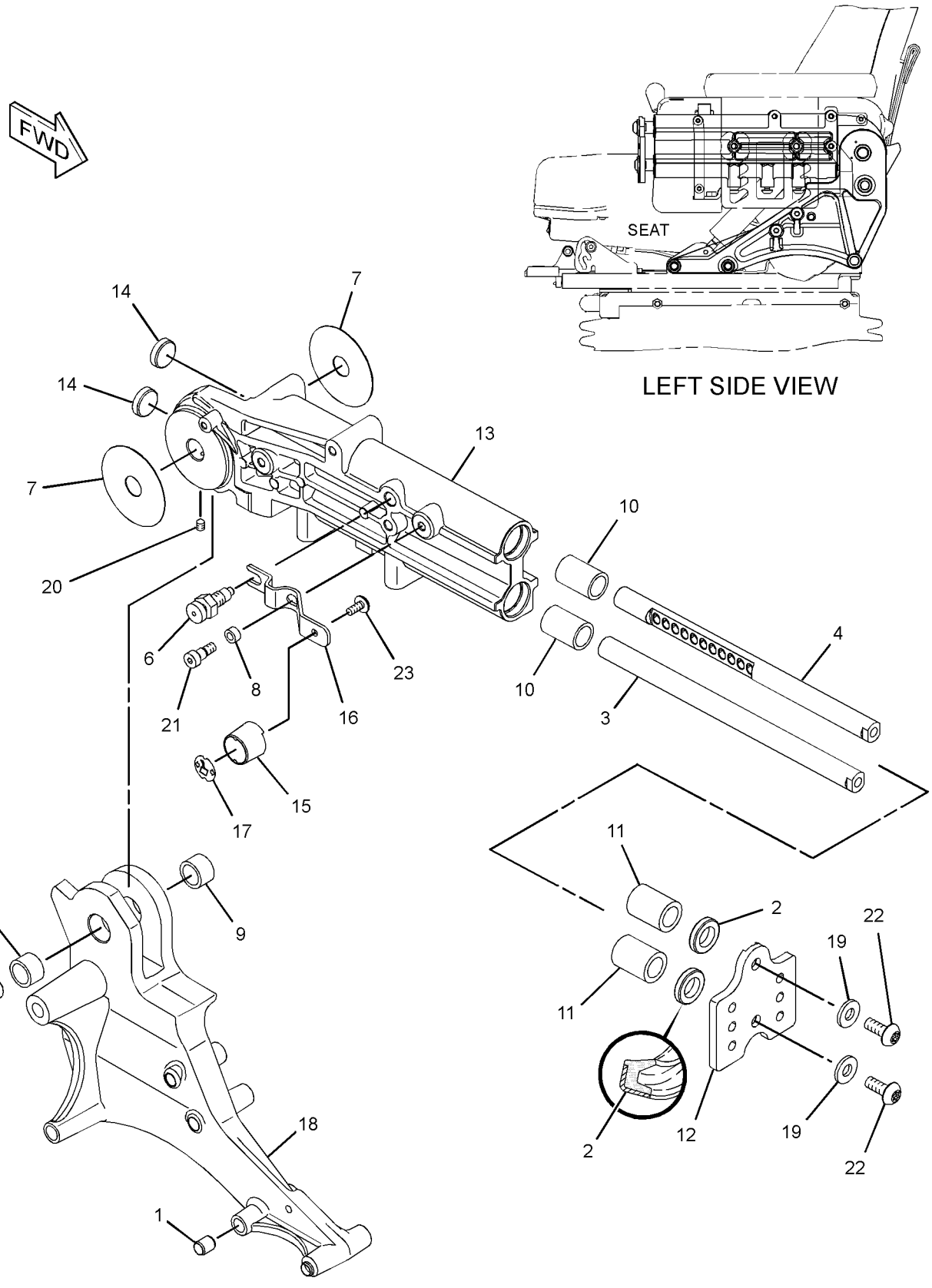

GRAPHIC #1 **<END>** g01342653

OPERATOR STATION

298-2818 SUSPENSION GP-SEAT—AIR

S/N: LBP1-UP

PART OF 255-8847, 255-8848 SEAT GP-SUSPENSION

AN ATTACHMENT

SMCS-7324 **i03090525**

NOTE	REF NO	GRAPHIC REF	PART NUMBER	QTY	PART NAME 1 2 3 4 5 6 (PRODUCT LEVEL)	SEE PAGE
	1	2,3	**4V-8577**	8	BEARING	
	2	2	**7L-0688**	2	BOLT-SOCKET HEAD (10-24X1.2-IN)	
	3	1	**8L-8413**	7	STRAP-CABLE	
	4	2	**031-0249**	2	LOCKNUT (10-24-THD)	
	5	1	**101-0003**	19	FASTENER	
	6	2	**145-0326**	1	FILM-INSTRUCTION (SEAT ADJUSTMENT)	
	7	2	**164-1229**	1	BUMPER	
	8	2	**169-7380**	1	BOLT-SOCKET HEAD (3/8-16X0.375-IN)	
	9	2	**186-5107**	2	SCREW-DRIVE (NO 8X1.25-IN)	
	10	1	**192-7795**	1	BOOT	
	11	1	**192-7805**	1	HARNESS AS-VALVE (SEAT AIR COMPRESSOR)	
		1	**102-8802**	1	KIT-RECEPTACLE (2-PIN)	
					(INCLUDES RECEPTACLE AS & WEDGE)	
	12	3	**192-7810**	1	SPRING AS-AIR	
		3	**163-1135**	1	SPRING	
		3	**5P-4423**	1	ELBOW	
	13	2	**192-7848**	2	KIT-SHOCK ABSORBER	
					(EACH INCLUDES SHOCK ABSORBER, BEARINGS, WASHERS, BOLTS, LOCKNUT & LOCKWASHER)	
	14	3	**213-5167**	1	ROD	
	15	2	**213-5168**	1	ARM-INDICATOR	
	16	2	**213-5169**	1	HOUSING	
	17	2	**218-7252**	1	RETAINER	
	18	2	**237-3943**	1	BRACKET	
	19	2	**237-3970**	1	AIR COMPRESSOR GP-SEAT	
	20	2	**251-2360**	1	TOGGLE AS (LOWER)	
	21	3	**251-2362**	1	TOGGLE AS (UPPER)	
	22	1	**291-7972**	1	HOUSING AS	
Y	23	1	*291-7980*	1	ARM GP-SEAT SUSPENSION (CENTER)	545
	24	2	**291-7993**	4	WASHER (20X40X2-MM THK)	
Y	25	2	*291-8004*	1	ARM GP-SEAT SUSPENSION (OUTER, RH)	546
	26	2	**291-8010**	2	BEARING	
Y	27	2	*291-8011*	1	ARM GP-SEAT SUSPENSION (OUTER, LH)	547
	28	3	**291-8019**	2	SHAFT	
	29	2	**291-8026**	1	SHAFT	
	30	2,3	**291-8027**	4	BLOCK (UPPER)	
	31	3	**291-8028**	4	BLOCK (FRONT)	
	32	2	**291-8031**	1	SPACER (19.3X25.4X212.4-MM THK)	
Y	33	1	*298-2819*	1	SUPPORT GP-SEAT (SUSPENSION)	688
	34	2	**308-3554**	1	SPACER (9.9X28.4X3.2-MM THK)	
	35	2	**308-3555**	1	SPACER (7.1X25.4X1.4-MM THK)	
	36	2	**308-8642**	1	FILM-IDENTIFICATION (SERIAL NUMBER)	
	37	3	**314-5274**	1	SHAFT	
	38	2	**314-5275**	1	SHAFT	
	39	3	**108-4311**	1	SCREW-MACHINE (3/8-16X0.75-IN)	
	40	2	**318-7992**	1	KIT-AIR VALVE	
					(INCLUDES KNOB AS, VALVE, NUT, LOCKWASHER & FITTING)	
	41	2,3	**2K-4973**	8	LOCKNUT (3/8-16-THD)	
	42	3	**3E-9865**	2	LOCKNUT (1/4-20-THD)	
	43	2	**4D-7794**	1	CLIP	
	44	2,3	**4L-6454**	4	BOLT (3/8-16X1-IN)	
	45	2	**6V-8185**	1	NUT (1/4-20-THD)	
	46	2,3	**8T-4224**	16	WASHER-HARD (8.8X16X2-MM THK)	
	47	2,3	**8T-4896**	12	WASHER-HARD (10.2X18.5X2.5-MM THK)	

298-2818 SUSPENSION GP-SEAT *(contd.)* i03090525

NOTE	REF NO	GRAPHIC REF	PART NUMBER	QTY	PART NAME 1 2 3 4 5 6 (PRODUCT LEVEL)	SEE PAGE
M	48	2,3	**8T-7547**	16	BOLT (M8X1.25X30-MM)	
	49	2	**8T-9371**	1	BOLT (3/8-16X0.5-IN)	
E	50	1	**211-5358**		CONDUIT-FLEXIBLE (27-CM)	
E	50A	1	**211-5358**		CONDUIT-FLEXIBLE (37-CM)	
D	51	1	**5P-6010**		TUBE (0.5-M EACH)	

D-ORDER BY THE METER
E-ORDER BY THE CENTIMETER
M-METRIC PART
Y-SEPARATE ILLUSTRATION

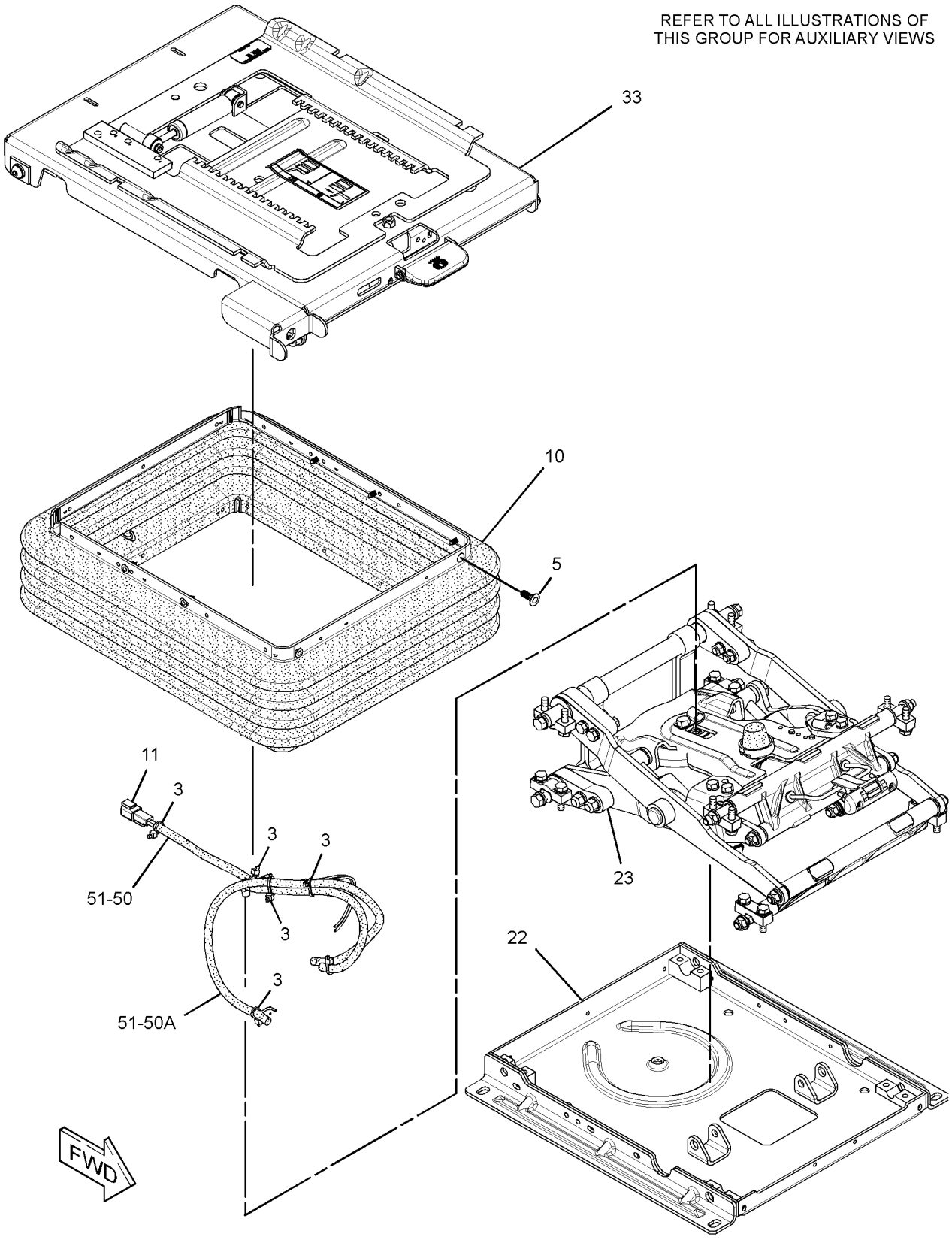

GRAPHIC #1 g01528973

298-2818 SUSPENSION GP-SEAT *(contd.)* i03090525

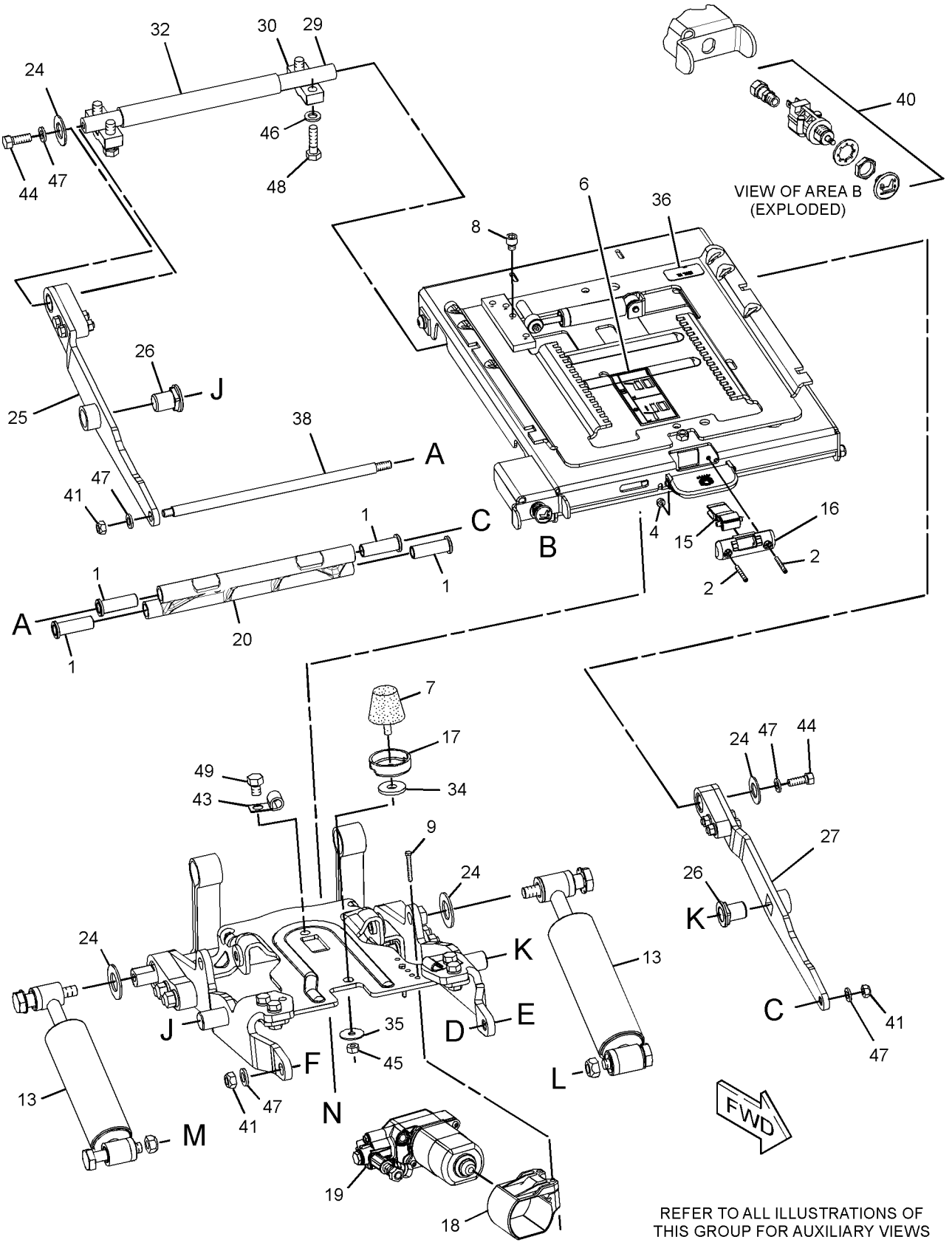

GRAPHIC #2 g01528974

REFER TO ALL ILLUSTRATIONS OF
THIS GROUP FOR AUXILIARY VIEWS

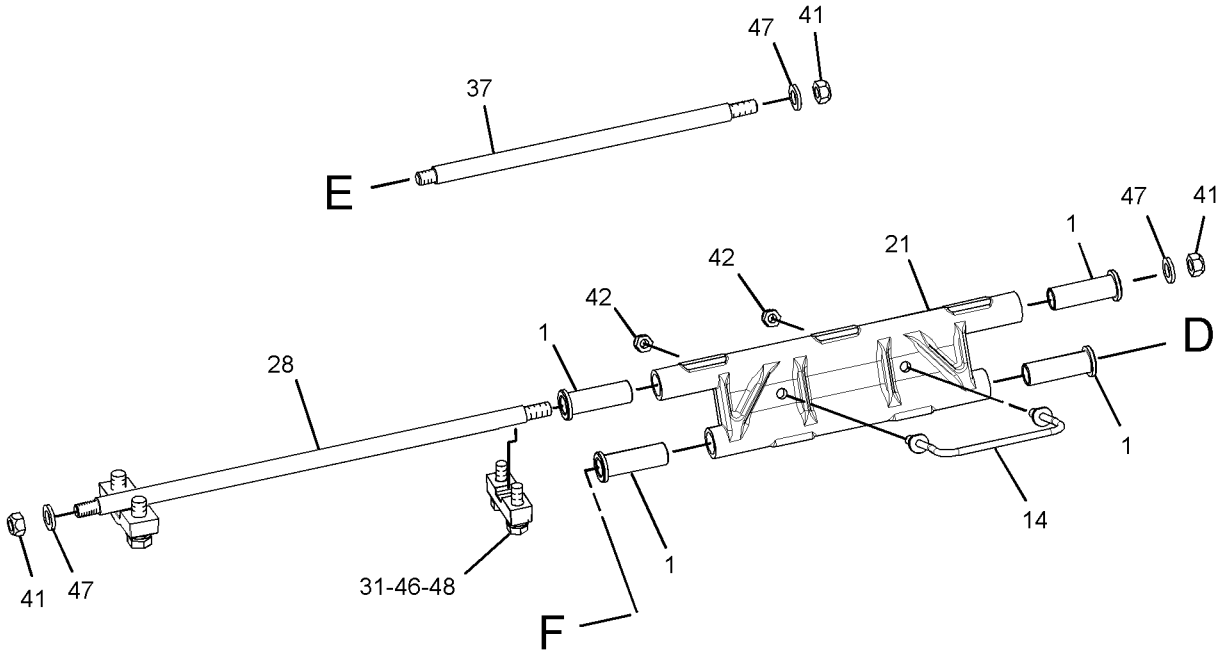

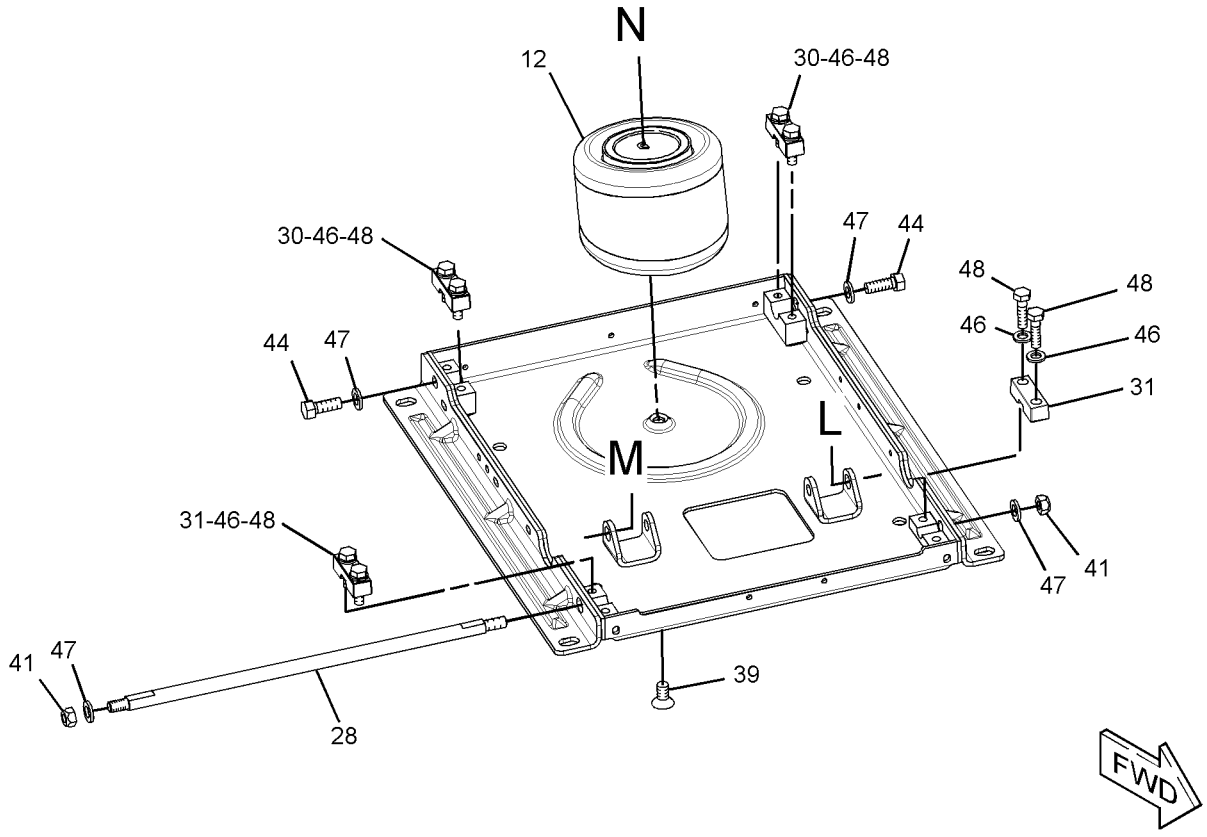

GRAPHIC #3 **<END>** g01528975

OPERATOR STATION

281-1296 TANK GP-WINDOW WASHER

S/N: LBP1-UP

PART OF 251-1923, 307-4283 WIPER GP-WINDOW

SMCS-7306 **i03097541**

NOTE	REF NO	GRAPHIC REF	PART NUMBER	QTY	PART NAME 1 2 3 4 5 6 (PRODUCT LEVEL)	SEE PAGE
	1	1	**7T-8890**	2	PUMP AS-WASHER	
	2	1	**8T-5913**	2	SCREEN-FILTER (WINDOW WASHER RESERVOIR)	
	3	1	**8T-5914**	2	GROMMET	
	4	1	**209-4482**	1	CAP-VENTED (WINDOW WASHER RESERVOIR)	
	5	1	**281-1297**	1	TANK	
	6	1	**281-3095**	1	PLATE	
M	7	1	**9X-2043**	2	SCREW-TRUSS HEAD (M6X1X14-MM)	

M-METRIC PART

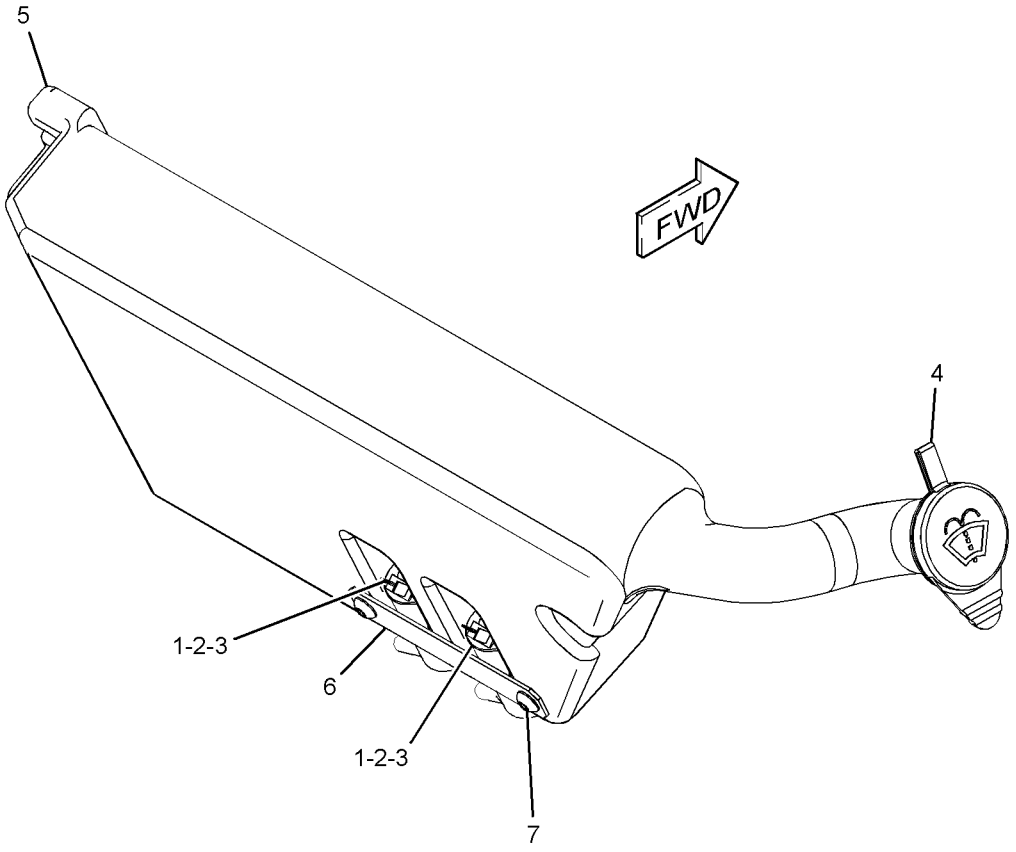

GRAPHIC #1 **<END>** g01338482

OPERATOR STATION

283-1389 WINDOW AS-FRONT—SEALED

S/N: LBP1-881
PART OF 257-0627 WINDOW GP-CAB
AN ATTACHMENT

SMCS-7310 **i02665519**

NOTE	REF NO	GRAPHIC REF	PART NUMBER	QTY	PART NAME 1 2 3 4 5 6 (PRODUCT LEVEL)	SEE PAGE
	1	1	**283-1388**	1	GLASS	
	2	1	**283-1393**	1	PLATE	
	3	1	**283-1395**	2	BRACKET	
	4	1	**283-1396**	2	BRACKET	
	5	1	**283-5572**	1	FILM-IDENTIFICATION (CATERPILLAR)	
M	6	1	**9X-2041**	10	SCREW-TRUSS HEAD (M10X1.5X20-MM)	
J	7	1	**283-1387**		SEAL (45.5-DM)	

J-SOLD BY THE DECIMETER
M-METRIC PART

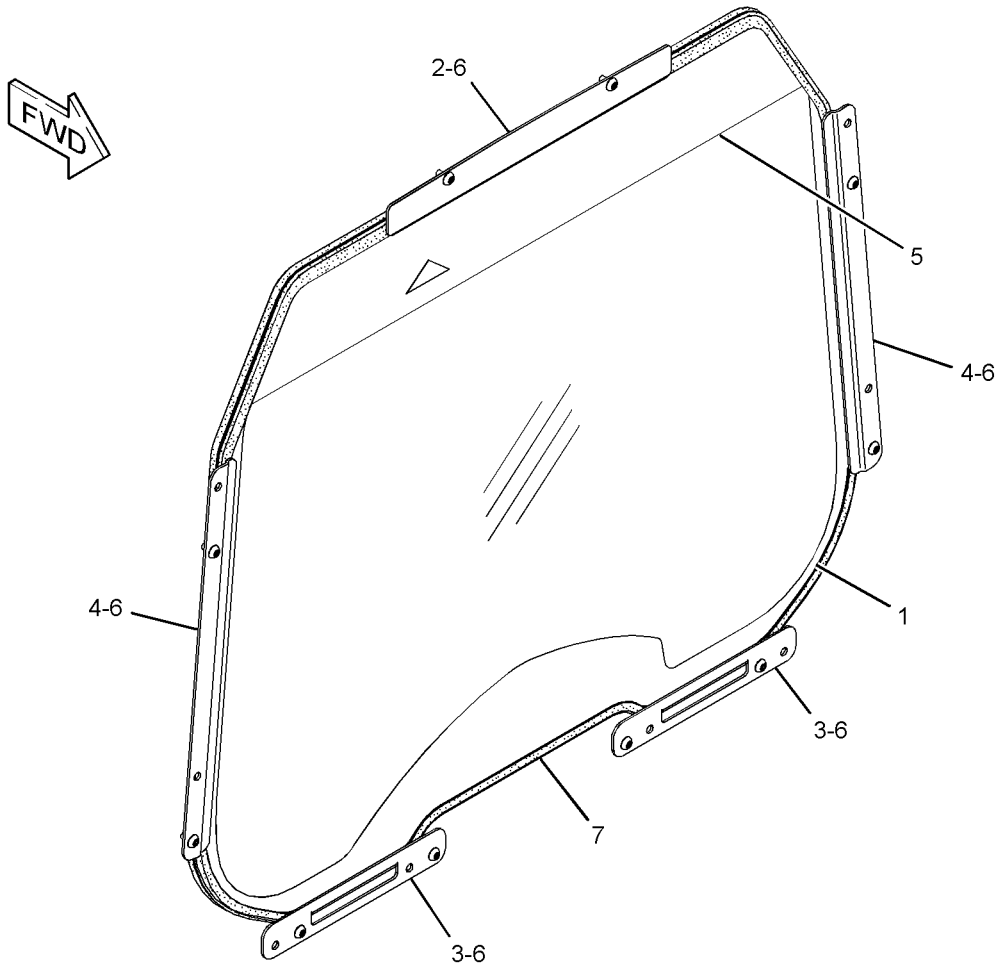

GRAPHIC #1 **<END>** g01345290

OPERATOR STATION

283-1389 WINDOW AS-FRONT–SEALED

S/N: LBP882-918

PART OF 257-0627 WINDOW GP-CAB

AN ATTACHMENT

SMCS-7310 **i03318600**

NOTE	REF NO	GRAPHIC REF	PART NUMBER	QTY	PART NAME 1 2 3 4 5 6 (PRODUCT LEVEL)	SEE PAGE
	1	1	**283-1388**	1	GLASS	
	2	1	**283-1393**	1	PLATE	
	3	1	**283-1396**	2	BRACKET	
	4	1	**283-5572**	1	FILM-IDENTIFICATION (CATERPILLAR)	
C	5	1	**323-6802**	1	BRACKET (LH)	
C	6	1	**323-6803**	1	BRACKET (RH)	
M	7	1	**9X-2041**	10	SCREW-TRUSS HEAD (M10X1.5X20-MM)	
J	8	1	**283-1387**		SEAL (45.5-DM)	

C-CHANGE FROM PREVIOUS TYPE
J-SOLD BY THE DECIMETER
M-METRIC PART

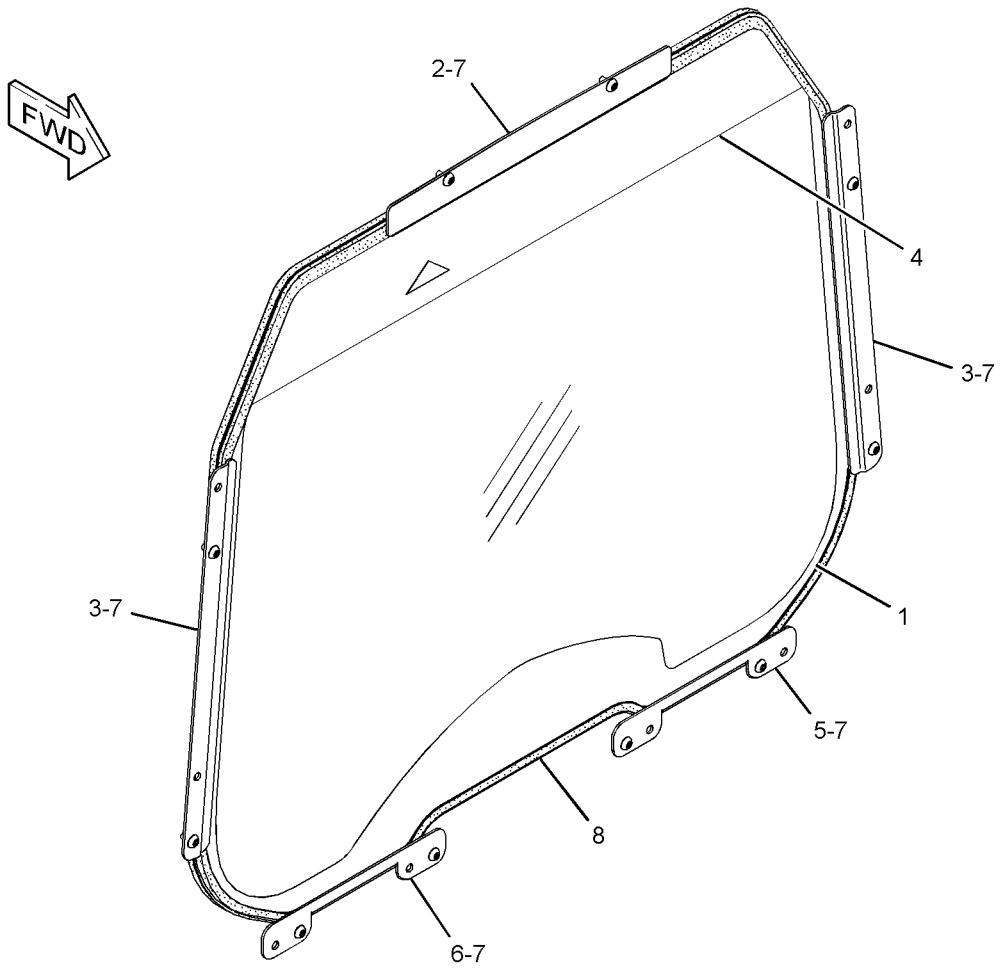

GRAPHIC #1 **<END>** g01703035

OPERATOR STATION

334-6717 WINDOW AS-FRONT—SEALED

S/N: LBP919-UP
PART OF 257-0627 WINDOW GP-CAB
AN ATTACHMENT

SMCS-7310 **i03516375**

NOTE	REF NO	GRAPHIC REF	PART NUMBER	QTY	PART NAME 1 2 3 4 5 6 (PRODUCT LEVEL)	SEE PAGE
	1	1	**283-1393**	1	PLATE	
	2	1	**283-1396**	2	BRACKET	
	3	1	**283-5572**	1	FILM-IDENTIFICATION (CATERPILLAR) (FRONT WINDOW)	
	4	1	**334-6714**	1	BRACKET	
	5	1	**334-6715**	1	GLASS	
M	6	1	**9X-2041**	10	SCREW-TRUSS HEAD (M10X1.5X20-MM)	
H	7	1	**283-1387**		SEAL (46-DM)	

H-ORDER BY THE DECIMETER
M-METRIC PART

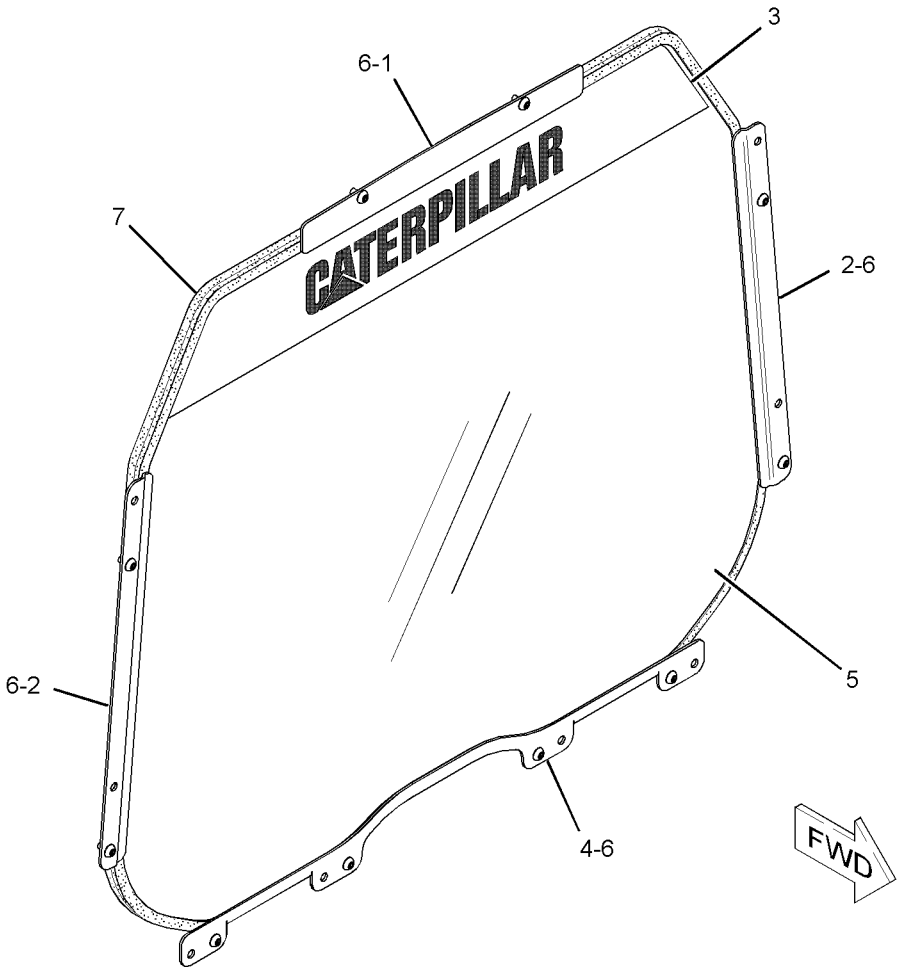

GRAPHIC #1 **<END>** g01851723

OPERATOR STATION

256-7407 WINDOW GP—CAB

S/N: LBP1-699

CANNOT BE USED WITH 257-0627—PAGE 704

AN ATTACHMENT

SMCS-7310 **i03302402**

NOTE	REF NO	GRAPHIC REF	PART NUMBER	QTY	PART NAME 1 2 3 4 5 6 (PRODUCT LEVEL)	SEE PAGE
	1	1	**252-8295**	1	GLASS-REAR	
	2	1	**284-9763**	1	WINDOW AS	
		1	**252-8293**	1	GLASS	
L		1	**283-1382**		SEAL (16.5-DM)	
		1	**283-5572**	1	FILM-IDENTIFICATION (CATERPILLAR)	
	3	1	**294-3178**	1	GLASS (RH)	
	4	1	**294-3179**	1	GLASS (LH)	

L-ORDER BY THE DECIMETER

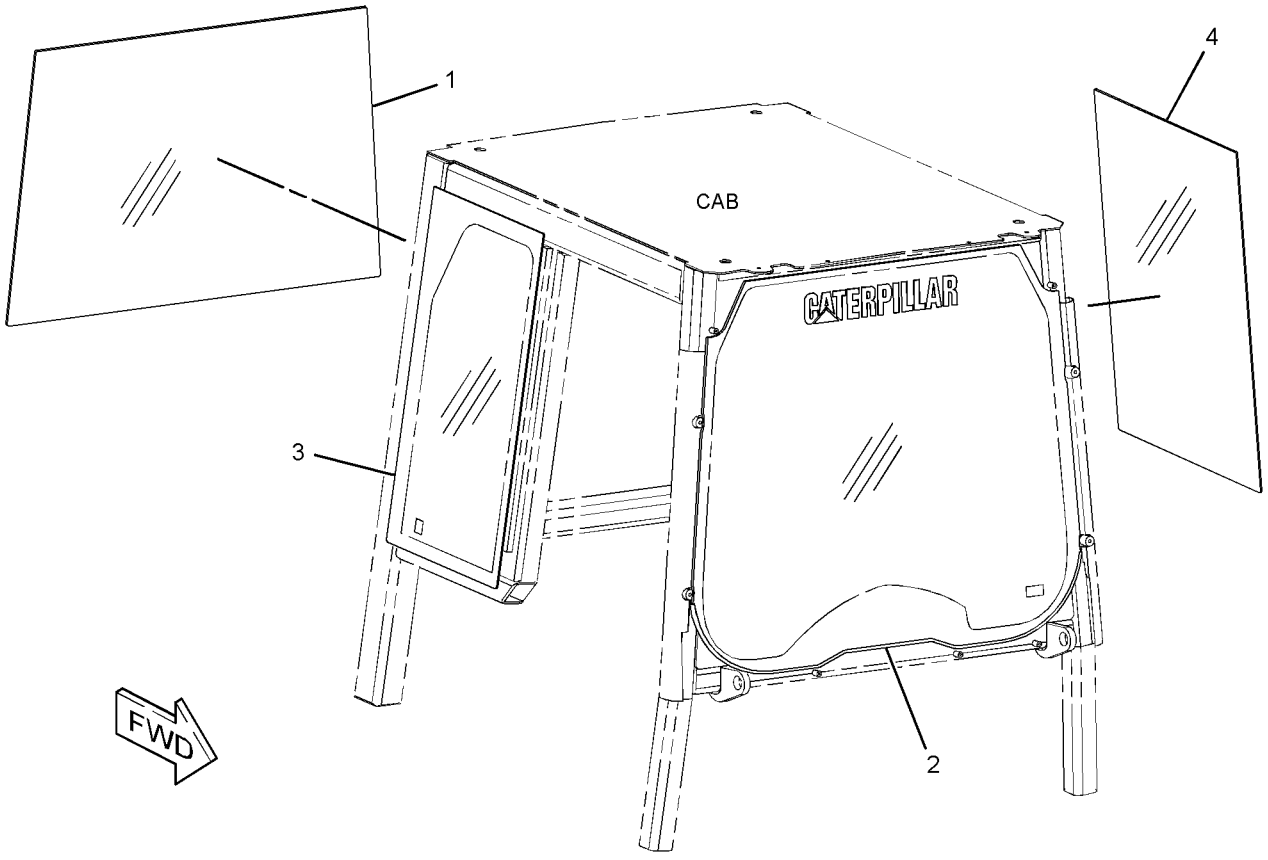

GRAPHIC #1 **<END>** g01344019

OPERATOR STATION

256-7407 WINDOW GP–CAB

S/N: LBP700-UP
CANNOT BE USED WITH 257-0627–PAGE 704
AN ATTACHMENT

SMCS-7310 **i03423202**

NOTE	REF NO	GRAPHIC REF	PART NUMBER	QTY	PART NAME 1 2 3 4 5 6 (PRODUCT LEVEL)	SEE PAGE
C	1	1	**312-0012**	1	WINDOW AS (RH)	
		1	**318-8499**	1	GLASS-SLIDING (RH)	
		1	**318-8501**	1	GLASS-FIXED (RH)	
		1	**318-8503**	1	HANDLE AS (LH)	
		1	**318-8504**	1	HANDLE AS (RH)	
C	2	1	**312-0013**	1	WINDOW AS (LH)	
		1	**318-8500**	1	GLASS-SLIDING (LH)	
		1	**318-8502**	1	GLASS-FIXED (LH)	
		1	**318-8503**	1	HANDLE AS (LH)	
		1	**318-8504**	1	HANDLE AS (RH)	
	3	1	**321-3471**	1	WINDOW AS (FRONT)	
		1	**334-6716**	1	GLASS-WINDOW (FRONT)	
L		1	**283-1382**		SEAL (17-DM)	
		1	**283-5572**	1	FILM-IDENTIFICATION (CATERPILLAR)	
	4	1	**334-6694**	1	GLASS (REAR)	

C-CHANGE FROM PREVIOUS TYPE
L-ORDER BY THE DECIMETER

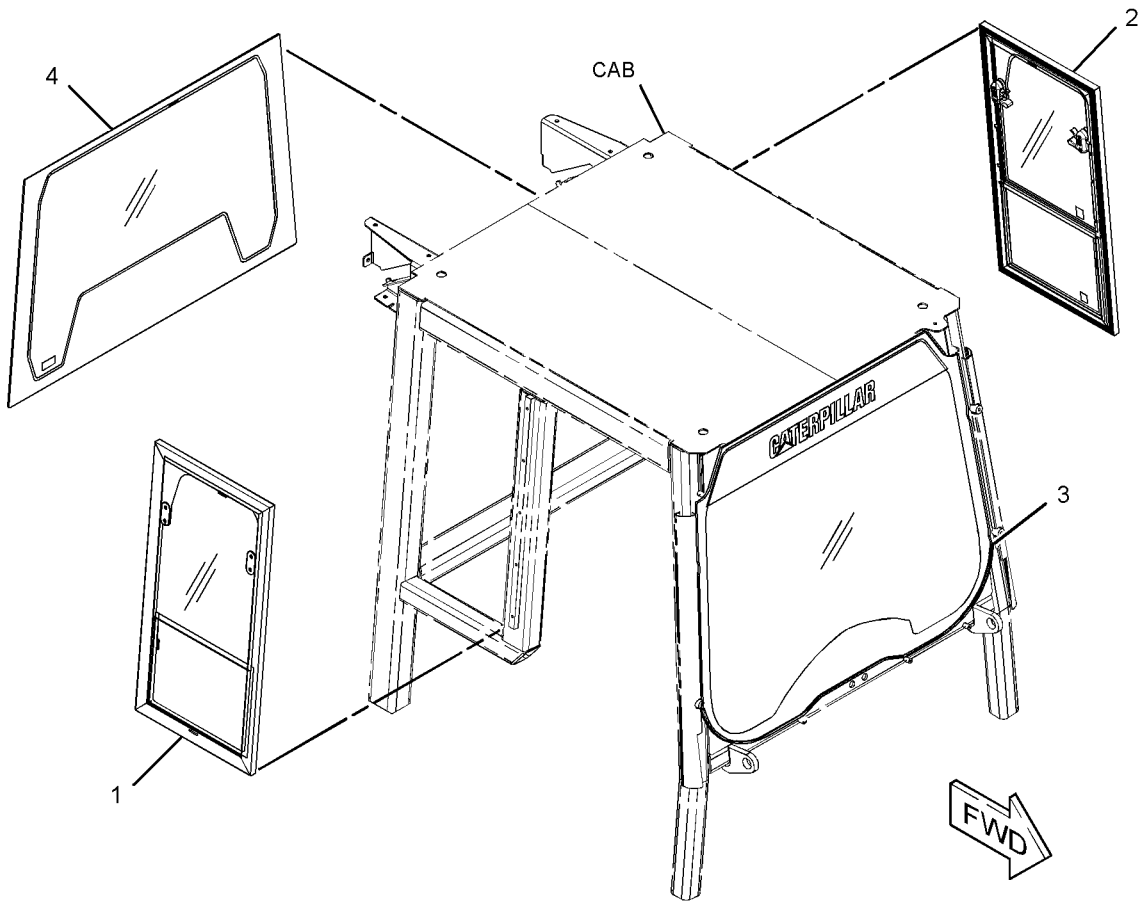

GRAPHIC #1 **<END>** g01807313

OPERATOR STATION

257-0627 WINDOW GP-CAB—SEALED

S/N: LBP1-699
PART OF 327-7787 KIT-CAB
CANNOT BE USED WITH 256-7407—PAGE 702
AN ATTACHMENT

SMCS-7310 **i03302261**

NOTE	REF NO	GRAPHIC REF	PART NUMBER	QTY	PART NAME 1 2 3 4 5 6 (PRODUCT LEVEL)	SEE PAGE
	1	1	**252-8295**	1	GLASS-REAR	
Y	2	1	**283-1389**	1	WINDOW AS-FRONT	699
	3	1	**294-3178**	1	GLASS (RH)	
	4	1	**294-3179**	1	GLASS (LH)	

Y-SEPARATE ILLUSTRATION

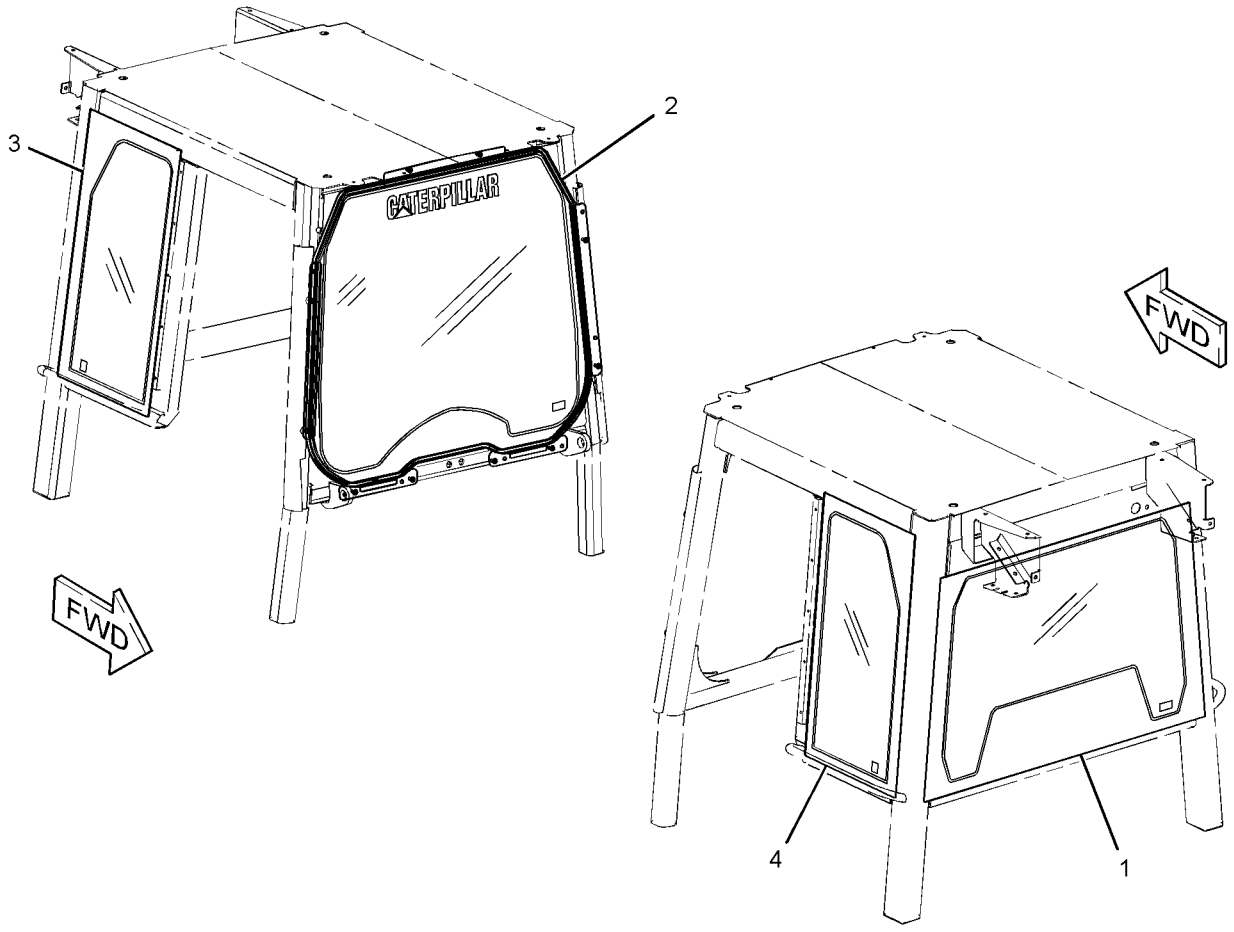

GRAPHIC #1 **<END>** g01345303

OPERATOR STATION

257-0627 WINDOW GP-CAB—SEALED

S/N: LBP700-918
PART OF 327-7787 KIT-CAB
CANNOT BE USED WITH 256-7407—PAGE 702
AN ATTACHMENT

SMCS-7310 **i03308489**

NOTE	REF NO	GRAPHIC REF	PART NUMBER	QTY	PART NAME 1 2 3 4 5 6 (PRODUCT LEVEL)	SEE PAGE
	1	1	**252-8295**	1	GLASS-REAR	
Y	2	1	**283-1389**	1	WINDOW AS-FRONT	699
C	3	1	**312-0012**	1	WINDOW AS	
			318-8499	1	GLASS-SLIDING (RH)	
			318-8501	1	GLASS-FIXED (RH)	
			318-8503	1	HANDLE AS (LH)	
			318-8504	1	HANDLE AS (RH)	
C	4	1	**312-0013**	1	WINDOW AS	
			318-8500	1	GLASS-SLIDING (LH)	
			318-8502	1	GLASS-FIXED (LH)	
			318-8503	1	HANDLE AS (LH)	
			318-8504	1	HANDLE AS (RH)	

C-CHANGE FROM PREVIOUS TYPE
Y-SEPARATE ILLUSTRATION

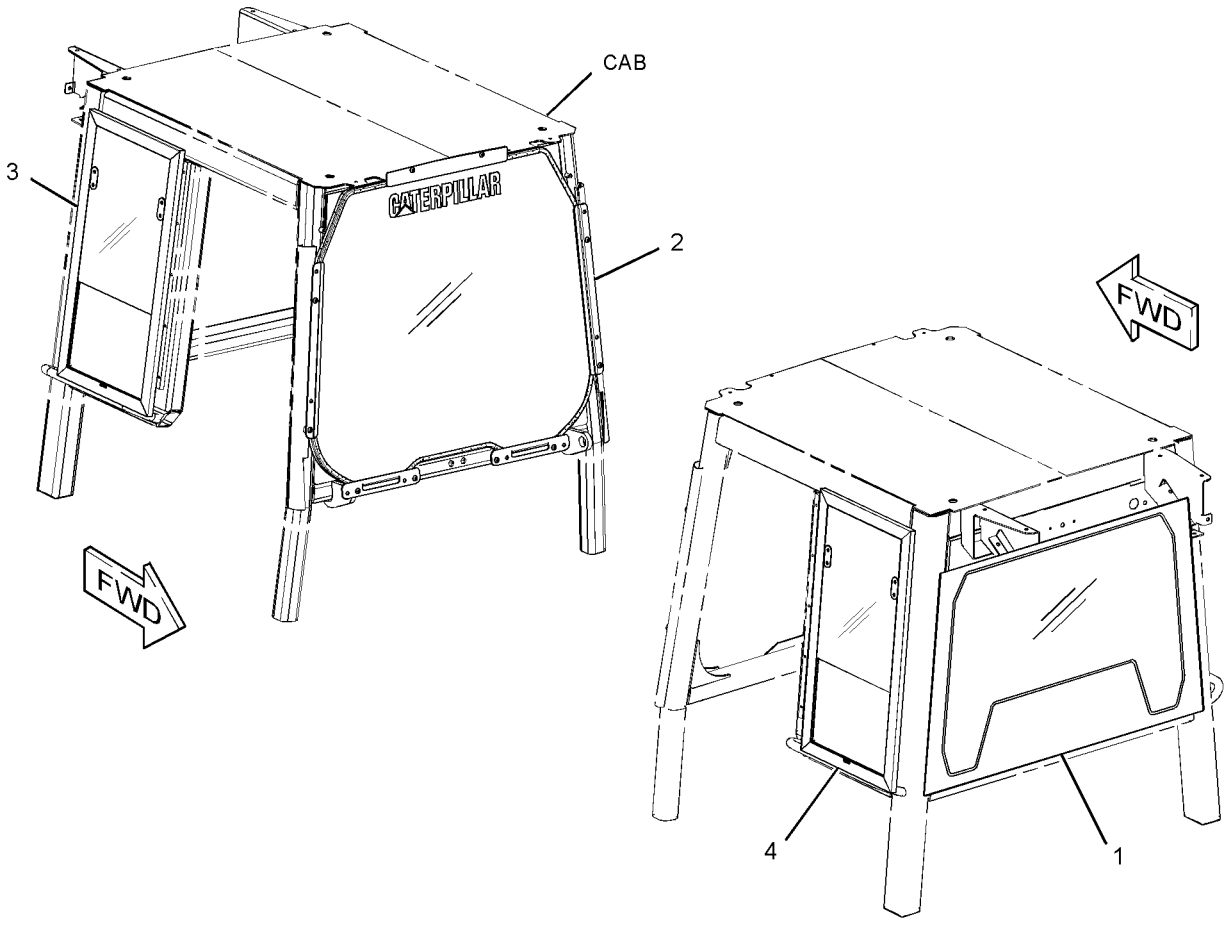

GRAPHIC #1 **<END>** g01448935

OPERATOR STATION

257-0627 WINDOW GP-CAB—SEALED

S/N: LBP919-UP
PART OF 327-7787 KIT-CAB
CANNOT BE USED WITH 256-7407—PAGE 702
AN ATTACHMENT

SMCS-7310 **i03516364**

NOTE	REF NO	GRAPHIC REF	PART NUMBER	QTY	PART NAME 1 2 3 4 5 6 (PRODUCT LEVEL)	SEE PAGE
	1	1	**334-6694**	1	GLASS (REAR)	
CY	2	1	**334-6717**	1	WINDOW AS-FRONT	701
	3	1	**312-0012**	1	WINDOW AS	
			318-8499	1	GLASS-SLIDING (RH)	
			318-8501	1	GLASS-FIXED (RH)	
			318-8503	1	HANDLE AS (LH)	
			318-8504	1	HANDLE AS (RH)	
	4	1	**312-0013**	1	WINDOW AS	
			318-8500	1	GLASS-SLIDING (LH)	
			318-8502	1	GLASS-FIXED (LH)	
			318-8503	1	HANDLE AS (LH)	
			318-8504	1	HANDLE AS (RH)	

C-CHANGE FROM PREVIOUS TYPE
Y-SEPARATE ILLUSTRATION

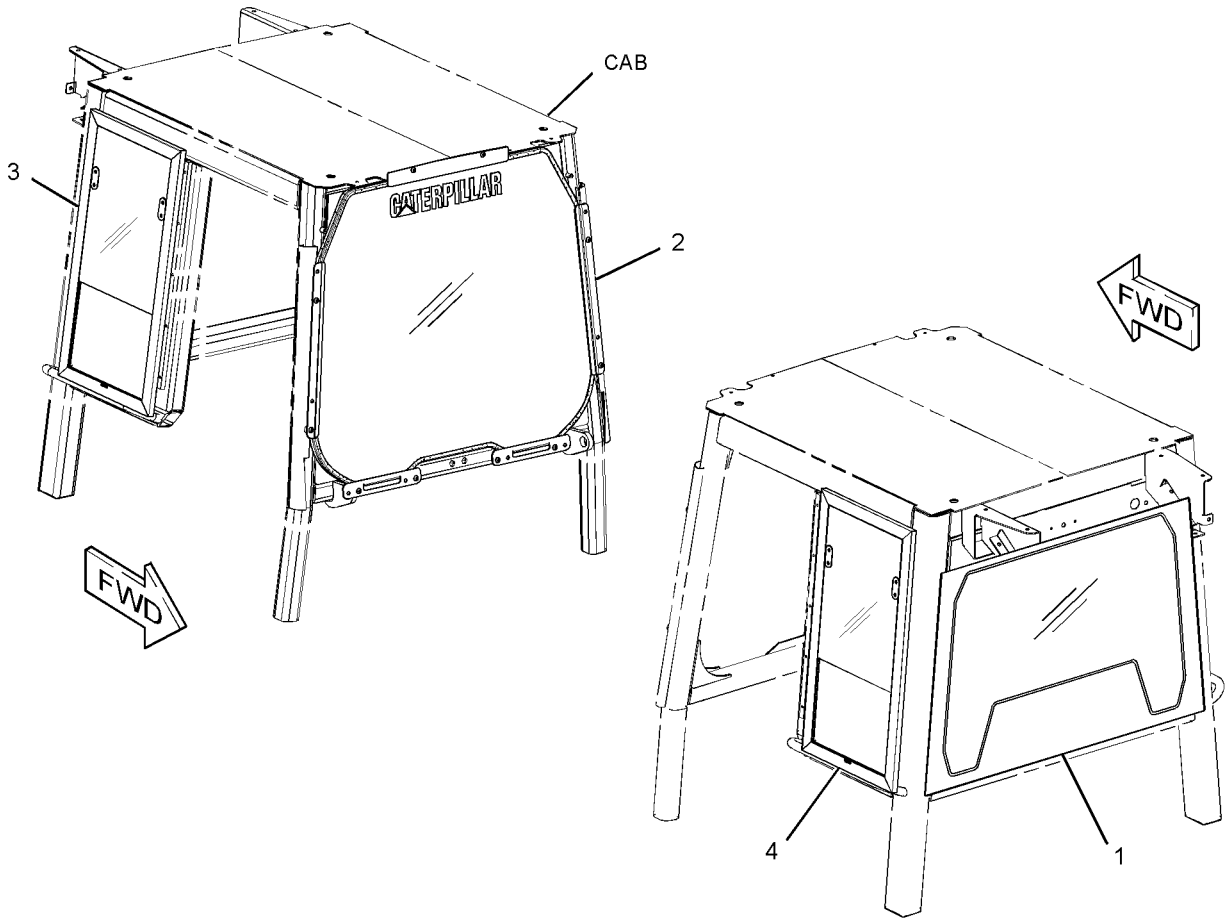

GRAPHIC #1 **<END>** g01448935

OPERATOR STATION

251-1923 WIPER GP-WINDOW

S/N: LBP1-699

PART OF 240-6230 CAB GP

SMCS-7305 **i03097542**

NOTE	REF NO	GRAPHIC REF	PART NUMBER	QTY	PART NAME 1 2 3 4 5 6 (PRODUCT LEVEL)	SEE PAGE
	1	1,2	**3S-2093**	17	STRAP-CABLE	
	2	1	**6V-5853**	1	BLADE AS-WIPER (450-MM) (REAR CAB WINDOW)	
	3	1,2	**7K-1181**	8	STRAP-CABLE	
	4	1,2	**8T-5400**	2	CONNECTOR AS	
	5	1	**126-3503**	1	ARM-WINDOW WIPER	
	6	1	**134-1935**	1	BLADE AS-WIPER (650-MM) (FRONT CAB WINDOW)	
Y	7	2	**146-6149**	1	MOTOR GP-WINDOW WIPER (24-VOLT) (FRONT)	660
	8	1	**152-6641**	1	ARM-WINDOW WIPER	
	9	1	**175-3760**	1	MOTOR AS-WINDOW WIPER (REAR)	
		1	**9G-3695**	1	PLUG	
		1	**186-3735**	5	PIN-CONNECTOR (16-GA TO 18-GA)	
		1	**102-8805**	1	KIT-RECEPTACLE (6-PIN)	
					(INCLUDES RECEPTACLE AS & WEDGE)	
	10	1	**204-2581**	2	VALVE AS-CHECK (WINDOW WASHER)	
Y	11	1	**281-1296**	1	TANK GP-WINDOW WASHER	698
	12	1	**281-1298**	2	GROMMET	
	13	2	**289-1108**	1	BRACKET	
	14	1	**4D-4835**	1	PIPE	
	15	2	**4P-8134**	1	CLIP	
M	16	2	**5C-7261**	2	NUT (M8X1.25-THD)	
M	17	2	**7X-2539**	1	BOLT (M8X1.25X110-MM)	
	18	2	**7X-7729**	3	WASHER (11X25X3-MM THK)	
E	19	1,2	**144-0195**		HOSE (16-CM)	
E	19A	1	**144-0195**		HOSE (36-CM)	
E	19B	1	**144-0195**		HOSE (92-CM)	
E	19C	1	**144-0195**		HOSE (187-CM)	
E	19D	1	**144-0195**		HOSE (338-CM)	

E-ORDER BY THE CENTIMETER
M-METRIC PART
Y-SEPARATE ILLUSTRATION

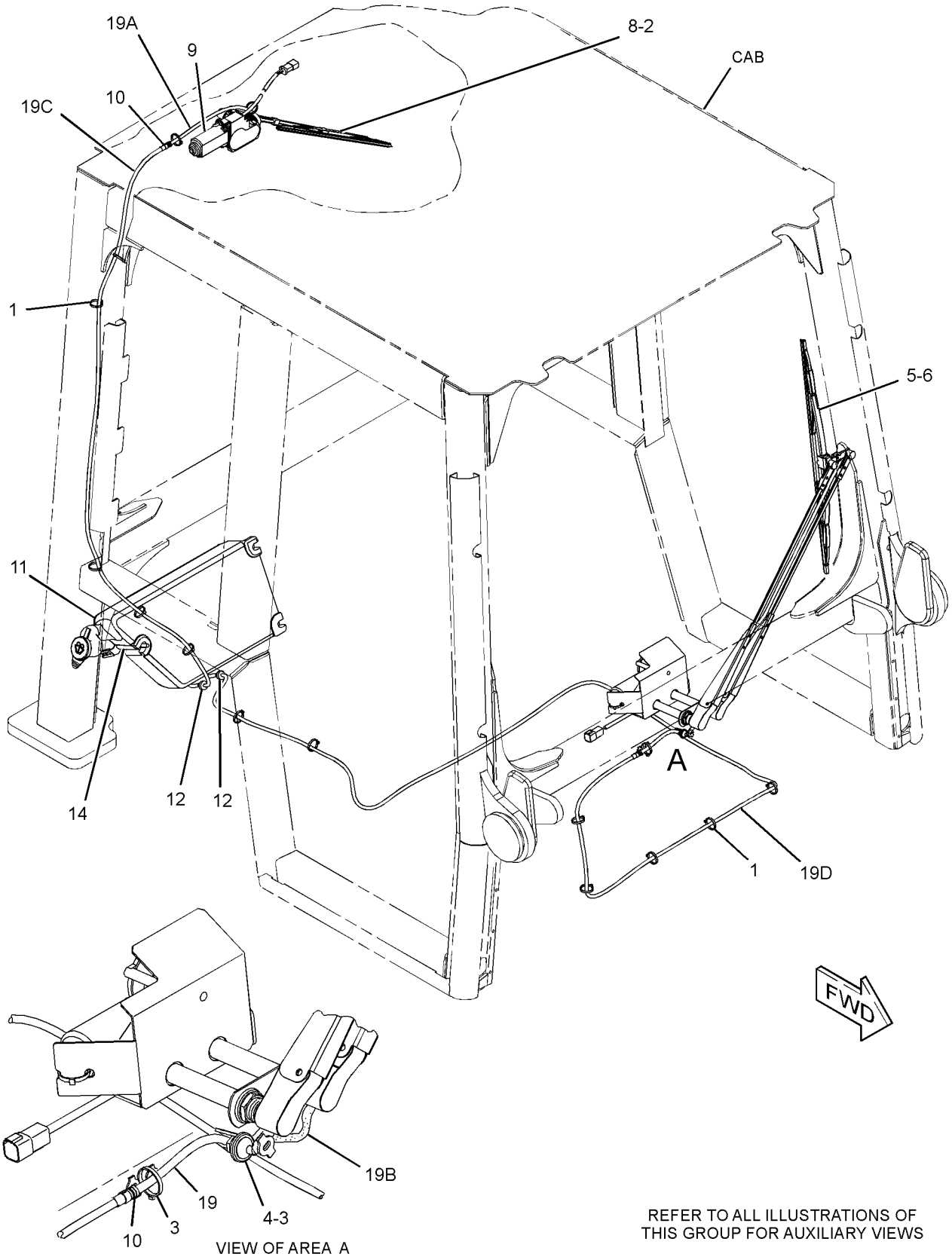

REFER TO ALL ILLUSTRATIONS OF
THIS GROUP FOR AUXILIARY VIEWS

GRAPHIC #1

g01338282

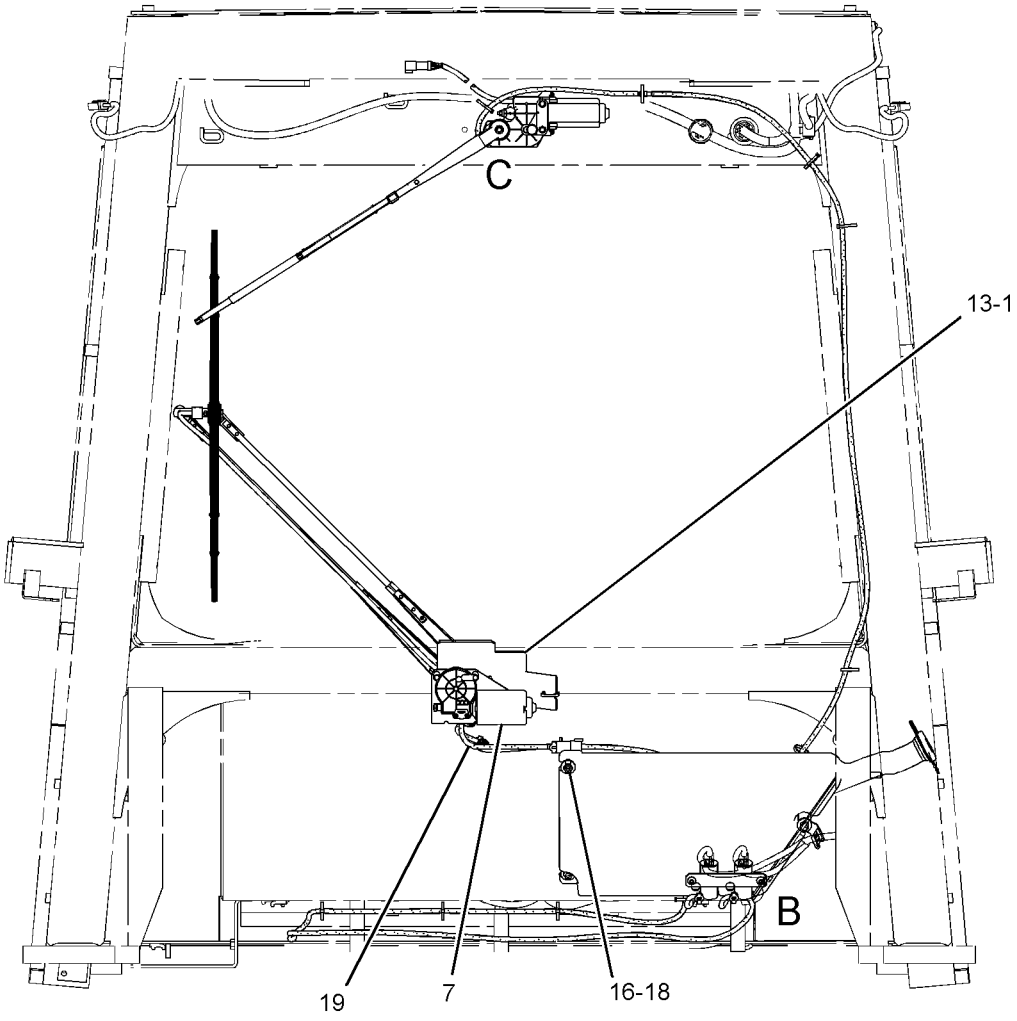

REAR VIEW

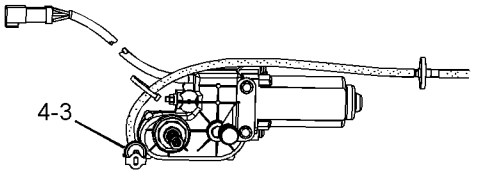

VIEW OF AREA C
(WIPER ARM REMOVED)

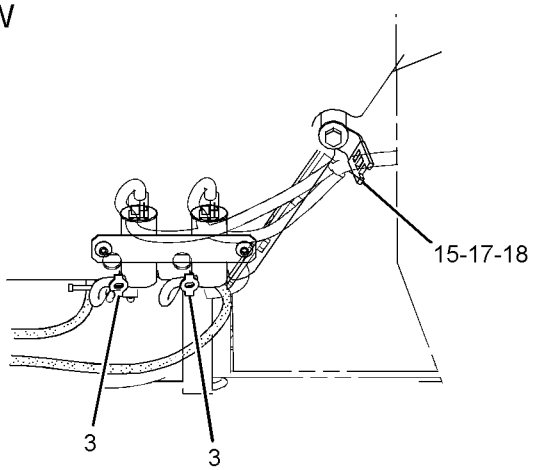

VIEW OF AREA B

GRAPHIC #2 **<END>** g01338400

OPERATOR STATION

307-4283 WIPER GP-WINDOW

S/N: LBP700-UP

PART OF 307-4279, 334-6680 CAB GP

SMCS-7305 **i03016830**

NOTE	REF NO	GRAPHIC REF	PART NUMBER	QTY	PART NAME 1 2 3 4 5 6 (PRODUCT LEVEL)	SEE PAGE
	1	1	**3S-2093**	17	STRAP-CABLE	
	2	1	**7K-1181**	8	STRAP-CABLE	
	3	1	**8T-5400**	2	CONNECTOR AS	
	4	1	**126-3503**	1	ARM-WINDOW WIPER (FRONT)	
Y	5	1	**146-6149**	1	MOTOR GP-WINDOW WIPER (24-VOLT) (FRONT)	660
	6	1	**152-6641**	1	ARM-WINDOW WIPER (REAR)	
	7	1	**175-3760**	1	MOTOR AS-WINDOW WIPER (REAR)	
	8	1	**204-2581**	2	VALVE AS-CHECK (WINDOW WASHER)	
Y	9	1	**281-1296**	1	TANK GP-WINDOW WASHER	698
	10	1	**281-1298**	2	GROMMET	
	11	1	**289-1108**	1	BRACKET	
	12	1	**4D-4835**	1	PIPE	
	13	1	**4P-8134**	1	CLIP	
M	14	1	**5C-7261**	2	NUT (M8X1.25-THD)	
M	15	1	**7X-2540**	1	BOLT (M8X1.25X120-MM)	
	16	1	**7X-7729**	1	WASHER (11X25X3-MM THK)	
E	17	1	**144-0195**		HOSE (36-CM)	
E	17A	1	**144-0195**		HOSE (187-CM)	
E	17B	1	**144-0195**		HOSE (16-CM)	
E	17C	1	**144-0195**		HOSE (338-CM)	
E	17D	1	**144-0195**		HOSE (92-CM)	
	18	1	**325-1344**	6	WASHER (15X30X2-MM THK)	
	19	1	**327-7860**	3	SPACER-SPECIAL	

E-ORDER BY THE CENTIMETER
M-METRIC PART
Y-SEPARATE ILLUSTRATION

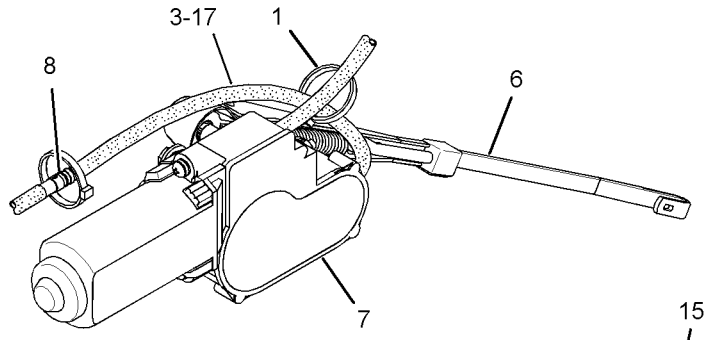

VIEW OF AREA A

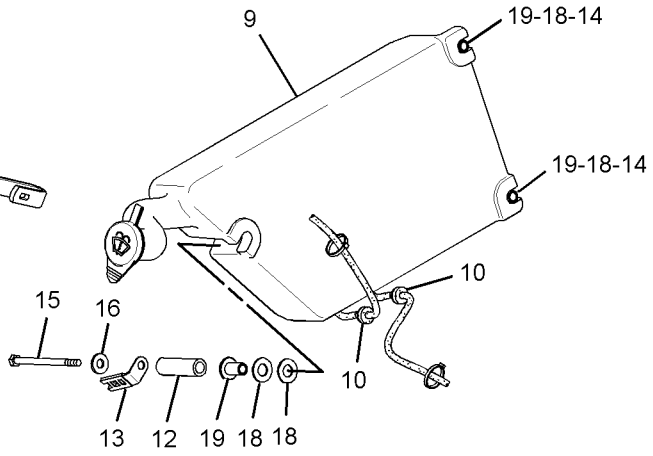

VIEW OF AREA B

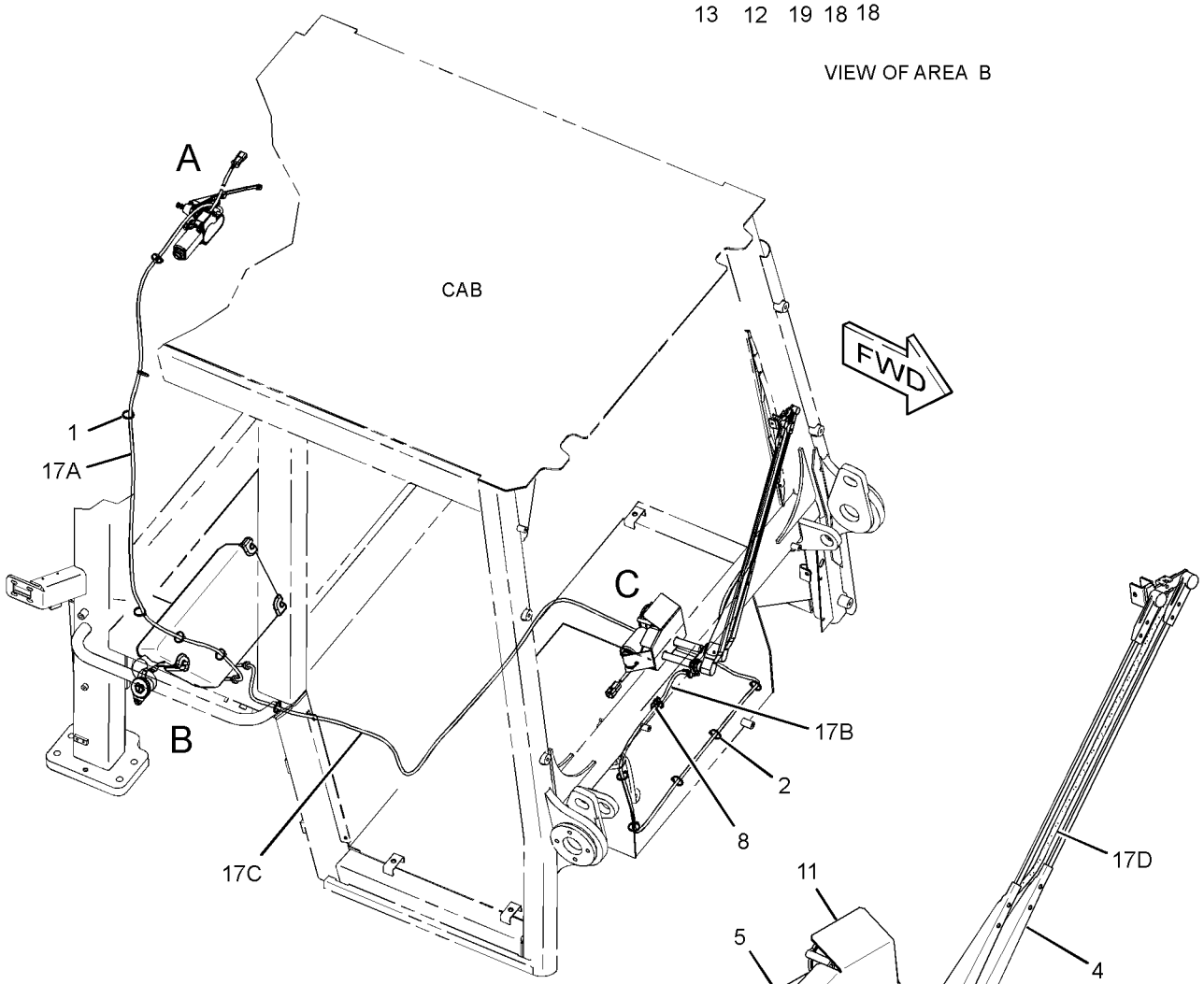

VIEW OF AREA C

GRAPHIC #1 **<END>** g01533174

OPERATOR STATION

327-7794 WIPER GP-WINDOW—REAR

S/N: LBP1-UP

PART OF 327-7790 CAB GP

SMCS-7305 **i03586362**

NOTE	REF NO	GRAPHIC REF	PART NUMBER	QTY	PART NAME 1 2 3 4 5 6 (PRODUCT LEVEL)	SEE PAGE
	1	1	**3S-2093**	15	STRAP-CABLE	
	2	1	**7K-1181**	6	STRAP-CABLE	
	3	1	**8T-5400**	2	CONNECTOR AS	
	4	1	**175-3760**	1	MOTOR AS-WINDOW WIPER (REAR)	
		1	**9G-3695**	1	PLUG	
		1	**102-8805**	1	KIT-RECEPTACLE (6-PIN)	
					(INCLUDES RECEPTACLE AS & WEDGE)	
		1	**186-3735**	5	PIN-CONNECTOR (16-GA TO 18-GA)	
	5	1	**204-2581**	2	VALVE AS-CHECK	
	6	1	**281-1298**	2	GROMMET	
	7	1	**325-1344**	6	WASHER (15X30X2-MM THK)	
	8	1	**327-7860**	3	SPACER-SPECIAL	
	9	1	**4D-4835**	1	PIPE	
	10	1	**4P-8134**	1	CLIP	
M	11	1	**5C-7261**	2	NUT (M8X1.25-THD)	
M	12	1	**7X-2540**	1	BOLT (M8X1.25X120-MM)	
	13	1	**7X-7729**	1	WASHER (11X25X3-MM THK)	
E	14	1	**144-0195**		HOSE (36-CM)	
E	14A	1	**144-0195**		HOSE (187-CM)	
E	14B	1	**144-0195**		HOSE (16-CM)	
E	14C	1	**144-0195**		HOSE (338-CM)	

E-ORDER BY THE CENTIMETER
M-METRIC PART

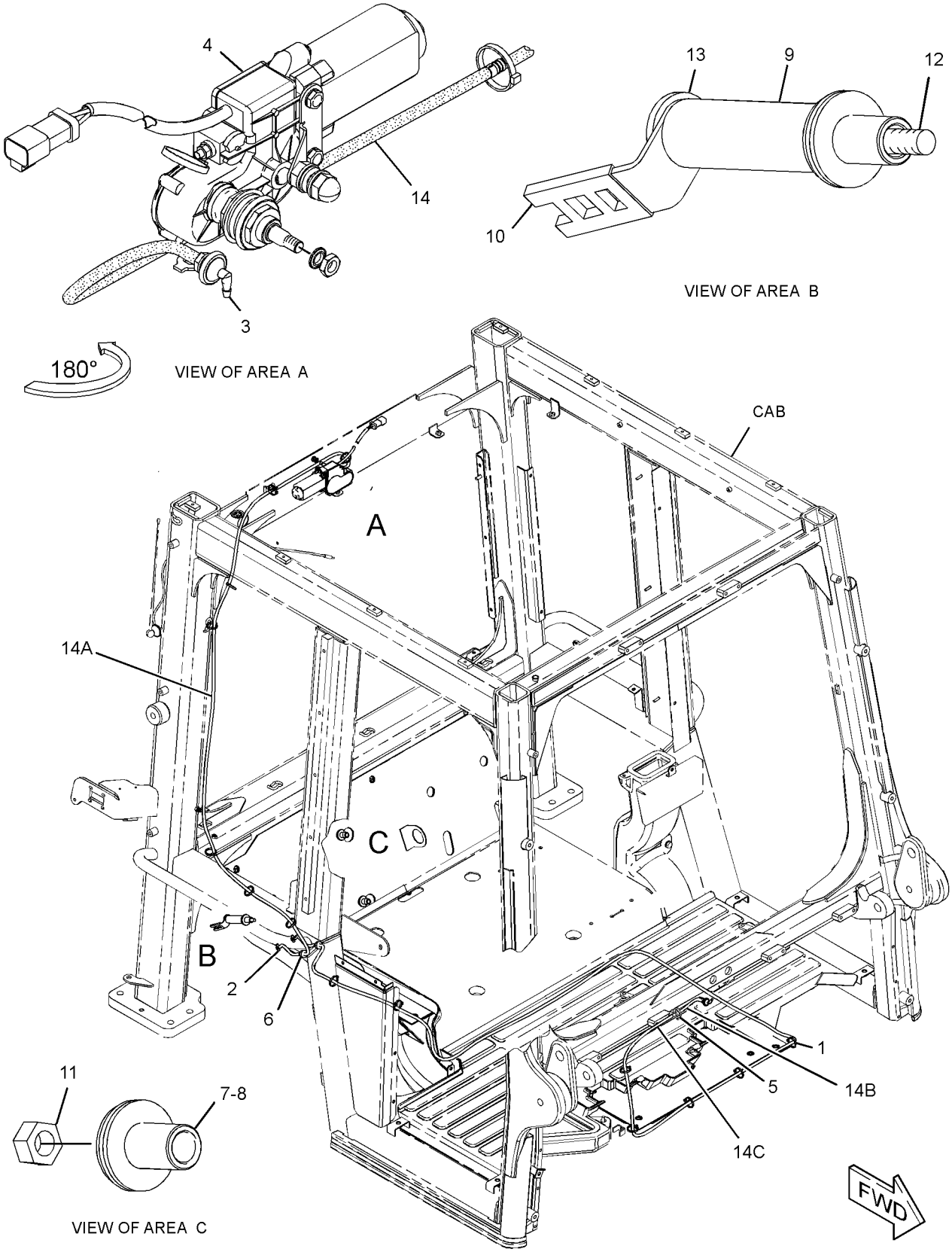

GRAPHIC #1 **<END>** g01706018

WORK TOOLS

258-6897 BUCKET AS-GENERAL PURPOSE

S/N: LBP1-UP
1.72-CU M (2.25-CU YD) HEAPED CAPACITY BARE BUCKET
FOR USE WITH BOLT-ON CUTTING EDGE AND SET OF EIGHT BOLT-ON TEETH
AN ATTACHMENT

SMCS-6101 **i02575176**

NOTE	REF NO	GRAPHIC REF	PART NUMBER	QTY	PART NAME 1 2 3 4 5 6 (PRODUCT LEVEL)	SEE PAGE
C	1	1	**264-8012**	1	HINGE AS (LH)	
	2	1	**8Y-3840**	1	HINGE AS (INNER, LH)	
	3	1	**8Y-3841**	1	HINGE AS (INNER, RH)	
C	4	1	**264-8013**	1	HINGE AS (RH)	
	5	1	**8Y-3843**	1	HINGE AS (CENTER, LH)	
C	6	1	**264-8014**	1	HINGE AS (RH)	
	7	1	**8Y-5252**	1	PLATE AS	
	7A	1	**8Y-3851**	1	BAR	
	7B	1	**8Y-3852**	2	BAR	
	7C	1	**8Y-9102**	4	PLATE	
	8	1	**9V-6572**	1	EDGE-CUTTING	
	9	1	**258-6898**	1	PLATE AS (LH)	
	9A	1	**8E-5303**	1	CORNER (LH)	
	9B	1	**8Y-9091**	1	BAR (LH)	
	10	1	**258-6899**	1	PLATE AS (RH)	
	10A	1	**8E-5302**	1	CORNER (RH)	
	10B	1	**8Y-9093**	1	BAR (RH)	
	11	1	**6V-3607**	1	FILM-NOTICE (BUCKET CORNER GUARD SYSTEM)	
C	12	1	**184-6391**	2	PLATE	
C	13	1	**8Y-3858**	6	PLATE	
C	14	1	**300-3445**	1	PLATE	

C-CHANGE FROM PREVIOUS TYPE

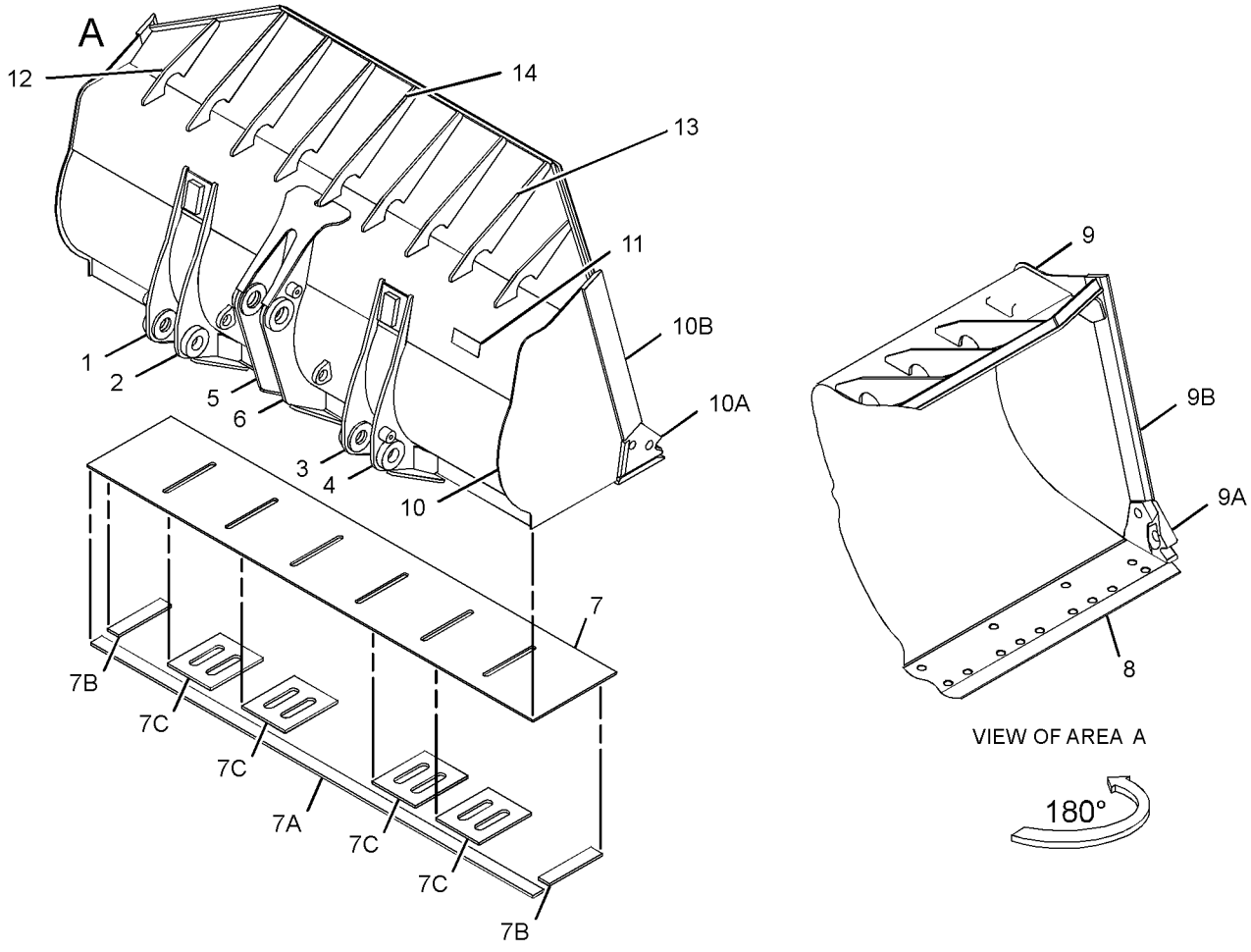

GRAPHIC #1 **<END>** g01340710

258-6900 BUCKET AS-GENERAL PURPOSE–
FLUSH MOUNTED TEETH
S/N: LBP1-UP
1.72-CU M (2.25-CU YD) HEAPED CAPACITY BARE BUCKET
FOR USE WITH SET OF EIGHT TIPS
AN ATTACHMENT

SMCS-6101 **i02440107**

NOTE	REF NO	GRAPHIC REF	PART NUMBER	QTY	PART NAME 1 2 3 4 5 6 (PRODUCT LEVEL)	SEE PAGE
	1	1	**264-8012**	1	HINGE AS (LH)	
	2	1	**8Y-3840**	1	HINGE AS (INNER, LH)	
	3	1	**8Y-3841**	1	HINGE AS (INNER, RH)	
	4	1	**264-8013**	1	HINGE AS (RH)	
	5	1	**8Y-3843**	1	HINGE AS (CENTER, LH)	
	6	1	**264-8014**	1	HINGE AS (RH)	
	7	1	**8Y-3858**	6	PLATE	
	8	1	**8Y-4891**	1	PLATE AS (LH)	
		1	**4V-8668**	1	CORNER (LH)	
		1	**8Y-9091**	1	BAR (LH)	
	9	1	**8Y-4892**	1	PLATE AS (RH)	
		1	**4V-8667**	1	CORNER (RH)	
		1	**8Y-9093**	1	BAR (RH)	
	10	1	**8Y-5252**	1	PLATE AS	
		1	**8Y-9102**	4	PLATE	
		1	**8Y-3851**	1	BAR	
		1	**8Y-3852**	2	BAR	
	11	1	**184-6391**	2	PLATE	
	12	1	**258-6901**	1	EDGE AS-CUTTING	
		1	**1V-3916**	1	EDGE-CUTTING	
		1	**229-7084**	8	ADAPTER-TIP (K-80, FLUSH MOUNT)	
	13	1	**300-3445**	1	PLATE	

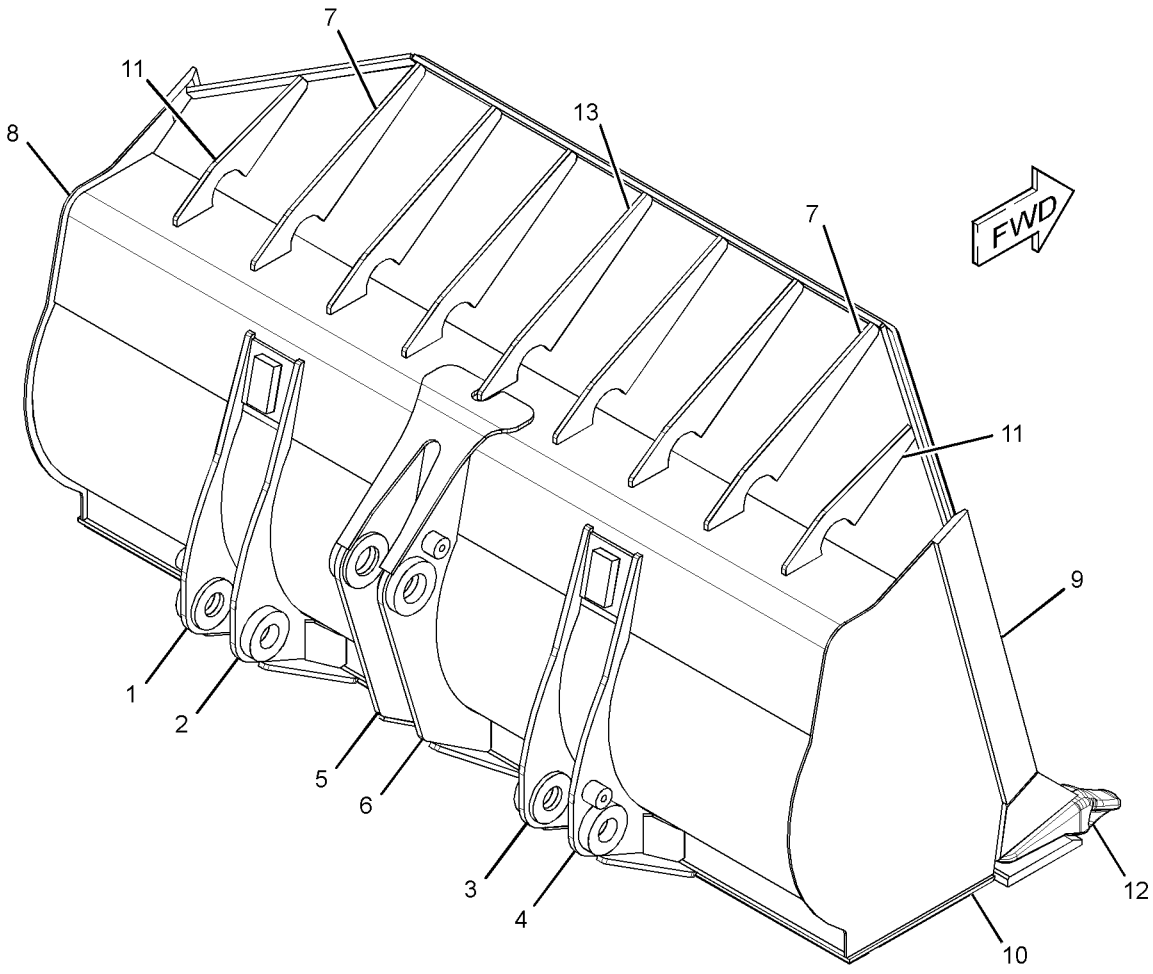

GRAPHIC #1 **<END>** g01340844

WORK TOOLS

264-3280 BUCKET GP-MULTIPURPOSE

S/N: LBP1-UP
1.65-CU M (2.15-CU YD) HEAPED CAPACITY BARE BUCKET
PART OF 283-7888 BUCKET GP-MULTIPURPOSE
AN ATTACHMENT

SMCS-6104 **i02400668**

NOTE	REF NO	GRAPHIC REF	PART NUMBER	QTY	PART NAME 1 2 3 4 5 6 (PRODUCT LEVEL)	SEE PAGE
	1	1	**4T-8082**	2	BIT-END	
	2	1	**4T-8083**	1	EDGE-CUTTING	
	3	1	**8V-7419**	2	PIN AS	
	4	1	**9K-9731**	2	SPACER (20.4X28.5X14.2-MM THK)	
	6	1	**264-3284**	1	BOWL AS	
	6A	1	**5G-8267**	1	EDGE-CUTTING	
	6B	1	**5G-8269**	2	BIT-END	
	6C	1	**6V-3607**	1	FILM-NOTICE (BUCKET CORNER GUARD SYSTEM)	
	6D	1	**9V-6572**	1	EDGE-CUTTING	
	6E	1	**264-3286**	1	PLATE AS (RH)	
		1	**8E-5302**	1	CORNER (RH)	
	6F	1	**264-3288**	1	PLATE AS (LH)	
		1	**8E-5303**	1	CORNER (LH)	
Y	7	1	**265-6475**	1	BULLDOZER GP	721
	8	1	**4F-3654**	17	BOLT-PLOW (5/8-11X2-IN)	
	9	1	**7X-0365**	2	BOLT (3/4-10X1.5-IN)	
	10	1	**7X-0448**	17	NUT (5/8-11-THD)	
	11	1	**7X-0582**	2	WASHER-HARD (20X44.5X6-MM THK)	

Y-SEPARATE ILLUSTRATION

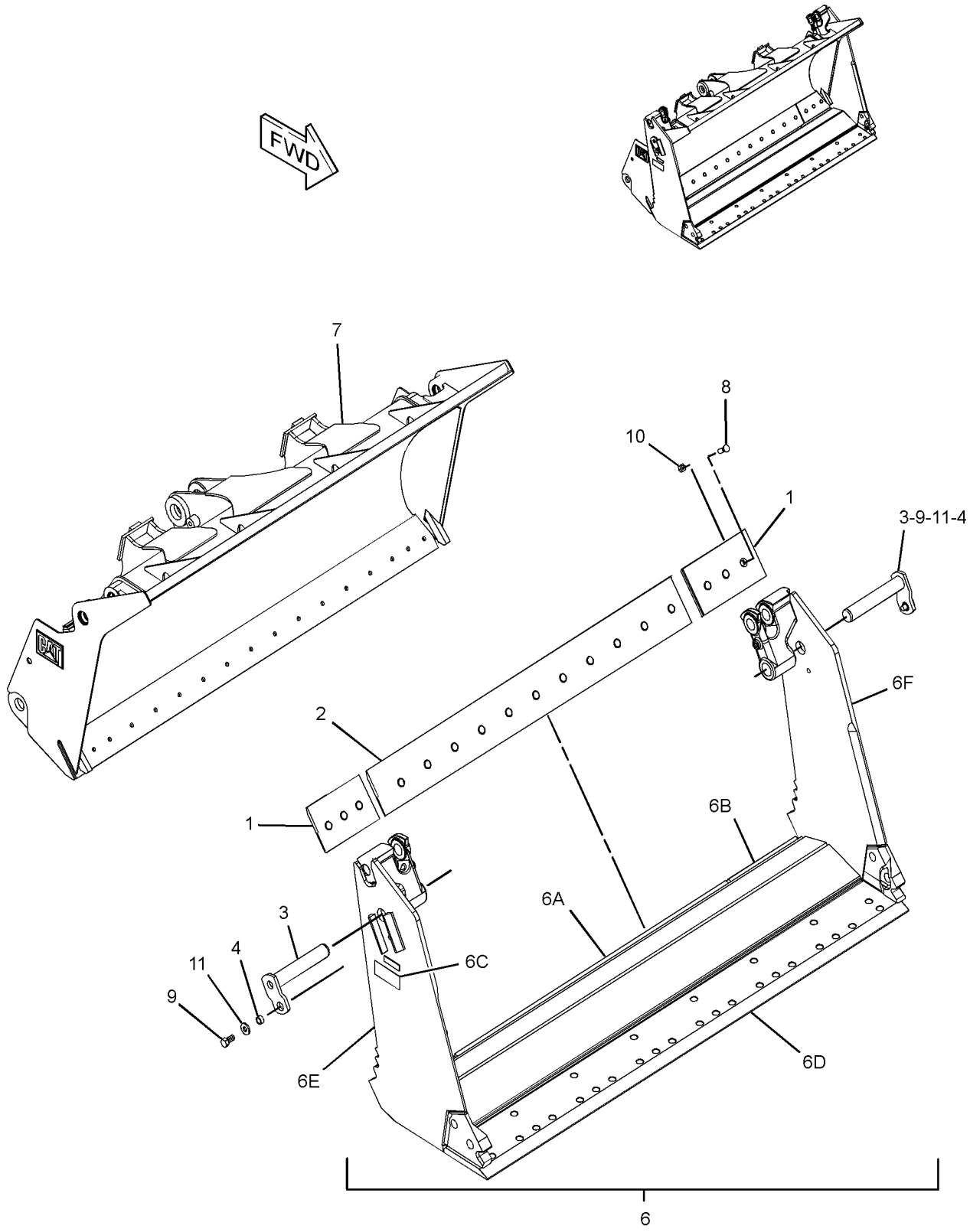

GRAPHIC #1 **<END>** g01336424

WORK TOOLS

283-7888 BUCKET GP-MULTIPURPOSE

S/N: LBP1-UP
1.5-CU M (2.0-CU YD) HEAPED CAPACITY BARE BUCKET
FOR USE WITH HYDRAULIC FRONT LINES
AN ATTACHMENT

SMCS-6104 **i03470400**

NOTE	REF NO	GRAPHIC REF	PART NUMBER	QTY	PART NAME 1 2 3 4 5 6 (PRODUCT LEVEL)	SEE PAGE
Y	1	1	*8V-7370*	1	MOUNTING GP-CYLINDER	463
Y	2	1	*264-3280*	1	BUCKET GP-MULTIPURPOSE	718
Y	3	1	*279-1956*	1	LINES GP-BUCKET CYLINDER	435
	4	1	**168-8672**	1	PLATE-SERIAL NUMBER (MULTIPURPOSE BUCKET)	
M	4A	1	**136-0155**	2	SETSCREW (M4X0.7X8-MM)	
Y	5	1	**292-9044**	2	CYLINDER GP-BUCKET (MULTIPURPOSE)	423
	6	1	**150-8896**	2	FILM-NOTICE (LIFT EYE LOCATION)	

M-METRIC PART
Y-SEPARATE ILLUSTRATION

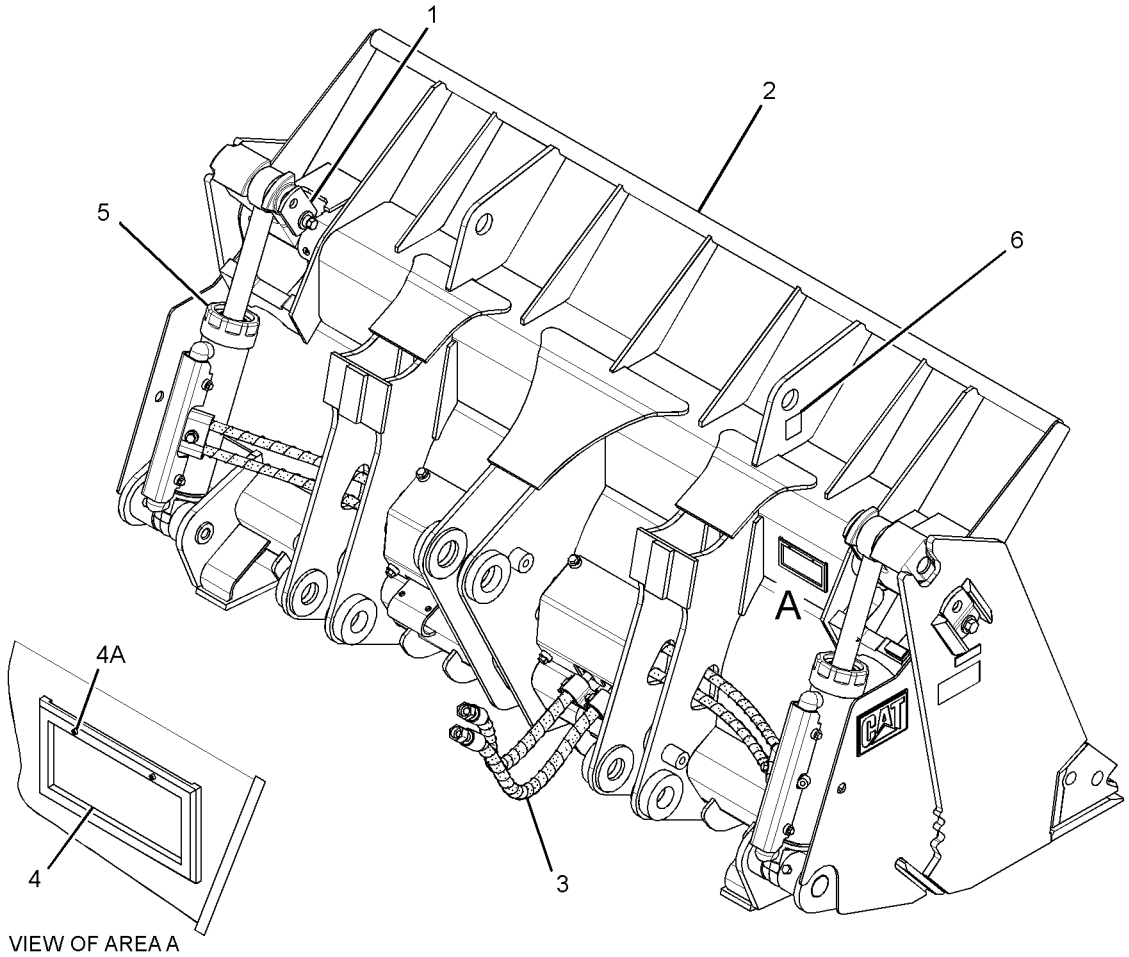

VIEW OF AREA A

GRAPHIC #1 **<END>** g01865793

WORK TOOLS

265-6475 BULLDOZER GP

S/N: LBP1-UP

PART OF 264-3280 BUCKET GP-MULTIPURPOSE

AN ATTACHMENT

SMCS-6050 **i02704388**

NOTE	REF NO	GRAPHIC REF	PART NUMBER	QTY	PART NAME 1 2 3 4 5 6 (PRODUCT LEVEL)	SEE PAGE
	1	1	**3B-8489**	4	FITTING-GREASE	
	2	1	*265-6476*	1	BULLDOZER AS	
	2A	1	**1V-8098**	4	BLOCK	
	2B	1	**2C-9259**	2	PLATE-IDENTIFICATION (CAT)	
	2C	1	**2V-7177**	4	BLOCK	
	2D	1	**3V-6035**	2	BAR	
	2E	1	**5D-2643**	2	LUG	
	2F	1	**8V-9488**	1	HINGE AS (LIFT, INNER, LH)	
	2G	1	**8V-9494**	1	HINGE AS (LIFT, INNER, RH)	
	2H	1	**8Y-4756**	1	HINGE AS (TILT, CENTER, LH)	
	2J	1	**265-6481**	1	HINGE AS (LIFT, OUTER, RH)	
	2K	1	**265-6482**	1	HINGE AS (LIFT, OUTER, LH)	
	2L	1	**265-6483**	1	HINGE AS (TILT, CENTER, RH)	
	3	1	**1V-7098**	4	BEARING-SLEEVE	
	4	1	**7K-9203**	8	SEAL-LIP TYPE	

265-6475 BULLDOZER GP *(contd.)* i02704388

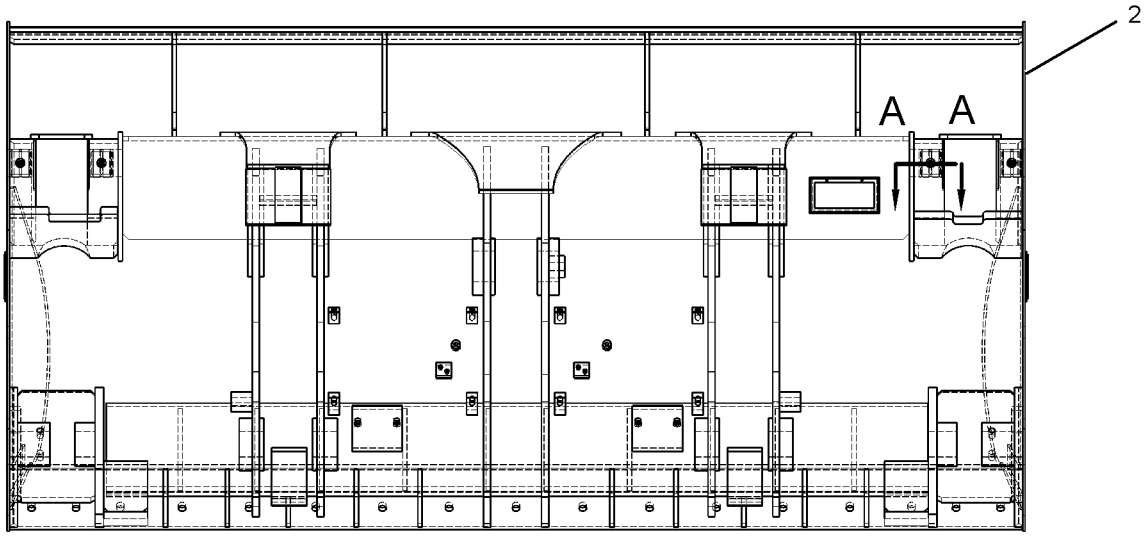

REAR VIEW

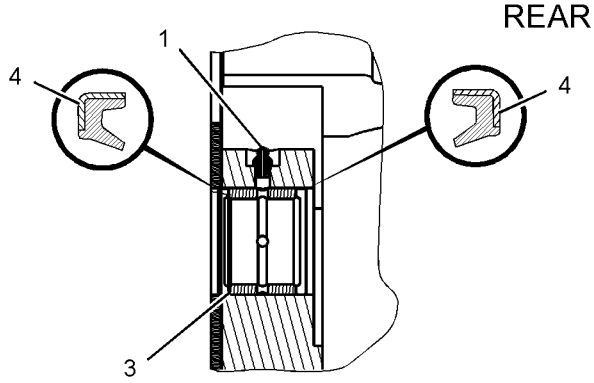

SECTION A-A

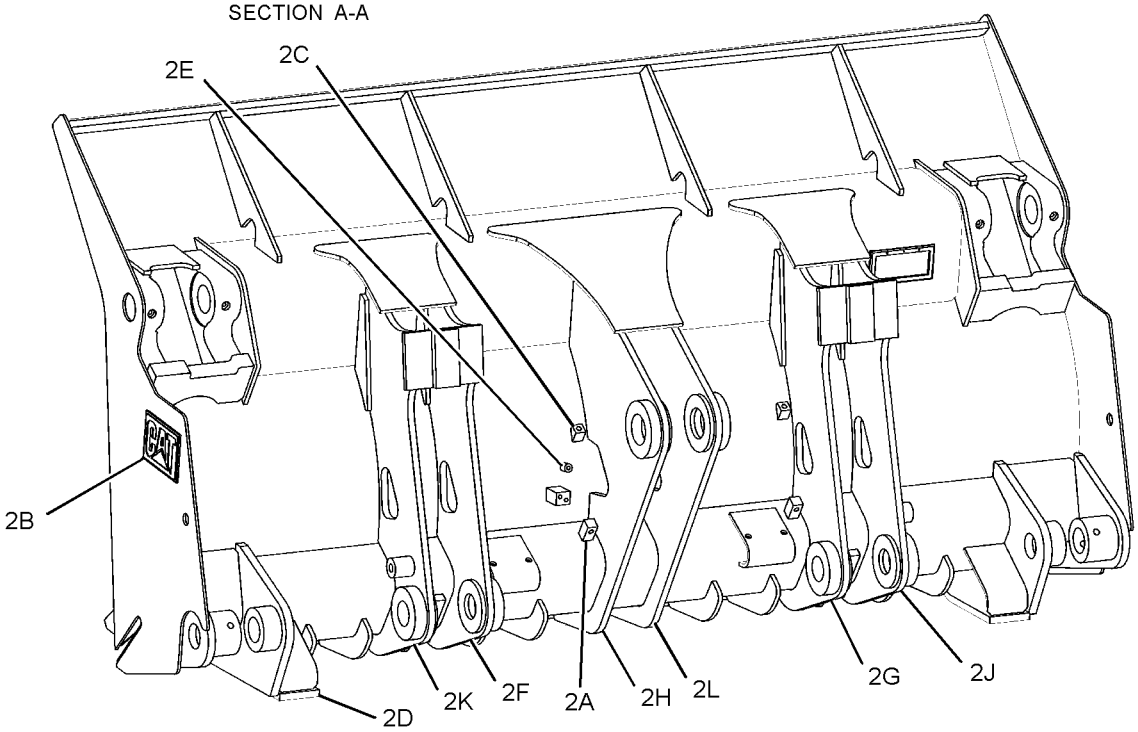

GRAPHIC #1 **<END>** g01304815

3G-4428 EDGE GP-BIT & CUTTING

S/N: LBP1-UP

FOR USE WITH MULTIPURPOSE BUCKET, GENERAL PURPOSE BUCKET

AN ATTACHMENT

SMCS-6801, 6804 **i02883413**

NOTE	REF NO	GRAPHIC REF	PART NUMBER	QTY	PART NAME 1 2 3 4 5 6 (PRODUCT LEVEL)	SEE PAGE
	1	1	**1U-0295**	2	EDGE-CUTTING	
	2	1	**4T-8091**	2	EDGE-END	
	3	1	**253-0062**	1	GUARD (CORNER, RH)	
	4	1	**253-0063**	1	GUARD (CORNER, LH)	
	5	1	**1J-5607**	10	BOLT-PLOW (1-8X2.75-IN)	
	6	1	**2J-3507**	10	NUT-FULL (1-8-THD)	
	7	1	**3K-9770**	4	NUT-FULL (1-1/4-7-THD)	
	8	1	**8T-9079**	4	BOLT-PLOW (1-1/4-7X3.35-IN)	

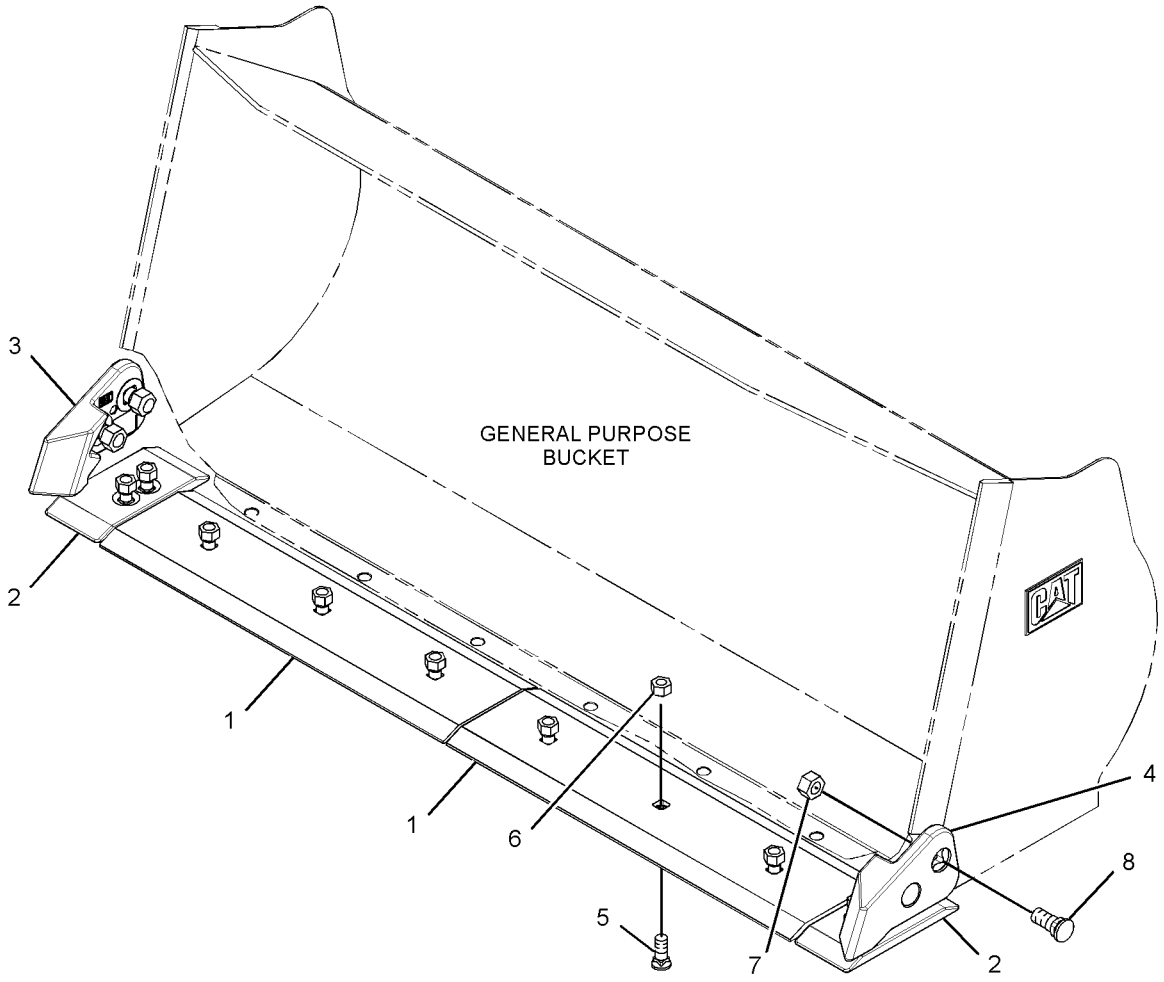

GRAPHIC #1 **<END>** g01438753

WORK TOOLS

264-6235 EDGE GP-SEGMENT

S/N: LBP1-UP

AN ATTACHMENT

SMCS-6818 **i02348056**

NOTE	REF NO	GRAPHIC REF	PART NUMBER	QTY	PART NAME 1 2 3 4 5 6 (PRODUCT LEVEL)	SEE PAGE
	1	1	**264-6233**	7	EDGE-SEGMENT	
	2	1	**1J-5607**	14	BOLT-PLOW (1-8X2.75-IN)	
	3	1	**2J-3507**	14	NUT-FULL (1-8-THD)	

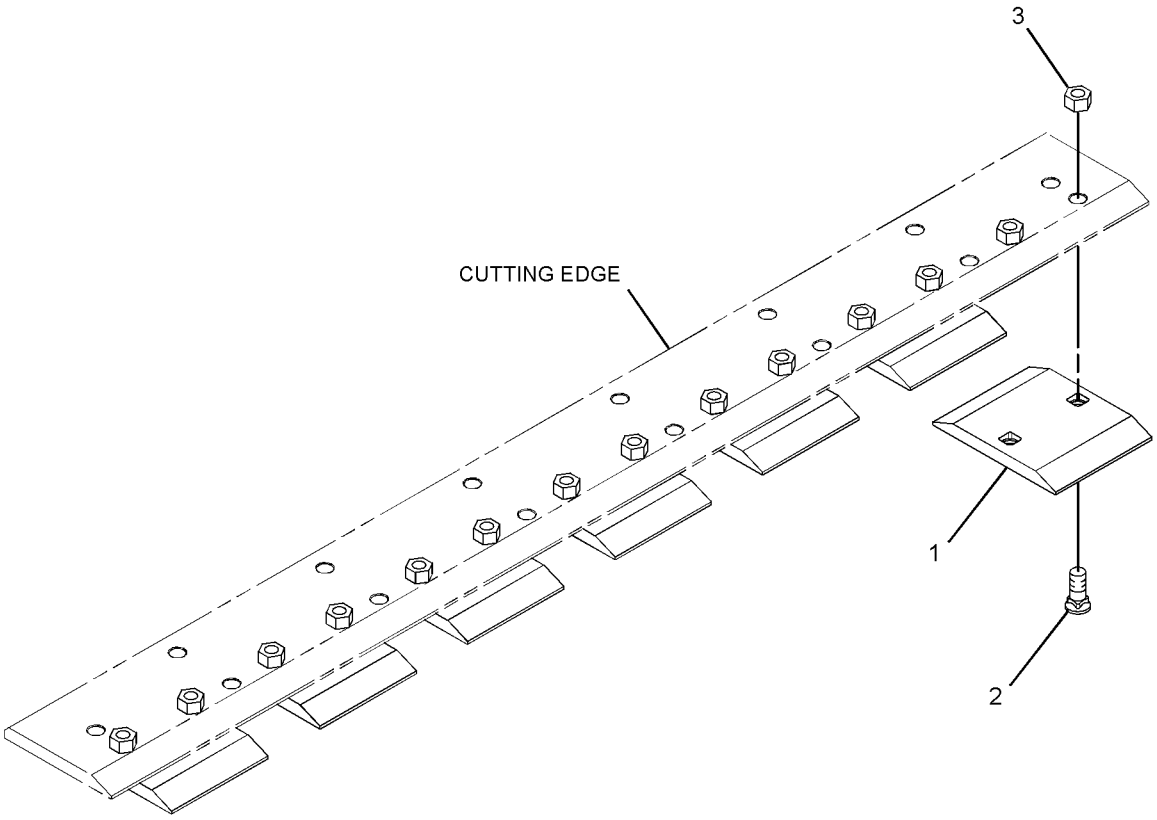

GRAPHIC #1 **<END>** g01299138

293-6460 GUARD GP-RIPPER

S/N: 9JW1-UP
PART OF 256-7612 RIPPER AR
AN ATTACHMENT

SMCS-6310 **i02665386**

NOTE	REF NO	GRAPHIC REF	PART NUMBER	QTY	PART NAME 1 2 3 4 5 6 (PRODUCT LEVEL)	SEE PAGE
	1	1	**296-6492**	1	GUARD AS (LH)	
	2	1	**296-6493**	1	GUARD AS (RH)	
	3	1	**299-6016**	2	PLATE	
	4	1	**5P-1076**	4	WASHER-HARD (13.5X30X4-MM THK)	
M	5	1	**8T-4139**	4	BOLT (M12X1.75X30-MM)	

M-METRIC PART

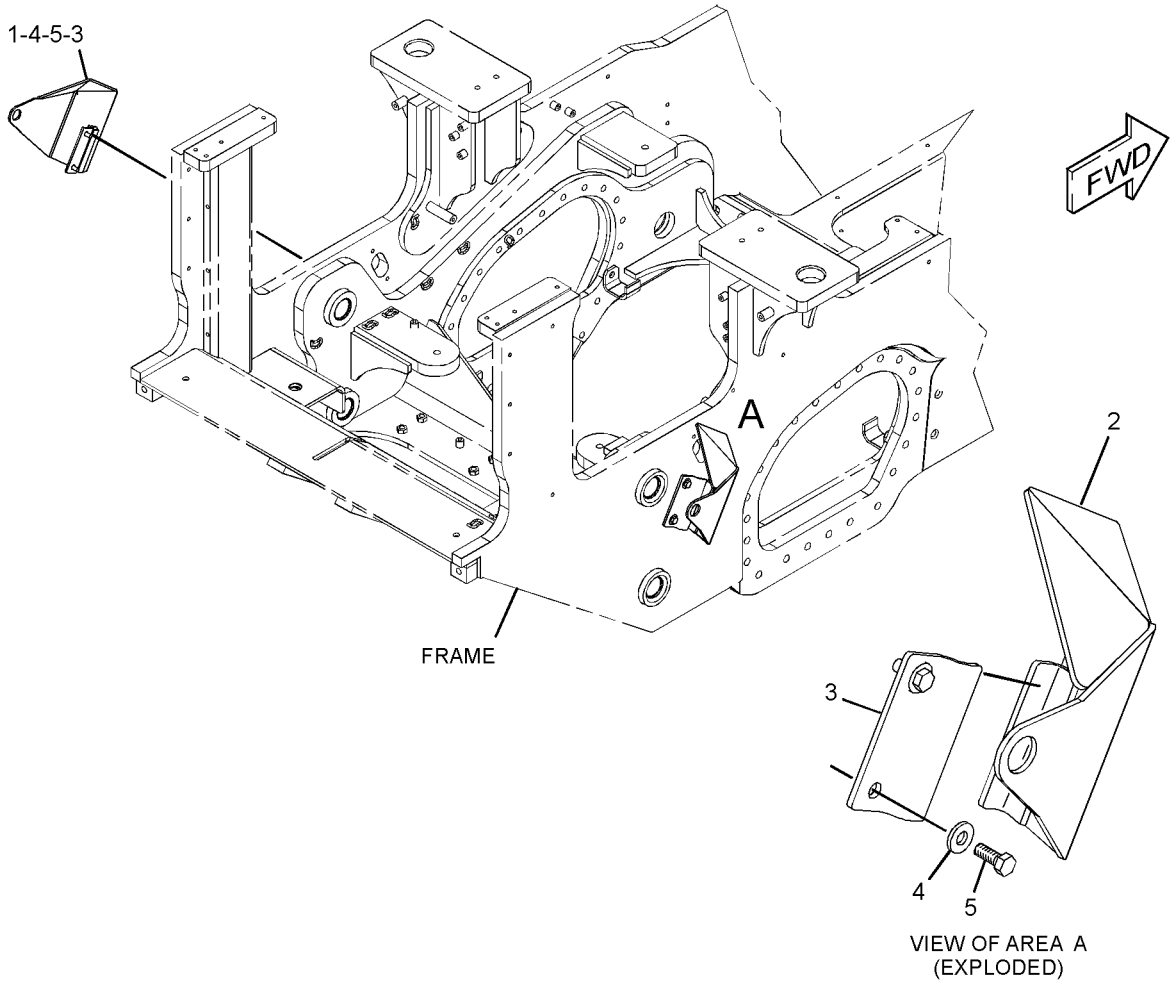

GRAPHIC #1 **<END>** g01343867

WORK TOOLS

277-0535 MOUNTING GP-RIPPER

S/N: 9JW1-459
PART OF 256-7612 RIPPER AR
AN ATTACHMENT

SMCS-6165, 6310, 6324 **i02741428**

NOTE	REF NO	GRAPHIC REF	PART NUMBER	QTY	PART NAME 1 2 3 4 5 6 (PRODUCT LEVEL)	SEE PAGE
	1	1	**2G-2885**	4	WASHER (20.6X114.3X12-MM THK)	
	2	1	**3G-1066**	4	SPACER (34X90X18-MM THK)	
	3	1	**3G-1528**	2	BLOCK AS	
					(EACH INCLUDES)	
	3A	1	**3G-2580**	1	BEARING	
	4	1	**3G-1583**	2	PIN	
	5	1	**3G-1585**	2	SPACER (66X100X35-MM THK)	
	6	1	**7B-2289**	4	BOLT (1-1/4-12X2.25-IN)	
	7	1	**283-4672**	4	PIN	
	8	1	**2H-3725**	4	BOLT (3/4-16X1.5-IN)	
	9	1	**2K-0337**	8	LOCKNUT (3/4-16-THD)	
	10	1	**2K-4973**	2	LOCKNUT (3/8-16-THD)	
	11	1	**3G-0472**	2	BEARING	
	12	1	**3G-1587**	2	BEARING-SLEEVE	
	13	1	**7K-3422**	8	STUD-TAPERLOCK (3/4-16, 3/4-10X5.512-IN)	
	14	1	**7K-9203**	4	SEAL-LIP TYPE	
	15	1	**7K-9205**	8	SEAL-LIP TYPE	
	16	1	**7X-0292**	2	BOLT (3/8-16X4.5-IN)	
	17	1	**7X-0533**	2	WASHER-HARD (34X55X6-MM THK)	

QUANTITIES SHOWN ARE THOSE REQUIRED FOR BOTH LH AND RH SIDES

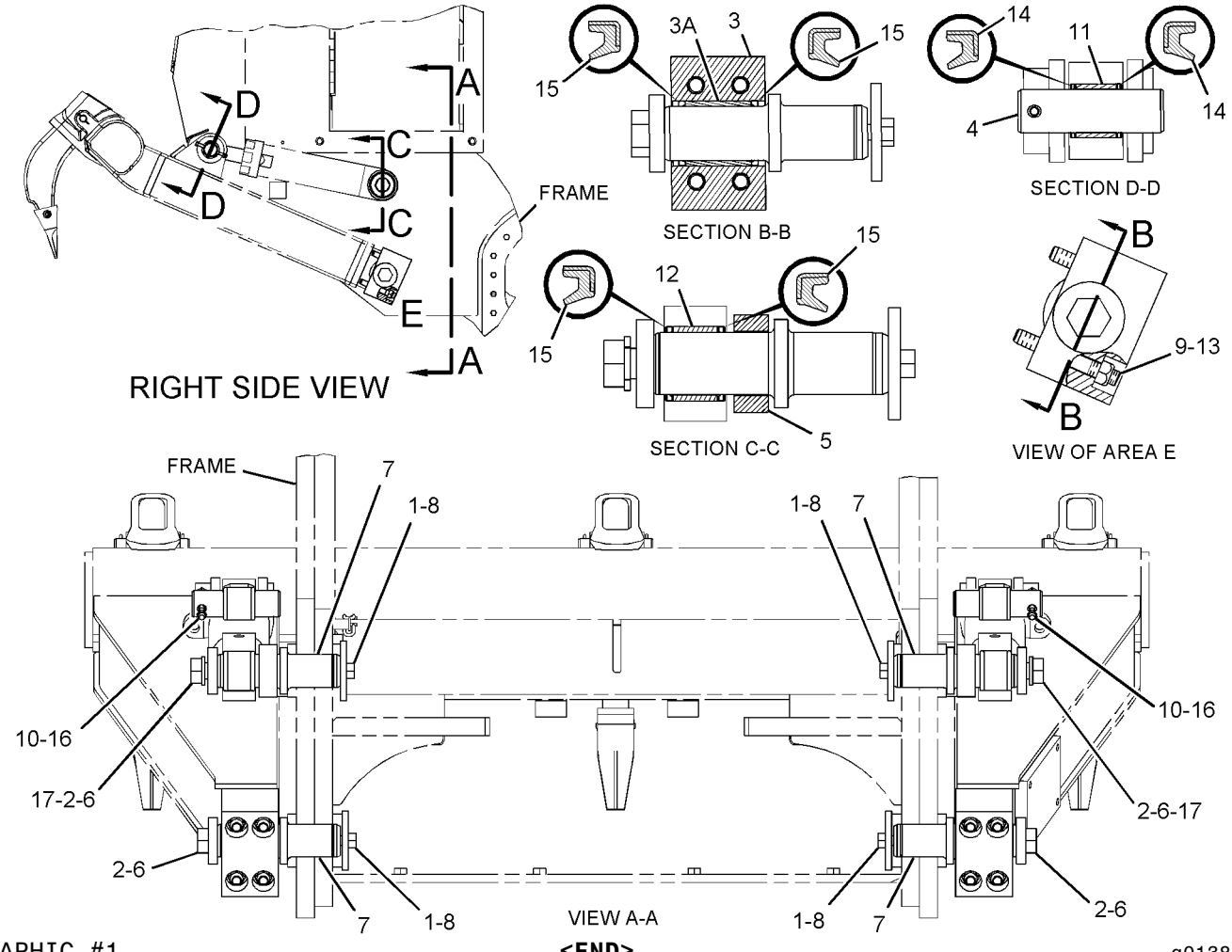

GRAPHIC #1 **<END>** g01384145

277-0535 MOUNTING GP-RIPPER

S/N: 9JW460-UP
PART OF 256-7612 RIPPER AR
AN ATTACHMENT

SMCS-6165, 6310, 6324 **i03588943**

NOTE	REF NO	GRAPHIC REF	PART NUMBER	QTY	PART NAME 1 2 3 4 5 6 (PRODUCT LEVEL)	SEE PAGE
C	1	1	**7X-2622**	4	WASHER (22X115X10-MM THK)	
C	2	1	**298-5985**	4	SPACER (26X90X18-MM THK)	
	3	1	**3G-1528**	2	BLOCK AS	
					(EACH INCLUDES)	
	3A	1	**3G-2580**	1	BEARING	
	4	1	**3G-1583**	2	PIN	
	5	1	**3G-1585**	2	SPACER (66X100X35-MM THK)	
CM	6	1	**7X-2576**	4	BOLT (M24X3X70-MM)	
C	7	1	**317-1050**	4	PIN	
CM	8	1	**8T-6430**	4	BOLT (M20X2.5X50-MM)	
	9	1	**2K-0337**	8	LOCKNUT (3/4-16-THD)	
CM	10	1	**6V-7744**	2	LOCKNUT (M10X1.5-THD)	
	11	1	**3G-0472**	2	BEARING	
	12	1	**3G-1587**	2	BEARING-SLEEVE	
	13	1	**7K-3422**	8	STUD-TAPERLOCK (3/4-16, 3/4-10X5.512-IN)	
	14	1	**7K-9203**	4	SEAL-LIP TYPE	
	15	1	**7K-9205**	8	SEAL-LIP TYPE	
CM	16	1	**7X-2543**	2	BOLT (M10X1.5X120-MM)	
C	17	1	**8T-4167**	2	WASHER-HARD (26X44X4-MM THK)	

QUANTITIES SHOWN ARE THOSE REQUIRED FOR BOTH LH AND RH SIDES
C-CHANGE FROM PREVIOUS TYPE
M-METRIC PART

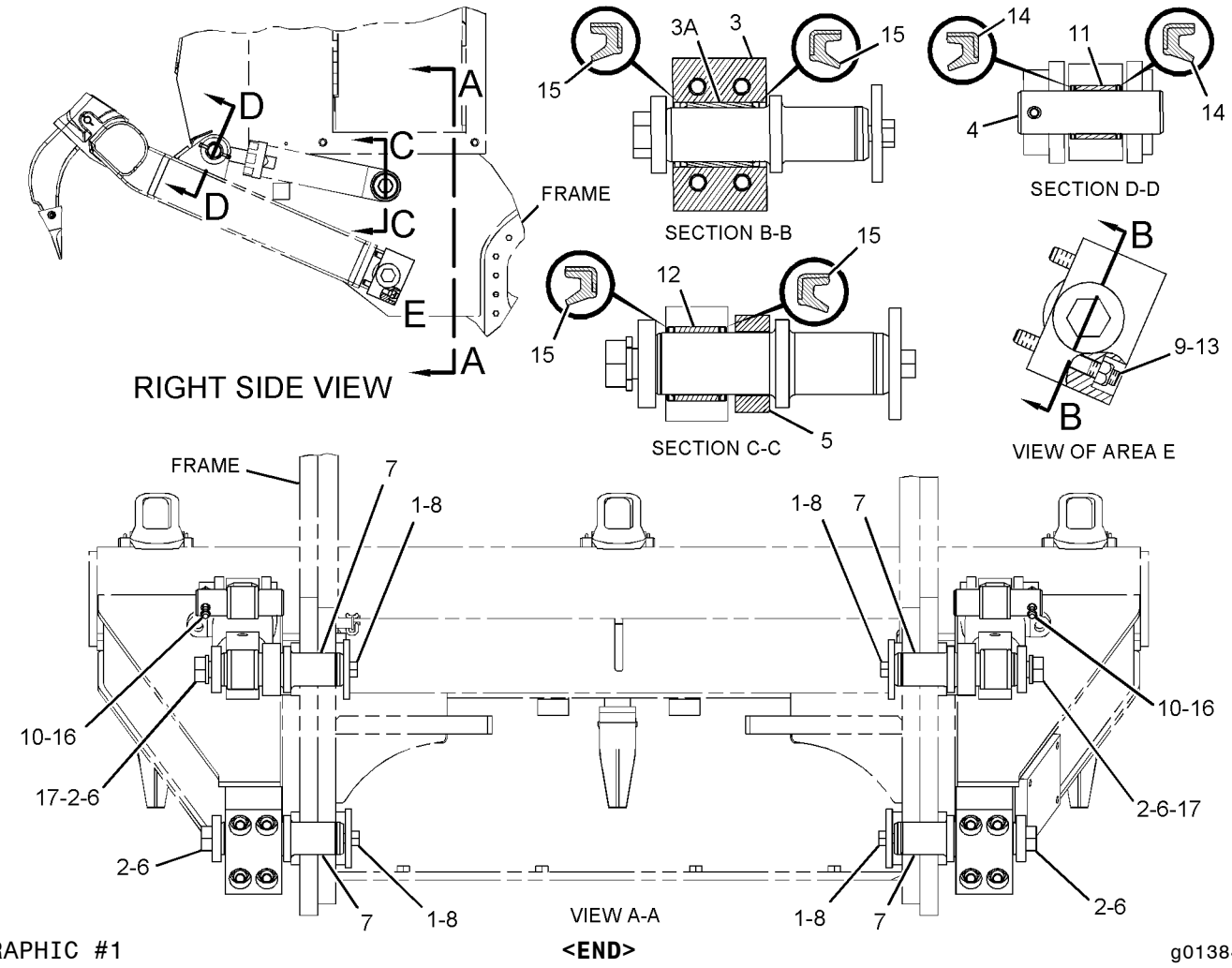

GRAPHIC #1

<END>

g01384145

WORK TOOLS

256-7612 RIPPER AR

S/N: 9JW1-UP

FOR USE WITH HYDRAULIC AR WITH REAR LINES. CANNOT BE USED WITH BUMPER GP, STRIKER BAR & STEP GP

AN ATTACHMENT

SMCS-6310 **i02676040**

NOTE	PART NUMBER	QTY	PART NAME 1 2 3 4 5 6 (PRODUCT LEVEL)	SEE PAGE
Y	**286-0814**	2	CYLINDER GP-RIPPER	429
Y	*293-6460*	1	GUARD GP-RIPPER	725
Y	*279-2040*	1	LINES GP-RIPPER	454
Y	*277-0535*	1	MOUNTING GP-RIPPER	726
Y	*277-0536*	1	RIPPER GP	730
	8M-3494	1	PLATE-SERIAL NUMBER (RIPPER)	
			ON CARRIAGE AS ON RH SIDE OF RH TOWER	
	4B-4158	2	SCREW-DRIVE (NO 4X1/4-IN)	
	193-5917	2	PLUG	
	2Y-5564	6	PLUG-BUTTON	

Y-SEPARATE ILLUSTRATION

<END>

WORK TOOLS

277-0536 RIPPER GP

S/N: 9JW1-UP
PART OF 256-7612 RIPPER AR
AN ATTACHMENT

SMCS-6310, 6325 **i02665355**

NOTE	REF NO	GRAPHIC REF	PART NUMBER	QTY	PART NAME 1 2 3 4 5 6 (PRODUCT LEVEL)	SEE PAGE
Y	1	1	*9J-1137*	3	TOOTH GP-RIPPER	735
	2	1	**277-0537**	1	CARRIAGE AS	
		1	**9J-1367**	1	HOLDER	

Y-SEPARATE ILLUSTRATION

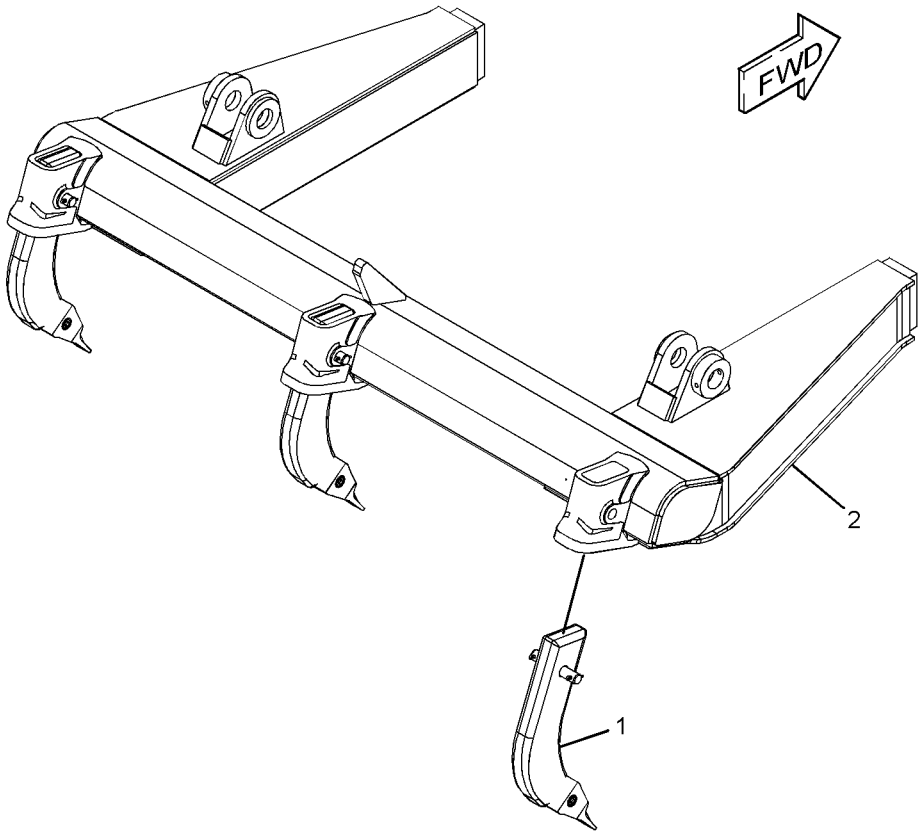

GRAPHIC #1 **<END>** g01343163

259-5590 TIP GP-EXTRA-DUTY–K-80

S/N: LBP1-UP

FOR USE WITH K-SERIES FLUSH MOUNTED TEETH BUCKET

AN ATTACHMENT

SMCS-6805 **i02666067**

NOTE	PART NUMBER	QTY	PART NAME 1 2 3 4 5 6 (PRODUCT LEVEL)	SEE PAGE
	220-9090	8	RETAINER-G.E.T.	
	220-9089	8	TIP-GENERAL PURPOSE (K-80)	

<END>

WORK TOOLS

257-1749 TIP GP-PENETRATION–K-80

S/N: LBP1-UP
FOR USE WITH 258-6897 BUCKET AS-GENERAL PURPOSE
AN ATTACHMENT

SMCS-6805 **i03608948**

NOTE	REF NO	GRAPHIC REF	PART NUMBER	QTY	PART NAME 1 2 3 4 5 6 (PRODUCT LEVEL)	SEE PAGE
	1	1	**8J-2933**	12	NUT (1-8-THD)	
	2	1	**220-9082**	8	TIP-PENETRATION (K-80)	
	3	1	**220-9090**	8	RETAINER-G.E.T. (K-90)	
	4	1	**222-1088**	1	ADAPTER-TIP (K-80, RH)	
	5	1	**222-1089**	1	ADAPTER-TIP (K-80, LH)	
	6	1	**229-7087**	6	ADAPTER-TIP (K-80, CENTER)	
	7	1	**2J-5997**	4	LOCKNUT (1-1/4-7-THD)	
	8	1	**6V-6535**	2	BOLT-PLOW (1-1/4-7X3.74-IN)	
	9	1	**6V-8360**	2	BOLT-PLOW (1-1/4-7X4.53-IN)	
	10	1	**8J-2928**	12	BOLT-PLOW (1-8X3.75-IN)	

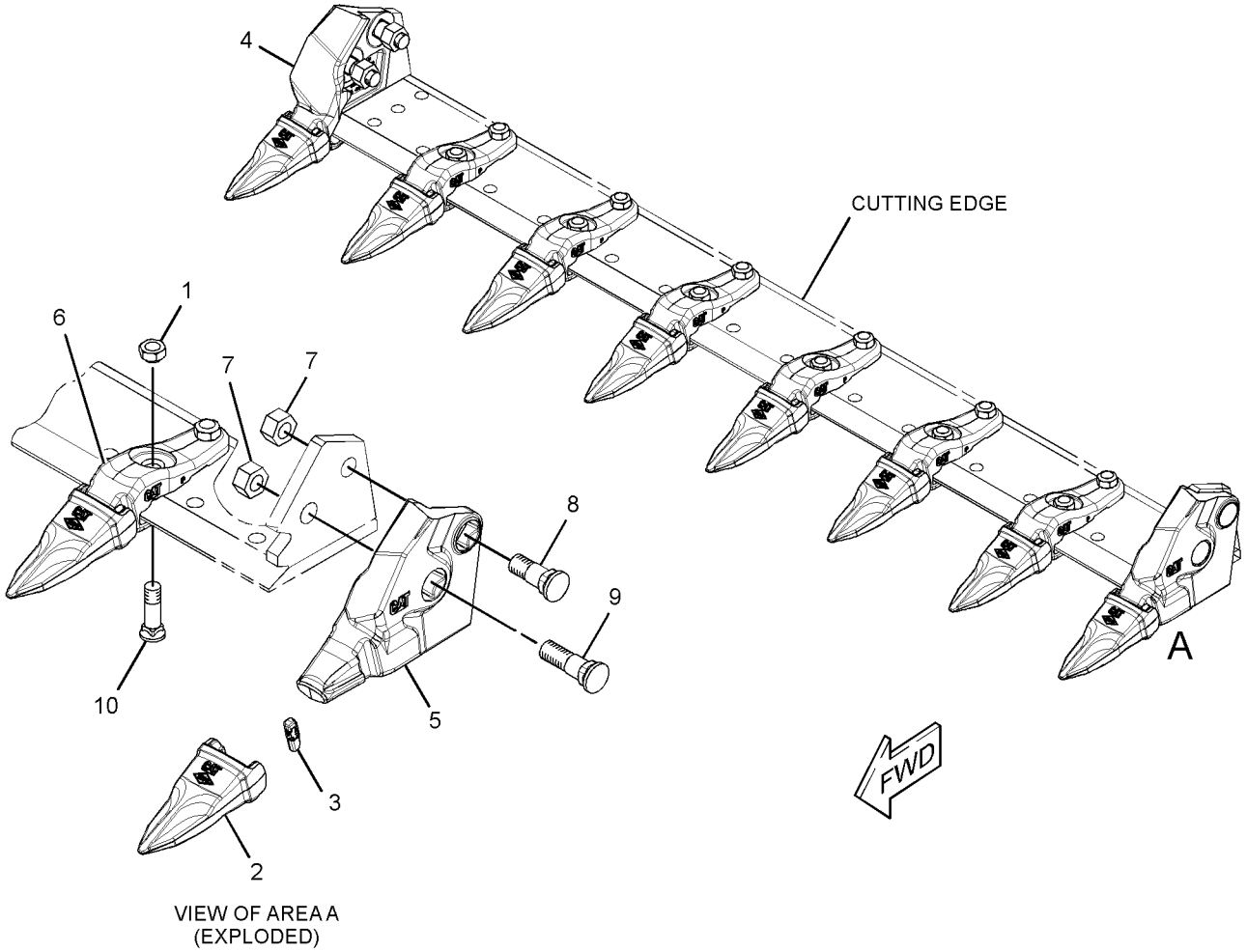

VIEW OF AREA A
(EXPLODED)

GRAPHIC #1 **<END>** g01323508

257-1747 TOOTH GP-LONG—K-80, EXTRA-DUTY

S/N: LBP1-UP

FOR USE WITH 258-6897—PAGE 714

AN ATTACHMENT

SMCS-6822 **i03608720**

NOTE	REF NO	GRAPHIC REF	PART NUMBER	QTY	PART NAME 1 2 3 4 5 6 (PRODUCT LEVEL)	SEE PAGE
	1	1	**8J-2933**	12	NUT (1-8-THD)	
	2	1	**220-9081**	8	TIP-EXTRA-DUTY (K-80)	
	3	1	**220-9090**	8	RETAINER-G.E.T. (K-90)	
	4	1	**222-1088**	1	ADAPTER-TIP (K-80, RH)	
	5	1	**222-1089**	1	ADAPTER-TIP (K-80, LH)	
	6	1	**229-7087**	6	ADAPTER-TIP (K-80, CENTER)	
	7	1	**2J-5997**	4	LOCKNUT (1-1/4-7-THD)	
	8	1	**6V-6535**	2	BOLT-PLOW (1-1/4-7X3.74-IN)	
	9	1	**6V-8360**	2	BOLT-PLOW (1-1/4-7X4.53-IN)	
	10	1	**8J-2928**	12	BOLT-PLOW (1-8X3.75-IN)	

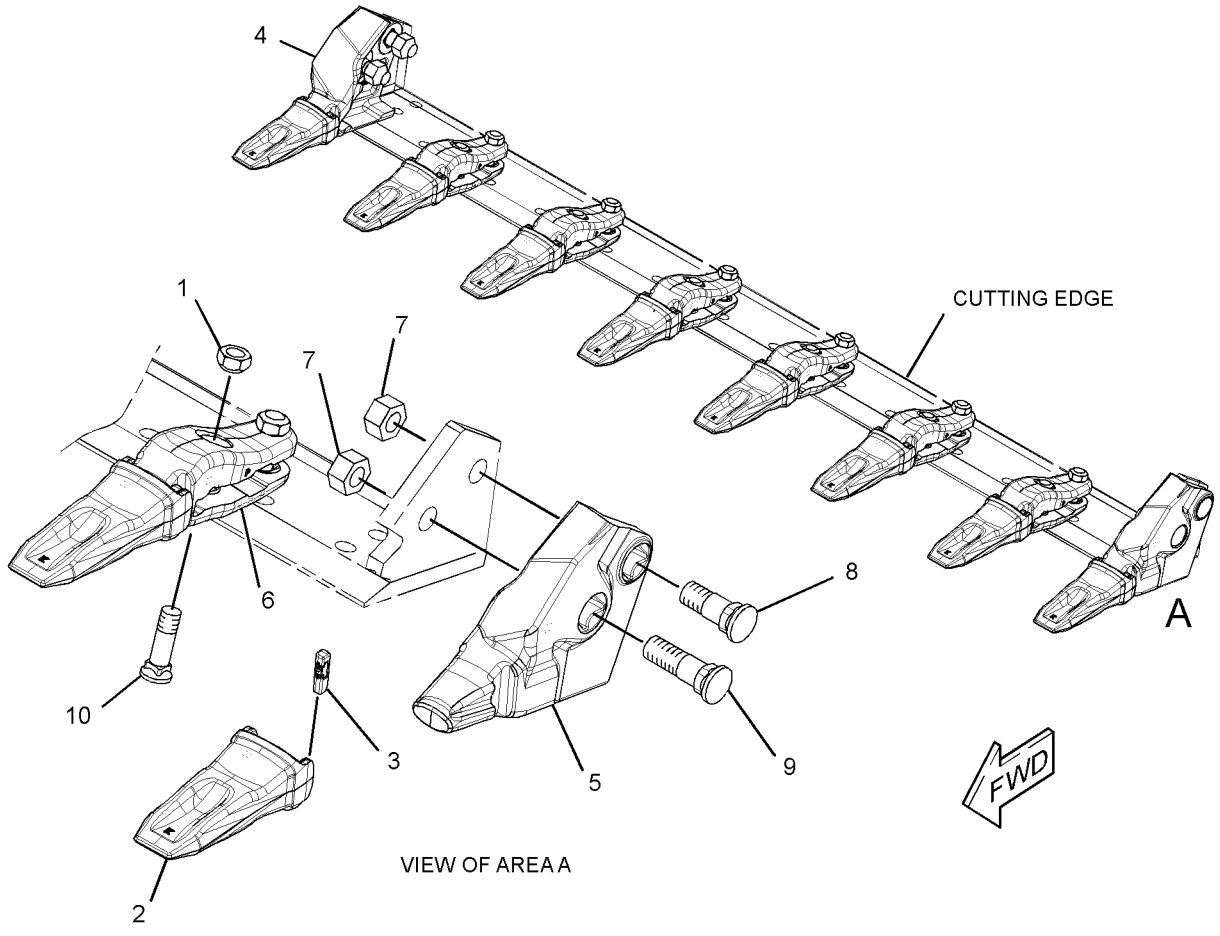

GRAPHIC #1 **<END>** g01305279

WORK TOOLS

257-1748 TOOTH GP-LONG–K-80

S/N: LBP1-UP

AN ATTACHMENT

SMCS-6822 **i03608853**

NOTE	REF NO	GRAPHIC REF	PART NUMBER	QTY	PART NAME 1 2 3 4 5 6 (PRODUCT LEVEL)	SEE PAGE
	1	1	**2J-5997**	4	LOCKNUT (1-1/4-7-THD)	
	2	1	**8J-2933**	12	NUT (1-8-THD)	
	3	1	**220-9089**	8	TIP-GENERAL PURPOSE (K-80)	
	4	1	**220-9090**	8	RETAINER-G.E.T. (K-90)	
	5	1	**222-1088**	1	ADAPTER-TIP (K-80, RH)	
	6	1	**222-1089**	1	ADAPTER-TIP (K-80, LH)	
	7	1	**229-7087**	6	ADAPTER-TIP (K-80, CENTER)	
	8	1	**6V-6535**	2	BOLT-PLOW (1-1/4-7X3.74-IN)	
	9	1	**6V-8360**	2	BOLT-PLOW (1-1/4-7X4.53-IN)	
	10	1	**8J-2928**	12	BOLT-PLOW (1-8X3.75-IN)	

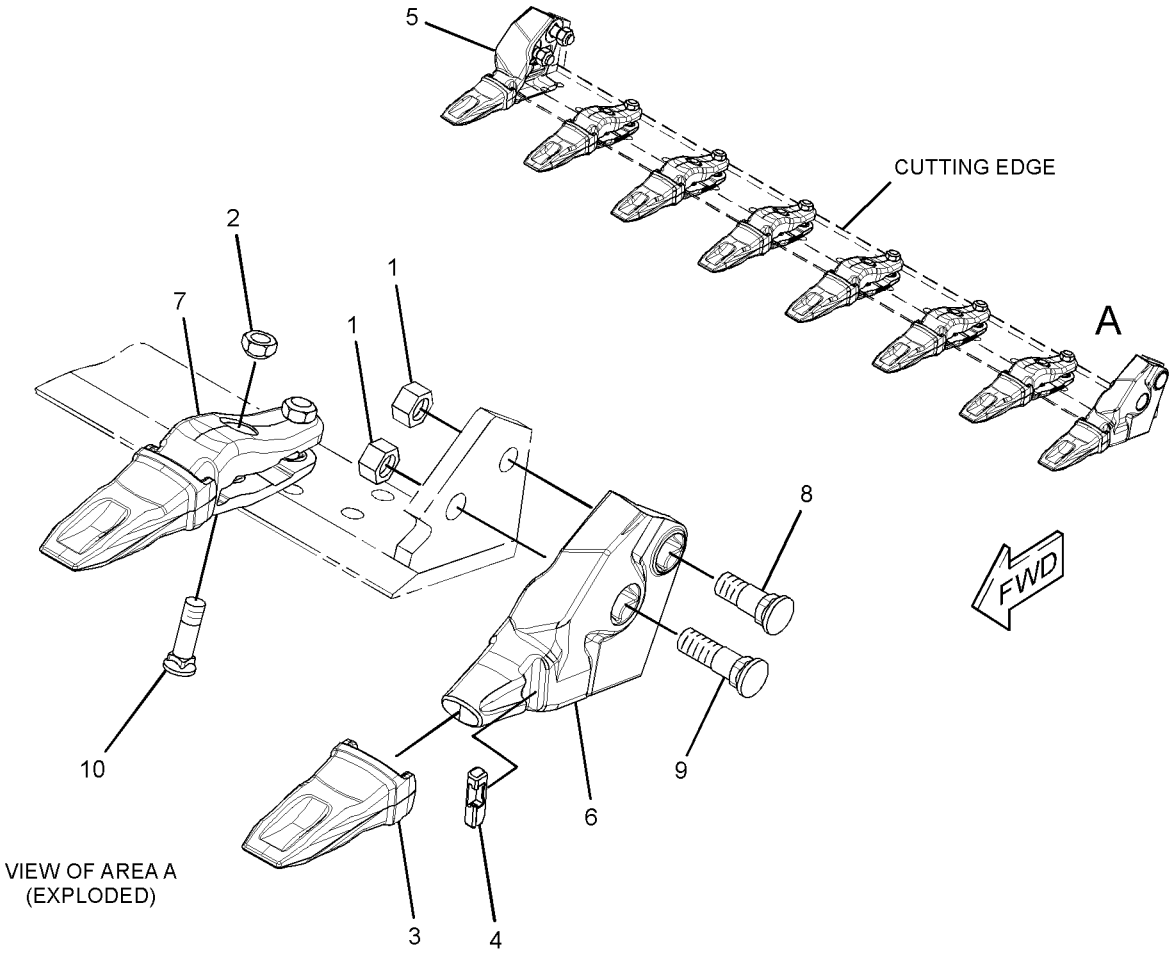

GRAPHIC #1 **<END>** g01382399

WORK TOOLS

9J-1137 TOOTH GP-RIPPER

S/N: 9JW1-UP
PART OF 277-0536 RIPPER GP
AN ATTACHMENT

SMCS-6808, 6810 **i01645919**

NOTE	REF NO	GRAPHIC REF	PART NUMBER	QTY	PART NAME 1 2 3 4 5 6 (PRODUCT LEVEL)	SEE PAGE
	1	1	**3B-4630**	2	PIN-COTTER	
	2	1	**3G-6049**	1	PIN	
	3	1	**1U-1257**	1	SHANK-RIPPER	
	4	1	**149-5733**	1	RETAINER AS (G.E.T.)	
	5	1	**9J-4259**	1	TIP-PENETRATION	
	6	1	**132-4763**	1	PIN	

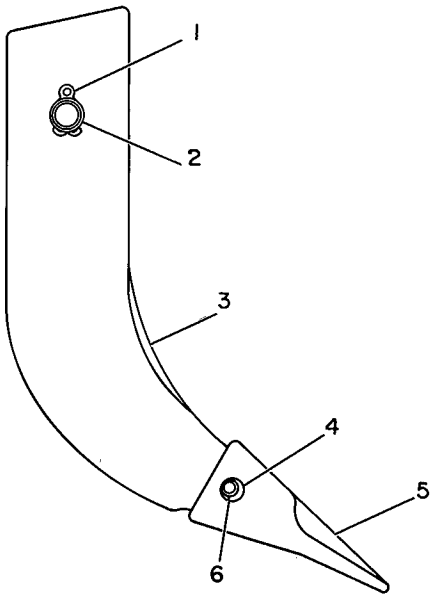

GRAPHIC #1 **<END>** g00145703

SERVICE EQUIPMENT AND SUPPLIES

283-5571 BOX GP-TOOL

S/N: LBP1-342

PART OF 251-1927 INSTALLATION GP-CAB

SMCS-7259 **i02662504**

NOTE	REF NO	GRAPHIC REF	PART NUMBER	QTY	PART NAME 1 2 3 4 5 6 (PRODUCT LEVEL)	SEE PAGE
	1	1	**188-8846**	1	LATCH AS	
	2	1	**294-3145**	1	BRACKET AS	
M		1	**8T-2321**	2	NUT-WELD (M8X1.25-THD)	
	3	1	**294-3146**	1	TOOL BOX AS	
	4	1	**294-3149**	1	SEAL	
M	5	1	**127-2170**	2	SCREW-TRUSS HEAD (M8X1.25X20-MM)	
	6	1	**5P-4116**	2	WASHER-HARD (8.8X20.5X2-MM THK)	
M	7	1	**8T-4200**	2	BOLT (M8X1.25X16-MM)	

M-METRIC PART

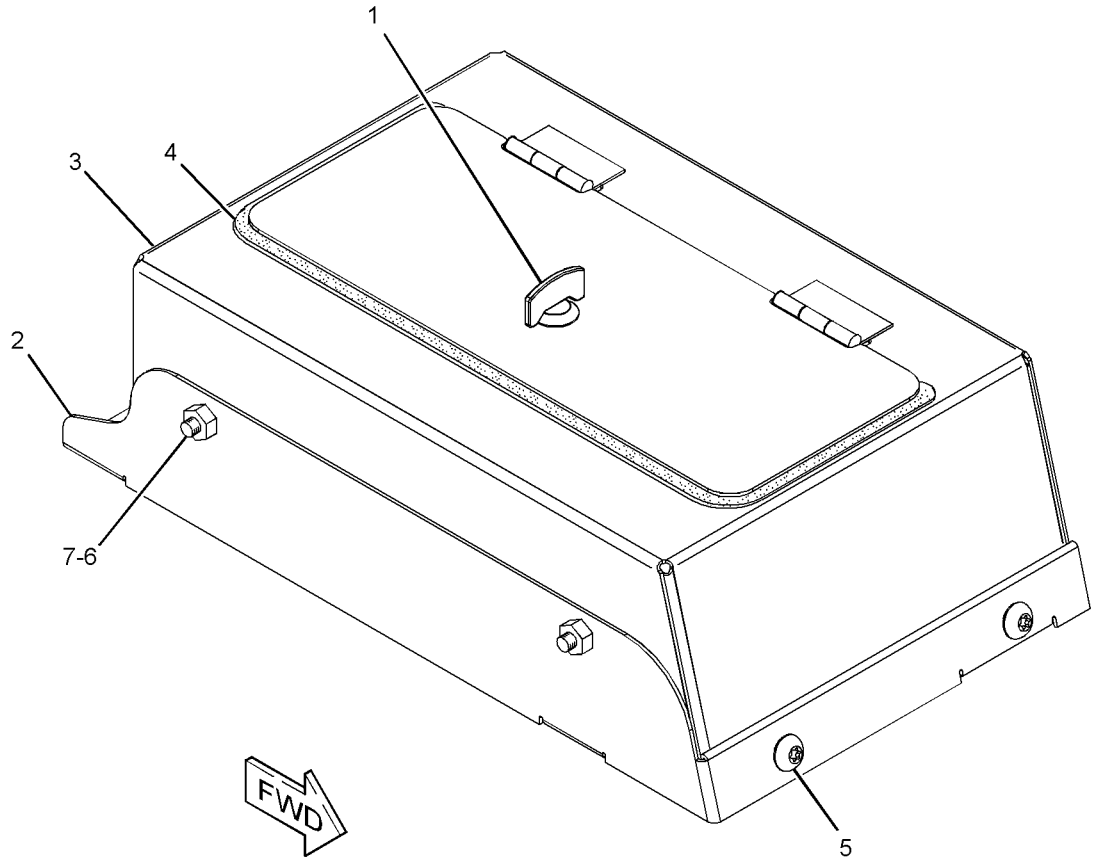

GRAPHIC #1 **<END>** g01339329

SERVICE EQUIPMENT AND SUPPLIES

296-3348 FILM GP

S/N: LBP1-UP

PART OF 242-7496 PLATE & FILM GP

SMCS-7405, 7557 **i02741389**

NOTE	REF NO	GRAPHIC REF	PART NUMBER	QTY	PART NAME 1 2 3 4 5 6 (PRODUCT LEVEL)	SEE PAGE
	1	1	**295-7790**	1	FILM-IDENTIFICATION (CAT, RH)	
	2	1	**307-2927**	1	FILM-IDENTIFICATION (CAT, LH)	
	3	1	**295-7835**	1	FILM-IDENTIFICATION (953D, LIFT ARM, RH)	
	4	1	**295-7834**	1	FILM-IDENTIFICATION (953D, LIFT ARM, LH)	
	5	1	**253-0861**	2	FILM-INFORMATION (CAT POWER, ACERT TECHNOLOGY)	
	6	1	**9X-2444**	1	FILM-IDENTIFICATION (CATERPILLAR)	

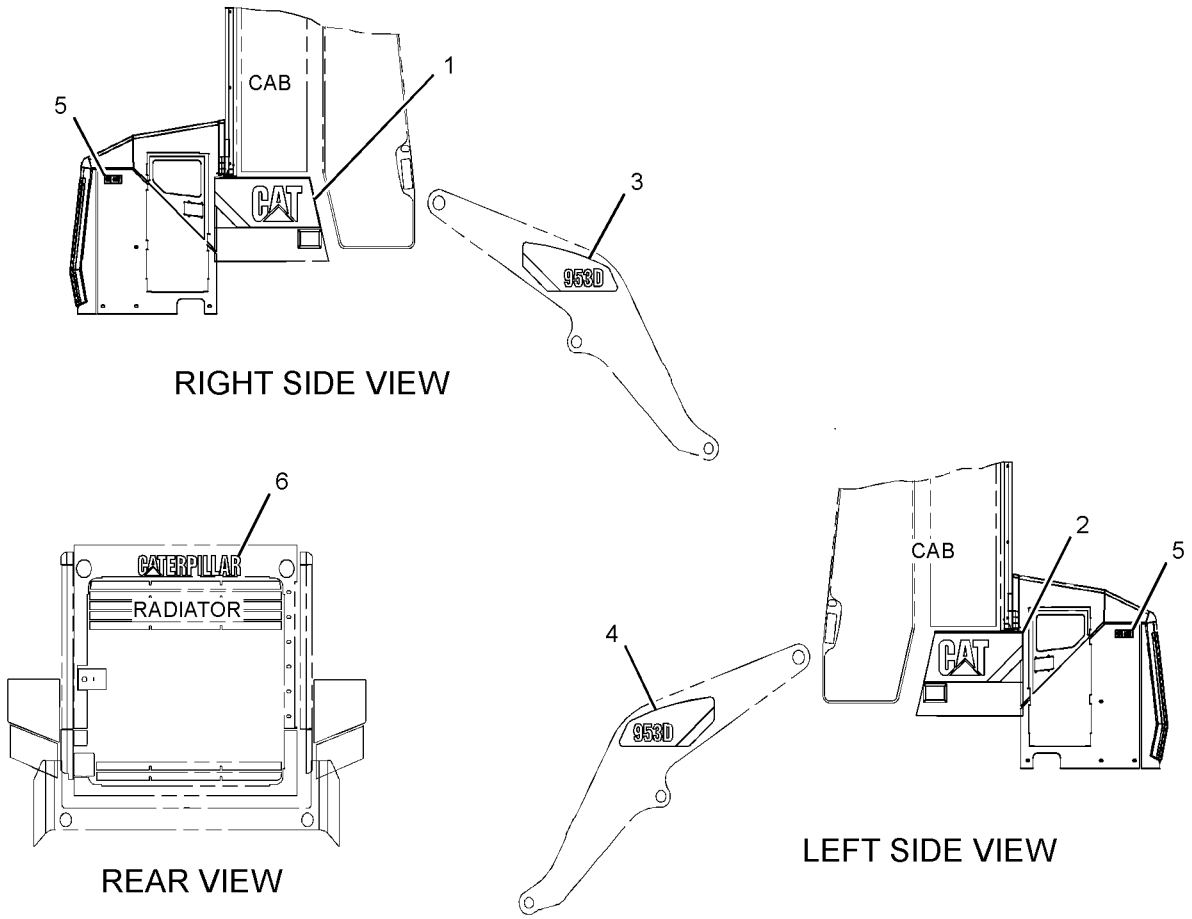

GRAPHIC #1 **<END>** g01385652

SERVICE EQUIPMENT AND SUPPLIES

327-7805 FILM GP

S/N: LBP1-UP

PART OF 327-7787 KIT-CAB

SMCS-7405, 7557 **i03588950**

NOTE	PART NUMBER	QTY	PART NAME 1 2 3 4 5 6 (PRODUCT LEVEL)	SEE PAGE
	164-9968	1	PLATE-IDENTIFICATION (SEQUENCE)	
			(INSIDE THE CAB ON PLATFORM AS AT THE LEFT OF THE DASH BELOW FILM SEAT BELT)	
	8M-7758	6	RIVET-POP	
	286-0200	1	FILM-INSTRUCTION (BUCKET CONTROLS)	
			(ON RIGHT HAND CONSOLE NEAR BUCKET CONTROL)	
	282-8719	1	FILM-INSTRUCTION (BUCKET CONTROLS) (MULTIPURPOSE)	
			(ON RIGHT HAND CONSOLE NEAR BUCKET CONTROL)	
	205-0826	1	FILM-INSTRUCTION (MACHINE SECURITY, CONSOLE)	
			(ON RIGHT HAND SIDE BELOW FUSE PANEL FILM)	
	309-9091	1	FILM-SPEED	
			(ON RIGHT HAND CONSOLE NEAR BUCKET CONTROL)	
	224-0554	1	FILM-WARNING (UNIVERSAL, READ OMM, INTL)	
			(INSIDE THE CAB ON LEFT SIDE PLATFORM AS ABOVE THE FILM WARNING SEAT BELT)	
	225-3305	1	FILM-WARNING (UNIVERSAL, READ OMM, U.S.)	
			(INSIDE THE CAB ON LEFT SIDE OF PLATFORM AS ABOVE THE FILM WARNING SEAT BELT)	
	260-7652	1	FILM-WARNING (PRODUCT LINK 300, U.S.)	
			(INSIDE THE CAB ON LEFT SIDE PLATFORM AS TO THE LEFT OF FILM SEAT BELT)	
	260-7653	1	FILM-WARNING (PRODUCT LINK, READ OMM)	
			(INSIDE THE CAB ON LEFT SIDE PLATFORM AS TO THE LEFT OF FILM SEAT BELT)	
	277-8367	2	FILM-WARNING (CRUSH HAZARD, READ OMM, U.S.)	
			(FOR A MACHINE EQUIPED WITH A CAB TILT MANUAL PUMP)	
			1-ON THE LH SIDE ON CAB TILT MANUAL PUMP IN A VIEWABLE AREA FROM THE FENDER ACCESS	
			1-ON RH SIDE OF C-POST BASE	
			(FOR A MACHINE WITHOUT A CAB TILT MANUAL PUMP)	
			1-ON RH & LH SIDE OF C-POST BASE	
	277-8368	2	FILM-WARNING (CRUSH HAZARD, READ OMM, INTL)	
			(FOR A MACHINE EQUIPED WITH A CAB TILT MANUAL PUMP)	
			1-ON THE LH SIDE ON CAB TILT MANUAL PUMP IN A VIEWABLE AREA FROM THE FENDER ACCESS	
			1-ON RH SIDE OF C-POST BASE	
			(FOR A MACHINE WITHOUT A CAB TILT MANUAL PUMP ONE ON LH ONE ON RH SIDE C-POST BASE)	
	289-1182	1	FILM-WARNING (CRUSH HAZARD, CAB TILT, INTL)	
			(ON THE LH SIDE OF THE MACHINE CLOSE TO THE LOCKING PIN AREA IN A VIEWABLE PLACE WHEN THE CAB IS SIGNIFICANTLY RAISED)	
	289-1183	1	FILM-WARNING (CRUSH HAZARD, CAB TILT, U.S.)	
			(ON THE LH SIDE OF THE MACHINE CLOSE TO THE LOCKING PIN AREA IN A VIEWABLE PLACE WHEN THE CAB IS SIGNIFICANTLY RAISED)	
	221-8045	1	FILM-WARNING (SEAT BELT, INTERNATIONAL)	
			(INSIDE THE CAB ON PLATFORM AS AT THE LEFT OF THE DASH BELOW FILM WARNING UNIVERSAL)	
	224-7717	1	FILM-WARNING (SEAT BELT, U.S.)	
			(INSIDE THE CAB ON PLATFORM AS AT THE LEFT OF THE DASH BELOW FILM WARNING UNIVERSAL)	
	219-0305	1	FILM-WARNING (NO WELD, NO DRILL, READ OMM)	

NOTE	PART NUMBER	QTY	PART NAME 1 2 3 4 5 6 (PRODUCT LEVEL)	SEE PAGE
			(INSIDE THE CAB ON UPPER B-POST)	

<END>

SERVICE EQUIPMENT AND SUPPLIES

274-4262 LINES GP-DIAGNOSTIC—REMOTE CONTROL

S/N: LBP1-UP

PART OF 240-6226 POWER TRAIN AR

SMCS-5057 **i02741376**

NOTE	REF NO	GRAPHIC REF	PART NUMBER	QTY	PART NAME 1 2 3 4 5 6 (PRODUCT LEVEL)	SEE PAGE
	1	1	**3S-2093**	11	STRAP-CABLE	
	2	2	**6V-0852**	9	CAP-DUST	
	3	1	**130-2531**	1	BRACKET AS	
M		1	**8T-3490**	1	NUT-WELD (M10X1.5-THD)	
	4	2	*164-5567*	9	COUPLER AS-QUICK DISCONNECT	
					(EACH INCLUDES)	
		2	**6V-3965**	1	FITTING (QUICK DISCONNECT)	
		2	**3J-1907**	1	SEAL-O-RING	
	5	1,2	**187-3547**	4	COUPLER AS-QUICK DISCONNECT	
	6	1,2	**187-9008**	4	CAP-DUST	
	7	1	**210-0691**	1	HOSE AS	
	8	1	**214-4643**	2	TAG-IDENTIFICATION (NUMBER ZERO)	
	9	1	**214-4644**	2	TAG-IDENTIFICATION (NUMBER THREE)	
	10	1	**214-4645**	2	TAG-IDENTIFICATION (NUMBER FIVE)	
	11	1	**214-4646**	2	TAG-IDENTIFICATION (NUMBER SIX)	
	12	1	**214-4647**	2	TAG-IDENTIFICATION (NUMBER EIGHT)	
	13	1	**214-4648**	2	TAG-IDENTIFICATION (NUMBER NINE)	
	14	1	**214-4653**	2	TAG-IDENTIFICATION (NUMBER TWO)	
	15	1	**236-3828**	1	HOSE AS	
	16	1	**254-1255**	1	HOSE AS	
	17	1	**257-8235**	1	HOSE AS	
	18	2	**274-4263**	1	HOSE AS	
I	19	1	**287-6014**	1	HOSE AS	
	20	1	**291-4218**	1	HOSE AS	
	23	1	**291-8068**	1	HOSE AS	
	24	2	**293-9267**	1	BRACKET	
	25	2	**298-5244**	1	BRACKET AS	
	27	2	*148-8318*	1	CONNECTOR AS	
		2	**6V-8634**	1	CONNECTOR	
		2	**3K-0360**	1	SEAL-O-RING	
		2	**6V-8397**	1	SEAL-O-RING	
	28	2	*148-8326*	3	CONNECTOR AS	
					(EACH INCLUDES)	
		2	**6V-9872**	1	CONNECTOR	
		2	**3J-7354**	1	SEAL-O-RING	
		2	**6V-8397**	1	SEAL-O-RING	
	29	2	*148-8336*	1	CONNECTOR AS	
		2	**6V-8636**	1	CONNECTOR	
		2	**3J-1907**	1	SEAL-O-RING	
		2	**6V-8397**	1	SEAL-O-RING	
	30	2	*148-8378*	2	ELBOW AS	
					(EACH INCLUDES)	
		2	**6V-8724**	1	ELBOW	
		2	**3J-1907**	1	SEAL-O-RING	
		2	**6V-8397**	1	SEAL-O-RING	
	31	2	**1S-0994**	2	CLIP	
	32	2	*260-9187*	10	CONNECTOR AS	
					(EACH INCLUDES)	
		2	**8T-9358**	1	CONNECTOR	
		2	**6V-8397**	1	SEAL-O-RING	
	33	1,2	**263-1244**	2	HOSE AS	
	34	1	**4D-7388**	2	CLIP	
	35	2	**5P-9297**	2	CLIP	
	36	1	**6D-3479**	1	CLIP	
	37	2	**6K-8179**	1	CLIP	
	38	2	**6V-9168**	10	NUT (11/16-16-THD)	

274-4262 **LINES GP-DIAGNOSTIC** *(contd.)* **i02741376**

NOTE	REF NO	GRAPHIC REF	PART NUMBER	QTY	PART NAME 1 2 3 4 5 6 (PRODUCT LEVEL)	SEE PAGE
M	39	2	**7X-2553**	2	BOLT (M16X2X40-MM)	
	40	2	**8M-2773**	2	CLIP	
	41	1	**8T-1889**	2	CLIP (SLOT)	
	42	1	**8T-1890**	2	CLIP (TAB)	
	43	1,2	**8T-4121**	12	WASHER-HARD (11X21X2.5-MM THK)	
M	44	1,2	**8T-4133**	5	NUT (M10X1.5-THD)	
M	45	1,2	**8T-4195**	10	BOLT (M10X1.5X30-MM)	
	46	2	**8T-7934**	3	WASHER-HARD (11X21X5-MM THK)	
	47	2	**9X-8257**	2	WASHER (17.5X30X3.5-MM THK)	
E	48	1	**9X-8705**		CONDUIT-FLEXIBLE (38-CM)	
	49	2	**270-1515**	1	FILM-IDENTIFICATION (PRESSURE TEST)	
	50	1	*148-8316*	1	CONNECTOR AS	
		1	**3J-7354**	1	SEAL-O-RING	
		1	**4J-5477**	1	SEAL-O-RING	
		1	**6V-8647**	1	CONNECTOR	
	51	1	*150-4047*	1	ADAPTER AS	
		1	**3J-7354**	1	SEAL-O-RING	
		1	**8T-2353**	1	ADAPTER	
	52	2	*241-6215*	1	ELBOW AS	
		2	**3J-1907**	1	SEAL-O-RING	
		2	**6V-8076**	1	ELBOW	
	53	1	**213-3745**	1	ELBOW	

E-ORDER BY THE CENTIMETER
I-REFER TO HYDRAULIC INFORMATION SYSTEM
M-METRIC PART

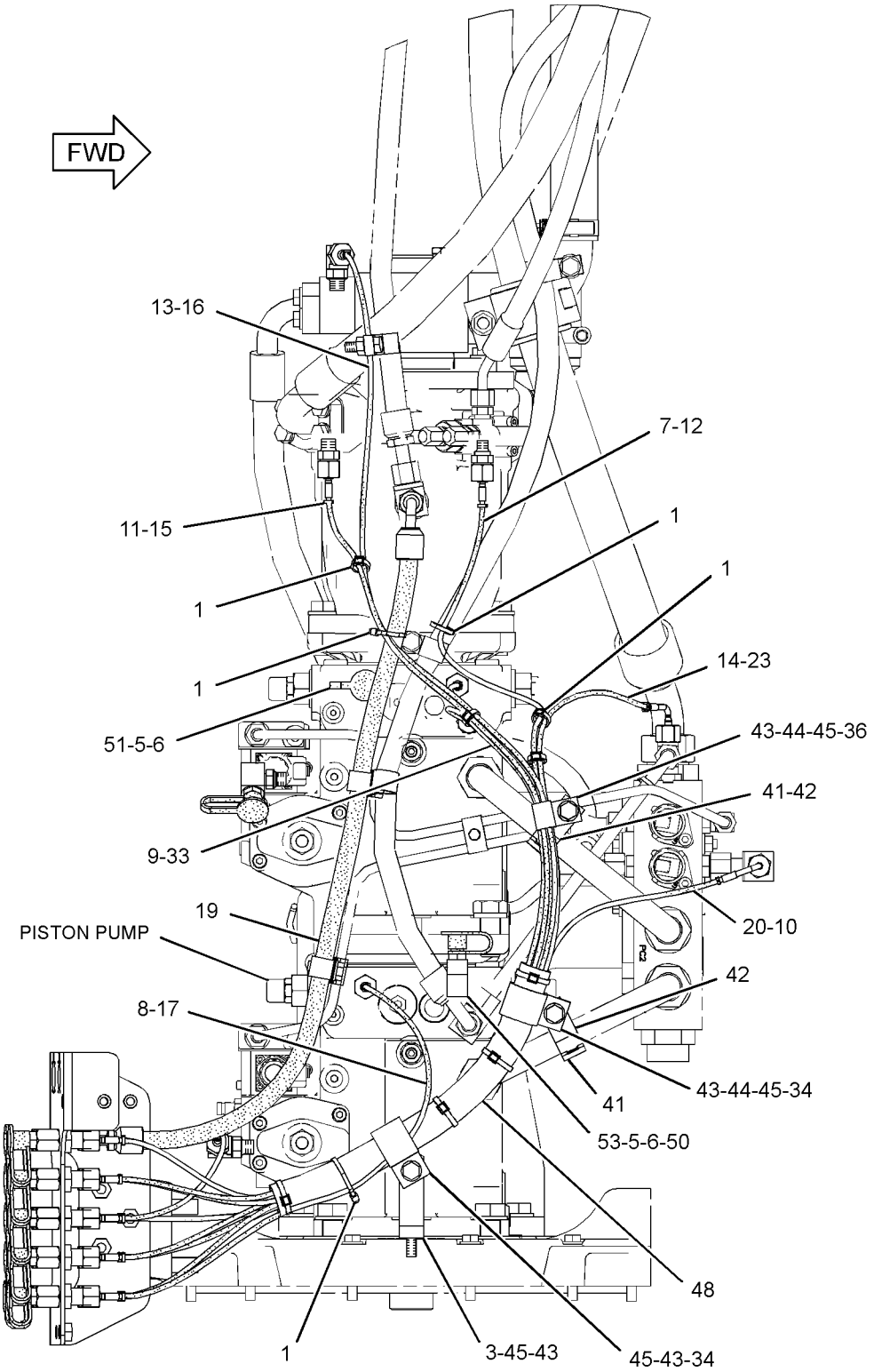

TOP VIEW

GRAPHIC #1

g01383631

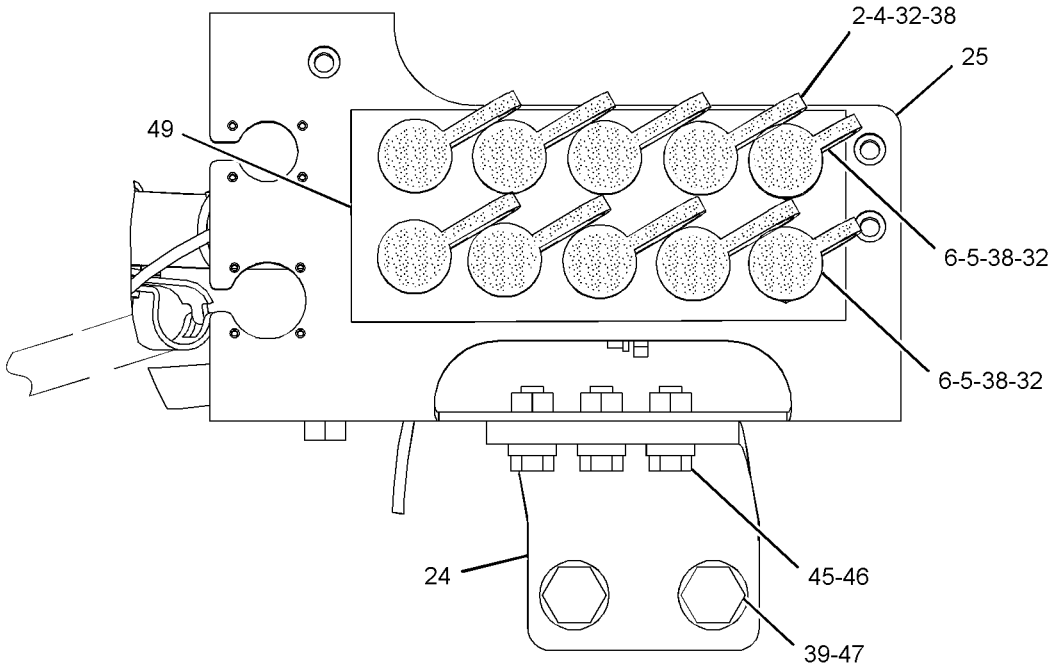

VIEW OF AREA A

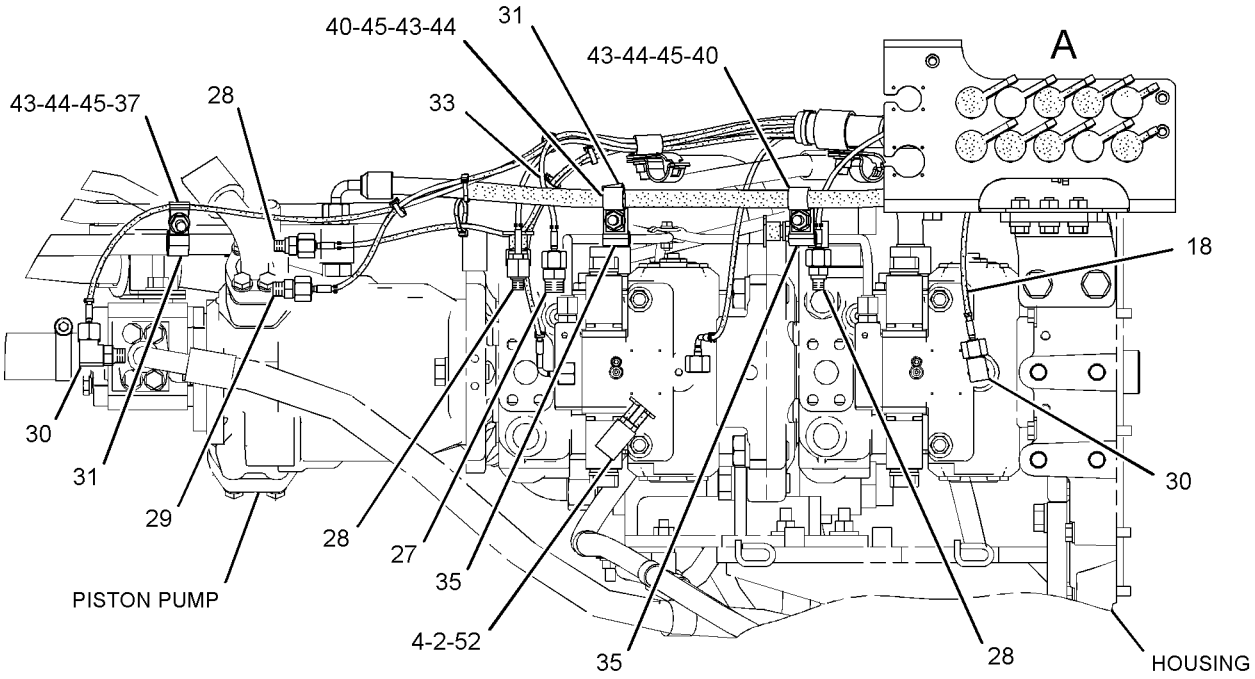

REAR VIEW

GRAPHIC #2 **<END>** g01383632

SERVICE EQUIPMENT AND SUPPLIES

242-7496 PLATE & FILM GP

S/N: LBP1-UP

PART OF 240-6225 CHASSIS AR

SMCS-7557, 7563 **i03608498**

NOTE	PART NUMBER	QTY	PART NAME 1 2 3 4 5 6 (PRODUCT LEVEL)	SEE PAGE
Y	*296-3348*	1	FILM GP	737
	239-6989	1	PLATE-SERIAL NUMBER (MACHINE)	
			(ON LH LOADER TOWER PLATE ABOVE LIFT ARM CYLINDER PIN)	
	225-4150	1	PLATE-SERVICE INFORMATION (MACHINE)	
			(ON THE PIN PLATE UNDER THE BAR CODE)	
	158-7864	1	FILM-IDENTIFICATION (HYDRAULIC OIL)	
			(NEAR THE HYDRAULIC OIL FILL TUBE)	
	295-9774	1	FILM-INFORMATION (LUBRICATION POINTS)	
			(INSIDE RH REAR DOOR, BETWEEN TWO FIXATIONS GREASE GUN)	
	1P-2807	2	FILM-INFORMATION (LIFT EYE LOCATION)	
			(ON TRACK ROLLER FRAMES, BETWEEN FRONT IDLER & ROLLER) (EACH SIDE)	
	7X-7644	6	FILM-INFORMATION (TIE-DOWN)	
			(2-ON SIDE OF TRACK ROLLER FRAME, NEAR FRONT LIFT SYMBOL (EACH SIDE)	
			(1-FRONT PULL HOOK EYES, TO RIGHT)	
			(1-FRONT PULL HOOK EYES, TO LEFT)	
			(2-ON REAR FINAL DRIVE GUARD (EACH SIDE) FOR MACHINE WITH RIPPER)	
	134-7258	2	FILM-INFORMATION (EXTENDED LIFE COOLANT,READ OMM)	
			(1-ON INSIDE OF DOOR TO RADIATOR FILL, THE TOP OF THE DECAL UNDERNEATH THE LOCK)	
			(1-INSIDE THE TRAP OF THE REAR GUARD BOTTOM, THE TOP OF THE FILM MUST BE AT THE BOTTOM OF THE TRAP)	
	9X-6340	1	FILM-INSTRUCTION (ENGINE OIL)	
			(ON RH SIDE OF ENGINE OIL FILLER TUBE)	
	211-0686	1	FILM-INSTRUCTION (BATTERY DISCONNECT)	
			(OVER SERVICE ELECTRIC DISCONNECT SWITCH IN ENCLOSURE NEAR BATTERY COMPARTMENT)	
	7X-3229	2	FILM-INSTRUCTION (LIFT EYE, TIE-DOWN LOCATION)	
			(ON REAR FINAL DRIVE GUARD (EACH SIDE) FOR MACHINE WITHOUT RIPPER)	
			(ON THE RIPPER BEAM AS (EACH SIDE) FOR MACHINE WITH RIPPER)	
	307-6202	1	FILM-INSTRUCTION (AIR FILTER SERVICE, READ OMM)	
			(ON AIR CLEANER END COVER ASSEMBLY)	
	190-5386	2	FILM-REFLECTOR (ROUND RED REFLECTIVE)	
			(ON THE LH AND RH SIDES AT THE REAR OF THE MACHINE)	

Y-SEPARATE ILLUSTRATION

<END>

SERVICE EQUIPMENT AND SUPPLIES

255-1044 PLATE & FILM GP—NACD

S/N: LBP1-UP

CANNOT BE USED WITH 255-1045—PAGE 746

AN ATTACHMENT

SMCS-7557, 7563 **i02942964**

NOTE	PART NUMBER	QTY	PART NAME 1 2 3 4 5 6 (PRODUCT LEVEL)	SEE PAGE
	224-7717	1	FILM-WARNING (SEAT BELT, U.S.)	
			(INSIDE THE CAB, ON PLATFORM AS, AT THE LEFT OF THE DASH)	
	225-0313	1	FILM-WARNING (JUMP START, READ OMM)	
			(ON THE HOLD DOWN BATTERY, WIRING GP STARTING)	
	225-3305	1	FILM-WARNING (UNIVERSAL, READ OMM, U.S.)	
			(INSIDE THE CAB, ON PLATFORM AS, BELOW THE FILM WARNING SEAT BELT	
	260-7652	1	FILM-WARNING (PRODUCT LINK 300, U.S.)	
			(INSIDE THE CAB ON THE PLATFORM AS, AT THE LEFT OF THE FILM-WARNING SEAT BELT)	
	277-8367	2	FILM-WARNING (CRUSH HAZARD, READ OMM, U.S.)	
			(FOR A MACHINE EQUIPED WITH A CAB TILT MANUAL PUMP)	
			(ONE-ON THE LH SIDE, ON CAB TILT MANUAL PUMP IN A VIEWABLE AREA FROM THE FENDER ACCESS)	
			(ONE-ON RH SIDE OF C-POST BASE)	
			(FOR A MACHINE WITHOUT A CAB TILT MANUAL PUMP)	
			(ONE-ON RH SIDE C-POST BASE)	
			(ONE-ON LH SIDE C-POST BASE)	
	289-1183	1	FILM-WARNING (CRUSH HAZARD, CAB TILT, U.S.)	
			(ON THE LH SIDE OF THE MACHINE, CLOSE TO THE LOCKING PIN AREA IN A VIEWABLE PLACE WHEN THE CAB IS SIGNIFICANTLY RAISED)	
	288-0661	2	FILM-WARNING (HOT FLUID UND PRESS, READ OMM)	
			(ONE ON INSIDE OF DOOR TO RADIATOR FILL,THE TOP OF THE DECAL UNDERNEATH THE LOCK)	
			(ONE INSIDE THE TRAP OF THE REAR GUARD BOTTOM, THE TOP OF THE FILM MUST BE AT THE BOTTOM OF THE TRAP)	
	299-7883	1	FILM-WARNING (DO NOT USE ETHER, READ OMM)	
			(NEXT TO THE FILM AIR CLEANER)	
	271-1368	4	PLATE-WARNING (HIGH PRESSURE, READ OMM)	
			(TWO ON INSIDE OF HYDRAULIC TRACK ADJUSTING ACCESS DOOR)	
			(TWO ON OUTSIDE OF HYDRAULIC TRACK ADJUSTING ACCESS DOOR)	

<END>

SERVICE EQUIPMENT AND SUPPLIES

255-1045 PLATE & FILM GP—INTERNATIONAL

S/N: LBP1-UP

CANNOT BE USED WITH 255-1044—PAGE 745

AN ATTACHMENT

SMCS-7557, 7563 **i02942965**

NOTE	PART NUMBER	QTY	PART NAME 1 2 3 4 5 6 (PRODUCT LEVEL)	SEE PAGE
	221-8045	1	FILM-WARNING (SEAT BELT, INTERNATIONAL)	
			(INSIDE THE CAB, ON THE PLATFORM ASSEMBLY, AT THE LEFT OF THE DASH)	
	224-0554	1	FILM-WARNING (UNIVERSAL, READ OMM, INTL)	
			(INSIDE THE CAB, ON THE PLATFORM AS, BELOW THE FILM WARNING SEAT BELT)	
	225-0312	1	FILM-WARNING (JUMP START, READ OMM)	
			(ON THE HOLD DOWN BATTERY, WIRING GP STARTING)	
	260-7653	1	FILM-WARNING (PRODUCT LINK, READ OMM)	
			(INSIDE THE CAB ON THE PLATFORM AS, AT THE LEFT OF THE FILM-WARNING SEAT BELT)	
	277-8368	2	FILM-WARNING (CRUSH HAZARD, READ OMM, INTL)	
			(FOR A MACHINE EQUIPPED WITH A CAB TILT MANUAL PUMP)	
			(1-ON THE LH SIDE, ON CAB TILT MANUAL PUMP IN A VIEWABLE AREA FROM THE FENDER ACCESS)	
			(1-ON RH SIDE C-POST BASE)	
			(FOR A MACHINE WITHOUT A CAB TILT MANUAL PUMP)	
			(1-ON LH SIDE C-POST BASE)	
			(1-ON RH SIDE C-POST BASE)	
	289-1182	1	FILM-WARNING (CRUSH HAZARD, CAB TILT, INTL)	
			(ON THE LH SIDE OF THE MACHINE, CLOSE TO THE LOCKING PIN AREA IN A VIEWABLE PLACE WHEN THE CAB IS SIGNIFICANTLY RAISED)	
	288-0662	2	FILM-WARNING (HOT FLUID UND PRESS, READ OMM)	
			(1-ON INSIDE OF DOOR TO RADIATOR FILL, THE TOP OF THE DECAL UNDERNEATH THE LOCK)	
			(1-INSIDE THE TRAP OF THE REAR GUARD BOTTOM, THE TOP OF THE FILM MUST BE AT THE BOTTOM OF THE TRAP)	
	293-9659	2	FILM-WARNING (UNIVERSAL, READ OMM)	
			(ON THE FRONT OF THE ENGINE EITHER SIDE OF THE TOP COVER)	
			(1-ON THE LH SIDE OF THE BASE SECTION)	
			(1-ON THE RH SIDE OF THE LID SECTION)	
	293-6467	2	FILM-WARNING (DO NOT USE ETHER, READ OMM)	
			(1-FORWARD OF THE INDUCTED ELBOW)	
			(1-NEXT TO THE FILM AIR CLEANER)	
	293-6468	1	FILM-WARNING (HIGH PRESSURE, READ OMM)	
			(ON THE FUEL MANIFOLD)	
	271-1369	4	PLATE-WARNING (HIGH PRESSURE, READ OMM)	
			(2-ON INSIDE OF HYDRAULIC TRACK ADJUSTING ACCESS DOOR)	
			(2-ON OUTSIDE OF HYDRAULIC TRACK ADJUSTING ACCESS DOOR)	

<END>

SERVICE EQUIPMENT AND SUPPLIES

258-9893 PLATE & FILM GP—BIODEGRADABLE HYDRAULIC OIL

S/N: LBP1-UP

SAE 10W

CANNOT BE USED WITH 257-4146 LUBRICANT GP-HYDRAULIC FLUID

AN ATTACHMENT

SMCS-7557, 7563 **i02665335**

NOTE	PART NUMBER	QTY	PART NAME 1 2 3 4 5 6 (PRODUCT LEVEL)	SEE PAGE
	141-6968	1	FILM-IDENTIFICATION (BIODEGRADABLE HYDRAULIC OIL)	
			NEAR THE IMPLEMENT HYDRAULIC OIL FILLER TUBE	

<END>

SERVICE EQUIPMENT AND SUPPLIES

327-7789 PLATE & FILM GP

S/N: LBP1-UP

PART OF 327-7787 KIT-CAB

SMCS-7557, 7563 **i03326765**

NOTE	REF NO	GRAPHIC REF	PART NUMBER	QTY	PART NAME 1 2 3 4 5 6 (PRODUCT LEVEL)	SEE PAGE
	1	1	**220-3261**	2	FILM-INSTRUCTION (CAB UNLOCK)	
	2	1	**283-1435**	1	FILM-IDENTIFICATION (SECURITY)	
	3	1	**310-6272**	1	FILM-IDENTIFICATION (ARTICULATION LOCK)	
	4	1	**321-3402**	2	PLATE	
	5	1	**321-3403**	1	BAFFLE	
	6	1	**321-3404**	1	BAFFLE	
	7	1	**110-6393**	1	PLATE-INSTRUCTION (AIR CONDITIONER)	
	8	1	**5P-4116**	8	WASHER-HARD (8.8X20.5X2-MM THK)	
M	9	1	**8T-4200**	8	BOLT (M8X1.25X16-MM)	

M-METRIC PART

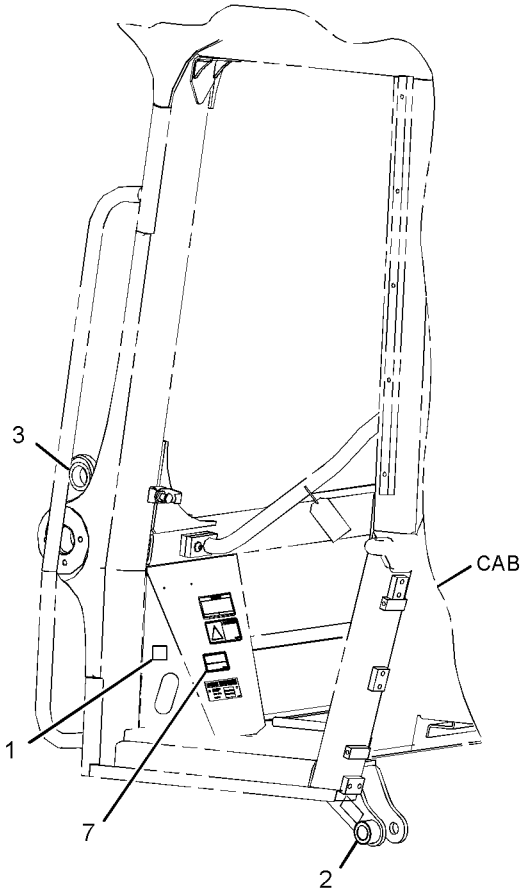

LEFT SIDE VIEW OF CAB

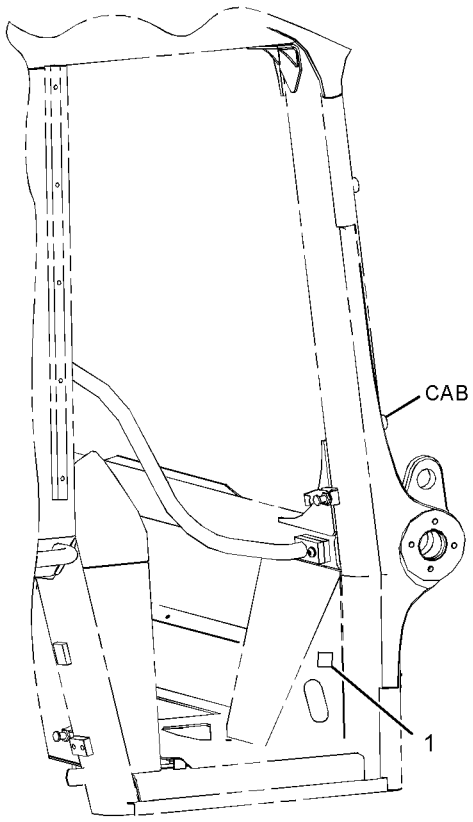

RIGHT SIDE VIEW OF CAB

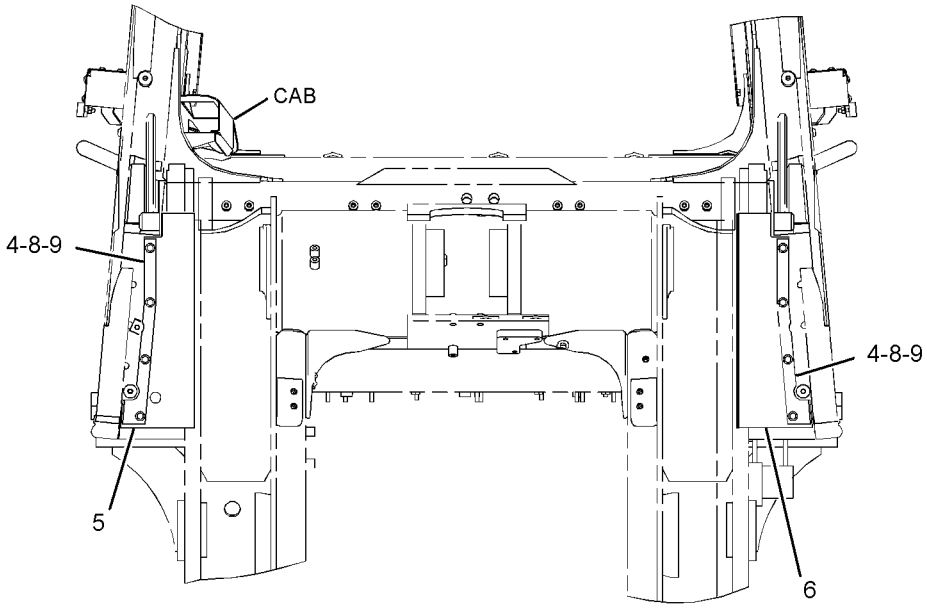

FRONT VIEW OF CAB

GRAPHIC #1 **<END>** g01708434

MEMORANDA

PART NUMBER INDEX

Part	Page
0	
0T-0489	678
1	
1B-3978	274
	277
	280
1B-3980	274
	277
	280
1B-8736	4
	20
	38
1D-5117	170
	590
1F-7567	651
	657
1G-3176	305
	307
1G-7407	285
	286
1G-8878	273
1H-3244	165
1H-6227	395
	397
1H-8128	115
	423
	429
1J-5607	723
	724
1J-9671	115
1K-6872	463
1K-7095	426
	427
1M-3097	395
	397
1M-4980	362
1M-6119	261
	264
1M-6120	261
	264
1M-9011	274
	277
	280
1P-2807	744
1P-2943	466
1P-3702	72
1P-3703	291
	443
1P-3704	291
1P-3705	468
1P-3709	447
1P-4278	151
	154
1P-4582	115
1P-5767	291
1P-6356	653
	655
1P-6872	472
1P-7009	122
1P-7326	254
	258
1S-0994	295
	416
	447
	740
1S-7251	261
	264
1S-7252	261
	264
1S-8947	395
	397
1U-0295	723
1U-1257	735
1U-2827	474
1U-7684	332
1V-3916	716
1V-7098	721
1V-8098	721
1W-7117	686
	691
2	
2B-0858	23
	25
	27
	69
2B-0941	464
2B-2695	545
2C-9259	721
2D-2751	102
2D-4867	508
2G-2885	326
	726
2G-7859	70
2G-8767	261
	264
2H-3725	726
2H-3920	240
2H-3922	218
2H-3928	407
	426
	427
2J-3507	723
	724
2J-5997	732
	733
	734
2J-6274	386
2K-0337	726
	727
2K-2939	274
	277
	280
2K-4821	165
2K-4973	688
	693
	726
2K-6830	423
	429
2K-8257	304
2K-9111	674
2K-9183	590
2L-6726	72
2L-8076	267
2M-2858	395
	397
2M-9780	72
	122
	151
	154
	158
	161
	298
	299
	429
	446
	454
	472
	485
	488
2P-0347	395
	397
2P-1293	63
2P-1692	285
	286
2S-3440	7
	92
2S-4078	75
	274
	278
	280
	287
	289
	293
	318
	439
	441
	443
	446
	449
	451
	456
	485
	488
2U-2552	512
	517
	626
	633
	649
2V-7177	721
2V-8259	225
	231
	237
	241
2W-1145	298
	299
2Y-5564	377
	729
2Y-5829	679
	681
3	
3B-4501	541
3B-4507	98
3B-4508	81
	84
3B-4630	735
3B-5319	362
3B-6488	464
3B-8489	387
	395
	397
	412
3D-2824	63
	287
	289
	293
	318
	439
	441
	443
	446
	449
	451
	456
	485
	488
3D-5279	251
3E-3365	164
3E-3371	207
	220
	254
	258
	259
3E-4051	653
	655
3E-4052	653
	655
3E-4057	653
	655
3E-4058	653
	655
3E-4066	653
	655
3E-4288	330
3E-4320	353
	354
	365
	366
3E-4321	651
	653
	655
	657
3E-4333	674
3E-4353	686
	691
3E-4367	223
	230
	235
3E-5169	246
	250
3E-5239	222
	223
	229
	234
	235
	240
	563
3E-5464	541
3E-6328	▶164
	223
	229
	240
3E-6760	283
	284
3E-6769	472

▶ **PRIMARY REFERENCE**

PART NUMBER INDEX

Part	Page
3E-6770	472
3E-7401	446
3E-7404	102
3E-7430	63
3E-7990	223
	230
	235
3E-8008	285
	286
3E-8020	513
	517
	597
	600
	602
	606
	608
	626
	633
	649
3E-8043	688
3E-8558	223
	230
	235
3E-9865	693
3F-9556	165
	660
3G-0361	474
3G-0472	726
	727
3G-1066	726
3G-1292	429
3G-1294	429
3G-1528	726
	727
3G-1583	726
	727
3G-1585	726
	727
3G-1587	726
	727
3G-2580	726
	727
3G-4428	▶723
3G-6049	735
3J-0634	298
	299
3J-1907	72
	151
	156
	163
	206
	247
	250
	273
	283
	284
	291
	295
	318
	321
	322
	323
	443
	446
	449
	451
	464
	485
	488
	740
	741
3J-2988	412
3J-7354	151
	154
	285
	286
	439
	441
	446
	468
	501
	740
	741
3K-0360	122
	154
	156
	158
	161
	163
	293
	295
	298
	299
	318
	390
	416
	435
	437
	443
	446
	447
	452
	454
	474
	740
3K-3042	449
	451
3K-9770	723
3P-1210	472
3P-8272	395
	397
3P-9900	688
3S-1349	661
3S-2093	154
	188
	189
	212
	217
	229
	235
	240
	541
	562
	563
	651
	657
	707
	710
	712
	740
3S-6049	261
	264
3S-6050	261
	264
3S-9182	274
	277
	280
3V-2431	427
	430
3V-4791	190
	192
	194
	204
3V-6035	721
3W-1573	341
3W-3321	590
3W-5159	274
	277
	280
3W-5436	274
	277
	280
3W-5447	274
	277
	280
3W-5451	274
	277
	280
3W-5928	274
	277
	280
3W-7482	390
3W-7486	412
3W-7514	412
3W-7515	386
3W-7519	386
3W-7522	386
3W-7523	412
3W-7549	407
3W-7559	387
3W-7561	▶387
	414
3W-7562	387
3W-8409	395
	397
3W-9849	508
	710
	712
4D-7388	212
	247
	250
	740
4D-7794	693
4D-9517	254
	259
4D-9986	188
	189
4F-2294	219
4F-3654	718
4F-4879	684
	685
4I-8019	610
	611
4J-0520	447
	456
4J-0527	115
4J-4606	430
4J-5267	468
4J-5309	476
	477
	478
	479
	480
	481
	482
	483
	484
4J-5477	115
	380
	383
	468
	741
4J-8982	395
	397
4K-9429	665
4L-6454	693
4P-7429	247
	250
4P-7581	115
	154
	161
	173
	174
	175
	176
	225
	231
	237
	241
	244
	247
	250
	256
	257
	258
	267
	541
	562
	571
4P-8134	115
	154

4

▶ **PRIMARY REFERENCE**

PART NUMBER INDEX

Part	Page
	158
	161
	188
	189
	225
	231
	237
	241
	244
	247
	250
	267
	287
	289
	529
	532
	535
	537
	562
	563
	653
	655
	707
	710
	712
4S-7762	412
4S-8264	70
4T-5613	423
	429
4T-8082	718
4T-8083	718
4T-8091	723
4T-9384	423
4T-9386	423
4T-9862	423
4V-2264	688
4V-8256	528
4V-8577	693
4V-8667	716
4V-8668	716
4W-3277	229
	241
5	
5A-3604	132
	133
	149
5B-0651	435
	437
	508
5B-3180	688
5B-9385	423
5C-2874	330
	513
	518
	596
	626
	633
	649
5C-2890	171
	186
	187
	222
	225
	231
	234
	237
	241
	295
	331
	332
	335
	338
	378
	513
	518
	563
	597
	610
	611
	649
	688
5C-6565	437
5C-7261	35
	154
	212
	214
	225
	231
	241
	247
	250
	332
	340
	348
	349
	350
	380
	383
	513
	518
	522
	524
	546
	547
	551
	621
	626
	633
	660
	666
	667
	707
	710
	712
5C-9553	102
	158
	161
	171
	196
	222
	513
	518
	541
	591
	593
	626
	633
5D-0718	287
	289
	651
	657
	659
5D-1026	7
	33
	72
5D-2643	721
5D-6543	421
	491
	492
	493
	494
5F-0149	277
	280
5F-0585	274
	277
	280
5F-0589	274
	277
	280
5F-9144	273
	421
	491
	492
	493
	494
5G-2881	550
5G-8267	718
5G-8269	718
5G-9672	386
5G-9677	387
5H-6734	115
5J-3488	430
5J-5731	426
	427
5J-7852	277
	280
5K-1568	474
5K-2697	439
	441
	443
5K-8451	122
	380
	383
5K-9090	293
	318
	439
	441
	443
	446
	456
5L-4751	387
5M-2057	474
5M-3062	435
5M-5000	395
	397
5M-6213	81
	84
5P-0537	663
	664
5P-0597	92
5P-0747	261
	264
5P-0761	261
	264
5P-0767	653
	655
5P-0998	339
5P-1075	435
5P-1076	75
	342
	344
	346
	352
	355
	356
	358
	359
	367
	369
	375
	451
	725
5P-2230	92
5P-2369	447
5P-3928	651
	657
5P-3929	653
	655
5P-3948	653
	655
5P-4106	651
	657
5P-4115	513
	518
	591
	593
	626
	633
	649
5P-4116	35
	72
	81
	84
	92
	154
	190
	192
	194
	212
	247
	250
	267
	342
	344
	346
	348
	349
	350
	351
	365
	366
	513
	518
	522
	524
	526
	529

► **PRIMARY REFERENCE**

PART NUMBER INDEX

Part	Page
	532
	591
	621
	626
	633
	641
	736
	748
5P-4423	693
5P-4566	464
5P-4920	274
	278
	281
5P-4921	274
	278
	281
5P-4961	72
5P-5623	246
	250
5P-5673	563
5P-5677	197
	224
	231
	236
5P-5991	151
	154
5P-6010	694
5P-6629	247
	250
5P-6875	512
	517
	625
	632
5P-7466	443
5P-7467	435
	437
	444
5P-7468	251
5P-7469	251
5P-7470	293
5P-7471	293
5P-7957	665
5P-7958	380
	383
5P-8112	444
5P-8182	293
5P-8245	34
	274
	278
	281
5P-8247	165
	389
5P-8250	423
5P-8500	550
	675
5P-9085	247
	251
5P-9119	102
5P-9147	274
	278
	281
5P-9209	590
	593
5P-9297	267
	740
5P-9436	318
5Q-5391	407
5Q-6023	407
5S-3676	274
	278
	281
5S-7349	165
5U-5745	659
5V-1496	528
	679
	681

6

Part	Page
6B-6684	81
	84
6C-3060	158
	161
6C-9149	327
6D-3479	154
	254
	258
	259
	740
6D-3534	33
6D-4246	657
6D-7889	132
	133
6E-0719	312
	314
6E-3263	472
6E-3264	472
6E-3265	472
6E-3283	298
	299
6E-4000	472
6E-4003	472
6E-4004	472
6E-4240	325
6E-4350	305
	307
6E-4385	305
	307
6E-4402	285
	286
	▶325
6E-4403	325
6E-4404	325
6E-6528	501
6F-0253	254
6F-7045	218
6F-7418	679
	681
6F-9974	691
6G-2256	261
	264
6G-2263	261
	264
6H-3615	508
6H-3616	339
6H-5139	474
6H-5829	550
6H-6429	75
6I-0217	7
	10
	13
	16
	38
	58
	60
	66
	77
	79
	106
	109
	112
	134
	139
	144
6I-0233	215
	216
6I-0254	58
	60
	77
	79
	134
	139
	144
6I-0260	44
	46
	48
	60
	66
	124
	128
	135
	139
	144
6I-0289	46
6I-0291	10
	13
	16
	18
6I-0456	124
	128
	134
	139
	144
6I-0563	106
	109
	112
6I-0572	44
	46
	48
6I-0593	106
	166
	168
6I-0594	66
6I-0645	38
	94
	95
6I-0650	38
6I-0654	41
	44
	46
	48
	106
	109
	112
6I-0817	106
	109
	112
6I-1090	64
6I-1201	60
6I-1418	176
	223
	229
	235
	240
6I-1497	44
	46
	48
6I-4079	44
6I-4200	166
	168
6I-4374	7
	58
	60
	135
	139
	144
6I-4681	44
	46
	48
6I-4709	66
6I-4793	134
	139
	144
6I-6033	621
6J-2245	208
	210
6J-2515	395
	397
6J-2797	423
	429
6K-4938	435
	437
6K-4939	435
	437
6K-6307	318
6K-8178	151
6K-8179	740
6M-5062	323
6R-7943	171
	675
6S-1066	251
6T-3631	220
	246
6T-3632	220
	246
	250
6T-3633	220
	246
	250
6T-6505	541
6T-7695	643
	644
	645
6V-0327	274

▶ **PRIMARY REFERENCE**

PART NUMBER INDEX

Part	Page	Part	Page	Part	Page	Part	Page
	277		484	6V-8398	271		664
	280	6V-5586	323		285	6V-8978	305
6V-0328	274	6V-5632	92		286		307
	277	6V-5683	323		293		417
	280	6V-5698	380		295		476
6V-0400	291		383		318		477
6V-0439	274	6V-5765	278		323		478
	277	6V-5839	474		416		479
	280	6V-5853	522		443		480
	390		524		444		481
6V-0852	273		707		446		482
	740	6V-6317	275		449		483
6V-0894	590		278		454		484
	593		281		485	6V-9003	485
6V-0937	317	6V-6339	501		488		488
6V-1228	653	6V-6535	732	6V-8400	75	6V-9006	75
	655		733		293	6V-9007	443
6V-1250	322		734		318	6V-9008	446
6V-1889	63	6V-6640	275		323	6V-9009	75
	287	6V-7357	295	6V-8523	72		293
	289		380	6V-8625	446	6V-9168	447
	468		383	6V-8626	454		740
6V-2452	275		621	6V-8634	740	6V-9169	449
	278	6V-7420	154	6V-8635	318	6V-9172	444
	281	6V-7732	474	6V-8636	151	6V-9182	158
6V-2496	542	6V-7744	262		295		161
6V-2722	170		265		318	6V-9189	199
6V-3378	287		474		446		200
	289		727		485	6V-9197	372
6V-3532	274	6V-7970	491		488		373
	277		497		740		621
	280	6V-7978	171	6V-8637	63	6V-9208	72
6V-3607	714	6V-8076	741		287	6V-9505	254
	718	6V-8185	693		289		258
6V-3823	275	6V-8187	171		293		259
	278	6V-8189	165		449	6V-9632	223
	281		545		451		229
6V-3940	565	6V-8200	472		485		235
	567	6V-8201	283		488		240
	569		284	6V-8638	454		541
	572	6V-8223	427	6V-8639	318		565
	575		430		416		621
6V-3965	273	6V-8225	336		443	6V-9669	512
	740		626	6V-8640	485		517
6V-3987	565		633		488		625
	567	6V-8237	430	6V-8647	468		632
	569	6V-8351	321		741	6V-9746	63
	572	6V-8352	325	6V-8714	293		158
	575	6V-8360	732		439		161
6V-4298	513		733		441		287
	518		734		443		289
	626	6V-8369	240		446		293
	633	6V-8397	72		456		318
	649		151	6V-8724	291		435
6V-4589	154		291		318		437
6V-5201	312		293		449		439
	314		295		451		441
6V-5326	476		318		740		443
	477		443	6V-8781	443		444
	478		446	6V-8784	318		449
	479		449	6V-8801	545		451
	480		451	6V-8928	597		468
	481		485		600		485
	482		488		602		488
	483		740	6V-8969	663	6V-9829	444

► **PRIMARY REFERENCE**

PART NUMBER INDEX

Part	Page
6V-9830	449
6V-9837	295
6V-9844	293
6V-9854	443
6V-9872	151
	446
	740
6V-9873	485
	488
6W-0058	659
6W-9917	435
	437
6W-9918	435
	437
6Y-0473	401
	402
	403
	404
	405
	406
6Y-0846	413
6Y-0859	277
	280
7	
7B-0863	363
7B-2289	726
7B-3028	390
7B-3039	474
7C-1281	16
	18
7C-4354	247
	250
7C-4355	72
7C-4616	38
7C-7241	212
7D-7233	247
7D-7453	686
	691
7D-7519	275
	278
	281
7D-9014	302
7D-9708	686
	691
7E-2707	295
7F-0560	170
7F-8268	395
	397
7F-8607	653
	655
7G-1060	246
	250
7G-3832	449
	451
7G-3833	449
	451
7G-3834	449
	451
7G-8839	371
7I-2272	231
	241
7J-3216	387
7J-5639	429
7J-6285	303
	447
7J-6461	423
	429
7J-6469	423
	429
7J-8956	274
	277
	280
7J-9108	295
	435
	437
	449
	451
	454
	468
	485
	488
7J-9688	423
7K-1181	154
	173
	174
	175
	176
	190
	192
	194
	212
	217
	222
	223
	229
	234
	235
	240
	244
	246
	250
	254
	256
	257
	258
	259
	261
	264
	267
	287
	512
	517
	532
	535
	537
	539
	571
	604
	625
	632
	649
	653
	655
	657
	672
	673
	707
	710
	712
7K-3176	651
	657
7K-3304	651
	657
7K-3422	726
	727
7K-9201	386
7K-9202	463
7K-9203	395
	397
	721
	726
	727
7K-9204	463
	508
7K-9205	387
	508
	726
	727
7K-9208	508
7K-9209	508
7K-9210	508
7K-9216	508
7L-0688	693
7M-6425	72
7M-8485	158
	161
	318
	446
7N-0296	212
7N-0718	▶218
	261
	264
7N-5274	261
	264
7N-9801	221
7P-3454	508
7P-3466	508
7P-6596	387
7P-6832	508
7P-6833	508
7P-6984	387
7P-7235	395
	397
7P-7245	386
7P-7333	386
7P-7368	394
7P-7428	395
	397
7P-7732	411
7P-7733	412
7P-7736	386
7P-9571	274
	277
	280
7T-0094	223
	230
	235
7T-1099	212
7T-3501	395
	397
7T-4532	561
7T-6799	223
	229
	240
7T-8890	698
7T-9302	240
7W-2632	134
	139
	144
7W-4313	688
7X-0289	545
7X-0292	726
7X-0311	395
	397
7X-0333	463
7X-0365	718
7X-0448	718
7X-0466	412
7X-0515	626
	633
7X-0533	726
7X-0549	346
7X-0563	395
	397
7X-0578	70
	548
	552
	555
	565
	567
	569
	572
7X-0579	154
	176
	231
	237
	241
7X-0582	718
7X-0583	341
	463
7X-0591	166
	168
7X-0603	621
7X-0620	513
	518
	626
	633
	649
7X-0772	70
7X-0818	225
	231
	237
	241
7X-1448	72
	464
7X-2459	291
7X-2475	392
	393
7X-2533	197
7X-2534	173
	174
	175
7X-2539	707
7X-2540	710
	712
7X-2543	727
7X-2545	552

▶ **PRIMARY REFERENCE**

PART NUMBER INDEX

Part	Page
	555
7X-2546	548
	552
	555
7X-2552	328
	329
7X-2553	75
	741
7X-2554	43
	278
	281
7X-2555	43
	390
7X-2562	387
7X-2563	327
	407
7X-2564	275
	278
	281
7X-2569	327
7X-2575	361
	362
7X-2576	326
	329
	727
7X-2619	675
7X-2622	329
	727
7X-2906	283
	284
7X-3151	387
7X-3229	744
7X-3392	447
7X-6222	223
	230
	235
7X-6315	178
	179
7X-7644	744
7X-7702	659
7X-7729	81
	84
	96
	115
	261
	262
	264
	265
	293
	331
	332
	335
	336
	338
	340
	342
	344
	346
	348
	349
	350
	351
	358
	359
	367
	369
	372
	373
	378
	444
	447
	449
	451
	456
	468
	513
	518
	522
	524
	529
	532
	535
	537
	591
	593
	621
	626
	633
	641
	659
	672
	673
	675
	707
	710
	712
7X-7958	72
7Y-0468	528
7Y-5221	304
7Y-7388	666
	667
7Y-7992	371

8

Part	Page
8C-3056	171
	246
8C-3205	468
8C-3206	447
	456
8C-3236	661
8C-3445	65
8C-3446	468
8C-3451	468
8C-3681	72
8C-3756	541
	563
8C-5607	190
	192
	194
	197
8C-5608	190
	192
	194
	197
8C-6354	224
	231
	236
8C-6358	170
8C-6438	156
	163
8C-6868	72
8C-7110	472
8C-8451	190
	192
	194
	225
	231
	237
	241
8C-8514	541
8C-8580	497
8C-8585	378
	679
	681
8C-9160	423
	429
8E-5302	714
	718
8E-5303	714
	718
8E-5450	387
8F-9206	653
	655
8F-9538	323
8G-0841	464
8G-0932	395
	397
8G-0935	395
	397
8G-1098	508
8G-1105	508
8G-1258	274
	277
	280
8G-1259	274
	277
	280
8G-4022	508
8G-4027	508
8G-4392	274
	277
	280
8G-4565	274
	277
	280
8G-4568	274
	277
	280
8G-4569	274
	277
	280
8G-8331	508
8H-5303	218
8H-5306	218
8H-7521	302
	303
8I-1362	72
8J-0412	472
8J-1256	575
8J-1688	430
8J-1689	430
8J-2413	502
	503
	504
8J-2928	732
	733
	734
8J-2933	732
	733
	734
8J-5667	423
8J-7415	429
8J-8489	423
8J-8782	474
8J-8783	474
8L-2779	132
	149
	506
8L-8413	693
8M-2773	247
	250
	464
	468
	653
	655
	741
8M-2784	225
8M-3494	729
8M-7758	512
	517
	581
	596
	738
8N-0869	224
	230
	235
	261
	264
8N-1725	261
	264
8P-6652	395
	397
8R-8847	341
8S-0023	75
8S-0024	75
8S-0948	72
	653
8S-1069	463
8T-0075	446
8T-0078	287
	289
8T-0154	72
	624
	653
	655
	659
8T-0267	247
	250
8T-0277	674
8T-0281	389
8T-0285	444
	449
	451
8T-0309	115
8T-0325	225
8T-0328	225
	231
	241

► **PRIMARY REFERENCE**

PART NUMBER INDEX

Part	Page
	244
	590
	593
8T-0338	322
8T-0352	244
8T-0357	626
	633
8T-0376	151
8T-0389	484
8T-0666	430
8T-1158	271
	417
	460
8T-1687	454
8T-1885	485
	488
8T-1886	485
	488
8T-1887	468
	485
	488
8T-1888	468
	485
	488
8T-1889	267
	439
	441
	444
	449
	451
	454
	456
	741
8T-1890	267
	439
	441
	444
	449
	451
	454
	456
	741
8T-1905	485
	488
8T-2321	736
8T-2353	741
8T-2502	437
8T-2525	251
8T-2530	295
8T-2561	435
8T-3282	274
	277
	280
8T-3298	474
8T-3490	115
	122
	225
	229
	241
	340
	342
	344
	346
	359
	378
	468
	537
	565
	649
	651
	657
	740
8T-3518	170
8T-3519	170
8T-3597	342
	355
	356
8T-3611	318
8T-3612	380
	383
8T-3647	485
	488
8T-3957	302
	303
8T-4121	40
	63
	70
	72
	75
	81
	84
	92
	96
	98
	115
	122
	151
	154
	158
	161
	212
	225
	231
	237
	241
	244
	247
	250
	262
	265
	267
8T-4122	387
	390
	392
	393
	394
	399
	513
	518
	626
	633
	649
8T-4123	43
	275
	278
	281
	293
	301
	304
	407
8T-4127	225
	439
	441
	444
	447
	449
	451
	454
	456
	466
	468
	474
	485
	488
	513
	518
	522
	524
	529
	532
	535
	537
	541
	548
	552
	555
	563
	590
	593
	612
	614
	616
	618
	626
	633
	638
	649
	651
	653
	655
	657
	675
	679
	681
	683
	741
8T-4130	625
	632
8T-4132	394
8T-4133	63
	72
	75
	122
	154
	247
	250
	262
	265
	267
	287
	289
	293
	295
	331
	332
	380
	383
	439
	441
	444
	447
	449
	451
	454
	456
	468
	485
	488
	522
	524
	529
	532
	535
	537
	590
	593
	610
	611
	612
	614
	616
	618
	621
	626
	633
	675
	741
8T-4136	63
	72
	81
	84
	92
	115
	122
	151
	262
	265
	267
	335

► **PRIMARY REFERENCE**

PART NUMBER INDEX

Part	Page	Part	Page	Part	Page	Part	Page
	340		194		655		526
	358		225	8T-4182	287		529
	367		231		289		532
	369		237		449		621
	372		241		451		675
	373		244	8T-4183	75	8T-4189	90
	444		563		115		92
	449	8T-4139	327		157		154
	451		333		160		190
	456		334		262		192
	468		355		265		194
	485		356		358		225
	488		360		359		231
	513		367		367		237
	518		369		369		241
	591		387		371		247
	593		390		375		250
	621		392		407		365
	626		393		447		366
	633		410		449		380
	649		411		451		383
8T-4137	63		444		468		529
	70		529	8T-4184	81		532
	72		532		84		551
	98		535		115		591
	115		537		291		621
	122		539		342	8T-4190	326
	212		661		344	8T-4191	96
	225		662		346		115
	231		675	8T-4185	81		158
	237		725		84		161
	241	8T-4140	275		262		225
	247		297		265		231
	250		363		287		237
	262		392		289		241
	265		393		444		244
	267		399		447		247
	275	8T-4141	275		464		250
	278		278		468		524
	281		281		590	8T-4192	355
	328		293	8T-4186	40		356
	329	8T-4167	361		70		375
	335		362		72		376
	336		363		212		392
	338		727		287		393
	339	8T-4171	70		289		407
	340		225		342		451
	346		231		344	8T-4193	367
	350		237		346		369
	351		241		348		390
	365		610		349	8T-4194	70
	366		611		350		291
	444	8T-4172	447		351		293
	454	8T-4173	464		367		342
	474	8T-4176	275		369		344
	542		278		373		346
	563		281		439		355
	593	8T-4178	468		441		356
	621		548		456	8T-4195	63
	638		552		464		81
	641		555		467		84
	651	8T-4179	247		468		92
	657		250		508		96
8T-4138	190		352		522		98
	192		653		524		115

► **PRIMARY REFERENCE**

PART NUMBER INDEX

Part	Page	Part	Page	Part	Page	Part	Page
	154		171		675		342
	244		188	8T-4224	35		344
	247		189		88		346
	250		214		90		371
	267		247		150		563
	335		250		165	8T-4910	342
	341		513		171		344
	342		518		176		346
	344		626		188	8T-4956	262
	346		633		189		265
	348		638		199		333
	349		641		200		334
	350		649		202		394
	351		736		212	8T-4970	675
	358		748		214	8T-4971	150
	359	8T-4205	150		225		612
	367		165		231		614
	369		171		237		616
	373		173		241		618
	380		174		335	8T-4983	287
	383		175		338		289
	386		196		340		468
	439		225		371		597
	441		231		380		600
	449		237		383		602
	451		241		485	8T-5005	444
	454		513		488		447
	468		518		513		468
	522		542		518	8T-5049	302
	524		563		522		303
	529		626		524	8T-5360	678
	532		633		546		688
	535	8T-4223	75		547	8T-5361	412
	537		115		551	8T-5373	63
	626		247		552	8T-5400	707
	633		250		555		710
	649		291		562		712
	653		293		563	8T-5413	122
	655		327		626		380
	659		360		633		383
	675		376		638	8T-5433	421
	683		387		649	8T-5439	275
	741		390		666		278
8T-4196	70		392		667		281
	81		393		693		387
	84		394	8T-4229	575		508
	96		395	8T-4244	75	8T-5878	362
	98		397		293		363
	287		407		395	8T-5913	698
	289		410		397	8T-5914	698
	449		411	8T-4648	291	8T-6378	274
	451		435		395		277
	679		444		397		280
	681		463	8T-4778	363	8T-6379	274
8T-4197	546		468		464		277
	547		472	8T-4779	394		280
8T-4198	466		529	8T-4896	395	8T-6381	43
8T-4199	225		532		397	8T-6430	301
	231		535		435		326
	237		537		437		329
	241		539		545		508
8T-4200	88		653		688		727
	132		655		693	8T-6451	456
	133		661	8T-4908	81	8T-6466	72
	149		662		84		75

PART NUMBER INDEX

Part	Page
	247
	250
	367
	369
	466
	467
	468
	653
	655
8T-6685	293
	548
8T-6703	72
	115
8T-6726	535
	537
	539
8T-6868	342
	344
	346
	412
8T-6869	154
8T-6870	267
8T-6876	446
8T-6912	70
	176
	199
	200
	621
8T-6936	81
	84
8T-6988	115
8T-7038	638
	641
8T-7338	341
	447
	466
8T-7352	154
8T-7547	35
	72
	150
	188
	189
	348
	349
	350
	351
	380
	383
	522
	524
	526
	529
	532
	694
8T-7566	663
	664
	688
8T-7811	283
	284
	321
8T-7852	171
	244
8T-7876	380
	383
8T-7934	96
8T-7971	275
	278
	281
8T-8442	472
	501
8T-8557	672
	673
8T-8729	229
8T-8737	176
	224
	230
	231
	235
	236
	240
	267
	427
	430
	578
	584
	588
	604
	660
8T-8827	246
8T-8874	620
8T-8917	435
8T-8919	437
8T-9079	723
8T-9358	740
8T-9371	694
8T-9383	435
8T-9384	435
8T-9393	387
	463
8T-9496	675
8T-9534	612
	614
	616
	618
8T-9655	154
	225
	231
	237
	240
8V-7370	▶463
	720
8V-7419	718
8V-7965	463
8V-9488	721
8V-9494	721
8W-1784	552
	555
8W-3214	63
8Y-1963	390
8Y-1968	395
	397
8Y-1990	392
8Y-1993	392
8Y-1994	392
8Y-2281	394
8Y-2429	356
8Y-3840	714
	716
8Y-3841	714
	716
8Y-3843	714
	716
8Y-3851	714
	716
8Y-3852	714
	716
8Y-3858	714
	716
8Y-4000	675
8Y-4756	721
8Y-4891	716
8Y-4892	716
8Y-5252	714
	716
8Y-6385	513
	518
	626
	633
	649
8Y-6388	600
	602
	605
	606
8Y-9091	714
	716
8Y-9093	714
	716
8Y-9102	714
	716
8Y-9228	361
9	
9B-2289	395
	397
9B-7237	395
	397
	435
9D-0630	115
9F-2247	94
9F-5644	218
9F-6445	537
9G-1642	401
	402
	403
	404
	405
	406
9G-3695	246
	250
	707
	712
9G-5343	274
9G-7101	254
	259
9G-9086	412
9H-6454	474
9J-1137	730
	▶735
9J-1367	730
9J-3047	474
9J-3866	446
9J-4259	735
9J-7031	474
9K-9731	387
	508
	718
9L-6331	154
9L-6770	165
9M-1974	565
	567
	569
	572
	575
9M-3835	550
9M-5732	638
9M-8406	122
	151
	225
	231
	237
	241
	247
	250
	651
9N-0869	225
9R-0824	295
9R-1004	454
9R-1005	449
	451
	454
9R-2860	373
9R-3171	70
9R-4872	512
	517
	625
	632
	649
9R-7802	449
	451
9R-7803	449
	451
9S-4182	439
	441
9S-4185	318
	390
	452
9S-4190	158
	161
	429
9S-5282	545
9S-8002	285
	286
	501
9S-8004	283
	284
	305
	307
	321
	322
	323
9S-8005	298

▶ **PRIMARY REFERENCE**

PART NUMBER INDEX

Part	Page
	299
9S-8006	154
	472
9S-8008	298
	299
9S-8184	363
9T-3853	322
9T-3928	305
	307
9T-7045	423
9T-9258	423
	429
9U-8263	643
	644
9V-1097	463
9V-6572	714
	718
9V-8595	435
	437
9W-0742	▶170
	262
	265
9W-0852	102
9W-1951	224
	230
	235
	267
9W-1991	72
	247
	250
9W-3361	413
9W-6582	43
9W-6584	43
9W-9930	43
9X-1054	224
	230
	235
	563
9X-1386	209
	427
	430
	653
	655
9X-1813	211
	246
	250
	273
9X-2026	254
	259
9X-2027	464
9X-2032	244
	541
9X-2038	597
	600
	602
	606
	608
	620
9X-2039	513
	518
	529
	532
	535
	537
	626
	633
	672
	673
	675
9X-2040	529
	532
	535
	537
	612
	614
	616
	618
	686
	691
9X-2041	357
	513
	518
	548
	552
	555
	591
	626
	633
	649
	699
	700
	701
9X-2042	513
	518
	548
	552
	555
	593
	597
	600
	602
	626
	633
9X-2043	548
	552
	555
	565
	567
	569
	572
	575
	686
	691
	698
9X-2044	513
	518
	524
	548
	552
	555
	597
	600
	602
	626
	633
	649
9X-2045	173
	174
	225
	231
	241
	548
	552
	555
	571
	587
	606
	608
	612
	614
	616
	618
	620
9X-2046	552
	555
	606
	608
9X-2085	443
9X-2133	72
9X-2383	246
9X-2444	737
9X-3265	224
	230
	235
9X-3401	207
	209
	217
	231
	236
	427
	430
9X-3402	176
	224
	225
	230
	231
	235
	236
	254
9X-3404	262
	265
9X-3463	199
	200
9X-3589	426
	427
9X-3598	430
9X-4244	199
	200
9X-6165	102
	190
	192
	194
	197
	675
9X-6340	744
9X-6381	190
	192
	194
	513
	518
	626
	633
9X-6654	102
	529
	532
9X-6772	176
	194
	224
	230
	235
	244
	246
9X-7373	231
	237
	241
	247
	251
	524
9X-7378	561
	653
	655
9X-7380	651
	657
9X-7381	651
	653
	655
	657
9X-7382	651
	653
	655
	657
9X-7383	651
	653
	655
	657
9X-7384	651
	653
	655
	657
9X-7385	561
	653
	655
9X-7849	201
9X-8121	201
9X-8139	201
9X-8250	653
	655
9X-8256	70
	158
	161
	222
	225
	231
	234
	237
	241
	244
	295
	331
	332
	335
	336
	338
	378
	380
	383
	591
	610
	611
	612

▶ **PRIMARY REFERENCE**

PART NUMBER INDEX

Part	Page
	614
	616
	618
	621
	675
9X-8257	43
	70
	275
	278
	281
	297
	326
	328
	329
	340
	341
	379
	447
	466
	741
9X-8483	298
	299
9X-8705	741
9X-8979	472
9X-9120	261
	264
9X-9825	261
	264
9Y-8315	96
	98
9Y-8389	150
9Y-9381	106
	109
	112
9Z-7719	513
	518
	626
	633
0	
014-0816	240
030-1709	171
031-0214	679
	681
031-0249	693
032-3237	287
	289
032-8047	106
	109
	112
032-9020	16
	18
033-6028	506
033-6039	320
033-6043	501
033-8248	72
	267
035-8014	106
	109
	112
037-4426	688
037-5197	261
	264
039-8557	157
	160
	375
	449
	451
061-7539	150
061-7540	283
	284
	321
067-6007	106
	109
	112
067-6043	23
067-6179	38
067-6269	186
070-0195	101
085-7539	323
089-7960	336
090-8865	70
091-9035	250
095-0723	267
095-0879	427
095-0929	311
095-0933	322
095-1207	70
095-1386	464
095-1750	323
095-1751	502
	503
	504
095-9805	472
096-6166	443
	449
	451
	541
096-7033	346
097-4896	439
	441
098-5747	70
	340
099-0169	379
099-3600	333
	334
1	
100-3751	38
	66
	124
	128
100-4830	5
	6
	38
	109
	112
100-4838	186
	187
100-4841	23
101-0003	693
101-2867	679
	681
101-3055	643
	644
	645
101-3129	446
	485
	488
101-3895	38
	135
	139
	144
101-3917	66
	166
101-7547	66
102-2240	154
	►211
102-2244	427
	430
102-2828	273
102-8801	224
	231
	236
102-8802	102
	164
	197
	201
	216
	217
	221
	223
	224
	229
	231
	235
	236
	246
	250
	273
	561
	653
	655
	693
102-8803	207
	211
	220
	254
	258
	259
	591
102-8804	206
	223
	229
	235
	240
	246
	250
	256
	257
	427
	430
	571
102-8805	563
	660
	707
	712
102-8806	223
	229
	235
	240
102-9690	44
	48
102-9941	36
103-0050	166
103-1066	10
	13
103-2543	225
	231
	237
	241
104-2091	597
	600
	602
	605
	606
	608
104-3173	115
105-3478	427
	430
105-4593	417
107-2348	106
	109
	112
107-3117	321
107-3786	512
	517
	625
	632
	649
107-4393	651
	657
107-4394	651
	657
107-4395	651
	657
107-4396	651
	657
107-4397	653
	655
107-4399	653
	655
107-6032	223
	229
	235
	240
108-4311	693
108-9528	435
	437
109-1633	529
	532
	535
	537
	539
109-1634	529
	532
	535
	537
	539
109-3657	318
109-4441	321
109-5351	92
110-6393	638
	641
	748

► **PRIMARY REFERENCE**

PART NUMBER INDEX

Part	Page
110-7885	240
110-7887	223
	229
	240
110-8769	246
111-0859	124
	128
111-4015	541
111-8222	5
	6
112-1817	443
	449
	451
	▶499
112-4159	371
112-4628	305
	307
112-4629	305
	307
112-6174	240
112-6646	254
	256
	257
	258
	259
112-9861	499
113-1504	58
	60
113-8129	77
	79
113-8490	223
	229
	235
113-8491	223
	229
	235
114-3349	590
	593
114-4270	312
	314
114-5333	653
	655
115-8634	446
116-0118	254
	259
116-6952	336
116-7471	223
	229
	235
	240
117-1385	132
	133
	149
117-2311	223
	229
	235
	240
117-5645	102
117-7296	303
117-8131	661
118-0021	380
	383
118-3122	472
118-7313	81
	84
118-9573	81
	84
119-3662	176
	224
	230
	231
	235
	236
119-7844	271
120-0091	223
	229
	235
	240
120-4394	283
	284
	285
	286
	322
120-5727	472
120-5729	472
120-9051	461
122-3608	72
122-9250	493
	494
	497
	498
123-0698	283
	284
123-2899	87
123-3132	506
123-5787	283
	284
123-6170	590
123-6171	590
123-6190	593
123-7556	285
	286
123-7574	305
	307
123-7575	305
	307
123-7582	305
	307
123-8828	380
	383
123-8829	380
123-9769	322
124-0506	7
	10
	13
124-0597	512
	517
	625
	632
	649
124-0829	291
124-2463	115
124-3536	50
124-3815	10
	13
	16
	18
	38
	124
	128
	134
	139
	144
124-6998	122
	657
124-9636	224
	230
	235
124-9637	230
	235
124-9855	309
	311
124-9856	309
	311
124-9857	309
	311
124-9858	309
	311
124-9859	309
	311
124-9860	309
	311
124-9861	309
124-9881	283
	284
124-9882	283
	284
124-9884	283
	284
124-9887	322
124-9888	322
124-9891	321
124-9894	321
124-9895	321
124-9896	321
124-9899	321
124-9900	321
124-9901	321
124-9904	321
124-9905	321
124-9906	321
124-9913	298
	299
124-9914	298
	299
124-9945	322
124-9948	322
125-1379	298
	299
125-2205	283
	284
125-4572	321
125-7484	246
125-7874	224
	225
	230
	231
	235
	236
125-7875	176
	224
	225
	230
	231
	235
	236
126-1401	312
	314
126-1402	312
	314
126-1403	312
	314
126-1405	312
	314
126-1406	312
	314
126-1407	312
	314
126-1408	312
	314
126-1413	312
	314
126-1419	312
	314
126-1420	312
	314
126-1477	286
	303
126-1595	661
126-1597	285
	286
126-1598	285
	286
126-1638	305
	307
126-1661	305
	307
126-1767	207
	217
	561
126-1773	235
126-1774	176
	194
	224
	230
	235
	244
	246
126-3503	707
	710
126-7574	178
	179
126-8165	593
126-8166	593
126-8472	563
127-0506	522
	524
	625
	632
	675
127-0540	688
127-2170	512
	517
	548
	552
	555
	626
	633
	649

▶ **PRIMARY REFERENCE**

PART NUMBER INDEX

Part	Page	Part	Page	Part	Page	Part	Page
	666		468		235		452
	667	139-1398	92	147-1446	224	148-8435	443
	736	139-1773	468		230	148-8443	291
127-5447	72	140-7684	267		236	148-8444	295
	246	141-3983	267	147-5553	106	149-1964	261
	250	141-6968	747		109		264
	261	141-8589	106		112	149-5733	735
	264		109	147-5630	330	149-6371	653
127-7443	212		112		512		655
127-8281	16	142-0485	565		517	149-7738	449
	18	142-8929	474		632		451
128-4249	224	142-9088	332	148-8316	468		468
	230	142-9439	312		741	150-3030	72
	235		314	148-8317	293		464
130-2531	740	142-9681	668		439	150-3036	485
130-9888	58		669		441		488
	60		670		443	150-3037	295
131-0359	246	143-1237	688		446	150-4037	293
	250	143-1288	679		456	150-4043	485
131-3093	541		681	148-8318	740		488
131-3540	335	143-2397	522	148-8322	485	150-4047	741
	338		524		488	150-8896	720
131-4725	171		612	148-8326	151	151-5145	154
	244		614		446	151-5520	81
131-4726	244		616		740		84
	246		618	148-8327	63	151-9274	577
131-4730	244		625		287		579
131-4731	171		632		289		580
131-9030	675	143-5052	63		293	152-6641	707
132-0338	528	143-6020	323		449		710
132-4763	735	144-0195	707		451	153-1276	101
133-1011	38		710		485	153-2159	271
133-8714	541		712		488	153-2160	271
133-9379	231	144-0331	578	148-8334	318	153-2162	271
	237		588	148-8335	318	153-2163	271
	241	144-0367	446	148-8336	151	153-6238	75
134-1935	522	144-1636	224		295	153-6932	542
	524		225		318	154-2302	456
	707		230		446	154-9024	72
134-2540	224		231		485	155-0576	134
	230		235		488		176
	235		236		740	155-2252	237
	246	144-2179	661	148-8338	446	155-2255	224
134-3518	541	144-8344	72	148-8340	318		225
134-3856	69		373		416		230
134-4126	178	144-9101	285		443		231
	179		286	148-8345	454		236
134-5245	593		323	148-8347	443		237
134-7258	744	145-0326	693	148-8352	443		246
135-0611	660	145-0905	285	148-8356	75	155-2260	224
135-7454	283		286		293		230
	284	145-5311	302	148-8357	446		236
135-7455	283	145-5927	314	148-8360	158		246
	284	145-8746	322		161		254
135-8054	312	146-0742	426	148-8364	446		267
	314		427	148-8365	446	155-2265	224
136-0155	720	146-0744	426	148-8378	291		230
136-1543	665		427		318		236
136-1953	33	146-6149	▶660		449	155-2269	237
	72		707		451	155-2270	206
	659		710		740		219
137-6723	565	147-0526	638	148-8390	454		224
	575		641	148-8410	158		225
137-8165	671	147-1445	224		161		230
138-7500	446		230	148-8411	318		231

▶ **PRIMARY REFERENCE**

PART NUMBER INDEX

Part	Page	Part	Page	Part	Page	Part	Page
	236		383		225		289
	237	161-2398	686		230		449
	246		691		231		451
	267	161-6879	420		236	177-2215	287
	563	161-6880	420	167-6805	305		289
155-2271	224	161-7614	271		307		416
	230	161-7615	70	167-7715	325		651
	236		340	168-8672	720		653
	246	161-9916	154	169-1616	502		655
	256	162-1565	16		503		657
	257		18		504	177-3868	459
	541	162-6556	254	169-2876	223		461
	571		259		229	177-9648	541
155-2274	224	162-6802	154		235	177-9649	237
	225	163-1135	693		240	177-9651	237
	230	164-1229	693	169-7380	693	177-9652	237
	231	164-2108	505	170-0235	529	177-9653	237
	236	164-4883	663		532		541
155-3504	485		664	170-8714	274	177-9656	224
	488	164-5567	740		277		230
155-3624	439	164-5574	318		280		236
	441	164-5590	468	171-1230	679	177-9853	246
155-9321	353	164-5597	72		681		250
	354	164-5606	287	171-2212	171	178-2334	206
	365		289	171-5349	209	178-2335	206
	366	164-5608	454	171-6725	456	178-2345	154
156-0214	273	164-5612	115	171-9073	115		▶206
156-8315	612	164-5624	443	172-3511	254	178-3586	246
	614	164-6872	446	172-4880	653		250
	616	164-7468	168		655	178-7907	665
	618	164-7556	199	172-8037	671	178-9983	584
157-0670	72		200	172-8039	671		585
158-2229	593	164-8473	605	173-1614	171		588
158-2231	593	164-9968	512	173-2052	665	179-4324	512
158-2232	590		517	173-5787	684		517
158-5001	597		738		685		625
	600	165-0050	593	173-7035	684		632
	602	165-0051	590		685		649
158-6634	246	165-5010	593	173-8073	446	179-7262	552
	250	165-5970	154	174-5414	101		555
158-7864	744		▶220	174-5415	104	180-6213	472
158-9955	593	166-0100	235	174-7876	246	180-7180	653
159-3419	590		244		250		655
159-4700	420	166-0613	395	174-9570	▶119	180-7181	653
159-9322	176		397		153	180-9419	▶420
	224	167-1192	380	175-2539	563	183-1343	215
	230		383	175-3760	707		216
	236	167-2195	423		710	183-2823	150
159-9854	312		429		712	183-2824	▶150
	314	167-2204	426	175-4291	199		151
160-0162	139		427		200	183-3873	464
	144	167-2210	430	175-4292	199	183-4274	254
160-0526	7	167-2304	423		200		259
	10		429	175-6222	675	183-4584	▶208
	13	167-2314	426	175-7902	426		246
160-2669	▶419		427		427	183-5106	▶561
	446	167-2322	430	176-3141	29		562
160-3518	671	167-3692	224		31	183-8410	325
160-7689	176		230	176-6755	468	184-2420	446
	244		236	176-8234	104	184-5394	92
	246	167-3693	173	176-9237	72	184-6391	714
160-7690	194		174		122		716
	230		175		261	185-0884	23
	236		176		264	185-1860	224
160-9925	380		224		287		230

▶ **PRIMARY REFERENCE**

PART NUMBER INDEX

Part	Page
	236
185-1861	224
	230
	236
185-2114	612
	614
	616
	618
185-2638	165
185-2639	165
185-2644	165
185-2647	165
185-2648	165
185-2650	165
185-2654	165
185-2655	165
185-2658	165
185-3159	7
	10
	13
185-3983	115
185-4026	295
186-3735	158
	161
	164
	197
	201
	206
	211
	220
	221
	223
	229
	240
	246
	250
	254
	258
	259
	273
	500
	578
	584
	585
	588
	653
	655
	660
	707
	712
186-3736	206
	219
186-5107	693
187-3547	740
187-7331	81
	84
187-8001	305
	307
187-8661	653
	655
187-9008	740
188-2199	427
	430
188-8846	512
	517
	649
	736
189-0135	254
	258
	259
189-1707	529
	532
	535
	537
	539
189-8898	458
	▶505
190-2787	272
190-5386	744
191-0885	▶309
	311
191-1393	309
191-1394	309
191-1395	309
191-1396	309
191-1397	309
191-1398	309
191-1782	154
191-1956	311
191-6084	293
192-7054	668
	669
	670
192-7795	693
192-7805	693
192-7810	693
192-7820	688
192-7848	693
193-3973	251
193-5917	377
	729
194-6523	156
	163
196-4250	323
196-4254	323
196-4672	316
196-9444	323
197-1932	102
197-7481	247
	251
	439
	441
197-9672	316
	317
197-9674	316
198-2970	552
	555
198-4766	675
198-4775	102
	254
	259
	380
	383
	606
	608
	621
198-4776	154
	188
	189
	340
	380
	383
	551
198-4777	70
	75
	81
	84
	96
	98
	287
	289
	293
	341
	348
	349
	350
	351
	367
	369
	380
	383
	437
	439
	441
	443
	449
	451
	464
	467
	468
	485
	488
	508
	610
	611
198-4778	81
	84
	262
	265
	293
	333
	334
	342
	344
	346
	358
	359
	371
	437
198-4780	75
	367
	369
	464
198-4781	293
198-5389	197
199-7647	446
199-7698	563
199-7891	165
199-8436	165
199-9252	134
	139
	144
199-9267	65
	134
	139
	144
199-9751	25
	27
	2
200-2371	460
200-5728	671
	672
	673
200-6345	293
	657
200-8790	679
	681
201-2733	223
	229
	235
	240
201-3386	75
201-3387	75
201-8338	485
	488
201-8339	485
	488
202-0671	499
202-0673	499
202-0674	499
202-0949	380
	383
202-2342	325
202-5397	224
	230
	236
202-6535	323
202-6611	200
202-6614	199
203-7607	92
203-7703	684
	685
204-2281	246
	250
	262
	265
	293
204-2581	707
	710
	712
204-8000	247
	250
	262
	265
205-0626	165
205-0826	738
205-8257	197
206-2423	154
	246
	250
	261
	264
	267
	653
206-5162	197
206-5165	197
206-7255	▶272

▶ **PRIMARY REFERENCE**

PART NUMBER INDEX

Part	Page	Part	Page	Part	Page	Part	Page
	300	215-4012	92		734		166
206-7893	591	215-7172	300	220-9090	731		168
	593		▶316		732	226-8766	38
207-5370	247	215-8010	323		733	226-8767	38
	250	215-8011	323		734	226-8770	186
208-0886	461	216-0143	335	220-9908	223	226-9622	505
208-7448	92		336	220-9909	171	227-1148	426
209-0381	223		338	221-3187	390		427
	229		372	221-3198	390	227-1184	462
	240		373	221-4486	460	227-1185	462
209-4482	698	216-0814	666	221-7693	115	227-1186	491
209-4573	92		667	221-8045	738		492
209-4580	92	216-0906	156		746		495
209-5502	5		163	221-8310	353		496
209-5503	5	216-4983	92		354	227-1197	462
209-7659	154	216-8634	38	222-1088	732	227-1198	462
209-8217	541	216-9633	65		733	227-1199	462
209-9219	21	216-9752	124		734	227-1989	223
210-0691	740		134	222-1089	732		229
210-6842	106	217-0099	134		733		235
	109		139		734		240
	112		144	222-5093	331	227-6715	81
211-0052	224	217-3307	446		332		84
	230	217-3312	427		522	227-6744	273
	236	217-3875	322		524	228-0172	132
211-0686	744		323		526		149
211-2092	459	217-8339	153	222-7890	223	228-6089	223
	461	217-9039	139		229		229
	▶506		144		240		240
211-5255	421		269	223-0455	597	228-7100	132
	491	218-0404	197		608		133
	492	218-0651	223	223-1395	122		149
	493		229		454	228-8960	10
	494		240		468		13
211-5358	694	218-2373	505	223-3490	653	228-9655	165
212-0061	460	218-2529	663		655	228-9656	165
212-0907	427		664	223-4296	194	228-9657	165
	430	218-4935	246	223-9102	▶389	229-1494	684
212-3657	▶153		247		414		685
	154		250	223-9110	389	229-3218	150
212-6603	417	218-7252	693	224-0554	738	229-5446	▶408
212-6604	417	219-0305	638		746		414
212-7568	485		641	224-7717	738	229-7084	716
	488		738		745	229-7087	732
213-3745	741	219-1897	497	225-0312	746		733
213-5167	693	219-6314	197	225-0313	745		734
213-5168	693	219-6487	▶199	225-3305	738	229-9382	423
213-5169	693		202		745		429
213-7489	584	219-6488	▶200	225-4150	744	230-0913	506
	585		203	225-5439	50	230-4009	173
	588		223	225-7738	77		174
214-1639	430	219-9654	318		79		175
214-4208	224	220-0229	246	225-7944	66		194
	230		250	225-8019	77		224
	236	220-1209	166		79		230
	244	220-3261	638	225-8524	134		236
214-4643	740		641		139		246
214-4644	740		748		144		256
214-4645	740	220-5946	267	225-8839	20		257
214-4646	740	220-8355	578	225-8858	23		571
214-4647	740		588	226-0294	353	230-4010	224
214-4648	740	220-8678	119		354		237
214-4653	740	220-9081	733		365		256
215-1942	427	220-9082	732		366		257
	430	220-9089	731	226-7683	▶165		267

▶ **PRIMARY REFERENCE**

PART NUMBER INDEX

Part	Page	Part	Page	Part	Page	Part	Page
	541	232-7597	23		280	242-9496	3
	571	232-7599	23	239-4481	274		▶90
230-4011	224	233-0622	430		277	243-0499	▶400
	230	234-2503	430		280		413
	236	234-3030	94	239-5025	595	243-0500	400
	246	234-3587	7	239-6989	744		▶402
230-4012	158	234-5925	223	239-9954	▶178	243-1455	274
	161		229		190		277
	209		235		192		280
	224		240		194	243-2147	43
	230	235-0320	102	240-2169	597	243-2150	3
	236	235-0346	641		600		▶35
	237	235-2501	400		602	243-2151	35
	246		401	240-6223	▶1	243-2153	100
230-4013	225		405	240-6225	1	243-2156	3
	231		413	240-6226	1		▶562
	237	235-2507	401		▶300	243-3177	430
	246		402	240-6227	1	243-6637	301
230-4014	225	235-2509	400		▶3		▶304
	231		▶401	240-6228	1	243-6639	297
	237		402		▶432		▶298
	246	236-2123	▶297	240-6229	▶414	243-6640	297
230-5008	246		300	240-6230	558		▶299
230-5009	247	236-3828	740	240-7193	230	244-1432	89
	267	236-4545	212		236		91
230-5010	194	236-4619	223	240-8551	3	244-2095	686
	224		229		▶100		691
	230		240	240-8552	▶89	244-2109	686
	236	236-4623	488		90		691
	246	236-5157	323	240-9557	▶409	244-2115	686
	256	236-5511	44		414		691
	257		46	241-4291	135	244-4534	413
	571		48		139	244-4535	▶413
230-5011	224	236-7889	▶386		144	244-9631	380
	230		412	241-5895	461		383
	236	237-0227	246	241-6215	741	245-1042	246
	237	237-3943	693	241-8368	171	245-1044	247
	256	237-3970	693		▶219	245-1045	247
	257	237-9736	204	241-8534	81	245-1181	417
	267	238-0120	132		84		418
	571		133	242-0180	416	245-1912	418
230-7058	443		145	242-0262	320	245-4824	464
230-8989	134		149	242-0814	322	245-5697	1
	139	238-8028	128	242-1357	1		▶333
	144	238-8288	95		▶2		▶334
231-1455	66	238-8292	106	242-7489	3	245-5808	171
231-2296	173		109		▶122	245-5821	171
	174		112	242-7490	1	245-5824	171
	175	239-0099	▶33		▶246	245-7434	224
231-3667	412	239-1134	214		▶250		230
232-1115	124		▶221	242-7491	1		236
	128	239-1250	274		▶261	245-8823	171
232-1322	23		277		▶264	246-2210	75
	25		280	242-7492	▶223	246-2641	550
	27	239-1251	274		558		675
232-1374	154		277	242-7496	1	246-5804	303
232-1376	154		280		▶744	246-8424	274
232-3149	134	239-1253	274	242-7503	▶274		277
	139		277	242-8156	3		280
	144		280		▶92	246-8425	274
232-3583	102	239-1254	274	242-8217	432		277
232-3666	38		277		▶456		280
232-3751	66		280	242-8965	432	246-8426	274
232-3861	65	239-4478	274		▶464		277
232-7596	23		277	242-9251	322	246-8428	274

▶ **PRIMARY REFERENCE**

PART NUMBER INDEX

Part	Page
	277
	280
246-8430	274
	277
	280
246-8431	274
	277
	280
246-8432	274
	277
	280
246-9113	427
247-0741	254
	▶500
247-1719	352
247-1749	433
	▶478
247-1750	434
	▶483
247-1753	432
	▶476
247-1913	552
	555
247-1925	92
247-2574	274
	277
	280
247-6019	132
	133
	149
247-9730	92
248-1066	132
	133
	149
248-6772	541
248-8788	▶426
	432
248-8789	426
248-8790	426
249-2844	528
249-3722	3
	▶43
249-3973	466
249-5481	223
	229
	240
249-5512	104
250-6148	461
251-1191	223
	229
251-1194	223
	229
251-1195	223
	229
	240
251-1197	223
	229
	240
251-1920	558
251-1921	558
	▶612
251-1922	558
	▶614
251-1923	558
	▶707
251-1924	558
	▶597
251-1925	558
	▶646
251-1926	▶529
	▶532
	558
251-1927	558
	▶625
	▶632
251-1928	558
	▶643
251-1929	558
	▶661
251-2360	693
251-2362	693
251-3227	88
251-4063	3
	▶212
251-4336	38
251-5506	▶157
251-5848	202
251-5932	▶329
251-8336	46
	48
251-8338	44
251-9555	468
252-0235	272
252-0240	▶432
252-0241	▶433
252-0242	▶433
252-0243	▶434
252-0706	309
	311
252-1577	92
252-1590	212
	▶214
252-1862	612
	614
	616
	618
252-1863	612
	614
	616
	618
252-1864	614
	618
252-1865	612
	616
252-2237	417
	▶418
252-2679	446
	▶472
252-4559	173
	▶577
252-5001	89
	91
252-5002	89
	91
252-5003	89
	91
252-5004	89
	91
252-5067	433
	▶479
	▶480
252-5720	446
252-6115	▶392
	▶393
	414
252-6116	▶390
	414
252-6337	▶427
	432
252-6341	427
252-6344	427
252-6363	427
252-6934	578
252-7008	▶459
	485
252-7010	461
252-7813	430
252-8230	512
	517
	625
	632
252-8231	512
	517
	625
	632
252-8284	614
	618
252-8286	612
	614
	616
	618
252-8293	702
252-8295	702
	704
	705
252-8296	612
	616
252-8297	612
	616
252-9870	433
	434
	▶449
	▶451
253-0062	723
253-0063	723
253-0861	737
253-1669	151
253-1817	612
	614
	616
	618
253-2111	171
253-3394	1
	▶179
253-3407	179
253-4895	432
	▶467
253-7835	333
	334
253-8441	157
	▶158
253-8442	▶683
253-8443	▶683
253-8444	▶583
253-8445	▶582
253-8798	548
	552
	555
	565
253-9237	▶361
253-9557	171
254-1255	740
254-3477	▶171
	558
	559
	560
254-3478	▶202
254-3479	▶194
254-3480	▶197
254-3481	▶204
254-4493	461
254-5262	390
254-5264	390
254-5287	▶394
254-5288	392
	393
254-5289	392
	393
254-5290	394
254-5291	394
254-7864	154
254-8589	614
	618
254-8590	612
	616
254-8594	512
	517
	625
	632
254-8602	597
	600
	602
254-8605	▶330
	596
254-8606	522
	526
	597
254-8609	522
	526
	597
254-8611	597
254-8612	597
254-8617	512
	517
	625
	632
254-8621	512
	517
	625
	632
254-8628	512
	517
	625
	632
254-8629	512
	517
	625
	632
255-1044	▶745
255-1045	▶746

▶ **PRIMARY REFERENCE**

PART NUMBER INDEX

Part	Page
255-1075	395
	397
255-1076	395
	397
255-1077	395
	397
255-1078	395
	397
255-1171	407
255-1195	447
255-1281	562
255-3939	▶173
	▶174
	433
	434
255-4762	▶70
	81
	84
255-4763	70
255-4764	70
255-4765	81
	84
255-4767	81
	84
255-4768	81
	84
255-4897	341
255-6210	541
255-8847	683
	▶684
255-8848	683
	▶685
256-0761	541
256-0762	541
256-0768	541
256-0770	541
256-1028	122
	651
	653
	657
256-3451	3
	▶96
	▶98
256-3454	154
256-3455	▶101
256-3464	3
	▶40
256-3467	104
	105
256-3468	▶188
256-3469	▶189
256-4710	604
256-4959	674
256-6453	474
256-6454	541
256-7248	▶675
256-7406	▶357
256-7407	▶702
	▶703
256-7612	▶729
256-7613	▶362
256-7614	▶358
	▶359
256-8619	▶485
256-8620	▶488
257-0440	460
257-0443	478
	479
	480
	481
	482
257-0444	483
	484
257-0449	476
	477
257-0468	462
	491
	492
	493
	494
	495
	496
	497
	498
257-0627	648
	▶704
	▶705
	▶706
257-1747	▶733
257-1748	▶734
257-1749	▶732
257-3227	529
	532
	535
	537
	539
257-4210	322
257-6141	597
	600
	602
257-6142	597
	600
	602
257-6157	512
	517
	625
	632
257-6170	612
	614
	616
	618
257-6175	422
	▶589
257-6176	589
	▶593
257-6177	593
257-6181	589
	591
257-6188	512
	517
	625
	632
257-6205	612
	614
	616
	618
257-6206	612
	614
	616
	618
257-6215	512
	517
	625
	632
	649
257-6228	512
	517
	625
	632
257-6229	512
	517
	625
	632
257-6239	512
	625
	632
257-6245	512
	517
	625
	632
257-6269	522
	524
	526
	529
	532
257-7612	▶422
257-7722	491
	492
	493
	494
	495
	496
	497
	498
257-7729	493
	494
	497
	498
257-7730	493
	494
	497
	498
257-7732	492
	496
	▶502
257-7733	493
	494
	497
	498
257-7734	491
	493
	494
	495
	497
	498
257-7735	492
	496
257-8235	740
258-3697	612
	614
	616
	618
258-6897	▶714
258-6898	714
258-6899	714
258-6900	▶716
258-6901	716
258-7787	1
	▶558
258-8527	104
258-9893	▶747
259-1286	223
	229
	235
	240
259-2479	▶410
259-5590	▶731
259-5673	256
	▶584
259-6864	394
259-8036	70
260-0596	171
260-0634	92
260-1555	188
260-1556	189
260-1566	188
260-1569	189
260-2656	443
260-3718	134
260-3719	134
260-3939	134
	135
	139
	144
260-4497	300
	▶301
260-6727	578
	588
260-6728	584
260-7652	738
	745
260-7653	738
	746
260-9187	740
261-0376	168
261-0420	246
	250
261-1937	72
261-1938	72
261-3629	304
	▶305
261-3630	304
	▶307
261-4762	488
261-4763	488
261-4764	488
261-5694	665
261-7105	355
	356
261-7110	355
261-7111	355
261-7268	512
	517
	625
	632
261-7382	512
	517
	625
	632
	649

▶ **PRIMARY REFERENCE**

PART NUMBER INDEX

Part	Page
261-7414	357
261-7832	485
261-7833	485
261-7834	485
262-0766	▶674
	679
	681
262-0767	674
262-0769	674
262-0771	674
262-0772	674
262-0779	528
262-0780	528
262-0781	528
262-0785	528
262-0786	528
262-0787	528
262-0789	674
262-1408	223
	229
262-2043	▶179
	190
	192
	194
262-2814	541
262-2815	541
262-2816	541
262-4806	▶209
	267
262-5630	593
262-5634	593
262-7293	312
	314
262-7701	323
263-0193	81
	84
263-1232	81
	84
263-1244	740
263-1491	254
263-7802	194
263-8727	468
263-9088	190
	192
	194
	▶205
263-9355	614
	618
263-9369	612
	614
	616
	618
263-9371	612
	614
	616
	618
263-9372	625
	632
263-9413	330
263-9417	614
	618
263-9418	612
	616
263-9431	512
	517
	625
	632
263-9432	522
	524
	526
	643
264-3280	▶718
	720
264-3284	718
264-3286	718
264-3288	718
264-5425	224
	231
	236
	267
264-6233	724
264-6235	▶724
264-7029	224
	230
	236
264-7030	231
	237
264-7032	224
	230
	236
264-7034	224
	230
	236
264-7088	81
	84
264-7098	356
264-7099	356
264-8012	714
	716
264-8013	714
	716
264-8014	714
	716
264-9764	▶403
264-9769	▶404
265-0670	371
265-0671	371
265-6475	718
	▶721
265-6476	721
265-6481	721
265-6482	721
265-6483	721
265-7268	446
265-7286	446
265-7981	223
	229
	240
265-8125	134
265-9683	430
266-1467	▶207
	590
	593
266-2058	468
266-2070	81
	84
266-2071	81
	84
266-2072	81
	84
266-2273	▶458
	491
	492
	493
	494
266-3214	686
	691
266-3592	491
	493
	494
	495
	497
	498
	▶503
266-3594	491
	492
	495
	496
	▶504
266-5291	407
266-7765	529
	532
	535
	537
266-9247	▶91
266-9976	426
	427
267-5147	679
	681
267-5156	667
267-5157	667
267-5159	666
	667
267-5160	666
	667
267-5243	223
	229
	240
267-6281	529
	532
	535
	537
	539
	▶659
267-6411	104
267-6417	122
	158
	161
267-6419	212
267-6426	92
267-6434	105
267-6443	92
267-6708	417
267-6709	318
	▶417
267-7282	261
	264
267-8575	532
267-9319	679
	681
267-9552	686
	691
267-9553	686
	691
267-9554	686
	691
267-9555	686
	691
267-9556	686
	691
267-9834	686
	691
267-9928	335
268-0799	675
268-0955	625
268-0956	625
268-0958	190
	192
	194
268-0959	522
	524
	625
	632
268-0960	512
	517
	625
	632
	649
268-1027	610
	611
268-1028	621
268-1029	621
268-1530	122
268-1531	122
268-1562	154
268-1563	154
268-6677	134
	139
268-6678	134
	139
	144
268-9349	▶567
	582
268-9350	422
	▶575
268-9382	548
268-9636	552
	555
268-9637	552
	555
268-9649	552
	555
269-1844	474
269-1845	474
269-4669	322
	323
269-4676	320
269-4970	287
	289
269-6476	430
269-6482	430
269-6483	▶430
	432
269-6484	430
269-6488	430
269-6707	508
269-8325	62
270-1515	741
270-2609	▶462

▶ **PRIMARY REFERENCE**

PART NUMBER INDEX

Part	Page	Part	Page	Part	Page	Part	Page
	476		289		372		48
	477	271-8883	287	274-1639	120	275-9889	44
	478	271-8890	▶75		121		46
	479		300		139		48
	480	271-8891	75		145	275-9891	44
	481	271-8892	75	274-1923	331		46
	482	271-9064	1		332		48
	483		▶342		335	275-9897	44
	484		▶344		336		46
270-2610	▶460		▶346		338		48
	476	271-9065	▶340		378	276-0142	44
	477		346		610		46
	478	271-9072	367		611		48
	479		369	274-1929	2	276-1243	117
	480		▶372		▶52	276-1816	427
	481	271-9073	367	274-1930	52		430
	482		369	274-1931	52	276-3063	664
	483		▶373	274-1932	52	276-3448	▶63
	484	271-9074	372	274-1933	52	276-3511	1
270-2611	476	271-9075	373	274-1934	52		▶339
	478	271-9166	340	274-1935	52	276-3512	339
	479	271-9168	▶293	274-3774	235	276-3513	1
	480		300	274-3775	235		▶341
	483	271-9169	293	274-3777	235	276-3550	1
	▶491	271-9170	293	274-4262	300		▶508
270-2612	476	271-9218	378		▶740	276-3642	679
	478	271-9226	367	274-4263	740		681
	479		369	274-5909	535	276-3644	679
	480	271-9228	367		537		681
	483		369		539	276-5438	212
	▶492	271-9240	331	274-6027	3	276-5570	651
270-2613	478	271-9241	332		▶81	276-5571	651
	483	271-9247	336		▶84	276-5572	651
	▶493		338	274-6619	432		657
270-2614	479		372		▶446	276-5575	529
	480		373	274-7769	300		532
	483	271-9408	330		▶466		▶651
	▶494		596	274-7770	466	276-5600	23
270-3704	75	271-9955	342	275-0348	3	276-5601	23
270-4206	3		344		▶371	276-5602	23
	▶88		346	275-0763	1	276-5603	23
270-4350	446	272-2272	▶678		▶348	276-5604	23
270-5239	303		684		▶349	276-5605	23
270-5320	119		685		▶350	276-6596	214
271-1368	745	272-6386	291		▶351	276-7387	20
271-1369	746	272-9222	▶295	275-0764	353	276-7388	20
271-1465	327		300	275-1042	▶160	276-7389	20
271-1470	▶327	272-9697	414	275-1043	160	276-7390	20
271-3100	585		▶416		▶161	276-7391	20
271-7082	▶291	273-3620	332	275-2428	186	276-7393	20
	300	273-3621	331		187	276-7394	20
271-7102	291	273-4275	373	275-6306	432	276-7475	50
271-7104	291		▶378		▶443	276-7476	50
271-7105	291	273-4276	378	275-6350	277	276-7478	50
271-7312	223	273-4278	373		280	276-7479	50
	229	273-4941	378	275-6395	▶326	276-7481	50
	240	273-5561	300	275-6707	541	276-7483	50
271-7688	3		▶468	275-7741	240	276-8115	▶25
	▶72	273-5562	468	275-7764	240		29
271-8879	▶287	273-5711	57	275-7803	678	276-8116	25
	▶289	273-6325	367	275-9884	44		27
	300		369		46	276-8117	25
271-8880	287	273-7316	▶331		48		27
	289		373	275-9888	44	276-8123	25
271-8882	287	273-7317	▶332		46		27

▶ **PRIMARY REFERENCE**

PART NUMBER INDEX

Part	Page
276-8132	25
	27
276-8133	25
	27
276-8134	29
	31
276-8398	▶133
	134
276-9200	53
276-9201	53
276-9206	53
276-9207	53
276-9230	53
277-0118	36
277-0121	36
277-0514	508
277-0516	508
277-0525	▶363
277-0526	363
277-0535	▶726
	▶727
	729
277-0536	729
	▶730
277-0537	730
277-0550	508
277-0554	508
277-0555	508
277-0557	508
277-0559	508
277-0564	508
277-0566	508
277-0588	34
277-1833	217
277-1973	2
	▶58
277-1974	58
	60
277-1975	58
	60
277-2500	66
277-2502	66
277-2503	66
277-2504	2
	▶66
277-2525	66
277-2526	66
277-2537	66
277-2538	66
277-2912	2
	▶62
277-2923	77
	79
277-2925	77
	79
277-2939	2
	▶77
	▶79
277-2974	87
277-2976	2
	▶87
277-3012	38
277-3013	38
277-3014	2
	▶38
277-4223	5
	6
277-4224	2
	▶5
	▶6
277-4262	2
	▶64
277-4302	95
277-4407	186
277-4408	186
	187
277-4409	186
	187
277-4410	2
	▶186
	▶187
277-4411	621
277-4490	42
277-4541	2
	▶42
277-4694	2
	▶65
277-4837	88
277-5030	7
	10
277-5031	7
	10
	13
	16
	18
277-5063	7
	10
277-5064	7
	10
	13
	16
	18
277-5065	7
	10
	13
	16
	18
277-5066	7
	10
277-5067	7
	10
	13
	16
	18
277-5094	7
	10
	13
	16
277-5096	7
	10
	13
	16
277-5307	53
277-6073	166
	168
277-6074	166
277-6075	166
	168
277-6077	166
277-6078	166
	168
277-6079	166
277-6080	2
	▶166
	▶168
277-6165	124
	128
277-6990	2
277-7013	287
	289
277-7014	287
	289
277-7112	541
277-7113	541
277-7713	390
277-8102	667
277-8103	666
277-8367	738
	745
277-8368	738
	746
277-8376	380
	383
277-8589	666
277-8697	122
277-8698	122
277-8702	63
277-8707	72
277-8713	3
277-8716	92
277-8717	▶105
	364
277-9602	106
	109
	112
277-9603	106
	109
	112
277-9938	106
	109
	112
277-9939	106
	109
	112
277-9940	106
	109
	112
277-9958	541
277-9959	541
277-9960	541
277-9962	541
277-9963	541
277-9964	541
277-9966	541
277-9968	624
277-9969	541
	▶624
278-0016	106
	109
	112
278-0017	106
	109
	112
278-0310	106
	109
278-0314	112
	124
	128
278-0316	▶166
278-0361	▶168
278-0875	106
278-0880	106
278-0895	464
	464
	558
	▶653
	▶655
278-2220	372
	373
278-2372	▶317
278-3242	77
278-3354	541
278-4138	118
	124
	128
	135
	140
	145
278-4144	468
278-4145	287
	289
278-4147	468
278-4437	305
	▶312
278-4438	307
	▶314
278-4439	▶271
	305
	307
278-4440	▶285
	305
278-4441	▶286
	307
278-4442	305
	307
	▶323
278-4448	▶302
	305
278-4449	▶303
	307
278-4452	271
278-4464	312
	314
278-4653	412
278-4693	7
	10
	13
278-4694	7
	10
	13
278-4976	312
278-4977	311
278-5111	53
278-5112	53
278-5113	53
278-5125	4
278-5126	4
278-5128	95
278-5168	134
	139
	144
278-5170	134

▶ **PRIMARY REFERENCE**

PART NUMBER INDEX

Part	Page	Part	Page	Part	Page	Part	Page
	139		580	279-8875	341	280-1913	53
	144	278-8974	577	279-8881	339	280-1914	53
278-5180	134		579	279-8883	1	280-2017	7
	139		580		▶379	280-2020	7
	144	279-0127	593	279-8884	379	280-2023	7
278-5201	134	279-0354	321	279-8885	▶407	280-2024	2
278-5202	134	279-0543	▶284		414		▶7
278-5203	134		299	279-9254	34	280-2050	2
	139	279-0850	541	279-9255	2		▶57
	144	279-1532	464		▶34	280-2053	432
278-5209	134	279-1540	380	279-9322	395		▶474
278-5210	134		383		397	280-2395	▶328
	269		551	279-9325	395	280-2407	106
278-5225	134	279-1544	661		397		109
	139		662	279-9361	106		112
	144	279-1546	661		109	280-2420	106
278-5226	134	279-1552	558		112		109
	139		▶638	279-9651	41		112
	144	279-1956	▶435	279-9652	41	280-2423	106
278-5227	134		▶437	279-9653	2		109
278-5228	134		720		▶41	280-2424	106
278-5272	134	279-1957	435	279-9876	117		109
	139	279-1958	435	280-0324	151		112
	144	279-1959	435	280-0404	348	280-2441	106
278-5273	134		437		349	280-2443	106
	139	279-1965	435		350		109
	144	279-2040	▶454		351		112
278-5307	134		729	280-0422	373	280-2453	464
	139	279-2508	584	280-0440	500	280-2458	2
	144	279-3208	81		584		▶106
278-5308	134		84		585	280-2709	223
278-5309	134	279-3212	454		588		229
278-5319	2	279-3213	454	280-0954	472		235
	▶134	279-3983	1	280-0957	472	280-2710	223
278-5689	117		▶267	280-0958	472		229
278-5927	7	279-4343	468	280-1288	348		235
	10	279-8104	▶380		349	280-3090	72
	13		▶383		350	280-3092	371
278-7528	663	279-8711	2		351	280-3512	686
278-8282	303		▶21	280-1289	348	280-3513	691
278-8283	303	279-8762	2		349	280-3514	686
278-8284	302		▶20		350	280-7283	81
278-8515	▶663	279-8780	2		351	280-7618	365
	679		▶50	280-1290	348		366
278-8516	▶664	279-8821	2		349		372
	681		▶29		350		373
278-8934	298		▶31		351		626
	299	279-8825	2	280-1291	94		633
	▶311		▶55	280-1292	2	280-7870	472
278-8935	▶283	279-8833	355		▶94		501
	298	279-8834	▶355		▶95	280-7887	373
278-8936	283	279-8835	541	280-1383	44	280-9179	589
	284	279-8837	2		46		▶590
	▶322		▶4		48		591
278-8937	283	279-8843	529	280-1384	44	280-9403	▶151
	284		532		46	280-9440	565
	▶321		535		48		567
278-8965	577		537	280-1417	410		569
	579		▶541	280-1430	60		572
	580	279-8846	2	280-1889	134	280-9441	565
278-8967	577		▶36	280-1890	134		567
	579	279-8870	341	280-1891	134		569
	580	279-8871	341	280-1911	▶53		572
278-8970	577	279-8872	341		55	280-9442	567
	579	279-8873	341	280-1912	53		569

▶ **PRIMARY REFERENCE**

PART NUMBER INDEX

Part	Page
	572
280-9443	565
280-9444	567
	569
	572
280-9445	575
280-9446	575
280-9447	575
280-9448	575
280-9449	▶254
	575
280-9450	▶569
	583
280-9453	541
280-9672	567
280-9673	567
	▶571
280-9675	▶256
	569
280-9897	567
	569
	572
281-0033	621
281-0034	621
281-0334	541
281-0645	115
281-0647	▶115
	158
281-1296	▶698
	707
	710
281-1297	698
281-1298	522
	524
	526
	643
	707
	710
	712
281-1561	638
	641
281-1678	430
281-1679	426
	427
281-1680	293
	▶318
281-2471	63
281-3044	277
	280
281-3095	698
281-3136	500
	584
	585
	588
281-4114	115
281-4484	287
	289
281-4499	171
281-4500	171
281-4517	380
	383
281-5528	365
	366
281-5882	122
281-7026	362
281-7049	362
281-8744	87
282-0480	▶120
	134
282-0557	674
282-1674	336
282-1825	446
282-2028	569
	572
282-2029	569
	572
282-2030	565
	575
282-2031	552
	555
282-2032	686
282-2033	686
	691
282-2034	548
282-2035	552
	555
282-2036	548
	555
282-2037	552
282-2301	433
	434
	▶439
	▶441
282-2408	474
282-2748	44
	46
	48
282-3145	257
	▶585
282-3233	134
282-3234	134
282-3476	541
282-3481	541
282-3653	541
282-4076	380
	383
	▶471
282-4887	597
	602
282-4889	597
282-4900	597
	600
	602
282-4901	597
	600
	602
282-4904	439
	441
282-4905	439
	441
282-5002	330
282-5005	597
	600
282-5006	597
	600
	602
282-5007	597
282-6689	548
282-6690	552
	555
282-6691	548
282-6692	552
	555
282-6694	552
	555
282-6695	686
	691
282-6697	567
282-6698	▶572
	586
282-6699	▶257
	572
282-6701	548
282-6702	552
	555
282-6707	548
282-6708	552
	555
282-6709	548
282-6710	552
	555
282-7890	75
282-8424	474
282-8719	583
	738
282-8746	171
282-8765	449
	451
282-9344	▶352
	433
	434
282-9405	352
282-9406	348
	349
	▶353
283-0557	468
283-0565	333
	334
283-1381	661
283-1382	702
	703
283-1387	699
	700
	701
283-1388	699
	700
283-1389	▶699
	▶700
	704
	705
283-1392	522
	524
	625
	632
283-1393	699
	700
	701
283-1395	699
283-1396	699
	700
	701
283-1398	643
	644
	645
283-1400	512
	517
	625
	632
283-1401	661
283-1402	357
283-1408	522
	524
	625
	632
283-1409	512
	517
	625
	632
	649
283-1412	625
	632
283-1414	522
	524
	625
	632
283-1415	522
	524
	625
	632
283-1417	529
	532
283-1419	512
	517
	625
	632
283-1420	512
	517
	625
	632
283-1435	638
	641
	748
283-1440	223
	229
	235
	240
283-4662	36
283-4672	726
283-4693	186
283-4888	340
283-5417	▶277
283-5517	605
283-5518	608
	620
283-5519	606
	608
283-5522	653
	655
283-5528	597
	600
	602
283-5529	522
	524
	526
	529
	532
283-5546	512
	517
	625
	632

▶ **PRIMARY REFERENCE**

PART NUMBER INDEX

Part	Page	Part	Page	Part	Page	Part	Page
	649		532	286-3686	140		626
283-5557	597		535	286-6938	75		633
	600	284-9763	702	286-7847	44	289-1074	512
	602	284-9764	▶586		46		517
283-5559	597	284-9766	▶596		48		625
	600		597	286-7851	106		632
	602		600		109	289-1077	621
283-5560	621		602		112	289-1079	625
283-5568	621	284-9769	606	286-8238	▶552	289-1080	522
283-5571	625		608		575		524
	▶736	284-9812	620	287-0553	563		605
283-5572	699	284-9813	651	287-0554	529		626
	700		657		532		633
	701	284-9815	512		535	289-1081	512
	702		517		537		517
	703		625		▶563		625
283-6286	449		632	287-2962	295		632
	451	284-9816	651	287-2963	295		649
283-6670	446		657	287-2964	295	289-1082	512
283-6671	446	284-9829	512	287-3254	223		517
283-6947	254		517	287-5705	70		625
283-7606	435		625	287-6014	740		632
283-7607	435		632	287-6595	81		649
283-7608	435	284-9830	512		84	289-1083	621
	437		517	287-6607	468	289-1087	638
283-7609	435		625	287-6657	624	289-1106	512
	437		632	287-6838	139		625
283-7888	▶720	285-0150	584		144		632
283-8289	261		585	287-6839	134	289-1107	512
	264		588		139		517
283-8301	42	285-0585	70		144		625
283-8302	42	285-0586	70	287-7324	293		632
283-8651	541	285-1133	178	287-7325	293	289-1108	707
283-9265	173	285-1975	7	287-7326	293		710
	174		10	287-7327	293	289-1123	653
	587		13	287-7430	77	289-1132	512
283-9662	342		16	287-7460	675		517
	344		18	287-7461	675		625
	346	285-3429	72	287-7564	675		632
284-0071	36	285-3433	435	287-7565	675		649
284-0662	661		437	287-7567	675	289-1133	512
284-1172	472	285-3555	124	287-7569	675		517
284-1495	373		128	287-7637	120		625
284-2971	293	285-5822	244		121		632
284-2973	293	285-7415	223	287-8597	36	289-1134	651
284-7054	▶548		229	288-0661	745		657
	567		240	288-0662	746	289-1135	529
	569	285-7612	472	288-2357	106		532
	572		▶501	288-3579	2	289-1136	653
284-7055	548	285-8553	542		▶44	289-1137	653
	▶686	286-0034	261	288-4010	2	289-1146	638
284-7648	548		264	288-4011	2	289-1147	638
284-7649	552	286-0200	586		▶69	289-1148	638
	555		738	288-6974	36		641
284-8531	190	286-0602	552	288-6975	36	289-1182	738
284-8746	70	286-0814	▶429	288-6982	60		746
284-8953	▶668		729	288-9575	340	289-1183	738
	671	286-2309	380	289-1072	522		745
284-8954	▶669		383		524	289-2073	686
	672	286-2890	128		529		691
284-8955	▶670	286-3462	353		532	289-2075	691
	673		354		626	289-2078	552
284-9055	672		365		633		555
	673		366	289-1073	522		▶691
284-9758	529	286-3683	134		524	289-4961	584

▶ **PRIMARY REFERENCE**

PART NUMBER INDEX

Part	Page	Part	Page	Part	Page	Part	Page
	585		693	293-6452	333		532
289-8323	551	291-7981	545		334	294-3143	612
289-8725	44	291-7984	545		▶335		614
	46	291-7986	545	293-6453	333	294-3144	512
	48	291-7989	545		▶336		517
289-9559	244	291-7990	545	293-6454	335		625
289-9765	295		546	293-6455	335		632
289-9766	295		547	293-6456	336		649
289-9924	371	291-7992	545	293-6457	▶366	294-3145	736
289-9926	371	291-7993	693		369	294-3146	736
290-0242	342	291-8004	▶546	293-6458	366	294-3149	736
	344		693	293-6459	621	294-3150	522
	346	291-8005	546	293-6460	▶725		524
290-0813	565	291-8008	546		729		526
	575		547	293-6467	746		625
290-1219	261	291-8010	693	293-6468	746		632
	264	291-8011	▶547	293-8350	501	294-3151	626
290-1967	▶375		693	293-9267	740	294-3153	330
	432	291-8012	547	293-9379	679	294-3154	597
	433	291-8019	693		681		600
	434	291-8026	693	293-9380	528		602
290-1968	▶376	291-8027	693	293-9381	528	294-3155	597
	433	291-8028	693	293-9659	746		600
	434	291-8030	545	293-9665	679		602
290-2077	261	291-8031	693		681	294-3159	522
	264	291-8068	740	293-9820	124		524
290-3910	134	291-9310	545		128		526
	139	291-9652	▶461	293-9901	134		626
290-3911	134		488		139		633
	139	291-9736	341		144	294-3160	653
290-3912	134	292-0848	134	294-0895	433	294-3164	529
	139	292-0886	21	294-0896	433		532
290-3913	134	292-3311	171	294-0897	434	294-3169	646
	139	292-3462	95	294-1999	▶551		647
290-3914	134	292-3543	574	294-2006	▶671	294-3170	646
	139		▶587	294-3031	132		647
290-3915	134	292-3566	▶102	294-3032	132	294-3171	646
	139	292-4829	106	294-3067	100		647
290-3916	134	292-6402	663	294-3126	638	294-3173	646
	139		664		641		647
290-4412	▶610		▶665	294-3127	597	294-3174	646
	621	292-6856	194		600		647
290-4413	610	292-8114	567		▶606	294-3175	597
290-4414	▶611	292-9044	▶423	294-3128	606		600
	621		720		▶620		602
290-4415	611	292-9881	187	294-3132	▶605		646
290-4417	558	293-0249	132		606		647
	▶621		133		608	294-3178	702
290-5623	40		149	294-3133	643		704
290-5624	40	293-0654	▶365		644	294-3179	702
290-5642	96		367		645		704
	98	293-0655	365	294-3137	651	294-3183	593
290-5651	96	293-0656	367		657	294-3184	593
	98		369	294-3138	529	294-3185	593
290-5652	212	293-0699	380		532	294-3186	593
290-5659	92		383		535	294-3190	646
290-5660	92	293-1880	269	294-3141	522		647
290-5728	215	293-2867	223		524	294-3191	608
	216	293-2915	528		526		620
291-3803	624	293-4766	380		529	294-3192	597
291-4218	740		383		532		600
291-5919	▶132	293-4767	342	294-3142	522		602
	139		344		524	294-3193	608
291-7972	693		346		526		620
291-7980	▶545	293-4770	340		529	294-3194	632

▶ **PRIMARY REFERENCE**

PART NUMBER INDEX

Part	Page	Part	Page	Part	Page	Part	Page
294-3582	675		383	296-8319	▶565		128
294-4415	102		551		581	298-5118	456
294-4416	102	295-4100	449	297-2561	261	298-5119	456
294-4417	102		451	297-2562	621	298-5121	456
294-4418	▶175	295-4434	▶679	297-4638	446	298-5244	740
	433		684	297-5051	439	298-5802	247
294-4420	102	295-4435	▶681	297-5052	439		250
294-4421	102		685	297-5866	371	298-5884	468
294-4422	102	295-4475	▶666	297-7632	342	298-5885	468
294-4424	173		679	297-7636	372	298-5981	326
	174	295-4476	▶667		373	298-5982	326
	175		681	297-7638	342	298-5983	326
294-4427	223	295-4670	124	297-7639	367		329
294-4428	246		128		369	298-5984	328
294-4429	267	295-4801	132	297-7640	342	298-5985	326
294-4430	267		149		344		329
294-5575	380	295-5423	106		346		727
	383		109	297-7916	287	298-5986	326
	▶425		112		289		329
294-7139	666	295-5742	512	297-7917	287	298-5987	326
	667		517		289		329
294-7779	▶528		626	297-9340	224	298-6321	449
	679		633	297-9525	256	298-6322	449
	681		649		257	298-6323	449
294-7829	▶180	295-5827	449		571	298-6324	449
294-7830	▶180		451	298-1201	102	298-6787	329
294-7831	▶181	295-5828	449		▶222	298-6788	329
294-7832	▶181		451	298-1202	222	298-6789	328
294-7833	▶181	295-6472	679	298-1212	449	298-6793	342
294-7834	▶182		681		451		344
294-7835	▶182	295-6661	25	298-1292	258		346
294-7836	▶182		27	298-2350	358	298-6794	367
294-7837	▶183	295-7790	737	298-2351	358		369
294-7838	▶183	295-7834	737	298-2722	403	298-6795	621
294-7839	▶183	295-7835	737		404	298-6818	443
294-7840	▶184	295-8610	66		405	298-6819	443
294-7841	▶184	295-8613	66		406	298-6820	443
294-7842	▶184	295-8615	66	298-2723	▶405	298-6821	443
294-7843	▶185	295-9737	443		406	298-6823	443
294-7844	▶185	295-9742	456	298-2724	▶406	298-6824	443
294-7845	▶185	295-9743	456	298-2818	684	298-6825	443
294-8051	380	295-9774	744		685	298-6826	443
	383	296-2735	90		▶693	298-7675	293
294-8576	44	296-3348	▶737	298-2819	▶688	299-0057	467
	46		744		693	299-3154	375
	48	296-3542	132	298-2820	688	299-3155	376
295-0065	70		149	298-2826	688	299-3194	157
295-0066	70	296-5226	443	298-2833	688		160
295-0189	132	296-5730	449	298-2836	688	299-3195	157
295-0585	168		451	298-2837	688		160
295-0912	94	296-6432	443	298-2841	688	299-4405	287
	95	296-6476	261	298-2842	688		289
295-0913	94		264	298-2847	688	299-4697	432
295-0914	94	296-6489	336	298-2848	688	299-5002	287
295-1000	7	296-6492	725	298-2849	688		289
	10	296-6493	725	298-2850	688	299-5118	115
	13	296-6495	340	298-2851	688	299-5119	115
295-1041	7	296-6499	70	298-2852	688	299-5511	25
	10		340	298-2854	688		27
295-1042	7	296-7899	439	298-3481	443	299-5852	287
	10	296-7900	70	298-4547	16	299-5853	287
	13	296-8302	▶555	298-4550	13	299-6013	348
	16		565		16		349
295-1711	38	296-8316	565		18		350
295-4074	380	296-8318	565	298-4576	124		351

▶ **PRIMARY REFERENCE**

PART NUMBER INDEX

Part	Page
299-6014	348
299-6015	▶377
299-6016	725
299-6020	621
299-6021	621
299-6953	51
299-6957	2
	▶51
299-6960	456
299-7210	462
299-7883	745
299-8018	115
3	
300-2940	135
	139
	144
300-2953	621
300-3445	714
	716
300-3631	173
	174
	175
300-3658	413
300-3660	413
300-3661	▶413
300-3662	▶413
300-3907	13
300-3965	7
	10
300-6520	106
	109
	112
300-6714	139
	144
300-9135	508
300-9137	508
301-0589	190
	192
301-2710	3
	▶154
301-2714	92
301-2716	▶104
	364
301-2735	96
	98
301-2744	2
	▶215
301-2768	3
	▶216
301-3004	88
301-3005	88
301-4133	115
301-4825	416
301-4840	115
301-5786	70
301-6921	157
	160
301-7791	443
301-7792	443
301-7849	▶364
301-7850	▶364
301-7890	283
	284
	▶320
301-9695	621
302-1266	188
	189
302-4254	▶201
	204
302-4788	225
	229
	241
302-5695	124
	128
302-5696	▶244
	380
	383
302-6303	638
	641
302-6721	551
302-7298	▶273
	287
	289
302-7780	380
	383
302-8149	421
	▶507
302-8157	▶421
	495
	496
	497
	498
302-8175	261
302-8176	261
302-8180	261
	264
302-8181	261
	264
302-8182	261
	264
302-8586	446
302-8655	261
	264
302-8656	261
	264
303-0260	621
303-1462	▶672
303-1463	▶673
303-1474	156
	163
303-1475	▶156
	161
303-1477	157
	160
303-1478	375
303-1479	158
	▶163
303-2116	109
	112
303-2169	151
303-2179	214
303-4017	415
	▶581
303-4025	632
303-4027	512
	517
	632
303-4036	522
	524
	526
303-4037	535
	537
	539
	▶657
303-4038	657
303-4039	657
303-4040	535
	537
303-4047	655
303-5939	157
	160
303-5940	151
304-3670	293
304-3715	563
304-4001	231
	241
	▶595
304-4162	258
	259
	▶588
304-4351	346
304-5166	269
304-5167	269
304-5564	550
304-5566	550
304-5687	179
	241
304-6586	▶604
304-6608	158
	161
304-8025	468
304-8026	468
305-1988	472
305-2154	358
305-2155	358
305-2156	358
305-2527	60
305-3289	81
	84
305-5291	144
305-5970	2
	▶109
	▶112
305-7294	2
	▶118
305-7297	2
	▶46
	▶48
305-7298	46
305-7299	2
	▶124
	▶128
305-7302	124
305-7303	124
305-7304	124
	128
305-7305	124
305-7306	124
	128
305-7307	124
	128
305-7308	124
	128
305-7309	124
	128
305-7311	124
305-8963	2
	▶10
	▶13
	▶16
	▶18
305-8964	10
	13
305-8977	2
	▶269
305-8978	269
305-8979	269
305-8980	269
306-2126	▶578
	588
306-2127	588
306-2337	58
306-4010	532
306-4998	▶117
	158
	161
306-5800	▶280
306-6035	72
306-6687	261
	264
306-6845	21
	▶23
306-9119	380
	383
306-9199	118
307-0047	192
307-1843	2
	▶60
307-2102	565
307-2927	737
307-3175	84
307-4279	558
	▶559
307-4281	559
	560
	▶616
307-4282	559
	560
	▶618
307-4283	559
	560
	▶710
307-4284	559
	560
	▶600
307-4285	559
	560
	▶647
307-4286	▶535
	▶537
	559
	560
307-4287	▶511
	559
	560
307-4288	559
	560

▶ **PRIMARY REFERENCE**

PART NUMBER INDEX

Part	Page	Part	Page	Part	Page	Part	Page
	▶644	308-6186	▶399	310-8310	393	315-5494	154
307-4296	511	308-6189	▶411	310-8311	393	315-5846	250
	▶512	308-6518	▶356	310-8312	393	315-5848	251
	▶517	308-8642	693	310-8320	562	315-5850	251
307-4297	511	309-1567	432	310-9997	267	315-8113	360
	▶522		▶477	311-0263	176	315-9810	106
	▶524	309-1568	433	311-2732	269		109
307-4324	581		▶481	311-2752	269		112
	▶591	309-1569	433	311-3858	139	316-2198	350
307-4325	591		▶482		144		351
307-4327	591	309-1570	434	311-6342	139	316-2199	264
307-4329	591		▶484		144	316-2209	340
307-4330	591	309-5906	▶258	311-6632	139	316-2210	346
307-4331	591		▶259		144	316-3216	433
307-4336	655		565	311-8482	443		434
307-4337	655	309-5907	▶190	311-8483	443		▶574
307-4341	532		▶192	311-8485	443	316-3219	264
	535	309-6527	426	312-0005	512	316-3220	264
	537		427		517	316-9073	187
	539	309-6663	▶27		649	316-9437	335
307-4342	591		31	312-0006	512		338
307-4344	600	309-6664	13		517	316-9438	364
	602		16		649		▶367
307-4345	600		18	312-0009	512	316-9439	364
	602	309-6678	25		517		▶369
307-4347	512		27		649	316-9446	354
	517	309-8006	139	312-0010	646	316-9447	350
	649		144		647		351
307-4348	512	309-8470	217	312-0011	646		▶354
	517	309-9091	581		647	316-9449	334
307-4349	512		738	312-0012	703		▶338
	517	310-0658	2		705	317-0680	280
307-4350	602		▶139		706	317-1050	727
307-4441	215		▶144	312-0013	703	317-1118	512
	▶217	310-2358	231		705		517
307-4671	571		236		706		649
	▶579	310-2392	192	312-0014	600	317-2684	95
307-4673	174	310-2715	449		602	317-2717	16
	▶580		451	312-0037	596		18
	587	310-2716	291	312-3084	13	317-3064	16
307-6202	744	310-3062	611	312-4545	64		18
307-8645	104	310-3063	610	312-4595	437	317-3065	16
307-9836	▶395		611	312-4596	437		18
	399	310-3064	610	312-4597	437	317-3580	13
307-9837	▶397	310-3065	621	312-5074	437	317-4099	289
	399	310-3066	621	312-8303	380	317-4251	500
307-9843	77	310-3067	621	312-8304	383	317-6137	▶360
307-9859	▶412	310-3216	365	312-8305	380	317-7147	124
	414		366		383	317-8021	144
308-0603	229	310-3217	432	313-2154	229		▶149
	235		433		241	318-0815	541
308-0604	▶229	310-3219	434	313-2394	344	318-7992	693
	559	310-3220	▶550		346	318-8499	703
308-0605	▶203	310-5150	449	313-2395	344		705
	559		451	313-2463	437		706
	560	310-6272	638	313-2794	545	318-8500	703
308-0606	▶176		641	313-6254	387		705
	433		748	313-6255	387		706
	574	310-6786	196	314-3472	548	318-8501	703
308-3554	693	310-6787	196	314-4018	561		705
308-3555	693	310-6788	196	314-5274	693		706
308-4182	81	310-6789	▶196	314-5275	693	318-8502	703
	84		237	315-3426	261		705
308-4183	81	310-7918	139		264		706
	84		144	315-5492	562	318-8503	703

▶ **PRIMARY REFERENCE**

PART NUMBER INDEX

Part	Page
	705
	706
318-8504	703
	705
	706
319-0844	118
319-6491	▶210
	250
320-2345	112
320-2868	168
320-3625	477
	481
	482
	484
	▶495
320-3626	477
	481
	482
	484
	▶496
320-3627	481
	484
	▶497
320-3628	482
	484
	▶498
320-3669	34
320-4729	124
	128
320-7426	158
	161
320-9921	16
	18
321-0614	229
	237
	241
321-1270	139
	144
321-2383	58
321-3396	661
	662
321-3402	641
	748
321-3403	641
	748
321-3404	641
	748
321-3420	649
321-3421	558
	▶641
321-3440	559
321-3446	▶415
321-3471	703
321-3600	▶121
	139
	144
321-5226	555
321-6100	451
321-6101	451
321-6102	451
321-6103	451
321-6104	452
322-2086	688
322-3161	665
322-6576	688
322-9213	180
322-9214	180
322-9215	180
322-9216	180
322-9217	181
322-9218	181
322-9219	181
322-9220	181
322-9221	181
322-9222	181
322-9223	182
322-9224	182
322-9225	182
322-9226	182
322-9227	182
322-9228	182
322-9229	183
322-9230	183
322-9231	183
322-9232	183
322-9233	183
322-9234	183
322-9235	184
322-9236	184
322-9237	184
322-9238	184
322-9239	184
322-9240	184
322-9241	185
322-9242	185
322-9243	185
322-9244	185
322-9245	185
322-9246	185
322-9662	79
322-9703	474
323-1602	432
	433
323-1603	433
	434
323-6802	700
323-6803	700
323-7359	688
323-8126	234
323-8127	▶234
	415
323-8561	688
324-0444	38
324-2713	323
324-3294	507
324-4595	441
324-4597	441
324-4616	441
325-1344	710
	712
325-7500	254
	259
326-1015	44
	46
	48
326-1644	119
326-1849	176
	▶180
326-3251	672
	673
326-5054	44
	46
	48
326-5063	38
326-7288	16
326-7289	16
327-4449	180
327-7787	▶648
327-7788	648
	▶662
327-7789	648
	▶748
327-7790	▶559
	648
327-7794	559
	▶712
327-7795	559
	▶602
327-7797	▶539
	559
327-7798	559
	▶649
327-7799	▶526
	559
327-7800	559
	▶645
327-7801	▶235
	559
327-7805	648
	▶738
327-7817	602
	▶608
327-7818	608
327-7860	710
	712
328-0449	341
328-8709	109
	112
329-0060	128
329-0061	128
329-0062	128
329-0063	128
329-0064	48
	128
329-6683	154
329-7854	6
329-7856	6
330-3123	216
330-3409	179
330-3410	179
330-3685	139
	144
330-3687	139
	144
330-5467	139
	144
330-9599	109
	112
331-7540	145
331-8840	359
331-8847	359
331-8854	359
333-0203	241
334-2932	149
334-5104	▶240
	560
334-5105	241
334-6680	558
	▶560
334-6684	517
334-6687	524
334-6688	524
334-6689	600
334-6690	600
334-6691	537
334-6693	537
334-6694	703
	706
334-6700	560
334-6714	701
334-6715	701
334-6716	703
334-6717	▶701
	706
334-8046	359
335-3953	454
336-0693	36
336-8174	144
336-8175	144
336-8176	144
336-8177	144
336-8178	144
336-8179	144
336-8180	144
337-9558	128
339-3397	55
339-5272	176
339-8785	128
339-9637	25
	27
342-4836	179
342-4837	179
343-5937	118
343-5938	118
347-1132	4

▶ **PRIMARY REFERENCE**



© 2009 CATERPILLAR
ALL RIGHTS
RESERVED

CAT, CATERPILLAR, THEIR RESPECTIVE LOGOS, “CATERPILLAR YELLOW” AND THE POWER EDGE TRADE DRESS, AS WELL AS CORPORATE AND PRODUCT IDENTITY USED HEREIN, ARE TRADEMARKS OF CATERPILLAR AND MAY NOT BE USED WITHOUT PERMISSION.

PRINTED IN
U.S.A.