JUNHO 1982

SEBP1183

CATERPILLAR

RUTHZIL TRATOR COMERCIAL DE PEÇAS LTDA 11 97083-6812 ROLANDO CITRANGULO

parts

955L Track Loader

Powered by 3304 Engine

13X1 to Last Built
78P38513 to Last Installed
2ZA1 to Last Installed

QUICK REFERENCE CHARTS

USE THESE CHARTS TO RECORD FREQUENTLY USED MAINTENANCE INFORMATION

MACHINE SERIAL NO.	
EQUIPMENT NO.	

FREQUENTLY REPLACED ITEMS

PART NO.	PART NAME

FLUIDS & LUBRICANTS

WHERE USED	TYPE	AMOUNT

OTHER MAINTENANCE ITEMS

FORM SEBP1183

CONTENTS

ALPHABETICAL INDEX OF GROUPS__ 3
CONVERSION EQUIVALENT TABLES INSIDE BACK COVER
ORDERING PARTS_____ 2
QUICK REFERENCE CHART INSIDE FRONT COVER
USING THE PARTS BOOK_____2

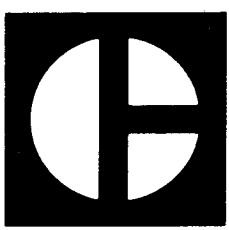

PARTS BOOK

955L TRACK LOADER

POWERED BY 3304 ENGINE

SERIAL NUMBER
13X1—TO LAST BUILT (VEHICLE)
78P38513—TO LAST INSTALLED (ENGINE)
2ZA1—TO LAST INSTALLED (TRANSMISSION)

REVISION PUBLISHED JUNE 1982
CATERPILLAR TRACTOR CO.
PUBLICATIONS DIV.—SERVICE G.O.
PEORIA, ILL. U.S.A.

QUICK REFERENCE GUIDE TO MAJOR SECTIONS

BASIC ENGINE
LUBRICATION SYSTEM
COOLING SYSTEM
INTAKE AND EXHAUST SYSTEM
FUEL SYSTEM AND GOVERNOR
STARTING AND ELECTRICAL SYSTEM
POWER TRAIN—POWER TRANSMISSION UNIT
STEERING CLUTCHES & BRAKES
CHASSIS & UNDERCARRIAGE
HYDRAULIC SYSTEM
IMPLEMENTS
CAB, GAUGES & ACCESSORIES
SERVICE EQUIPMENT & SUPPLIES

MACHINE IDENTIFICATION Caterpillar machines are identified with SERIAL NUMBERS. Serial numbers are assigned to the chassis and to the engine. The chassis and the engine also carry ARRANGEMENT NUMBERS and in some cases MODIFICATION NUMBERS. These numbers are shown on the serial number plates and on the master plate in the operator's compartment. For the location of the serial number plates, refer to the Specification Section at the back of this Parts Book.

Caterpillar dealers need these numbers to determine which components were included on the machine when it was assembled at the factory. This permits accurate identification of replacement part numbers.

ORDERING PARTS Quality Caterpillar Replacement parts are available from Caterpillar dealers throughout the world. Their parts stocks are up to date and include all parts normally required to protect your investment in Caterpillar machines. When ordering parts, your order should specify the quantity, part number, part name and the serial number, arrangement number and any modification numbers of the machine for which the parts are needed. If in doubt about the part number, please provide your dealer with a complete description of the needed item.

HOW TO USE THE PARTS BOOK Caterpillar Parts Books include illustrations of the groups or assemblies which make up the machine. These illustrations show the standard components plus many of the attachments available for the machine.

The alphabetical index located in the front part of the book should be used to determine the page number on which specific illustrations are shown. Reference to those pages will identify each of the individual serviceable parts.

Captions The caption under each illustration identifies the part number and name of the group or assembly shown. If more than one illustration is included for any group, the caption identifies the specific machine serial numbers to which each illustration applies. In some cases it is not possible to determine the specific machine serial numbers to which different illustrations are applicable. In those cases the caption identifies the illustration as "First Type", "Second Type", etc. Reference to the actual group or assembly is necessary in those cases to determine which illustration should be used.

Captions provide additional information such as page numbers where illustrations of sub assemblies are shown, information reguarding quantities used and other information intended to assist the user in determining parts needs.

Indented Part Names Within each illustration is a parts list identifying each serviceable part in the illustration. When a part name is indented in this list, it means that serviceable item is a part of the serviceable item under which it is indented.

Abbreviations and Symbols

▲ ●	Used to call attention to additional information shown elsewhere within the illustration.	
R.H.	Right Hand	Refers to the side of the machine as viewed from the operator's compartment.
L.H.	Left Hand	
C	Indicates changes from the previous illustration of the same group or assembly.	
O.D.	Outside Diameter	
I.D.	Inside Diameter	
N/S	Not Serviced	
Assem.	Assembly	
in.	Inch	
ft	Foot	
cm	Centimetre	
dm	Decimetre	

Note: Continuing improvement and advancement of product design may cause changes to your machine which may not be included in this publication. Each publication is reviewed and revised, as required, to update and include these changes in later editions.

Whenever a question arises regarding your Caterpillar product, or this publication, please consult your Caterpillar dealer for the latest available information.

INDEX

A

Name	Page
Adjustable Suspension Seat	239B
Air Cleaner	42
Air Conditioner	232F
Air Conditioner Arrangement	232A
Air Conditioner Lines	233A
Air Lines	43
Alternator	97 thru 100
Ammeter—60 Ampere	72

B

Back-Up Warning	101
Balancer—Engine	13
Battery	70
Battery and Wiring	70
Battery Cables	70 & 71
Bearings—Connecting Rod	12
Bearings—Crankshaft	9, 10 & 11
Bearings—Engine Balancer	9
Bevel Gear	122
Bevel Gear & Steering Clutch Lubrication Filter	123
Bevel Gear Oil Filler	118
Bevel Gear Pump Lines & Filter	121
Blower—Cab Pressurizer	230
Blower Fan and Guard	35
Brace—Lift Cylinder	207D
Brake Linkage Service	135
Brake Repair	135B
Breather—Engine	31
Breather—Steering Clutch & Final Drive	133
Bucket—General Purpose	208, 209, 212 & 213
Bucket—General Purpose—Weld-On Teeth	210
Bucket—Multi-Purpose	214
Bucket—Side Dump	215
Bucket Control	206
Bucket Positioner	205
Bucket Teeth	217
Bumper—Rear	153

C

Cab Heater	232
Cab Liner	225
Cab Mounting	231
Cab Pressurizer	226 thru 230
Camshaft	12
Cap—Fuel Tank	67
Cap—Hydraulic Tank	171 & 175
Cap—Oil Filler	27
Cap—Radiator	33
Cartridge—Hydraulic Vane Pump	183
Circuit Breaker—15 & 60 Amp	72
Circuit Breaker—30 Amp	232A
Compressor—Refrigerant	232B
Connecting Rod & Piston	12
Control Valve—Auxiliary Cylinder Relief	177
Control Valve—Lift & Tilt Cylinder	178
Conversion Arrangement—Non-ROPS	223
Counterweight	152
Covers—Cylinder Block	8
Crankcase Guard	150
Crankshaft	10
Crankshaft Bearings	9, 10 & 11
Crankshaft Hub	22
Crankshaft Pulley	21
Crankshaft Seals	11
Cutting Edge—Bolt-On	216
Cutting Edge—General Purpose Bucket	208, 209, 212 & 213
Cylinder Block	8 & 9
Cylinder Block Covers	8
Cylinder Head	14
Cylinder Head Fastener	13
Cylinder Liners—Engine	8

D

Dash	146
Dash Lamp	79
Disc — Steering Clutch	136
Disconnect Switch	79
Drain — Fuel Tank	67
Drain — Radiator	32
Drain Line — Fuel Filter to Governor Housing	65
Drain Line — Fuel Injection Pump	65
Drain Lines — Fuel	65
Drum — Final Drive	128

E

Name	Page
Electric Horn	232
Electric Starting Motor	85 thru 94
Element — Air Cleaner	42
Element — Bevel Gear & Steering Clutch	123
Element — Hydraulic Tank	171 & 175
Element — Transmission Oil	120
Engine Arrangements	4
Engine Mounting Hardware	19
Engine Oil Cooler	39
Exhaust Manifold	48
Exhaust Manifold Fastener	47

F

Name	Page
Fan—Blower	35
Fan—Reversible	35
Fan Drive	19
Fastener—Cylinder Head	13
Fastener—Exhaust Manifold	47
Fastener—Front Housing	24
Fastener—Oil Pan	26
Filler—Bevel Gear Oil	118
Filler—Transmission Oil	118
Filter—Air Cleaner	42
Filter—Bevel Gear & Steering Clutch	123
Filter—Cab Pressurizer	226
Filter—Crankcase Oil	28
Filter—Fuel	66
Filter—Hydraulic Tank	171 & 175
Filter—Transmission	120
Final Drive—Lower Half	129
Final Drive—Upper Half	128
Final Drive—Lower Half—Wide Gauge	131
Final Drive—Upper Half—Wide Gauge	130
Fire Extinguisher	244
Flexible Coupling Drive	103
Flood Lamp	84
Floorplate	224
Flywheel	24
Flywheel Housing	24
Front Housing—Timing Gear	23B
Front Housing Cover—Timing Gear	23
Front Housing Fastener	24
Front Hydraulic Hand Control	189
Front Hydraulic Lines	185
Front Idler	154
Front Pull Hook	150
Front Timing Gear	22
Fuel Filter	66
Fuel Injection Valves & Lines	64 & 65
Fuel Injector	58 & 62
Fuel Lines	68
Fuel Priming Pump	65
Fuel Ratio Control	55
Fuel Tank	67
Fuel Tank Protective Cover	66
Fumes Disposal	31
Fuse Holder, Fuse & Wire Kit—Hour Meter	242E

G

Name	Page
Gasket—Cylinder Head	14
Gasket—Exhaust Manifold	48
Gasket—Front Housing to Block	23B
Gasket—Valve Mechanism Cover	16
Gasket Kits	246
Gauge—Bevel Gear Oil Level	118
Gauge—Converter Temperature	242
Gauge—Fuel Pressure	242
Gauge—Oil Level	27
Gauge—Oil Pressure	242
Gauge—Transmission Oil Level	118
Gauge—Water Temperature	242
Gauges	242
Gear—Crankshaft	10
Glow Plug	96
Governor & Fuel Injection Pump	51 thru 63
Governor Control	50
Governor Cover	51
Grab Iron—Dash	146
Grab Iron—Platform Support	149
Grease Gun	246
Guard—Blower Fan	35
Guard—Crankcase	150
Guard—Radiator	151
Guard—Recoil Mechanism	160
Guard—Track Guiding	159
Guard—Track Roller	159

H

Name	Page
Hand Tools	245

Name Page

Handle—ROPS Door 220
Harness—Cab Pressurizer 228
Harness—Compressor 233D
Heater—Cab 232
Heater—Jacket Water 34
Heater Lines 234
Hitch 151
Hood & Guard 144
Horn—Electric 232
Hoses—Radiator Inlet & Outlet 32
Hub—Crankshaft 22
Hydraulic Arrangements 167
Hydraulic Control—Mechanical 191
Hydraulic Control—Transmission 110
Hydraulic Cylinder—Lift 199
Hydraulic Cylinder—Multi-Purpose Bucket 202
Hydraulic Cylinder—Side Dump Bucket 201
Hydraulic Cylinder—Tilt 197
Hydraulic Cylinder—Mounting—Multi-Purpose Bucket 203
Hydraulic Hand Control—Front 189
Hydraulic Hand Control—Rear 190
Hydraulic Lines—Multi-Purpose Bucket 188
Hydraulic Lines—Side Dump Bucket 187
Hydraulic Lines Swivel Joint 186
Hydraulic Pump & Lines 182
Hydraulic Tank & Valve ..... 168 thru 176

I

Indicator — Air Service 242
Indicator — Converter Temperature ... 242
Indicator — Fuel Pressure 242
Indicator — Water Temperature 242

J

Jacket Water Heater 34

K

Kit — Alternator Repair 98
Kit — Electric Starting Motor .. 86 thru 94
Kit — Solenoid Switch 95
Kit — Turbocharger Repair 46
Kit — Water Pump 36

L

Name Page

Lever—Governor Control 50
Lever—Power Take-Off Control 126
Lever—Transmission Control 114
Lift Cylinder 199
Lift Cylinder Brace 207D
Lift Cylinder Lines 194
Lifter—Valve 15
Lifting—Engine 16
Lighting—4 Lamp 81
Lighting—6 Lamp 82
Lines—Air Conditioner 233A
Lines—Bucket Positioner 205
Lines—Cab Heater 234
Lines—Front Hydraulic 185
Lines—Fuel Injection ..... 64 & 65
Lines—Hydraulic—Multi-Purpose Bucket 188
Lines—Hydraulic—Side Dump Bucket 187
Lines—Hydraulic Tank to Pump 182
Lines—Hydraulic Tank to Ripper 184
Lines—Lift Cylinder 194
Lines—Tilt Cylinder 192
Lines—Torque Converter Cooler 41
Lines—Transmission Filter 119
Linkage—Bucket Control 206
Linkage—Governor Control 50
Linkage—Transmission Control 114
Loader Frame 140

M

Magnetic Screen—Transmission Filter Lines 120
Mechanical Hydraulic Control 191
Mechanical Kickout 203
Mirror 225
Motor—Cab Pressurizer 230
Motor—Windshield Wiper 238
Mounting and Condenser—Air Conditioner 232D
Mounting—Multi-Purpose Hydraulic Cylinder 203
Mounting—Platform 224
Mounting—Roll-Over Protective Structure 142
Mounting—Transmsission 117
Mounting Hardware—Engine 19
Muffler—Air Conditioner 232A
Muffler 48
Muffler Mounting 48
Multi-Purpose Bucket 214
Multi-Purpose Bucket Arrangement 210

N

Name	Page
Name Plates & Transfers	247

O

Name	Page
Oil Cooler — Engine	39
Oil Cooler — Torque Converter	40
Oil Filler	27
Oil Filter	28
Oil Level Gauge	27
Oil Lines — Engine	30
Oil Pan	25
Oil Pan Fastener	26
Oil Pump — Engine	28 & 29
Orifice — Piston Cooling	30

P

Name	Page
Padlock — Fuel Tank Protective Cover	66
Padlock — Hydraulic Tank Cap Protective Cover	181
Padlock — Vandalism Guard	243
Pilot Operated Relief Valve	181
Pilot Valve — Bucket Positioner	204
Pipe — Air Cleaner to Turbocharger	43
Piston	12
Piston Ring	12
Platform Mounting	224
Platform Support	147
Plug — Oil Pan Drain	25
Plug — Steering Clutch Drain	133
Power Take-Off — Rear	124
Power Take-Off Control	126
Power Train Arrangement	102
Powershift Transmission	104
Precombustion Chamber	14
Prescreener — Air Cleaner	42
Pressure Control — Transmission	113
Protection Grid — Radiator	34
Protective Cover — Fuel Tank	66
Protective Cover — Hydraulic Tank Cap	181
Pulley — Crankshaft	21
Pulley — Fan Drive	20 & 21
Pull Hook — Front	150
Pump — Cartridge	183
Pump — Fuel Priming	65
Pump — Hydraulic Vane	183
Pump — Steering	116
Pump — Transmission	116

R

Name	Page
Radiator	32
Radiator Core Protection Grid	34
Radiator Guard	151
Rear Bumper	153
Rear Hydraulic Hand Control	190
Rear Hydraulic Lines	184
Rear Power Take-Off Arrangement	123
Recoil Mechanism Guard	160
Recoil Spring — Front Idler	154
Regulator — Water Temperature	40
Regulator & Housing	40
Relief Valve — Transmission	117
Reversible Fan & Guard	35
Rocker Arm — Valve	15
Roll-Over Protective Structure — Enclosed	219
Roll-Over Protective Structure — Open	223
Roll-Over Protective Structure Mounting	142
Roll-Over Protective System Arrangement — Open	222

S

Name	Page
Safety Brace	143
Seal — Final Drive	129
Seal — Fuel Injection Pump Housing	64 & 65
Seals — Crankshaft	11
Seals — Cylinder Liner	8
Seals — Turbocharger Exhaust	44
Seat — Adjustable Suspension	239
Seat & Support	240
Seat Belts	240
Selector Valve — Transmission Control	112
Service Meter	242
Shaft & Link — Windshield Wiper	239
Side Dump Bucket & Support	215
Side Dump Bucket Arrangement	211
Sliding Window — ROPS	222

Name Page

Solenoid Switch 94D
Specifications 248
Sprocket 127
Starting Motor—Electric ..... 85 thru 94
Steering Brake 137
Steering Brake Lining 137
Steering Brake Linkage ..... 138 & 139
Steering Clutch 136
Steering Clutch Case 132
Steering Clutch Control 134
Steering Pump 116
Suction Bell—Oil Lines 30
Support—Engine ..... 17 & 18
Support & Seat 240
Switch—Disconnect 79
Switch—Heat-Start 72
Switch—Oil Pressure 72
Switch—Solenoid 95
Swivel Joint—Hydraulic Lines 186
Swivel Joint—Tilt Cylinder Lines 196

T

Thermostat—Water Temperature 40
Tilt Cylinder 197
Tilt Cylinder Lines 192
Tilt Cylinder Lines Swivel Joint 196
Tilt Relief Valve 180
Tip—Bucket Teeth 218
Tools 245
Tooth—Bucket 217
Torque Chart 247A
Torque Control 55
Torque Converter 105
Torque Converter Cooler Lines 41
Torque Converter Oil Cooler 40
Track ..... 163 thru 165
Track Carrier Roller 158
Track Guiding Guard 159
Track Links ..... 163 thru 165
Track Roller 162
Track Roller Frame 156
Track Roller Frame—Wide Gauge 157
Track Roller Guard 159
Transmission 107
Transmission Control 114
Transmission Filter 120
Transmission Filters Lines 119
Transmission Hydraulic Control 110
Transmission Mounting 117
Transmission Oil Filler 118

Name Page

Transmission Pump 116
Trunnion — Engine 17
Tube — Fuel Ratio Control to Inlet Manifold 43B
Turbocharger ..... 45 & 46
Turbocharger Oil Lines 47

V

Valve — Bucket Positioner Pilot 204
Valve — Control — Auxiliary Cylinder Relief 177
Valve — Fuel Injection ..... 64 & 65
Valve — Fuel Injection Housing Drain 54
Valve — Fuel Tank Drain 67
Valve — Intake & Exhaust 14
Valve — Lift & Tilt Cylinder Control 178
Valve — Pilot Operated Relief 181
Valve — Selector — Transmission 112
Valve — Steering Clutch Control 135
Valve — Tilt Relief 180
Valve — Torque Converter Cooler Lines 41
Valve — Transmission Relief 117
Valve Mechanism 15
Valve Mechanism Cover 16
Vandalism Guard 243
Vane Pump — Hydraulic 183
Vee Belt — Fan Drive 20

W

Warning & Gauges 242
Water Lines 38
Water Lines—Elbow 39
Water Pump 36
Water Separator 69
Weld-On Teeth—General Purpose Bucket 210
Wide Gauge Track Loader Arrangement 166
Windshield Washer 235
Windshield Wiper—Front 236
Windshield Wiper—Rear 237
Windshield Wiper Shaft & Link 239
Wiring Harness—Compressor 233D
Wiring Diagram 73
Wiring Harness ..... 76 thru 78

INDEX ALPHABÉTIQUE

Moteur de base (Page 4)

Désignation	Page
Arbre à cames	12
Bielles et pistons	12
Bloc-cylindres	8
Bloc-cylindres (couvercles)	8
Bride de levage	16
Carter avant	23B
Carter avant (boulonnerie)	24
Carter avant (couvercle)	23
Carter de volant	25
Carter inférieur	25
Coussinets de rechange de vilebrequin	11
Culasse	14
Culasse (boulonnerie)	13
Engrenage de distribution (avant)	22
Ensemble moteur	4
Équilibreur dynamique	13
Fixation du carter inférieur	26
Joint de vilebrequin	11
Moyeu de vilebrequin	22
Pièces de fixation du moteur	19
Poulie	20
Poulie de ventilateur	21
Poulie de vilebrequin	21
Soupapes (couvercle)	16
Soupapes et train de commande	15
Support moteur (arrière)	18
Support moteur (avant)	18
Support moteur (avant et arrière)	17
Tourillon	17
Ventilateur (entraînement)	19
Vilebrequin	10
Volant	24

Circuit de graissage (Page 27)

Désignation	Page
Canalisations de graissage	30
Filtre à huile	28
Indicateur de niveau d'huile	27
Pompe à huile	28
Reniflard	31
Tubulure de remplissage d'huile	27
Tuyauterie d'évacuation de vapeurs	31

Circuit de refroidissement (Page 32)

Désignation	Page
Convertisseur de couple (refroidisseur d'huile)	40
Convertisseur de couple (tuyauterie de refroidisseur)	41
Grille de protection du faisceau de radiateur	34
Pompe à eau	36
Radiateur	32
Réchauffeur d'eau de cylindres	34
Refroidisseur d'huile moteur	39
Thermostat et boîtier	40
Tuyauterie d'eau	38
Tuyauterie d'eau (coude)	39
Ventilateur à pales réversibles et protection	35
Ventilateur soufflant et protection	35

Admission et échappement (Page 42)

Désignation	Page
Canalisations d'air	43
Canalisations de graissage (turbocompresseur)	47
Collecteur d'échappement	48
Collecteur d'échappement (boulonnerie)	47
Filtre à air	42
Silencieux d'échappement	48
Silencieux d'échappement (groupe de montage)	49
Tamis de préfiltre à air	42
Turbocompresseur	45

Alimentation en carburant et régulateur (Page 50)

Désignation	Page
Canalisations de carburant	68
Canalisations de vidange	65
Chapeau de sécurité (bouchon de réservoir de carburant)	66
Filtre à carburant	66
Injecteurs et tuyauterie	64
Pompe d'amorçage de carburant	65
Régulateur (couvercle)	51
Régulateur (timonerie extérieure)	50
Régulateur et pompe d'injection	51
Réservoir de carburant	67
Séparateur d'eau	69

Démarrage et installation électrique (Page 70)

Alternateurs	97
Avertisseur de recul	101
Batterie et câblage	70
Bougies de préchauffage	96
Démarreur électrique	85
Éclairage	81
Schéma de câblage	73

Train de transmission (Page 102)

Accouplement flexible (entraînement)	103
Convertisseur de couple	105
Couple conique	122
Couple conique (canalisations de pompe et filtre)	121
Couple conique (tubulure de remplissage d'huile)	118
Filtre et canalisations de transmission	119
Mécanisme de transmission	102
Pompe de direction	116
Pompe de transmission	116
Prise de force arrière	123
Réducteurs latéraux	128
Soupape de décharge (transmission)	117
Transmission	107
Transmission (groupe de montage)	117
Transmission à trains planétaires	108
Transmission Power Shift	104
Tubulure de remplissage d'huile de transmission	118
Vitesses (commande)	114
Vitesses (commande hydraulique)	110

Embrayages de direction et freins (Page 132)

Bâti AR (embrayages de direction)	132
Embrayages de direction	136
Embrayages de direction (commande)	134
Frein de direction	137

Bâti et train de roulement (Page 140)

Attelage	151
Bâti de l'appareil de levage	140
Capot et protège-radiateur	144
Chaînes de roulement	163
Chargeur à chaînes (voie large)	166
Châssis porteur	156
Châssis porteur (tôlerie de protection)	159
Contrepoids	152
Crochet d'attelage avant	150
Galets inférieurs	162
Galets supérieurs	158
Groupe de pose pour bâti de sécurité	142
Guide-protecteur de chaîne	159
Pare-chocs arrière	153
Plate-forme (support)	147
Protège-carter moteur	150
Protège-radiateur	151

Désignation Page

Roues AV 154
Tablier 146
Tendeur hydraulique
(capot protecteur) 160
Tirant de sécurité 143

Circuit hydraulique (Page 167)

Arrêt de fin de levage
(tringlerie) 203
Canalisations hydrauliques 187
Chapeau de sécurité (bouchon
de réservoir hydraulique) 181
Commande hydraulique
(tringlerie) 191
Équipement hydraulique. 167
Pompe hydraulique
et canalisations 182
Réservoir hydraulique
et valve sélective 168
Retour automatique
à l'angle d'attaque. 205
Vérin 201
Vérin (groupe de montage) 203
Vérin de levage 199
Vérin de levage
(canalisations). 194
Vérin d'inclinaison. 197
Vérin d'inclinaison
(canalisations). 192

Équipement de travail (Page 206)

Bord tranchant 216
Bras et bielles de godet 206

Désignation Page

Dents 217
Godet du type normal 208
Godets 210

Cabine, instruments de contrôle et accessoires (Page 219)

Avertisseur sonore électrique 232
Bâti de sécurité 219
Bâti de sécurité
(ouvert). 222
Cabine (groupe de montage) 231
Chauffage de cabine. 232
Dispositif anti-vandalisme 243
Essuie-glace (arrière) 237
Essuie-glace (avant) 236
Garniture d'insonorisation. 225
Groupe de transformation
pour machines sans ROPS 223
Lave-glace 235
Rétroviseur 225
Siège à suspension réglable 239
Support et siège 240
Surpresseur d'air de cabine 226
Témoins et
instruments de contrôle 242

Divers Page 244)

Caractéristiques. 249
Extincteur 244
Instructions sur décalcomanies. . . 247
Jeux de joints 246
Outils à main 245

INDICE

Motor Básico (Página 4)

Nombre	Página
Arbol de levas	12
Bielas y pistones	12
Bloque de motor	8
Caja delantera	23B
Caja del volante	25
Cáncamo	16
Cárter	25
Cigüeñal	10
Cojinete de bancada de repuesto	11
Conjunto de motor	4
Culata	14
Engranajes compensadores	13
Engranaje de distribución	22
Herrajes de la caja delantera	24
Herrajes de la culata	13
Herrajes del cárter	26
Herrajes del montaje de motor	19
Mando del ventilador	19
Maza del cigüeñal	22
Mecanismo de las válvulas	15
Muñón	17
Polea	20
Polea del cigüeñal	21
Polea del ventilador	21
Sello del cigüeñal	11
Soporte del motor delantero	18
Soporte del motor delantero y trasero	17
Soporte del motor trasero	18
Tapa de la caja delantera	23
Tapa del bloque de motor	8
Tapa del mecanismo de las válvulas	16
Volante	24

Sistema de Lubricación (Página 27)

Nombre	Página
Bomba del aceite	28
Filtro del aceite	28
Respiradero	31
Tuberías del aceite	30
Tubo de llenado del aceite	27
Varilla indicadora de nivel del aceite	27

Sistema de Enfriamiento (Página 32)

Nombre	Página
Bomba del agua	36
Calentador del agua de las camisas	34
Codo de tuberías del agua	39
Enfriador del aceite del convertidor de par	40
Enfriador del aceite del motor	39
Radiador	32
Reja protectora del radiador	34
Regulador y caja	40
Tuberías del agua	38
Tuberías del enfriador del convertidor de par	41
Ventilador insuflador y protección	35
Ventilador insuflador y protección reversible	35

Sistema de Admisión y Escape (Página 42)

Nombre	Página
Antefiltro especial	42
Filtro de aire	42
Herrajes de múltiple de escape	47
Montaje del silenciador	49
Múltiple de escape	48
Silenciador	48
Tuberías de aire	43
Tuberías del aceite del turboalimentador	47
Turboalimentador	45

Sistema del Combustible y Regulador (Página 50)

Nombre	Página
Bomba de cebado del combustible	65

Nombre Página

Control del regulador 50
Filtro del combustible 66
Regulador y bombas de inyección del combustible. 51
Separador de agua 69
Tanque del combustible 67
Tapa del regulador. 51
Tapa protectora del tanque del combustible. 66
Tuberías de drenado 65
Tuberías y válvulas de inyección del combustible. . . . 64
Tuberías del combustible 68

Sistema de Arranque Eléctrico (Página 70)

Alarma de retroceso. 101
Alternador 97
Batería y alambrado. 70
Bujías incandescentes. 96
Conjunto del alternador 97
Diagrama de conexiones 73
Motor de arranque eléctrico. 85
Sistema de luces 81

Tren de Potencia — Unidad de Transmisión de Fuerza (Página 102)

Bomba de la dirección 116
Bomba de la transmisión. 116
Conjunto de la toma de fuerza trasera 123
Control de la transmisión 114
Control hidráulico de la transmisión. 110
Convertidor de par. 105
Corona 122
Mando de acoplamiento flexible 103
Mando final 128
Montaje de la transmisión 117
Servotransmisión. 104
Transmisión 107
Transmisión planetaria 108
Tren de potencia 102

Nombre Página

Tuberías de la bomba de la corona y filtro 121
Tuberías del filtro de la transmisión 119
Tubo de llenado del aceite de la corona 118
Tubo de llenado de la transmisión 118
Válvula de presión máxima de la transmisión 117

Sistema de la Dirección y Frenos (Página 132)

Caja de los embragues de dirección 132
Control de los embragues de dirección 134
Embragues de dirección 136
Frenos de dirección 137

Chasís y Tren de Rodaje (Página 140)

Bastidor de los rodillos inferiores . 156
Bastidor del cargador 140
Capota y protección. 144
Carril 163
Contrapeso. 152
Enganche. 151
Gancho delantero 150
Montaje de estructura protectora contra vuelcos 142
Parachoques traseros 153
Protección de los rodillos inferiores 159
Protección guía de carril 159
Protección del cárter 150
Protección del mecanismo tensor . 160
Protección del radiador. 151
Rodillos inferiores. 162
Rodillos superiores 158
Rueda guía. 154
Soporte de la plataforma. 141
Tablero 146
Tirante de seguridad. 143

Sistema Hidráulico (Página 167)

Nombre	Página
Cilindro	201
Cilindro de inclinación	197
Cilindro de levantamiento	199
Conjunto hidráulico	167
Control hidráulico	191
Desenganche automático	203
Montaje de cilindro	203
Protección de la tapa del tanque hidráulico	181
Tuberías y bomba hidráulica	182
Tuberías del cilindro de inclinación	192
Tuberías del cilindro de levantamiento	197
Tuberías hidráulicas	187
Ubicador del cucharón	205
Válvula y tanque hidráulico	168

Implementos (Página 206)

Conjunto del cucharón	210
Control del cucharón	206
Cucharón para uso general	208
Cuchillas	216
Dientes	217

Cabina, Instrumentos y Accesorios (Página 219)

Nombre	Página
Asiento de suspensión ajustable	239
Bocina eléctrica	232
Compresor de la cabina	226
Conjunto de conversión sin estructura protectora contra vuelcos	223
Conjunto del calentador de la cabina	232
Espejos	225
Estructura protectora contra vuelcos	219
Estructura protectora contra vuelcos — abierta	222
Lavador de parabrisas	235
Limpiaparabrisas delantero	236
Limpiaparabrisas trasero	237
Montaje de la cabina	231
Protección contra vandalismo	243
Recubrimiento de la cabina	225
Sistema de alarma e instrumentos	242
Soporte y asiento	240

Materiales Diversos (Página 244)

Calcomanías	247
Especificaciones	250
Extinguidor contra incendios	244
Herramientas	245
Juegos de empaquetaduras	246

ÍNDICE

Partes da máquina relativas ao motor (Página 4)

Designação	Página
Arranjo do motor básico	4
Árvore de comando das válvulas	12
Árvore de manivelas	10
Biela e pistão	12
Bloco do motor	8
Cabeçote	14
Caixa das engrenagens de distribuição	23B
Caixa do volante	25
Cárter do óleo	25
Comando do ventilador	19
Contrabalanço	13
Cubo da árvore de manivelas	22
Engrenagens de distribuição	22
Mancais principais do motor	11
Mecanismo das válvulas	15
Munhão	17
Olhal de levantamento	16
Peças para montagem da caixa das engrenagens de distribuição	24
Peças para montagem do cabeçote	13
Peças para montagem do cárter do óleo	26
Peças para montagem do motor	19
Polia	20
Polia da árvore de manivelas	21
Polia do ventilador	21
Suporte do motor — dianteiro	18
Suporte do motor — dianteiro e traseiro	17
Suporte do motor — traseiro	18
Tampa da caixa das engrenagens de distribuição	23
Tampa do bloco do motor	8
Tampa superior do motor	16
Vedador da árvore de manivelas	11
Volante do motor	24

Sistema de lubrificação (Página 27)

Designação	Página
Bocal de enchimento de óleo	27
Bomba de óleo	28
Filtro de óleo	28
Respiro	31
Tubulações de óleo	30
Vareta de nível do óleo	27
Ventilação do cárter	31

Sistema de arrefecimento (Página 32)

Designação	Página
Aquecedor d'água do motor	34
Arrefecedor de óleo (do motor)	39
Arrefecedor de óleo do conversor	40
Bomba d'água	36
Cotovelo d'água	39
Grelha de proteção contra erosão	34
Radiador	32
Termostato	40
Tubos d'água	38
Tubulações do arrefecedor do conversor	41
Ventilador de pás reversíveis e protetor	35
Ventilador insuflador e protetor	35

Sistema de admissão e escape (Página 42)

Designação	Página
Coletor de escape	48
Peças para montagem do coletor de escape	47
Pré-purificador	42
Purificador de ar	42
Silenciador	48
Suporte do silenciador	49
Tubos de ar	43
Tubos de óleo do turbocompressor	47
Turbocompressor	45

Sistema de alimentação e regulador de velocidade (Página 50)

Designação	Página
Bomba de purgação do combustível	65

Designação Página

Bomba injetora do combustível e regulador de velocidade 51
Controle de aceleração 50
Filtro de combustível 66
Separador d'água 69
Tampa no regulador de velocidade 51
Tampa do tanque de combustível com cadeado 66
Tanque de combustível 67
Tubos injetores de combustível e válvulas 64
Tubulações de combustível 68

Sistema elétrico e de partida (Página 70)

Alarme de marcha à ré 101
Alternador 97
Alternador — arranjo 97
Diagrama da instalação elétrica ... 73
Motor de arranque elétrico 85
Sistema de iluminação 81
Vela de aquecimento 96

Sistema de transmissão (Página 102)

Acoplamento flexível 103
Bocal de óleo da coroa do diferencial 118
Bocal de óleo do sistema de transmissão 118
Bomba da coroa do diferencial e filtro 121
Bomba da direção 116
Bomba do sistema de transmissão 116
Caixa de mudanças 107
Comando final 128
Controle das marchas 114
Controle hidráulico das marchas .. 110
Conversor de torque 105
Coroa do diferencial 122
Engrenagens da caixa de mudanças 108
Servo-transmissão 104

Designação Página

Sistema de transmissão 102
Suporte da caixa de mudanças 117
Tomada de força traseira 123
Tubulações de óleo do sistema de transmissão 119
Válvula de segurança do sistema de transmissão 117

Embreagens de direção e freios (Página 132)

Caixa das embreagens de direção 132
Controle das embreagens de direção 134
Embreagem de direção 136
Freios 137

Chassi e material rodante (Página 140)

Armação dos roletes de esteira 156
Arranjo para bitola larga 166
Capô e protetor 144
Chassi dos braços 140
Contrapeso 152
Engate 151
Escora de segurança 143
Esteira 163
Gancho dianteiro 150
Moldura do radiador 151
Painel de instrumentos 146
Pára-choque traseiro 153
Protetor e guia de esteira 159
Protetor do cárter 150
Protetor dos roletes de esteira ... 159
Roda-guia 154
Rolete inferior 162
Rolete superior 158
Suporte da plataforma 147
Suporte da estrutura de segurança (ROPS) 142
Tampa da mola tensora 160

Sistema hidráulico (Página 167)

Designação	Página
Arranjo hidráulico	167
Assentador automático da caçamba	205
Bomba hidráulica e tubulações	182
Cilindro	201
Cilindro de inclinação	197
Cilindro elevador	199
Comando hidráulico — mecânico	191
Limitador automático da elevação mecânico	203
Reservatório hidráulico e válvula	168
Suporte do cilindro	203
Tampa do reservatório hidráulico com cadeado	181
Tubos hidráulicos	187
Tubulações do cilindro elevador	194
Tubulações do cilindro de inclinação	192
Suporte do cilindro	203

Implementos (Página 206)

Borda cortante	216
Braços da caçamba	206
Caçamba de aplicação geral	208
Dentes	217

Cabine, indicadores e acessórios (Página 219)

Designação	Página
Aquecedor da cabine	232
Assento e suporte	240
Assento — suspensão	239
Buzina elétrica	232
Conversão da estrutura não ROPS	223
Espelho retro-visor	225
Estrutura contra capotagem ROPS	219
Estrutura contra capotagem ROPS — toldo	222
Forro da cabine	225
Indicadores e painel	242
Limpador do pára-brisa	236
Limpador do vidro traseiro	237
Suporte da cabine	231
Tampas com cadeado	243
Ventilador da cabine	226

Equipamento para manutenção e diversos (Página 244)

Decalcomanias	247
Especificações	251
Extintor de incêndio	244
Ferramentas	245
Jogos de juntas	246

INHALTSVERZEICHNIS

Motor (Seite 4)

Bezeichnung	Seite
Auswuchter	13
Huböse	16
Kurbelwelle	10
Kurbelwellendichtung	11
Kurbelwellen-Ersatzlager	11
Kurbelwellennabe	22
Lüfterantrieb	19
Lüfterriemenscheibe	21
Montagezapfen	17
Motorauflager, hinten	18
Motorauflager, vorne	18
Motorauflager, vorne und hinten	17
Motorausführung	4
Motorblock	8
Motorblockdeckel	8
Motor-Halteteile	19
Nockenwelle	12
Ölwanne	25
Ölwannen-Halteteile	26
Pleuelstange und Kolben	12
Riemenscheibe	20
Riemenscheibe der Kurbelwelle	21
Schwungscheibe	24
Schwungscheibengehäuse	25
Stirnrad	22
Stirnradgehäuse	23B
Stirnradgehäusedeckel	23
Stirnradgehäuse-Halteteile	24
Ventildeckel	16
Ventilsteuerung	15
Zylinderkopf	14
Zylinderkopf-Halteteile	13

Schmiersystem (Seite 27)

Bezeichnung	Seite
Entdunster	31
Entlüfter	31
Öleinfüllstutzen	27
Ölleitungen	30
Ölmeßstab	27
Schmierfilter	28
Schmierpumpe	28

Kühlsystem (Seite 32)

Bezeichnung	Seite
Drucklüfter und Verkleidung	35
Gehäuse und Thermostat	40
Kühlernetz	32
Kühlerschutzgitter	34
Kühlwasserheizung	34
Motorölkühler	39
Umkehrlüfter und Verkleidung	35
Wandlerkühlleitungen	41
Wandlerölkühler	40
Wasserleitungen	38
Wasserleitungsknie	39
Wasserpumpe	36

Ansaug- und Abgasanlage (Seite 42)

Bezeichnung	Seite
Auspuffkrümmer	48
Auspuffkrümmer-Halteteile	47
Druckluftleitungen	43
Luftreiniger	42
Schalldämpfer	48
Schalldämpferstützen	49
Turbolader	45
Turboladerölleitungen	47
Vorabscheider	42

Kraftstoffanlage und Regler (Seite 50)

Bezeichnung	Seite
Ablaßleitungen	65
Kraftstoffeinspritzventile und Leitungen	64
Kraftstoffentlüftungspumpe	65
Kraftstoffilter	66
Kraftstoffleitungen	68
Kraftstofftank	67

Bezeichnung Seite

Regler und
Kraftstoffeinspritzpumpe 51
Reglerdeckel. 51
Reglersteuerung 50
Tankkappe. 66
Wasserabscheider. 69

Anlasser und elektr. Anlage (Seite 70)

Anlasser, elektr. 85
Batterie und Verdrahtung 70
Beleuchtungsanlage 81
Drehstromlichtmaschine. 97
Glühkerze 96
Rückfahrwarnhorn. 101
Schaltplan 73
Teilliste –
Drehstromlichtmaschine. 97

Kraftübertragung – Getriebe (Seite 102)

Antrieb, elast. Kupplung. 103
Drehmomentwandler 105
Getriebe 107
Getriebeauflager 117
Getriebefüllstutzen 118
Getriebehydraulik 110
Getriebepumpe. 116
Getriebeschmierfilterleitungen . . . 119
Kraftübertragung. 102
Lastschaltgetriebe 104
Lenkpumpe 116
Planetengetriebe 108
Schaltgestänge 114
Seitenantrieb 128
Tellerrad 122
Tellerradgehäuse
– Füllstutzen 118
Tellerradgehäuse –
Pumpenleitungen und Filter . . 121
Überdruckventil –
Getriebeschmierung. 117
Zapfwelle, hinten 123

Lenkkupplungen und Bremsen (Seite 132)

Bezeichnung Seite

Lenkbremse 137
Lenkkupplung 136
Lenkkupplungsgehäuse. 132
Lenkkupplungsgestänge 134

Fahr- und Laufwerk (Seite 140)

Armaturenbrett. 146
Breitspurausrüstung 166
Frontzughaken 150
Gegengewicht. 152
Heckstoßstange. 153
Hubzylindersicherheitsstrebe 143
Kettenführungsplatten 140
Kühlerschutz 151
Laderrahmen 159
Laufkette. 163
Laufrollen 162
Laufrollenführung 159
Laufwerksrahmen 156
Leitrad 154
Motorhaube
und Verkleidung 144
Panzerwanne 150
Plattformunterbau. 147
Stützrollen. 158
Überroll-Schutzdachauflager 142
Verkleidung des
Kettenspanners. 160
Zughaken. 151

Hydraulikanlage (Seite 167)

Hubausschalter, mech. 203
Hubzylinder. 199
Hubzylinderleitungen. 194
Hydraulikanordnungen. 167
Hydraulikleitungen 187
Hydraulikpumpe
und Leitungen 182
Hydrauliksteuerung, mech. 191

Bezeichnung Seite

Hydrauliktank und Ventil 168
Hydrauliktankkappe 181
Kippzylinder 197
Kippzylinderleitungen 192
Schaufeleinsteller 205
Zylinder 201
Zylinderaufhängung 203

Anbaugeräte (Seite 206)

Normalschaufel 208
Schaufelausführungen 210
Schaufelgestänge 206
Schaufelmesser 216
Schaufelzähne 217

Fahrerhaus, Anzeigen und Zubehör (Seite 219)

Fahrerhaus-Anbausatz 231
Fahrerhausbelüftung 226
Fahrerhausheizung 232

Bezeichnung Seite

Fahrerhausverkleidung 225
Fahrersitzfederung, verstellbar 239
Fahrersitzunterbau 240
Hupe, elektr. 232
Rückspiegel 225
Schutzabdecke 243
Scheibenwaschanlage 235
Scheibenwischer, hinten 237
Scheibenwischer, vorne 236
Überrollschutz 219
Überroll-Schutzdachauflager 222
Umbausatz – ohne Überrollschutz 223
Warn- und Anzeigensatz 242

Wartungsgerät und Zubehör (Seite 244)

Abziehbilder 247
Dichtungssätze 246
Feuerlöscher 244
Handwerkzeuge 245
Technische Daten 252

		CONSISTS OF:	PAGE
CENTRAL STRUCTURE			
1	2P6201	CAMSHAFT GROUP	12
1	2P6218	CRANKSHAFT GROUP	10
1	2P6224	CRANKSHAFT SEAL GROUP	11
1	2P6495	CYLINDER BLOCK COVER GROUP	8
1	2P6540	CYLINDER BLOCK GROUP	8
1	5S6425	BALANCER GROUP	13
4	9S8912	CONNECTING ROD AND PISTON GROUP	12
UPPER STRUCTURE			
1	6N8326	ENGINE LIFTING GROUP	16
1	2P6484	CYLINDER HEAD GROUP	14
1	2P6514	VALVE MECHANISM COVER GROUP	16
1	2P6524	VALVE MECHANISM GROUP	15
1	2P6544	CYLINDER HEAD FASTENER GROUP	13
FRONT STRUCTURE			
1	2P6246	TRUNNION GROUP	17
1	2P6498	FRONT HOUSING FASTENER GROUP	24
1	2P6528	FRONT HOUSING COVER GROUP	23
1	2P7756	ENGINE SUPPORT GROUP	17
1	2P8598	CRANKSHAFT HUB GROUP	22
1	2P8608	PULLEY GROUP	20
1	2P9641	FRONT HOUSING GROUP	23
1	2P9642	FRONT TIMING GEAR GROUP	22
REAR STRUCTURE			
1	2P6119	FLYWHEEL HOUSING GROUP	25
1	7S7753	FLYWHEEL GROUP	24
LOWER STRUCTURE			
1	2P6155	OIL PAN GROUP	25
1	2P6189	OIL PAN FASTENER GROUP	26

4N3974 ENGINE ARRANGEMENT—Part 1
Engine Serial No. 78P38513 to 78P40899 inclusive. NOTE: WHEN ORDERING PARTS GIVE ENGINE ARRANGEMENT NUMBER AND SERIAL NUMBER

		Consists of:	Page
LUBRICATION SYSTEM			
1	4N4817	Oil Filler Group	27
1	1P4244	Breather Group	31
1	2P1784	Oil Pump Group	28
1	2P6475	Oil Filter Group	28
1	2P6494	Oil Level Gauge Group	27
1	2P6512	Oil Lines Group	30
COOLING SYSTEM			
1	2P662	Water Pump Group	36
1	2P6188	Water Lines Group	38
1	2P6215	Oil Cooler Group	39
1	2P7740	Water Lines Group--Elbow	39
INTAKE AND EXHAUST SYSTEM			
1	4N3924	Turbocharger Oil Lines Group	47
1	4N9584	Exhaust Manifold Fastener Group	47
1	1P8533	Turbocharger Group	45
1	2P6571	Exhaust Manifold Group	48
1	2P7337	Air Lines Group	43
FUEL SYSTEM AND GOVERNOR			
1	4N3287	Fuel Priming Pump Group	65
1	4N4510	Governor Cover Group	51
1	6N281	Governor and Fuel Injection Pump Group	51
1	6N728	Fuel Injection Lines Group	64
	- OR -		
1	7N3461	Fuel Injection Lines Group	64A
1	6N5916	Fuel Filter Group	66
1	7N3651	Drain Lines Group	65
STARTING AND ELECTRICAL SYSTEM			
1	5S8500	Glow Plug Group	96

NOTE: REFER TO INDEX FOR PAGE LOCATION OF GASKET KITS

		CONSISTS OF:	PAGE
CENTRAL STRUCTURE			
1	2P6201	CAMSHAFT GROUP	12
1	2P6218	CRANKSHAFT GROUP	10
	- OR -		
1	6N8080	CRANKSHAFT GROUP	10A
1	2P6224	CRANKSHAFT SEAL GROUP	11
1	2P6495	CYLINDER BLOCK COVER GROUP	8
	- OR -		
1	7N1088	CYLINDER BLOCK COVER GROUP	8A
1	2P6540	CYLINDER BLOCK GROUP	8
	- OR -		
1	7N8014	CYLINDER BLOCK GROUP	8B
1	5S6425	BALANCER GROUP	13
4	9S8912	CONNECTING ROD AND PISTON GROUP	12
UPPER STRUCTURE			
1	6N8326	ENGINE LIFTING GROUP	16
	- OR -		
1	8N9696	ENGINE LIFTING GROUP	16A
1	2P6484	CYLINDER HEAD GROUP	14
	- OR -		
1	6N8101	CYLINDER HEAD GROUP	14B
1	2P6514	VALVE MECHANISM COVER GROUP	16
1	2P6524	VALVE MECHANISM GROUP	15
	- OR -		
1	7N8024	VALVE MECHANISM GROUP	15B
1	2P6544	CYLINDER HEAD FASTENER GROUP	13
	- OR -		
1	7N9534	CYLINDER HEAD FASTENER GROUP	13B
FRONT STRUCTURE			
1	7N2887	CRANKSHAFT PULLEY GROUP	21
1	2P6246	TRUNNION GROUP	17
	- OR -		
1	7N9589	TRUNNION GROUP	17B
1	2P6498	FRONT HOUSING FASTENER GROUP	24
1	2P6528	FRONT HOUSING COVER GROUP	23
1	2P7753	ENGINE SUPPORT GROUP--FRONT	18
1	2P8598	CRANKSHAFT HUB GROUP	22
1	2P9641	FRONT HOUSING GROUP	23B
1	2P9642	FRONT TIMING GEAR GROUP	22
REAR STRUCTURE			
1	2P6119	FLYWHEEL HOUSING GROUP	25
1	7S7753	FLYWHEEL GROUP	24
LOWER STRUCTURE			
1	2P6155	OIL PAN GROUP	25
1	2P6189	OIL PAN FASTENER GROUP	26

7N1524 ENGINE ARRANGEMENT—Part 1
3304 Engine Serial No. 78P40900—Up. NOTE: WHEN ORDERING PARTS GIVE ENGINE ARRANGEMENT NUMBER AND SERIAL NUMBER

		CONSISTS OF:	PAGE
LUBRICATION SYSTEM			
1	4N4817	OIL FILLER GROUP	27
1	1P4244	BREATHER GROUP	31
1	2P1784	OIL PUMP GROUP	28
1	2P6475	OIL FILTER GROUP	28
1	2P6494	OIL LEVEL GAUGE GROUP	27
1	2P6512	OIL LINES GROUP	30A
COOLING SYSTEM			
1	7N5909	WATER PUMP GROUP	37
1	7N7211	WATER LINES GROUP	38
1	2P6215	OIL COOLER GROUP	39
1	2P7740	WATER LINES GROUP--ELBOW	39
INTAKE AND EXHAUST SYSTEM			
1	4N3924	TURBOCHARGER OIL LINES GROUP	47
1	4N9584	EXHAUST MANIFOLD FASTENER GROUP	47
1	7N3228	AIR LINES GROUP	45
1	1P8533	TURBOCHARGER GROUP	45
1	2P6571	EXHAUST MANIFOLD GROUP	48
FUEL SYSTEM AND GOVERNOR			
1	4N3287	FUEL PRIMING PUMP GROUP	65
1	6N5916	FUEL FILTER GROUP	66
		- OR -	
1	8N4471	FUEL PRIMING AND PRIMARY FILTER PUMP GROUP	65B
1	4N4510	GOVERNOR COVER GROUP	51
1	6N281	GOVERNOR & FUEL INJECTION PUMP GROUP	51
		- OR -	
1	7N929	GOVERNOR & FUEL INJECTION PUMP GROUP	51B
1	7N3461	FUEL INJECTION LINES GROUP	64A
1	7N3651	DRAIN LINES GROUP	65
STARTING AND ELECTRICAL SYSTEM			
1	5S8500	GLOW PLUG GROUP	96

NOTE: REFER TO INDEX FOR PAGE LOCATION OF GASKET KITS

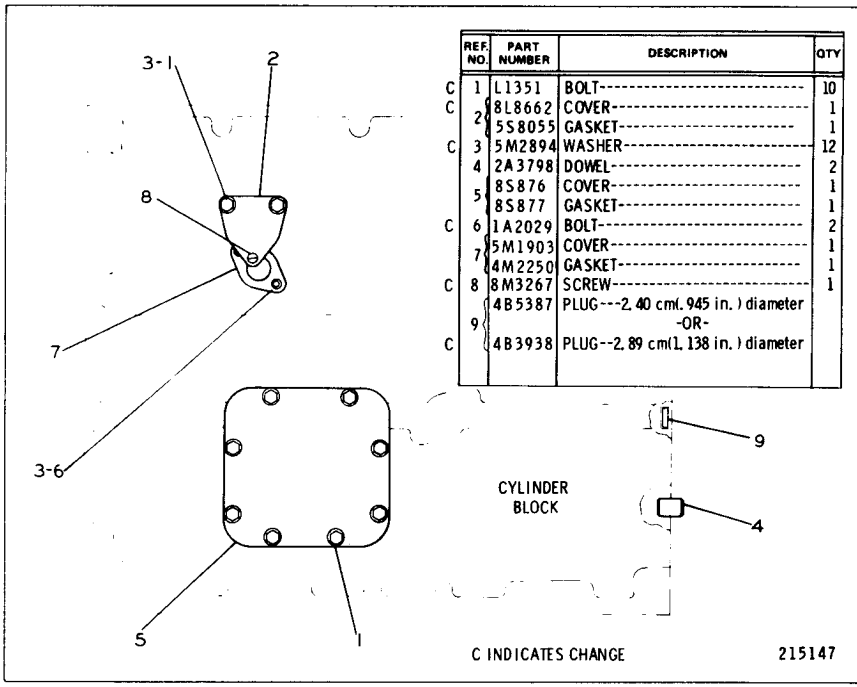

REF. NO.	PART NUMBER	DESCRIPTION	QTY
C 1	L1351	BOLT	10
C 2	8L8662	COVER	1
	5S8055	GASKET	1
C 3	5M2894	WASHER	12
4	2A3798	DOWEL	2
5	8S876	COVER	1
	8S877	GASKET	1
C 6	1A2029	BOLT	2
7	5M1903	COVER	1
	4M2250	GASKET	1
C 8	8M3267	SCREW	1
9	4B5387	PLUG---2.40 cm(.945 in.) diameter -OR-	
C	4B3938	PLUG--2.89 cm(1.138 in.) diameter	

2P6495 CYLINDER BLOCK COVER GROUP
Engine Serial No. 78P38513 to 78P47096 inclusive

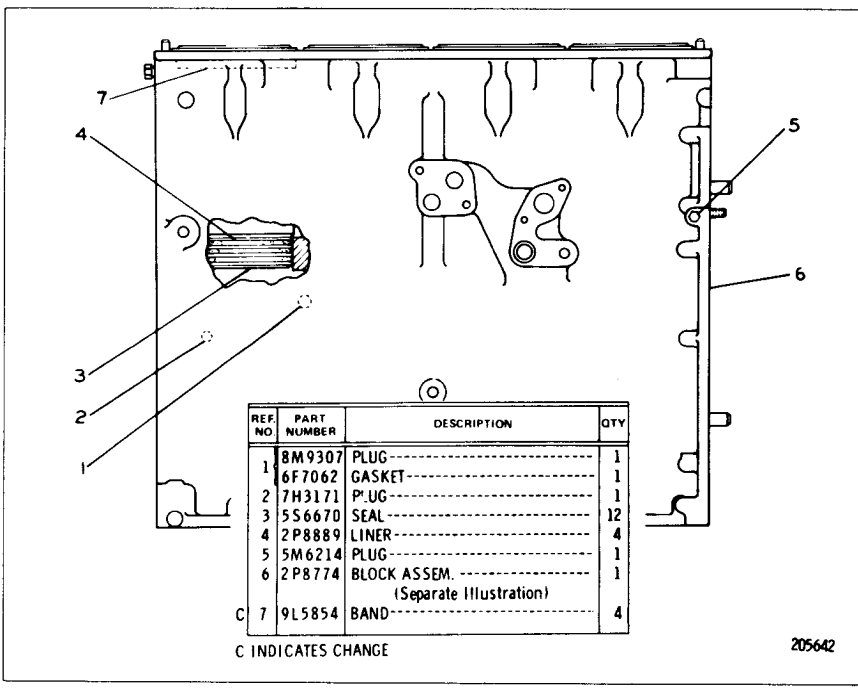

REF. NO.	PART NUMBER	DESCRIPTION	QTY
1	8M9307	PLUG	1
	6F7062	GASKET	1
2	7H3171	PLUG	1
3	5S6670	SEAL	12
4	2P8889	LINER	4
5	5M6214	PLUG	1
6	2P8774	BLOCK ASSEM. (Separate Illustration)	1
C 7	9L5854	BAND	4

C INDICATES CHANGE

2P6540 CYLINDER BLOCK GROUP
Engine Serial No. 78P38513 to 78P47096 inclusive
2P8774 Block parts are shown on Page 9

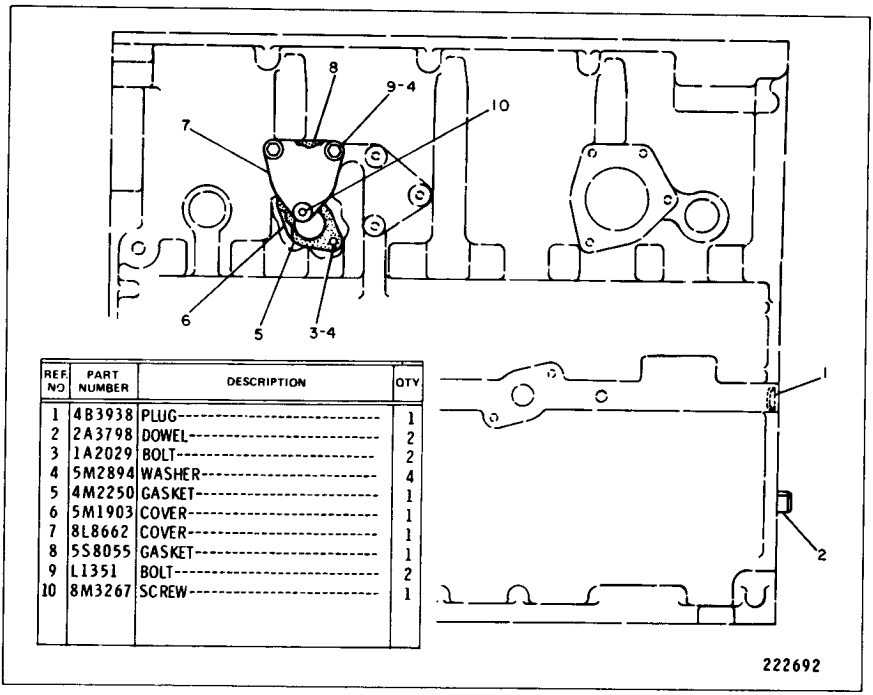

REF. NO	PART NUMBER	DESCRIPTION	QTY
1	4B3938	PLUG	1
2	2A3798	DOWEL	2
3	1A2029	BOLT	2
4	5M2894	WASHER	4
5	4M2250	GASKET	1
6	5M1903	COVER	1
7	8L8662	COVER	1
8	5S8055	GASKET	1
9	L1351	BOLT	2
10	8M3267	SCREW	1

7N1088 CYLINDER BLOCK COVER GROUP
Engine Serial No. 78P47097—Up

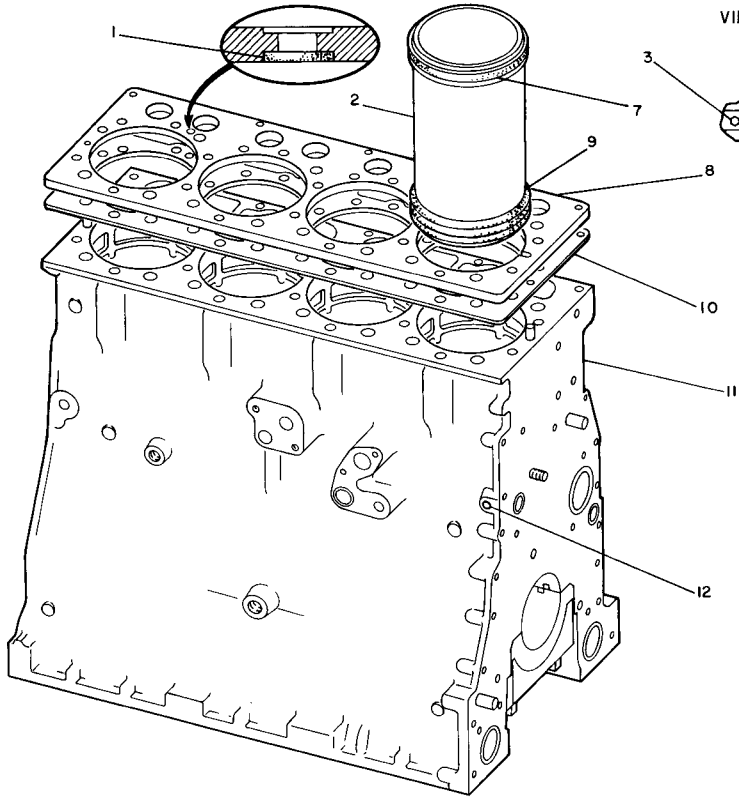

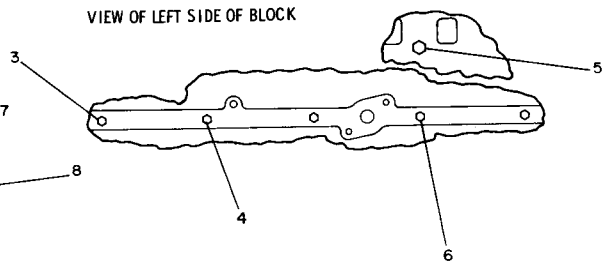

REF. NO.	PART NUMBER	DESCRIPTION	QTY
1	3S5496	SEAL	1
2	2P8889	LINER	4
3	7H3171	PLUG	1
4	3J5389	PLUG	2
5	8M9307	PLUG	1
	6F7062	GASKET	1
6	5M6213	PLUG	2
C 7	9L5854	BAND	4
8	7N8021	PLATE	1
9	5S6670	SEAL	12
10	7N8020	GASKET	1
11	6N8127	BLOCK ASSEM. (Separate Illustration)	1
12	5M6214	PLUG	1

C INDICATES CHANGE

232071

7N8014 CYLINDER BLOCK GROUP
Engine Serial No. 78P47097 to 78P57459 inclusive
6N8127 Block parts are shown on Page 9B

7N8014 CYLINDER BLOCK GROUP
Engine Serial No. 78P57460—Up
7N6552 Block parts are shown on Page 8D

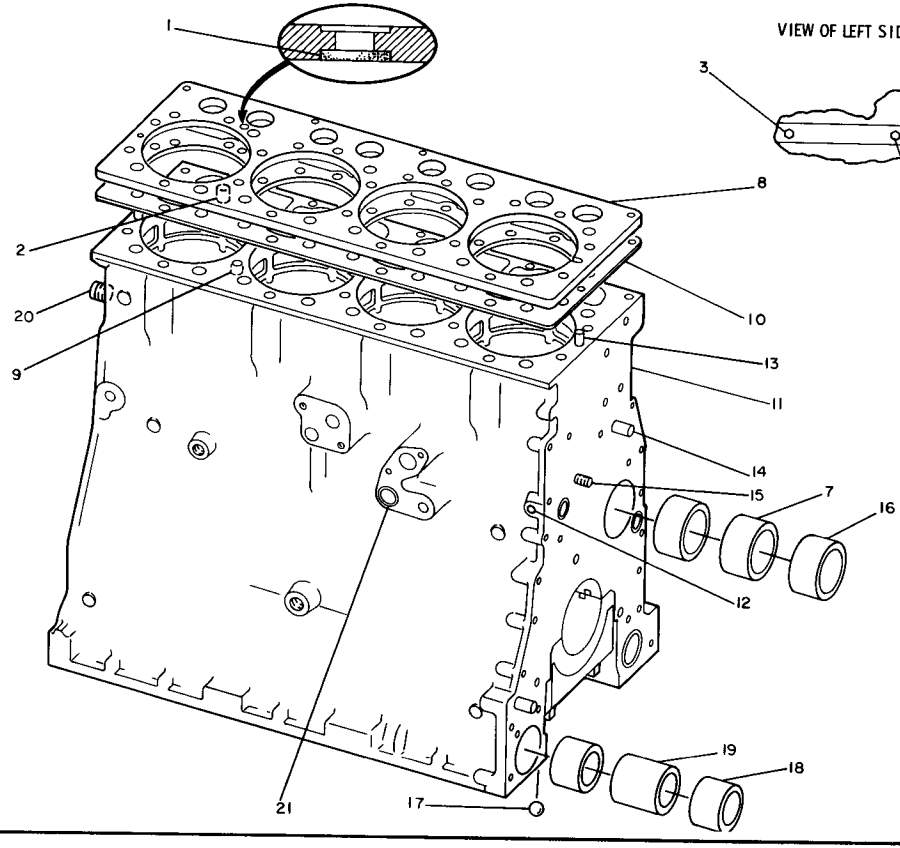

VIEW OF LEFT SIDE OF BLOCK

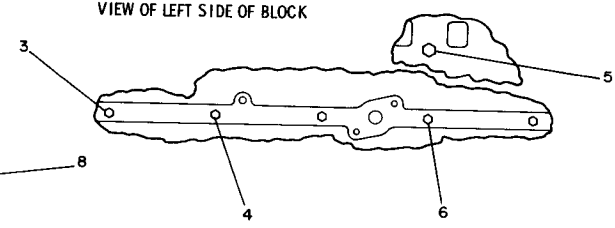

	REF. NO.	PART NUMBER	DESCRIPTION	QTY.
	1	3S5496	SEAL	1
	2	1S9540	DOWEL	1
	3	7H3171	PLUG	1
	4	3J5389	PLUG	2
	5	8M9307	PLUG	1
		6F7062	WASHER	1
	6	5M6213	PLUG	2
	7	7M4046	BEARING	2
	8	7N8021	PLATE	1
	9	5B7652	DOWEL	2
	10	7N8020	GASKET	1
C	11	7N6552	BLOCK ASSEM. (Separate Illustration)	1
	12	5M6214	PLUG	1
	13	8K1207	DOWEL	2
	14	8B6349	DOWEL	2
	15	5S8462	STUD	1
	16	8N4110	BEARING	1
	17	4B9782	BALL	5
	18	5S6419	BEARING	4
	19	5S6420	BEARING	2
	20	2B858	PLUG	1
	21	4B5387	PLUG	1

C INDICATES CHANGE

232390

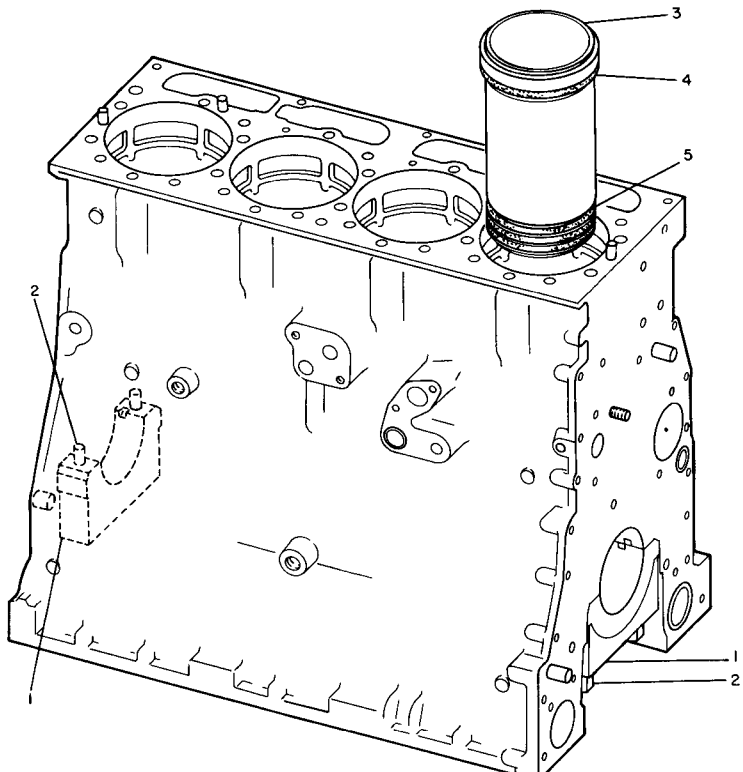

REF. NO.	PART NUMBER	DESCRIPTION	QTY.
1	6N8003	CAP	5
2	7S3224	BOLT	10
	2S5658	WASHER	10
3	2P8889	LINER	4
4	9L5854	BAND	4
5	5S6670	SEAL	12

232391

7N6552 CYLINDER BLOCK ASSEMBLY
Engine Serial No. 78P57460—Up
For Field Replacement order 1N3574 shown on Page 8E. Part of 7N8014 Cylinder Block Group shown on Page 8C

1N3574 CYLINDER BLOCK GROUP—Type 1
Engine Serial No. 78P57460—Up
Provides Field Replacement for 7N6552 shown on Page 8D

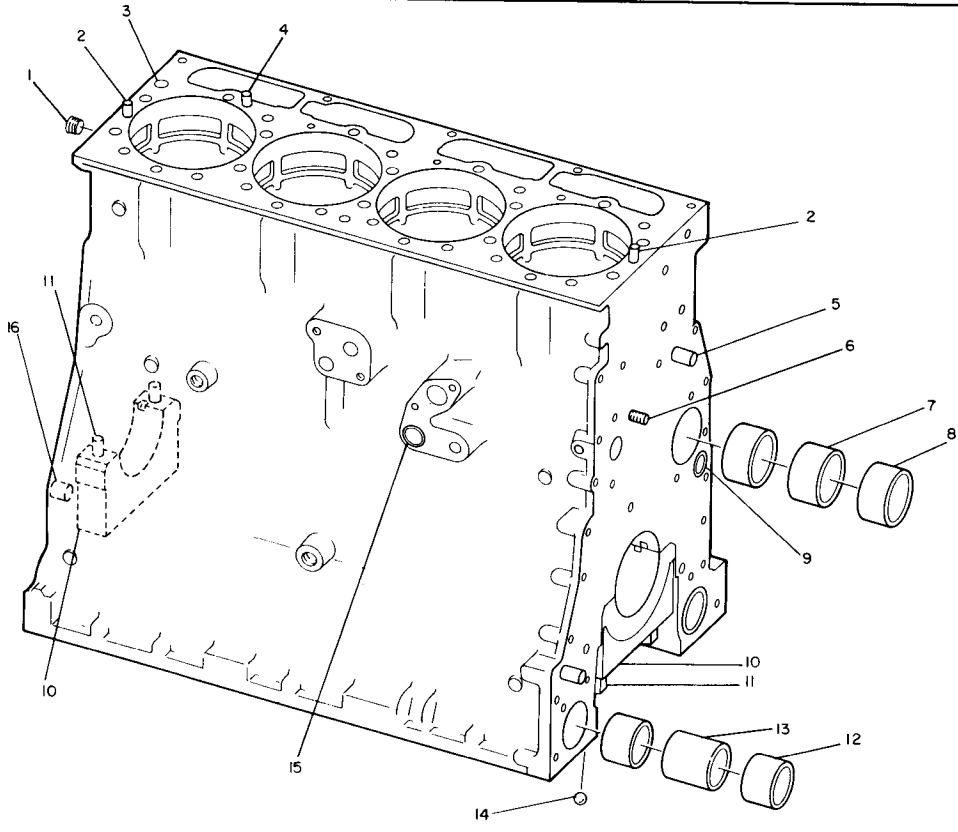

REF. NO.	PART NUMBER	DESCRIPTION	QTY
1	2B858	PLUG	1
2	8K1207	PIN	2
3	5B7652	DOWEL	2
4	1S9540	DOWEL	1
5	8B6349	DOWEL	2
6	5S8462	STUD	1
7	7M4046	BEARING	2
8	8N4110	BEARING	1
9	4B3938	PLUG	2
10	6N8003	CAP	5
11	7S3224	BOLT	10
	2S5658	WASHER	10
12	5S6419	BEARING	4
13	5S6420	BEARING	2
14	4B9782	BALL	5
15	4B5387	PLUG	1
16	2A3798	DOWEL	2

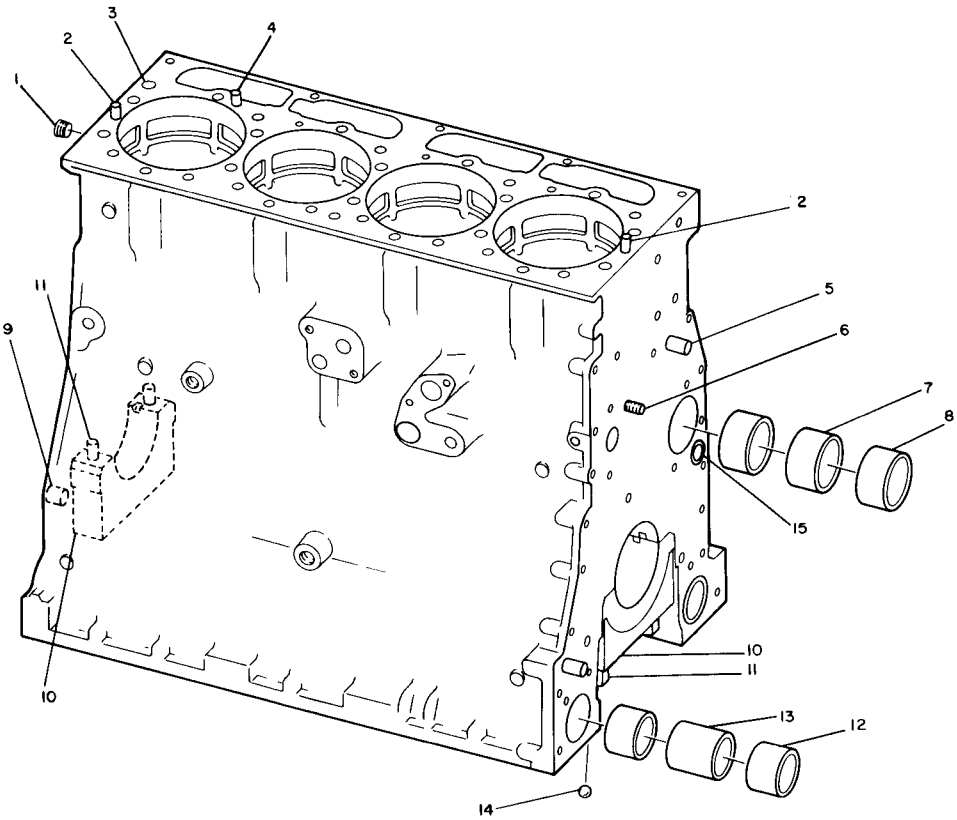

	REF. NO	PART NUMBER	DESCRIPTION	QTY
C	1	3J6019	PLUG	1
	2	8K1207	PIN	2
	3	5B7652	DOWEL	2
	4	1S9540	DOWEL	1
	5	8B6349	DOWEL	2
	6	5S8462	STUD	1
	7	7M4046	BEARING	2
	8	8N4110	BEARING	1
	9	2A3798	DOWEL	2
	10	6N8003	CAP	5
	11	7S3224	BOLT	10
		2S5658	WASHER	10
	12	5S6419	BEARING	4
	13	5S6420	BEARING	2
	14	4B9782	BALL	5
C	15	4B3938	PLUG	1

C INDICATES CHANGE

181965

1N3574 CYLINDER BLOCK GROUP—Type 2
Engine Serial No. 78P57460—Up
Provides Field Replacement for 7N6552 shown on Page 8D

2P8774 CYLINDER BLOCK ASSEMBLY

Engine Serial No. 78P38513 to 78P47096 inclusive
Part of 2P6540 Cylinder Block Group shown on Page 8

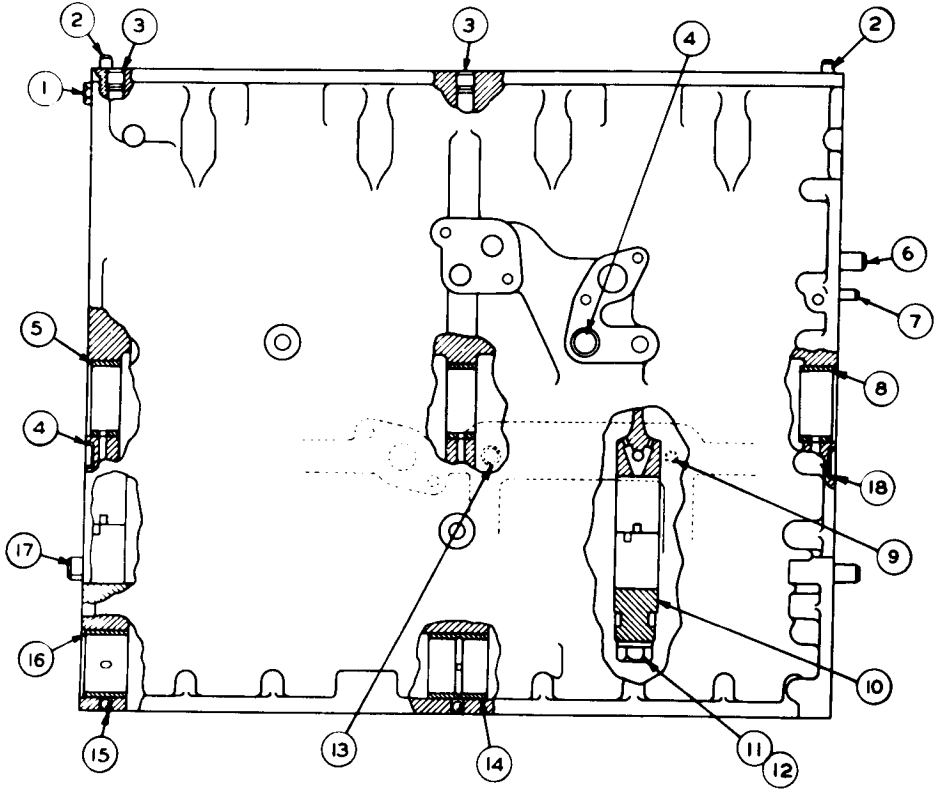

	REF. NO.	PART NUMBER	DESCRIPTION	QTY
	1	5M6213	PLUG	1
	2	8B1312	DOWEL	2
	3	5B7652	DOWEL	2
C	4	4B5387	PLUG	1
	5	7M4046	BEARING	2
	6	8B6349	DOWEL	2
	7	5S8462	STUD	1
	8	9M5477	BEARING	1
	9	1H974	DOWEL	1
	10	1P2717	BEARING CAP	5
	11	7S3224	BOLT	10
	12	2S5658	WASHER	10
	13	8S835	DOWEL	1
	14	5S6420	BEARING	2
	15	4B9782	BALL	5
	16	5S6419	BEARING	4
	17	2A3798	DOWEL	2
	18	4B5387	PLUG--24.01 mm(.945 in.) hole dia.	2
			-OR-	
C		4B3938	PLUG--28.95 mm(1.14 in.) hole dia.	2

C INDICATES CHANGE

214988

CONSISTS OF:

1	8N3663	PLATE
1	7N8022	GASKET
1	8N3661	GASKET
2	3J5389	PLUG
4	7N8018	SEAL
12	7N8025	SEAL
5	5B9603	BOLT
2	7N9342	PLATE
2	7N9343	PLATE
1	9S1366	BOLT
2	S1585	BOLT
1	.....	FORM SMHS7541

8N6274 CYLINDER BLOCK HARDWARE KIT—Field Installation
Engine Serial No. 78P38513 to 78P47096 inclusive
Note: Provides the necessary hardware to allow a counterbore 3304 Engine to be serviced with a spacer plate block

6N8127 CYLINDER BLOCK GROUP
Engine Serial No. 78P47097 to 78P57459 inclusive
Part of 7N8014 Cylinder Block Group shown on Page 8B

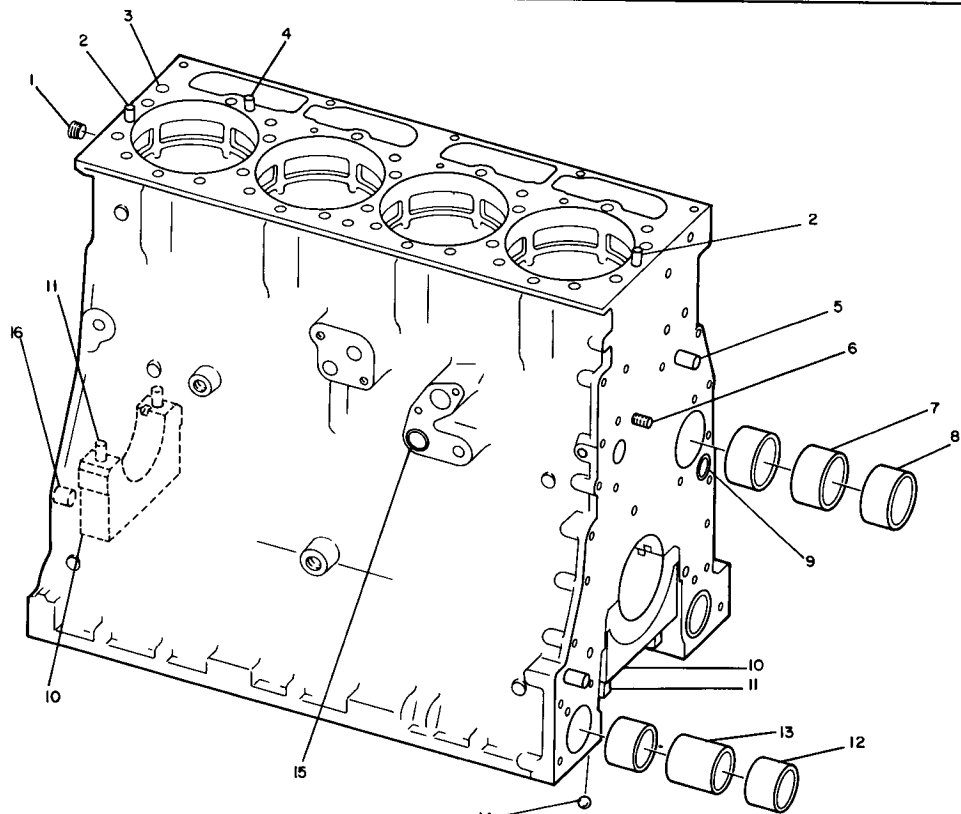

	REF. NO.	PART NUMBER	DESCRIPTION	QTY
	1	2B858	PLUG	1
	2	8K1207	DOWEL	2
	3	5B7652	DOWEL	2
	4	1S9540	DOWEL	1
	5	8B6349	DOWEL	2
	6	5S8462	STUD	1
	7	7M4046	BEARING	2
C	8	8N4110	BEARING	1
	9	4B3938	PLUG	2
	10	6N8003	CAP	5
	11	7S3224	BOLT	10
		2S5658	WASHER	10
	12	5S6419	BEARING	4
	13	5S6420	BEARING	2
	14	4B9782	BALL	5
	15	4B5387	PLUG	1
	16	2A3798	DOWEL	2

C INDICATES CHANGE

227964

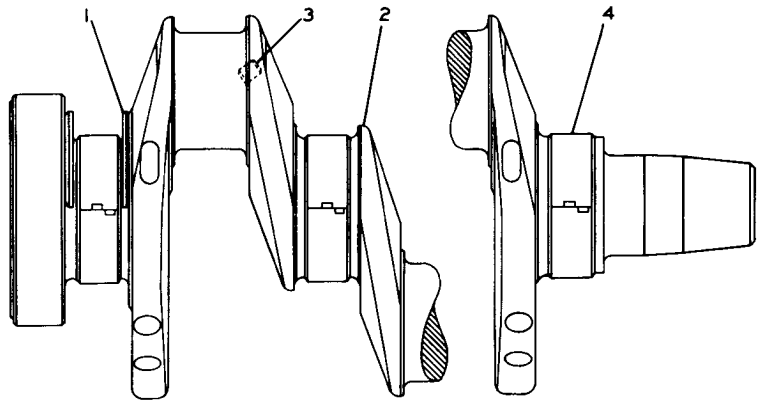

	REF. NO.	PART NUMBER	DESCRIPTION	QTY
C	1	6N8940	PLATE	2
	2	4N7695	CRANKSHAFT ASSEM.	1
	3	9F2247	PLUG	4
	4	3S9730	BEARING	5

C INDICATES CHANGE 211892

2P6218 CRANKSHAFT GROUP
Engine Serial No. 78P38513 to 78P47096 inclusive
Note: For Field Replacement of 4N7695 Crankshaft Assembly, order 4N7692

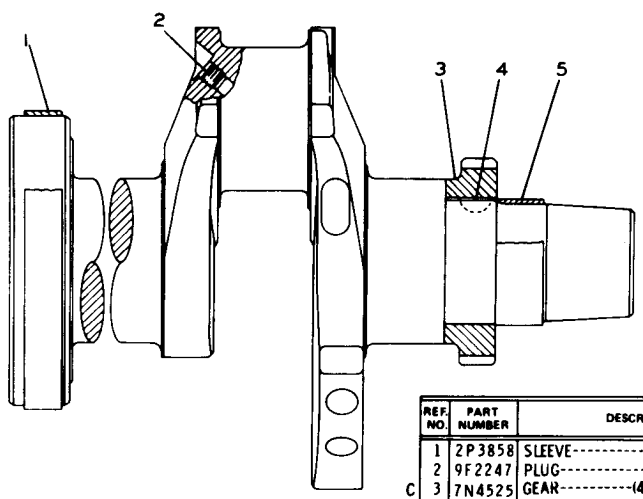

	REF. NO.	PART NUMBER	DESCRIPTION	QTY
	1	2P3858	SLEEVE	1
	2	9F2247	PLUG	4
C	3	7N4525	GEAR (40 teeth)	1
	4	5H2671	KEY	1
	5	2P3859	SLEEVE	1

GMG02327-FORM 1
(Installing Crankshafts for Field Replacement)

C INDICATES CHANGE 224348

4N7692 CRANKSHAFT ASSEMBLY—Field Installation

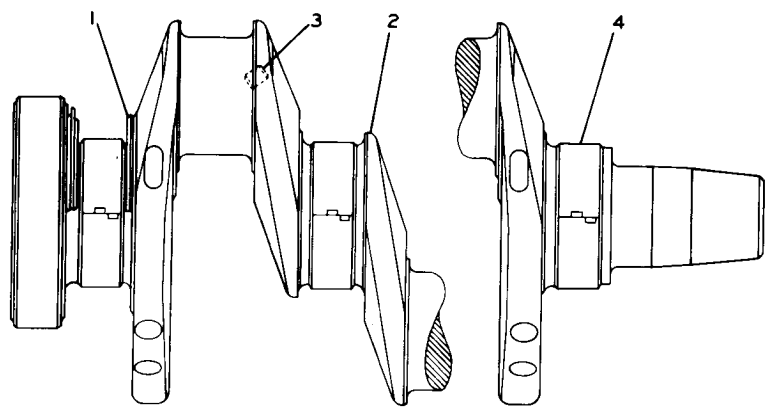

REF. NO.	PART NUMBER	DESCRIPTION	QTY
1	7N9342	PLATE	2
2	4N7695	CRANKSHAFT ASSEM. (Includes)	1
3	9F2247	PLUG	4
4	3S9730	BEARING	5

222680

6N8080 CRANKSHAFT GROUP
NOTE: For Field Replacement of 4N7695 Crankshaft Assembly order 4N7692 shown on Page 10

1	7N9343	THRUST PLATE
1	.....	FORM SMHS7060

CRANKSHAFT SERVICE THRUST PLATE—Field Installation
Provides a Thrust Plate to be used in the event a "Wide" Thrust Journal Crankshaft is installed in a Spacer Plate Cylinder Block

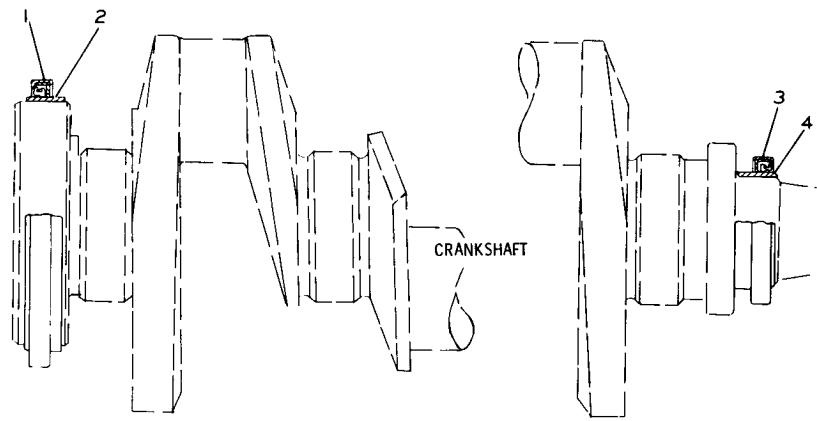

	REF. NO.	PART NUMBER	DESCRIPTION	QTY.
C	1	1N3216	SEAL GROUP---------- (Includes)	1
		9S3111	SEAL----------	1
	2	2P3858	SLEEVE----------	1

3	5S6296	SEAL----------	1
4	2P3859	SLEEVE----------	1

C INDICATES CHANGE

228583

2P6224 CRANKSHAFT SEAL GROUP

CYLINDER BLOCK NOT REBORED			
CRANKSHAFT GROUND FOR UNDERSIZE BEARING I.D. OF	.010 IN.	.020 IN.	.030 IN.
MAIN QTY. 5	4S8881	4S8883	4S8885
CYLINDER BLOCK REBORED (.020 IN.) (BEARING OVERSIZE O.D.)			
CRANKSHAFT GROUND FOR UNDERSIZE BEARING I.D. OF	0 (STANDARD)	.010 IN.	
MAIN QTY. 5	6N3823	6N3822	

O.D. --OUTSIDE DIAMETER
I.D. --INSIDE DIAMETER

CRANKSHAFT BEARING REPLACEMENTS

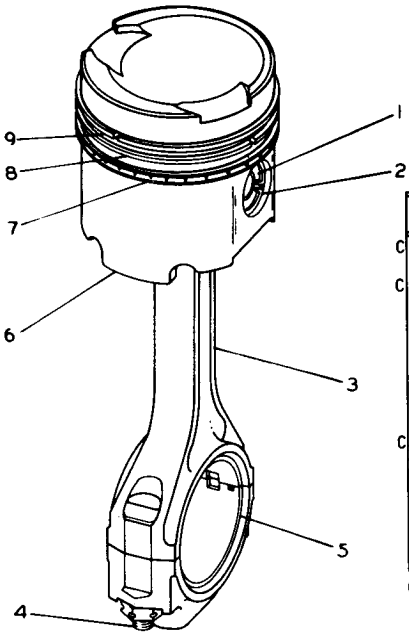

	REF. NO.	PART NUMBER	DESCRIPTION	QTY
C	1	7N9804	PIN	1
	2	9H4015	RETAINER	2
C	3	6N8061	ROD ASSEM.	1
		7S9347	BEARING	1
	4	1P9956	BOLT	2
		5S6348	NUT	2
	5	7M7821	BEARING-(Standard)	1
		2S502	BEARING-(.010" Undersize)	1
		2S503	BEARING-(.020" Undersize)	1
		7M7826	BEARING-(.030" Undersize)	1
C	6	8N3183	PISTON GROUP	1
	7	9S7788	RING-(Oil)	1
	8	5S6750	RING-(Intermediate)	1
	9	7S8378	RING-(Top)	1
		7S9404	RING GROUP (Consists of Complete Set of Rings For One Piston)	1

C INDICATES CHANGE

222701

9S8912 CONNECTING ROD AND PISTON GROUP—4 Required
Engine Serial No. 78P38513 to 78P51947 inclusive

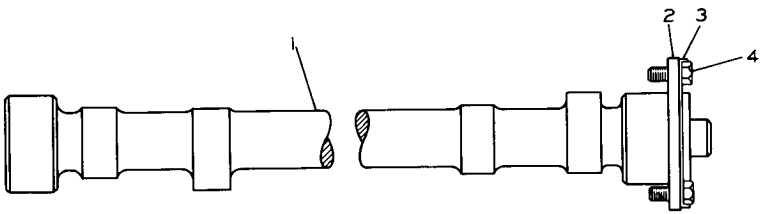

	REF. NO.	PART NUMBER	DESCRIPTION	QTY
C	1	8N4111	CAMSHAFT	1
	2	7S2204	WASHER	1
	3	8S1491	LOCK	1
	4	S509	BOLT	2

C INDICATES CHANGE

227965

2P6201 CAMSHAFT GROUP

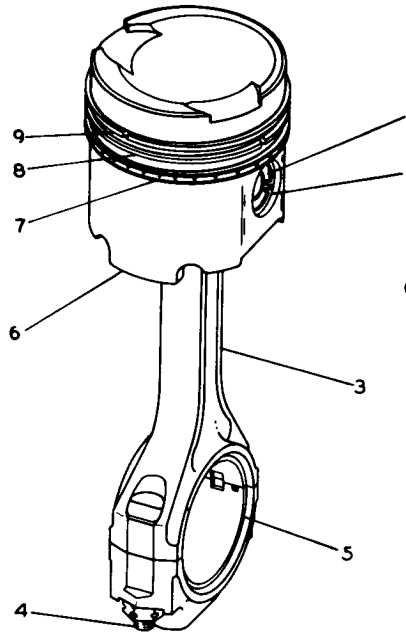

REF. NO.	PART NUMBER	DESCRIPTION	QTY
1	7N9804	PIN	1
2	9H4015	RETAINER	2
C 3	8N1984	ROD ASSEM.	1
	8N1985	BEARING	1
4	1P9956	BOLT	2
	5S6348	NUT	2
5	7M7821	BEARING-------(Standard)-------	1
	2S502	BEARING----(.010" Undersize)----	1
	2S503	BEARING----(.020" Undersize)----	1
	7M7826	BEARING----(.030" Undersize)----	1
6	8N3183	PISTON GROUP	1
7	9S7788	RING---------(Oil)----------	1
8	5S6750	RING-----(Intermediate)-------	1
9	7S8378	RING---------(Top)----------	1
	7S9404	RING GROUP (Consists of Complete Set of Rings For One Piston)	1

C INDICATES CHANGE

226004

9S8912 CONNECTING ROD AND PISTON GROUP—4 Required
Engine Serial No. 78P51948—Up

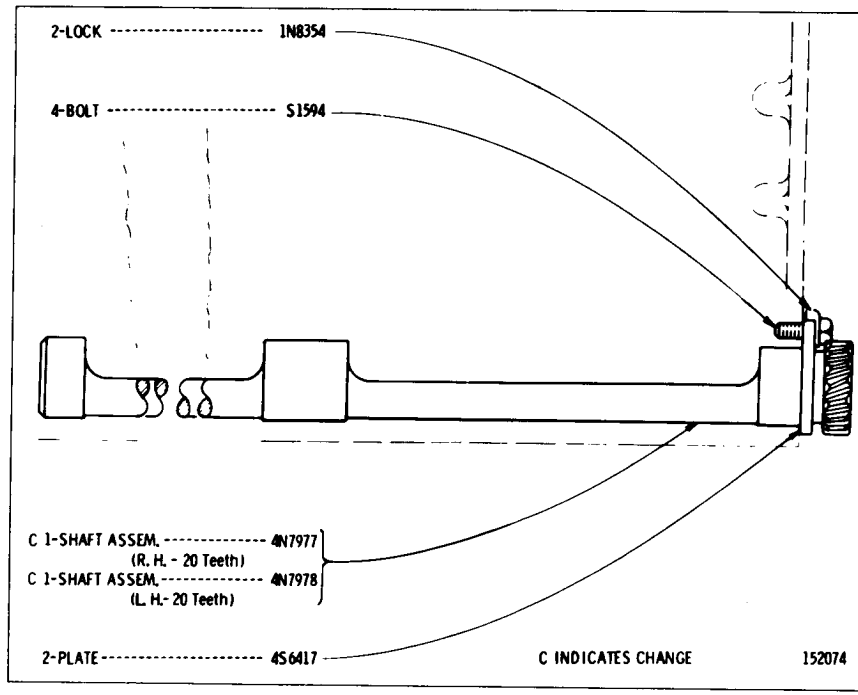

5S6425 BALANCER GROUP

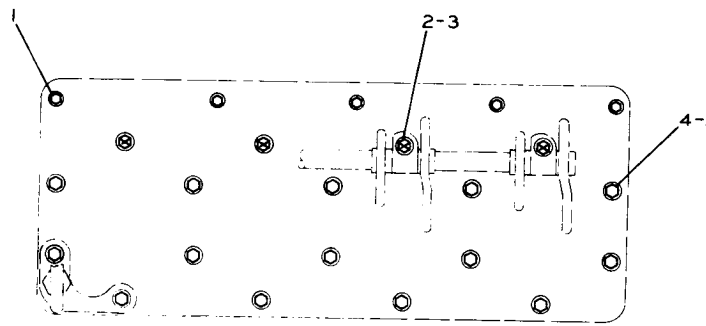

	REF. NO.	PART NUMBER	DESCRIPTION	QTY
	1	1A5183	BOLT----120 mm(4. 75 in.) long--	5
		5B3850	WASHER----------	5
			-OR-	
C		1A5964	BOLT----114 mm(4. 50 in.) long--	5

C INDICATES CHANGE

2	1B7709	BOLT----203 mm(8 in.) long----	4
3	2S736	WASHER----------	18
4	1D4595	BOLT----152 mm(6 in.) long-----	14

222879

2P6544 CYLINDER HEAD FASTENER GROUP
Engine Serial No. 78P38513 to 78P47096 inclusive

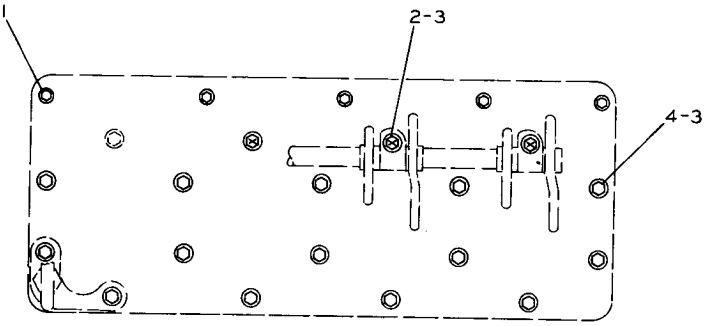

	REF. NO.	PART NUMBER	DESCRIPTION	QTY.
	1	5B9603	BOLT--------127mm(5 in.) long---	5
C	2	1B7709	BOLT--------203mm(8 in.) long---	3
C	3	2S736	WASHER----------	17
	4	1D4595	BOLT-----152mm(6 in.) long-----	14

C INDICATES CHANGE

227966

7N9534 CYLINDER HEAD FASTENER GROUP
Engine Serial No. 78P47097—Up

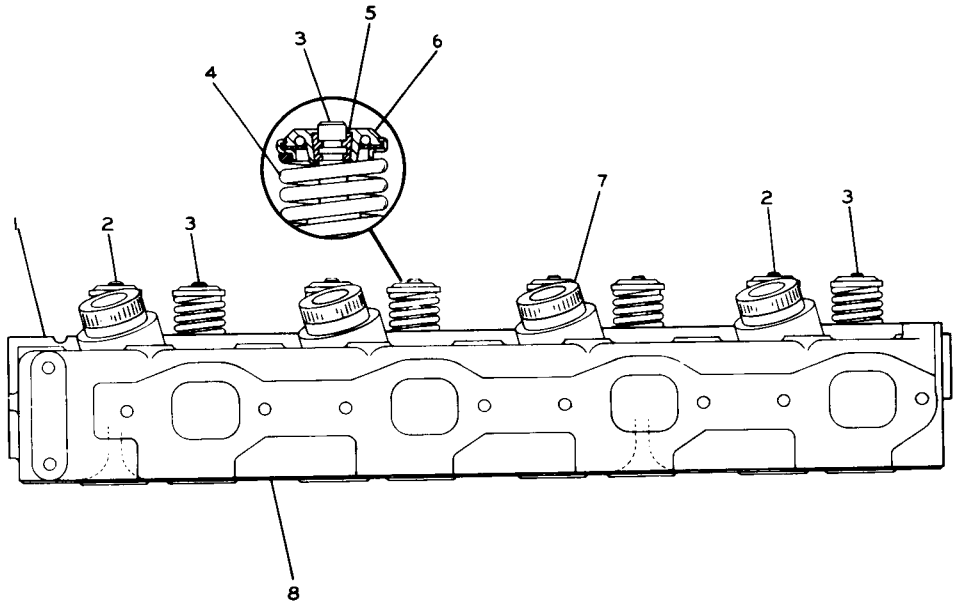

	REF. NO.	PART NUMBER	DESCRIPTION	QTY
C	1	6N8875	HEAD ASSEM. (Separate Illustration)	1
	2	5S6452	VALVE--------(Intake)----------	4
	3	5S7232	VALVE--------(Exhaust)----------	4
	4	7S7144	SPRING----------	8
	5	2A4429	LOCK----------	16
	6	5S5874	ROTO COIL----------	8
	7	8S3970	CHAMBER ASSEM.----------	4
		7S3206	SEAL----------	4
		5M2667	GASKET---4.93 mm(.194 in.) thick	4
		2S8959	GASKET---5.66 mm(.223 in.) thick	4
		2S8960	GASKET---6.3 mm(.248 in.) thick	4
C	8	7N7386	GASKET----------	1

C INDICATES CHANGE

217001

2P6484 CYLINDER HEAD GROUP
Engine Serial No. 78P38513 to 44445, 46254, 46256, 46257, 46259, 46262, 46265, 46267, 46268, 46270, 46271, 46273 to 46276, 46278, 46280 and 78P46282 inclusive
6N8875 Cylinder Head parts are shown on Page 15

2P6484 CYLINDER HEAD GROUP

Engine Serial No. 78P44446 to 46253, 46255, 46258, 46260, 46261, 46263, 46264, 46266, 46269, 46272, 46277, 46279, 46281 and 78P46283 to 78P47096 inclusive

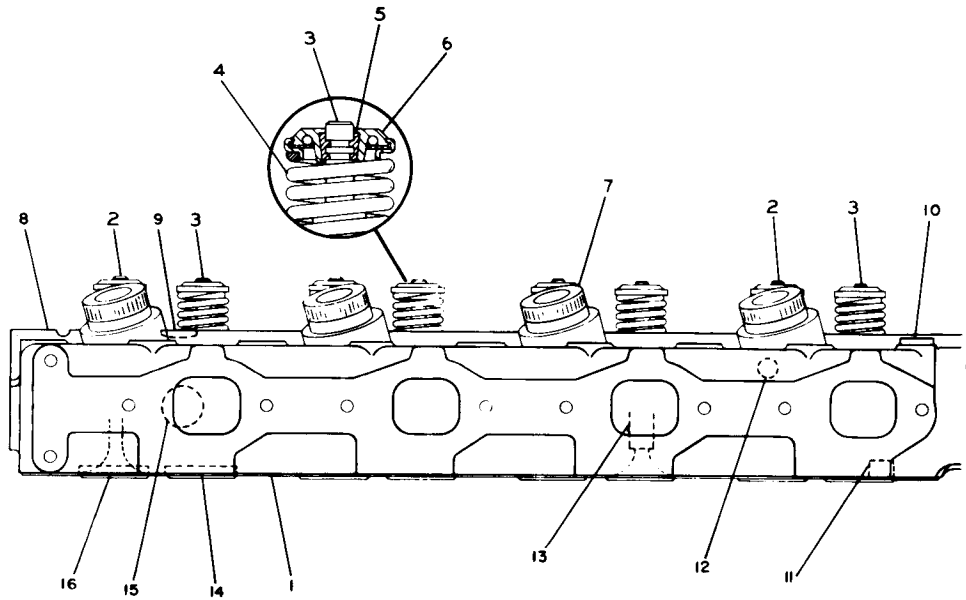

REF. NO.	PART NUMBER	DESCRIPTION	QTY.
1	7N7386	GASKET	1
2	5S6452	VALVE-------(intake)	4
3	5S7232	VALVE-------(exhaust)	4
4	7S7144	SPRING	8
5	2A4429	LOCK	16
6	5S5874	ROTO COIL	8
7	8S3970	CHAMBER ASSEM.	4
	7S3206	SEAL	4
	5M2667	GASKET--4.93 mm (.194 in.) thick	4
	2S8959	GASKET------5.66mm(.223 in.)thick	4
	2S8960	GASKET----6.3 mm (.248 in.) thick	4
C 8	6N8121	HEAD ASSEM. (Includes)	1
9	3B623	PLUG	4
10	7N2597	SPACER	1
11	1S3062	DIRECTOR	12
12	2B858	PLUG	3
13	2P1262	GUIDE	8
14	5S7221	INSERT	4
15	3S8313	PLUG	4
16	7N4448	INSERT	4

C INDICATES CHANGE

220699

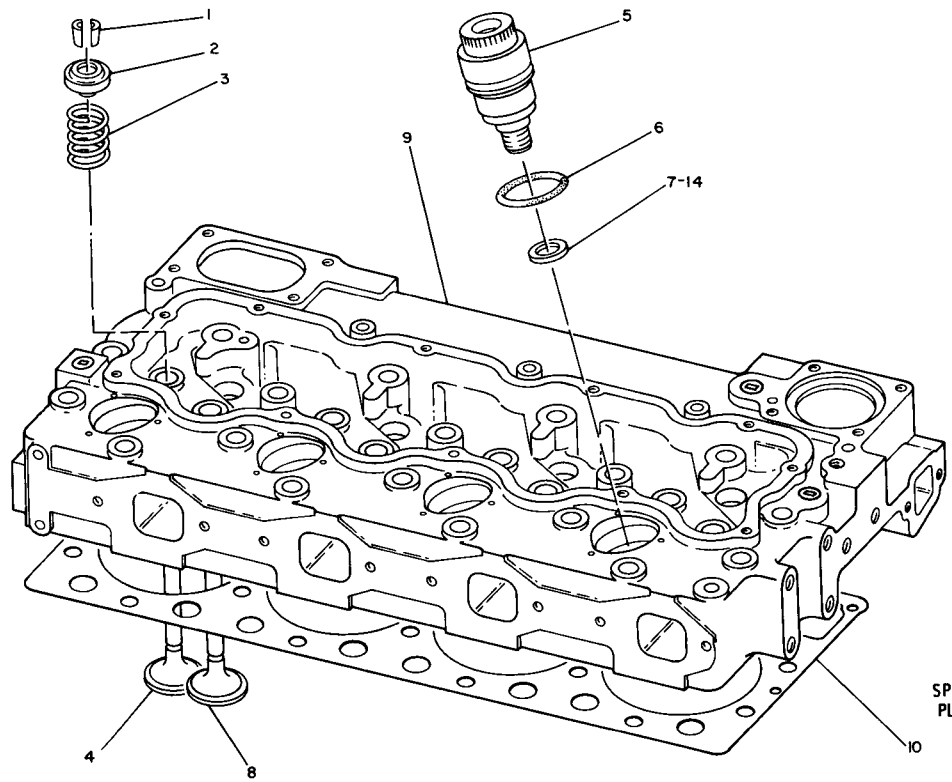

REF. NO.	PART NUMBER	DESCRIPTION	QTY
1	2A4429	LOCK	16
2	5S5874	ROTOCOIL	8
3	7S7144	SPRING	8
4	5S6452	VALVE----(intake)	4
5	8S3970	CHAMBER ASSEM.	4
C 6	6V1585	SEAL	4
7	5M2667	GASKET	4
8	5S7232	VALVE------(exhaust)	4
9	8N1188	HEAD ASSEM. (Separate Illustration)	1
10	7N8022	GASKET	1
11	3S5496	SEAL	1
12	7N8025	SEAL	12
13	7N8018	SEAL	4
14	2S8959	GASKET---5.67 mm(.223 in.) thick	4
	2S8960	GASKET---6.30 mm(.248 in.) thick	4

C INDICATES CHANGE

6N8101 CYLINDER HEAD GROUP
Engine Serial No. 78P470979 to 78P53418 Inclusive
8N1188 Head parts are shown on Page 15A

6N8101 CYLINDER HEAD GROUP
Engine Serial No. 78P53419—Up
8N1188 Head parts are shown on Page 15A

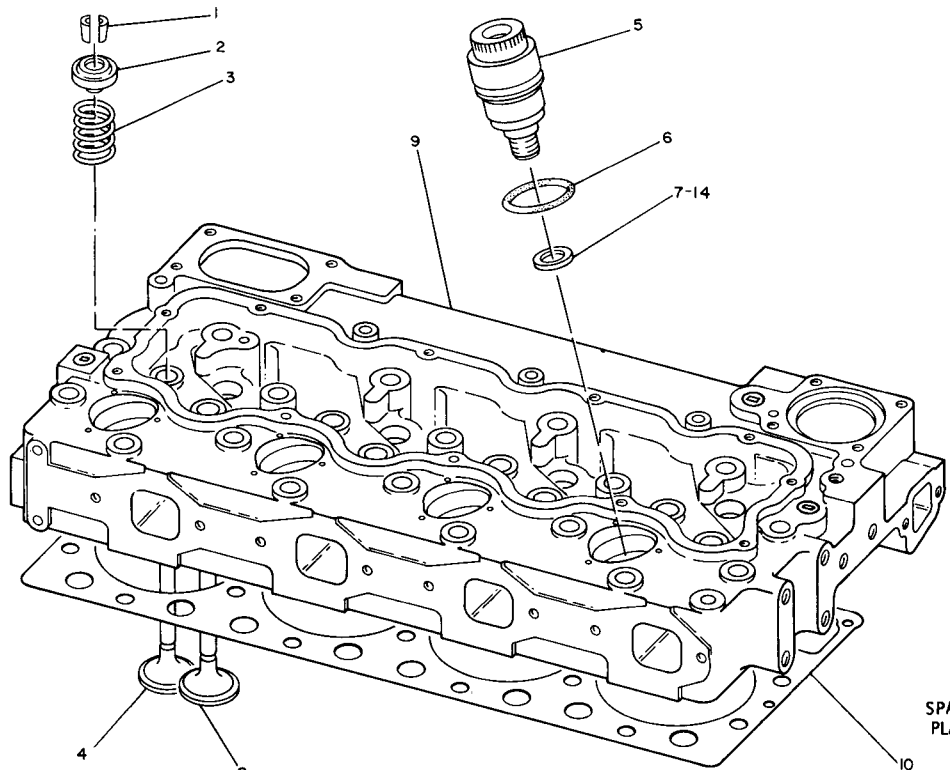

	REF. NO.	PART NUMBER	DESCRIPTION	QTY
	1	2A4429	LOCK	16
C	2	8N7782	ROTOCOIL ASSEM.	8
	3	7S7144	SPRING	8
	4	5S6452	VALVE----(intake)	4
	5	8S3970	CHAMBER ASSEM.	4
	6	6V1585	SEAL	4
	7	5M2667	GASKET	4
	8	5S7232	VALVE------(exhaust)	4
	9	8N1188	HEAD ASSEM. (Separate Illustration)	1
	10	7N8022	GASKET	1
	11	3S5496	SEAL	1
	12	7N8025	SEAL	12
	13	7N8018	SEAL	4
	14	2S8959	GASKET---5.67 mm(.223 in.) thick	4
		2S8960	GASKET---6.30 mm(.248 in.) thick	4

C INDICATES CHANGE

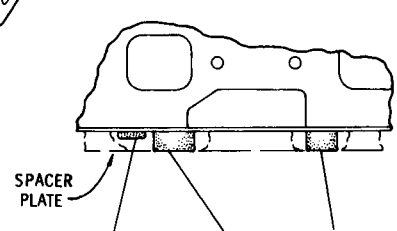

175789

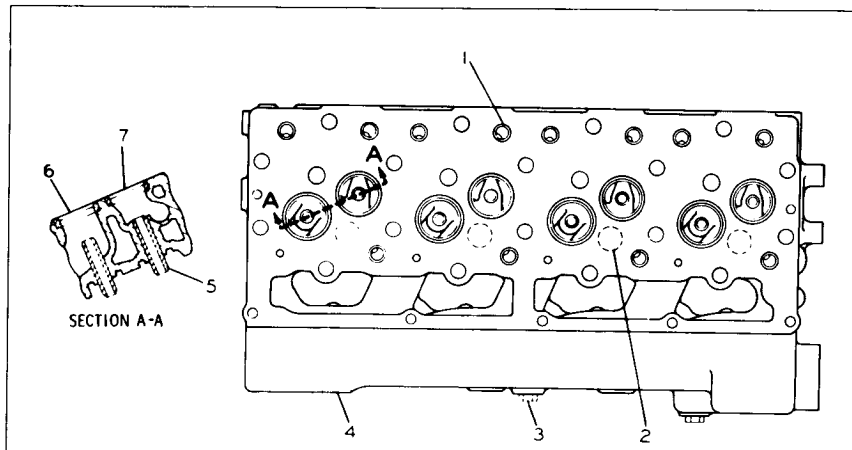

REF. NO.	PART NUMBER	DESCRIPTION	QTY
1	1S3062	DIRECTOR	12
2	3B623	PLUG	4
3	2B858	PLUG	3
4	3S8313	PLUG	4
5	2P1262	GUIDE	8
6	5S7218	INSERT-(intake)	4
7	1P6837	INSERT-(exhaust)	4

217788

6N8875 CYLINDER HEAD ASSEMBLY
Engine Serial No. 78P38513 to 44445, 46254, 46256, 46257, 46259, 46262, 46265, 46267, 46268, 46270, 46271, 46273 to 46276, 46278, 46280 and 78P46282 inclusive. Part of 2P6484 Cylinder Head Group shown on Page 14

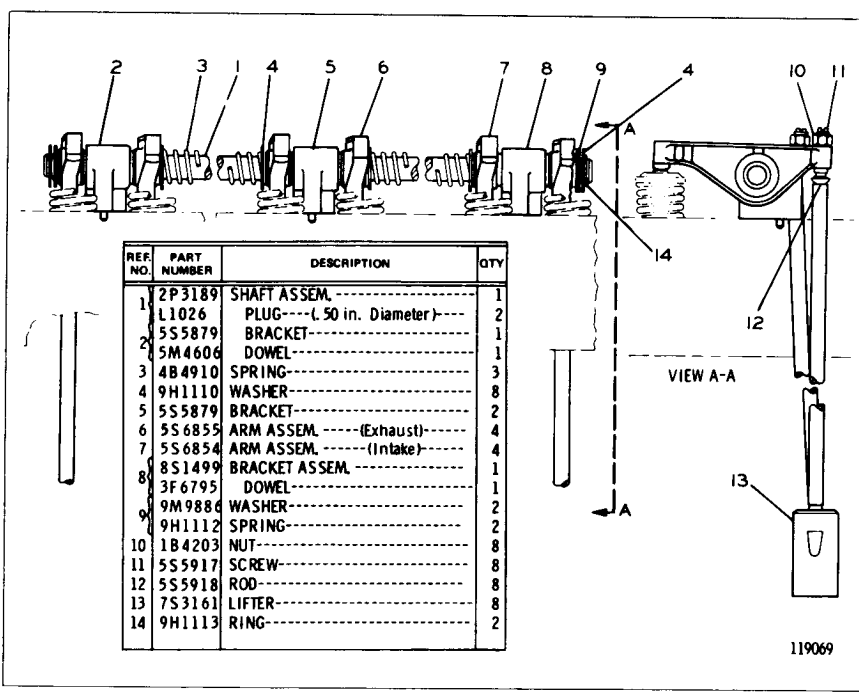

REF. NO.	PART NUMBER	DESCRIPTION	QTY
1	2P3189	SHAFT ASSEM.	1
	L1026	PLUG-(.50 in. Diameter)	2
2	5S5879	BRACKET	1
	5M4606	DOWEL	1
3	4B4910	SPRING	3
4	9H1110	WASHER	8
5	5S5879	BRACKET	2
6	5S6855	ARM ASSEM.-(Exhaust)	4
7	5S6854	ARM ASSEM.-(Intake)	4
8	8S1499	BRACKET ASSEM.	1
	3F6795	DOWEL	1
9	9M9886	WASHER	2
	9H1112	SPRING	2
10	1B4203	NUT	8
11	5S5917	SCREW	8
12	5S5918	ROD	8
13	7S3161	LIFTER	8
14	9H1113	RING	2

119069

2P6524 VALVE MECHANISM GROUP
Engine Serial No. 78P38513 to 78P45838 and 78P46446 to 78P47096 inclusive

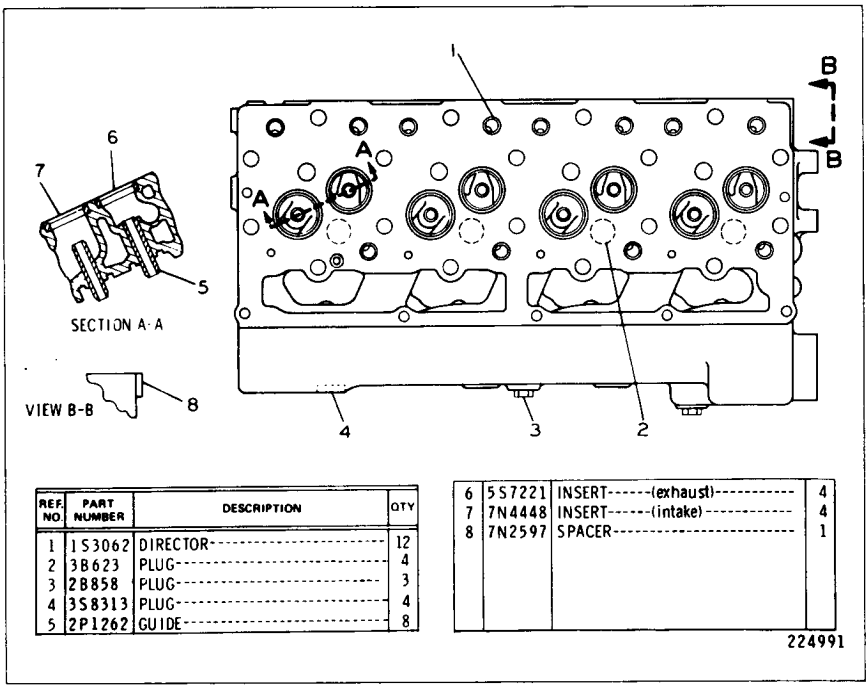

REF. NO.	PART NUMBER	DESCRIPTION	QTY
1	1S3062	DIRECTOR	12
2	3B623	PLUG	4
3	2B858	PLUG	3
4	3S8313	PLUG	4
5	2P1262	GUIDE	8
6	5S7221	INSERT-(exhaust)	4
7	7N4448	INSERT-(intake)	4
8	7N2597	SPACER	1

8N1188 CYLINDER HEAD ASSEMBLY
Engine Serial No. 78P47097—Up
Part of 6N8101 Cylinder Head Group shown on Page 14B

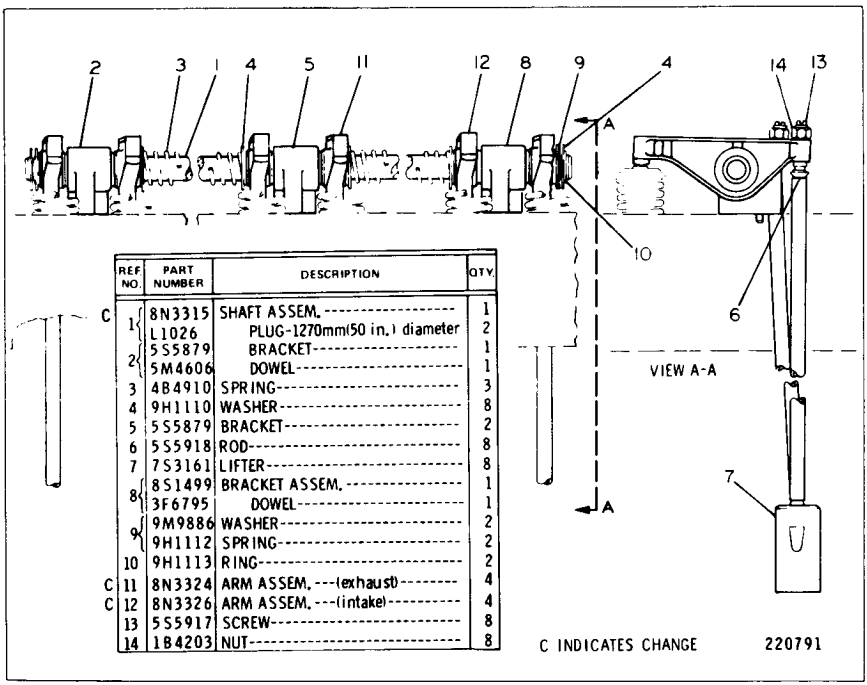

REF. NO.	PART NUMBER	DESCRIPTION	QTY
1	8N3315	SHAFT ASSEM.	1
	L1026	PLUG-1270mm(50 in.) diameter	2
2	5S5879	BRACKET	1
	5M4606	DOWEL	1
3	4B4910	SPRING	3
4	9H1110	WASHER	8
5	5S5879	BRACKET	2
6	5S5918	ROD	8
7	7S3161	LIFTER	8
8	8S1499	BRACKET ASSEM.	1
	3F6795	DOWEL	1
9	9M9886	WASHER	2
	9H1112	SPRING	2
10	9H1113	RING	2
C 11	8N3324	ARM ASSEM.-(exhaust)	4
C 12	8N3326	ARM ASSEM.-(intake)	4
13	5S5917	SCREW	8
14	1B4203	NUT	8

2P6524 VALVE MECHANISM GROUP
Engine Serial No. 78P45839 to 78P46445 inclusive

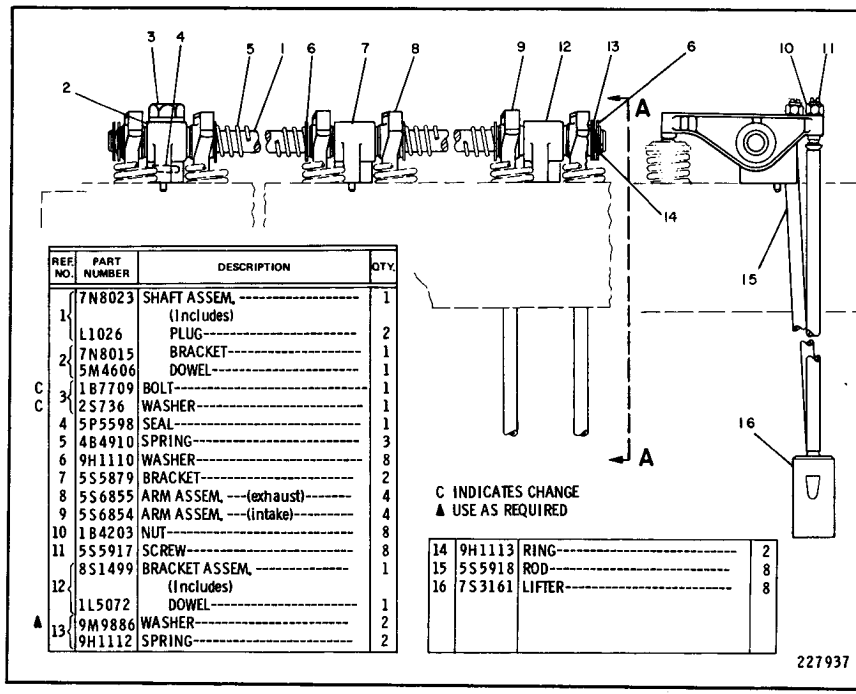

REF. NO.	PART NUMBER	DESCRIPTION	QTY.
1	7N8023	SHAFT ASSEM. (Includes)	1
	L1026	PLUG	2
2	7N8015	BRACKET	1
	5M4606	DOWEL	1
C 3	1B7709	BOLT	1
C 3	2S736	WASHER	1
4	5P5598	SEAL	1
5	4B4910	SPRING	3
6	9H1110	WASHER	8
7	5S5879	BRACKET	2
8	5S6855	ARM ASSEM. ---(exhaust)	4
9	5S6854	ARM ASSEM. ---(intake)	4
10	1B4203	NUT	8
11	5S5917	SCREW	8
12	8S1499	BRACKET ASSEM. (Includes)	1
	1L5072	DOWEL	1
▲ 13	9M9886	WASHER	2
	9H1112	SPRING	2
14	9H1113	RING	2
15	5S5918	ROD	8
16	7S3161	LIFTER	8

C INDICATES CHANGE
▲ USE AS REQUIRED

7N8024 VALVE MECHANISM GROUP
Engine Serial No. 78P47097 to 78P50618 inclusive

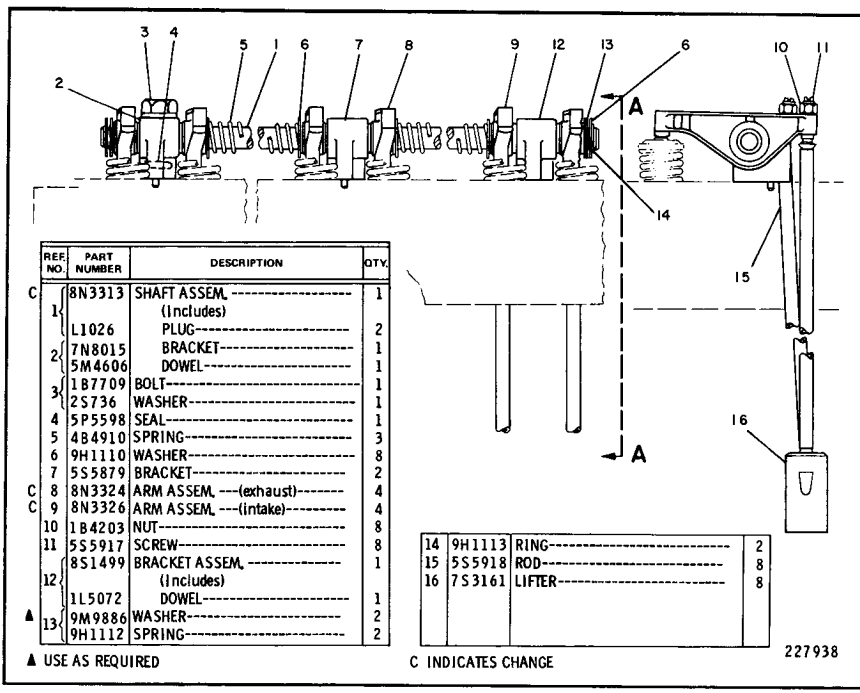

REF. NO.	PART NUMBER	DESCRIPTION	QTY.
C 1	8N3313	SHAFT ASSEM. (Includes)	1
	L1026	PLUG	2
2	7N8015	BRACKET	1
	5M4606	DOWEL	1
3	1B7709	BOLT	1
	2S736	WASHER	1
4	5P5598	SEAL	1
5	4B4910	SPRING	3
6	9H1110	WASHER	8
7	5S5879	BRACKET	2
C 8	8N3324	ARM ASSEM. ---(exhaust)	4
C 9	8N3326	ARM ASSEM. ---(intake)	4
10	1B4203	NUT	8
11	5S5917	SCREW	8
12	8S1499	BRACKET ASSEM. (Includes)	1
	1L5072	DOWEL	1
▲ 13	9M9886	WASHER	2
	9H1112	SPRING	2
14	9H1113	RING	2
15	5S5918	ROD	8
16	7S3161	LIFTER	8

▲ USE AS REQUIRED
C INDICATES CHANGE

7N8024 VALVE MECHANISM GROUP
Engine Serial No. 78P50619—Up

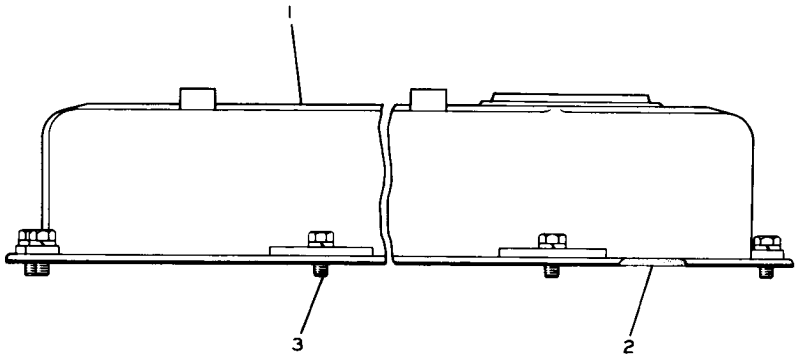

REF. NO.	PART NUMBER	DESCRIPTION	QTY
1	2N3871	COVER ASSEM.	1
2	8S1606	GASKET	1
3	S1617	BOLT	11
	3B4505	LOCKWASHER	11

117345

2P6514 VALVE MECHANISM COVER GROUP

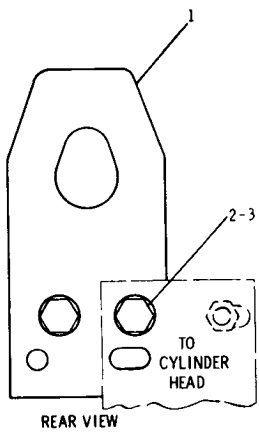

REAR VIEW

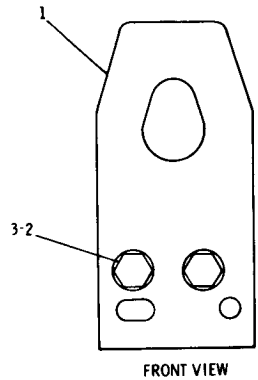

FRONT VIEW

REF. NO.	PART NUMBER	DESCRIPTION	QTY.
1	6N7650	PLATE	2
▲C 2	4B3823	BOLT	4
▲C 3	5P8245	WASHER	4

C INDICATES CHANGE ▲ USE AS REQUIRED

226153

6N8326 ENGINE LIFTING GROUP
Engine Serial No. 78P38513 to 78P57628 inclusive

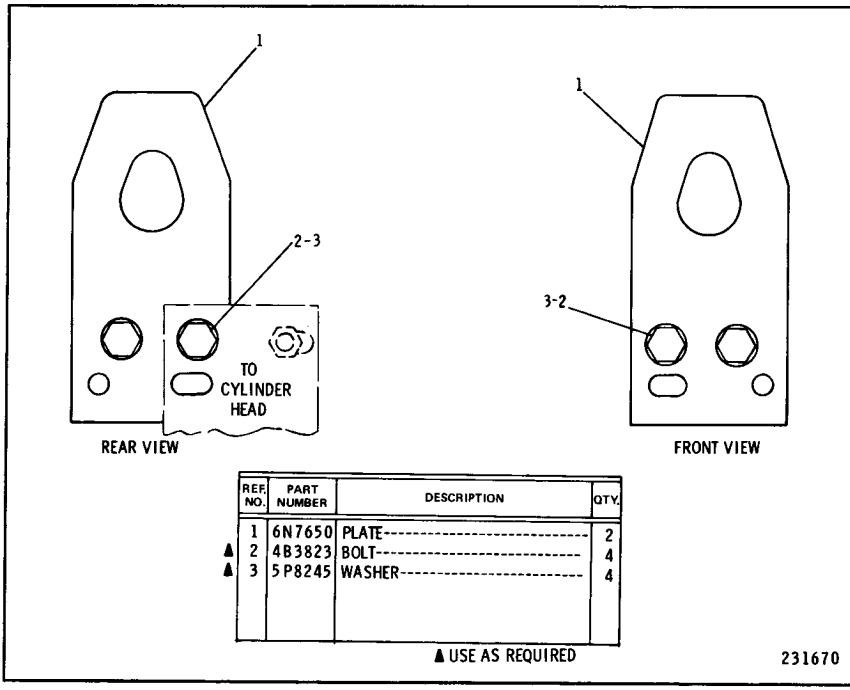

REF. NO.	PART NUMBER	DESCRIPTION	QTY.
1	6N7650	PLATE	2
▲ 2	4B3823	BOLT	4
▲ 3	5P8245	WASHER	4

▲ USE AS REQUIRED

231670

8N9696 ENGINE LIFTING GROUP
Engine Serial No. 78P57629 to 78P58037 inclusive

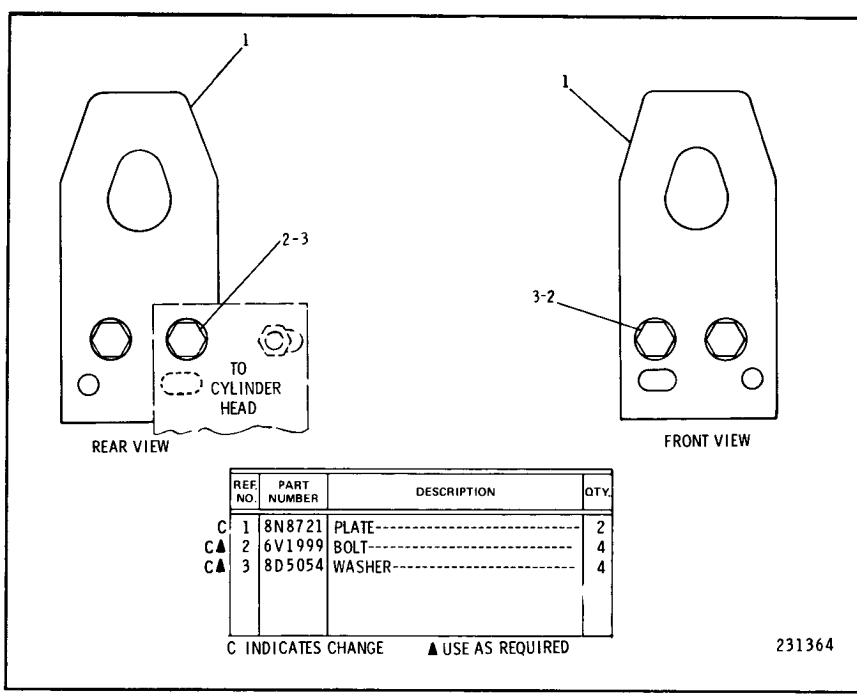

REF. NO.	PART NUMBER	DESCRIPTION	QTY.
C 1	8N8721	PLATE	2
C▲ 2	6V1999	BOLT	4
C▲ 3	8D5054	WASHER	4

C INDICATES CHANGE ▲ USE AS REQUIRED

231364

6N8326 ENGINE LIFTING GROUP
Engine Serial No. 78P58038—Up

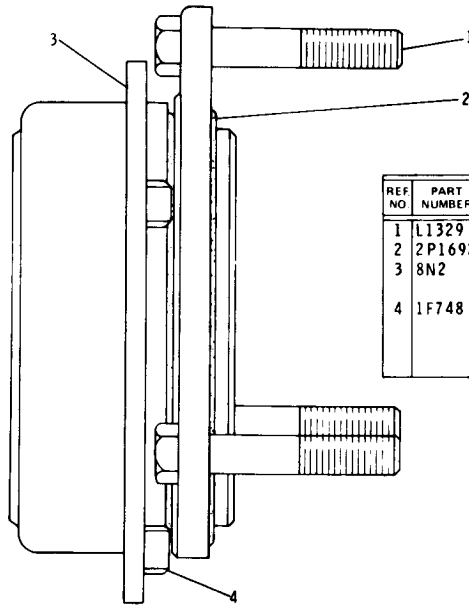

REF NO.	PART NUMBER	DESCRIPTION	QTY.
1	L1329	BOLT	3
2	2P1692	SEAL	1
3	8N2	TRUNNION ASSEM. (Includes)	1
4	1F748	NUT	4

2P6246 TRUNNION GROUP
Engine Serial No. 78P38513 to 78P51867 inclusive

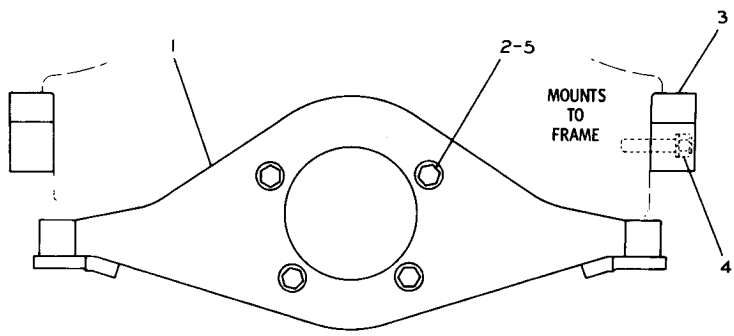

	REF. NO.	PART NUMBER	DESCRIPTION	QTY
	1	2P1466	SUPPORT ASSEM.	1
C	2	S1585	BOLT	4
C	3	5S1792	BRACKET	2
	4	S1625	BOLT	4
		3B4510	LOCKWASHER	4
	5	2M849	WASHER	4

C INDICATES CHANGE

2P7756 ENGINE SUPPORT GROUP—Front and Rear
Engine Serial No. 78P38513 to 78P40899 inclusive

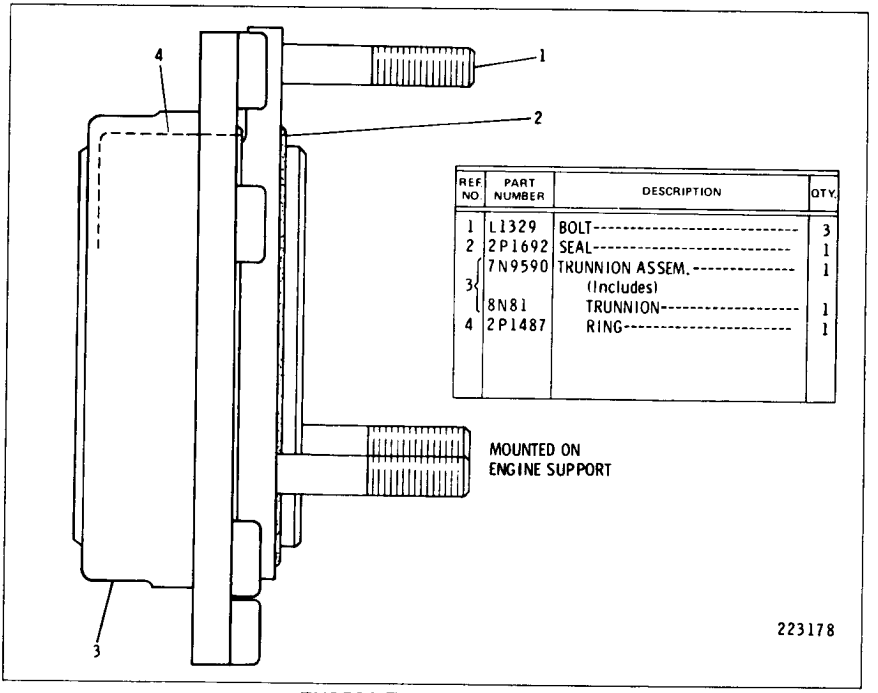

REF. NO.	PART NUMBER	DESCRIPTION	QTY.
1	L1329	BOLT	3
2	2P1692	SEAL	1
3	7N9590	TRUNNION ASSEM. (Includes)	1
	8N81	TRUNNION	1
4	2P1487	RING	1

7N9589 TRUNNION GROUP
Engine Serial No. 78P51868—Up

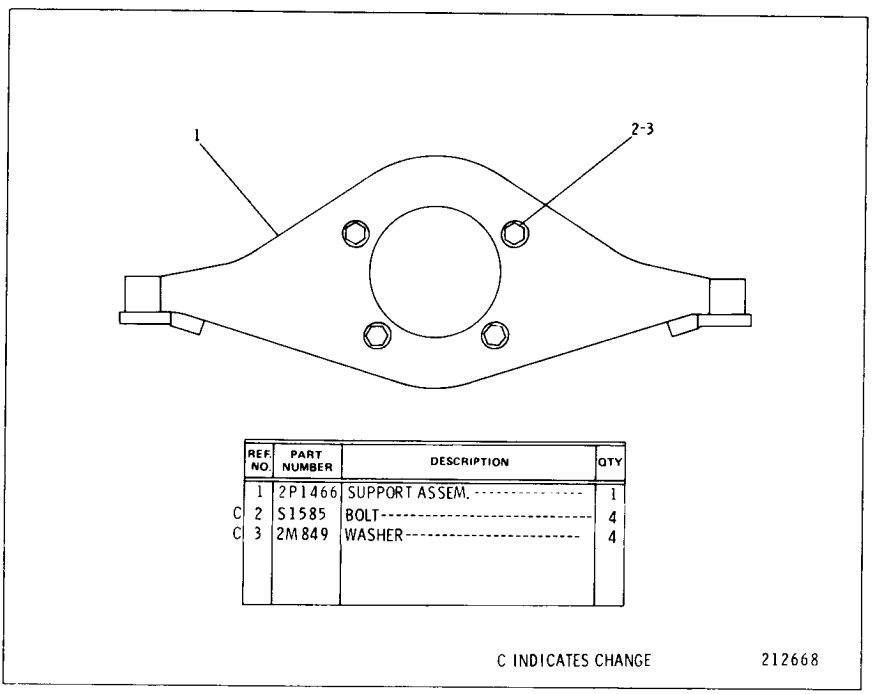

REF. NO.	PART NUMBER	DESCRIPTION	QTY
1	2P1466	SUPPORT ASSEM.	1
C 2	S1585	BOLT	4
C 3	2M849	WASHER	4

C INDICATES CHANGE

2P7753 ENGINE SUPPORT GROUP—Front
Engine Serial No. 78P40900 to 78P51867 inclusive

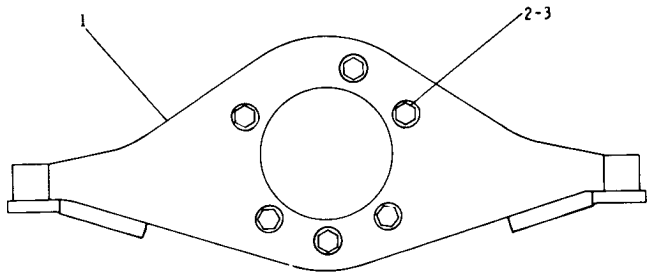

	REF. NO.	PART NUMBER	DESCRIPTION	QTY
C	1	8N5584	SUPPORT ASSEM.	1
C	2	S1585	BOLT	6
C	3	5P8245	WASHER	6

C INDICATES CHANGE

175274

2P7753 ENGINE SUPPORT GROUP—Front
Engine Serial No. 78P51868—Up

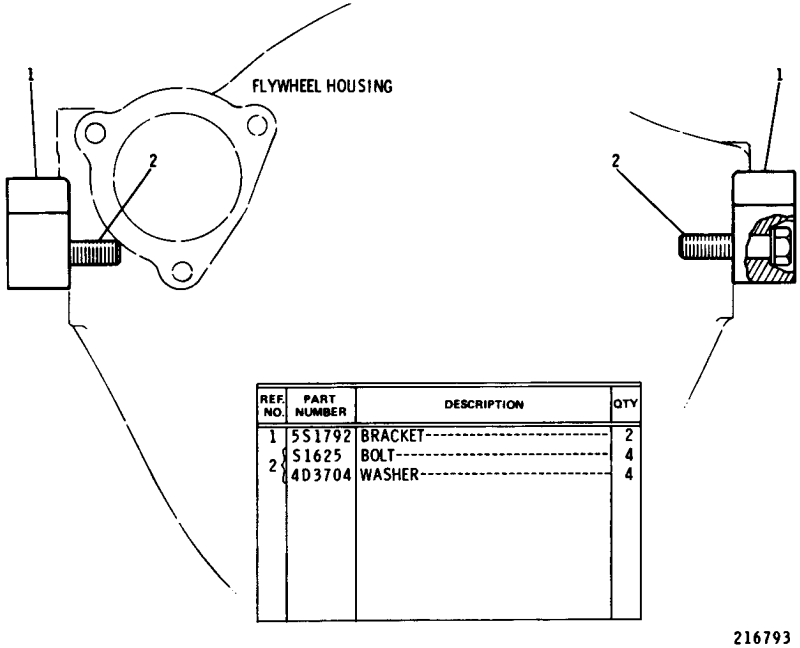

REF. NO.	PART NUMBER	DESCRIPTION	QTY
1	5S1792	BRACKET	2
2	S1625	BOLT	4
2	4D3704	WASHER	4

216793

7N4191 ENGINE SUPPORT GROUP—Rear
Serial No. 13X678—Up

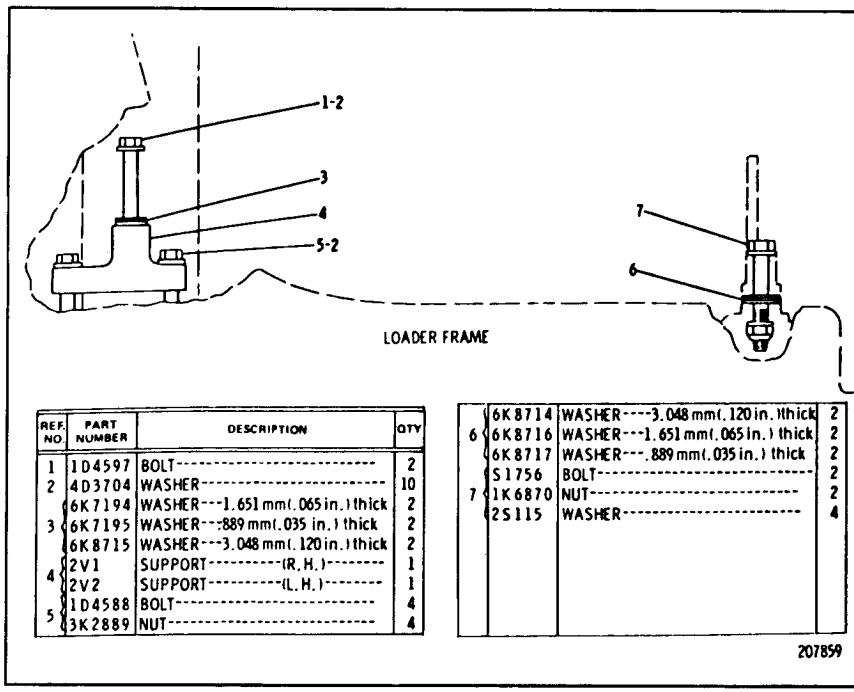

REF. NO.	PART NUMBER	DESCRIPTION	QTY
1	1D4597	BOLT	2
2	4D3704	WASHER	10
3	6K7194	WASHER---1.651 mm(.065 in.) thick	2
	6K7195	WASHER---.889 mm(.035 in.) thick	2
	6K8715	WASHER---3.048 mm(.120 in.) thick	2
4	2V1	SUPPORT----------(R.H.)--------	1
	2V2	SUPPORT----------(L.H.)--------	1
5	1D4588	BOLT	4
	3K2889	NUT	4
6	6K8714	WASHER----3.048 mm(.120 in.)thick	2
	6K8716	WASHER---1.651 mm(.065 in.) thick	2
	6K8717	WASHER---.889 mm(.035 in.) thick	2
7	S1756	BOLT	2
	1K6870	NUT	2
	2S115	WASHER	4

207859

1V8311 ENGINE MOUNTING HARDWARE GROUP

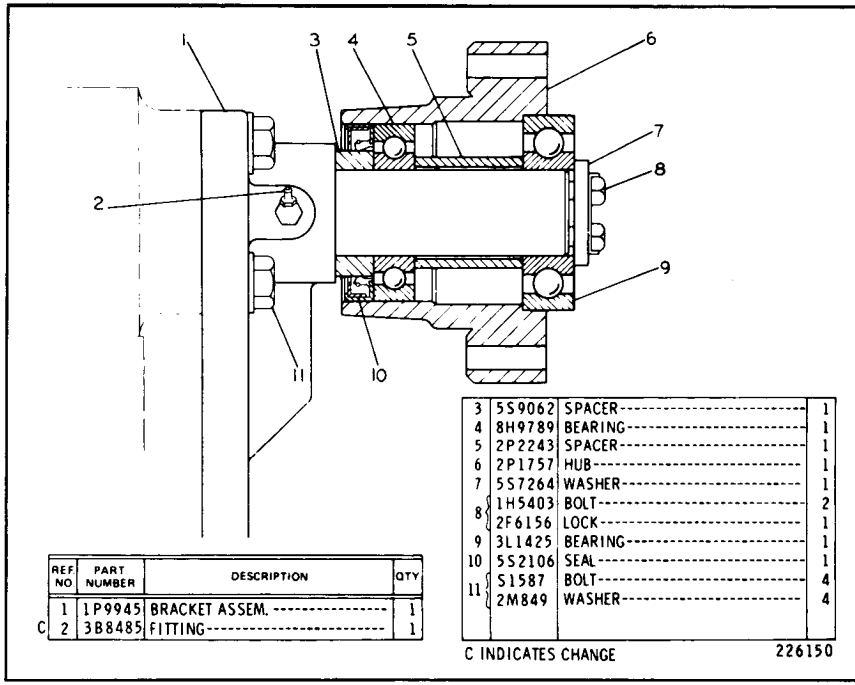

REF NO	PART NUMBER	DESCRIPTION	QTY
1	1P9945	BRACKET ASSEM.	1
C 2	3B8485	FITTING	1

3	5S9062	SPACER	1
4	8H9789	BEARING	1
5	2P2243	SPACER	1
6	2P1757	HUB	1
7	5S7264	WASHER	1
8	1H5403	BOLT	2
	2F6156	LOCK	1
9	3L1425	BEARING	1
10	5S2106	SEAL	1
11	S1587	BOLT	4
	2M849	WASHER	4

C INDICATES CHANGE

226150

2P7831 FAN DRIVE GROUP
Serial No. 13X1 to 13X3149 Inclusive

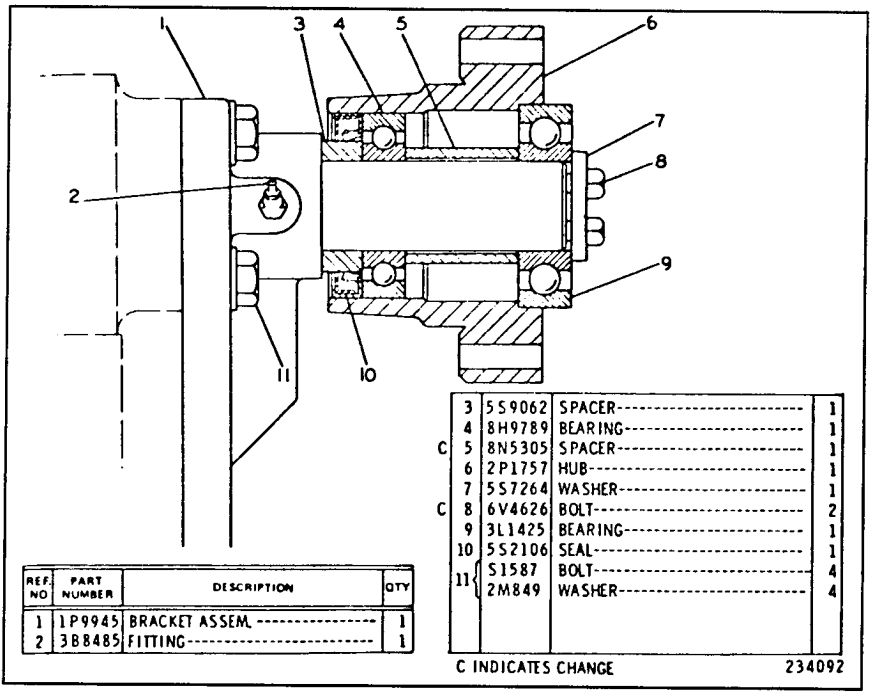

REF. NO	PART NUMBER	DESCRIPTION	QTY
1	1P9945	BRACKET ASSEM.	1
2	3B8485	FITTING	1

3	5S9062	SPACER	1
4	8H9789	BEARING	1
C 5	8N5305	SPACER	1
6	2P1757	HUB	1
7	5S7264	WASHER	1
C 8	6V4626	BOLT	2
9	3L1425	BEARING	1
10	5S2106	SEAL	1
11	1S1587	BOLT	4
	2M849	WASHER	4

C INDICATES CHANGE 234092

2P7831 FAN DRIVE GROUP
Serial No. 13X3150—Up

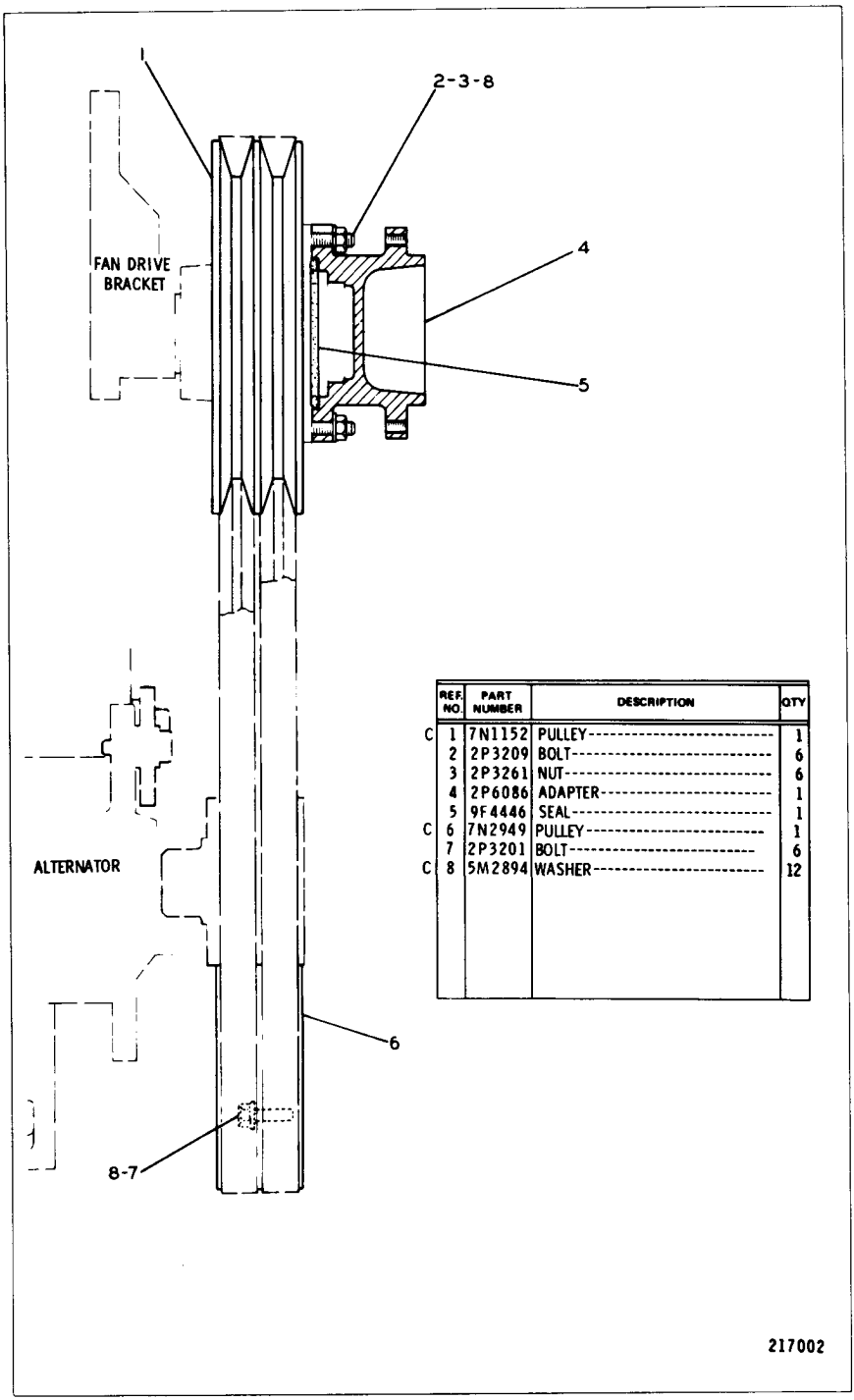

	REF. NO.	PART NUMBER	DESCRIPTION	QTY
C	1	7N1152	PULLEY	1
	2	2P3209	BOLT	6
	3	2P3261	NUT	6
	4	2P6086	ADAPTER	1
	5	9F4446	SEAL	1
C	6	7N2949	PULLEY	1
	7	2P3201	BOLT	6
C	8	5M2894	WASHER	12

2P8608 PULLEY GROUP
Engine Serial No. 78P38513 to 78P40899 inclusive
Note: 2P2696 Vee Belt Set, consisting of 2 belts, is used

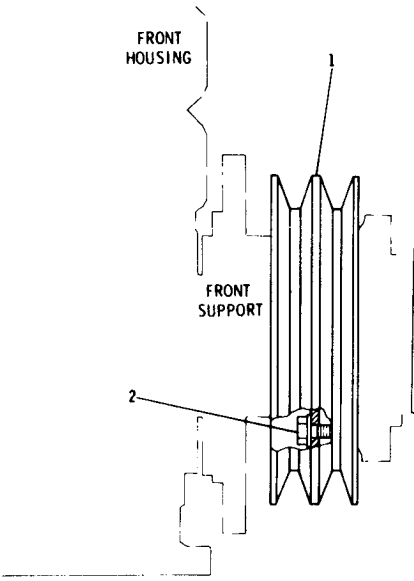

REF. NO	PART NUMBER	DESCRIPTION	QTY
1	7N2949	PULLEY	1
2	S1594	BOLT	6
	5M2894	WASHER	6

7N2887 CRANKSHAFT PULLEY GROUP
Engine Serial No. 78P40900—Up
Note: 2P2696 Vee Belt Set, consisting of 2 belts, is used

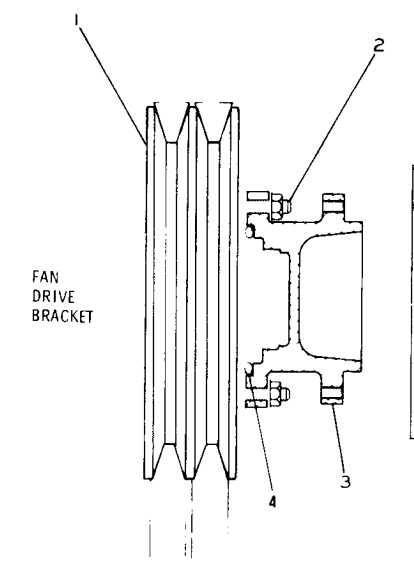

REF. NO	PART NUMBER	DESCRIPTION	QTY
1	7N1152	PULLEY	1
	T573	BOLT	6
2	1D4717	NUT	6
	5M2894	WASHER	6
3	2P6086	ADAPTER	1
4	9F4446	SEAL	1

7N4189 FAN PULLEY GROUP
Serial No. 13X678—Up
Note: 2P2696 Vee Belt Set, consisting of 2 belts, is used

REF. NO.	PART NUMBER	DESCRIPTION	QTY
1	2P1818	HUB	1
2	7B5163	BOLT	1
3	5S9948	WASHER	1

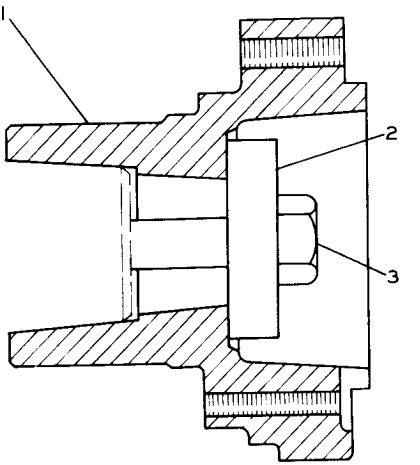

117253

2P8598 CRANKSHAFT HUB GROUP

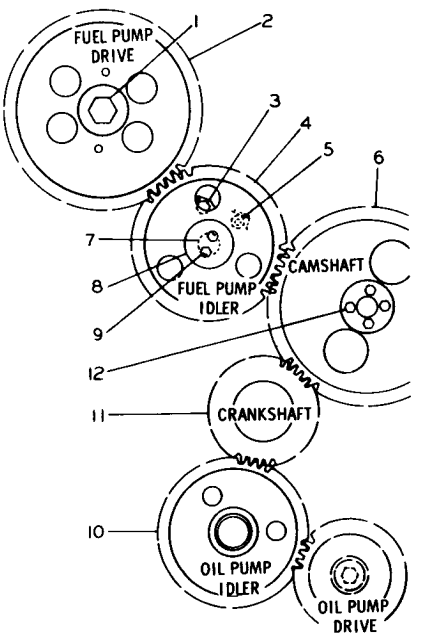

REF. NO.	PART NUMBER	DESCRIPTION	QTY
1	S1603	BOLT	1
	4N3371	WASHER	1
2	4N3330	GEAR--------(80 Teeth)	1
3	L1351	BOLT	2
4	5S7660	GEAR ASSEM. ----(57 Teeth)	1
	5S7630	BEARING	1
5	5B9079	NUT	1
	5S7611	LOCK	1
6	5S3804	GEAR--------(80 Teeth)	1
7	5S7608	SHAFT	1
8	5S7612	PLATE	1
9	2H3755	BOLT	2
10	2P1172	GEAR ASSEM. -----(60 Teeth)	1
	2P1168	BEARING	1
11	4M9933	GEAR---------(40 Teeth)	1
	5H2671	KEY	1
12	S1748	BOLT	4

207194

2P9642 FRONT TIMING GEAR GROUP
Engine Serial No. 78P38513 to 78P54758 Inclusive

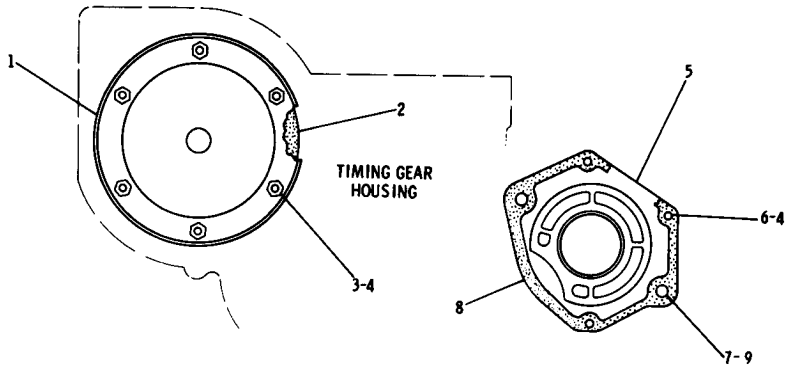

	REF. NO.	PART NUMBER	DESCRIPTION	QTY
C	1	2P8701	COVER	1
C	2	6N7887	GASKET	1
C	3	1B4203	NUT	6
C	4	5M2894	WASHER	9
	5	2P218	COVER	1
C	6	3B1915	BOLT	3
	7	S1566	BOLT	2
C	8	2P220	GASKET	1
C	9	5P8247	WASHER	2

C INDICATES CHANGE

226145

2P6528 FRONT HOUSING COVER GROUP—Timing Gear

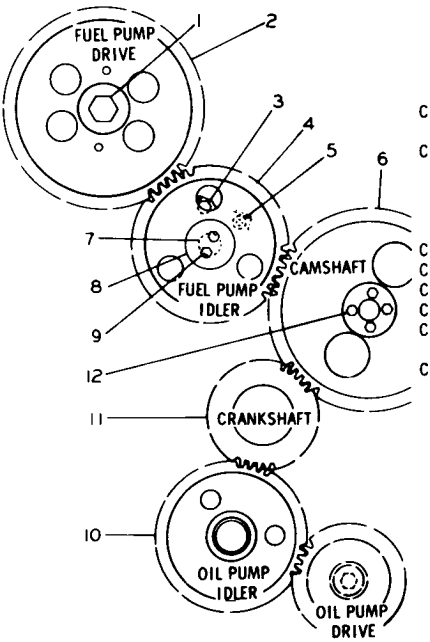

	REF. NO.	PART NUMBER	DESCRIPTION	QTY.
	1	S1603	BOLT	1
		4N3371	WASHER	1
C	2	7N3536	GEAR-------(80 teeth)	1
	3	L1351	BOLT	2
C	4	7N4791	GEAR ASSEM. -----(57 teeth)----- (Includes)	1
		5S7630	BEARING	1
	5	5B9079	NUT	1
		5S7611	LOCK	1
C	6	7N3515	GEAR---------(80 teeth)	1
C	7	8N4959	SHAFT	1
C	8	8N4960	PLATE	1
C	9	S1618	BOLT	2
C	10	7N4716	GEAR----------(60 teeth)-------	1
		2P1168	BEARING	1
C	11	7N4525	GEAR----------(40 teeth)-------	1
		5H2671	KEY	1
	12	S1748	BOLT	4

C INDICATES CHANGE

226714

2P9642 FRONT TIMING GEAR GROUP
Engine Serial No. 78P54759—Up

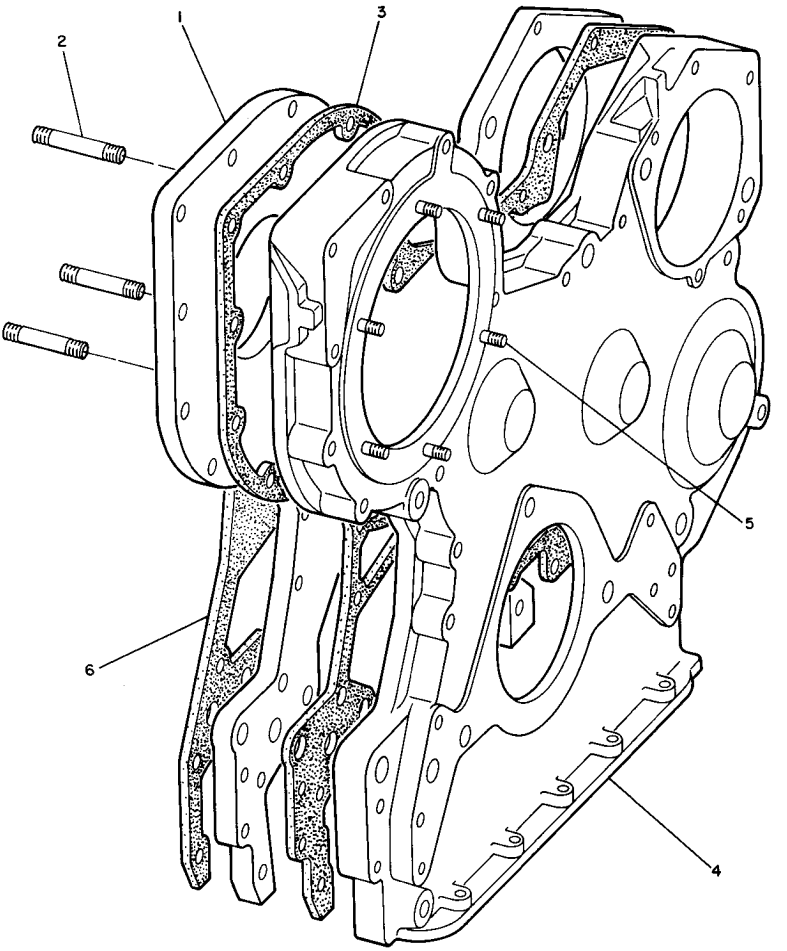

REF. NO.	PART NUMBER	DESCRIPTION	QTY
1	6N9060	PLATE ASSEM. (Includes)	1
2	4M8743	STUD	3
3	2P1274	GASKET	1
C 4	8N7711	HOUSING ASSEM. (Includes)	1
5	2S42	STUD	6
6	2P1273	GASKET	1

C INDICATES CHANGE

228004

2P9641 FRONT HOUSING GROUP—Timing Gear
Engine Serial No. 78P38513 to 78P53510 inclusive

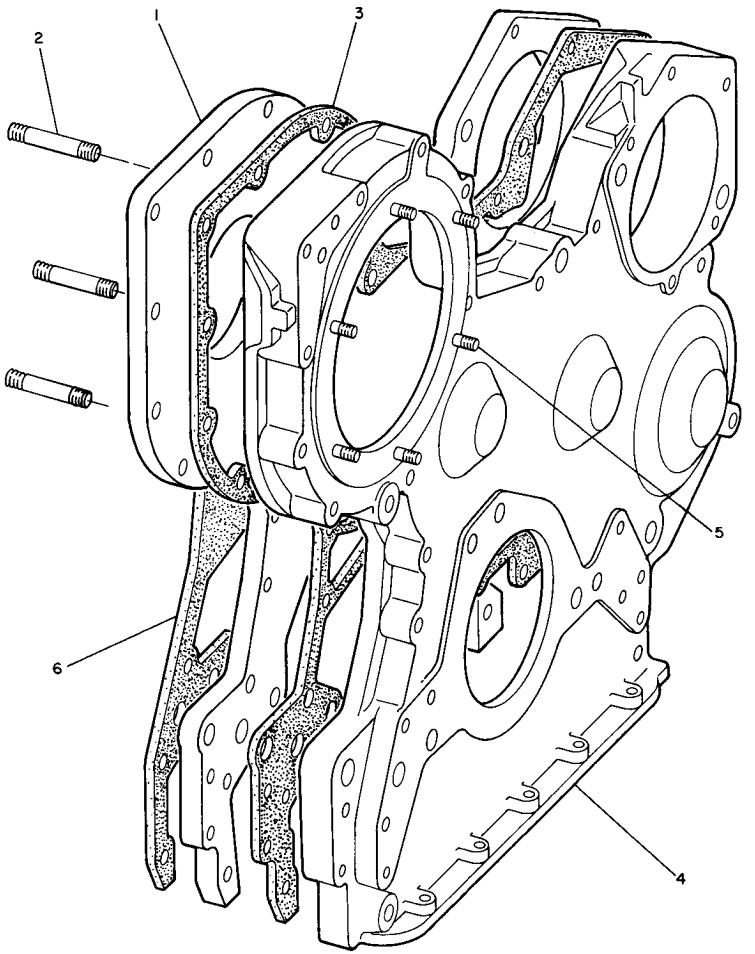

	REF. NO.	PART NUMBER	DESCRIPTION	QTY
	1	6N9060	PLATE ASSEM. (Includes)	1
	2	4M8743	STUD	3
C	3	8N533	GASKET	1
C	4	8N109	HOUSING ASSEM. (Includes)	1
	5	2S42	STUD	6
C	6	8N110	GASKET	1

C INDICATES CHANGE

234135

2P9641 FRONT HOUSING GROUP—Timing Gear
Engine Serial No. 78P53511—Up

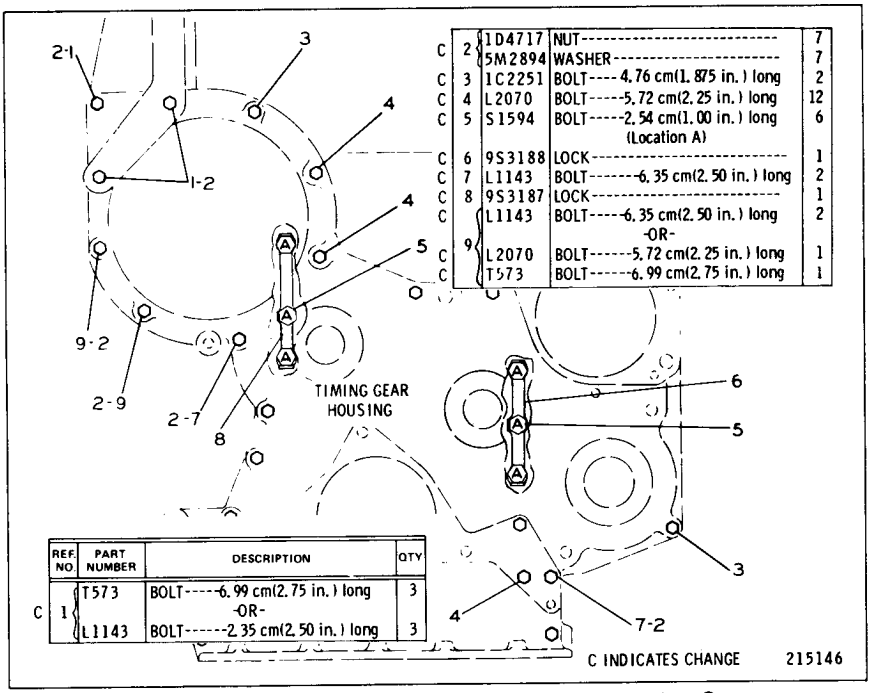

	REF. NO.	PART NUMBER	DESCRIPTION	QTY
C	1	T573	BOLT-----6.99 cm(2.75 in.) long	3
			-OR-	
		L1143	BOLT------2.35 cm(2.50 in.) long	3

	REF. NO.	PART NUMBER	DESCRIPTION	QTY
C	2	1D4717	NUT----------	7
		5M2894	WASHER----------	7
C	3	1C2251	BOLT----4.76 cm(1.875 in.) long	2
C	4	L2070	BOLT-----5.72 cm(2.25 in.) long	12
C	5	S1594	BOLT-----2.54 cm(1.00 in.) long (Location A)	6
C	6	9S3188	LOCK----------	1
C	7	L1143	BOLT-------6.35 cm(2.50 in.) long	2
C	8	9S3187	LOCK----------	1
C	9	L1143	BOLT----6.35 cm(2.50 in.) long	2
			-OR-	
C		L2070	BOLT------5.72 cm(2.25 in.) long	1
C		T573	BOLT------6.99 cm(2.75 in.) long	1

C INDICATES CHANGE 215146

2P6498 FRONT HOUSING FASTENER GROUP—Timing Gear

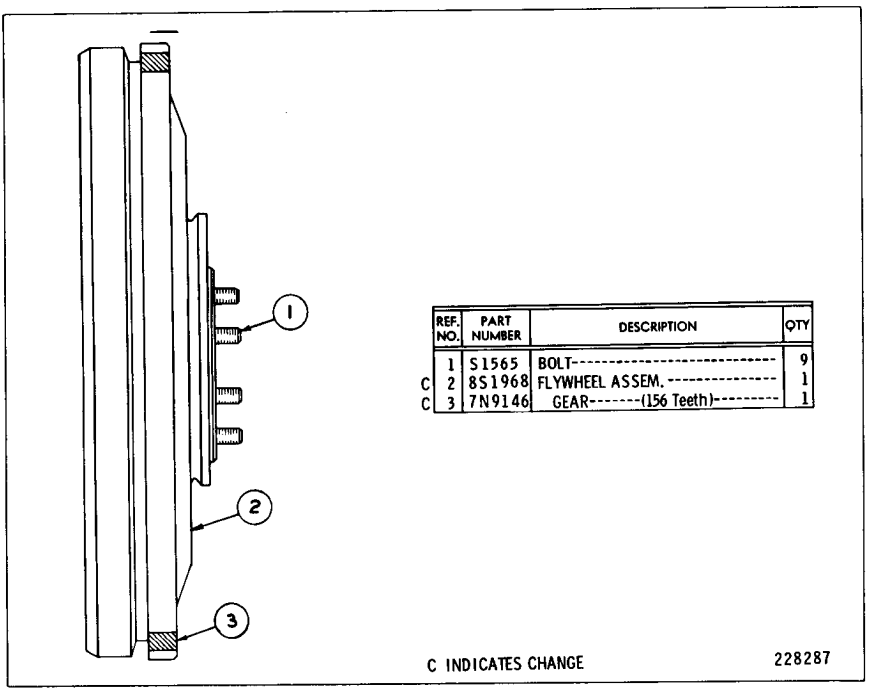

	REF. NO.	PART NUMBER	DESCRIPTION	QTY
	1	S1565	BOLT----------	9
C	2	8S1968	FLYWHEEL ASSEM.----------	1
C	3	7N9146	GEAR-------(156 Teeth)---------	1

C INDICATES CHANGE 228287

7S7753 FLYWHEEL GROUP

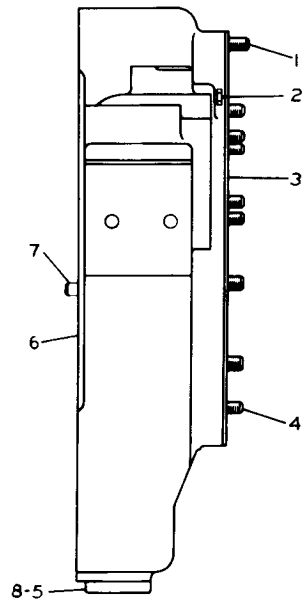

	REF. NO.	PART NUMBER	DESCRIPTION	QTY
	1	2B947	BOLT	2
	2	5M6213	PLUG (For Use With Direct Drive Transmission)	1
			-OR-	
C	2	4H6112	BREATHER (For Use With Power Shift Transmission)	1
	3	9H5921	GASKET	1
	4	1A1460	BOLT	11
	5	L827	PLUG	1
	6	7S7780	HOUSING ASSEM. (Includes)	1
		5S8030	HOUSING	1
	7	2A3798	DOWEL	2
C	8	L1124	GASKET	1

C INDICATES CHANGE

165859

2P6119 FLYWHEEL HOUSING GROUP

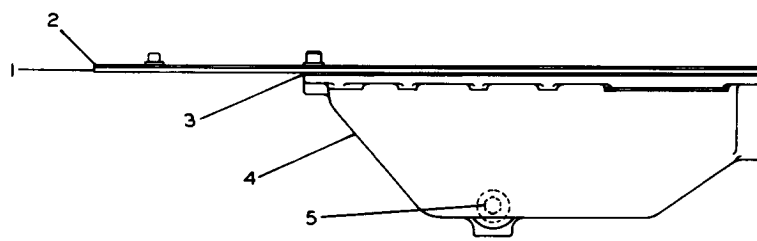

REF. NO.	PART NUMBER	DESCRIPTION	QTY
1	2P2351	PLATE ASSEM.	1
2	5S6045	GASKET	1
3	8S1963	GASKET	1
4	2P7828	PAN	1
5	4B7739	PLUG	1

117331

2P6155 OIL PAN GROUP
Engine Serial No. 78P38513 to 78P54466 inclusive

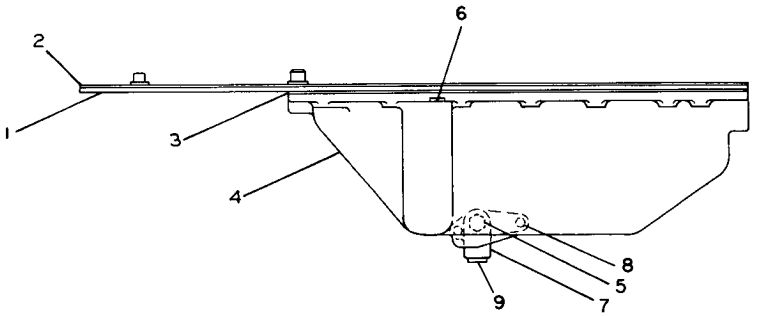

	REF. NO.	PART NUMBER	DESCRIPTION	QTY
	1	2P2351	PLATE ASSEM.	1
	2	5S6045	GASKET	1
	3	8S1963	GASKET	1
C	4	7N2942	PAN	1
	5	4B7739	PLUG	1
C	6	2B858	PLUG	1
C	7	8N6849	ADAPTER	1
C		8N6854	GASKET	1
C	8	3B1915	BOLT	2
C	9	1B5174	PLUG	1

C INDICATES CHANGE

227293

2P6155 OIL PAN GROUP
Engine Serial No. 78P54467—Up

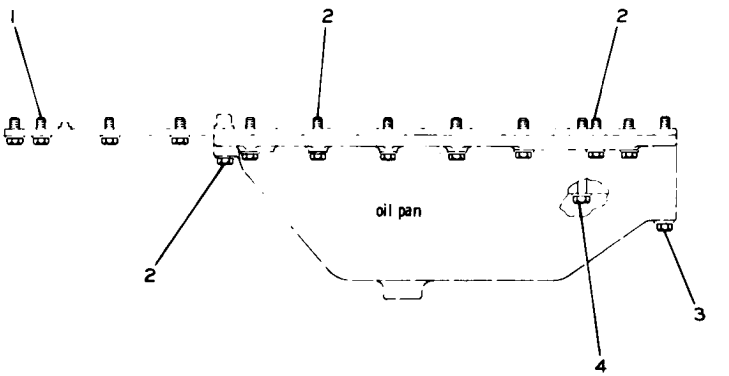

REF. NO.	PART NUMBER	DESCRIPTION	QTY
1	2P3200	BOLT--------(.75 in. long)--------	12
2	2P3204	BOLT--------(1.50 in. long)-------	17
3	2P3213	BOLT--------(4.50 in. long)------	5
4	2P1301	BOLT--------(3.25 in. long)------	2

117333

2P6189 OIL PAN FASTENER GROUP
Engine Serial No. 78P38513 to 78P54466 inclusive

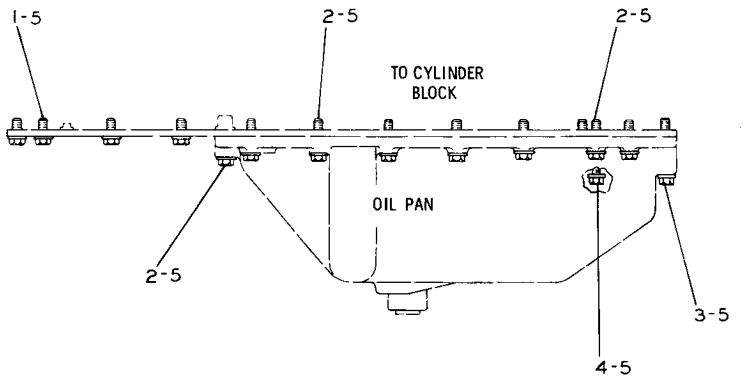

	REF. NO.	PART NUMBER	DESCRIPTION	QTY
C	1	S1594	BOLT----------2.54 cm(1 in.) long	12
C	2	S1591	BOLT---------3.81 cm(1.5 in.) long	17
C	3	T573	BOLT----6.98 cm(2.75 in.) long---	6
C	4	L1143	BOLT-----6.35 cm(2.50 in.) long--	1
C	5	5M2894	WASHER----------	36

C INDICATES CHANGE

227294

2P6189 OIL PAN FASTENER GROUP
Engine Serial No. 78P54467—Up

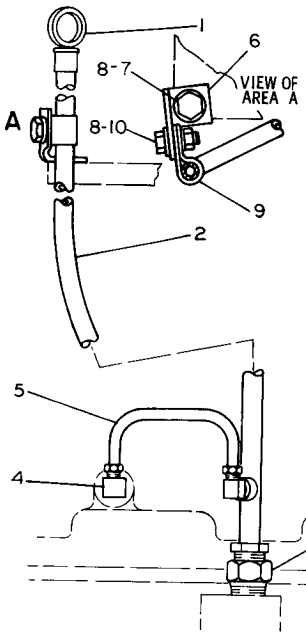

	REF. NO.	PART NUMBER	DESCRIPTION	QTY
	1	5S2898	GAUGE ASSEM.	1
	2	2P3869	TUBE ASSEM.	1
	3	8S1326	FITTING	1
		8F8998	NUT	1
	4	5K9243	ELBOW	2
	5	2P2697	TUBE ASSEM.	1
C	6	8N8935	BRACKET	1
C	7	1A2029	BOLT	1
C	8	5M2894	WASHER	3
C	9	4H2633	CLIP	1
C	10	T102	BOLT	1
C		1B5355	NUT	1

C INDICATES CHANGE 178225

2P6494 OIL LEVEL GAUGE GROUP

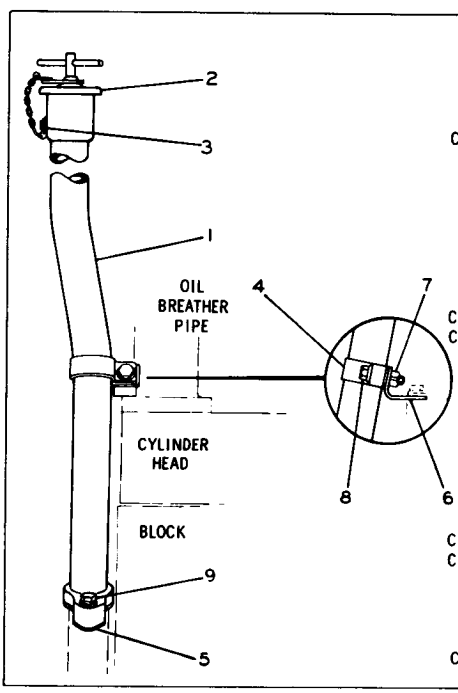

	REF. NO.	PART NUMBER	DESCRIPTION	QTY
	1	4N4758	TUBE ASSEM. (Includes)	1
C	2	6N2985	CAP ASSEM.	1
	3	5S7337	WASHER	1
	4	8M6744	CLAMP	1
	5	2P2720	GASKET	1
	6	4N4658	BRACKET ASSEM. (Includes)	1
	7	9F2978	NUT	1
	8	2P3203	BOLT-(washer head) -OR-	1
C		S1588	BOLT	1
C		5M2894	WASHER	1
	9	2P3204	BOLT-(washer head) -OR-	1
C		S1591	BOLT	1
C		5M2894	WASHER	1

C INDICATES CHANGE 217023

4N4817 OIL FILLER GROUP

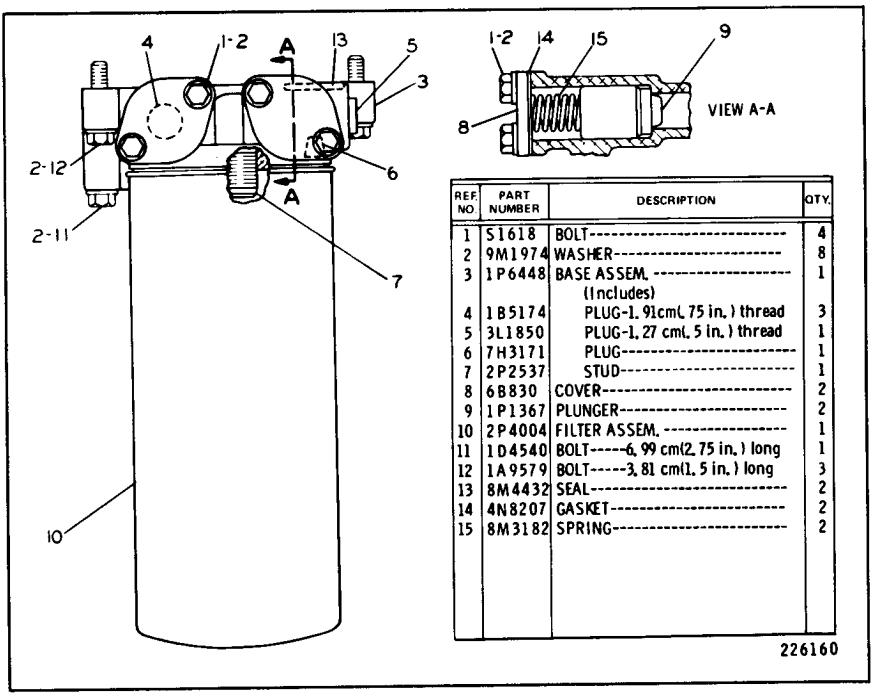

REF. NO.	PART NUMBER	DESCRIPTION	QTY.
1	S1618	BOLT	4
2	9M1974	WASHER	8
3	1P6448	BASE ASSEM. (Includes)	1
4	1B5174	PLUG-1.91cm(.75 in.) thread	3
5	3L1850	PLUG-1.27 cm(.5 in.) thread	1
6	7H3171	PLUG	1
7	2P2537	STUD	1
8	6B830	COVER	2
9	1P1367	PLUNGER	2
10	2P4004	FILTER ASSEM.	1
11	1D4540	BOLT-6.99 cm(2.75 in.) long	1
12	1A9579	BOLT-3.81 cm(1.5 in.) long	3
13	8M4432	SEAL	2
14	4N8207	GASKET	2
15	8M3182	SPRING	2

226160

2P6475 OIL FILTER GROUP
Engine Serial No. 78P38513 to 78P56556 Inclusive

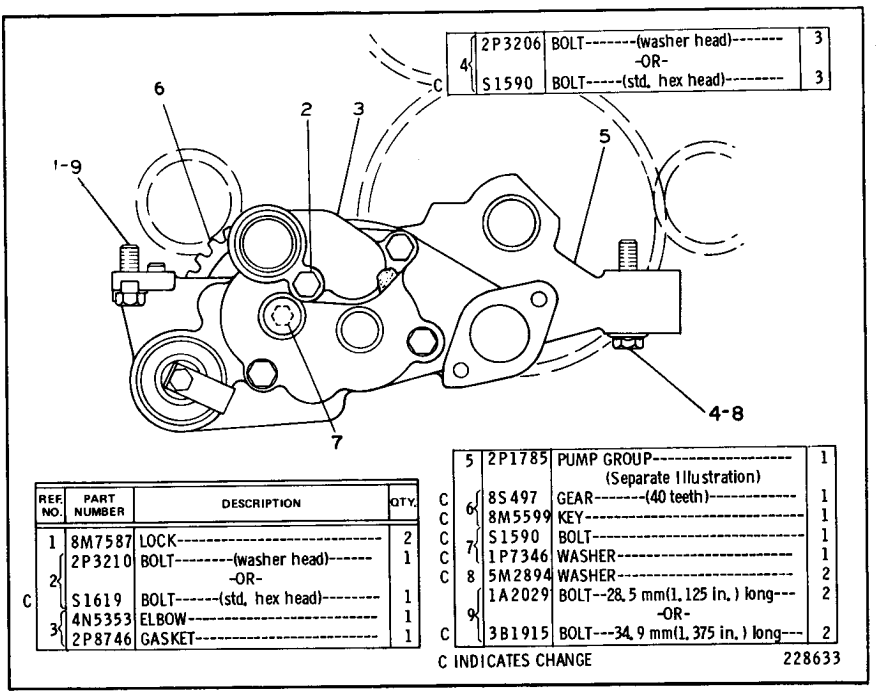

	REF. NO.	PART NUMBER	DESCRIPTION	QTY.
	4	2P3206	BOLT-(washer head)	3
			-OR-	
C		S1590	BOLT-(std. hex head)	3

REF. NO.	PART NUMBER	DESCRIPTION	QTY.
1	8M7587	LOCK	2
2	2P3210	BOLT-(washer head)	1
		-OR-	
C	S1619	BOLT-(std. hex head)	1
3	4N5353	ELBOW	1
	2P8746	GASKET	1

	REF. NO.	PART NUMBER	DESCRIPTION	QTY.
	5	2P1785	PUMP GROUP (Separate Illustration)	1
C	6	8S497	GEAR-(40 teeth)	1
C		8M5599	KEY	1
C	7	S1590	BOLT	1
C		1P7346	WASHER	1
C	8	5M2894	WASHER	2
	9	1A2029	BOLT-28.5 mm(1.125 in.) long	2
			-OR-	
C		3B1915	BOLT-34.9 mm(1.375 in.) long	2

C INDICATES CHANGE

228633

2P1784 OIL PUMP GROUP
2P1785 Pump parts are shown on Pages 28B & 29

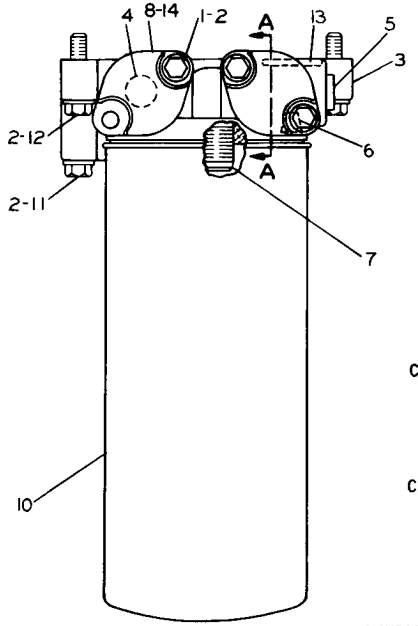

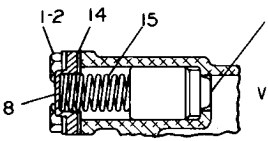

	REF. NO.	PART NUMBER	DESCRIPTION	QTY.
	1	S1618	BOLT----------	3
	2	9M1974	WASHER----------	8
	3	8N6212	BASE ASSEM. ----------	1
			(Includes)	
	4	2R5657	PLUG-2.54 cm(1 in.)thread	3
	5	2B858	PLUG-1.27 cm(.5 in.) thread	1
	6	7H3171	PLUG----------	1
	7	2P2537	STUD----------	1
C	8	8N6986	COVER----------	2
	9	1P1367	PLUNGER----------	2
	10	2P4004	FILTER ASSEM. ----------	1
	11	1D4540	BOLT-----6.99 cm(2.75 in.) long	1
	12	1B9575	BOLT-----4.44 cm(1.75 in.)long-	3
	13	8M4432	SEAL----------	2
C	14	8N6985	GASKET----------	2
	15	8M3182	SPRING----------	2

C INDICATES CHANGE 227300

2P6475 OIL FILTER GROUP
Engine Serial No. 78P56557—Up

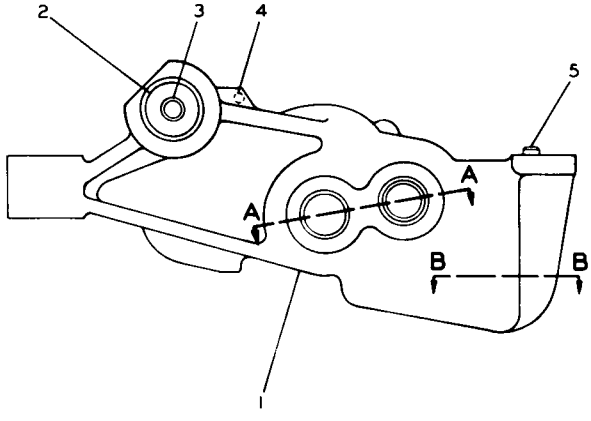

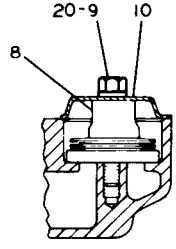

SECTION B-B

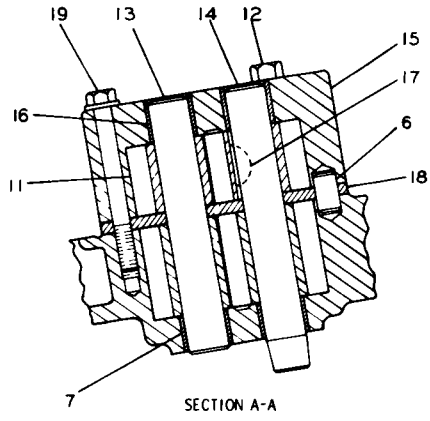

SECTION A-A

REF. NO.	PART NUMBER	DESCRIPTION	QTY
1	2P685	BODY ASSEM.	1
2	2P1170	SHAFT ASSEM.	1
3	6F7172	DOWEL	1
4	4B9880	BALL	1
5	1F1006	DOWEL	1
6	1M3735	DOWEL	2
7	8S6511	BEARING	2
C 8	4N8385	VALVE ASSEM.	1
C 9	2B2694	BOLT	1
10	4N3732	COVER	1
C 11	6N1036	GEAR (8 Teeth)	2
C 12	T65	BOLT	2
C 13	8S493	SHAFT ASSEM.	1
14	2P6245	SHAFT ASSEM.	1
15	4N4055	BODY ASSEM.	1
16	8S6511	BEARING	2
17	1B8709	KEY	1
18	2P1781	SPACER	1
C 19	2M3403	BOLT	1
C	5M2894	WASHER	1
C 20	9M1974	WASHER	1

C INDICATES CHANGE

217789

2P1785 OIL PUMP GROUP
Engine Serial No. 78P38513 to 78P58039, 78P58604 & 78P58605 inclusive
Part of 2P1784 Oil Pump Group shown on Page 28

2P1785 OIL PUMP GROUP
Engine Serial No. 78P58040 to 78P58603 & 78P58606—Up
Part of 2P1784 Oil Pump Group shown on Page 28

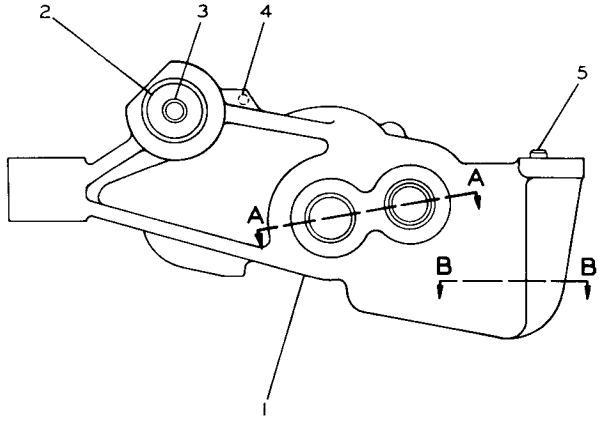

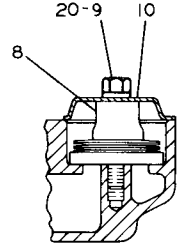

SECTION B-B

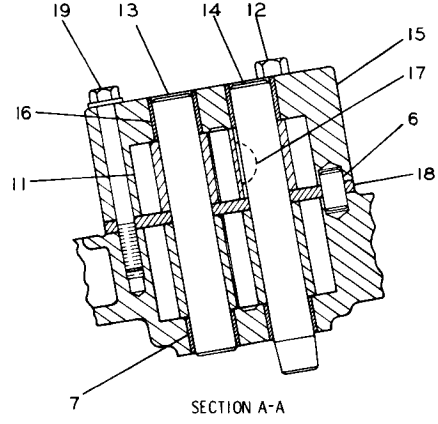

SECTION A-A

	REF. NO.	PART NUMBER	DESCRIPTION	QTY
C	1	8N8636	BODY ASSEM.	1
	2	2P1170	SHAFT ASSEM.	1
	3	6F7172	DOWEL	1
	4	4B9880	BALL	1
	5	1F1006	DOWEL	1
	6	1M3735	DOWEL	2
	7	8S6511	BEARING	2

8	4N8385	VALVE ASSEM.	1
9	2B2694	BOLT	1
10	4N3732	COVER	1
11	6N1036	GEAR (8 Teeth)	2
12	T65	BOLT	2
13	8S493	SHAFT ASSEM.	1
14	2P6245	SHAFT ASSEM.	1

15	4N4055	BODY ASSEM.	1
16	8S6511	BEARING	2
17	1B8709	KEY	1
18	2P1781	SPACER	1
19	2M3403	BOLT	1
	5M2894	WASHER	1
20	9M1974	WASHER	1

C INDICATES CHANGE

228659

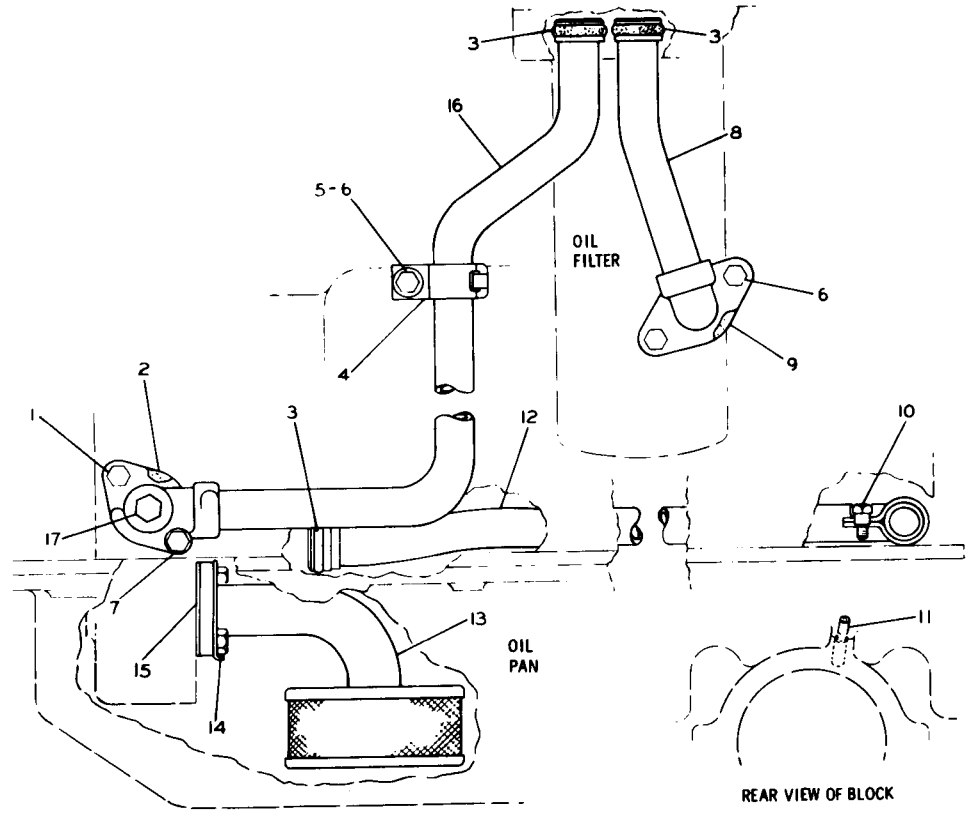

	REF. NO.	PART NUMBER	DESCRIPTION	QTY
	1	2P3202	BOLT	1
	2	2M5407	GASKET	1
C	3	9M4849	SEAL	3
	4	7S3919	CLIP	1
		7S3916	CLIP-------(Tab)	1
	5	4B4278	WASHER	1
	6	2P3201	BOLT	3
	7	2P3207	BOLT	1
	8	2P2460	TUBE ASSEM.	1
	9	7F7590	GASKET	1
	10	T102	BOLT	1
		L364	LOCK	1
	11	2S1541	ORIFICE	4
	12	2P744	TUBE ASSEM.	1
	13	2P1776	BELL ASSEM.	1
	14	S1594	BOLT	2
		8S8874	LOCK	1
	15	8M904	GASKET	1
	16	2P2519	TUBE ASSEM. (Includes)	1
C	17	5M6213	PLUG	1

C INDICATES CHANGE

168737

2P6512 OIL LINES GROUP
Engine Serial No. 78P38513 to 78P40899 inclusive

2P6512 OIL LINES GROUP
Engine Serial No. 78P40900 to 78P53880 and 78P53907 to 78P54106 inclusive

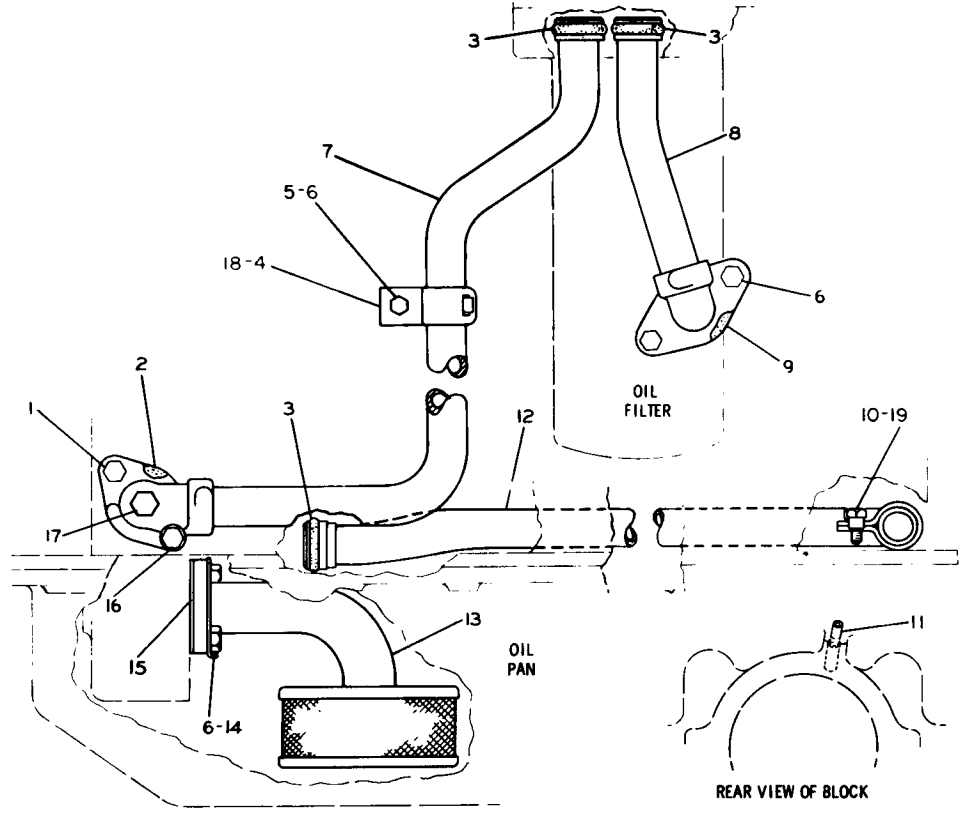

	REF. NO.	PART NUMBER	DESCRIPTION	QTY.
	1	1A2029	BOLT	1
	2	2M5407	GASKET	1
	3	9M4849	SEAL	3
	4	7S3919	CLIP--(slot)	1
C	5	9L9132	WASHER	1
C	6	S1594	BOLT	5
C	7	2P2519	TUBE ASSEM.	1
	8	2P2460	TUBE ASSEM.	1
	9	7F7590	GASKET	1
	10	L364	LOCK	1
	11	2S1541	ORIFICE	4
	12	2P744	TUBE ASSEM.	1
	13	2P1776	BELL ASSEM.	1
	14	8S8874	LOCK	1
	15	8M904	GASKET	1
C	16	L2070	BOLT	1
C	17	5M6213	PLUG	1
C	18	7S3916	CLIP--(tab)	1
	19	T102	BOLT--(plain)	1
			-OR-	
C		4F29	BOLT--(drilled head)	1

C INDICATES CHANGE

172345

2P6512 OIL LINES GROUP
Engine Serial No. 78P53881 to 78P53906 and 78P54107—Up

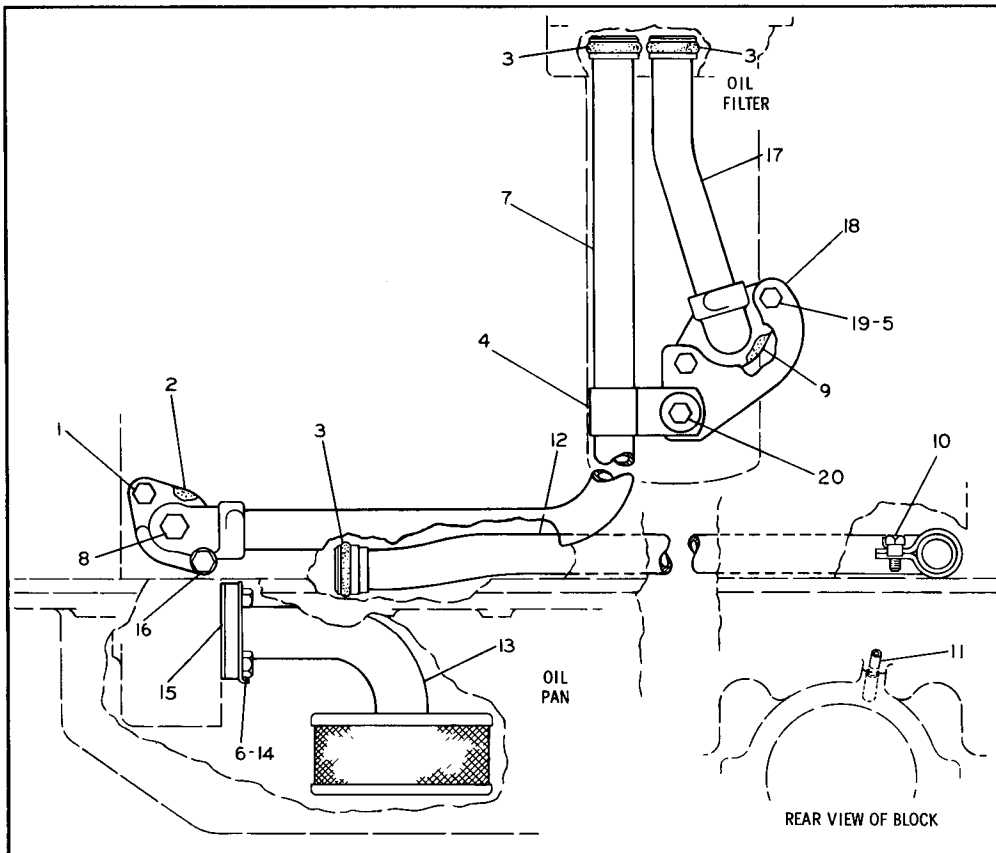

	REF. NO.	PART NUMBER	DESCRIPTION	QTY.
	1	1A2029	BOLT	1
	2	2M5407	GASKET	1
	3	9M4849	SEAL	3
C	4	8M2769	CLIP	1
C	5	8D5898	SPACER	4
C	6	S1594	BOLT	2
C	7	8N7318	TUBE ASSEM. (Includes)	1
	8	5M6213	PLUG	1
	9	7F7590	GASKET	1
	10	4F29	BOLT	1
		L364	LOCK	1
	11	2S1541	ORIFICE	4
	12	2P744	TUBE ASSEM.	1
	13	2P1776	BELL ASSEM.	1
	14	8S8874	LOCK	1
	15	8M904	GASKET	1
	16	L2070	BOLT	1
C	17	8N7315	TUBE ASSEM.	1
C	18	8N5739	BRACKET	1
C	19	S1590	BOLT	2
C		5M2894	WASHER	2
C	20	L1351	BOLT	1
C		1D4717	NUT	1
C		9L9132	WASHER	1

C INDICATES CHANGE

227295

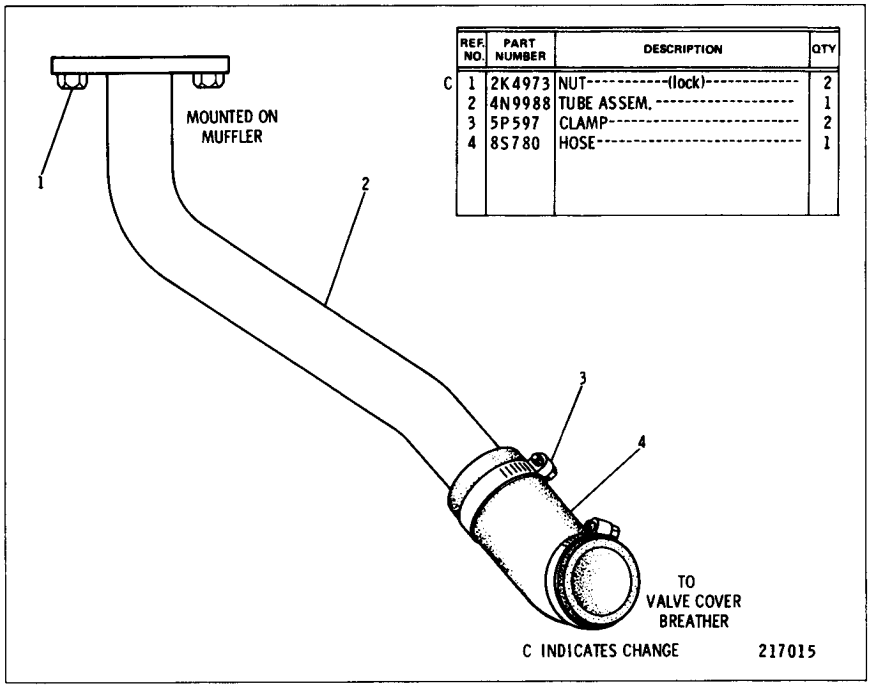

	REF. NO.	PART NUMBER	DESCRIPTION	QTY
C	1	2K4973	NUT----------(lock)----------	2
	2	4N9988	TUBE ASSEM.----------	1
	3	5P597	CLAMP----------	2
	4	8S780	HOSE----------	1

4N9989 FUMES DISPOSAL GROUP
Serial No. 13X1 to 13X623 inclusive

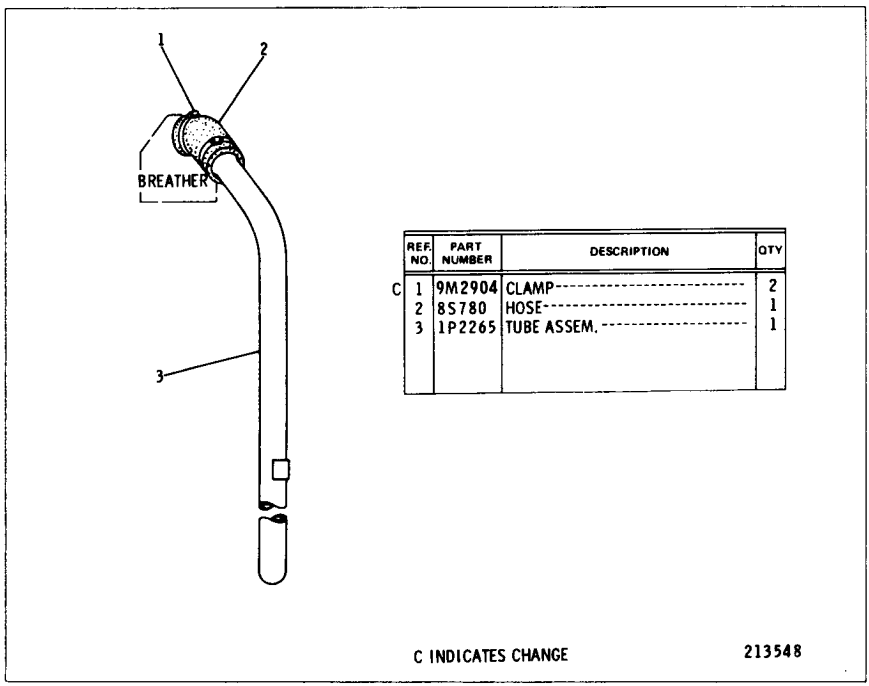

	REF. NO.	PART NUMBER	DESCRIPTION	QTY
C	1	9M2904	CLAMP----------	2
	2	8S780	HOSE----------	1
	3	1P2265	TUBE ASSEM.----------	1

6N4873 FUMES DISPOSAL GROUP
Part of 4V1696 Air Conditioner Arrangement listed on Page 232A
AN ATTACHMENT

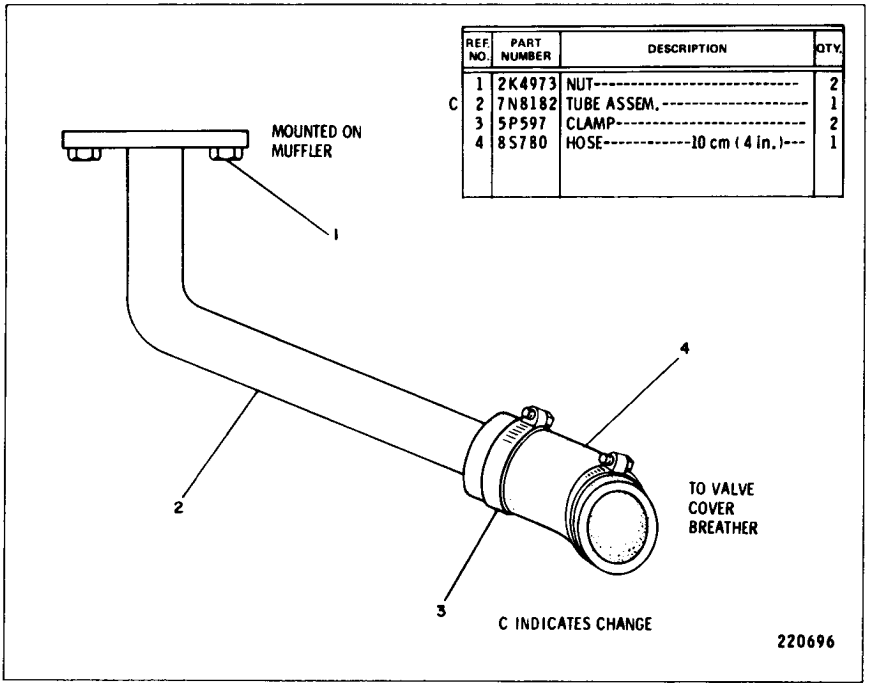

	REF. NO.	PART NUMBER	DESCRIPTION	QTY.
	1	2K4973	NUT----------	2
C	2	7N8182	TUBE ASSEM.----------	1
	3	5P597	CLAMP----------	2
	4	8S780	HOSE----------10 cm (4 in.)---	1

4N9989 FUMES DISPOSAL GROUP
Serial No. 13X624—Up

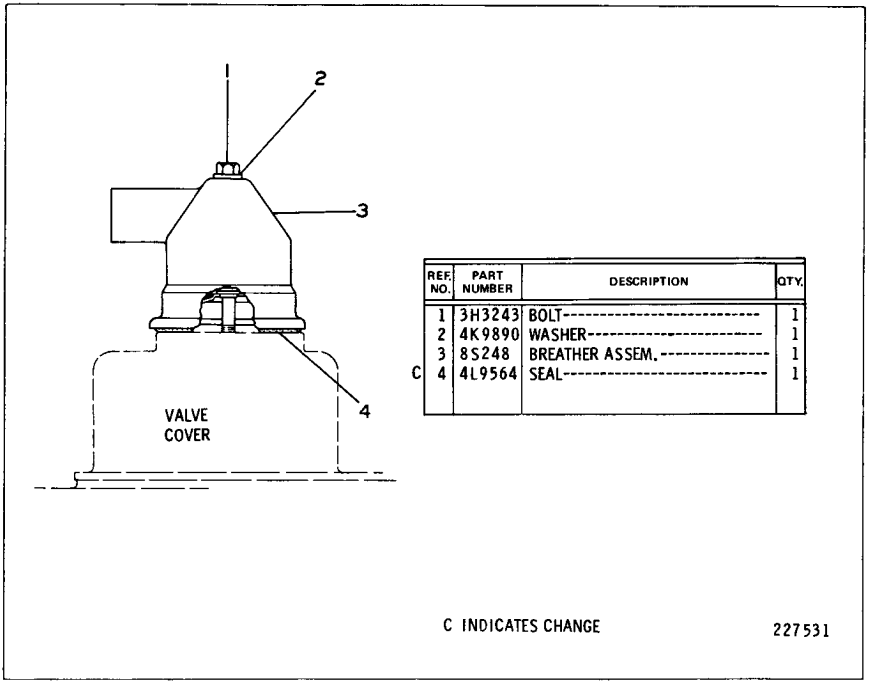

	REF. NO.	PART NUMBER	DESCRIPTION	QTY.
	1	3H3243	BOLT----------	1
	2	4K9890	WASHER----------	1
	3	8S248	BREATHER ASSEM.----------	1
C	4	4L9564	SEAL----------	1

1P4244 BREATHER GROUP

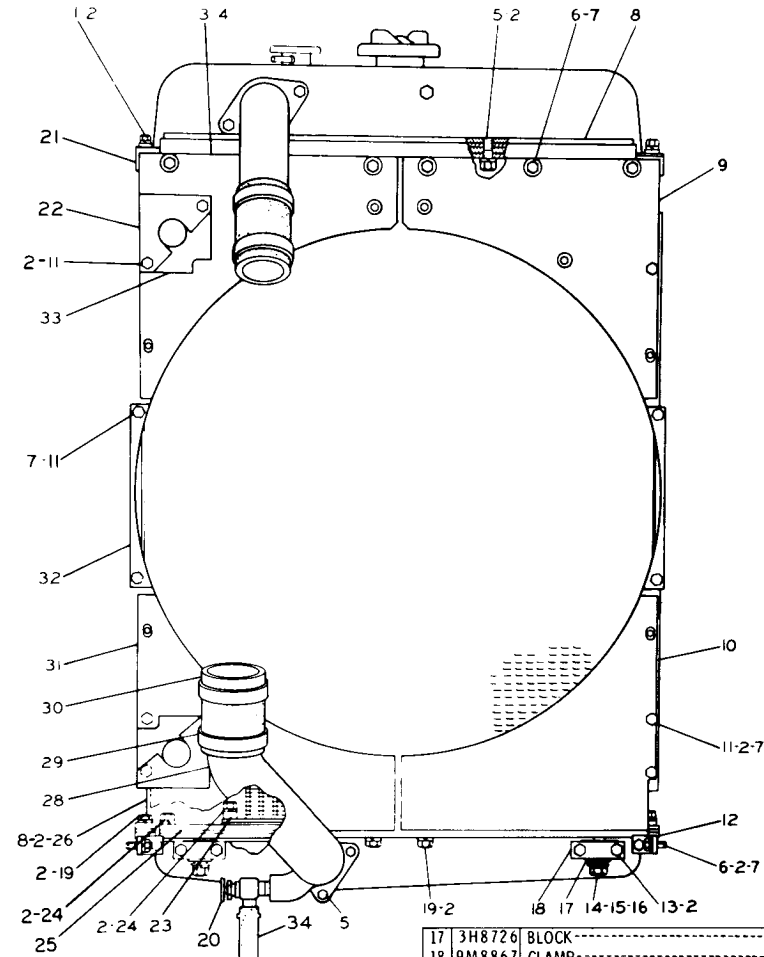

	REF. NO.	PART NUMBER	DESCRIPTION	QTY
C	1	T55	BOLT	2
C	2	5M2894	WASHER	37
	3	2P1366	SHIELD ASSEM.	1
	4	9F2978	NUT	3
C	5	1A2029	BOLT	17
	6	L1351	BOLT	10
C	7	5P1075	WASHER	18
C	8	7N2619	STRIP--(tapped)	2
	9	2P1364	SHIELD ASSEM.---(Upper R.H.)---	1
		9F2978	NUT--------(Weld)----------	2
	10	2P1391	SHIELD	1
	11	S509	BOLT	12
	12	3S2927	BRACKET	2
	13	L2070	BOLT	4
	14	1A5822	BOLT	2
	15	4B4280	WASHER	2
C	16	2M849	WASHER	2
	17	3H8726	BLOCK	2
	18	9M8867	CLAMP	2
C	19	S1588	BOLT	5
	20	8F8151	COCK	1
	21	5S6758	BLOCK	1
	22	2P1496	PLATE	2
	23	2P1788	STRIP	2
C	24	S1571	BOLT	8
C	25	7N2620	STRIP	1
	26	2P1822	BAFFLE ASSEM.	1
		2P1821	BAFFLE	1
		6B4594	RIVET	2
	28	2P4249	ELBOW	1
C	29	5P4868	CLAMP	2
▲	30	5P1262	HOSE----------12.7 cm(5 in.)	
	31	2P1389	SHIELD ASSEM.---(lower L.H.)---	1
		9F2978	NUT---------(weld)----------	1
	32	2P2395	BAFFLE	2
	33	2P1495	PLATE	2
▲	34	5P767	HOSE----------25.4 cm(10 in.)	

C INDICATES CHANGE

▲ ORDER BY THE CENTIMETER

174937

2P8187 RADIATOR GROUP—Rear View

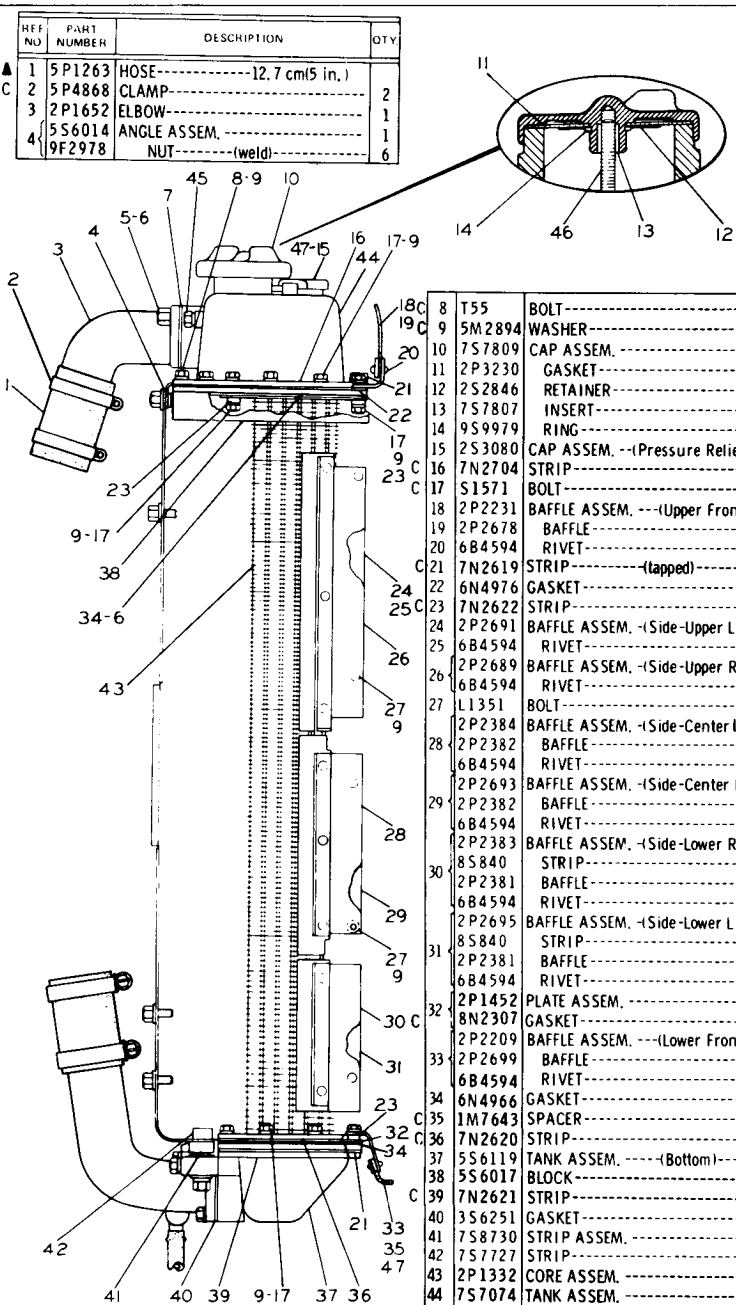

REF NO	PART NUMBER	DESCRIPTION	QTY
▲ 1	5P1263	HOSE----------12.7 cm(5 in.)	
C 2	5P4868	CLAMP----------	2
3	2P1652	ELBOW----------	1
4	5S6014	ANGLE ASSEM. ----------	1
	9F2978	NUT--------(weld)----------	6

5	S1595	BOLT----------	2
6	2P1765	PLATE ASSEM. ----------	1
7	1M7830	GASKET----------	1

8	T55	BOLT----------	2
C 9	5M2894	WASHER----------	63
10	7S7809	CAP ASSEM. ----------	1
11	2P3230	GASKET----------	1
12	2S2846	RETAINER----------	1
13	7S7807	INSERT----------	1
14	9S9979	RING----------	1
15	2S3080	CAP ASSEM. --(Pressure Relief)---	1
16	7N2704	STRIP----------	2
C 17	S1571	BOLT----------	49
18	2P2231	BAFFLE ASSEM. ---(Upper Front)---	1
19	2P2678	BAFFLE----------	1
20	6B4594	RIVET----------	6
C 21	7N2619	STRIP----------(tapped)----------	2
22	6N4976	GASKET----------	1
C 23	7N2622	STRIP----------	4
24	2P2691	BAFFLE ASSEM. -(Side-Upper L. H.)-	1
25	6B4594	RIVET----------	3
26	2P2689	BAFFLE ASSEM. -(Side-Upper R. H.)-	1
	6B4594	RIVET----------	3
27	L1351	BOLT----------	12
28	2P2384	BAFFLE ASSEM. -(Side-Center L. H.)	1
	2P2382	BAFFLE----------	1
	6B4594	RIVET----------	3
29	2P2693	BAFFLE ASSEM. -(Side-Center L. H.)	1
	2P2382	BAFFLE----------	1
	6B4594	RIVET----------	3
30	2P2383	BAFFLE ASSEM. -(Side-Lower R. H.)-	1
	8S840	STRIP----------	1
	2P2381	BAFFLE----------	1
	6B4594	RIVET----------	2
31	2P2695	BAFFLE ASSEM. -(Side-Lower L. H.)-	1
	8S840	STRIP----------	1
	2P2381	BAFFLE----------	1
	6B4594	RIVET----------	2
32	2P1452	PLATE ASSEM. ----------	1
	8N2307	GASKET----------	1
33	2P2209	BAFFLE ASSEM. ---(Lower Front)---	1
	2P2699	BAFFLE----------	1
	6B4594	RIVET----------	6
34	6N4966	GASKET----------	2
C 35	1M7643	SPACER----------	1
C 36	7N2620	STRIP----------	1
37	5S6119	TANK ASSEM. -----(Bottom)-------	1
38	5S6017	BLOCK----------	1
C 39	7N2621	STRIP----------	2
40	3S6251	GASKET----------	1
41	7S8730	STRIP ASSEM. ----------	1
42	7S7727	STRIP----------	1
43	2P1332	CORE ASSEM. ----------	1
44	7S7074	TANK ASSEM. ----------	1
45	5M6214	PLUG----------	1
46	1S286	STUD----------	1
47	4N4579	NECK ASSEM. ----------	1
48	S1591	BOLT----------	4

C INDICATES CHANGE

▲ ORDER BY THE CENTIMETER

174938

2P8187 RADIATOR GROUP—Side View

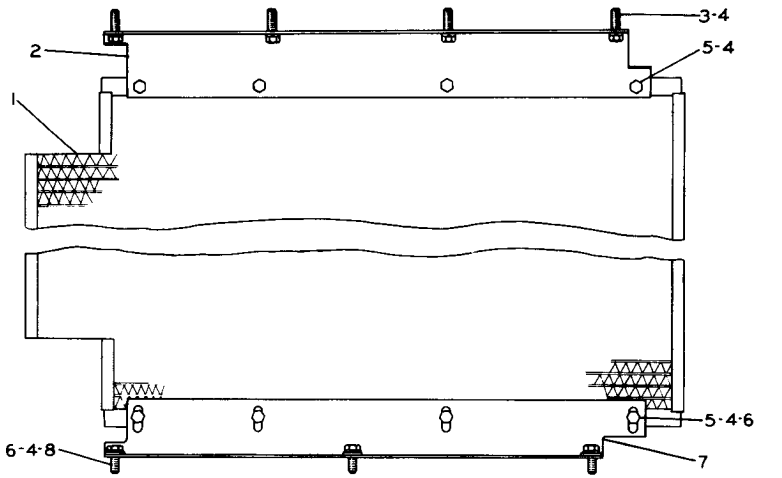

REF. NO.	PART NUMBER	DESCRIPTION	QTY
1	2P1761	GRID ASSEM.	1
2	2P1759	BRACKET	1
3	S1594	BOLT	4
4	3B4506	LOCKWASHER	15
5	S509	BOLT	8
6	4B4278	WASHER	7
C 7	6N9048	BRACKET	1
8	T102	BOLT	3

C INDICATES CHANGE 215751

2P1778 RADIATOR CORE PROTECTION GRID GROUP
AN ATTACHMENT

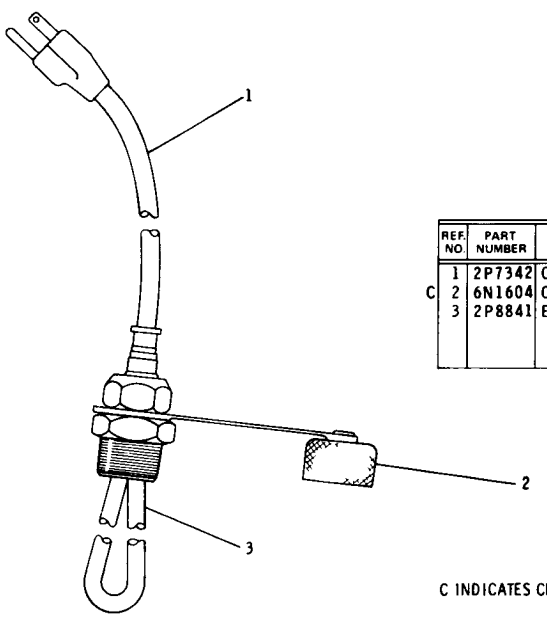

REF. NO.	PART NUMBER	DESCRIPTION	QTY
1	2P7342	CORD ASSEM.	1
C 2	6N1604	CAP ASSEM.	1
3	2P8841	ELEMENT ASSEM.	1

C INDICATES CHANGE 205356

4N3586 JACKET WATER HEATER GROUP
AN ATTACHMENT

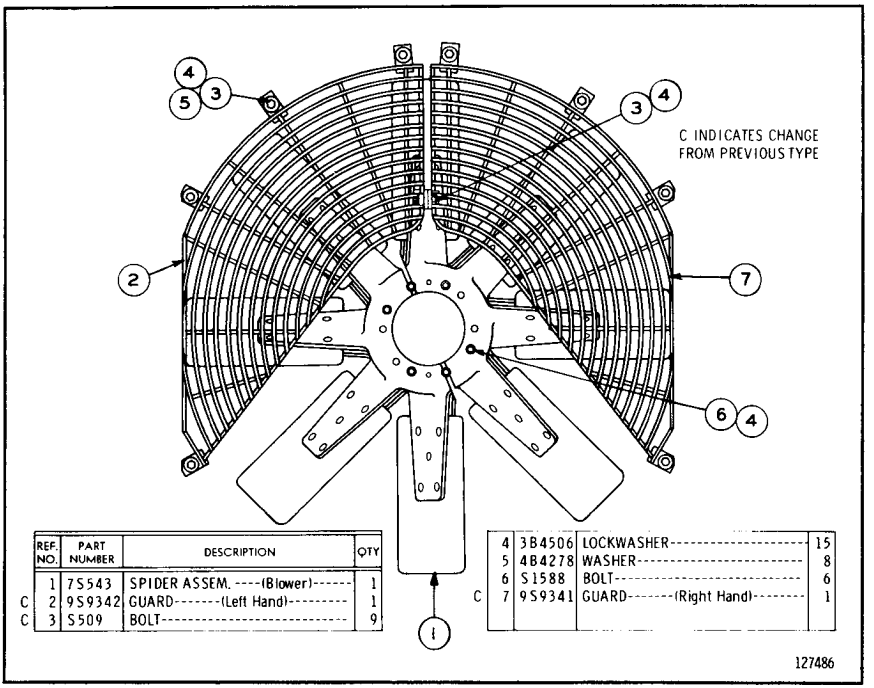

	REF. NO.	PART NUMBER	DESCRIPTION	QTY
	1	7S543	SPIDER ASSEM. -----(Blower)------	1
C	2	9S9342	GUARD-------(Left Hand)---------	1
C	3	S509	BOLT----------	9
	4	3B4506	LOCKWASHER----------	15
	5	4B4278	WASHER----------	8
	6	S1588	BOLT----------	6
C	7	9S9341	GUARD-------(Right Hand)--------	1

7S1164 BLOWER FAN AND GUARD GROUP
Note: 8N6583 Blower Ejector Fan Spider Assembly for reducing sandblasting and Radiator core plugging and 1P8491 Reversible Fan Assembly is available

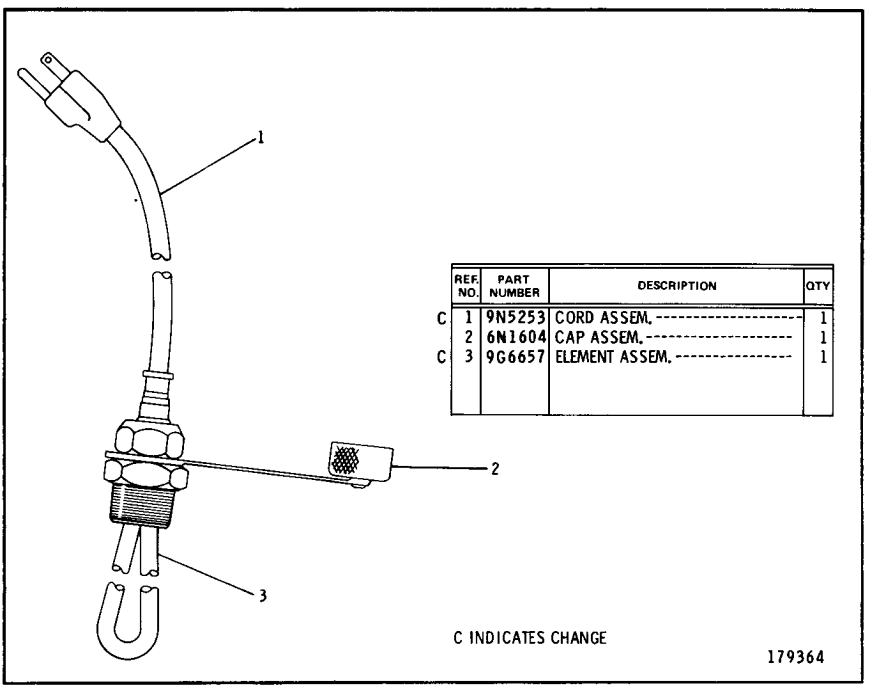

	REF. NO.	PART NUMBER	DESCRIPTION	QTY
C	1	9N5253	CORD ASSEM. ----------	1
	2	6N1604	CAP ASSEM. ----------	1
C	3	9G6657	ELEMENT ASSEM. ----------	1

4N3586 JACKET WATER HEATER GROUP—Type 2
AN ATTACHMENT

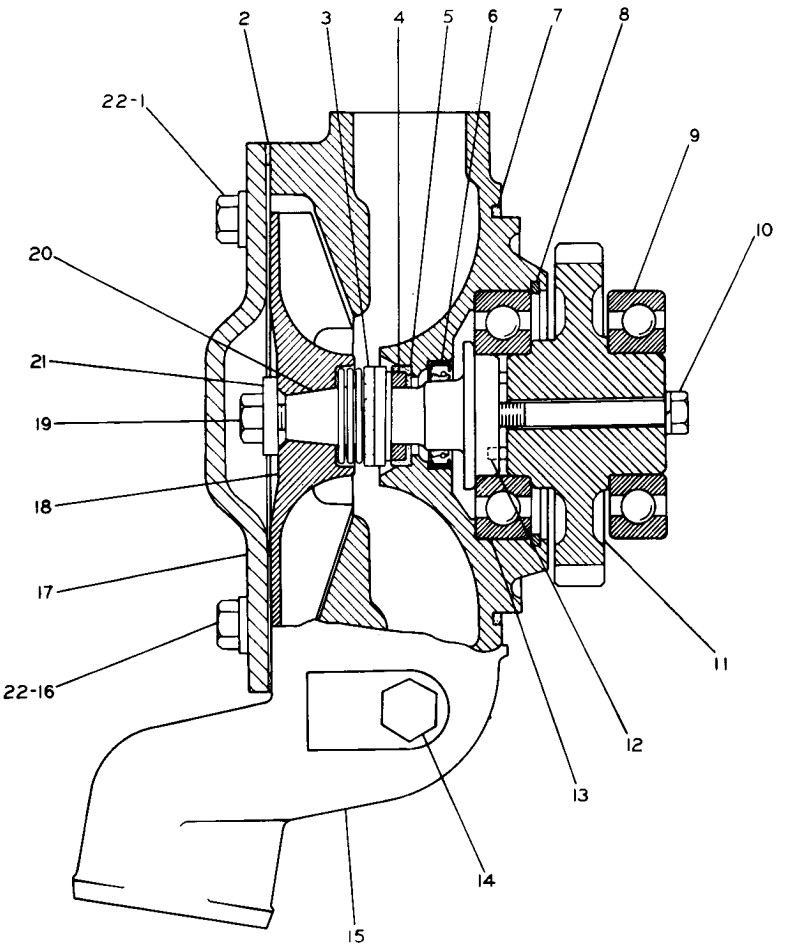

C 1W7051-REBUILD KIT ---------- 1C
(Includes Parts Marked ▲)

	REF. NO.	PART NUMBER	DESCRIPTION	QTY
C	1	L1351	BOLT	2
C	2	6N8190	GASKET	1
	3	4N6556	SEAL ASSEM.	1
	4	8S7762	RING	1
	5	8S8821	SEAL	1
	6	8H9520	SEAL	1
	7	5F3106	SEAL	1
▲	8	1K6985	RETAINER	1
▲	9	8H9789	BEARING	1
▲	10	5S1619	BOLT	1
▲		3B4506	LOCKWASHER	1
	11	2P660	GEAR ASSEM. -----(40 teeth)---- (Includes)	1
	12	2L5893	PIN	2
▲	13	6H3957	BEARING	1
▲	14	5M6213	PLUG	1
C	15	6N8413	HOUSING	1
C	16	8S9191	BOLT	2
C	17	8N5929	COVER	1
C	18	6N8411	IMPELLER	1
▲	19	4L6454	BOLT	1
▲	20	1P9929	SHAFT	1
▲	21	9M6527	WASHER	1
C	22	5M2894	WASHER	4

235724

C INDICATES CHANGE

2P662 WATER PUMP GROUP
Engine Serial No. 78P38513 to 78P40899 inclusive

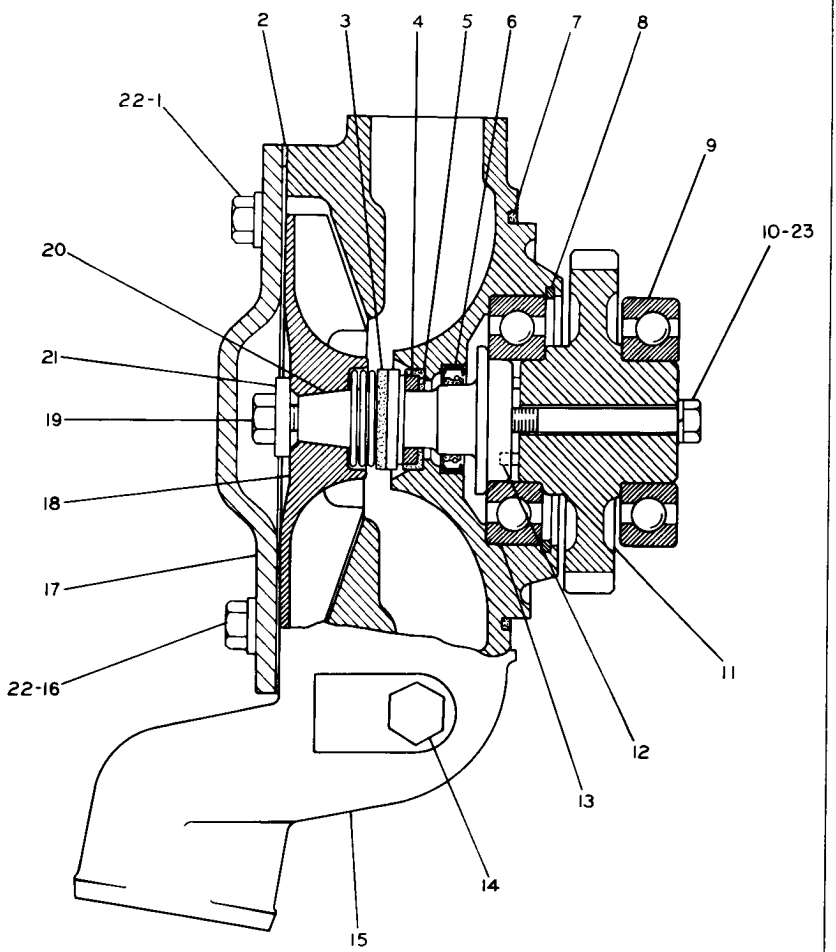

1W7051 -REBUILD KIT----------1C
(Includes parts marked ▲)

	REF. NO.	PART NUMBER	DESCRIPTION	QTY
	1	L1351	BOLT----------	2
C	2	6N8190	GASKET----------	1
	3	4N6556	SEAL ASSEM.----------	1
	4	8S7762	RING----------	1
	5	8S8821	SEAL----------	1
	6	8H9520	SEAL----------	1
	7	5F3106	SEAL----------	1
▲	8	1K6985	RING----------	1
▲	9	8H9789	BEARING----------	1
▲	10	S1619	BOLT----------	1
	11	2P660	GEAR ASSEM.------(40 teeth)----- (Includes)	1
	12	2L5893	PIN----------	2
▲	13	6H3957	BEARING----------	1
▲	14	5M6213	PLUG----------	1
C	15	6N8413	HOUSING----------	1
C	16	8S9191	BOLT----------	2
	17	2P404	COVER----------	1
C	18	6N8411	IMPELLER----------	1
▲	19	4L6454	BOLT----------	1
C▲	20	1P9929	SHAFT----------	1
▲	21	9M6527	WASHER----------	1
C	22	5M2894	WASHER----------	4
▲	23	3B4506	LOCKWASHER----------	1

C INDICATES CHANGE 235725

7N5909 WATER PUMP GROUP
Engine Serial No. 78P40900 to 78P41848 inclusive

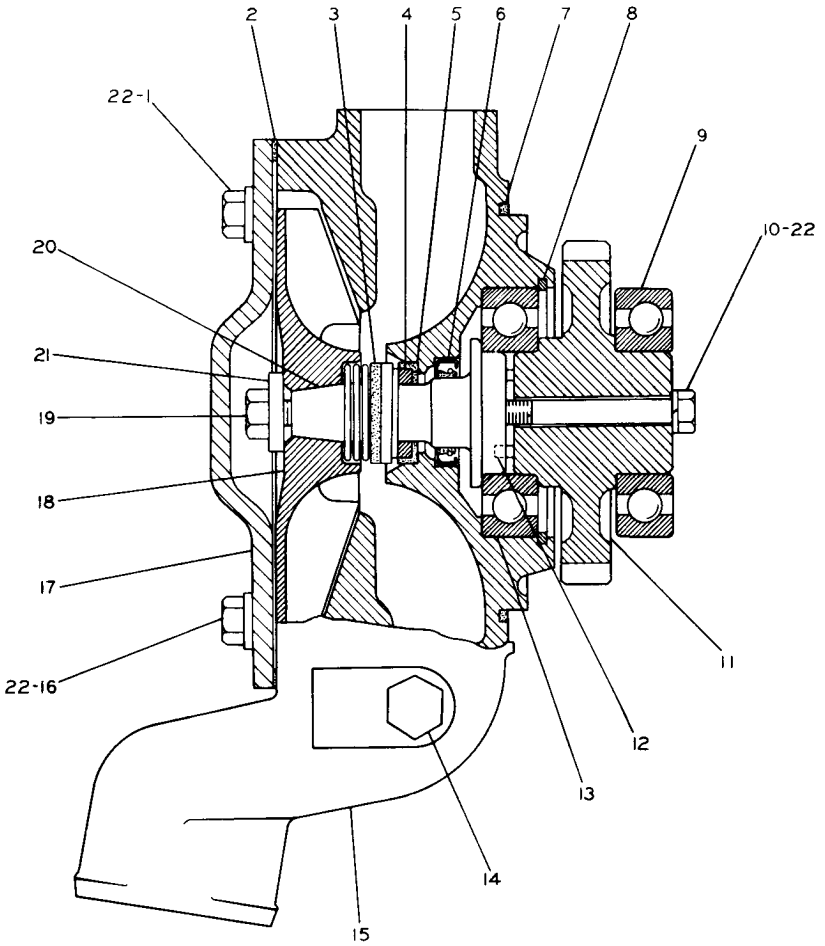

1W7053 -REBUILD KIT----------1
(Includes parts marked ▲)

REF. NO.	PART NUMBER	DESCRIPTION	QTY
1	L1351	BOLT	2
2	7N201	GASKET	1
3	4N6556	SEAL ASSEM.	1
4	8S7762	RING	1
5	8S8821	SEAL	1
6	8H9520	SEAL	1
7	5F3106	SEAL	1
▲ 8	1K6985	RING	1
▲ 9	8H9789	BEARING	1
▲ 10	S1619	BOLT	1
11	2P660	GEAR ASSEM. ------(40 teeth)----- (Includes	1
12	2L5893	PIN	2
▲ 13	6H3957	BEARING	1
14	5M6213	PLUG	1
15	7N196	HOUSING	1
16	T55	BOLT	2
17	2P404	COVER	1
18	7N5910	IMPELLER	1
▲ 19	4L6454	BOLT	1
▲ 20	7N5899	SHAFT	1
▲ 21	9M6527	WASHER	1
▲ 22	5M2894	WASHER	5

235726

7N5909 WATER PUMP GROUP
Engine Serial No. 78P41849 to 78P53478 Inclusive

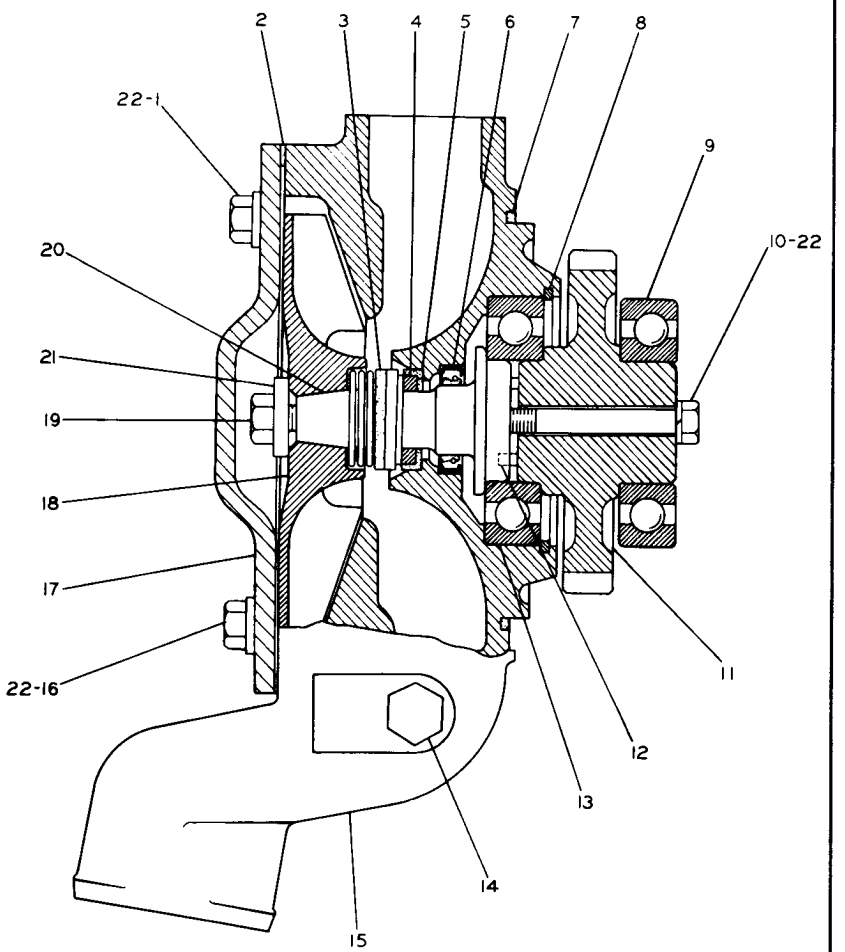

1W7053-REBUILD KIT----------1
(Includes parts marked ▲)

	REF. NO.	PART NUMBER	DESCRIPTION	QTY
	1	L1351	BOLT	2
C	2	8N5928	GASKET	1
	3	4N6556	SEAL ASSEM.	1
	4	8S7762	RING	1
	5	8S8821	SEAL	1
	6	8H9520	SEAL	1
	7	5F3106	SEAL	1
▲	8	1K6985	RING	1
▲	9	8H9789	BEARING	1
▲	10	S1619	BOLT	1
C	11	7N5193	GEAR---------(40 teeth)----------	1
	12	2L5893	PIN	2
▲	13	6H3957	BEARING	1
	14	5M6213	PLUG	1
C	15	1W4619	HOUSING	1
	16	T55	BOLT	2
C	17	8N5929	COVER	1
	18	7N5910	IMPELLER	1
▲	19	4L6454	BOLT	1
▲	20	7N5899	SHAFT	1
▲	21	9M6527	WASHER	1
▲	22	5M2894	WASHER	5

C INDICATES CHANGE

234310

7N5909 WATER PUMP GROUP
Engine Serial No. 78P53479—Up

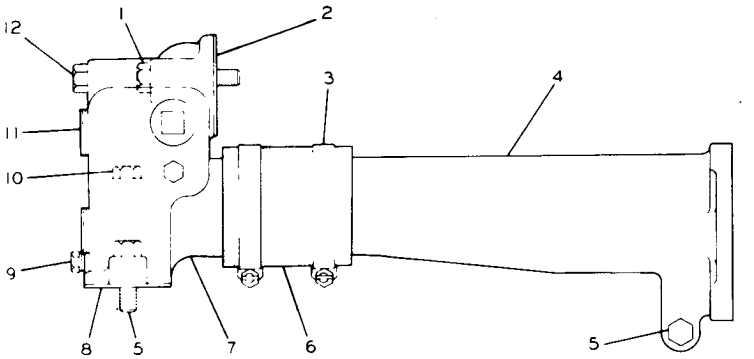

	REF NO	PART NUMBER	DESCRIPTION	QTY
C	1	T65	BOLT	1
	2	2P6132	GASKET	1
C	3	5P4868	CLAMP	2
	4	2P2511	PIPE	1
C	5	S1588	BOLT	2
C▲	6	5P1260	HOSE----------7.62 cm(3 in.)	
C	7	2P6117	ELBOW	1
	8	2P406	GASKET	1
	9	5M6213	PLUG	2
C	10	S1619	BOLT	1
	11	1B5174	PLUG	3
C	12	S1590	BOLT	1

C INDICATES CHANGE

▲ ORDER BY THE CENTIMETER 226547

2P6188 WATER LINES GROUP
Engine Serial No. 78P38513 to 78P40899 inclusive

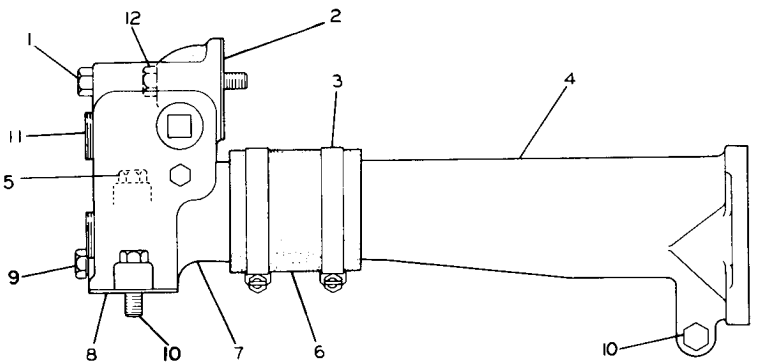

	REF NO.	PART NUMBER	DESCRIPTION	QTY.
	1	T65	BOLT	1
	2	2P6132	GASKET	1
	3	5P4868	CLAMP	2
	4	2P2511	PIPE	1
C	5	S1619	BOLT--76.2 mm(3 in.)long	1
▲	6	5P1260	HOSE-------7.62 cm(3 in.)	
C	7	2P6117	ELBOW	1
C	8	2P406	GASKET	1
	9	5M6213	PLUG	2
C	10	S1588	BOLT--31.7 mm(1.25 in.)long	2
	11	1B5174	PLUG	3
	12	S1590	BOLT	1

C INDICATES CHANGE

▲ ORDER BY THE CENTIMETER 176119

7N7211 WATER LINES GROUP
Engine Serial No. 78P40900 to 78P41848 inclusive

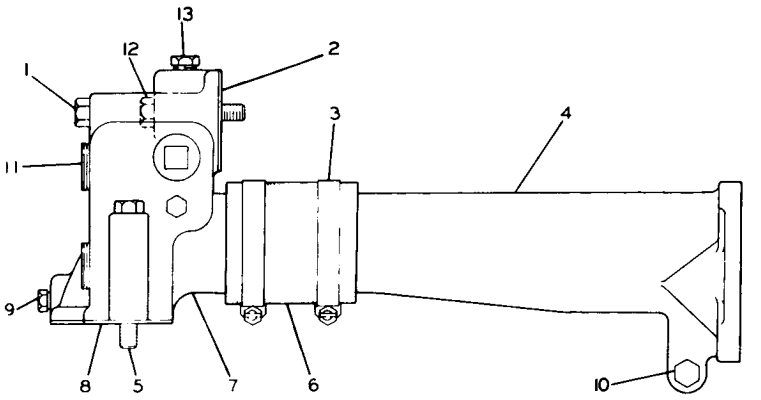

REF NO	PART NUMBER	DESCRIPTION	QTY
1	T65	BOLT	1
2	2P6132	GASKET	1
3	5P4868	CLAMP	2
4	2P2511	PIPE	1
5	S1619	BOLT	2
▲ 6	5P1260	HOSE----------7.62 cm(3 in.)	
7	7N172	ELBOW	1
8	7N200	GASKET	1
9	5M6213	PLUG	2
10	S1588	BOLT	1
11	1B5174	PLUG	3
12	S1590	BOLT	1
13	3J5390	PLUG	1

▲ ORDER BY THE CENTIMETRE 216810

7N7211 WATER LINES GROUP
Engine Serial No. 78P41849—Up

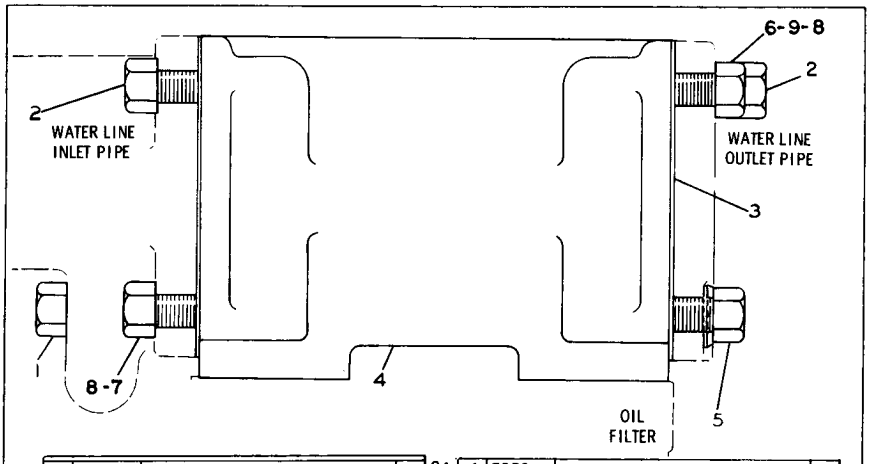

REF. NO.	PART NUMBER	DESCRIPTION	QTY.
1	L2070	BOLT----------	1
2	1A2029	BOLT----------	6
3	5S6051	GASKET----------	2
4	7N165	CORE ASSEM. ----------	1
5	2P3202	BOLT---2.85 cm(1.125 in.)long----	1
		- OR -	
	1T765	BOLT------2.54 cm(1 in.)long-----	1
C▲ 6	T573	BOLT----------	1
C▲ 7	S1591	BOLT----------	1
C▲ 8	5M2894	WASHER----------	2
C▲ 9	3B1915	BOLT----------	1

C INDICATES CHANGE

▲ USE AS REQUIRED

234137

2P6215 ENGINE OIL COOLER GROUP

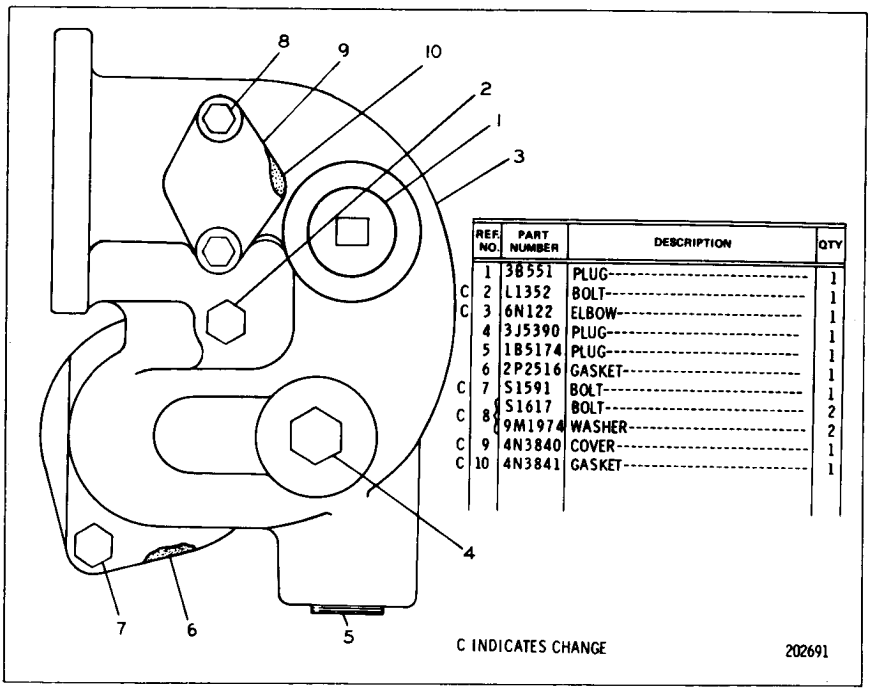

REF. NO.	PART NUMBER	DESCRIPTION	QTY
1	3B551	PLUG----------	1
C 2	L1352	BOLT----------	1
C 3	6N122	ELBOW----------	1
4	3J5390	PLUG----------	1
5	1B5174	PLUG----------	1
6	2P2516	GASKET----------	1
C 7	S1591	BOLT----------	1
C 8	S1617	BOLT----------	2
	9M1974	WASHER----------	2
C 9	4N3840	COVER----------	1
C 10	4N3841	GASKET----------	1

C INDICATES CHANGE

202691

2P7740 WATER LINES GROUP—Elbow

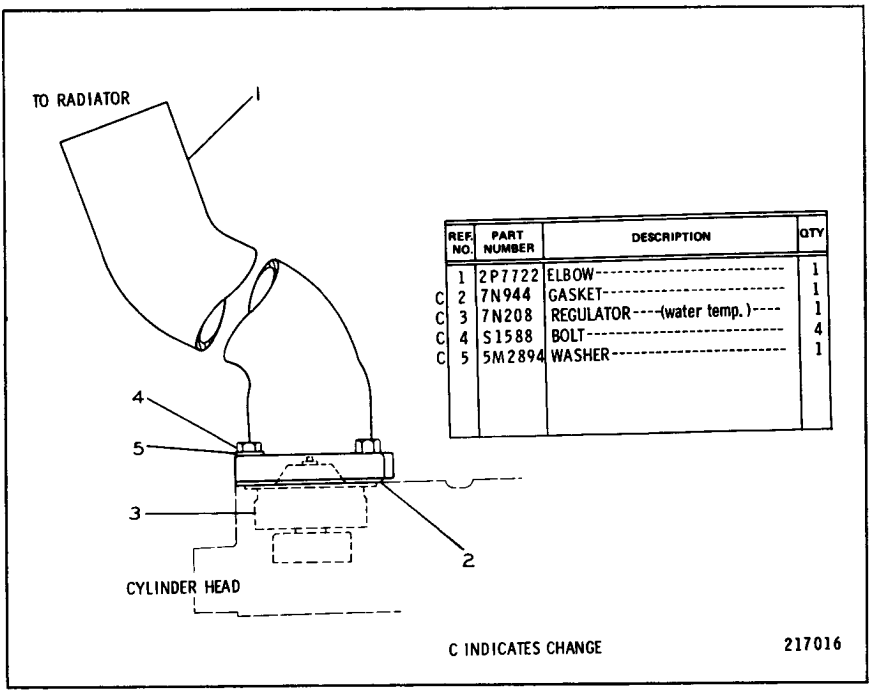

REF. NO.	PART NUMBER	DESCRIPTION	QTY
1	2P7722	ELBOW	1
C 2	7N944	GASKET	1
C 3	7N208	REGULATOR----(water temp.)----	1
C 4	S1588	BOLT	4
C 5	5M2894	WASHER	1

C INDICATES CHANGE 217016

2P8167 REGULATOR AND HOUSING GROUP

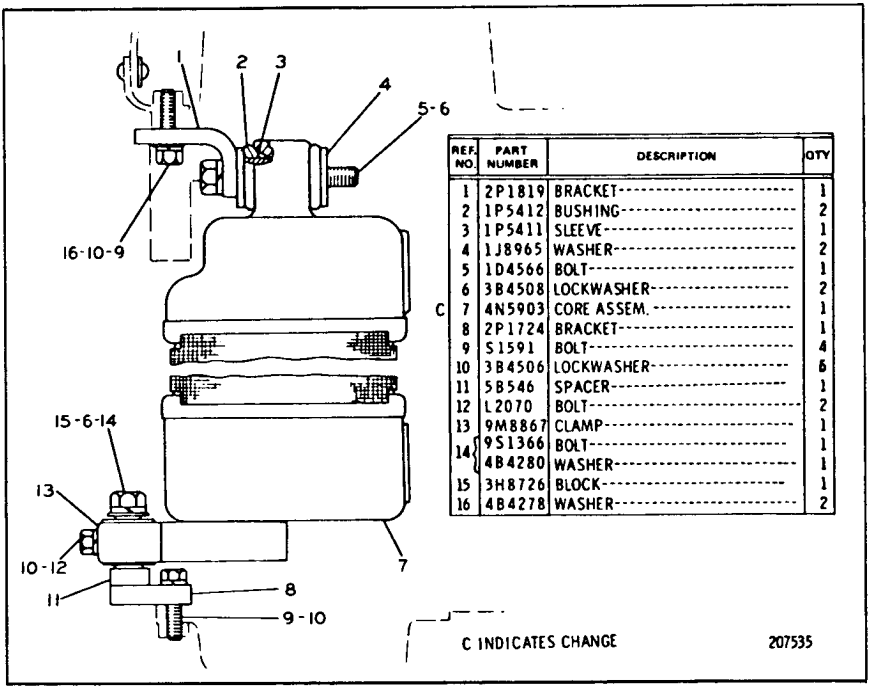

REF. NO.	PART NUMBER	DESCRIPTION	QTY
1	2P1819	BRACKET	1
2	1P5412	BUSHING	2
3	1P5411	SLEEVE	1
4	1J8965	WASHER	2
5	1D4566	BOLT	1
6	3B4508	LOCKWASHER	2
C 7	4N5903	CORE ASSEM.	1
8	2P1724	BRACKET	1
9	S1591	BOLT	4
10	3B4506	LOCKWASHER	6
11	5B546	SPACER	1
12	L2070	BOLT	2
13	9M8867	CLAMP	1
14	9S1366	BOLT	1
	4B4280	WASHER	1
15	3H8726	BLOCK	1
16	4B4278	WASHER	2

C INDICATES CHANGE 207535

2P1671 TORQUE CONVERTER OIL COOLER GROUP
Serial No. 13X1 to 13X3165 inclusive

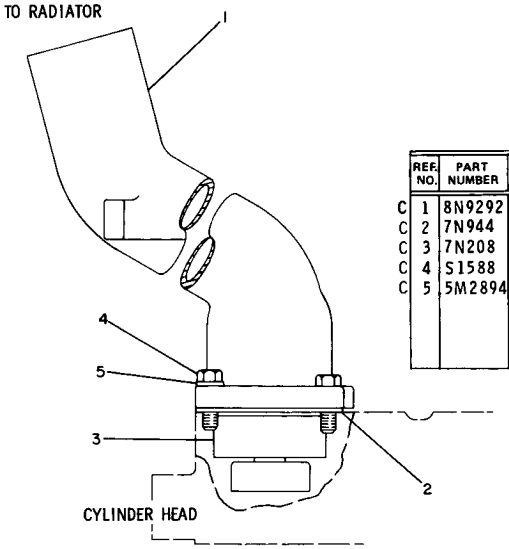

	REF. NO.	PART NUMBER	DESCRIPTION	QTY
C	1	8N9292	ELBOW----------	1
C	2	7N944	GASKET----------	1
C	3	7N208	REGULATOR----(water temp.)----	1
C	4	S1588	BOLT----------	4
C	5	5M2894	WASHER----------	1

C INDICATES CHANGE 180375

2P8167 REGULATOR AND HOUSING GROUP
Serial No. 13X3166—Up

3V2973 TORQUE CONVERTER COOLER LINES GROUP

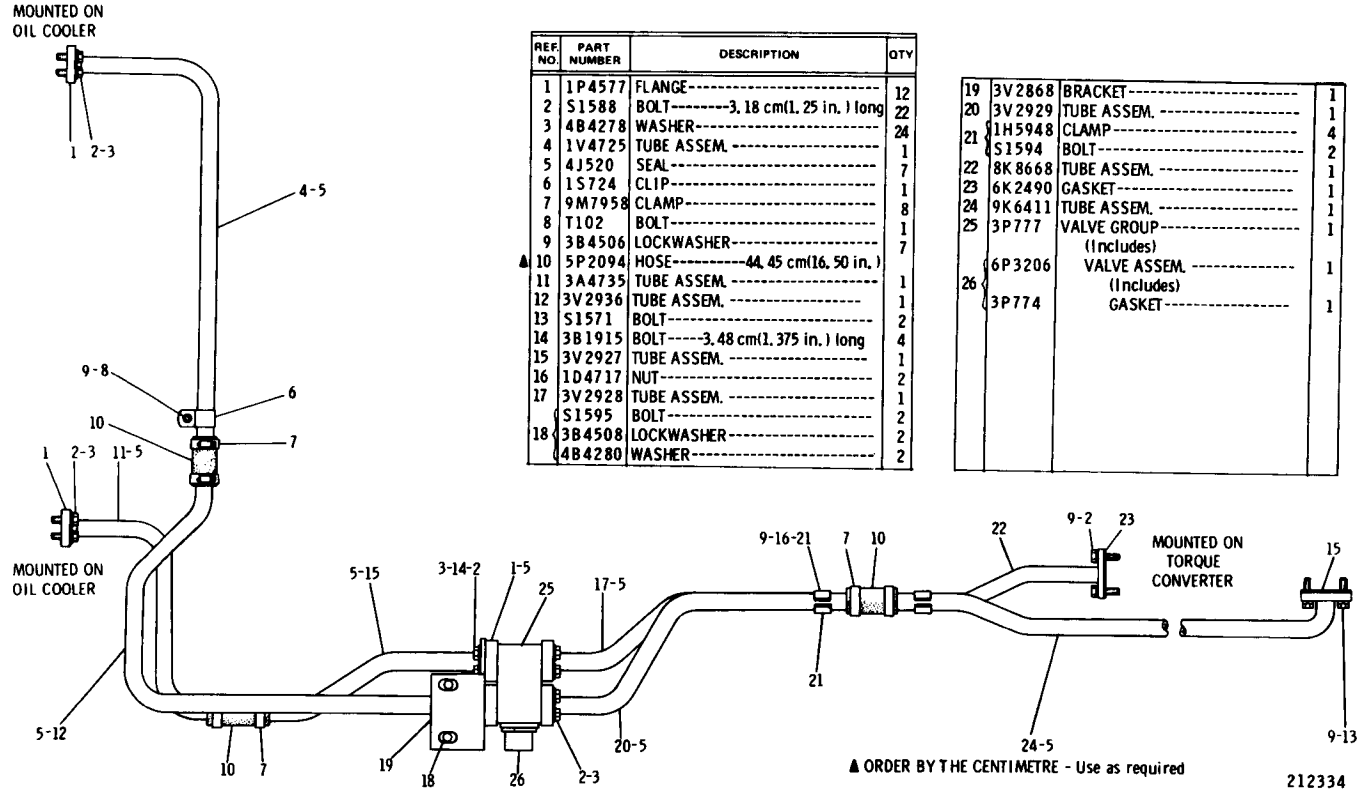

REF. NO.	PART NUMBER	DESCRIPTION	QTY
1	1P4577	FLANGE	12
2	S1588	BOLT-3.18 cm(1.25 in.) long	22
3	4B4278	WASHER	24
4	1V4725	TUBE ASSEM.	1
5	4J520	SEAL	7
6	1S724	CLIP	1
7	9M7958	CLAMP	8
8	T102	BOLT	1
9	3B4506	LOCKWASHER	7
▲10	5P2094	HOSE-44.45 cm(16.50 in.)	
11	3A4735	TUBE ASSEM.	1
12	3V2936	TUBE ASSEM.	1
13	S1571	BOLT	2
14	3B1915	BOLT-3.48 cm(1.375 in.) long	4
15	3V2927	TUBE ASSEM.	1
16	1D4717	NUT	2
17	3V2928	TUBE ASSEM.	1
18	S1595	BOLT	2
	3B4508	LOCKWASHER	2
	4B4280	WASHER	2

19	3V2868	BRACKET	1
20	3V2929	TUBE ASSEM.	1
21	1H5948	CLAMP	4
	S1594	BOLT	2
22	8K8668	TUBE ASSEM.	1
23	6K2490	GASKET	1
24	9K6411	TUBE ASSEM.	1
25	3P777	VALVE GROUP (Includes)	1
26	6P3206	VALVE ASSEM. (Includes)	1
	3P774	GASKET	1

▲ ORDER BY THE CENTIMETRE - Use as required

212334

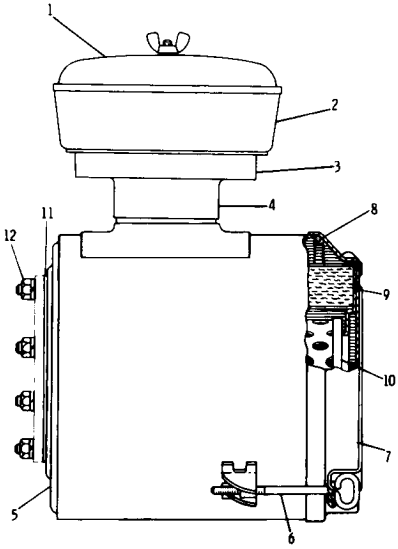

	REF. NO.	PART NUMBER	DESCRIPTION	QTY
	1	4M310	PRECLEANER	1
		9M9439	COVER ASSEM.	1
	2	1M7250	BODY	1
C	3	4N8945	BASE ASSEM.,	1
		1S5163	BOLT	1
	5	2P5080	AIR CLEANER GROUP	1
	6	7S3131	ROD ASSSEM.	2
	7	1S4392	CUP ASSEM.	1
	8	9M8513	GASKET	1
	9	4M9334	ELEMENT-(primary)	1
	10	2S1286	ELEMENT-(secondary)	1
	11	4M4299	GASKET	1
	12	2K4973	LOCKNUT	8

C INDICATES CHANGE

160696

2P7336 AIR CLEANER GROUP

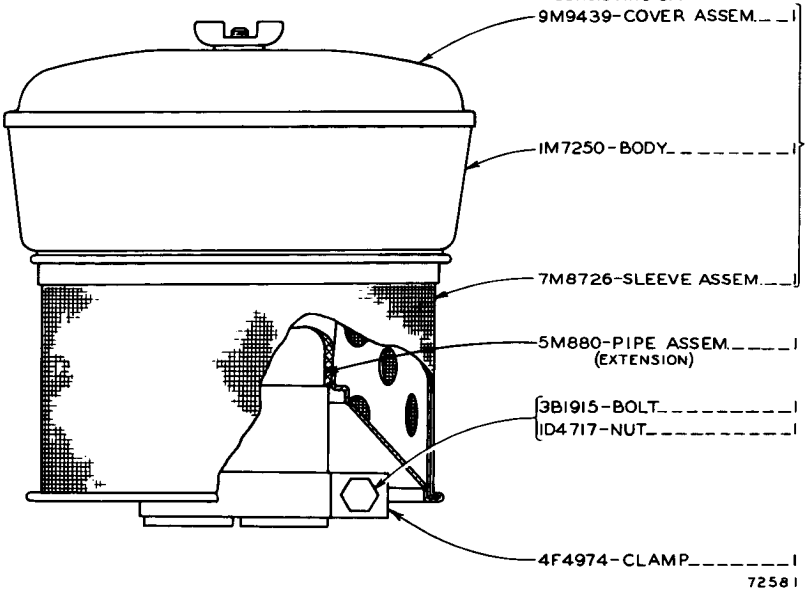

5M2734 PRESCREENER GROUP
AN ATTACHMENT

2P7337 AIR LINES GROUP
Engine Serial No. 78P38513 to 78P38773 inclusive

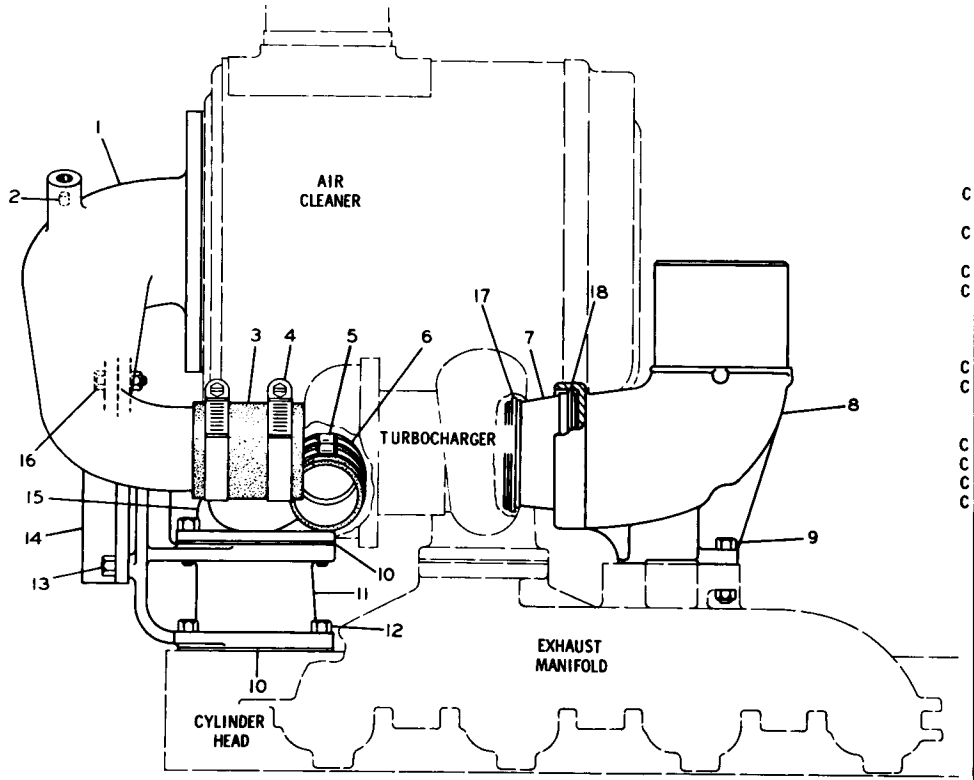

REF. NO.	PART NUMBER	DESCRIPTION	QTY
	1P1177	PIPE ASSEM.	1
1		(Includes)	
	1P1149	PIPE	1
2	7M1674	ELEMENT	1
3	2P7847	HOSE	1
4	5P598	CLAMP	2
C 5	5P597	CLAMP	2
6	1P1195	HOSE	1
C 7	6N1553	COUPLING	1
8	2P8912	ELBOW	1
C	S1571	BOLT ------1.75 in. (4.44 cm) long	1
C 9	S1590	BOLT ---------2 in. (5.08 cm) long	2
	1B5355	NUT	3
10	5S6735	GASKET	2
11	1P699	PIPE	1
C 12	1A2029	BOLT	8
C 13	S1594	BOLT	4
14	1P1128	BRACKET	1
15	1P677	ELBOW	1
C	S1588	BOLT	3
C 16	1B5355	NUT	3
C 17	6N9	RING	1
C 18	6N1558	RING	1

C INDICATES CHANGE

155446

2P7337 AIR LINES GROUP
Engine Serial No. 78P38774 to 78P40899 inclusive

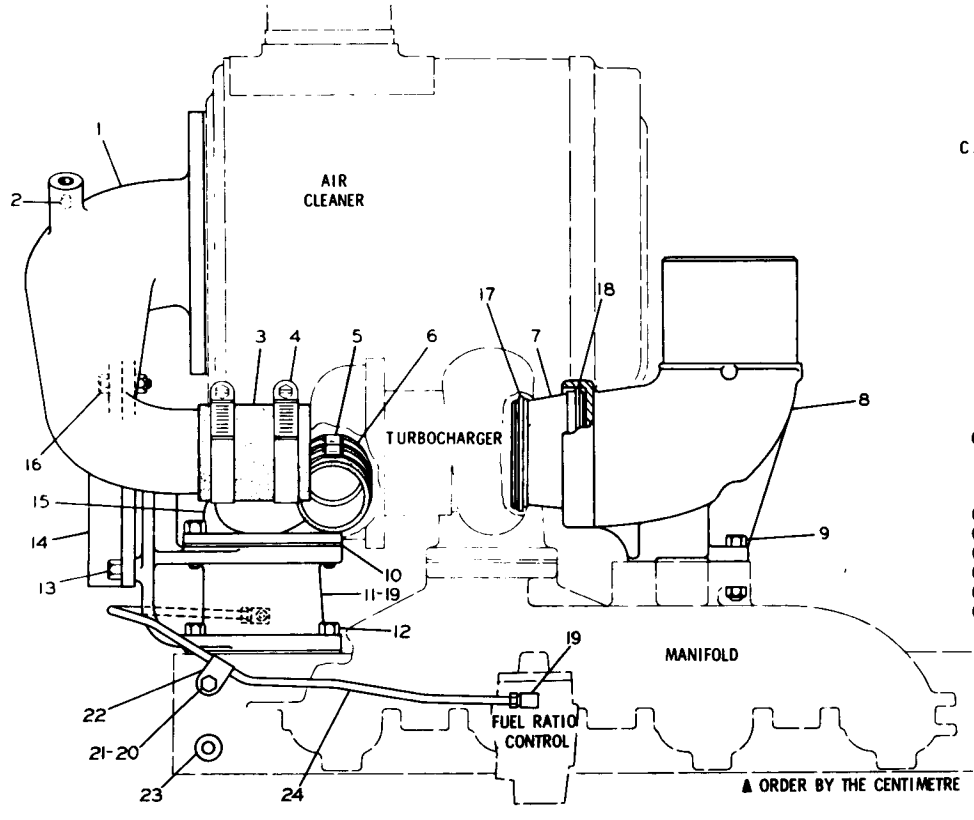

	REF. NO.	PART NUMBER	DESCRIPTION	QTY.
	1	1P1177	PIPE ASSEM.	1
			(Includes)	
		1P1149	PIPE	1
	2	7M1674	ELEMENT	1
C ▲	3	5P1263	HOSE--12.70 cm(5 in.)	
	4	5P598	CLAMP	2
	5	5P597	CLAMP	2
	6	1P1195	HOSE	1
	7	6N1553	COUPLING	1
	8	2P8912	ELBOW	1
	9	S1571	BOLT--4.44 cm(1.75 in.) long	1
		S1590	BOLT--5.08 cm(2 in.) long	2
		1B5355	NUT	3
	10	5S6735	GASKET	2
	11	1P699	PIPE	1
	12	1A2029	BOLT	8
	13	S1594	BOLT	4
	14	1P1128	BRACKET	1
	15	1P677	ELBOW	1
C	16	S1591	BOLT	3
		1B5355	NUT	3
	17	6N9	RING	1
	18	6N1558	RING	1
C	19	5K9243	ELBOW	2
C	20	S509	BOLT	1
C	21	5M2894	WASHER	1
C	22	4H8878	CLIP	1
C	23	4B4278	WASHER	1
C	24	6N7671	TUBE ASSEM.	1

▲ ORDER BY THE CENTIMETRE C INDICATES CHANGE 216812

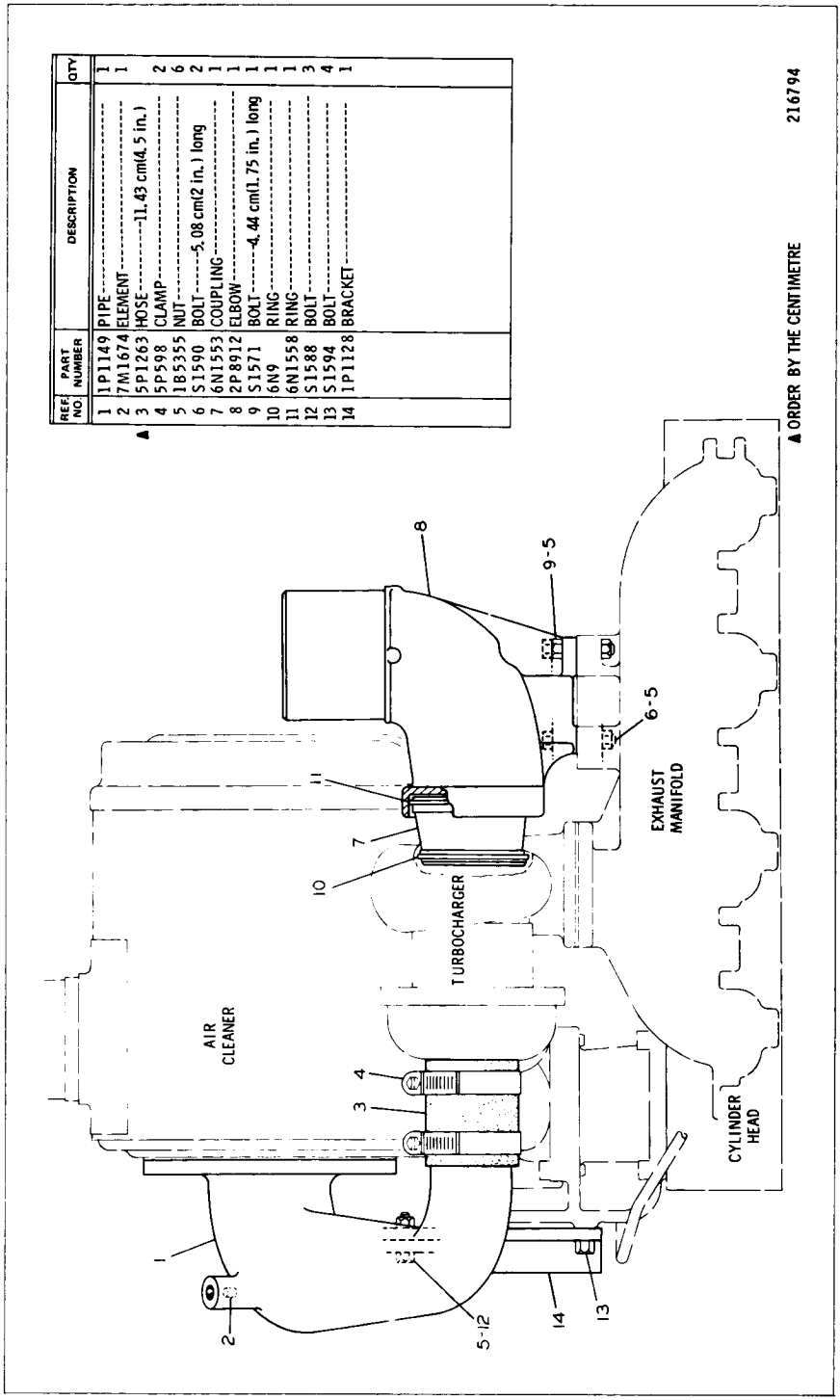

REF NO	PART NUMBER	DESCRIPTION	QTY
1	1P1149	PIPE	1
2	7M1674	ELEMENT	1
▲ 3	5P1263	HOSE---11.43 cm(4.5 in.)	
4	5P598	CLAMP	2
5	1B5355	NUT	6
6	S1590	BOLT---5.08 cm(2 in.) long	2
7	6N1553	COUPLING	1
8	2P8912	ELBOW	1
9	S1571	BOLT---4.44 cm(1.75 in.) long	1
10	6N9	RING	1
11	6N1558	RING	1
12	S1588	BOLT	3
13	S1594	BOLT	4
14	1P1128	BRACKET	1

▲ ORDER BY THE CENTIMETRE

216794

7N4193 AIR LINES GROUP
Serial No. 13X678—Up

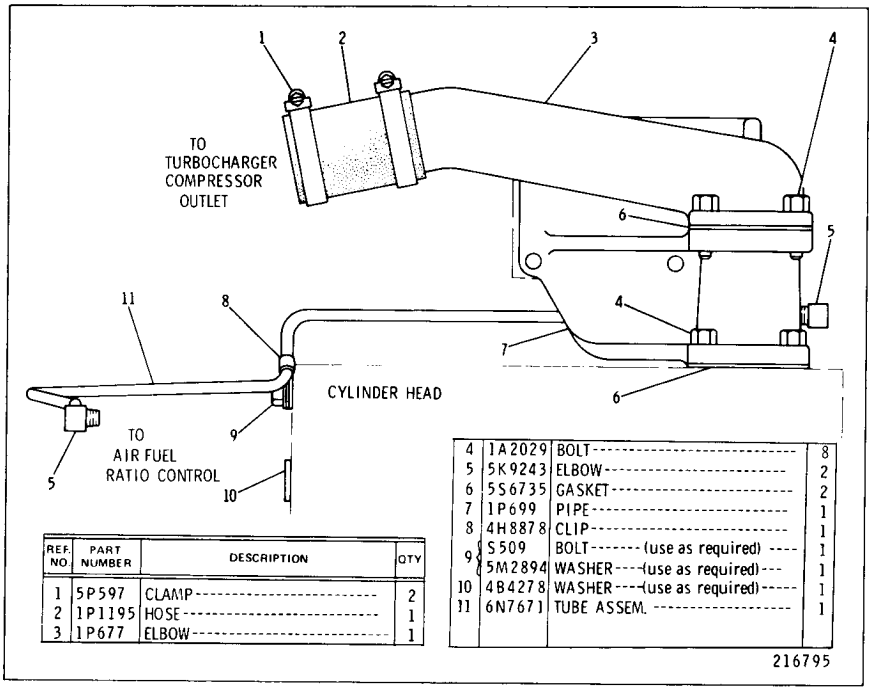

REF. NO.	PART NUMBER	DESCRIPTION	QTY
1	5P597	CLAMP	2
2	1P1195	HOSE	1
3	1P677	ELBOW	1
4	1A2029	BOLT	8
5	5K9243	ELBOW	2
6	5S6735	GASKET	2
7	1P699	PIPE	1
8	4H8878	CLIP	1
9	5S509	BOLT (use as required)	1
	5M2894	WASHER (use as required)	1
10	4B4278	WASHER (use as required)	1
11	6N7671	TUBE ASSEM.	1

216795

7N3228 AIR LINES GROUP
Engine Serial No. 78P40900—Up

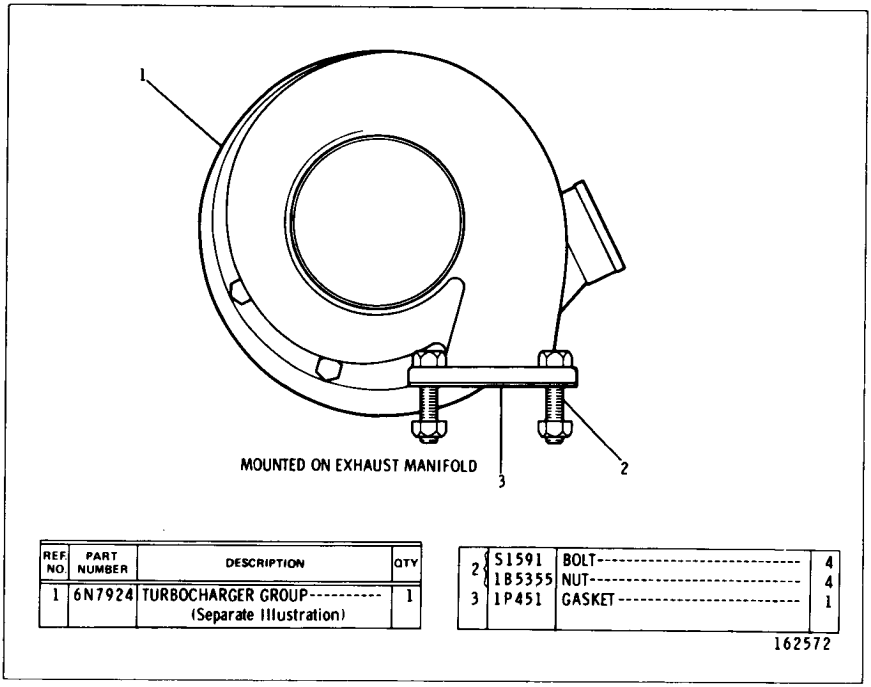

REF. NO.	PART NUMBER	DESCRIPTION	QTY
1	6N7924	TURBOCHARGER GROUP (Separate Illustration)	1
2	S1591	BOLT	4
	1B5355	NUT	4
3	1P451	GASKET	1

162572

1P8533 TURBOCHARGER GROUP
6N7924 Turbocharger parts are shown on Page 46

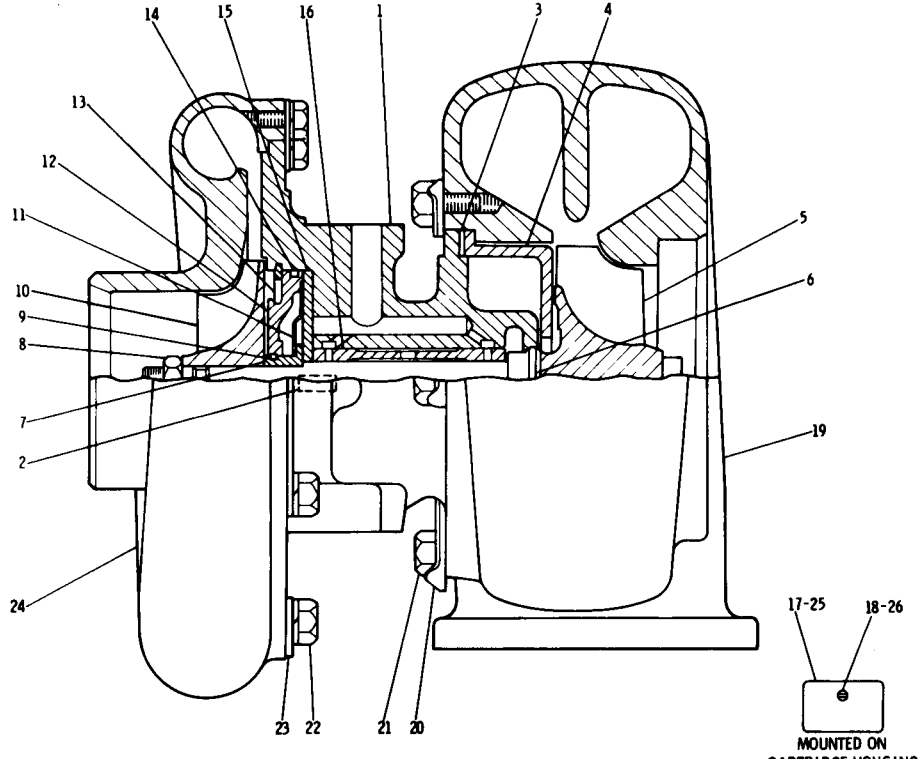

REF. NO.	PART NUMBER	DESCRIPTION	QTY
1	6N7926	CARTRIDGE ASSEM.	1
		(Includes)	
	6N1529	HOUSING ASSEM. (Includes)	1
2	6N1530	PIN	2
▲ 3	6N4357	GASKET	1
4	6N1531	SHROUD	1
5	6N1532	SHAFT AND WHEEL ASSEM.	1
▲ 6	4N9852	RING	1
▲ 7	6N1535	SLEEVE	1
▲ 8	7N456	NUT	1
▲ 9	6N1526	RING	1
10	6N7927	WHEEL	1
▲ 11	6N1534	DEFLECTOR	1
12	6N1527	INSERT	1
▲ 13	5S4546	RING	1
▲ 14	5P5757	SEAL	1
15	6N1528	BEARING	1
▲ 16	6N1533	BEARING	1
17	2S1507	NAMEPLATE	1
18	8H3710	SCREW	1
19	6N1521	HOUSING-(turbine)	1
20	6N1523	LOCK	2
	6N1522	PLATE	2
21	6N2145	BOLT	4
C 22	S1614	BOLT	8
	3B4504	LOCKWASHER	8
23	1P715	PLATE	4
24	6N7925	COVER-(compressor)	1
25	4N8155	NAMEPLATE	1
26	8H3710	SCREW	1
▲	SMHS6774	FORM (Installing Turbocharger Repair Kit)	1
		THE FOLLOWING REPAIR KIT IS AVAILABLE:	
	6N7242	KIT-(cartridge) (Includes Parts Marked ▲)	1

217018

6N7924 TURBOCHARGER GROUP
Part of 1P8533 Turbocharger Group shown on Page 45

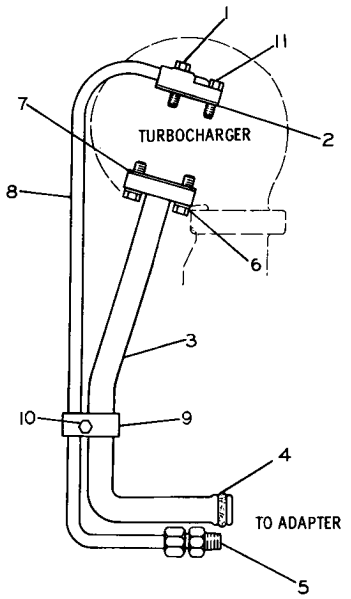

	REF. NO.	PART NUMBER	DESCRIPTION	QTY.
C	1	1B2790	BOLT	1
C	2	1S6595	GASKET	1
C	3	6N8884	TUBE ASSEM. ----(oil drain)	1
	4	9M4849	SEAL	1
C	5	8M755	CONNECTOR	1
C	6	1A2029	BOLT	2
C		5M2894	WASHER	2
	7	1P1255	GASKET	1
C	8	6N8883	TUBE ASSEM. -----(oil supply)	1
	9	6N6033	CLIP	1
C	10	S1617	BOLT	1
C		1D4716	NUT	1
C		9M1974	WASHER	2
C	11	4B3388	BOLT	1

C INDICATES CHANGE

178537

4N3924 TURBOCHARGER OIL LINES GROUP

	REF. NO.	PART NUMBER	DESCRIPTION	QTY
	1	6B6205	SPACER	1
	2	2P1974	STUD	2
		5M2894	WASHER	2
	3	4N9587	SHIELD ASSEM.	1
C	4	7S6719	STUD	6
	5	1B5355	NUT	8
	6	6N508	SPACER	1
	7	8M7145	WASHER	7
	8	9M6527	WASHER	1

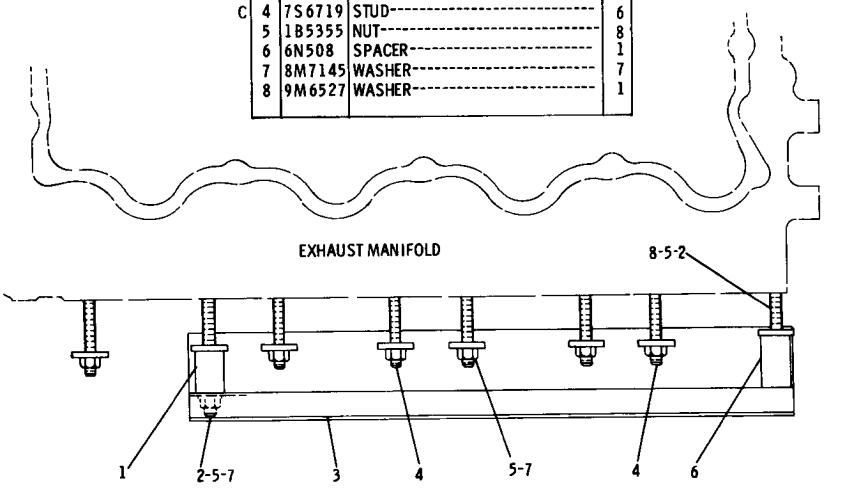

C INDICATES CHANGE

227967

4N9584 EXHAUST MANIFOLD FASTENER GROUP

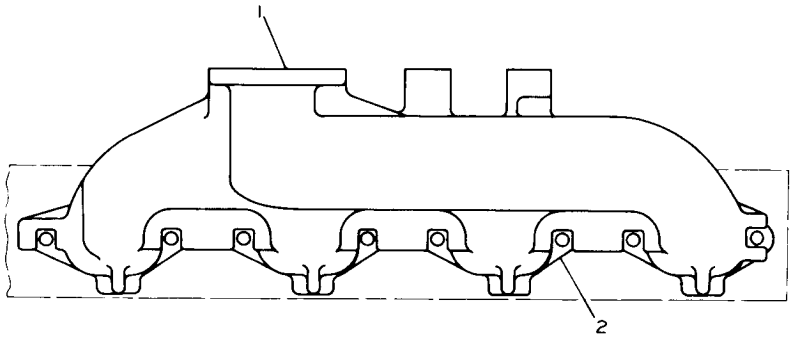

REF. NO.	PART NUMBER	DESCRIPTION	QTY
1	1P1216	MANIFOLD	1
2	8S8258	GASKET	4

117199

2P6571 EXHAUST MANIFOLD GROUP

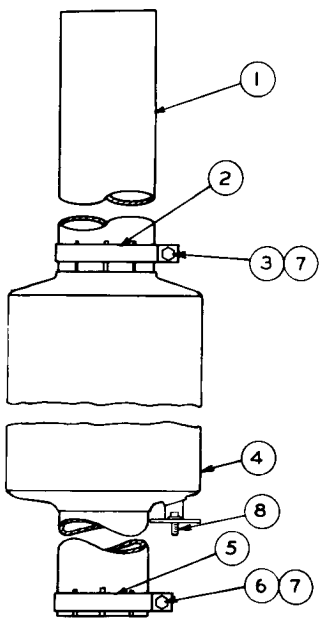

	REF. NO.	PART NUMBER	DESCRIPTION	QTY
	1	9S1768	PIPE	1
	2	6F8815	CLAMP	1
C	3	S1591	BOLT	1
C	4	4N9715	MUFFLER ASSEM.	1
	5	7H4266	CLAMP	1
C	6	S1571	BOLT	1
	7	1B5355	NUT	2
C	8	6F7012	STUD	2

C INDICATES CHANGE

217014

8S2815 MUFFLER GROUP
Serial No. 13X1 to 13X623 inclusive

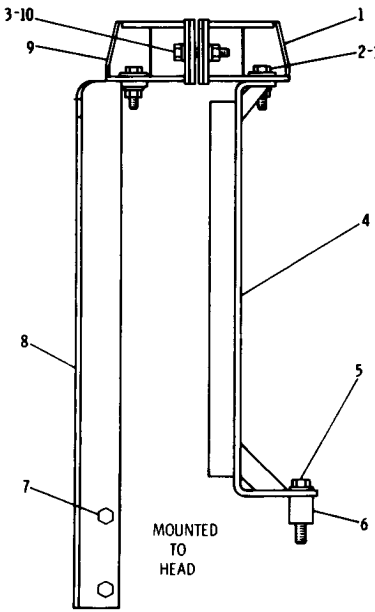

REF. NO.	PART NUMBER	DESCRIPTION	QTY
1	7N5533	STRAP ASSEM. ------(L. H.)------	1
2	S1588	BOLT----------	2
	8M9024	WASHER----------	2
3	1D4717	NUT----------	6
	5M2894	WASHER----------	8
4	7N5530	BRACKET ASSEM. ----------	1
5	2B947	BOLT----------	1
	5P8245	WASHER----------	1
6	4L9600	SPACER----------	1
7	T573	BOLT----------	2
8	7N5528	BRACKET ASSEM. ----------	1
9	7N5532	STRAP ASSEM. ------(R. H.)------	1
10	S1571	BOLT----------	2

217008

7N5522 MUFFLER MOUNTING GROUP

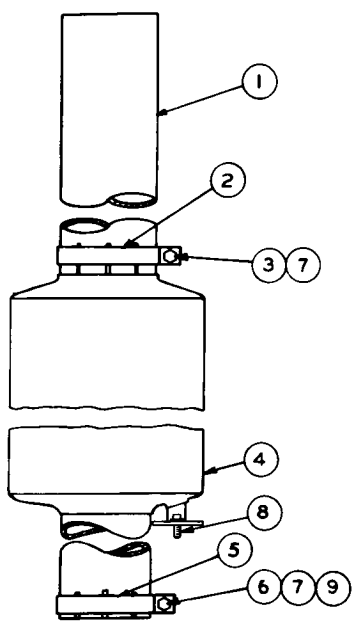

	REF. NO.	PART NUMBER	DESCRIPTION	QTY
	1	9S1768	PIPE----------	1
	2	6F8815	CLAMP----------	1
	3	S1591	BOLT----------	1
C	4	7N8117	MUFFLER ASSEM. ----------	1
C	5	7N810	CLAMP----------	1
C	6	7F1866	BOLT----------	1
	7	1B5355	NUT----------	2
C	8	6F7012	STUD----------	2
C	9	5M2894	WASHER----------	2

C INDICATES CHANGE

220697

8S2815 MUFFLER GROUP
Serial No. 13X624—Up

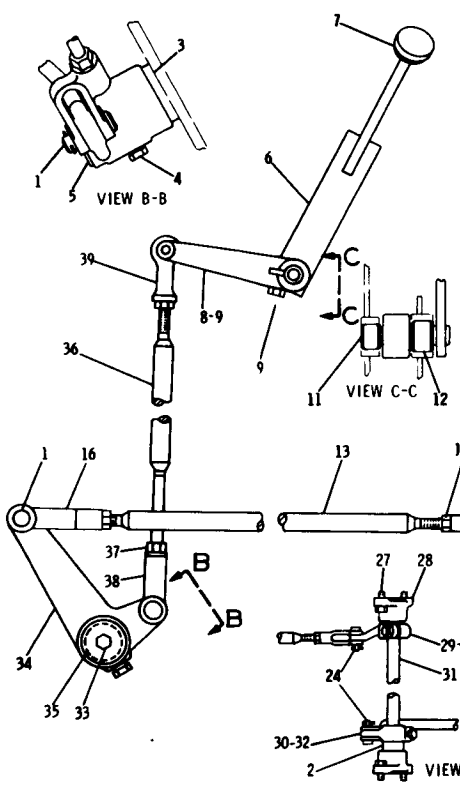

REF. NO.	PART NUMBER	DESCRIPTION	QTY
	S175	BOLT	2
1	3B4617	COTTER PIN	2
C 2	1K5760	SPACER	1
3	3B6823	WASHER	1
4	5M6214	PLUG	1
5	7K3222	WASHER	1
6	9P530	LEVER ASSEM.	1
7	7F8092	KNOB	1
8	4V457	LEVER	1
9	S1588	BOLT	2
C 10	9F6580	BOLT	3
11	1K6663	BUSHING	1
12	9F5647	BEARING	1

13	4V662	ROD ASSEM. (Includes)	1
C 14	5B9079	NUT	2
15	1A9252	END	1
16	2K4277	END	1
17	1V6167	ROD ASSEM. (Includes)	1
18	2K400	YOKE END	1
19	5B9079	NUT	1
20	4V179	LEVER	1
21	S1591	BOLT	2
	1D4717	NUT	2

	314155	LOCKNUT	1
22	4B5270	WASHER	4
	4V159	DISC	2
	8L5394	WASHER	4
	3V9809	BRACKET ASSEM. (Includes)	1
23			
	4L7547	STUD	1
	1B676	PIN	3
24	3B4615	COTTER PIN	3
25	4H5236	ROD END	1
26	5B9079	NUT	1
27	1A2029	BOLT	4
	5K37	BRACKET	2
28	5K2294	BEARING	2
29	7K8498	LEVER	1
30	1B8706	KEY	2
31	1V6169	SHAFT	1
	6K19	LEVER	1
32	3B1915	BOLT	1
33	4F4879	BOLT	1
	4V571	BELLCRANK ASSEM. (Includes)	1
34			
	5K1792	BELLCRANK	1
35	6K8088	BEARING	2
	4V609	ROD ASSEM. (Includes)	1
36			
	9M9594	ROD	1
37	1B4203	NUT	2
38	2K5886	YOKE END	1
39	4D4064	END	1

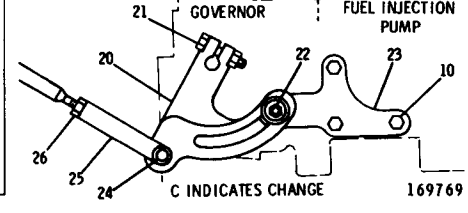

3V6930 GOVERNOR CONTROL GROUP

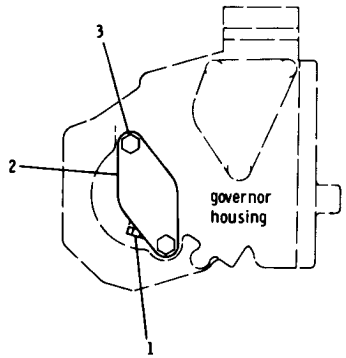

REF. NO.	PART NUMBER	DESCRIPTION	QTY
1	2S7905	PLUG	1
2	4N4508	COVER	1
	4N4509	GASKET	1
3	S1615	BOLT	2

144197

4N4510 GOVERNOR COVER GROUP
Engine Serial No. 78P38513 to 78P55516 inclusive

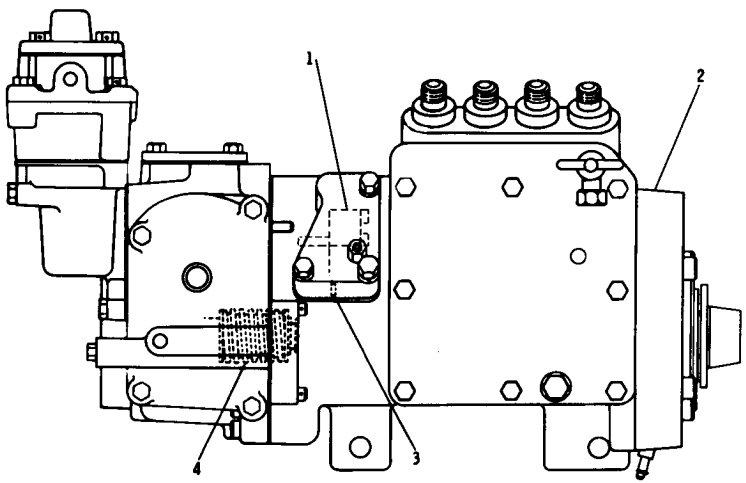

REF. NO.	PART NUMBER	DESCRIPTION	QTY
1	Not Serv	TORQUE CONTROL	1
2	Not Serv	GOVERNOR & FUEL INJECTION PUMP (Separate Illustration)	1

3	4N443	PIN	1
4	4N4225	SPRING	1

201367

6N281 GOVERNOR AND FUEL INJECTION PUMP GROUP—Type 1
Engine Serial No. 78P38513 to 42557, 44275 to 45680 and 78P46495—Up
6N244 Governor and Fuel Injection Pump and 6N509 Torque Control parts are shown on Pages 53 & 55

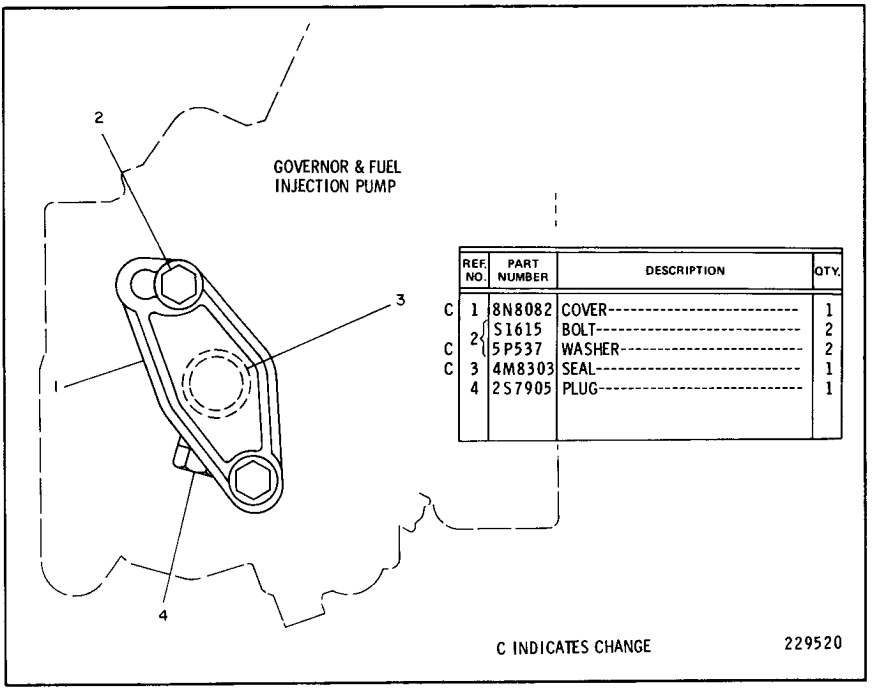

	REF. NO.	PART NUMBER	DESCRIPTION	QTY.
C	1	8N8082	COVER	1
	2	S1615	BOLT	2
C		5P537	WASHER	2
C	3	4M8303	SEAL	1
	4	2S7905	PLUG	1

4N4510 GOVERNOR COVER GROUP
Engine Serial No. 78P55517—Up

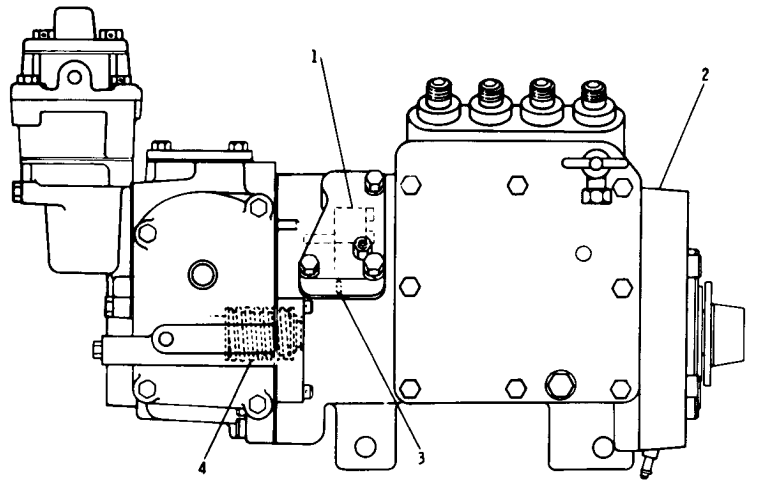

	REF. NO.	PART NUMBER	DESCRIPTION	QTY
C	1	6N581	TORQUE CONTROL----------	1
	2	6N244	GOVERNOR & FUEL INJECTION PUMP (Separate Illustration)	1

3	4N443	PIN----------	1
4	4N4225	SPRING----------	1

220698

6N281 GOVERNOR AND FUEL INJECTION PUMP GROUP—Type 2
Engine Serial No. 78P38513 to 42557, 44275 to 45680 and 78P46495—Up
6N244 Governor and Fuel Injection Pump and 6N581 Torque Control parts are shown on Pages 53 and 54A

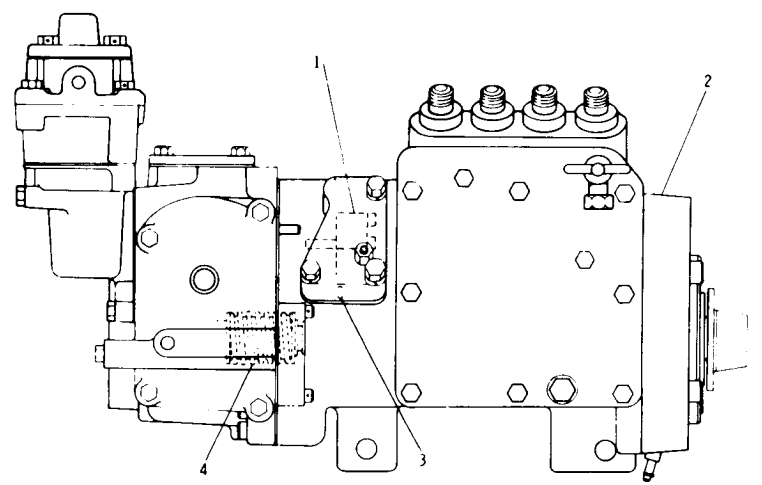

REF. NO.	PART NUMBER	DESCRIPTION	QTY
1	6N509	TORQUE CONTROL GROUP----------	1
2	6N244	PUMP GROUP---------- (Separate Illustration)	1

3	4N443	PIN----------	1
4	4N4225	SPRING----------	1

170919

7N929 GOVERNOR AND FUEL INJECTION PUMP GROUP
Engine Serial No. 78P42558 to 78P44274 and 78P45681 to 78P46494 inclusive
6N244 Governor and Fuel Injection Pump and 6N509 Torque Control parts are shown on Pages 53 and 55

	Consists of:		Page
1	4N6115	Governor and Fuel Injection Pump Group	54
1	.....	Form SMHS6728	

4N6116 GOVERNOR AND FUEL INJECTION PUMP GROUP—Field Installation

6N244 GOVERNOR AND FUEL INJECTION PUMP GROUP

Part of 6N281 and 7N929 Governor and Fuel Injection Pump Group shown on Pages 51 and 51B
9N867 Fuel Ratio Control and 4N1834 Fuel Injection Pump parts are shown on Pages 55 through 59

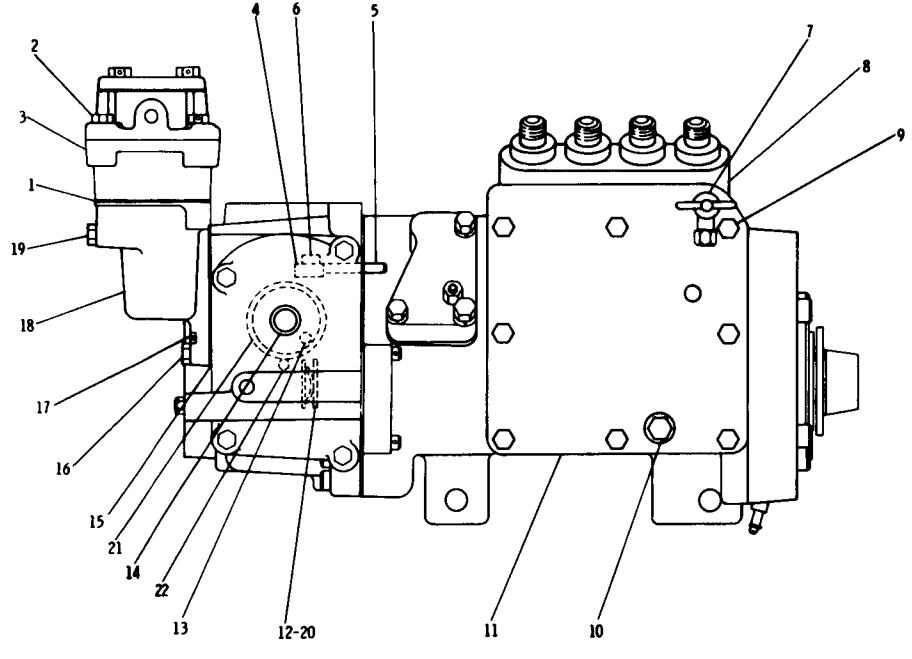

	REF. NO.	PART NUMBER	DESCRIPTION	QTY
	1	6L5773	GASKET	1
	2	2M5471	BOLT	2
C	3	9N867	FUEL RATIO CONTROL (Separate Illustration)	1
	4	4N440	LEVER ASSEM. (Includes)	1
	5	5S6458	DOWEL	1
	6	2N2658	BOLT	1
	7	6D238	VALVE ASSEM.	1
C	8	4N1834	FUEL INJECTION PUMP (Separate Illustration)	1
	9	S1615	BOLT	8
	10	9S4180	PLUG	1
		4J7533	SEAL	1
	11	4N9338	COVER	1
		4N9056	GASKET	1
C	12	6N2957	WASHER	1
	13	4N444	SPACER	2
	14	4N4320	SHAFT ASSEM.	1
	15	4N159	GASKET	1
	16	6B4198	BOLT	1
	17	4N5658	PLUG	1
	18	4N5515	ADAPTER	1
	19	4B9365	BOLT---7.62 cm(3 in.) long	1
		1B2718	BOLT---15.24 cm(6 in.) long	1
C	20	6N2956	WASHER---(spring)	1
C	21	4N4366	SPRING	1
	22	4N8179	PIN	1

C INDICATES CHANGE

156324

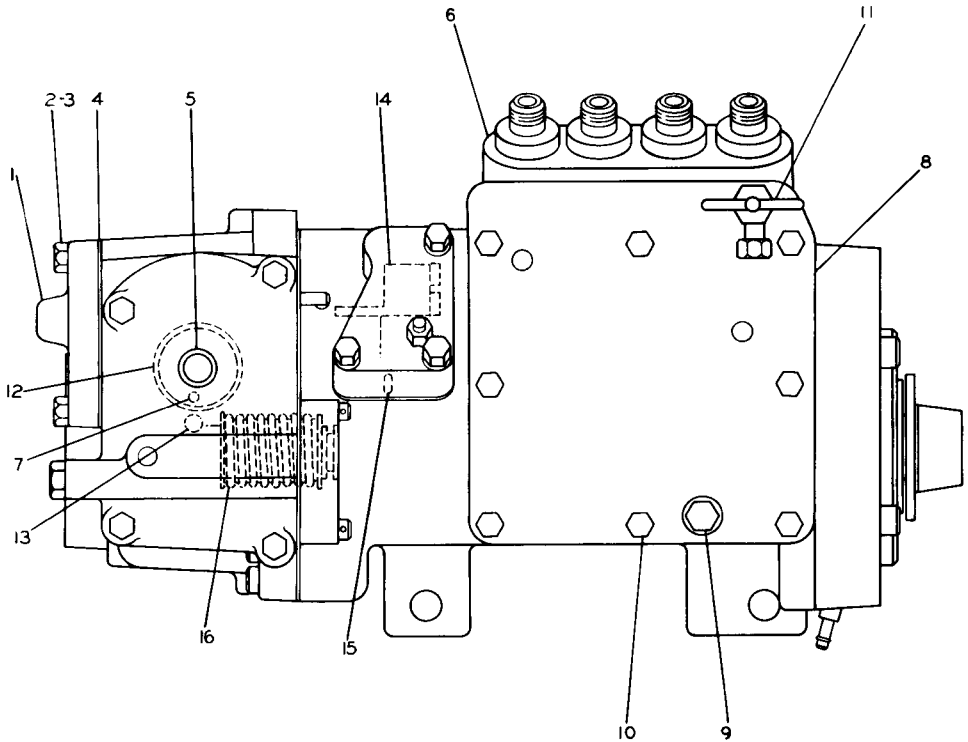

REF. NO.	PART NUMBER	DESCRIPTION	QTY
1	4N53	COVER	1
2	S1616	BOLT---2.54 cm(1 in.) long	1
3	8S4710	BOLT---10.16 cm(4 in.) long	2
4	4N159	GASKET	1
5	4N4320	SHAFT ASSEM.	1
6	6N5356	GOVERNOR AND FUEL PUMP (Separate Illustration)	1
7	4N444	SPACER	2
8	4N9338	COVER	1
	4N9056	GASKET	1
9	9S4180	PLUG	1
	4J7533	SEAL	1
10	S1615	BOLT	8
11	7N450	VALVE ASSEM.	1
12	4N4366	SPRING	1
13	4N8179	PIN	1
14	6N509	TORQUE CONTROL GROUP (Separate Illustration)	1
15	4N443	PIN	1
16	4N4225	SPRING	1

C INDICATES CHANGE

213935

4N6115 GOVERNOR AND FUEL INJECTION PUMP GROUP
Part of 4N6116 Governor and Fuel Injection Pump Group listed on Page 52
6N509 Torque Control and 6N5356 Governor and Fuel Pump parts are shown on Pages 55 and 60 through 63

4N6115 GOVERNOR AND FUEL INJECTION PUMP GROUP—Type 2
Part of 4N6116 Governor and Fuel Injection Pump Group listed on Page 52
6N581 Control and 6N5356 Pump parts are shown on Pages 54A and 60 through 63D

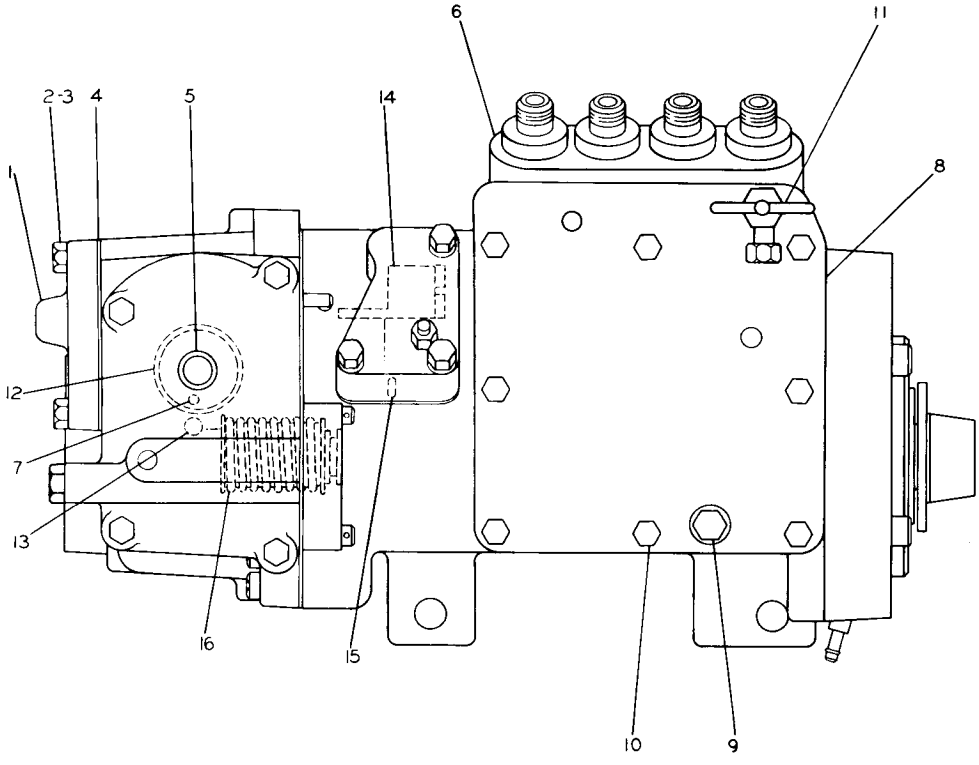

	REF. NO.	PART NUMBER	DESCRIPTION	QTY
	1	4N53	COVER	1
	2	S1616	BOLT----------2.54 cm(1 in.) long	1
	3	8S4710	BOLT----------10.16 cm(4 in.) long	2
	4	4N159	GASKET	1
	5	4N4320	SHAFT ASSEM.	1
	6	6N5356	GOVERNOR AND FUEL PUMP (Separate Illustration)	1
	7	4N444	SPACER	2
C	8	7N2057	COVER	1
		4N9056	GASKET	1
	9	9S4180	PLUG	1
		4J7533	SEAL	1
	10	S1615	BOLT	8
	11	7N450	VALVE ASSEM.	1
	12	4N4366	SPRING	1
	13	4N8179	PIN	1
C	14	6N581	TORQUE CONTROL GROUP (Separate Illustration)	1
	15	4N443	PIN	1
	16	4N4225	SPRING	1

C INDICATES CHANGE

232383

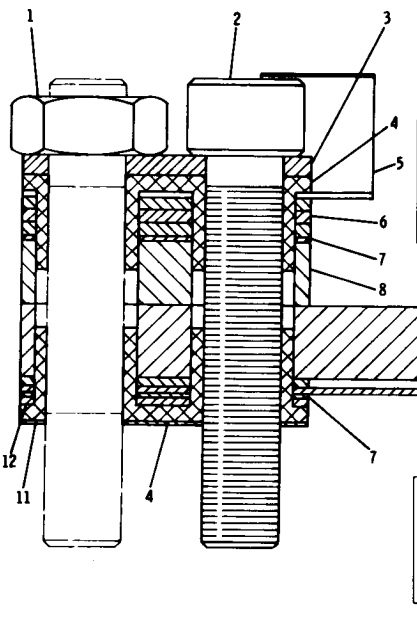

REF. NO.	PART NUMBER	DESCRIPTION	QTY
1	4L6458	NUT	1
2	4L7124	BOLT	1
3	8M9064	SHIM-----(.064 in. thick)	1
4	1P6452	INSULATOR	2
5	4N3882	CONTACT	1
6	9L7235	SHIM------(.039 in. thick)	3
7	4N7777	SPACER----(.010 in. thick)	3
8	4N9098	SPACER----(.500 in. thick)	1
9	1P6453	BAR	1
10	9L5176	SPRING------(.024 in. thick)	1
11	8L8601	SHIM------(.002 in. thick)	6
12	9L9347	SHIM------(.020 in. thick)	1

201372

6N581 TORQUE CONTROL GROUP

Part of 6N281 Governor and Fuel Injection Pump Group shown on Page 51B

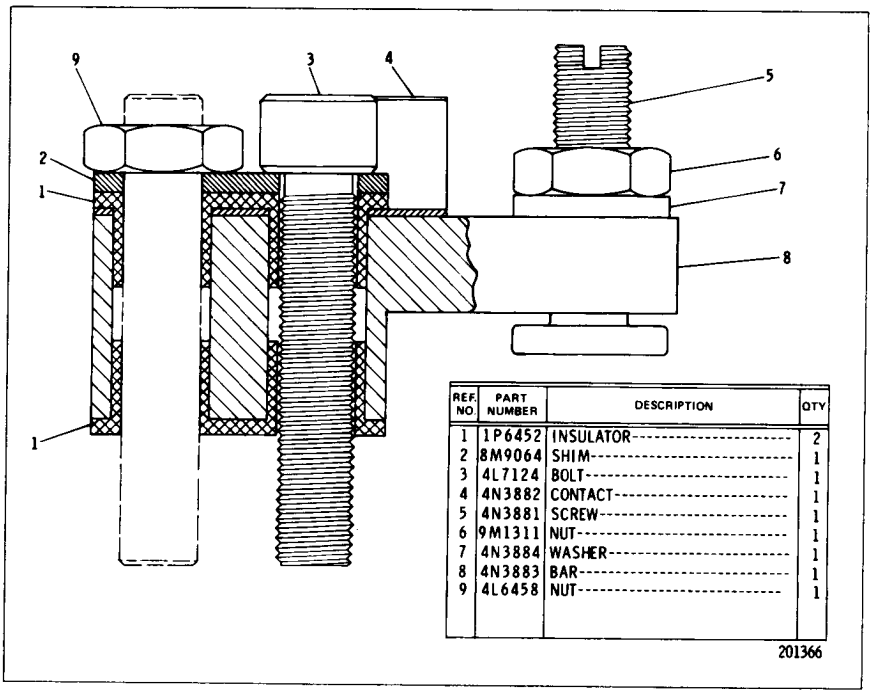

REF. NO.	PART NUMBER	DESCRIPTION	QTY
1	1P6452	INSULATOR	2
2	8M9064	SHIM	1
3	4L7124	BOLT	1
4	4N3882	CONTACT	1
5	4N3881	SCREW	1
6	9M1311	NUT	1
7	4N3884	WASHER	1
8	4N3883	BAR	1
9	4L6458	NUT	1

201366

6N509 TORQUE CONTROL GROUP
Part of 6N281, 7N929 and 4N6115 Governor and Fuel Injection Pump Groups shown on Pages 51, 51B & 54

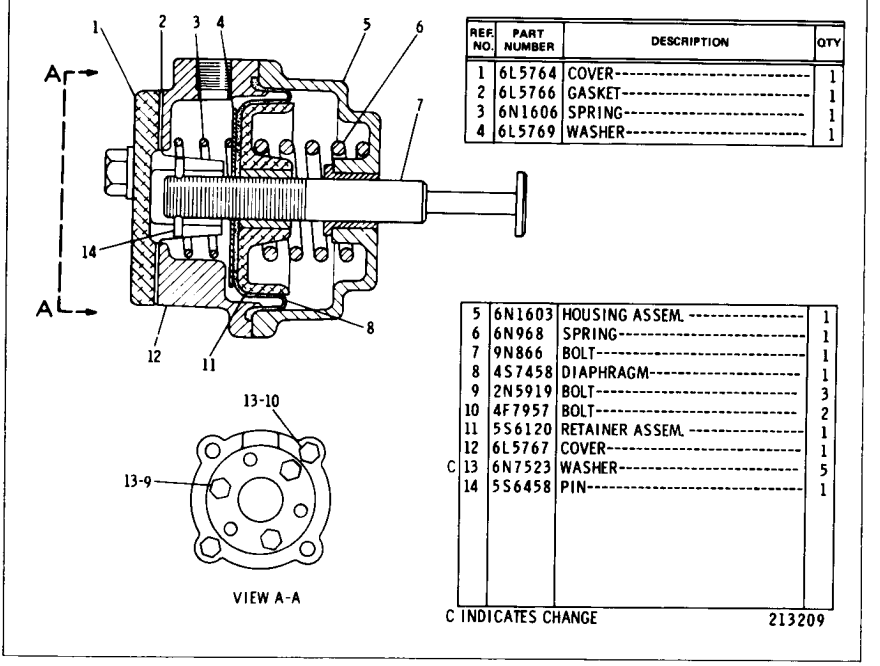

REF. NO.	PART NUMBER	DESCRIPTION	QTY
1	6L5764	COVER	1
2	6L5766	GASKET	1
3	6N1606	SPRING	1
4	6L5769	WASHER	1

5	6N1603	HOUSING ASSEM.	1
6	6N968	SPRING	1
7	9N866	BOLT	1
8	4S7458	DIAPHRAGM	1
9	2N5919	BOLT	3
10	4F7957	BOLT	2
11	5S6120	RETAINER ASSEM.	1
12	6L5767	COVER	1
C 13	6N7523	WASHER	5
14	5S6458	PIN	1

C INDICATES CHANGE 213209

9N867 FUEL RATIO CONTROL GROUP
Part of 6N244 Governor and Fuel Injection Pump Group shown on Page 53

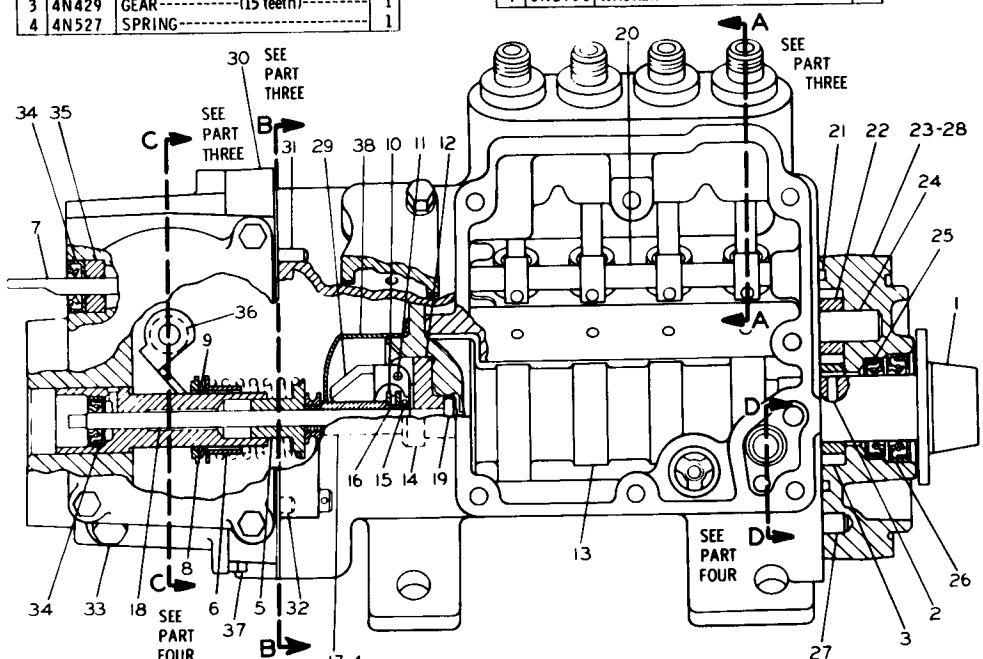

REF. NO.	PART NUMBER	DESCRIPTION	QTY
1	4N2954	SLEEVE	1
2	4N3779	KEY	1
3	4N429	GEAR (15 teeth)	1
4	4N527	SPRING	1
5	4N435	SEAT	1
6	6N7451	SEAT	1
7	4N927	SHAFT ASSEM.	1
8	6N2957	WASHER	2
9	6N2956	WASHER	1
10	4N2927	RACE	2
11	4N511	DOWEL	3
12	4N446	CARRIER	1
13	6N6567	CAMSHAFT	1
14	4N2955	BOLT	3
15	4N2953	RING	1
16	4N2401	BEARING	1
17	4N434	RISER	1
18	4N9018	SHAFT	1
19	4N9019	DOWEL	1
20	4N507	SHAFT ASSEM.	1
21	5M6509	SEAL	1
22	4N406	GEAR (10 teeth)	1
C 23	9L6863	BODY ASSEM. (Includes)	1
24	8H9804	SHAFT	1
25	4N636	SEAL	1
26	4N1584	SEAL	1
27	8S6814	DOWEL	1
28	4N5050	PLUG	1
29	4N425	WEIGHT	3
C 30	6N5324	HOUSING ASSEM. (Includes)	1
31	4N2333	DOWEL	1
32	8S6814	DOWEL	2
33	4N5050	PLUG	1
34	4N260	SEAL	2
35	6N2578	BEARING	1
36	4N2786	SEAL	1
37	9S4180	PLUG	1
	4J7533	SEAL	1
38	4N1723	SHIELD	1

C INDICATES CHANGE

215547

4N1834 GOVERNOR AND FUEL INJECTION PUMP GROUP—Part 1 of 4
Part of 6N244 Governor and Fuel Injection Pump Group shown on Page 53

4N1834 GOVERNOR AND FUEL INJECTION PUMP GROUP—Part 2 of 4
Part of 6N244 Governor and Fuel Injection Pump Group shown on Page 53

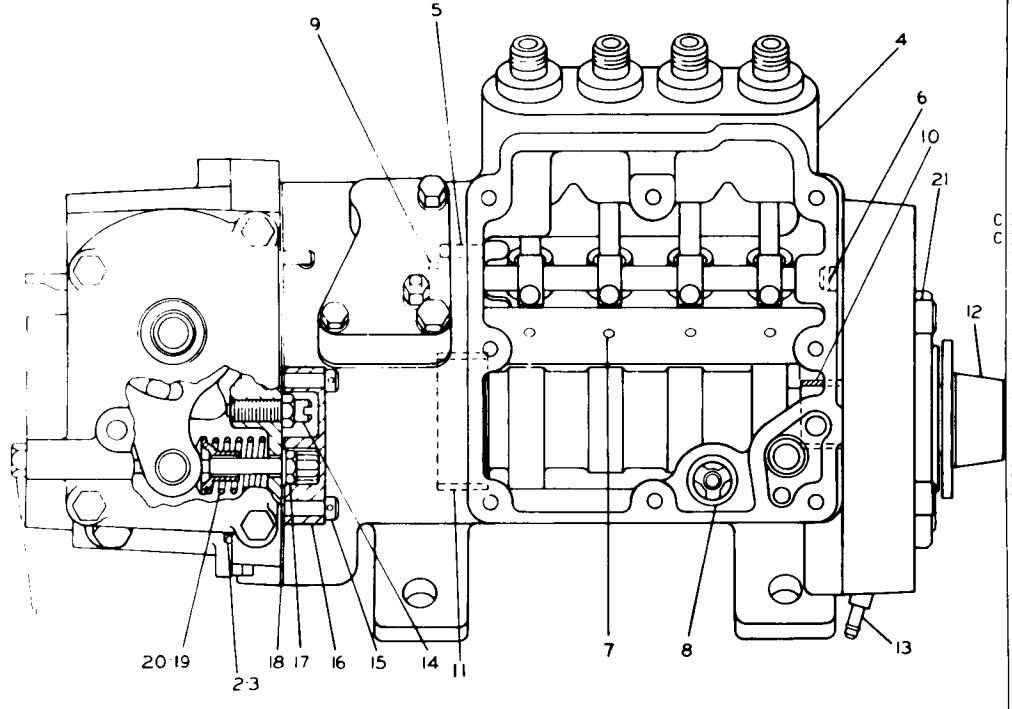

REF. NO.	PART NUMBER	DESCRIPTION	QTY
1	4N6430	PIN	1
2	3B8695	BOLT ------88.9 mm(3.50 in.) long	1
3	2A4781	BOLT ------69.8 mm(2.75 in.) long	1
4	6N1346	HOUSING ASSEM. (Includes)	1
5	4N2333	PIN	1
6	4N1826	DOWEL	1
	2D6392	SEAL	1
7	6N5325	PIN	4
8	1P2298	VALVE ASSEM.	1
9	4N5481	STUD	1
C 10	6N1078	BEARING	1
C 11	8N628	BEARING	4
12	4N2954	SLEEVE	1
13	1P4001	FITTING	1
14	4N54	SCREW	1
	5B3180	NUT	1
15	1P2497	BOLT	2
16	4N5578	COVER	1
	4N49	GASKET	1
17	1P9925	BOLT	2
	6N7523	WASHER	1
18	4N594	GASKET	1
19	9S8632	SPRING	1
20	4N116	GUIDE	1
21	5J5314	BOLT	4

C INDICATES CHANGE

223902

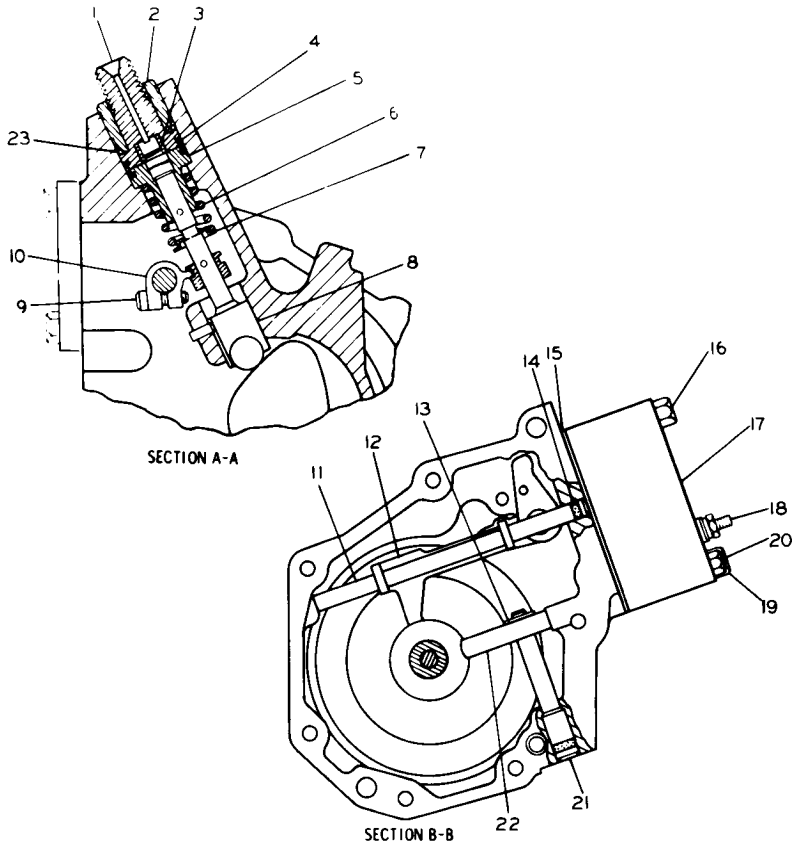

REF. NO.	PART NUMBER	DESCRIPTION	QTY
1	4N209	BONNET	4
2	4N218	BUSHING	4
3	9B1320	VALVE	4
	9L9424	SPRING	4
4	4N224	RING	4
5	4N1765	PLUNGER & BARREL ASSEM.	4
6	4N4318	SPRING	4
7	4N2728	WASHER	4
8	4N1750	LIFTER	4
	4N2685	ROLLER	4
9	2N2658	SCREW	4
10	4N1763	LEVER	4
11	4N528	SHAFT	1
12	4N2677	LEVER ASSEM.	1
13	2M7819	RING	1
14	3H442	SEAL	1
15	4N508	GASKET	1
16	2M5471	BOLT	1
	4N1591	COVER ASSEM.	1
17		(Includes)	
	6N411	COVER	1
	6N412	MACHINE SCREW	1
	4B2042	NUT	1
18	3B4501	LOCKWASHER	1
	1P7326	WASHER--1.52 mm(.06 in.)thick	1
	8F1326	WASHER--.82 mm(.032 in.)thick	1
19	2P3200	BOLT	1
	1J9671	SEAL	1
20	2M5471	BOLT	1
21	4N523	DOWEL	1
	2D6392	SEAL	1
22	4N445	LEVER	1
23	4N223	SEAL	4

215549

4N1834 GOVERNOR AND FUEL INJECTION PUMP GROUP—Part 3 of 4
Part of 6N244 Governor and Fuel Injection Pump Group shown on Page 53

4N1834 GOVERNOR AND FUEL INJECTION PUMP GROUP—Part 4 of 4

Part of 6N244 Governor and Fuel Injection Pump Group shown on Page 53

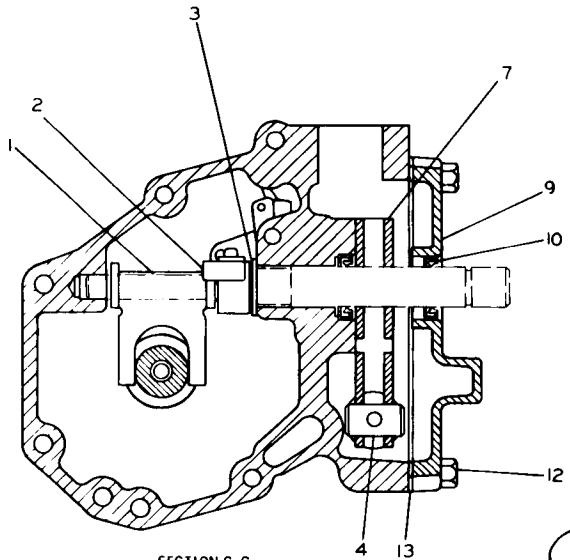

SECTION C-C

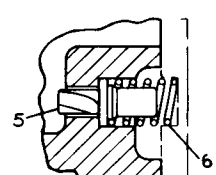

SECTION D-D

REF. NO.	PART NUMBER	DESCRIPTION	QTY
1	4N1881	LEVER	1
2	4N448	LEVER ASSEM. (Includes)	1
	9L8571	DOWEL	1
3	8F5368	WASHER	1
4	9S8601	PIN	1
5	4N1767	VALVE	1
6	4N605	SPRING	1
7	6N5482	PLATE	2
9	4N687	COVER ASSEM. (Includes)	1
10	4N2786	SEAL	1
12	S1616	BOLT	4
13	4N402	GASKET	1

215550

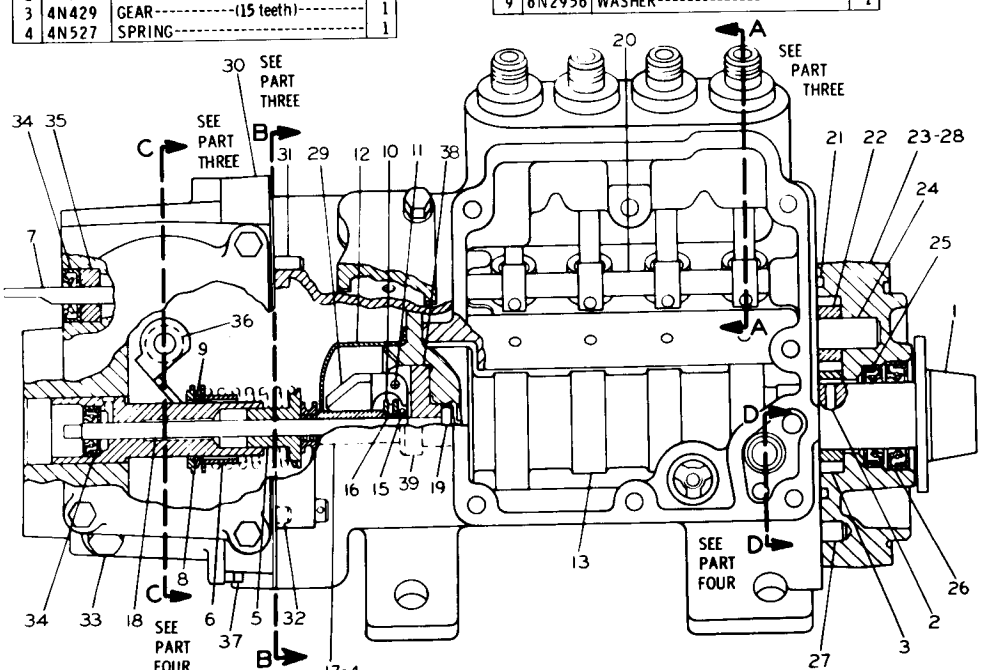

REF. NO.	PART NUMBER	DESCRIPTION	QTY
1	4N2954	SLEEVE	1
2	4N3779	KEY	1
3	4N429	GEAR----------(15 teeth)	1
4	4N527	SPRING	1
5	4N435	SEAT	1
6	6N7451	SEAT	1
7	4N927	SHAFT ASSEM.	1
8	6N2957	WASHER	2
9	6N2956	WASHER	1
10	4N2927	RACE	2
11	4N511	DOWEL	3
12	4N1723	SHIELD	1
13	6N6567	CAMSHAFT	1
15	4N2953	RING	1
16	4N2401	BEARING	1
17	4N434	RISER	1
18	4N9018	SHAFT	1
19	4N9019	DOWEL	1
20	4N507	SHAFT ASSEM.	1
21	5M6509	SEAL	1
22	4N406	GEAR ---------(10 teeth)	1
23	9L6863	BODY ASSEM. (Includes)	1
24	8H9804	SHAFT	1
25	4N636	SEAL	1
26	4N1584	SEAL	1
27	8S6814	DOWEL	1
28	4N5050	PLUG	1
29	4N425	WEIGHT	3
30	6N5324	HOUSING ASSEM. (Includes)	1
31	4N2333	DOWEL	1
32	8S6814	DOWEL	2
33	4N5050	PLUG	1
34	4N260	SEAL	2
35	6N2578	BEARING	1
36	4N2786	SEAL	1
37	9S4180	PLUG	1
	4J7533	SEAL	1
38	4N446	CARRIER	1
		- OR -	
C	8N2663	CARRIER	1
	4N2955	BOLT-----22.23 mm(.875 in.) long	3
		- OR -	
C 39	8N2662	BOLT-----25.4 mm(1 in.) long--- (Low Head)	3

C INDICATES CHANGE

4N1834 GOVERNOR AND FUEL INJECTION PUMP GROUP—Part 1 of 4—Type 2
Part of 6N244 Governor and Fuel Injection Pump Group shown on Page 53

4N1834 GOVERNOR AND FUEL INJECTION PUMP GROUP—Part 2 of 4—Type 2
Part of 6N244 Governor and Fuel Injection Pump Group shown on Page 53

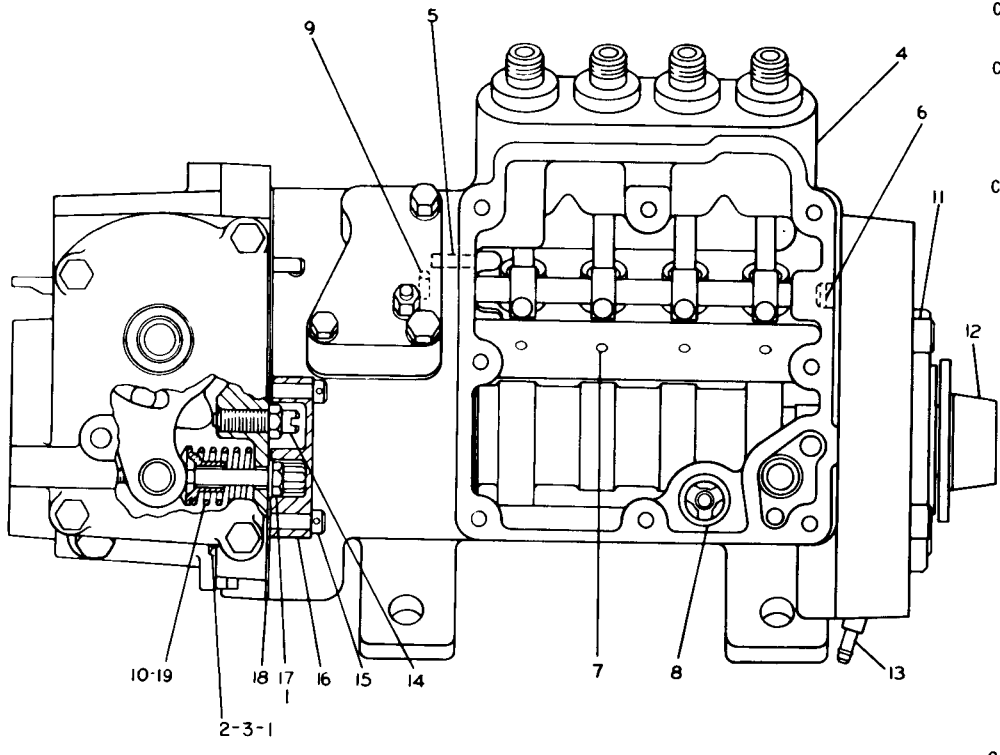

	REF. NO.	PART NUMBER	DESCRIPTION	QTY.
C	1	6N7523	WASHER	2
	2	3B8695	BOLT---88.9 mm(3.50 in.) long	1
	3	2A4781	BOLT---69.8 mm(2.75 in.) long	1
C	4	8N1569	HOUSING ASSEM. (Includes)	1
		6N1078	BEARING	1
	5	4N2333	PIN	1
	6	4N1826	DOWEL	1
		2D6392	SEAL	1
C	7	8N984	PIN	4
	8	1P2298	VALVE ASSEM.	1
	9	4N5481	STUD	1
	10	4N116	GUIDE	1
	11	5J5314	BOLT	4
	12	4N2954	SLEEVE	1
	13	1P4001	FITTING	1
	14	4N54	SCREW	1
		5B3180	NUT	1
	15	1P2497	BOLT	2
	16	4N5578	COVER	1
		4N49	GASKET	1
	17	1P9925	BOLT	2
	18	4N594	GASKET	1
	19	9S8632	SPRING	1

C INDICATES CHANGE

228524

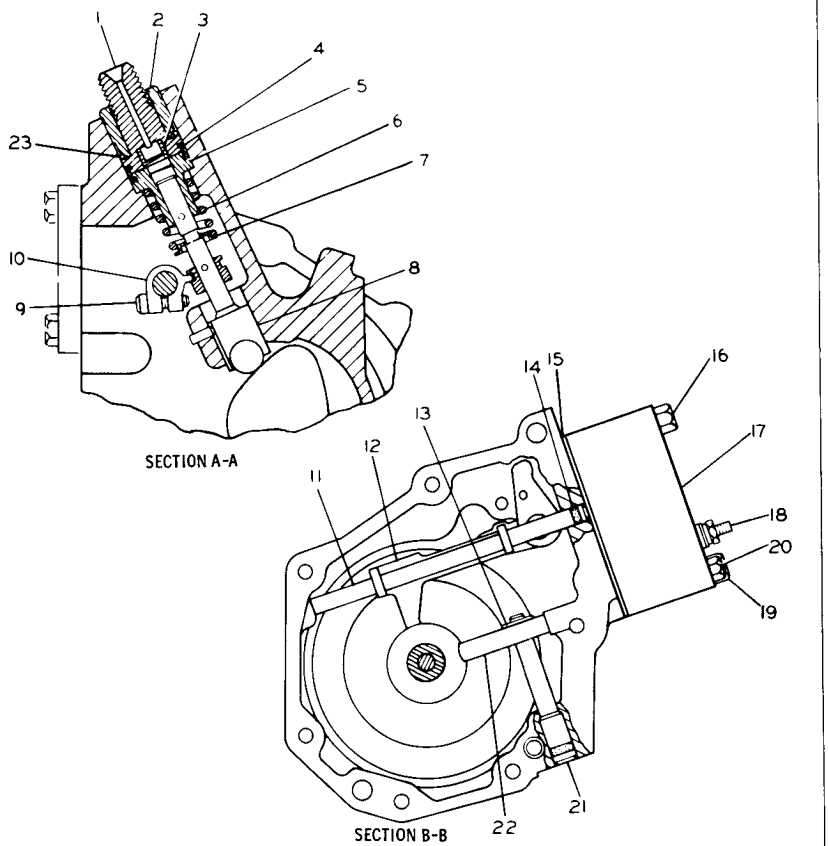

	REF. NO.	PART NUMBER	DESCRIPTION	QTY.
	1	4N209	BONNET	4
	2	4N218	BUSHING	4
	3	9B1320	VALVE	4
		9L9424	SPRING	4
	4	4N224	RING	4
	5	4N1765	PLUNGER & BARREL ASSEM.	4
C	6	9N5862	SPRING	4
	7	4N2728	WASHER	4
C	8	8N1317	LIFTER	4
		4N2685	ROLLER	4
	9	2N2658	SCREW	4
	10	4N1763	LEVER	4
	11	4N528	SHAFT	1
	12	4N2677	LEVER ASSEM.	1
	13	2M7819	RING	1
	14	3H442	SEAL	1
	15	4N508	GASKET	1

	16	2M5471	BOLT	1
	17	4N1591	COVER ASSEM.	1
			(Includes)	
		6N411	COVER	1
		6N412	MACHINE SCREW	1
		4B2042	NUT	1
	18	3B4501	LOCKWASHER	1
		1P7326	WASHER--1.52 mm(.06 in.)thick	1
		8F1326	WASHER-.82 mm(.032 in.)thick	1
	19	2P3200	BOLT	1
		1J9671	SEAL	1
	20	2M5471	BOLT	1
	21	4N523	DOWEL	1
		2D6392	SEAL	1
	22	4N445	LEVER	1
C	23	6F6672	SEAL	4

C INDICATES CHANGE 228525

4N1834 GOVERNOR AND FUEL INJECTION PUMP GROUP—Part 3 of 4—Type 2
Part of 6N244 Governor and Fuel Injection Pump Group shown on Page 53

4N1834 GOVERNOR AND FUEL INJECTION PUMP GROUP—Part 4 of 4—Type 2
Part of 6N244 Governor and Fuel Injection Pump Group shown on Page 53

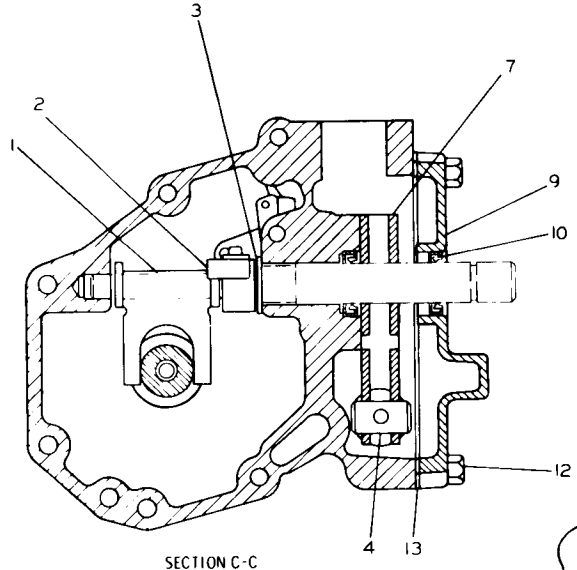

SECTION C-C

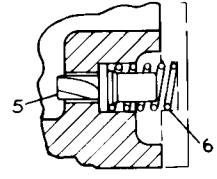

SECTION D-D

REF. NO.	PART NUMBER	DESCRIPTION	QTY
1	4N1881	LEVER	1
2	4N448	LEVER ASSEM. (Includes)	1
	9L8571	DOWEL	1
3	8F5368	WASHER	1
4	9S8601	PIN	1
5	4N1767	VALVE	1
6	4N605	SPRING	1
7	6N5482	PLATE	2
9	4N687	COVER ASSEM. (Includes)	1
10	4N2786	SEAL	1
12	S1616	BOLT	4
13	4N402	GASKET	1

215550

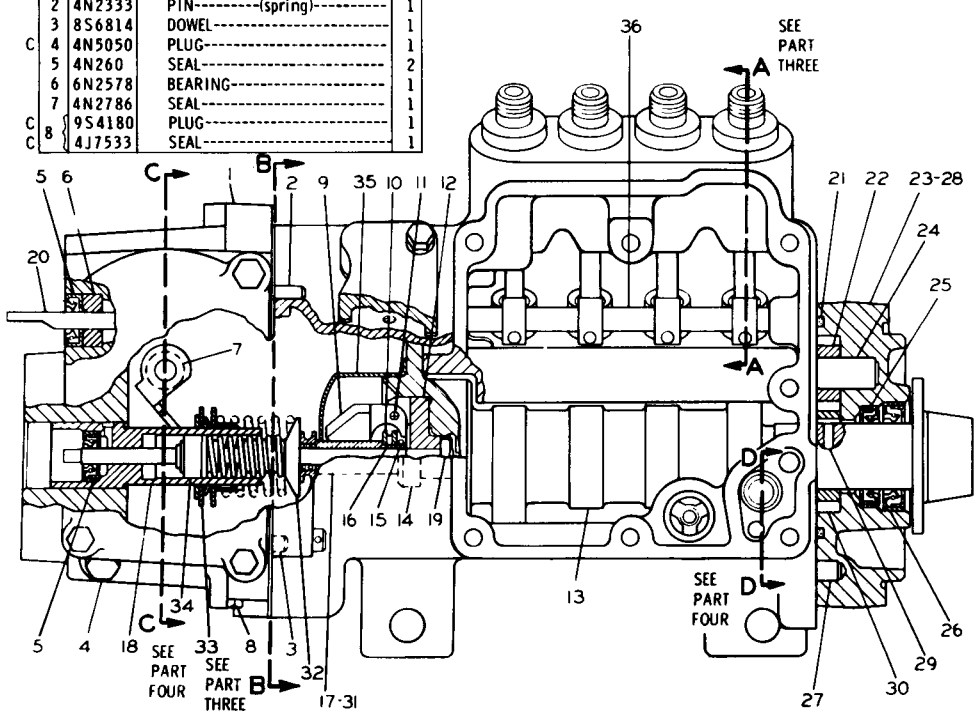

REF. NO.	PART NUMBER	DESCRIPTION	QTY
	1 6N5324	HOUSING ASSEM. (Includes)	1
	2 4N2333	PIN---------(spring)----------	1
	3 8S6814	DOWEL----------	1
C	4 4N5050	PLUG----------	1
	5 4N260	SEAL----------	2
	6 6N2578	BEARING----------	1
	7 4N2786	SEAL----------	1
C	8 9S4180	PLUG----------	1
C	8 4J7533	SEAL----------	1
	9 4N425	WEIGHT----------	3
	10 4N2927	RACE----------	2
	11 4N511	DOWEL----------	3
	12 4N446	CARRIER----------	1
	13 6N6567	CAMSHAFT----------	1
	14 4N2955	BOLT----------	3
	15 4N2953	RING----------	1
	16 4N2401	BEARING----------	1
	17 4N434	RISER----------	1
	18 4N9018	SHAFT----------	1
	19 4N9019	DOWEL----------	1
	20 4N927	SHAFT ASSEM. ----------	1
	21 5M6509	SEAL----------	1
	22 4N406	GEAR----------(10 teeth)----------	1
C	23 9L6863	BODY ASSEM. (Includes) ----------	1
	24 8H9804	SHAFT----------	1
	25 4N636	SEAL----------	1
	26 4N1584	SEAL----------	1
	27 8S6814	DOWEL----------	1
	28 4N5050	PLUG----------	1
	29 4N3779	KEY----------	1
	30 4N429	GEAR----------(15 teeth)----------	1
	31 4N527	SPRING----------	1
	32 6N4655	DASHPOT ASSEM. ----------	1
	33 6N2957	WASHER----------	2
	33 6N2956	WASHER----------(spring)--------	1
	34 6N7451	SEAT----------	1
	35 4N1723	SHIELD----------	1
	36 4N507	SHAFT ASSEM. ----------	1

C INDICATES CHANGE 214980

6N5356 GOVERNOR AND FUEL INJECTION PUMP GROUP—Part 1 of 4—Type 1
Part of 4N6115 Governor and Fuel Injection Pump Group shown on Page 54

6N5356 GOVERNOR AND FUEL INJECTION PUMP GROUP—Part 2 of 4—Type 1

Part of 4N6115 Governor and Fuel Injection Pump Group shown on Page 54

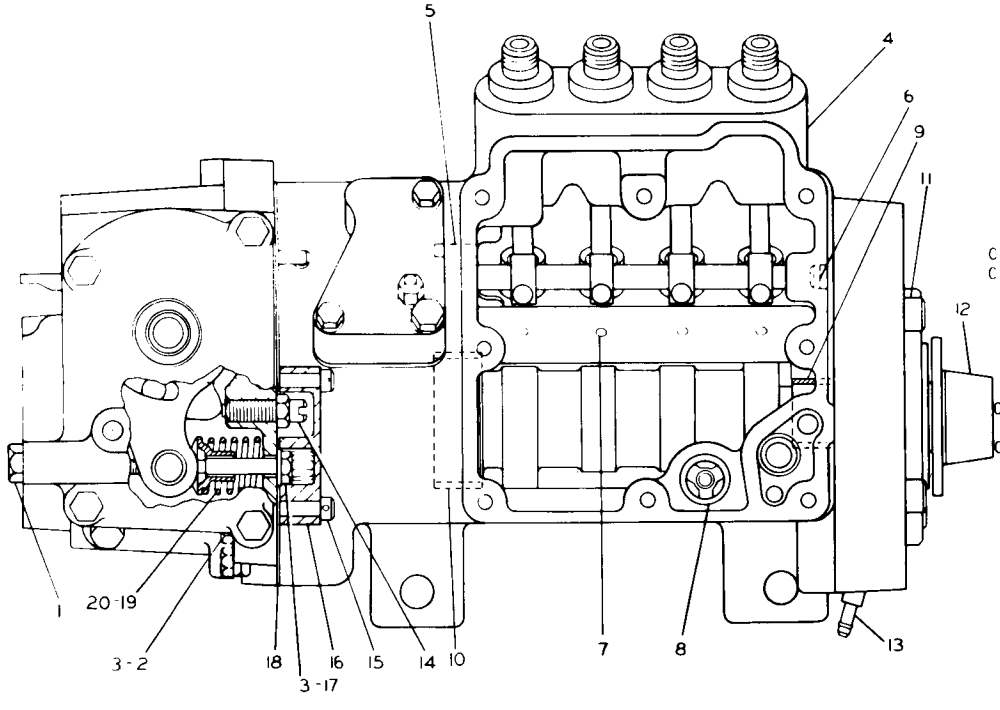

REF. NO	PART NUMBER	DESCRIPTION	QTY
1	4N6430	PIN	1
2	3B8695	BOLT—8.89 cm(3.5 in.) long	1
	2A4781	BOLT—6.98 cm(2.75 in.) long	1
3	1P9925	BOLT—6.35 cm(2.5 in.) long	2
4	6N1346	HOUSING ASSEM. (Includes)	1
	6N343	STUD	1
5	4N2333	PIN—(spring)	1
6	4N1826	DOWEL	1
	2D6392	SEAL	1
7	6N5325	PIN	4
8	1P2298	VALVE ASSEM.	1
C 9	6N1078	BEARING	1
C 10	8N628	BEARING	1
11	5J5314	BOLT	4
12	4N2954	SLEEVE	1
13	1P4001	FITTING	1
14	4N54	SCREW	1
	5B3180	NUT	1
15	1P2497	BOLT	2
C 16	4N5578	COVER	1
	4N49	GASKET	1
C 17	6N7523	WASHER	1
18	4N594	GASKET	1
19	9S8632	SPRING	1
20	4N116	GUIDE	1

C INDICATES CHANGE

223906

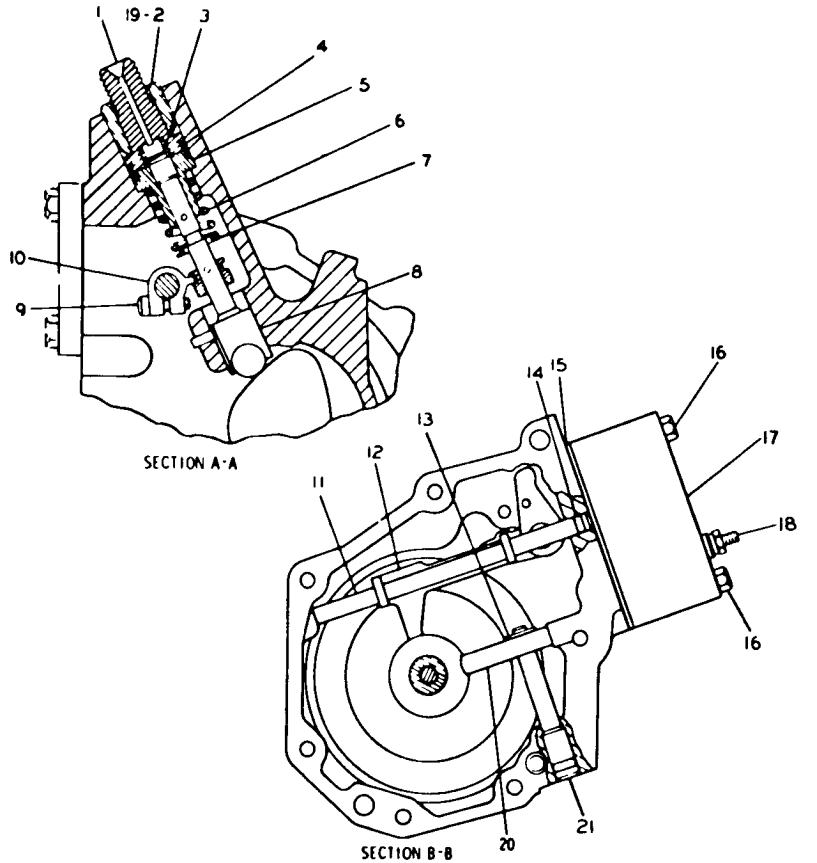

REF. NO	PART NUMBER	DESCRIPTION	QTY
1	4N209	BONNET	4
C 2	4N218	BUSHING	4
3	9B1320	VALVE	4
	9L9424	SPRING	4
4	4N224	RING	4
5	4N1765	PLUNGER AND BARREL ASSEM.	4
6	4N4318	SPRING	4
7	4N2728	WASHER	4
8	4N1750	LIFTER	4
C	4N2685	ROLLER	4
9	2N2658	SCREW	4
10	4N1763	LEVER	4
11	4N528	SHAFT	1
12	4N2677	LEVER ASSEM.	1
13	2M7819	RING	1
14	3H442	SEAL	1
15	4N508	GASKET	1
16	2M5471	BOLT	2
17	4N1591	COVER ASSEM. (Includes)	1
	4N506	COVER	1
C	4N1594	SCREW	1
	4B2042	NUT	1
18	3B4501	LOCKWASHER	1
	1P7326	WASHER--1.53 mm(.06 in.)thick	1
	8F1326	WASHER--.82 mm (.032 in.)thick	1
19	4N223	SEAL	4
20	4N445	LEVER	1
21	4N523	DOWEL	1
	2D6392	SEAL	1

C INDICATES CHANGE 227044

6N5356 GOVERNOR AND FUEL INJECTION PUMP GROUP—Part 3 of 4—Type 1
Part of 4N6115 Governor and Fuel Injection Pump Group shown on Page 54

6N5356 GOVERNOR AND FUEL INJECTION PUMP GROUP—Part 4 of 4—Type 1

Part of 4N6115 Governor and Fuel Injection Pump Group shown on Page 54

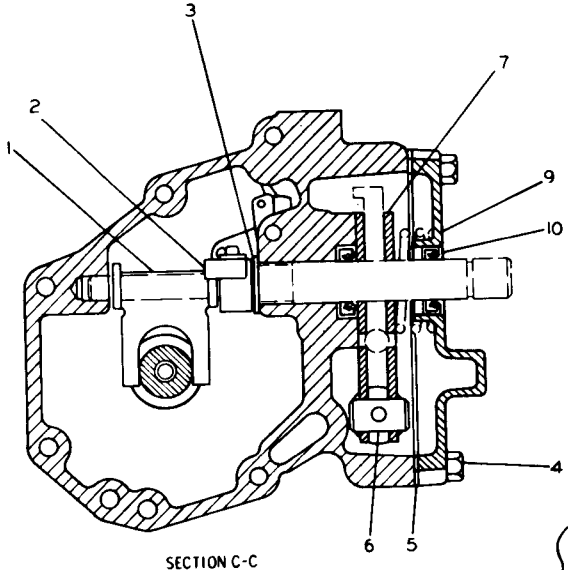

SECTION C-C

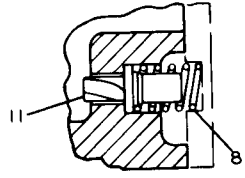

SECTION D-D

REF. NO.	PART NUMBER	DESCRIPTION	QTY
1	4N1881	LEVER	1
2	4N448	LEVER ASSEM. (Includes)	1
	9L8571	DOWEL	1
3	8F5368	WASHER	1
4	S1616	BOLT	4
5	4N402	GASKET	1
6	9S8601	PIN	1
7	6N5482	PLATE	2
8	4N605	SPRING	1
9	4N687	COVER ASSEM. (Includes)	1
10	4N2786	SEAL	1
11	4N1767	VALVE	1

160293

REF. NO.	PART NUMBER	DESCRIPTION	QTY
1	6N5324	HOUSING ASSEM. ---------- (Includes)	1
2	4N2333	PIN---------(spring)----------	1
3	8S6814	DOWEL----------	1
4	4N5050	PLUG----------	1
5	4N260	SEAL----------	2
6	6N2578	BEARING----------	1
7	4N2786	SEAL----------	1
8	9S4180	PLUG----------	1
	4J7533	SEAL----------	1
9	4N425	WEIGHT----------	3
10	4N2927	RACE----------	2
11	4N511	DOWEL----------	3

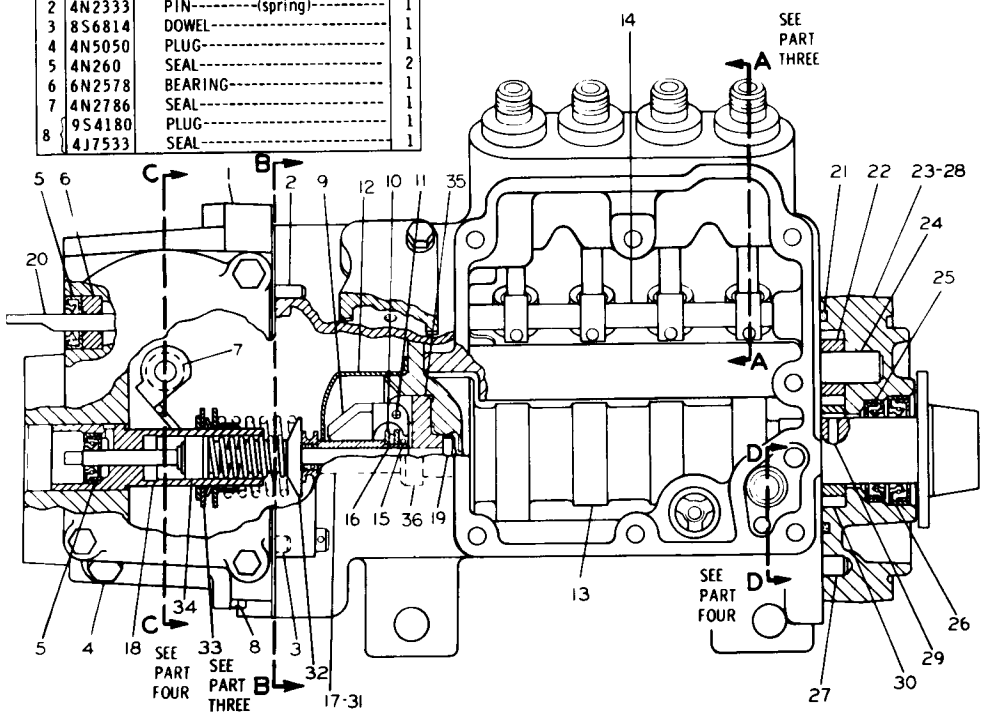

12	4N1723	SHIELD----------	1
13	6N6567	CAMSHAFT----------	1
14	4N507	SHAFT ASSEM. ----------	1
15	4N2953	RING----------	1
16	4N2401	BEARING----------	1
17	4N434	RISER----------	1
18	4N9018	SHAFT----------	1
19	4N9019	DOWEL----------	1
20	4N927	SHAFT ASSEM. ----------	1
21	5M6509	SEAL----------	1
22	4N406	GEAR----------(10 teeth)----------	1
23	9L6863	BODY ASSEM. ---------- (Includes)	1
24	8H9804	SHAFT----------	1
25	4N636	SEAL----------	1
26	4N1584	SEAL----------	1
27	8S6814	DOWEL----------	1
28	4N5050	PLUG----------	1
29	4N3779	KEY----------	1
30	4N429	GEAR----------(15 teeth)----------	1
31	4N527	SPRING----------	1
32	6N4655	DASHPOT ASSEM. ----------	1
33	6N2957	WASHER----------	2
	6N2956	WASHER----------(spring)--------	1
34	6N7451	SEAT----------	1
35	4N446	CARRIER----------	1
		- OR -	
	8N2663	CARRIER----------	1
36	4N2955	BOLT----22.23 mm(.875 in.) long	3
		- OR -	
	8N2662	BOLT----25.4 mm(1 in.) long----- (Low Head)	3

C INDICATES CHANGE

226241

6N5356 GOVERNOR AND FUEL INJECTION PUMP GROUP—Part 1 of 4—Type 2

Part of 4N6115 Governor and Fuel Injection Pump Group shown on Page 54

6N5356 GOVERNOR AND FUEL INJECTION PUMP GROUP—Part 2 of 4—Type 2
Part of 4N6115 Governor and Fuel Injection Pump Group shown on Page 54

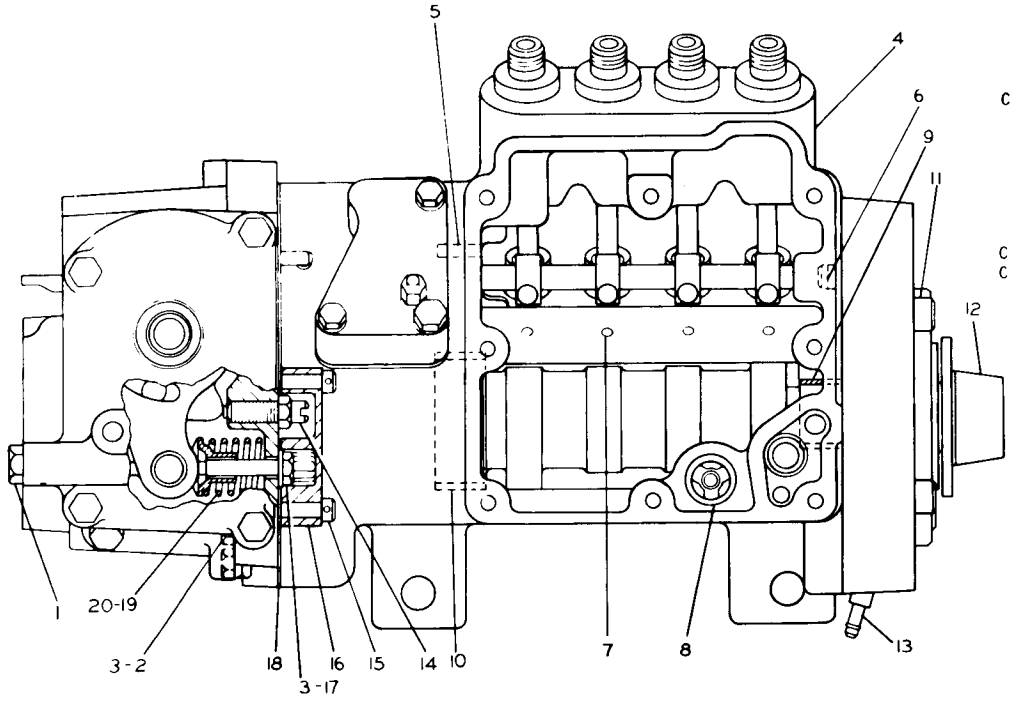

	REF. NO.	PART NUMBER	DESCRIPTION	QTY
	1	4N6430	PIN	1
	2	3B8695	BOLT—8.89 cm(3.5 in.) long	1
		2A4781	BOLT—6.98 cm(2.75 in.) long	1
	3	1P9925	BOLT—6.35 cm(2.5 in.) long	2
C	4	8N1569	HOUSING ASSEM.	1
			(Includes)	
		4N5481	STUD	1
	5	4N2333	PIN—(spring)	1
	6	4N1826	DOWEL	1
		2D6392	SEAL	1
	7	8N984	PIN	4
	8	1P2298	VALVE ASSEM.	1
C	9	6N1078	BEARING	1
C	10	8N628	BEARING	1
	11	5J5314	BOLT	4
	12	4N2954	SLEEVE	1
	13	1P4001	FITTING	1
	14	4N54	SCREW	1
		5B3180	NUT	1
	15	1P2497	BOLT	2
	16	4N5578	COVER	1
		4N49	GASKET	1
	17	6N7523	WASHER	1
	18	4N594	GASKET	1
	19	9S8632	SPRING	1
	20	4N116	GUIDE	1

C INDICATES CHANGE

223909

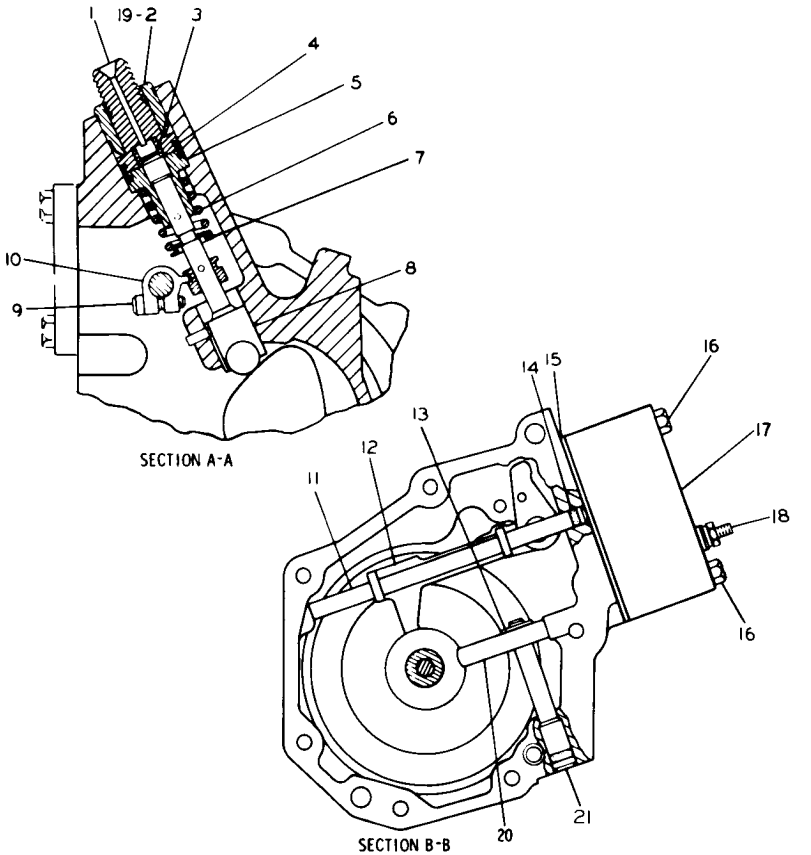

REF. NO.	PART NUMBER	DESCRIPTION	QTY
1	4N209	BONNET	4
2	4N218	BUSHING	4
3	9B1320	VALVE	4
	9L9424	SPRING	4
4	4N224	RING	4
5	4N1765	PLUNGER AND BARREL ASSEM.	4
6	4N4318	SPRING	4
7	4N2728	WASHER	4
C 8	8N1317	LIFTER	4
C	4N2685	ROLLER	4
9	2N2658	SCREW	4
10	4N1763	LEVER	4
11	4N528	SHAFT	1
12	4N2677	LEVER ASSEM.	1
13	2M7819	RING	1
14	3H442	SEAL	1
15	4N508	GASKET	1
16	2M5471	BOLT	2

17	4N1591	COVER ASSEM.	1
		(Includes)	
	4N506	COVER	1
C	4N1594	SCREW	1
	4B2042	NUT	1
18	3B4501	LOCKWASHER	1
	1P7326	WASHER--1.53 mm(.06 in.)thick	1
	8F1326	WASHER--.82 mm (.032 in.)thick	1
19	4N223	SEAL	4
20	4N445	LEVER	1
21	4N523	DOWEL	1
	2D6392	SEAL	1

C INDICATES CHANGE 227045

6N5356 GOVERNOR AND FUEL INJECTION PUMP GROUP—Part 3 of 4—Type 2
Part of 4N6115 Governor and Fuel Injection Pump Group shown on Page 54

6N5356 GOVERNOR AND FUEL INJECTION PUMP GROUP—Part 4 of 4—Type 2
Part of 4N6115 Governor and Fuel Injection Pump Group shown on Page 54

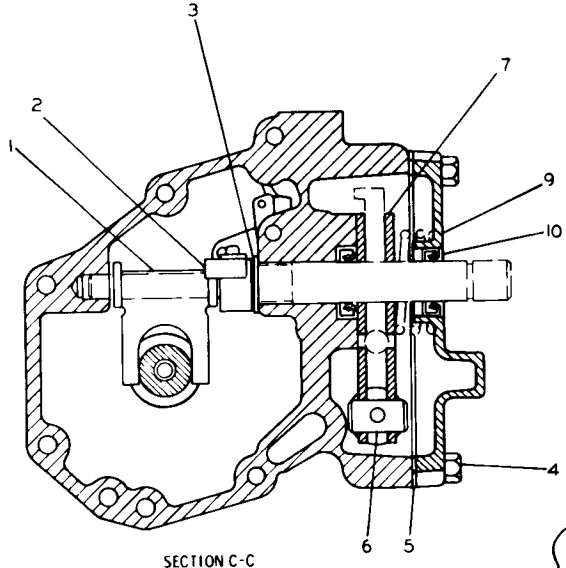

SECTION C-C

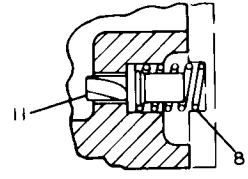

SECTION D-D

REF. NO.	PART NUMBER	DESCRIPTION	QTY
1	4N1881	LEVER	1
2	4N448	LEVER ASSEM. (Includes)	1
	9L8571	DOWEL	1
3	8F5368	WASHER	1
4	S1616	BOLT	4
5	4N402	GASKET	1
6	9S8601	PIN	1
7	6N5482	PLATE	2
8	4N605	SPRING	1
9	4N687	COVER ASSEM. (Includes)	1
10	4N2786	SEAL	1
11	4N1767	VALVE	1

160293

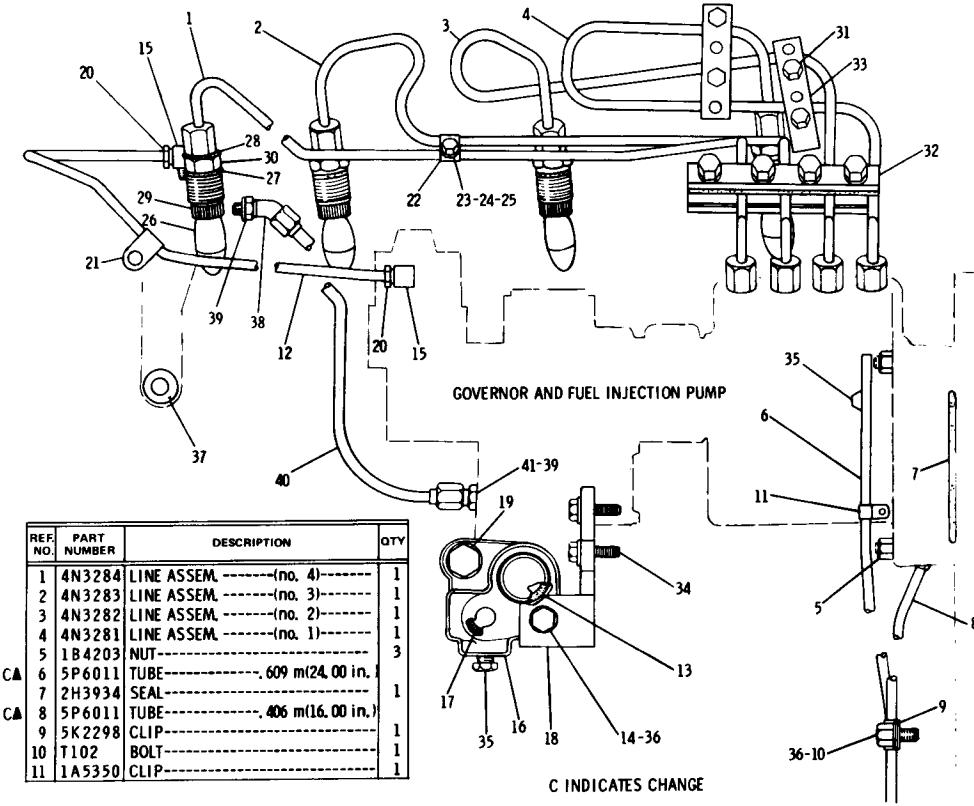

REF. NO.	PART NUMBER	DESCRIPTION	QTY
1	4N3284	LINE ASSEM. -------(no. 4)-------	1
2	4N3283	LINE ASSEM. -------(no. 3)-------	1
3	4N3282	LINE ASSEM. -------(no. 2)-------	1
4	4N3281	LINE ASSEM. -------(no. 1)-------	1
5	1B4203	NUT----------	3
C▲ 6	5P6011	TUBE----------.609 m(24.00 in.)	
7	2H3934	SEAL----------	1
C▲ 8	5P6011	TUBE----------.406 m(16.00 in.)	
9	5K2298	CLIP----------	1
10	T102	BOLT----------	1
11	1A5350	CLIP----------	1

C 12	6N7671	TUBE ASSEM. ----------	1
13	8M5248	SEAL----------	1
14	T65	BOLT----------	1
15	5K9243	ELBOW----------	2
16	4N4021	ADAPTER----------	1
17	8M5253	SEAL----------	1
18	6N3760	BRACKET----------	1
19	7B3235	BOLT----------	1
	2M849	WASHER----------	1
20	4B8756	NUT----------	2
21	4H8878	CLIP----------	1
22	6F8868	CLAMP----------	2
C 23	S1615	BOLT----------	1
24	1B4330	NUT----------	1
25	3B4504	LOCKWASHER----------	1
26	7S9891	VALVE SERVICE GROUP---------- (Each Includes)	4
27	5B3718	SEAL----------	1
28	6F1069	SEAL ASSEM. ----------	1
29	8S2389	BODY----------	4
30	5H7225	NUT----------	4
C 31	1B7182	BOLT----------	8
C	3B4505	LOCKWASHER----------	8
C	8S4004	CLAMP----------	1
C 32	8S4003	CLAMP----------(tapped)---------	1
C	8S4005	DAMPER----------	2
C	8S3999	CLAMP----------	2
C 33	8S3998	CLAMP--------(tapped)----------	2
C	8S4000	DAMPER----------	4
34	2A5546	BOLT----------	2
	5P537	WASHER----------	2
35	5M6214	PLUG----------	2
36	5M2894	WASHER----------	2
37	4B4278	WASHER----------	1
38	307942	ELBOW----------	1
39	3J1907	SEAL----------	2
40	4N3551	TUBE ASSEM. ----------	1
41	2R6806	CONNECTOR----------	1

▲ ORDER BY THE METRE

162095

6N728 FUEL INJECTION VALVES AND LINES GROUP
Engine Serial No. 78P38513 to 78P38773 inclusive

7N3461 FUEL INJECTION VALVES AND LINES GROUP
Engine Serial No. 78P38774 to 78P49430 inclusive

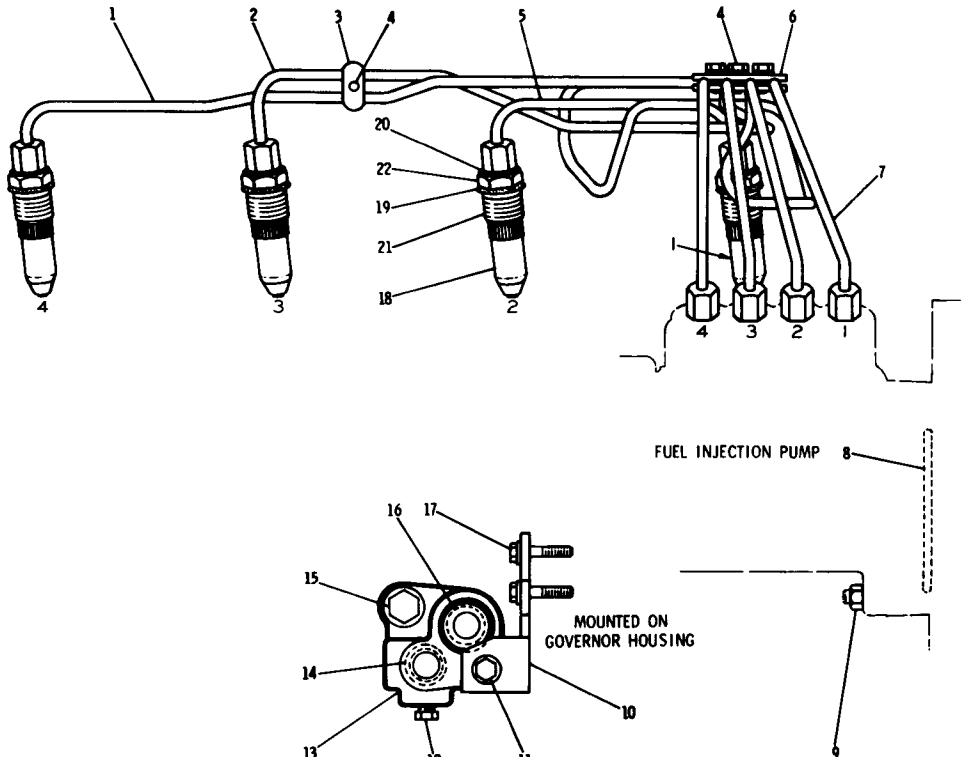

REF. NO.	PART NUMBER	DESCRIPTION	QTY
1	7N2874	LINE ASSEM. -------(no. 4)-------	1
2	7N2873	LINE ASSEM. -------(no. 3)-------	1
3	6N6403	CLAMP---------(tapped)----------	2
	6N6404	CLAMP----------	2
4	S1615	BOLT----------	8
	3B4504	LOCKWASHER----------	8
5	7N2872	LINE ASSEM. -------(no. 2)-------	1
6	6N5124	CLAMP---------(tapped)----------	3
	6N5125	CLAMP----------	3
7	7N2871	LINE ASSEM. -------(no. 1)-------	1
8	2H3934	SEAL----------	1
9	1B4203	NUT----------	3
10	6N3760	BRACKET----------	1
11	L1352	BOLT----------	1
	5M2894	WASHER----------	1
12	5M6214	PLUG----------	1
13	4N4021	ADAPTER----------	1
14	8M5253	SEAL----------	1
15	7B3235	BOLT----------	1
	5P8245	WASHER----------	1
16	8M5248	SEAL----------	1
17	2A5546	BOLT----------	2
	5P537	WASHER----------	2
18	7S9891	VALVE SERVICE GROUP---------- (Each Includes)	4
19	5B3718	SEAL----------	1
20	6F1069	SEAL ASSEM. ----------	1
21	8S2389	BODY----------	4
22	5H7225	NUT----------	4

217006

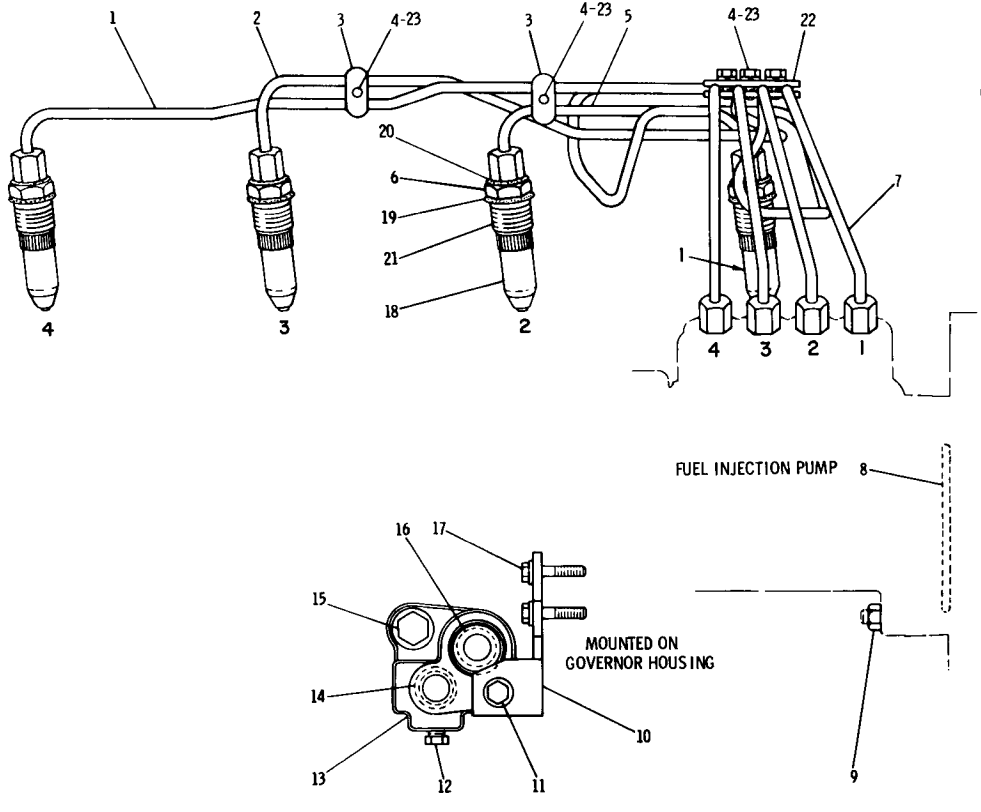

	REF. NO.	PART NUMBER	DESCRIPTION	QTY.
	1	7N2874	LINE ASSEM. -----(no. 4)----------	1
C	2	7N2873	LINE ASSEM. -----(no. 3)----------	1
C	3	6N6403	CLAMP ----------(tapped)--------	5
C		6N6404	CLAMP----------	5
C	4	S1615	BOLT----------	9
	5	7N2872	LINE ASSEM. -----(no. 2)-------	1
	6	5H7225	NUT----------	4
	7	7N2871	LINE ASSEM. -----(no. 1)---------	1
	8	2H3934	SEAL----------	1
	9	1B4203	NUT----------	3
	10	6N3760	BRACKET----------	1
	11	L1352	BOLT----------	1
		5M2894	WASHER----------	1
	12	5M6214	PLUG----------	1
	13	4N4021	ADAPTER----------	1
	14	8M5253	SEAL----------	1
	15	7B3235	BOLT----------	1
		5P8245	WASHER----------	1
	16	8M5248	SEAL----------	1
	17	2A5546	BOLT----------	2
		5P537	WASHER----------	2
	18	8N8796	VALVE SERVICE GROUP---------- (Each Includes)	4
	19	5B3718	SEAL----------	1
	20	6F1069	SEAL ASSEM. ----------	1
	21	8S2389	BODY ----------	4
	22	6N5124	CLAMP------(tapped)----------	2
		6N5125	CLAMP----------	2
	23	3B4504	LOCKWASHER----------	9

C INDICATES CHANGE

176970

7N3461 FUEL INJECTION VALVES AND LINES GROUP
Engine Serial No. 78P49431 to 78P52953 inclusive

7N3461 FUEL INJECTION VALVES AND LINES GROUP
Engine Serial No. 78P52954—Up
8N9615 Lines parts are shown on Page 64D

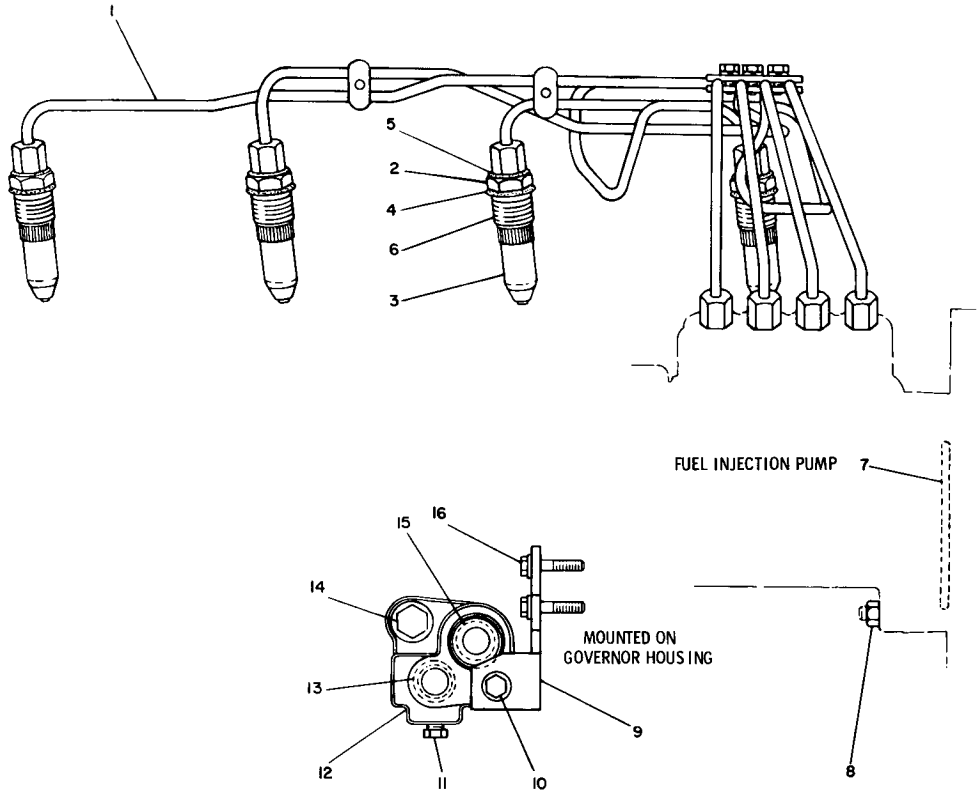

	REF. NO.	PART NUMBER	DESCRIPTION	QTY.
C	1	8N9615	LINES GROUP (Separate Illustration)	1
	2	5H7225	NUT	4
	3	8N8796	VALVE SERVICE GROUP (Each Includes)	4
	4	5B3718	SEAL	1
	5	6F1069	SEAL ASSEM.	1
	6	8S2389	BODY	4
	7	2H3934	SEAL	1
	8	1B4203	NUT	3
	9	6N3760	BRACKET	1
	10	1L1352	BOLT	1
		5M2894	WASHER	1
	11	5M6214	PLUG	1
	12	4N4021	ADAPTER	1
	13	8M5253	SEAL	1
	14	7B3235	BOLT	1
		5P8245	WASHER	1
	15	8M5248	SEAL	1

C INDICATES CHANGE

176971

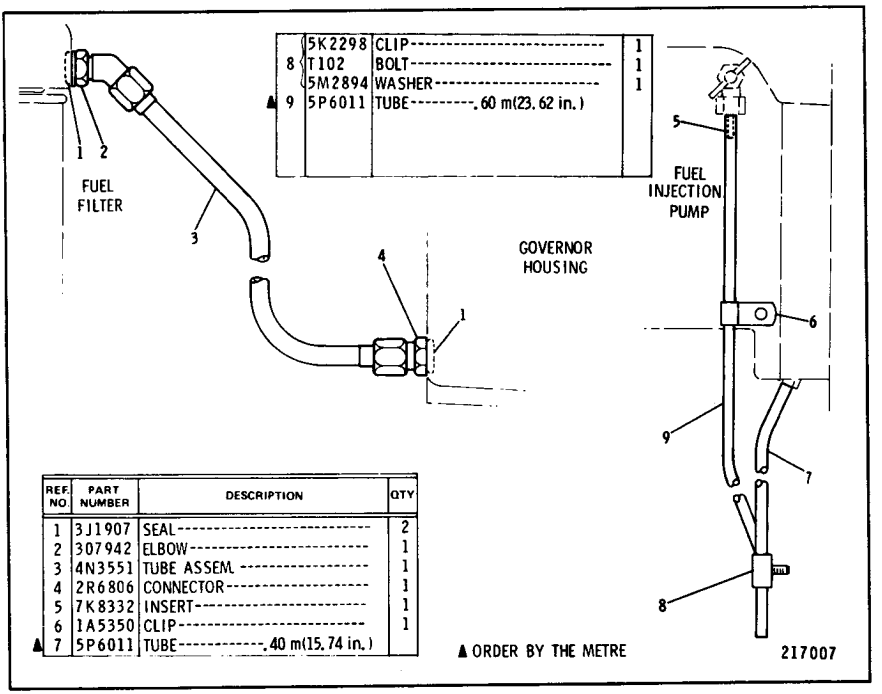

8	5K2298	CLIP	1
	T102	BOLT	1
	5M2894	WASHER	1
▲ 9	5P6011	TUBE---.60 m(23.62 in.)	

REF. NO.	PART NUMBER	DESCRIPTION	QTY
1	3J1907	SEAL	2
2	307942	ELBOW	1
3	4N3551	TUBE ASSEM.	1
4	2R6806	CONNECTOR	1
5	7K8332	INSERT	1
6	1A5350	CLIP	1
▲ 7	5P6011	TUBE---.40 m(15.74 in.)	

▲ ORDER BY THE METRE

7N3651 DRAIN LINES GROUP
Engine Serial No. 78P38774 to 78P54917 inclusive

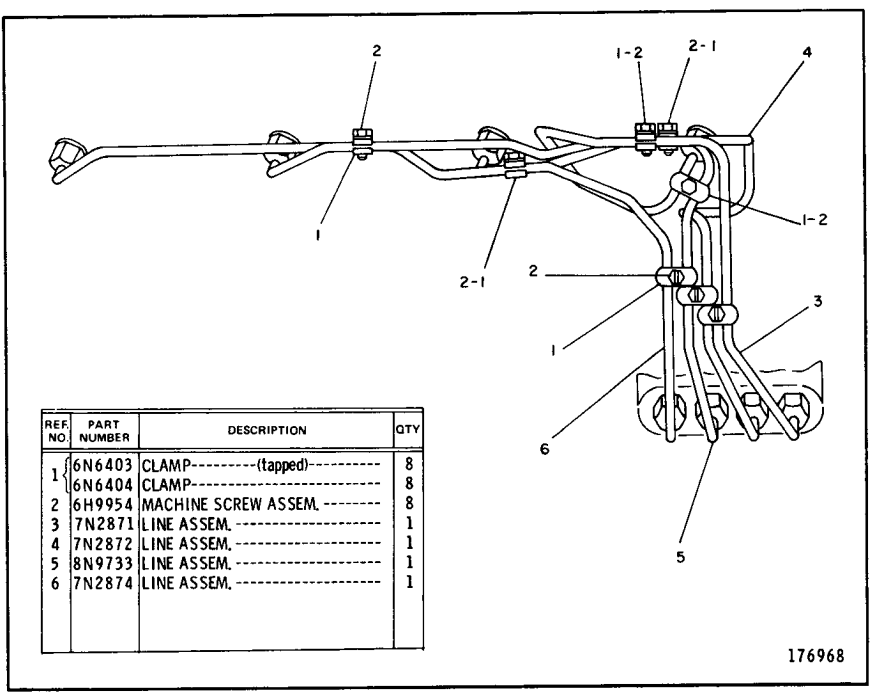

REF. NO.	PART NUMBER	DESCRIPTION	QTY
1	6N6403	CLAMP---(tapped)	8
	6N6404	CLAMP	8
2	6H9954	MACHINE SCREW ASSEM.	8
3	7N2871	LINE ASSEM.	1
4	7N2872	LINE ASSEM.	1
5	8N9733	LINE ASSEM.	1
6	7N2874	LINE ASSEM.	1

8N9615 FUEL INJECTION LINES GROUP
Engine Serial No. 78P52954—Up
Part of 7N3461 Fuel Injection Valves and Lines Group shown on Page 64C

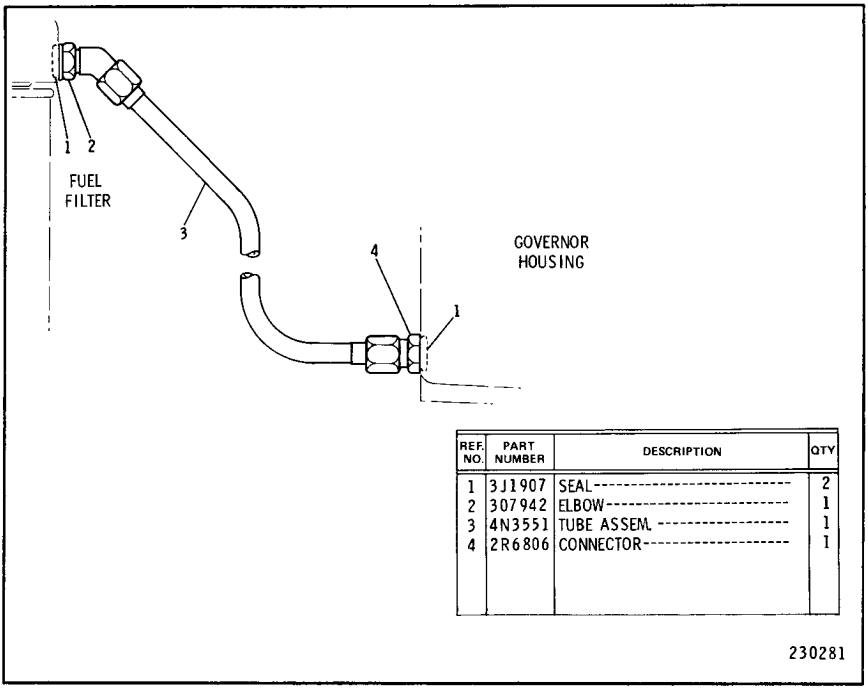

REF. NO.	PART NUMBER	DESCRIPTION	QTY
1	3J1907	SEAL	2
2	307942	ELBOW	1
3	4N3551	TUBE ASSEM.	1
4	2R6806	CONNECTOR	1

230281

7N3651 DRAIN LINES GROUP
Engine Serial No. 78P54918 to 78P56549 inclusive

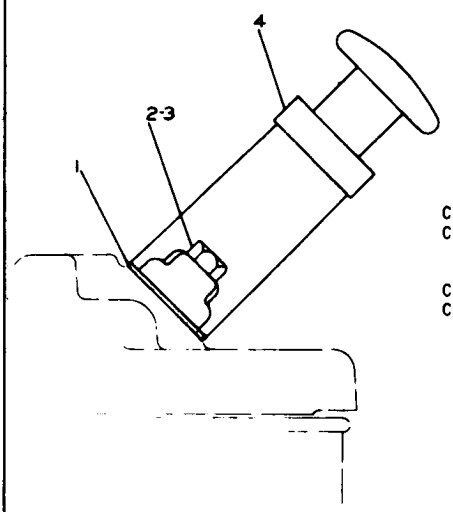

	REF. NO.	PART NUMBER	DESCRIPTION	QTY
	1	1P436	GASKET	1
	2	4B3388	BOLT---2.86 cm(1.125 in.) long	1
			-OR-	
C	2	1B2790	BOLT---3.49 cm(1.375 in.) long	1
C	2	9M1974	WASHER---7.95 mm(.313 in.) dia.	1
	2	S1616	BOLT---2.54 cm(1 in.) long	1
			-OR-	
C	3	7B2742	BOLT---3.18 cm(1.25 in.) long	1
C	3	5P537	WASHER---6.35 mm(.25 in.) dia.	1
	4	4N2511	PUMP ASSEM.	1

C INDICATES CHANGE

215540

4N3287 FUEL PRIMING PUMP GROUP
Engine Serial No. 78P38513 to 78P46313 inclusive

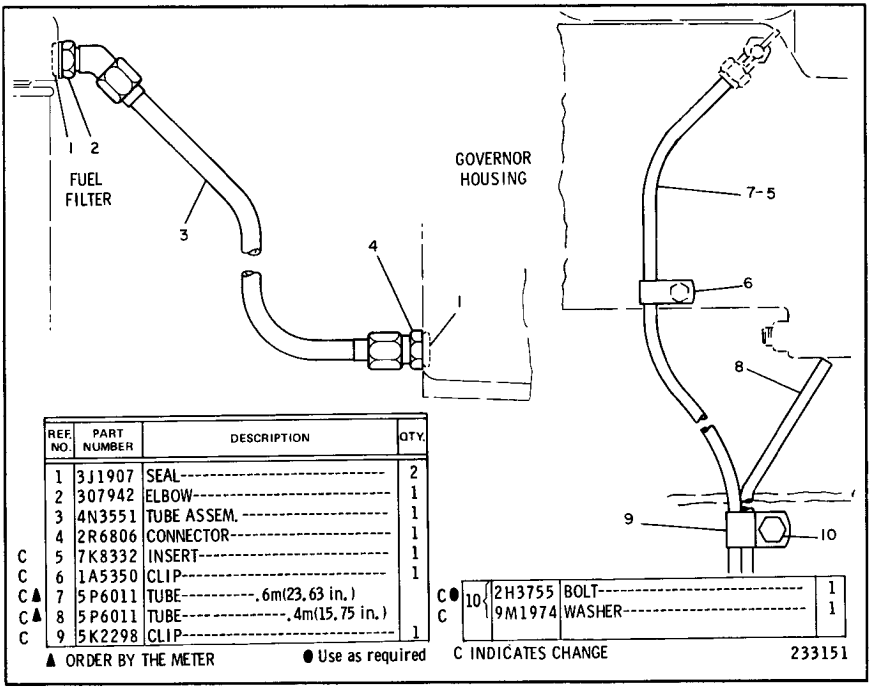

	REF. NO.	PART NUMBER	DESCRIPTION	QTY.
	1	3J1907	SEAL	2
	2	307942	ELBOW	1
	3	4N3551	TUBE ASSEM.	1
	4	2R6806	CONNECTOR	1
C	5	7K8332	INSERT	1
C	6	1A5350	CLIP	1
C▲	7	5P6011	TUBE-----.6m(23.63 in.)	
C▲	8	5P6011	TUBE-----.4m(15.75 in.)	
C	9	5K2298	CLIP	1
C●	10	2H3755	BOLT	1
C		9M1974	WASHER	1

▲ ORDER BY THE METER ● Use as required C INDICATES CHANGE 233151

7N3651 DRAIN LINES GROUP
Engine Serial No. 78P56550—Up

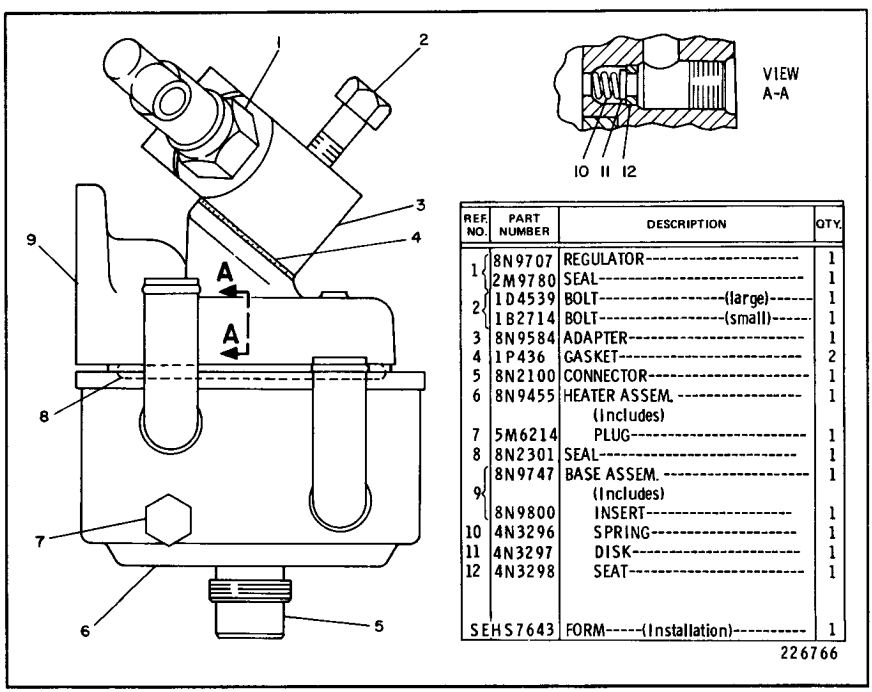

REF. NO.	PART NUMBER	DESCRIPTION	QTY.
1	8N9707	REGULATOR	1
	2M9780	SEAL	1
2	1D4539	BOLT-----(large)	1
	1B2714	BOLT-----(small)	1
3	8N9584	ADAPTER	1
4	1P436	GASKET	2
5	8N2100	CONNECTOR	1
6	8N9455	HEATER ASSEM. (Includes)	1
7	5M6214	PLUG	1
8	8N2301	SEAL	1
9	8N9747	BASE ASSEM. (Includes)	1
	8N9800	INSERT	1
10	4N3296	SPRING	1
11	4N3297	DISK	1
12	4N3298	SEAT	1
SEHS7643		FORM-----(Installation)	1

226766

8N9751 FUEL HEATER CHANGEOVER GROUP—Field Installation

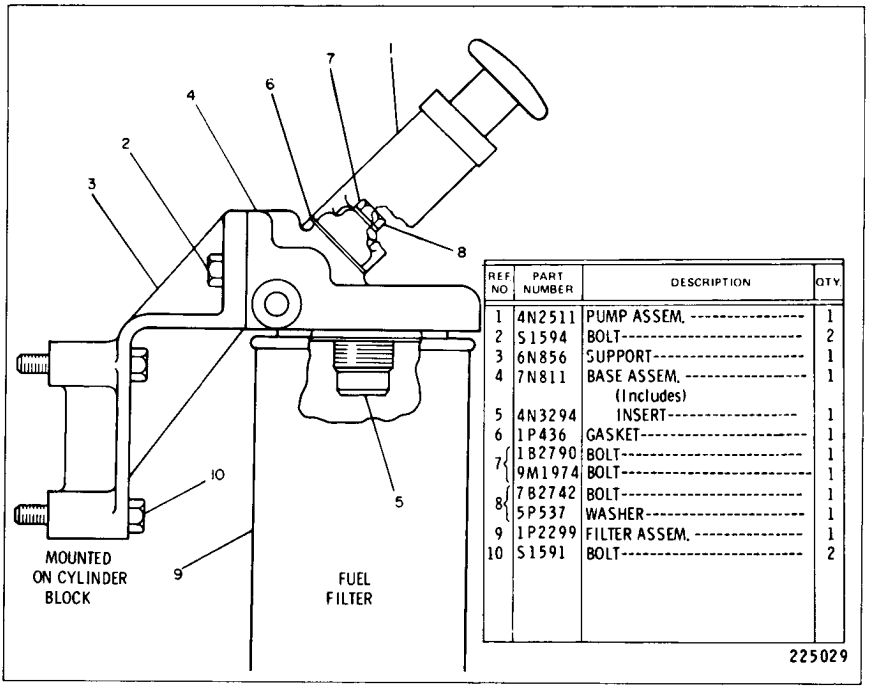

REF NO.	PART NUMBER	DESCRIPTION	QTY.
1	4N2511	PUMP ASSEM.	1
2	S1594	BOLT	2
3	6N856	SUPPORT	1
4	7N811	BASE ASSEM. (Includes)	1
5	4N3294	INSERT	1
6	1P436	GASKET	1
7	1B2790	BOLT	1
	9M1974	BOLT	1
8	7B2742	BOLT	1
	5P537	WASHER	1
9	1P2299	FILTER ASSEM.	1
10	S1591	BOLT	2

225029

8N4471 FUEL PRIMING AND PRIMARY FILTER PUMP GROUP
Engine Serial No. 78P46314 to 78P50282 inclusive

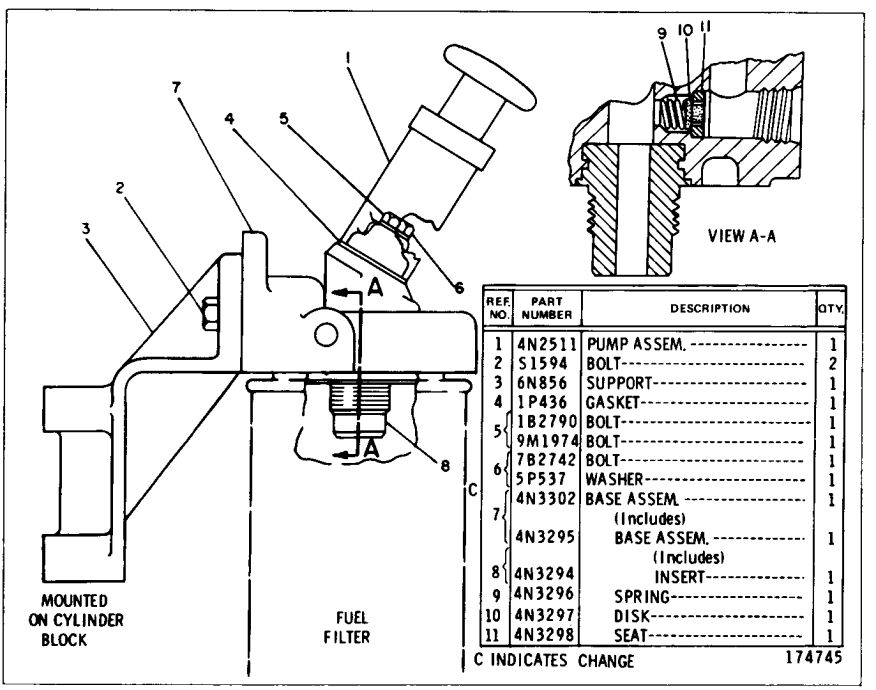

REF NO.	PART NUMBER	DESCRIPTION	QTY.
1	4N2511	PUMP ASSEM.	1
2	S1594	BOLT	2
3	6N856	SUPPORT	1
4	1P436	GASKET	1
5	1B2790	BOLT	1
	9M1974	BOLT	1
6	7B2742	BOLT	1
	5P537	WASHER	1
7	4N3302	BASE ASSEM. (Includes)	1
	4N3295	BASE ASSEM. (Includes)	1
8	4N3294	INSERT	1
9	4N3296	SPRING	1
10	4N3297	DISK	1
11	4N3298	SEAT	1

C INDICATES CHANGE

174745

8N4471 FUEL PRIMING AND PRIMARY FILTER PUMP GROUP
Engine Serial No. 78P50283—Up

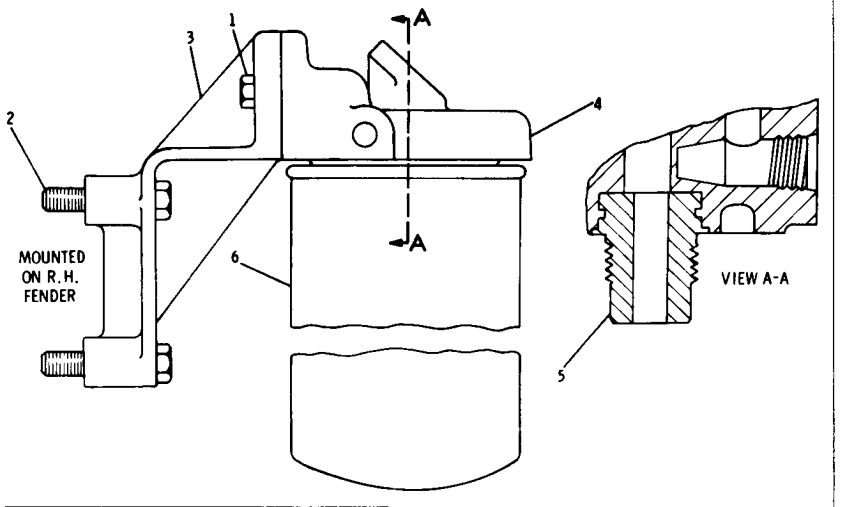

	REF. NO.	PART NUMBER	DESCRIPTION	QTY
C	1	S1594	BOLT	2
	2	S1591	BOLT	2
	3	6N856	SUPPORT	1
C	4	7N811	BASE ASSEM. (Includes)	1
	5	4N3294	INSERT	1
	6	1P2299	FILTER ASSEM.	1

C INDICATES CHANGE 220049

6N5916 FUEL FILTER GROUP—Type 1
Engine Serial No. 78P38513 to 78P46313 inclusive

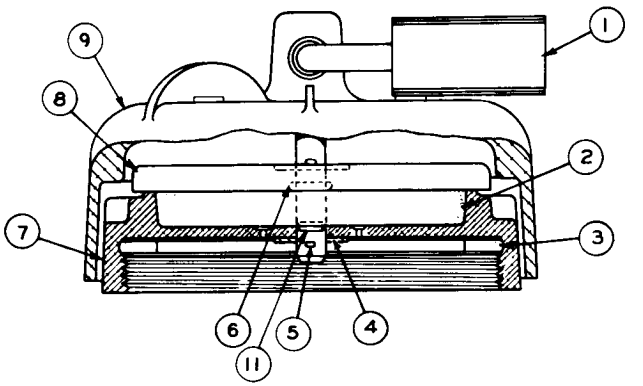

	REF. NO.	PART NUMBER	DESCRIPTION	QTY
	1	8S7949	PADLOCK GROUP (Includes)	1
		8M439	KEY	2
	2	5S7657	FILTER	1
	3	2A1763	GASKET	1
	4	4J1105	SHIM	2
C	5	3B4615	COTTER PIN	2
	6	5F9144	SEAL	1
	7	1P8680	CAP	1
	8	5S7646	LID	1
C	9	8P668	COVER ASSEM.	1
	11	8F9538	SEAL	1

C INDICATES CHANGE 207043

1P8678 PROTECTION COVER GROUP—Fuel Tank Cap
AN ATTACHMENT

		CONSISTS OF:	PAGE
1	8H4681	PRIMARY FUEL FILTER GROUP	66B
1	6N6	FUEL PUMP ASSEMBLY	
1	.....	FORM SMHS7468	

8N3569 FUEL PUMP GROUP—Boost—24 Volt—Field Installation
Provides positive pressure to the sleeve metering fuel system components on the suction side of the fuel transfer pump

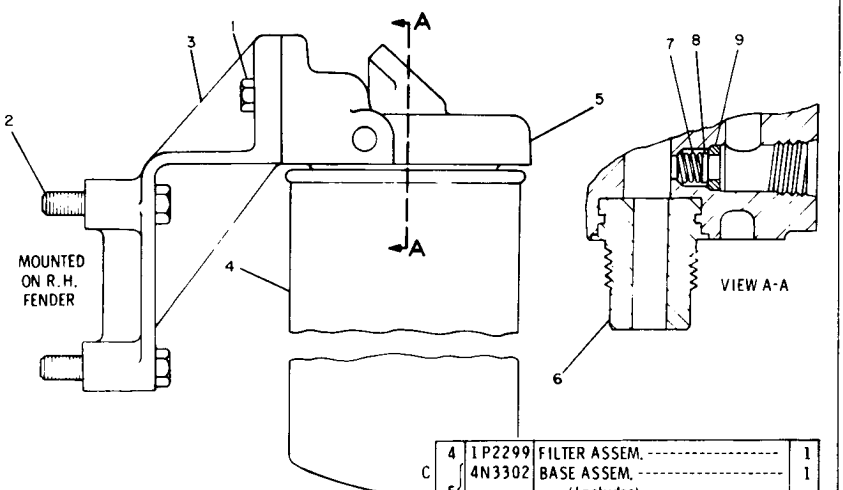

REF. NO	PART NUMBER	DESCRIPTION	QTY
1	S1594	BOLT	2
2	S1591	BOLT	2
3	6N856	SUPPORT	1

C	4	1P2299	FILTER ASSEM.	1
C	5	4N3302	BASE ASSEM. (Includes)	1
		4N3295	BASE ASSEM. (Includes)	1
	6	4N3294	INSERT	1
	7	4N3296	SPRING	1
	8	4N3297	DISK	1
	9	4N3298	SEAT	1

C INDICATES CHANGE 175690

6N5916 FUEL FILTER GROUP—Type 2
Engine Serial No. 78P38513 to 78P46313 inclusive

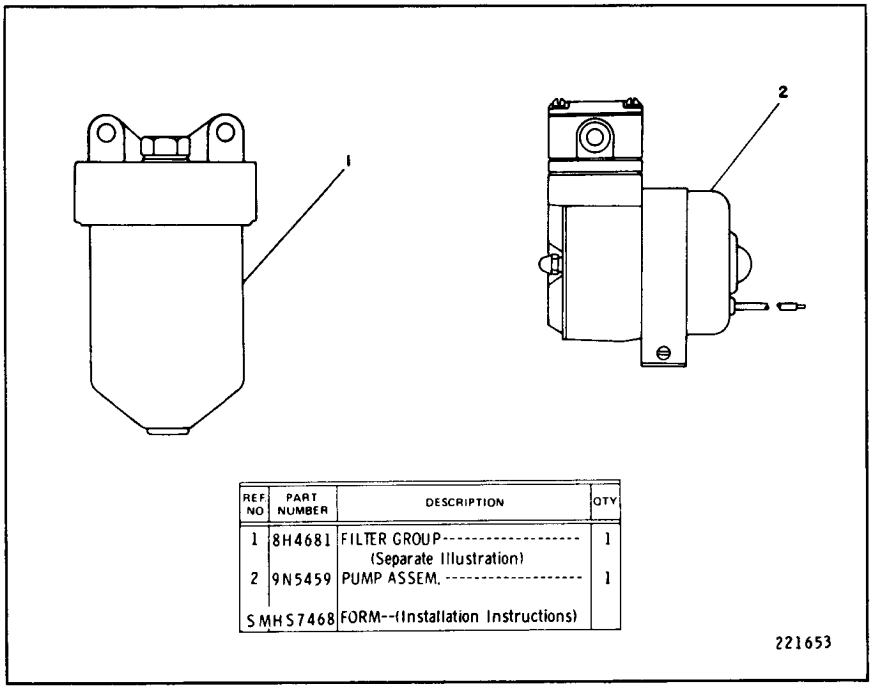

REF NO	PART NUMBER	DESCRIPTION	QTY
1	8H4681	FILTER GROUP---------- (Separate Illustration)	1
2	9N5459	PUMP ASSEM. ----------	1
S	MHS7468	FORM--(Installation Instructions)	

9N5458 FUEL PUMP GROUP—Boost—12 Volt—Field Installation
Provides positive pressure to the sleeve metering fuel system components on the suction side of the fuel transfer pump

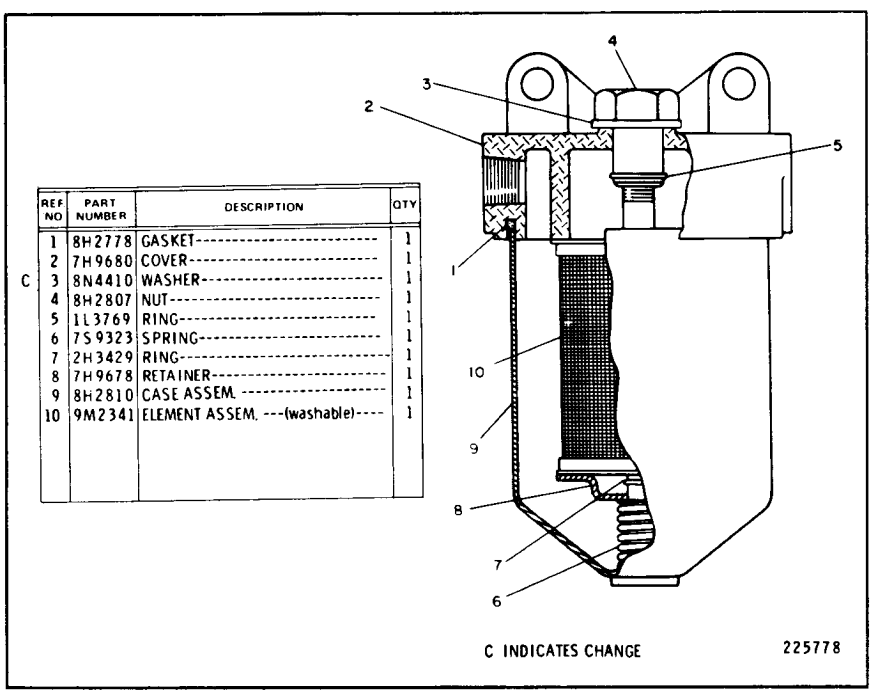

	REF NO	PART NUMBER	DESCRIPTION	QTY
C	1	8H2778	GASKET----------	1
	2	7H9680	COVER----------	1
C	3	8N4410	WASHER----------	1
	4	8H2807	NUT----------	1
	5	1L3769	RING----------	1
	6	7S9323	SPRING----------	1
	7	2H3429	RING----------	1
	8	7H9678	RETAINER----------	1
	9	8H2810	CASE ASSEM. ----------	1
	10	9M2341	ELEMENT ASSEM. ---(washable)----	1

8H4681 PRIMARY FUEL FILTER GROUP—Type 1
Part of 8N3569 and 9N5458 Fuel Pump Groups shown on Pages 66A and 66B

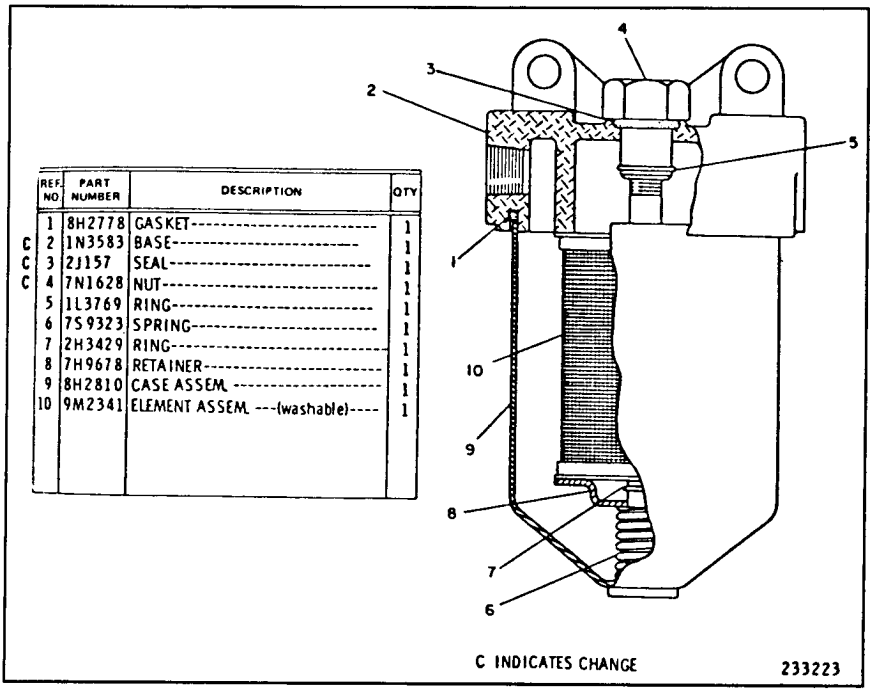

	REF. NO.	PART NUMBER	DESCRIPTION	QTY
	1	8H2778	GASKET	1
C	2	1N3583	BASE	1
C	3	2J157	SEAL	1
C	4	7N1628	NUT	1
	5	1L3769	RING	1
	6	7S9323	SPRING	1
	7	2H3429	RING	1
	8	7H9678	RETAINER	1
	9	8H2810	CASE ASSEM.	1
	10	9M2341	ELEMENT ASSEM. ---(washable)	1

8H4681 PRIMARY FUEL FILTER GROUP—Type 2
Part of 8N3569 and 9N5458 Fuel Pump Groups shown on Pages 66A and 66B

3V6931 FUEL TANK GROUP

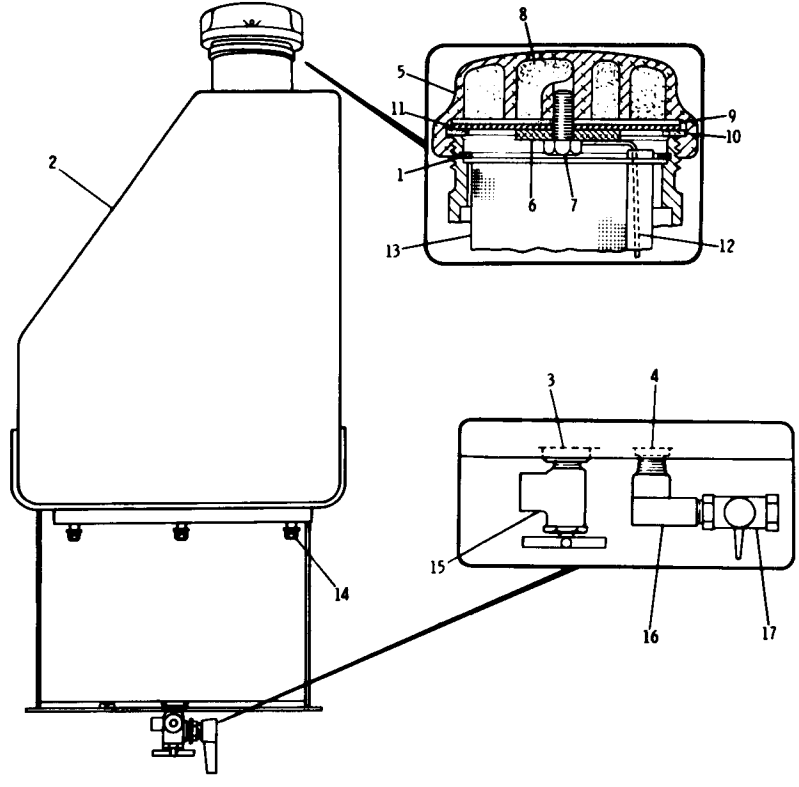

REF. NO.	PART NUMBER	DESCRIPTION	QTY
1	8H3497	RING	1
2	3V7752	TANK ASSEM. (Includes)	1
3	3V6350	FITTING	1
4	1F2417	BOSS	1
5	4B5441	CAP ASSEM. (Includes)	1
6	7B2002	WASHER	1
7	3H8389	BOLT	1
8	4B5949	ELEMENT	2
9	4B5423	GASKET	1
10	2A1763	GASKET	1
11	3F4134	BAFFLE	1
12	3V7508	PLUNGER	1
13	8H3498	STRAINER ASSEM.	1
14	S1566	BOLT--3.81 cm(1.50 in.) long	3
	S1592	BOLT--3.18 cm(1.25 in.) long	3
	3B4510	LOCKWASHER	6
	L2119	WASHER	6
15	5P4485	VALVE ASSEM. --(needle)--	1
16	3B747	ELBOW	1
	3B7739	NIPPLE	1
17	5P7486	VALVE --(ball)--	1

216750

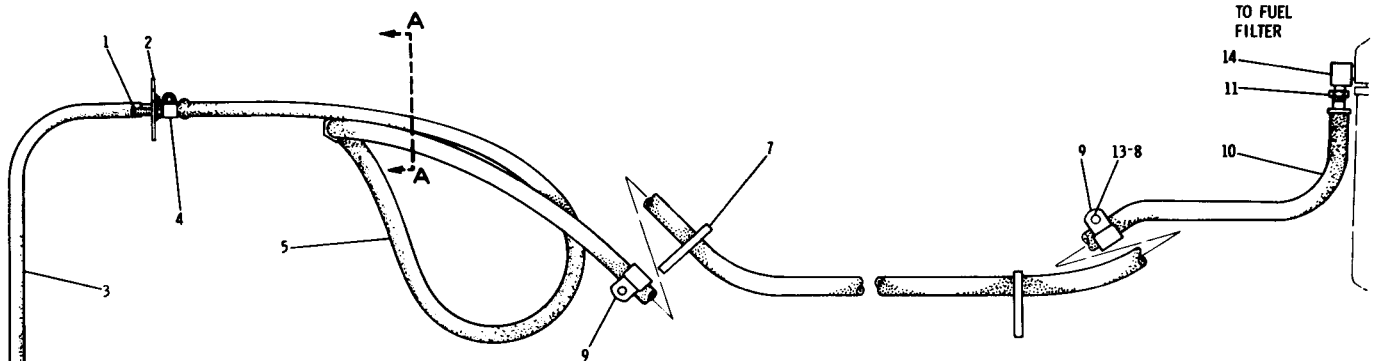

	REF. NO.	PART NUMBER	DESCRIPTION	QTY
	1	1L1351	BOLT	2
		5P1075	WASHER	2
	2	4V877	TUBE ASSEM.	1
▲	3	5P1520	HOSE-144.78 cm(57 in.)	
	4	5P4961	CLAMP	1
▲	5	5P1520	HOSE-96.52 cm(38 in.)	
	6	66586	INSERT	1
C	7	7K1181	STRAP	2
C	8	3B4506	LOCKWASHER	1
	9	6D3479	CLIP	2
C▲	10	5P1520	HOSE-228.6 cm(90 in.)	
	11	1V3546	COUPLING	2
	12	5K9246	CONNECTOR	1
	13	619325	PIPE	1
		1L1143	BOLT	1
	14	5K9235	ELBOW	1

▲ ORDER BY THE CENTIMETRE

C INDICATES CHANGE

167924

3V6618 FUEL LINES GROUP
Serial No. 13X1 to 13X623 inclusive

3V6618 FUEL LINES GROUP
Serial No. 13X624 to 13X2790 inclusive

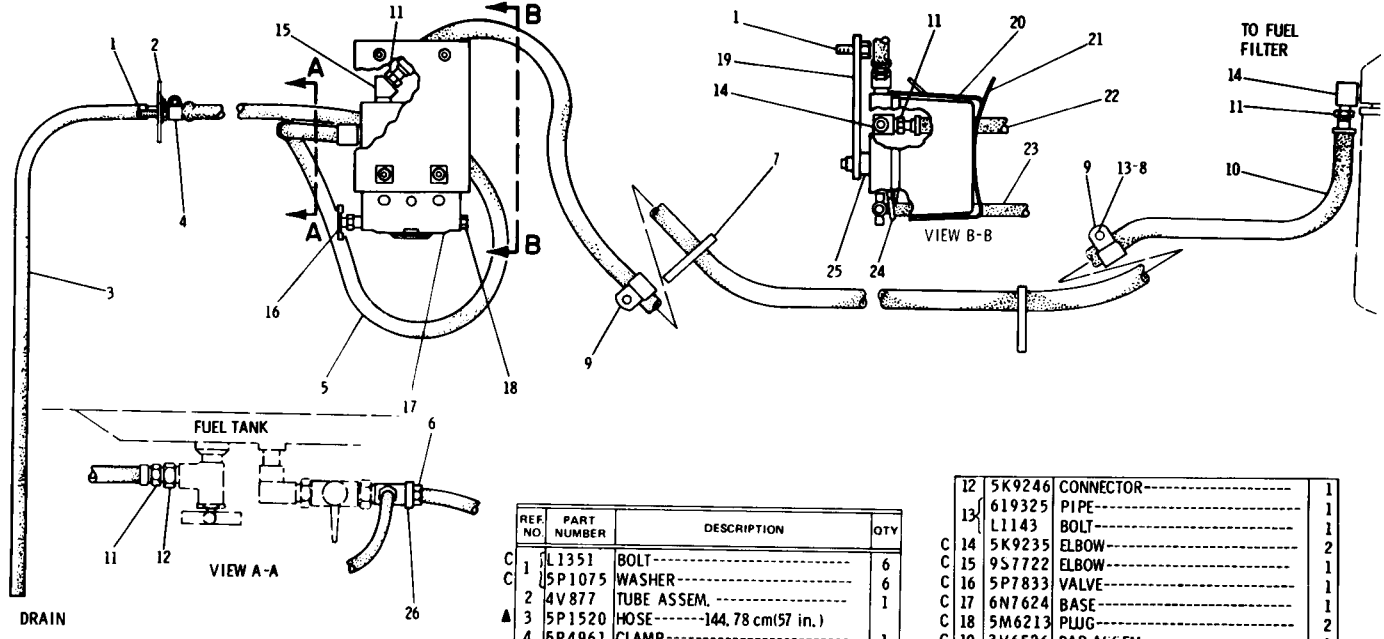

	REF. NO.	PART NUMBER	DESCRIPTION	QTY
C	1	L1351	BOLT	6
C		5P1075	WASHER	6
	2	4V877	TUBE ASSEM.	1
▲	3	5P1520	HOSE--144.78 cm(57 in.)	
	4	5P4961	CLAMP	1
▲	5	5P1520	HOSE--96.52 cm(38 in.)	
C	6	66586	INSERT	2
	7	7K1181	STRAP	2
	8	3B4506	LOCKWASHER	1
	9	6D3479	CLIP	2
▲	10	5P1520	HOSE--218.6 cm(86 in.)	
C	11	1V3546	COUPLING	4
	12	5K9246	CONNECTOR	1
	13	619325	PIPE	1
		L1143	BOLT	1
C	14	5K9235	ELBOW	2
C	15	9S7722	ELBOW	1
C	16	5P7833	VALVE	1
C	17	6N7624	BASE	1
C	18	5M6213	PLUG	2
C	19	3V6526	BAR ASSEM.	1
C	20	6N7617	ELEMENT	1
C	21	6N7618	CLAMP	1
C▲	22	5P1520	HOSE--31 cm(12.2 in.)	
C▲	23	5P1520	HOSE--61 cm (24 in.)	
C	24	3S5096	CLAMP	1
C	25	1K4129	SPACER	2
C	26	2D7325	TEE	1

▲ ORDER BY THE CENTIMETER

C INDICATES CHANGE

171131

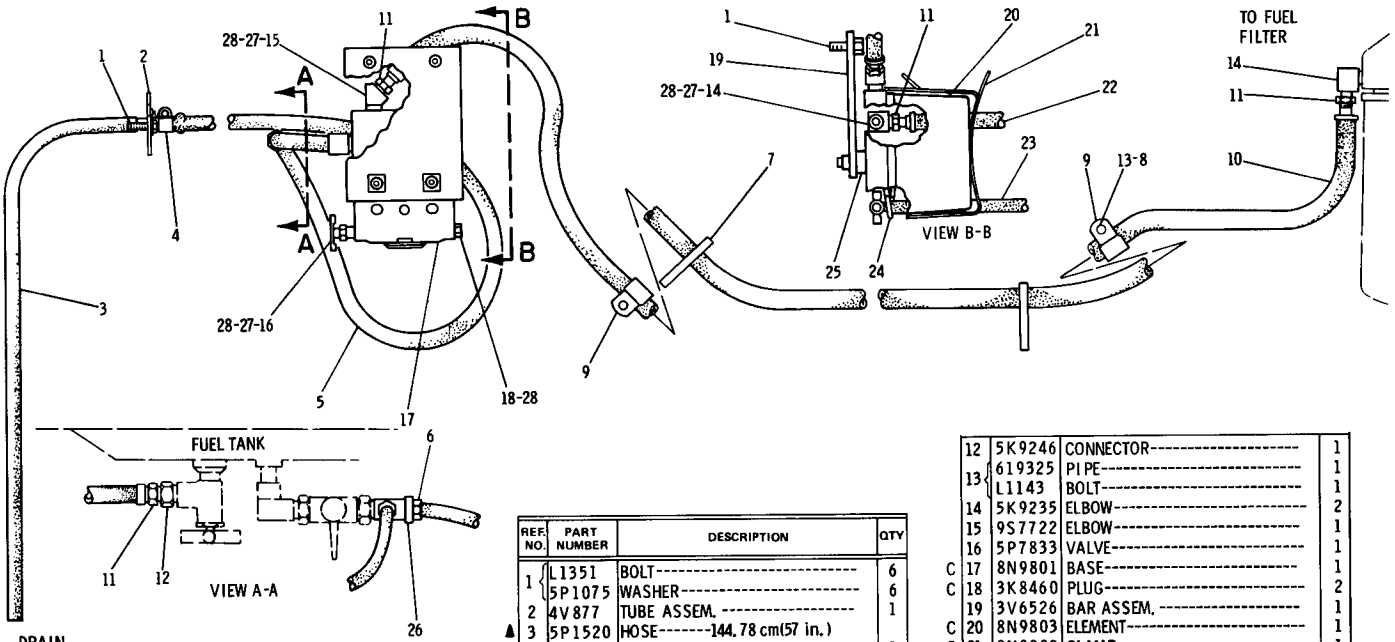

REF. NO.	PART NUMBER	DESCRIPTION	QTY
1	L1351	BOLT	6
	5P1075	WASHER	6
2	4V877	TUBE ASSEM.	1
▲ 3	5P1520	HOSE--144.78 cm(57 in.)	
4	5P4961	CLAMP	1
▲ 5	5P1520	HOSE--96.52 cm(38 in.)	
6	66586	INSERT	2
7	7K1181	STRAP	2
8	3B4506	LOCKWASHER	1
9	6D3479	CLIP	2
▲ 10	5P1520	HOSE--218.6 cm(86 in.)	
11	1V3546	COUPLING	4

▲ ORDER BY THE CENTIMETER

12	5K9246	CONNECTOR	1
13	619325	PIPE	1
	L1143	BOLT	1
14	5K9235	ELBOW	2
15	9S7722	ELBOW	1
16	5P7833	VALVE	1
C 17	8N9801	BASE	1
C 18	3K8460	PLUG	2
19	3V6526	BAR ASSEM.	1
C 20	8N9803	ELEMENT	1
C 21	8N9802	CLAMP	1
▲ 22	5P1520	HOSE--31 cm (12.2 in.)	
▲ 23	5P1520	HOSE--61 cm (24 in.)	
24	3S5096	CLAMP	1
25	1K4129	SPACER	2
26	2D7325	TEE	1
C 27	5P4675	ADAPTER	3
C 28	1J9671	SEAL	5

C INDICATES CHANGE

178381

3V6618 FUEL LINES GROUP
Serial No. 13X2791—Up

3V9849 WATER SEPARATOR GROUP
Serial No. 13X1 to 13X623 inclusive
AN ATTACHMENT

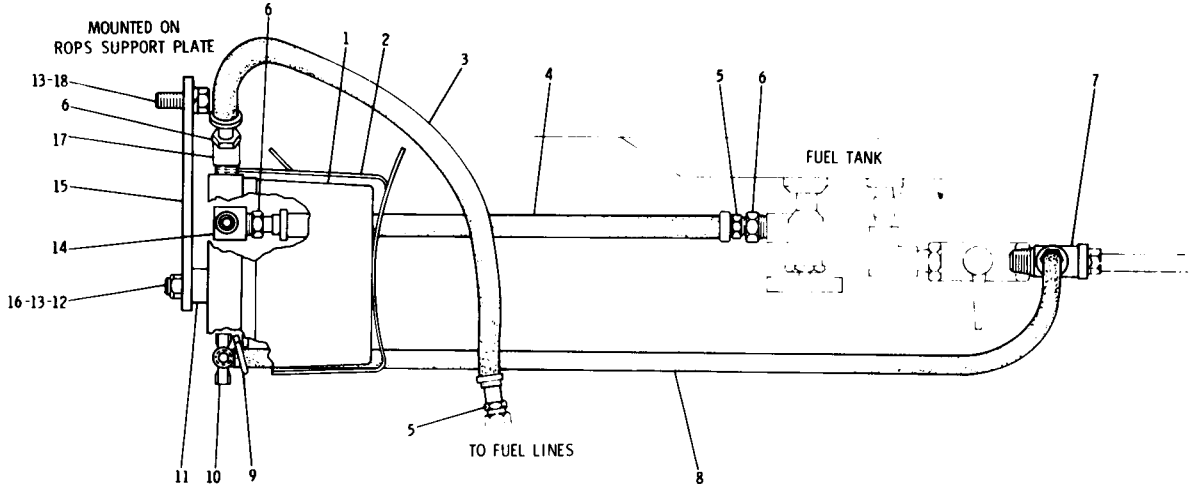

REF NO.	PART NUMBER	DESCRIPTION	QTY
1	6N7617	ELEMENT	1
	6N7624	BASE	1
	5M6213	PLUG	2
2	6N7618	CLAMP	1
▲ 3	5P1520	HOSE--218.40 cm(86 in.)	
▲ 4	5P1520	HOSE--31 cm(12.20 in.)	
C 5	1V3546	COUPLING	3
6	5K9246	CONNECTOR	1

7	2D7325	TEE	1
	66586	INSERT	1
▲ 8	5P1520	HOSE--60.96 cm(24 in.)	
C 9	3S5096	CLAMP	1
C 10	5P7833	VALVE	1
11	1K4129	SPACER	2
12	2A4639	BOLT	2
	4B4278	WASHER	2
13	3B4506	LOCKWASHER	4
14	5K9235	ELBOW	1

C INDICATES CHANGE

15	3V6526	BAR ASSEM. (Includes)	1
16	9F2978	NUT--(weld)	2
17	9S7722	ELBOW	1
18	S1594	BOLT	2

▲ ORDER BY THE CENTIMETRE

167925

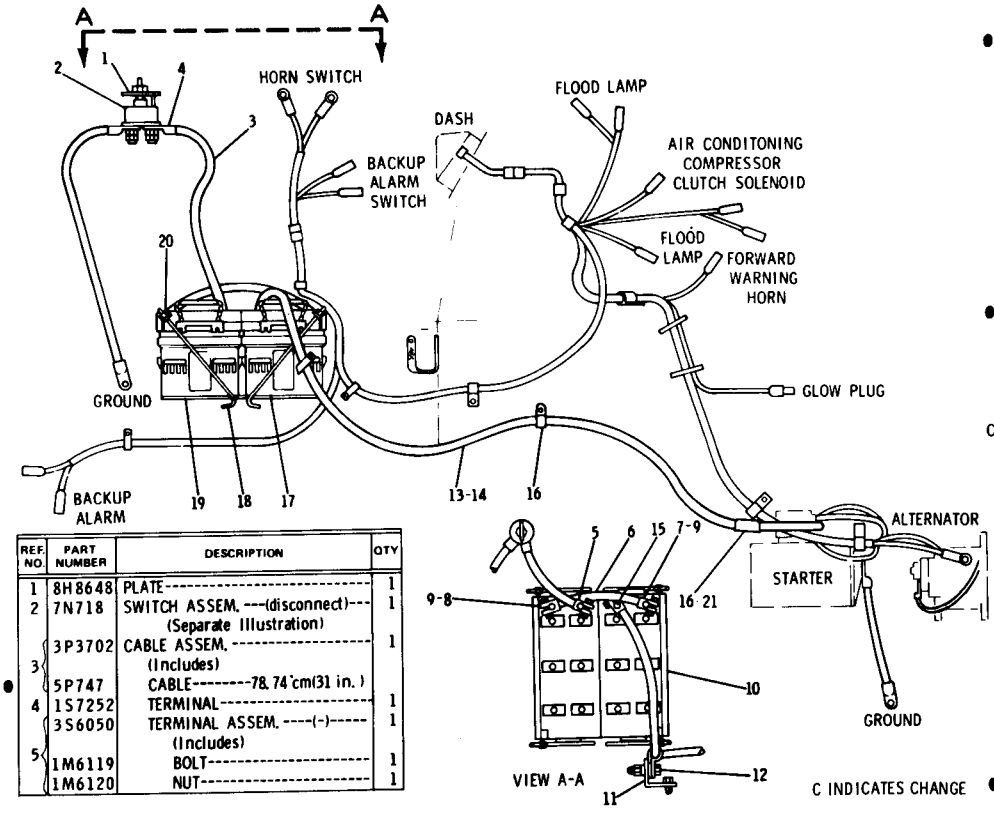

REF. NO.	PART NUMBER	DESCRIPTION	QTY
1	8H8648	PLATE	1
2	7N718	SWITCH ASSEM. ---(disconnect)--- (Separate Illustration)	1
3	3P3702	CABLE ASSEM. (Includes)	1
•	5P747	CABLE--------78.74 cm(31 in.)	
4	1S7252	TERMINAL	1
5	3S6050	TERMINAL ASSEM. ----(-)---- (Includes)	1
	1M6119	BOLT	1
	1M6120	NUT	1
6	5S131	CABLE ASSEM. (Includes)	1
•	5P747	CABLE------38.40 cm(15.12 in.)	
7	3S6050	TERMINAL ASSEM. ----(-)----	1
8	3S6049	TERMINAL ASSEM. ----(+)---- (Each Includes)	1
9	1M6119	BOLT	1
	1M6120	NUT	1
10	3P1428	HOLD DOWN ASSEM.	2
11	2V4196	BRACKET	1
	4S1936	CLIP	1
	L1351	BOLT	1
12	1D4717	NUT	1
	5P1075	WASHER	1
13	4V458	CABLE ASSEM. (Includes)	1
•	5P761	CABLE----275 cm(108.30 in.)	
14	7N2708	TERMINAL	1
15	5M9204	TERMINAL ASSEM. ----(+)---- (Includes)	1
	1M6119	BOLT	1
	1M6120	NUT	1
C 16	4K8302	CLIP	2
17	4S9261	BATTERY (Each Includes)	2
	7S5041	PLUG	6
18	8P9710	ROD	4
19	8M4972	MAT	1
20	1D4716	NUT	4
	5P4116	WASHER	4
21	S1620	BOLT	1

C INDICATES CHANGE • ORDER BY THE CENTIMETRE 169770

3V6932 BATTERY AND WIRING GROUP—24 Volt—Part 1 of 3
Serial No. 13X1 to 13X2437 inclusive
7N718 Switch parts are shown on Page 79

3V6932 BATTERY AND WIRING GROUP—24 Volt—Part 2 of 3
Serial No. 13X1 to 13X2437 inclusive
4V1041 Harness parts are shown on Page 77

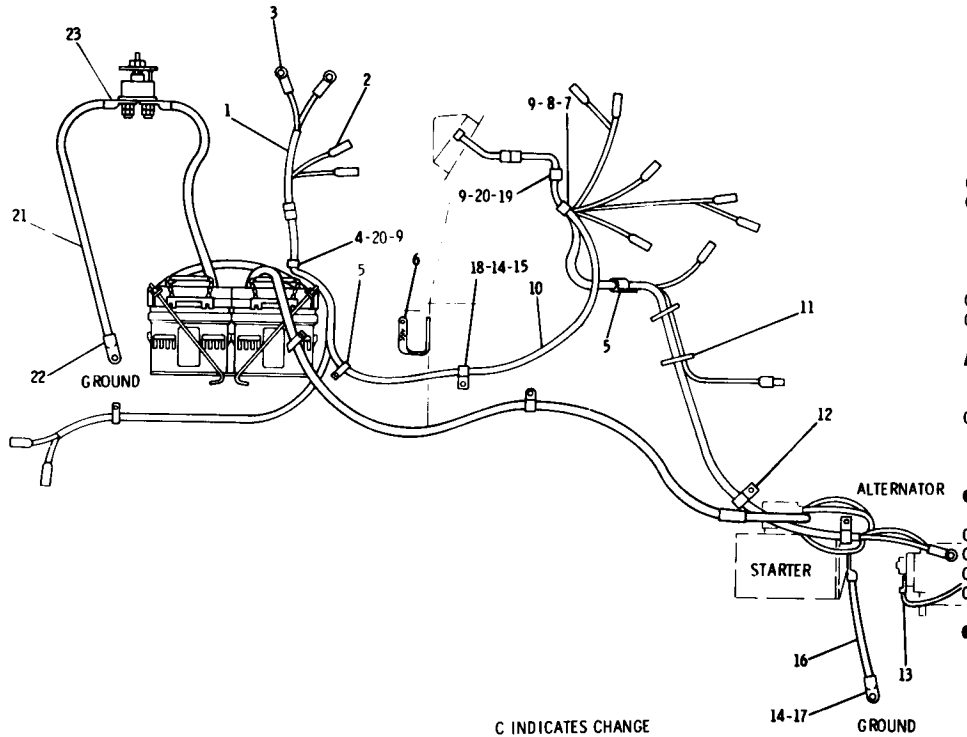

REF. NO.	PART NUMBER	DESCRIPTION	QTY
	4V4528	HARNESS ASSEM.	1
1		(Includes)	
▲	5P5623	WIRE---(16 gauge)	
2	6N9587	CONNECTOR	2
3	2L8075	TERMINAL	2
4	4S1936	CLIP	1
5	1H5165	CLIP	2
6	1V6622	STRAP ASSEM.	1
C 7	4D7735	CLIP	1
C 8	S509	BOLT	1
9	5P1075	WASHER	3
10	4V1041	HARNESS ASSEM.	1
		(Separate Illustration)	
11	3S2093	TIE	2
C 12	4K640	CLIP	2
C	1H6936	WIRE ASSEM.	1
		(Includes)	
▲ 13	5P5689	WIRE-------.210 m (8.25 in.)	
	2L8058	TERMINAL-6.35mm(.25 in.)scr.	1
	2L8060	TERMINAL-9.5 mm(.375 in.)scr.	1
C 14	S1620	BOLT	2
15	5P8245	WASHER	1
	2V6166	CABLE ASSEM.	1
16		(Includes)	
●	5P747	CABLE-------40.64 cm (16 in.)	
17	1S7251	TERMINAL	2
C 18	4K8302	CLIP	1
C 19	2R1939	CLIP	1
C 20	1D4717	NUT	2
C	4V9764	CABLE ASSEM.	1
21		(Includes)	
●	5P747	CABLE----91.5 cm (36 in.)	
22	1S7251	TERMINAL	1
23	1S7252	TERMINAL	1

C INDICATES CHANGE
▲ ORDER BY THE METRE
● ORDER BY THE CENTIMETRE

169771

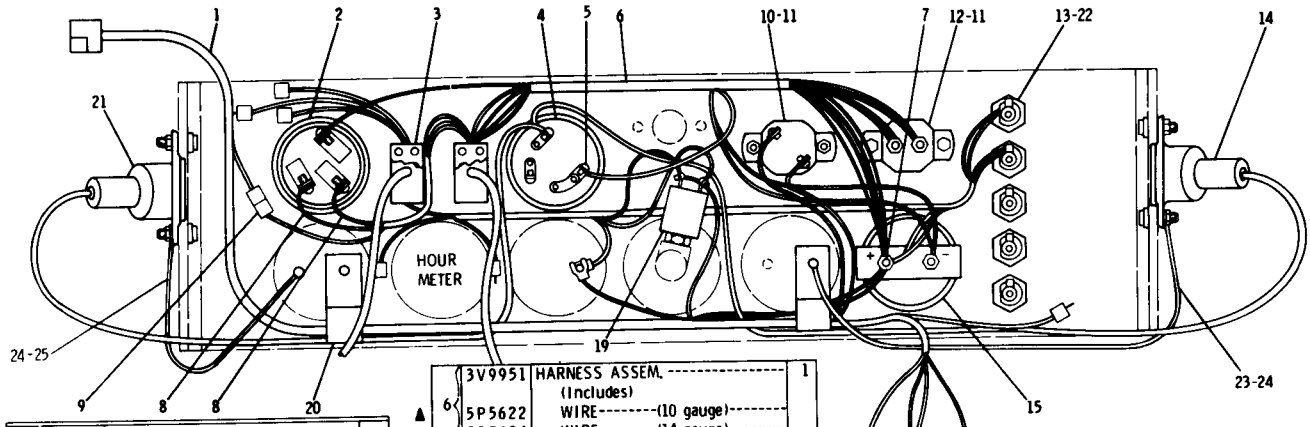

REF. NO.	PART NUMBER	DESCRIPTION	QTY
1	4V5095	HARNESS ASSEM. (Separate Illustration)	1
2	8S7713	SWITCH ASSEM. ----(heat-start)--- (Includes)	1
	8F3437	LEVER	1
	5L7200	SCREW	1
	3B4501	LOCKWASHER	1
3	4V711	HARNESS ASSEM. (Separate Illustration)	1
4	7S6402	SWITCH ASSEM. -----(light)----- (Includes)	1
	7S5432	KNOB	1
	7H27	NUT	1
5	9B7242	SCREW	3
	1H4393	LOCKWASHER	3
▲ 6	3V9951	HARNESS ASSEM. (Includes)	1
▲	5P5622	WIRE--------(10 gauge)--------	
▲	5P5624	WIRE--------(14 gauge)--------	
7	2L8049	TERMINAL	4
8	2L8066	TERMINAL	6
9	6N9587	CONNECTOR	1
10	6N8589	CIRCUIT BREAKER----(15 amp)---	1
11	5M6668	SCREW	4
12	9S173	CIRCUIT BREAKER----(60 amp)---	1
13	4K5122	FUSE HOLDER	5
14	8M7677	LAMP GROUP (Separate Illustration)	1
15	8M7892	AMMETER---------(60 amp)--------	1
16	3P4358	SWITCH---------(magnetic)------- (Includes)	1
17	4F2294	NUT	4
	4M62	LOCKWASHER	4
18	4B2047	NUT	4
	3B4502	LOCKWASHER	4
19	2N7744	SWITCH ASSEM. -----(oil pressure)-	1
20	5K1090	CLIP	2
21	9M1305	LAMP GROUP (Separate Illustration)	1
C 22	8M8948	FUSE-------(15 amp)----------	5
C▲ 23	5P5629	WIRE----------.305m (12 in.)	
C 24	2L8076	TERMINAL	4
C▲ 25	5P5629	WIRE----------.305 m (12 in.)	
C 26	2A762	BOLT	2
C	1B4330	NUT	2

C INDICATES CHANGE

▲ ORDER BY THE METRE

169772

3V6932 BATTERY AND WIRING GROUP—24 Volt—Part 3 of 3
Serial No. 13X1 to 13X2437 inclusive
4V711 & 4V5095 **Harness and 9M1305 and 8M7677 Lamp parts are shown on** Pages 76, 78, 79 & 80

3V6932 BATTERY AND WIRING GROUP—24 Volt—Part 1 of 3
Serial No. 13X2438 to 13X2973 inclusive
7N718 Switch parts are shown on Page 79

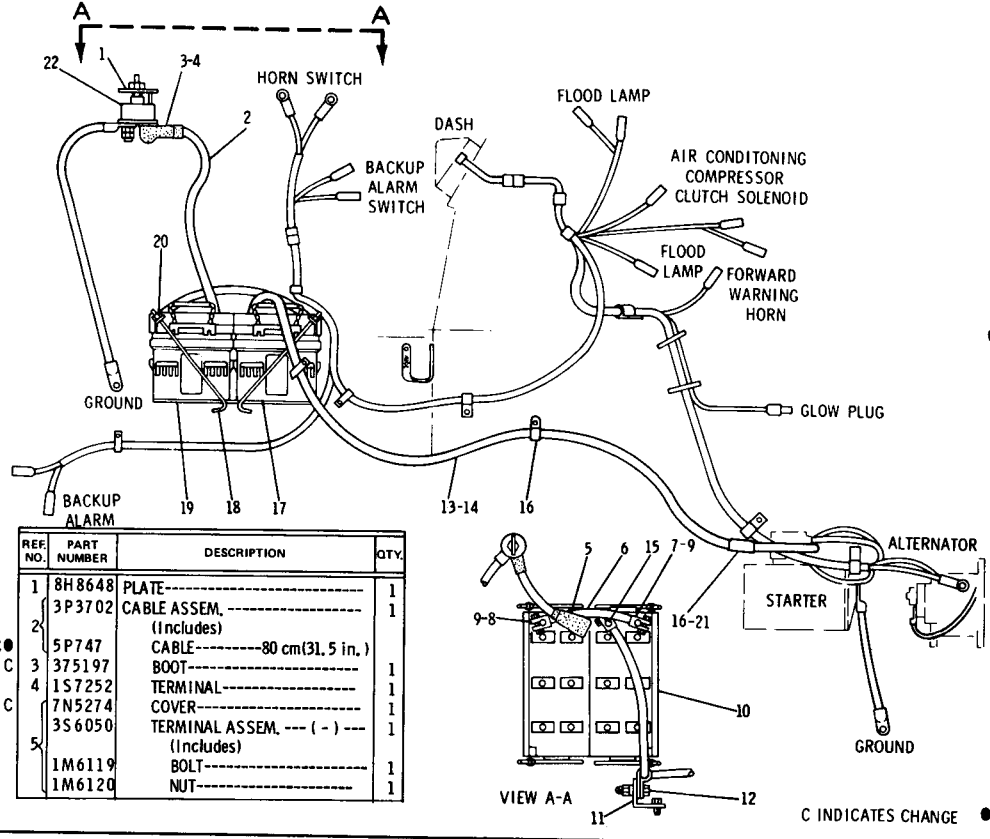

REF. NO.	PART NUMBER	DESCRIPTION	QTY.
1	8H8648	PLATE	1
2	3P3702	CABLE ASSEM. (Includes)	1
C●	5P747	CABLE---80 cm(31.5 in.)	
C 3	375197	BOOT	1
4	1S7252	TERMINAL	1
C	7N5274	COVER	1
5	3S6050	TERMINAL ASSEM. ---(-)--- (Includes)	1
	1M6119	BOLT	1
	1M6120	NUT	1
6	5S131	CABLE ASSEM. (Includes)	1
●	5P747	CABLE---38.40 cm(15.12 in.)	
7	3S6050	TERMINAL ASSEM. ----(-)----	1
8	3S6049	TERMINAL ASSEM. ----(+)---- (Each Includes)	1
9	1M6119	BOLT	1
	1M6120	NUT	1
10	3P1428	HOLD DOWN ASSEM.	2
11	2V4196	BRACKET	1
	4S1936	CLIP	1
12	L1351	BOLT	1
	1D4717	NUT	1
	5P1075	WASHER	1
13	4V458	CABLE ASSEM. (Includes)	1
●	5P761	CABLE----275 cm(108.30 in.)	
14	7N2708	TERMINAL	1
15	5M9204	TERMINAL ASSEM. ----(+)---- (Includes)	1
	1M6119	BOLT	1
	1M6120	NUT	1
16	4K8302	CLIP	2
17	4S9261	BATTERY (Each Includes)	2
	7S5041	PLUG	6
18	8P9710	ROD	4
19	8M4972	MAT	1
20	1D4716	NUT	4
	5P4116	WASHER	4
21	S1620	BOLT	1
22	7N718	SWITCH ASSEM. --(disconnect)-- (Separate Illustration)	1

C INDICATES CHANGE

● ORDER BY THE CENTIMETER

176082

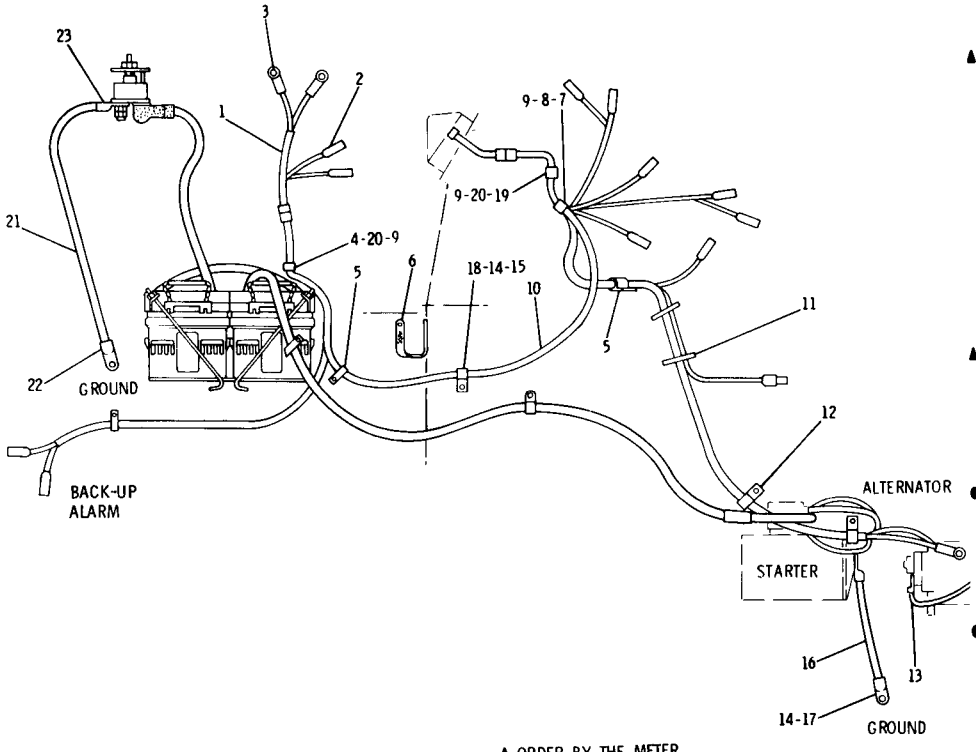

REF. NO.	PART NUMBER	DESCRIPTION	QTY
1	4V4528	HARNESS ASSEM. (Includes)	1
▲	5P5623	WIRE----------(16 gauge)	
2	6N9587	CONNECTOR----------	2
3	2L8075	TERMINAL----------	2
4	4S1936	CLIP----------	1
5	1H5165	CLIP----------	2
6	1V6622	STRAP ASSEM.----------	1
7	4D7735	CLIP----------	1
8	S509	BOLT----------	1
9	5P1075	WASHER----------	3
10	4V1041	HARNESS ASSEM. (Separate Illustration)----------	1
11	3S2093	TIE----------	2
12	4K640	CLIP----------	2
	1H6936	WIRE ASSEM. (Includes)----------	1
▲ 13	5P5689	WIRE--------.210 m (8.25 in.)	
	2L8058	TERMINAL-6.35mm(.25 in.)scr.	1
	2L8060	TERMINAL-9.5 mm(.375 in.)scr.	1
14	S1620	BOLT----------	2
15	5P8245	WASHER----------	1
16	2V6166	CABLE ASSEM. (Inciudes)----------	1
●	5P747	CABLE--------40.64 cm (16 in.)	
17	1S7251	TERMINAL----------	2
18	4K8302	CLIP----------	1
19	2R1939	CLIP----------	1
20	1D4717	NUT----------	2
21	4V9764	CABLE ASSEM. (Includes)----------	1
●	5P747	CABLE----91.5 cm (36 in.)	
22	1S7251	TERMINAL----------	1
23	1S7252	TERMINAL----------	1

▲ ORDER BY THE METER
● ORDER BY THE CENTIMETER

176083

3V6932 BATTERY AND WIRING GROUP—24 Volt—Part 2 of 3
Serial No. 13X2438 to 13X2973 inclusive
4V1041 Harness parts are shown on Page 77

3V6932 BATTERY AND WIRING GROUP—24 Volt—Part 3 of 3
Serial No. 13X2438 to 13X2973 inclusive
4V711 and 4V5095 Harness and 9M1305 and 8M7677 Lamp parts are shown on Pages 76, 78, 79 & 80

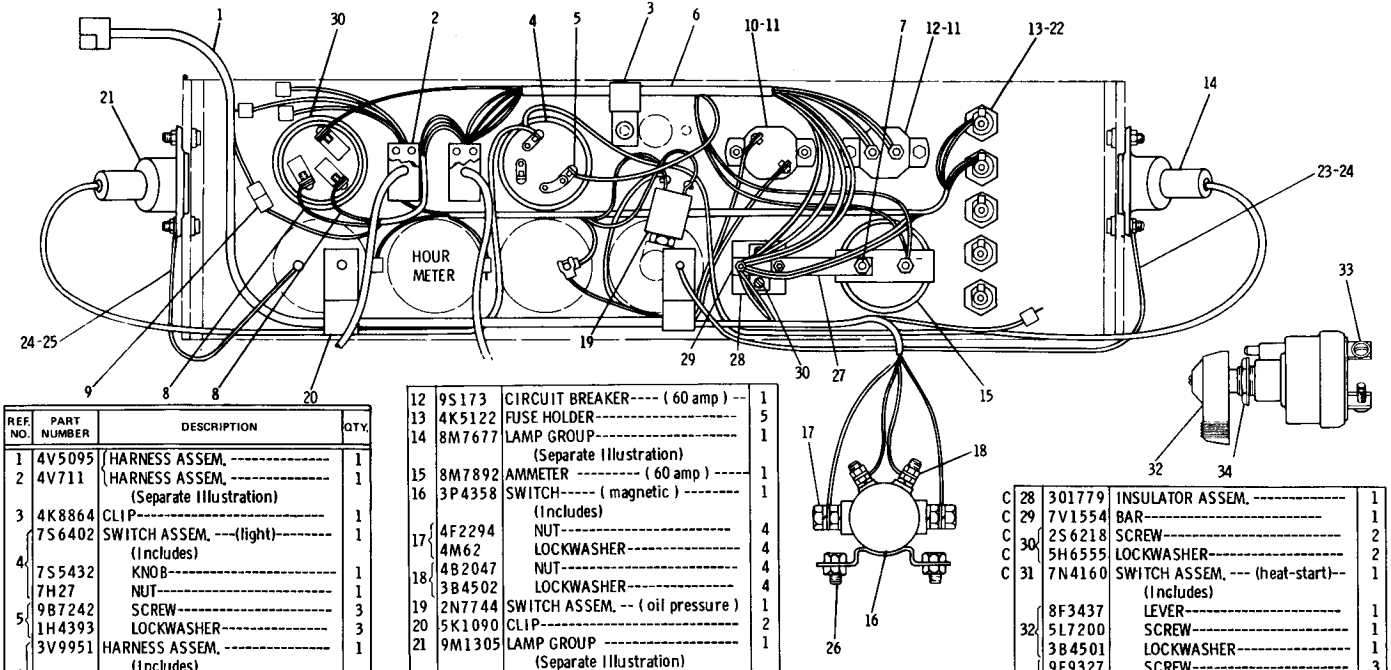

REF. NO.	PART NUMBER	DESCRIPTION	QTY.
1	4V5095	HARNESS ASSEM. ----------	1
2	4V711	HARNESS ASSEM. ---------- (Separate Illustration)	1
3	4K8864	CLIP----------	1
4	7S6402	SWITCH ASSEM. ---(light)-------- (Includes)	1
	7S5432	KNOB----------	1
	7H27	NUT----------	1
5	9B7242	SCREW----------	3
	1H4393	LOCKWASHER----------	3
6	3V9951	HARNESS ASSEM. ---------- (Includes)	1
▲	5P5622	WIRE----------(10 gauge)	
▲	5P5624	WIRE----------(14 gauge)	
7	2L8049	TERMINAL----------	4
8	2L8066	TERMINAL----------	6
9	6N9587	CONNECTOR----------	1
10	6N8589	CIRCUIT BREAKER--(15 amp)------	1
11	5M6668	SCREW----------	4
12	9S173	CIRCUIT BREAKER---- (60 amp) --	1
13	4K5122	FUSE HOLDER----------	5
14	8M7677	LAMP GROUP---------- (Separate Illustration)	1
15	8M7892	AMMETER ---------- (60 amp) -----	1
16	3P4358	SWITCH----- (magnetic) -------- (Includes)	1
17	4F2294	NUT----------	4
	4M62	LOCKWASHER----------	4
18	4B2047	NUT----------	4
	3B4502	LOCKWASHER----------	4
19	2N7744	SWITCH ASSEM. -- (oil pressure)	1
20	5K1090	CLIP----------	2
21	9M1305	LAMP GROUP ---------- (Separate Illustration)	1
22	8M8948	FUSE---------- (15 amp) ---------	5
▲ 23	5P5629	WIRE----------, 305 m(12 in.)	
24	2L8076	TERMINAL----------	4
▲ 25	5P5629	WIRE----------, 305 m(12 in.)	
26	2A762	BOLT----------	2
	1B4330	NUT----------	2
C 27	7V1555	BAR----------	1
C 28	301779	INSULATOR ASSEM. ----------	1
C 29	7V1554	BAR----------	1
C 30	2S6218	SCREW----------	2
C	5H6555	LOCKWASHER----------	2
C 31	7N4160	SWITCH ASSEM. --- (heat-start)-- (Includes)	1
	8F3437	LEVER----------	1
32	5L7200	SCREW----------	1
	3B4501	LOCKWASHER----------	1
33	9F9327	SCREW----------	3
	9F8125	LOCKWASHER ----------	3
34	7H27	NUT----------	1
	6F253	LOCKWASHER----------	1

C INDICATES CHANGE

▲ ORDER BY THE METER

176084

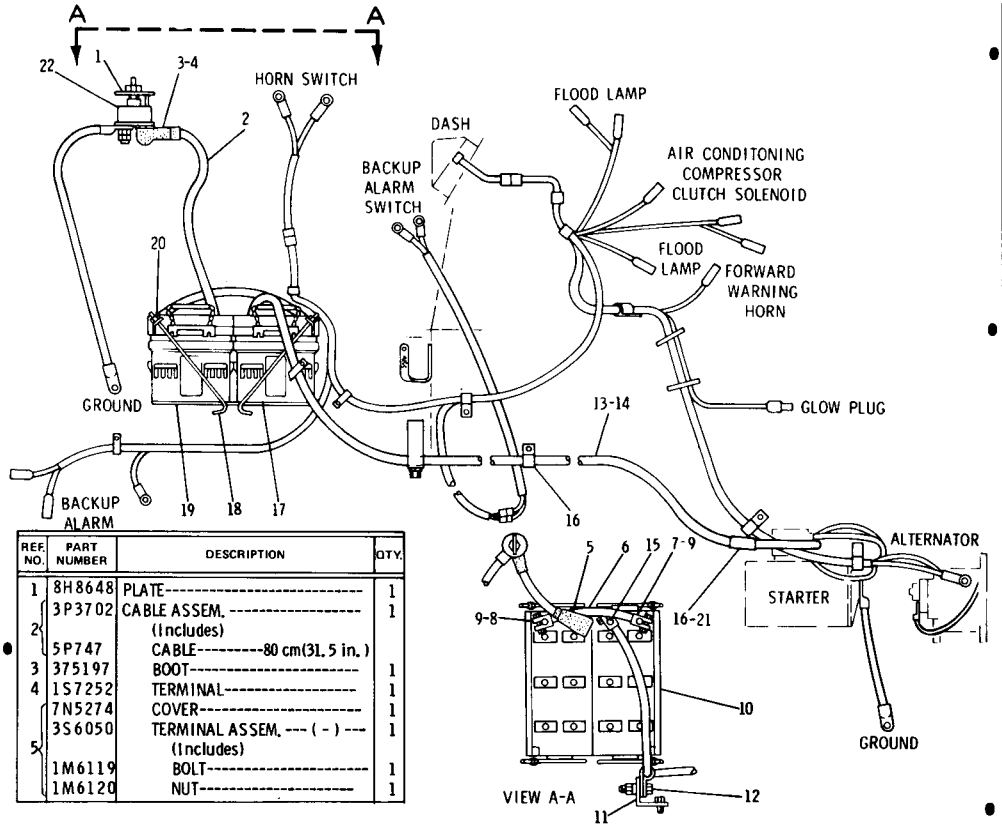

REF. NO.	PART NUMBER	DESCRIPTION	QTY.
1	8H8648	PLATE	1
2	3P3702	CABLE ASSEM. (Includes)	1
●	5P747	CABLE---80 cm(31.5 in.)	
3	375197	BOOT	1
4	1S7252	TERMINAL	1
	7N5274	COVER	1
5	3S6050	TERMINAL ASSEM. ---(-)--- (Includes)	1
	1M6119	BOLT	1
	1M6120	NUT	1
6	5S131	CABLE ASSEM. (Includes)	1
●	5P747	CABLE---38.40 cm(15.12 in.)	
7	3S6050	TERMINAL ASSEM. ----(-)----	1
8	3S6049	TERMINAL ASSEM. ----(+)---- (Each Includes)	1
9	1M6119	BOLT	1
	1M6120	NUT	1
10	3P1428	HOLD DOWN ASSEM.	2
11	2V4196	BRACKET	1
	4S1936	CLIP	1
	L1351	BOLT	1
12	1D4717	NUT	1
	5P1075	WASHER	1
13	4V458	CABLE ASSEM. (Includes)	1
●	5P761	CABLE----275 cm(108.30 in.)	
14	7N2708	TERMINAL	1
15	5M9204	TERMINAL ASSEM. ----(+)---- (Includes)	1
	1M6119	BOLT	1
	1M6120	NUT	1
16	4K8302	CLIP	2
17	4S9261	BATTERY (Each Includes)	2
	7S5041	PLUG	6
18	8P9710	ROD	4
19	8M4972	MAT	1
20	1D4716	NUT	4
	5P4116	WASHER	4
21	S1620	BOLT	1
22	7N718	SWITCH ASSEM. --(disconnect)- (Separate Illustration)	1

● ORDER BY THE CENTIMETER

181633

3V6932 BATTERY AND WIRING GROUP—24 Volt—Part 1 of 3
Serial No. 13X2974 to 13X3187 inclusive
7N718 Switch parts are shown on Page 79

3V6932 BATTERY AND WIRING GROUP—24 Volt—Part 2 of 3
Serial No. 13X2974 to 13X3187 inclusive
5V494 and 8V2568 Harness parts are shown on Pages 77A and 77B

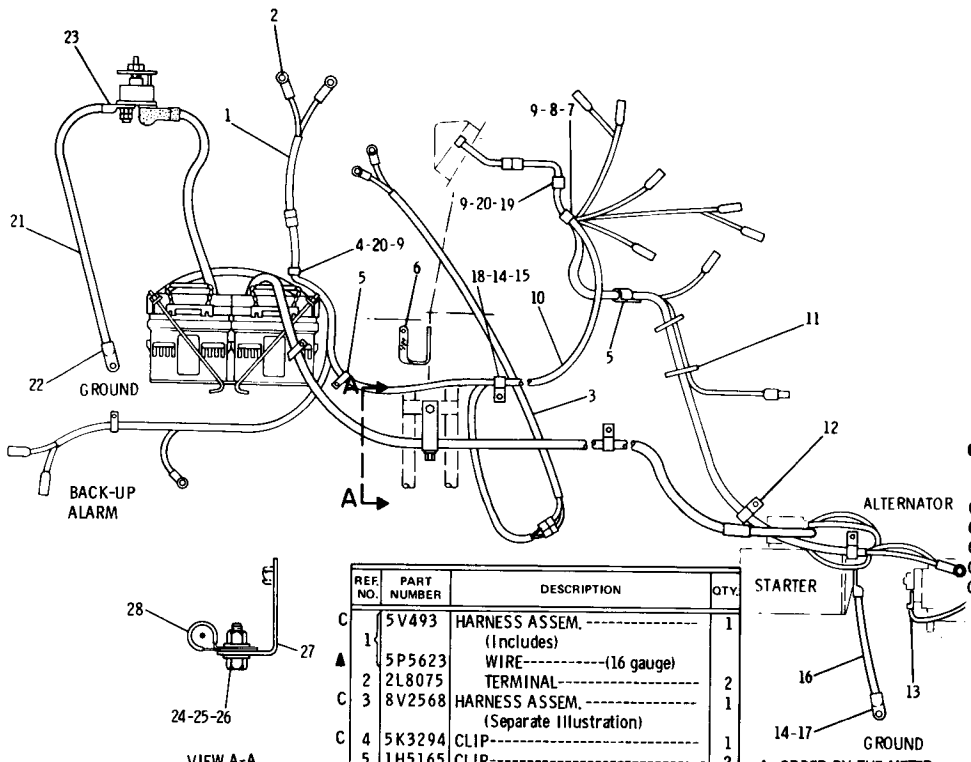

REF. NO.		PART NUMBER	DESCRIPTION	QTY.
C	1	5V493	HARNESS ASSEM. (Includes)	1
▲		5P5623	WIRE----------(16 gauge)	
	2	2L8075	TERMINAL----------	2
C	3	8V2568	HARNESS ASSEM. (Separate Illustration)	1
C	4	5K3294	CLIP----------	1
	5	1H5165	CLIP----------	2
	6	1V6622	STRAP ASSEM.----------	1
	7	4D7735	CLIP----------	1
	8	S509	BOLT----------	1
	9	5P1075	WASHER----------	3
C	10	5V494	HARNESS ASSEM. (Separate Illustration)	1
	11	3S2093	TIE----------	2
	12	4K640	CLIP----------	2
	13	1H6936	WIRE ASSEM. (Includes)	1
▲		5P5689	WIRE----.210m(8.25 in.)	
		2L8058	TERMINAL-6.35mm(.25 in.)scr.	1
		2L8060	TERMINAL-9.5mm(.375 in.)scr.	1
	14	S1620	BOLT----------	2
	15	5P8245	WASHER----------	1
	16	2V6166	CABLE ASSEM. (Includes)	1
●		5P747	CABLE------40.64 cm(16 in.)	
	17	1S7251	TERMINAL----------	2
	18	4K8302	CLIP----------	1
	19	2R1939	CLIP----------	1
	20	1D4717	NUT----------	2
	21	4V9764	CABLE ASSEM. (Includes)	1
●		5P747	CABLE--91.5cm(36 in.)	
	22	1S7251	TERMINAL----------	1
	23	1S7252	TERMINAL----------	1
C	24	1D4717	NUT----------	1
C	25	5M2894	WASHER----------	2
C	26	L1351	BOLT----------	1
C	27	2S1865	BRACKET----------	1
C	28	4K8302	CLIP----------	1

▲ ORDER BY THE METER
● ORDER BY THE CENTIMETER
C INDICATES CHANGE

181634

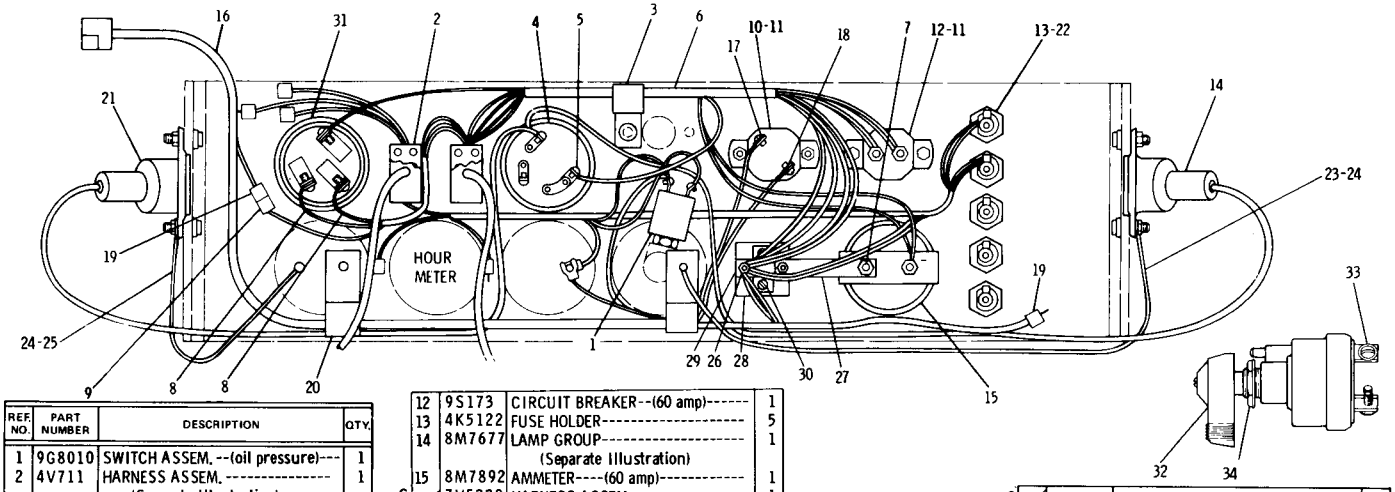

REF. NO.	PART NUMBER	DESCRIPTION	QTY.
C 1	9G8010	SWITCH ASSEM. --(oil pressure)---	1
2	4V711	HARNESS ASSEM. ---------- (Separate Illustration)	1
3	4K8864	CLIP----------	1
4	7S6402	SWITCH ASSEM. ---(light)-------- (Includes)	1
	7S5432	KNOB----------	1
	7H27	NUT----------	1
5	9B7242	SCREW----------	3
	1H4393	LOCKWASHER----------	3
6	3V9951	HARNESS ASSEM. ---------- (Includes)	1
▲	5P5622	WIRE----------(10 gauge)	
▲	5P5624	WIRE----------(14 gauge)	
7	2L8049	TERMINAL----------	4
8	2L8066	TERMINAL----------	6
9	6N9587	CONNECTOR----------	1
10	6N8589	CIRCUIT BREAKER--(15 amp)------	1
11	5M6668	SCREW----------	4
12	9S173	CIRCUIT BREAKER--(60 amp)------	1
13	4K5122	FUSE HOLDER----------	5
14	8M7677	LAMP GROUP---------- (Separate Illustration)	1
15	8M7892	AMMETER----(60 amp)----------	1
C	7V5330	HARNESS ASSEM. ---------- (Includes)	1
▲	5P5623	WIRE---(16 gauge)	
▲ 16	5P5624	WIRE---(14 gauge)	
▲	5P5622	WIRE---(10 gauge)	
	2L8065	TERMINAL----------	2
17	2L8066	TERMINAL----------	1
18	2L8076	TERMINAL----------	1
19	5P5610	CONNECTOR----------	2
20	5K1090	CLIP----------	2
21	9M1305	LAMP GROUP---------- (Separate Illustration)	1
22	8M8948	FUSE---(15 amp)----------	5
▲ 23	5P5629	WIRE---.305 m(12 in.)	
24	2L8076	TERMINAL----------	4
▲ 25	5P5629	WIRE------.305m(12 in.)	

C INDICATES CHANGE

C 26	4B2041	NUT----------	2
	9B1117	LOCKWASHER----------	2
27	7V1555	BAR----------	1
28	301779	INSULATOR ASSEM. ----------	1
29	7V1554	BAR----------	1
30	2S6218	SCREW----------	2
	5H6555	LOCKWASHER----------	2
31	7N4160	SWITCH ASSEM. -(heat-start)------ (Includes)	1
32	8F3437	LEVER----------	1
	5L7200	SCREW----------	1
	3B4501	LOCKWASHER----------	1
33	9F9327	SCREW----------	3
	9F8125	LOCKWASHER----------	3
34	7H27	NUT----------	1
	6F253	LOCKWASHER----------	1

▲ ORDER BY THE METER

181635

3V6932 BATTERY AND WIRING GROUP—24 Volt—Part 3 of 3
Serial No. 13X2974 to 13X3187 inclusive
4V711 & 4V5095 Harness and 9M1305 & 8M7677 Lamp parts are shown on Pages 76, 78, 79 & 80

3V6932 BATTERY AND WIRING GROUP—24 Volt—Part 1 of 3
Serial No. 13X3188—Up. 7N718 Switch parts are shown on Page 79

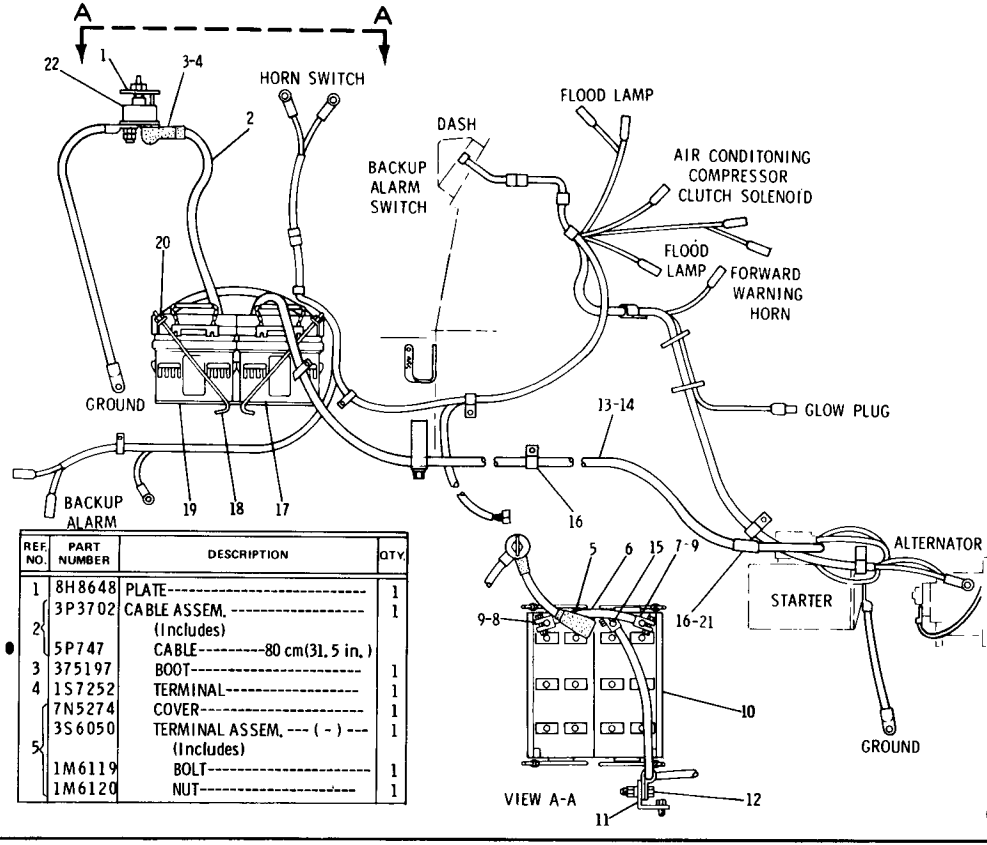

REF. NO.	PART NUMBER	DESCRIPTION	QTY.
1	8H8648	PLATE	1
2	3P3702	CABLE ASSEM. (Includes)	1
•	5P747	CABLE---80 cm(31.5 in.)	
3	375197	BOOT	1
4	1S7252	TERMINAL	1
5	7N5274	COVER	1
	3S6050	TERMINAL ASSEM. ---(-)--- (Includes)	1
	1M6119	BOLT	1
	1M6120	NUT	1
6	5S131	CABLE ASSEM. (Includes)	1
•	5P747	CABLE---38.40 cm(15.12 in.)	
7	3S6050	TERMINAL ASSEM. ----(-)----	1
8	3S6049	TERMINAL ASSEM. ----(+)---- (Each Includes)	1
9	1M6119	BOLT	1
	1M6120	NUT	1
10	3P1428	HOLD DOWN ASSEM.	2
11	2V4196	BRACKET	1
	4S1936	CLIP	1
12	L1351	BOLT	1
	1D4717	NUT	1
	5P1075	WASHER	1
13	4V458	CABLE ASSEM. (Includes)	1
•	5P761	CABLE----275 cm(108.30 in.)	
14	7N2708	TERMINAL	1
15	5M9204	TERMINAL ASSEM. ----(+)---- (Includes)	1
	1M6119	BOLT	1
	1M6120	NUT	1
16	4K8302	CLIP	2
17	4S9261	BATTERY (Each Includes)	2
	7S5041	PLUG	6
18	8P9710	ROD	4
19	8M4972	MAT	1
20	1D4716	NUT	4
	5P4116	WASHER	4
21	S1620	BOLT	1
22	7N718	SWITCH ASSEM. -- (disconnect) - (Separate Illustration)	1

• ORDER BY THE CENTIMETER

181638

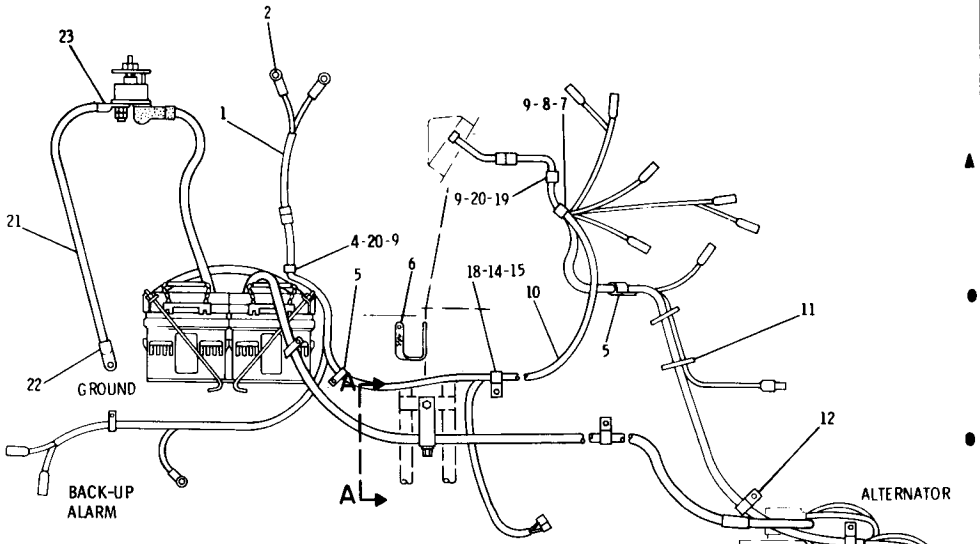

REF. NO.	PART NUMBER	DESCRIPTION	QTY.
1	5V493	HARNESS ASSEM. (Includes)	1
▲	5P5623	WIRE----------(16 gauge)	
2	2L8075	TERMINAL----------	2
3	4K8302	CLIP----------	1
4	5K3294	CLIP----------	1
5	1H5165	CLIP----------	2
6	1V6622	STRAP ASSEM.----------	1
7	4D7735	CLIP----------	1
8	S509	BOLT----------	1
9	5P1075	WASHER----------	3
10	5V494	HARNESS ASSEM.---------- (Separate Illustration)	1
11	3S2093	TIE----------	2
12	4K640	CLIP----------	2
	1H6936	WIRE ASSEM.---------- (Includes)	1
▲ 13	5P5689	WIRE-----.210m(8.25 in.)	
	2L8058	TERMINAL-6.35mm(.25 in.)scr.	1
	2L8060	TERMINAL-9.5mm(.375 in.)scr.	1
14	S1620	BOLT----------	2
15	5P8245	WASHER----------	1
	2V6166	CABLE ASSEM.---------- (Includes)	1
16 ●	5P747	CABLE------40.64 cm(16 in.)	
17	1S7251	TERMINAL----------	2
18	4K8302	CLIP----------	1
19	2R1939	CLIP----------	1
20	1D4717	NUT----------	2
	4V9764	CABLE ASSEM.---------- (Includes)	1
21 ●	5P747	CABLE--91.5cm(36 in.)	
22	1S7251	TERMINAL----------	1
23	1S7252	TERMINAL----------	1
24	1D4717	NUT----------	1
25	5M2894	WASHER----------	2
26	L1351	BOLT----------	1
27	2S1865	BRACKET----------	1

▲ ORDER BY THE METER
● ORDER BY THE CENTIMETER

181639

3V6932 BATTERY AND WIRING GROUP—24 Volt—Part 2 of 3
Serial No. 13X3188—Up. 5V494 Harness parts are shown on Page 77A

3V6932 BATTERY AND WIRING GROUP—24 Volt—Part 3 of 3
Serial No. 13X3188—Up

4V711 & 4V5095 Harness and 9M1305 & 8M7677 Lamp parts are shown on Pages 76, 78, 79 & 80

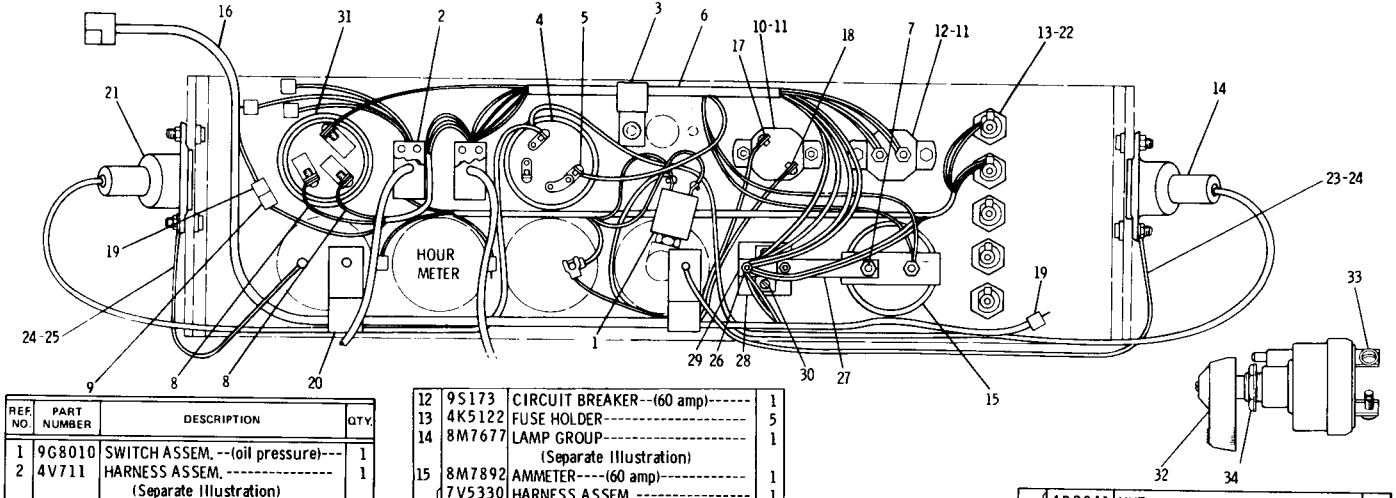

REF. NO.	PART NUMBER	DESCRIPTION	QTY.
1	9G8010	SWITCH ASSEM. --(oil pressure)---	1
2	4V711	HARNESS ASSEM. ---------- (Separate Illustration)	1
3	4K8864	CLIP----------	1
4	7S6402	SWITCH ASSEM. ---(light)-------- (Includes)	1
	7S5432	KNOB----------	1
	7H27	NUT----------	1
5	9B7242	SCREW----------	3
	1H4393	LOCKWASHER----------	3
6	3V9951	HARNESS ASSEM. ---------- (Includes)	1
▲	5P5622	WIRE----------(10 gauge)	
▲	5P5624	WIRE----------(14 gauge)	
7	2L8049	TERMINAL----------	4
8	2L8066	TERMINAL----------	6
9	6N9587	CONNECTOR ----------	1
10	6N8589	CIRCUIT BREAKER--(15 amp)------	1
11	5M6668	SCREW----------	4
12	9S173	CIRCUIT BREAKER--(60 amp)------	1
13	4K5122	FUSE HOLDER----------	5
14	8M7677	LAMP GROUP---------- (Separate Illustration)	1
15	8M7892	AMMETER----(60 amp)----------	1
	7V5330	HARNESS ASSEM. ---------- (Includes)	1
▲	5P5623	WIRE---(16 gauge)	
▲ 16	5P5624	WIRE---(14 gauge)	
▲	5P5622	WIRE---(10 gauge)	
	2L8065	TERMINAL----------	2
17	2L8066	TERMINAL----------	1
18	2L8076	TERMINAL----------	1
19	5P5610	CONNECTOR----------	2
20	5K1090	CLIP----------	2
21	9M1305	LAMP GROUP---------- (Separate Illustration)	1
22	8M8948	FUSE---(15 amp)----------	5
▲ 23	5P5629	WIRE---.305 m(12 in.)	
24	2L8076	TERMINAL----------	4
▲ 25	5P5629	WIRE------.305m(12 in.)	
26	4B2041	NUT----------	2
	9B1117	LOCKWASHER----------	2
27	7V1555	BAR----------	1
28	301779	INSULATOR ASSEM. ----------	1
29	7V1554	BAR----------	1
30	2S6218	SCREW----------	2
	5H6555	LOCKWASHER----------	2
31	7N4160	SWITCH ASSEM. -(heat-start)------ (Includes)	1
32	8F3437	LEVER----------	1
	5L7200	SCREW----------	1
	3B4501	LOCKWASHER----------	1
33	9F9327	SCREW----------	3
	9F8125	LOCKWASHER----------	3
34	7H27	NUT----------	1
	6F253	LOCKWASHER----------	1

▲ ORDER BY THE METER

181640

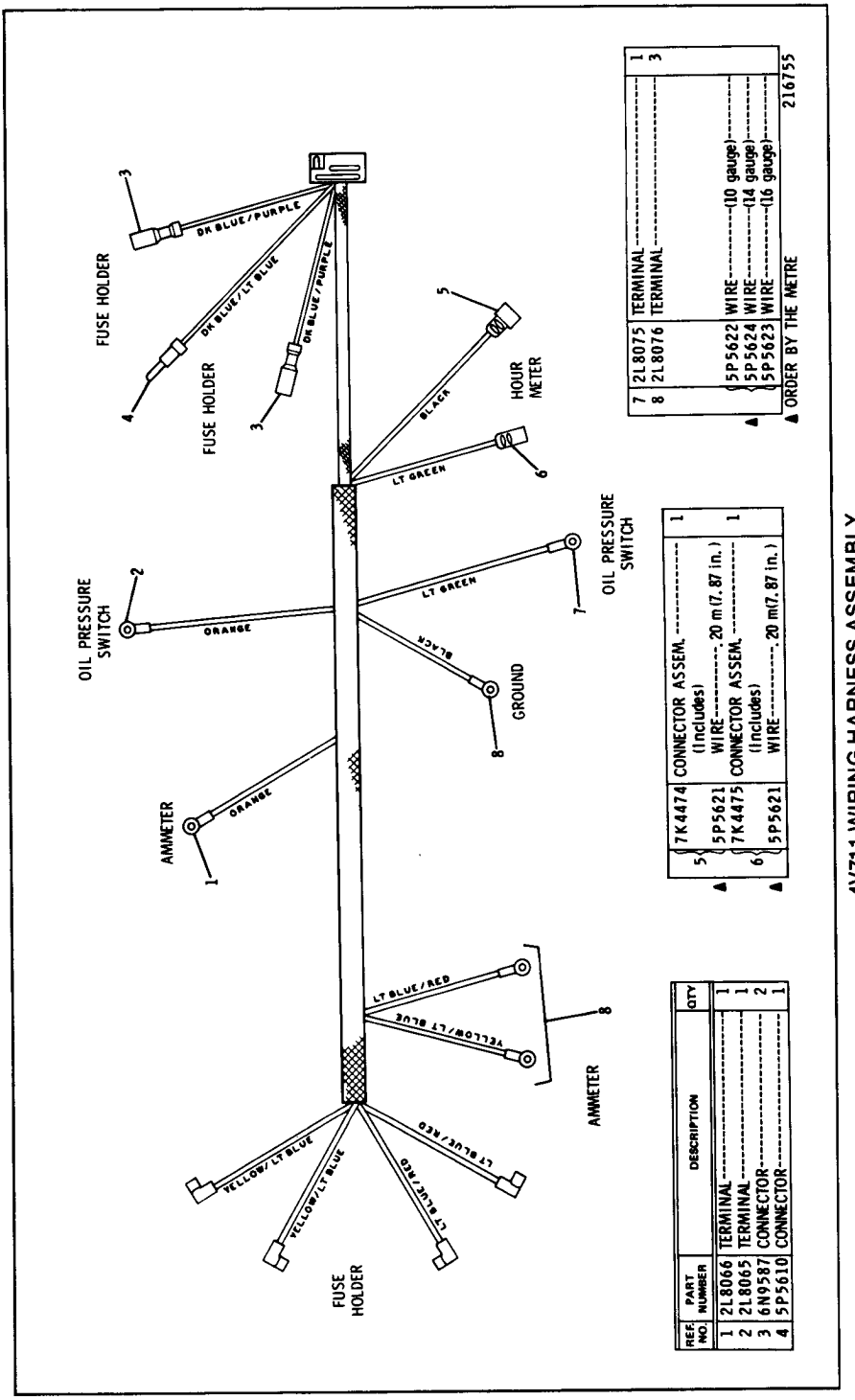

REF. NO.	PART NUMBER	DESCRIPTION	QTY
1	2L8066	TERMINAL	1
2	2L8065	TERMINAL	1
3	6N9587	CONNECTOR	2
4	5P5610	CONNECTOR	1

5	7K4474	CONNECTOR ASSEM. (Includes)	1
▲	5P5621	WIRE----------.20 m(7.87 in.)	
6	7K4475	CONNECTOR ASSEM. (Includes)	1
▲	5P5621	WIRE----------.20 m(7.87 in.)	

7	2L8075	TERMINAL	1
8	2L8076	TERMINAL	3
▲	5P5622	WIRE----------(10 gauge)	
▲	5P5624	WIRE----------(14 gauge)	
▲	5P5623	WIRE----------(16 gauge)	

▲ ORDER BY THE METRE 216755

4V711 WIRING HARNESS ASSEMBLY
Part of 3V6932 Battery and Wiring Group shown on Pages 72 & 75

4V1041 WIRING HARNESS ASSEMBLY
Serial No. 13X1 to 13X2973 inclusive
Part of 3V6932 Battery and Wiring Group shown on Page 71

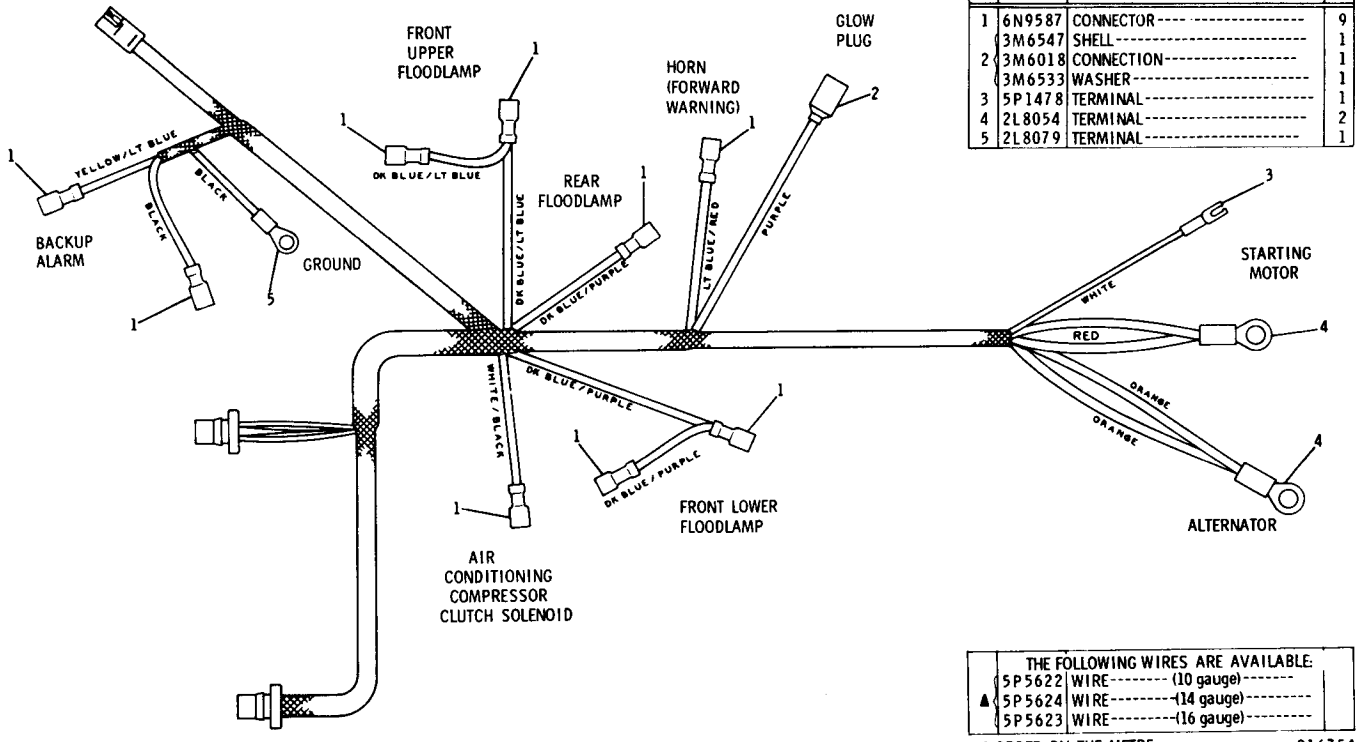

REF. NO.	PART NUMBER	DESCRIPTION	QTY
1	6N9587	CONNECTOR	9
2	3M6547	SHELL	1
	3M6018	CONNECTION	1
	3M6533	WASHER	1
3	5P1478	TERMINAL	1
4	2L8054	TERMINAL	2
5	2L8079	TERMINAL	1

THE FOLLOWING WIRES ARE AVAILABLE:

	5P5622	WIRE (10 gauge)	
▲	5P5624	WIRE (14 gauge)	
	5P5623	WIRE (16 gauge)	

▲ ORDER BY THE METRE

216754

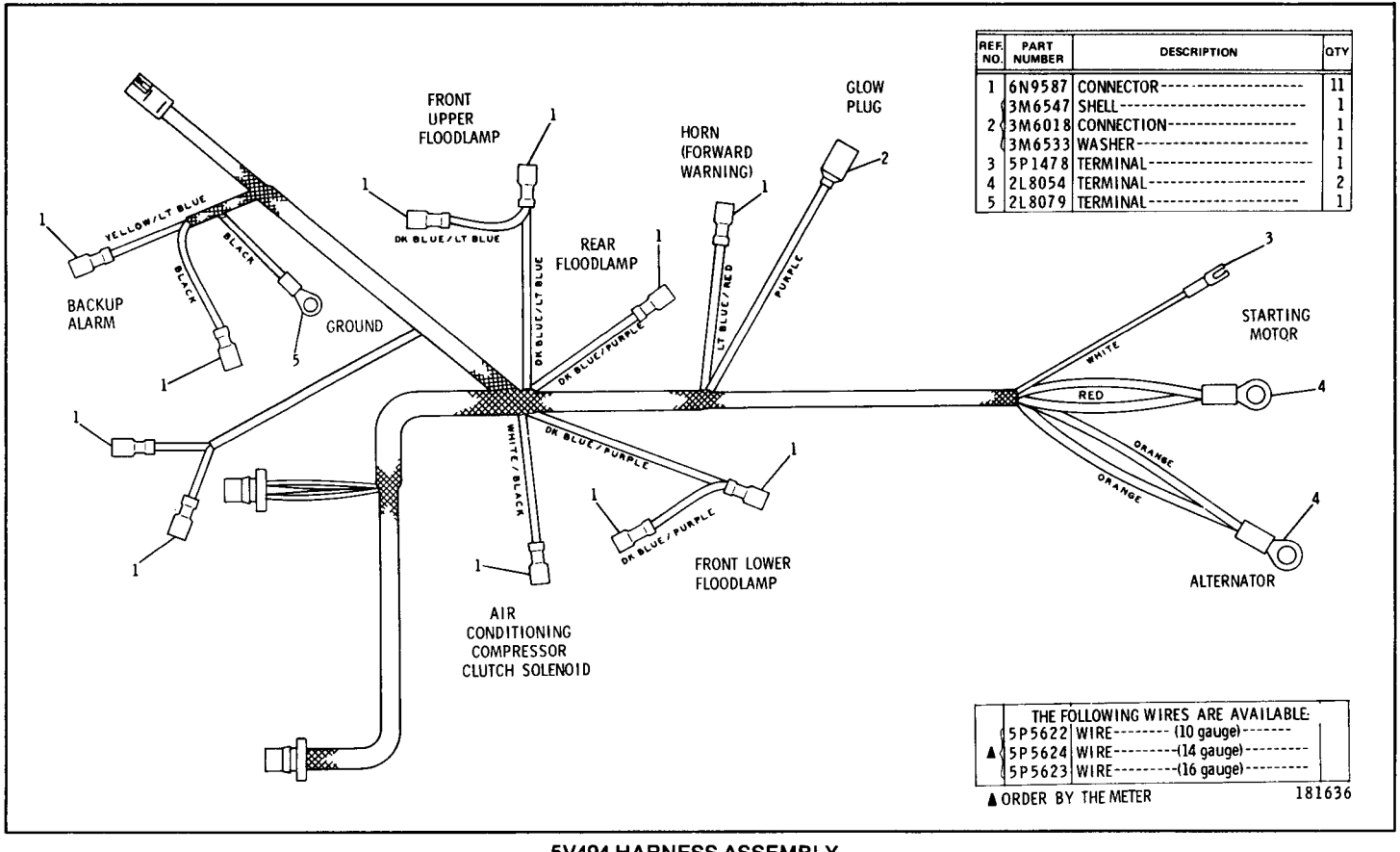

REF. NO.	PART NUMBER	DESCRIPTION	QTY
1	6N9587	CONNECTOR	11
2	3M6547	SHELL	1
	3M6018	CONNECTION	1
	3M6533	WASHER	1
3	5P1478	TERMINAL	1
4	2L8054	TERMINAL	2
5	2L8079	TERMINAL	1

	THE FOLLOWING WIRES ARE AVAILABLE:		
▲	5P5622	WIRE (10 gauge)	
▲	5P5624	WIRE (14 gauge)	
▲	5P5623	WIRE (16 gauge)	

▲ ORDER BY THE METER

5V494 HARNESS ASSEMBLY
Serial No. 13X2974—Up
Part of 3V6932 Battery and Wiring Group shown on Pages 75B and 75E

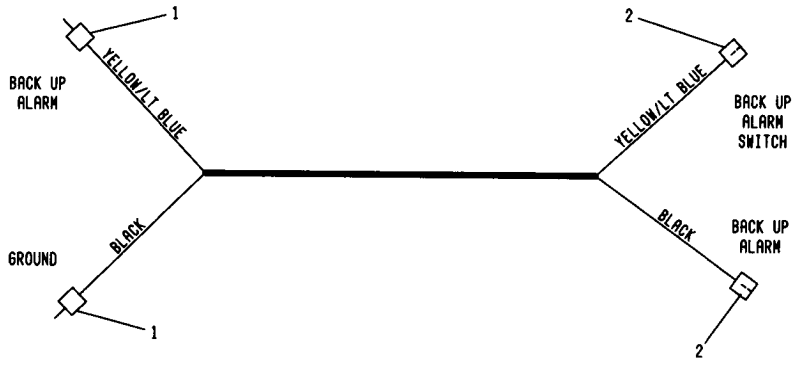

REF. NO.	PART NUMBER	DESCRIPTION	QTY.
1	5P5610	CONNECTOR----------	2
2	6N9587	CONNECTOR----------	2
		THE FOLLOWING WIRE IS AVAILABLE:	
▲	5P5623	WIRE----------(16 gauge)-----	

▲ ORDER BY THE METER

181637

8V2568 HARNESS ASSEMBLY
Serial No. 13X2974 to 13X3187 inclusive
Part of 3V6932 Battery & Wiring Group shown on Page 75B

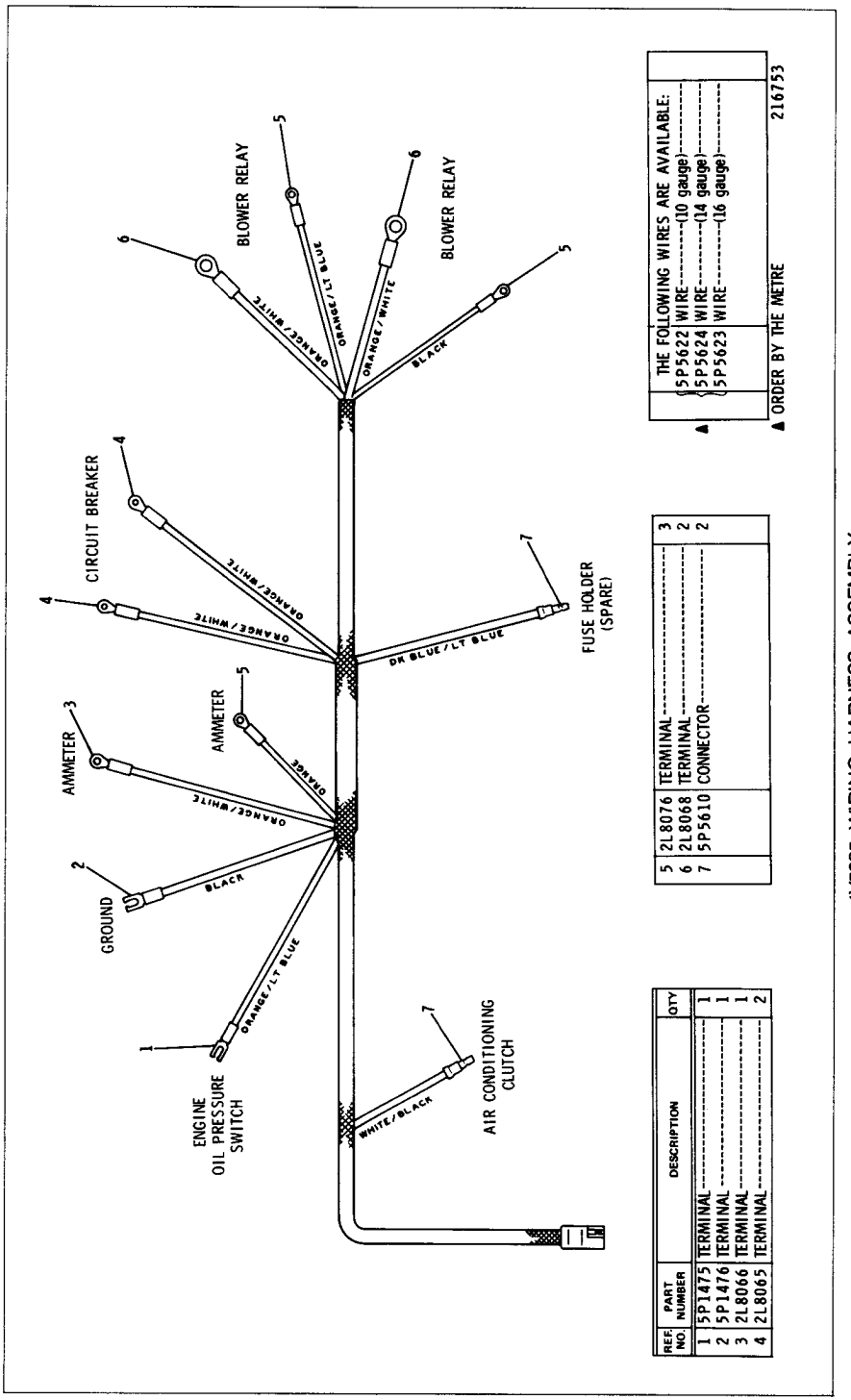

REF. NO.	PART NUMBER	DESCRIPTION	QTY
1	5P1475	TERMINAL	1
2	5P1476	TERMINAL	1
3	2L8066	TERMINAL	1
4	2L8065	TERMINAL	2
5	2L8076	TERMINAL	3
6	2L8068	TERMINAL	2
7	5P5610	CONNECTOR	2

4V5095 WIRING HARNESS ASSEMBLY
Part of 3V6932 Battery and Wiring Group shown on Page 72

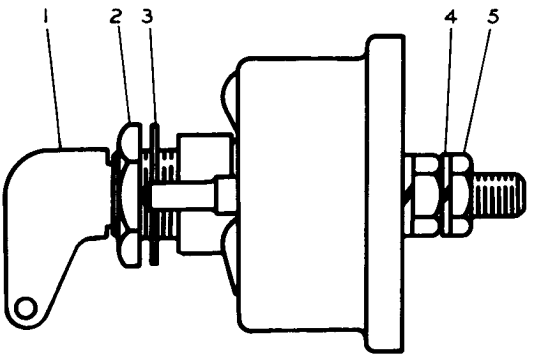

REF. NO.	PART NUMBER	DESCRIPTION	QTY
1	8H5306	KEY	1
2	8H5303	NUT	1
3	2H3922	LOCKWASHER	1
4	7F7259	LOCKWASHER	4
5	6F7045	NUT	4

211499

7N718 DISCONNECT SWITCH ASSEMBLY
Part of 3V6932 Battery and Wiring Group shown on Page 70

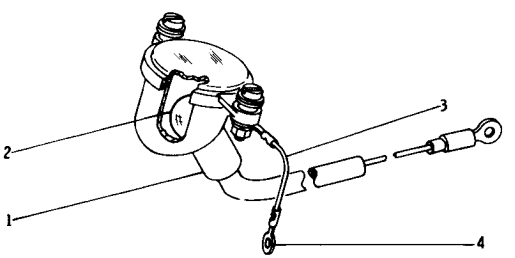

	REF. NO.	PART NUMBER	DESCRIPTION	QTY
	1	9H4349	SOCKET AND WIRE ASSEM.	1
	2	3H2691	LAMP	1
C▲	3	5P5623	WIRE, 20 m(8 in.)	
	4	7F9224	TERMINAL	2

C INDICATES CHANGE

211053

9M1305 DASH LAMP ASSEMBLY
Part of 3V6932 Battery and Wiring Group shown on Page 72

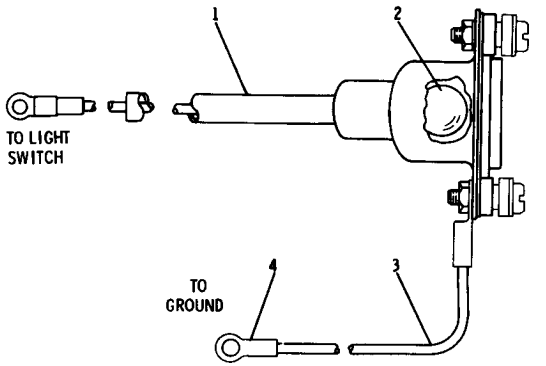

REF. NO.	PART NUMBER	DESCRIPTION	QTY
1	9H4349	SOCKET & WIRE ASSEM. --------	1
2	3H2691	LAMP----------	1
▲ 3	5P5623	WIRE----------, 203 m(8.00 in.)	
4	7F9224	TERMINAL----------	2

▲ ORDER BY THE METRE

210961

8M7677 DASH LAMP ASSEMBLY
Part of 3V6932 Battery and Wiring Group shown on Page 72

4V36 LIGHTING GROUP—24 Volt, 4 Lamp
FOR USE WITH NON ROPS MOUNTING
1M1882 Lamp parts are shown on Page 84
AN ATTACHMENT

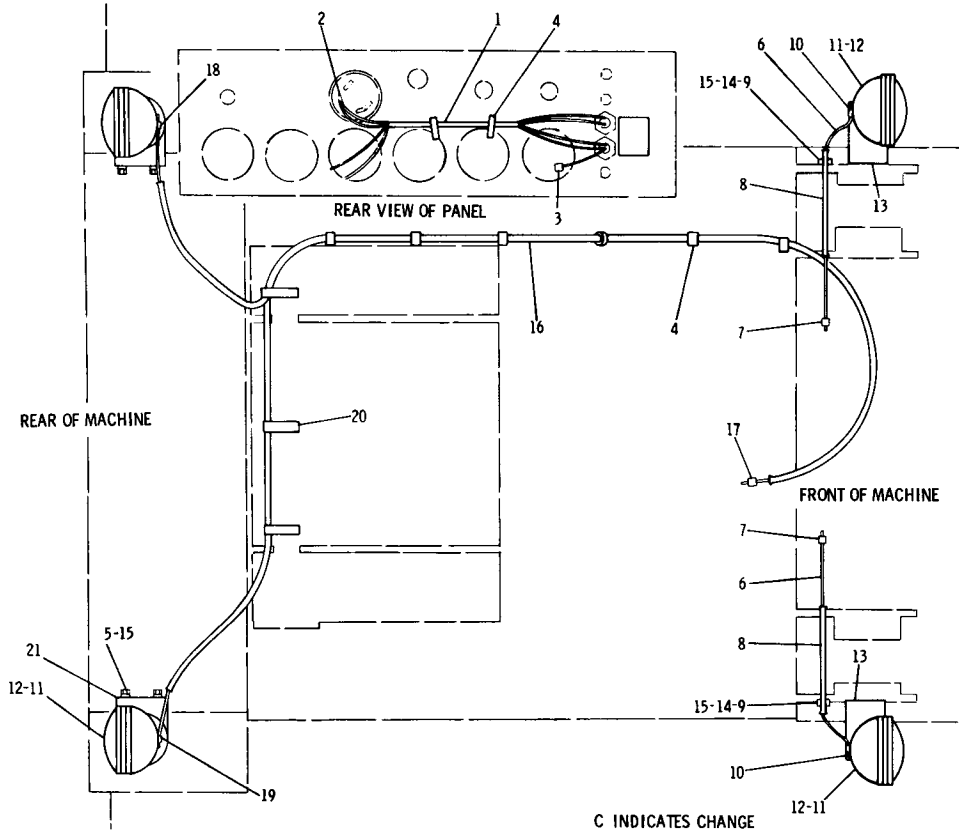

REF. NO.	PART NUMBER	DESCRIPTION	QTY
1	4V5094	HARNESS ASSEM. (Includes)	1
▲	5P5624	WIRE-------(14 gauge)--------	
	5P5610	CONNECTOR ASSEM. ---(lamp)---	2
2	5P1475	TERMINAL----(light switch)----	2
3	6N9587	CONNECTOR ASSEM.	1
4	1S9593	TIE	8
5	L1351	BOLT	4
6	4V3420	WIRE ASSEM. (Each Includes)	2
▲	5P5624	WIRE---------1.22 m(48.03 in.)	
7	5P5610	CONNECTOR ASSEM.	1
8	1V6406	TUBE ASSEM. (Includes)	1
9	4L4058	CLIP	1
10	5P1475	TERMINAL	1
11	1M1882	LAMP ASSEM. (Separate Illustration)	4
12	5D3183	NUT	4
	5D3184	LOCKWASHER	4
	2B8352	WASHER	8
13	6H3925	BRACKET	2
	6H1717	BOLT	6
	5P8245	WASHER	6
14	T102	BOLT	2
15	5P1075	WASHER	6
16	4V3419	WIRE ASSEM. (Includes)	1
▲	5P5624	WIRE-------4.11 m(161.81 in.)	
▲	5P5623	WIRE-------2.68 m(105.51 in.)	
17	5P5610	CONNECTOR ASSEM.	1
18	5P1477	TERMINAL	1
19	5P1475	TERMINAL	1
20	4D5371	CLIP	3
C 21	5K9490	BRACKET ASSEM.	2

C INDICATES CHANGE

▲ ORDER BY THE METER

227816

4V2192 LIGHTING GROUP—24 Volt, 4 Lamp
NOT FOR USE WITH ROPS
1M1882 Lamp parts are shown on Page 84
AN ATTACHMENT

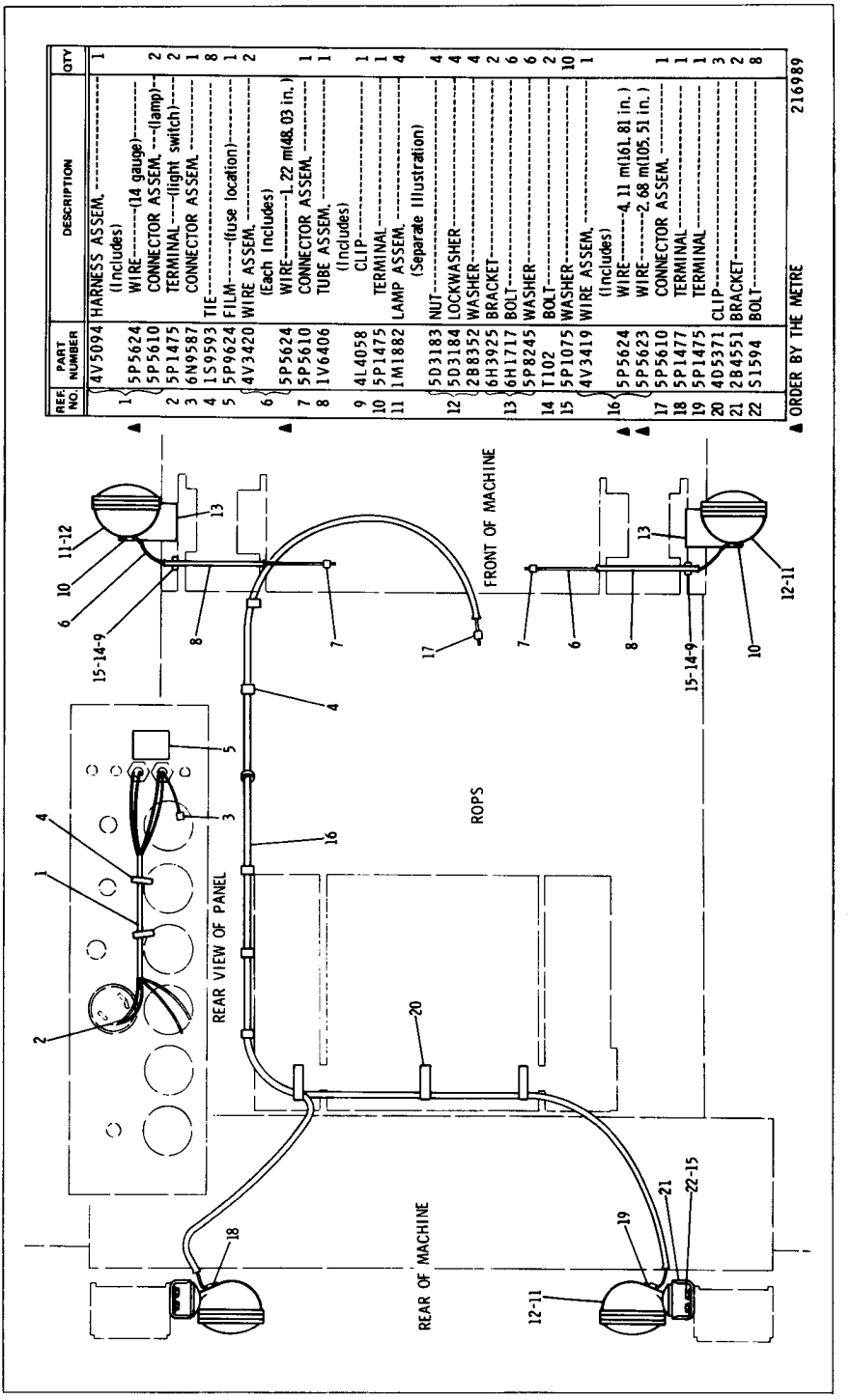

REF. NO.	PART NUMBER	DESCRIPTION	QTY
	4V5094	HARNESS ASSEM.	1
		(Includes)	
1	5P5624	WIRE----(14 gauge)	2
	5P5610	CONNECTOR ASSEM. ---(lamp)	
2	5P1475	TERMINAL----(light switch)	2
3	6N9587	CONNECTOR ASSEM.	1
4	1S9593	TIE	8
5	5P9624	FILM------(fuse location)	1
6	4V3420	WIRE ASSEM.	2
		(Each Includes)	
	5P5624	WIRE----1.22 m(48.03 in.)	1
7	5P5610	CONNECTOR ASSEM.	1
8	1V6406	TUBE ASSEM.	1
		(Includes)	
9	4L4058	CLIP	1
10	5P1475	TERMINAL	1
11	1M1882	LAMP ASSEM.	4
		(Separate Illustration)	
12	5D3183	NUT	4
	5D3184	LOCKWASHER	4
	2B8352	WASHER	4
	6H3925	BRACKET	2
13	6H1717	BOLT	6
	5P8245	WASHER	6
14	1T102	BOLT	2
15	5P1075	WASHER	10
	4V3419	WIRE ASSEM.	1
		(Includes)	
16	5P5624	WIRE----4.11 m(161.81 in.)	
	5P5623	WIRE----2.68 m(105.51 in.)	
17	5P5610	CONNECTOR ASSEM.	1
18	5P1477	TERMINAL	1
19	5P1475	TERMINAL	1
20	4D5371	CLIP	3
21	2B4551	BRACKET	2
22	S1594	BOLT	8

▲ ORDER BY THE METRE 216989

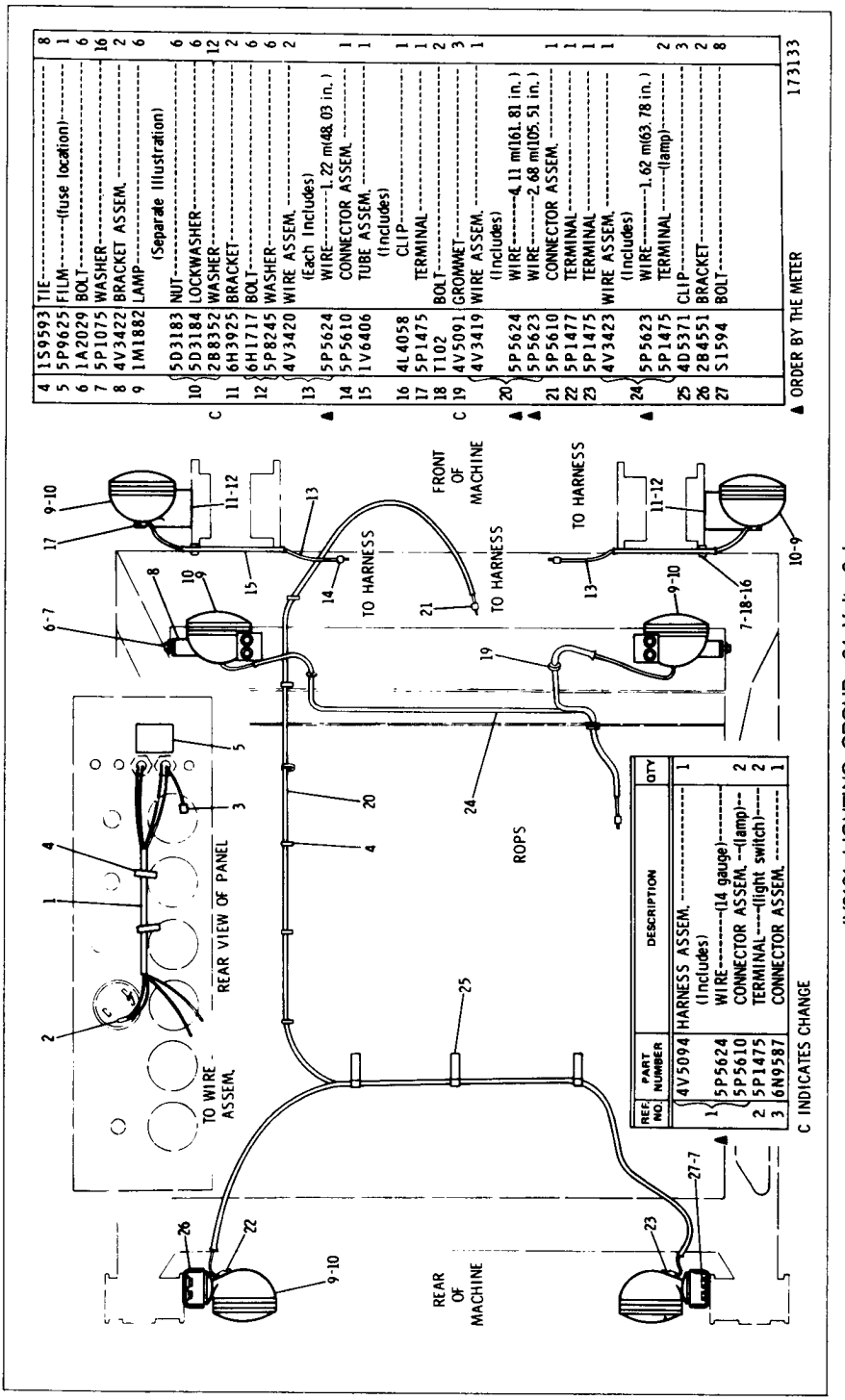

REF NO.	PART NUMBER	DESCRIPTION	QTY
	4V5094	HARNESS ASSEM. (Includes)	1
1	5P5624	WIRE--------(14 gauge)--------	
	5P5610	CONNECTOR ASSEM. --(lamp)--	2
2	5P1475	TERMINAL----(light switch)----	2
3	6N9587	CONNECTOR ASSEM.	1

4	1S9593	TIE	8
5	5P9625	FILM--------(fuse location)--------	1
6	1A2029	BOLT	6
7	5P1075	WASHER	16
8	4V3422	BRACKET ASSEM.	2
9	1M1882	LAMP (Separate Illustration)	6
10	5D3183	NUT	6
	5D3184	LOCKWASHER	6
C	2B8352	WASHER	12
11	6H3925	BRACKET	2
	6H1717	BOLT	6
12	5P8245	WASHER	6
	4V3420	WIRE ASSEM. (Each Includes)	2
13	5P5624	WIRE--------1.22 m(48.03 in.)	
▲ 14	5P5610	CONNECTOR ASSEM.	1
15	1V6406	TUBE ASSEM. (Includes) CLIP	1
16	4L4058		1
17	5P1475	TERMINAL	1
18	T102	BOLT	2
C 19	4V5091	GROMMET	3
	4V3419	WIRE ASSEM. (Includes)	1
▲ 20	5P5624	WIRE--------4.11 m(161.81 in.)	
▲	5P5623	WIRE--------2.68 m(105.51 in.)	
21	5P5610	CONNECTOR ASSEM.	1
22	5P1477	TERMINAL	1
23	5P1475	TERMINAL	1
	4V3423	WIRE ASSEM. (Includes)	1
▲ 24	5P5623	WIRE--------1.62 m(63.78 in.)	
	5P1475	TERMINAL--------(lamp)	2
25	4D5371	CLIP	3
26	2B4551	BRACKET	2
27	S1594	BOLT	8

4V2191 LIGHTING GROUP—24 Volt, 6 Lamp
FOR USE WITH ENCLOSED ROPS AND 50 AMPERE ALTERNATOR
1M1882 Lamp parts are shown on Page 84
AN ATTACHMENT

4V4429 LIGHTING GROUP—24 Volt, 6 Lamp
FOR USE WITH OPEN ROPS
1M1882 Lamp parts are shown on Page 84
AN ATTACHMENT

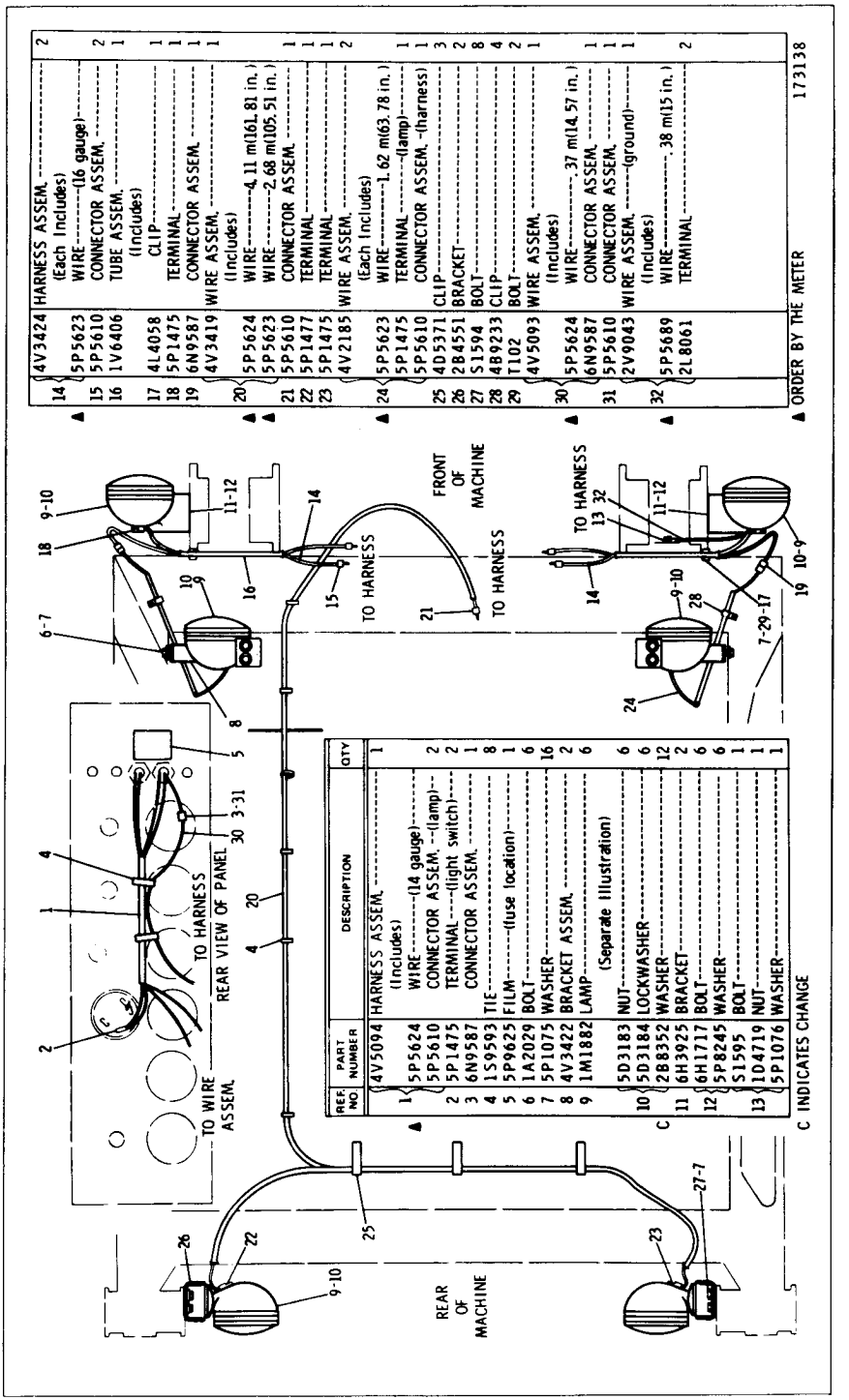

REF NO	PART NUMBER	DESCRIPTION	QTY
▲ 1	4V5094	HARNESS ASSEM.	1
		(Includes)	
	5P5624	WIRE----------(14 gauge)----------	
	5P5610	CONNECTOR ASSEM.--(lamp)--	2
2	5P1475	TERMINAL----(light switch)----	2
3	6N9587	CONNECTOR ASSEM.	1
4	1S9593	TIE----------(fuse location)----------	8
5	5P9625	FILM	1
6	1A2029	BOLT	6
7	5P1075	WASHER	16
8	4V3422	BRACKET ASSEM.	2
9	1M1882	LAMP	6
		(Separate Illustration)	
10	5D3183	NUT	6
	5D3184	LOCKWASHER	6
C	2B8352	WASHER	12
11	6H3925	BRACKET	2
12	6H1717	BOLT	6
	5P8245	WASHER	6
	1S1595	BOLT	1
13	1D4719	NUT	1
	5P1076	WASHER	1

14	4V3424	HARNESS ASSEM.	2
		(Each Includes)	
15	5P5623	WIRE----------(16 gauge)----------	
16	5P5610	CONNECTOR ASSEM.	2
	1V6406	TUBE ASSEM.	1
		(Includes)	
17	4L4058	CLIP	1
18	5P1475	TERMINAL	1
19	6N9587	CONNECTOR ASSEM.	1
	4V3419	WIRE ASSEM.	1
		(Includes)	
20	5P5624	WIRE----------4.11 m(161.81 in.)----------	
	5P5623	WIRE----------2.68 m(105.51 in.)----------	
21	5P5610	CONNECTOR ASSEM.	1
22	5P1477	TERMINAL	1
23	5P1475	TERMINAL	1
	4V2185	WIRE ASSEM.	2
		(Each Includes)	
24	5P5623	WIRE----------1.62 m(63.78 in.)----------	
	5P1475	TERMINAL----------(lamp)----------	1
	5P5610	CONNECTOR ASSEM.--(harness)	1
25	4D5371	CLIP	3
26	2B4551	BRACKET	2
27	S1594	BOLT	8
28	4B9233	CLIP	4
29	T102	BOLT	2
	4V5093	WIRE ASSEM.	1
		(Includes)	
30	5P5624	WIRE----------.37 m(14.57 in.)----------	
	6N9587	CONNECTOR ASSEM.	1
31	5P5610	CONNECTOR ASSEM.	1
	2V9043	WIRE ASSEM.------(ground)------	
		(Includes)	
32	5P5689	WIRE----------.38 m(15 in.)----------	
	2L8061	TERMINAL	2

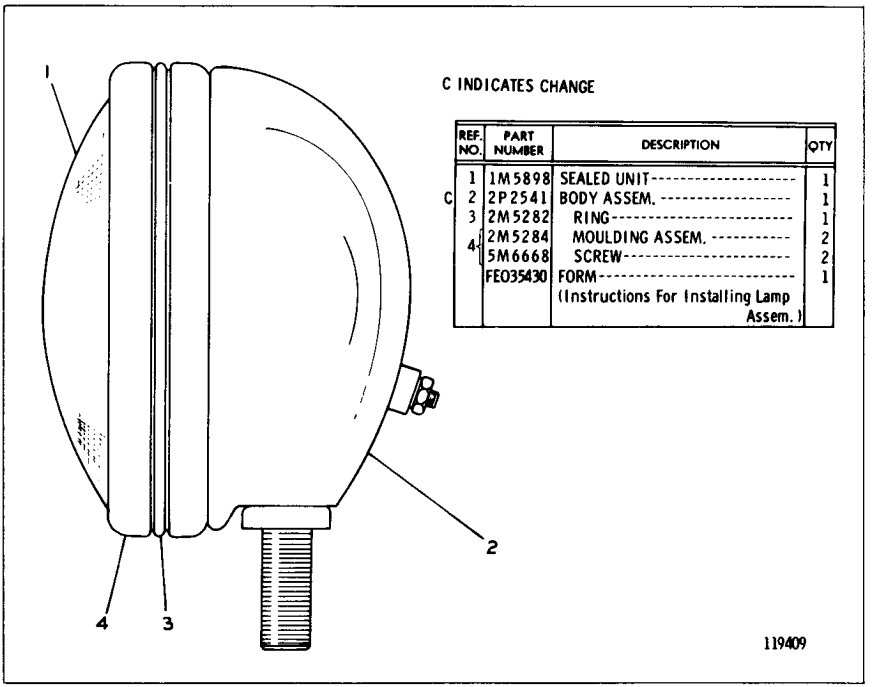

C INDICATES CHANGE

	REF. NO.	PART NUMBER	DESCRIPTION	QTY
	1	1M5898	SEALED UNIT	1
C	2	2P2541	BODY ASSEM.	1
	3	2M5282	RING	1
	4	2M5284	MOULDING ASSEM.	2
		5M6668	SCREW	2
		FE035430	FORM (Instructions For Installing Lamp Assem.)	1

1M1882 FLOOD LAMP GROUP
Part of 4V36, 4V2192, 4V2191 and 4V4429 Lighting Groups shown on Pages 80A, 81, 82 & 83. AN ATTACHMENT

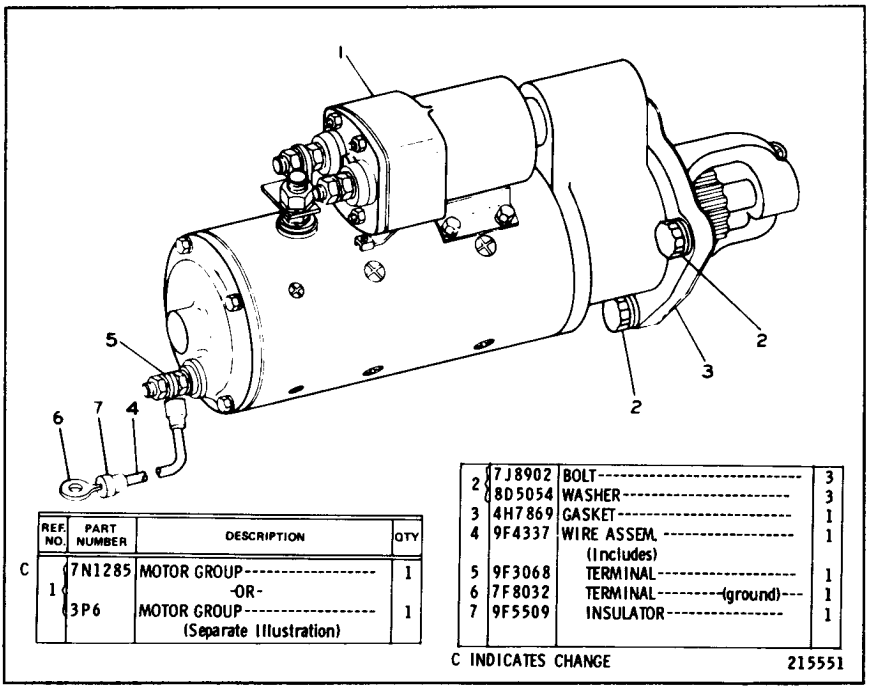

REF. NO.	PART NUMBER	DESCRIPTION	QTY
C 1	7N1285	MOTOR GROUP	1
		-OR-	
	3P6	MOTOR GROUP (Separate Illustration)	1

2	7J8902	BOLT	3
	8D5054	WASHER	3
3	4H7869	GASKET	1
4	9F4337	WIRE ASSEM. (Includes)	1
5	9F3068	TERMINAL	1
6	7F8032	TERMINAL (ground)	1
7	9F5509	INSULATOR	1

C INDICATES CHANGE 215551

7S4090 ELECTRIC STARTING MOTOR GROUP—24 Volt
Serial No. 13X1 to 13X3162 inclusive
7N1285 and 3P6 Motor parts are shown on Pages 86 through 89

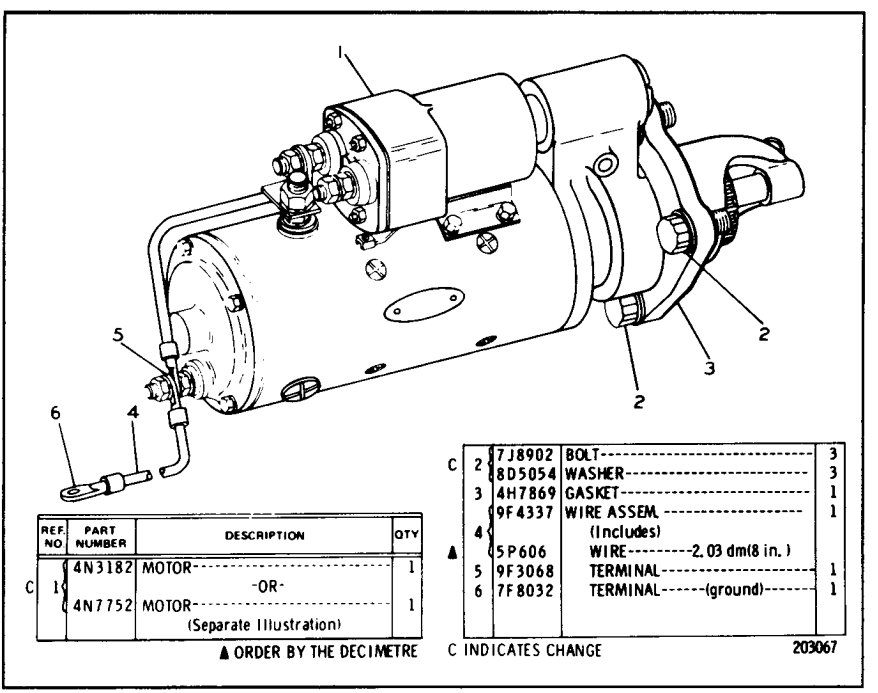

REF. NO	PART NUMBER	DESCRIPTION	QTY
C 1	4N3182	MOTOR	1
		-OR-	
	4N7752	MOTOR (Separate Illustration)	1

▲ ORDER BY THE DECIMETRE

C	2	7J8902	BOLT	3
		8D5054	WASHER	3
	3	4H7869	GASKET	1
	4	9F4337	WIRE ASSEM. (Includes)	1
▲		5P606	WIRE 2.03 dm(8 in.)	
	5	9F3068	TERMINAL	1
	6	7F8032	TERMINAL (ground)	1

C INDICATES CHANGE 203067

7S3622 ELECTRIC STARTING MOTOR GROUP—24 Volt
4N7752 and 4N3182 Motor parts are shown on Pages 90 through 94, 94A, 94B & 94D
AN ATTACHMENT

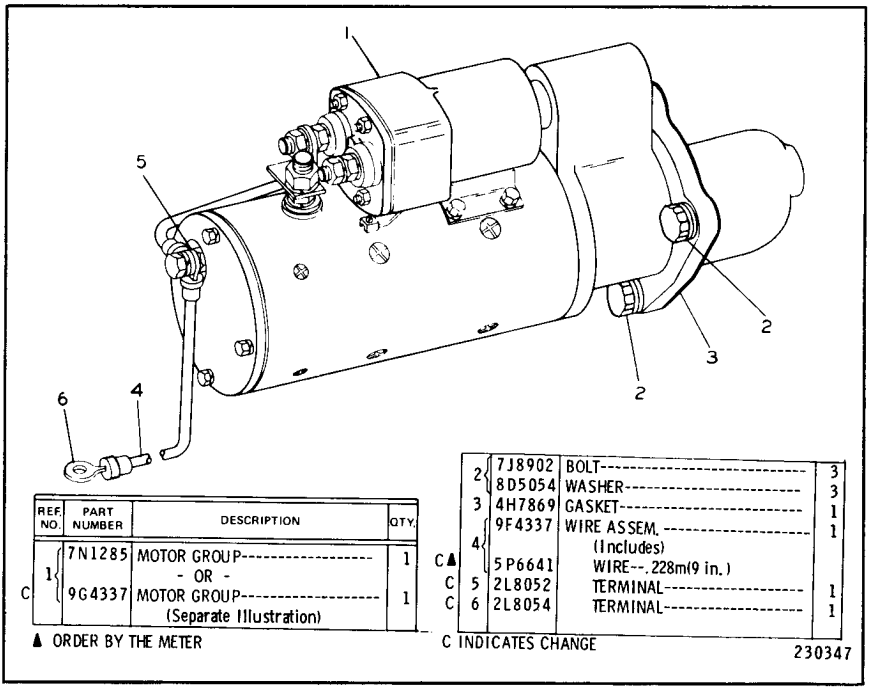

REF. NO.	PART NUMBER	DESCRIPTION	QTY.
1	7N1285	MOTOR GROUP	1
		- OR -	
C 1	9G4337	MOTOR GROUP (Separate Illustration)	1

▲ ORDER BY THE METER

2	7J8902	BOLT	3
	8D5054	WASHER	3
3	4H7869	GASKET	1
4	9F4337	WIRE ASSEM. (Includes)	1
C▲	5P6641	WIRE--.228m(9 in.)	
C 5	2L8052	TERMINAL	1
C 6	2L8054	TERMINAL	1

C INDICATES CHANGE

230347

7S4090 ELECTRIC STARTING MOTOR GROUP—24 Volt
Serial No. 13X3163—Up
7N1285 and 9G4337 Motor parts are shown on Pages 86 & 87 and 89A & 89B

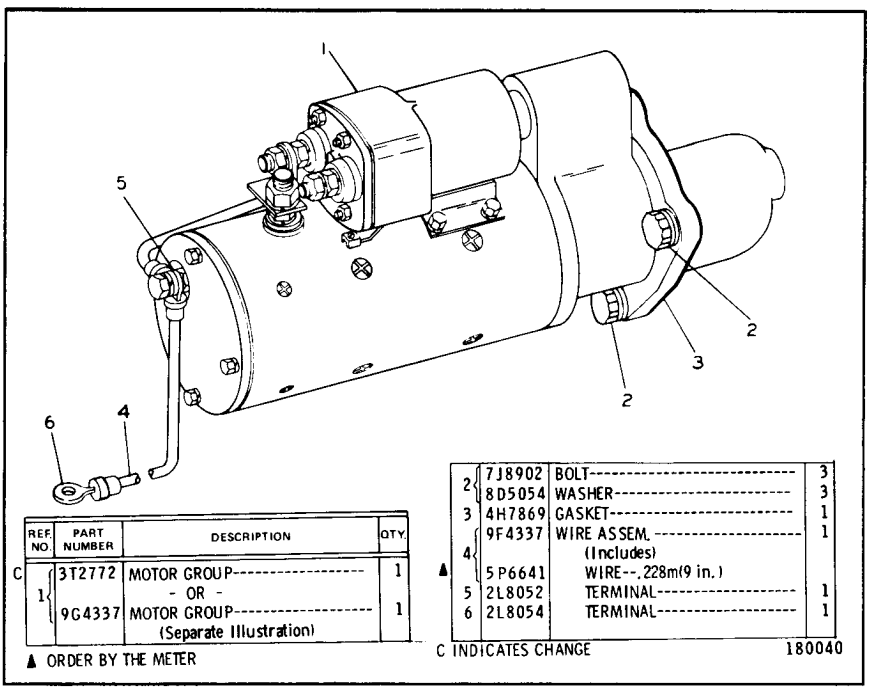

REF. NO.	PART NUMBER	DESCRIPTION	QTY.
C 1	3T2772	MOTOR GROUP	1
		- OR -	
	9G4337	MOTOR GROUP (Separate Illustration)	1

▲ ORDER BY THE METER

2	7J8902	BOLT	3
	8D5054	WASHER	3
3	4H7869	GASKET	1
4	9F4337	WIRE ASSEM. (Includes)	1
▲	5P6641	WIRE--.228m(9 in.)	
5	2L8052	TERMINAL	1
6	2L8054	TERMINAL	1

C INDICATES CHANGE

180040

7S4090 ELECTRIC STARTING MOTOR GROUP—24 Volt
Serial No. 13X3163—Up
3T2772 and 9G4337 Motor parts are shown on Pages 87A & 87B and 89A & 89B

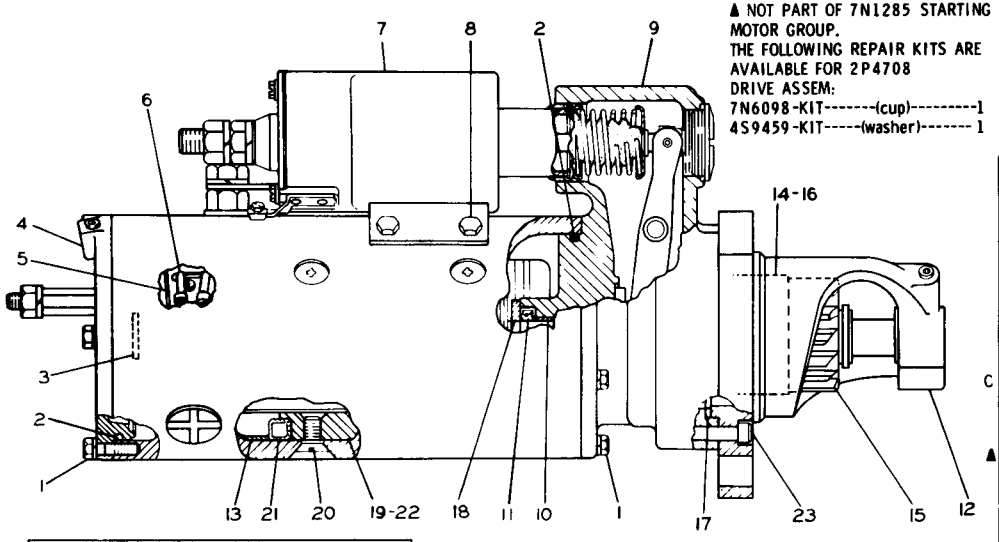

▲ NOT PART OF 7N1285 STARTING MOTOR GROUP.
THE FOLLOWING REPAIR KITS ARE AVAILABLE FOR 2P4708 DRIVE ASSEM:
7N6098-KIT-------(cup)---------1
4S9459-KIT-----(washer)------- 1

REF. NO.	PART NUMBER	DESCRIPTION	QTY
1	7F4556	BOLT	9
	1L4789	LOCKWASHER	9
2	4M189	SEAL	2
3	2L8166	WASHER	1
4	7N1284	FRAME ASSEM.	1
5	7N1282	BRUSH PLATE	1
	6F5829	SCREW ASSEM.	1
6	4M1845	BRUSH	4
	7N1281	SPRING	4
	2F2860	SCREW	4
7	4M1812	SWITCH ASSEM. (Separate Illustration)	1
8	6H3622	SCREW ASSEM.	4
9	4M1850	HOUSING ASSEM. (Includes)	1
	2B4602	PLUG	1
	9F2547	WICK	1
10	1M9968	BUSHING	1
11	2F6678	SEAL	1
12	8L5265	HOUSING ASSEM.	1
13	7N1280	INSULATOR	1
C 14	2P4708	DRIVE ASSEM. ---(1894213)---- (Includes)	1
15	9S9771	PINION -OR-	1
▲ 16	6N3827	DRIVE ASSEM---(480118)-----	1
17	4M1851	GASKET	1
18	1M9971	SPACER	1
19	8H1141	SHOE	4
20	3R8797	SCREW ASSEM.	8
21	7N1283	COIL ASSEM.	1
22	1H2629	STRIP	1
23	4M1833	SCREW-----3.81 cm(1.5 in.) long	5
	7M336	SCREW-----2.18 cm(.86 in.) long	1

C INDICATES CHANGE

217019

7N1285 ELECTRIC STARTING MOTOR GROUP—Delco-Remy—24 Volt—Part 1
Part of 7S4090 Electric Starting Motor Group shown on Page 85
4M1812 Switch parts are shown on Page 95

7N1285 ELECTRIC STARTING MOTOR GROUP—Delco-Remy—24 Volt—Part 2
Part of 7S4090 Electric Starting Motor Group shown on Page 85

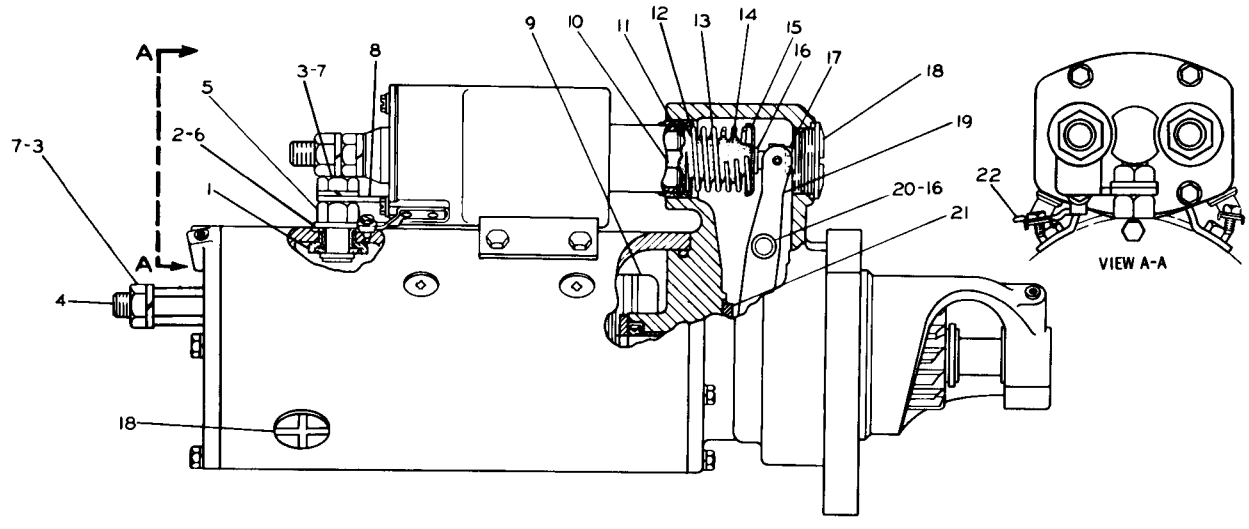

REF. NO.	PART NUMBER	DESCRIPTION	QTY
1	3L3380	BUSHING	1
2	690811	STUD	1
3	3H3680	NUT	1
4	7N1279	STUD ADAPTER	1
5	3H3681	NUT	1
6	9H3757	WASHER—(large)	2
	7F3494	WASHER—(small)	1
7	9F4976	LOCKWASHER	2

8	4M1841	CONNECTOR	1
9	5L8877	ARMATURE ASSEM.	1
10	9M7606	PLUNGER ASSEM.	1
11	369821	WASHER	1
12	4M1828	RETAINER	1
13	9M7609	SPRING	1
14	4M1829	BOOT	1
15	4M1827	RETAINER	1
16	9M7611	RING	2
17	3F2617	NUT	1

18	4M1831	PLUG	3
	7L2894	GASKET	3
19	690797	LEVER ASSEM.	1
20	4M1854	SHAFT	1
	1H1023	SEAL—9.37 mm(.369 in.) diameter	1
	2D6392	SEAL—6.07 mm(.239 in.) diameter	1
21	4L2729	WASHER	1
22	1P3879	LEAD ASSEM.	1
		THE FOLLOWING REPAIR KIT IS AVAILABLE:	
	3N3763	TERMINAL KIT—(insulator)	1

215553

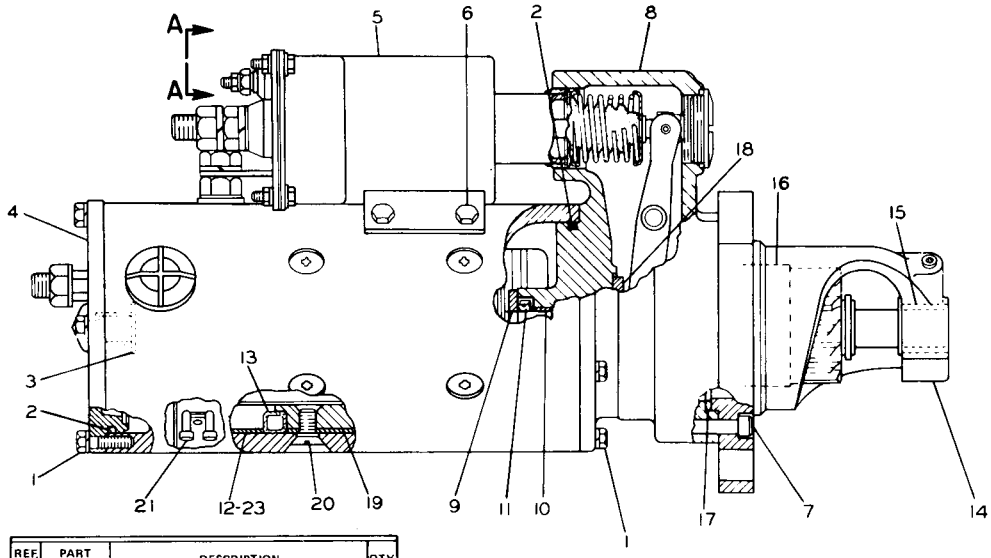

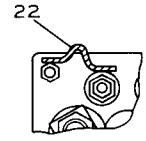

REF. NO.	PART NUMBER	DESCRIPTION	QTY.
1	369823	BOLT	9
	1L4789	LOCKWASHER	9
2	4M189	SEAL	2
3	2L8166	WASHER	1
4	3P173	FRAME ASSEM.	1
5	3T3421	SOLENOID ASSEM.	1
6	6H3622	SCREW	4
7	4M1833	SCREW-----1.5 in. (3.81 cm) long	5
	7M336	SCREW-----.86 in. (2.18 cm) long	1

8	3T4702	HOUSING ASSEM. (Includes)	1
	3T3424	PLUG	1
	3T3423	CUP	1
	3T3433	PLUG	1
● 9	4L2729	WASHER	2
10	9G9817	BUSHING	1
11	2F6678	SEAL	1
12	1H2629	STRIP	2
13	7N1283	COIL ASSEM.	1

● PART OF 3T2772 GROUP

14	3T4700	HOUSING ASSEM. (Includes)	1
	3T3424	PLUG	1
	3T3423	CUP	1
15	9G9818	BUSHING	1
16	6N3827	DRIVE ASSEM.	1
17	4M1851	GASKET	1
18	1M9971	SPACER	1
19	8H1141	SHOE	4
20	3F379	SCREW	8
21	4M1845	BRUSH ASSEM.	4
	7N1281	SPRING	4
	7N1282	PLATE ASSEM.	1
	3T3106	SCREW ASSEM.	1
	2F2860	SCREW	4
22	1P3879	LEAD ASSEM.	1
23	7N1280	INSULATOR	1

180041

3T2772 ELECTRIC STARTING MOTOR GROUP—Delco-Remy—24 Volt—Part 1
Serial No. 13X3163—Up
Part of 7S4090 Electric Starting Motor Group shown on Page 85B

3T2772 ELECTRIC STARTING MOTOR GROUP—Delco-Remy, 24 Volt—Part 2
Serial No. 13X3163—Up
Part of 7S4090 Electric Starting Motor Group shown on Page 85B

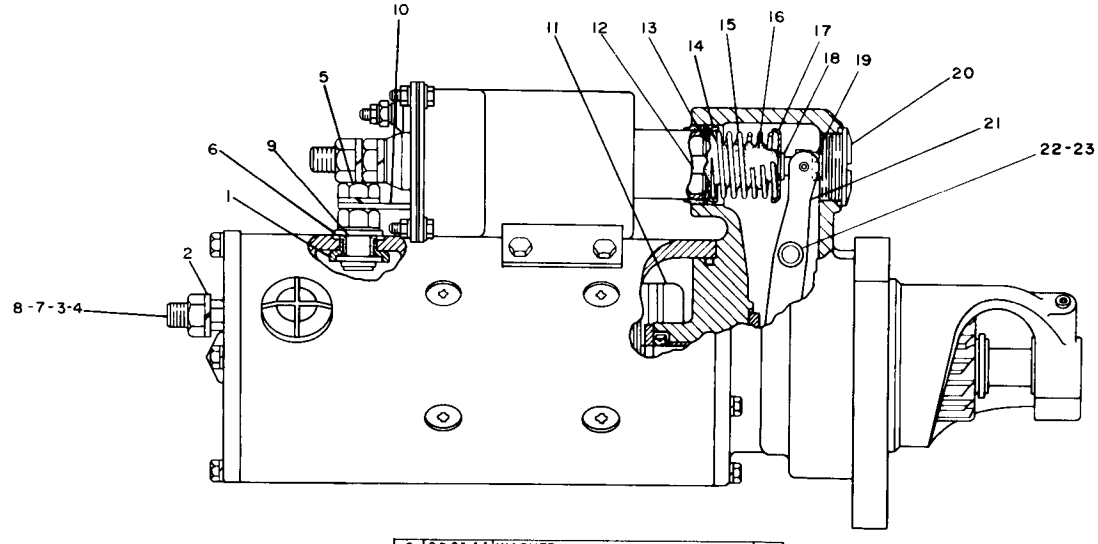

REF. NO.	PART NUMBER	DESCRIPTION	QTY.
1	3L3380	BUSHING	1
2	1H134	LOCKWASHER	1
3	3H3680	NUT	1
4	7N1279	STUD	1
5	1D4719	NUT	1
6	9H3757	WASHER-------(large)----------	2
	7F3494	WASHER-------(small)----------	1
7	335902	WASHER	1
8	9B9144	WASHER	1
9	690811	STUD	1
10	4M1841	CONNECTOR	1
11	5L8877	ARMATURE ASSEM.	1
12	9M7606	PLUNGER ASSEM.	1
13	369821	WASHER	1
14	4M1828	RETAINER	1
15	9M7609	SPRING	1
16	4M1829	BOOT	1
17	4M1827	RETAINER	1
18	9M7611	RING	2
19	5M3034	LOCKNUT	1
20	4M1831	PLUG	3
	7L2894	GASKET	3
21	4M1853	LEVER ASSEM. (Includes)	1
	4M1830	GUIDE	1
	4M1854	SHAFT	1
22	1H1023	SEAL-------9.37mm(.369 in.) dia.	1
	2D6392	SEAL-------6.07mm(.239 in.) dia.	1
23	4L2729	WASHER	1

180042

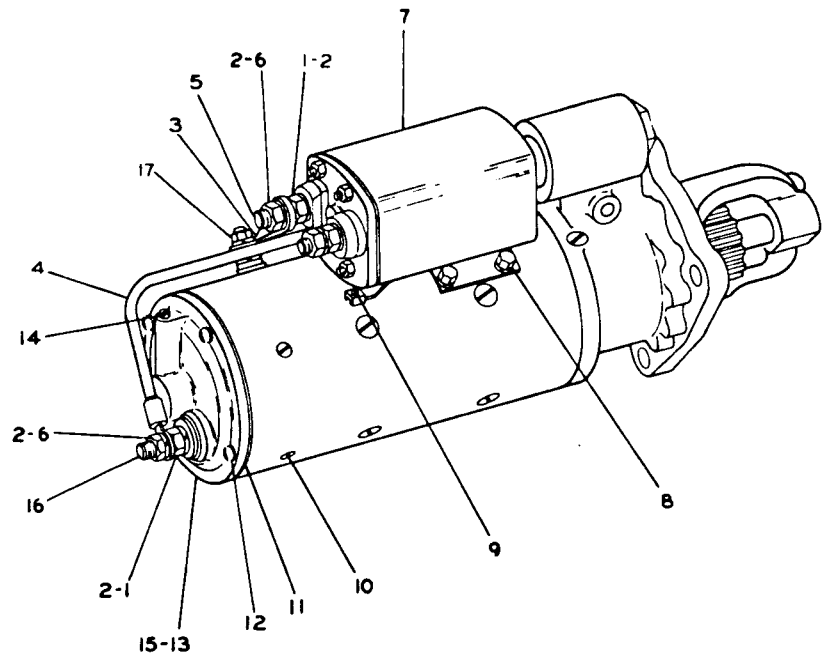

REF. NO.	PART NUMBER	DESCRIPTION	QTY
1	1D5117	NUT	3
2	3B4508	LOCKWASHER	6
3	8S2771	CONNECTOR	1
C 4	4N9404	LEAD ASSEM.	1
5	4N4694	KIT-(Field Terminal Stud) (Includes Stud, Bushing & Washers)	1
6	1D4719	NUT	3
7	9S7976	SOLENOID ASSEM. (Separate Illustration)	1
(	6H3622	SCREW	4
8(	3B4504	LOCKWASHER	4
(	3K6116	WASHER	4
9	4M3217	SCREW	2
10	4B1220	SCREW	3
11	8S6035	GASKET	1
12	3B4502	LOCKWASHER	4
13	8S2769	HEAD ASSEM.-(Commutator End)	1
14	2B4602	PLUG	1
15	8S4682	KIT-(Bearing & Wick)	1
16	4N4693	KIT-(Commutator End Terminal Stud) (Includes Stud, Bushing & Washers)	1
(	1D4717	NUT-(plain)	1
17(	1B2578	NUT-(jam)	1
(	3B4506	LOCKWASHER	2

C INDICATES CHANGE 207040

3P6 ELECTRIC STARTING MOTOR GROUP—Prestolite—24 Volt—Part 1
Serial No. 13X1 to 13X3162 inclusive
Part of 7S4090 Electric Starting Motor Group shown on Page 85
9S7976 Solenoid parts are shown on Page 95

3P6 ELECTRIC STARTING MOTOR GROUP—Prestolite—24 Volt—Part 2
Serial No. 13X1 to 13X3162 inclusive
Part of 7S4090 Electric Starting Motor Group shown on Page 85

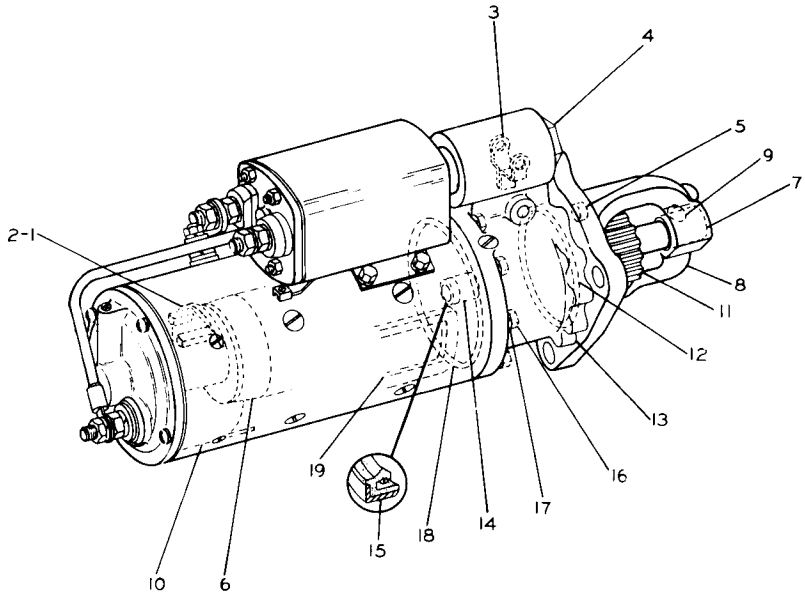

	REF. NO.	PART NUMBER	DESCRIPTION	QTY
	1	4N4691	PLATE ASSEM.	1
C	2	4N8618	KIT-(Includes 3 Brushes & 1 Clip)-	1
		4N4692	KIT-----(Includes 8 Springs)-----	1
C	3	2P8825	SHIFT YOKE ASSEM.	1
	4	2P8817	KIT-------(Yoke Adjusting)------- (Includes Plugs, Pin, Gasket & Nut)	1
	5	8S1535	KIT------(Includes 6 Plugs)------	1
	6	9S6100	ARMATURE ASSEM.	1
		8S8071	KIT--(Armature Thrust Washers)--	1
	7	8S4684	KIT-------(Bearing & Wick)-------	1
	8	8S1543	HOUSING ASSEM. ----(Pinion)----	1
	9	2B4602	PLUG	1
	10	8S2780	KIT---(Includes 10 Insulations)---	1
C	11	4N4517	MOTOR DRIVE ASSEM.	1
	12	2H3931	SEAL	1
	13	2P8824	HOUSING ASSEM.	1
		2B4602	PLUG	1
	14	8S2226	BUSHING	1
	15	8S2225	SEAL	1
	16	2P8816	KIT--(Includes Housing Screws)--	1
	17	3B4504	LOCKWASHER	7
	18	4M189	SEAL	1
	19	4N4690	KIT--------(Field Coil)--------- (Includes Coils, Gaskets & Screws)	1

C INDICATES CHANGE

215137

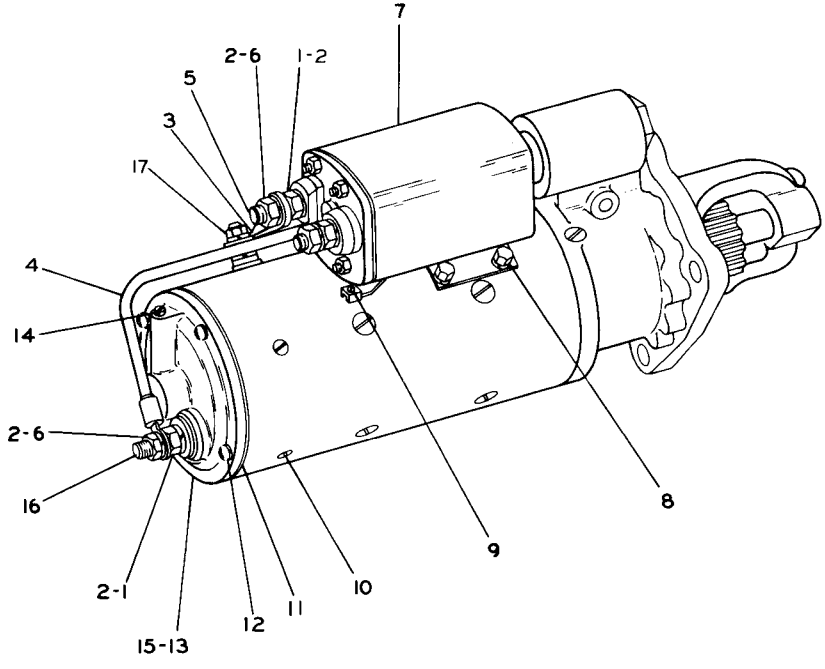

	REF. NO.	PART NUMBER	DESCRIPTION	QTY
	1	1D5117	NUT	3
	2	3B4508	LOCKWASHER	6
	3	8S2771	CONNECTOR	1
C	4	4N9404	LEAD ASSEM.	1
	5	4N4694	KIT-----(Field Terminal Stud)----- (Includes Stud, Bushing &Washers)	1
	6	1D4719	NUT	3
	7	9S7976	SOLENOID ASSEM. (Separate Illustration)	1
	8	6H3622	SCREW	4
		3B4504	LOCKWASHER	4
		3K6116	WASHER	4
	9	4M3217	SCREW	2
	10	4B1220	SCREW	3
	11	8S6035	GASKET	1
	12	3B4502	LOCKWASHER	4
	13	8S2769	HEAD ASSEM. --(Commutator End)-	1
	14	2B4602	PLUG	1
	15	8S4682	KIT--------(Bearing & Wick)------	1
	16	4N4693	KIT-(Commutator End Terminal Stud) (Includes Stud, Bushing &Washers)	1
		1D4717	NUT----------(plain)----------	1
	17	1B2578	NUT----------(jam)----------	1
		3B4506	LOCKWASHER	2

C INDICATES CHANGE

230348

9G4337 ELECTRIC STARTING MOTOR GROUP—Prestolite—24 Volt—Part 1
Serial No. 13X3163—Up
Part of 7S4090 Electric Starting Motor Group shown on Page 85B
9S7976 Solenoid Switch parts are shown on Page 95

9G4337 ELECTRIC STARTING MOTOR GROUP—Prestolite—24 Volt—Part 2
Serial No. 13X3163—Up
Part of 7S4090 Electric Starting Motor Group shown on Page 85B

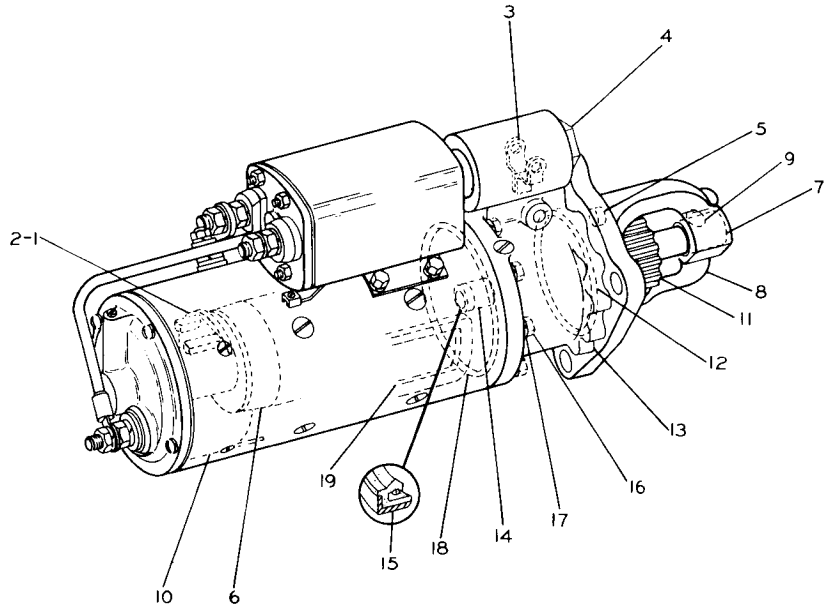

REF. NO.	PART NUMBER	DESCRIPTION	QTY
1	4N4691	PLATE ASSEM.	1
2	4N8618	KIT-(Includes 3 Brushes & 1 Clip)	1
	4N4692	KIT-----(Includes 8 Springs)-----	1
3	2P8825	SHIFT YOKE ASSEM.	1
4	2P8817	KIT-------(Yoke Adjusting)------- (Includes Plugs, Pin, Gasket & Nut)	1
5	8S1535	KIT------(Includes 6 Plugs)------	1
6	9S6100	ARMATURE ASSEM.	1
	8S8071	KIT--(Armature Thrust Washers)--	1
7	8S4684	KIT-------(Bearing & Wick)-------	1
8	9G5854	HOUSING ASSEM. ----(Pinion)----	1
9	9F2247	PLUG	1
10	8S2780	KIT---(Includes 10 Insulations)---	1
11	9G5587	MOTOR DRIVE ASSEM.	1
12	2H3931	SEAL	1
13	2P8824	HOUSING ASSEM.	1
	2B4602	PLUG	1
14	8S2226	BUSHING	1
15	8S2225	SEAL	1
16	2P8816	KIT--(Includes Housing Screws)--	1
17	3B4504	LOCKWASHER	7
18	4M189	SEAL	1
19	4N4690	KIT---------(Field Coil)--------- (Includes Coils, Gaskets & Screws)	1
		THE FOLLOWING REPAIR KIT IS AVAILABLE:	
	8S4684	KIT--(pinion housing repair)------	1

230349

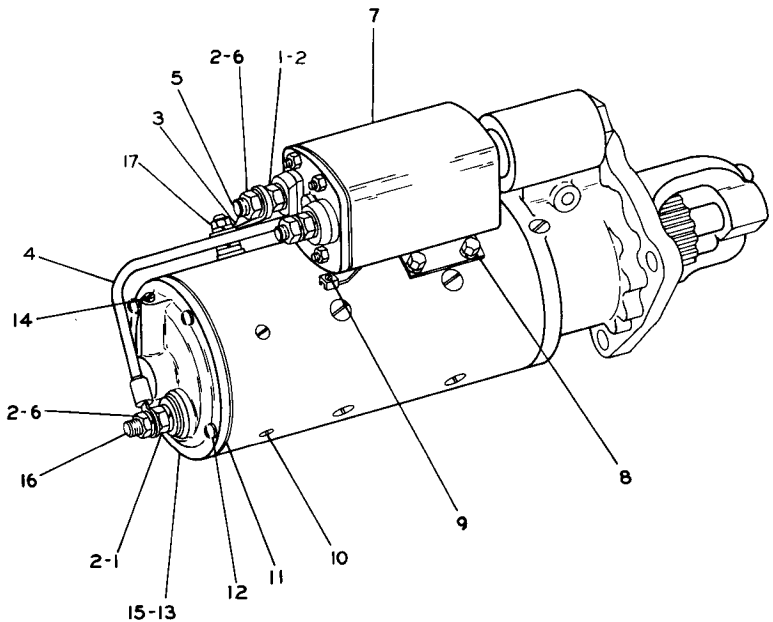

REF. NO.	PART NUMBER	DESCRIPTION	QTY
1	1D5117	NUT	3
2	3B4508	LOCKWASHER	6
3	8S2771	CONNECTOR	1
4	4N9404	LEAD ASSEM.	1
5	4N4694	KIT-(Field Terminal Stud) (Includes Stud, Bushing & Washers)	1
6	1D4719	NUT	3
C 7	3T3369	SOLENOID ASSEM. (Separate Illustration)	1
	6H3622	SCREW	4
8	3B4504	LOCKWASHER	4
	3K6116	WASHER	4
9	4M3217	SCREW	2
10	4B1220	SCREW	3
11	8S6035	GASKET	1
12	3B4502	LOCKWASHER	4
13	8S2769	HEAD ASSEM.-(Commutator End)	1
14	2B4602	PLUG	1
15	8S4682	KIT-(Bearing & Wick)	1
16	4N4693	KIT-(Commutator End Terminal Stud) (Includes Stud, Bushing & Washers)	1
	1D4717	NUT-(plain)	1
17	1B2578	NUT-(jam)	1
	3B4506	LOCKWASHER	2

C INDICATES CHANGE

181281

9G4337 ELECTRIC STARTING MOTOR GROUP—Prestolite—24 Volt—Part 1—Type 2
Serial No. 13X3163—Up. Part of 7S4090 Electric Starting Motor Group shown on Page 85B
3T3369 Solenoid parts are shown on Page 94D

9G4337 ELECTRIC STARTING MOTOR GROUP—Prestolite—24 Volt—Part 2—Type 2
Serial No. 13X3163—Up. Part of 7S4090 Electric Starting Motor Group shown on Page 85B

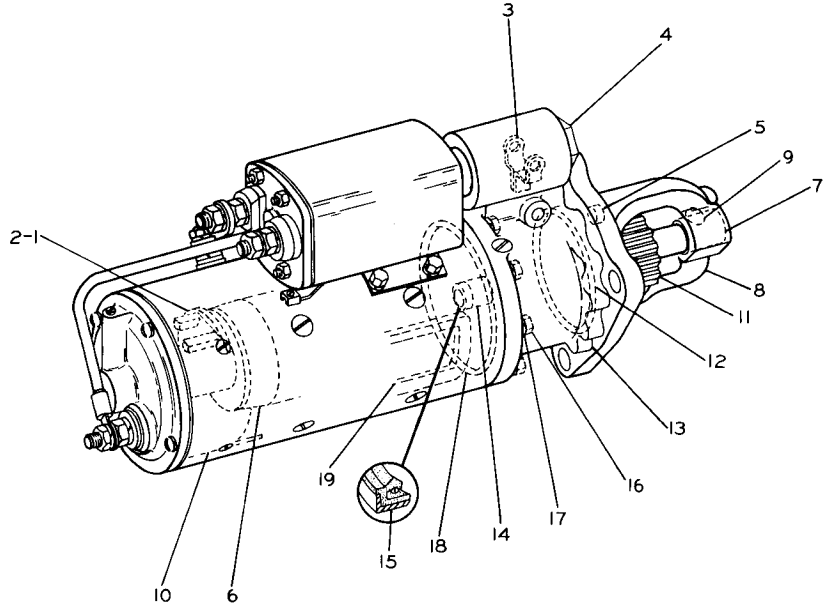

	REF. NO.	PART NUMBER	DESCRIPTION	QTY
	1	4N4691	PLATE ASSEM.	1
	2	4N8618	KIT-(Includes 3 Brushes & 1 Clip)	1
		4N4692	KIT-----(Includes 8 Springs)-----	1
	3	2P8825	SHIFT YOKE ASSEM.	1
	4	2P8817	KIT-------(Yoke Adjusting)------- (Includes Plugs, Pin, Gasket & Nut)	1
	5	8S1535	KIT------(Includes 6 Plugs)------	1
	6	9S6100	ARMATURE ASSEM.	1
		8S8071	KIT--(Armature Thrust Washers)--	1
	7	8S4684	KIT-------(Bearing & Wick)-------	1
	8	9G5854	HOUSING ASSEM. ----(Pinion)----	1
	9	9F2247	PLUG	1
	10	8S2780	KIT---(Includes 10 Insulations)---	1
C	11	4N4517	MOTOR DRIVE ASSEM.	1
	12	2H3931	SEAL	1
	13	2P8824	HOUSING ASSEM.	1
		2B4602	PLUG	1
	14	8S2226	BUSHING	1
	15	8S2225	SEAL	1
	16	2P8816	KIT--(Includes Housing Screws)--	1
	17	3B4504	LOCKWASHER	7
	18	4M189	SEAL	1
	19	4N4690	KIT--------(Field Coil)---------- (Includes Coils, Gaskets & Screws)	1
			THE FOLLOWING REPAIR KIT IS AVAILABLE:	
		8S4684	KIT--(pinion housing repair)------	1

C INDICATES CHANGE

181282

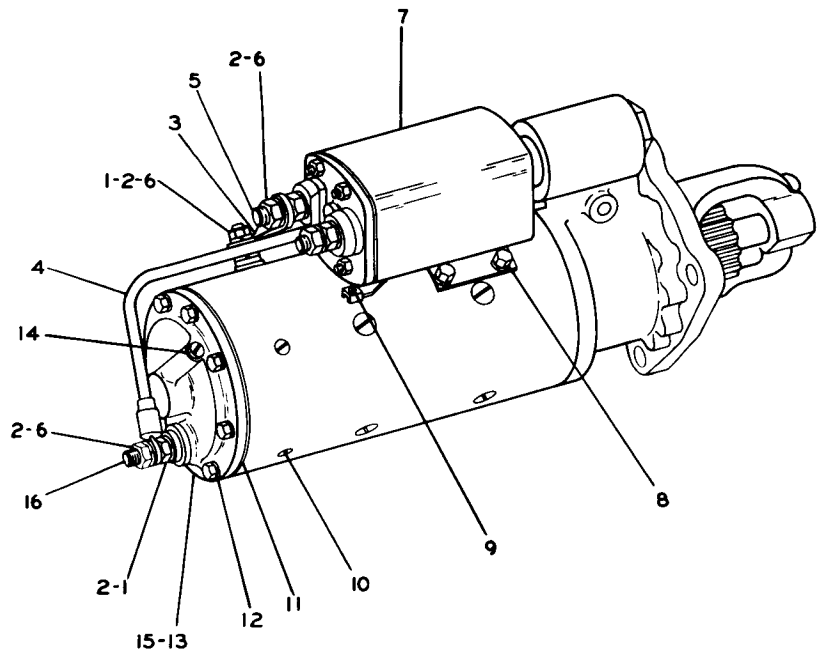

REF. NO.	PART NUMBER	DESCRIPTION	QTY
1	1D5117	NUT---------(jam)----------	2
2	3B4508	LOCKWASHER----------	6
3	4N9405	CONNECTOR----------	1
4	4N9404	LEAD ASSEM.----------	1
5	2P8819	KIT-----(Field Terminal Stud)----- (Includes Stud, Bushing & Washers)	1
6	1D4719	NUT----------	4
7	9S7976	SOLENOID ASSEM.---------- (Separate Illustration)	1
8	6H3622	SCREW----------	4
	3B4504	LOCKWASHER----------	4
	3K6116	WASHER----------	4
9	4M3217	SCREW----------	2
10	4B1220	SCREW----------	3
11	8S1553	GASKET----------	1
12	3B4502	LOCKWASHER----------	7
13	1P7831	HEAD ASSEM. --(Commutator End)-	1
14	2B4602	PLUG----------	1
15	1P7832	KIT--------(Bearing & Wick)------	1
16	4N9403	KIT-(Commutator End Terminal Stud) (Includes Stud, Bushing & Washers)	1

200573

4N7752 ELECTRIC STARTING MOTOR GROUP—Prestolite—24 Volt—Part 1
Part of 7S3622 Electric Starting Motor Group shown on Page 85
9S7976 Solenoid parts are shown on Page 95
AN ATTACHMENT

4N7752 ELECTRIC STARTING MOTOR GROUP—Prestolite—24 Volt—Part 2
Part of 7S3622 Electric Starting Motor Group shown on Page 85
AN ATTACHMENT

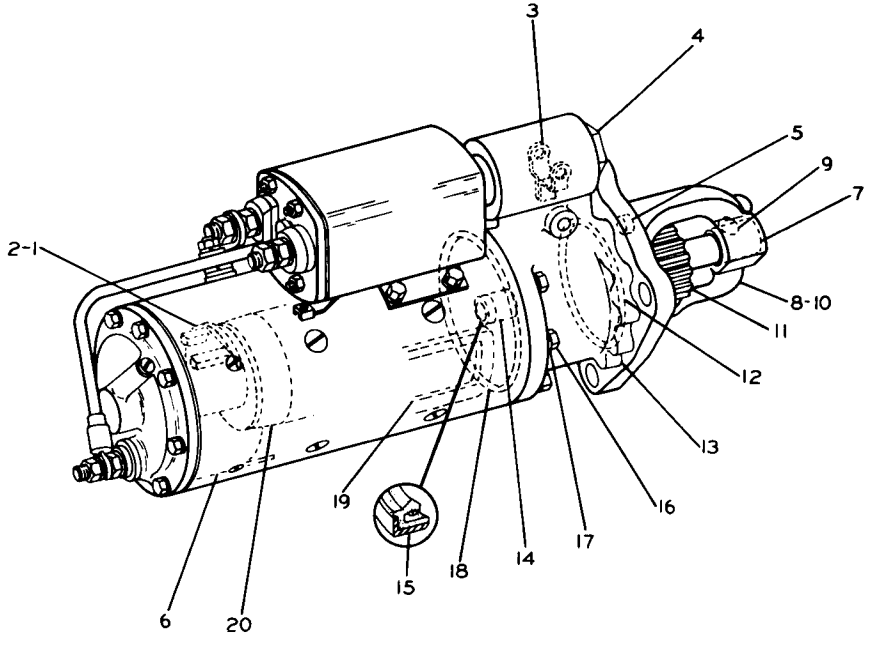

REF. NO.	PART NUMBER	DESCRIPTION	QTY
1	2P8822	PLATE ASSEM.	1
2	4N9401	KIT--(Includes 6 Brushes)	1
	2P8868	KIT--(Includes 8 Springs)	1
3	2P8825	SHIFT YOKE ASSEM.	1
4	2P8817	KIT--(Yoke Adjusting) (Includes Plugs, Pin, Gasket & Nut)	1
5	8S1535	KIT--(Includes 6 Plugs)	1
6	4N9402	KIT--(Includes 10 Insulations)	1
7	8S4684	KIT--(Bearing & Wick)	1
8	8S1543	HOUSING ASSEM.--(Pinion)	1
9	2B4602	PLUG	1
10	8S4680	KIT--(Includes 10 Seals)	1
11	4N4517	DRIVE ASSEM.	1
12	2H3931	SEAL	1
13	2P8824	HOUSING ASSEM.	1
	2B4602	PLUG	1
14	8S2226	BUSHING	1
15	8S2225	SEAL	1
16	L1340	SCREW	7
	2P8816	KIT--(Includes Housing Screws)	1
17	3B4504	LOCKWASHER	7
18	4M189	SEAL	1
19	2P8818	KIT--(Field Coil) (Includes Coils, Gaskets & Screws)	1
20	8S1546	ARMATURE ASSEM.	1
	8S8075	KIT--(Armature Thrust Washers)	1

200574

REF. NO.	PART NUMBER	DESCRIPTION	QTY
1	7F4556	BOLT	4
2	1L4789	LOCKWASHER	4
3	4M1844	FRAME ASSEM.	1
4	7S9826	PLUG	1
5	3S2398	BUSHING	1
6	2B4602	PLUG	1
7	9F2547	WICK	1
8	2L8166	WASHER	1
9	4M1868	ARMATURE ASSEM.	1
10	3L3380	BUSHING	1
11	4M1839	COIL ASSEM.	1
12	9H3757	WASHER	2
13	7F3494	WASHER	1
14	4M1841	CONNECTOR	1
15	1D5117	NUT	2

C	16	6N5123	SWITCH ASSEM. (Separate Illustration)	1
	17	6H3622	SCREW ASSEM.	4
	18	3B4508	LOCKWASHER	1
	19	3F379	SCREW	8
C	20	2N3145	INSULATOR	1
	21	4M1831	PLUG	2
	22	4M1832	GASKET	2
	23	1H2629	STRIP	2
	24	8H1141	SHOE	4

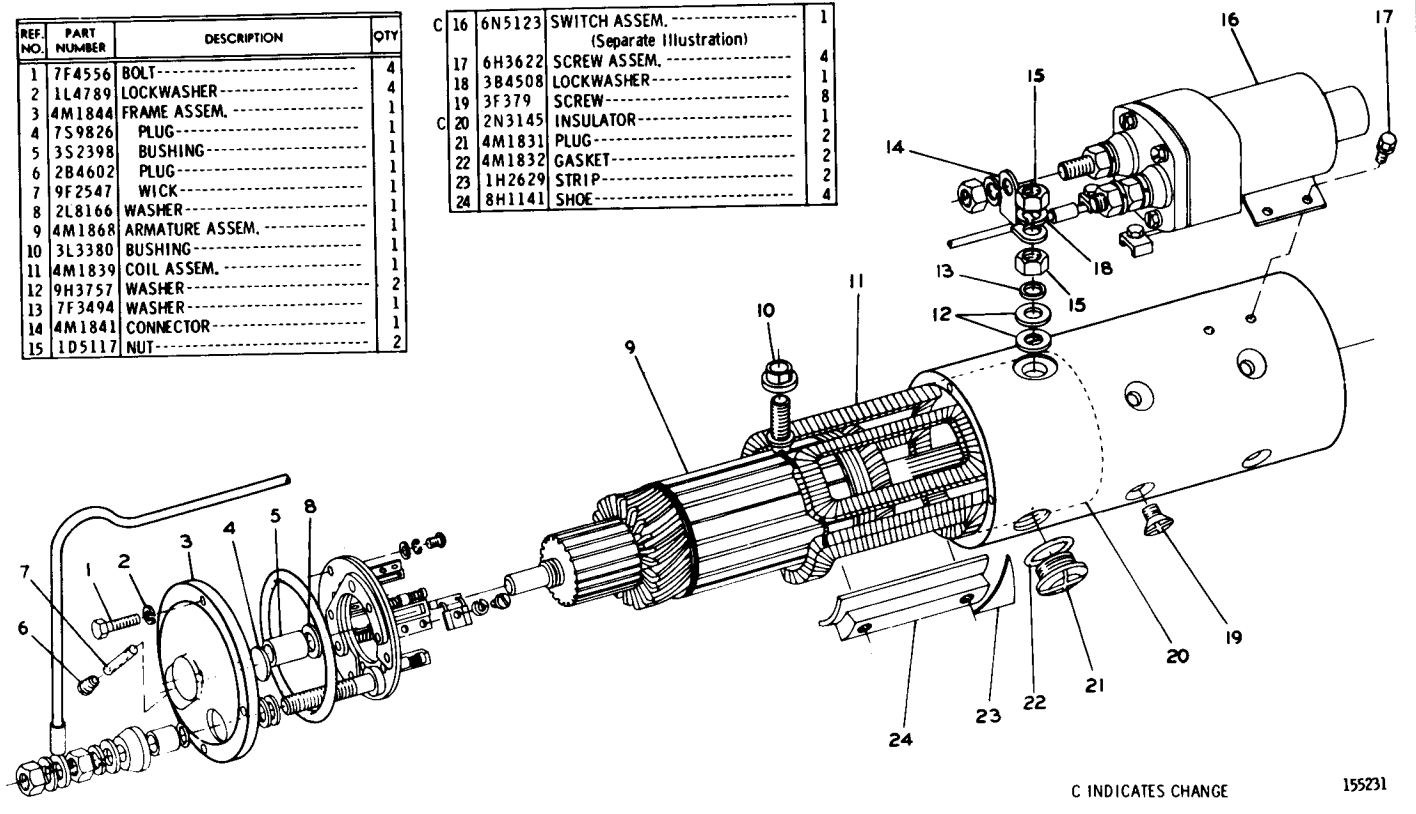

4N3182 ELECTRIC STARTING MOTOR GROUP—Delco-Remy—24 Volt—Part 1 of 3—Type 1
Part of 7S3622 Electric Starting Motor Group shown on Page 85. 6N5123 Switch parts are shown on Page 96
AN ATTACHMENT

4N3182 ELECTRIC STARTING MOTOR GROUP—Delco-Remy—24 Volt—Part 2 of 3—Type 1
Part of 7S3622 Electric Starting Motor Group shown on Page 85. AN ATTACHMENT

REF. NO.	PART NUMBER	DESCRIPTION	QTY
1	4M1849	LEAD ASSEM.	1
2	4M189	SEAL	1
3	7F3529	WASHER	3
4	8H878	LOCKWASHER	3
5	4B1221	SCREW	3
6	4M1846	PLATE ASSEM.	1
7	7F3525	BUSHING	8
8	7F4550	PLATE	1
9	5H6467	SCREW	2
10	7H2079	LOCKWASHER	8
11	2L6679	PLATE	2
12	7F4546	HOLDER	4
13	7F3522	SCREW	2
14	7F3512	SPRING	8
15	4M1891	PLATE ASSEM.	1
16	7F4549	PLATE	2
17	4B1311	SCREW	2
18	7F4545	PLATE	1
19	3H3697	SCREW	2

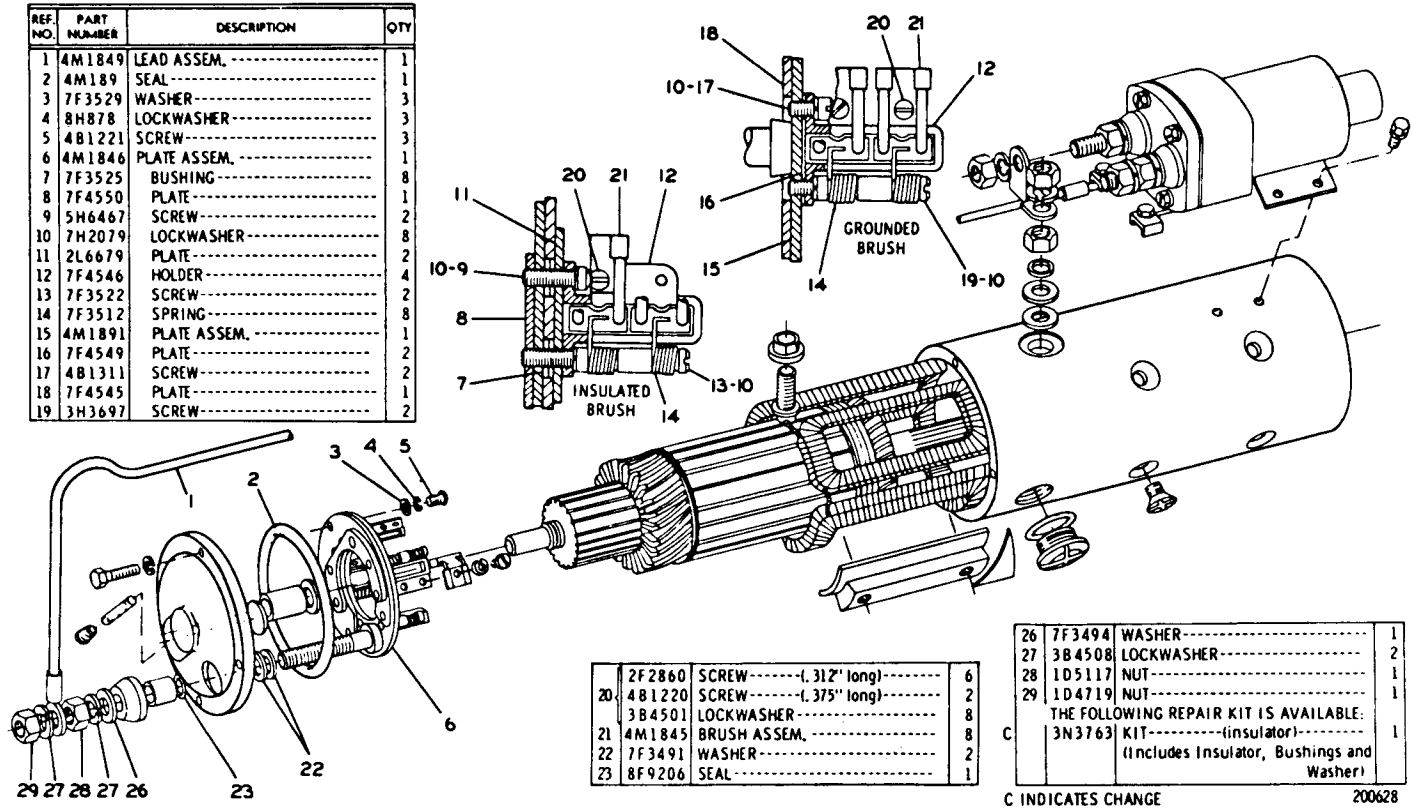

20	2F2860	SCREW-------(.312" long)--------	6
	4B1220	SCREW-------(.375" long)--------	2
	3B4501	LOCKWASHER----------	8
21	4M1845	BRUSH ASSEM.	8
22	7F3491	WASHER	2
23	8F9206	SEAL	1

26	7F3494	WASHER	1
27	3B4508	LOCKWASHER	2
28	1D5117	NUT	1
29	1D4719	NUT	1
		THE FOLLOWING REPAIR KIT IS AVAILABLE:	
C	3N3763	KIT----------(insulator)--------- (Includes Insulator, Bushings and Washer)	1

C INDICATES CHANGE

200628

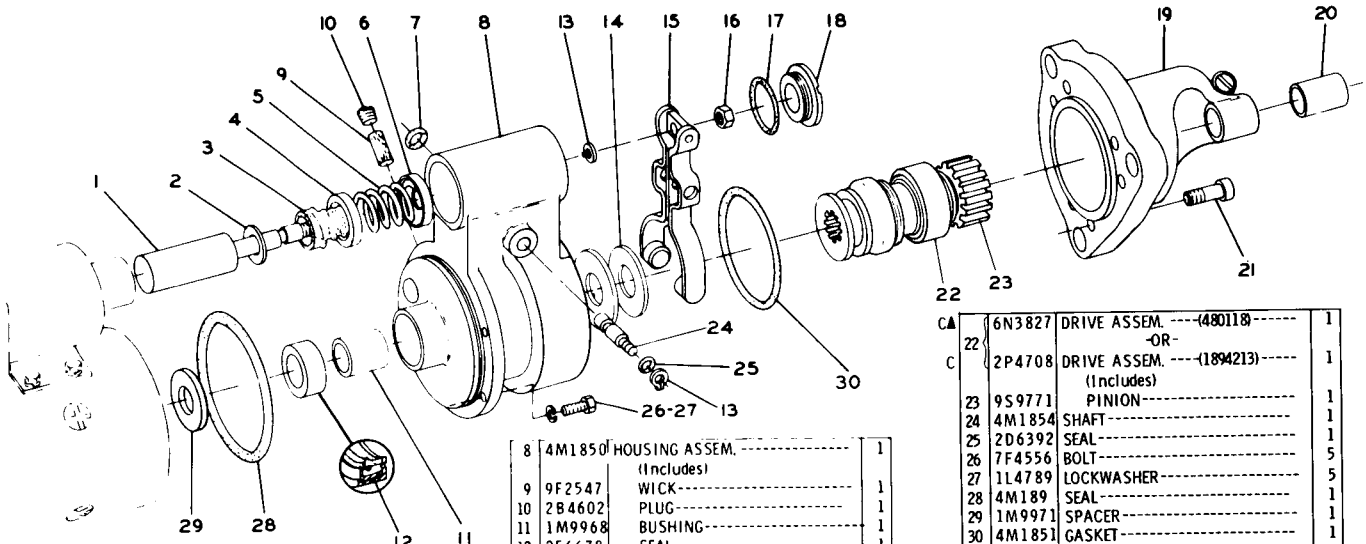

REF NO	PART NUMBER	DESCRIPTION	QTY
1	4M1855	PLUNGER ASSEM.	1
	FM055075	FORM----(installation instructions)	1
2	2S4027	WASHER	1
3	4M1829	BOOT	1
4	4M1828	RETAINER	1
5	9M7609	SPRING	1
6	4M1827	RETAINER	1
7	1H1023	SEAL	1
8	4M1850	HOUSING ASSEM. (Includes)	1
9	9F2547	WICK	1
10	2B4602	PLUG	1
11	1M9968	BUSHING	1
12	2F6678	SEAL	1
13	2H3429	RING	2
14	4L2729	WASHER	1
15	4M1853	LEVER ASSEM.	1
16	3F2617	NUT	1
17	4M1832	GASKET	1
18	4M1831	PLUG	1
19	1S297	HOUSING ASSEM. (Includes)	1
20	4M1896	BUSHING	1
21	4M1833	SCREW---1.50 in. (38.10 mm) long	5
	7M336	SCREW---.875 in. (22.23 mm) long	1
C▲ 22	6N3827	DRIVE ASSEM. ----(480118)---- -OR-	1
C 22	2P4708	DRIVE ASSEM. ----(1894213)---- (Includes)	1
23	9S9771	PINION	1
24	4M1854	SHAFT	1
25	2D6392	SEAL	1
26	7F4556	BOLT	5
27	1L4789	LOCKWASHER	5
28	4M189	SEAL	1
29	1M9971	SPACER	1
30	4M1851	GASKET	1
		THE FOLLOWING REPAIR KITS ARE AVAILABLE FOR 2P4708 DRIVE ASSEM.:	
C	7N6098	KIT--------(spring)---------- (Includes Cup & Spring)	1
	9S9825	KIT---------(cup)---------- (Includes Cup & Washers)	1
	4S9459	KIT-------(washer)---------- (Includes Cup & Washers)	1
	FM035152	FORM. ------(cup kit installation)--	1

C INDICATES CHANGE

▲ NOT PART OF 4N3182 MOTOR GROUP

217034

4N3182 ELECTRIC STARTING MOTOR GROUP—Delco-Remy—24 Volt—Part 3 of 3—Type 1
Part of 7S3622 Electric Starting Motor Group shown on Page 85. AN ATTACHMENT

4N3182 ELECTRIC STARTING MOTOR GROUP—Delco-Remy—24 Volt—Part 1 of 3—Type 2
Part of 7S3622 Starting Motor Group shown on Page 85
4M1812 Switch parts are shown on Page 95. AN ATTACHMENT

REF. NO.	PART NUMBER	DESCRIPTION	QTY
1	7F4556	BOLT	4
2	1L4789	LOCKWASHER	4
3	4M1844	FRAME ASSEM.	1
4	7S9826	PLUG	1
5	3S2398	BUSHING	1
6	2B4602	PLUG	1
7	9F2547	WICK	1
8	2L8166	WASHER	1
9	4M1868	ARMATURE ASSEM.	1
10	3L3380	BUSHING	1
11	4M1839	COIL ASSEM.	1
12	9H3757	WASHER	2
13	7F3494	WASHER	1
14	4M1841	CONNECTOR	1
15	1D5117	NUT	2

C	16	4M1812	SWITCH ASSEM. (Separate Illustration)	1
	17	6H3622	SCREW ASSEM.	4
	18	3B4508	LOCKWASHER	1
	19	3F379	SCREW	8
	20	2N3145	INSULATOR	1
	21	4M1831	PLUG	2
	22	4M1832	GASKET	2
	23	1H2629	STRIP	2
	24	8H1141	SHOE	4

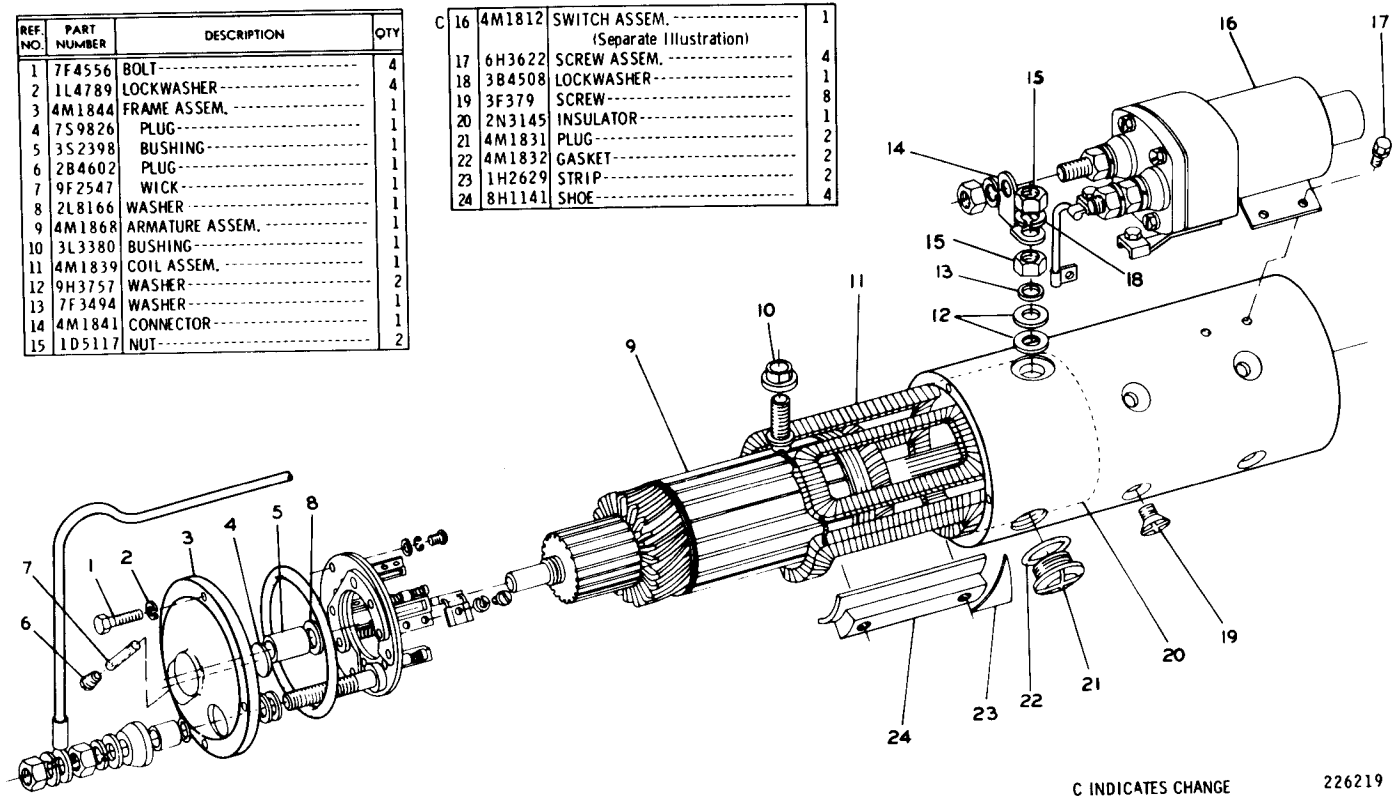

C INDICATES CHANGE

226219

REF. NO.	PART NUMBER	DESCRIPTION	QTY
1	4M1849	LEAD ASSEM.	1
2	4M189	SEAL	1
3	7F3529	WASHER	3
4	8H878	LOCKWASHER	3
5	4B1221	SCREW	3
6	4M1846	PLATE ASSEM.	1
7	7F3525	BUSHING	8
8	7F4550	PLATE	1
9	5H6467	SCREW	2
10	7H2079	LOCKWASHER	8
11	2L6679	PLATE	2
12	7F4546	HOLDER	4
13	7F3522	SCREW	2
14	7F3512	SPRING	8
15	4M1891	PLATE ASSEM.	1
16	7F4549	PLATE	2
17	4B1311	SCREW	2
18	7F4545	PLATE	1
19	3H3697	SCREW	2

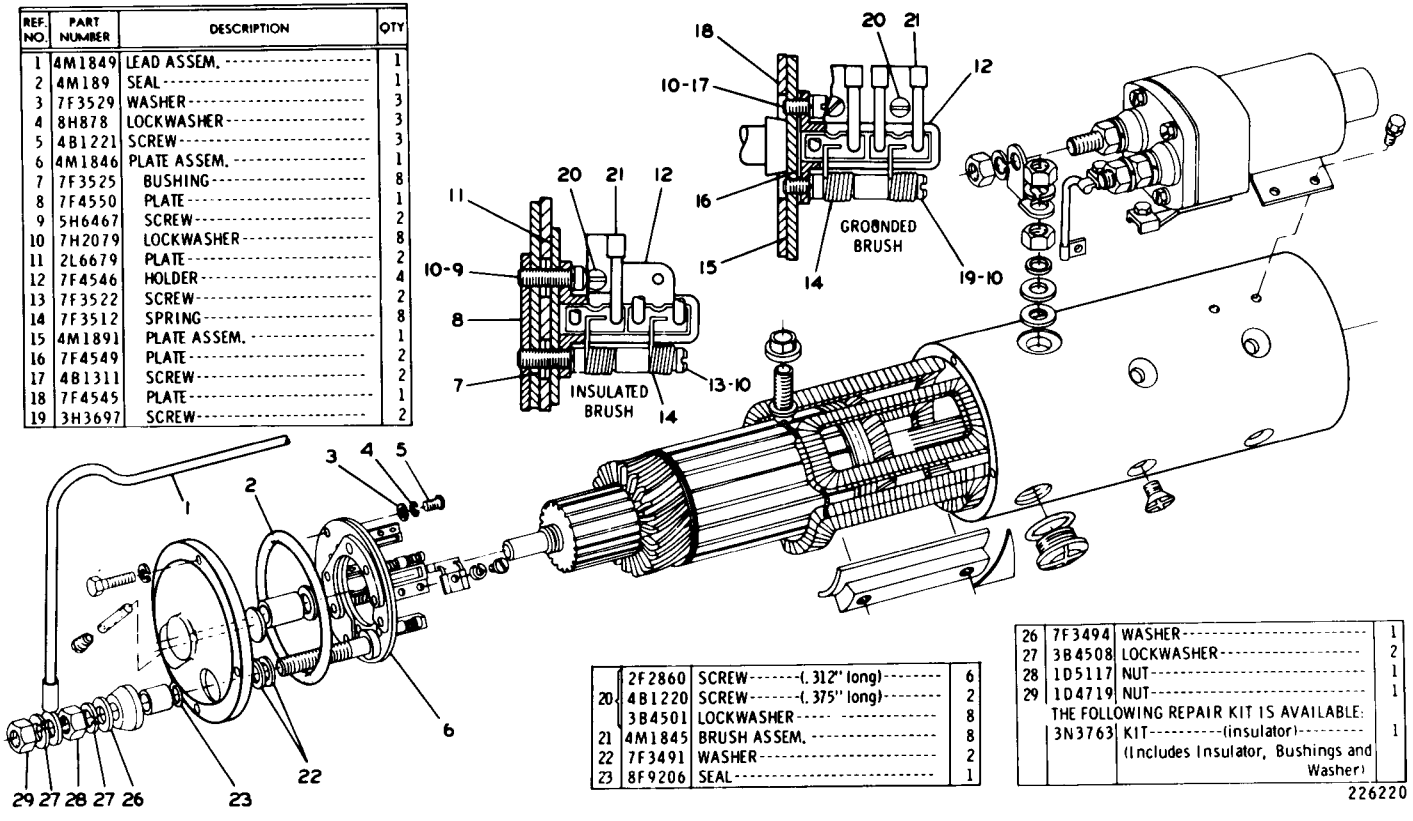

20	2F2860	SCREW-------(.312" long)--------	6
	4B1220	SCREW-------(.375" long)--------	2
	3B4501	LOCKWASHER-----	8
21	4M1845	BRUSH ASSEM.	8
22	7F3491	WASHER	2
23	8F9206	SEAL	1

26	7F3494	WASHER	1
27	3B4508	LOCKWASHER	2
28	1D5117	NUT	1
29	1D4719	NUT	1
	THE FOLLOWING REPAIR KIT IS AVAILABLE:		
	3N3763	KIT----------(insulator)---------- (Includes Insulator, Bushings and Washer)	1

226220

4N3182 ELECTRIC STARTING MOTOR GROUP—Delco-Remy—24 Volt—Part 2 of 3—Type 2
Part of 7S3622 Starting Motor Group shown on Page 85. AN ATTACHMENT

4N3182 ELECTRIC STARTING MOTOR GROUP—Delco-Remy—24 Volt—Part 3 of 3—Type 2
Part of 7S3622 Starting Motor Group shown on Page 85. AN ATTACHMENT

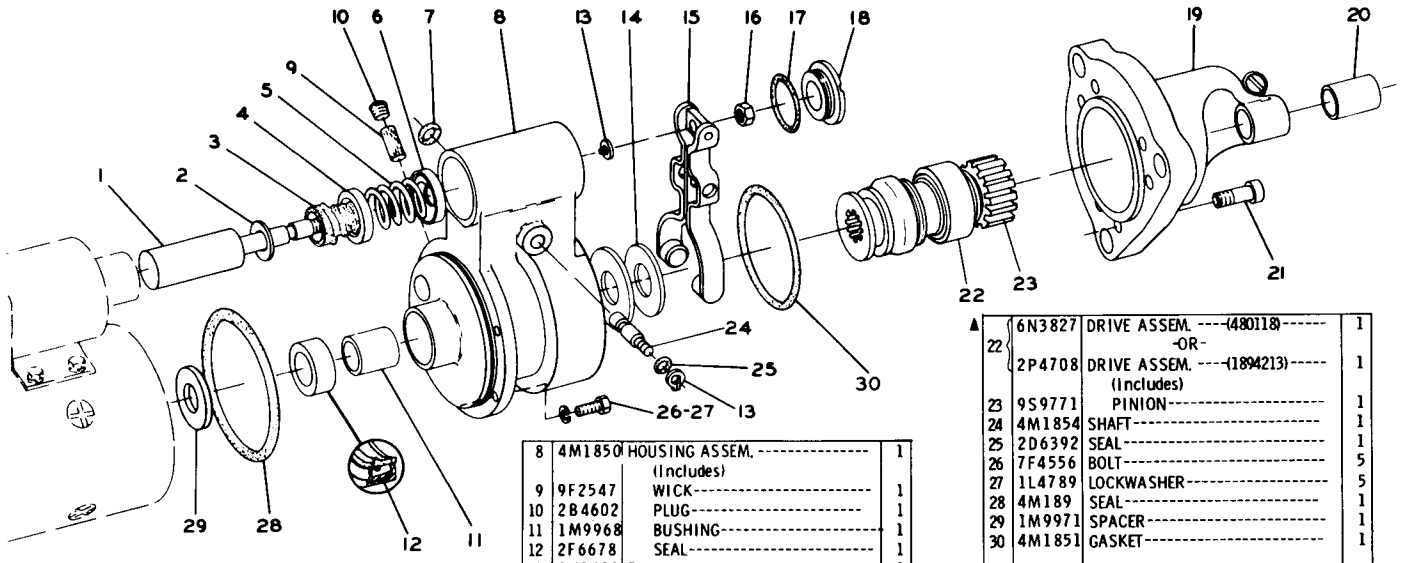

REF. NO.	PART NUMBER	DESCRIPTION	QTY
1	4M1855	PLUNGER ASSEM.	1
	FM055075	FORM----(installation instructions)	1
2	2S4027	WASHER	1
3	4M1829	BOOT	1
4	4M1828	RETAINER	1
5	9M7609	SPRING	1
6	4M1827	RETAINER	1
7	1H1023	SEAL	1
8	4M1850	HOUSING ASSEM. (Includes)	1
9	9F2547	WICK	1
10	2B4602	PLUG	1
11	1M9968	BUSHING	1
12	2F6678	SEAL	1
13	2H3429	RING	2
14	4L2729	WASHER	1
15	4M1853	LEVER ASSEM.	1
16	3F2617	NUT	1
17	4M1832	GASKET	1
18	4M1831	PLUG	1
19	1S297	HOUSING ASSEM. (Includes)	1
20	4M1896	BUSHING	1
21	4M1833	SCREW---1.50 in. (38.10 mm) long	5
	7M336	SCREW---.875 in. (22.23 mm) long	1

▲ 22	6N3827	DRIVE ASSEM. ----(480118)----	1
		-OR-	
	2P4708	DRIVE ASSEM. ----(1894213)---- (Includes)	1
23	9S9771	PINION	1
24	4M1854	SHAFT	1
25	2D6392	SEAL	1
26	7F4556	BOLT	5
27	1L4789	LOCKWASHER	5
28	4M189	SEAL	1
29	1M9971	SPACER	1
30	4M1851	GASKET	1
		THE FOLLOWING REPAIR KITS ARE AVAILABLE FOR 2P4708 DRIVE ASSEM.:	
	7N6098	KIT--------(spring)---------- (Includes Cup & Spring)	1
	9S9825	KIT---------(cup)---------- (Includes Cup & Washers)	1
	4S9459	KIT-------(washer)---------- (Includes Cup & Washers)	1
	FM035152	FORM. ------(cup kit installation)--	1

226221

▲ NOT PART OF 4N3182 MOTOR GROUP

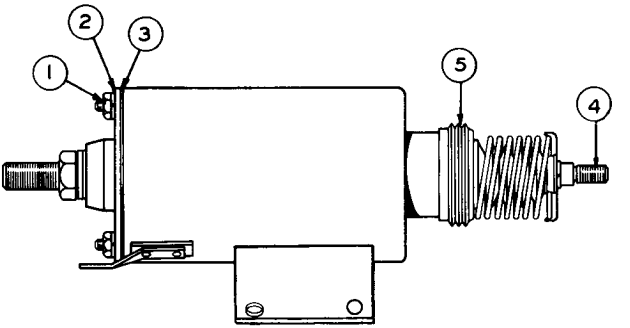

REF. NO.	PART NUMBER	DESCRIPTION	QTY.
1	9M7657	NUT----------	4
2	8S8023	COVER ASSEM. ---------- (Includes)	1
3	8S8024	GASKET----------	1
4	3T3370	CORE ASSEM. ----------	1
5	8S1528	BOOT----------	1

The following Repair Kits are available:

8S1524-KIT--------(Terminal Stud-Battery)--------1
8S1525-KIT---------(Terminal Stud-Motor)--------- 1
9S8688-KIT----------(Core-Contact End)---------- 1
8S1527-KIT----------(Core-Yoke End)---------- 1

181240

3T3369 SOLENOID SWITCH ASSEMBLY
Part of 9G4337 Electric Starting Motor Group shown on Page 89C

REF. NO.	PART NUMBER	DESCRIPTION	QTY
C 1	7N1269	TERMINAL ASSEM.	1
	4M1834	PLATE	1
2	7F4907	STRIP	1
3	3H3681	NUT	2
4	3B4508	LOCKWASHER	4
5	3H3680	NUT	2
6	7F3494	WASHER	2
7	4M1836	INSULATOR	2
8	4M1837	BUSHING	2
9	7F4906	STUD	1
10	4M2800	TERMINAL	1
11	7N1271	TERMINAL ASSEM.	1
12	4M5274	SCREW--(hex head)	1
		- OR -	
C	5P9132	SCREW--(truss head)	1
13	1P3879	LEAD ASSEM.	1
14	4M3217	SCREW	2
C 15	9G6770	CONTACT ASSEM.	1
16	4M1813	CASE ASSEM.	1
17	1F73	CLIP	2
18	4M1815	SPRING	1
19	9M7657	NUT	4
		- OR -	
	9S4489	SCREW ASSEM.	4
20	9S4490	GASKET	4

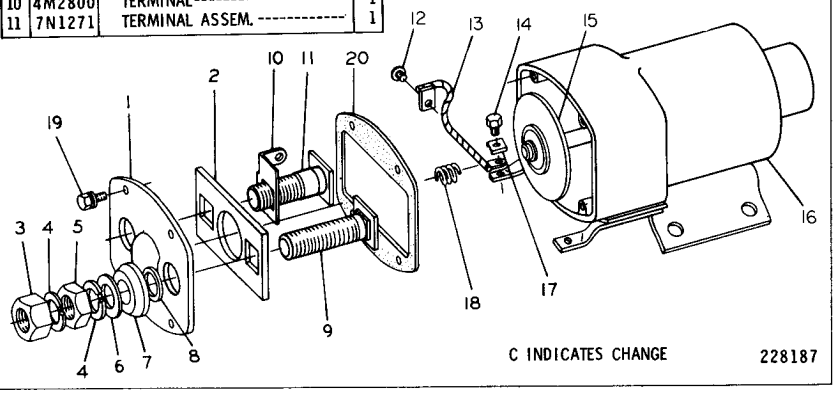

4M1812 SOLENOID SWITCH ASSEMBLY
Part of 7N1285 & 4N3182 Electric Starting Motor Group shown on Pages 86 & 94A

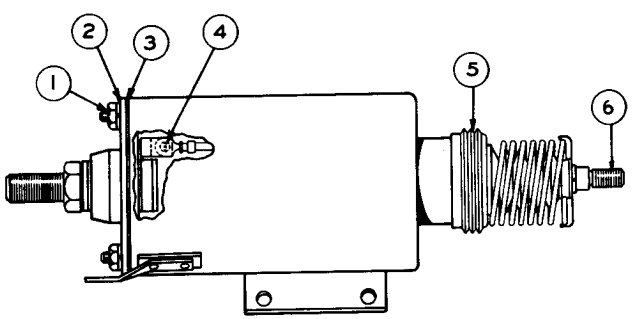

REF. NO.	PART NUMBER	DESCRIPTION	QTY.
C 1	9M7657	NUT	4
2	8S8023	COVER ASSEM.	1
3	8S8024	GASKET	1
		(Part of 8S8023 Cover Assem.)	
4	9B7235	SCREW	1
	9M7233	LOCKWASHER	1
5	8S1528	BOOT	1
6	8S8021	CORE ASSEM.	1

The following Repair Kits are available:
8S1524-KIT--------(Terminal Stud-Battery)--------1
8S1525-KIT---------(Terminal Stud-Motor)--------1
9S8688-KIT----------(Core-Contact End)----------1
8S1527-KIT----------(Core-Yoke End)----------1

C INDICATES CHANGE

115899

9S7976 SOLENOID SWITCH ASSEMBLY
Part of 3P6 and 4N7752 Electric Starting Motor Groups shown on Pages 88 & 90

REF. NO.	PART NUMBER	DESCRIPTION	QTY
C 1	7N908	TERMINAL ASSEM. (Includes)	1
	4M1834	PLATE	1
2	7F4907	STRIP	1
3	3H3681	NUT	2
4	3B4508	LOCKWASHER	4
5	3H3680	NUT	2
6	7F3494	WASHER	2
7	4M1836	INSULATOR	2
8	4M1837	BUSHING	2
C 9	7F4906	STUD	1
10	7N909	TERMINAL ASSEM.	1
11	9S4490	GASKET	1
12	4M5274	SCREW---(large)	1
		- OR -	
C	5P9132	SCREW---(small)	1
13	9S4489	SCREW ASSEM.	4
14	4M3217	SCREW	2
15	4M1814	CONTACT ASSEM.	1
16	3P72	CASE ASSEM.	1
17	1F73	CLIP	2
18	4M1815	SPRING	1

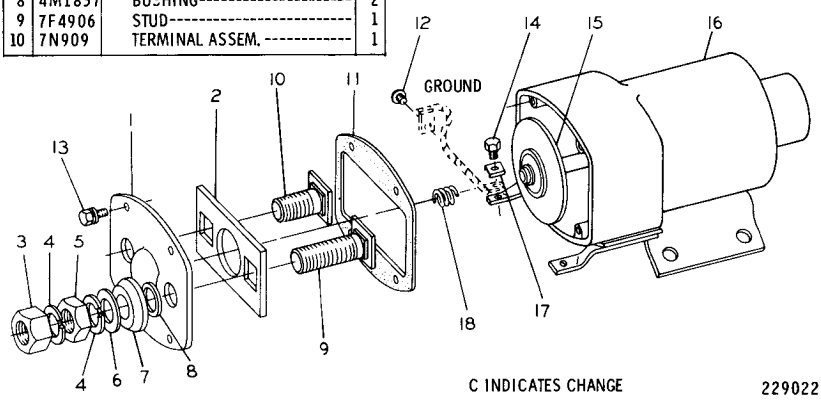

6N5123 SOLENOID SWITCH ASSEMBLY
Part of 4N3182 Electric Starting Motor Group shown on Page 92
AN ATTACHMENT

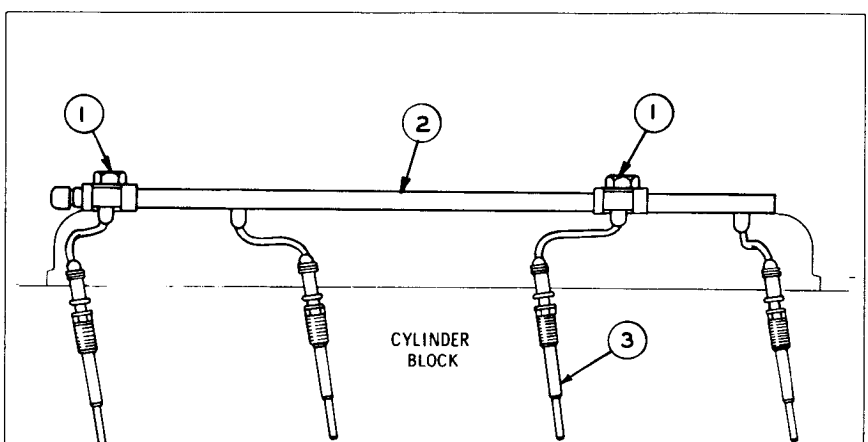

REF. NO.	PART NUMBER	DESCRIPTION	QTY
C 1	2H3755	BOLT	2
C	9M1974	WASHER	2
C 2	7N9634	LEAD ASSEM.	1
C 3	4N360	GLOW PLUG	4

C INDICATES CHANGE 221039

5S8500 GLOW PLUG GROUP—24 Volt

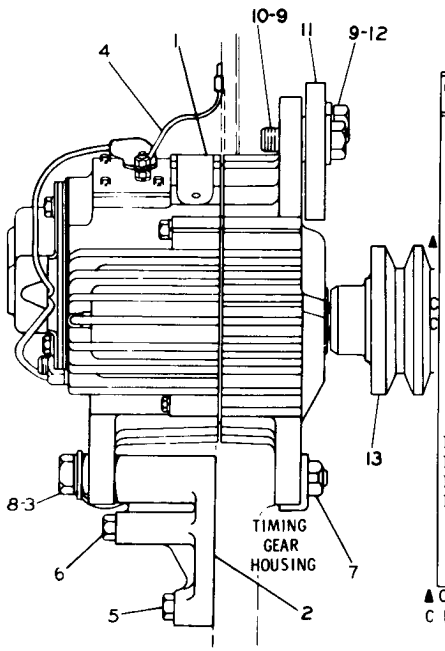

REF. NO.	PART NUMBER	DESCRIPTION	QTY
1	2P1204	ALTERNATOR ASSEM. (Separate Illustration)	1
2	7S6723	BRACKET	1
3	1D4574	BOLT--15.24 cm(6 in.)long	1
	9S4146	WIRE ASSEM. (Includes)	1
▲ 4	5P5622	WIRE--.16 m(6.5 in.)	
	2L8069	TERMINAL--(large)	1
	2L8066	TERMINAL--(small)	1
5	2D2285	BOLT	1
6	7F1866	BOLT	1
	9S1240	NUT ASSEM. (Includes)	1
7	1F748	NUT	1
8	8M4791	WASHER	1
9	S1585	BOLT	2
10	8M4791	WASHER	2
11	8S4183	STRAP	1
12	2S6735	SPACER	1
13	9S6129	PULLEY	1

▲ ORDER BY THE METRE
C INDICATES CHANGE

167177

6N5468 ALTERNATOR GROUP—24 Volt, 19 Ampere
Serial No. 13X1 to 13X1144 inclusive
2P1204 Alternator parts are shown on Page 99B
Note: 2P2696 Vee Belt Set, consisting of 2 belts, is used

		CONSISTS OF:	PAGE
1	5S9088	ALTERNATOR ASSEMBLY	98
1	1H6936	WIRE ASSEMBLY--ALTERNATOR TO ENGINE	
		CONSISTING OF:	
2	8B653	INSULATOR	
1	9F5320	TERMINAL	
1	9F9353	TERMINAL	
1	9S173	CIRCUIT BREAKER--60 AMPERE	
1	9S6129	PULLEY--ALTERNATOR DRIVE	

9D1460 ALTERNATOR ARRANGEMENT—24 Volt, 50 Ampere
Serial No. 13X1 to 13X1144 inclusive. AN ATTACHMENT

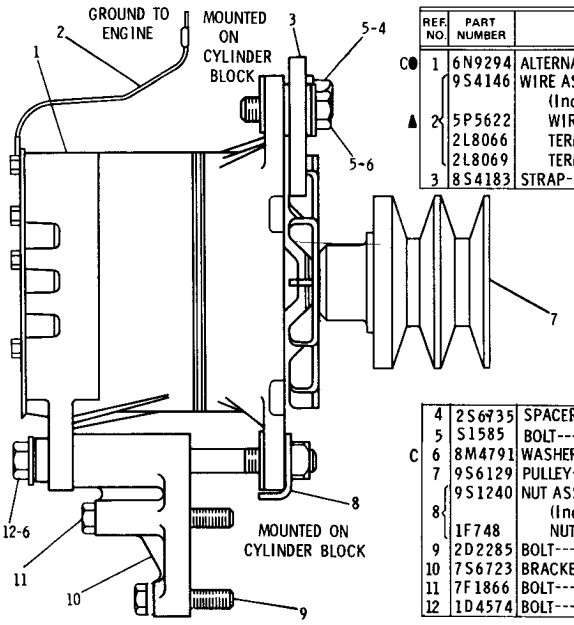

REF. NO.	PART NUMBER	DESCRIPTION	QTY
C● 1	6N9294	ALTERNATOR GROUP	1
	9S4146	WIRE ASSEM. (Includes)	1
▲ 2	5P5622	WIRE. 16 m(6.5 in.)	
	2L8066	TERMINAL (small)	1
	2L8069	TERMINAL (large)	1
3	8S4183	STRAP	1
4	2S6735	SPACER	1
5	S1585	BOLT	2
C 6	8M4791	WASHER	4
7	9S6129	PULLEY	1
	9S1240	NUT ASSEM. (Includes)	1
8	1F748	NUT	1
9	2D2285	BOLT	1
10	7S6723	BRACKET	1
11	7F1866	BOLT	1
12	1D4574	BOLT	1

● SEPARATE ILLUSTRATION
▲ ORDER BY THE METER
C INDICATES CHANGE

229212

6N5468 ALTERNATOR GROUP—24 Volt, 35 Ampere
Serial No. 13X1145—Up
6N9294 Alternator parts are shown on Pages 100 and 100A
Note: 2P2696 Vee Belt Set, consisting of 2 belts, is used

CONSISTS OF: PAGE

1 5S9088 ALTERNATOR GROUP 98

1 1H6936 WIRE ASSEMBLY--ALTERNATOR TO ENGINE

CONSISTS OF:

1 2L8060 TERMINAL--No. 8 WIRE--3/8 SCREW

1 2L8058 TERMINAL--No. 8 WIRE--3/8 SCREW

▲ 5P5689 WIRE

.30 M (12 IN.)

▲ SOLD BY THE METER

8N1084 CHARGING ALTERNATOR GROUP—24 Volt, 50 Ampere
Serial No. 13X1145—Up. AN ATTACHMENT

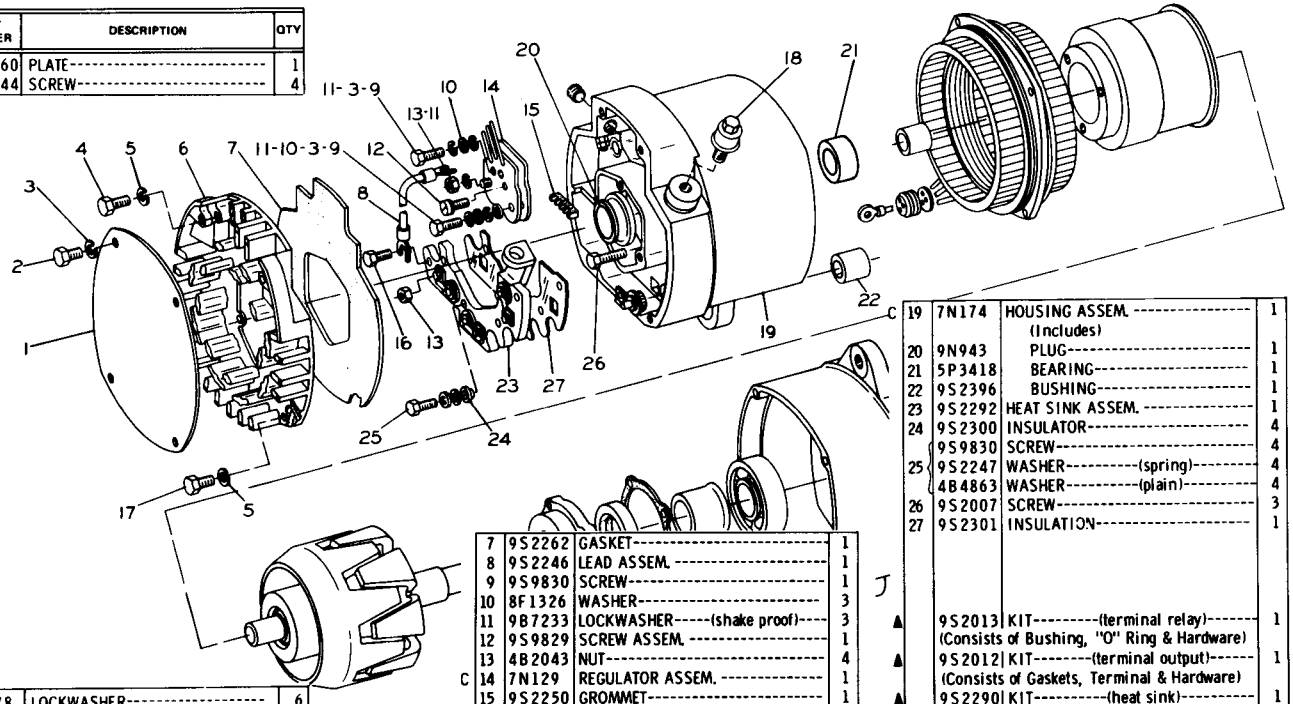

REF. NO.	PART NUMBER	DESCRIPTION	QTY
1	9S2260	PLATE	1
2	9S2544	SCREW	4
3	8H878	LOCKWASHER	6
4	9S2438	SCREW	2
5	7H2079	LOCKWASHER	7
6	9S2255	COVER	1
7	9S2262	GASKET	1
8	9S2246	LEAD ASSEM.	1
9	9S9830	SCREW	1
10	8F1326	WASHER	3
11	9B7233	LOCKWASHER-----(shake proof)----	3
12	9S9829	SCREW ASSEM.	1
13	4B2043	NUT	4
C 14	7N129	REGULATOR ASSEM.	1
15	9S2250	GROMMET	1
16	9S2542	SCREW	1
17	9S2437	SCREW	5
18	9S2389	STUD ASSEM.	1
19	7N174	HOUSING ASSEM. (Includes)	1
20	9N943	PLUG	1
21	5P3418	BEARING	1
22	9S2396	BUSHING	1
23	9S2292	HEAT SINK ASSEM.	1
24	9S2300	INSULATOR	4
25	9S9830	SCREW	4
	9S2247	WASHER----------(spring)--------	4
	4B4863	WASHER----------(plain)---------	4
26	9S2007	SCREW	3
27	9S2301	INSULATION	1
▲	9S2013	KIT---------(terminal relay)------- (Consists of Bushing, "O" Ring & Hardware)	1
▲	9S2012	KIT--------(terminal output)------ (Consists of Gaskets, Terminal & Hardware)	1
▲	9S2290	KIT----------(heat sink)---------- (Diode Junction Hardware)	1
▲	9S2291	KIT----------(heat sink)---------- (Positive Diode Hardware)	1

C INDICATES CHANGE

▲ NOT PART OF 5S9088 ALTERNATOR ASSEM. 162528

5S9088 ALTERNATOR ASSEMBLY—24 Volt, 50 Ampere—Part 1
Part of 9D1460 Alternator Arrangement listed on Page 97
AN ATTACHMENT

5S9088 ALTERNATOR ASSEMBLY—24 Volt, 50 Ampere—Part 2
Part of 9D1460 Alternator Arrangement listed on Page 97
AN ATTACHMENT

	REF. NO.	PART NUMBER	DESCRIPTION	QTY
C	1	5P3419	RACE	1
	2	9S2248	FIELD COIL AND SUPPORT ASSEM.	1
	3	9S2004	STATOR ASSEM.	1
	4	9S2006	INSULATOR	1
	5	9S2005	GROMMET	1
	6	9S2014	CLIP	3
	7	9S2302	ROTOR ASSEM.	1
	8	9S2390	RETAINER ASSEM.	1
	9	9S2391	SEAL	1
	10	9S2256	GASKET	1
	11	9S2261	COLLAR	1
	12	2F5721	BEARING	1
	13	2P5616	FRAME	1
	14	3B4502	LOCKWASHER	4
	15	9S2009	BOLT	4
	16	9S2391	SEAL	1
	17	9S2254	COLLAR	1
	18	9S2252	SLINGER	1
	19	9S2008	SCREW	4
	20	9S2258	FAN AND BAFFLE ASSEM.	1
	21	7F7621	WASHER	1
	22	2K4821	LOCKNUT	1

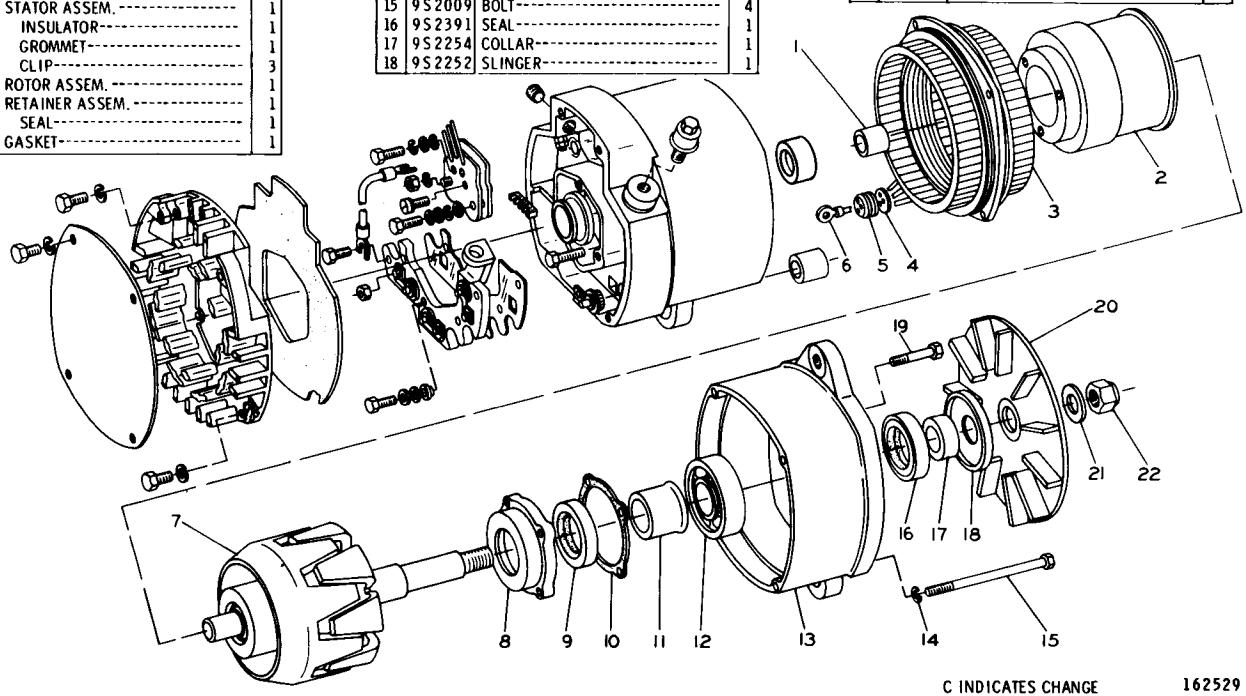

C INDICATES CHANGE

162529

2P1204 ALTERNATOR GROUP—24 Volt, 19 Ampere
Serial No. 13X1 to 13X1144 inclusive
Part of 6N5468 Alternator Group shown on Page 97

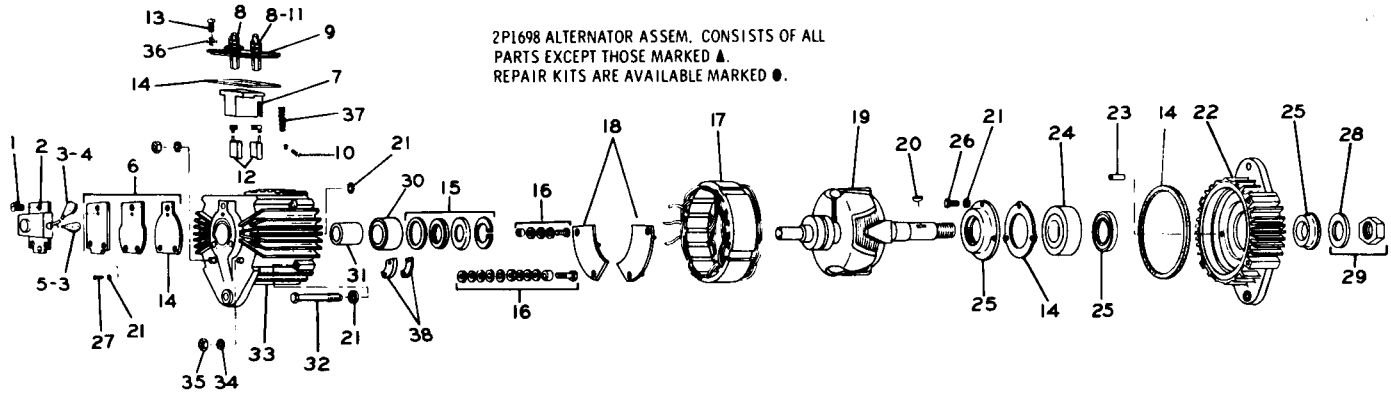

	REF. NO.	PART NUMBER	DESCRIPTION	QTY
	1	310243	SCREW	3
C▲		6N3821	REGULATOR ASSEM.	1
	2	3K6234	SCREW	1
		4B4863	WASHER	1
	3	98708	BOOT	2
	4	2L8076	TERMINAL	1
	5	2L8077	TERMINAL	1
●	6	1P1091	KIT-(Reg. Mounting Plate & Gasket)	
		1P1145	HOLDER ASSEM.	1
	7	1P1137	HOLDER	1
		4B2049	NUT	4
	8	3B4502	LOCKWASHER	4
	9	1P1138	FIELD TERMINAL & PLATE ASSEM.	1
		5S4245	SCREW	2
	10	6B4542	LOCKWASHER	2
	11	4B4274	WASHER	1

●	12	1P1130	KIT-(2 Brushes)	1
	13	324000	SCREW	4
●	14	2P1714	KIT-(4 Gaskets)	1
●	15	1P1080	KIT-(Retainer and Seals)	1
C●	16	6N6717	KIT- (insulator) (Terminal Stud)	1
	17	2P1709	RECTIFIER & STATOR ASSEM.	1
	18	2P1719	PLATE & RECTIFIER ASSEM. (Positive)	1
		2P1720	PLATE & RECTIFIER ASSEM. (Negative)	1
C	19	6N1226	ROTOR ASSEM.	1
	20	1B8705	KEY	1
	21	3B4502	LOCKWASHER	10
C	22	6N5255	HEAD ASSEM.	1
	23	6D9953	PIN	2
C	24	1B5387	BEARING	1

GMG00844-FORM(Alternator Installation)--1

●	25	2P1713	KIT-(Retainer and Seal) (Retainer, Seal, Spacer, Washer)	1
	26	172311	SCREW	3
	27	9M5520	SCREW	1
	28	3B4511	LOCKWASHER	1
●	29	1P1131	KIT-(Shaft Parts-Nut & Lockwasher)	1
	30	2L611	BEARING	1
	31	1P1134	RACE	1
C●	32	6N5257	KIT- (frame screw-12 bolts)	1
C	33	6N5254	HEAD ASSEM.	1
	34	3B4507	LOCKWASHER-11mm(.437 in.)I.D.	2
		3B4504	LOCKWASHER-6.35mm(.25 in.)I.D.	2
	35	1D4718	NUT-11mm(.437 in.)I.D.	2
		9M1311	NUT-6.35mm(.25 in.)I.D.	2
	36	2H6139	LOCKWASHER	4
●	37	1P1088	KIT-(2 Brush Springs)	1
C	38	2P6261	INSULATOR	2

C INDICATES CHANGE

207038

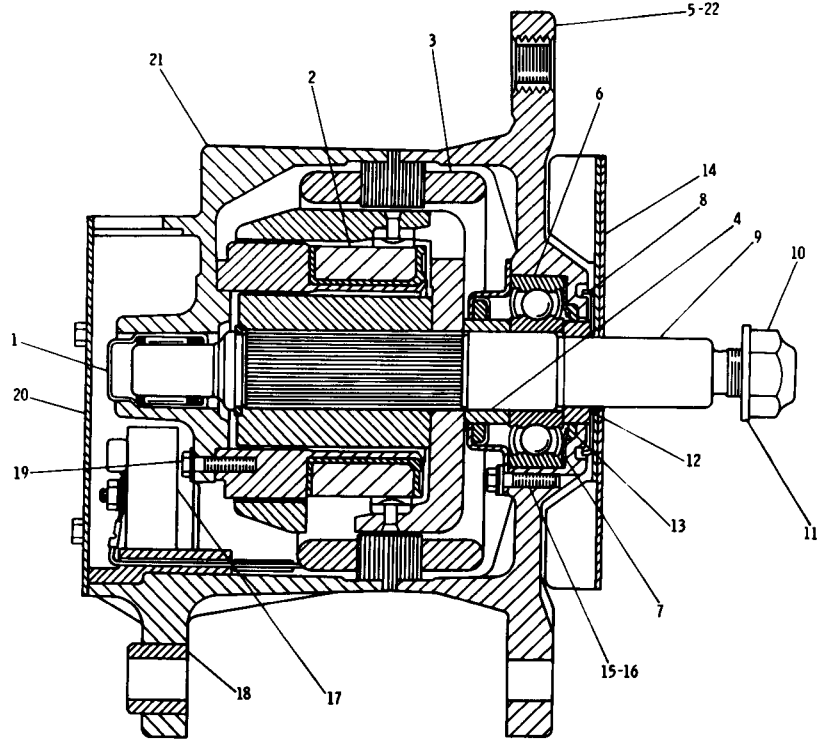

REF. NO.	PART NUMBER	DESCRIPTION	QTY
1	5P6920	BEARING	1
2	7N7806	COIL ASSEM.	1
3	7N7804	STRATOR ASSEM.	1
4	7N7795	COLLAR	1
5	7N7810	FRAME ASSEM.	1
6	5P9514	BEARING	1
7	9L2140	PLATE	1
8	9L6782	SHIELD	1
9	7N7800	ROTOR ASSEM.	1
10	2K4821	LOCKNUT	1
11	7F7621	WASHER	1
12	9L6783	COLLAR	1
13	9L2139	WASHER	1
14	9N1210	FAN ASSEM.	1
15	7N9020	SCREW ASSEM.	3
16	9L2137	RETAINER ASSEM.	1
C 17	7N7122	RECTIFIER ASSEM.	1
18	9S2396	BUSHING	1
19	9S2007	SCREW	4
20	7N7809	PLATE	1
C 21	7N7805	HOUSING	1
22	7N9024	BOLT	4

C INDICATES CHANGE 226124

6N9294 ALTERNATOR GROUP—24 Volt, 35 Ampere—Part 1
Serial No. 13X1145 to 13X2331 Inclusive
Part of 6N5468 Alternator Group shown on Page 97B

6N9294 ALTERNATOR GROUP—24 Volt, 35 Ampere—Part 2
Serial No. 13X1145 to 13X2331 inclusive
Part of 6N5468 Alternator Group shown on Page 97B

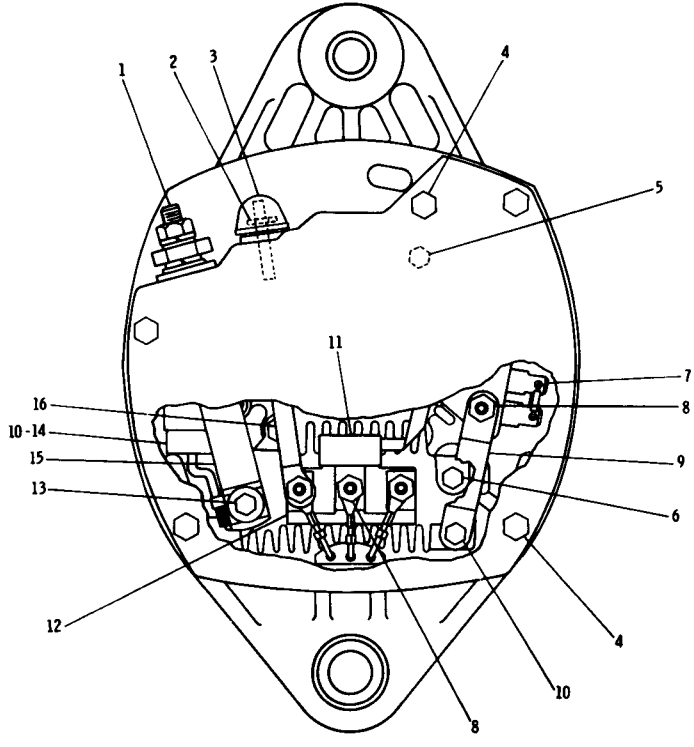

REF. NO.	PART NUMBER	DESCRIPTION	QTY
1	7N7807	TERMINAL KIT-----(output)------- (Includes Insulator, Screw, Washers, Lockwasher,Nut,&Adapter)	1
2	7N7808	TERMINAL KIT---------- (Includes Stud, Bushings, Washers & Nut Assem.)	1
3	9L6770	CAP----------	1
4	8N740	SCREW ASSEM.----------	5
5	7N9022	SCREW ASSEM.----------	2
	9N938	WASHER----------	2
6	7N9023	SCREW ASSEM.----------	2
7	7N7799	REGULATOR ASSEM.----------	1
8	6N1869	NUT ASSEM.----------	4
9	7N7811	CONNECTOR----------	1
10	7N9018	SCREW ASSEM.----------	3
11	9N1202	DIODE ASSEM.----------	1
12	7N7797	INSULATOR----------	2
13	7N9021	SCREW ASSEM.----------	2
	7N7796	BUSHING----------	1
14	7N7802	CAPACITOR ASSEM.----------	1
	3N4082	BRACKET----------	1
15	7N7798	CONNECTOR----------	1
16	7N7801	CONNECTOR----------	1

218759

		CONSISTS OF:	PAGE
1	9G8255	ALTERNATOR GROUP--DELCO-REMY	100D
	- OR -		
1	7N9720	ALTERNATOR GROUP	100C

6N9294 ALTERNATOR GROUP—24 Volt, 35 Ampere
Serial No. 13X2332—Up
Part of 6N5468 Alternator Group shown on Page 97B

7N9720 ALTERNATOR GROUP—24 Volt, 35 Ampere
Serial No. 13X2332 to 13X3002 inclusive
Part of 6N9294 Alternator Group listed on Page 100B

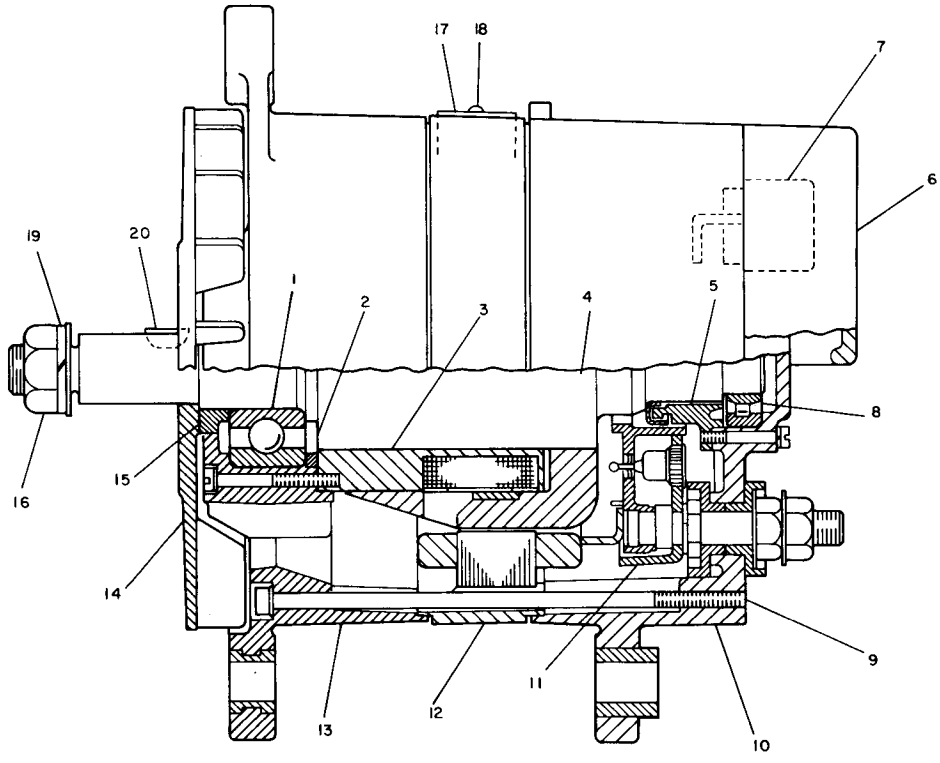

REF. NO.	PART NUMBER	DESCRIPTION	QTY.
1	9G7551	BEARING	1
2	9G7548	RING	1
3	9G7558	COIL ASSEM.	1
4	9G7560	ROTOR ASSEM.	1
5	9G7553	RING	1
6	9G7562	COVER ASSEM.	1
7	9G7567	REGULATOR ASSEM.	1
8	9G7552	BEARING	1
9	9G7557	SCREW ASSEM.	1
10	9G7568	FRAME ASSEM.	1
11	9G7563	DIODE ASSEM.	1
12	9G7561	STATOR ASSEM.	1
13	9G7566	FRAME	1
14	9G7564	FAN	1
15	9G7549	SPACER	1
16	2K4821	LOCKNUT	1
	7K7621	WASHER	1
C 17	3T5962	NAMEPLATE	1
C 18	2H3880	SCREW—(drive)	2
C 19	3B4510	LOCKWASHER	1
C 20	1B8705	KEY	1
		THE FOLLOWING REPAIR KITS ARE AVAILABLE:	
	9G7554	KIT—(ground terminal) (Includes nuts & lockwashers)	1
	9G7555	KIT—(output terminal) (Includes nuts, washers & bushings)	1
	9G7556	KIT—(capacitor) (Includes capacitor, screw, lockwasher & washer)	1
	9G7559	KIT—(relay terminal) (Includes splice, tube, nut, terminal, lockwasher, washers, and bushing)	1
	9G7565	KIT—(regulator terminal) (Includes nuts, lockwashers, washers and bushing)	1

C INDICATES CHANGE

235257

7N9720 ALTERNATOR GROUP—24 Volt, 35 Ampere
Serial No. 13X3003—Up
Part of 6N9294 Alternator Group listed on Page 100B

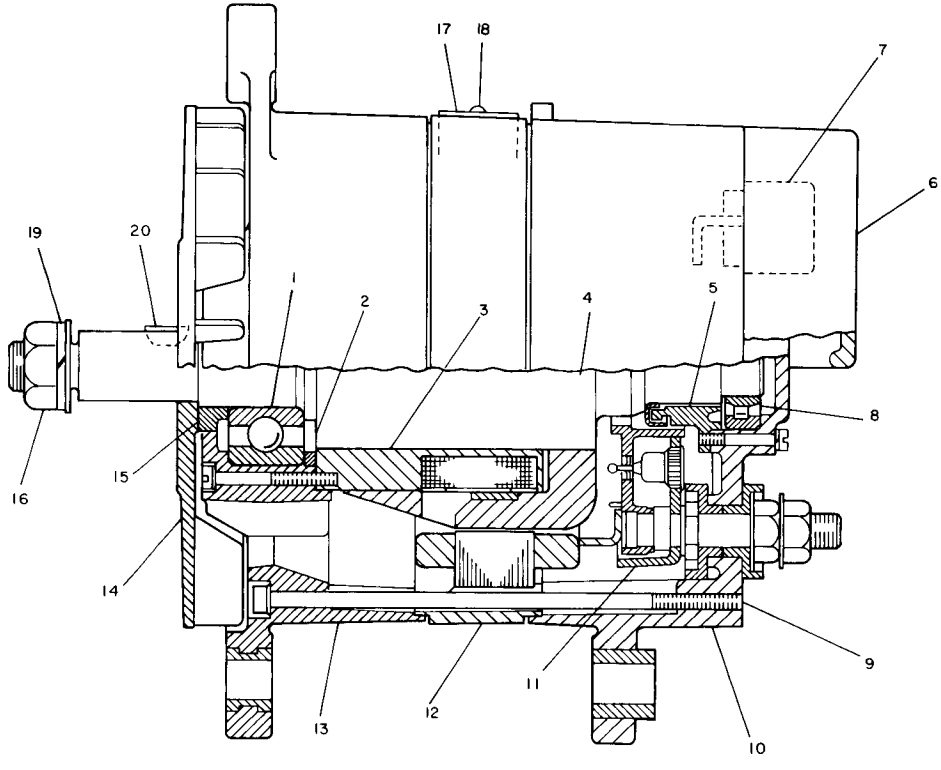

	REF. NO.	PART NUMBER	DESCRIPTION	QTY.
	1	9G7551	BEARING	1
	2	9G7548	RING	1
	3	9G7558	COIL ASSEM.	1
	4	9G7560	ROTOR ASSEM.	1
	5	9G7553	RING	1
	6	9G7562	COVER ASSEM.	1
	7	9G7567	REGULATOR ASSEM.	1
	8	9G7552	BEARING	1
C	9	9G7557	SCREW ASSEM.	4
	10	9G7568	FRAME ASSEM.	1
C	11	3T1887	DIODE ASSEM.	1
	12	9G7561	STATOR ASSEM.	1
	13	9G7566	FRAME	1
	14	9G7564	FAN	1
	15	9G7549	SPACER	1
	16	2K4821	LOCKNUT	1
		7K7621	WASHER	1
	17	3T5962	NAMEPLATE	1
	18	2H3880	SCREW—(drive)	2
	19	3B4510	LOCKWASHER	1
	20	1B8705	KEY	1
			THE FOLLOWING REPAIR KITS ARE AVAILABLE:	
		9G7554	KIT—(ground terminal) (Includes nuts & lockwashers)	1
		9G7555	KIT—(output terminal) (Includes nuts, washers & bushings)	1
		9G7556	KIT—(capacitor) (Includes capacitor, screw, lockwasher & washer)	1
		9G7559	KIT—(relay terminal) (Includes splice, tube, nut, terminal, lockwasher, washers, and bushing)	1
		9G7565	KIT—(regulator terminal) (Includes nuts, lockwashers, washers and bushing)	1

C INDICATES CHANGE

235180

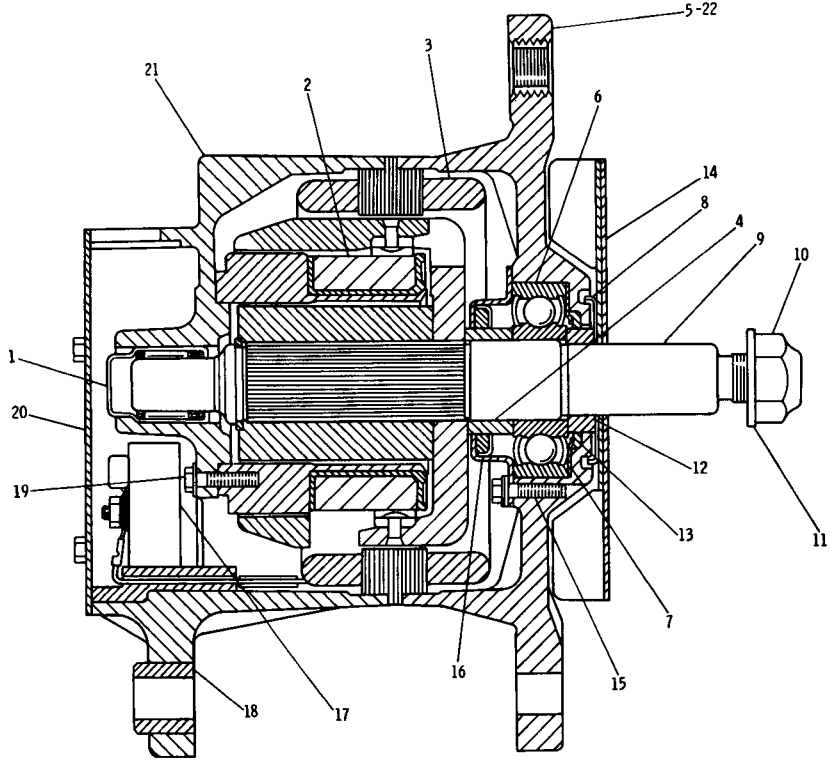

REF. NO.	PART NUMBER	DESCRIPTION	QTY
1	5P6920	BEARING	1
2	7N7806	COIL ASSEM.	1
3	7N7804	STATOR ASSEM.	1
4	7N7795	COLLAR	1
5	7N7810	FRAME ASSEM.	1
6	5P9514	BEARING	1
7	9L2140	PLATE	1
8	9L6782	SHIELD	1
9	7N7800	ROTOR ASSEM.	1
10	2K4821	LOCKNUT	1
11	7F7621	WASHER	1
12	9L6783	COLLAR	1
13	9L2139	WASHER	1
14	9N1210	FAN ASSEM.	1
15	7N9020	SCREW ASSEM.	3
16	9L2137	RETAINER ASSEM.	1
17	7N7122	RECTIFIER ASSEM.	1
18	9S2396	BUSHING	1
19	9S2007	SCREW	4
20	7N7809	PLATE	1
21	7N7805	HOUSING	1
22	7N9024	BOLT	4

228795

9G8255 ALTERNATOR GROUP—Delco-Remy—24 Volt, 35 Ampere—Part 1
Serial No. 13X2332—Up
Part of 6N9294 Alternator Group listed on Page 100B

9G8255 ALTERNATOR GROUP—Delco-Remy—24 Volt, 35 Ampere—Part 2
Serial No. 13X2332—Up
Part of 6N9294 Alternator Group listed on Page 100B

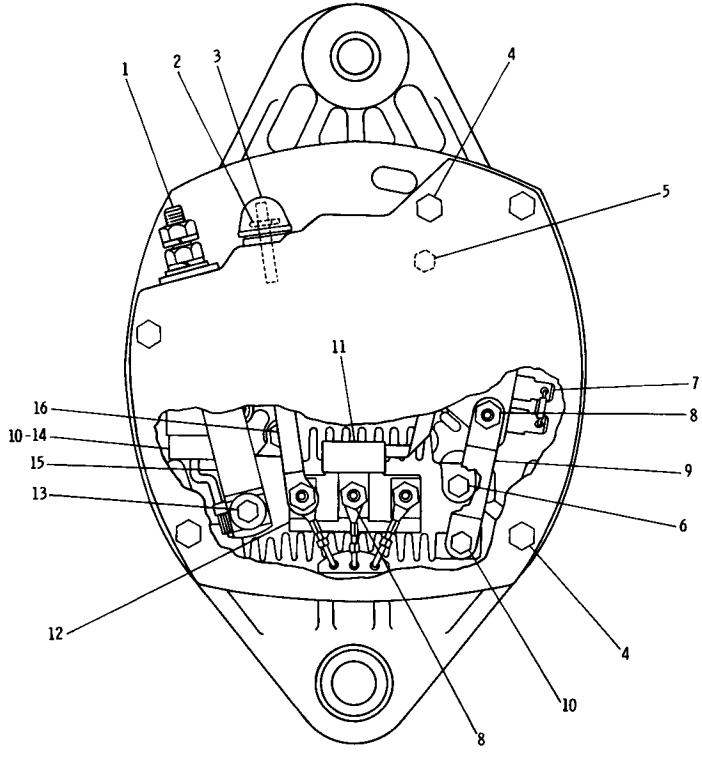

REF. NO.	PART NUMBER	DESCRIPTION	QTY
1	7N7807	TERMINAL KIT-----(output)------- (Includes Insulator, Screw, Washers, Lockwasher, Nut &Adapter)	1
2	7N7808	TERMINAL KIT---------- (Includes Stud, Bushings, Washers & Nut Assem.)	1
3	9L6770	CAP----------	1
4	8N740	SCREW ASSEM.----------	5
5	7N9022	SCREW ASSEM.----------	2
	9N938	WASHER----------	2
6	7N9023	SCREW ASSEM.----------	2
7	7N7799	REGULATOR ASSEM.----------	1
8	6N1869	NUT ASSEM.----------	4
9	7N7811	CONNECTOR----------	1
10	7N9018	SCREW ASSEM.----------	3
11	9N1202	DIODE ASSEM.----------	1
12	7N7797	INSULATOR----------	2
13	7N9021	SCREW ASSEM.----------	1
	7N7796	BUSHING----------	1
14	7N7802	CAPACITOR ASSEM.----------	1
	3N4082	BRACKET----------	1
15	7N7798	CONNECTOR----------	1
16	7N7801	CONNECTOR----------	1

228796

REF. NO.	PART NUMBER	DESCRIPTION	QTY
1	6K9555	GROMMET	1
2	T102	BOLT	2
3	5P1075	WASHER	4
4	9P539	COVER ASSEM. (Includes)	1
5	9P4608	SWITCH ASSEM. (Includes)	1
▲ 6	5P5628	TUBE-----. 114 m(4.50 in.)	
6	3S2093	STRAP	2
7	5P5610	CONNECTOR	2
8	337291	RIVET	5
9	8P2290	SPRING	1
10	6S9169	WIRE ASSEM. (Includes)	1
▲ 10	5P5629	WIRE--------. 125 m(4.92 in.)	
11	2L8079	TERMINAL	1
12	6N9587	CONNECTOR	1
13	S1608	BOLT	2
14	6P8576	ALARM (Includes)	1
15	5P5610	CONNECTOR	2
16	9M5617	GROMMET	1
17	7B8359	PIN	1
	4B4277	WASHER	1
	3B4610	COTTER PIN	1
18	9P543	BRACKET ASSEM. (Includes)	1
19	1A5121	PIN	1
20	9P4609	ACTUATOR	1
21	337291	RIVET	2

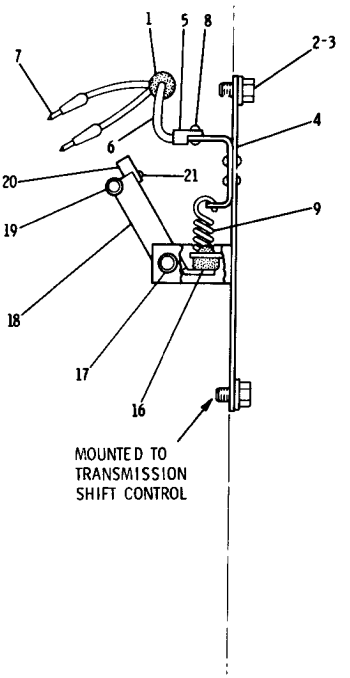

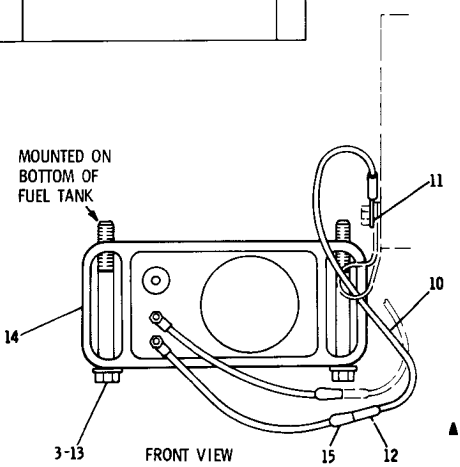

▲ ORDER BY THE METRE

214910

3V6924 BACK-UP WARNING GROUP

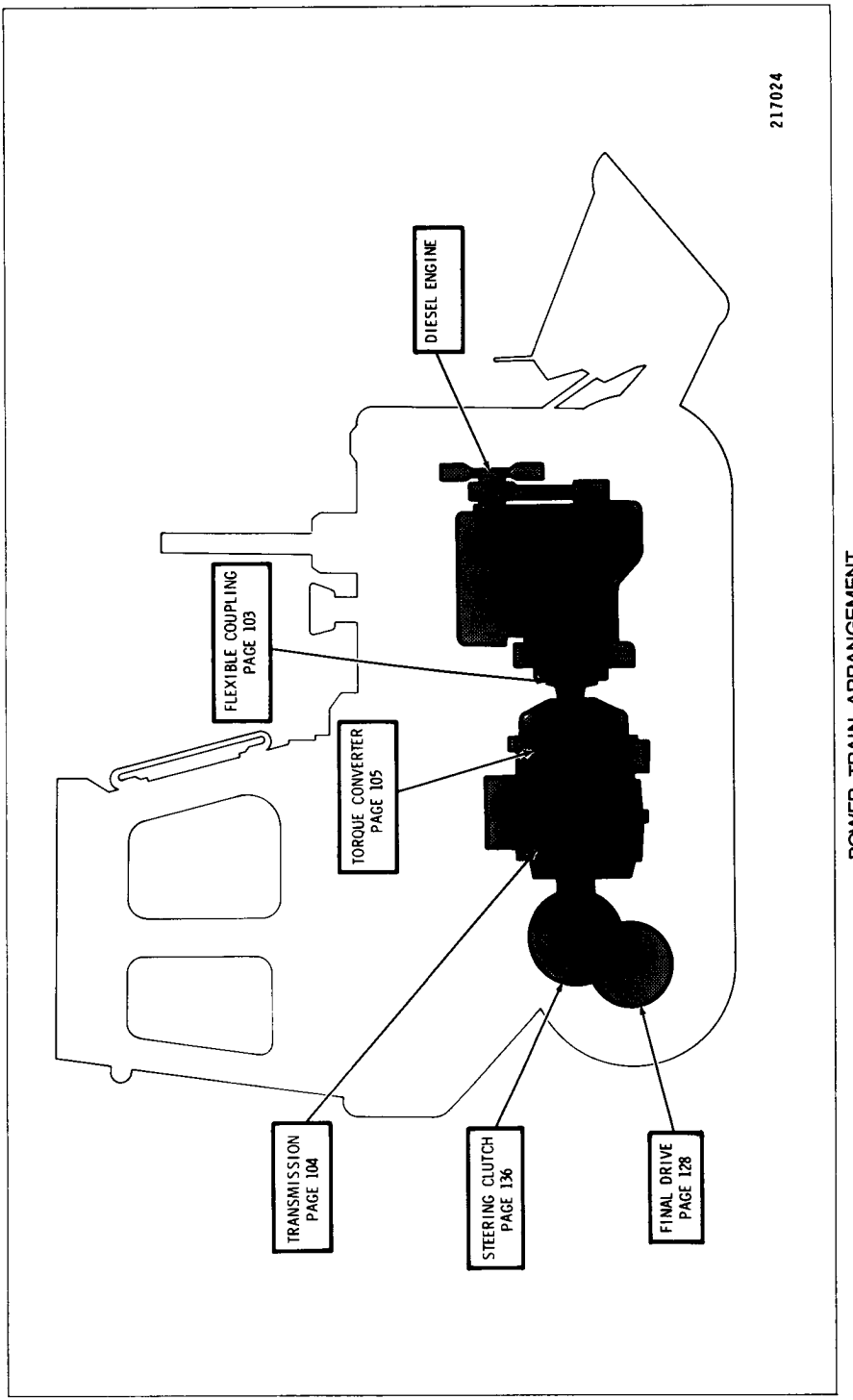

POWER TRAIN ARRANGEMENT

6P3984 FLEXIBLE COUPLING DRIVE GROUP

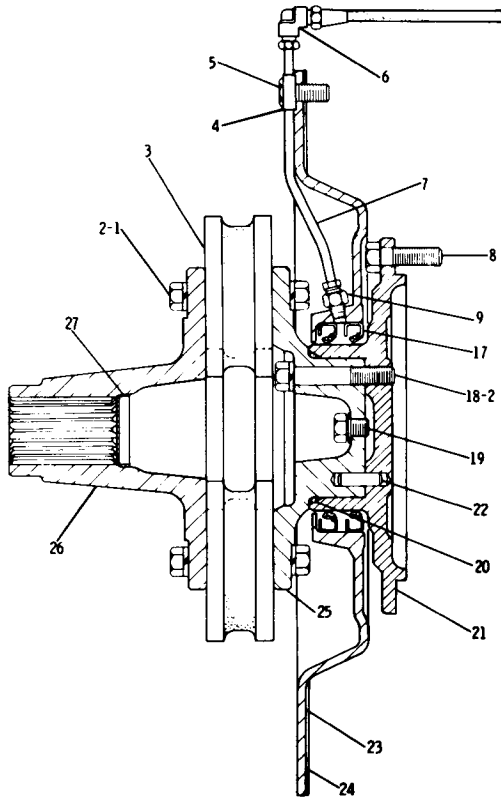

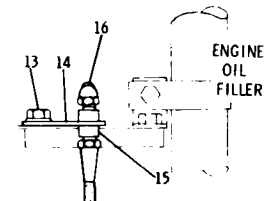

REF. NO	PART NUMBER	DESCRIPTION	QTY
1	6H1717	BOLT	16
2	3B4508	LOCKWASHER	24
3	5S7893	JOINT	4
C 4	8K5443	CLIP	1
5	S1621	BOLT	12
6	9S7712	ELBOW	1
7	6P4404	TUBE ASSEM.	1
C 8	S1587	BOLT	6
	7M7205	LOCK	6
9	6L3616	CONNECTOR	1
10	7K5108	HOSE ASSEM. -----93.98 cm(37 in.)	1
11	6P5042	CLIP	1
13	S1591	BOLT	1
	5M2894	WASHER	1
14	6P5043	PLATE ASSEM. (Includes)	1
15	3B6487	COUPLING	1
16	3B8686	FITTING	1
17	5P3276	SEAL	2
18	L1329	BOLT	8
C 19	2H8829	PLUG	1
C	1T808	WASHER	1
20	4F7387	SEAL	1
21	6P4014	FLANGE ASSEM. (Includes)	1
22	8K1207	PIN	2
23	6P3956	COVER ASSEM.	1
24	8S1495	GASKET	1
25	6P3920	FLANGE	1
C 26	5S7894	FLANGE ASSEM. (Includes)	1
27	5S3585	PLUG	1

C INDICATES CHANGE

171741

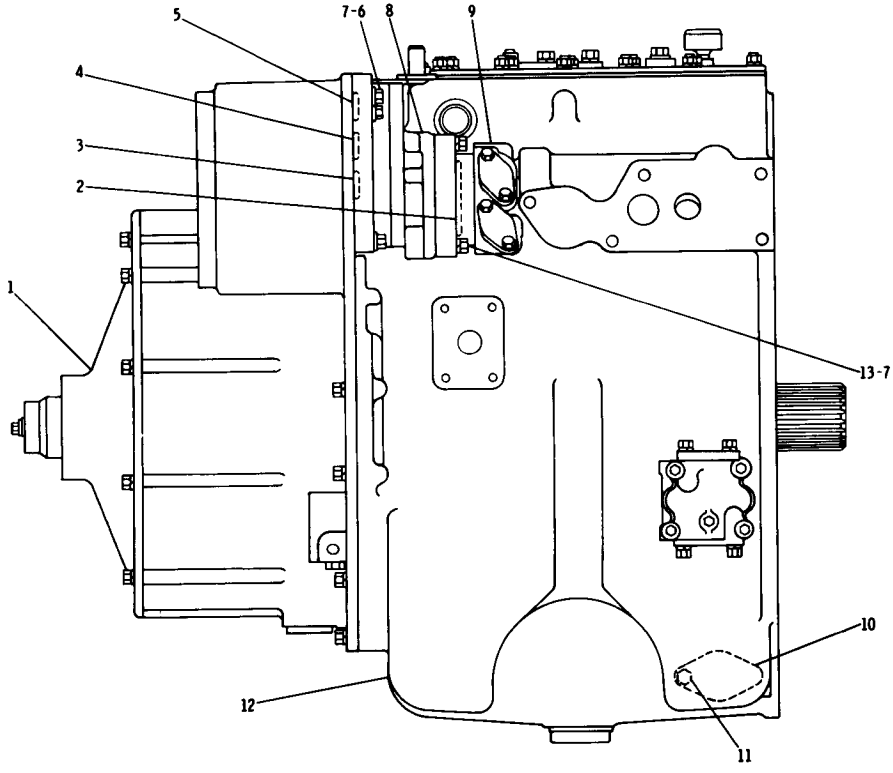

REF. NO.	PART NUMBER	DESCRIPTION	QTY
1	8P27	TORQUE CONVERTER GROUP------ (Separate Illustration)	1
2	9M9729	SEAL----------	1
3	8M4986	SEAL----------	1
4	8M4987	SEAL----------	1
5	2K8257	SEAL----------	1
6	S1591	BOLT----------	3
7	5M2894	WASHER----------	5
8	7S6875	TRANSMISSION PUMP GROUP---- (Separate Illustration)	1
9	3S4386	STEERING PUMP GROUP---------- (Separate Illustration)	1
10	6F3808	COVER----------	1
	4H2719	GASKET----------	1
11	S1594	BOLT----------	2
	3B4506	LOCKWASHER----------	2
12	8P8926	TRANSMISSION GROUP---------- (Separate Illustration)	1
13	S1588	BOLT----------	2
▲	9P139	COVERS GROUP--(shipping & storage)(consists of covers, gaskets, plugs, seals & hardware)	1

▲ NOT SHOWN

216780

8P7869 POWERSHIFT TRANSMISSION ARRANGEMENT
IF TRANSMISSION IS SERIALIZED USE TRANSMISSION SERIAL NO. OTHERWISE USE VEHICLE SERIAL NO.
Serial No. 13X1 to 13X2463 Inclusive. Transmission Serial No. 2ZA1 —Up. 8P27 Torque Converter, 8P8926 Transmission, 7S6875 Transmission Pump and 3S4386 Steering Pump parts are shown on Pages 105, 107 & 116

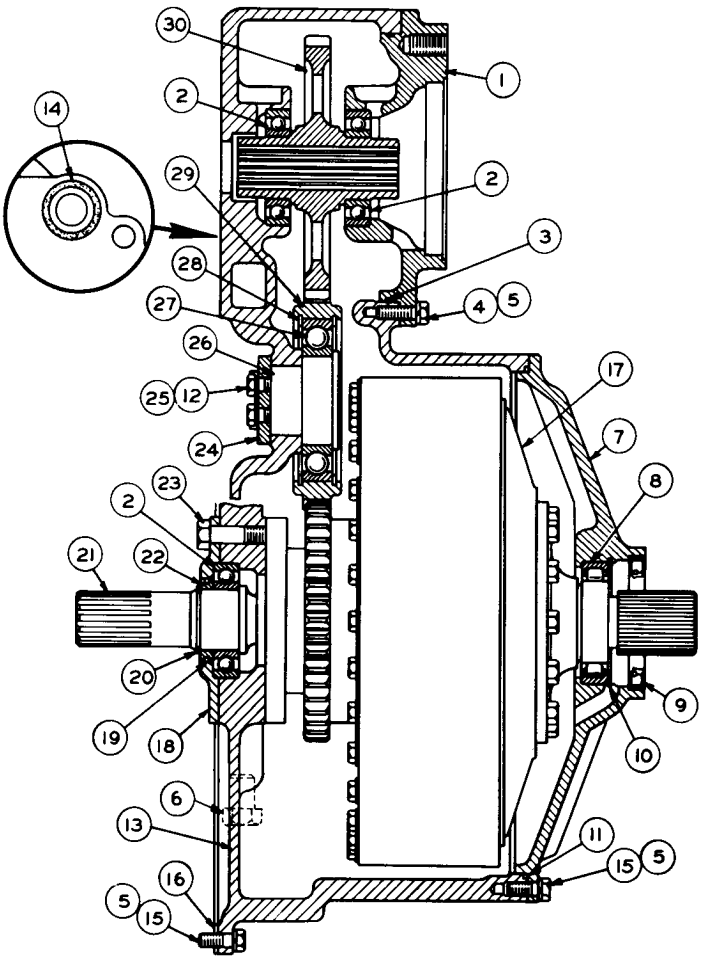

REF. NO.	PART NUMBER	DESCRIPTION	QTY
1	4S5861	ADAPTER	1
2	4B3665	BEARING	3
3	3J634	SEAL	1
4	S1588	BOLT	6
5	3B4506	LOCKWASHER	36
6	9S4191	PLUG	1
	3J1907	SEAL	1
7	8S9058	COVER	1
8	5H1901	BEARING	1
9	5S4408	SEAL	1
10	3J8903	RING	1
11	4S5879	SEAL	1
12	S1594	BOLT	2
13	4S5897	HOUSING ASSEM.	1
	8B1312	DOWEL	2
14	8M5254	SEAL	1
15	1A2029	BOLT	30
16	9S2811	GASKET	1
17	1T1255	TORQUE CONVERTER GROUP (Separate Illustration)	1
18	4S5862	RETAINER	1
19	4H478	RING	1
20	4S5875	RING	1
21	4S5946	SHAFT	1
22	4S5877	CARRIER	1
23	2B947	BOLT	7
24	5M7339	WASHER	1
25	9M1367	LOCK	1
26	3S9897	SHAFT	1
27	1S3743	BEARING	1
28	3K2559	RING	2
29	8P25	GEAR (37 Teeth - Idler)	1
30	8P26	GEAR (44 Teeth - Drive)	1

207854

8P27 TORQUE CONVERTER GROUP
IF TRANSMISSION IS SERIALIZED USE TRANSMISSION SERIAL NO. OTHERWISE USE VEHICLE SERIAL NO. Serial No. 13X1 to 13X2463 inclusive. Transmission Serial No. 2ZA1—Up. Part of 8P7869 Powershift Transmission Arrangement shown on Page 104. 1T1255 Torque Converter parts are shown on Page 106

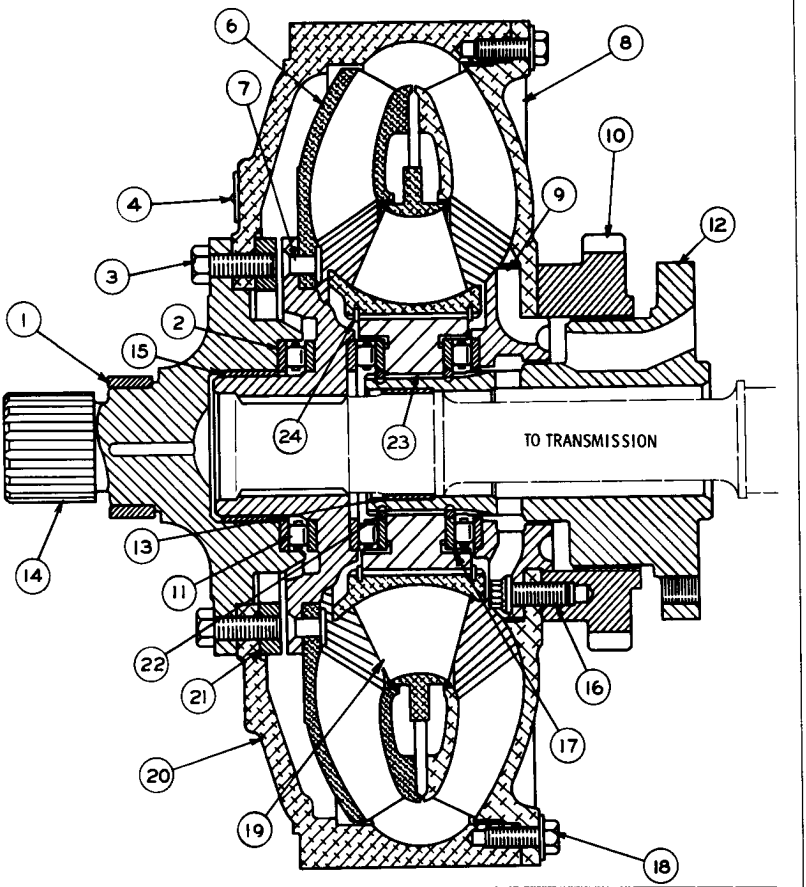

REF. NO.	PART NUMBER	DESCRIPTION	QTY
1	8B5964	RACE	1
2	1T737	RACE	6
3	1A2029	BOLT	16
4	4B4158	SCREW	2
6	1T723	TURBINE ASSEM. (Includes)	1
7	4B4459	RIVET	16
8	1T724	IMPELLER	1
9	1T727	HUB	1
10	1T1285	GEAR ASSEM. -(40 teeth)- (Includes)	1
	1T969	BEARING	1
11	1T736	BEARING	3
12	1T972	CARRIER ASSEM. (Includes)	1
13	1T902	BEARING	1
14	1T947	FLANGE ASSEM. (Includes)	1
15	1T767	BEARING	1
16	1T765	BOLT	8
17	1T805	RETAINER	2
18	S1618	BOLT	24
	1T738	WASHER	24
C 19	1T1351	STATOR	1
20	1T949	HOUSING	1
21	1T735	RING	1
22	2F6067	RING	2
C 23	1T1329	ADAPTER	1
C 24	1T13	RING	2

C INDICATES CHANGE

165200

1T1255 TORQUE CONVERTER GROUP
Torque Converter Serial No. BG7769C & 67T921
Part of 8P27 Torque Converter Group shown on Page 105

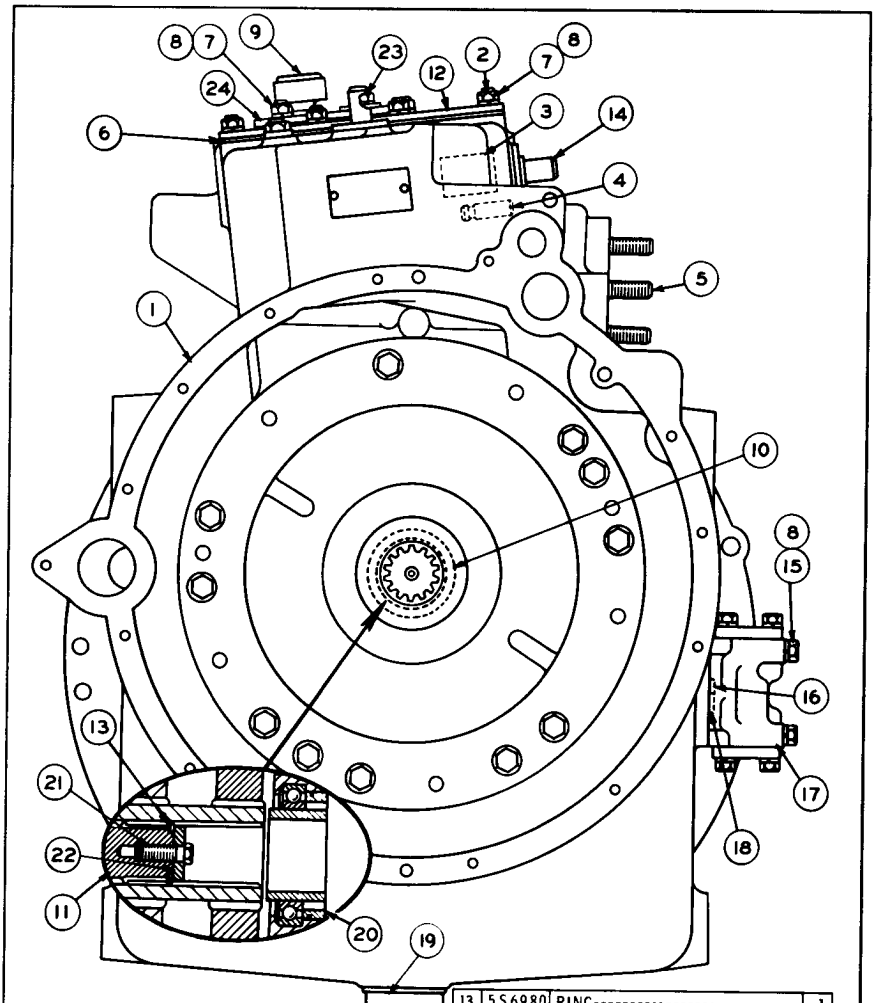

REF. NO.	PART NUMBER	DESCRIPTION	QTY
1	9P129	CASE ASSEM. (Includes)	1
2	9M2151	STUD	16
3	9H3249	BEARING	2
4	1M3833	DOWEL	2
5	3D490	STUD	5
6	4S8610	GASKET	1
7	1D4717	NUT	19
8	3B4506	LOCKWASHER	23
9	8S5820	BREATHER	1
10	4S5984	SHAFT	1
11	5S6975	RETAINER	1
12	3P9567	COVER ASSEM. (Includes)	1
	1F2417	BOSS	1
	7M7794	STUD	3
13	5S6980	RING	1
14	3S4300	HYDRAULIC CONTROL (Separate Illustration)	1
15	S1619	BOLT	4
16	8M4389	SEAL	2
17	3S6860	RELIEF VALVE GROUP (Separate Illustration)	1
18	8M8514	SEAL	1
19	8B6599	PLUG	1
	L1124	GASKET	1
20	4S6000	PLANETARY TRANSMISSION (Separate Illustration)	1
21	S1591	BOLT	1
22	5S6981	RETAINER	1
23	9S4191	PLUG	1
	3J1907	SEAL	1
24	9F5831	COVER	1
	4B579	GASKET	1

C INDICATES CHANGE

216783

8P8926 TRANSMISSION GROUP

IF TRANSMISSION IS SERIALIZED USE TRANSMISSION SERIAL NO. OTHERWISE USE VEHICLE SERIAL NO. Serial No. 13X1 to 13X2463 inclusive Transmission Serial No. 2ZA1—Up. Part of 8P7869 Powershift Transmission Arrangement shown on Page 104. 4S6000 Planetary Transmission, 3S4300 Hydraulic Control and 3S6860 Relief Valve parts are shown on Pages 108 through 111 and 117

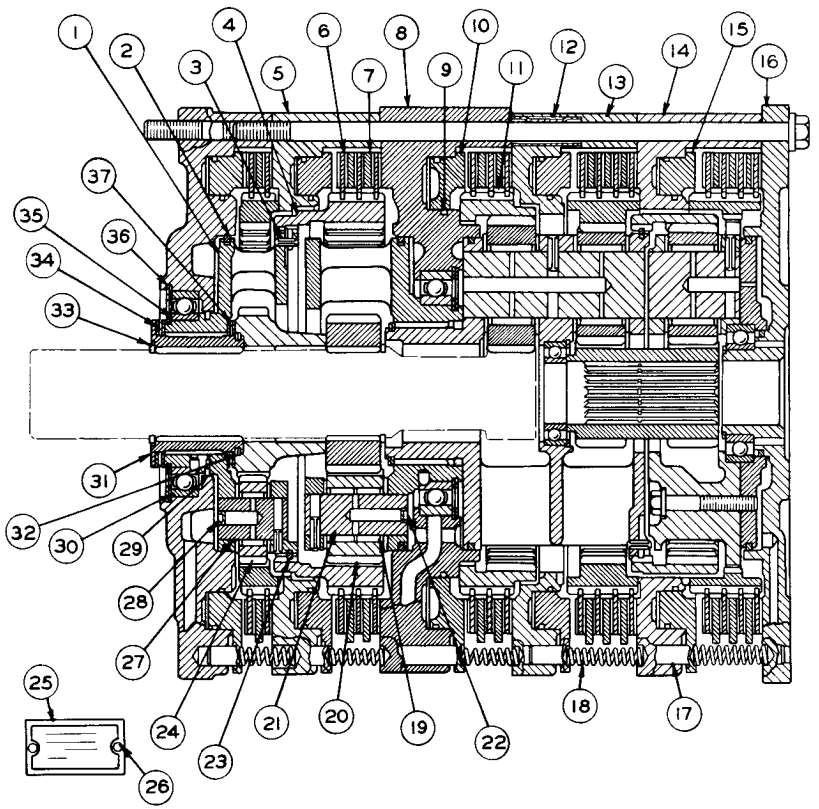

REF. NO.	PART NUMBER	DESCRIPTION	QTY.
1	4S5979	CARRIER ASSEM.	1
		(Includes)	
	4S8537	DOWEL	1
2	3S1259	RING	4
3	2K5986	PIN	7
4	4S5981	GEAR-(82 teeth)	1
5	4S5937	HOUSING	1
6	3S1188	DISC ASSEM.	16
7	8S3522	PLATE	11
8	4S5972	HOUSING ASSEM.	1
		(Includes)	
	5M7937	DOWEL	4
9	8S3373	RING	1
10	3S988	PISTON	1
11	4S5948	GEAR-(84 teeth)	1
12	9M4355	DAMPER	11
13	4S5932	HOUSING	1
14	4S5974	HOUSING ASSEM.	1
		(Includes)	
	5M7937	DOWEL	4
15	4S5943	PISTON	4
16	5S7009	PLATE ASSEM.	1
		(Includes)	
	4B9880	BALL	1
17	9H5546	PIN	5
18	9H5537	SPRING	20
19	2S669	BEARING	9
C 20	7G2520	GEAR-(22 teeth)	3
21	4S8534	SHAFT ASSEM.	3
		(Each Includes)	
22	3S36	PLUG	3
23	5M7878	RING	2
C 24	7G2477	GEAR-(20 teeth)	3
C 25	6V1720	PLATE -(Serial Number)	1
26	7B3028	SCREW	2
		(Mounted on Transmission Case)	
27	4S8531	SHAFT ASSEM.	3
		(Each Includes)	
28	3S36	PLUG	3
29	6F155	RING	1
30	4S8538	BEARING	1
31	4S5998	SPACER	1
32	1T649	RING	1
33	1S3781	RING	2
34	3S8022	BEARING	2
35	1S8868	RING	1
36	2S613	RING	1
37	3S8021	RACE	4

C INDICATES CHANGE 176651

4S6000 PLANETARY TRANSMISSION GROUP—Part 1
IF TRANSMISSION IS SERIALIZED USE TRANSMISSION SERIAL NO. OTHERWISE USE VEHICLE SERIAL NO. Serial No. 13X1 to 13X2463 inclusive Transmission Serial No. 2ZA1 to 2ZA902 inclusive. Part of 8P8926 Transmission Group shown on Page 107

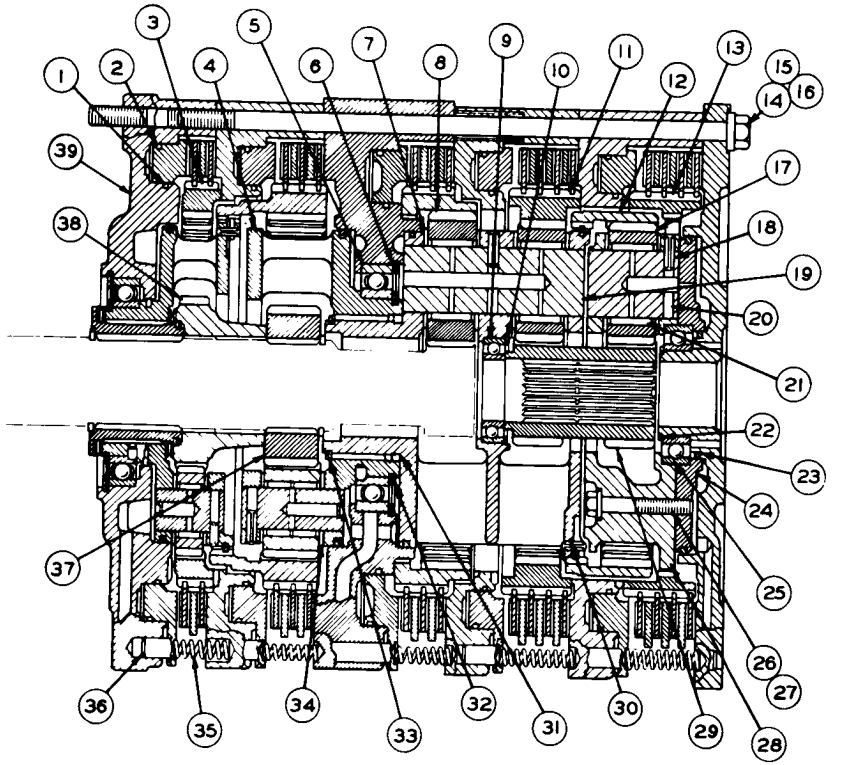

	REF. NO.	PART NUMBER	DESCRIPTION	QTY
	1	8S3371	SEAL	4
	2	8S3372	RING	5
	3	4S5947	GEAR--(81 teeth)	1
	4	4S5490	CARRIER ASSEM. (Includes)	1
		4S8537	DOWEL	1
	5	4S8546	BEARING	1
	6	5S1041	RING	1
C	7	7G896	WASHER	18
C	8	7G2473	GEAR--(33 teeth)	3
	9	4L9825	BEARING	1
	10	5S6979	RING	1
	11	5S7014	GEAR--(81 teeth)	1
	12	5S7013	GEAR--(83 teeth)	1
	13	5S6973	GEAR--(90 & 101 teeth)	1
	14	9H6530	BOLT--42.6cm(16.75 in.) long	8
	15	4M4924	BOLT--36.8cm(14.50 in.) long	3
	16	2M849	WASHER	11
C	17	7G2487	GEAR--(28 teeth)	6
	18	3S2708	PIN	9
	19	5S6978	SHAFT	3
	20	5S7010	SHAFT	3
C	21	5M2051	BEARING	9
	22	5H6199	RING	1
	23	1M3937	RING	1
	24	5S4491	CAGE	1
	25	7F2742	BEARING	1
	26	L1143	BOLT	3
	27	5M2894	WASHER	3
	28	5S4493	CARRIER	1
	29	5S6972	GEAR--(27 & 25 teeth)	1
	30	5S7023	CARRIER	1
	31	4L9564	SEAL	1
	32	2S8939	RING	1
	33	9F7104	RING	1
C	34	7G891	WASHER	12
	35	4M9592	SPRING	30
	36	3K2510	PIN	5
	37	4S5945	GEAR--(38 teeth)	1
	38	4S5944	GEAR--(45 teeth)	1
	39	4S5973	HOUSING ASSEM. (Includes)	1
		5M7937	DOWEL	2
		4B9782	BALL	2

C INDICATES CHANGE 225869

4S6000 PLANETARY TRANSMISSION GROUP—Part 2
IF TRANSMISSION IS SERIALIZED USE TRANSMISSION SERIAL NO. OTHERWISE USE VEHICLE SERIAL NO. Serial No. 13X1 to 13X2463 inclusive Transmission Serial No. 2ZA1 to 2ZA902 inclusive. Part of 8P8926 Transmission Group shown on Page 107

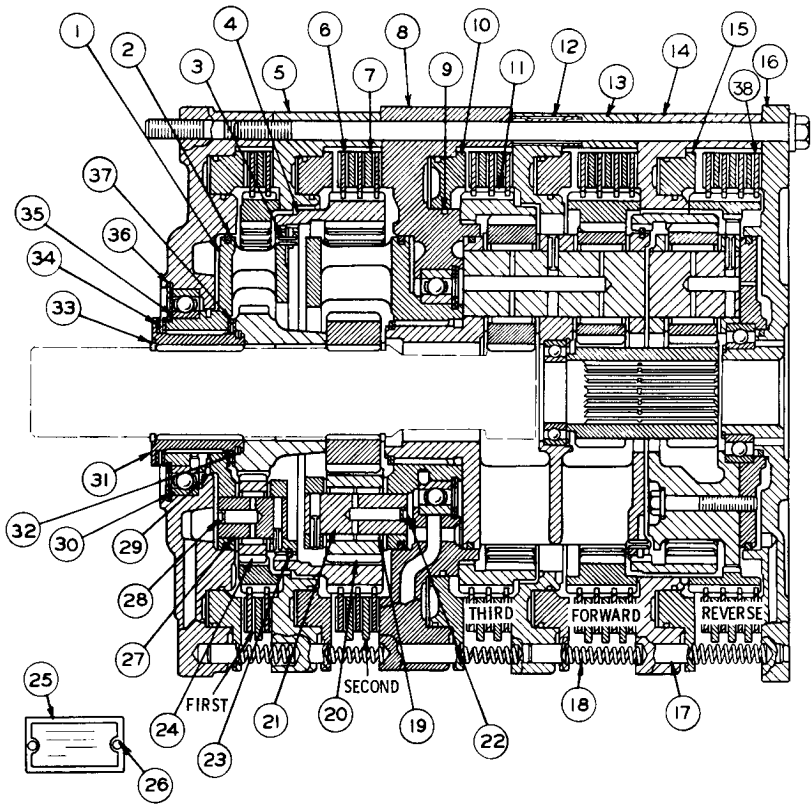

REF. NO.	PART NUMBER	DESCRIPTION	QTY.
1	4S5979	CARRIER ASSEM. (Includes)	1
	4S8537	DOWEL	1
2	3S1259	RING	4
3	2K5986	PIN	7
4	4S5981	GEAR-(82 teeth)	1
5	4S5937	HOUSING	1
C 6	8P8680	DISC ASSEM.	8
7	8S3522	PLATE	11
8	4S5972	HOUSING ASSEM. (Includes)	1
	5M7937	DOWEL	4
9	8S3373	RING	1
10	3S988	PISTON	1
11	4S5948	GEAR-(84 teeth)	1
12	9M4355	DAMPER	11
13	4S5932	HOUSING	1
14	4S5974	HOUSING ASSEM. (Includes)	1
	5M7937	DOWEL	4
15	4S5943	PISTON	4
16	5S7009	PLATE ASSEM. (Includes)	1
	4B9880	BALL	1
17	9H5546	PIN	5
18	9H5537	SPRING	20
19	2S669	BEARING	9
20	7G2520	GEAR-(22 teeth)	3
21	4S8534	SHAFT ASSEM. (Each Includes)	3
22	3S36	PLUG	3
23	5M7878	RING	2
24	7G2477	GEAR-(20 teeth)	3
25	6V1720	PLATE -(Serial Number)	1
26	7B3028	SCREW (Mounted on Transmission Case)	2
27	4S8531	SHAFT ASSEM. (Each Includes)	3
28	3S36	PLUG	3
29	6F155	RING	1
30	4S8538	BEARING	1
31	4S5998	SPACER	1
32	1T649	RING	1
33	1S3781	RING	2
34	3S8022	BEARING	2
35	1S8868	RING	1
36	2S613	RING	1
37	3S8021	RACE	4
C 38	3S1188	DISC ASSEM. -(Forward-Reverse)-	8

C INDICATES CHANGE

182330

4S6000 PLANETARY TRANSMISSION GROUP—Part 1
Transmission Serial No. 2ZA903—Up
Part of 8P8926 Transmission Group shown on Page 107

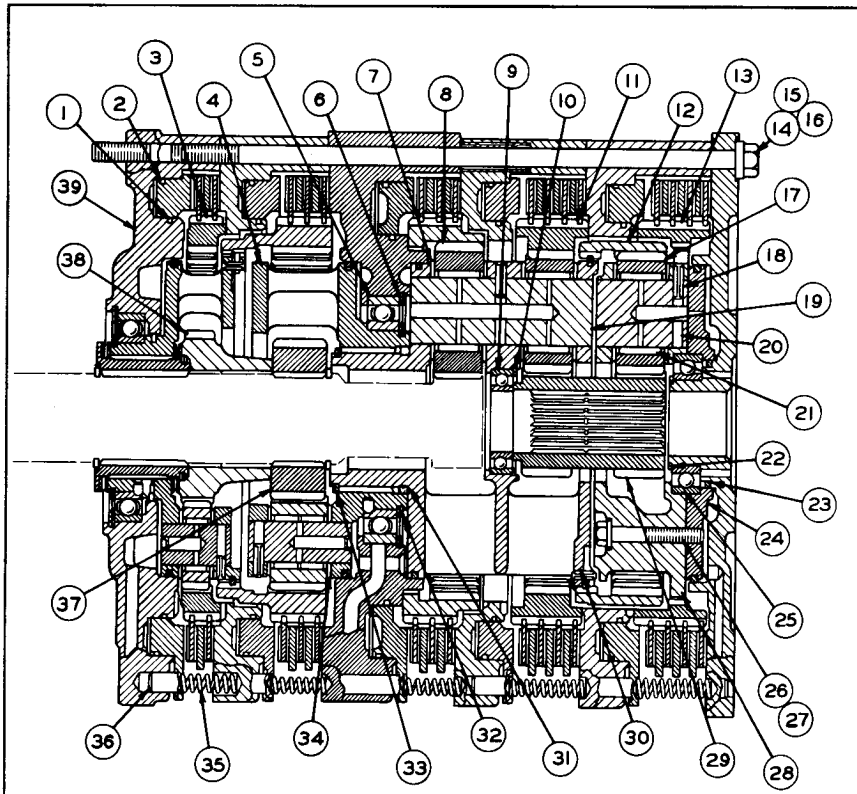

REF. NO.	PART NUMBER	DESCRIPTION	QTY
1	8S3371	SEAL	4
2	8S3372	RING	5
3	4S5947	GEAR--(81 teeth)	1
4	4S5490	CARRIER ASSEM. (Includes)	1
	4S8537	DOWEL	1
5	4S8546	BEARING	1
6	5S1041	RING	1
7	7G896	WASHER	18
8	7G2473	GEAR--(33 teeth)	3
9	4L9825	BEARING	1
10	5S6979	RING	1
11	5S7014	GEAR--(81 teeth)	1
12	5S7013	GEAR--(83 teeth)	1
13	5S6973	GEAR--(90 & 101 teeth)	1
14	9H6530	BOLT--42.6cm(16.75 in.) long	8
15	4M4924	BOLT--36.8 cm(14.50 in.) long	3
16	2M849	WASHER	11
17	7G2487	GEAR--(28 teeth)	6
18	3S2708	PIN	9
19	5S6978	SHAFT	3
20	5S7010	SHAFT	3
21	5M2051	BEARING	9
22	5H6199	RING	1
23	1M3937	RING	1
24	5S4491	CAGE	1
25	7F2742	BEARING	1
26	L1143	BOLT	3
27	5M2894	WASHER	3
28	5S4493	CARRIER	1
29	5S6972	GEAR--(27 & 25 teeth)	1
30	5S7023	CARRIER	1
31	4L9564	SEAL	1
32	2S8939	RING	1
33	9F7104	RING	1
34	7G891	WASHER	12
35	4M9592	SPRING	30
36	3K2510	PIN	5
37	4S5945	GEAR--(38 teeth)	1
38	4S5944	GEAR--(45 teeth)	1
39	4S5973	HOUSING ASSEM. (Includes)	1
	5M7937	DOWEL	2
	4B9782	BALL	2

232350

4S6000 PLANETARY TRANSMISSION GROUP—Part 2
Transmission Serial No. 2ZA903—Up
Part of 8P8926 Transmission Group shown on Page 107

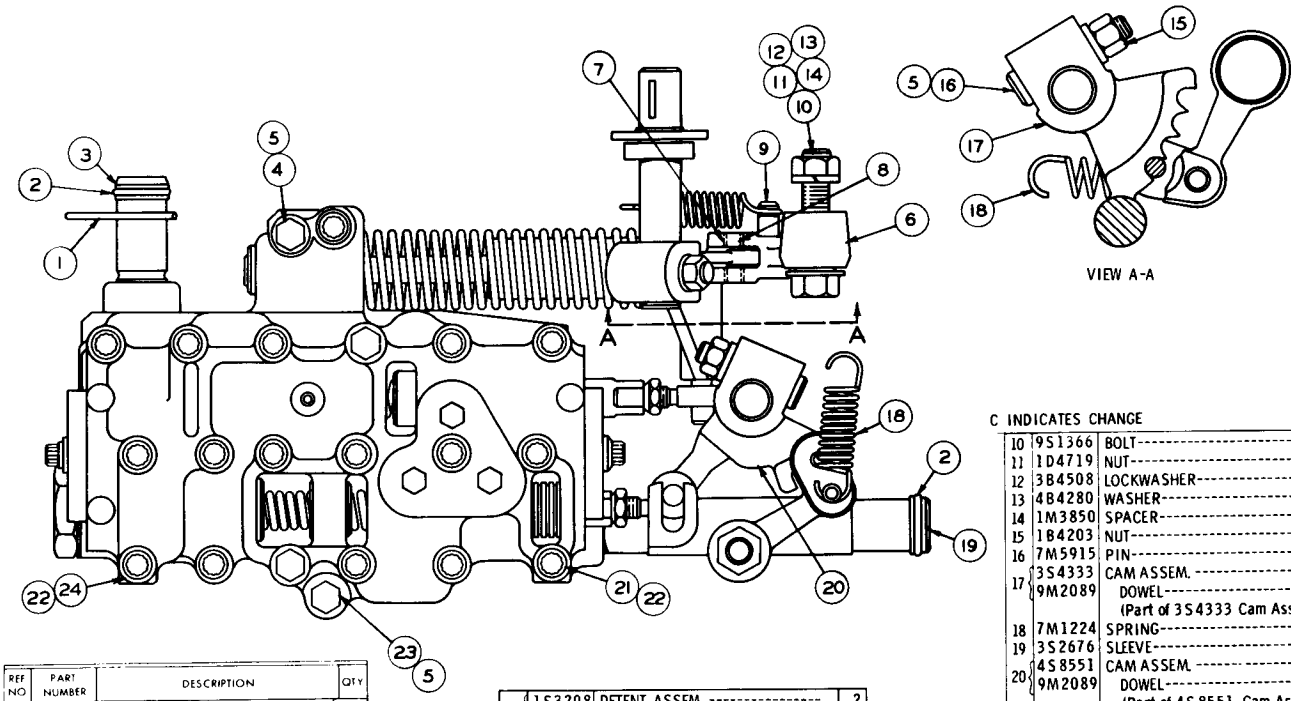

REF NO	PART NUMBER	DESCRIPTION	QTY
1	7B2500	RING	1
2	8M4389	SEAL	4
3	3S2582	SLEEVE	1
4	5B9603	BOLT	2
5	5M2894	WASHER	7

	REF NO	PART NUMBER	DESCRIPTION	QTY
	6	1S3208	DETENT ASSEM.	2
			(Includes)	
		1S3207	DETENT	1
	7	1S3206	BEARING	2
C	8	8P4764	PIN	1
	9	9M2022	DOWEL	1

C INDICATES CHANGE

REF NO	PART NUMBER	DESCRIPTION	QTY
10	9S1366	BOLT	1
11	1D4719	NUT	1
12	3B4508	LOCKWASHER	1
13	4B4280	WASHER	1
14	1M3850	SPACER	1
15	1B4203	NUT	2
16	7M5915	PIN	2
17	3S4333	CAM ASSEM.	1
	9M2089	DOWEL	1
		(Part of 3S4333 Cam Assem.)	
18	7M1224	SPRING	2
19	3S2676	SLEEVE	1
20	4S8551	CAM ASSEM.	1
	9M2089	DOWEL	1
		(Part of 4S8551 Cam Assem.)	
21	1S9810	BOLT	13
22	9M1974	WASHER	16
23	9F8999	BOLT	3
24	2S629	BOLT	3

3S4300 TRANSMISSION HYDRAULIC CONTROL GROUP—Part 1
IF TRANSMISSION IS SERIALIZED USE TRANSMISSION SERIAL NO. OTHERWISE USE VEHICLE SERIAL NO.
Serial No. 13X1 to 13X2463 Inclusive. Transmission Serial No. 2ZA1—Up. Part of 8P8926 Transmission Group
shown on Page 107

3S4300 TRANSMISSION HYDRAULIC CONTROL GROUP—Part 2

IF TRANSMISSION IS SERIALIZED USE TRANSMISSION SERIAL NO. OTHERWISE USE VEHICLE SERIAL NO.
Serial No. 13X1 to 13X2463 inclusive. Transmission Serial No. 2ZA1—Up. Part of 8P8926 Transmission Group shown on Page 107. 3S4298 Valve and 3S4299 Control parts are shown on Pages 112 and 113

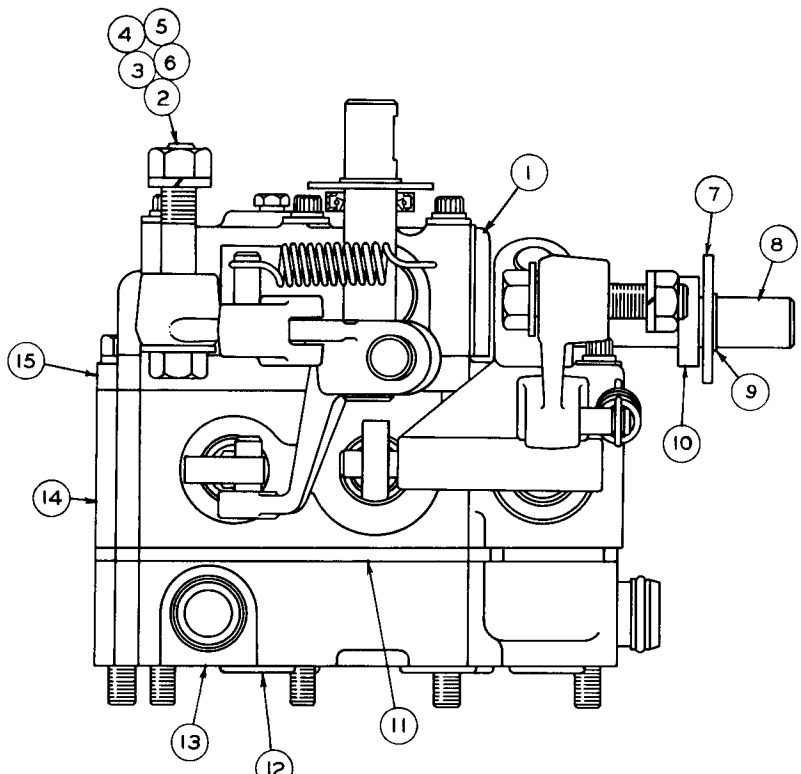

REF NO	PART NUMBER	DESCRIPTION	QTY
1	3S4299	CONTROL GROUP (See Separate Illustration)	1
2	L-1329	BOLT	1
3	1D4719	NUT	1
4	3B4508	LOCKWASHER	1
5	4B4280	WASHER	1
6	1M3850	SPACER	1
7	9M8186	WASHER	2
8	7M1225	SHAFT	2
9	1M8147	RING	2
10	9H223	SEAL	2
11	3S4294	PLATE	1
12	8M4446	SEAL	5
13	3S4293	MANIFOLD	1
14	3S4298	VALVE GROUP (See Separate Illustration)	1
15	3S4296	MANIFOLD	1

98661

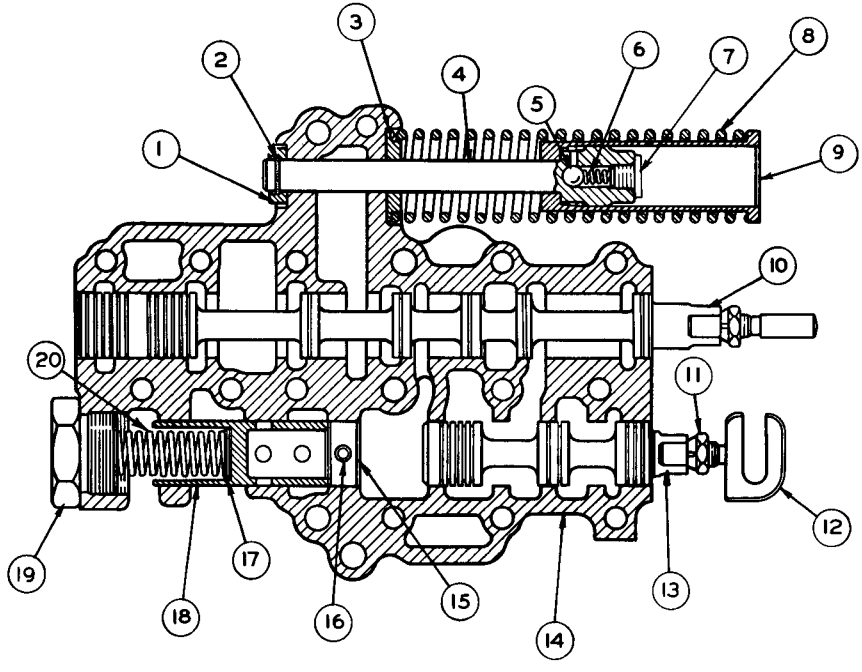

	REF. NO.	PART NUMBER	DESCRIPTION	QTY
	1	1S7553	STOP	1
	2	2S1387	RING	1
	3	8M8630	SPACER	1
	4	1S7556	STEM ASSEM.	1
	5	4B9880	BALL	1
	6	4M2381	SPRING	1
C	7	9S8002	PLUG	1
C		3J7354	SEAL	1
	8	5M6118	SPRING	1
	9	4M2375	VALVE	1
	10	3S59	SPOOL	1
	11	2S5717	NUT	2
	12	5S909	LINK	2
	13	3S61	SPOOL	1
	14	Not Serv	BODY	1
	15	2S4872	STOP	1
	16	2S696	DOWEL	1
	17	5M3492	SHIM (.010" Thick)	7
		7M1397	SHIM (.036" Thick)	1
C		7M1396	SHIM (.063" Thick)	2
	18	5M9656	SPOOL	1
C	19	9S4181	PLUG	1
	20	8M8627	SPRING	1

C INDICATES CHANGE

114232

3S4298 SELECTOR VALVE GROUP
IF TRANSMISSION IS SERIALIZED USE TRANSMISSION SERIAL NO. OTHERWISE USE VEHICLE SERIAL NO.
Serial No. 13X1 to 13X2463 inclusive. Transmission Serial No. 2ZA1—Up. Part of 3S4300 Transmission Hydraulic Control Group shown on Page 111

3S4299 PRESSURE CONTROL GROUP

IF TRANSMISSION IS SERIALIZED USE TRANSMISSION SERIAL NO. OTHERWISE USE VEHICLE SERIAL NO.
Serial No. 13X1 to 13X2463 inclusive. Transmission Serial No. 2ZA1—Up. Part of 3S4300 Transmission
Hydraulic Control Group shown on Page 111

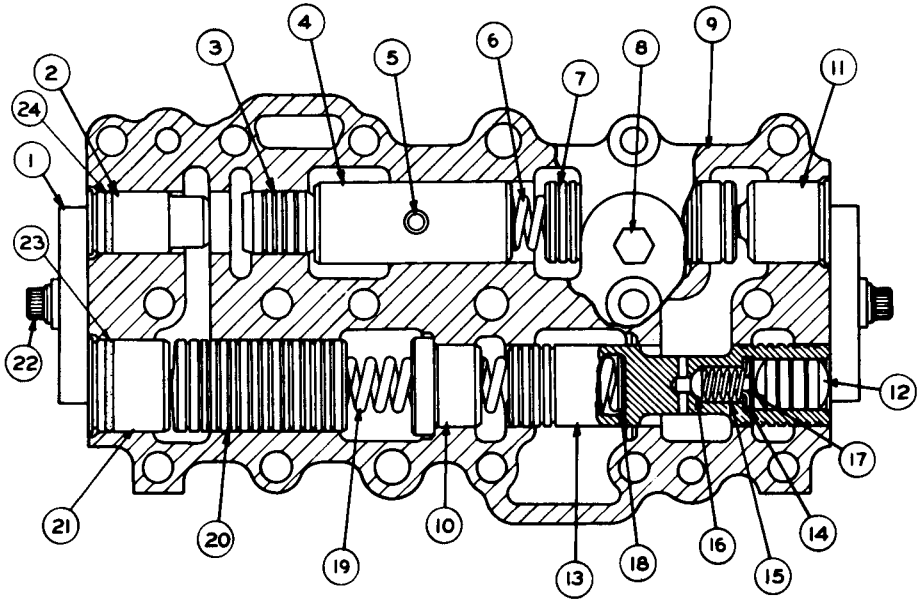

	REF. NO.	PART NUMBER	DESCRIPTION	QTY
	1	3S2589	COVER	2
C	2	3P209	STOP	1
	3	1S6529	PLUNGER	1
	4	3S2588	RETAINER	1
	5	2S696	DOWEL	1
	6	8M8132	SPRING	1
	7	8M6303	PLUNGER	3
	8	5M6214	PLUG	3
	9	3S4352	BODY ASSEM.	1
	10	3S2581	STOP	1
	11	3S60	STOP	1
	12	2M7041	SLUG	1
C	13	3P211	SPOOL ASSEM.	1
		3P212	SPOOL	1
	14	8M1013	RETAINER	1
	15	4M2381	SPRING	1
	16	1S2121	PLUNGER	1
	17	3D8317	RING	1
	18	5M7915	SPACER (.036 in. Thick)	3
		5M7914	SPACER (.010 in. Thick)	2
	19	3S2593	SPRING	1
	20	3S6919	PISTON	1
C	21	3P210	STOP	1
	22	1T414	BOLT	4
		9M1974	WASHER	4
C	23	8M4445	SEAL	1
C	24	5M1868	SEAL	1

C INDICATES CHANGE

207871

REF. NO.	PART NUMBER	DESCRIPTION	QTY
1	7M706	KNOB	1
2	9P1155	LEVER ASSEM.	1
3	4M8799	SPRING	1
4	9P535	BRACKET ASSEM.	1
5	T102	BOLT	2
	5P1075	WASHER	2
6	4V152	WASHER	2
7	9P1372	LEVER ASSEM.	1
8	9P1016	SEAL	1
9	2J7295	SPRING	1
10	S1587	BOLT	2
11	4V545	YOKE ASSEM. (Includes)	1
	4K3893	BEARING	2
12	2L8801	BOLT	1
	1B4207	NUT	1
	5P8248	WASHER	1
13	4V583	LEVER ASSEM. (Includes)	1
	3D5718	BEARING	1
14	1B4203	NUT	1
15	5J5315	END	1
16	5B9079	NUT	1
17	4V591	ROD ASSEM. (Includes)	1
18	4D4064	END	1
19	5B9079	NUT	1
C 20	S1591	BOLT	1
	1D4717	NUT	1
21	4V2	LEVER	1
	1B8706	KEY	1
22	S1594	BOLT	1
23	5K2817	PAWL	1
	9F7882	PIN	1
24	4V598	SHAFT	1
25	8F492	SPACER	1
	L1365	WASHER	2
26	1K473	SPACER	1
27	5787	WASHER	4
28	5M6214	PLUG	1

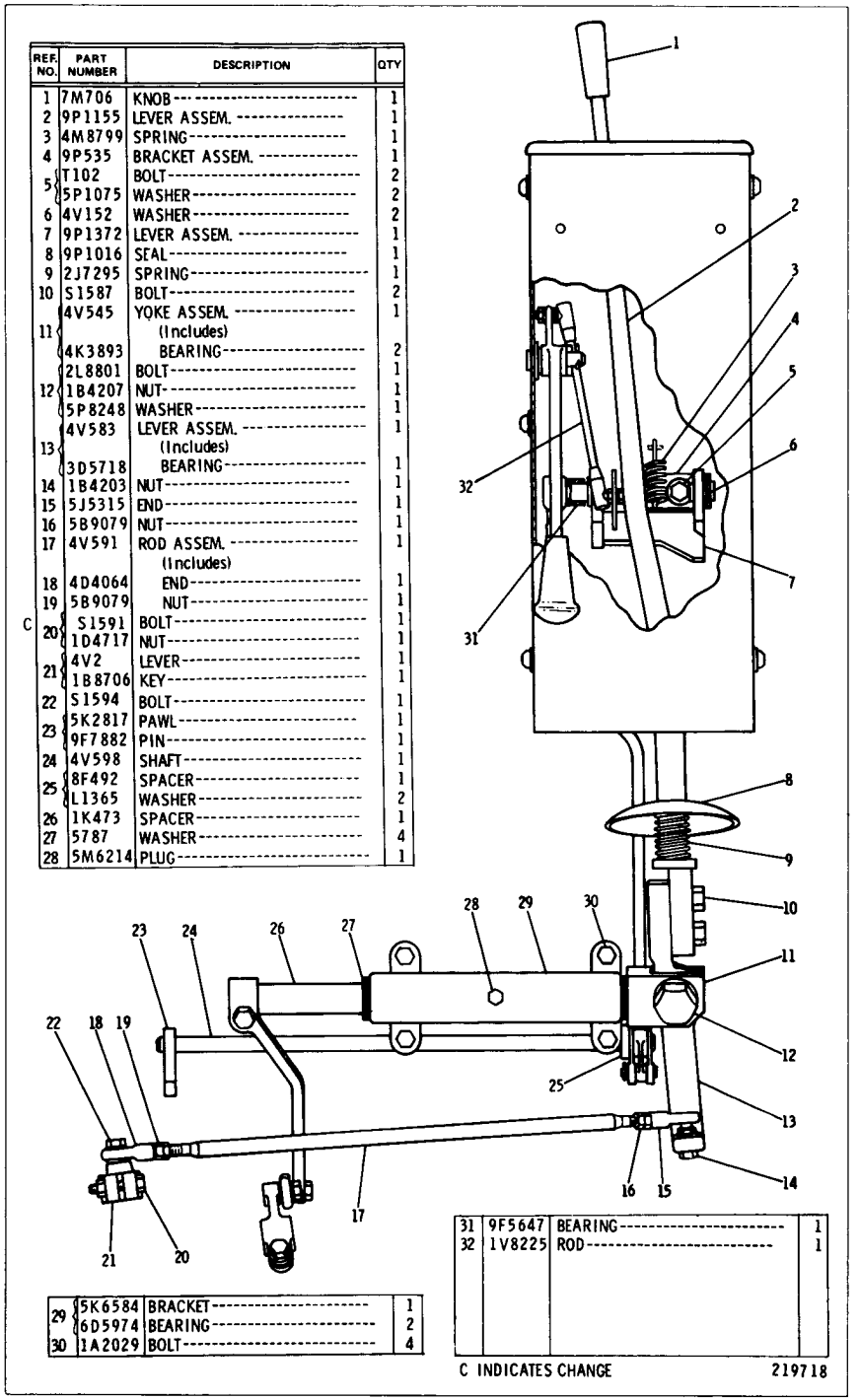

29	5K6584	BRACKET	1
	6D5974	BEARING	2
30	1A2029	BOLT	4

31	9F5647	BEARING	1
32	1V8225	ROD	1

C INDICATES CHANGE 219718

3V6929 TRANSMISSION CONTROL GROUP—Part 1
Serial No. 13X1 to 621, 623 to 675, 678 to 684, 686 to 696, 699, 701, 703, 705, 707, 709, 711, 713, 715, 717, 719 to 721, 729, 734, 737 to 742, 744, 748 to 750, 752, 753, 757, 773, 778, 782, 784, 793, 796, 797, 808, 810, 814, 818, 824, 828 and 832 inclusive

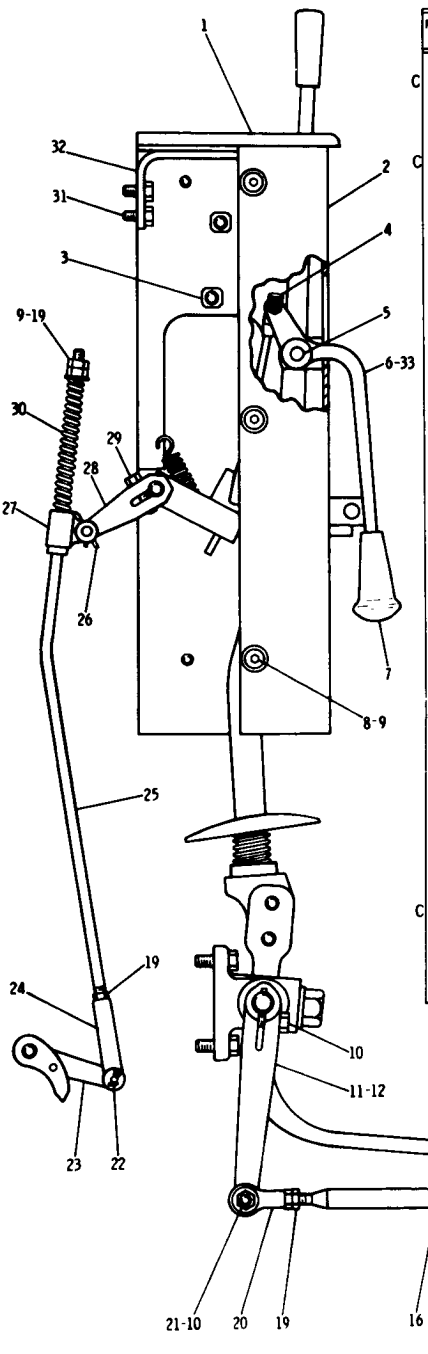

REF. NO.	PART NUMBER	DESCRIPTION	QTY
1	9P537	GUIDE	1
C	4S4465	SCREW	4
2	9P1543	COVER ASSEM. (Includes)	1
	1F748	NUT	1
C 3	9F2978	NUT	6
4	1B4415	BALLJOINT	2
	6F612	NUT	2
	1K6925	PIN	1
5	3B4617	COTTER PIN	1
	9K4848	WASHER-------(thrust)	1
	7F502	WASHER	1
6	3S5722	LEVER	1
7	2M8908	KNOB	1
8	6J488	SCREW	5
9	4B4278	WASHER	6
10	S1588	BOLT	2
11	8K7128	LEVER	1
12	1B8706	KEY	2
13	6F7030	BOLT	1
14	S1591	BOLT	1
15	3S6593	LEVER	1
16	4V590	ROD ASSEM. (Includes)	1
17	5B9079	NUT	1
18	4D4064	END	1
19	5B9079	NUT	4
20	4D4064	END	1
21	1D4717	NUT	2
22	5B1133	PIN	1
	3B4607	COTTER PIN	1
23	4K630	LEVER	1
	5H9839	PIN	1
24	7K8446	END	1
25	4V712	ROD ASSEM.	1
26	5P372	COTTER PIN	1
27	9P1734	GUIDE	1
28	9P1735	LEVER ASSEM.	1
	1B8701	KEY	1
29	1A2029	BOLT	1
30	4M7980	SPRING	1
31	S509	BOLT	2
32	9P538	BRACKET	1
C 33	4B4276	WASHER	2

C INDICATES CHANGE

3V6929 TRANSMISSION CONTROL GROUP—Part 2

Serial No. 13X1 to 621, 623 to 675, 678 to 684, 686 to 696, 699, 701, 703, 705, 707, 709, 711, 713, 715, 717, 719 to 721, 729, 734, 737 to 742, 744, 748 to 750, 752, 753, 757, 773, 778, 782, 784, 793, 796, 797, 808, 810, 814, 818, 824, 828 and 832 inclusive

REF. NO.	PART NUMBER	DESCRIPTION	QTY.
1	7M706	KNOB	1
2	9P1155	LEVER ASSEM.	1
3	4M8799	SPRING	1
4	9P535	BRACKET ASSEM.	1
5	T102	BOLT	2
C	5M2894	WASHER	2
6	4V152	WASHER	2
7	9P1372	LEVER ASSEM.	1
8	9P1016	SEAL	1
9	2J7295	SPRING	1
10	S1587	BOLT	2
11	4V545	YOKE ASSEM. (Includes)	1
	4K3893	BEARING	2
12	2L8801	BOLT	1
	1B4207	NUT	1
	5P8248	WASHER	1
13	4V583	LEVER ASSEM. (Includes)	1
	3D5718	BEARING	1
14	1B4203	NUT	1
15	5J5315	END	1
16	5B9079	NUT	1
17	4V591	ROD ASSEM. (Includes)	1
18	4D4064	END	1
19	5B9079	NUT	1
20	S1591	BOLT	1
	1D4717	NUT	1
21	4V2	LEVER	1
	1B8706	KEY	1
22	S1594	BOLT	1
23	5K2817	PAWL	1
	9F7882	PIN	1
24	4V598	SHAFT	1
25	8F492	SPACER	1
	L1365	WASHER	2
26	1K473	SPACER	1
27	5787	WASHER	4
28	5M6214	PLUG	1

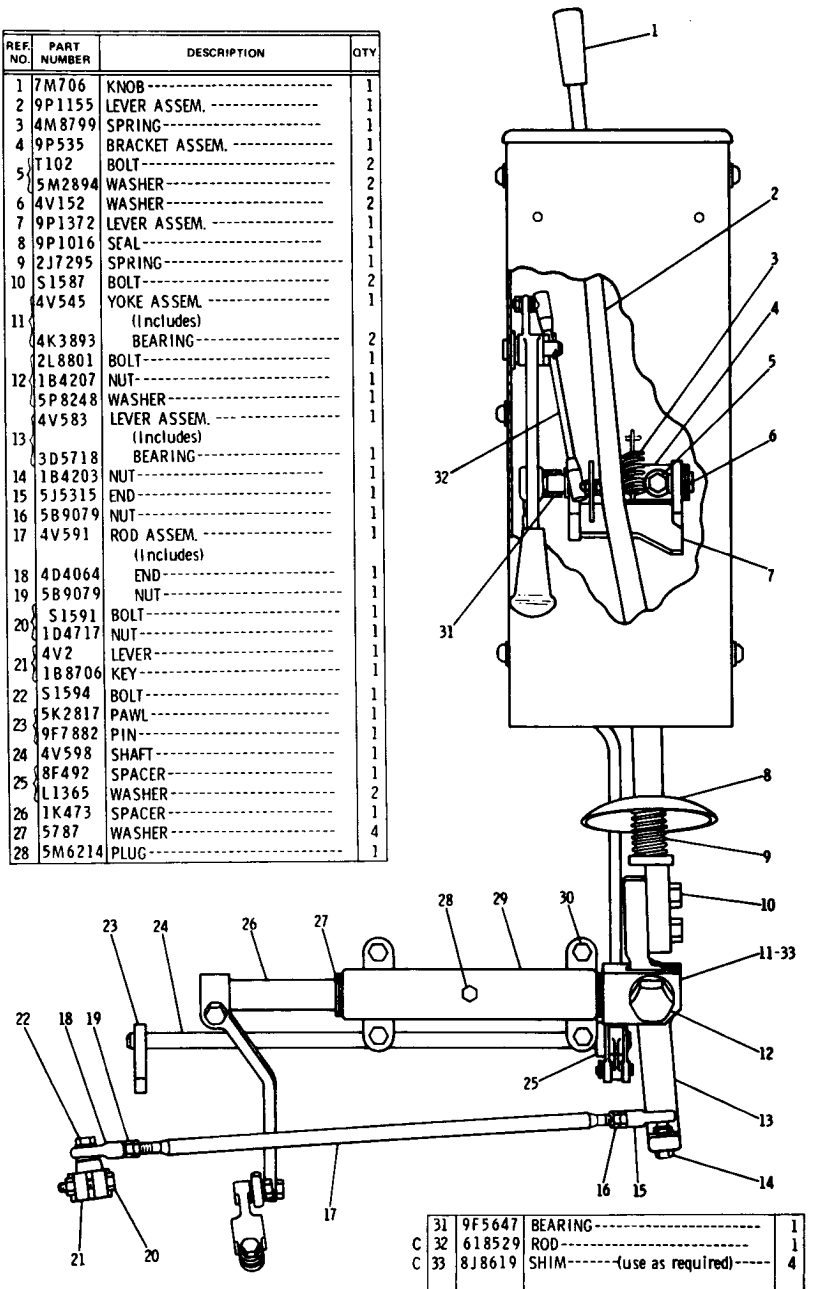

29	5K6584	BRACKET		1
	6D5974	BEARING		2
30	1A2029	BOLT		4

31	9F5647	BEARING		1
C	32	618529	ROD	1
C	33	8J8619	SHIM (use as required)	4

C INDICATES CHANGE 171159

3V6929 TRANSMISSION CONTROL GROUP—Part 1

Serial No. 13X676, 677, 685, 697, 698, 700, 702, 704, 706, 708, 710, 712, 714, 716, 718, 722 to 728, 730 to 733, 735, 736, 743, 745 to 747, 751, 754 to 756, 758 to 766, 768 to 772, 774 to 777, 779 to 781, 783, 785 to 792, 794, 795, 798 to 807, 809, 811 to 813, 815 to 817, 819 to 823, 825 to 827, 829 to 831 and 13X833 inclusive

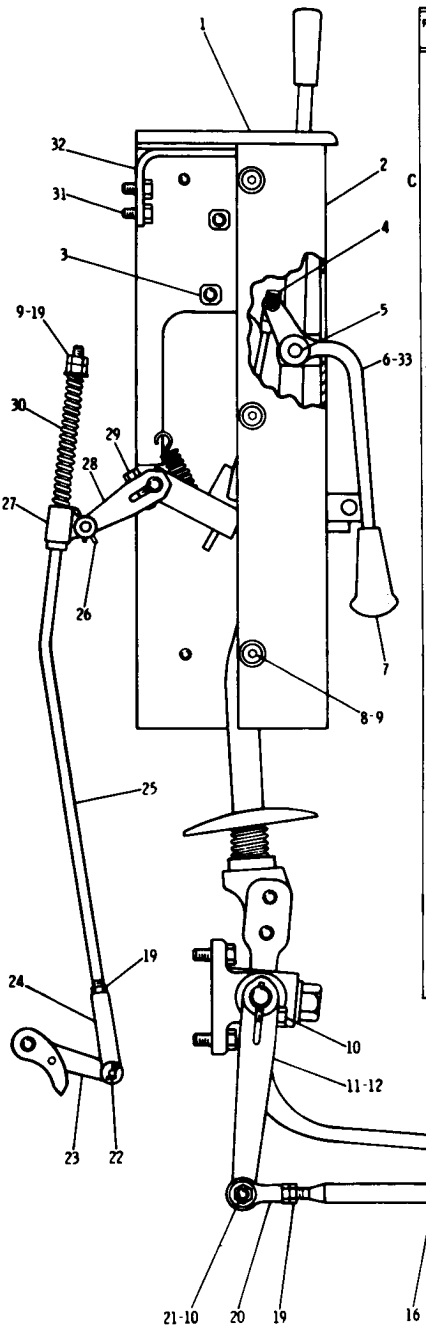

REF. NO.	PART NUMBER	DESCRIPTION	QTY
1	9P537	GUIDE	1
	4S4465	SCREW	4
2	9P1543	COVER ASSEM. (Includes)	1
	1F748	NUT	1
3	9F2978	NUT	6
4	1B1750	BALLJOINT	2
	6F612	NUT	2
5	1K6925	PIN	1
	3B4617	COTTER PIN	1
	9K4848	WASHER (thrust)	1
	7F502	WASHER	1
6	3S5722	LEVER	1
7	2M8908	KNOB	1
8	6J488	SCREW	5
9	4B4278	WASHER	6
10	S1588	BOLT	2
11	8K7128	LEVER	1
12	1B8706	KEY	2
13	6F7030	BOLT	1
14	S1591	BOLT	1
15	3S6593	LEVER	1
16	4V590	ROD ASSEM. (Includes)	1
17	5B9079	NUT	1
18	4D4064	END	1
19	5B9079	NUT	4
20	4D4064	END	1
21	1D4717	NUT	2
22	5B1133	PIN	1
	3B4607	COTTER PIN	1
23	4K630	LEVER	1
	5H9839	PIN	1
24	7K8446	END	1
25	4V712	ROD ASSEM.	1
26	5P372	COTTER PIN	1
27	9P1734	GUIDE	1
28	9P1735	LEVER ASSEM.	1
	1B8701	KEY	1
29	1A2029	BOLT	1
30	4M7980	SPRING	1
31	S509	BOLT	2
32	9P538	BRACKET	1
33	4B4276	WASHER	2

C INDICATES CHANGE

3V6929 TRANSMISSION CONTROL GROUP—Part 2

Serial No. 13X676, 677, 685, 697, 698, 700, 702, 704, 706, 708, 710, 712, 714, 716, 718, 722 to 728, 730 to 733, 735, 736, 743, 745 to 747, 751, 754 to 756, 758 to 766, 768 to 772, 774 to 777, 779 to 781, 783, 785 to 792, 794, 795, 798 to 807, 809, 811 to 813, 815 to 817, 819 to 823, 825 to 827, 829 to 831 and 13X833 inclusive

REF. NO.	PART NUMBER	DESCRIPTION	QTY
1	7M706	KNOB	1
2	9P1155	LEVER ASSEM.	1
3	4M8799	SPRING	1
4	9P535	BRACKET ASSEM.	1
5	T102	BOLT	2
	5M2894	WASHER	2
6	4V152	WASHER	2
7	9P1372	LEVER ASSEM.	1
8	9P1016	SEAL	1
9	2J7295	SPRING	1
10	S1587	BOLT	2
11	4V545	YOKE ASSEM. (Includes)	1
	4K3893	BEARING	2
12	2L8801	BOLT	1
	1B4207	NUT	1
	5P8248	WASHER	1
13	4V583	LEVER ASSEM. (Includes)	1
	3D5718	BEARING	1
14	1B4203	NUT	1
15	5J5315	END	1
16	5B9079	NUT	1
17	4V591	ROD ASSEM. (Includes)	1
18	4D4064	END	1
19	5B9079	NUT	1
20	S1591	BOLT	1
	1D4717	NUT	1
21	4V2	LEVER	1
	1B8706	KEY	1
C 22	S1594	BOLT	3
23	5K2817	PAWL	1
	9F7882	PIN	1
24	4V598	SHAFT	1
25	8F492	SPACER	1
	L1365	WASHER	2
26	1K473	SPACER	1
27	5787	WASHER	4
28	5M6214	PLUG	1

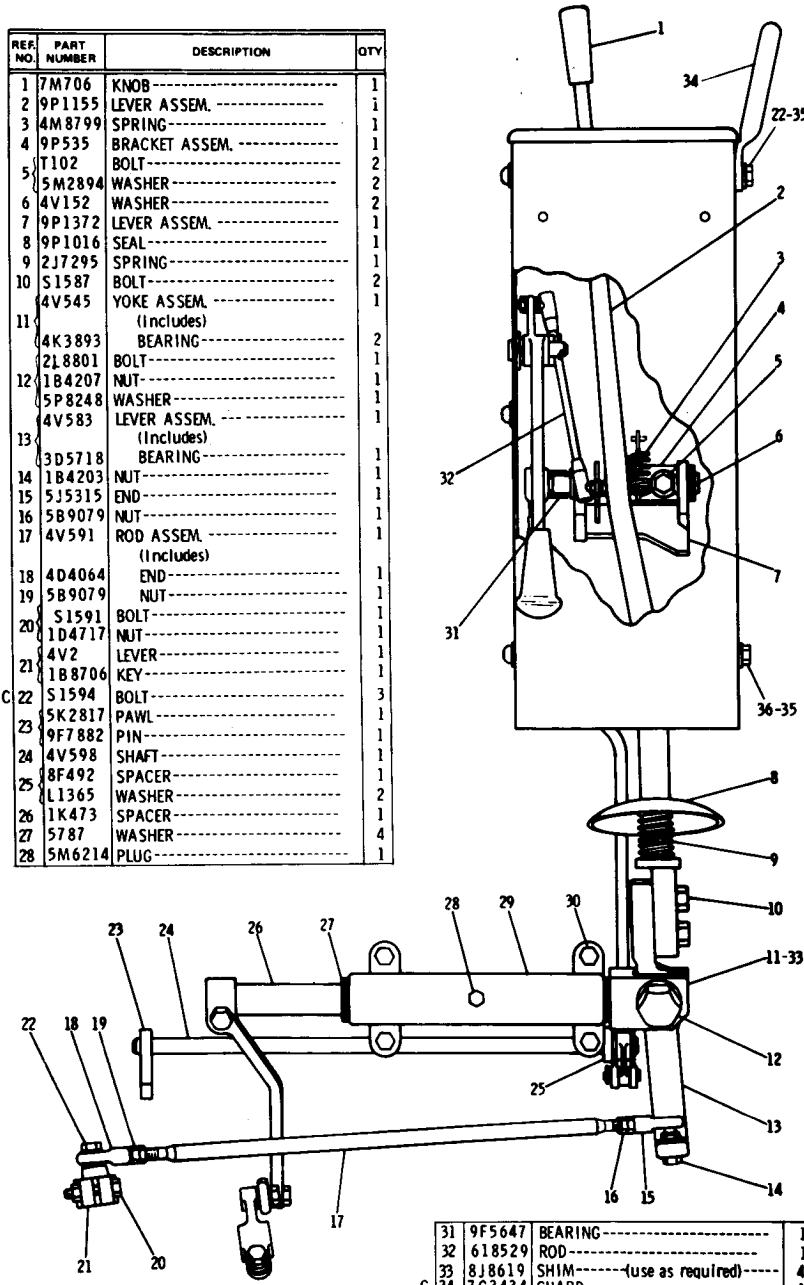

29	5K6584	BRACKET	1
	6D5974	BEARING	2
30	1A2029	BOLT	4

31	9F5647	BEARING	1
32	618529	ROD	1
33	8J8619	SHIM-(use as required)	4
C 34	7G3434	GUARD	1
C 35	5P1075	WASHER	3
C 36	L1351	BOLT	1

C INDICATES CHANGE 171161

3V6929 TRANSMISSION CONTROL GROUP—Part 1
Serial No. 13X834 to 13X1134 inclusive

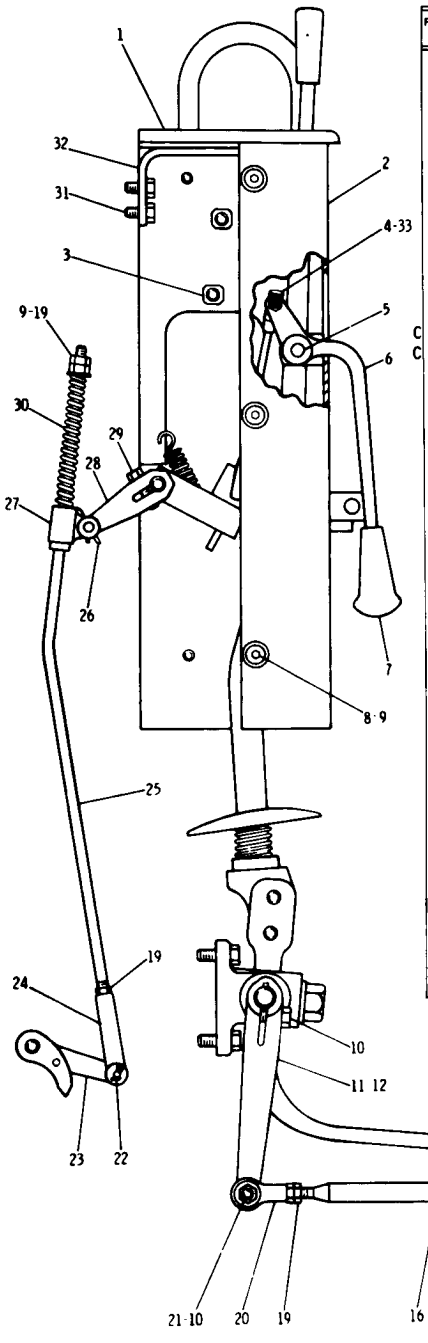

REF. NO.	PART NUMBER	DESCRIPTION	QTY
1	9P537	GUIDE	1
	4S4465	SCREW	4
2	9P1543	COVER ASSEM. (Includes)	1
	1F748	NUT	1
3	9F2978	NUT	6
4	1B1750	BALLJOINT	2
	6F612	NUT	2
5	1K6925	PIN	1
	3B4617	COTTER PIN	1
	9K4848	WASHER-(thrust)	1
	7F502	WASHER	1
6	3S5722	LEVER	1
7	2M8908	KNOB	1
C 8	6J488	SCREW	3
C 9	4B4278	WASHER	4
10	S1588	BOLT	2
11	8K7128	LEVER	1
12	1B8706	KEY	2
13	6F7030	BOLT	1
14	S1591	BOLT	1
15	3S6593	LEVER	1
16	4V590	ROD ASSEM. (Includes)	1
17	5B9079	NUT	1
18	4D4064	END	1
19	5B9079	NUT	4
20	4D4064	END	1
21	1D4717	NUT	2
22	5B1133	PIN	1
	3B4607	COTTER PIN	1
23	4K630	LEVER	1
	5H9839	PIN	1
24	7K8446	END	1
25	4V712	ROD ASSEM.	1
26	5P372	COTTER PIN	1
27	9P1734	GUIDE	1
28	9P1735	LEVER ASSEM.	1
	1B8701	KEY	1
29	1A2029	BOLT	1
30	4M7980	SPRING	1
31	S509	BOLT	2
32	9P538	BRACKET	1
33	4B4276	WASHER	2

C INDICATES CHANGE

171162

3V6929 TRANSMISSION CONTROL GROUP—Part 2
Serial No. 13X834 to 13X1134 inclusive

REF. NO.	PART NUMBER	DESCRIPTION	QTY
1	7M706	KNOB	1
2	9P1155	LEVER ASSEM.	1
3	4M8799	SPRING	1
4	9P535	BRACKET ASSEM.	1
5	T102	BOLT	2
	5M2894	WASHER	2
6	4V152	WASHER	2
C 7	L1351	BOLT	3
8	9P1016	SEAL	1
9	2J7295	SPRING	1
10	S1587	BOLT	2
11	4V545	YOKE ASSEM. (Includes)	1
C	5V4410	BEARING	2
12	2L8801	BOLT	1
	1B4207	NUT	1
C	5P8248	WASHER	2
13	4V583	LEVER ASSEM. (Includes)	1
	5V4410	BEARING	1
C 14	2L6267	NUT	1
15	5J5315	END	1
16	5B9079	NUT	1
17	4V591	ROD ASSEM. (Includes)	1
18	4D4064	END	1
19	5B9079	NUT	1
20	S1591	BOLT	1
	1D4717	NUT	1
21	4V2	LEVER	1
	1B8706	KEY	1
C 22	S1594	BOLT	2
23	5K2817	PAWL	1
	9F7882	PIN	1
24	4V598	SHAFT	1
25	8F492	SPACER	1
	L1365	WASHER	2
26	1K473	SPACER	1
27	5787	WASHER	4
28	5M6214	PLUG	1
29	5K6584	BRACKET	1
	6D5974	BEARING	2
30	1A2029	BOLT	4

31	9F5647	BEARING	1
32	618529	ROD	1
C 33	8D5636	SHIM-------(use as required)----	4
C	1L3046	WASHER----(use as required)-----	4

34	7G3434	GUARD	1
C 35	5P1075	WASHER	5
C 36	7G4136	PLATE	1
C 37	7G4132	LEVER ASSEM. (Includes)	1
	9F2978	NUT	2
C 38	5D353	BOLT	1

C INDICATES CHANGE

173215

3V6929 TRANSMISSION CONTROL GROUP—Part 1
Serial No. 13X622, 13X767 and 13X1135 to 13X1632 inclusive

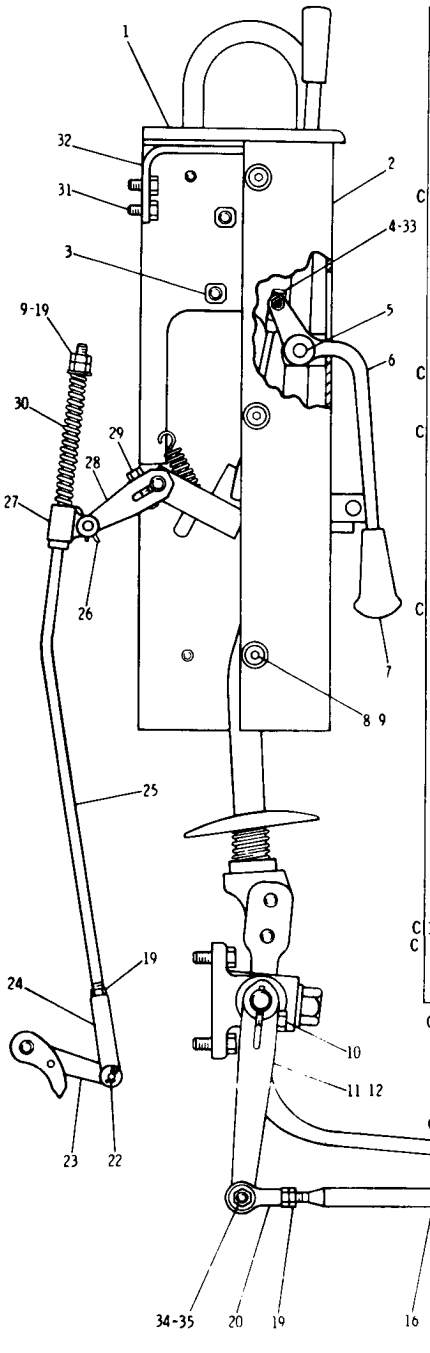

REF. NO.	PART NUMBER	DESCRIPTION	QTY
1	9P537	GUIDE	1
	4S4465	SCREW	4
	9P1543	COVER ASSEM. (Includes)	1
2	1F748	NUT	1
3	9F2978	NUT	6
4	1B1750	BALLJOINT	2
C	1B4201	NUT	4
	1K6925	PIN	1
5	3B4617	COTTER PIN	1
	9K4848	WASHER-(thrust)	1
	7F502	WASHER	1
6	3S5722	LEVER	1
7	2M8908	KNOB	1
8	6J488	SCREW	3
9	4B4278	WASHER	4
C 10	S1588	BOLT	2
11	8K7128	LEVER	1
12	1B8706	KEY	2
C 13	6D3967	BOLT	1
14	S1591	BOLT	1
15	3S6593	LEVER	1
16	4V590	ROD ASSEM. (Includes)	1
17	5B9079	NUT	1
18	4D4064	END	1
19	5B9079	NUT	4
20	4D4064	END	1
C 21	1D4717	NUT	1
22	5B1133	PIN	1
	3B4607	COTTER PIN	1
23	4K630	LEVER	1
	5H9839	PIN	1
24	7K8446	END	1
25	4V712	ROD ASSEM.	1
26	5P372	COTTER PIN	1
27	9P1734	GUIDE	1
28	9P1735	LEVER ASSEM.	1
	1B8701	KEY	1
29	1A2029	BOLT	1
30	4M7980	SPRING	1
31	S509	BOLT	2
32	9P538	BRACKET	1
33	4B4276	WASHER	2
C 34	2L6267	NUT	1
C 35	1A2209	BOLT	1

C INDICATES CHANGE

3V6929 TRANSMISSION CONTROL GROUP—Part 2
Serial No. 13X622, 13X767 and 13X1135 to 13X1632 inclusive

REF. NO.	PART NUMBER	DESCRIPTION	QTY
1	7M706	KNOB	1
2	9P1155	LEVER ASSEM.	1
C 3	3F6142	SPRING	1
4	9P535	BRACKET ASSEM.	1
5	T102	BOLT	2
	5M2894	WASHER	2
6	4V152	WASHER	2
7	L1351	BOLT	3
8	9P1016	SEAL	1
9	2J7295	SPRING	1
10	S1587	BOLT	2
11	4V545	YOKE ASSEM. (Includes)	1
	5V4410	BEARING	2
12	2L8801	BOLT	1
	1B4207	NUT	1
	5P8248	WASHER	2
13	4V583	LEVER ASSEM. (Includes)	1
	5V4410	BEARING	1
14	2L6267	NUT	1
15	5J5315	END	1
16	5B9079	NUT	1
17	4V591	ROD ASSEM. (Includes)	1
18	4D4064	END	1
19	5B9079	NUT	1
20	S1591	BOLT	1
	1D4717	NUT	1
21	4V2	LEVER	1
	1B8706	KEY	1
22	S1594	BOLT	2
23	5K2817	PAWL	1
	9F7882	PIN	1
24	4V598	SHAFT	1
25	8F492	SPACER	1
	L1365	WASHER	2
26	1K473	SPACER	1
27	5787	WASHER	4
28	5M6214	PLUG	1
29	5K6584	BRACKET	1
	6D5974	BEARING	2
30	1A2029	BOLT	4

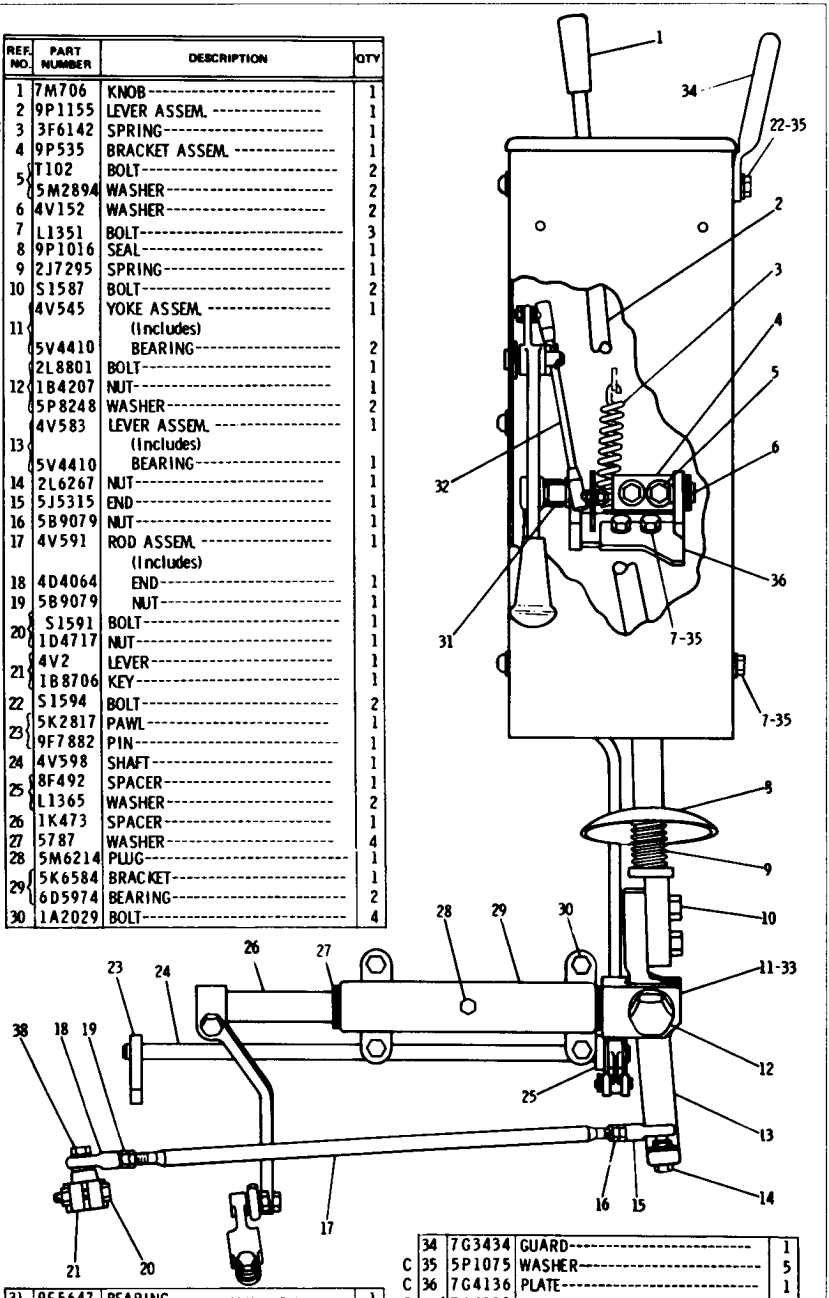

	31	9F5647	BEARING	1
	32	6I8529	ROD	1
C	33	8D5636	SHIM-------(use as required)----	4
C		1L3046	WASHER----(use as required)-----	4

	34	7G3434	GUARD	1
C	35	5P1075	WASHER	5
C	36	7G4136	PLATE	1
C	37	7G4132	LEVER ASSEM. (Includes)	1
		9F2978	NUT	2
C	38	5D353	BOLT	1

C INDICATES CHANGE

173216

3V6929 TRANSMISSION CONTROL GROUP—Part 1
Serial No. 13X1633 to 13X1678 inclusive

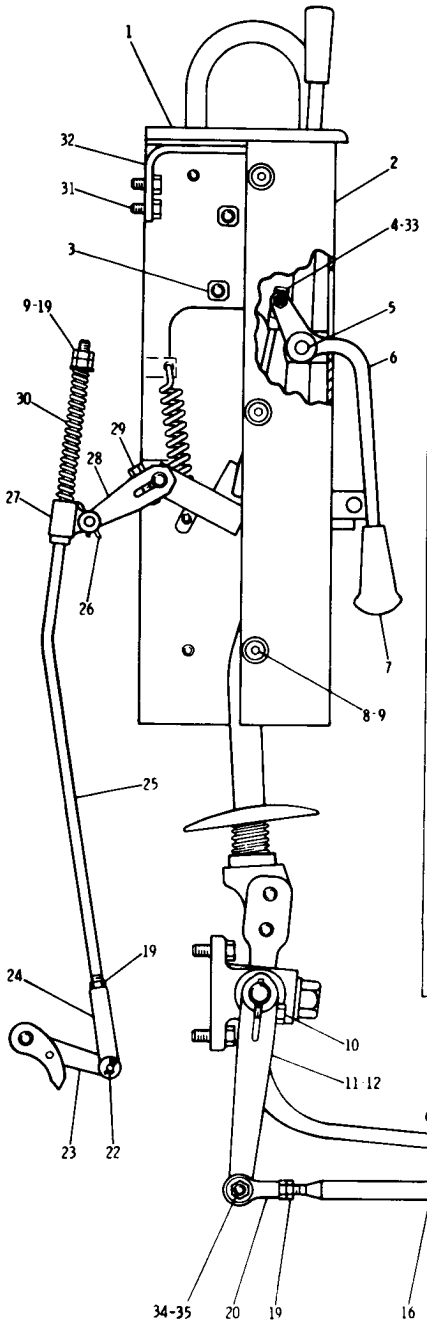

REF. NO.	PART NUMBER	DESCRIPTION	QTY
1	9P537	GUIDE	1
	4S4465	SCREW	4
2	9P1543	COVER ASSEM. (Includes)	1
	1F748	NUT	1
3	9F2978	NUT	6
4	1B1750	BALLJOINT	2
	1B4201	NUT	4
5	1K6925	PIN	1
	3B4617	COTTER PIN	1
	9K4848	WASHER-------(thrust)	1
	7F502	WASHER	1
6	3S5722	LEVER	1
7	2M8908	KNOB	1
8	6J488	SCREW	3
9	4B4278	WASHER	4
10	S1588	BOLT	2
11	8K7128	LEVER	1
12	1B8706	KEY	2
13	6D3967	BOLT	1
14	S1591	BOLT	1
15	3S6593	LEVER	1
16	4V590	ROD ASSEM. (Includes)	1
17	5B9079	NUT	1
18	4D4064	END	1
19	5B9079	NUT	4
20	4D4064	END	1
21	1D4717	NUT	1
22	5B1133	PIN	1
	3B4607	COTTER PIN	1
23	4K630	LEVER	1
	5H9839	PIN	1
24	7K8446	END	1
25	4V712	ROD ASSEM.	1
26	5P372	COTTER PIN	1
27	9P1734	GUIDE	1
28	9P1735	LEVER ASSEM.	1
	1B8701	KEY	1
29	1A2029	BOLT	1
30	4M7980	SPRING	1
31	S509	BOLT	2
32	9P538	BRACKET	1
33	4B4276	WASHER	2
34	2L6267	NUT	1
35	1A2209	BOLT	1

3V6929 TRANSMISSION CONTROL GROUP—Part 2
Serial No. 13X1633 to 13X1678 inclusive

REF. NO.	PART NUMBER	DESCRIPTION	QTY.
1	7M706	KNOB	1
2	9P1155	LEVER ASSEM.	1
3	3F6142	SPRING	1
4	9P535	BRACKET ASSEM.	1
5	T102	BOLT	2
	5M2894	WASHER	2
6	4V152	WASHER	2
7	L1351	BOLT	3
8	9P1016	SEAL	1
9	2J7295	SPRING	1
10	S1587	BOLT	2
C 11	5V5818	YOKE ASSEM.	1
	4K3893	BEARING	2
C 12	3B1915	BOLT	1
C 13	5V4738	LEVER	1
C 14	2L6267	NUT	3
C 15	4D4064	END	2
C 16	1B4203	NUT	2
C 17	2R1528	ROD	1
C 18	1A2209	BOLT	3
C 19	5V5628	SHAFT	1
C 20	5H4730	PIN	1
C	3B4628	COTTER	1
C 21	3D6915	LEVER	1
	1B8706	KEY	1
22	S1594	BOLT	2
23	5K2817	PAWL	1
	9F7882	PIN	1
24	4V598	SHAFT	1
25	8F492	SPACER	1
	L1365	WASHER---(Use as required)	2
C 26	8K5858	SPACER	1
27	5787	WASHER	4
28	5M6214	PLUG	1
29	5K6584	BRACKET	1
	6D5974	BEARING	2
30	1A2029	BOLT	4
31	9F5647	BEARING	1
32	618529	ROD	1
C 33	8D5636	SHIM-----(Use as required)	2
C	1L3046	WASHER----(Use as required)	2
34	7G3434	GUARD	1

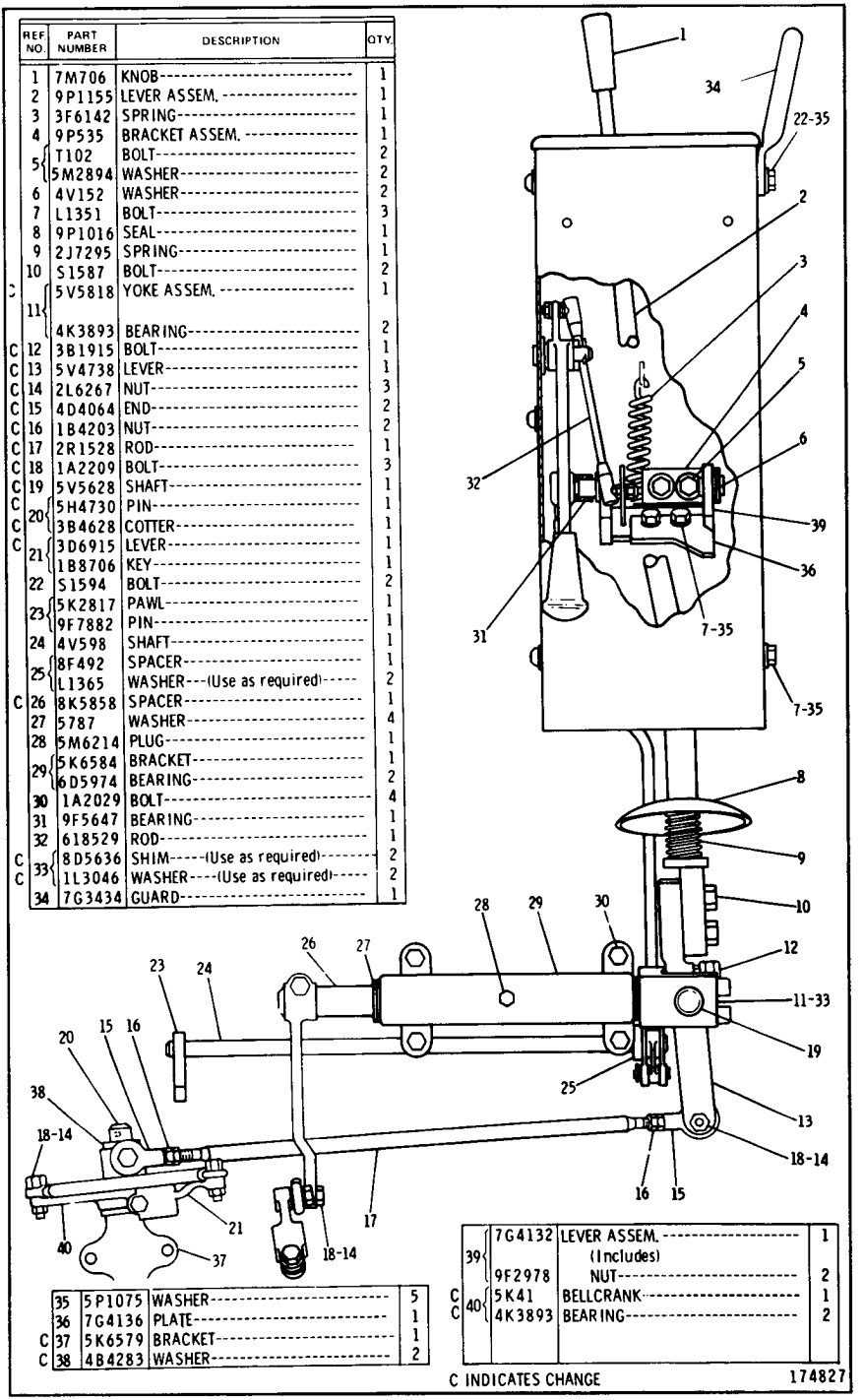

35	5P1075	WASHER	5
36	7G4136	PLATE	1
C 37	5K6579	BRACKET	1
C 38	4B4283	WASHER	2

39	7G4132	LEVER ASSEM. (Includes)	1
	9F2978	NUT	2
C 40	5K41	BELLCRANK	1
C	4K3893	BEARING	2

C INDICATES CHANGE 174827

3V6929 TRANSMISSION CONTROL GROUP—Part 1
Serial No. 13X1679 to 13X2516 inclusive

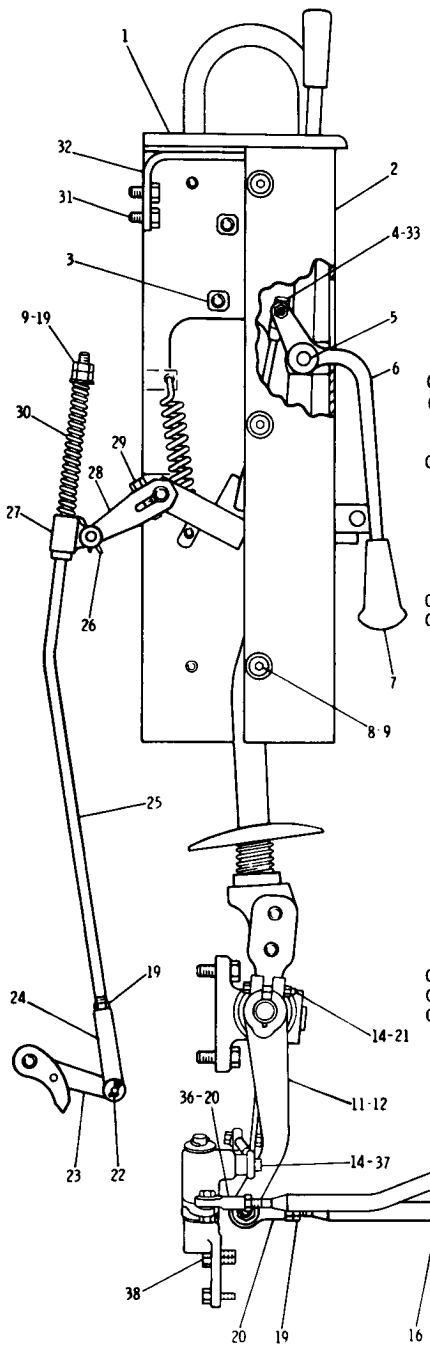

REF NO.	PART NUMBER	DESCRIPTION	QTY.
1	9P537	GUIDE	1
	4S4465	SCREW	4
2	9P1543	COVER ASSEM.	1
		(Includes)	
	1F748	NUT	1
3	9F2978	NUT	6
4	1B1750	BALLJOINT	2
	1B4201	NUT	4
5	1K6925	PIN	1
	3B4617	COTTER PIN	1
	9K4848	WASHER------(thrust)	1
	7F502	WASHER	1
6	3S5722	LEVER	1
7	2M8908	KNOB	1
8	6J488	SCREW	3
9	4B4278	WASHER	4
C 10	5V5257	ROD	1
C 11	5V4840	LEVER	1
12	1B8706	KEY	2
13	6D3967	BOLT	1
C 14	S1591	BOLT	4
15	3S6593	LEVER	1
16	4V590	ROD ASSEM.	1
		(Includes)	
17	5B9079	NUT	1
18	4D4064	END	1
19	5B9079	NUT	4
C 20	4D4064	END	3
C 21	1D4717	NUT	3
22	5B1133	PIN	1
	3B4607	COTTER PIN	1
23	4K630	LEVER	1
	5H9839	PIN	1
24	7K8446	END	1
25	4V712	ROD ASSEM.	1
26	5P372	COTTER PIN	1
27	9P1734	GUIDE	1
28	9P1735	LEVER ASSEM.	1
	1B8701	KEY	1
29	1A2029	BOLT	1
30	4M7980	SPRING	1
31	S509	BOLT	2
32	9P538	BRACKET	1
33	4B4276	WASHER	2
34	2L6267	NUT	1
35	1A2209	BOLT	1
C 36	1B4203	NUT	2
C 37	1F3981	SPACER	1
C 38	S1594	BOLT	3

C INDICATES CHANGE

174828

3V6929 TRANSMISSION CONTROL GROUP—Part 2
Serial No. 13X1679 to 13X2516 inclusive

	REF. NO.	PART NUMBER	DESCRIPTION	QTY.
	1	7M706	KNOB	1
	2	9P1155	LEVER ASSEM.	1
C	3	1K3536	SPRING	1
	4	9P535	BRACKET ASSEM.	1
	5	T102	BOLT	2
		5M2894	WASHER	2
	6	4V152	WASHER	2
C	7	L1351	BOLT	4
	8	9P1016	SEAL	1
	9	2J7295	SPRING	1
	10	S1587	BOLT	2
	11	5V5818	YOKE ASSEM.	1
		4K3893	BEARING	2
	12	3B1915	BOLT	1
	13	5V4738	LEVER	1
	14	2L6267	NUT	3
	15	4D4064	END	2
	16	1B4203	NUT	2
	17	2R1528	ROD	1
	18	1A2209	BOLT	3
	19	5V5628	SHAFT	1
	20	5H4730	PIN	1
		3B4628	COTTER	1
	21	3D6915	LEVER	1
		1B8706	KEY	1
C	22	5K41	BELLCRANK	1
	23	5K2817	PAWL	1
		9F7882	PIN	1
	24	4V598	SHAFT	1
	25	8F492	SPACER	1
		L1365	WASHER---(Use as required)	2
	26	8K5858	SPACER	1
C	27	94089	WASHER---(Use as required)	4
C	28	5M6214	PLUG	1
	29	5K6584	BRACKET	1
		6D5974	BEARING	2
	30	1A2029	BOLT	4
	31	9F5647	BEARING	1
	32	618529	ROD	1
	33	8D5636	SHIM-----(Use as required)	2
		1L3046	WASHER----(Use as required)	2
C	34	4K3893	BEARING	2

C	35	5P1075	WASHER	4
	36	7G4136	PLATE	1
	37	5K6579	BRACKET	1
	38	4B4283	WASHER	2

	39	7G4132	LEVER ASSEM. (Includes)	1
		9F2978	NUT	2

C INDICATES CHANGE 178210

3V6929 TRANSMISSION CONTROL GROUP—Part 1
Serial No. 13X2517—Up

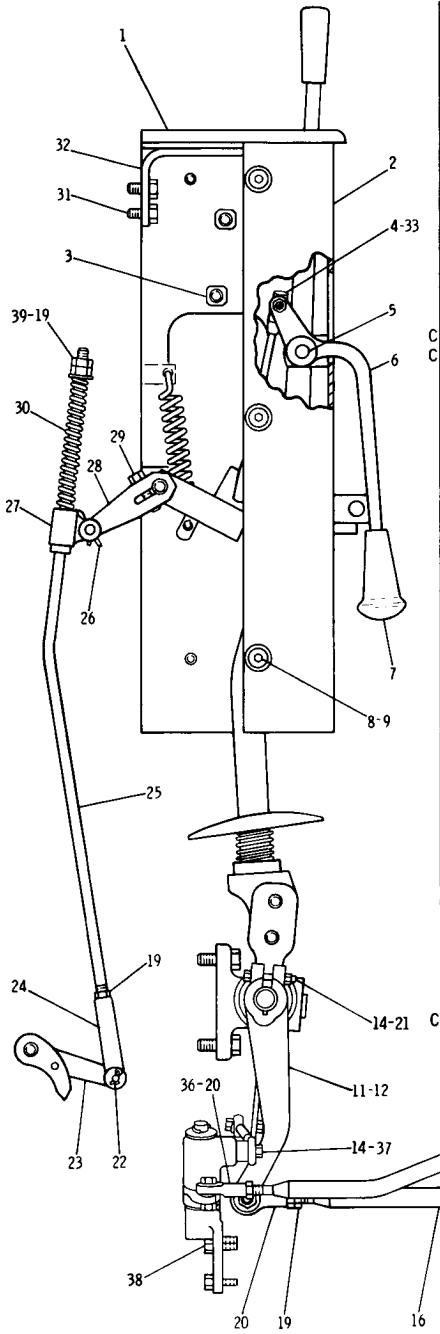

REF. NO.	PART NUMBER	DESCRIPTION	QTY.
1	9P537	GUIDE	1
	4S4465	SCREW	4
2	9P1543	COVER ASSEM. (Includes)	1
	1F748	NUT	1
3	9F2978	NUT	6
4	1B1750	BALLJOINT	2
	1B4201	NUT	4
5	1K6925	PIN	1
	3B4617	COTTER PIN	1
	9K4848	WASHER-----(thrust)	1
	7F502	WASHER	1
6	3S5722	LEVER	1
7	2M8908	KNOB	1
C 8	6V1193	SCREW	3
C 9	4B4278	WASHER	3
10	5V5257	ROD	1
11	5V4840	LEVER	1
12	1B8706	KEY	2
13	6D3967	BOLT	1
14	S1591	BOLT	4
15	3S6593	LEVER	1
16	4V590	ROD ASSEM. (Includes)	1
17	5B9079	NUT	1
18	4D4064	END	1
19	5B9079	NUT	4
20	4D4064	END	3
21	1D4717	NUT	3
22	5B1133	PIN	1
	3B4607	COTTER PIN	1
23	4K630	LEVER	1
	5H9839	PIN	1
24	7K8446	END	1
25	4V712	ROD ASSEM.	1
26	5P372	COTTER PIN	1
27	9P1734	GUIDE	1
28	9P1735	LEVER ASSEM.	1
	1B8701	KEY	1
29	1A2029	BOLT	1
30	4M7980	SPRING	1
31	S509	BOLT	2
32	9P538	BRACKET	1
33	4B4276	WASHER	2
34	2L6267	NUT	1
35	1A2209	BOLT	1
36	1B4203	NUT	2
37	1F3981	SPACER	1
38	S1594	BOLT	3
C 39	5B3850	WASHER	1

C INDICATES CHANGE

178211

3V6929 TRANSMISSION CONTROL GROUP—Part 2
Serial No. 13X2517—Up

5V5862 TRANSMISSION CONTROL SERVICE GROUP

Serial No. 13X1 to 13X1678 inclusive

Provides Field Replacement for 4V583 Lever Assembly shown on Pages 114, 115A, 115C, 115E and 115G

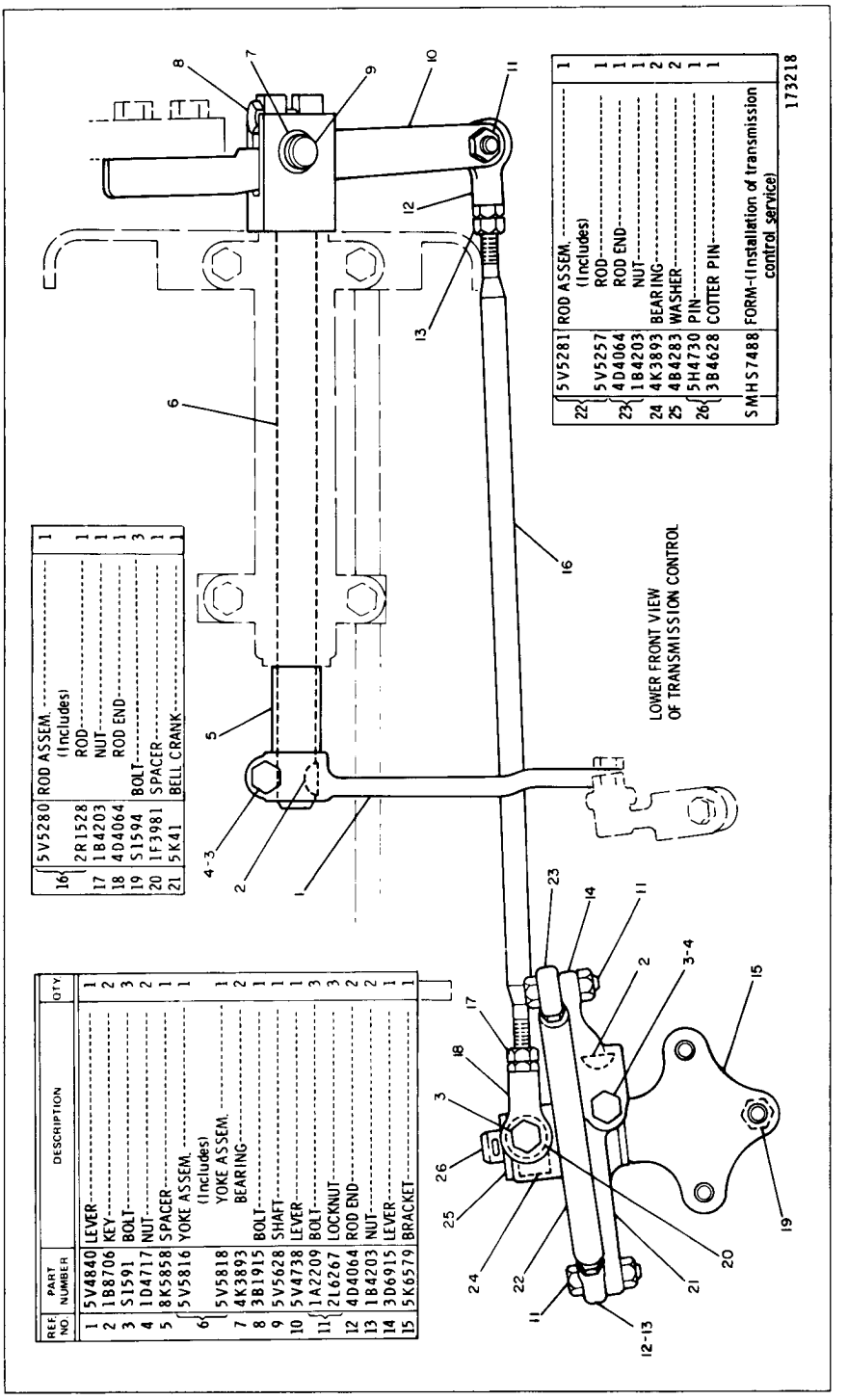

REF NO	PART NUMBER	DESCRIPTION	QTY
1	5V4840	LEVER	1
2	1B8706	KEY	2
3	S1591	BOLT	3
4	1D4717	NUT	2
5	8K5858	SPACER	1
6	5V5816	YOKE ASSEM. (Includes)	1
	5V5818	YOKE ASSEM.	1
7	4K3893	BEARING	2
8	3B1915	BOLT	1
9	5V5628	SHAFT	1
10	5V4738	LEVER	1
11	1A2209	BOLT	3
	2L6267	LOCKNUT	3
12	4D4064	ROD END	2
13	1B4203	NUT	2
14	3D6915	LEVER	1
15	5K6579	BRACKET	1
16	5V5280	ROD ASSEM. (Includes)	1
	2R1528	ROD	1
17	1B4203	NUT	1
18	4D4064	ROD END	1
19	S1594	BOLT	3
20	1F3981	SPACER	1
21	5K41	BELL CRANK	1
22	5V5281	ROD ASSEM. (Includes)	1
	5V5257	ROD	1
23	4D4064	ROD END	1
	1B4203	NUT	1
24	4K3893	BEARING	2
25	4B4283	WASHER	2
26	5H4730	PIN	1
	3B4628	COTTER PIN	1
	SMHS7488	FORM-(Installation of transmission control service)	

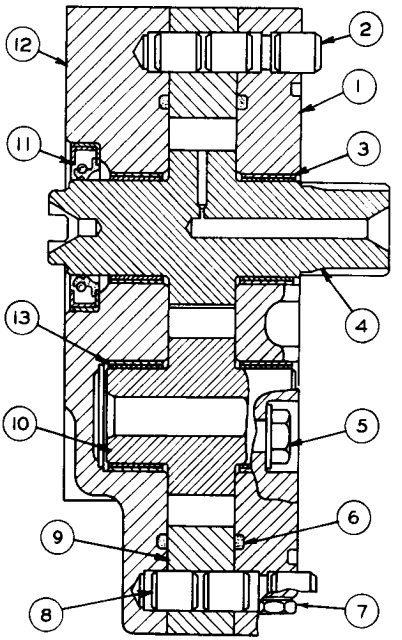

REF. NO.	PART NUMBER	DESCRIPTION	QTY
1	7S6877	MANIFOLD ASSEM.	1
2	8M8489	DOWEL	2
3	9M4370	BEARING	2
4	3S4380	GEAR--(12 teeth-Drive)	1
5	S1590	BOLT	4
	8M3175	WASHER	4
6	8M5007	SEAL	2
C 7	9S4182	PLUG	1
	3J7354	SEAL	1
8	8M8489	DOWEL	4
9	9M2209	BODY	1
10	3S4382	GEAR--(12 teeth-Idler)	1
11	5S6622	SEAL	1
12	3S4373	COVER ASSEM.	1
13	9M4370	BEARING	2

C INDICATES CHANGE

114228

7S6875 TRANSMISSION PUMP GROUP
IF TRANSMISSION IS SERIALIZED USE TRANSMISSION SERIAL NO. OTHERWISE USE VEHICLE SERIAL NO. Serial No. 13X1 to 13X2463 inclusive Transmission Serial No. 2ZA1—Up. Part of 8P7869 Powershift Transmission
Arrangement shown on Page 104

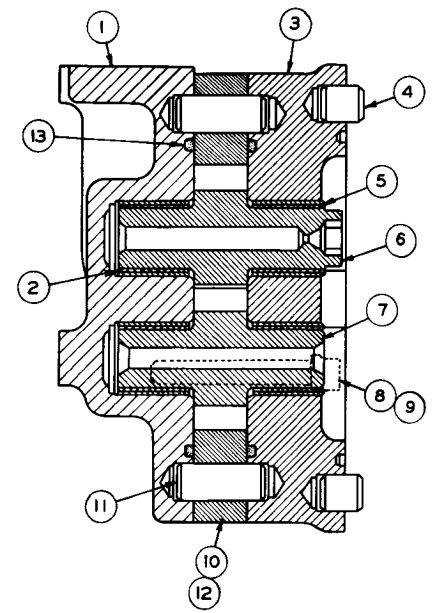

REF. NO.	PART NUMBER	DESCRIPTION	QTY
1	7S2904	COVER ASSEM.	1
2	2S7931	BEARING	2
C 3	9S8815	COVER	1
4	8M8489	DOWEL	2
5	2S7931	BEARING	2
6	3S4383	GEAR--(10 Teeth-Drive)	1
7	3S4384	GEAR--(10 Teeth-Idler)	1
8	3S127	BOLT	4
9	8M3175	WASHER	4
10	3S4377	BODY ASSEM.	1
11	1M3736	DOWEL	2
12	9S4182	PLUG	1
	3J7354	SEAL	1
13	4M189	SEAL	2

C INDICATES CHANGE

114227

3S4386 STEERING PUMP GROUP
IF TRANSMISSION IS SERIALIZED USE TRANSMISSION SERIAL NO. OTHERWISE USE VEHICLE SERIAL NO. Serial No. 13X1 to 13X2463 inclusive Transmission Serial No. 2ZA1—Up. Part of 8P7869 Powershift Transmission
Arrangement shown on Page 104

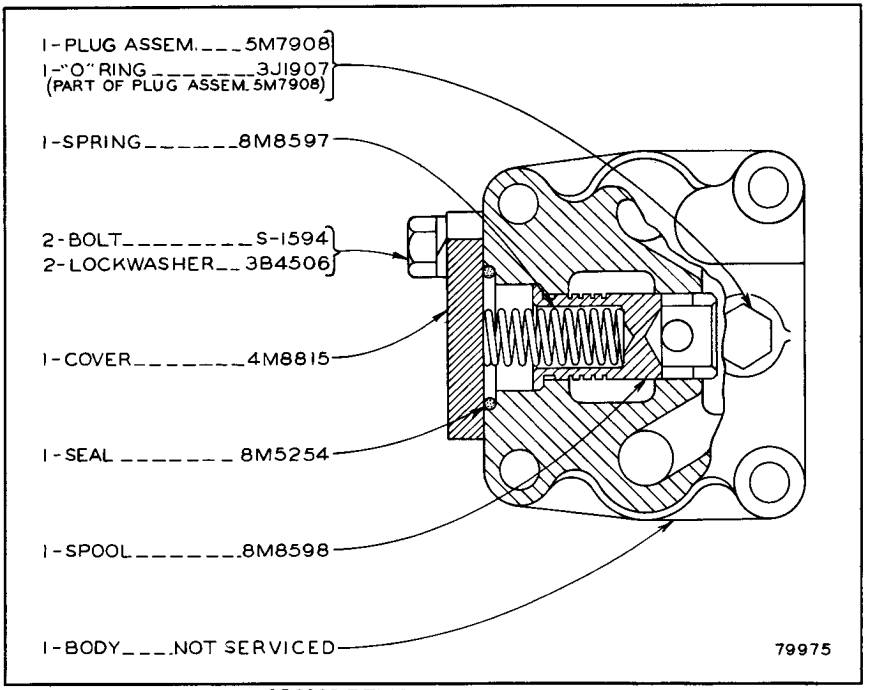

3S6860 RELIEF VALVE GROUP
IF TRANSMISSION IS SERIALIZED USE TRANSMISSION SERIAL NO. OTHERWISE USE VEHICLE SERIAL NO. Serial No. 13X1 to 13X2463 inclusive Transmission Serial No. 2ZA1—Up. Part of 8P8926 Transmission Group shown on Page 107

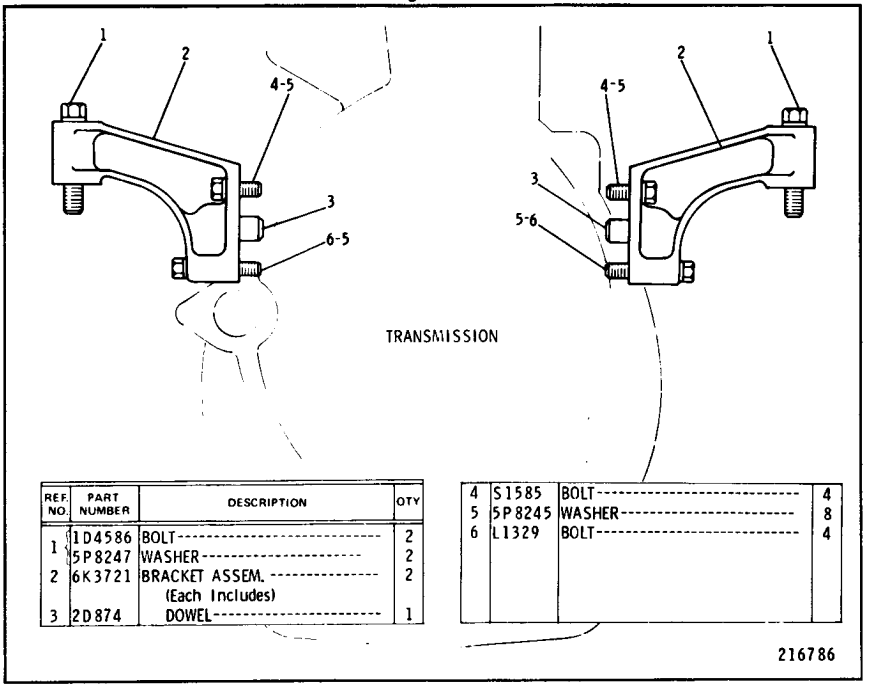

REF. NO.	PART NUMBER	DESCRIPTION	QTY
1	1D4586	BOLT	2
	5P8247	WASHER	2
2	6K3721	BRACKET ASSEM. (Each Includes)	2
3	2D874	DOWEL	1
4	S1585	BOLT	4
5	5P8245	WASHER	8
6	L1329	BOLT	4

3V6940 TRANSMISSION MOUNTING GROUP

REF. NO.	PART NUMBER	DESCRIPTION	QTY
1	3V8336	GAUGE ASSEM. ----(oil level)----	1
	6H1717	BOLT----------	2
2	1D4719	NUT----------	2
	5P1076	WASHER----------	2
3	3V8340	BRACKET----------	1
4	1J2264	CLAMP----------	1
5	3V8338	TUBE ASSEM. ----------	1
6	4H2719	GASKET----------	1
7	1A2029	BOLT----------	2
	3B4506	LOCKWASHER----------	2

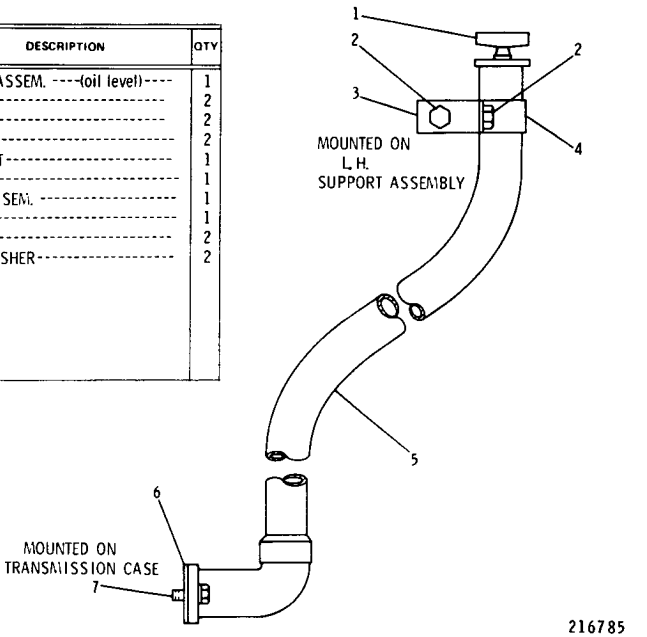

3V6939 TRANSMISSION OIL FILLER GROUP

REF. NO.	PART NUMBER	DESCRIPTION	QTY
1	3V8335	GAUGE ASSEM. ------(oil level)---	1
2	4D7306	CLAMP----------	1
	1S1594	BOLT----------	1
3	1D4717	NUT----------	1
	5P1075	WASHER----------	1
4	3V8339	TUBE ASSEM. ----------	1
5	7F8268	SEAL----------	1
6	7H7954	BOLT----------	1
7	3B4506	LOCKWASHER----------	2
8	1A2029	BOLT----------	1

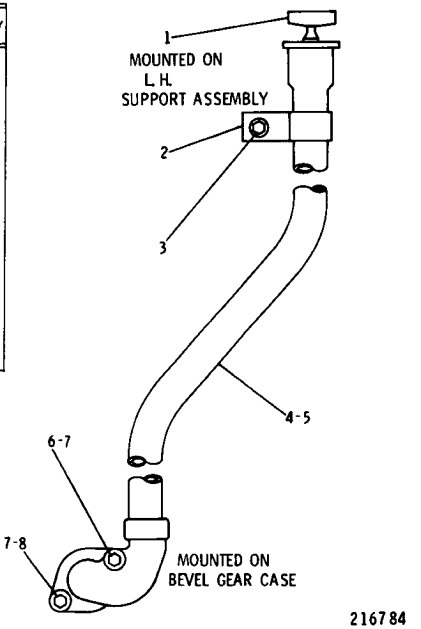

3V6938 BEVEL GEAR OIL FILLER GROUP

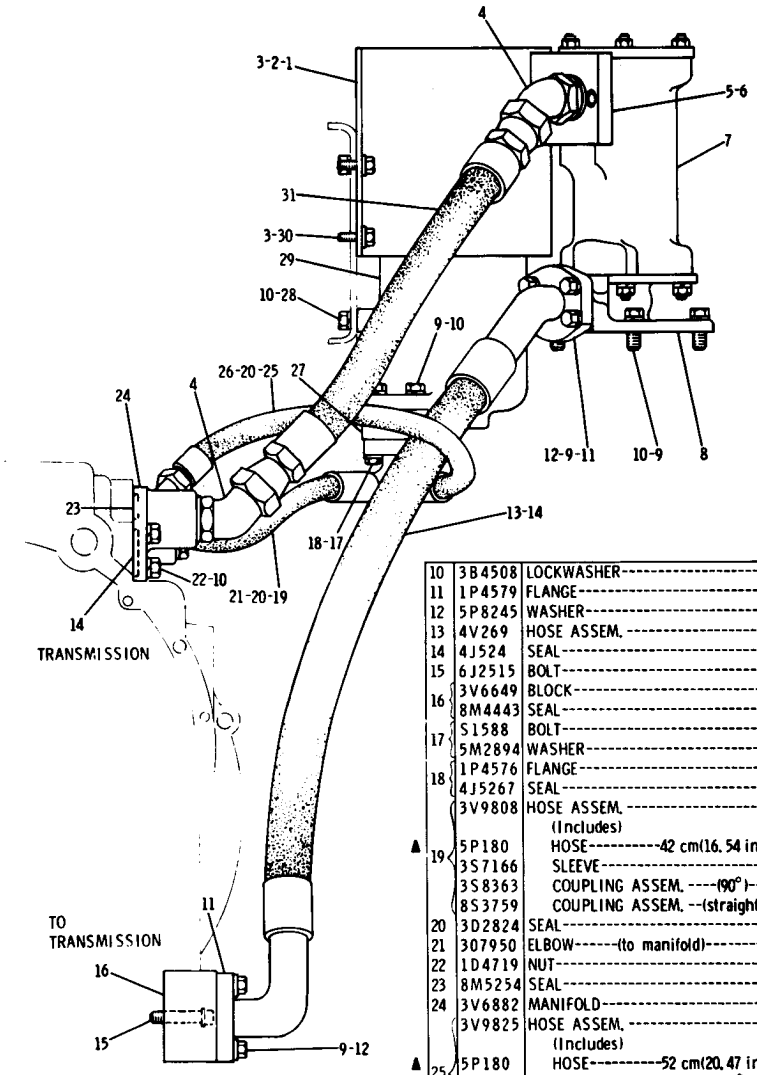

REF. NO.	PART NUMBER	DESCRIPTION	QTY
1	2V9808	PLATE	1
2	L1351	BOLT	2
3	5P1075	WASHER	4
4	329267	ELBOW	2
5	3V6650	BLOCK	1
	5F8000	SEAL	1
6	1T765	BOLT	2
7	9M8669	SCREEN GROUP (Separate Illustration)	1
8	3V6902	MANIFOLD	1
9	S1585	BOLT	16
10	3B4508	LOCKWASHER	15
11	1P4579	FLANGE	4
12	5P8245	WASHER	8
13	4V269	HOSE ASSEM.	1
14	4J524	SEAL	4
15	6J2515	BOLT	2
16	3V6649	BLOCK	1
	8M4443	SEAL	1
17	S1588	BOLT	8
	5M2894	WASHER	8
18	1P4576	FLANGE	4
	4J5267	SEAL	2
19 ▲	3V9808	HOSE ASSEM. (Includes)	1
	5P180	HOSE---42 cm(16.54 in.)	
	3S7166	SLEEVE	2
	3S8363	COUPLING ASSEM. ---(90°)---	1
	8S3759	COUPLING ASSEM. --(straight)-	1
20	3D2824	SEAL	2
21	307950	ELBOW------(to manifold)---	1
22	1D4719	NUT	5
23	8M5254	SEAL	2
24	3V6882	MANIFOLD	1
25 ▲	3V9825	HOSE ASSEM. (Includes)	1
	5P180	HOSE---52 cm(20.47 in.)	
	3S8363	COUPLING ASSEM. ---(90°)---	1
	3S7166	SLEEVE	2
	8S3759	COUPLING ASSEM. --(straight)-	1
26	307944	ELBOW-------(to manifold)---	1
27	4V684	BLOCK	1
	8M4986	SEAL	2
28	6H1717	BOLT	3
29	9P6447	FILTER GROUP (Separate Illustration)	1
30	S1594	BOLT	2
31	4V268	HOSE ASSEM.	1
	2S4078	SEAL	2

▲ ORDER BY THE CENTIMETRE 216781

3V6937 TRANSMISSION FILTER LINES GROUP
9M8669 Screen and 9P6447 Filter parts are shown on Page 120

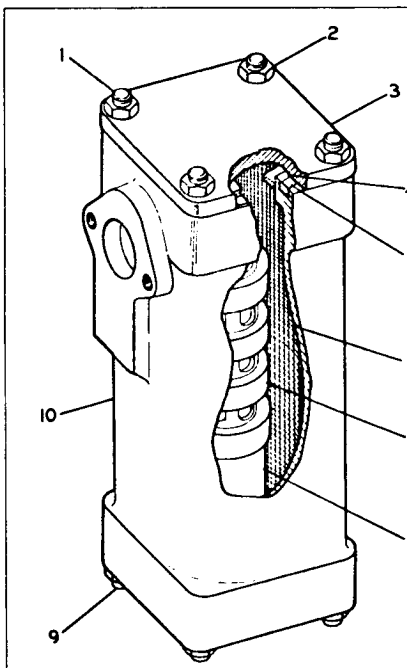

REF. NO.	PART NUMBER	DESCRIPTION	QTY
1	3D2871	STUD	4
2	1D4717	NUT	4
3	3S3439	COVER	1
4	3S3440	SPRING WASHER	1
5	5F149	SEAL	2
6	3S3875	SCREEN	1
7	2S1641	TUBE ASSEM.	1
8	8M7160	MAGNET	4
9	1J8668	STUD (2" long)	4
		-OR-	
	8M1047	STUD (1.70" long)	4
		-OR-	
	2M4779	STUD (1.80" long)	4
	1D4717	NUT	4
	3B4506	LOCKWASHER	4
10	8M7166	HOUSING	1

9M8669 MAGNETIC SCREEN GROUP
Part of 3V6937 Transmission Filter Lines Group shown on Page 119

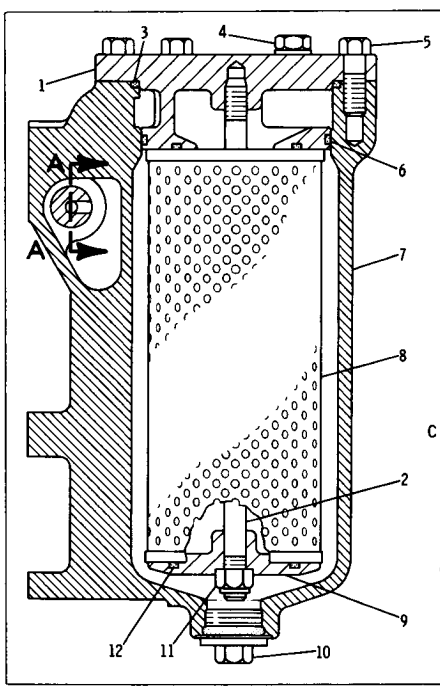

REF. NO.	PART NUMBER	DESCRIPTION	QTY
1	7S8700	COVER ASSEM. (Includes)	1
2	3S4398	STUD	1
3	2H3928	SEAL	1
4	9S4191	PLUG	1
	3J1907	SEAL	1
5	7B3235	BOLT	6
6	5K1770	SEAL	1
7	9P6442	HOUSING	1
8	9M9740	ELEMENT	1
		-OR-	
C ▲	1U2093	ELEMENT (For use with fire resistant hydraulic system)	1
9	2S6462	RETAINER	1
10	9S4205	PLUG	1
	7M8485	SEAL	1
11	2H3788	NUT	1
12	8F8882	SEAL	2
C 13	3T688	SPOOL	1
14	9M1986	SPRING	1
15	9S8008	PLUG	1
16	3D2824	SEAL	1

▲ NOT PART OF 9P6447 C INDICATES CHANGE

9P6447 TRANSMISSION FILTER GROUP
Part of 3V6937 Transmission Filter Lines Group shown on Page 119

3V6941 BEVEL GEAR PUMP LINES AND FILTER GROUP

3S7406 Filter parts are shown on Page 123

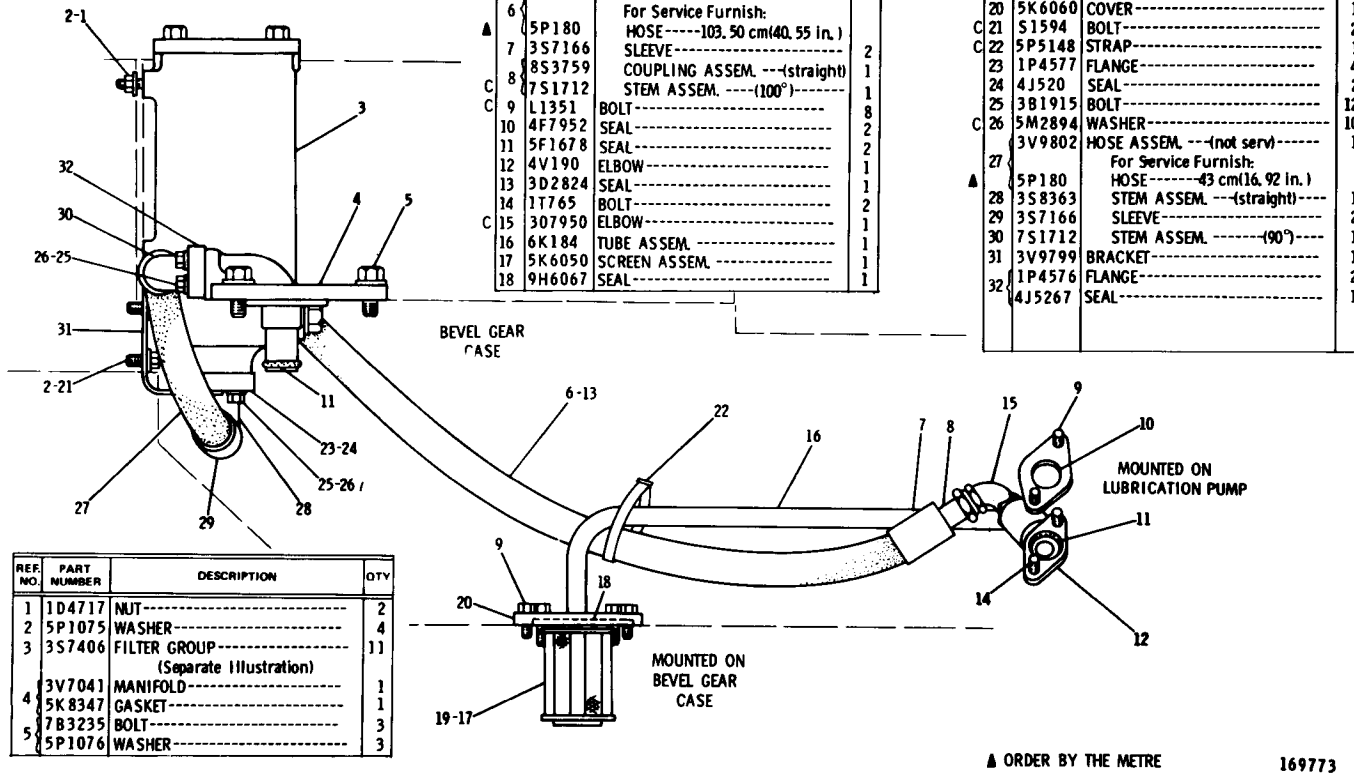

	3V9801	HOSE ASSEM. ---(not serv)-------	1
▲	6	For Service Furnish:	
▲	5P180	HOSE-----103.50 cm(40.55 in.)	
	7 3S7166	SLEEVE----------	2
	8 8S3759	COUPLING ASSEM. ---(straight)	1
C	8 7S1712	STEM ASSEM. ----(100°)-------	1
C	9 L1351	BOLT----------	8
	10 4F7952	SEAL----------	2
	11 5F1678	SEAL----------	2
	12 4V190	ELBOW----------	1
	13 3D2824	SEAL----------	1
	14 1T765	BOLT----------	2
C	15 307950	ELBOW----------	1
	16 6K184	TUBE ASSEM. ----------	1
	17 5K6050	SCREEN ASSEM. ----------	1
	18 9H6067	SEAL----------	1

	19 1H8128	SEAL----------	1
	20 5K6060	COVER----------	1
C	21 S1594	BOLT----------	2
C	22 5P5148	STRAP----------	1
	23 1P4577	FLANGE----------	4
	24 4J520	SEAL----------	2
	25 3B1915	BOLT----------	12
C	26 5M2894	WASHER----------	10
	27 3V9802	HOSE ASSEM. ---(not serv)------	1
		For Service Furnish:	
▲	5P180	HOSE-------43 cm(16.92 in.)	
	28 3S8363	STEM ASSEM. ---(straight)----	1
	29 3S7166	SLEEVE----------	2
	30 7S1712	STEM ASSEM. -------(90°)----	1
	31 3V9799	BRACKET----------	1
	32 1P4576	FLANGE----------	2
	4J5267	SEAL----------	1

REF. NO.	PART NUMBER	DESCRIPTION	QTY
1	1D4717	NUT----------	2
2	5P1075	WASHER----------	4
3	3S7406	FILTER GROUP----------	11
		(Separate Illustration)	
4	3V7041	MANIFOLD----------	1
4	5K8347	GASKET----------	1
5	7B3235	BOLT----------	3
5	5P1076	WASHER----------	3

▲ ORDER BY THE METRE

169773

REF. NO.	PART NUMBER	DESCRIPTION	QTY
1	9K447	SHAFT----------(11 Teeth)-------	1
2	L1351	BOLT----------	4
	3H6237	LOCK----------	2
3	S1595	BOLT----------	4
	3K3179	LOCK----------	2
4	3K3658	SHIM----------	1

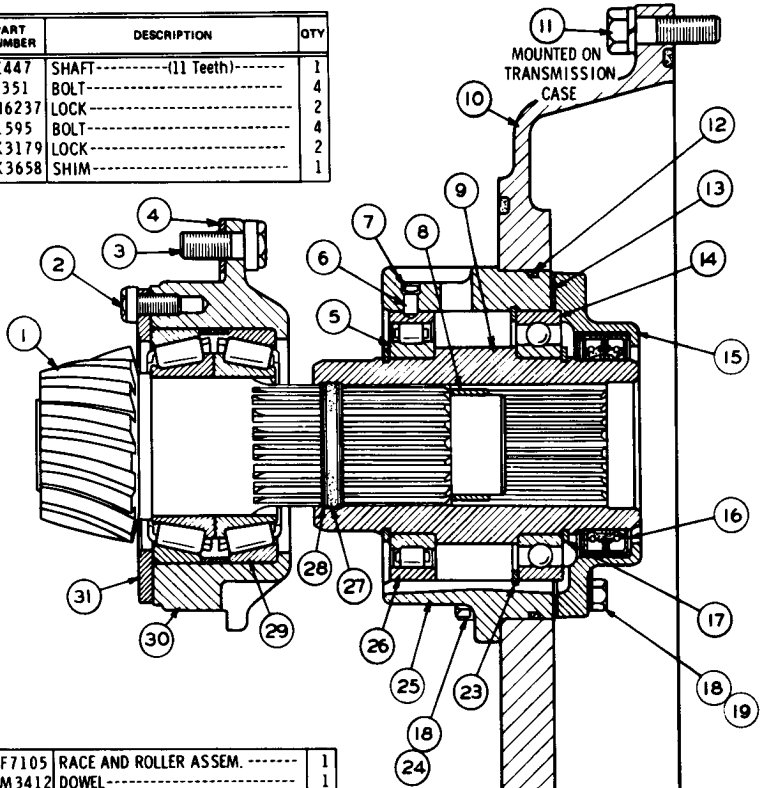

5	9F7105	RACE AND ROLLER ASSEM. -------	1
6	2M3412	DOWEL----------	1
7	2A3746	PLUG----------	1
8	6K3360	SPACER----------	1
9	5K8953	COUPLER----------	1
10	6K8207	COVER----------	1
	1A3284	DOWEL----------	2
11	S1587	BOLT----------	10
	3B4508	LOCKWASHER----------	10
12	2K4472	"O" RING----------	1
13	5K9066	GASKET----------	1
14	5K9060	BEARING----------	1
15	5K8955	RETAINER----------	1
16	4K4376	SEAL----------	2
17	5K9064	RING---------(External)----------	2
18	1A2029	BOLT----------	12
19	5K9059	LOCK----------	3
20	5K6155	SEAL----------	1
21	5K6157	SEAL----------	1
22	1A1460	BOLT----------	11
	3H7654	WASHER----------	11
23	5K9065	RING---------(Internal)---------	1
24	6K4004	LOCK----------	2
25	5K8954	CAGE----------	1
26	5K9063	OUTER RACER----------	1
27	5K5959	SEAL----------	1
28	4K6613	RING----------	2
C 29	5P3086	BEARING ASSEM. ----------	1
30	3K2895	CAGE----------	1
31	8K5153	RETAINER----------	1

C INDICATES CHANGE 207532

9K715 BEVEL GEAR GROUP

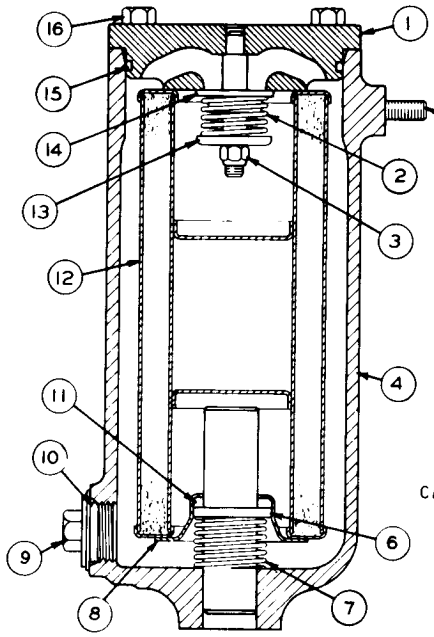

C INDICATES CHANGE

REF. NO.	PART NUMBER	DESCRIPTION	QTY
1	3S7405	COVER ASSEM.	1
2	2J9	SPRING	1
3	2F8616	NUT	1
4	3S7099	HOUSING ASSEM. (Includes)	1
5	3D2871	STUD	2
6	5S9759	RING	1
7	3J3370	SPRING	1
8	3S7101	RETAINER	1
9	4S5858	PLUG ASSEM. (Includes)	1
10	7M8485	SEAL	1
11	3S1751	SEAL	1
C▲ 12	9M9740	ELEMENT ASSEM. -OR-	1
C▲ 12	3G3467	ELEMENT (fire resistant fluid)	1
13	5S6661	WASHER	1
14	1M5471	VALVE	1
15	2H3928	SEAL	1
16	S1595	BOLT	4

▲ NOT PART OF 3S7406 216941

3S7406 BEVEL GEAR AND STEERING CLUTCH LUBRICATION FILTER GROUP
Serial No. 13X1 to 13X1076 inclusive
Part of 3V6941 Bevel Gear Pump Lines and Filter Group shown on Page 121

CONSISTS OF:

			PAGE
1	4V5159	POWER TAKE-OFF GROUP	124
1	4V5193	POWER TAKE-OFF CONTROL GROUP	126

4V5192 REAR POWER TAKE-OFF ARRANGEMENT
AN ATTACHMENT

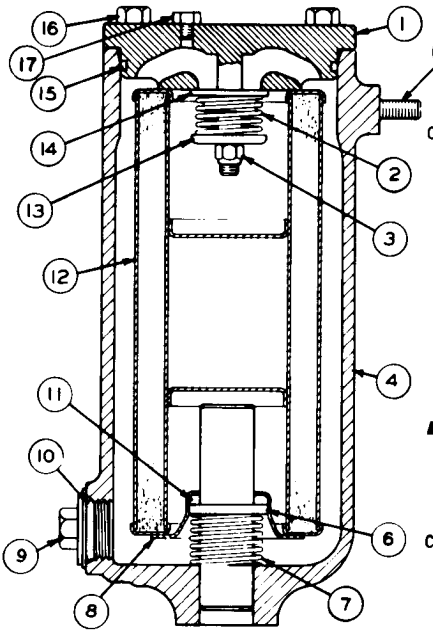

	REF. NO.	PART NUMBER	DESCRIPTION	QTY.
C	1	9P9393	COVER ASSEM.	1
	2	2J9	SPRING	1
	3	2F8616	NUT	1
	4	3S7099	HOUSING ASSEM. (Includes)	1
	5	3D2871	STUD	2
	6	5S9759	RING	1
	7	3J3370	SPRING	1
	8	3S7101	RETAINER	1
	9	4S5858	PLUG ASSEM. (Includes)	1
	10	7M8485	SEAL	1
	11	3S1751	SEAL	1
	12	9M9740	ELEMENT ASSEM. -OR-	1
▲		3G3467	ELEMENT (fire resistant fluid)	1
	13	5S6661	WASHER	1
	14	1M5471	VALVE	1
	15	2H3928	SEAL	1
	16	S1595	BOLT	4
C	17	5M6214	PLUG	1

C INDICATES CHANGE
▲ NOT PART OF 3S7406 GROUP

171798

3S7406 BEVEL GEAR AND STEERING CLUTCH LUBRICATION FILTER GROUP
Serial No. 13X1077—Up
Part of 3V6941 Bevel Gear Pump Lines and Filter Group shown on Page 121

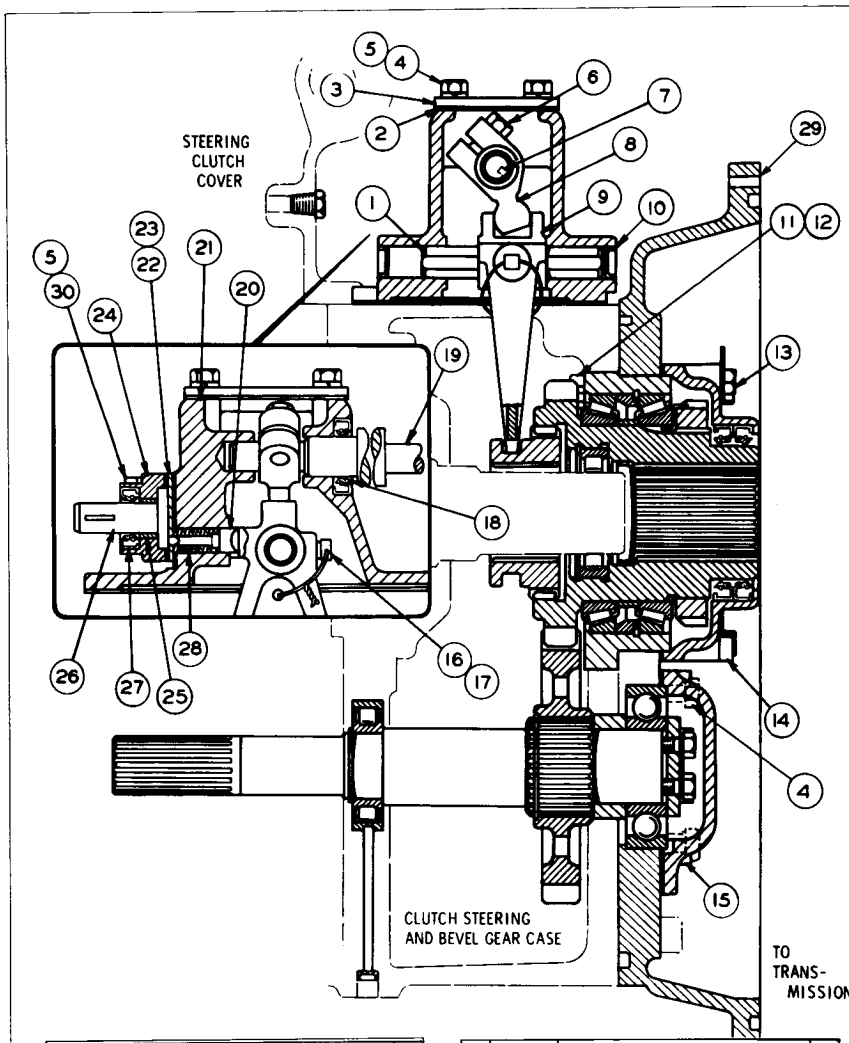

REF NO	PART NUMBER	DESCRIPTION	QTY
1	5K6524	SHAFT	1
2	4M9771	GASKET	1
3	4M9770	COVER	1
4	S1594	BOLT	8
5	3B4506	LOCKWASHER	6
6	1A2209	BOLT	1
7	1B8706	KEY	1
8	5K6481	LEVER	1
9	5K6432	FORK	1
10	8F6575	PLUG	2
11	3B1915	BOLT	6
12	6K4004	LOCK	2
13	S1590	BOLT	6
14	5K9061	LOCK	3
15	6K4003	LOCK	2
16	1A6766	SCREW	1
▲ 17	5P6628	LOCKWIRE, .41 m(18 in.)	
18	4J3923	SEAL	1
19	4V5153	SHAFT	1
20	4B3728	PLUNGER	1
21	5K6424	COVER	1
22	5K6523	GUIDE	1
23	5H2831	GASKET	2
24	1V3544	HOUSING ASSEM. (Includes)	1
25	3K5718	BEARING	1
26	1V4101	SHAFT	1
27	3K2593	SEAL	1
28	T270	SPRING	1
29	5K6086	COVER	1
30	S1591	BOLT	2

▲ ORDER BY THE METRE 216992

4V5159 POWER TAKE-OFF GROUP—Part 1—Type 1
Part of 4V5192 Rear Power Take-Off Arrangement listed on Page 123
AN ATTACHMENT

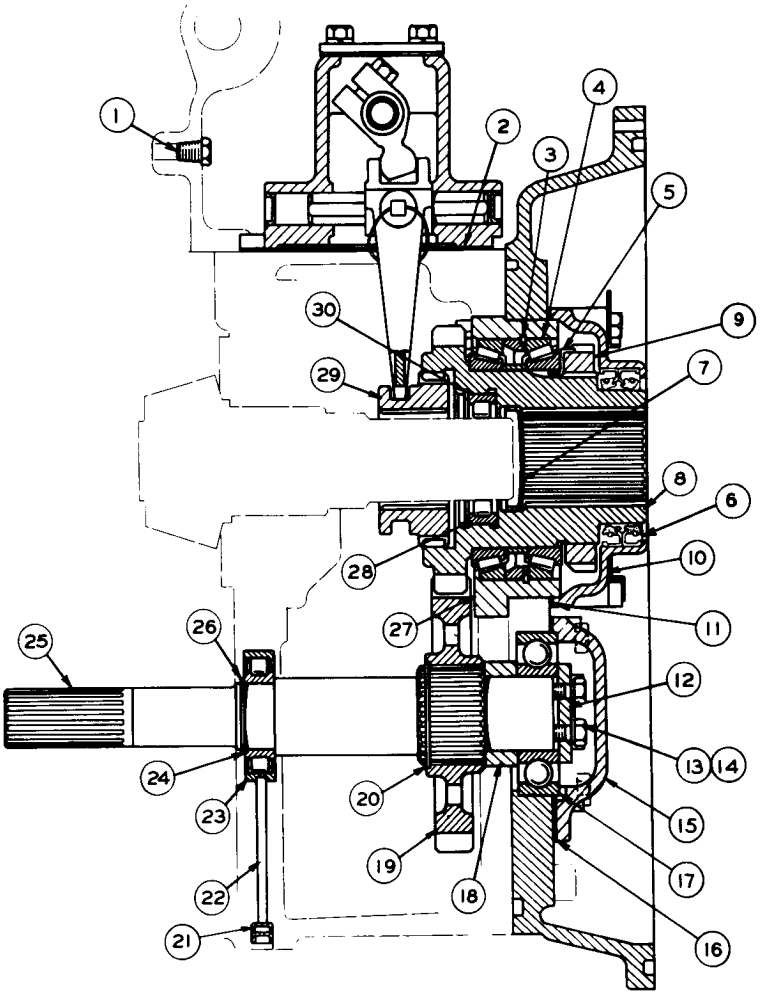

REF NO	PART NUMBER	DESCRIPTION	QTY
1	5M6213	PLUG	1
2	5K6304	GASKET	1
3	9H3452	RING	1
4	5K9522	BEARING ASSEM.	1
5	3L1188	LOCK	1
6	4K4376	SEAL	2
7	4B4098	PLUG	1
8	5K8928	GEAR (30 Teeth)	1
9	5L7333	NUT	1
10	5K8956	RETAINER	1
11	5K9067	GASKET	1
12	4F3190	WASHER	1
13	6F7030	BOLT	2
14	T329	LOCK	1
15	5K8927	COVER	1
16	3K3706	GASKET	1
17	8B5972	BEARING	1
18	5K9062	SPACER	1
19	3K4287	GEAR (31 Teeth)	1
20	3K58	RING	1
21	2A3746	PLUG	2
22	3K3656	DOWEL	1
23	3K3522	RACE	1
24	6B4947	INNER RACE AND ROLLER ASSEM.	1
25	5K6345	SHAFT	1
26	1T33	RING	1
27	5K8957	CAGE	1
28	1M3100	OUTER RACE AND ROLLER ASSEM.	1
29	5K6609	COLLAR	1
30	3J7719	RING	1

216993

4V5159 POWER TAKE-OFF GROUP—Part 2—Type 1
Part of 4V5192 Rear Power Take-Off Arrangement listed on Page 123
AN ATTACHMENT

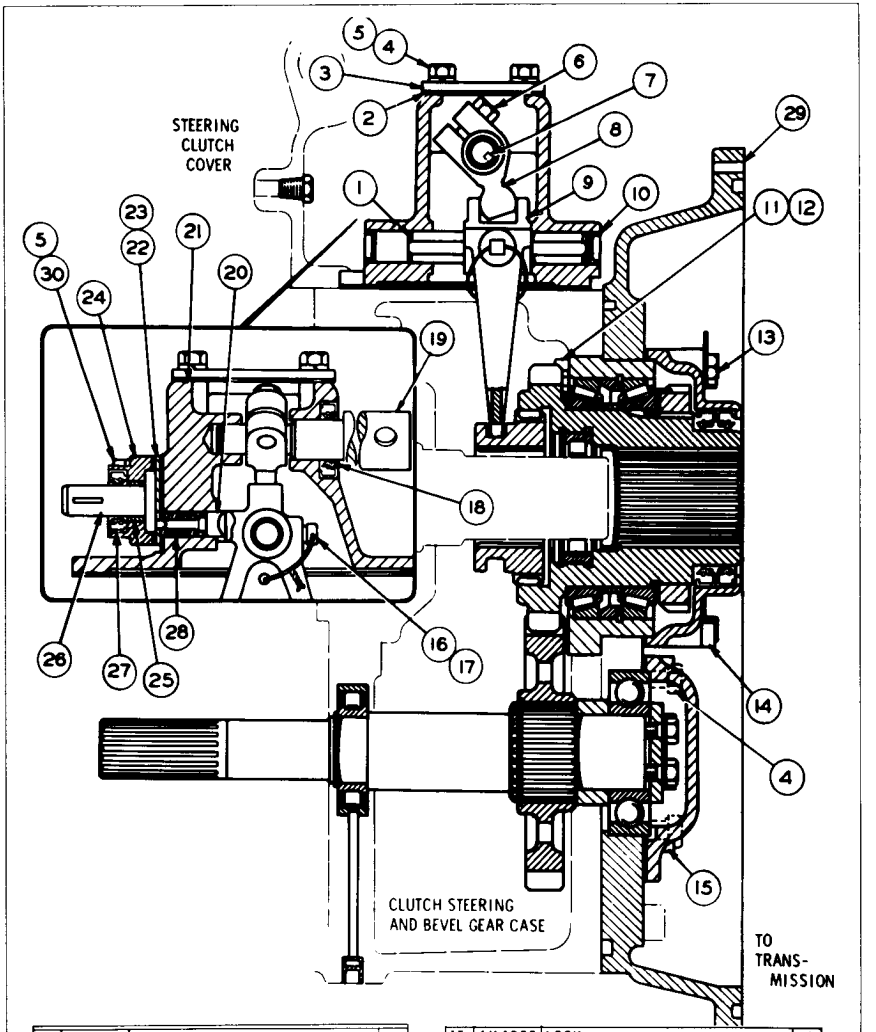

REF NO	PART NUMBER	DESCRIPTION	QTY
1	5K6524	SHAFT	1
2	4M9771	GASKET	1
3	4M9770	COVER	1
4	S1594	BOLT	8
5	3B4506	LOCKWASHER	6
6	1A2209	BOLT	1
7	1B8706	KEY	1
8	5K6481	LEVER	1
9	5K6432	FORK	1
10	8F6575	PLUG	2
11	3B1915	BOLT	6
12	6K4004	LOCK	2
13	S1590	BOLT	6
14	5K9061	LOCK	3
15	6K4003	LOCK	2
16	1A6766	SCREW	1
▲ 17	5P6628	LOCKWIRE, 41 mm(18 in.)	
18	4J3923	SEAL	1
C 19	5V2902	SHAFT	1
20	4B3728	PLUNGER	1
21	5K6424	COVER	1
22	5K6523	GUIDE	1
23	5H2831	GASKET	2
24	1V3544	HOUSING ASSEM. (Includes)	1
25	3K5718	BEARING	1
26	1V4101	SHAFT	1
27	3K2593	SEAL	1
28	T270	SPRING	1
29	5K6086	COVER	1
30	S1591	BOLT	2

C INDICATES CHANGE

▲ ORDER BY THE METER

220712

4V5159 POWER TAKE-OFF GROUP—Part 1—Type 2
Part of 4V5192 Rear Power Take-Off Arrangement listed on Page 123
AN ATTACHMENT

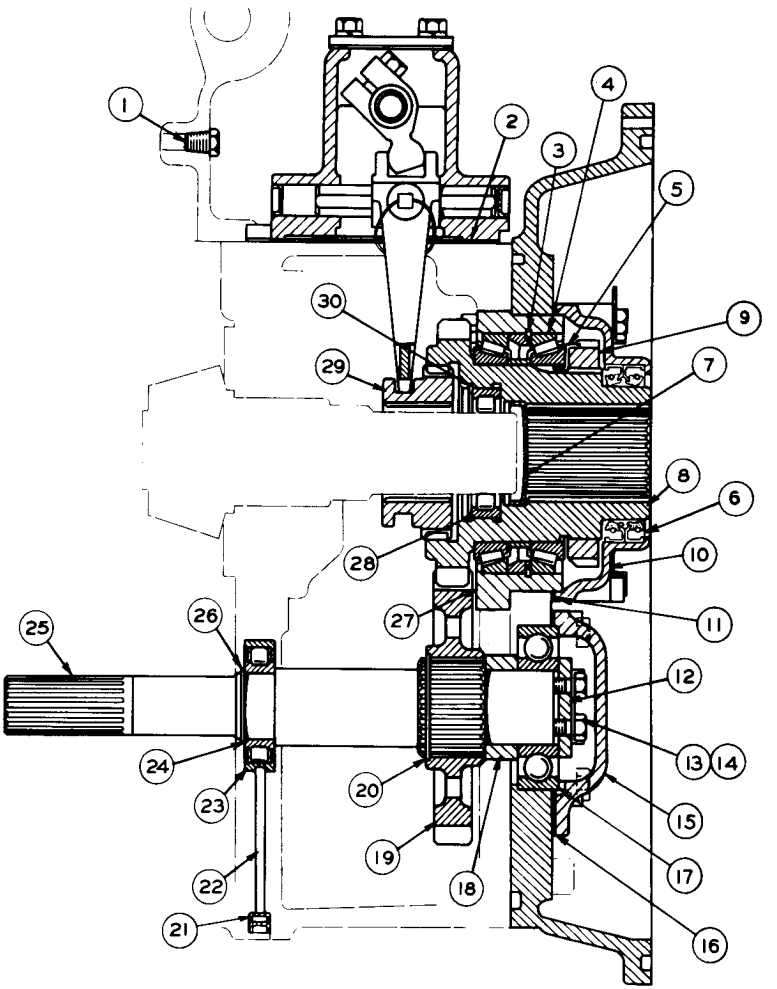

REF NO	PART NUMBER	DESCRIPTION	QTY
1	5M6213	PLUG	1
2	5K6304	GASKET	1
3	9H3452	RING	1
4	5K9522	BEARING ASSEM.	1
5	3L1188	LOCK	1
6	4K4376	SEAL	2
7	4B4098	PLUG	1
8	5K8928	GEAR (30 Teeth)	1
9	5L7333	NUT	1
10	5K8956	RETAINER	1
11	5K9067	GASKET	1
12	4F3190	WASHER	1
13	6F7030	BOLT	2
14	T329	LOCK	1
15	5K8927	COVER	1
16	3K3706	GASKET	1
17	8B5972	BEARING	1
18	5K9062	SPACER	1
19	3K4287	GEAR (31 Teeth)	1
20	3K58	RING	1
21	2A3746	PLUG	2
22	3K3656	DOWEL	1
23	3K3522	RACE	1
24	6B4947	INNER RACE AND ROLLER ASSEM.	1
25	5K6345	SHAFT	1
26	1T33	RING	1
27	5K8957	CAGE	1
28	1M3100	OUTER RACE AND ROLLER ASSEM.	1
29	5K6609	COLLAR	1
30	3J7719	RING	1

216993

4V5159 POWER TAKE-OFF GROUP—Part 2—Type 2
Part of 4V5192 Rear Power Take-Off Arrangement listed on Page 123
AN ATTACHMENT

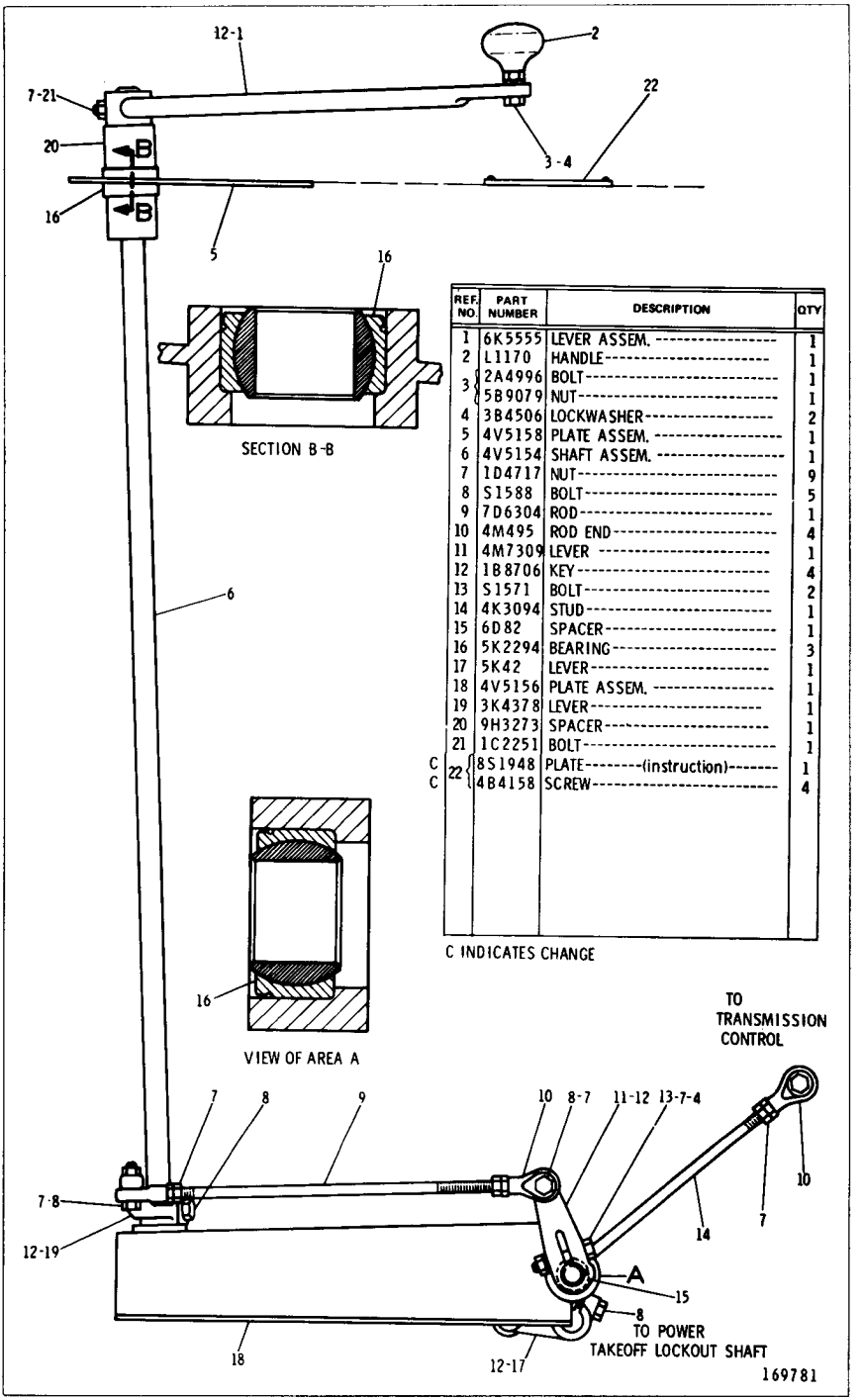

REF. NO.	PART NUMBER	DESCRIPTION	QTY
1	6K5555	LEVER ASSEM.	1
2	L1170	HANDLE	1
3	2A4996	BOLT	1
	5B9079	NUT	1
4	3B4506	LOCKWASHER	2
5	4V5158	PLATE ASSEM.	1
6	4V5154	SHAFT ASSEM.	1
7	1D4717	NUT	9
8	S1588	BOLT	5
9	7D6304	ROD	1
10	4M495	ROD END	4
11	4M7309	LEVER	1
12	1B8706	KEY	4
13	S1571	BOLT	2
14	4K3094	STUD	1
15	6D82	SPACER	1
16	5K2294	BEARING	3
17	5K42	LEVER	1
18	4V5156	PLATE ASSEM.	1
19	3K4378	LEVER	1
20	9H3273	SPACER	1
21	1C2251	BOLT	1
C 22	8S1948	PLATE--------(instruction)-------	1
C	4B4158	SCREW	4

C INDICATES CHANGE

4V5193 POWER TAKE-OFF CONTROL GROUP
Part of 4V5192 Rear Power Take-Off Arrangement listed on Page 123
AN ATTACHMENT

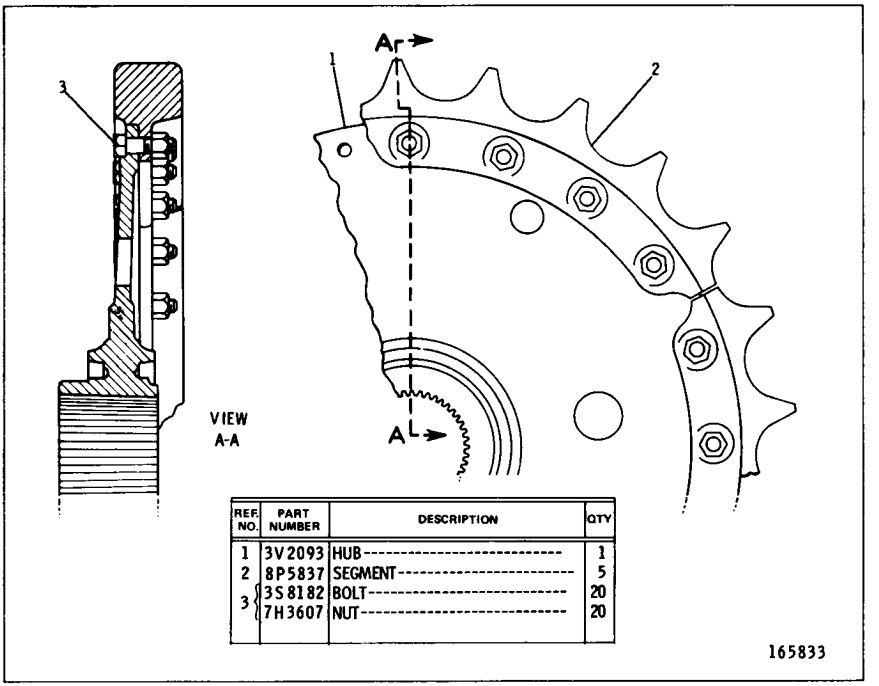

REF. NO.	PART NUMBER	DESCRIPTION	QTY
1	3V2093	HUB	1
2	8P5837	SEGMENT	5
3	3S8182	BOLT	20
	7H3607	NUT	20

165833

4V1282 SEGMENTED SPROCKET GROUP
Part of 1V8056 and 3V1091 Final Drive Groups shown on Pages 129 & 131

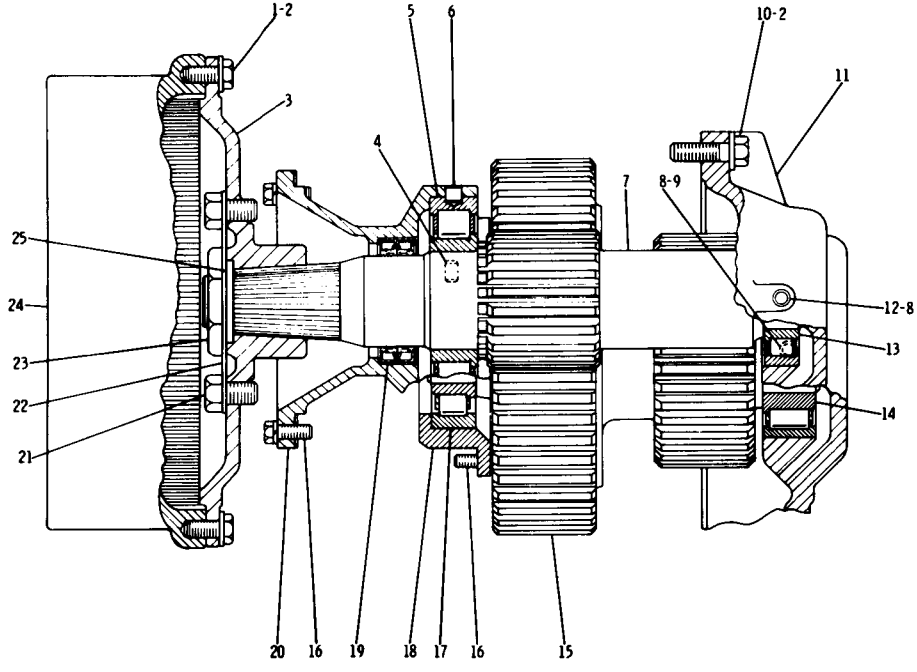

NOTE: QUANTITIES SHOWN ARE THOSE REQUIRED FOR BOTH R. H. & L. H. SIDES

REF. NO.	PART NUMBER	DESCRIPTION	QTY
1	S1825	BOLT	28
2	2M849	WASHER	62
3	7K8238	FLANGE	2
4	3F1953	DOWEL	2
5	6B5067	RACE AND ROLLER ASSEM.	2
	9S8669	RACE	2
6	5K8315	DOWEL	2
7	3V5604	PINION (11 teeth)	2
8	L1026	PLUG	4
9	3B8852	DOWEL	2
10	S1587	BOLT	34
C	3V2444	CASE (R. H.)	1
C 11	3V2445	CASE (L. H.)	1
	1V5832	DOWEL	4
12	4F6165	DOWEL	2
13	3B3967	RACE	2
	5K8592	RACE AND ROLLER ASSEM.	2
14	6K4717	RACE	2
	6K4718	RACE AND ROLLER ASSEM.	2
15	3V5605	GEAR AND PINION (11 and 34 teeth)	2
16	1A2029	BOLT	24
	3B4506	LOCKWASHER	24
17	5K8591	RACE AND ROLLER ASSEM.	2
	3B3969	RACE	2
18	5K6142	CAGE	2
19	7K2830	SEAL	4
20	5K8628	CAGE	2
	5K2083	GASKET	2
21	1H9456	BOLT	4
22	9K4058	LOCK	2
23	2J5815	NUT	2
24	7K8237	DRUM	2
25	2B6325	SEAL	2

C INDICATES CHANGE

216796

1V8056 FINAL DRIVE GROUP—Upper Half

1V8056 FINAL DRIVE GROUP—Lower Half

4V1282 Sprocket parts are shown on Page 127

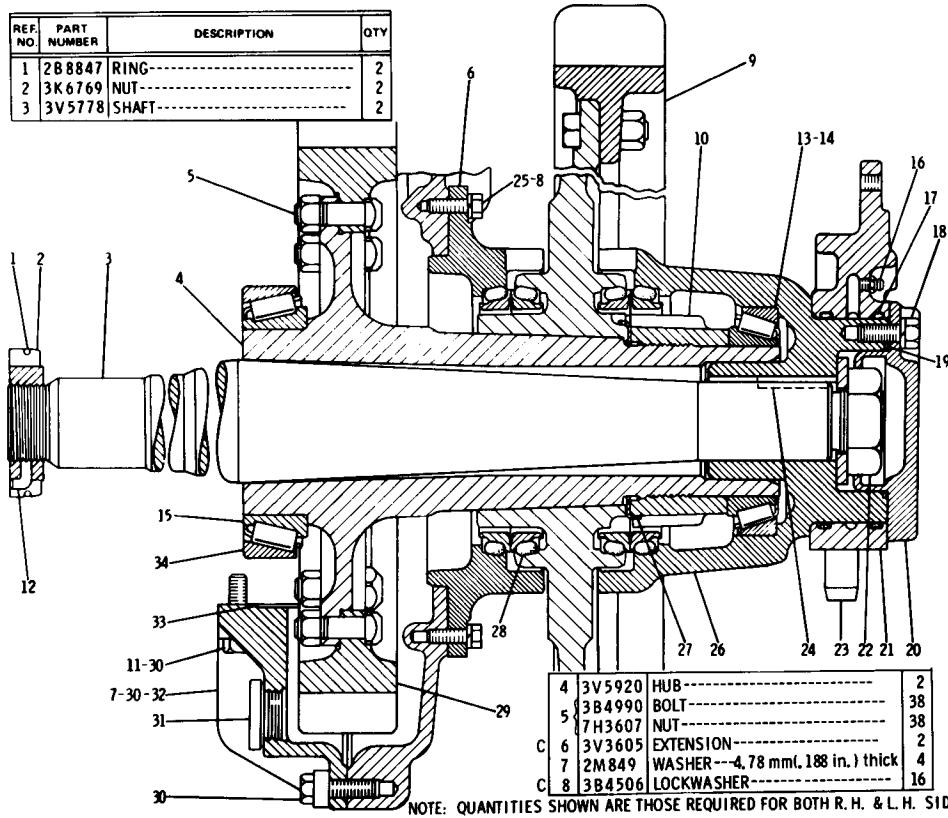

REF. NO.	PART NUMBER	DESCRIPTION	QTY
1	2B8847	RING	2
2	3K6769	NUT	2
3	3V5778	SHAFT	2

	4	3V5920	HUB	2
	5	3B4990	BOLT	38
		7H3607	NUT	38
C	6	3V3605	EXTENSION	2
	7	2M849	WASHER---4.78 mm(.188 in.) thick	4
C	8	3B4506	LOCKWASHER	16

C	9	4V1282	SPROCKET GROUP (Separate Illustration)	1
	10	1V7870	NUT	2
	11	7K8790	SPACER---11.17 mm(.44 in.) thick	22
	12	2B8093	PIN	2
	13	8B6343	CUP	2
	14	3F1396	CONE	2
	15	5F1248	CONE	2
	16	3B8489	FITTING	2
	17	5H3252	SEAL	4
	18	S1595	BOLT	10
		3B4508	LOCKWASHER	10
	10	1H6227	SEAL	2
	20	1V2615	RETAINER ASSEM.	2
	21	1V7556	SUPPORT	2
C	22	7F2339	NUT	2
C		4V6589	WASHER---(spring)	2
	23	2M122	DOWEL	4
	24	616869	KEY	2
C	25	S1588	BOLT	16
C	26	3V2771	RETAINER	2
	27	3F1960	LOCK	2
C	28	8P1857	SEAL GROUP (Includes)	4
		7M475	RING	2
	29	3V5918	GEAR---(34 teeth)	2
	30	S1587	BOLT	26
	31	4B2363	PLUG	2
		6F4868	GASKET	2
	32	3V6799	COVER	2
	33	3K3753	GASKET	2
C	34	5D7449	CUP	2

NOTE: QUANTITIES SHOWN ARE THOSE REQUIRED FOR BOTH R. H. & L. H. SIDES. C INDICATES CHANGE

216797

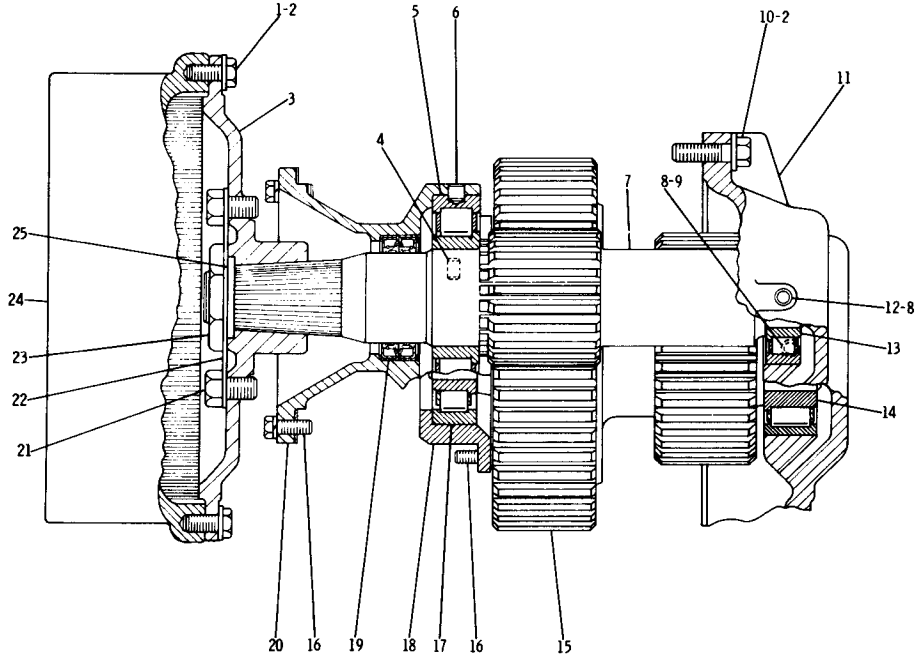

NOTE: QUANTITIES SHOWN ARE THOSE REQUIRED FOR BOTH R.H. & L.H. SIDES

REF. NO.	PART NUMBER	DESCRIPTION	QTY
1	S1825	BOLT	28
2	2M849	WASHER	62
3	7K8238	FLANGE	2
4	3F1953	DOWEL	2
5	6B5067	RACE AND ROLLER ASSEM.	2
	9S8669	RACE	2
6	5K8315	DOWEL	2
7	3V5604	PINION-(11 teeth)	2
8	L1026	PLUG	4
9	3B8852	DOWEL	2
10	S1587	BOLT	34
11	3V2444	CASE-(R. H.)	1
	3V2445	CASE-(L. H.)	1
	1V5832	DOWEL	4
12	4F6165	DOWEL	2
13	3B3967	RACE	2
	5K8592	RACE AND ROLLER ASSEM.	2
14	6K4717	RACE	2
	6K4718	RACE AND ROLLER ASSEM.	2
15	3V5605	GEAR AND PINION-(11 and 34 teeth)	2
16	1A2029	BOLT	24
	3B4506	LOCKWASHER	24
17	5K8591	RACE AND ROLLER ASSEM.	2
	3B3969	RACE	2
18	5K6142	CAGE	2
19	7K2830	SEAL	4
20	5K8628	CAGE	2
	5K2083	GASKET	2
21	1H9456	BOLT	4
22	9K4058	LOCK	2
23	2J5815	NUT	2
24	7K8237	DRUM	2
25	2B6325	SEAL	2

163252

3V1091 FINAL DRIVE GROUP—Upper Half
Part of 4V2193 Wide Gauge Track Loader Arrangement listed on Page 166
AN ATTACHMENT

3V1091 FINAL DRIVE GROUP—Lower Half
Part of 4V2193 Wide Gauge Track Loader Arrangement listed on Page 166
4V1282 Sprocket parts are shown on Page 127. AN ATTACHMENT

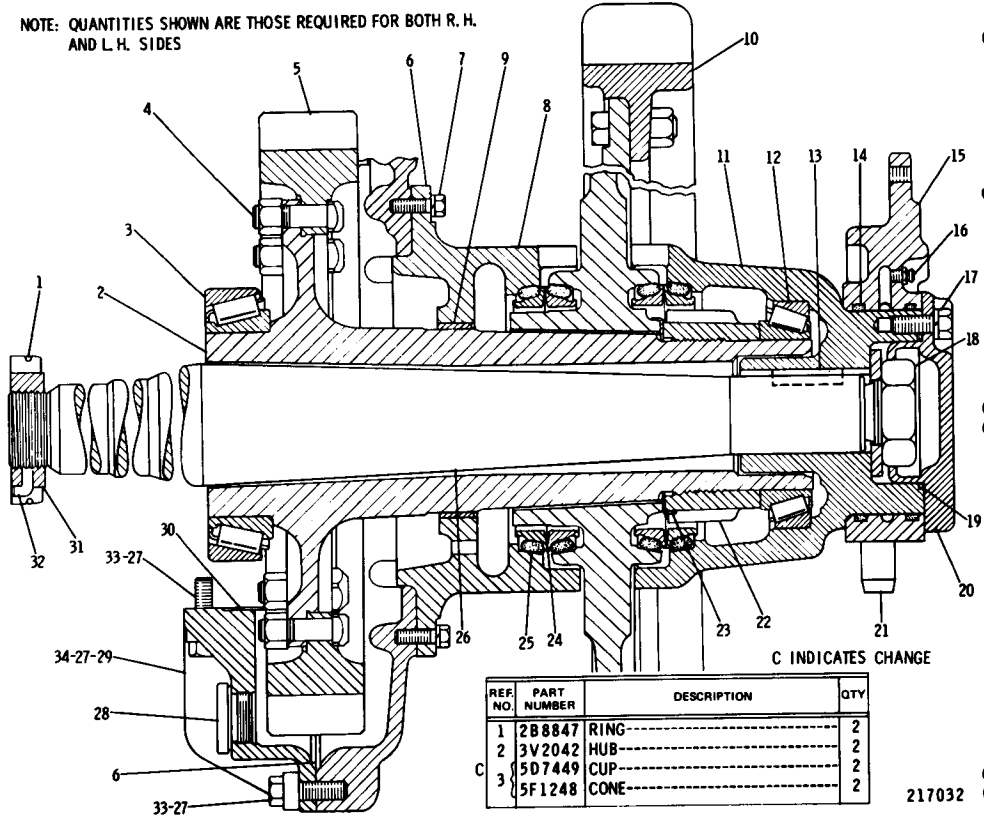

C INDICATES CHANGE

REF. NO.	PART NUMBER	DESCRIPTION	QTY
1	2B8847	RING	2
2	3V2042	HUB	2
C 3	5D7449	CUP	2
	5F1248	CONE	2

	4	3B4990	BOLT	38
C		7H3607	NUT	38
	5	3V5918	GEAR---(34 teeth)	2
	6	7M7260	LIQUID GASKET	
	7	S1588	BOLT	16
		3B4506	LOCKWASHER	16
	8	3V2514	EXTENSION ASSEM. (Each Includes)	2
	9	3V1090	BEARING	1
C	10	4V1282	SPROCKET GROUP (Separate Illustration)	2
	11	3V2771	RETAINER	2
	12	8B6343	CUP	2
		3F1396	CONE	2
	13	6H6869	KEY	2
	14	5H3252	SEAL	4
	15	1V7556	SUPPORT	2
	16	3B8489	FITTING	2
	17	S1595	BOLT	10
		3B4508	LOCKWASHER	10
C	18	7F2339	NUT	2
C		4V6589	WASHER---(spring)	2
	19	1H6227	SEAL	2
	20	1V2615	RETAINER ASSEM.	2
	21	2M122	DOWEL	4
	22	1V7870	NUT	2
	23	3F1960	LOCK	2
	24	8P1857	SEAL GROUP (Each Includes)	2
	25	7M475	RING	2
	26	3V838	SHAFT	2
	27	S1587	BOLT	26
	28	4B2363	PLUG	2
		6F4868	GASKET	2
C	29	3V6799	COVER	2
	30	3K3753	GASKET	2
	31	3K6769	NUT	2
	32	2B8093	PIN	2
C	33	7K8790	SPACER	22
C	34	2M849	WASHER	4

217032

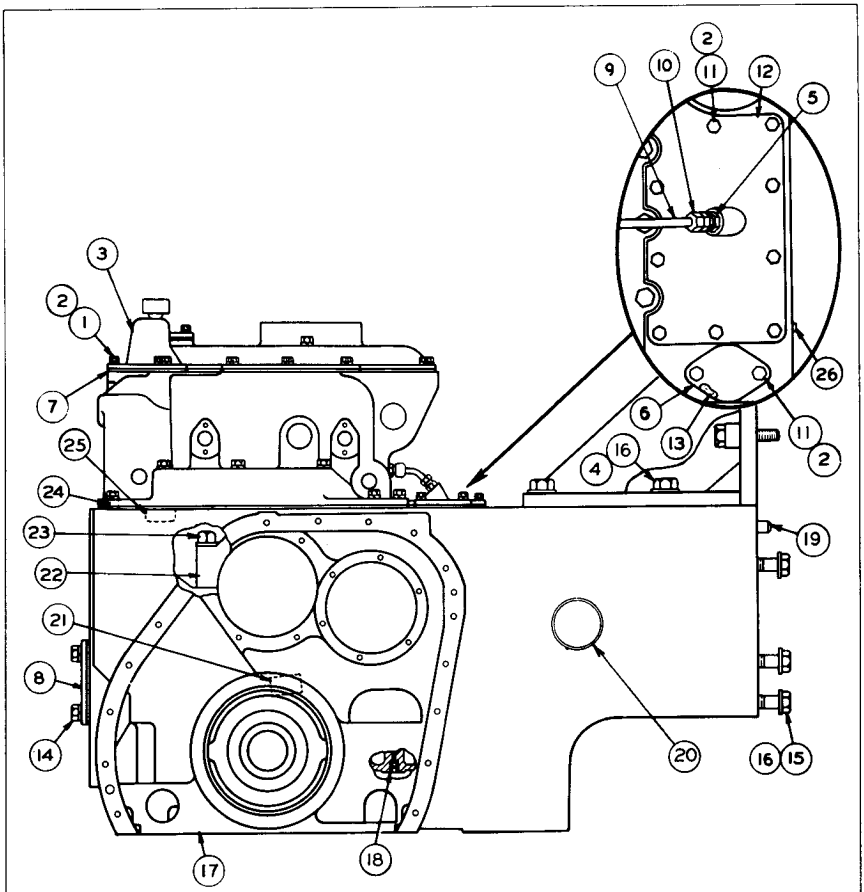

REF. NO.	PART NUMBER	DESCRIPTION	QTY
1	S1594	BOLT	3
2	3B4506	LOCKWASHER	15
3	7M1809	COVER	1
4	2S115	WASHER	20
5	1H7724	BUSHING	1
6	4B4949	COVER	1
7	7M1770	GASKET	1
8	3B844	COVER	1
	3B845	GASKET	1
9	2V7477	TUBE	1
10	2V7476	FITTING	2
11	1A2029	BOLT	12
12	5K7914	COVER ASSEM.	1
	5K6304	GASKET	1
13	8B1615	GASKET	1
14	S1624	BOLT	4
	3B4510	LOCKWASHER	4
15	3B2968	BOLT	12
16	2A1538	BOLT	8
17	1V4092	CASE ASSEM. (Includes)	1
18	2A3746	PLUG	2
19	6K8987	DOWEL	1
20	5F1474	PLUG	4
21	4K2143	BUSHING	2
22	2B8786	CAP	2
23	1D4586	BOLT	4
	4D3704	WASHER	4
24	2B2994	DOWEL	2
25	4N932	PLUG	6
26	1A2223	DOWEL	2
	GMG00805	FORM (Instructions for installing steering clutch and final drive gear cases)	1

216789

3V6943 STEERING CLUTCH CASE GROUP—Part 1

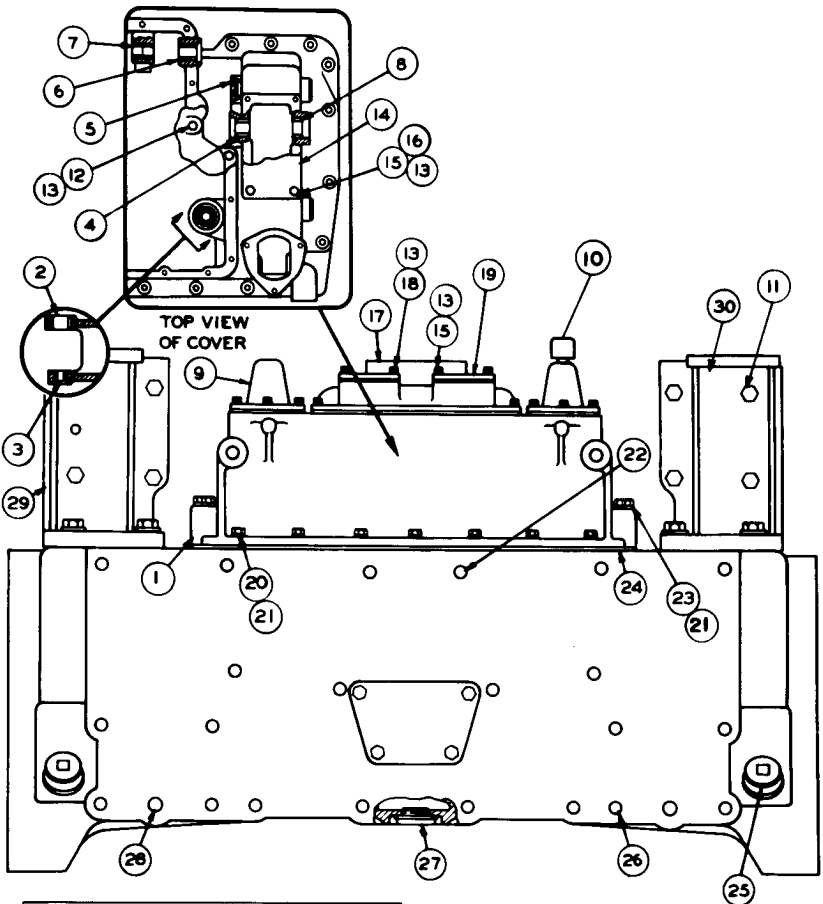

REF. NO.	PART NUMBER	DESCRIPTION	QTY
1	5K8537	COVER ASSEM. (Includes)	1
2	3D9263	BEARING	2
3	7F7983	BEARING	2
4	4B1933	BEARING	2
5	3B623	PLUG	2
6	3H9261	BEARING	2
7	4K1576	BEARING	2
8	2D9528	BEARING	2
9	5K5279	COVER	1
	7M1770	GASKET	1
10	8S5820	BREATHER	1
11	3B2968	BOLT	8
	6K5640	SPACER	8
12	L2070	BOLT	2
13	3B4506	LOCKWASHER	36
14	5K3583	COVER ASSEM.	2
	4K1312	GASKET	2
15	S1594	BOLT----2.54 cm(1 in.) long	28
16	1A2029	BOLT----2.86 cm(1.125 in.) long	2
17	6K201	COVER	1
	4K1526	GASKET	1
18	S1619	BOLT	4
19	1L1728	COVER	2
	1H6856	GASKET	2
20	S1587	BOLT	18
21	3B4508	LOCKWASHER	24
22	2B7558	CORK	2
23	S1573	BOLT	6
24	5K8987	GASKET	1
25	4B2363	PLUG	2
	6F4868	GASKET	2
26	2B7561	CORK	18
27	L827	PLUG	1
	L1124	GASKET	1
28	2B7583	CORK	4
29	9K810	BRACE ASSEM. (Includes)	1
	6K8987	DOWEL	1
30	1V3739	BRACE ASSEM.	1

169774

3V6943 STEERING CLUTCH CASE GROUP—Part 2

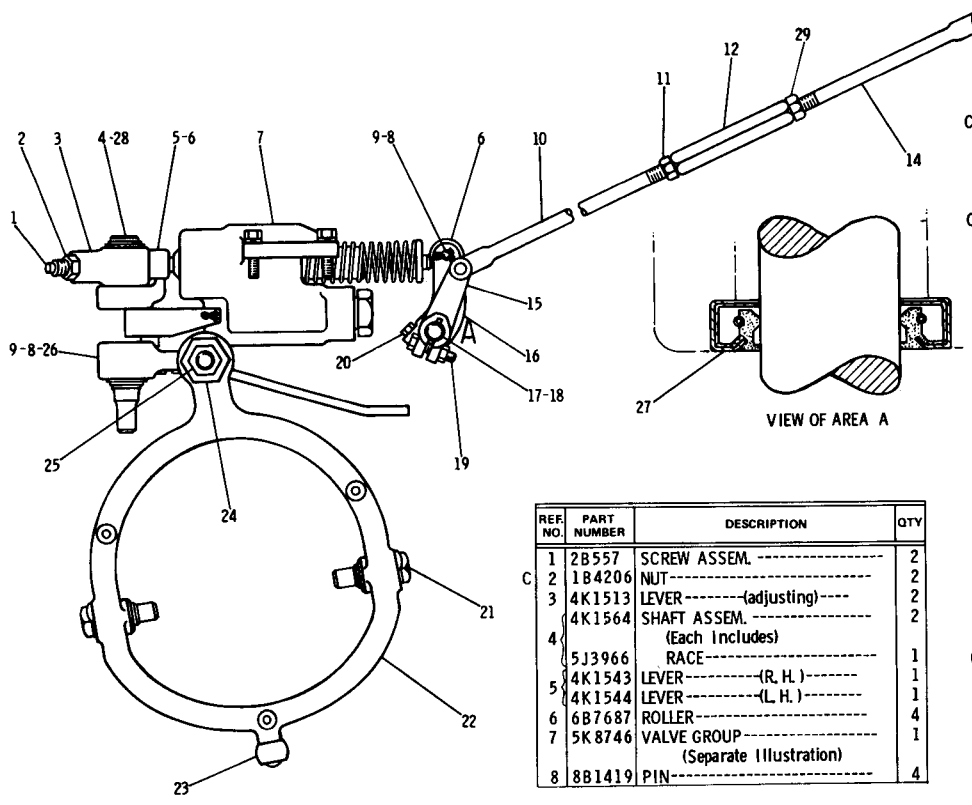

REF. NO.	PART NUMBER	DESCRIPTION	QTY
1	2B557	SCREW ASSEM.	2
C 2	1B4206	NUT	2
3	4K1513	LEVER-(adjusting)	2
4	4K1564	SHAFT ASSEM. (Each Includes)	2
	5J3966	RACE	1
5	4K1543	LEVER-(R. H.)	1
	4K1544	LEVER-(L. H.)	1
6	6B7687	ROLLER	4
7	5K8746	VALVE GROUP (Separate Illustration)	1
8	8B1419	PIN	4
9	3B4617	COTTER PIN	10
C 10	7V8687	ROD	2
11	1D5117	NUT	2
12	4V2429	TURNBUCKLE	2
13	S175	PIN	4
14	3V8094	ROD	2
C 15	7V8642	LEVER	2
16	5K27	LEVER-(R. H.)	1
	5K28	LEVER-(L. H.)	1
17	3V7929	SHAFT-(R. H.)	1
	3V8093	SHAFT-(L. H.)	1
18	1B8710	KEY	4
19	S1571	BOLT	2
	1D4717	NUT	2
20	3B1915	BOLT	2
21	7K8915	SCREW	4
	T355	LOCK	4
22	1K9087	YOKE	2
	2H1627	INSERT	2
23	1K9085	BALL	2
24	4H199	NUT	2
25	1D5120	NUT	2
26	7K68	LEVER	2
	4K3156	ROD END	2
	4K1540	PIN	2
27	4K4114	SEAL	2
28	8H3981	RING	4
	4K1598	WASHER	4
C 29	6V299	NUT	2

C INDICATES CHANGE

177269

3V6942 STEERING CLUTCH CONTROL GROUP

5K8746 Valve parts are shown on Page 135

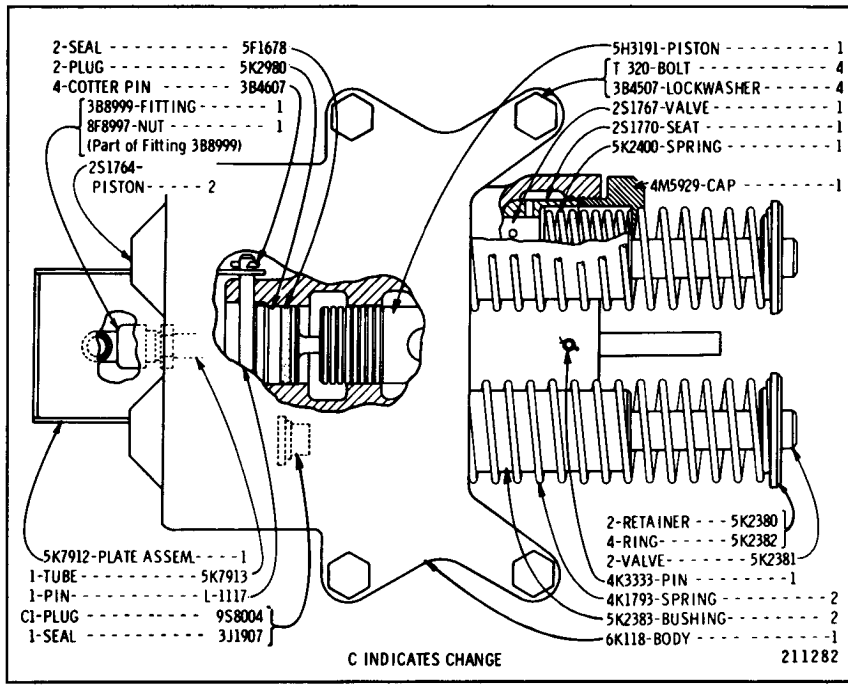

5K8746 CONTROL VALVE GROUP
Part of 3V6942 Steering Clutch Control Group shown on Page 134

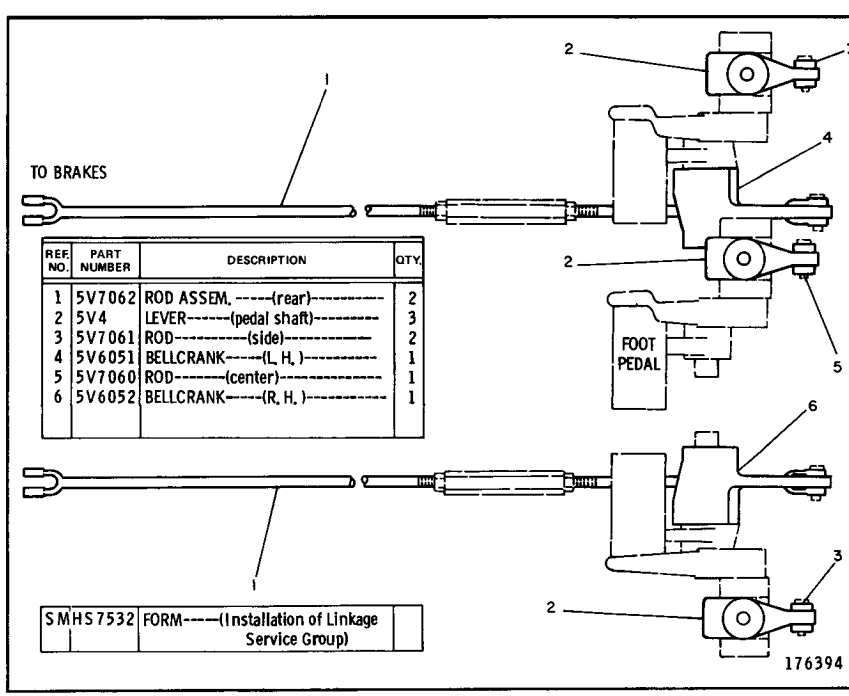

REF. NO.	PART NUMBER	DESCRIPTION	QTY.
1	5V7062	ROD ASSEM. -----(rear)----------	2
2	5V4	LEVER------(pedal shaft)---------	3
3	5V7061	ROD----------(side)----------	2
4	5V6051	BELLCRANK-----(L. H.)----------	1
5	5V7060	ROD-------(center)----------	1
6	5V6052	BELLCRANK-----(R. H.)----------	1

5V8311 BRAKE LINKAGE SERVICE GROUP—Field Installation
Serial No. 13X1 to 13X2365 inclusive

CONSISTS OF:

4	8V3148	LINK
8	8V3147	LINK

8V3150 BRAKE REPAIR GROUP—Field Installation
Provides Brake Scissors Linkage to reduce Brake Pedal efforts

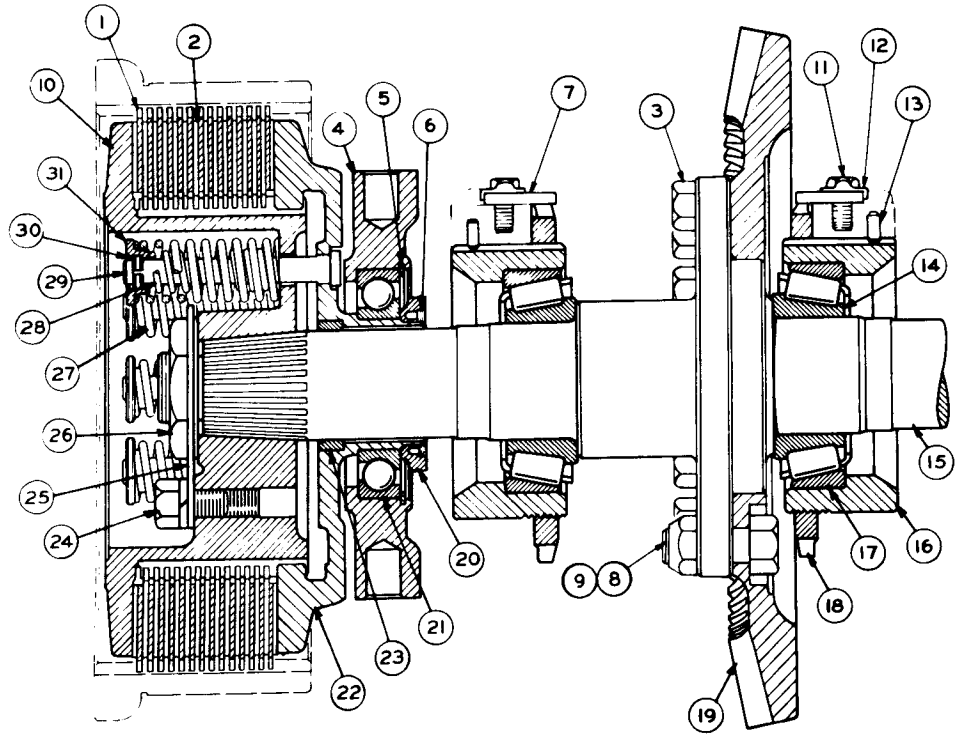

REF. NO.	PART NUMBER	DESCRIPTION	QTY
1	4K1333	DISC ASSEM. (95 Teeth)	28
C 2	4K1317	DISC (8 Teeth)	30
3	S1566	BOLT	11
C 4	1V3242	CAGE	2
5	1H7478	RING	2
C 6	102571	SCREW	4
7	1A4145	LOCK	2
C 8	9K5706	BOLT	1
9	2K337	NUT	1
10	4K1328	DRUM	2
11	L1351	BOLT	2
12	L364	LOCK	2
13	S130	PIN	2
14	6H3566	CONE	2
15	9K323	SHAFT	1
16	5K8606	CAGE	2
17	6H3568	CUP	2
18	2B8778	NUT	2
19	8K9661	GEAR (55 Teeth)	1
C 20	3V2	NUT	2
21	1B4102	BEARING	2
C 22	3V5916	PLATE ASSEM.	2
23	6H3569	BUSHING	1
24	S1624	BOLT	4
	3B4510	LOCKWASHER	4
25	3B5524	LOCK	2
26	L2341	NUT	2
27	4K1302	SPRING (Outer)	16
28	6B8804	SPRING (Inner)	16
29	2B8759	STUD	16
30	2B9018	LOCK	32
31	2B9020	RETAINER	16

AS VIEWED FROM FRONT OF MACHINE

C INDICATES CHANGE

217000

9K714 STEERING CLUTCH GROUP
Serial No. 13X1 to 13X3095 inclusive

8V3093 STEERING CLUTCH GROUP
Serial No. 13X3096—Up

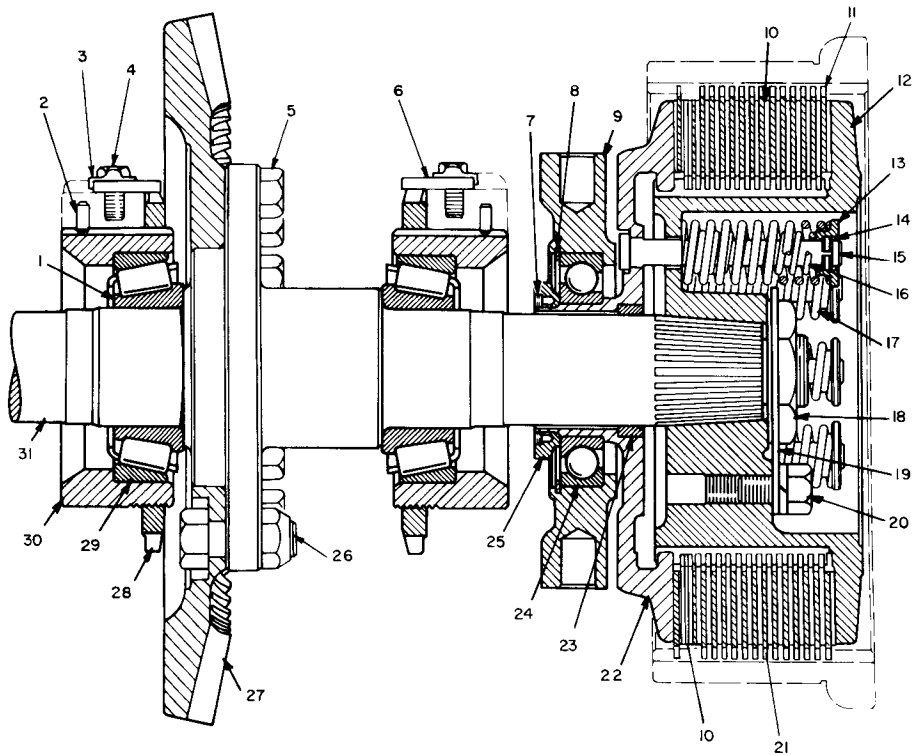

REF. NO.	PART NUMBER	DESCRIPTION	QTY.
1	6H3566	CONE	2
2	S130	PIN	2
3	L364	LOCK	2
4	L1351	BOLT	2
5	S1566	BOLT	11
6	1A4145	LOCK	2
7	102571	SETSCREW	4
8	1H7478	RING	2
9	1V3242	CAGE	2
10	5K8616	DISC--------(8 teeth)	32
11	5V593	DISC ASSEM.	2
12	4K1328	DRUM	2
13	2B9020	RETAINER	16
14	2B9018	LOCK	32
15	2B8759	STUD	16
16	6B8804	SPRING----(inner)	16
17	6B8807	SPRINT------(outer)	16
18	L2341	NUT	2
19	3B5524	LOCK	2
20	S1624	BOLT	4
	3B4510	LOCKWASHER	4
21	5K8617	DISC ASSEM. ----(95 teeth)	28
22	3V5916	PLATE ASSEM. (Each Includes)	2
23	6H3569	BUSHING	1
24	1B4102	BEARING	2
25	3V2	NUT	2
26	9K5706	BOLT	1
	2K337	LOCKNUT	1
27	8K9661	GEAR-----(55 teeth)	1
28	2B8778	NUT	2
29	6H3568	CUP	2
30	5K8606	CAGE	2
31	7V5249	SHAFT	1

181644

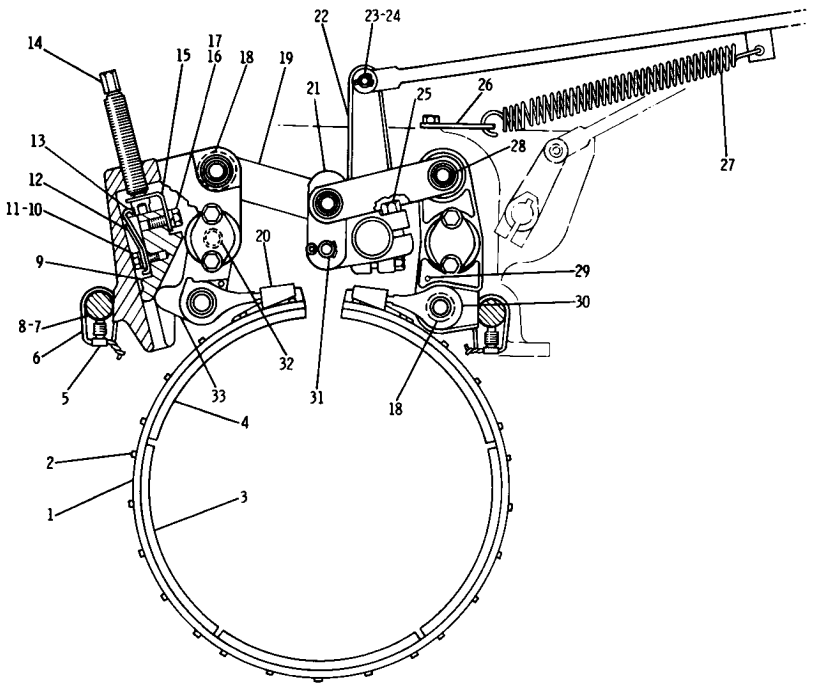

NOTE: QUANTITIES SHOWN ARE THOSE REQUIRED FOR BOTH R. H. & L. H. BRAKES

	REF. NO.	PART NUMBER	DESCRIPTION	QTY
C	1	4K1327	BAND AND LINING ASSEM. ------- (Each Includes)	2
	2	7B5062	RIVET----------	50
	3	4K6769	LINING----------	3
	4	4K1323	LINING----------	2
	5	1A6766	SCREW----------	4
▲	6	5P6026	LOCKWIRE------.84 m(33.08 in.)	
	7	4K1455	SHAFT----------	4
		3H107	SEAL----------	4
	8	4B3938	PLUG----------	2
	9	1M4025	WEDGE----------	2
	10	1A9136	BOLT----------	2
	11	3B4505	LOCKWASHER----------	2
	12	5H6639	SPRING----------	2
	13	9M8087	SPRING----------	2
	14	7M1812	SCREW----------	2
	15	5H6624	SUPPORT----------	2
	16	L1351	BOLT----------	2
	17	3B4506	LOCKWASHER----------	2
	18	7M1813	BEARING----------	8
	19	4K1307	LINK----------	8
	20	4K1512	RETAINER----------	4
		4K3335	SCREW----------	8
	21	4K1305	LINK----------	4
	22	4V7724	LEVER----------	2
		1B8716	KEY----------	2
	23	S175	PIN----------	2
	24	3B4617	COTTER PIN----------	2
	25	S1587	BOLT----------	2
	26	7B5868	LINK----------	2
	27	4B6493	SPRING----------	2
	28	7M780	PIN----------	10
		1H9535	RING----------	20
	29	6H3956	PIN----------	4
	30	4K1326	STRUT----------	4
	31	8B1056	PIN----------	2
		3B4629	COTTER PIN----------	2
	32	7M1814	BEARING----------	4
	33	4K1316	LEVER----------	2

C INDICATES CHANGE

▲ ORDER BY THE METER

227867

3V6944 STEERING BRAKE GROUP—Side View—Part 1 of 3
Serial No. 13X1 to 13X623 inclusive

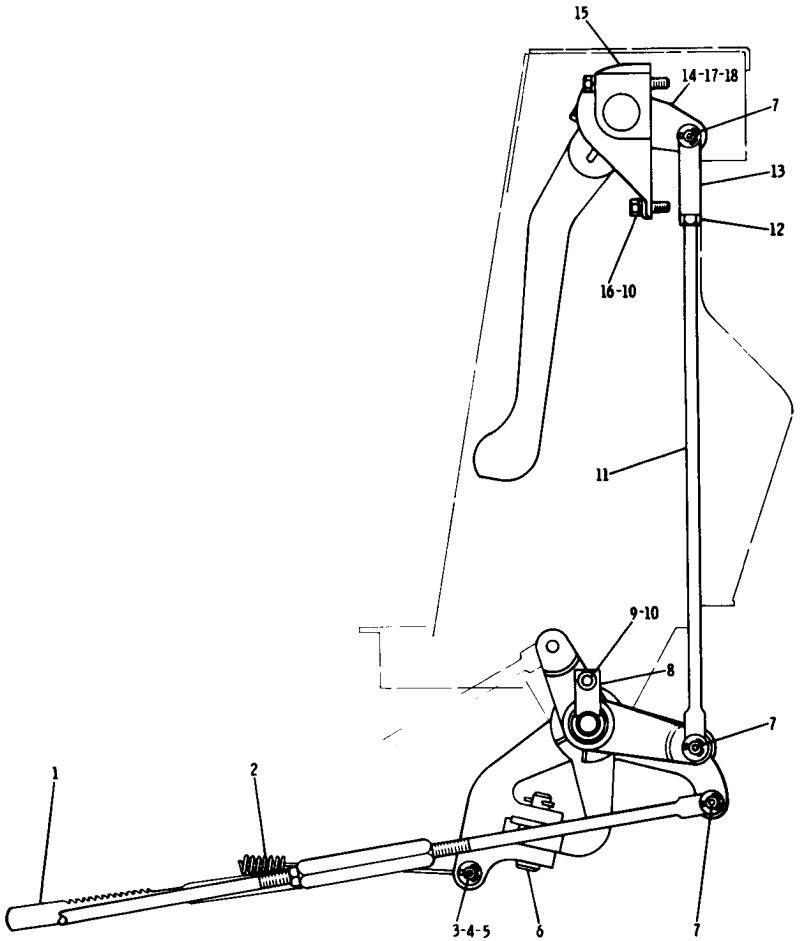

NOTE: QUANTITIES SHOWN ARE THOSE REQUIRED FOR BOTH R. H. & L. H. BRAKES

REF. NO.	PART NUMBER	DESCRIPTION	QTY
1.	4V588	RATCHET	1
2	5K6386	SPRING	1
3	3H1977	PIN	1
4	3B4618	COTTER PIN	1
5	4B4280	WASHER	1
6	7K1899	PIN	1
	3B4628	COTTER PIN	1
7	S175	PIN	6
	3B4617	COTTER PIN	6
8	3V8483	BAR	2
9	S1594	BOLT	2
10	3B4506	LOCKWASHER	5
11	5K7090	ROD	2
12	1B4430	NUT	2
13	6F7010	END	2
14	3V4	LEVER	3
	1B8714	KEY	3
15	8P7936	COVER	3
16	1A2029	BOLT	3
17	1A1460	BOLT	3
18	3B4508	LOCKWASHER	3

216792

3V6944 STEERING BRAKE GROUP—Side View—Part 2 of 3
Serial No. 13X1 to 13X623 inclusive

3V6944 STEERING BRAKE GROUP—Top View—Part 3 of 3
Serial No. 13X1 to 13X623 inclusive

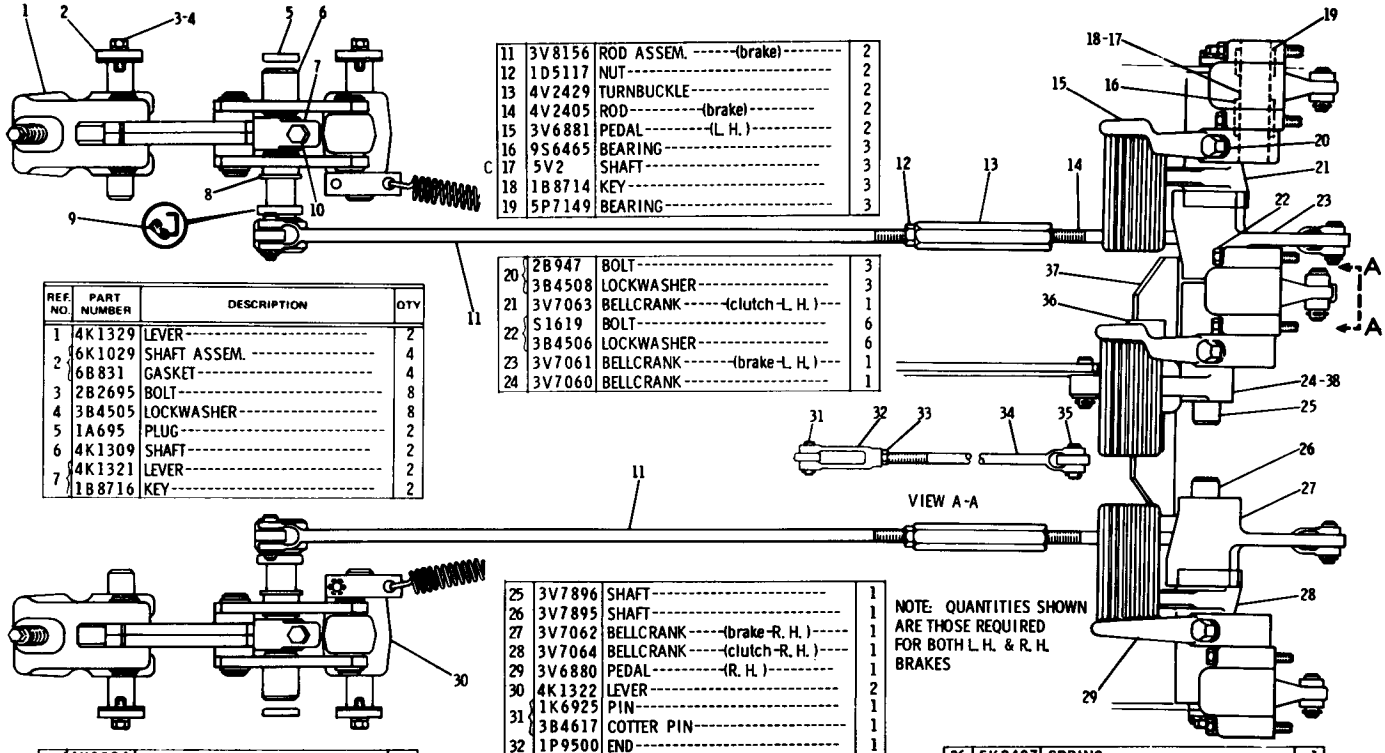

REF. NO.	PART NUMBER	DESCRIPTION	QTY
1	4K1329	LEVER	2
2	6K1029	SHAFT ASSEM.	4
	6B831	GASKET	4
3	2B2695	BOLT	8
4	3B4505	LOCKWASHER	8
5	1A695	PLUG	2
6	4K1309	SHAFT	2
7	4K1321	LEVER	2
	1B8716	KEY	2

11	3V8156	ROD ASSEM. ------(brake)--------	2
12	1D5117	NUT	2
13	4V2429	TURNBUCKLE	2
14	4V2405	ROD---------(brake)---------	2
15	3V6881	PEDAL--------(L. H.)----------	2
16	9S6465	BEARING	3
17	5V2	SHAFT	3
18	1B8714	KEY	3
19	5P7149	BEARING	3

20	2B947	BOLT	3
	3B4508	LOCKWASHER	3
21	3V7063	BELLCRANK------(clutch-L. H.)---	1
22	S1619	BOLT	6
	3B4506	LOCKWASHER	6
23	3V7061	BELLCRANK-------(brake-L. H.)---	1
24	3V7060	BELLCRANK	1

8	4K1304	SPACER	2
	S454	WASHER	2
9	4K1372	SEAL	2
10	S1587	BOLT	2

25	3V7896	SHAFT	1
26	3V7895	SHAFT	1
27	3V7062	BELLCRANK-----(brake-R. H.)-----	1
28	3V7064	BELLCRANK-----(clutch-R. H.)----	1
29	3V6880	PEDAL----------(R. H.)----------	1
30	4K1322	LEVER	2
31	1K6925	PIN	1
	3B4617	COTTER PIN	1
32	1P9500	END	1
33	9S1354	NUT	1
34	4H9496	ROD	1
35	9S1315	PIN	1
	3B4618	COTTER PIN	1

NOTE: QUANTITIES SHOWN ARE THOSE REQUIRED FOR BOTH L. H. & R. H. BRAKES

36	5K2407	SPRING	1
37	3V8157	BAR	1
38	6K8088	BEARING	10

C INDICATES CHANGE

169775

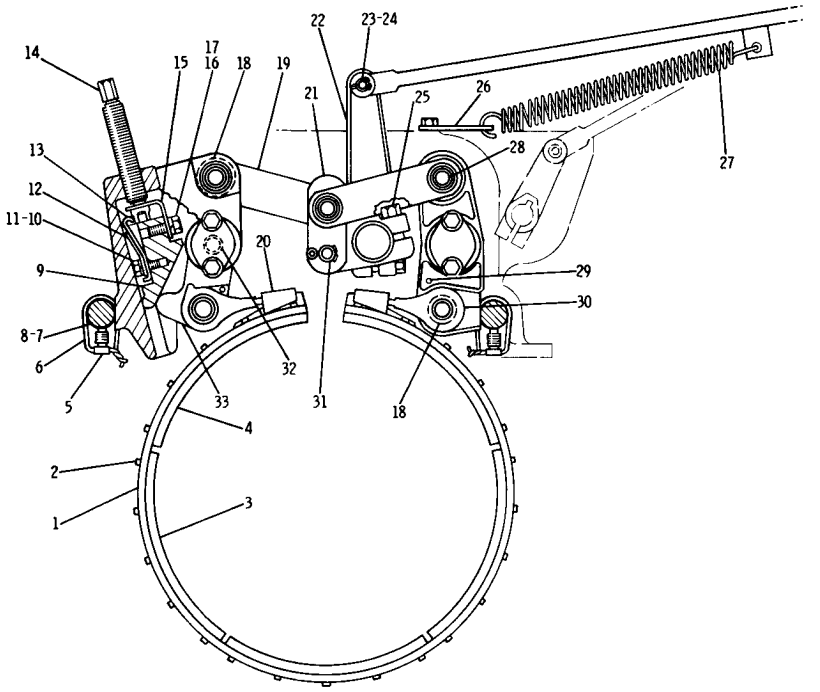

NOTE: QUANTITIES SHOWN ARE THOSE REQUIRED FOR BOTH R. H. & L. H. BRAKES

	REF. NO.	PART NUMBER	DESCRIPTION	QTY
C	1	4K1327	BAND AND LINING ASSEM. ------- (Each Includes)	2
	2	7B5062	RIVET----------	50
	3	4K6769	LINING----------	3
	4	4K1323	LINING----------	2
	5	1A6766	SCREW----------	4
▲	6	5P6026	LOCKWIRE------. 84 m(33.08 in.)	
	7	4K1455	SHAFT----------	4
		3H107	SEAL----------	4
	8	4B3938	PLUG----------	2
	9	1M4025	WEDGE----------	2
	10	1A9136	BOLT----------	2
	11	3B4505	LOCKWASHER----------	2
	12	5H6639	SPRING----------	2
	13	9M8087	SPRING----------	2
	14	7M1812	SCREW----------	2
	15	5H6624	SUPPORT----------	2
	16	L1351	BOLT----------	2
	17	3B4506	LOCKWASHER----------	2
	18	7M1813	BEARING----------	8
	19	4K1307	LINK----------	8
	20	4K1512	RETAINER----------	4
		4K3335	SCREW----------	8
	21	4K1305	LINK----------	4
	22	4V7724	LEVER----------	2
		1B8716	KEY----------	2
	23	S175	PIN----------	2
	24	3B4617	COTTER PIN----------	2
	25	S1587	BOLT----------	2
	26	7B5868	LINK----------	2
	27	4B6493	SPRING----------	2
	28	7M780	PIN----------	10
		1H9535	RING----------	20
	29	6H3956	PIN----------	4
	30	4K1326	STRUT----------	4
	31	8B1056	PIN----------	2
		3B4629	COTTER PIN----------	2
	32	7M1814	BEARING----------	4
	33	4K1316	LEVER----------	2

C INDICATES CHANGE

▲ ORDER BY THE METER

227867

3V6944 STEERING BRAKE GROUP—Side View—Part 1 of 3
Serial No. 13X624 to 13X1676 inclusive

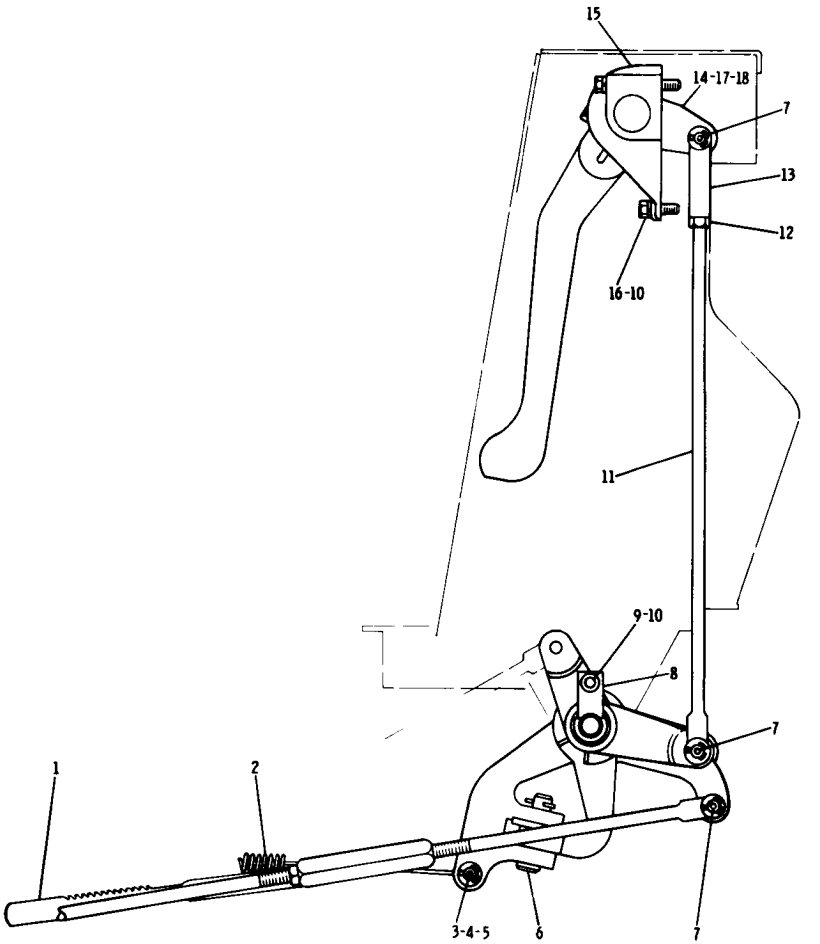

NOTE: QUANTITIES SHOWN ARE THOSE REQUIRED FOR BOTH R. H. & L. H. BRAKES

REF. NO.	PART NUMBER	DESCRIPTION	QTY
1	4V588	RATCHET	1
2	5K6386	SPRING	1
3	3H1977	PIN	1
4	3B4618	COTTER PIN	1
5	4B4280	WASHER	1
6	7K1899	PIN	1
	3B4628	COTTER PIN	1
7	S175	PIN	6
	3B4617	COTTER PIN	6
8	3V8483	BAR	2
9	S1594	BOLT	2
10	3B4506	LOCKWASHER	5
11	5K7090	ROD	2
12	1B4430	NUT	2
13	6F7010	END	2
14	3V4	LEVER	3
	1B8714	KEY	3
15	8P7936	COVER	3
16	1A2029	BOLT	3
17	1A1460	BOLT	3
18	3B4508	LOCKWASHER	3

216792

3V6944 STEERING BRAKE GROUP—Side View—Part 2 of 3
Serial No. 13X624 to 13X1676 inclusive

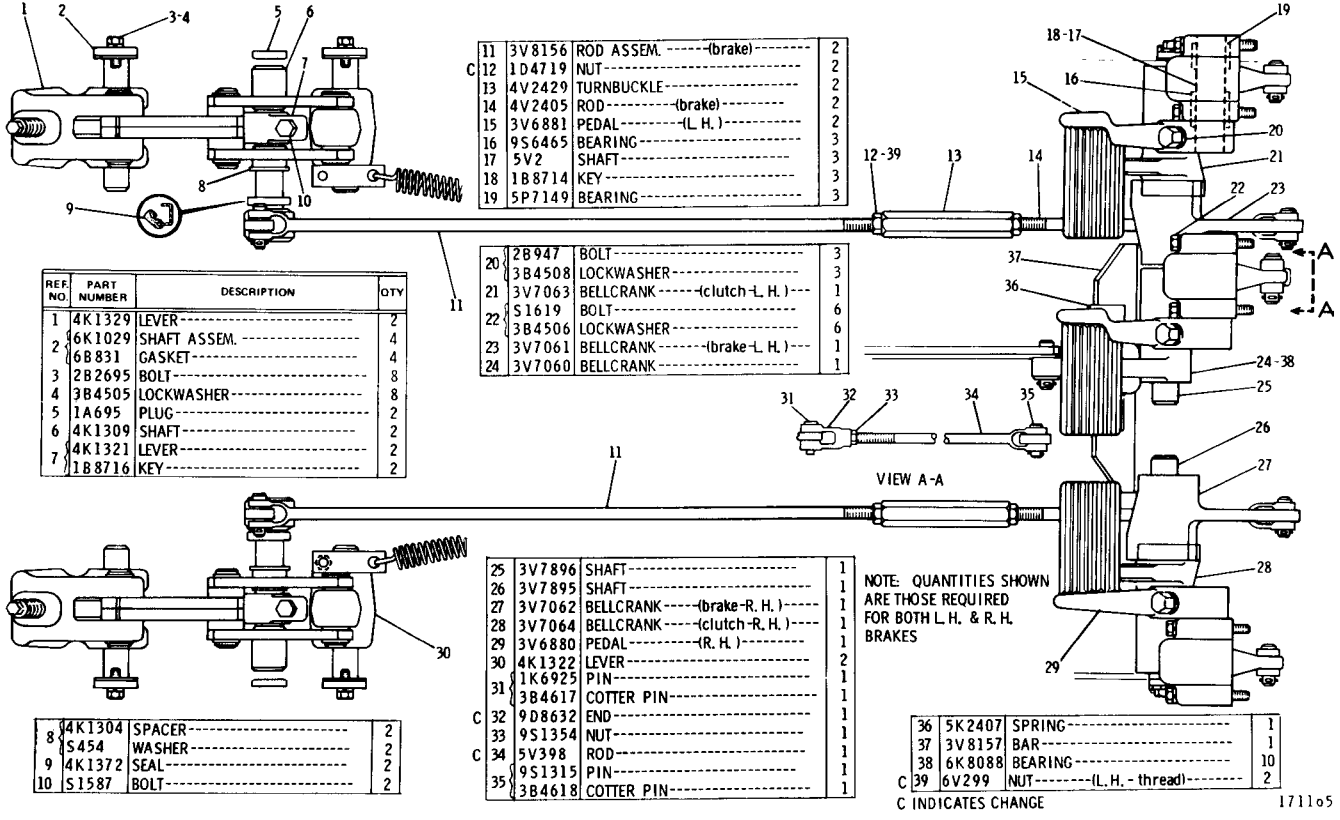

REF. NO.	PART NUMBER	DESCRIPTION	QTY
1	4K1329	LEVER	2
2	6K1029	SHAFT ASSEM.	4
	6B831	GASKET	4
3	2B2695	BOLT	8
4	3B4505	LOCKWASHER	8
5	1A695	PLUG	2
6	4K1309	SHAFT	2
7	4K1321	LEVER	2
	1B8716	KEY	2
8	4K1304	SPACER	2
	S454	WASHER	2
9	4K1372	SEAL	2
10	S1587	BOLT	2
11	3V8156	ROD ASSEM. -------(brake)--------	2
C 12	1D4719	NUT	2
13	4V2429	TURNBUCKLE	2
14	4V2405	ROD ----------(brake)---------	2
15	3V6881	PEDAL---------(L. H.)----------	2
16	9S6465	BEARING	3
17	5V2	SHAFT	3
18	1B8714	KEY	3
19	5P7149	BEARING	3
20	2B947	BOLT	3
	3B4508	LOCKWASHER	3
21	3V7063	BELLCRANK ------(clutch-L. H.)---	1
22	S1619	BOLT	6
	3B4506	LOCKWASHER	6
23	3V7061	BELLCRANK -------(brake-L. H.)---	1
24	3V7060	BELLCRANK	1
25	3V7896	SHAFT	1
26	3V7895	SHAFT	1
27	3V7062	BELLCRANK -----(brake-R. H.)-----	1
28	3V7064	BELLCRANK -----(clutch-R. H.)----	1
29	3V6880	PEDAL ----------(R. H.)----------	1
30	4K1322	LEVER	2
31	1K6925	PIN	1
	3B4617	COTTER PIN	1
C 32	9D8632	END	1
33	9S1354	NUT	1
C 34	5V398	ROD	1
35	9S1315	PIN	1
	3B4618	COTTER PIN	1
36	5K2407	SPRING	1
37	3V8157	BAR	1
38	6K8088	BEARING	10
C 39	6V299	NUT --------(L. H. - thread)--------	2

C INDICATES CHANGE

3V6944 STEERING BRAKE GROUP—Top View—Part 3 of 3
Serial No. 13X624 to 13X1676 inclusive

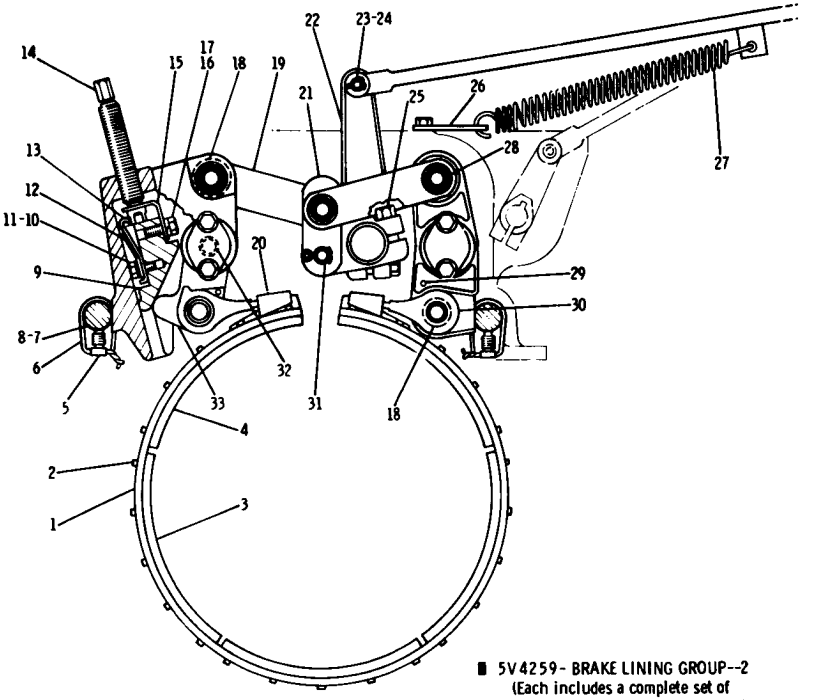

■ 5V4259- BRAKE LINING GROUP--2
(Each includes a complete set of Linings and Rivets for one Brake)

NOTE: QUANTITIES SHOWN ARE THOSE REQUIRED FOR BOTH R. H. & L. H. BRAKES

	REF. NO.	PART NUMBER	DESCRIPTION	QTY
C	1	5V4247	LINING AND BAND ASSEM. ------- (Each Includes)	2
	2	7B5062	RIVET----------	50
	3	5V4246	LINING----------	3
	4	5V4245	LINING----------	2
	5	1A6766	SCREW----------	4
▲	6	5P6026	LOCKWIRE------, 84 m(33.08 in.)	
	7	4K1455	SHAFT----------	4
		3H107	SEAL----------	4
	8	4B3938	PLUG----------	2
	9	1M4025	WEDGE----------	2
	10	1A9136	BOLT----------	2
	11	3B4505	LOCKWASHER----------	2
	12	5H6639	SPRING----------	2
	13	9M8087	SPRING----------	2
	14	7M1812	SCREW----------	2
	15	5H6624	SUPPORT----------	2
	16	L1351	BOLT----------	2
	17	3B4506	LOCKWASHER----------	2
	18	7M1813	BEARING----------	8
	19	4K1307	LINK----------	8
	20	4K1512	RETAINER----------	4
		4K3335	SCREW----------	8
	21	4K1305	LINK----------	4
C	22	5V6200	LEVER----------	2
		1B8716	KEY----------	2
	23	S175	PIN----------	2
	24	3B4617	COTTER PIN----------	2
	25	S1587	BOLT----------	2
	26	7B5868	LINK----------	2
	27	4B6493	SPRING----------	2
	28	7M780	PIN----------	10
		1H9535	RING----------	20
	29	6H3956	PIN----------	4
	30	4K1326	STRUT----------	4
	31	8B1056	PIN----------	2
		3B4629	COTTER PIN----------	2
	32	7M1814	BEARING----------	4
	33	4K1316	LEVER----------	2

■ NOT PART OF 3V6944 GROUP
C INDICATES CHANGE
▲ ORDER BY THE METER
173221

3V6944 STEERING BRAKE GROUP—Side View—Part 1 of 3
Serial No. 13X1677 to 13X2365 Inclusive

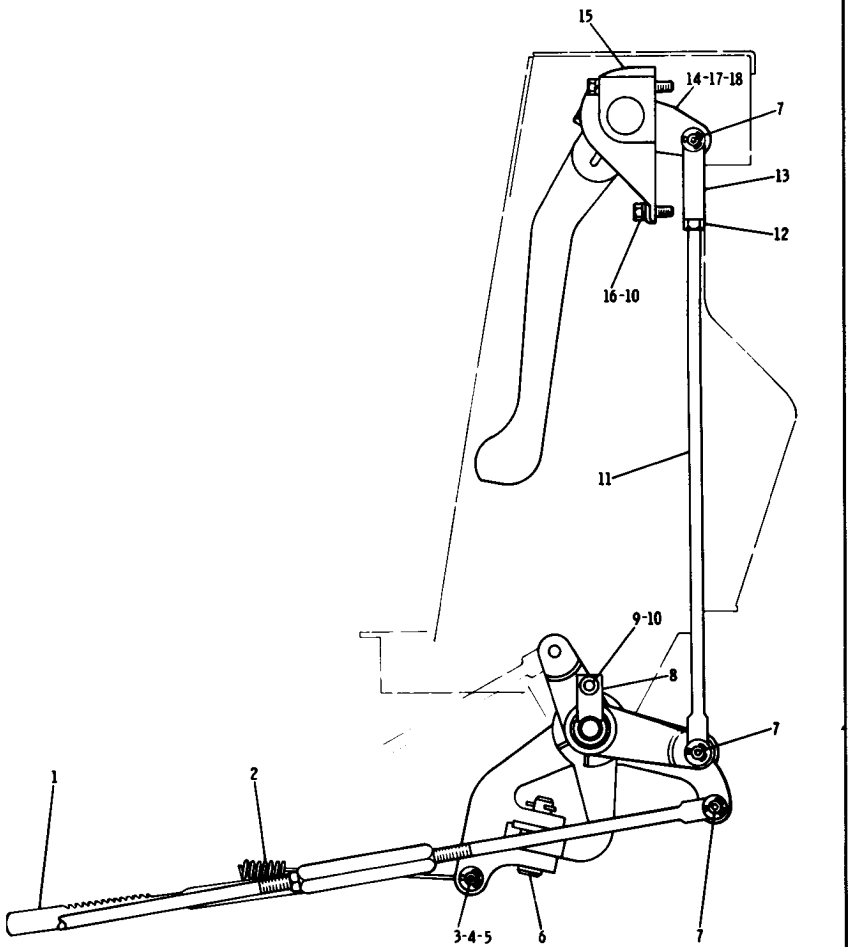

NOTE: QUANTITIES SHOWN ARE THOSE REQUIRED FOR BOTH R.H. & L.H. BRAKES

REF. NO.	PART NUMBER	DESCRIPTION	QTY
1	4V588	RATCHET	1
2	5K6386	SPRING	1
3	3H1977	PIN	1
4	3B4618	COTTER PIN	1
5	4B4280	WASHER	1
6	7K1899	PIN	1
	3B4628	COTTER PIN	1
7	S175	PIN	6
	3B4617	COTTER PIN	6
8	3V8483	BAR	2
9	S1594	BOLT	2
10	3B4506	LOCKWASHER	5
11	5K7090	ROD	2
12	1B4430	NUT	2
13	6F7010	END	2
14	3V4	LEVER	3
	1B8714	KEY	3
15	8P7936	COVER	3
16	1A2029	BOLT	3
17	1A1460	BOLT	3
18	3B4508	LOCKWASHER	3

216792

3V6944 STEERING BRAKE GROUP—Side View—Part 2 of 3
Serial No. 13X1677 to 13X2365 Inclusive

3V6944 STEERING BRAKE GROUP—Top View—Part 3 of 3
Serial No. 13X1677 to 13X2365 Inclusive

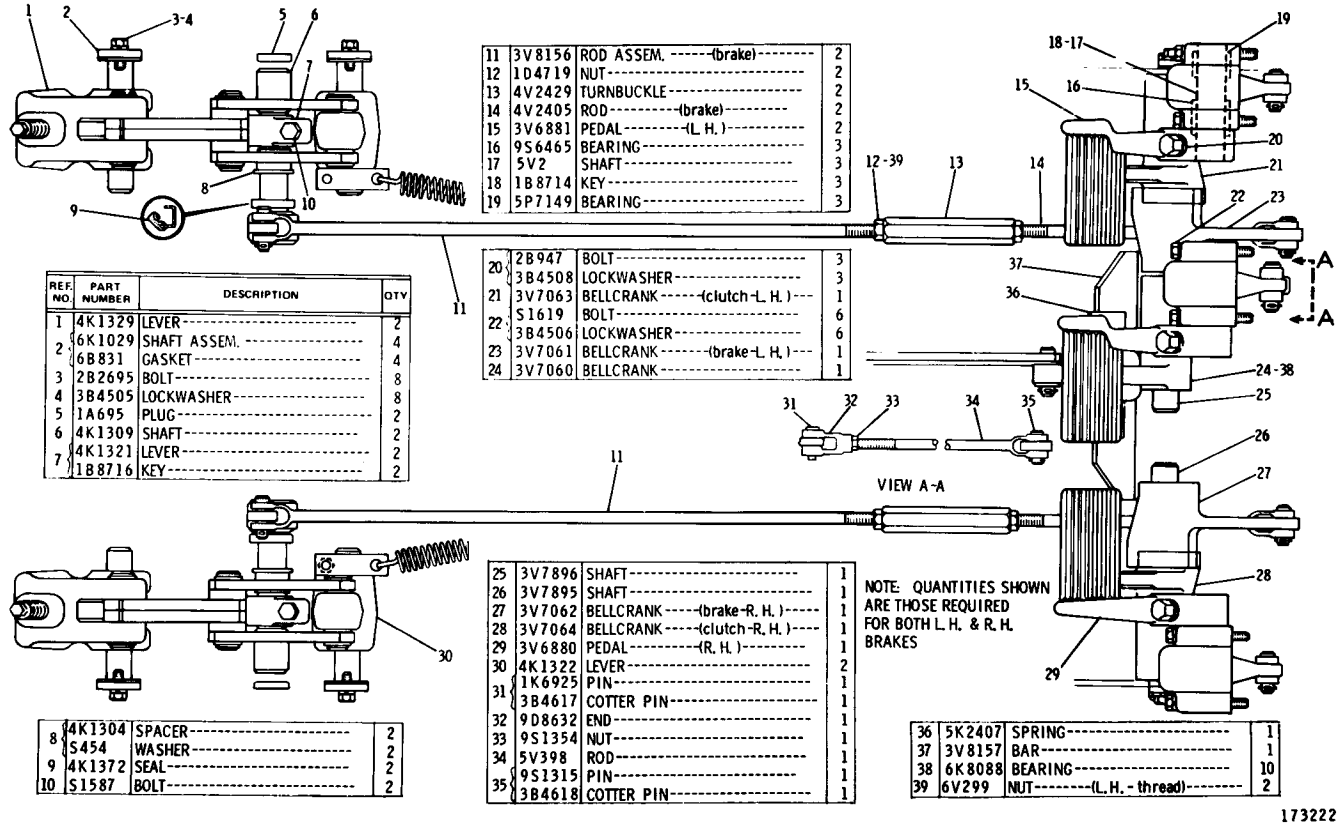

REF. NO.	PART NUMBER	DESCRIPTION	QTY
1	4K1329	LEVER	2
2	6K1029	SHAFT ASSEM.	4
	6B831	GASKET	4
3	2B2695	BOLT	8
4	3B4505	LOCKWASHER	8
5	1A695	PLUG	2
6	4K1309	SHAFT	2
7	4K1321	LEVER	2
	1B8716	KEY	2

11	3V8156	ROD ASSEM. ------(brake)--------	2
12	1D4719	NUT	2
13	4V2429	TURNBUCKLE	2
14	4V2405	ROD----------(brake)---------	2
15	3V6881	PEDAL---------(L. H.)----------	2
16	9S6465	BEARING	3
17	5V2	SHAFT	3
18	1B8714	KEY	3
19	5P7149	BEARING	3

20	2B947	BOLT	3
	3B4508	LOCKWASHER	3
21	3V7063	BELLCRANK------(clutch-L. H.)---	1
22	S1619	BOLT	6
	3B4506	LOCKWASHER	6
23	3V7061	BELLCRANK-------(brake-L. H.)---	1
24	3V7060	BELLCRANK	1

8	4K1304	SPACER	2
	S454	WASHER	2
9	4K1372	SEAL	2
10	S1587	BOLT	2

25	3V7896	SHAFT	1
26	3V7895	SHAFT	1
27	3V7062	BELLCRANK-----(brake-R. H.)-----	1
28	3V7064	BELLCRANK-----(clutch-R. H.)----	1
29	3V6880	PEDAL----------(R. H.)----------	1
30	4K1322	LEVER	2
31	1K6925	PIN	1
	3B4617	COTTER PIN	1
32	9D8632	END	1
33	9S1354	NUT	1
34	5V398	ROD	1
35	9S1315	PIN	1
	3B4618	COTTER PIN	1

NOTE: QUANTITIES SHOWN ARE THOSE REQUIRED FOR BOTH L. H. & R. H. BRAKES

36	5K2407	SPRING	1
37	3V8157	BAR	1
38	6K8088	BEARING	10
39	6V299	NUT--------(L. H. - thread)-------	2

173222

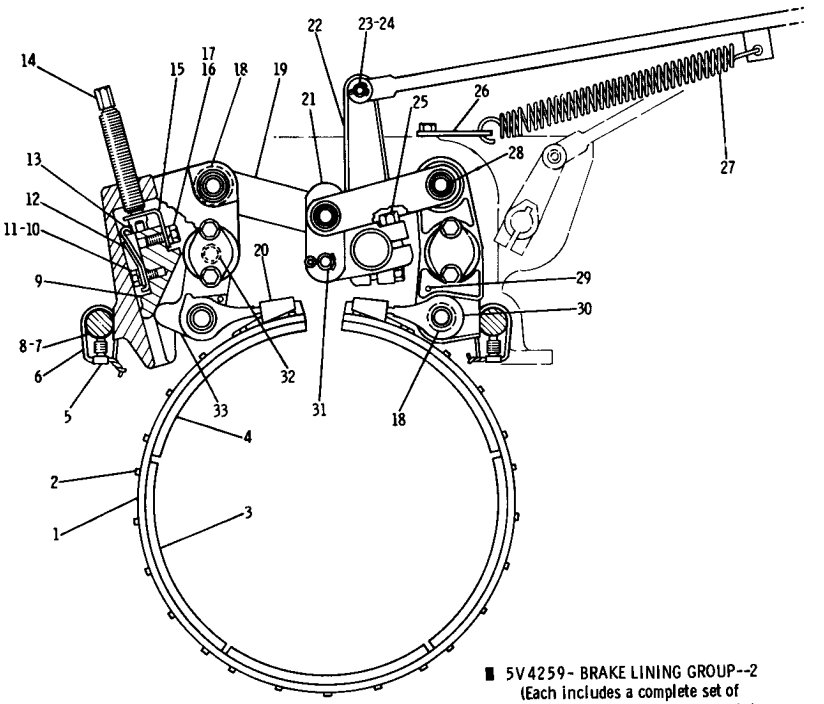

■ 5V4259- BRAKE LINING GROUP--2
(Each includes a complete set of Linings and Rivets for one Brake)

NOTE: QUANTITIES SHOWN ARE THOSE REQUIRED FOR BOTH R. H. & L. H. BRAKES

REF. NO.	PART NUMBER	DESCRIPTION	QTY
1	5V4247	LINING AND BAND ASSEM. ------- (Each Includes)	2
2	7B5062	RIVET----------	50
3	5V4246	LINING----------	3
4	5V4245	LINING----------	2
5	1A6766	SCREW----------	4
▲ 6	5P6026	LOCKWIRE------. 84 m(33.08 in.)	
7	4K1455	SHAFT----------	4
	3H107	SEAL----------	4
8	4B3938	PLUG----------	2
9	1M4025	WEDGE----------	2
10	1A9136	BOLT----------	2
11	3B4505	LOCKWASHER----------	2
12	5H6639	SPRING----------	2
13	9M8087	SPRING----------	2
14	7M1812	SCREW----------	2
15	5H6624	SUPPORT----------	2
16	L1351	BOLT----------	2
17	3B4506	LOCKWASHER----------	2
18	7M1813	BEARING----------	8
19	4K1307	LINK----------	8
20	4K1512	RETAINER----------	4
	4K3335	SCREW----------	8
C 21	7V2356	LINK----------	4
C 22	5V9421	LEVER----------	2
	1B8716	KEY----------	2
23	S175	PIN----------	2
24	3B4617	COTTER PIN----------	2
25	S1587	BOLT----------	2
26	7B5868	LINK----------	2
27	4B6493	SPRING----------	2
28	7M780	PIN----------	10
	1H9535	RING----------	20
29	6H3956	PIN----------	4
30	4K1326	STRUT----------	4
31	8B1056	PIN----------	2
	3B4629	COTTER PIN----------	2
32	7M1814	BEARING----------	4
C 33	5V6373	LEVER----------	2

■ NOT PART OF 3V6944 GROUP
C INDICATES CHANGE

▲ ORDER BY THE METER

176391

3V6944 STEERING BRAKE GROUP—Side View—Part 1 of 3
Serial No. 13X2366—Up

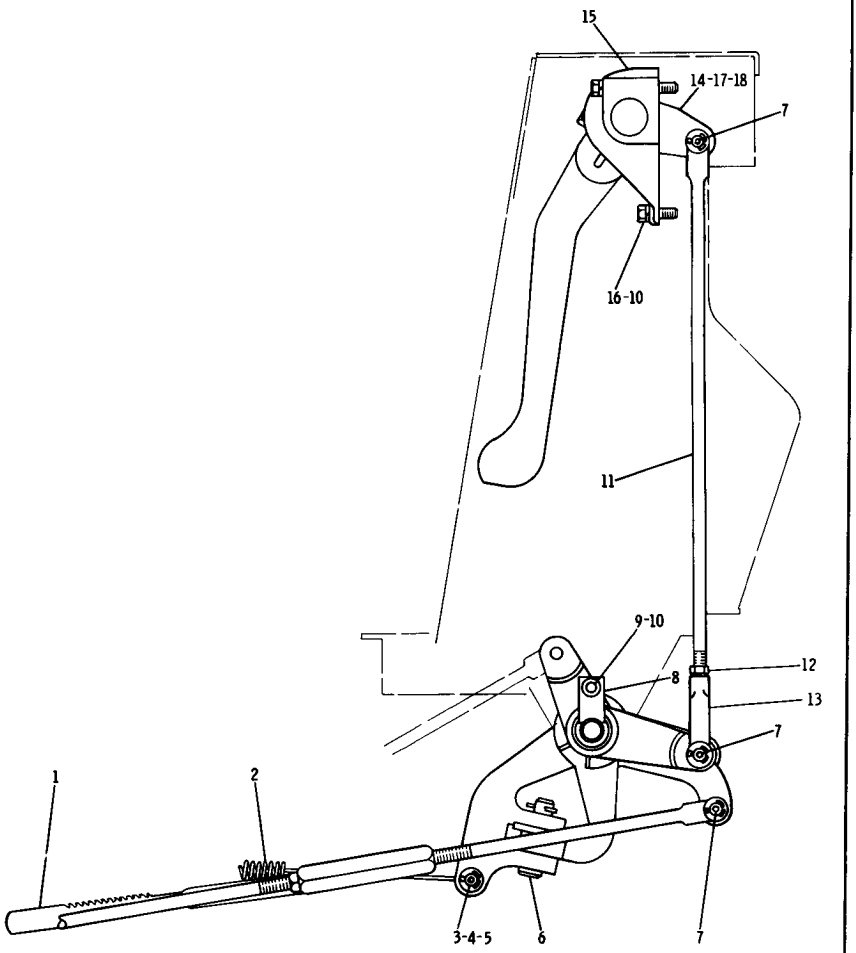

NOTE: QUANTITIES SHOWN ARE THOSE REQUIRED FOR BOTH R. H. & L. H. BRAKES

REF. NO.	PART NUMBER	DESCRIPTION	QTY
1	4V588	RATCHET	1
2	5K6386	SPRING	1
3	3H1977	PIN	1
4	3B4618	COTTER PIN	1
5	4B4280	WASHER	1
6	7K1899	PIN	1
	3B4628	COTTER PIN	1
7	S175	PIN	6
	3B4617	COTTER PIN	6
8	3V8483	BAR	2
9	S1594	BOLT	2
10	3B4506	LOCKWASHER	5

	REF. NO.	PART NUMBER	DESCRIPTION	QTY
C	11	5K7061	ROD	2
	12	1B4430	NUT	2
	13	6F7010	END	2
C	14	5V4	LEVER	3
		1B8714	KEY	3
	15	8P7936	COVER	3
	16	1A2029	BOLT	3
	17	1A1460	BOLT	3
	18	3B4508	LOCKWASHER	3

C INDICATES CHANGE 176392

3V6944 STEERING BRAKE GROUP—Side View—Part 2 of 3
Serial No. 13X2366—Up

3V6944 STEERING BRAKE GROUP—Top View—Part 3 of 3
Serial No. 13X2366—Up

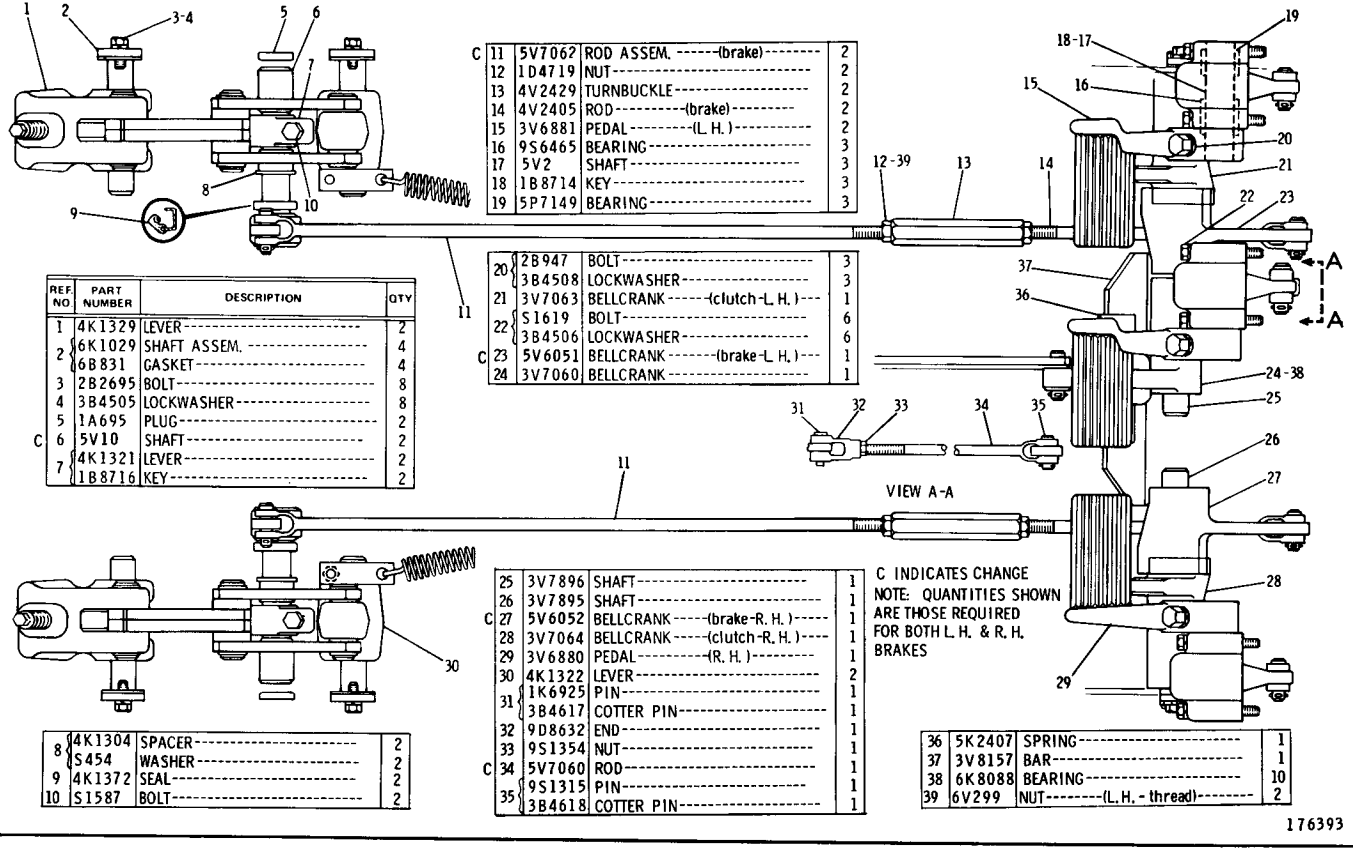

REF. NO.	PART NUMBER	DESCRIPTION	QTY
1	4K1329	LEVER	2
2	6K1029	SHAFT ASSEM.	4
	6B831	GASKET	4
3	2B2695	BOLT	8
4	3B4505	LOCKWASHER	8
5	1A695	PLUG	2
C 6	5V10	SHAFT	2
7	4K1321	LEVER	2
	1B8716	KEY	2

C	11	5V7062	ROD ASSEM. -----(brake)--------	2
	12	1D4719	NUT	2
	13	4V2429	TURNBUCKLE	2
	14	4V2405	ROD----------(brake)---------	2
	15	3V6881	PEDAL---------(L. H.)----------	2
	16	9S6465	BEARING	3
	17	5V2	SHAFT	3
	18	1B8714	KEY	3
	19	5P7149	BEARING	3
	20	2B947	BOLT	3
		3B4508	LOCKWASHER	3
	21	3V7063	BELLCRANK------(clutch-L. H.)---	1
	22	S1619	BOLT	6
		3B4506	LOCKWASHER	6
C	23	5V6051	BELLCRANK-------(brake-L. H.)---	1
	24	3V7060	BELLCRANK	1

	25	3V7896	SHAFT	1
	26	3V7895	SHAFT	1
C	27	5V6052	BELLCRANK-----(brake-R. H.)-----	1
	28	3V7064	BELLCRANK-----(clutch-R. H.)----	1
	29	3V6880	PEDAL---------(R. H.)---------	1
	30	4K1322	LEVER	2
	31	1K6925	PIN	1
		3B4617	COTTER PIN	1
	32	9D8632	END	1
	33	9S1354	NUT	1
C	34	5V7060	ROD	1
	35	9S1315	PIN	1
		3B4618	COTTER PIN	1

C INDICATES CHANGE
NOTE: QUANTITIES SHOWN ARE THOSE REQUIRED FOR BOTH L. H. & R. H. BRAKES

8	4K1304	SPACER	2
	S454	WASHER	2
9	4K1372	SEAL	2
10	S1587	BOLT	2

36	5K2407	SPRING	1
37	3V8157	BAR	1
38	6K8088	BEARING	10
39	6V299	NUT--------(L. H. - thread)-------	2

176393

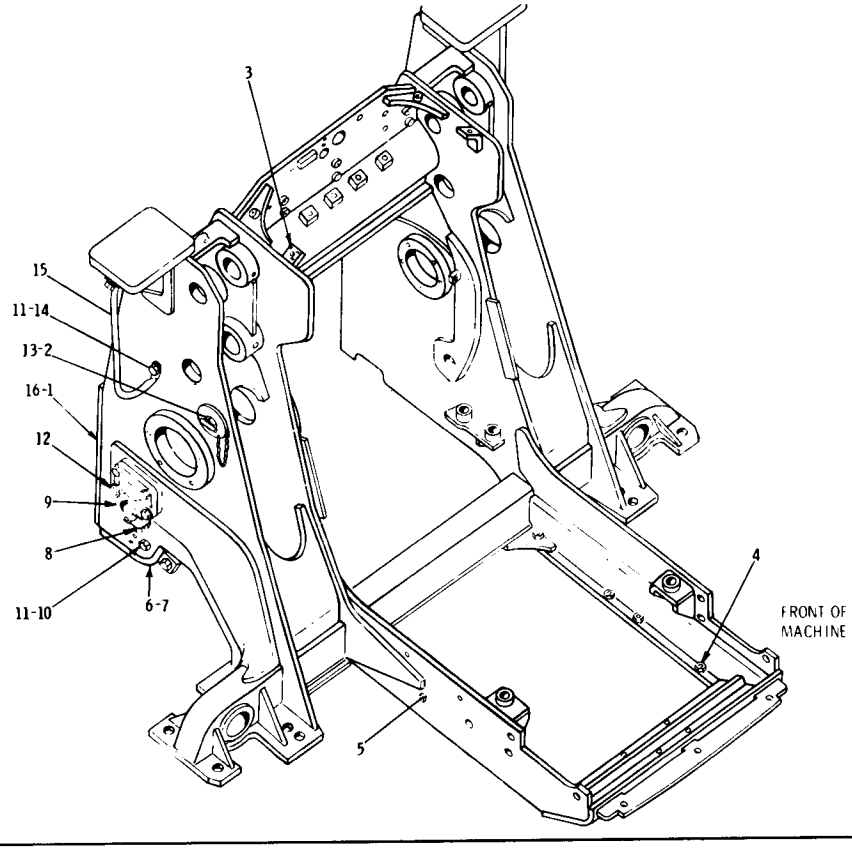

REF. NO.	PART NUMBER	DESCRIPTION	QTY
1	3V6919	FRAME ASSEM. ---------- (Includes)	1
2	7K7891	RETAINER ASSEM. ---------- (Includes)	1
	1B4210	NUT----------	1
3	9F2978	NUT----------	2
4	3K2889	NUT----------	8
5	1F748	NUT----------	2
6	5K8187	GUARD ASSEM. -------(R. H.)----- (Includes)	1
	2M473	LUG----------	1
7	5K8188	GUARD ASSEM. -------(L. H.)------ (Includes)	1
	2M473	LUG----------	1
8	1D4585	BOLT----------	4
	3B4510	LOCKWASHER----------	4
9	5K9930	BRACKET----------	2
10	S1595	BOLT----------	4
11	5P1076	WASHER----------	8
12	S1589	BOLT----------	8
	2S736	WASHER----------	8
13	7K7970	BOLT ASSEM. ----------	1
	2M4287	RING----------	1
14	S1621	BOLT----------	4
15	3V6963	GRAB IRON----------	2
16	5L6766	BUTTON--29. 84 mm(1. 75in.)dia. hole	4

216777

3V6935 LOADER FRAME GROUP
Serial No. 13X1 to 13X1604 Inclusive

3V6935 LOADER FRAME GROUP
Serial No. 13X1605—Up

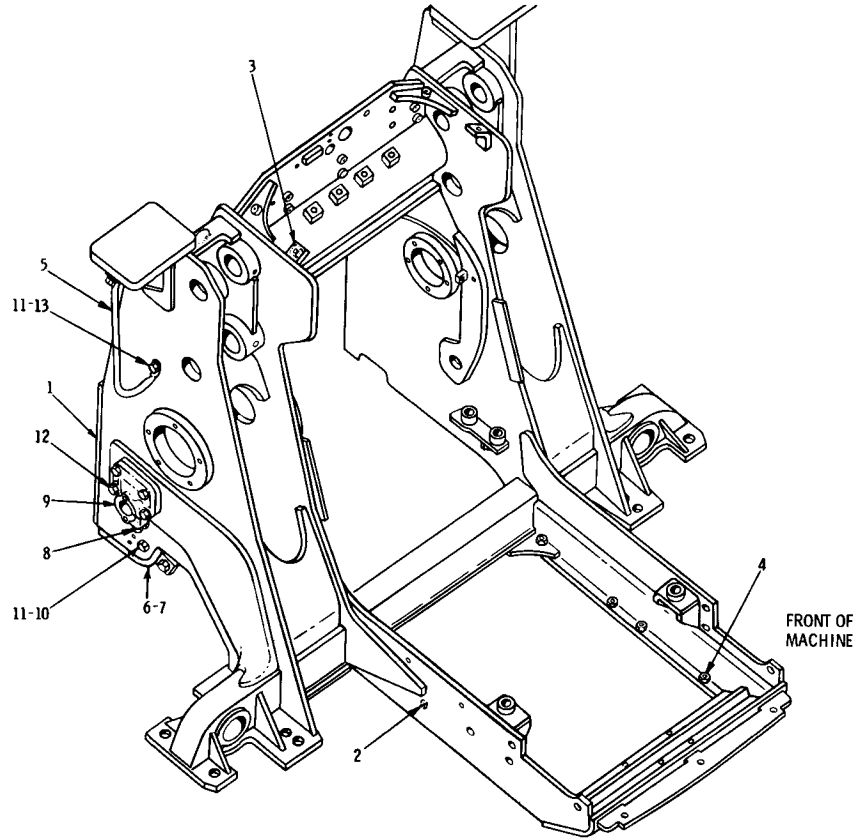

REF. NO.	PART NUMBER	DESCRIPTION	QTY.
1	3V6919	FRAME ASSEM. (Includes)	1
2	1F748	NUT	2
3	9F2978	NUT	2
4	3K2889	NUT	8
5	3V6963	GRAB IRON	2
6	5K8187	GUARD ASSEM.-(R.H.) (Includes)	1
	2M473	LUG	1
7	5K8188	GUARD ASSEM.-(L.H.) (Includes)	1
	2M473	LUG	1
8	1D4585	BOLT	4
	3B4510	LOCKWASHER	4
9	5K9930	BRACKET	2
10	S1595	BOLT	4
11	5P1076	WASHER	8
12	S1589	BOLT	8
	2S736	WASHER	8
13	S1621	BOLT	4
SMS	H7578	FORM (Installations Instruction For Frame Assem.)	1

175953

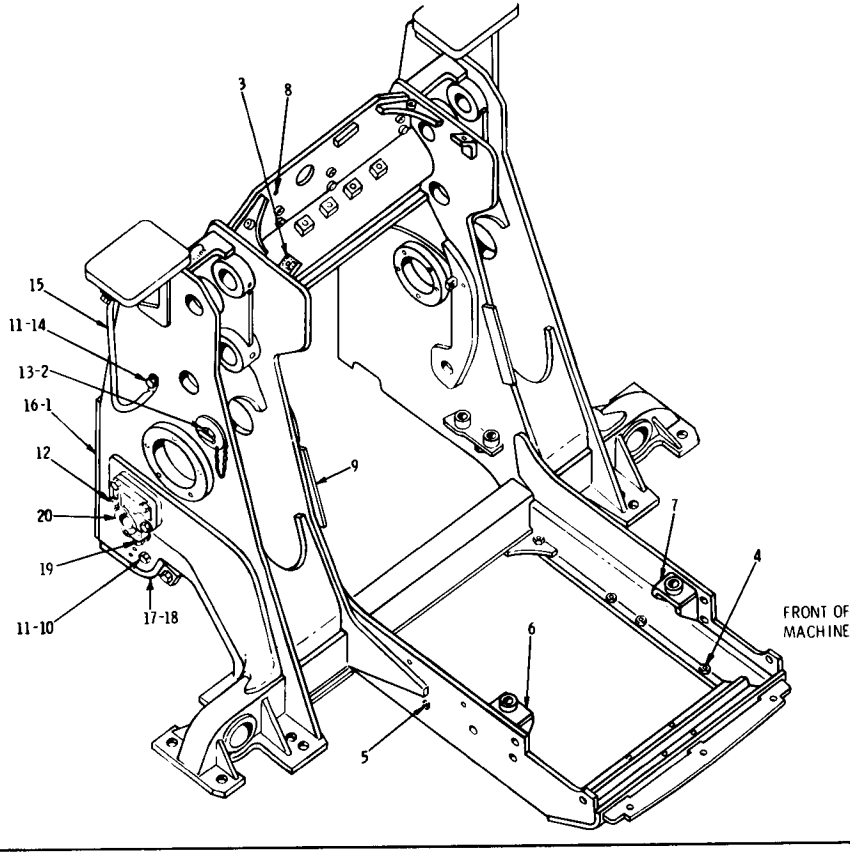

REF. NO.	PART NUMBER	DESCRIPTION	QTY
1	2V9806	FRAME ASSEM. (Includes)	1
2	7K7891	RETAINER ASSEM. (Includes)	1
	1B4210	NUT	1
3	9F2978	NUT	2
4	3K2889	NUT	8
5	1F748	NUT	2
6	6K8221	BRACKET-(R.H.)	1
7	6K8222	BRACKET-(L.H.)	1
8	4L	STUD	1
9	7K1326	STRIP	2
10	S1595	BOLT	4
11	5P1076	WASHER	8
12	S1589	BOLT	8
	2S736	WASHER	8
13	7K7970	BOLT ASSEM.	1
	2M4287	RING	1
14	S1621	BOLT	4
15	3V6963	GRAB IRON	2
16	5L6766	BUTTON--29.84mm(1.75in. Idia. hole	4
17	5K8187	GUARD ASSEM. -(R.H.) (Includes)	1
	2M473	LUG	1
18	5K8188	GUARD ASSEM. -(L.H.) (Includes)	1
	2M473	LUG	1
19	1D4585	BOLT	4
	3B4510	LOCKWASHER	4
20	5K9930	BRACKET	2

216990

4V2466 LOADER FRAME GROUP—Type 1
Part of 4V2193 Wide Gauge Track Loader Arrangement listed on Page 166
AN ATTACHMENT

4V2466 LOADER FRAME GROUP—Type 2
Part of 4V2193 Wide Gauge Track Loader Arrangement listed on Page 166
AN ATTACHMENT

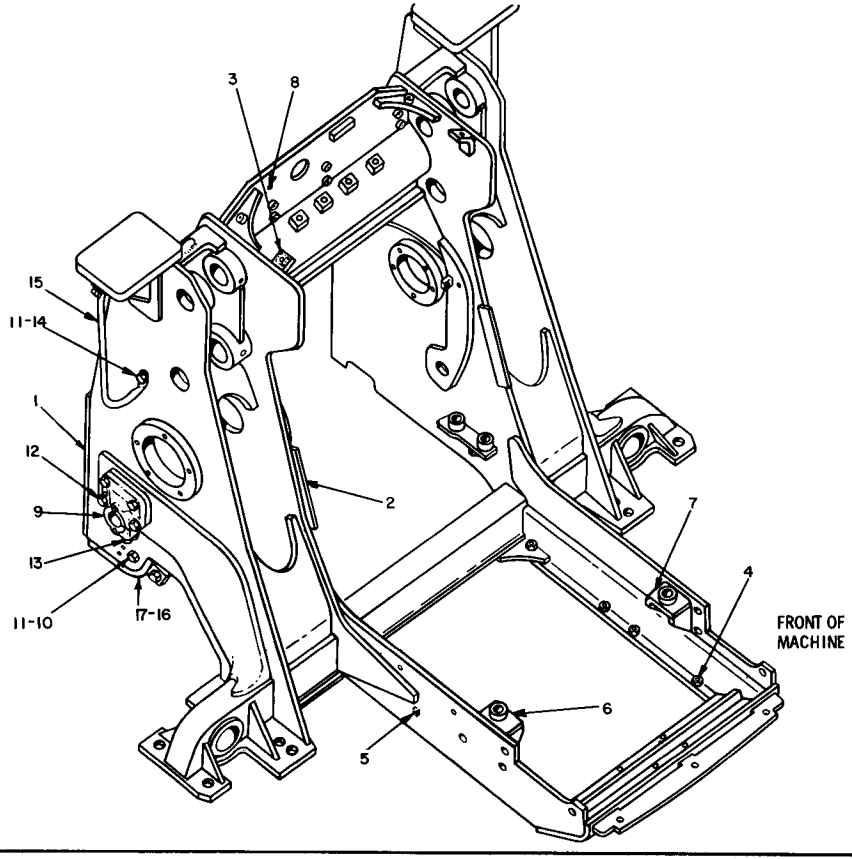

REF. NO.	PART NUMBER	DESCRIPTION	QTY.
1	2V9806	FRAME ASSEM.---------- (Includes)	1
2	7K1326	STRIP----------	2
3	9F2978	NUT----------	2
4	3K2889	NUT----------	8
5	1F748	NUT----------	2
6	6K8221	BRACKET-----(R.H.)--------	1
7	6K8222	BRACKET-----(L.H.)--------	1
8	4K8479	STUD----------	1
9	5K9930	BRACKET----------	2
10	S1595	BOLT----------	4
11	5P1076	WASHER----------	8
12	S1589	BOLT----------	8
	2S736	WASHER----------	8
13	1D4585	BOLT----------	4
	3B4510	LOCKWASHER----------	4
14	S1621	BOLT----------	4
15	3V6963	GRAB IRON----------	2
16	5K8188	GUARD ASSEM.-----(L.H.)------ (Includes)	1
	2M473	LUG----------	1
17	5K8187	GUARD ASSEM.------(R.H.)----- (Includes)	1
	2M473	LUG----------	1
C	SMSH7578	FORM---------- (Installations Instruction For Frame Assem.)	1

C INDICATES CHANGE 175718

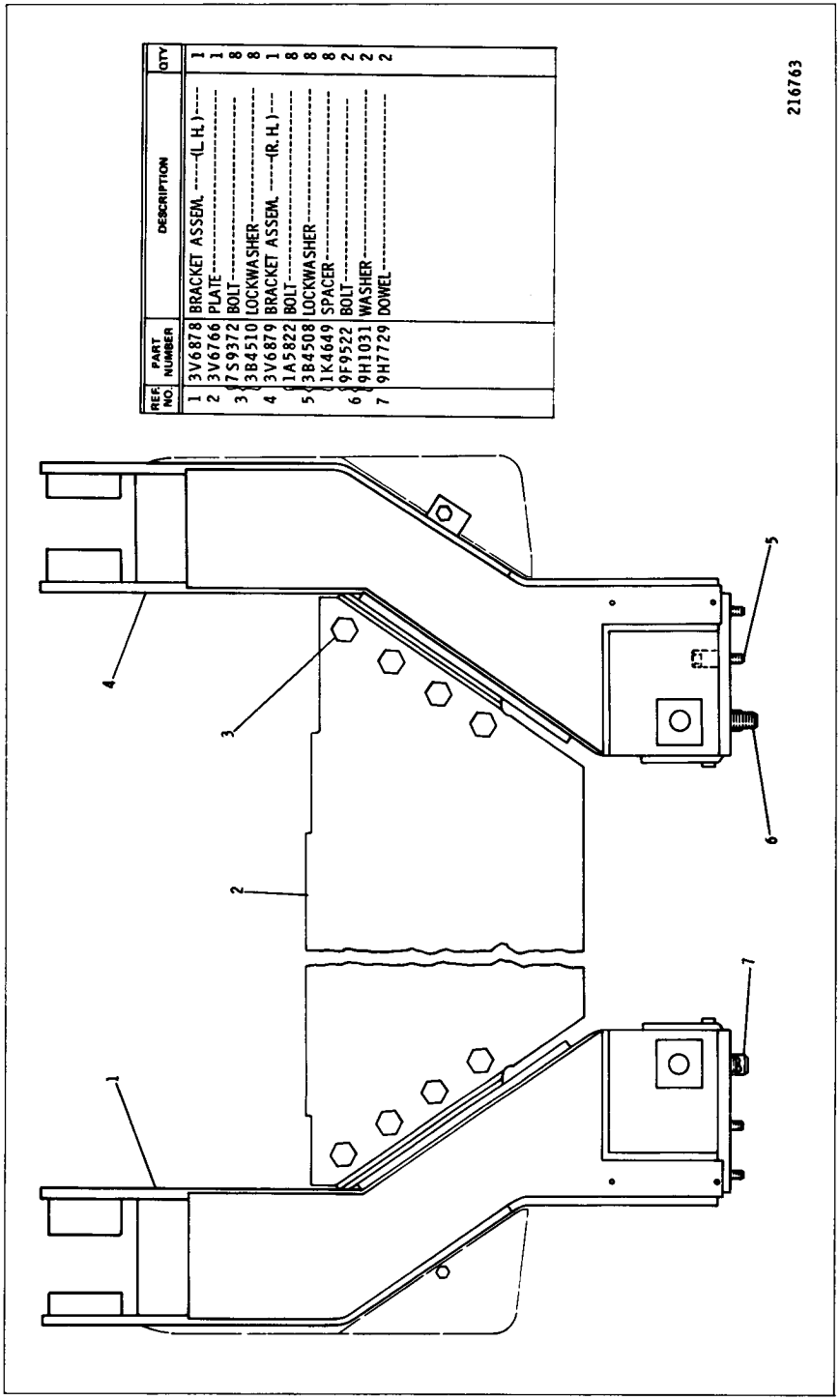

3V6901 ROLL-OVER PROTECTIVE STRUCTURE MOUNTING GROUP

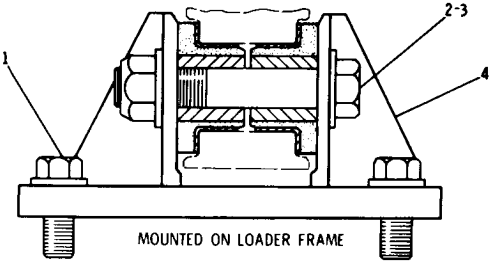

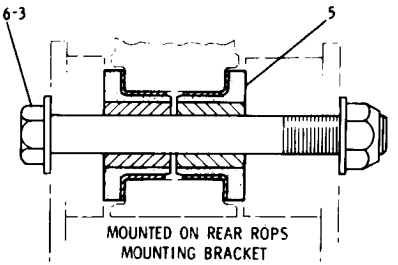

REF. NO.	PART NUMBER	DESCRIPTION	QTY
1	L1178	BOLT	8
	5P8248	WASHER	8
2	1D4643	BOLT	2
3	6K3632	LOCKNUT	4
	4B4285	WASHER	8
4	3V7333	PAD ASSEM. (R.H.)	1
	3V7332	PAD ASSEM. (L.H.)	1
5	8P2575	BUSHING	8
6	1D4645	BOLT	2

216811

3V6926 ROLL-OVER PROTECTIVE STRUCTURE MOUNTING GROUP
Also part of 4V2188 Roll-Over Protective System Arrangement listed on Page 222

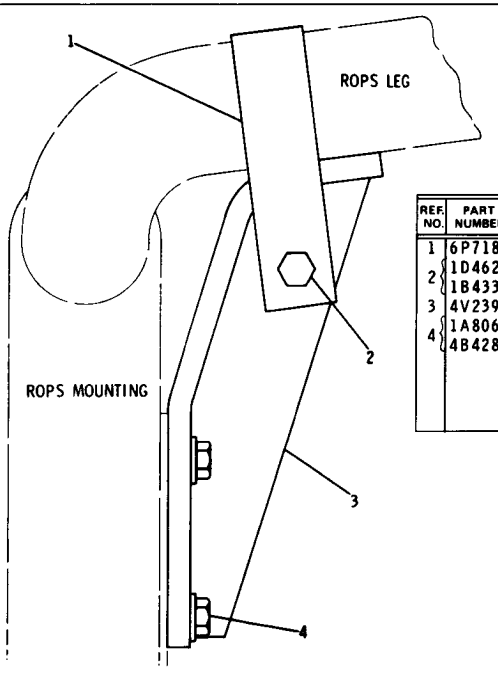

REF. NO.	PART NUMBER	DESCRIPTION	QTY
1	6P7184	BRACKET	1
2	1D4620	BOLT	1
	1B4331	NUT	1
3	4V2398	BRACKET ASSEM.	1
4	1A8063	BOLT	4
	4B4283	WASHER	4

216798

4V2171 SAFETY BRACE GROUP

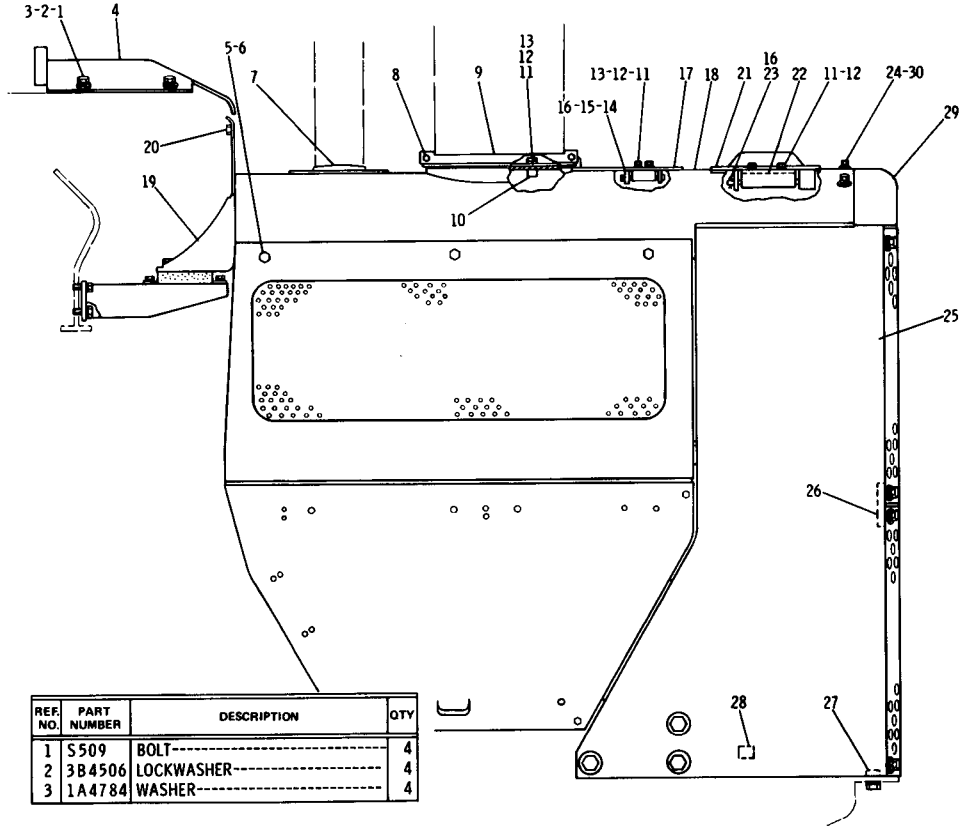

REF. NO.	PART NUMBER	DESCRIPTION	QTY
1	S509	BOLT	4
2	3B4506	LOCKWASHER	4
3	1A4784	WASHER	4

4	3V9861	SHROUD ASSEM.	1
5	6H1717	BOLT	6
C 6	5P1076	WASHER	6
7	1S6933	GROMMET	1
8	S1588	BOLT	2
	2K4973	NUT	2
9	9K2823	ANGLE ASSEM.	2
10	7S7670	SUPPORT	1
11	S1615	BOLT	8
12	3B4504	LOCKWASHER	8
13	3S5735	LUG	3
14	8S7411	HINGE-(rear)	2
15	9K693	PIN	2
16	3B4607	COTTER PIN	4
17	9K5980	DOOR ASSEM.	1
18	1V3748	HOOD ASSEM. (Includes)	1
	1K6872	LOCKNUT	6
19	8K9118	BRACKET ASSEM.	1
20	5B8855	PLATE	2
21	9K5977	DOOR ASSEM. -(front)-	1
22	9K8119	HINGE	1
	9K218	BAR	1
23	3S1952	PIN	1
24	S1595	BOLT	4
	5P1076	WASHER	4
25	1V3750	GUARD ASSEM. (Includes)	1
	9K2978	NUT	14
26	9K7221	LUG	2
27	3K2889	NUT	3
28	3K6736	LUG	2
29	8K8951	GUARD ASSEM. (Includes)	1
30	1K6872	LOCKNUT	4

C INDICATES CHANGE

227794

3V6936 HOOD AND GUARD GROUP—Part 1

3V6936 HOOD AND GUARD GROUP—Part 2

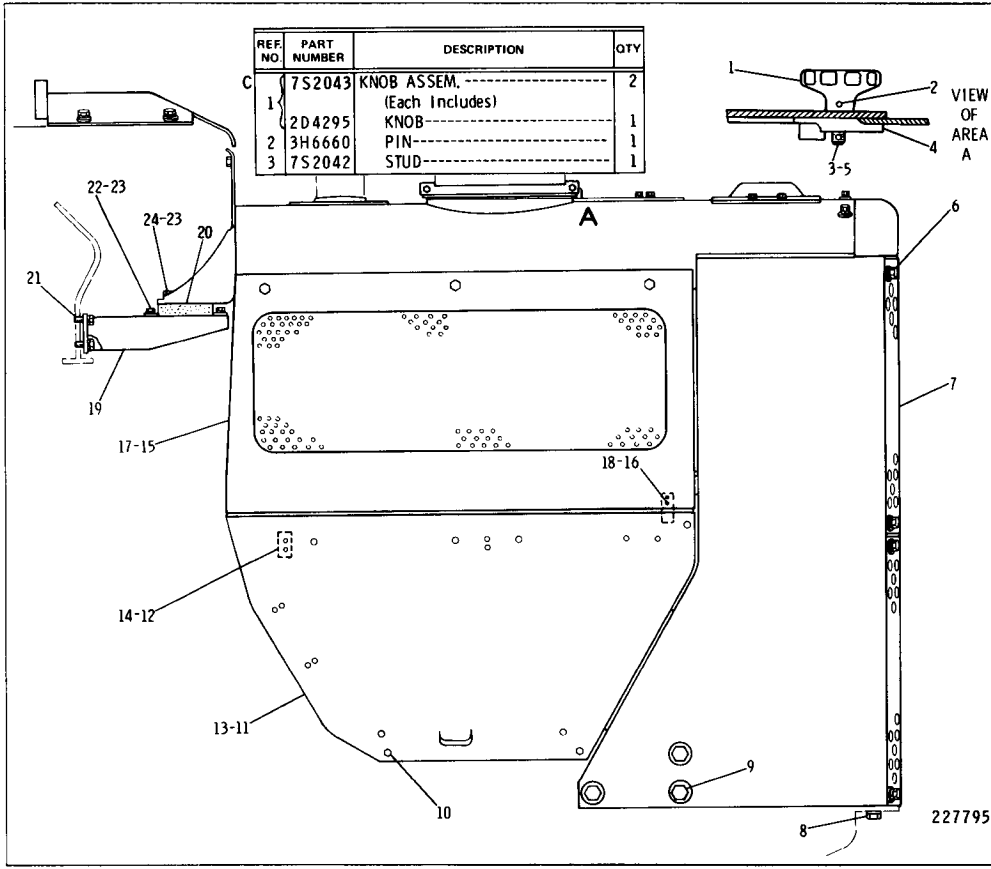

REF. NO.	PART NUMBER	DESCRIPTION	QTY
C 1	7S2043	KNOB ASSEM. (Each Includes)	2
	2D4295	KNOB	1
2	3H6660	PIN	1
3	7S2042	STUD	1

4	9S8230	PLATE ASSEM.	2
5	4H1641	PIN	2
6	4B4043	BOLT	8
	3B4510	LOCKWASHER	8
	4D3704	WASHER	8
7	1V3746	PLATE	2
C 8	1A1135	BOLT	3
C	2S7593	WASHER	3
9	L1178	BOLT	6
	2J3506	NUT	6
	2S115	WASHER	12
10	5K8548	BOLT	6
11	1V8532	SHEET ASSEM.---(R. H. -lower)--- (Includes)	1
12	5B3809	CLIP	4
	5B9078	RIVET	8
13	1V8531	SHEET ASSEM. ---(L. H. -lower)---- (Includes)	1
14	5B3809	CLIP	4
	5B9078	RIVET	8
15	3V2801	SHEET ASSEM. ---(R. H. -upper)---- (Includes)	1
16	5B3809	CLIP	1
	5B9078	RIVET	2
17	3V2802	SHEET ASSEM. ---(L. H. -upper)---- (Includes)	1
18	5B3809	CLIP	1
	5B9078	RIVET	2
19	8K9117	BRACKET ASSEM. (Each Includes)	2
	5B8855	PLATE	1
20	8K9119	PAD	2
21	6H1717	BOLT	6
	3B4508	LOCKWASHER	6
22	S509	BOLT	4
C 23	5P1075	WASHER	8
24	1D4717	NUT	4
			4

C INDICATES CHANGE

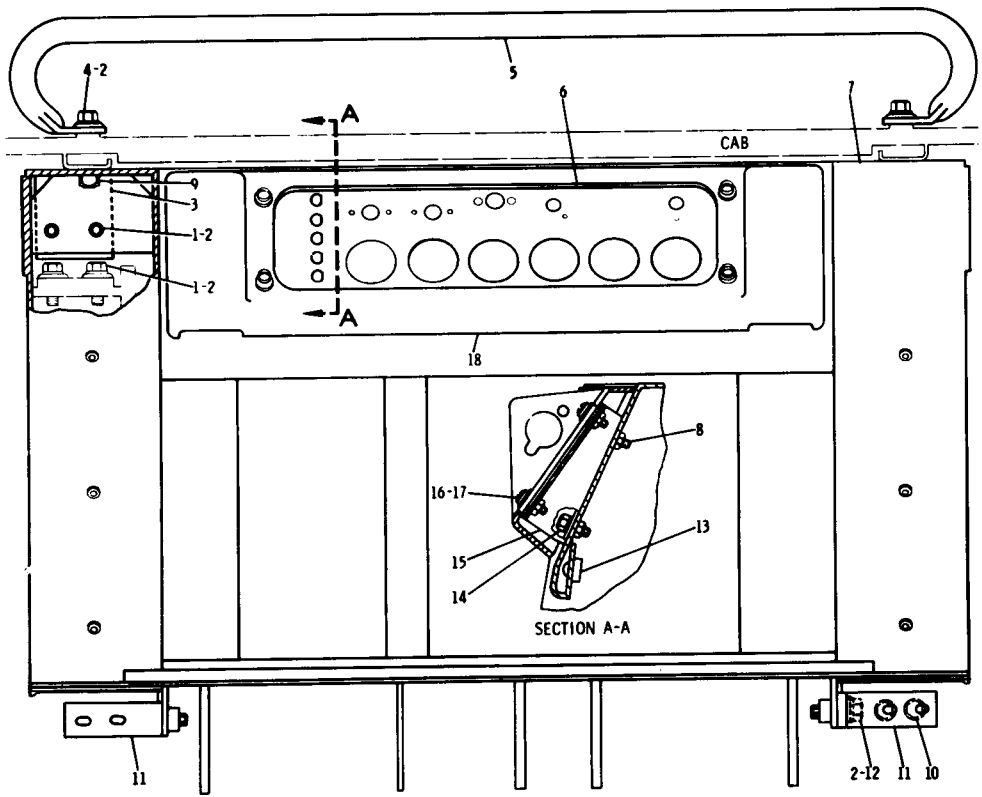

REF. NO.	PART NUMBER	DESCRIPTION	QTY
1	S1595	BOLT	8
2	5P1076	WASHER	12
3	3V8422	ANGLE ASSEM.	2
4	6H1717	BOLT	2
5	9P3227	GRAB IRON	1
6	3V9828	INLAY	1
7	3V8485	DASH ASSEM. (Includes)	1
8	9F2978	NUT	4
9	1F748	NUT	8
10	S1588	BOLT	4
	5P1075	WASHER	4
11	3V8426	ANGLE	2
12	S1587	BOLT	2
13	9M5884	BUMPER	3
14	S509	BOLT	4
	3B4506	LOCKWASHER	4
15	3V8594	PLATE ASSEM. (Includes)	1
	9F6445	NUT	2
16	9F2978	NUT	4
17	4B1330	SCREW	4
	4K3533	WASHER	4
	6J450	SHIM	4
18	8P7957	COVER	1

216762

3V6934 DASH GROUP
Serial No. 13X1 to 13X2437 Inclusive

3V6934 DASH GROUP
Serial No. 13X2438—Up

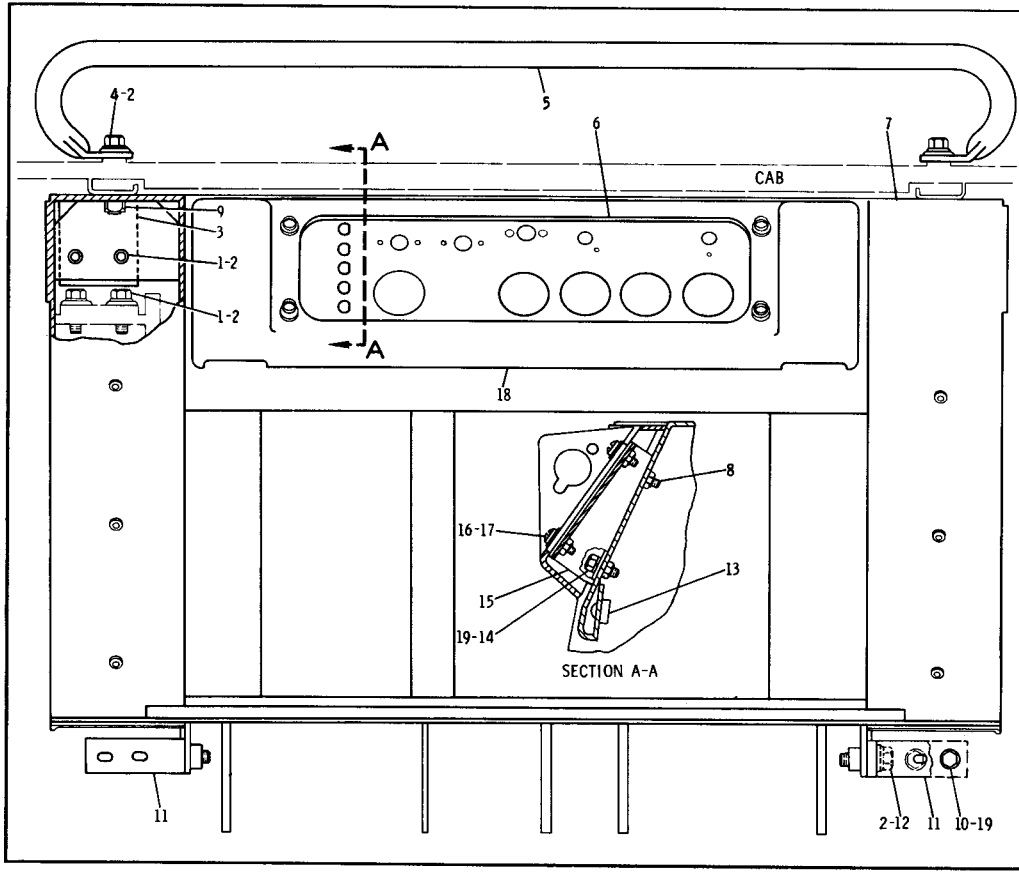

	REF. NO.	PART NUMBER	DESCRIPTION	QTY
	1	S1595	BOLT	8
	2	5P1076	WASHER	12
	3	3V8422	ANGLE ASSEM.	2
	4	6H1717	BOLT	2
	5	9P3227	GRAB IRON	1
C	6	7V2261	INLAY	1
	7	3V8485	DASH ASSEM. (Includes)	1
	8	9F2978	NUT	4
	9	1F748	NUT	8
	10	S1588	BOLT	4
	11	3V8426	ANGLE	2
	12	S1587	BOLT	2
	13	9M5884	BUMPER	3
C	14	L1351	BOLT	4
C	15	7V2260	PLATE ASSEM. (Includes)	1
		9F6445	NUT	2
	16	9F2978	NUT	4
	17	4B1330	SCREW	4
		4K3533	WASHER	4
		6J450	SHIM	4
	18	8P7957	COVER	1
C	19	5P1075	WASHER	8

C INDICATES CHANGE

176086

3V6928 PLATFORM SUPPORT GROUP—R.H. Side View—Part 1 of 3
Serial No. 13X1 to 13X623 inclusive

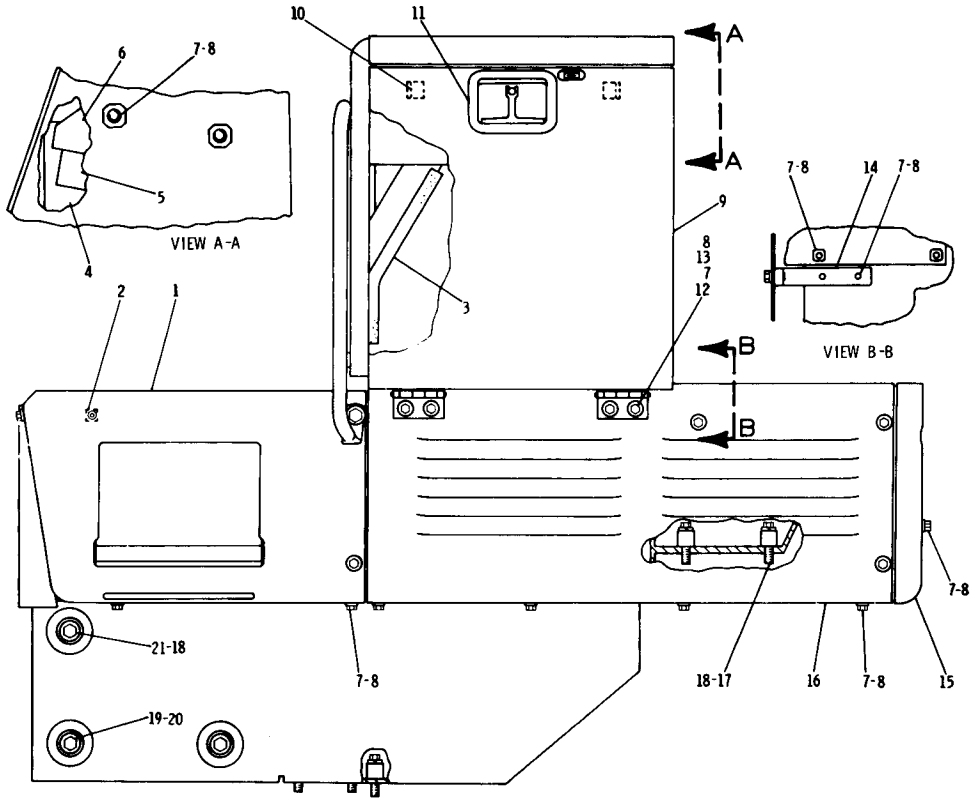

REF. NO.	PART NUMBER	DESCRIPTION	QTY
1	4V808	PLATE ASSEM. ------(L. H.)----- (Includes)	1
2	9F2978	NUT----------	1
▲ 3	5P5657	SEAL----------.3 m(11.82 in.)	
4	3V8334	BOX ASSEM. ----------	1
5	3V8332	ANGLE----------	2
6	3V8331	ANGLE----------	2
7	L1351	BOLT----------	23
8	5P1075	WASHER----------(conical)------	23
9	3V8098	DOOR ASSEM. ---------- (Includes)	1
10	7K1333	GUIDE----------	2
11	7K1332	HANDLE ASSEM. ---------- (Includes)	1
	1D4716	NUT----------	1
	3B4505	LOCKWASHER----------	1
12	1V8284	HINGE----------	2
13	1D4717	NUT----------	4
	4B4278	WASHER----------	4
14	1V7031	BAR----------	1
15	4V6738	CORNER ASSEM. ------(L. H.)---- (Includes)	1
	9F2978	NUT----------	2
16	4V558	SHEET ASSEM. ---------- (Includes)	1
	9F2978	NUT----------	1
17	2B947	BOLT----------	4
	1K4649	SPACER----------	4
18	3B4508	LOCKWASHER----------	5
19	7B3235	BOLT----------	2
	1K6872	NUT----------	2
20	L1714	WASHER----------	3
	9F2289	SPACER----------	3
21	S1621	BOLT----------	1

▲ ORDER BY THE METRE

214911

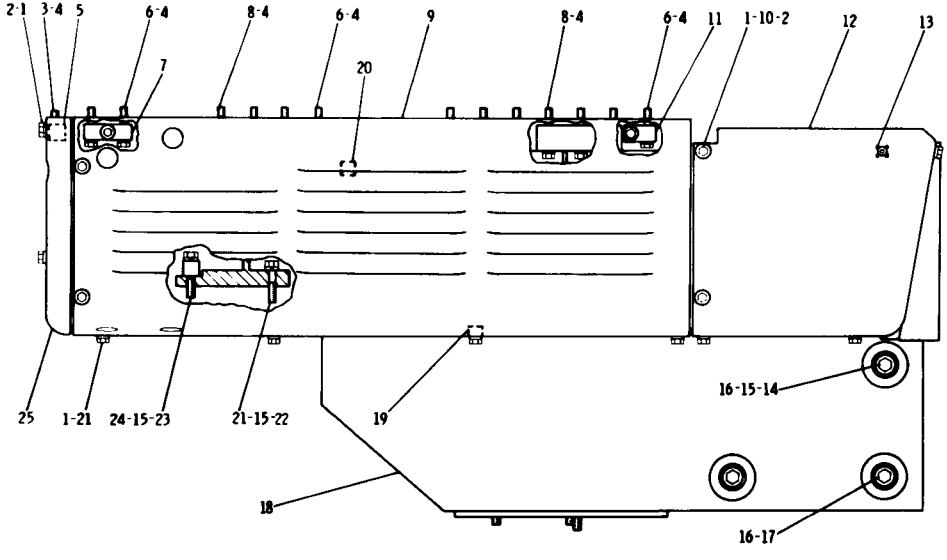

REF. NO.	PART NUMBER	DESCRIPTION	QTY
1	L1351	BOLT	16
2	5P1075	WASHER	16
3	T319	BOLT	1
4	3B4507	LOCKWASHER	13
5	9K7545	BLOCK	1
6	1D4707	BOLT	6
7	6K847	BLOCK	2
8	7H696	BOLT	6
9	4V744	SHEET ASSEM. (Includes)	1
10	9F2978	NUT	2
11	6K4641	BLOCK	2
12	4V789	PLATE ASSEM. -(R. H.)- (Includes)	1
13	9F2978	NUT	1
14	S1621	BOLT	1
15	3B4508	LOCKWASHER	5
16	L1714	WASHER	3
	9F2289	SPACER	3
17	7B3235	BOLT	2
	1K6872	NUT	2
18	1V3740	SUPPORT ASSEM. (Includes)	1
19	9F2978	NUT	8
20	1F748	NUT	4
C 21	2B947	BOLT	2
22	4B4280	WASHER	2
23	9S1366	BOLT	2
24	1K4649	SPACER	2
25	4V6737	CORNER ASSEM. -(R. H.)- (Includes)	1
	9F2978	NUT	2

C INDICATES CHANGE

171158

3V6928 PLATFORM SUPPORT GROUP—L.H. Side View—Part 2 of 3
Serial No. 13X1 to 13X623 inclusive

3V6928 PLATFORM SUPPORT GROUP—End View—Part 3 of 3
Serial No. 13X1 to 13X623 inclusive

REF. NO.	PART NUMBER	DESCRIPTION	QTY
1	L1351	BOLT	12
2	5P1075	WASHER	16
3	4V741	BAR ASSEM. (Includes)	1
4	9F2978	NUT	1
5	4V750	BAR	1
6	4V271	SHEET ASSEM.	1
7	S1587	BOLT	9
8	3B4508	LOCKWASHER	23
9	3V7730	BOX ASSEM. (Includes)	1
	9F2978	NUT	10
10	5M9929	STAPLE	1
11	7B3235	BOLT	2
12	5P1076	WASHER	2
13	4V5301	GRAB IRON	1
14	7K1329	STOP	2
15	T102	BOLT	4
16	4V386	ROD ASSEM.	1
17	3B8428	BOLT	6
18	8H3526	WASHER	3
19	3B4507	LOCKWASHER	6
20	4V3756	BRACKET ASSEM.	1
21	3V7714	SUPPORT ASSEM. —(L. H.)— (Includes)	1
	9F2978	NUT	16
22	1F748	NUT	11
23	4V436	SHAFT	1
24	2B947	BOLT	3
25	1K4649	SPACER	3
26	3V8676	SUPPORT ASSEM. —(front)—	1
27	3V8606	SUPPORT ASSEM. —(rear)—	1
28	9S1366	BOLT	8
29	3V8600	BAR	2
30	S1585	BOLT	1
31	4B4280	WASHER	4
32	1A5822	BOLT	2
33	4V724	BAR ASSEM. —(L. H.)— (Includes)	1
	9F2978	NUT	1

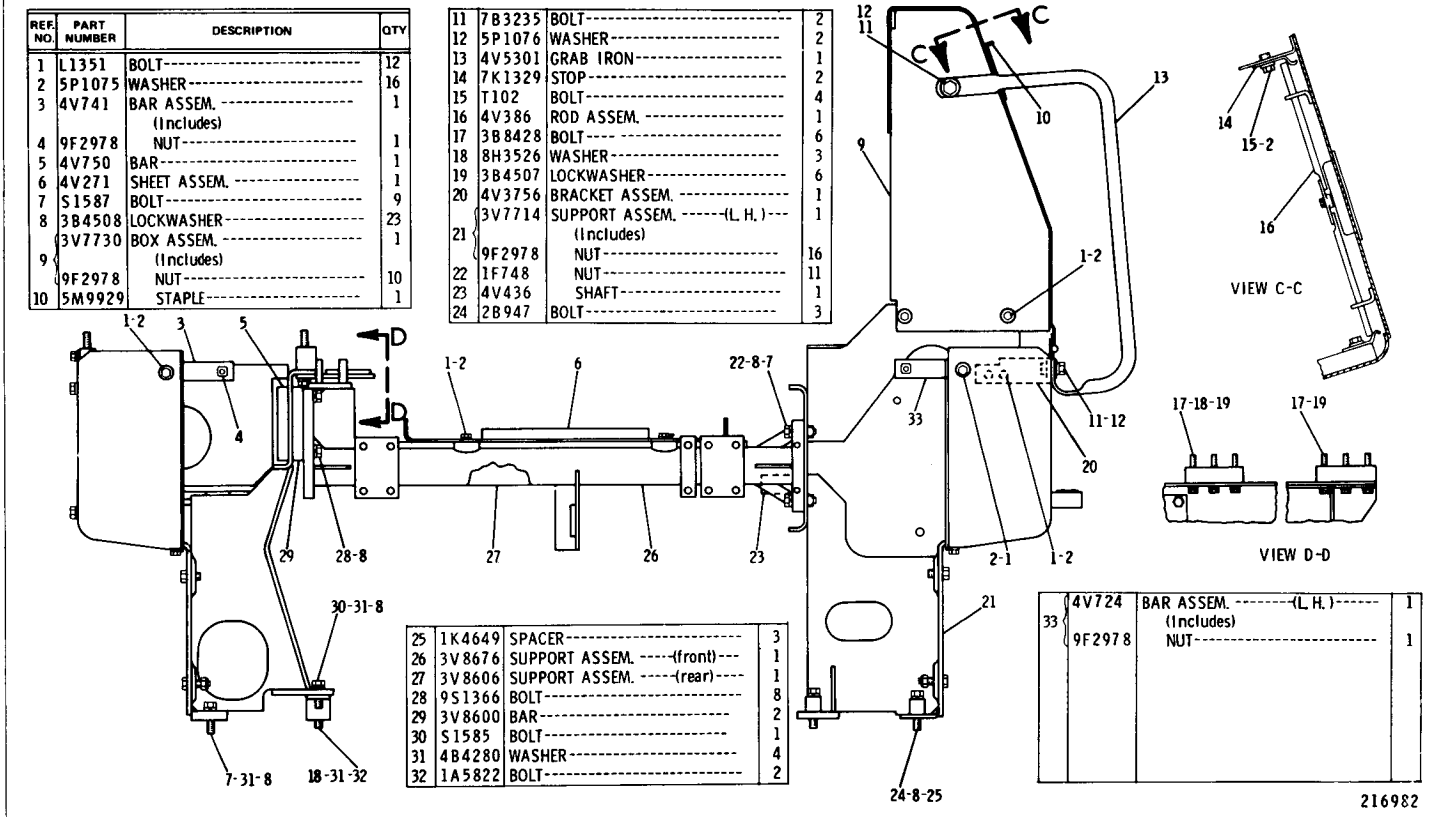

216982

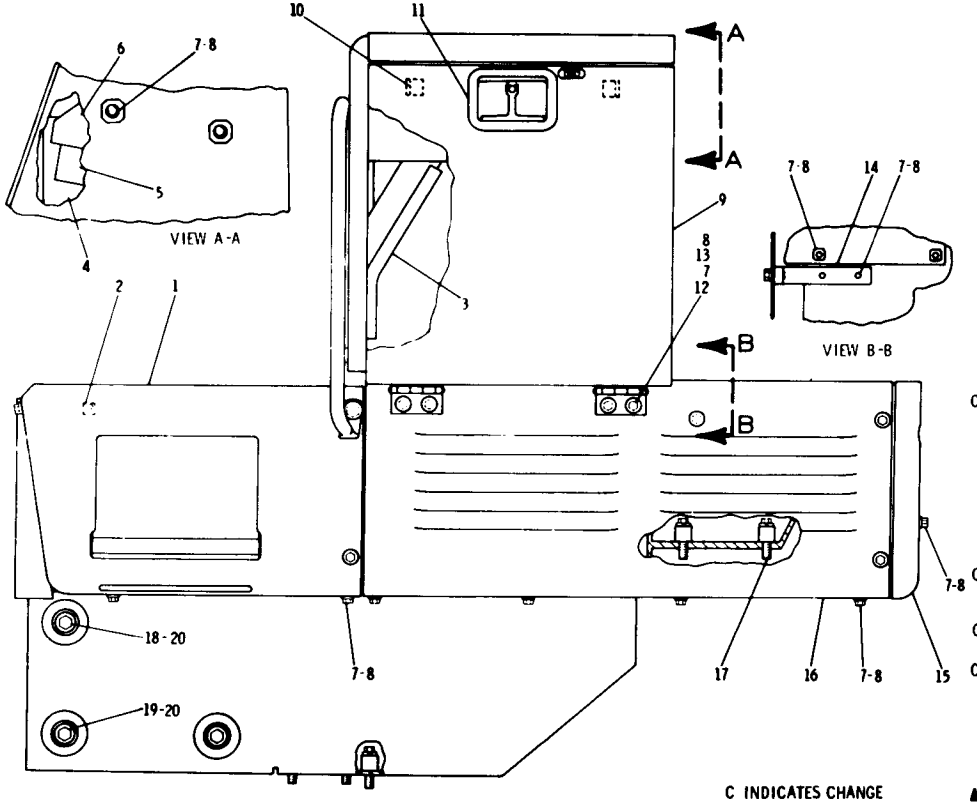

REF. NO.	PART NUMBER	DESCRIPTION	QTY
1	4V808	PLATE ASSEM. ------(L. H.)----- (Includes)	1
2	9F2978	NUT	1
▲ 3	5P5657	SEAL----------, 3 m(11.82 in.)	
4	3V8334	BOX ASSEM.	1
5	3V8332	ANGLE	2
6	3V8331	ANGLE	2
7	L1351	BOLT	23
8	5P1075	WASHER----------(conical)-----	23
9	3V8098	DOOR ASSEM. (Includes)	1
10	7K1333	GUIDE	2
	7K1332	HANDLE ASSEM. (Includes)	1
11	1D4716	NUT	1
	3B4505	LOCKWASHER	1
12	1V8284	HINGE	2
C 13	4J6659	STRIP	2
14	1V7031	BAR	1
15	4V6738	CORNER ASSEM. ------(L. H.)---- (Includes)	1
	9F2978	NUT	2
16	4V558	SHEET ASSEM. (Includes)	1
	9F2978	NUT	1
C 17	1A1460	BOLT	4
	1K4649	SPACER	4
18	S1621	BOLT	1
C 19	S1585	BOLT	2
	1K6872	NUT	2
C 20	7D1649	WASHER	3
	9F2289	SPACER	3

C INDICATES CHANGE

▲ ORDER BY THE METER

170921

3V6928 PLATFORM SUPPORT GROUP—R.H. Side View—Part 1 of 3
Serial No. 13X624 to 13X1168 and 13X1294 inclusive

3V6928 PLATFORM SUPPORT GROUP—L.H. Side View—Part 2 of 3
Serial No. 13X624 to 13X1168 and 13X1294 inclusive

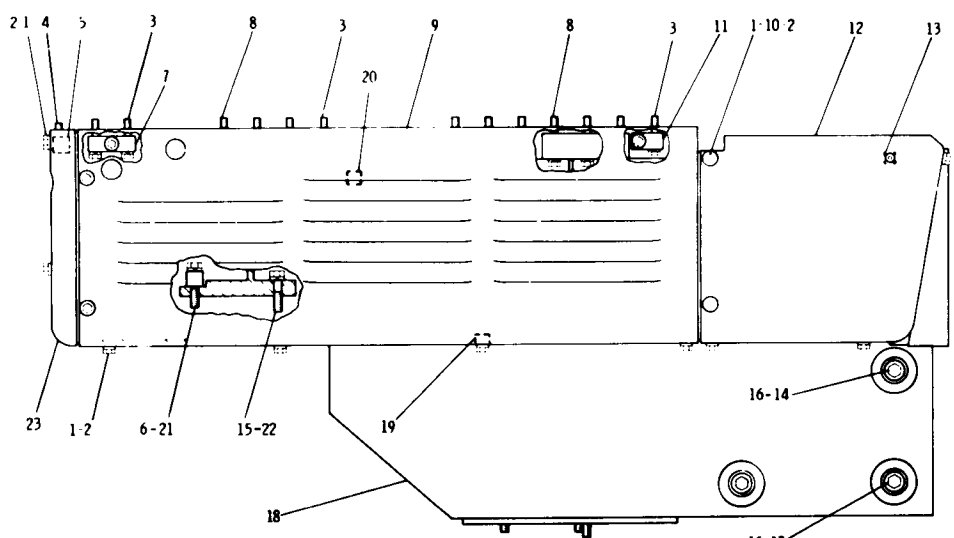

	REF. NO.	PART NUMBER	DESCRIPTION	QTY
	1	L1351	BOLT	16
	2	5P1075	WASHER	16
C	3	T319	BOLT	6
C	4	T768	BOLT	1
	5	9K7545	BLOCK	1
	6	1K4649	SPACER	2
	7	6K847	BLOCK	2
C	8	1D4556	BOLT	6
	9	4V744	SHEET ASSEM. (Includes)	1
	10	9F2978	NUT	2
	11	6K4641	BLOCK	2
	12	4V789	PLATE ASSEM. -----(R. H.)----- (Includes)	1
	13	9F2978	NUT	1
	14	S1621	BOLT	1
C	15	S1587	BOLT	2
C	16	7D1649	WASHER	3
		9F2289	SPACER	3
C	17	S1585	BOLT	2
		1K6872	NUT	2
	18	1V3740	SUPPORT ASSEM. (Includes)	1
	19	9F2978	NUT	8
	20	1F748	NUT	4
	21	2B947	BOLT	2
C	22	5P8245	WASHER	2
	23	4V6737	CORNER ASSEM. -----(R.H.)--- (Includes)	1
		9F2978	NUT	2

C INDICATES CHANGE

170922

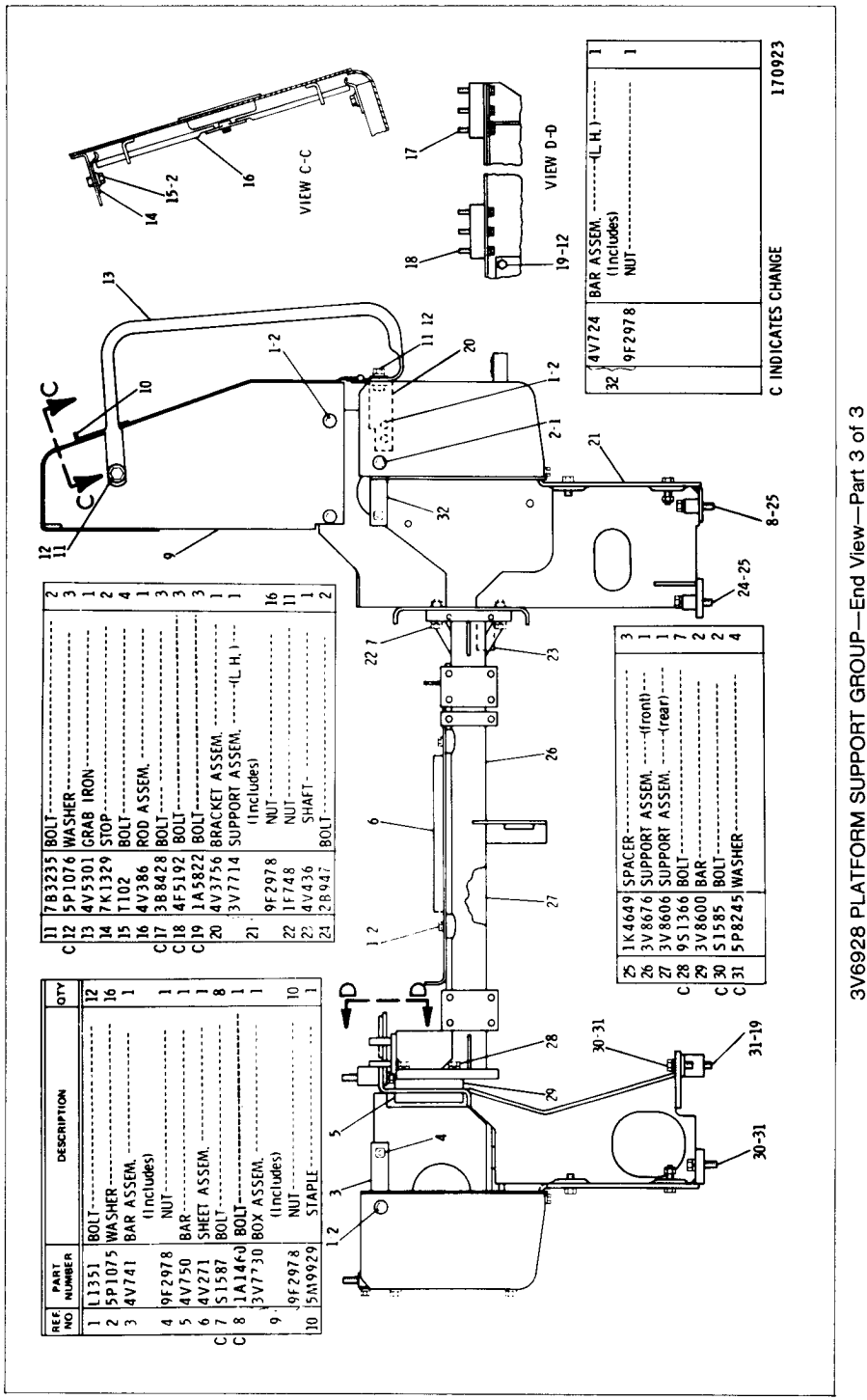

REF. NO.	PART NUMBER	DESCRIPTION	QTY
1	1J351	BOLT	12
2	5P1075	WASHER	16
3	4V741	BAR ASSEM. (Includes)	1
4	9F2978	NUT	1
5	4V750	BAR	1
6	4V271	SHEET ASSEM.	1
C 7	5I587	BOLT	8
C 8	1A14KJ	BOLT	1
9	3V7730	BOX ASSEM. (Includes)	1
	9F2978	NUT	10
10	5M9929	STAPLE	1
11	7B3235	BOLT	2
C 12	5P1076	WASHER	3
13	4V5301	GRAB IRON	1
14	7K1329	STOP	2
15	T102	BOLT	4
16	4V386	ROD ASSEM.	1
C 17	3B8428	BOLT	3
C 18	4F5192	BOLT	3
C 19	1A5822	BOLT	3
20	4V3756	BRACKET ASSEM.	1
	3V7714	SUPPORT ASSEM. -----(L.H.)--- (Includes)	1
21	9F2978	NUT	16
22	1F748	NUT	11
23	4V436	SHAFT	1
24	2B942	BOLT	2
25	1K4649	SPACER -----(front)---	3
26	3V8676	SUPPORT ASSEM. -----(front)---	1
27	3V8606	SUPPORT ASSEM. -----(rear)----	1
C 28	9S1366	BOLT	7
29	3V8600	BAR	2
C 30	5I585	BOLT	2
C 31	5P8245	WASHER	4
32	4V724	BAR ASSEM. -----(L.H.)----- (Includes)	1
	9F2978	NUT	1

3V6928 PLATFORM SUPPORT GROUP—End View—Part 3 of 3
Serial No. 13X624 to 13X1168 and 13X1294 inclusive

3V6928 PLATFORM SUPPORT GROUP—R.H. Side View—Part 1 of 3
Serial No. 13X1169 to 13X1293 and 13X1295—Up

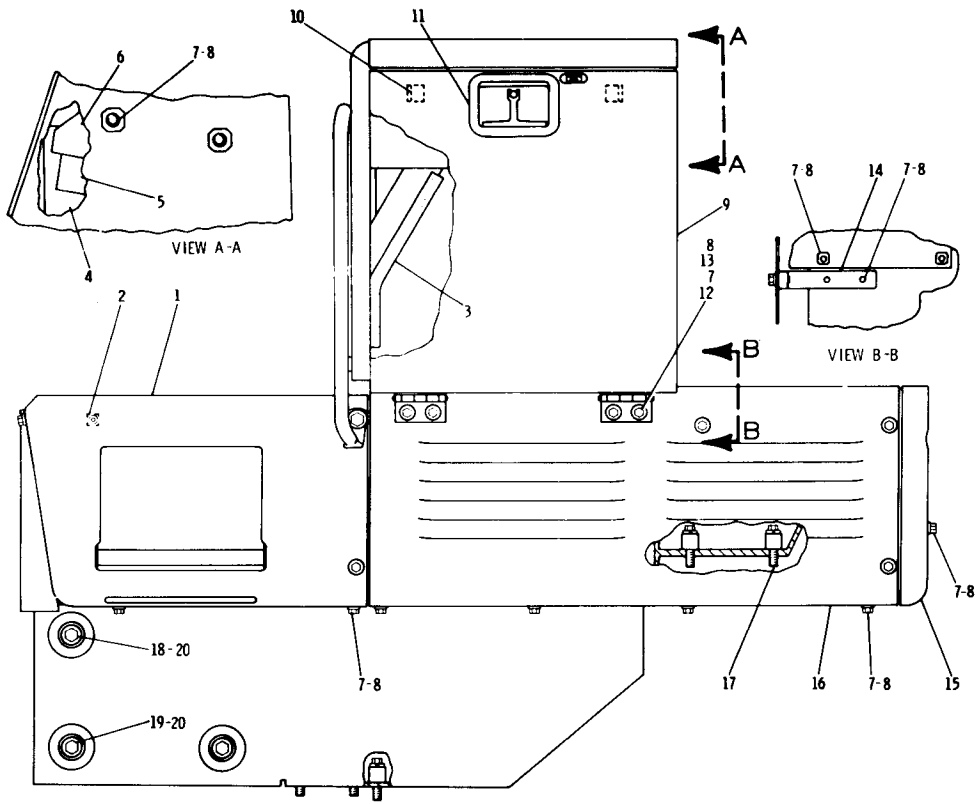

REF. NO.	PART NUMBER	DESCRIPTION	QTY
1	4V808	PLATE ASSEM. ------(L. H.)----- (Includes)	1
2	9F2978	NUT	1
▲ 3	5P5657	SEAL----------.3 m(11.82 in.)	
4	3V8334	BOX ASSEM.	1
5	3V8332	ANGLE	2
6	3V8331	ANGLE	2
7	L1351	BOLT	23
8	5P1075	WASHER---------(conical)-----	23
9	3V8098	DOOR ASSEM. (Includes)	1
10	7K1333	GUIDE	2
11	7K1332	HANDLE ASSEM. (Includes)	1
	1D4716	NUT	1
	3B4505	LOCKWASHER	1
12	1V8284	HINGE	2
13	4J6659	STRIP	2
14	1V7031	BAR	1
15	4V6738	CORNER ASSEM. ------(L. H.)---- (Includes)	1
	9F2978	NUT	2
16	4V558	SHEET ASSEM. (Includes)	1
	9F2978	NUT	1
17	1A1460	BOLT	4
	1K4649	SPACER	4
18	S1621	BOLT	1
19	S1585	BOLT	2
	1K6872	NUT	2
20	7D1649	WASHER	3
	9F2289	SPACER	3

▲ ORDER BY THE METER

220719

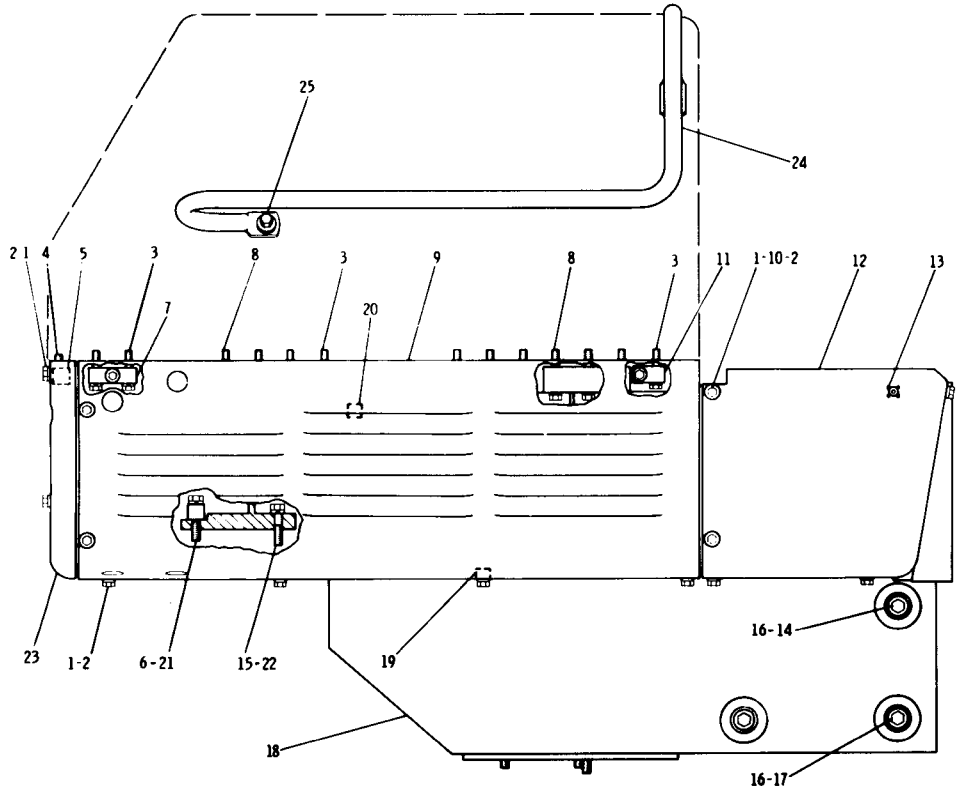

	REF. NO.	PART NUMBER	DESCRIPTION	QTY
	1	L1351	BOLT	16
	2	5P1075	WASHER	16
	3	T319	BOLT	6
	4	T768	BOLT	1
	5	9K7545	BLOCK	1
	6	1K4649	SPACER	2
	7	6K847	BLOCK	2
	8	1D4556	BOLT	6
	9	4V744	SHEET ASSEM. (Includes)	1
	10	9F2978	NUT	2
	11	6K4641	BLOCK	2
	12	4V789	PLATE ASSEM. -(R. H.)- (Includes)	1
	13	9F2978	NUT	1
	14	S1621	BOLT	1
	15	S1587	BOLT	2
	16	7D1649	WASHER	3
		9F2289	SPACER	3
	17	S1585	BOLT	2
		1K6872	NUT	2
	18	1V3740	SUPPORT ASSEM. (Includes)	1
	19	9F2978	NUT	8
	20	1F748	NUT	4
	21	2B947	BOLT	2
	22	5P8245	WASHER	2
	23	4V6737	CORNER ASSEM. -(R. H.)- (Includes)	1
		9F2978	NUT	2
C	24	9P3231	GRAB IRON	1
C	25	6H1717	BOLT	2
C		5P1076	WASHER	2

C INDICATES CHANGE

220700

3V6928 PLATFORM SUPPORT GROUP—L.H. Side View—Part 2 of 3
Serial No. 13X1169 to 13X1293 and 13X1295—Up

3V6928 PLATFORM SUPPORT GROUP—End View—Part 3 of 3
Serial No. 13X1169 to 13X1293 and 13X1295—Up

REF NO	PART NUMBER	DESCRIPTION	QTY
1	L1351	BOLT	12
2	5P1075	WASHER	16
3	4V741	BAR ASSEM. (Includes)	1
4	9F2978	NUT	1
5	4V750	BAR	1
6	4V271	SHEET ASSEM.	1
7	S1587	BOLT	8
8	1A1460	BOLT	1
9	3V7730	BOX ASSEM. (Includes)	1
	9F2978	NUT	10
10	5M9929	STAPLE	1
11	7B3235	BOLT	2
12	5P1076	WASHER	3
13	4V5301	GRAB IRON	1
14	7K1329	STOP	2
15	T102	BOLT	4
16	4V386	ROD ASSEM.	1
17	3B8428	BOLT	3
18	4F5192	BOLT	3
19	1A5822	BOLT	3
20	4V3756	BRACKET ASSEM.	1
21	3V7714	SUPPORT ASSEM. (L.H.) (Includes)	1
	9F2978	NUT	16
22	1F748	NUT	11
23	4V436	SHAFT	1
24	2B947	BOLT	2
25	1K4649	SPACER	3
26	3V8676	SUPPORT ASSEM. (front)	1
27	3V8606	SUPPORT ASSEM. (rear)	1
28	9S1366	BOLT	7
29	3V8600	BAR	2
30	S1585	BOLT	2
31	5P8245	WASHER	4
32	4V724	BAR ASSEM. (L.H.) (Includes)	1
	9F2978	NUT	1

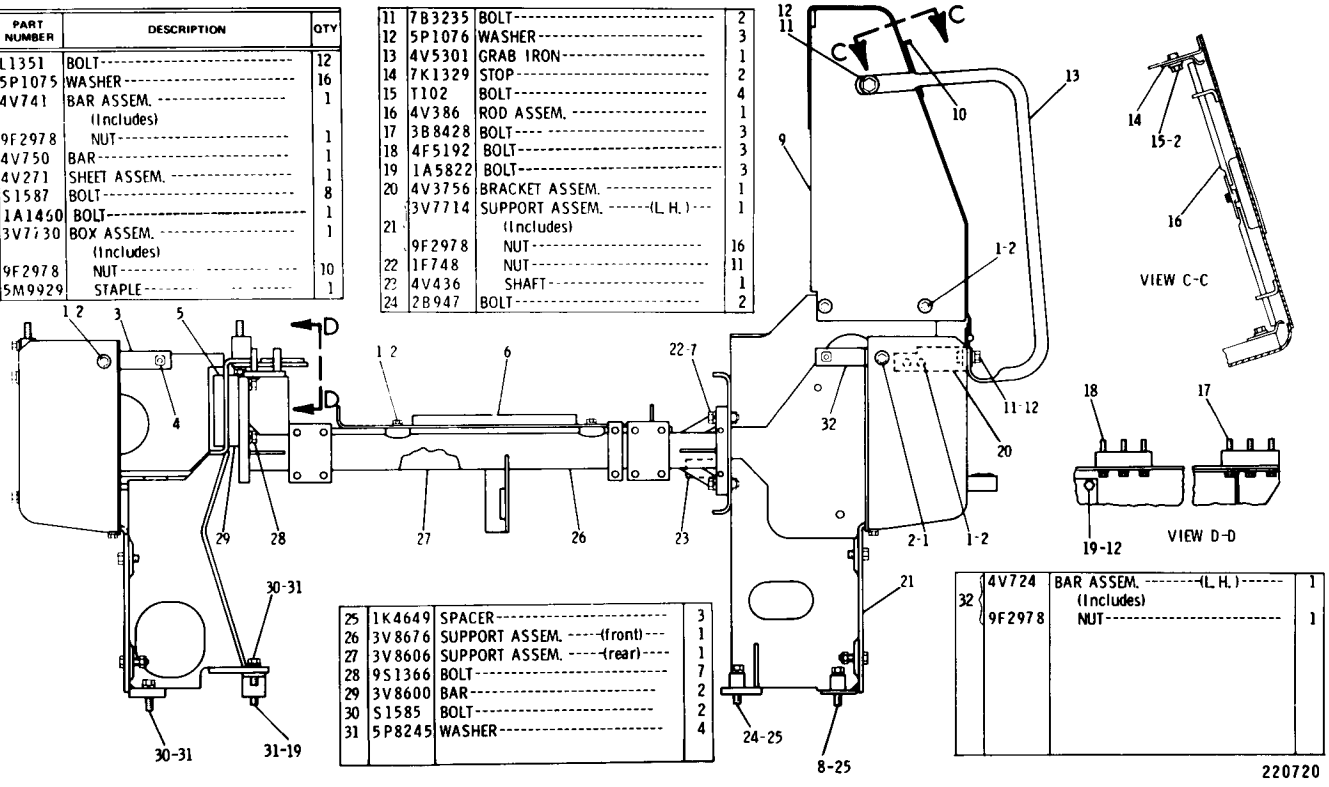

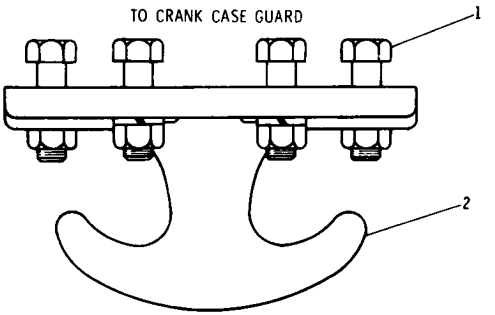

	REF. NO.	PART NUMBER	DESCRIPTION	QTY
	1	1A8063	BOLT	4
		1B4331	NUT	4
		3B4512	LOCKWASHER	4
C	2	4V302	HOOK	1

C INDICATES CHANGE

217030

3B2665 FRONT PULL HOOK GROUP
FOR USE WITH CRANKCASE GUARD
AN ATTACHMENT

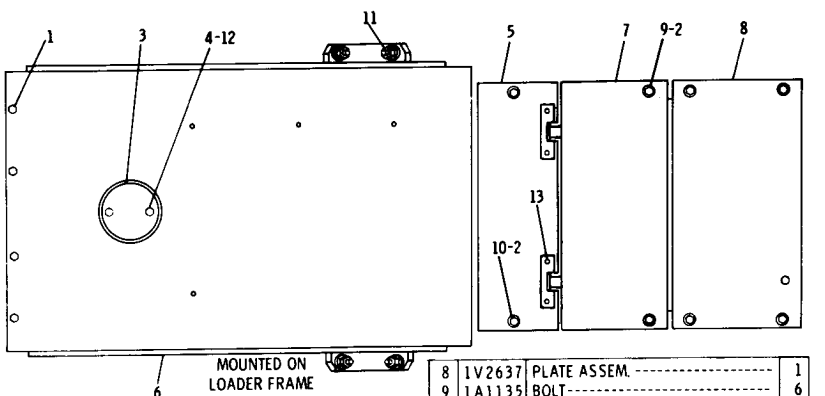

	REF. NO.	PART NUMBER	DESCRIPTION	QTY
	1	S1585	BOLT	4
		5P1076	WASHER	4
C	2	2S7593	WASHER	8
	3	5K6506	COVER	1
	4	S509	BOLT	2
	5	1V2639	PLATE ASSEM.	1
C	6	1V6179	PLATE ASSEM.	1
	7	1V2635	PLATE ASSEM.	1
	8	1V2637	PLATE ASSEM.	1
	9	1A1135	BOLT	6
	10	S1625	BOLT	2
	11	1D4588	BOLT	4
		3K2889	NUT	4
		4D3704	WASHER	8
	12	3B4506	LOCKWASHER	2
C	13	1A2029	BOLT	4
		3L9689	WASHER	4
		GMG02466	FORM (Installation Instructions for 1V6179 Plate Assem.)	1

C INDICATES CHANGE

216999

1V2767 CRANKCASE GUARD GROUP

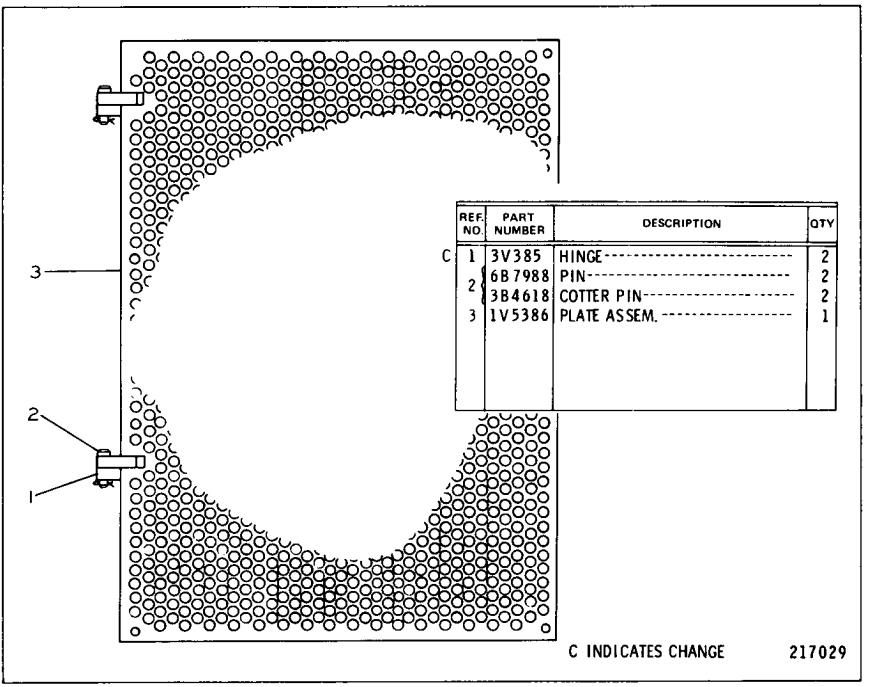

REF. NO.	PART NUMBER	DESCRIPTION	QTY
C 1	3V385	HINGE	2
2	6B7988	PIN	2
	3B4618	COTTER PIN	2
3	1V5386	PLATE ASSEM.	1

1V5387 RADIATOR GUARD GROUP—Hinged
AN ATTACHMENT

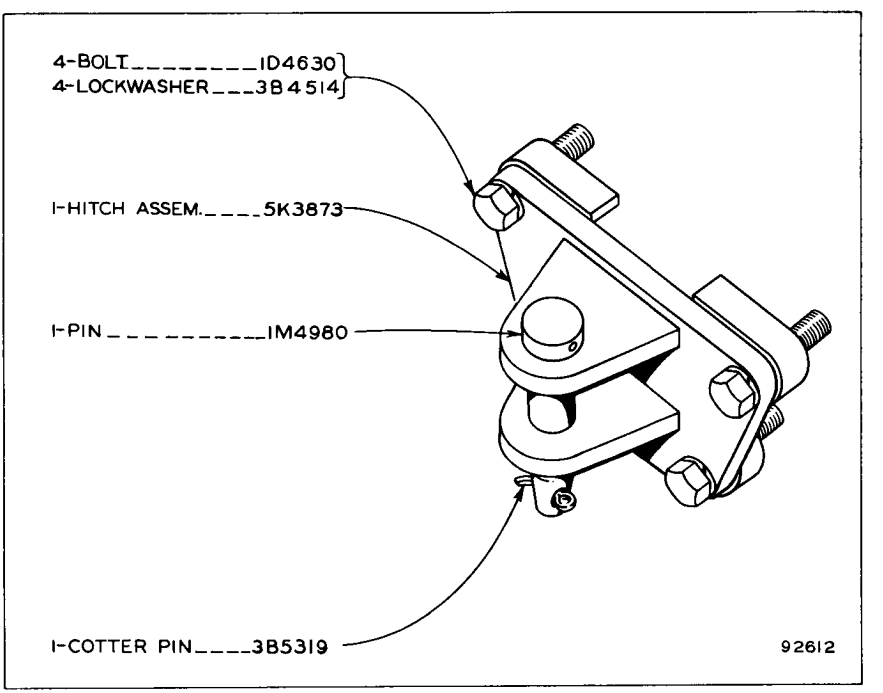

5K1282 HITCH GROUP

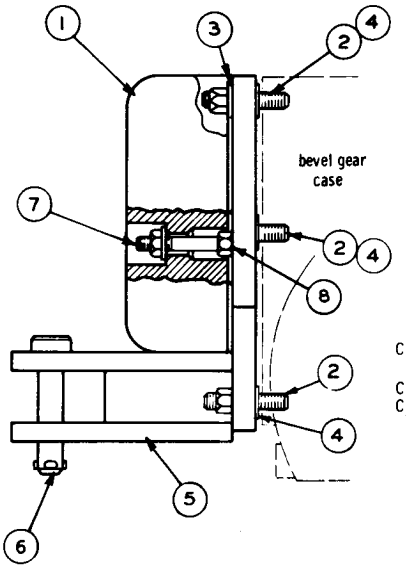

REF. NO.	PART NUMBER	DESCRIPTION	QTY
1	6K6660	COUNTERWEIGHT	1
2	6K2039	STUD	8
	6K545	NUT	8
3	2D4854	WASHER	2
4	4B4284	WASHER	8
5	6K7437	SUPPORT ASSEM.	1
6	1M4980	PIN	1
	3B5319	COTTER PIN	1
C	9K5627	STUD	2
7	2K337	NUT	2
C	5B639	WASHER	2
C 8	1D5119	NUT	2

C INDICATES CHANGE 217027

6K7709 COUNTERWEIGHT GROUP—476 kg (1050 Pounds)
AN ATTACHMENT

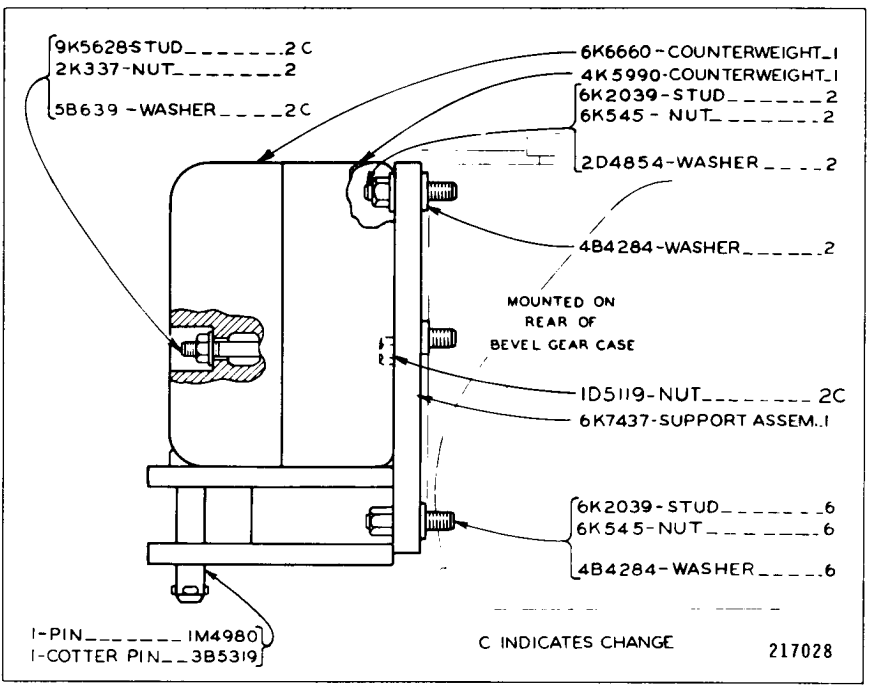

6K7710 COUNTERWEIGHT GROUP—782 kg (1725 Pounds)
CANNOT BE USED WITH CANOPY OR CAB
AN ATTACHMENT

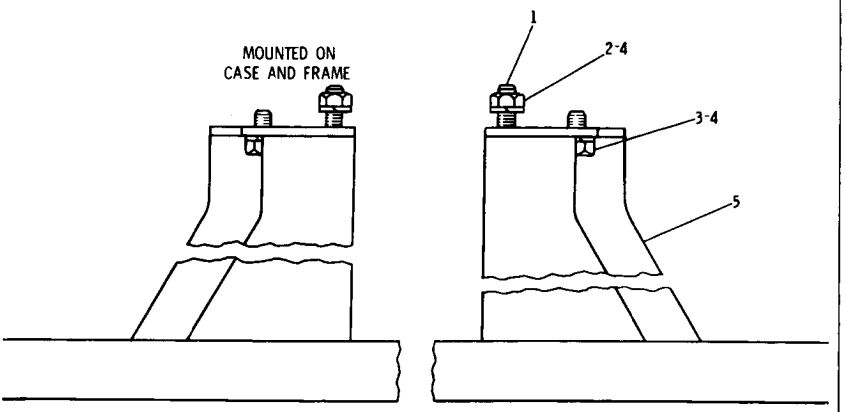

REF. NO.	PART NUMBER	DESCRIPTION	QTY
1	1D4625	BOLT	2
2	1B4332	NUT	2
3	2H3757	BOLT	4
4	3B4514	LOCKWASHER	6
5	6K9709	BUMPER ASSEM.	1

217025

4V2186 REAR BUMPER GROUP
FOR USE WITHOUT RIPPER MOUNTING
AN ATTACHMENT

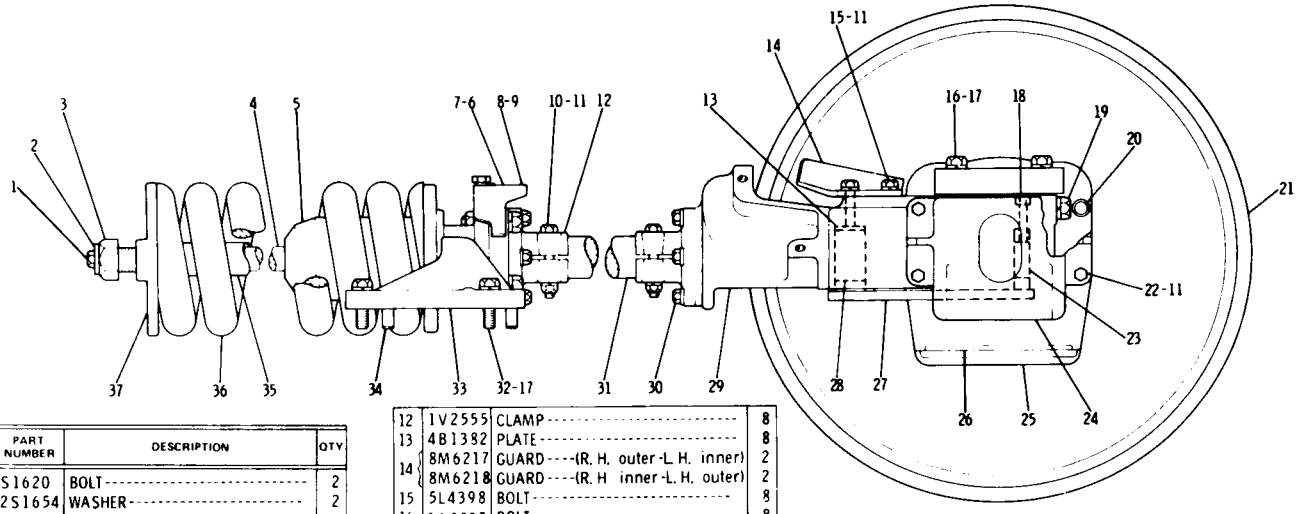

REF NO	PART NUMBER	DESCRIPTION	QTY
1	S1620	BOLT	2
2	2S1654	WASHER	2
3	9M3770	NUT	2
4	1V7793	BOLT	2
5	7M1859	PILOT ASSEM.	2
6	2V4198	PLATE ASSEM. (R. H.) (Includes)	1
C	5P9446	PLATE (warning)	1
7	7B3028	SCREW	4
8	2V4197	PLATE ASSEM. (L. H.) (Includes)	1
C	5P9446	PLATE (warning)	1
9	7B3028	SCREW	4
10	1B2886	BOLT	8
	1D4719	NUT	8
11	3B4508	LOCKWASHER	32
12	1V2555	CLAMP	8
13	4B1382	PLATE	8
14	8M6217	GUARD (R. H. outer-L. H. inner)	2
	8M6218	GUARD (R. H inner-L. H. outer)	2
15	5L4398	BOLT	8
16	1A8537	BOLT	8
17	3B4510	LOCKWASHER	16
18	1D4556	BOLT	4
	3B4507	LOCKWASHER	4
19	6F4991	BOLT	8
	3B4514	LOCKWASHER	8
20	9M3486	SPACER	8
21	5M5009	IDLER ASSEM.	2
22	8S9089	BOLT	16
23	5M5000	LOCK	4
24	7M1776	PLATE	4
25	7M1849	COLLAR ASSEM. (Each Includes)	4
26	7M1850	STRIP	1
27	7M1845	PLATE ASSEM.	4
28	4F5004	SPRING ASSEM.	8
C 29	3V62	YOKE	2
30	S1585	BOLT	16
	2M849	WASHER	16
31	1V7790	ROD	2
32	S1625	BOLT	8
33	7M1861	STOP (R. H. outer-L. H. inner)	2
	7M1862	STOP (R. H. inner-L. H. outer)	2
34	1F5151	DOWEL	8
35	5K6261	SLEEVE	2
36	1V7785	SPRING	2
37	7M1856	PILOT	2

NOTE: QUANTITIES SHOWN ARE THOSE REQUIRED FOR BOTH R. H. AND L. H. IDLERS

C INDICATES CHANGE

217009

1V8050 FRONT IDLER GROUP—Part 1
Serial No. 13X1 to 13X1946 inclusive

1V8050 FRONT IDLER GROUP—Part 2
Serial No. 13X1 to 13X1946 inclusive

NOTE: QUANTITIES SHOWN ARE THOSE REQUIRED FOR BOTH R. H. AND L. H. IDLERS.

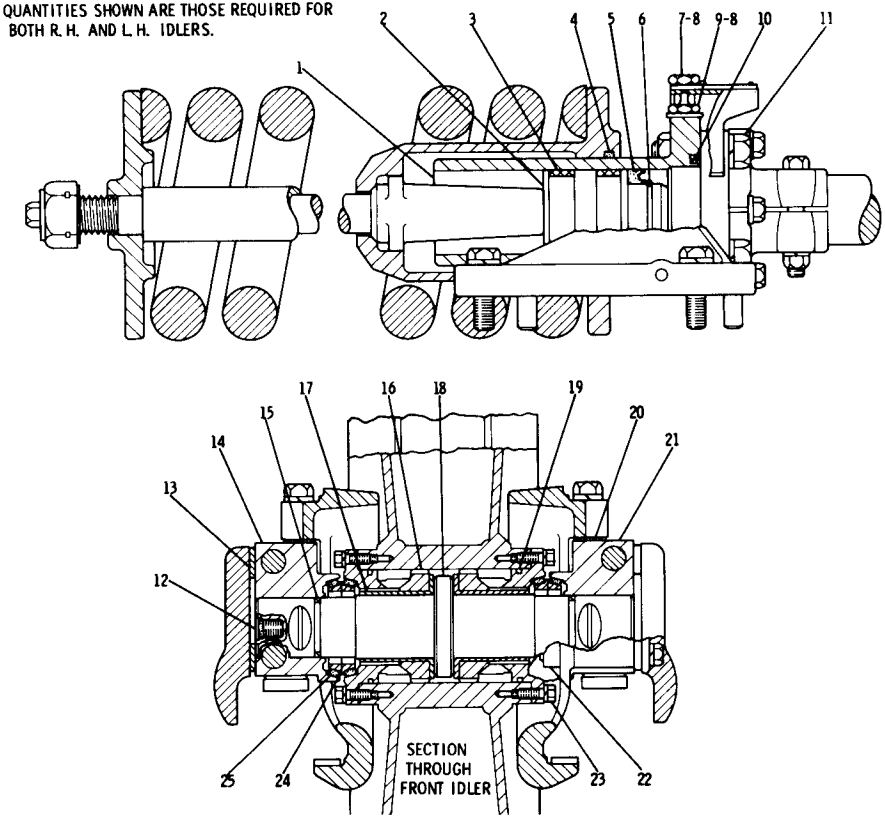

REF. NO.	PART NUMBER	DESCRIPTION	QTY
1	1S5331	CYLINDER	2
2	8H7980	PISTON	2
3	6H6269	RING	4
4	5F149	SEAL	2
5	4S9006	SEAL	2
6	1H8397	RING	2
7	2S5926	VALVE	2
8	5M6708	WASHER	4
9	2S5925	VALVE	2
10	5M2998	RING	2
	5M2997	SEAL	2
11	1A8537	BOLT	8
	1D4720	NUT	8
	3B4510	LOCKWASHER	8
12	2P347	PLUG	2
	1S8947	SEAL	2
13	7M1848	SHIM	24
14	5M5003	BEARING	2
15	5F8000	SEAL	4
16	3P1900	BUSHING ASSEM. (Each Includes)	4
	9B2289	PIN	2
17	8S5349	BEARING	2
18	5M5005	SHAFT	2
19	1H6227	SEAL	4
20	7M1857	SHIM	12
21	5M5004	BEARING	2
22	9M6692	STRIP	8
23	S1588	BOLT	24
	3B4506	LOCKWASHER	24
24	1M8747	SEAL GROUP (Each Includes)	4
25	8H2262	RING	2

207850

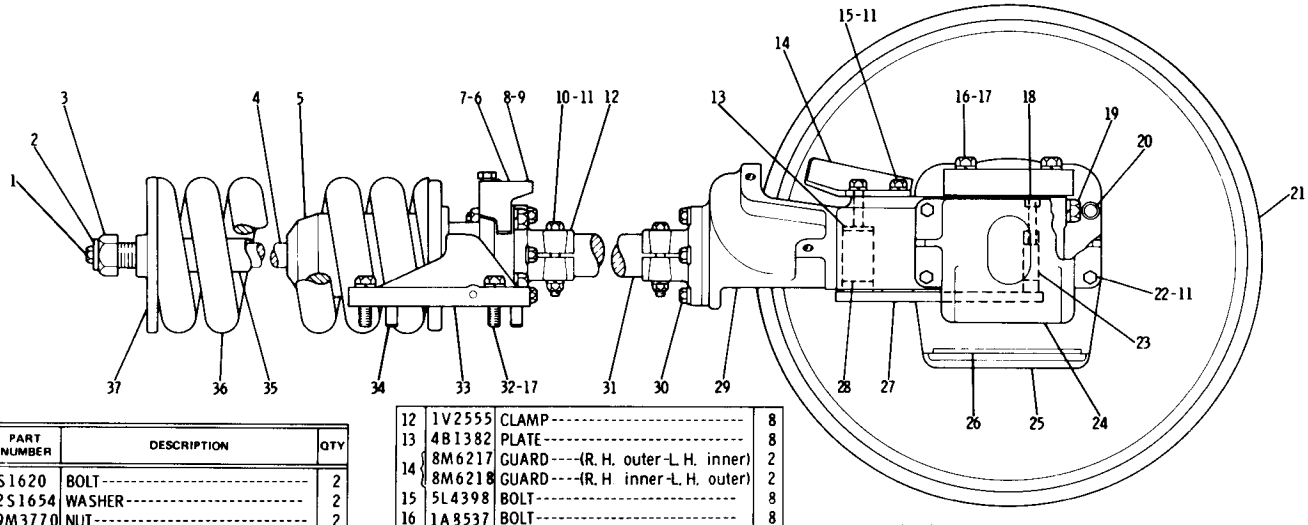

REF. NO.	PART NUMBER	DESCRIPTION	QTY
1	S1620	BOLT	2
2	2S1654	WASHER	2
3	9M3770	NUT	2
4	1V7793	BOLT	2
5	7M1859	PILOT ASSEM.	2
6	2V4198	PLATE ASSEM. -------(R. H.)	1
		(Includes)	
	5P9446	PLATE---------(warning)	1
7	7B3028	SCREW	4
8	2V4197	PLATE ASSEM. --------(L. H.)	1
		(Includes)	
	5P9446	PLATE--------(warning)	1
9	7B3028	SCREW	4
10	1B2886	BOLT	8
	1D4719	NUT	8
11	3B4508	LOCKWASHER	32
12	1V2555	CLAMP	8
13	4B1382	PLATE	8
14	8M6217	GUARD----(R. H. outer-L. H. inner)	2
	8M6218	GUARD----(R. H. inner-L. H. outer)	2
15	5L4398	BOLT	8
16	1A8537	BOLT	8
17	3B4510	LOCKWASHER	16
18	1D4556	BOLT	4
	3B4507	LOCKWASHER	4
19	6F4991	BOLT	8
	3B4514	LOCKWASHER	8
20	9M3486	SPACER	8
C 21	4V7612	IDLER ASSEM.	2
22	8S9089	BOLT	16
23	5M5000	LOCK	4
24	7M1776	PLATE	4
C 25	5V1675	COLLAR ASSEM.	4
		(Each Includes)	
C 26	5V1678	BAR	1
C 27	5V1669	PLATE ASSEM.	4
28	4F5004	SPRING ASSEM.	8
C 29	5V1671	YOKE	2
30	S1585	BOLT	16
	2M849	WASHER	16
C 31	5V2760	ROD	2
32	S1625	BOLT	8
33	7M1861	STOP-----(R. H. outer-L. H. inner)	2
	7M1862	STOP-----(R. H. inner-L. H. outer)	2
34	1F5151	DOWEL	8
C 35	5V1639	SLEEVE	2
36	1V7785	SPRING	2
37	7M1856	PILOT	2

NOTE: QUANTITIES SHOWN ARE THOSE REQUIRED FOR BOTH R. H. AND L. H. IDLERS

C INDICATES CHANGE

173134

1V8050 FRONT IDLER GROUP—Part 1
Serial No. 13X1947—Up

1V8050 FRONT IDLER GROUP—Part 2
Serial No. 13X1947—Up

NOTE: QUANTITIES SHOWN ARE THOSE REQUIRED FOR BOTH R. H. AND L. H. IDLERS.

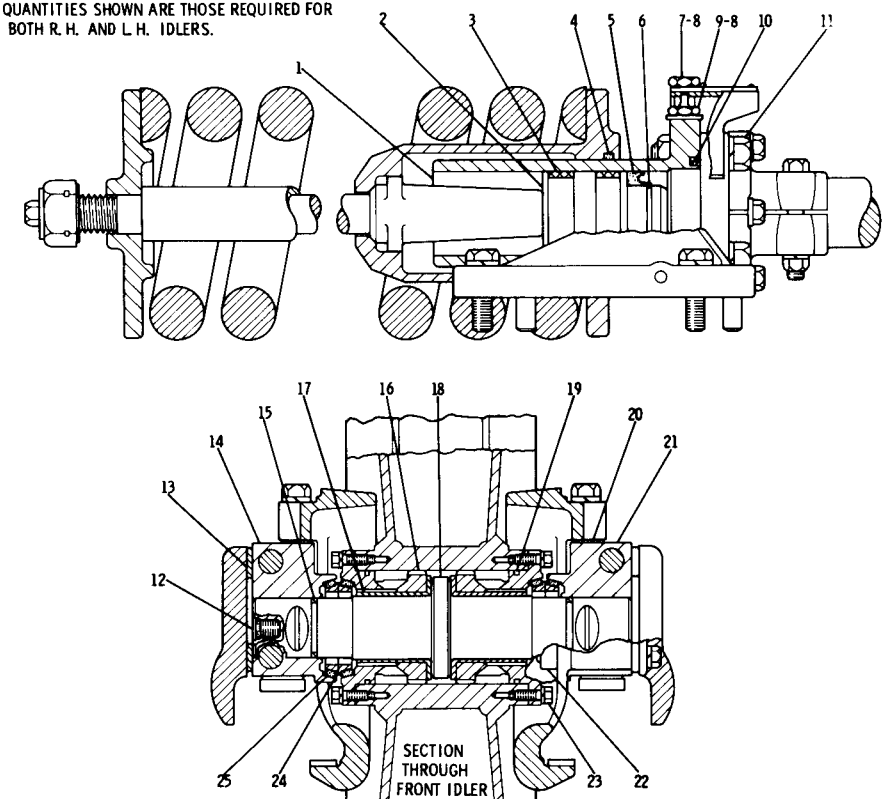

REF. NO.	PART NUMBER	DESCRIPTION	QTY
1	1S5331	CYLINDER	2
2	8H7980	PISTON	2
3	6H6269	RING	4
4	5F149	SEAL	2
5	4S9006	SEAL	2
6	1H8397	RING	2
7	2S5926	VALVE	2
8	5M6708	WASHER	4
9	2S5925	VALVE	2
10	5M2998	RING	2
	5M2997	SEAL	2
11	1A8537	BOLT	8
	1D4720	NUT	8
	3B4510	LOCKWASHER	8
12	2P347	PLUG	2
	1S8947	SEAL	2
13	7M1848	SHIM	24
14	5M5003	BEARING	2
15	5F8000	SEAL	4
16	3P1900	BUSHING ASSEM. (Each Includes)	4
	9B2289	PIN	2
17	8S5349	BEARING	2
18	5M5005	SHAFT	2
19	1H6227	SEAL	4
20	7M1857	SHIM	12
21	5M5004	BEARING	2
22	9M6692	STRIP	8
23	S1588	BOLT	24
	3B4506	LOCKWASHER	24
24	1M8747	SEAL GROUP (Each Includes)	4
25	8H2262	RING	2

207850

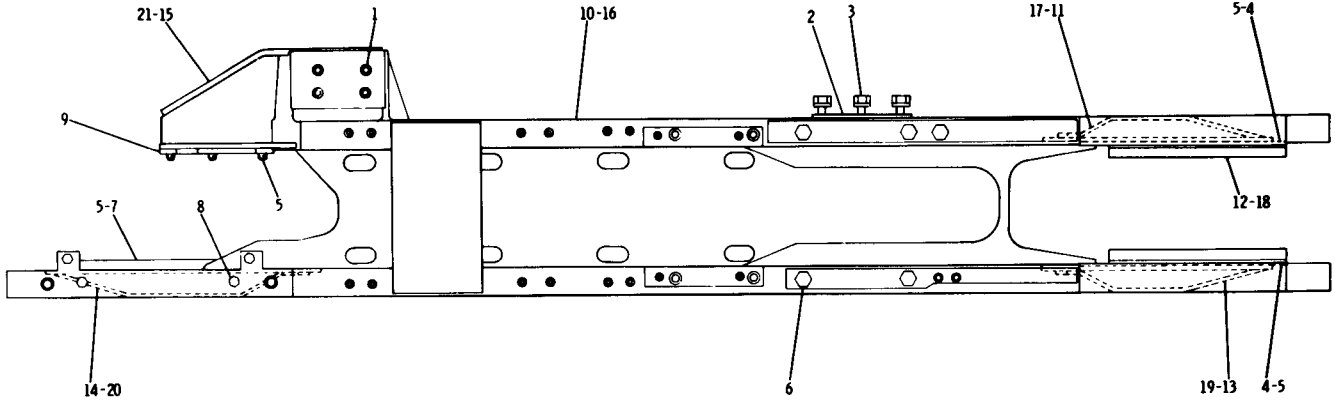

REF. NO	PART NUMBER	DESCRIPTION	QTY
1	1D4630	BOLT	8
	6K6444	SPACER	8
2	1V8191	SHIM	6
3	9F9522	BOLT	6
	9H1031	WASHER	6
4	7K3703	STRIP	4
5	5K8454	BOLT	32
6	1D4626	BOLT	10
	6K5040	WASHER	10
7	7K3704	STRIP	2
8	1A1135	BOLT	8
	3B4510	LOCKWASHER	8
9	9K461	STRIP	2

NOTE: QUANTITIES SHOWN ARE THOSE REQUIRED FOR BOTH R.H. & L.H. SIDES

C	10	4V195	FRAME ASSEM. -----(R. H.)------ (Includes)	1
	11	1V8176	GUARD ASSEM. --(front-L. H.)-- (Includes)	1
		2M2933	NUT	2
	12	8M6689	GUIDE ASSEM. (Includes)	2
		7M728	STRIP	1
	13	1V8173	GUARD ASSEM. --(front-R. H.)-- (Includes)	1
		2M2933	NUT	2
	14	1V8187	GUARD ASSEM. --(rear-R. H.)-- (Includes)	1
		2M2933	NUT	2
	15	1V8162	GUARD ASSEM. --(rear-L. H.)- (Includes)	1
		2M2933	NUT	2

C	16	4V196	FRAME ASSEM. -----(L. H.)------ (Includes)	1
	17	1V8173	GUARD ASSEM. ---(front-L. H.)- (Includes)	1
		2M2933	NUT	2
	18	8M6689	GUIDE ASSEM. (Includes)	2
		7M728	STRIP	1
	19	1V8176	GUARD ASSEM. --(front-R. H.)- (Includes)	1
		2M2933	NUT	2
	20	1V8192	GUARD ASSEM. --(rear-R. H.)-- (Includes)	1
		2M2933	NUT	2
	21	1V8202	GUARD ASSEM. --(rear-L. H.)-- (Includes)	1
		2M2933	NUT	2

C INDICATES CHANGE 217010

1V8053 TRACK ROLLER FRAME GROUP

2V9803 TRACK ROLLER FRAME GROUP

Part of 4V2193 Wide Gauge Track Loader Arrangement listed on Page 166
Note: Quantities shown are those required for both R.H. and L.H. Sides
AN ATTACHMENT

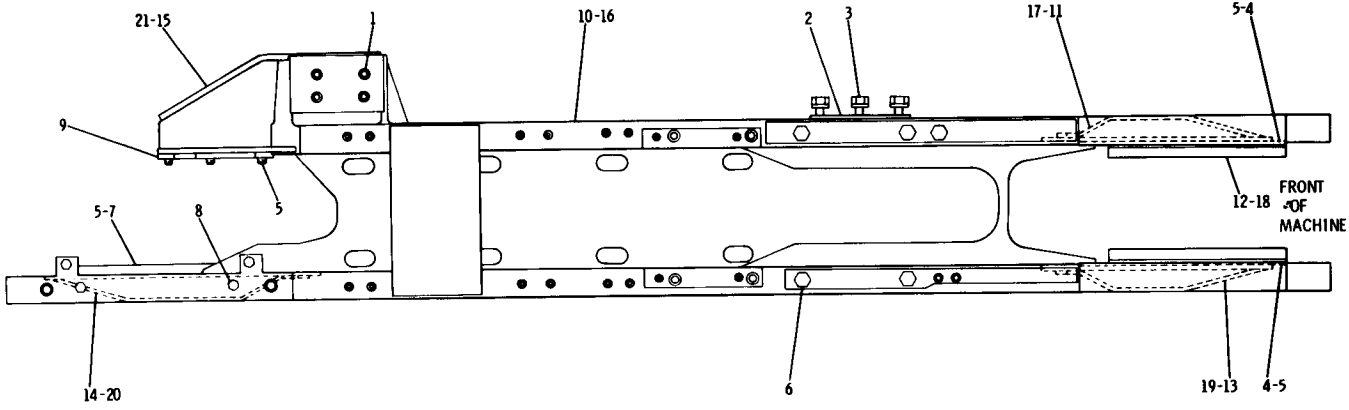

REF NO	PART NUMBER	DESCRIPTION	QTY
1	1D4630	BOLT	8
	6K6444	SPACER	8
2	1V8191	SHIM	6
3	9F9522	BOLT	6
	9H1031	WASHER	6
4	7K3703	STRIP	4
5	5K8454	BOLT	32
6	1D4626	BOLT	10
	6K5040	WASHER	10
7	7K3704	STRIP	2
8	1A1135	BOLT	8
	3B4510	LOCKWASHER	8
9	9K461	STRIP	2

	REF NO	PART NUMBER	DESCRIPTION	QTY
C	10	4V194	FRAME ASSEM. -----(R. H.)------ (Includes)	1
	11	1V8176	GUARD ASSEM. -(front-inner)-- (Includes)	1
		2M2933	NUT	2
	12	8M6689	GUIDE ASSEM. (Each Includes)	2
		7M728	STRIP	1
	13	1V8173	GUARD ASSEM. - (front-outer)-- (Includes)	1
		2M2933	NUT	2
	14	1V8187	GUARD ASSEM. -- (rear-outer) (Includes)	1
		2M2933	NUT	2
	15	3V693	GUARD ASSEM. - (rear-inner) (Includes)	1
		2M2933	NUT	2

	REF NO	PART NUMBER	DESCRIPTION	QTY
C	16	4V193	FRAME ASSEM. -----(L. H.)------ (Includes)	1
	17	1V8173	GUARD ASSEM. -- (front-inner) (Includes)	1
		2M2933	NUT	2
	18	8M6689	GUIDE ASSEM. (Each Includes)	2
		7M728	STRIP	1
	19	1V8176	GUARD ASSEM. -- (front-outer) (Includes)	1
		2M2933	NUT	2
	20	1V8202	GUARD ASSEM. -- (rear-outer)- (Includes)	1
		2M2933	NUT	2
	21	3V694	GUARD ASSEM. -(rear-inner)-- (Includes)	1
		2M2933	NUT	2

C INDICATES CHANGE

217011

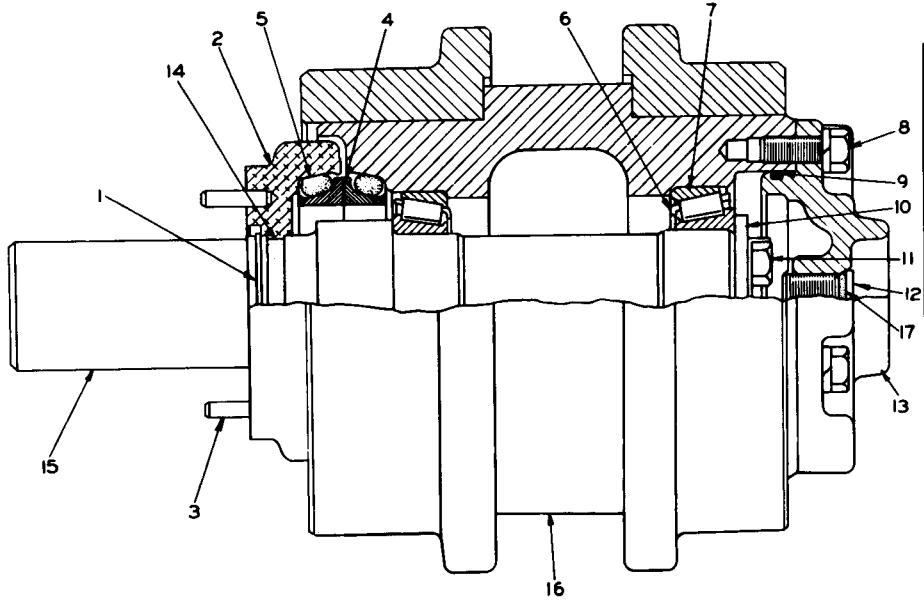

REF. NO.	PART NUMBER	DESCRIPTION	QTY
1	1M7914	RING	1
2	9S3567	COLLAR ASSEM.	1
3	1M4291	DOWEL	2
4	1M8747	SEAL GROUP	1
5	8H2262	RING	2
6	9S3582	CONE	2
7	9S3581	CUP	2
8	S1594	BOLT	3
	3B4506	LOCKWASHER	3
9	2H6338	SEAL	1
10	9S3568	PLATE	1
11	T703	BOLT	2
	T329	LOCK	1
12	2P347	PLUG	1
13	5M2043	COVER	1
14	1H9696	SEAL	1
15	9S3565	SHAFT	1
16	1V9509	ROLLER ASSEM.	1
17	1S8947	SEAL	1

1V8055 TRACK CARRIER ROLLER GROUP—2 Required

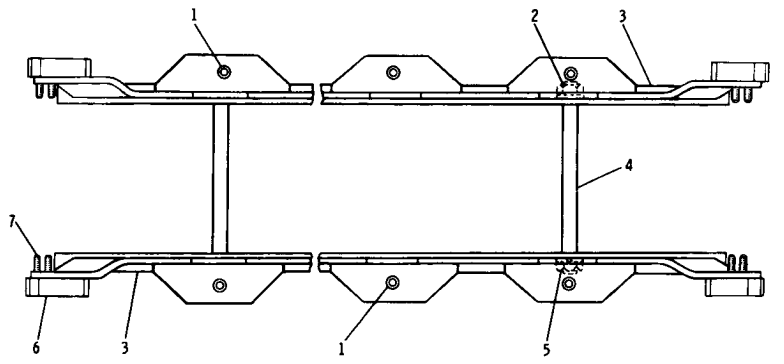

REF. NO.	PART NUMBER	DESCRIPTION	QTY
1	1D4608	BOLT	12
	2S115	WASHER	12
	3P4133	SPACER	12
2	7M2531	ROD	6
3	9S8253	GUARD ASSEM.	4
4	7M2530	TUBE	6
5	1B4206	NUT	12
	3B4510	LOCKWASHER	12
6	2M4668	RETAINER	8
7	5K7143	BOLT	16
	2M849	WASHER	16

208014

1V9334 TRACK ROLLER GUARD GROUP
Note: Quantities shown are those required for both R.H. and L.H. Sides
AN ATTACHMENT

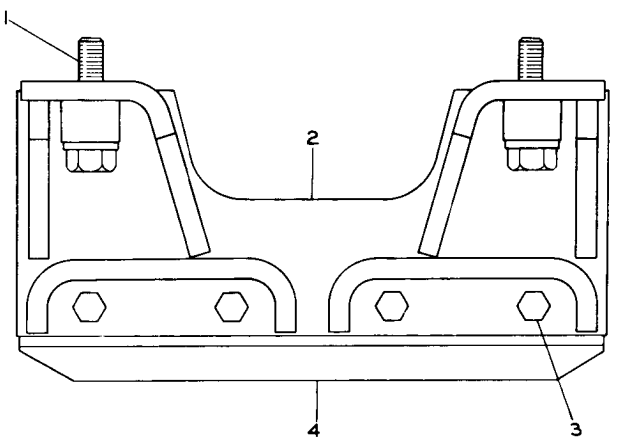

	REF. NO.	PART NUMBER	DESCRIPTION	QTY
C	1	1D4608	BOLT	8
		2S115	WASHER	8
C		3P4133	SPACER	8
	2	1P963	GUARD ASSEM.	2
	3	6H1717	BOLT	16
		3B4508	LOCKWASHER	16
C	4	3V1133	STRIP	4

C INDICATES CHANGE

212926

1P964 TRACK GUIDING GUARD GROUP—Center
Note: Quantities shown are those required for both R.H. and L.H. Sides
AN ATTACHMENT

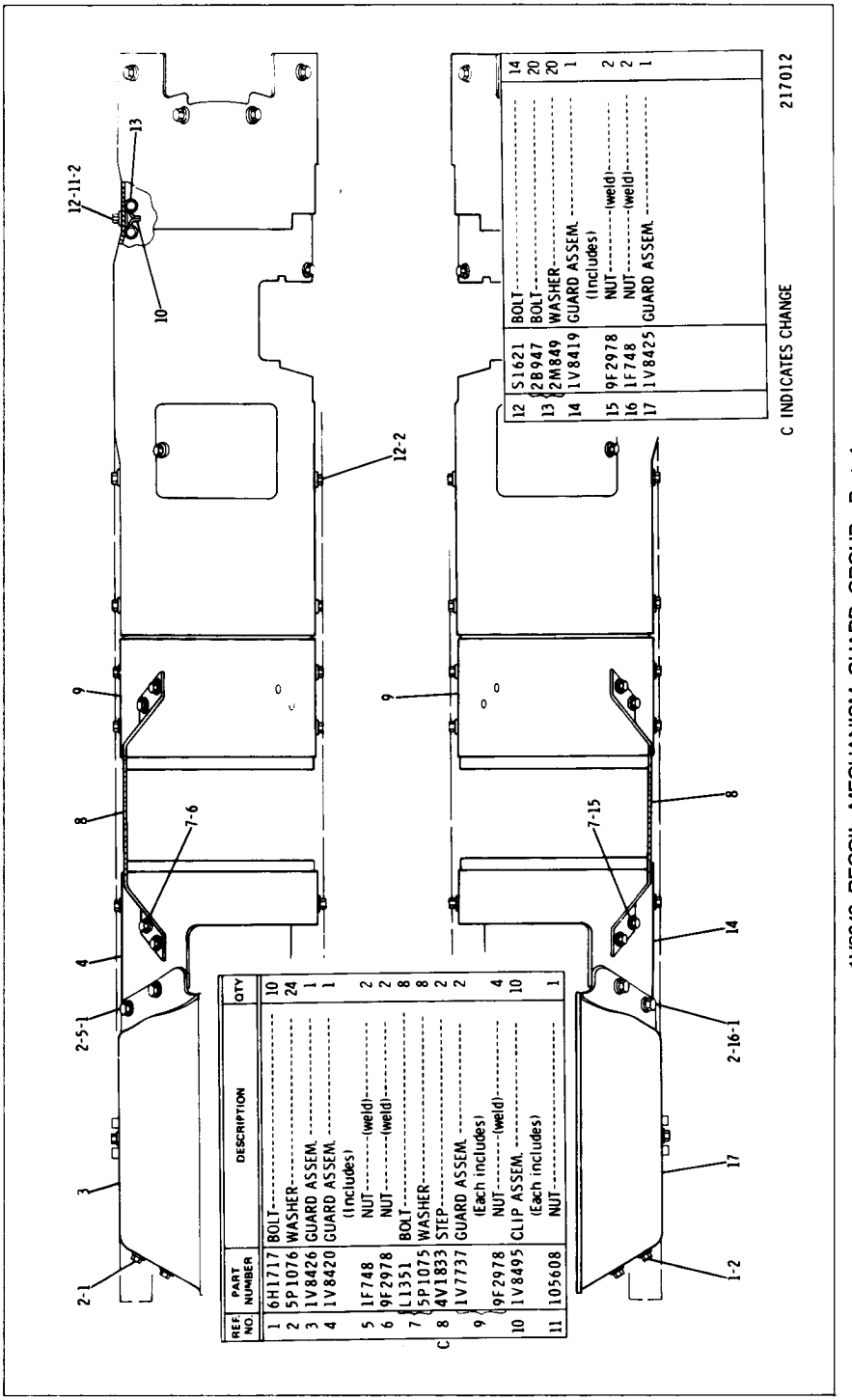

REF NO.	PART NUMBER	DESCRIPTION	QTY
1	6H1717	BOLT	10
2	5P1076	WASHER	24
3	1V8426	GUARD ASSEM.	1
4	1V8420	GUARD ASSEM. (Includes)	1
5	1F748	NUT (weld)	2
6	9F2978	NUT (weld)	2
7	1L1351	BOLT	8
	5P1075	WASHER	8
C 8	4V1833	STEP	2
	1V7737	GUARD ASSEM. (Each includes)	2
9	9F2978	NUT (weld)	4
10	1V8495	CLIP ASSEM. (Each includes)	10
11	105608	NUT	1

1V8049 RECOIL MECHANISM GUARD GROUP—Part 1

1V8049 RECOIL MECHANISM GUARD GROUP—Part 2

	REF. NO.	PART NUMBER	DESCRIPTION	QTY
	1	2V3636	GUARD ASSEM. -----(L. H.)------- (Includes)	1
	2	2V3359	COVER ASSEM. ---------- (Includes)	1
C	3	5P9441	PLATE------(warning)------	1
		7B3028	SCREW----------	4
		3B1915	BOLT----------	2
	4	2K4973	LOCKNUT----------	2
		4B4278	WASHER----------	2
	5	S1621	BOLT----------	10
	6	5P1076	WASHER----------	18
	7	1V7728	GUARD----------	1
	8	6H1717	BOLT----------	8
	9	2B947	BOLT----------	8
	10	3B4508	LOCKWASHER----------	10
	11	1V7723	BAR----------	4
	12	1V7726	ANGLE ASSEM. ---------- (Each includes)	2
		1F748	NUT---------(weld)----------	2
	13	S1585	BOLT----------	2
		4B4280	WASHER----------	2
	14	2V3635	GUARD ASSEM. -----(R. H.)------ (Includes)	1
	15	2V3359	COVER ASSEM. ---------- (Includes)	1
C	16	5P9441	PLATE-------(warning)----	1
		7B3028	SCREW----------	4
	17	1V7727	GUARD----------	1

C INDICATES CHANGE

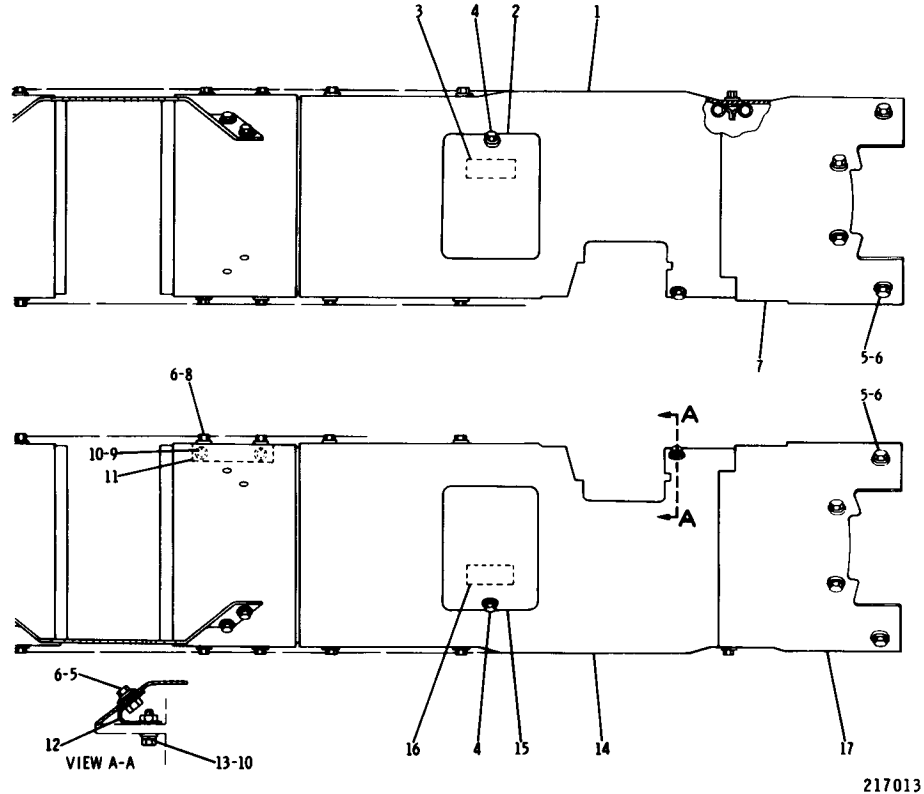

217013

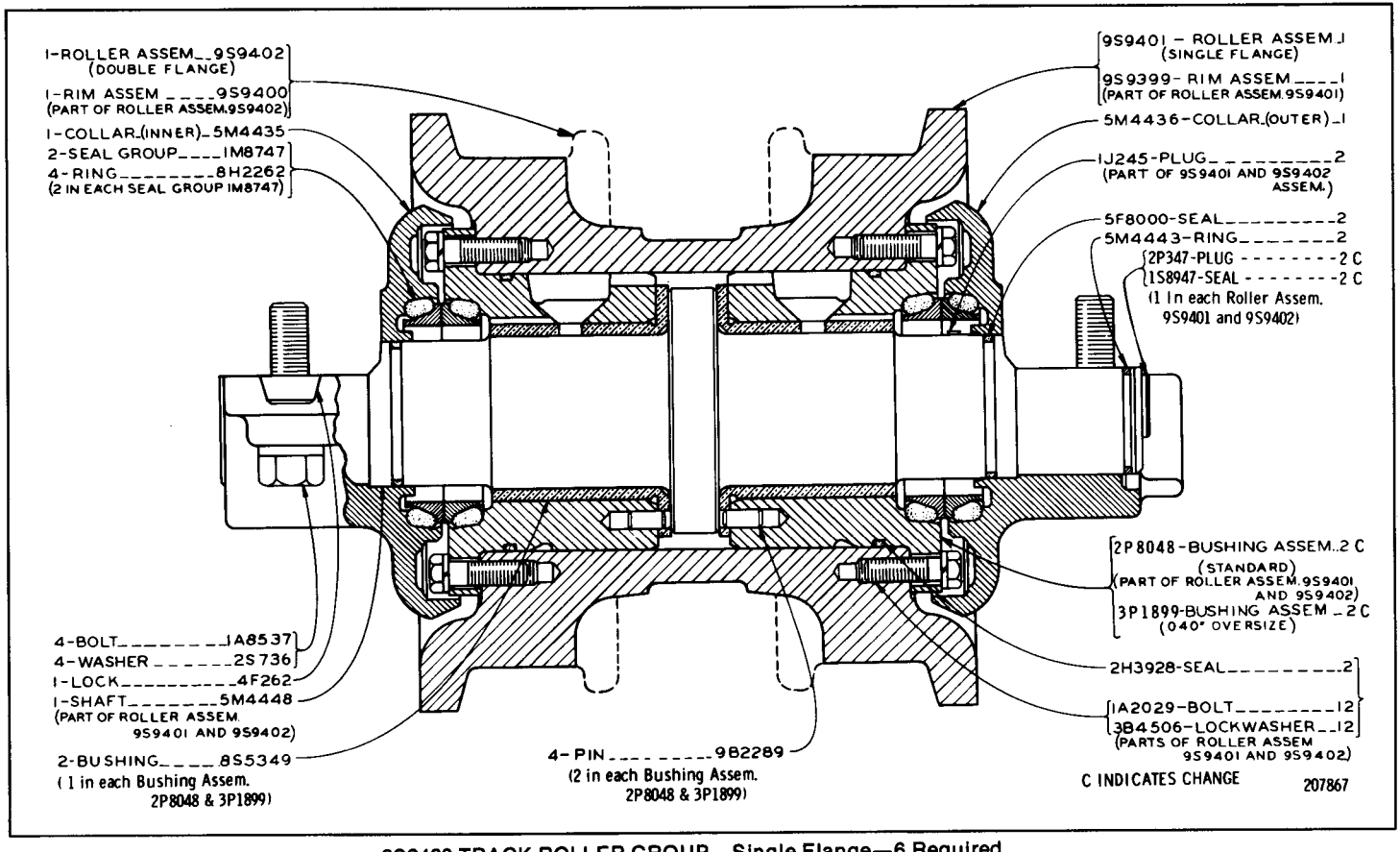

9S9403 TRACK ROLLER GROUP—Single Flange—6 Required
9S9404 TRACK ROLLER GROUP—Double Flange—6 Required
Serial No. 13X1 to 13X3015 Inclusive

9S8098 TRACK ROLLER GROUP—Double Flange—6 Required
Serial No. 13X3016—Up

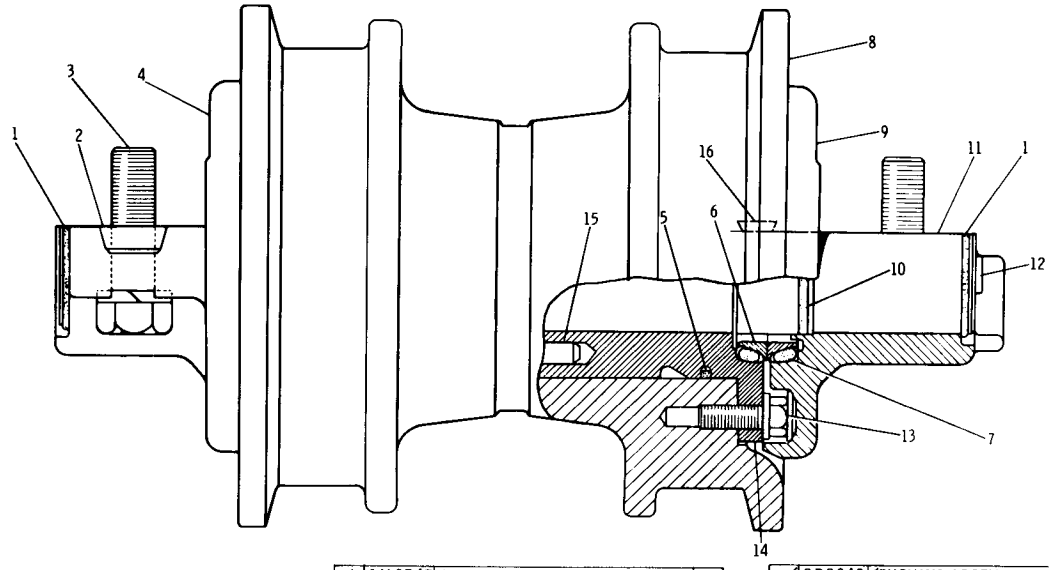

REF. NO.	PART NUMBER	DESCRIPTION	QTY.
1	5M4443	RING	2
2	4F262	LOCK	1
3	1A8537	BOLT	4
	2S736	WASHER	4
4	5M4435	COLLAR--------(inner)	1
5	2H3928	SEAL	2
6	1M8747	SEAL GROUP (Each Includes)	2
7	8H2262	RING	2
8	9G8032	RIM ASSEM.	1
9	5M4436	COLLAR--------(outer)	1
10	5F8000	SEAL	2
11	5M4448	SHAFT	1
12	2P347	PLUG	1
	1S8947	SEAL	1
13	2P3201	BOLT	12
14	2P8048	BUSHING ASSEM. (Standard)	2
	3P1899	BUSHING ASSEM. 1.02 mm (.04 in.) oversize (Each Includes)	2
15	9B2289	PIN	2
16	1J245	PLUG	2

232771

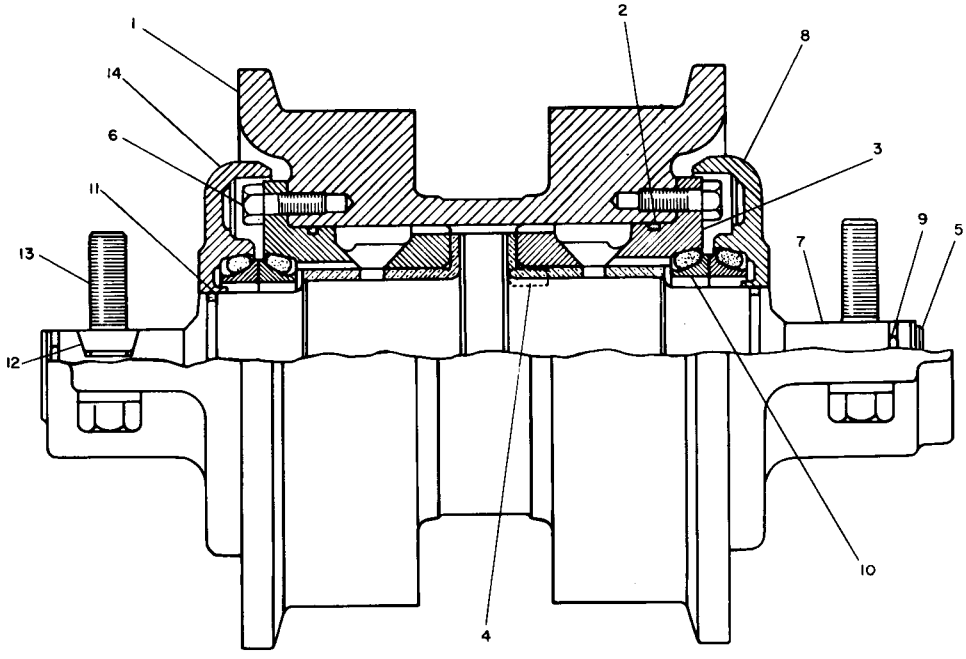

REF. NO.	PART NUMBER	DESCRIPTION	QTY.
1	9G8027	RIM ASSEM.	1
2	2H3928	SEAL	2
▲ 3	2P8048	BUSHING ASSEM. -(standard)	2
		-OR-	
	3P1899	BUSHING ASSEM. 1, 02 mm(. 04 in.) Oversize (Each Includes)	2
	8S5346	BUSHING	1
4	9B2289	PIN	2
5	2P347	PLUG	1
	1S8947	SEAL	1
6	2P3201	BOLT	12
7	5M4448	SHAFT	1
8	5M4436	COLLAR-(inner)	1
9	5M4443	RING	2
10	1M8747	SEAL GROUP (Each Includes)	2
	8H2262	RING	2
11	5F8000	SEAL	2
12	4F262	LOCK	1
13	1A8537	BOLT	4
	2S736	WASHER	4
14	5M4435	COLLAR-(outer)	1

▲ NOT PART OF 9G8099 ROLLER GROUP

232772

9G8099 TRACK ROLLER GROUP—Single Flange—6 Required
Serial No. 13X3016—Up

1V8054 TRACK GROUP—432 mm (17 Inch) Double Grouser Shoe—2 Required

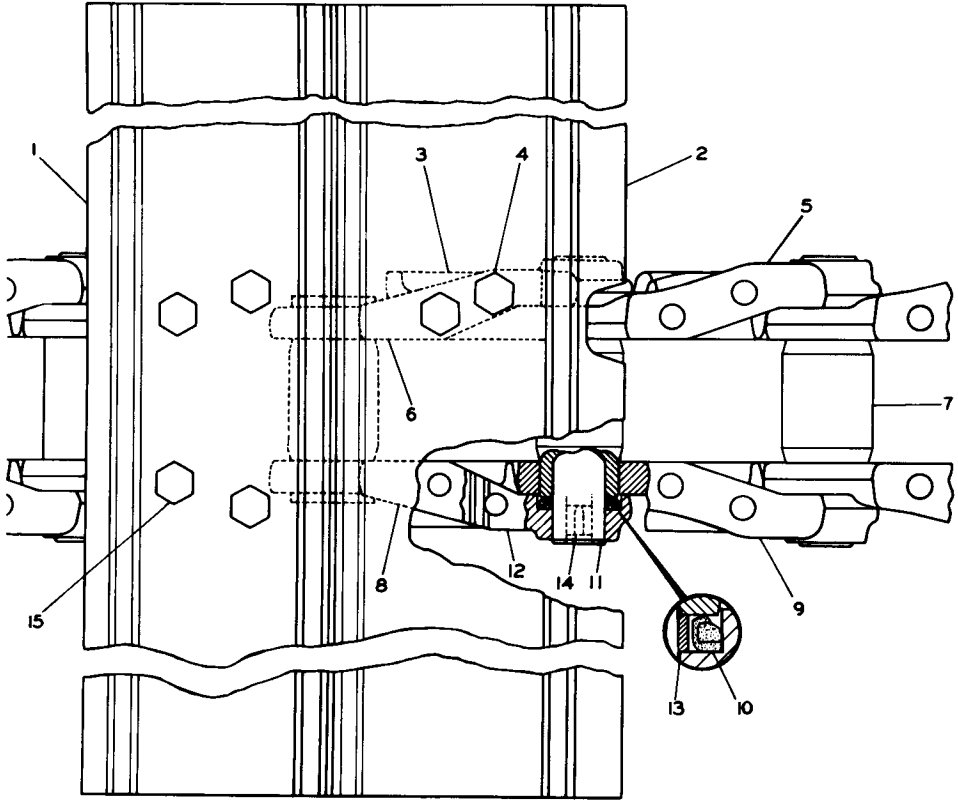

REF. NO.	PART NUMBER	DESCRIPTION	QTY
1	1V9470	SHOE	35
2	1V9469	SHOE—(master)	1
3	3P1118	LINK ASSEM. (Includes)	1
	3P1115	LINK—(master) (L. H. -pin end)	1
4	9S1838	BOLT	4
5	3P1113	LINK—(L. H.)	35
6	3P1117	LINK—(master) (L. H. -bushing end)	1
7	3P1109	BUSHING	36
8	3P1116	LINK—(master) (R. H. -bushing end)	1
9	3P1112	LINK—(R. H.)	35
10	3P1107	SEAL ASSEM.	72
11	3P1108	PIN	36
12	3P1114	LINK—(master) (R. H. -pin end)	1
13	3P1104	RING	72
14	3P1103	STOPPER	36
	3P3080	PLUG	36
15	1S1859	BOLT	140
	1S1860	NUT	140

213646

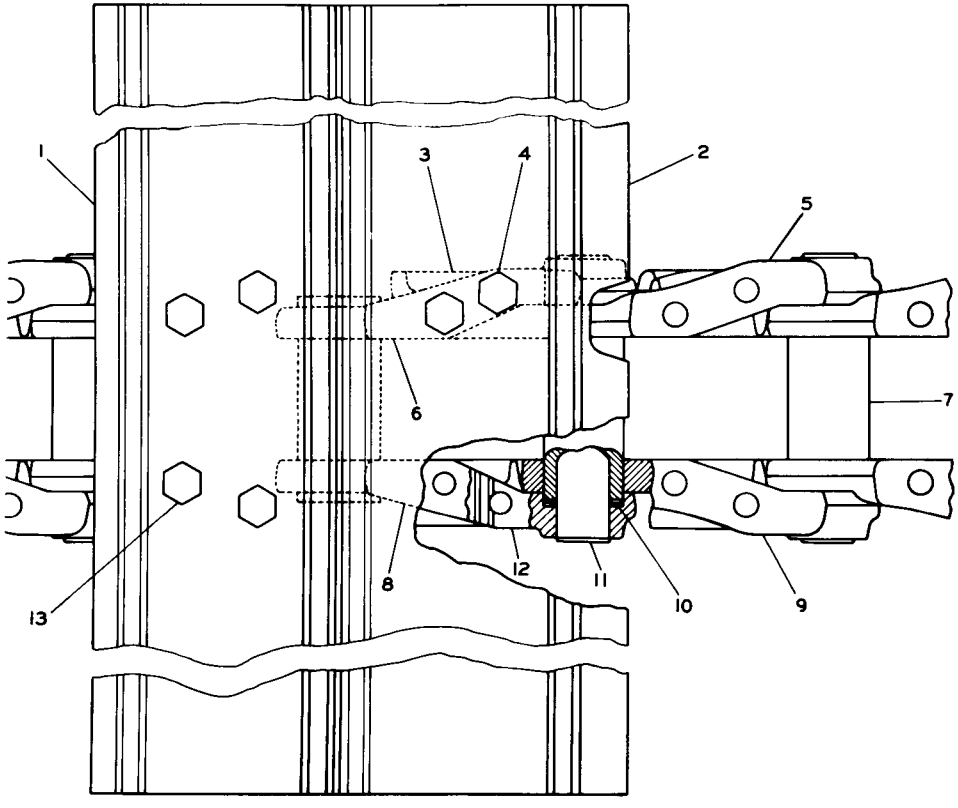

REF. NO.	PART NUMBER	DESCRIPTION	QTY
1	1V9470	SHOE	35
2	1V9469	SHOE (Master)	1
3	3P1088	LINK ASSEM.	1
	3P1115	HALF LINK (Master) (L.H. Pin End)	1
4	9S1838	BOLT	4
5	3P1113	LINK (L.H.)	35
6	3P1117	HALF LINK (Master) (L.H. Bushing End)	1
7	4M5991	BUSHING	36
8	3P1116	HALF LINK (Master) (R.H. Bushing End)	1
9	3P1112	LINK (R.H.)	35
10	8M7231	SEAL	144
11	4M5989	PIN	36
12	3P1114	HALF LINK (Master) (R.H. Pin End)	1
13	1S1859	BOLT	140
	1S1860	NUT	140

1V9497 TRACK GROUP—432 mm (17 Inch) Double Grouser Shoe—2 Required
AN ATTACHMENT

3V7828 TRACK GROUP—533 mm (21 Inch) Double Grouser Shoe—2 Required
Part of 4V2193 Wide Gauge Track Loader Arrangement listed on Page 166
AN ATTACHMENT

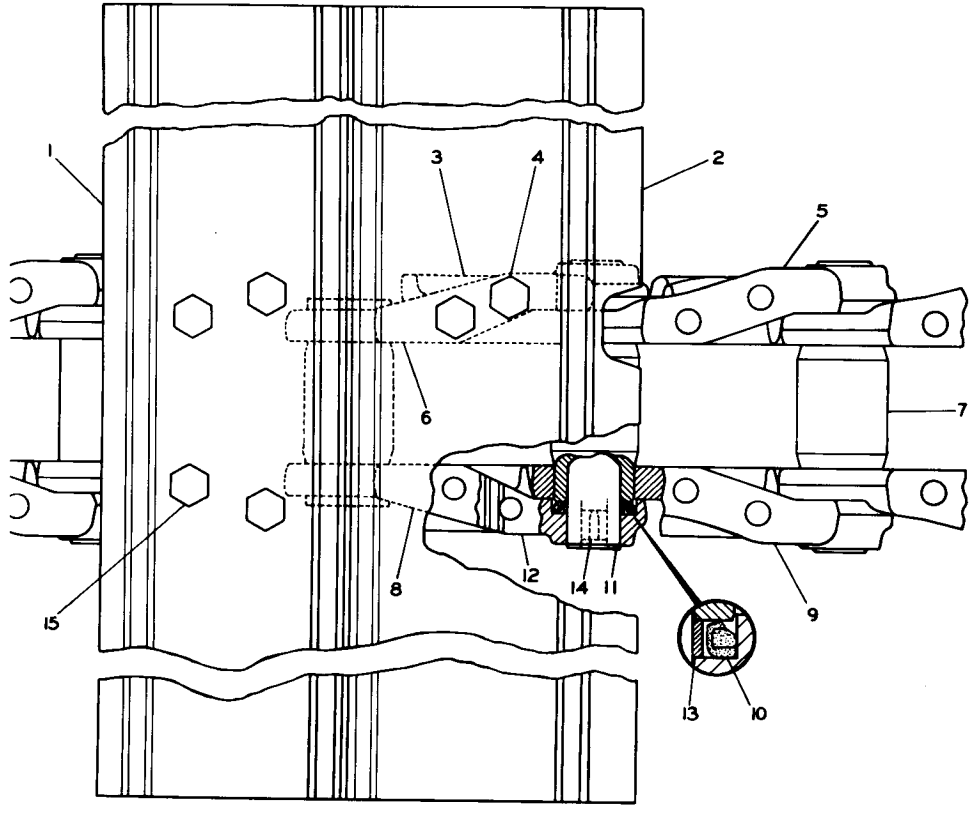

REF. NO.	PART NUMBER	DESCRIPTION	QTY
1	3V840	SHOE	35
2	3V841	SHOE—(master)	1
3	3P1118	LINK ASSEM. (Includes)	1
	3P1115	LINK—(master)—(L. H. -pin end)	1
4	9S1838	BOLT	4
5	3P1113	LINK—(L. H.)	35
6	3P1117	LINK—(master)—(L. H. -bushing end)	1
7	3P1109	BUSHING	36
8	3P1116	LINK—(master)—(R. H. -bushing end)	1
9	3P1112	LINK—(R. H.)	35
10	3P1107	SEAL ASSEM.	72
11	3P1108	PIN	36
12	3P1114	LINK—(master)—(R. H. -pin end)	1
13	3P1104	RING	72
14	3P1103	STOPPER	36
	3P3080	PLUG	36
15	1S1859	BOLT	140
	1S1860	NUT	140

		CONSISTS OF:	PAGE
1	2V7293	GENERAL PURPOSE BUCKET ASSEMBLY	212
	- OR -		
1	5V7258	GENERAL PURPOSE BUCKET ASSEMBLY	212A
1	2V9803	TRACK ROLLER FRAME GROUP	157
1	3V1091	FINAL DRIVE GROUP	130
1	3V7828	TRACK GROUP	165
1	4V2466	LOADER FRAME GROUP	141

ALL OTHER CONSISTS ARE THE SAME AS USED ON THE STANDARD MACHINES.

4V2193 WIDE GAUGE TRACK LOADER ARRANGEMENT—1829 mm (72 Inch) FOR USE IN LOW GROUND PRESSURE APPLICATIONS. AN ATTACHMENT

		CONSISTS OF:	PAGE
1	8J5804	TANK AND VALVE GROUP	172
1	4V2189	FRONT HAND CONTROL GROUP	189
1	7V3675	FRONT HYDRAULIC LINES GROUP	185B

7V3686 HYDRAULIC ARRANGEMENT—4 Valve
Serial No. 13X2555—Up

		CONSISTS OF:	PAGE
1	4V2189	FRONT HAND CONTROL GROUP	189
1	4V2190	REAR HAND CONTROL GROUP	190
1	7V3675	FRONT HYDRAULIC LINES GROUP	185B
1	3V7426	REAR HYDRAULIC LINES GROUP	184
1	8J5804	TANK AND VALVE GROUP	172

8V357 ARRANGEMENT—FOR USE WITH MULTI-PURPOSE BUCKET OR FRONT AND REAR ATTACHMENTS WITH AUXILIARY CYLINDER RELIEF
Serial No. 13X2555—Up

4V721 ARRANGEMENT--FOR USE WITH MULTI-PURPOSE BUCKET OR FRONT ATTACHMENTS WITH AUXILIARY CYLINDER RELIEF
SERIAL NO. 13X1 TO 13X2554 INCLUSIVE

CONSISTS OF:

			PAGE
1	8J5804	TANK AND VALVE GROUP	172
1	5K7050	FRONT HYDRAULIC LINES GROUP	185
1	4V2189	FRONT HAND CONTROL GROUP	189

4V722 ARRANGEMENT FOR USE WITH REAR ATTACHMENTS WITH AUXILIARY CYLINDER RELIEF

CONSISTS OF:

			PAGE
1	8J5804	TANK AND VALVE GROUP	172
1	3V7426	REAR HYDRAULIC LINES GROUP	184
1	4V2190	REAR HAND CONTROL GROUP	190

4V723 ARRANGEMENT--FOR USE WITH MULTI-PURPOSE BUCKET OR FRONT AND REAR ATTACHMENTS WITH AUXILIARY CYLINDER RELIEF
SERIAL NO. 13X1 TO 13X2554 INCLUSIVE

CONSISTS OF:

			PAGE
1	8J5804	TANK AND VALVE GROUP	172
1	5K7050	FRONT HYDRAULIC LINES GROUP	185
1	3V7426	REAR HYDRAULIC LINES GROUP	184
1	4V2189	FRONT HAND CONTROL GROUP	189
1	4V2190	REAR HAND CONTROL GROUP	190

HYDRAULIC ARRANGEMENTS—4 Valve
AN ATTACHMENT

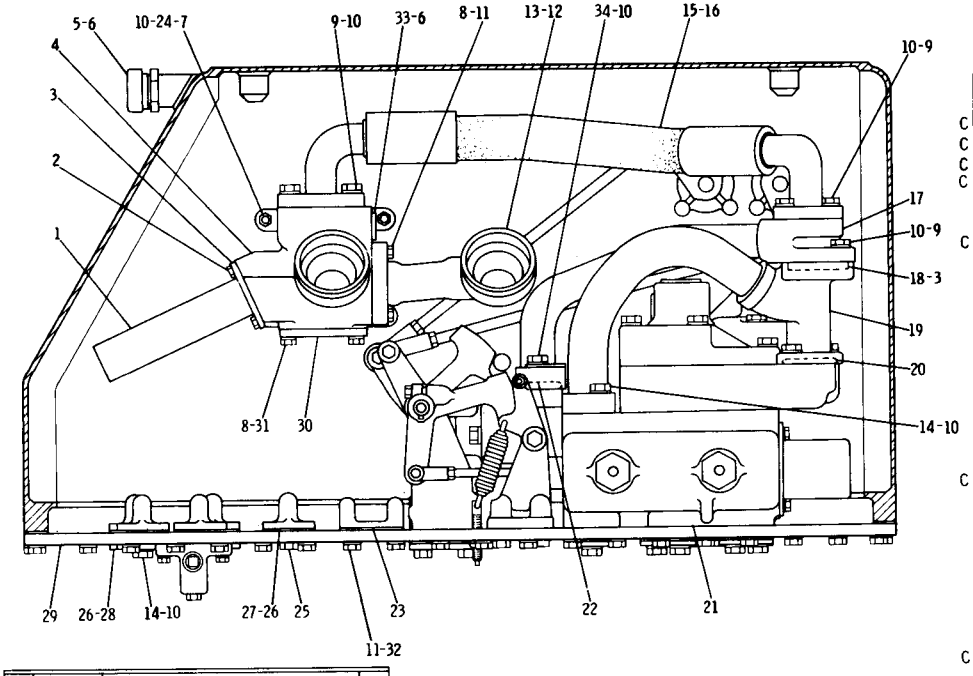

REF. NO.	PART NUMBER	DESCRIPTION	QTY
1	3G3824	TUBE ASSEM.	1
	3G3820	SPRING	1
	3G3821	VALVE	1
2	5K9107	BOLT	2
3	3G3823	FLANGE	1
4	3G2303	BASE	1
5	3G4783	VALVE	1

	6	3D2824	SEAL	2
	7	2K4973	NUT	3
C	8	5M2894	WASHER	4
C	9	5K7143	BOLT	8
C	10	5P8245	WASHER	20
C	11	343557	BOLT	17
	12	3G2346	ADAPTER	1
	13	4J522	SEAL	2
C	14	310223	BOLT	10
	15	3G3862	HOSE ASSEM.	1
	16	4J524	SEAL	2
	17	3G3749	TUBE ASSEM.	1
	18	9D8799	RING	1
	19	3G2285	TUBE ASSEM.	1
	20	4J523	SEAL	2
	21	8J5803	VALVE GROUP (Separate Illustration)	1
	22	1P3705	SEAL	1
	23	7J8252	COVER	2
		1U4599	GASKET	2
C	24	3V3308	WASHER	3
	25	308538	BOLT	2
	26	8J6129	COVER	5
	27	2J1799	GASKET	9
	28	1J8476	COVER	4
	29	8J2332	PLATE	1
		5J5234	GASKET	1
	30	4N794	COVER	1
		8F6711	SEAL	1
C	31	5D353	BOLT	2
	32	4B5167	WASHER	3
	33	9S8008	PLUG	1
C	34	5P4143	BOLT	2

C INDICATES CHANGE

181646

8J5802 HYDRAULIC TANK AND VALVE GROUP—Part 1 of 4
8J5803 Valve parts are shown on Pages 178 and 179

8J5802 HYDRAULIC TANK AND VALVE GROUP—Part 2 of 4

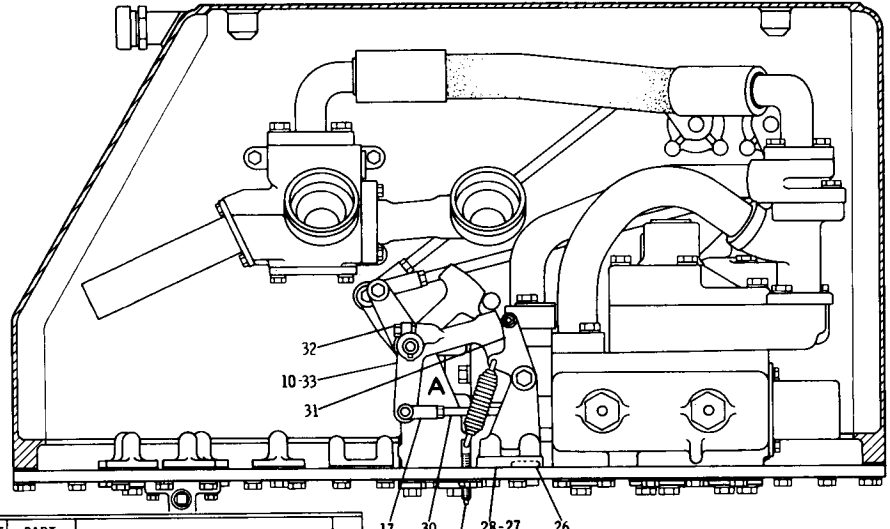

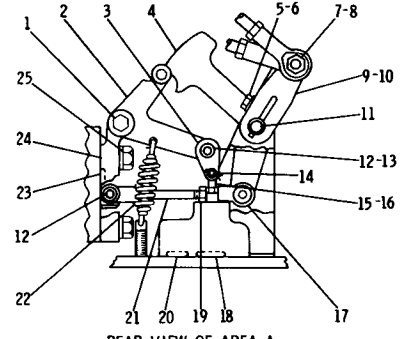

REAR VIEW OF AREA A

REF. NO.	PART NUMBER	DESCRIPTION	QTY
1	2J6602	PIN	1
	4D6432	NUT	1
2	5J5071	LEVER	1
3	5J7518	LINK	2
4	5J5111	LEVER	1
5	308537	BOLT	1
6	5M2894	WASHER	3
7	S1587	BOLT	1
8	1K6872	NUT	1
9	3G5840	LEVER	1
10	1B8706	KEY	2
11	9J653	SHAFT	1

12	5F9199	PIN	3
	8S7803	RETAINER	3
13	7H3912	BUSHING	1
C 14	6V4415	PIN	1
	3B4607	COTTER PIN	1
15	5J7546	ROD	1
16	1B4201	NUT	1
17	1J8489	END	2
18	5F7054	SEAL	1
19	1B4203	NUT	2
20	6F4855	SEAL	1
21	5J5933	ROD	1

22	6H962	SPRING	2
23	4J519	SEAL	1
24	5J5109	BRACKET	1
25	5K7143	BOLT	2
	5P8245	WASHER	2
26	8F3469	SEAL	2
C 27	308538	BOLT	2
28	7J6226	BRACKET	1
	7J6227	EYESCREW	2
29	1D4717	NUT	2
	8J6775	SEAL	2
30	5J5932	ROD	1
31	5J5108	LEVER	1
32	1A2209	BOLT	1
33	5J5110	LEVER	1

C INDICATES CHANGE

181647

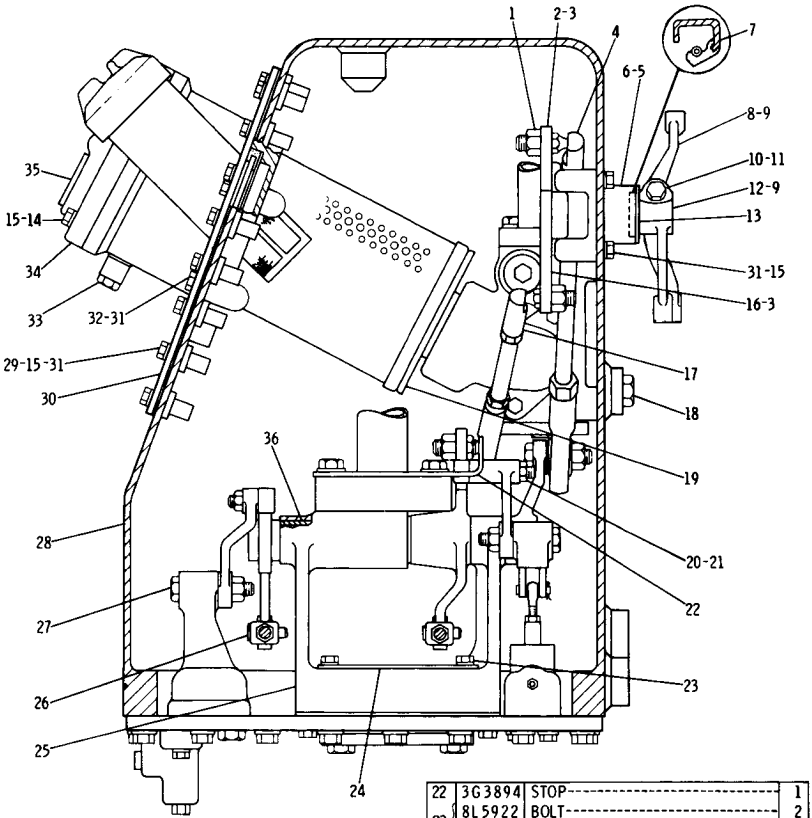

REF. NO.	PART NUMBER	DESCRIPTION	QTY
1	2K564	LOCKNUT	3
2	9J652	LEVER ASSEM.	1
3	2H5746	ADAPTER	2
4	9J639	ROD END ASSEM.	1
5	5J8102	HOUSING	2
C	1U4599	GASKET	2
6	9H8751	BEARING	5
C 7	5P9440	SEAL	2
8	3V7839	BELLCRANK	1
	3B1915	BOLT	1
9	1B8706	KEY	2
C 10	S1591	BOLT	1
11	1D4717	NUT	1
C 12	1U2635	LEVER	1
13	8B4037	WASHER	2
C 14	2J3118	BOLT	8
15	5M2894	WASHER	64
16	8J6135	LEVER ASSEM.	1
17	9J640	ROD END ASSEM.	1
18	3J5389	PLUG	1
19	9J1979	RETAINER ASSEM.	2
	7D1195	SEAL	2
20	4J3441	ROLLER	1
C 21	1B4203	NUT	1
22	3G3894	STOP	1
23	8L5922	BOLT	2
	9M1974	WASHER	2
24	6J8118	SCREEN ASSEM.	1
25	7J779	BRACKET	1
	5J5247	GASKET	1
26	5F9199	PIN	2
	8S7803	RETAINER	2
27	2J6602	PIN	1
	4D6432	NUT	1
28	3G2609	TANK ASSEM. (Includes)	1
	8J6910	STUD	3
29	6J2237	BOSS	48
30	3G2348	COVER ASSEM.	1
	3G3855	GASKET	1
C 31	5D353	BOLT	60
32	5H6005	SEAL	4
33	9S4191	PLUG	2
	3J1907	SEAL	2
34	9J1778	COVER	2
	5H6733	SEAL	2
	9J1991	HANDLE	2
	308535	BOLT	4
35	9S8010	PLUG	2
	2S4078	SEAL	2
36	9H8751	BEARING	4

C INDICATES CHANGE 181648

8J5802 HYDRAULIC TANK AND VALVE GROUP—Part 3 of 4

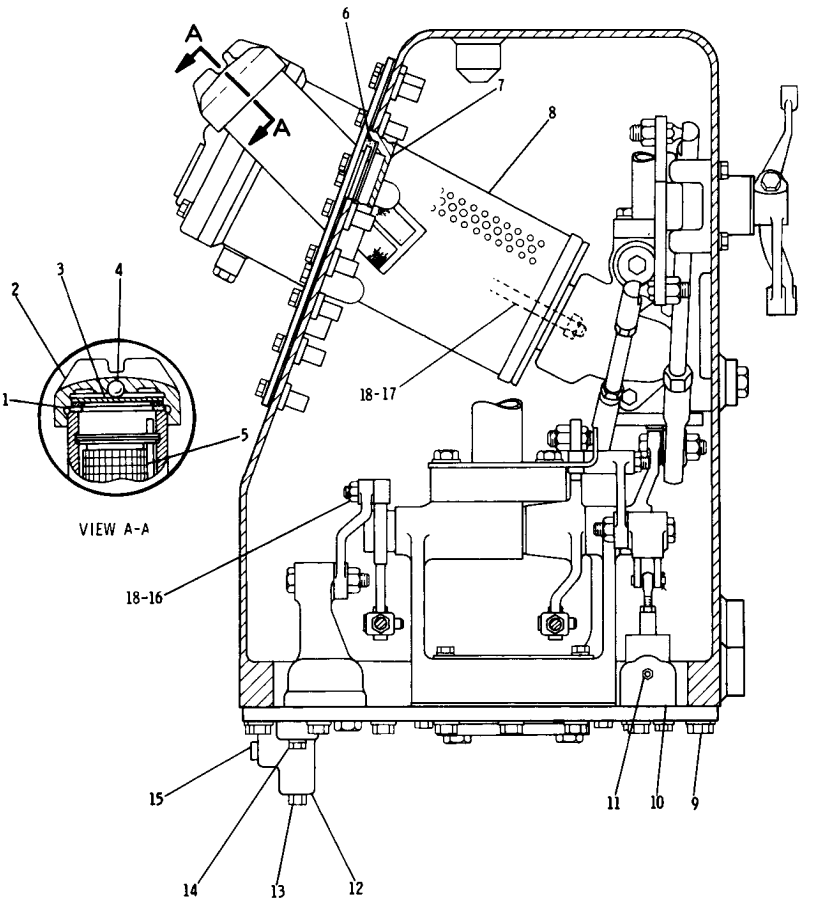

REF. NO.	PART NUMBER	DESCRIPTION	QTY
1	3G361	GASKET	1
2	7H1447	CAP	1
3	6H5139	PLATE	1
	9H6454	GASKET	1
4	7B6368	BALL	1
5	9J3047	STRAINER	1
6	6J1080	GROMMET	1
	6J1081	GLASS	1
	3G6455	PLATE	1
7	9J8243	RETAINER	1
8	9J5461	ELEMENT ASSEM.	2
		-OR-	
▲	3G3448	ELEMENT---(fire resistant fluid)---	2

C INDICATES CHANGE

9	312523	BOLT	52
	5P8244	WASHER	52
10	5J7958	VALVE GROUP (Includes)	1
11	3D4603	PLUG	1
12	8H9819	ADAPTER	1
	8H9818	GASKET	1
13	4B7739	PLUG	1
14	343557	BOLT	2
	4B5167	WASHER	2
15	8J135	PLUG	1
C 16	1B4203	NUT	1
	2J8262	ROLLER	1
17	5P1843	STUD	2
C	2K4973	NUT	2
C 18	5M2894	WASHER	3

▲ NOT PART OF 8J5802 GROUP

181649

8J5802 HYDRAULIC TANK AND VALVE GROUP—Part 4 of 4

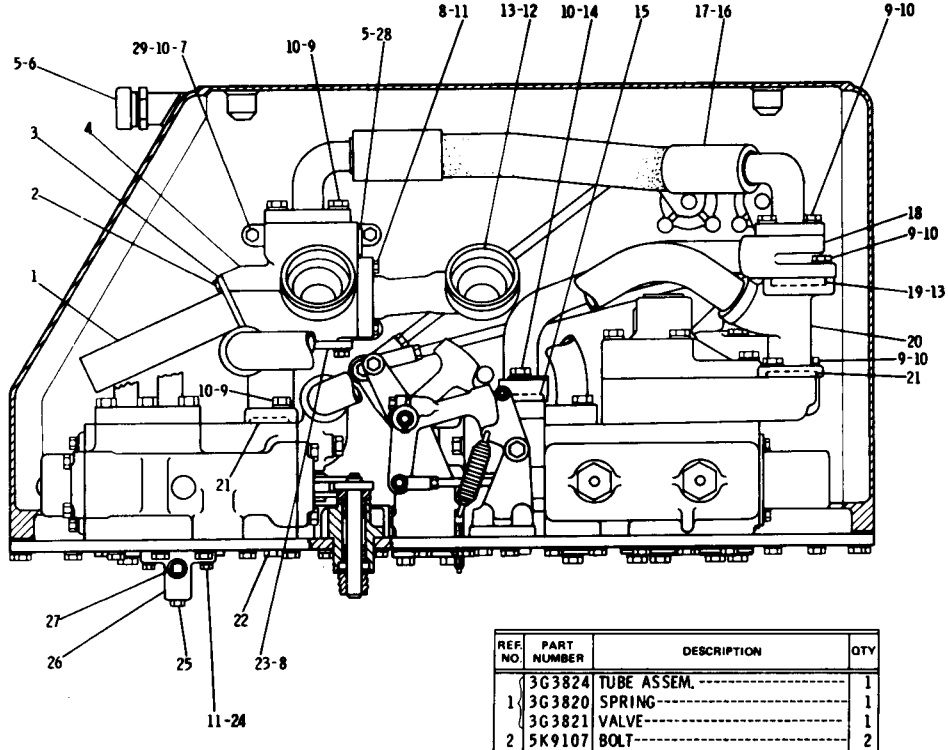

REF. NO.	PART NUMBER	DESCRIPTION	QTY
1	3G3824	TUBE ASSEM.	1
	3G3820	SPRING	1
	3G3821	VALVE	1
2	5K9107	BOLT	2
3	3G3823	FLANGE	1

	4	3G2303	BASE	1
	5	3D2824	SEAL	2
	6	3G4783	VALVE	1
	7	2K4973	NUT	3
C	8	5M2894	WASHER	4
	9	5K7143	BOLT	10
C	10	5P8245	WASHER----(use as required)----	14
	11	343557	BOLT	4
	12	3G2346	ADAPTER	1
	13	4J522	SEAL	2
	14	5P4143	BOLT	2
	15	1P3705	SEAL	1
	16	3G3862	HOSE ASSEM. --60.4 cm(23.78 in.)	1
	17	4J524	SEAL	2
	18	3G3749	TUBE ASSEM.	1
	19	9D8799	RING	1
	20	3G3728	TUBE ASSEM.	1
	21	4J523	SEAL	2
	22	308538	BOLT	2
	23	4N794	COVER	1
		8F6711	SEAL	1
		5D353	BOLT	2
	24	4B5167	WASHER	2
	25	4B7739	PLUG	1
	26	8H9819	ADAPTER	1
		8H9818	GASKET	1
	27	8J135	PLUG	1
	28	9S8008	PLUG	1
C	29	3V3308	WASHER	3

C INDICATES CHANGE 170915

8J5804 HYDRAULIC TANK AND VALVE GROUP—Part 1 of 5
Part of 4V721, 4V722 and 4V723 Hydraulic Arrangements listed on Page 167
AN ATTACHMENT

8J5804 HYDRAULIC TANK AND VALVE GROUP—Part 2 of 5
Part of 4V721, 4V722 and 4V723 Hydraulic Arrangements listed on Page 167
AN ATTACHMENT

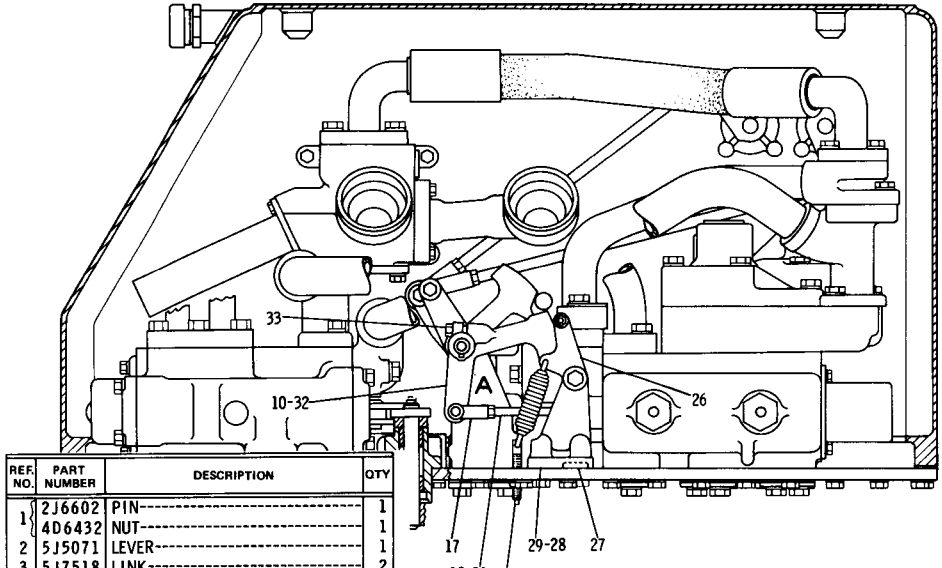

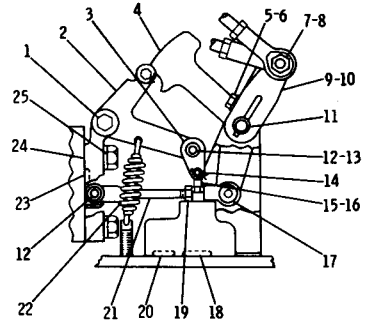

REAR VIEW OF AREA A

REF. NO.	PART NUMBER	DESCRIPTION	QTY
1	2J6602	PIN	1
	4D6432	NUT	1
2	5J5071	LEVER	1
3	5J7518	LINK	2
4	5J5111	LEVER	1
5	308537	BOLT	1
6	5M2894	WASHER	3
7	S1587	BOLT	1
8	1K6872	NUT	1
9	3G5840	LEVER	1
10	1B8706	KEY	2
11	9J653	SHAFT	1
12	5F9199	PIN	3
	8S7803	RETAINER	3

C 13	7H3912	BUSHING	1
14	6V4415	PIN	1
	3B4607	COTTER PIN	1
15	5J7546	ROD	1
16	1B4201	NUT	1
17	1J8489	END	2
18	5F7054	SEAL	1
19	1B4203	NUT	2
20	6F4855	SEAL	1

21	5J5933	ROD	1
22	6H962	SPRING	2
23	4J519	SEAL	1
24	5J5109	BRACKET	1
25	5K7143	BOLT	2
	5P8245	WASHER	2
26	5J5108	LEVER	1
27	8F3469	SEAL	2
28	308538	BOLT	2
29	7J6226	BRACKET	1
30	7J6227	EYE SCREW	2
	1D4717	NUT	2
	8J6775	SEAL	2
31	5J5932	ROD	1
32	5J5110	LEVER	1
33	1A2209	BOLT	1

C INDICATES CHANGE

180457

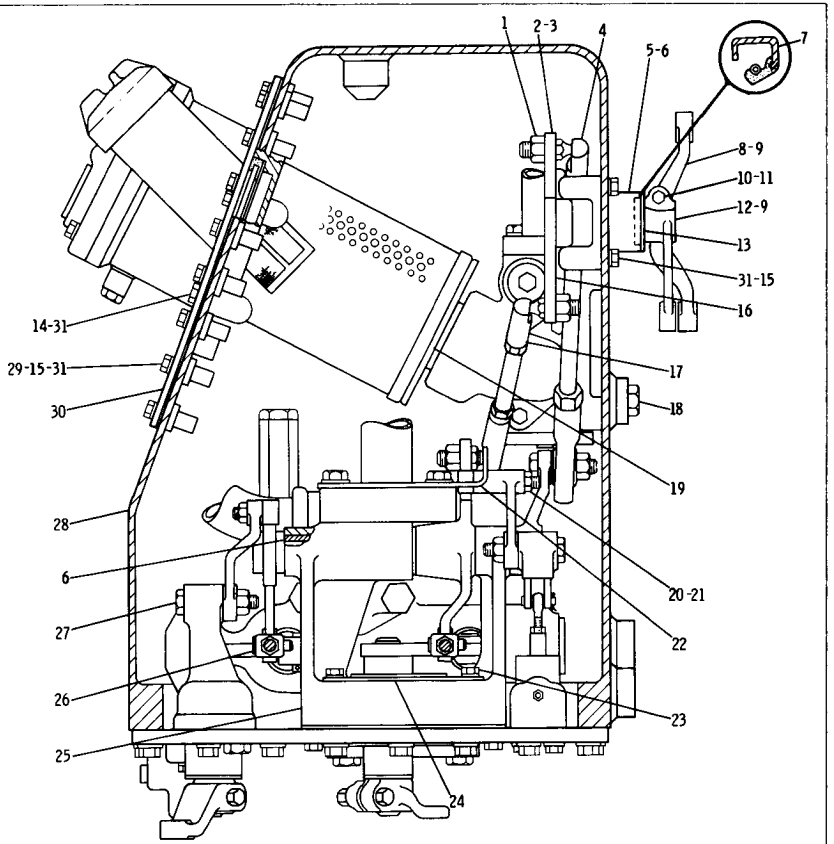

REF. NO.	PART NUMBER	DESCRIPTION	QTY
1	2K564	NUT	3
2	9J652	LEVER ASSEM.	1
3	2H5746	ADAPTER	2
4	9J639	ROD END ASSEM.	1
5	5J8102	HOUSING	2
C	1U4599	GASKET	2
6	9H8751	BEARING	5
C 7	5P9440	SEAL	2
8	3V7839	BELLCRANK	1
	3B1915	BOLT	1
9	1B8706	KEY	2
C 10	S1591	BOLT	1
11	1D4717	NUT	1
C 12	1U2635	LEVER	1
13	8B4037	WASHER	2
14	5H6005	SEAL	4
15	5M2894	WASHER	56
16	8J6135	LEVER ASSEM.	1
17	9J640	ROD END ASSEM.	1
18	3J5389	PLUG	1
19	9J1979	RETAINER ASSEM.	2
	7D1195	SEAL	2
20	4J3441	ROLLER	1
C 21	1B4203	NUT	1
22	3G3894	STOP	1
23	8L5922	BOLT	2
	9M1974	WASHER	2
24	6J8118	SCREEN ASSEM.	1
25	7J779	BRACKET	1
	5J5247	GASKET	1
26	5F9199	PIN	2
	8S7803	RETAINER	2
27	2J6602	PIN	1
	4D6432	NUT	1
28	3G2609	TANK ASSEM. (Includes)	1
	8J6910	STUD	3
29	6J2237	BOSS	48
30	3G2348	COVER ASSEM.	1
	3G3855	GASKET	1
C 31	5D353	BOLT-2.54 cm (1 in.) long	60

C INDICATES CHANGE 18Q458

8J5804 HYDRAULIC TANK AND VALVE GROUP—Part 3 of 5
Part of 4V721, 4V722 and 4V723 Hydraulic Arrangements listed on Page 167
AN ATTACHMENT

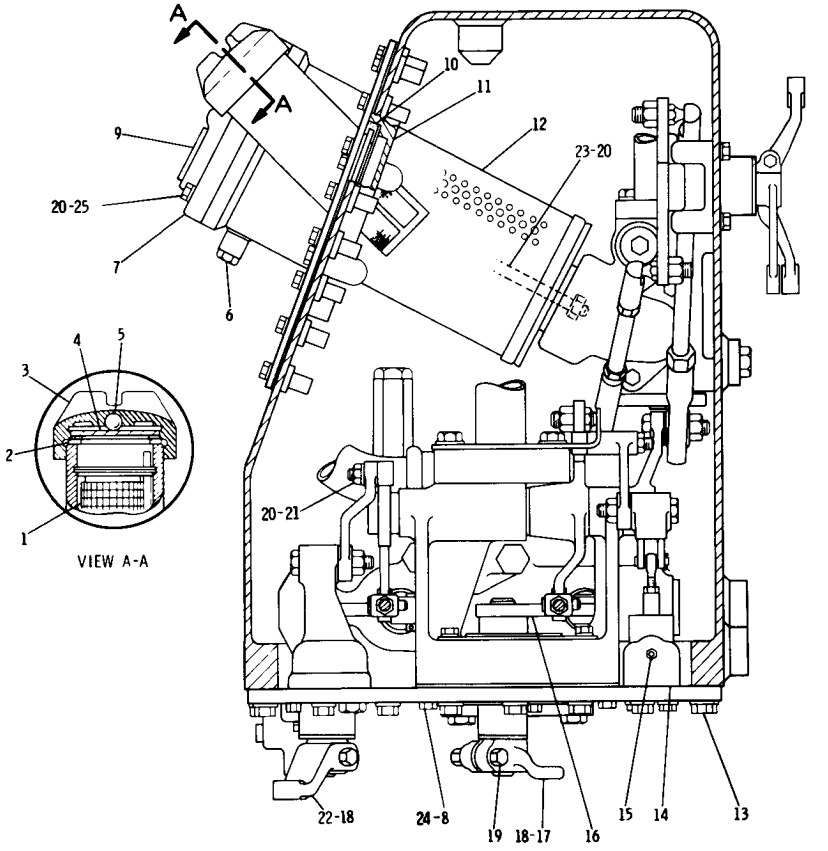

REF. NO.	PART NUMBER	DESCRIPTION	QTY
1	9J3047	STRAINER	1
2	3G361	GASKET	1
3	7H1447	CAP	1
4	6H5139	PLATE	1
	9H6454	GASKET	1
5	7B6368	BALL	1
6	9S4191	PLUG	2
	3J1907	SEAL	2
7	9J1778	COVER	2
	5H6733	SEAL	2
	9J1991	HANDLE	2
	308535	BOLT	4
C 8	343557	BOLT-----2.86 cm(1.125 in.) long	7
9	9S8010	PLUG	2
	2S4078	SEAL	2
10	6J1080	GROMMET	1
	6J1081	GLASS	1
11	3G6455	PLATE	1
	9J8243	RETAINER	1
12	9J5461	ELEMENT ASSEM.	2
		-OR-	
▲	3G3448	ELEMENT---(fire resistant fluid)---	2
13	312523	BOLT	52
	5P8244	WASHER	52
14	5J7958	VALVE GROUP (Includes)	1
15	3D4603	PLUG	1
16	8J6132	LEVER ASSEM.	1
	7H3912	BUSHING	1
17	2J7408	LEVER	1
18	1B8706	KEY	2
C 19	S1591	BOLT	2
	1D4717	NUT	2
C 20	5M2894	WASHER	11
C 21	1B4203	NUT	1
	2J8262	ROLLER	1
22	6J2449	LEVER	1
23	5P1843	STUD	2
C	2K4973	NUT	2
C 24	4B5167	WASHER------(use as required)--	3
C 25	2J3118	BOLT	8

▲ NOT PART OF 8J5804

C INDICATES CHANGE 180459

8J5804 HYDRAULIC TANK AND VALVE GROUP—Part 4 of 5
Part of 4V721, 4V722 and 4V723 Hydraulic Arrangements listed on Page 167
AN ATTACHMENT

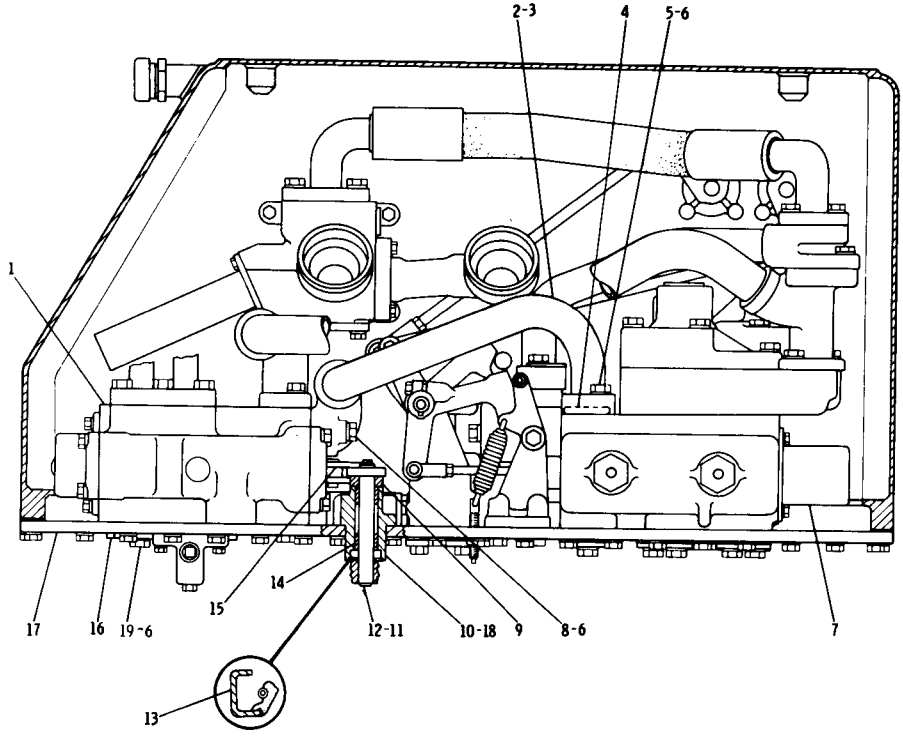

REF. NO.	PART NUMBER	DESCRIPTION	QTY.
	5J7963	VALVE GROUP	1
		(Separate Illustration)	
2	5J5151	TUBE ASSEM.	1
3	4J522	SEAL	1
4	4J523	SEAL	1
C 5	310223	BOLT	2
6	5P8245	WASHER	12
7	8J5803	VALVE GROUP	1
		(Separate Illustration)	
8	9S1366	BOLT	2
9	2H5746	ADAPTER	2
10	8J7240	HOUSING	2
C	1U4599	GASKET	2
11	8B4037	WASHER	2
12	8J6133	LEVER ASSEM.	1
C 13	5P9440	SEAL	2
14	9H8751	BEARING	2
	4J7942	LINK	4
15	5F9199	PIN	4
	8S7803	RETAINER	4
	3K2759	COVER	4
16	4J523	SEAL	7
	8J2332	PLATE	1
17	5J5234	GASKET	1
C 18	343557	BOLT	8
C 19	5P4143	BOLT-----2.86 cm (1.125 in.) long	8

C INDICATES CHANGE 180460

8J5804 HYDRAULIC TANK AND VALVE GROUP—Part 5 of 5
Part of 4V721, 4V722 and 4V723 Hydraulic Arrangements listed on Page 167
5J7963 and 8J5803 Valve parts are shown on Pages 177, 178 & 179
AN ATTACHMENT

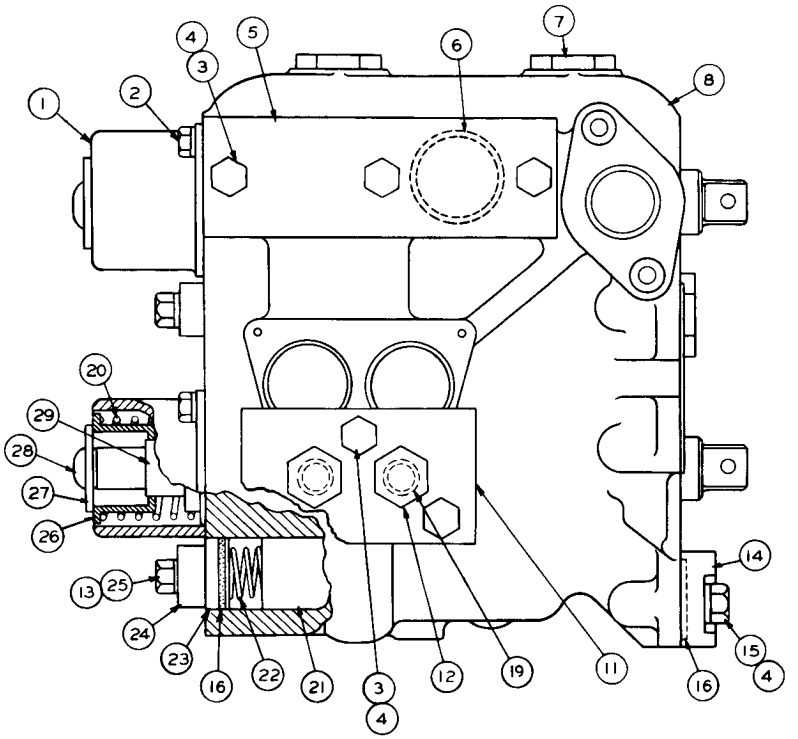

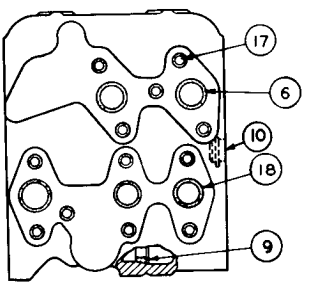

REAR VIEW

	REF. NO.	PART NUMBER	DESCRIPTION	QTY
	1	8J2334	RETAINER	2
C	2	5K9107	BOLT	4
C		5M2894	WASHER	4
C	3	310219	BOLT	6
C	4	2M849	WASHER	8
	5	4J4753	COVER	1
	6	4J523	SEAL	5
	7	3J1553	PLUG	3
		4J5267	SEAL	3
	8	5J7962	BODY GROUP (Includes)	1
	9	2J5437	INSERT	2
C	10	9S8005	PLUG	1
C		3K360	SEAL	1
	11	8J2289	COVER	1
	12	5J9106	VALVE GROUP (Separate Illustration)	2
C	13	3K6113	WASHER	4
C	14	5J9066	COVER	1
C	15	5K7143	BOLT	2
	16	4J519	SEAL	3
	17	8F3469	SEAL	12
	18	4J522	SEAL	2
	19	4J521	SEAL	2
	20	4J3789	SPRING	2
	21	4J7415	VALVE	2
	22	2J5845	SPRING	2
	23	2J5820	PLUG	2
	24	4J2923	FLANGE	2
C	25	312523	BOLT	4
	26	2J4860	SPACER	2
C	27	1A2519	WASHER	2
C	28	6K7917	BOLT	2
	29	3J3096	SPACER	2

C INDICATES CHANGE

178547

5J7963 CONTROL VALVE GROUP—Auxiliary Cylinder Relief
Part of 8J5804 Hydraulic Tank and Valve Group shown on Page 176
5J9106 Valve parts are shown on Page 180
AN ATTACHMENT

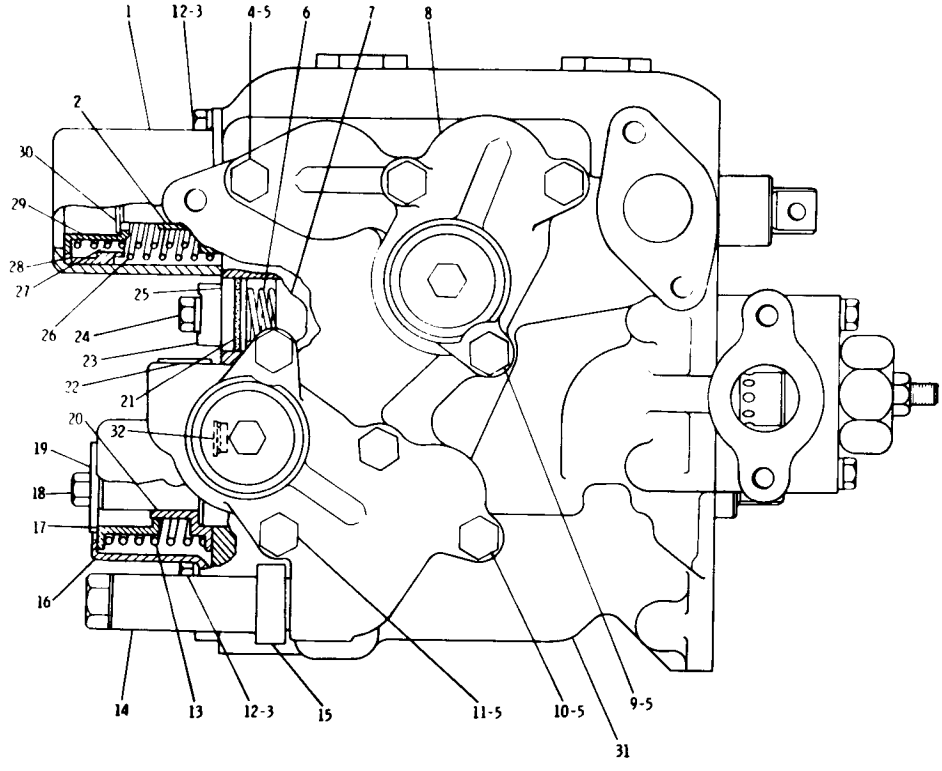

C	REF NO	PART NUMBER	DESCRIPTION	QTY
	1	3G261	RETAINER	1
	2	4J7932	SPACER	1
	3	5M2894	WASHER	4
	4	1B2886	BOLT	1
C	5	5P8245	WASHER	8
	6	2J5845	SPRING	2
	7	4J7415	VALVE	2
	8	8J6128	HOUSING	1
	9	9H8260	BOLT	1
	10	S1573	BOLT	1
	11	2B2006	BOLT	5
C	12	5K9107	BOLT	4
	13	4J3789	SPRING	1
	14	5J9106	VALVE GROUP (Separate Illustration)	1
	15	6J5804	BAFFLE	1
	16	8J2334	RETAINER	1
	17	2J4860	SPACER	1
	18	6K7917	BOLT	1
	19	1A2519	WASHER	1
	20	3J3096	SPACER	1
	21	4J519	SEAL	2
	22	9S8006	PLUG	1
		2M9780	SEAL	1
	23	4J2923	FLANGE	2
	24	312523	BOLT	4
C		5P8244	WASHER	4
	25	2J5820	PLUG	2
	26	4J8149	SPRING	1
	27	8F1560	SPRING	1
	28	4J7954	SPACER	1
	29	4J7953	SPACER	1
	30	4J7910	SCREW	1
C	31	5J5277	VALVE GROUP (Includes)	1
	32	9S8005	PLUG	1
		3K360	SEAL	1

C INDICATES CHANGE

174872

8J5803 CONTROL VALVE GROUP—Lift and Tilt Cylinder—Part 1
Part of 8J5802 and 8J5804 Hydraulic Tank and Valve Groups shown on Pages 168 & 176
5J9106 Valve parts are shown on Page 180

8J5803 CONTROL VALVE GROUP—Lift and Tilt Cylinder—Part 2
Part of 8J5802 and 8J5804 Hydraulic Tank and Valve Groups shown on Pages 168 & 176
9J638 and 8J5800 Valve parts are shown on Pages 180 & 181

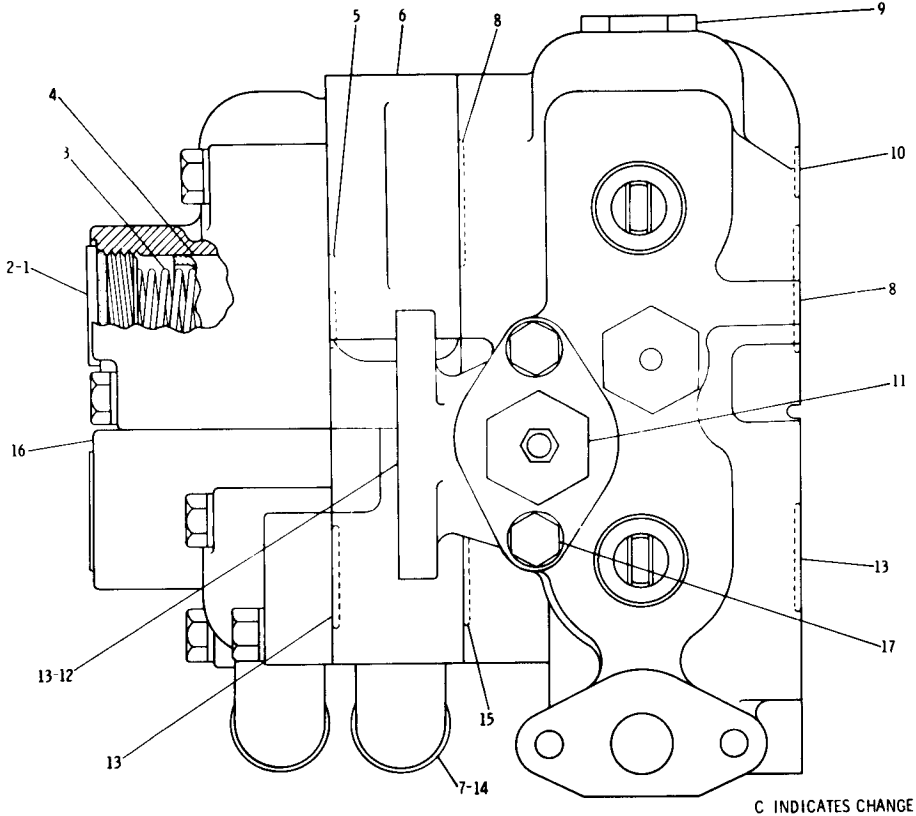

REF. NO.	PART NUMBER	DESCRIPTION	QTY
1	9S8010	PLUG	2
2	2S4078	SEAL	2
3	4J7066	SPRING	2
4	4J7415	VALVE	2
5	6F711	SEAL	2
6	9J631	MANIFOLD	1
7	9J638	VALVE GROUP (Separate Illustration)	1
8	4J523	SEAL	6
9	3J1553	PLUG	3
	4J5267	SEAL	3
10	8F3469	SEAL	12
11	8J5800	VALVE GROUP (Separate Illustration)	1
12	3G2308	HOUSING	1
13	4J522	SEAL	5
14	6J5804	BAFFLE	1
15	4J521	SEAL	2
16	8J6126	HOUSING	1
17	1B2886	BOLT	2
C	5P8245	WASHER	2

C INDICATES CHANGE

174873

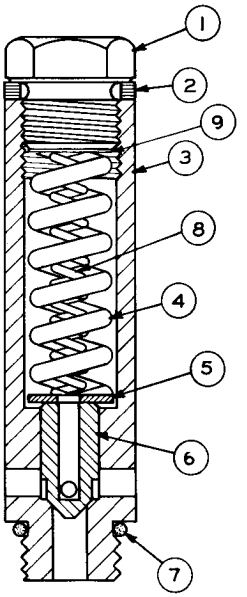

	REF. NO.	PART NUMBER	DESCRIPTION	QTY
	1	5B5946	PLUG	1
	2	5J9100	SHIM-------(.005" Thick)	2
		5J9101	SHIM-------(.010" Thick)	5
	3	5J9102	BODY	1
	4	5J9103	SPRING	1
	5	5J9105	WASHER	1
	6	6J6439	VALVE	1
	7	2M9780	SEAL	1
	8	5J9104	SPRING	1
C	9	5M3492	SHIM	5

C INDICATES CHANGE

114289

5J9106 TILT RELIEF VALVE GROUP
Part of 5J7963 and 8J5803 Control Valve Groups shown on Pages 177 & 178

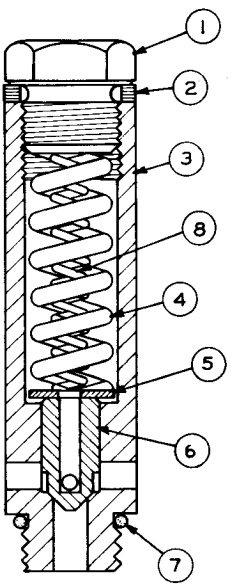

REF. NO.	PART NUMBER	DESCRIPTION	QTY
1	5B5946	PLUG	1
2	5J9100	SHIM-------(.005" Thick)	2
	5J9101	SHIM-------(.010" Thick)	4
3	5J9102	BODY	1
4	5J9103	SPRING	1
5	5J9105	WASHER	1
6	6J6439	VALVE	1
7	2M9780	SEAL	1
8	5J9104	SPRING	1

149721

9J638 TILT RELIEF VALVE GROUP
Part of 8J5803 Control Valve Group shown on Page 179

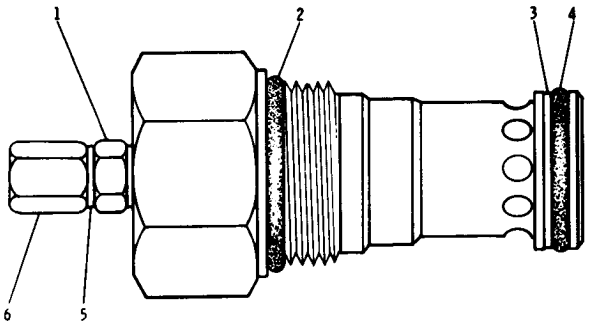

	REF. NO.	PART NUMBER	DESCRIPTION	QTY
	1	3G3726	NUT	1
	2	4J520	SEAL	1
	3	5P7529	RING	1
	4	5P7530	SEAL	1
C	5	3G3857	GASKET	2
C	6	3G3854	CAP	1

C INDICATES CHANGE

169760

8J5800 PILOT OPERATED RELIEF VALVE GROUP
Part of 8J5803 Control Valve Group shown on Page 179

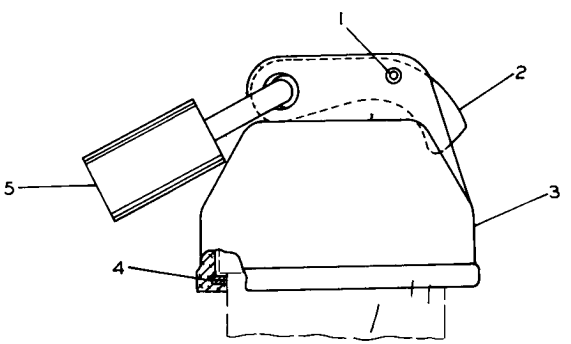

▲ Not Part of Protection Cover Group 5D1910

REF. NO.	PART NUMBER	DESCRIPTION	QTY
1	1L5072	DOWEL	1
2	9M7394	LEVER	1
3	5D1911	COVER	1
4	2J7761	RING	1

	5	Not Serv	PADLOCK (For Service of Padlock & Key Order 8S7949 Padlock Group)	1
▲		8M439	KEY (NOT SHOWN)	2

113719

5D1910 PROTECTION COVER GROUP—Hydraulic Tank Cap
AN ATTACHMENT

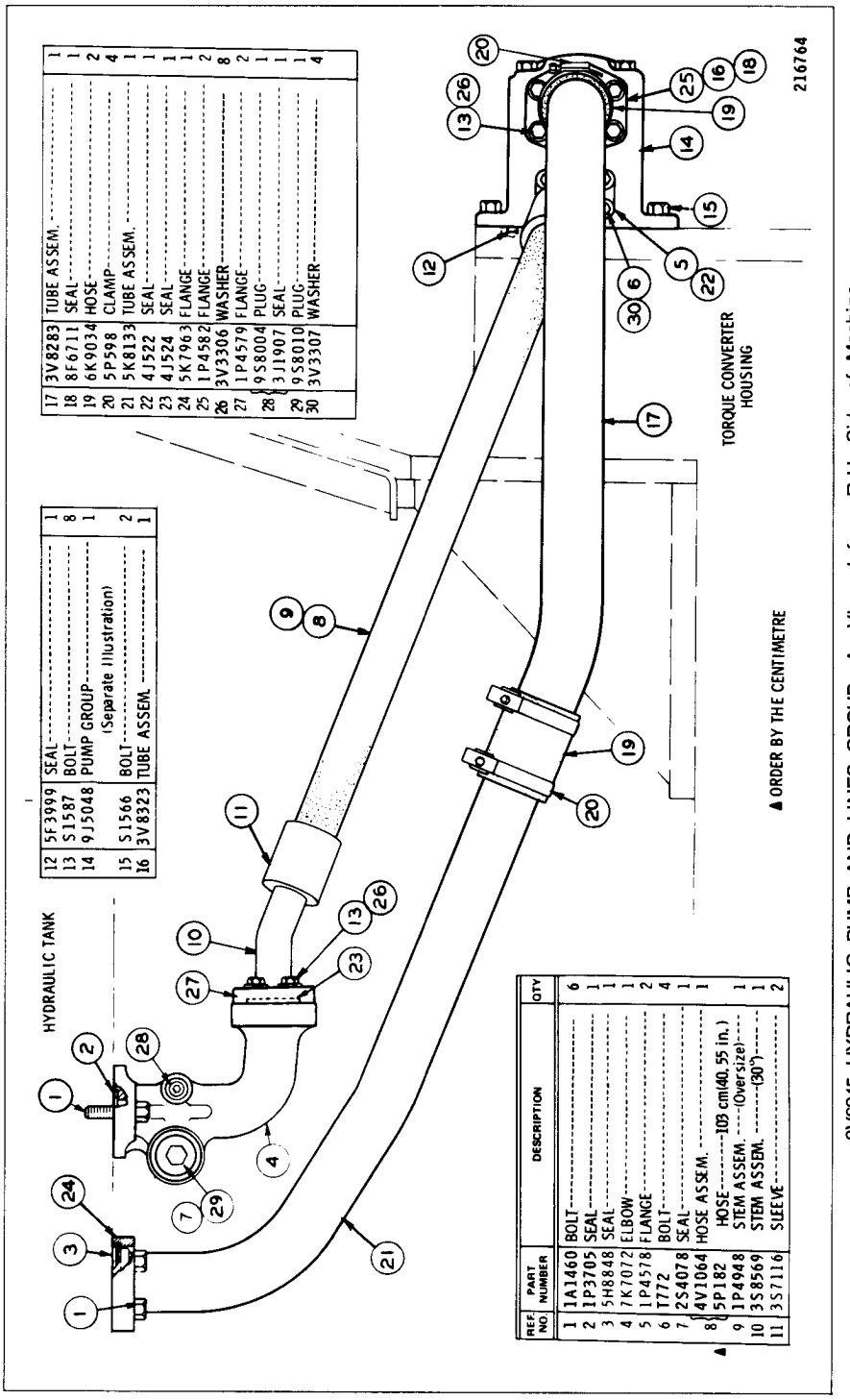

REF. NO.	PART NUMBER	DESCRIPTION	QTY
1	1A1460	BOLT	6
2	1P3705	SEAL	1
3	5H8848	SEAL	1
4	7K7072	ELBOW	1
5	1P4578	FLANGE	2
6	T772	BOLT	4
7	2S4078	SEAL	1
8	4V1064	HOSE ASSEM.	1
▲	5P182	HOSE---103 cm(40.55 in.) (Oversize)	1
9	1P4948	STEM ASSEM.	1
10	3S8569	STEM ASSEM.---(30°)	1
11	3S7116	SLEEVE	2

12	5F3999	SEAL	1
13	S1587	BOLT	8
14	9J5048	PUMP GROUP	1
		(Separate Illustration)	
15	S1566	BOLT	2
16	3V8323	TUBE ASSEM.	1

17	3V8283	TUBE ASSEM.	1
18	8F6711	SEAL	1
19	6K9034	HOSE	2
20	5P598	CLAMP	4
21	5K8133	TUBE ASSEM.	1
22	4J522	SEAL	1
23	4J524	SEAL	1
24	5K7963	FLANGE	1
25	1P4582	FLANGE	2
26	3V3306	WASHER	8
27	1P4579	FLANGE	2
28	9S8004	PLUG	1
	3J1907	SEAL	1
29	9S8010	PLUG	1
30	3V3307	WASHER	4

3V6945 HYDRAULIC PUMP AND LINES GROUP—As Viewed from R.H. Side of Machine
9J5048 Pump parts are shown on Page 183

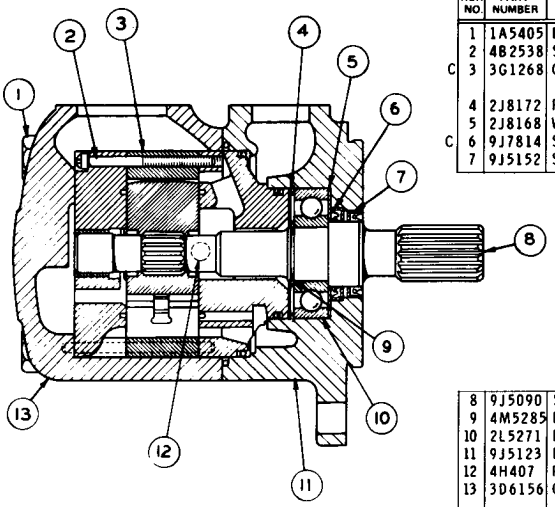

REF. NO.	PART NUMBER	DESCRIPTION	QTY
1	1A5405	BOLT	4
2	4B2538	SCREW	2
C 3	3G1268	CARTRIDGE GROUP (Separate Illustration)	1
4	2J8172	RING	1
5	2J8168	WASHER	1
C 6	9J7814	SEAL	1
7	9J5152	SEAL	1
8	9J5090	SHAFT	1
9	4M5285	RING	1
10	2L5271	BEARING	1
11	9J5123	BODY	1
12	4H407	PLUG	1
13	3D6156	COVER	1

C INDICATES CHANGE 217017

9J5048 VANE PUMP GROUP
Part of 3V6945 Hydraulic Pump and Lines Group shown on Page 182

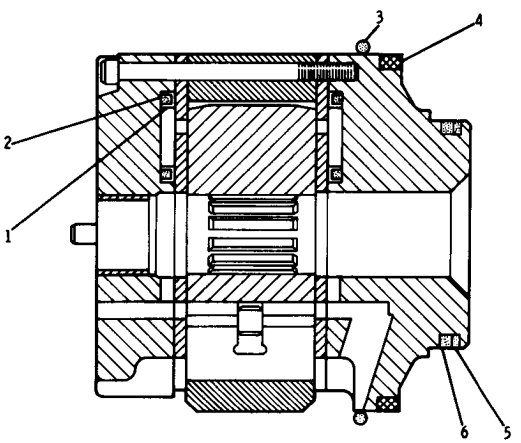

REF. NO.	PART NUMBER	DESCRIPTION	QTY
1	3G1264	RETAINER	4
2	3G1265	SEAL	4
3	2J8163	SEAL	1
4	3G1820	SEAL	1
5	4J9225	RING	1
6	1H5728	SEAL	1

163257

3G1268 CARTRIDGE GROUP—35 GPM
Part of 9J5048 Vane Pump Group

REF. NO.	PART NUMBER	DESCRIPTION	QTY
1	6K1251	BRACKET	2
2	S1595	BOLT	2
	2H3788	NUT	2
	4B4280	WASHER	2
3	3V7418	TUBE ASSEM.	1
	6K1185	CLIP	1
4	3H7654	WASHER	4
5	4J5267	SEAL	2
6	3V7419	TUBE ASSEM.	1
7	2B947	BOLT	4
8	3B4508	LOCKWASHER	8
9	1P3703	SEAL	2
10	3V7421	TUBE ASSEM.	1
11	S1588	BOLT	8
C	3V3308	WASHER	8
12	3V7420	TUBE ASSEM.	1
	6K1185	CLIP	1
13	1A1460	BOLT	4

	FMO55053	FORM (Instructions for installing Auxiliary Valve Conversions)	1

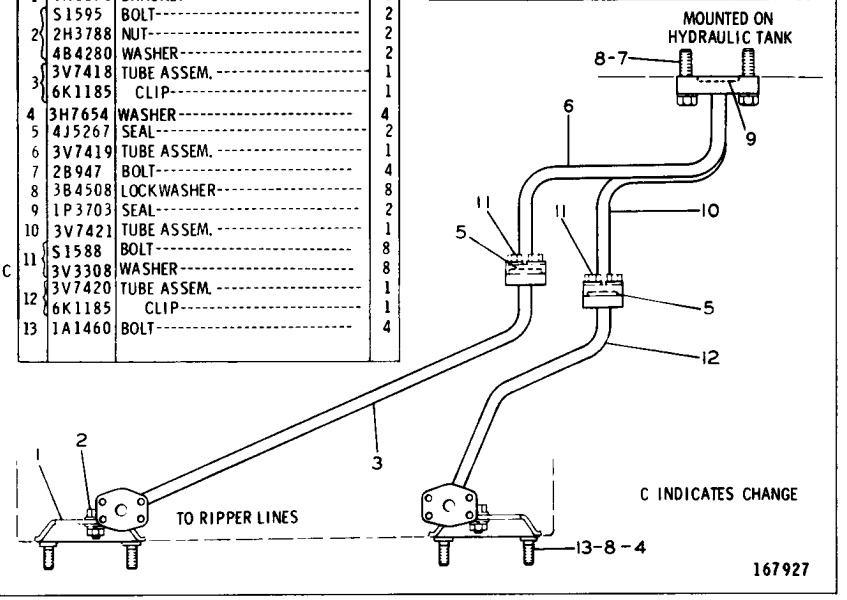

3V7426 REAR HYDRAULIC LINES GROUP
Part of 4V722 and 4V723 Hydraulic Arrangements listed on Page 167
AN ATTACHMENT

5K7050 FRONT HYDRAULIC LINES GROUP

Serial No. 13X1 to 13X2554 Inclusive

Part of 4V721 and 4V723 Hydraulic Arrangements listed on Page 167. 5J7691 and 5J7692 Swivel Joint parts are shown on Page 186

AN ATTACHMENT

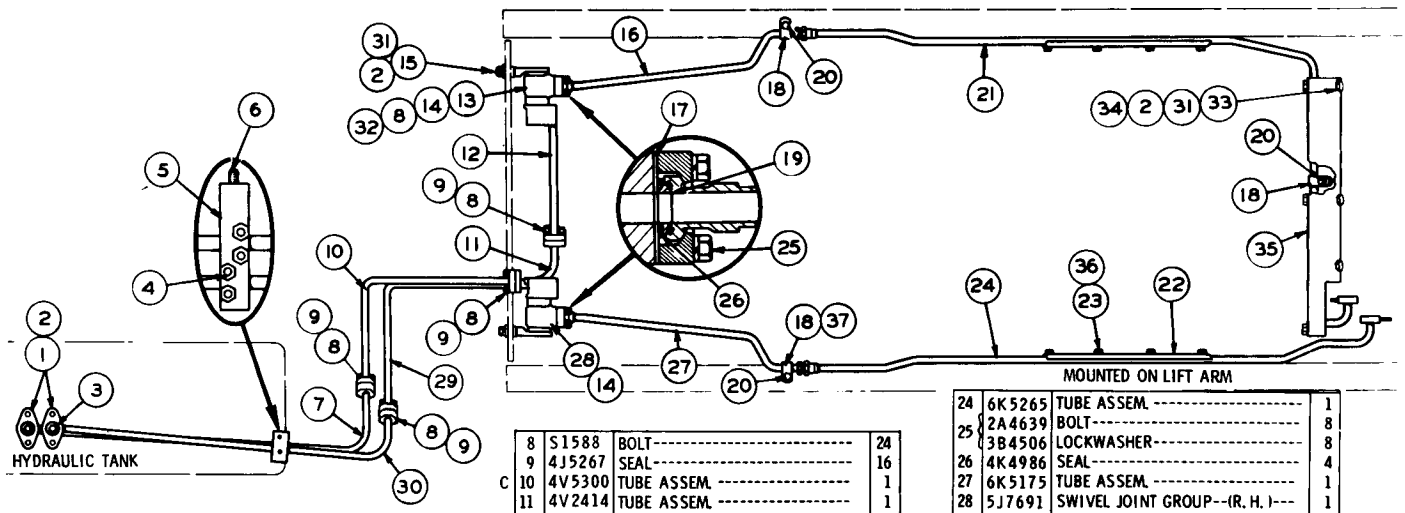

REF NO	PART NUMBER	DESCRIPTION	QTY
1	2B947	BOLT	4
2	3B4508	LOCKWASHER	14
3	1P3703	SEAL	2
4	4K1110	"U" BOLT	2
	1B4330	NUT	4
	3B4504	LOCKWASHER	4
C	5P537	WASHER	4
5	6K2087	BRACKET	1
6	T772	BOLT	2
	3B4507	LOCKWASHER	2
C	5P8244	WASHER	2
C 7	3V7992	TUBE ASSEM.	1
8	S1588	BOLT	24
9	4J5267	SEAL	16
C 10	4V5300	TUBE ASSEM.	1
11	4V2414	TUBE ASSEM.	1
C 12	4V5292	TUBE ASSEM.	1
13	5J7692	SWIVEL JOINT GROUP---(L. H.)-- (Separate Illustration)	1
14	4J8997	SEAL	2
15	6K2124	BOLT	4
16	6K5176	TUBE ASSEM.	1
17	6K154	PLATE	2
18	6K5318	CLIP	3
19	4K4987	SEAT	2
20	5K9107	BOLT	3
	5D931	BLOCK	3
21	1V4757	TUBE ASSEM.	1
22	6K5303	STRIP	2
23	6K4936	BOLT	8
C	3V3308	WASHER	8
24	6K5265	TUBE ASSEM.	1
25	2A4639	BOLT	8
	3B4506	LOCKWASHER	8
26	4K4986	SEAL	4
27	6K5175	TUBE ASSEM.	1
28	5J7691	SWIVEL JOINT GROUP--(R. H.)--- (Separate Illustration)	1
C 29	4V5293	TUBE ASSEM.	1
30	4V1130	TUBE ASSEM.	1
C 31	5P8245	WASHER	10
32	1P3702	SEAL	2
33	S1595	BOLT	6
34	1V4754	LUG----33. 27 mm(1. 31 in.) long	3
	1V4755	LUG----29. 46 mm(1. 16 in.) long	3
35	1V4756	CHANNEL	1
36	3K6736	LUG	8
37	6K5319	BRACKET	3
	GMG02462	FORM (Instructions for Installing Front Hydraulic Lines Group)	1

C INDICATES CHANGE

217026

7V3675 FRONT HYDRAULIC LINES GROUP

Serial No. 13X2555—Up. Part of 7V3686 and 8V357 Hydraulic Arrangements listed on Pages 166 and 166A
5N7691 & 5J7692 Swivel Joint parts are shown on Page 186. AN ATTACHMENT

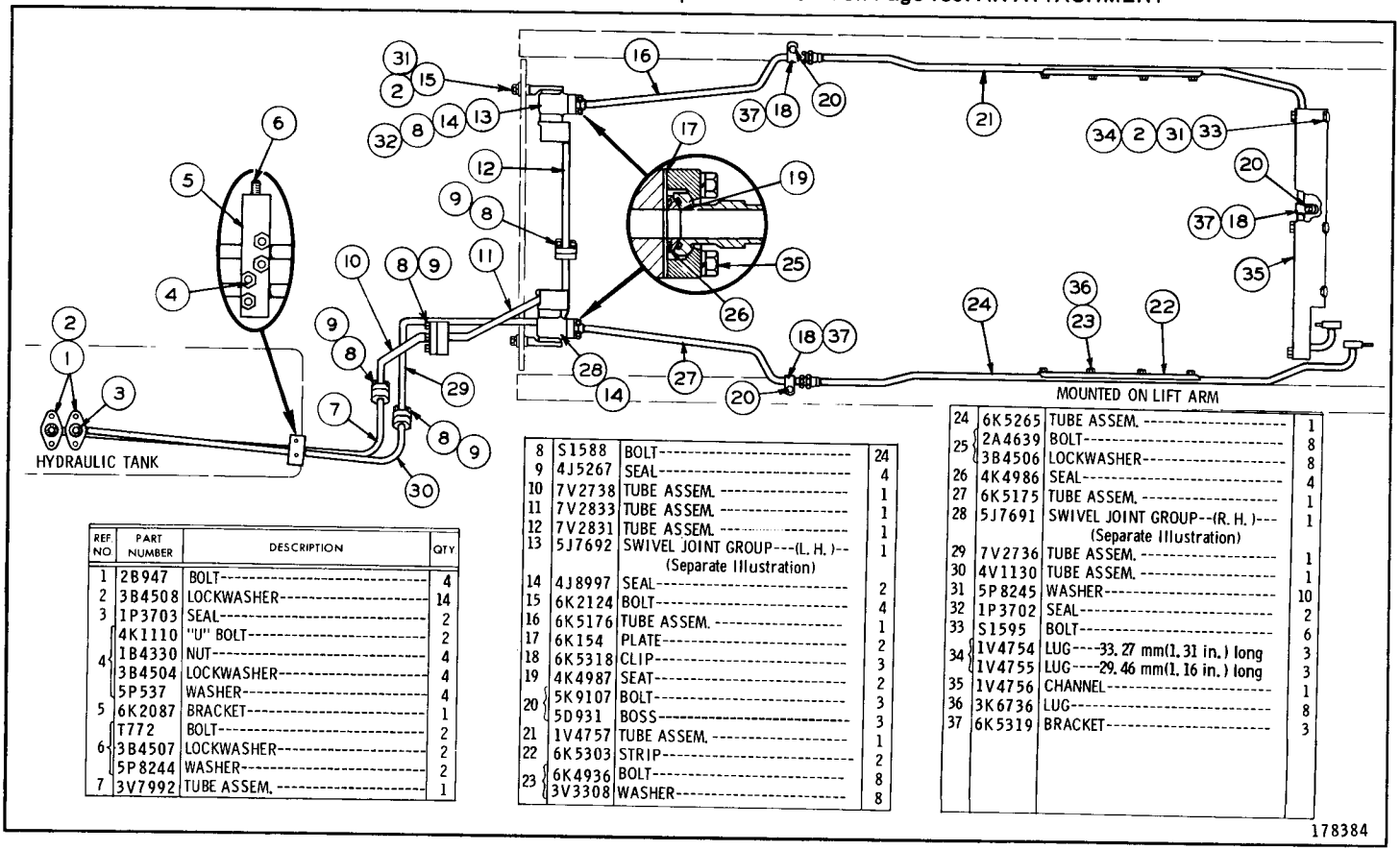

REF NO	PART NUMBER	DESCRIPTION	QTY
1	2B947	BOLT	4
2	3B4508	LOCKWASHER	14
3	1P3703	SEAL	2
4	4K1110	"U" BOLT	2
	1B4330	NUT	4
	3B4504	LOCKWASHER	4
	5P537	WASHER	4
5	6K2087	BRACKET	1
6	T772	BOLT	2
	3B4507	LOCKWASHER	2
	5P8244	WASHER	2
7	3V7992	TUBE ASSEM.	1
8	S1588	BOLT	24
9	4J5267	SEAL	4
10	7V2738	TUBE ASSEM.	1
11	7V2833	TUBE ASSEM.	1
12	7V2831	TUBE ASSEM.	1
13	5J7692	SWIVEL JOINT GROUP---(L. H.)--(Separate Illustration)	1
14	4J8997	SEAL	2
15	6K2124	BOLT	4
16	6K5176	TUBE ASSEM.	1
17	6K154	PLATE	2
18	6K5318	CLIP	3
19	4K4987	SEAT	2
20	5K9107	BOLT	3
	5D931	BOSS	3
21	1V4757	TUBE ASSEM.	1
22	6K5303	STRIP	2
23	6K4936	BOLT	8
	3V3308	WASHER	8
24	6K5265	TUBE ASSEM.	1
25	2A4639	BOLT	8
	3B4506	LOCKWASHER	8
26	4K4986	SEAL	4
27	6K5175	TUBE ASSEM.	1
28	5J7691	SWIVEL JOINT GROUP--(R. H.)--(Separate Illustration)	1
29	7V2736	TUBE ASSEM.	1
30	4V1130	TUBE ASSEM.	1
31	5P8245	WASHER	10
32	1P3702	SEAL	2
33	S1595	BOLT	6
34	1V4754	LUG----33.27 mm(1.31 in.) long	3
	1V4755	LUG----29.46 mm(1.16 in.) long	3
35	1V4756	CHANNEL	1
36	3K6736	LUG	8
37	6K5319	BRACKET	3

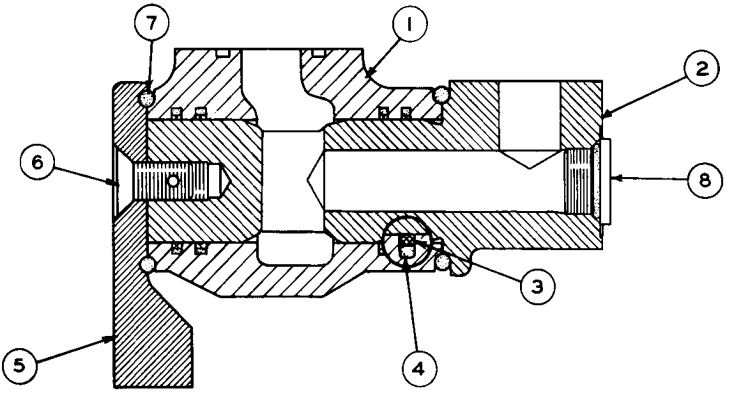

C INDICATES CHANGE

	REF. NO.	PART NUMBER	DESCRIPTION	QTY
	1	7J5171	HOUSING	1
C	2	8J2655	SWIVEL ASSEM.	1
		3F6795	DOWEL	1
	3	4J8266	SEAL	4
	4	4J8268	SEAL	4
	5	5J7689	RETAINER	1
	6	4K1493	SCREW	1
	7	4F9653	SEAL	2
C	8	9S8006	PLUG	1
C		2M9780	SEAL	1

113876

5J7691 SWIVEL JOINT GROUP—R.H.
Part of 5K7050 Front Hydraulic Lines Group shown on Page 185
AN ATTACHMENT

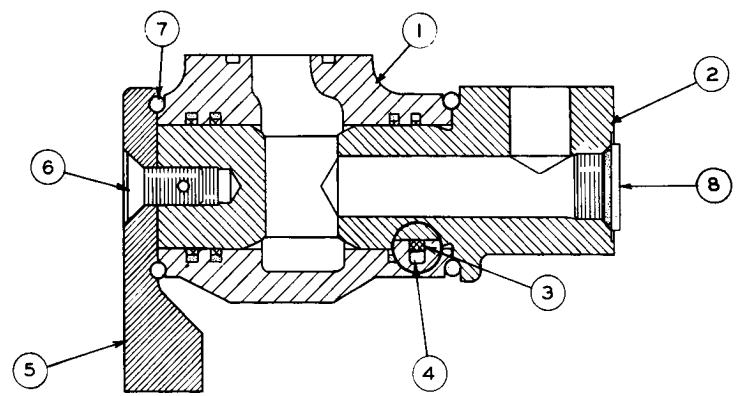

C INDICATES CHANGE

	REF. NO.	PART NUMBER	DESCRIPTION	QTY
	1	7J5171	HOUSING	1
C	2	8J2655	SWIVEL ASSEM.	1
		3F6795	DOWEL	1
	3	4J8266	SEAL	4
	4	4J8268	SEAL	4
C	5	5J7689	RETAINER	1
	6	4K1493	SCREW	1
	7	4F9653	SEAL	2
C	8	9S8006	PLUG	1
C		2M9780	SEAL	1

113877

5J7692 SWIVEL JOINT GROUP—L.H.
Part of 5K7050 Front Hydraulic Lines Group shown on Page 185
AN ATTACHMENT

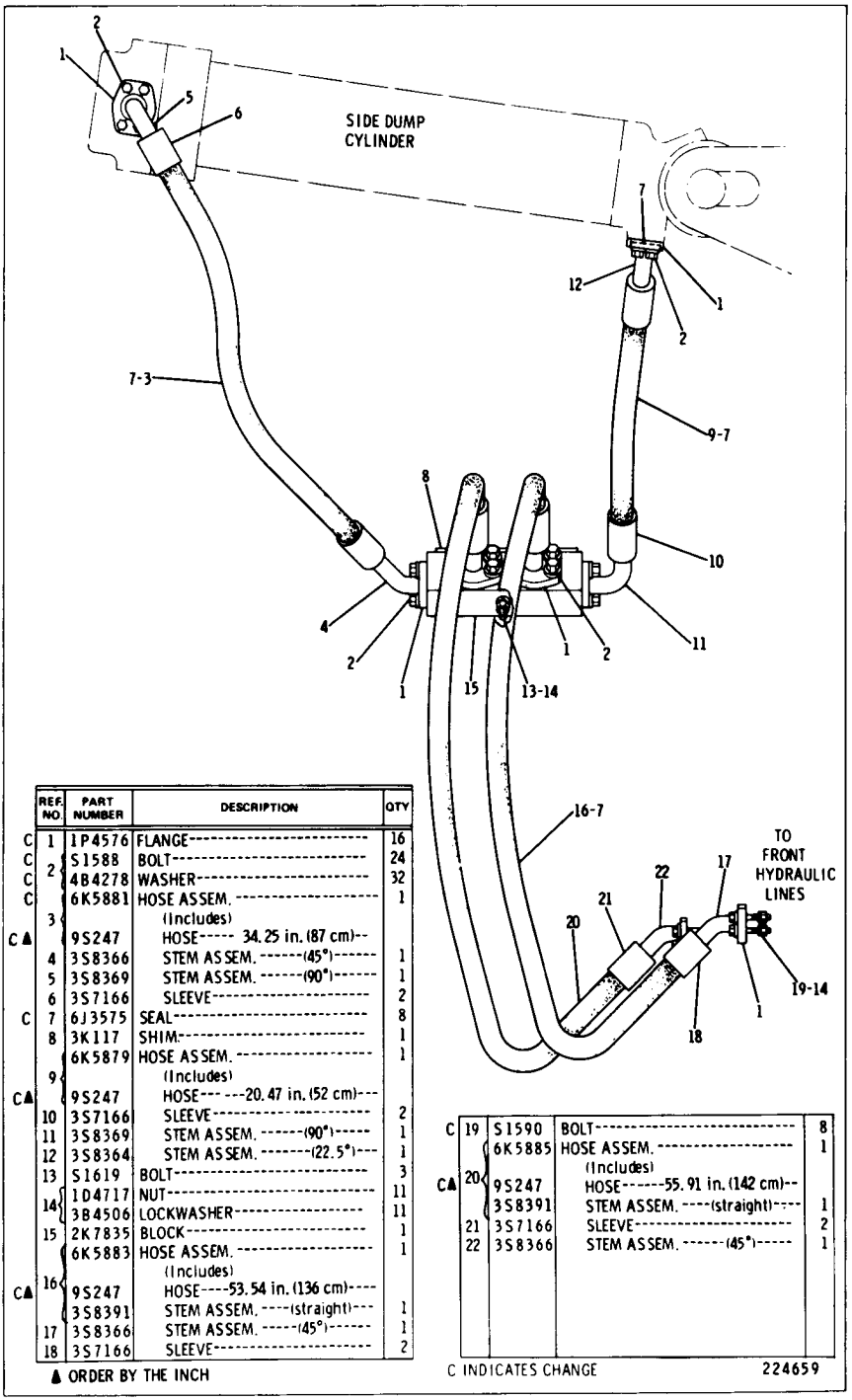

	REF. NO.	PART NUMBER	DESCRIPTION	QTY.
C	1	1P4576	FLANGE	16
C	2	S1588	BOLT	24
C		4B4278	WASHER	32
C	3	6K5881	HOSE ASSEM. (Includes)	1
C▲		9S247	HOSE 34.25 in. (87 cm)	
	4	3S8366	STEM ASSEM. (45°)	1
	5	3S8369	STEM ASSEM. (90°)	1
	6	3S7166	SLEEVE	2
C	7	6J3575	SEAL	8
	8	3K117	SHIM	1
	9	6K5879	HOSE ASSEM. (Includes)	1
C▲		9S247	HOSE 20.47 in. (52 cm)	
	10	3S7166	SLEEVE	2
	11	3S8369	STEM ASSEM. (90°)	1
	12	3S8364	STEM ASSEM. (22.5°)	1
	13	S1619	BOLT	3
	14	1D4717	NUT	11
		3B4506	LOCKWASHER	11
	15	2K7835	BLOCK	1
	16	6K5883	HOSE ASSEM. (Includes)	1
C▲		9S247	HOSE 53.54 in. (136 cm)	
		3S8391	STEM ASSEM. (straight)	1
	17	3S8366	STEM ASSEM. (45°)	1
	18	3S7166	SLEEVE	2
C	19	S1590	BOLT	8
	20	6K5885	HOSE ASSEM. (Includes)	1
C▲		9S247	HOSE 55.91 in. (142 cm)	
		3S8391	STEM ASSEM. (straight)	1
	21	3S7166	SLEEVE	2
	22	3S8366	STEM ASSEM. (45°)	1

▲ ORDER BY THE INCH

C INDICATES CHANGE 224659

6K1985 HYDRAULIC LINES GROUP
Part of 6K703 Side Dump Bucket Arrangement listed on Page 211
AN ATTACHMENT

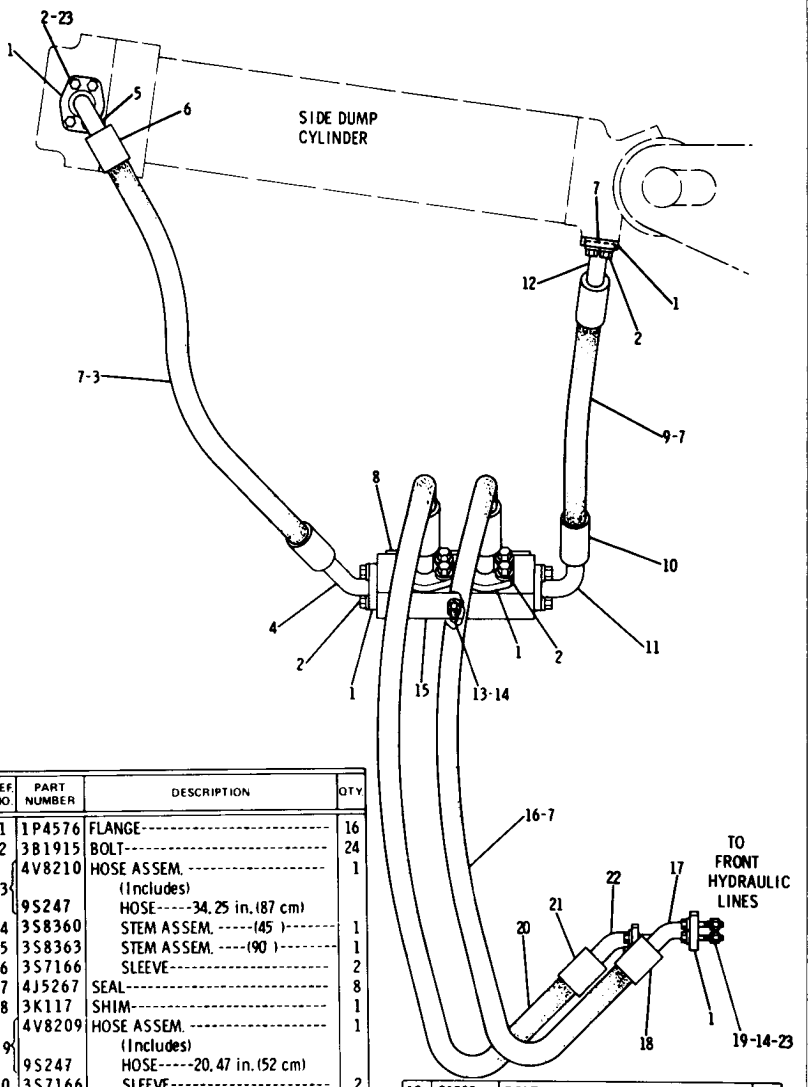

	REF. NO.	PART NUMBER	DESCRIPTION	QTY
	1	1P4576	FLANGE	16
C	2	3B1915	BOLT	24
C	3	4V8210	HOSE ASSEM. (Includes)	1
▲		9S247	HOSE-----34.25 in.(87 cm)	
	4	3S8360	STEM ASSEM. -----(45°)-------	1
	5	3S8363	STEM ASSEM. ----(90°)-------	1
	6	3S7166	SLEEVE	2
C	7	4J5267	SEAL	8
	8	3K117	SHIM	1
C	9	4V8209	HOSE ASSEM. (Includes)	1
▲		9S247	HOSE-----20.47 in.(52 cm)	
	10	3S7166	SLEEVE	2
	11	3S8363	STEM ASSEM. -----(90°)-------	1
	12	3S8358	STEM ASSEM. -----(22.5°)-----	1
	13	S1619	BOLT	3
	14	1D4717	NUT	11
		3B4506	LOCKWASHER	11
	15	2K7835	BLOCK	1
C	16	4V8207	HOSE ASSEM. (Includes)	1
▲		9S247	HOSE-----53.54 in.(136 cm)	
		3S7165	STEM ASSEM. ----(straight)---	1
	17	3S8360	STEM ASSEM. -----(45°)------	1
	18	3S7166	SLEEVE	2
C	19	S1590	BOLT	8
	20	4V8208	HOSE ASSEM. (Includes)	1
▲		9S247	HOSE----55.9 in.(142 cm)	
		3S7165	STEM ASSEM. ----(straight)----	1
	21	3S7166	SLEEVE	2
	22	3S8360	STEM ASSEM. --(45°)--------	1
C	23	5M2894	WASHER	32

▲ ORDER BY THE INCH

C INDICATES CHANGE

172699

6K1985 HYDRAULIC LINES GROUP—Type 2
Part of 6K703 Side Dump Bucket Arrangement listed on Page 211
AN ATTACHMENT

9K8829 HYDRAULIC LINES GROUP

Part of 9K8817 Multi-Purpose Bucket Arrangement listed on Page 210

AN ATTACHMENT

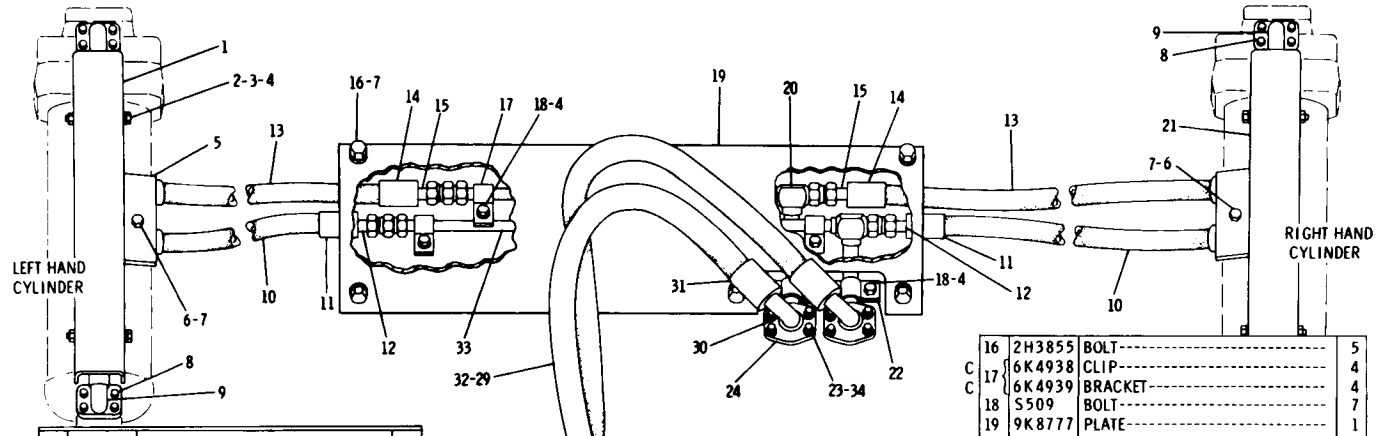

REF NO	PART NUMBER	DESCRIPTION	QTY
1	9K8778	PLATE	1
2	S1619	BOLT	4
3	1D4717	NUT	12
4	3B4506	LOCKWASHER	19
5	9K8776	CLAMP	2
6	S1621	BOLT	2
7	3B4508	LOCKWASHER	7
8	4B3388	BOLT	16
	3B4505	LOCKWASHER	16
9	9K8773	TUBE ASSEM.	4
	5J1583	SEAL	4
10	9K8775	HOSE ASSEM. (Each Includes)	2
▲	5P179	HOSE--------60.96 cm(24 in.)	
	1P4899	COUPLING ASSEM. ----(90°)----	1
11	3S8606	SLEEVE	2
12	8S4064	COUPLING ASSEM. --(straight)-	1

13	9K8774	HOSE ASSEM. (Each Includes)	2
▲	5P179	HOSE--------66.54 cm(26.2 in.)	
	1P4899	COUPLING ASSEM. ----(90°)----	1
14	3S8606	SLEEVE	2
15	8S4064	COUPLING ASSEM. --(straight)-	1

C INDICATES CHANGE

16	2H3855	BOLT	5
C 17	6K4938	CLIP	4
C	6K4939	BRACKET	4
18	S509	BOLT	7
19	9K8777	PLATE	1
20	9K8822	TUBE ASSEM.	1
21	9K8779	PLATE	1
22	6K4234	CLIP	1
23	S1588	BOLT	8
24	1P4576	FLANGE	8
25	S1590	BOLT	8
26	6K5525	HOSE ASSEM. (Includes)	1
▲	5P180	HOSE-------139.70 cm(55 in.)	
27	3S8368	STEM ASSEM. -----(67.5°)-----	2
28	3S7166	SLEEVE	2
29	6K5524	HOSE ASSEM. (Includes)	1
▲	5P180	HOSE-------152.40 cm(60 in.)	
30	3S8368	STEM ASSEM.	1
31	3S7166	SLEEVE	2
32	6J3575	SEAL	4
33	9K8823	TUBE ASSEM.	1
34	4B4278	WASHER	16

▲ ORDER BY THE CENTIMETRE

207534

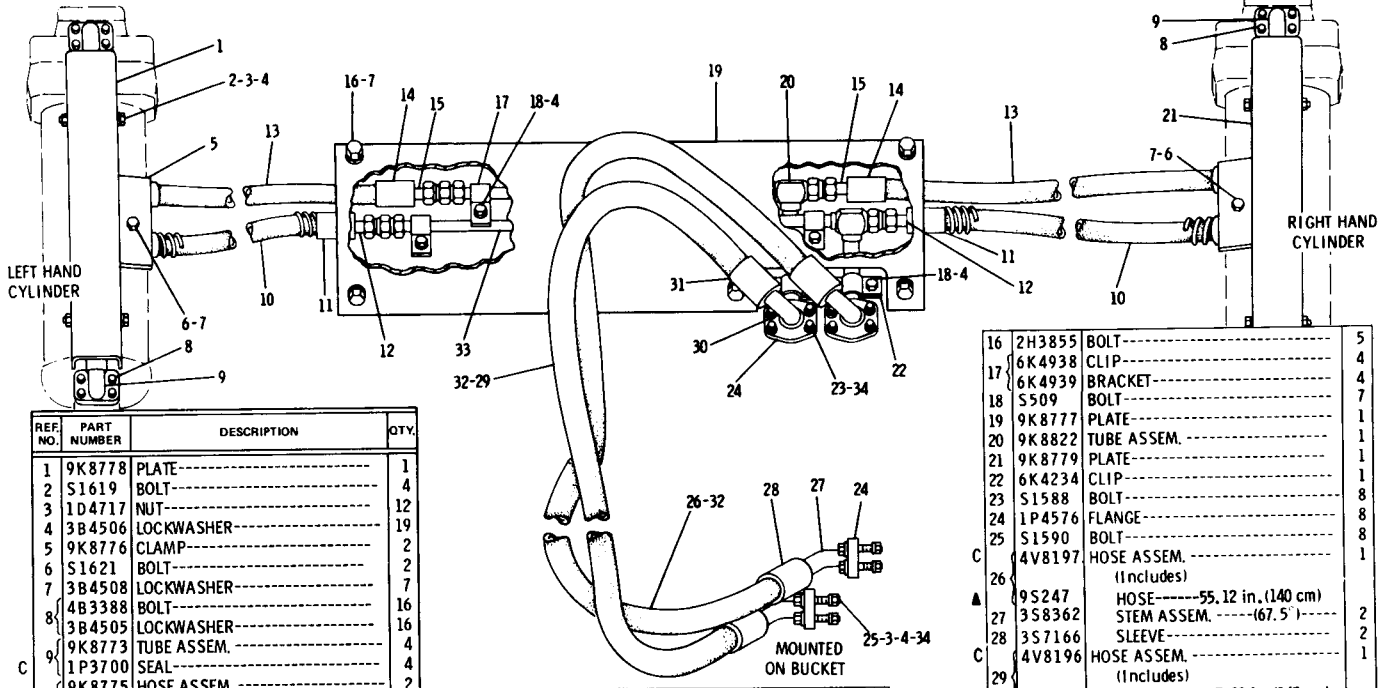

REF. NO.	PART NUMBER	DESCRIPTION	QTY.
1	9K8778	PLATE	1
2	S1619	BOLT	4
3	1D4717	NUT	12
4	3B4506	LOCKWASHER	19
5	9K8776	CLAMP	2
6	S1621	BOLT	2
7	3B4508	LOCKWASHER	7
8	4B3388	BOLT	16
	3B4505	LOCKWASHER	16
9	9K8773	TUBE ASSEM.	4
C	1P3700	SEAL	4
	9K8775	HOSE ASSEM.	2
		(Each Includes)	
C▲ 10	9S671	HOSE--24 in. (60.96 cm)	
	1P4899	COUPLING ASSEM. --(90°)--	1
C●	5P7532	GUARD--54 cm(21.3 in.)	1
11	3S8606	SLEEVE	2
12	8S4064	COUPLING ASSEM. -(straight)	1

● ORDER BY THE CENTIMETER

	9K8774	HOSE ASSEM.	2
		(Each Includes)	
C▲ 13	9S671	HOSE--26.2 in. (66.54 cm)	
	1P4899	COUPLING ASSEM. --(90°)--	1
14	3S8606	SLEEVE	2
15	8S4064	COUPLING ASSEM. --(straight)-	1

C INDICATES CHANGE

16	2H3855	BOLT	5
17	6K4938	CLIP	4
	6K4939	BRACKET	4
18	S509	BOLT	7
19	9K8777	PLATE	1
20	9K8822	TUBE ASSEM.	1
21	9K8779	PLATE	1
22	6K4234	CLIP	1
23	S1588	BOLT	8
24	1P4576	FLANGE	8
25	S1590	BOLT	8
C	4V8197	HOSE ASSEM.	1
		(Includes)	
▲ 26	9S247	HOSE--55.12 in. (140 cm)	
27	3S8362	STEM ASSEM. --(67.5°)--	2
28	3S7166	SLEEVE	2
C	4V8196	HOSE ASSEM.	1
		(Includes)	
▲ 29	9S247	HOSE--57.09 in. (145 cm)	
30	3S8362	STEM ASSEM. --(67.5°)--	2
31	3S7166	SLEEVE	2
C 32	4J5267	SEAL	4
33	9K8823	TUBE ASSEM.	1
C 34	5M2894	WASHER	16

▲ ORDER BY THE INCH

180927

9K8829 HYDRAULIC LINES GROUP
Part of 9K8817 Multi-Purpose Bucket Arrangement listed on Page 210
AN ATTACHMENT

REF. NO.	PART NUMBER	DESCRIPTION	QTY
1	9P7478	COVER ASSEM. (Includes)	1
	9F2978	NUT	1
2	6J488	SCREW	1
	5M2894	WASHER	1
3	9P4724	LEVER ASSEM.	1
4	L1170	HANDLE	1
5	S509	BOLT	3
	5P1075	WASHER	3
6	1A2029	BOLT	1
7	S1588	BOLT	1
8	9P4723	SHAFT	1
	1B8704	KEY	1
9	7K2135	BEARING	2
10	S1595	BOLT	1
11	4D4065	END	1
12	1B4430	NUT	3
13	6K8090	ROD	1
14	4D4065	ROD END	1
15	S1587	BOLT	1
	1D4719	NUT	1
16	1B4205	NUT	1
17	6K4442	BALLJOINT ASSEM.	1
18	6K1830	ROD	1
19	S175	PIN	1
	3B4617	COTTER PIN	1
20	S1621	BOLT	2
	4B4280	WASHER	2
21	6K1837	BRACKET ASSEM.	1
22	4H3119	PIN-(spring)	1
23	1L3046	WASHER	4

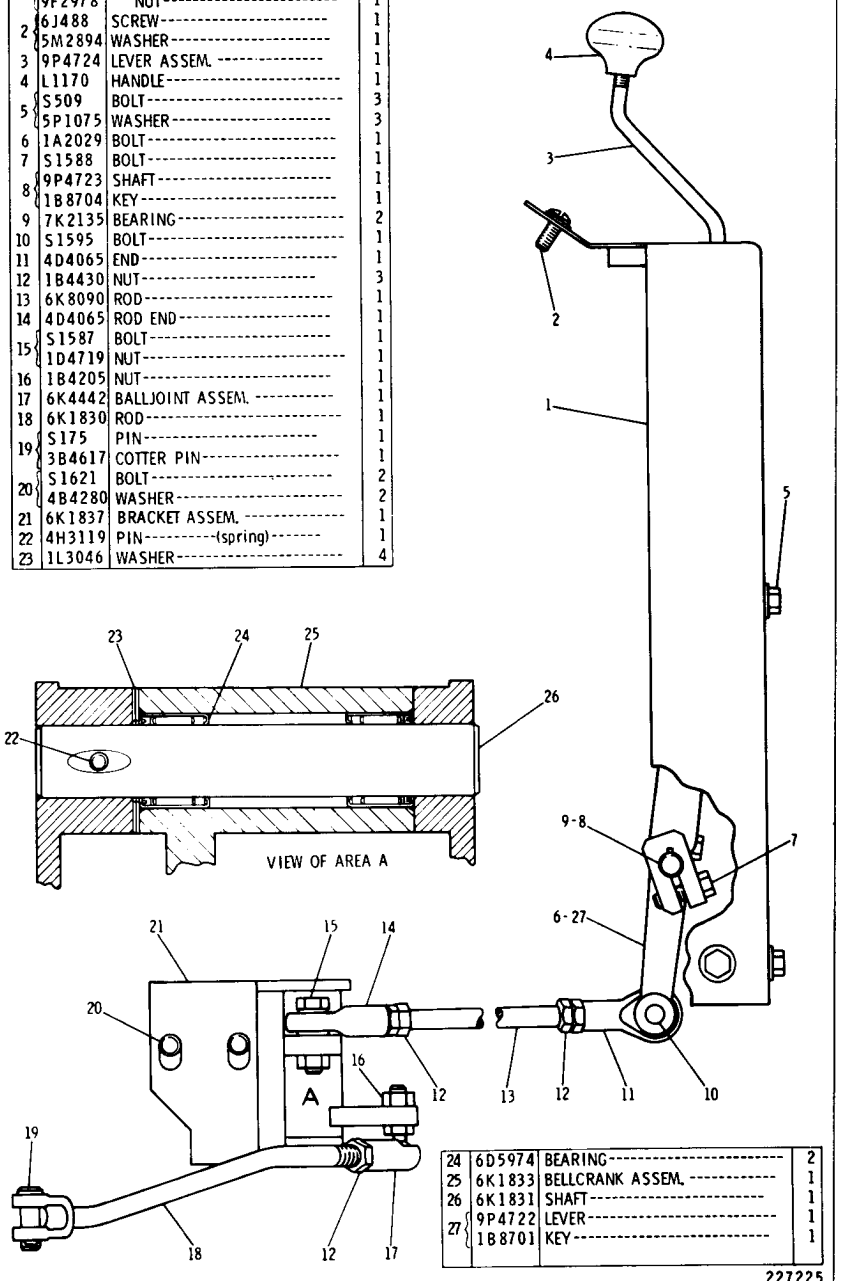

24	6D5974	BEARING	2
25	6K1833	BELLCRANK ASSEM.	1
26	6K1831	SHAFT	1
27	9P4722	LEVER	1
	1B8701	KEY	1

227225

4V2189 FRONT HYDRAULIC HAND CONTROL GROUP
Part of 4V721 and 4V723 Hydraulic Arrangements listed on Page 167
AN ATTACHMENT

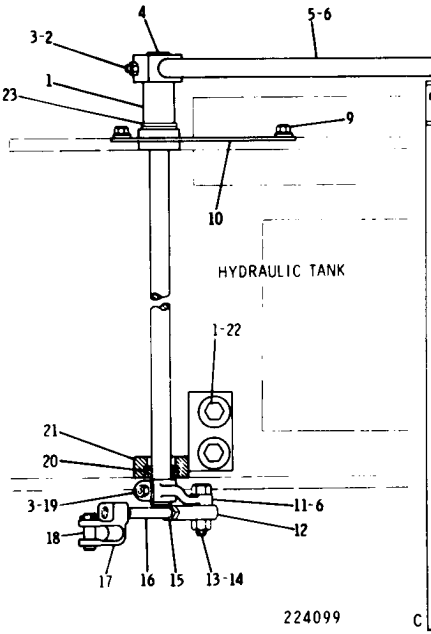

REF. NO	PART NUMBER	DESCRIPTION	QTY
1	1V630	SPACER	1
2	1C2251	BOLT	1
3	1D4717	NUT	2
4	4V2720	SHAFT	1
5	6K5555	LEVER ASSEM.	1
6	1B8706	KEY	2
7	L1170	HANDLE	1
8	2A4996	BOLT	1
	1B4203	NUT	1
9	S509	BOLT	4
	5P1075	WASHER	4
10	9P615	COVER ASSEM.	1
11	2J7408	LEVER	1
12	4D4065	ROD END	1
13	S1585	BOLT	3
14	1D4719	NUT	1
15	1B4430	NUT	2
16	2H3686	ROD	1
17	1K6556	ROD END	1
18	S175	PIN	1
	3B4617	COTTER PIN	1
19	S1591	BOLT	1
20	5K2294	BEARING	2
21	4V2688	BRACKET ASSEM.	1
22	5P1076	WASHER	2
C 23	4B4283	WASHER	2

4V2190 REAR HYDRAULIC HAND CONTROL GROUP
Part of 4V722 and 4V723 Hydraulic Arrangements listed on Page 167
AN ATTACHMENT

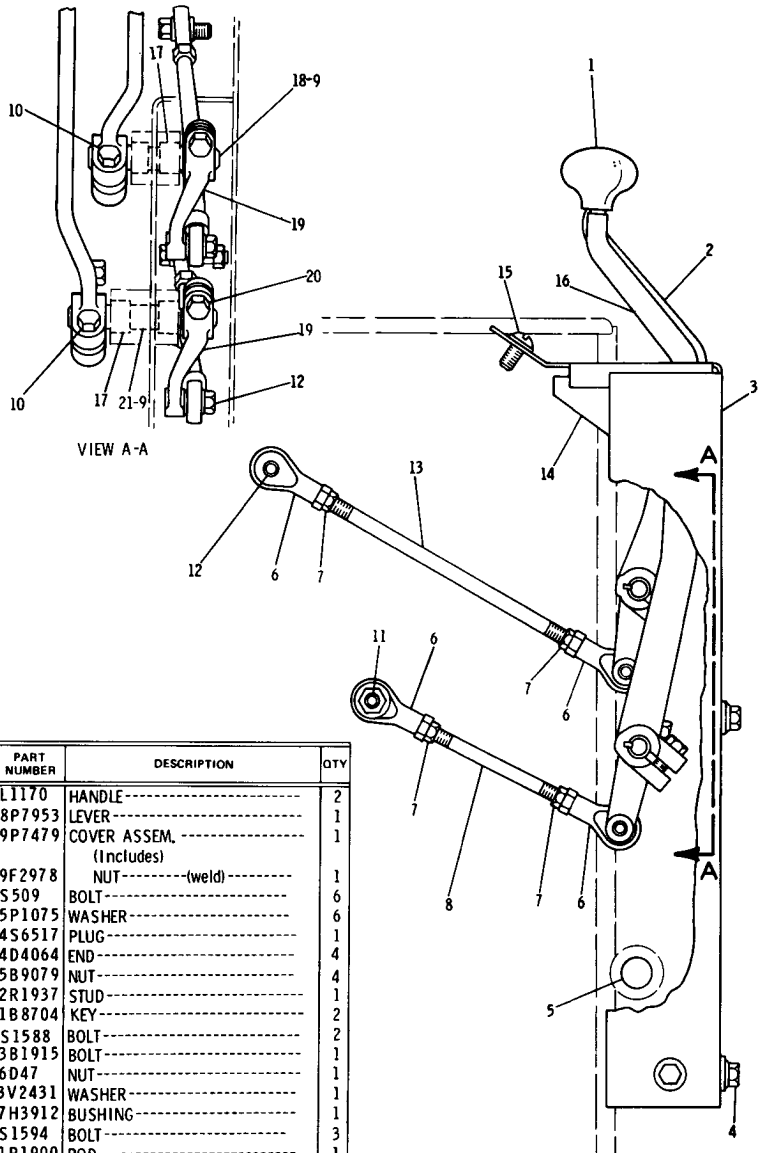

REF. NO.	PART NUMBER	DESCRIPTION	QTY
1	L1170	HANDLE	2
2	8P7953	LEVER	1
3	9P7479	COVER ASSEM. (Includes)	1
	9F2978	NUT--------(weld)--------	1
4	S509	BOLT	6
	5P1075	WASHER	6
5	4S6517	PLUG	1
6	4D4064	END	4
7	5B9079	NUT	4
8	2R1937	STUD	1
9	1B8704	KEY	2
10	S1588	BOLT	2
C 11	3B1915	BOLT	1
	6D47	NUT	1
	3V2431	WASHER	1
	7H3912	BUSHING	1
12	S1594	BOLT	3
13	1P1900	ROD	1
14	9P102	COVER	1
15	6J488	SCREW	3
	5M2894	WASHER	3
16	8P7954	LEVER	1
17	7K2135	BEARING	4
18	9P64	SHAFT	1
19	8P7952	LEVER	2
	1B8701	KEY	2
20	1A2029	BOLT	2

C	21	9P4983	SHAFT	1

C INDICATES CHANGE

237835

3V6948 MECHANICAL HYDRAULIC CONTROL GROUP
Serial No. 13X1 to 13X2936 Inclusive

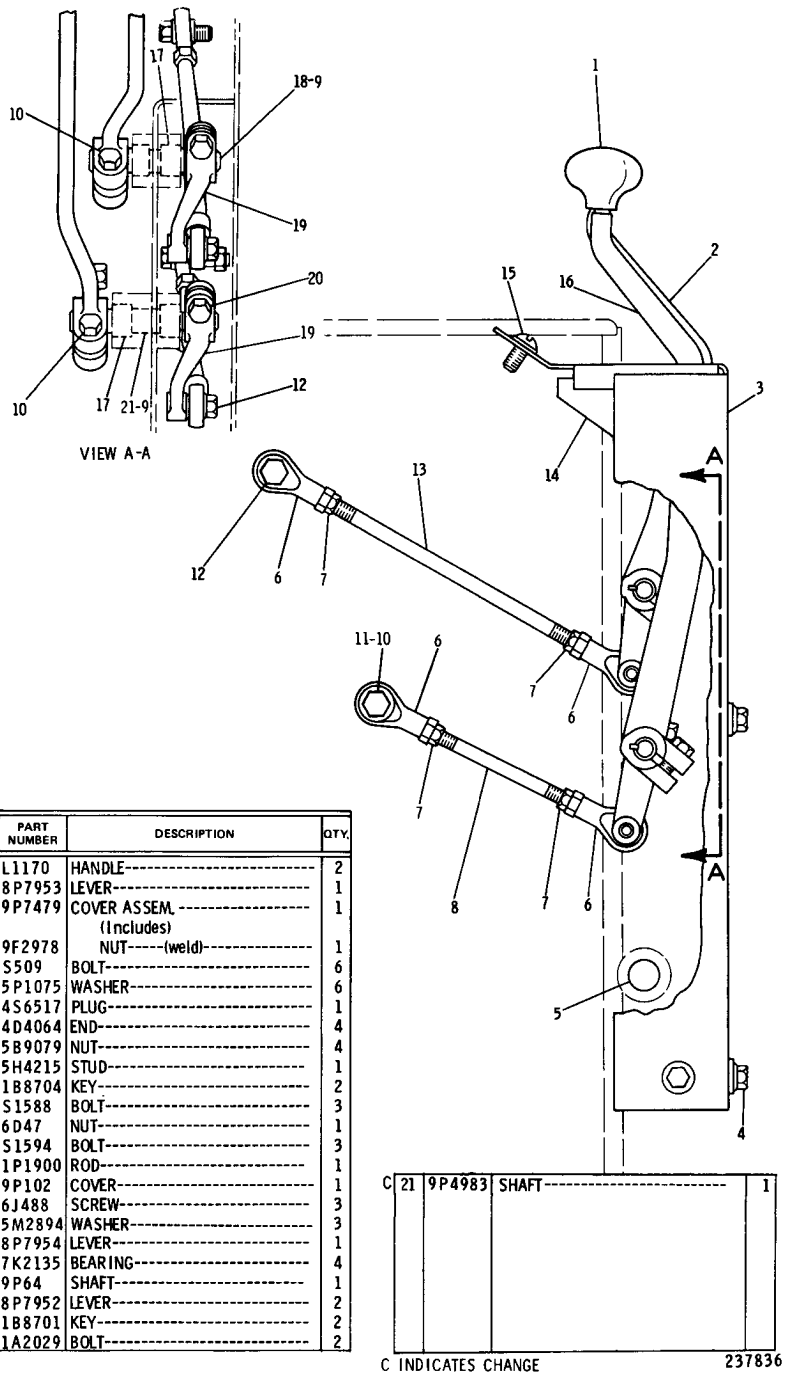

REF. NO.	PART NUMBER	DESCRIPTION	QTY.
1	L1170	HANDLE	2
2	8P7953	LEVER	1
3	9P7479	COVER ASSEM. (Includes)	1
	9F2978	NUT-----(weld)	1
4	S509	BOLT	6
	5P1075	WASHER	6
5	4S6517	PLUG	1
6	4D4064	END	4
7	5B9079	NUT	4
C 8	5H4215	STUD	1
9	1B8704	KEY	2
10	S1588	BOLT	3
C 11	6D47	NUT	1
12	S1594	BOLT	3
13	1P1900	ROD	1
14	9P102	COVER	1
15	6J488	SCREW	3
	5M2894	WASHER	3
16	8P7954	LEVER	1
17	7K2135	BEARING	4
18	9P64	SHAFT	1
19	8P7952	LEVER	2
	1B8701	KEY	2
20	1A2029	BOLT	2

C	21	9P4983	SHAFT	1

C INDICATES CHANGE

237836

3V6948 MECHANICAL HYDRAULIC CONTROL GROUP
Serial No. 13X2937—Up

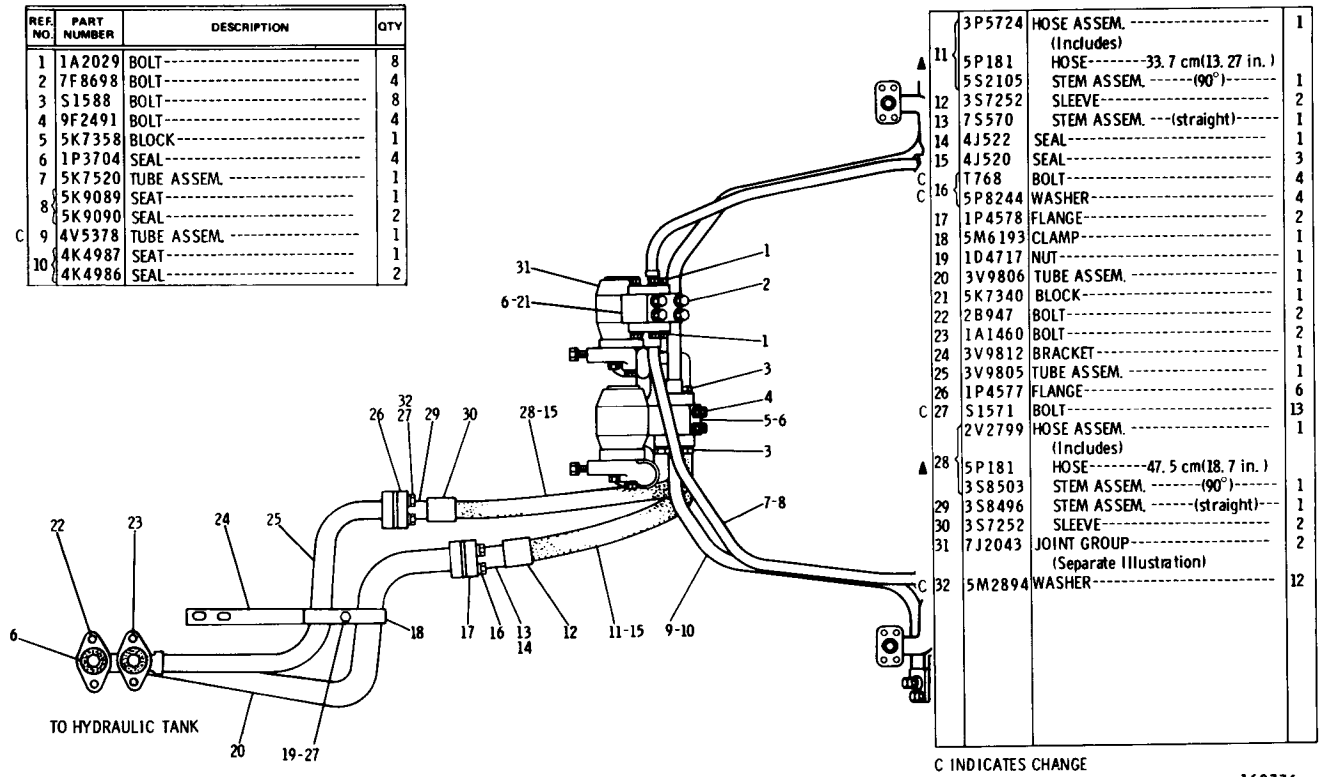

REF. NO.	PART NUMBER	DESCRIPTION	QTY
1	1A2029	BOLT	8
2	7F8698	BOLT	4
3	S1588	BOLT	8
4	9F2491	BOLT	4
5	5K7358	BLOCK	1
6	1P3704	SEAL	4
7	5K7520	TUBE ASSEM.	1
8	5K9089	SEAT	1
	5K9090	SEAL	2
C 9	4V5378	TUBE ASSEM.	1
10	4K4987	SEAT	1
	4K4986	SEAL	2
11	3P5724	HOSE ASSEM. (Includes)	1
	5P181	HOSE--33.7 cm(13.27 in.)	
	5S2105	STEM ASSEM. (90°)	1
12	3S7252	SLEEVE	2
13	7S570	STEM ASSEM. (straight)	1
14	4J522	SEAL	1
15	4J520	SEAL	3
C 16	T768	BOLT	4
C	5P8244	WASHER	4
17	1P4578	FLANGE	2
18	5M6193	CLAMP	1
19	1D4717	NUT	1
20	3V9806	TUBE ASSEM.	1
21	5K7340	BLOCK	1
22	2B947	BOLT	2
23	1A1460	BOLT	2
24	3V9812	BRACKET	1
25	3V9805	TUBE ASSEM.	1
26	1P4577	FLANGE	6
C 27	S1571	BOLT	13
	2V2799	HOSE ASSEM. (Includes)	1
▲ 28	5P181	HOSE--47.5 cm(18.7 in.)	
	3S8503	STEM ASSEM. (90°)	1
29	3S8496	STEM ASSEM. (straight)	1
30	3S7252	SLEEVE	2
31	7J2043	JOINT GROUP (Separate Illustration)	2
C 32	5M2894	WASHER	12

3V6946 TILT CYLINDER LINES GROUP—Part 1
Serial No. 13X1 to 2219, 2221 to 2224 and 13X2226 to 13X2250 inclusive
7J2043 Joint parts are shown on Page 196

3V6946 TILT CYLINDER LINES GROUP—Part 2

Serial No. 13X1 to 2219, 2221 to 2224 and 13X2226 to 13X2250 inclusive

	REF. NO.	PART NUMBER	DESCRIPTION	QTY
C	1	4V5407	TUBE ASSEM.	1
	2	4K4987	SEAT	1
		4K4986	SEAL	2
C	3	1P3702	SEAL	4
	4	2A4639	BOLT	4
	5	1A2029	BOLT	8
	6	5K7300	ELBOW	1
C		4V5184	HOSE ASSEM.	2
			(Each Includes)	
●	7	9S247	HOSE—37.8 in. (96 cm)	
▲		5P7533	GUARD—87 cm(34.25 in.)	
		3S7165	STEM ASSEM. —(straight)	1
	8	3S7166	SLEEVE	2
	9	3S8363	STEM ASSEM. —(90°)	1
	10	1P4576	FLANGE	16
C	11	S1571	BOLT	24
C	12	5M2894	WASHER	32
C	13	4J5267	SEAL	14
C	14	4V5413	TUBE ASSEM.	1
	15	1C2251	BOLT	4
C	16	3V3308	WASHER	10
C	17	S1594	BOLT	11
	18	7K2246	SPACER	2
	19	S1588	BOLT	8
C		4V5185	HOSE ASSEM.	2
			(Each Includes)	
●	20	9S247	HOSE—37 in. (93 cm)	
▲		5P7533	GUARD—84 cm(33.07 in.)	
	21	3S7166	SLEEVE	2
	22	3S7165	STEM ASSEM.	2
	23	S1585	BOLT	4
		5P8245	WASHER	8
C	24	1D4719	NUT	4
	25	9K9017	BRACKET	4
	26	7K2248	SPACER	4
	27	5P1075	WASHER	1
	28	3V7944	CLAMP	1

C INDICATES CHANGE

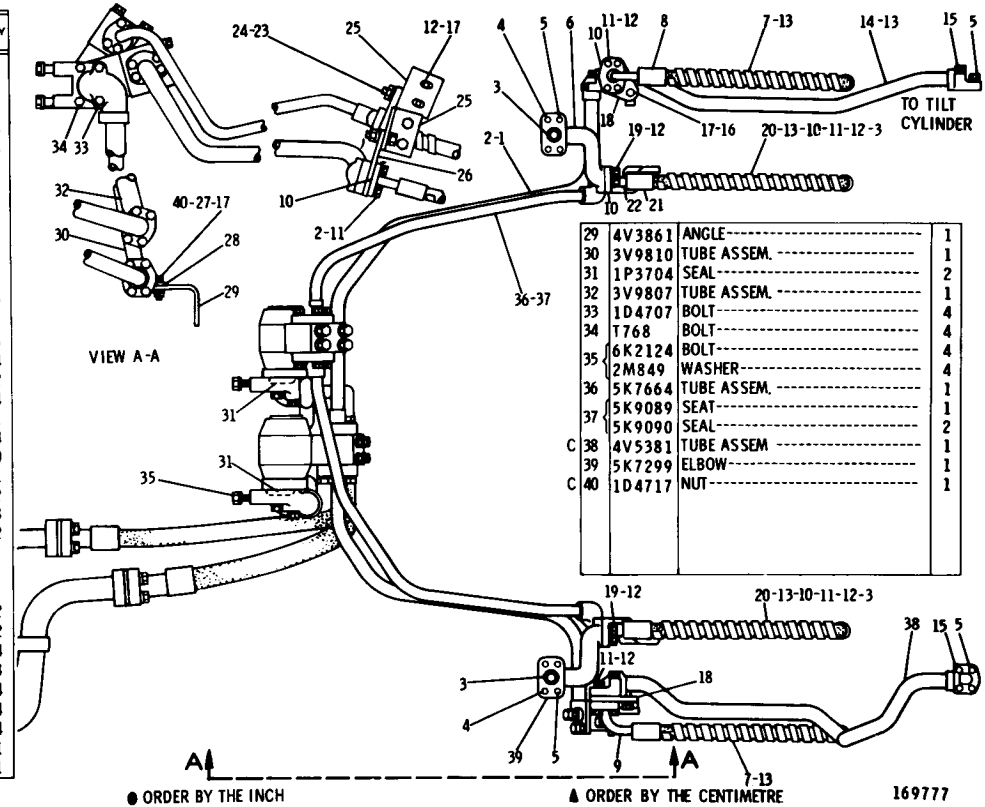

REF. NO.	PART NUMBER	DESCRIPTION	QTY
29	4V3861	ANGLE	1
30	3V9810	TUBE ASSEM.	1
31	1P3704	SEAL	2
32	3V9807	TUBE ASSEM.	1
33	1D4707	BOLT	4
34	T768	BOLT	4
35	6K2124	BOLT	4
	2M849	WASHER	4
36	5K7664	TUBE ASSEM.	1
37	5K9089	SEAT	1
	5K9090	SEAL	2
C 38	4V5381	TUBE ASSEM	1
39	5K7299	ELBOW	1
C 40	1D4717	NUT	1

● ORDER BY THE INCH

▲ ORDER BY THE CENTIMETRE

169777

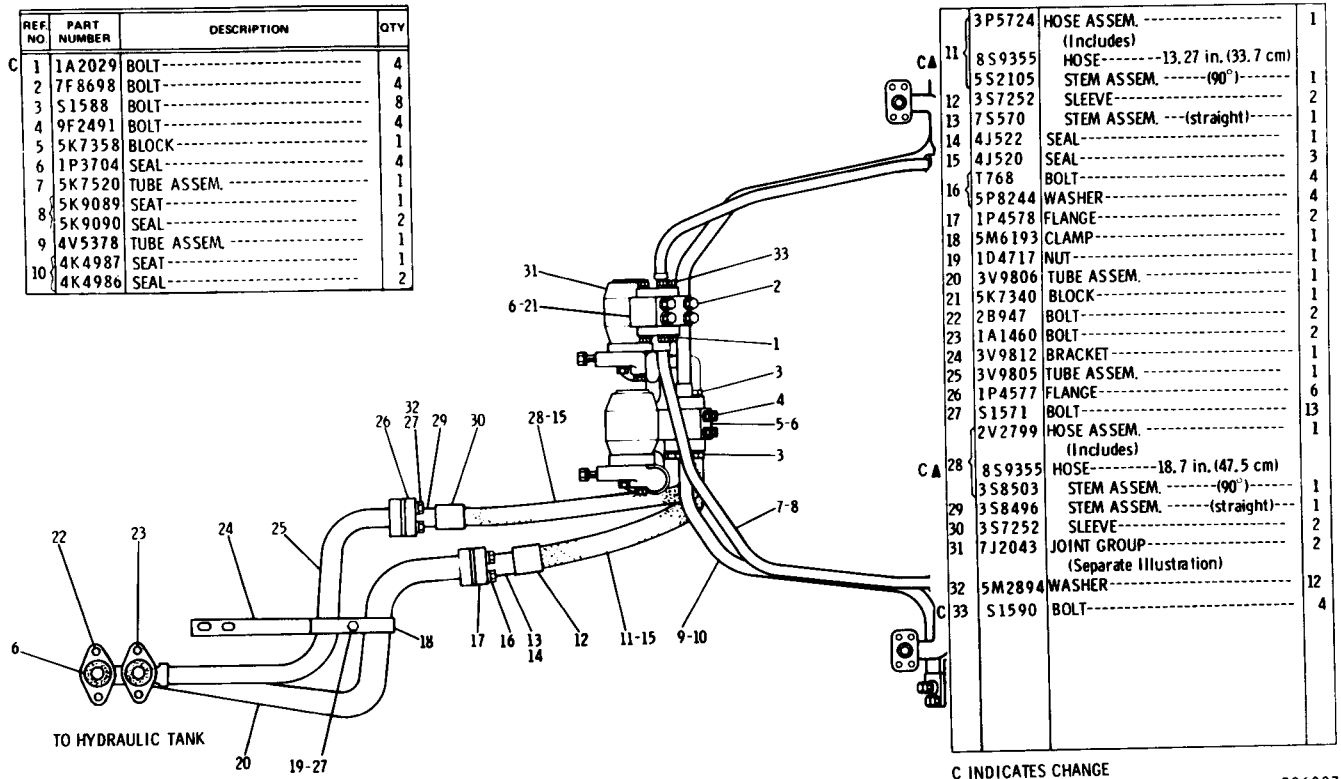

REF. NO.	PART NUMBER	DESCRIPTION	QTY
C 1	1A2029	BOLT	4
2	7F8698	BOLT	4
3	S1588	BOLT	8
4	9F2491	BOLT	4
5	5K7358	BLOCK	1
6	1P3704	SEAL	4
7	5K7520	TUBE ASSEM.	1
8	5K9089	SEAT	1
	5K9090	SEAL	2
9	4V5378	TUBE ASSEM.	1
10	4K4987	SEAT	1
	4K4986	SEAL	2

	3P5724	HOSE ASSEM. (Includes)	1
11	8S9355	HOSE---13.27 in. (33.7 cm)	
	5S2105	STEM ASSEM. ---(90°)---	1
12	3S7252	SLEEVE	2
13	7S570	STEM ASSEM. ---(straight)---	1
14	4J522	SEAL	1
15	4J520	SEAL	3
16	T768	BOLT	4
	5P8244	WASHER	4
17	1P4578	FLANGE	2
18	5M6193	CLAMP	1
19	1D4717	NUT	1
20	3V9806	TUBE ASSEM.	1
21	5K7340	BLOCK	1
22	2B947	BOLT	2
23	1A1460	BOLT	2
24	3V9812	BRACKET	1
25	3V9805	TUBE ASSEM.	1
26	1P4577	FLANGE	6
27	S1571	BOLT	13
	2V2799	HOSE ASSEM. (Includes)	1
28	8S9355	HOSE---18.7 in. (47.5 cm)	
	3S8503	STEM ASSEM. ---(90°)---	1
29	3S8496	STEM ASSEM. ---(straight)---	1
30	3S7252	SLEEVE	2
31	7J2043	JOINT GROUP (Separate Illustration)	2
32	5M2894	WASHER	12
C 33	S1590	BOLT	4

3V6946 TILT CYLINDER LINES GROUP—Part 1
Serial No. 13X2220, 2225 and 13X2251 to 13X2554 inclusive
7J2043 Joint parts are shown on Page 196

3V6946 TILT CYLINDER LINES GROUP—Part 2
Serial No. 13X2220, 2225 and 13X2251 to 13X2554 inclusive

REF. NO.	PART NUMBER	DESCRIPTION	QTY.
C 1	4V5407	TUBE ASSEM.	1
2	4K4987	SEAT	1
2	4K4986	SEAL	2
C 3	1P3702	SEAL	5
4	2A4639	BOLT	4
5	1A2029	BOLT	8
6	5K7300	ELBOW	1
C	4V5184	HOSE ASSEM.	2
		(Each Includes)	
● 7	9S247	HOSE—37.8 in. (96 cm)	
▲	5P7533	GUARD—87 cm(34.35 in.)	
	3S7165	STEM ASSEM. —(straight)—	1
8	3S7166	SLEEVE	2
9	3S8363	STEM ASSEM. —(90°)—	1
10	1P4576	FLANGE	16
C 11	S1571	BOLT	24
C 12	5M2894	WASHER	32
C 13	4J5267	SEAL	13
C 14	4V5413	TUBE ASSEM.	1
15	1C2251	BOLT	4
C 16	3V3308	WASHER	10
C 17	S1594	BOLT	11
18	7K2246	SPACER	2
19	S1588	BOLT	8
C	4V5185	HOSE ASSEM.	2
20		(Each Includes)	
●	9S247	HOSE—37 in. (93 cm)	
▲	5P7533	GUARD—84 cm(33.07 in.)	
21	3S7166	SLEEVE	2
22	3S7165	STEM ASSEM.	2
23	S1585	BOLT	4
23	5P8245	WASHER	8
C 24	1D4719	NUT	4
25	9K9017	BRACKET	4
26	7K2248	SPACER	4
27	5P1075	WASHER	1
28	3V7944	CLAMP	1

C INDICATES CHANGE

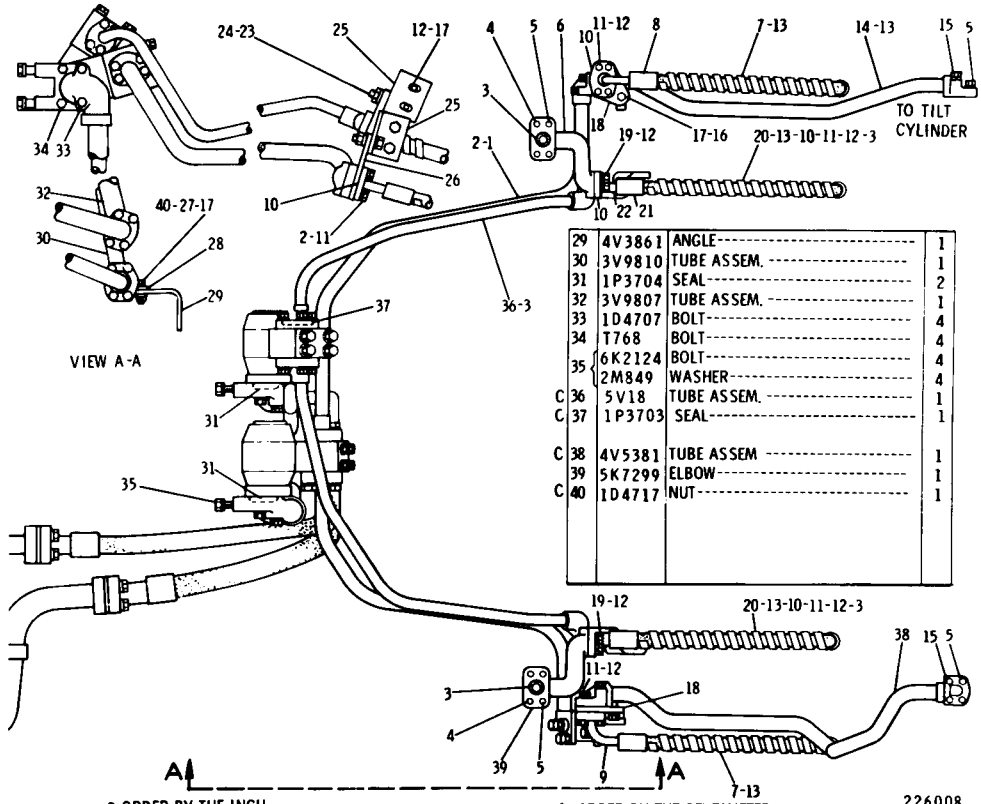

29	4V3861	ANGLE	1
30	3V9810	TUBE ASSEM.	1
31	1P3704	SEAL	2
32	3V9807	TUBE ASSEM.	1
33	1D4707	BOLT	4
34	T768	BOLT	4
35	6K2124	BOLT	4
35	2M849	WASHER	4
C 36	5V18	TUBE ASSEM.	1
C 37	1P3703	SEAL	1
C 38	4V5381	TUBE ASSEM	1
39	5K7299	ELBOW	1
C 40	1D4717	NUT	1

REF. NO.	PART NUMBER	DESCRIPTION	QTY
1	1A2029	BOLT	4
2	7F8698	BOLT	4
3	S1588	BOLT	8
4	9F2491	BOLT	4
5	5K7358	BLOCK	1
6	1P3704	SEAL	4
7	5K7520	TUBE ASSEM.	1
8	5K9089	SEAT	1
	5K9090	SEAL	2
9	4V5378	TUBE ASSEM.	1
10	4K4987	SEAT	1
	4K4986	SEAL	2

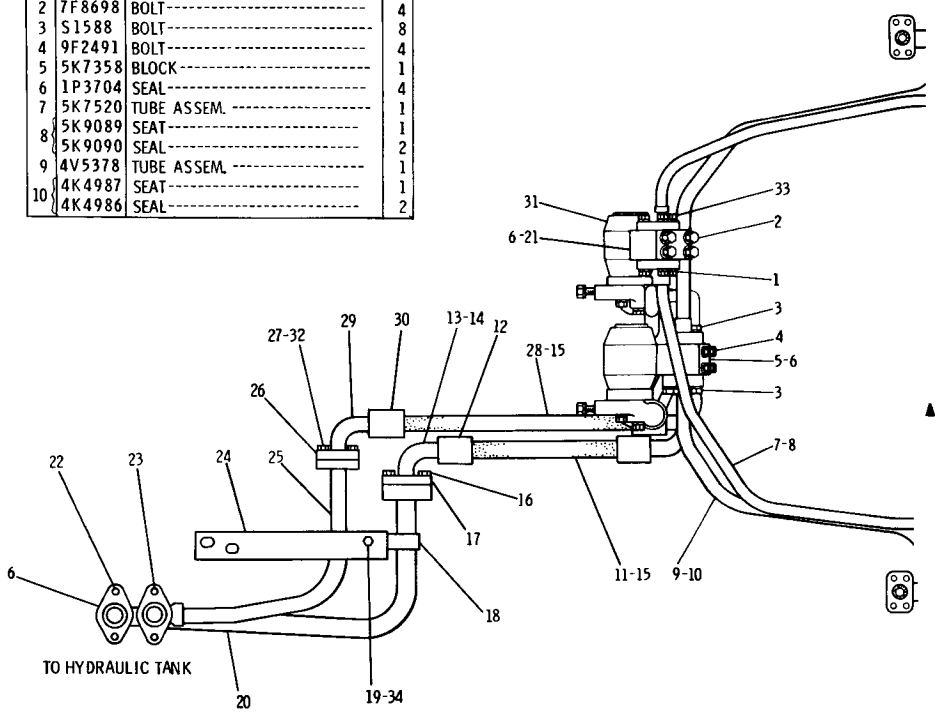

REF. NO.	PART NUMBER	DESCRIPTION	QTY
11	7V3734	HOSE ASSEM.	1
		(Includes)	
	8S9355	HOSE--19.7 in. (50 cm)	
	3S8503	STEM ASSEM. ---(large dia.)--	1
12	3S7252	SLEEVE	2
13	7S575	STEM ASSEM. -(small dia.)-----	1
14	4J522	SEAL	1
15	4J520	SEAL	3
16	T768	BOLT	4
	5P8244	WASHER	4
17	1P4578	FLANGE	2
18	6K3919	CLAMP	2
19	1D4717	NUT	1
20	7V2950	TUBE ASSEM.	1
21	5K7340	BLOCK	1
22	2B947	BOLT	2
23	1A1460	BOLT	2
24	7V3628	BRACKET	1
25	7V2947	TUBE ASSEM.	1
26	1P4577	FLANGE	6
27	S1571	BOLT	13
28	7V3735	HOSE ASSEM.	1
		(Includes)	
	8S9355	HOSE--25.6 in. (65 cm)	
29	3S8503	STEM ASSEM. ---(90°)----------	2
30	3S7252	SLEEVE	2
31	7J2043	JOINT GROUP	2
		(Separate Illustration)	
32	5M2894	WASHER	12
33	L2070	BOLT	4
34	3B1915	BOLT	1

▲ ORDER BY THE INCH

178382

7V3629 TILT CYLINDER LINES GROUP—Part 1
Serial No. 13X2555—Up
7J2043 Joint parts are shown on Page 196

7V3629 TILT CYLINDER LINES GROUP—Part 2
Serial No. 13X2555—Up

REF. NO.	PART NUMBER	DESCRIPTION	QTY.
1	4V5407	TUBE ASSEM.	1
2	4K4987	SEAT	1
	4K4986	SEAL	2
3	1P3702	SEAL	5
4	2A4639	BOLT	4
5	1A2029	BOLT	8
6	5K7300	ELBOW	1
7	4V5184	HOSE ASSEM. (Each Includes)	2
●	9S247	HOSE—37.8 in. (96 cm)	
▲	5P7533	GUARD—87 cm(34.35 in.)	
	3S7165	STEM ASSEM. (straight)	1
8	3S7166	SLEEVE	2
9	3S8363	STEM ASSEM. (90°)	1
10	1P4576	FLANGE	16
11	S1571	BOLT	24
12	5M2894	WASHER	32
13	4J5267	SEAL	13
14	4V5413	TUBE ASSEM.	1
15	1C2251	BOLT	4
16	3V3308	WASHER	10
17	S1594	BOLT	11
18	7K2246	SPACER	2
19	S1588	BOLT	8
20	4V5185	HOSE ASSEM. (Each Includes)	2
●	9S247	HOSE—37 in. (93 cm)	
▲	5P7533	GUARD—84 cm(33.07 in.)	
21	3S7166	SLEEVE	2
22	3S7165	STEM ASSEM.	2
23	5P8245	WASHER	8
24	1D4719	NUT	4
25	9K9017	BRACKET	4
26	7K2248	SPACER	4
27	5P1075	WASHER	1
28	3V7944	CLAMP	1

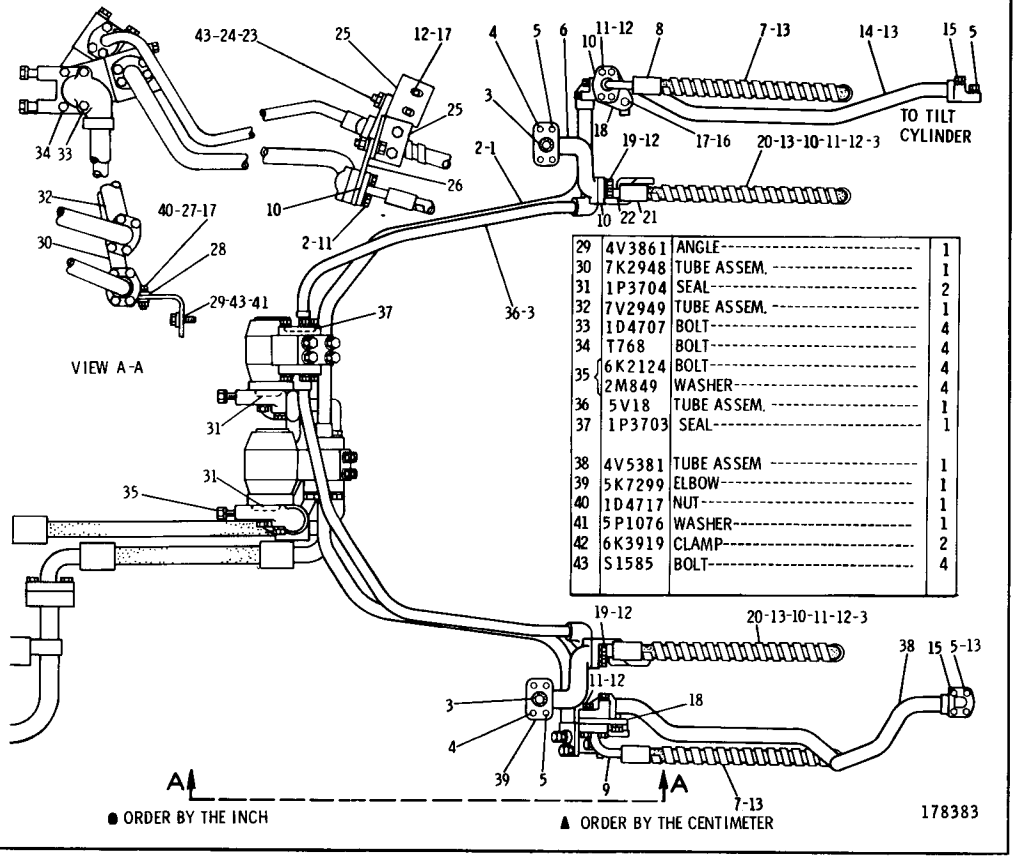

29	4V3861	ANGLE	1
30	7K2948	TUBE ASSEM.	1
31	1P3704	SEAL	2
32	7V2949	TUBE ASSEM.	1
33	1D4707	BOLT	4
34	T768	BOLT	4
35	6K2124	BOLT	4
	2M849	WASHER	4
36	5V18	TUBE ASSEM.	1
37	1P3703	SEAL	1
38	4V5381	TUBE ASSEM	1
39	5K7299	ELBOW	1
40	1D4717	NUT	1
41	5P1076	WASHER	1
42	6K3919	CLAMP	2
43	S1585	BOLT	4

● ORDER BY THE INCH

▲ ORDER BY THE CENTIMETER

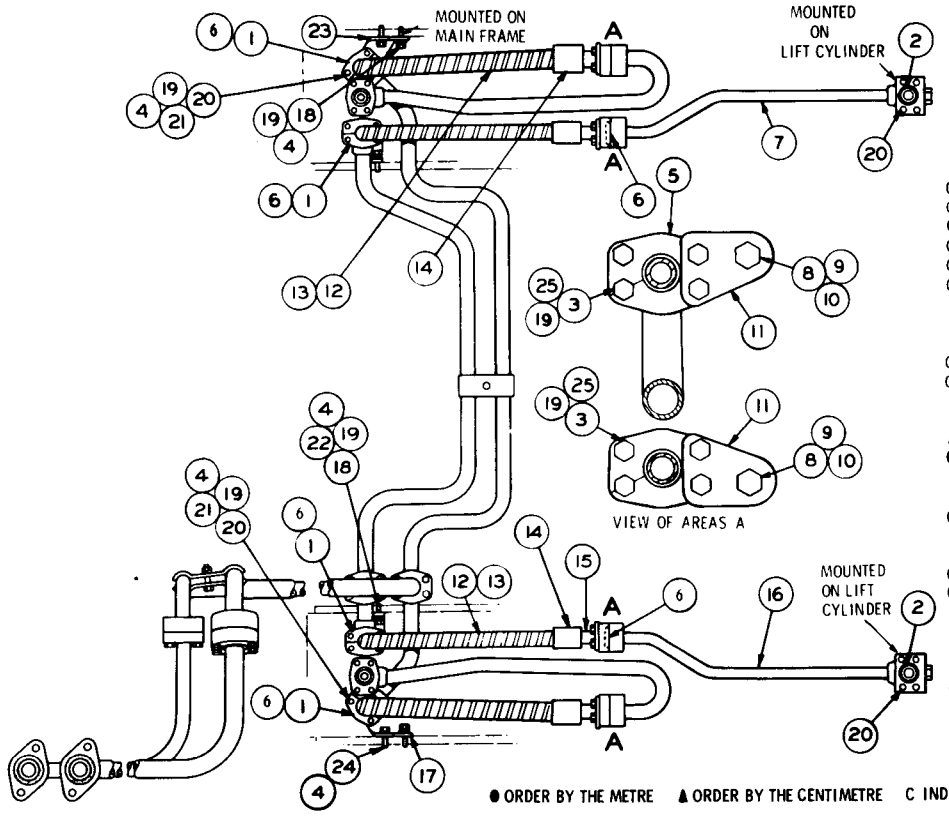

	REF. NO.	PART NUMBER	DESCRIPTION	QTY
C	1	6K435	FLANGE	8
C	2	1P3703	SEAL	2
C	3	L1143	BOLT	16
C	4	3B4506	LOCKWASHER	24
C	5	1P4576	FLANGE	8
C	6	4J5267	SEAL	6
	7	4V3402	TUBE ASSEM. -------(L. H.)-------	1
	8	S1595	BOLT	4
	9	3B4508	LOCKWASHER	4
C	10	5P8245	WASHER	4
C	11	4V3398	BRACKET	4
	12	3V7490	HOSE ASSEM. (Includes)	4
▲		5P180	HOSE------69.60 cm(27.40 in.)	
●	13	5P5975	GUARD-------.61 m(23.86 in.)	
	14	3S7166	SLEEVE	2
	15	3S7165	STEM ASSEM.	2
C	16	4V3401	TUBE ASSEM. --------(R. H.)------	1
	17	6K4069	BRACKET----------(R. H.)--------	1
	18	S1594	BOLT	4
C	19	3V3308	WASHER	20
C	20	L2070	BOLT--------5.72 cm(2.25 in.) long	16
	21	S1590	BOLT---------5.08 cm(2 in.) long	8
	22	6K3911	BRACKET	2
	23	6K4070	BRACKET---------(L. H.)---------	1
	24	L1351	BOLT	4
C	25	1D4717	NUT	16

218084

● ORDER BY THE METRE ▲ ORDER BY THE CENTIMETRE C INDICATES CHANGE

5K6407 LIFT CYLINDER LINES GROUP—Part 1
Serial No. 13X1 to 13X759 inclusive

5K6407 LIFT CYLINDER LINES GROUP—Part 2
Serial No. 13X1 to 13X759 inclusive

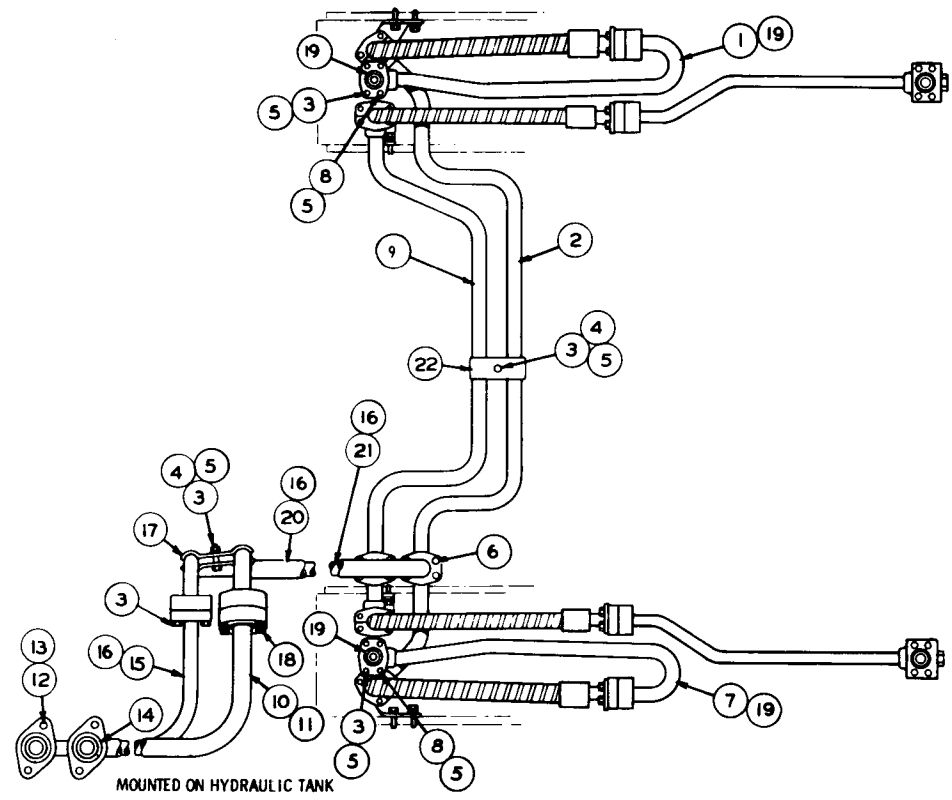

	REF. NO.	PART NUMBER	DESCRIPTION	QTY
C	1	4V3400	TUBE ASSEM. -------(L.H.)-------	1
	2	6K3776	TUBE ASSEM. ----------	1
	3	S1588	BOLT----------	10
	4	1D4717	NUT----------	2
	5	3B4506	LOCKWASHER----------	10
	6	3B1915	BOLT----------	8
C	7	4V3399	TUBE ASSEM. -----(R.H.)---------	1
	8	1C2251	BOLT----------	4
	9	6K3778	TUBE ASSEM. ----------	1
	10	1V4990	TUBE ASSEM. ----------	1
	11	1P3704	SEAL----------	1
	12	9S1366	BOLT----------	4
	13	3B4508	LOCKWASHER----------	4
	14	1P3705	SEAL----------	2
C	15	4V6475	TUBE ASSEM. ----------	1
C	16	4J520	SEAL----------	3
	17	6K3919	CLAMP----------	2
	18	T319	BOLT----------	4
C	19	4J5267	SEAL----------	4
C	20	4V6471	TUBE ASSEM. ----------	1
C	21	4V6470	TUBE ASSEM. ----------	1
	22	5M7087	CLAMP----------	2

C INDICATES CHANGE

218085

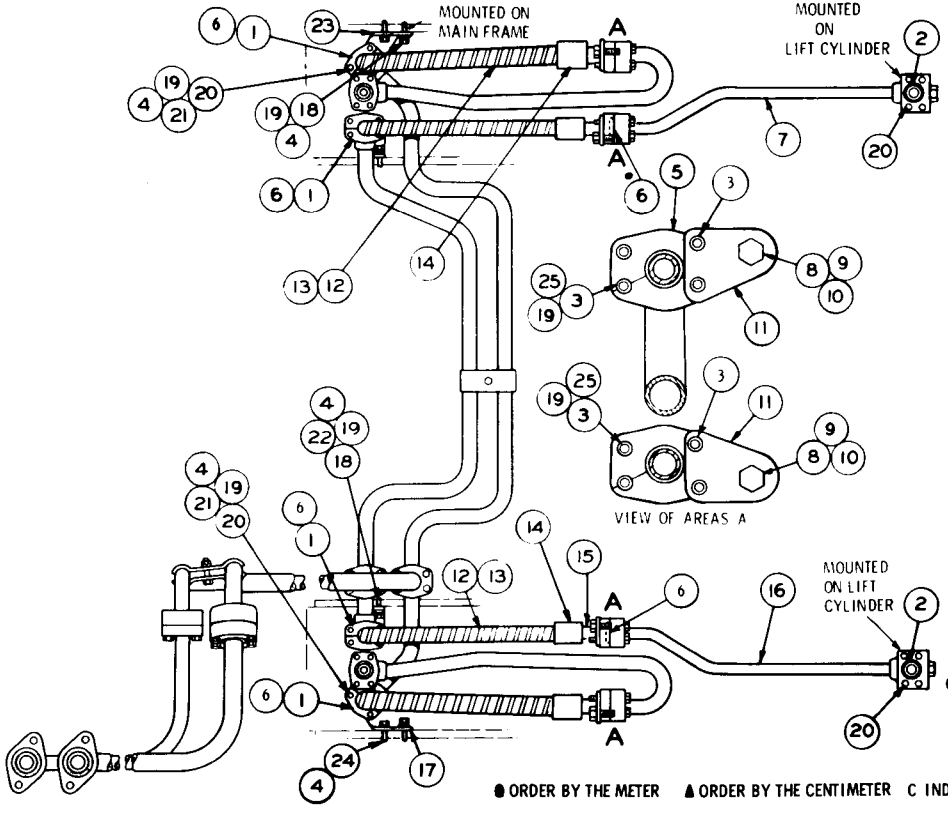

REF NO.	PART NUMBER	DESCRIPTION	QTY
	6K435	FLANGE	8
	1P3703	SEAL	2
C	L1143	BOLT	16
	3B4506	LOCKWASHER	24
	1P4576	FLANGE	8
	4J5267	SEAL	6
	4V3402	TUBE ASSEM. (L. H.)	1
C	S1585	BOLT	4
	3B4508	LOCKWASHER	4
	5P8245	WASHER	4
C	4V9813	BRACKET	4
12	3V7490	HOSE ASSEM. (Includes)	4
▲	5P180	HOSE 69.60 cm (27.40 in.)	
● 13	5P5975	GUARD .61 m (23.86 in.)	
14	3S7166	SLEEVE	2
15	3S7165	STEM ASSEM.	2
16	4V3401	TUBE ASSEM. (R. H.)	1
17	6K4069	BRACKET (R. H.)	1
18	S1594	BOLT	4
C 19	5M2894	WASHER	20
20	L2070	BOLT 5.72 cm (2.25 in.) long	16
21	S1590	BOLT 5.08 cm (2 in.) long	8
22	6K3911	BRACKET	2
23	6K4070	BRACKET (L. H.)	1
24	L1351	BOLT	4
C 25	1D4717	NUT	8

● ORDER BY THE METER ▲ ORDER BY THE CENTIMETER C INDICATES CHANGE 220694

5K6407 LIFT CYLINDER LINES GROUP—Part 1
Serial No. 13X760—Up

5K6407 LIFT CYLINDER LINES GROUP—Part 2
Serial No. 13X760—Up

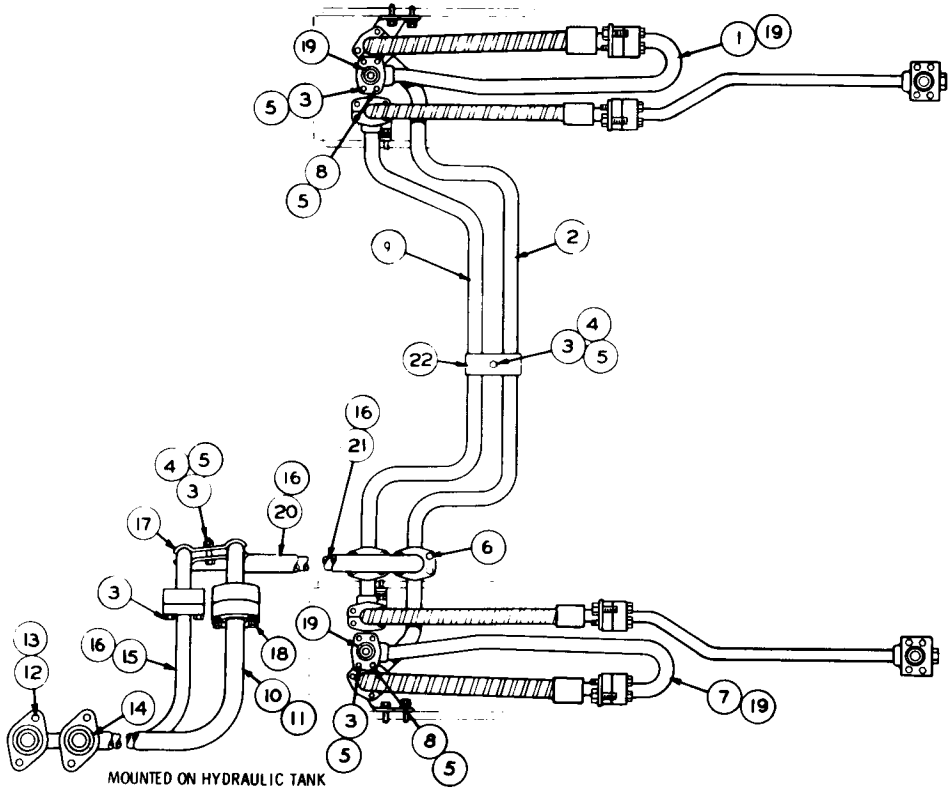

REF. NO	PART NUMBER	DESCRIPTION	QTY
1	4V3400	TUBE ASSEM. -------(L.H.)-------	1
2	6K3776	TUBE ASSEM. ----------	1
3	S1588	BOLT----------	10
4	1D4717	NUT----------	2
5	3B4506	LOCKWASHER----------	10
6	3B1915	BOLT----------	8
7	4V3399	TUBE ASSEM. -----(R.H.)---------	1
8	1C2251	BOLT----------	4
9	6K3778	TUBE ASSEM. ----------	1
10	1V4990	TUBE ASSEM. ----------	1
11	1P3704	SEAL----------	1
12	9S1366	BOLT----------	4
13	3B4508	LOCKWASHER----------	4
14	1P3705	SEAL----------	2
15	4V6475	TUBE ASSEM. ----------	1
16	4J520	SEAL----------	3
17	6K3919	CLAMP----------	2
18	T319	BOLT----------	4
19	4J5267	SEAL----------	4
20	4V6471	TUBE ASSEM. ----------	1
21	4V6470	TUBE ASSEM. ----------	1
22	5M7087	CLAMP----------	2

220695

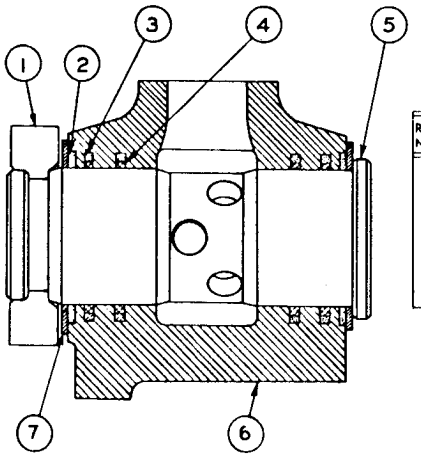

REF. NO.	PART NUMBER	DESCRIPTION	QTY
1	7J2042	FLANGE	2
2	7J2038	SEAL	2
3	7J2036	SEAL	4
4	7J2037	SEAL	4
5	7J2039	ROTOR	1
6	7J2041	HOUSING	1
7	7J2040	WASHER	2

111025

7J2043 SWIVEL JOINT GROUP
Part of 3V6946 and 7V3629 Tilt Cylinder Lines Groups shown on Pages 192 & 193C

7J9637 TILT CYLINDER GROUP (Change 5)—(7K9443 N/S)—R.H.—127 mm (5 in.) Bore x 591.82 mm (23.30 in.) Stroke

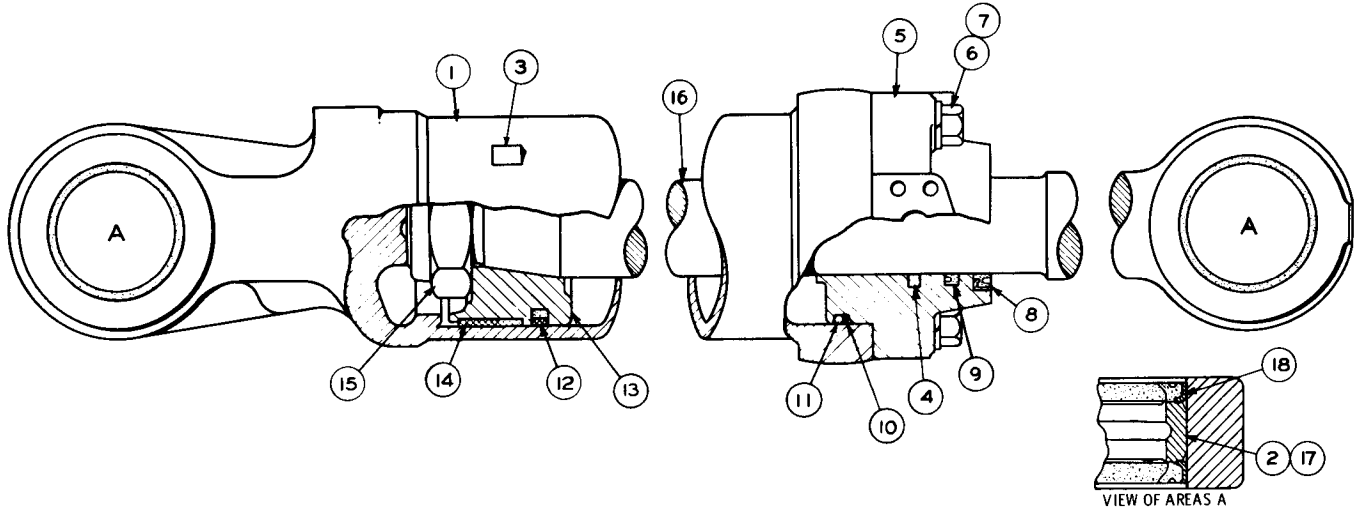

REF. NO.	PART NUMBER	DESCRIPTION	QTY
1	7J9635	CYLINDER ASSEM.-----(R.H.)---- (Includes)	1
	5B8855	PLATE----------	1
	7J9633	HEAD ASSEM.---------- (Includes)	1
2	7J9346	BEARING----------	1
3	6J2653	LUG----------	1
4	5J3620	SEAL----------	1
5	6J9739	HEAD----------	1
6	1D4628	BOLT----------	4
7	3B4514	LOCKWASHER----------	4
8	1K6982	SEAL----------	1
9	5J964	SEAL----------	1
10	2K4096	RING----------	1
11	5F3144	SEAL----------	1
C 12	5J5020	SEAL ASSEM.----------	1
C 13	3G3263	PISTON----------	1
C 14	4J3420	RING----------	1
15	2J564	NUT----------	1
16	7J9631	ROD ASSEM.---------- (Includes)	1
17	7J9346	BEARING----------	1
▲ 18	5P64	SEAL----------	4

C INDICATES CHANGE

▲ NOT PART OF 7J9637 CYLINDER GROUP

168588

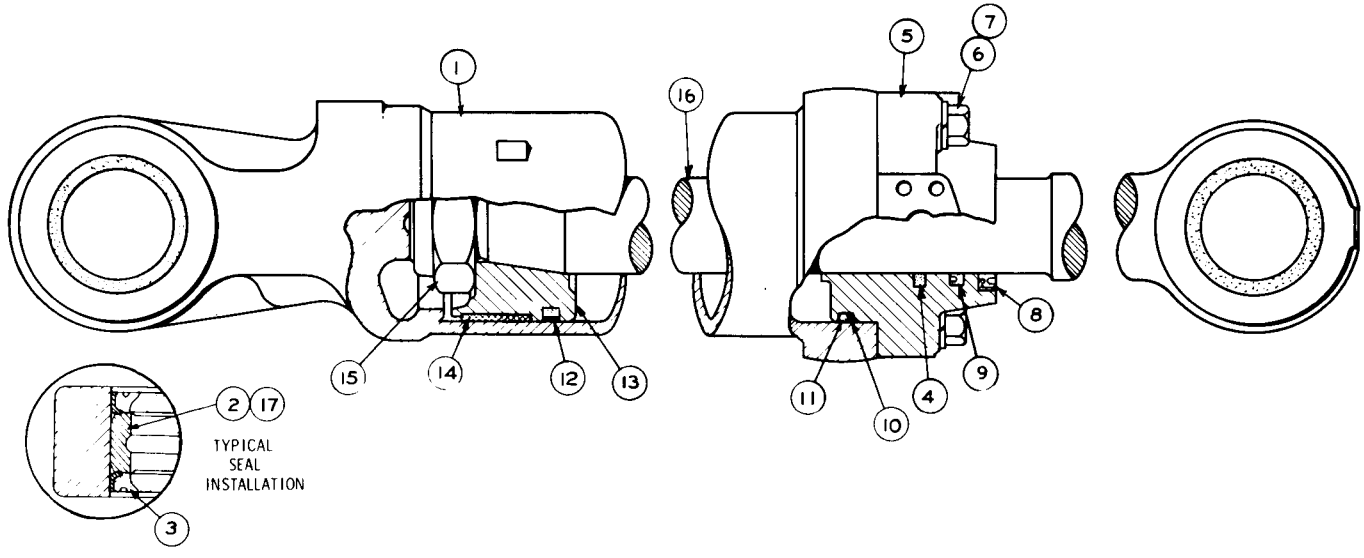

REF. NO.	PART NUMBER	DESCRIPTION	QTY
1	7J9636	CYLINDER ASSEM. ------(L.H.)----	1
2	7J9346	BEARING----------	1
▲ 3	5P64	SEAL----------	4
4	5J3620	SEAL----------	1
5	6J9739	HEAD----------	1
6	1D4628	BOLT----------	4
7	3B4514	LOCKWASHER----------	4
8	1K6982	SEAL----------	1
9	5J964	SEAL----------	1
10	2K4096	RING----------	1
11	5F3144	SEAL----------	1
C 12	5J5020	SEAL ASSEM.----------	1
C 13	3G3263	PISTON----------	1
C 14	4J3420	RING----------	1
15	2J564	NUT----------	1
16	7J9632	ROD ASSEM.----------	1
		(Includes)	
18	7J9346	BEARING----------	1

C INDICATES CHANGE

▲ NOT PART OF 7J9638 CYLINDER GROUP 168460

7J9638 TILT CYLINDER GROUP (Change 5)—(7K9444 N/S)—L.H.—127 mm (5 in.) Bore x 591.82 mm (23.30 in.) Stroke
Serial No. 13X1 to 13X1422 inclusive

3G8081 TILT CYLINDER GROUP (Change 0)—(5V1693 N/S)—L.H. 127 mm (5 in.) Bore x 593 mm (23.35 in.) Stroke
Serial No. 13X1423—Up

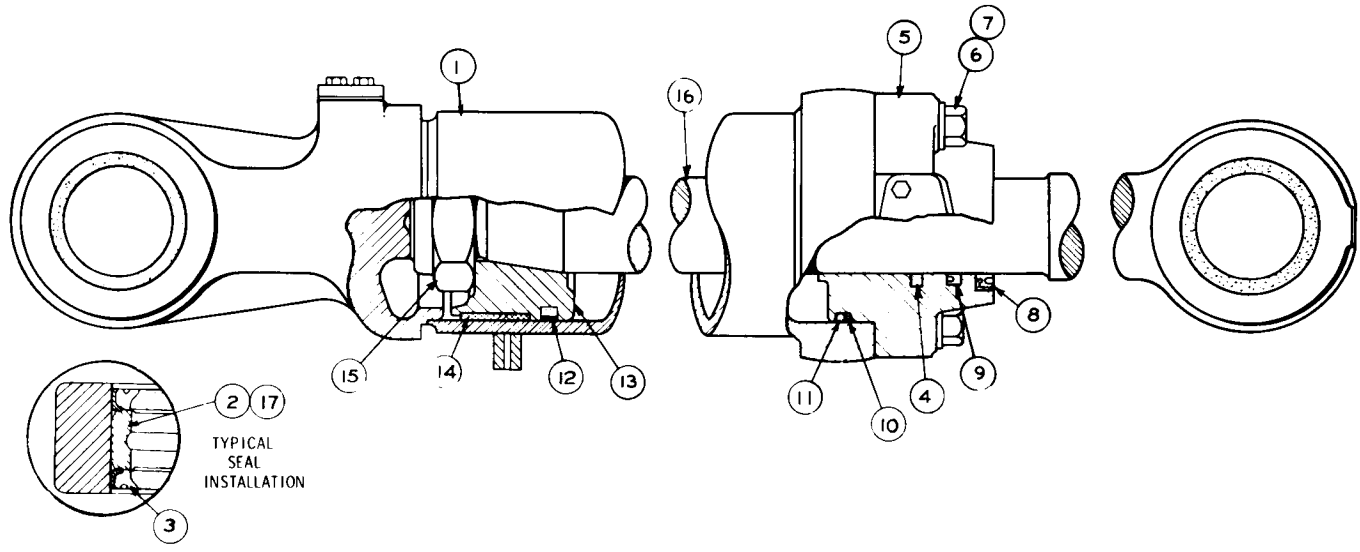

REF. NO.	PART NUMBER	DESCRIPTION	QTY.
1	3G8080	CYLINDER ASSEM. ----(L. H.)----- (Includes)	1
2	7J9346	BEARING----------	1
▲ 3	5P64	SEAL----------	4
4	5J3620	SEAL----------	1
5	6J9739	HEAD----------	1
6	1D4628	BOLT----------	4
7	5P8249	WASHER----------	4
8	1K6982	SEAL----------	1
9	5J964	SEAL----------	1
10	2K4096	RING----------	1
11	5F3144	SEAL----------	1
12	5J5020	SEAL ASSEM. ----------	1
13	3G3263	PISTON----------	1
14	4J3420	RING----------	1
15	2J564	NUT----------	1
16	7J9631	ROD ASSEM. ---------- (Includes)	1
17	7J9346	BEARING----------	1

▲ NOT PART OF 3G8081 CYLINDER GROUP

173212

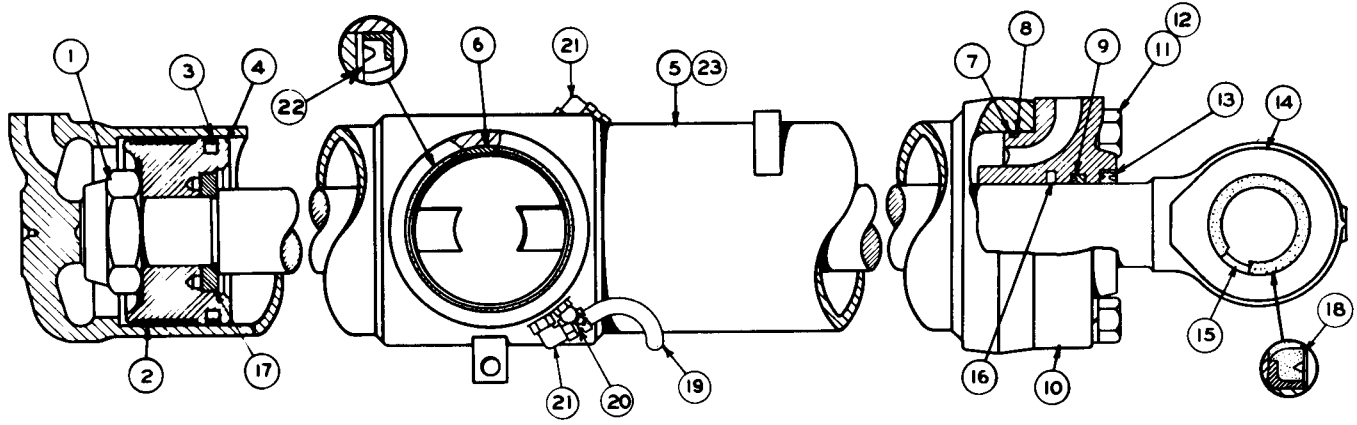

REF. NO.	PART NUMBER	DESCRIPTION	QTY
1	2J564	NUT	1
2	7J1731	RING	1
3	5J4988	SEAL ASSEM.	1
4	7J1727	PISTON	1
5	9J2403	CYLINDER ASSEM. (Includes)	1
6	9J2408	BEARING	2
7	2H9247	SEAL	1
8	2K2961	RING	1
9	5J964	SEAL ASSEM.	1
10	6J6918	HEAD	1
11	1D4628	BOLT	4
12	3B4514	LOCKWASHER	4
13	1K6982	SEAL	1
14	7J9639	ROD ASSEM. (Includes)	1
15	7J9374	BEARING	1
16	5J3620	SEAL	1
17	6J5773	WASHER	1
▲ 18	7K9208	SEAL	2
▲ 19	7K4572	HOSE ASSEM.	1
C▲ 20	7J7283	FITTING	1
▲ 21	307946	ELBOW	2
▲	3J7354	SEAL	2
C▲ 22	5P1178	SEAL	2
▲ 23	1K6853	FITTING	1

C INDICATES CHANGE
▲ NOT PART OF 9J2401 CYLINDER GROUP

166556

9J2401 LIFT CYLINDER GROUP (Change 0-2)—(1V2133 N/S)—R.H.—139.7 mm (5.50 in.) Bore x 833.12 mm (32.80 in.) Stroke
Serial No. 13X1 to 13X2979 inclusive

9J2401 LIFT CYLINDER GROUP (Change 3)—(1V2133 N/S)—R.H.—139.7 mm (5.50 in.) Bore x 833.12 mm (32.80 in.) Stroke
Serial No. 13X2980—Up

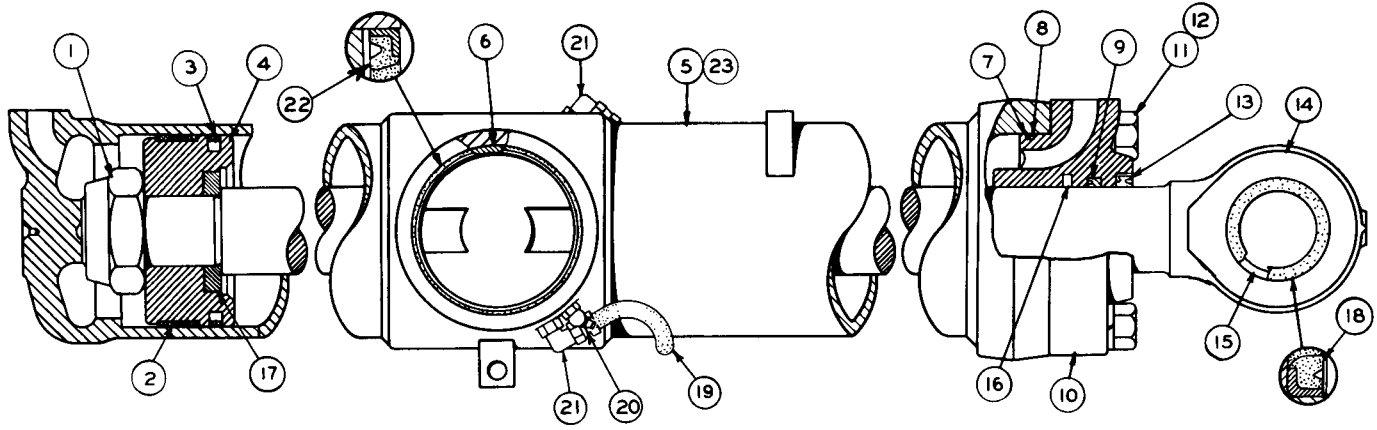

	REF. NO	PART NUMBER	DESCRIPTION	QTY
	1	2J564	NUT	1
C	2	4J4606	RING	1
	3	5J4988	SEAL ASSEM.	1
C	4	7J2672	PISTON	1
	5	9J2403	CYLINDER ASSEM. (Includes)	1
	6	9J2408	BEARING	2
	7	2H9247	SEAL	1
	8	2K2961	RING	1
	9	5J964	SEAL ASSEM.	1
	10	6J6918	HEAD	1
	11	1D4628	BOLT	4
	12	3B4514	LOCKWASHER	4
	13	1K6982	SEAL	1
	14	7J9639	ROD ASSEM. (Includes)	1
	15	7J9374	BEARING	1
	16	5J3620	SEAL	1
	17	6J5773	WASHER	1
▲	18	7K9208	SEAL	2
▲	19	7K4572	HOSE ASSEM.	1
▲	20	7J7283	FITTING	1
▲	21	307946	ELBOW	2
▲		3J7354	SEAL	2
▲	22	5P1178	SEAL	2
▲	23	1K6853	FITTING	1

C INDICATES CHANGE
▲ NOT PART OF 9J2401 CYLINDER GROUP

232574

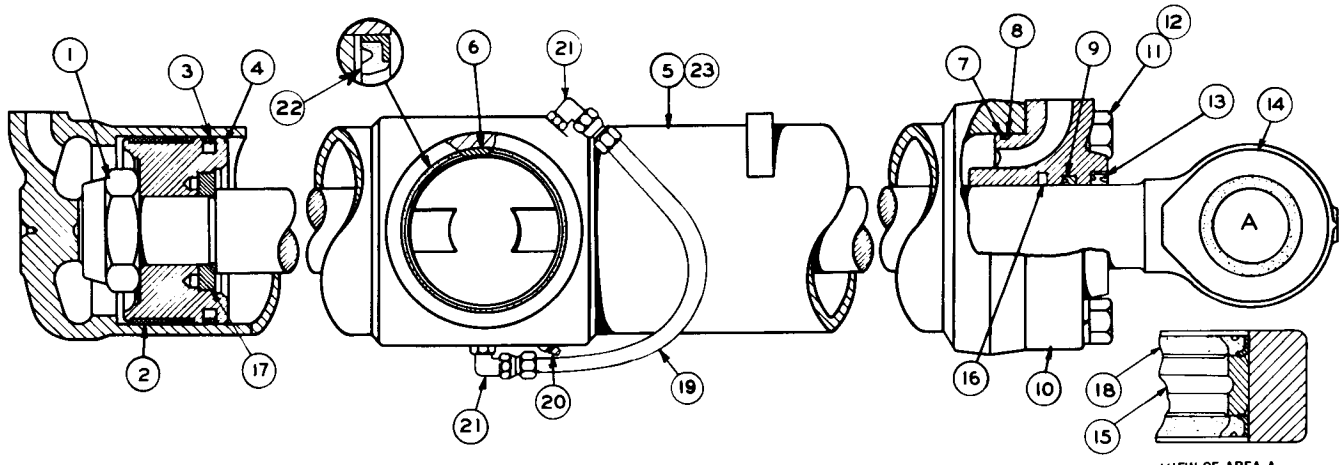

VIEW OF AREA A

REF. NO.	PART NUMBER	DESCRIPTION	QTY
1	2J564	NUT	1
2	7J1731	RING	1
3	5J4988	SEAL ASSEM.	1
4	7J1727	PISTON	1
5	9J2402	CYLINDER ASSEM. (Includes)	1
6	9J2408	BEARING	2
7	2H9247	SEAL	1
8	2K2961	RING	1
9	5J964	SEAL ASSEM.	1
10	6J6918	HEAD	1
11	1D4628	BOLT	4
12	3B4514	LOCKWASHER	4
13	1K6982	SEAL	1
14	7J9639	ROD ASSEM. (Includes)	1
15	7J9374	BEARING	1
16	5J3620	SEAL	1
17	6J5773	WASHER	1
▲ 18	7K9208	SEAL	2
▲ 19	7K4572	HOSE ASSEM.	1
C ▲ 20	3J7283	FITTING	1
▲ 21	3J7946	ELBOW	2
▲	3J7354	SEAL	2
▲ 22	5P1178	SEAL	2
▲ 23	1K6853	FITTING	1

▲ NOT PART OF 9J2399 CYLINDER GROUP

C INDICATES CHANGE

207865

9J2399 LIFT CYLINDER GROUP (Change 0-2)—(1V2134 N/S)—L.H.—139.7 mm (5.50 in.) Bore x 833.12 mm :32.80 in.) Stroke
Serial No. 13X1 to 13X2979 inclusive

9J2399 LIFT CYLINDER GROUP (Change 3)—(1V2134 N/S)—L.H.—139.7 mm (5.50 in.) Bore x 833.12 mm (32.80 in.) Stroke
Serial No. 13X2980—Up

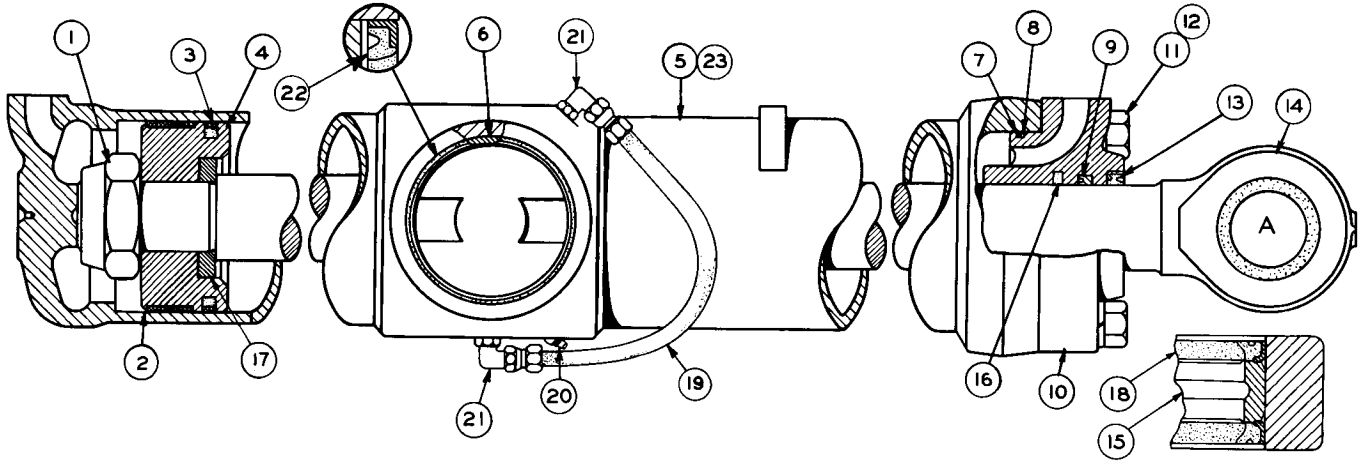

VIEW OF AREA A

	REF. NO.	PART NUMBER	DESCRIPTION	QTY
	1	2J564	NUT	1
C	2	4J4606	RING	1
	3	5J4988	SEAL ASSEM.	1
C	4	7J2672	PISTON	1
	5	9J2402	CYLINDER ASSEM. (Includes)	1
	6	9J2408	BEARING	2
	7	2H9247	SEAL	1
	8	2K2961	RING	1
	9	5J964	SEAL ASSEM.	1
	10	6J6918	HEAD	1
	11	1D4628	BOLT	4
	12	3B4514	LOCKWASHER	4
	13	1K6982	SEAL	1
	14	7J9639	ROD ASSEM. (Includes)	1
	15	7J9374	BEARING	1
	16	5J3620	SEAL	1
	17	6J5773	WASHER	1
▲	18	7K9208	SEAL	2
▲	19	7K4572	HOSE ASSEM.	1
▲	20	3J7283	FITTING	1
▲	21	307946	ELBOW	2
▲		3J7354	SEAL	2
▲	22	5P1178	SEAL	2
▲	23	1K6853	FITTING	1

▲ NOT PART OF 9J2399 CYLINDER GROUP

C INDICATES CHANGE

232575

8J5713 CYLINDER GROUP (Change 0)—(9K3167 N/S)—114.3 mm (4.5 in.) Bore x 513.08 mm (20.20 in.) Stroke
Part of 6K703 Side Dump Bucket Arrangement listed on Page 211
AN ATTACHMENT

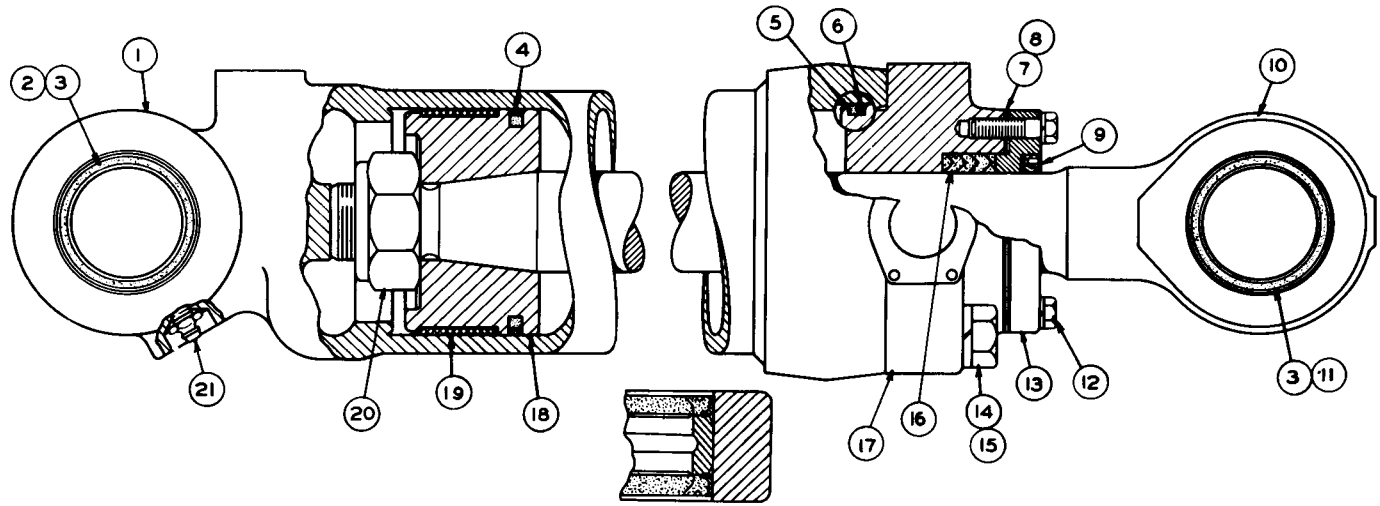

TYPICAL SEAL INSTALLATION

REF. NO.	PART NUMBER	DESCRIPTION	QTY
1	8J5714	CYLINDER ASSEM. (Includes)	1
2	8J5717	BEARING	1
▲ 3	5P94	SEAL	4
4	5J4986	SEAL ASSEM.	1
5	2H3928	SEAL	1
6	1K7095	RING	1
7	2J3864	SHIM-----(.0478 in. thick)-----	1
8	2J3861	SHIM-----(.010 in. thick)-----	6
9	1K6981	SEAL	1
10	8J5718	ROD ASSEM. (Includes)	1
11	8J5667	BEARING	1
12	3B1915	BOLT	4
	3B4506	LOCKWASHER	4
13	2J3860	RETAINER	1
14	1D4608	BOLT	4
15	3B4512	LOCKWASHER	4
16	3F9609	PACKING	1
17	5J9989	HEAD	1
18	5J9986	PISTON	1
19	4J2620	RING	1
20	2J3950	NUT	1
21	3B8489	FITTING	1

▲ NOT PART OF 8J5713 CYLINDER GROUP

144870

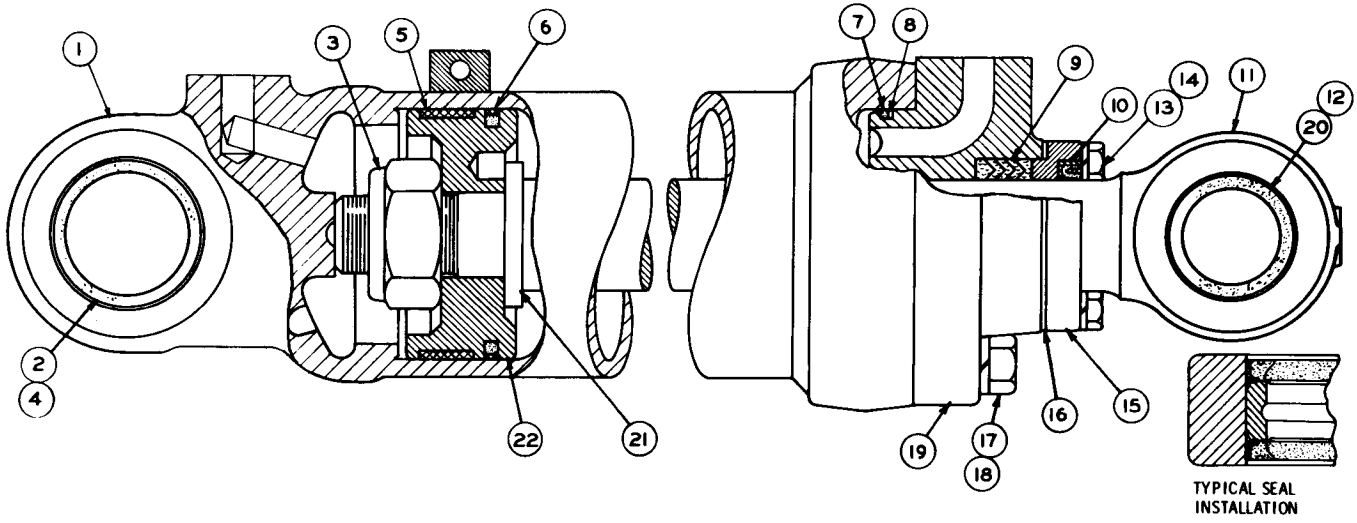

REF. NO.	PART NUMBER	DESCRIPTION	QTY
1	8J8495	CYLINDER ASSEM. (Includes)	1
2	7J9708	BEARING	1
3	2J3950	NUT	1
▲ 4	5P94	SEAL	2
5	4J3745	RING	1
6	5J4986	SEAL ASSEM.	1
7	2H3928	SEAL	1
8	1K7095	RING	1
9	3F9609	PACKING	1
10	1K6981	SEAL	1
11	8J5711	ROD ASSEM. (Includes)	1
12	7J9688	BEARING	1
13	3B1915	BOLT	4
14	3B4506	LOCKWASHER	4
15	2J3860	RETAINER	1
16	2J3864	SHIM-------(.0478 in. thick)	1
	2J3861	SHIM-------(.010 in. thick)	1
17	8S9092	BOLT	4
18	3B4510	LOCKWASHER	4
19	5J8784	HEAD	1
▲ 20	5P92	SEAL	2
21	4D4248	WASHER	1
22	4J3747	PISTON	1

▲ NOT PART OF 8J8498 GROUP

146688

8J8498 CYLINDER GROUP (Change 0-1)—(9K8659 N/S)—114.3 mm (4.5 in.) Bore x 513.08 mm (20.20 in.) Stroke
Part of 9K8817 Multi-Purpose Bucket Arrangement listed on Page 210
AN ATTACHMENT

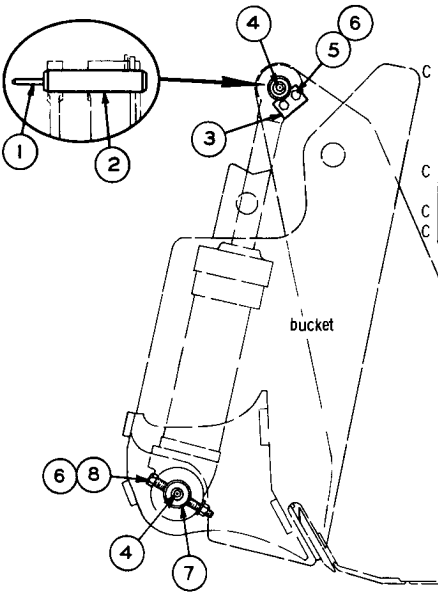

REF. NO.	PART NUMBER	DESCRIPTION	QTY
1	7K2103	PIN	1
2	3K6607	PIN	2
3	2K703	WASHER BAR	2
4	3B8489	FITTING	4
5	S1621	BOLT	4
C 6	3B4508	LOCKWASHER	6
7	6K3447	PIN	2
C 8	2B2006	BOLT	2
C	1D4719	NUT	2

C INDICATES CHANGE FROM PREVIOUS TYPE
QUANTITIES SHOWN ARE THOSE REQUIRED FOR R. H. AND L. H. HYDRAULIC CYLINDER 128240

6K4140 CYLINDER MOUNTING GROUP
Part of 9K8817 Multi-Purpose Bucket Arrangement listed on Page 210
AN ATTACHMENT

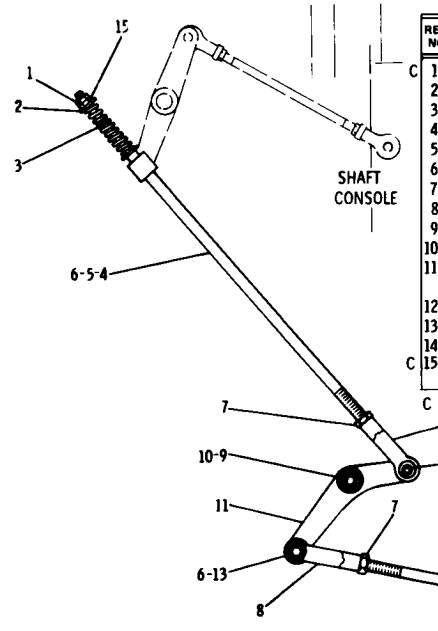

REF. NO.	PART NUMBER	DESCRIPTION	QTY
1	5B9079	NUT	1
2	3K925	SPACER	2
3	3K8797	SPRING	1
4	4V2805	ROD	1
5	8K6410	PIN	1
6	3B4617	COTTER PIN	4
7	1B4430	NUT	2
8	6F7010	END	2
9	5K8481	SHAFT	1
10	4H3119	PIN	1
11	3V78	BELLCRANK ASSEM. (Includes)	1
12	5K8478	BEARING	1
13	S175	PIN	3
14	3V8778	ROD	1
C 15	1B4203	NUT	1

C INDICATES CHANGE

3V6947 MECHANICAL KICKOUT GROUP

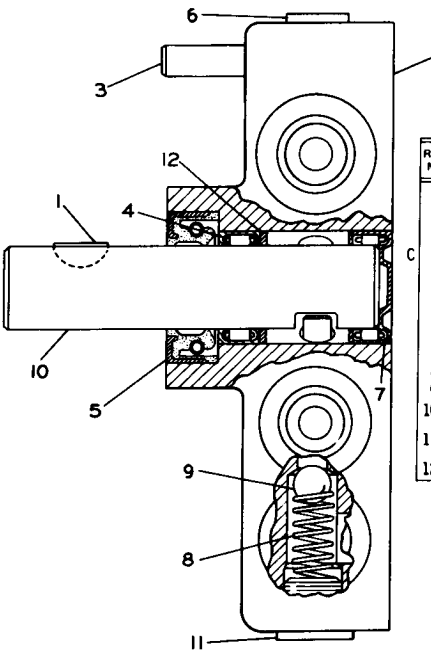

REF. NO.	PART NUMBER	DESCRIPTION	QTY
1	1B8702	KEY	1
2	8J83	VALVE GROUP (Includes)	1
C 3	2S696	DOWEL	1
4	4J3044	BEARING	1
5	4J3043	SEAL	1
6	9S8001	PLUG	1
	4J7533	SEAL	1
7	5J7489	BEARING	1
8	1H516	SPRING	1
9	4B9880	BALL	1
10	7J3586	SHAFT	1
11	9S8002	PLUG	1
	3J7354	SEAL	1
12	1L3769	RING	1

C INDICATES CHANGE

207446

8J82 PILOT VALVE GROUP
Part of 8K8552 Bucket Positioner Group shown on Page 205

8K8552 BUCKET POSITIONER GROUP

8J82 Valve parts are shown on Page 204

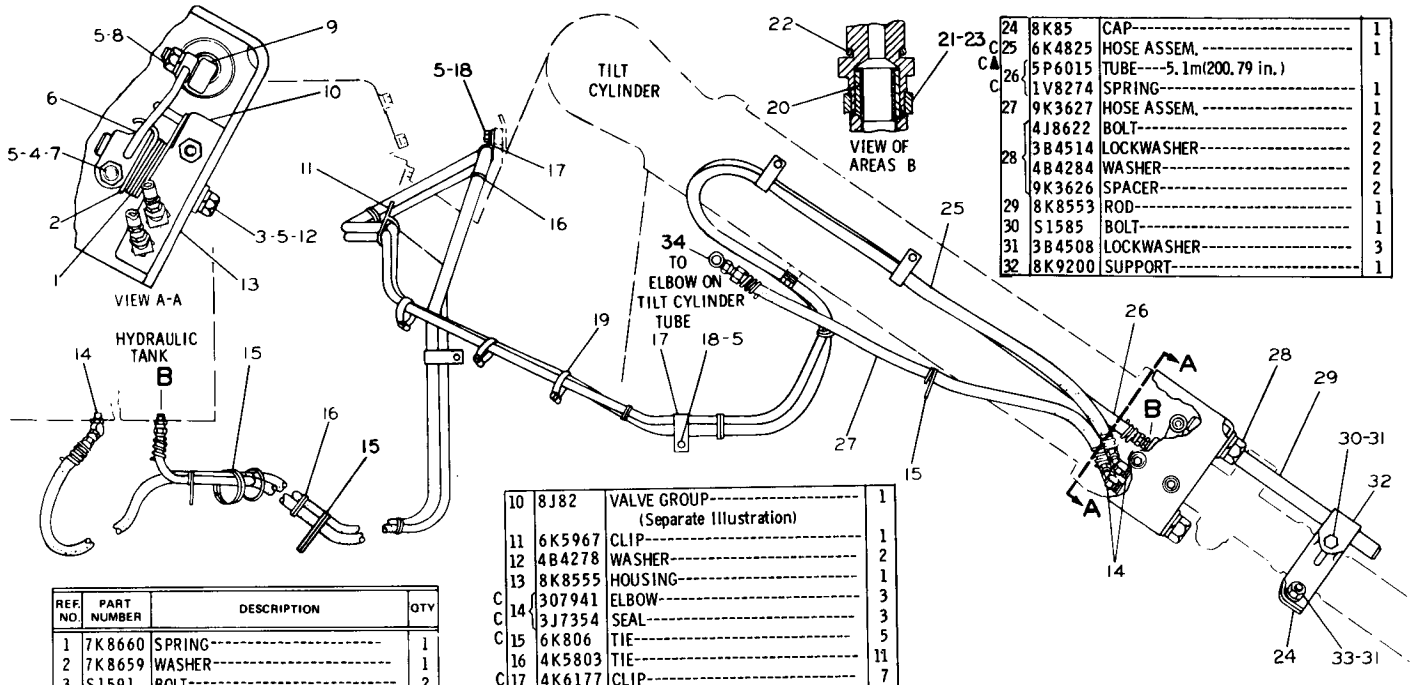

REF. NO.	PART NUMBER	DESCRIPTION	QTY
1	7K8660	SPRING	1
2	7K8659	WASHER	1
3	S1591	BOLT	2
4	1D4717	NUT	1
C 5	3B4506	LOCKWASHER	11
6	8K12	LEVER	1
C 7	S1571	BOLT	1
8	1B4203	NUT	1
9	7K854	ROLLER	1

10	8J82	VALVE GROUP (Separate Illustration)	1
11	6K5967	CLIP	1
12	4B4278	WASHER	2
13	8K8555	HOUSING	1
C 14	307941	ELBOW	3
C 14	3J7354	SEAL	3
C 15	6K806	TIE	5
16	4K5803	TIE	11
C 17	4K6177	CLIP	7
C 18	T102	BOLT	7
C 19	2S3440	CLAMP	3
20	5K8649	INSERT	2
C 21	5P9110	NUT ASSEM. -8.71mm(.34 in.)long-	1
C 22	1J9671	SEAL	3
C 23	5P9111	NUT ASSEM. 15.88mm(.63 in.)long-	1

C INDICATES CHANGE

24	8K85	CAP	1
C 25	6K4825	HOSE ASSEM.	1
C ▲ 26	5P6015	TUBE----5.1m(200.79 in.)	
C 26	1V8274	SPRING	1
27	9K3627	HOSE ASSEM.	1
28	4J8622	BOLT	2
28	3B4514	LOCKWASHER	2
28	4B4284	WASHER	2
28	9K3626	SPACER	2
29	8K8553	ROD	1
30	S1585	BOLT	1
31	3B4508	LOCKWASHER	3
32	8K9200	SUPPORT	1

33	1A1460	BOLT	2
33	1D4719	NUT	2
34	3J7353	FITTING	1
34	3J7354	SEAL	1

▲ ORDER BY THE METER

237451

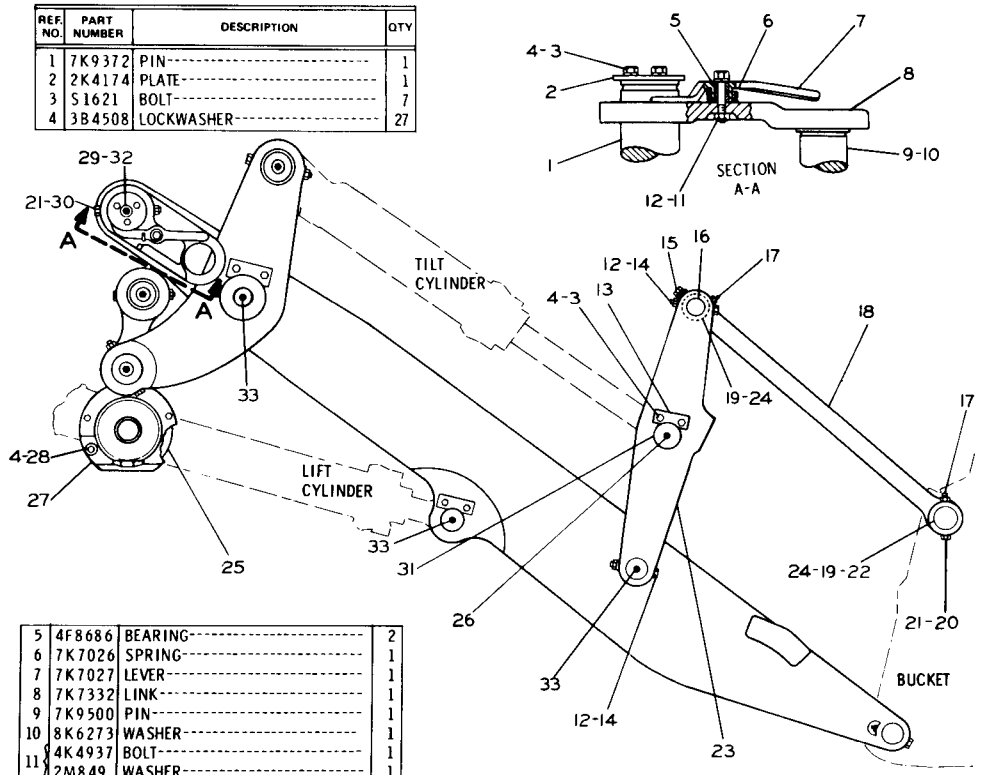

REF. NO.	PART NUMBER	DESCRIPTION	QTY
1	7K9372	PIN	1
2	2K4174	PLATE	1
3	S1621	BOLT	7
4	3B4508	LOCKWASHER	27
5	4F8686	BEARING	2
6	7K7026	SPRING	1
7	7K7027	LEVER	1
8	7K7332	LINK	1
9	7K9500	PIN	1
10	8K6273	WASHER	1
11	4K4937	BOLT	1
	2M849	WASHER	1
12	1K6872	NUT	5
13	5K2266	BAR	2
14	8F8804	BOLT	4
15	L1351	BOLT	2
	3B4506	LOCKWASHER	2
	4B4278	WASHER--.0625 in. (1.59mm) thick	2
	5986	WASHER---.250 in. (6.35mm) thick	2
	7K4541	BAR	2
16	8K6357	PIN	2
17	3B8489	FITTING	4
18	7K9708	LINK ASSEM. (Each Includes)	2
	4F4879	BOLT	1
	4B5167	WASHER	1
19	7K9549	BEARING	2
20	1D4590	BOLT	2
21	3K2889	NUT	6
22	7K9501	PIN	2
	7K9223	WASHER	4
23	8K6361	LEVER ASSEM. ---(Outer R. H.)---	1
	8K6363	LEVER ASSEM. ---(Inner R. H.)---	1
	8K6362	LEVER ASSEM. ---(Outer L. H.)---	1
	8K6364	LEVER ASSEM. ---(Inner L. H.)---	1
24	7K9203	SEAL	8
25	1V1893	RETAINER	2
26	5B651	FITTING	2
27	1V2646	RETAINER	2
28	7B3235	BOLT	20
29	7K6627	FITTING	2
30	8F1635	BOLT	2
31	8K6359	PIN	2
32	7K9502	PIN	1
33	2D4867	FITTING	6

207677

1V9235 BUCKET CONTROL GROUP—Part 1
Serial No. 13X1 to 13X1422 inclusive

1V9235 BUCKET CONTROL GROUP—Part 2
Serial No. 13X1 to 13X1422 inclusive

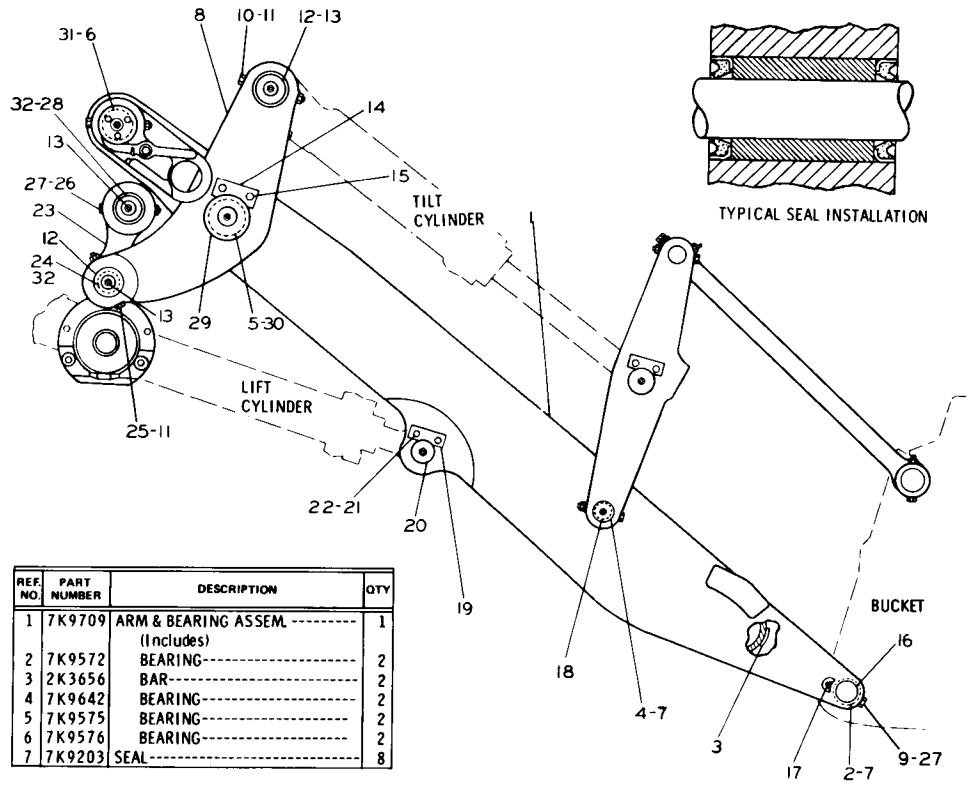

TYPICAL SEAL INSTALLATION

REF. NO.	PART NUMBER	DESCRIPTION	QTY
1	7K9709	ARM & BEARING ASSEM. (Includes)	1
2	7K9572	BEARING	2
3	2K3656	BAR	2
4	7K9642	BEARING	2
5	7K9575	BEARING	2
6	7K9576	BEARING	2
7	7K9203	SEAL	8

8	8K6067	LEVER ASSEM. ----(R. H. outer)---	1
	8K6069	LEVER ASSEM. ----(R. H. inner)--	1
	8K6070	LEVER ASSEM. ----(L. H. inner)---	1
	8K6068	LEVER ASSEM. ----(L. H. outer)---	1
9	1D4590	BOLT	2
10	1A7669	BOLT	2
11	1K6872	NUT	4
12	7K9499	PIN	3
	8K6273	WASHER	3
13	5B651	FITTING	6
14	5K7044	BAR	2
15	1A458	BOLT	4
	3B4512	LOCKWASHER	4
16	7K9501	PIN	2
	7K9223	WASHER	4
17	3B8489	FITTING------(Hydraulic)--------	2
18	8K6358	PIN	2
19	5K2266	BAR	2
20	7K9503	PIN	2
21	2H3855	BOLT	4
22	3B4508	LOCKWASHER	4
23	7K9707	LINK ASSEM. (Each Includes)	2
24	7K9573	BEARING	2
25	2A1531	BOLT	2
26	5D9514	BOLT	2
27	3K2889	NUT	4
28	5K7027	PIN	2
29	7K9505	PIN	2
	8B4037	WASHER	2
30	7K9219	SEAL	4
31	7K9211	SEAL	4
32	7K9209	SEAL	4

207678

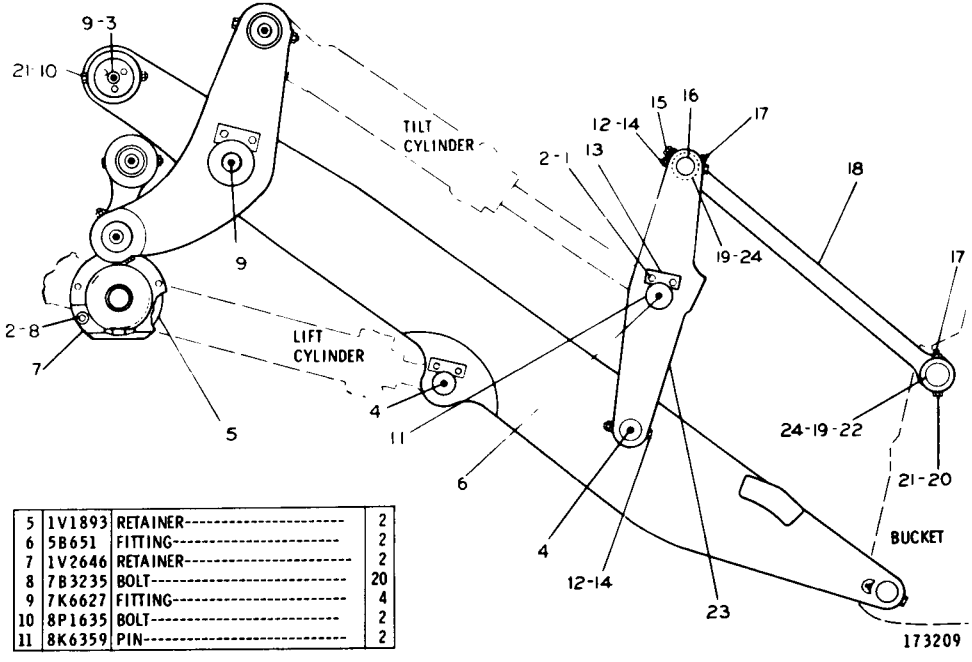

REF NO.	PART NUMBER	DESCRIPTION	QTY.
1	S1621	BOLT	4
2	3B4508	LOCKWASHER	24
3	7K9502	PIN	2
4	2D4867	FITTING	4

5	1V1893	RETAINER	2
6	5B651	FITTING	2
7	1V2646	RETAINER	2
8	7B3235	BOLT	20
9	7K6627	FITTING	4
10	8P1635	BOLT	2
11	8K6359	PIN	2

12	1K6872	NUT	4
13	5K2266	BAR	2
14	8P8804	BOLT	4
15	L1351	BOLT	2
	3B4506	LOCKWASHER	2
	4B4278	WASHER--.0625 in. (1.59 mm)thick	2
	5986	WASHER--.250 in. (6.35 mm) thick	2
	7K4541	BAR	2
16	8K6357	PIN	2
17	3B8489	FITTING	4
18	7K9708	LINK ASSEM. (Each Includes)	2
19	7K9549	BEARING	2
20	1D4590	BOLT	2
21	3K2889	NUT	4
22	7K9501	PIN	2
23	4V9607	LEVER ASSEM. --(Outer R.H.)	1
	4V9605	LEVER ASSEM. --(Inner R.H.)	1
	4V9608	LEVER ASSEM. --(Outer L.H.)	1
	4V9606	LEVER ASSEM. --(Inner L.H.)	1
24	7K9203	SEAL	8

4V7417 BUCKET CONTROL GROUP—Part 1
Serial No. 13X1423—Up

4V7417 BUCKET CONTROL GROUP—Part 2
Serial No. 13X1423—Up

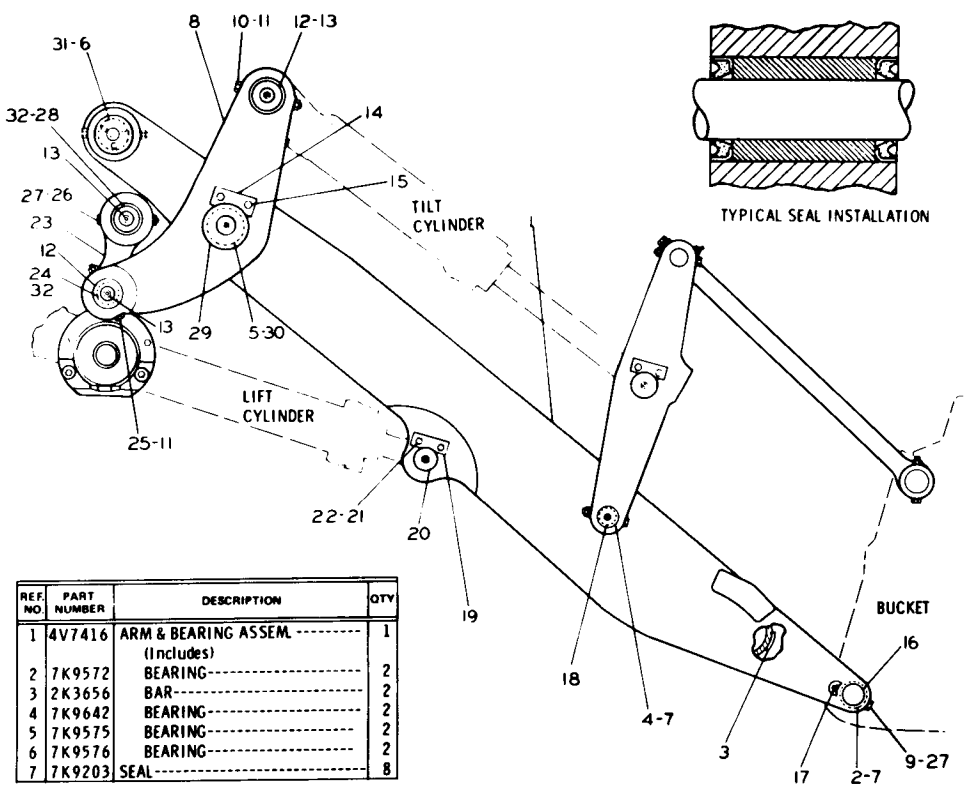

TYPICAL SEAL INSTALLATION

REF. NO.	PART NUMBER	DESCRIPTION	QTY
1	4V7416	ARM & BEARING ASSEM. (Includes)	1
2	7K9572	BEARING	2
3	2K3656	BAR	2
4	7K9642	BEARING	2
5	7K9575	BEARING	2
6	7K9576	BEARING	2
7	7K9203	SEAL	8

8	8K6067	LEVER ASSEM. ----(R. H. outer)---	1
	8K6069	LEVER ASSEM. ----(R. H. inner)--	1
	8K6070	LEVER ASSEM. ----(L. H. inner)---	1
	8K6068	LEVER ASSEM. ----(L. H. outer)---	1
9	1D4590	BOLT	2
10	1A7669	BOLT	2
11	1K6872	NUT	4
12	8K6315	PIN	4
13	5B651	FITTING	6
14	5K7044	BAR	2
15	1A458	BOLT	4
	3B4512	LOCKWASHER	4
16	7K9501	PIN	2
	7K9223	WASHER	8
17	3B8489	FITTING-----(Hydraulic)------	2
18	8K6358	PIN	2
19	5K2266	BAR	2
20	7K9503	PIN	2
21	2H3855	BOLT	4
22	3B4508	LOCKWASHER	4
23	7K9707	LINK ASSEM. (Each Includes)	2
24	7K9573	BEARING	2
25	2A1531	BOLT	2
26	5D9514	BOLT	2
27	3K2889	NUT	4
28	5K7027	PIN	2
29	7K9505	PIN	2
	8B4037	WASHER	2
30	7K9219	SEAL	4
31	7K9211	SEAL	4
32	7K9209	SEAL	8

173210

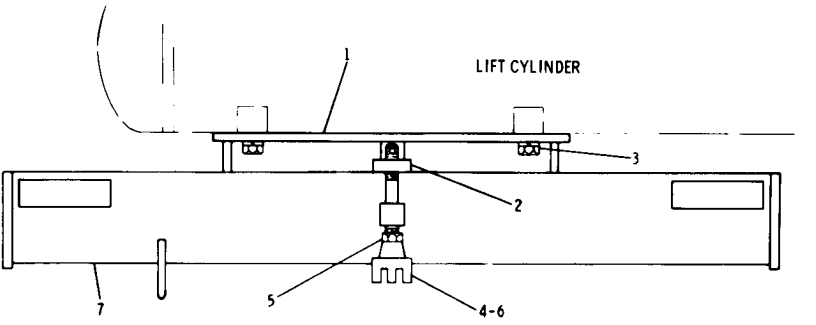

REF NO	PART NUMBER	DESCRIPTION	QTY
1	4V606	PLATE ASSEM.	1
2	4V604	PLATE ASSEM.	1
3	6H1717	BOLT	2
	5P8245	WASHER	2
4	4V4690	KNOB ASSEM. (Each Includes)	2
5	1D4719	NUT	1
6	3K4897	PIN-------3.18 mm(.125 in.)dia.	1
	7M5130	PIN-------6.35 mm(.25 in.)dia.	1
7	4V607	BRACE ASSEM.	1

173211

4V669 LIFT CYLINDER BRACE GROUP
Serial No. 13X1423—Up

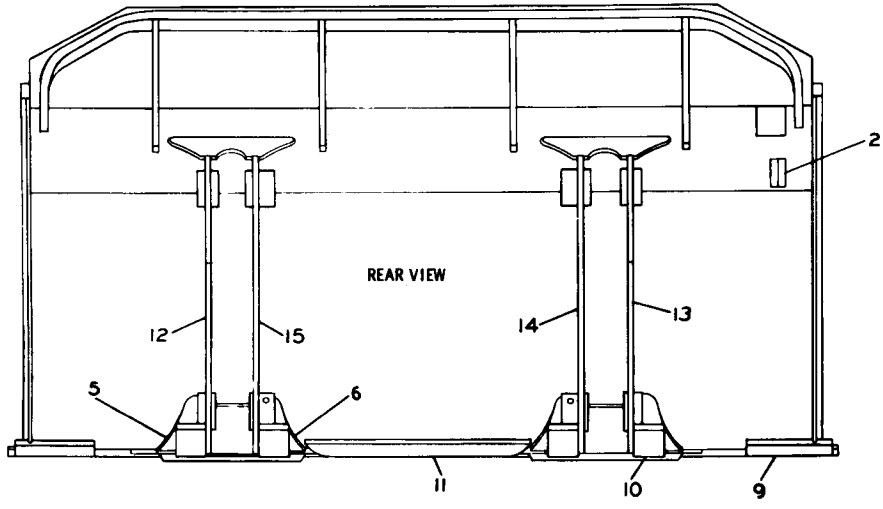

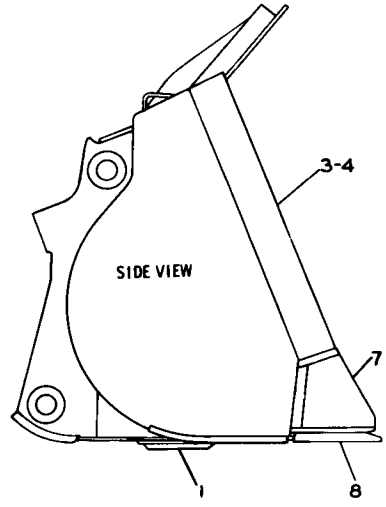

REF. NO.	PART NUMBER	DESCRIPTION	QTY
1	8K7514	PLATE	2
2	2K3656	BAR	2
3	1V5338	BAR-(R. H.)	1
4	1V5896	BAR-(L. H.)	1
5	9K7713	PLATE--(L. H. outer-R. H. inner)--	2
6	9K7712	PLATE--(L. H. inner-R. H. outer)--	2
7	8K6455	CORNER-(R. H.)	1
	8K6456	CORNER-(L. H.)	1
8	1V2911	CUTTING EDGE	1
9	9K1068	BAR	2
10	9K7714	BAR	4
11	9K5391	PLATE	1
12	1V8320	HINGE ASSEM.-(L. H. -Outer)	1
13	1V8323	HINGE ASSEM.-(R. H. -Outer)	1
14	1V8322	HINGE ASSEM.-(R. H. -inner)	1
15	1V8321	HINGE ASSEM.-(L. H. -inner)	1

155390

1V2912 GENERAL PURPOSE BUCKET ASSEMBLY—2286 mm (90 in.) Wide—1.53 m^3 (2.0 $Yd.^3$)
Replaced by 5V7256 shown on Page 208A. AN ATTACHMENT

5V7256 GENERAL PURPOSE BUCKET ASSEMBLY—2286 mm (90 in.) Wide—1.53 m^3 (2 $Yd.^3$)—Nominal Heaped
NOTE: 1U1898 End Bit is available. AN ATTACHMENT

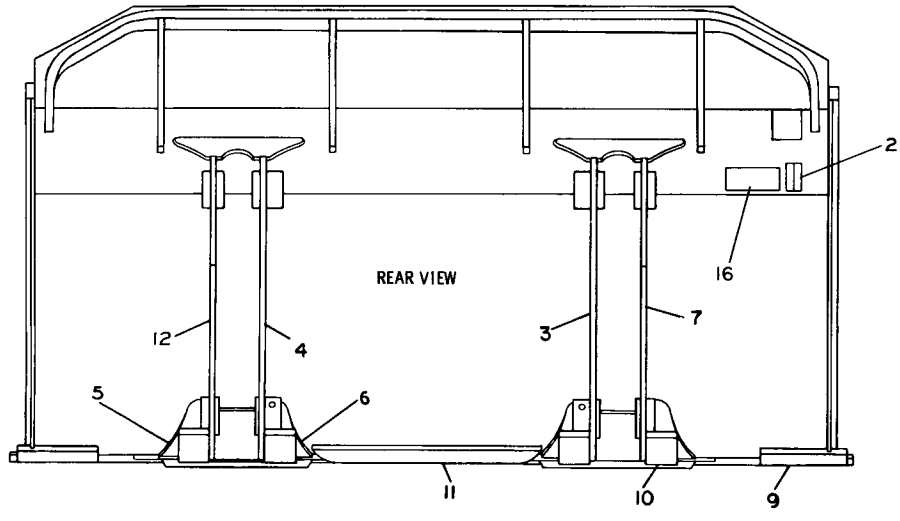

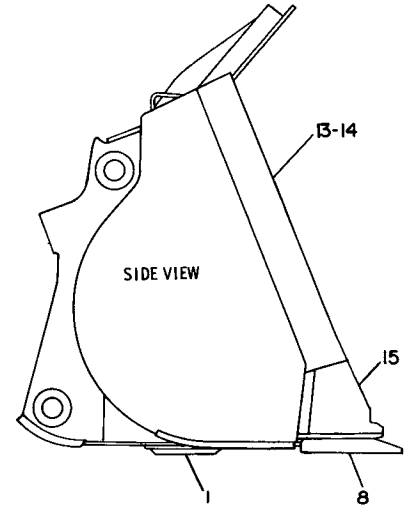

REF. NO.	PART NUMBER	DESCRIPTION	QTY.
1	8K7514	PLATE----------	2
2	8P9770	PLATE----------	2
3	1V8322	HINGE ASSEM. ---(R.H. INNER)---	1
4	1V8321	HINGE ASSEM. --(L. H. -Inner)---	1
5	9K7713	PLATE-(L. H. Outer-R. H. Inner)----	2
6	9K7712	PLATE--(L. H. Inner-R. H. Outer)---	2
7	1V8323	HINGE ASSEM. -----(R. H. -Outer)--	1
8	5V7262	CUTTING EDGE----------	1
9	5V7505	PLATE----------	2
10	9K7714	BAR----------	4
11	5V7506	PLATE----------	1
12	1V8320	HINGE ASSEM. --(L. H. -Outer)---	1
13	1V5338	BAR-------(R. H.)----------	1
14	1V5896	BAR--------(L. H.)----------	1
15	5V1783	CORNER---------(R. H.)---------	1
	5V1784	CORNER---------(L. H.)---------	1
16	6V3607	FILM------(caution)----------	1

178385

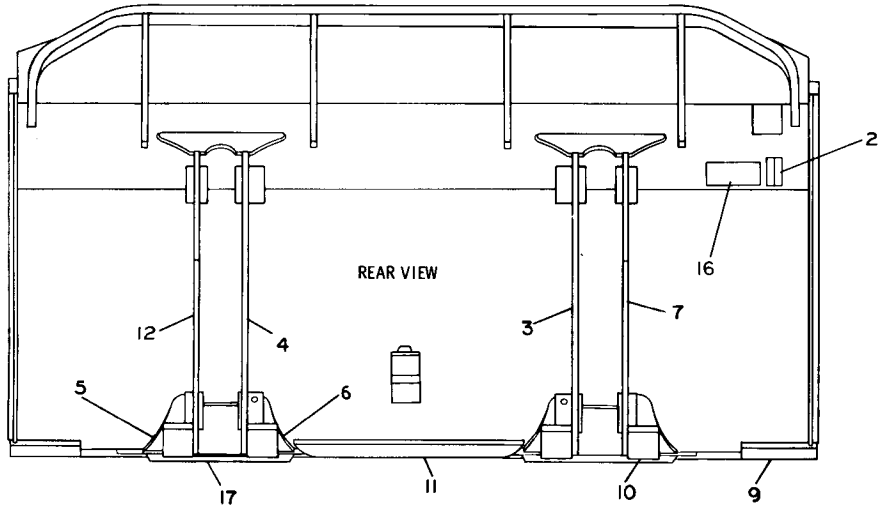

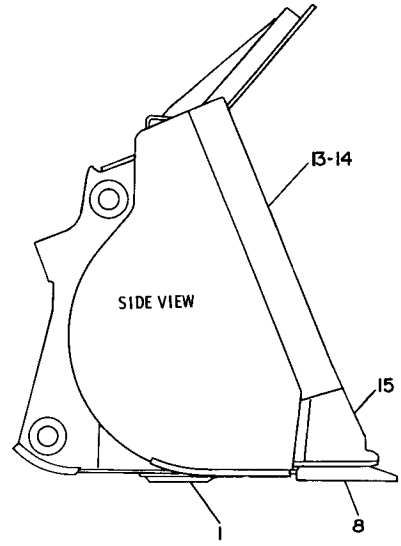

REF. NO.	PART NUMBER	DESCRIPTION	QTY.
1	8K7514	PLATE----------	2
2	8P9770	PLATE----------	2
3	1V8322	HINGE ASSEM. --(R. H. Inner)-----	1
4	1V8321	HINGE ASSEM. --(L. H. Inner)------	1
5	9K7713	PLATE-(L. H. Outer-R. H. Inner)----	2
6	9K7712	PLATE-(L. H. Inner-R. H. Outer)---	2
7	1V8323	HINGE ASSEM. --(R. H. Outer)-----	1
8	5V7262	CUTTING EDGE----------	1
9	9K1068	BAR----------	2
10	9K7714	BAR----------	4
11	5V7499	PLATE----------	1
12	1V8320	HINGE ASSEM. --(L. H. Outer)------	1
13	1V5334	BAR---------(R. H.)----------	1
14	1V5895	BAR---------(L. H.)----------	1
15	5V1783	CORNER--------(R. H.)----------	1
	5V1784	CORNER--------(L. H.)----------	1
▲ 16	6V3607	FILM---------(caution)----------	1
17	5V7500	PLATE----------	2

▲ USE AS REQUIRED

178386

5V7257 GENERAL PURPOSE BUCKET ASSEMBLY—2286 mm (90 in.) Wide—1.72 m^3 (2.25 $Yd.^3$)—Nominal Heaped
NOTE: 1U1898 End Bit is available. AN ATTACHMENT

1V9079 GENERAL PURPOSE BUCKET ASSEMBLY—2286 mm (90 in.) Wide—1.72 m^3 (2.25 $Yd.^3$)

Replaced by 5V7257 shown on Page 208B. AN ATTACHMENT

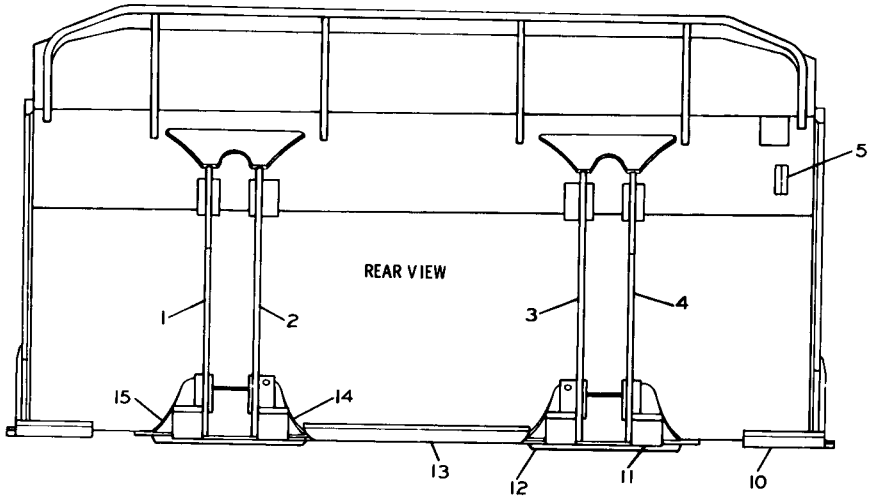

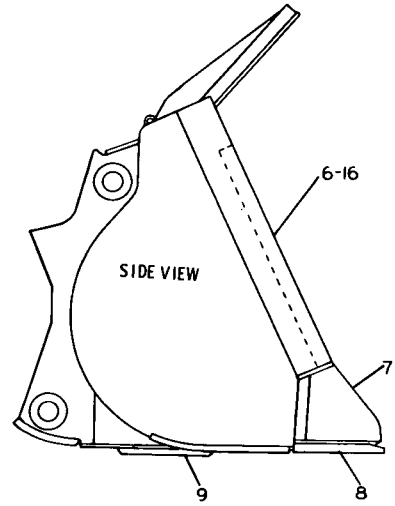

REF. NO.	PART NUMBER	DESCRIPTION	QTY
1	1V8320	HINGE ASSEM. --(L. H. -Outer)-----	1
2	1V8321	HINGE ASSEM. --(L. H. -Inner)-----	1
3	1V8322	HINGE ASSEM. --(R. H. -Outer)-----	1
4	1V8323	HINGE ASSEM. --(R. H. -Outer)----	1
5	2K3656	BAR----------	2

6	1V5334	BAR----------	1
7	8K6455	CORNER--------(R. H.)----------	1
	8K6456	CORNER--------(L. H.)----------	1
8	1V2911	CUTTING EDGE----------	1
9	8K7514	PLATE----------	2
10	6K196	BAR----------	2

11	9K7714	BAR----------	4
12	9K7817	PLATE----------	2
13	9K5370	PLATE----------	1
14	9K7712	PLATE--(L. H. Inner-R. H. Outer)--	2
15	9K7713	PLATE--(L. H. Outer-R. H. Inner)--	2
16	1V5895	BAR----------	1

155384

		CONSISTS OF:	PAGE
8	9J3167	TIP GROUP	218
1	1V9080	BUCKET ASSEMBLY	213

1V9624 GENERAL PURPOSE BUCKET GROUP—Weld-On Teeth
AN ATTACHMENT

		CONSISTS OF:	PAGE
1	6K4140	CYLINDER MOUNTING GROUP	203
1	9K8623	BUCKET GROUP	214
2	9K8659	CYLINDER GROUP	202
1	9K8829	HYDRAULIC LINES GROUP	188

9K8817 MULTI-PURPOSE BUCKET ARRANGEMENT
Replaced by 5V7259 shown on Page 211
AN ATTACHMENT

		Consists of:	Page
1	8J5713	Cylinder Group	201
1	6K576	Bucket and Support Group	215
1	6K1985	Hydraulic Lines Group	187

6K703 SIDE DUMP BUCKET ARRANGEMENT
Note: A counterweight is required, but not included, in this Arrangement
AN ATTACHMENT

		Consists of:	Page
1	6K4140	Cylinder Mounting Group	203
2	9K8659	Cylinder Group	202
1	9K8829	Hydraulic Lines Group	188
1	5V7260	Bucket Group	214A

5V7259 MULTI-PURPOSE BUCKET ARRANGEMENT
Note: 1U1898 End Bit is available
AN ATTACHMENT

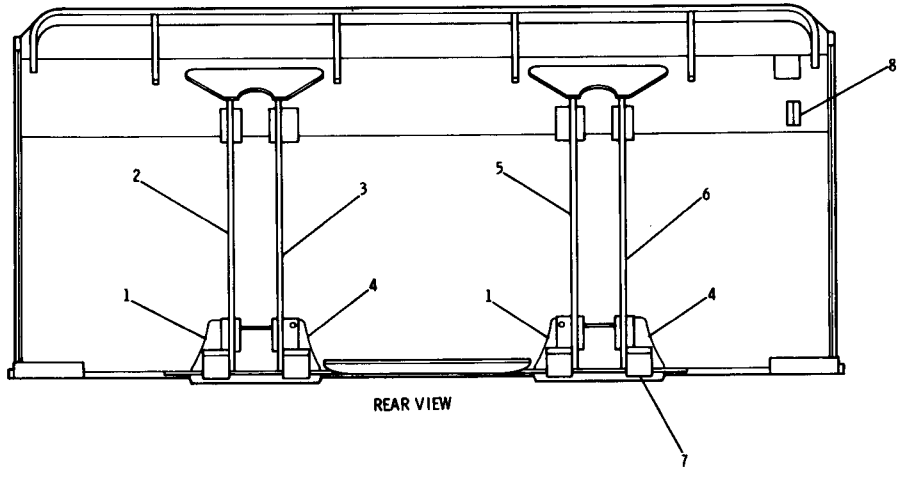

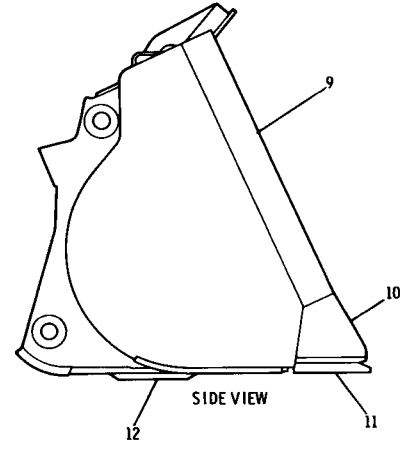

REF. NO.	PART NUMBER	DESCRIPTION	QTY
1	9K7713	PLATE--(L. H. outer & R. H. inner)	2
2	1V8320	HINGE ASSEM. ----(L. H. outer)---	1
3	1V8321	HINGE ASSEM. ----(L. H. inner)---	1
4	9K7712	PLATE--(L. H. inner & R. H. outer)--	2
5	1V8322	HINGE ASSEM. -----(R. H. inner)--	1
6	1V8323	HINGE ASSEM. ------(R. H. outer)-	1
7	9K7714	BAR----------	4
8	2K3656	BAR----------	2
9	1V5338	BAR----------(R. H.)----------	1
	1V5896	BAR----------(L. H.)----------	1
10	8K6455	CORNER-------(R. H.)----------	1
	8K6456	CORNER-------(L. H.)----------	1
11	2V7298	CUTTING EDGE----------	1
12	8K7514	PLATE----------	2

163250

2V7293 GENERAL PURPOSE BUCKET ASSEMBLY—2489 mm (98 in.) Wide—1.62 m^3 (2.12 $Yd.^3$)
Replaced by 5V7258 shown on Page 212A. Part of 4V2193 Wide Gauge Track Loader Arrangement listed on Page 166
AN ATTACHMENT

5V7258 GENERAL PURPOSE BUCKET ASSEMBLY—2489 mm (98 in.) Wide—1.62 m^3 (2.12 $Yd.^3$)—Nominal Heaped
Part of 4V2193 Wide Gauge Track Loader Arrangement listed on Page 166
Note: 1U1898 End Bit is available. AN ATTACHMENT

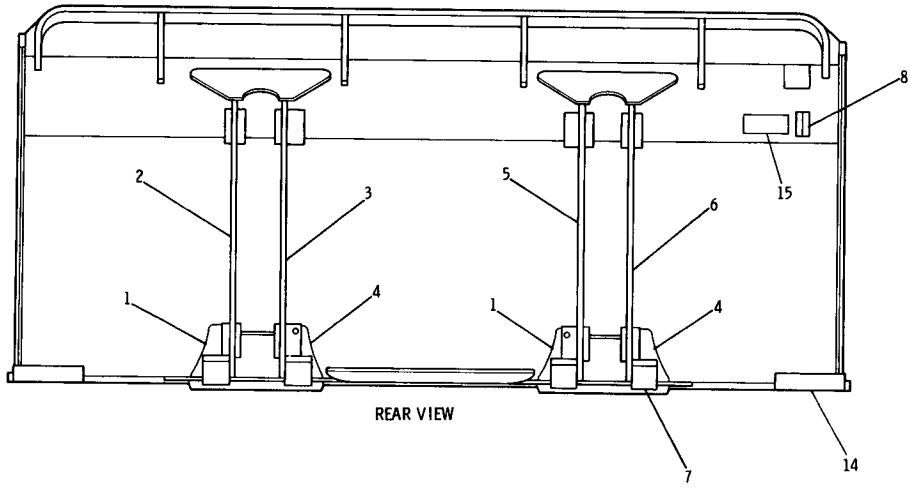

REAR VIEW

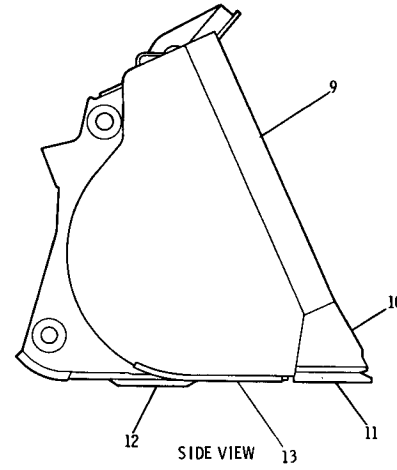

SIDE VIEW

REF. NO.	PART NUMBER	DESCRIPTION	QTY
1	9K7713	PLATE--(L. H. outer & R. H. inner)	2
2	1V8320	HINGE ASSEM. ----(L. H. outer)---	1
3	1V8321	HINGE ASSEM. ----(L. H. inner)---	1
4	9K7712	PLATE--(L. H. inner & R. H. outer)--	2
5	1V8322	HINGE ASSEM. -----(R. H. inner)--	1
6	1V8323	HINGE ASSEM. ------(R. H. outer)-	1
7	9K7714	BAR----------	4
8	8P9770	PLATE----------	2
9	1V5338	BAR----------(R. H.)----------	1
	1V5896	BAR----------(L. H.)----------	1
10	5V1783	CORNER-------(R. H.)----------	1
	5V1784	CORNER-------(L. H.)----------	1
11	5V7263	CUTTING EDGE----------	1
12	8K7514	PLATE----------	2
13	5V7506	PLATE----------	1
14	5V7505	PLATE----------	2
▲ 15	6V3607	FILM-----(caution)----------	1

▲ USE AS REQUIRED

178387

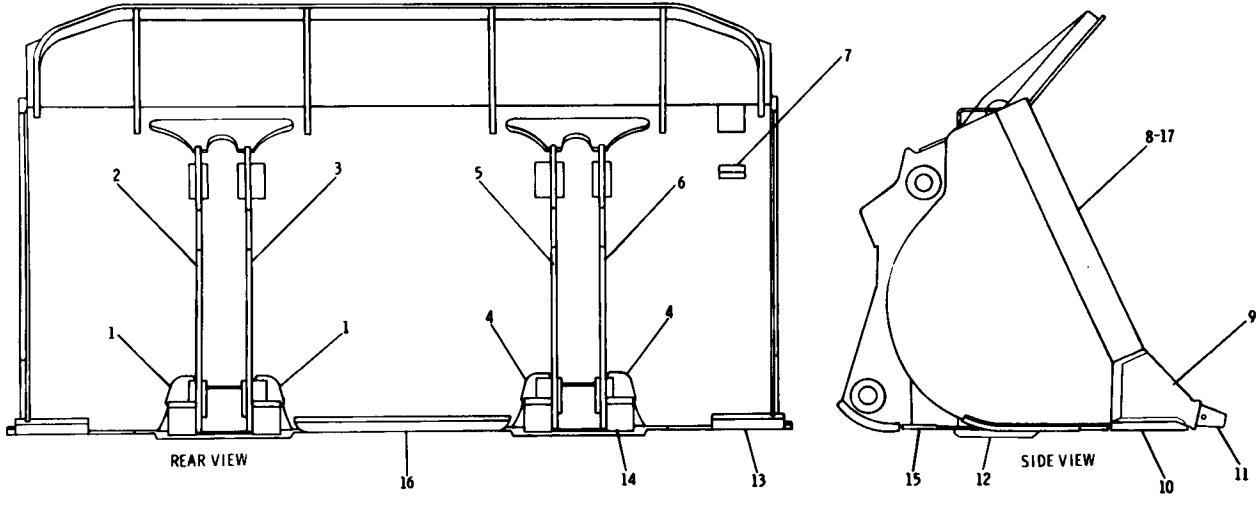

REF. NO.	PART NUMBER	DESCRIPTION	QTY
1	9K7713	PLATE---(L. H. outer-R. H. inner)--	2
2	1V8320	HINGE ASSEM. ----(L. H. -outer)---	1
3	1V8321	HINGE ASSEM. ----(L. H. -inner)---	1
4	9K7712	PLATE---(L. H. inner-R. H. outer)--	2
5	1V8322	HINGE ASSEM. -----(R. H. inner)--	1
6	1V8323	HINGE ASSEM. ----(R. H. outer)---	1
7	2K3656	BAR----------	2

8	1V5334	BAR---------(R. H.)----------	1
9	9J3083	CORNER------(R. H.)----------	1
	9J3084	CORNER------(L. H.)----------	1
	1V9078	CUTTING EDGE ASSEM. ----------	1
10		(Includes)	
	1V9077	EDGE----------	1
11	9J4304	ADAPTER----------	6
12	8K7514	PLATE----------	2
13	6K196	BAR----------	2

14	9K7714	BAR----------	4
15	9K7817	PLATE----------	2
16	9K5370	PLATE----------	1
17	1V5895	BAR---------(L. H.)----------	1

155383

1V9080 GENERAL PURPOSE BUCKET ASSEMBLY—2286 mm (90 in.) Wide—1.72 m^3 (2.25 $Yd.^3$)—Type 1
Part of 1V9624 General Purpose Bucket Group listed on Page 210. AN ATTACHMENT

1V9080 GENERAL PURPOSE BUCKET ASSEMBLY—2286 mm (90 in.) Wide—1.72 m^3 (2.25 $Yd.^3$)—Type 2

Part of 1V9624 General Purpose Bucket Group listed on Page 210. AN ATTACHMENT

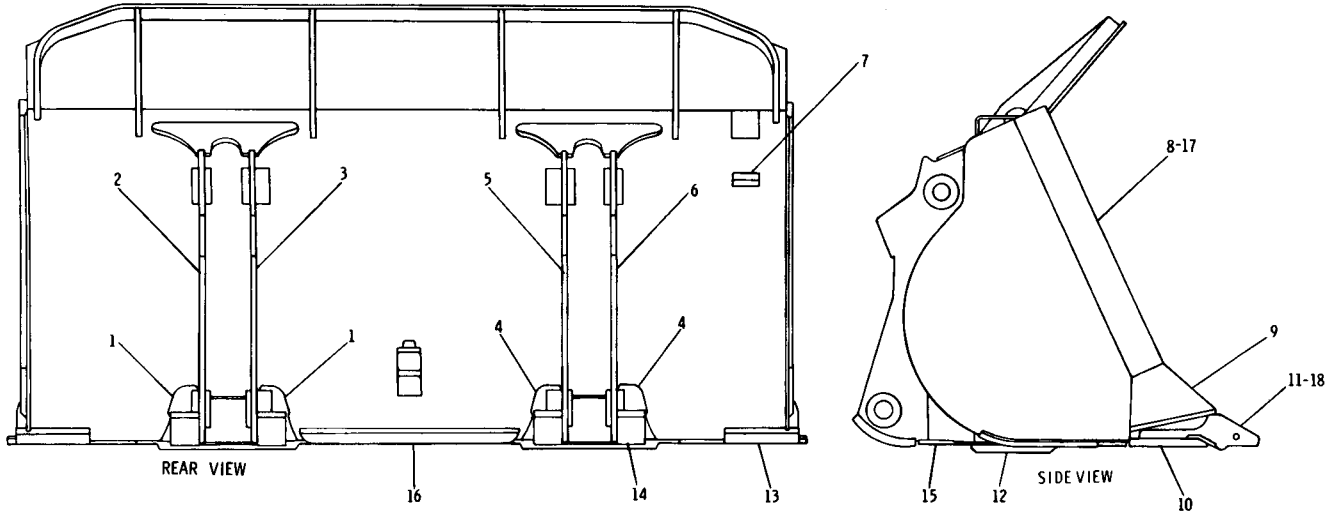

REF. NO.	PART NUMBER	DESCRIPTION	QTY
1	9K7713	PLATE---(L. H. outer-R. H. inner)--	2
2	1V8320	HINGE ASSEM. ----(L. H. -outer)---	1
3	1V8321	HINGE ASSEM. ----(L. H. -inner)---	1
4	9K7712	PLATE---(L. H. inner-R. H. outer)--	2
5	1V8322	HINGE ASSEM. -----(R. H. inner)--	1
6	1V8323	HINGE ASSEM. ----(R. H. outer)---	1
7	2K3656	BAR----------	2

	8	1V5334	BAR---------(R. H.)----------	1
C	9	4V8667	CORNER------(R. H.)----------	1
C	9	4V8668	CORNER------(L. H.)----------	1
	10	1V9078	CUTTING EDGE ASSEM. ---------- (Includes)	1
	10	1V9077	EDGE----------	1
C	11	1V1304	ADAPTER----------	6
	12	8K7514	PLATE----------	2
C	13	9K1068	BAR----------	2

	14	9K7714	BAR----------	4
	15	9K7817	PLATE----------	2
	16	9K5370	PLATE----------	1
	17	1V5895	BAR----------(L. H.)----------	1
C	18	1V1304	ADAPTER----------	2

C INDICATES CHANGE

176081

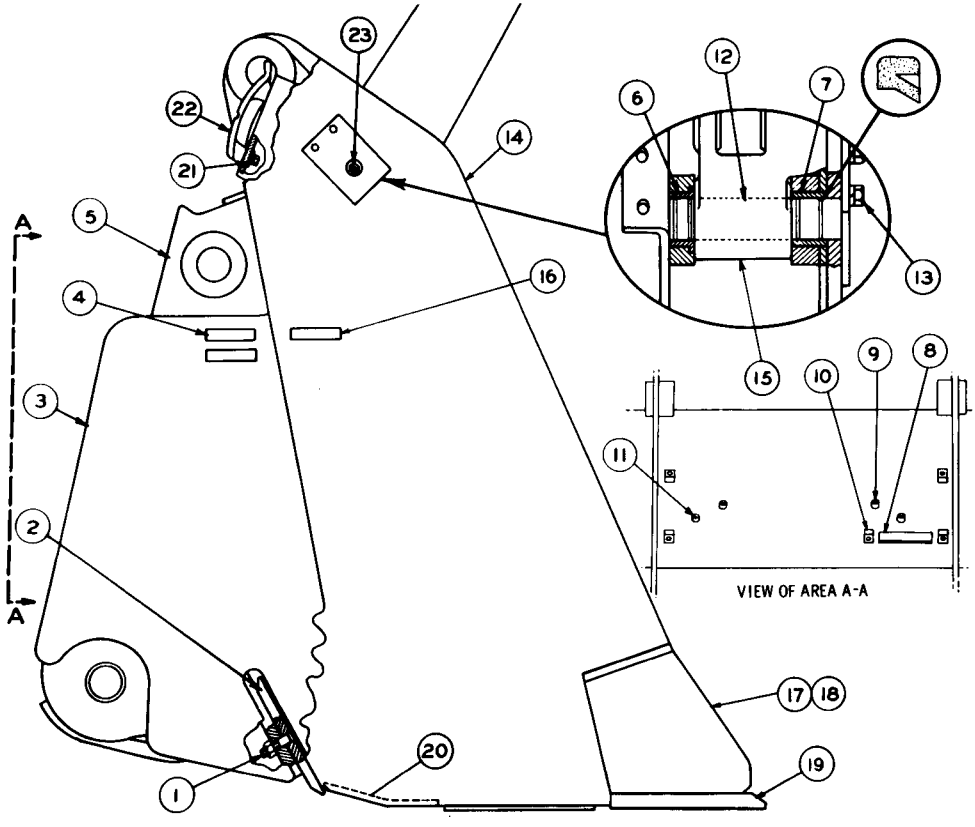

REF. NO.	PART NUMBER	DESCRIPTION	QTY.
1	3F5108	BOLT	14
	1D4720	NUT	14
2	6K4084	CUTTING EDGE	1
3	9K8624	BULLDOZER ASSEM. (Includes)	1
4	2K3656	BAR	3
5	9K8599	HINGE ASSEM.---(R.H.-outer)-	1
	9K8593	HINGE ASSEM.---(R.H.-inner)-	1
	9K8594	HINGE ASSEM.---(L.H.-inner)-	1
	9K8600	HINGE ASSEM.---(L.H.-outer)-	1
6	9K1228	BEARING ASSEM. (Includes)	2
C	2V9002	SEAL	2
7	9K1206	BEARING ASSEM. (Includes)	2
C	2V9002	SEAL	2
8	8K8592	BAR	1
9	8K8590	BOSS	2
10	9K8591	BLOCK	5
11	4D6293	BOSS	2
12	6K4127	PIN ASSEM.	2
13	6H1717	BOLT	4
	3B4508	LOCKWASHER	4
14	9K8618	BOWL ASSEM. (Includes)	1
15	6K3109	HINGE	2
16	2K3656	BAR	1
17	8K7525	CORNER---------(R.H.)------	1
18	8K7526	CORNER---------(L.H.)------	1
19	9K658	CUTTING EDGE	1
C 20	9K8609	PLATE	1
	1A2029	BOLT	2
21	3B4506	LOCKWASHER	2
	4B5271	WASHER	2
22	4K9376	INDICATOR	1
C 23	5B651	FITTING	2

C INDICATES CHANGE 217031

9K8623 MULTI-PURPOSE BUCKET GROUP—2314 mm (91.12 in.) Wide—1.53 m^3 (2.0 $Yd.^3$)
Replaced by 5V7260 shown on Page 214A. Part of 9K8817 Multi-Purpose Bucket Arrangement listed on Page 210
AN ATTACHMENT

5V7260 MULTI-PURPOSE BUCKET GROUP—2286 mm (90 in.) Wide—1.53 m^3 (2 $Yd.^3$)—Nominal Heaped
Part of 5V7259 Multi-Purpose Bucket Arrangement listed on Page 211. AN ATTACHMENT

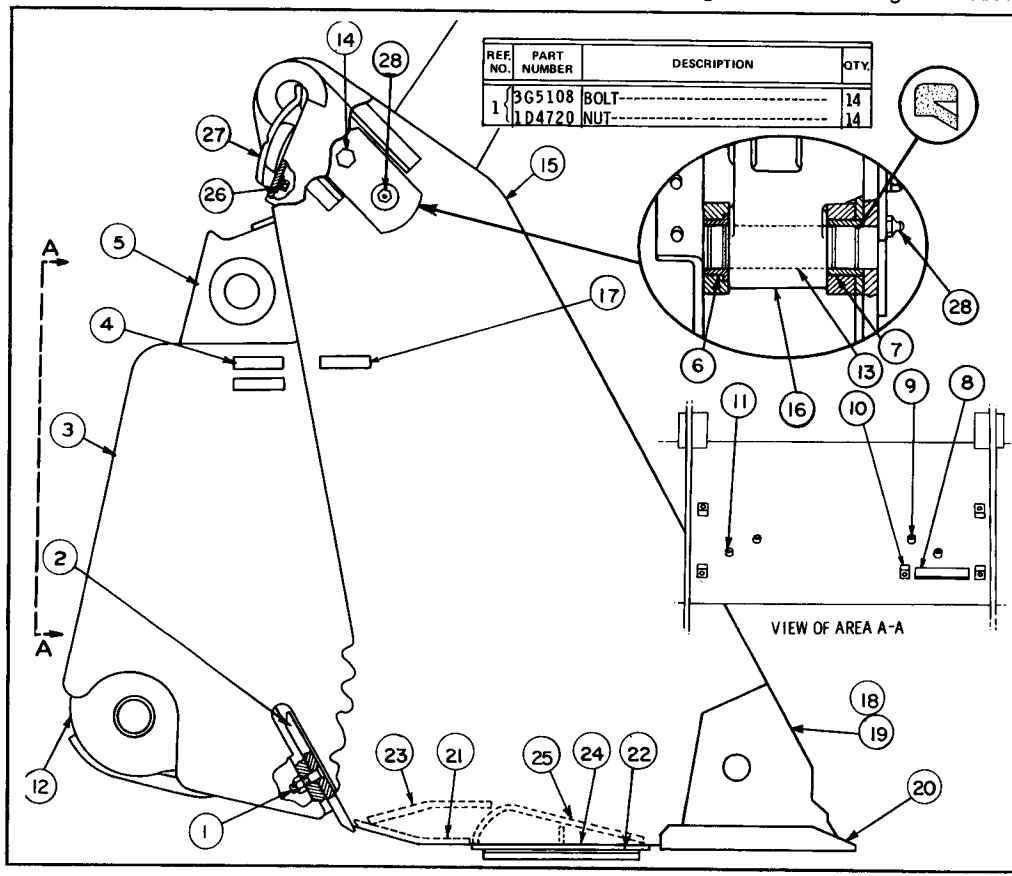

2	6K4084	CUTTING EDGE	1
3	9K8624	BULLDOZER ASSEM.	1
4	2K3656	BAR	3
5	9K8599	HINGE ASSEM. -(R. H. -Outer)-	1
	9K8593	HINGE ASSEM. --(R. H. -Inner)-	1
	9K8594	HINGE ASSEM. -(L. H. -Inner)-	1
	9K8600	HINGE ASSEM. -(L. H. -Outer)-	1
6	9K1228	BEARING ASSEM.	2
	2V9002	SEAL	2
7	9K1206	BEARING ASSEM.	2
	2V9002	SEAL	2
8	8K8592	BAR	1
9	8K8590	BOSS	2
10	9K8591	BLOCK	5
11	4D6293	BOSS	2
12	9K8602	BRACKET ASSEM.	2
13	4V4951	PIN ASSEM.	2
14	S1626	BOLT	2
	5P8248	WASHER	2
	4V4905	SPACER	2
15	5V7261	BOWL ASSEM.	1
16	4V4932	HINGE	2
17	8P9770	PLATE	1
18	5V1783	CORNER-------(R. H.)	1
19	5V1784	CORNER-------(L. H.)	1
20	5V7262	CUTTING EDGE	1
	7V8627	EDGE---(End-Wear)	2
	7V8050	EDGE--(Center-Wear)	1
21	9K8609	PLATE	1
22	9K8610	BAR	3
23	9K8611	PLATE	1
24	9K8608	PLATE	1
25	9K8612	PLATE	1
26	1A2029	BOLT	2
	3B4506	LOCKWASHER	2
	4B5271	WASHER	2
27	4K9376	INDICATOR	1
28	3B8489	FITTING	2
	SMHS7527	FORM (Installation of cutting edge)	1

6K576 SIDE DUMP BUCKET AND SUPPORT GROUP—1.34 m³ (1.75 yd³)—2610 mm (102.75 in.) Wide
Part of 6K703 Side Dump Bucket Arrangement listed on Page 211
AN ATTACHMENT

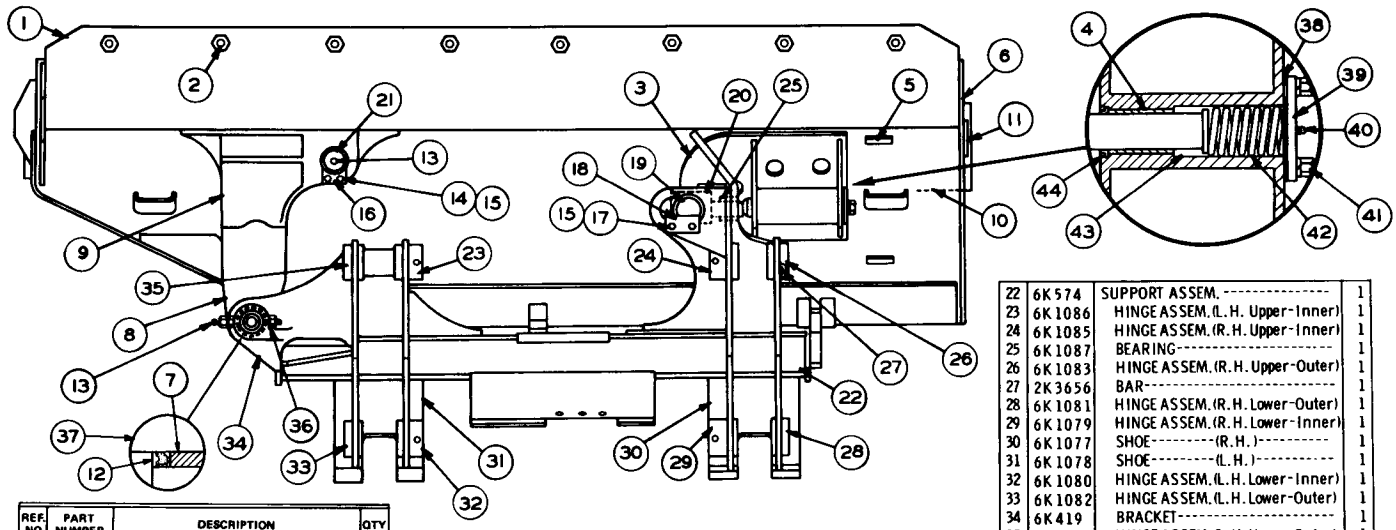

REF. NO.	PART NUMBER	DESCRIPTION	QTY
C 1	9K2266	BUCKET & SEAL GROUP	1
2	1D4720	NUT	8
3	6K819	LATCH ASSEM.	1
4	4H5865	BEARING	1
5	2K3656	BAR	2
6	6K851	BAR	1
7	9K707	BEARING	2
8	6K748	HINGE	1
9	6K504	SUPPORT	1
10	7K6280	CUTTING EDGE ASSEM.	1
	7K6283	CUTTING EDGE--(field repl.)--	1
11	7K5479	CORNER--------(R.H.)--------	1
	6K425	CORNER--------(L.H.)--------	1
12	7K9203	SEAL	1

13	3H122	FITTING	3
14	S1621	BOLT	2
15	3B4508	LOCKWASHER	4
16	2K703	WASHER BAR	1
17	S1585	BOLT	2
18	3K5628	PLATE	1
	6K1457	BAR	1
19	6K380	PIN	1
C 20	6K509	YOKE ASSEM.	1
	2L4573	PLATE	1
21	6K499	PIN	1

22	6K574	SUPPORT ASSEM.	1
23	6K1086	HINGE ASSEM.(L.H. Upper-Inner)	1
24	6K1085	HINGE ASSEM.(R.H. Upper-Inner)	1
25	6K1087	BEARING	1
26	6K1083	HINGE ASSEM.(R.H. Upper-Outer)	1
27	2K3656	BAR	1
28	6K1081	HINGE ASSEM.(R.H. Lower-Outer)	1
29	6K1079	HINGE ASSEM.(R.H. Lower-Inner)	1
30	6K1077	SHOE---------(R.H.)----------	1
31	6K1078	SHOE---------(L.H.)----------	1
32	6K1080	HINGE ASSEM.(L.H. Lower-Inner)	1
33	6K1082	HINGE ASSEM.(L.H. Lower-Outer)	1
34	6K419	BRACKET	1
35	6K1084	HINGE ASSEM.(L.H. Upper-Outer)	1
36	1D4590	BOLT	2
	3K2889	NUT	2
37	6K489	PIN	2
38	6K1120	GASKET	1
39	6K1119	COVER	1
40	2B4602	PLUG	2
41	S1594	BOLT	2
	3B4506	LOCKWASHER	2
42	6K571	SPRING	1
43	6K1121	PIN	1
44	1K6981	SEAL	1

C INDICATES CHANGE

140323

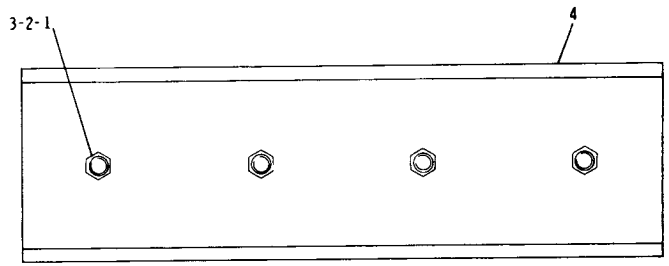

REF. NO.	PART NUMBER	DESCRIPTION	QTY
1	4F4042	BOLT----------	8
2	2J3507	NUT----------	8
3	3K5234	WASHER----------	8
4	9J6125	CUTTING EDGE----------	2

155391

9J6123 CUTTING EDGE GROUP—Bolt-On
Replaced by 1U1472 Cutting Edge Group shown on Page 216-1
FOR USE WITH 1V2912 OR 1V9079 BUCKET ASSEMBLIES SHOWN ON PAGES 208 & 209. AN ATTACHMENT

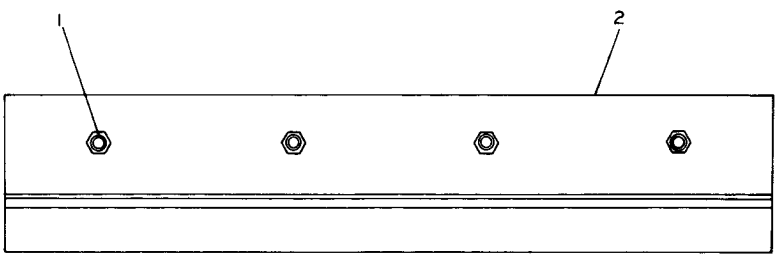

REF. NO.	PART NUMBER	DESCRIPTION	QTY
1	1J5607	BOLT----------	8
	2J3507	NUT----------	8
2	9J6127	CUTTING EDGE------(R. H.)--------	1
	9J6128	CUTTING EDGE------(L. H.)--------	1

155392

9J6124 CUTTING EDGE GROUP—Bolt-On
Replaced by 1U1472 Cutting Edge Group shown on Page 216-1. FOR USE WITH 1V2912 OR 1V9079 BUCKET ASSEMBLIES SHOWN ON PAGES 208 & 209 AN ATTACHMENT

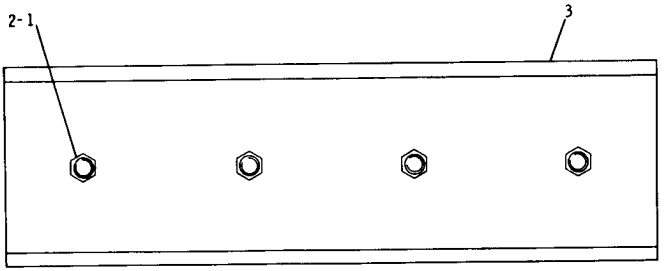

REF. NO.	PART NUMBER	DESCRIPTION	QTY
1	1J5607	BOLT----------	8
2	2J3507	NUT----------	8

3	1U1473	CUTTING EDGE----------	2

181964

1U1472 CUTTING EDGE GROUP
FOR USE WITH 1V2912 OR 1V9079 BUCKET ASSEMBLIES SHOWN ON
PAGES 208 & 209

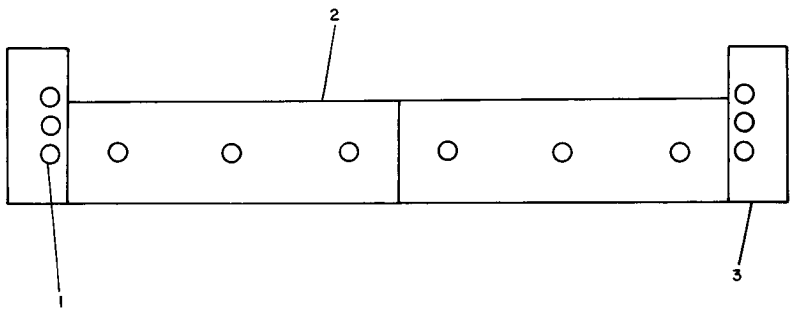

REF. NO.	PART NUMBER	DESCRIPTION	QTY.
1	4F4042	BOLT	12
	2J3507	NUT	12
2	1U2410	EDGE	2
3	3G9512	BIT	2

178389

1U1928 BIT AND CUTTING EDGE GROUP
FOR USE WITH 5V7256 AND 5V7257 BUCKET ASSEMBLIES SHOWN ON PAGES 208A AND 208B AND 5V7259 MULTI-PURPOSE BUCKET ARRANGEMENT LISTED ON PAGE 211. AN ATTACHMENT

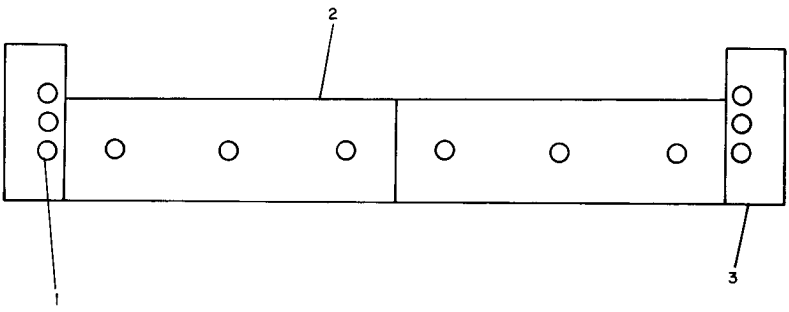

REF. NO.	PART NUMBER	DESCRIPTION	QTY.
1	4F4042	BOLT	12
	2J3507	NUT	12
2	1U2411	EDGE	2
3	3G9512	BIT	2

178390

1U1929 BIT CUTTING EDGE GROUP
FOR USE WITH 5V7258 BUCKET ASSEMBLY SHOWN ON PAGE 212A AN ATTACHMENT

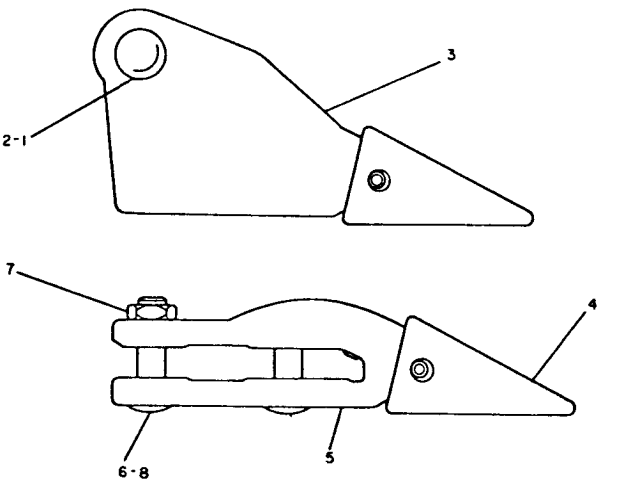

REF NO.	PART NUMBER	DESCRIPTION	QTY.
1	5P8823	BOLT	2
2	5P8362	NUT	2
3	3G4309	ADAPTER-(R. H.)	1
	3G4308	ADAPTER-(L. H.)	1
C 4	9J3175	TIP GROUP (Separate Illustration)	1
5	3G4307	ADAPTER	6
6	8J2928	BOLT-9.53 cm (3.75 in.) long	6
7	8J2933	NUT	12
8	1J3527	BOLT-11.4 cm (4.45 in.) long	6

C INDICATES CHANGE 179154

3G4014 TOOTH GROUP—Short Tip
FOR USE WITH 5V7256, 5V7257 AND 5V7258 BUCKET ASSEMBLIES SHOWN ON PAGES 208A, 208B & 212A AND 5V7259 MULTI-PURPOSE BUCKET ARRANGEMENT LISTED ON PAGE 211. 9J3175 Tip parts are shown on Page 216B. AN ATTACHMENT

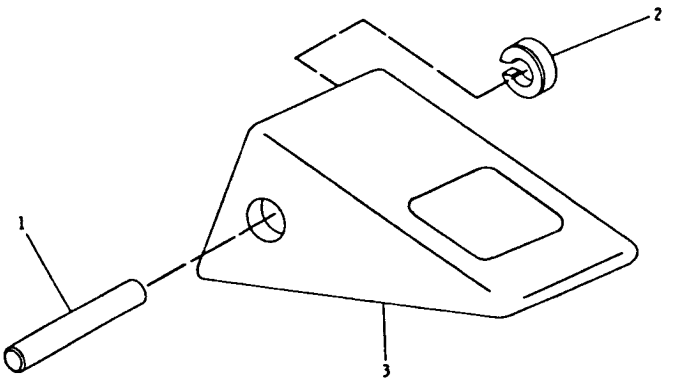

REF NO.	PART NUMBER	DESCRIPTION	QTY.
1	9J2308	PIN	1
C 2	3G9609	RETAINER	1
C 3	1U3301	TIP	1

C INDICATES CHANGE 229057

9J3175 TIP GROUP—Short Tip—Extreme Service
Part of 3G4014 and 8J6589 Tooth Groups shown on Pages 216B and 217
AN ATTACHMENT

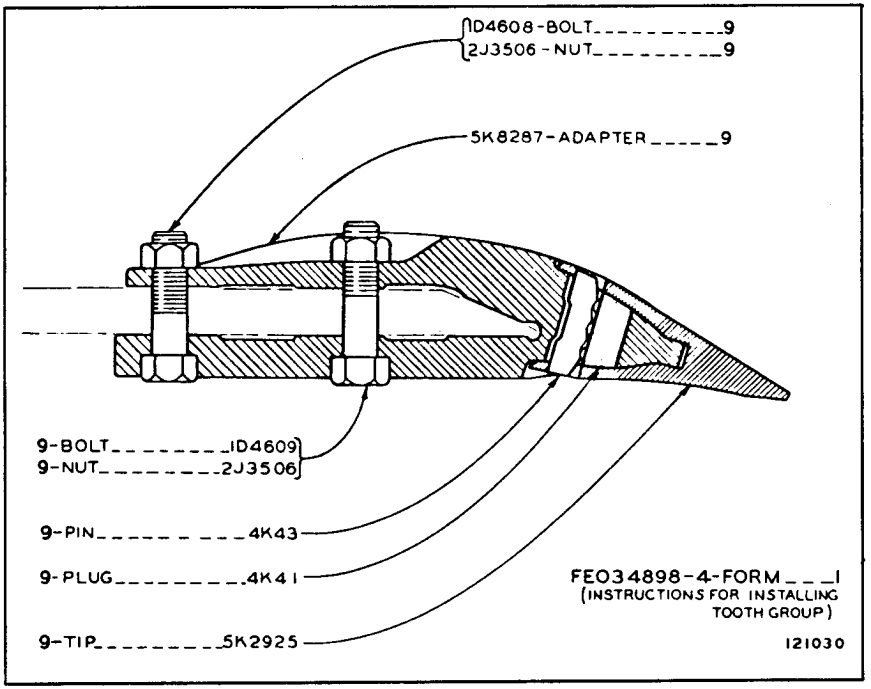

6K1339 TOOTH GROUP—Short Tip
FOR USE WITH 6K703 SIDE DUMP BUCKET ARRANGEMENT LISTED ON PAGE 211 AN ATTACHMENT

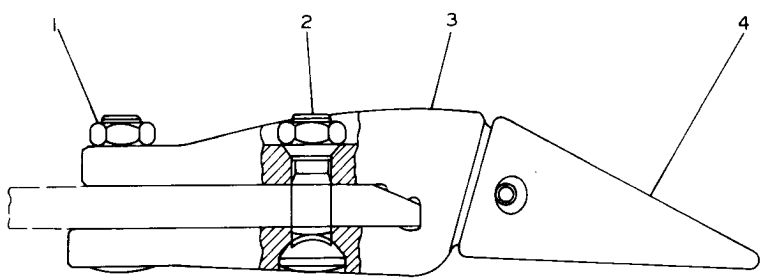

	REF. NO.	PART NUMBER	DESCRIPTION	QTY
	1	8J2933	NUT	2
	2	8J2928	BOLT	2
C	3	1U307	ADAPTER—(bolted on)	1
			-OR-	
C▲	3	9J8929	ADAPTER—(welded on)	1

C	4	9J3175	TIP GROUP (Separate Illustration)	1
		GMG00832	FORM--(Instructions for Installing Tooth Groups on Track Type and Wheel Type Loaders)	1

▲ NOT PART OF 8J6589 TOOTH GROUP

C INDICATES CHANGE

179155

8J6589 TOOTH GROUP—Short Tip
FOR USE WITH 1V2912 OR 1V9079 BUCKET ASSEMBLIES SHOWN ON PAGES 208 & 209. 9J3175 Tip parts are shown on Page 216B. AN ATTACHMENT

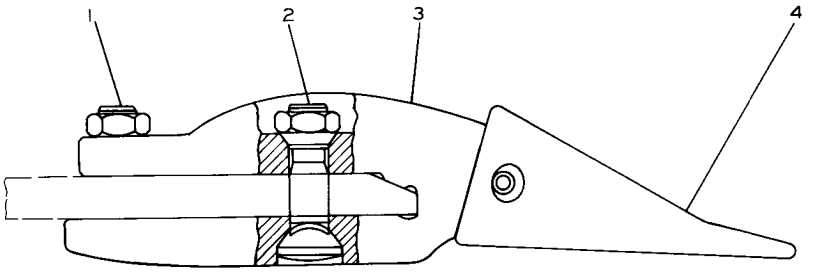

	REF. NO.	PART NUMBER	DESCRIPTION	QTY
	1	8J2933	NUT	2
	2	8J2928	BOLT	2
C	3	1U307	ADAPTER (bolted on)	1
			-OR-	
C▲	3	9J8929	ADAPTER (welded on)	1
C	4	9J3167	TIP GROUP (Separate Illustration)	1

GMG00832	FORM (Instructions for Installing Tooth Groups on Track Type and Wheel Type Loaders)	1

▲ NOT PART OF 8J6588 TOOTH GROUP

C INDICATES CHANGE

178391

8J6588 TOOTH GROUP—Long Tip
Replaced by 3G4013 shown on Page 218A. FOR USE WITH 1V2912 OR 1V9079 BUCKET ASSEMBLIES SHOWN ON PAGES 208 & 209. AN ATTACHMENT

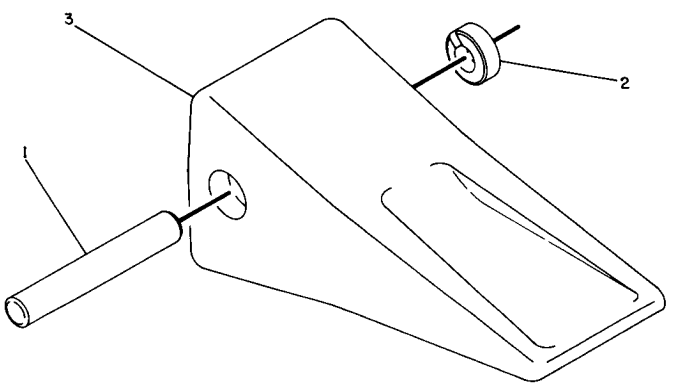

	REF. NO.	PART NUMBER	DESCRIPTION	QTY.
	1	9J2308	PIN	1
C	2	3G9609	RETAINER	1
C	3	1U3302	TIP	1

C INDICATES CHANGE

229056

9J3167 TIP GROUP
Part of 1V9624 General Purpose Bucket Group and 8J6588 Tooth Group shown on Pages 210 & 218. AN ATTACHMENT

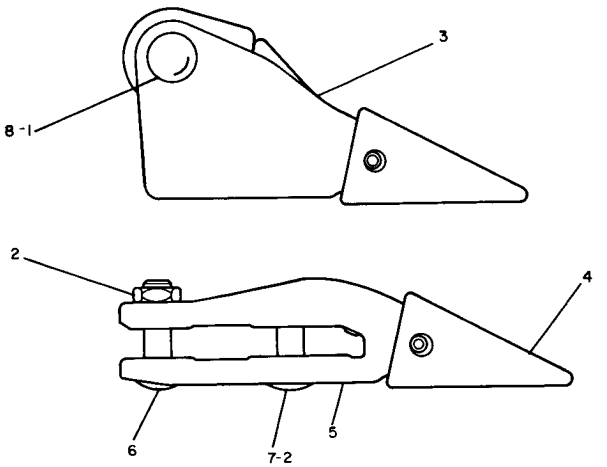

REF. NO.	PART NUMBER	DESCRIPTION	QTY.
1	5P8823	BOLT----------	2
2	8J2933	NUT----------	12
3	3G4309	ADAPTER------(R. H.)----------	1
	3G4308	ADAPTER-------(L. H.)----------	1
4	9J3167	TIP GROUP---------- (Separate Illustration)	8
5	3G4307	ADAPTER----------	6
6	8J2928	BOLT----------	6
7	1J3527	BOLT----------	6
8	5P8362	NUT----------	2

178392

3G4013 TOOTH GROUP—Long Tip
FOR USE WITH 5V7256 AND 5V7257 BUCKET ASSEMBLIES, 5V7259 MULTI-PURPOSE BUCKET ARRANGEMENT AND 5V7258 BUCKET ASSEMBLY SHOWN ON PAGES 208A, 208B, 211 & 212A. AN ATTACHMENT

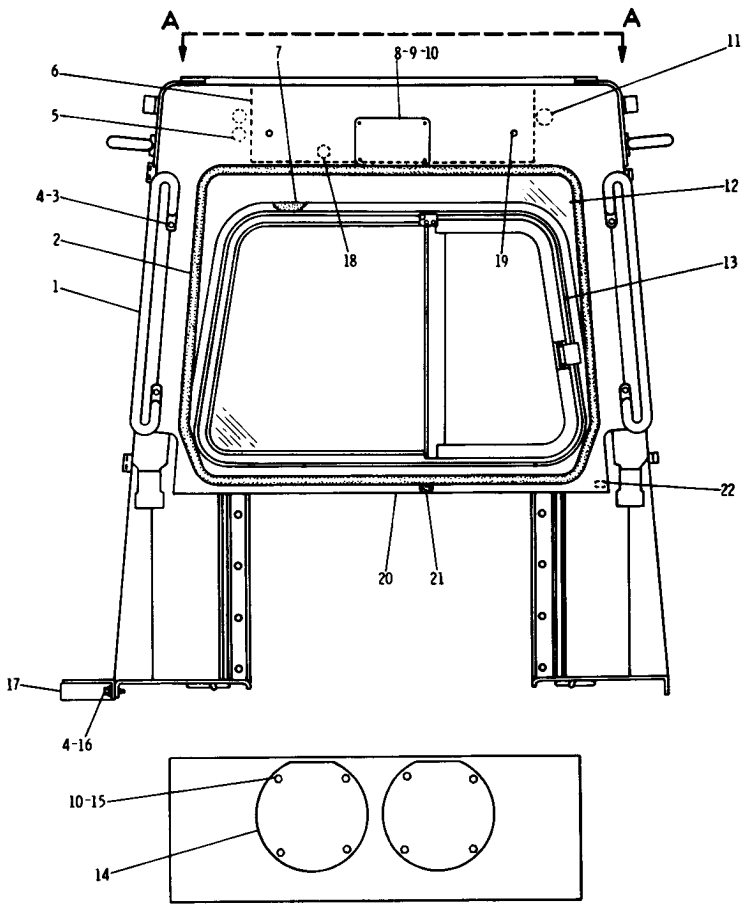

VIEW A-A

REF. NO.	PART NUMBER	DESCRIPTION	QTY
1	4V4842	GRAB IRON	2
2	5P5768	SEAL (use as required)	
3	S1621	BOLT	4
4	5P1076	WASHER	6
5	4V7318	PLUG	2
6	9P2894	COVER	1
	9P2858	GASKET	1
7	5P5768	SEAL (use as required)	
8	9P7517	PLATE	1
9	2A762	BOLT	4
10	3B4504	LOCKWASHER	12
11	4V7319	PLUG	1
12	9P481	GLASS (safety)	1
13	9P9398	WINDOW ASSEM. (Separate Illustration)	1
14	9P1579	COVER	2
15	4F7957	BOLT	8
16	S1595	BOLT	2
17	8P738	STEP ASSEM.	1
18	S1594	BOLT	12
	5P1075	WASHER	12
19	4V5090	BUMPER	2
20	3V8000	CAB ASSEM. (Includes)	1
	1F748	NUT---.95 cm(.375 in.) thread	2
	9F2978	NUT---1.27 cm(.5 in.) thread	18
21	1J7581	NUT	4
22	6J499	LUG	2

216816

4V1239 ROLL-OVER PROTECTIVE STRUCTURE GROUP—Enclosed—Front View—Part 1 of 3

Serial No. 13X1 to 13X1121 inclusive. 9P9398 Window parts are shown on Page 222

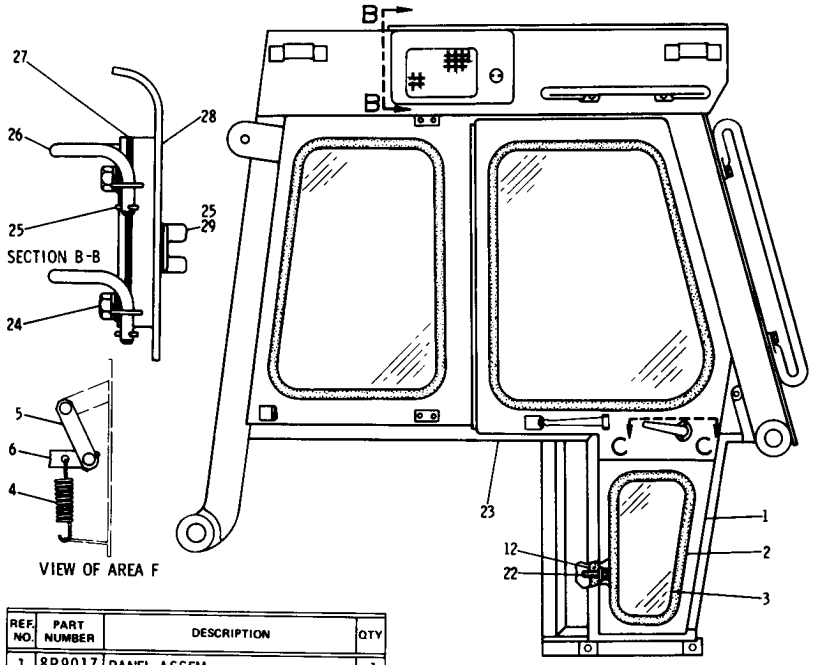

REF. NO.	PART NUMBER	DESCRIPTION	QTY
1	8P9017	PANEL ASSEM.	1
2	5P5768	SEAL-(use as required)	
3	8P9028	GLASS-(tinted)	1
4	4H3521	SPRING	2
5	9P6894	LEVER	2
	9P6895	PIN	4
	3B5311	COTTER PIN	4
6	9P436	LEVER ASSEM.	2
7	5P8527	STRIKER	2
8	S1616	BOLT	4
	7H8909	LOCKNUT	4
9	3B4504	LOCKWASHER	10
	4B4276	WASHER	10
10	9P1145	PLATE	2
	9P1200	SHIM	6
11	9P7490	BRACKET-(R. H.)	1
	8P9550	BRACKET-(L. H.)	1
12	5P5747	SEAL-(use as required)	
13	7B2742	BOLT	8
	2D6235	LOCKNUT	8
14	5P8529	LATCH	1
	5P8528	LATCH-(L. H.)	1
15	5P5582	SCREW	4
	3F1147	LOCKWASHER	4
16	9P553	HANDLE ASSEM. (Each Includes)	2
	9D1447	KEY	1
17	9P897	SPACER	2
18	S1615	BOLT	6
19	9P7494	COVER ASSEM.-(R. H.)	1
	9P7493	COVER ASSEM.-(L. H.)	1
20	3H9675	PIN	4
21	9P435	HANDLE	2
22	S1571	BOLT	6
	5P1075	WASHER	6
23	8P9007	DOOR ASSEM.	1

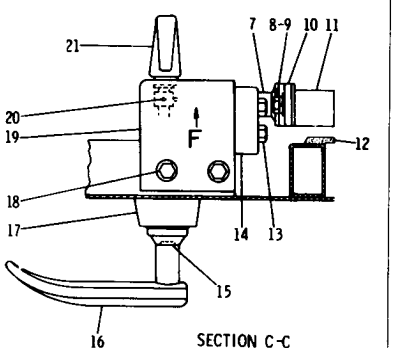

24	L1351	BOLT	4
	3B4506	LOCKWASHER	4
	4B4278	WASHER	4
25	3B4610	COTTER PIN	6
26	8P9591	ARM ASSEM.-(R. H.)	1
	8P9594	ARM ASSEM.-(L. H.)	1
27	8P9588	SHIM	4
28	8P9736	DOOR ASSEM.-(R. H.)	1
	8P9779	DOOR ASSEM.-(L. H.)	1
29	4D6082	BOLT	2
	4B4280	WASHER	2
	GMG02622	FORM (Instructions for Installing Handle Assem.)	1

216817

4V1239 ROLL-OVER PROTECTIVE STRUCTURE GROUP—Enclosed—R.H. Side View—Part 2 of 3
Serial No. 13X1 to 13X1121 inclusive

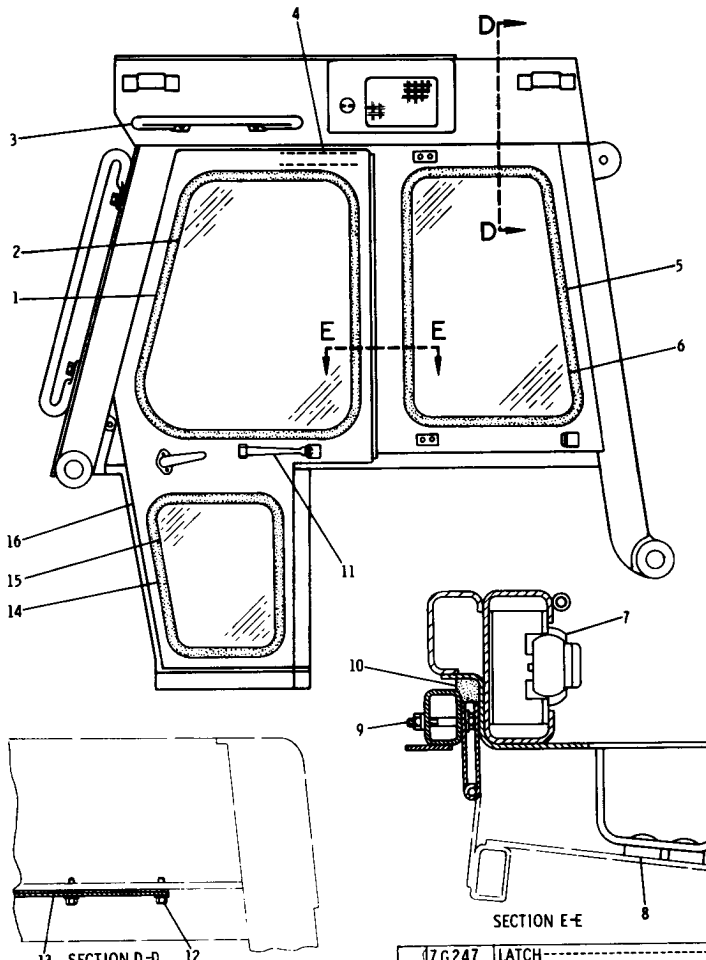

REF. NO.	PART NUMBER	DESCRIPTION	QTY
1	5P5768	SEAL--------(use as required)----	
2	8P9036	GLASS--------(tinted)------	2
3	9P2854	GRAB IRON----------	2
	S1621	BOLT----------	4
	5P1076	WASHER----------	4
4	5P5747	SEAL------(use as required)----	
5	5P5768	SEAL------(use as required)-----	
6	8P9548	GLASS---------(tinted)-------	2
7	6P8690	BEZEL----------	2
	6P8689	LOUVER----------	2
8	9M5884	BUMPER----------	8
9	7B8167	BOLT----------	12
	7H8909	LOCKNUT----------	10
	4B4276	WASHER----------	12
	8M2337	WASHER----------	10
10	5P5640	SEAL-------(use as required)---	

11	7G247	LATCH----------	2
	7G246	PIN----------	2
	3B4604	COTTER PIN----------	2
12	T102	BOLT----------	10
	5P1075	WASHER----------	10
13	9P2501	COVER----------	1
	9P2500	GASKET----------	1
14	5P5768	SEAL------(use as required)----	
15	8P9037	GLASS------(tinted)--------	1
16	8P9023	DOOR ASSEM.----------	1
	5P8896	PLATE--------(certification)----	1
▲	5P8897	PLATE--------(identification)----	1
	347044	RIVET----------	6

▲ NOT SHOWN-Mounted on front panel

216818

4V1239 ROLL-OVER PROTECTIVE STRUCTURE GROUP—Enclosed—L.H. Side View—Part 3 of 3
Serial No. 13X1 to 13X1121 inclusive

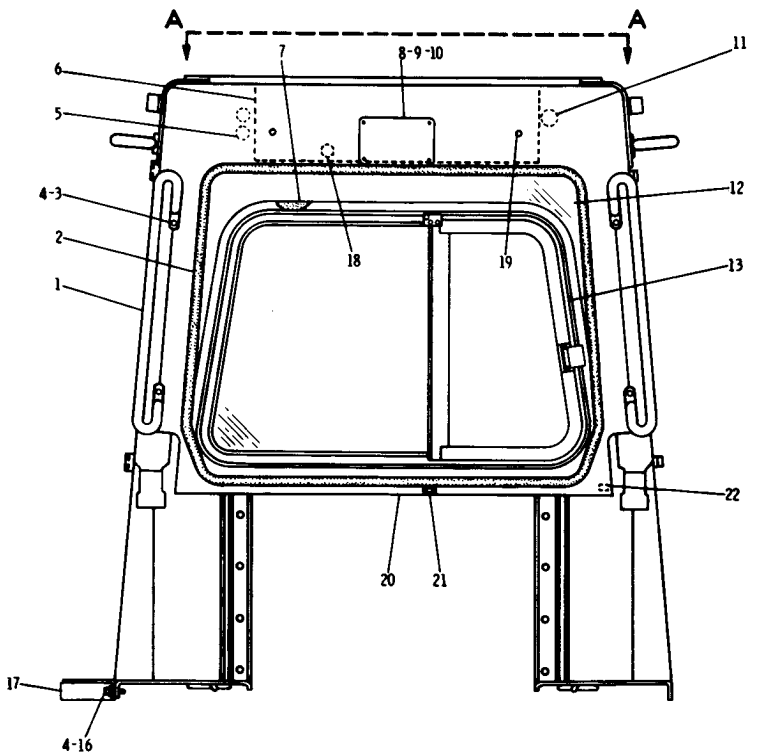

VIEW A-A

REF. NO.	PART NUMBER	DESCRIPTION	QTY
1	4V4842	GRAB IRON	2
2	5P5768	SEAL (use as required)	
3	S1621	BOLT	4
4	5P1076	WASHER	6
5	4V7318	PLUG	2
6	9P2894	COVER	1
	9P2858	GASKET	1
7	5P5768	SEAL (use as required)	
8	9P7517	PLATE	1
9	2A762	BOLT	4
10	3B4504	LOCKWASHER	12
11	4V7319	PLUG	1
12	9P481	GLASS (safety)	1
13	9P9398	WINDOW ASSEM. (Separate Illustration)	1
14	9P1579	COVER	2
15	4F7957	BOLT	8
16	S1595	BOLT	2
17	8P738	STEP ASSEM.	1
18	S1594	BOLT	12
	5P1075	WASHER	12
19	4V5090	BUMPER	2
20	3V8000	CAB ASSEM. (Includes)	1
	1F748	NUT---.95 cm(.375 in.) thread	2
	9F2978	NUT---1.27 cm(.5 in.) thread	18
21	1J7581	NUT	4
22	6J499	LUG	2

216816

4V1239 ROLL-OVER PROTECTIVE STRUCTURE GROUP—Enclosed—Front View—
Part 1 of 3
Serial No. 13X1122 to 13X1913 inclusive
9P9398 Window parts are shown on Page 222

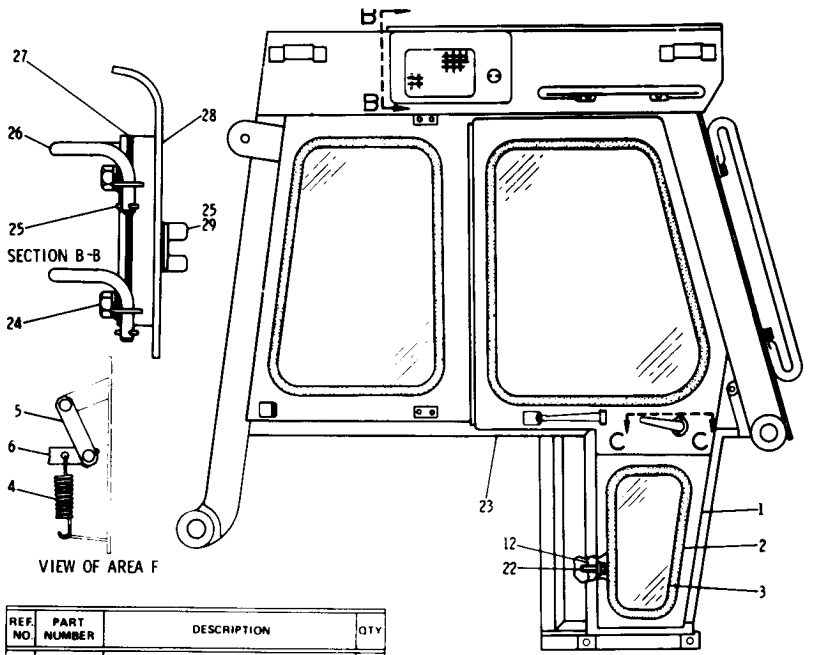

REF. NO.	PART NUMBER	DESCRIPTION	QTY
1	8P9017	PANEL ASSEM.	1
■ 2	5P5768	SEAL-(use as required)	
3	8P9028	GLASS-(tinted)	1
4	4H3521	SPRING	2
	9P6894	LEVER	2
5	9P6895	PIN	4
	3B5311	COTTER PIN	4
6	9P436	LEVER ASSEM.	2
7	5P8527	STRIKER	2
8	S1616	BOLT	4
	7H8909	LOCKNUT	4
9	3B4504	LOCKWASHER	10
	4B4276	WASHER	10
10	9P1145	PLATE	2
	9P1200	SHIM	6
11	9P7490	BRACKET-(R. H.)	1
	8P9550	BRACKET-(L. H.)	1
■ 12	5P5747	SEAL-(use as required)	
13	7B2742	BOLT	8
	2D6235	LOCKNUT	8
14	5P8529	LATCH	1
	5P8528	LATCH-(L. H.)	1
15	5P5582	SCREW	4
	3F1147	LOCKWASHER	4
C	5P9591	HANDLE ASSEM.	2
16		(Each Includes)	
	9D1447	KEY	1
C 17	5P9610	SPACER	2
18	S1615	BOLT	6
19	9P7494	COVER ASSEM.-(R. H.)	1
	9P7493	COVER ASSEM.-(L. H.)	1
C 20	5606	PIN	4
21	9P435	HANDLE	2
22	S1571	BOLT	6
	5P1075	WASHER	6
23	8P9007	DOOR ASSEM.	1

■ ORDER BY THE METER

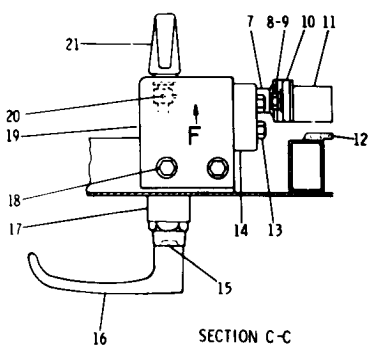

SECTION C-C

	L1351	BOLT	4
24	3B4506	LOCKWASHER	4
	4B4278	WASHER	4
25	3B4610	COTTER PIN	6
26	8P9591	ARM ASSEM.-(R. H.)	1
	8P9594	ARM ASSEM.-(L. H.)	1
27	8P9588	SHIM	4
C 28	5V461	DOOR ASSEM.-(R. H.)	1
C	5V460	DOOR ASSEM.-(L. H.)	1
29	4D6082	BOLT	2
	4B4280	WASHER	2
C	SMHS6848	FORM (Instructions for Installing Handle Assem.)	1

C INDICATES CHANGE 220707

4V1239 ROLL-OVER PROTECTIVE STRUCTURE GROUP—Enclosed—R.H. Side View—Part 2 of 3
Serial no. 13X1122 to 13X1913 inclusive

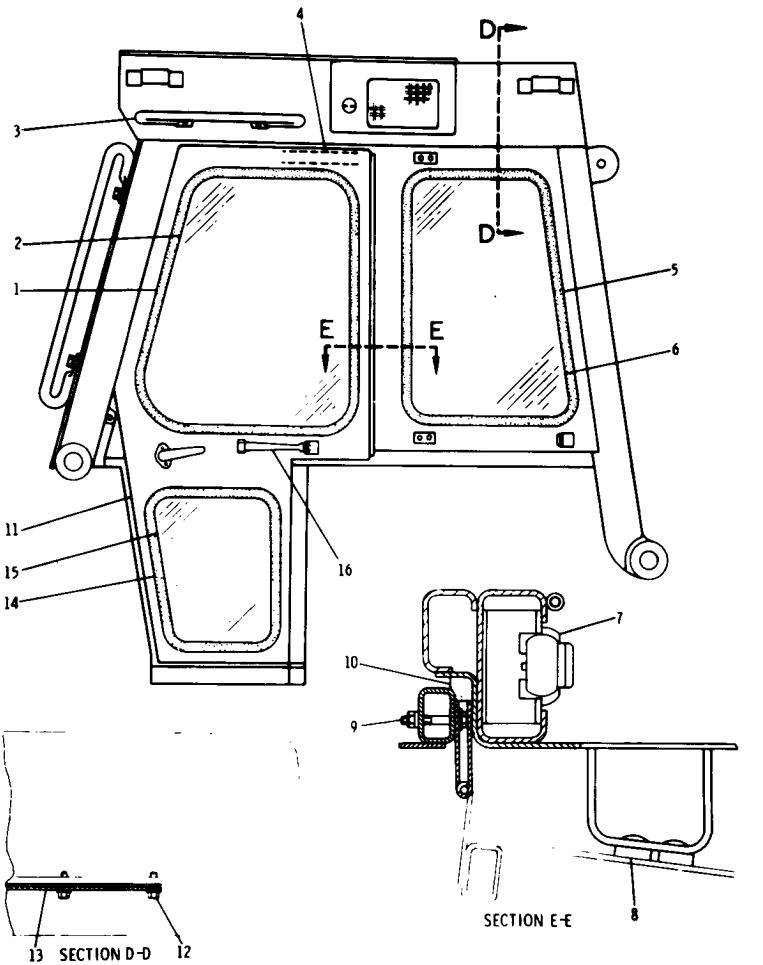

	REF. NO.	PART NUMBER	DESCRIPTION	QTY
■	1	5P5768	SEAL--------(use as required)----	
	2	8P9036	GLASS--------(tinted)------	2
		9P2854	GRAB IRON----------	2
	3	S1621	BOLT----------	4
		5P1076	WASHER----------	4
■	4	5P5747	SEAL------(use as required)----	
■	5	5P5768	SEAL------(use as required)-----	
	6	8P9548	GLASS---------(tinted)-------	2
C	7	7G2172	LOUVER ASSEM.----------	2
	8	9M5884	BUMPER----------	8
	9	7B8167	BOLT----------	12
		7H8909	LOCKNUT----------	10
		4B4276	WASHER----------	12
		8M2337	WASHER----------	10
■	10	5P5640	SEAL----------(use as required)	
	11	8P9023	DOOR ASSEM.----------	1

▲ NOT SHOWN -Mounted on front panel

12	T102	BOLT----------	10
	5P1075	WASHER----------	10
13	9P2501	COVER----------	1
	9P2500	GASKET----------	1
■ 14	5P5768	SEAL----------(use as required)	
15	8P9037	GLASS---------(tinted)---------	1
16	7G247	LATCH----------	2
	7G246	PIN----------	2
	3B4604	COTTER PIN----------	2
	5P8896	PLATE------(certification)--------	1
▲	5P8897	PLATE-----(identification)-------	1
	347044	RIVET----------	6

■ ORDER BY THE METER

220708

4V1239 ROLL-OVER PROTECTIVE STRUCTURE GROUP—Enclosed—L.H. Side View—Part 3 of 3
Serial No. 13X1122 to 13X1913 inclusive

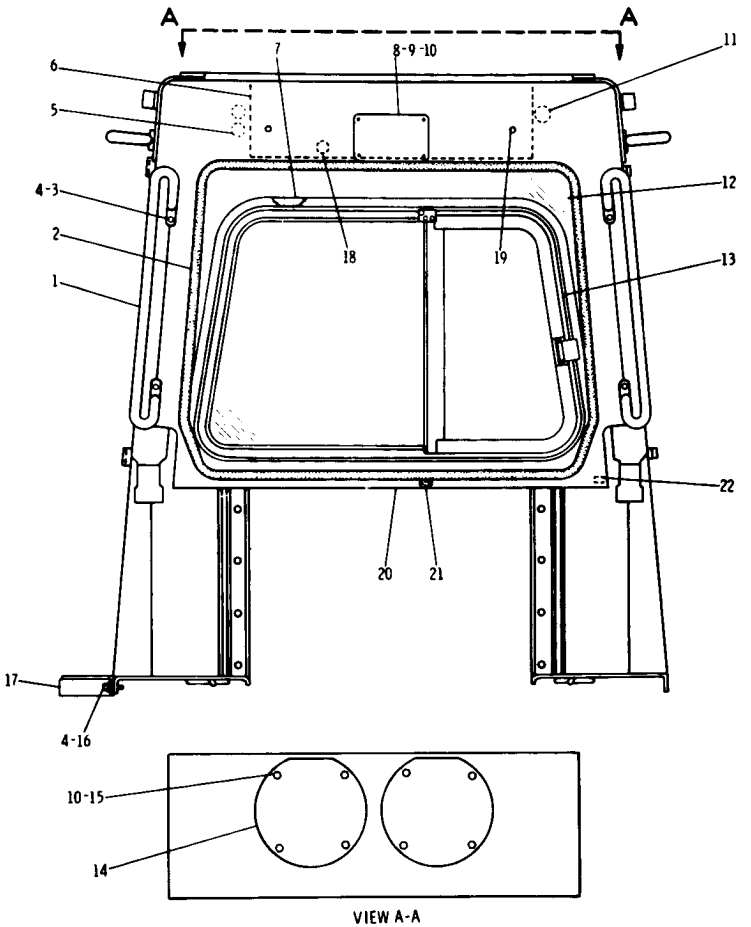

VIEW A-A

REF. NO.	PART NUMBER	DESCRIPTION	QTY.
1	4V4842	GRAB IRON	2
2	5P5768	SEAL--------(Use as required)	
3	S1621	BOLT	4
4	5P1076	WASHER	6
5	4V7318	PLUG	2
6	9P2894	COVER	1
	9P2858	GASKET	1
7	5P5768	SEAL----------(Use as required)	
8	9P7517	PLATE	1
9	2A762	BOLT	4
10	3B4504	LOCKWASHER	12
11	4V7319	PLUG	1
12	9P481	GLASS----------(safety)----------	1
13	9P9398	WINDOW ASSEM. (Separate Illustration)	1
14	9P1579	COVER	2
15	4F7957	BOLT	8
16	S1595	BOLT	2
17	8P738	STEP ASSEM.	1
18	S1594	BOLT	12
	5P1075	WASHER	12
19	4V5090	BUMPER	2
20	3V8000	CAB ASSEM. (Includes)	1
	1F748	NUT---.95 cm(.375 in.)thread	2
	9F2978	NUT---1.27cm(.5 in.)thread	18
21	1J7581	NUT	4
22	6J499	LUG	2

174824

4V1239 ROLL-OVER PROTECTIVE STRUCTURE GROUP—Enclosed—Front View—
Part 1 of 3
Serial No. 13X1914—Up
9P9398 Window parts are shown on Page 222

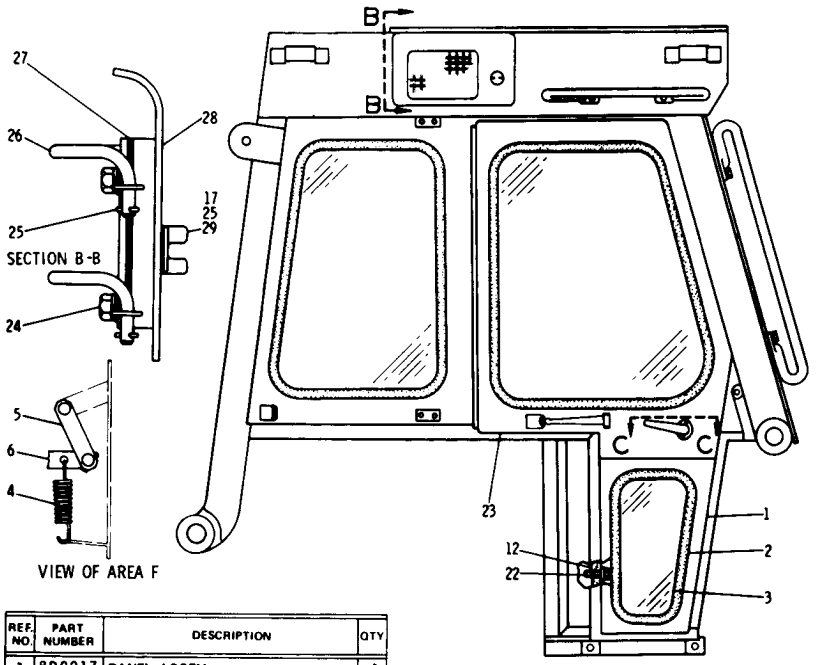

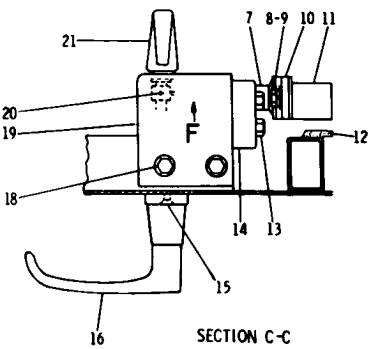

REF. NO.	PART NUMBER	DESCRIPTION	QTY
1	8P9017	PANEL ASSEM.	1
■ 2	5P5768	SEAL (use as required)	
3	8P9028	GLASS (tinted)	1
4	4H3521	SPRING	2
5	9P6894	LEVER	2
	9P6895	PIN	4
	3B5311	COTTER PIN	4
6	9P436	LEVER ASSEM.	2
C 7	6V1155	STRIKER ASSEM.	2
8	S1616	BOLT	4
	7H8909	LOCKNUT	4
9	3B4504	LOCKWASHER	10
	4B4276	WASHER	10
10	9P1145	PLATE	2
	9P1200	SHIM	6
11	9P7490	BRACKET (R. H.)	1
	8P9550	BRACKET (L. H.)	1
■ 12	5P5747	SEAL (use as required)	
13	7B2742	BOLT	8
	2D6235	LOCKNUT	8
C	6V1157	LATCH (R. H.)	1
C 14	6V1156	LATCH (L. H.)	1
C	2H6120	SCREW	4
15	3F1147	LOCKWASHER	4
C	6V1994	HANDLE ASSEM. (Each Includes)	2
16	5K4340	KEY	2
17	4B4280	WASHER	2
18	S1615	BOLT	6
19	9P7494	COVER ASSEM. (R. H.)	1
	9P7493	COVER ASSEM. (L. H.)	1
20	5606	PIN	4
21	9P435	HANDLE	2
22	S1571	BOLT	6
	5P1075	WASHER	6
23	8P9007	DOOR ASSEM.	1
	L1351	BOLT	4
24	3B4506	LOCKWASHER	4
	4B4278	WASHER	4
25	3B4610	COTTER PIN	6
26	8P9591	ARM ASSEM. (R. H.)	1
	8P9594	ARM ASSEM. (L. H.)	1
27	8P9588	SHIM	4
28	5V461	DOOR ASSEM. (R. H.)	1
	5V460	DOOR ASSEM. (L. H.)	1
29	4D6082	BOLT	2
	SMHS6848	FORM (Instructions for Installing Handle Assem.)	1

■ ORDER BY THE METER

C INDICATES CHANGE

174825

4V1239 ROLL-OVER PROTECTIVE STRUCTURE GROUP—Enclosed—R.H. Side View—
Part 2 of 3
Serial No. 13X1914—Up

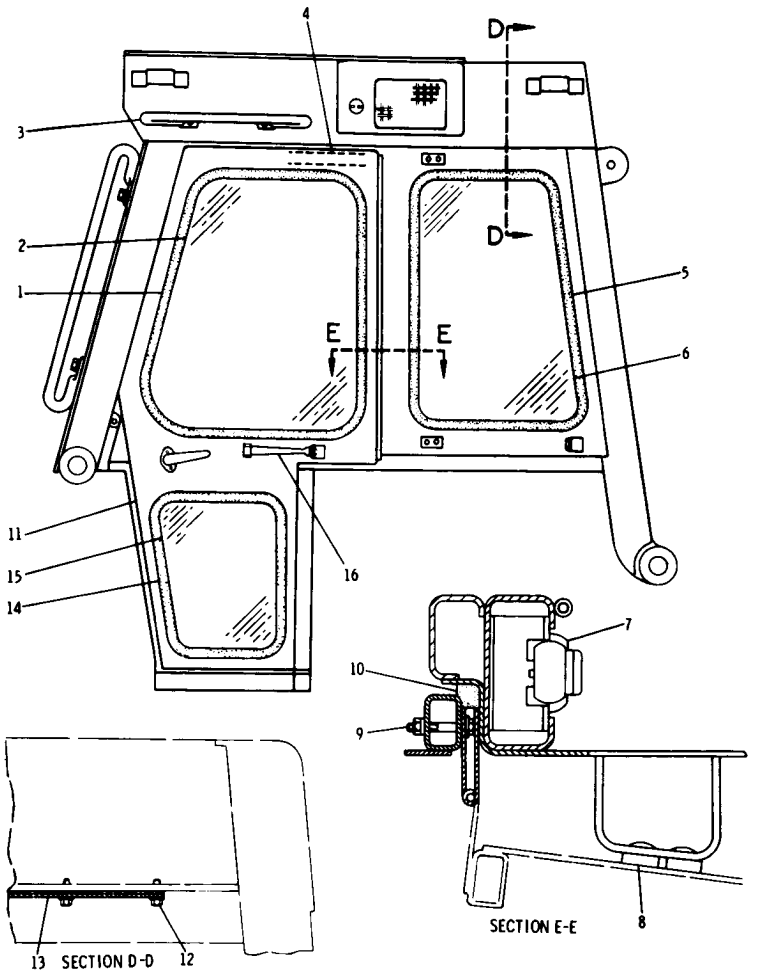

REF. NO.	PART NUMBER	DESCRIPTION	QTY
■ 1	5P5768	SEAL--------(use as required)----	
2	8P9036	GLASS--------(tinted)------	2
	9P2854	GRAB IRON----------	2
3	S1621	BOLT----------	4
	5P1076	WASHER----------	4
■ 4	5P5747	SEAL------(use as required)----	
■ 5	5P5768	SEAL------(use as required)-----	
6	8P9548	GLASS---------(tinted)-------	2
7	7G2172	LOUVER ASSEM.----------	2
8	9M5884	BUMPER----------	8
9	7B8167	BOLT----------	12
	7H8909	LOCKNUT----------	10
	4B4276	WASHER----------	12
	8M2337	WASHER----------	10
■ 10	5P5640	SEAL----------(use as required)	
11	8P9023	DOOR ASSEM.----------	1

12	T102	BOLT----------	10
	5P1075	WASHER----------	10
13	9P2501	COVER----------	1
	9P2500	GASKET----------	1
■ 14	5P5768	SEAL----------(use as required)	
15	8P9037	GLASS---------(tinted)----------	1
16	7G247	LATCH----------	2
	7G246	PIN----------	2
	3B4604	COTTER PIN----------	2
▲	5P8896	PLATE------(certification)--------	1
▲	5P8897	PLATE-----(identification)-------	1
	347044	RIVET----------	6

▲ NOT SHOWN-Mounted on front panel

■ ORDER BY THE METER

174826

4V1239 ROLL-OVER PROTECTIVE STRUCTURE GROUP—Enclosed—L.H. Side View—
Part 3 of 3
Serial No. 13X1914—Up

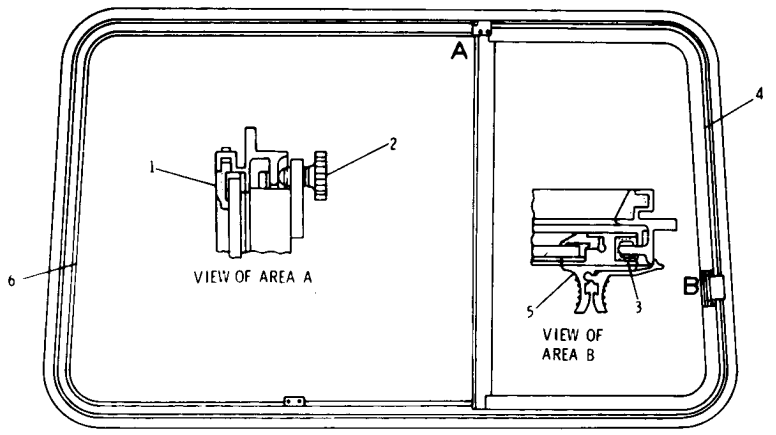

	REF NO	PART NUMBER	DESCRIPTION	QTY
▲	1	5P5680	SEAL---------3.05 m(120.07 in.)	1
	2	9P7856	KNOB----------	
▲	3	5P8918	SEAL-------1.52 m(59.85 in.)	

C INDICATES CHANGE

	4	9P9399	SLIDE ASSEM.---------- (Includes)	1
C	5	9P7860	LOCK ASSEM.----------	1
C		9P7859	SCREW----------	4
	6	9P9400	GLASS----------	1

▲ ORDER BY THE METRE

220010

9P9398 SLIDING WINDOW ASSEMBLY
Part of 4V1239 Roll-Over Protective Structure Group shown on Pages 219 and 221A

		CONSISTS OF:	PAGE
1	9P9392	MIRROR GROUP	225
1	3V6925	FLOORPLATE GROUP	224
1	3V6926	ROPS MOUNTING GROUP	143
1	3V7350	ROLL-OVER PROTECTIVE SYSTEM GROUP	223
1	4V4404	PLATFORM MOUNTING GROUP	224

4V2188 ROLL-OVER PROTECTIVE SYSTEM ARRANGEMENT—Open
AN ATTACHMENT

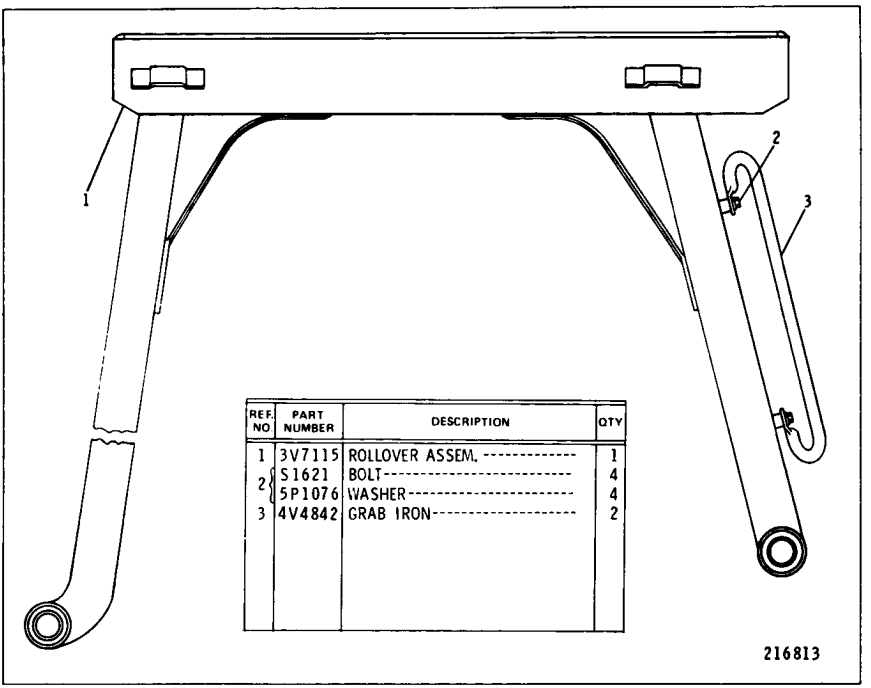

REF. NO	PART NUMBER	DESCRIPTION	QTY
1	3V7115	ROLLOVER ASSEM.	1
2	S1621	BOLT	4
	5P1076	WASHER	4
3	4V4842	GRAB IRON	2

3V7350 ROLL-OVER PROTECTIVE STRUCTURE GROUP
Part of 4V2188 Roll-Over Protective System Arrangement listed on Page 222
AN ATTACHMENT

CONSISTS OF: PAGE

1	3V6925	FLOORPLATE GROUP	224
1	4V4404	PLATFORM MOUNTING GROUP	224

4V2187 NON-ROPS CONVERSION ARRANGEMENT
FOR USE WITH MACHINES SHIPPED WITHOUT ROPS
AN ATTACHMENT

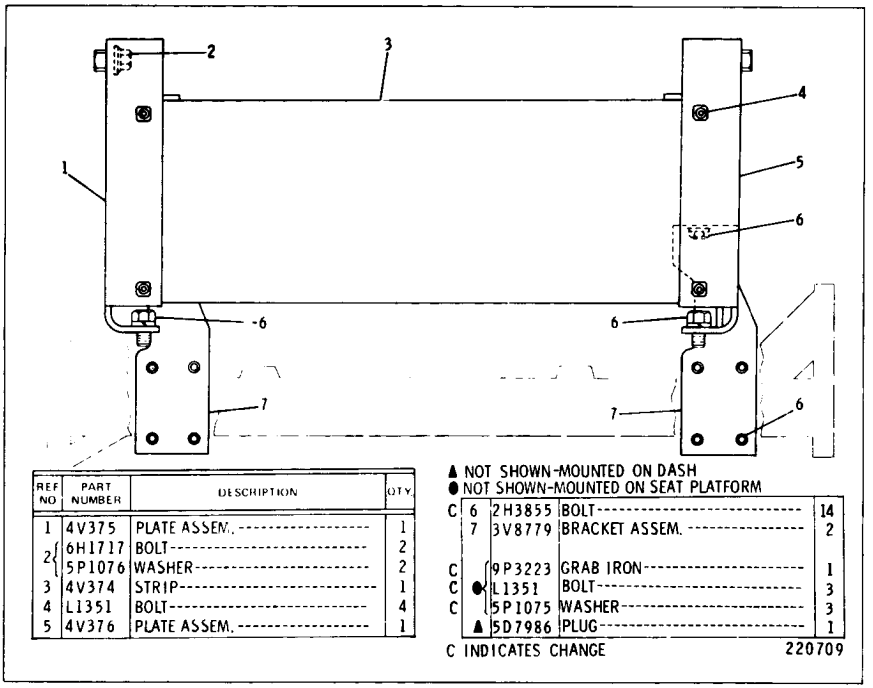

REF NO	PART NUMBER	DESCRIPTION	QTY
1	4V375	PLATE ASSEM.	1
2	6H1717	BOLT	2
	5P1076	WASHER	2
3	4V374	STRIP	1
4	L1351	BOLT	4
5	4V376	PLATE ASSEM.	1

▲ NOT SHOWN-MOUNTED ON DASH
● NOT SHOWN-MOUNTED ON SEAT PLATFORM

	REF NO	PART NUMBER	DESCRIPTION	QTY
C	6	2H3855	BOLT	14
	7	3V8779	BRACKET ASSEM.	2
C		9P3223	GRAB IRON	1
C	●	L1351	BOLT	3
C		5P1075	WASHER	3
	▲	5D7986	PLUG	1

C INDICATES CHANGE 220709

4V4404 PLATFORM MOUNTING GROUP—Type 1
Part of 4V2188 ROPS Arrangement and 4V2187 Non-ROPS Conversion Arrangement
listed on Pages 222 & 223. AN ATTACHMENT

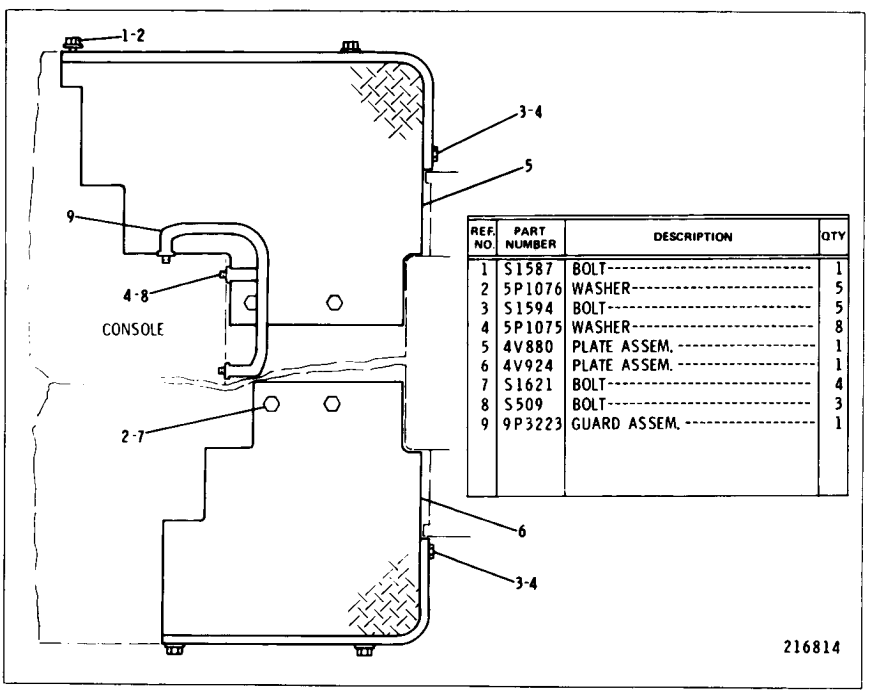

REF. NO.	PART NUMBER	DESCRIPTION	QTY
1	S1587	BOLT	1
2	5P1076	WASHER	5
3	S1594	BOLT	5
4	5P1075	WASHER	8
5	4V880	PLATE ASSEM.	1
6	4V924	PLATE ASSEM.	1
7	S1621	BOLT	4
8	S509	BOLT	3
9	9P3223	GUARD ASSEM.	1

3V6925 FLOORPLATE GROUP
Part of 4V2188 ROPS Arrangement and 4V2187 Non-ROPS Conversion Arrangement
listed on Pages 222 & 223. AN ATTACHMENT

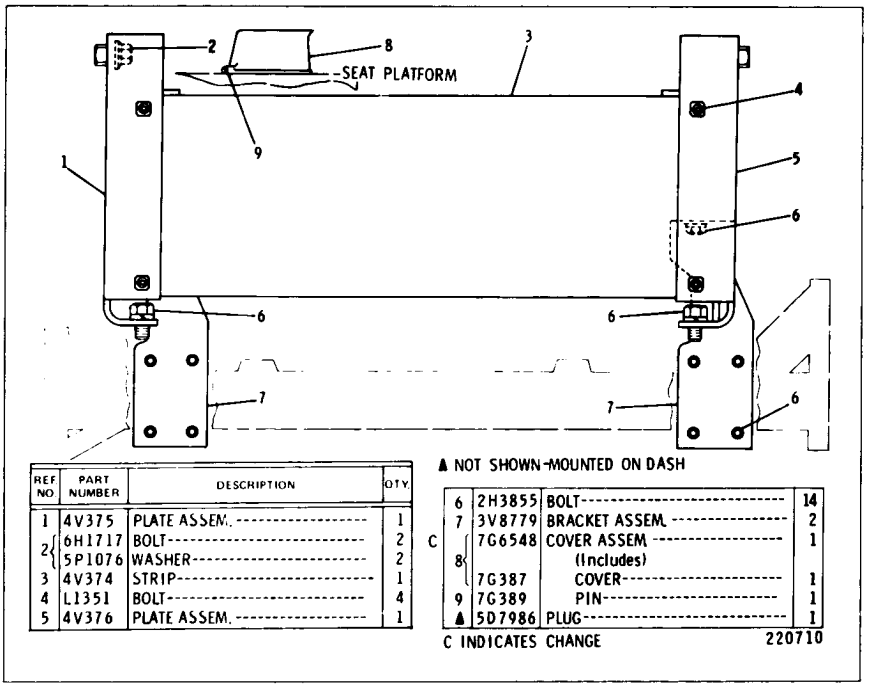

REF NO	PART NUMBER	DESCRIPTION	QTY.
1	4V375	PLATE ASSEM.	1
2	6H1717	BOLT	2
	5P1076	WASHER	2
3	4V374	STRIP	1
4	L1351	BOLT	4
5	4V376	PLATE ASSEM.	1

▲ NOT SHOWN-MOUNTED ON DASH

	6	2H3855	BOLT	14
	7	3V8779	BRACKET ASSEM.	2
C	8	7G6548	COVER ASSEM. (Includes)	1
		7G387	COVER	1
	9	7G389	PIN	1
	▲	5D7986	PLUG	1

C INDICATES CHANGE 220710

4V4404 PLATFORM MOUNTING GROUP—Type 2
Part of 4V2188 ROPS Arrangement and 4V2187 Non-ROPS Conversion Arrangement listed on Pages 222 and 223. AN ATTACHMENT

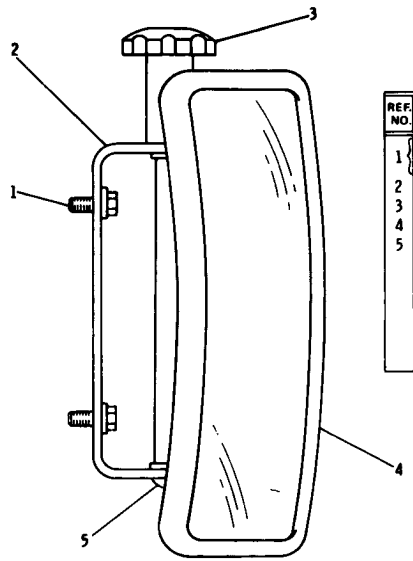

REF. NO.	PART NUMBER	DESCRIPTION	QTY
1	L1351	BOLT	2
	5P1075	WASHER	2
2	9P9390	BRACKET	1
3	9P9388	KNOB	1
4	5P6874	MIRROR	1
5	5K9179	BOLT	1

216983

9P9392 MIRROR GROUP
Also part of 4V2188 ROPS Arrangement listed on Page 222

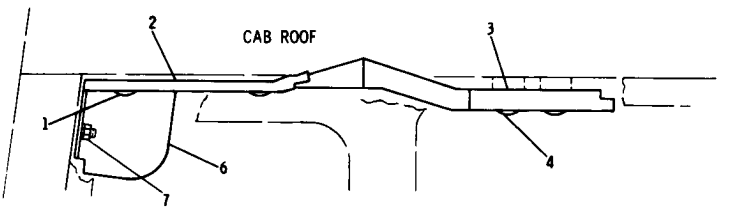

REF. NO.	PART NUMBER	DESCRIPTION	QTY
1	6P863	BUTTON	6
2	9P3392	LINER	1
3	9P3395	LINER	1
4	6P815	BUTTON	4
5	4V3996	FLOORPLATE	1
6	4V8488	COVER	1
7	1D4717	NUT	2
	4B4280	WASHER	2

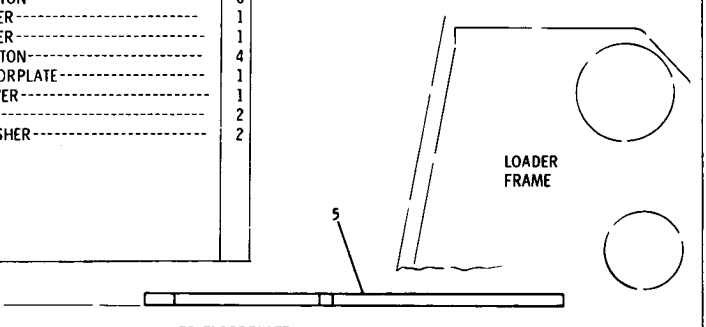

216799

4V3511 CAB LINER GROUP

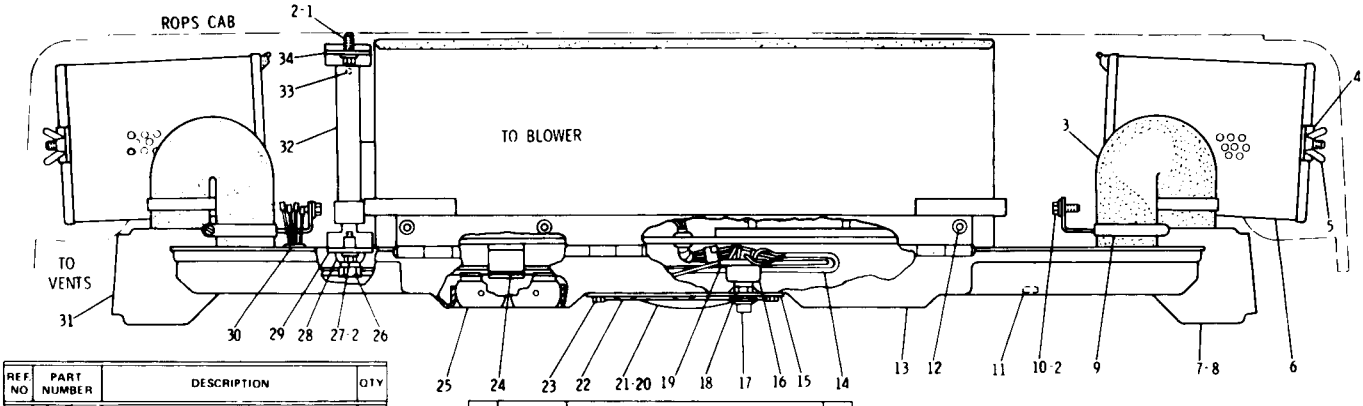

REF NO	PART NUMBER	DESCRIPTION	QTY
1	S509	BOLT	2
2	5P1075	WASHER	6
▲ 3	5P3915	HOSE--65 cm(25.59 in.)	
4	8P9587	STRAP	2
5	2B9498	NUT	4
6	2V36	FILTER ASSEM.	2
7	9P592	DUCT ASSEM. (Includes)	1
8	9M5733	RIVET	1
9	2J6540	CLAMP	4
10	L1351	BOLT	2
11	2D3406	PLUG--25.4 mm(1 in.) dia. hole	1
12	S1614	BOLT	10
	3B4504	LOCKWASHER	10
	4B4276	WASHER	10
13	7G1367	DUCT ASSEM.	1
14	8P6368	HARNESS (Separate Illustration)	1
15	8P3710	PLATE	1

● ORDER BY THE METER

16	6P3236	SWITCH ASSEM.	1
17	1P6509	KNOB	1
18	2P4339	NUT	1
19	9P2046	HARNESS ASSEM. (Includes)	1
●	5P5624	WIRE--(14 gauge)	1
●	5P5623	WIRE--(16 gauge)	
	2L8065	TERMINAL	1
	2L8075	TERMINAL	3
20	9M4192	LAMP ASSEM. (Includes)	1
	1S3291	DOOR ASSEM.	1
C	7N9443	LAMP	1
	2F2860	SCREW	2
21	1H2204	SCREW	3
	4B2047	NUT	3
22	302283	PLUG	2
23	310243	SCREW	4
24	319195	CLIP	1

C INDICATES CHANGE

25	6P5673	LOUVER	4
26	6P5812	SCREW ASSEM.	1
27	S1594	BOLT	2
28	6P5564	ROD	1
29	6P4152	BRACKET	1
30	9D3768	GROMMET	1
31	9P4044	DUCT ASSEM. (Includes)	1
	9M5733	RIVET	1
32	6P4147	TUBE ASSEM.	1
33	4H1641	PIN	1
34	6P4151	BRACKET	1

▲ ORDER BY THE CENTIMETER

226814

9P4039 CAB PRESSURIZER GROUP—Part 1
Serial No. 13X1 to 13X623 inclusive
8P6368 Harness parts are shown on Page 228

9P4039 CAB PRESSURIZER GROUP—Part 2
Serial No. 13X1 to 13X623 inclusive
9P8674 Harness and 9P5089 Pressurizer parts are shown on Pages 228 & 229

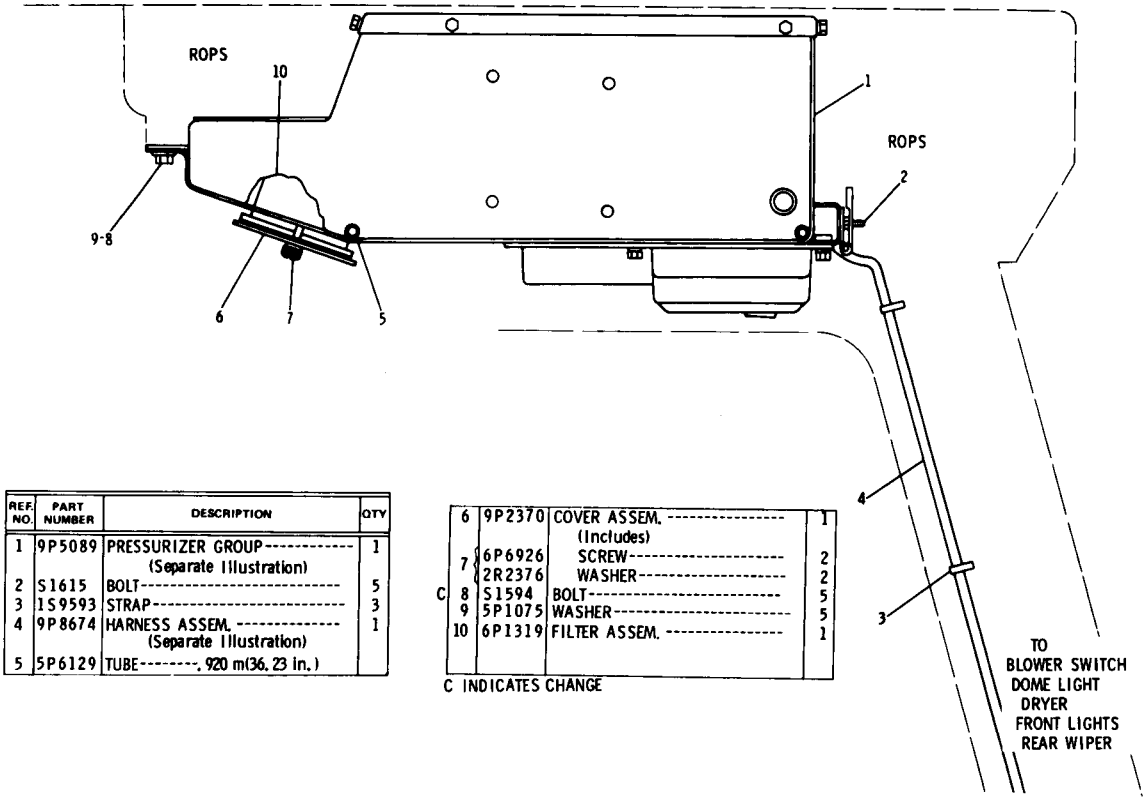

REF. NO.	PART NUMBER	DESCRIPTION	QTY
1	9P5089	PRESSURIZER GROUP---------- (Separate Illustration)	1
2	S1615	BOLT----------	5
3	1S9593	STRAP----------	3
4	9P8674	HARNESS ASSEM. ---------- (Separate Illustration)	1
5	5P6129	TUBE--------, 920 m(36, 23 in.)	

	REF. NO.	PART NUMBER	DESCRIPTION	QTY
	6	9P2370	COVER ASSEM. ---------- (Includes)	1
	7	6P6926	SCREW----------	2
		2R2376	WASHER----------	2
C	8	S1594	BOLT----------	5
	9	5P1075	WASHER----------	5
	10	6P1319	FILTER ASSEM. ----------	1

C INDICATES CHANGE

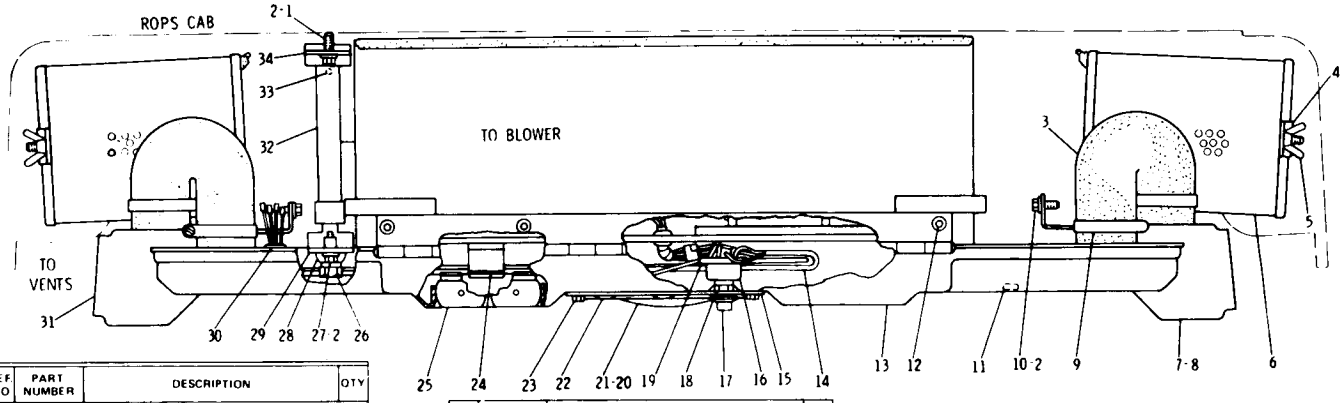

REF NO	PART NUMBER	DESCRIPTION	QTY
1	S509	BOLT	2
2	5P1075	WASHER	6
▲ 3	5P3915	HOSE---65 cm(25.59 in.)	
4	8P9587	STRAP	2
5	2B9498	NUT	4
6	2V36	FILTER ASSEM.	2
7	9P592	DUCT ASSEM. (Includes)	1
8	9M5733	RIVET	1
9	2J6540	CLAMP	4
10	L1351	BOLT	2
11	2D3406	PLUG---25.4 mm(1 in.)dia. hole	1
12	S1614	BOLT	10
	3B4504	LOCKWASHER	10
	4B4276	WASHER	10
13	7G1367	DUCT ASSEM.	1
14	8P6368	HARNESS (Separate Illustration)	1
15	8P3710	PLATE	1

16		6P3236	SWITCH ASSEM.	1
17		1P6509	KNOB	1
18		2P4339	NUT	1
		9P2046	HARNESS ASSEM. (Includes)	1
●	19	5P5624	WIRE---(14 gauge)	1
●		5P5623	WIRE---(16 gauge)	
		2L8065	TERMINAL	1
		2L8075	TERMINAL	3
		9M4192	LAMP ASSEM. (Includes)	1
	20	1S3291	DOOR ASSEM.	1
C		7N9443	LAMP	1
		2F2860	SCREW	2
	21	1H2204	SCREW	3
		4B2047	NUT	3
22		302283	PLUG	2
23		310243	SCREW	4
24		319195	CLIP	1

25	6P5673	LOUVER	4
26	6P5812	SCREW ASSEM.	1
27	S1594	BOLT	2
28	6P5564	ROD	1
29	6P4152	BRACKET	1
30	9D3768	GROMMET	1
	9P4044	DUCT ASSEM. (Includes)	1
31	9M5733	RIVET	1
32	6P4147	TUBE ASSEM.	1
33	4H1641	PIN	1
34	6P4151	BRACKET	1

● ORDER BY THE METER

C INDICATES CHANGE

▲ ORDER BY THE CENTIMETER

226814

9P4039 CAB PRESSURIZER GROUP—Part 1
Serial No. 13X624 to 13X1602 inclusive
8P6368 Harness parts are shown on Page 228

9P4039 CAB PRESSURIZER GROUP—Part 2
Serial No. 13X624 to 13X1602 inclusive
9P8674 Harness and 9P5089 Pressurizer parts are shown on Pages 228 and 229

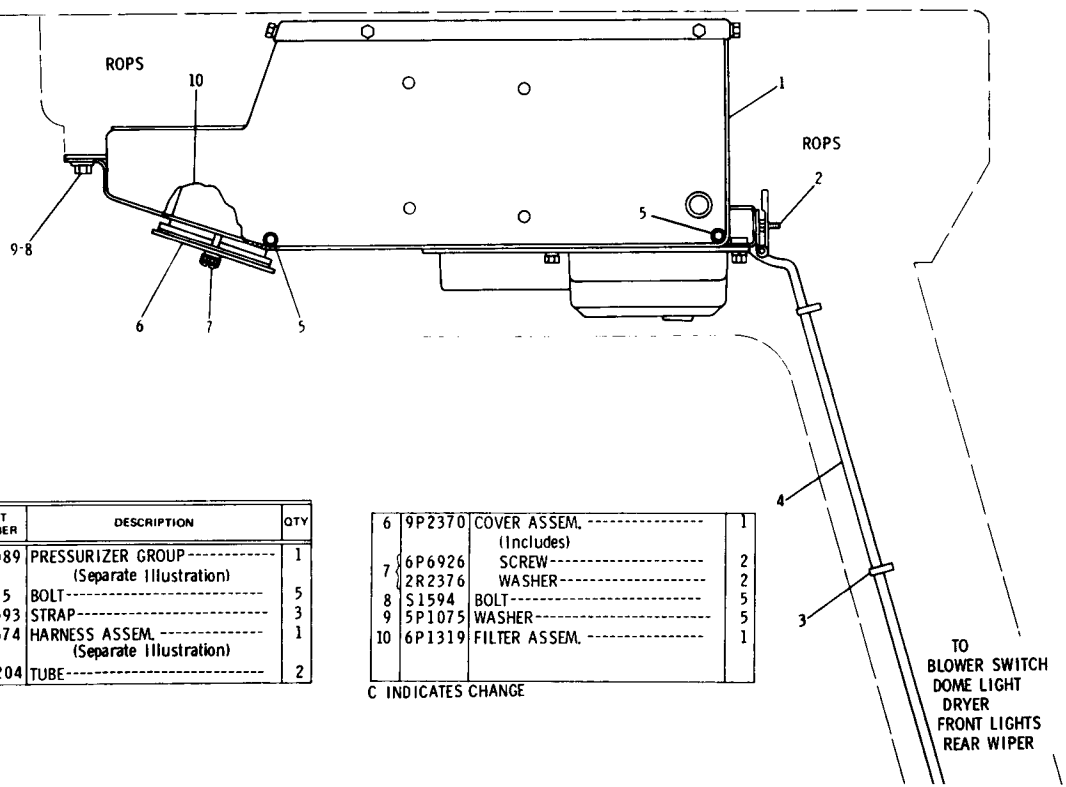

REF. NO.	PART NUMBER	DESCRIPTION	QTY
1	9P5089	PRESSURIZER GROUP (Separate Illustration)	1
2	S1615	BOLT	5
3	1S9593	STRAP	3
4	9P8674	HARNESS ASSEM. (Separate Illustration)	1
C 5	7G6204	TUBE	2
6	9P2370	COVER ASSEM. (Includes)	1
7	6P6926	SCREW	2
	2R2376	WASHER	2
8	S1594	BOLT	5
9	5P1075	WASHER	5
10	6P1319	FILTER ASSEM.	1

C INDICATES CHANGE

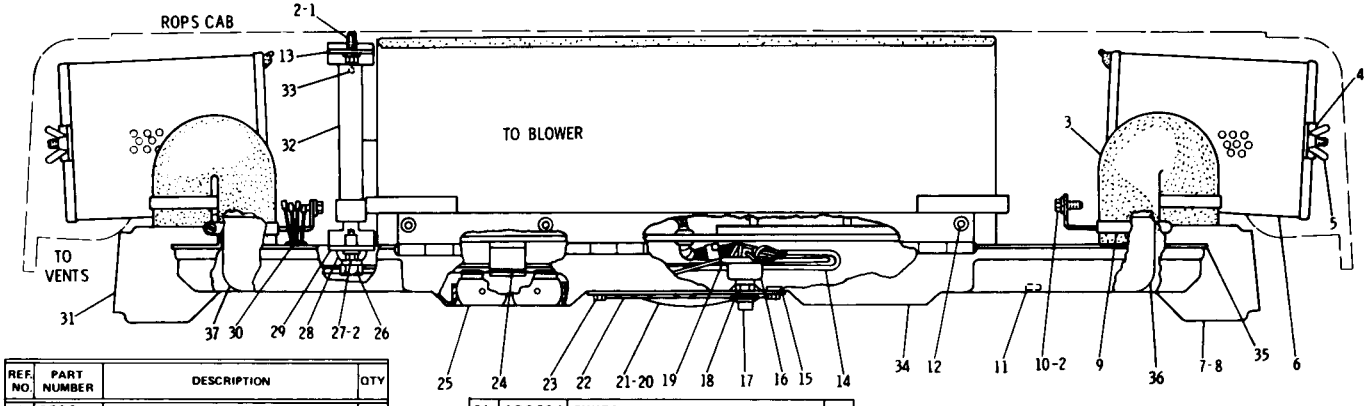

REF. NO.	PART NUMBER	DESCRIPTION	QTY
1	S509	BOLT	2
2	5P1075	WASHER	6
▲ 3	5P3915	HOSE---65 cm(25.59 in.)	
4	8P9587	STRAP	2
5	2B9498	NUT	4
6	2V36	FILTER ASSEM.	2
7	9P592	DUCT ASSEM. (Includes)	1
8	9M5733	RIVET	1
9	2J6540	CLAMP	4
10	L1351	BOLT	2
11	2D3406	PLUG---25.4 mm(1 in.)dia. hole	1
12	S1614	BOLT	10
	3B4504	LOCKWASHER	10
	4B4276	WASHER	10
13	6P4151	BRACKET	1
14	8P6368	HARNESS (Separate Illustration)	1
15	8P3710	PLATE	1
16	6P3236	SWITCH ASSEM.	1
17	1P6509	KNOB	1
18	2P4339	NUT	1
	9P2046	HARNESS ASSEM. (Includes)	1
● 19	5P5624	WIRE---(14 gauge)	1
●	5P5623	WIRE---(16 gauge)	
	2L8065	TERMINAL	1
	2L8075	TERMINAL	3
	9M4192	LAMP ASSEM. (Includes)	1
20	1S3291	DOOR ASSEM.	1
	7N9443	LAMP	1
	2F2860	SCREW	2
21	1H2204	SCREW	3
	4B2047	NUT	3
22	302283	PLUG	2
23	310243	SCREW	4
24	319195	CLIP	1
25	6P5673	LOUVER	4
26	6P5812	SCREW ASSEM.	1
27	S1594	BOLT	2
28	6P5564	ROD	1
29	6P4152	BRACKET	1
30	9D3768	GROMMET	1
	9P4044	DUCT ASSEM. (Includes)	1
31	9M5733	RIVET	1
32	6P4147	TUBE ASSEM.	1
33	4H1641	PIN	1
C 34	8P3588	DUCT ASSEM. (Includes)	1
35	8P3589	COVER	1
36	9P2027	ADAPTER	1
37	8P3587	ADAPTER	1

● ORDER BY THE METER C INDICATES CHANGE ▲ ORDER BY THE CENTIMETER 172606

9P4039 CAB PRESSURIZER GROUP—Part 1
Serial No. 13X1603—Up
8P6368 Harness parts are shown on Page 228

9P4039 CAB PRESSURIZER GROUP—Part 2
Serial No. 13X1603—Up
9P8674 Harness and 9P5089 Pressurizer parts are shown on Pages 228 and 229

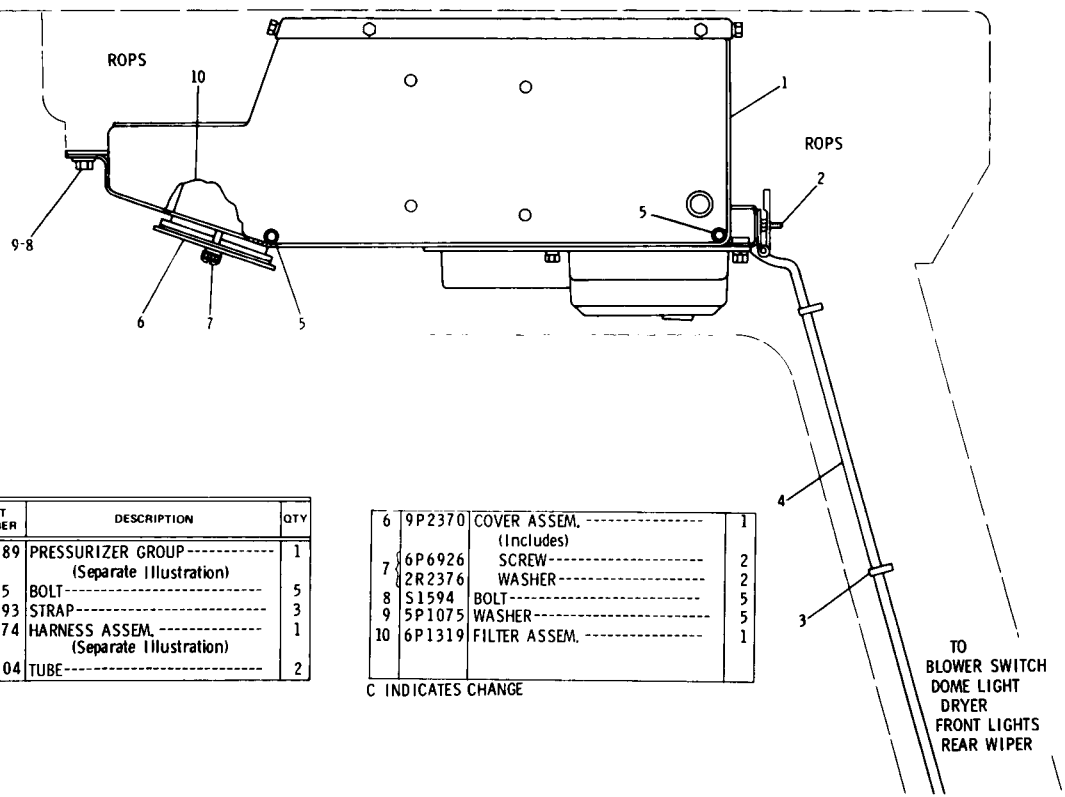

REF. NO.	PART NUMBER	DESCRIPTION	QTY
1	9P5089	PRESSURIZER GROUP---------- (Separate Illustration)	1
2	S1615	BOLT----------	5
3	1S9593	STRAP----------	3
4	9P8674	HARNESS ASSEM.---------- (Separate Illustration)	1
C 5	7G6204	TUBE----------	2
6	9P2370	COVER ASSEM.---------- (Includes)	1
7	6P6926	SCREW----------	2
	2R2376	WASHER----------	2
8	S1594	BOLT----------	5
9	5P1075	WASHER----------	5
10	6P1319	FILTER ASSEM.----------	1

C INDICATES CHANGE

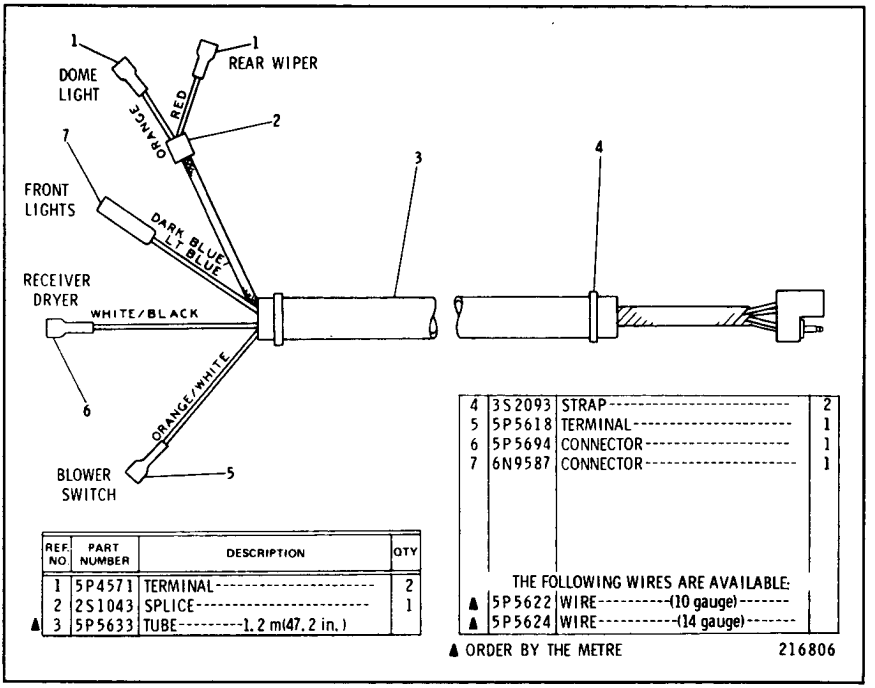

REF. NO.	PART NUMBER	DESCRIPTION	QTY
1	5P4571	TERMINAL	2
2	2S1043	SPLICE	1
▲ 3	5P5633	TUBE--------1.2 m(47.2 in.)	
4	3S2093	STRAP	2
5	5P5618	TERMINAL	1
6	5P5694	CONNECTOR	1
7	6N9587	CONNECTOR	1
		THE FOLLOWING WIRES ARE AVAILABLE:	
▲	5P5622	WIRE----------(10 gauge)-------	
▲	5P5624	WIRE----------(14 gauge)-------	

▲ ORDER BY THE METRE 216806

9P8674 HARNESS ASSEMBLY
Part of 9P4039 Cab Pressurizer Group shown on Pages 227 and 227D

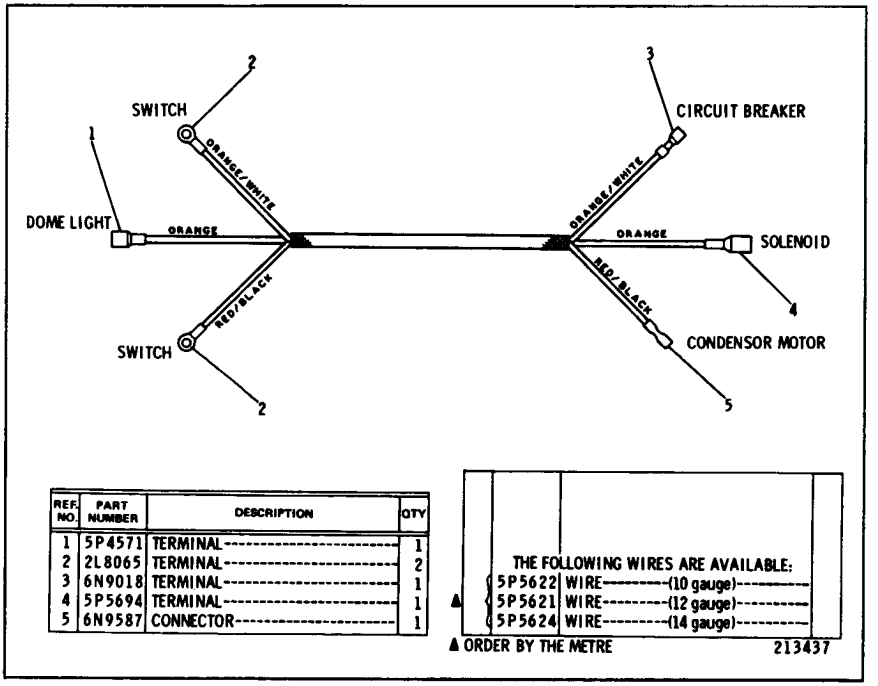

REF. NO.	PART NUMBER	DESCRIPTION	QTY
1	5P4571	TERMINAL	1
2	2L8065	TERMINAL	2
3	6N9018	TERMINAL	1
4	5P5694	TERMINAL	1
5	6N9587	CONNECTOR	1
		THE FOLLOWING WIRES ARE AVAILABLE:	
	5P5622	WIRE----------(10 gauge)----------	
▲	5P5621	WIRE----------(12 gauge)----------	
	5P5624	WIRE----------(14 gauge)----------	

▲ ORDER BY THE METRE 213437

8P6368 HARNESS ASSEMBLY
Part of 9P4039 Cab Pressurizer Group shown on Pages 226 and 227C

9P5089 BASIC PRESSURIZER GROUP—Type 1

Part of 9P4039 Cab Pressurizer Group, 8P2146 Air Conditioner Group and 8P4914 Heater Group shown on Pages 227, 227B, 227D, 232F, 232H, 232K and 233. 9P3788 Blower parts are shown on Page 230

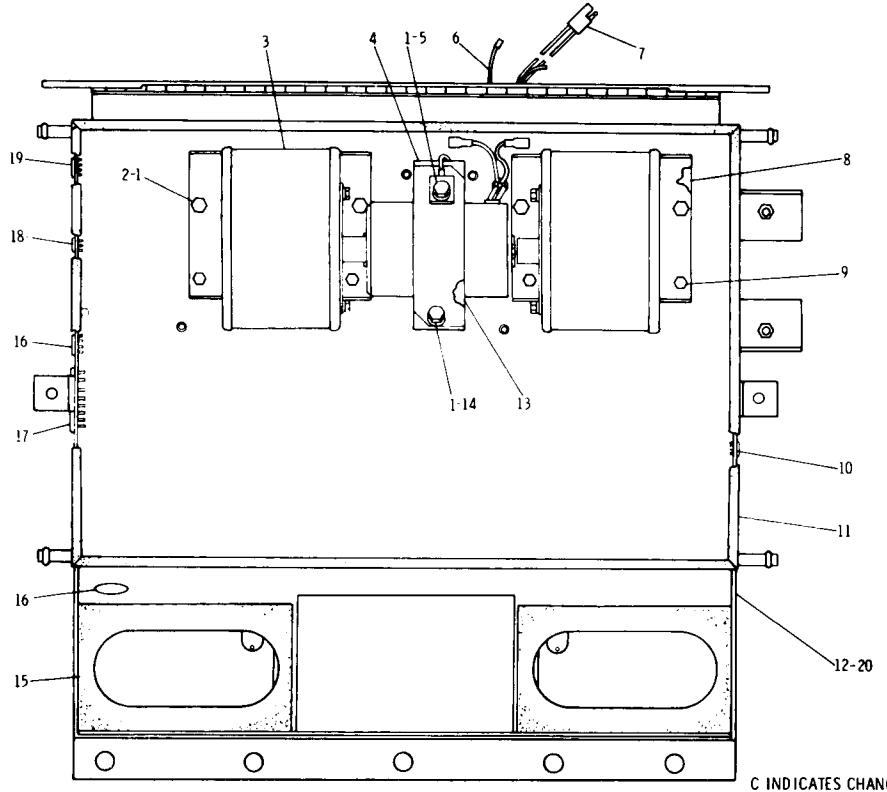

REF. NO.	PART NUMBER	DESCRIPTION	QTY
1	S1594	BOLT	6
	3B4506	LOCKWASHER	6
2	1D4717	NUT	4
3	9P3788	BLOWER ASSEM. (Separate Illustration)	1
4	6P1298	STRAP	1
5	2H4499	LOCK	1
	9P6897	WIRE ASSEM. (Includes)	1
C▲ 6	5P5629	WIRE-------.36 m(14 in.)	
	4S1988	TERMINAL----(dome light)-----	1
	2L8079	TERMINAL	1
	8P6385	HARNESS ASSEM. (Includes)	1
▲ 7	5P5623	WIRE-------(16 gauge)--------	
▲	5P5624	WIRE-------(14 gauge)--------	
	5P4571	TERMINAL	6
8	6P1296	SEAL	2
	2A762	BOLT	4
9	1B4330	NUT	4
	3B4504	LOCKWASHER	4
10	3D9871	BUTTON	4
▲ 11	5P5657	SEAL----------2.25 m(88.58 in.)	
12	9P2385	CASE ASSEM.	1
▲ 13	5P5908	SEAL----------.31 m(12.20 in.)	
14	4B4278	WASHER	1
15	8P2303	SEAL	2
16	7D4786	PLUG	3
17	6P1294	PLUG	1
18	5K3546	BUTTON	1
19	4S6336	BUTTON	1
20	7L6479	PLUG—(fits 7.87 mm(.31 in.) hole)	5

C INDICATES CHANGE

▲ ORDER BY THE METRE

217020

9P5089 BASIC PRESSURIZER GROUP—Type 2

Part of 9P4039 Cab Pressurizer Group, 8P2146 Air Conditioner Group and 8P4914 Heater Group shown on Pages 227, 232F, 232H and 233. 9P3788 Blower parts are shown on Page 230

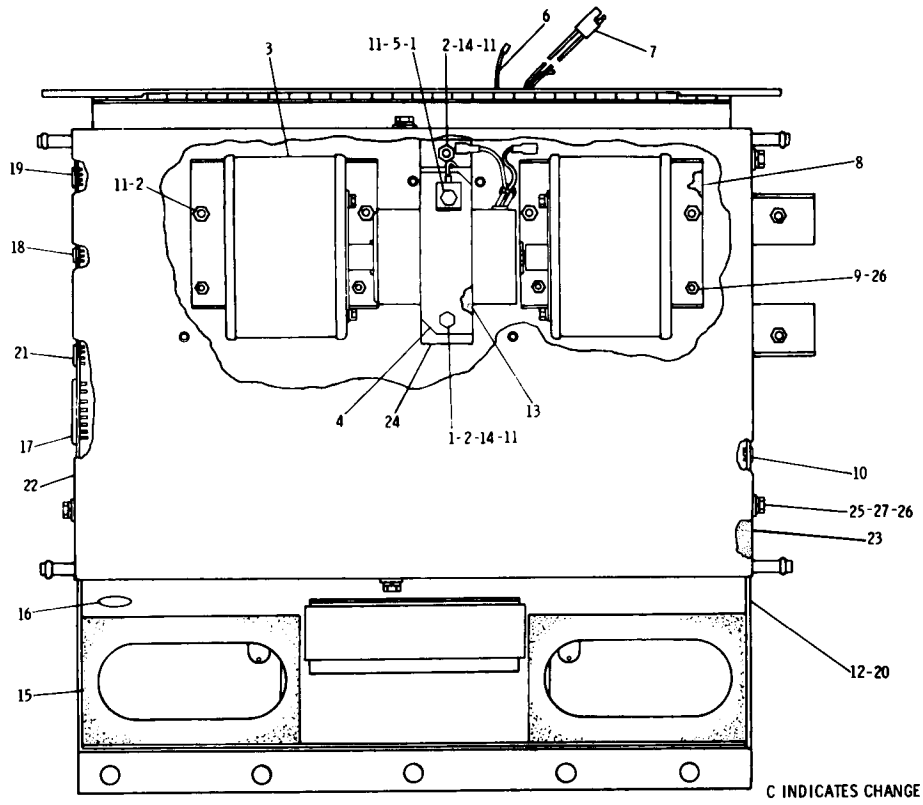

	REF. NO.	PART NUMBER	DESCRIPTION	QTY
C	1	S1594	BOLT	2
C	2	1D4717	NUT	6
	3	9P3788	BLOWER ASSEM. (Separate Illustration)	1
	4	6P1298	STRAP	1
	5	2H4499	LOCK	1
		9P6897	WIRE ASSEM. (Includes)	1
▲	6	5P5629	WIRE-----.36 m (14 in.)	
		4S1988	TERMINAL----(dome light)----	1
		2L8079	TERMINAL	1
		8P6385	HARNESS ASSEM. (Includes)	1
▲	7	5P5623	WIRE----------(16 gauge)	
▲		5P5624	WIRE----------(14 gauge)	
		5P4571	TERMINAL	6
	8	6P1296	SEAL	2
	9	1B4330	NUT	4
	10	3D9871	BUTTON	4
C	11	3B4506	LOCKWASHER	8
C	12	7G3057	CASE ASSEM.	1
▲	13	5P5908	SEAL----------.31 m(12.20 in)	
C	14	4B4278	WASHER	3
	15	8P2303	SEAL	2
C	16	7D4786	PLUG	1
	17	6P1294	PLUG	1
	18	5K3546	BUTTON	1
	19	4S6336	BUTTON	1
	20	7L6479	PLUG---(fits 7.87mm(.31 in.)hole)	5
C	21	1V9019	PLUG	2
C	22	7G3000	COVER ASSEM. (Includes)	1
	23	7G2999	SEAL	1
C	24	7G2377	BRACKET ASSEM.	1
C	25	S1614	BOLT	6
C	26	3B4504	LOCKWASHER	10
C	27	4B4276	WASHER	6

C INDICATES CHANGE

▲ ORDER BY THE METRE

169044

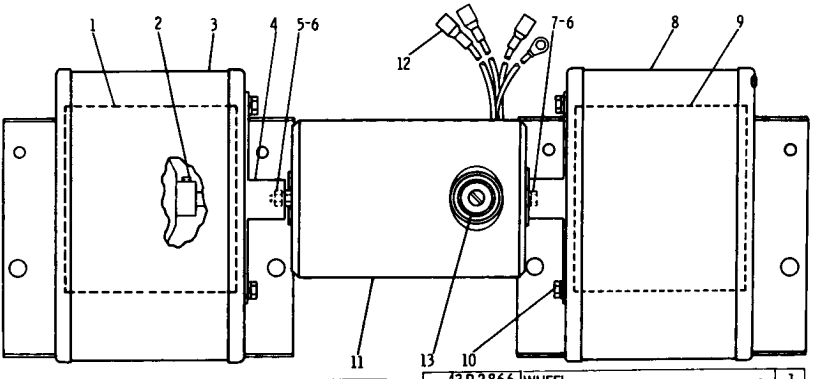

REF. NO.	PART NUMBER	DESCRIPTION	QTY
1	1P6550	WHEEL (Includes)	1
2	1K6979	SCREW-------(set)----------	1
3	8P4324	HOUSING ASSEM. ----------	1
4	8P1291	PLATE----------	1
5	4B2049	NUT----------	2
6	9F8125	LOCKWASHER----------	4
7	8L6521	BOLT----------	2
	4B4274	WASHER----------	2
8	8P4325	HOUSING ASSEM. ----------	1
9	3P2866	WHEEL (Includes) ----------	1
	1K6979	SCREW-------(set)---------	1
10	S1613	BOLT----------	8
	3B4504	LOCKWASHER----------	8
11	9P2217	MOTOR ASSEM. (Includes) ----------	1
12	5P5694	CONNECTOR----------	3
13	2P5145	BRUSH----------	2

212838

9P3788 BLOWER ASSEMBLY
Part of 9P5089 Basic Pressurizer Group shown on Page 229

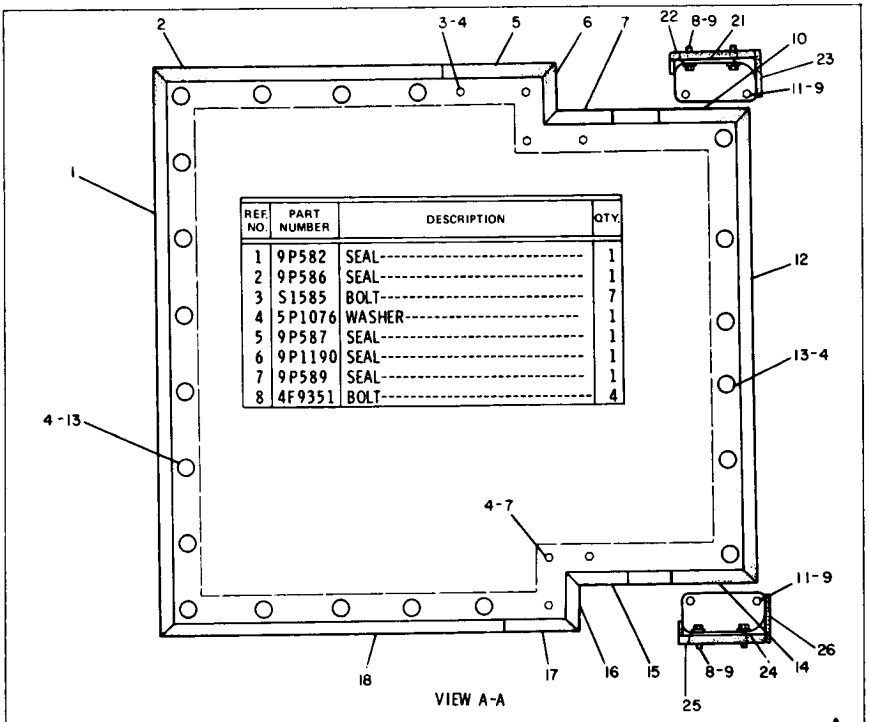

REF. NO.	PART NUMBER	DESCRIPTION	QTY.
1	9P582	SEAL	1
2	9P586	SEAL	1
3	S1585	BOLT	7
4	5P1076	WASHER	1
5	9P587	SEAL	1
6	9P1190	SEAL	1
7	9P589	SEAL	1
8	4F9351	BOLT	4

9	5P1075	WASHER	8
10	9P593	SEAL	1
11	S509	BOLT	4
12	9P594	SEAL	1
13	4F8711	BUTTON	37
	S1621	BOLT	37
14	9P595	SEAL	1
15	9P596	SEAL	1
16	9P1191	SEAL	1
17	9P785	SEAL	1
18	9P1175	SEAL	1
19	9P588	SEAL	2
20	9P590	SEAL	2
C	7G1818	CORNER ASSEM. ---(L. H.)-------- (Includes)	1
21	7G2448	INSULATION----------	1
	7G4614	SPACER----------	2
▲ 22	5P5921	SEAL--.3 m(11.81 in.)	
▲ 23	5P5662	SEAL--.2 m(7.87 in.)	
C	7G1819	CORNER ASSEM. ----(R. H.)------- (Includes)	1
24	7G2448	INSULATION----------	1
	7G4614	SPACER----------	2
▲ 25	5P5921	SEAL--.34 m(13.38 in.)	
▲ 26	5P5662	SEAL--.2 m(7.87 in.)	

C●▲	5P5657	SEAL--.94 m(37.01 in.)	
C●▲	5P7036	SEAL--.2 m(8.67 in.) (Mounted on front lower edge of cab toward windshield)	

▲ ORDER BY THE METER C INDICATES CHANGE ● NOT SHOWN 226005

4V2172 CAB MOUNTING GROUP
Serial No. 13X1 to 13X2216 inclusive

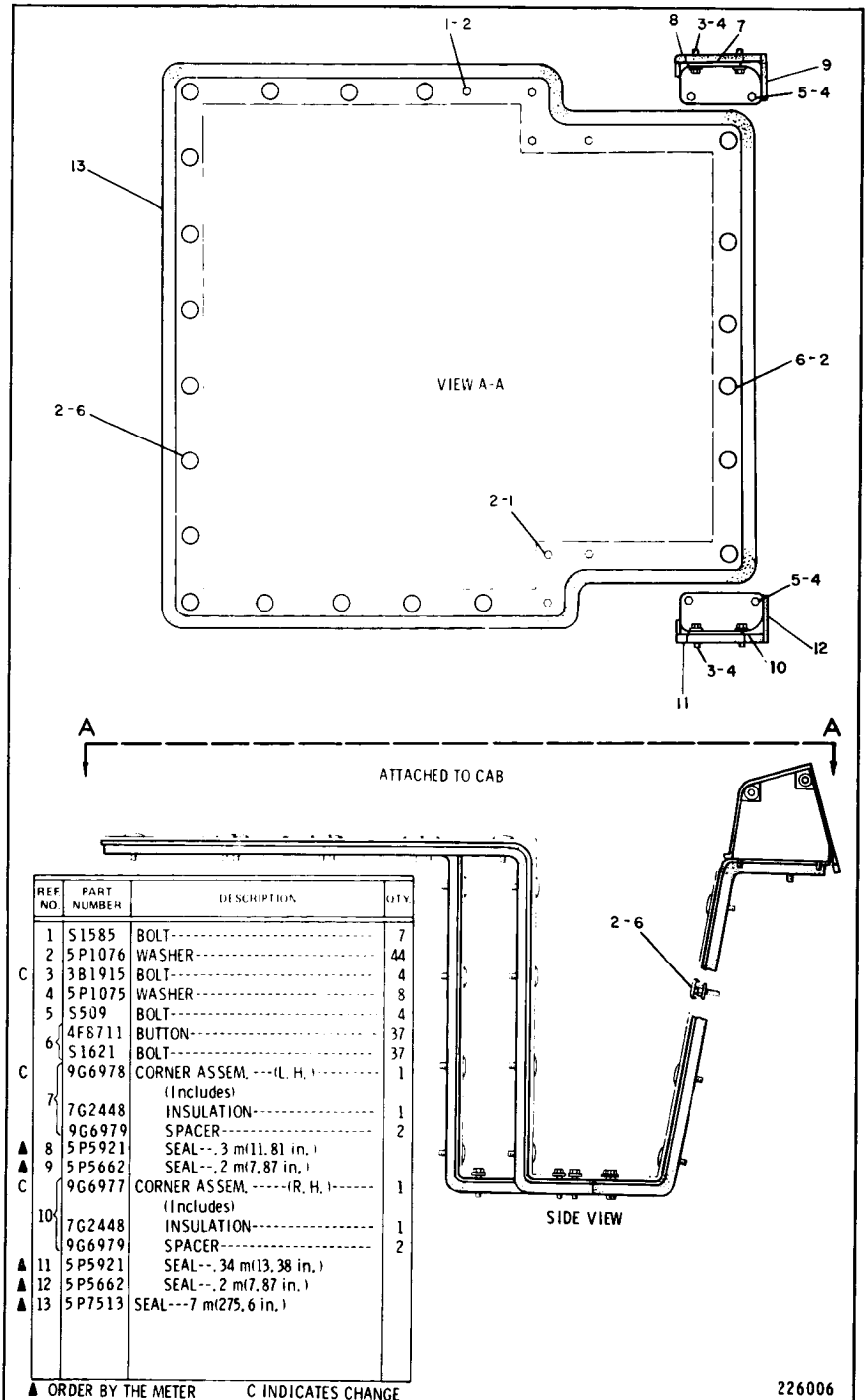

	REF NO.	PART NUMBER	DESCRIPTION	QTY.
	1	S1585	BOLT	7
	2	5P1076	WASHER	44
C	3	3B1915	BOLT	4
	4	5P1075	WASHER	8
	5	S509	BOLT	4
	6	4F8711	BUTTON	37
		S1621	BOLT	37
C		9G6978	CORNER ASSEM. ---(L. H.)	1
	7		(Includes)	
		7G2448	INSULATION	1
		9G6979	SPACER	2
▲	8	5P5921	SEAL--.3 m(11.81 in.)	
▲	9	5P5662	SEAL--.2 m(7.87 in.)	
C		9G6977	CORNER ASSEM. -----(R. H.)	1
	10		(Includes)	
		7G2448	INSULATION	1
		9G6979	SPACER	2
▲	11	5P5921	SEAL--.34 m(13.38 in.)	
▲	12	5P5662	SEAL--.2 m(7.87 in.)	
▲	13	5P7513	SEAL---7 m(275.6 in.)	

▲ ORDER BY THE METER C INDICATES CHANGE

226006

4V2172 CAB MOUNTING GROUP
Serial No. 13X2217 to 13X2516 Inclusive

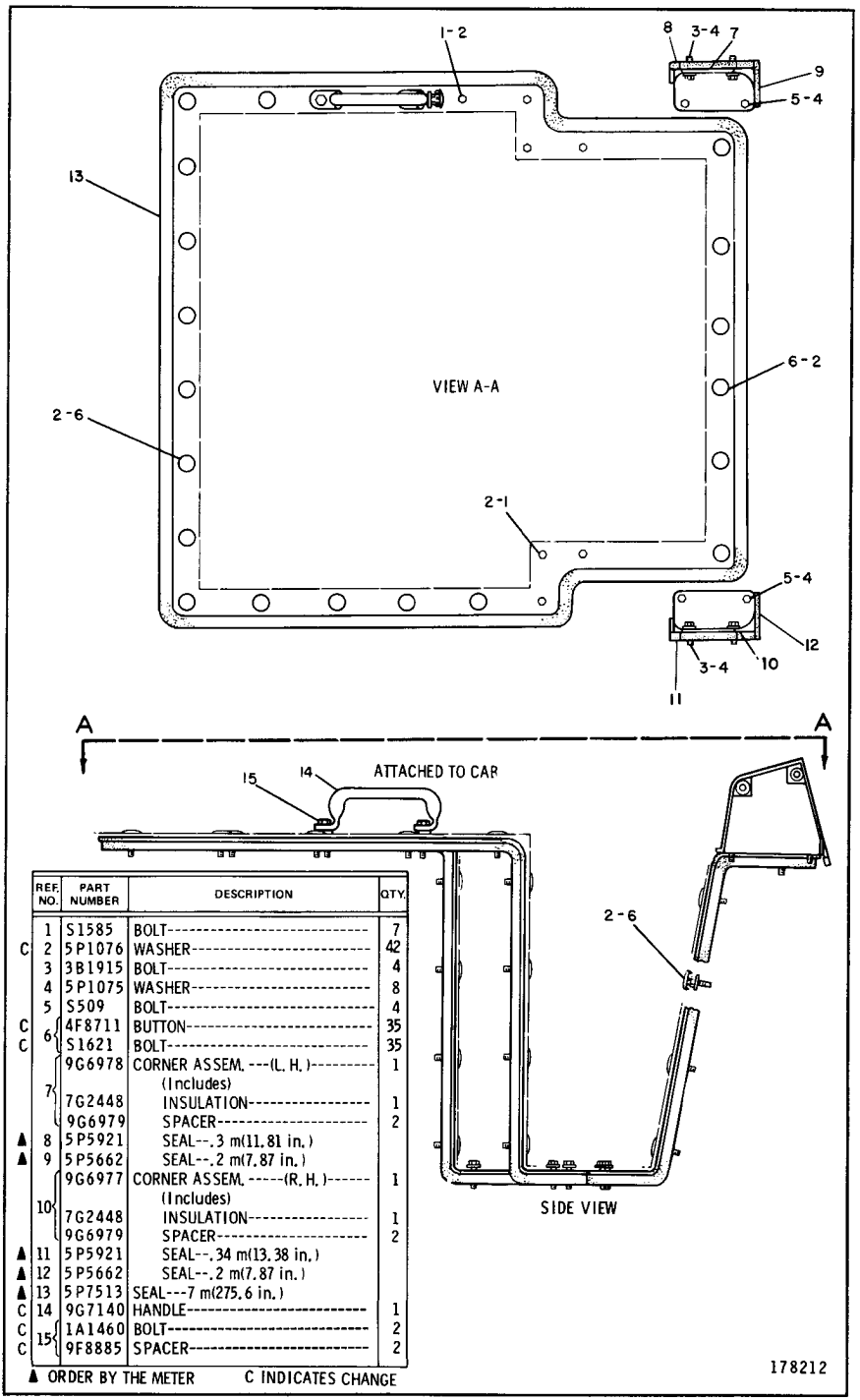

	REF. NO.	PART NUMBER	DESCRIPTION	QTY.
	1	S1585	BOLT	7
C	2	5P1076	WASHER	42
	3	3B1915	BOLT	4
	4	5P1075	WASHER	8
	5	S509	BOLT	4
C	6	4F8711	BUTTON	35
C		S1621	BOLT	35
	7	9G6978	CORNER ASSEM. ---(L. H.) (Includes)	1
		7G2448	INSULATION	1
		9G6979	SPACER	2
▲	8	5P5921	SEAL--.3 m(11.81 in.)	
▲	9	5P5662	SEAL--.2 m(7.87 in.)	
	10	9G6977	CORNER ASSEM. -----(R. H.) (Includes)	1
		7G2448	INSULATION	1
		9G6979	SPACER	2
▲	11	5P5921	SEAL--.34 m(13.38 in.)	
▲	12	5P5662	SEAL--.2 m(7.87 in.)	
▲	13	5P7513	SEAL---7 m(275.6 in.)	
C	14	9G7140	HANDLE	1
C	15	1A1460	BOLT	2
C		9F8885	SPACER	2

▲ ORDER BY THE METER C INDICATES CHANGE

4V2172 CAB MOUNTING GROUP
Serial No. 13X2517—Up

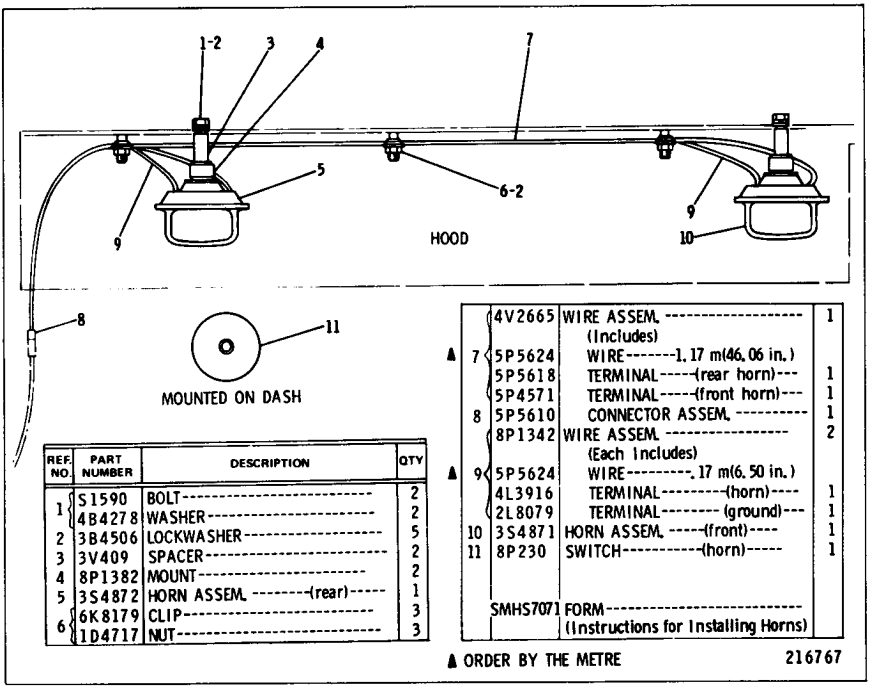

REF. NO.	PART NUMBER	DESCRIPTION	QTY
1	S1590	BOLT	2
	4B4278	WASHER	2
2	3B4506	LOCKWASHER	5
3	3V409	SPACER	2
4	8P1382	MOUNT	2
5	3S4872	HORN ASSEM. (rear)	1
6	6K8179	CLIP	3
	1D4717	NUT	3
	4V2665	WIRE ASSEM. (Includes)	1
▲ 7	5P5624	WIRE-1.17 m(46.06 in.)	
	5P5618	TERMINAL (rear horn)	1
	5P4571	TERMINAL (front horn)	1
8	5P5610	CONNECTOR ASSEM.	1
	8P1342	WIRE ASSEM. (Each Includes)	2
▲ 9	5P5624	WIRE-.17 m(6.50 in.)	
	4L3916	TERMINAL (horn)	1
	2L8079	TERMINAL (ground)	1
10	3S4871	HORN ASSEM. (front)	1
11	8P230	SWITCH (horn)	1
	SMHS7071	FORM (Instructions for Installing Horns)	

▲ ORDER BY THE METRE 216767

4V1956 ELECTRIC HORN GROUP

CONSISTS OF: PAGE

1 8P4914 BASIC HEATER GROUP 233
1 4V3411 HEATER LINES GROUP 234

4V1692 CAB HEATER ARRANGEMENT
FOR USE WITH CAB WHEN NOT EQUIPPED WITH AIR CONDITIONING AN ATTACHMENT

		Consists of:	Page
1	6N240	Refrigerant Compressor Arrangement	232A
1	6N4873	Fumes Disposal Group	30B
1	9P729	Mounting and Condenser Group	232D
1	8P2146	Air Conditioner Group	232F
	- or -		
1	9P5225	Air Conditioner Group	232M
1	8P4914	Heater Group	233
1	9P2045	Compressor Harness Assembly	233D
1	4V1695	Air Conditioning Lines Group	233A
1	4V3411	Heater Lines Group	234
1	6N9349	Circuit Breaker--30 Amp	
1	8S2809	Muffler	

4V1696 AIR CONDITIONER ARRANGEMENT—Cools and Heats
AN ATTACHMENT

		Consists of:	Page
1	4N9145	Compressor Group	232B
1	4N7207	Pulley Assembly	
		Consists of:	
6	4S6137	Stud	
1	4N6130	Vee Belt	

6N240 REFRIGERANT COMPRESSOR ARRANGEMENT
FOR USE WITH 24 VOLT, 50 AMPERE ALTERNATOR
Part of 4V1696 Air Conditioner Arrangement listed on Page 232A

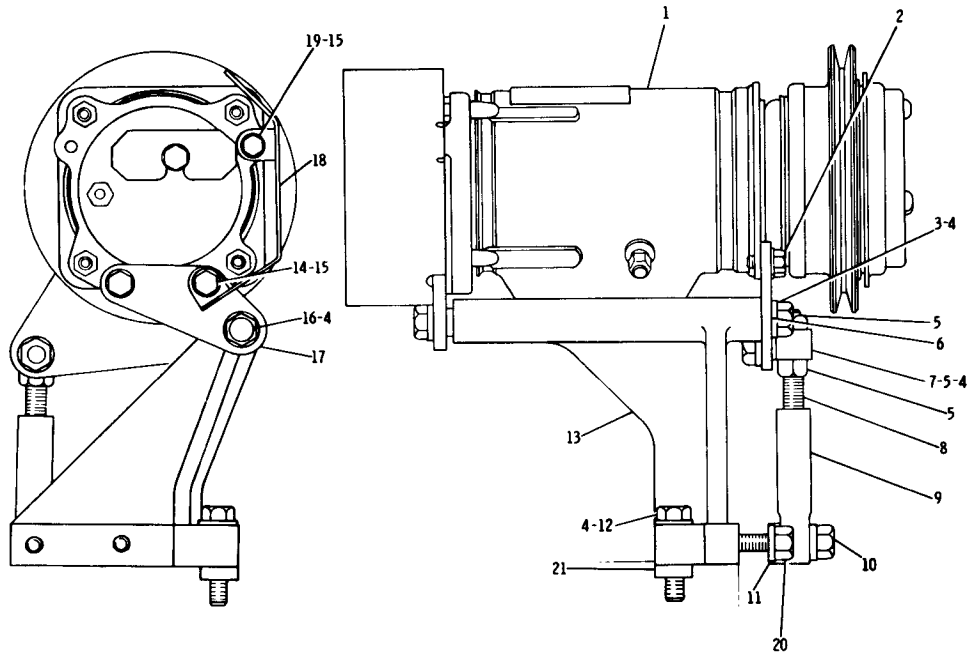

	REF. NO.	PART NUMBER	DESCRIPTION	QTY
C	1	7N4296	COMPRESSOR GROUP (Separate Illustration)	1
	2	1A2343	BOLT	2
		9M1974	WASHER	2
	3	S1595	BOLT	1
	4	2M849	WASHER	7
	5	1D4719	NUT	2
	6	6N5072	BRACKET	1
	7	1P2237	SWIVEL	1
	8	1P2236	ROD ASSEM. (Includes)	1
		1D5117	NUT	1
	9	1P9742	END	1
	10	L1329	BOLT	1
	11	1B8074	WASHER	1
	12	2B947	BOLT	1
	13	6N5896	BRACKET ASSEM.	1
	14	S1594	BOLT	2
	15	5M2894	WASHER	3
	16	7B3235	BOLT	1
		8S8320	SPACER	1
	17	6N5071	BRACKET	1
	18	6N6973	SHIELD	1
	19	S509	BOLT	1
	20	1A1460	BOLT	1
	21	7N2597	SPACER	1

C INDICATES CHANGE

168378

4N9145 REFRIGERANT COMPRESSOR GROUP
Part of 6N240 Refrigerant Compressor Arrangement listed on Page 232A
7N4296 Compressor parts are shown on Page 232C. AN ATTACHMENT

7N4296 CLUTCH AND REFRIGERANT COMPRESSOR GROUP
Part of 4N9145 Refrigerant Compressor Group shown on Page 232B
AN ATTACHMENT

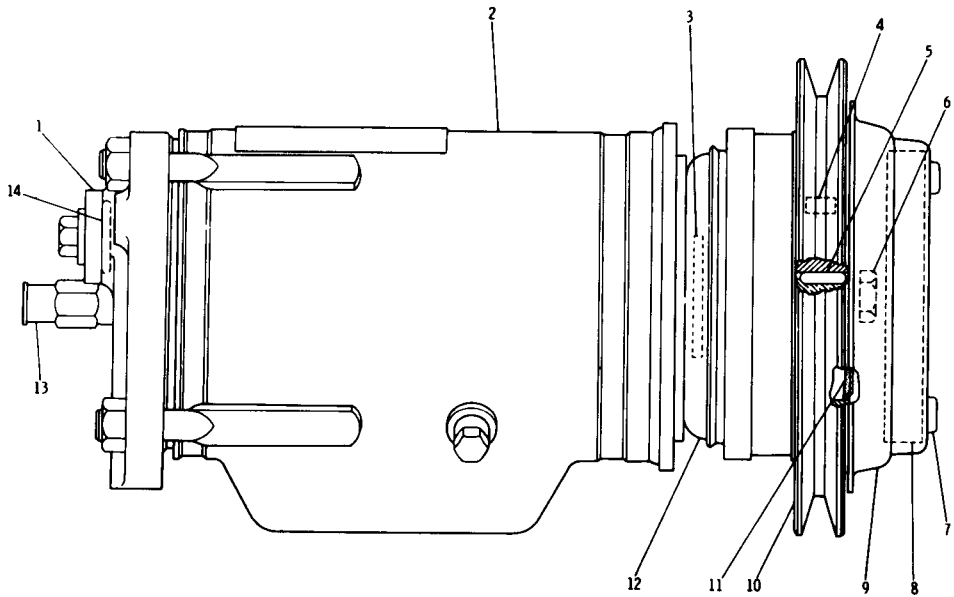

REF. NO.	PART NUMBER	DESCRIPTION	QTY
1	1P6356	PLATE	1
2	2P8232	COMPRESSOR ASSEM.	1
3	7N4293	SEAL KIT-----(refrigerant)------- (Includes shield assem., rings, seals, nut, seal kit, key and sleeve)	1
4	7N4289	BEARING KIT (Includes bearing, seals, rings, nut, key, sleeve and shield group)	1
5	7N809	KEY	1
C 6	9P8750	NUT	1
7	145111	SCREW	3
8	7N4294	DRIVE CLUTCH KIT (Includes drive assem. nut, key, shield assem., rings, seals and sleeve)	1
9	6N1116	COVER KIT------(dust)---------- (Includes cover and screws)	1
10	7N4290	PULLEY KIT (Includes pulley assem., seals, shield group, rings, nut, key and sleeve)	1
11	7N4291	SEAL KIT--------(dust)-------- (Includes shield group, seals, key, nut, rings and sleeve)	1
12	7N4292	COIL KIT (Includes coil assem., shield assem., seals, rings, nut, key and sleeve)	1
13	1P6355	VALVE ASSEM.	1
14	1H8171	SEAL	2

C INDICATES CHANGE

215392

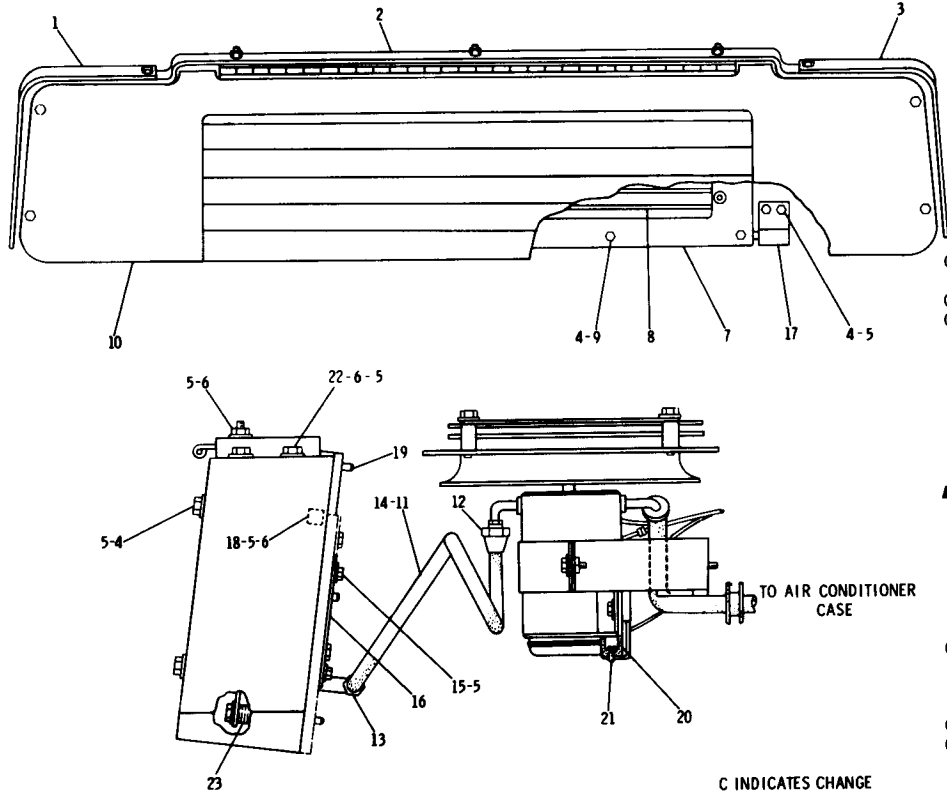

	REF. NO.	PART NUMBER	DESCRIPTION	QTY
C	1	7G4338	BRACKET ASSEM.	1
	2	7G4346	PLATE	1
C	3	7G4337	BRACKET ASSEM.	1
C	4	S1594	BOLT	8
	5	5P1075	WASHER	41
	6	1D4717	NUT	13
	7	9P2492	CASE ASSEM.	1
	8	8P5089	COIL	1
	9	T65	BOLT	12
	10	7G4351	GRILL ASSEM.	1
	11	9P2502	HOSE ASSEM.	1
			(Includes)	
▲		5P5664	HOSE-----.65 m(25.59 in.)	
	12	9D4507	COUPLING	1
	13	5P2493	COUPLING	1
	14	5F9144	SEAL	2
	15	S1608	BOLT	4
	16	6P4473	STRIP	2
	17	9P2499	CLIP	2
	18	1B4971	SPACER	6
C	19	8J9385	STUD	6
	20	8P7567	BUMPER ASSEM.	2
	21	2H6622	SCREW	2
		6L7101	SPACER	2
C	22	S1588	BOLT	4
C	23	7K3245	TUBE	4

C INDICATES CHANGE

▲ ORDER BY THE METRE

169783

9P729 MOUNTING AND CONDENSER GROUP—Part 1
Part of 4V1696 Air Conditioner Arrangement listed on Page 232A
AN ATTACHMENT

9P729 MOUNTING AND CONDENSER GROUP—Part 2
Part of 4V1696 Air Conditioner Arrangement listed on Page 232A
AN ATTACHMENT

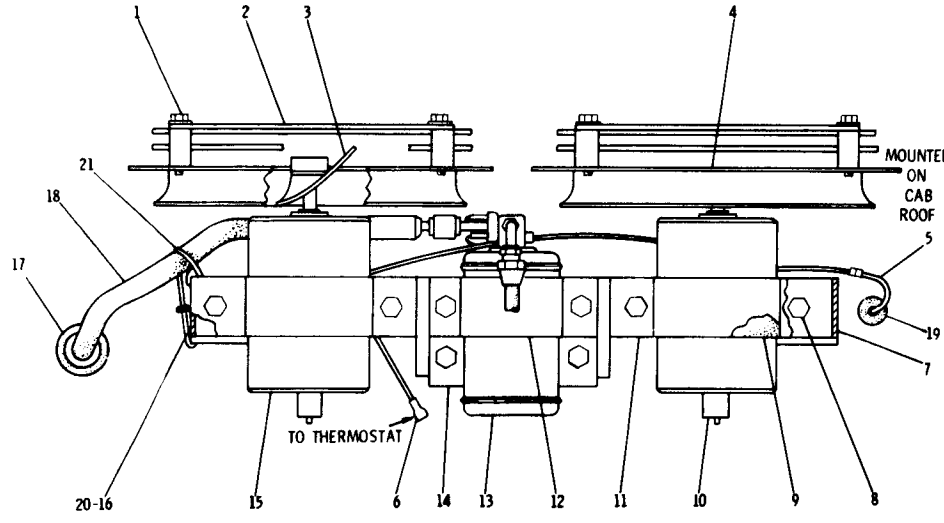

REF. NO.	PART NUMBER	DESCRIPTION	QTY
C 1	8B2377	BOLT	8
1	4B4276	WASHER	8
2	7G1289	GUARD ASSEM.	2
3	3P7995	FAN	2
4	9P247	ORIFICE ASSEM.	2
	9P8675	HARNESS ASSEM. (Includes)	1
▲ 5	5P5624	WIRE--------(14 gauge)--------	
▲ 5	5P5621	WIRE--------(12 gauge)--------	
5	6N9587	CONNECTOR	2
5	5P4571	TERMINAL	3
6	5P5694	TERMINAL	1
7	9P2491	BRACKET ASSEM.	1
8	S509	BOLT	12
8	5P1075	WASHER	12
▲ 9	5P5908	SEAL----------. 9 m(36 in.)	
10	9P2424	STRAP ASSEM.	2
11	2P4556	STRAP	2
12	8P9606	CLAMP	1
13	9D6888	DRYER	1
14	8P9605	BRACKET	1
	9P2218	MOTOR ASSEM. (Each Includes)	2
15	2P5145	BRUSH	2
15	5P5610	CONNECTOR----(push type)---	1
15	2L7018	PAD	1
16	9P2488	BRACKET ASSEM.	1
17	3D5279	GROMMET	1
18	9P2504	HOSE ASSEM.	1
18	5P9144	SEAL	2
C 19	1K9007	GROMMET	1
C ▲ 20	5P7086	TRIM----------. 1 m (3.94 in.)	
C 21	3S2093	STRAP	1

C INDICATES CHANGE

▲ ORDER BY THE METRE

169784

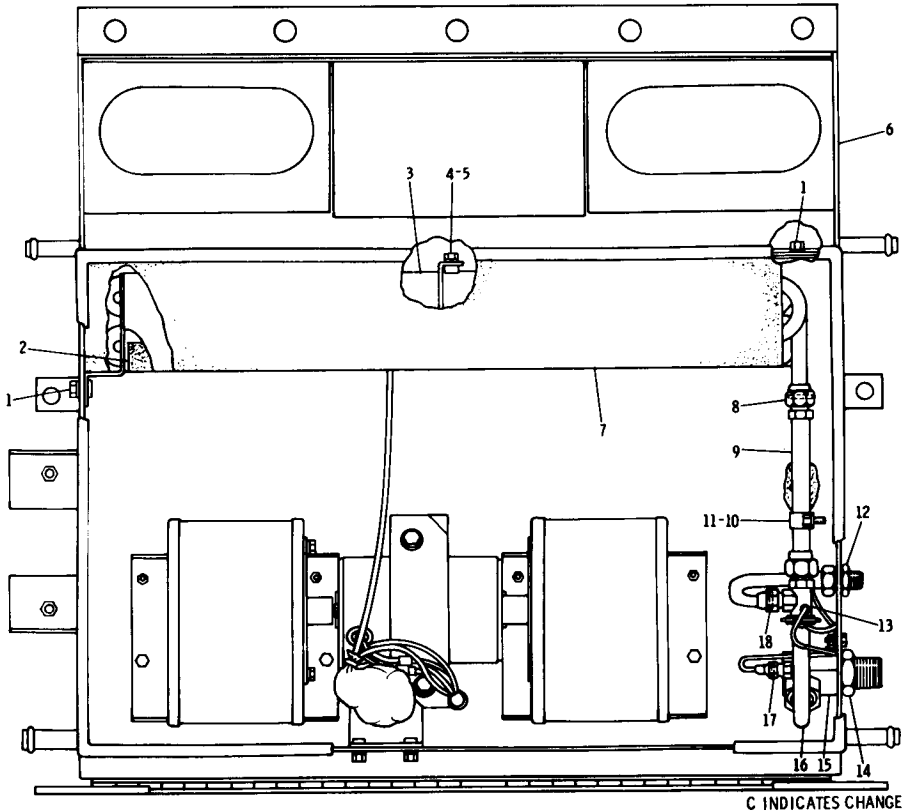

REF. NO.	PART NUMBER	DESCRIPTION	QTY
1	T102	BOLT	4
	3B4506	LOCKWASHER	4
▲ 2	5P5671	SEAL---------1.08 m(42.52 in.)	
3	8P4709	COIL	1
C 4	S1614	BOLT	1
5	3B4504	LOCKWASHER	2
C 6	9P5089	PRESSURIZER GROUP (Separate Illustration)	1
7	8P4882	SEAL	1
8	6M5062	SEAL	2
9	8P3599	TUBE ASSEM.	1
10	8J1256	CLIP	1
C 11	2A762	BOLT	1
12	1B9982	NUT	1
	1K4702	WASHER	1
C 13	2G401	VALVE	1
14	6P1303	NUT	1
15	9P2185	FITTING ASSEM.	1
16	9P2188	TUBE ASSEM.	1
	5L4758	SEAL	2
17	5P6458	SEAL	1
18	5F9144	SEAL	1

▲ ORDER BY THE METRE

C INDICATES CHANGE

215941

8P2146 AIR CONDITIONER GROUP—Part 1—Type 1
Part of 4V1696 Air Conditioner Arrangement listed on Page 232A
9P5089 Pressurizer parts are shown on Page 229 and 229B
AN ATTACHMENT

8P2146 AIR CONDITIONER GROUP—Part 2—Type 1
Part of 4V1696 Air Conditioner Arrangement listed on Page 232A
AN ATTACHMENT

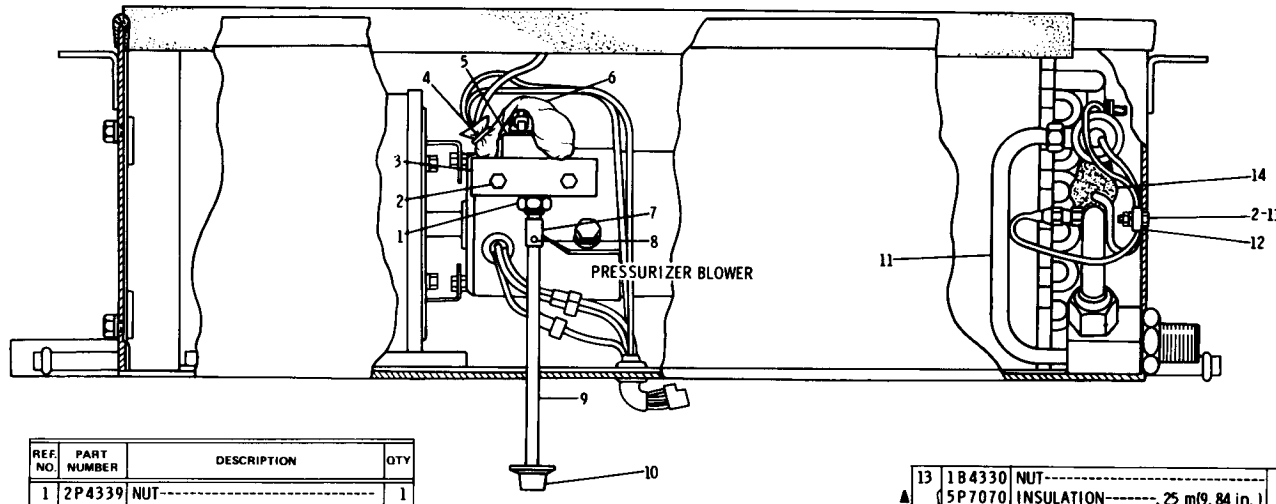

	REF. NO.	PART NUMBER	DESCRIPTION	QTY
	1	2P4339	NUT	1
	2	2A762	BOLT	3
		3B4504	LOCKWASHER	3
	3	8P2111	BRACKET ASSEM.	1
	4	677135	STRAP	1
C	5	9P3498	SWITCH-------(thermostat)-------	1
	6	1V9647	BAG	1
	7	8P3597	SLEEVE	1
	8	3H1118	PIN	2
	9	8P3598	ROD	1
	10	1P6509	KNOB	1
	11	8P4710	TUBE ASSEM.	1
	12	1P6525	CLAMP	1

	13	1B4330	NUT	1
▲		5P7070	INSULATION-------.25 m(9.84 in.)	
	14	6P1299	CLAMP	1
		1P6524	SCREW	1
C		SMHS7000	FORM------(installing switch)------	1

C INDICATES CHANGE ▲ ORDER BY THE METRE

215394

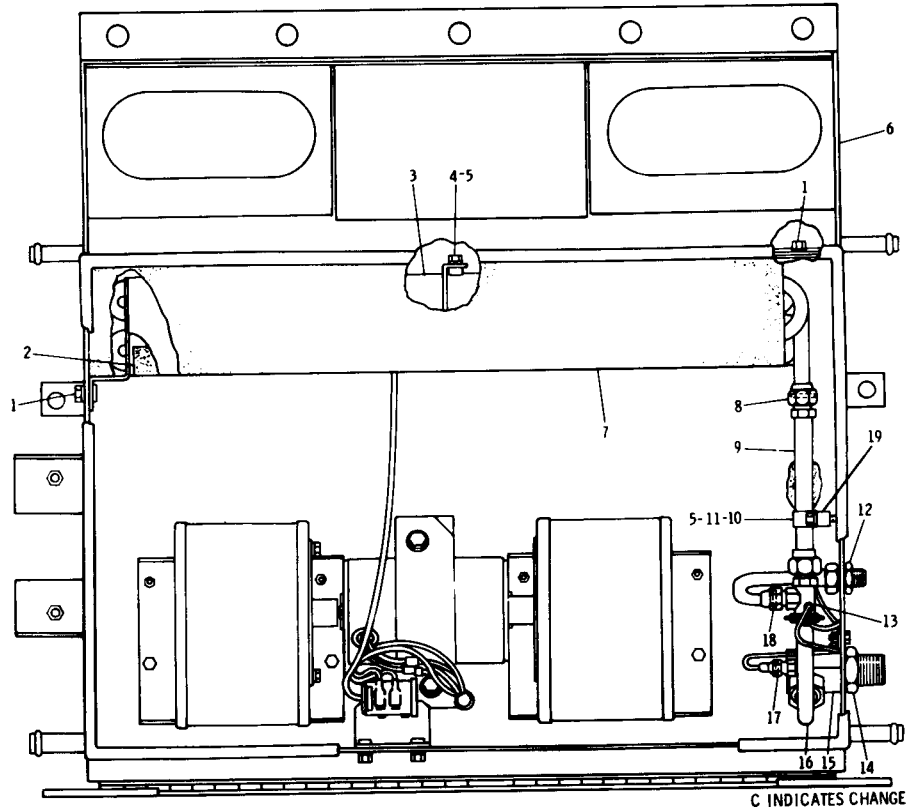

REF. NO.	PART NUMBER	DESCRIPTION	QTY
1	T102	BOLT	4
	3B4506	LOCKWASHER	4
C▲ 2	5P5671	SEAL-(.54 m(21.26 in.)	
3	8P4709	COIL	1
4	S1614	BOLT	1
5	3B4504	LOCKWASHER	2
6	9P5089	PRESSURIZER GROUP (Separate Illustration)	1
C 7	7G3616	SEAL	1
8	6M5062	SEAL	2
9	8P3599	TUBE ASSEM.	1
10	8J1256	CLIP	1
C 11	1B4330	NUT	1
12	1B9982	NUT	1
	1K4702	WASHER	1
13	2G401	VALVE	1
14	6P1303	NUT	1
15	9P2185	FITTING ASSEM.	1
16	9P2188	TUBE ASSEM.	1
	5L4758	SEAL	2
17	5P6458	SEAL	1
18	5F9144	SEAL	1
C 19	3S6696	SPACER	1

C INDICATES CHANGE

▲ ORDER BY THE METRE

220614

8P2146 AIR CONDITIONER GROUP—Part 1—Type 2
Part of 4V1696 Air Conditioner Arrangement listed on Page 232A
9P5089 Pressurizer parts are shown on Page 229 and 229B
AN ATTACHMENT

8P2146 AIR CONDITIONER GROUP—Part 2—Type 2
Part of 4V1696 Air Conditioner Arrangement listed on Page 232A
AN ATTACHMENT

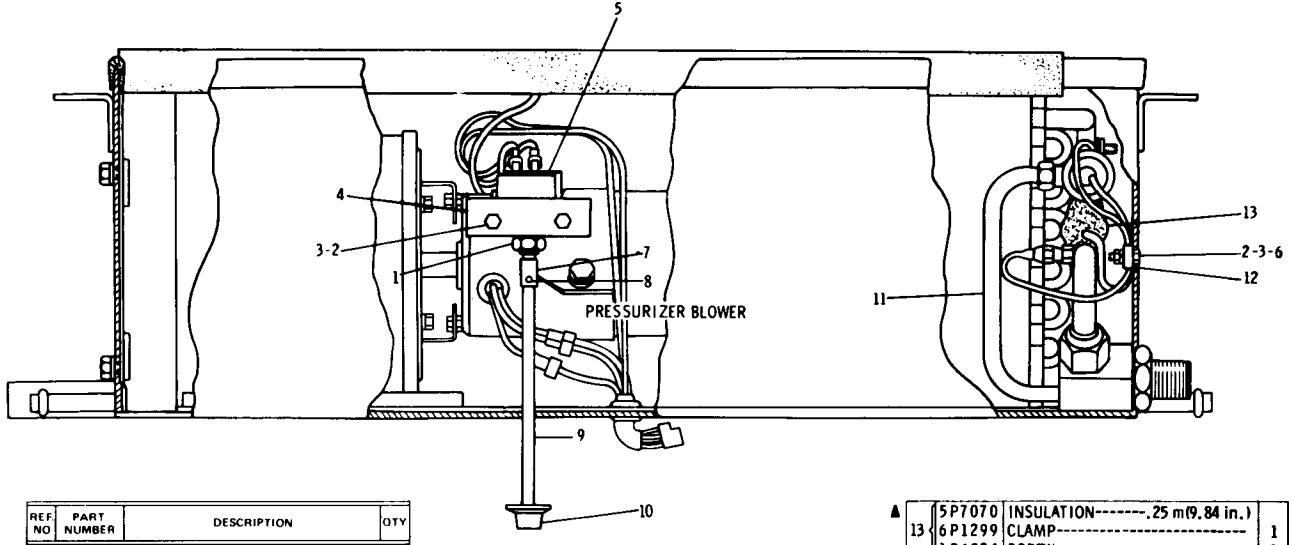

REF NO	PART NUMBER	DESCRIPTION	QTY
1	2P4339	NUT----------	1
2	2A762	BOLT----------	3
3	3B4504	LOCKWASHER----------	3
4	8P2111	BRACKET ASSEM.----------	1
5	9P3498	SWITCH------(thermostat)--------	1
6	1B4330	NUT----------	1
7	8P3597	SLEEVE----------	1
8	3H1118	PIN----------	2
9	8P3598	ROD----------	1
10	1P6509	KNOB----------	1
11	8P4710	TUBE ASSEM.----------	1
12	1P6525	CLAMP----------	1

▲ 13	5P7070	INSULATION-------.25 m(9.84 in.)	
	6P1299	CLAMP----------	1
	1P6524	SCREW----------	1
	SMHS7000	FORM------(installing switch)------	1

C INDICATES CHANGE

▲ ORDER BY THE METRE

220615

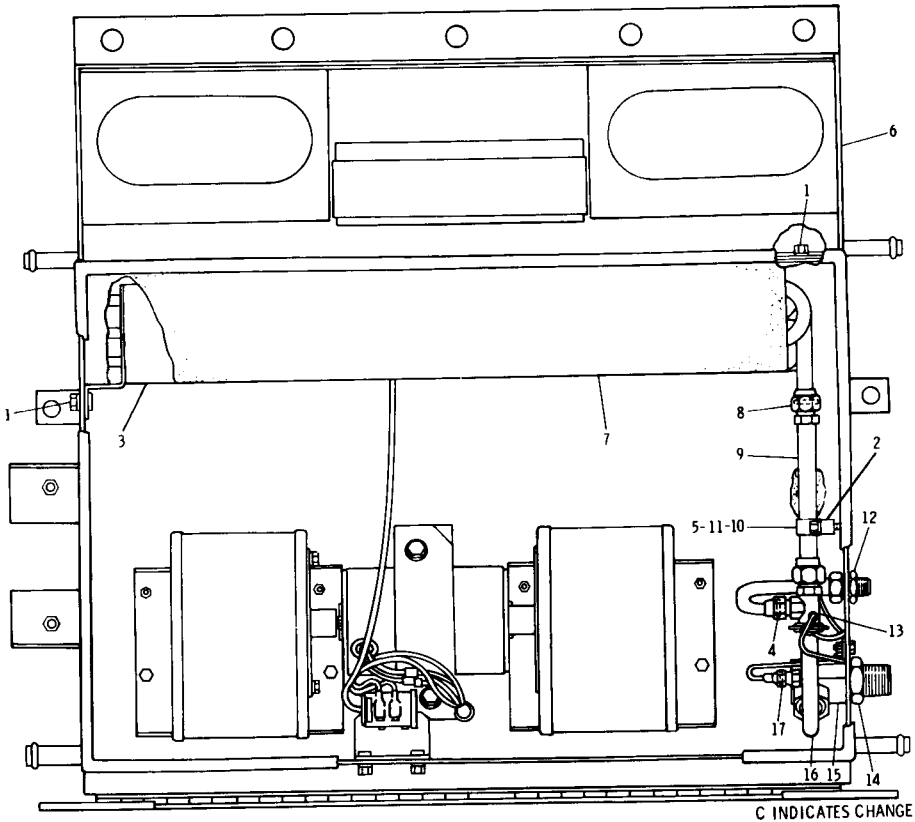

	REF. NO.	PART NUMBER	DESCRIPTION	QTY.
	1	T102	BOLT	4
		3B4506	LOCKWASHER	4
	2	3S6696	SPACER	1
C	3	7G3474	COIL	1
	4	5F9144	SEAL	1
C	5	3B4504	LOCKWASHER	1
	6	9P5089	PRESSURIZER GROUP (Separate Illustration)	1
	7	7G3616	SEAL	1
	8	6M5062	SEAL	2
	9	8P3599	TUBE ASSEM.	1
	10	8J1256	CLIP	1
	11	1B4330	NUT	1
	12	1B9982	NUT	1
		1K4702	WASHER	1
	13	2G401	VALVE	1
	14	6P1303	NUT	1
	15	9P2185	FITTING ASSEM.	1
	16	9P2188	TUBE ASSEM.	1
		5L4758	SEAL	2
	17	5P6458	SEAL	1

C INDICATES CHANGE

175850

8P2146 AIR CONDITIONER GROUP—Part 1—Type 3
Part of 4V1696 Air Conditioner Arrangement listed on Page 232A
9P5089 Pressurizer parts are shown on Pages 229 & 229B. AN ATTACHMENT

8P2146 AIR CONDITIONER GROUP—Part 2—Type 3

Part of 4V1696 Air Conditioner Arrangement listed on Page 232A. AN ATTACHMENT

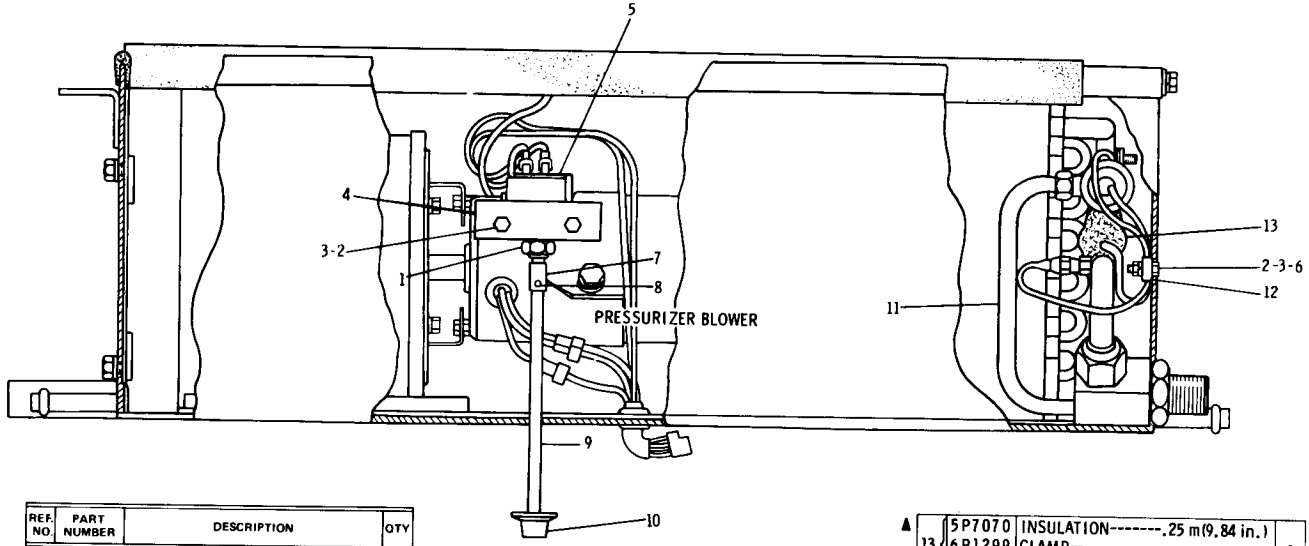

REF. NO.	PART NUMBER	DESCRIPTION	QTY
1	2P4339	NUT	1
2	2A762	BOLT	3
3	3B4504	LOCKWASHER	3
4	8P2111	BRACKET ASSEM.	1
5	9P3498	SWITCH------(thermostat)--------	1
6	1B4330	NUT	1
7	8P3597	SLEEVE	1
8	3H1118	PIN	2
9	8P3598	ROD	1
10	1P6509	KNOB	1
11	8P4710	TUBE ASSEM.	1
12	1P6525	CLAMP	1

▲	REF. NO.	PART NUMBER	DESCRIPTION	QTY
	13	5P7070	INSULATION-------.25 m(9.84 in.)	
		6P1299	CLAMP	1
		1P6524	SCREW	1
		SMHS7000	FORM----(Installing Switch)-----	1

▲ ORDER BY THE METER

175851

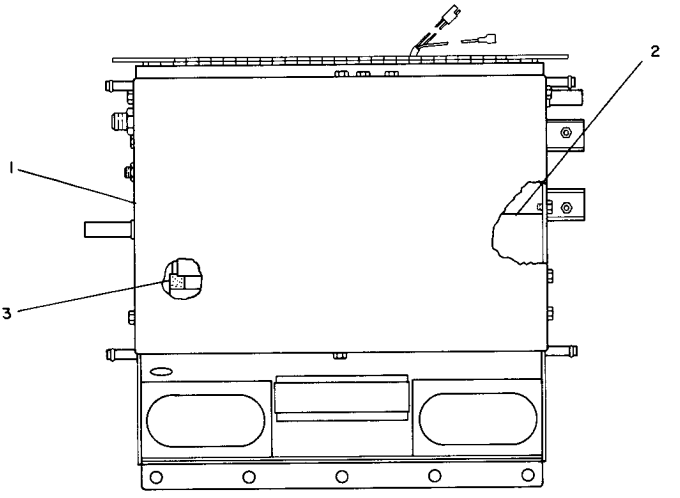

REF. NO.	PART NUMBER	DESCRIPTION	QTY.
1	8P2146	CONDITIONER GROUP---------- (Separate Illustration)	1
2	9G3764	HEATER GROUP---------- (Separate Illustration)	1
▲ 3	5P5671	SEAL--------.25 m(9.8 in.)	

▲ ORDER BY THE METER

176040

9P5225 AIR CONDITIONER GROUP
Part of 4V1696 AIR CONDITIONER ARRANGEMENT LISTED ON Page 232A
8P2146 Air Conditioner and 9G3764 Heater parts are shown on Pages 232F through 232L, 233-2 and 233-4. AN ATTACHMENT

8P4914 HEATER GROUP

Part of 4V1692 Cab Heater Arrangement and 4V1696 Air Conditioner Arrangement listed on Pages 232 & 232A
9P5089 Pressurizer parts are shown on Page 229. AN ATTACHMENT

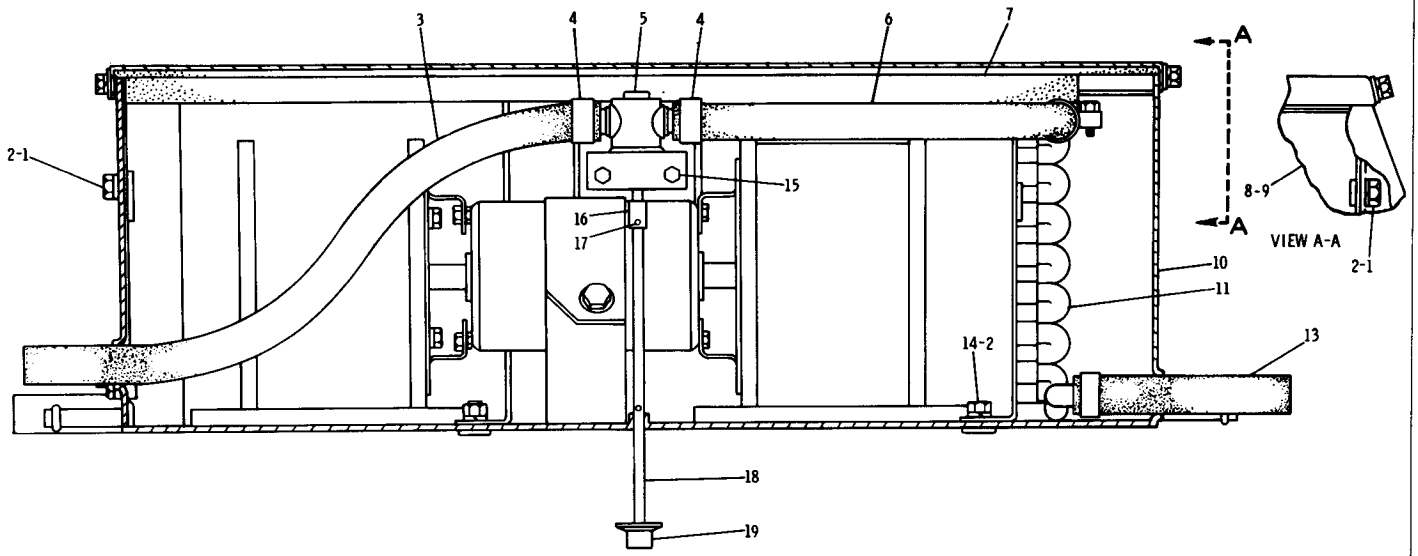

REF. NO.	PART NUMBER	DESCRIPTION	QTY
1	T102	BOLT	4
2	3B4506	LOCKWASHER	6
▲ 3	5P767	HOSE--44.50 cm(17.52 in.)	
4	1B1169	CLAMP	4
5	3P7994	VALVE	1
▲ 6	5P767	HOSE--38.10 cm(15 in.)	
C 7	7G3615	SEAL	1
● 8	5P5671	SEAL--.135 m(5.32 in.)	

C INDICATES CHANGE

9	8P4884	BAFFLE ASSEM.	1
10	9P5089	PRESSURIZER GROUP (Separate Illustration)	1
11	3P7993	COIL	1
▲ 13	5P767	HOSE--10.20 cm(4.02 in.)	
14	1D4717	NUT	2

▲ ORDER BY THE CENTIMETER

15	7B2742	BOLT	2
	3B4504	LOCKWASHER	2
	8P6099	SPACER	2
16	8P3597	SLEEVE	1
17	3H1118	PIN	2
18	8P3600	ROD	1
19	1P6509	KNOB	1

● ORDER BY THE METER

227450

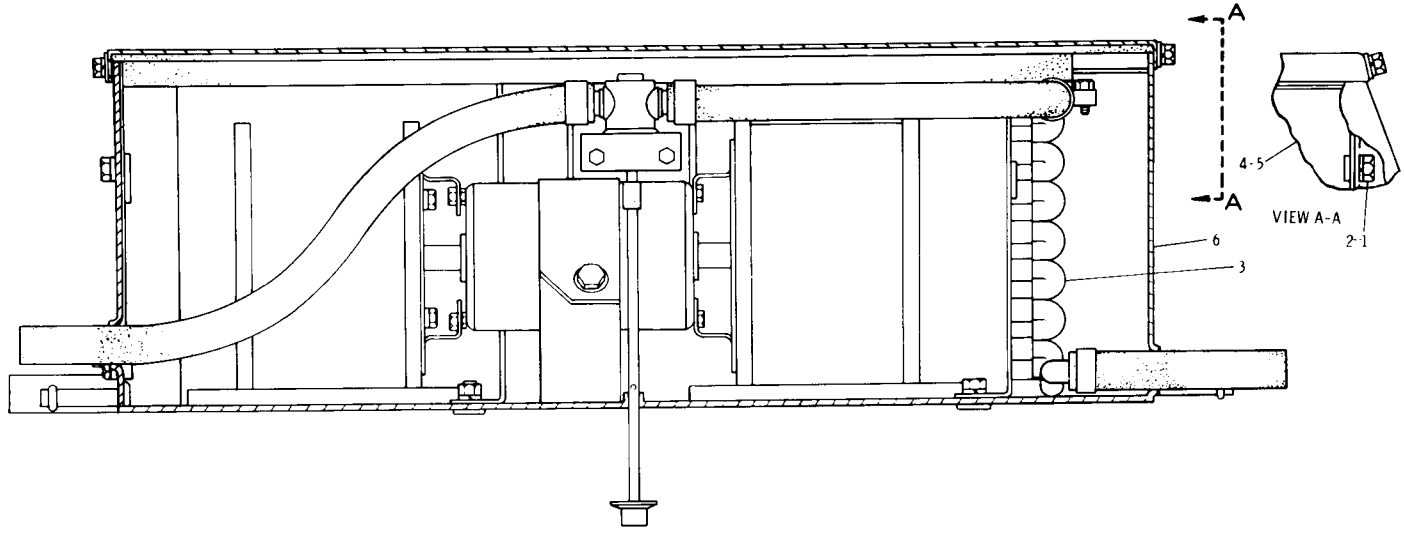

REF. NO.	PART NUMBER	DESCRIPTION	QTY.
1	T102	BOLT	2
2	3B4506	LOCKWASHER	2
3	9G3764	CAB HEATER GROUP (Separate Illustration)	1

▲	4	5P5671	SEAL-----.135 m(5.32 in.)	
	5	8P4884	BAFFLE ASSEM.	1
	6	9P5089	PRESSURIZER GROUP (Separate Illustration)	1

▲ ORDER BY THE METER
C INDICATES CHANGE

174989

8P4914 HEATER GROUP—Type 2
Part of 4V1692 Cab Heater Arrangement and 4V1696 Air Conditioner Arrangement listed on Pages 232 and 232A
9P5089 Pressurizer and 9G3764 Heater parts are shown on Pages 229 and 223-2
AN ATTACHMENT

9G3764 CAB HEATER GROUP
Part of 8P4914 Heater Group shown on Page 233-1
AN ATTACHMENT

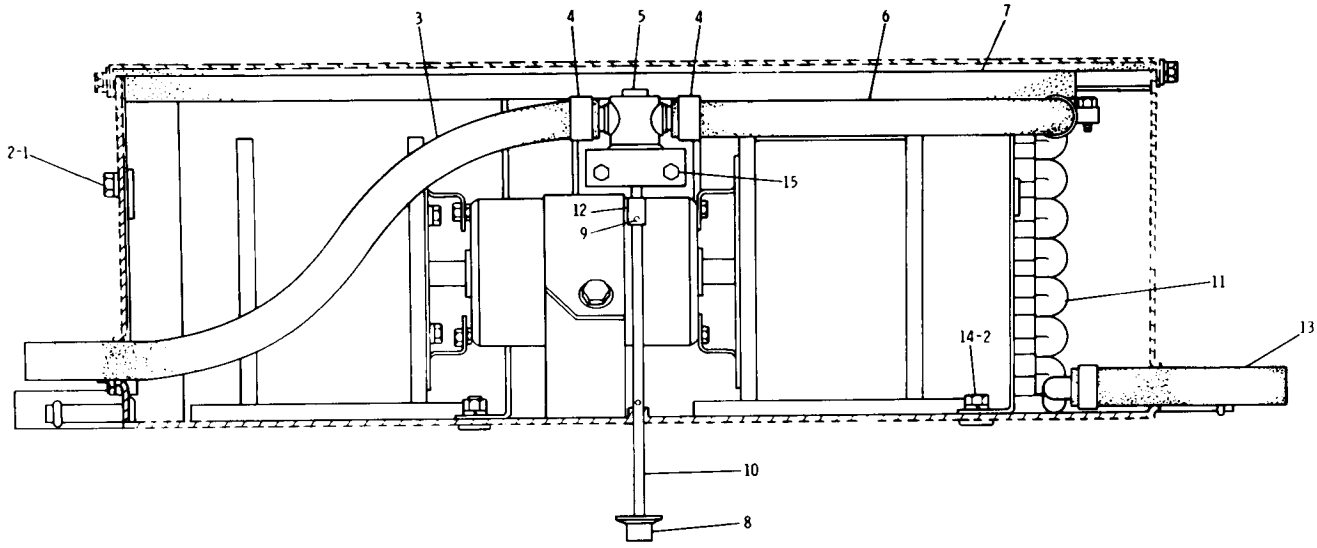

REF. NO.	PART NUMBER	DESCRIPTION	QTY.
1	T102	BOLT	2
2	3B4506	LOCKWASHER	4
▲ 3	5P767	HOSE---44.50 cm(17.52 in.)	
4	5D1026	CLAMP	4
5	3P7994	VALVE	1
▲ 6	5P767	HOSE---38.10 cm(15 in.)	
7	7G3615	SEAL	1
8	1P6509	KNOB	1
9	3H1118	PIN	2
10	8P3600	ROD	1
11	3P7993	COIL	1
12	8P3597	SLEEVE	1
▲ 13	5P767	HOSE---10.20 cm(4.02 in.)	
14	1D4717	NUT	2
	7B2742	BOLT	2
15	3B4504	LOCKWASHER	2
	8P6099	SPACER	2

▲ ORDER BY THE CENTIMETER

174990

9G3764 CAB HEATER GROUP—Type 2
Part of 9P5225 Air Conditioner Group and 8P4914 Heater Group shown on Pages 232M and 233-1
AN ATTACHMENT

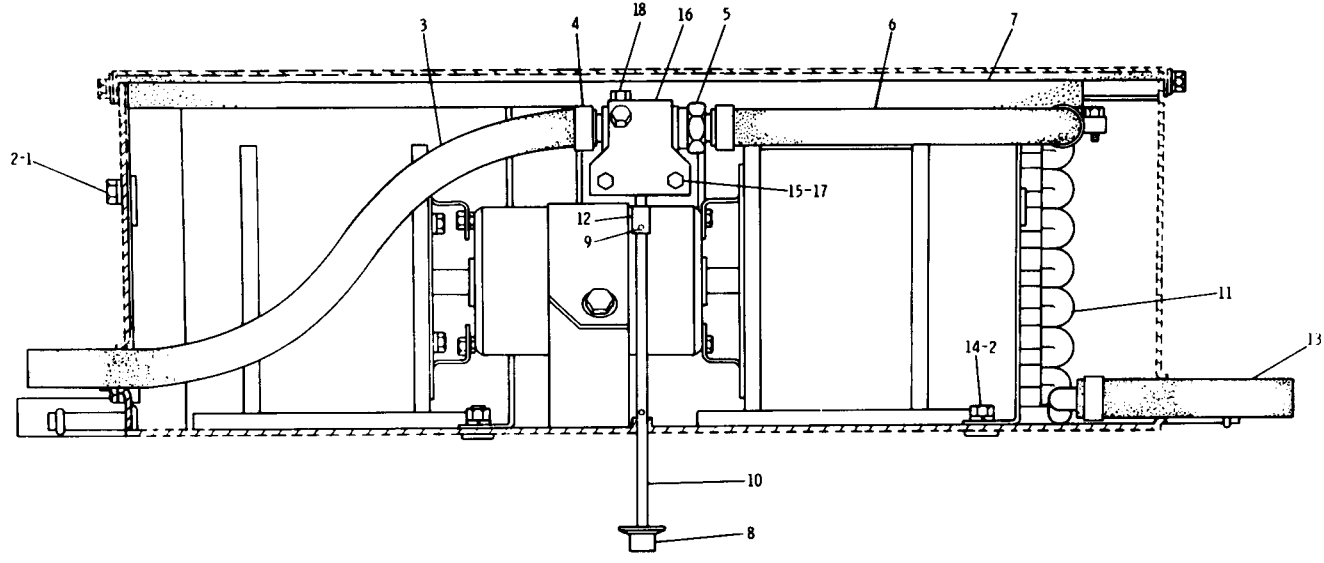

REF. NO.	PART NUMBER	DESCRIPTION	QTY.
1	T102	BOLT----------	2
2	3B4506	LOCKWASHER----------	4
▲ 3	5P767	HOSE------44.50 cm(17.52 in.)	
4	5D1026	CLAMP----------	4
C 5	7G8699	VALVE----------	1
▲ 6	5P767	HOSE----------38.10cm(15 in.)	
7	7G3615	SEAL----------	1
8	1P6509	KNOB----------	1

C INDICATES CHANGE

9	3H1118	PIN----------	2
10	8P3600	ROD----------	1
11	3P7993	COIL----------	1
12	8P3597	SLEEVE----------	1
▲ 13	5P767	HOSE--------10.20 cm(4.02 in.)	
14	1D4717	NUT----------	2
15	7B2742	BOLT----------	2
	3B4504	LOCKWASHER----------	2
	8P6099	SPACER----------	2

▲ ORDER BY THE CENTIMETER

C 16	9G931	BRACKET ASSEM. (Includes) ----------	1
17	9F6445	NUT----------	2
C 18	2L5317	SCREW----------	2
C	8F1434	LOCKWASHER----------	2

175849

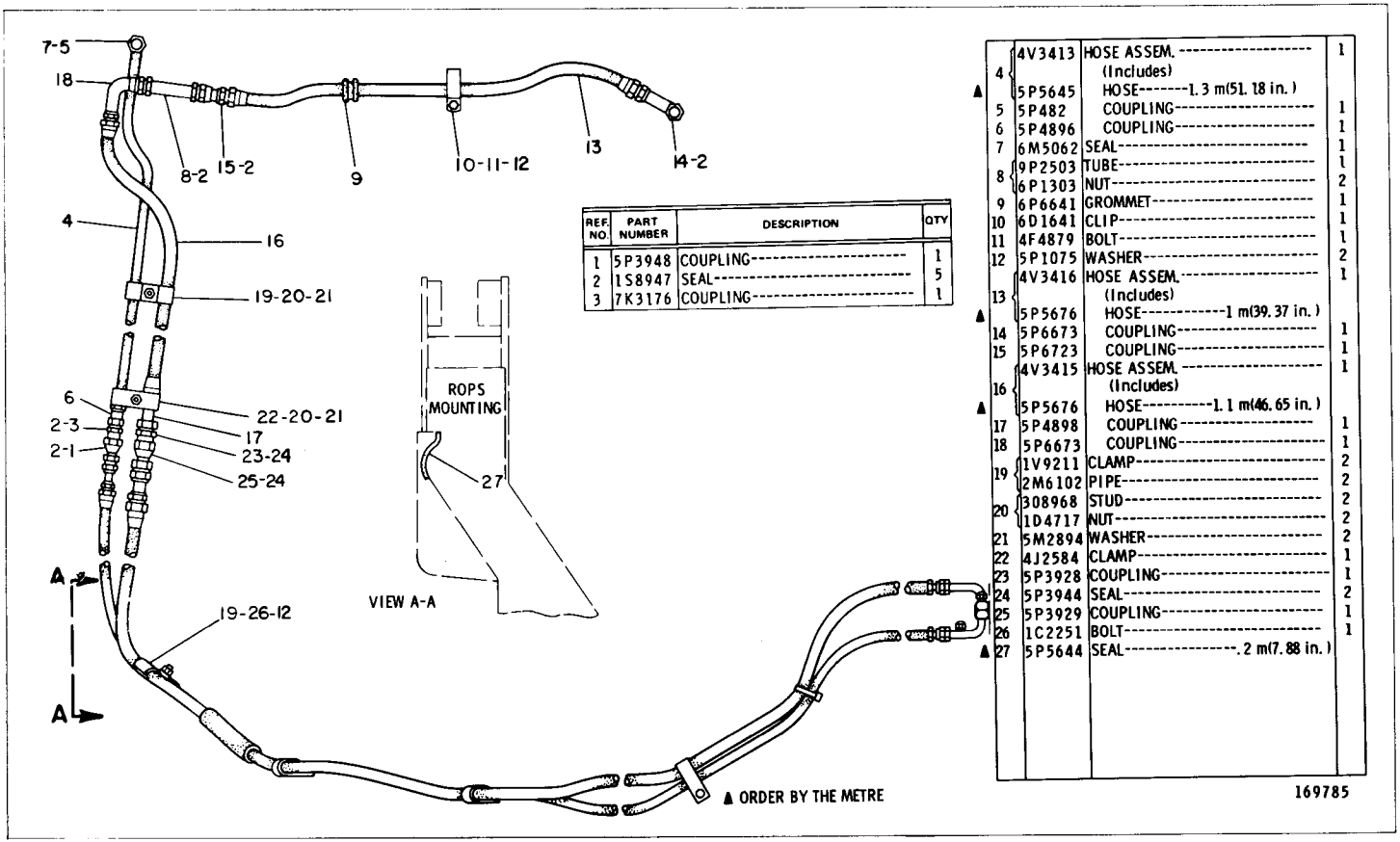

REF. NO.	PART NUMBER	DESCRIPTION	QTY
1	5P3948	COUPLING	1
2	1S8947	SEAL	5
3	7K3176	COUPLING	1

4	4V3413	HOSE ASSEM. (Includes)	1
▲	5P5645	HOSE--1.3 m(51.18 in.)	
5	5P482	COUPLING	1
6	5P4896	COUPLING	1
7	6M5062	SEAL	1
8	9P2503	TUBE	1
	6P1303	NUT	2
9	6P6641	GROMMET	1
10	6D1641	CLIP	1
11	4F4879	BOLT	1
12	5P1075	WASHER	2
13	4V3416	HOSE ASSEM. (Includes)	1
▲	5P5676	HOSE--1 m(39.37 in.)	
14	5P6673	COUPLING	1
15	5P6723	COUPLING	1
16	4V3415	HOSE ASSEM. (Includes)	1
▲	5P5676	HOSE--1.1 m(46.65 in.)	
17	5P4898	COUPLING	1
18	5P6673	COUPLING	1
19	1V9211	CLAMP	2
	2M6102	PIPE	2
20	308968	STUD	2
	1D4717	NUT	2
21	5M2894	WASHER	2
22	4J2584	CLAMP	1
23	5P3928	COUPLING	1
24	5P3944	SEAL	2
25	5P3929	COUPLING	1
26	1C2251	BOLT	1
▲ 27	5P5644	SEAL--.2 m(7.88 in.)	

▲ ORDER BY THE METRE

169785

4V1695 AIR CONDITIONING LINES GROUP—Part 1
Part of 4V1696 Air Conditioner Arrangement listed on Page 232A
AN ATTACHMENT

4V1695 AIR CONDITIONING LINES GROUP—Part 2
Part of 4V1696 Air Conditioner Arrangement listed on Page 232A
AN ATTACHMENT

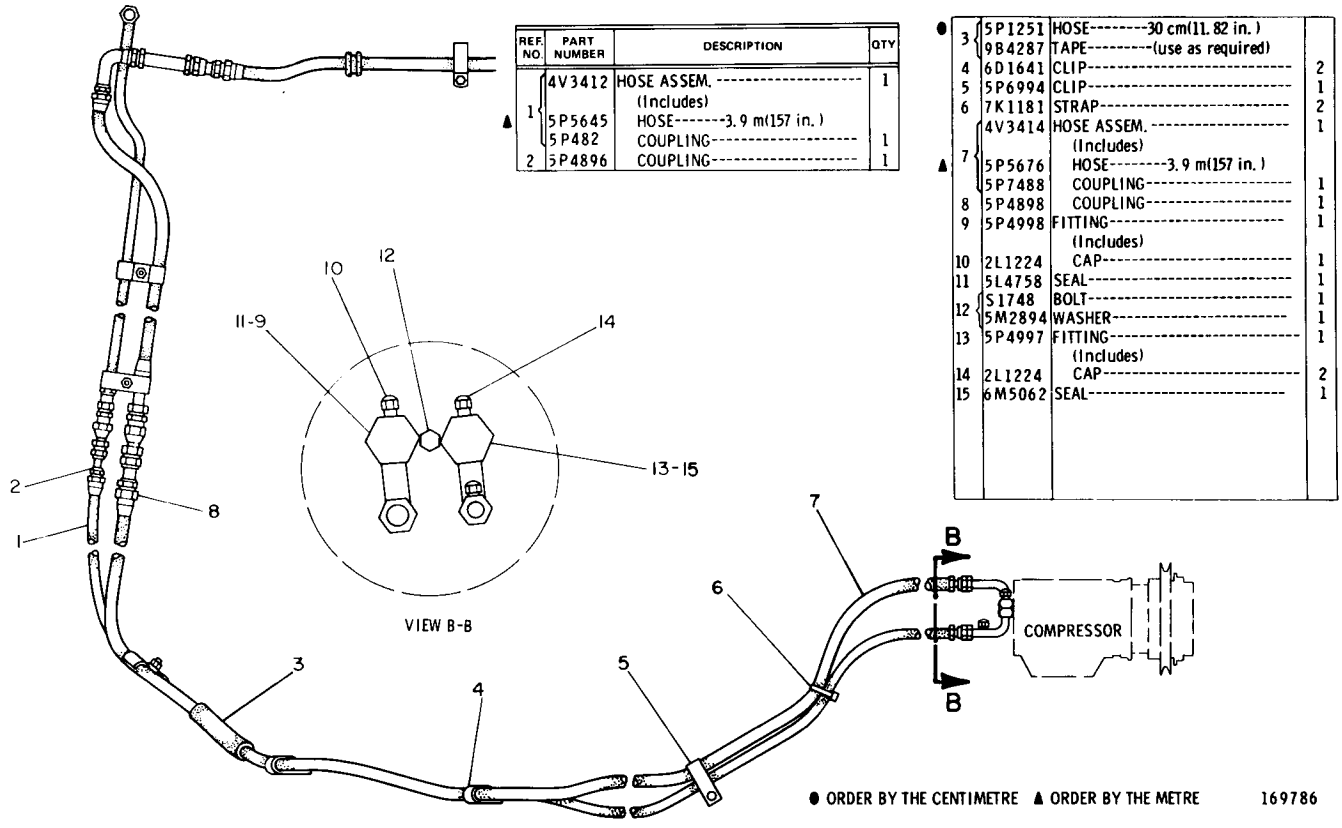

REF. NO.	PART NUMBER	DESCRIPTION	QTY
▲ 1	4V3412	HOSE ASSEM. (Includes)	1
	5P5645	HOSE-------3.9 m(157 in.)	
	5P482	COUPLING----------	1
2	5P4896	COUPLING----------	1

	REF. NO.	PART NUMBER	DESCRIPTION	QTY
●	3	5P1251	HOSE--------30 cm(11.82 in.)	
		9B4287	TAPE---------(use as required)	
	4	6D1641	CLIP----------	2
	5	5P6994	CLIP----------	1
	6	7K1181	STRAP----------	2
▲	7	4V3414	HOSE ASSEM. (Includes)	1
		5P5676	HOSE--------3.9 m(157 in.)	
		5P7488	COUPLING----------	1
	8	5P4898	COUPLING----------	1
	9	5P4998	FITTING (Includes)	1
	10	2L1224	CAP----------	1
	11	5L4758	SEAL----------	1
	12	5S1748	BOLT----------	1
		5M2894	WASHER----------	1
	13	5P4997	FITTING (Includes)	1
	14	2L1224	CAP----------	2
	15	6M5062	SEAL----------	1

● ORDER BY THE CENTIMETRE ▲ ORDER BY THE METRE 169786

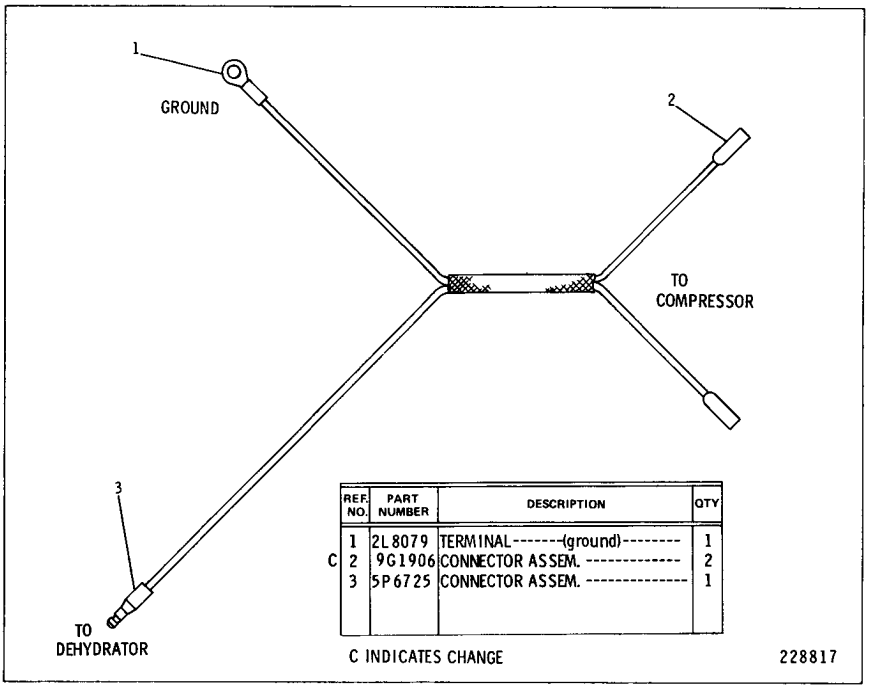

	REF. NO.	PART NUMBER	DESCRIPTION	QTY
	1	2L8079	TERMINAL-------(ground)--------	1
C	2	9G1906	CONNECTOR ASSEM. ----------	2
	3	5P6725	CONNECTOR ASSEM. ----------	1

C INDICATES CHANGE

228817

9P2045 COMPRESSOR HARNESS ASSEMBLY
Part of 4V1696 Air Conditioner Arrangement listed on Page 232A
AN ATTACHMENT

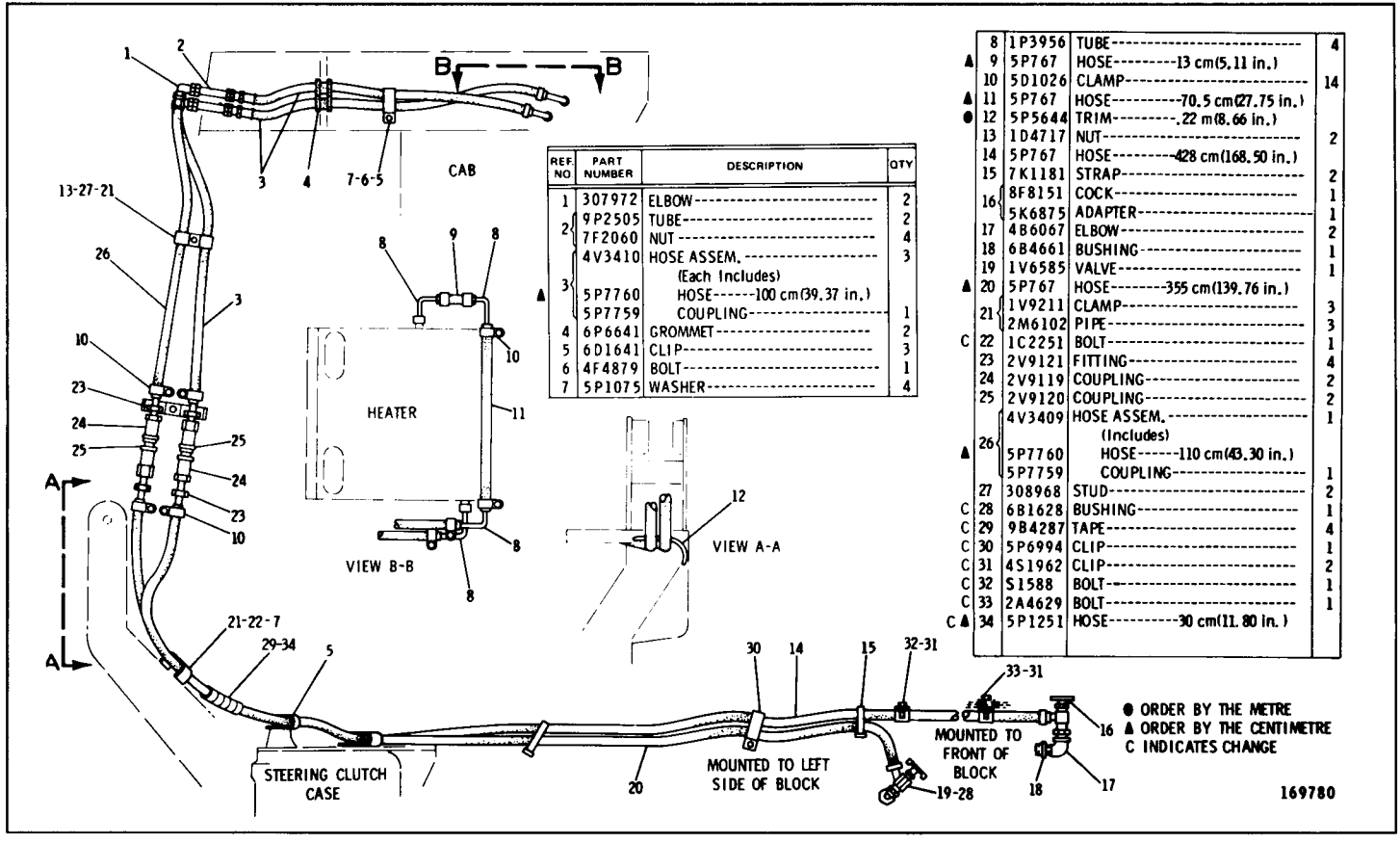

REF NO	PART NUMBER	DESCRIPTION	QTY
1	307972	ELBOW	2
2	9P2505	TUBE	2
	7F2060	NUT	4
3	4V3410	HOSE ASSEM. (Each Includes)	3
▲	5P7760	HOSE--100 cm(39.37 in.)	
	5P7759	COUPLING	1
4	6P6641	GROMMET	2
5	6D1641	CLIP	3
6	4F4879	BOLT	1
7	5P1075	WASHER	4

	8	1P3956	TUBE	4
▲	9	5P767	HOSE--13 cm(5.11 in.)	
	10	5D1026	CLAMP	14
▲	11	5P767	HOSE--70.5 cm(27.75 in.)	
●	12	5P5644	TRIM--.22 m(8.66 in.)	
	13	1D4717	NUT	2
	14	5P767	HOSE--428 cm(168.50 in.)	
	15	7K1181	STRAP	2
	16	8F8151	COCK	1
		5K6875	ADAPTER	1
	17	4B6067	ELBOW	2
	18	6B4661	BUSHING	1
	19	1V6585	VALVE	1
▲	20	5P767	HOSE--355 cm(139.76 in.)	
	21	1V9211	CLAMP	3
		2M6102	PIPE	3
C	22	1C2251	BOLT	1
	23	2V9121	FITTING	4
	24	2V9119	COUPLING	2
	25	2V9120	COUPLING	2
	26	4V3409	HOSE ASSEM. (Includes)	1
▲		5P7760	HOSE--110 cm(43.30 in.)	
		5P7759	COUPLING	1
	27	308968	STUD	2
C	28	6B1628	BUSHING	1
C	29	9B4287	TAPE	4
C	30	5P6994	CLIP	1
C	31	4S1962	CLIP	2
C	32	S1588	BOLT	1
C	33	2A4629	BOLT	1
C ▲	34	5P1251	HOSE--30 cm(11.80 in.)	

4V3411 HEATER LINES GROUP—Type 1
Part of 4V1692 Cab Heater Arrangement and 4V1696 Air Conditioner Arrangement listed on Pages 232 and 232A
AN ATTACHMENT

4V3411 HEATER LINES GROUP—Type 2

Part of 4V1692 Cab Heater Arrangement and 4V1696 Air Conditioner Arrangement listed on Pages 232 and 232A

AN ATTACHMENT

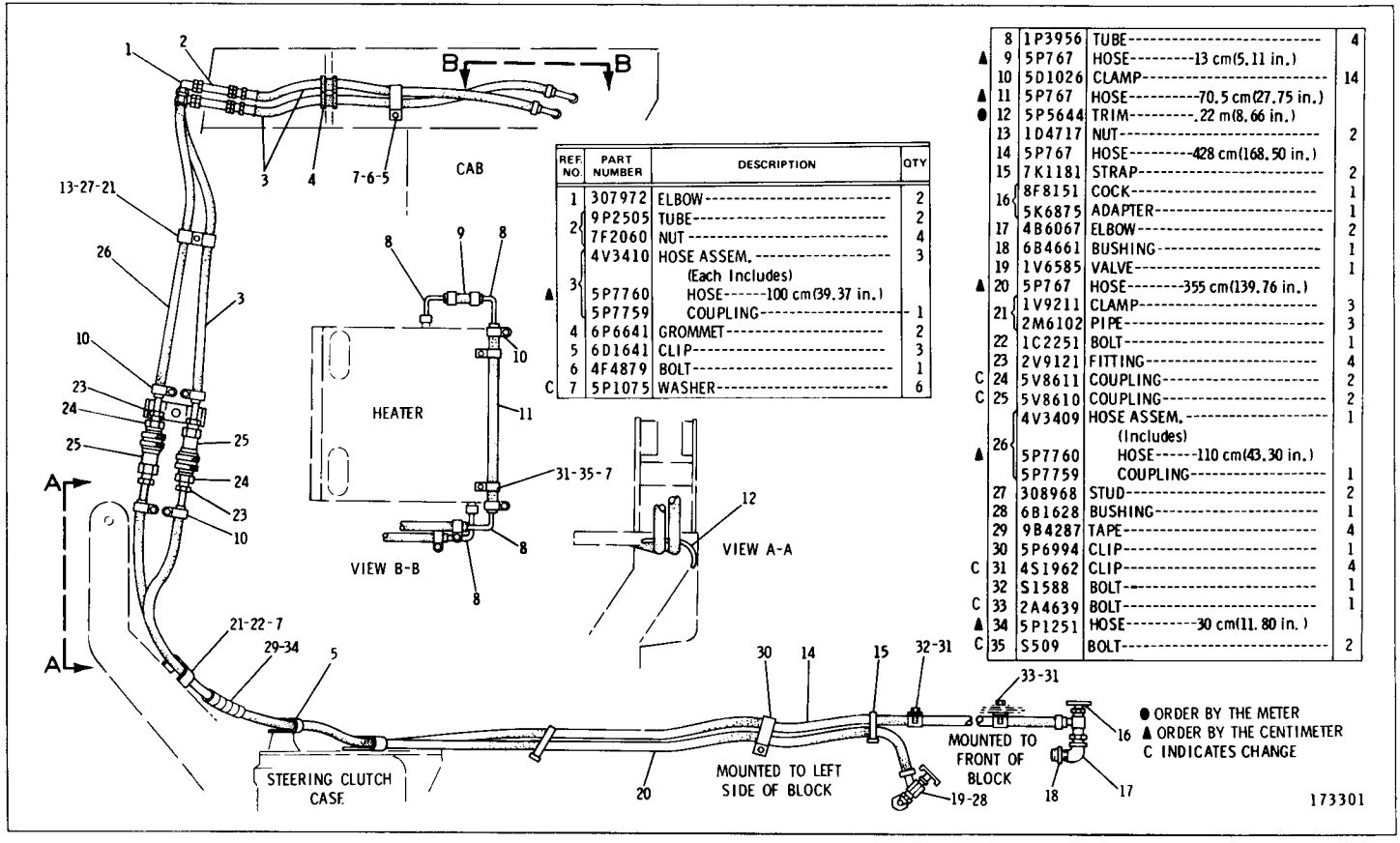

REF. NO.	PART NUMBER	DESCRIPTION	QTY
1	307972	ELBOW	2
2	9P2505	TUBE	2
	7F2060	NUT	4
3	4V3410	HOSE ASSEM. (Each Includes)	3
▲	5P7760	HOSE—100 cm(39.37 in.)	
	5P7759	COUPLING	1
4	6P6641	GROMMET	2
5	6D1641	CLIP	3
6	4F4879	BOLT	1
C 7	5P1075	WASHER	6
8	1P3956	TUBE	4
▲ 9	5P767	HOSE—13 cm(5.11 in.)	
10	5D1026	CLAMP	14
▲ 11	5P767	HOSE—70.5 cm(27.75 in.)	
● 12	5P5644	TRIM—.22 m(8.66 in.)	
13	1D4717	NUT	2
14	5P767	HOSE—428 cm(168.50 in.)	
15	7K1181	STRAP	2
16	8F8151	COCK	1
	5K6875	ADAPTER	1
17	4B6067	ELBOW	2
18	6B4661	BUSHING	1
19	1V6585	VALVE	1
▲ 20	5P767	HOSE—355 cm(139.76 in.)	
21	1V9211	CLAMP	3
	2M6102	PIPE	3
22	1C2251	BOLT	1
23	2V9121	FITTING	4
C 24	5V8611	COUPLING	2
C 25	5V8610	COUPLING	2
26	4V3409	HOSE ASSEM. (Includes)	1
▲	5P7760	HOSE—110 cm(43.30 in.)	
	5P7759	COUPLING	1
27	308968	STUD	2
28	6B1628	BUSHING	1
29	9B4287	TAPE	4
30	5P6994	CLIP	1
C 31	4S1962	CLIP	4
32	S1588	BOLT	1
C 33	2A4639	BOLT	1
▲ 34	5P1251	HOSE—30 cm(11.80 in.)	
C 35	S509	BOLT	2

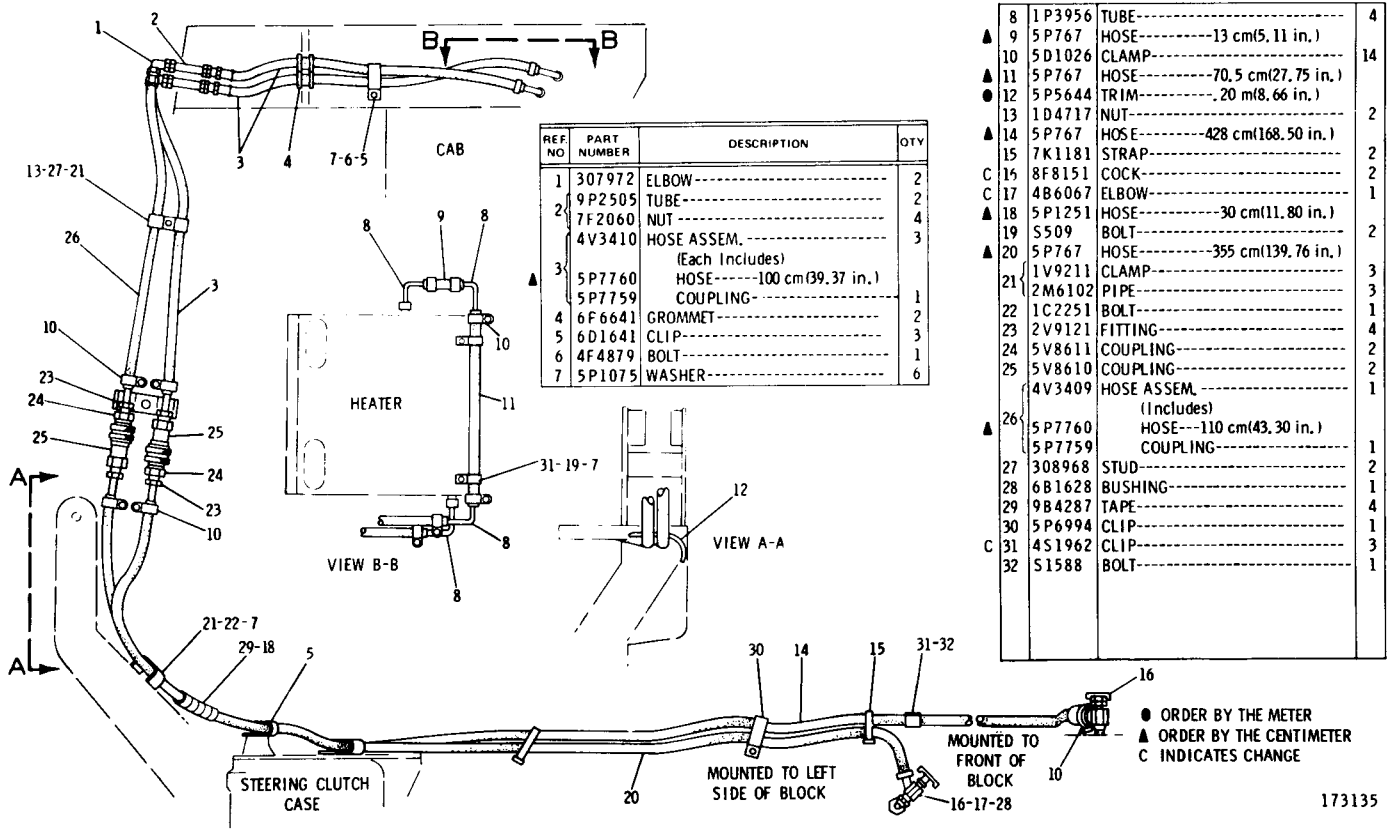

REF NO	PART NUMBER	DESCRIPTION	QTY
1	307972	ELBOW	2
2	9P2505	TUBE	2
	7F2060	NUT	4
3	4V3410	HOSE ASSEM. (Each Includes)	3
▲	5P7760	HOSE---100 cm(39.37 in.)	
	5P7759	COUPLING	1
4	6F6641	GROMMET	2
5	6D1641	CLIP	3
6	4F4879	BOLT	1
7	5P1075	WASHER	6
8	1P3956	TUBE	4
▲ 9	5P767	HOSE---13 cm(5.11 in.)	
10	5D1026	CLAMP	14
▲ 11	5P767	HOSE---70.5 cm(27.75 in.)	
● 12	5P5644	TRIM---.20 m(8.66 in.)	
13	1D4717	NUT	2
▲ 14	5P767	HOSE---428 cm(168.50 in.)	
15	7K1181	STRAP	2
C 16	8F8151	COCK	2
C 17	4B6067	ELBOW	1
▲ 18	5P1251	HOSE---30 cm(11.80 in.)	
19	S509	BOLT	2
▲ 20	5P767	HOSE---355 cm(139.76 in.)	
21	1V9211	CLAMP	3
	2M6102	PIPE	3
22	1C2251	BOLT	1
23	2V9121	FITTING	4
24	5V8611	COUPLING	2
25	5V8610	COUPLING	2
26	4V3409	HOSE ASSEM. (Includes)	1
▲	5P7760	HOSE---110 cm(43.30 in.)	
	5P7759	COUPLING	1
27	308968	STUD	2
28	6B1628	BUSHING	1
29	9B4287	TAPE	4
30	5P6994	CLIP	1
C 31	4S1962	CLIP	3
32	S1588	BOLT	1

4V3411 HEATER LINES GROUP—Type 3
Part of 4V1692 Cab Heater Arrangement and 4V1696 Air Conditioner Arrangement listed on Pages 232 and 232A
AN ATTACHMENT

9P4345 WINDSHIELD WASHER GROUP

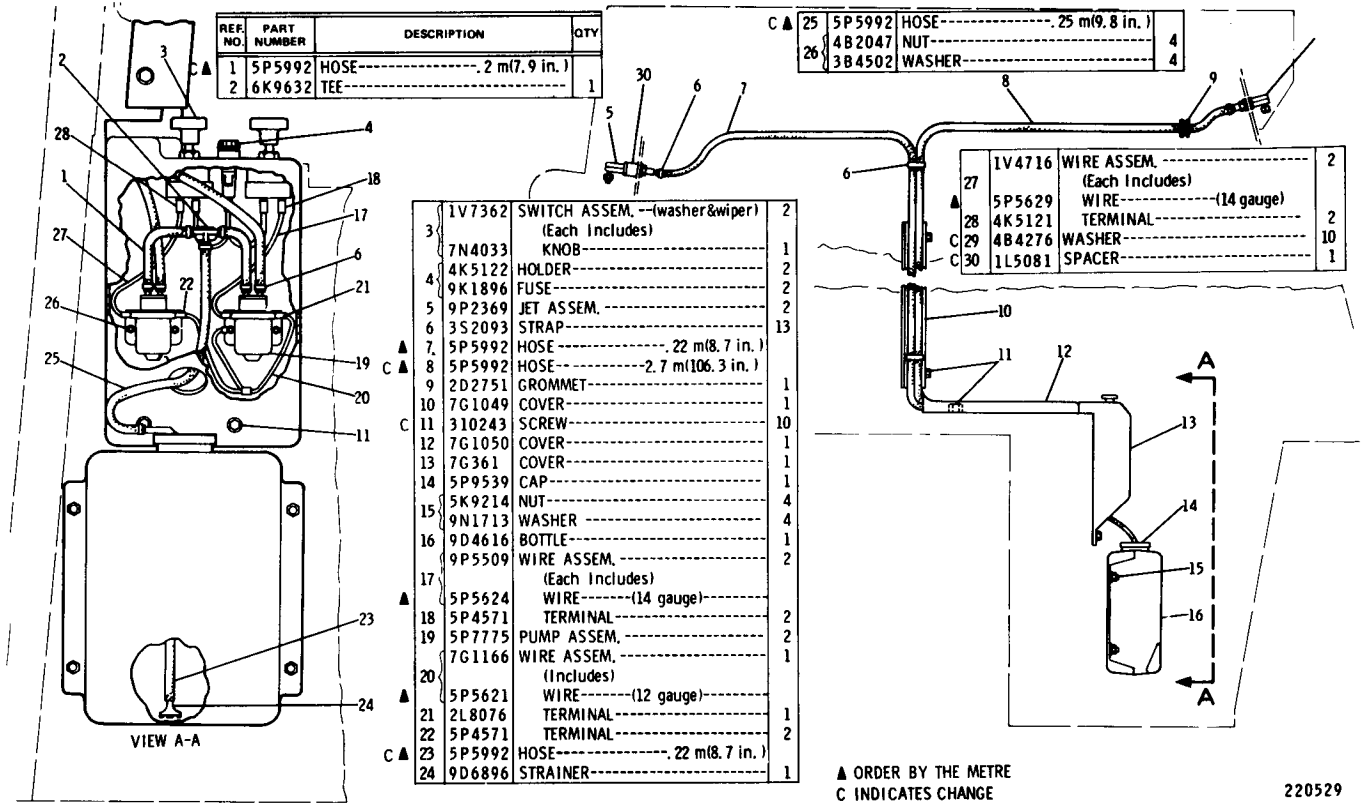

REF. NO.	PART NUMBER	DESCRIPTION	QTY
C ▲ 1	5P5992	HOSE----------. 2 m(7.9 in.)	
2	6K9632	TEE----------	1

C ▲ 25	5P5992	HOSE----------. 25 m(9.8 in.)	
26	4B2047	NUT----------	4
	3B4502	WASHER----------	4

27	1V4716	WIRE ASSEM. ---------- (Each Includes)	2
▲	5P5629	WIRE----------(14 gauge)	
28	4K5121	TERMINAL----------	2
C 29	4B4276	WASHER----------	10
C 30	1L5081	SPACER----------	1

3	1V7362	SWITCH ASSEM. --(washer&wiper) (Each Includes)	2
	7N4033	KNOB----------	1
4	4K5122	HOLDER----------	2
	9K1896	FUSE----------	2
5	9P2369	JET ASSEM. ----------	2
6	3S2093	STRAP----------	13
▲ 7	5P5992	HOSE----------. 22 m(8.7 in.)	
C ▲ 8	5P5992	HOSE----------2.7 m(106.3 in.)	
9	2D2751	GROMMET----------	1
10	7G1049	COVER----------	1
C 11	310243	SCREW----------	10
12	7G1050	COVER----------	1
13	7G361	COVER----------	1
14	5P9539	CAP----------	1
15	5K9214	NUT----------	4
	9N1713	WASHER ----------	4
16	9D4616	BOTTLE----------	1
17	9P5509	WIRE ASSEM. ---------- (Each Includes)	2
▲	5P5624	WIRE-------(14 gauge)--------	
18	5P4571	TERMINAL----------	2
19	5P7775	PUMP ASSEM. ----------	2
20	7G1166	WIRE ASSEM. ---------- (Includes)	1
▲	5P5621	WIRE-------(12 gauge)--------	
21	2L8076	TERMINAL----------	1
22	5P4571	TERMINAL----------	2
C ▲ 23	5P5992	HOSE----------. 22 m(8.7 in.)	
24	9D6896	STRAINER----------	1

▲ ORDER BY THE METRE
C INDICATES CHANGE

220529

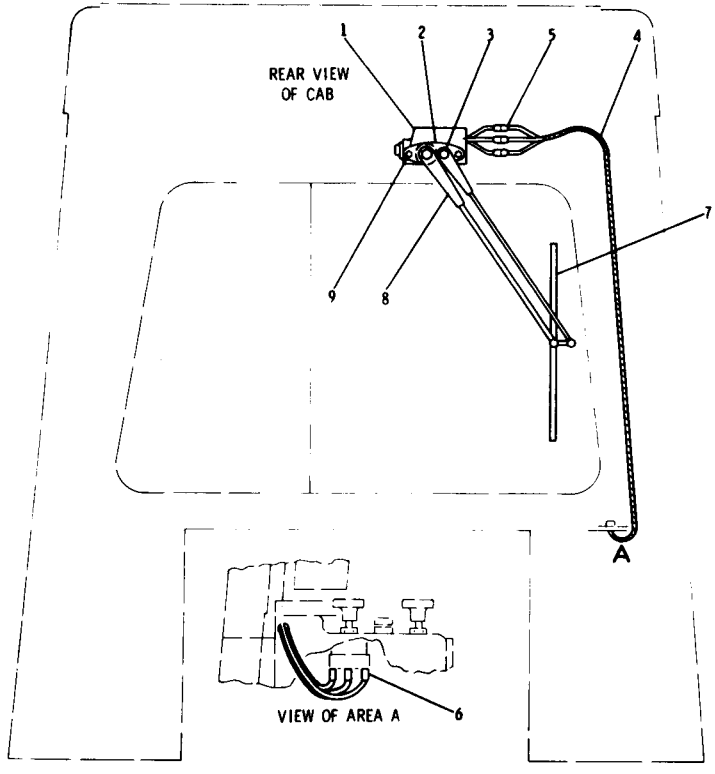

REF. NO.	PART NUMBER	DESCRIPTION	QTY
1	1V4358	WIPER GROUP---------- (Separate Illustration)	1
2	9K7021	PIVOT----------	1
	9K7022	GASKET----------	1
3	4D7412	NUT----------	1
4	7G1168	HARNESS ASSEM. ---------- (Includes)	1
▲	5P5624	WIRE--------(14 gauge)--------	
5	4S1988	TERMINAL----------	3
6	5P4571	TERMINAL----------	3
7	4K1077	BLADE----------	1
8	9P1726	ARM ASSEM. ----------	1
9	5P592	SCREW----------	2
	1H3244	LOCKWASHER----------	2

▲ ORDER BY THE METRE

218096

7G3324 WIPER GROUP—Front and Rear—Part 1—Type 1
1V4358 Wiper parts are shown on Page 238

7G3324 WIPER GROUP—Front and Rear—Part 2—Type 1

1V3079 Wiper parts are shown on Page 238

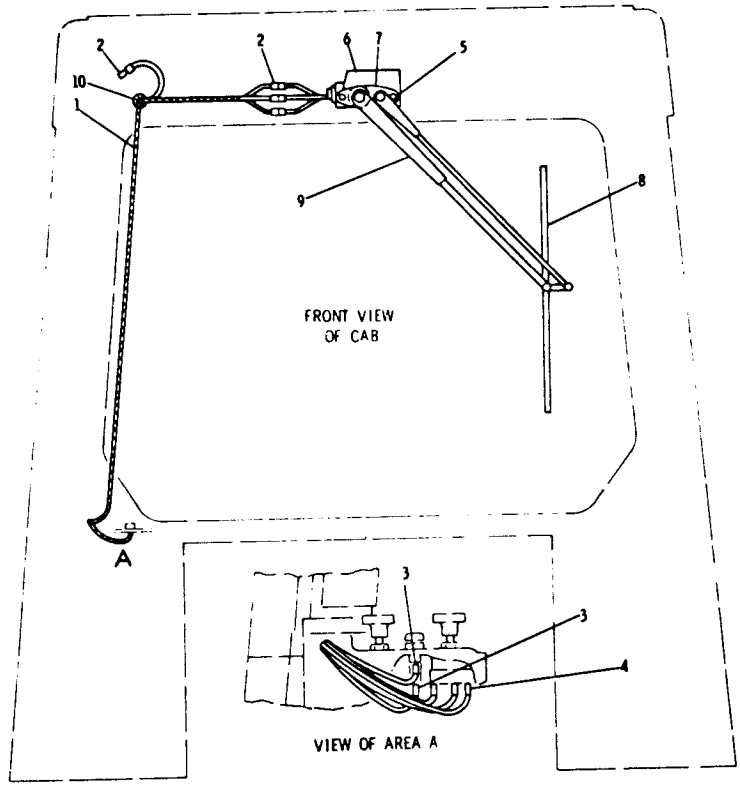

REF NO	PART NUMBER	DESCRIPTION	QTY
	7G1167	HARNESS ASSEM.	1
1		(Includes)	
▲	5P5624	WIRE--------(14 gauge)--------	
2	4S1988	TERMINAL	4
3	5P5618	TERMINAL	2
4	5P4571	TERMINAL	3
5	5P592	SCREW	2
	1H3244	LOCKWASHER	2
6	1V3079	WIPER GROUP	1
		(Separate Illustration)	
7	9J5951	PIVOT ASSEM.	1
	9K7022	GASKET	1
8	2V2248	BLADE	1
9	9P1725	ARM ASSEM.	1
10	9M5870	GROMMET	1

▲ ORDER BY THE METRE

218647

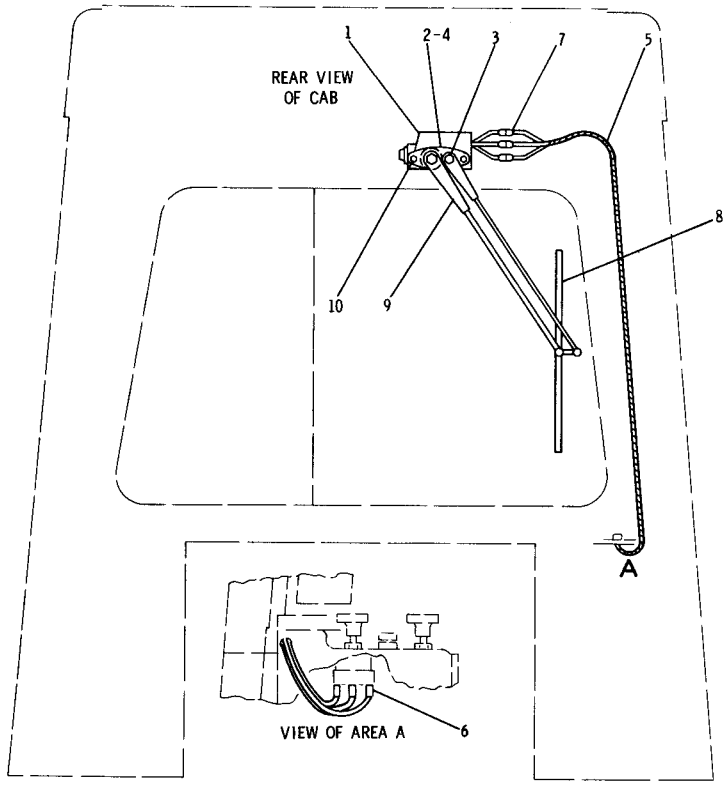

	REF. NO.	PART NUMBER	DESCRIPTION	QTY.
C	1	3T175	WIPER GROUP---------- (Separate Illustration)	1
	2	9K7021	PIVOT ASSEM.---------- (Includes)	1
	3	4D7412	NUT----------	1
	4	9K7022	GASKET----------	1
	5	7G1168	HARNESS ASSEM.---------- (Includes)	1
▲		5P5624	WIRE------(14 gauge)--------	
	6	5P4571	TERMINAL----------	3
C	7	9G9314	TERMINAL----------	3
	8	4K1077	BLADE----------	1
	9	9P1726	ARM ASSEM.----------	1
	10	5P592	SCREW----------	2
		1H3244	LOCKWASHER----------	2

▲ ORDER BY THE METER
C INDICATES CHANGE

181288

7G3324 WIPER GROUP—Front and Rear—Part 1—Type 2
3T175 Wiper parts are shown on Page 238A

7G3324 WIPER GROUP—Front & Rear—Part 2—Type 2

3T183 Wiper parts are shown on Page 238A

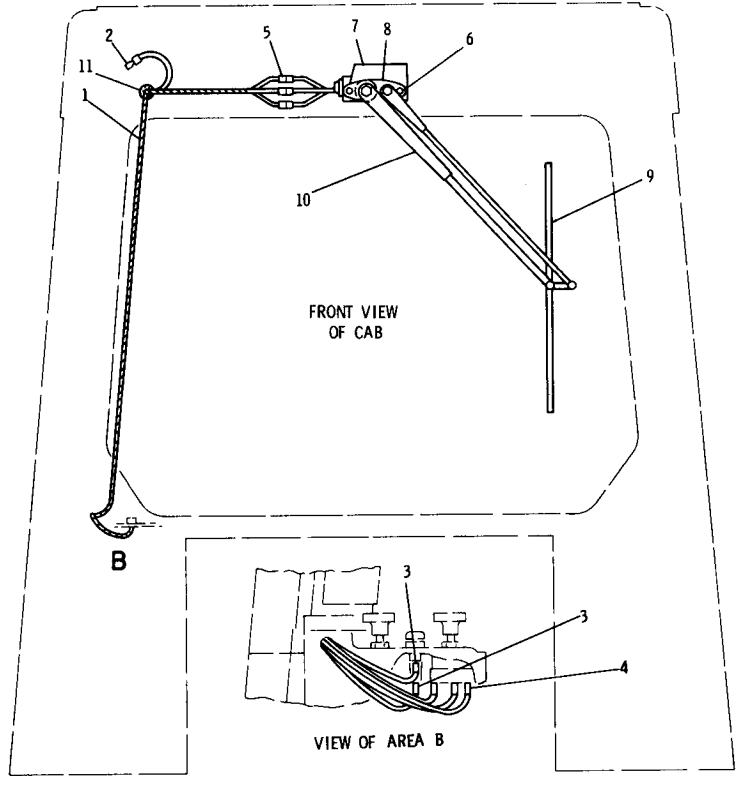

	REF. NO.	PART NUMBER	DESCRIPTION	QTY.
	1	7G1167	HARNESS ASSEM. (Includes)	1
C●▲		5P5624	WIRE--(14 gauge)	
C	2	4S1988	TERMINAL	1
	3	5P5618	TERMINAL	2
	4	5P4571	TERMINAL	3
C	5	9G9314	TERMINAL	3
	6	5P592	SCREW	2
		1H3244	LOCKWASHER	2
C	7	3T183	WIPER GROUP (Separate Illustration)	1
C	8	3T325	PIVOT ASSEM.	1
	9	2V2248	BLADE	1
	10	9P1725	ARM ASSEM.	1
	11	9M5870	GROMMET	1

▲ ORDER BY THE METER
● USE AS REQUIRED
C INDICATES CHANGE

181289

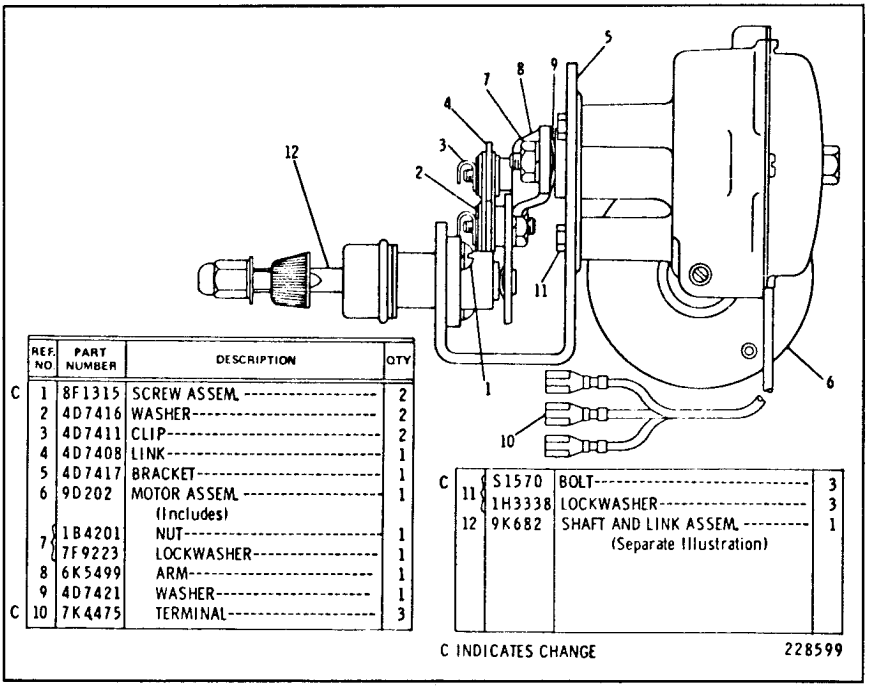

	REF. NO	PART NUMBER	DESCRIPTION	QTY
C	1	8F1315	SCREW ASSEM.	2
	2	4D7416	WASHER	2
	3	4D7411	CLIP	2
	4	4D7408	LINK	1
	5	4D7417	BRACKET	1
	6	9D202	MOTOR ASSEM. (Includes)	1
	7	1B4201	NUT	1
		7F9223	LOCKWASHER	1
	8	6K5499	ARM	1
	9	4D7421	WASHER	1
C	10	7K4475	TERMINAL	3
C	11	S1570	BOLT	3
		1H3338	LOCKWASHER	3
	12	9K682	SHAFT AND LINK ASSEM. (Separate Illustration)	1

C INDICATES CHANGE 228599

1V3079 WIPER GROUP
Replaced by 3T183 Wiper Group shown on Page 238A
Part of 7G3324 Wiper Group shown on Page 237
9K682 Shaft and Link parts are shown on Page 239

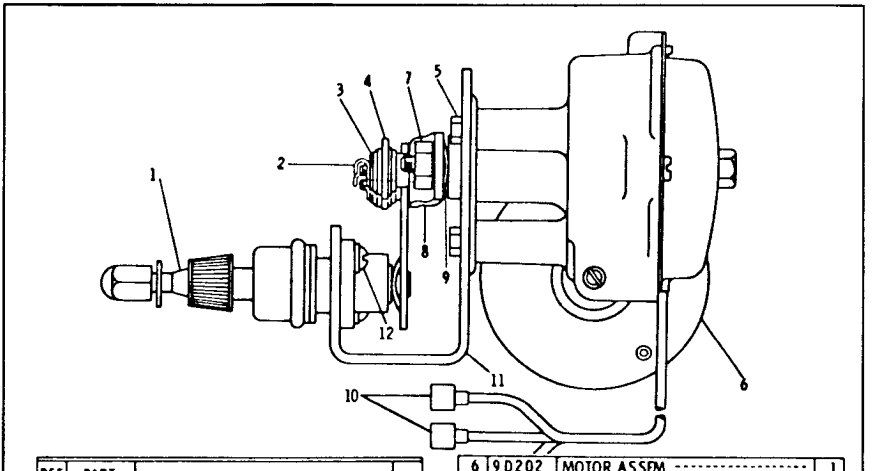

	REF. NO	PART NUMBER	DESCRIPTION	QTY
	1	9K682	SHAFT & LINK ASSEM. (Separate Illustration)	1
	2	4D7411	CLIP	2
	3	4D7416	SPACER	2
	4	4D7408	LINK	1
C	5	S1570	BOLT	3
		1H3338	LOCKWASHER	3
	6	9D202	MOTOR ASSEM.	1
	7	1B4201	NUT	1
		7F9223	LOCKWASHER	1
	8	6K5499	ARM	1
	9	4D7421	WASHER	1
C	10	7K4475	TERMINAL	3
	11	4D7417	BRACKET	1
	12	8F1315	SCREW ASSEM.	2

C INDICATES CHANGE 228598

1V4358 WIPER GROUP
Replaced by 3T175 Wiper Group shown on Page 238A
Part of 7G3324 Wiper Group shown on Page 236
9K682 Shaft and Link parts are shown on Page 239

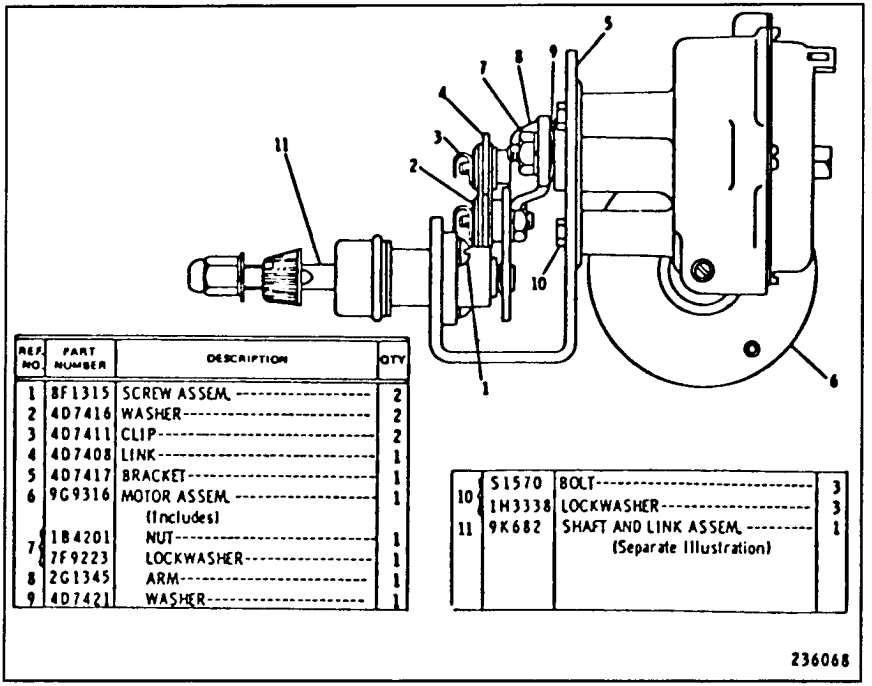

REF NO	PART NUMBER	DESCRIPTION	QTY
1	8F1315	SCREW ASSEM.	2
2	4D7416	WASHER	2
3	4D7411	CLIP	2
4	4D7408	LINK	1
5	4D7417	BRACKET	1
6	9G9316	MOTOR ASSEM. (Includes)	1
7	1B4201	NUT	1
	7F9223	LOCKWASHER	1
8	2G1345	ARM	1
9	4D7421	WASHER	1
10	S1570	BOLT	3
	1H3338	LOCKWASHER	3
11	9K682	SHAFT AND LINK ASSEM. (Separate Illustration)	1

3T183 WIPER GROUP
Part of 7G3324 Wiper Group shown on Page 237B
9K682 Shaft & Link parts are shown on Page 239

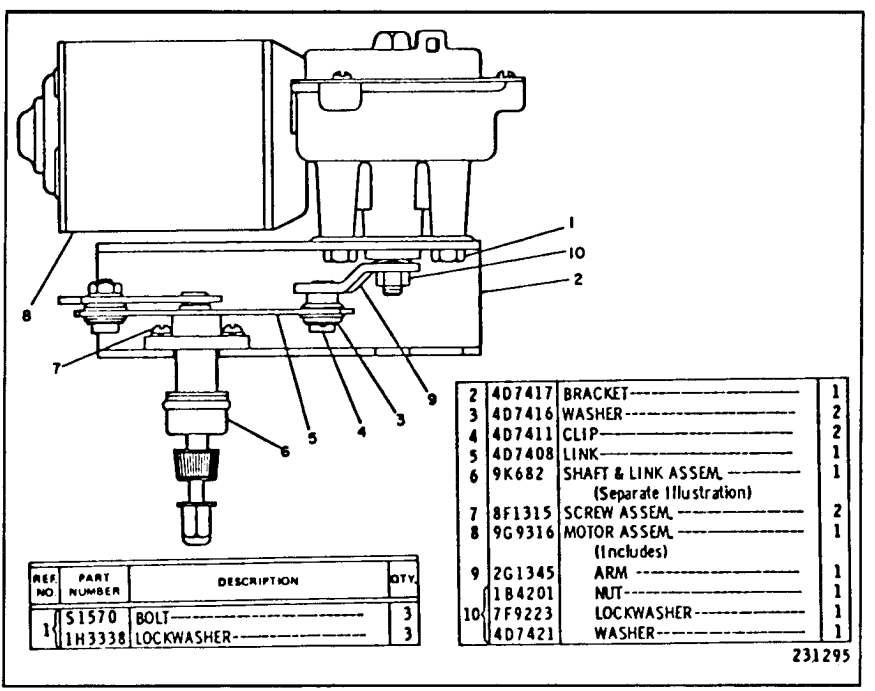

REF NO	PART NUMBER	DESCRIPTION	QTY
1	S1570	BOLT	3
	1H3338	LOCKWASHER	3

2	4D7417	BRACKET	1
3	4D7416	WASHER	2
4	4D7411	CLIP	2
5	4D7408	LINK	1
6	9K682	SHAFT & LINK ASSEM. (Separate Illustration)	1
7	8F1315	SCREW ASSEM.	2
8	9G9316	MOTOR ASSEM. (Includes)	1
9	2G1345	ARM	1
10	1B4201	NUT	1
	7F9223	LOCKWASHER	1
	4D7421	WASHER	1

3T175 WIPER GROUP
Part of 7G3324 Wiper Group shown on Page 237A
9K682 Shaft and Link parts are shown on Page 239

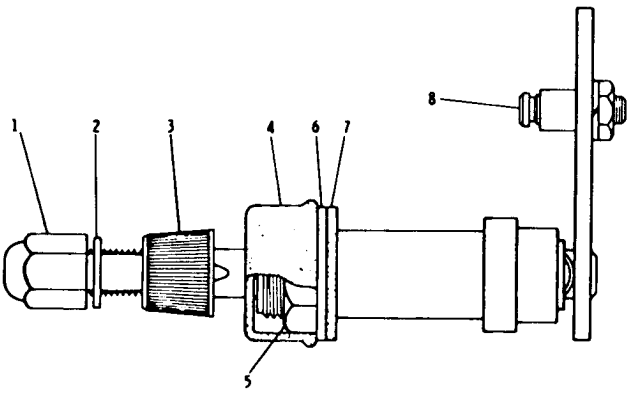

REF NO	PART NUMBER	DESCRIPTION	QTY
1	8D237	NUT	1
2	9F5644	LOCKWASHER	1
3	1V3658	DRIVER	1
4	1V3657	CAP	1
5	1V3656	NUT	1
6	4B1550	WASHER	1
7	9S8016	GASKET	1
8	1V3655	STUD	1
	9M1311	NUT	1
	1H3244	LOCKWASHER	1

119884

9K682 SHAFT AND LINK ASSEMBLY
Part of 1V3079, 1V4358, 3T175 and 3T183 Wiper Groups shown on Pages 238 & 238A

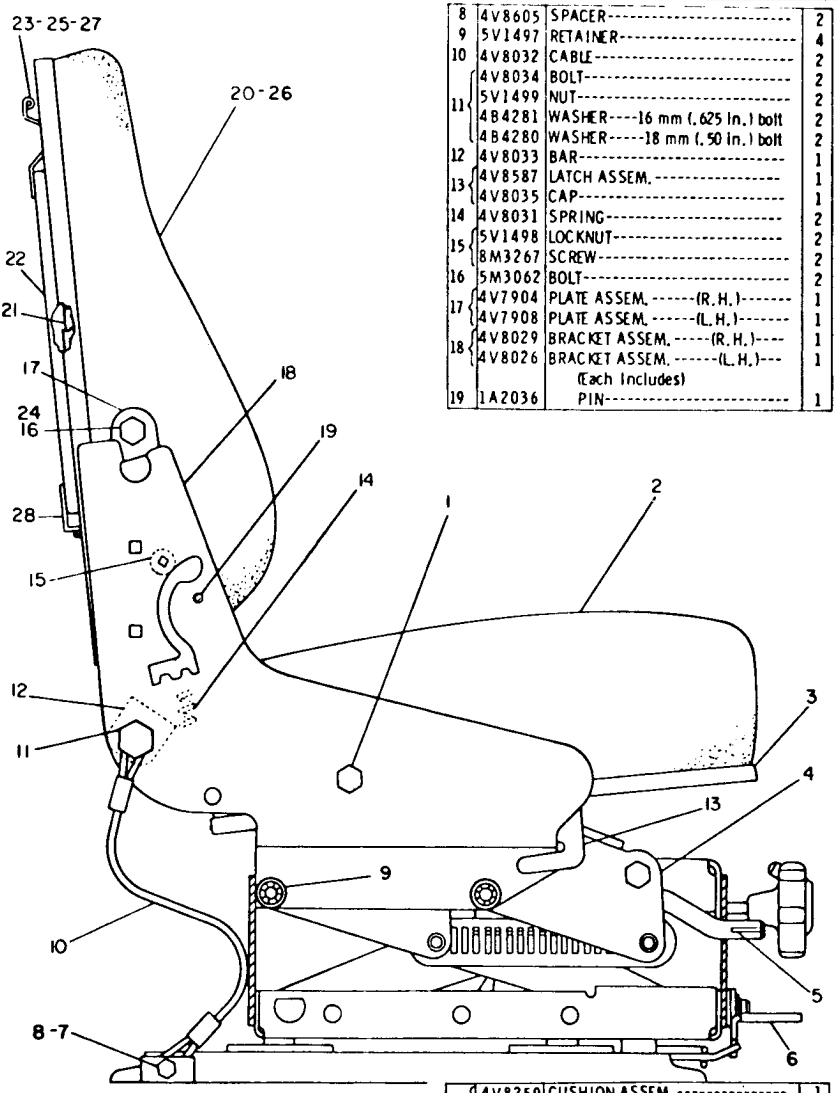

REF. NO	PART NUMBER	DESCRIPTION	QTY
1	5P2566	BOLT	2
	4V8586	SPACER	2
2	4V8271	CUSHION ASSEM. (Includes)	1
3	4V8579	CLIP	1
4	4V8596	SUSPENSION GROUP (Separate Illustration)	1
5	4V7896	CAP	1
6	4V7865	CAP	1
7	5S7379	BOLT	2
	2K4973	NUT	2
8	4V8605	SPACER	2
9	5V1497	RETAINER	4
10	4V8032	CABLE	2
11	4V8034	BOLT	2
	5V1499	NUT	2
	4B4281	WASHER---16 mm (.625 in.) bolt	2
	4B4280	WASHER---18 mm (.50 in.) bolt	2
12	4V8033	BAR	1
13	4V8587	LATCH ASSEM.	1
	4V8035	CAP	1
14	4V8031	SPRING	2
15	5V1498	LOCKNUT	2
	8M3267	SCREW	2
16	5M3062	BOLT	2
17	4V7904	PLATE ASSEM. (R.H.)	1
	4V7908	PLATE ASSEM. (L.H.)	1
18	4V8029	BRACKET ASSEM. (R.H.)	1
	4V8026	BRACKET ASSEM. (L.H.) (Each Includes)	1
19	1A2036	PIN	1
20	4V8259	CUSHION ASSEM. (Includes)	1
	5V1496	NUT	19
▲C 21	5P5684	SEAL--1.03 m (40.5 in.)	1
22	4V7902	PAN ASSEM. (Includes)	1
	4V7903	PAN	1
C	4V8023	LID	1
C 23	4V8585	LATCH	1
C 24	5V1584	NUT	4
25	4V8581	CLIP	1
C 26	5V1719	SNAP	6
C	337291	RIVET	6
27	4B4304	RIVET	3
28	4V8579	CLIP	1

▲ ORDER BY THE METER 222651

3V8252 SUSPENSION SEAT GROUP—Type 1
4V8596 Seat Suspension parts are shown on Page 239C
AN ATTACHMENT

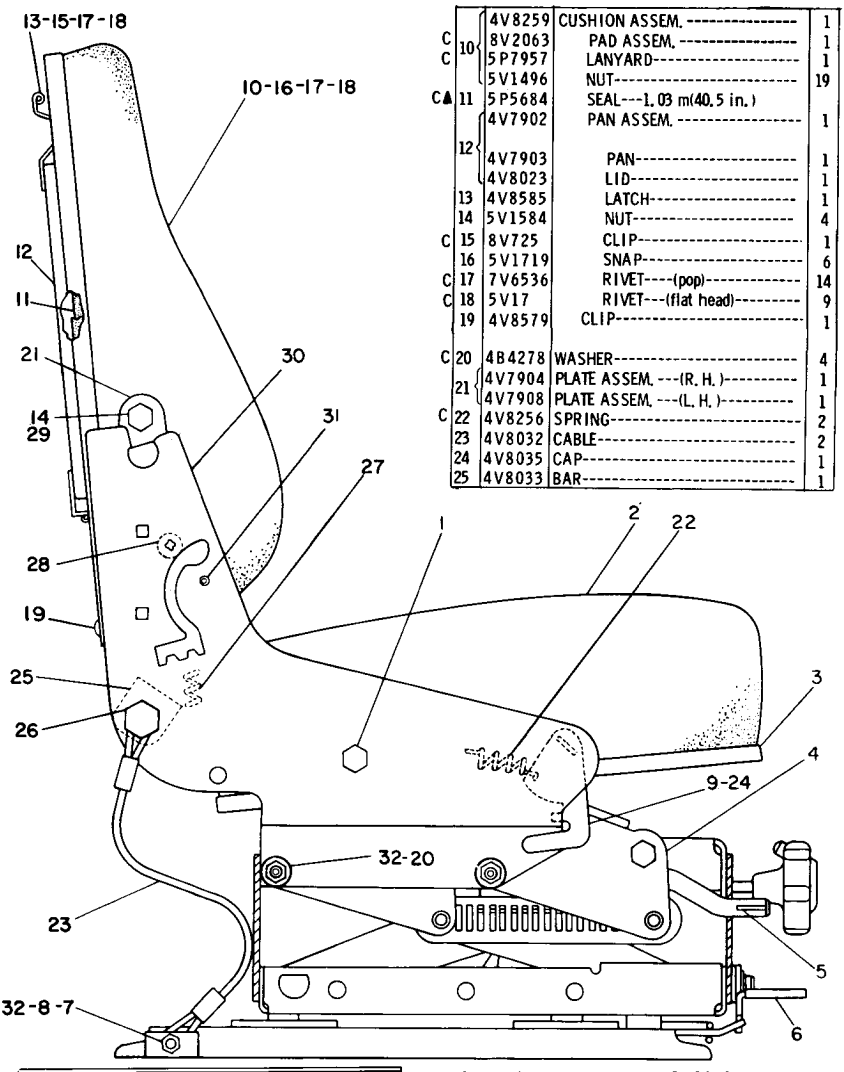

	REF. NO.	PART NUMBER	DESCRIPTION	QTY
	1	5P2566	BOLT	2
		4V8586	SPACER	2
	2	4V8271	CUSHION ASSEM.	1
C		8V2065	PAD ASSEM.	1
	3	4V8579	CLIP	1
	4	5V4861	SUSPENSION GROUP (Separate Illustration)	1
	5	4V7896	CAP	1
	6	4V7865	CAP	1
	7	5S7379	BOLT	2
	8	4V8605	SPACER	2
C	9	7V3728	LATCH ASSEM.	1
	10	4V8259	CUSHION ASSEM.	1
C		8V2063	PAD ASSEM.	1
C		5P7957	LANYARD	1
		5V1496	NUT	19
C▲	11	5P5684	SEAL---1.03 m(40.5 in.)	
	12	4V7902	PAN ASSEM.	1
		4V7903	PAN	1
		4V8023	LID	1
	13	4V8585	LATCH	1
	14	5V1584	NUT	4
C	15	8V725	CLIP	1
	16	5V1719	SNAP	6
C	17	7V6536	RIVET---(pop)	14
C	18	5V17	RIVET---(flat head)	9
	19	4V8579	CLIP	1
C	20	4B4278	WASHER	4
	21	4V7904	PLATE ASSEM. ---(R. H.)	1
		4V7908	PLATE ASSEM. ---(L. H.)	1
C	22	4V8256	SPRING	2
	23	4V8032	CABLE	2
	24	4V8035	CAP	1
	25	4V8033	BAR	1

C INDICATES CHANGE

●-NOT SHOWN-NOT PART OF 3V8252 SEAT GROUP

	26	4V8034	BOLT	2
		5V1499	NUT	2
		4B4281	WASHER----16mm(.625 in.)bolt---	2
		4B4280	WASHER---18 mm(.50 in.)bolt----	2
	27	4V8031	SPRING	2
	28	5V1498	LOCKNUT	2
		8M3267	SCREW	2
	29	5M3062	BOLT	2
	30	4V8029	BRACKET ASSEM. ---(R. H.)	1
		4V8026	BRACKET ASSEM. ---(L. H.)	1
	31	1A2036	PIN	1
●		5P7958	SLEEVE-------(cable splice)	1
	32	2K4973	NUT	6

▲ ORDER BY THE METER 235170

3V8252 SUSPENSION SEAT GROUP—Type 2
5V4861 Seat Suspension parts are shown on Page 239D-1
AN ATTACHMENT

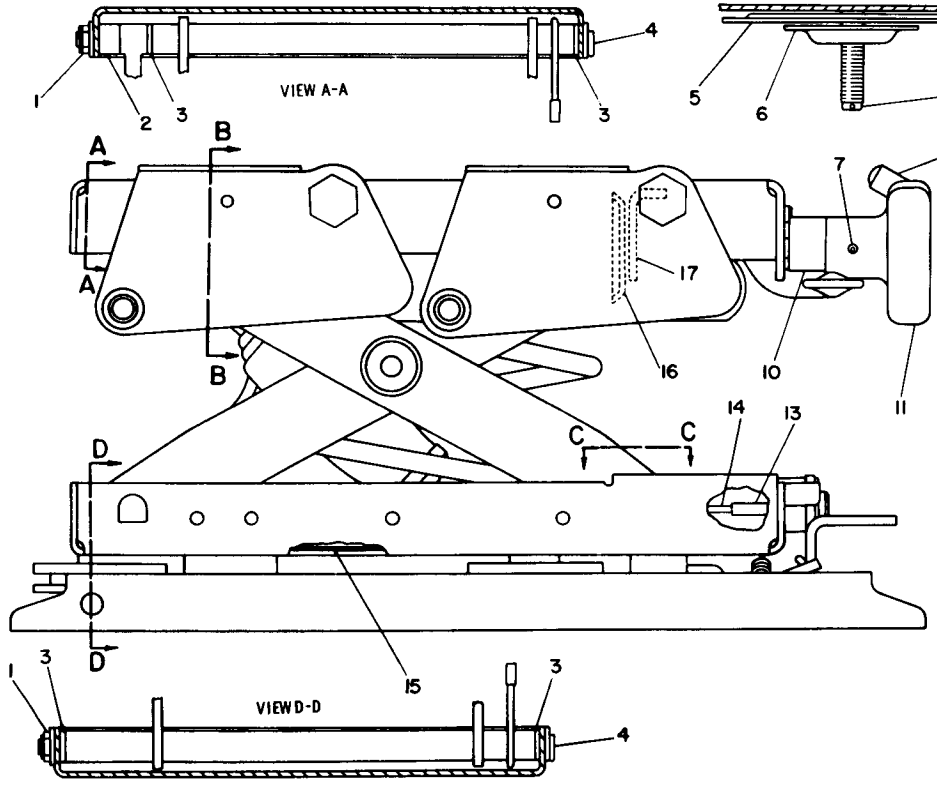

REF. NO.	PART NUMBER	DESCRIPTION	QTY
1	5V1839	NUT	2
2	4V7884	BEARING	1
3	4V8577	BEARING	4
4	4V8576	SHAFT	2
5	4V8566	GEAR ASSEM.	1
	4V8561	WASHER	1
6	4V8562	PLATE ASSEM.	1
7	3K8584	PIN	2
8	4V8583	BLOCK	1
9	4V8257	BLOCK	1
10	4V8560	SPACER	1
	4V7872	KNOB ASSEM.	1
		(Includes)	
11	4V7873	KNOB	1
	5V1483	PIN	1
	4V7877	SPRING	1
	4V7874	HANDLE ASSEM.	1
		(Includes)	
12	5V1474	SCREW	1
	4V7876	SLEEVE	1
	4V7875	HANDLE	1
13	5H3193	PIN	1
14	4V8565	INDICATOR	1
15	4V8261	PAD	1
16	4V8557	GEAR ASSEM.	1
17	4V8554	BRACKET	1

220406

4V8596 SEAT SUSPENSION GROUP—Part 1
Part of 3V8252 Seat Group shown on Page 239A

4V8596 SEAT SUSPENSION GROUP—Part 2
Part of 3V8252 Seat Group shown on Page 239A
4V7849 Seat Adjuster parts are shown on Page 239F

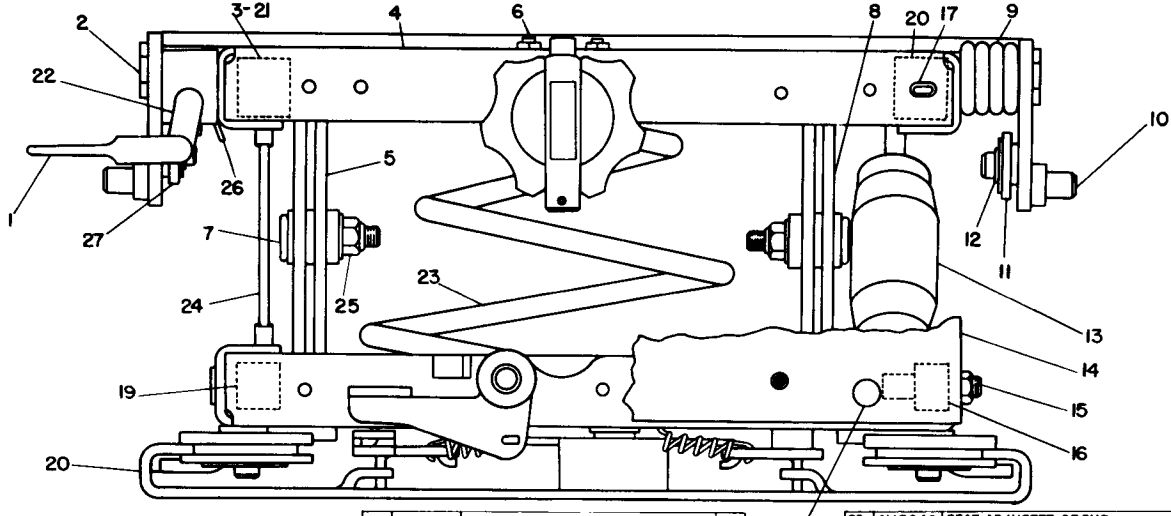

REF. NO.	PART NUMBER	DESCRIPTION	QTY.
1	4V7889	LEVER	1
	3L1473	PIN	1
2	4V8266	BOLT	4
	5V1494	LOCKWASHER	4
3	4V7885	SLEEVE	1
4	4V8606	HOUSING ASSEM.	1
5	4V8569	ARM ASSEM.	1
6	3K1553	BOLT	2
	273924	NUT	2
7	4V8272	SHAFT	2
	4V8273	WASHER	2
8	4V8573	ARM ASSEM.	1
9	4V7895	SPRING	2
10	4V7887	LINK ASSEM.	2
11	4V8265	LINK	2
12	5V1497	RETAINER	4
13	4V7866	SHOCK ABSORBER	1
14	4V8609	BOOT	1
15	4V8556	BOLT	1
	5V1847	NUT	1
16	4V7884	BEARING	1
17	4V8555	BUMPER	2
18	6D4054	FASTENER	23
19	4V8270	SLEEVE	1
20	4V8591	BLOCK	1
20	4V7849	SEAT ADJUSTER GROUP (Separate Illustration)	1
21	4V8580	BLOCK	1
22	4V7891	LATCH ASSEM.	1
23	4V8610	SPRING	1
24	4V7886	CABLE	1
25	4J8265	NUT	2
	4B4278	WASHER	2
	4V7863	BEARING	2
26	4V7890	SPRING	1
27	4V8264	LINK	1

220407

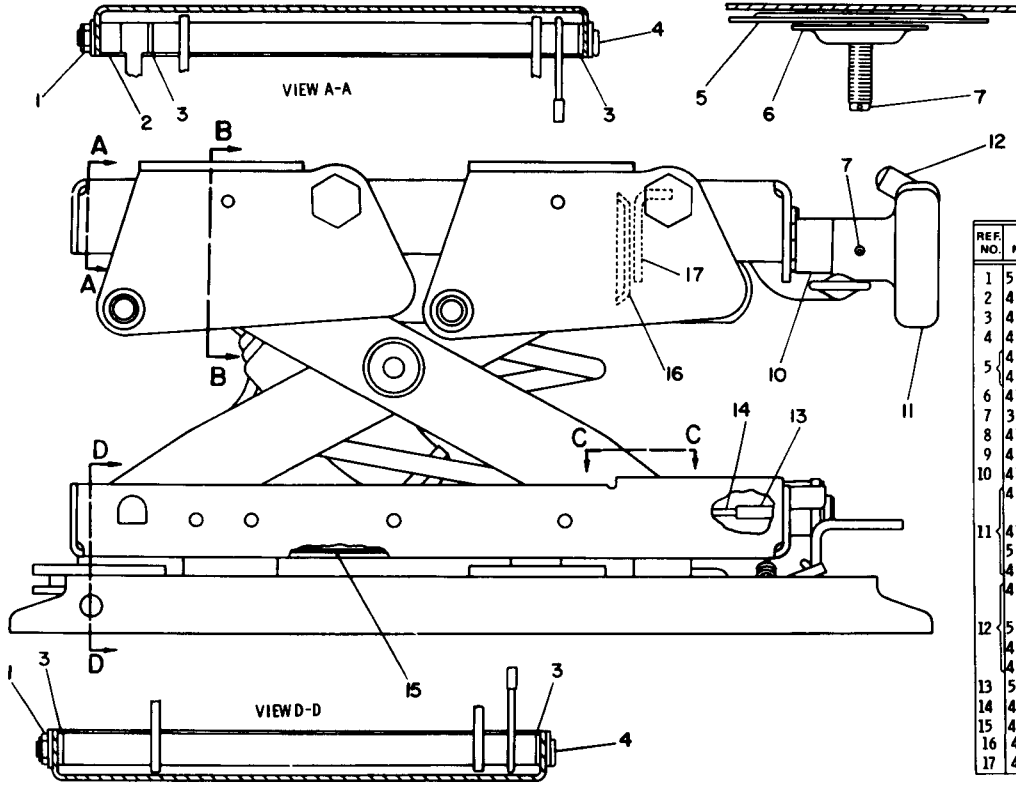

REF. NO.	PART NUMBER	DESCRIPTION	QTY
1	5V1839	NUT	2
2	4V7884	BEARING	1
3	4V8577	BEARING	4
4	4V8576	SHAFT	2
5	4V8566	GEAR ASSEM.	1
	4V8561	WASHER	1
6	4V8562	PLATE ASSEM.	1
7	3K8584	PIN	2
8	4V8583	BLOCK	1
9	4V8257	BLOCK	1
10	4V8560	SPACER	1
11	4V7872	KNOB ASSEM.	1
		(Includes)	
	4V7873	KNOB	1
	5V1483	PIN	1
	4V7877	SPRING	1
12	4V7874	HANDLE ASSEM.	1
		(Includes)	
	5V1474	SCREW	1
	4V7876	SLEEVE	1
	4V7875	HANDLE	1
13	5H3193	PIN	1
14	4V8565	INDICATOR	1
15	4V8261	PAD	1
16	4V8557	GEAR ASSEM.	1
17	4V8554	BRACKET	1

223751

5V4861 SEAT SUSPENSION GROUP—Part 1—Type 1
Part of 3V8252 Suspension Seat Group shown on Page 239B
AN ATTACHMENT

5V4861 SEAT SUSPENSION GROUP—Part 2—Type 1
Part of 3V8252 Suspension Seat Group shown on Page 239B
4V7849 Seat Adjuster parts are shown on Page 239F
AN ATTACHMENT

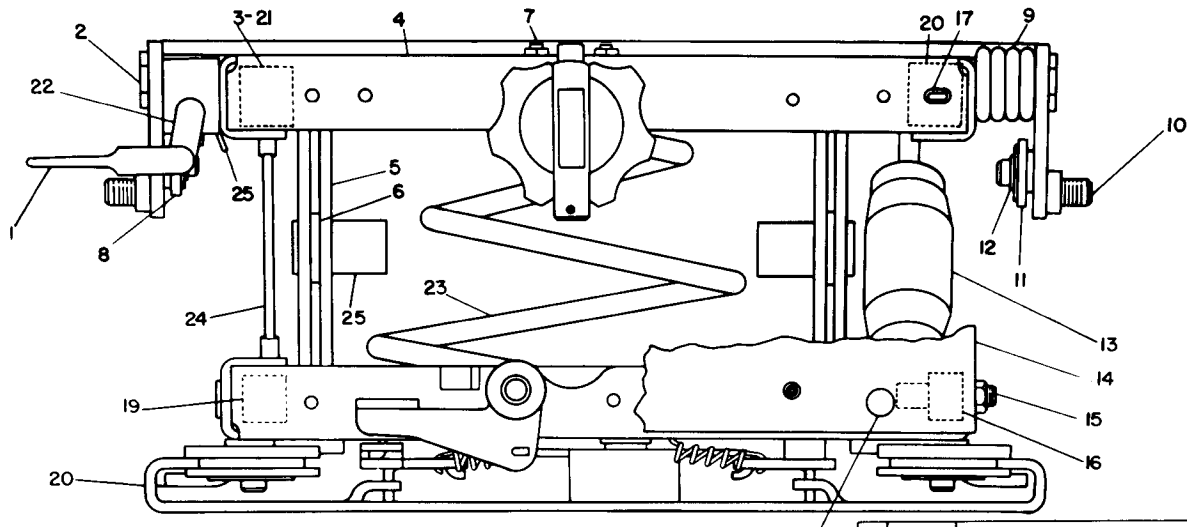

REF. NO.	PART NUMBER	DESCRIPTION	QTY.
1	4V7889	LEVER	1
	3L1473	PIN	1
2	5V4855	BOLT	4
3	4V7885	SLEEVE	1
4	4V8606	HOUSING ASSEM.	1
5	5V4846	ARM ASSEM. (Includes)	1
6	5V4845	BEARING	2
7	3K1553	BOLT	2
	273924	NUT	2
8	4V8264	LINK	1
9	4V7895	SPRING	2
10	5V5233	LINK ASSEM.	2
11	4V8265	LINK	1
12	5V1497	RETAINER	4
13	4V7866	SHOCK ABSORBER	1
14	4B8609	BOOT	1
15	4V8556	BOLT	1
	6D47	NUT	1
16	4V7884	BEARING	1
17	4V7885	BUMPER	2
18	6D4054	FASTENER	23
19	4V8270	SLEEVE	1
20	4V8591	BLOCK	1
20	4V7849	SEAT ADJUSTER GROUP (Separate Illustration)	1
21	4V8580	BLOCK	1
22	4V7891	LATCH ASSEM.	1
23	4V8610	SPRING	1
24	4V7886	CABLE	1
25	4V7890	SPRING	1

223752

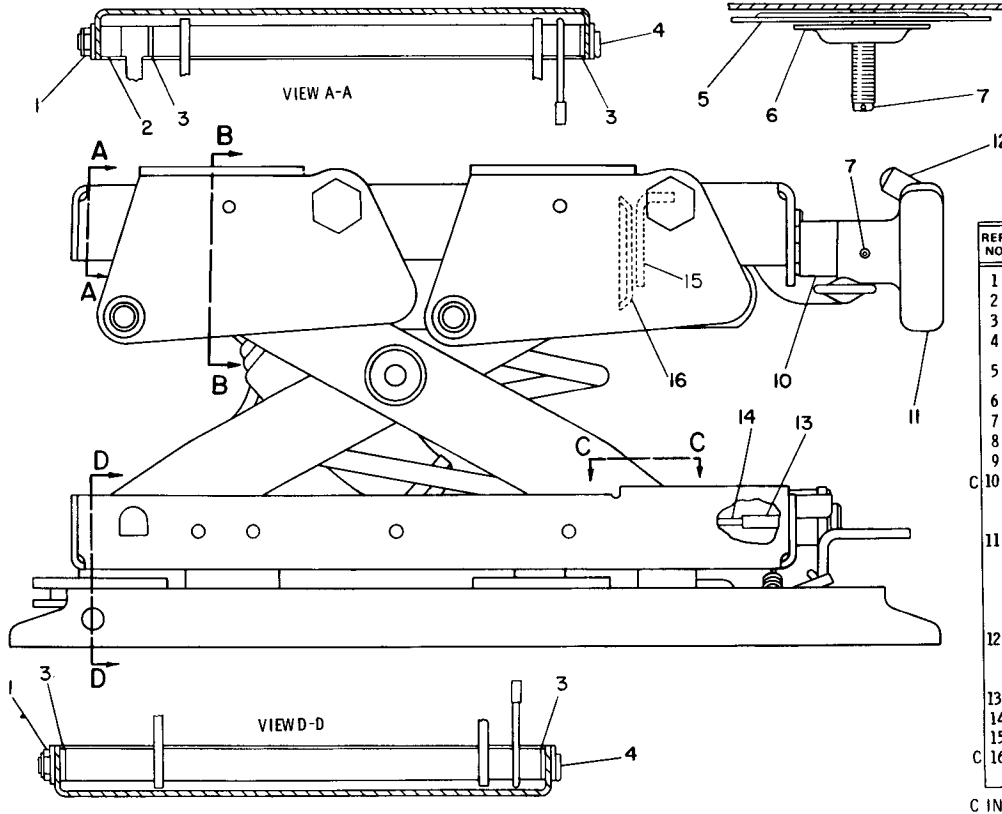

REF. NO.	PART NUMBER	DESCRIPTION	QTY
1	5V1839	NUT	2
2	4V7884	BEARING	1
3	4V8577	BEARING	4
4	4V8576	SHAFT	2
5	4V8566	GEAR ASSEM.	1
	4V8561	WASHER	1
6	4V8562	PLATE ASSEM.	1
7	3K8584	PIN	2
8	4V8583	BLOCK	1
9	4V8257	BLOCK	1
C 10	7V5191	SPACER	1
	4V7872	KNOB ASSEM.	1
		(Includes)	
11	4V7873	KNOB	1
	5V1483	PIN	1
	4V7877	SPRING	1
	4V7874	HANDLE ASSEM.	1
		(Includes)	
12	5V1474	SCREW	1
	4V7876	SLEEVE	1
	4V7875	HANDLE	1
13	5H3193	PIN	1
14	4V8565	INDICATOR	1
15	4V8554	BRACKET	1
C 16	7V5190	GEAR ASSEM. -----(28 teeth)-----	1

C INDICATES CHANGE

232181

5V4861 SEAT SUSPENSION GROUP—Part 1—Type 2
Part of 3V8252 Suspension Seat Group shown on Page 239B
AN ATTACHMENT

5V4861 SEAT SUSPENSION GROUP—Part 2—Type 2
Part of 3V8252 Suspension Seat Group shown on Page 239B
4V7849 Seat Adjuster parts are shown on Page 239F. AN ATTACHMENT

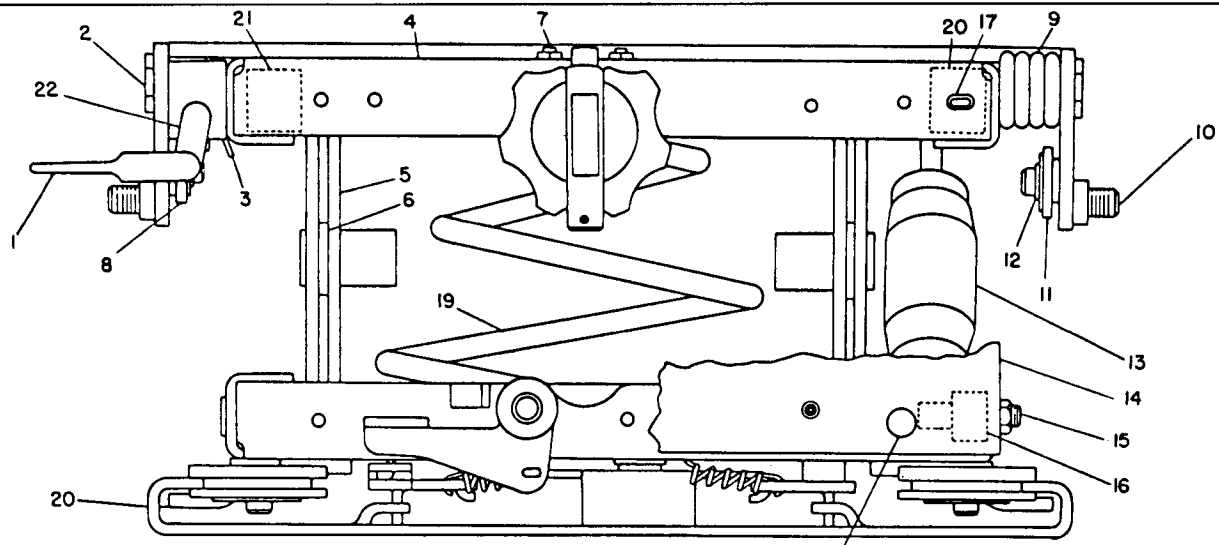

	REF NO	PART NUMBER	DESCRIPTION	QTY.
C	1	7V5507	LEVER	1
		3L1473	PIN	1
	2	5V4855	BOLT	4
	3	4V7890	SPRING	1
	4	4V8606	HOUSING ASSEM.	1
	5	5V4846	ARM ASSEM. (Includes)	1
	6	5V4845	BEARING	2
C	7	1B2693	BOLT	2
		273924	NUT	2
	8	4V8264	LINK	1

9	4V7895	SPRING	2
10	5V5233	LINK ASSEM.	2
11	4V8265	LINK	1
12	5V1497	RETAINER	4
13	4V7866	SHOCK ABSORBER	1
14	4B8609	BOOT	1
15	4V8556	BOLT	1
	6D47	NUT	1
16	4V7884	BEARING	1
17	4V7885	BUMPER	2
18	6D4054	FASTENER	23
19	4V8610	SPRING	1
20	4V8591	BLOCK	1

20	4V7849	SEAT ADJUSTER GROUP (Separate Illustration)	1
21	4V8580	BLOCK	1
22	4V7891	LATCH ASSEM.	1

C INDICATES CHANGE

234759

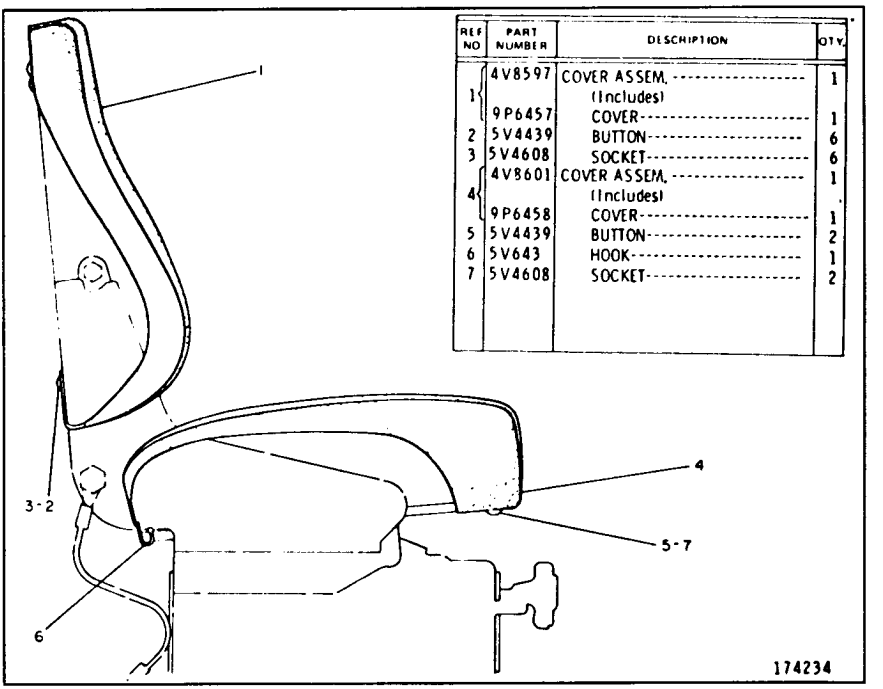

REF NO	PART NUMBER	DESCRIPTION	QTY.
1	4V8597	COVER ASSEM. (Includes)	1
	9P6457	COVER	1
2	5V4439	BUTTON	6
3	5V4608	SOCKET	6
4	4V8601	COVER ASSEM. (Includes)	1
	9P6458	COVER	1
5	5V4439	BUTTON	2
6	5V643	HOOK	1
7	5V4608	SOCKET	2

4V9830 SEAT COVER GROUP
FOR USE WITH 3V8252 SUSPENSION SEAT SHOWN ON PAGE 239B
AN ATTACHMENT

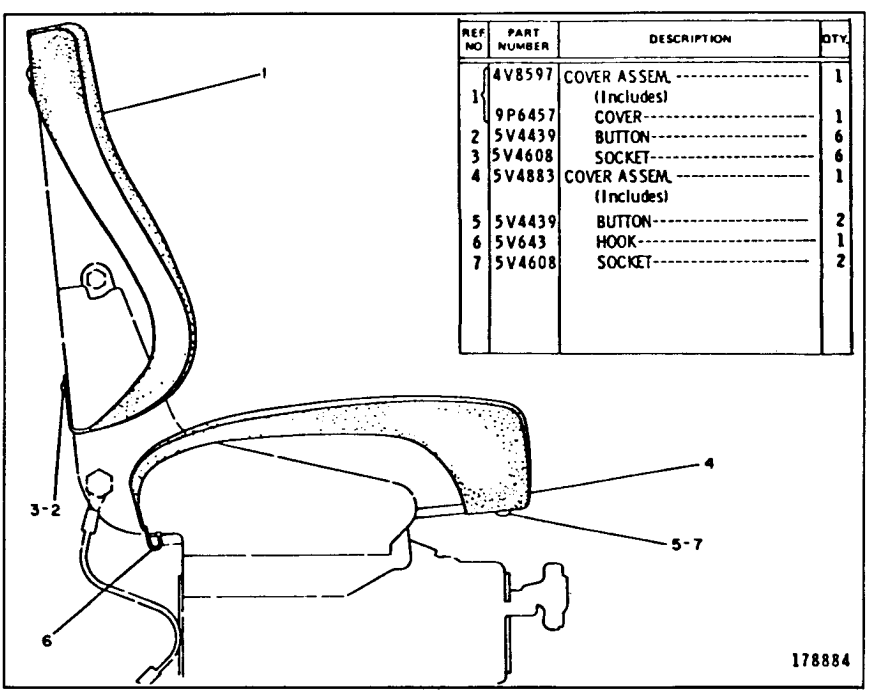

REF NO	PART NUMBER	DESCRIPTION	QTY.
1	4V8597	COVER ASSEM. (Includes)	1
	9P6457	COVER	1
2	5V4439	BUTTON	6
3	5V4608	SOCKET	6
4	5V4883	COVER ASSEM. (Includes)	1
5	5V4439	BUTTON	2
6	5V643	HOOK	1
7	5V4608	SOCKET	2

5V4884 SEAT COVER GROUP—Type 1
AN ATTACHMENT

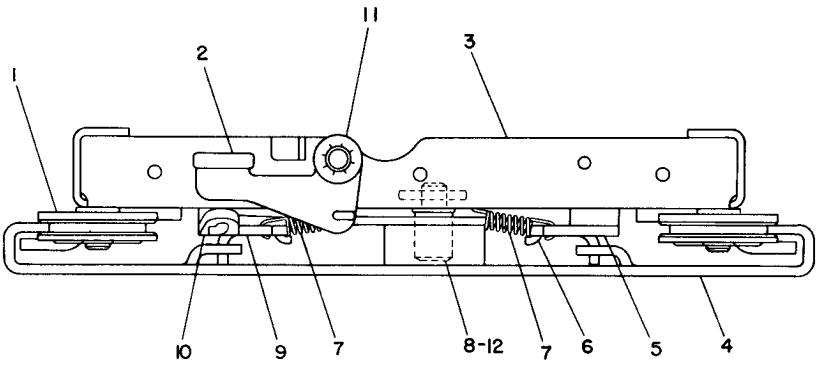

REF. NO.	PART NUMBER	DESCRIPTION	QTY
1	4V7861	ROLLER ASSEM. (Each Includes)	4
	8D4146	BEARING	1
2	4V7860	LEVER	1
3	4V7851	HOUSING ASSEM.	1
4	4V7850	PLATE	1
5	4V7855	LATCH ASSEM.	1
6	4V7881	ROD	1
7	4V8256	SPRING	2
C 8	5H4893	BOLT	1
9	4V7859	ROD	1
10	4V7857	LATCH ASSEM.	1
11	5V1497	RETAINER	7
C 12	1B6182	SPACER	

C INDICATES CHANGE 230220

4V7849 SEAT ADJUSTER GROUP
Part of 4V8596 and 5V4861 Seat Groups shown on Pages 239D & 239D-2
AN ATTACHMENT

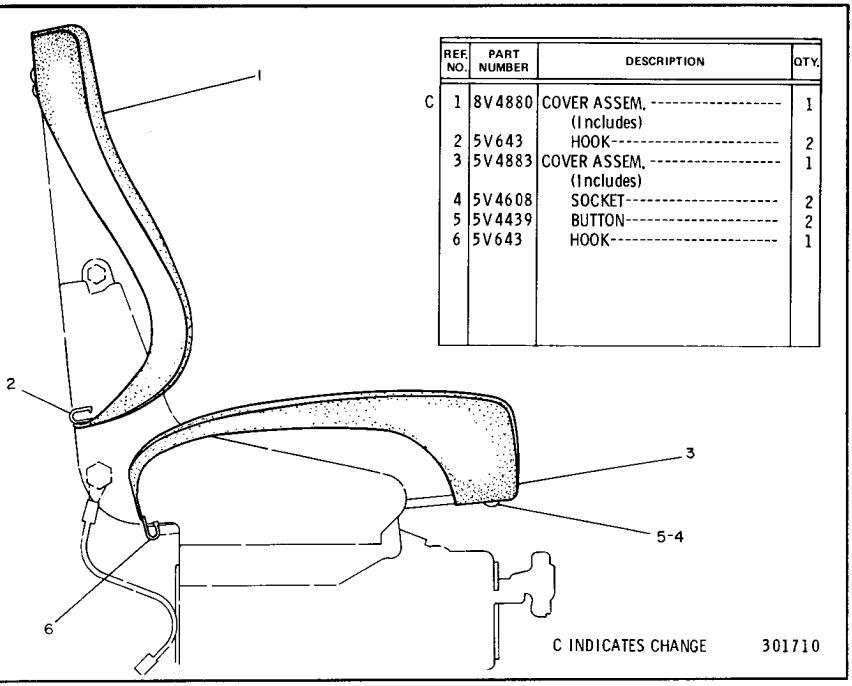

REF. NO.	PART NUMBER	DESCRIPTION	QTY.
C 1	8V4880	COVER ASSEM. (Includes)	1
2	5V643	HOOK	2
3	5V4883	COVER ASSEM. (Includes)	1
4	5V4608	SOCKET	2
5	5V4439	BUTTON	2
6	5V643	HOOK	1

C INDICATES CHANGE 301710

5V4884 SEAT COVER GROUP—Type 2
AN ATTACHMENT

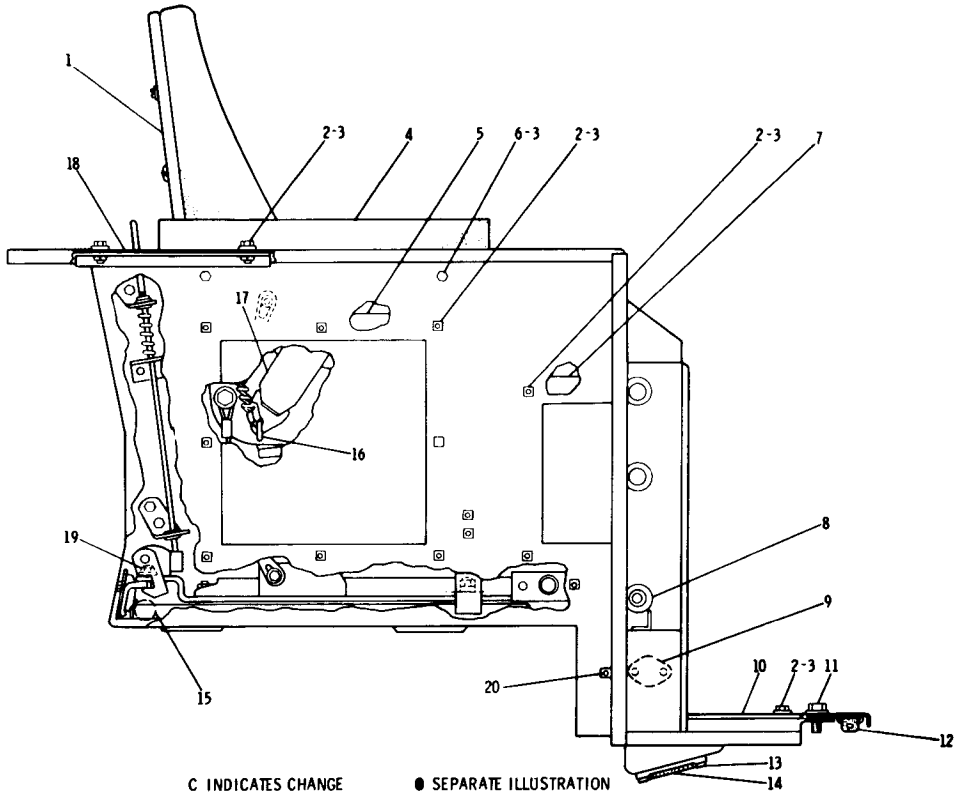

	REF. NO.	PART NUMBER	DESCRIPTION	QTY
●	1	7P5719	SEAT GROUP	1
C	2	L1351	BOLT	25
C	3	5P1075	WASHER	29
	4	5H2028	CUSHION ASSEM.	2
	5	9P51	PLATE	1
	6	L472	BOLT	4
	7	9P56	PLATE	1
	8	4S6517	PLUG	1
	9	1L1303	COVER	1
	10	9P1801	FLOORPLATE	1
	11	6H1717	BOLT	5
		5P1076	WASHER	5
▲	12	5P7513	SEAL--1 m(39 in.)	
	13	9M5732	RIVET	4
	14	9P5946	SEAL	1
	15	4H3001	PLUG	2
	16	8S933	EYEBOLT	2
		8S934	NUT	2
	17	3V1932	BELT ASSEM. (Includes)	1
C		3B4605	COTTER PIN	2
	18	9P50	PLATE	1
	19	5M4273	SETSCREW	2
		2K4973	LOCKNUT	2
	20	T102	BOLT	2

C INDICATES CHANGE ● SEPARATE ILLUSTRATION ▲ ORDER BY THE METRE 169767

3V6927 SUPPORT AND SEAT GROUP—Part 1
Serial No. 13X1 to 13X1522 inclusive
7P5719 Seat parts are shown on Page 241A

3V6927 SUPPORT AND SEAT GROUP—Part 2
Serial No. 13X1 to 13X1522 inclusive

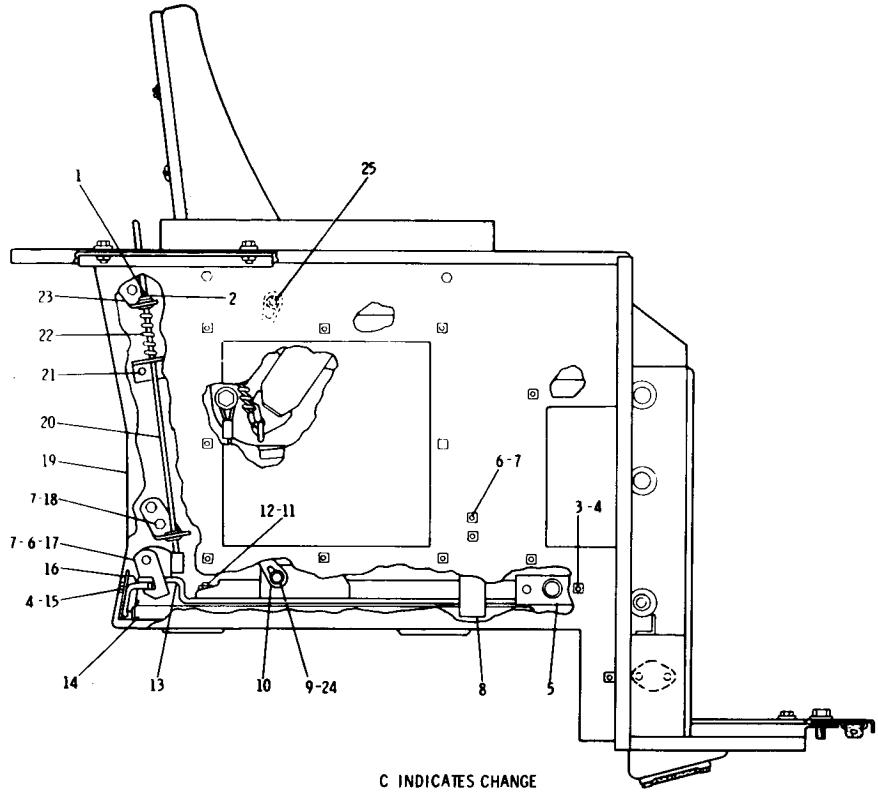

C INDICATES CHANGE

REF. NO.	PART NUMBER	DESCRIPTION	QTY
	3B4610	COTTER PIN	1
C	4B4277	WASHER	2
	1A2029	BOLT	4
	5P1075	WASHER	7
	8P9660	PLATE	2
	S1615	BOLT	8
	5P4115	WASHER	12
8	8P9666	SPRING	2
8	8P9669	PLATE	2
C	9 310214	BOLT	1
	9P4696	CABLE ASSEM.	1
	2K4973	LOCKNUT	4
	5M2894	WASHER	4
	8P9668	PLATE ASSEM.	1
14	8P9659	PLATE ASSEM. (Includes)	1
▲	5P5967	SEAL---2.2 m(87 in.)	
	1D4717	NUT	3
	8P9680	BRACKET	1
	8P9675	LATCH ASSEM.	1
	2A762	BOLT	4
19	8P8324	PLATFORM ASSEM. (Includes)	1
19	9F2978	NUT	1
	8P9677	ROD ASSEM.	1
	6K1756	PLUG	2
	8J438	SPRING	1
23	8P9676	BRACKET	2
23	2D9535	GROMMET	2
C	4D2303	WASHER	1
C	352017	SCREW	1

▲ ORDER BY THE METRE

169768

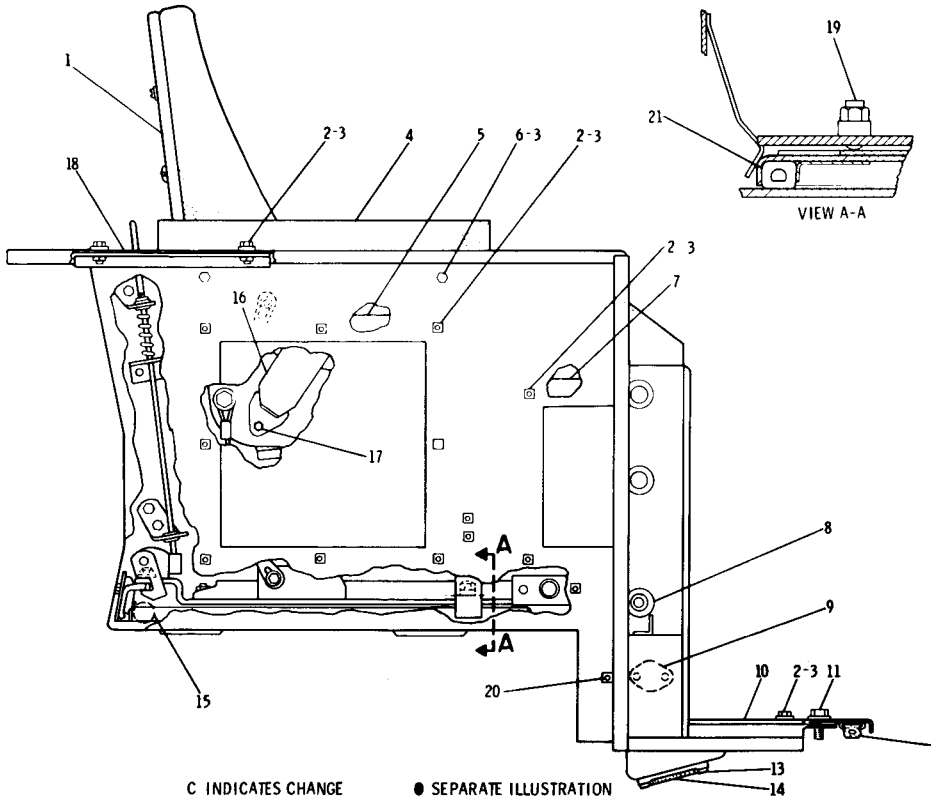

REF. NO.	PART NUMBER	DESCRIPTION	QTY
● 1	7P5719	SEAT GROUP	1
2	L1351	BOLT	25
3	5P1075	WASHER	29
4	5H2028	CUSHION ASSEM.	2
5	9P51	PLATE	1
6	L472	BOLT	4
7	9P56	PLATE	1
8	4S6517	PLUG	1
9	1L1303	COVER	1
10	9P1801	FLOOR PLATE	1
11	6H1717	BOLT	5
	5P1076	WASHER	5
▲ 12	5P7513	SEAL--1 m(39 in.)	
13	9M5732	RIVET	4
14	9P5946	SEAL	1
15	4H3001	PLUG	2
C	7G2998	BELT ASSEM.	1
16		(Includes)	
	8D6899	BELT GROUP	1
17	8S933	BOLT	2
	8S934	NUT	2
18	9P50	PLATE	1
19	5M4273	SETSCREW	2
	2K4973	LOCKNUT	2
20	T102	BOLT	2
C ▲ 21	5P5967	SEAL--2.2 m(87 in.)	

C INDICATES CHANGE ● SEPARATE ILLUSTRATION ▲ ORDER BY THE METER 173213

3V6927 SUPPORT AND SEAT GROUP—Part 1
Serial No. 13X1523 to 13X2576 inclusive
7P5719 Seat parts are shown on Page 241A

3V6927 SUPPORT AND SEAT GROUP—Part 2
Serial No. 13X1523 to 13X2576 Inclusive

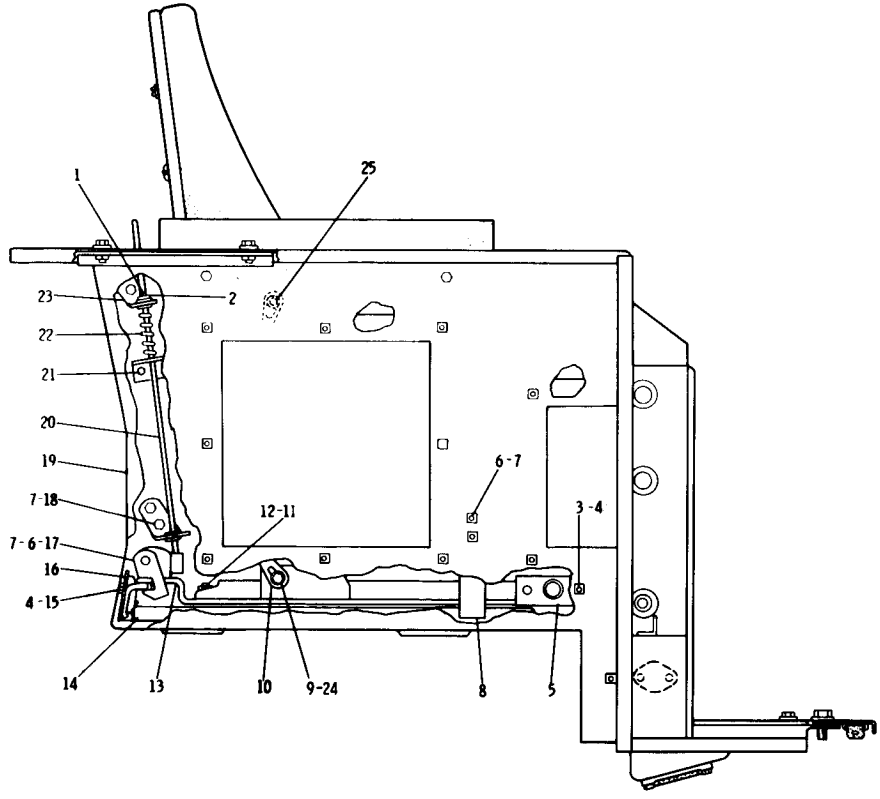

REF. NO.	PART NUMBER	DESCRIPTION	QTY.
1	3B4610	COTTER PIN	1
2	4B4277	WASHER	2
3	1A2029	BOLT	4
4	5P1075	WASHER	7
5	8P9660	PLATE	2
6	S1615	BOLT	8
7	5P4115	WASHER	12
8	8P9666	SPRING	2
	8P9669	PLATE	2
9	310214	BOLT	1
10	9P4696	CABLE ASSEM.	1
11	2K4973	LOCKNUT	4
12	5M2894	WASHER	4
13	8P9668	PLATE ASSEM.	1
14	8P9659	PLATE ASSEM.	1
15	1D4717	NUT	3
16	8P9680	BRACKET	1
17	8P9675	LATCH ASSEM.	1
18	2A762	BOLT	4
19	8P8324	PLATFORM ASSEM. (Includes)	1
	9F2978	NUT	1
20	8P9677	ROD ASSEM.	1
21	6K1756	PLUG	2
22	8J438	SPRING	1
23	8P9676	BRACKET	2
	2D9535	GROMMET	2
24	4D2303	WASHER	1
25	352017	SCREW	1

173214

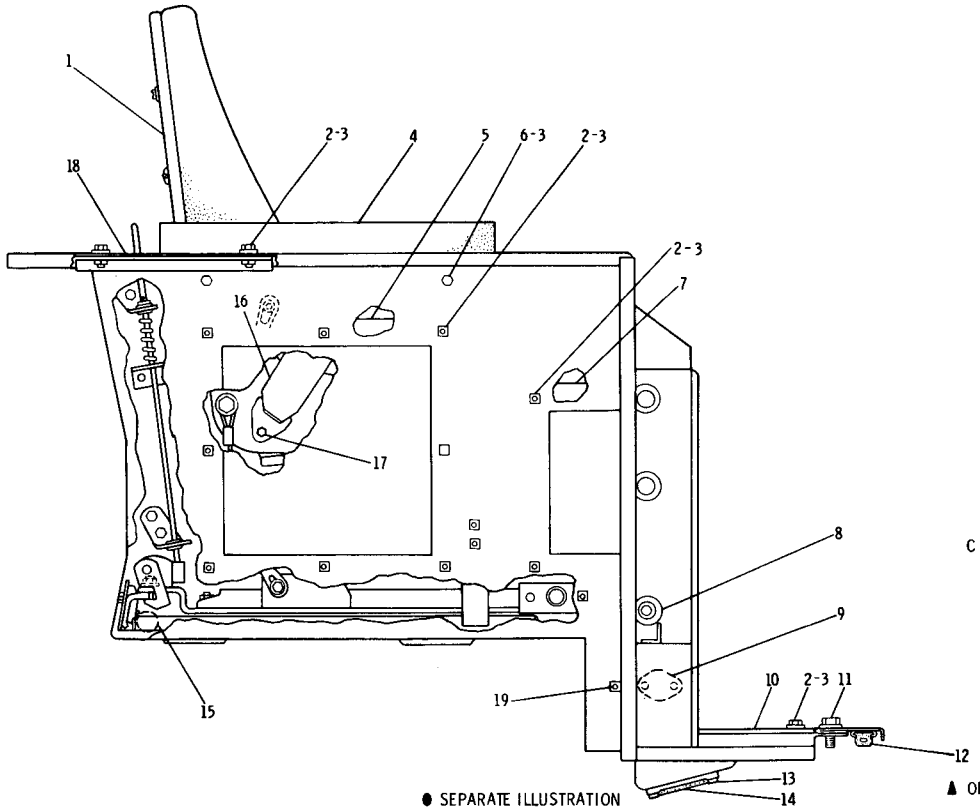

REF. NO.	PART NUMBER	DESCRIPTION	QTY.
● 1	7P5719	SEAT GROUP	1
2	L1351	BOLT	25
3	5P1075	WASHER	29
4	5H2028	CUSHION ASSEM.	2
5	9P51	PLATE	1
6	L472	BOLT	4
7	9P56	PLATE	1
8	4S6517	PLUG	1
9	1L1303	COVER	1
10	9P1801	FLOORPLATE	1
11	6H1717	BOLT	5
	5P1076	WASHER	5
▲ 12	5P7513	SEAL--1 m(39 in.)	
13	9M5732	RIVET	4
14	9P5946	SEAL	1
15	4H3001	PLUG	2
16	7G2998	BELT ASSEM.	1
		(Includes)	
	8D6899	BELT GROUP	1
17	8S933	BOLT	2
	8S934	NUT	2
18	9P50	PLATE	1
19	T102	BOLT	2

C

● SEPARATE ILLUSTRATION

▲ ORDER BY THE METER

178213

3V6927 SUPPORT AND SEAT GROUP—Part 1
Serial No. 13X2577 to 13X2741 inclusive
7P5719 Seat parts are shown on Page 241A

3V6927 SUPPORT AND SEAT GROUP—Part 2
Serial No. 13X2577 to 13X2741 Inclusive

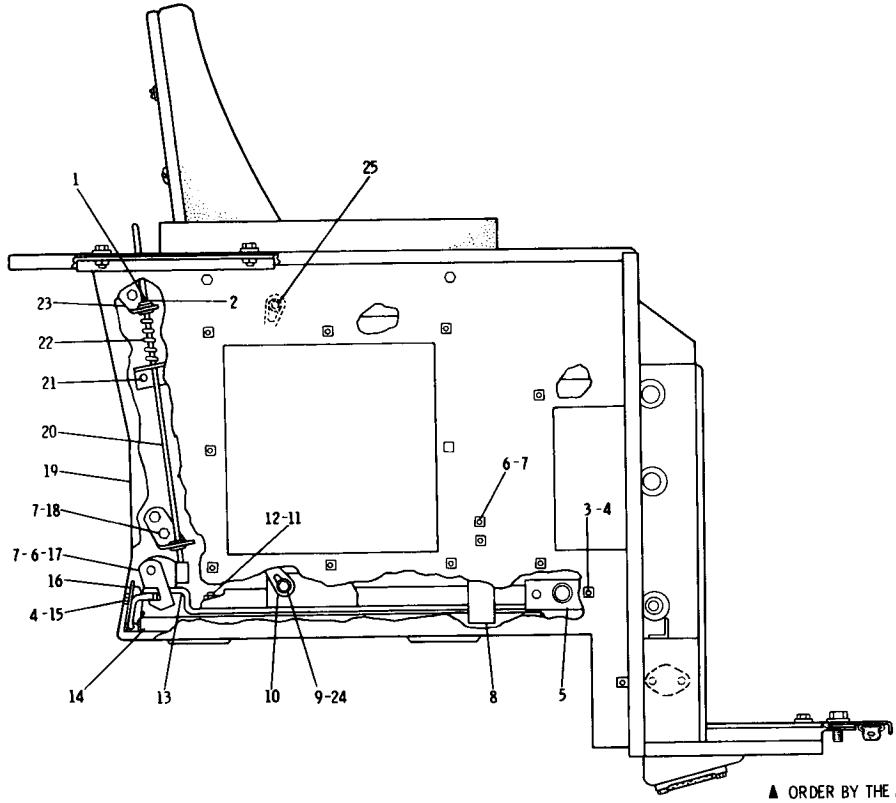

REF. NO.	PART NUMBER	DESCRIPTION	QTY.
1	3B4610	COTTER PIN	1
2	4B4277	WASHER	2
3	1A2029	BOLT	4
4	5P1075	WASHER	7
5	8P9660	PLATE	2
6	S1615	BOLT	8
7	5P4115	WASHER	12
8	8P9666	SPRING	2
	8P9669	PLATE	2
9	310214	BOLT	1
10	9P4696	CABLE ASSEM.	1
11	2K4973	LOCKNUT	4
12	5M2894	WASHER	4
13	8P9668	PLATE ASSEM.	1
C	9G5576	COVER ASSEM.	1
14		(Includes)	
▲	5P5967	SEAL-----2.30m(90.55 in.)	
15	1D4717	NUT	3
16	8P9680	BRACKET	1
17	8P9675	LATCH ASSEM.	1
18	2A762	BOLT	4
19	8P8324	PLATFORM ASSEM.	1
		(Includes)	
	9F2078	NUT	1
20	8P9677	ROD ASSEM.	1
21	6K1756	PLUG	2
22	8J438	SPRING	1
23	8P9676	BRACKET	2
	2D9535	GROMMET	2
24	4D2303	WASHER	1
25	352017	SCREW	1

▲ ORDER BY THE METER C INDICATES CHANGE

178214

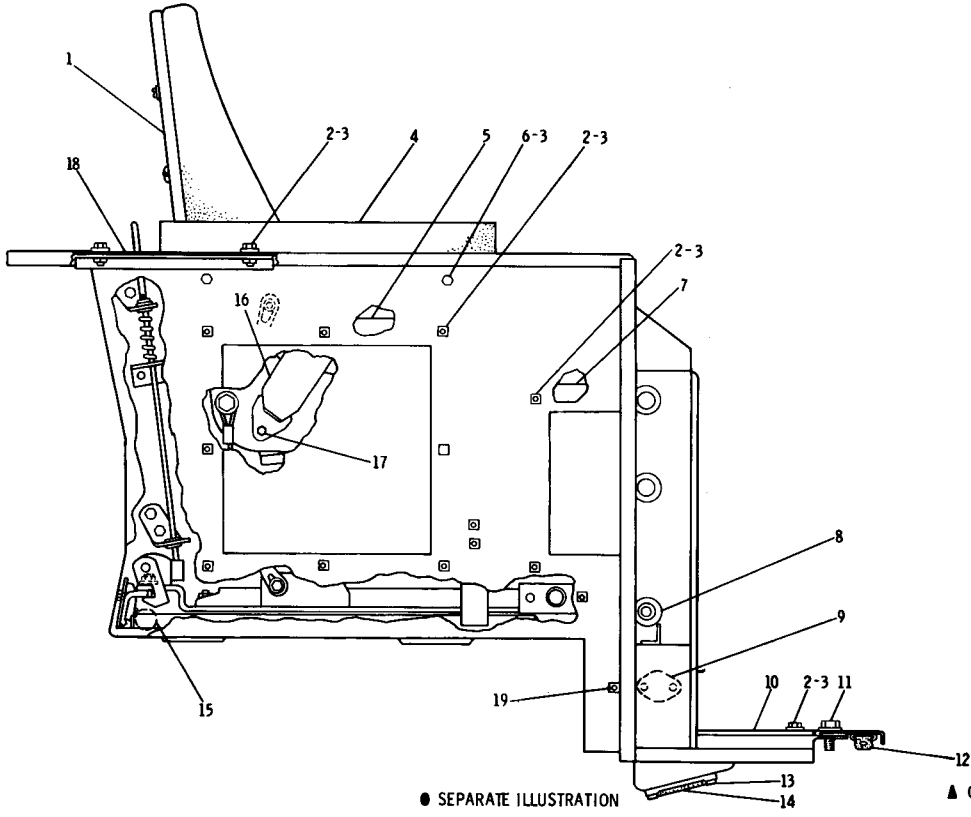

	REF. NO.	PART NUMBER	DESCRIPTION	QTY.
●	1	7P5719	SEAT GROUP	1
	2	L1351	BOLT	25
	3	5P1075	WASHER	29
	4	5H2028	CUSHION ASSEM.	2
	5	9P51	PLATE	1
	6	L472	BOLT	4
	7	9P56	PLATE	1
	8	4S6517	PLUG	1
	9	1L1303	COVER	1
	10	9P1801	FLOORPLATE	1
	11	6H1717	BOLT	5
		5P1076	WASHER	5
▲	12	5P7513	SEAL--1 m(39 in.)	
	13	9M5732	RIVET	4
	14	9P5946	SEAL	1
	15	4H3001	PLUG	2
	16	7G2998	BELT ASSEM. (Includes)	1
		8D6899	BELT GROUP	1
	17	8S933	BOLT	2
		8S934	NUT	2
	18	9P50	PLATE	1
	19	T102	BOLT	2

● SEPARATE ILLUSTRATION

▲ ORDER BY THE METER

181642

3V6927 SUPPORT AND SEAT GROUP—Part 1
Serial No. 13X2742—Up
7P5719 Seat parts are shown on Page 241A

3V6927 SUPPORT AND SEAT GROUP—Part 2
Serial No. 13X2742—Up

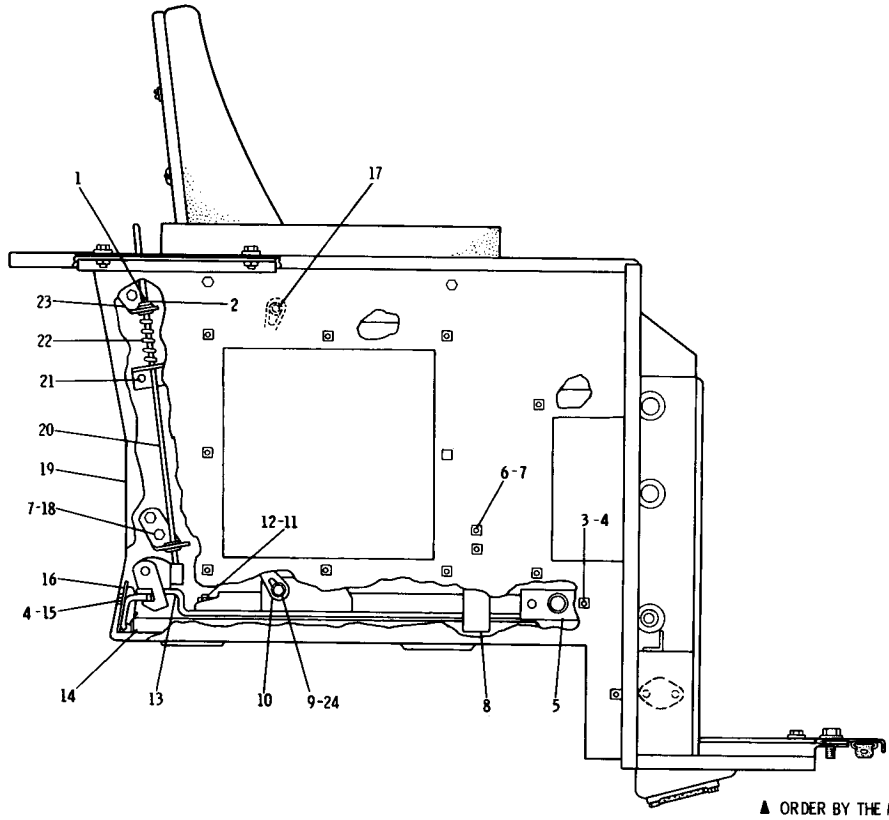

REF. NO.	PART NUMBER	DESCRIPTION	QTY.
1	3B4610	COTTER PIN	1
2	4B4277	WASHER	2
3	1A2029	BOLT	4
4	5P1075	WASHER	7
5	8P9660	PLATE	2
C 6	S1615	BOLT	4
C 7	5P4115	WASHER	8
8	8P9666	SPRING	2
	8P9669	PLATE	2
9	310214	BOLT	1
10	9P4696	CABLE ASSEM.	1
11	2K4973	LOCKNUT	4
12	5M2894	WASHER	4
C	9G8475	PLATE ASSEM.	1
		(Includes)	
	3B3526	LOCK	1
13	2N6345	SPRING	1
	7F5345	PLATE	1
	5P6915	NUT	1
	7M7794	STUD	4
	9G5576	COVER ASSEM.	1
14		(Includes)	
▲	5P5967	SEAL---2.30 m(90.55 in.)	
15	1D4717	NUT	3
16	8P9680	BRACKET	1
17	352017	SCREW	1
18	2A762	BOLT	4
	8P8324	PLATFORM ASSEM.	1
19		(Includes)	
	9F2078	NUT	1
20	8P9677	ROD ASSEM.	1
21	6K1756	PLUG	2
22	8J438	SPRING	1
23	8P9676	BRACKET	2
	2D9535	GROMMET	2
24	4D2303	WASHER	1

181643

▲ ORDER BY THE METER C INDICATES CHANGE

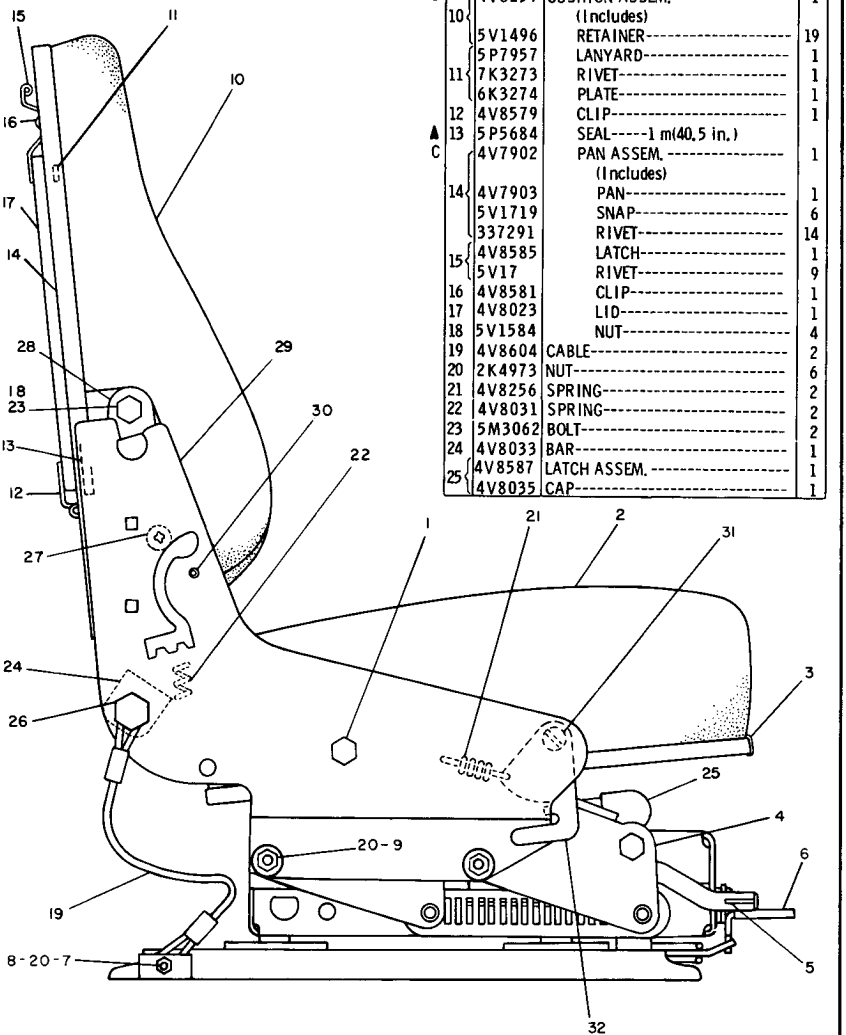

C	10	4V8259	CUSHION ASSEM. (Includes)	1
		5V1496	RETAINER	19
	11	5P7957	LANYARD	1
		7K3273	RIVET	1
		6K3274	PLATE	1
	12	4V8579	CLIP	1
▲	13	5P5684	SEAL-----1 m(40.5 in.)	
C		4V7902	PAN ASSEM. (Includes)	1
	14	4V7903	PAN	1
		5V1719	SNAP	6
		337291	RIVET	14
	15	4V8585	LATCH	1
		5V17	RIVET	9
	16	4V8581	CLIP	1
	17	4V8023	LID	1
	18	5V1584	NUT	4
	19	4V8604	CABLE	2
	20	2K4973	NUT	6
	21	4V8256	SPRING	2
	22	4V8031	SPRING	2
	23	5M3062	BOLT	2
	24	4V8033	BAR	1
	25	4V8587	LATCH ASSEM.	1
		4V8035	CAP	1

REF. NO.	PART NUMBER	DESCRIPTION	QTY.
1	5P2566	BOLT	2
	4V8586	SPACER	2
2	4V8594	CUSHION ASSEM. (Includes)	1
3	4V8579	CLIP	1
C 4	4V8599	ADJUSTER GROUP (Separate Illustration)	1
5	4V7896	CAP	1
6	4V7865	CAP	1
7	5S7379	BOLT	2
8	4V8605	SPACER	2
C 9	4B4278	WASHER	4

26	4V8034	BOLT	2
	5V1499	NUT	2
	4B4281	WASHER---16 mm(.625 in.)bolt	2
	4B4280	WASHER---18 mm(.50 in.)bolt	2
27	5V1498	LOCKNUT	2
	8M3267	SCREW	2
28	4V7904	PLATE ASSEM. ----(R. H.)	1
	4V7908	PLATE ASSEM. ----(L. H.)	1
29	4V8029	BRACKET ASSEM. ---(R. H.)	1
	4V8026	BRACKET ASSEM. ---(L. H.) (Includes)	1
30	1A2036	PIN	1
31	3L1473	PIN	1
32	5V5232	LATCH ASSEM.	1

▲ ORDER BY THE METER C INDICATES CHANGE 177635

7P5719 ADJUSTABLE SEAT GROUP—Type 1
Part of 3V6927 Support and Seat Group shown on Page 240
4V8599 Adjuster parts are shown on Page 241B

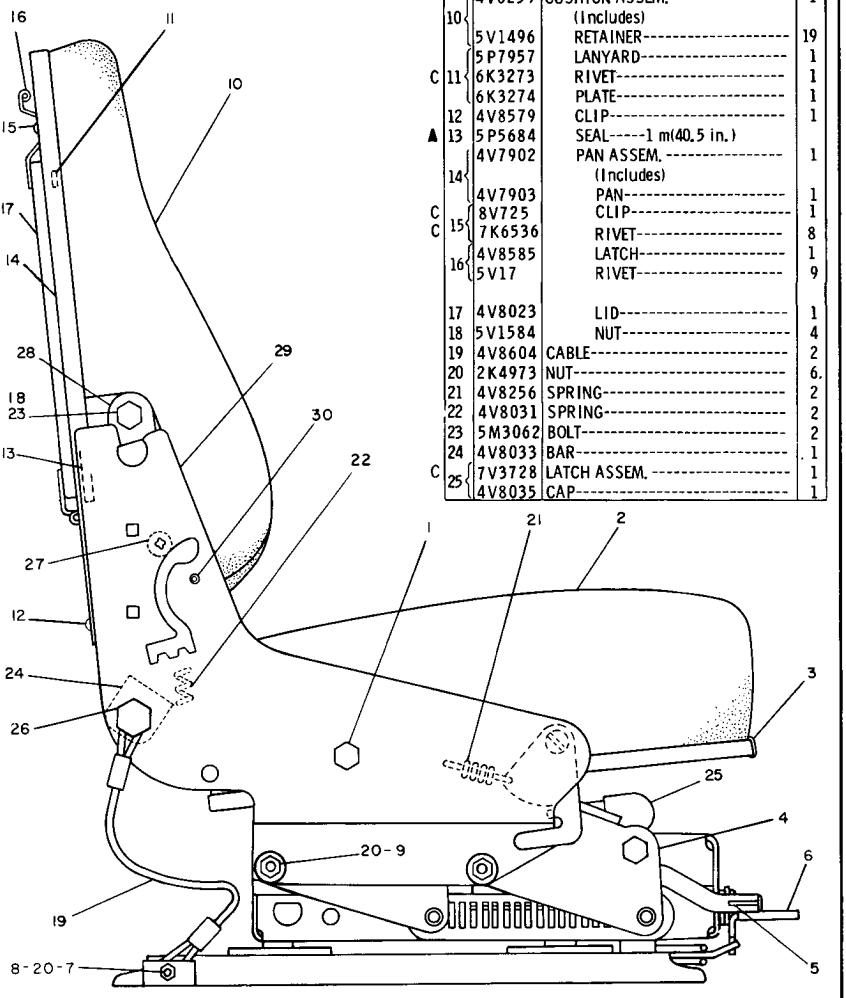

	REF. NO.	PART NUMBER	DESCRIPTION	QTY.
	10	4V8259	CUSHION ASSEM. (Includes)	1
		5V1496	RETAINER	19
	11	5P7957	LANYARD	1
C		6K3273	RIVET	1
		6K3274	PLATE	1
	12	4V8579	CLIP	1
▲	13	5P5684	SEAL-----1 m(40.5 in.)	
	14	4V7902	PAN ASSEM. (Includes)	1
		4V7903	PAN	1
C	15	8V725	CLIP	1
C		7K6536	RIVET	8
	16	4V8585	LATCH	1
		5V17	RIVET	9
	17	4V8023	LID	1
	18	5V1584	NUT	4
	19	4V8604	CABLE	2
	20	2K4973	NUT	6
	21	4V8256	SPRING	2
	22	4V8031	SPRING	2
	23	5M3062	BOLT	2
	24	4V8033	BAR	1
C	25	7V3728	LATCH ASSEM.	1
		4V8035	CAP	1
	26	4V8034	BOLT	2
		5V1499	NUT	2
		4B4281	WASHER-----16mm(.625 in.)bolt---	2
		4B4280	WASHER--18mm(.50 in.)bolt------	2
	27	5V1498	LOCKNUT	2
		8M3267	SCREW	2
	28	4V7904	PLATE ASSEM. ----(R. H.)---------	1
		4V7908	PLATE ASSEM. ---(L. H.)---------	1
	29	4V8029	BRACKET ASSEM. ----(R. H.)-------	1
		4V8026	BRACKET ASSEM. ---(L. H.)-------	1
	30	1A2036	(Includes) PIN	1
C ●		5P7958	SLEEVE------(Cable Splice)-------	1

● NOT SHOWN-NOT PART OF 5P5719 SEAT GROUP

▲ ORDER BY THE METER C INDICATES CHANGE 237194

7P5719 ADJUSTABLE SEAT GROUP—Type 2
Part of 3V6927 Support and Seat Group shown on Page 240
4V8599 Adjuster parts are shown on Page 241B

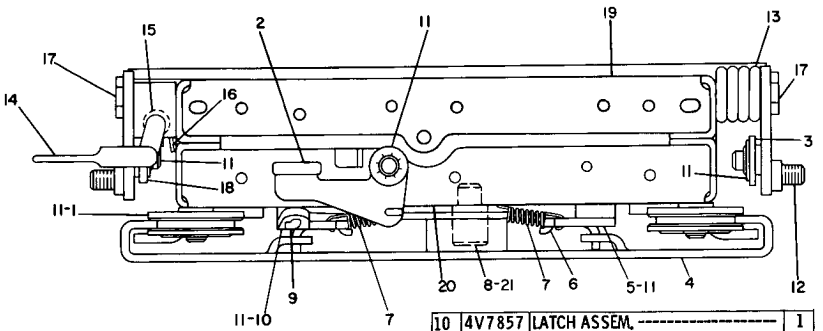

REF. NO.	PART NUMBER	DESCRIPTION	QTY
1	4V7861	ROLLER ASSEM. (Each Includes)	4
	8D4146	BEARING	1
2	4V7860	LEVER	1
3	4V8265	LINK	1
4	4V7850	PLATE	1
5	4V7855	LATCH ASSEM.	1
6	4V7881	ROD	1
7	4V8256	SPRING	2
C 8	5H4893	BOLT	1
9	4V7859	ROD	1
10	4V7857	LATCH ASSEM.	1
11	5V1497	RETAINER	11
12	5V5233	LINK ASSEM.	2
13	4V7895	SPRING	2
C 14	7V5507	LEVER	1
15	4V7891	LATCH ASSEM.	1
	3L1473	PIN	1
16	4V7890	SPRING	1
17	5V4855	BOLT	4
18	4V8264	LINK	1
19	4V8600	HOUSING ASSEM. (Includes)	1
C	4V8606	HOUSING ASSEM.	1
C 20	4V7851	HOUSING ASSEM.	1
C 21	1B6182	SPACER	2

C INDICATES CHANGE 231267

4V8599 ADJUSTER SEAT GROUP
Part of 7P5719 Adjustable Seat Group shown on Pages 241A & 241A-1

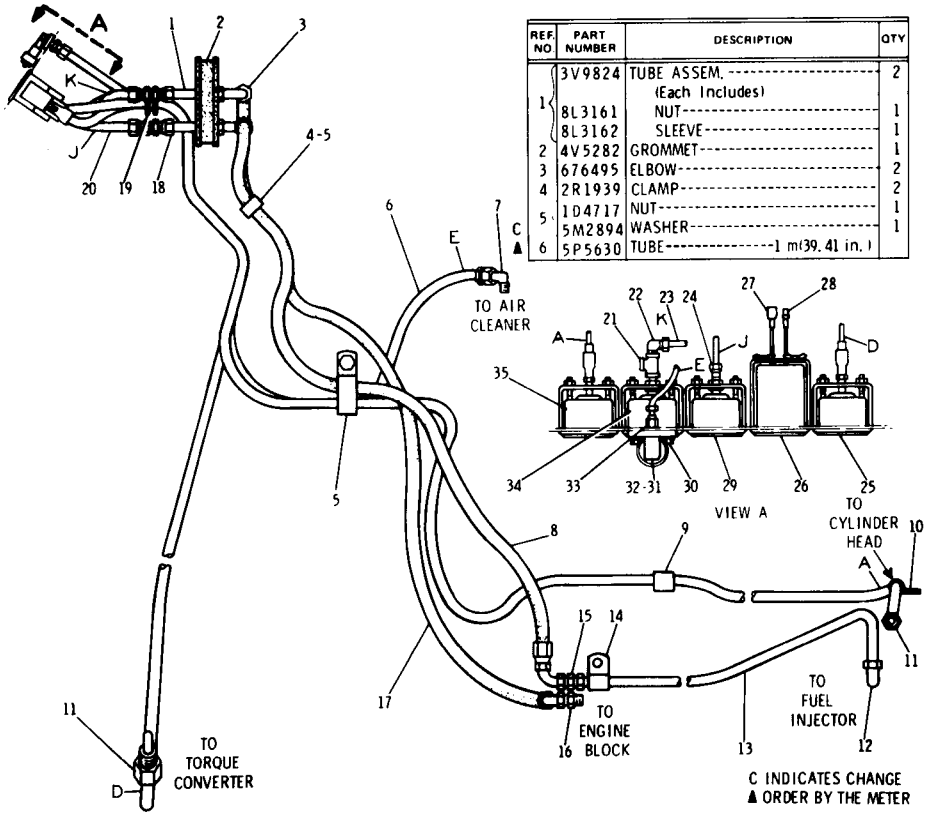

REF. NO.	PART NUMBER	DESCRIPTION	QTY
1	3V9824	TUBE ASSEM. (Each Includes)	2
	8L3161	NUT	1
	8L3162	SLEEVE	1
2	4V5282	GROMMET	1
3	676495	ELBOW	2
4	2R1939	CLAMP	2
5	1D4717	NUT	1
	5M2894	WASHER	1
6	5P5630	TUBE----1 m(39.41 in.)	
7	3K6675	FITTING (Includes)	1
	4K9822	NUT	1
	4K9821	SLEEVE	1
8	3V3281	HOSE ASSEM. ----1.69 m(66.54 in.)	1
9	1B8102	CLIP	1
10	2B2404	CLIP	1
11	6H6699	ADAPTER	2
12	2N1287	ELBOW	1
13	2V9906	TUBE ASSEM.	1
14	8M2772	CLIP	1
15	3J7355	UNION	1
16	3B6768	BUSHING	1
17	3V3282	HOSE ASSEM. ----1.46 m(57.48 in.)	1
18	5P4470	UNION	2
19	8P4541	GROMMET	1
▲ 20	5P6011	TUBE----.311 m(12.52 in.)	
21	3B7900	TEE	1
22	5P4423	ELBOW	1
▲ 23	5P6011	TUBE----.311 m(12.52 in.)	
24	5P4405	CONNECTOR	1
25	2S2535	INDICATOR---(converter temp.)---	1
26	6N5906	METER-------(service)---------- (Includes)	1
27	5P4571	CONNECTOR	1
28	4S1988	CONNECTOR	1
29	6N3272	INDICATOR----(fuel pressure)----	1
30	4M5283	BOLT	2
	5P537	WASHER	2
31	1P6886	ADAPTER	1
32	7S687	INDICATOR-----(air service)-----	1
33	5P2948	CONNECTOR (Includes)	1
	4K9822	NUT	1
	4K9821	SLEEVE	1
34	4N7563	GAUGE-----(oil pressure)-------	1
35	3S4824	INDICATOR-----(water temp.)-----	1

C INDICATES CHANGE
▲ ORDER BY THE METER

171164

3V6933 WARNING AND GAUGE GROUP
Serial No. 13X1 to 13X623 inclusive

3V6933 WARNING AND GAUGE GROUP
Serial No. 13X624 to 1515 and 13X1517 to 13X1529 inclusive

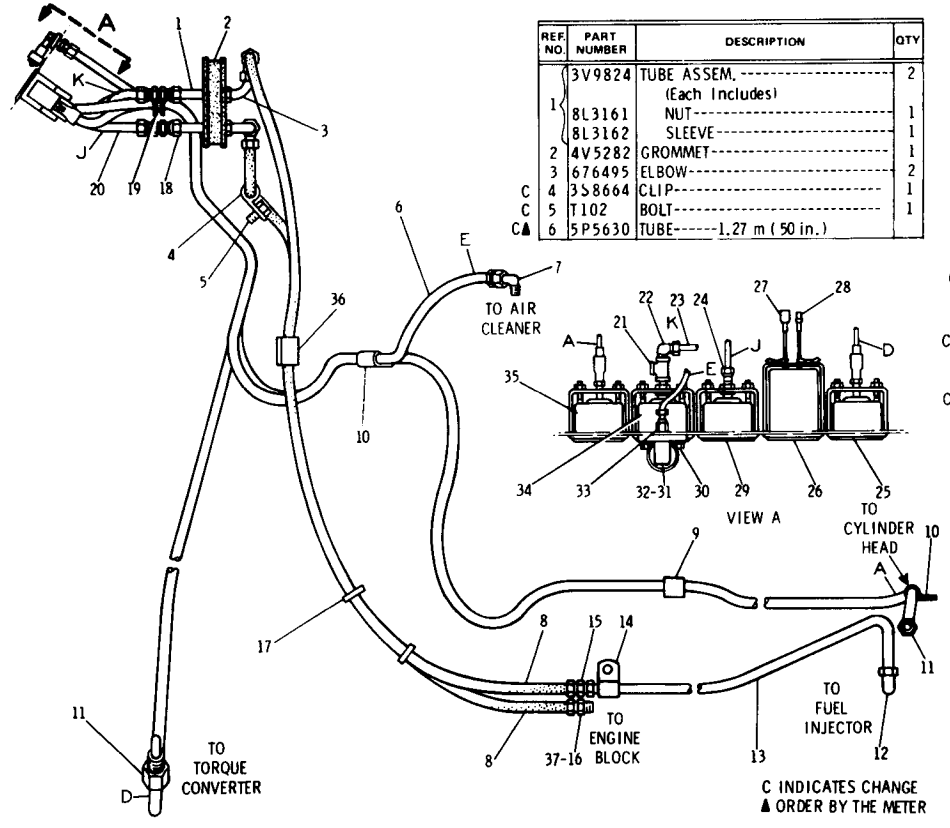

REF. NO.	PART NUMBER	DESCRIPTION	QTY
	3V9824	TUBE ASSEM.	2
		(Each Includes)	
1	8L3161	NUT	1
	8L3162	SLEEVE	1
2	4V5282	GROMMET	1
3	676495	ELBOW	2
C 4	3S8664	CLIP	1
C 5	T102	BOLT	1
C▲ 6	5P5630	TUBE-----1.27 m (50 in.)	

		3K6675	FITTING	1
			(Includes)	
	7	4K9822	NUT	1
		4K9821	SLEEVE	1
C	8	5V446	HOSE ASSEM.-----1.27 m (50 in.)	2
	9	1B8102	CLIP	1
C	10	2B2404	CLIP	2
	11	6H6699	ADAPTER	2
	12	2N1287	ELBOW	1
	13	2V9906	TUBE ASSEM.	1
	14	8M2772	CLIP	1
	15	3J7355	UNION	1
	16	3B6768	BUSHING	1
C	17	3S2093	TIE	2
	18	5P4470	UNION	2
	19	8P4541	GROMMET	1
C▲	20	5P6011	TUBE-----.460 m (18 in.)	
	21	3B7900	TEE	1
	22	5P4423	ELBOW	1
C▲	23	5P6011	TUBE-----.460 m (18 in.)	
	24	5P4405	CONNECTOR	1
	25	2S2535	INDICATOR---(converter temp.)---	1
	26	6N5906	METER--------(service)----------	1
			(Includes)	
	27	5P4571	CONNECTOR	1
	28	4S1988	CONNECTOR	1
	29	6N3272	INDICATOR----(fuel pressure)----	1
	30	4M5283	BOLT	2
		5P537	WASHER	2
	31	1P6886	ADAPTER	1
	32	7S687	INDICATOR-----(air service)-----	1
		5P2948	CONNECTOR	1
	33		(Includes)	
		4K9822	NUT	1
		4K9821	SLEEVE	1
	34	4N7563	GAUGE------(oil pressure)-------	1
	35	3S4824	INDICATOR-----(water temp.)-----	1
C	36	4K8302	CLIP	2
C	37	8L6557	CONNECTOR	1

C INDICATES CHANGE
▲ ORDER BY THE METER

171163

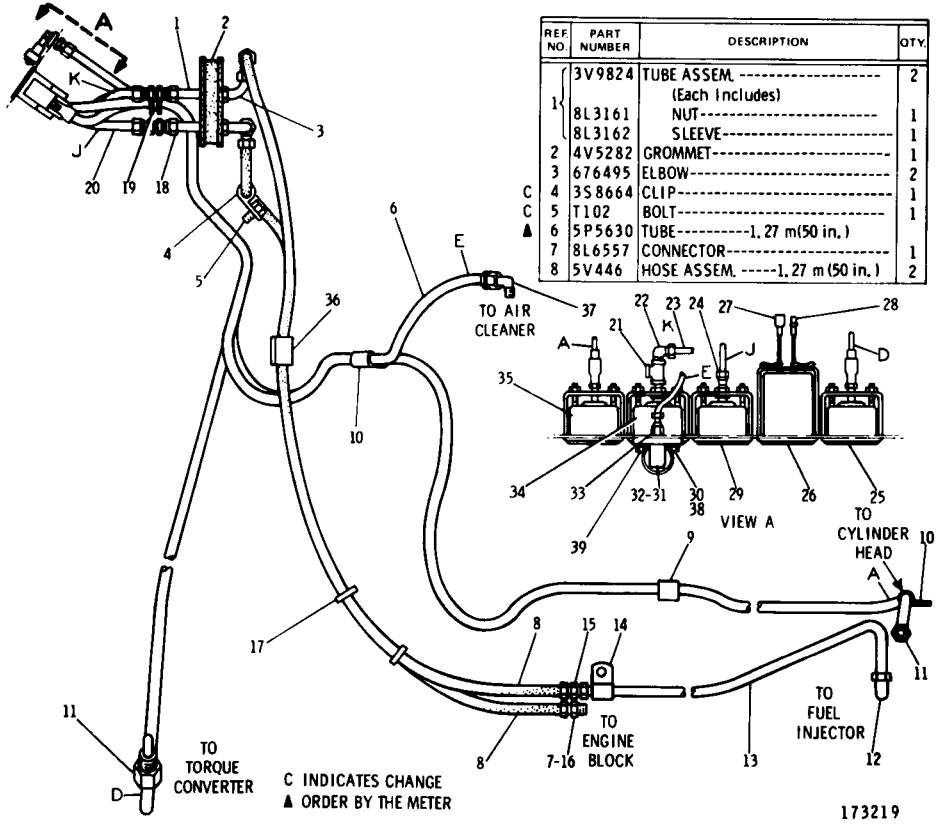

REF. NO.	PART NUMBER	DESCRIPTION	QTY.
1	3V9824	TUBE ASSEM. (Each Includes)	2
	8L3161	NUT	1
	8L3162	SLEEVE	1
2	4V5282	GROMMET	1
3	676495	ELBOW	2
C 4	3S8664	CLIP	1
C 5	T102	BOLT	1
▲ 6	5P5630	TUBE----1.27 m(50 in.)	
7	8L6557	CONNECTOR	1
8	5V446	HOSE ASSEM. ----1.27 m (50 in.)	2
9	1B8102	CLIP	1
10	2B2404	CLIP	2
11	6H6699	ADAPTER	2
12	2N1287	ELBOW	1
13	2V9906	TUBE ASSEM.	1
14	8M2772	CLIP	1
15	3J7355	UNION	1
16	3B6768	BUSHING	1
17	3S2093	TIE	2
18	5P4470	UNION	2
19	8P4541	GROMMET	1
▲ 20	5P6011	TUBE----.460m(18in.)	
21	3B7900	TEE	1
22	5P4423	ELBOW	1
▲ 23	5P6011	TUBE----.460 m(18 in.)	
24	5P4405	CONNECTOR	1
25	2S2535	INDICATOR---(converter temp.)--	1
26	6N5906	METER---(service)--- (Includes)	1
27	5P4571	CONNECTOR	1
28	4S1988	CONNECTOR	1
29	6N3272	INDICATOR---(fuel pressure)--	1
C	9F6580	BOLT	1
C 30	1B4330	NUT	1
C	3B4504	LOCKWASHER	1
31	1P6886	ADAPTER	1
32	7S687	INDICATOR---(air service)	1
33	5P2948	CONNECTOR (Includes)	1
	4K9822	NUT	1
	4K9821	SLEEVE	1
34	4N7563	GAUGE---(oil pressure)--	1
35	3S4824	INDICATOR---(water temp.)---	1
36	4K8302	CLIP	2
37	3K6675	FITTING (Includes)	1
	4K9822	NUT	1
	4K9821	SLEEVE	1
C 38	4B5269	WASHER	2
C 39	2A762	BOLT	1
	5P537	WASHER	2

3V6933 WARNING AND GAUGE GROUP
Serial No. 13X1516 and 13X1530 to 13X1565 and 13X1567 to 13X1595 inclusive

3V6933 WARNING AND GAUGE GROUP
Serial No. 13X1566 and 13X1596 to 13X2437 inclusive

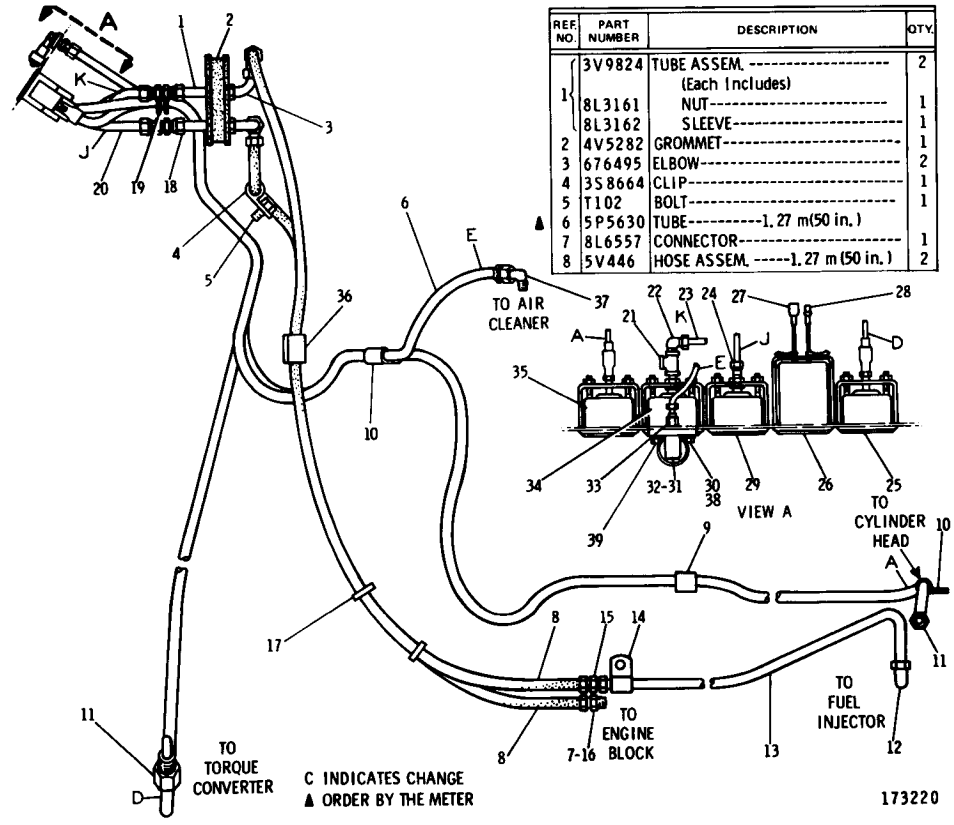

REF. NO.	PART NUMBER	DESCRIPTION	QTY.
1	3V9824	TUBE ASSEM. (Each Includes)	2
	8L3161	NUT	1
	8L3162	SLEEVE	1
2	4V5282	GROMMET	1
3	676495	ELBOW	2
4	3S8664	CLIP	1
5	T102	BOLT	1
▲ 6	5P5630	TUBE---1.27 m(50 in.)	
7	8L6557	CONNECTOR	1
8	5V446	HOSE ASSEM. ---1.27 m (50 in.)	2

9	1B8102	CLIP		1
10	2B2404	CLIP		2
11	6H6699	ADAPTER		2
12	2N1287	ELBOW		1
13	2V9906	TUBE ASSEM.		1
14	8M2772	CLIP		1
15	3J7355	UNION		1
C 16	2H5547	BUSHING		1
17	3S2093	TIE		2
18	5P4470	UNION		2
19	8P4541	GROMMET		1
▲ 20	5P6011	TUBE---.460m(18in.)		
21	3B7900	TEE		1
22	5P4423	ELBOW		1
▲ 23	5P6011	TUBE---.460 m(18 in.)		
24	5P4405	CONNECTOR		1
25	2S2535	INDICATOR---(converter temp.)		1
26	6N5906	METER---(service) (Includes)		1
27	5P4571	CONNECTOR		1
28	4S1988	CONNECTOR		1
29	6N3272	INDICATOR---(fuel pressure)		1
30	9F6580	BOLT		1
	1B4330	NUT		1
	3B4504	LOCKWASHER		1
31	1P6886	ADAPTER		1
32	7S687	INDICATOR---(air service)		1
33	5P2948	CONNECTOR (Includes)		1
	4K9822	NUT		1
	4K9821	SLEEVE		1
34	4N7563	GAUGE---(oil pressure)		1
35	3S4824	INDICATOR---(water temp.)		1
36	4K8302	CLIP		2
37	3K6675	FITTING (Includes)		1
	4K9822	NUT		1
	4K9821	SLEEVE		1
38	4B5269	WASHER		2
39	2A762	BOLT		1
	5P537	WASHER		2

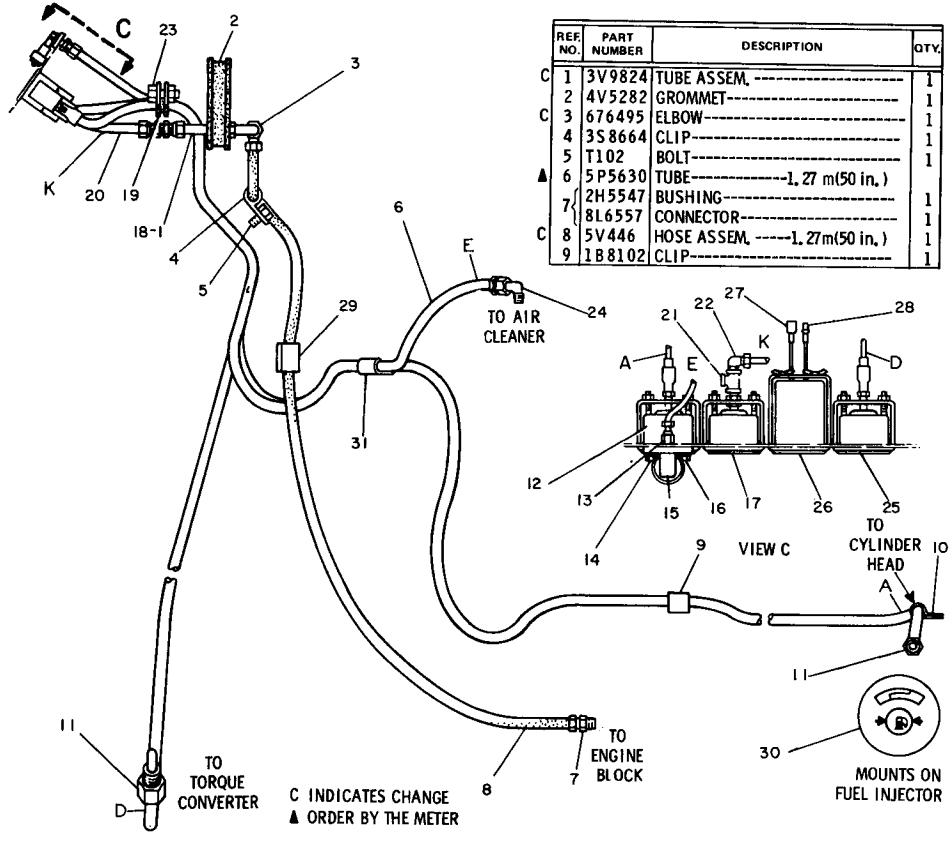

REF. NO.	PART NUMBER	DESCRIPTION	QTY.
C 1	3V9824	TUBE ASSEM.	1
2	4V5282	GROMMET	1
C 3	676495	ELBOW	1
4	3S8664	CLIP	1
5	T102	BOLT	1
▲ 6	5P5630	TUBE--1.27 m(50 in.)	
7	2H5547	BUSHING	1
	8L6557	CONNECTOR	1
C 8	5V446	HOSE ASSEM. --1.27m(50 in.)	1
9	1B8102	CLIP	1

C	10	2B2404	CLIP	1
	11	6H6699	ADAPTER	2
	12	3S4824	INDICATOR--(water temp)	1
	13	5P2948	CONNECTOR (Includes)	1
		4K9822	NUT	1
		4K9821	SLEEVE	1
	14	2A762	BOLT	1
		5P537	WASHER	2
	15	1P6886	ADAPTER	1
		7S687	INDICATOR--(air service)	1
	16	9F6580	BOLT	1
		1B4330	NUT	1
		3B4504	LOCKWASHER	1
		4B5269	WASHER	2
	17	4N7563	GAUGE--(oil pressure)	1
C	18	5P4470	UNION	1
	19	8P4541	GROMMET	1
▲	20	5P6011	TUBE--.460 m(18 in.)	
	21	3B7900	TEE	1
	22	5P4423	ELBOW	1
C		S509	BOLT	1
C	23	1D4717	NUT	1
C		5P1075	WASHER	2
	24	3K6675	FITTING (Includes)	1
		4K9822	NUT	1
		4K9821	SLEEVE	1
	25	2S2535	INDICATOR--(converter temp)	1
	26	6N5906	METER--(service) (Includes)	1
	27	5P4571	CONNECTOR	1
	28	4S1988	CONNECTOR	1
C	29	4S8302	CLIP	1
C	30	8N7813	INDICATOR--(fuel pressure)	1
C		6K6967	ADAPTER	1
C	31	3L2875	CLIP	1
C		4B4278	WASHER	1

179282

3V6933 WARNING AND GAUGE GROUP
Serial No. 13X2438—Up

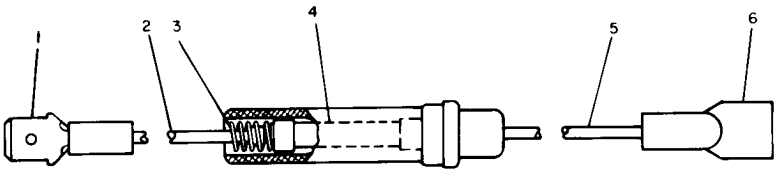

	REF NO	PART NUMBER	DESCRIPTION	QTY
	1	4S1988	TERMINAL----------	1
▲	2	5P5624	WIRE----------.08m (3.15 in.)	
	3	2S5013	SPRING----------	1
	4	2S6024	FUSE----------(5 amp)----------	1
		2S8708	CONTACT----------	2
▲	5	5P5624	WIRE-----.06 m (2.36 in.)	
	6	5P4571	TERMINAL----------	1

▲ ORDER BY THE METER

174551

7N8292 FUSE HOLDER, FUSE AND WIRE KIT—Field Installation
Provides protection from overload failure of 6N5906 Hour Meter without sealed vent holes. Those hour meters with vent holes have a white dash mark under two central figures

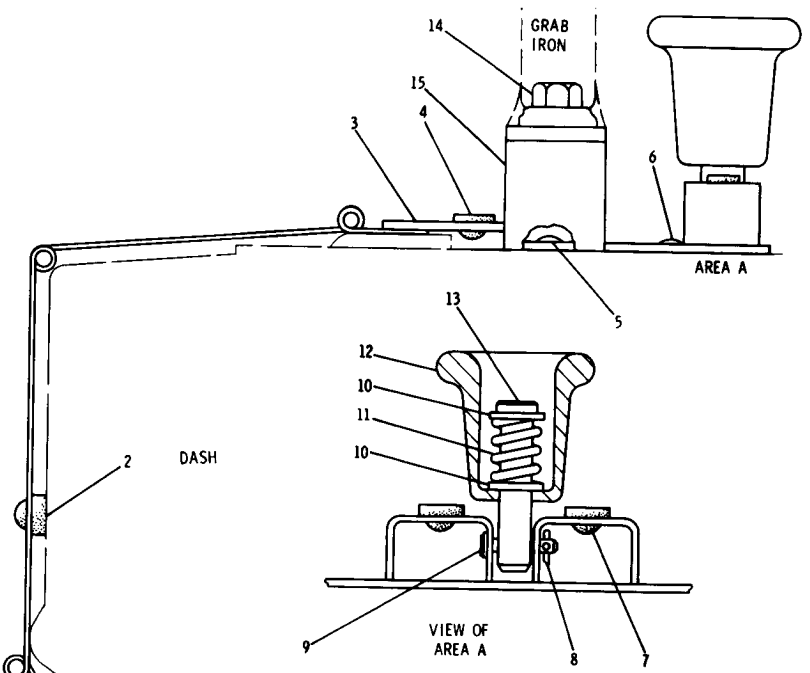

REF. NO.	PART NUMBER	DESCRIPTION	QTY
1	4V5449	LUG	1
2	2V2569	BUMPER	3
3	9P3189	DOOR ASSEM.	1
4	3V613	BUMPER	3
5	4D6716	RIVET	4
6	9M5732	RIVET	4
7	8K1115	BUMPER	2
8	3B4605	COTTER PIN	1
9	8S5278	PIN	1
10	4B1040	WASHER	2
11	4B7033	SPRING	1
12	9P3198	KNOB	1
13	2R363	PIN	1
C 14	1A5822	BOLT	2
C 15	9F4831	SPACER	2
●	8S7949	PADLOCK GROUP (Includes)	1
●	8M439	KEY	2

● NOT SHOWN C INDICATES CHANGE 170578

4V5447 VANDALISM GUARD GROUP
NOT FOR USE WITH ENCLOSED ROPS
AN ATTACHMENT

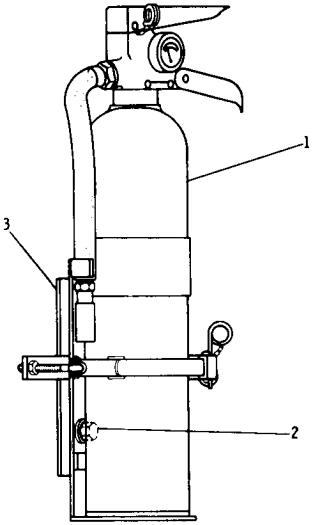

REF. NO.	PART NUMBER	DESCRIPTION	QTY
1	8K4738	EXTINGUISHER----(procure locally)	1
C	S509	BOLT----------	4
2			
	4B4278	WASHER----------	4
3	8K4737	BRACKET----------	1

C INDICATES CHANGE 218100

9P2743 FIRE EXTINGUISHER GROUP
FOR USE WITH ENCLOSED ROPS
AN ATTACHMENT

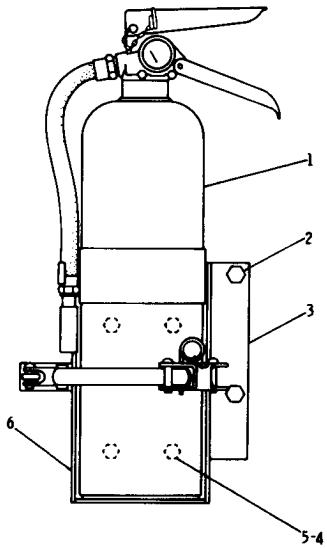

REF. NO.	PART NUMBER	DESCRIPTION	QTY
1	8K4738	EXTINGUISHER------(fire)----------	1
2	S1595	BOLT----------	2
	5P1076	WASHER----------	2
3	4V8171	PLATE ASSEM.----------	1
		(Includes)	
4	9F2978	NUT----------	4
5	S509	BOLT----------	4
6	8K4737	BRACKET----------	1

217033

4V8169 FIRE EXTINGUISHER GROUP
NOT FOR USE WITH ENCLOSED ROPS
AN ATTACHMENT

9S7977 HAND TOOL GROUP

8F9866 Grease Gun parts are shown on Page 246

AN ATTACHMENT

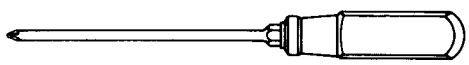

9S1738 SCREWDRIVER
NO. 2 PHILLIPS

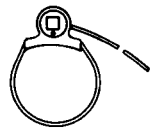

2P8250 STRAP WRENCH ASSEM.



5S9569 SOCKET

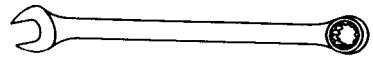

8H8503 WRENCH (5/16" Opening)
8H8505 WRENCH (3/8" Opening)
8H8513 WRENCH (7/8" Opening)
8H8508 WRENCH (9/16" Opening)
8H8509 WRENCH (5/8" Opening)
8H8511 WRENCH (3/4" Opening)
8H8515 WRENCH (1" Opening)

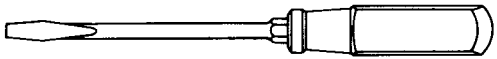

1F1157 SCREWDRIVER



5S9568 SOCKET



C 5P1763 SOCKET

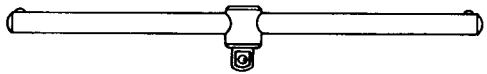

5S9566 WRENCH

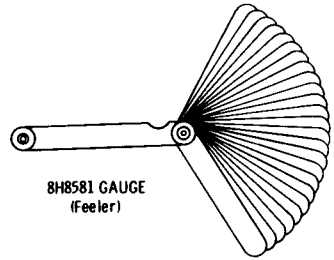

8H8581 GAUGE
(Feeler)



8H8549 SOCKET (9/16" Opening)
8H8554 SOCKET (7/8" Opening)
8H8555 SOCKET (15/16" Opening)
8H8556 SOCKET (1" Opening)
9S1730 SOCKET (11/8" Opening)

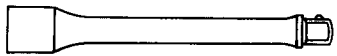

5S9567 EXTENSION

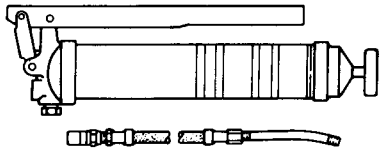

8F9866 GREASE GUN (Lever)
(See Separate Illustration)

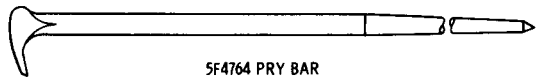

5F4764 PRY BAR

C INDICATES CHANGE

201200

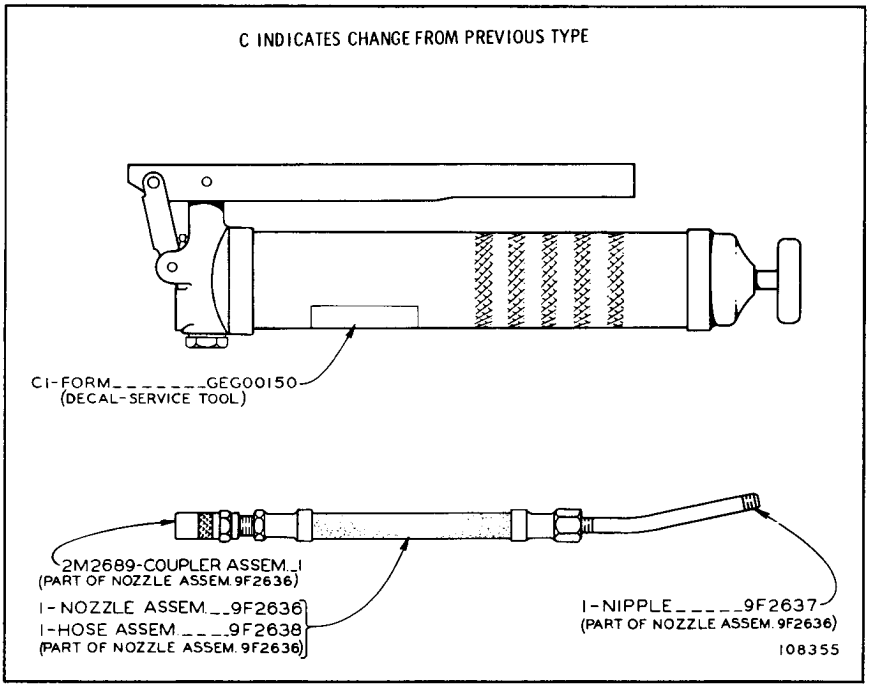

8F9866 GREASE GUN
Part of 9S7977 Hand Tool Group shown on Page 245
AN ATTACHMENT

ENGINE GASKET KITS

6V260	VALVE GRINDING
- OR -	SERIAL No. 78P38513 TO 78P47096 INCLUSIVE
6V2209	VALVE GRINDING
	SERIAL No. 78P47097--UP
5P9415	CENTRAL AND LOWER STRUCTURE
5P8768	SINGLE CYLINDER LINER
5P9416	FRONT STRUCTURE
6V2534	REAR STRUCTURE
- OR -	SERIAL No. 78P38513 TO 78P40899 INCLUSIVE
6V1550	REAR STRUCTURE
	SERIAL No. 78P40900--UP
5P9898	WATER PUMP
5P9102	OIL COOLER AND LINES
6V261	TURBOCHARGER MOUNTING
5P261	TURBOCHARGER MOUNTING
5P9419	FUEL SYSTEM

OTHER GASKET KITS

6V274	PLANETARY TRANSMISSION
6V275	TRANSMISSION CASE AND COVERS
6V276	TRANSMISSION HYDRAULIC CONTROL
6V277	TORQUE CONVERTER
6V278	TRANSMISSION FILTER AND OIL LINES

GASKET KITS

QUANTITY USED	PART NUMBER	DESCRIPTION
1	3H3842	PLATE--SERIAL NUMBER (TRACK LOADER) ON REAR FACE OF BEVEL GEAR AND STEERING CLUTCH CASE AT L.H. END NEAR TOP
1	3N3790	PLATE--SERIAL NUMBER (ENGINE) ON UPPER REAR L.H. SIDE OF CYLINDER BLOCK
1	6V1721	PLATE--SERIAL NUMBER (MASTER) ON R.H. SIDE OF LOADER FRAME, UPPER PORTION
1	5P8197	PLATE--WARNING (UNIVERSAL) R.H. FRONT CAB SURFACE NEAR DASH
2	5P9545	FILM--WARNING ON EACH SIDE ON OUTER REAR TILT LEVERS
1	5P9675	FILM--TRANSMISSION AND PARKING BRAKE LOCK ON INNER SIDE OF L.H. CONTROL COLUMN NEAR LOCK LEVER
10	4B4158	DRIVE SCREW
1	2P7539	TRANSFER GROUP
		CONSISTING OF:
2	1P2270	FILM--WARNING ON EACH SIDE, ON OUTER REAR TILT LEVERS
2	1P9876	FILM--CAT ON R.H. & L.H. SIDE OF RADIATOR GUARD
2	2P6020	FILM--955L ON R.H. SIDE OF HYDRAULIC TANK & L.H. SIDE OF MACHINE ON SERVICE BOX DOOR
2	8S3922	FILM--CORPORATE SYMBOL ON R.H. SIDE OF HYDRAULIC TANK & L.H. SIDE OF MACHINE ON SERVICE BOX DOOR
1	8S3942	FILM--CATERPILLAR ON FRONT OF RADIATOR GUARD
1	8S8958	FILM--CATERPILLAR ON BACK OF FUEL TANK

TORQUE REQUIREMENTS FOR CATERPILLAR BOLTS, NUTS AND TAPERLOCK STUDS

GROUND ENGAGING AND CUTTING EDGE BOLTS AND NUTS

— Round dome shaped head
Proof Load — 120,000 psi minimum
Tensile Strength — 150,000 psi minimum
Hardness — Rockwell C 33 to 39
Sizes 1/2 thru 5/8



— Seven Radial Dashes —
Round Dome Shaped Head
Proof Load — 135,000 psi minimum
Tensile Strength — 160,000 psi minimum
Hardness — Rockwell C 36 to 42
Sizes 3/4 thru 1-1/4

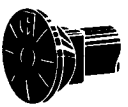

TORQUE REQUIREMENTS FOR PLOW BOLTS

THREAD DIAMETER		STANDARD TORQUE	
inches	millimeters	lb.ft.	N·m
5/8	15.88	195 ± 20	265 ± 25
3/4	19.05	350 ± 50	475 ± 70
7/8	22.22	565 ± 85	765 ± 115
1	25.40	900 ± 110	1220 ± 150
1-1/4	31.75	1500 ± 185	2000 ± 250

GENERAL TIGHTENING TORQUE FOR BOLTS, NUTS AND TAPERLOCK STUDS

The following charts give the standard torque values for bolts, nuts and taperlock studs of SAE Grade 5 or better quality. Exceptions are given in the Service Manuals where needed.



THREAD DIAMETER		STANDARD TORQUE	
inches	millimeters	lb.ft.	N·m
Standard thread 		Use these torques for bolts and nuts with standard threads (conversions are approximate).	
1/4	6.35	9 ± 3	12 ± 4
5/16	7.94	18 ± 5	25 ± 4
3/8	9.53	32 ± 5	45 ± 7
7/16	11.11	50 ± 10	70 ± 15
1/2	12.70	75 ± 10	100 ± 15
9/16	14.29	110 ± 15	150 ± 20
5/8	15.88	150 ± 20	200 ± 25
3/4	19.05	265 ± 35	360 ± 50
7/8	22.23	420 ± 60	570 ± 80
1	25.40	640 ± 80	875 ± 100
1-1/8	28.58	800 ± 100	1100 ± 150
1-1/4	31.75	1000 ± 120	1350 ± 175
1-3/8	34.93	1200 ± 150	1600 ± 200
1-1/2	38.10	1500 ± 200	2000 ± 275
		Use these torques for bolts and nuts on hydraulic valve bodies.	
5/16	7.94	13 ± 2	20 ± 3
3/8	9.53	24 ± 2	35 ± 3
7/16	11.11	39 ± 2	50 ± 3
1/2	12.70	60 ± 3	80 ± 4
5/8	15.88	118 ± 4	160 ± 6
Taperlock stud 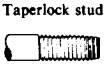		Use these torques for studs with Taperlock threads.	
1/4	6.35	5 ± 2	7 ± 3
5/16	7.94	10 ± 3	15 ± 5
3/8	9.53	20 ± 3	30 ± 5
7/16	11.11	30 ± 5	40 ± 10
1/2	12.70	40 ± 5	55 ± 10
9/16	14.29	60 ± 10	80 ± 15
5/8	15.88	75 ± 10	100 ± 15
3/4	19.05	110 ± 15	150 ± 20
7/8	22.23	170 ± 20	230 ± 30
1	25.40	260 ± 30	350 ± 40
1-1/8	28.58	320 ± 30	400 ± 40
1-1/4	31.75	400 ± 40	550 ± 50
1-3/8	34.93	480 ± 40	650 ± 50
1-1/2	38.10	550 ± 50	750 ± 70



1P2305 ELECTRIC TERMINAL KIT

(Insulated)
(Includes terminals, wire joints and crimping tool)

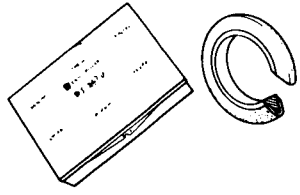

9S3138 SEAL KIT

(Includes 28 metal - backed seals)

Qty.	Nominal Size	Part No.
2	1/2 inch (1,27 cm)	5J1583
6	3/4 inch (1,905 cm)	6J3575
6	1 inch (2,54 cm)	6J3600
6	1 1/4 inch (3,175 cm)	6J3625
4	1 1/2 inch (3,81 cm)	6J3650
4	2 inches (5,08 cm)	6J3800

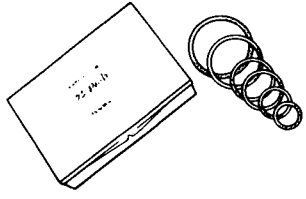

9S3135 SEAL KIT

(Includes 60 rubber O-ring seals)

Qty.	Nominal Size	Part No.
10	1/2 inch (1,27 cm)	4J5140
10	3/4 inch (1,905 cm)	4J5267
10	1 inch (2,54 cm)	4J0520
10	1 1/4 inch (3,175 cm)	4J0522
10	1 1/2 inch (3,81 cm)	4J0524
10	2 inches (5,08 cm)	4J0527

THREADED INSERTS KITS

Master (Includes inserts and tools)

Coarse	Fine	Size
9S3700	9S3500	Assorted

Repair (Includes inserts and tools)

9S3510	9S3509	#10
9S3512	9S3511	1/4
9S3514	9S3513	5/16
9S3618	9S3515	3/8
9S3620	9S3619	7/16
9S3622	9S3621	1/2
9S3624	9S3623	9/16
9S3626	9S3625	5/8
9S3628	9S3627	3/4
9S3630	9S3629	7/8
9S3632	9S3631	1
9S3633		1 1/8
9S3635		1 1/4
9S3637		1 1/2

Refill (Includes inserts)

9S3674	9S3673	#10
9S3649	9S3639	1/4
9S3650	9S3640	5/16
9S3651	9S3641	3/8
9S3652	9S3642	7/16
9S3653	9S3643	1/2
9S3654	9S3644	9/16
9S3655	9S3645	5/8
9S3656	9S3646	3/4
9S3657	9S3647	7/8
9S3658	9S3648	1
9S3675		1 1/8
9S3677		1 1/4
9S3679		1 1/2

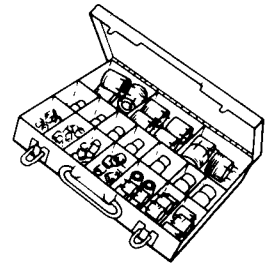

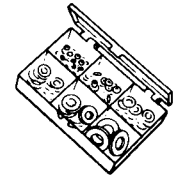

HARDWARE ASSORTMENT KITS

8S7198 Course Thread Hex Nut
8S7197 Fine Thread Hex Nut
8S7196 Lockwasher Assortment
8S7195 Flatwasher Assortment
8S7193 Woodruff Key Assortment

139338



GASKET CEMENT

5H2471 8 oz. (227 g)

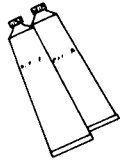

EPOXY CEMENT

5M2941 2 - 2 oz. (57g) Tube

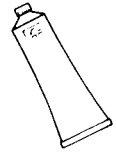

BEARING LUBRICANT

2S3230 14 1/2 oz. (411 g)

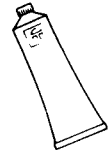

GASKET SEALER

4H5363 11 oz. (312 g)
(fast drying-hard setting)
8H5137 11 oz. (312 g)
(non-hardening)



ANTI-SEIZURE COMPOUND

4S9416 16 oz. (454 g) Aerosol
9M3710 16 oz. (454 g) Paste



GLASS OR PLASTIC CEMENT

3S1831 1 pint (0.473 L)



CHAIN & CABLE LUBRICANT

9S6106 16 oz. (454 g) Aerosol
2P2737 Case of 12

BELT DRESSING

9S6107 16 oz. (454 g) Aerosol
2P2738 Case of 12

ELECTRO-INSULATION SPRAY

9S6108 16 oz. (454 g) Aerosol
2P2739 Case of 12

PENETRATING OIL

9S6109 16 oz. (454 g) Aerosol
2P2740 Case of 12

BATTERY SAVER & CLEANER

9S6110 16 oz. (454 g) Aerosol
2P2741 Case of 12

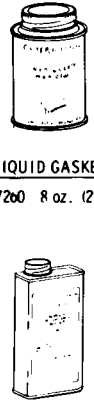

LIQUID GASKET

7M7260 8 oz. (227 g)



SEALING COMPOUND

5S1454 1 pint (0.473 L)



GREASE - SILICONE

4L7464 8 oz. (227 g)

SILICONE FLUID

8M553 145 cc.
9M5165 150 cc.



GREASE GUN CARTRIDGE

1P808 14 1/2 oz. (411 gms)

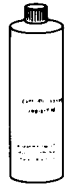

COOLING SYSTEM INHIBITOR

3P2043 1 pint (0.473 L)
P0001 1 case of 12
3P2044 1 quart (0.946 L)
P0002 1 case of 12

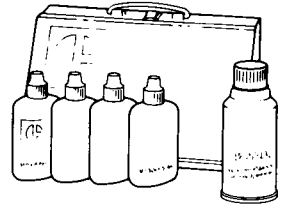

9S3262 SEALANT REPAIR KIT

contains:

Bearing Mount	7M7456	1 2/3 fl. oz. (50 cc)
Thread Lock	9S3263	1 2/3 fl. oz. (50 cc)
Pipe Sealant	9S3264	1 2/3 fl. oz. (50 cc)
Retaining Compound	9S3265	1 2/3 fl. oz. (50 cc)
Quick Cure Primer	8M8060	6 oz. (170 g) Aerosol

139339

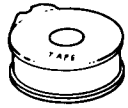

ELECTRICAL TAPE

1P810 (plastic) 2/3" (20mm) width
66 ft. (20m) length
9B4287 (cloth) 3/4" (20mm) width
30 ft. (9M) length
(Plastic tape comes in dispenser. Cloth tape does not.)

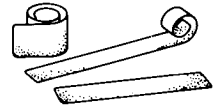

9S8703 ANTI-SKID TREADS

(May be ordered by foot lengths up to 60 feet (18,30m), width 4" (100mm)

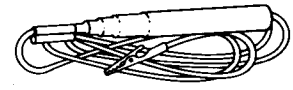

8S4627 CIRCUIT TESTER

(Maximum Capacity: 10 oms)



BUTTON PLUGS

Hole Diameter Inches	Hole Diameter mm	Part Number
.219	5,6	4L0820
.310	7,9	7L6479
.380	9,7	5L6688
.438	11,1	4L0821
.469	11,9	3D9871
.484	12,3	8M3839
.500	12,7	3D9872
.625	15,9	2M4009
.687	17,5	6K2660
.750	19,0	5K3546
.875	22,2	5H4871
1.000	25,4	2D3406
1.250	31,8	4S6336
1.375	34,9	4F8711
1.500	38,1	3L1979
2.000	50,8	1L6377
2.250	57,2	7M3248
2.500	63,5	3L8852
3.000	76,2	1L6366



MAGNETIC DRAIN PLUGS

Type	Thread Size-Threads Per Inch	Head Inches	A Inches	A mm	Part No.
I	5/8 - 11	7/8 Hex	1 3/16	26,9	5K1555
I	5/8 - 18	7/8 Hex	3/4	19,1	2R166
I	7/8 - 14	1 1/8 Hex	1 3/16	30,2	3H4190
I	1 1/8 - 12	1 1/2 Hex	1 1/2	38,1	8M3837
I	1 1/8 - 12	1 1/2 Hex	1 7/8	47,8	2J1559
I	1 1/2 - 12	1 Hex	1 1/2	38,1	8M5576
I	1 1/2 - 12	1 7/8 Hex	1 7/8	47,8	2D8390
II	1/2 - 14	9/16 Sq.	1 1/8	28,5	2F3628
II	3/4	5/8 Sq.	1 1/4	31,8	2H3865
II	7/8 - 14	7/8 Hex	1 5/8	41,3	2R1491
II	1 Std. Pipe Thd.	13/16 Sq.	1 7/16	36,6	2H3864
II	1 1/4 Std. Pipe Thd.	15/16 Sq.	1 11/16	42,9	2H3863
II	1 1/4 Std. Pipe Thd.	15/16 Sq.	1 3/8	35,0	7H3664
III	3/4 - 14 Pipe Thd., Fine	1/2 Sq.	1 3/16	30,2	5D1894
III	1 - 11 1/2 Pipe Thd., Fine	1/2 Sq.	1 5/16	33,4	2K744
III	1 1/4 - 11 1/2 Pipe Thd., Fine	3/4 Sq.	13/16	20,6	5S4017
III	2 - 12	3/4 Sq.	1 11/16	42,9	8B6599

SPECIFICATIONS

(With 2.00 cu.yd. GP Bucket)

(SUBJECT TO CHANGE WITHOUT NOTICE)

Weight, shipping (approximate)		
955L Track Loader	15 600 kg	34,400 lbs.

DIMENSIONS

Length (bucket level on ground).	5 090 mm	16' 8 1/4"
Width, without bucket		
(across sprocket shaft caps)	2 180 mm	7' 1 3/4"
Height (top of exhaust stack).	2 960 mm	9' 8 1/2"
Bucket Width (overall)	2 290 mm	90"
Dumping Clearance*	2 890 mm	9' 5 3/4"
Dumping Height (bucket hinge pin)	3 660 mm	12'
Dumping Reach*.	1 110 mm	3' 7 1/2"
Maximum Digging Depth (level bucket)	95 mm	3 3/4"

STARTING METHOD

Direct Electric 24-Volt Starting System is standard. All starting controls are located in operator's compartment.

MACHINE SERIAL NUMBER PLATE LOCATION

Track Loader serial number plate is located on the rear face of the bevel gear case at the left-hand end of the steering clutch case. Engine serial number plate is located on the left-hand side of the cylinder block. Master serial number plate is located on the upper right-hand side of the loader frame.

CARACTÉRISTIQUES

(avec un godet normal d'une capacité de 1,5 m^3)

(PEUVENT ÊTRE MODIFIÉES SANS PRÉAVIS)

Poids (approx.), en ordre d'expédition :
Chargeur à chaînes 955L. . . . . 15 600 kg

DIMENSIONS

Longueur (godet à plat sur le sol) . . . . . 5 090 mm
Largeur, sans godet (entre chapeaux de moyeux de barbotin). . . . . 2 180 mm
Hauteur (y compris le tuyau d'échappement) . . . . . 2 960 mm
Largeur hors tout du godet . . . . . 2 290 mm
Hauteur maximale de vidage* . . . . . 2 890 mm
Hauteur de déversement (mesurée à la charnière). . . . . 3 660 mm
Distance de déversement* . . . . . 1 110 mm
Profondeur maximale de cavage (flanc de godet horizontal) . . . . . 95 mm
*Godet incliné à 45°

DÉMARRAGE

Démarrage électrique direct 24 volts fourni de série. Toutes commandes de départ groupées sur poste de conduite.

MARQUAGE DU NUMÉRO DE SÉRIE

La plaque portant le numéro de série du chargeur à chaînes est située sur la face arrière du côté gauche du bâti AR de la machine. La plaque portant le numéro de série du moteur est située sur le côté gauche du bloc-cylindres. La plaque principale est fixée au côté supérieur droit du bâti de l'appareil chargeur.

ESPECIFICACIONES

(Con Cucharón de 1,5 metros cúbicos)

(SUJETAS A CAMBIO SIN PREVIO AVISO)

Peso de embarque aproximado del Cargador de Carriles 955L . . . . . 15 600 kg

DIMENSIONES

Longitud (cucharón a nivel del suelo) . . . . . 5090 mm
Ancho, sin cucharón (en las tapas del eje de las ruedas dentadas) 2180 mm
Alto (parte superior del tubo de escape). . . . . 2960 mm
Ancho total del cucharón . . . . . 2290 mm
Altura de descarga* . . . . . 2890 mm
Alto de descarga (pasador pivote del cucharón) . . . . . 3660 mm
Alcance de descarga* . . . . . 1110 mm
Profundidad máxima de excavación (cucharón a nivel) . . . . . 95 mm
*A un ángulo de descarga de 45°.

METODO DE ARRANQUE

Sistema de arranque eléctrico directo de 24 voltios, estándar. Todos los controles para el arranque están colocados en el compartimiento del operador.

UBICACION DE LA PLACA CON EL NUMERO DE SERIE DE LA MAQUINA

La placa con el número de serie del Cargador de Carriles está colocada en la cara trasera de la caja de la corona al extremo izquierdo de la caja de los embragues de dirección. La placa con el número de serie del motor está colocada en el lado izquierdo del bloque de motor. La placa con el número de serie maestro está colocada en la parte superior del lado derecho del bastidor del cargador.

ESPECIFICAÇÕES

(com caçamba de 1,5 m^3)

(SUJEITAS A ALTERAÇÕES SEM AVISO PRÉVIO)

Peso de embarque (aproximado)	15 600 kg

DIMENSÕES

Comprimento (caçamba no chão)	5 090 mm
Largura, sem caçamba (entre as calotas)	2 180 mm
Altura (ao tubo de descarga)	2 960 mm
Largura da caçamba (total)	2 290 mm
Altura livre para despejo (descarga a 45º)	2 890 mm
Elevação máxima (aos pinos de articulação da caçamba)	3 660 mm
Alcance horizontal (caçamba a 45º)	1 110 mm
Profundidade máxima de escavação (caçamba horizontal)	95 mm

MÉTODO DE PARTIDA

Direto elétrico com motor de arranque de 24 volts. Controles na plataforma de operação.

SITUAÇÃO DO NÚMERO DE SÉRIE

A placa do número de série da máquina está atrás da caixa da coroa no lado esquerdo da caixa das embreagens de direção. A placa do número de série mestre está na direita do chassi dos braços. A placa do número de série do motor está no lado esquerdo do bloco.

TECHNISCHE DATEN

(Mit 1,5 m^3 Normalschaufel)

(UNVERBINDLICH, ÄNDERUNGEN VORBEHALTEN)

Versandgewicht, etwa	
Kettenlader 955L	15 600 kg

ABMESSUNGEN

Länge (Schaufel am Boden)	5 090 mm
Breite, ohne Schaufel (Außenkante Nabendeckel)	2 180 mm
Höhe (Oberkante Auspuffrohr)	2 960 mm
Schaufelbreite	2 290 mm
Schütthöhe*	2 890 mm
Abkipphöhe (Schaufelschwenkzapfen)	3 660 mm
Reichweite*	1 110 mm
Max. Grabtiefe (Schaufel eben)	95 mm

*Bei 45° Abkippwinkel

STARTANLAGEN

24 V elektrischer Direktanlasser ist Standardausrüstung. Alle Bedienungen der Startanlage befinden sich im Fahrerstand.

LAGE DER SERIENNUMMERNSCHILDER

Seriennummernschild des Kettenladers befindet sich rückwärts am Tellerradgehäuse auf der linken Seite des Lenkkupplungsgehäuses. Seriennummernschild des Motors befindet sich links am Motorblock. Seriennummernschild der Maschine befindet sich rechts oben am Laderrahmen.

PRINTED IN U.S.A. FORM SEBP1183

CONVERSION EQUIVALENT TABLES

VOLUME AND CAPACITY EQUIVALENTS

Unit	Cu. In.	Cu. Ft.	Cu. Yd.	Cu. Cm.	Cu. M.	U.S. Liquid Gallons	Imperial Gallons	Liters
1 Cu. In.	1	.000579	.0000214	16.39	.0000164	.004329	.00359	.0164
1 Cu. Ft.	1728	1	.03704	28317	.0283	7.481	6.23	28.32
1 Cu. Yd.	46656	27	1	764600	.765	202	167.9	764.6
1 Cu. Cm.	.061	.0000353	.00000131	1	.000001	.000264	.00022	.001
1 Cu. M.	61020	35.31	1.308	1,000,000	1	264.2	220.2	1000
1 U.S. Liquid Gal.	231	.1337	.00495	3785	.003785	1	.833	3.785
1 Imperial Gallon	277.42	.16	.00594	4545.6	.004546	1.2	1	4.546
1 Liter	61.02	.03531	.001308	1000	.001	.2642	.22	1

LENGTH EQUIVALENTS

Unit	Centimeters	Inches	Feet	Yards	Meters	Kilometers
1 Centimeter	1	0.3937	0.03281	0.01094	0.01	
1 Inch	2,540	1	0.08333	0.02778	0.0254	
1 Foot	30.48	12	1	0.3333	0.3048	
1 Yard	91.44	36	3	1	0.9144	
1 Meter	100	39.37	3.281	1.0936	1	
1 Kilometer	100000	39370	3281	1093.6	1000	1

AREA EQUIVALENTS

Unit	Sq. Cm.	Sq. In.	Sq. M.	Sq. Ft.
1 Sq. Cm.	1	0.155		
1 Sq. In.	6.4516	1	.00064516	.006944
1 Sq. M.	10,000	1550	1	10.764
1 Sq. Ft.	929	144	0.0929	1

WEIGHT EQUIVALENTS

Unit	Kilograms	Ounces Avoirdupois	Pounds Avoirdupois
1 Kilogram	1	35.27	2.205
1 Ounce	0.02835	1	0.0625
1 Pound	0.4536	16	1

Inches to Centimeters and Centimeters to Inches

Inches or Centi-meters	Inches	Centi-meters	Inches or Centi-meters	Inches	Centi-meters
1	0.39	2.54	26	10.24	66.04
2	0.79	5.08	27	10.63	68.58
3	1.18	7.62	28	11.02	71.12
4	1.57	10.16	29	11.42	73.66
5	1.97	12.70	30	11.81	76.20
6	2.36	15.24	31	12.20	78.74
7	2.76	17.78	32	12.60	81.28
8	3.15	20.32	33	12.99	83.82
9	3.54	22.86	34	13.39	86.36
10	3.94	25.40	35	13.78	88.90
11	4.33	27.94	36	14.17	91.44
12	4.72	30.48	37	14.57	93.98
13	5.12	33.02	38	14.96	96.52
14	5.51	35.56	39	15.35	99.06
15	5.91	38.10	40	15.75	101.60
16	6.30	40.64	41	16.14	104.14
17	6.69	43.18	42	16.54	106.68
18	7.09	45.72	43	16.93	109.22
19	7.48	48.26	44	17.32	111.76
20	7.87	50.80	45	17.72	114.30
21	8.27	53.34	46	18.11	116.84
22	8.66	55.88	47	18.50	119.38
23	9.06	58.42	48	18.90	121.92
24	9.45	60.96	49	19.29	124.46
25	9.84	63.50	50	19.69	127.00

How to use:
11 inches = 27.94 centimeters
11 centimeters = 4.33 inches



Caterpillar, Cat and CE are Trademarks of Caterpillar Tractor Co.

SEBP1183 (6-82)

Printed in U.S.A.