RUTHZIL TRATOR COMERCIAL DE PEÇAS LTDA 11 97083-6812 ROLANDO

BEPB063900

Parts Book

KOMATSU

960E-1

960E-1

DUMP TRUCK

SERIAL NUMBER **A30003**

KOMATSU®

BEPB063900

BELTS & REPLACEMENT FILTERS

KOMATSU SSDA18V170 ENGINE

PART NUMBER	QTY.	DESCRIPTION	PAGE NUMBER
	1	BELT, AIR CONDITIONER COMPRESSOR DRIVE (MATCHED SET)	218
	1	BELT, BATTERY CHARGING ALTERNATOR DRIVE	332
BF4991	1	BELT, ENGINE FAN DRIVE	50
VJ5175	4	ELEMENT, AIR CLEANER (PRIMARY)	64, 66
VJ5176	4	ELEMENT, AIR CLEANER (SAFETY)	64, 66
PB7001	1	ELEMENT, CAB AIR FILTER	156, 226
VS7035	1	ELEMENT, ENGINE OIL RESERVE (SPIN-ON)	482
XA0002	1	IN-LINE SCREEN, ENGINE OIL RESERVE	482
XA3847	6	ELEMENT, FUEL FILTER/WATER SEPARATOR	70
AK3570	2	ELEMENT, HIGH PRESSURE - HOIST/BRAKE	420
AK3572	1	ELEMENT, HIGH PRESSURE - STEERING	138
EM0055	1	ELEMENT, HVAC AIR FILTER	228
BF5461	1	ELEMENT, AUTO LUBE FILTER	470
PB5556	2	ELEMENT, HYDRAULIC TANK BREATHER (SPIN-ON)	364
XA2134	2	ELEMENT, WATER CORROSION RESISTOR	70
PB5526	2	STRAINER, HYDRAULIC TANK	364

GROUP INDEX

SECTION A

FRAME GROUP

DECALS & WARNINGS .....4 - 10
GRILLE INSTALLATION 12
FRAME & UPRIGHTS 14
ACCESS LADDER & HANDRAIL INSTALLATION 16
LADDERS, STEPS & PLATFORMS 18
HANDRAILS - LADDERS, STEPS & PLATFORMS 20
HANDRAILS & MIRROR - R.H. DECK 22
HANDRAILS & MIRROR - L.H. DECK 24
L.H. DECK & BUMPER MOUNTING 26
R.H. DECK & BUMPER MOUNTING 28
DECK SECTIONS & SAFETY WALKS 30

SECTION B

COOLING SYSTEM

RADIATOR SUPPORT & MOUNTING 34
RADIATOR & SHROUD ASSEMBLY 36
LOW & HIGH TEMPERATURE CORES 38
RADIATOR PIPING .....40 - 42
HEAT EXCHANGER MOUNTING & PIPING 44
HEAT EXCHANGER 46
FAN GUARD INSTALLATION 48
FAN & FAN DRIVE 50
FAN CLUTCH ASSEMBLY 52

SECTION C

ENGINE GROUP

AIR CLEANER INSTALLATION - LEFT 56
AIR CLEANER INSTALLATION - RIGHT 58
AIR CLEANER PIPING - LEFT 60
AIR CLEANER PIPING - RIGHT 62
AIR CLEANER ASSEMBLY, DUAL 64
AIR CLEANER ASSEMBLY, SINGLE 66
AIR CLEANER INDICATOR PIPING 68
ENGINE & MISCELLANEOUS INSTALLATION 70
ALTERNATOR/FLYWHEEL HOUSING BRACING INSTALLATION 72
EXHAUST PIPING & INSTALLATION .....74 - 76

SECTION D

FRONT WHEEL & BRAKE GROUP

SPINDLE, HUB AND BRAKE ASSEMBLY .....80 - 82
FRONT BRAKE ASSEMBLY (WET DISC) 84
FRONT WHEEL & MOUNTING 86
FRONT SUSPENSION & MOUNTING 88
FRONT SUSPENSION ASSEMBLY 90

SECTION E

REAR WHEEL & BRAKE GROUP

REAR BRAKE MOUNTING 94
REAR BRAKE ASSEMBLY 96
PARKING BRAKE MOUNTING 98
PARKING BRAKE ASSEMBLY 100
REAR WHEELS & MOUNTING 102
RIM ASSEMBLY, TAPER LOCK 104
DRIVE AXLE & MOUNTING 106
WHEEL MOTOR MOUNTING 108
REAR AXLE HATCH & COVER 110
REAR SUSPENSION & MOUNTING 112
REAR SUSPENSION ASSEMBLY 114

SECTION F

STEERING SYSTEM

STEERING CONTROL VALVE INSTALLATION 118
STEERING CONTROL VALVE 120
STEERING ARMS & LINKAGE 122
STEERING CYLINDER PIPING 124
STEERING CYLINDER ASSEMBLY 126
STEERING SYSTEM PIPING ..... 128 - 132
STEERING ACCUMULATOR ASSEMBLY 134
BLEED DOWN MANIFOLD VALVE ASSEMBLY 136
HYDRAULIC FILTER ASSEMBLY (STEERING) 138

SECTION G

CAB GROUP

CAB MOUNTING 142
DOOR INSTALLATION 144
DOOR - L.H. 146
INNER DOOR PANEL ASSEMBLY - L.H. 148
DOOR - R.H. 150
INNER DOOR PANEL ASSEMBLY - R.H. 152
CAB WINDOWS 154
FRONT ACCESS COVER 156
CAB ACCESS COVERS 158
CAB CONNECTOR PLATE AND HOSE FLAP 160
DOME LIGHT & COAT HOOKS 162
SEAT INSTALLATION 164
SEAT ASSEMBLY ..... 166 - 168
FOOTREST AND FLOOR MATS 170
OPERATOR CONTROLS & CAB FEATURES 172
OVERHEAD DASH MODULE 174
RADIO MODULE 176
AIR CLEANER RESTRICTION GAUGE MODULE 178
REAR SPEAKER INSTALLATION 180
INSTRUMENT PANEL ASSEMBLY 182
UPPER R.H. DASH MODULE 184
LOWER R.H. DASH MODULE 186
GAUGE PANEL 188
LOWER L.H. DASH MODULE 190

SECTION G continued...

PEDAL INSTALLATION 192
RETARD/BRAKE VALVE ASSEMBLY 194
BRAKE VALVE SUB-ASSEMBLY ..... 196 - 198
ELECTRONIC TREADLE 200
STEERING COLUMN & STEERING WHEEL INSTALLATION 202
STEERING COLUMN & LEVER ASSEMBLY 204
STEERING COLUMN ASSEMBLY 206
RETARDER LEVER ASSEMBLY 208
CENTER CONSOLE MODULE INSTALLATION 210
D.I.D. PANEL INSTALLATION 212
CAB ELECTRICAL COMPONENTS 214
AIR CONDITIONER PIPING & INSTALLATION 216
AIR CONDITIONER COMPRESSOR INSTALLATION 218
AIR CONDITIONING COMPRESSOR 220
ADJUSTABLE HOLD-DOWN ASSEMBLY 222
HEATER HOSE PIPING 224
HEATER PIPING & INSTALLATION 226
HEATER/AIR CONDITIONER ASSEMBLY 228
HEATER/AIR CONDITIONER DASH MODULE 230
HEATER/AC DRAIN HOSE INSTALLATION 232
WINDSHIELD WIPER/WASHER INSTALLATION 234
WIPER/WASHER TIMER DELAY MODULES 236
ORBCOMM CAB INSTALLATION 238

SECTION H

BODY GROUP

BODY & BODY PIVOT 242
DECK MUD FLAPS INSTALLATION 244
BODY TO DECK & BODY MUD FLAP INSTALLATION 246
SIDE MUD FLAP INSTALLATION 248

SECTION I

ELECTRIC POWER COMPONENTS & WIRING GROUP

BLOWER INLET DUCTING & CONTROL CABINET MOUNTING 252
BLOWER INLET DUCTING 254
CONTROL CABINETS & EXTERNAL WIRING 256
AUXILIARY CONTROL CABINET EXTERNAL WIRING 258
POWER CABLE ROUTING ..... 260 - 264
AUXILIARY CONTROL CABINET COMPONENTS - FRONT VIEW ..... 266 - 268
AUXILIARY CONTROL CABINET COMPONENTS - REAR WALL ..... 270 - 272
AUXILIARY CONTROL CABINET COMPONENTS - LEFT WALL ..... 274 - 278
AUXILIARY CONTROL CABINET COMPONENTS - RIGHT WALL ..... 280 - 282
VHMS HOOKUP 284
RELAY BOARDS ..... 286 - 288
RELAY AND DIODE BOARDS 290
PAYLOAD METER III - FRONT SUSPENSIONS 292
JUNCTION BOX ASSEMBLY - R.H. 294
JUNCTION BOX ASSEMBLY - L.H. 296
PAYLOAD METER III - REAR SUSPENSIONS 298
JUNCTION BOX ASSEMBLY - REAR 300

SECTION L

FUEL SYSTEM

FUEL TANK INSTALLATION & PIPING .....304 - 306
FUEL SYSTEM PIPING 308
FUEL COOLER ASSEMBLY 310

SECTION M

ELECTRICAL SYSTEM

L.H. DECK WIRING 314
R.H. DECK WIRING 316
ELECTRICAL HARNESS ROUTING - FRONT PLATFORMS 318
BATTERY DISCONNECT BOX .....320 - 322
BATTERY BOX .....324 - 328
BATTERY BOX EXTERNAL WIRING 330
ENGINE ELECTRICAL - RIGHT SIDE 332
ENGINE ELECTRICAL - PRELUBE SWITCHES 334
ENGINE ELECTRICAL - LEFT SIDE 336
REAR AXLE ELECTRICAL GROUP 338
REAR LIGHTS & BACKUP HORN INSTALLATION 340
SERVICE LIGHTS & GROUND LEVEL SWITCHES 342
HEADLIGHT/FOG LIGHT/SERVICE LIGHT 344
REAR TURN SIGNAL & CLEARANCE LIGHTS 346
LIGHT ASSEMBLY (SUPER HALOGEN & LED) .....348 - 350
PAYLOAD METER III - INDICATOR LIGHTS 352
STEERING ACCUMULATOR PRESSURE SWITCH 354
BODY UP & HOIST LIMIT SWITCH INSTALLATION 356
VHMS SENSOR INSTALLATION 358

SECTION N

HYDRAULIC SYSTEM

HYDRAULIC TANK MOUNTING 362
HYDRAULIC TANK ASSEMBLY 364
HOIST CIRCUIT & HYDRAULIC PIPING 366
BRAKE COOLING PIPING .....368 - 372
BRAKE APPLICATION PIPING 374
REAR AXLE HYDRAULIC PIPING .....376 - 378
PUMP/HOIST VALVE MODULE .....380 - 386
UNIVERSAL JOINT INSTALLATION 388
HOIST & BRAKE PIPING 390
HOIST CYLINDER & PIPING 392
HOIST CYLINDER & MOUNTING 394
HOIST CYLINDER ASSEMBLY 396
STEERING PUMP HOUSING (FRONT) 398
STEERING PUMP ROTATING GROUP 400
STEERING PUMP HOUSING (REAR) 402
STEERING PUMP SEAL INSTALLATION 404
HOIST PUMP INSTALLATION 406
HOIST PUMP ASSEMBLY 408
HOIST VALVE ASSEMBLY 410
RELIEF VALVE ASSEMBLY 412
SPOOL SECTION ASSEMBLY 414
SPOOL SECTION ASSEMBLY - TANK 416

SECTION N continued...

OVERCENTER MANIFOLD VALVE ASSM 418
HYDRAULIC FILTER (HOIST/BRAKE COOLING) 420
STEERING CONTROL VALVE PIPING 422
BRAKE VALVE PIPING 424
HYDRAULIC BRAKE CABINET MOUNTING 426
HYDRAULIC BRAKE CABINET ASSEMBLY ..... 428 - 432
BRAKE MANIFOLD ..... 434 - 436
HOIST PILOT VALVE ASSEMBLY 438
DUAL RELAY VALVE 440
HYDRAULIC BRAKE CABINET HOSE ROUTING ..... 442 - 444
BRAKE ACCUMULATORS & PIPING 446
ACCUMULATOR ASSEMBLY - 10 GAL. 448

SECTION O

OPTIONS & MISCELLANEOUS GROUP

AUTOMATIC LUBRICATION SYSTEM PUMP & PIPING 452
AUTOMATIC LUBRICATION SYSTEM - REAR AXLE 454
AUTO LUBE SYSTEM HOSE ROUTING ..... 456 - 458
LUBE PUMP/CONTAINER ASSEMBLY 460
LUBE PUMP ASSEMBLY ..... 462 - 464
CHECK VALVE ASSEMBLY 466
VENT VALVE ASSEMBLY 468
HYDRAULIC FILTER ASSEMBLY 470
CHARGING MANIFOLD ASSEMBLY 472
TOOL GROUP - DOMESTIC ..... 474 - 476
SERVICE CENTER - L.H. 478
ENGINE OIL RESERVE SYSTEM 480
RESERVE SYSTEM KIT 482
RADIO ANTENNA INSTALLATION 484
FIRE EXTINGUISHER 486

SECTION P

CONTROL GROUP

CONTROL CABINET - LEFT COMPARTMENT ..... 490 - 492
CONTROL CABINET - RIGHT FRONT 494
CONTROL CABINET - RIGHT COMPARTMENT ..... 496 - 498
CONTROL CABINET - TOP ..... 500 - 502
CONTROL CABINET - REAR VIEW 504
CONTROL CABINET - CONTACTOR BOX 506
CONTROL CABINET - DOORS & COVERS ..... 508 - 510
CONTACTOR ASSEMBLY - R.P. ..... 512 - 514
PANEL - A.F.S.E. ..... 516 - 518
A.F.S.E. PANEL COVER ASSEMBLY ..... 520 - 522
RELAY - CPR & GFR 524
PANEL - ICP ..... 526 - 528
CONTACTOR - GF & GFR ..... 530 - 532
POSITION SENSOR INTERLOCK 534
TERMINAL BOARDS ..... 536 - 538

SECTION R

ALTERNATOR GROUP

ALTERNATOR/BLOWER ASSEMBLY 542
ALTERNATOR - ENGINE MOUNT END .....544 - 546
ALTERNATOR - FAN SHAFT & BEARING 548
ALT. - BRUSH HOLDER/SPEED SENSOR WIRING 550
ALTERNATOR - BRUSH HOLDER ASSEMBLY 552
ALTERNATOR - YOKE ASSEMBLY 554
ALTERNATOR - BLOWER HOUSING 556
ALTERNATOR - STATOR WIRING 558

SECTION S

RETARDER GRID GROUP

RETARDING GRID ASSEMBLY .....562 - 566
BLOWER MOTOR (COMMUTATOR END) 568
BLOWER MOTOR (NON-COMMUTATOR END) 570
BRUSH HOLDER ASSEMBLY 572
BLOWER MOTOR (BRUSH HOLDER WIRING) 574
BLOWER MOTOR (FIELD INSTALLATION) 576

SECTION T

WHEEL MOTOR GROUP

WHEEL MOTOR ASSEMBLY 580
TRANSMISSION, MOTORIZED WHEEL .....582 - 584
CARRIER ASSEMBLY - HIGH SPEED 586
CARRIER ASSEMBLY - LOW SPEED 588
MOTOR ASSEMBLY - WHEEL .....590 - 592

ALPHABETICAL INDEX

ACCUMULATOR
- SERVICE BRAKES 448
- STEERING 134
AIR CLEANER 64, 66
AIR CONDITIONER . . . . . 216 - 222
ALTERNATOR
- BATTERY CHARGING 332
- MAIN . . . . . 542 - 558
ANTENNA
- ORBCOMM 238
- RADIO 484
AUTO LUBE SYSTEM . . . . . 452 - 470
AXLE - REAR 106, 110, 338, 376, 378

BATTERIES 324
BELTS
- AIR CONDITIONER COMPRESSOR DRIVE 218
- BATTERY CHARGING ALTERNATOR DRIVE 332
- ENGINE FAN DRIVE 50
BLOWER INLET DUCTING 252, 254
BODY & BODY PIVOT 242
BRAKE
- FRONT WHEEL . . . . . 80 - 84
- PARKING 98, 100
- REAR WHEEL 94, 96

CAB ASSEMBLY 142, 162
CABINET
- AUXILIARY CONTROL . . . . . 256, 266 - 282
- CONTROL . . . . . 256, 490 - 538
- HYDRAULIC BRAKE . . . . . 426 - 432
CHARGING MANIFOLD - HYDRAIR 472
COMPRESSOR - A/C . . . . . 218 - 222
CONSOLE - CENTER 210
CONTROLLER
-ORBCOMM 280
-VHMS 280
CONTROLS - OPERATOR 172, 210, 230
CYLINDER
- HOIST . . . . . 392 - 396
- STEERING 126

DASH MODULES . . . . . 174 - 178, 182 - 190, 230
DECALS & WARNINGS . . . . . 4 - 10
DECKS . . . . . 26 - 30
DIAGNOSTIC INFORMATION DISPLAY (DID) PANEL 212
DOORS - CAB . . . . . 144 - 152

EJECTORS - ROCK 272
ENGINE 70
EXHAUST - ENGINE 74, 76

FAN - ENGINE 50

FILTER
- AIR CLEANER 64, 66
- AUTO LUBE 470
- CAB AIR 156, 226
- ELIMINATOR 70
- ENGINE OIL RESERVE (SPIN-ON) 482
- FUEL 70
- HIGH PRESSURE - HOIST/BRAKE 420
- HIGH PRESSURE - STEERING 138
- HVAC 228
- HYDRAULIC TANK BREATHER (SPIN-ON) 364
- WATER CORROSION RESISTOR 70

FIRE EXTINGUISHER 490
FLOORMATS 170
FRAME & UPRIGHTS 14
FUEL SYSTEM . . . . . 304 - 310
FUSES 266

GRILLE 12

HANDRAILS . . . . . 16, 20 - 24
HEAT EXCHANGER 44, 46
HEATER - CAB . . . . . 224 - 228
HORN
- BACKUP 340
- FRONT 314

HUB
- FRONT WHEEL 80
- REAR WHEEL 582, 584

INSTRUMENT PANEL / OVERHEAD DASH MODULE . . . . . 172 - 190
INTERFACE MODULE 280

JUNCTION BOX - PLM III . . . . . 292 - 300

LADDERS / STEPS 16, 18
LEVER - RETARDER 204, 208
LIGHTS
- AUXILIARY CONTROL CABINET DOME 266
- BACKUP 340
- BRAKE/RETARD (CAB) 214
- BRAKE CABINET DOME 430
- CAB DOME 162
- CLEARANCE 346
- FLOOD (SERVICE) 314, 316, 342, 344
- FOG 344
- HEADLIGHT 344
- PAYLOAD METER 352
- RETARDER 340
- STOP & TAIL 340
- TURN SIGNAL 314, 316, 344

MIRRORS 22, 24
MOTOR
- GRID BLOWER . . . . . 568 - 576
- HVAC 228
- WHEEL . . . . . 108, 580 - 592
- WINDSHIELD WIPER 146, 192, 256

MUD FLAPS . . . . . 244 - 248

PAYLOAD METER / ON BOARD WEIGHING . . . . . 292 - 300, 352
PEDALS . . . . . 172, 192 - 200
PIPING
- AIR CLEANER . . . . . 56 - 62
- AIR CLEANER INDICATOR 68
- AIR CONDITIONER 216
- AUTO LUBE . . . . . 452 - 458
- BRAKE APPLICATION 374
- BRAKE COOLING 370, 372
- BRAKE / STEERING VALVE 423
- ENGINE EXHAUST 74, 76
- FUEL . . . . . 304 - 308
- HEATER 224, 226
- HOIST & BRAKE 390, 392
- HOIST CIRCUIT & HYDRAULIC 366, 368
- HYDRAULIC BRAKE CABINET . . . . . 442 - 446
- PUMP / HOIST VALVE . . . . . 380 - 386
- RADIATOR . . . . . 40 - 44
- REAR AXLE HYDRAULIC 376, 378
- STEERING CYLINDER 124
- STEERING SYSTEM . . . . . 128 - 132
- STEERING VALVE 422
PUMP
- HOIST 406, 408
- LUBE . . . . . 460 - 470
- STEERING . . . . . 398 - 404

RADIATOR . . . . . 34 - 38
RELAY BOARDS . . . . . 286 - 290
RESERVE SYSTEM - ENGINE OIL 480, 482
RETARDING GRID . . . . . 562 - 576
RIM ASSEMBLY 86, 102, 104

SEAT . . . . . 164 - 168
SENSOR
- FRONT & REAR SUSPENSION LOAD WEIGH 292, 298
- VHMS 358
- WHEEL SPEED 80
SERVICE CENTER 478
SHROUD - FAN 36
SPINDLE - FRONT 80
STARTER - ELECTRIC 336
STEERING LINKAGE 122
STEERING WHEEL & COLUMN . . . . . 202 - 206
SUSPENSION
- FRONT 88, 90
- REAR 112, 114
SWITCH
- BATTERY DISCONNECT 326
- BLOWER PRESSURE (REAR AXLE) 338
- BODY UP & HOIST LIMIT 356
- ENGINE OIL PRESSURE 334
- ENGINE SHUTDOWN 210, 342
- INSTRUMENT PANEL . . . . . 184 - 190
- PRELUBE 334
- STEERING ACCUMULATOR PRESSURE 354

TANK
- AUTO LUBE 460
- ENGINE OIL RESERVE 480, 482
- FUEL 304, 306
- HYDRAULIC 362, 364
- SURGE (RADIATOR) 36
TIE ROD 122
TOOL GROUP 474, 476

UNIVERSAL JOINT 388

VALVE
- BLEED DOWN MANIFOLD (STEERING) 130, 136
- BRAKE MANIFOLD 434, 436
- DUAL RELAY 440
- FLOW AMPLIFIER 130
- HOIST CONTROL . . . . . 410 - 416
- HOIST PILOT 438
- LOAD WEIGH 292, 298
- OVERCENTER MANIFOLD 418
- BRAKE. . . . . 194 - 198
- STEERING CONTROL 118, 220

WALKWAYS - ANTI-SKID (SAFETY) 30
WHEEL
- FRONT 86
- REAR. 102, 104
- STEERING 172, 202
WIPER/WASHER - WINDSHIELD. 234
WIRING
- BATTERY / BATTERY DISCONNECT BOX 320, 324, 330
- CAB CONNECTOR PLATE. 314
- CONTROL CABINET (EXTERNAL) . . . . . 256 - 264
- DECK LIGHTING. 314, 316
- FRONT PLATFORMS 318
- ENGINE . . . . . 332 - 336
- HEADLIGHT / FOG LIGHT 344
- REAR AXLE. 338
- REAR LIGHTS & BACKUP HORN 340
- REAR TURN & CLEARANCE LIGHTS 346
- SERVICE LIGHTS & GROUND LEVEL SWITCHES 342
- VHMS HOOKUP 284
- WIPER / WASHER TIMER DELAY MODULES 236

FRAME GROUP

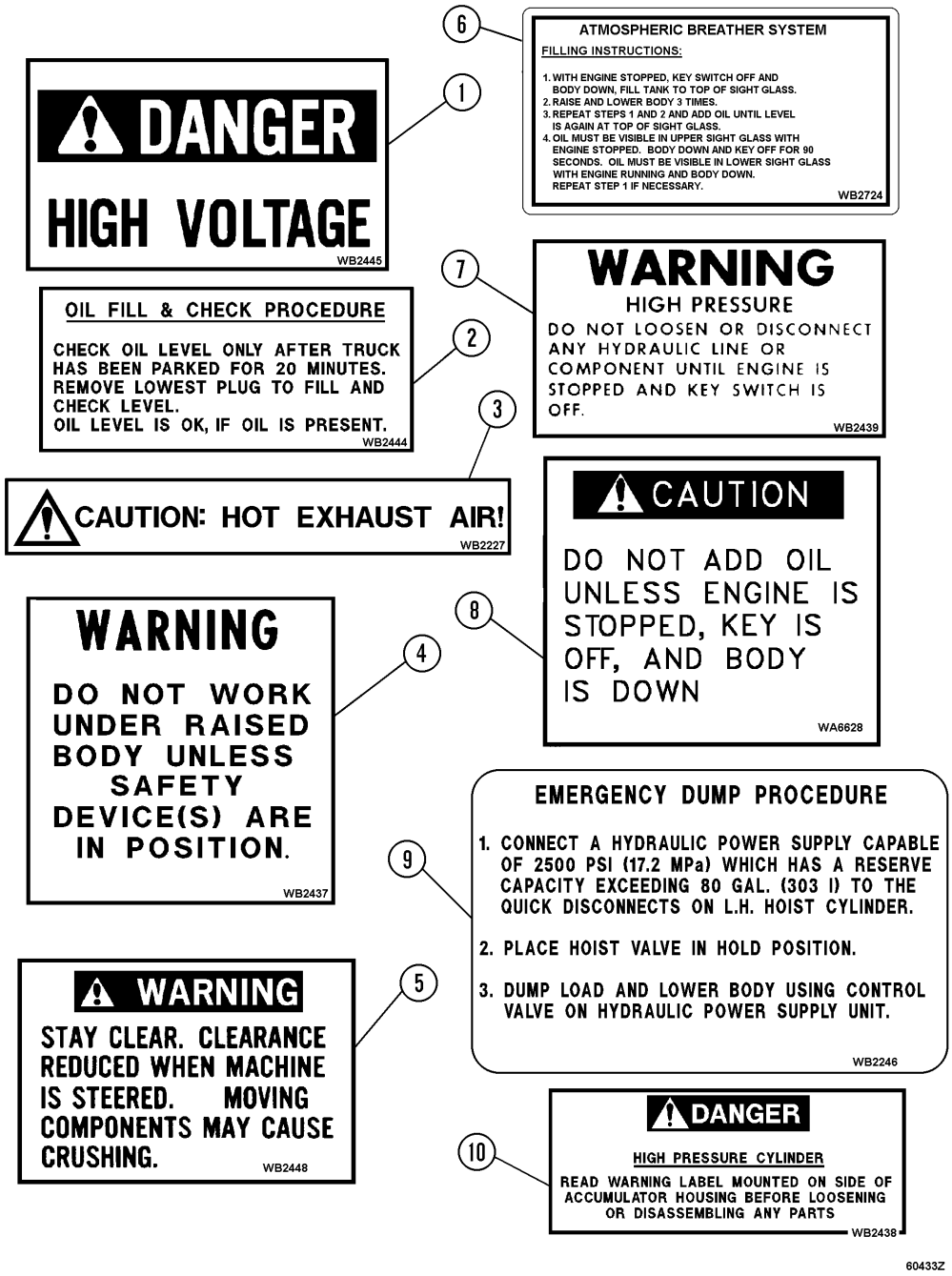
6
ATMOSPHERIC BREATHER SYSTEM
FILLING INSTRUCTIONS:
1. WITH ENGINE STOPPED, KEY SWITCH OFF AND BODY DOWN, FILL TANK TO TOP OF SIGHT GLASS.
2. RAISE AND LOWER BODY 3 TIMES.
3. REPEAT STEPS 1 AND 2 AND ADD OIL UNTIL LEVEL IS AGAIN AT TOP OF SIGHT GLASS.
4. OIL MUST BE VISIBLE IN UPPER SIGHT GLASS WITH ENGINE STOPPED. BODY DOWN AND KEY OFF FOR 90 SECONDS. OIL MUST BE VISIBLE IN LOWER SIGHT GLASS WITH ENGINE RUNNING AND BODY DOWN. REPEAT STEP 1 IF NECESSARY.
WB2724
1
DANGER
HIGH VOLTAGE
WB2445
7
WARNING
HIGH PRESSURE
DO NOT LOOSEN OR DISCONNECT ANY HYDRAULIC LINE OR COMPONENT UNTIL ENGINE IS STOPPED AND KEY SWITCH IS OFF.
WB2439
OIL FILL & CHECK PROCEDURE
CHECK OIL LEVEL ONLY AFTER TRUCK HAS BEEN PARKED FOR 20 MINUTES. REMOVE LOWEST PLUG TO FILL AND CHECK LEVEL.
OIL LEVEL IS OK, IF OIL IS PRESENT.
WB2444
2
3
CAUTION: HOT EXHAUST AIR!
WB2227
CAUTION
DO NOT ADD OIL UNLESS ENGINE IS STOPPED, KEY IS OFF, AND BODY IS DOWN
WA6628
8
WARNING
DO NOT WORK UNDER RAISED BODY UNLESS SAFETY DEVICE(S) ARE IN POSITION.
WB2437
4
EMERGENCY DUMP PROCEDURE
1. CONNECT A HYDRAULIC POWER SUPPLY CAPABLE OF 2500 PSI (17.2 MPa) WHICH HAS A RESERVE CAPACITY EXCEEDING 80 GAL. (303 l) TO THE QUICK DISCONNECTS ON L.H. HOIST CYLINDER.
2. PLACE HOIST VALVE IN HOLD POSITION.
3. DUMP LOAD AND LOWER BODY USING CONTROL VALVE ON HYDRAULIC POWER SUPPLY UNIT.
WB2246
9
WARNING
STAY CLEAR. CLEARANCE REDUCED WHEN MACHINE IS STEERED. MOVING COMPONENTS MAY CAUSE CRUSHING.
WB2448
5
DANGER
HIGH PRESSURE CYLINDER
READ WARNING LABEL MOUNTED ON SIDE OF ACCUMULATOR HOUSING BEFORE LOOSENING OR DISASSEMBLING ANY PARTS
WB2438
10
60433Z

REF.	PART NUM.	QTY.	DESCRIPTION
1.00	WB2445	1	DECAL, HIGH VOLTAGE DANGER (REAR HATCH)
2.00	WB2444	4	DECAL, OIL FILL & CHECK PROCEDURE (ELECTRIC WHEELS)
3.00	WB2227	5	DECAL, HOT EXHAUST AIR (REAR HATCH & BLOWN GRID)
4.00	WB2437	2	DECAL, RAISED BODY WARNING (HYDRAULIC & FUEL TANKS)
5.00	WB2448	4	DECAL, WHEEL SPACE WARNING (BOTH SIDES OF FRAME BEHIND & IN FRONT OF FRONT WHEELS)
6.00	WB2724	1	DECAL, ATMOSHERIC BREATHER SYSTEM (HYDRAULIC TANK)
7.00	WB2439	1	DECAL, HIGH PRESSURE WARNING (HYDRAULIC TANK)
8.00	WA6628	1	DECAL, ADD OIL CAUTION (HYDRAULIC TANK)
9.00	WB2246	1	DECAL, EMERGENCY DUMP PROCEDURE (L.H. SIDE OF FRAME BEHIND HOIST CYLINDER.)
10.00	WB2438	4	DECAL, HIGH PRESSURE CYLINDER DANGER (BOTH SIDES OF FRAME BY STEERING & BRAKE ACCUMULATORS)

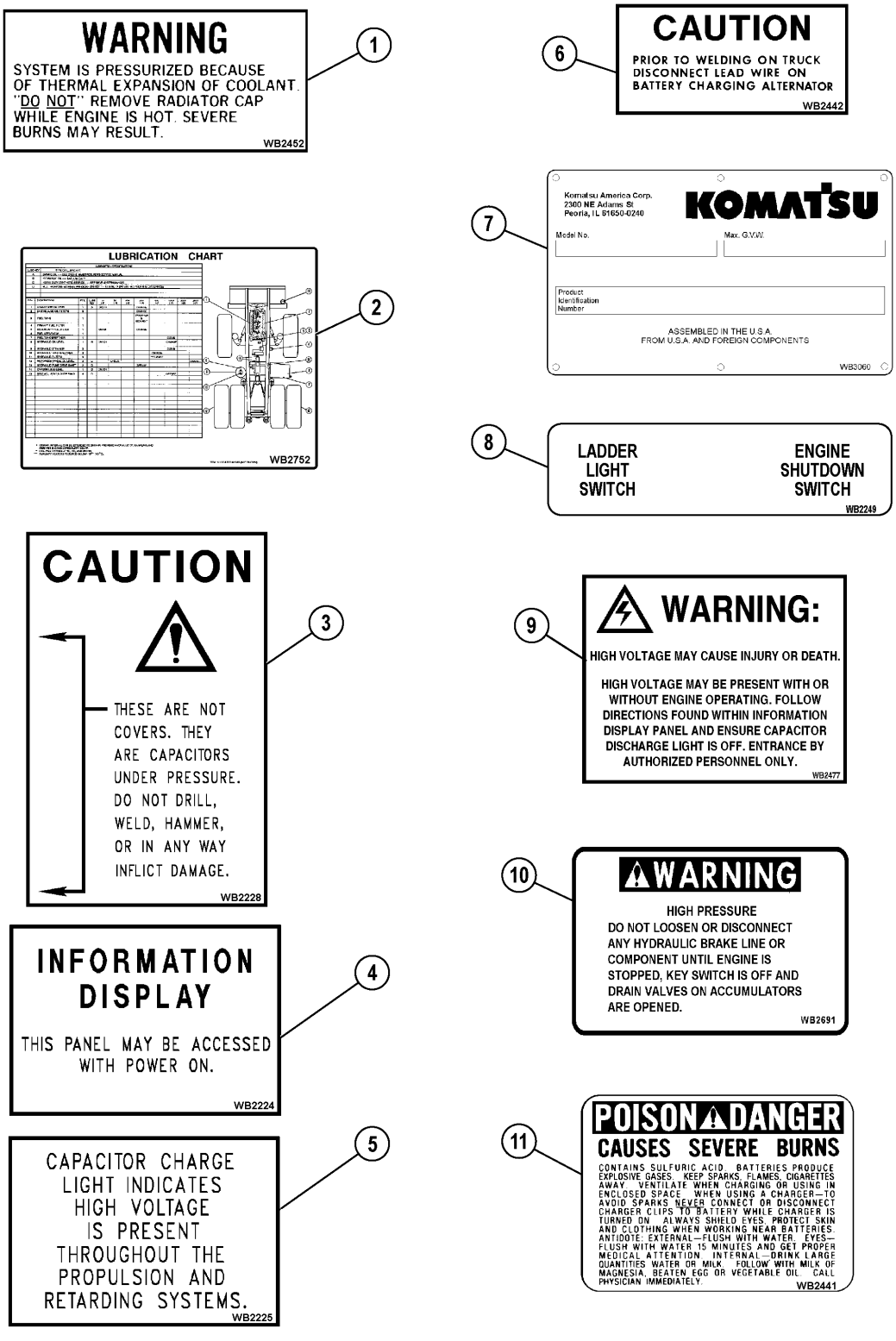
WARNING
SYSTEM IS PRESSURIZED BECAUSE OF THERMAL EXPANSION OF COOLANT. "DO NOT" REMOVE RADIATOR CAP WHILE ENGINE IS HOT. SEVERE BURNS MAY RESULT.
WB2452
1
LUBRICATION CHART
WB2752
2
CAUTION
THESE ARE NOT COVERS. THEY ARE CAPACITORS UNDER PRESSURE. DO NOT DRILL, WELD, HAMMER, OR IN ANY WAY INFLICT DAMAGE.
WB2228
3
INFORMATION DISPLAY
THIS PANEL MAY BE ACCESSED WITH POWER ON.
WB2224
4
CAPACITOR CHARGE LIGHT INDICATES HIGH VOLTAGE IS PRESENT THROUGHOUT THE PROPULSION AND RETARDING SYSTEMS.
WB2225
5
6
CAUTION
PRIOR TO WELDING ON TRUCK DISCONNECT LEAD WIRE ON BATTERY CHARGING ALTERNATOR
WB2442
7
Komatsu America Corp.
2300 NE Adams St
Peoria, IL 61650-0240
KOMATSU
Model No.
Max. G.V.W.
Product Identification Number
ASSEMBLED IN THE U.S.A.
FROM U.S.A. AND FOREIGN COMPONENTS
WB3060
8
LADDER LIGHT SWITCH
ENGINE SHUTDOWN SWITCH
WB2249
9
WARNING:
HIGH VOLTAGE MAY CAUSE INJURY OR DEATH.
HIGH VOLTAGE MAY BE PRESENT WITH OR WITHOUT ENGINE OPERATING. FOLLOW DIRECTIONS FOUND WITHIN INFORMATION DISPLAY PANEL AND ENSURE CAPACITOR DISCHARGE LIGHT IS OFF. ENTRANCE BY AUTHORIZED PERSONNEL ONLY.
WB2477
10
WARNING
HIGH PRESSURE
DO NOT LOOSEN OR DISCONNECT ANY HYDRAULIC BRAKE LINE OR COMPONENT UNTIL ENGINE IS STOPPED, KEY SWITCH IS OFF AND DRAIN VALVES ON ACCUMULATORS ARE OPENED.
WB2691
11
POISON DANGER
CAUSES SEVERE BURNS
CONTAINS SULFURIC ACID. BATTERIES PRODUCE EXPLOSIVE GASES. KEEP SPARKS, FLAMES, CIGARETTES AWAY. VENTILATE WHEN CHARGING OR USING IN ENCLOSED SPACE. WHEN USING A CHARGER—TO AVOID SPARKS NEVER CONNECT OR DISCONNECT CHARGER CLIPS TO BATTERY WHILE CHARGER IS TURNED ON. ALWAYS SHIELD EYES. PROTECT SKIN AND CLOTHING WHEN WORKING NEAR BATTERIES. ANTIDOTE: EXTERNAL—FLUSH WITH WATER. EYES—FLUSH WITH WATER 15 MINUTES AND GET PROPER MEDICAL ATTENTION. INTERNAL—DRINK LARGE QUANTITIES WATER OR MILK. FOLLOW WITH MILK OF MAGNESIA, BEATEN EGG OR VEGETABLE OIL. CALL PHYSICIAN IMMEDIATELY.
WB2441

61318Z

REF.	PART NUM.	QTY.	DESCRIPTION
1.00	WB2452	1	DECAL, RADIATOR CAP WARNING (TOP OF GRILLE)
2.00	WB2752	1	CHART, LUBE (BEHIND R.H. LADDER)
3.00	WB2228	1	DECAL, STORED ENERGY HAZARD (BATTERY BOX)
4.00	WB2224	1	DECAL, INFORMATION DISPLAY (CONTROL CABINET)
5.00	WB2225	2	DECAL, CAPACTOR CHARGE LIGHT (CONTROL CABINETS)
6.00	WB2442	1	DECAL, WELDING CAUTION (BATTERY CONTROL BOX)
7.00	WB3060	1	PLATE, PRODUCT IDENTIFICATION (FRONT R.H. FRAME)
7.01	WA3134	6	SCREW
8.00	WB2249	1	DECAL, LADDER LIGHT & ENGINE SHUTDOWN SWITCHES (FRONT L.H. FRAME)
9.00	WB2477	8	DECAL, HIGH VOLTAGE WARNING (CONTROL CABINET AND RETARDING GRID)
10.00	WB2691	1	DECAL, HIGH PRESSURE WARNING (BRAKE CABINET DOORS)
11.00	WB2441	1	DECAL, BATTERY DANGER (BATTERY BOX)

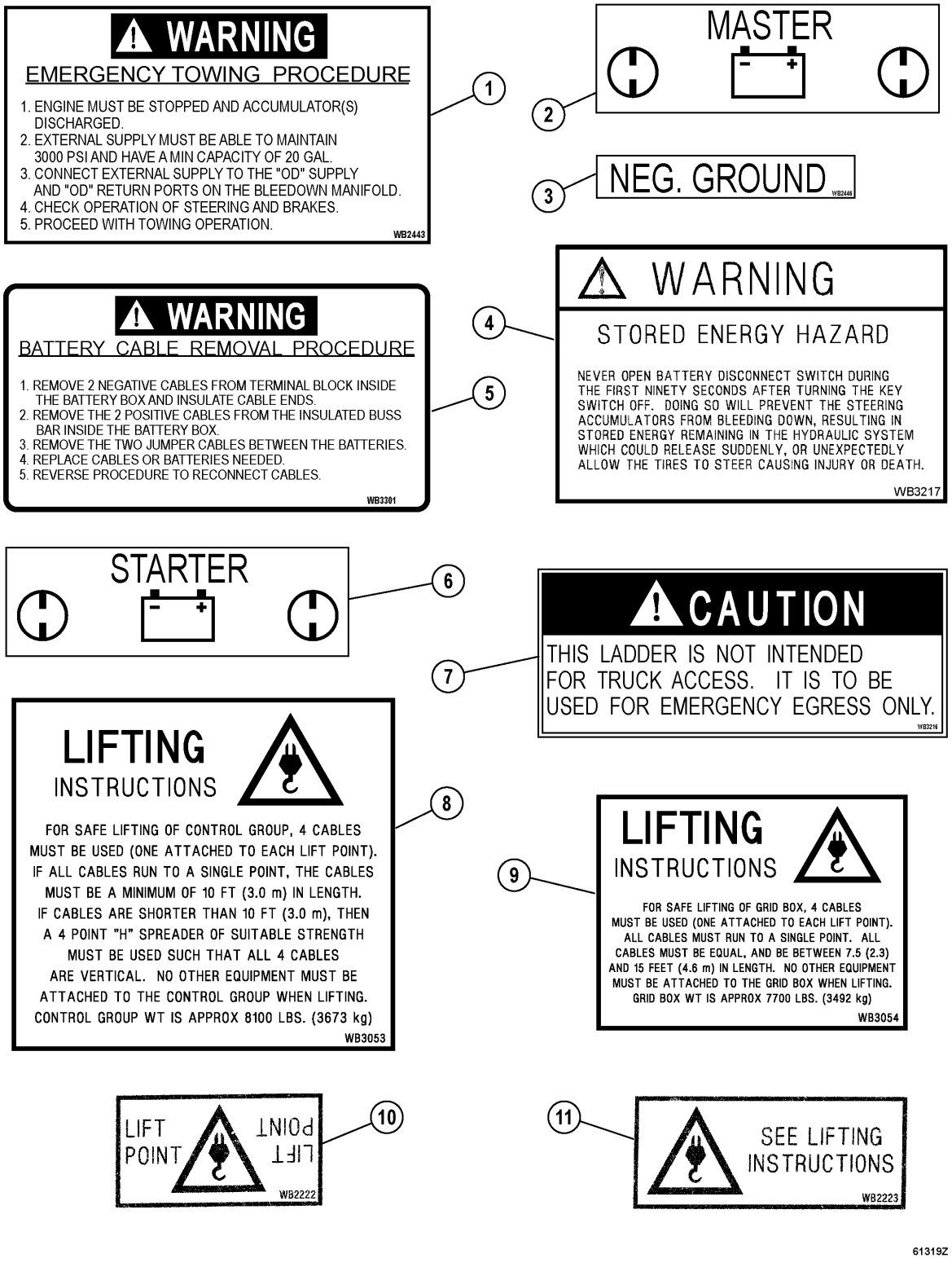
WARNING
EMERGENCY TOWING PROCEDURE
1. ENGINE MUST BE STOPPED AND ACCUMULATOR(S) DISCHARGED.
2. EXTERNAL SUPPLY MUST BE ABLE TO MAINTAIN 3000 PSI AND HAVE A MIN CAPACITY OF 20 GAL.
3. CONNECT EXTERNAL SUPPLY TO THE "OD" SUPPLY AND "OD" RETURN PORTS ON THE BLEEDOWN MANIFOLD.
4. CHECK OPERATION OF STEERING AND BRAKES.
5. PROCEED WITH TOWING OPERATION.
WB2443
1
MASTER
2
NEG. GROUND
WB2446
3
WARNING
BATTERY CABLE REMOVAL PROCEDURE
1. REMOVE 2 NEGATIVE CABLES FROM TERMINAL BLOCK INSIDE THE BATTERY BOX AND INSULATE CABLE ENDS.
2. REMOVE THE 2 POSITIVE CABLES FROM THE INSULATED BUSS BAR INSIDE THE BATTERY BOX.
3. REMOVE THE TWO JUMPER CABLES BETWEEN THE BATTERIES.
4. REPLACE CABLES OR BATTERIES NEEDED.
5. REVERSE PROCEDURE TO RECONNECT CABLES.
WB3301
5
4
WARNING
STORED ENERGY HAZARD
NEVER OPEN BATTERY DISCONNECT SWITCH DURING THE FIRST NINETY SECONDS AFTER TURNING THE KEY SWITCH OFF. DOING SO WILL PREVENT THE STEERING ACCUMULATORS FROM BLEEDING DOWN, RESULTING IN STORED ENERGY REMAINING IN THE HYDRAULIC SYSTEM WHICH COULD RELEASE SUDDENLY, OR UNEXPECTEDLY ALLOW THE TIRES TO STEER CAUSING INJURY OR DEATH.
WB3217
STARTER
6
CAUTION
7
THIS LADDER IS NOT INTENDED FOR TRUCK ACCESS. IT IS TO BE USED FOR EMERGENCY EGRESS ONLY.
WB3216
LIFTING
INSTRUCTIONS
8
FOR SAFE LIFTING OF CONTROL GROUP, 4 CABLES MUST BE USED (ONE ATTACHED TO EACH LIFT POINT). IF ALL CABLES RUN TO A SINGLE POINT, THE CABLES MUST BE A MINIMUM OF 10 FT (3.0 m) IN LENGTH. IF CABLES ARE SHORTER THAN 10 FT (3.0 m), THEN A 4 POINT "H" SPREADER OF SUITABLE STRENGTH MUST BE USED SUCH THAT ALL 4 CABLES ARE VERTICAL. NO OTHER EQUIPMENT MUST BE ATTACHED TO THE CONTROL GROUP WHEN LIFTING. CONTROL GROUP WT IS APPROX 8100 LBS. (3673 kg)
WB3053
9
LIFTING
INSTRUCTIONS
FOR SAFE LIFTING OF GRID BOX, 4 CABLES MUST BE USED (ONE ATTACHED TO EACH LIFT POINT). ALL CABLES MUST RUN TO A SINGLE POINT. ALL CABLES MUST BE EQUAL, AND BE BETWEEN 7.5 (2.3) AND 15 FEET (4.6 m) IN LENGTH. NO OTHER EQUIPMENT MUST BE ATTACHED TO THE GRID BOX WHEN LIFTING. GRID BOX WT IS APPROX 7700 LBS. (3492 kg)
WB3054
LIFT POINT
LIFT POINT
WB2222
10
11
SEE LIFTING INSTRUCTIONS
WB2223
61319Z

REF.	PART NUM.	QTY.	DESCRIPTION
1.00	WB2443	1	DECAL, EMERGENCY TOWING PROCEDURE (L.H. SIDE OF FRAME BEHIND ACCUMULATORS)
2.00	WB3299	1	DECAL, MASTER DISCONNECT (BATTERY CONTROL BOX)
3.00	WB2446	2	DECAL, NEGATIVE GROUND (BATTERY CONTROL BOX & BATTERY BOX)
4.00	WB3217	2	DECAL, STORED ENERGY HAZARD (BATTERY BOX)
5.00	WB3301	2	DECAL, BATTERY CABLE REMOVAL (BATTERY BOX)
6.00	WB3300	1	DECAL, STARTER DISCONNECT (BATTERY CONTROL BOX)
7.00	WB3216	2	DECAL, EMERGENCY EXIT (BOTH EMERGENCY LADDERS)
8.00	WB3053	2	DECAL, LIFTING INSTRUCTIONS (CONTROL CABINET)
9.00	WB3054	2	DECAL, LIFTING INSTRUCTIONS (FRONT OF RETARDING GRID BOX)
10.00	WB2222	8	DECAL, LIFTING POINT (TOP OF CAB AND RETARDING GRID BOX)
11.00	WB2223	2	DECAL, LIFTING (REAR OF CAB)

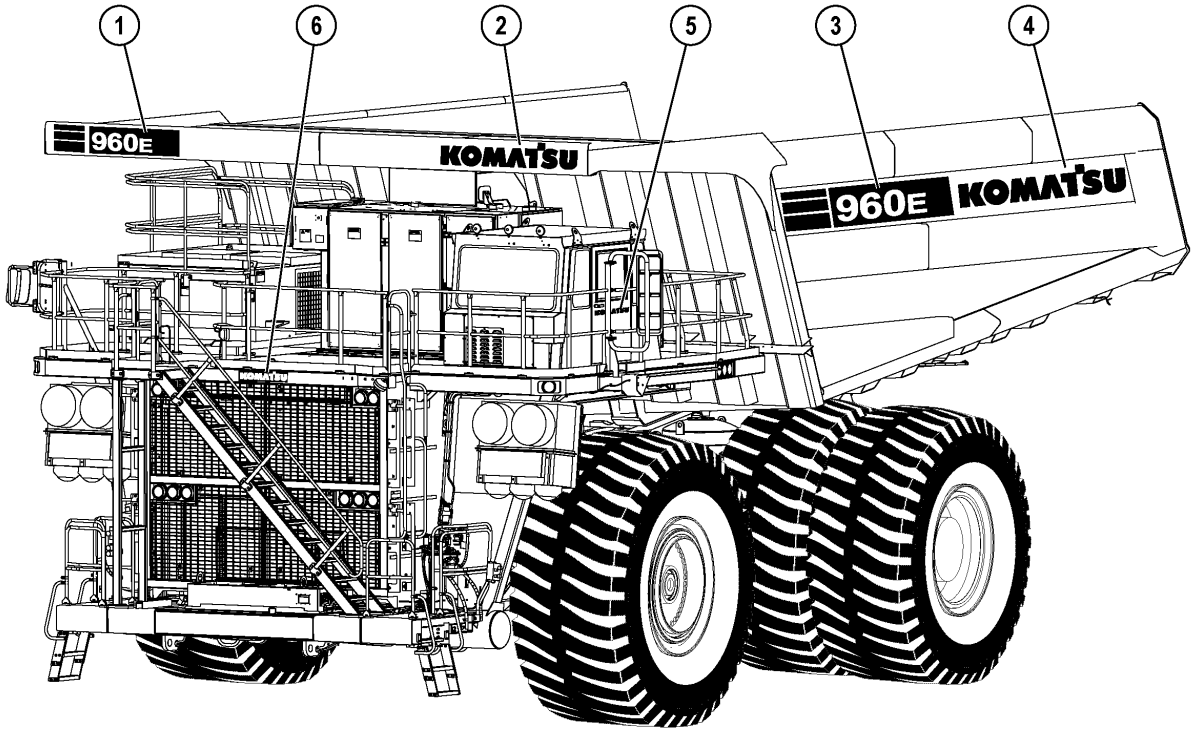

61316Z

REF.	PART NUM.	QTY.	DESCRIPTION
1.00	WB3057	1	DECAL, 960E
2.00	09690-P1800	1	DECAL, KOMATSU
3.00	WB3055	1	DECAL, 960E (L.H. SIDE OF BODY)
3.01	WB3056	1	DECAL, 960E (R.H. SIDE OF BODY)
4.00	09690-P2500	2	DECAL, KOMATSU
5.00	09690-P0710	1	DECAL, KOMATSU
6.00	09690-F1250	1	DECAL, KOMATSU
6.01	EM7216	1	PLATE, MOUNTING
6.02	MM0042	5	CAPSCREW - M10 X 1.50 X 25
6.03	MM0471	5	LOCKWASHER - M10

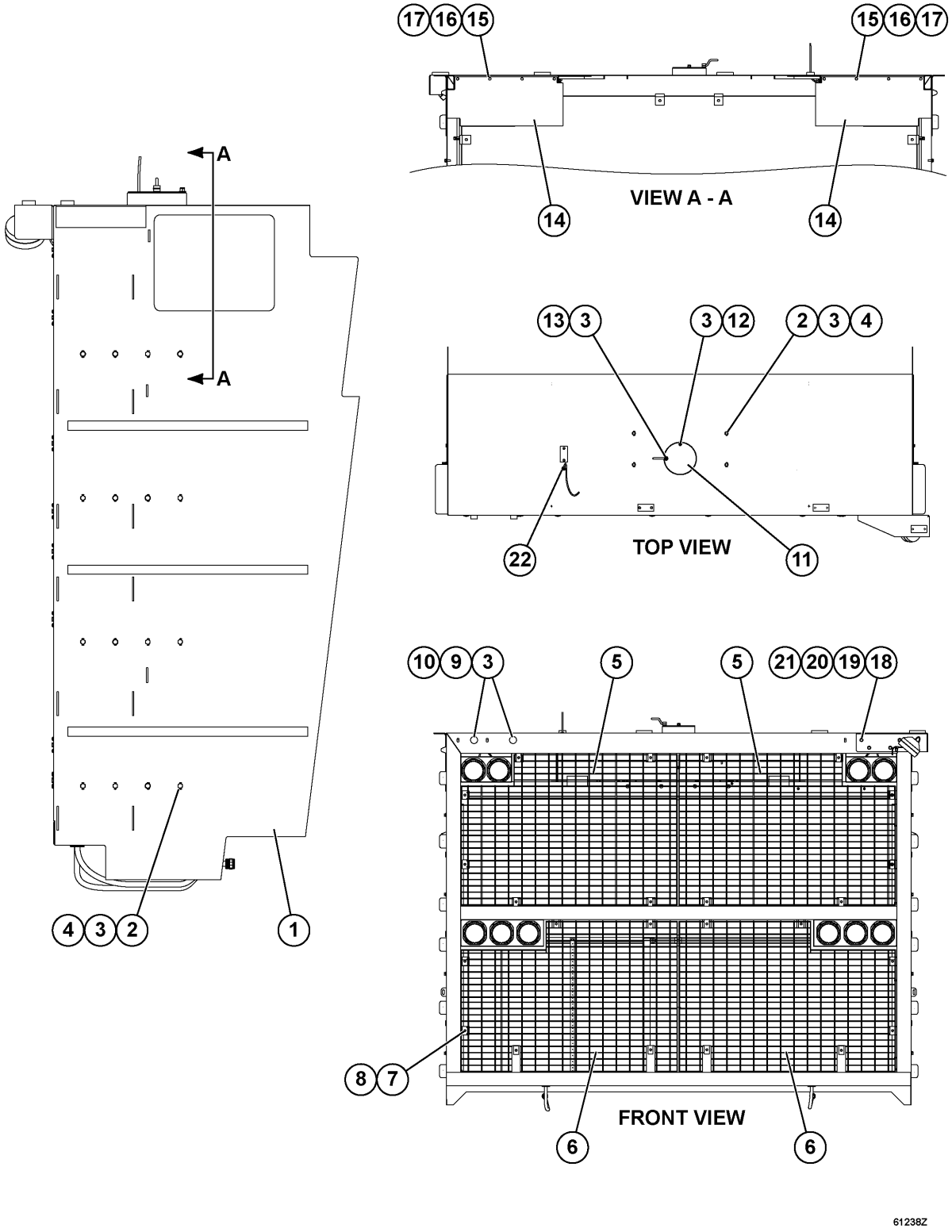
17 16 15
15 16 17
VIEW A - A
14
14
A
A
13 3
3 12
2 3 4
22
TOP VIEW
11
10 9 3
5
5
21 20 19 18
4 3 2
1
8 7
FRONT VIEW
6
6
61238Z

REF.	PART NUM.	QTY.	DESCRIPTION
1.00	EM7217	1	HOUSING, GRILLE
2.00	TR1376	36	CAPSCREW - 1/2" - 13NC X 1 1/4"
3.00	TR6008	40	FLAT WASHER - 1/2"
4.00	TR5445	36	LOCKWASHER - 1/2"
5.00	EJ2479	2	INSERT, GRILLE - TOP
6.00	EJ6260	2	INSERT, GRILLE - BOTTOM
7.00	TY7538	24	CLIP
8.00	WA3364	24	LOCKSCREW
9.00	PB9890	2	BUMPER, RUBBER
10.00	VG7146	2	CAPSCREW - 1/2" - 13NC X 3/4"
11.00	EF8143	1	PLATE, COVER
12.00	DF3500	1	LOCKNUT - 1/2" - 13NC
13.00	PB6877	1	NUT, LEVER - 1/2" - 13NC
14.00	EH8123	2	AIR DAM (TOP)
15.00	MM0042	8	CAPSCREW - M10 X 1.50 X 25
16.00	MM0461	8	FLAT WASHER - M10
17.00	MM0471	8	LOCKWASHER - M10
18.00	EM3855	1	BRACKET
19.00	MM0626	4	CAPSCREW - M12 X 1.75 X 90
20.00	MM0714	8	FLAT WASHER - M12 (HARDENED)
21.00	MM0694	4	LOCKNUT - M12 X 1.75
22.00	SG2103	1	GROMMET, RUBBER

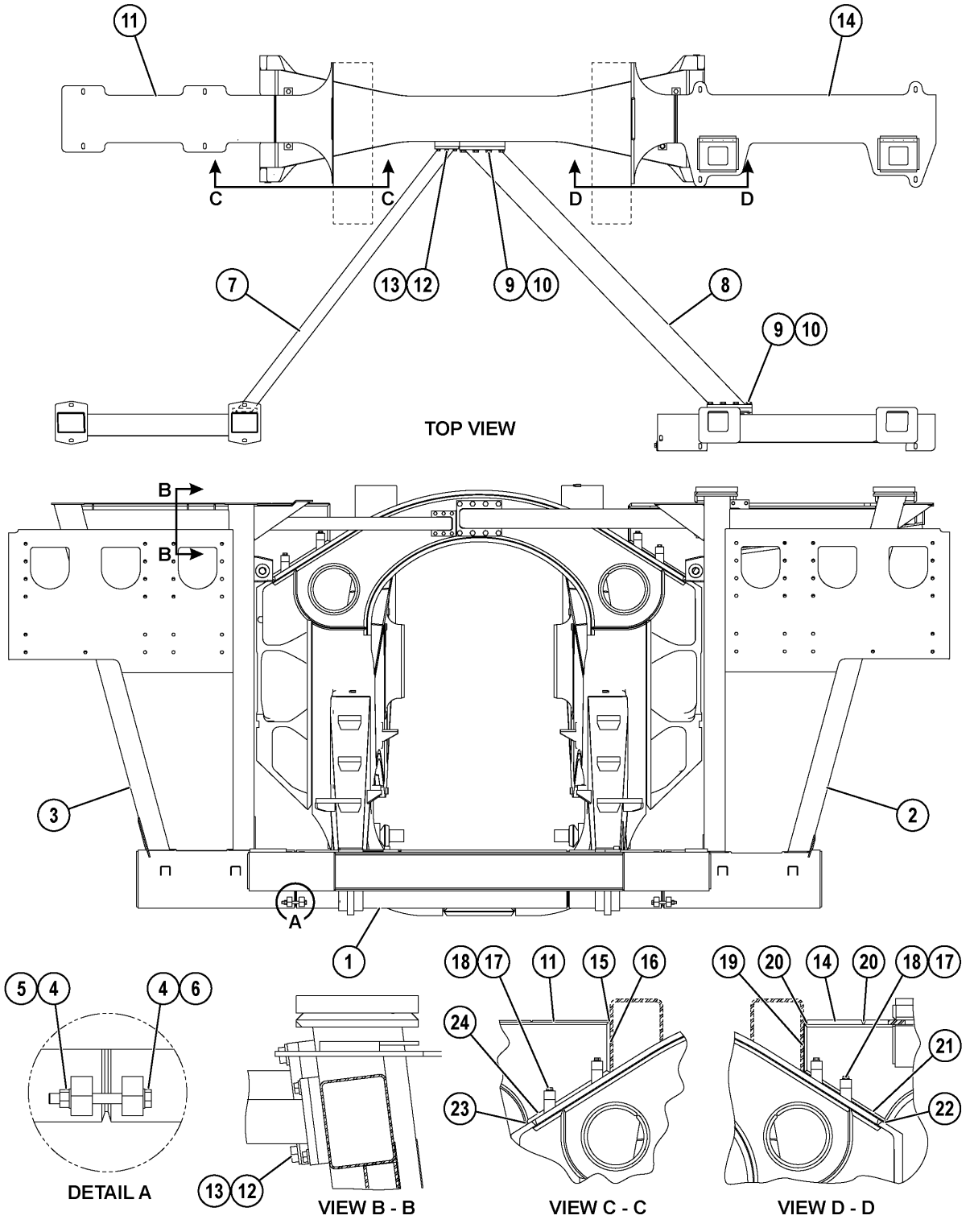
11
14
C
C
D
D
7
13
12
9
10
8
9
10
TOP VIEW
B
B
3
2
A
1
5
4
4
6
DETAIL A
13
12
VIEW B - B
18
17
11
15
16
24
23
VIEW C - C
19
20
14
20
18
17
21
22
VIEW D - D
60959Z

REF.	PART NUM.	QTY.	DESCRIPTION
1.00		1	FRAME, MAIN (1)
2.00		1	UPRIGHT - L.H. (1)
3.00		1	UPRIGHT - R.H. (1)
4.00	MM0465	16	FLAT WASHER - M20
5.00	MM0168	8	CAPSCREW - M20 X 2.50 X 180
6.00	MM0182	8	NUT - M20 X 2.50
7.00		1	TUBE, ROPS - L.H. (1)
8.00		1	TUBE, ROPS - R.H. (1)
9.00	01643-32460	16	FLAT WASHER - M24 (HARDENED)
10.00	MM0058	16	CAPSCREW - M24 X 3.00 X 60
11.00	EM0764	1	SUPPORT, DECK - R.H.
12.00	01643-31645	12	FLAT WASHER - M16 (HARDENED)
13.00	MM0071	12	CAPSCREW - M16 X 2.00 X 45
14.00	EL2822	1	SUPPORT, DECK - L.H.
15.00	EK5448	2	BACKER
16.00	EL0234	2	BACKER
17.00	01643-32060	8	FLAT WASHER - M20 (HARDENED)
18.00	MM0109	8	CAPSCREW - M20 X 2.50 X 90
19.00	EL0235	2	BACKER
20.00	EK5807	2	BACKER
21.00	EL2824	2	BACKER
22.00	EK3336	1	BACKER
23.00	EK4965	1	BACKER
24.00	EL2823	2	BACKER

NOTE: (1) ORDER FROM FACTORY.

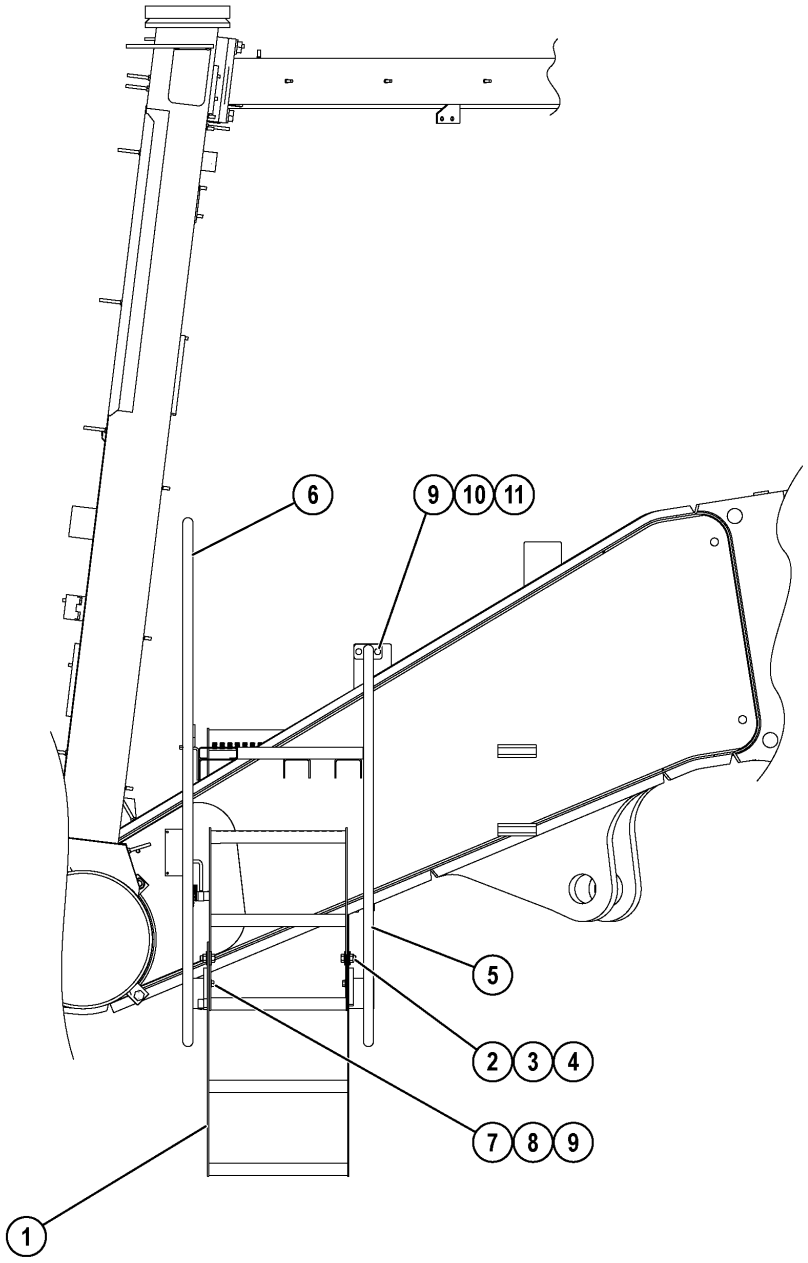

61070Z

REF.	PART NUM.	QTY.	DESCRIPTION
1.00	EL0163	2	LADDER, ACCESS (BOTH SIDES)
2.00	VN9952	4	LOCKNUT - 5/8" - 11NC
3.00	WA4863	8	FLAT WASHER - 5/8"
4.00	TV1748	4	CAPSCREW - 5/8" - 11NC X 1 1/2"
5.00	EM4705	1	HANDRAIL - L.H. SIDE
5.01	EM4701	1	HANDRAIL - R.H. SIDE
6.00	EM4706	1	HANDRAIL - L.H. SIDE
6.01	EM4704	1	HANDRAIL - R.H. SIDE
7.00	MM0619	12	CAPSCREW - M12 X 1.75 X 35
8.00	MM0694	12	LOCKNUT - M12 X 1.75
9.00	MM0462	28	FLAT WASHER - M12
10.00	MM0618	4	CAPSCREW - M12 X 1.75 X 30
11.00	MM0472	4	LOCKWASHER - M12

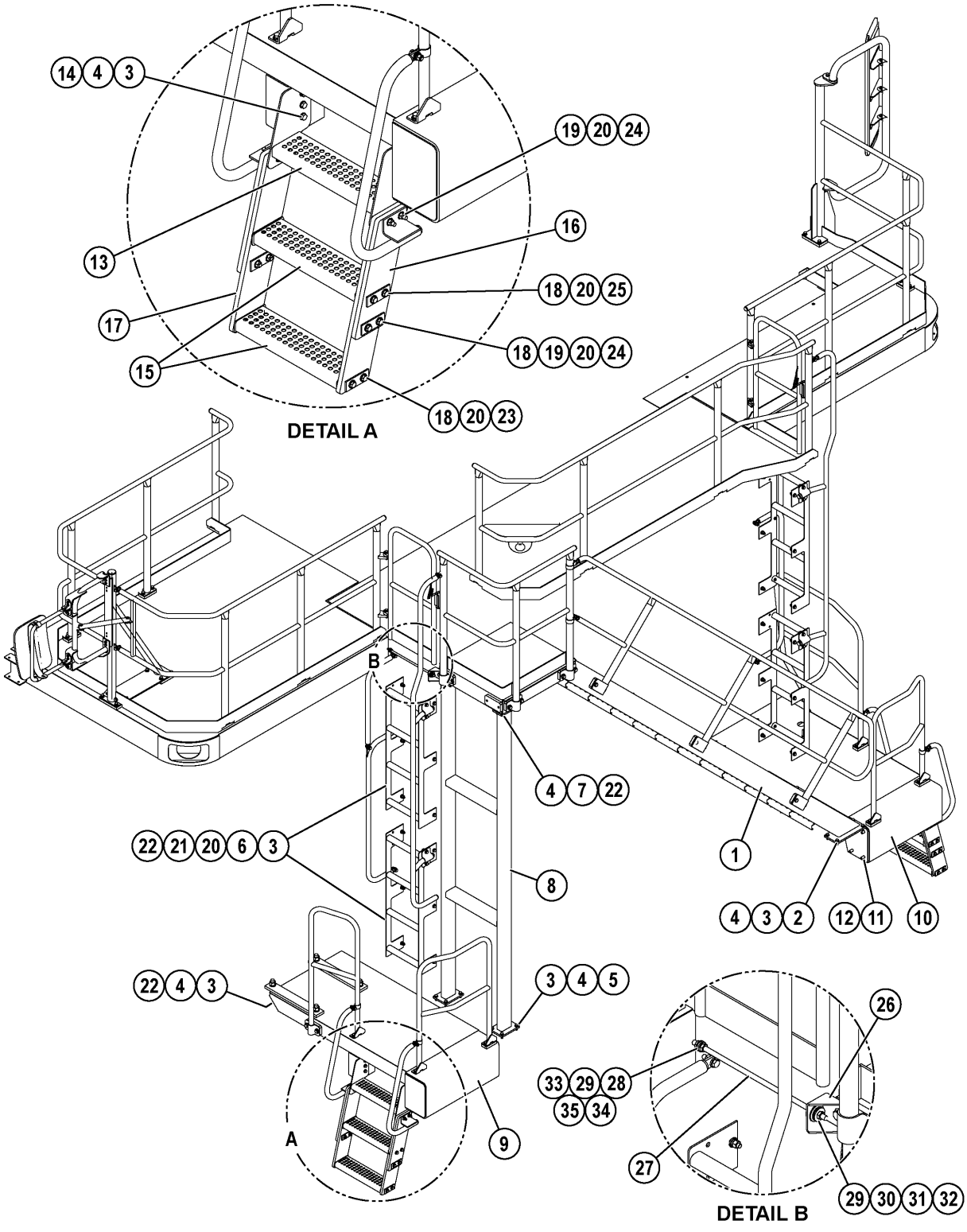
14 4 3
19 20 24
13
16
18 20 25
17
18 19 20 24
15
18 20 23
DETAIL A
B
4 7 22
22 21 20 6 3
1
8
4 3 2 12 11 10
22 4 3
3 4 5
A
9
33 29 28
35 34
26
27
29 30 31 32
DETAIL B
61236Z

REF.	PART NUM.	QTY.	DESCRIPTION
1.00	EM0323	1	LADDER, DIAGONAL (STAIRS)
2.00	EJ6571	AR	SHIM
3.00	MM0619	54	CAPSCREW - M12 X 1.75 X 35
4.00	MM0462	48	FLAT WASHER - M12
5.00	EJ6569	AR	SHIM
6.00	EM0338	4	LADDER, VERTICAL
7.00	MM0621	4	CAPSCREW - M12 X 1.75 X 45
8.00	EL0144	1	SUPPORT, DIAGONAL LADDER
9.00	EM0567	1	PLATFORM - R.H.
10.00	EM3247	1	PLATFORM - L.H.
11.00	MM0071	8	CAPSCREW - M16 X 2.00 X 45
12.00	MM0706	8	FLAT WASHER - M16 (HARDENED)
13.00	EL6438	2	STEP
14.00	MM0720	12	NUT - M12 X 1.75
15.00	EL0827	4	TREAD
16.00	EL6439	4	STRAP, RUBBER
17.00	EL6436	2	STRAP, RUBBER
18.00	EL0828	16	FLAT
19.00	MM0624	16	CAPSCREW - M12 X 1.75 X 70
20.00	MM0714	96	FLAT WASHER - M12 (HARDENED)
21.00	MM0472	24	LOCKWASHER - M12
22.00	MM0179	32	NUT - M12 X 1.75
23.00	MM0622	8	CAPSCREW - M12 X 1.75 X 50
24.00	MM0694	16	LOCKNUT - M12 X 1.75
25.00	MM0623	8	CAPSCREW - M12 X 1.75 X 60
26.00	EM0573	1	BRACKET
27.00	EM4603	1	ROD, THREADED
28.00	PC1247	1	ROD END, FEMALE (SPECIAL)
29.00	C1523	3	NUT - 1/2" - 13NC
30.00	VP3771	1	MOUNT SHOCK
31.00	EK9095	1	WASHER
32.00	EK9094	1	WASHER
33.00	VC4898	1	CAPSCREW - 1/2" - 13NC X 2 1/2"
34.00	WA4728	4	FLAT WASHER - 1/2" (HARDENED)
35.00	DF3500	1	LOCKNUT - 1/2" - 13NC

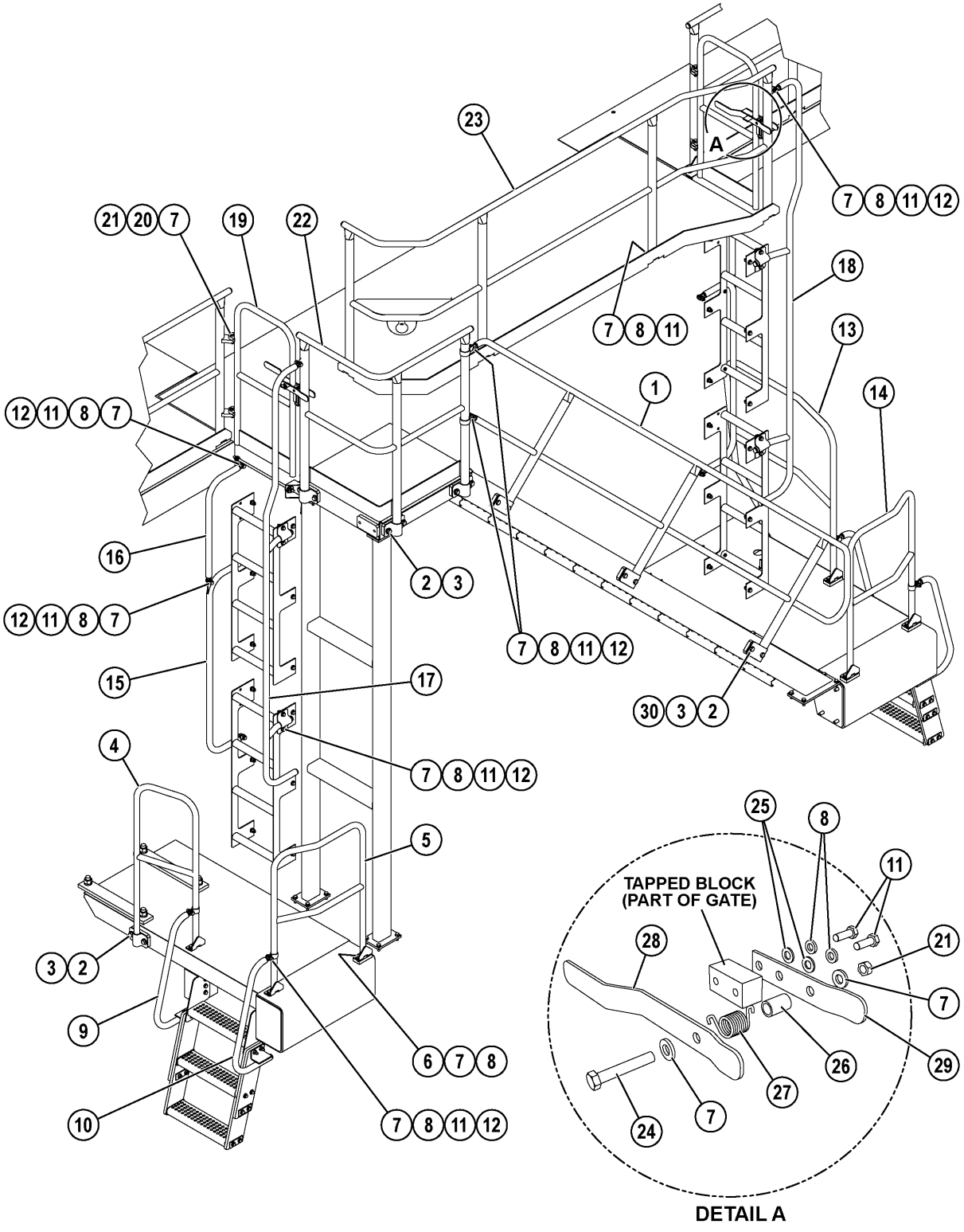
23
A
7 8 11 12
21 20 7
19
22
18
7 8 11
13
1
14
12 11 8 7
16
2 3
12 11 8 7
7 8 11 12
15
17
30 3 2
4
7 8 11 12
5
3 2
9
6 7 8
10
7 8 11 12
25
8
11
TAPPED BLOCK
(PART OF GATE)
28
21
7
26
29
27
7
24
DETAIL A
61237Z

REF.	PART NUM.	QTY.	DESCRIPTION
1.00	EM3891	1	HANDRAIL, DIAGONAL LADDER
2.00	MM0012	16	CAPSCREW - M16 X 2.00 X 25
3.00	MM0706	16	FLAT WASHER - M16 (HARDENED)
4.00	EM0326	1	HANDRAIL, R.H. PLATFORM
5.00	EM0823	1	HANDRAIL, R.H. PLATFORM - FRONT
6.00	MM0618	12	CAPSCREW - M12 X 1.75 X 30
7.00	MM0714	76	FLAT WASHER - M12 (HARDENED)
8.00	MM0472	48	LOCKWASHER - M12
9.00	EL6441	2	HANDRAIL, STEPS
10.00	EL6443	2	HANDRAIL, STEPS
11.00	MM0619	38	CAPSCREW - M12 X 1.75 X 35
12.00	MM0179	22	NUT - M12 X 1.75
13.00	EM0820	1	HANDRAIL, L.H. PLATFORM
14.00	EM0818	1	HANDRAIL, L.H. PLATFORM - FRONT
15.00	EL0874	2	HANDRAIL, VERTICAL LADDER - LOWER
16.00	EM1406	2	HANDRAIL, VERTICAL LADDER - UPPER
17.00	EM0321	1	HANDRAIL, VERTICAL LADDER - R.H. SIDE
18.00	EM0345	1	HANDRAIL, VERTICAL LADDER - L.H. SIDE
19.00	EM3823	2	GATE
20.00	MM0623	4	CAPSCREW - M12 X 1.75 X 60
21.00	MM0694	4	LOCKNUT - M12 X 1.75
22.00	EM3863	1	HANDRAIL, DIAGONAL LADDER PLATFORM
23.00	EM3862	1	HANDRAIL, GRILLE
24.00	MM0624	2	CAPSCREW - M12 X 1.75 X 70
25.00	MM0462	4	FLAT WASHER - M12
26.00	EL3986	2	SPACER
27.00	PC2322	1	SPRING, GATE LATCH - L.H.
27.01	PC2325	1	SPRING, GATE LATCH - R.H.
28.00	EM0558	2	PLATE, BENT
29.00	EM0561	2	PLATE, BENT
30.00	EM3894	3	CLAMP

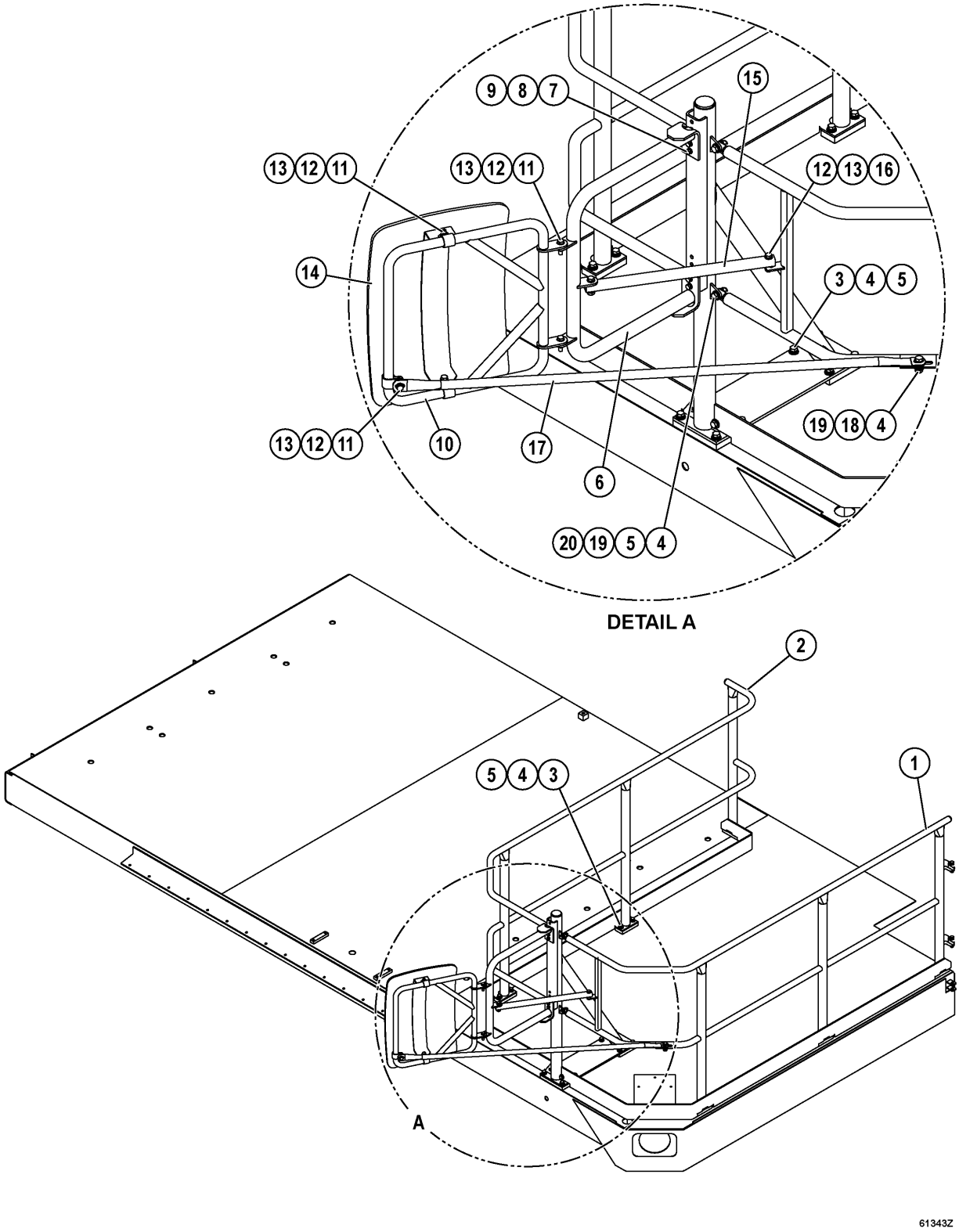
9
8
7
15
13
12
11
13
12
11
12
13
16
14
3
4
5
13
12
11
10
17
6
19
18
4
20
19
5
4
DETAIL A
2
5
4
3
1
A
61343Z

REF.	PART NUM.	QTY.	DESCRIPTION
1.00	EM0317	1	HANDRAIL, R.H. DECK - FRONT
2.00	EL1897	1	HANDRAIL, R.H. DECK - REAR
3.00	MM0618	20	CAPSCREW - M12 X 1.75 X 30
4.00	MM0714	28	FLAT WASHER - M12 (HARDENED)
5.00	MM0472	23	LOCKWASHER - M12
6.00	EK7585	1	MOUNT, MIRROR
7.00	MM0594	4	CAPSCREW - M8 X 1.25 X 25
8.00	MM0470	4	LOCKWASHER - M8
9.00	MM0460	4	FLAT WASHER - M8
10.00	EM1438	1	ARM BOW ASSEMBLY - R.H.
11.00	MM0608	5	CAPSCREW - M10 X 1.50 X 40
12.00	MM0693	7	LOCKNUT - M10 X 1.50
13.00	MM0713	14	FLAT WASHER - M10 (HARDENED)
14.00	PC1003	1	MIRROR, R.H. CONVEX
15.00	EK7589	1	BRACE
16.00	MM0610	2	CAPSCREW - M10 X 1.50 X 50
17.00	EK9055	1	BRACE, MIRROR
18.00	MM0619	1	CAPSCREW - M12 X 1.75 X 35
19.00	MM0179	4	NUT - M12 X 1.75
20.00	MM0620	3	CAPSCREW - M12 X 1.75 X 40

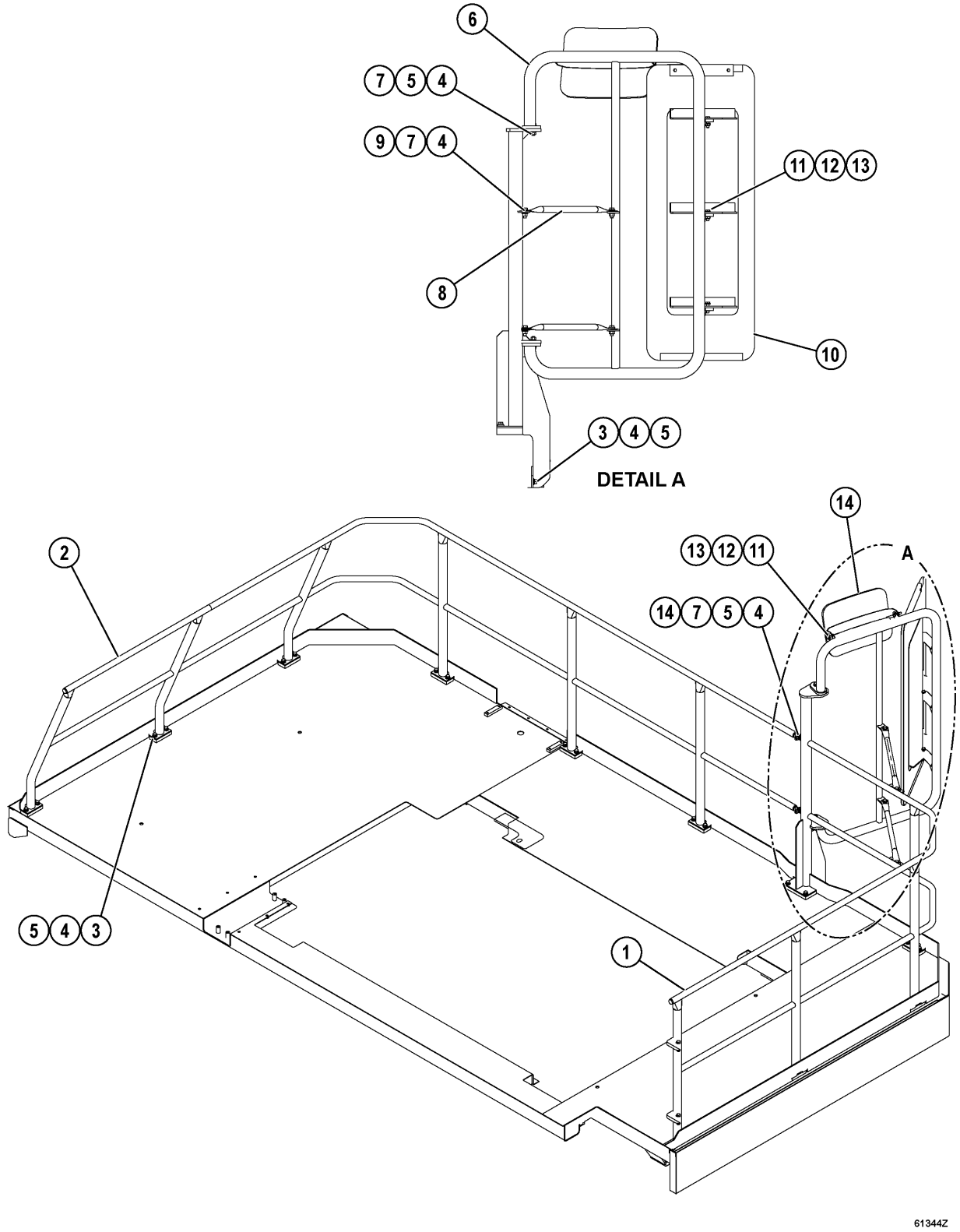
6
7 5 4
9 7 4
11 12 13
8
10
3 4 5
DETAIL A
14
13 12 11
A
14 7 5 4
2
5 4 3
1
61344Z

REF.	PART NUM.	QTY.	DESCRIPTION
1.00	EM1428	1	HANDRAIL, L.H. DECK - FRONT
2.00	EK9073	1	HANDRAIL, L.H. DECK - REAR
3.00	MM0618	26	CAPSCREW - M12 X 1.75 X 30
4.00	MM0714	46	FLAT WASHER - M12 (HARDENED)
5.00	MM0472	31	LOCKWASHER - M12
6.00	EM1420	1	MOUNT, MIRROR
7.00	MM0179	9	NUT - M12 X 1.75
8.00	EM1421	2	BRACE, MIRROR
9.00	MM0619	4	CAPSCREW - M12 X 1.75 X 35
10.00	PC2227	1	MIRROR, FLAT
11.00	MM0608	5	CAPSCREW - M10 X 1.50 X 40
12.00	MM0693	5	LOCKNUT - M10 X 1.50
13.00	MM0713	10	FLAT WASHER - M10 (HARDENED)
14.00	MM0620	3	CAPSCREW - M12 X 1.75 X 40

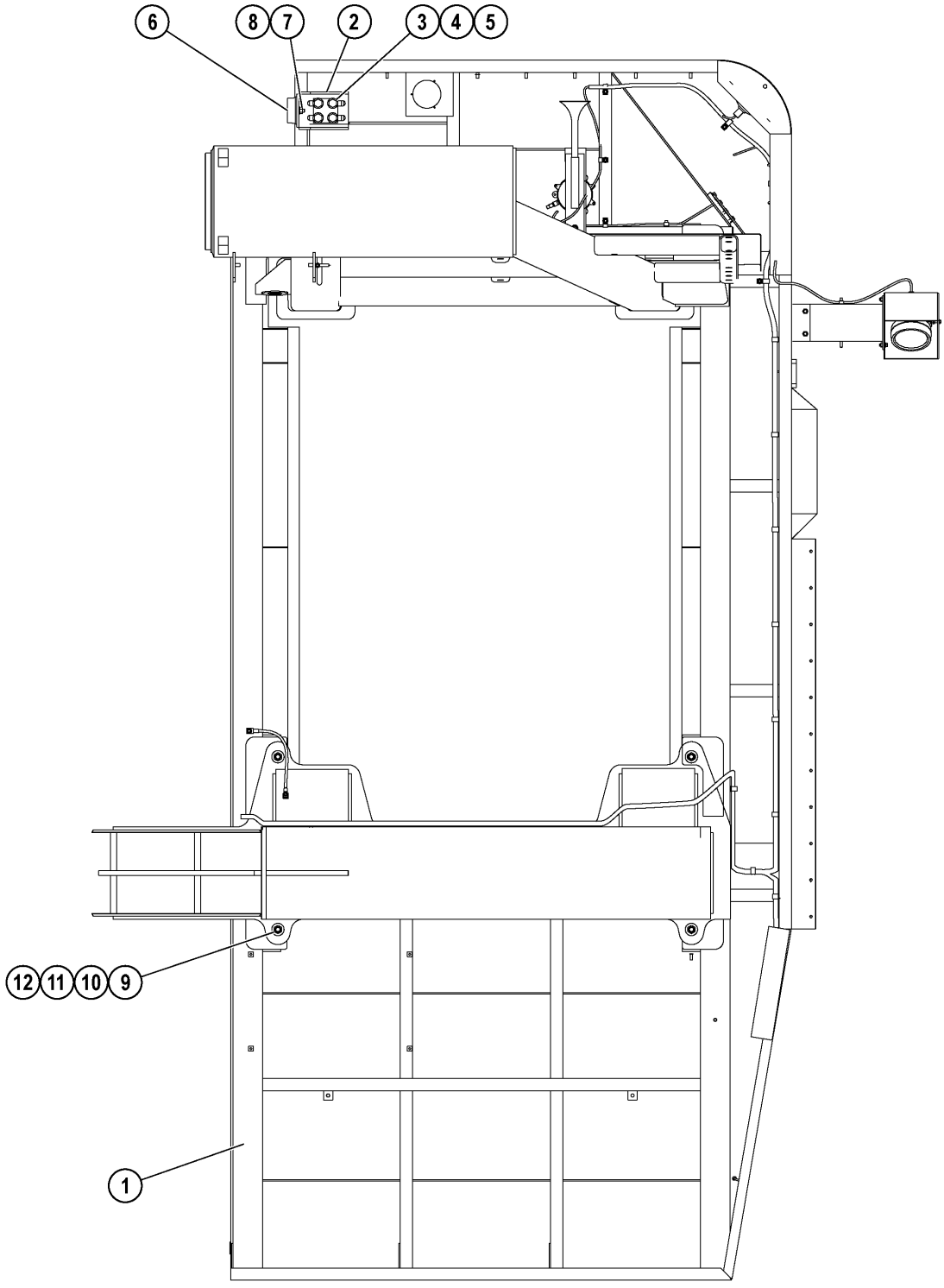
6
8
7
2
3
4
5
12
11
10
9
1
61081Z

REF.	PART NUM.	QTY.	DESCRIPTION
1.00	EM4622	1	DECK - L.H.
2.00	EJ2443	1	BRACKET
3.00	EC7589	1	PLATE
4.00	MM0031	4	CAPSCREW - M20 X 2.50 X 45
5.00	MM0707	4	FLAT WASHER - M20 (HARDENED)
6.00	D104556	1	BUMPER
7.00	VN9780	1	FLAT WASHER - 9/16"
8.00	TR6643	1	NUT - 1/2" - 13NC
9.00	MM0135	6	CAPSCREW - M20 X 2.50 X 120
10.00	EC7594	6	FLAT WASHER (HARDENED)
11.00	EG9144	6	SPACER
12.00	MM0697	6	LOCKNUT - M20 X 2.50

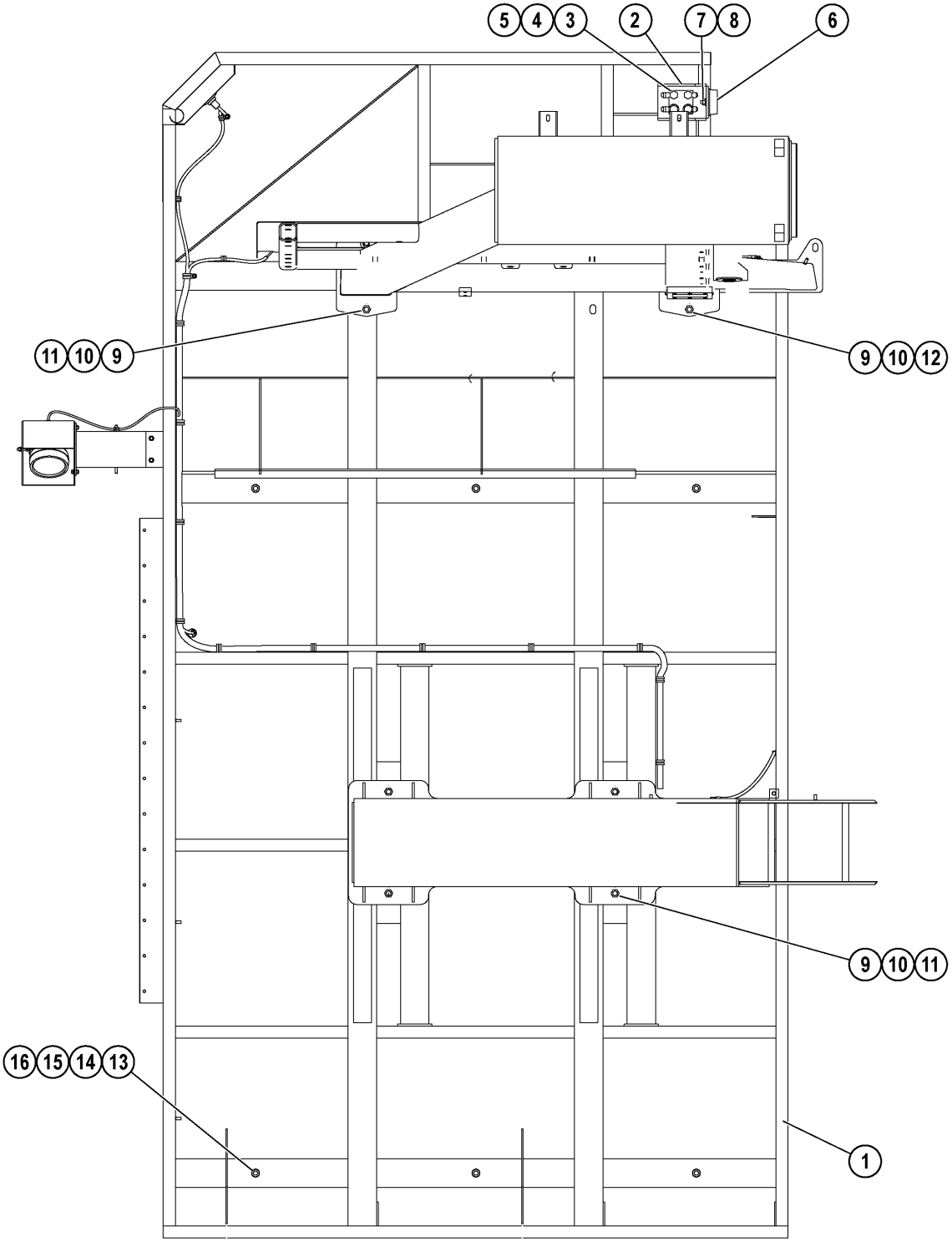
5 4 3
2
7 8
6
11 10 9
9 10 12
9 10 11
16 15 14 13
1
61330Z

REF.	PART NUM.	QTY.	DESCRIPTION
1.00	EM0308	1	DECK - R.H.
2.00	EJ2443	1	BRACKET
3.00	EC7589	1	PLATE
4.00	MM0031	4	CAPSCREW - M20 X 2.50 X 45
5.00	MM0707	4	FLAT WASHER - M20 (HARDENED)
6.00	D104556	1	BUMPER
7.00	VN9780	1	FLAT WASHER - 9/16"
8.00	TR6643	1	NUT - 1/2" - 13NC
9.00	EC7594	16	FLAT WASHER (HARDENED)
10.00	MM0697	8	LOCKNUT - M20 X 2.50
11.00	MM0091	5	CAPSCREW - M20 X 2.50 X 80
12.00	MM0085	3	CAPSCREW - M20 X 2.50 X 70
13.00	MM0164	6	CAPSCREW - M20 X 2.50 X 160
14.00	01643-32060	12	FLAT WASHER - M20 (HARDENED)
15.00	MM0475	6	LOCKWASHER - M20
16.00	MM0182	6	NUT - M20 X 2.50

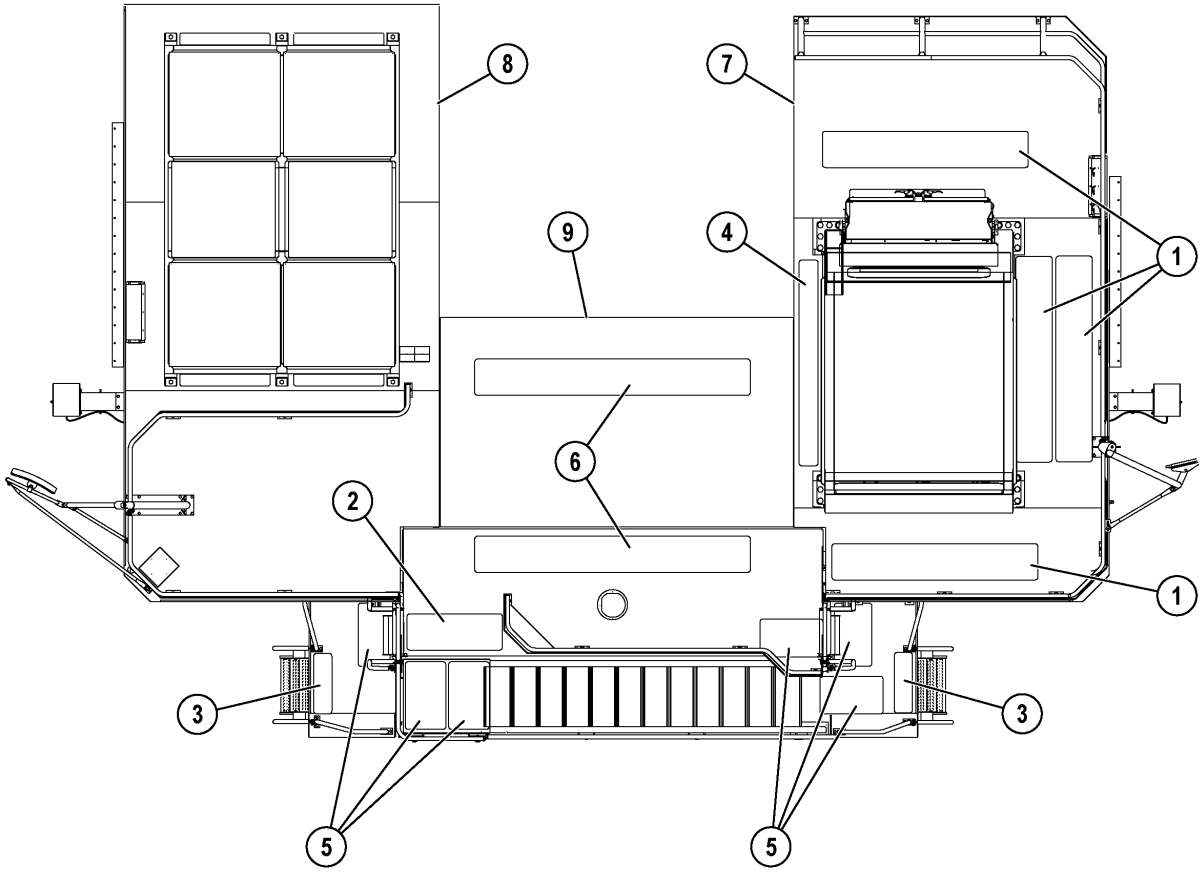

61327Z

REF.	PART NUM.	QTY.	DESCRIPTION
1.00	TY9256	4	STRIP, ANTI-SLIP
2.00	EC1733	1	STRIP, ANTI-SLIP
3.00	EC6799	2	STRIP, ANTI-SLIP
4.00	EC1734	1	STRIP, ANTI-SLIP
5.00	TY9258	6	STRIP, ANTI-SLIP
6.00	TY9254	2	STRIP, ANTI-SLIP
7.00	EM4622	1	DECK - L.H.
8.00	EM0308	1	DECK - R.H.
9.00	EM0309	1	DECK, CENTER

COOLING SYSTEM

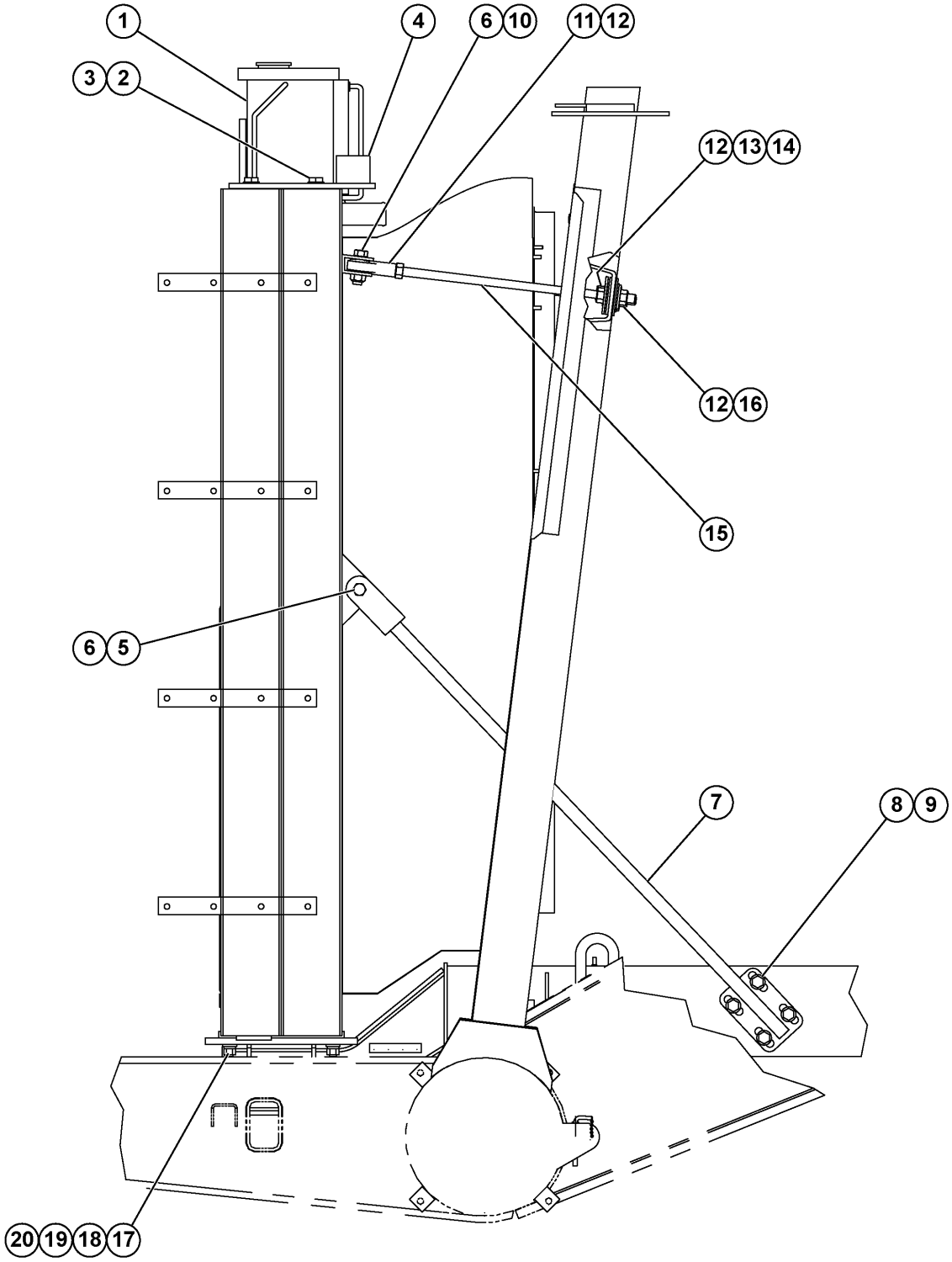
1
4
6
10
11
12
3
2
12
13
14
12
16
15
6
5
7
8
9
20
19
18
17
61069Z

REF.	PART NUM.	QTY.	DESCRIPTION
1.00	PC2169	1	RADIATOR & SHROUD ASSEMBLY (SEE INDEX)
2.00	VN9106	4	CAPSCREW - 1 1/4" - 7NC X 3"
3.00	WA0366	4	FLAT WASHER - 1 1/4" (HARDENED)
4.00	EH8107	1	BRACKET - R.H.
4.01	EH8108	1	BRACKET - L.H.
5.00	C1667	2	CAPSCREW - 1" - 8NC X 2 1/2"
6.00	VH8186	4	LOCKNUT - 1" - 8NC
7.00	EJ5637	2	BAR, STABILIZER
8.00	MM0029	8	CAPSCREW - M16 X 2.00 X 30
9.00	MM0706	8	FLAT WASHER - M16 (HARDENED)
10.00	E3909	2	CAPSCREW - 1" - 8NC X 3 1/4"
11.00	PB6831	2	ROD END
12.00	C1532	6	NUT (SPECIAL)
13.00	TG6760	2	MOUNT, RUBBER
14.00	TK6567	2	FLAT WASHER (SPECIAL)
15.00	EF3378	2	ROD, THREADED
16.00	TK6566	2	FLAT WASHER (SPECIAL)
17.00	MM0475	8	LOCKWASHER - M20
18.00	MM0091	8	CAPSCREW - M20 X 2.50 X 80
19.00	01643-32060	16	FLAT WASHER - M20 (HARDENED)
20.00	MM0182	8	NUT - M20 X 2.50

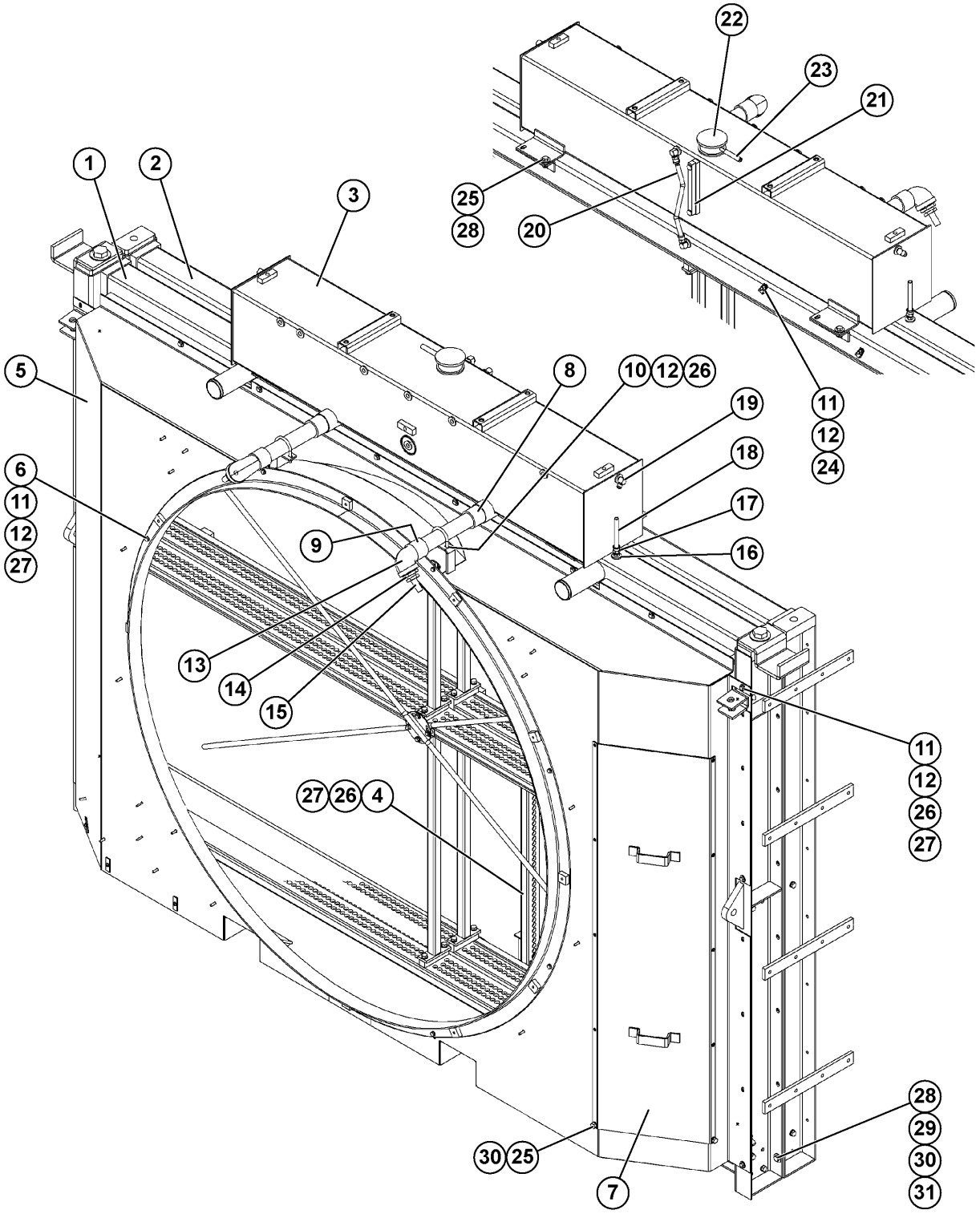
22
23
21
25
28
20
1
2
3
5
8
10
12
26
19
11
12
24
18
6
11
12
27
17
9
16
13
14
15
11
12
26
27
27
26
4
28
29
30
31
30
25
7
61287Z

REF.	PART NUM.	QTY.	DESCRIPTION
1.00	XA4162	1	RADIATOR, JACKET WATER (SEE FIG 61288)
2.00	XA4163	1	RADIATOR, AFTERCOOLER (SEE FIG 61288)
3.00	XA2708	1	TANK, SURGE
4.00	XA2709	1	FUEL COOLER ASSEMBLY (SEE INDEX)
5.00	XA2204	1	SHROUD, FAN
6.00	XA2710	1	FAN RING
7.00	XA2711	1	DOOR, ACCESS
8.00	XA2206	2	NIPPLE
9.00	BF4949	2	COUPLING, PIPE
10.00	BF4201	2	U-BOLT ASSEMBLY
11.00	VE8559	33	LOCKWASHER - 3/8"
12.00	C1521	37	NUT - 3/8" - 16NC
13.00	VE4441	2	ELBOW
14.00	VE8326	2	BUSHING, REDUCER
15.00	BF4464	2	FITTING, NIPPLE
16.00	BF4463	2	ADAPTER
17.00	BF4462	6	SWIVEL
18.00	BF5073	2	HOSE
19.00	BF4461	4	ELBOW
20.00	XA4165	1	HOSE
21.00	BF3625	1	SIGHT GAUGE ASSEMBLY
22.00	VE1474	1	CAP - 14 PSI
23.00	XA4164	1	HOSE, OVERFLOW
24.00	VE1223	7	CLIP
25.00	VE3460	14	CAPSCREW - 1/2" - 13NC X 1"
26.00	C1547	50	FLAT WASHER - 3/8"
27.00	C1602	46	CAPSCREW - 3/8" - 16NC X 1"
28.00	VE4440	24	WASHER
29.00	C1613	20	CAPSCREW - 1/2" - 13NC X 1 1/4"
30.00	C1540	30	LOCKWASHER - 1/2"
31.00	VE3461	20	NUT - 1/2" - 13NC

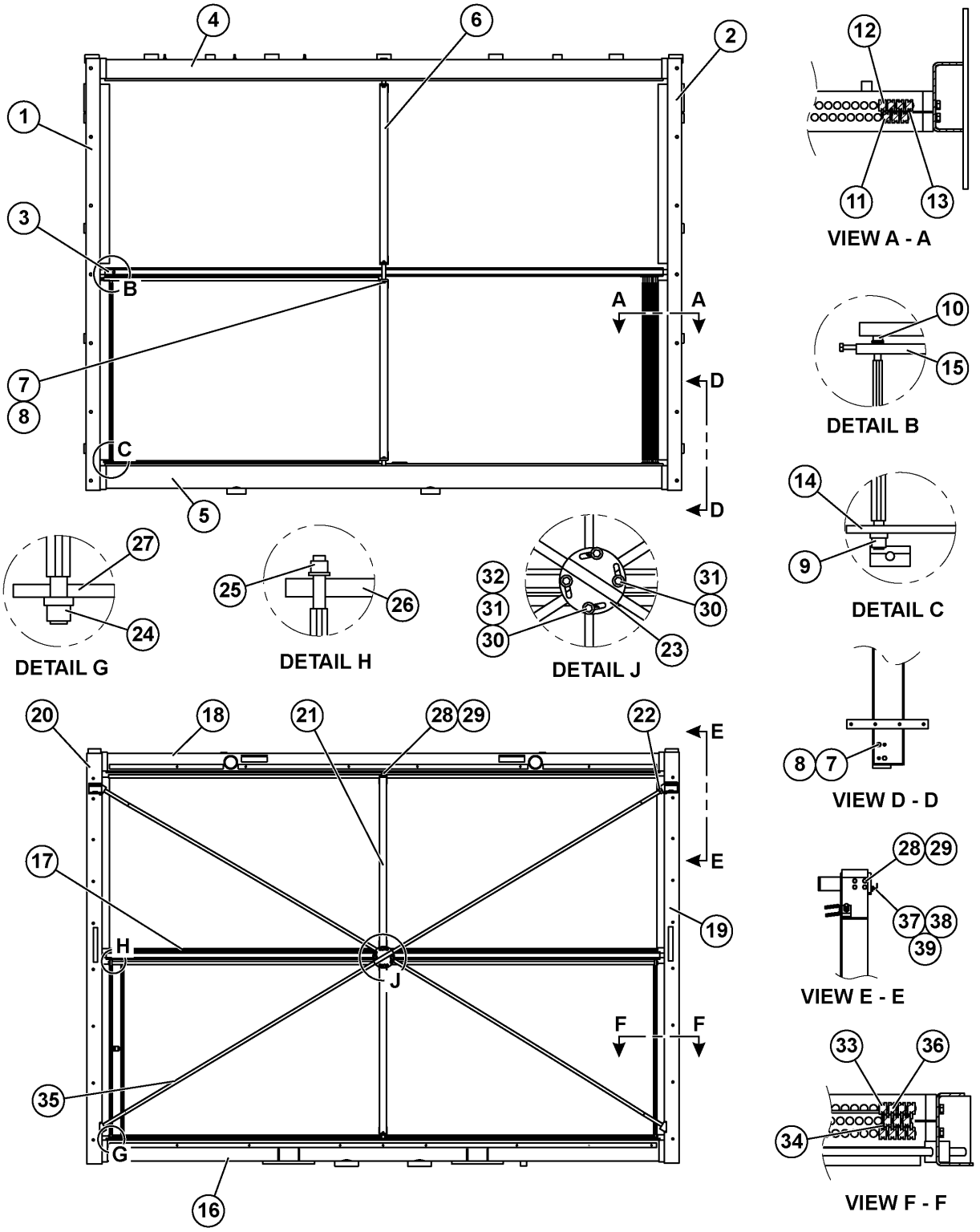
4
6
2
1
3
B
7
8
C
5
A
A
D
D
27
24
DETAIL G
25
26
DETAIL H
32
31
30
31
30
23
DETAIL J
12
11
13
VIEW A - A
10
15
DETAIL B
14
9
DETAIL C
8
7
VIEW D - D
28
29
37
38
39
VIEW E - E
33
36
34
VIEW F - F
20
18
21
28
29
22
E
E
17
H
J
19
F
F
35
G
16
61288Z

REF.	PART NUM.	QTY.	DESCRIPTION
	XA4163	1	RADIATOR, AFTERCOOLER (LTC)
1.00	XA4176	1	MEMBER, SIDE
2.00	XA4177	1	MEMBER, SIDE
3.00	XA4175	1	TANK, CENTER
4.00	XA4178	1	TANK, TOP
5.00	XA4174	1	TANK, BOTTOM
6.00	XA4172	2	TIE, TENSION
7.00	C1540	28	LOCKWASHER - 1/2"
8.00	VE3460	28	CAPSCREW - 1/2" - 13NC X 1"
9.00	XA2721	836	SEAL, RUBBER (LOCKING)
10.00	XA2720	836	SEAL, RUBBER
11.00	BF4193	324	TUBES
12.00	BF4194	512	TUBE ASSEMBLY
13.00	VE1219	16	STAY, TUBE END
14.00	XA4180	4	AIR BAFFLE, BOTTOM
15.00	XA4179	4	AIR BAFFLE, TOP
	XA4162	1	RADIATOR, JACKET WATER (HTC)
16.00	XA4167	1	TANK, TOP
17.00	XA4168	1	TANK, CENTER
18.00	XA4169	1	TANK, BOTTOM
19.00	XA4170	1	MEMBER, SIDE
20.00	XA4171	1	MEMBER, SIDE
21.00	XA4172	2	TIE, TENSION
22.00	C1521	12	NUT - 3/8" - 16NC
23.00	VE1285	2	BRACKET, X-BRACE
24.00	XA2721	836	SEAL, RUBBER (LOCKING)
25.00	XA2720	836	SEAL, RUBBER
26.00	BF3012	2	AIR BAFFLE, TOP
27.00	BF3013	2	AIR BAFFLE, BOTTOM
28.00	C1540	28	LOCKWASHER - 1/2"
29.00	VE3460	28	CAPSCREW - 1/2" - 13NC X 1"
30.00	XA2806	6	FLAT WASHER - 5/16"
31.00	C5747	4	CAPSCREW - 5/16" - 18NC X 3/4"
32.00	VE6312	2	NUT - 5/16" - 18NC
33.00	BF4194	512	TUBE ASSEMBLY
34.00	BF4193	324	TUBES
35.00	BF3020	2	ROD, X-BRACE
36.00	VE1219	16	STAY, TUBE END
37.00	XA4173	4	BAFFLE
38.00	C1547	12	FLAT WASHER - 3/8"
39.00	VE4005	12	CAPSCREW - 3/8 - 16NC x 3/4"

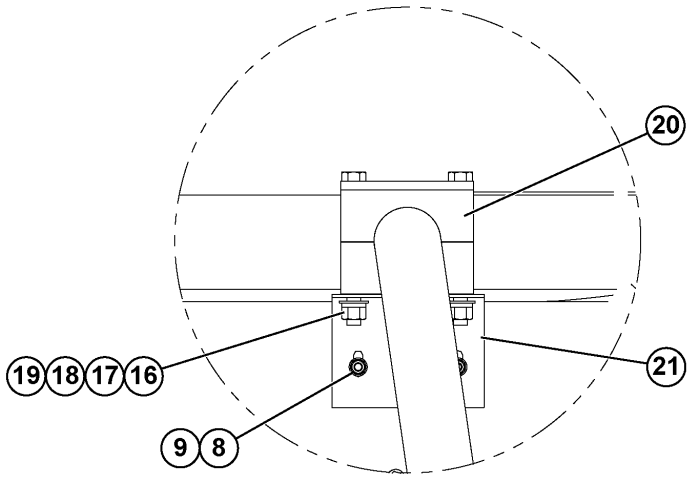
20
19
18
17
16
21
9
8

DETAIL A

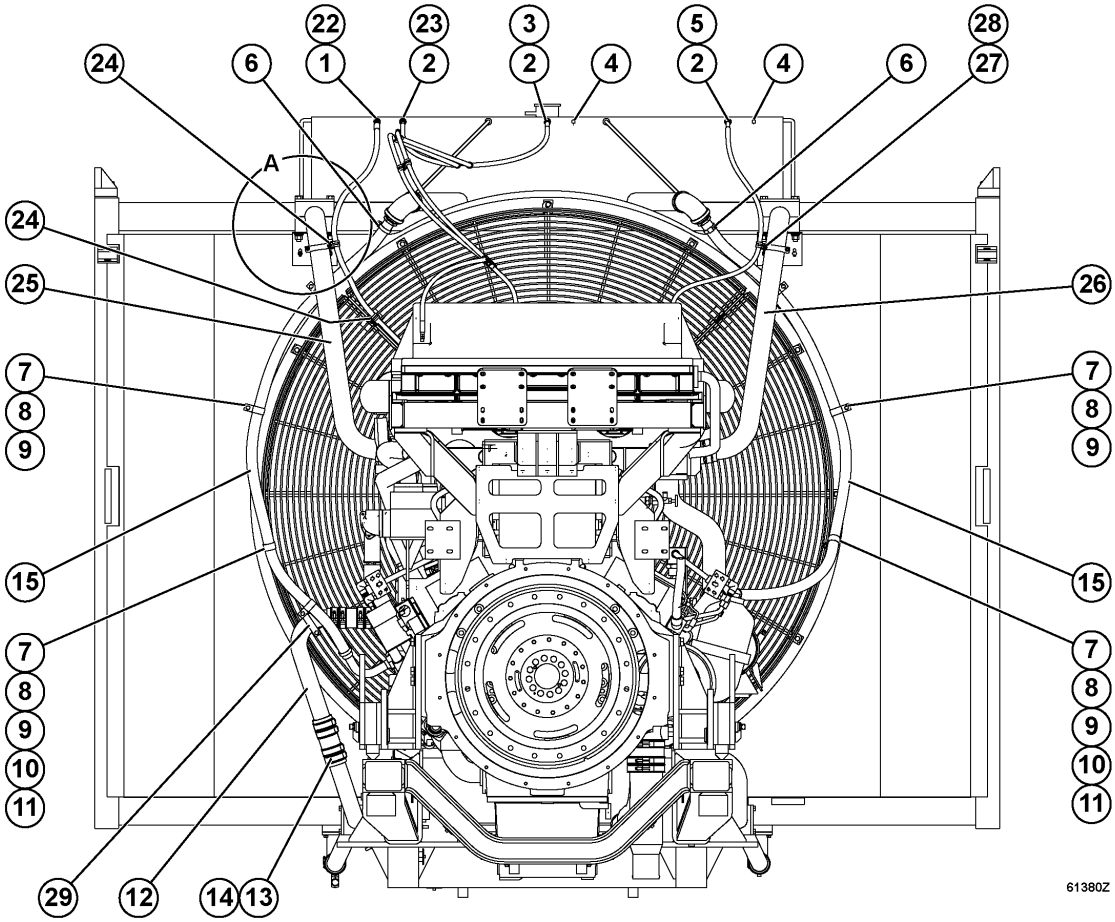
22
23
3
5
28
24
6
1
2
2
4
2
4
6
27
A
24
25
26
7
8
9
7
8
9
15
15
7
8
9
10
11
7
8
9
10
11
29
12
14
13
61380Z

REF.	PART NUM.	QTY.	DESCRIPTION
1.00	TD9743	1	FITTING, ADAPTER
2.00	WA3038	3	FITTING, ADAPTER
3.00	HA8276	1	HOSE
4.00	C5770	2	PLUG, PIPE - 3/8"
5.00	HA7598	1	HOSE
6.00	CD9707	2	CLAMP, WORM DRIVE
7.00	WB3094	6	CLAMP, CUSHIONED - 1 3/4"
8.00	MM0461	12	FLAT WASHER - M10
9.00	MM0178	6	NUT - M10 X 1.50
10.00	MM0042	2	CAPSCREW - M10 X 1.50 X 25
11.00	WB1301	2	CLAMP, CUSHIONED - 1/4"
12.00	EJ5611	1	TUBE
13.00	EG6269	2	HOSE, COOLANT
14.00	WB1088	8	CLAMP, T-BOLT
15.00	TM2966	1	HOSE
16.00	C1525	4	NUT - 5/8" - 11NC
17.00	SF4076	4	CAPSCREW - 5/8" - 11NC X 6 1/2"
18.00	SD1979	4	FLAT WASHER - 5/8"
19.00	C1541	4	LOCKWASHER - 5/8"
20.00	WA5686	2	CLAMP, HEAVY DUTY
21.00	EH9858	2	BRACKET
22.00	HA8277	1	HOSE
23.00	HA8275	1	HOSE
24.00	WB1303	4	CLAMP, CUSHIONED - 3/4"
25.00	EH7767	1	TUBE
26.00	EH7773	1	TUBE
27.00	WB1300	1	CLAMP, CUSHIONED - 5/8"
28.00	WA2237	2	CLAMP
29.00	KC1255	1	CLAMP

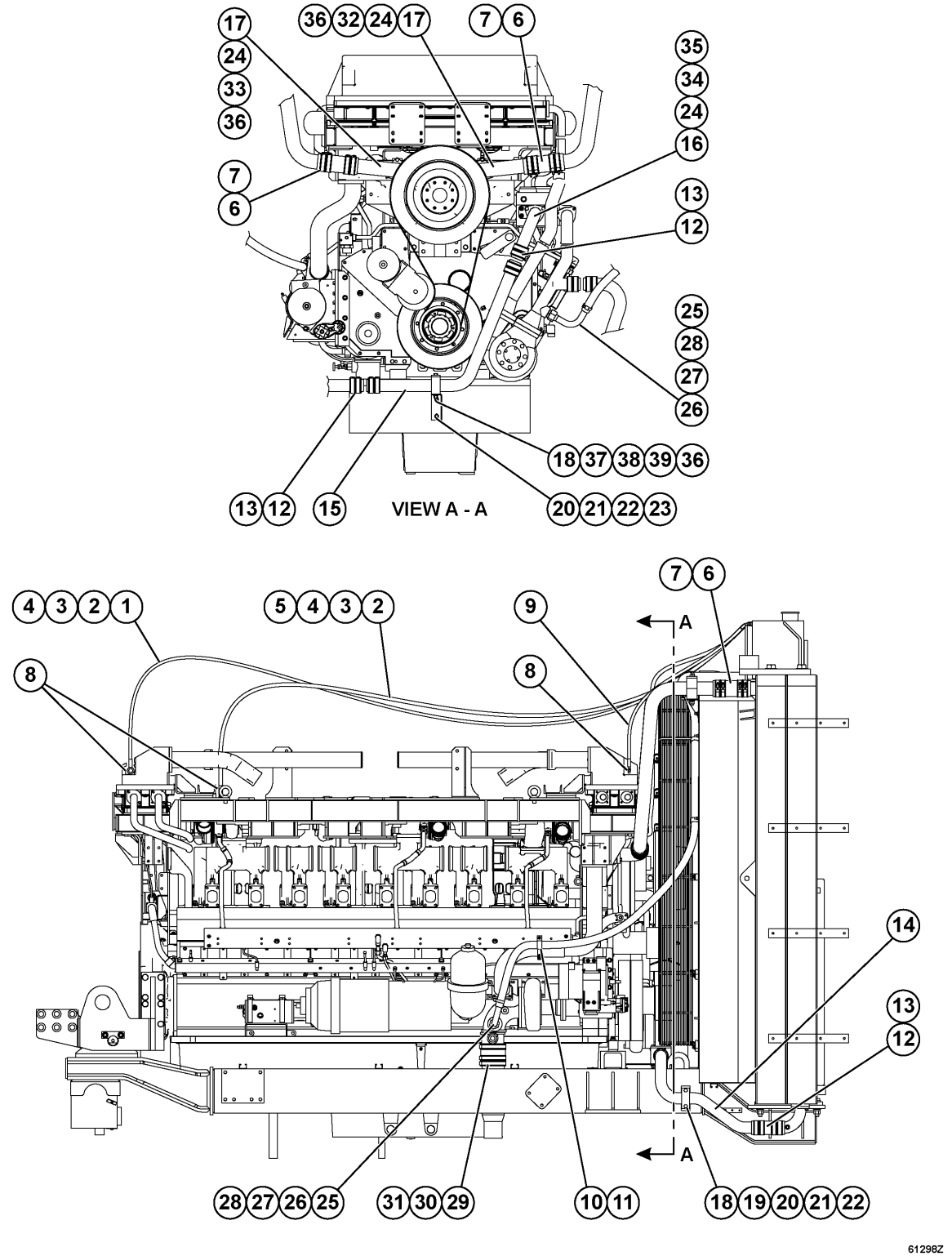
17
24
33
36
7
6
36 32 24 17
7 6
35
34
24
16
13
12
25
28
27
26
18 37 38 39 36
13 12 15
VIEW A - A
20 21 22 23
4 3 2 1
5 4 3 2
9
8
8
7 6
A
A
14
13
12
28 27 26 25
31 30 29
10 11
18 19 20 21 22
61298Z

REF.	PART NUM.	QTY.	DESCRIPTION
1.00	HA8276	1	HOSE
2.00	WB1300	15	CLAMP, CUSHIONED - 5/8"
3.00	MM0461	8	FLAT WASHER - M10
4.00	MM0178	8	NUT - M10 X 1.50
5.00	HA8275	1	HOSE
6.00	EH7753	4	HOSE
7.00	WB1047	16	CLAMP, T-BOLT
8.00	WB1142	3	ADAPTER, METRIC TO JIC
9.00	HA7598	1	HOSE
10.00	WB3094	1	CLAMP, CUSHIONED - 1 3/4"
11.00	TA1432	1	CLAMP
12.00	EG6269	6	HOSE, COOLANT
13.00	WB1088	16	CLAMP, T-BOLT
14.00	EK2573	1	TUBE - R.H. SIDE
14.01	EJ5612	1	TUBE - L.H. SIDE
15.00	EH7791	1	TUBE
16.00	EH2022	1	GASKET
17.00	EH7754	2	GASKET
18.00	WA5460	3	CLAMP, HEAVY DUTY
19.00	EJ5609	2	BRACKET
20.00	TC1234	6	CAPSCREW - 3/8" - 16NC X 3/4"
21.00	TC1231	6	LOCKWASHER - 3/8"
22.00	TR4436	6	FLAT WASHER - 3/8"
23.00	EH7794	1	BRACKET, MOUNTING
24.00	MM0471	9	LOCKWASHER - M10
25.00	TM2966	2	HOSE
26.00	CD9707	2	CLAMP, WORM DRIVE
27.00	PC0818	2	ADAPTER, METRIC TO JIC
28.00	ED8256	2	TUBE
29.00	EH3376	1	TUBE
30.00	ED0020	1	HOSE, COOLANT
31.00	WB1051	3	CLAMP, T-BOLT
32.00	EH7766	1	TUBE
33.00	EH7764	1	TUBE
34.00	EH7768	1	TUBE
35.00	MM0607	9	CAPSCREW - M10 X 1.50 X 35
36.00	C5759	2	CAPSCREW - 1/2" - 13NC X 5"
37.00	TR5445	2	LOCKWASHER - 1/2"
38.00	TR6008	2	FLAT WASHER - 1/2"
39.00	C1523	2	NUT - 1/2" - 13NC

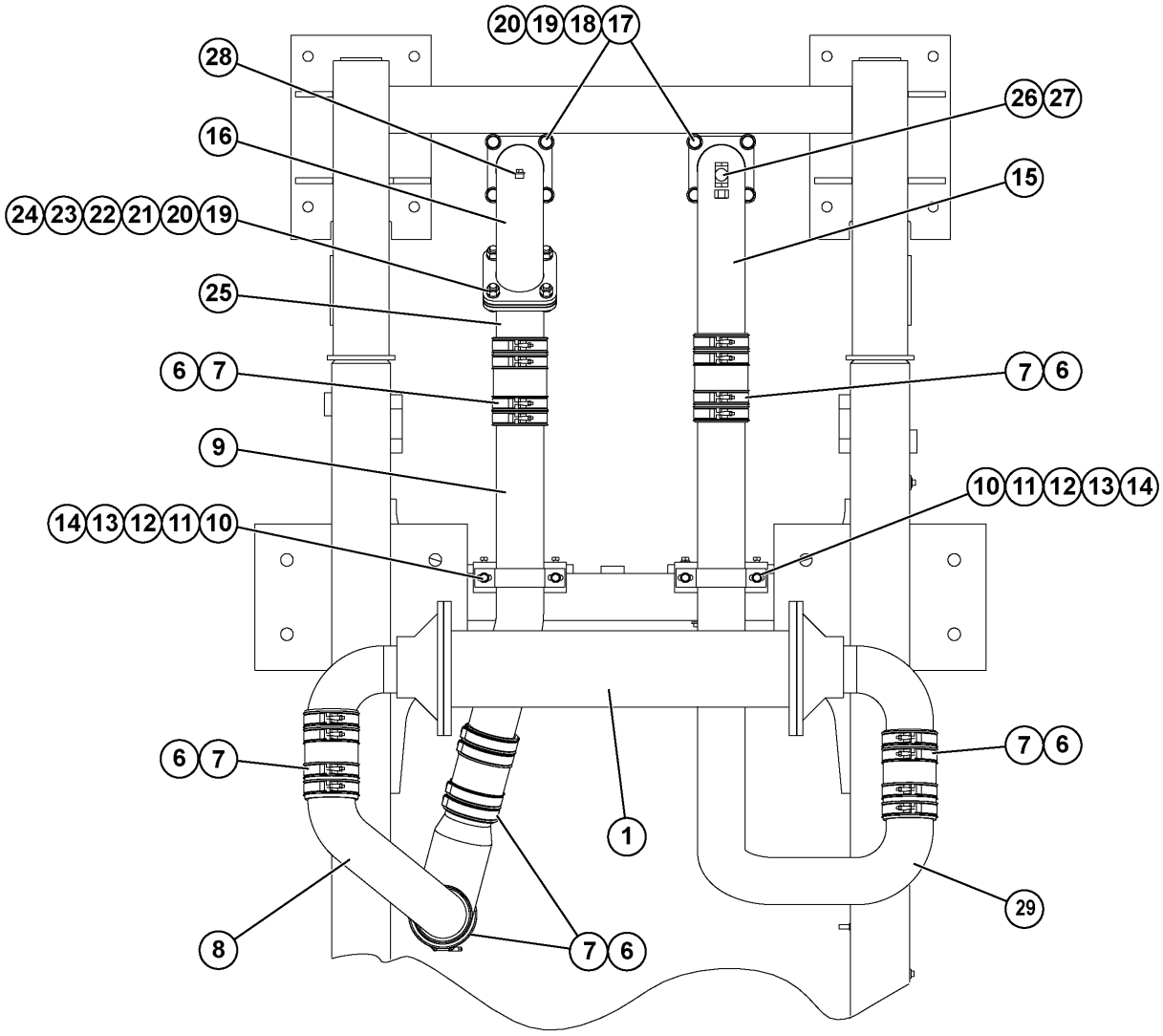

BOTTOM VIEW

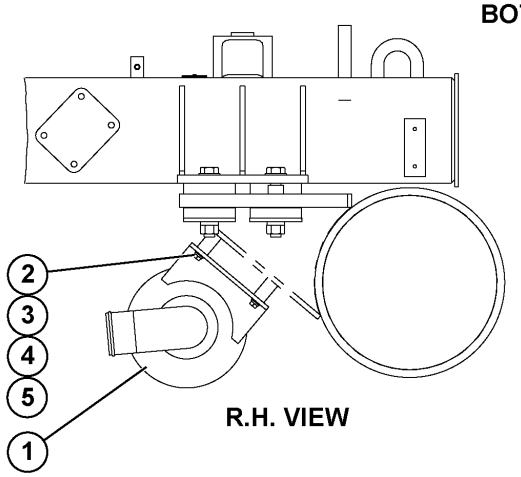

R.H. VIEW

61245Z

REF.	PART NUM.	QTY.	DESCRIPTION
1.00	PB9796	1	HEAT EXCHANGER (SEE INDEX)
2.00	MM0621	4	CAPSCREW - M12 X 1.75 X 45
3.00	MM0714	4	FLAT WASHER - M12 (HARDENED)
4.00	MM0179	4	NUT - M12 X 1.75
5.00	MM0472	4	LOCKWASHER - M12
6.00	EH0431	6	HOSE, COOLANT
7.00	WB1049	24	CLAMP, T-BOLT
8.00	EK2570	1	TUBE
9.00	EK2545	1	TUBE
10.00	EH3380	2	BRACKET
11.00	EF6665	2	PLATE, BENT
12.00	TC1234	8	CAPSCREW - 3/8" - 16NC X 3/4"
13.00	TC1231	8	LOCKWASHER - 3/8"
14.00	TR4436	8	FLAT WASHER - 3/8"
15.00	EK2568	1	TUBE
16.00	EK2567	1	TUBE
17.00	EF2781	2	GASKET
18.00	WA0839	8	CAPSCREW - 5/8" - 11NC X 1 1/2" (12 PT)
19.00	C1550	12	FLAT WASHER - 5/8"
20.00	C1541	12	LOCKWASHER - 5/8"
21.00	C1630	4	CAPSCREW - 5/8" - 11NC X 2"
22.00	C1525	4	NUT - 5/8" - 11NC
23.00	EF3305	2	GASKET
24.00	EH6686	1	PLATE, ORIFICE
25.00	EH9852	1	TUBE
26.00	TF6957	2	DRAIN COCK
27.00	E2579	2	NIPPLE
28.00	C5771	2	PLUG, PIPE - 1/2"
29.00	EK2571	1	TUBE

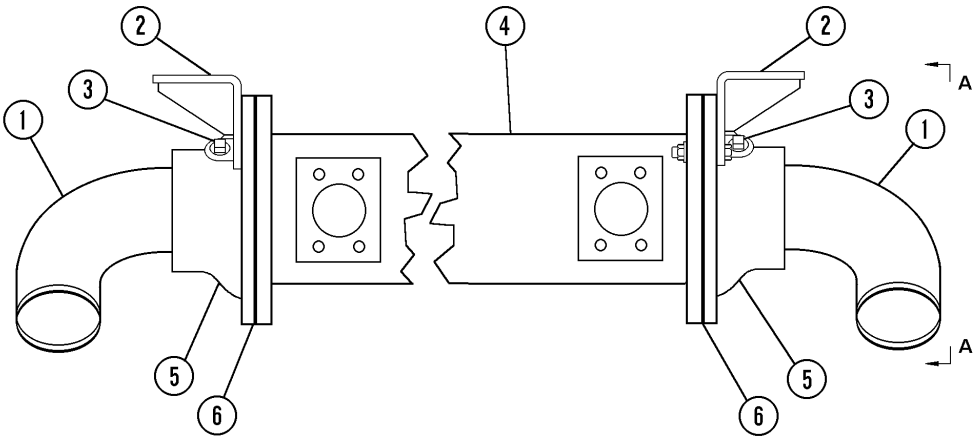

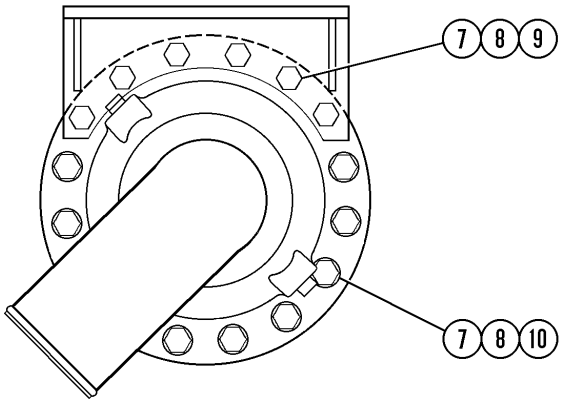

VIEW A-A

60059Z

REF.	PART NUM.	QTY.	DESCRIPTION
1.00	BF2668	2	TUBE, CONNECTION
2.00	BF2670	2	BRACKET, MOUNTING
3.00	BF2665	4	PLUG
4.00	BF2662	1	TUBE, COPPER
5.00	BF2663	2	BONNET
6.00	BF2664	2	GASKET
7.00	VE7367	32	NUT - 1/2" - 13NC
8.00	VE7366	32	LOCKWASHER - 1/2"
9.00	BF2671	12	CAPSCREW - 1/2" - 13NC X 2 1/2"
10.00	BF2666	20	CAPSCREW - 1/2" - 13NC X 2 1/4"

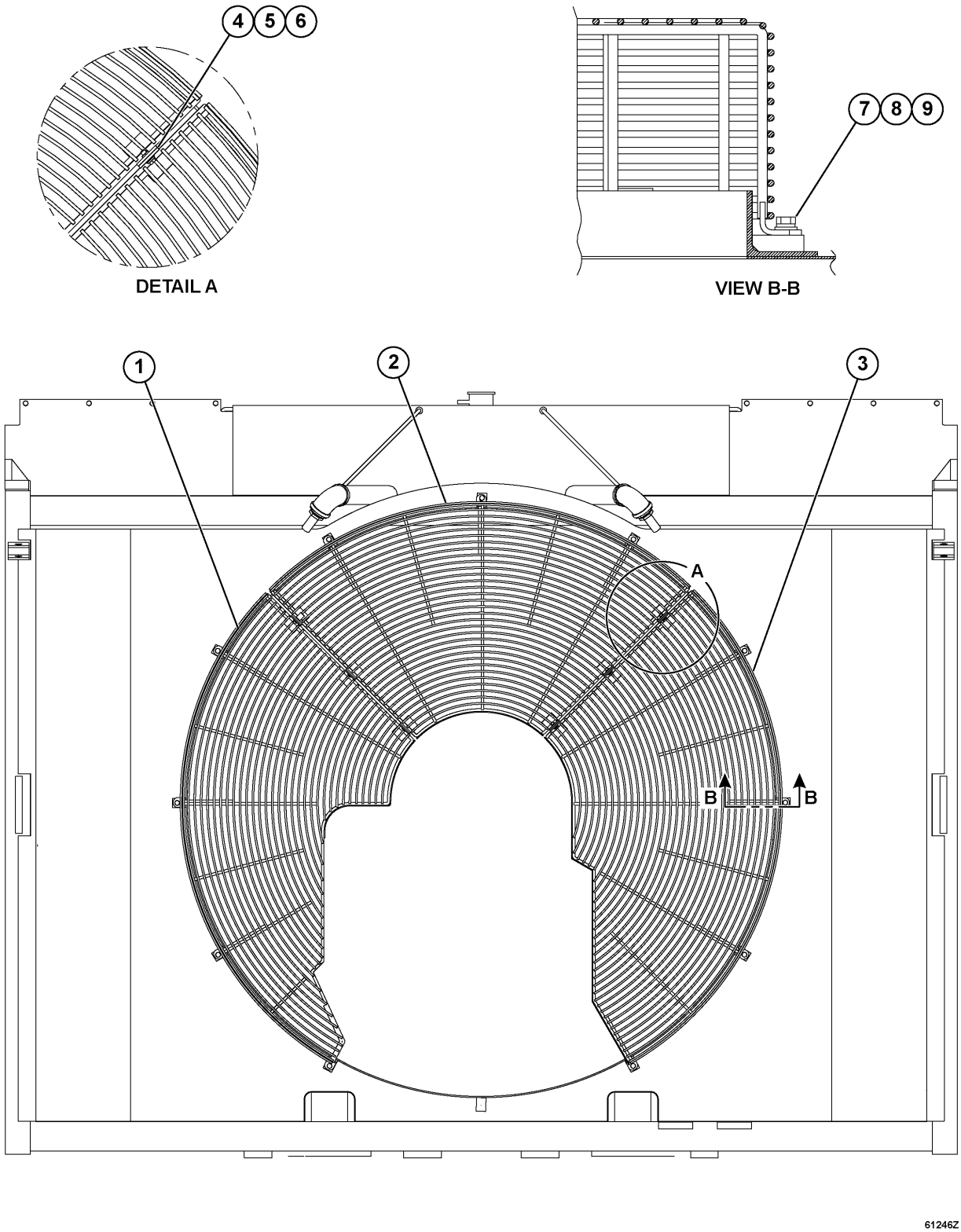
4
5
6
DETAIL A
7
8
9
VIEW B-B
1
2
3
A
B
B
61246Z

REF.	PART NUM.	QTY.	DESCRIPTION
1.00	EL1528	1	GUARD, FAN - L.H.
2.00	EL1527	1	GUARD, FAN - CENTER
3.00	EL1526	1	GUARD, FAN - R.H.
4.00	C1602	6	CAPSCREW - 3/8" - 16NC X 1"
5.00	WA0720	6	FLAT WASHER - 3/8" (HARDENED)
6.00	C0312	6	LOCKWASHER - 3/8"
7.00	MM0036	11	CAPSCREW - M10 X 1.50 X 20
8.00	MM0704	11	FLAT WASHER - M10 (HARDENED)
9.00	MM0471	11	LOCKWASHER - M10

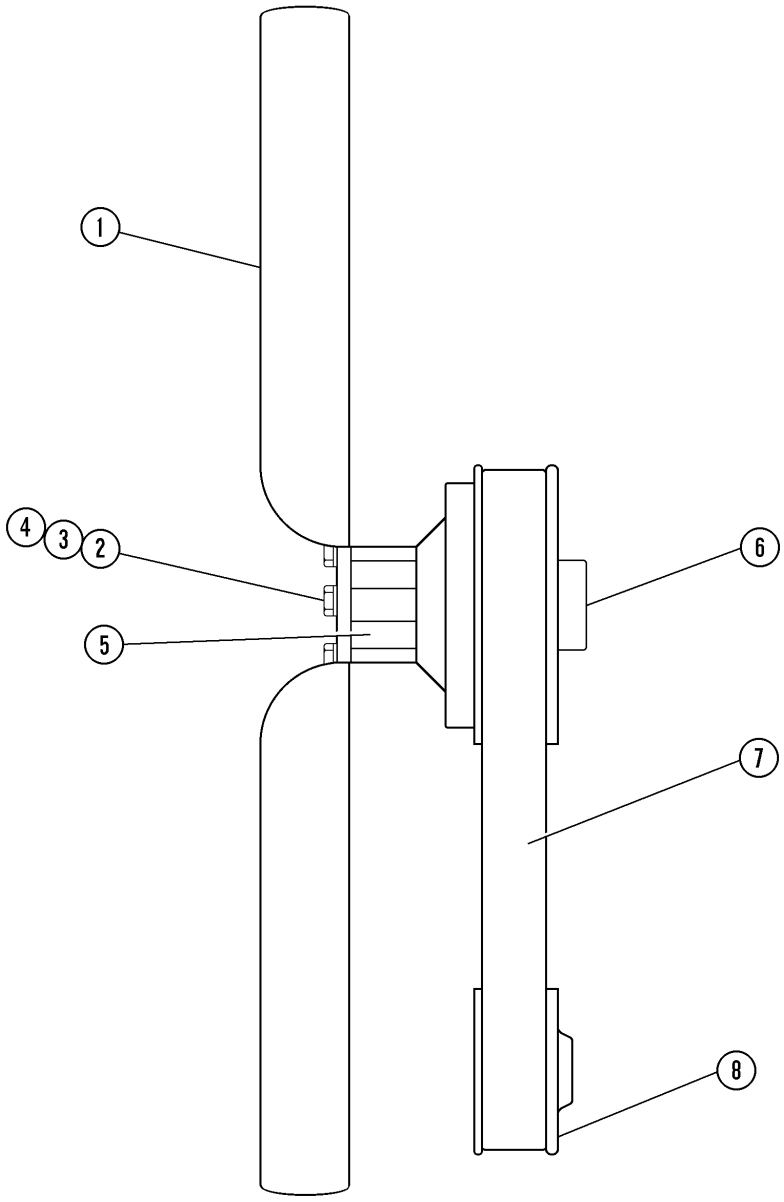
1
4
3
2
5
6
7
8
60166Z

REF.	PART NUM.	QTY.	DESCRIPTION
1.00	PC0665	1	FAN - 84"
2.00	01011-81690	8	BOLT
3.00	01643-31645	8	FLAT WASHER - M16 (HARDENED)
4.00	MM0474	8	LOCKWASHER - M16
5.00	EH3192	1	SPACER, FAN
6.00	XA2335	1	CLUTCH, FAN (1)
7.00	BF4991	1	BELT, FAN
8.00		1	PULLEY, FAN DRIVE (1)

NOTE: (1) SUPPLIED WITH ENGINE.

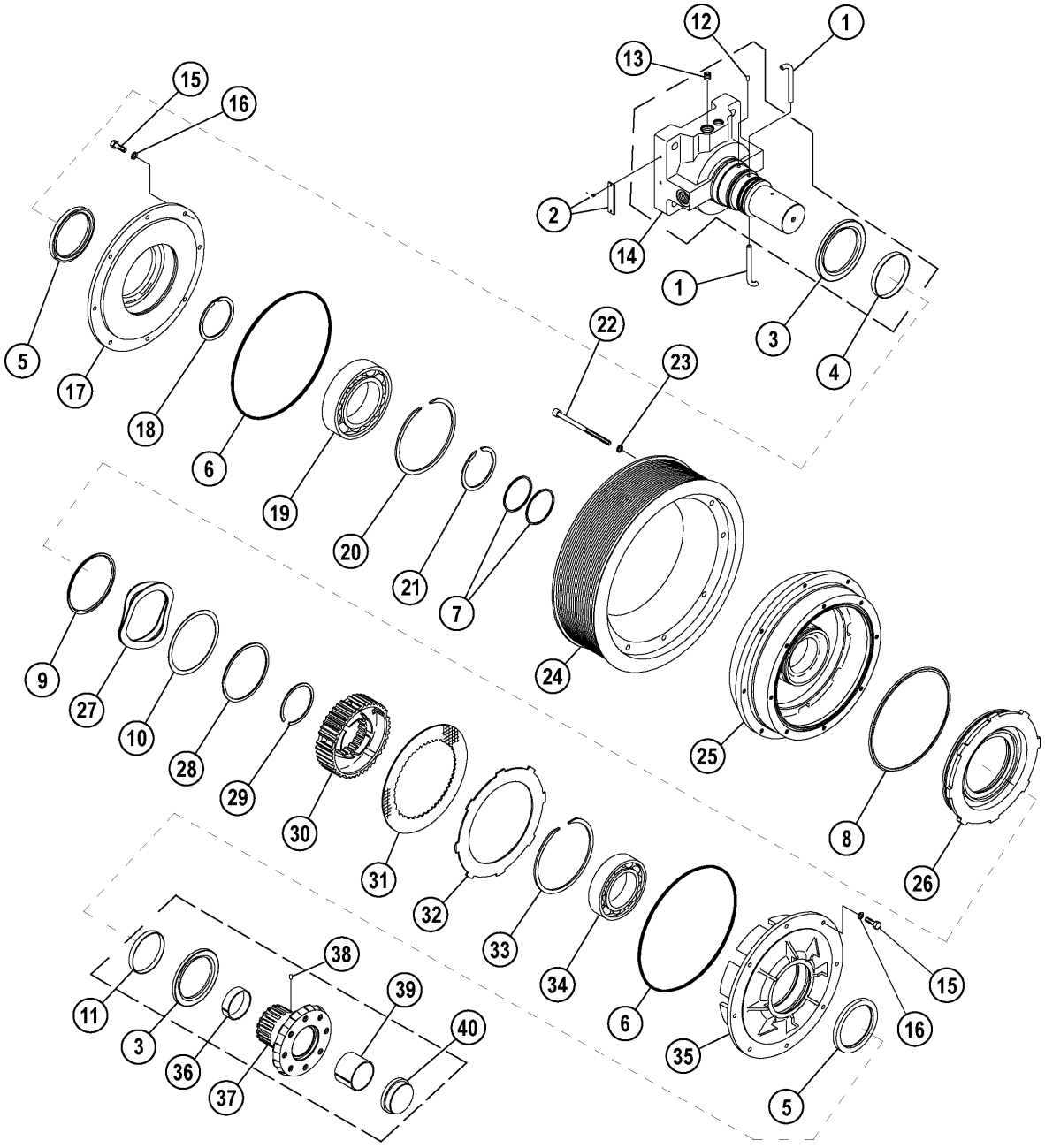
60873Z

REF.	PART NUM.	QTY.	DESCRIPTION
	XA2271	1	SEAL KIT (1)
1.00	BF0143	2	TUBE, PITOT (2)
2.00	BF0142	1	NAME PLATE (2)
3.00	VE8126	2	RETAINER / SEAL ASSEMBLY
4.00	BF0136	1	SLEEVE, WEAR (2)
5.00	BF0883	2	SEAL, OIL
6.00	BF0144	2	SEAL, O-RING (2)
7.00	BF0138	2	RING, SEAL (2)
8.00	BF0139	1	RING, SEAL (2)
9.00	BF0140	1	RING, SEAL (2)
10.00	BF0147	1	SHIM (2)
11.00	BF0141	1	SLEEVE, WEAR (2)
12.00	XA2279	1	PIN, DOWEL - REAR (1)
13.00	VE1297	1	FITTING, ORIFICE
14.00	XA2272	1	SHAFT & BRACKET
15.00	BF0884	16	CAPSCREW
16.00	BF0848	16	LOCKWASHER
17.00	BF0842	1	RETAINER, BEARING
18.00	XA2277	1	SPACER, BEARING
19.00	XA2273	1	BEARING, MAIN REAR (1)
20.00	BF0849	1	SNAP RING (1)
21.00	VE8122	1	SNAP RING, EXTERNAL
22.00	XA2336	8	CAPSCREW
23.00	BF5366	8	LOCKWASHER
24.00	XA2334	1	PULLEY, FAN
25.00	BF5359	1	ADAPTER, PULLEY
26.00	BF4032	1	PISTON
27.00		1	WASHER, SPRING (2)
28.00	VE8128	1	SNAP RING, EXTERNAL (1)
29.00	VE8125	1	SNAP RING, EXTERNAL (1)
30.00	BF0885	1	HUB, SPLINED
31.00	VE1304	8	PLATE, CLUTCH (FACING) (1)
32.00		8	PLATE, CLUTCH (1)
33.00	VE8127	1	SNAP RING, INTERNAL (1)
34.00	XA2275	1	BEARING, MAIN FRONT (1)
35.00	VE8525	1	RETAINER, BEARING
36.00	VE8123	1	BEARING, SLEEVE (1)
37.00	XA2274	1	HUB, FAN MOUNTING
38.00	XA2278	1	PIN, DOWEL - FRONT (1)
39.00	VE8524	1	BEARING, SLEEVE (1)
40.00	BF4043	1	CAP, END

KT EK2970

NOTE: (1) INCLUDED IN EK2970 OVERHAUL KIT.
(2) NOT SERVICED SEPARATELY.

(TO ORDER FAN CLUTCH ASSEMBLY LESS PULLEY, ORDER BF5364.)

ENGINE GROUP

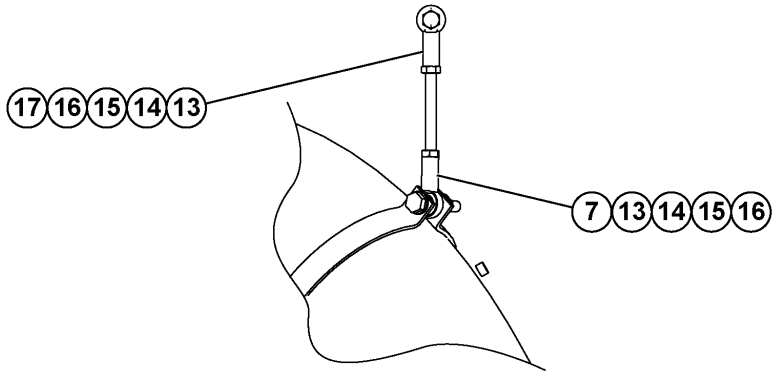

DETAIL A
TYPICAL 6 HANGER LOCATIONS

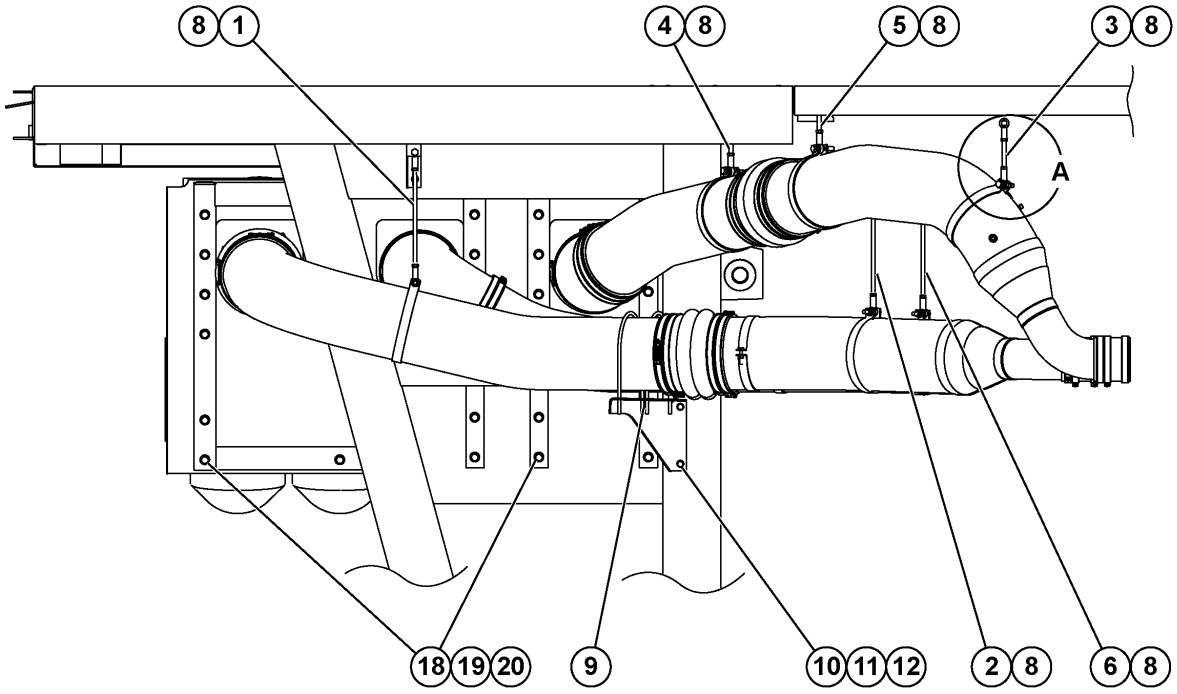

60946Z

REF.	PART NUM.	QTY.	DESCRIPTION
1.00	EJ9915	1	ROD, THREADED
2.00	EK5667	1	ROD, THREADED
3.00	EL2513	1	ROD, THREADED
4.00	EK2341	1	ROD, THREADED
5.00	EJ9910	1	ROD, THREADED
6.00	EK5664	1	ROD, THREADED
7.00	VC7083	6	CAPSCREW - 1/2" - 13NC X 3"
8.00	EJ9909	6	CLAMP
9.00	TA6490	2	CLAMP ASSEMBLY
9.01	TA6483	1	CLAMP
9.02	TA6491	1	U-BOLT - 3/8" - 16NC
9.03	C0312	2	LOCKWASHER - 3/8"
9.04	C1521	2	NUT - 3/8" - 16NC
10.00	EJ5567	1	BRACKET, SHELF - L.H.
11.00	MM0462	2	FLAT WASHER - M12
12.00	MM0616	2	CAPSCREW - M12 X 1.75 X 20
13.00	PC1247	12	ROD END, FEMALE (SPECIAL)
14.00	WA4728	24	FLAT WASHER - 1/2" (HARDENED)
15.00	DF3500	12	LOCKNUT - 1/2" - 13NC
16.00	TL8151	12	JAM NUT - 1/2" - 20NF
17.00	WA0471	6	CAPSCREW - 1/2" - 13NC X 2 1/4"
18.00	C1641	15	CAPSCREW - 5/8" - 11NC X 4 1/2"
19.00	WA0361	25	FLAT WASHER - 5/8" (HARDENED)
20.00	C1629	10	CAPSCREW - 5/8" - 11NC X 1 3/4"

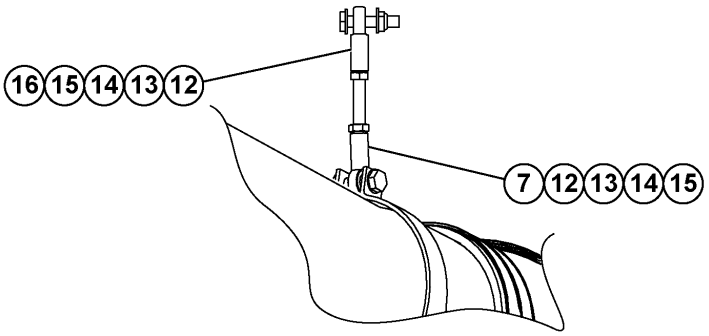

DETAIL A
TYPICAL 7 HANGER LOCATIONS

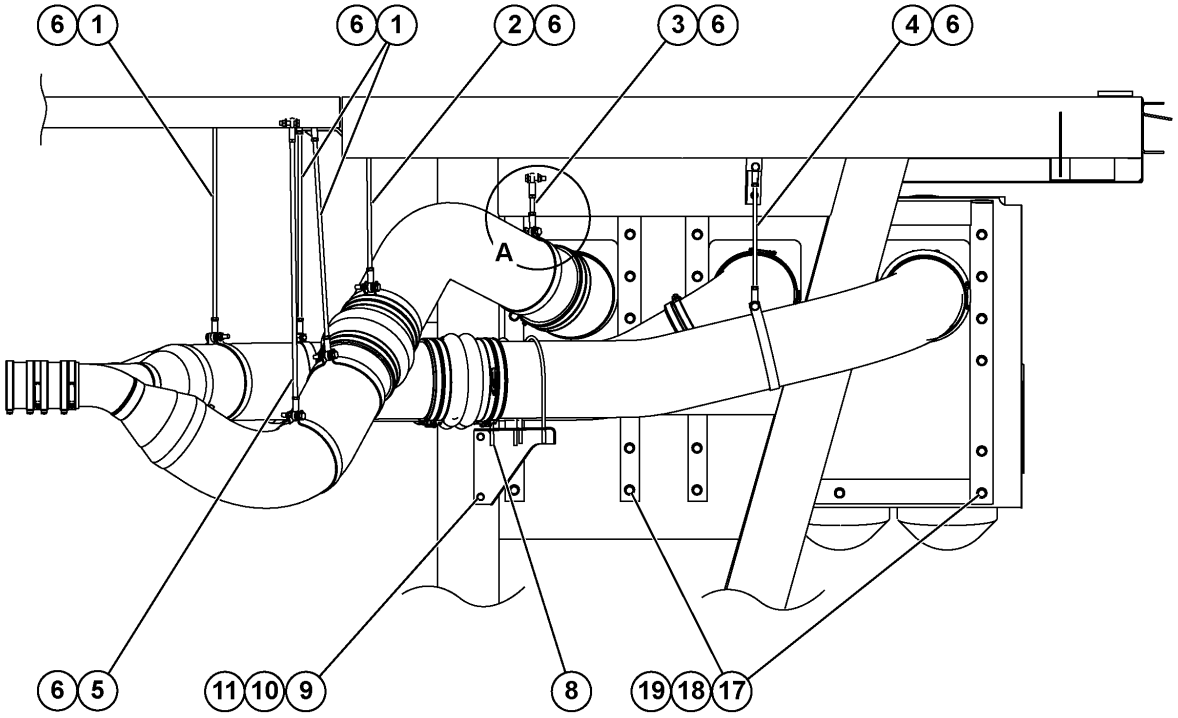

60947Z

REF.	PART NUM.	QTY.	DESCRIPTION
1.00	EK5664	3	ROD, THREADED
2.00	EK3395	1	ROD, THREADED
3.00	EJ9910	1	ROD, THREADED
4.00	EK3399	1	ROD, THREADED
5.00	EL2512	1	ROD, THREADED
6.00	EJ9909	7	CLAMP
7.00	VC7083	7	CAPSCREW - 1/2" - 13NC X 3"
8.00	TA6490	2	CLAMP ASSEMBLY
8.01	TA6483	1	CLAMP
8.02	TA6491	1	U-BOLT - 3/8" - 16NC
8.03	C0312	2	LOCKWASHER - 3/8"
8.04	C1521	2	NUT - 3/8" - 16NC
9.00	EJ5568	1	BRACKET, SHELF - R.H.
10.00	MM0462	2	FLAT WASHER - M12
11.00	MM0616	2	CAPSCREW - M12 X 1.75 X 20
12.00	PC1247	14	ROD END, FEMALE (SPECIAL)
13.00	WA4728	28	FLAT WASHER - 1/2" (HARDENED)
14.00	DF3500	14	LOCKNUT - 1/2" - 13NC
15.00	TL8151	14	JAM NUT - 1/2" - 20NF
16.00	WA0471	7	CAPSCREW - 1/2" - 13NC X 2 1/4"
17.00	C1641	15	CAPSCREW - 5/8" - 11NC X 4 1/2"
18.00	WA0361	25	FLAT WASHER - 5/8" (HARDENED)
19.00	C1629	10	CAPSCREW - 5/8" - 11NC X 1 3/4"

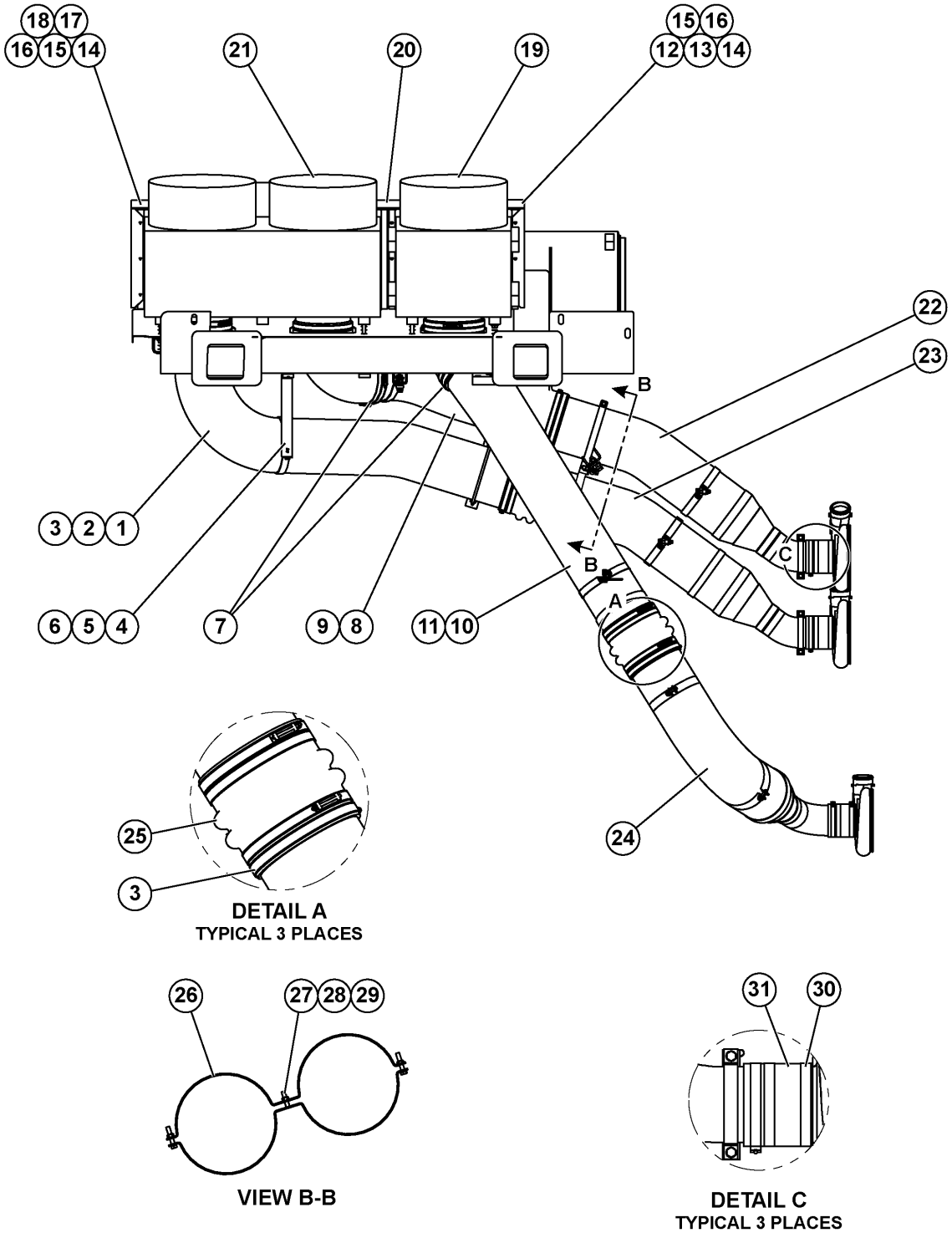
18
17
16
15
14
21
20
19
15
16
12
13
14
22
23
B
3
2
1
C
B
A
6
5
4
7
9
8
11
10
25
3
24
DETAIL A
TYPICAL 3 PLACES
26
27
28
29
31
30
VIEW B-B
DETAIL C
TYPICAL 3 PLACES

60948Z

REF.	PART NUM.	QTY.	DESCRIPTION
1.00	EK5654	1	TUBE, BENT - L.H. OUTER FRONT
2.00	VW7882	1	HOSE
3.00	WB1177	16	CLAMP, T-BOLT
4.00	EJ9919	1	BRACKET, MOUNTING
5.00	MM0462	2	FLAT WASHER - M12
6.00	MM0616	2	CAPSCREW - M12 X 1.75 X 20
7.00	WB1179	8	CLAMP, T-BOLT
8.00	EK5666	1	TUBE, BENT - L.H. MIDDLE FRONT
9.00	PB1597	1	ELBOW, RUBBER
10.00	EK5657	1	TUBE, BENT - L.H. INNER FRONT
11.00	TX6040	1	ELBOW, RUBBER - 45 DEG
12.00	TB1019	2	RAIN GUARD - L.H.
13.00	TB1017	1	RAIN GUARD
14.00	TR2961	8	CAPSCREW - 5/8" - 11NC X 1"
15.00	VC1390	8	LOCKWASHER - 5/8"
16.00	TR9082	8	FLAT WASHER - 5/8"
17.00	TB1018	2	RAIN GUARD - R.H.
18.00	TB1406	1	RAIN GUARD
19.00	VA0010	1	AIR CLEANER ASSEMBLY, SINGLE (SEE INDEX)
20.00	EJ0609	1	SHEET
21.00	PB6850	1	AIR CLEANER ASSEMBLY, DUAL (SEE INDEX)
22.00	EH9685	1	TUBE - L.H. MIDDLE REAR
23.00	EH9682	1	TUBE - L.H. OUTER REAR
24.00	EK5656	1	TUBE - L.H. INNER REAR
25.00	PC1115	3	HOSE, DOUBLE HUMP
26.00	EG8033	2	CLAMP, DOUBLE
27.00	TR4434	3	CAPSCREW - 3/8" - 16NC X 2"
28.00	HE5611	3	LOCKNUT - 3/8" - 16NC
29.00	WA4726	3	FLAT WASHER - 3/8" (HARDENED)
30.00	WB1169	9	CLAMP, T-BOLT
31.00	EH9965	3	HOSE, TURBO CONNECTION

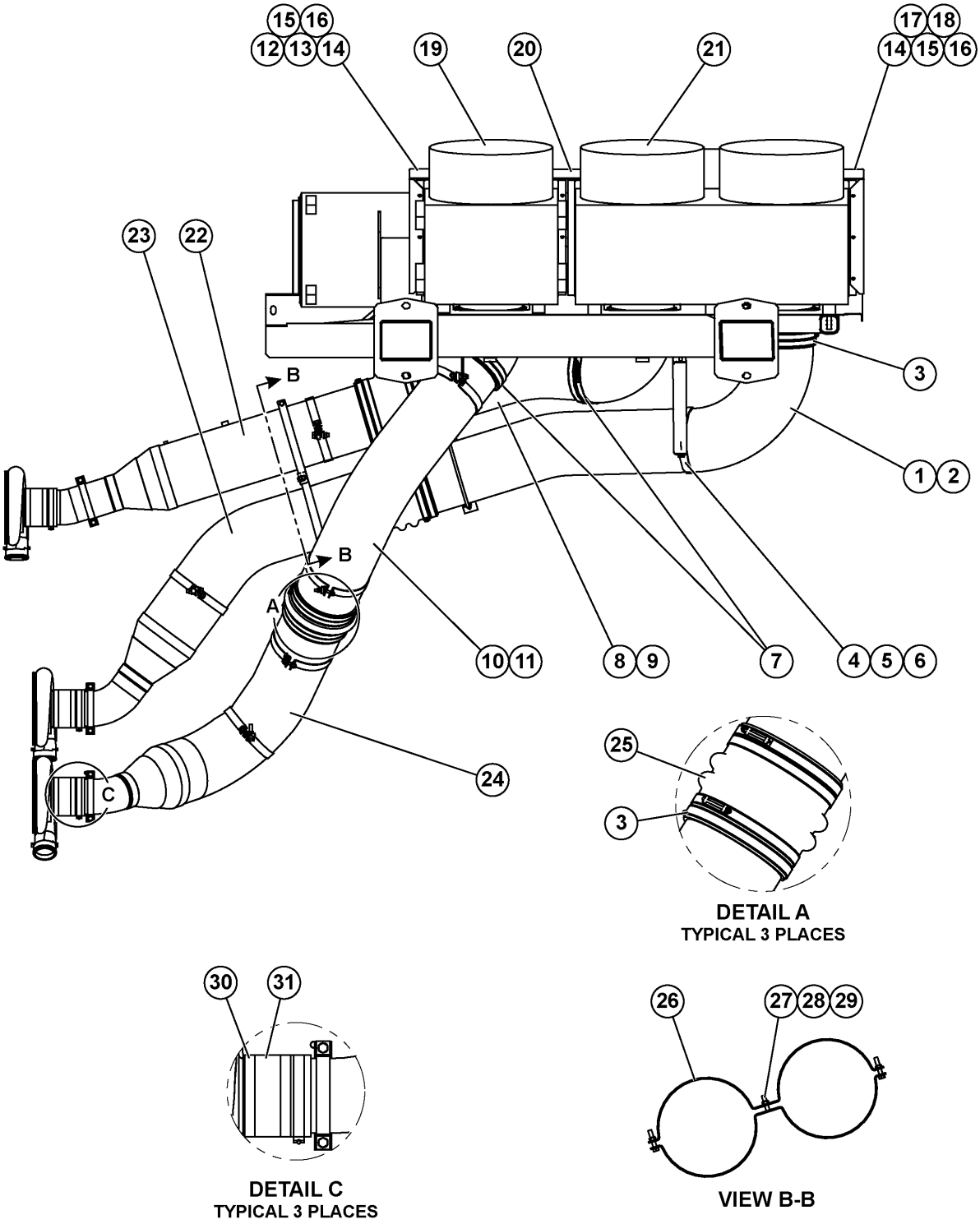
15 16
12 13 14
19
20
21
17 18
14 15 16
23
22
3
1 2
B
B
A
10 11
8 9
7
4 5 6
C
24
25
3
DETAIL A
TYPICAL 3 PLACES
30
31
DETAIL C
TYPICAL 3 PLACES
26
27 28 29
VIEW B-B
60949Z

REF.	PART NUM.	QTY.	DESCRIPTION
1.00	EK5653	1	TUBE, BENT - R.H. OUTER FRONT
2.00	VW7882	1	HOSE
3.00	WB1177	16	CLAMP, T-BOLT
4.00	EJ9919	1	BRACKET, MOUNTING
5.00	MM0462	2	FLAT WASHER - M12
6.00	MM0616	2	CAPSCREW - M12 X 1.75 X 20
7.00	WB1179	8	CLAMP, T-BOLT
8.00	EH9693	1	TUBE, BENT - R.H. MIDDLE FRONT
9.00	PB1597	1	ELBOW, RUBBER
10.00	EH9696	1	TUBE, BENT - R.H. INNER FRONT
11.00	TX6040	1	ELBOW, RUBBER - 45 DEG
12.00	TB1019	2	RAIN GUARD - L.H.
13.00	TB1017	1	RAIN GUARD
14.00	TR2961	8	CAPSCREW - 5/8" - 11NC X 1"
15.00	VC1390	8	LOCKWASHER - 5/8"
16.00	TR9082	8	FLAT WASHER - 5/8"
17.00	TB1018	2	RAIN GUARD - R.H.
18.00	TB1406	1	RAIN GUARD
19.00	VA0010	1	AIR CLEANER ASSEMBLY, SINGLE (SEE INDEX)
20.00	EJ0609	1	SHEET
21.00	PB6850	1	AIR CLEANER ASSEMBLY, DUAL (SEE INDEX)
22.00	EH9694	1	TUBE, R.H. MIDDLE REAR
23.00	EH9691	1	TUBE, R.H. OUTER REAR
24.00	EH9697	1	TUBE, R.H. INNER REAR
25.00	PC1115	3	HOSE, DOUBLE HUMP
26.00	EG8033	2	CLAMP, DOUBLE
27.00	TR4434	3	CAPSCREW - 3/8" - 16NC X 2"
28.00	HE5611	3	LOCKNUT - 3/8" - 16NC
29.00	WA4726	3	FLAT WASHER - 3/8" (HARDENED)
30.00	WB1169	9	CLAMP, T-BOLT
31.00	EH9965	3	HOSE, TURBO CONNECTION

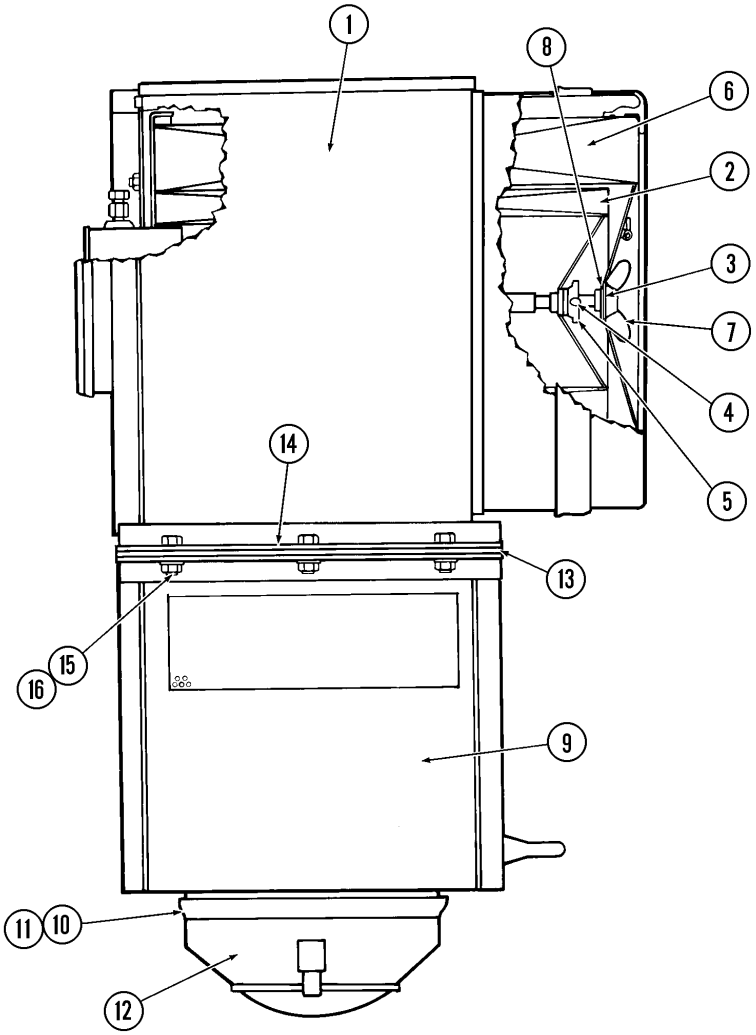
1
8
6
2
3
7
4
5
14
13
15
16
9
11
10
12
14491Z

REF.	PART NUM.	QTY.	DESCRIPTION
1.00	VE7502	1	BODY, UPPER
2.00	VJ5176	2	ELEMENT, SAFETY
3.00	VS1351	2	GASKET
4.00	VS1349	2	PIN
5.00	VS6704	2	NUT, INDICATOR
6.00	VJ5175	2	ELEMENT, PRIMARY
7.00	VS2187	2	WING NUT
8.00	VS2188	2	CLIP
9.00	VJ4028	1	BODY, LOWER
10.00	VP0359	3	CLAMP
11.00	VS2190	3	O-RING
12.00	VJ4014	3	CUP ASSEMBLY
12.01	VE0171	3	GASKET
12.02	PB6091	3	CUP, VACUUM RELIEF (1)
13.00	VS2193	2	GASKET
14.00	VS2194	2	GASKET
15.00	VS2195	22	CAPSCREW
16.00	VS2196	22	NUT

NOTE: (1) NOT INCLUDED IN ASSEMBLY.
OPTIONAL EQUIPMENT.

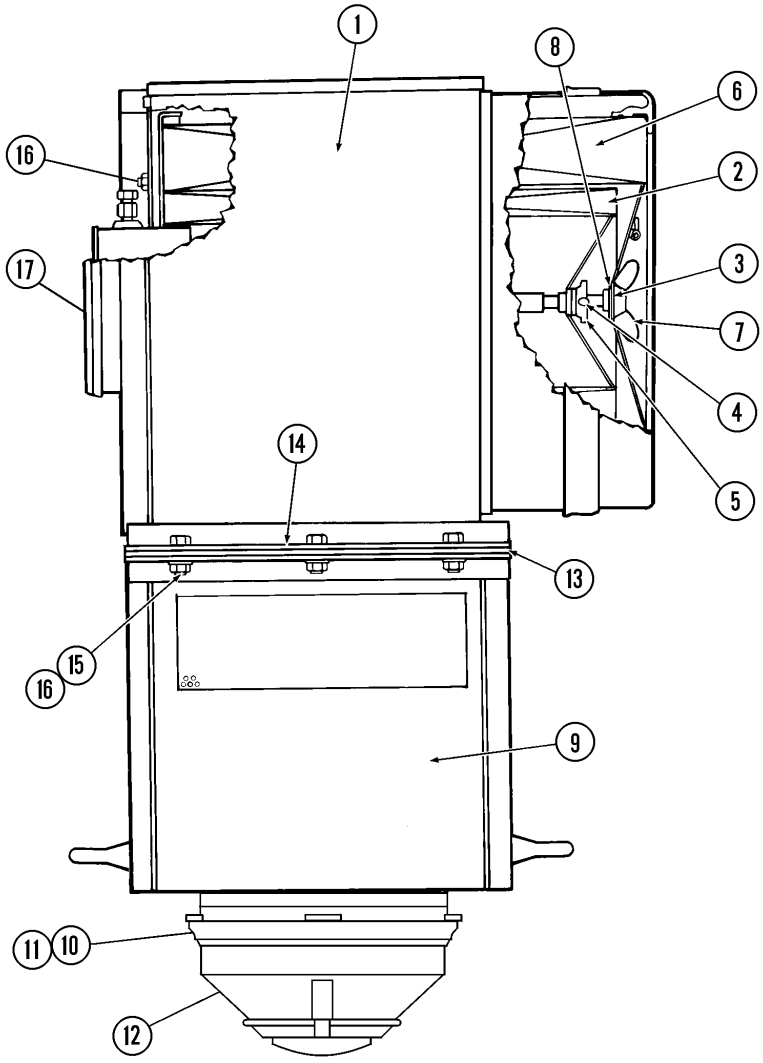

60573Z

REF.	PART NUM.	QTY.	DESCRIPTION
1.00	XA2138	1	BODY, UPPER
2.00	VJ5176	1	ELEMENT, SAFETY
3.00	VS1351	1	GASKET
4.00	VS1349	1	PIN
5.00	VE9668	1	NUT, INDICATOR
6.00	VJ5175	1	ELEMENT, PRIMARY
7.00	VS2187	1	WING NUT
8.00	VS2188	1	CLIP
9.00	XA2139	1	BODY, LOWER
10.00	VP0359	1	CLAMP
11.00	VS2190	1	O-RING
12.00	VJ4014	1	CUP ASSEMBLY
13.00	VJ4035	2	GASKET
14.00	VS2194	2	GASKET
15.00	VS2195	14	CAPSCREW
16.00	VS2196	20	NUT
17.00	VE2232	1	FLANGE ASSEMBLY

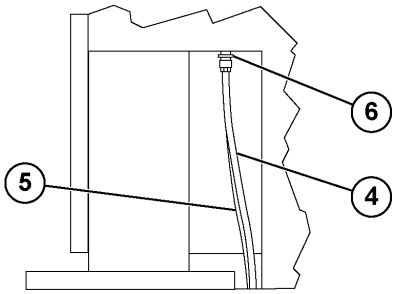

VIEW A - A

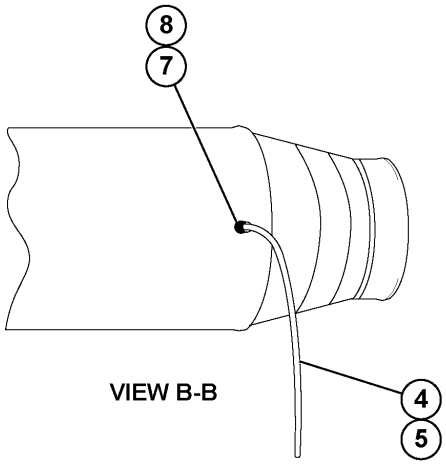

VIEW B-B

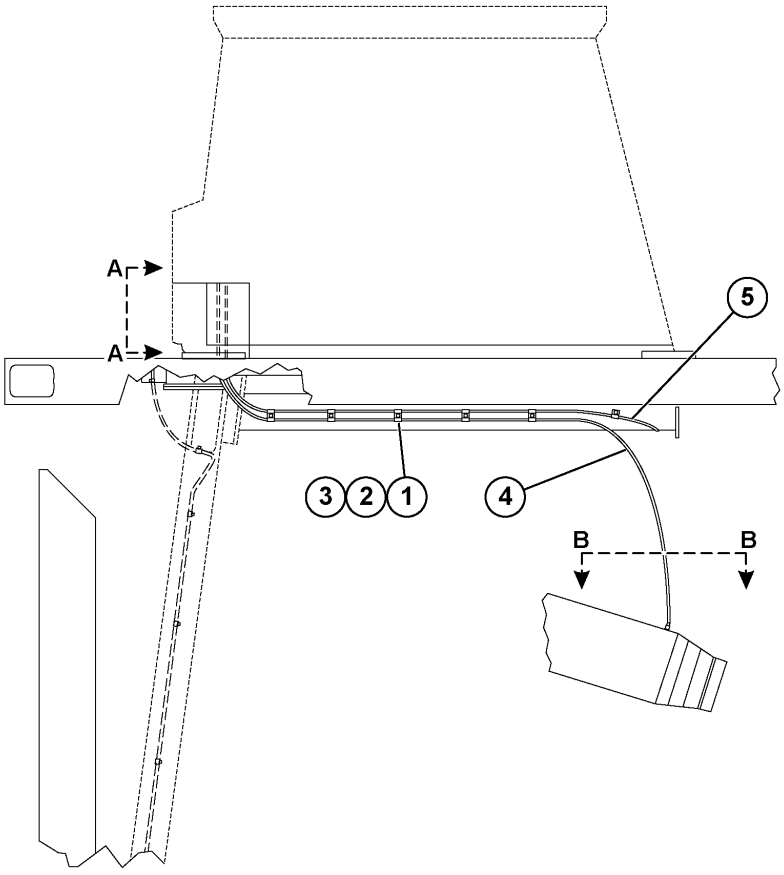

60919z

REF.	PART NUM.	QTY.	DESCRIPTION
1.00	MM0178	8	NUT - M10 X 1.50
2.00	MM0461	8	FLAT WASHER - M10
3.00	VY8331	13	CLAMP, VINYL - 1/4" I.D.
4.00	EL6434	1	TUBE, NYLON (L.H. SIDE)
5.00	EL6435	1	TUBE, NYLON (R.H. SIDE)
6.00	TA0603	2	FITTING, NYLON
7.00	TH7238	2	RESTRICTOR, FILTER
8.00	TA7047	2	FITTING, NYLON CONNECTOR

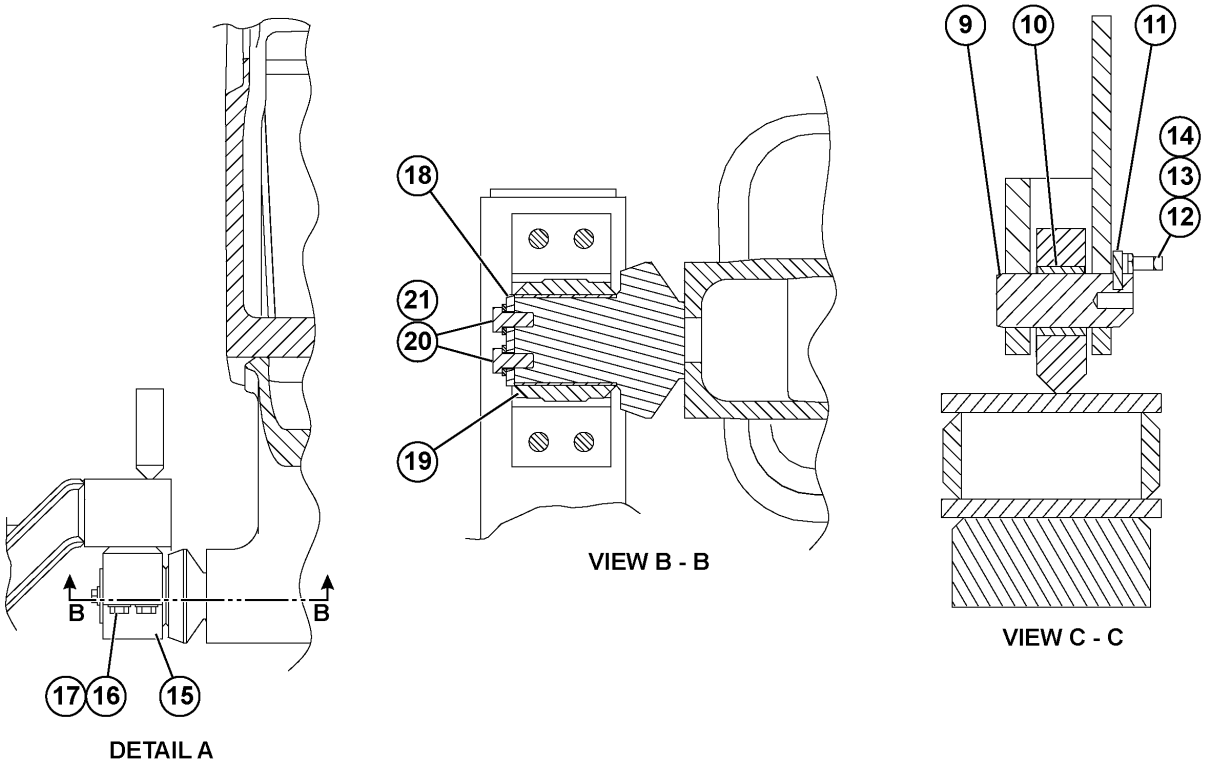
9
10
11
14
13
12
18
21
20
19
B
B
17
16
15
DETAIL A
VIEW B - B
VIEW C - C

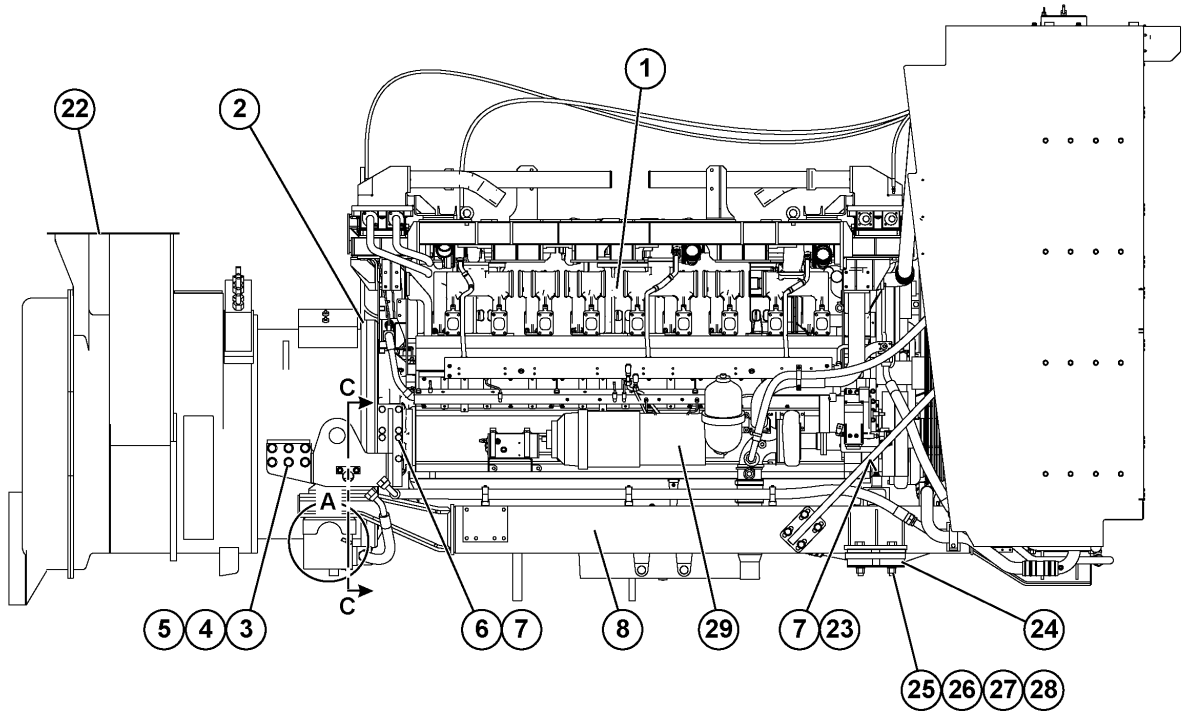
22
2
1
C
A
C
5
4
3
6
7
8
29
7
23
24
25
26
27
28

61243Z

REF.	PART NUM.	QTY.	DESCRIPTION
1.00		1	ENGINE (ORDER FROM FACTORY)
2.00	EJ1033	1	ADAPTER ASSEMBLY
2.01	EJ1055	20	SHIM
2.02	EJ1056	35	SHIM
2.03	EL3331	40	SHIM
2.04	EL3332	35	SHIM
2.05	MM0053	16	CAPSCREW - M12 X 1.75 X 45
2.06	MM0705	16	FLAT WASHER - M12 (HARDENED)
2.07	VN9169	20	CAPSCREW - 5/8" - 11NC X 5 1/2"
2.08	WA0361	20	FLAT WASHER - 5/8" (HARDENED)
3.00	VN9079	12	CAPSCREW - 1" - 8NC X 2 1/4"
4.00	C1544	12	LOCKWASHER - 1"
5.00	EH7714	1	CRADLE - R.H.
5.01	EH7713	1	CRADLE - L.H.
6.00	MM0075	14	CAPSCREW - M20 X 2.50 X 60
7.00	MM0475	16	LOCKWASHER - M20
8.00	EM6787	1	SUB-FRAME
9.00	TN1019	2	PIN
10.00	PB4177	2	RACE, INNER
11.00	TN1018	2	PLATE
12.00	PC0936	4	SET SCREW - 3/4" - 10NC X 2"
13.00	C1542	4	LOCKWASHER - 3/4"
14.00	E5222	4	JAM NUT - 3/4" - 10NC
15.00	EM5499	2	MACHINED CAP
16.00	MM0055	8	CAPSCREW - M20 X 2.50 X 50
17.00	MM0707	8	FLAT WASHER - M20 (HARDENED)
18.00	EM5444	2	PLATE
19.00	VM3891	2	BUSHING, RUBBER
20.00	MM0038	4	CAPSCREW - M16 X 2.00 X 35
21.00	MM0706	4	FLAT WASHER - M16 (HARDENED)
22.00	PC2516	1	ALTERNATOR/BLOWER ASSEMBLY (SEE INDEX)
23.00	WB1193	2	CAPSCREW - M20 X 2.50 X 90 (12 PT)
24.00	PC1393	8	MOUNT, RUBBER (TWO-PIECE)
25.00	VN9202	8	CAPSCREW - 1" - 8NC X 7"
26.00	WA4732	8	FLAT WASHER - 1" (HARDENED)
27.00	VC7828	8	LOCKWASHER - 1"
28.00	VX1156	8	NUT - 1" - 8NC
29.00	XA2215	1	ELIMINATOR FILTER ASSEMBLY
29.01	XA2216	1	FILTER / HOUSING KIT
29.02	XA2217	1	CENTRIFUGE SERVICE KIT
NS	XA3847	6	ELEMENT, FUEL FILTER/WATER SEPARATOR
NS	XA2134	2	ELEMENT, WATER CORROSION RESISTOR
NS	EL1529	1	PLATE, BENT (UNDER FAN GUARD)

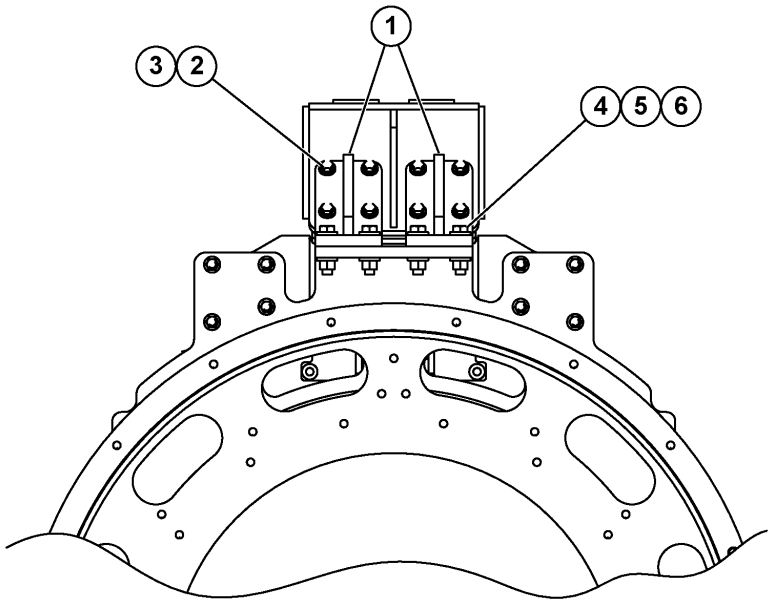

REAR VIEW

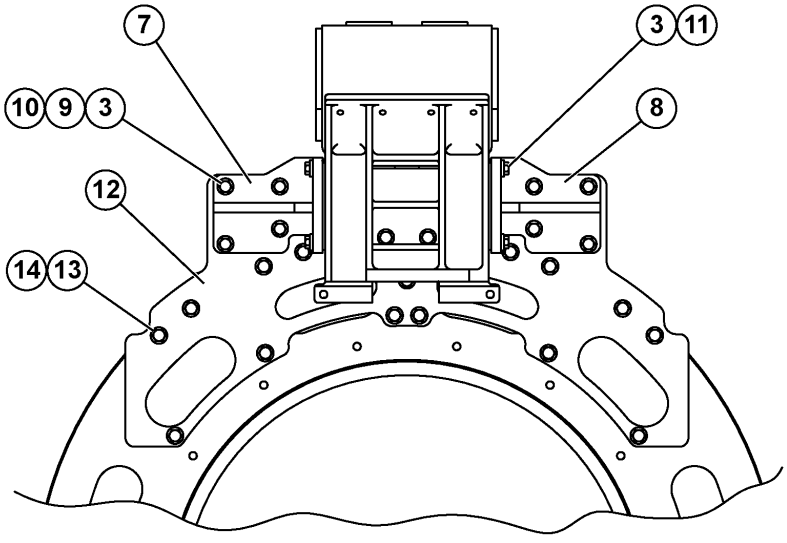

FRONT VIEW

60980Z

REF.	PART NUM.	QTY.	DESCRIPTION
1.00	EL0612	2	BRACKET
2.00	MM0059	8	CAPSCREW - M12 X 1.75 X 50
3.00	MM0705	32	FLAT WASHER - M12 (HARDENED)
4.00	MM0093	8	CAPSCREW - M16 X 2.00 X 70
5.00	MM0706	16	FLAT WASHER - M16 (HARDENED)
6.00	MM0181	8	NUT - M16 X 2.00
7.00	EL0619	1	BRACKET
8.00	EL0618	1	BRACKET
9.00	MM0062	8	CAPSCREW - M12 X 1.75 X 60
10.00	MM0179	8	NUT - M12 X 1.75
11.00	MM0045	8	CAPSCREW - M12 X 1.75 X 40
12.00	EL0611	1	PLATE, BENT
13.00	VN9057	17	CAPSCREW - 1/2" - 13NC X 1 3/4"
14.00	WA0360	17	FLAT WASHER - 1/2" (HARDENED)

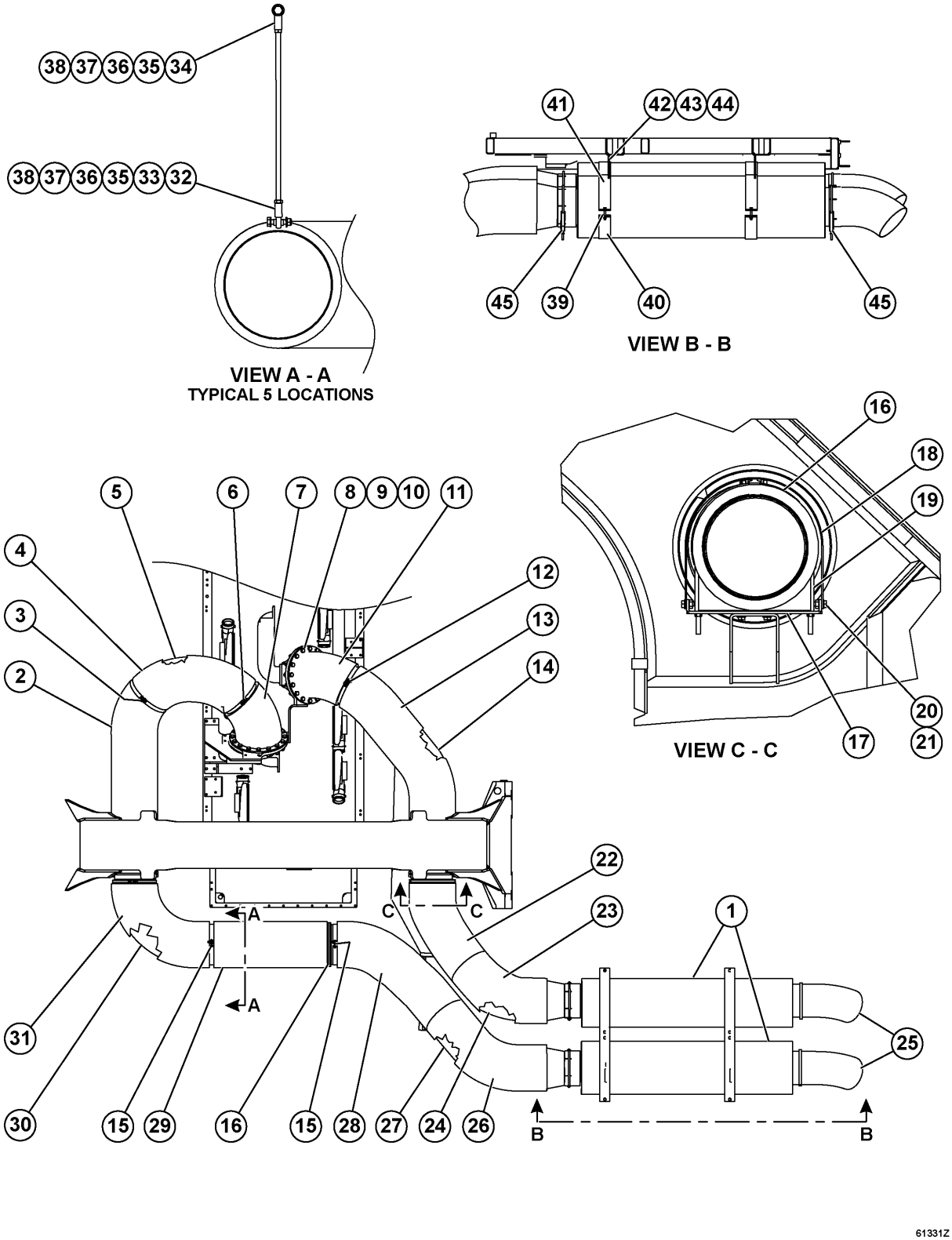
38 37 36 35 34
38 37 36 35 33 32
VIEW A - A
TYPICAL 5 LOCATIONS
41 42 43 44
45 39 40 45
VIEW B - B
16 18 19 20 21 17
VIEW C - C
5 6 7 8 9 10 11
4 3 2 12 13 14
22 23 1 25
A A C C
31 30 15 29 16 15 28 27 24 26
B B

61331Z

REF.	PART NUM.	QTY.	DESCRIPTION
1.00	EH9967	2	MUFFLER
2.00	EM2601	1	BLANKET, EXHAUST
3.00	EK4002	1	ROD, THREADED
4.00	EM2608	1	BLANKET, EXHAUST
5.00	EM6461	1	TUBE, EXHAUST - L.H.
6.00	EK1650	1	ROD, THREADED
7.00	EM2609	1	BLANKET, EXHAUST
8.00	C1647	32	CAPSCREW - 3/4" - 10NC X 2 3/4"
9.00	C1542	32	LOCKWASHER - 3/4"
10.00	C1527	32	NUT - 3/4" - 10NC
11.00	EM2611	1	BLANKET, EXHAUST
12.00	EK1727	1	ROD, THREADED
13.00	EM2607	1	BLANKET, EXHAUST
14.00	EM6462	1	TUBE, EXHAUST - R.H.
15.00	EK4001	2	ROD, THREADED
16.00	PC0760	3	CLAMP, V-BAND
17.00	EK6240	2	MOUNT
18.00	EK6241	2	PLATE, BENT
19.00	EH9397	2	CLAMP ASSEMBLY
19.01	EH9391	1	CLAMP
19.02	EH9389	1	U-BOLT
19.03	C0312	2	LOCKWASHER - 3/8"
19.04	C1521	2	NUT - 3/8" - 16NC
20.00	MM0042	12	CAPSCREW - M10 X 1.50 X 25
21.00	MM0461	12	FLAT WASHER - M10
22.00	EK6685	1	BLANKET, EXHAUST
23.00	EK6686	1	BLANKET, EXHAUST
24.00	EM2605	1	TUBE, EXHAUST
25.00	EH9563	2	TUBE, EXHAUST
26.00	EK6684	1	BLANKET, EXHAUST
27.00	EK6679	1	TUBE, EXHAUST
28.00	EM2612	1	BLANKET, EXHAUST
29.00	EM2610	1	BLANKET, EXHAUST
30.00	EM0774	1	TUBE, EXHAUST
31.00	EM0775	1	BLANKET, EXHAUST
32.00	EK5668	5	CLAMP
33.00	VC7083	5	CAPSCREW - 1/2" - 13NC X 3"
34.00	WA0471	5	CAPSCREW - 1/2" - 13NC X 2 1/4"
35.00	PC1247	14	ROD END, FEMALE (SPECIAL)
36.00	TL8151	14	JAM NUT - 1/2" - 20NF
37.00	WA4728	20	FLAT WASHER - 1/2" (HARDENED)
38.00	DF3500	10	LOCKNUT - 1/2" - 13NC

(SEE FOLLOWING PAGE FOR BALANCE OF PARTS...)

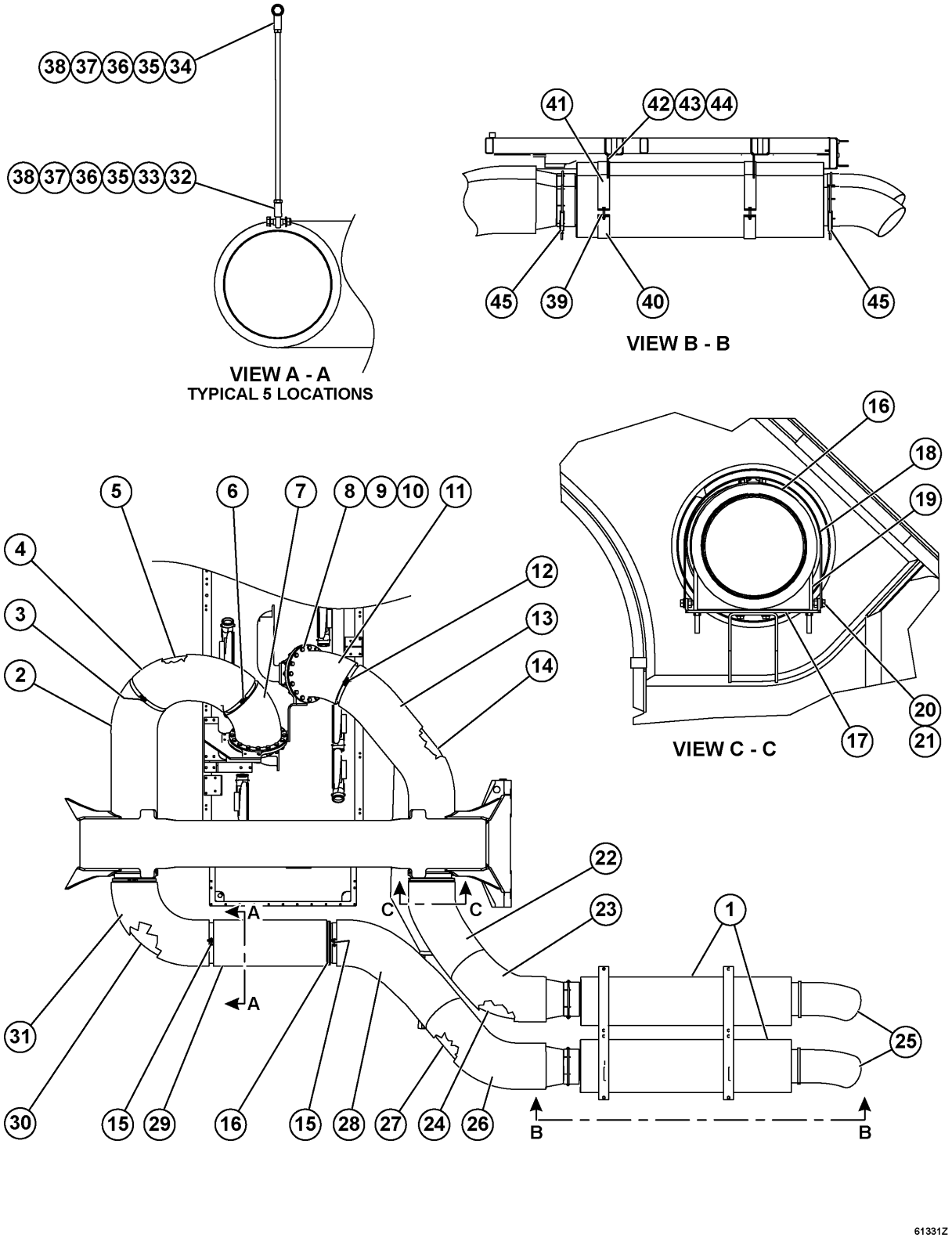
38 37 36 35 34
38 37 36 35 33 32
VIEW A - A
TYPICAL 5 LOCATIONS
41 42 43 44
45 39 40 45
VIEW B - B
16 18 19 20 21 17
VIEW C - C
5 6 7 8 9 10 11
4 3 2 12 13 14
A A
C C
22 23 1 25
31 30 15 29 16 15 28 27 24 26
B B

61331Z

REF.	PART NUM.	QTY.	DESCRIPTION
39.00	MM0624	8	CAPSCREW - M12 X 1.75 X 70
40.00	EJ1952	4	CLAMP
41.00	EK6689	2	HANGER, MUFFLER
42.00	MM0620	8	CAPSCREW - M12 X 1.75 X 40
43.00	MM0179	8	NUT - M12 X 1.75
44.00	MM0714	8	FLAT WASHER - M12 (HARDENED)
45.00	TA6490	4	CLAMP ASSEMBLY
45.01	TA6483	1	CLAMP
45.02	TA6491	1	U-BOLT - 3/8" - 16NC
45.03	C0312	2	LOCKWASHER - 3/8"
45.04	C1521	2	NUT - 3/8" - 16NC

(SEE PRECEDING PAGE FOR BALANCE OF PARTS...)

FRONT WHEEL & BRAKE GROUP

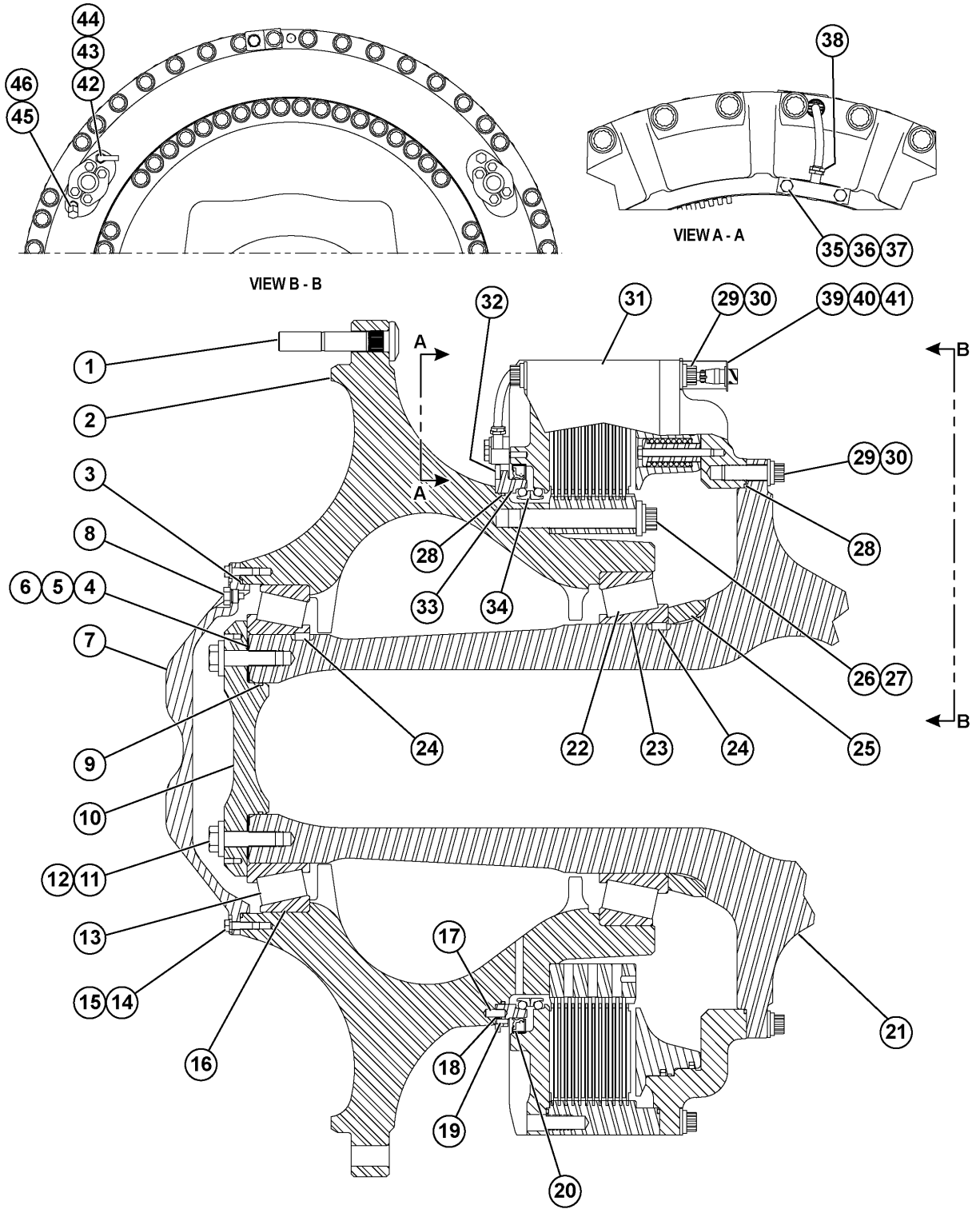
VIEW B - B
VIEW A - A
A
A
B
B
61320Z

REF.	PART NUM.	QTY.	DESCRIPTION
	EK3519	1	SPINDLE, HUB AND BRAKE ASSEMBLY
1.00	EK4352	57	STUD W/ HEAD
2.00	EK1300	1	HUB, WHEEL
3.00	EK3776	1	O-RING (1)
4.00	EK2731	3	SHIM - .005 (1)
5.00	EK2732	4	SHIM - .007 (1)
6.00	EK2733	6	SHIM - .020 (1)
7.00	EK5259	1	COVER
8.00	WB1199	1	PLUG, MAGNETIC
9.00	EK3777	1	O-RING (1)
10.00	EK1286	1	RETAINER, BEARING
11.00	TY2148	10	FLAT WASHER - 1" (HARDENED)
12.00	VM8258	10	CAPSCREW - 1" - 8NC X 3 3/4"
13.00	PB9996	1	CONE, ROLLER (TAPERED) (1)
14.00	C1540	12	LOCKWASHER - 1/2"
15.00	C1614	12	CAPSCREW - 1/2" - 13NC X 1 1/2"
16.00	PC0002	1	CUP, ROLLER (TAPERED) (1)
17.00	TD3705	6	PIN, DOWEL
18.00	EK3799	64	SHIM - .020 (1)
19.00	SG3566	2	PIN, DOWEL
20.00	PC1431	1	SEAL, OIL (1)
21.00	EK3800	1	SPINDLE
22.00	PC1130	1	CONE, ROLLER (TAPERED) (1)
23.00	PC1131	1	CUP, ROLLER (TAPERED) (1)
24.00	562-22-32290	2	PIN (1)
25.00	EK1288	1	SPACER
26.00	WB1231	32	CAPSCREW - 1 1/4" - 12NF X 8" (12 PT)
27.00	TY2149	32	FLAT WASHER (HARDENED)
28.00	EH7195	2	SEAL, O-RING (1)
29.00	WA0908	54	CAPSCREW - 1" - 8NC X 3" (12 PT)
30.00	WA4174	54	FLAT WASHER - 1" (HARDENED)
31.00	EK5262	1	FRONT BRAKE ASSEMBLY (SEE INDEX)
32.00	EK3344	1	GEAR
33.00	EK3508	1	SEAL, CARRIER
34.00	PC0651	1	SEAL ASSEMBLY (1)
35.00	EK3787	1	BRACKET, MOUNTING
36.00	C1616	2	CAPSCREW - 1/2" - 13NC X 2"
37.00	WA0360	2	FLAT WASHER - 1/2" (HARDENED)
38.00	EL3825	1	SENSOR, SPEED
39.00	EK5273	1	BRACKET
40.00	WA5642	4	MACHINE SCREW - #4 - 40NC X 1/2"
41.00	SM2117	1	PLATE, NUT CONNECTOR

(SEE FOLLOWING PAGE FOR BALANCE OF PARTS...)

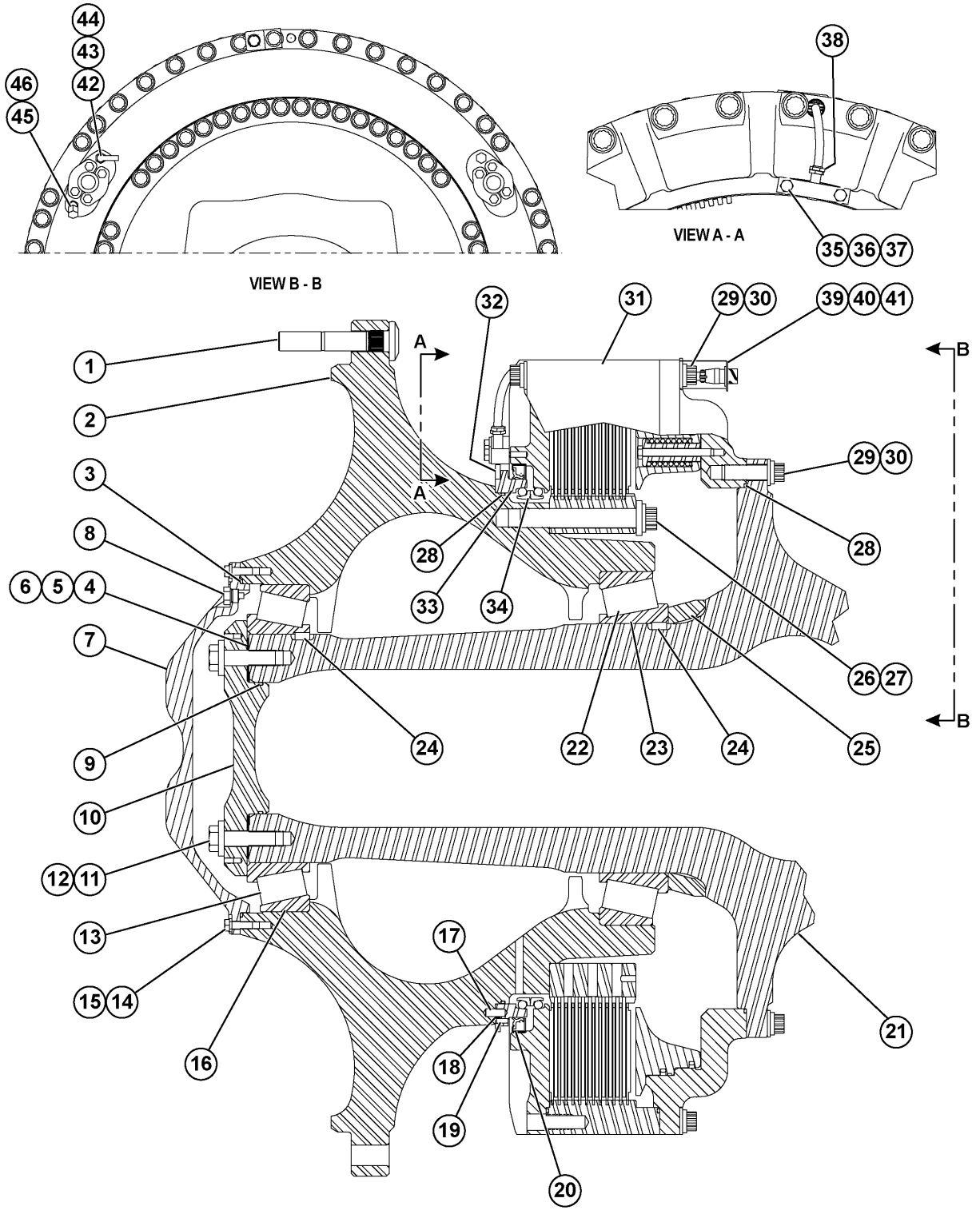
VIEW B - B
VIEW A - A
A
A
B
B
61320Z

REF.	PART NUM.	QTY.	DESCRIPTION
42.00	WB1057	1	REDUCER
43.00	PB6528	1	COUPLING, DIAGNOSTIC
44.00	PB6041	1	CAP, DUST
45.00	WA2567	1	FITTING, CAPNUT
46.00	WB0537	1	FITTING, ELBOW - 45 DEG
KT	AK5416		NOTE: (1) INCLUDED IN AK5416 SPINDLE MAINTENANCE KIT.

(QUANTITIES SHOWN ARE FOR ONE SIDE ONLY.)

(SEE PRECEDING PAGE FOR BALANCE OF PARTS...)

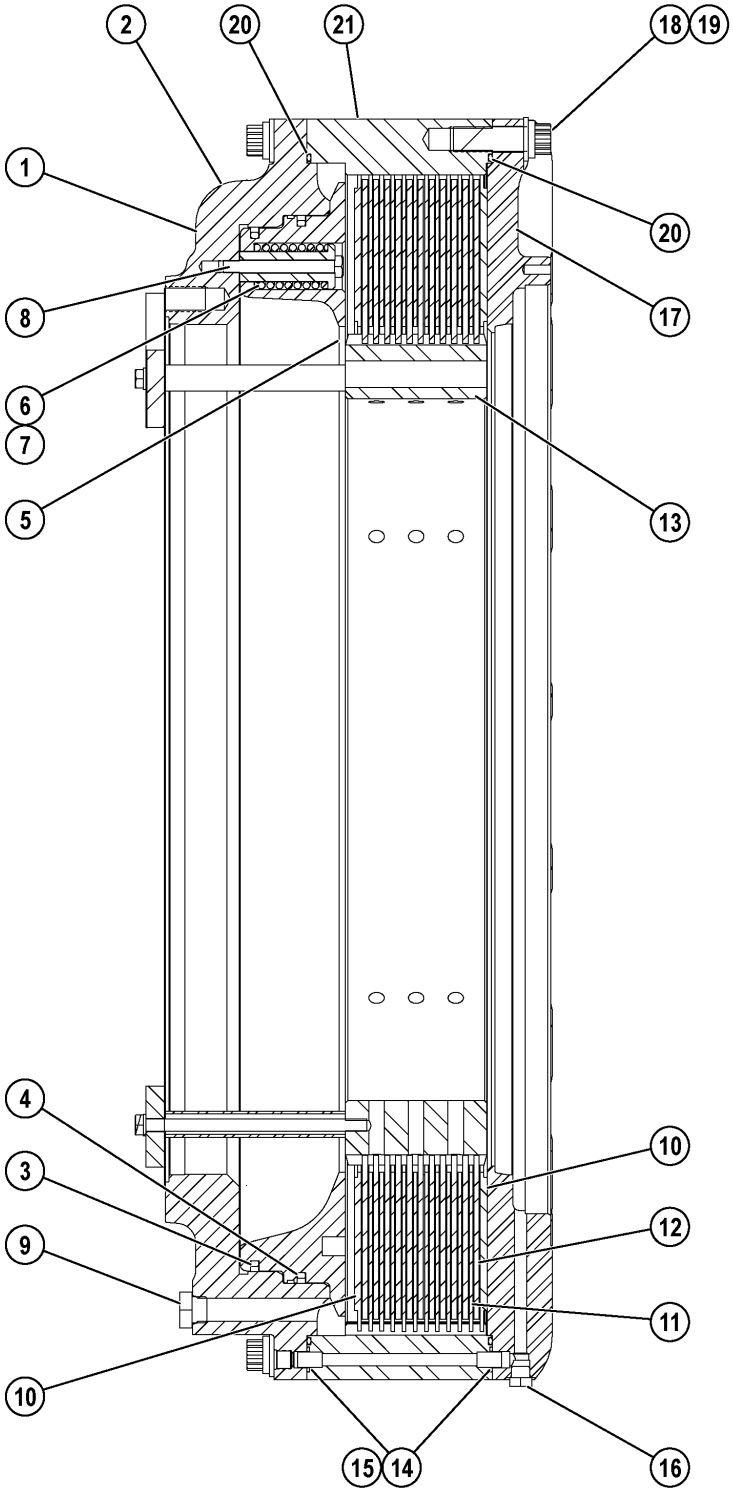
2
20
21
18
19
1
20
8
17
6
7
5
13
4
10
3
12
9
11
10
15
14
16
60939Z

REF.	PART NUM.	QTY.	DESCRIPTION
1.00	EK5260	1	PISTON AND HOUSING ASSEMBLY
2.00	EK5254	1	HOUSING, PISTON
3.00	EJ6990	1	SEAL ASSEMBLY (1)
4.00	EJ6991	1	SEAL ASSEMBLY (1)
5.00	EJ5849	1	PISTON
6.00	EJ6986	12	SPRING, COMPRESSION
7.00	EJ6985	12	GUIDE, SPRING
8.00	VN9149	12	CAPSCREW - 1/2" - 13NC X 4 1/2"
9.00	VM0317	1	PLUG, O-RING (1)
10.00	EJ6987	2	DAMPER
11.00	EH5306	9	PLATE, SEPARATOR
12.00	EH5307	10	DISC, FRICTION
13.00	EK2738	1	GEAR, INNER
14.00	PC1427	2	SPRING, DOWEL
15.00	VG9098	2	O-RING
16.00	VM0315	4	PLUG (1)
17.00	EK3501	1	PLATE, BACK
18.00	WA0908	90	CAPSCREW - 1" - 8NC X 3" (12 PT)
19.00	WA4174	90	FLAT WASHER - 1" (HARDENED)
20.00	EH7197	2	SEAL, O-RING (1)
21.00	EK5257	1	GEAR, OUTER
KT	AK5629		NOTE: (1) INCLUDED IN AK5629 FRONT BRAKE SEAL KIT.

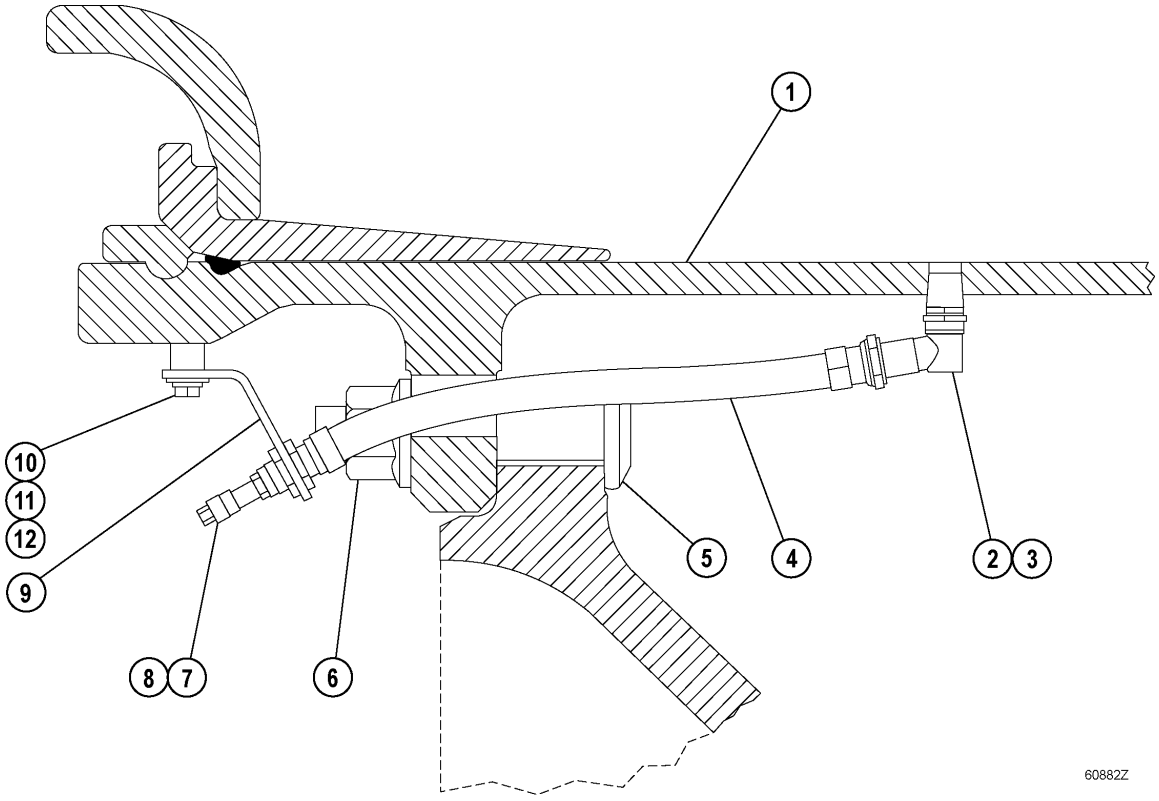
1
10
11
12
9
8
7
6
5
4
2
3
60882Z

REF.	PART NUM.	QTY.	DESCRIPTION
1.00	AK5177	1	RIM - 63" X 41" (SEE FIG 60798)
2.00	PC0579	1	CONNECTOR, SWIVEL NUT
3.00	PC0580	1	SPUD, COLLIE
4.00	PC1826	1	EXTENSION, FLEXIBLE
5.00	EK4352	57	STUD W/ HEAD
6.00	WB1134	57	NUT - 1 1/4" - 7NC
7.00	PC0583	1	HOUSING, CORE
8.00			(NOT USED THIS APPLICATION)
9.00	EL2322	1	PLATE, BENT
10.00	C1601	1	CAPSCREW - 3/8" - 16NC X 3/4"
11.00	C1547	1	FLAT WASHER - 3/8"
12.00	C0312	1	LOCKWASHER - 3/8"

(QUANTITIES SHOWN ARE FOR ONE SIDE ONLY.)

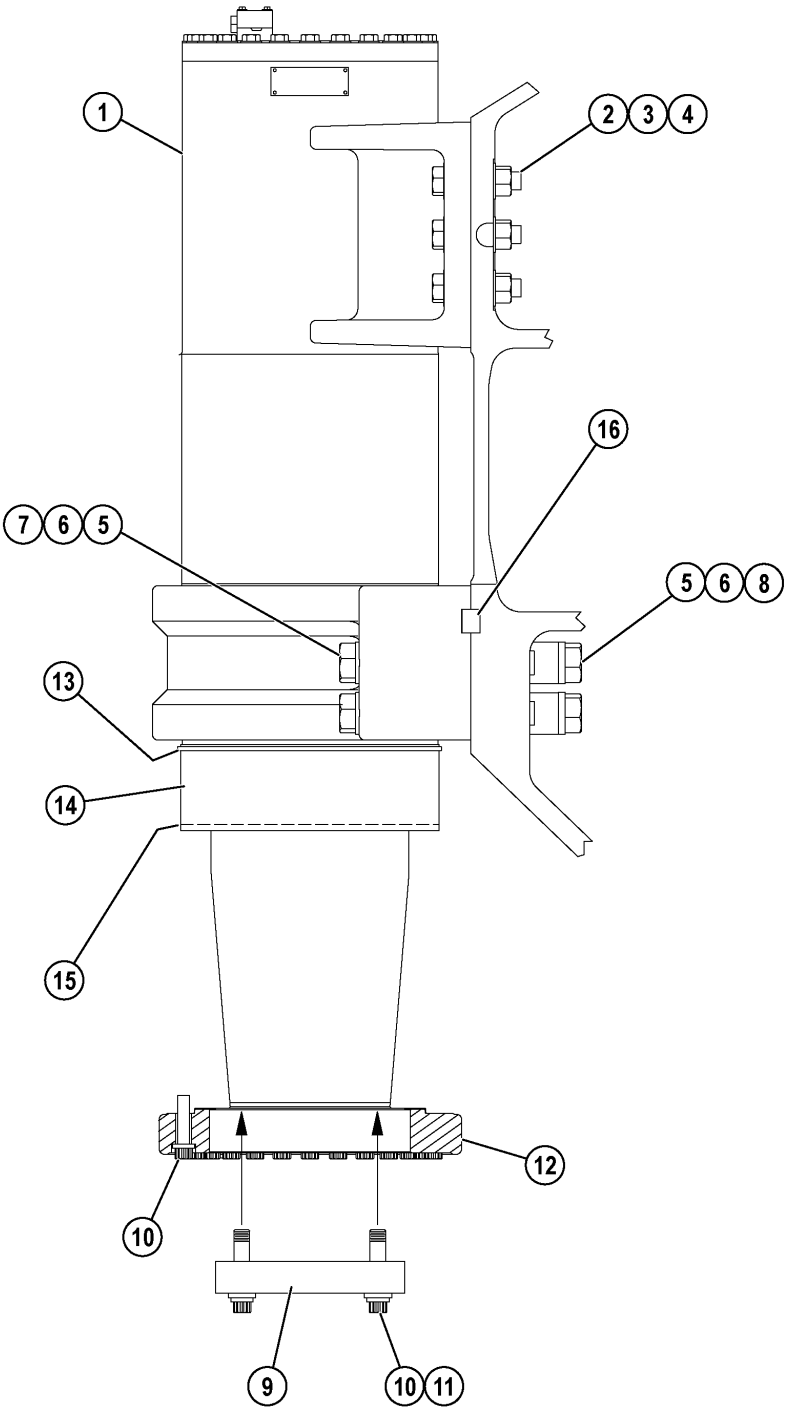
1
2
3
4
16
7
6
5
5
6
8
13
14
15
12
10
9
10
11
61036Z

REF.	PART NUM.	QTY.	DESCRIPTION
1.00	EM3203	1	FRONT SUSPENSION ASSEMBLY (SEE INDEX)
2.00	WA0368	12	FLAT WASHER - 1 1/2" (HARDENED)
3.00	VN9193	6	CAPSCREW - 1 1/2" - 6NC X 6 1/2"
4.00	WA0404	6	NUT - 1 1/2" - 6NC
5.00	EL0932	12	FLAT WASHER - 2" (HARDENED)
6.00	EL0945	8	CAPSCREW - 2" - 5NC X 14 1/2"
7.00	WA0406	4	NUT - 2" - 5NC
8.00	EL7294	4	SPACER
9.00	EK1287	1	PLATE, RETAINING
10.00	WA4817	42	CAPSCREW - 1 1/4" - 12NF X 5"
11.00	TY2149	15	FLAT WASHER (HARDENED)
12.00	EK5252	1	ARM, STEERING - L.H.
12.01	EK5251	1	ARM, STEERING - R.H.
13.00	WA2746	2	CLAMP, WORM DRIVE
14.00	EK6697	1	BOOT
15.00	EK6698	1	WIRE, BOOT
16.00	EL0968	1	KEY, SHEAR
NS	WA3925	1	DECAL, HYDRAIR II

(QUANTITIES SHOWN ARE FOR ONE SIDE ONLY.)

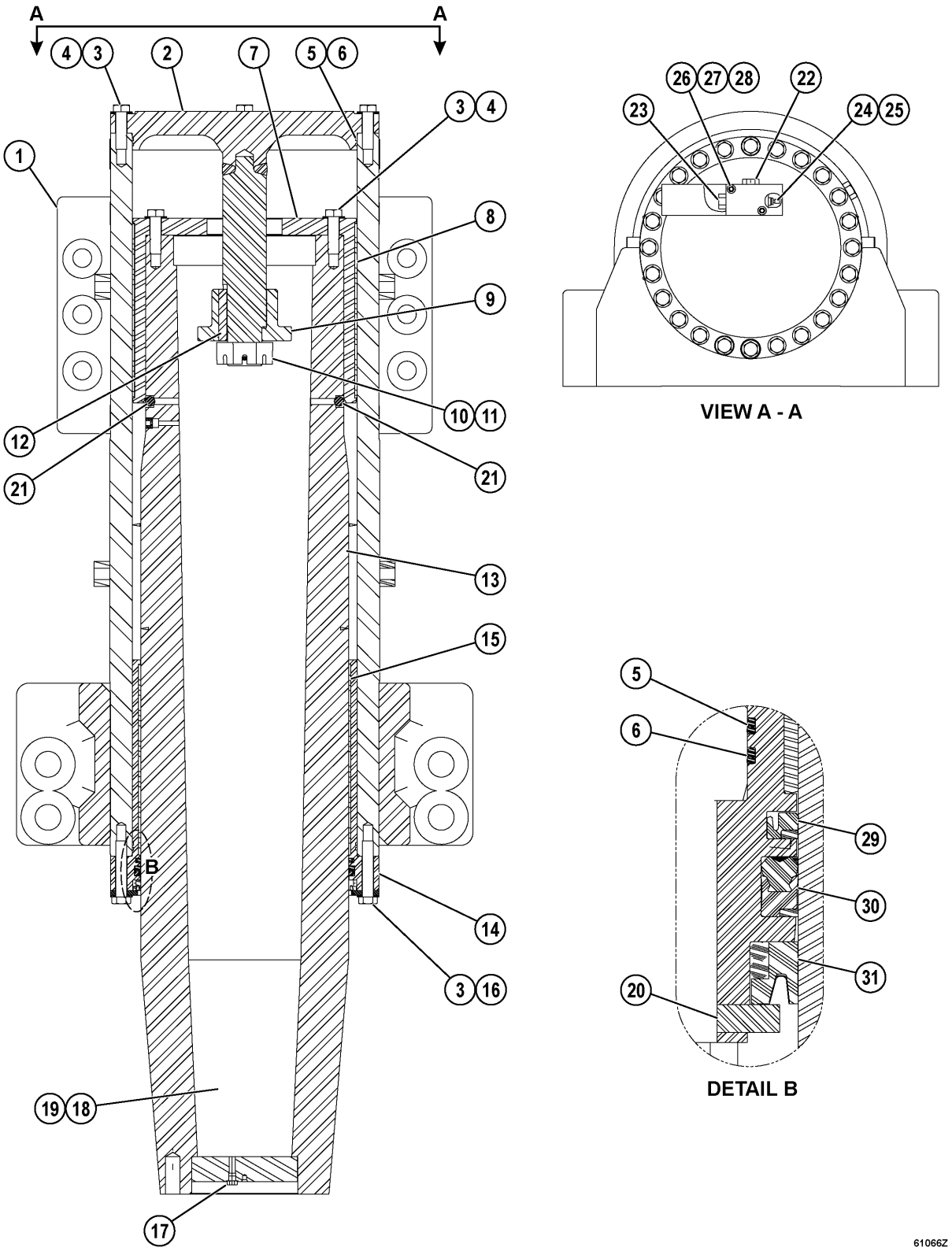
A
A
4
3
2
7
5
6
3
4
1
8
9
10
11
12
21
21
13
15
B
14
3
16
19
18
17
26
27
28
22
23
24
25
VIEW A - A
5
6
29
30
31
20
DETAIL B
61066Z

REF.	PART NUM.	QTY.	DESCRIPTION
1.00	EM1565	1	HOUSING
2.00	EK5290	1	CAP, SUSPENSION
3.00	WA0363	60	FLAT WASHER - 7/8" (HARDENED)
4.00	VN9105	36	CAPSCREW - 7/8" - 9NC X 3"
5.00	PC1392	4	RING, BACKUP (1)
6.00	WA2522	4	SEAL, O-RING (1)
7.00	EM3205	1	RETAINER, UPPER BEARING
8.00	PC1320	1	BEARING, UPPER
9.00	EH6529	1	STOP, PISTON
10.00	VW4451	1	NUT
11.00	VC2629	1	LOCKPIN
12.00	EH6536	1	KEY
13.00	EK2151	1	ROD, PISTON
14.00	EL4841	1	RETAINER, LOWER BEARING
15.00	PC1321	1	BEARING, LOWER
16.00	VN9152	24	CAPSCREW - 7/8" - 9NC X 4 1/2"
17.00	VM0314	1	PLUG
18.00	VJ3911	6	OIL, SUSPENSION (5 GAL CONTAINER)
19.00	AK3761	1	ADDITIVE, OIL (5 GAL CONTAINER)
20.00	EL0974	1	PLATE, WIPER RETAINER
21.00	H2981	2	BALL, STEEL (1)
22.00	TY8879	1	PLUG, VENT
23.00	TZ8637	1	PLUG, SENSOR
24.00	PB2194	1	CHARGING VALVE ASSEMBLY (1)/(2)
24.01	TR9993	1	CAP, VALVE
24.02	TD7179	1	CORE, VALVE
24.03	TF1144	1	O-RING, HOUSING
24.04	WA0052	1	O-RING, VALVE STEM
25.00	VD5076	1	GASKET, FLAT (1)/(2)
26.00	EF5480	1	COVER, PROTECTOR
27.00	C1602	2	CAPSCREW - 3/8" - 16NC X 1"
28.00	DF3042	2	FLAT WASHER - 3/8"
29.00	PC1818	1	SEAL, BUFFER (1)
30.00	PC1322	1	SEAL, DOUBLE LIP (1)
31.00	PC1819	1	SEAL, WIPER (1)

KT	AK5238	NOTE: (1) INCLUDED IN AK5238 SEAL KIT.
KT	RK1887	(2) INCLUDED IN RK1887 CHARGING VALVE KIT.

(QUANTITIES SHOWN ARE FOR ONE SIDE ONLY.)

REAR WHEEL & BRAKE GROUP

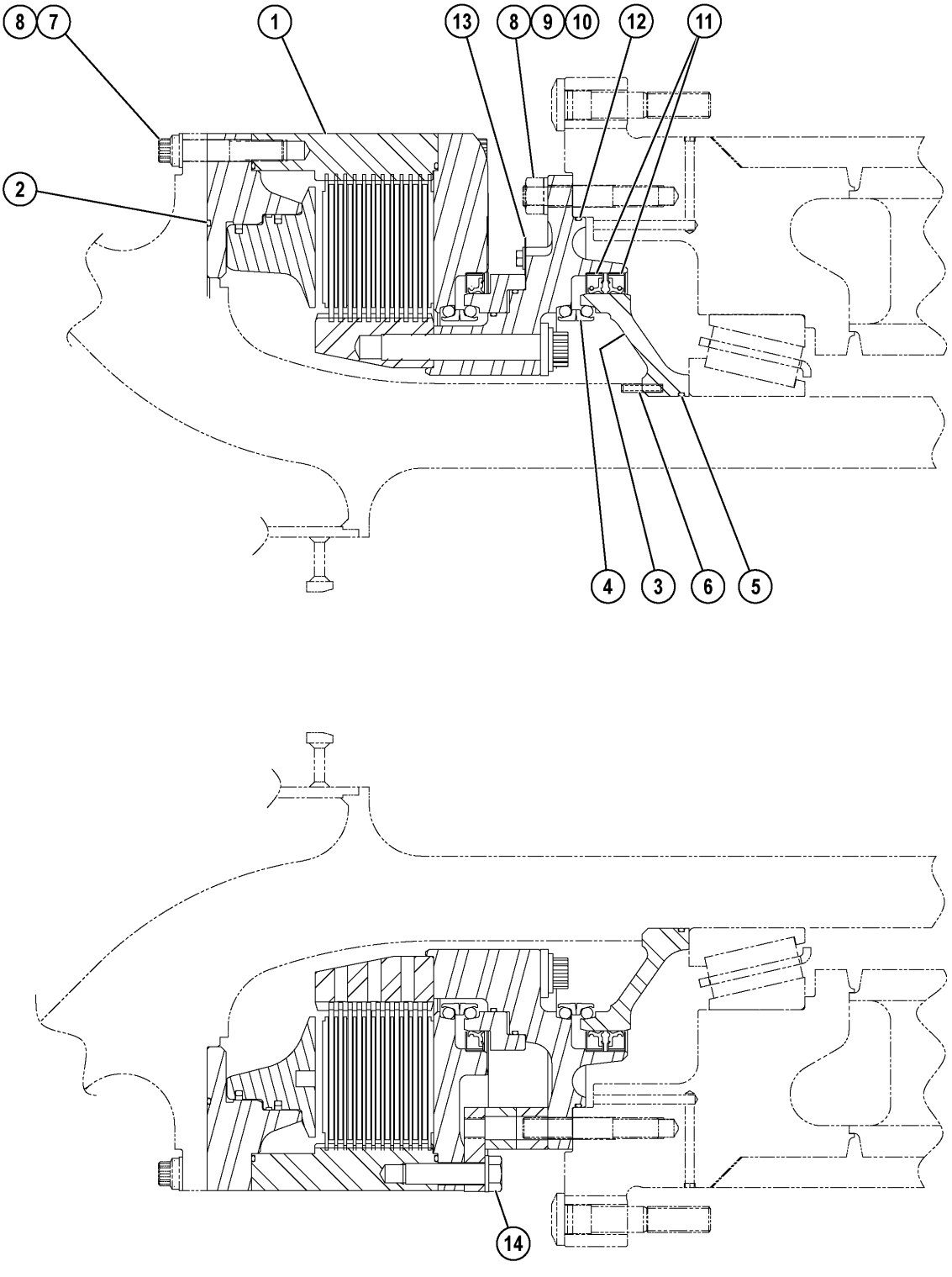
8
7
1
13
8
9
10
12
11
2
4
3
6
5
14
61008Z

REF.	PART NUM.	QTY.	DESCRIPTION
1.00	EM1143	1	REAR BRAKE ASSEMBLY (SEE INDEX)
2.00	EK3788	1	SEAL, O-RING
3.00	EK3517	1	CARRIER, SEAL
4.00	PC0651	1	SEAL ASSEMBLY
5.00	EK3791	1	SEAL, O-RING
6.00	SL7740	1	ROLLPIN
7.00	GE1445	42	CAPSCREW - 1" - 8NC X 5" (12 PT)
8.00	VE3922	90	FLAT WASHER - 1" (HARDENED)
9.00	GE1442	48	STUD - 1" - 12NC X 6 1/8"
10.00	GE1443	48	NUT - 1" - 12NC
11.00	PC1431	2	SEAL, OIL
12.00	EJ9381	1	SEAL, O-RING
13.00	ED3755	AR	SHIM
14.00	WA0908	3	CAPSCREW - 1" - 8NC X 3" (12 PT)
14.01	WA4174	3	FLAT WASHER - 1" (HARDENED)

(QUANTITIES SHOWN ARE FOR ONE SIDE ONLY.)

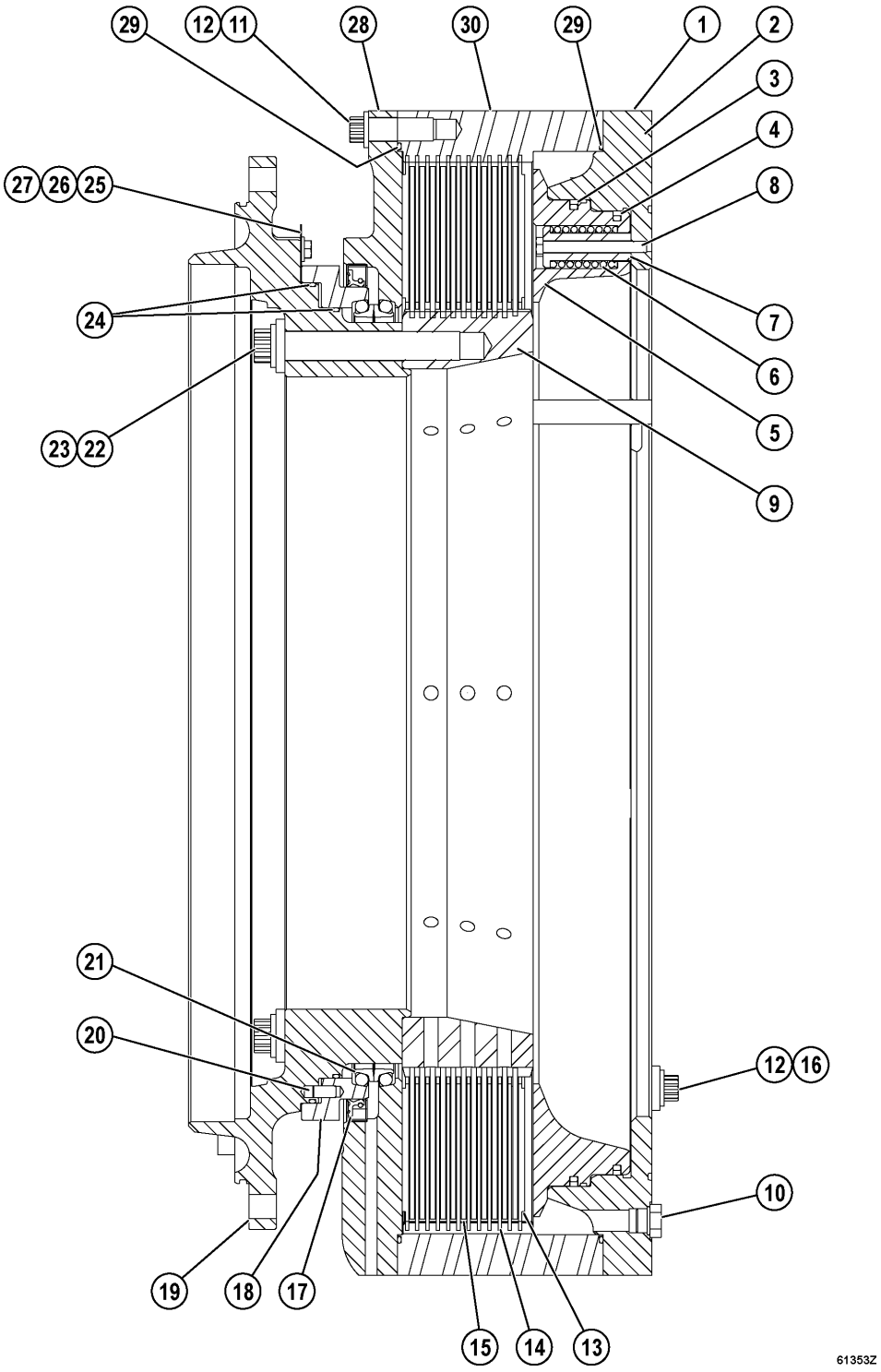
29
12
11
28
30
29
1
2
3
4
27
26
25
8
24
7
6
5
23
22
9
21
20
12
16
10
19
18
17
15
14
13
61353Z

REF.	PART NUM.	QTY.	DESCRIPTION
1.00	EM1141	1	PISTON AND HOUSING ASSEMBLY
2.00	EM1140	1	HOUSING, PISTON
3.00	EJ6991	1	SEAL ASSEMBLY
4.00	EJ6990	1	SEAL ASSEMBLY
5.00	EJ5849	1	PISTON
6.00	EJ6986	12	SPRING, COMPRESSION
7.00	EJ6985	12	GUIDE, SPRING
8.00	VN9149	12	CAPSCREW - 1/2" - 13NC X 4 1/2"
9.00	EK3514	1	GEAR, INNER
10.00	VM0317	1	PLUG, O-RING
11.00	WA0908	39	CAPSCREW - 1" - 8NC X 3" (12 PT)
12.00	WA4174	45	FLAT WASHER - 1" (HARDENED)
13.00	EJ6987	2	DAMPER
14.00	EH5306	10	PLATE, SEPARATOR
15.00	EH5307	11	DISC, FRICTION
16.00	EJ6997	6	CAPSCREW - 1" - 8NC X 3 1/2" (12PT)
17.00	PC1431	1	SEAL, OIL
18.00	EK3515	1	CARRIER, SEAL
19.00	EK3510	1	ADAPTER, HUB
20.00	TV7355	2	PIN, DOWEL
21.00	PC0651	1	SEAL ASSEMBLY
22.00	TY2149	32	FLAT WASHER (HARDENED)
23.00	WB1231	32	CAPSCREW - 1 1/4" - 12NF X 8" (12 PT)
24.00	EH7195	2	SEAL, O-RING
25.00	ED3755	12	SHIM
26.00	WA0360	12	FLAT WASHER - 1/2" (HARDENED)
27.00	C1612	12	CAPSCREW - 1/2" - 13NC X 1"
28.00	EM1131	1	PLATE, BACK
29.00	EH7197	2	SEAL, O-RING
30.00	EM1142	1	GEAR, OUTER
NS	VM0315	3	PLUG

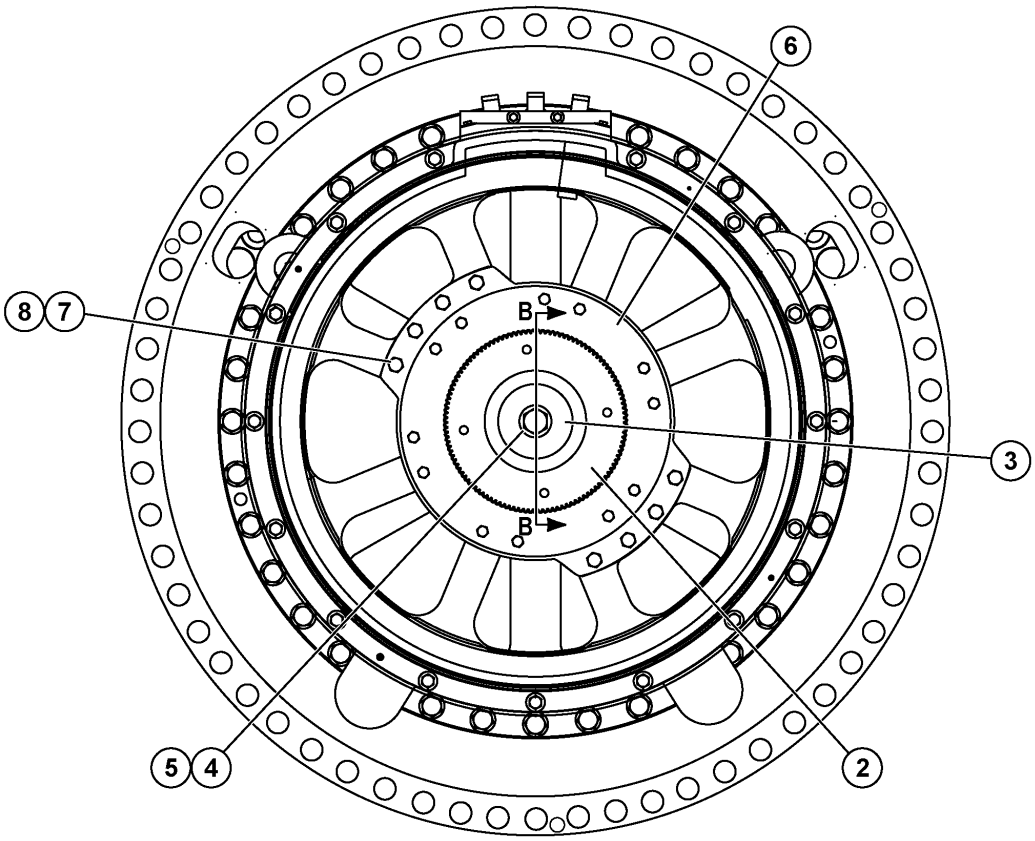

VIEW A - A

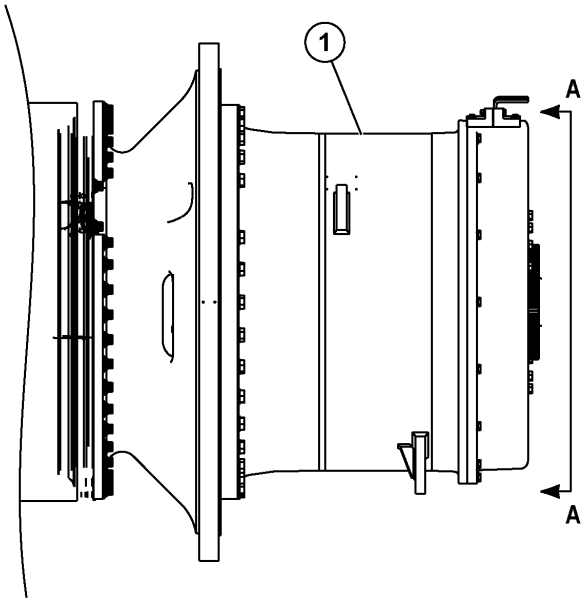

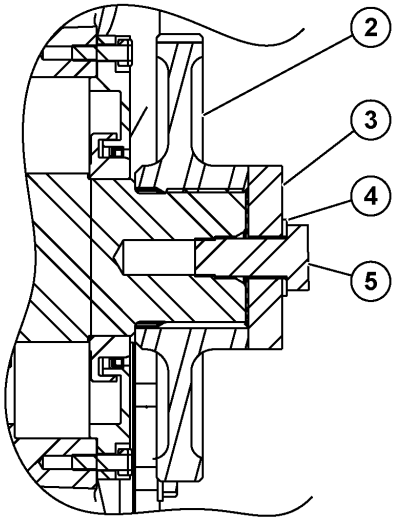

VIEW B - B

60925Z

REF.	PART NUM.	QTY.	DESCRIPTION
1.00	EM0545	1	WHEEL MOTOR ASSEMBLY (SEE INDEX)
2.00	EH7186	1	ADAPTER, PARKING BRAKE
3.00	EK3963	1	PLATE, RETAINER
4.00	WA0366	2	FLAT WASHER - 1 1/4" (HARDENED)
5.00	C5542	2	CAPSCREW - 1 1/4" - 7NC X 3"
6.00	EF6160	1	PARKING BRAKE ASSEMBLY (SEE INDEX)
7.00	WA0362	16	FLAT WASHER - 3/4" (HARDENED)
8.00	VN9077	16	CAPSCREW - 3/4" - 10NC X 2 1/4"

(QUANTITIES SHOWN ARE FOR ONE SIDE ONLY.)

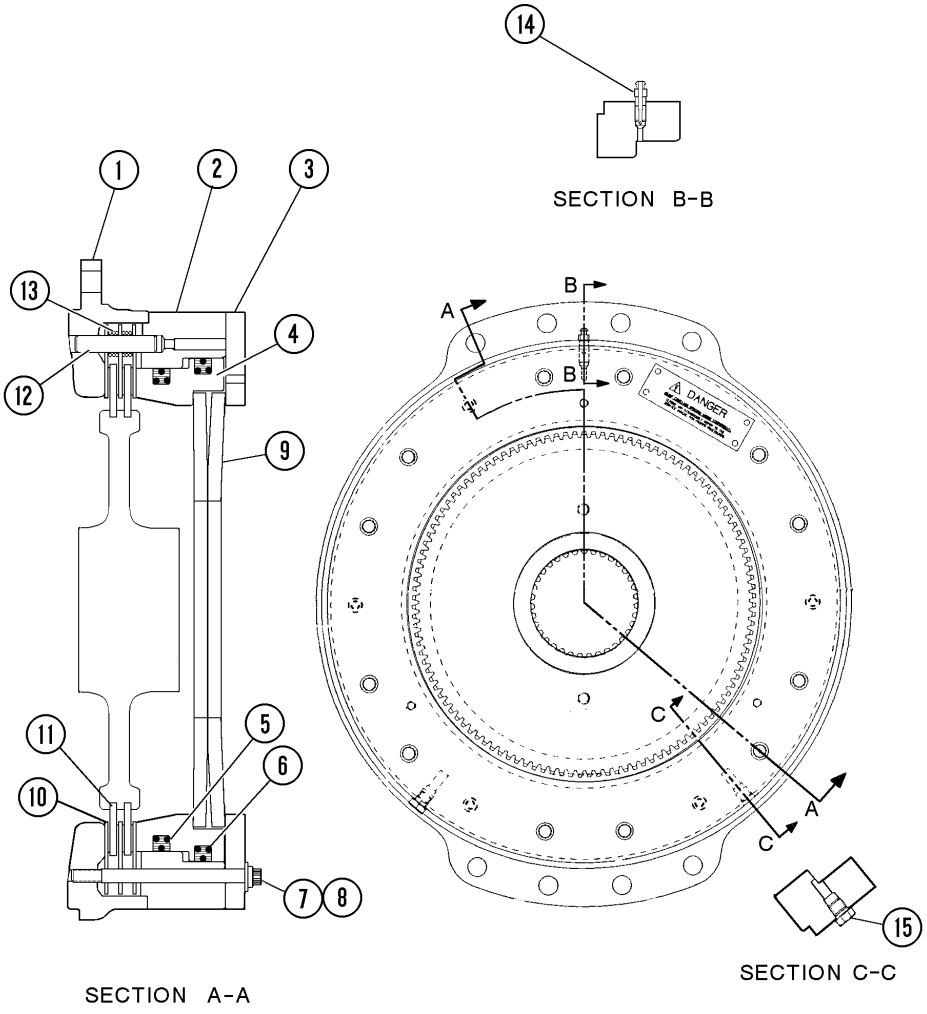
14
SECTION B-B
1
2
3
13
4
12
9
11
5
6
10
7
8
SECTION A-A
A
B
B
DANGER
C
A
C
15
SECTION C-C
60019Z

REF.	PART NUM.	QTY.	DESCRIPTION
1.00	ED4280	1	HOUSING
2.00	EF6158	1	HOUSING, PISTON
3.00	ED5327	1	CAP, END
4.00	EF6157	1	PISTON
5.00	PB9661	1	SEAL
6.00	PB9662	1	SEAL
7.00	WA0360	12	FLAT WASHER - 1/2" (HARDENED)
8.00	WA5664	12	CAPSCREW - 1/2" - 13NC X 6 1/2" (12 PT)
9.00	ED4300	2	SPRING, BELLEVILLE
10.00	ED4276	3	DISC, SEPARATOR
11.00	ED0675	2	DISC, FRICTION
12.00	VG7407	6	PIN, DOWEL
13.00	WA5665	12	SPRING, COMPRESSION
14.00	PB7509	1	SCREW, BLEEDER
14.01	EF6161	1	PLUG, ADAPTER
15.00	VM0314	1	PLUG

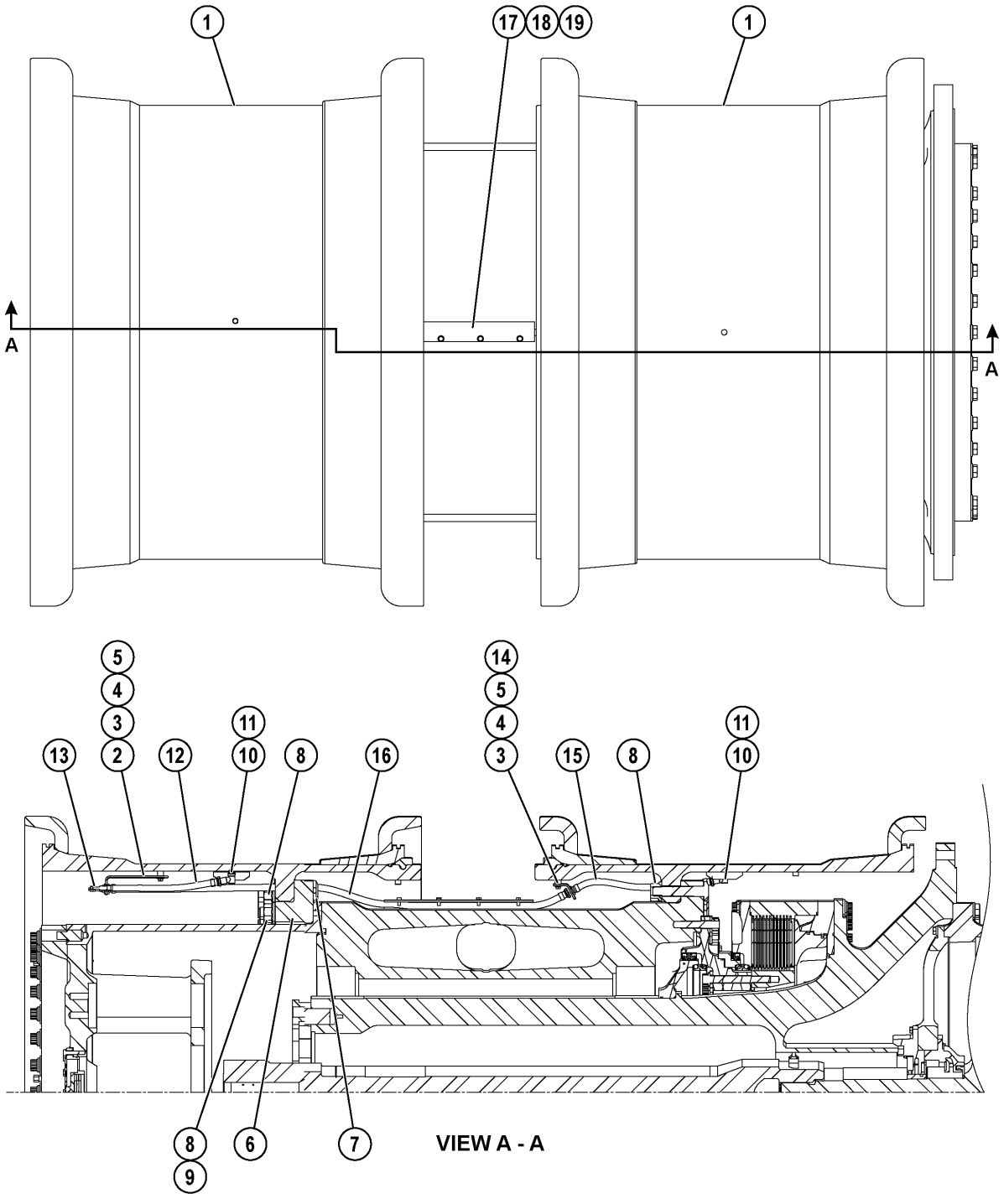
1
17
18
19
1
A
A
5
4
3
2
13
12
11
10
8
16
14
5
4
3
15
8
11
10
8
9
6
7
VIEW A - A
60943Z

REF.	PART NUM.	QTY.	DESCRIPTION
1.00	AK5177	2	RIM - 63" X 41" (SEE FIG 60798)
2.00	EJ2283	1	PLATE, BENT
3.00	C1547	2	FLAT WASHER - 3/8"
4.00	C1601	2	CAPSCREW - 3/8" - 16NC X 3/4"
5.00	C0312	2	LOCKWASHER - 3/8"
6.00	EK4356	1	ADAPTER, RING ASSEMBLY (OUTER)
6.01	EK4354	1	RING, ADAPTER
7.00	EK4352	57	STUD W/ HEADED
8.00	WB1134	225	NUT - 1 1/4" - 7NC
9.00	GE0534	54	STUD (SPECIAL)
10.00	PC0579	2	CONNECTOR, SWIVEL NUT
11.00	PC0580	2	SPUD, COLLIE
12.00	PC1452	1	EXTENSION, FLEXIBLE
13.00	PC0583	2	HOUSING, CORE
14.00	EL2322	1	PLATE, BENT
15.00	PC1826	1	EXTENSION, FLEXIBLE
16.00	PC1870	1	EXTENSION, FLEXIBLE (OUTER)
17.00	EL1894	1	COVER
18.00	TR4436	4	FLAT WASHER - 3/8"
19.00	TC1234	4	CAPSCREW - 3/8" - 16NC X 3/4"

(QUANTITIES SHOWN ARE FOR ONE SIDE ONLY.)

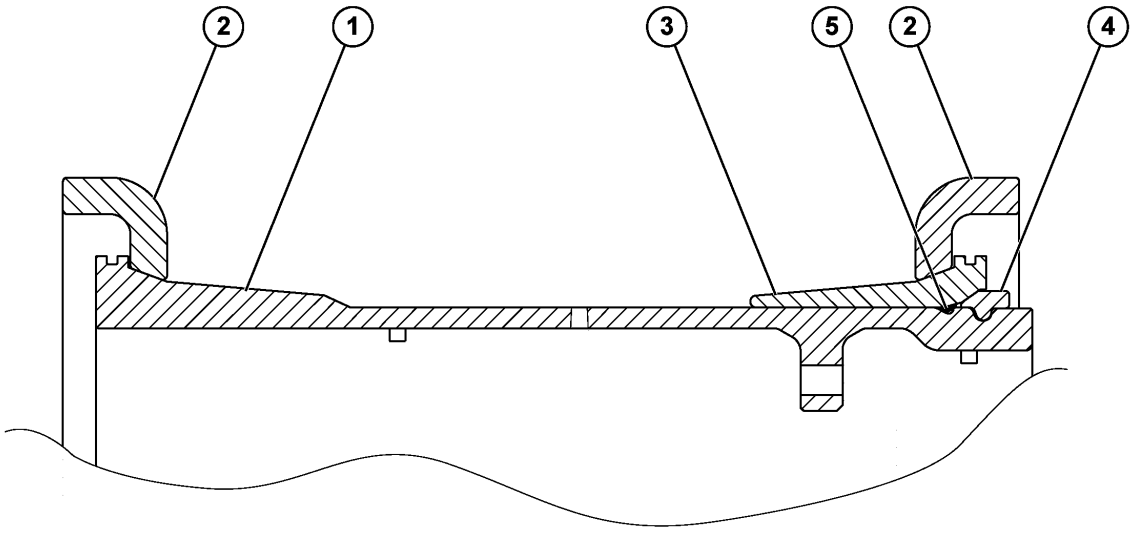

60798Z

REF.	PART NUM.	QTY.	DESCRIPTION
	AK5177	1	RIM - 63" X 41"
1.00	AK4896	1	RIM BASE - 63" X 41"
2.00	AK5178	2	RING, SIDE
3.00	AK4791	1	BAND, BEAD SEAT - 63"
4.00	AK4790	1	RING, LOCK - 63"
5.00	WB1139	1	O-RING - 63"

(QUANTITIES SHOWN ARE FOR ONE WHEEL ONLY.)

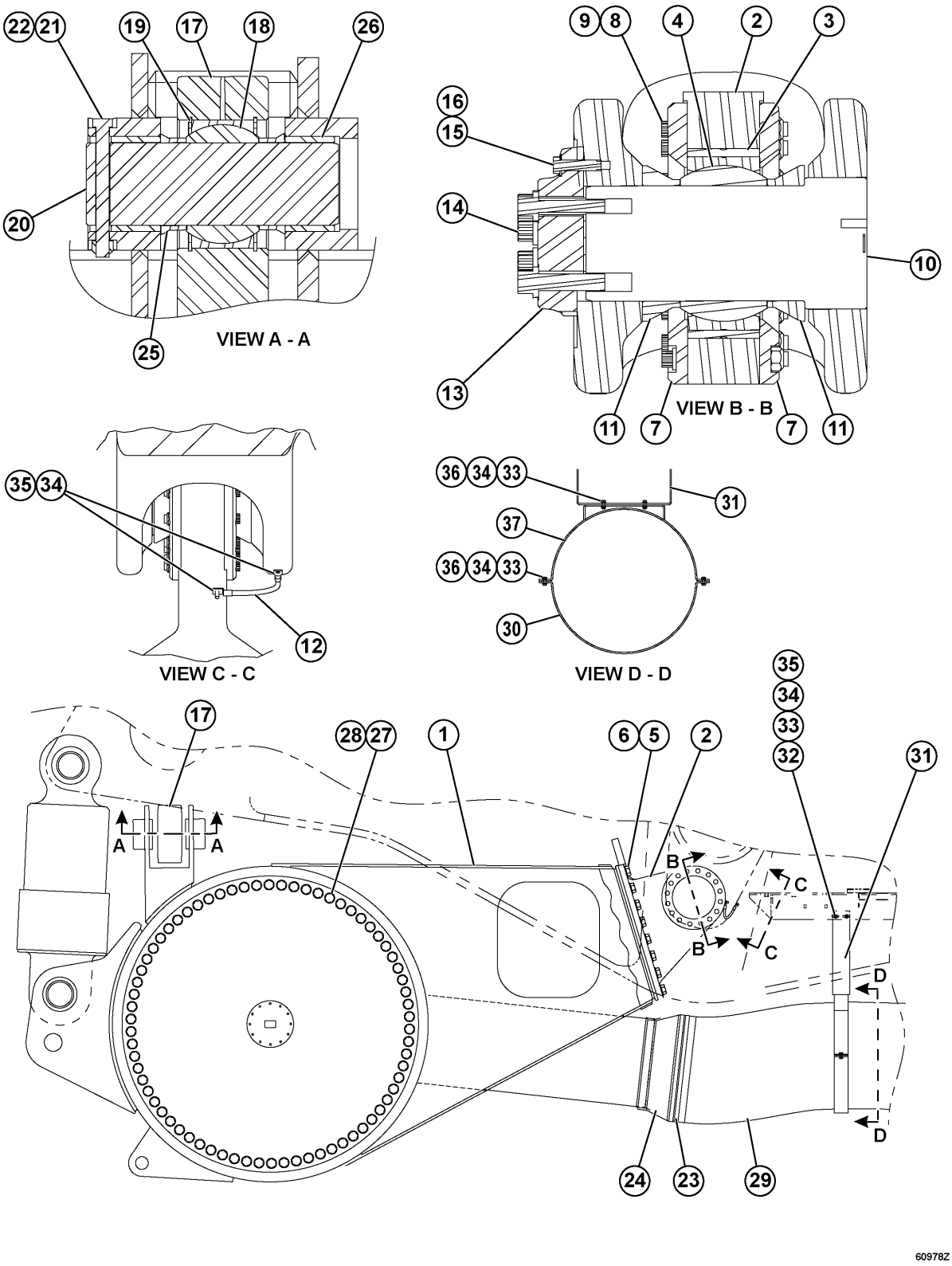
22
21
19
17
18
26
20
25
VIEW A - A
9
8
4
2
3
16
15
14
10
13
11
7
VIEW B - B
7
11
35
34
12
VIEW C - C
36
34
33
31
37
36
34
33
30
VIEW D - D
35
34
33
32
31
17
28
27
1
6
5
2
A
A
B
C
B
C
D
D
24
23
29
60978Z

REF.	PART NUM.	QTY.	DESCRIPTION
1.00	EL8292	1	HOUSING, AXLE
2.00	EL1886	1	PIVOT EYE ASSEMBLY
2.01	EL0769	1	PIVOT EYE
3.00	EK1742	1	CARRIER, BEARING (1)
4.00	PC1317	1	BEARING, SPHERICAL (1)
5.00	EK5634	28	FLAT WASHER - 1 3/8" (HARDENED)
6.00	WB3020	28	CAPSCREW - 1 3/8" - 6NC X 4" (12 PT)
7.00	EK1743	2	RETAINER, BEARING (1)
8.00	WB3026	16	CAPSCREW - 7/8" - 9NC X 6 3/4" (12 PT) (1)
9.00	VN9953	16	LOCKNUT - 7/8" - 9NC (1)
10.00	EK1744	1	PIN, DRIVE PIVOT (1)
11.00	EK1747	2	SPACER (1)
12.00	VN5153	1	WIRE, GROUND
13.00	EK1746	1	RETAINER, PIN (1)
14.00	WB1059	7	CAPSCREW - 1 1/4" - 7NC X 4 1/2" (12 PT) (1)
15.00	C1541	3	LOCKWASHER - 5/8" (1)
16.00	VN9087	3	CAPSCREW - 5/8" - 11NC X 2 1/2" (1)
17.00	EH7812	1	SWAY BAR W/BEARINGS
17.01	EH7813	1	BAR, ANTI-SWAY
18.00	PB0027	2	BUSHING, BALL (2)
19.00	VN9351	4	RING, RETAINING (2)
20.00	EH7811	2	PIN, PANHARD ROD (2)
21.00	MM0173	2	CAPSCREW - M20 X 2.50 X 2.00 (2)
22.00	MM0697	2	LOCKNUT - M20 X 2.50 (2)
23.00	WB1191	4	CLAMP, T-BOLT
24.00	EJ9729	1	ADAPTER (3)
25.00	TY2734	4	SPACER (2)
26.00	TX8110	2	SLEEVE (2)
27.00	EK2600	120	FLAT WASHER (HARDENED)
28.00	VN9172	120	CAPSCREW - 1 1/2" - 6NC X 5 1/2"
29.00	EJ0689	1	HOSE, AXLE AIR BLOWER
30.00	EJ1949	1	STRAP
31.00	EK9922	1	BRACKET, SUPPORT
32.00	MM0607	4	CAPSCREW - M10 X 1.50 X 35
33.00	MM0461	14	FLAT WASHER - M10
34.00	MM0471	10	LOCKWASHER - M10
35.00	MM0178	4	NUT - M10 X 1.50
36.00	MM0606	6	CAPSCREW - M10 X 1.50 X 30
37.00	EJ1946	1	BRACKET
KT	AK5212		NOTE: (1) INCLUDED IN AK5212 NOSE CONE PIN KIT.
KT	AK4321		(2) INCLUDED IN AK4321 PAN HARD ROD PIN KIT.
			(3) WELD-ON COMPONENT OF THE AXLE HOUSING

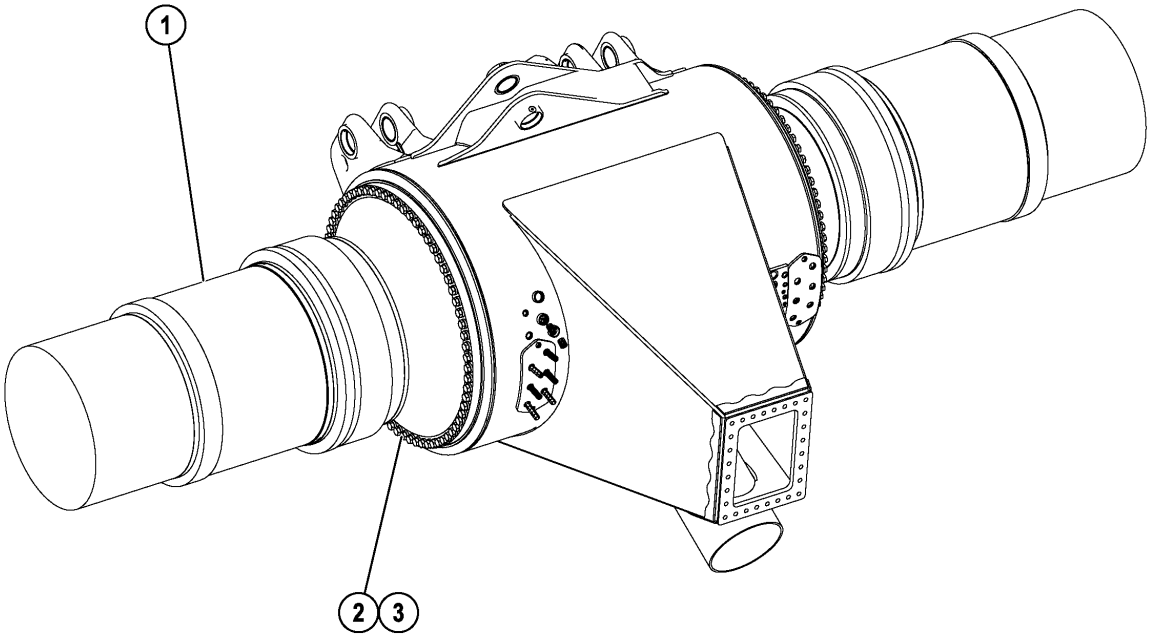

60765Z

REF.	PART NUM.	QTY.	DESCRIPTION
1.00	EM0545	2	WHEEL MOTOR ASSEMBLY (SEE INDEX)
2.00	EK2600	120	FLAT WASHER (HARDENED)
3.00	VN9172	120	CAPSCREW - 1 1/2" - 6NC X 5 1/2"

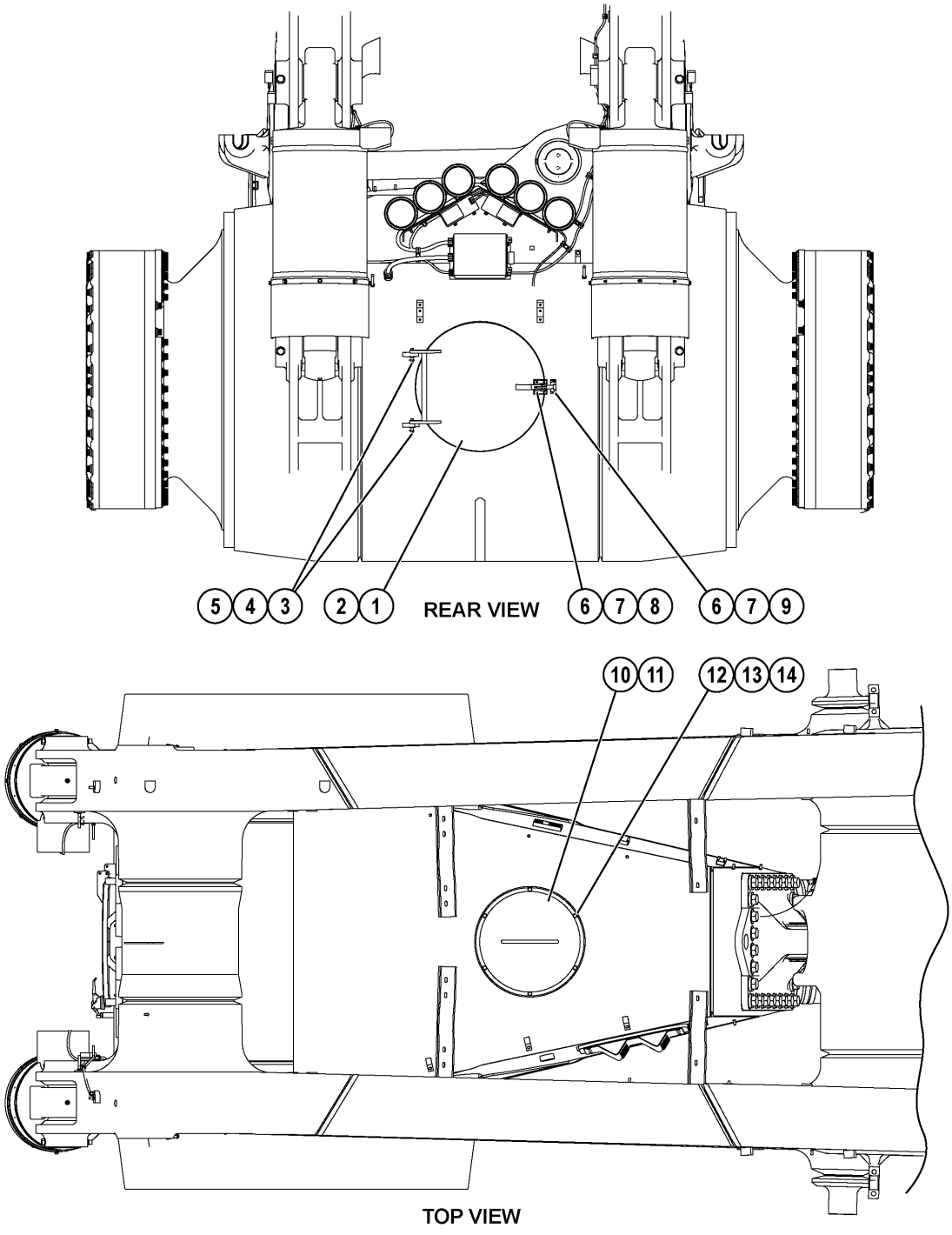
5 4 3 2 1
REAR VIEW
6 7 8 6 7 9
10 11 12 13 14
TOP VIEW
60942Z

REF.	PART NUM.	QTY.	DESCRIPTION
1.00	EL0156	1	HATCH
2.00	EL0852	1	SEAL
3.00	VC4899	2	FLAT WASHER - 1/2" (COPPER)
4.00	WA0360	AR	FLAT WASHER - 1/2" (HARDENED)
5.00	C2303	2	COTTER PIN
6.00	TD1809	6	CAPSCREW - 1/4" - 20NC X 3/4"
7.00	SP8417	6	FLAT WASHER - 1/4"
8.00	PB1006	1	LATCH/KEEPER SET
9.00	TK7738	AR	SHIM
10.00	EL0712	1	COVER
11.00	EL0714	1	GASKET
12.00	MM0607	6	CAPSCREW - M10 X 1.50 X 35
13.00	MM0461	6	FLAT WASHER - M10
14.00	MM0471	6	LOCKWASHER - M10

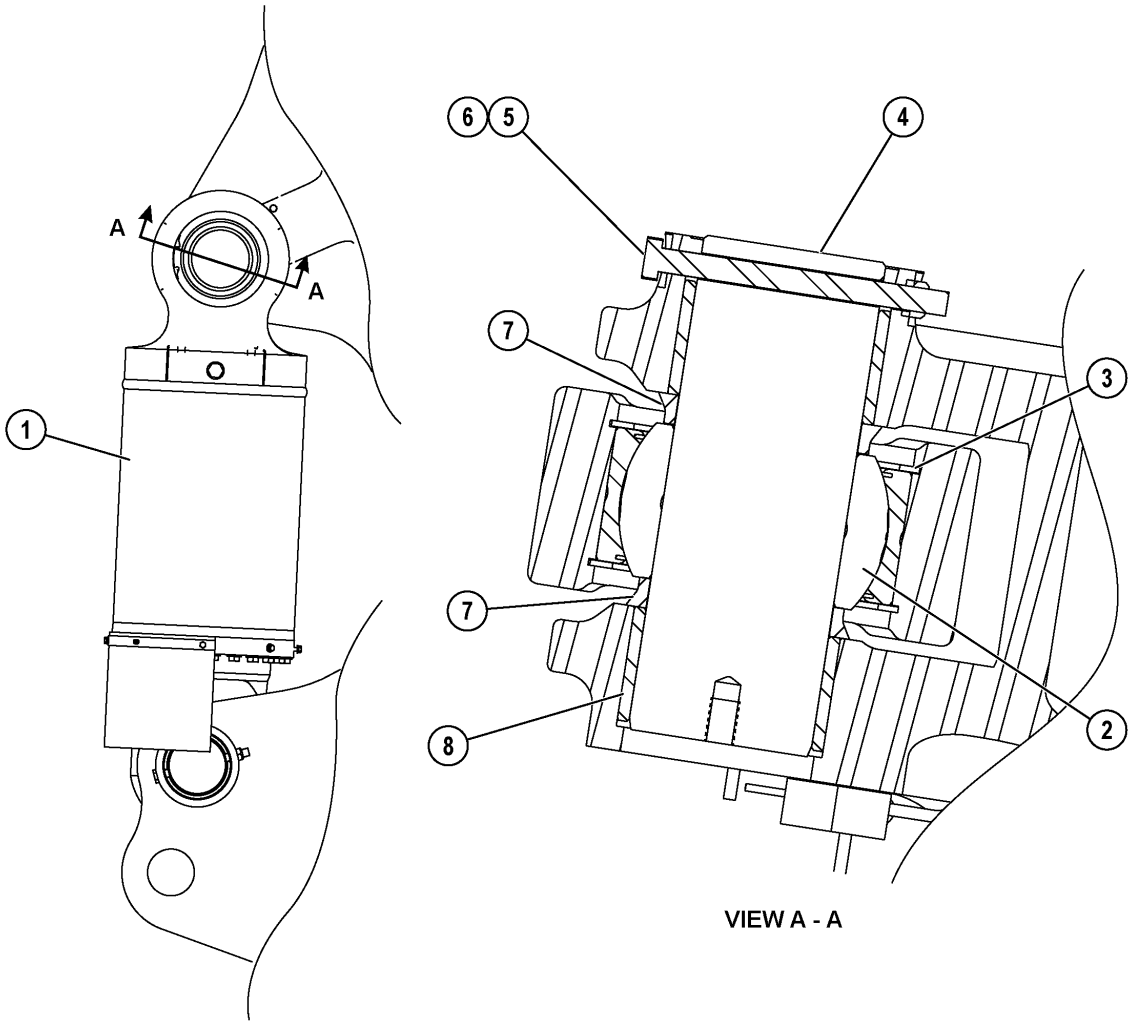

60941Z

REF.	PART NUM.	QTY.	DESCRIPTION
	EM1578	1	REAR SUSPENSION W/ BEARINGS
1.00	EM1580	1	REAR SUSPENSION ASSEMBLY (1) (SEE INDEX)
2.00	PC1381	2	BEARING, SPHERICAL (2)
3.00	VN9357	4	RING, RETAINING (2)
4.00	EL1158	2	PIN, BEARING (2)
5.00	MM0690	2	CAPSCREW - M20 X 2.50 X 240 (2)
6.00	MM0697	2	LOCKNUT - M20 X 2.50 (2)
7.00	EK5269	2	SLEEVE, PIN
8.00	EK5271	4	SPACER (2)
NS	WA3925	1	DECAL, HYDRAIR II
			NOTE: (1) NOT SERVICED SEPARATELY. ORDER EM1578.
KT	AK5214		(2) INCLUDED IN AK5214 REAR SUSPENSION PIN KIT.

(QUANTITIES SHOWN ARE FOR ONE SIDE ONLY.)

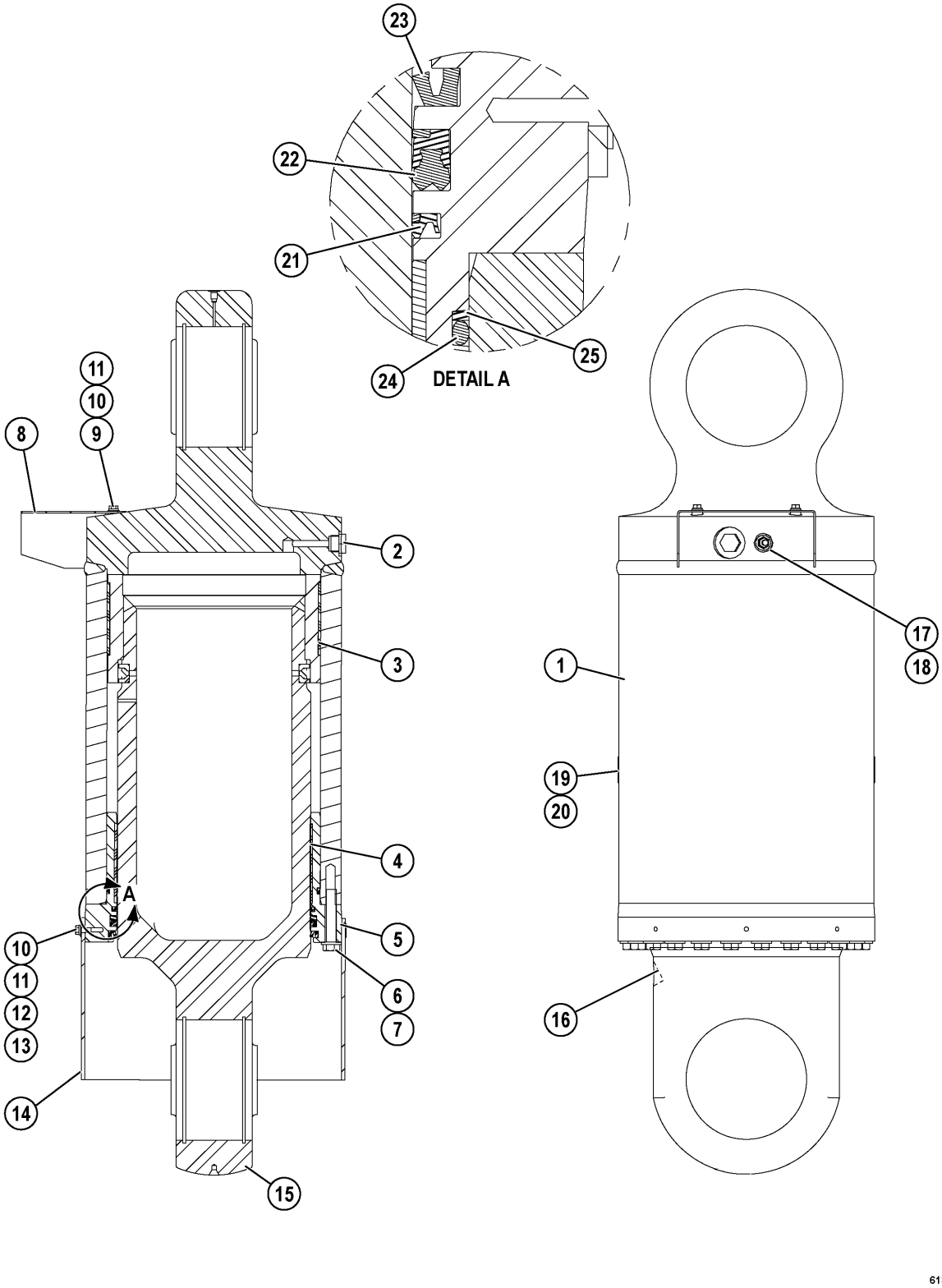
23
22
21
25
24
DETAIL A
11
10
9
8
2
3
4
A
10
11
12
13
14
5
6
7
15
1
17
18
19
20
16
61335Z

REF.	PART NUM.	QTY.	DESCRIPTION
1.00	EK6522	1	HOUSING
2.00	TY8879	1	PLUG, VENT
3.00	PC0903	1	BEARING, PISTON
4.00	PC0902	1	BEARING, ROD
5.00	EK8138	1	RETAINER, BEARING
6.00	VN9140	24	CAPSCREW - 3/4" - 10NC X 4"
7.00	WA0362	24	FLAT WASHER - 3/4" (HARDENED)
8.00	EJ6733	1	COVER
9.00	C1603	2	CAPSCREW - 3/8" - 16NC X 1 1/4"
10.00	WA0720	7	FLAT WASHER - 3/8" (HARDENED)
11.00	C0312	7	LOCKWASHER - 3/8"
12.00	DC7524	5	CAPSCREW - 3/8" - 16NC X 7/8" (3)
13.00	EJ5117	1	BAR, FLAT (3)
14.00	EJ5116	1	MUD FLAP (3)
15.00	EM1582	1	PISTON
16.00	VM0313	1	PLUG
17.00	PB2194	1	CHARGING VALVE ASSEMBLY (1)/(2)
17.01	TD7179	1	CORE, VALVE
17.02	TR9993	1	CAP, VALVE
17.03	TF1144	1	O-RING, HOUSING
17.04	WA0052	1	O-RING, VALVE STEM
18.00	VD5076	1	GASKET, FLAT (1)/(2)
19.00	WA2892	2	PLATE, DANGER (1)
20.00	WA3134	8	SCREW
21.00	PC0626	1	SEAL, BUFFER (1)
22.00	PC0625	1	SEAL, DOUBLE LIP (1)
23.00	PC0627	1	SEAL, WIPER (1)
24.00	WA0180	1	SEAL, O-RING (1)
25.00	PC0673	1	RING, BACKUP (1)
NS	VJ3911	3	OIL, SUSPENSION (5 GAL CONTAINER)
NS	AK3761	1	ADDITIVE, OIL (5 GAL CONTAINER)
KT	AK5239		NOTE: (1) INCLUDED IN AK5239 SEAL KIT.
KT	RK1887		(2) INCLUDED IN RK1887 CHARGING VALVE KIT.
			(3) NOT INCLUDED IN ASSEMBLY.

STEERING SYSTEM

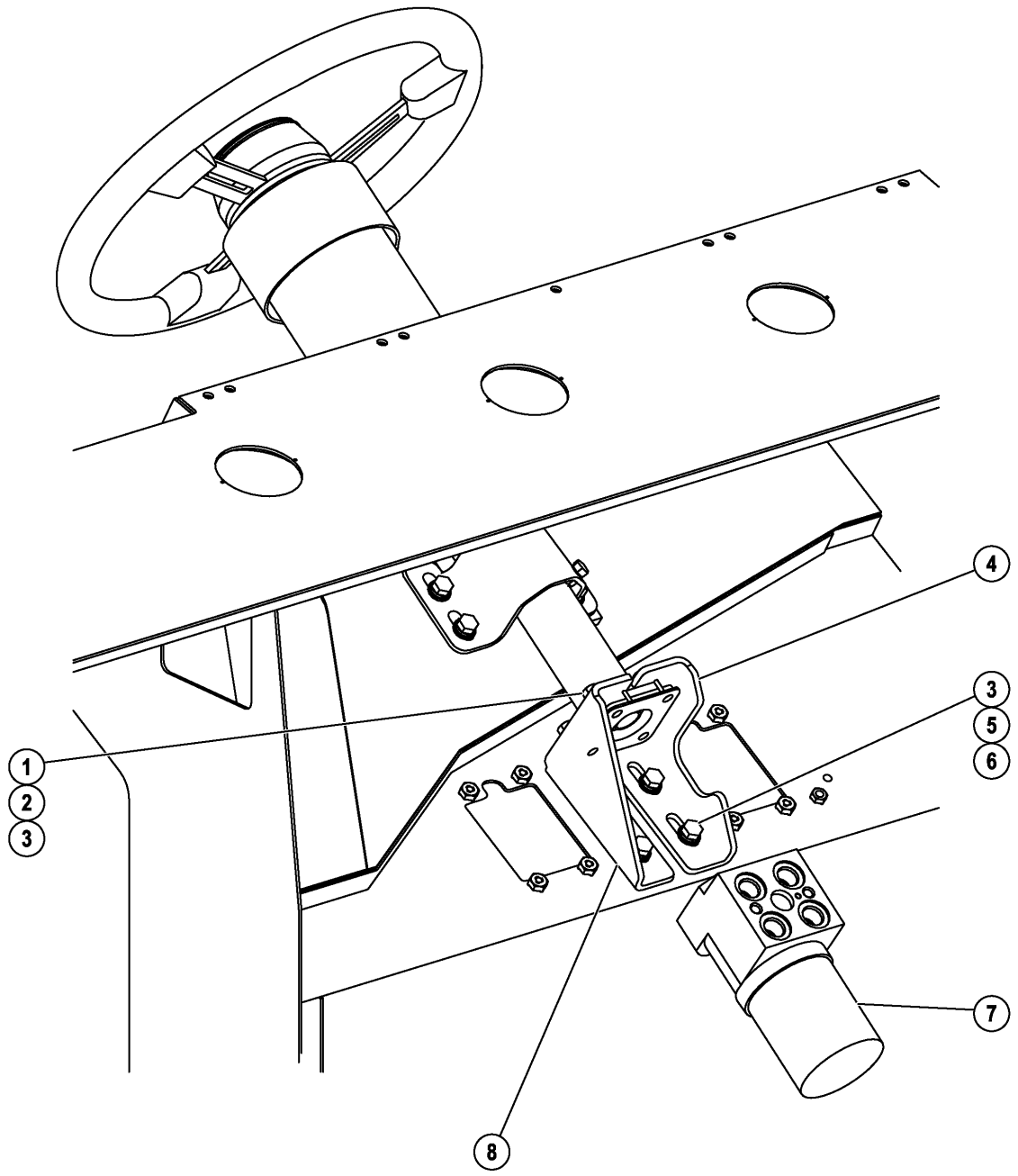
1
2
3
4
3
5
6
7
8
55650Z

REF.	PART NUM.	QTY.	DESCRIPTION
1.00	VC8762	4	CAPSCREW - 3/8" - 16NC X 1 1/2"
2.00	TC1231	4	LOCKWASHER - 3/8"
3.00	MM0713	8	FLAT WASHER - M10 (HARDENED)
4.00	EJ9843	1	BRACKET, L.H.
5.00	MM0604	4	CAPSCREW - M10 X 1.50 X 20
6.00	MM0471	4	LOCKWASHER - M10
7.00	PB9881	1	STEERING CONTROL VALVE (SEE INDEX)
8.00	EJ9842	1	BRACKET, R.H.

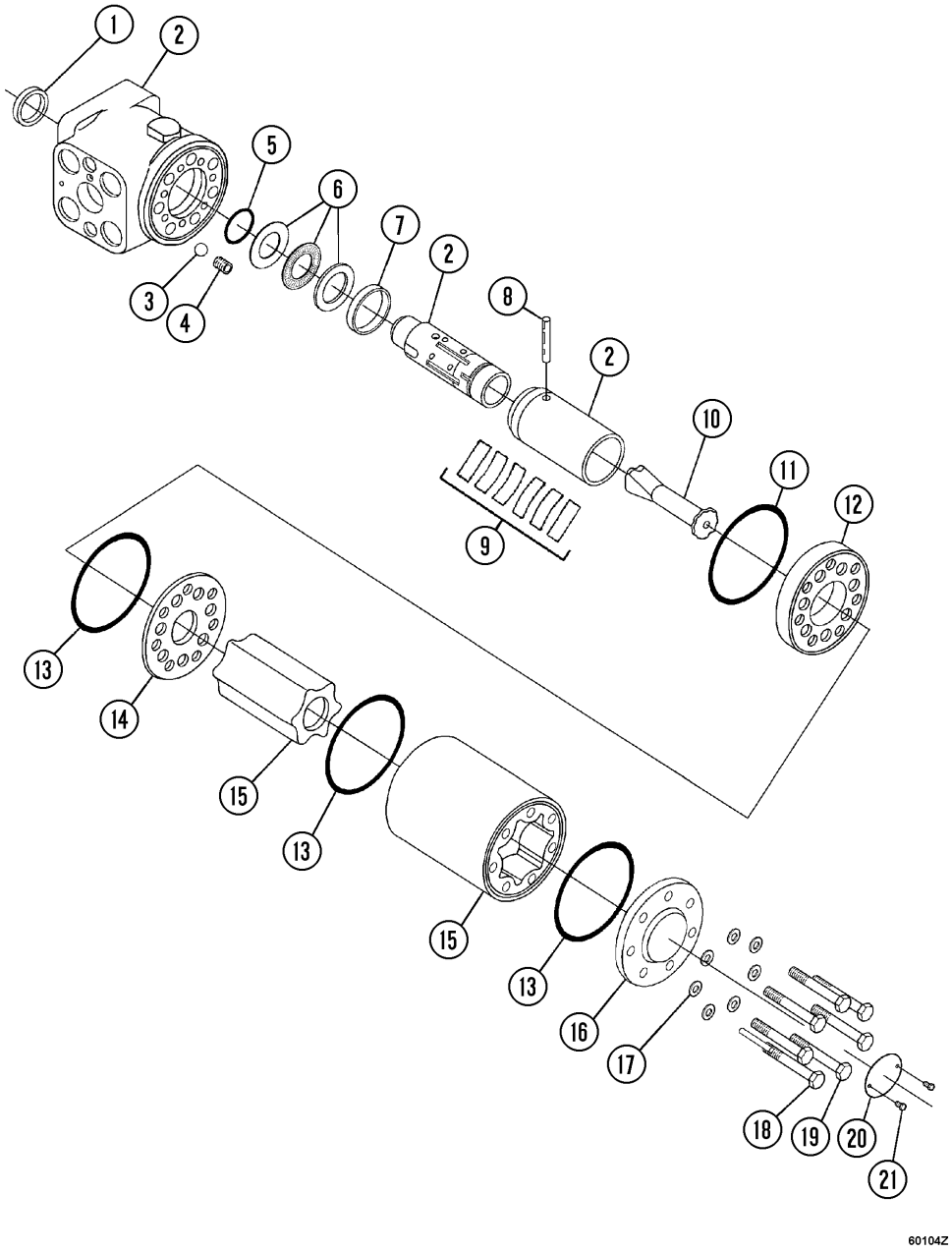
1
2
5
6
7
2
8
2
10
11
12
9
13
14
15
13
15
13
16
17
18
19
20
21
60104Z

REF.	PART NUM.	QTY.	DESCRIPTION
1.00	VE4064	1	SEAL, DUST (1)
2.00	VE3080	1	HOUSING/SPOOL/SLEEVE
3.00	VE3081	1	BALL
4.00	VE3082	1	BUSHING, THREADED
5.00	BF3031	1	O-RING (1)
6.00	VE3083	1	BEARING ASSEMBLY
7.00	VE3084	1	RING
8.00	VE3085	1	CROSS PIN
9.00	BF3032	1	SPRING SET (QTY. 6)
10.00	BF1287	1	SHAFT, CARDAN
11.00	VE4069	1	O-RING (1)
12.00	BF3033	1	PLATE, INTERMEDIATE
13.00	VE4071	3	O-RING (1)
14.00	BF3034	1	PLATE, DISTRIBUTOR
15.00	BF3035	1	GEAR WHEEL SET
16.00	VE3091	1	COVER, END
17.00	VE4072	7	WASHER (1)
18.00	BF3036	1	CAPSCREW W/ PIN (SPECIAL)
19.00	BF3037	6	CAPSCREW
20.00		1	NAME PLATE (2)
21.00		1	DRIVE SCREW (2)
NS	BF3031	1	O-RING
KT	BF3038		NOTE: (1) INCLUDED IN BF3038 SEAL KIT. (2) NOT SERVICED SEPARATELY.

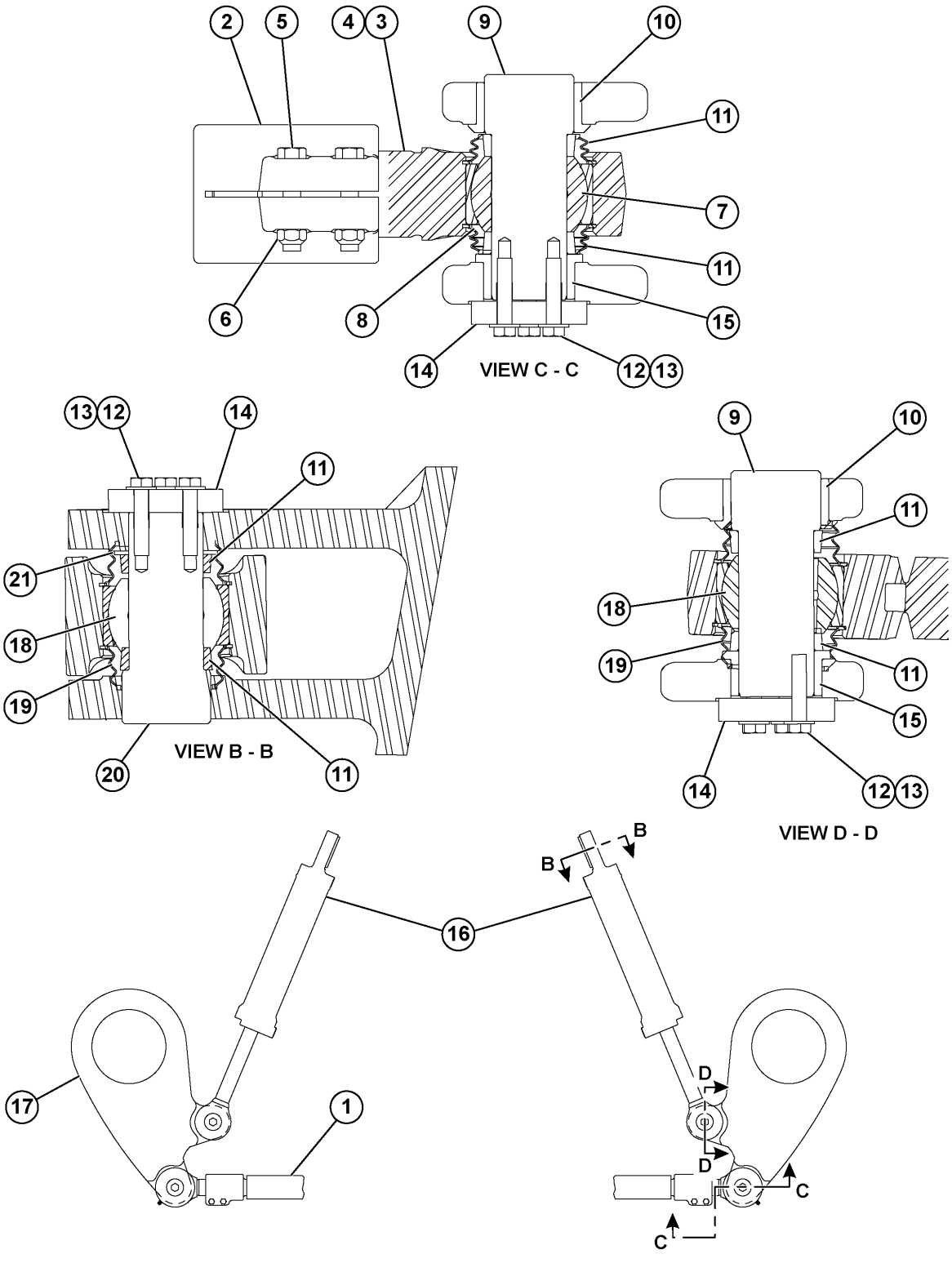
2
5
4
3
9
10
11
7
11
15
6
8
14
12
13
VIEW C - C
13
12
14
11
21
18
19
20
11
VIEW B - B
9
10
11
18
19
11
15
14
12
13
VIEW D - D
B
B
16
17
1
D
D
C
C
61321Z

REF.	PART NUM.	QTY.	DESCRIPTION
1.00	EK1048	1	TIE ROD ASSEMBLY
2.00	EK1050	1	TIE ROD
3.00	EK1695	1	ROD END - L.H.
4.00	EK1694	1	ROD END - R.H.
5.00	VN9140	4	CAPSCREW - 3/4" - 10NC X 4"
6.00	VL2993	4	LOCKNUT - 3/4" - 10NC
7.00	PC1289	2	BEARING, SPHERICAL (1)
8.00	EL0926	2	SEAL, BEARING (1)
9.00	EK1699	6	PIN (1)
10.00	EK1290	4	SLEEVE
11.00	EK1700	12	SPACER (1)
12.00	WA0361	24	FLAT WASHER - 5/8" (HARDENED) (1)
13.00	VN9104	24	CAPSCREW - 5/8" - 11NC X 3" (1)
14.00	EK1995	6	RETAINER (1)
15.00	EK1289	4	SLEEVE
16.00	EM0228	2	STEERING CYLINDER ASSEMBLY (SEE INDEX)
17.00	EK5252	1	ARM, STEERING - L.H.
17.01	EK5251	1	ARM, STEERING - R.H.
18.00	PC1289	4	BEARING, SPHERICAL (1)
19.00	EL0926	8	SEAL, BEARING (1)
20.00	EK1998	2	PIN
21.00	EK5878	2	WASHER (HARDENED)
KT	AK5211		NOTE: (1) INCLUDED IN AK5211 TIE ROD AND STEERING PIN KIT.

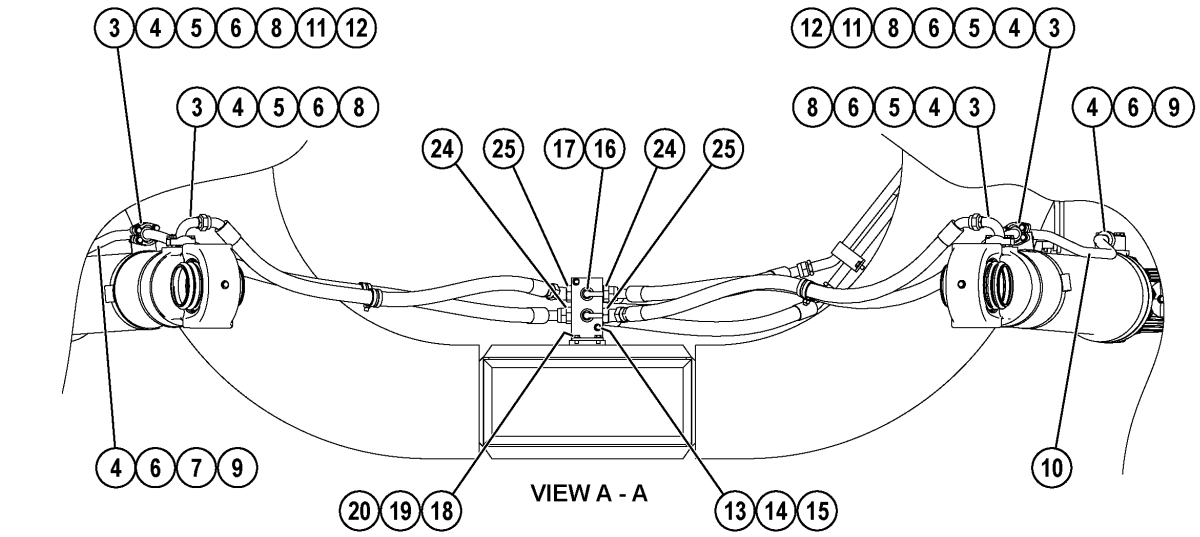
3 4 5 6 8 11 12
3 4 5 6 8
12 11 8 6 5 4 3
8 6 5 4 3
4 6 9
24 25 17 16 24 25
4 6 7 9
10
20 19 18
VIEW A - A
13 14 15

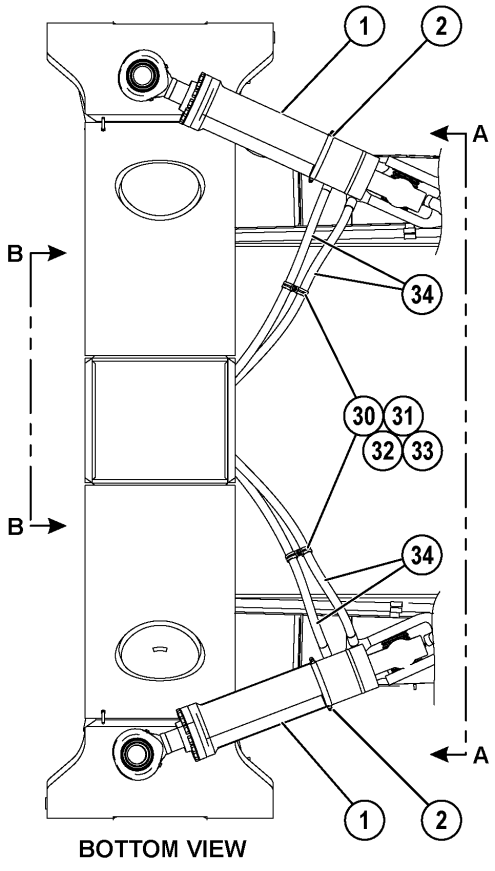
1
2
A
B
34
30 31
32 33
B
34
A
1
2
BOTTOM VIEW

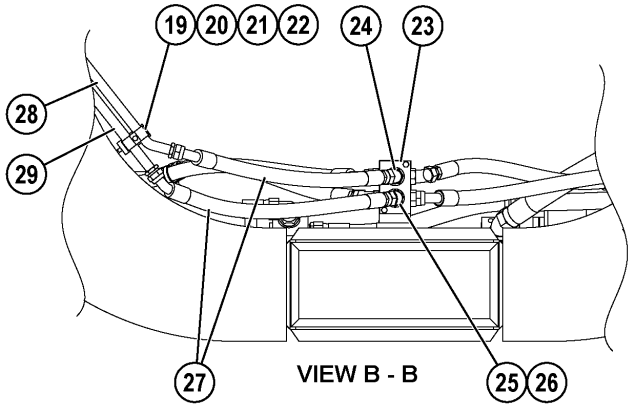
19 20 21 22 24 23
28
29
27
VIEW B - B
25 26

60986Z

REF.	PART NUM.	QTY.	DESCRIPTION
1.00	EM0228	2	STEERING CYLINDER ASSEMBLY (SEE INDEX)
2.00	PC1462	2	CLAMP ASSEMBLY
3.00	TF8077	8	CLAMP, SPLIT FLANGE
4.00	VG9097	6	O-RING
5.00	C1603	12	CAPSCREW - 3/8" - 16NC X 1 1/4"
6.00	C0312	24	LOCKWASHER - 3/8"
7.00	EL3398	1	TUBE - R.H.
8.00	WA4855	4	FITTING, ELBOW - 90 DEG
9.00	H0595	8	CAPSCREW - 3/8" - 16NC X 2 1/4"
10.00	EL3397	1	TUBE - L.H.
11.00	TG2341	4	CAPSCREW - 3/8" - 16NC X 2 1/4"
12.00	C1521	4	NUT - 3/8" - 16NC
13.00	TF8481	2	CAPSCREW - 3/8" - 16NC X 4"
14.00	TC1231	4	LOCKWASHER - 3/8"
15.00	TC1233	2	NUT - 3/8" - 16NC
16.00	PB6528	2	COUPLING, DIAGNOSTIC
17.00	PB6041	2	CAP, DUST
18.00	EJ5570	1	BRACKET
19.00	H8524	4	CAPSCREW - 3/8" - 16NC X 5/8"
20.00	DF3042	4	FLAT WASHER - 3/8"
21.00	EL1924	1	CLAMP ASSEMBLY
22.00	EL3952	1	BRACKET, CLAMP
23.00	TZ5901	1	MANIFOLD
24.00	WB0547	1	FITTING, ELBOW - 45 DEG
25.00	WB0599	3	FITTING, STRAIGHT
26.00	WB0320	1	FITTING, ELBOW - 90 DEG
27.00	HA5133	2	HOSE
28.00	EL1919	1	TUBE
29.00	EL1918	1	TUBE
30.00	WB1305	4	CLAMP, CUSHIONED - 1 1/2"
31.00	MM0461	4	FLAT WASHER - M10
32.00	MM0605	2	CAPSCREW - M10 X 1.50 X 25
33.00	MM0178	2	NUT - M10 X 1.50
34.00	HA2497	4	HOSE

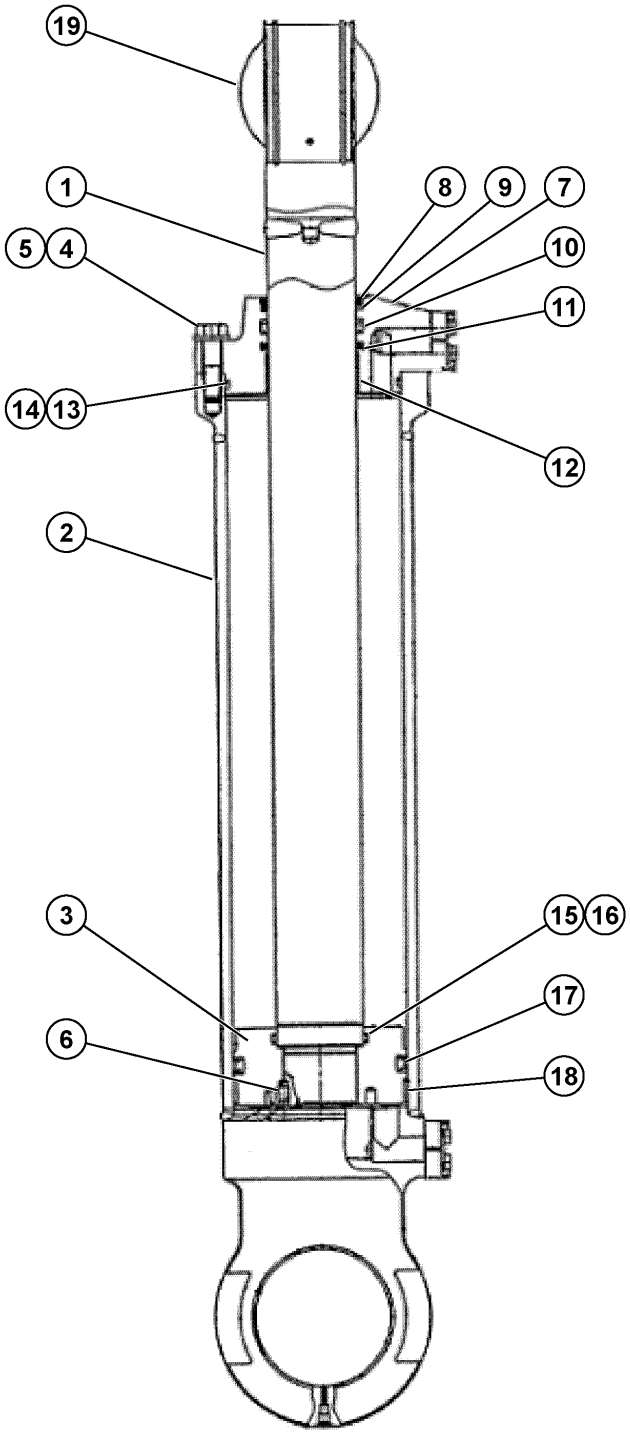

61023Z

REF.	PART NUM.	QTY.	DESCRIPTION
1.00	707-58-90A10	1	ROD
2.00	707-13-18850	1	HOUSING, CYLINDER
3.00	707-36-18620	1	PISTON
4.00	01643-31845	12	FLAT WASHER
5.00	01010-81865	12	CAPSCREW
6.00	01310-01216	1	SCREW (1)
7.00	707-27-18880	1	GLAND
8.00	07179-13104	1	SNAP RING (1)
9.00	707-56-90580	1	SEAL, DUST (1)
10.00	707-51-90030	1	PACKING (1)
11.00	707-51-90640	1	RING (1)
12.00	707-52-90680	1	BUSHING (1)
13.00	07146-05172	1	RING, BACKUP (1)
14.00	07000-15170	1	O-RING (1)
15.00	707-35-90010	2	RING, BACKUP (1)
16.00	07000-15090	1	O-RING (1)
17.00	707-44-18180	1	RING, PISTON (1)
18.00	07156-01822	1	RING, WEAR
19.00	PC1289	1	BEARING, SPHERICAL (2)
KT	AK5240		NOTE: (1) INCLUDED IN AK5240 SEAL KIT. (2) NOT INCLUDED IN THE ASSEMBLY

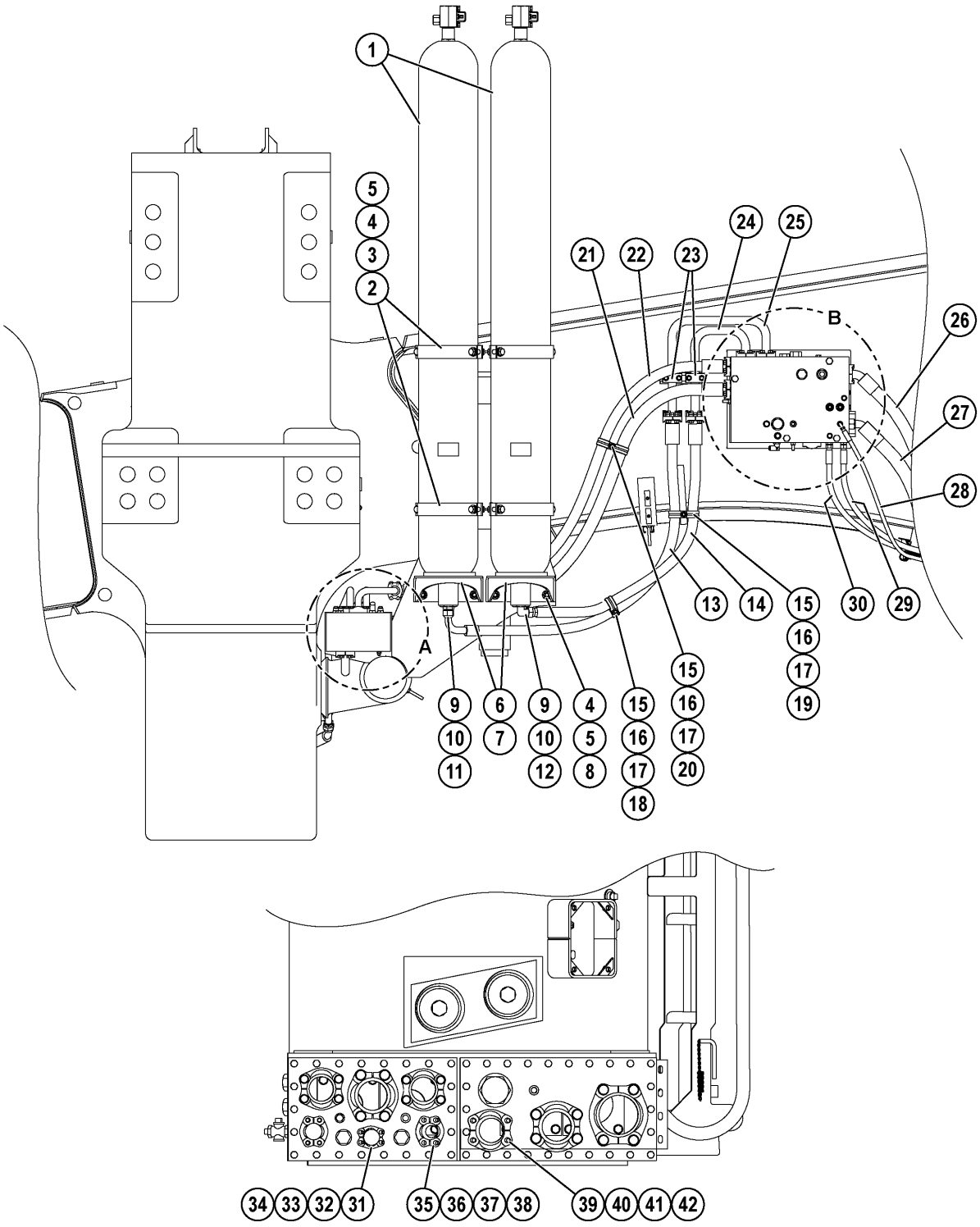
1
5
4
3
2
21
22
23
24
25
B
26
27
28
13
14
15
30
29
16
17
19
A
9
10
11
6
7
9
10
12
4
5
8
15
16
17
18
15
16
17
20
34
33
32
31
35
36
37
38
39
40
41
42
60987Z

REF.	PART NUM.	QTY.	DESCRIPTION
1.00	PC1339	2	ACCUMULATOR ASSEMBLY (SEE INDEX)
2.00	EC3036	4	CLAMP, HALF
3.00	MM0086	8	CAPSCREW - M16 X 2.00 X 60
4.00	MM0706	32	FLAT WASHER - M16 (HARDENED)
5.00	MM0696	16	LOCKNUT - M16 X 2.00
6.00	EJ7766	2	BRACKET, BASE
7.00	PC1118	2	RING, BASE
8.00	MM0044	8	CAPSCREW - M16 X 2.00 X 40
9.00	DA6756	2	REDUCER, O-RING BOSS
10.00	VN9912	2	O-RING
11.00	WB0599	1	FITTING, STRAIGHT
12.00	WB0522	1	FITTING, ELBOW - 90 DEG
13.00	HA7691	1	HOSE
14.00	HA7692	1	HOSE
15.00	MM0461	3	FLAT WASHER - M10
16.00	MM0178	3	NUT - M10 X 1.50
17.00	WB1305	5	CLAMP, CUSHIONED - 1 1/2"
18.00	MM0605	1	CAPSCREW - M10 X 1.50 X 25
19.00	EK9883	1	SPACER
20.00	WB3094	2	CLAMP, CUSHIONED - 1 3/4"
21.00	HA8073	1	HOSE
22.00	HA8072	1	HOSE
23.00	WA4709	2	CLAMP, HYDRA ZORB - 1 1/4"
24.00	EK2624	1	TUBE
25.00	EK2623	1	TUBE
26.00	HA7985	1	HOSE
27.00	HA7829	1	HOSE
28.00	HA8063	1	HOSE
29.00	HA6752	1	HOSE
30.00	HA7331	1	HOSE
31.00	TF8077	2	CLAMP, SPLIT FLANGE
32.00	VG9097	1	O-RING
33.00	C1603	4	CAPSCREW - 3/8" - 16NC X 1 1/4"
34.00	C0312	4	LOCKWASHER - 3/8"
35.00	TF3237	2	CLAMP, SPLIT FLANGE
36.00	VG9096	1	O-RING
37.00	C1609	4	CAPSCREW - 7/16" - 14NC X 1 1/2"
38.00	C5775	4	LOCKWASHER - 7/16"
39.00	VH6718	2	CLAMP, SPLIT FLANGE
40.00	WA0232	1	O-RING
41.00	C1623	4	CAPSCREW - 1/2" - 13NC X 3 3/4"
42.00	C1540	4	LOCKWASHER - 1/2"

(SEE FOLLOWING PAGE FOR DETAILS A & B.)

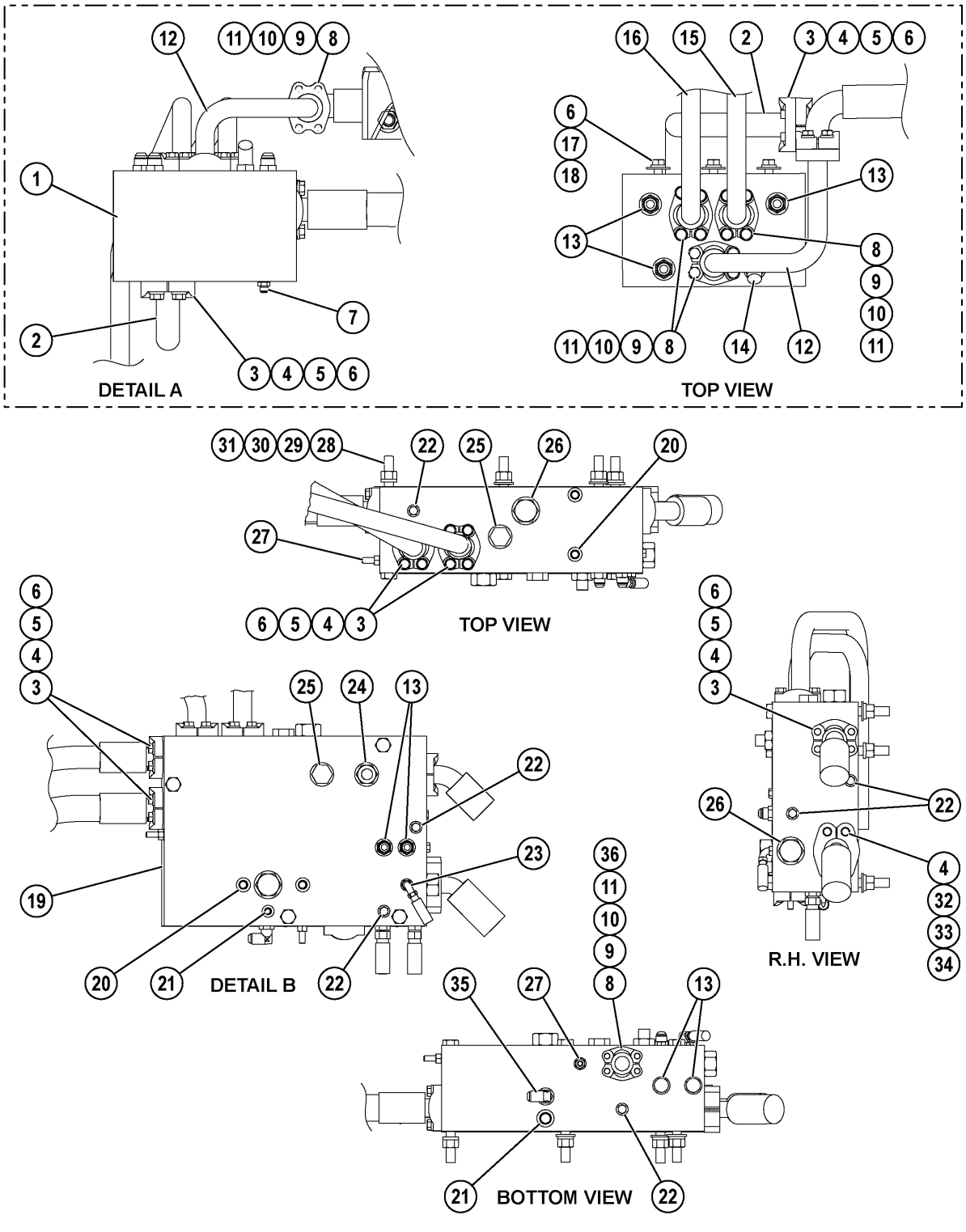
DETAIL A
TOP VIEW
TOP VIEW
DETAIL B
R.H. VIEW
BOTTOM VIEW
60988Z

REF.	PART NUM.	QTY.	DESCRIPTION
1.00	PC1337	1	FLOW AMPLIFIER
2.00	EL1921	1	TUBE
3.00	TF3237	6	CLAMP, SPLIT FLANGE
4.00	VG9096	4	O-RING
5.00	C1609	12	CAPSCREW - 7/16" - 14NC X 1 1/2"
6.00	C5775	15	LOCKWASHER - 7/16"
7.00	WB0574	1	FITTING, STRAIGHT
8.00	TF8077	14	CLAMP, SPLIT FLANGE
9.00	VG9097	7	O-RING
10.00	C1603	28	CAPSCREW - 3/8" - 16NC X 1 1/4"
11.00	C0312	28	LOCKWASHER - 3/8"
12.00	EL1920	1	TUBE
13.00	WB0584	7	FITTING, STRAIGHT
14.00	WB0537	1	FITTING, ELBOW - 45 DEG
15.00	EL1919	1	TUBE
16.00	EL1918	1	TUBE
17.00	C1608	3	CAPSCREW - 7/16" - 14NC X 1"
18.00	PB1255	3	FLAT WASHER - 7/16" (HARDENED)
19.00	PC1493	1	BLEED DOWN MANIFOLD (SEE INDEX)
20.00	VM0314	2	PLUG
21.00	VM0315	2	PLUG
22.00	VM0313	6	PLUG
23.00	WB0499	1	FITTING, ELBOW - 90 DEG
24.00	WB0586	1	FITTING, STRAIGHT
25.00	VM0317	2	PLUG
26.00	VM0319	2	PLUG
27.00	PB6770	2	COUPLING, MALE QUICK DISCONNECT
28.00	SR7222	4	CAPSCREW - 5/8" - 11NC X 8"
29.00	WA0361	4	FLAT WASHER - 5/8" (HARDENED)
30.00	C1541	4	LOCKWASHER - 5/8"
31.00	C1525	4	NUT - 5/8" - 11NC
32.00	WA5630	2	CLAMP, FLANGE
33.00	C1615	4	CAPSCREW - 1/2" - 13NC X 1 3/4"
34.00	C1540	4	LOCKWASHER - 1/2"
35.00	WB0508	1	FITTING, ELBOW - 90 DEG
36.00	603517C1	1	PLUG, FLANGE

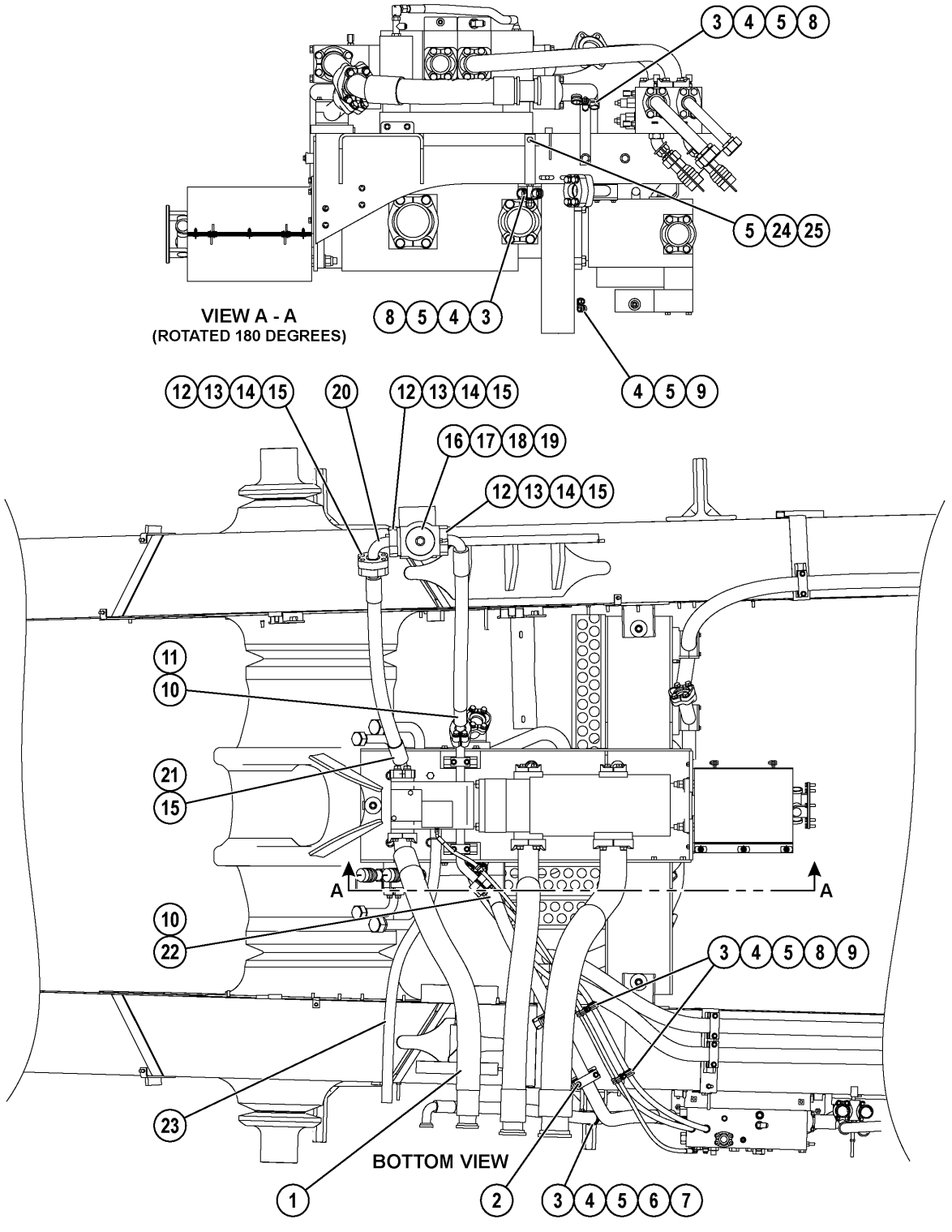
3 4 5 8
5 24 25
VIEW A - A
(ROTATED 180 DEGREES)
8 5 4 3
4 5 9
12 13 14 15
20
12 13 14 15
16 17 18 19
12 13 14 15
11
10
21
15
A
A
10
22
3 4 5 8 9
23
BOTTOM VIEW
1
2
3 4 5 6 7
60989Z

REF.	PART NUM.	QTY.	DESCRIPTION
1.00	HA7986	1	HOSE
2.00	WA4712	2	CLAMP, HYDRA ZORB - 2"
3.00	TY8375	5	SPACER
4.00	MM0461	6	FLAT WASHER - M10
5.00	MM0178	7	NUT - M10 X 1.50
6.00	WB3094	1	CLAMP, CUSHIONED - 1 3/4"
7.00	HA7985	1	HOSE
8.00	WB3092	8	CLAMP, CUSHIONED - 7/8"
9.00	WB3097	3	CLAMP, CUSHIONED - 1/2"
10.00	VG9096	2	O-RING
11.00	HA7737	1	HOSE
12.00	VG9095	4	O-RING
13.00	WA5629	6	CLAMP, FLANGE
14.00	C1631	12	CAPSCREW - 5/8" - 11NC X 2 1/4"
15.00	C1541	12	LOCKWASHER - 5/8"
16.00	EH1242	1	FILTER, HYDRAULIC STEERING (SEE INDEX)
17.00	EH1552	1	PAD, RUBBER
18.00	TL5327	3	CAPSCREW - 1/2" - 13NC X 1 1/2"
19.00	WA0360	3	FLAT WASHER - 1/2" (HARDENED)
20.00	EH1249	1	TUBE
21.00	HA7736	1	HOSE
22.00	HA7829	1	HOSE
23.00	HA7687	1	HOSE
24.00	EK9920	1	BRACKET, CLAMP
25.00	MM0605	1	CAPSCREW - M10 X 1.50 X 25

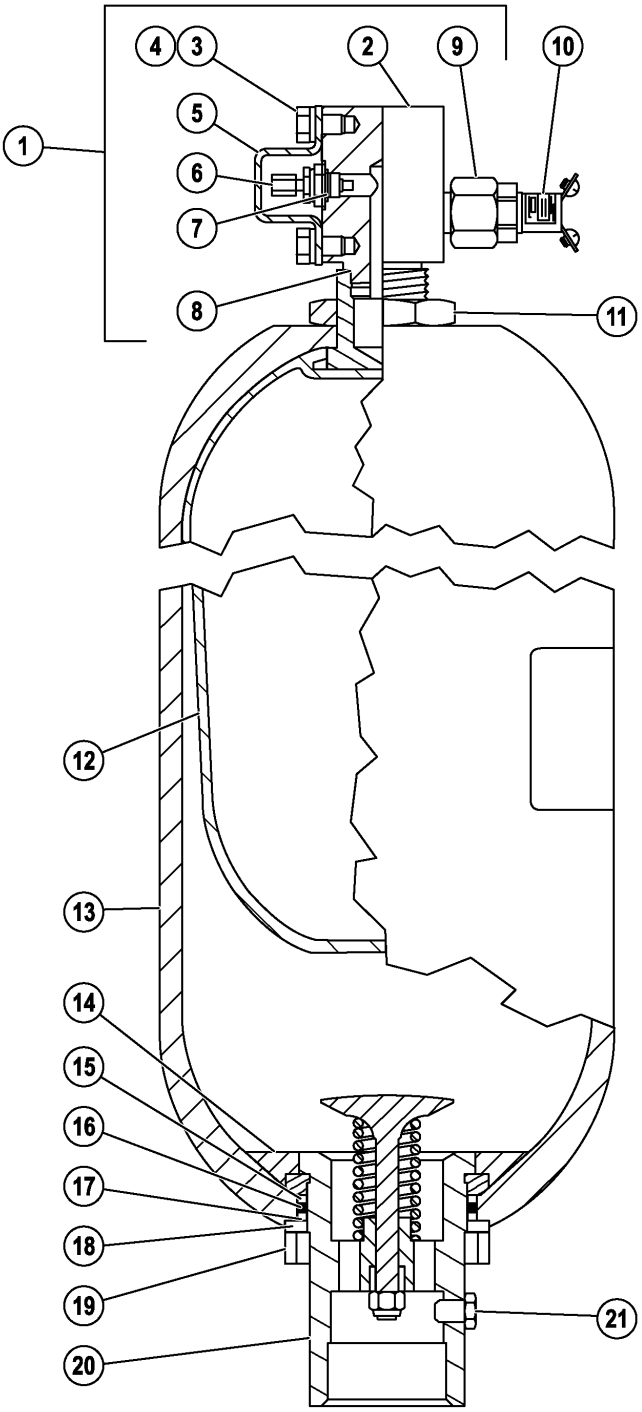

60678Z

REF.	PART NUM.	QTY.	DESCRIPTION
1.00	XA2283	1	GAS MANIFOLD KIT
2.00	EJ7887	1	MANIFOLD, GAS VALVE
3.00	MM0603	2	CAPSCREW - M10 X 1.50 X 16
4.00	MM0471	2	LOCKWASHER - M10
5.00	TV1294	1	GUARD
6.00	PB2194	1	CHARGING VALVE ASSEMBLY (1)
6.01	TR9993	1	CAP, VALVE
6.02	TD7179	1	CORE, VALVE
6.03	TF1144	1	O-RING, HOUSING
6.04	WA0052	1	O-RING, VALVE STEM
7.00	VD5076	1	GASKET, FLAT (1)
8.00	TC9899	1	O-RING
9.00	EC1015	1	GAS VALVE ASSEMBLY
9.01	TD7179	1	CORE, VALVE
9.02	EC1447	1	BODY, VALVE
9.03	TL3995	1	O-RING
10.00	PB8333	1	SWITCH, PRESSURE (2)
11.00	XA0069	1	NUT
12.00	XA1959	1	BLADDER ASSEMBLY
12.01	AK4789	1	BLADDER REPAIR KIT
13.00	XA1960	1	SHELL
14.00	XA0067	1	RING, ANTI-EXTRUSION
15.00	XA0070	1	WASHER, BACKUP
16.00	XA0071	1	O-RING
17.00	XA0072	1	RING, BACKUP
18.00	XA0073	1	SPACER
19.00	XA0074	1	RING, LOCKING
20.00	XA0066	1	VALVE PORT ASSEMBLY
21.00	XA0077	1	PLUG, BLEED
KT	RK1887		NOTE: (1) INCLUDED IN RK1887 CHARGING VALVE KIT. (2) NOT INCLUDED IN ASSEMBLY.

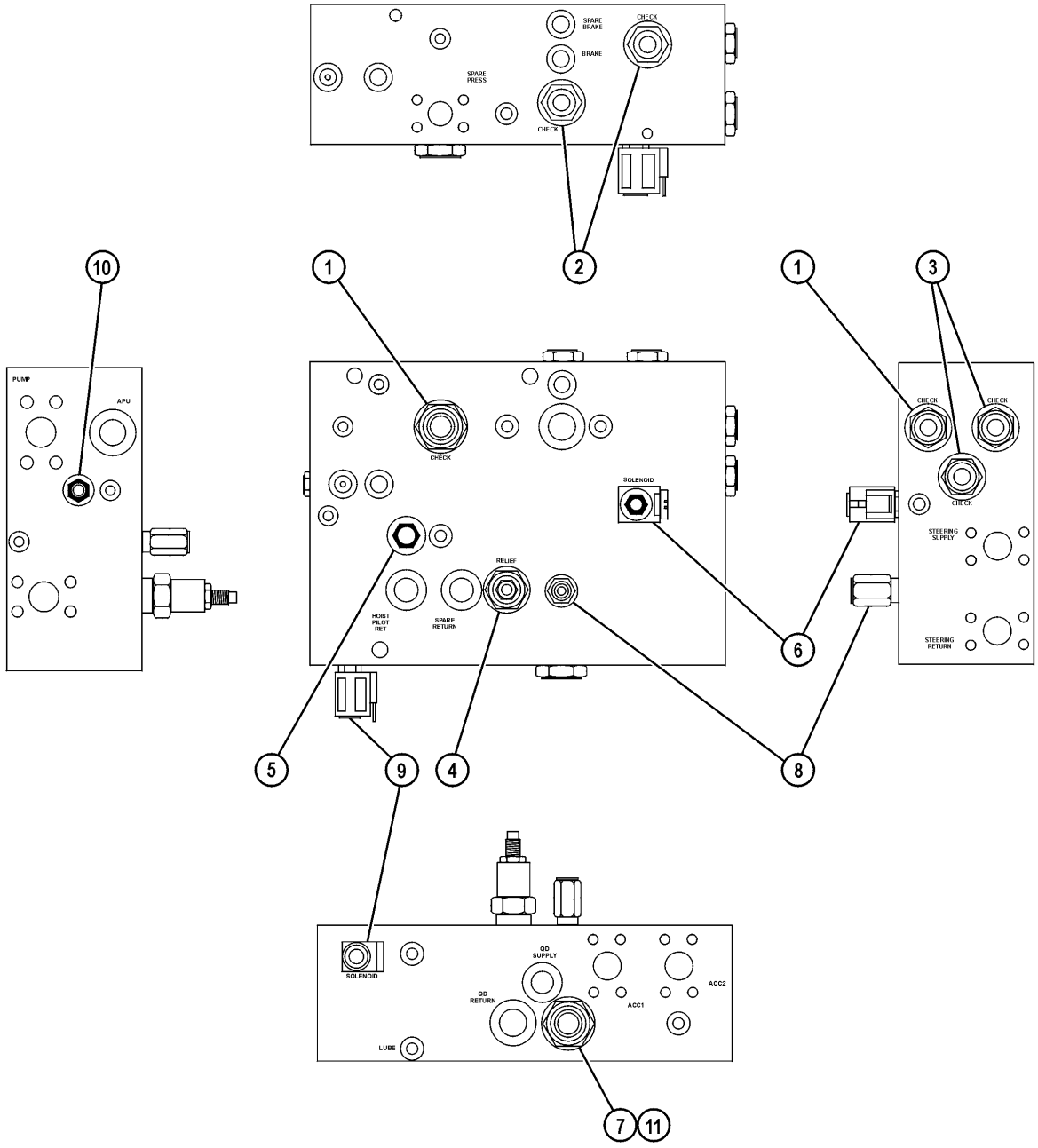
SPARE BRAKE
CHECK
BRAKE
SPARE PRESS
CHECK
2
10
1
1
3
PUMP
APU
CHECK
CHECK
CHECK
SOLENOID
STEERING SUPPLY
RELIEF
HOIST PILOT RET
SPARE RETURN
STEERING RETURN
6
5
9
4
8
SOLENOID
OD SUPPLY
ACC2
OD RETURN
ACC1
LUBE
7
11

60405Z

REF.	PART NUM.	QTY.	DESCRIPTION
1.00	PB5916	2	VALVE, CHECK
2.00	XA0200	2	VALVE, CHECK
3.00	VE3054	2	VALVE, CHECK
4.00	VE3833	1	VALVE, RELIEF
5.00	XA0201	1	PLUG, CAVITY
6.00	BF5201	1	VALVE, SOLENOID
7.00	VE3839	1	VALVE, CHECK
8.00	BF5202	1	VALVE, RELIEF
9.00	VS7009	1	CARTRIDGE, SOLENOID
9.01	XA2380		COIL - 24V
10.00	BF5204	1	VALVE, PILOT
11.00	XA2379	1	VALVE, PILOT PISTON

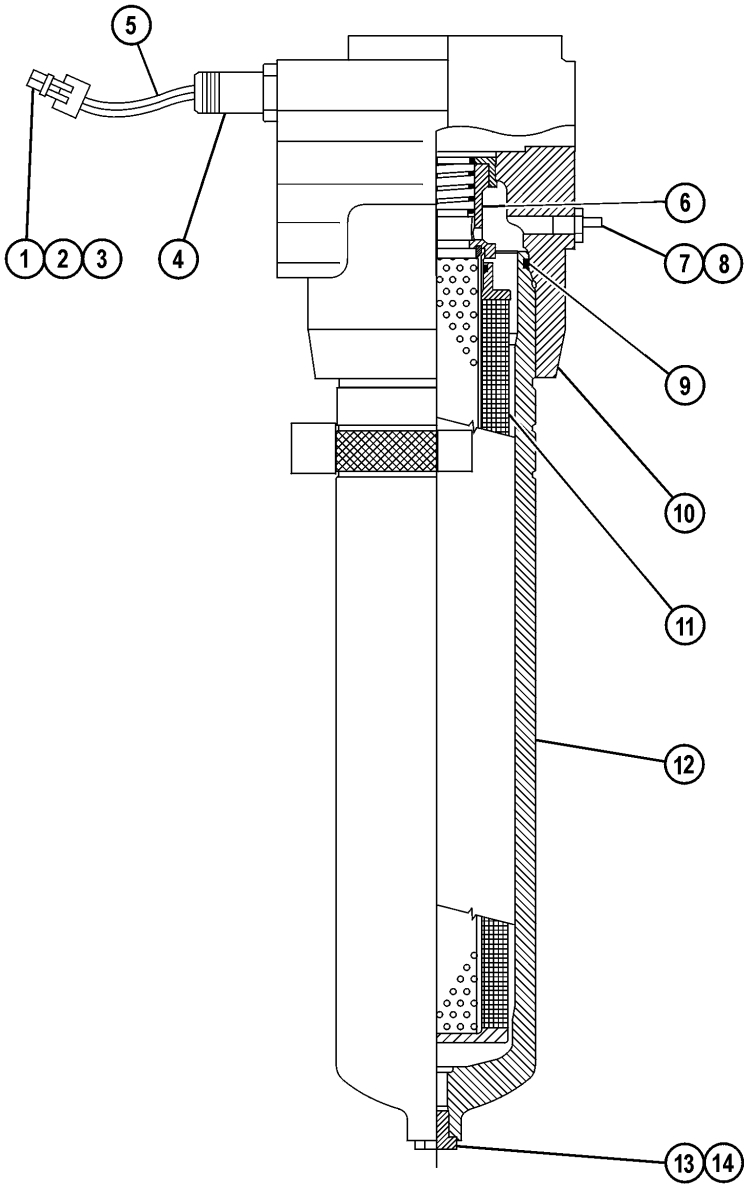
5
1
2
3
4
6
7
8
9
10
11
12
13
14
60831Z

REF.	PART NUM.	QTY.	DESCRIPTION
1.00	PB7743	1	CONNECTOR
2.00	PB7740	2	TERMINAL
3.00	PB7034	2	SEAL, CABLE
4.00	VE2607	1	INDICATOR, PRESSURE
5.00		1	SLEEVE, INSULATION - 3/8" (5" LONG)
6.00	BF4491	1	CORE
7.00	PB6770	1	COUPLING, MALE QUICK DISCONNECT
8.00	TF5194	1	O-RING
9.00	WA0100	1	O-RING
10.00	BF4490	1	HEAD
11.00	AK3572	1	ELEMENT
12.00	BF2213	1	BOWL
13.00	VE1978	1	PLUG, DRAIN
14.00	TL3995	1	O-RING

CAB GROUP

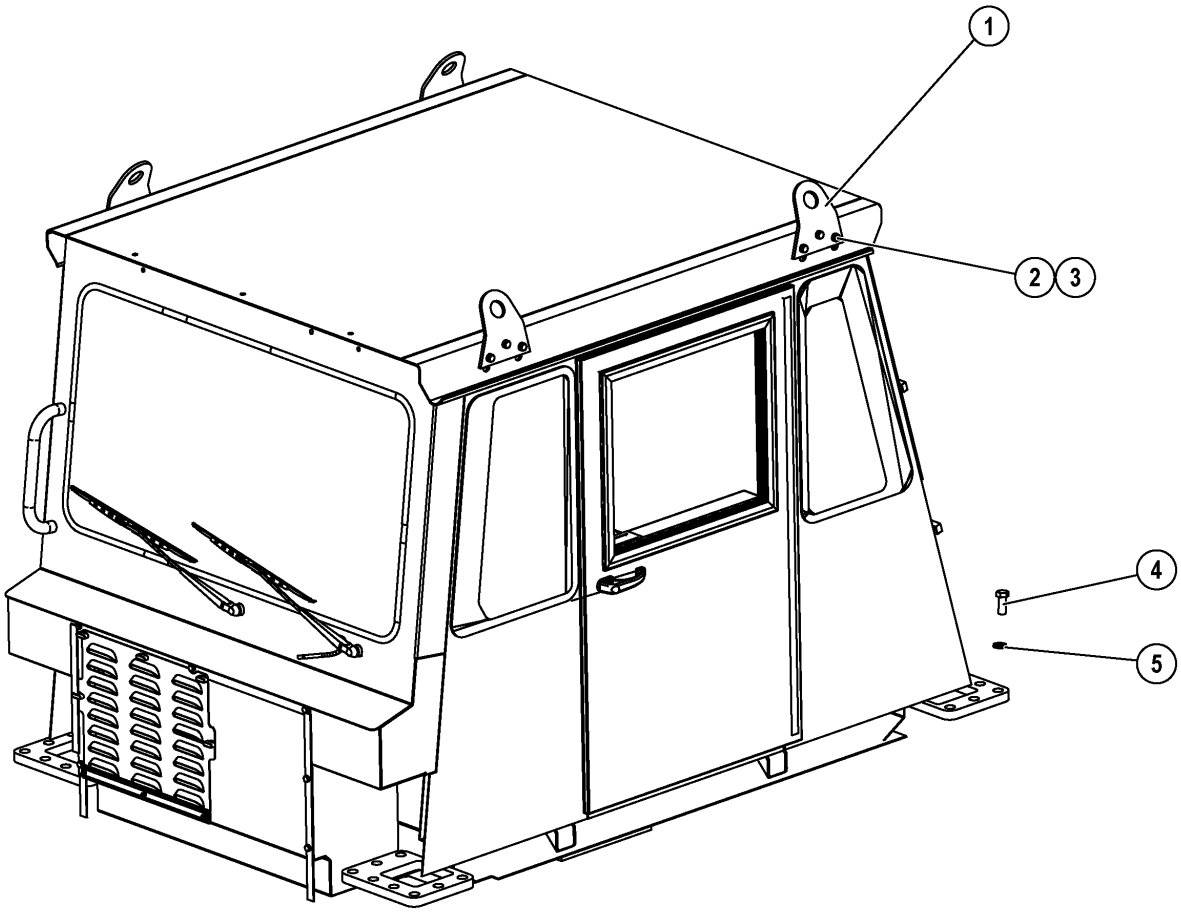

50662Z

REF.	PART NUM.	QTY.	DESCRIPTION
1.00	SM2052	4	PLATE, LIFTING
2.00	VN9039	12	CAPSCREW - 1/2" - 13NC X 1 1/4"
3.00	TR5445	12	LOCKWASHER - 1/2"
4.00	VA1833	32	CAPSCREW - 1 1/8" - 7NC X 3 1/2"
5.00	EL8825	32	FLAT WASHER (HARDENED)

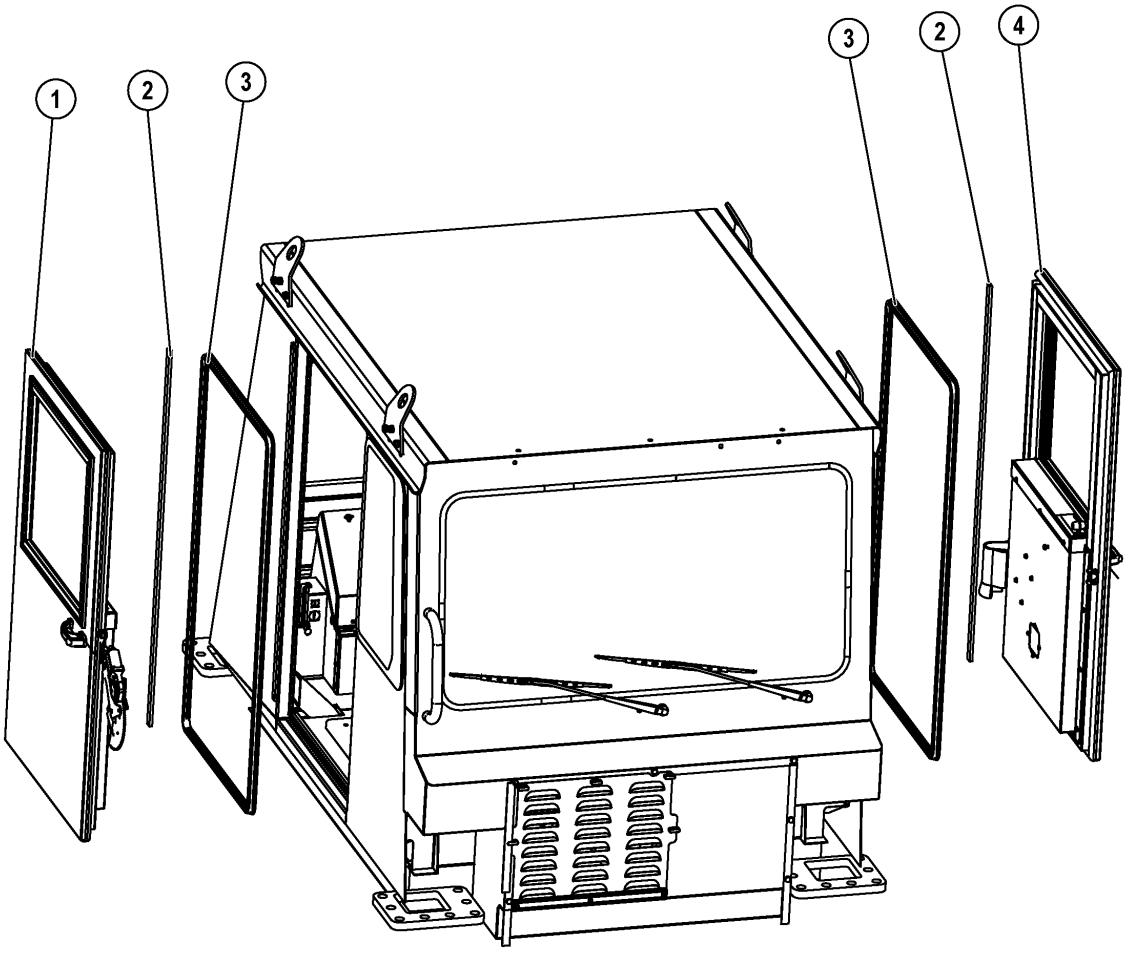

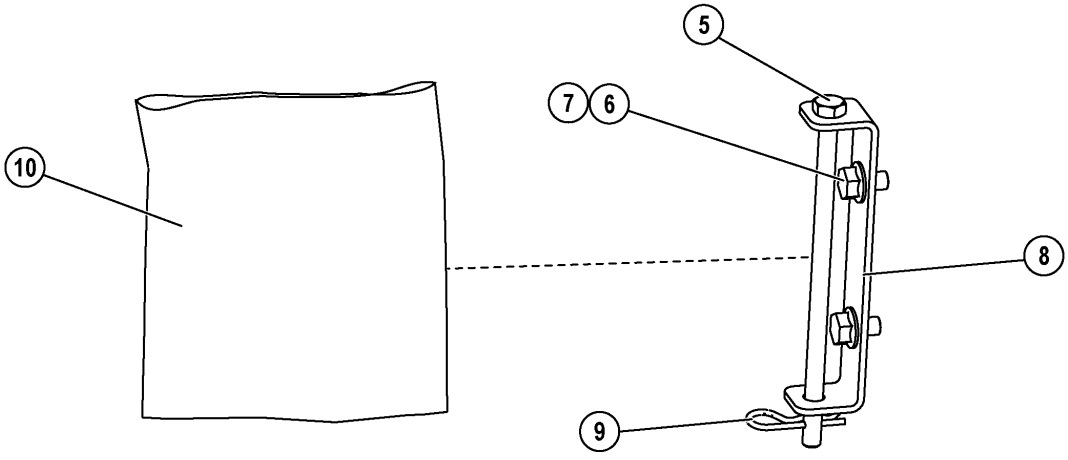

DOOR STRAP DETAIL

50666Z

REF.	PART NUM.	QTY.	DESCRIPTION
1.00	EM0049	1	DOOR - RH (SEE INDEX)
2.00	SM2402	2	SEAL, DOOR
3.00	SM2582	2	SEAL, INNER DOOR
4.00	EM0048	1	DOOR - LH (SEE INDEX)
5.00	EL1022	2	CAPSCREW - BLANK DRILLED
6.00	31154R1	4	CAPSCREW - M8 X 1.25 X 12
7.00	MM0470	4	LOCKWASHER - M8
8.00	SM2165	2	BRACKET, DOOR STRAP
9.00	SM2322	2	CLIP, HAIR PIN
10.00	EL1021	2	STRAP

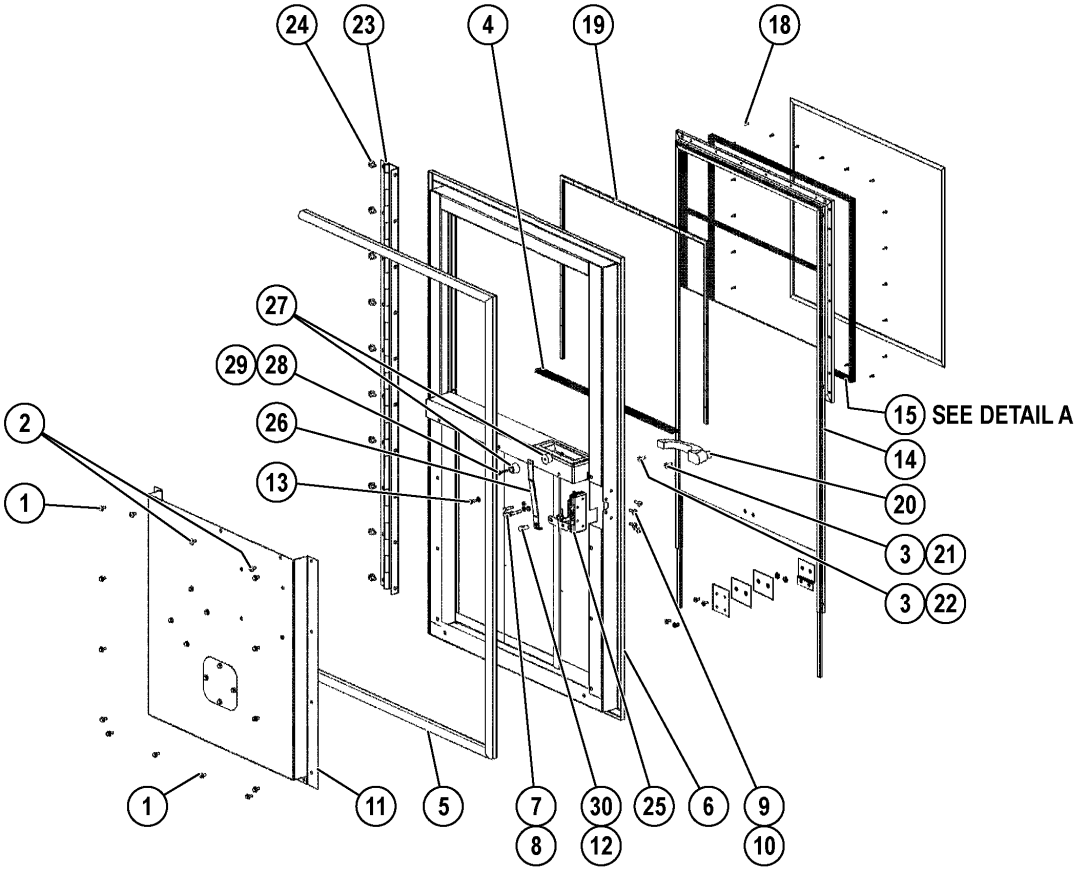

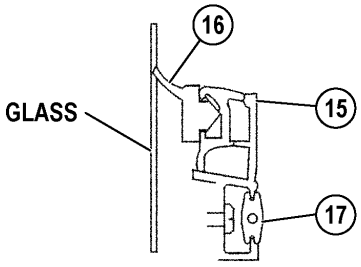

DETAIL A

41972Z

REF.	PART NUM.	QTY.	DESCRIPTION
1.00	31127R1	12	CAPSCREW - M6 X 1.00 X 12
2.00	SM0926	3	SCREW - M6 X 1.00
3.00	MM0469	3	LOCKWASHER - M6
4.00	SM2405	1	SEAL, WINDOW (INSIDE)
5.00	SM2548	1	SEAL, DOOR
6.00	EL2730	1	FRAME, DOOR - L.H.
7.00	TV6025	1	CAPSCREW - 1/4" - 20NC X 1 1/2" (STRIKER)
8.00	VN2882	1	JAM NUT - 1/4" - 20NC
9.00	KD0252	4	MACHINE SCREW
10.00	SD4235	4	LOCKWASHER - 1/4" (EXTERNAL TOOTH)
11.00	EL2746	1	INNER PANEL ASSEMBLY, L.H. (SEE INDEX)
12.00	TG9225	1	LOCKNUT - 3/8" - 16NC
13.00	MM0357	1	MACHINE SCREW - M6 X 1.00 X 12
14.00	PC2166	1	WINDOW ASSEMBLY
14.01	EL2724	1	GLASS
14.02	BF5190	1	RUN, GLASS - TOP
14.03	BF5191	2	RUN, GLASS - SIDE
15.00	BF5189	1	BOTTOM FRAME ASSEMBLY
16.00	BF5194	1	SEAL, OUTSIDE - RUBBER FLOCK
17.00	BF2744	1	COVER, SCREW
18.00	SM2406	22	SCREW, SELF-TAPPING - #6 - 32NC X 3/8"
19.00	2048889R1	AR	TRIM, BULK
20.00	PC1828	1	HANDLE, PUSH BUTTON
21.00	31126R1	2	SCREW, MACHINE - M6 X 20
22.00	31006R1	1	SCREW, MACHINE - M6 X 16
23.00	SM2544	1	HINGE, DOOR
24.00	31154R1	10	CAPSCREW - M8 X 1.25 X 12
25.00	SM2297	1	LATCH DOOR ASSEMBLY - L.H.
26.00	SM2263	1	LEVER, DOOR LATCH
27.00	SM2264	2	KNOB, DOOR LATCH
28.00	SM2354	1	SCREW - #10 - 24NC
29.00	SM2355	1	LOCKNUT - #10 - 24NC
30.00	TC1234	1	CAPSCREW - 3/8" - 16NC X 3/4"
NS	SM2256	1	KEY, DOOR (1)

NOTE: (1) NOT SERVICED SEPARATELY.

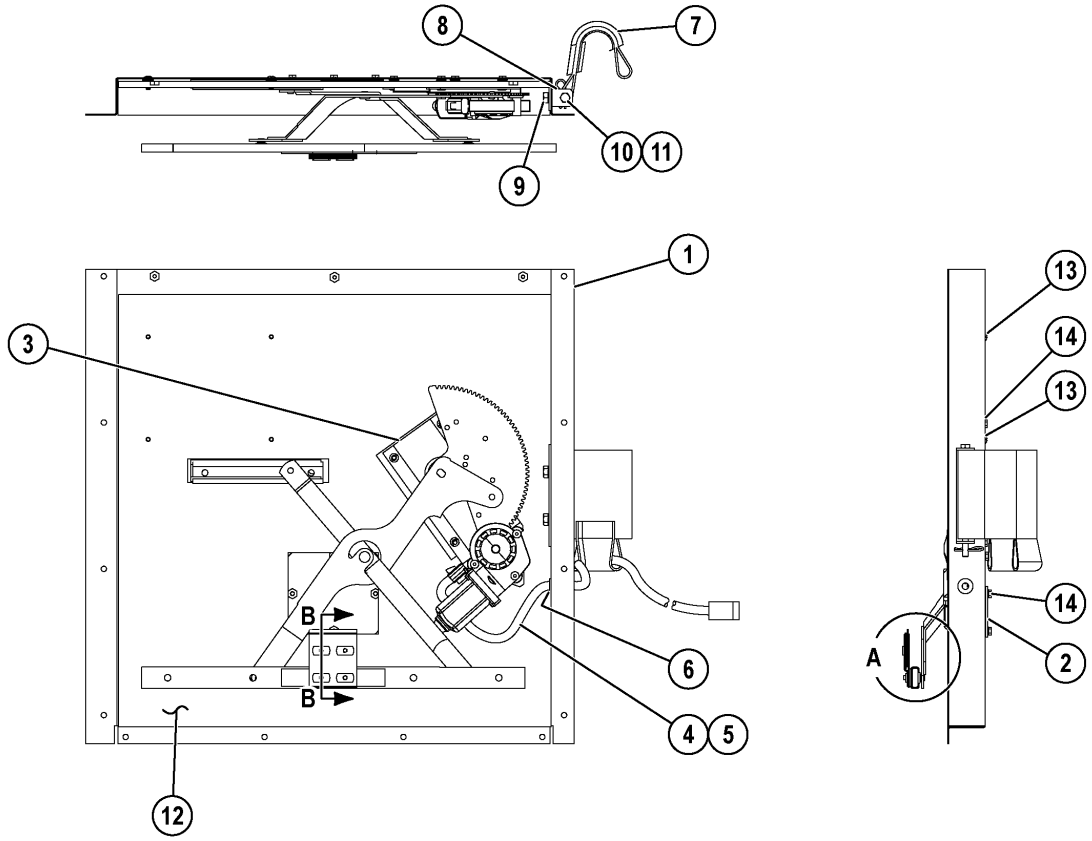

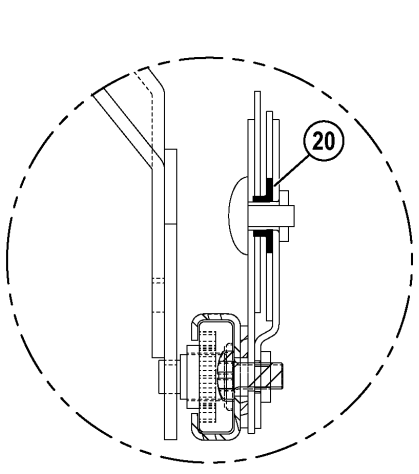

SECTION B - B

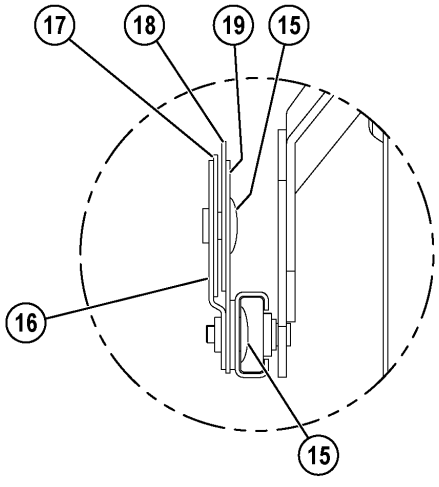

DETAIL A

42110Z

REF.	PART NUM.	QTY.	DESCRIPTION
1.00	SM2738	1	PANEL, INSIDE DOOR - L.H.
2.00	SM2294	1	COVER
3.00	SM2740	1	WINDOW REGULATOR AND MOTOR - L.H.
4.00	SM3010	1	HARNESS
5.00	VH2929	2	TERMINAL, BUTT CONNECTOR - 14-16 AWG
6.00	SL9490	1	GROMMET
7.00	EL1021	1	STRAP
8.00	SM2165	1	BRACKET, DOOR STRAP
9.00	31154R1	2	CAPSCREW - M8 X 1.25 X 12
10.00	EL1022	1	CAPSCREW - BLANK DRILLED
11.00	SM2322	1	CLIP, HAIR PIN
12.00	SM5390	1	INSULATION
13.00	SM0926	4	SCREW - M6 X 1.00
14.00	31127R1	8	CAPSCREW - M6 X 1.00 X 12
15.00	MM0357	4	MACHINE SCREW - M6 X 1.00 X 12
16.00	EL5721	1	BRACKET, OUTER
17.00	SM2261	1	GASKET
18.00	SM2260	1	GASKET
19.00	SM2832	1	BRACKET, INNER
20.00	SM2300	2	BUSHING

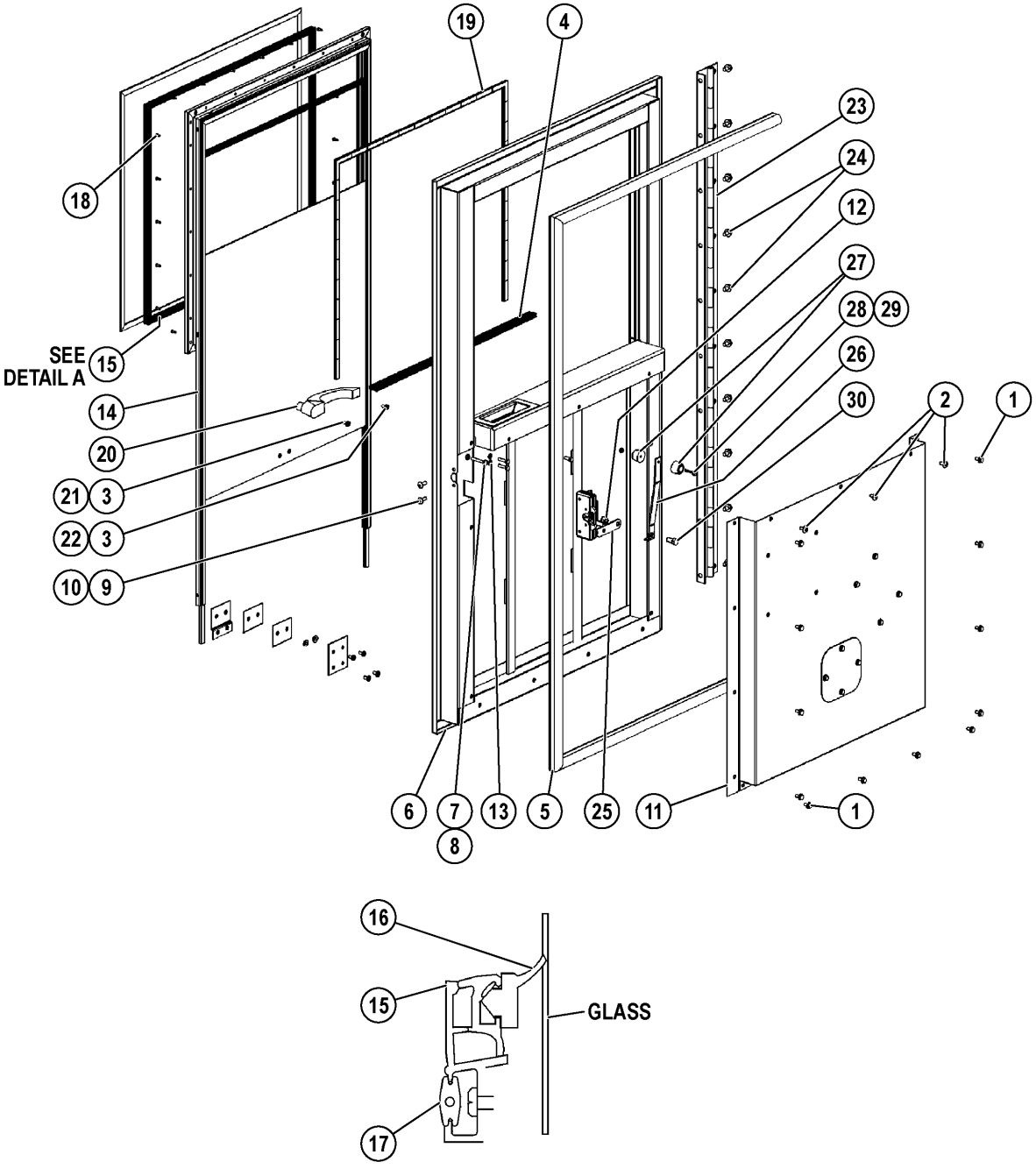
19
4
18
23
24
12
27
28
29
26
30
2
1
SEE
DETAIL A
15
14
20
21
3
22
3
10
9
6
7
8
13
5
25
11
1
16
15
GLASS
17
41974Z

REF.	PART NUM.	QTY.	DESCRIPTION
1.00	31127R1	12	CAPSCREW - M6 X 1.00 X 12
2.00	SM0926	3	SCREW - M6 X 1.00
3.00	MM0469	3	LOCKWASHER - M6
4.00	SM2405	1	SEAL, WINDOW (INSIDE)
5.00	SM2548	1	SEAL, DOOR
6.00	EL2731	1	FRAME, DOOR - R.H.
7.00	TV6025	1	CAPSCREW - 1/4" - 20NC X 1 1/2" (STRIKER)
8.00	VN2882	1	JAM NUT - 1/4" - 20NC
9.00	KD0252	4	MACHINE SCREW
10.00	SD4235	4	LOCKWASHER - 1/4" (EXTERNAL TOOTH)
11.00	EL2747	1	INNER PANEL ASSEMBLY, R.H. (SEE INDEX)
12.00	TG9225	1	LOCKNUT - 3/8" - 16NC
13.00	MM0357	4	MACHINE SCREW - M6 X 1.00 X 12
14.00	PC2661	1	WINDOW ASSEMBLY
14.01	EL2724	1	GLASS
14.02	BF5190	1	RUN, GLASS - TOP
14.03	BF5191	2	RUN, GLASS - SIDE
15.00	BF5189	1	BOTTOM FRAME ASSEMBLY
16.00	BF5194	1	SEAL, OUTSIDE - RUBBER FLOCK
17.00	BF2744	1	COVER, SCREW
18.00	SM2406	22	SCREW, SELF-TAPPING - #6 - 32NC X 3/8"
19.00	2048889R1	AR	TRIM, BULK
20.00	PC1828	1	HANDLE, PUSH BUTTON
21.00	31126R1	2	SCREW, MACHINE - M6 X 20
22.00	31006R1	1	SCREW, MACHINE - M6 X 16
23.00	SM2544	1	HINGE, DOOR
24.00	31154R1	10	CAPSCREW - M8 X 1.25 X 12
25.00	SM2274	1	LATCH DOOR ASSEMBLY - R.H.
26.00	SM2263	1	LEVER, DOOR LATCH
27.00	SM2264	2	KNOB, DOOR LATCH
28.00	SM2354	1	SCREW - #10 - 24NC
29.00	SM2355	1	LOCKNUT - #10 - 24NC
30.00	TC1234	1	CAPSCREW - 3/8" - 16NC X 3/4"

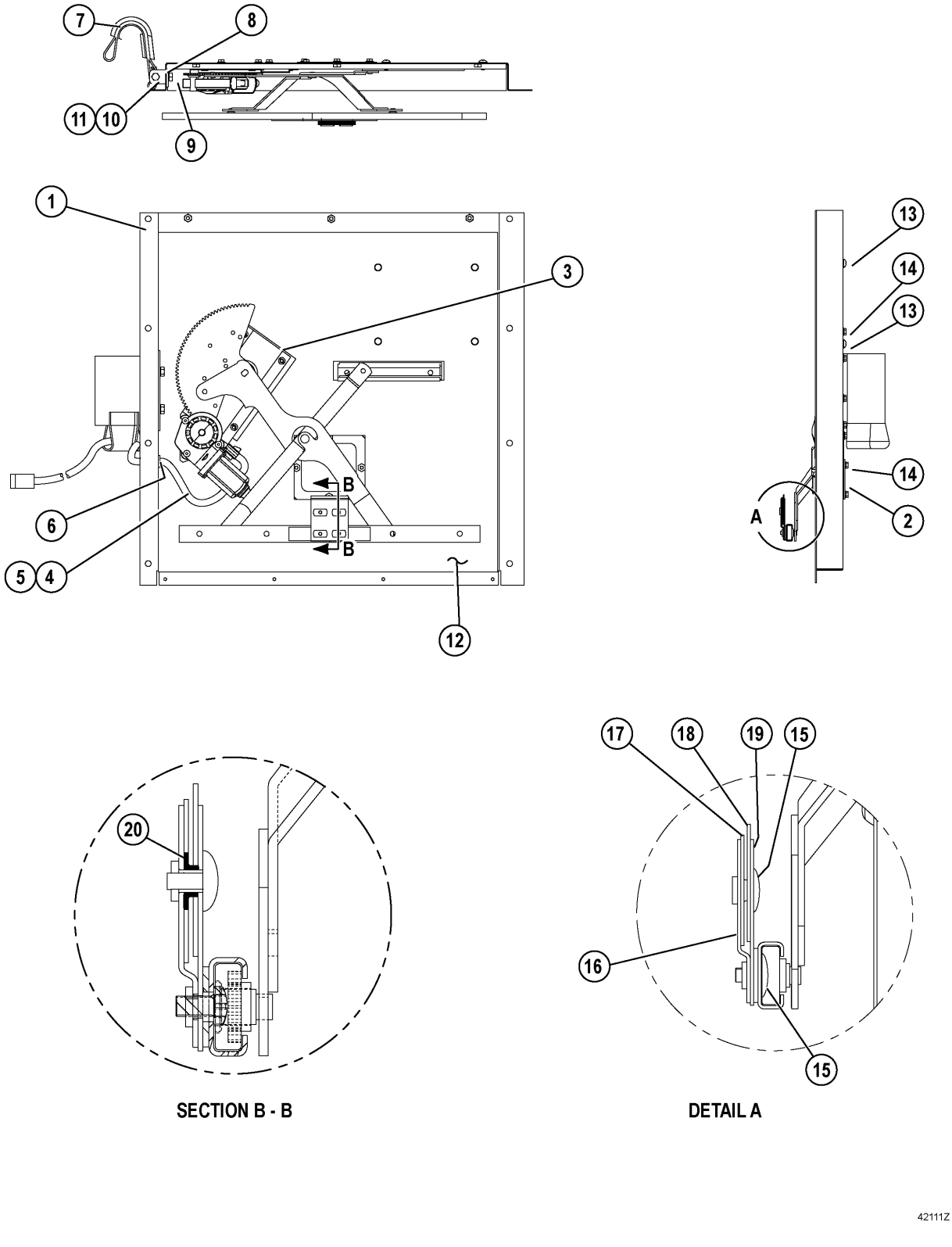

SECTION B - B

DETAIL A

42111Z

REF.	PART NUM.	QTY.	DESCRIPTION
1.00	SM2739	1	PANEL, INSIDE DOOR - R.H.
2.00	SM2294	1	COVER
3.00	SM2741	1	REGULATOR, WINDOW WITH MOTOR - R.H.
4.00	SM3010	1	HARNESS
5.00	VH2929	2	TERMINAL, BUTT CONNECTOR - 14-16 AWG
6.00	SL9490	1	GROMMET
7.00	EL1021	1	STRAP
8.00	SM2165	1	BRACKET, DOOR STRAP
9.00	31154R1	2	CAPSCREW - M8 X 1.25 X 12
10.00	EL1022	1	CAPSCREW - BLANK DRILLED
11.00	SM2322	1	CLIP, HAIR PIN
12.00	SM5391	1	INSULATION
13.00	SM0926	4	SCREW - M6 X 1.00
14.00	31127R1	8	CAPSCREW - M6 X 1.00 X 12
15.00	MM0357	4	MACHINE SCREW - M6 X 1.00 X 12
16.00	EL5721	1	BRACKET, OUTER
17.00	SM2261	1	GASKET
18.00	SM2260	1	GASKET
19.00	SM2832	1	BRACKET, INNER
20.00	SM2300	2	BUSHING

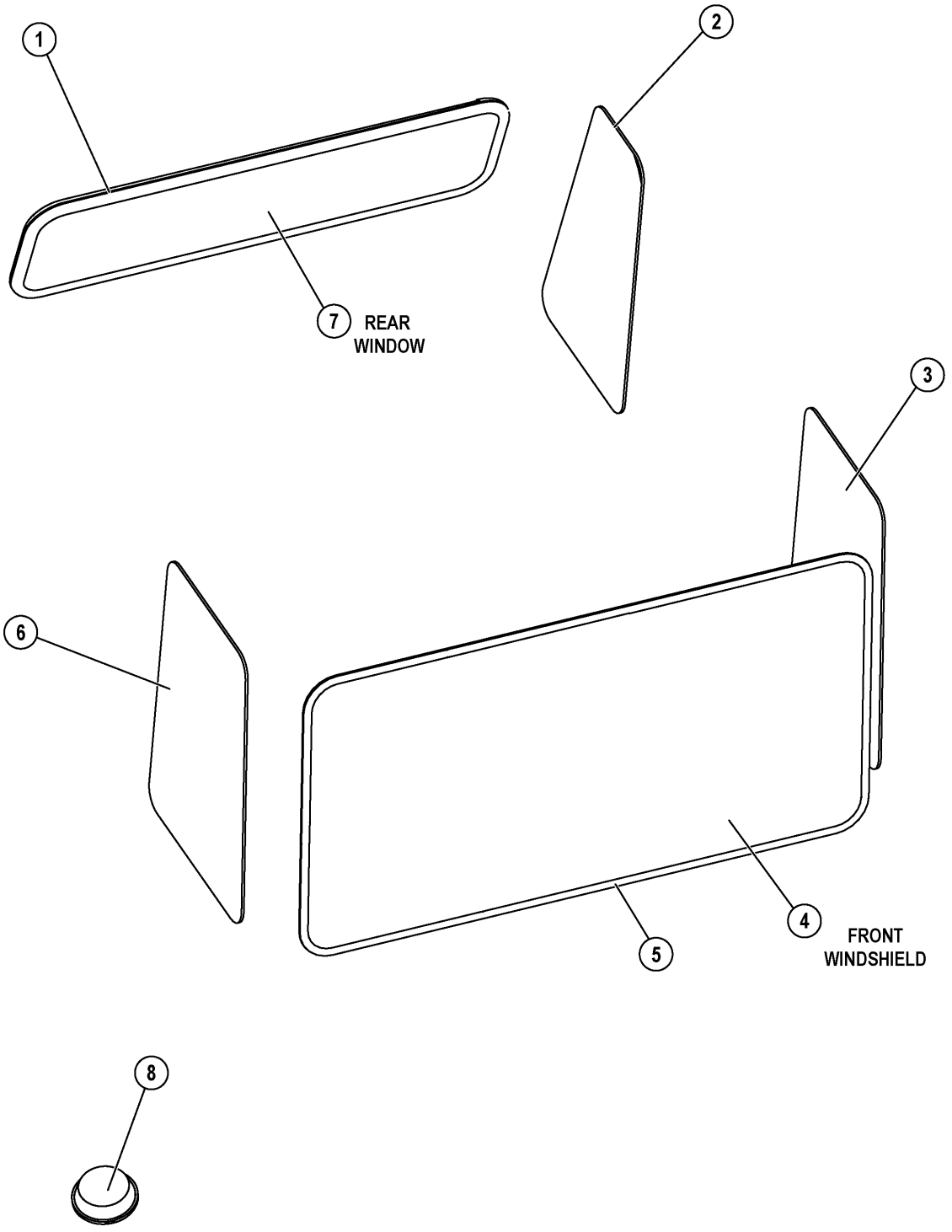
1
2
7
REAR
WINDOW
3
6
4
5
FRONT
WINDSHIELD
8
50664Z

REF.	PART NUM.	QTY.	DESCRIPTION
1.00	SM1094	1	GLASS, REAR INSULATED
2.00	SM2898	1	GLASS, LH REAR
3.00	SM2877	1	GLASS, LH FRONT
4.00	SM2899	1	GLASS, WINDSHIELD
5.00	SM4377	1	CHANNEL, RUBBER
6.00	SM2879	1	GLASS, RH FRONT
7.00	SM2045	1	CHANNEL, RUBBER
8.00	SM2897	20	SPACER

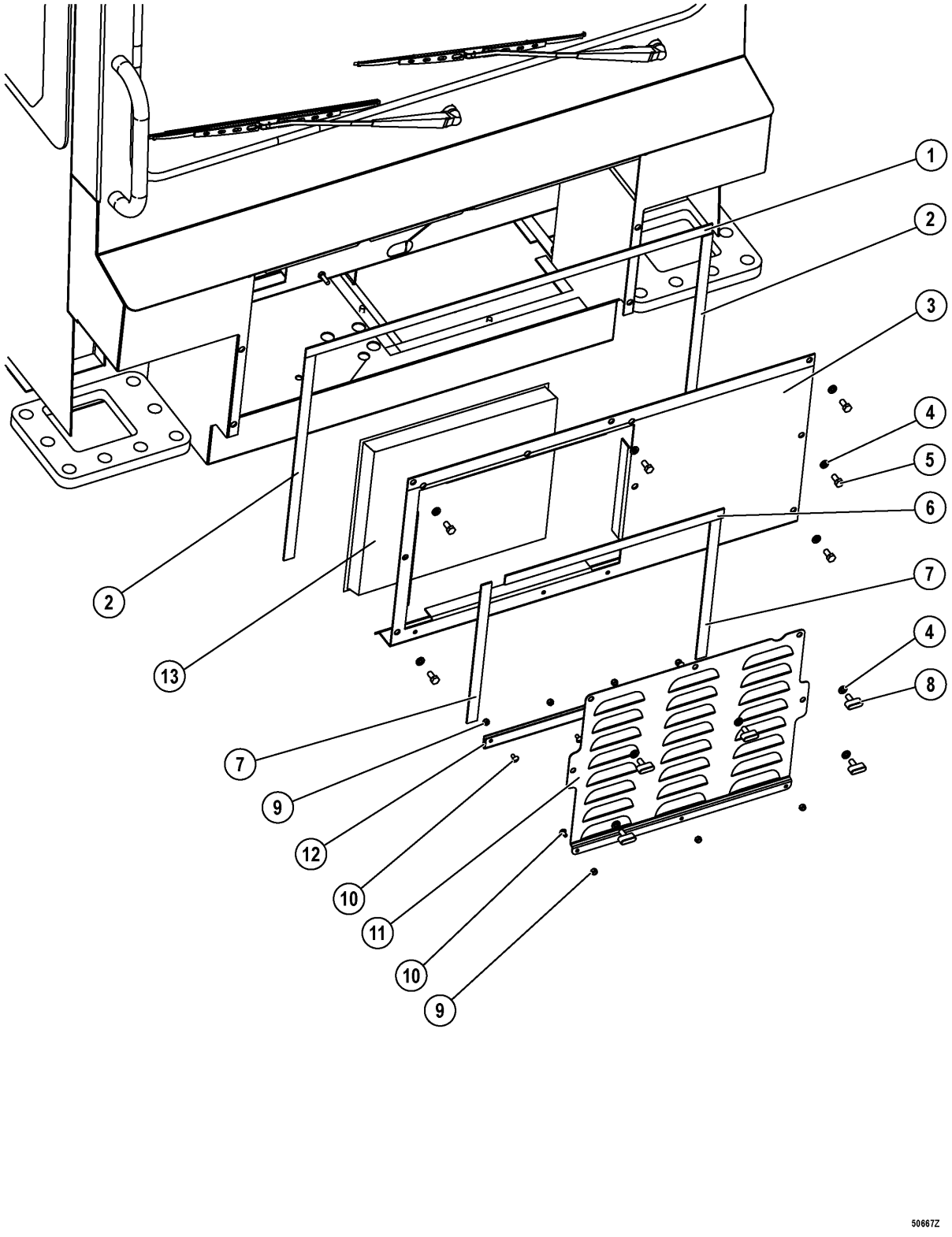
1
2
3
4
5
6
7
8
9
10
11
12
13
50667Z

REF.	PART NUM.	QTY.	DESCRIPTION
1.00	ED0108	1	SEAL STRIP
2.00	ED0109	2	SEAL STRIP
3.00	EL1094	1	COVER
4.00	MM0471	12	LOCKWASHER - M10
5.00	MM0036	6	CAPSCREW - M10 X 1.50 X 20
6.00	ED0110	1	SEAL STRIP
7.00	ED0112	2	SEAL STRIP
8.00	EL3987	5	WING SCREW - M10 X 1.50
9.00	VD4460	7	LOCKNUT - 1/4" - 20NC
10.00	WA5653	7	MACHINE SCREW - 1/4" - 20NC X 1/2"
11.00	EL1046	1	COVER, HINGED
12.00	SM0190	1	HINGE, FRONT COVER
13.00	PB7001	1	FILTER, AIR

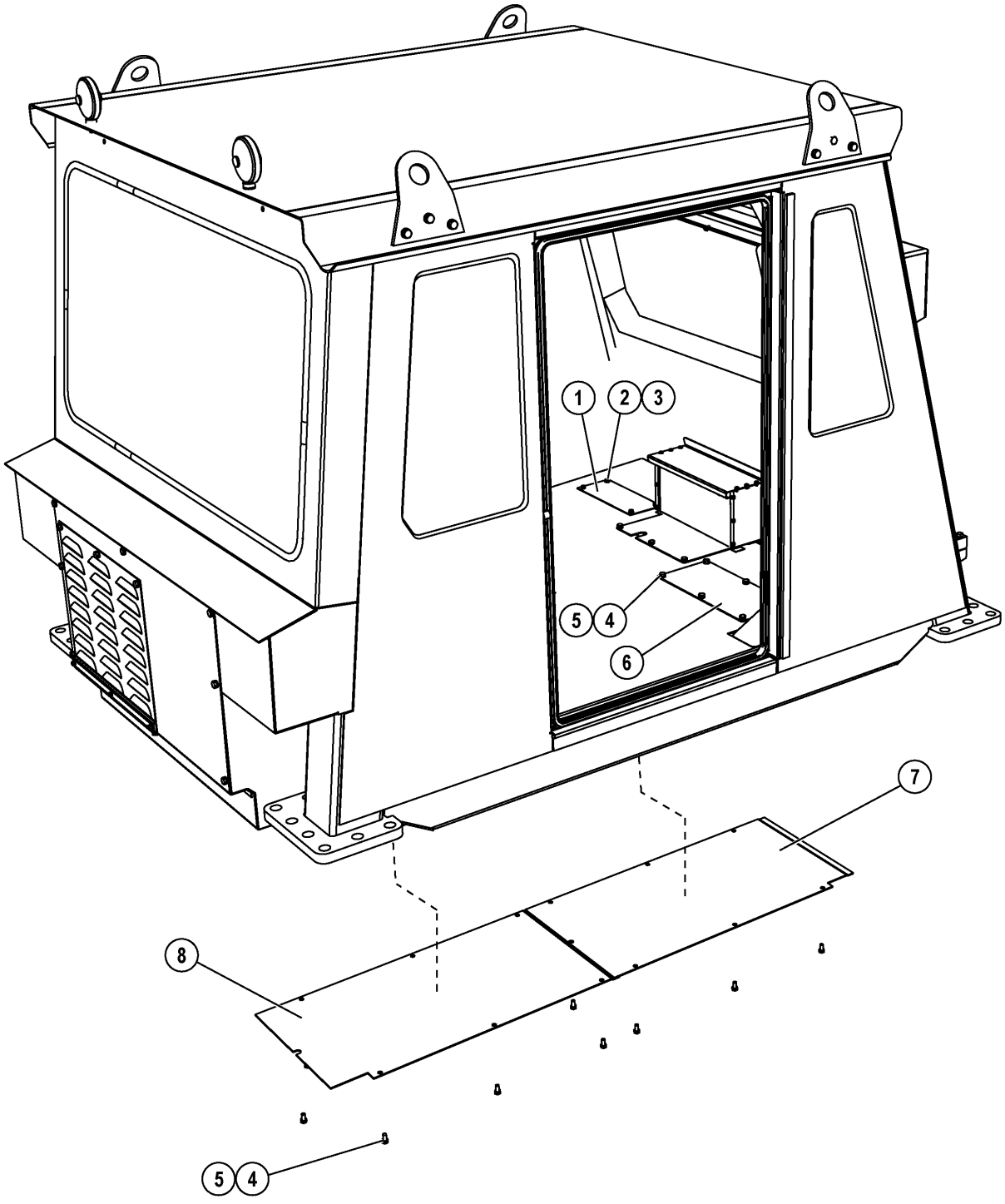
1
2
3
5
4
6
7
8
5
4
61338Z

REF.	PART NUM.	QTY.	DESCRIPTION
1.00	EL2941	1	PLATE, ACCESS - R.H. FLOOR
2.00	MM0595	4	CAPSCREW - M8 X 1.25 X 30
3.00	MM0470	4	LOCKWASHER - M8
4.00	MM0036	20	CAPSCREW - M10 X 1.50 X 20
5.00	MM0471	20	LOCKWASHER - M10
6.00	SM2189	1	PLATE, ACCESS - L.H. FLOOR
7.00	SM0992	1	PLATE, REAR ACCESS - BRAKE & STEERING PIPING
8.00	SM0991	1	PLATE, FRONT ACCESS - BRAKE & STEERING PIPING

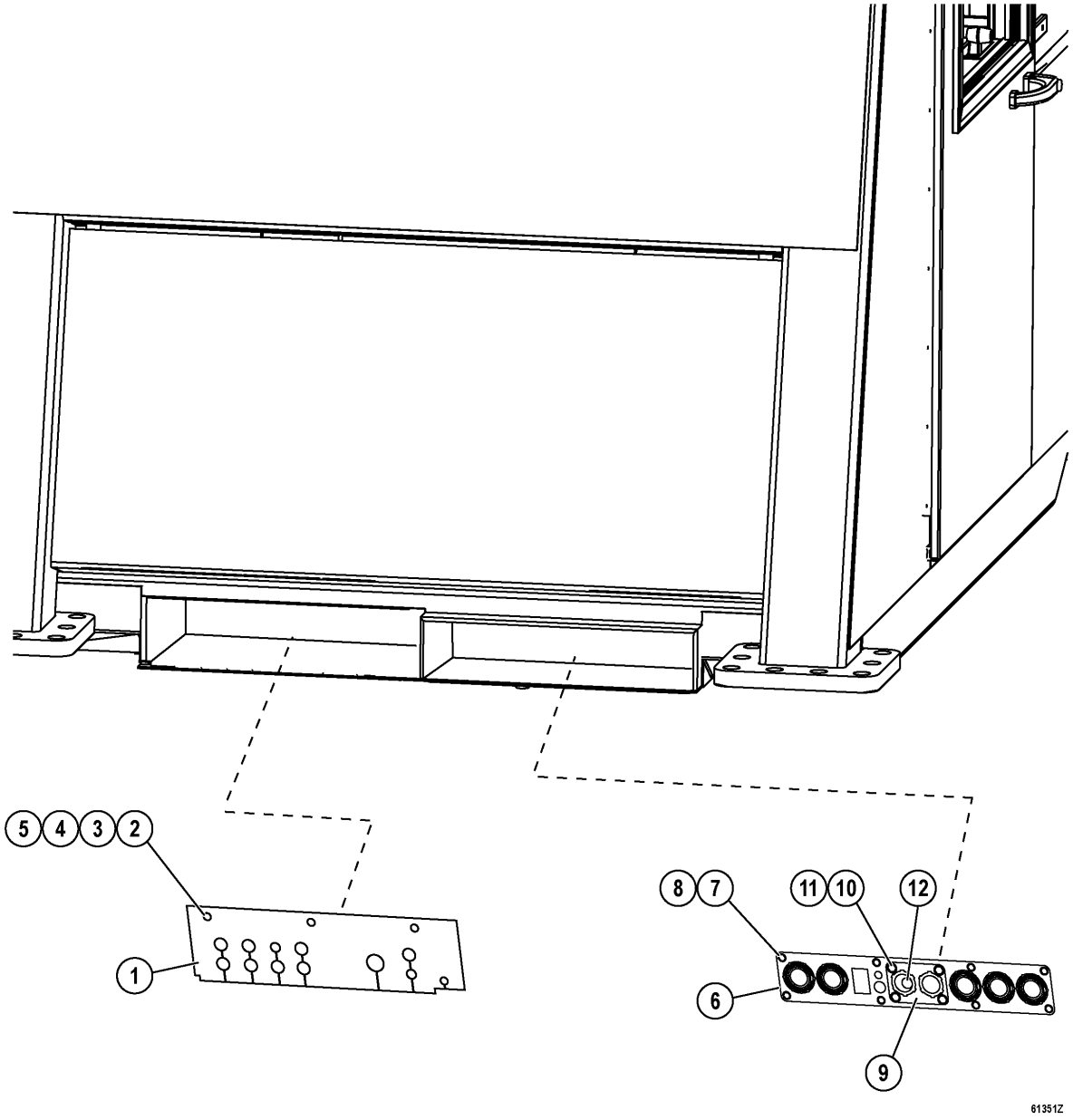
5
4
3
2
1
8
7
11
10
12
6
9
61351Z

REF.	PART NUM.	QTY.	DESCRIPTION
1.00	EF9801	1	FLAP, RUBBER
2.00	MM0594	3	CAPSCREW - M8 X 1.25 X 25
3.00	MM0460	3	FLAT WASHER - M8
4.00	MM0470	3	LOCKWASHER - M8
5.00	MM0177	3	NUT - M8 X 1.25
6.00	EM5649	1	PLATE, CONNECTOR MOUNTING
7.00	MM0027	8	CAPSCREW - M6 X 1.00 X 25
8.00	MM0469	8	LOCKWASHER - M6
9.00	EM6528	1	PLATE, CONNECTOR MOUNTING
10.00	TD1809	4	CAPSCREW - 1/4" - 20NC X 3/4"
11.00	SP8417	4	FLAT WASHER - 1/4"
12.00	PC1701	1	FITTING, BULKHEAD (COAX)

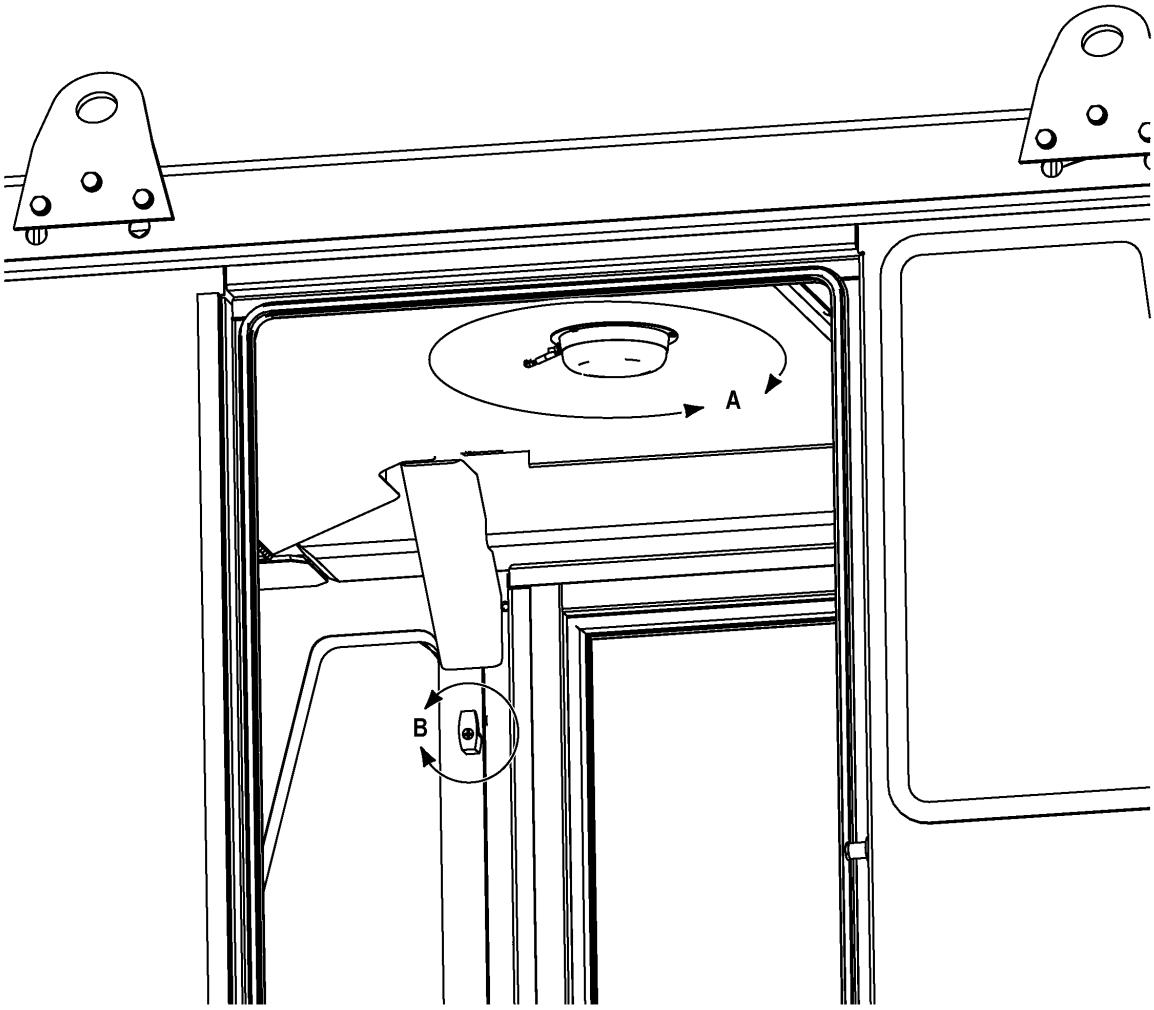

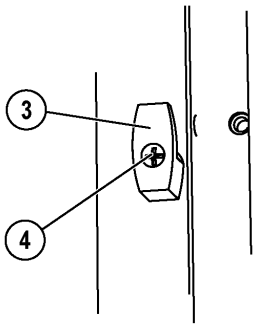

DETAIL B

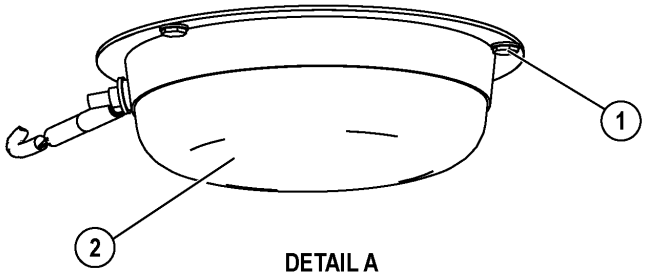

DETAIL A

50698Z

REF.	PART NUM.	QTY.	DESCRIPTION
1.00	WA5654	3	SCREW
2.00	VE5837	1	LIGHT, DOME
2.01	VE8635	1	LENS, PLASTIC
2.02	VE8636	1	SWITCH
3.00	VS6253	2	COAT, HOOK
4.00	PB8658	2	SCREW - M6 X 1.00 X 30

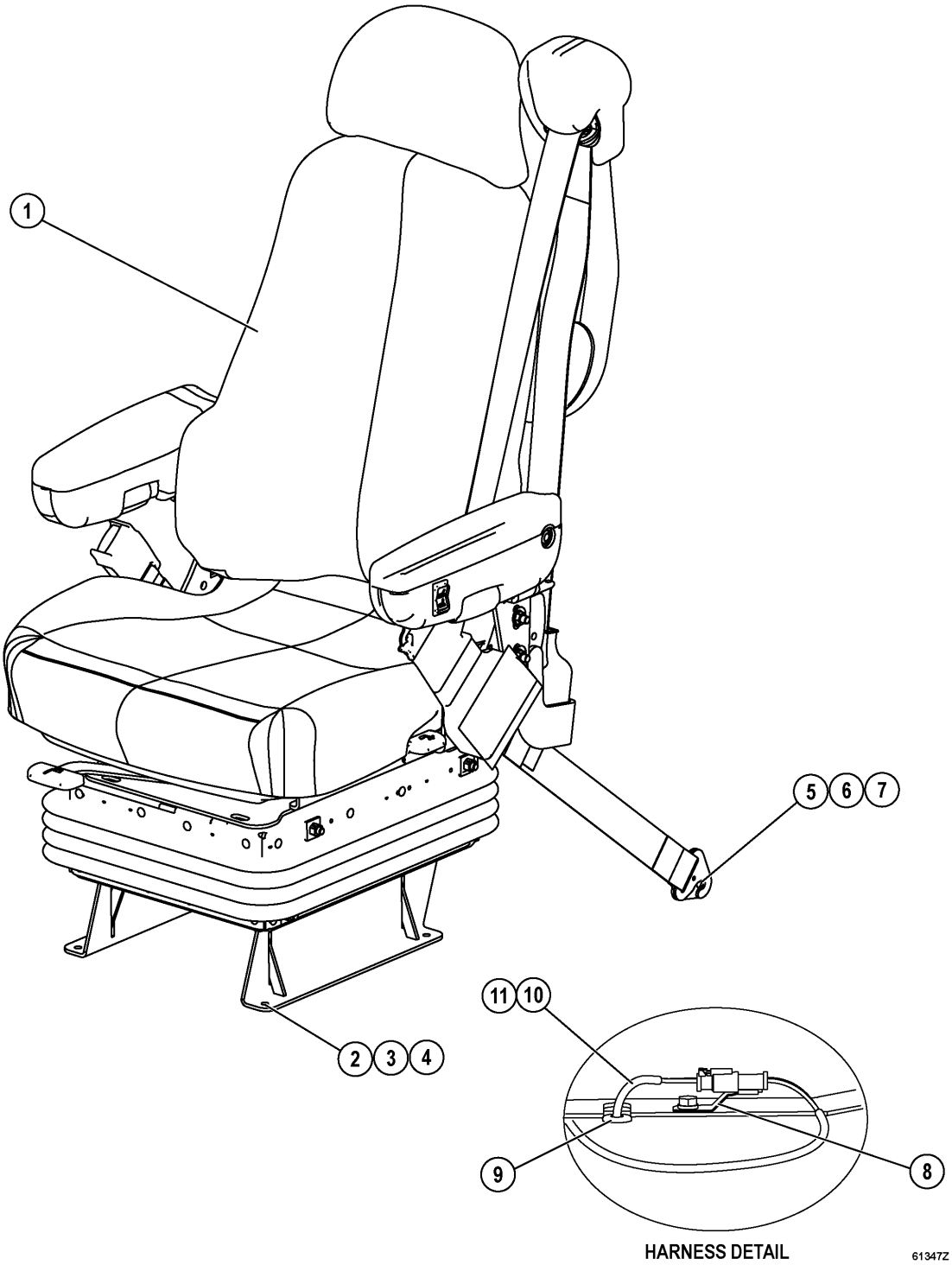
1
5
6
7
2
3
4
11
10
9
8
HARNESS DETAIL
61347Z

REF.	PART NUM.	QTY.	DESCRIPTION
1.00	PC2406	1	SEAT ASSEMBLY (SEE INDEX)
2.00	TD0794	4	CAPSCREW - 5/16" - 18NC X 3/4"
3.00	TV0177	4	FLAT WASHER - 5/16"
4.00	SC4174	4	LOCKWASHER - 5/16"
5.00	WB1089	2	CAPSCREW - 7/16" - 20NF X 1 1/2"
6.00	WA4727	2	FLAT WASHER - 7/16" (HARDENED)
7.00	TD0795	2	LOCKWASHER - 7/16"
8.00	08193-21012	1	CLIP
9.00	TD2186	1	GROMMET, RUBBER
10.00	EG4511	1	HARNESS, SEAT
11.00	VH5017	1	TYRAP

(QUANTITIES SHOWN FOR ONE SEAT ONLY.)

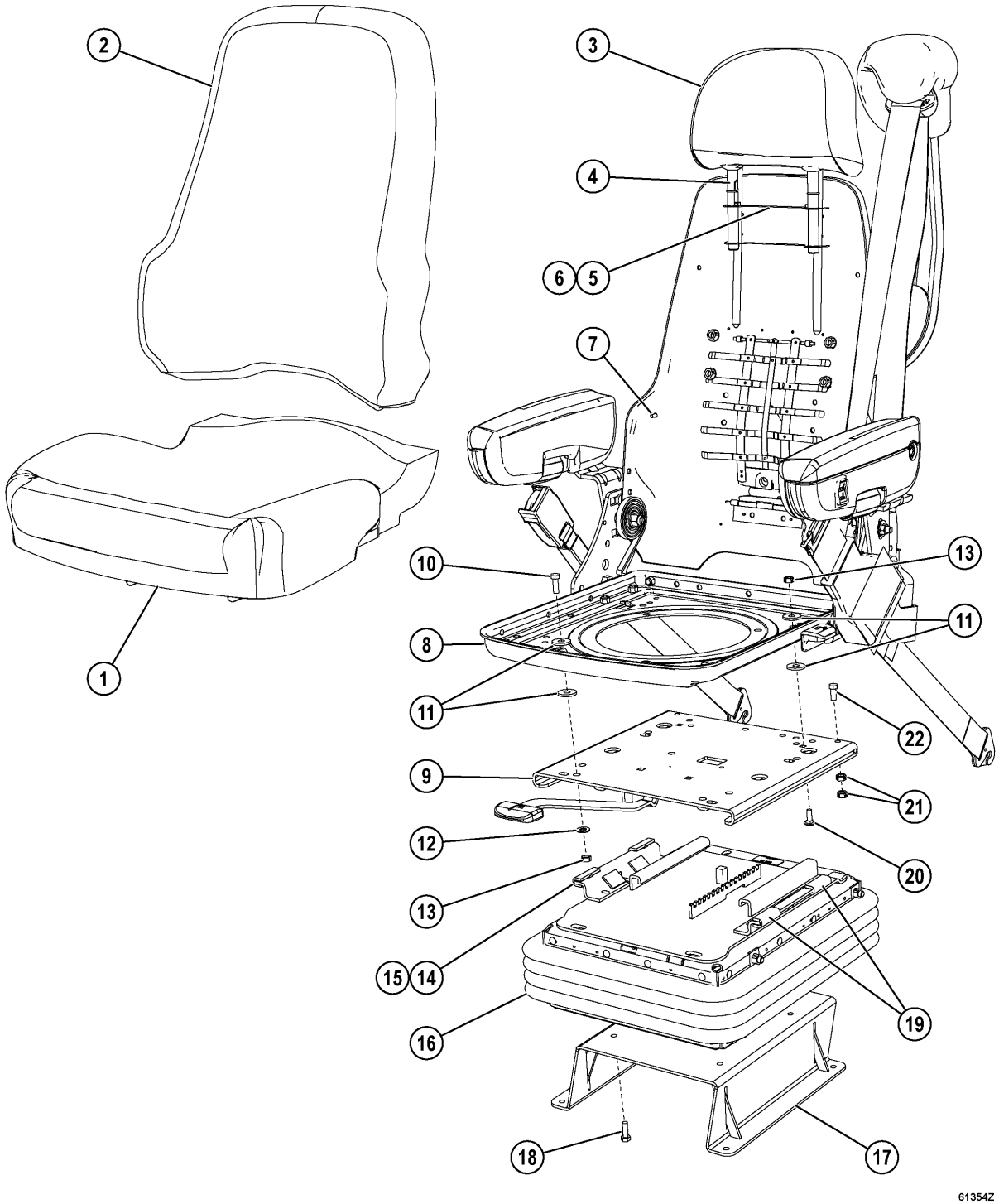
2
3
4
6
5
7
10
13
8
11
11
22
9
21
12
20
13
15
14
19
16
18
17
1
61354Z

REF.	PART NUM.	QTY.	DESCRIPTION
1.00	EM4051	1	CUSHION, SEAT
2.00	EM4052	1	CUSHION, BACKREST
3.00	XA4060	1	HEADREST
4.00	XA4061	1	KIT, HEADREST GUIDE
5.00	XA4065	1	BRACKET, HEADREST GUIDE
6.00	XA4066	4	RIVET
7.00	EM4070	2	SCREW - #10
8.00	EM4053	1	KIT, HIGHBACK SEAT
9.00	EM4054	1	SLIDE ASSEMBLY
10.00	EM4080	2	CAPSCREW - 5/16" - 18NC X 1"
11.00	EM4074	8	FLAT WASHER
12.00	EM4075	2	FLAT WASHER
13.00	EM4072	4	NUT, CENTERLOCK - 5/16" - 18NC
14.00	EM4066	2	BLOCK, SLIDER (ADJUSTABLE)
15.00	EM4068	2	SCREW, ALLEN HEAD - 1/4" - 20NC X 1/2"
16.00	EM4055	1	SEAT SUSPENSION ASSEMBLY
17.00	EM4056	1	RISER
18.00	EM4078	4	CAPSCREW - M8 X 1.25 X 25
19.00	EM4059	2	BLOCK, SLIDER (NON-ADJUSTABLE)
20.00	EM4069	2	BOLT, CARRIAGE - 5/16" - 18NC
21.00	EM4071	4	NUT, CENTERLOCK - 5/16" - 18NC
22.00	EM4079	2	CAPSCREW - 5/16" - 18NC X 3/4"

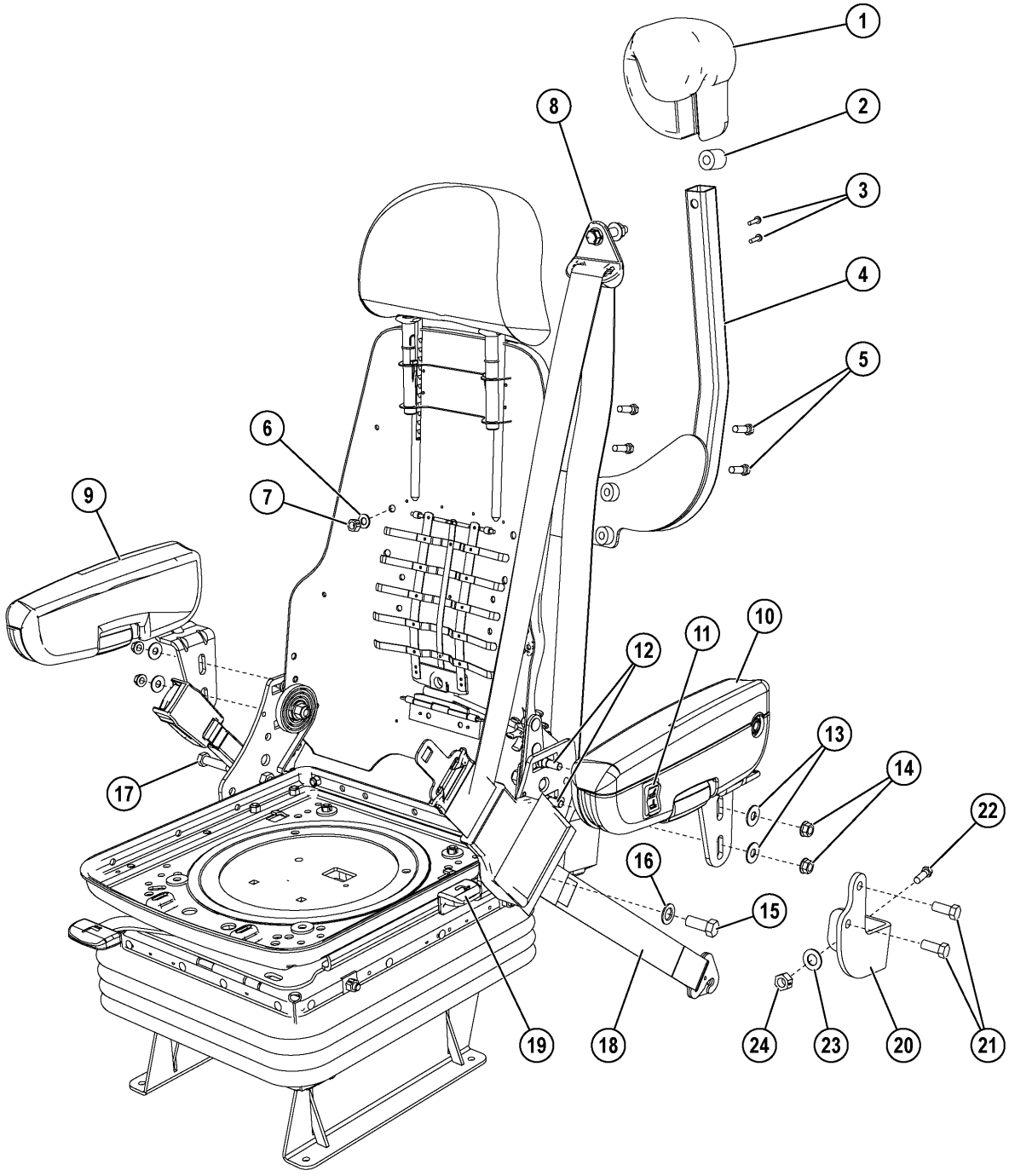
1
2
3
4
5
6
7
8
9
10
11
12
13
14
15
16
17
18
19
20
21
22
23
24
61355Z

REF.	PART NUM.	QTY.	DESCRIPTION
1.00	XA4058	1	SEAT BELT CUSHION ASSEMBLY
2.00	XA4064	1	SPACER
3.00	XA4067	2	SCREW - #10
4.00	XA4059	1	SUPPORT, SEAT BELT
5.00	XA4075	4	CAPSCREW - 3/8" - 16NC X 1 1/4"
6.00	XA4070	4	FLAT WASHER
7.00	XA4069	6	NUT, CENTERLOCK - 3/8" - 16NC
8.00	xa4063	1	SEAT BELT, HIGHBACK (3-POINT)
9.00	EM4058	1	ARM & BRACKET ASSEMBLY - R.H.
10.00	EM4057	1	ARM & BRACKET ASSEMBLY - L.H.
11.00	EM4063	1	SWITCH, VALVE - SEAT RAISE/LOWER
12.00	EM4062	4	BOLT, SHOULDER
13.00	XA4071	4	FLAT WASHER
14.00	EM4067	4	NUT, FLANGE - 3/8" - 16NC
15.00	EM4076	1	CAPSCREW - M12 X 1.75 X 35
16.00	EM4065	1	FLAT WASHER (HARDENED)
17.00	XA4073	1	CAPSCREW - M12 X 1.75 X 50
18.00	EM4061	2	KIT, TETHER BELT
19.00	EM4064	1	KNOB, RECLINER
20.00	XA4062	1	SUPPORT PLATE, RETRACTOR
21.00	XA4076	2	CAPSCREW - 3/8" - 16NC X 7/8"
22.00	XA4074	1	CAPSCREW - 7/16" - 20NC X 1 1/4"
23.00	XA4072	1	FLAT WASHER
24.00	XA4068	1	NUT, CENTERLOCK - 7/16" - 20NC

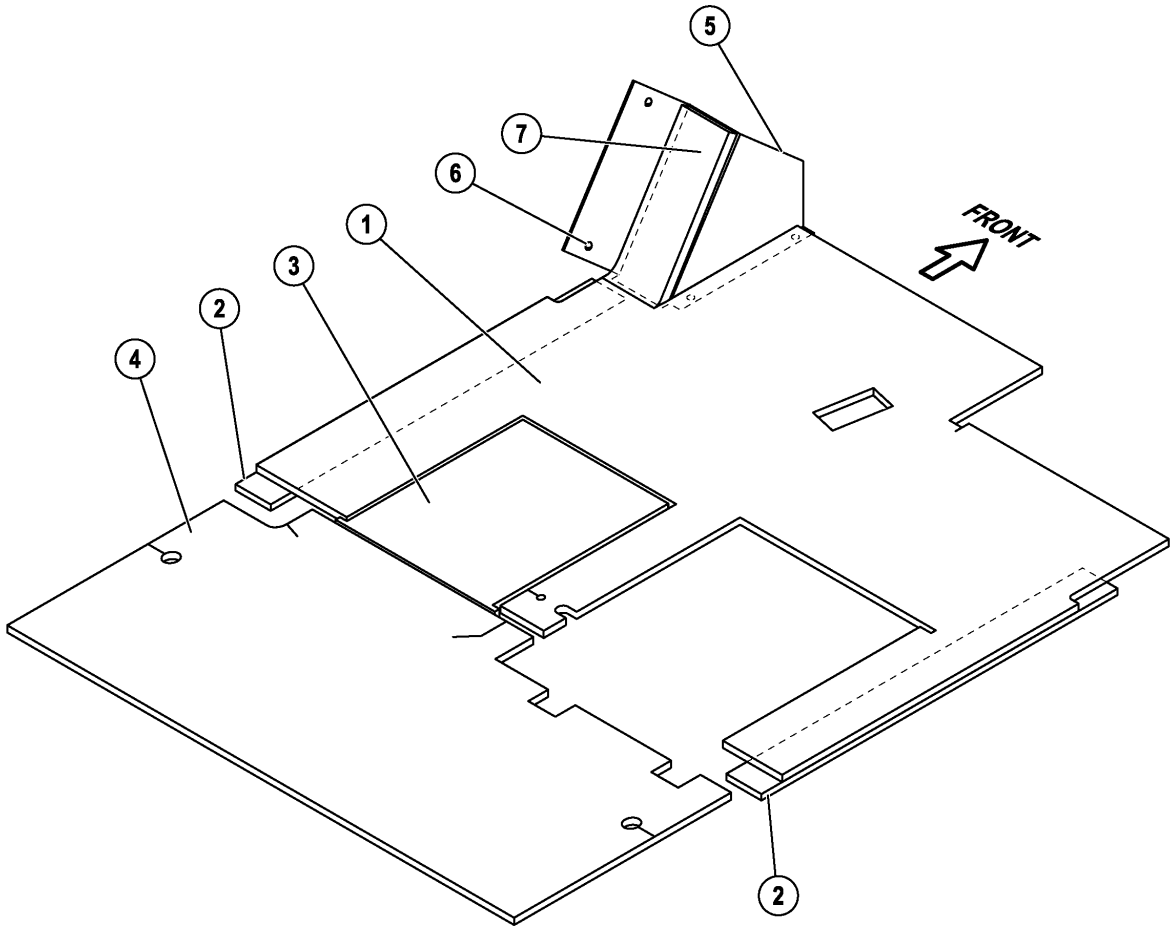

55651Z

REF.	PART NUM.	QTY.	DESCRIPTION
1.00	EK2816	1	FLOOR MAT, FRONT
2.00	SM5435	2	FLOOR MAT, THRESHOLD
3.00	EK2811	1	FLOOR MAT, REAR
4.00	EK2817	1	FLOOR MAT, SEAT
5.00	SM5048	1	FOOTREST
6.00	27705R1	4	SCREW, TAP - 1/4" - 14NC X 1"
7.00	SM5434	1	FLOOR MAT, FOOTREST

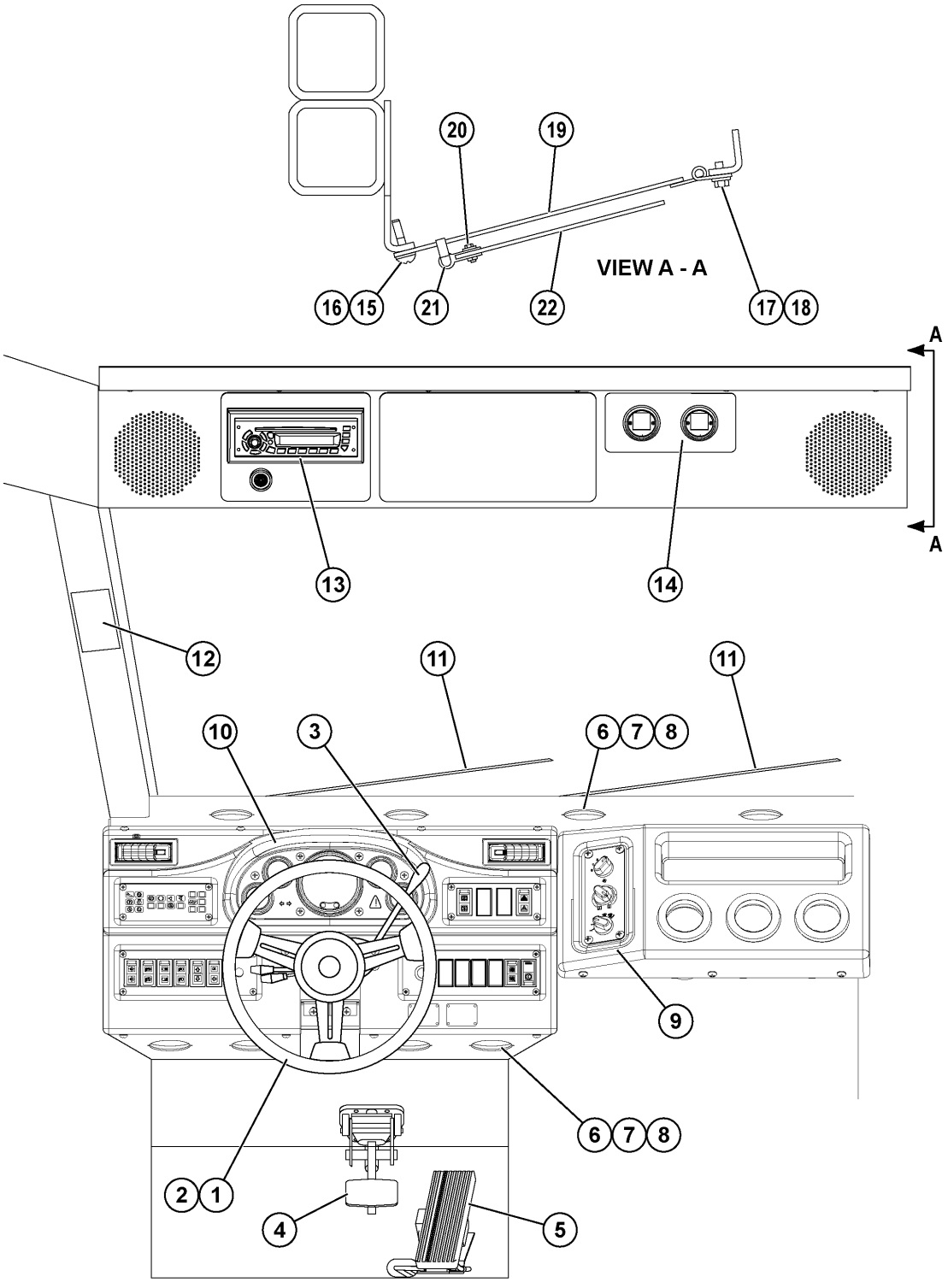
20
19
VIEW A - A
16
15
21
22
17
18
A
A
13
14
12
11
11
10
3
6
7
8
9
6
7
8
2
1
4
5
61328Z

REF.	PART NUM.	QTY.	DESCRIPTION
1.00	PC0683	1	STEERING WHEEL
2.00	EK9210	1	STEERING COLUMN AND LEVER ASSEMBLY (SEE INDEX)
3.00	EK9211	1	RETARDER LEVER ASSEMBLY (SEE INDEX)
4.00	PC1955	1	BRAKE VALVE ASSEMBLY (SEE INDEX)
5.00	PB9506	1	ELECTRONIC THROTTLE ASSEMBLY (SEE INDEX)
6.00	PB8319	8	LOUVER
7.00	PB8320	8	ADAPTER
8.00	SG2106	16	SCREW, SELF-TAPPING - #6 - 32NC X 1/2"
9.00		1	HEATER/AIR CONDITIONER DASH MODULE (SEE FIG 61383)
10.00		1	INSTRUMENT PANEL (SEE FIG 61322)
11.00		2	WINDSHIELD WIPERS/WASHERS (SEE FIG 42092)
12.00	WB3058	1	CHART, GRADE SPEED
13.00	EM0006	1	RADIO MODULE (SEE INDEX)
14.00	EL1086	1	AIR CLEANER RESTRICTION GAUGE MODULE (SEE INDEX)
15.00	PB9829	4	SCREW - M6 X 1.00
16.00	PB8658	1	SCREW - M6 X 1.00 X 30
17.00	31127R1	6	CAPSCREW - M6 X 1.00 X 12
18.00	MM0207	6	LOCKWASHER - M6 (INTERNAL TOOTH)
19.00	EK7876	1	CLOSURE, FRONT
20.00	EK2770	2	SHEET, FORMED
21.00	SM0926	10	SCREW - M6 X 1.00
22.00	SM5244	2	LENS, VISOR
NS	VS6253	2	COAT HOOK
NS	EL1982	1	PLATE, ROPS WARNING
NS	WA3134	4	SCREW

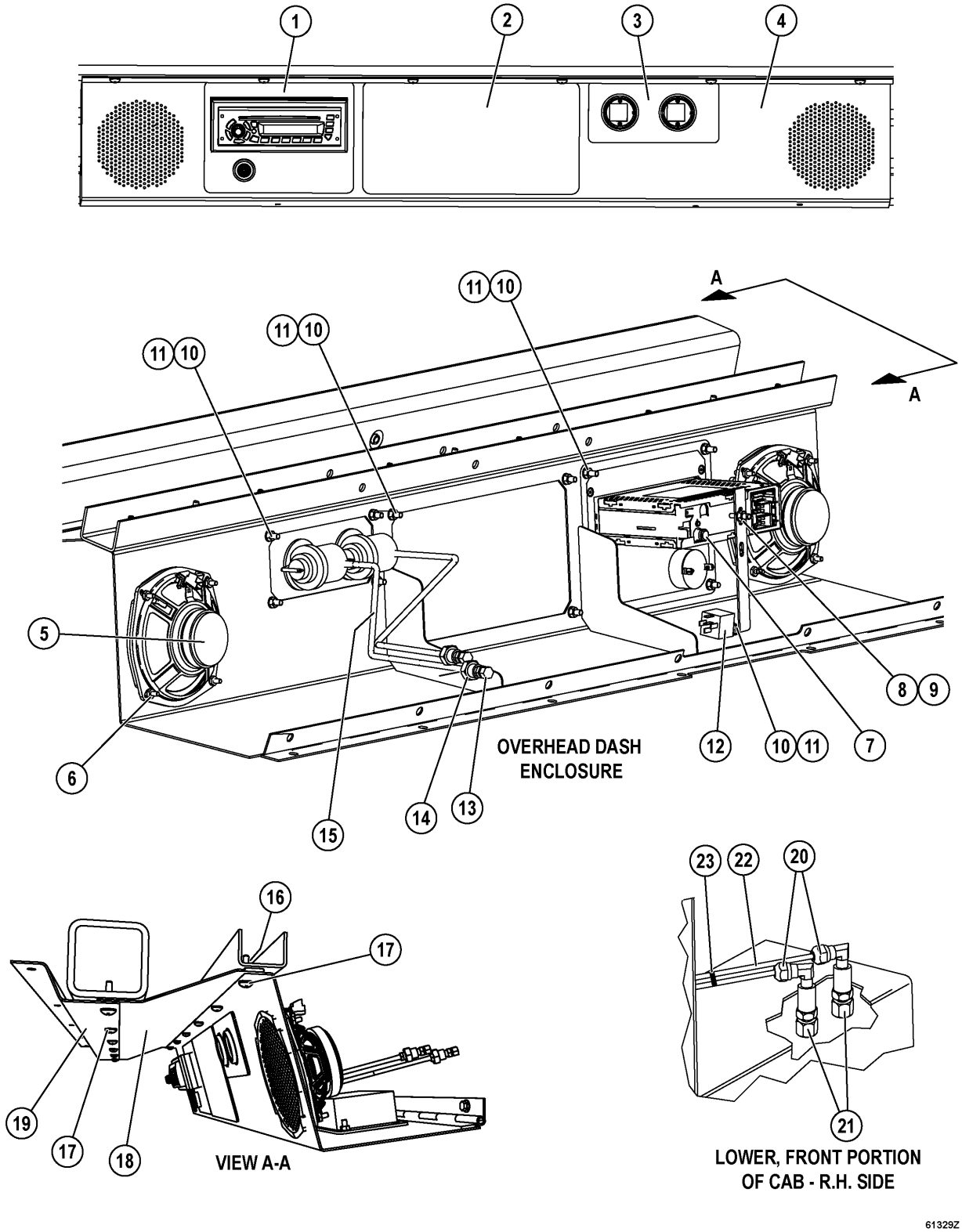
1
2
3
4
11
10
A
A
5
6
8
9
12
7
OVERHEAD DASH
ENCLOSURE
14
13
15
16
17
19
17
18
VIEW A-A
23
22
20
21
LOWER, FRONT PORTION
OF CAB - R.H. SIDE
61329Z

REF.	PART NUM.	QTY.	DESCRIPTION
1.00	EM0006	1	RADIO MODULE (SEE INDEX)
2.00	EK4254	1	PLATE, BLANK
3.00	EL1086	1	AIR CLEANER RESTRICTION GAUGE MODULE (SEE INDEX)
4.00	EM3590	1	DASH, OVERHEAD
5.00	PC0724	2	SPEAKER ASSEMBLY
5.01	EL0296	2	HARNESS, SPEAKER
5.02	EM0177	2	HARNESS, SPEAKER
6.00	WA3367	8	NUT ASSEMBLY
7.00	PB9957	1	CABLE, ANTENNA EXTENSION
8.00	MM0206	1	LOCKWASHER - M5
9.00	MM0373	1	NUT - M5 X .8
10.00	MM0207	15	LOCKWASHER - M6 (INTERNAL TOOTH)
11.00	MM0176	15	NUT - M6 X 1.00
12.00	PB4767	1	RELAY
13.00	PB9056	2	FITTING, COMPRESSION (FEMALE)
14.00	PB9051	2	FITTING, SINGLE BARB W/FILTER
15.00	PB9050	2	HOSE, VACUUM
16.00	SM2682	3	SCREW, COUNTERSUNK
17.00	PB8658	12	SCREW - M6 X 1.00 X 30
18.00	EK4176	1	PLATE
19.00	EL3810	1	SHEET, BENT
20.00	TA0602	2	FITTING, NYLON
21.00	TA0603	2	FITTING, NYLON
22.00	TM4777	2	TUBE, NYLON
23.00	VZ4843	4	TYRAP

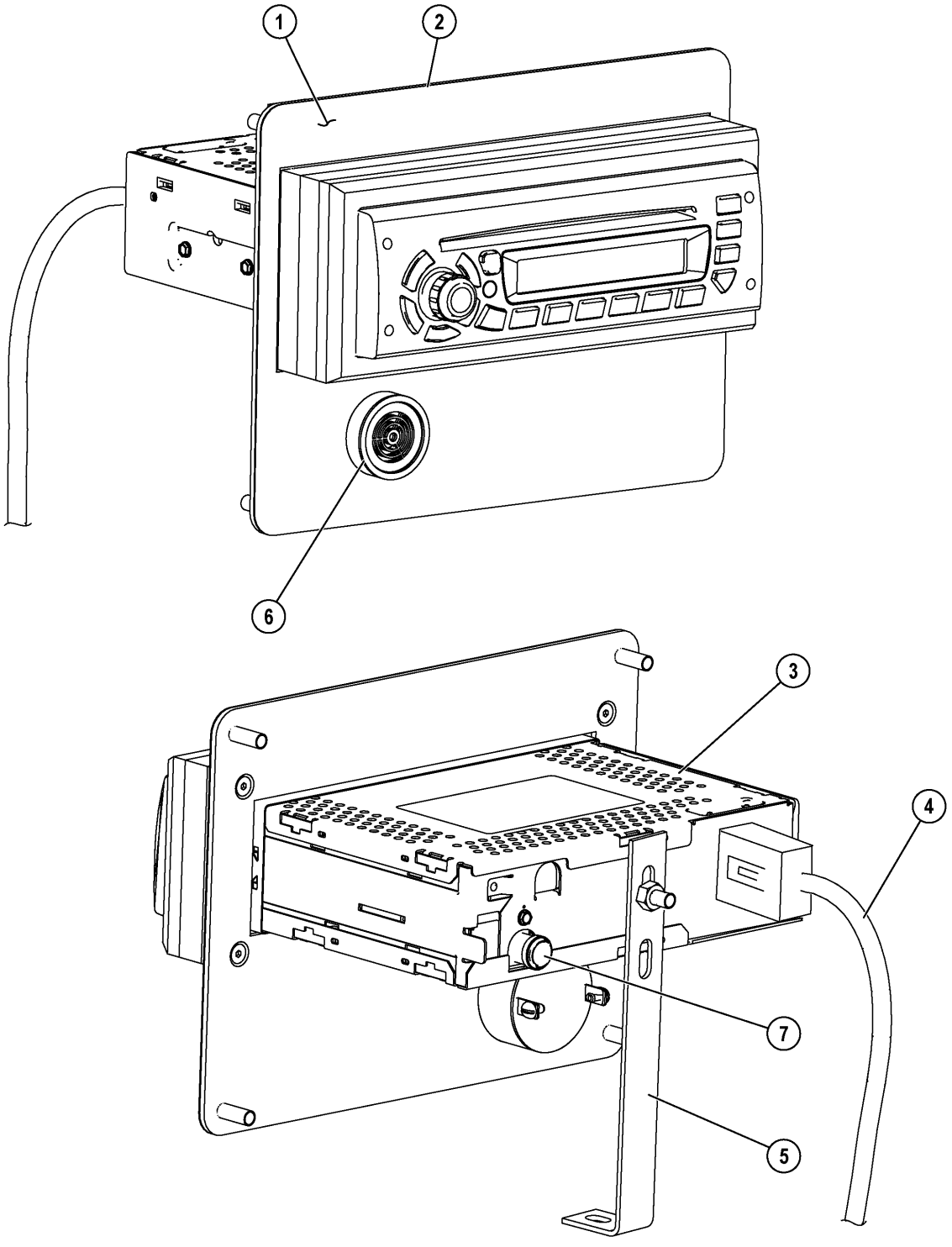
1
2
6
3
4
7
5
61326Z

REF.	PART NUM.	QTY.	DESCRIPTION
1.00	SM2701	1	LEXAN OVERLAY
2.00	EL5798	1	MOUNT, RADIO
3.00	PC2172	1	RADIO
4.00	EJ1556	1	HARNESS, RADIO
5.00	EK4230	1	SUPPORT
6.00	PB1951	1	ALARM, AUDIBLE
7.00	EJ7875	1	CABLE, RADIO ANTENNA ADAPTER
7.01	PB9916	1	EXTENSION, RADIO ANTENNA CABLE

NOTE: MODULE NOT SERVICED AS AN ASSEMBLY.
ORDER INDIVIDUAL COMPONENT PARTS.

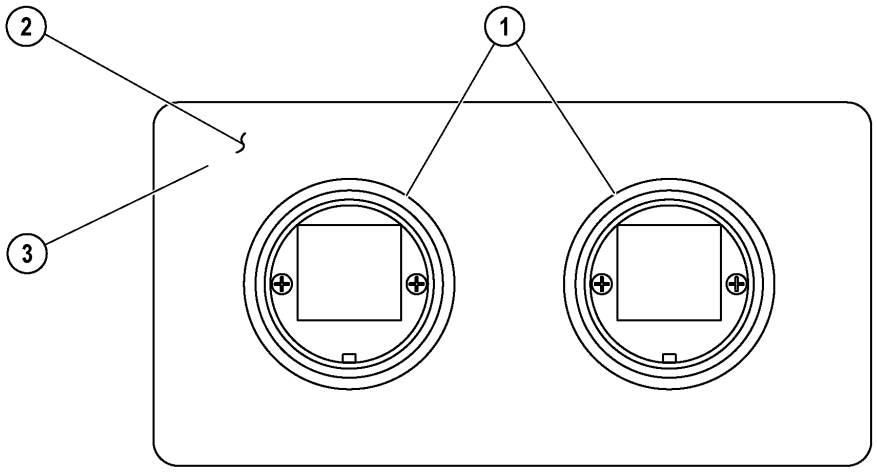

60921z

REF.	PART NUM.	QTY.	DESCRIPTION
1.00	PB8987	2	GAUGE, AIR CLEANER RESTRICTION
2.00	EL1087	1	LEXAN OVERLAY
3.00	EL1084	1	PLATE, MOUNTING
NS	PB9050	2	HOSE, VACUUM
NS	PB9051	2	FITTING, SINGLE BARB W/FILTER
NS	PB9056	2	FITTING, COMPRESSION (FEMALE)

NOTE: MODULE NOT SERVICED AS AN ASSEMBLY.
ORDER INDIVIDUAL COMPONENT PARTS.

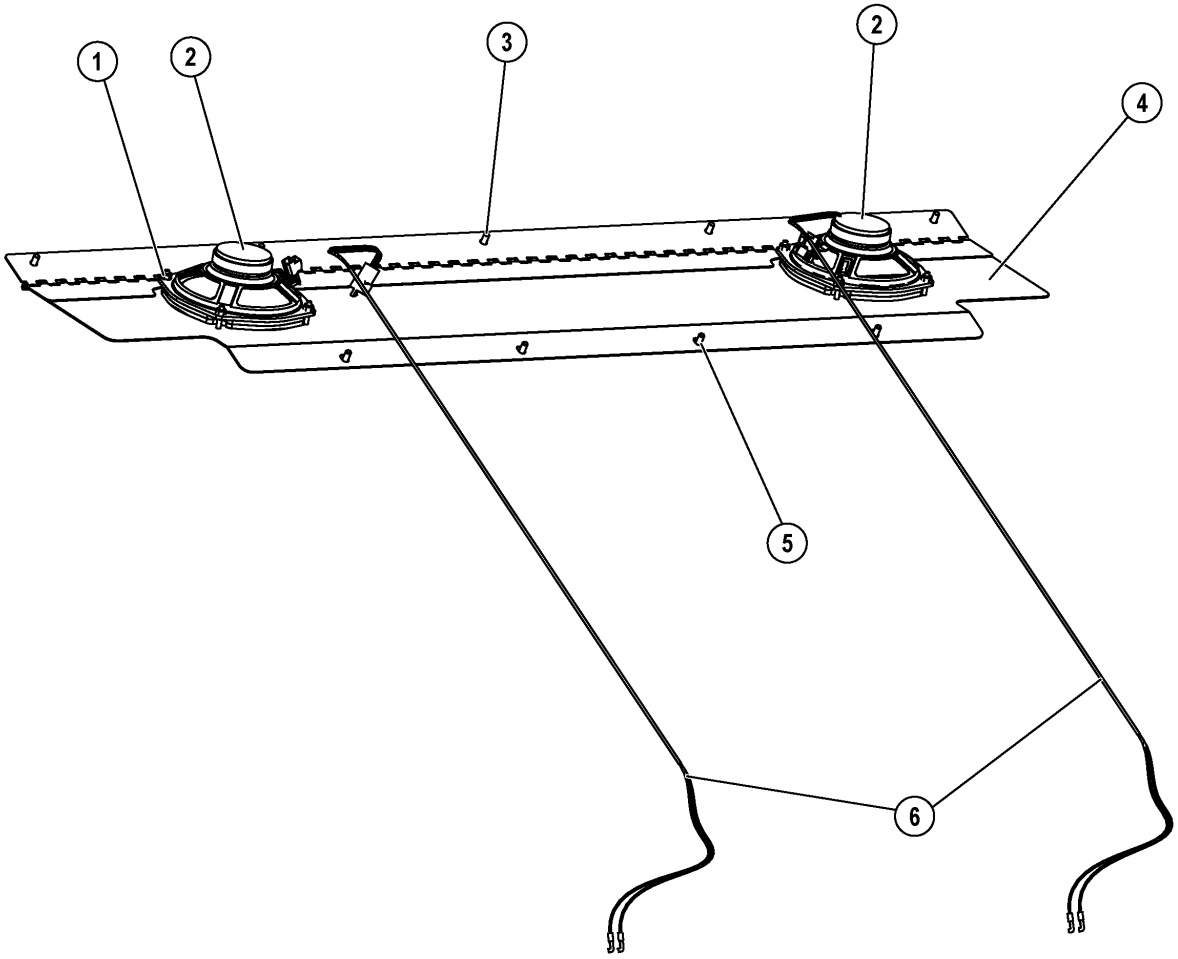
1
2
3
2
4
5
6
50665Z

REF.	PART NUM.	QTY.	DESCRIPTION
1.00	WA2858	8	LOCKNUT - #10 - 24NC
1.01	EL2767	4	SPACER
2.00	PC1834	2	SPEAKER
3.00	31127R1	5	CAPSCREW - M6 X 1.00 X 12
4.00	EL2765	1	PANEL
5.00	PB8658	1	SCREW - M6 X 1.00 X 30
5.01	SM0926	3	SCREW - M6 X 1.00
6.00	EM0178	2	HARNESS, SPEAKER

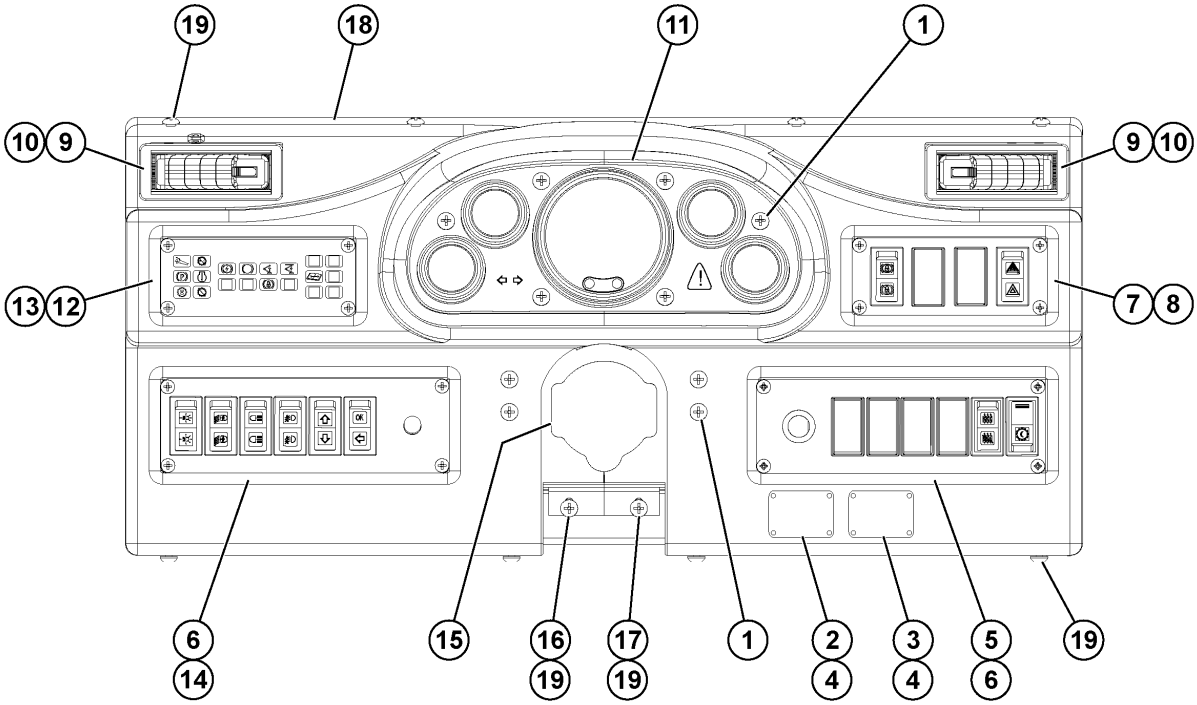

61322Z

REF.	PART NUM.	QTY.	DESCRIPTION
1.00	PB8658	10	SCREW - M6 X 1.00 X 30
2.00	WB2490	1	DECAL, WARNING (KEY SWITCH)
3.00	WB3295	1	DECAL, SHIFT SELECTOR
4.00	DC9822	8	DRIVE SCREW
5.00	EM5643	1	DASH MODULE, LOWER R.H. (SEE FIG 61323)
6.00	EK8962	2	SEAL, LOWER MODULE
7.00	EL3495	1	DASH MODULE, UPPER R.H. (SEE FIG 60931)
8.00	EK8961	1	SEAL, UPPER MODULE
9.00	EK7947	2	LOUVER, RECTANGULAR
10.00	EK7946	2	ADAPTER, HOSE
10.01	SM5145	2	TUBE (TO TOP LOUVERS)
10.02	WA4513	4	SCREW, SELF-TAPPING - #10 - 24NC X 1/2"
11.00	PC1927	1	PANEL, GAUGE (SEE FIG 61325)
11.01	PC1938	1	HARNESS, MAIN GAUGE PANEL
11.02	PC1939	1	HARNESS, WARNING PANEL
12.00	PC1929	1	PANEL, STATUS
13.00	WA4605	4	SCREW - #10 - 24NC X 1/2"
14.00	EL3494	1	DASH MODULE, LOWER L.H. (SEE FIG 61324)
15.00	TX7829	1	SEAL, STEERING COLUMN
16.00	SM2646	1	PLATE, SEAL RETAINER - L.H.
17.00	SM2648	1	PLATE, SEAL RETAINER - R.H.
18.00	EL5675	1	DASH PANEL, MOLDED
19.00	PB9829	10	SCREW - M6 X 1.00
NS	SM2783	2	HOSE, AIR (BEHIND INSTRUMENT PANEL)
NS	CC6103	4	CLAMP, WORM DRIVE (FOR AIR HOSES)

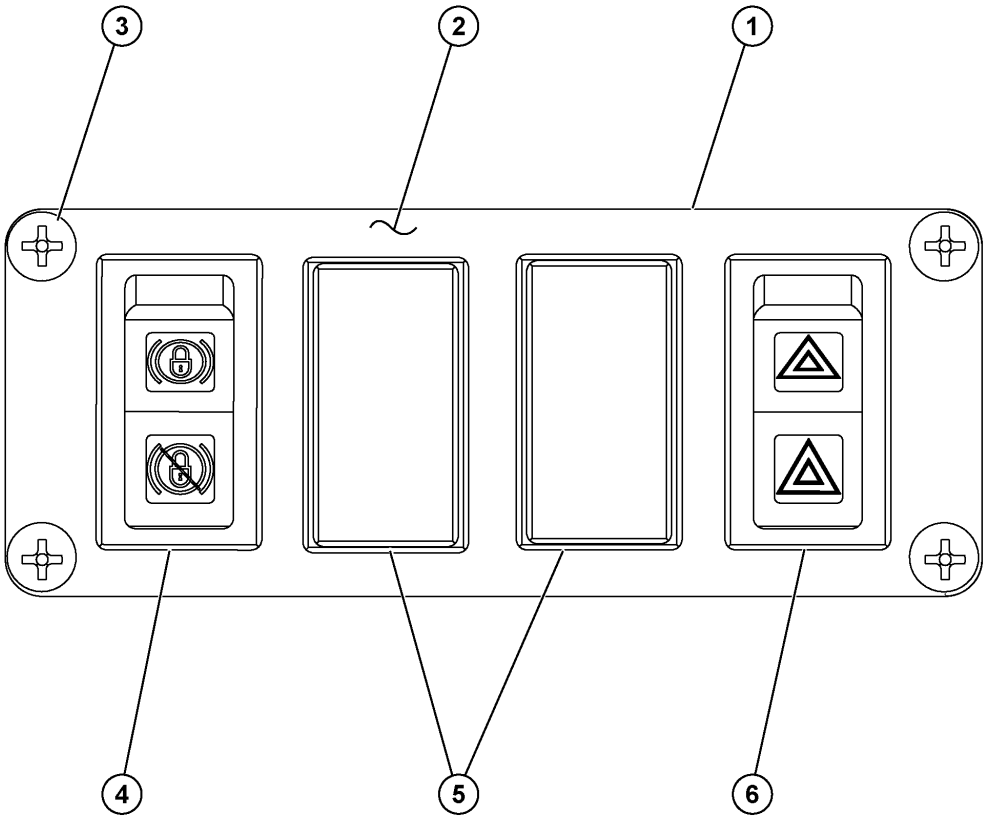

60931Z

REF.	PART NUM.	QTY.	DESCRIPTION
1.00	EL3144	1	PLATE
2.00	EL3143	1	DECAL
3.00	WA4605	4	SCREW, PHILLIPS - #10 - 24NC X 1/2"
4.00	PC0493	1	SWITCH, ROCKER (FRONT WHEEL BRAKE)
5.00	1439428H1	2	PLUG, SWITCH HOLE FILLER
6.00	PC1766	1	SWITCH, ROCKER (HAZARD FLASHER)

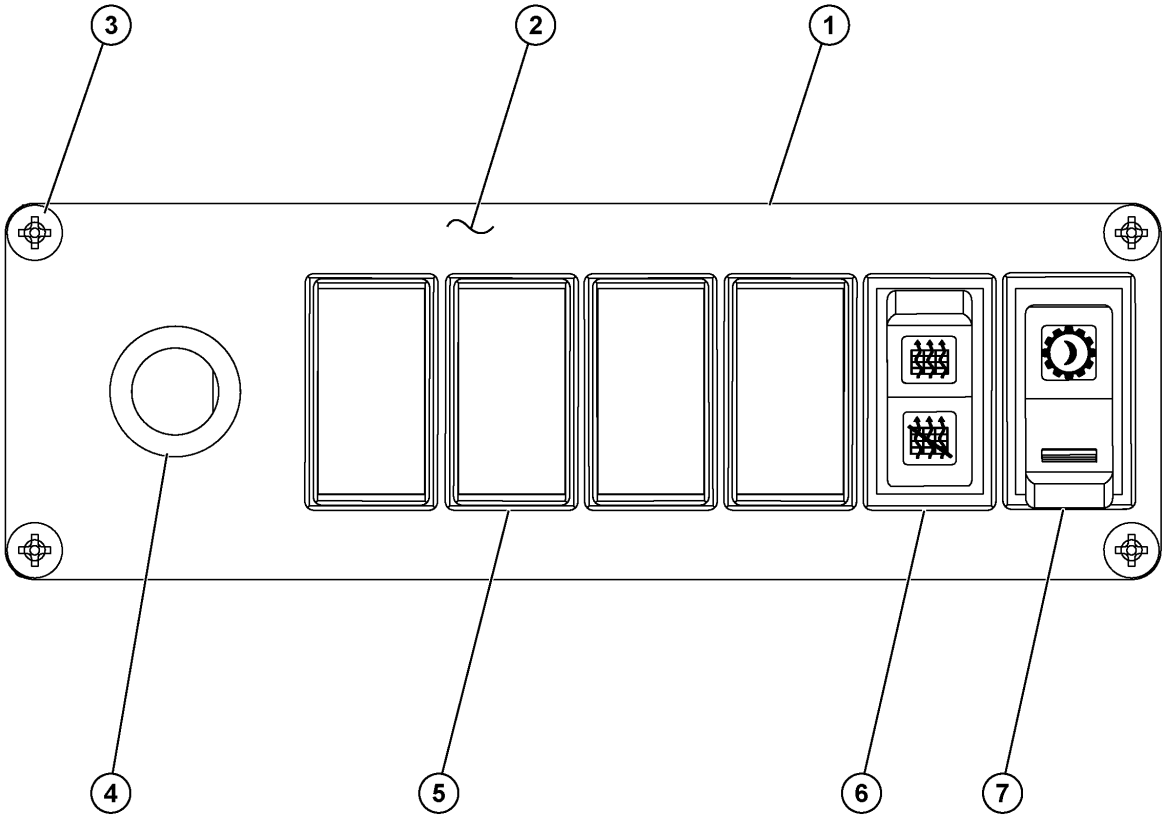

61323Z

REF.	PART NUM.	QTY.	DESCRIPTION
1.00	EK5527	1	PLATE
2.00	EK5539	1	DECAL
3.00	WA4605	4	SCREW - #10 - 24NC X 1/2"
4.00	08086-10000	1	SWITCH, ENGINE START
5.00	1439428H1	4	PLUG, SWITCH HOLE FILLER
6.00	PC2317	1	SWITCH, ROCKER (GRID DRIER)
7.00	PC2146	1	SWITCH, ROCKER (PROPEL TEST)

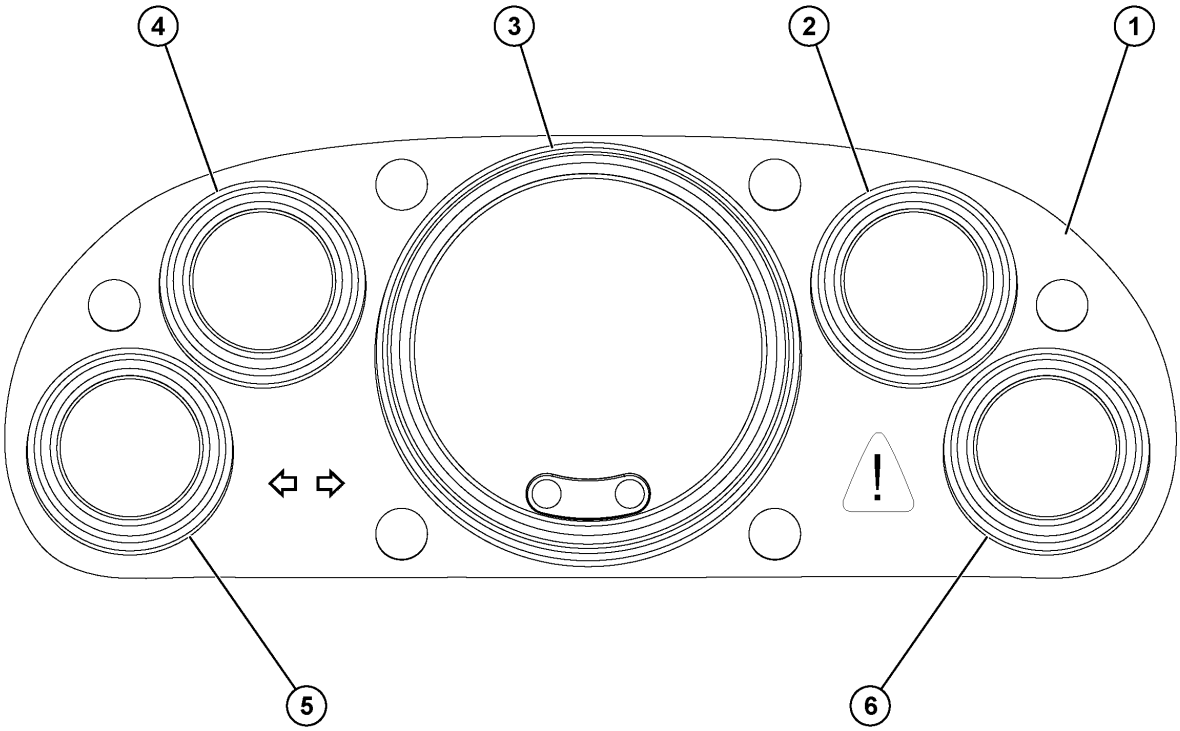

61325Z

REF.	PART NUM.	QTY.	DESCRIPTION
1.00	PC1932	1	PANEL (WITH INDICATORS ONLY)
2.00	PC1936	1	GAUGE, CYLINDER OIL TEMPERATURE
3.00	PC1933	1	GAUGE, SPEEDOMETER
4.00	PC1935	1	GAUGE, COOLANT TEMPERATURE
5.00	PC1934	1	GAUGE, DRIVE SYSTEM TEMPERATURE
6.00	PC1937	1	GAUGE, FUEL LEVEL
NS	PC1942	4	HARNESS, SLAVE - 12"
NS	PC1943	1	HARNESS, SLAVE - 24" (TO STATUS PANEL)

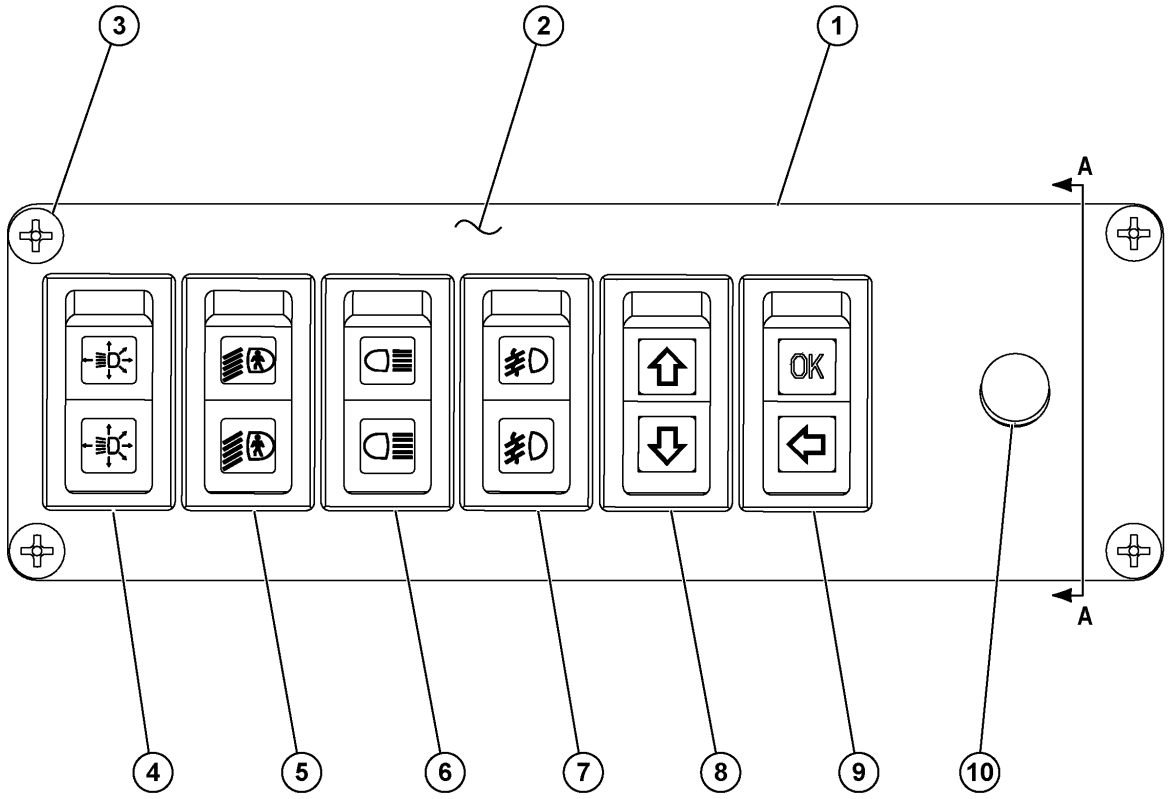

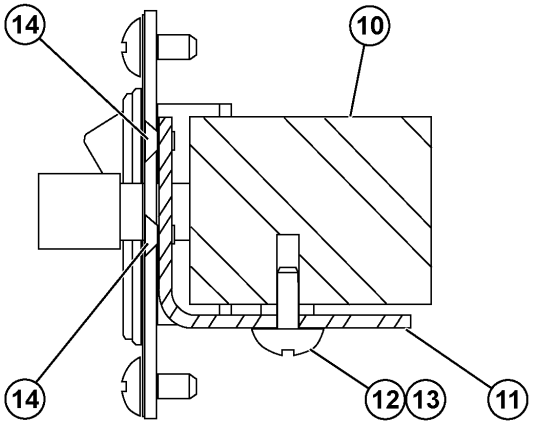

VIEW A - A

61324Z

REF.	PART NUM.	QTY.	DESCRIPTION
1.00	EK5528	1	PLATE
2.00	EK5538	1	DECAL
3.00	WA4605	4	SCREW - #10 - 24NC X 1/2"
4.00	PC1501	1	SWITCH, ROCKER (HEADLIGHTS)
5.00	PC1502	1	SWITCH, ROCKER (LADDER LIGHT)
6.00	PC1500	1	SWITCH, ROCKER (BACK-UP LIGHT)
7.00	PC1496	1	SWITCH, ROCKER (FOG LIGHT)
8.00	PC1945	1	SWITCH, ROCKER (MODE #2)
9.00	PC1944	1	SWITCH, ROCKER (MODE #1)
10.00	56906-61711	1	SWITCH, PANEL LIGHT DIMMER
11.00	SM2853	1	BRACKET
12.00	SM0926	2	SCREW - M6 X 1.00
13.00	MM0711	2	FLAT WASHER - M6 (HARDENED)
14.00	SM2709	4	SCREW, FLAT HEAD

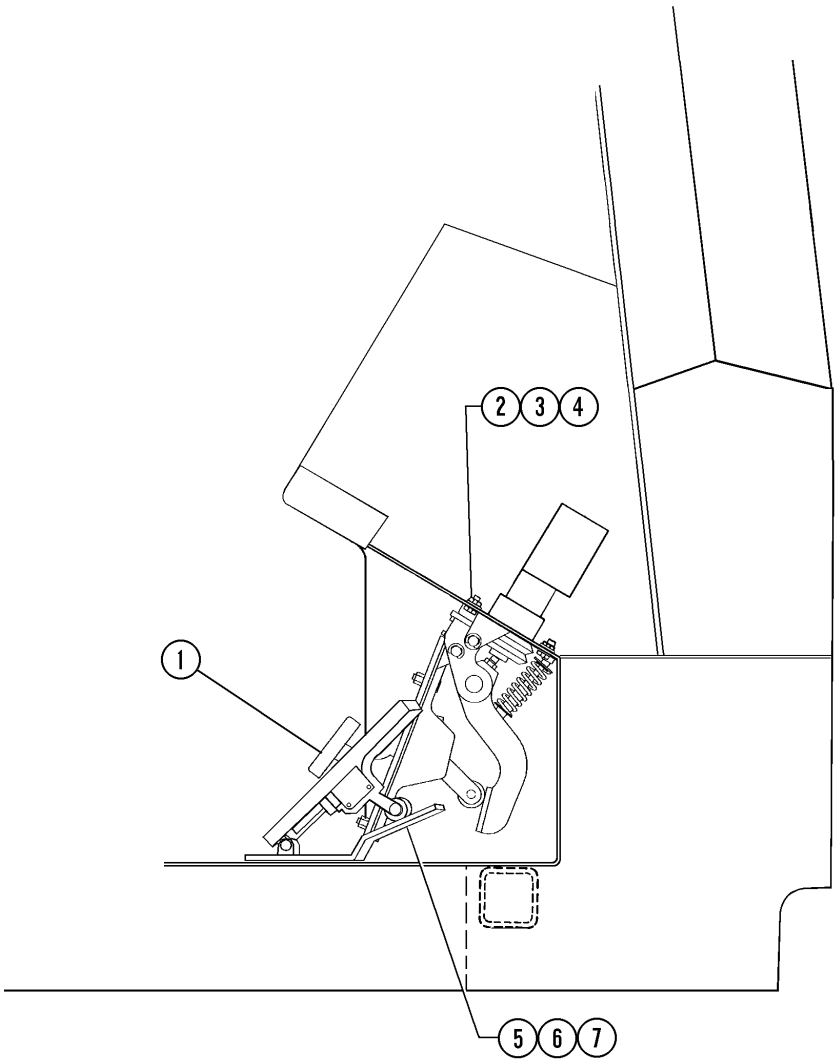

60119Z

REF.	PART NUM.	QTY.	DESCRIPTION
1.00	PC1955	1	BRAKE VALVE ASSEMBLY (SEE INDEX)
2.00	MM0594	4	CAPSCREW - M8 X 1.25 X 25
3.00	MM0470	4	LOCKWASHER - M8
4.00			(NOT USED THIS APPLICATION)
5.00	PB9506	1	ELECTRONIC THROTTLE ASSEMBLY (SEE INDEX)
6.00	MM0593	4	CAPSCREW - M8 X 1.25 X 20
7.00	01643-30823	4	FLAT WASHER - M8 (HARDENED)

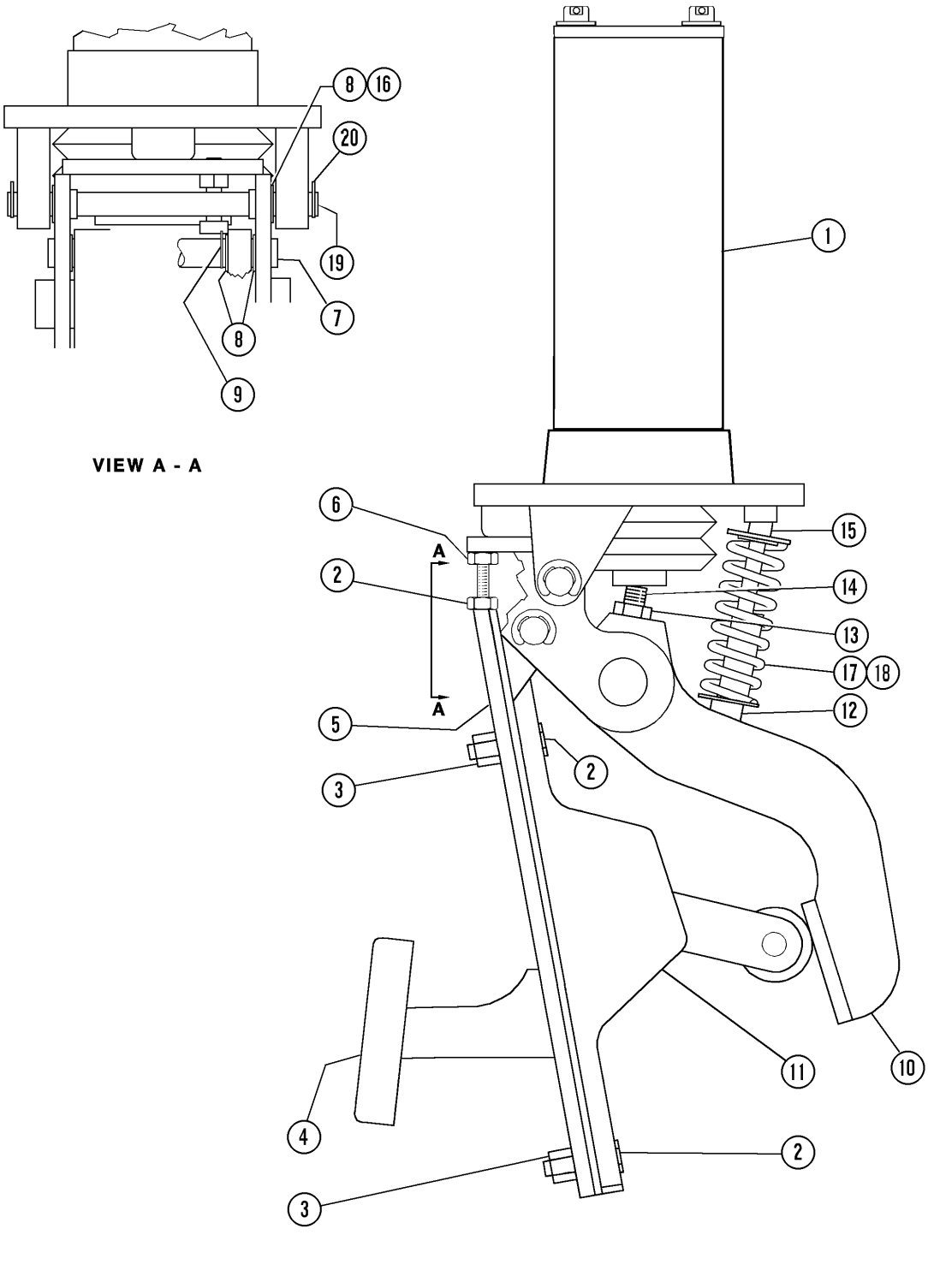
8
16
20
19
7
8
9
VIEW A - A
1
6
A
2
A
5
3
15
14
13
17
18
12
2
11
10
4
2
3
61159Z

REF.	PART NUM.	QTY.	DESCRIPTION
1.00	XA2704	1	VALVE SUB-ASSEMBLY (SEE INDEX)
2.00	BF2584	3	CAPSCREW
3.00	BF2588	2	NUT
4.00	BF2582	1	FOOT PAD, RUBBER
5.00	BF2587	1	PEDAL ASSEMBLY (ACTUATOR)
6.00	BF2585	1	NUT
7.00	XA3393	1	PIN, PEDAL
8.00	BF1858	6	BEARING, FLANGED (NYLON)
9.00	VE8835	2	RING, RETAINING
10.00	XA3392	1	PEDAL ASSEMBLY
11.00	XA3394	1	PEDAL ASSEMBLY (ELECTRONIC)
12.00		1	STOP, BOTTOM PIVOT (1)
13.00	VE8538	1	NUT
14.00	BF1854	1	BOLT
15.00		1	STOP, TOP PIVOT (1)
16.00	BF1857	AR	SHIM
17.00		1	SPRING, INNER (1)
18.00		1	SPRING, OUTER (1)
19.00	XA3389	1	PIN, ACTUATOR
20.00	XA3395	2	RING, RETAINING
KT	XA3458		NOTE: (1) INCLUDED IN XA3458 DUAL SPRING KIT.

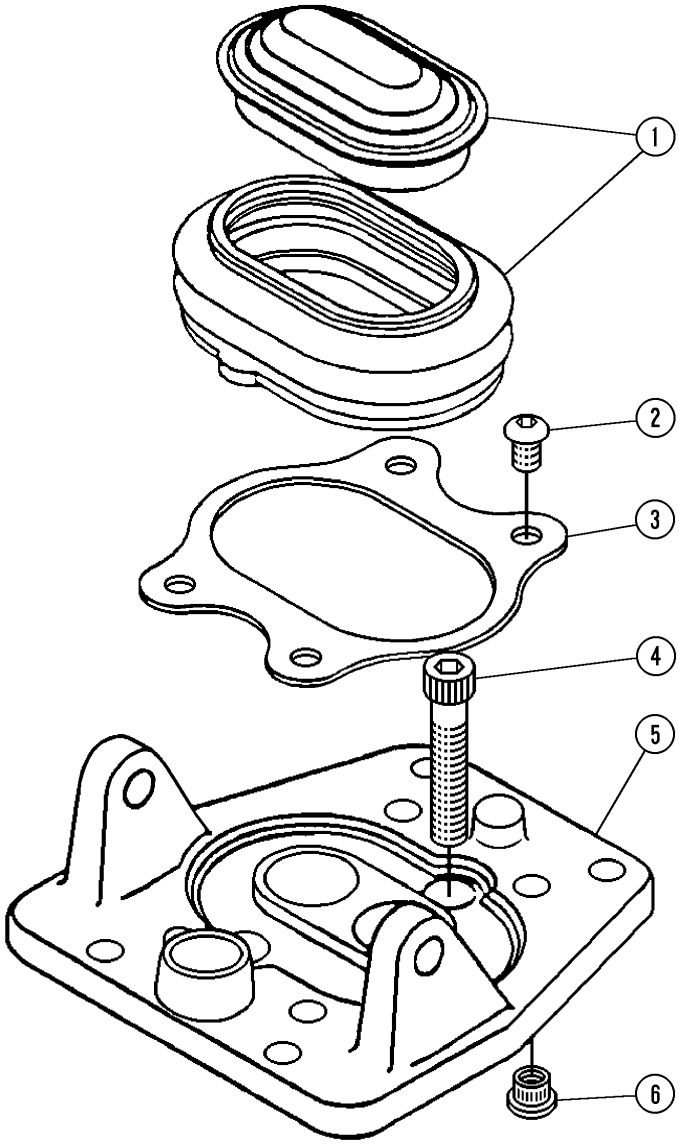

55112Z

REF.	PART NUM.	QTY.	DESCRIPTION
1.00	VE9420	1	BOOT/CAP ASSEMBLY
1.01	VE9411	1	BOOT (1)
1.02		1	CAP (2)
2.00	VE8544	4	SCREW
3.00	VE8545	1	PLATE, RETAINER
4.00	VE8546	2	SCREW
5.00	VE9419	1	BASE, ACTUATOR
6.00	VE8547	4	INSERT
KT	VE8530		NOTE: (1) INCLUDED IN VE8530 BOOT KIT.
			(2) NOT SERVICED SEPARATELY.

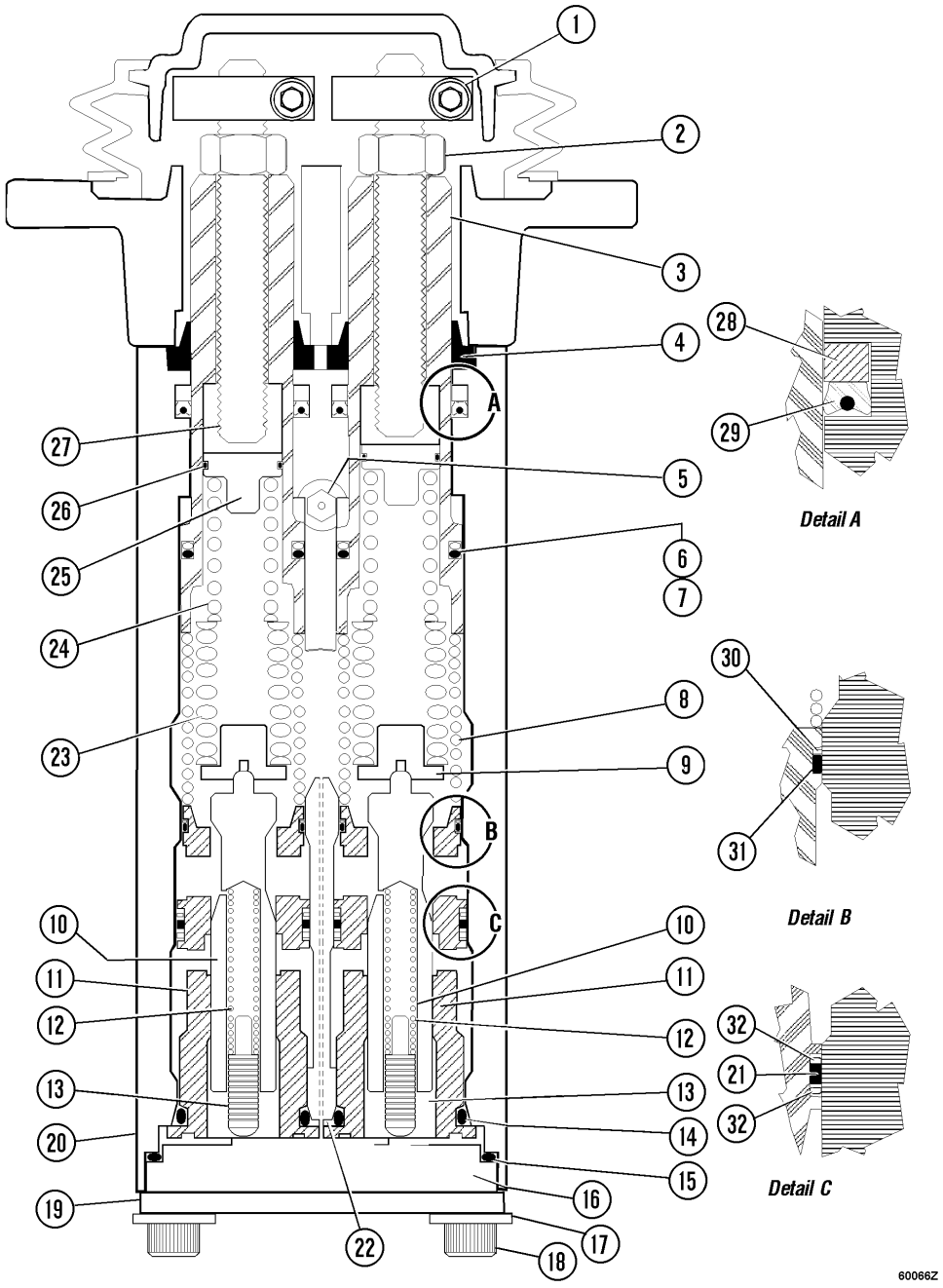
1
2
3
4
A
5
6
7
8
9
B
C
10
11
12
13
14
15
16
17
18
19
20
21
22
23
24
25
26
27
28
29
30
31
32
Detail A
Detail B
Detail C
60066Z

REF.	PART NUM.	QTY.	DESCRIPTION
1.00	VE8070	2	COLLAR
2.00	BF2596	2	NUT
3.00	BF2594	2	PLUNGER
4.00		2	SEAL, WIPER (1)
5.00	VE8533	1	SCREW
6.00	BF2595	6	PACKING
7.00	BF2598	2	RING, GLYD
8.00	VE9403	2	SPRING, PLUNGER RETURN (1)/(2)
9.00	BF2597	2	SEAT, SPRING (2)
10.00	EF5752	2	SPOOL, REGULATING
11.00		2	SLEEVE (1)
12.00	VE9401	2	SPRING, SPOOL (1)/(2)
13.00		2	PLUNGER (1)
14.00		2	SEAL (1)
15.00		1	PACKING (1)
16.00	VE9418	1	PLUG
17.00	C1546	4	FLAT WASHER - 1/4"
18.00		4	CAPSCREW (1)
19.00	VE9421	1	RETAINER, SLEEVE
20.00		1	BODY
21.00		2	SEAL (1)
22.00	EF3449	1	PLUG, ORIFICE - .045
23.00	VE8080	2	SPRING, REGULATOR (2)
24.00	BF2599	2	SPRING, REGULATOR (2)
25.00	BF2593	2	SEAT - STAGING (2)
26.00	BF2592	2	PACKING
27.00	BF2591	2	STUD
28.00		2	RING, BACKUP (1)
29.00		2	SEAL (1)
30.00		2	RING, BACKUP (1)
31.00	WA0019	2	O-RING
32.00		4	RING, BACKUP (1)
			NOTE: (1) NOT SERVICED SEPARATELY.
KT	AK5063		(2) INCLUDED IN AK5063 SPRING KIT.

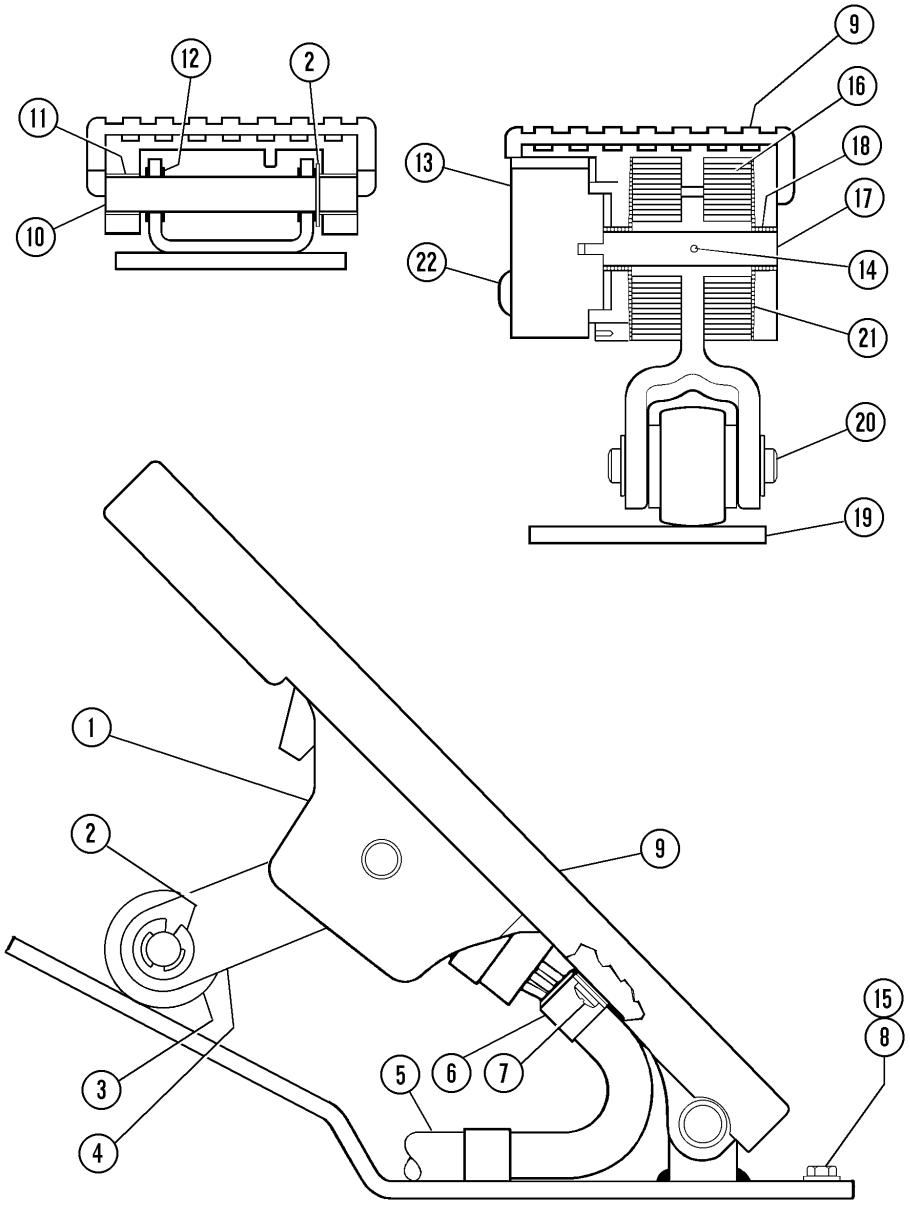

41060Z

REF.	PART NUM.	QTY.	DESCRIPTION
1.00	BF1493	1	PEDAL (4)
2.00	VJ4023	3	RING, RETAINING (1)/(2)/(4)
3.00	VE3517	1	ROLLER (2)/(4)
4.00	BF1494	1	LEVER, TREADLE (4)
5.00	VE7636	1	HARNESS, WIRE (3)/(4)
6.00	VE7634	2	CLAMP, WIRE (4)
7.00	VE4213	2	SCREW, PAN HEAD (3)/(4)
8.00	VC9049	4	CAPSCREW - 5/16" - 18NC X 5/8" (6)
9.00	BF1495	1	COVER
10.00		1	PIN, TREADLE (1)/(4)/(5)
11.00	VE3504	2	BUSHING (1)/(4)
12.00	VE3510	2	BUSHING (1)/(4)
13.00		1	SENSOR (4)/(5)
14.00	VE7551	1	PIN (4)
15.00	SC4174	4	LOCKWASHER - 5/16" (6)
16.00		2	SPRING (4)/(5)
17.00	BF1492	1	SHAFT, SENSOR (4)
18.00	VE7557	2	BUSHING (4)
19.00	BF1355	1	PLATE, BASE
20.00	VE7638	1	ROLLPIN (2)/(4)
21.00	VE7556	2	WASHER, THRUST (OUTER) (4)
22.00	VE3522	2	MACHINE SCREW (4)

KT	VE7549	NOTE: (1) INCLUDED IN VE7549 TREADLE PIN KIT.
KT	VE7561	(2) INCLUDED IN VE7561 ROLLER KIT.
KT	BF1497	(3) INCLUDED IN BF1497 SENSOR KIT.
KT	BF1498	(4) INCLUDED IN BF1498 UPPER SERVICE ASSEMBLY KT.
		(5) NOT SERVICED SEPARATELY.
		(6) NOT INCLUDED IN ASSEMBLY.

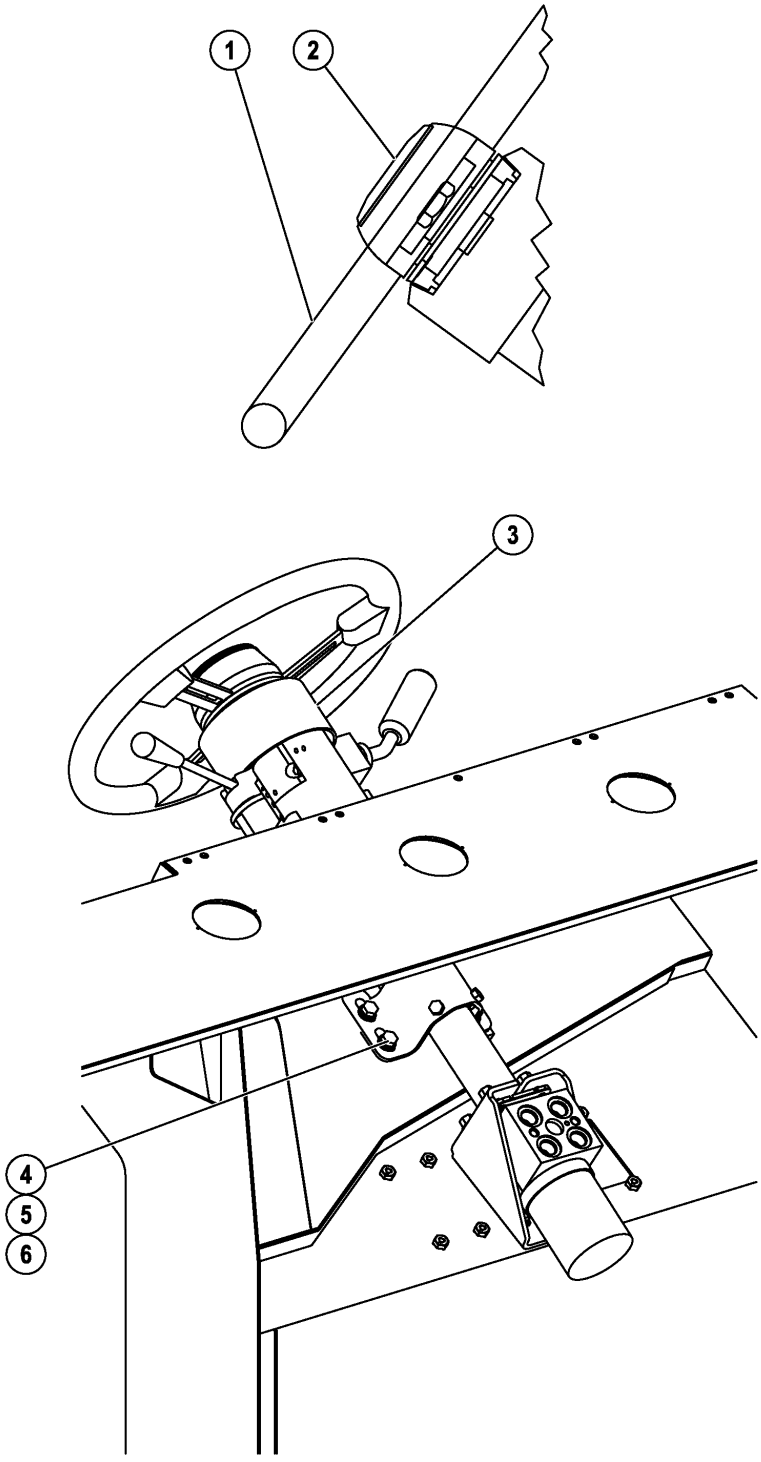

60756Z

REF.	PART NUM.	QTY.	DESCRIPTION
1.00	PC0683	1	STEERING WHEEL
2.00	PC1621	1	BUTTON, HORN
3.00	EK9210	1	STEERING COLUMN AND LEVER ASSEMBLY (SEE INDEX)
4.00	MM0604	4	CAPSCREW - M10 X 1.50 X 20
5.00	MM0713	8	FLAT WASHER - M10 (HARDENED)
6.00	MM0471	4	LOCKWASHER - M10
NS	EK9576	1	HARNESS, MULTI-FUNCTION SWITCH

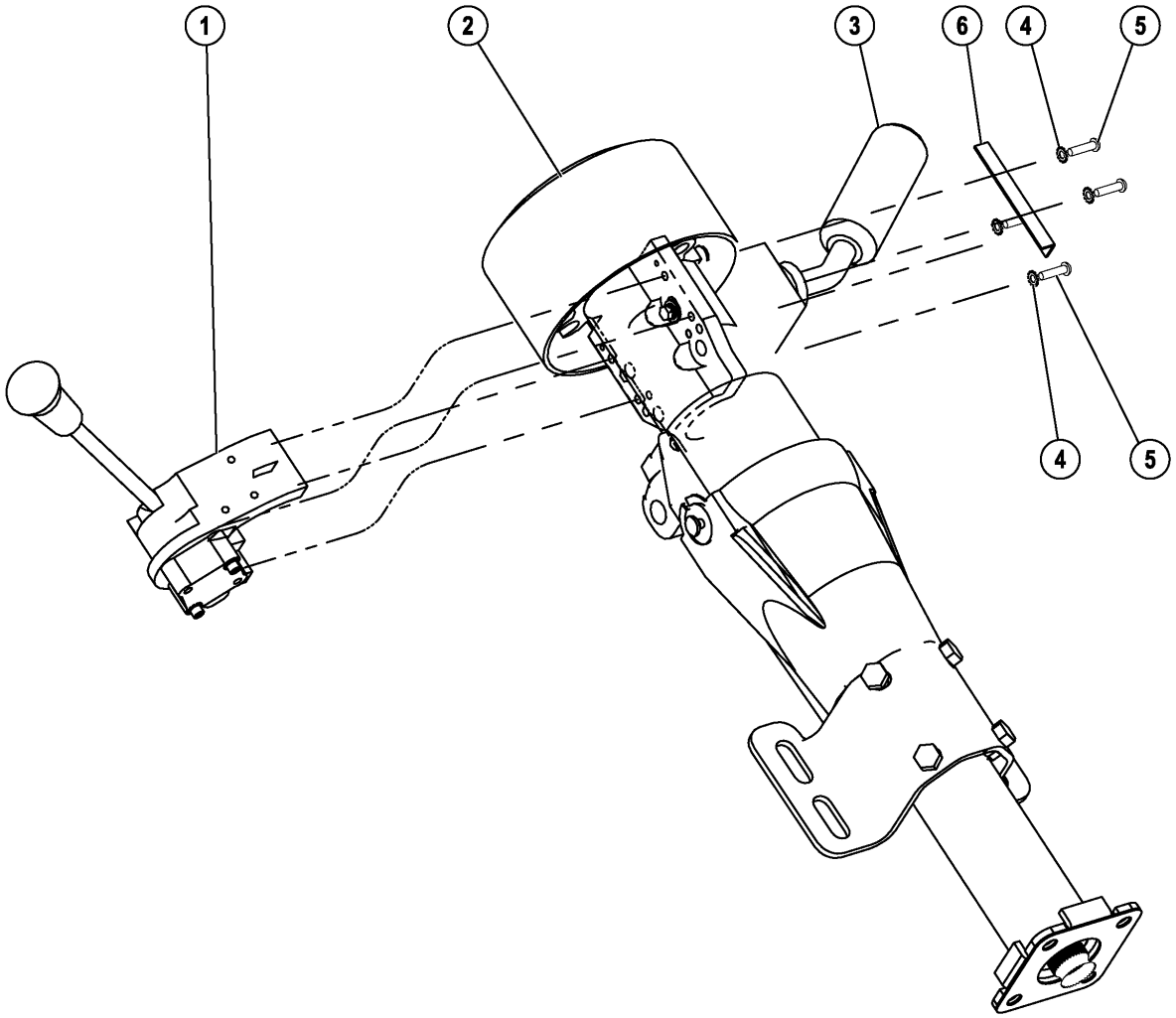
1
2
3
6
4
5
4
5
60755Z

REF.	PART NUM.	QTY.	DESCRIPTION
1.00	EK9211	1	RETARDER LEVER ASSEMBLY (SEE INDEX)
2.00	EK9197	1	STEERING COLUMN ASSEMBLY
2.01	PC1447	1	COLUMN, STEERING (SEE INDEX)
3.00	PC1709	1	MULTI-FUNCTION SWITCH ASSEMBLY
3.01	WB3105	2	FLAT WASHER - M7
3.02	WB3104	2	FLAT WASHER - M5
3.03	WB3103	2	LOCKWASHER - M5
3.04	WB3102	2	CAPSCREW - M5 X .8 X 25
3.05	08021-00400	1	CONNECTOR
3.06	VZ4843	1	TYRAP
4.00	R2634	4	LOCKWASHER - #10 (EXTERNAL TOOTH)
5.00	HD6007	4	MACHINE SCREW - #10 - 24NC X 3/4"
6.00	EK4275	1	ANGLE, FORMED
NS	SM6037	1	HARNESS, THROTTLE PEDAL
NS	VZ4843	1	TYRAP

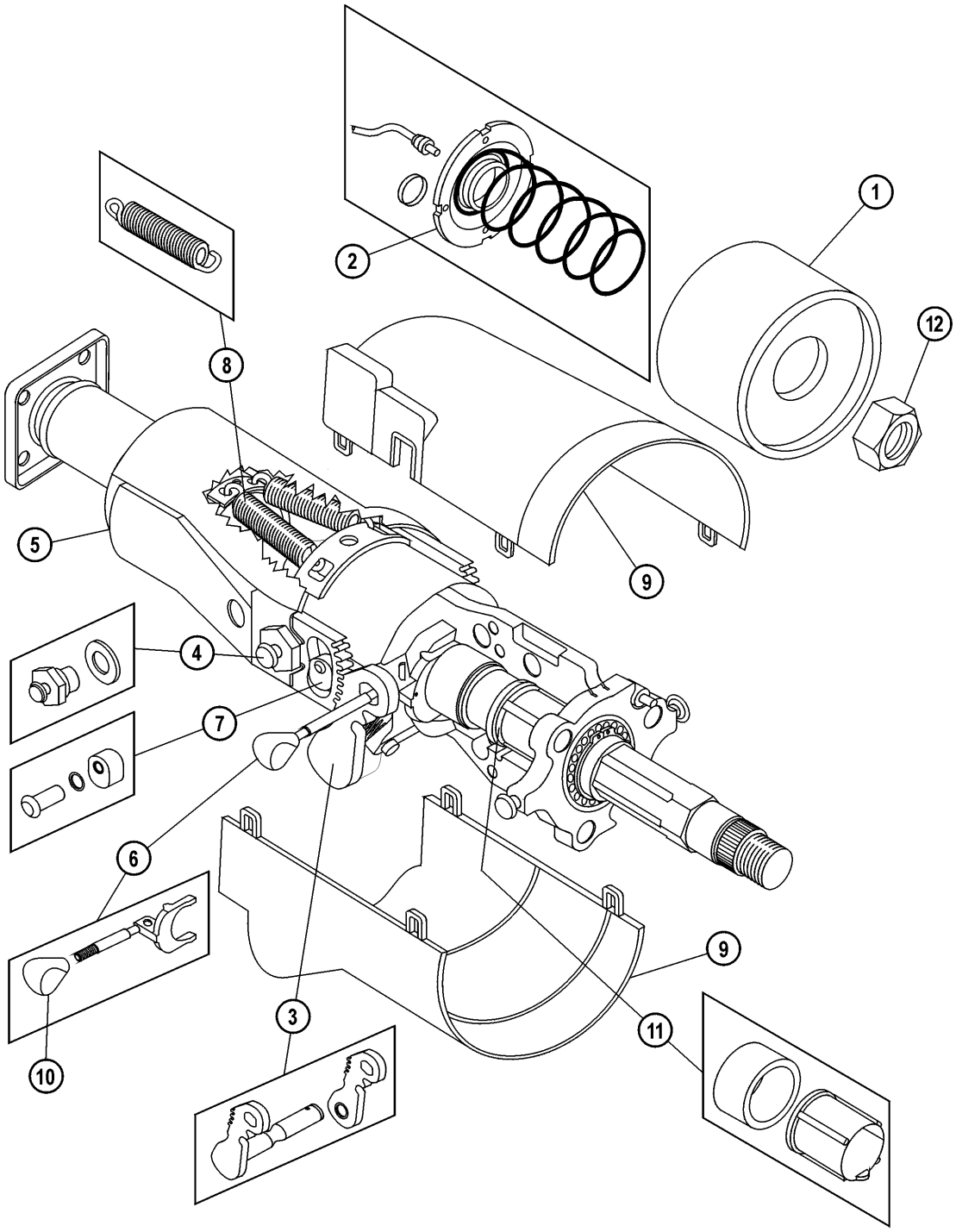

41730Z

REF.	PART NUM.	QTY.	DESCRIPTION
1.00	BF5167	1	KIT, GAP HIDER
2.00	BF5168	1	KIT, HORN BUSHING
3.00	BF5169	1	KIT, ROD AND PAWL
4.00	BF5170	1	KIT, TILT BOLT
5.00	VE4299	1	COVER
6.00	BF5171	1	KIT, TILT LEVER
7.00	BF2071	1	KIT, TILT STOP
8.00	BF5176	1	KIT, EXTENSION SPRING
9.00	BF5172	1	KIT, COVER (UPPER & LOWER)
10.00	BF5173	1	KIT, KNOB
11.00	BF5174	1	KIT, TELESCOPE LINK
12.00	BF5175	1	NUT
NS	VE4309	1	BRACKET, MOUNTING
NS	VE4310	2	CAPSCREW - 3/8" - 24NF
NS	VE4311	2	LOCKWASHER - 3/8"

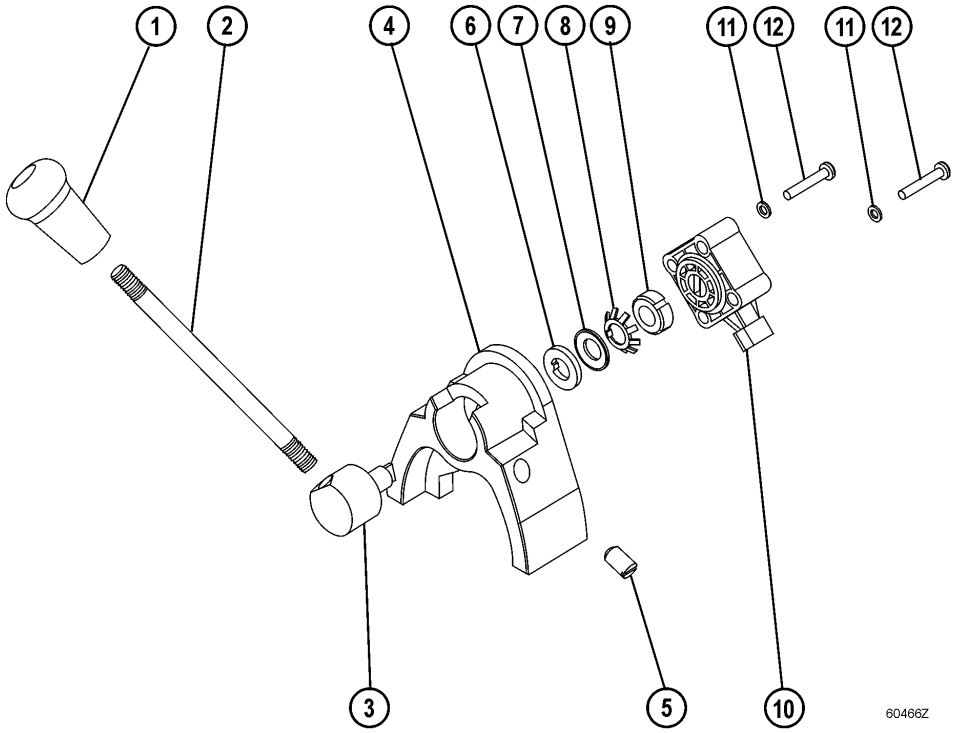
1
2
4
6
7
8
9
11
12
11
12
3
5
10
60466Z

REF.	PART NUM.	QTY.	DESCRIPTION
1.00	BF5631	1	KNOB
2.00	BF5626	1	LEVER, INPUT
3.00	BF5622	1	SHAFT, DRIVE
4.00	BF5621	1	HOUSING
5.00	BF5632	1	PLUNGER, BALL
6.00	BF5630	1	WASHER, TONGUED
7.00	XA2374	1	WASHER, SPRING
8.00	BF5627	1	LOCKWASHER
9.00	BF5629	1	LOCKNUT
10.00	XA2347	1	POTENTIOMETER
11.00	XA2349	2	LOCKWASHER
12.00	XA2348	2	SCREW, PAN HEAD

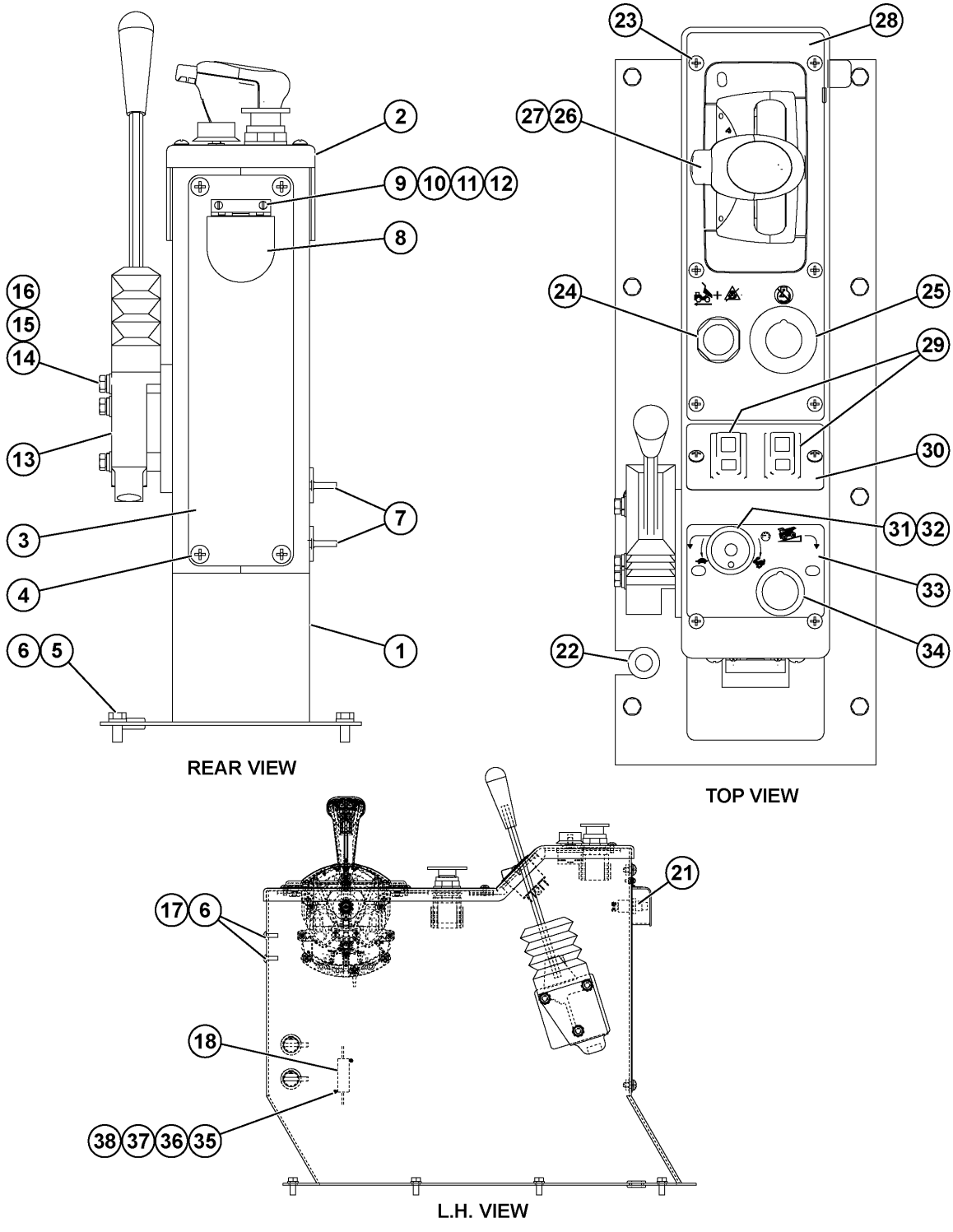
23
28
27
26
2
9
10
11
12
8
16
15
14
24
25
29
13
30
7
3
31
32
4
33
6
5
1
22
34
REAR VIEW
TOP VIEW
21
17
6
18
38
37
36
35
L.H. VIEW
61339Z

REF.	PART NUM.	QTY.	DESCRIPTION
1.00	EM5646	1	CONSOLE
2.00	EL4131	1	COVER, MOLDED (SHIFT CONSOLE)
3.00	EM6529	1	PLATE, DIAGNOSTIC
4.00	SM0926	4	SCREW - M6 X 1.00
5.00	MM0593	8	CAPSCREW - M8 X 1.25 X 20
6.00	MM0712	16	FLAT WASHER - M8 (HARDENED)
7.00	PC1374	2	OUTLET, AUXILIARY POWER
8.00	SM0628	1	COVER
9.00	DF4944	2	LOCKWASHER - #6
10.00	HE2467	2	MACHINE SCREW - #6 - 32NC X 1/2"
11.00	HE5125	2	FLAT WASHER - #6
12.00	DD2468	2	NUT - #6 - 32NC
13.00	PB6893	1	VALVE, CONTROL
14.00	SC4174	3	LOCKWASHER - 5/16"
15.00	TV0177	3	FLAT WASHER - 5/16"
16.00	WA3597	3	CAPSCREW - 5/16" - 18NC X 2 1/4"
17.00	SM5115	8	CAPSCREW, INTERNAL HEX - M8 X 1.25
18.00	EM5648	1	RESISTOR
21.00	PB8624	1	SWITCH, PUSH BUTTON (DATA STORE)
22.00	TF7982	1	GROMMET, RUBBER
23.00	WA4605	8	SCREW - #10 - 24NC X 1/2"
24.00	PC1377	1	BUTTON, PUSH (OVERRIDE/FAULT RESET)
25.00	PC1375	1	BUTTON, PUSH-PULL (ENGINE SHUTDOWN)
26.00	PC1817	1	LEVER, GEAR SELECTOR
27.00	31127R1	4	CAPSCREW - M6 X 1.00 X 12 (UNDER MOLDED COVER)
28.00	EL2721	1	DECAL, SHIFT CONSOLE - FORWARD
29.00	PC0490	2	SWITCH, ROCKER (ELECTRIC WINDOW)
30.00	EL2723	1	DECAL, SHIFT CONSOLE - MIDDLE
31.00	ED2863	1	POTENTIOMETER (RETARD SPEED CONTROL)
32.00	PB5957	1	KNOB
33.00	EL2722	1	DECAL, SHIFT CONSOLE - REAR
34.00	PC1376	1	BUTTON, PUSH-PULL (RETARD SPEED CONTROL)
35.00	VG1621	2	MACHINE SCREW - #4 - 40NC
36.00	VN9708	2	NUT - #4 - 40NC
37.00	VD7129	2	LOCKWASHER - #4
38.00	VN9762	4	FLAT WASHER - #4

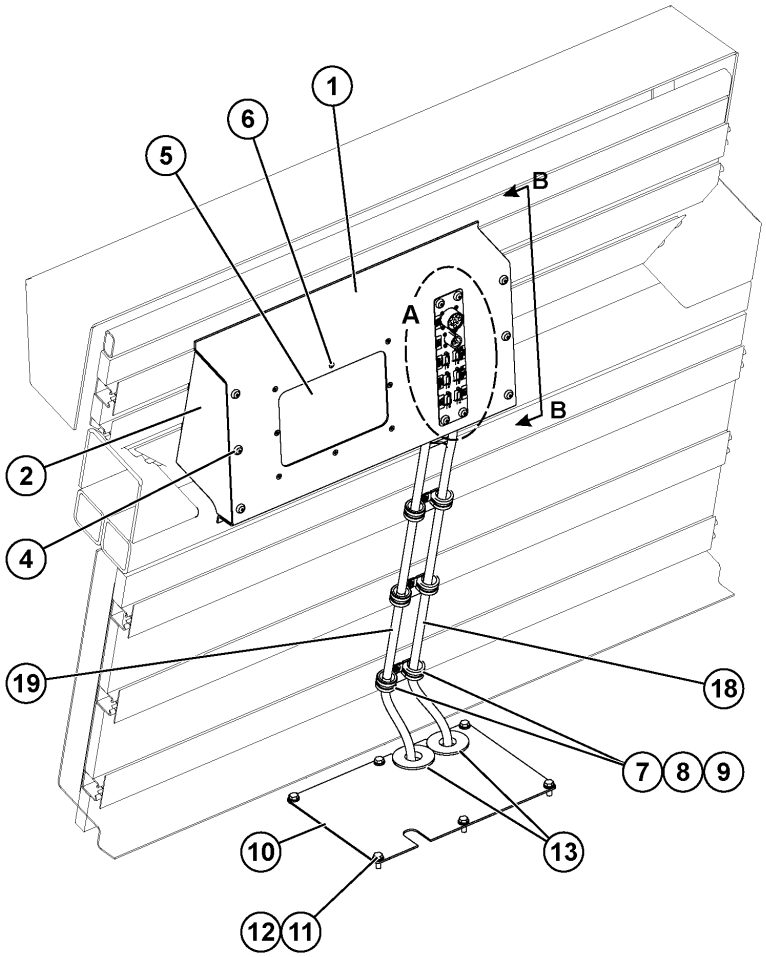

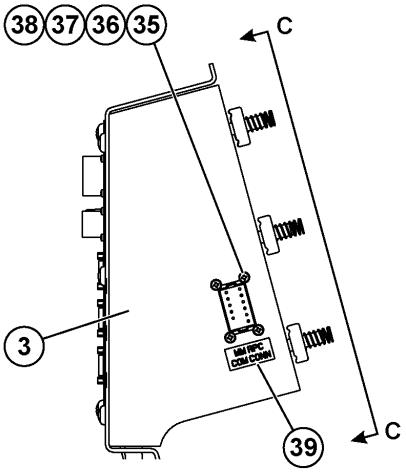

VIEW B - B

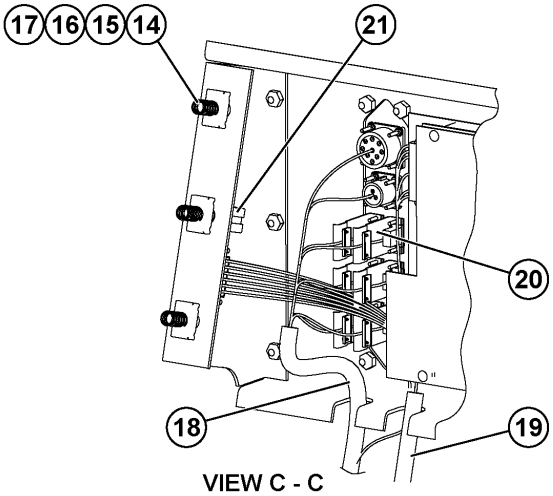

VIEW C - C

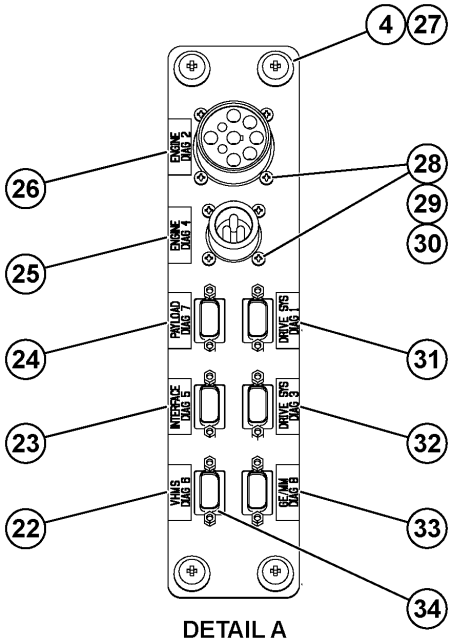

DETAIL A

61356Z

REF.	PART NUM.	QTY.	DESCRIPTION
1.00	EM4640	1	PLATE, BENT (D.I.D. PANEL MOUNTING)
2.00	SM4274	1	PLATE, SIDE - R.H.
3.00	EM4642	1	PLATE, SIDE - L.H.
4.00	PB9829	10	SCREW - M6 X 1.00
5.00	PB9785	1	PANEL, DIAGNOSTIC INFORMATION DISPLAY (D.I.D.)
6.00	PB9828	6	SCREW, FLAT HEAD - #10 - 32NF X 7/8"
7.00	WB3093	6	CLAMP, CUSHIONED - 1"
8.00	WA4513	3	SCREW, SELF-TAPPING - #10 - 24NC X 1/2"
9.00	DF3445	3	FLAT WASHER - #12
10.00	EM4638	1	PLATE, COVER
11.00	MM0593	6	CAPSCREW - M8 X 1.25 X 20
12.00	01643-30823	6	FLAT WASHER - M8 (HARDENED)
13.00	VP3271	2	GROMMET
14.00	TC1231	6	LOCKWASHER - 3/8"
15.00	VC8762	6	CAPSCREW - 3/8" - 16NC X 1 1/2"
16.00	TR4436	6	FLAT WASHER - 3/8"
17.00	SM5049	6	NUT, SPRING - 3/8" - 16NC
18.00	EM6530	1	HARNESS, ENGINE/CAB DIAGNOSTIC
19.00	EM6531	1	HARNESS, CAB DASH
20.00	PB8334	5	CLAMP, STRAIN RELIEF
21.00	WB3098	1	CLAMP, CUSHIONED - 3/8"
22.00	WB3120	1	NAME PLATE - VHMS DIAG 6
23.00	WB3117	1	NAME PLATE - INTERFACE DIAG 5
24.00	WB3118	1	NAME PLATE - PAYLOAD DIAG 7
25.00	WB3115	1	NAME PLATE - ENGINE DIAG 4
26.00	WB3114	1	NAME PLATE - ENGINE DIAG 2
27.00	EL4141	1	PLATE, DIAGNOSTIC
28.00	MM0376	8	LOCKWASHER - M3 (EXTERNAL TOOTH)
29.00	MM0370	8	NUT - M3
30.00	MM0331	8	MACHINE SCREW - M3 X .5 X 20
31.00	WB3116	1	NAME PLATE - DRIVE SYS DIAG 1
32.00	WB3119	1	NAME PLATE - DRIVE SYS DIAG 3
33.00	PB8256	6	SCREW LOCK, FEMALE
34.00	WB3314	1	NAME PLATE - GE/MM DIAG 8
35.00	MM0459	4	FLAT WASHER - M6
36.00	MM0372	4	NUT - M4 X 0.7
37.00	MM0378	4	LOCKWASHER - M4 (EXTERNAL TOOTH)
38.00	MM0345	4	MACHINE SCREW - M4 X .7 X 8
39.00	WB3415	1	DECAL, MM RPC COM CONN

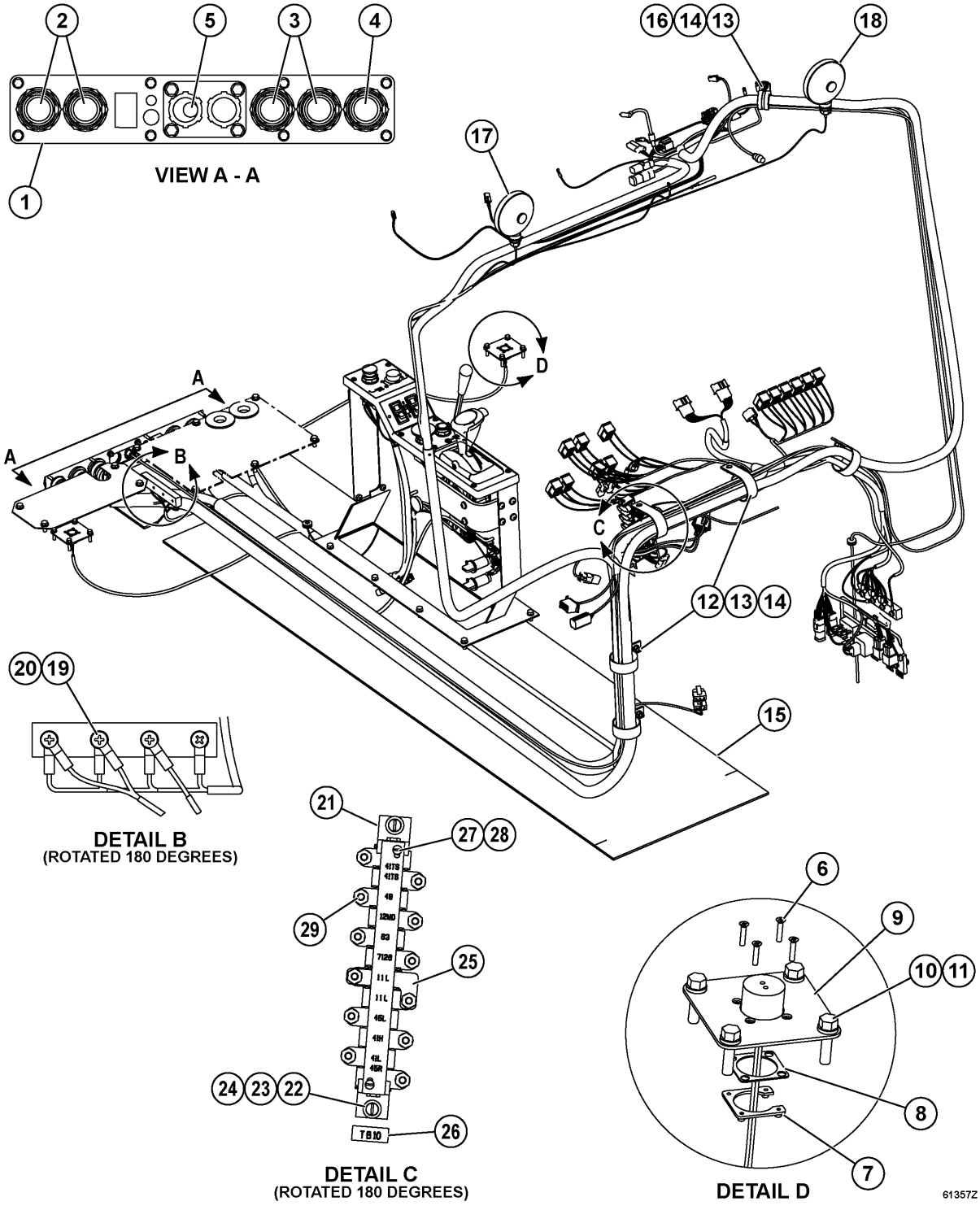
2
5
3
4
1
VIEW A - A
16
14
13
18
17
A
A
B
D
C
12
13
14
15
20
19
DETAIL B
(ROTATED 180 DEGREES)
21
27
28
29
25
24
23
22
26
T810
DETAIL C
(ROTATED 180 DEGREES)
6
9
10
11
8
7
DETAIL D
61357Z

REF.	PART NUM.	QTY.	DESCRIPTION
1.00	EM5649	1	PLATE, CONNECTOR MOUNTING (SEE FIG 61351)
2.00	EM6530	1	HARNESS, ENGINE/CAB DIAGNOSTIC
3.00	EM6531	1	HARNESS, CAB DASH
4.00	EM6532	1	HARNESS, CAB OVERHEAD
5.00	PC1963	1	HARNESS, ORBCOMM - 20 FT.
6.00	WA5642	8	MACHINE SCREW - #4 - 40NC X 1/2"
7.00	SM2117	2	PLATE, NUT CONNECTOR
8.00	SM0721	2	GASKET
9.00	SM2192	2	PLATE, HARNESS MOUNTING
10.00	MM0027	16	CAPSCREW - M6 X 1.00 X 25
11.00	MM0469	16	LOCKWASHER - M6
12.00	VC7674	5	CLAMP, VINYL - 2 7/16" I.D.
13.00	MM0460	7	FLAT WASHER - M8
14.00	MM0177	7	NUT - M8 X 1.25
15.00	EK4010	1	MAT, PROTECTIVE RUBBER
16.00	WB3096	2	CLAMP, CUSHIONED - 1 1/4"
17.00	PB8205	1	LIGHT, BRAKE
17.01	PB8211	1	LENS, RED
17.02	VZ1912	1	BULB
18.00	PB8206	1	LIGHT, RETARD
18.01	PB8207	1	LENS, AMBER
18.02	VZ1912	1	BULB
19.00	MM0357	4	MACHINE SCREW - M6 X 1.00 X 12
20.00	MM0459	4	FLAT WASHER - M6
21.00	VS8192	1	TERMINAL BOARD (SEE FIG 64070A)
22.00	TG1929	2	MACHINE SCREW - #10 - 24NC X 1/2"
23.00	DC3101	2	LOCKWASHER - #10
24.00	VC5344	2	FLAT WASHER - #10
25.00	EB7418	2	BAR, BUS
26.00	WB0820	1	NAME PLATE - TB10
27.00	WB3414	1	STRIP, CIRCUIT ID
28.00	VM2951	2	SCREW, SELF-TAPPING - #6 - 32NC X 5/16"
29.00	WA3367	12	NUT ASSEMBLY

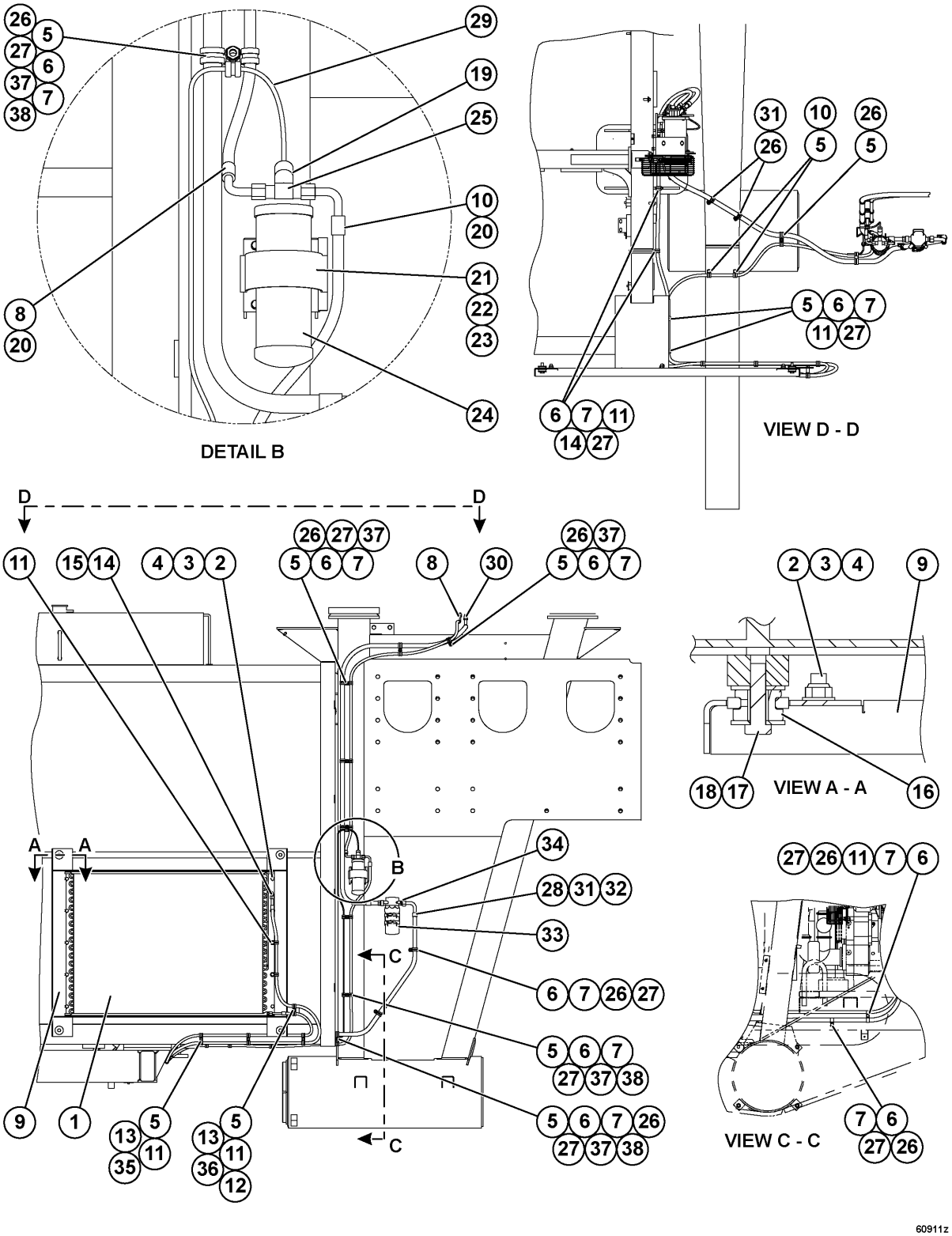
DETAIL B
VIEW D - D
VIEW A - A
VIEW C - C
60911z

REF.	PART NUM.	QTY.	DESCRIPTION
1.00	EK8720	1	CONDENSER
2.00	C1613	12	CAPSCREW - 1/2" - 13NC X 1 1/4"
3.00	WA4728	24	FLAT WASHER - 1/2" (HARDENED)
4.00	DF3500	12	LOCKNUT - 1/2" - 13NC
5.00	WB1300	17	CLAMP, CUSHIONED - 5/8"
6.00	MM0461	16	FLAT WASHER - M10
7.00	MM0178	16	NUT - M10 X 1.50
8.00	HA8272	1	HOSE (TO CAB OUTLET)
9.00	EK8761	1	MOUNT, CONDENSER
10.00	HA8215	1	HOSE (FROM CONDENSER)
11.00	WB3091	9	CLAMP, CUSHIONED - 11/16"
12.00	C1605	1	CAPSCREW - 3/8" - 16NC X 1 3/4"
13.00	TR4436	4	FLAT WASHER - 3/8"
14.00	HA8270	1	HOSE (FROM COMPRESSOR)
15.00	WA1732	1	O-RING
16.00	VY9850	4	MOUNT, RUBBER
17.00	C1616	4	CAPSCREW - 1/2" - 13NC X 2"
18.00	DA0557	8	WASHER (SPECIAL)
19.00	PC1804	1	SWITCH, PRESSURE
20.00	WA1731	4	O-RING
21.00	PC1341	1	BRACKET, DRIER
22.00	MM0027	4	CAPSCREW - M6 X 1.00 X 25
23.00	MM0459	4	FLAT WASHER - M6
24.00	PB8689	1	DRIER, RECEIVER
25.00	PB7619	1	ADAPTER
26.00	WB3093	13	CLAMP, CUSHIONED - 1"
27.00	MM0471	15	LOCKWASHER - M10
28.00	WA1733	1	O-RING
29.00	EH5046	1	HARNESS, A/C COMPRESSOR JUMPER
30.00	HA8216	1	HOSE (TO ACCUMULATOR)
31.00	HA8214	1	HOSE (TO COMPRESSOR)
32.00	WB1027	2	O-RING
33.00	PC1830	1	ACCUMULATOR
34.00	20D0911130	2	CLAMP
35.00	C1521	3	NUT - 3/8" - 16NC
36.00	892124C1	1	SPACER
37.00	TY8375	8	SPACER
38.00	WB3097	4	CLAMP, CUSHIONED - 1/2"

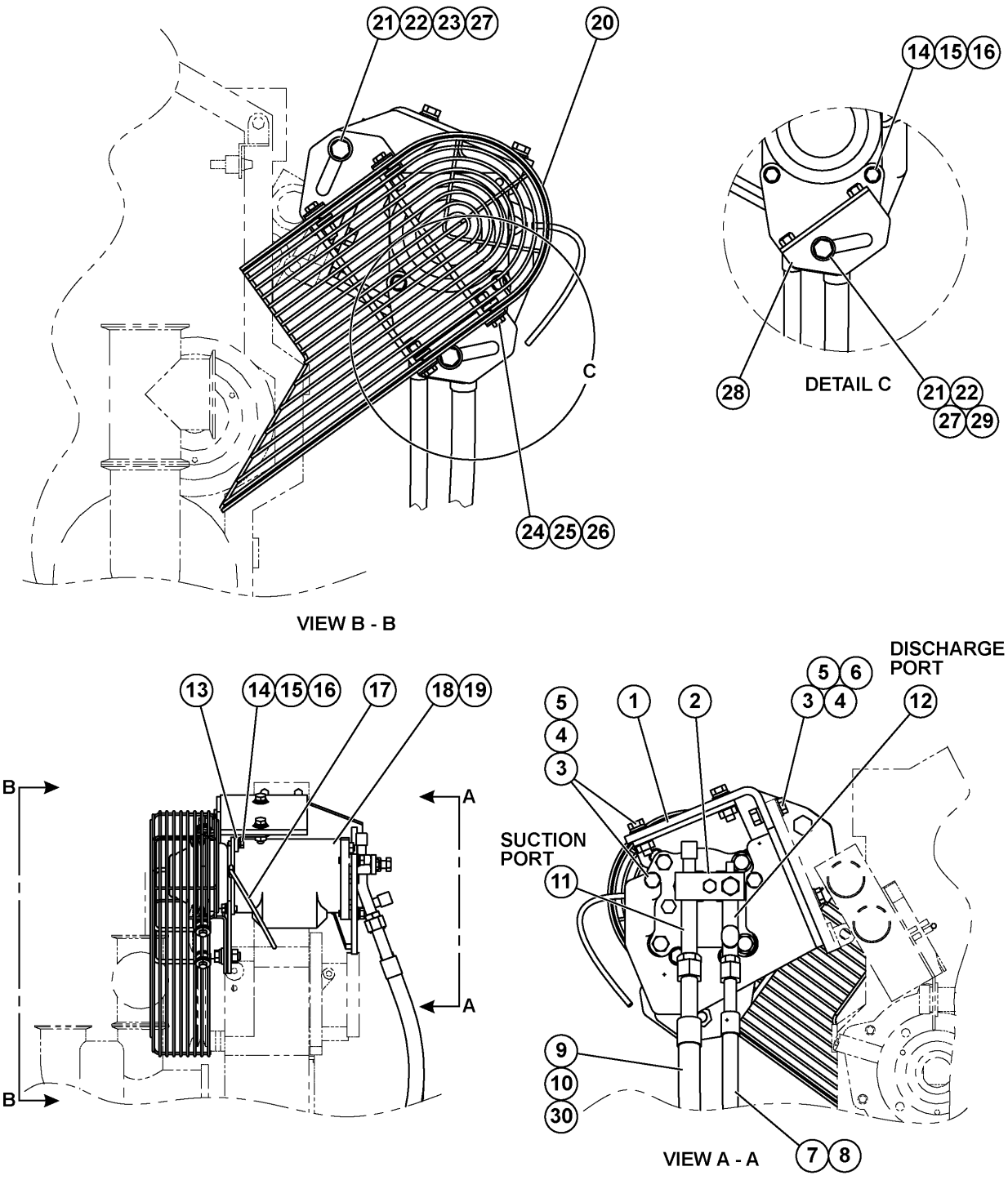
21
22
23
27
20
14
15
16
C
28
DETAIL C
21
22
27
29
24
25
26
VIEW B - B
13
14
15
16
17
18
19
B
A
A
B
DISCHARGE PORT
5
6
3
4
12
5
4
3
1
2
SUCTION PORT
11
9
10
30
VIEW A - A
7
8
90912Z

REF.	PART NUM.	QTY.	DESCRIPTION
1.00	EL0839	1	MOUNT, AIR CONDITIONER GUARD
2.00	EJ1087	1	HOLD-DOWN, ADJUSTABLE (SEE INDEX)
3.00	MM0607	10	CAPSCREW - M10 X 1.50 X 35
4.00	MM0461	10	FLAT WASHER - M10
5.00	MM0471	10	LOCKWASHER - M10
6.00	MM0178	4	NUT - M10 X 1.50
7.00	HA8270	1	HOSE (TO CONDENSER)
8.00	WA1732	1	O-RING
9.00	HA8214	1	HOSE (FROM ACCUMULATOR)
10.00	WA1733	1	O-RING
11.00	PC1831	1	FITTING ASSEMBLY, A/C COMPRESSOR (SUCTION PORT)
12.00	PB9152	1	FITTING ASSEMBLY, A/C COMPRESSOR (DISCHARGE PORT)
13.00	EH3653	1	BRACKET
14.00	MM0593	4	CAPSCREW - M8 X 1.25 X 20
15.00	MM0460	4	FLAT WASHER - M8
16.00	MM0470	4	LOCKWASHER - M8
17.00	EH5046	1	HARNESS, A/C COMPRESSOR JUMPER
18.00	PC1816	1	COMPRESSOR, A/C (SEE INDEX)
19.00	PC1400	1	V-BELTS (MATCHED SET)
20.00	EK9927	1	GUARD, A/C BELT
21.00	MM0472	2	LOCKWASHER - M12
22.00	MM0714	2	FLAT WASHER - M12 (HARDENED)
23.00	EK2557	1	BRACKET, MOUNTING
24.00	PC1119	8	WASHER, RUBBER
25.00	C1547	4	FLAT WASHER - 3/8"
26.00	C1603	4	CAPSCREW - 3/8" - 16NC X 1 1/4"
27.00	MM0619	2	CAPSCREW - M12 X 1.75 X 35
28.00	EK2559	1	BRACKET, MOUNTING
29.00	EK2558	1	PLATE, BENT
30.00	WB1027	1	O-RING

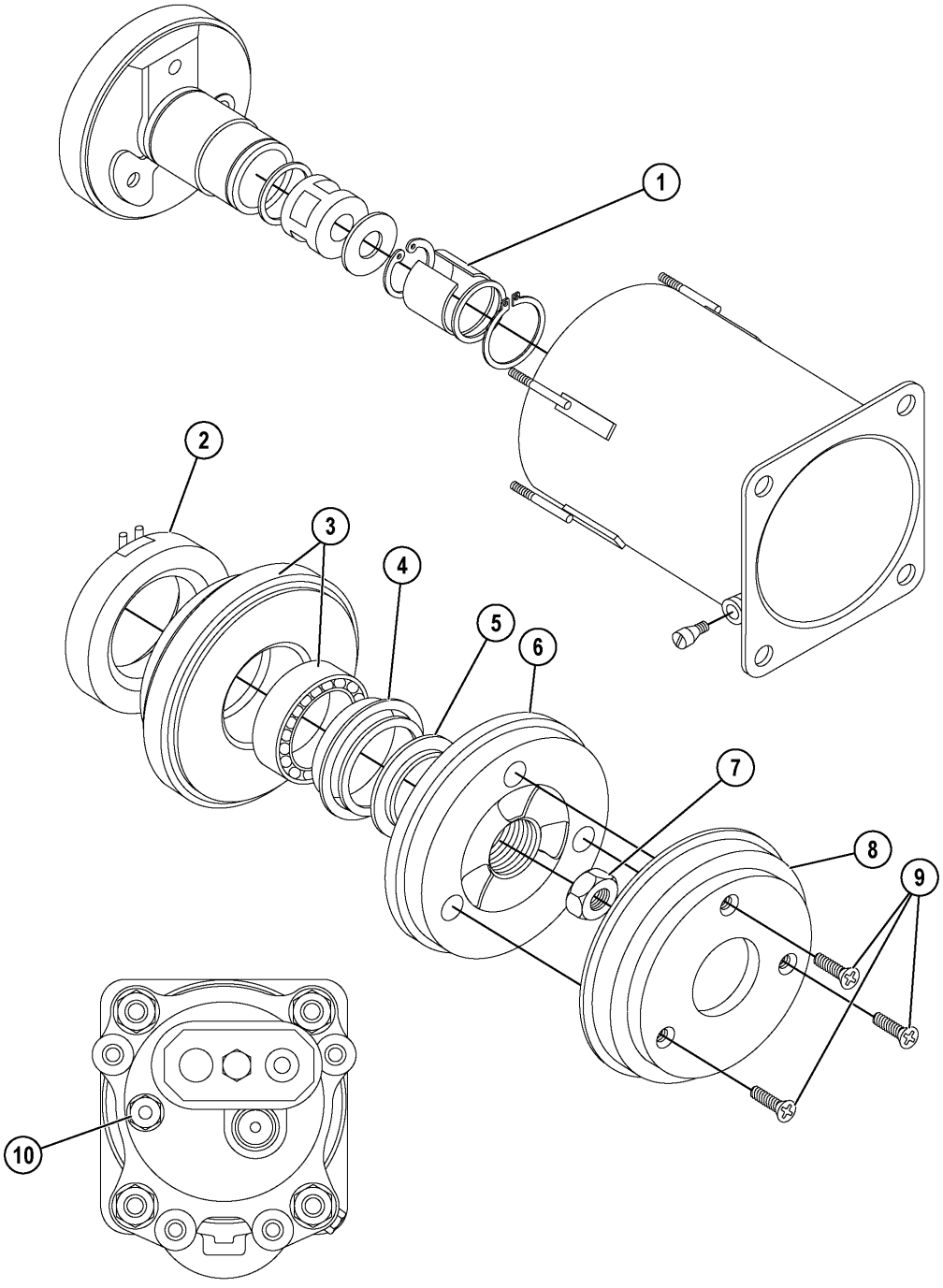

REAR VIEW OF COMPRESSOR

55781Z

REF.	PART NUM.	QTY.	DESCRIPTION
1.00		1	SLEEVE, SEAL (1) (2)
2.00		1	CLUTCH COIL (1)
3.00		1	PULLEY & BEARING (1)/(3)/(6)/(8)
4.00		1	SEAL, RETAINER (1) (2)
5.00		1	SEAL, BEARING (1)/(2)
6.00		1	CLUTCH DRIVE W/ KEY (1)/(3)/(5)
7.00		1	SHAFT LOCK NUT (1)/(3)/(5)/(6)
8.00		1	DUST COVER (1)/(7)
9.00		3	MACHINE SCREW (1)/(7)
10.00		1	HIGH PRESSURE RELIEF VALVE & O-RING (1)/(4)
NS		1	SEAL, BEARING (1)/(2)
NS		1	O-RING (1)/(2)
NS		1	RETAINING RING - COIL (1) (3)
NS	PC2212	2	OIL, REFRIGERANT - 8 OZ.

NOTE: (1) NOT SERVICED SEPARATELY.
(2) INCLUDED IN XA3357 SEAL KIT.
(3) INCLUDED IN XA3363 CLUTCH & PULLEY KIT.
(4) INCLUDED IN XA3351 HIGH PRESSURE RELIEF VALVE & O-RING KIT.
(5) INCLUDED IN XA3360 CLUTCH DRIVER KIT.
(6) INCLUDED IN XA3376 PULLEY & BEARING KIT.
(7) INCLUDED IN XA3364 DUST COVER KIT.
(8) REPLACEMENT OF THIS COMPONENT REQUIRES PURCHASE OF XA3357 SEAL KIT.

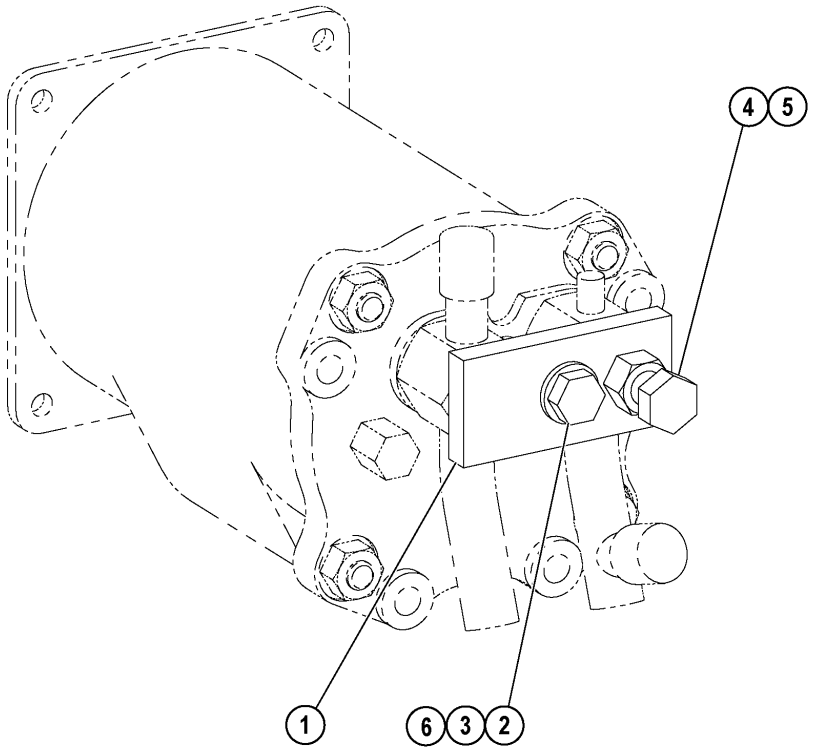

50388Z

REF.	PART NUM.	QTY.	DESCRIPTION
1.00	EJ1068	1	PLATE W/ HOLES
2.00	MM0611	1	CAPSCREW - M10 X 1.50 X 60
3.00	MM0713	1	FLAT WASHER - M10 (HARDENED)
4.00	MM0618	1	CAPSCREW - M12 X 1.75 X 30
5.00	MM0179	1	NUT - M12 X 1.75
6.00	MM0471	1	LOCKWASHER - M10

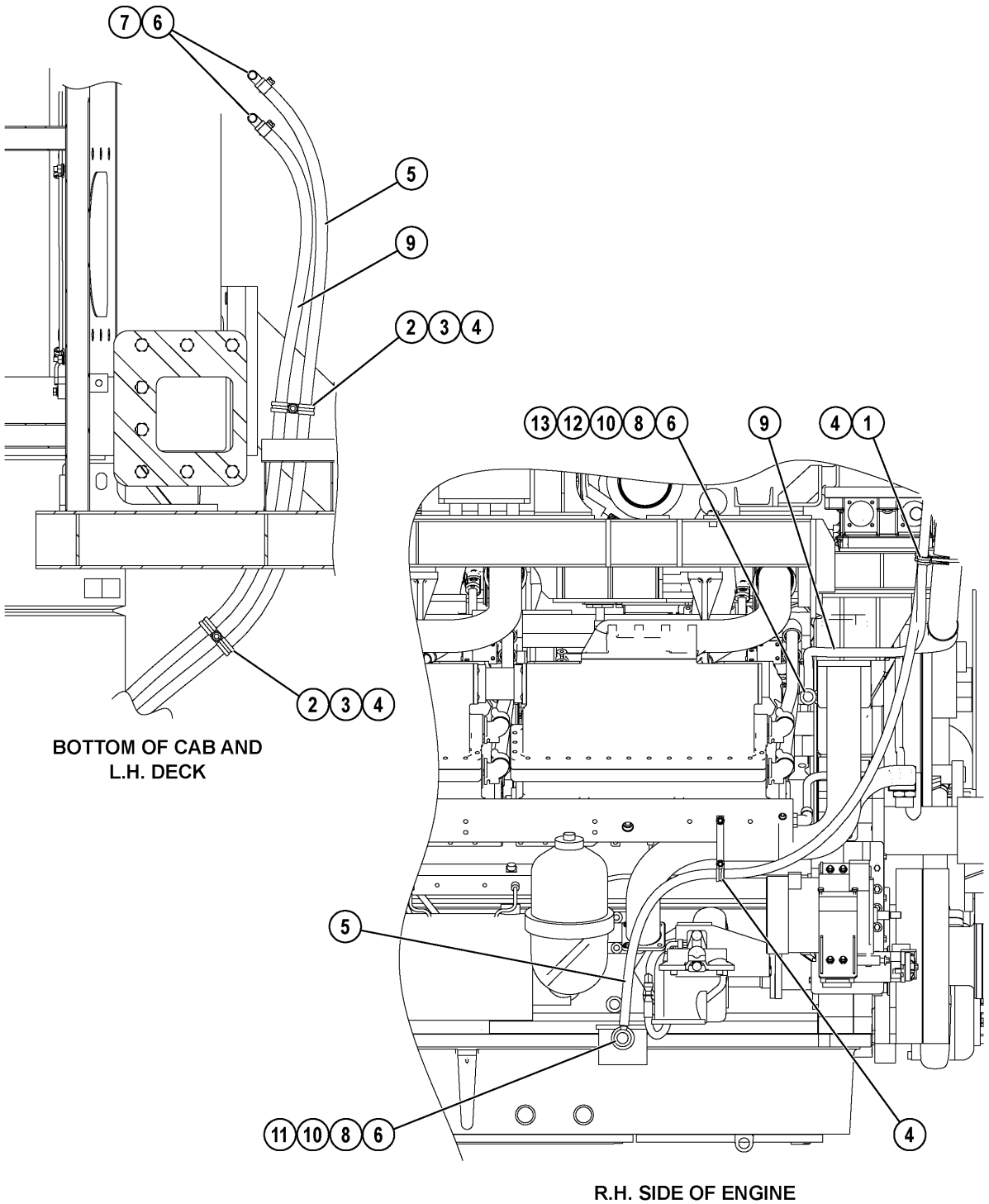
7
6
5
9
2
3
4
2
3
4
BOTTOM OF CAB AND
L.H. DECK
13
12
10
8
6
9
4
1
5
11
10
8
6
4
R.H. SIDE OF ENGINE
60944Z

REF.	PART NUM.	QTY.	DESCRIPTION
1.00	WA2237	2	CLAMP
2.00	MM0461	6	FLAT WASHER - M10
3.00	MM0178	6	NUT - M10 X 1.50
4.00	WB3093	17	CLAMP, CUSHIONED - 1"
5.00	EL0128	1	HOSE, HEATER (RETURN)
6.00	HC0908	4	CLAMP, WORM DRIVE
7.00	TV2642	2	ELBOW
8.00	VN6280	2	VALVE, SHUT-OFF
9.00	EL0129	1	HOSE, HEATER (SUPPLY)
10.00	SD5209	2	BUSHING, PIPE - 3/4" X 5/8"
11.00	WB1192	1	ADAPTER
12.00	WB1063	1	ADAPTER, METRIC - 90 DEG
13.00	WB1141	1	ADAPTER, PIPE TO JIC

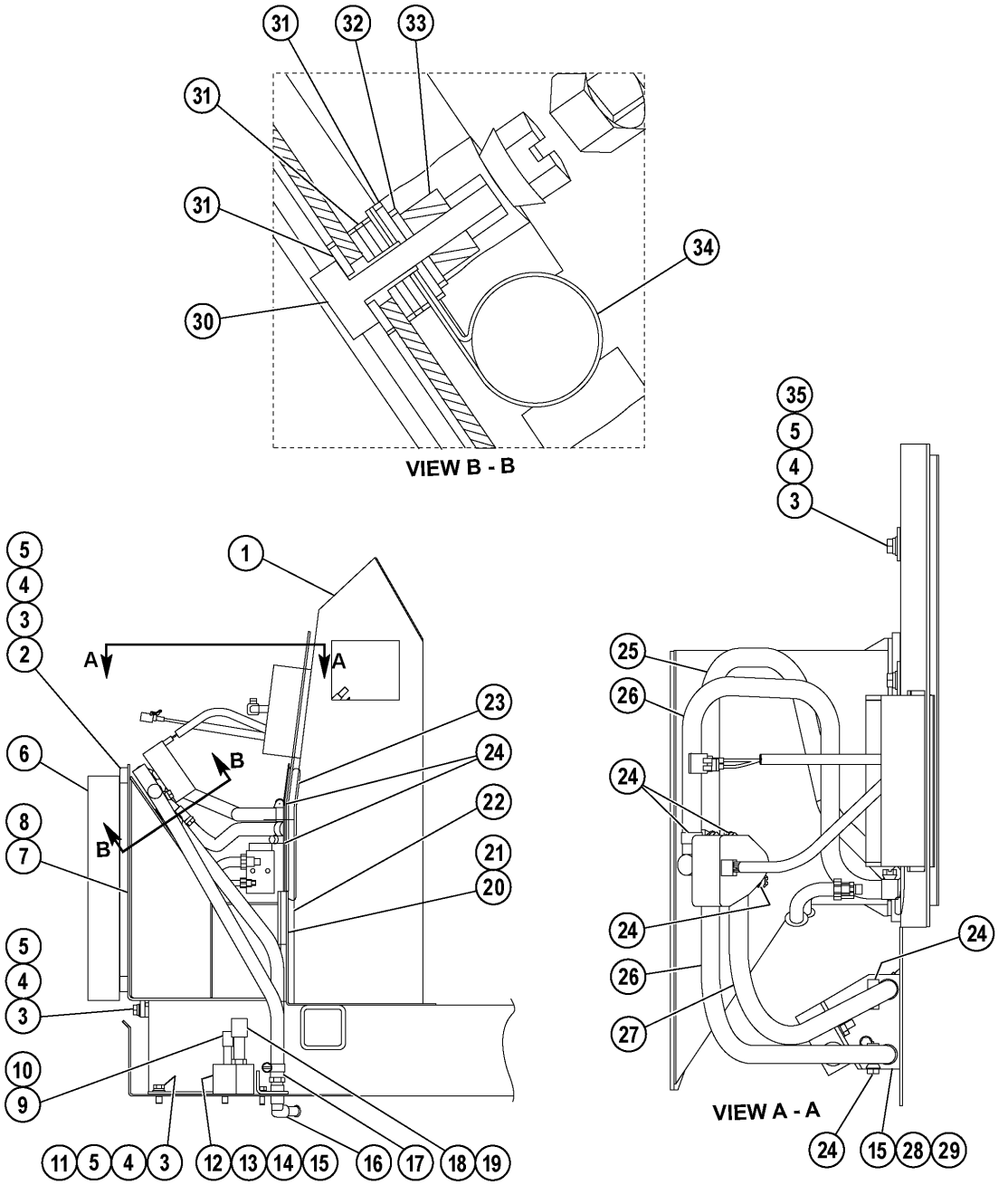
31
32
33
31
31
34
30
VIEW B - B
35
5
4
3
1
5
4
3
2
A
A
23
6
B
24
22
8
B
7
21
20
5
4
3
10
9
11
5
4
3
12
13
14
15
16
17
18
19
25
26
24
24
24
26
27
24
VIEW A - A
24
15
28
29
60867Z

REF.	PART NUM.	QTY.	DESCRIPTION
1.00	PC1920	1	HEATER/AIR CONDITIONER ASSEMBLY (SEE INDEX)
2.00	SM2106	1	PLENUM
3.00	MM0042	15	CAPSCREW - M10 X 1.50 X 25
4.00	MM0461	15	FLAT WASHER - M10
5.00	MM0471	15	LOCKWASHER - M10
6.00	PB7001	1	FILTER, AIR
7.00	TY8684	2	SEAL, NEOPRENE SPONGE
8.00	TY8687	2	SEAL, NEOPRENE SPONGE
9.00	HA7190	1	HOSE
10.00	WA1731	2	O-RING
11.00	EL5745	1	SUPPORT, PLENUM
12.00	SM2489	1	BLOCK, JUNCTION (REFRIGERANT)
13.00	MM0057	1	CAPSCREW - M8 X 1.25 X 60
14.00	MM0460	1	FLAT WASHER - M8
15.00	MM0470	3	LOCKWASHER - M8
16.00	TV2642	2	ELBOW
17.00	TG5601	2	CONNECTOR, HOSE
18.00	HA7601	1	HOSE
19.00	WA1733	2	O-RING
20.00	EC8893	2	SEAL, NEOPRENE SPONGE
21.00	EC8894	2	SEAL, NEOPRENE SPONGE
22.00	SM6047	1	SEAL, EDGE TRIM
23.00	SM6046	1	SEAL, EDGE TRIM
24.00	HC0908	8	CLAMP, WORM DRIVE
25.00	TH0031	1	HOSE, HEATER
26.00	VG2833	2	HOSE, HEATER
27.00	EB0256	1	HOSE, WATER
28.00	SM2111	1	PLATE, JUNCTION
29.00	MM0026	2	CAPSCREW - M8 X 1.25 X 25
30.00	TD0791	1	CAPSCREW - 3/8" - 16NC X 1 1/4"
31.00	TR4436	5	FLAT WASHER - 3/8"
32.00	TC1231	1	LOCKWASHER - 3/8"
33.00	TC1233	1	NUT - 3/8" - 16NC
34.00	TC1565	1	CLAMP, VINYL - 15/16" I.D.
35.00	DA0557	3	WASHER (SPECIAL)
NS	JG8379	2	HOSE (HEATER TO WATER SUPPLY)

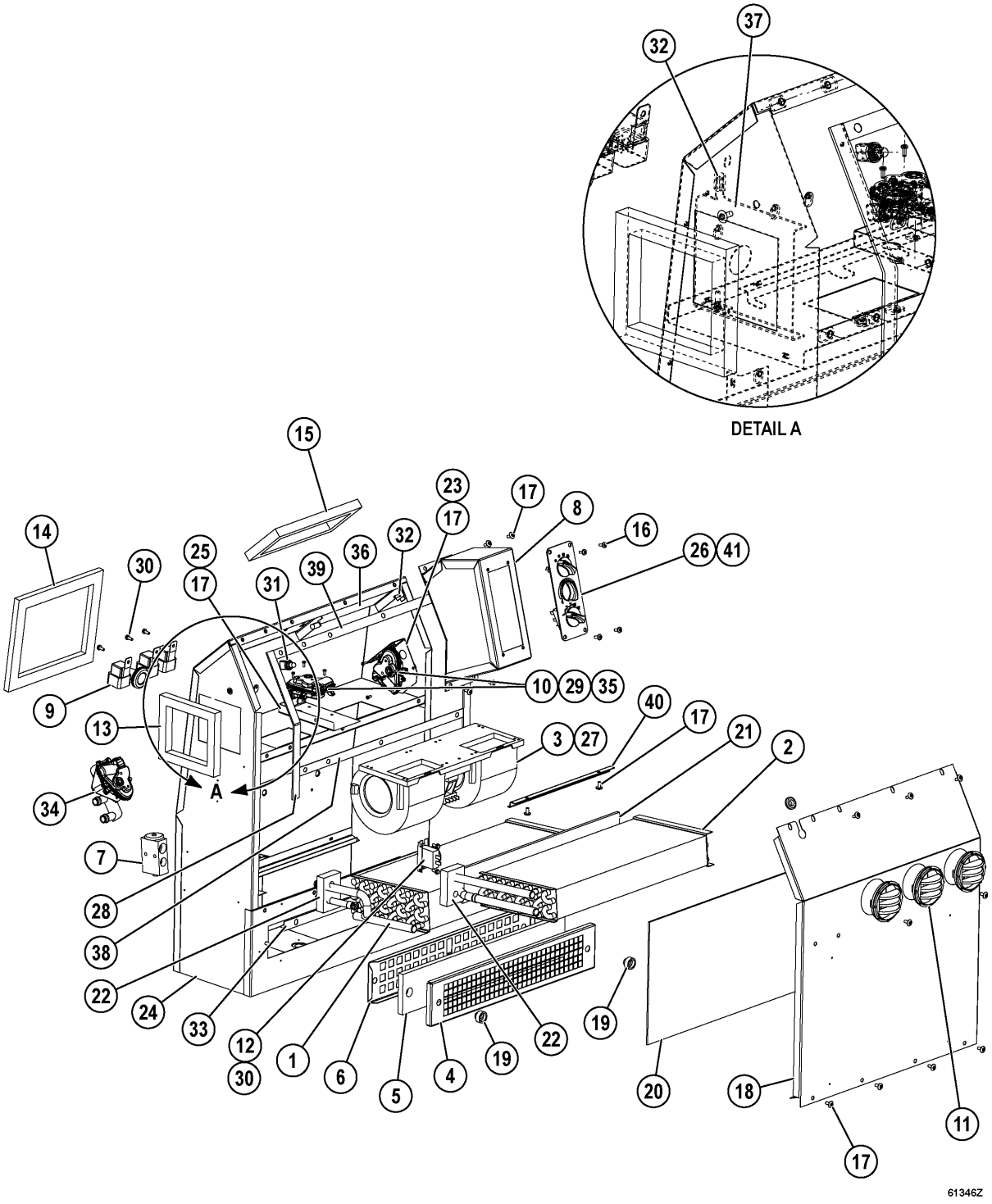
37
32
DETAIL A
15
14
23
17
8
16
26
41
30
25
17
36
32
39
31
17
10
29
35
9
13
40
17
21
2
3
27
A
34
7
28
38
22
24
33
12
30
1
6
5
4
19
22
19
20
18
11
17
61346Z

REF.	PART NUM.	QTY.	DESCRIPTION
1.00	EM0051	1	AC CORE
2.00	EM0052	1	HEATER CORE
3.00	EM0053	1	BLOWER ASSEMBLY
4.00	EM0054	1	RECIRCULATION GRILLE - OUTER
5.00	EM0055	1	RECIRCULATION FILTER
6.00	EM0056	1	RECIRCULATION GRILLE - INNER
7.00	EM0057	1	EXPANSION BLOCK VALVE
8.00			(NOT USED IN THIS APPLICATION)
9.00	EM0059	3	RELAY
10.00	EM0060	2	ACTUATOR
11.00	EM0061	3	LOUVER
12.00	EM0062	1	THERMOSTAT
13.00	EM0063	1	SEAL - L.H.
14.00	EM0064	1	SEAL - FRONT
15.00	EM0065	1	SEAL - TOP
16.00	EM0066	4	SCREW
17.00	EM0067	15	SCREW
18.00	EM0068	1	COVER
19.00	EM0069	2	KNOB
20.00	EM0070	1	SEAL
21.00	EM0071	1	FOAM
22.00	EM0072	2	FOAM
23.00	EM0073	1	BRACKET
24.00	EM0074	1	CASE
25.00	EM0075	1	BRACKET
26.00	EM0076	1	HARNESS, CONTROL PANEL
27.00	EM0078	1	HARNESS, MAIN UNIT
28.00	EM0082	2	SEAL
29.00	EM0083	6	SCREW
30.00	EM0084	5	SCREW
31.00	EM0085	2	BULB
32.00	EM0086	2	PIVOT BUSHING
33.00	EM0087	1	PUNCHED STRIP
34.00	EL5797	1	VALVE, WATER
35.00	EM0089	2	DRIVE ADAPTER
36.00	EM0090	1	DAMPER DOOR (UP)
37.00	EM0091	1	DAMPER DOOR (SIDE)
38.00	EM0092	1	PUNCHED STRIP
39.00	EM0093	1	PUNCHED STRIP
40.00	EM0094	1	BLOWER RETAINER
41.00	EL5676	1	CONTROL PANEL, SWITCH
NS	EM0088	1	GROMMET

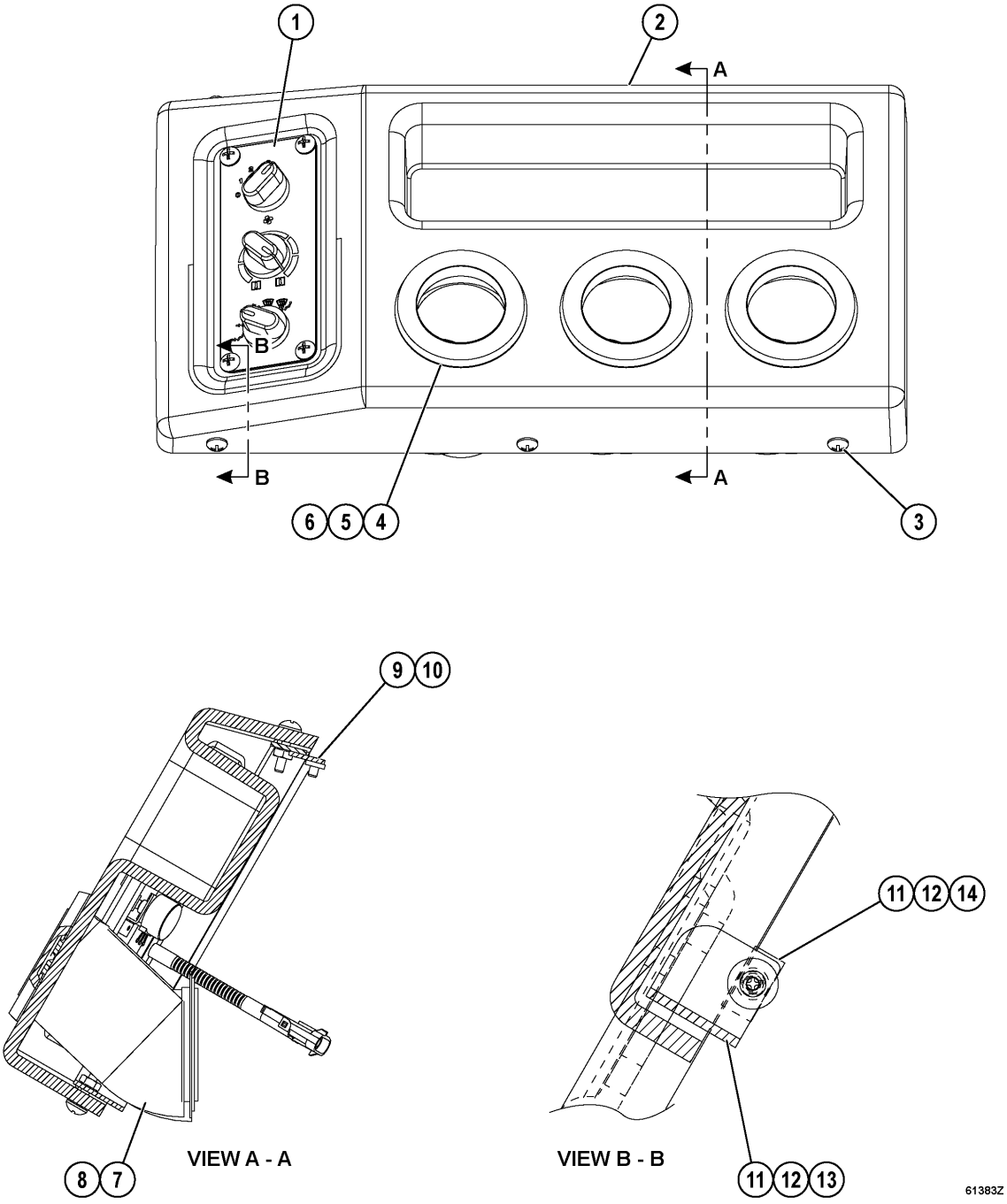
1
2
A
B
B
A
6
5
4
3
9
10
11
12
14
VIEW A - A
VIEW B - B
8
7
11
12
13
61383Z

REF.	PART NUM.	QTY.	DESCRIPTION
1.00	EL5676	1	CONTROL PANEL, SWITCH (1)
2.00	EL1060	1	PANEL, MOLDED
3.00	PB8658	6	SCREW - M6 X 1.00 X 30
4.00	PB8319	3	LOUVER
5.00	EK7943	3	HOSE, ADAPTER
6.00	SM2406	6	SCREW, SELF-TAPPING - #6 - 32NC X 3/8"
7.00	EK7941	3	HOSE
8.00	HC0920	6	CLAMP, WORM DRIVE
9.00	EK8966	1	BAR
10.00	SM2682	5	SCREW, COUNTERSUNK
11.00	MM0349	2	MACHINE SCREW - M5 X .8 X 12
12.00	TR1307	2	FLAT WASHER - 1/4"
13.00	EK7948	1	BAR
14.00	EK5507	1	BLOCK

NOTE: (1) NOT INCLUDED IN ASSEMBLY.

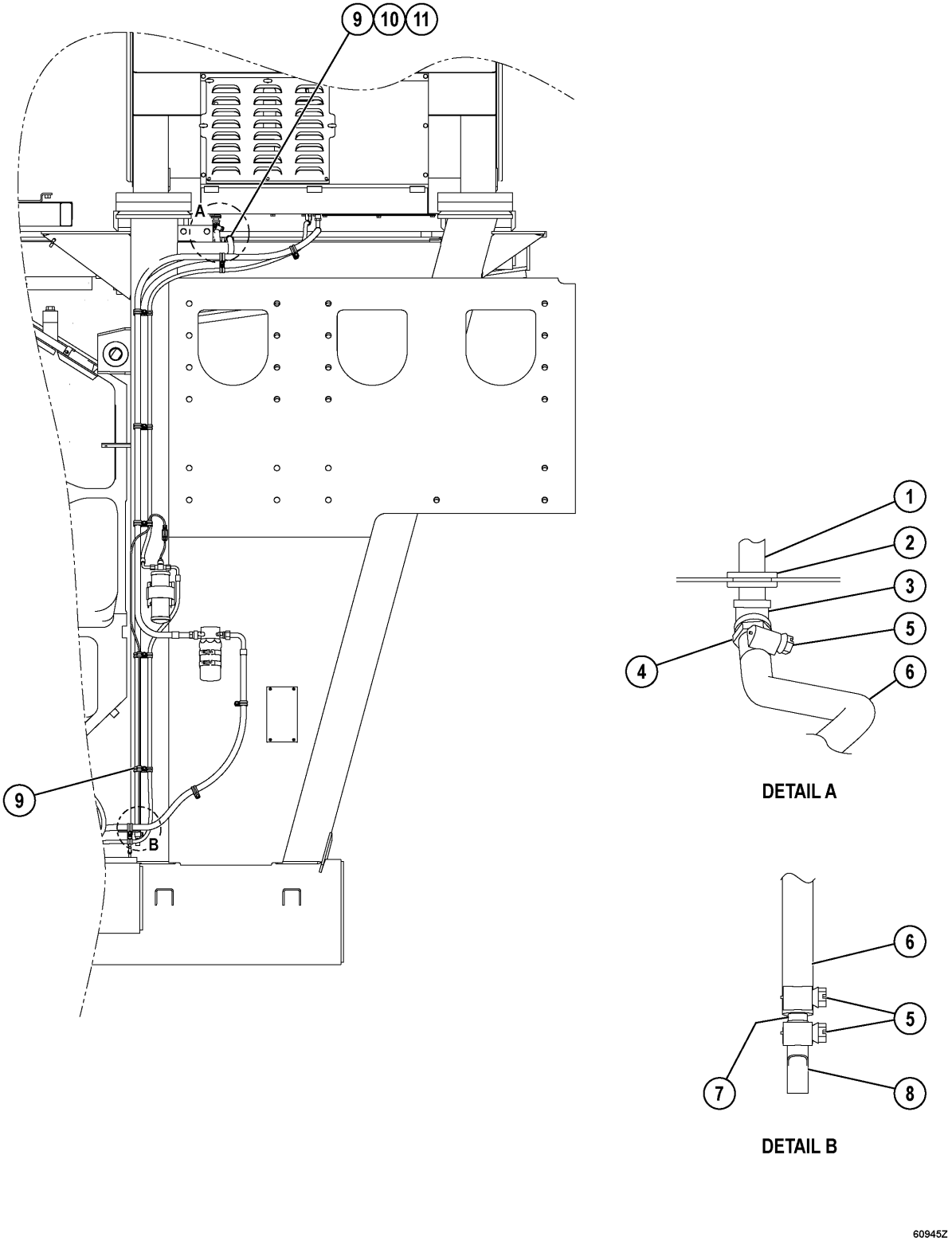
9
10
11
A
9
B
1
2
3
4
5
6
DETAIL A
6
5
7
8
DETAIL B
60945Z

REF.	PART NUM.	QTY.	DESCRIPTION
1.00	TG1993	1	NIPPLE, LONG - 1/2" NPT X 7"
2.00	SL6447	1	GROMMET, RUBBER
3.00	R5011	1	ELBOW
4.00	KC3835	1	FITTING
5.00	HC0908	3	CLAMP, WORM DRIVE
6.00	HK0425	1	HOSE
7.00	SM6023	1	TUBE, DRAIN
8.00	SM6022	1	VALVE, VACUUM
9.00	WB3093	7	CLAMP, CUSHIONED - 1"
10.00	MM0461	1	FLAT WASHER - M10
11.00	MM0178	1	NUT - M10 X 1.50

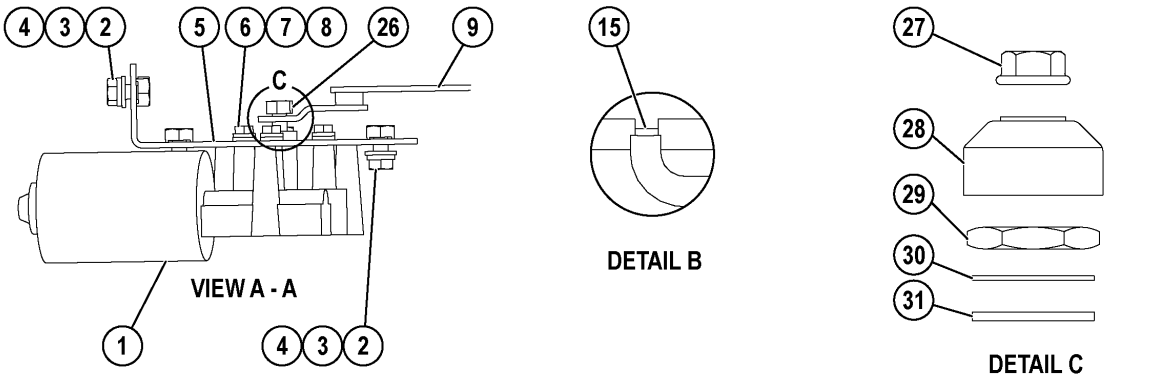
4
3
2
5
6
7
8
26
9
C
VIEW A - A
1
4
3
2
15
DETAIL B
27
28
29
30
31
DETAIL C

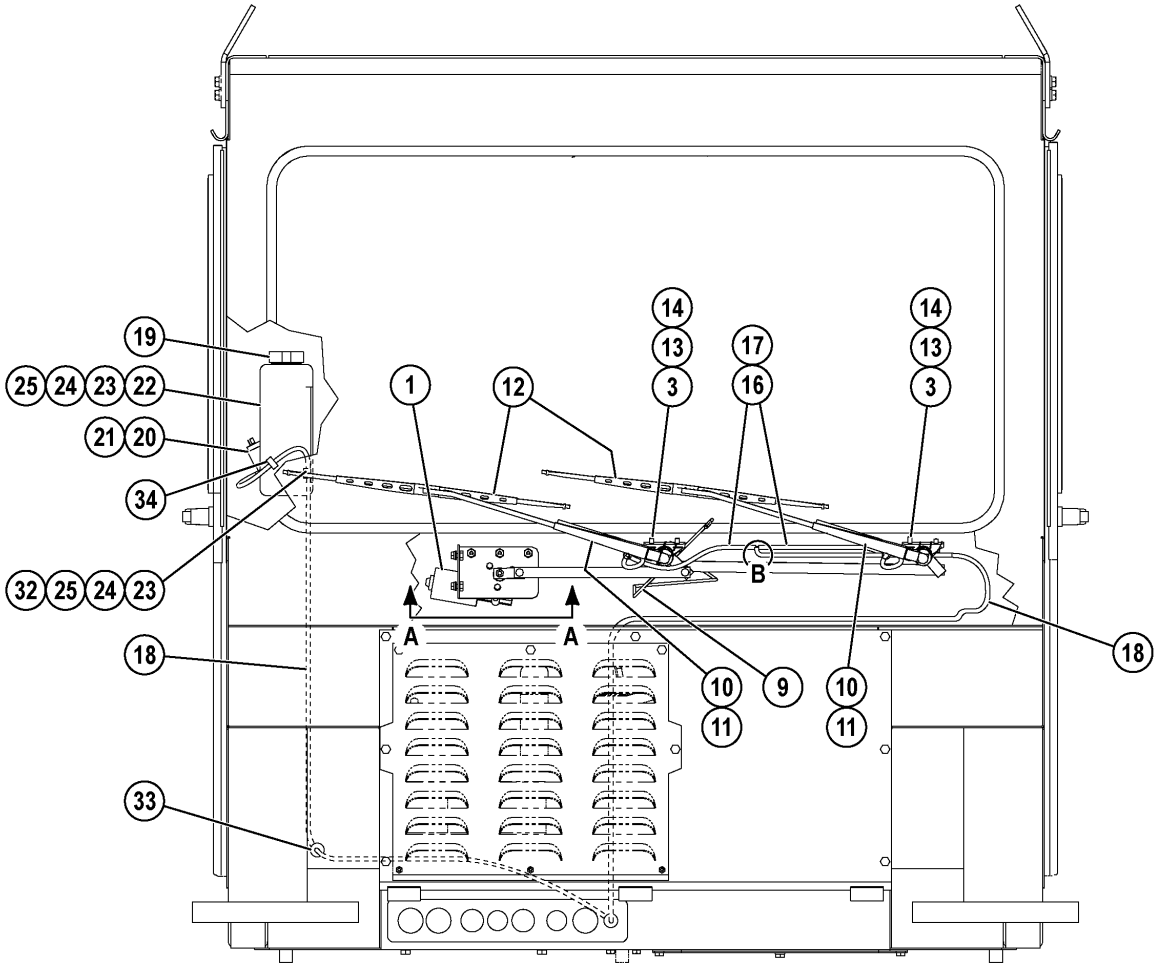
19
25
24
23
22
21
20
34
32
25
24
23
18
1
12
14
13
3
17
16
14
13
3
B
A
A
10
11
9
10
11
18
33

42092Z

REF.	PART NUM.	QTY.	DESCRIPTION
1.00	PB9923	1	MOTOR, WIPER - 24 VOLT
2.00	MM0592	5	CAPSCREW - M8 X 1.25 X 16
3.00	MM0712	14	FLAT WASHER - M8 (HARDENED)
4.00	MM0470	5	LOCKWASHER - M8
5.00	SM4345	1	PLATE
6.00	MM0581	3	CAPSCREW - M6 X 1.00 X 16
7.00	MM0711	3	FLAT WASHER - M6 (HARDENED)
8.00	MM0469	3	LOCKWASHER - M6
9.00	PB9926	1	WIPER LINKAGE ASSEMBLY
10.00	PC1823	2	ARM, WET WIPER
11.00	XA2095	2	NOZZLE
12.00	PB9925	2	BLADE, WIPER
13.00	MM0022	4	CAPSCREW - M8 X 1.25 X 20
14.00	MM0460	4	FLAT WASHER - M8
15.00	EG0735	1	TEE, HOSE
16.00	TF6380	2	GROMMET, RUBBER
17.00	SM4477	2	HOSE
18.00	EG3904	1	HOSE
19.00	PB7514	1	WINDSHIELD WASHER ASSEMBLY
19.01	VE2942	1	CAP
20.00	VE2941	1	PUMP
21.00	VE6598	1	GROMMET
22.00	VE5339	1	TANK - 4 QT.
23.00	VF6144	7	FLAT WASHER - 1/4"
24.00	MM0469	7	LOCKWASHER - M6
25.00	MM0176	7	NUT - M6 X 1.00
26.00	XA3071	1	HARDWARE KIT
27.00		1	NUT - M8 X 1.25 (1)
28.00		1	COVER (1)
29.00		1	NUT - M20 X 1.00 (1)
30.00		1	WASHER (1)
31.00		1	WASHER (1)
32.00	VN0137	6	CLAMP, CUSHIONED - 7/16"
33.00	VC8920	1	GROMMET, RUBBER
34.00	PC2145	1	VALVE, CHECK (WASHER FLUID)

NOTE: (1) NOT SERVICED SEPARATELY.

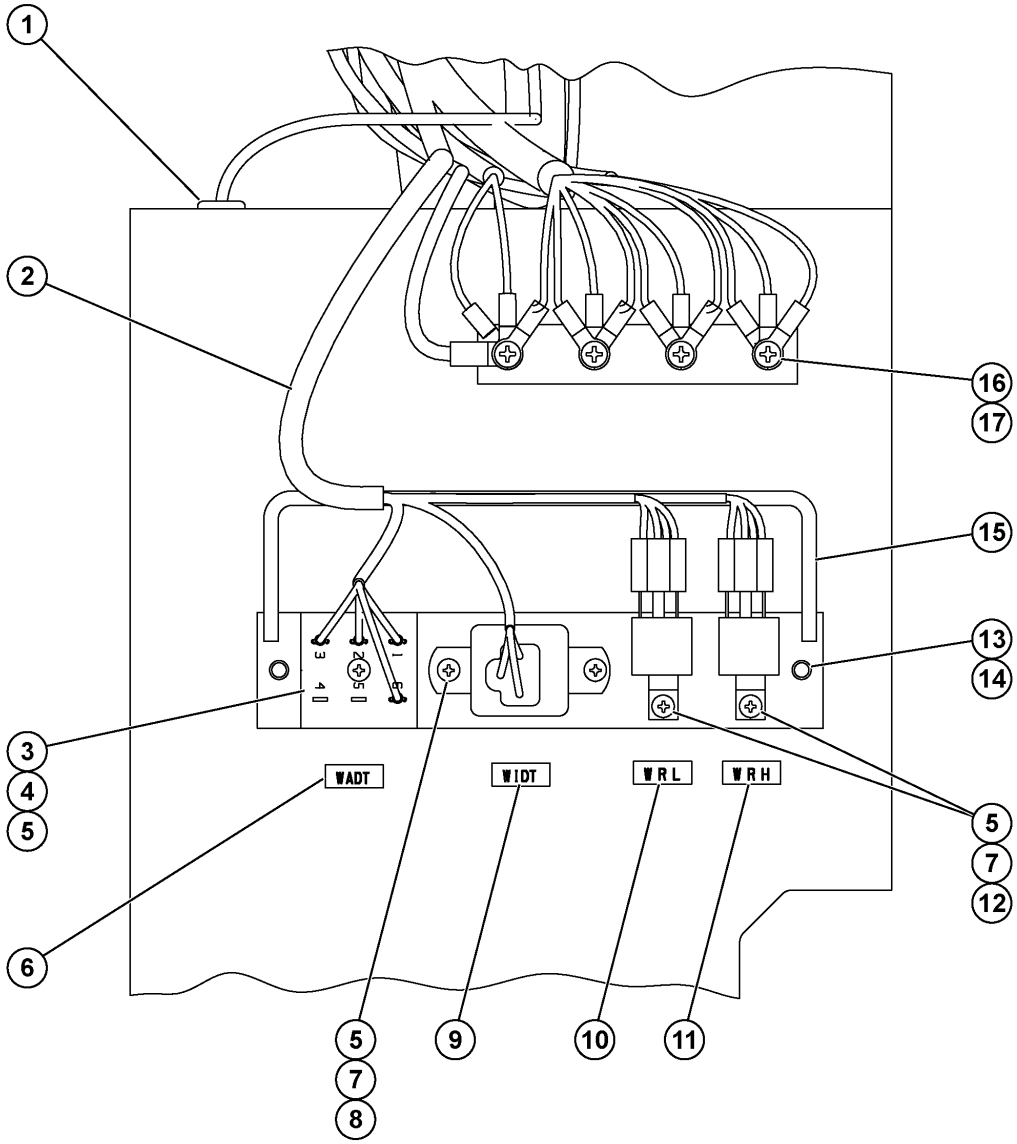
1
2
16
17
15
13
14
3
4
5
WADT
WIDT
WRL
WRH
5
7
12
6
5
7
8
9
10
11
60928Z

REF.	PART NUM.	QTY.	DESCRIPTION
1.00	VY2784	1	GROMMET, RUBBER
2.00	EM6531	1	HARNESS, CAB DASH
3.00	PC1838	1	MODULE, WASHER TIMER DELAY
4.00	MM0353	1	MACHINE SCREW - M5 X .8 X 30
5.00	MM0379	5	LOCKWASHER - M5 (EXTERNAL TOOTH)
6.00	WB0818	1	NAME PLATE - WADT
7.00	MM0348	2	MACHINE SCREW - M5 X .8 X 10
8.00	PC0566	1	MODULE, WIPER TIMER DELAY
9.00	WB0819	1	NAME PLATE - WIDT
10.00	WB0817	1	NAME PLATE - WRL
11.00	WB0816	1	NAME PLATE - WRH
12.00	PB4767	2	RELAY
13.00	SM5115	2	CAPSCREW, INTERNAL HEX - M8 X 1.25
14.00	MM0470	2	LOCKWASHER - M8
15.00	EL1698	1	BRACKET
16.00	MM0357	4	MACHINE SCREW - M6 X 1.00 X 12
17.00	MM0459	4	FLAT WASHER - M6

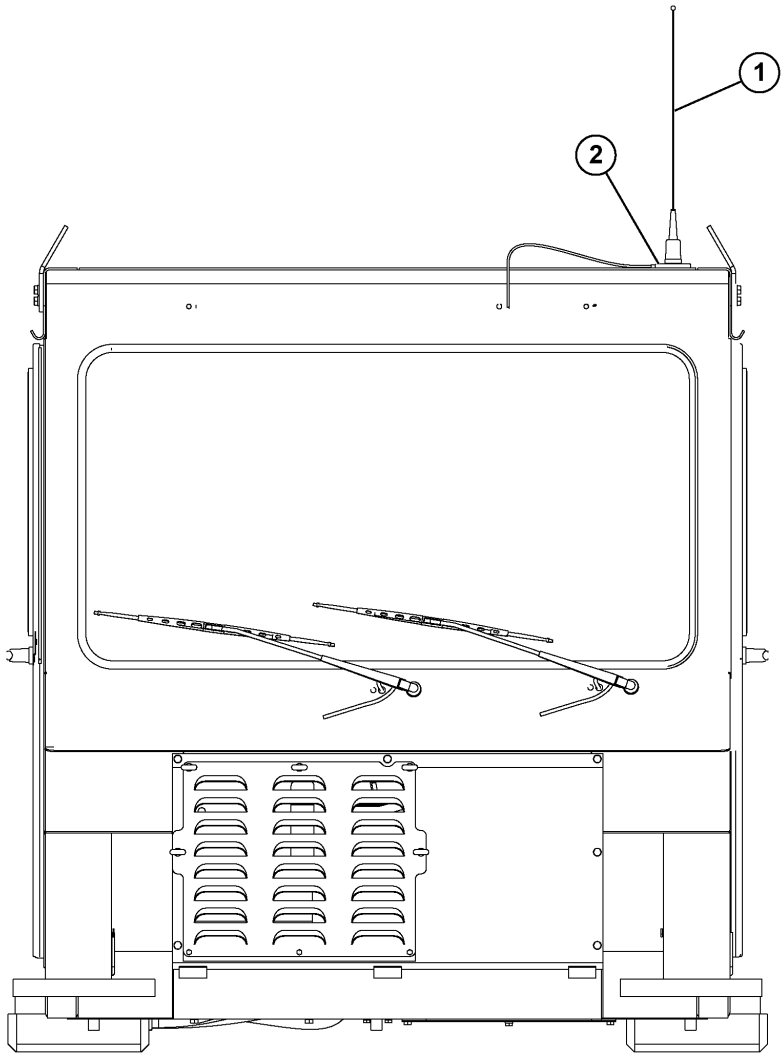

61029Z

REF.	PART NUM.	QTY.	DESCRIPTION
1.00	PC1692	1	ANTENNA, ORBCOMM
2.00	PC1964	1	ANTENNA MOUNT, MAGNETIC

BODY GROUP

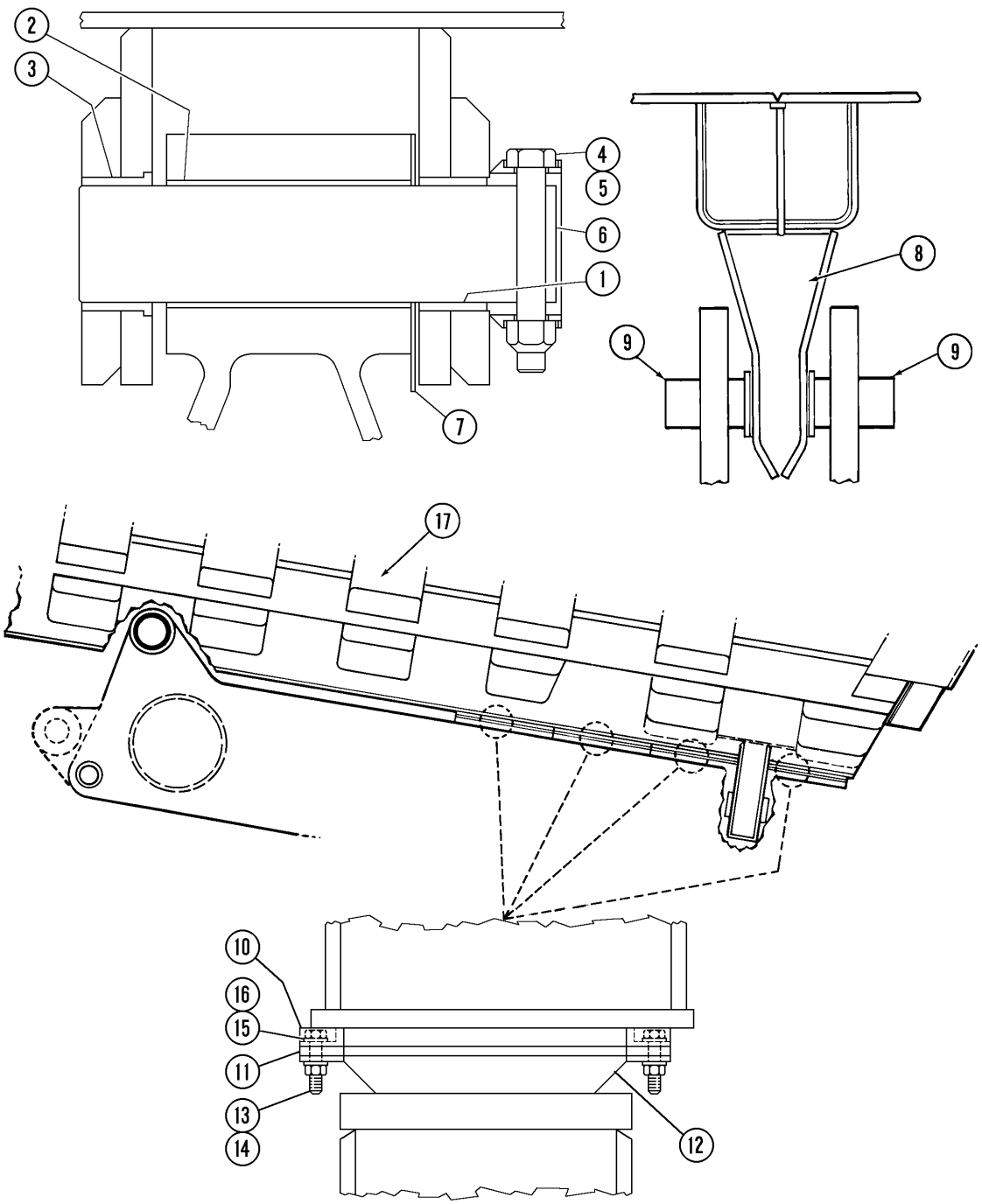

41524Z

REF.	PART NUM.	QTY.	DESCRIPTION
1.00	ED7962	2	BUSHING, BODY PIVOT - OUTER (1)
2.00	EK6696	2	BUSHING, PIVOT (1)
3.00	EF0745	2	BUSHING, BODY PIVOT - INNER (1)
4.00	WB1182	2	CAPSCREW - 1 3/8" - 6NC X 11" (12 PT)
4.01	WA4736	4	FLAT WASHER - 1 3/8" (HARDENED)
5.00	WB1183	2	LOCKNUT - 1 3/8" - 6NC
6.00	EK6273	2	PIN, BODY PIVOT (1)
7.00	TY9293	8	SHIM (1)
8.00	EL3802	1	GUIDE, BODY
9.00	TY5960	2	GUIDE, BODY
10.00		8	PLATE (2)
11.00	TY9407	70	SHIM
12.00	EG8098	8	PAD, BODY
13.00	TR5445	32	LOCKWASHER - 1/2"
14.00	TR6643	32	NUT - 1/2" - 13NC
15.00	WA0471	32	CAPSCREW - 1/2" - 13NC X 2 1/4"
16.00	WA4728	32	FLAT WASHER - 1/2" (HARDENED)
17.00		1	BODY (3)
KT	AK5213		NOTE: (1) INCLUDED IN AK5213 BODY PIVOT PIN KIT.
			(2) INCLUDED WITH BODY.
			(3) ORDER FROM FACTORY.

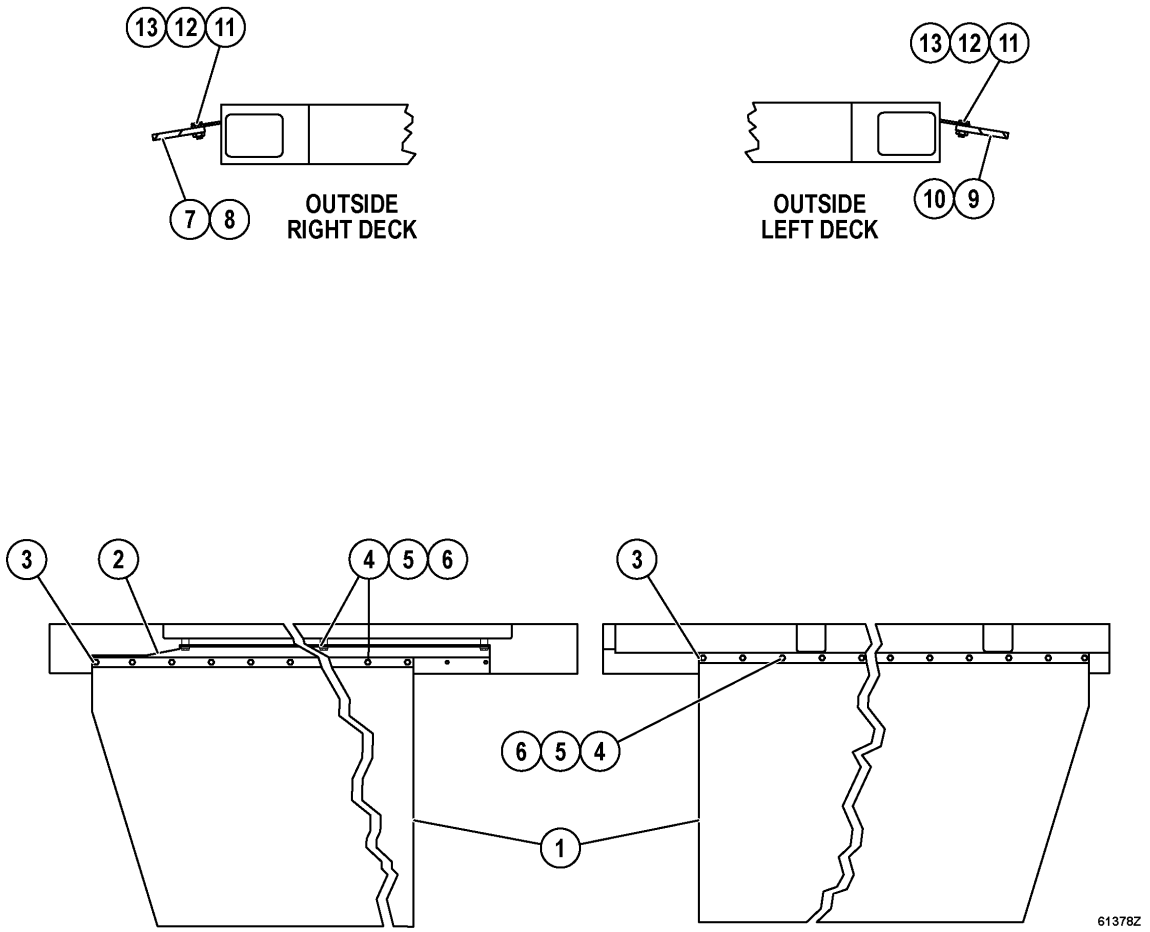
13
12
11
7
8
OUTSIDE
RIGHT DECK
13
12
11
10
9
OUTSIDE
LEFT DECK
3
2
4
5
6
3
6
5
4
1
61378Z

REF.	PART NUM.	QTY.	DESCRIPTION
1.00	EF6606	2	MUD FLAP
2.00	EF4813	1	BRACKET - R.H.
3.00	EF6605	2	BAR, FLAT
4.00	MM0607	45	CAPSCREW - M10 X 1.50 X 35
5.00	MM0461	45	FLAT WASHER - M10
6.00	MM0471	45	LOCKWASHER - M10
7.00	EJ5709	1	MUD FLAP
8.00	EJ5710	1	RETAINER
9.00	EJ4757	1	MUD FLAP
10.00	EJ4756	1	RETAINER
11.00	MM0067	25	CAPSCREW - M10 X 1.50 X 50
12.00	MM0461	50	FLAT WASHER - M10
13.00	MM0693	25	LOCKNUT - M10 X 1.50

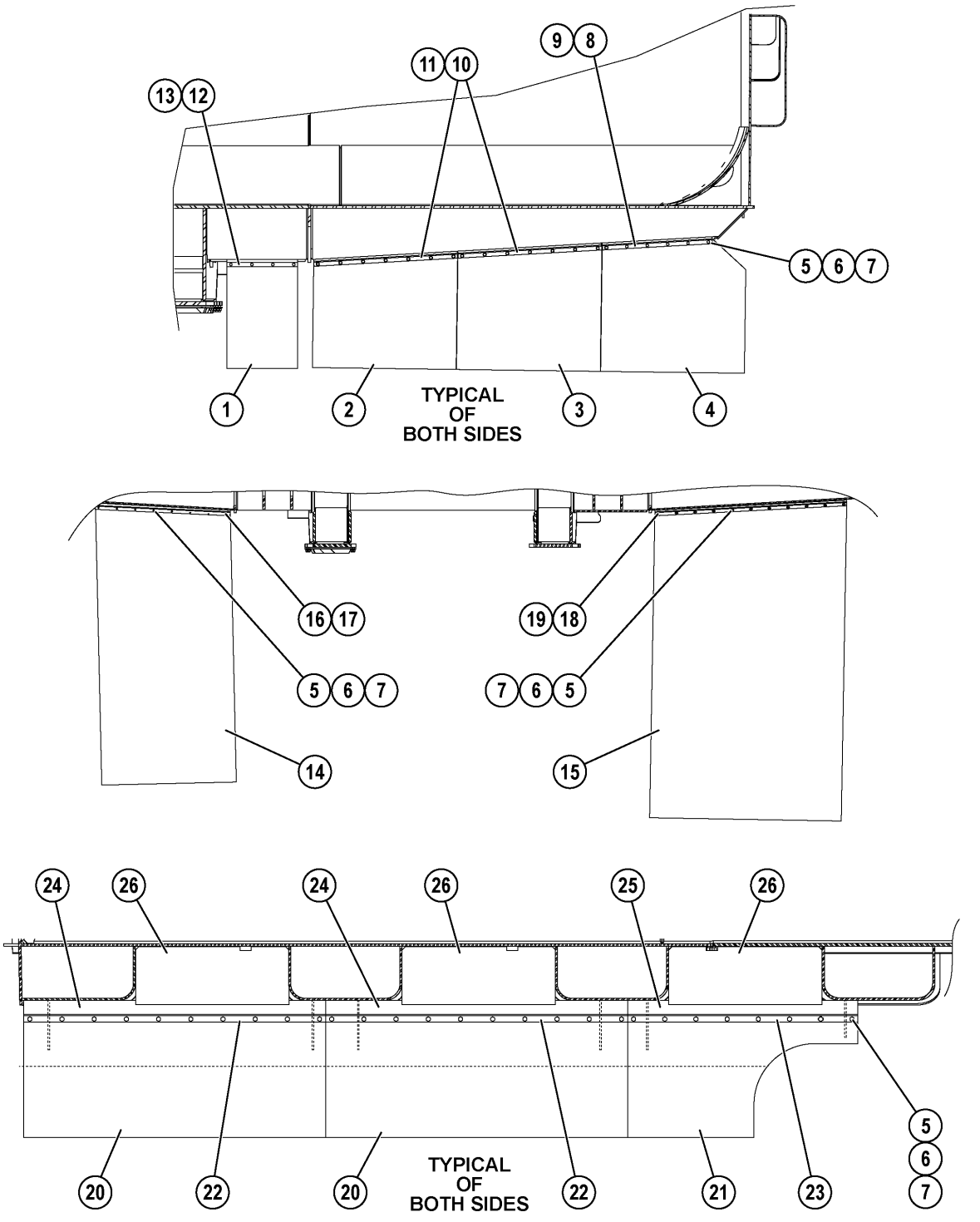
13
12
11
10
9
8
5
6
7
1
2
TYPICAL
OF
BOTH SIDES
3
4
16
17
19
18
5
6
7
7
6
5
14
15
24
26
24
26
25
26
5
6
7
20
22
20
TYPICAL
OF
BOTH SIDES
22
21
23

60955Z

REF.	PART NUM.	QTY.	DESCRIPTION
1.00	EK6280	2	MUD FLAP
2.00	EF3394	2	MUD FLAP
3.00	EH5380	2	MUD FLAP
4.00	EL4090	2	MUD FLAP
5.00	MM0471	123	LOCKWASHER - M10
6.00	MM0461	123	FLAT WASHER - M10
7.00	MM0607	123	CAPSCREW - M10 X 1.50 X 35
8.00	EL4091	2	ANGLE
9.00	EL4089	2	STRIP, BACKUP
10.00	EL4087	4	ANGLE
11.00	EF3391	4	STRIP, BACKUP
12.00	EK6281	2	BAR, FLAT
13.00	EL4085	2	ANGLE
14.00	EK6277	1	MUD FLAP
15.00	EK6278	1	MUD FLAP
16.00	EF4827	1	ANGLE
17.00	EF4828	1	BAR, FLAT
18.00	EF4831	1	ANGLE
19.00	EF4832	1	BAR, FLAT
20.00	EL4095	4	MUD FLAP
21.00	EL3806	2	MUD FLAP
22.00	EL4096	4	STRIP, BACKUP
23.00	EL4097	2	STRIP, BACKUP
24.00	EM6387	4	PLATE, MOUNTING
25.00	EM6389	1	PLATE, MOUNTING - R.H. SIDE
25.01	EM6390	1	PLATE, MOUNTING - L.H. SIDE
26.00	EL4093	6	PLATE

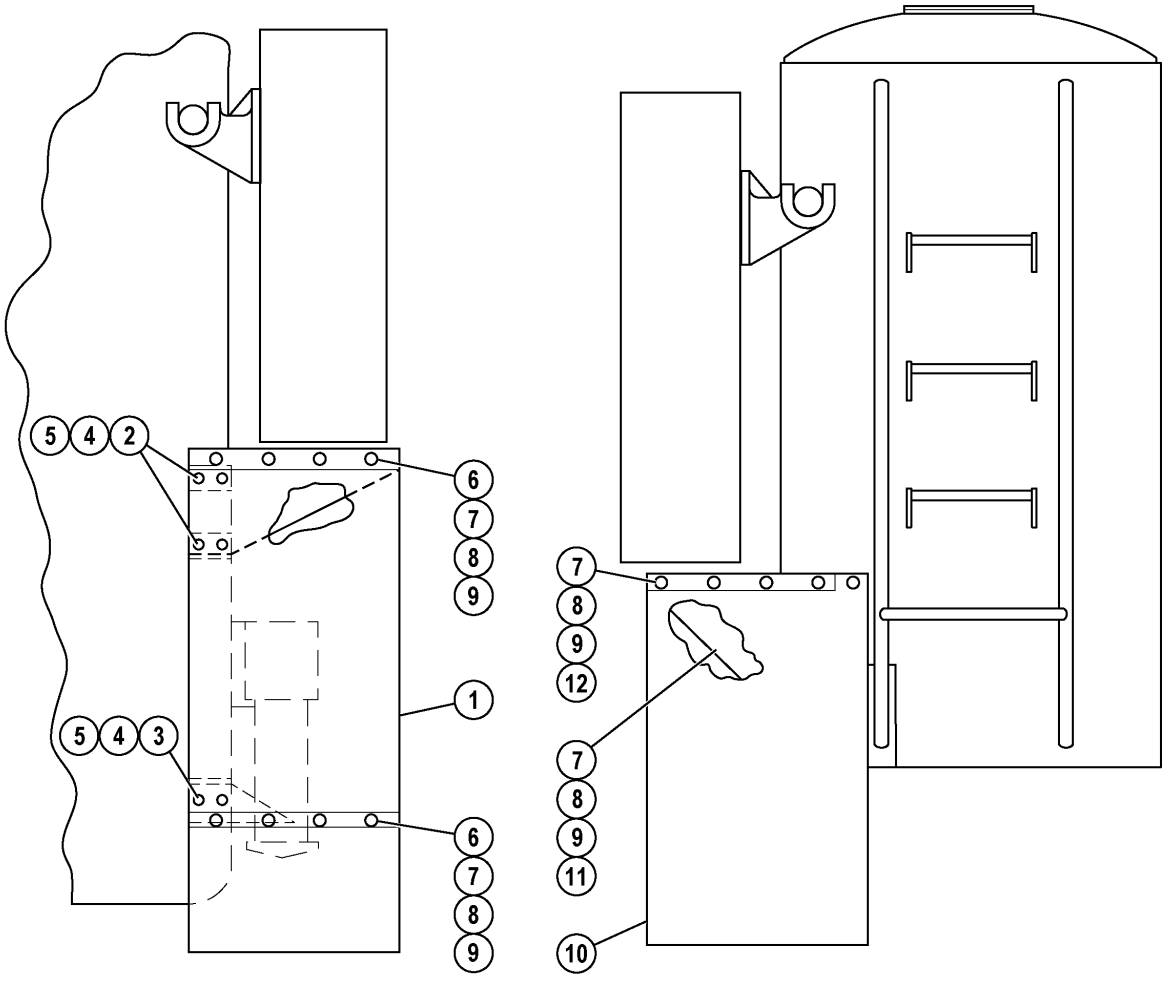
5
4
2
6
7
8
9
1
5
4
3
6
7
8
9
7
8
9
12
7
8
9
11
10
FUEL TANK
HYDRAULIC TANK
61379Z

REF.	PART NUM.	QTY.	DESCRIPTION
1.00	TZ3112	1	MUD FLAP
2.00	EB5598	1	BRACKET
3.00	EB5600	1	BRACKET
4.00	C1612	6	CAPSCREW - 1/2" - 13NC X 1"
5.00	TR5445	6	LOCKWASHER - 1/2"
6.00	TZ3113	2	RETAINER, FLAT
7.00	C1603	17	CAPSCREW - 3/8" - 16NC X 1 1/4"
8.00	C1547	17	FLAT WASHER - 3/8"
9.00	C0312	17	LOCKWASHER - 3/8"
10.00	TZ3104	1	MUD FLAP
11.00	EL0247	1	BRACKET
12.00	EL0588	1	BAR

ELECTRIC POWER COMPONENTS & WIRING GROUP

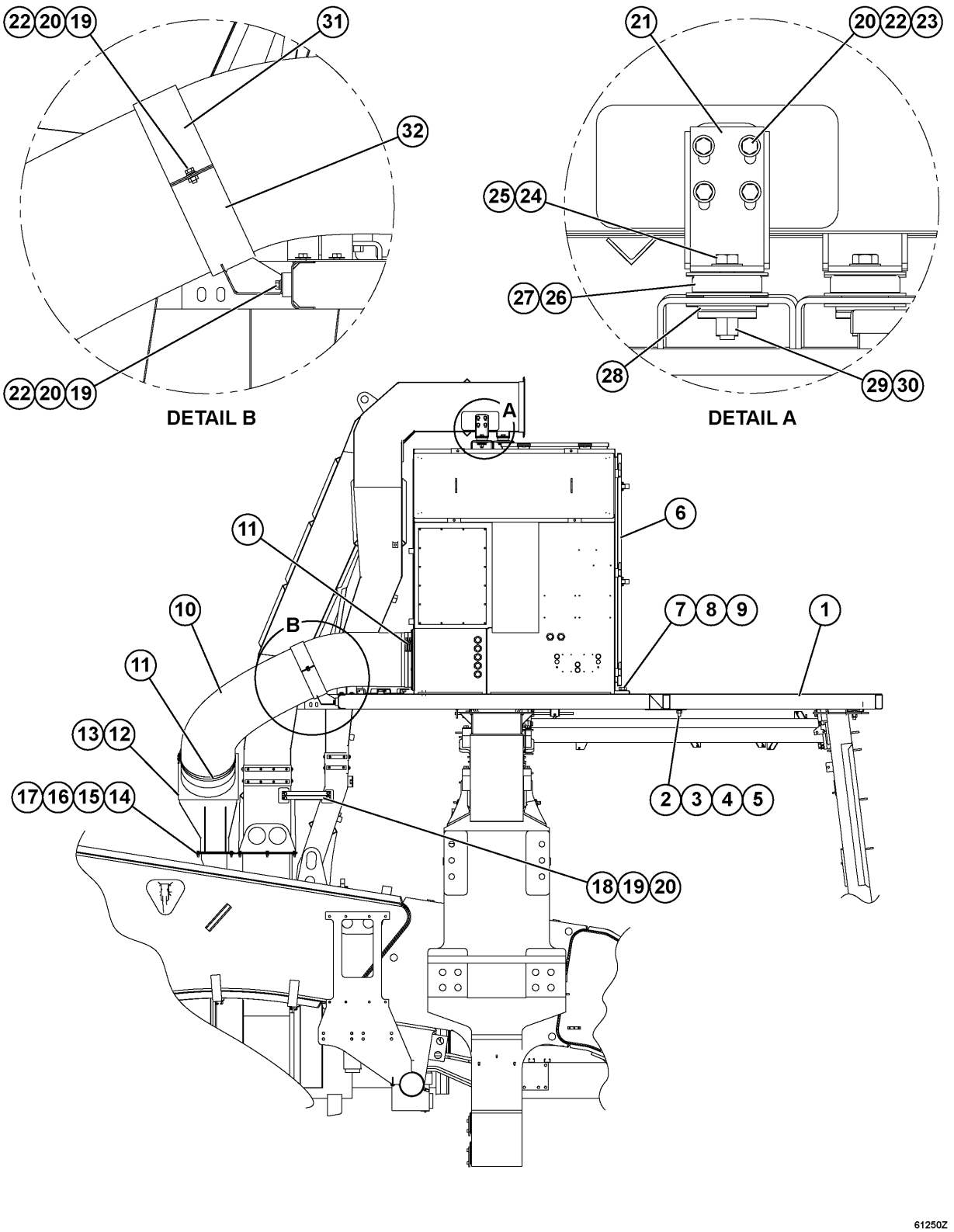
22 20 19
31
32
22 20 19
DETAIL B
21
20 22 23
25 24
27 26
28
29 30
DETAIL A
A
B
6
11
10
11
7 8 9
1
13 12
17 16 15 14
2 3 4 5
18 19 20
61250Z

REF.	PART NUM.	QTY.	DESCRIPTION
1.00	EM0309	1	DECK, CENTER
2.00	MM0075	4	CAPSCREW - M20 X 2.50 X 60
3.00	MM0465	8	FLAT WASHER - M20
4.00	MM0475	4	LOCKWASHER - M20
5.00	MM0182	4	NUT - M20 X 2.50
6.00	PC2522	1	CABINET, CONTROL (SEE INDEX)
7.00	MM0124	9	CAPSCREW - M30 X 3.50 X 90
8.00	MM0467	18	FLAT WASHER - M30
9.00	MM0184	9	NUT - M30 X 3.50
10.00	EL8842	1	HOSE, BLOWER AIR
11.00	WB1190	4	CLAMP, T-BOLT
12.00	EM3471	1	TRANSITION (CONTROL CABINET BLOWER)
13.00	EJ0678	1	GASKET
14.00	VC8762	10	CAPSCREW - 3/8" - 16NC X 1 1/2"
15.00	TR4436	10	FLAT WASHER - 3/8"
16.00	TC1231	10	LOCKWASHER - 3/8"
17.00	TC1233	10	NUT - 3/8" - 16NC
18.00	EL9286	1	STRAP
19.00	MM0461	8	FLAT WASHER - M10
20.00	MM0605	24	CAPSCREW - M10 X 1.50 X 25
21.00	EL3792	2	BRACKET, MOUNTING
22.00	MM0471	20	LOCKWASHER - M10
23.00	WA4727	8	FLAT WASHER - 7/16" (HARDENED)
24.00	C1635	4	CAPSCREW - 5/8" - 11NC X 3 1/4"
25.00	WA4729	16	FLAT WASHER - 5/8" (HARDENED)
26.00	EK7045	4	WASHER (SPECIAL)
27.00	WA2591	4	MOUNT, RUBBER
28.00	EK7044	8	WASHER (SPECIAL)
29.00	WA4719	4	FLAT WASHER (SPECIAL)
30.00	TG9226	4	LOCKNUT - 5/8" - 11NC
31.00	EJ2279	1	STRAP
32.00	EM3796	1	BRACKET

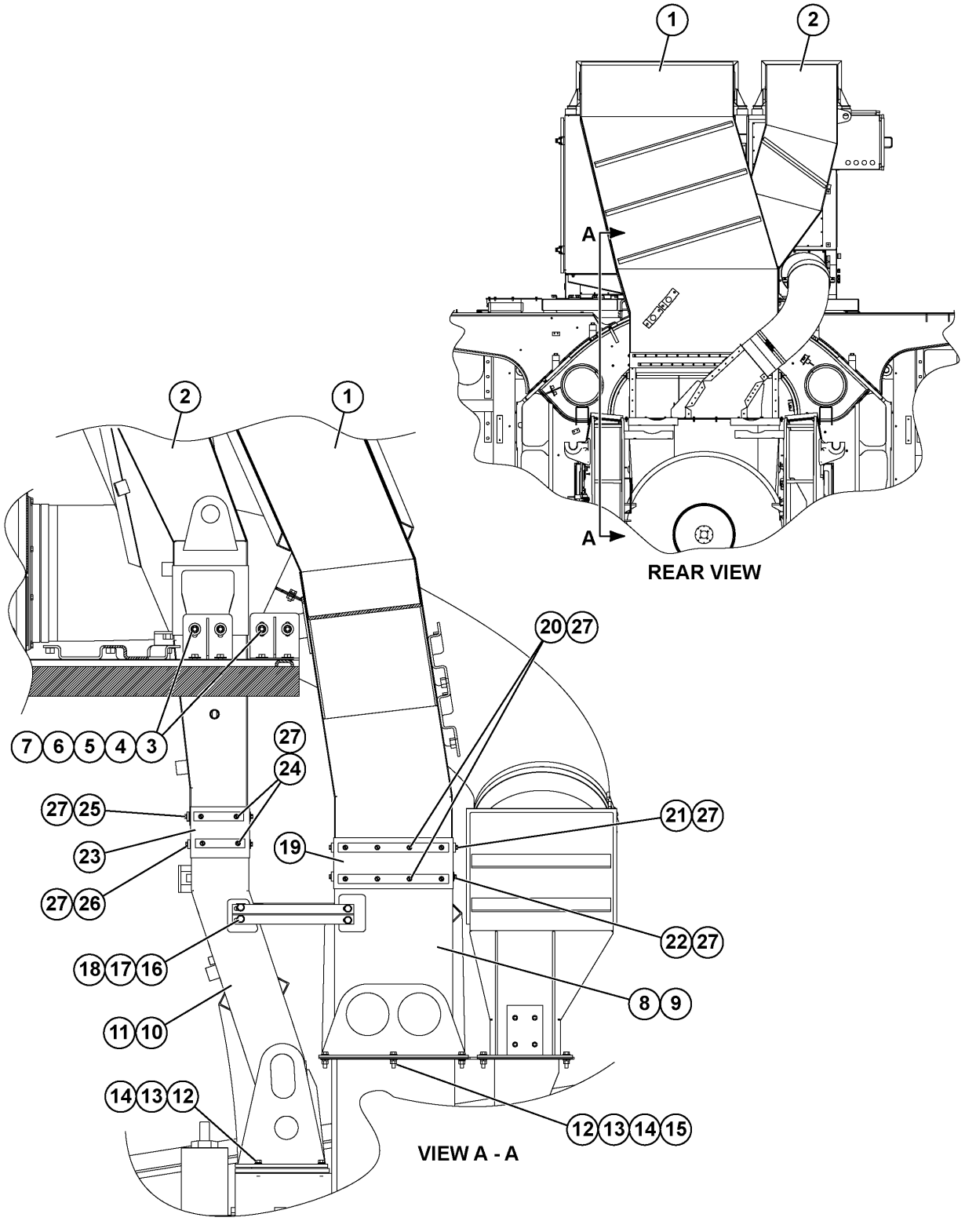
1
2
A
A
REAR VIEW
2
1
20
27
7
6
5
4
3
27
24
27
25
23
27
26
19
21
27
22
27
18
17
16
8
9
11
10
14
13
12
12
13
14
15
VIEW A - A
61251Z

REF.	PART NUM.	QTY.	DESCRIPTION
1.00	EL8840	1	DUCT
1.01	EL8938	1	SCREEN, INTAKE
2.00	EL8841	1	DUCT
2.01	EL8944	1	SCREEN, INTAKE
3.00	EJ9295	4	BRACKET
4.00	MM0714	32	FLAT WASHER - M12 (HARDENED)
5.00	MM0179	16	NUT - M12 X 1.75
6.00	MM0620	16	CAPSCREW - M12 X 1.75 X 40
7.00	MM0472	16	LOCKWASHER - M12
8.00	EM2521	1	TRANSITION (WHEEL MOTOR BLOWER)
9.00	EJ0676	1	GASKET
10.00	EM2505	1	TRANSITION (ALTERNATOR BLOWER)
11.00	EJ0677	1	GASKET
12.00	VC8762	34	CAPSCREW - 3/8" - 16NC X 1 1/2"
13.00	TR4436	34	FLAT WASHER - 3/8"
14.00	TC1231	34	LOCKWASHER - 3/8"
15.00	TC1233	20	NUT - 3/8" - 16NC
16.00	EL9288	1	STRAP
17.00	MM0605	4	CAPSCREW - M10 X 1.50 X 25
18.00	MM0461	4	FLAT WASHER - M10
19.00	EJ0520	1	BOOT
20.00	EJ0522	4	BAR
21.00	EJ0521	2	BAR
22.00	EL8946	2	BAR
23.00	EJ0508	1	BOOT
24.00	EJ0510	4	BAR
25.00	EJ0509	2	BAR
26.00	EL9267	2	BAR
27.00	WA4497	120	SCREW, SELF-TAPPING - 1/4" X 3/4"

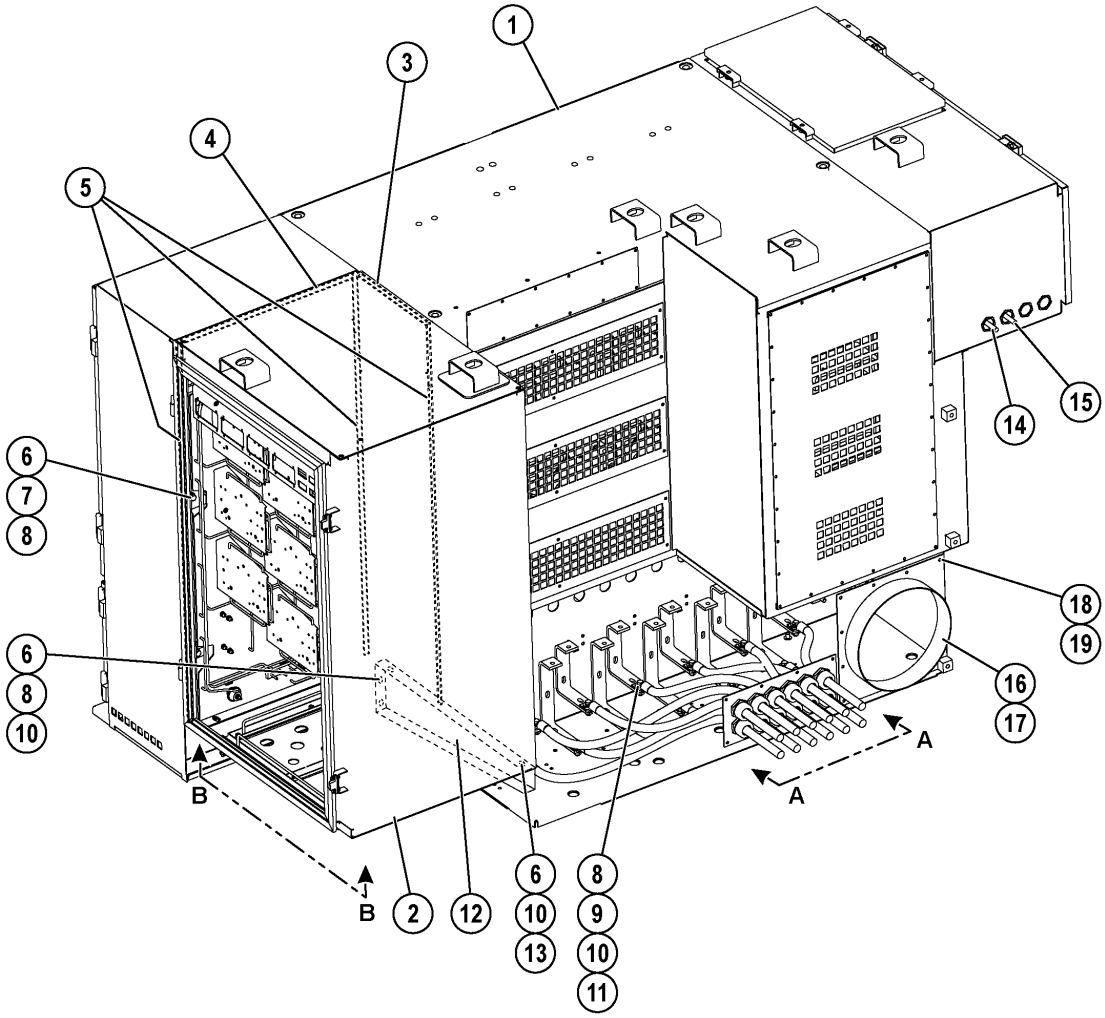
1
3
4
5
6
7
8
6
8
10
B
B
2
12
6
10
13
8
9
10
11
14
15
18
19
16
17
A
A

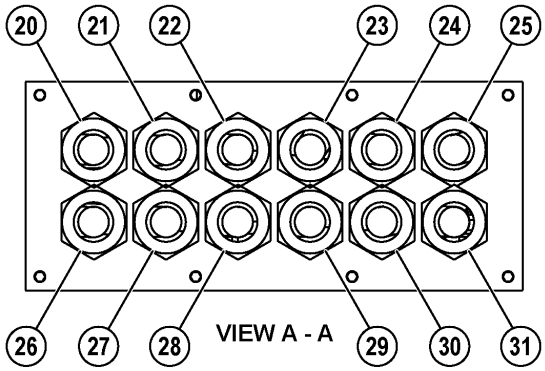
20
21
22
23
24
25
26
27
28
VIEW A - A
29
30
31

61341Z

REF.	PART NUM.	QTY.	DESCRIPTION
1.00	PC2522	1	CABINET, CONTROL (SEE INDEX)
2.00	EM5630	1	CABINET, AUXILIARY CONTROL
3.00	EL5801	1	STRIP, SEAL
4.00	EH7494	1	STRIP, SEAL
5.00	EK7544	3	STRIP, SEAL
6.00	VC6561	13	CAPSCREW - 1/2" - 13NC X 1 1/2"
7.00	WA4728	9	FLAT WASHER - 1/2" (HARDENED)
8.00	TR5445	23	LOCKWASHER - 1/2"
9.00	TV1918	12	CAPSCREW - 1/2" - 13NC X 1 3/4"
10.00	VC7836	18	FLAT WASHER - 1/2"
11.00	TR6643	12	NUT - 1/2" - 13NC
12.00	PC2368	1	BRACKET, SUPPORT
13.00	VG7811	2	LOCKNUT - 1/2" - 13NC
14.00	CH3625	1	CABLE - 71J
15.00	CH3626	1	CABLE - 74D
16.00	EK7594	1	GASKET
17.00	EL9860	1	TRANSITION
18.00	TR4731	12	CAPSCREW - 5/16" - 18NC X 1
19.00	TV0177	12	FLAT WASHER - 5/16"
20.00	CH2236	1	CABLE - 7M1A1
21.00	CH2239	1	CABLE - 7M1B2
22.00	CH2240	1	CABLE - 7M1C1
23.00	CH2242	1	CABLE - 7M2A1
24.00	CH2245	1	CABLE - 7M2B2
25.00	CH2246	1	CABLE - 7M2C1
26.00	CH2237	1	CABLE - 7M1A2
27.00	CH2238	1	CABLE - 7M1B1
28.00	CH2241	1	CABLE - 7M1C2
29.00	CH2243	1	CABLE - 7M2A2
30.00	CH2244	1	CABLE - 7M2B1
31.00	CH2247	1	CABLE - 7M2C2

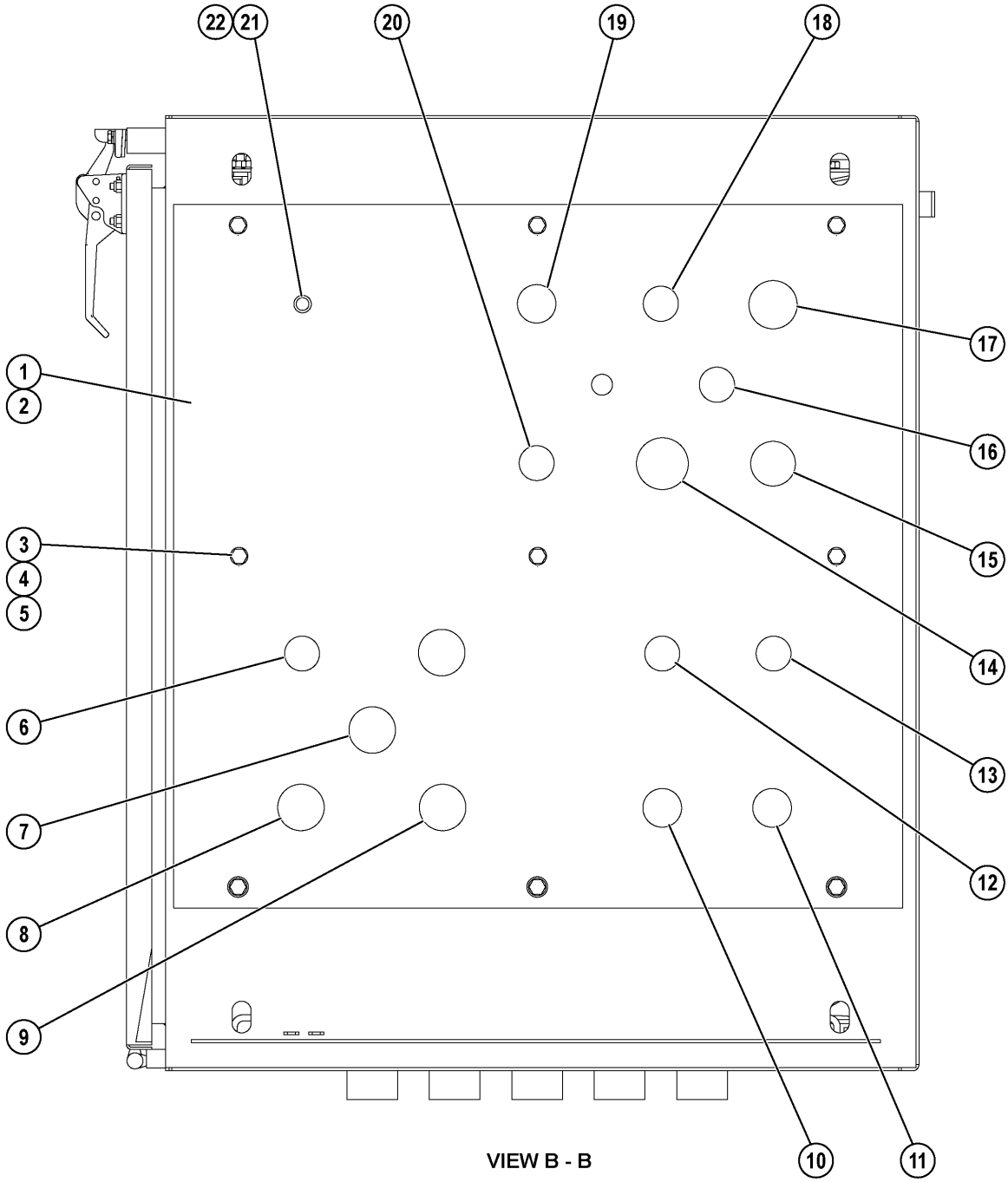

61342Z

REF.	PART NUM.	QTY.	DESCRIPTION
1.00	EM2720	1	PLATE, BOTTOM
2.00	EL0316	1	GASKET
3.00	TC1234	9	CAPSCREW - 3/8" - 16NC X 3/4"
4.00	TR4436	9	FLAT WASHER - 3/8"
5.00	TC1231	9	LOCKWASHER - 3/8"
6.00	EL8050	1	HARNESS, FLUID COMP/CC JUNCTION
7.00	EM6534	1	HARNESS, CAB/AUX BOX - DIAGNOSTIC
8.00	EM6536	1	HARNESS, CAB/AUX BOX - OVERHEAD
9.00	EM6535	1	HARNESS, CAB/AUX BOX - DASH
10.00	CH4066	1	CABLE, BLACK
11.00	CH3867	1	CABLE, RED
12.00	EM5636	1	HARNESS, L.H. JUNCTION BOX
13.00	EM5637	1	HARNESS, R.H. JUNCTION BOX
14.00	EM5756	1	HARNESS, LEFT REAR FRAME
15.00	EL5817	1	HARNESS, GE WHEEL SPEED
16.00	EM5758	1	HARNESS, RIGHT FRONT FRAME
17.00	EM5638	1	HARNESS, RIGHT REAR FRAME
18.00	EM5757	1	HARNESS, LEFT FRONT FRAME
19.00	EL6147	1	HARNESS, ENGINE/AUX BOX
20.00	EM2767	1	HARNESS, ENGINE EXTERNAL
21.00	PC1962	1	HARNESS, ORBCOMM - 5 FT
22.00	PC1701	1	FITTING, BULKHEAD (COAX)

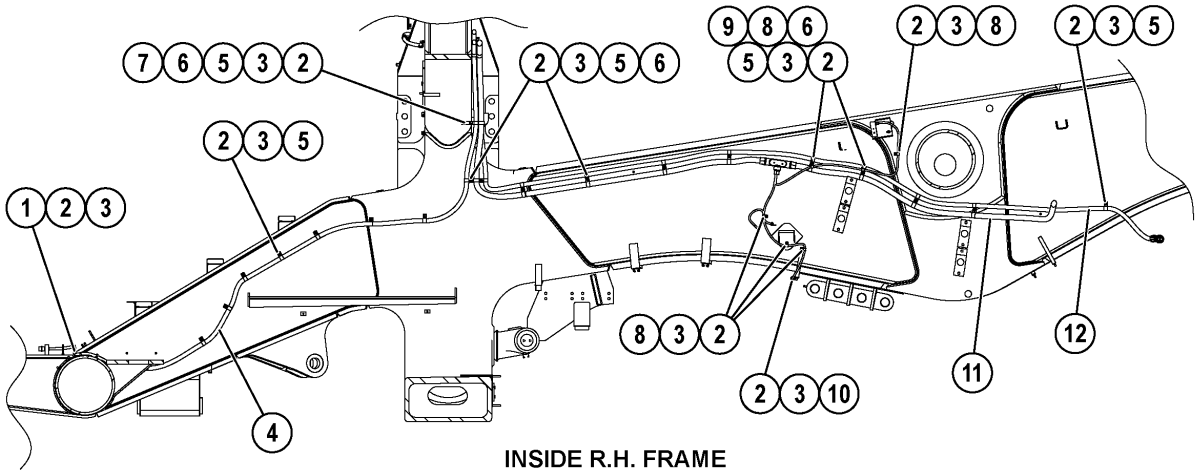

INSIDE R.H. FRAME

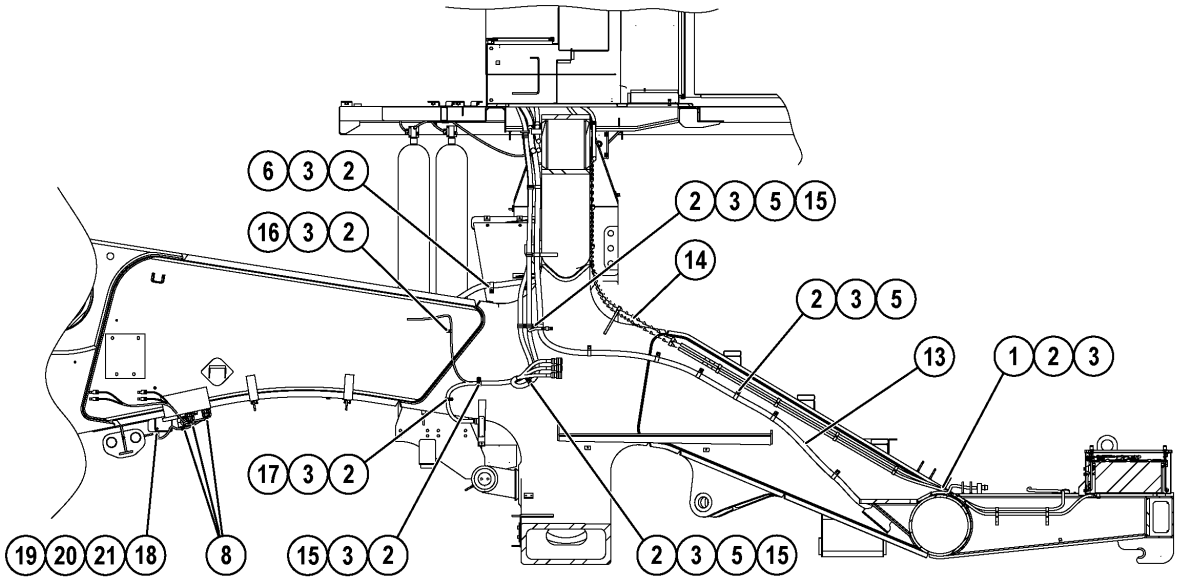

INSIDE L.H. FRAME

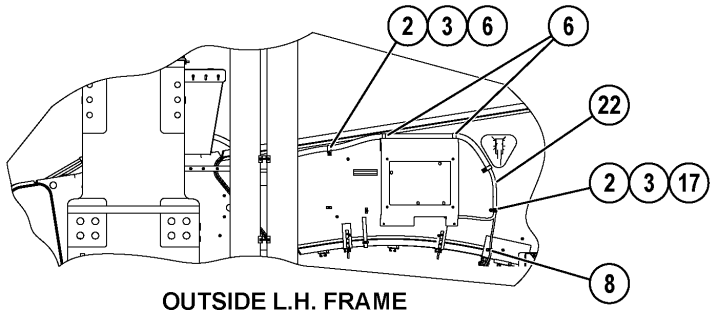

OUTSIDE L.H. FRAME

61003Z

REF.	PART NUM.	QTY.	DESCRIPTION
1.00	WB1303	2	CLAMP, CUSHIONED - 3/4"
2.00	MM0461	48	FLAT WASHER - M10
3.00	MM0178	48	NUT - M10 X 1.50
4.00	EM5758	1	HARNESS, RIGHT FRONT FRAME
5.00	TR9441	39	CLAMP, VINYL - 1 1/4" I.D.
6.00	TG2563	17	CLAMP, VINYL - 1 9/16" I.D.
7.00	TY8375	1	SPACER
8.00	SP7847	10	CLAMP, CUSHIONED - 1/2"
9.00	EK9883	2	SPACER
10.00	VN9913	1	CLAMP, VINYL - 1 1/16" I.D.
11.00	EM5638	1	HARNESS, RIGHT REAR FRAME
12.00	EL5817	1	HARNESS, GE WHEEL SPEED
13.00	EM5757	1	HARNESS, LEFT FRONT FRAME
14.00	EJ3891	13	CLAMP ASSEMBLY
15.00	WB3096	4	CLAMP, CUSHIONED - 1 1/4"
16.00	WB3097	1	CLAMP, CUSHIONED - 1/2"
17.00	WB3093	2	CLAMP, CUSHIONED - 1"
18.00	EG0606	1	PLATE
19.00	TG5720	4	CAPSCREW - 3/8" - 16NC X 1"
20.00	TR4436	4	FLAT WASHER - 3/8"
21.00	TC1231	4	LOCKWASHER - 3/8"
22.00	EM5756	1	HARNESS, LEFT REAR FRAME

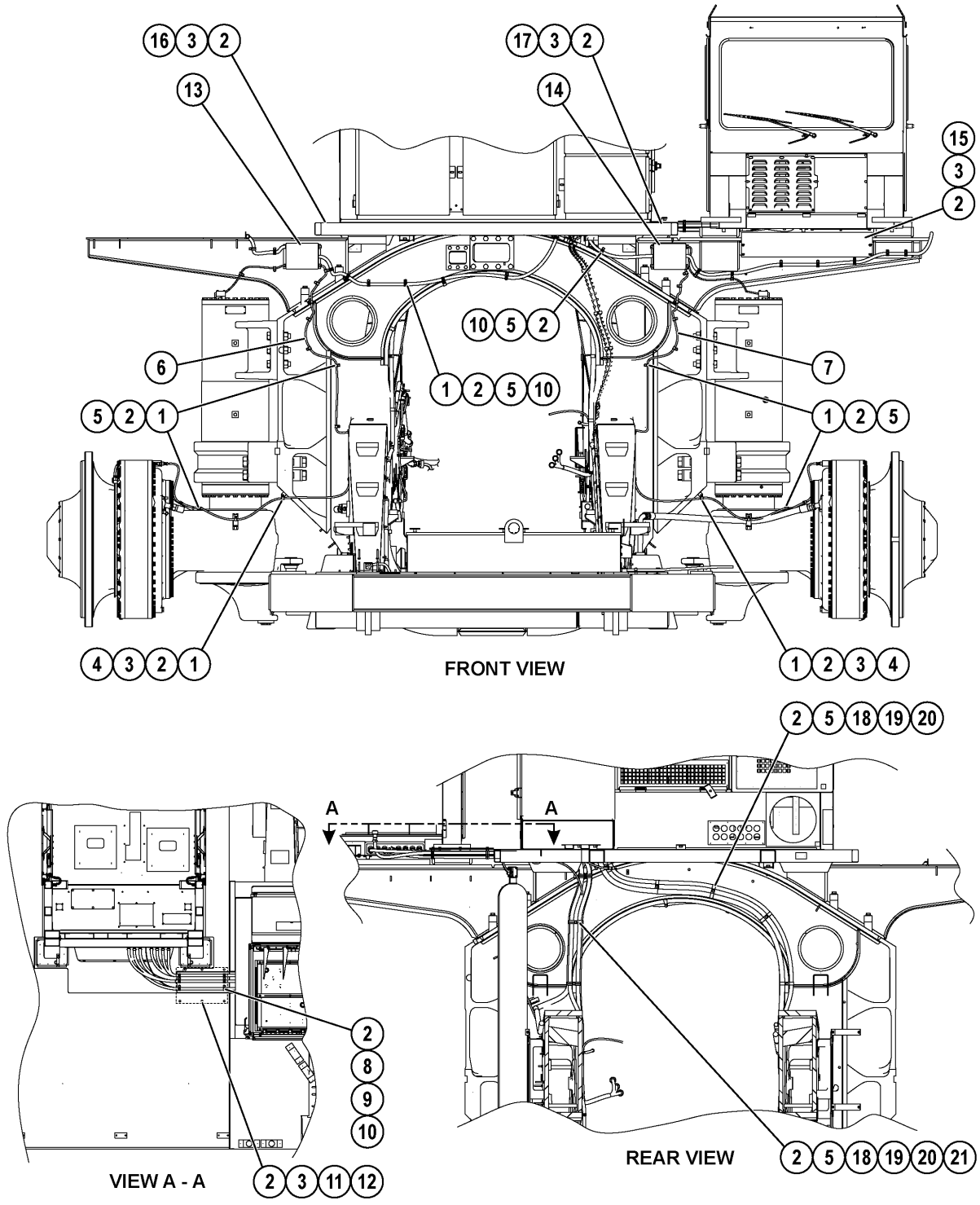
16 3 2
13
17 3 2
14
15
3
2
10 5 2
6
7
1 2 5 10
5 2 1
1 2 5
4 3 2 1
FRONT VIEW
1 2 3 4
2 5 18 19 20
A
A
2
8
9
10
VIEW A - A
2 3 11 12
REAR VIEW
2 5 18 19 20 21

61004Z

REF.	PART NUM.	QTY.	DESCRIPTION
1.00	WB3097	28	CLAMP, CUSHIONED - 1/2"
2.00	MM0461	75	FLAT WASHER - M10
3.00	MM0605	26	CAPSCREW - M10 X 1.50 X 25
4.00	EK9920	2	BRACKET, CLAMP
5.00	MM0178	39	NUT - M10 X 1.50
6.00	EK6757	1	CABLE, WHEEL SPEED SENSOR - L.H.
7.00	EK6756	1	CABLE, WHEEL SPEED SENSOR - R.H.
8.00	WB1301	2	CLAMP, CUSHIONED - 1/4"
9.00	MM0604	4	CAPSCREW - M10 X 1.50 X 20
10.00	WB3093	27	CLAMP, CUSHIONED - 1"
11.00	EM4624	1	GASKET
12.00	EM4625	1	COVER, L.H. DECK
13.00	EK5824	1	JUNCTION BOX ASSEMBLY - R.H. (SEE INDEX)
14.00	EK5822	1	JUNCTION BOX ASSEMBLY - L.H. (SEE INDEX)
15.00	EL3813	1	SHEET, BENT
16.00	EL3783	1	PLATFORM - R.H.
17.00	EL3784	1	PLATFORM - L.H.
18.00	TR9441	10	CLAMP, VINYL - 1 1/4" I.D.
19.00	TG2563	6	CLAMP, VINYL - 1 9/16" I.D.
20.00	TY8375	6	SPACER
21.00	WB3096	4	CLAMP, CUSHIONED - 1 1/4"

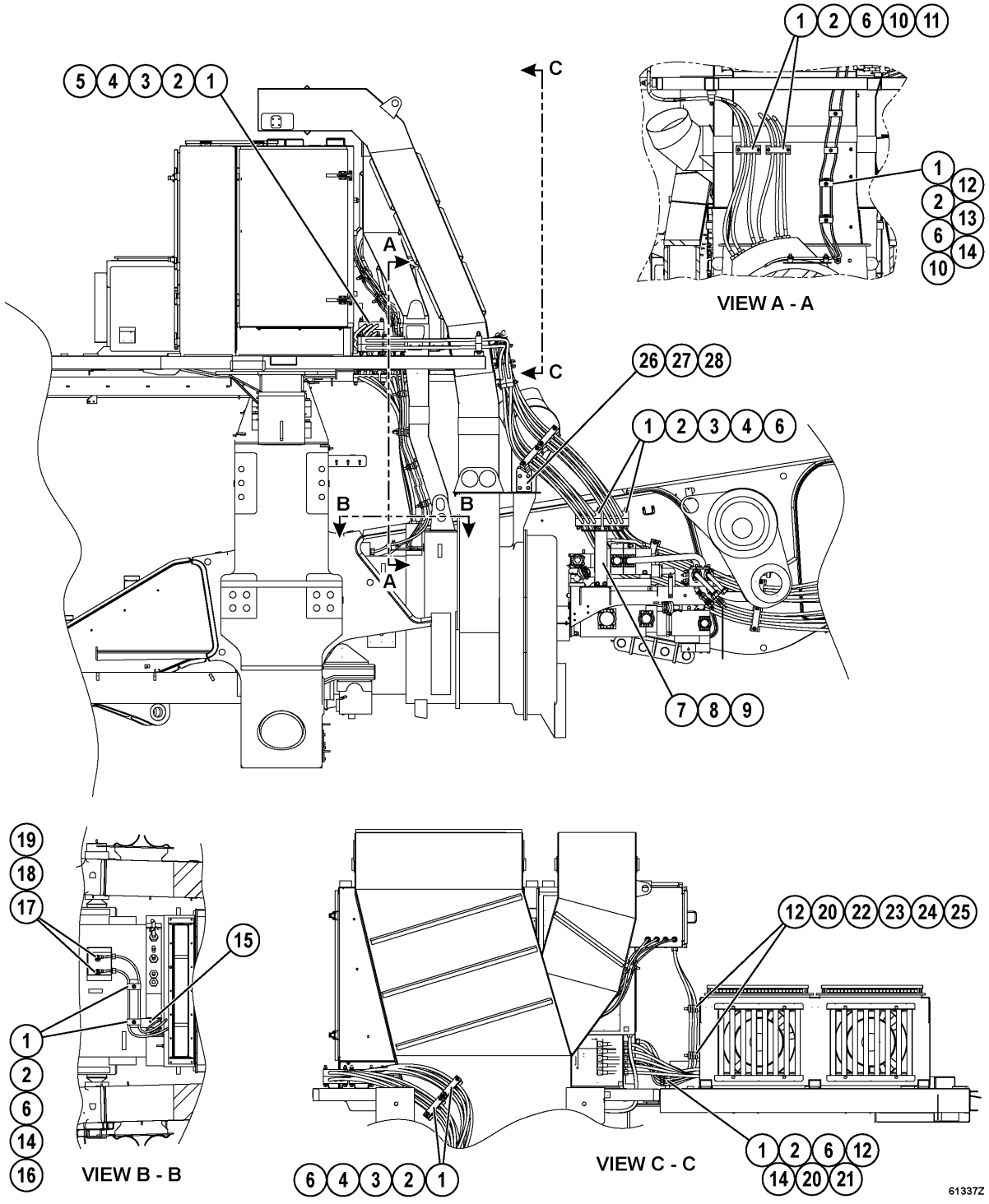
1 2 6 10 11
5 4 3 2 1
C
A
1 12
2 13
6 14
10
VIEW A - A
26 27 28
1 2 3 4 6
B
B
A
C
7 8 9
19
18
17
15
1
2
6
14
16
VIEW B - B
12 20 22 23 24 25
1 2 6 12
14 20 21
6 4 3 2 1
VIEW C - C
61337Z

REF.	PART NUM.	QTY.	DESCRIPTION
1.00	MM0181	55	NUT - M16 X 2.00
2.00	MM0474	55	LOCKWASHER - M16
3.00	EC1090	32	STUD, THREADED
4.00	EJ9742	32	CLAMP, WOOD
5.00	EK4014	2	STUD, THREADED
6.00	MM0464	51	FLAT WASHER - M16
7.00	EK9879	1	STRAP, MOUNTING
8.00	WA4729	4	FLAT WASHER - 5/8" (HARDENED)
9.00	MM0618	4	CAPSCREW - M12 X 1.75 X 30
10.00	EB9886	22	STUD, THREADED
11.00	ED8940	6	CLAMP, WOOD
12.00	VA0609	12	SPACER
13.00	ED8936	16	CLEAT, CABLE
14.00	EH1785	24	CLEAT, CABLE
15.00	EK6397	1	BRACKET
16.00	EB9885	2	STUD, THREADED
17.00	TC1231	2	LOCKWASHER - 3/8"
18.00	TC1233	2	NUT - 3/8" - 16NC
19.00	TR4436	2	FLAT WASHER - 3/8"
20.00	VN5529	8	CLEAT, CABLE
21.00	EC1089	1	STUD, THREADED
22.00	C1525	2	NUT - 5/8" - 11NC
23.00	TR9082	2	FLAT WASHER - 5/8"
24.00	VC1390	2	LOCKWASHER - 5/8"
25.00	VN6187	2	STUD, THREADED
26.00	EL8830	1	BRACKET
27.00	MM0042	4	CAPSCREW - M10 X 1.50 X 25
28.00	MM0461	4	FLAT WASHER - M10

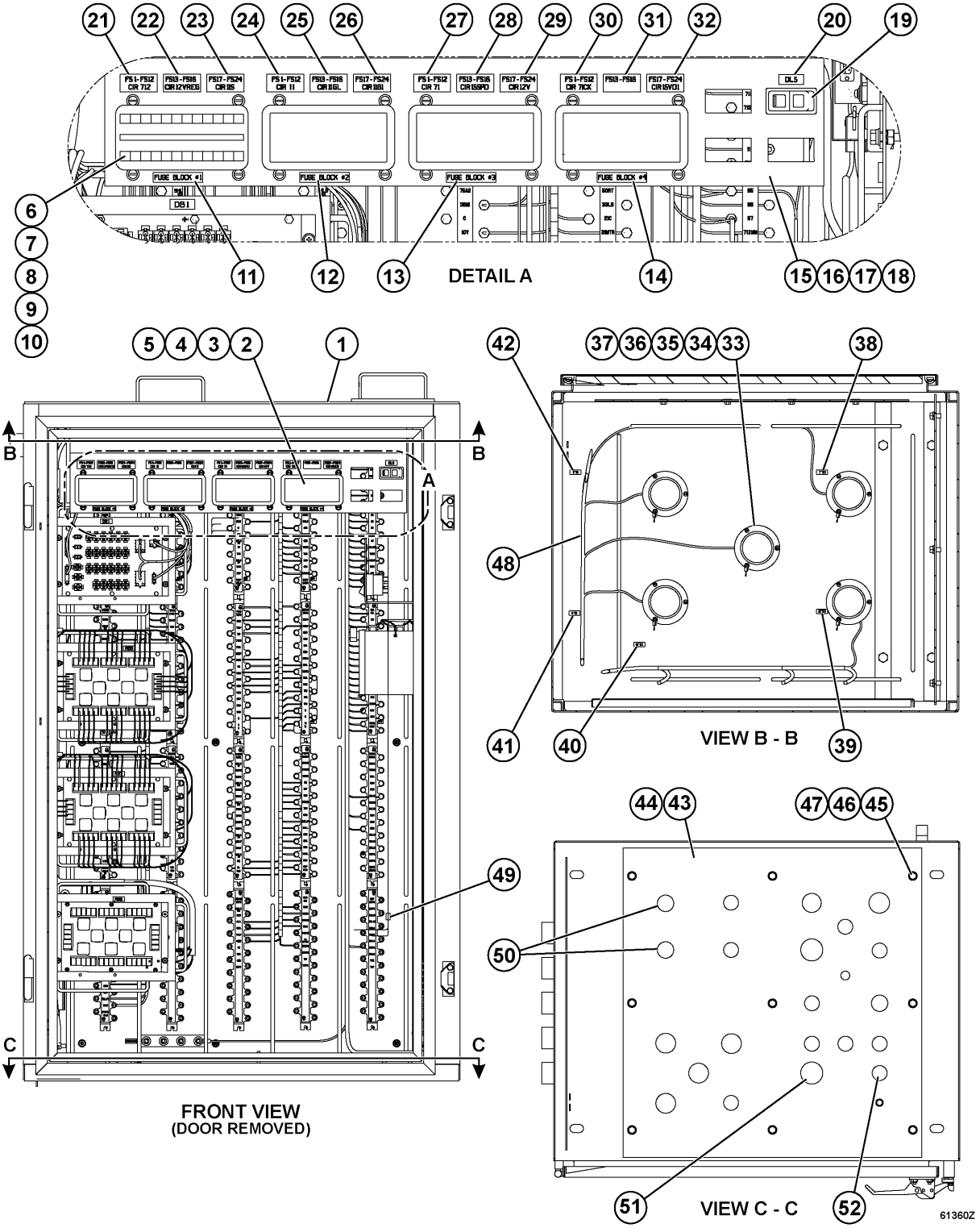
DETAIL A
FRONT VIEW
(DOOR REMOVED)
VIEW B - B
VIEW C - C
61360Z

REF.	PART NUM.	QTY.	DESCRIPTION
1.00	EL8250	1	CABINET
2.00	PC1345	4	FUSE BLOCK
3.00	DC3101	16	LOCKWASHER - #10
4.00	VC5344	16	FLAT WASHER - #10
5.00	SD5390	16	MACHINE SCREW - #10 - 32NC X 1"
6.00	PC2399	1	FUSE - 1 AMP
7.00	08041-00500	9	FUSE - 5 AMP
8.00	08041-01000	20	FUSE - 10 AMP
9.00	08041-01500	14	FUSE - 15 AMP
10.00	08041-02000	9	FUSE - 20 AMP
11.00	WB2941	1	NAME PLATE - FUSE BLOCK #1
12.00	WB2942	1	NAME PLATE - FUSE BLOCK #2
13.00	EK2512	1	NAME PLATE - FUSE BLOCK #3
14.00	EK2513	1	NAME PLATE - FUSE BLOCK #4
15.00	EL9245	1	BRACKET, MOUNTING - CIRCUIT BREAKER
16.00	TD1549	4	NUT - 1/4" - 20NC
17.00	DC3584	4	LOCKWASHER - 1/4"
18.00	TR1307	4	FLAT WASHER - 1/4"
19.00	PC0254	1	SWITCH, ROCKER (LOCKED)
20.00	WB2200	1	NAME PLATE - DLS
21.00	EK2075	1	NAME PLATE - FS1 - FS12 CIR 712
22.00	EL7627	1	NAME PLATE - FS13 - FS16 12V REG
23.00	EK2502	1	NAME PLATE - FS17 - FS24 CIR 11S
24.00	EK2503	1	NAME PLATE - FS1 - FS12 CIR 11
25.00	WB3313	1	NAME PLATE - FS13 - FS16 CIR 11GL
26.00	EL7626	1	NAME PLATE - FS17 - FS24 CIR 11B1
27.00	EK2505	1	NAME PLATE - FS1 - FS12 CIR 71
28.00	EK2508	1	NAME PLATE - FS13 - FS16 CIR 15SPD
29.00	EK2509	1	NAME PLATE - FS17 - FS24 CIR 12V
30.00	EK2510	1	NAME PLATE - FS1 - FS12 CIR 71CK
31.00	EK2501	1	NAME PLATE - FS13 - FS16
32.00	EK2511	1	NAME PLATE - FS17 - FS24 CIR 15VD1
33.00	VS0035	5	LIGHT, DOME
33.01	VZ1912	5	BULB
33.02	TM9090	5	INSULATOR
34.00	SF9896	5	KNIFE, DISCONNECT
35.00	TF6248	15	FLAT WASHER - #8
36.00	VM9910	15	LOCKWASHER - #8
37.00	TV2179	60	NUT - #8 - 32NC
38.00	EC7462	1	NAME PLATE - DL1
39.00	EC7458	1	NAME PLATE - DL2
40.00	EC7459	1	NAME PLATE - DL3

(SEE FOLLOWING PAGE FOR BALANCE OF PARTS...)

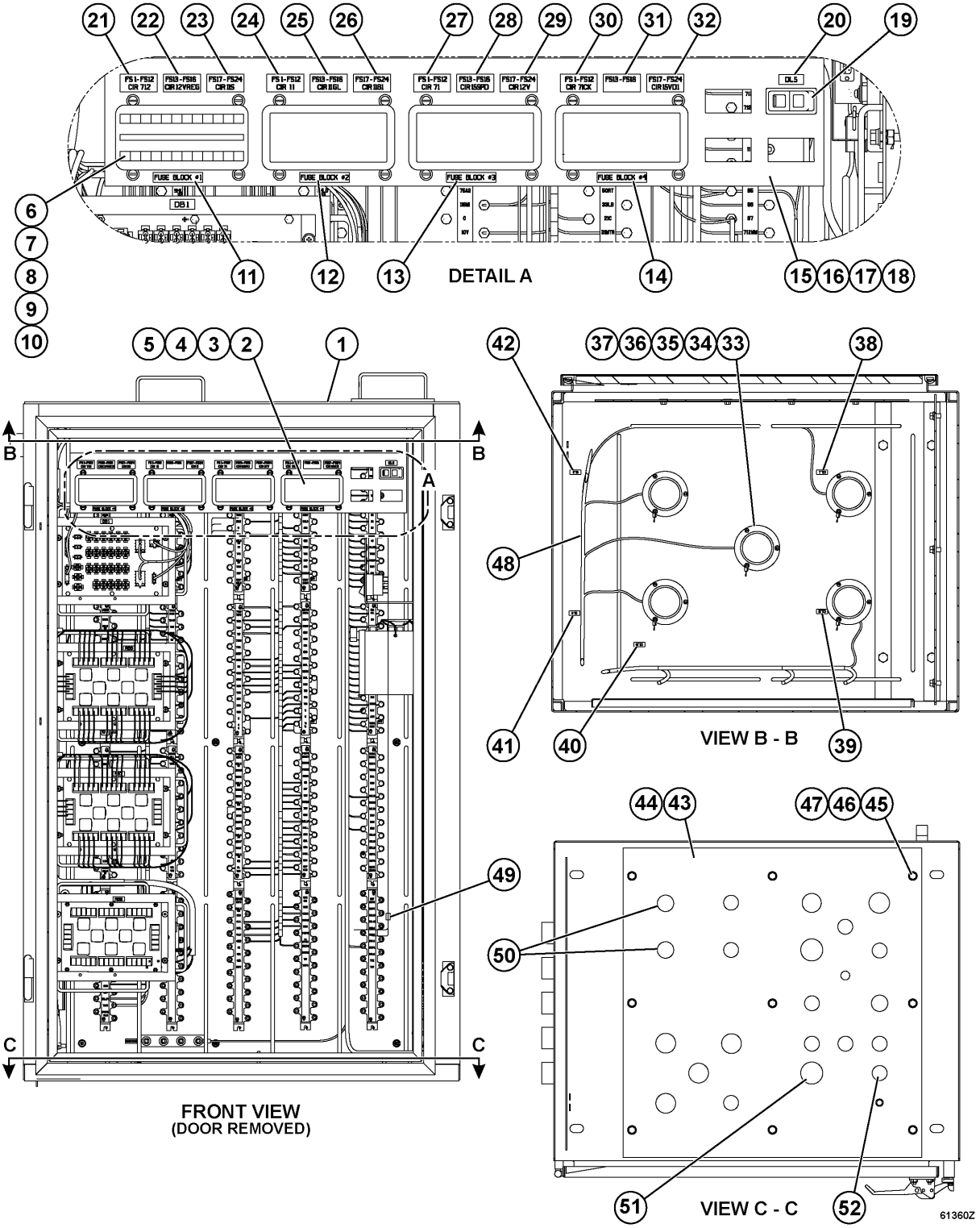
DETAIL A
FRONT VIEW
(DOOR REMOVED)
VIEW B - B
VIEW C - C
61360Z

REF.	PART NUM.	QTY.	DESCRIPTION
41.00	EC7460	1	NAME PLATE - DL4
42.00	EC7457	1	NAME PLATE - DL5
43.00	EM2720	1	PLATE, BOTTOM
44.00	EL0316	1	GASKET
45.00	TC1234	9	CAPSCREW - 3/8" - 16NC X 3/4"
46.00	TC1231	9	LOCKWASHER - 3/8"
47.00	TR4436	9	FLAT WASHER - 3/8"
48.00	EM5631	1	HARNESS, AUXILIARY CONTROL CABINET INTERNAL
49.00	EK5332	1	FILTER, NOISE
50.00	VZ1369	2	LOCKNUT, CONDULET - 1"
51.00	WA0724	1	PLUG, BUTTON - 2"
52.00	TV3555	1	PLUG, BUTTON - 1 3/8"
NS	EM5641	1	LABEL, FUSE BLOCK (INSIDE CABINET DOOR)

(SEE PRECEDING PAGE FOR BALANCE OF PARTS...)

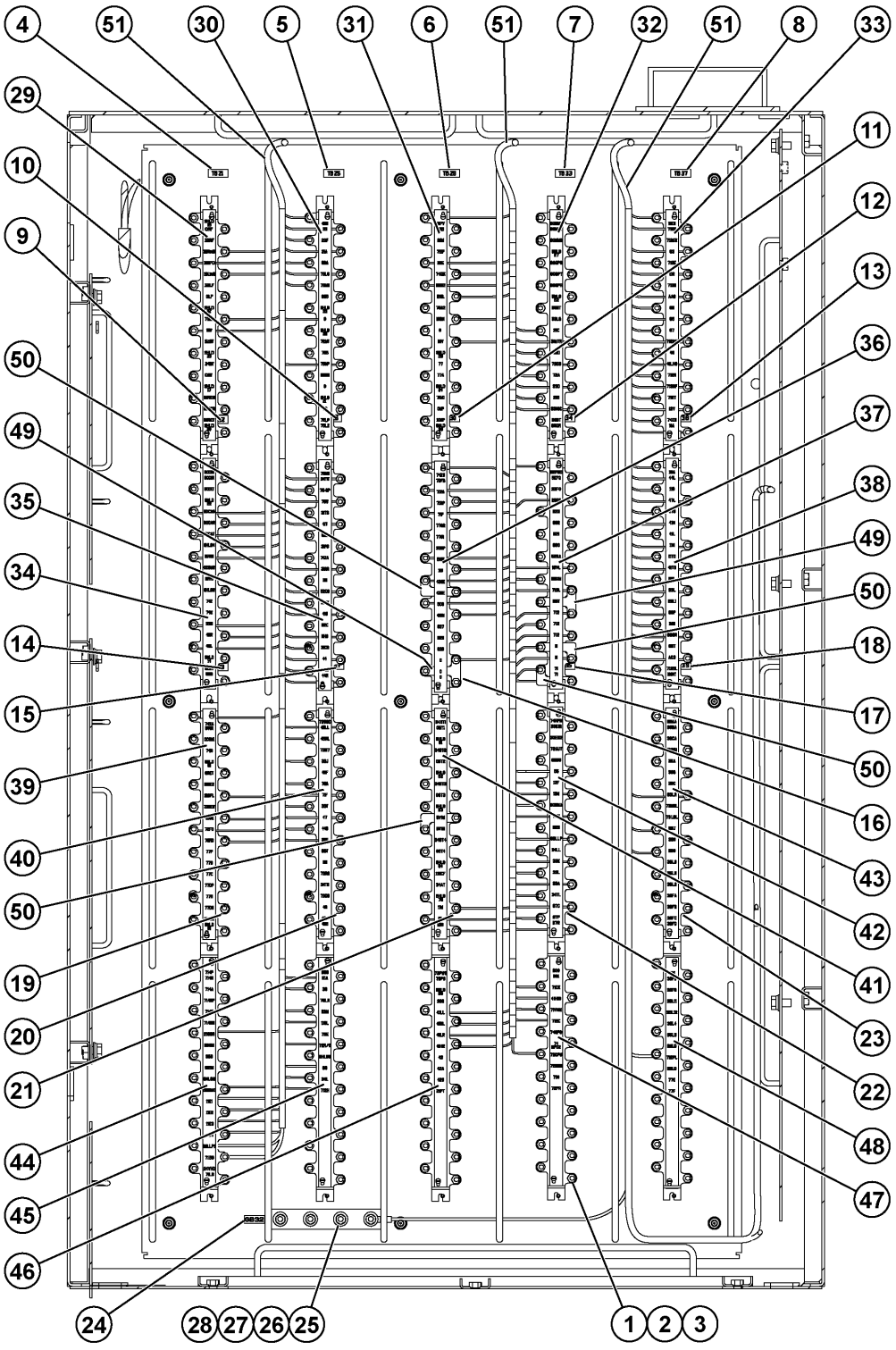
4
51
30
5
31
6
51
7
32
51
8
33
29
10
9
50
49
35
34
14
15
39
40
50
19
20
21
44
45
46
24
28
27
26
25
1
2
3
11
12
13
36
37
38
49
50
18
17
50
16
43
42
41
23
22
48
47

61019Z

REF.	PART NUM.	QTY.	DESCRIPTION
1.00	PB5732	20	BOARD, TERMINAL
2.00	WA3367	400	NUT ASSEMBLY
3.00	VM2951	40	SCREW, SELF-TAPPING - #6 - 32NC X 5/16"
4.00	WB2273	1	NAME PLATE - TB21
5.00	WB2385	1	NAME PLATE - TB25
6.00	WB2276	1	NAME PLATE - TB29
7.00	EF3015	1	NAME PLATE - TB33
8.00	WB2654	1	NAME PLATE - TB37
9.00	WB2382	1	NAME PLATE - TB22
10.00	WB2386	1	NAME PLATE - TB26
11.00	WB2277	1	NAME PLATE - TB30
12.00	EF3016	1	NAME PLATE - TB34
13.00	EK0732	1	NAME PLATE - TB38
14.00	WB2383	1	NAME PLATE - TB23
15.00	WB2274	1	NAME PLATE - TB27
16.00	WB2278	1	NAME PLATE - TB31
17.00	EF3017	1	NAME PLATE - TB35
18.00	EK0733	1	NAME PLATE - TB39
19.00	WB2384	1	NAME PLATE - TB24
20.00	WB2275	1	NAME PLATE - TB28
21.00	WB2279	1	NAME PLATE - TB32
22.00	EF3013	1	NAME PLATE - TB36
23.00	EK0734	1	NAME PLATE - TB40
24.00	EL7629	1	NAME PLATE - GB32
25.00	ED0913	4	ROD, THREADED - 1/4"
26.00	TD1549	4	NUT - 1/4" - 20NC
27.00	DC3584	8	LOCKWASHER - 1/4"
28.00	TR1307	8	FLAT WASHER - 1/4"
29.00	WB1251	1	STRIP, CIRCUIT ID
30.00	WB1254	1	STRIP, CIRCUIT ID
31.00	WB1257	1	STRIP, CIRCUIT ID
32.00	WB1260	1	STRIP, CIRCUIT ID
33.00	WB3422	1	STRIP, CIRCUIT ID
34.00	WB1252	1	STRIP, CIRCUIT ID
35.00	WB1255	1	STRIP, CIRCUIT ID
36.00	WB1258	1	STRIP, CIRCUIT ID
37.00	WB1261	1	STRIP, CIRCUIT ID
38.00	WB1264	1	STRIP, CIRCUIT ID
39.00	WB1253	1	STRIP, CIRCUIT ID
40.00	WB1256	1	STRIP, CIRCUIT ID
41.00	WB1259	1	STRIP, CIRCUIT ID
42.00	WB1262	1	STRIP, CIRCUIT ID

(SEE FOLLOWING PAGE FOR BALANCE OF PARTS...)

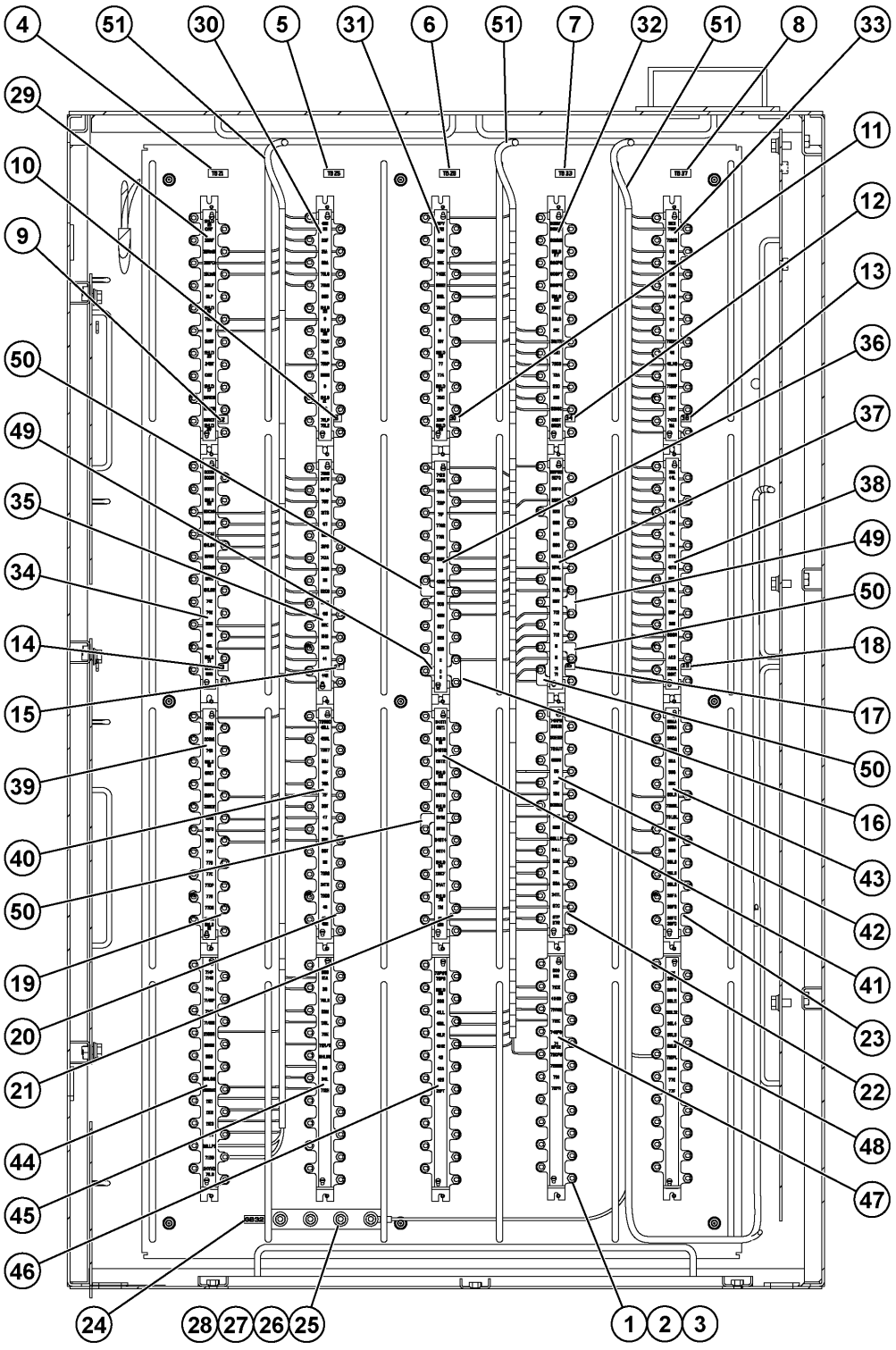
4
51
30
5
31
6
51
7
32
51
8
33
29
10
9
50
49
35
34
14
15
39
40
50
19
20
21
44
45
46
24
28
27
26
25
1
2
3
11
12
13
36
37
38
49
50
18
17
50
16
43
42
41
23
22
48
47

61019Z

REF.	PART NUM.	QTY.	DESCRIPTION
43.00	WB1265	1	STRIP, CIRCUIT ID
44.00	WB3234	1	STRIP, CIRCUIT ID
45.00	WB3424	1	STRIP, CIRCUIT ID
46.00	WB3297	1	STRIP, CIRCUIT ID
47.00	WB3503	1	STRIP, CIRCUIT ID
48.00	WB3421	1	STRIP, CIRCUIT ID
49.00	EB7417	2	BAR, BUS
50.00	EB7418	4	BAR, BUS
51.00	EM5631	1	HARNESS, AUXILIARY CONTROL CABINET INTERNAL

(SEE PRECEDING PAGE FOR BALANCE OF PARTS...)

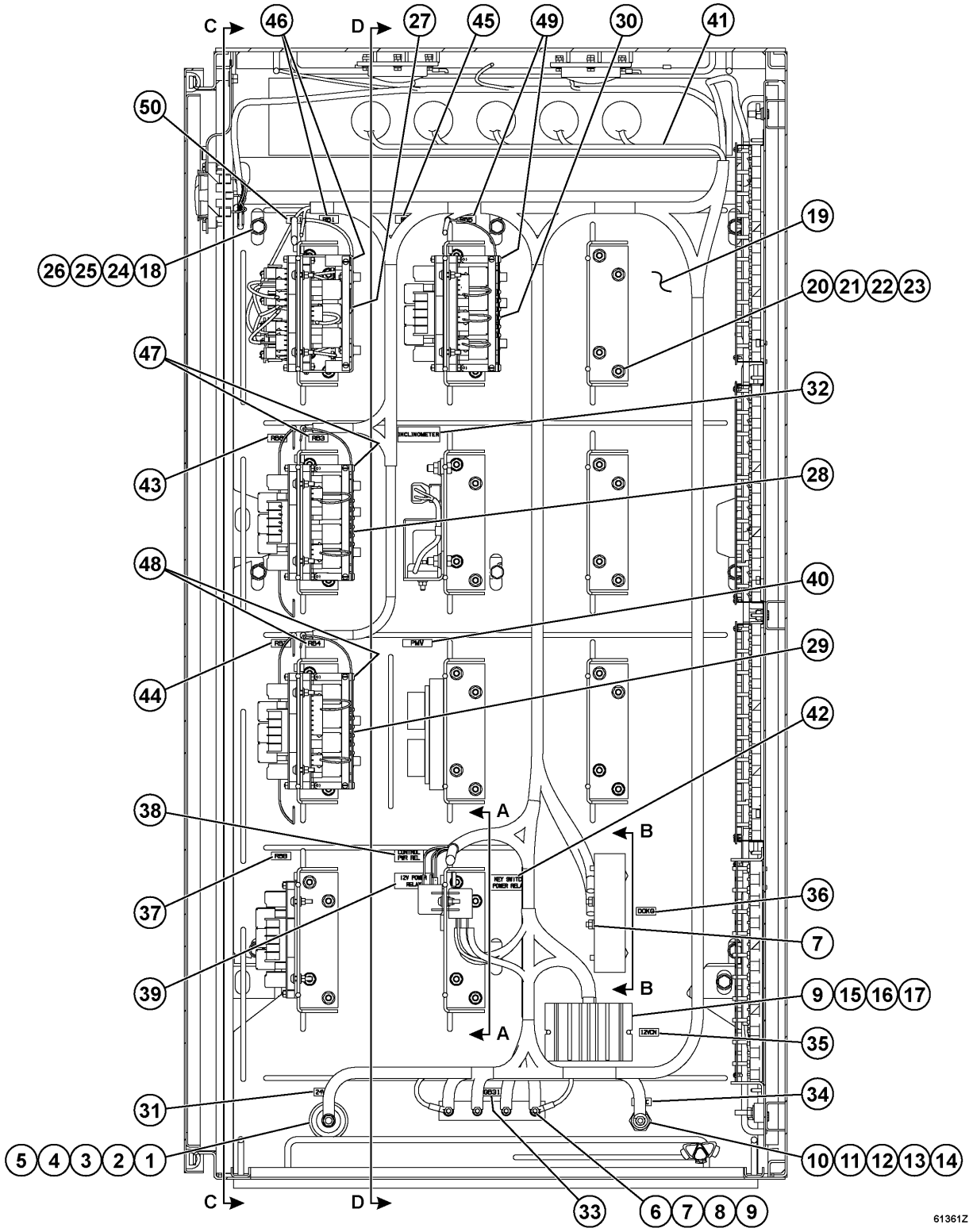
C
D
46
27
45
49
30
41
50
19
26
25
24
18
20
21
22
23
47
32
43
28
48
40
44
29
42
38
A
B
37
36
39
7
9
15
16
17
35
31
34
5
4
3
2
1
10
11
12
13
14
33
6
7
8
9
61361Z

REF.	PART NUM.	QTY.	DESCRIPTION
1.00	PB7202	1	INSULATOR
2.00	EM8612	1	ROD, THREADED - 5/16"
3.00	SC4174	2	LOCKWASHER - 5/16"
4.00	TD1684	1	NUT - 5/16" - 18NC
5.00	TV0177	2	FLAT WASHER - 5/16"
6.00	EK0731	4	ROD, THREADED - M6
7.00	MM0176	6	NUT - M6 X 1.00
8.00	MM0469	4	LOCKWASHER - M6
9.00	MM0459	6	FLAT WASHER - M6
10.00	TA7409	1	INSULATOR, STAND-OFF
11.00	ED0913	1	ROD, THREADED - 1/4"
12.00	TD1549	1	NUT - 1/4" - 20NC
13.00	DC3584	2	LOCKWASHER - 1/4"
14.00	TR1307	2	FLAT WASHER - 1/4"
15.00	PC1615	1	CONVERTER
16.00	MM0373	2	NUT - M5 X .8
17.00	MM0379	2	LOCKWASHER - M5 (EXTERNAL TOOTH)
18.00	EL0312	1	MOUNTING BRACKET ASSEMBLY
19.00	EL0311	1	MOUNT, BRACKET
20.00	EK9239	11	BRACKET
21.00	MM0470	44	LOCKWASHER - M8
22.00	MM0177	44	NUT - M8 X 1.25
23.00	MM0460	44	FLAT WASHER - M8
24.00	TC1234	9	CAPSCREW - 3/8" - 16NC X 3/4"
25.00	TC1231	9	LOCKWASHER - 3/8"
26.00	TR4436	9	FLAT WASHER - 3/8"
27.00	EK3808	1	RELAY BOARD ASSEMBLY - RB1 (SEE FIG 55612)
28.00	EK3803	1	RELAY BOARD ASSEMBLY - RB3 (SEE FIG 55612)
29.00	EK3806	1	RELAY BOARD ASSEMBLY - RB4 (SEE FIG 55612)
30.00	EK3811	1	RELAY BOARD ASSEMBLY - RB5 (SEE FIG 55612)
31.00	TZ7377	1	NAME PLATE - 24 VDC
32.00	EL7628	1	NAME PLATE - INCLINOMETER
33.00	WB2303	1	NAME PLATE - GB31
34.00	TZ7378	1	NAME PLATE - 12 VDC
35.00	WB3239	1	NAME PLATE - 12 VCN
36.00	WB3238	1	NAME PLATE - DOKG
37.00	WB3237	1	NAME PLATE - RB9
38.00	WB2836	1	NAME PLATE - 12V POWER RELAY
39.00	WB2289	1	NAME PLATE - CONTROL POWER RELAY
40.00	EH3010	1	NAME PLATE - PVM
41.00	EM1468	1	HARNESS, GE/AUX BOX INTERFACE
42.00	WB2835	1	NAME PLATE - KEY SWITCH POWER RELAY

(SEE FOLLOWING PAGE FOR BALANCE OF PARTS...)

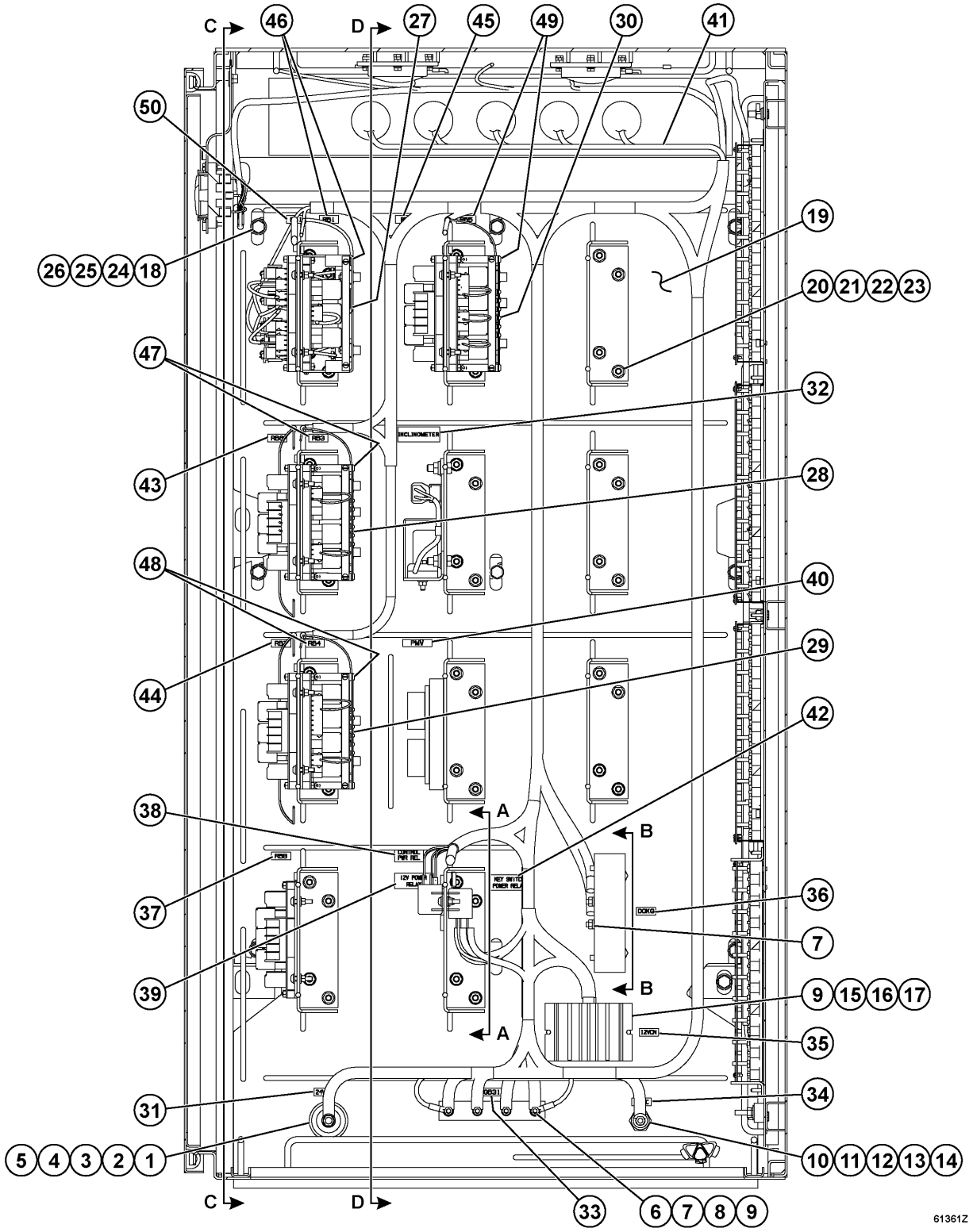
C
D
A
B
46
27
45
49
30
41
50
19
26
25
24
18
20
21
22
23
47
32
43
28
48
40
44
29
42
38
37
39
36
7
9
15
16
17
35
31
34
5
4
3
2
1
10
11
12
13
14
33
6
7
8
9
61361Z

REF.	PART NUM.	QTY.	DESCRIPTION
43.00	EC8824	1	NAME PLATE - RB6
44.00	WB2280	1	NAME PLATE - RB7
45.00	WB2733	1	NAME PLATE - RB8
46.00	EC8819	2	NAME PLATE - RB1
47.00	EC8821	2	NAME PLATE - RB3
48.00	EC8822	2	NAME PLATE - RB4
49.00	EC8823	2	NAME PLATE - RB5
50.00	EC8825	1	NAME PLATE - DB1

(FOR VIEWS A-A THROUGH D-D, SEE FOLLOWING PAGE.)

(SEE PRECEDING PAGE FOR BALANCE OF PARTS...)

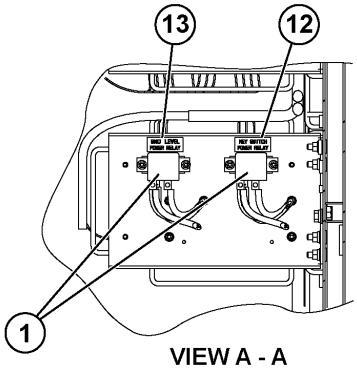

VIEW A - A

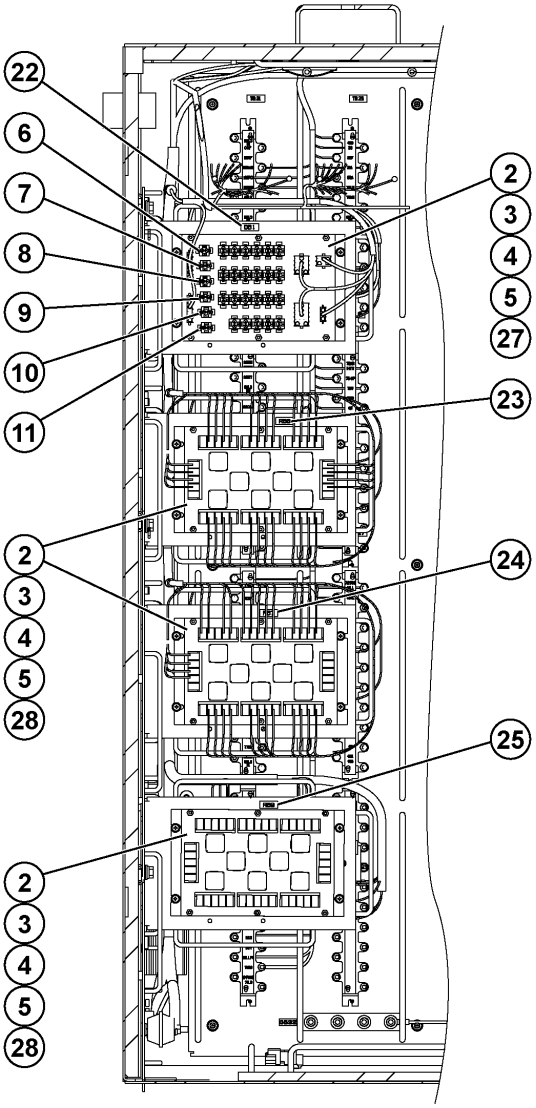

VIEW C - C

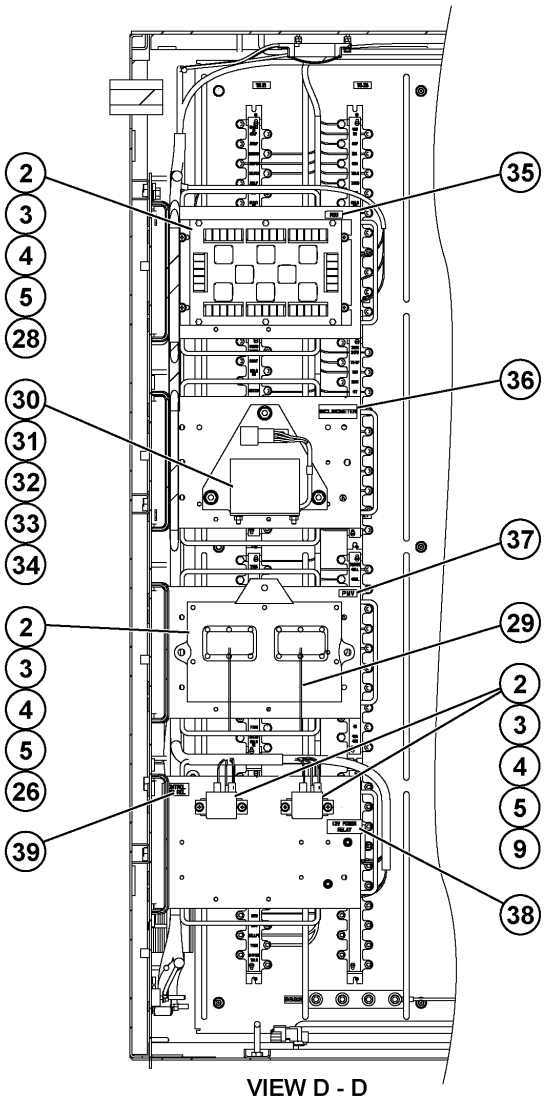

VIEW D - D

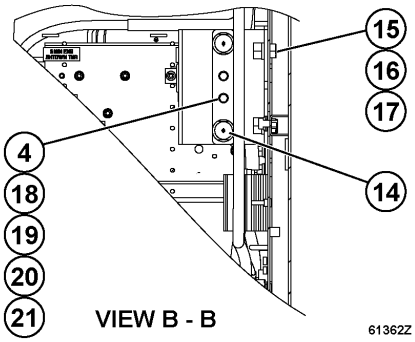

VIEW B - B

61362Z

REF.	PART NUM.	QTY.	DESCRIPTION
1.00	PB7276	4	RELAY - 24V, 50 AMP
2.00	MM0379	26	LOCKWASHER - M5 (EXTERNAL TOOTH)
3.00	MM0373	26	NUT - M5 X .8
4.00	MM0459	28	FLAT WASHER - M6
5.00	MM0352	26	MACHINE SCREW - M5 X .8 X 25
6.00	EH7286	1	RESISTOR
7.00	EH7285	1	RESISTOR
8.00	EH7284	1	RESISTOR/CAPACITOR
9.00	EG8333	1	RESISTOR - 20 OHM
10.00	SM3124	1	DIODE
11.00	EG0664	1	RESISTOR - 270 OHM
12.00	WB2835	1	NAME PLATE - KEY SWITCH POWER RELAY
13.00	WB3298	1	NAME PLATE - GROUND LEVEL POWER RELAY
14.00	EK0744	2	DIODE, 40 AMP
15.00	EK7515	1	BRACKET, INSULATED
16.00	TR6643	2	NUT - 1/2" - 13NC
17.00	TR5445	4	LOCKWASHER - 1/2"
18.00	MM0176	2	NUT - M6 X 1.00
19.00	MM0469	2	LOCKWASHER - M6
20.00	EK7516	1	BAR, BUS
21.00	MM0025	2	CAPSCREW - M6 X 1.00 X 20
22.00	EC8825	1	NAME PLATE - DB1
23.00	EC8824	1	NAME PLATE - RB6
24.00	WB2280	1	NAME PLATE - RB7
25.00	WB3237	1	NAME PLATE - RB9
26.00	PC0606	1	ENGINE ECM MODULE
27.00	EK4993	1	DIODE BOARD ASSEMBLY - DB1 (SEE FIG 55613)
28.00	EK4991	3	RELAY BOARD ASSEMBLY - RB6, RB7, RB8 (SEE FIG 55613)
29.00	EK7545	1	HARNESS, AUX BOX/ENGINE INTERFACE
30.00	78619-25330	1	SENSOR, ANGLE
31.00	TG5720	3	CAPSCREW - 3/8" - 16NC X 1"
32.00	TR9008	3	JAM NUT - 3/8" - 16NC
33.00	TC1231	3	LOCKWASHER - 3/8"
34.00	TR4436	3	FLAT WASHER - 3/8"
35.00	WB2733	1	NAME PLATE - RB8
36.00	EL7628	1	NAME PLATE - INCLINOMETER
37.00	EH3010	1	NAME PLATE - PVM
38.00	WB2289	1	NAME PLATE - CONTROL POWER RELAY
39.00	WB2836	1	NAME PLATE - 12V POWER RELAY

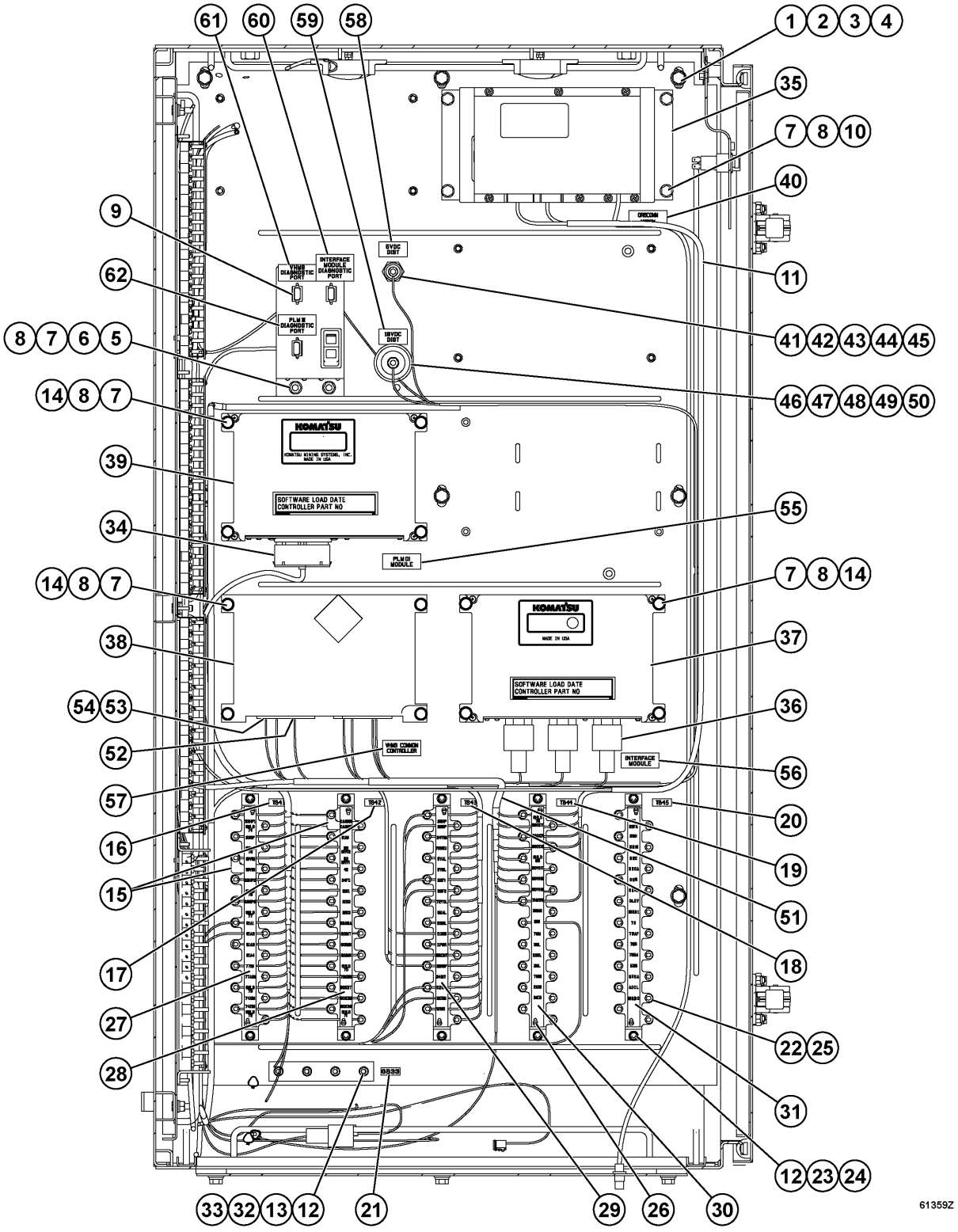
61
60
59
58
1
2
3
4
35
7
8
10
40
9
62
11
8
7
6
5
41
42
43
44
45
14
8
7
46
47
48
49
50
39
55
34
14
8
7
7
8
14
38
37
54
53
36
52
56
57
20
16
19
15
51
18
17
22
25
27
31
28
12
23
24
33
32
13
12
21
29
26
30
61359Z

REF.	PART NUM.	QTY.	DESCRIPTION
1.00	EL0309	1	BRACKET, MOUNTING
2.00	TC1234	8	CAPSCREW - 3/8" - 16NC X 3/4"
3.00	TC1231	8	LOCKWASHER - 3/8"
4.00	TR4436	8	FLAT WASHER - 3/8"
5.00	EK0742	1	BRACKET
6.00	MM0177	2	NUT - M8 X 1.25
7.00	MM0470	18	LOCKWASHER - M8
8.00	MM0460	18	FLAT WASHER - M8
9.00	PB8256	3	SCREW LOCK, FEMALE
10.00	MM0594	4	CAPSCREW - M8 X 1.25 X 25
11.00	EM5415	1	HARNESS, ORBCOMM
12.00	MM0459	14	FLAT WASHER - M6
13.00	MM0469	4	LOCKWASHER - M6
14.00	MM0401	12	CAPSCREW - M8 X 1.25 X 90
15.00	EB7418	2	BAR, BUS
16.00	EK0735	1	NAME PLATE - TB41
17.00	EK0736	1	NAME PLATE - TB42
18.00	EK0737	1	NAME PLATE - TB43
19.00	EK0738	1	NAME PLATE - TB44
20.00	EK0739	1	NAME PLATE - TB45
21.00	EL7630	1	NAME PLATE - GB33
22.00	PB5732	5	BOARD, TERMINAL
23.00	MM0373	10	NUT - M5 X .8
24.00	MM0379	10	LOCKWASHER - M5 (EXTERNAL TOOTH)
25.00	WA3367	100	NUT ASSEMBLY
26.00	VM2951	10	SCREW, SELF-TAPPING - #6 - 32NC X 5/16"
27.00	WB3420	1	STRIP, CIRCUIT ID
28.00	WB3419	1	STRIP, CIRCUIT ID
29.00	WB3418	1	STRIP, CIRCUIT ID
30.00	WB3250	1	STRIP, CIRCUIT ID
31.00	WB3357	1	STRIP, CIRCUIT ID
32.00	EK0731	4	ROD, THREADED - M6
33.00	MM0176	4	NUT - M6 X 1.00
34.00	EM6538	1	HARNESS, PLM III/AUX BOX
35.00	78261-22302	1	CONTROLLER, ORBCOMM
36.00	EM5644	1	HARNESS, INTERFACE MODULE CONNECTOR
37.00	EJ9089	1	INTERFACE MODULE
38.00	78261-74500	1	CONTROLLER, VHMS
39.00	EJ3060	1	PAYLOAD METER III ASSEMBLY
40.00	WB2879	1	NAME PLATE - ORBCOMM MODEM
41.00	TA7409	1	INSULATOR, STAND-OFF
42.00	ED0913	1	ROD, THREADED - 1/4"

(SEE FOLLOWING PAGE FOR BALANCE OF PARTS...)

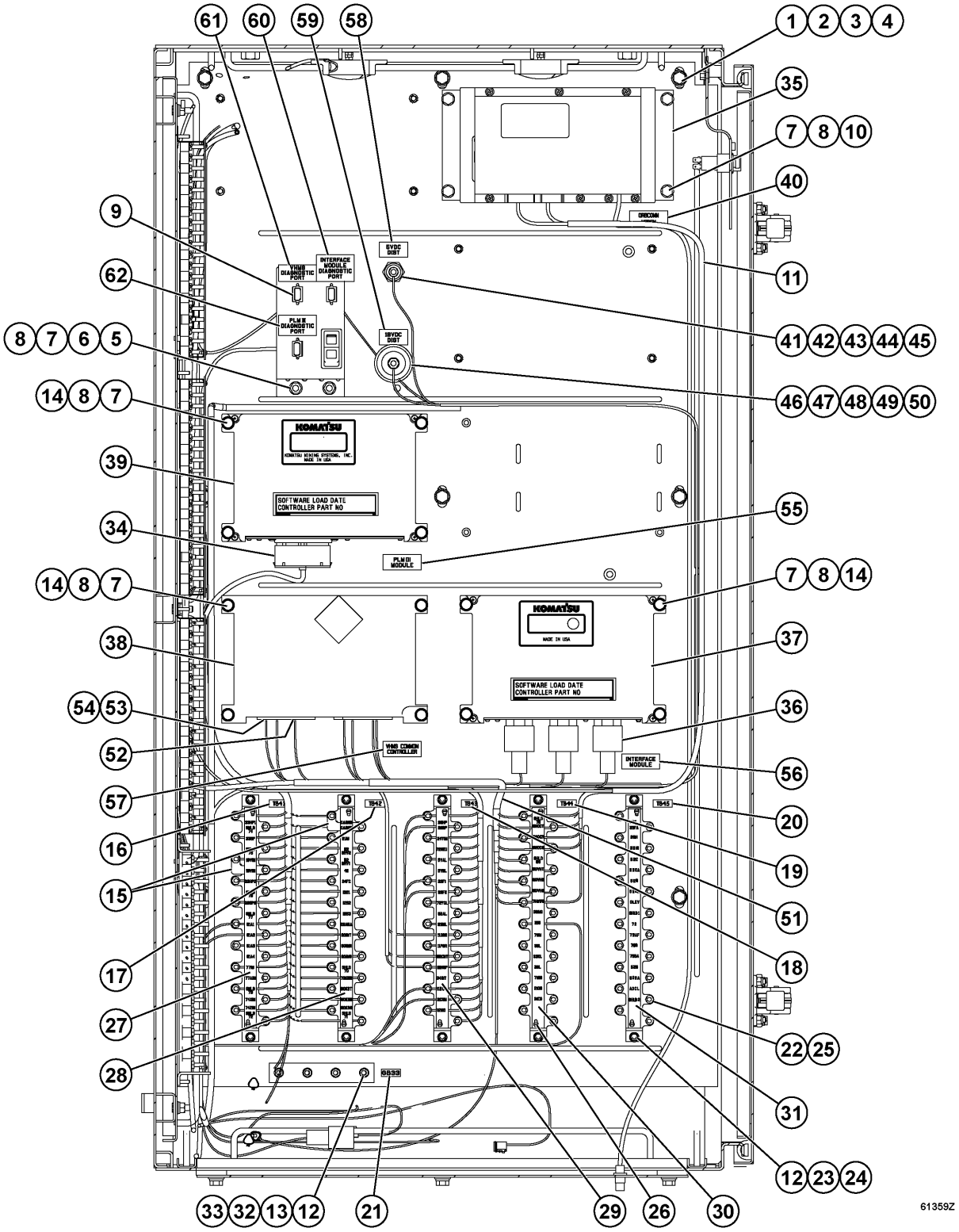
61
60
59
58
1
2
3
4
35
7
8
10
40
9
62
11
8
7
6
5
41
42
43
44
45
14
8
7
46
47
48
49
50
39
55
34
14
8
7
7
8
14
38
37
54
53
36
52
56
57
20
16
19
15
51
18
17
22
25
27
31
28
12
23
24
33
32
13
12
21
29
26
30
61359Z

REF.	PART NUM.	QTY.	DESCRIPTION
43.00	TD1549	1	NUT - 1/4" - 20NC
44.00	DC3584	2	LOCKWASHER - 1/4"
45.00	TR1307	2	FLAT WASHER - 1/4"
46.00	PB7202	1	INSULATOR
47.00	ED7468	1	ROD, THREADED - 5/16"
48.00	SC4174	2	LOCKWASHER - 5/16"
49.00	TD1684	1	NUT - 5/16" - 18NC
50.00	TV0177	2	FLAT WASHER - 5/16"
51.00	EM6534	1	HARNESS, CAB/AUX BOX - DIAGNOSTIC
52.00	EJ6371	1	CONNECTOR ASSEMBLY - CNB2
53.00	EK7547	1	HARNESS, VHMS
54.00	EK5337	1	CONNECTOR ASSEMBLY - CNI-6
55.00	EK3934	1	NAME PLATE - PLM III
56.00	EK2723	1	NAME PLATE - INTERFACE MODULE
57.00	WB2838	1	NAME PLATE - VHMS COMMON CONTROLLER
58.00	EK6252	1	NAME PLATE - 5VDC DIST
59.00	EK6251	1	NAME PLATE - 18VDC DIST
60.00	EK6255	1	NAME PLATE - INTERFACE MODULE DIAGNOSTIC PORT
61.00	EK6257	1	NAME PLATE - VHMS DIAGNOSTIC PORT
62.00	EK6256	1	NAME PLATE - PLM III DIAGNOSTIC PORT

(SEE PRECEDING PAGE FOR BALANCE OF PARTS...)

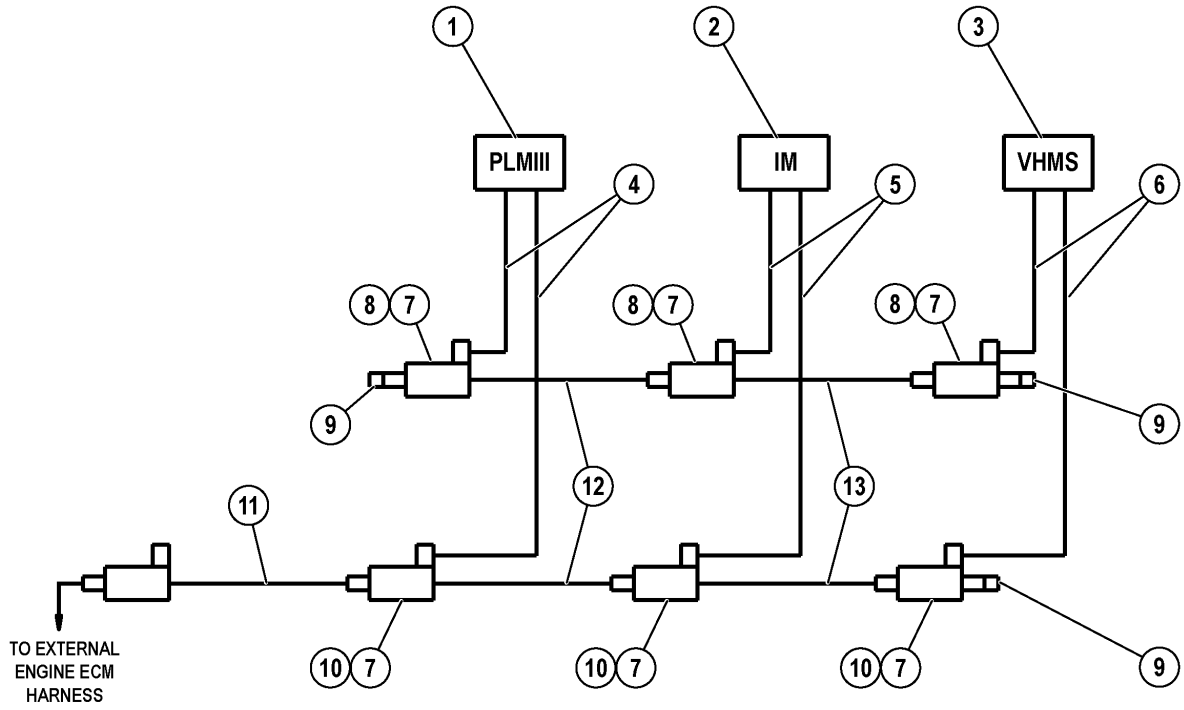
1
2
3
PLMIII
IM
VHMS
4
5
6
8
7
8
7
8
7
9
9
9
12
13
11
TO EXTERNAL
ENGINE ECM
HARNESS
10
7
10
7
10
7
9

61032Z

REF.	PART NUM.	QTY.	DESCRIPTION
1.00	EJ3060	1	PAYLOAD METER III ASSEMBLY (SEE FIG 61359)
2.00	EJ9089	1	INTERFACE MODULE (SEE FIG 61359)
3.00	78261-74500	1	CONTROLLER, VHMS (SEE FIG 61359)
4.00	EM6538	1	HARNESS, PLM III/AUX BOX
5.00	EM5644	1	HARNESS, INTERFACE MODULE CONNECTOR
6.00	EK7547	1	HARNESS, VHMS
7.00	PC0616	6	RECEPTACLE, TEE
8.00	EK6259	3	SHRINK SLEEVE - YELLOW
9.00	PC0618	3	PLUG, TERMINATING
10.00	EK6258	3	SHRINK SLEEVE - RED
11.00	EK5339	1	HARNESS, 1939 JUMPER
12.00	EK5340	1	HARNESS, 1939 JUMPER
13.00	EK5341	1	HARNESS, 1939 JUMPER

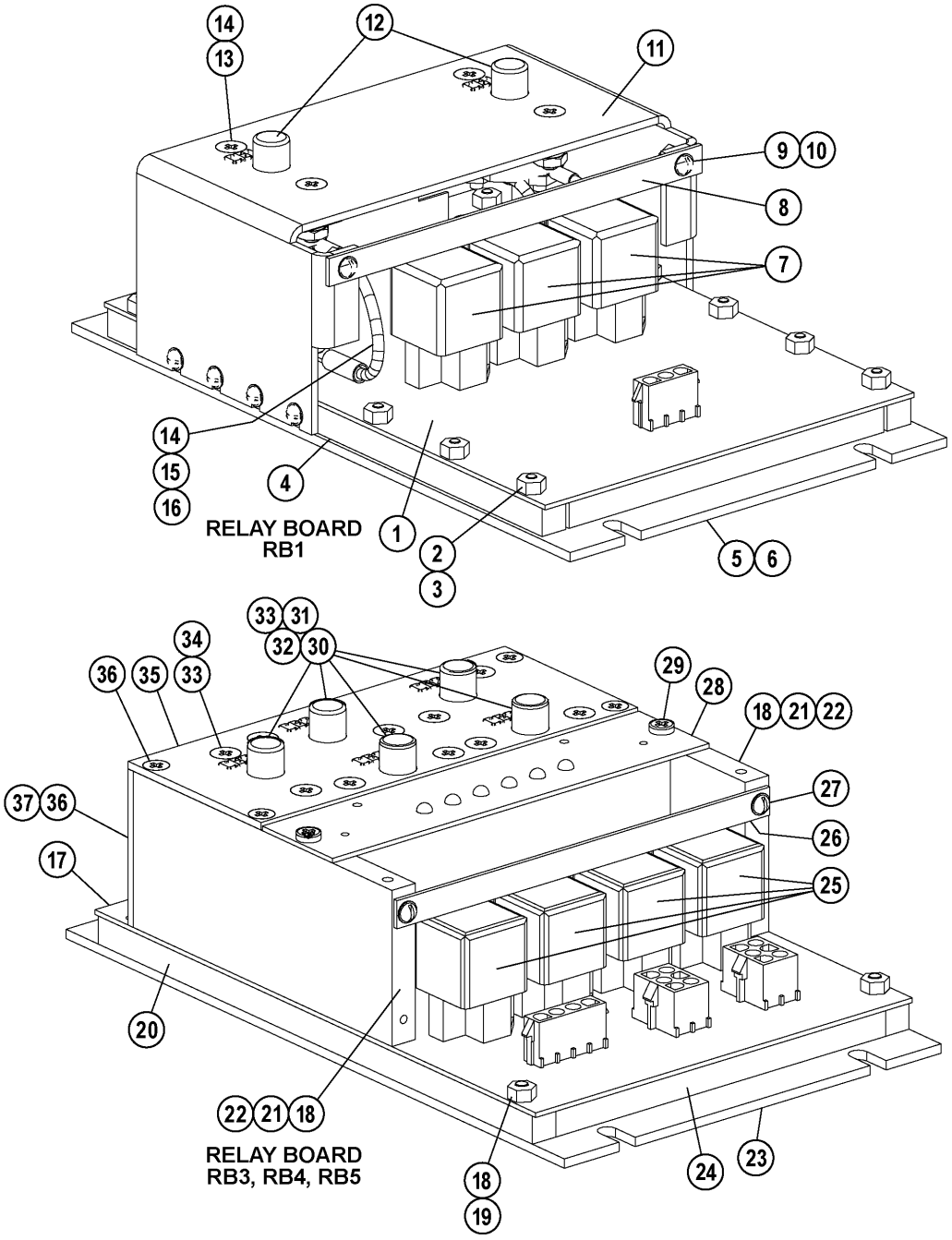
14
13
12
11
9
10
8
7
14
15
16
4
1
2
3
5
6
RELAY BOARD
RB1
33
31
32
30
34
36
35
33
29
28
18
21
22
27
26
25
37
36
17
20
22
21
18
RELAY BOARD
RB3, RB4, RB5
18
19
24
23
55612Z

REF.	PART NUM.	QTY.	DESCRIPTION
	EK3808	1	RELAY BOARD ASSEMBLY - RB1
1.00	SM5646	1	BOARD, PRINTED CIRCUIT - RB1
2.00	PC1509	12	MACHINE SCREW - #6 - 32NC X 3/4"
3.00	PC1510	12	NUT - #6 - 32NC
4.00	EK4986	10	RAIL, MOUNTING
5.00	EK4985	1	PLATE, MOUNTING
6.00	EK4990	1	BLOCK, FOAM
7.00	SM3189	3	RELAY
8.00	EH6156	1	PLATE, RELAY HOLDDOWN
9.00	SM1602	2	MACHINE SCREW - #6 - 32NC
10.00	SM1603	2	NUT - #6 - 32NC
11.00	EK3488	1	PLATE, CIRCUIT BREAKER MOUNTING
12.00	PC1385	2	CIRCUIT BREAKER - 12.5 AMP
13.00	PC1508	4	MACHINE SCREW - #10 - 32NF X 3/4"
14.00	WA3367	8	NUT ASSEMBLY
15.00	PC1433	4	MACHINE SCREW - #10 - 32NF X 1/4"
16.00	EK3804	4	WIRE
	EK3803	1	RELAY BOARD ASSEMBLY - RB3
	EK3806	1	RELAY BOARD ASSEMBLY - RB4
	EK3811	1	RELAY BOARD ASSEMBLY - RB5
17.00	SM5403	1	BOARD, PRINTED CIRCUIT - RB3
17.01	SM5404	1	BOARD, PRINTED CIRCUIT - RB4
17.02	SM5405	1	BOARD, PRINTED CIRCUIT - RB5
18.00	PC1506	4	MACHINE SCREW - #8 - 32NC X 3/4"
19.00	PC1516	2	NUT - #8 - 32NC
20.00	EK4982	2	RAIL, MOUNTING (BOTTOM)
21.00	EK4984	2	RAIL, MOUNTING (TOP)
22.00	PC1507	6	MACHINE SCREW - #8 - 32NC X 1"
23.00	EK4983	1	PLATE, MOUNTING (BOTTOM)
24.00	EK4989	1	BLOCK, FOAM
25.00	SM3189	4	RELAY
26.00	SM2163	1	PLATE, RELAY HOLDDOWN
27.00	SM1624	2	MACHINE SCREW - #6 - 32NC X 1/4"
28.00	SM3035	1	BOARD, PRINTED CIRCUIT - RB3
28.01	SM5652	1	BOARD, PRINTED CIRCUIT - RB4
28.02	SM3043	1	BOARD, PRINTED CIRCUIT - RB5
29.00	PC1515	2	MACHINE SCREW - #8 - 32NC X 3/8"
30.00	PC1385	4	CIRCUIT BREAKER - 12.5 AMP (RB3)
30.01	PC1385	3	CIRCUIT BREAKER - 12.5 AMP (RB4)
30.02	PC1385	5	CIRCUIT BREAKER - 12.5 AMP (RB5)
31.00	EK3804	10	WIRE
32.00	PC1433	10	MACHINE SCREW - #10 - 32NF X 1/4"

(SEE FOLLOWING PAGE FOR BALANCE OF PARTS...)

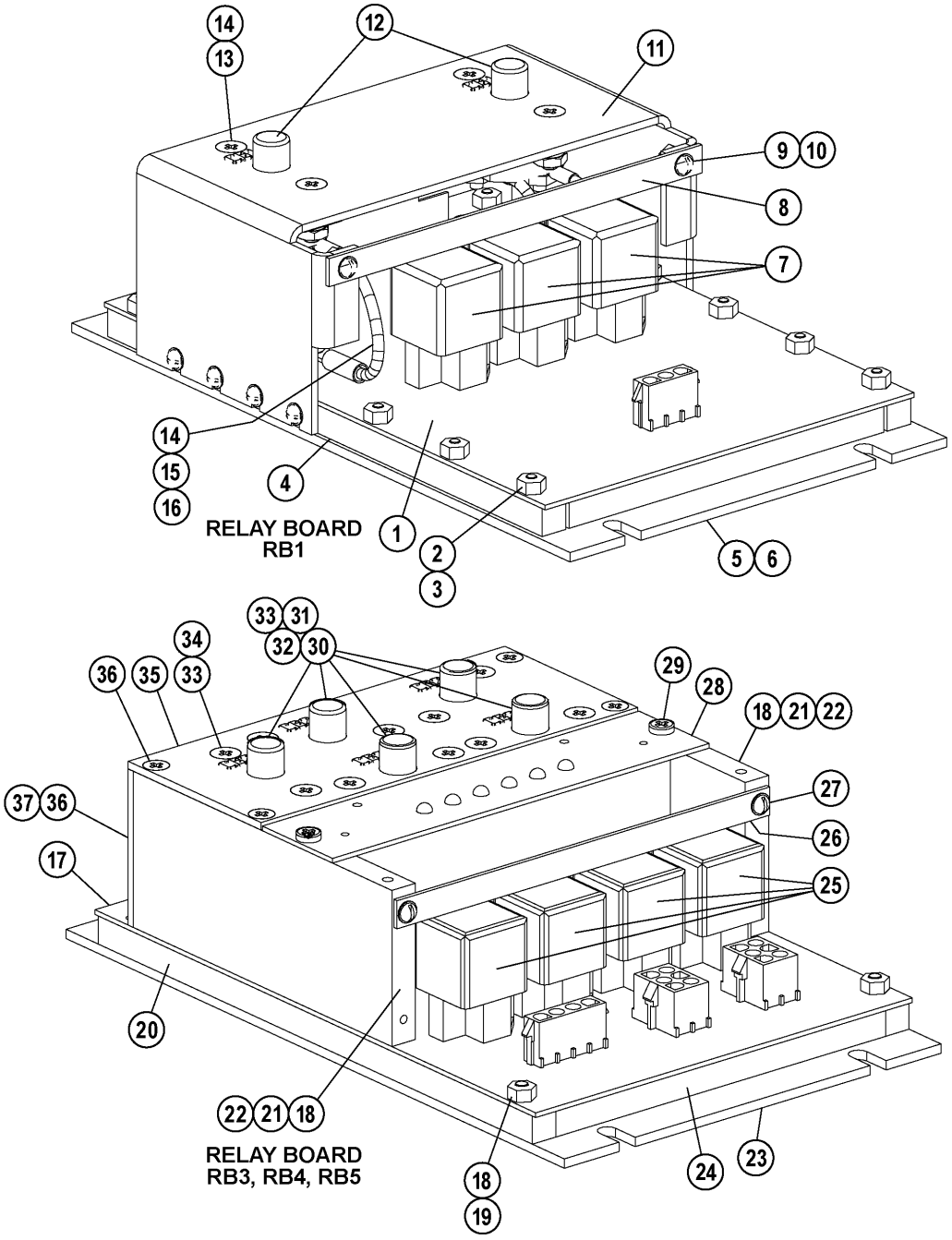
14
13
12
11
9
10
8
7
14
15
16
4
1
2
3
RELAY BOARD
RB1
5
6
33
31
32
30
34
36
35
33
29
28
18
21
22
27
26
25
37
36
17
20
22
21
18
RELAY BOARD
RB3, RB4, RB5
18
19
24
23
55612Z

REF.	PART NUM.	QTY.	DESCRIPTION
33.00	WA3367	20	NUT ASSEMBLY
34.00	PC1508	10	MACHINE SCREW - #10 - 32NF X 3/4"
35.00	EK3490	1	PLATE, CIRCUIT BREAKER MOUNTING - RB3
35.01	EK3491	1	PLATE, CIRCUIT BREAKER MOUNTING - RB4
35.02	EK3492	1	PLATE, CIRCUIT BREAKER MOUNTING - RB5
36.00	PC1505	8	MACHINE SCREW - #8 - 32NC X 1/2"
37.00	EK4987	1	PLATE, MOUNTING (FRONT)

(SEE PRECEDING PAGE FOR BALANCE OF PARTS...)

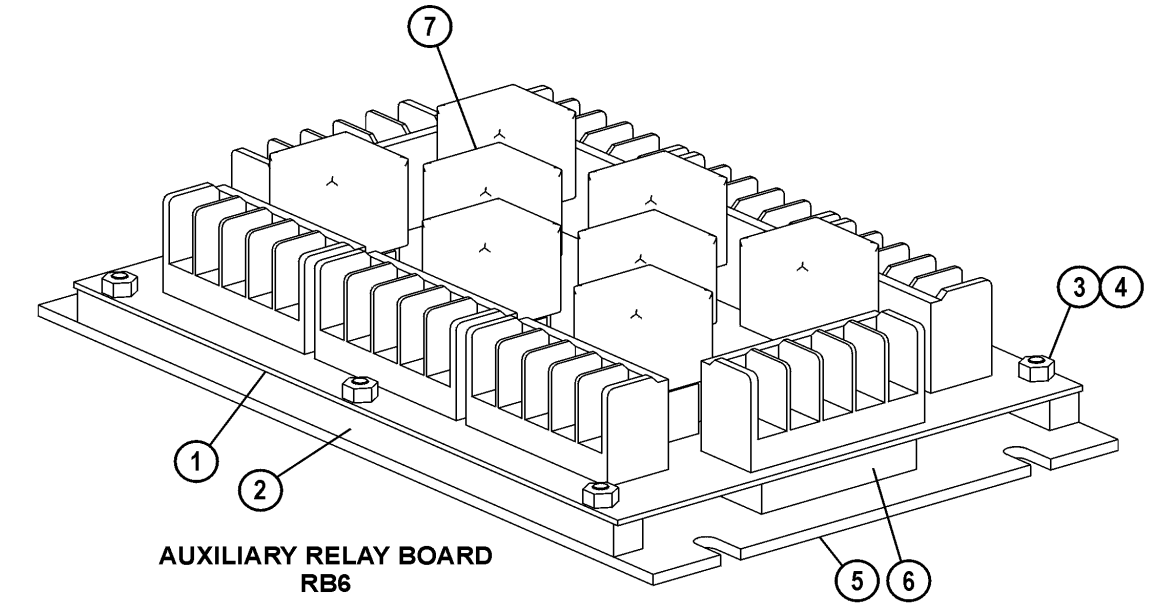

AUXILIARY RELAY BOARD
RB6

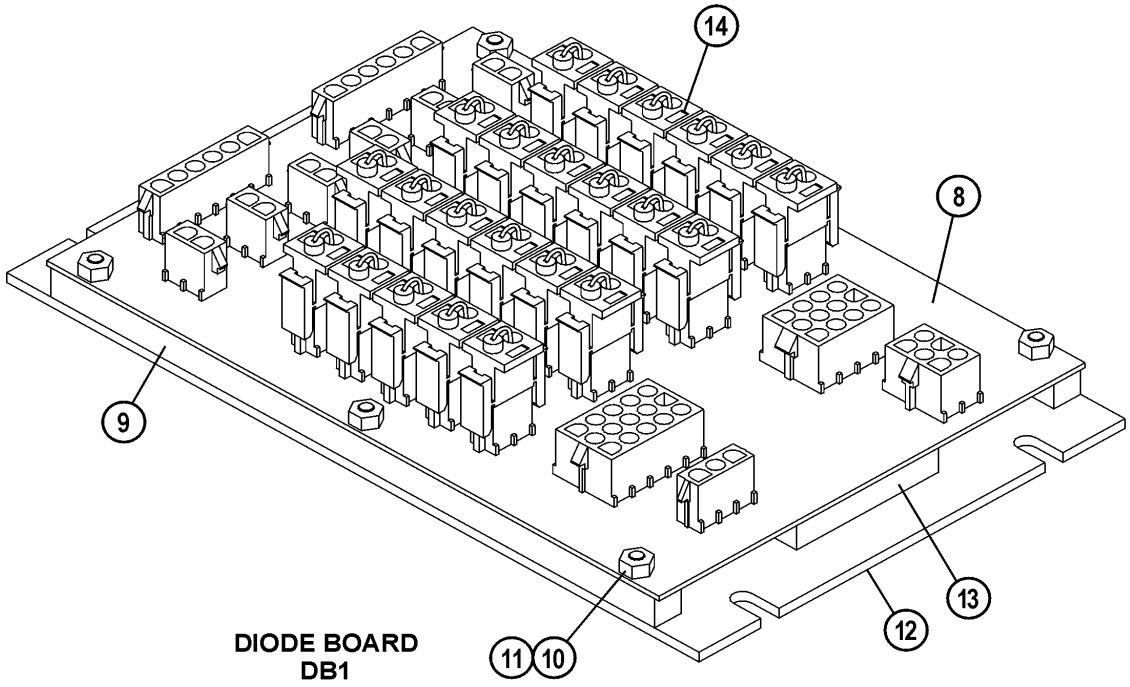

DIODE BOARD
DB1

55613Z

REF.	PART NUM.	QTY.	DESCRIPTION
	EK4991	1	RELAY BOARD ASSEMBLY - RB6, RB7, RB8
1.00	SM5408	1	BOARD, PRINTED CIRCUIT - RB6, 7 & 8
2.00	EK4982	2	RAIL, MOUNTING (BOTTOM)
3.00	PC1506	6	MACHINE SCREW - #8 - 32NC X 3/4"
4.00	PC1516	6	NUT - #8 - 32NC
5.00	EK4983	1	PLATE, MOUNTING (BOTTOM)
6.00	EK4988	1	BLOCK, FOAM
7.00	SM3189	8	RELAY
	EK4993	1	DIODE BOARD ASSEMBLY - DB1
8.00	SM5406	1	BOARD, PRINTED CIRCUIT - DB1
9.00	EK4982	2	RAIL, MOUNTING (BOTTOM)
10.00	PC1506	6	MACHINE SCREW - #8 - 32NC X 3/4"
11.00	PC1516	6	NUT - #8 - 32NC
12.00	EK4983	1	PLATE, MOUNTING (BOTTOM)
13.00	EK4988	1	BLOCK, FOAM
14.00	SM3124	23	DIODE

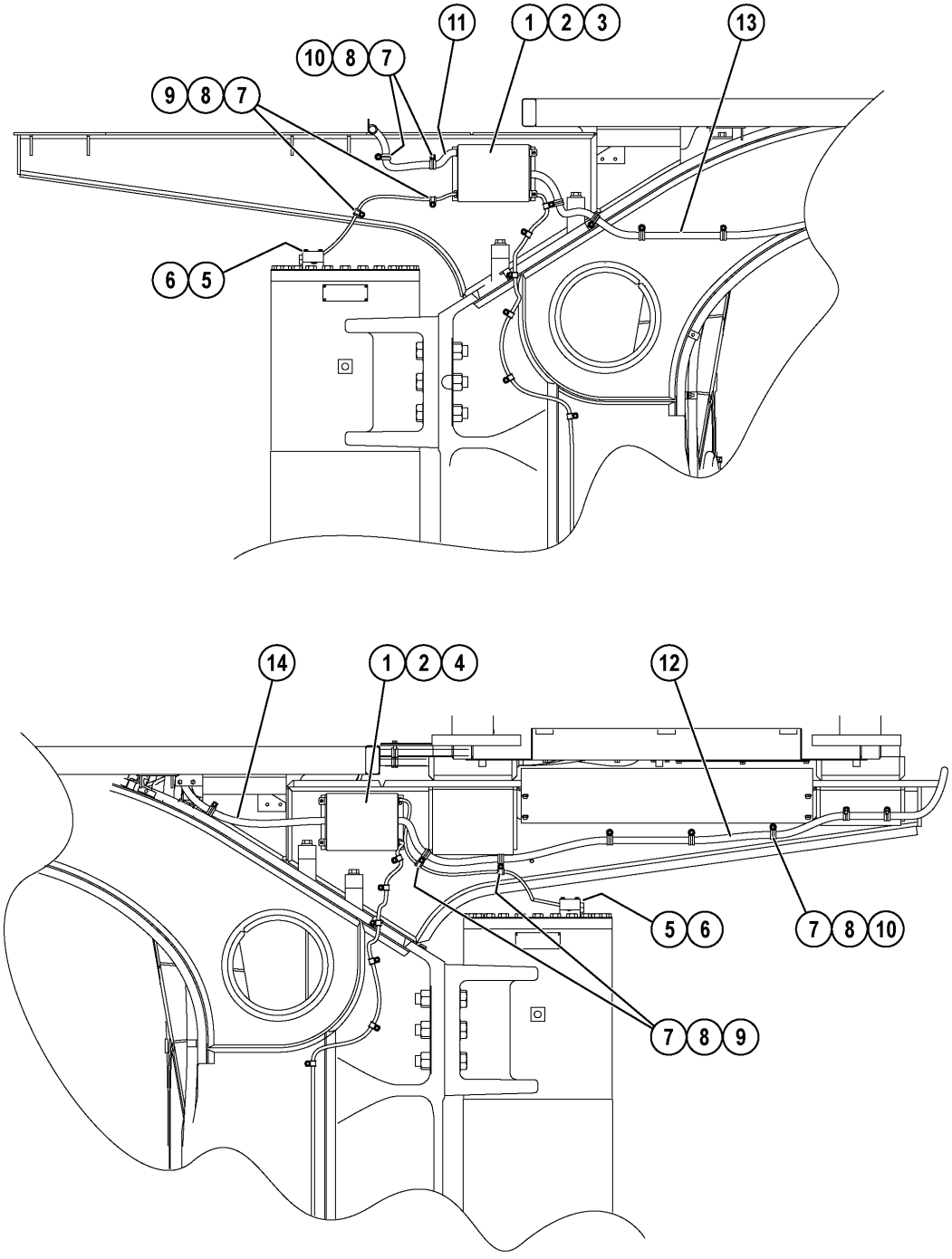
11
1 2 3
13
10 8 7
9 8 7
b
6 5
14
1 2 4
12
5 6
7 8 10
7 8 9
61016Z

REF.	PART NUM.	QTY.	DESCRIPTION
1.00	MM0019	8	CAPSCREW - M6 X 1.00 X 16
2.00	MM0711	8	FLAT WASHER - M6 (HARDENED)
3.00	EK5824	1	JUNCTION BOX ASSEMBLY - R.H. (SEE INDEX)
4.00	EK5822	1	JUNCTION BOX ASSEMBLY - L.H. (SEE INDEX)
5.00	PC1578	2	SENSOR, PRESSURE
5.01	07000-51009	2	O-RING
6.00	EH1251	2	LOAD WEIGH VALVE ASSEMBLY
6.01	TZ8627	2	BODY, VALVE
6.02	TD7179	2	CORE, VALVE
7.00	MM0461	11	FLAT WASHER - M10
8.00	MM0178	11	NUT - M10 X 1.50
9.00	WB3097	4	CLAMP, CUSHIONED - 1/2"
10.00	WB3093	9	CLAMP, CUSHIONED - 1"
11.00	EK5652	1	HARNESS, R.H. DECK LIGHTING
12.00	EK5651	1	HARNESS, L.H. DECK LIGHTING
13.00	EM5637	1	HARNESS, R.H. JUNCTION BOX
14.00	EM5636	1	HARNESS, L.H. JUNCTION BOX

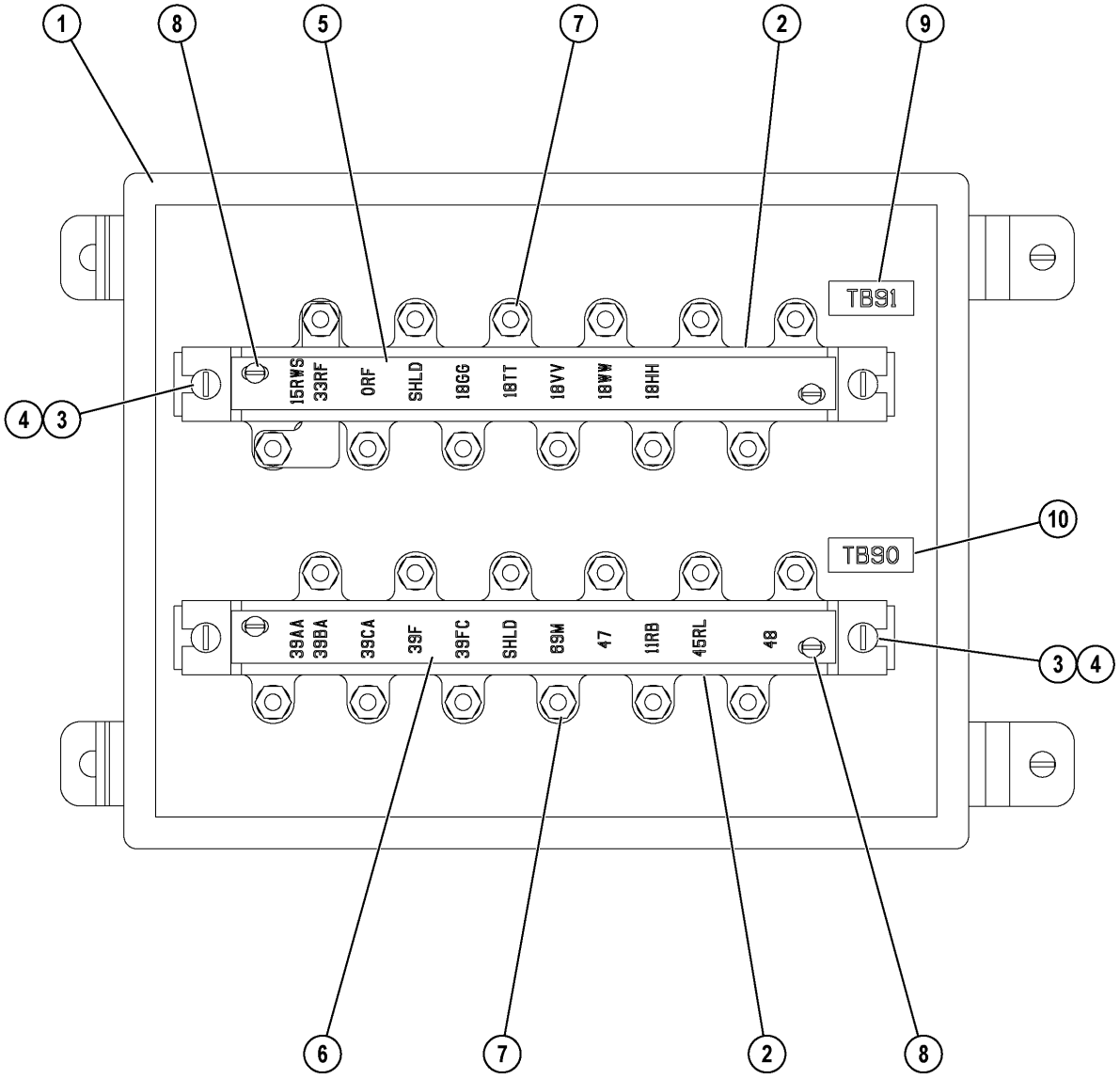
1
8
5
7
2
9
TB91
15RWS
33RF
ORF
SHLD
18GG
18TT
18VV
18WW
18HH
4
3
10
TB90
39AA
39BA
39CA
39F
39FC
SHLD
89M
47
11RB
45RL
48
3
4
6
7
2
8

60961Z

REF.	PART NUM.	QTY.	DESCRIPTION
1.00	EK1411	1	BOX W/COVER
2.00	VS8479	2	BOARD, TERMINAL
3.00	VF2231	4	MACHINE SCREW - #10 - 24NC X 3/8"
4.00	DC3101	4	LOCKWASHER - #10
5.00	WB1247	1	STRIP, CIRCUIT ID
6.00	WB1246	1	STRIP, CIRCUIT ID
7.00	WA3367	24	NUT ASSEMBLY
8.00	VM2951	4	SCREW, SELF-TAPPING - #6 - 32NC X 5/16"
9.00	WB1249	1	NAME PLATE - TB91
10.00	WB1248	1	NAME PLATE - TB90

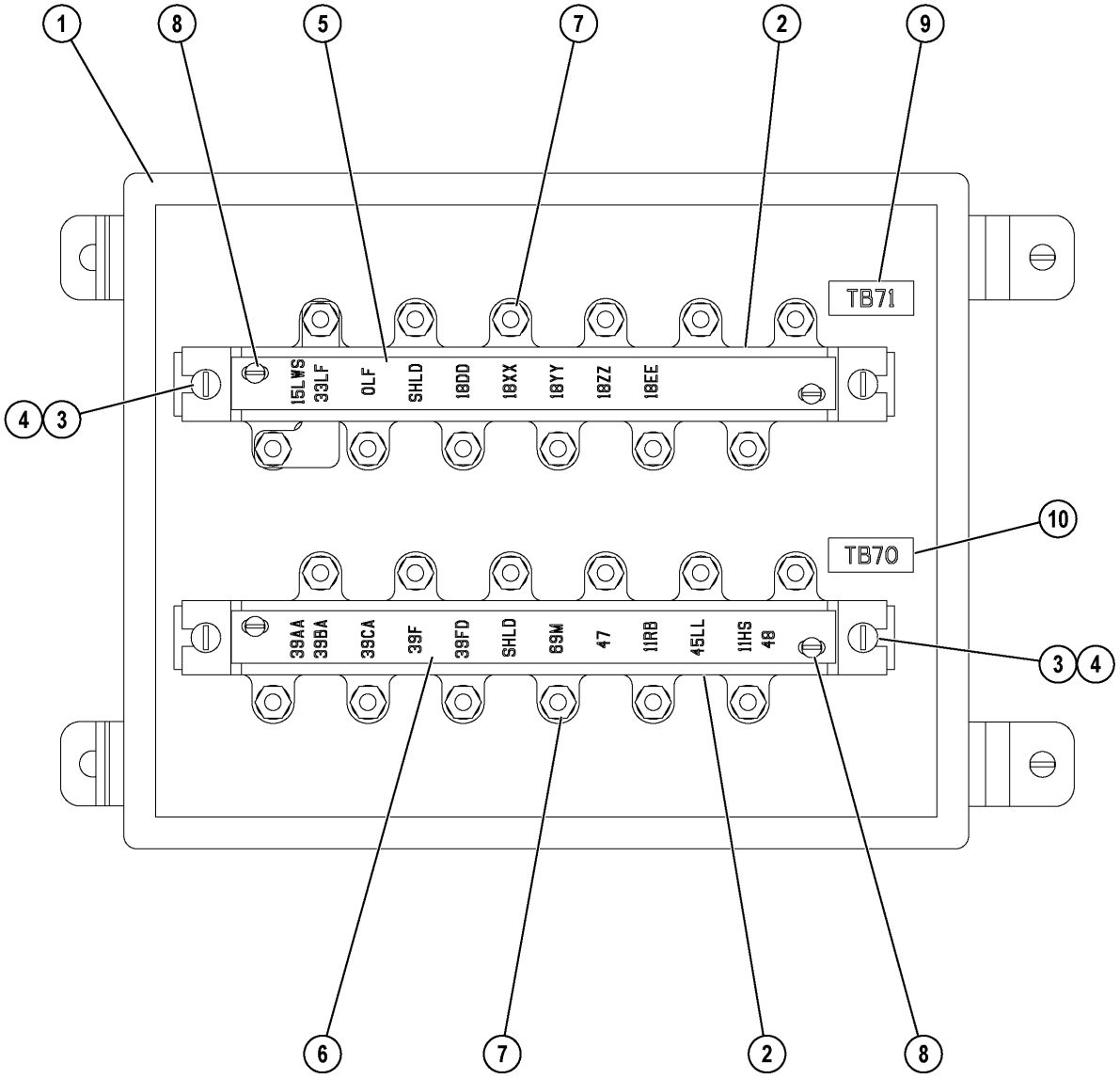
1
8
5
7
2
9
TB71
15LWS
33LF
OLF
SHLD
18DD
18XX
18YY
18ZZ
18EE
4
3
10
TB70
39AA
39BA
39CA
39F
39FD
SHLD
69M
47
11RB
45LL
11HS
48
3
4
6
7
2
8

60962Z

REF.	PART NUM.	QTY.	DESCRIPTION
1.00	EK1411	1	BOX W/COVER
2.00	VS8479	2	BOARD, TERMINAL
3.00	VF2231	4	MACHINE SCREW - #10 - 24NC X 3/8"
4.00	DC3101	4	LOCKWASHER - #10
5.00	WB1243	1	STRIP, CIRCUIT ID
6.00	WB1242	1	STRIP, CIRCUIT ID
7.00	WA3367	24	NUT ASSEMBLY
8.00	VM2951	4	SCREW, SELF-TAPPING - #6 - 32NC X 5/16"
9.00	WB1245	1	NAME PLATE - TB71
10.00	WB1244	1	NAME PLATE - TB70

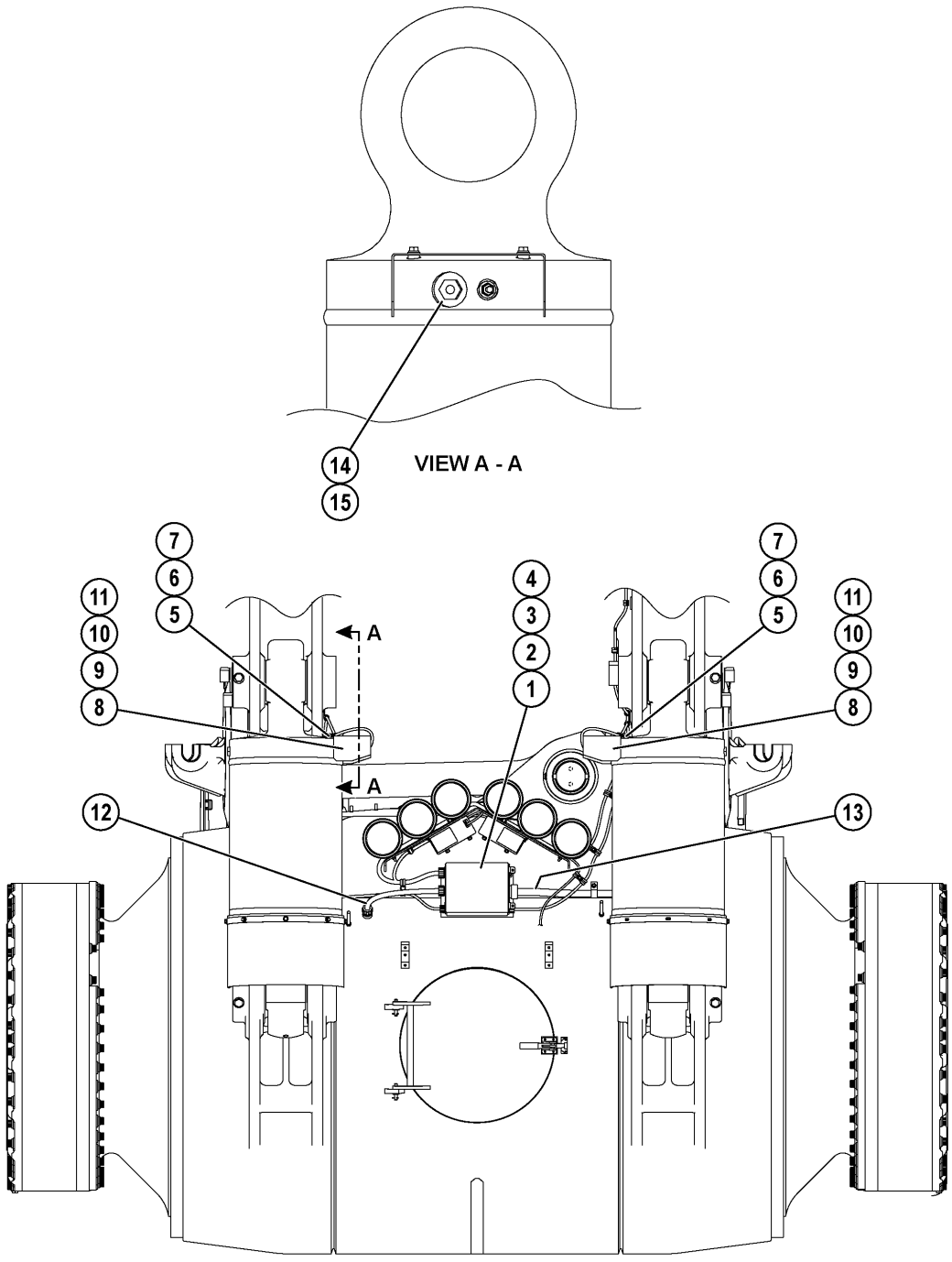
VIEW A - A
14
15
7
6
5
11
10
9
8
4
3
2
1
A
12
13
61017Z

REF.	PART NUM.	QTY.	DESCRIPTION
1.00	EK1413	1	JUNCTION BOX ASSEMBLY - REAR (SEE INDEX)
2.00	MM0025	4	CAPSCREW - M6 X 1.00 X 20
3.00	MM0459	4	FLAT WASHER - M6
4.00	MM0469	AR	LOCKWASHER - M6
5.00	WB3097	6	CLAMP, CUSHIONED - 1/2"
6.00	MM0461	6	FLAT WASHER - M10
7.00	MM0178	6	NUT - M10 X 1.50
8.00	EJ6733	2	COVER
9.00	C1603	4	CAPSCREW - 3/8" - 16NC X 1 1/4"
10.00	WA0720	4	FLAT WASHER - 3/8" (HARDENED)
11.00	C0312	4	LOCKWASHER - 3/8"
12.00	EM5135	1	HARNESS, BLOWER PRESSURE SWITCH
13.00	EM5638	1	HARNESS, RIGHT REAR FRAME
14.00	PC1578	2	SENSOR, PRESSURE
14.01	07000-51009	2	O-RING
15.00	EH1251	2	LOAD WEIGH VALVE ASSEMBLY
15.01	TZ8627	2	BODY, VALVE
15.02	TD7179	2	CORE, VALVE

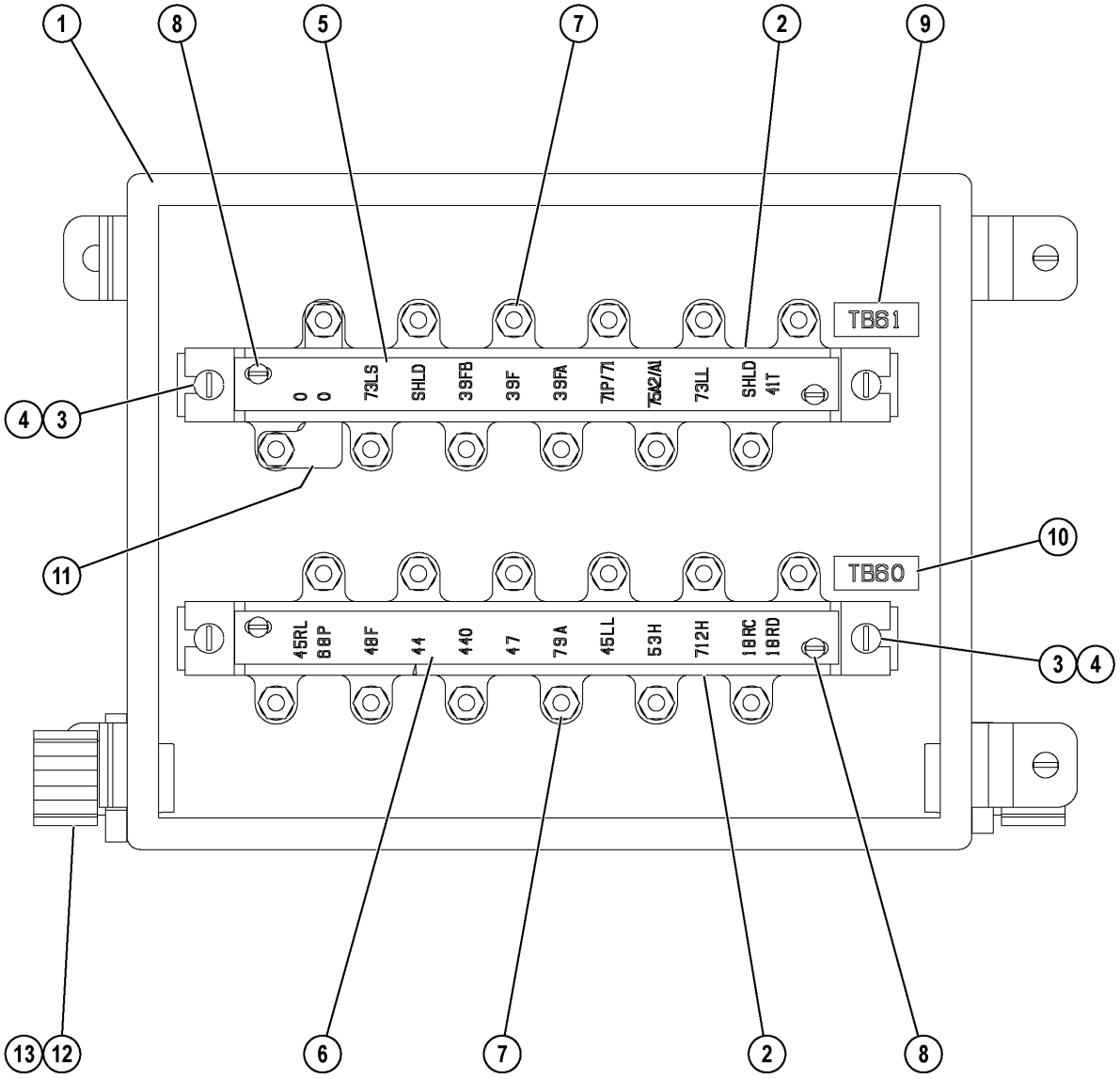
1
8
5
7
2
9
TB61
0
0
73LS
SHLD
39FB
39F
39FA
71P/71
75A2/A1
73LL
SHLD
41T
4
3
11
10
TB60
45RL
88P
48F
44
440
47
79A
45LL
53H
712H
18RC
18RD
3
4
13
12
6
7
2
8

60960Z

REF.	PART NUM.	QTY.	DESCRIPTION
1.00	EK1411	1	BOX W/COVER
2.00	VS8479	2	BOARD, TERMINAL
3.00	VF2231	4	MACHINE SCREW - #10 - 24NC X 3/8"
4.00	DC3101	4	LOCKWASHER - #10
5.00	WB1232	1	STRIP, CIRCUIT ID
6.00	WB3233	1	STRIP, CIRCUIT ID
7.00	WA3367	24	NUT ASSEMBLY
8.00	VM2951	4	SCREW, SELF-TAPPING - #6 - 32NC X 5/16"
9.00	WB1234	1	NAME PLATE - TB60
10.00	WB1235	1	NAME PLATE - TB61
11.00	VZ3046	2	CORD GRIP
12.00	VM5737	2	CORD GRIP
13.00	VM5587	2	LOCKNUT, CONDULET - 1/2"

FUEL SYSTEM

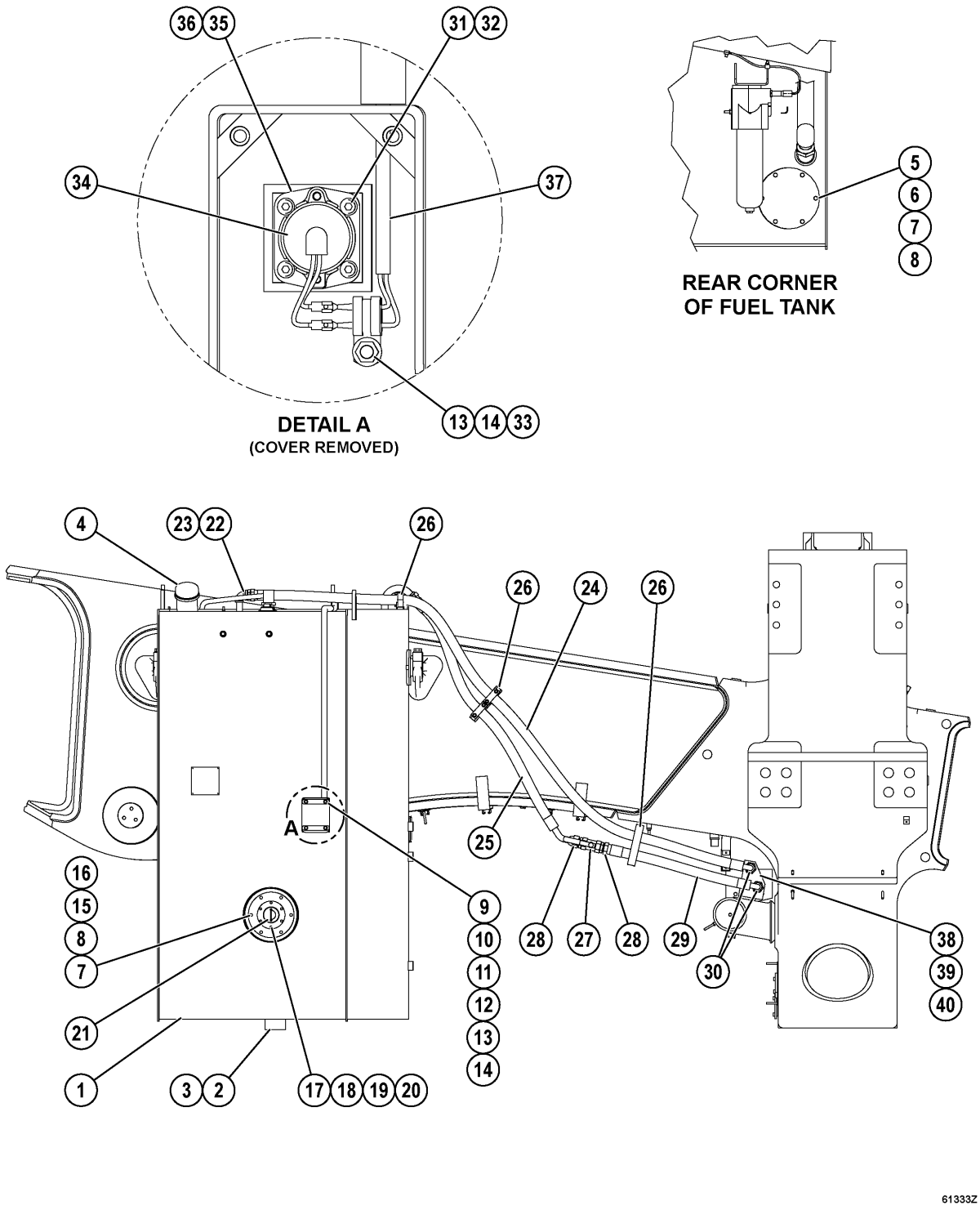
36
35
31
32
34
37
DETAIL A
(COVER REMOVED)
13
14
33
5
6
7
8
REAR CORNER
OF FUEL TANK
4
23
22
26
26
24
26
A
25
16
15
8
7
21
1
3
2
17
18
19
20
9
10
11
12
13
14
28
27
28
29
30
38
39
40
61333Z

REF.	PART NUM.	QTY.	DESCRIPTION
	EM2072	1	FUEL TANK ASSEMBLY W/ COVERS
1.00	EM2071	1	TANK, FUEL
2.00	WA3688	1	BUSHING, PIPE - 1 1/4" X 1/4"
3.00	HC1851	1	DRAIN COCK
4.00	D5576	1	CAP, PIPE
5.00	TA1683	1	COVER
6.00	TA1691	1	GASKET
7.00	TC8793	12	CAPSCREW - 3/8" - 16NC X 1 1/4"
8.00	TC1231	12	LOCKWASHER - 3/8"
9.00	EL3328	1	FLAP
10.00	EL3330	2	BAR
11.00	TD0791	4	CAPSCREW - 3/8" - 16NC X 1 1/4"
12.00	TC1231	2	LOCKWASHER - 3/8"
13.00	TR4436	7	FLAT WASHER - 3/8"
14.00	TC1233	3	NUT - 3/8" - 16NC
15.00	EK7337	1	PLATE, ADAPTER (WIGGINS)
16.00	TA1691	1	GASKET
17.00	VH6864	6	CAPSCREW - 1/4" - 20NC X 1/2"
18.00	DC3584	6	LOCKWASHER - 1/4"
19.00	TA9974	1	FLANGE ASSEMBLY
20.00	VW4748	1	GASKET
21.00	VW6420	1	CAP, REFUELING
22.00	TC2410	1	FITTING, PIPE
23.00	KC6842	1	FITTING, ADAPTER
24.00	HA7925	1	HOSE
25.00	HA8207	1	HOSE
26.00	WA4712	5	CLAMP, HYDRA ZORB - 2"
27.00	PC0799	1	VALVE, BALL - FULL PORT
28.00	TD7426	2	FITTING, ADAPTER
29.00	HA8208	1	HOSE
30.00	WB1186	2	FITTING, BULKHEAD - 1 1/2"
31.00	H5769	4	CAPSCREW - 1/4" - 28NF X 5/8"
32.00	CC6807	4	LOCKWASHER - 1/4" (INTERNAL TOOTH)
33.00	WB1303	1	CLAMP, CUSHIONED - 3/4"
34.00	PC0371	1	DISPLAY/TRANSMITTER, FUEL GAUGE
35.00	VW1231	1	GASKET
36.00	PB9513	1	FLOAT ARM, FUEL GAUGE
37.00	EM5755	1	HARNESS, FUEL TANK
38.00	EL3961	1	PLATE, BENT
39.00	DF3042	2	FLAT WASHER - 3/8"
40.00	H8524	2	CAPSCREW - 3/8" - 16NC X 5/8"

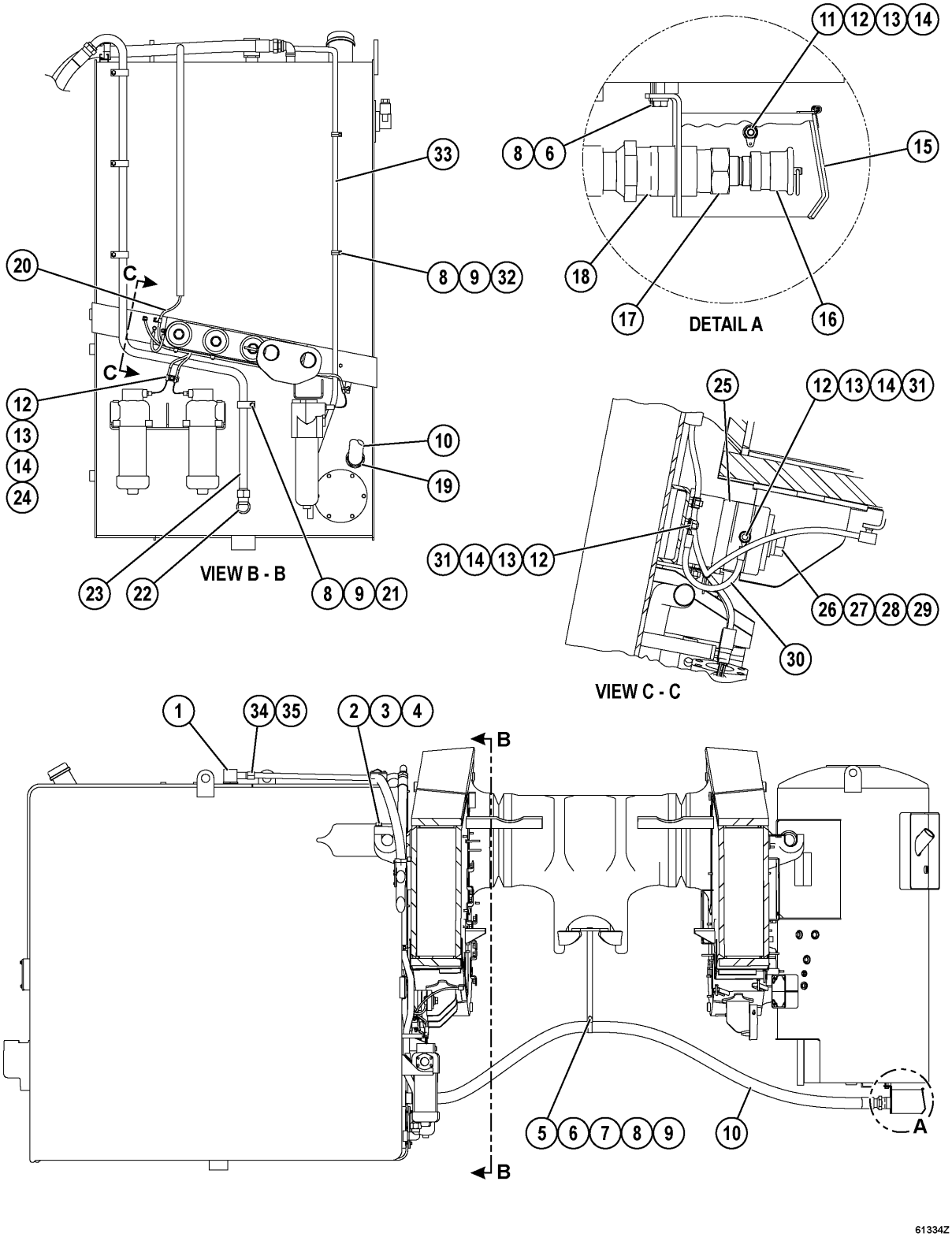
11 12 13 14
8 6
15
18
17
16
DETAIL A
33
8 9 32
20
C
C
12
13
14
24
10
19
23 22
VIEW B - B
8 9 21
25
12 13 14 31
31 14 13 12
26 27 28 29
30
VIEW C - C
1
34 35
2 3 4
B
B
5 6 7 8 9
10
A
61334Z

REF.	PART NUM.	QTY.	DESCRIPTION
1.00	PB9887	1	VENT ASSEMBLY
2.00	C1669	4	CAPSCREW - 1" - 8NC X 3 1/2"
3.00	C1544	4	LOCKWASHER - 1"
4.00	TY4907	2	CAP
5.00	TR3662	1	CLAMP, VINYL - 2 3/4" I.D.
6.00	TR1376	4	CAPSCREW - 1/2" - 13NC X 1 1/4"
7.00	TR6008	2	FLAT WASHER - 1/2"
8.00	C1540	11	LOCKWASHER - 1/2"
9.00	C1523	8	NUT - 1/2" - 13NC
10.00	HA8269	1	HOSE (TO FUEL TANK)
11.00	TG5720	1	CAPSCREW - 3/8" - 16NC X 1"
12.00	TC1231	10	LOCKWASHER - 3/8"
13.00	TR4436	10	FLAT WASHER - 3/8"
14.00	TC1233	10	NUT - 3/8" - 16NC
15.00	TZ8035	1	BOX, FUELING
16.00	PB2020	1	CAP ASSEMBLY
17.00	PB2154	1	RECEIVER ASSEMBLY
18.00	WB0479	1	FITTING, STRAIGHT
19.00	SV6653	1	FITTING, ADAPTER
20.00	EK6446	1	HARNESS, FUEL TANK
21.00	VN9994	4	CLAMP, TUBE - 1 1/2" O.D.
22.00	VG6711	1	FITTING, ELBOW - 90 DEG
23.00	EK6443	1	TUBE
24.00	WB3097	7	CLAMP, CUSHIONED - 1/2"
25.00	PC0780	4	MOUNT, RUBBER (TWO-PIECE)
26.00	MM0163	4	CAPSCREW - M24 X 3.00 X 160
27.00	VW6877	4	FLAT WASHER - 1"
28.00	MM0476	4	LOCKWASHER - M24
29.00	MM0708	4	FLAT WASHER - M24 (HARDENED)
30.00	VL4462	1	WIRE, GROUND
31.00	TG0545	2	FLAT WASHER - 3/8" (COPPER)
32.00	VN9993	3	CLAMP, TUBE - 1" O.D.
33.00	EM7213	1	TUBE
34.00	DC0859	1	COUPLING, PIPE
35.00	WB0474	1	FITTING, STRAIGHT

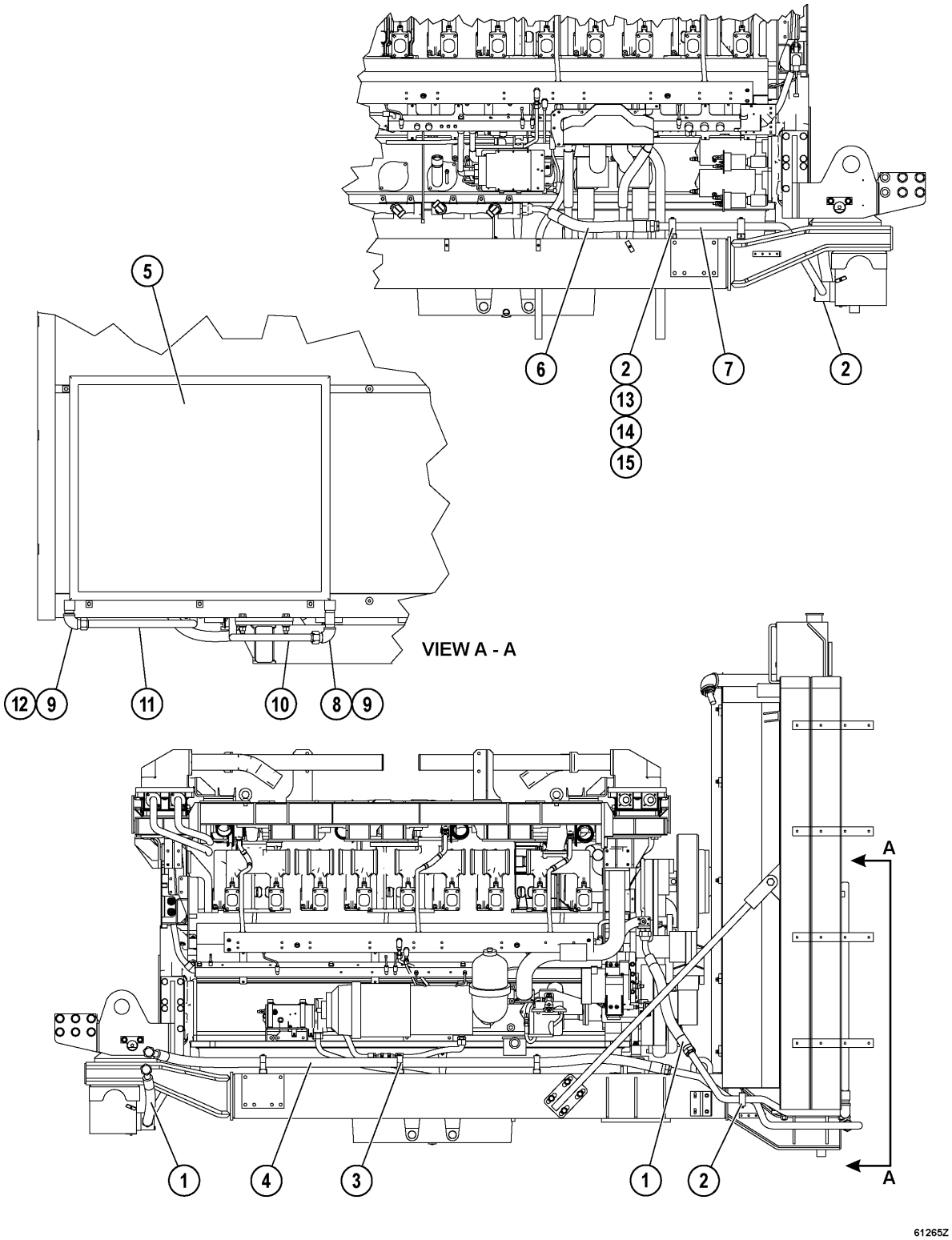
5
6
2
7
2
13
14
15
VIEW A - A
12
9
11
10
8
9
A
A
1
4
3
1
2
61265Z

REF.	PART NUM.	QTY.	DESCRIPTION
1.00	HA7978	2	HOSE
2.00	WA4710	6	CLAMP, HYDRA ZORB - 1 1/2"
3.00	WA4712	3	CLAMP, HYDRA ZORB - 2"
4.00	HA7868	1	HOSE
5.00	XA2709	1	FUEL COOLER ASSEMBLY (SEE INDEX) (1)
6.00	HA7824	1	HOSE
7.00	EK6302	1	TUBE
8.00	TC6967	1	NIPPLE, LONG - 1 1/2 NPT X 4 1/2"
9.00	VM3917	2	FITTING, TUBE
10.00	EM6435	1	TUBE
11.00	EM6442	1	TUBE
12.00	TD1649	1	NIPPLE, LONG - 1 1/2 NPT X 3"
13.00	TD1684	4	NUT - 5/16" - 18NC
14.00	TV0177	4	FLAT WASHER - 5/16"
15.00	EK9907	4	ROD, THREADED

NOTE: (1) SUPPLIED WITH RADIATOR.

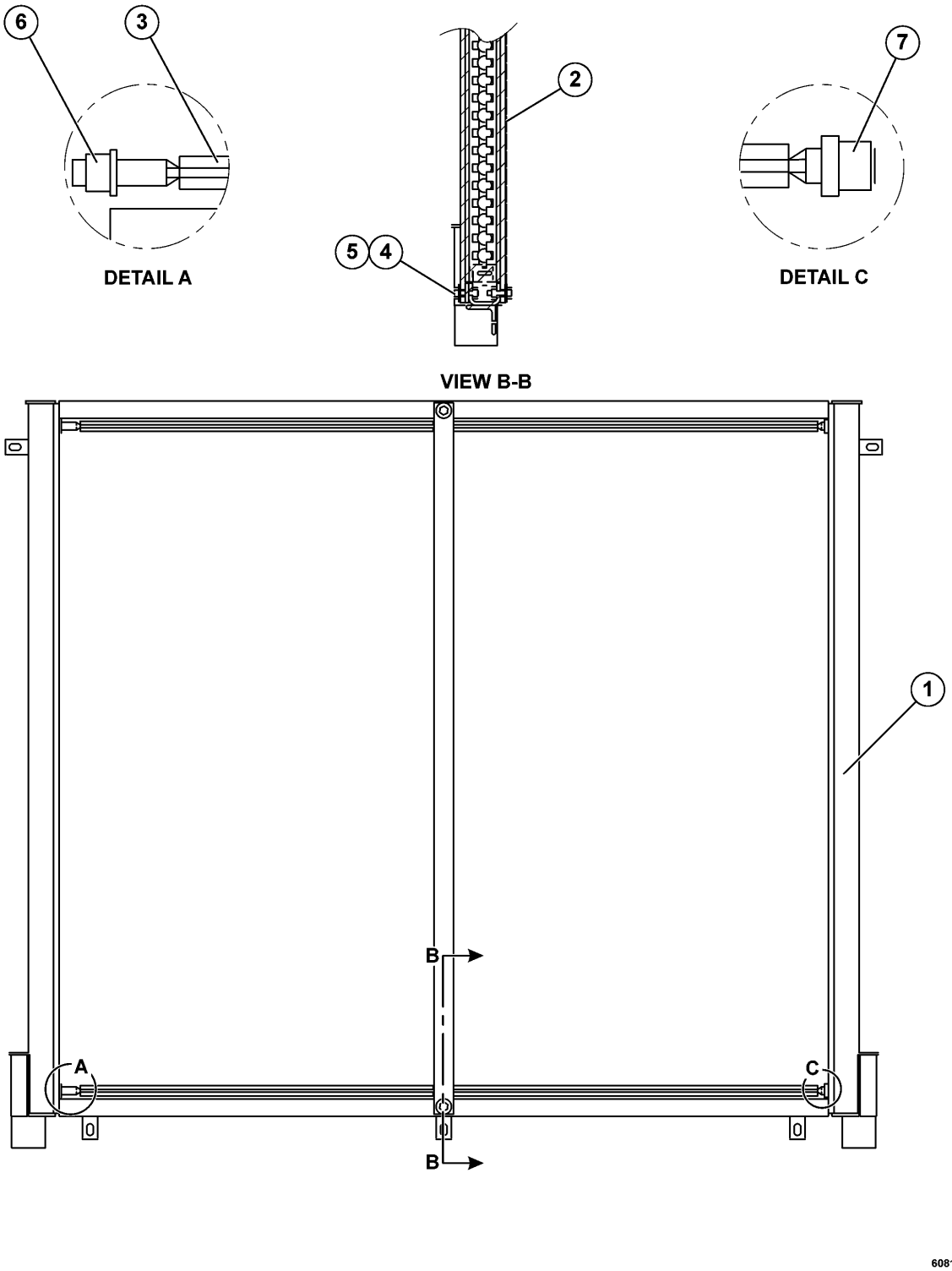
6
3
DETAIL A
2
5
4
VIEW B-B
7
DETAIL C
1
B
A
C
B
60817Z

REF.	PART NUM.	QTY.	DESCRIPTION
1.00	XA4181	1	FRAME, FUEL COOLER
2.00	XA4182	2	BAR, SUPPORT
3.00	XA4183	49	TUBES
4.00	VE5442	4	FLAT WASHER
5.00	C1598	4	CAPSCREW - 5/16" - 18NC X 1"
6.00	VE3999	49	GROMMET, RUBBER
7.00	VE4000	49	GROMMET, RUBBER

ELECTRICAL SYSTEM

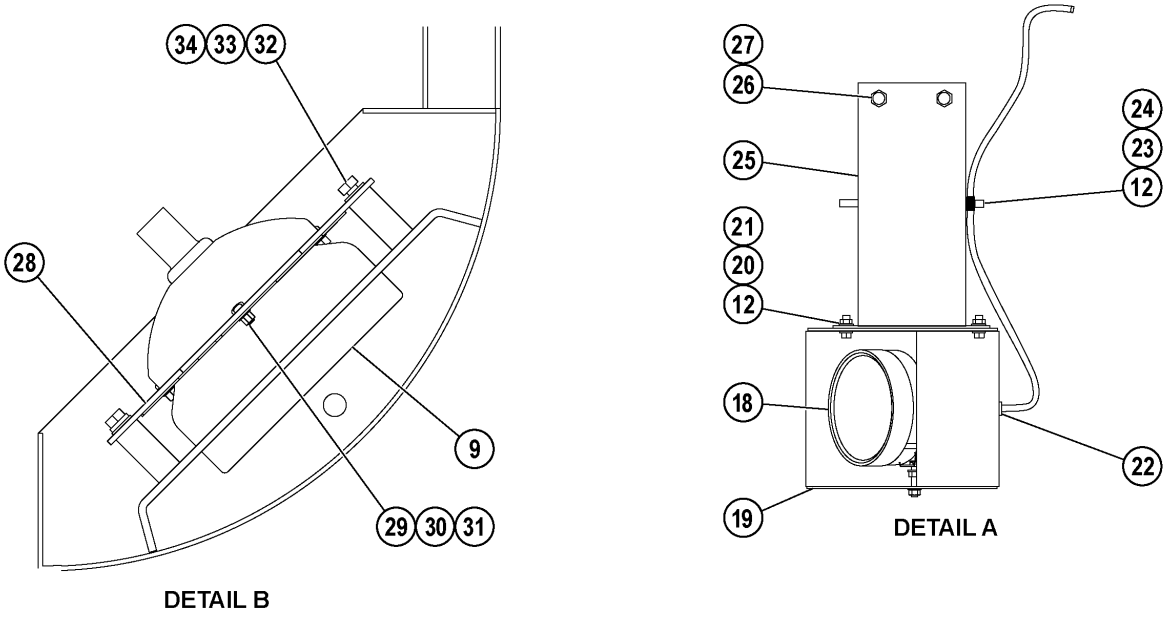
34
33
32
28
9
29
30
31
DETAIL B
27
26
25
21
20
12
18
19
24
23
12
22
DETAIL A

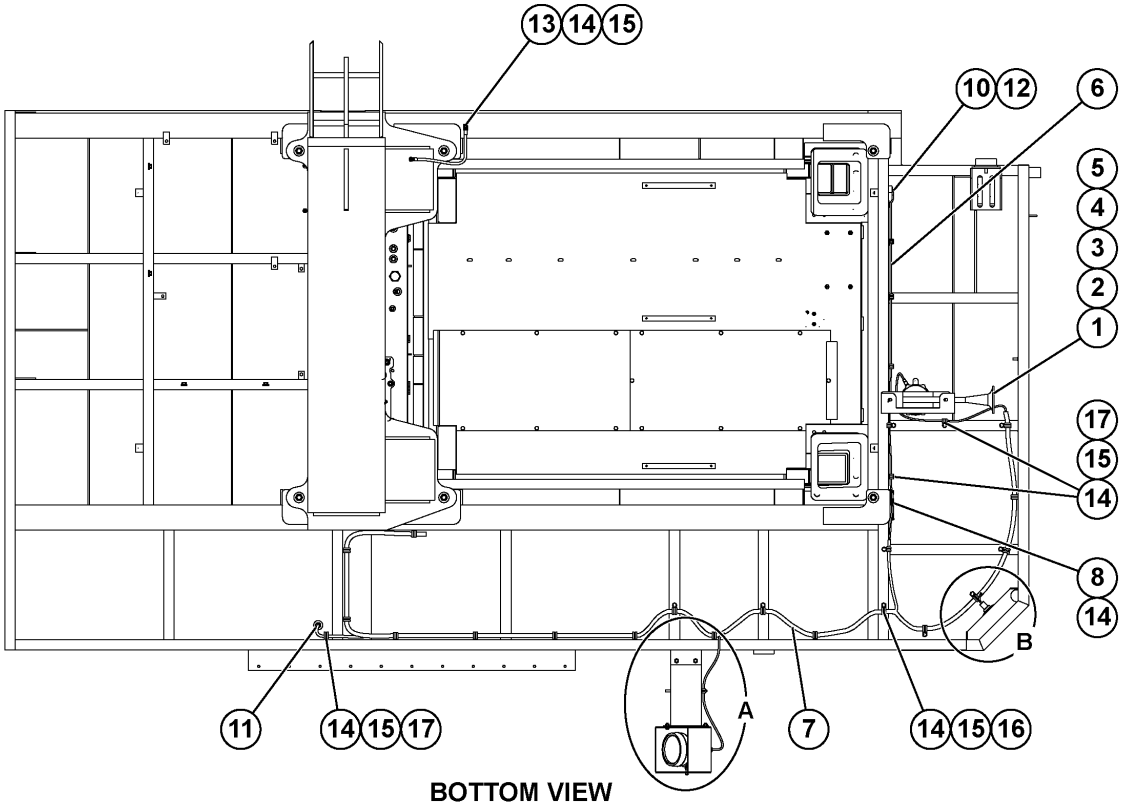
13
14
15
10
12
6
5
4
3
2
1
17
15
14
8
14
B
11
14
15
17
A
7
14
15
16
BOTTOM VIEW

61340Z

REF.	PART NUM.	QTY.	DESCRIPTION
1.00	PC0244	1	HORN, FORWARD
2.00	MM0617	2	CAPSCREW - M12 X 1.75 X 25
3.00	MM0462	2	FLAT WASHER - M12
4.00	MM0472	2	LOCKWASHER - M12
5.00	MM0179	2	NUT - M12 X 1.75
6.00	ED7521	1	WIRE, GROUND
7.00	EK5651	1	HARNESS, L.H. DECK LIGHTING
8.00	MM0603	4	CAPSCREW - M10 X 1.50 X 16
9.00	PC1867	1	LIGHT, TURN SIGNAL (LED) (SEE FIG 41107)
10.00	TV3461	1	CAPSCREW - 3/8" - 16NC X 5/8"
11.00	TR8279	1	GROMMET, RUBBER
12.00	TR4436	4	FLAT WASHER - 3/8"
13.00	VN5153	2	WIRE, GROUND
14.00	MM0461	28	FLAT WASHER - M10
15.00	MM0178	24	NUT - M10 X 1.50
16.00	WB3093	15	CLAMP, CUSHIONED - 1"
17.00	WB3097	8	CLAMP, CUSHIONED - 1/2"
18.00	AK7519	1	FLOOD LIGHT ASSEMBLY (SEE FIG 60883)
19.00	TY0616	1	BRACKET, MOUNTING
20.00	TG5720	3	CAPSCREW - 3/8" - 16NC X 1"
21.00	TC1231	3	LOCKWASHER - 3/8"
22.00	VY2784	1	GROMMET, RUBBER
23.00	WB1302	1	CLAMP, CUSHIONED - 5/16"
24.00	TC1233	1	NUT - 3/8" - 16NC
25.00	EG9194	1	MOUNT
26.00	SR7215	2	CAPSCREW - 1/2" - 13NC X 7 1/2"
27.00	VG7811	2	LOCKNUT - 1/2" - 13NC
28.00	EG1107	1	PLATE, MOUNTING
29.00	MM0349	3	MACHINE SCREW - M5 X .8 X 12
30.00	MM0379	3	LOCKWASHER - M5 (EXTERNAL TOOTH)
31.00	MM0373	3	NUT - M5 X .8
32.00	MM0593	4	CAPSCREW - M8 X 1.25 X 20
33.00	MM0460	4	FLAT WASHER - M8
34.00	MM0470	4	LOCKWASHER - M8

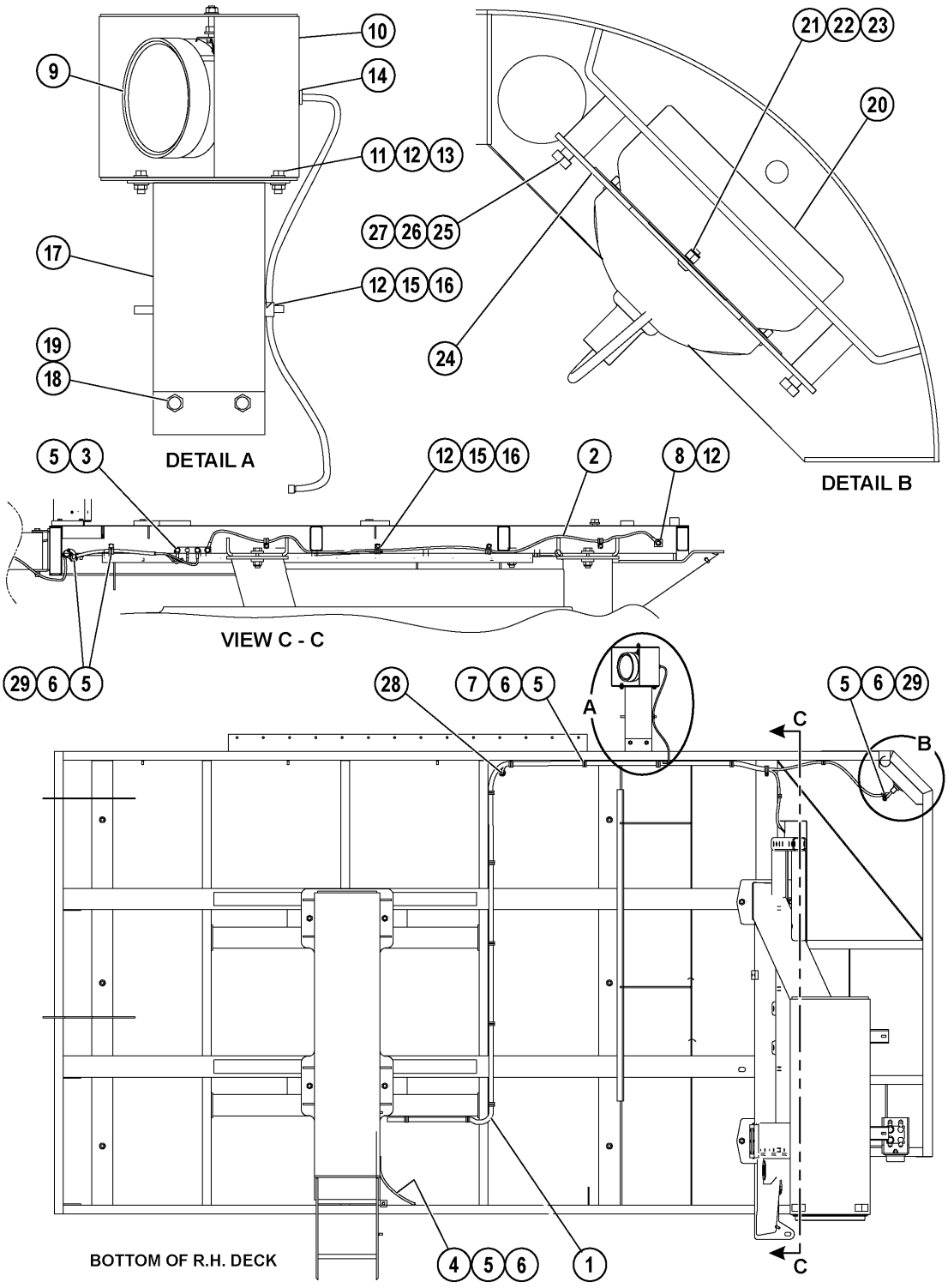
10
9
14
11 12 13
17
27 26 25
12 15 16
19
18
DETAIL A
21 22 23
20
24
DETAIL B
5 3
12 15 16
2
8 12
VIEW C - C
29 6 5
28
7 6 5
A
5 6 29
C
B
BOTTOM OF R.H. DECK
4 5 6
1
C

60982Z

REF.	PART NUM.	QTY.	DESCRIPTION
1.00	EK5652	1	HARNESS, R.H. DECK LIGHTING
2.00	EK7521	1	WIRE, GROUND CONNECTOR
3.00	MM0603	4	CAPSCREW - M10 X 1.50 X 16
4.00	VN5153	1	WIRE, GROUND
5.00	MM0461	23	FLAT WASHER - M10
6.00	MM0178	19	NUT - M10 X 1.50
7.00	WB3093	12	CLAMP, CUSHIONED - 1"
8.00	TV3461	1	CAPSCREW - 3/8" - 16NC X 5/8"
9.00	AK7519	1	FLOOD LIGHT ASSEMBLY (SEE FIG 60883)
10.00	TY0616	1	BRACKET, MOUNTING
11.00	TG5720	3	CAPSCREW - 3/8" - 16NC X 1"
12.00	TR4436	5	FLAT WASHER - 3/8"
13.00	TC1231	3	LOCKWASHER - 3/8"
14.00	VY2784	1	GROMMET, RUBBER
15.00	WB1302	1	CLAMP, CUSHIONED - 5/16"
16.00	TC1233	1	NUT - 3/8" - 16NC
17.00	EG9194	1	MOUNT
18.00	SR7215	2	CAPSCREW - 1/2" - 13NC X 7 1/2"
19.00	VG7811	2	LOCKNUT - 1/2" - 13NC
20.00	PC1867	1	LIGHT, TURN SIGNAL (LED) (SEE FIG 41107)
21.00	MM0349	3	MACHINE SCREW - M5 X .8 X 12
22.00	MM0379	3	LOCKWASHER - M5 (EXTERNAL TOOTH)
23.00	MM0373	3	NUT - M5 X .8
24.00	EG1107	1	PLATE, MOUNTING
25.00	MM0594	4	CAPSCREW - M8 X 1.25 X 25
26.00	MM0460	4	FLAT WASHER - M8
27.00	MM0470	4	LOCKWASHER - M8
28.00	TR8279	1	GROMMET, RUBBER
29.00	WB3097	2	CLAMP, CUSHIONED - 1/2"

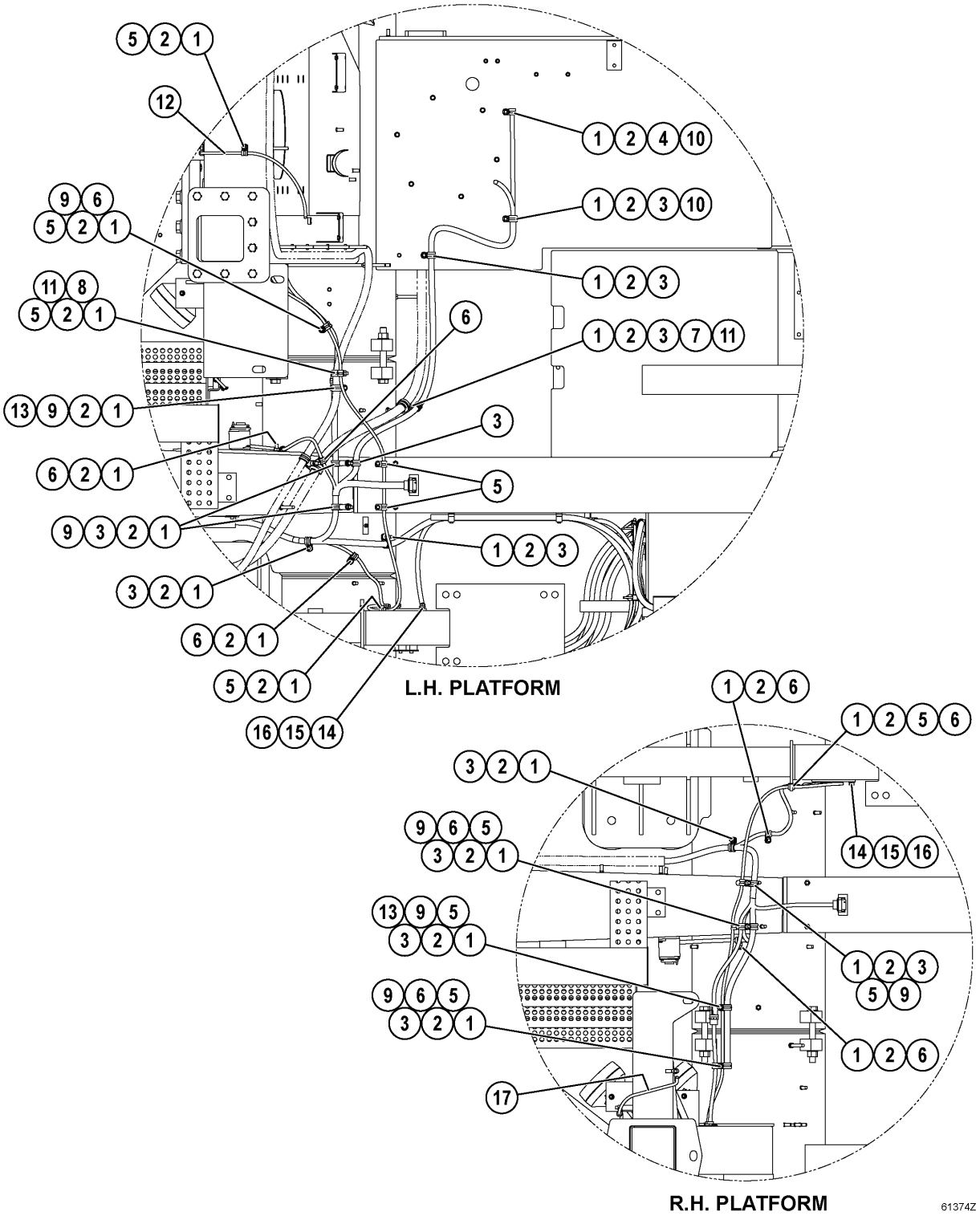
5 2 1
12
1 2 4 10
9 6
5 2 1
1 2 3 10
11 8
5 2 1
1 2 3
6
1 2 3 7 11
13 9 2 1
3
6 2 1
5
9 3 2 1
1 2 3
3 2 1
6 2 1
5 2 1
16 15 14
L.H. PLATFORM
1 2 6
1 2 5 6
3 2 1
9 6 5
3 2 1
14 15 16
13 9 5
3 2 1
1 2 3
5 9
9 6 5
3 2 1
1 2 6
17
R.H. PLATFORM
61374Z

REF.	PART NUM.	QTY.	DESCRIPTION
1.00	MM0461	AR	FLAT WASHER - M10
2.00	MM0178	AR	NUT - M10 X 1.50
3.00	WB1303	13	CLAMP, CUSHIONED - 3/4"
4.00	WB1304	1	CLAMP, CUSHIONED - 9/16"
5.00	WB3098	11	CLAMP, CUSHIONED - 3/8"
6.00	WB3097	8	CLAMP, CUSHIONED - 1/2"
7.00	WB3096	1	CLAMP, CUSHIONED - 1 1/4"
8.00	WB3093	1	CLAMP, CUSHIONED - 1"
9.00	EK9883	6	SPACER
10.00	TY8375	2	SPACER
11.00	MM0605	2	CAPSCREW - M10 X 1.50 X 25
12.00	EL0854	1	WIRE, GROUND
13.00	VN9908	2	CLAMP, VINYL - 1" I.D.
14.00	MM0604	3	CAPSCREW - M10 X 1.50 X 20
15.00	MM0713	3	FLAT WASHER - M10 (HARDENED)
16.00	MM0471	3	LOCKWASHER - M10
17.00	EL0856	1	WIRE, GROUND

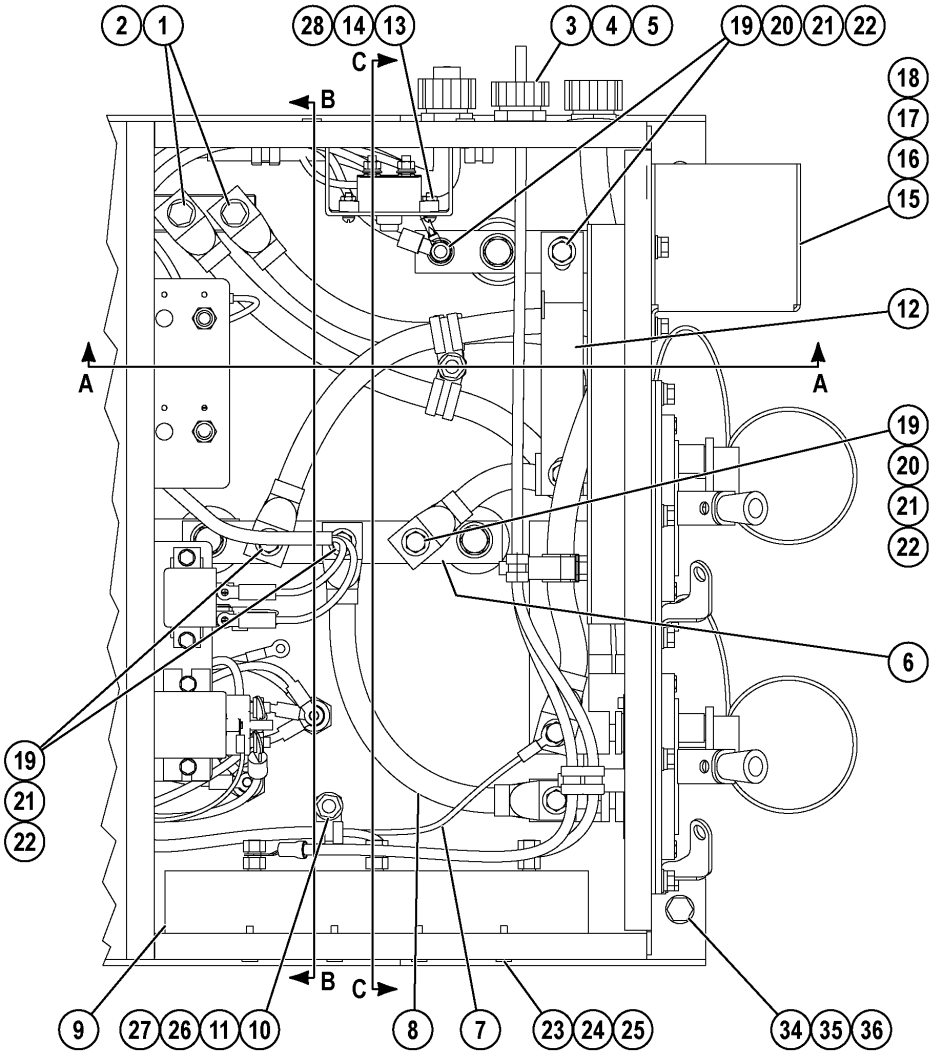

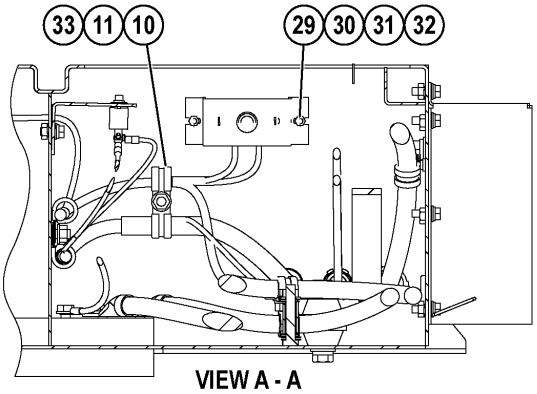

VIEW A - A

61373Z

REF.	PART NUM.	QTY.	DESCRIPTION
1.00	MM0604	5	CAPSCREW - M10 X 1.50 X 20
2.00	MM0713	5	FLAT WASHER - M10 (HARDENED)
3.00	VZ1369	1	LOCKNUT, CONDULET - 1"
4.00	VZ3028	1	GRIP, CORD
5.00	VM3655	1	BUSHING, CONDULET - 1"
6.00	EM2054	1	BUS BAR
7.00	EM4323	1	HARNESS
8.00	CH3885	1	CABLE, BATTERY - RED
9.00	PC0938	1	DIODE, SCHOTTKY (BATTERY ISOLATOR)
10.00	MM0178	2	NUT - M10 X 1.50
11.00	MM0461	2	FLAT WASHER - M10
12.00	EL3821	1	BUS BAR
13.00	TR4977	2	MACHINE SCREW - #10 - 32NC X 3/4"
14.00	SD4245	2	LOCKWASHER - #10 (EXTERNAL TOOTH)
15.00	EL7794	1	COVER
16.00	MM0470	4	LOCKWASHER - M8
17.00	MM0460	4	FLAT WASHER - M8
18.00	MM0594	4	CAPSCREW - M8 X 1.25 X 25
19.00	TC1231	7	LOCKWASHER - 3/8"
20.00	TC1233	7	NUT - 3/8" - 16NC
21.00	TD0791	7	CAPSCREW - 3/8" - 16NC X 1 1/4"
22.00	TR4436	10	FLAT WASHER - 3/8"
23.00	MM0206	8	LOCKWASHER - M5
24.00	MM0373	8	NUT - M5 X .8
25.00	MM0379	8	LOCKWASHER - M5 (EXTERNAL TOOTH)
26.00	TY8375	1	SPACER
27.00	WB1302	1	CLAMP, CUSHIONED - 5/16"
28.00	PB8460	1	CIRCUIT BREAKER
29.00	MM0459	2	FLAT WASHER - M6
30.00	MM0176	2	NUT - M6 X 1.00
31.00	ED4418	1	BRACKET
32.00	MM0469	2	LOCKWASHER - M6
33.00	WB1301	2	CLAMP, CUSHIONED - 1/4"
34.00	MM0032	4	CAPSCREW - M12 X 1.75 X 30
35.00	MM0462	8	FLAT WASHER - M12
36.00	MM0472	4	LOCKWASHER - M12

(FOR VIEWS B-B & C-C, SEE THE FOLLOWING PAGE.)

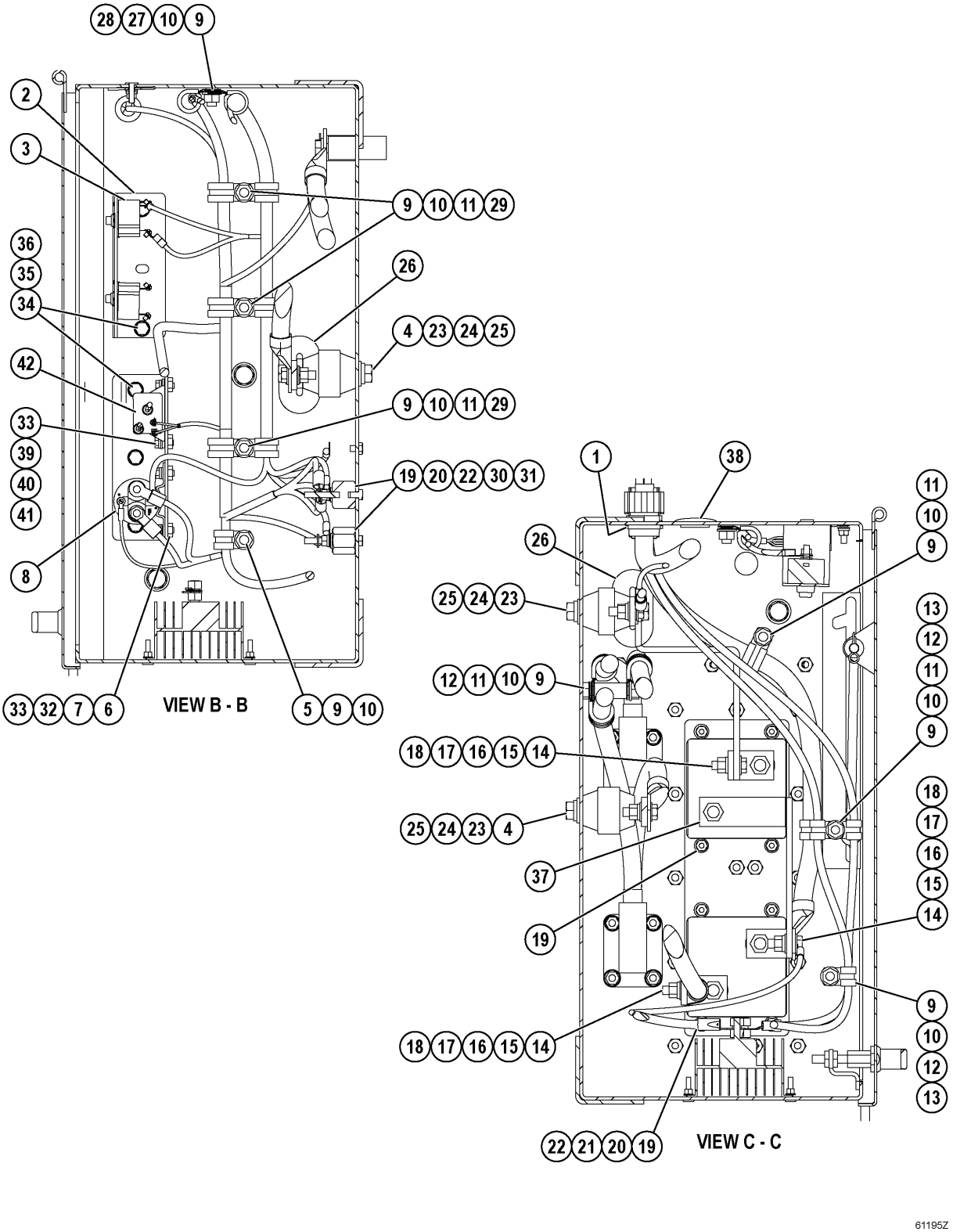
28 27 10 9
2
3
9 10 11 29
36
35
34
26
4 23 24 25
42
33
39
40
41
8
9 10 11 29
19 20 22 30 31
33 32 7 6
VIEW B - B
5 9 10
1
38
26
25 24 23
12 11 10 9
18 17 16 15 14
25 24 23 4
37
19
18 17 16 15 14
22 21 20 19
VIEW C - C
11
10
9
13
12
11
10
9
18
17
16
15
14
9
10
12
13
61195Z

REF.	PART NUM.	QTY.	DESCRIPTION
1.00	VZ1369	1	LOCKNUT, CONDULET - 1"
2.00	EK7517	1	BRACKET
3.00	PB6073	2	CIRCUIT BREAKER - 15 AMP
4.00	VZ2686	2	STAND-OFF, INSULATED
5.00	WB3097	1	CLAMP, CUSHIONED - 1/2"
6.00	MM0581	4	CAPSCREW - M6 X 1.00 X 16
7.00	EL6406	1	BRACKET
8.00	PC1903	2	RELAY - 200 AMP
9.00	MM0178	9	NUT - M10 X 1.50
10.00	MM0461	9	FLAT WASHER - M10
11.00	WB1303	8	CLAMP, CUSHIONED - 3/4"
12.00	TY8375	3	SPACER
13.00	WB1302	3	CLAMP, CUSHIONED - 5/16"
14.00	EH7492	2	BUS BAR
15.00	TC1231	3	LOCKWASHER - 3/8"
16.00	TC1233	3	NUT - 3/8" - 16NC
17.00	TD0791	3	CAPSCREW - 3/8" - 16NC X 1 1/4"
18.00	TR4436	6	FLAT WASHER - 3/8"
19.00	DC3584	10	LOCKWASHER - 1/4"
20.00	TD1549	10	NUT - 1/4" - 20NC
21.00	TR1306	8	CAPSCREW - 1/4" - 20NC X 1"
22.00	SP8417	10	FLAT WASHER - 1/4"
23.00	TR5445	4	LOCKWASHER - 1/2"
24.00	TR6008	4	FLAT WASHER - 1/2"
25.00	VC1387	4	CAPSCREW - 1/2" - 13NC X 1"
26.00	WA2859	2	GROMMET
27.00	WB3098	1	CLAMP, CUSHIONED - 3/8"
28.00	WB3091	1	CLAMP, CUSHIONED - 11/16"
29.00	VN0137	3	CLAMP, CUSHIONED - 7/16"
30.00	ED0913	2	ROD, THREADED - 1/4"
31.00	TA7409	2	INSULATOR, STAND-OFF
32.00	MM0469	2	LOCKWASHER - M6
33.00	MM0459	6	FLAT WASHER - M6
34.00	MM0593	5	CAPSCREW - M8 X 1.25 X 20
35.00	MM0460	5	FLAT WASHER - M8
36.00	MM0470	5	LOCKWASHER - M8
37.00	EM2053	1	BUS BAR
38.00	TV3555	1	PLUG, BUTTON - 1 3/8"
39.00	MM0379	2	LOCKWASHER - M5 (EXTERNAL TOOTH)
40.00	MM0373	2	NUT - M5 X .8
41.00	MM0353	2	MACHINE SCREW - M5 X .8 X 30
42.00	PB7276	1	RELAY - 24V, 50 AMP

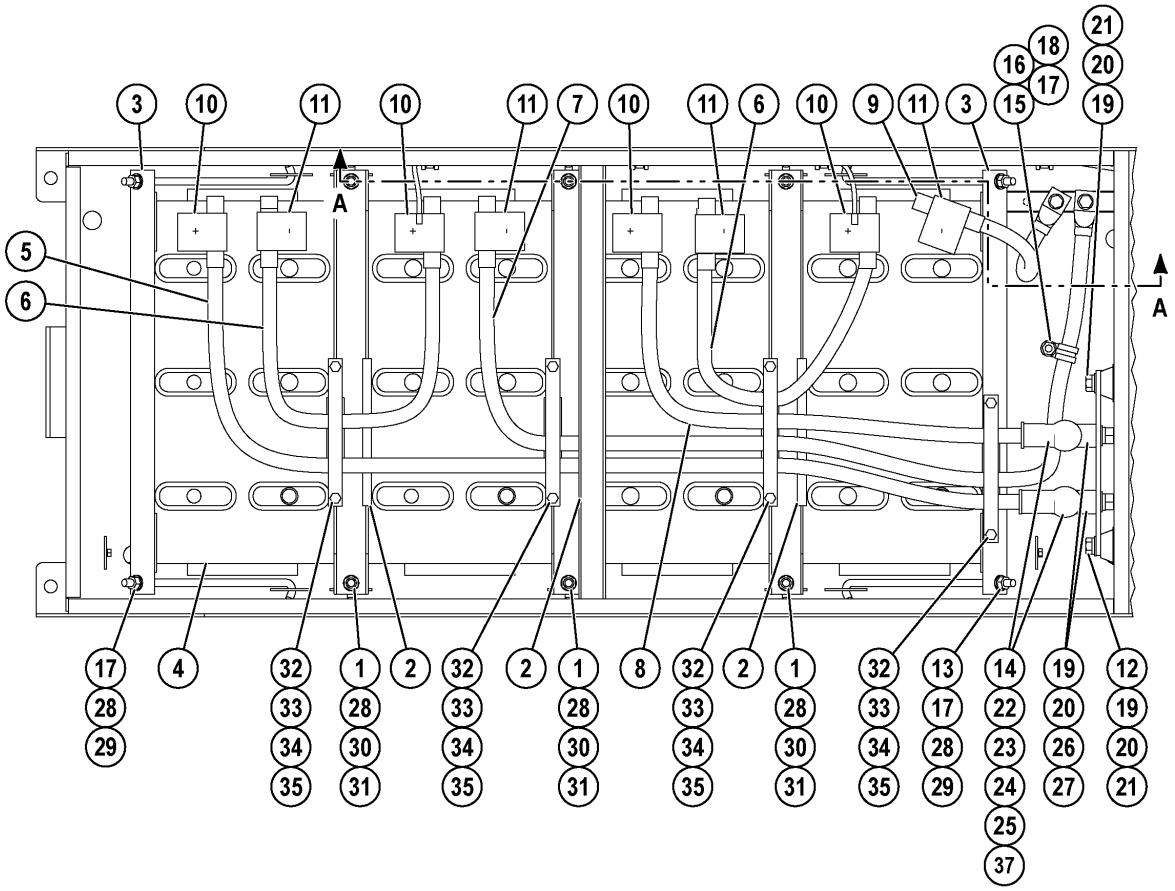

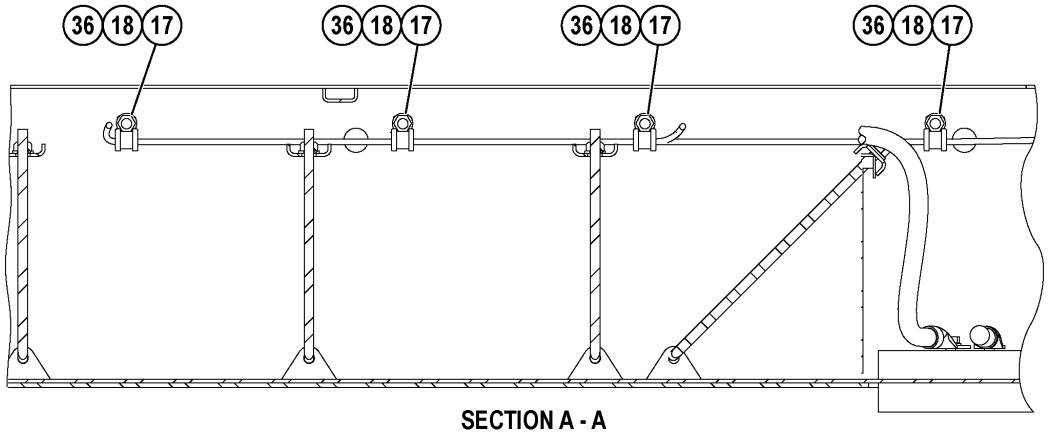

SECTION A - A

61303Z

REF.	PART NUM.	QTY.	DESCRIPTION
1.00	EL0584	3	BATTERY HOLD DOWN
2.00	EJ3805	3	TRIM, EDGE
3.00	56106A4130	2	CLAMP
4.00	VZ0639	4	BATTERY
5.00	CH5801	1	CABLE, BATTERY - RED
6.00	CH5803	2	CABLE, BATTERY - RED
7.00	CH5707	1	CABLE, BATTERY - BLACK
8.00	CH5802	1	CABLE, BATTERY - RED
9.00	CH4070	1	CABLE, BATTERY - BLACK
10.00	PC0247	4	CAP - RED
11.00	PC0246	4	CAP - BLACK
12.00	EL3819	1	BUS BAR
13.00	EL5181	1	HOLD DOWN, BATTERY
14.00	EH7492	2	BUS BAR
15.00	TY8375	1	SPACER
16.00	WB1303	1	CLAMP, CUSHIONED - 3/4"
17.00	MM0178	9	NUT - M10 X 1.50
18.00	MM0461	5	FLAT WASHER - M10
19.00	TR5445	6	LOCKWASHER - 1/2"
20.00	TR6008	8	FLAT WASHER - 1/2"
21.00	VC1387	4	CAPSCREW - 1/2" - 13NC X 1"
22.00	TC1231	2	LOCKWASHER - 3/8"
23.00	TC1233	2	NUT - 3/8" - 16NC
24.00	TD0791	2	CAPSCREW - 3/8" - 16NC X 1 1/4"
25.00	TR4436	4	FLAT WASHER - 3/8"
26.00	VC6561	2	CAPSCREW - 1/2" - 13NC X 1 1/2"
27.00	TR6643	2	NUT - 1/2" - 13NC
28.00	MM0713	10	FLAT WASHER - M10 (HARDENED)
29.00	56106A4140	4	ROD
30.00	MM0693	6	LOCKNUT - M10 X 1.50
31.00	56106A4160	6	ROD
32.00	MM0022	8	CAPSCREW - M8 X 1.25 X 20
33.00	EL0585	4	SPACER
34.00	EJ0043	4	STRAP
35.00	MM0712	8	FLAT WASHER - M8 (HARDENED)
36.00	VN0137	4	CLAMP, CUSHIONED - 7/16"
37.00	0803800035	2	CAP, TERMINAL

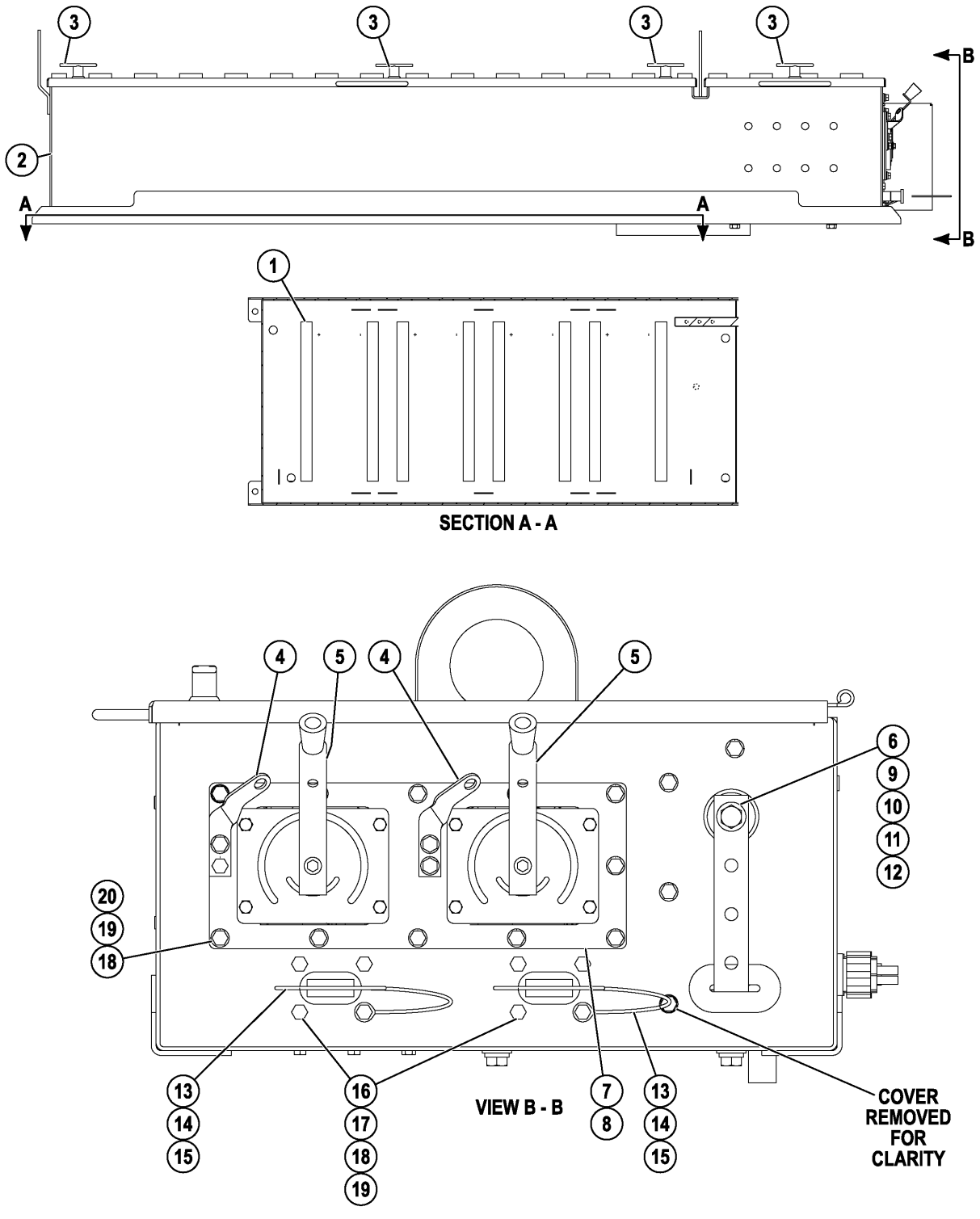
3
3
3
3
B
2
A
A
B
1
SECTION A - A
4
5
4
5
6
9
10
11
12
20
19
18
13
14
15
16
17
18
19
VIEW B - B
7
8
13
14
15
COVER
REMOVED
FOR
CLARITY
42011Z

REF.	PART NUM.	QTY.	DESCRIPTION
1.00	EG9126	8	STRIP, RUBBER
2.00	EM2060	1	BOX, BATTERY
3.00	PC1081	4	LATCH
4.00	EK9945	2	PLATE, BENT
5.00	EC1725	2	SWITCH, BATTERY DISCONNECT
6.00	EL3820	1	BUS BAR
7.00	EL3998	1	PLATE
8.00	EL3997	1	GASKET
9.00	PC0291	2	INSULATOR
10.00	TR5445	2	LOCKWASHER - 1/2"
11.00	TR6008	2	FLAT WASHER - 1/2"
12.00	VC1387	2	CAPSCREW - 1/2" - 13NC X 1"
13.00	PB5993	2	COVER ASSEMBLY
14.00	EJ7781	2	GASKET
15.00	PB9112	2	RECEPTACLE ASSEMBLY
16.00	MM0596	8	CAPSCREW - M8 X 1.25 X 35
17.00	MM0177	8	NUT - M8 X 1.25
18.00	MM0470	23	LOCKWASHER - M8
19.00	MM0460	23	FLAT WASHER - M8
20.00	MM0594	15	CAPSCREW - M8 X 1.25 X 25

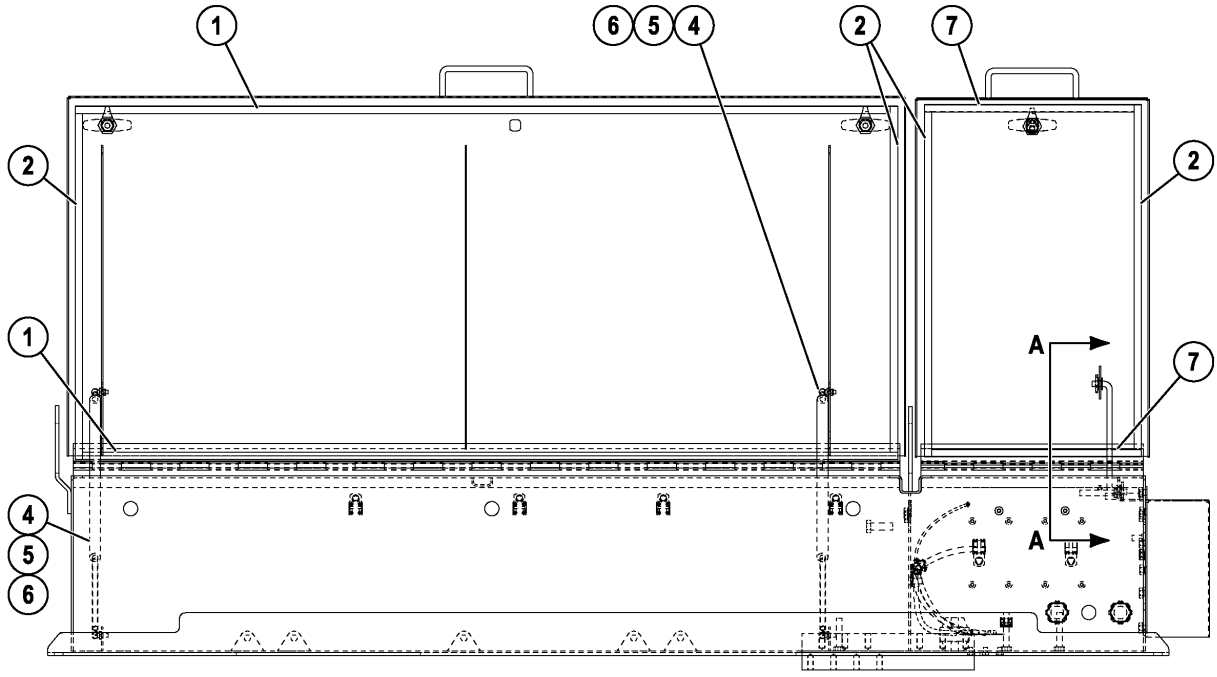

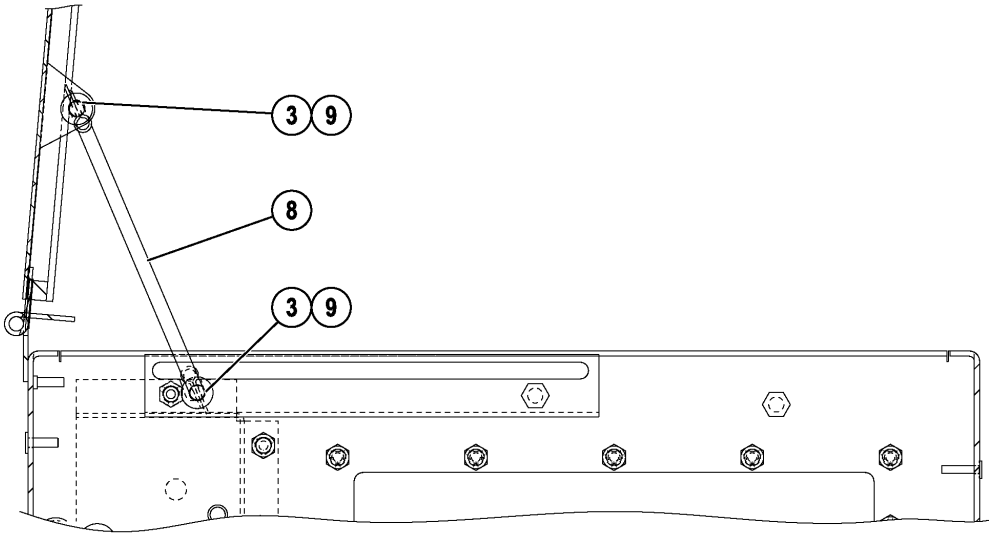

SECTION A - A

42012Z

REF.	PART NUM.	QTY.	DESCRIPTION
1.00	EL6401	2	SEAL STRIP
2.00	EJ0216	4	SEAL STRIP
3.00	MM0523	2	PIN, COTTER
4.00	MM0459	8	FLAT WASHER - M6
5.00	MM0717	4	NUT - M6 X 1.00
6.00	PC1950	2	STRUT
7.00	EL6402	2	SEAL STRIP
8.00	EL6412	1	SUPPORT, LID
9.00	MM0461	2	FLAT WASHER - M10

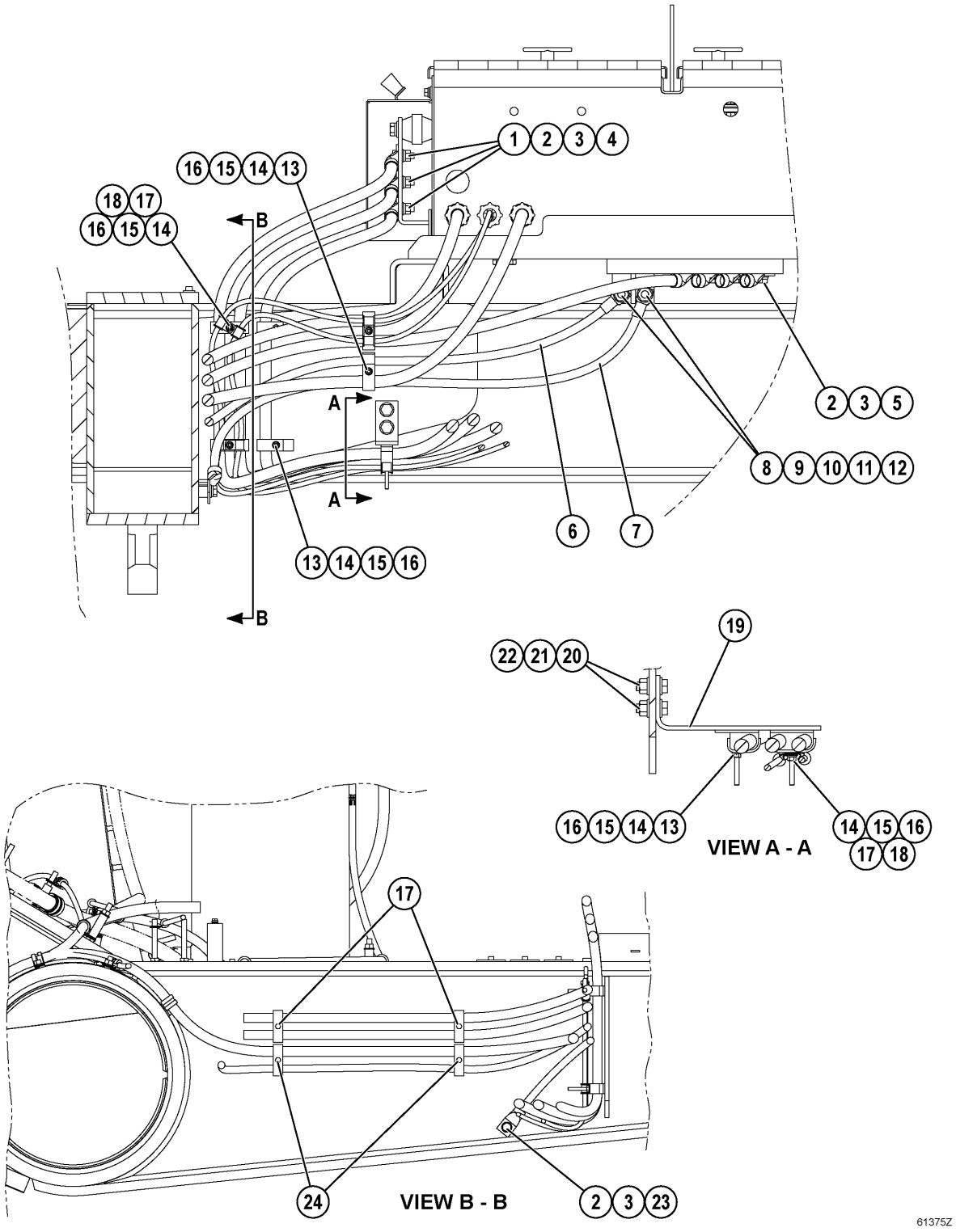
1 2 3 4
16 15 14 13
18 17
16 15 14
B
A
A
B
2 3 5
8 9 10 11 12
6
7
13 14 15 16
19
22 21 20
16 15 14 13
VIEW A - A
14 15 16
17 18
17
24
VIEW B - B
2 3 23
61375Z

REF.	PART NUM.	QTY.	DESCRIPTION
1.00	MM0606	3	CAPSCREW - M10 X 1.50 X 30
2.00	MM0713	9	FLAT WASHER - M10 (HARDENED)
3.00	MM0471	9	LOCKWASHER - M10
4.00	MM0178	3	NUT - M10 X 1.50
5.00	MM0605	5	CAPSCREW - M10 X 1.50 X 25
6.00	CH4519	1	CABLE, SUBFRAME GROUND
7.00	CH4520	1	CABLE, FRAME GROUND
8.00	EH7492	2	BUS BAR
9.00	VC6561	2	CAPSCREW - 1/2" - 13NC X 1 1/2"
10.00	TR6008	2	FLAT WASHER - 1/2"
11.00	TR5445	2	LOCKWASHER - 1/2"
12.00	TR6643	2	NUT - 1/2" - 13NC
13.00	EJ5576	4	CLAMP ASSEMBLY
14.00	EL1939	8	ROD, THREADED
15.00	MM0459	8	FLAT WASHER - M6
16.00	MM0176	8	NUT - M6 X 1.00
17.00	EJ3891	6	CLAMP ASSEMBLY
18.00	SP7846	8	CLAMP, CUSHIONED - 5/16"
19.00	EM0570	1	BRACKET
20.00	MM0619	2	CAPSCREW - M12 X 1.75 X 35
21.00	MM0462	4	FLAT WASHER - M12
22.00	MM0179	2	NUT - M12 X 1.75
23.00	MM0604	1	CAPSCREW - M10 X 1.50 X 20
24.00	PC1112	2	CLAMP ASSEMBLY

(THIS ROUTING CONFIGURATION IS FOR L.H. DIAGONAL LADDER INSTALLATION.)

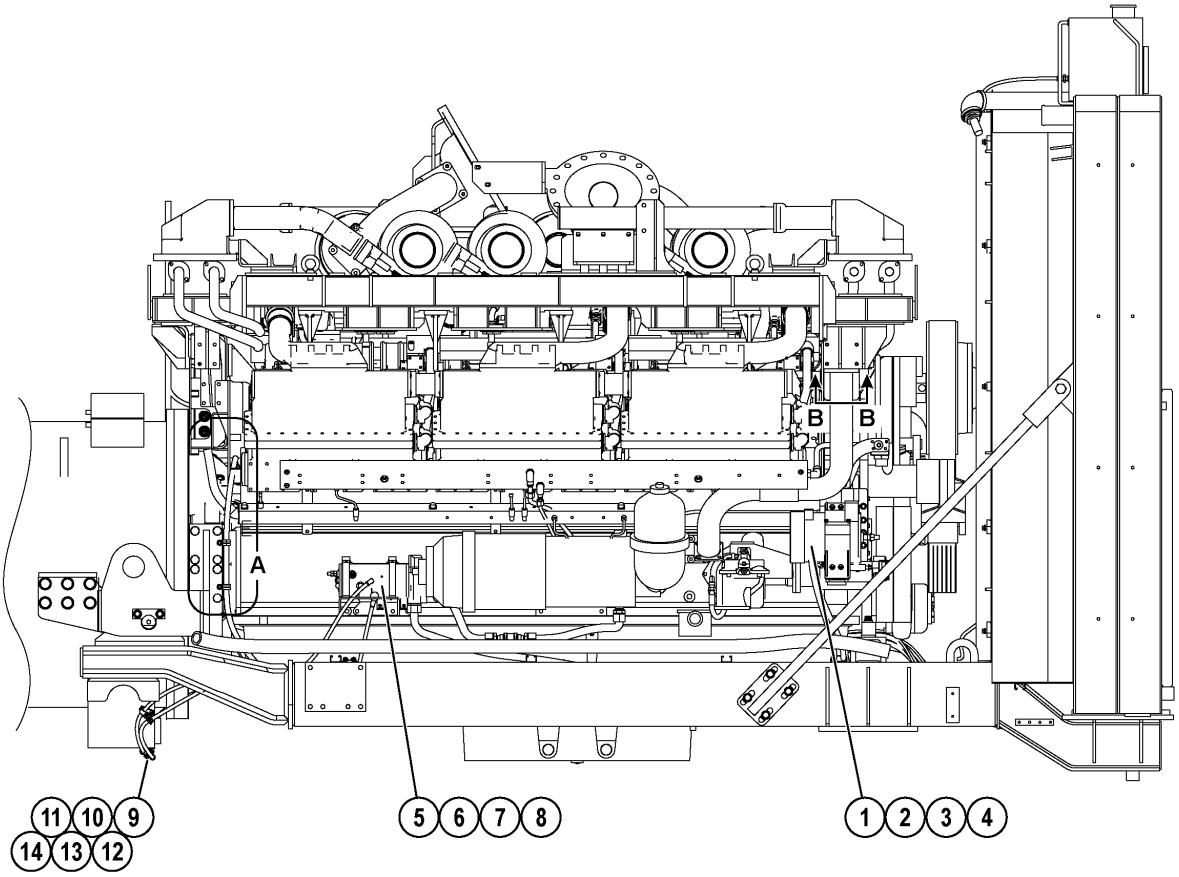

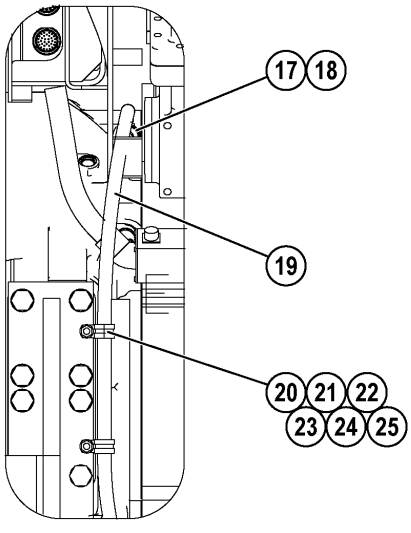

DETAIL A

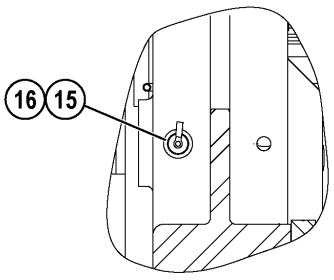

VIEW B - B

61279Z

REF.	PART NUM.	QTY.	DESCRIPTION
1.00		1	ALTERNATOR, BATTERY CHARGING (1)
2.00		1	BELT, ALTERNATOR DRIVE (1)
3.00	CH5421	1	CABLE - RED
4.00	CH5708	1	CABLE - BLACK
5.00	XA0011	1	STARTER (PRELUBE) (1)
6.00	CH4452	1	CABLE - RED
7.00	CH4323	1	CABLE - BLACK
8.00	08038-02027	2	CAP, TERMINAL
9.00	PC1113	7	CLAMP, DOUBLE
10.00	MM0176	6	NUT - M6 X 1.00
11.00	MM0459	6	FLAT WASHER - M6
12.00	MM0462	6	FLAT WASHER - M12
13.00	EM3364	6	ROD, THREADED
14.00	WB3097	6	CLAMP, CUSHIONED - 1/2"
15.00	WB1185	1	WASHER, METRIC - 22 MM
16.00	PC0607	1	SENDER, COOLANT TEMPERATURE
17.00	PC0843	1	ADAPTER - METRIC TO JIC
17.01	PC0119	1	SEAL, ADAPTER
18.00	PC2511	1	REDUCER
19.00	HA0188	1	HOSE
20.00	MM0461	2	FLAT WASHER - M10
21.00	MM0178	2	NUT - M10 X 1.50
22.00	WB1303	2	CLAMP, CUSHIONED - 3/4"
23.00	WB3092	2	CLAMP, CUSHIONED - 7/8"
24.00	EM1398	2	SPACER
25.00	MM0671	2	STUD, WELD - M10 X 60

NOTE: (1) SUPPLIED WITH ENGINE.

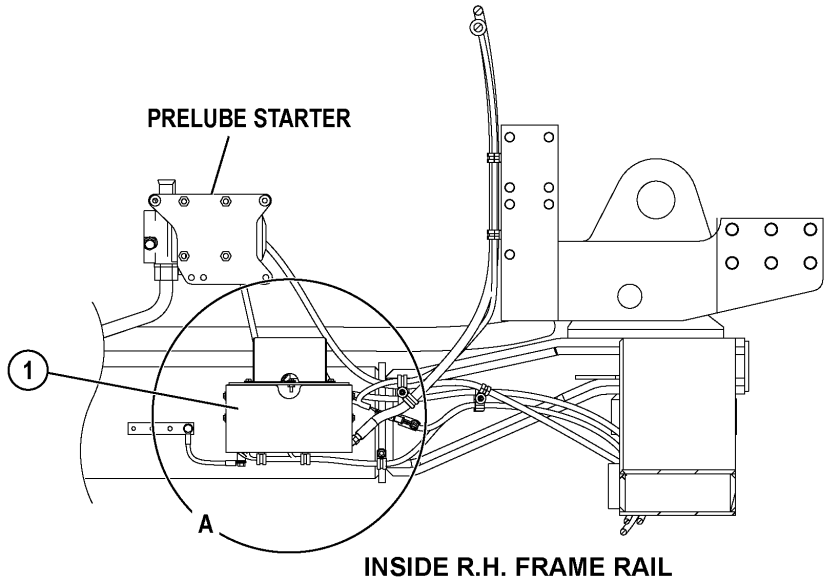

INSIDE R.H. FRAME RAIL

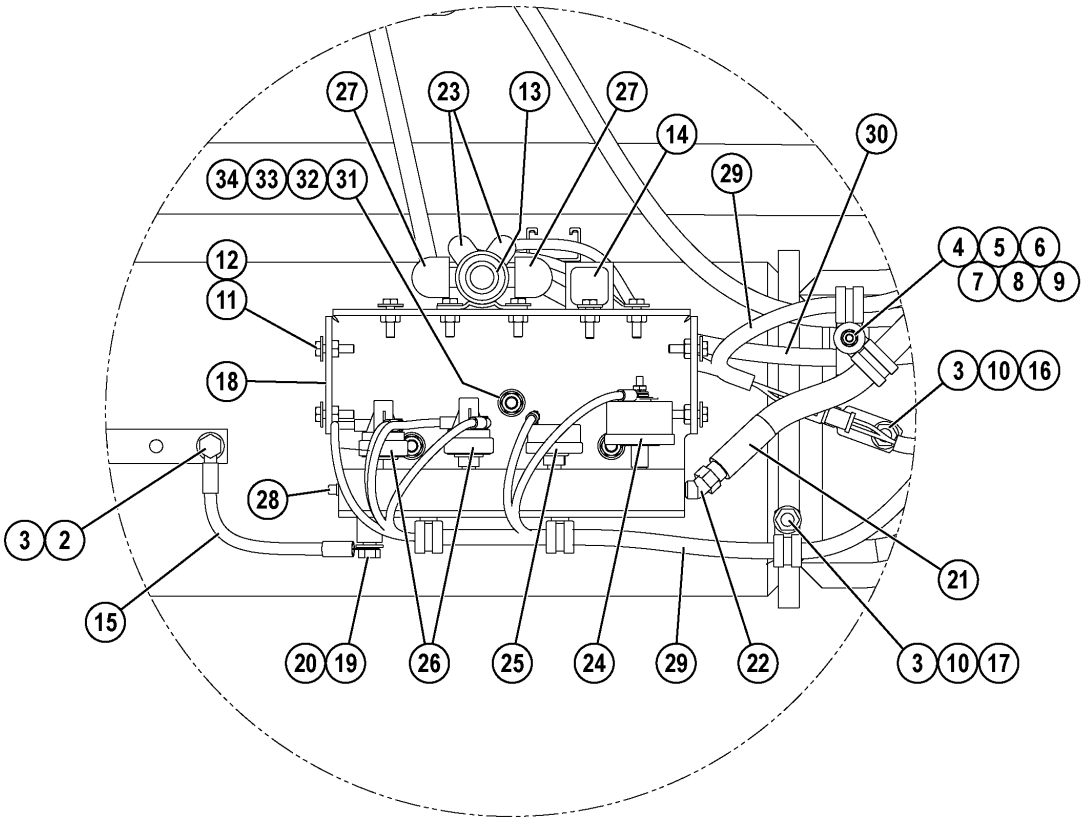

DETAIL A

61280Z

REF.	PART NUM.	QTY.	DESCRIPTION
1.00	EJ5625	1	COVER
2.00	MM0036	1	CAPSCREW - M10 X 1.50 X 20
3.00	MM0461	4	FLAT WASHER - M10
4.00	WB3092	1	CLAMP, CUSHIONED - 7/8"
5.00	MM0459	1	FLAT WASHER - M6
6.00	MM0176	1	NUT - M6 X 1.00
7.00	EM3364	1	ROD, THREADED
8.00	WB1303	1	CLAMP, CUSHIONED - 3/4"
9.00	MM0462	1	FLAT WASHER - M12
10.00	MM0178	3	NUT - M10 X 1.50
11.00	TR1306	8	CAPSCREW - 1/4" - 20NC X 1"
12.00	C1546	8	FLAT WASHER - 1/4"
13.00		1	SOLENOID, PRELUBE TIMER (1)
14.00		1	RELAY, PRELUBE (1)
15.00	CH3423	1	CABLE
16.00	08193-21012	1	CLIP
17.00	WB1300	3	CLAMP, CUSHIONED - 5/8"
18.00	EM3810	1	BRACKET
19.00	TC1234	1	CAPSCREW - 3/8" - 16NC X 3/4"
20.00	TR4436	1	FLAT WASHER - 3/8"
21.00	HA0188	1	HOSE
22.00	WB0283	1	FITTING, ELBOW - 45 DEG
23.00	08038-00519	2	CAP, TERMINAL
24.00	677161R94	1	SENDER, PRESSURE
25.00	VZ0589	1	SWITCH, PRESSURE
26.00	SG3290	2	SWITCH, PRESSURE
27.00	08038-02027	2	CAP, TERMINAL
28.00	C5768	1	PLUG, PIPE - 1/8"
29.00	EM6152	1	HARNESS, PRELUBE
30.00	EM6151	1	LINK, FUSABLE
31.00	PC1000	3	MOUNT, RUBBER
32.00	C1521	3	NUT - 3/8" - 16NC
33.00	C0312	3	LOCKWASHER - 3/8"
34.00	WA0720	3	FLAT WASHER - 3/8" (HARDENED)

NOTE: (1) SUPPLIED WITH ENGINE.

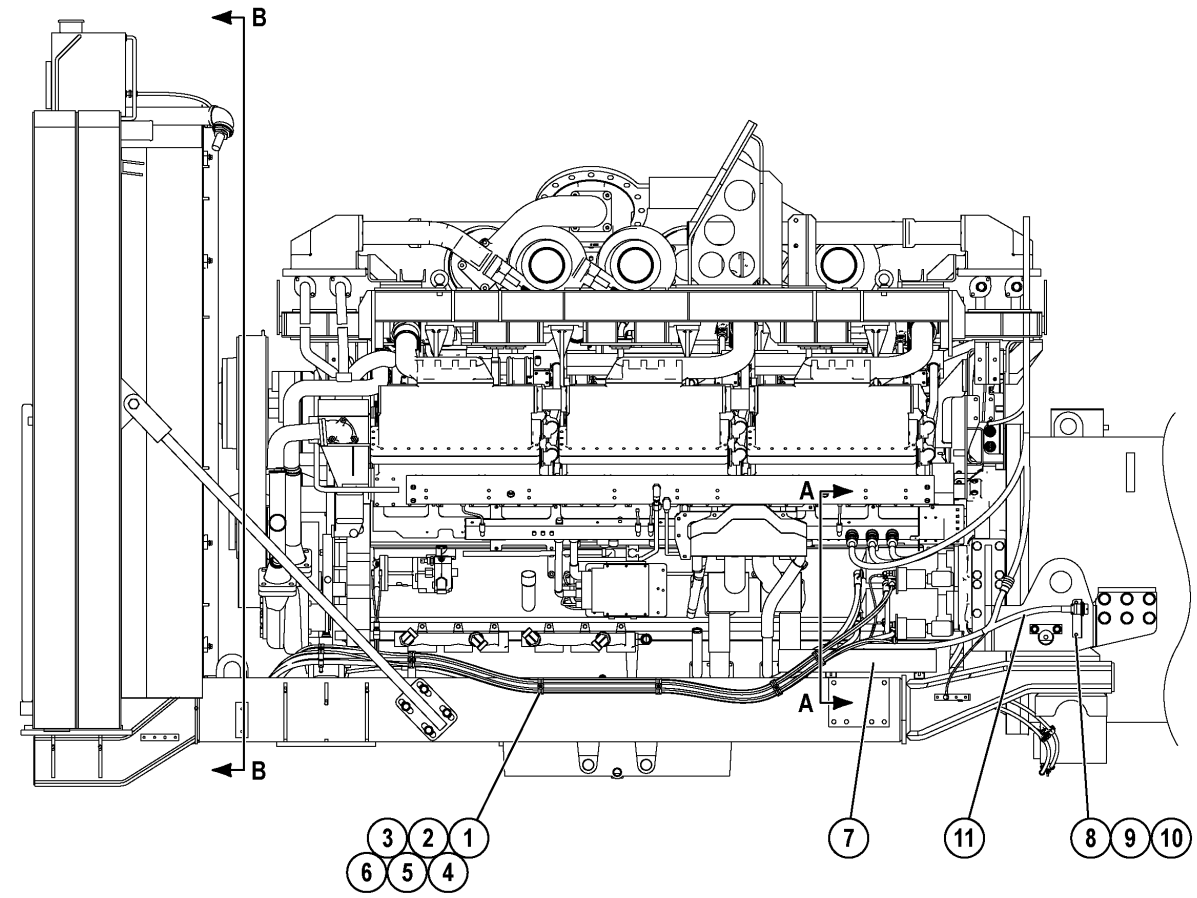

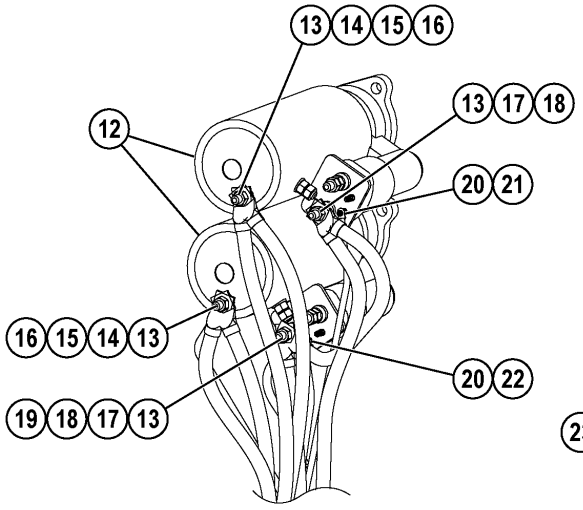

VIEW A - A

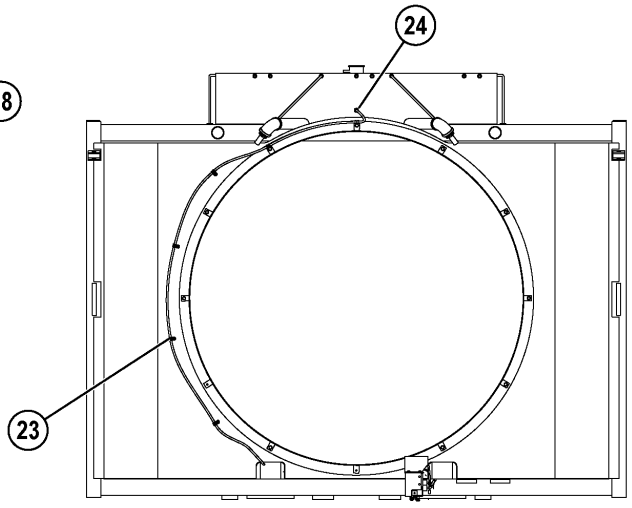

VIEW B - B

61281Z

REF.	PART NUM.	QTY.	DESCRIPTION
1.00	EL1939	6	ROD, THREADED
2.00	EJ3891	12	CLAMP ASSEMBLY
3.00	MM0462	6	FLAT WASHER - M12
4.00	WB1302	12	CLAMP, CUSHIONED - 5/16"
5.00	MM0459	6	FLAT WASHER - M6
6.00	MM0176	6	NUT - M6 X 1.00
7.00	EJ5615	1	SHIELD
8.00	EH9890	1	SHEET, BENT
9.00	MM0025	2	CAPSCREW - M6 X 1.00 X 20
10.00	MM0469	2	LOCKWASHER - M6
11.00	EM6153	1	HARNESS, EXTERNAL ENGINE
12.00	BF4994	2	STARTER (NO PRELUBE)
12.01	09842-A0481	2	DECAL, JUMP START WARNING
13.00	08038-00035	4	CAP, TERMINAL
14.00	CH4075	2	CABLE - BLACK (TO GROUND)
15.00	CH5415	2	CABLE - RED (TO BATTERY BOX)
16.00	CH4503	1	CABLE - BLACK (TOP STARTER TO BOTTOM STARTER)
17.00	CH5701	2	CABLE - BLACK (TO BATTERY BOX)
18.00	CH4605	1	CABLE - RED (TOP STARTER TO BOTTOM STARTER)
19.00	EM6151	1	LINK, FUSABLE
20.00	08038-04030	2	CAP, TERMINAL
21.00	CH4172	1	CABLE - RED (TO BATTERY BOX)
22.00	CH4173	1	CABLE - RED (TO BATTERY BOX)
23.00	WB3097	6	CLAMP, CUSHIONED - 1/2"
24.00	PB9710	1	SWITCH, COOLANT LEVEL

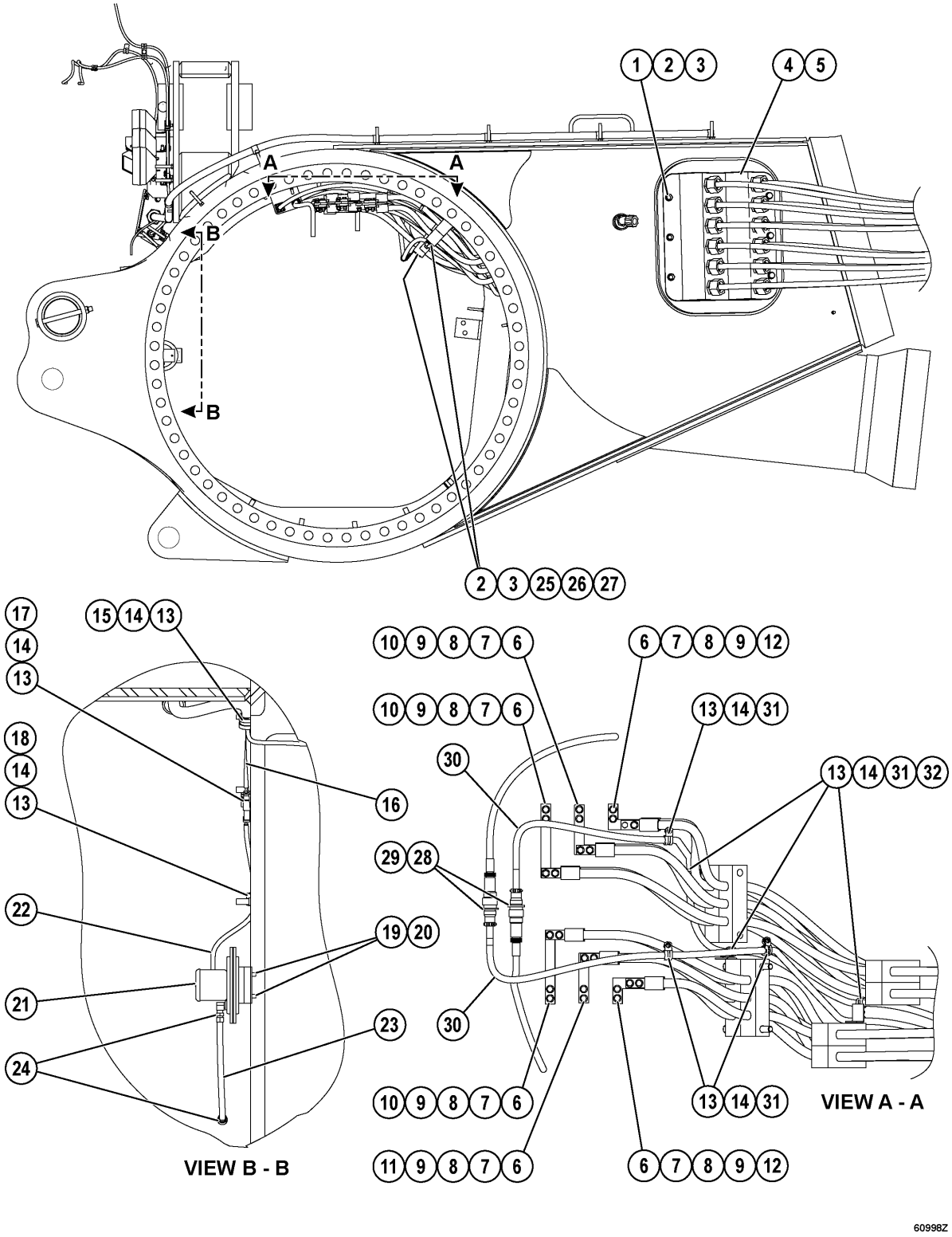
1 2 3
4 5
A
A
B
B
2 3 25 26 27
17
14
13
18
14
13
22
21
24
15 14 13
16
19 20
23
VIEW B - B
10 9 8 7 6
10 9 8 7 6
30
29 28
30
10 9 8 7 6
11 9 8 7 6
6 7 8 9 12
13 14 31
13 14 31 32
13 14 31
6 7 8 9 12
VIEW A - A
60998Z

REF.	PART NUM.	QTY.	DESCRIPTION
1.00	MM0086	6	CAPSCREW - M16 X 2.00 X 60
2.00	MM0464	14	FLAT WASHER - M16
3.00	MM0474	14	LOCKWASHER - M16
4.00	EK5643	1	GASKET
5.00	EK4384	1	MOUNT, POWER CABLES
6.00	VC8762	24	CAPSCREW - 3/8" - 16NC X 1 1/2"
7.00	TR4436	48	FLAT WASHER - 3/8"
8.00	TC1233	24	NUT - 3/8" - 16NC
9.00	TC1231	24	LOCKWASHER - 3/8"
10.00	EK6385	2	BAR, BUS
11.00	EK6384	2	BAR, BUS
12.00	EK6383	2	BAR, BUS
13.00	MM0461	9	FLAT WASHER - M10
14.00	MM0178	9	NUT - M10 X 1.50
15.00	WB3092	1	CLAMP, CUSHIONED - 7/8"
16.00	EM5135	1	HARNESS, BLOWER PRESSURE SWITCH
17.00	08193-20012	1	CLIP
18.00	WB3097	1	CLAMP, CUSHIONED - 1/2"
19.00	H8136	4	CAPSCREW - 1/4" - 20NC X 1/2"
20.00	C5774	4	LOCKWASHER - 1/4"
21.00	EM1179	1	SWITCH, BLOWER PRESSURE
21.01	PB4673	1	SWITCH
22.00	EL9925	1	HARNESS
23.00	TK7603	1	TUBE, NYLON
24.00	TA0603	2	FITTING, NYLON
25.00	EJ9742	8	CLAMP, WOOD
26.00	EC1090	8	STUD, THREADED
27.00	MM0181	8	NUT - M16 X 2.00
28.00	WA5642	16	MACHINE SCREW - #4 - 40NC X 1/2"
29.00	WB0904	2	PLATE, NUT CONNECTOR
30.00	EL5817	1	HARNESS, GE WHEEL SPEED
31.00	WB3091	6	CLAMP, CUSHIONED - 11/16"
32.00	EL0855	3	BRACKET
NS	WA1578	AR	TAPE (1)
NS	EB3432	12	SLEEVE, SHRINK (1)
NS	PC0284	6	"Y" BOOT, SHRINK (1)
NS	EG1834	AR	SLEEVE, INSULATING
NS	DC4979	24	CLAMP, WORM DRIVE

NOTE: (1) USE AT BUS BAR/CABLE CONNECTION.

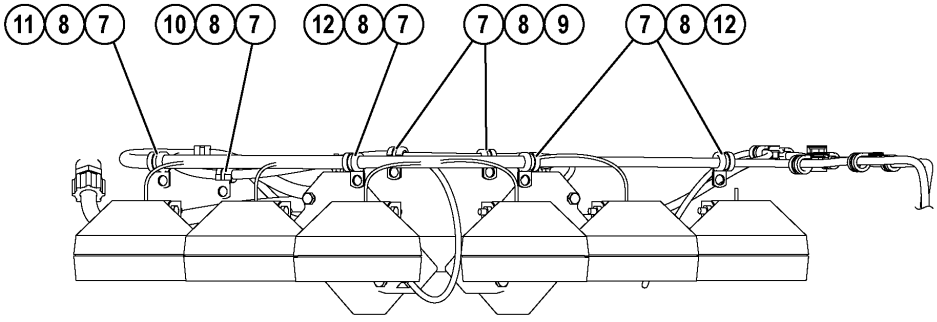

TOP VIEW

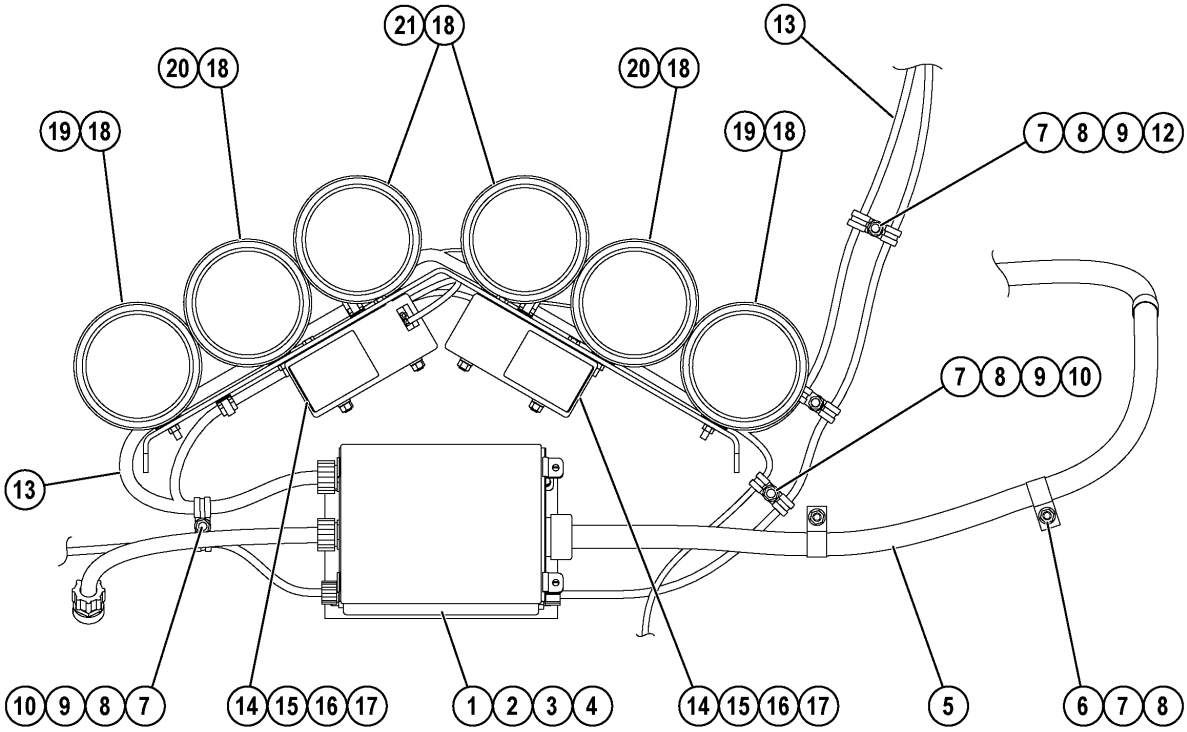

60999Z

REF.	PART NUM.	QTY.	DESCRIPTION
1.00	EK1413	1	JUNCTION BOX ASSEMBLY - REAR (SEE INDEX)
2.00	MM0025	4	CAPSCREW - M6 X 1.00 X 20
3.00	MM0469	4	LOCKWASHER - M6
4.00	MM0459	4	FLAT WASHER - M6
5.00	EM5638	1	HARNESS, RIGHT REAR FRAME
6.00	TR9441	3	CLAMP, VINYL - 1 1/4" I.D.
7.00	MM0461	15	FLAT WASHER - M10
8.00	MM0178	15	NUT - M10 X 1.50
9.00	WB3097	5	CLAMP, CUSHIONED - 1/2"
10.00	WB3098	2	CLAMP, CUSHIONED - 3/8"
11.00	WB3091	2	CLAMP, CUSHIONED - 11/16"
12.00	WB1300	6	CLAMP, CUSHIONED - 5/8"
13.00	EM5754	1	HARNESS, AXLE HOUSING
14.00	736131C2	2	ALARM, BACKUP
15.00	C5733	4	CAPSCREW - 3/8" - 16NC X 4"
16.00	TC1231	4	LOCKWASHER - 3/8"
17.00	TC1233	4	NUT - 3/8" - 16NC
18.00	SP8708	6	LOCKWASHER - 5/16" (EXTERNAL - INTERNAL TOOTH)
19.00	PC1913	2	STOP/TAIL LIGHT - RED (LED) (SEE FIG. 60883)
20.00	PC1914	2	RETARD LIGHT - AMBER (LED) (SEE FIG. 60883)
21.00	AK7513	2	BACKUP LIGHT ASSEMBLY (SEE FIG 60883)

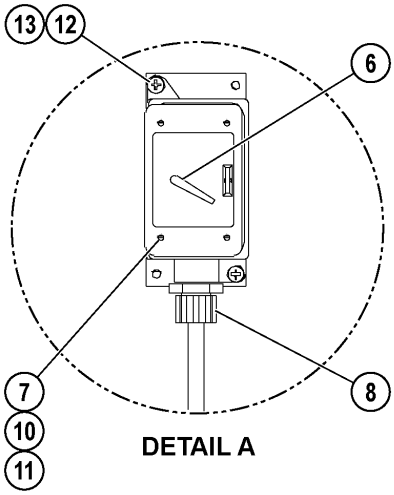

DETAIL A

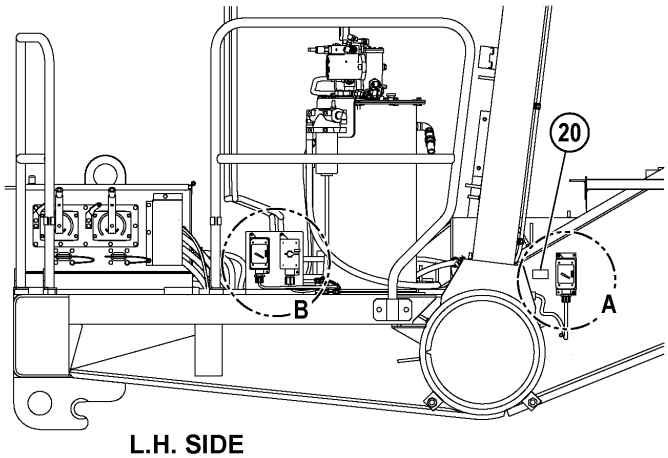

L.H. SIDE

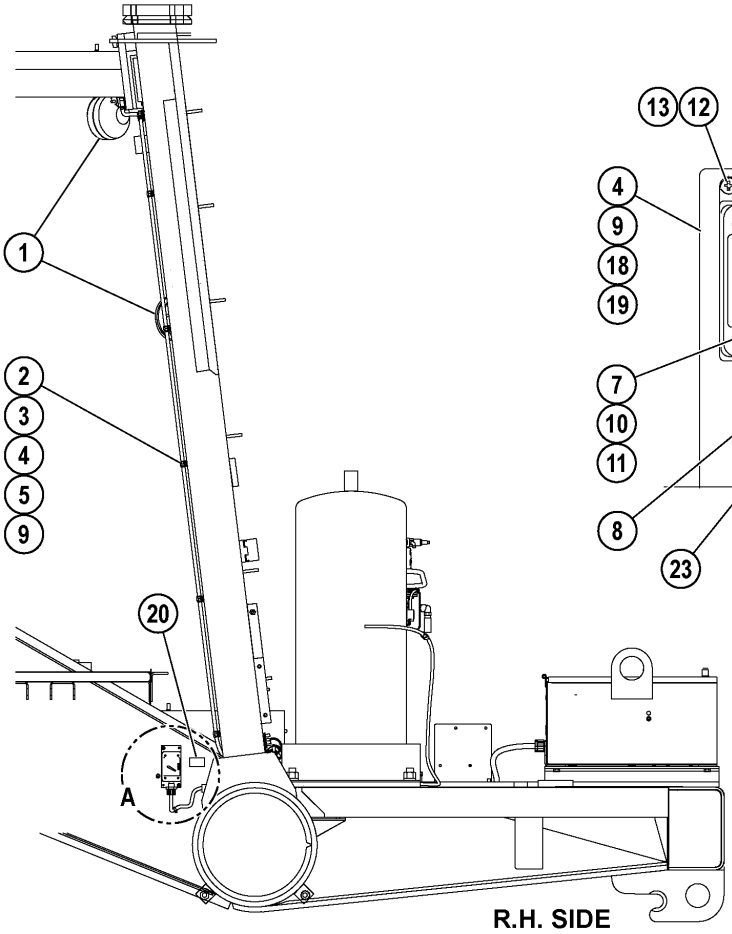

R.H. SIDE

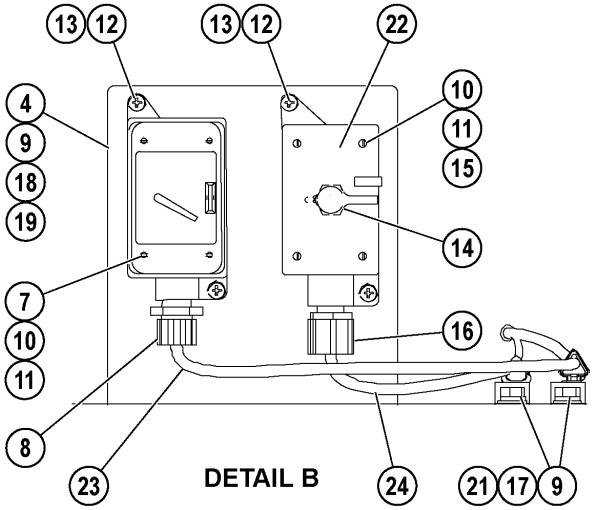

DETAIL B

61345Z

REF.	PART NUM.	QTY.	DESCRIPTION
1.00	AK7503	4	FLOODLIGHT (SEE FIG 60883)
2.00	EG0659	2	HARNESS, SERVICE LIGHTS
3.00	WB3097	15	CLAMP, CUSHIONED - 1/2"
4.00	MM0471	18	LOCKWASHER - M10
5.00	MM0178	16	NUT - M10 X 1.50
6.00	VA2828	3	SWITCH, FLUSH (SERVICE & LADDER LIGHTS)
7.00	VA2826	3	COVER, SWITCH
8.00	PB9072	3	CONDULET
9.00	MM0461	20	FLAT WASHER - M10
10.00	VN7129	12	MACHINE SCREW - #6 - 32NC X 5/8"
11.00	DF4944	12	LOCKWASHER - #6
12.00	MM0358	8	MACHINE SCREW - M6 X 1.00 X 16
13.00	MM0469	8	LOCKWASHER - M6
14.00	PB8735	1	SWITCH, ENGINE SHUTDOWN
15.00	TZ0880	1	COVER, SWITCH
16.00	PB9075	1	CONDULET
17.00	MM0604	2	CAPSCREW - M10 X 1.50 X 20
18.00	EM2064	1	BRACKET, SWITCH MOUNT
19.00	MM0605	2	CAPSCREW - M10 X 1.50 X 25
20.00	WB2248	2	DECAL (ENGINE BAY LIGHT SWITCH)
21.00	08193-20012	2	CLIP
22.00	TZ6931	1	TITLE PLATE (EMERGENCY SHUTDOWN ONLY)
23.00	EM2230	1	HARNESS, JUMPER - LADDER LIGHT SWITCH
24.00	EM2231	1	HARNESS, JUMPER - ENGINE SHUTDOWN SWITCH

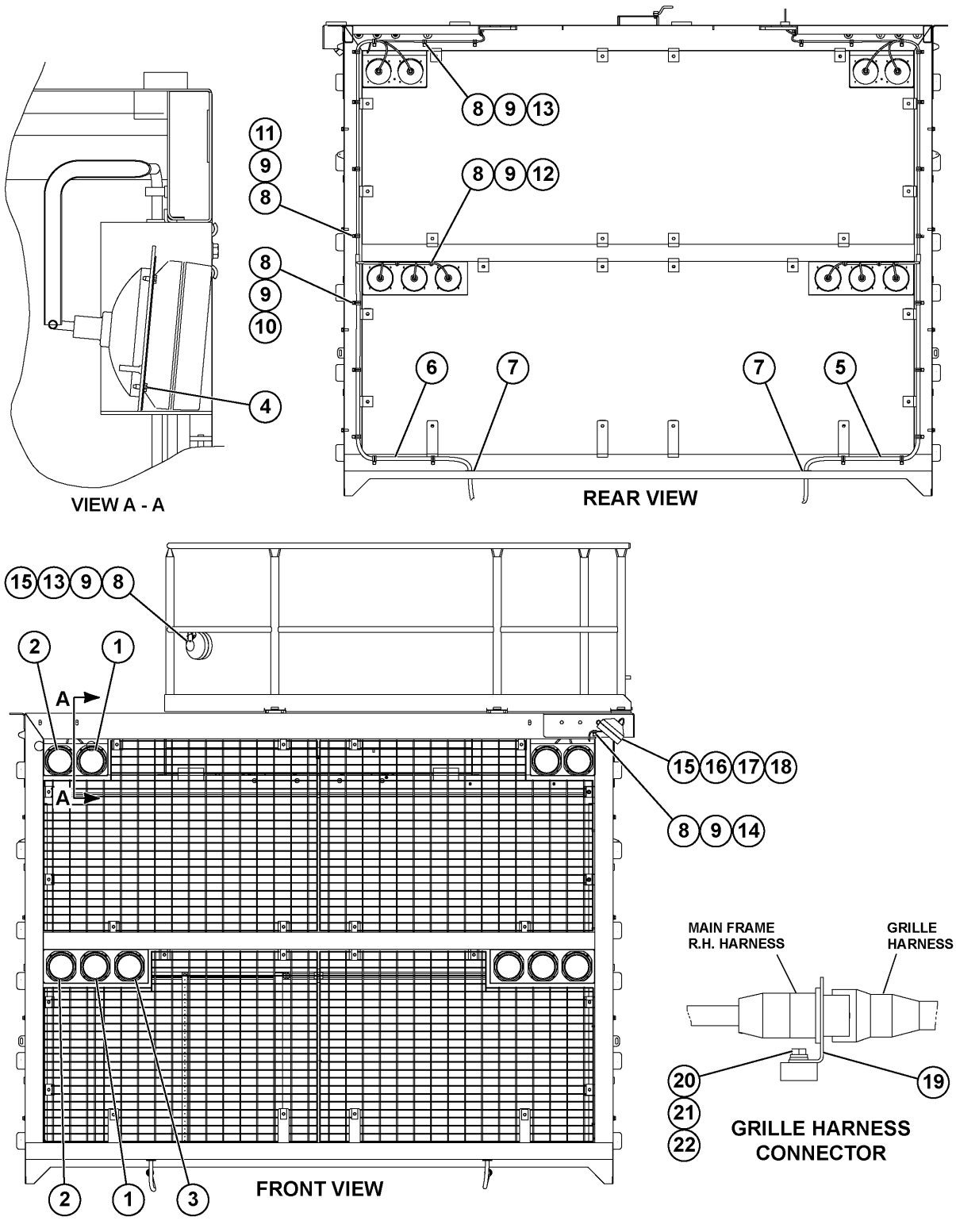
11
9
8
8
9
10
4
VIEW A - A
8 9 13
8 9 12
6
7
7
5
REAR VIEW
15 13 9 8
2
1
A
A
15 16 17 18
8 9 14
MAIN FRAME
R.H. HARNESS
GRILLE
HARNESS
20
21
22
19
GRILLE HARNESS
CONNECTOR
2
1
3
FRONT VIEW
61072Z

REF.	PART NUM.	QTY.	DESCRIPTION
1.00	AK7525	4	HEADLIGHT ASSEMBLY - HIGH BEAM (SEE FIG 41107)
2.00	AK7526	4	HEADLIGHT ASSEMBLY - LOW BEAM (SEE FIG 41107)
3.00	AK7524	2	FOG LIGHT ASSEMBLY (SEE FIG 41107)
4.00	WA4513	40	SCREW, SELF-TAPPING - #10 - 24NC X 1/2"
5.00	EM3429	1	HARNESS, GRILLE - R.H.
6.00	EM0779	1	HARNESS, GRILLE - L.H.
7.00	WB0810	2	GROMMET
8.00	MM0461	32	FLAT WASHER - M10
9.00	MM0178	32	NUT - M10 X 1.50
10.00	WB3092	10	CLAMP, CUSHIONED - 7/8"
11.00	WB1300	10	CLAMP, CUSHIONED - 5/8"
12.00	WB3097	4	CLAMP, CUSHIONED - 1/2"
13.00	WB3098	7	CLAMP, CUSHIONED - 3/8"
14.00	WB1301	1	CLAMP, CUSHIONED - 1/4"
15.00	AK7503	2	FLOODLIGHT (SEE FIG 60883)
16.00	MM0593	1	CAPSCREW - M8 X 1.25 X 20
17.00	MM0460	1	FLAT WASHER - M8
18.00	MM0470	1	LOCKWASHER - M8
19.00	EJ8368	2	BRACKET, GRILLE HARNESS SOCKET
20.00	MM0581	4	CAPSCREW - M6 X 1.00 X 16
21.00	MM0459	4	FLAT WASHER - M6
22.00	MM0469	4	LOCKWASHER - M6

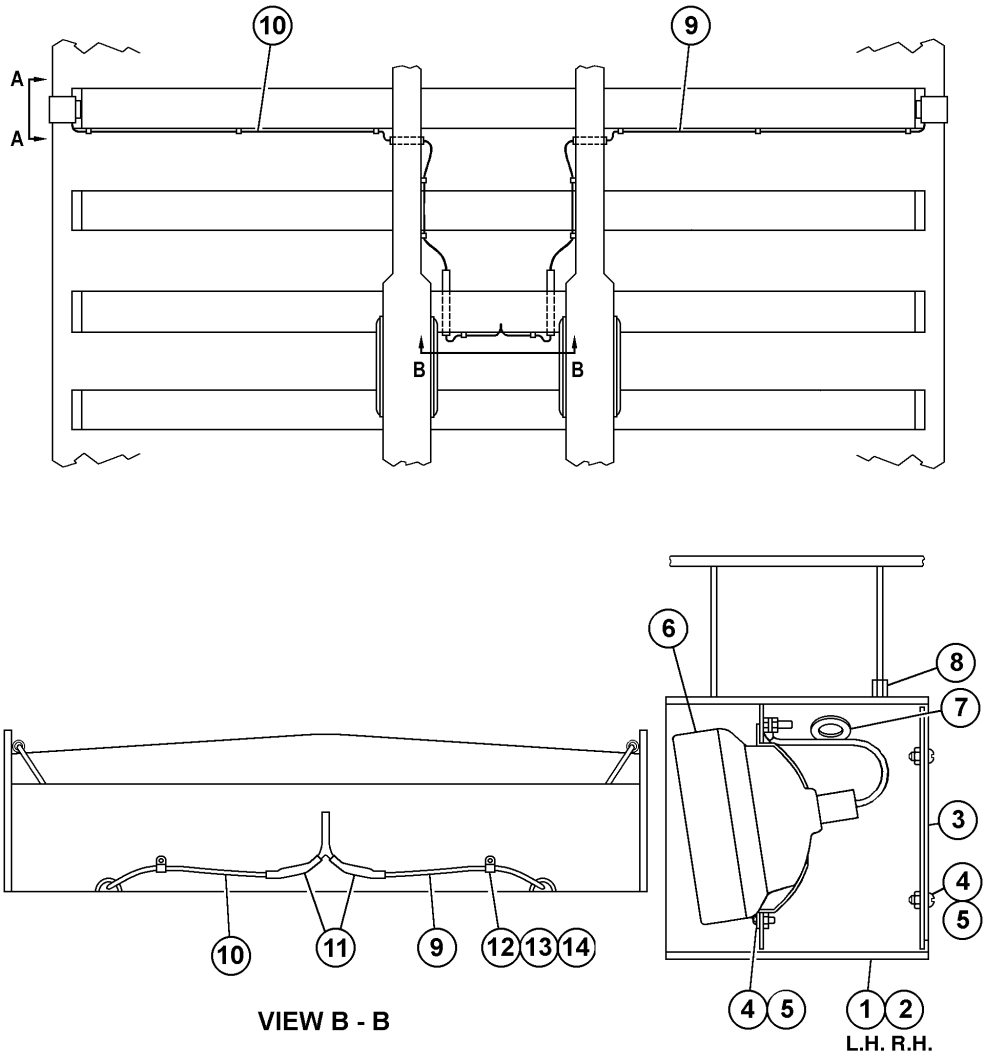

61133Z

REF.	PART NUM.	QTY.	DESCRIPTION
1.00	EH5393	1	MOUNTING, CLEARANCE LIGHT - L.H.
2.00	EH5392	1	MOUNTING, CLEARANCE LIGHT - R.H.
3.00	EF2186	2	PLATE, COVER
4.00	VM1464	16	MACHINE SCREW - #10 - 24NC X 5/8"
5.00	DC3101	16	LOCKWASHER - #10
6.00	PC1866	2	CLEARANCE LIGHT (LED) (SEE FIG 41107)
7.00	SL7366	2	GROMMET
8.00	TC5943	2	GROMMET
9.00	EL7470	1	HARNESS, BODY CLEARANCE LIGHT - R.H.
10.00	EL7471	1	HARNESS, BODY CLEARANCE LIGHT - L.H.
11.00		1	SLEEVE, INSULATION - 3/4" (12" LONG)
12.00	TG2562	2	CLAMP, VINYL - 1/2" I.D.
13.00	MM0461	2	FLAT WASHER - M10
14.00	MM0178	2	NUT - M10 X 1.50

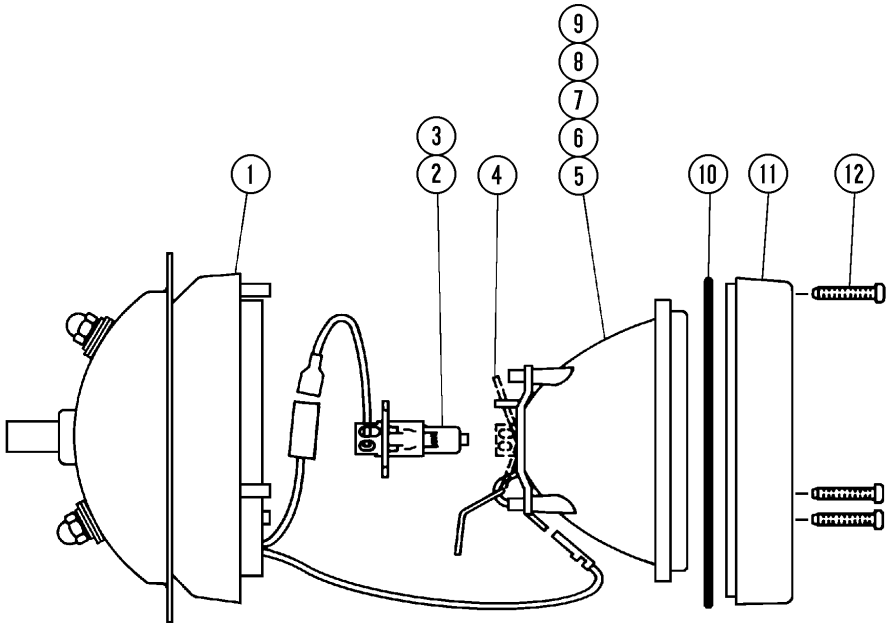

41107Z

REF.	PART NUM.	QTY.	DESCRIPTION
1.00	AK7551	1	FLANGE HOUSING ASSEMBLY (1)/(2)/(3)
2.00	AK1284	1	LIGHT BULB - 24V/100W (1)/(2)
3.00	AK7575	1	LIGHT BULB - 24V/65W (3)/(4)/(5)
4.00	AK7554	1	SPRING, BULB RETAINER (1)/(2)/(3)
5.00	AK3335	1	LENS/REFLECTOR - HIGH BEAM (WITHOUT BULB) (1)
5.01	AK3341	1	LENS/REFLECTOR - HIGH BEAM (WITH BULB) (1)
6.00	AK3336	1	LENS/REFLECTOR - LOW BEAM (WITHOUT BULB) (2)
6.01	AK3342	1	LENS/REFLECTOR - LOW BEAM (WITH BULB) (2)
7.00	AK7533	1	LENS/REFLECTOR - FOG - AMBER (WITHOUT BULB) (3)
7.01	AK7546	1	LENS/REFLECTOR - FOG - AMBER (WITH BULB) (3)
8.00	AK7536	1	LENS/REFLECTOR - RETARD/TURN SIGNAL - AMBER (4)
9.00	AK7537	1	LENS/REFLECTOR - CLEARANCE - RED (5)
10.00	AK7556	1	GASKET (MULTIPAK 10)
11.00	AK7559	1	BEZEL
12.00	AK7561	3	SCREW (MULTIPAK 10)

NOTE: (1) INCLUDED IN AK7525 HEADLIGHT ASSM.(HIGH BEAM)
(2) INCLUDED IN AK7526 HEADLIGHT ASSM.(LOW BEAM)
(3) INCLUDED IN AK7524 FOG LIGHT ASSEMBLY.
(4) INCLUDED IN PC1867 TURN SIGNAL LIGHT ASSM.
(5) INCLUDED IN PC1866 CLEARANCE LIGHT ASSM.

(ALL PARTS ARE COMMON, EXCEPT WHERE INDICATED.)

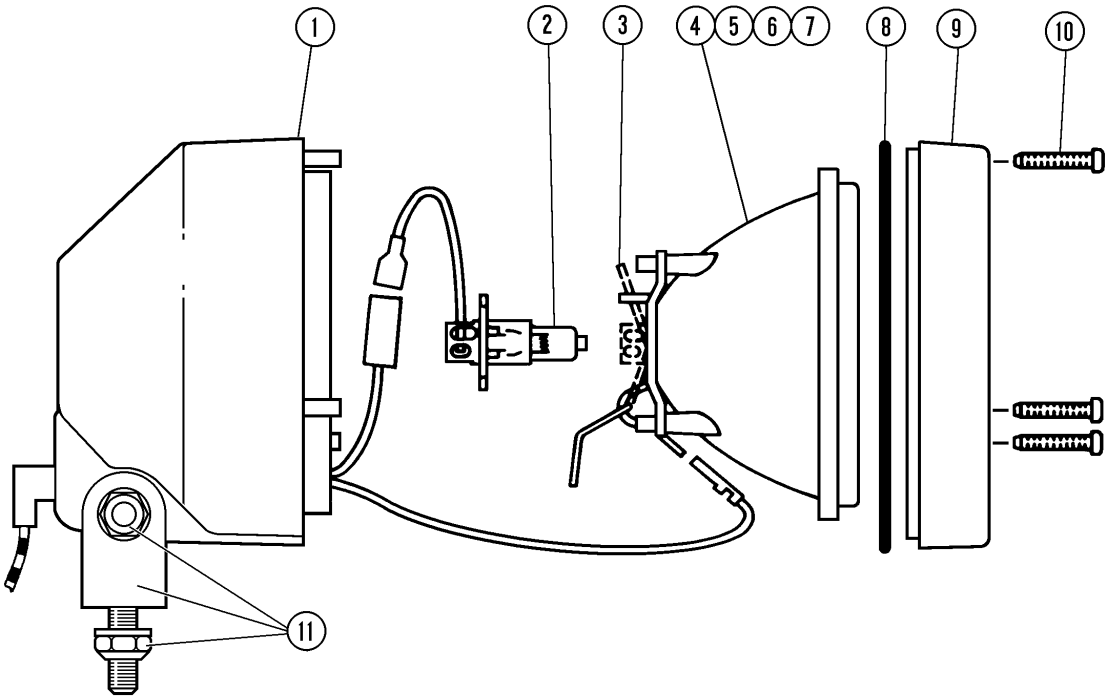

60883Z

REF.	PART NUM.	QTY.	DESCRIPTION
1.00	AK7552	1	UNIVERSAL HOUSING ASSEMBLY
2.00	AK7575	1	LIGHT BULB - 24V/65W (3)/(4)
2.01	AK1284	1	LIGHT BULB - 24V/100W (5)
3.00	AK7554	1	SPRING, BULB RETAINER (3)/(4)/(5)
4.00	AK4696	1	LENS/REFLECTOR - RETARD/TURN SIGNAL - AMBER (1)
5.00	AK4695	1	LENS/REFLECTOR - STOP/TAIL - RED (WITHOUT BULB) (2)
6.00	AK7534	1	LENS/REFLECTOR - FLOOD - CLEAR (WITHOUT BULB) (3)
6.01	AK3337	1	LENS/REFLECTOR - FLOOD - CLEAR (WITHOUT BULB) (4)/(5)
7.00			(NOT USED IN THIS APPLICATION)
8.00	AK7556	1	GASKET (MULTIPAK 10)
9.00	AK7559	1	BEZEL
10.00	AK7561	3	SCREW (MULTIPAK 10)
11.00	AK7560	1	KIT, HARDWARE

NOTE: (1) INCLUDED IN PC1914 RETARD LIGHT ASSEMBLY.
(2) INCLUDED IN PC1913 STOP/TAIL LIGHT ASSM.
(3) INCLUDED IN AK7503 SVC (BACKUP) LIGHT ASSM.
(4) INCLUDED IN AK7519 FLOOD (BACKUP) LIGHT ASSM.
(5) INCLUDED IN AK7513 FLOOD (BACKUP) LIGHT ASSM.

(ALL PARTS ARE COMMON, EXCEPT WHERE INDICATED.)

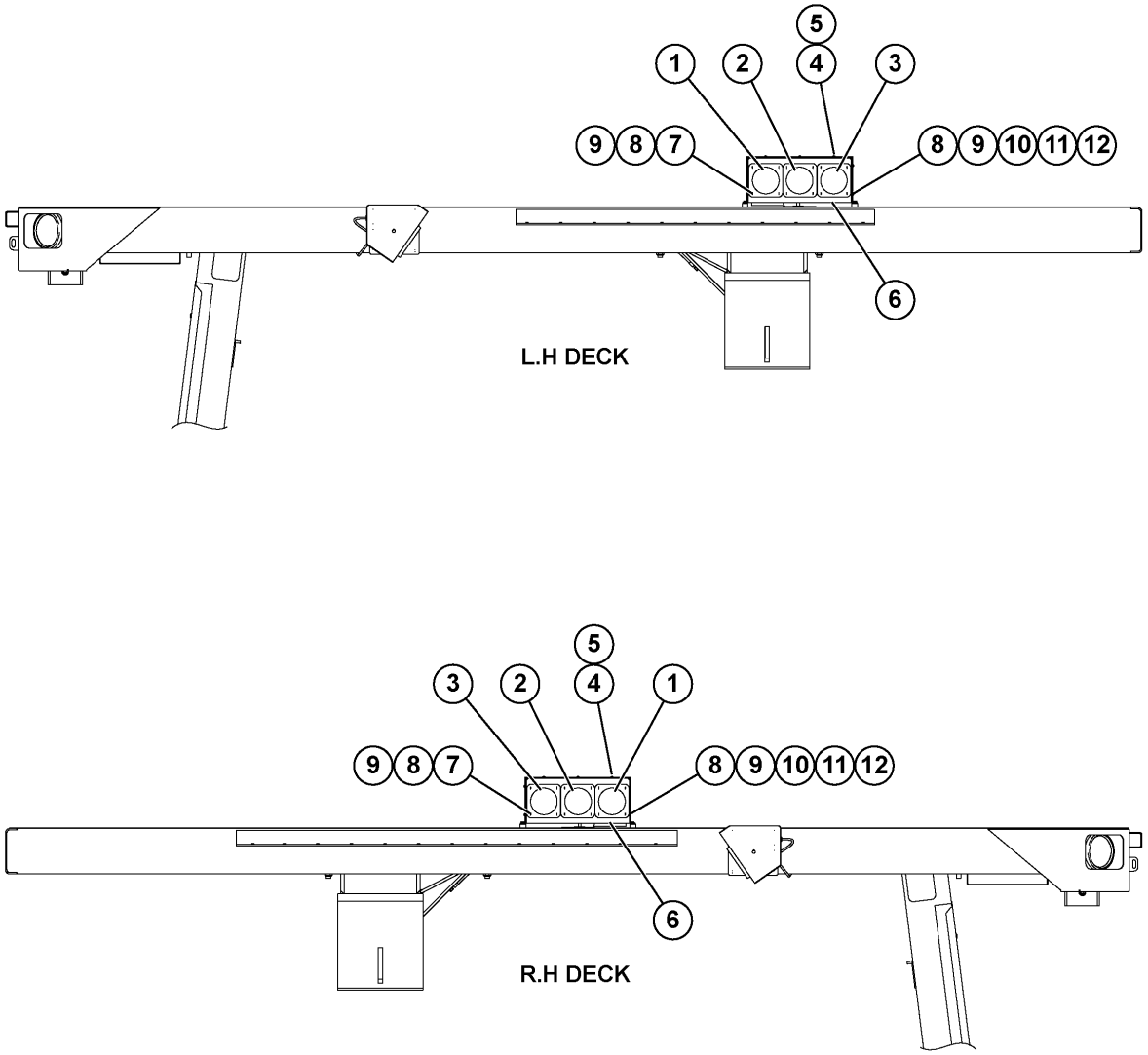

60977Z

REF.	PART NUM.	QTY.	DESCRIPTION
1.00	EK9382	1	LIGHT, LED - GREEN
2.00	EK9381	1	LIGHT, LED - YELLOW
3.00	EK9380	1	LIGHT, LED - RED
4.00	EB4084	1	COVER, HOUSING
5.00	WA2853	7	SCREW, SELF-TAPPING - #12 - 24NC X 5/8"
6.00	EK3852	1	HOUSING, PLM III LIGHT
7.00	TG1929	12	MACHINE SCREW - #10 - 24NC X 1/2"
8.00	DC3101	13	LOCKWASHER - #10
9.00	DF0017	13	NUT - #10 - 24NC
10.00	HD6007	1	MACHINE SCREW - #10 - 24NC X 3/4"
11.00	SD4245	1	LOCKWASHER - #10 (EXTERNAL TOOTH)
12.00	VC5344	1	FLAT WASHER - #10

(QUANTITIES SHOWN FOR ONE SIDE ONLY.)

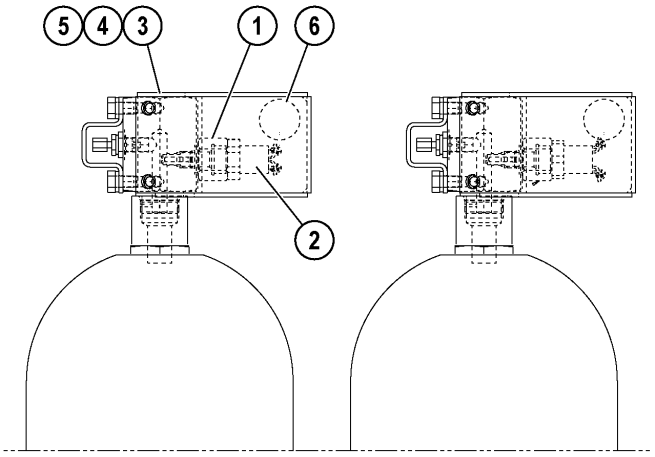

TOP OF STEERING ACCUMULATORS

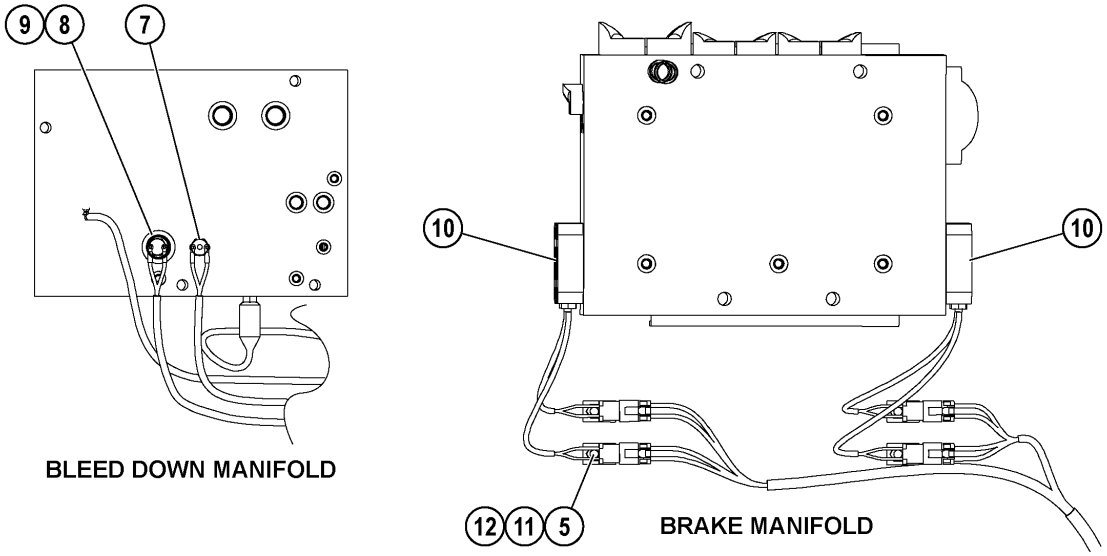

BLEED DOWN MANIFOLD

BRAKE MANIFOLD

61368Z

REF.	PART NUM.	QTY.	DESCRIPTION
1.00		2	GAS VALVE ASSEMBLY (1)
2.00	PB8333	2	SWITCH, PRESSURE
3.00	EJ7888	2	COVER
4.00	MM0603	4	CAPSCREW - M10 X 1.50 X 16
5.00	MM0471	8	LOCKWASHER - M10
6.00	VN7967	2	GROMMET
7.00	PC1693	1	SWITCH, PRESSURE
8.00	PC2208	1	FITTING
9.00	PC1677	1	SWITCH, PRESSURE
10.00	78619-23320	4	SENSOR, TEMPERATURE
11.00	MM0178	8	NUT - M10 X 1.50
12.00	08053-01512	4	CLIP, CONNECTOR

NOTE: (1) SUPPLIED WITH ACCUMULATOR ASSEMBLY.

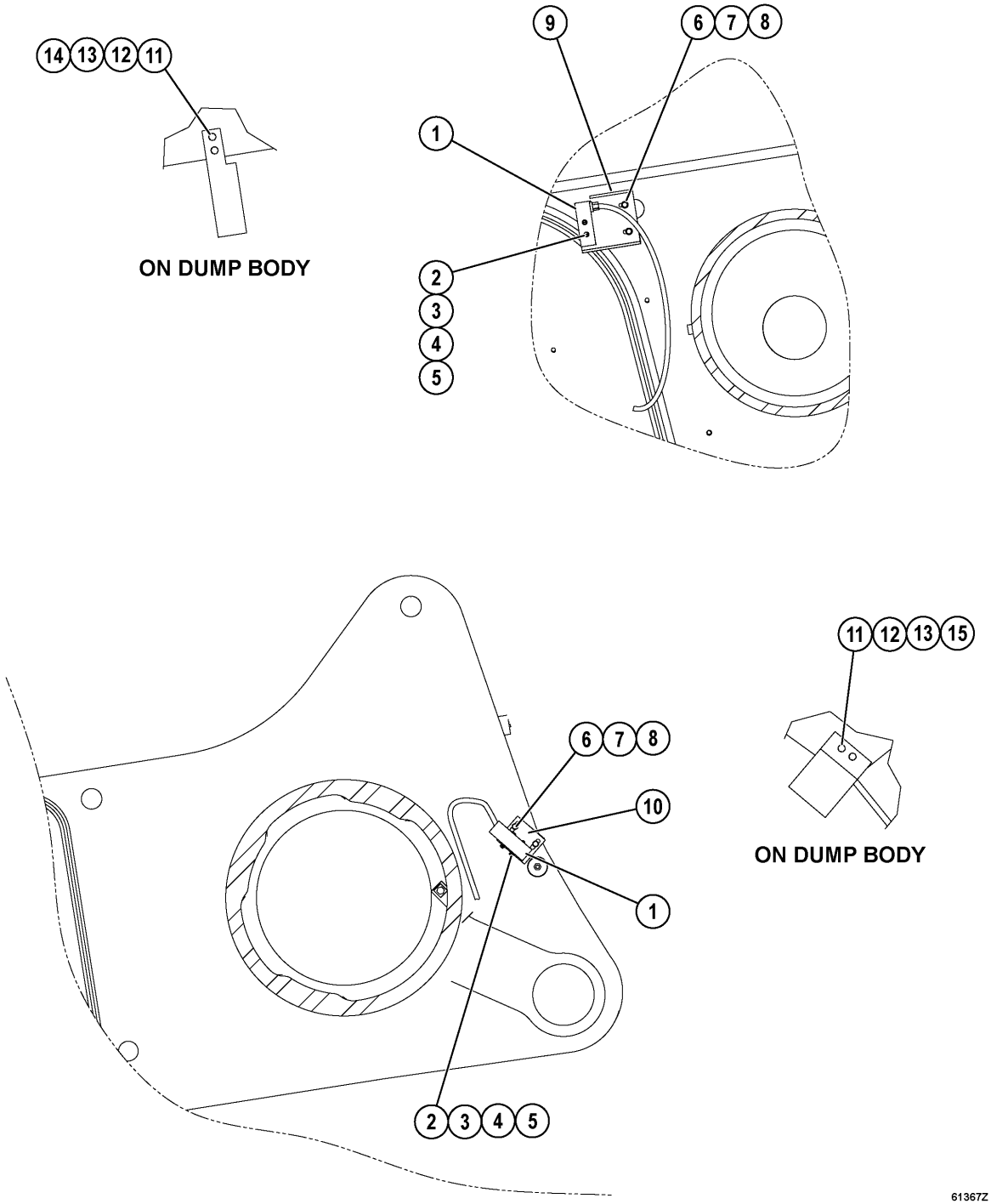
14
13
12
11
ON DUMP BODY
9
6
7
8
1
2
3
4
5
6
7
8
10
1
2
3
4
5
11
12
13
15
ON DUMP BODY
61367Z

REF.	PART NUM.	QTY.	DESCRIPTION
1.00	PB4307	2	SWITCH, PROXIMITY
2.00	WA4770	4	MACHINE SCREW - #10 - 24NC X 2"
3.00	VC5344	4	FLAT WASHER - #10
4.00	DC3101	4	LOCKWASHER - #10
5.00	DF0017	4	NUT - #10 - 24NC
6.00	TD0794	4	CAPSCREW - 5/16" - 18NC X 3/4"
7.00	TV0177	4	FLAT WASHER - 5/16"
8.00	SC4174	4	LOCKWASHER - 5/16"
9.00	TW2477	1	BRACKET, MOUNTING
10.00	TX6079	1	BRACKET, MOUNTING
11.00	MM0471	4	LOCKWASHER - M10
12.00	MM0604	4	CAPSCREW - M10 X 1.50 X 20
13.00	MM0461	4	FLAT WASHER - M10
14.00	EH0753	1	PLATE, BENT
15.00	EG4754	1	PLATE, BENT

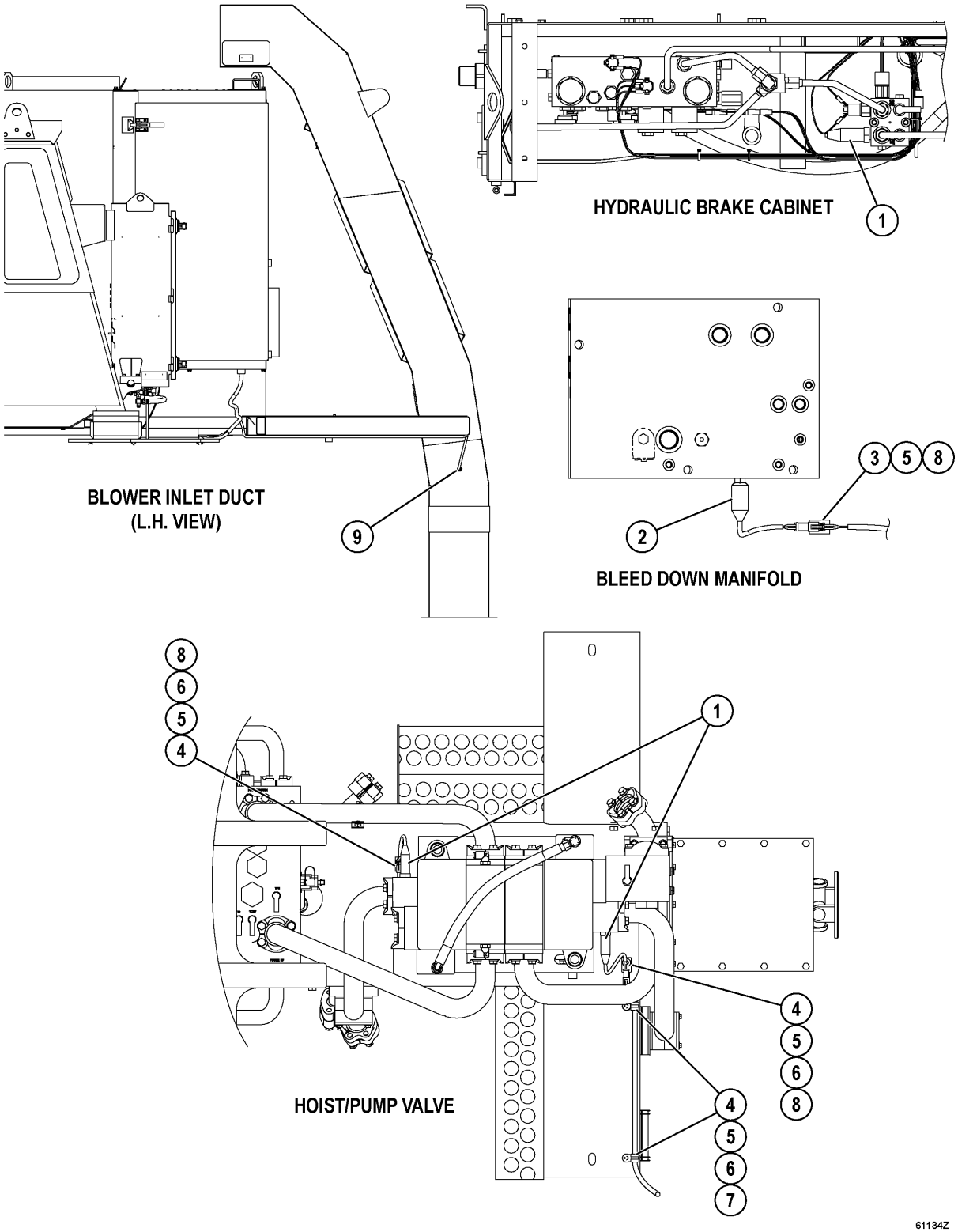
HYDRAULIC BRAKE CABINET
1
BLOWER INLET DUCT
(L.H. VIEW)
9
3
5
8
2
BLEED DOWN MANIFOLD
8
6
5
4
1
4
5
6
8
HOIST/PUMP VALVE
4
5
6
7
61134Z

REF.	PART NUM.	QTY.	DESCRIPTION
1.00	PC1537	3	SENSOR, PRESSURE - 4000 PSI
2.00	PC1538	1	SENSOR, PRESSURE - 4000 PSI
3.00	MM0178	1	NUT - M10 X 1.50
4.00	MM0603	7	CAPSCREW - M10 X 1.50 X 16
5.00	MM0471	8	LOCKWASHER - M10
6.00	MM0461	7	FLAT WASHER - M10
7.00	WB3097	5	CLAMP, CUSHIONED - 1/2"
8.00	08053-01512	3	CLIP, CONNECTOR
9.00	AK7339	1	SENSOR, TEMPERATURE THERMISTER

HYDRAULIC SYSTEM

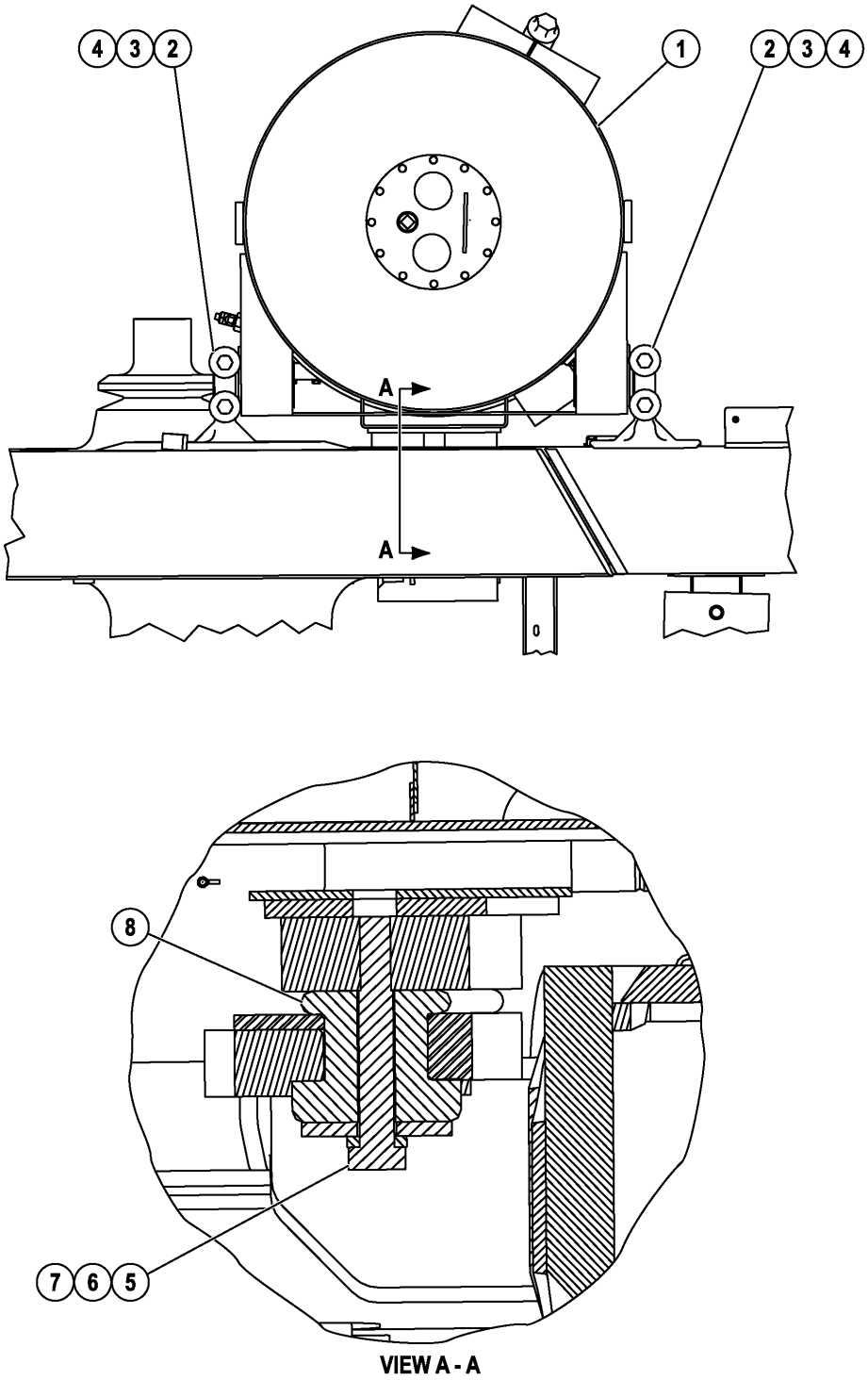

60749Z

REF.	PART NUM.	QTY.	DESCRIPTION
1.00	EM0636	1	HYDRAULIC TANK ASSEMBLY (SEE INDEX)
2.00	TY4907	2	CAP
3.00	C1669	4	CAPSCREW - 1" - 8NC X 3 1/2"
4.00	WA4733	4	FLAT WASHER - 1" (HARDENED)
5.00	MM0159	2	CAPSCREW - M24 X 3.00 X 150
6.00	VW6877	2	FLAT WASHER - 1"
7.00	MM0476	2	LOCKWASHER - M24
8.00	VL7792	2	DAMPENER, RUBBER

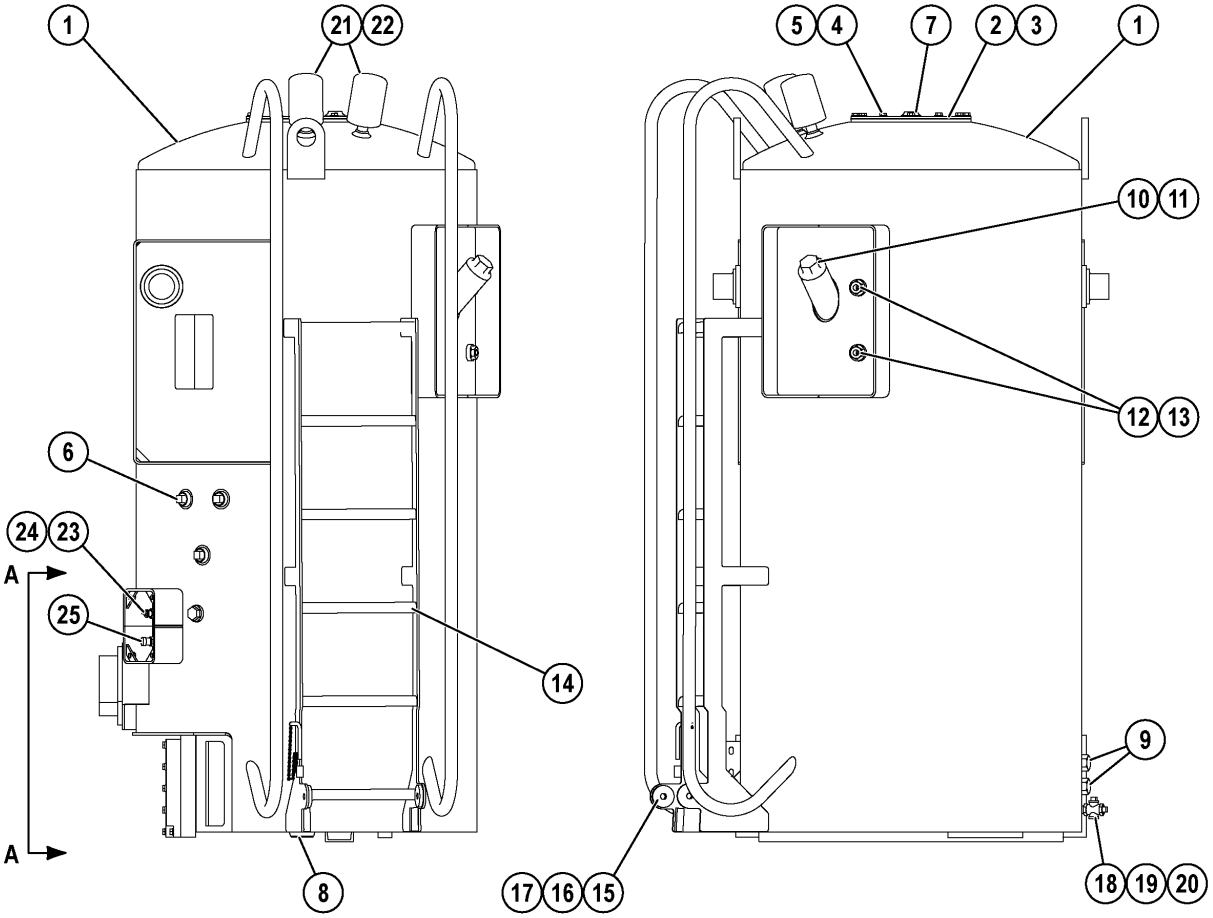

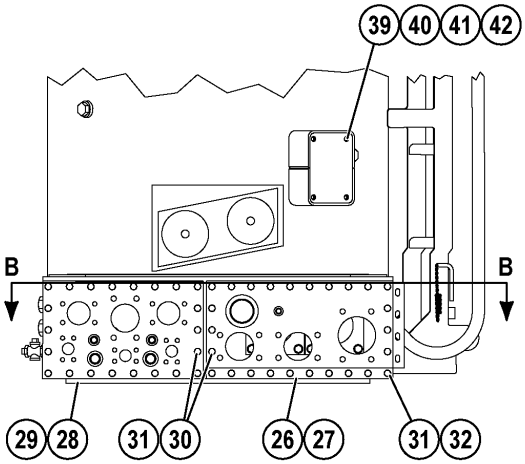

VIEW A - A

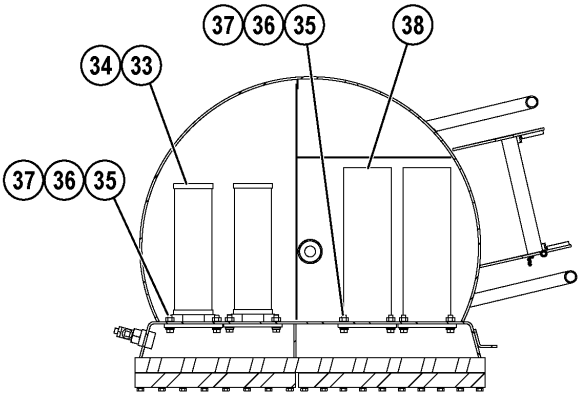

VIEW B - B

61336Z

REF.	PART NUM.	QTY.	DESCRIPTION
1.00	EK9885	1	HYDRAULIC TANK W/ COVERS
2.00	EK5035	1	COVER
3.00	PB0699	1	GASKET
4.00	MM0605	12	CAPSCREW - M10 X 1.50 X 25
5.00	MM0713	12	FLAT WASHER - M10 (HARDENED)
6.00	C5772	4	PLUG, PIPE - 1"
7.00	R2028	2	PLUG, PIPE
8.00	EH7675	1	PLUG, DRAIN - 2" (MAGNETIC)
9.00	VM0319	2	PLUG
10.00	TB0623	1	PLUG, CAP
11.00	VL4534	1	O-RING
12.00	DA5893	2	GAUGE, SIGHT
13.00	TH5604	2	O-RING
14.00	EJ6634	1	LADDER (1)
15.00	VH3402	2	CAPSCREW - 5/8" - 11NC X 1 3/4" (1)
16.00	WA4863	4	FLAT WASHER - 5/8" (1)
17.00	VN9952	2	LOCKNUT - 5/8" - 11NC (1)
18.00	TF6957	1	DRAIN COCK
19.00	E2579	1	NIPPLE
20.00	C5771	1	PLUG, PIPE - 1/2"
21.00	PB5556	2	FILTER, SPIN-ON
22.00	PB5557	2	ADAPTER, FILTER
23.00	EK8243	1	SWITCH, OIL LEVEL
24.00	PB3019	1	REDUCER, BAFFLED
25.00	AK7339	1	SENSOR, TEMPERATURE THERMISTER
26.00	EH7672	1	PLATE, SUCTION COVER
27.00	EH7674	1	GASKET
28.00	EH7671	1	PLATE, RETURN COVER
29.00	EH7673	1	GASKET
30.00	MM0073	38	CAPSCREW - M10 X 1.50 X 60
31.00	MM0471	48	LOCKWASHER - M10
32.00	MM0056	10	CAPSCREW - M10 X 1.50 X 40
33.00	PC0007	2	DIFFUSER
34.00	TY7922	2	FLANGE
35.00	MM0620	16	CAPSCREW - M12 X 1.75 X 40
36.00	MM0462	16	FLAT WASHER - M12
37.00	MM0472	16	LOCKWASHER - M12
38.00	PB5526	2	STRAINER
39.00	EG0606	1	PLATE (1)
40.00	TG5720	4	CAPSCREW - 3/8" - 16NC X 1" (1)
41.00	TC1231	4	LOCKWASHER - 3/8" (1)
42.00	TR4436	4	FLAT WASHER - 3/8" (1)

NOTE: (1) NOT INCLUDED IN THE ASSEMBLY

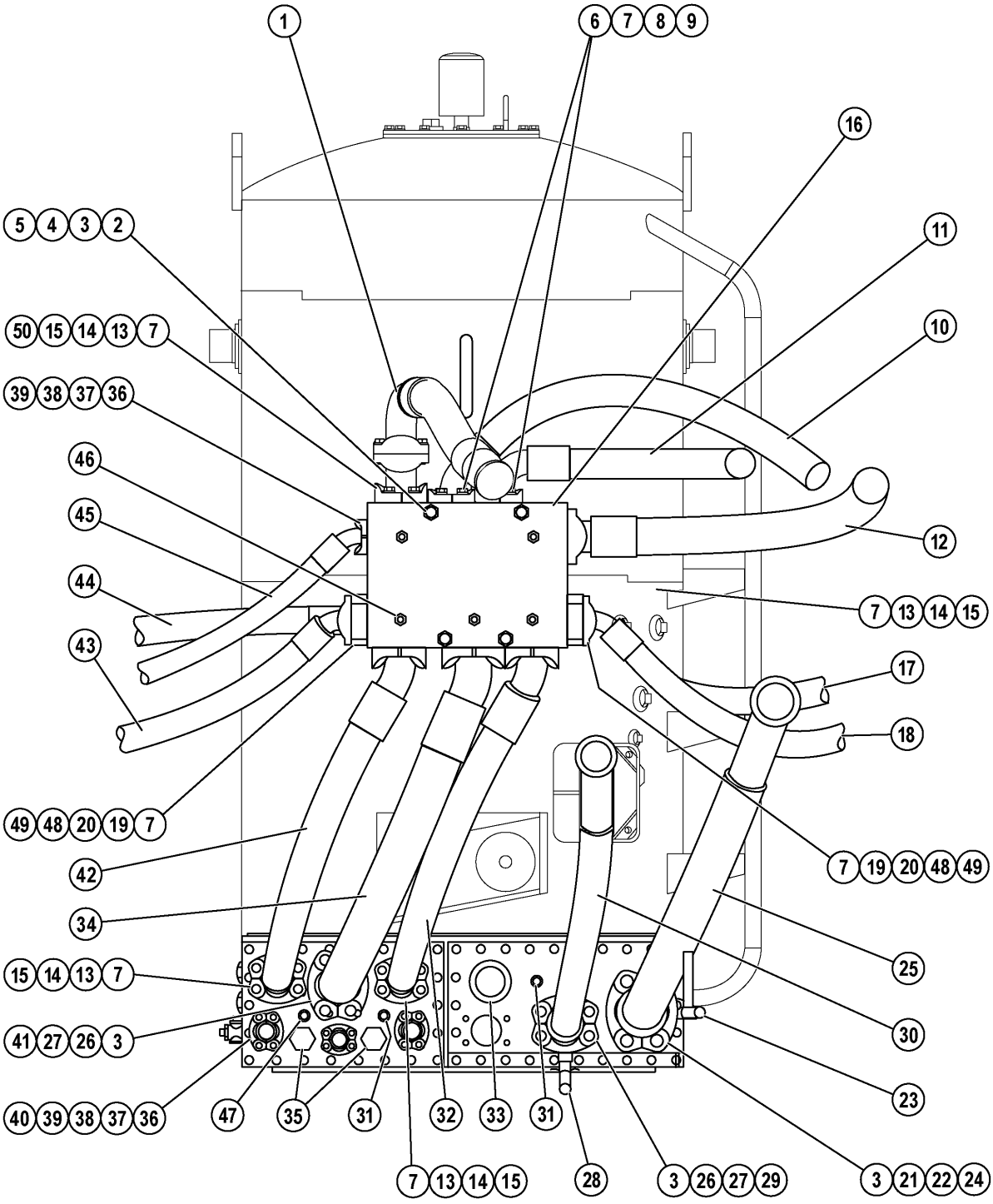
1
6 7 8 9
16
5 4 3 2
11
50 15 14 13 7
10
39 38 37 36
46
45
12
44
7 13 14 15
43
17
18
49 48 20 19 7
7 19 20 48 49
42
34
25
15 14 13 7
30
41 27 26 3
23
40 39 38 37 36
47
35
31
32
33
31
7 13 14 15
28
3 26 27 29
3 21 22 24
61304Z

REF.	PART NUM.	QTY.	DESCRIPTION
1.00	HA7977	1	HOSE
1.01	EK3697	1	SLEEVE, FIRE
2.00	VN9210	4	CAPSCREW - 5/8" - 11NC X 7 1/2"
3.00	C1541	20	LOCKWASHER - 5/8"
4.00	WA0361	4	FLAT WASHER - 5/8" (HARDENED)
5.00	C1525	4	NUT - 5/8" - 11NC
6.00	C1614	12	CAPSCREW - 1/2" - 13NC X 1 1/2"
7.00	C1540	56	LOCKWASHER - 1/2"
8.00	TF3231	4	CLAMP, SPLIT FLANGE
9.00	WA0187	2	O-RING
10.00	HA7702	1	HOSE
11.00	HA7703	1	HOSE
12.00	HA7916	1	HOSE
13.00	VH6718	16	CLAMP, SPLIT FLANGE
14.00	C1615	32	CAPSCREW - 1/2" - 13NC X 1 3/4"
15.00	WA0232	8	O-RING
16.00	PC0678	1	MANIFOLD, DUAL CHECK SPLIT FLANGE
17.00	HA7818	1	HOSE
18.00	HA7817	1	HOSE
19.00	TF8090	8	CLAMP, SPLIT FLANGE
20.00	VG9095	4	O-RING
21.00	VN7716	2	CLAMP, SPLIT FLANGE
22.00	WA0245	2	O-RING
23.00	PC0691	1	VALVE, SHUT-OFF
24.00	H0593	4	CAPSCREW - 5/8" - 11NC X 5 1/2"
25.00	HA7707	1	HOSE
26.00	VL9963	4	CLAMP, SPLIT FLANGE
27.00	WA0237	4	O-RING
28.00	PC0171	1	VALVE, SHUT-OFF
29.00	C1640	4	CAPSCREW - 5/8" - 11NC X 4 1/4"
30.00	HA7387	1	HOSE
31.00	VM0314	2	PLUG
32.00	HA7704	1	HOSE
33.00	VM0322	1	PLUG
34.00	HA7705	1	HOSE
35.00	VM0317	2	PLUG, O-RING
36.00	C1609	8	CAPSCREW - 7/16" - 14NC X 1 1/2"
37.00	C5775	8	LOCKWASHER - 7/16"
38.00	TF3237	4	CLAMP, SPLIT FLANGE
39.00	VG9096	2	O-RING
40.00	656658C1	1	PLUG
41.00	C1629	8	CAPSCREW - 5/8" - 11NC X 1 3/4"

(SEE FOLLOWING PAGE FOR BALANCE OF PARTS...)

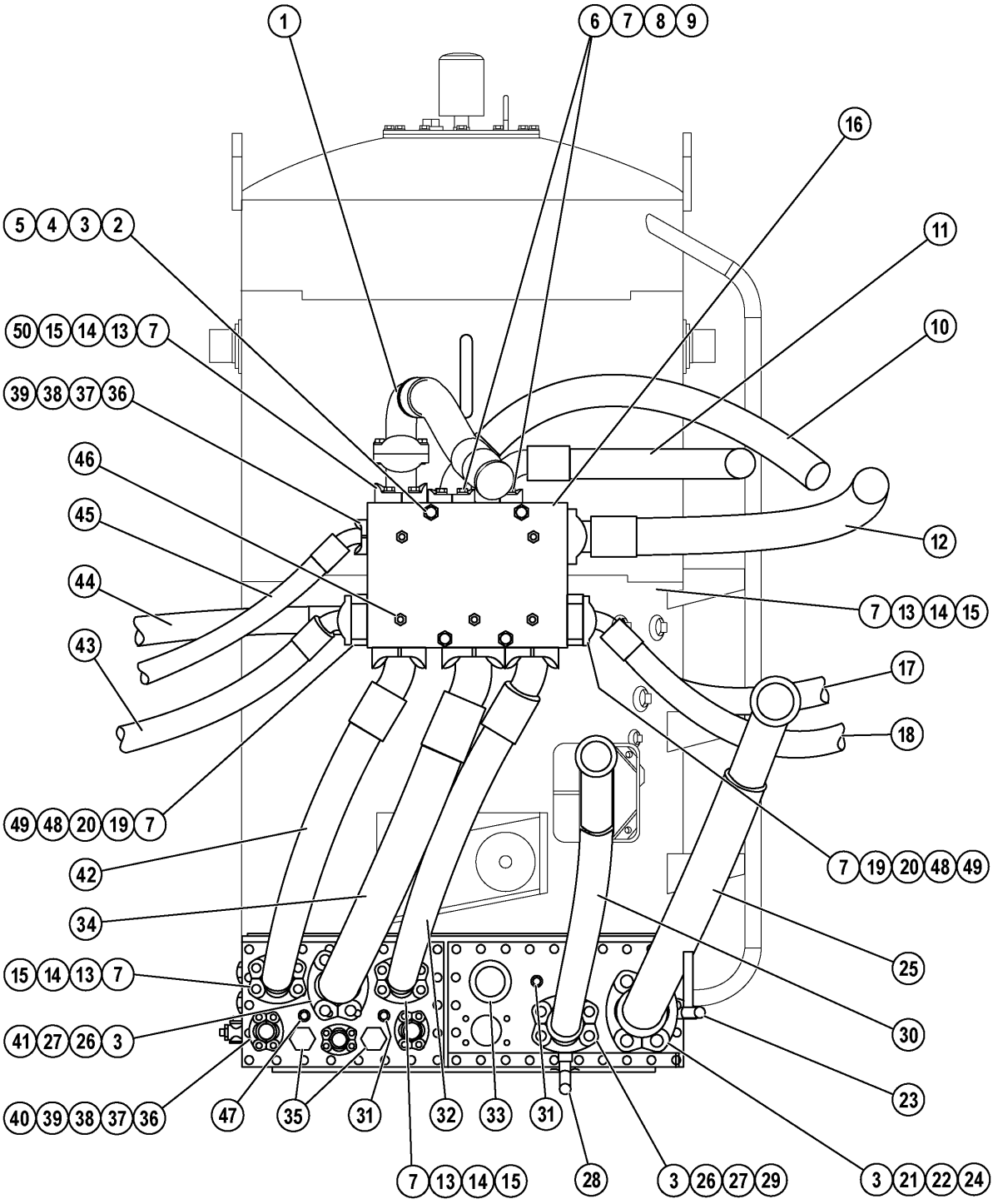
1
6 7 8 9
16
5 4 3 2
11
50 15 14 13 7
10
39 38 37 36
46
45
12
44
7 13 14 15
43
17
18
49 48 20 19 7
7 19 20 48 49
42
34
25
15 14 13 7
30
41 27 26 3
23
40 39 38 37 36
47
35
31
32
33
31
7 13 14 15
28
3 26 27 29
3 21 22 24
61304Z

REF.	PART NUM.	QTY.	DESCRIPTION
42.00	HA7706	1	HOSE
43.00	HA7700	1	HOSE
44.00	HA7699	1	HOSE
45.00	HA7698	1	HOSE
46.00	PB6770	5	COUPLING, MALE QUICK DISCONNECT
47.00	WB0581	1	FITTING, STRAIGHT
47.01	HA8306	1	HOSE (AUTO LUBE)
48.00	EJ7406	4	FLANGE, ADAPTER
49.00	C1619	16	CAPSCREW - 1/2" - 13NC X 2 3/4"
50.00	EK3019	1	TUBE, STR

(SEE PRECEDING PAGE FOR BALANCE OF PARTS...)

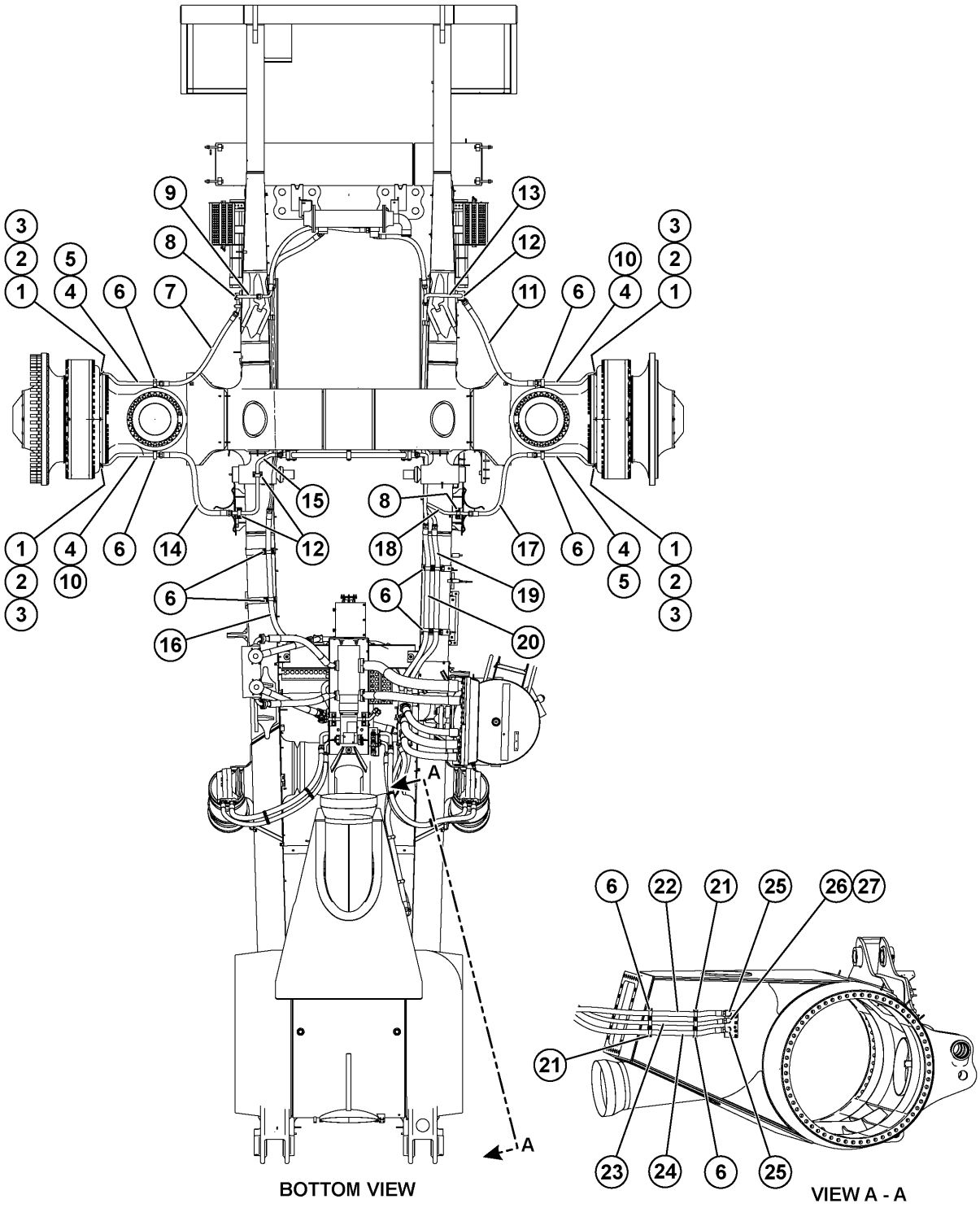
BOTTOM VIEW
VIEW A - A
A
A
60964Z

REF.	PART NUM.	QTY.	DESCRIPTION
1.00	TF8090	8	CLAMP, SPLIT FLANGE
2.00	C1549	16	FLAT WASHER - 1/2"
3.00	C1614	16	CAPSCREW - 1/2" - 13NC X 1 1/2"
4.00	WA3574	4	O-RING
5.00	EK9909	2	TUBE
6.00	WA4713	14	CLAMP, HYDRA ZORB - 2 1/4"
7.00	HA8123	1	HOSE
8.00	WA4709	3	CLAMP, HYDRA ZORB - 1 1/4"
9.00	EL3954	1	TUBE
10.00	EK9910	1	TUBE
11.00	HA8122	1	HOSE
12.00	WA4710	4	CLAMP, HYDRA ZORB - 1 1/2"
13.00	EJ5572	1	TUBE
14.00	HA8059	1	HOSE
15.00	EM4628	1	TUBE
16.00	HA7751	1	HOSE
17.00	HA8061	1	HOSE
18.00	EK9914	1	TUBE
19.00	HA7818	1	HOSE
20.00	HA7817	1	HOSE
21.00	WA4711	2	CLAMP, HYDRA ZORB - 1 3/4"
22.00	HA7896	1	HOSE
23.00	HA7895	1	HOSE
24.00	HA7897	1	HOSE
25.00	VC4571	2	FITTING, ELBOW - 90 DEG
26.00	TF3238	1	FITTING, CONNECTOR
27.00	VM3450	1	FITTING

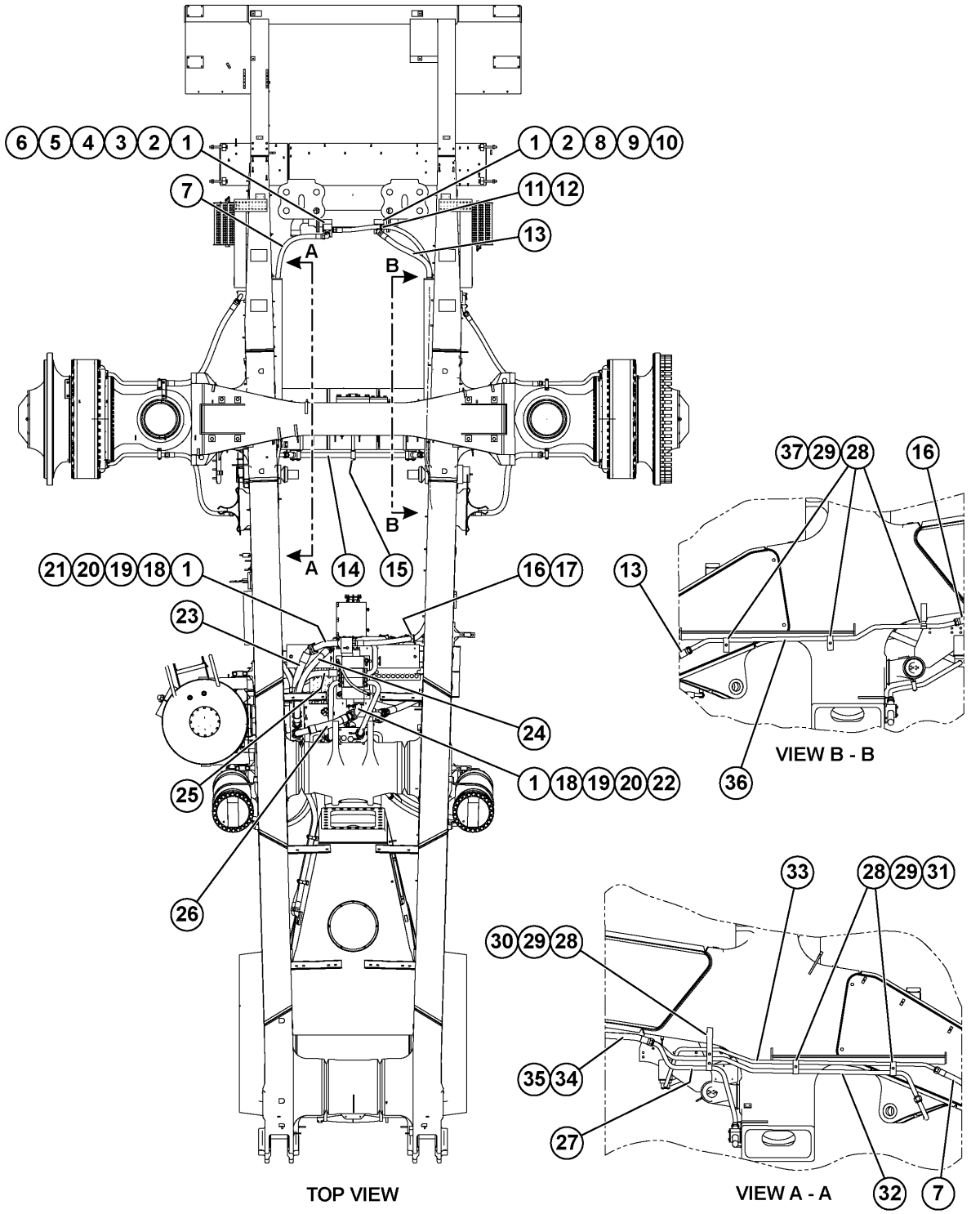
6 5 4 3 2 1
1 2 8 9 10
7
11 12
13
A
B
B
A
14
15
21 20 19 18 1
16 17
23
24
25
1 18 19 20 22
26
TOP VIEW
37 29 28
16
13
VIEW B - B
36
33
28 29 31
30 29 28
35 34
27
VIEW A - A
32
7

60965Z

REF.	PART NUM.	QTY.	DESCRIPTION
1.00	WA0232	6	O-RING
2.00	C1549	8	FLAT WASHER - 1/2"
3.00	C1624	4	CAPSCREW - 1/2" - 13NC X 4"
4.00	EG0555	1	ADAPTER, FLANGE
5.00	WB0601	1	FITTING, STRAIGHT
6.00	WB0524	1	FITTING, ELBOW - 90 DEG
7.00	VF4420	1	HOSE
8.00	C1616	4	CAPSCREW - 1/2" - 13NC X 2"
9.00	EG0554	1	ADAPTER, FLANGE
10.00	WB0551	1	FITTING, ELBOW - 45 DEG
11.00	WB3094	1	CLAMP, CUSHIONED - 1 3/4"
12.00	HA7404	1	HOSE
13.00	VW4075	1	HOSE
14.00	HA8120	1	HOSE
15.00	WB1053	3	CLAMP, HEAVY DUTY
16.00	HA7751	1	HOSE
17.00	WA4713	1	CLAMP, HYDRA ZORB - 2 1/4"
18.00	VH6718	4	CLAMP, SPLIT FLANGE
19.00	C1615	8	CAPSCREW - 1/2" - 13NC X 1 3/4"
20.00	C1540	8	LOCKWASHER - 1/2"
21.00	EK6184	1	TUBE
22.00	EK3018	1	TUBE
23.00	HA7916	1	HOSE
24.00	HA7702	1	HOSE
25.00	HA7703	1	HOSE
26.00	HA7977	1	HOSE
27.00	EL1922	1	TUBE
28.00	MM0461	7	FLAT WASHER - M10
29.00	MM0047	7	CAPSCREW - M10 X 1.50 X 30
30.00	EJ3080	2	CLEAT, TUBE
31.00	EJ1121	4	CLEAT, TUBE
32.00	EK9913	1	TUBE
33.00	EK9914	1	TUBE
34.00	HA7818	1	HOSE
35.00	HA7817	1	HOSE
36.00	EL3967	1	TUBE
37.00	EJ3083	6	CLEAT, TUBE

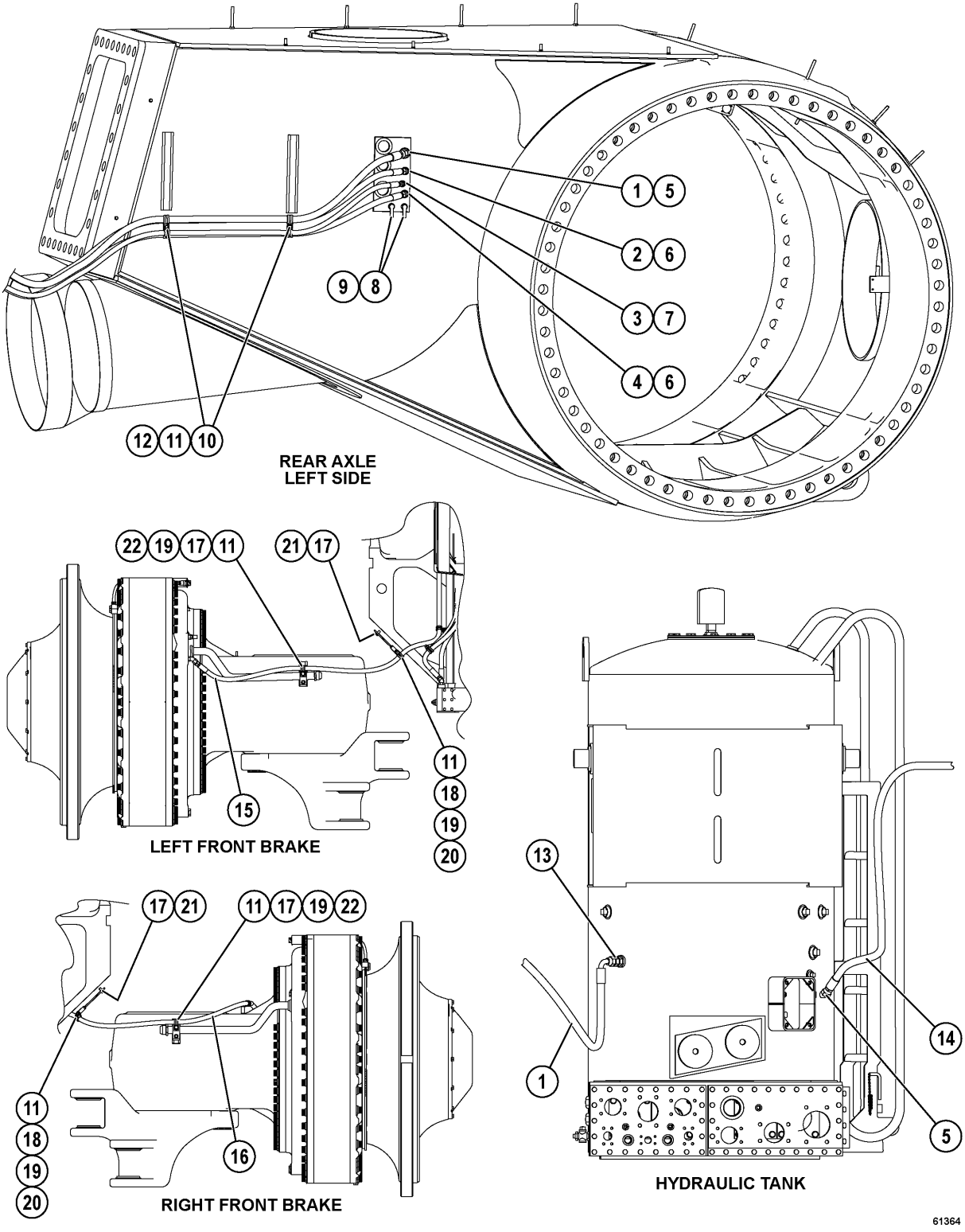
1 5
2 6
3 7
4 6
9 8
12 11 10
REAR AXLE
LEFT SIDE
22 19 17 11
21 17
11
18
19
20
15
LEFT FRONT BRAKE
17 21
11 17 19 22
11
18
19
20
16
RIGHT FRONT BRAKE
13
1
14
5
HYDRAULIC TANK
61364

REF.	PART NUM.	QTY.	DESCRIPTION
1.00	HA8088	1	HOSE (REAR BRAKE VALVE RETURN)
2.00	HA8090	1	HOSE (PARKING BRAKE)
3.00	HA8089	1	HOSE (REAR BRAKE RELAY VALVE PRESSURE)
4.00	HA8087	1	HOSE (REAR BRAKE RELAY VALVE SIGNAL)
5.00	WB0542	2	FITTING, ELBOW - 45 DEG
6.00	WB0537	2	FITTING, ELBOW - 45 DEG
7.00	WB0535	1	FITTING, ELBOW - 45 DEG
8.00	PB6528	2	COUPLING, DIAGNOSTIC
9.00	PB6041	2	CAP, DUST
10.00	WB3096	AR	CLAMP, CUSHIONED - 1 1/4"
11.00	WB3092	AR	CLAMP, CUSHIONED - 7/8"
12.00	WB3091	AR	CLAMP, CUSHIONED - 11/16"
13.00	WB0593	1	FITTING, STRAIGHT
14.00	HA7834	1	HOSE (BRAKE RETURN)
15.00	HA8095	1	HOSE (LEFT FRONT BRAKE APPLICATION)
16.00	HA8087	1	HOSE (RIGHT FRONT BRAKE APPLICATION)
17.00	MM0604	4	CAPSCREW - M10 X 1.50 X 20
18.00	MM0178	AR	NUT - M10 X 1.50
19.00	MM0461	AR	FLAT WASHER - M10
20.00	TY8375	AR	SPACER
21.00	EK9920	2	BRACKET, CLAMP
22.00	4260611570	2	BRACKET

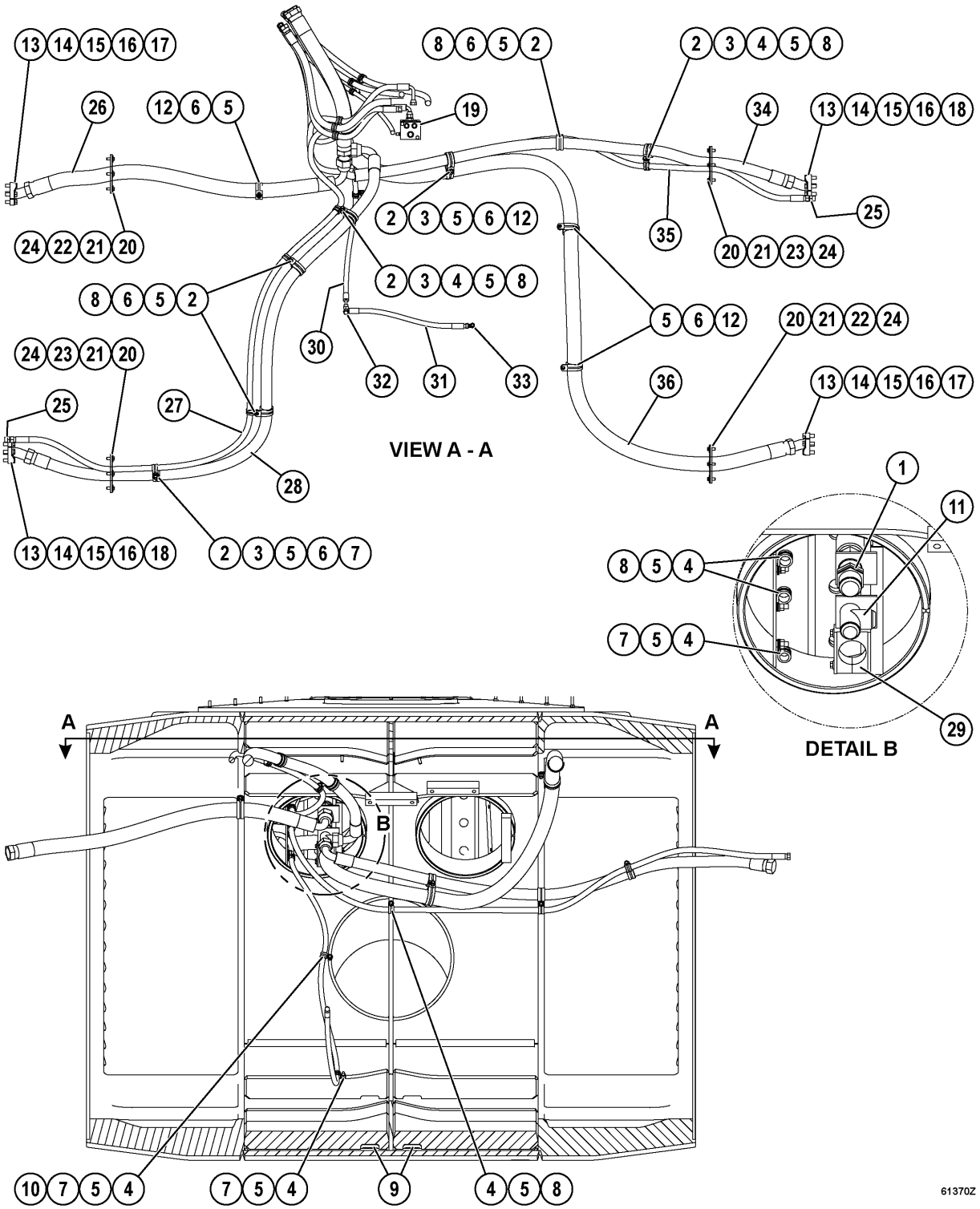
13 14 15 16 17
26
12 6 5
24 22 21 20
8 6 5 2
24 23 21 20
25
27
28
13 14 15 16 18
2 3 5 6 7
8 6 5 2
19
2 3 5 6 12
2 3 4 5 8
30
32
31
33
VIEW A - A
2 3 4 5 8
2 3 4 5 8
34
13 14 15 16 18
25
35
20 21 23 24
5 6 12
20 21 22 24
36
13 14 15 16 17
1
11
8 5 4
7 5 4
29
DETAIL B
A
A
B
10 7 5 4
7 5 4
9
4 5 8
61370Z

REF.	PART NUM.	QTY.	DESCRIPTION
1.00	WB1186	1	FITTING, BULKHEAD
2.00	WB3094	6	CLAMP, CUSHIONED - 1 3/4"
3.00	MM0605	4	CAPSCREW - M10 X 1.50 X 25
4.00	MM0461	15	FLAT WASHER - M10
5.00	MM0178	15	NUT - M10 X 1.50
6.00	MM0471	6	LOCKWASHER - M10
7.00	WB3096	4	CLAMP, CUSHIONED - 1 1/4"
8.00	WB3092	8	CLAMP, CUSHIONED - 7/8"
9.00	D1423	2	PLUG, PIPE
10.00	TY8375	1	SPACER
11.00	WB2970	1	FITTING, BULKHEAD
12.00	WB3095	4	CLAMP, CUSHIONED - 2 1/4"
13.00	WA3574	4	O-RING
14.00	TF8090	8	CLAMP, SPLIT FLANGE
15.00	C1614	16	CAPSCREW - 1/2" - 13NC X 1 1/2"
16.00	C1540	16	LOCKWASHER - 1/2"
17.00	EF9609	2	TUBE
18.00	ED6514	2	TUBE
19.00	PC1531	1	VALVE, DUAL RELAY (SEE INDEX)
20.00	C1602	16	CAPSCREW - 3/8" - 16NC X 1"
21.00	C1547	16	FLAT WASHER - 3/8"
22.00	EM0501	2	GASKET
23.00	EL8991	2	GASKET
24.00		AR	SEALANT, MASTIC
25.00	WB0584	2	FITTING, STRAIGHT
26.00	HA8023	1	HOSE
27.00	HA7368	1	HOSE
28.00	HA3629	1	HOSE
29.00	WA4713	2	CLAMP, HYDRA ZORB - 2 1/4"
30.00	HA7910	1	HOSE
31.00	HA5579	1	HOSE
32.00	WB0556	1	FITTING, TEE
33.00	WB0505	1	FITTING, ELBOW - 90 DEG
34.00	HA3619	1	HOSE
35.00	HA8490	1	HOSE
36.00	HA8024	1	HOSE

(FOR DETAILS B & C AND VIEW D-D, SEE FOLLOWING PAGES.)

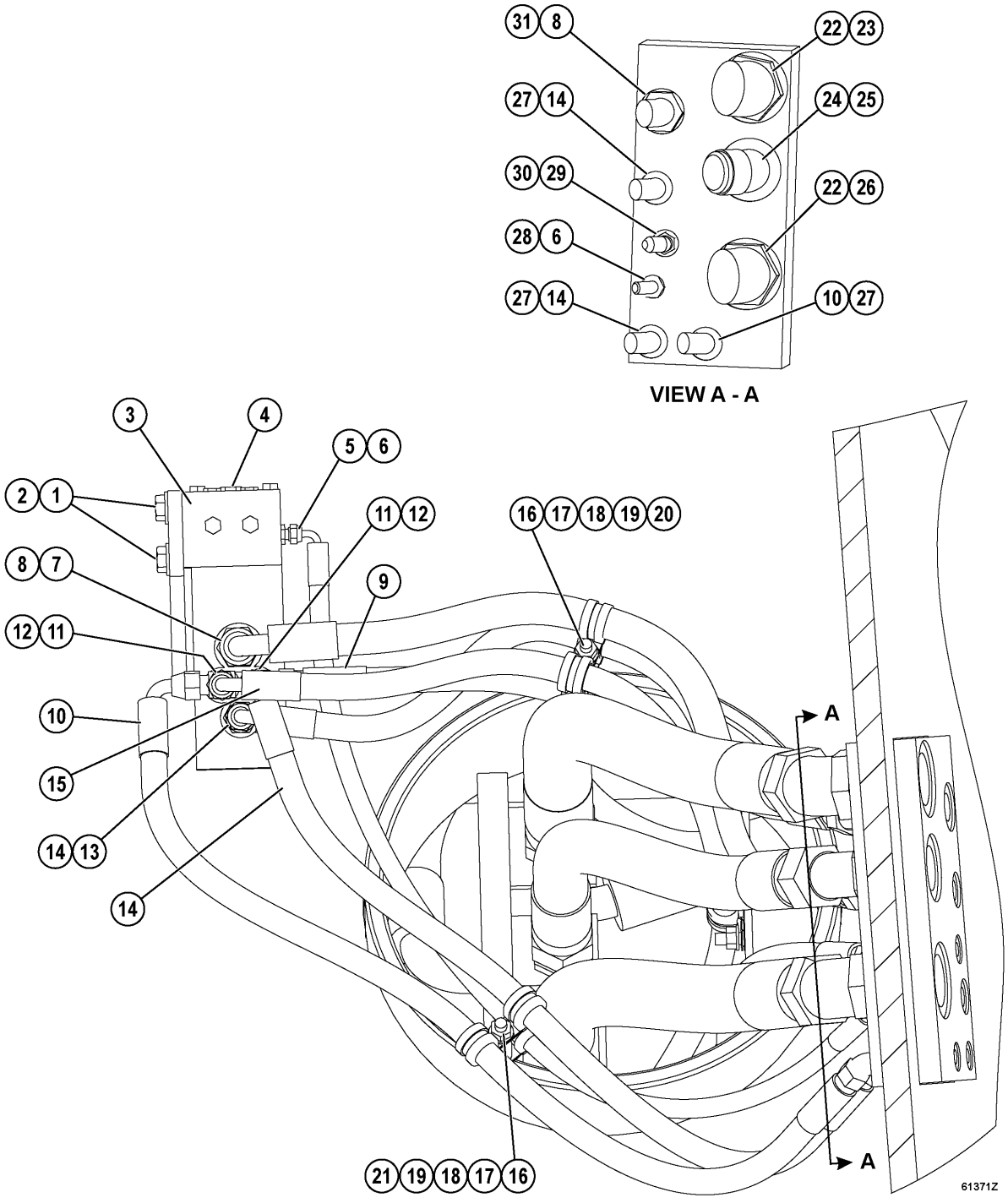
31 8
22 23
27 14
24 25
30 29
22 26
28 6
27 14
10 27
VIEW A - A
3
4
5 6
2 1
11 12
16 17 18 19 20
8 7
9
12 11
10
15
14 13
14
A
A
21 19 18 17 16
61371Z

REF.	PART NUM.	QTY.	DESCRIPTION
1.00	VC6561	2	CAPSCREW - 1/2" - 13NC X 1 1/2"
2.00	TR6008	2	FLAT WASHER - 1/2"
3.00	PC1531	1	VALVE, DUAL RELAY (SEE INDEX)
4.00	VM0314	1	PLUG
5.00	WB0574	1	FITTING, STRAIGHT
6.00	HA7719	1	HOSE
7.00	WB0593	1	FITTING, STRAIGHT
8.00	HA8489	1	HOSE
9.00	HA7368	1	HOSE
10.00	HA8488	1	HOSE
11.00	WB0584	2	FITTING, STRAIGHT
12.00	WB0384	2	FITTING, TEE
13.00	WB0585	1	FITTING, STRAIGHT
14.00	HA5913	2	HOSE
15.00	HA8490	1	HOSE
16.00	MM0461	2	FLAT WASHER - M10
17.00	MM0178	2	NUT - M10 X 1.50
18.00	TY8375	2	SPACER
19.00	WB3093	1	CLAMP, CUSHIONED - 1"
20.00	WB3092	5	CLAMP, CUSHIONED - 7/8"
21.00	WB1300	1	CLAMP, CUSHIONED - 5/8"
22.00	WB0551	2	FITTING, ELBOW - 45 DEG
23.00	HA8022	1	HOSE
24.00	WB0549	1	FITTING, ELBOW - 45 DEG
25.00	VM7598	1	HOSE
26.00	HA8024	1	HOSE
27.00	WB0537	3	FITTING, ELBOW - 45 DEG
28.00	WB0531	1	FITTING, ELBOW - 45 DEG
29.00	WB0535	1	FITTING, ELBOW - 45 DEG
30.00	HA7910	1	HOSE
31.00	WB0542	1	FITTING, ELBOW - 45 DEG

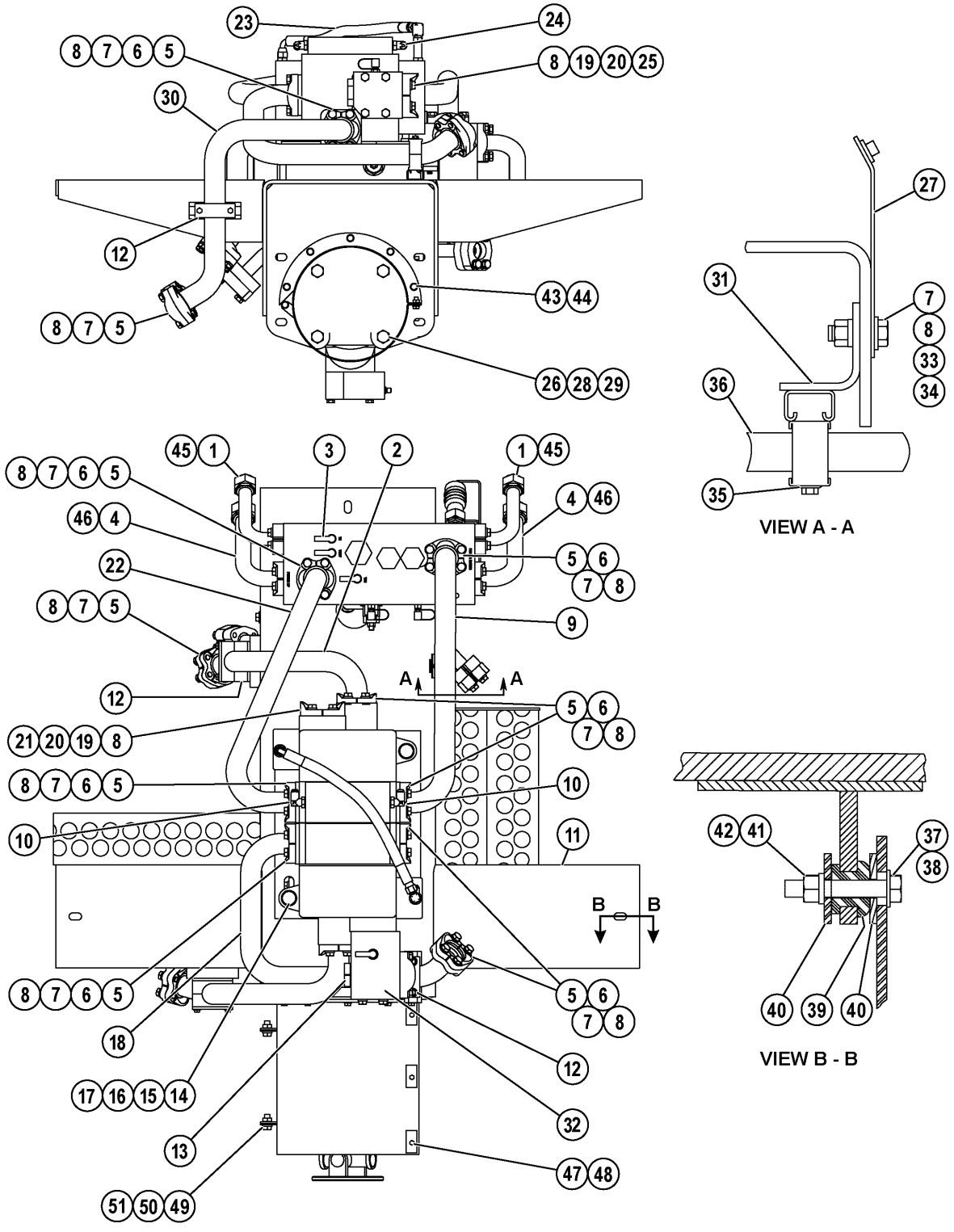
VIEW A - A
VIEW B - B
60936Z

REF.	PART NUM.	QTY.	DESCRIPTION
1.00	EH3596	2	TUBE
2.00	EK2614	1	TUBE
3.00	PB6770	5	COUPLING, MALE QUICK DISCONNECT
4.00	EK2613	2	TUBE
5.00	TF3231	22	CLAMP, SPLIT FLANGE
6.00	WA0187	8	O-RING
7.00	C1614	48	CAPSCREW - 1/2" - 13NC X 1 1/2"
8.00	C1540	56	LOCKWASHER - 1/2"
9.00	EK2619	1	TUBE
10.00	WB0508	2	FITTING, ELBOW - 90 DEG
11.00	EK6400	1	MOUNT, PUMP/VALVE
12.00	WA4712	3	CLAMP, HYDRA ZORB - 2"
13.00	WB0604	1	FITTING, STRAIGHT
14.00	C1663	3	CAPSCREW - 7/8" - 9NC X 3"
15.00	C1543	3	LOCKWASHER - 7/8"
16.00	WA0363	3	FLAT WASHER - 7/8" (HARDENED)
17.00	C1529	3	NUT - 7/8" - 9NC
18.00	EH8492	1	TUBE
19.00	VH6718	4	CLAMP, SPLIT FLANGE
20.00	WA0232	2	O-RING
21.00	C1615	4	CAPSCREW - 1/2" - 13NC X 1 3/4"
22.00	EK2618	1	TUBE
23.00	HA5698	1	HOSE
24.00	WB0557	1	FITTING, TEE
25.00	SR7215	4	CAPSCREW - 1/2" - 13NC X 7 1/2"
26.00	C1647	4	CAPSCREW - 3/4" - 10NC X 2 3/4"
27.00	EK9917	1	BRACKET, CLAMP
28.00	WA0362	4	FLAT WASHER - 3/4" (HARDENED)
29.00	TH3747	4	LOCKNUT - 3/4" - 10NC
30.00	EK2612	1	TUBE
31.00	ED6147	2	ANGLE
32.00	EK6183	1	ADAPTER, FLANGE
33.00	WA0360	4	FLAT WASHER - 1/2" (HARDENED)
34.00	C1523	4	NUT - 1/2" - 13NC
35.00	WA4709	2	CLAMP, HYDRA ZORB - 1 1/4"
36.00	EH8490	1	TUBE
37.00	C1637	3	CAPSCREW - 5/8" - 11NC X 3 3/4"
38.00	WA0361	3	FLAT WASHER - 5/8" (HARDENED)
39.00	VG7000	3	MOUNT, CENTER BONDED
40.00	TD5915	6	FLAT WASHER (SPECIAL)
41.00	C1541	3	LOCKWASHER - 5/8"
42.00	C1525	3	NUT - 5/8" - 11NC

(SEE FOLLOWING PAGE FOR BALANCE OF PARTS...)

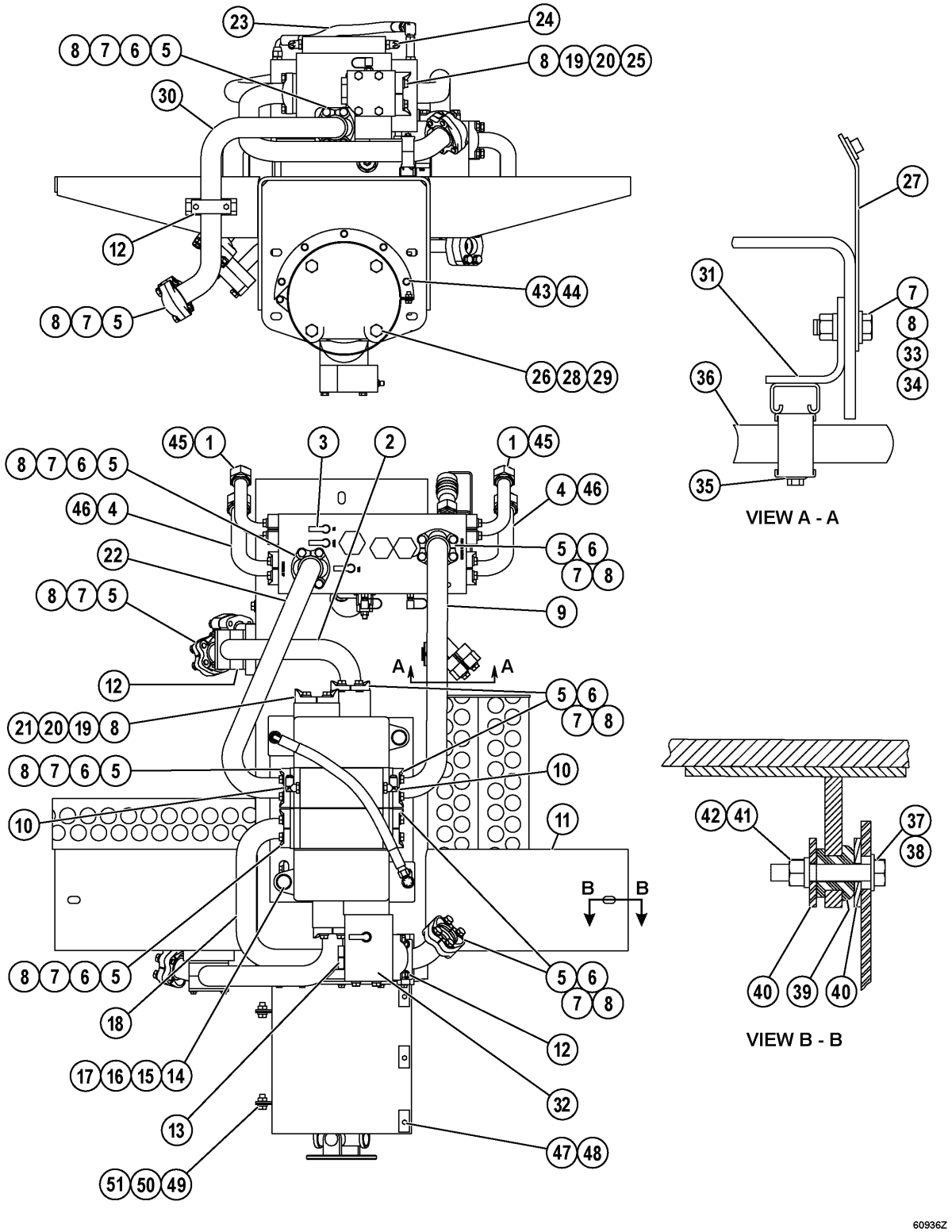
VIEW A - A
VIEW B - B
60936Z

REF.	PART NUM.	QTY.	DESCRIPTION
43.00	TD0791	5	CAPSCREW - 3/8" - 16NC X 1 1/4"
44.00	TC1231	5	LOCKWASHER - 3/8"
45.00	WA2572	2	FITTING, CAPNUT
46.00	WA2573	2	FITTING, CAPNUT
47.00	EK7573	3	SCREW, CAPTIVE
48.00	EK7907	3	RETAINER
49.00	WA0720	4	FLAT WASHER - 3/8" (HARDENED)
50.00	HE5611	2	LOCKNUT - 3/8" - 16NC
51.00	TG5720	2	CAPSCREW - 3/8" - 16NC X 1"

(SEE PRECEDING PAGE FOR BALANCE OF PARTS...)

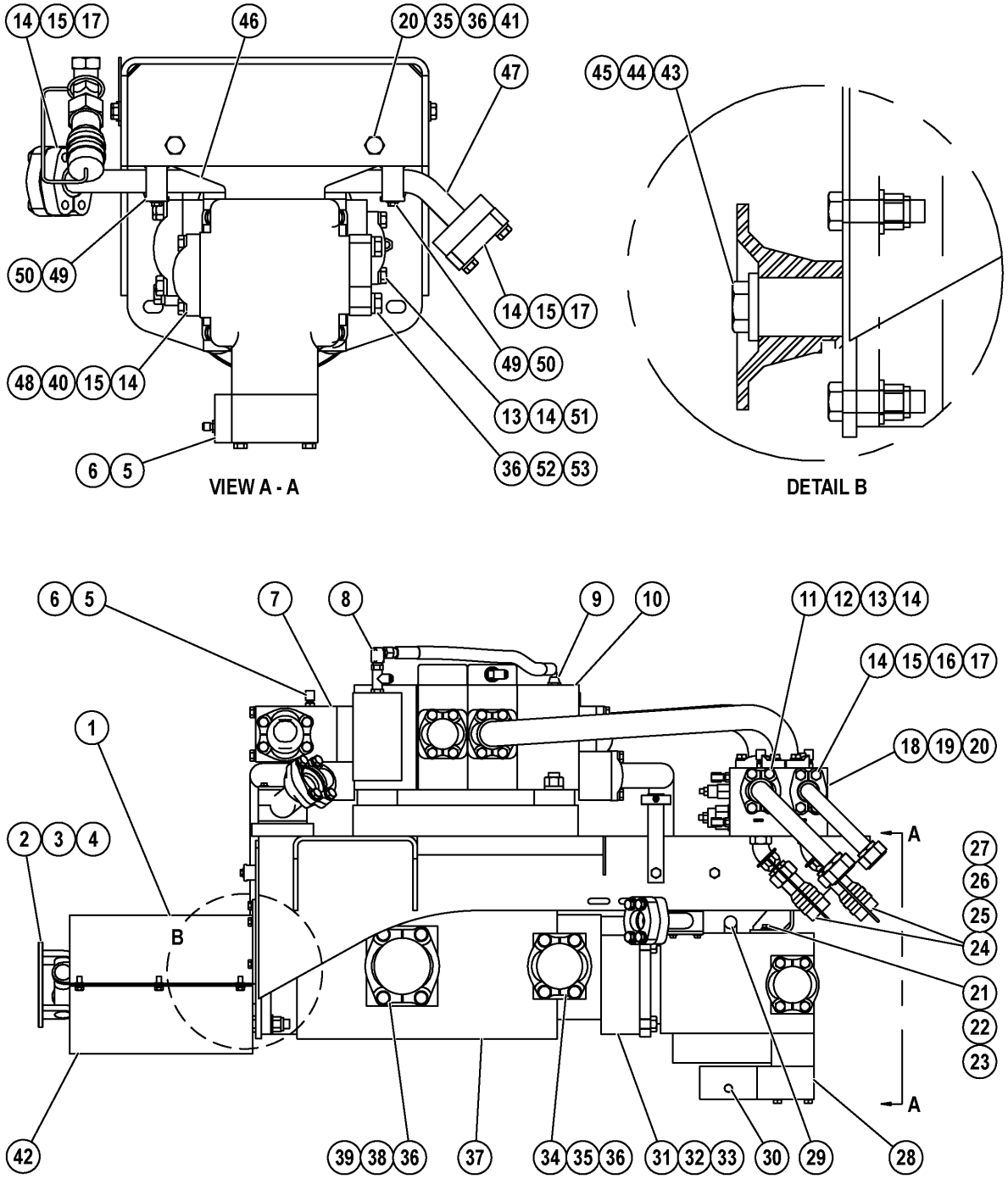
14 15 17
46
20 35 36 41
47
50 49
48 40 15 14
6 5
VIEW A - A
14 15 17
49 50
13 14 51
36 52 53
45 44 43
DETAIL B
6 5
7
8
9
10
11 12 13 14
14 15 16 17
18 19 20
1
2 3 4
B
A
27
26
25
24
21
22
23
42
39 38 36
37
34 35 36
31 32 33
30
29
28
60937Z

REF.	PART NUM.	QTY.	DESCRIPTION
1.00	EL6424	1	COVER, TOP
2.00	PC0183	1	DRIVE SHAFT ASSEMBLY (SEE FIG 41635)
3.00	VN9037	8	CAPSCREW - 3/8" - 16NC X 1 1/4"
4.00	WA0386	8	NUT - 3/8" - 16NC
5.00	PB6528	2	COUPLING, DIAGNOSTIC
6.00	PB6041	2	CAP, DUST
7.00	EK6183	1	ADAPTER, FLANGE
8.00	WB0375	1	FITTING, ELBOW - 90 DEG
9.00	WB0584	1	FITTING, STRAIGHT
10.00	PC1482	1	HOIST VALVE ASSEMBLY (SEE INDEX)
11.00	TF8090	4	CLAMP, SPLIT FLANGE
12.00	VG9095	2	O-RING
13.00	C1614	16	CAPSCREW - 1/2" - 13NC X 1 1/2"
14.00	C1540	36	LOCKWASHER - 1/2"
15.00	C1615	20	CAPSCREW - 1/2" - 13NC X 1 3/4"
16.00	VG9096	2	O-RING
17.00	WA5630	8	CLAMP, FLANGE
18.00	PC0522	1	VALVE, OVERCENTER MANIFOLD (SEE INDEX)
19.00	C7595	4	CAPSCREW - 5/8" - 11NC X 1 1/4"
20.00	WA0361	8	FLAT WASHER - 5/8" (HARDENED)
21.00	DC7524	2	CAPSCREW - 3/8" - 16NC X 7/8"
22.00	C0312	2	LOCKWASHER - 3/8"
23.00	WA0720	2	FLAT WASHER - 3/8" (HARDENED)
24.00	TA2968	2	PLUG, DUST
25.00	PB4685	2	COUPLING, HYDRAULIC
26.00	WA3568	2	FITTING, TUBE
27.00	WB0547	2	FITTING, ELBOW - 45 DEG
28.00	PC1141	1	STEERING PUMP ASSEMBLY (SEE INDEX)
29.00	WB0520	1	FITTING, ELBOW - 90 DEG
30.00	WB0574	1	FITTING, STRAIGHT
31.00	WA0098	4	O-RING
32.00	VG9058	4	RING, SEATING
33.00	WA0878	4	CAPSCREW - 3/4" - 10NC X 2 1/2"
34.00	VL9963	2	CLAMP, SPLIT FLANGE
35.00	C1629	6	CAPSCREW - 5/8" - 11NC X 1 3/4"
36.00	C1541	14	LOCKWASHER - 5/8"
37.00	PB9008	1	HOIST PUMP ASSEMBLY (SEE INDEX)
38.00	VN7716	2	CLAMP, SPLIT FLANGE
39.00	C1630	4	CAPSCREW - 5/8" - 11NC X 2"
40.00	VH6718	2	CLAMP, SPLIT FLANGE
41.00	VN9952	2	LOCKNUT - 5/8" - 11NC
42.00	EL6425	1	COVER, BOTTOM

(SEE FOLLOWING PAGE FOR BALANCE OF PARTS...)

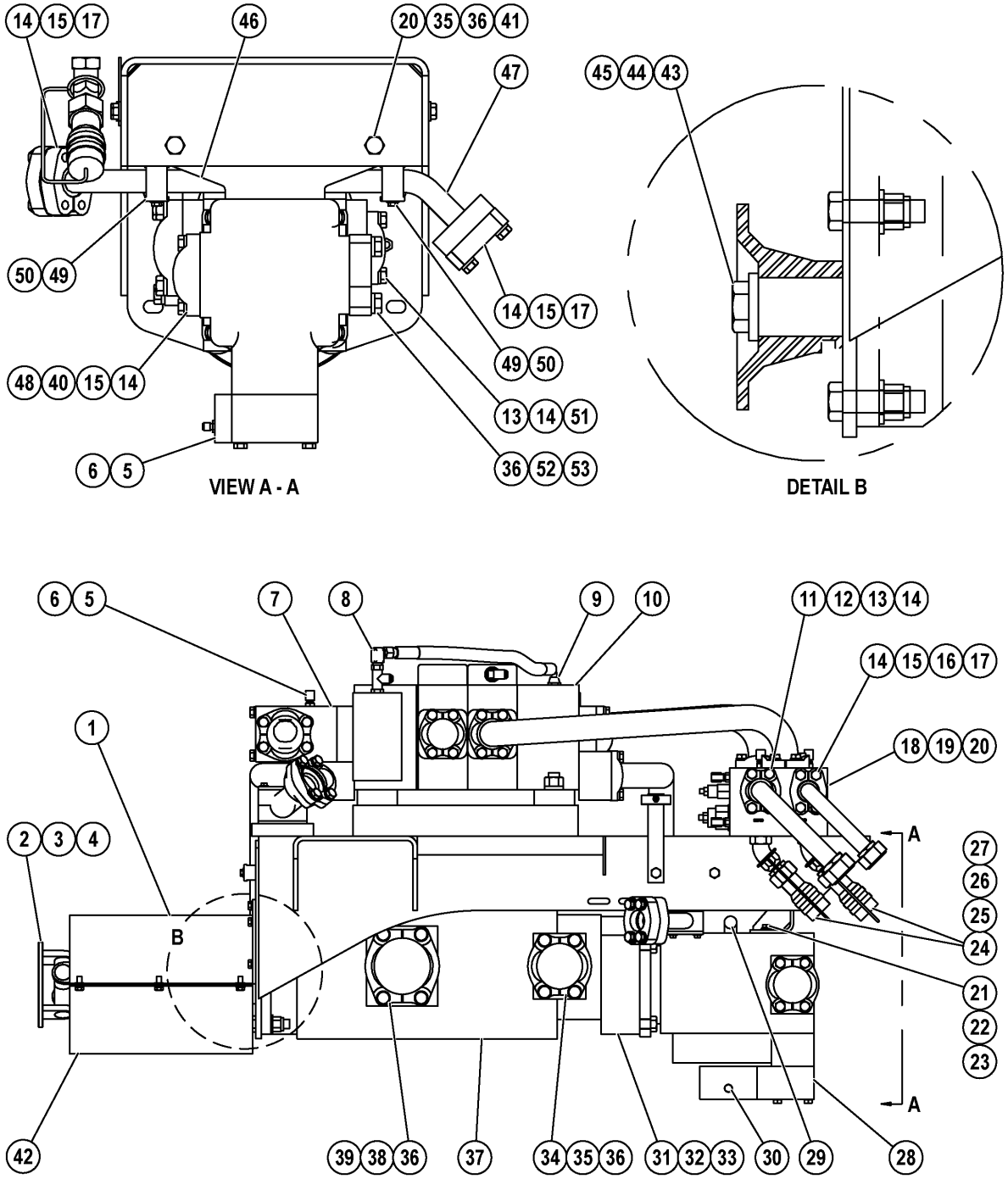
14 15 17
46
20 35 36 41
47
50 49
48 40 15 14
6 5
VIEW A - A
14 15 17
49 50
13 14 51
36 52 53
45 44 43
DETAIL B
6 5
7
8
9
10
11 12 13 14
14 15 16 17
18 19 20
1
2 3 4
B
A
27
26
25
24
21
22
23
42
39 38 36
37
34 35 36
31 32 33
30
29
28
60937Z

REF.	PART NUM.	QTY.	DESCRIPTION
43.00	PB7940	1	FLANGE, COMPANION
44.00	EB3976	1	WASHER (SPECIAL)
45.00	H0989	1	JAM NUT - 1" - 14NF
46.00	EH8957	1	BRACKET
47.00	EH8490	1	TUBE
48.00	WA0232	1	O-RING
49.00	ED6147	2	ANGLE
50.00	WA4709	2	CLAMP, HYDRA ZORB - 1 1/4"
51.00	TF3231	4	CLAMP, SPLIT FLANGE
52.00	WA5629	2	CLAMP, FLANGE
53.00	C1631	4	CAPSCREW - 5/8" - 11NC X 2 1/4"

(SEE PRECEDING PAGE FOR BALANCE OF PARTS...)

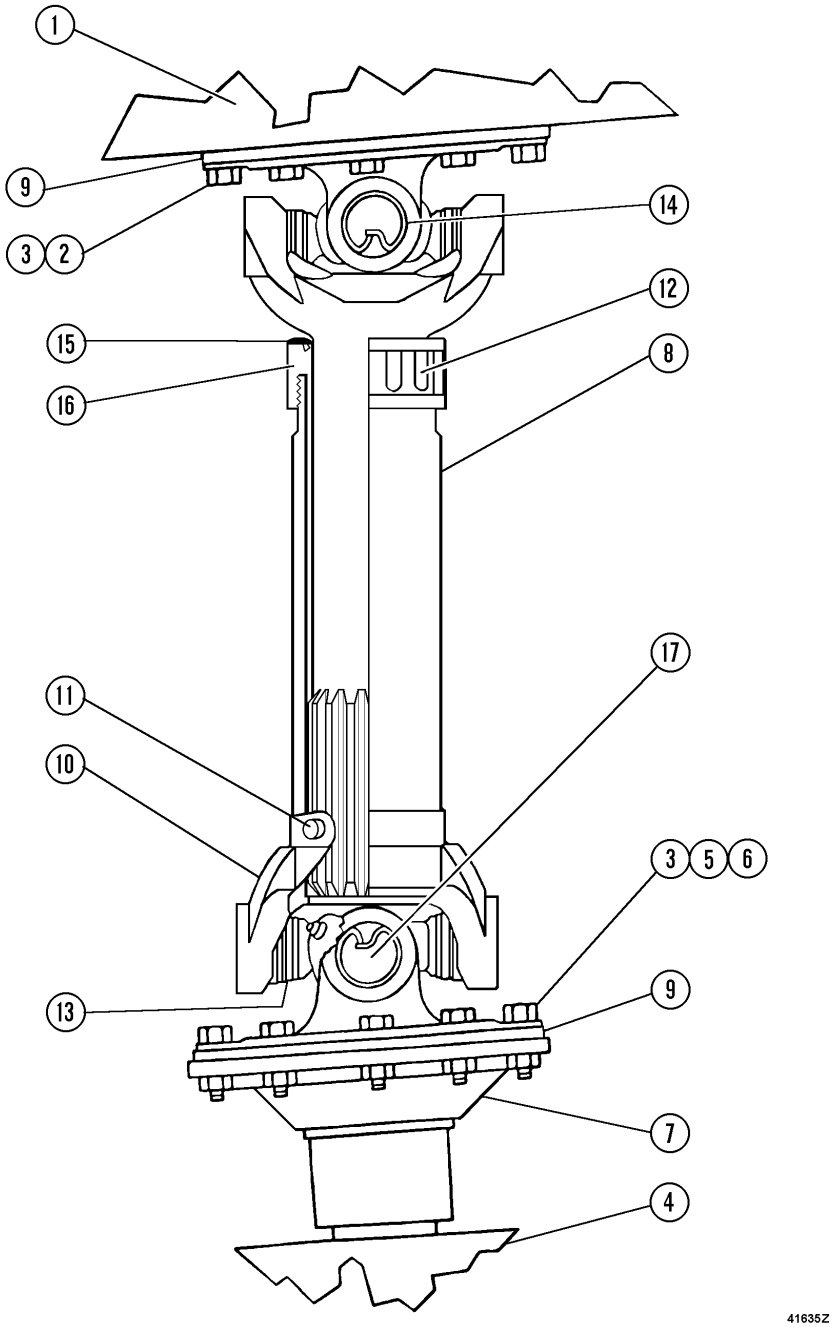
1
9
3
2
14
12
15
8
16
17
11
10
3
5
6
9
13
7
4
41635Z

REF.	PART NUM.	QTY.	DESCRIPTION
1.00	PC2516	1	ALTERNATOR/BLOWER ASSEMBLY (SEE INDEX)
2.00	SG7814	8	CAPSCREW - 3/8" - 24NF X 1 1/4"
3.00	C0312	16	LOCKWASHER - 3/8"
4.00	PB9008	1	HOIST PUMP ASSEMBLY (SEE INDEX)
5.00	VN9037	8	CAPSCREW - 3/8" - 16NC X 1 1/4"
6.00	WA0386	8	NUT - 3/8" - 16NC
7.00	PB7940	1	FLANGE, COMPANION
8.00	PC0183	1	DRIVE SHAFT ASSEMBLY
9.00	VE3436	2	FLANGE
10.00	70653	1	YOKE ASSEMBLY
11.00	TH7435	1	FITTING, GREASE (1)
12.00	70655	1	RETAINER (2)
13.00	VE3438	2	CROSS ASSEMBLY (1)
14.00	VE3439	8	RING, RETAINING (1)
15.00	70657	1	CAP (2)
16.00	53890V	1	WASHER (2)
17.00		8	CAP, BEARING (1)/(3)

KT	VE7350	NOTE: (1) INCLUDED IN VE7350 CROSS & BEARING KIT.
KT	1216225H1	(2) INCLUDED IN 1216225H1 DUST CAP KIT.
		(3) NOT SERVICED SEPARATELY.

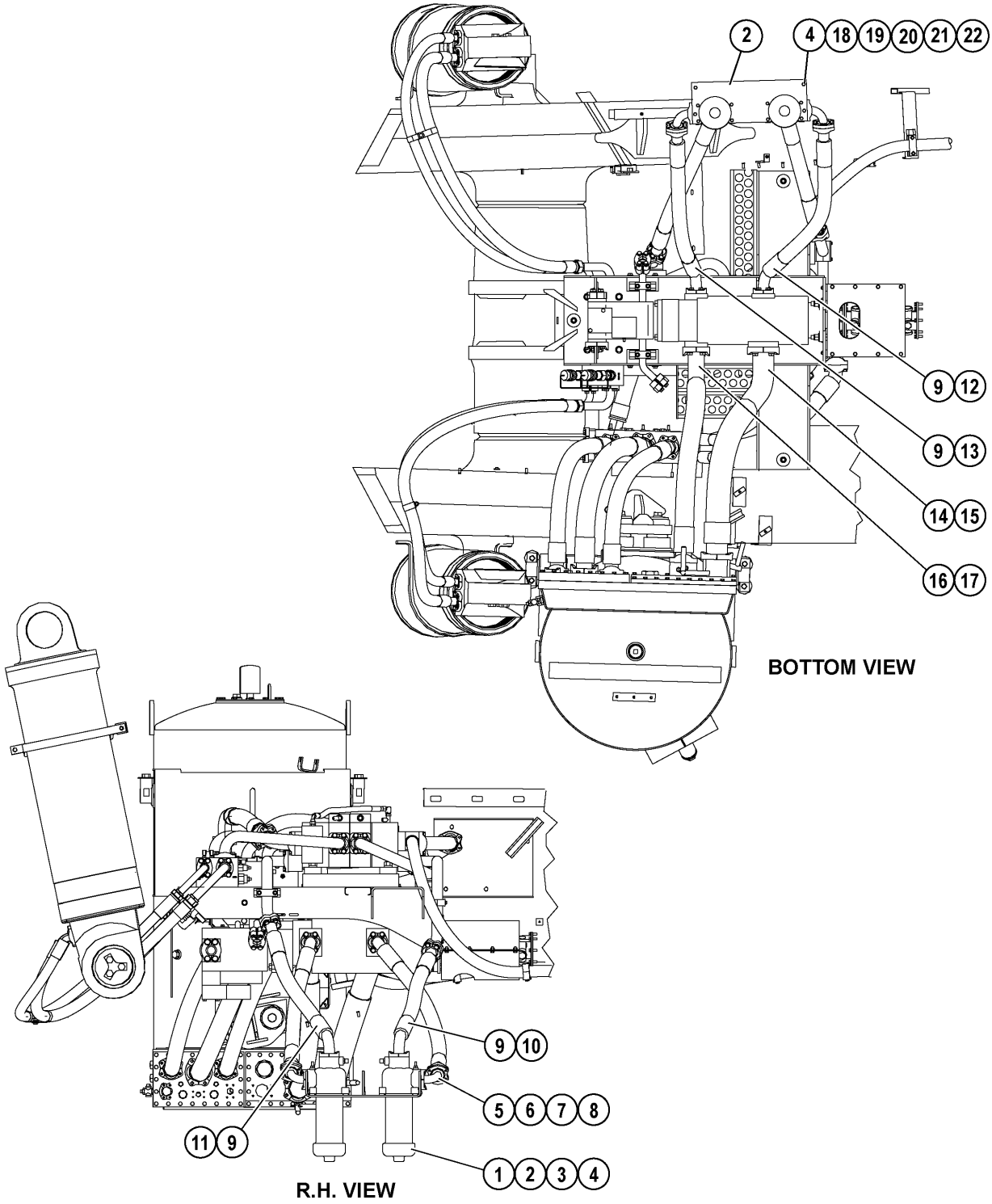
2
4
18
19
20
21
22
9
12
9
13
14
15
16
17
BOTTOM VIEW
9
10
5
6
7
8
11
9
1
2
3
4
R.H. VIEW
61297Z

REF.	PART NUM.	QTY.	DESCRIPTION
1.00	EH1241	2	HYDRAULIC FILTER, HOIST / BRAKE COOLING (SEE INDEX)
2.00	EL8980	1	PLATE
3.00	VN6454	8	CAPSCREW - 1/2" - 13NC X 1"
4.00	TR6008	12	FLAT WASHER - 1/2"
5.00	PB8318	2	ELBOW
6.00	TF3231	4	CLAMP, SPLIT FLANGE
7.00	C1614	8	CAPSCREW - 1/2" - 13NC X 1 1/2"
8.00	C1540	8	LOCKWASHER - 1/2"
9.00	WA0187	8	O-RING
10.00	HA7907	1	HOSE
11.00	HA7905	1	HOSE
12.00	HA7908	1	HOSE
13.00	HA7906	1	HOSE
14.00	WA0245	1	O-RING
15.00	HA7984	1	HOSE
16.00	WA0237	1	O-RING
17.00	HA7899	1	HOSE
18.00	PC2057	4	WASHER, HEAD
19.00	PC2058	4	WASHER, TAIL
20.00	TR6643	4	NUT - 1/2" - 13NC
21.00	WA0471	4	CAPSCREW - 1/2" - 13NC X 2 1/4"
22.00	WA2586	4	MOUNT, RUBBER

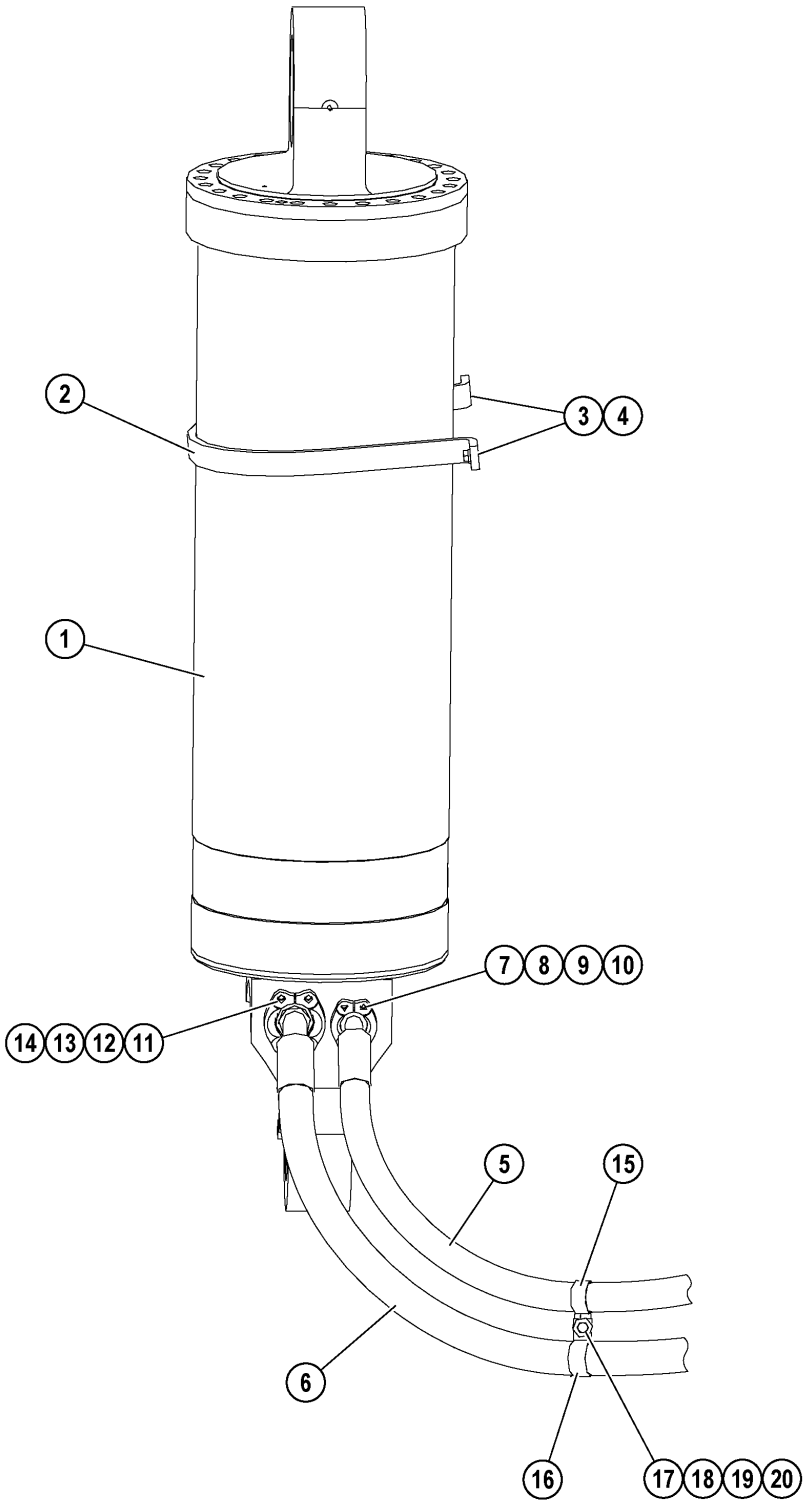
2
3
4
1
7
8
9
10
14
13
12
11
5
15
6
16
17
18
19
20
61191Z

REF.	PART NUM.	QTY.	DESCRIPTION
1.00	EL4827	1	HOIST CYLINDER ASSEMBLY (SEE INDEX)
2.00	TY9627	1	CLAMP
3.00	C1643	2	CAPSCREW - 3/4" - 10NC X 1 3/4"
4.00	C1542	2	LOCKWASHER - 3/4"
5.00	HA7731	1	HOSE
6.00	HA7904	1	HOSE (L.H. CYLINDER)
6.01	HA8464	1	HOSE (R.H. CYLINDER)
7.00	VG9096	1	O-RING
8.00	TF3237	2	CLAMP, SPLIT FLANGE
9.00	C1609	4	CAPSCREW - 7/16" - 14NC X 1 1/2"
10.00	C5775	4	LOCKWASHER - 7/16"
11.00	WA0187	1	O-RING
12.00	TF3231	2	CLAMP, SPLIT FLANGE
13.00	C1614	4	CAPSCREW - 1/2" - 13NC X 1 1/2"
14.00	C1540	4	LOCKWASHER - 1/2"
15.00	WB1306	2	CLAMP, CUSHIONED - 2"
16.00	WB1307	2	CLAMP, CUSHIONED - 2 3/16"
17.00	VC8762	2	CAPSCREW - 3/8" - 16NC X 1 1/2"
18.00	TR4436	4	FLAT WASHER - 3/8"
19.00	TC1231	2	LOCKWASHER - 3/8"
20.00	TC1233	2	NUT - 3/8" - 16NC

(QUANTITIES SHOWN ARE FOR ONE CYLINDER ONLY.)

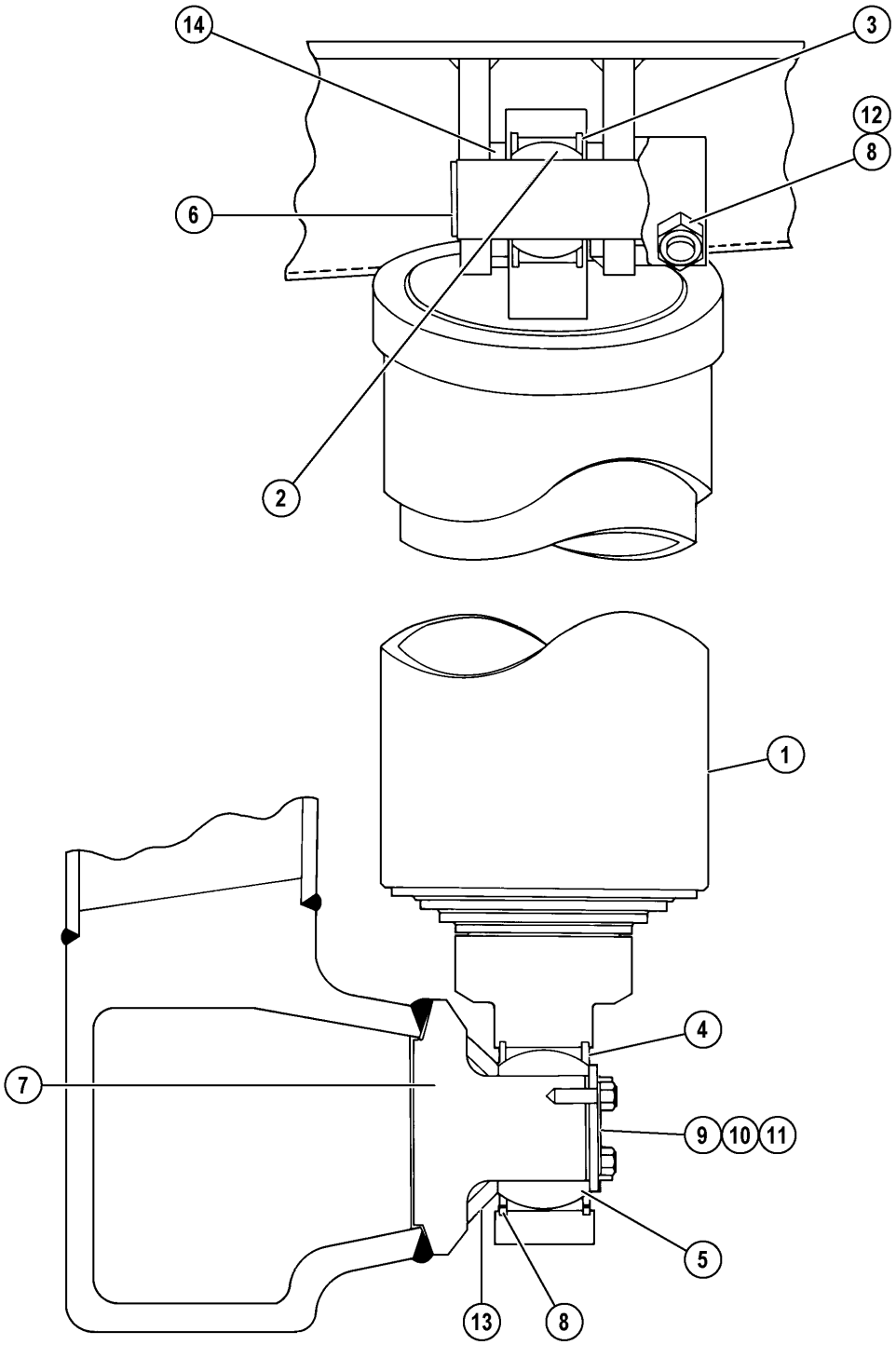
14
3
12
8
6
2
1
4
7
9
10
11
5
13
8
61262Z

REF.	PART NUM.	QTY.	DESCRIPTION
1.00	EL4826	1	HOIST CYLINDER ASSEMBLY W/BEARINGS
1.01	EL4827	1	HOIST CYLINDER ASSEMBLY (1) (SEE INDEX)
2.00	VL4293	1	BUSHING, BALL
3.00	VN9350	2	RING, RETAINING
4.00	VN9353	2	RING, RETAINING
5.00	PB8931	1	BUSHING, BALL
6.00	EH7921	1	PIN, UPPER HOIST
7.00	ED3070	1	SHAFT, HOIST BEARING
8.00	MM0149	1	CAPSCREW - M36 X 4.00 X 200
9.00	EF4836	1	PLATE, RETAINER
10.00	EF4837	1	PLATE, LOCKING
11.00	MM0021	3	CAPSCREW - M20 X 2.50 X 40
12.00	MM0700	1	LOCKNUT - M36 X 4.00
13.00	EF4835	1	SPACER, BEARING
14.00	EH7816	2	SPACER, UPPER HOIST PIN

NOTE: (1) NOT SERVICED SEPARATELY. ORDER EL4826.

(QUANTITIES SHOWN ARE FOR ONE SIDE ONLY.)

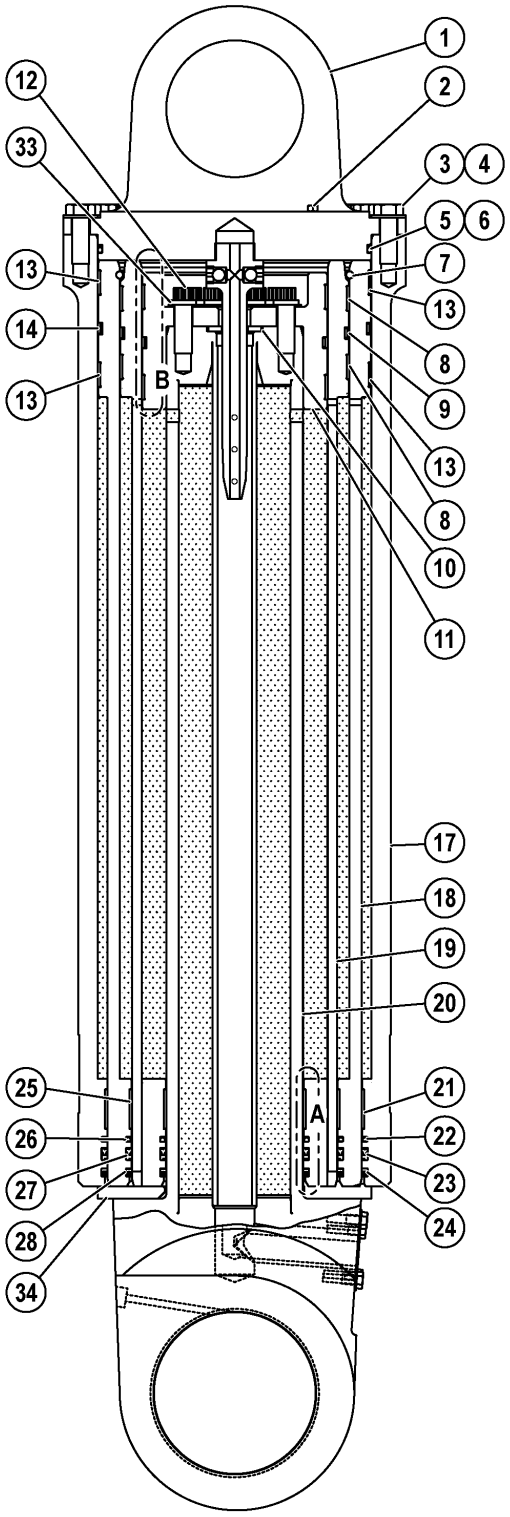

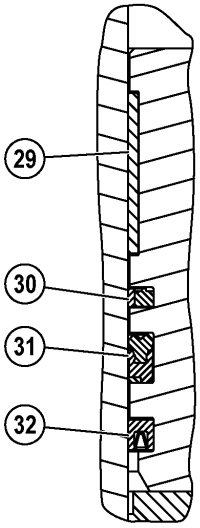

DETAIL A

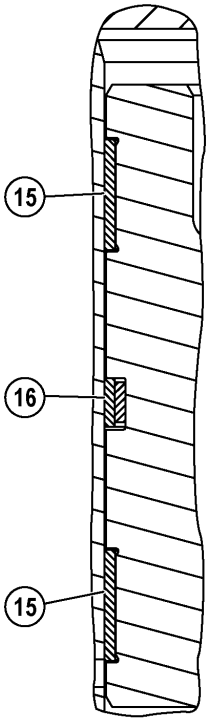

DETAIL B

60862Z

REF.	PART NUM.	QTY.	DESCRIPTION
1.00	EL3417	1	CYLINDER HEAD ASSEMBLY
1.01	EH7939	1	HEAD
1.02	EL3415	1	QUILL ASSEMBLY
1.03	EL3414	1	QUILL
1.04	722187	2	POPPET, BALL
1.05	EB8590	2	PLUG
2.00	VM2202	1	PLUG, VENT
3.00	VN9088	24	CAPSCREW - 7/8" - 9NC X 2 1/2"
4.00	WA0363	24	FLAT WASHER - 7/8" (HARDENED)
5.00	WA0456	1	O-RING (1)
6.00	WA1456	1	RING, BACKUP (1)
7.00	PC1050	1	SNAP RING
8.00	PC1436	2	BEARING - 11 3/4" (1)
9.00	PB8618	1	SEAL - 11 3/4" (1)
10.00	TY1503	1	SEAL (1)
11.00	EK4596	1	RETAINER, BEARING
12.00	WA0879	10	CAPSCREW - 7/8" - 9NC X 2 1/2"
13.00	PC1437	2	BEARING - 14" (1)
14.00	PB8908	1	SEAL - 14" (1)
15.00	PC1435	2	BEARING - 9 1/2" (1)
16.00	PB8615	1	SEAL - 9 1/2" (1)
17.00	EK4582	1	HOUSING
18.00	EK4585	1	TUBE - 13"
19.00	EK4588	1	TUBE - 10 1/2"
20.00	EK4591	1	ROD, PIVOT
21.00	PB9810	1	BEARING - 13" (1)
22.00	PB9912	1	SEAL, BUFFER - 13" (1)
23.00	PB9808	1	SEAL, ROD - 13" (1)
24.00	PB9807	1	SEAL, WIPER - 13" (1)
25.00	PB9806	1	BEARING - 10 1/2" (1)
26.00	PB9911	1	SEAL, BUFFER - 10 1/2" (1)
27.00	PB9804	1	SEAL, ROD - 10 1/2" (1)
28.00	PB9803	1	SEAL, WIPER - 10 1/2" (1)
29.00	PB9802	1	BEARING - 7" (1)
30.00	PB9910	1	SEAL, BUFFER - 7" (1)
31.00	PB9800	1	SEAL, ROD - 7" (1)
32.00	PB9799	1	SEAL, WIPER - 7" (1)
33.00	EG9090	1	PLATE
34.00	EK7088	1	RING, CUSHION (1)
KT	AK5630		NOTE: (1) INCLUDED IN AK5630 REBUILD KIT.

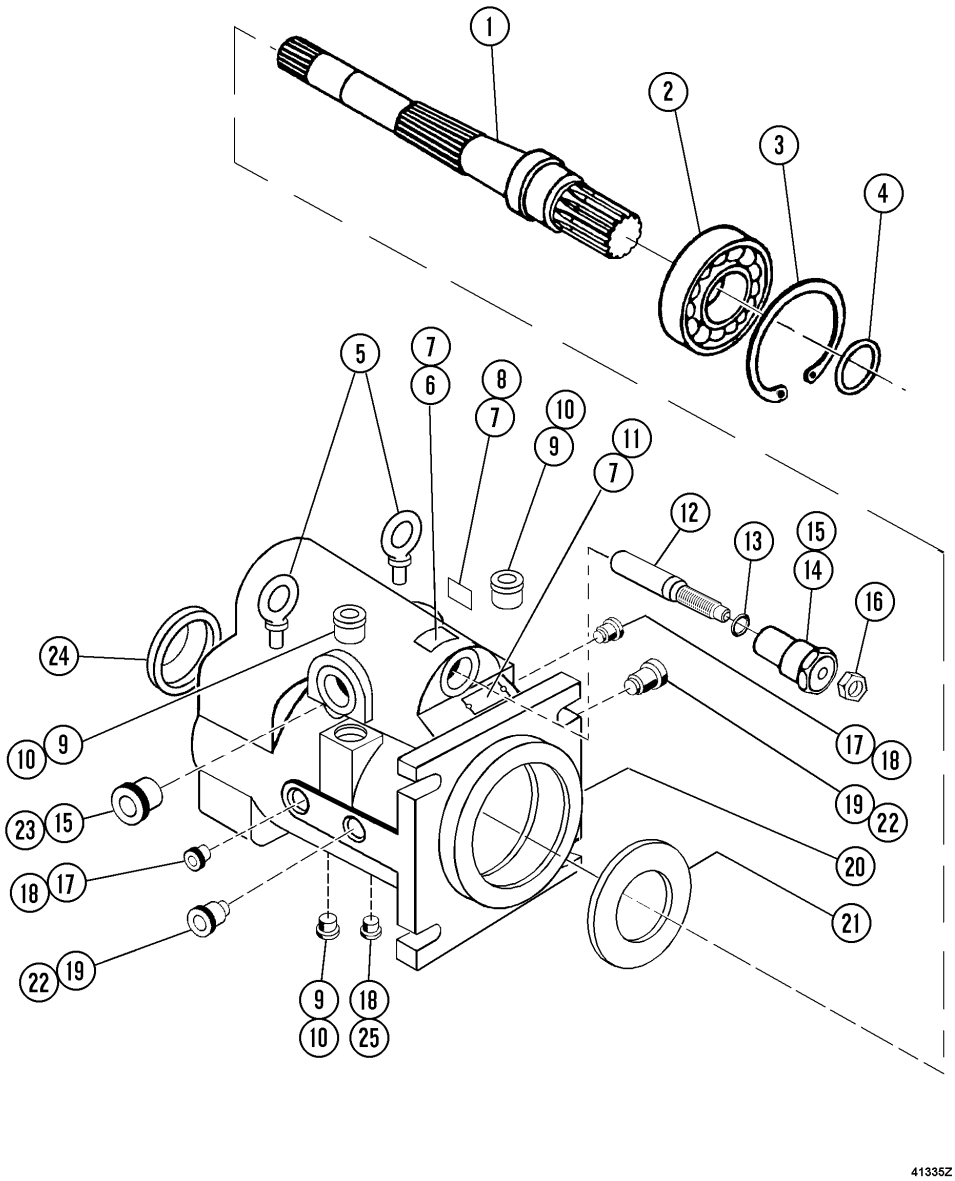
1
2
3
4
5
7
6
8
7
10
9
11
7
12
13
15
14
16
24
10
9
17
18
19
22
23
15
20
18
17
21
22
19
9
18
10
25
41335Z

REF.	PART NUM.	QTY.	DESCRIPTION
1.00	VE9566	1	DRIVE SHAFT W/ SPLINE
2.00	VE9568	1	BEARING
3.00	VE9570	1	RING, RETAINING
4.00	VE9569	1	RING, RETAINING
5.00	VE9535	2	EYE BOLT
6.00	VE9545	1	NAME PLATE
7.00	VE9544	8	DRIVE SCREW
8.00	VE9542	1	NAME PLATE
9.00	VE9538	3	PLUG
10.00	VE9540	3	O-RING (1)
11.00	VE9543	1	NAME PLATE
12.00	VE9597	1	STEM
13.00	VE9598	1	SEAL, O-RING (1)
14.00	VE9595	1	GLAND
15.00	VE9541	2	SEAL, O-RING (1)
16.00	BF3733	1	JAM NUT
17.00	VE9534	2	BEARING, RETAINER PIN
18.00	VE9546	3	SEAL, O-RING (1)
19.00	VE9562	2	PIN, SWASH BLOCK
20.00	VE9530	1	HOUSING, PUMP
21.00	VE9567	1	RETAINER, SEAL
22.00	BF0293	2	O-RING (1)
23.00	VE9536	1	PLUG
24.00	VE9532	1	SEAL, SHAFT (1)
25.00	VE9607	1	PLUG, HOLLOW HEX
KT	BF1369		NOTE: (1) INCLUDED IN BF1369 HOUSING KIT.

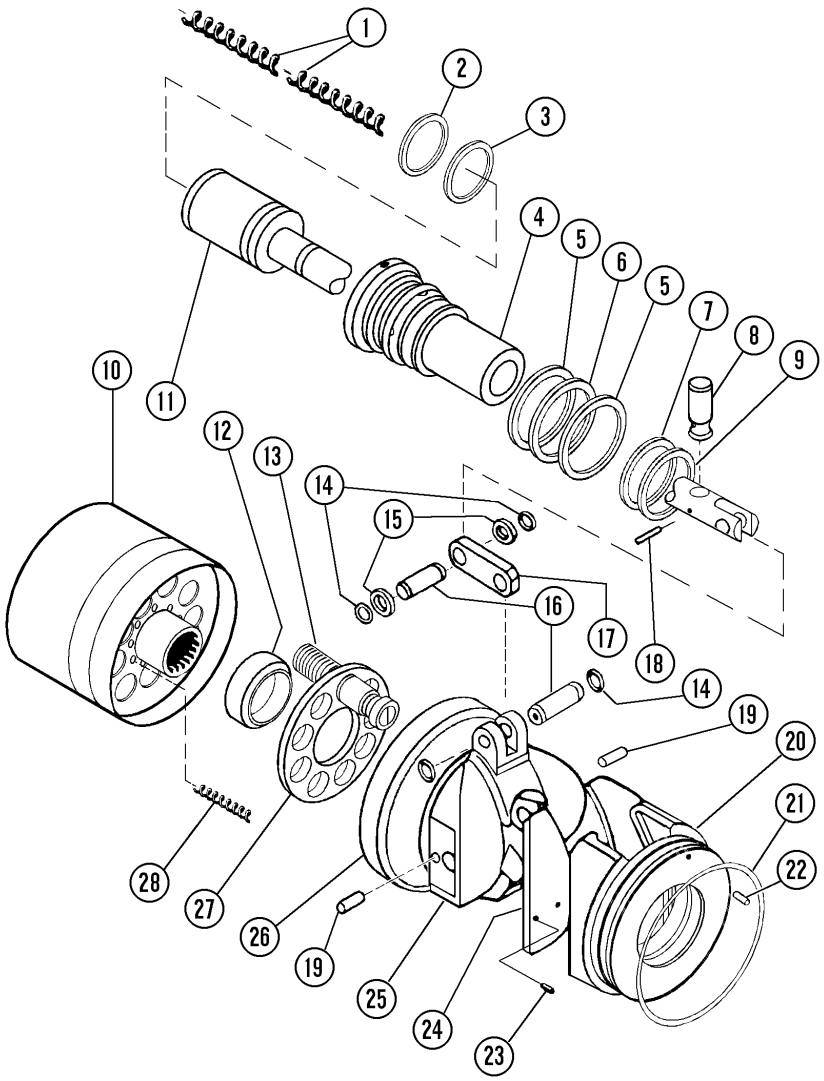
1
2
3
4
5
6
5
7
8
9
10
11
12
13
14
15
16
17
18
14
19
20
21
22
28
27
26
19
25
24
23

40732Z

REF.	PART NUM.	QTY.	DESCRIPTION
1.00	VE9591	2	SPRING
2.00	VE9586	1	SEAL (1)
3.00	VE9581	1	RING, PISTON (1)
4.00	VE9578	1	SLEEVE
5.00	VE9580	2	RING, BACKUP (1)
6.00	VE9583	1	SEAL, O-RING (1)
7.00	VE9585	1	SEAL, O-RING (1)
8.00	VE9579	1	PIN
9.00	VE9582	1	RING, BACKUP (1)
10.00	VE9553	1	BARREL, CYLINDER (3)
11.00	VE9577	1	PISTON
12.00		1	BALL (3)/(4)
13.00	VE9554	9	PISTON SHOE ASSEMBLY (3)
14.00	VE9574	4	RING, RETAINING
15.00	VE9575	2	WASHER
16.00	VE9573	2	PIN
17.00	VE7572	1	LINK
18.00	VE9584	1	PIN
19.00	VE9564	2	PIN, DOWEL
20.00	VE9559	1	SADDLE
21.00	VE9539	1	SEAL, O-RING (2)
22.00	VE9533	1	ROLLPIN
23.00	BF2617	4	ROLLPIN
24.00	BF2616	2	BEARING
25.00	BF3176	1	SWASH BLOCK (W/ PIN)
26.00	VE9531	1	BEARING, CYLINDER
27.00		1	RETAINER (3)/(4)
28.00	VE9556	9	SPRING (3)

KT	BF3727	NOTE: (1) INCLUDED IN BF3727 CONTROL PISTON KIT.
KT	BF1369	(2) INCLUDED IN BF1369 HOUSING KIT.
		(3) INCLUDED IN VE9552 ROTARY SUB-ASSEMBLY.
		(4) NOT SERVICED SEPARATELY.

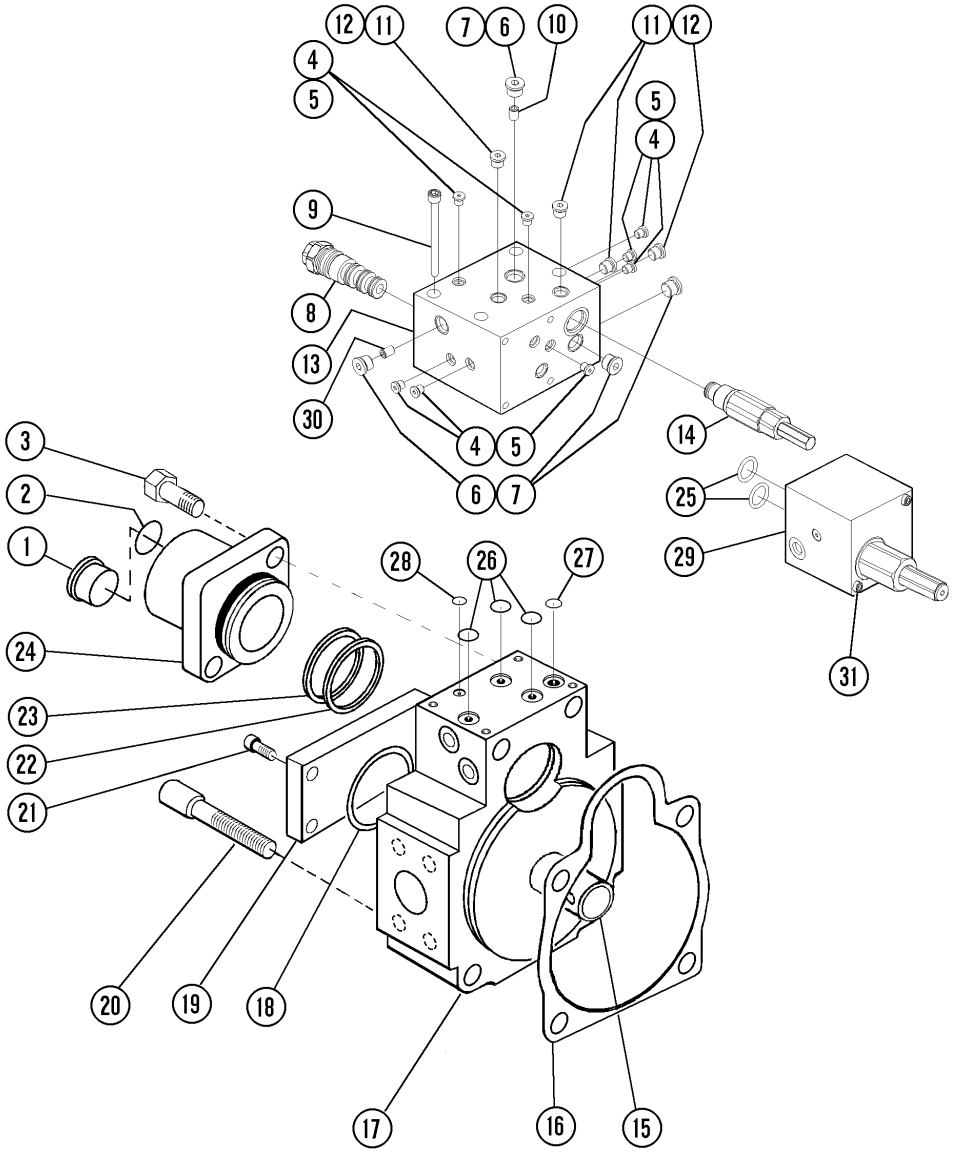
12
11
7
6
10
11
12
4
5
5
4
9
8
13
30
4
5
6
7
14
25
29
31
3
2
1
28
26
27
24
23
22
21
20
19
18
17
16
15
41334Z

REF.	PART NUM.	QTY.	DESCRIPTION
1.00	VE9536	1	PLUG
2.00	VE9541	1	SEAL, O-RING (3)
3.00	VE9592	4	CAPSCREW
4.00	VE9610	11	PLUG, HOLLOW HEX (6)/(7)
5.00	VE9613	11	O-RING (1)/(6)/(7)
6.00	VE9607	4	PLUG, HOLLOW HEX (6)/(7)
7.00	VE9612	4	O-RING (1)/(4)/(6)/(7)
8.00	BF2226	1	VALVE, 4-WAY (6)/(7)
9.00	VE9606	4	SCREW (6)/(7)
10.00	VE9609	1	ORIFICE (6)/(7)
11.00	VE9608	4	PLUG, HOLLOW HEX (6)/(7)
12.00	VE9611	4	O-RING (1)/(6)/(7)
13.00	VE9603	1	BLOCK (6)/(7)
14.00	BF2227	1	VALVE, RELIEF (6)/(7)
15.00	VE9550	1	BEARING
16.00	VE9549	1	GASKET (2)
17.00	VE9548	1	PLATE, VALVE - R.H.
18.00	VE9551	1	O-RING (2)
19.00	VE9600	1	COVER, VALVE PLATE
20.00	VE9537	4	CAPSCREW
21.00	VE9601	4	CAPSCREW
22.00	VE9590	1	SEAL, O-RING (5)
23.00	BF3732	1	RING, BACKUP (5)
24.00	VE9588	1	CAP
25.00	BF2185	2	O-RING (7)
26.00	VE9616	3	O-RING (2)/(4)
27.00	VE9617	1	O-RING (2)
28.00	VE9615	1	O-RING (2)
29.00	BF2239	1	MODULE, UNLOADER (7)
30.00	BF1731	1	ORIFICE (6)/(7)
31.00	BF2188	4	SCREW (7)

KT	VE9618	NOTE: (1) INCLUDED IN VE9618 GASKET/SEAL KIT.
KT	VE9614	(2) INCLUDED IN VE9614 PUMP GASKET/SEAL KIT.
KT	BF1369	(3) INCLUDED IN BF1369 HOUSING KIT.
KT	BF1368	(4) INCLUDED IN BF1368 VALVE PLATE KIT.
KT	BF3727	(5) INCLUDED IN BF3727 CONTROL PISTON KIT.
		(6) INCLUDED IN BF3179 CONTROL ASSEMBLY.
		(7) INCLUDED IN BF2224 CTRL ASSM/UNLOADER ASSM.

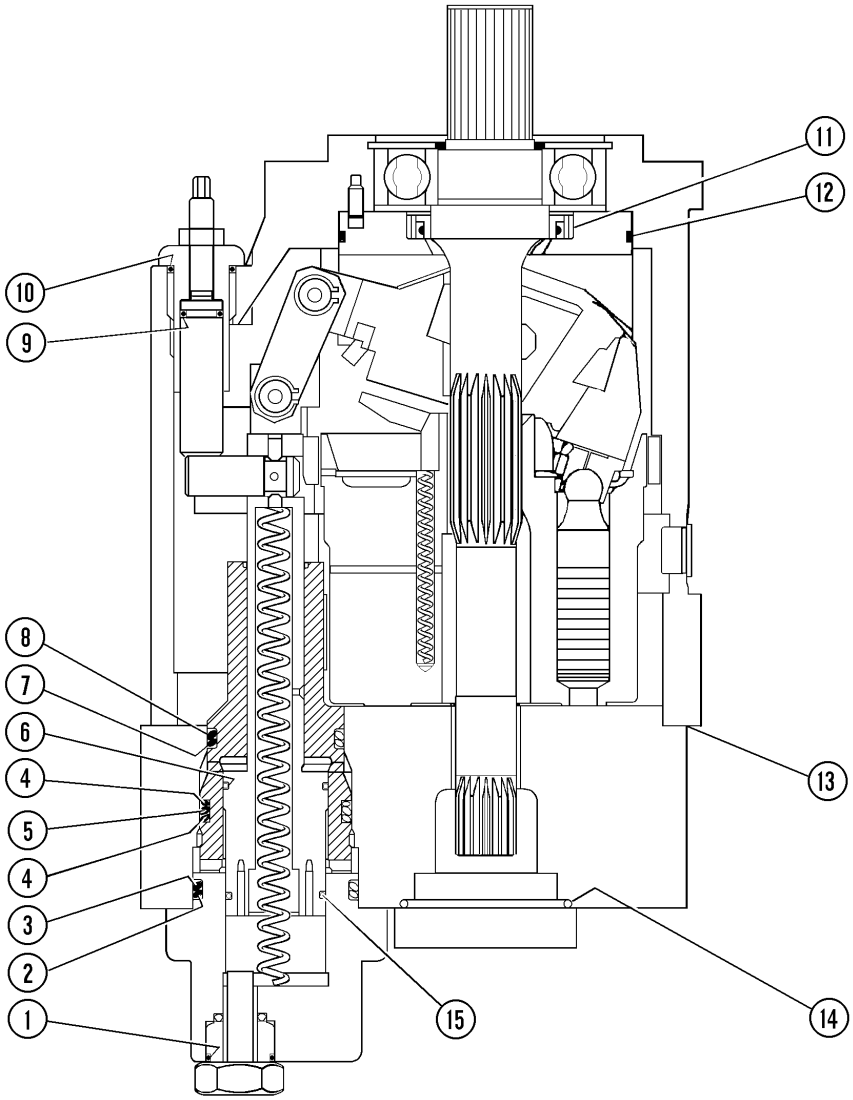
11
12
10
9
8
7
6
4
5
4
3
2
1
15
14
13
40734Z

REF.	PART NUM.	QTY.	DESCRIPTION
1.00	VE9541	1	SEAL, O-RING (5)
2.00	BF3732	1	RING, BACKUP (5)
3.00	VE9590	1	SEAL, O-RING (5)
4.00	VE9580	2	RING, BACKUP (5)
5.00	VE9583	1	SEAL, O-RING (5)
6.00	VE9581	1	RING, PISTON (5)
7.00	VE9585	1	SEAL, O-RING (5)
8.00	VE9582	1	RING, BACKUP (5)
9.00	VE9598	1	SEAL, O-RING (4)
10.00	VE9541	1	SEAL, O-RING (4)
11.00	VE9532	1	SEAL, SHAFT (4)
12.00	VE9539	1	SEAL, O-RING (4)
13.00	VE9549	1	GASKET (2)/(3)
14.00	VE9551	1	O-RING (1)/(2)/(3)
15.00	VE9586	1	SEAL (5)

KT	VE9618	NOTE: (1) INCLUDED IN VE9618 GASKET/SEAL KIT.
KT	VE9614	(2) INCLUDED IN VE9614 PUMP GASKET/SEAL KIT.
KT	BF1368	(3) INCLUDED IN BF1368 VALVE PLATE KIT.
KT	BF1369	(4) INCLUDED IN BF1369 HOUSING KIT.
KT	BF3727	(5) INCLUDED IN BF3727 CONTROL PISTON KIT.

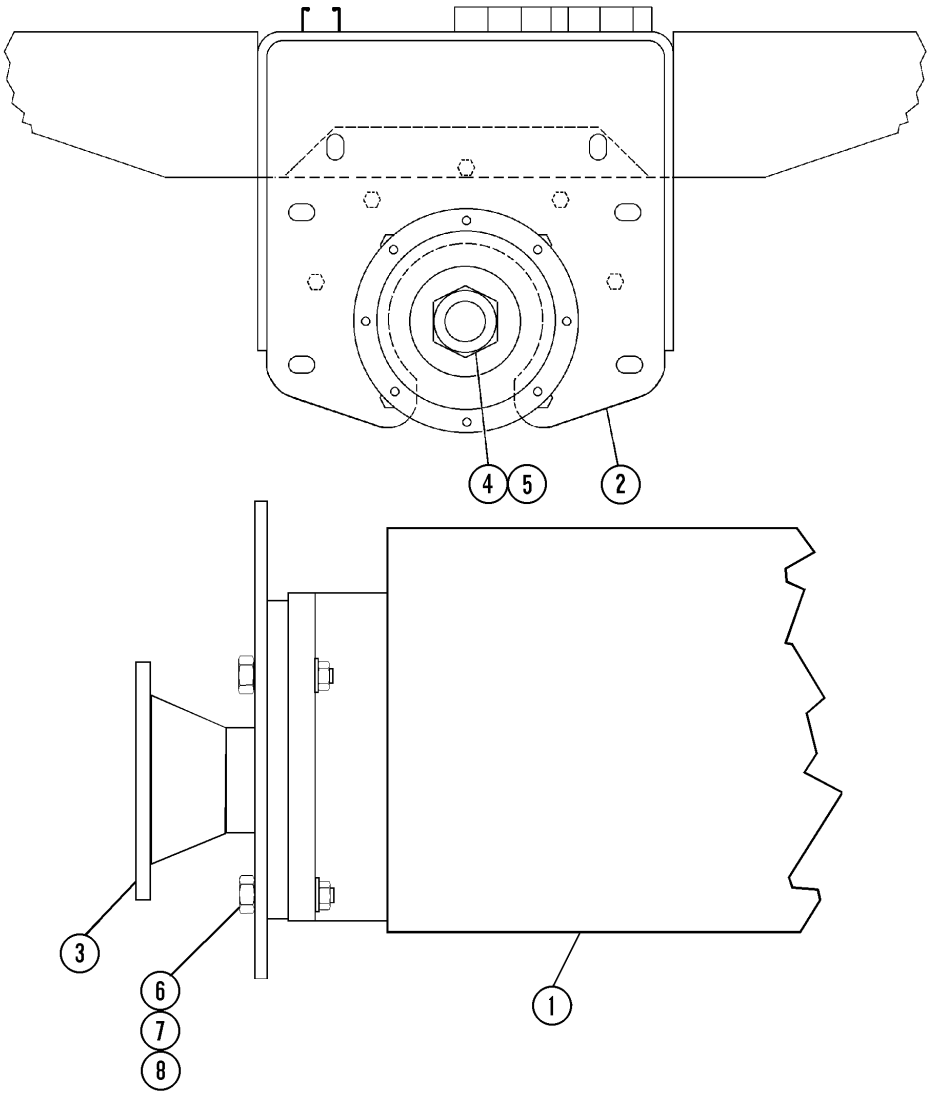
4
5
2
3
6
7
8
1
60265Z

REF.	PART NUM.	QTY.	DESCRIPTION
1.00	PB9008	1	HOIST PUMP ASSEMBLY (SEE INDEX)
2.00	EM4832	1	MOUNT, PUMP/VALVE
3.00	PB7940	1	FLANGE, COMPANION
4.00	H0989	1	JAM NUT - 1" - 14NF
5.00	EB3976	1	WASHER (SPECIAL)
6.00	TH3747	4	LOCKNUT - 3/4" - 10NC
7.00	WA0362	4	FLAT WASHER - 3/4" (HARDENED)
8.00	C1647	4	CAPSCREW - 3/4" - 10NC X 2 3/4"

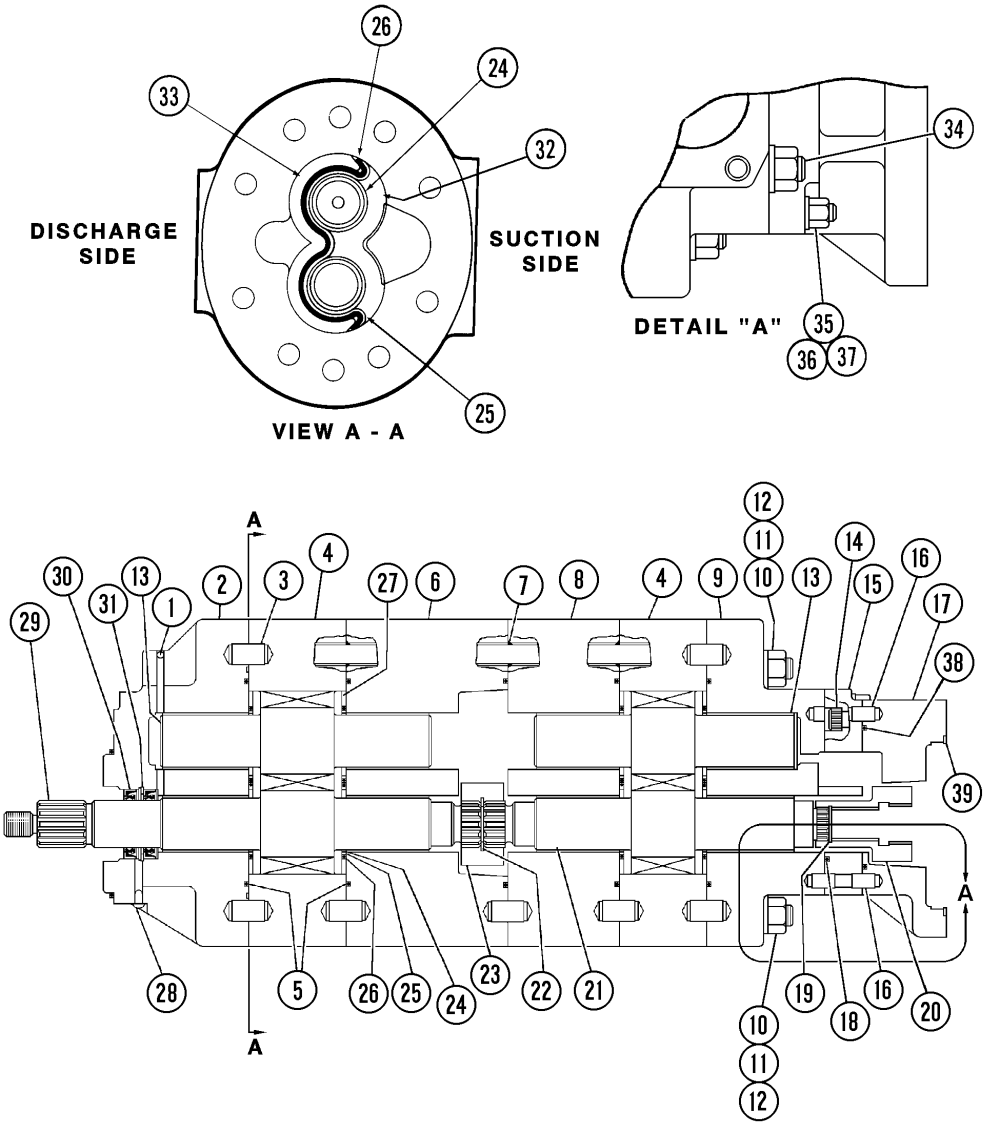
DISCHARGE SIDE
SUCTION SIDE
VIEW A - A
DETAIL "A"
A
A
60246Z

REF.	PART NUM.	QTY.	DESCRIPTION
1.00	TH7965	1	BALL, STEEL - 1/4"
2.00	VE3571	1	FLANGE
3.00	VE3588	10	DOWEL
4.00	VE7795	2	PLATE, GEAR
5.00	WA0262	5	O-RING (1)/(2)
6.00	VE3572	1	PLATE, CONNECTOR
7.00	VE3593	24	O-RING (2)
8.00	VE3574	1	PLATE, BEARING
9.00	VE3573	1	PLATE, CONNECTOR
10.00	VE3592	8	WASHER
11.00	25632R1	8	NUT
12.00	BF2675	4	STUD
13.00	VE7797	2	GEAR, IDLER
14.00	BF0065	8	CAPSCREW
15.00	VE3575	1	PLATE, BEARING
16.00	VS0629	4	DOWEL
17.00	VE8967	1	PLATE, TRANSITION (3)
18.00	WA0158	1	O-RING (2)/(3)
19.00			(NOT USED IN THIS APPLICATION)
20.00	VE8966	1	COUPLING, SPLINE (3)
21.00	BF2674	1	GEAR, DRIVE
22.00	SL8698	1	SNAP RING
23.00	VE3589	1	COUPLING
24.00	VE3738	8	RING, STEEL
25.00	VE3583	4	RING, BACKUP (2)
26.00	VE3584	4	O-RING (2)
27.00	VE3580	4	PLATE, PRESSURE
28.00	VE1783	1	PLUG (1)/(2)
29.00	BF2673	1	GEAR, DRIVE
30.00	VE3586	2	SEAL (1)/(2)
31.00	TG3789	1	SNAP RING (1)/(2)
32.00	VE3581	4	PLATE, ISOLATION
33.00	VE3582	4	RING, RETAINING (2)
34.00	BF2676	4	STUD
35.00	VE5201	4	STUD
36.00	WA0360	4	FLAT WASHER - 1/2" (HARDENED)
37.00	25527R1	4	NUT
38.00	WA0155	1	O-RING (2)/(3)
39.00	WA0098	1	O-RING

KT	VE3594	NOTE: (1) INCLUDED IN VE3594 SHAFT SEAL KIT.
KT	BF0033	(2) INCLUDED IN BF0033 SOFT GOODS SERVICE KIT.
KT	PB8769	(3) INCLUDED IN PB8769 PUMP REWORK KIT.

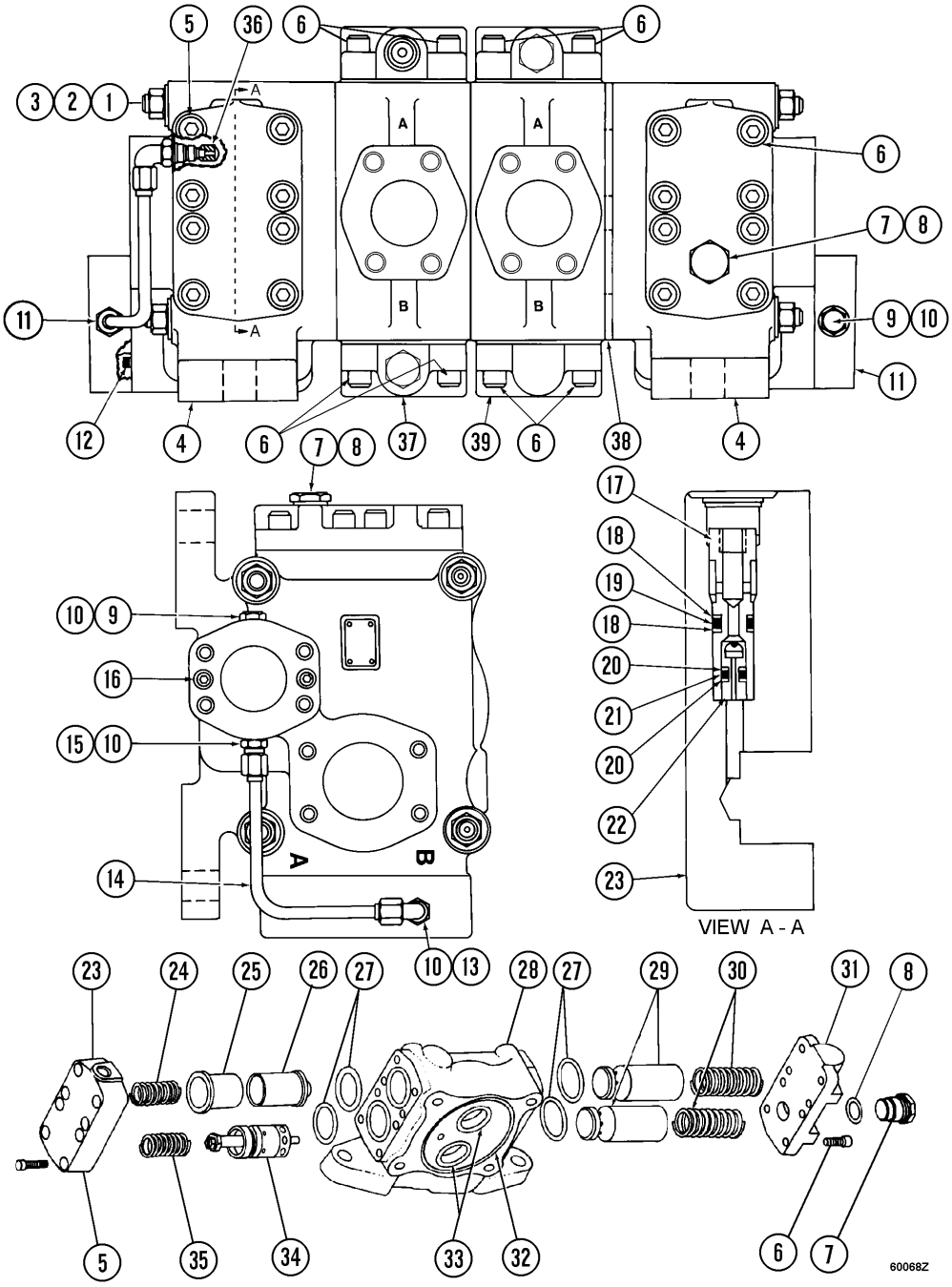
VIEW A - A
60068Z

REF.	PART NUM.	QTY.	DESCRIPTION
1.00	BF3045	4	TIE ROD
2.00	VE3807	8	WASHER, COMPRESSION
3.00	VE3804	8	LOCKNUT
4.00	BF3049	2	INLET SECTION ASSEMBLY
5.00	VJ2002	16	CAPSCREW
6.00	DF6928	48	CAPSCREW
7.00	VJ0011	2	PLUG
8.00	VJ0435	2	O-RING (2)/(3)
9.00	VE3551	2	PLUG
10.00	VE3565	6	O-RING (2)/(3)
11.00	VE3563	2	CAP, FLANGE
12.00	VE3553	2	O-RING (2)/(3)
13.00	VE3559	2	FITTING
14.00	VE3564	2	TUBE
15.00	VE3561	2	FITTING
16.00	VE3803	4	CAPSCREW
17.00	VE3560	2	SLEEVE (2)
18.00	VE3554	4	RING, BACKUP (2)/(3)
19.00	VE3552	2	O-RING (2)/(3)
20.00	1133800C1	4	RING, BACKUP (2)/(3)
21.00	VE3526	2	O-RING (2)/(3)
22.00	VE3558	2	POPPET, RESTRICTION (2)
23.00	VE3562	2	COVER
24.00	VE3569	2	SPRING
25.00	VJ1989	2	SLEEVE
26.00	VE3609	2	RELIEF VALVE ASSEMBLY (2)
26.01	VE3555	2	PLUG
26.02	VE3556	2	POPPET
27.00	VE3533	8	O-RING (2)/(3)
28.00	BF3046	2	HOUSING, INLET (1)
29.00	VJ1988	4	POPPET
30.00	VJ1985	4	SPRING
31.00	VE3568	2	COVER, POPPET
32.00	VE3534	4	O-RING (2)/(3)
33.00	VE3528	8	O-RING (2)/(3)
34.00	VE3567	2	RELIEF VALVE ASSEMBLY (2) (SEE INDEX)
35.00	VJ1990	2	SPRING
36.00	VE3557	2	SCREW, RESTRICTION
37.00	VE3810	1	SPOOL SECTION ASSEMBLY (SEE INDEX)
38.00	VE3806	1	PLATE, SPACER
39.00	BF3050	1	SPOOL SECTION ASSEMBLY (SEE INDEX)

NOTE: (1) NOT SERVICED SEPARATELY.
(2) INCLUDED IN BF3047 MAJOR SERVICE KIT.
(3) INCLUDED IN BF3048 MINOR SERVICE KIT.

KT BF3047
KT BF3048

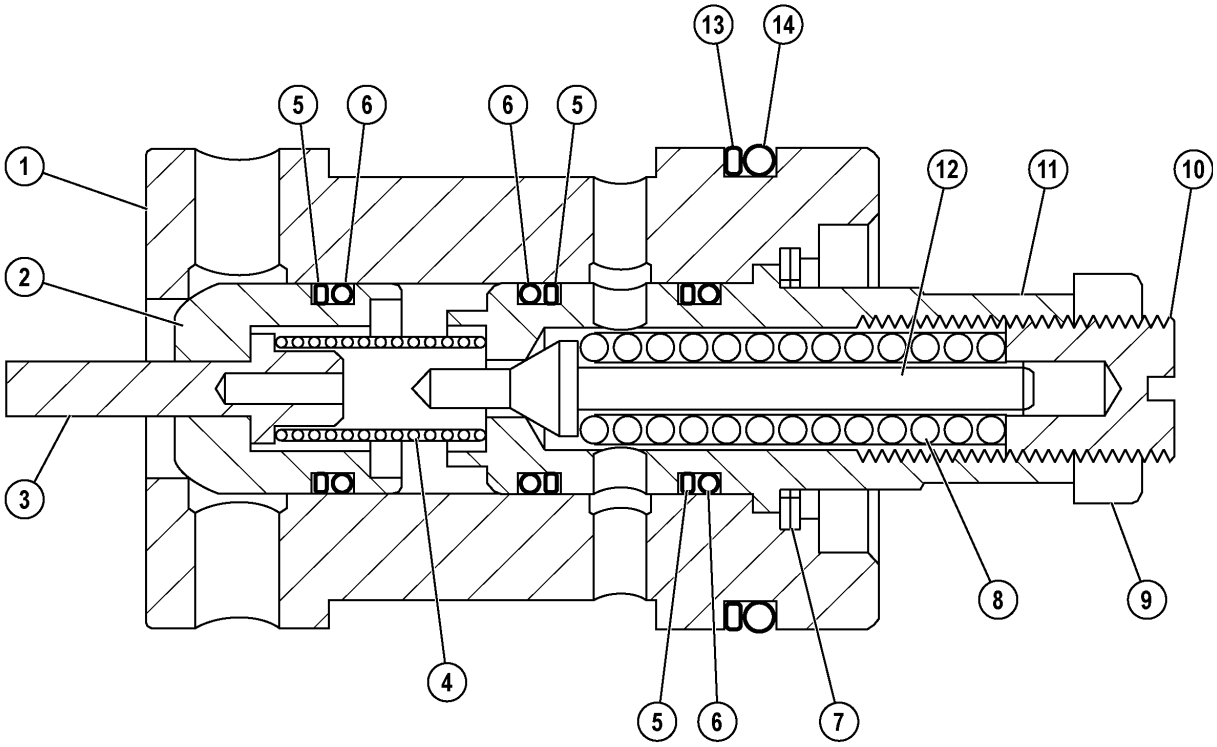

61152Z

REF.	PART NUM.	QTY.	DESCRIPTION
1.00	XA3749	1	POPPET
2.00	VJ2008	1	RELIEF VALVE
3.00	VJ2020	1	PISTON
4.00	VE3610	1	SPRING (2)
5.00	VJ2016	3	BACKUP RING (1)/(2)
6.00	VJ2011	3	O-RING (1)/(2)
7.00	VJ2022	1	POPPET
8.00	VJ2015	1	SPRING (2)
9.00	VJ2017	1	NUT
10.00	XA3750	1	SCREW, ADJUSTING
11.00	VJ2018	1	PLUG
12.00	VJ2014	1	POPPET
13.00	VJ2010	1	BACKUP RING (1)/(2)
14.00	VJ2012	1	O-RING (1)/(2)

KT	XA3747	NOTE: (1) INCLUDED IN XA3747 SEAL KIT.
KT	XA3748	(2) INCLUDED IN XA3748 SEAL & SPRING KIT.

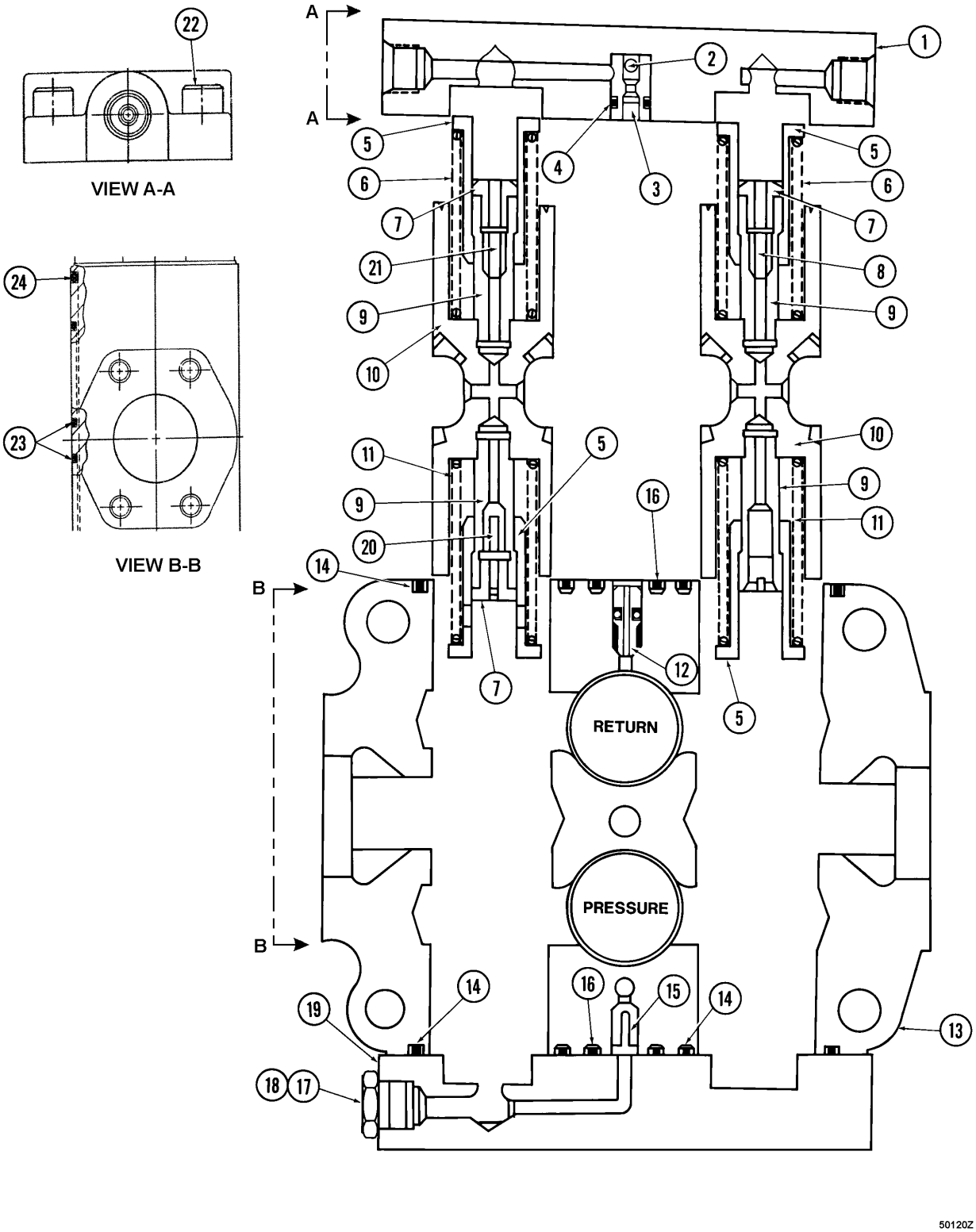
VIEW A-A
VIEW B-B
A
A
B
B
RETURN
PRESSURE
50120Z

REF.	PART NUM.	QTY.	DESCRIPTION
1.00	VE3543	1	COVER, SPOOL
2.00	VE3535	1	BALL (1)/(2)
3.00	VE3536	1	POPPET (1)
4.00	VE3527	1	O-RING (1)/(2)
5.00	VE3548	4	SEAT, SPRING
6.00	VE3541	2	SPRING
7.00	VE3545	3	PLUG
8.00	VE3539	1	POPPET (1)
9.00	VE3546	4	END, SPOOL
10.00	VE3547	2	SPOOL
11.00	VE3542	2	SPRING
12.00	VE5472	1	POPPET
13.00	VE7619	1	HOUSING, SPOOL
14.00	VE3533	4	O-RING (1)/(2)
15.00	VE3603	1	POPPET (1)
16.00	VJ2946	2	O-RING (1)/(2)
17.00	VJ1983	1	PLUG
18.00	VE3549	1	O-RING (1)/(2)
19.00	VE3544	1	COVER, SPOOL
20.00	VE3538	1	POPPET (1)
21.00	VE3540	1	POPPET (1)
22.00	VJ1987	16	CAPSCREW
23.00	VE3528	2	O-RING (1)/(2)
24.00	VE3534	1	O-RING (1)/(2)

KT	BF3047	NOTE: (1) INCLUDED IN BF3047 MAJOR SERVICE KIT.
KT	BF3048	(2) INCLUDED IN BF3048 MINOR SERVICE KIT.

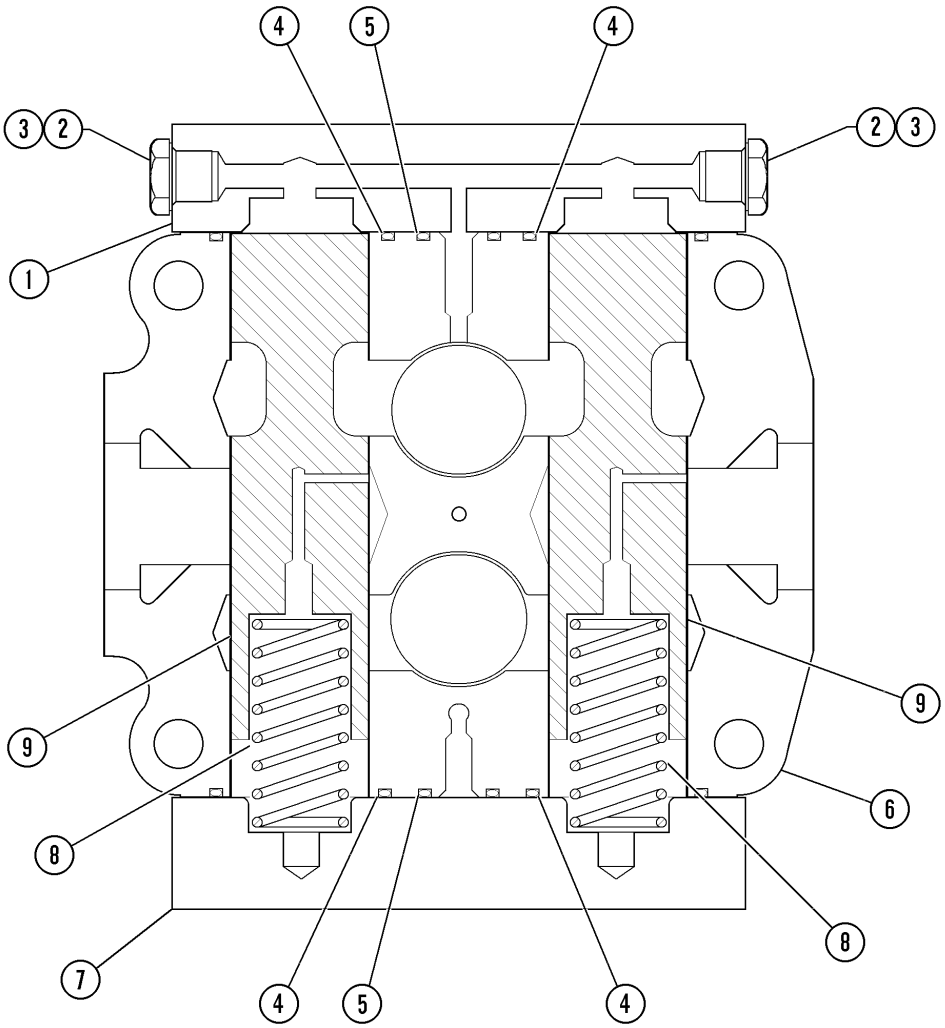
4
5
4
3
2
2
3
1
9
9
8
6
8
7
4
5
4
60069Z

REF.	PART NUM.	QTY.	DESCRIPTION
1.00	BF3044	1	COVER, SPOOL
2.00	VJ1983	2	PLUG
3.00	VE3549	2	O-RING (2)/(3)
4.00	VE3533	4	O-RING (2)/(3)
5.00	VJ2946	2	O-RING (2)/(3)
6.00	VE7619	1	HOUSING, SPOOL (1)
7.00	BF3042	1	COVER, SPOOL
8.00	VE3541	2	SPRING
9.00	BF3043	2	SPOOL

NOTE: (1) NOT SERVICED SEPARATELY.
(2) INCLUDED IN BK3047 MAJOR SERVICE KIT.
(3) INCLUDED IN BK3048 MINOR SERVICE KIT.

KT	BF3047	
KT	BF3048	

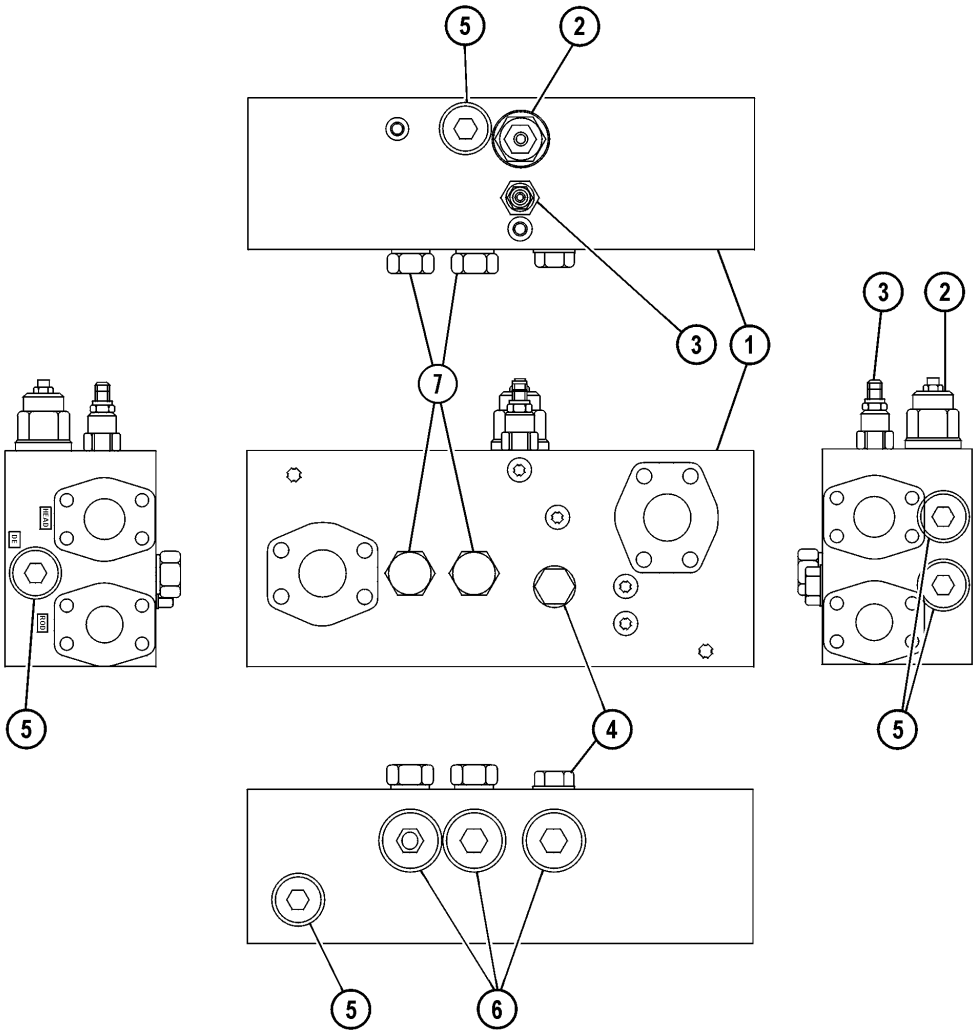

55589Z

REF.	PART NUM.	QTY.	DESCRIPTION
1.00		1	MANIFOLD (1)
2.00	PB9864	1	VALVE, COUNTER BALANCE
2.01	XA2443	1	SEAL KIT
3.00	BF4797	1	VALVE, NEEDLE
3.01	XA2444	1	SEAL KIT
4.00	BF4798	1	PLUG, CAVITY
5.00		5	PLUG (1)
6.00		3	PLUG (1)
7.00	BF4796	2	VALVE, CHECK
7.01	XA2442	2	SEAL KIT

NOTE: (1) NOT SERVICED SEPARATELY.

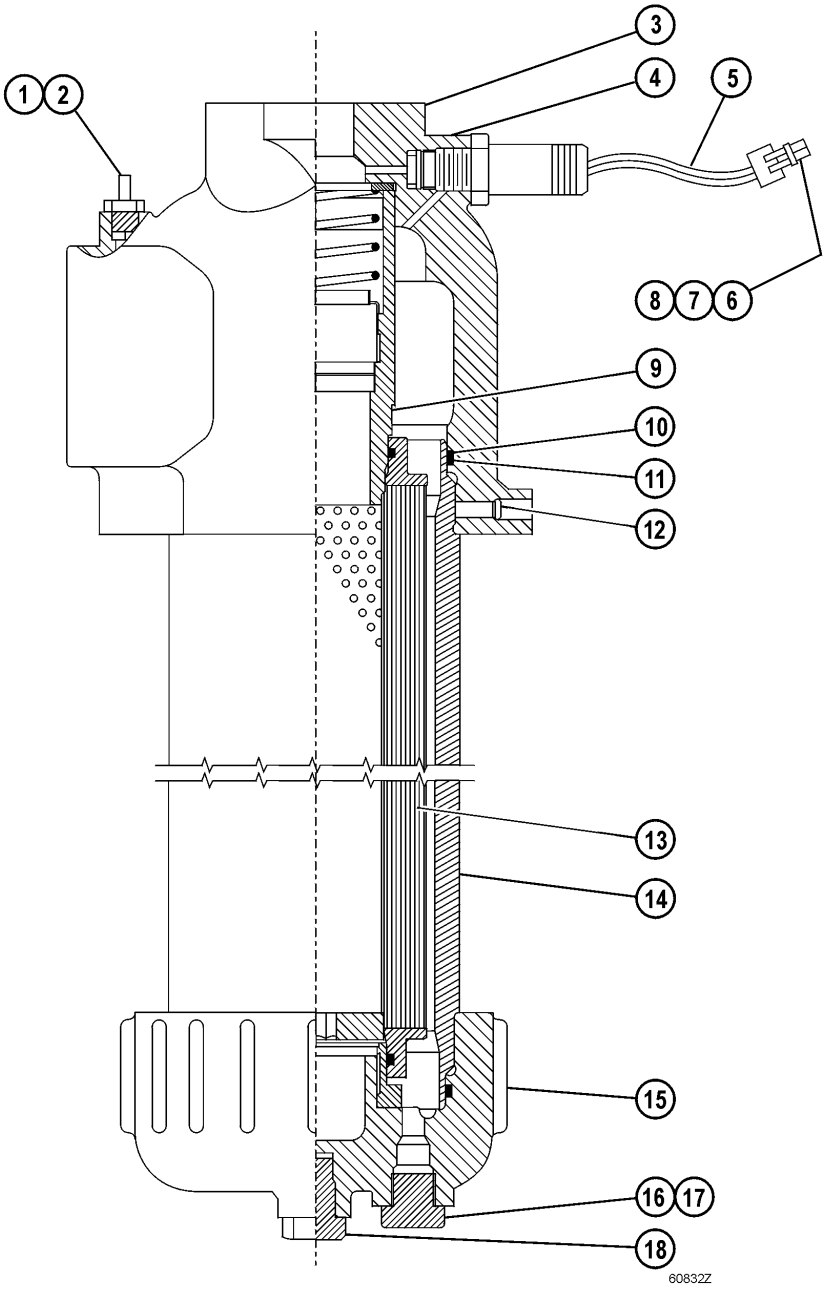
1
2
3
4
5
6
7
8
9
10
11
12
13
14
15
16
17
18
60832Z

REF.	PART NUM.	QTY.	DESCRIPTION
1.00	PB6770	1	COUPLING, MALE QUICK DISCONNECT
2.00	TF5194	1	O-RING
3.00	BF2192	1	HEAD (1)
4.00	VE2607	1	INDICATOR, PRESSURE
5.00		1	SLEEVE, INSULATION - 3/8" (5" LONG)
6.00	PB7743	1	CONNECTOR
7.00	PB7740	2	TERMINAL
8.00	PB7034	2	SEAL, CABLE
9.00	BF4801	1	CORE
10.00	TG4083	1	O-RING
11.00	BF2196	2	RING, BACKUP
12.00	BF2197	1	SETSCREW
13.00	AK3570	1	ELEMENT
14.00	BF2198	1	TUBE (1)
15.00	BF3632	1	COVER
16.00	VE1978	1	PLUG, DRAIN
17.00	SV9812	1	O-RING
18.00	BF2194	1	PLUG, BOTTOM

NOTE: (1) NOT SERVICED SEPARATELY.

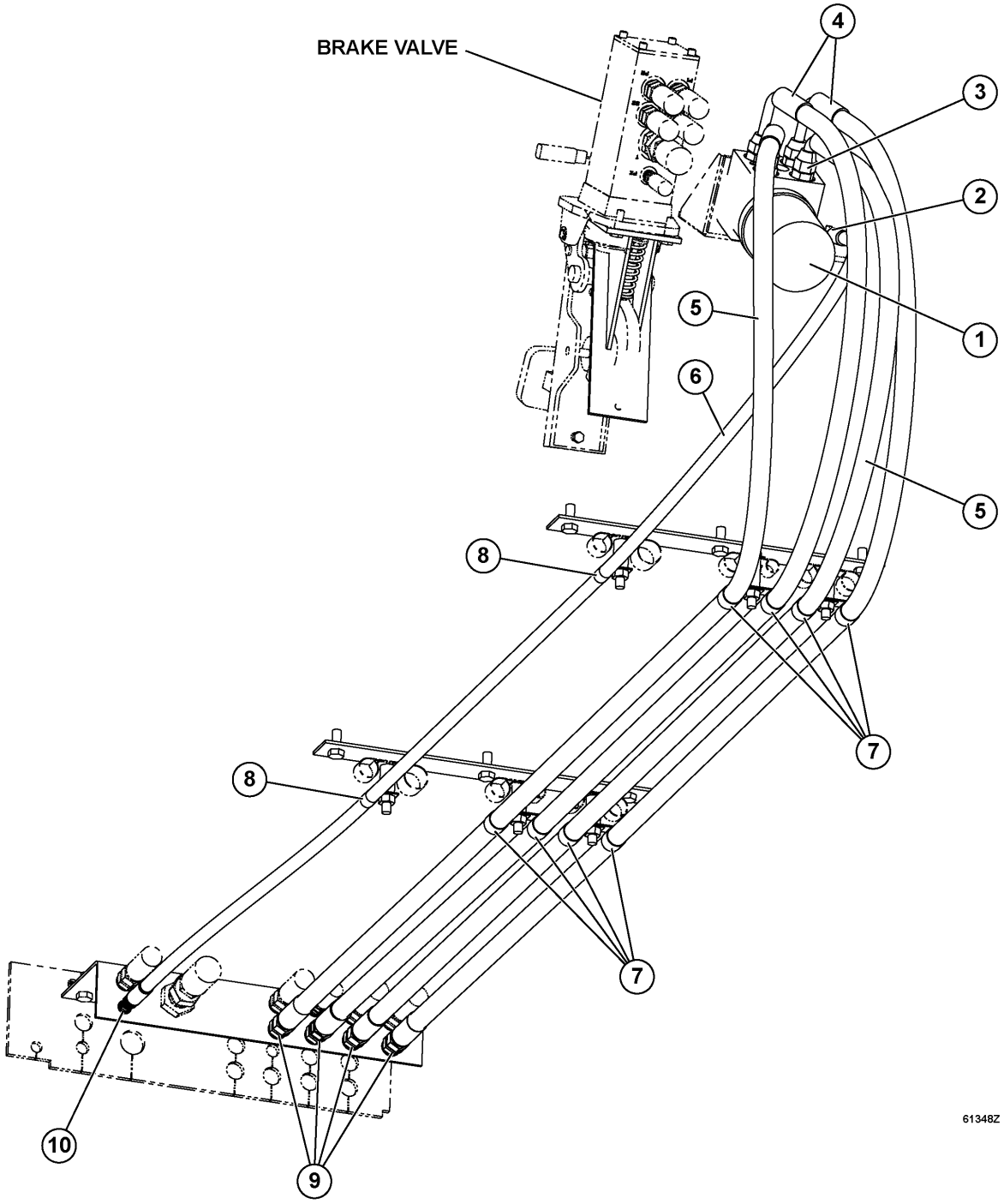
BRAKE VALVE
4
3
2
1
5
6
5
8
7
8
7
10
9
61348Z

REF.	PART NUM.	QTY.	DESCRIPTION
1.00	PB9881	1	STEERING CONTROL VALVE (SEE INDEX)
2.00	WB0574	1	FITTING, STRAIGHT
3.00	WB0584	4	FITTING, STRAIGHT
4.00	HA7382	2	HOSE
5.00	HA5569	2	HOSE
6.00	HA7358	1	HOSE
7.00	TG2568	4	CLAMP, VINYL - 7/8" I.D.
8.00	TG2960	2	CLAMP, VINYL - 9/16" I.D.
9.00	WB0430	4	FITTING, STRAIGHT
10.00	WB0427	1	FITTING, STRAIGHT

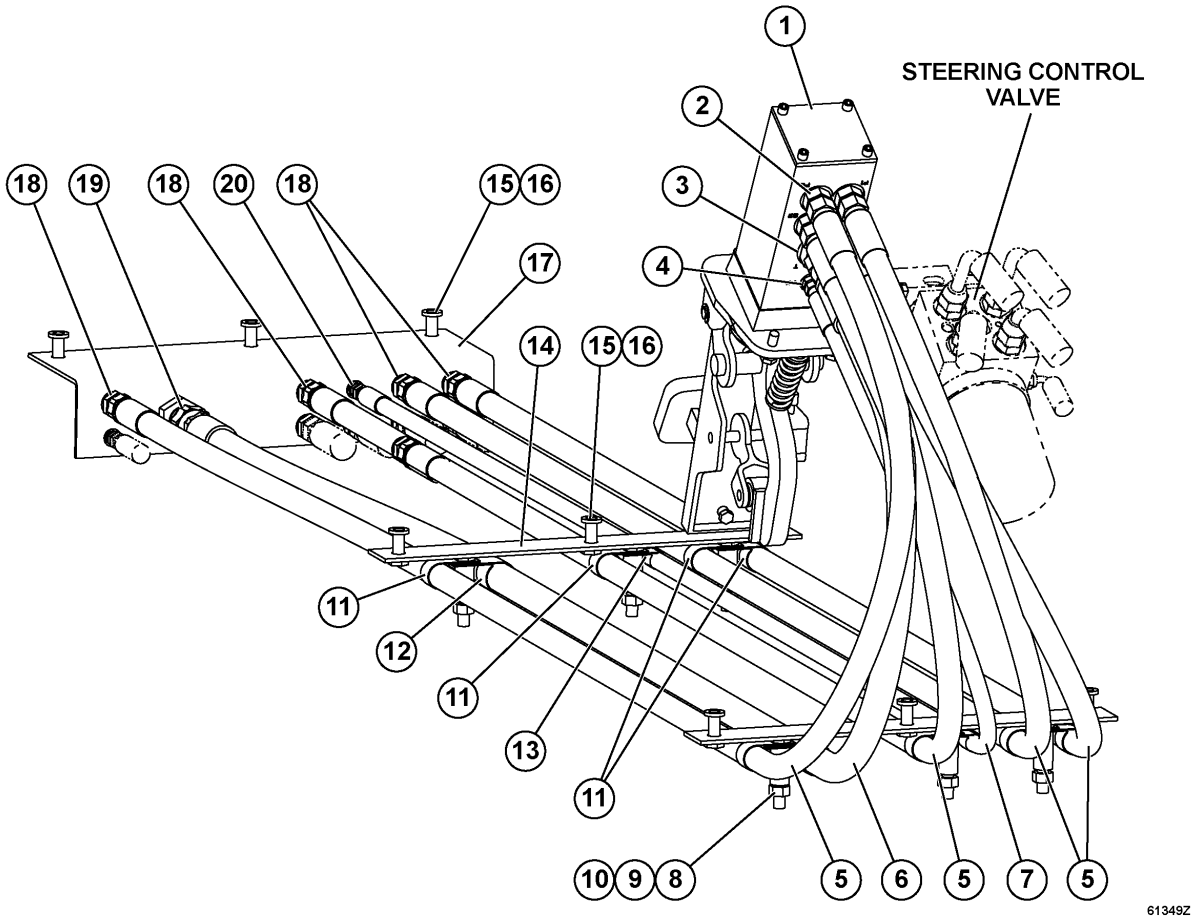
1
STEERING CONTROL VALVE
2
3
4
18
19
18
20
18
15
16
17
14
15
16
11
12
11
13
11
10
9
8
5
6
5
7
5
61349Z

REF.	PART NUM.	QTY.	DESCRIPTION
1.00	PC1955	1	BRAKE VALVE ASSEMBLY (SEE INDEX)
2.00	WB0584	4	FITTING, STRAIGHT
3.00	WB0593	1	FITTING, STRAIGHT
4.00	WB0574	1	FITTING, STRAIGHT
5.00	HA7331	4	HOSE
6.00	HA7389	1	HOSE
7.00	HA7360	1	HOSE
8.00	TY8375	6	SPACER
9.00	MM0461	6	FLAT WASHER - M10
10.00	MM0178	6	NUT - M10 X 1.50
11.00	TG2568	8	CLAMP, VINYL - 7/8" I.D.
12.00	VN9913	2	CLAMP, VINYL - 1 1/16" I.D.
13.00	TG2960	2	CLAMP, VINYL - 9/16" I.D.
14.00	EF8174	2	BRACKET, CLAMP
15.00	MM0605	9	CAPSCREW - M10 X 1.50 X 25
16.00	MM0471	9	LOCKWASHER - M10
17.00	EF8177	1	BRACKET
18.00	WB0430	4	FITTING, STRAIGHT
19.00	WB0432	1	FITTING, STRAIGHT
20.00	WB0427	1	FITTING, STRAIGHT

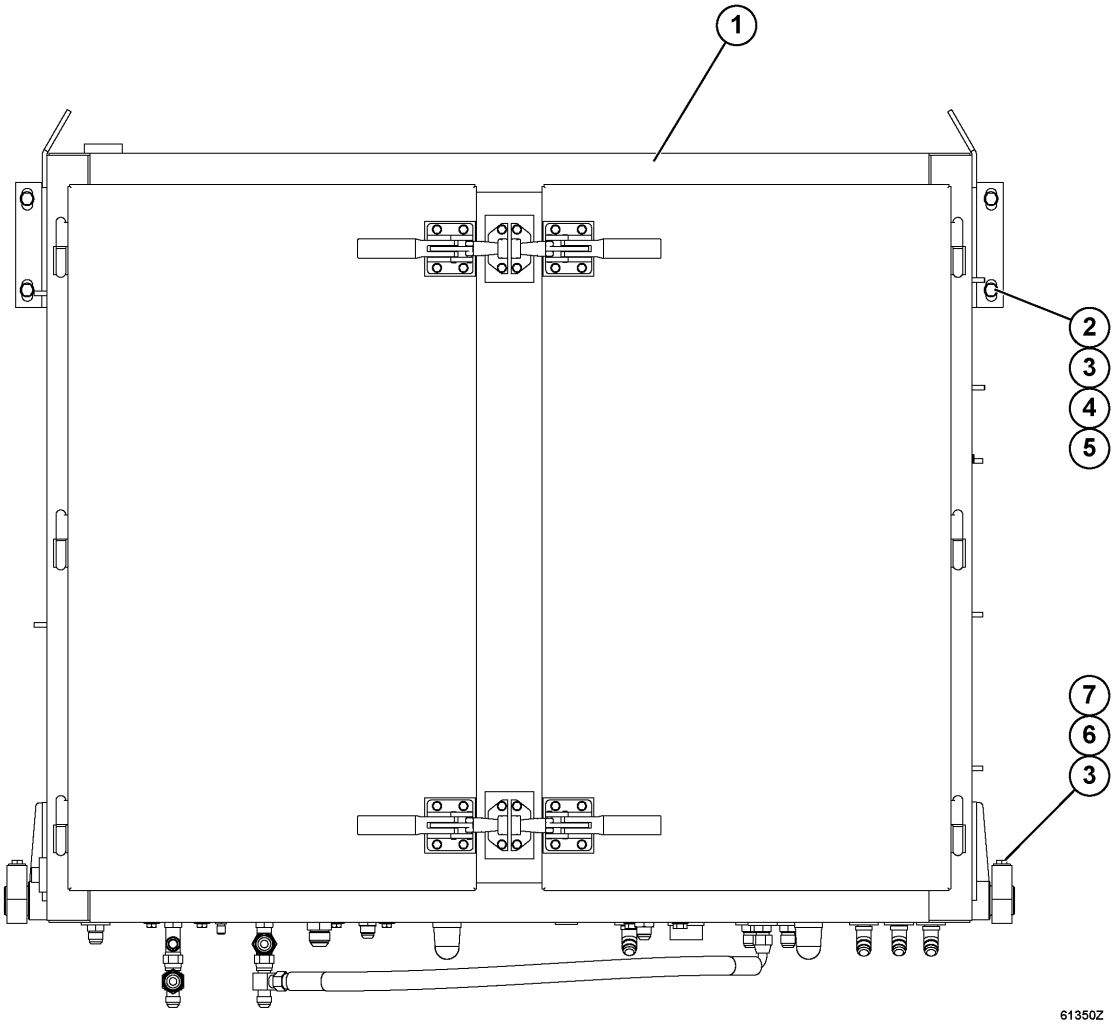
1
2
3
4
5
7
6
3
61350Z

REF.	PART NUM.	QTY.	DESCRIPTION
1.00	EM0527	1	HYDRAULIC BRAKE CABINET ASSEMBLY (1) (SEE INDEX)
2.00	MM0620	4	CAPSCREW - M12 X 1.75 X 40
3.00	MM0472	8	LOCKWASHER - M12
4.00	MM0179	4	NUT - M12 X 1.75
5.00	MM0714	12	FLAT WASHER - M12 (HARDENED)
6.00	SM2014	2	CAP
7.00	MM0623	4	CAPSCREW - M12 X 1.75 X 60

NOTE: (1) NOT SERVICED AS AN ASSEMBLY.
ORDER INDIVIDUAL COMPONENT PARTS.

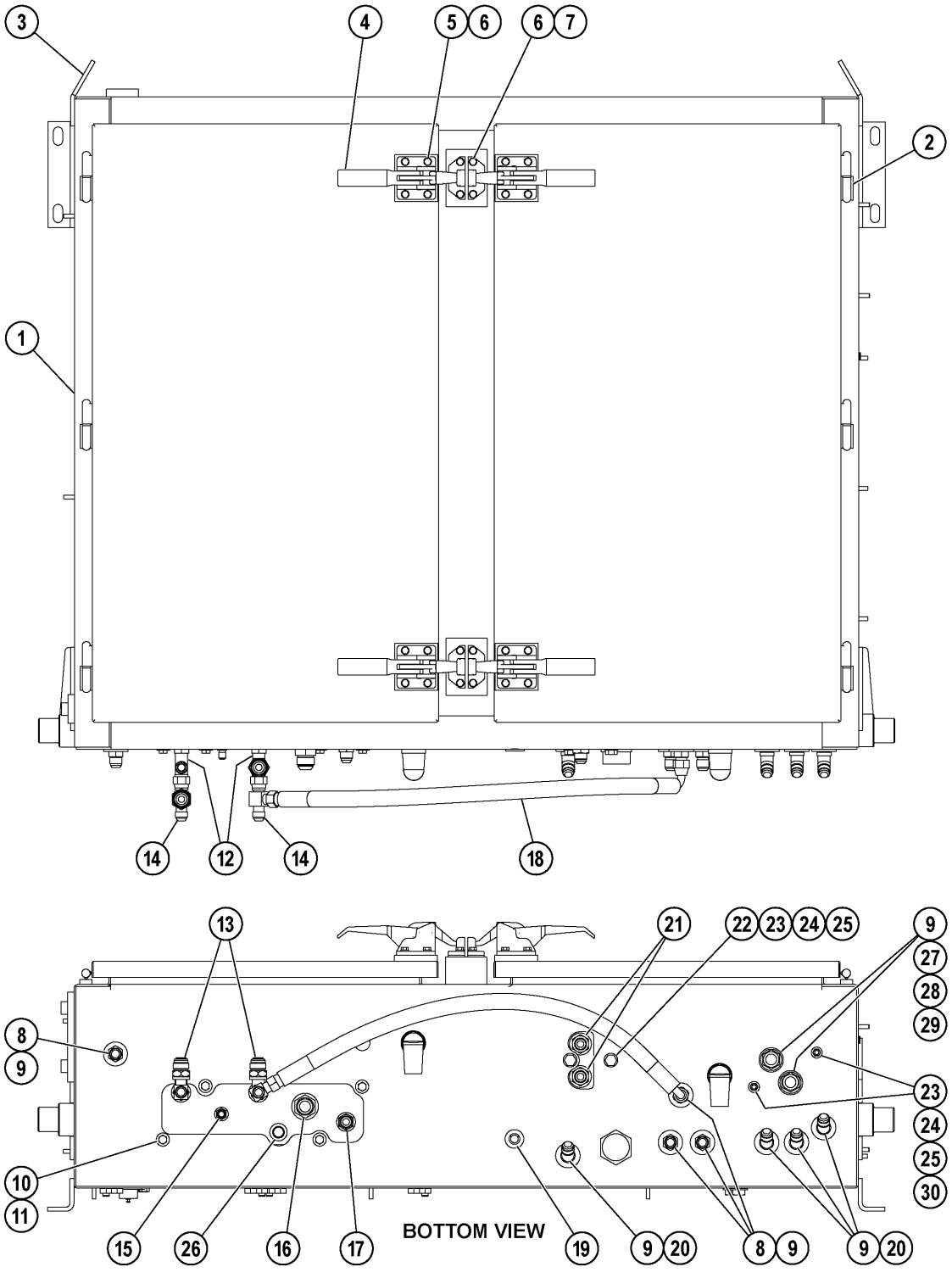
3
4
5
6
6
7
2
1
14
12
14
18
13
21
22
23
24
25
9
27
28
29
8
9
23
24
25
30
10
11
15
26
16
17
BOTTOM VIEW
19
9
20
8
9
9
20
60973Z

REF.	PART NUM.	QTY.	DESCRIPTION
1.00	EM0524	1	CABINET, BRAKE
1.01	BF5207	1	SEAL
2.00	PB7207	6	HINGE (WELD-ON)
3.00	EH0944	2	EYE, LIFTING (WELD-ON)
4.00	PB1006	4	LATCH/KEEPER SET
5.00	MM0581	16	CAPSCREW - M6 X 1.00 X 16
6.00	MM0469	24	LOCKWASHER - M6
7.00	MM0583	8	CAPSCREW - M6 X 1.00 X 25
8.00	WB0430	4	FITTING, STRAIGHT
9.00	TF2449	20	FLAT WASHER - 3/4"
10.00	C1601	4	CAPSCREW - 3/8" - 16NC X 3/4"
11.00	DF3042	4	FLAT WASHER - 3/8"
12.00	WB0557	2	FITTING, TEE
13.00	WB1201	2	FITTING, STRAIGHT
14.00	WB0384	2	FITTING, TEE
15.00	WB0574	1	FITTING, STRAIGHT
16.00	WB0593	1	FITTING, STRAIGHT
17.00	WB0584	1	FITTING, STRAIGHT
18.00	HA7755	1	HOSE
19.00	SG2103	1	GROMMET, RUBBER
20.00	WB0249	4	FITTING, ELBOW - 45 DEG
21.00	WB0585	2	FITTING, STRAIGHT
22.00	SR6301	2	CAPSCREW - 1/4" - 20NC X 2 3/4"
23.00	VN9773	6	FLAT WASHER - 1/4"
24.00	C5774	4	LOCKWASHER - 1/4"
25.00	C5780	4	NUT - 1/4" - 20NC
26.00	WB0581	1	FITTING, STRAIGHT
27.00	D0312	2	CAPSCREW - 3/4" - 10NC X 1 1/4"
28.00	TR4735	2	LOCKWASHER - 3/4"
29.00	TR8960	2	NUT - 3/4" - 10NC
30.00	H8136	2	CAPSCREW - 1/4" - 20NC X 1/2"

(BRAKE CABINET ASSEMBLY NOT SERVICED AS AN ASSEMBLY. ORDER INDIVIDUAL COMPONENT PARTS.)

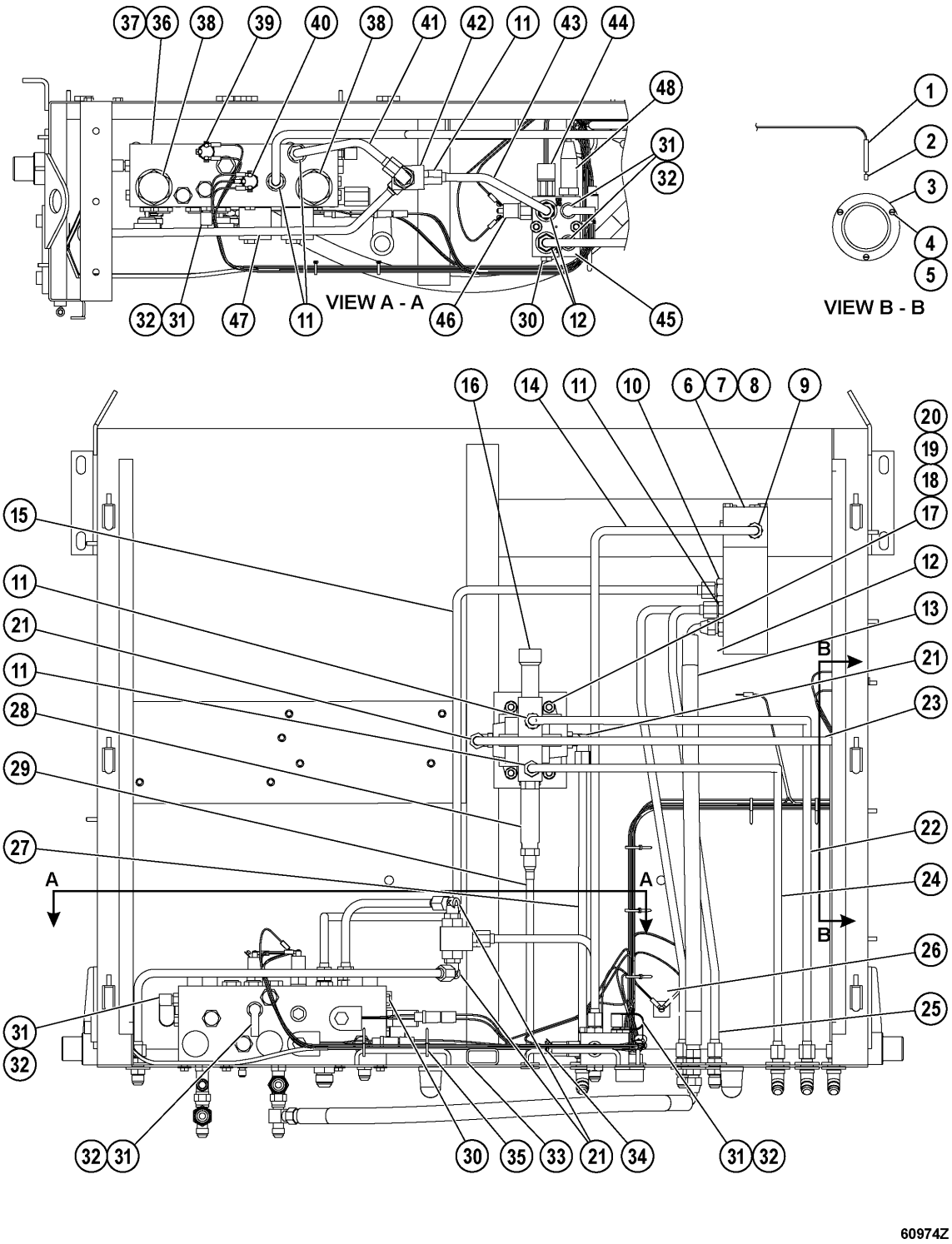
VIEW A - A
VIEW B - B
60974Z

REF.	PART NUM.	QTY.	DESCRIPTION
1.00	DL4172	2	SLEEVE, INSULATING
2.00	SF9896	2	KNIFE, DISCONNECT
3.00	VS0035	2	LIGHT, DOME
3.01	SR6747	2	BULB
3.02	TM9090	2	INSULATOR
4.00	VF2231	6	MACHINE SCREW - #10 - 24NC X 3/8"
5.00	DC3101	6	LOCKWASHER - #10
6.00	PC1531	1	VALVE, DUAL RELAY (SEE FIG 61000)
7.00	SR6320	2	CAPSCREW - 1/2" - 13NC X 7/8"
8.00	DD5640	2	FLAT WASHER - 1/2"
9.00	WB1024	1	FITTING, STRAIGHT
10.00	WB0586	1	FITTING, STRAIGHT
11.00	WB0584	7	FITTING, STRAIGHT
12.00	WB0585	3	FITTING, STRAIGHT
13.00	HA7755	1	HOSE
14.00	EG0603	1	TUBE
15.00	EG0601	1	TUBE
16.00	PB6922	1	VALVE, HOIST PILOT (SEE INDEX)
17.00	MM0056	4	CAPSCREW - M10 X 1.50 X 40
18.00	MM0461	4	FLAT WASHER - M10
19.00	MM0471	4	LOCKWASHER - M10
20.00	MM0178	4	NUT - M10 X 1.50
21.00	WB0508	4	FITTING, ELBOW - 90 DEG
22.00	EH8954	1	TUBE
23.00	EC6228	1	TUBE
24.00	EH8955	1	TUBE
25.00	EG0604	1	TUBE
26.00	EG0605	1	TUBE
27.00	EG0607	1	TUBE
28.00	PB6895	1	CONNECTION KIT
29.00	PC1898	1	CABLE ASSEMBLY
30.00	VM0314	3	PLUG
31.00	PB6528	5	COUPLING, DIAGNOSTIC
32.00	PB6041	5	CAP, DUST
33.00	EL2220	1	HARNESS, INTERNAL
34.00	VZ3250	2	DIODE
35.00	VZ0598	12	TYRAP
36.00	PC1498	1	MANIFOLD, BRAKE (SEE INDEX)
37.00	WB0583	1	FITTING, STRAIGHT
38.00	VM0320	2	PLUG, O-RING BOSS
39.00	PC1558	1	SWITCH, PRESSURE
40.00	PC1557	1	SWITCH, PRESSURE

(SEE FOLLOWING PAGE FOR BALANCE OF PARTS...)

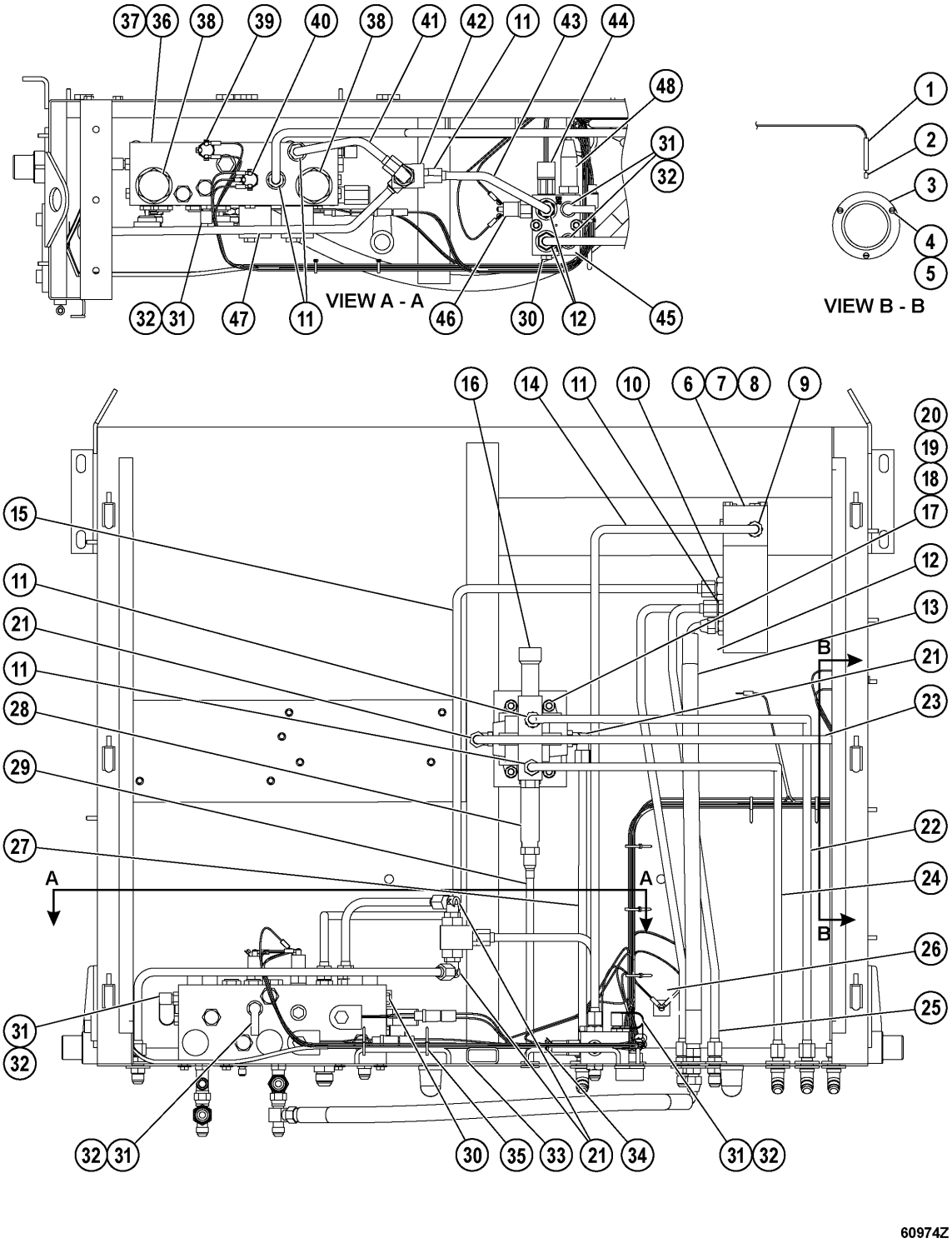
VIEW A - A
VIEW B - B
60974Z

REF.	PART NUM.	QTY.	DESCRIPTION
41.00	EF8197	1	TUBE
42.00	PB6803	1	VALVE, SHUTTLE
43.00	EF8198	1	TUBE
44.00	PC1678	1	SWITCH, PRESSURE
45.00	EK3957	1	BLOCK, JUNCTION
46.00	PC1677	1	SWITCH, PRESSURE
47.00	TY9260	1	TUBE
48.00	PC1537	1	SENSOR, PRESSURE - 4000 PSI

(BRAKE CABINET ASSEMBLY NOT SERVICED AS AN ASSEMBLY. ORDER INDIVIDUAL COMPONENT PARTS.)

(SEE PRECEDING PAGE FOR BALANCE OF PARTS...)

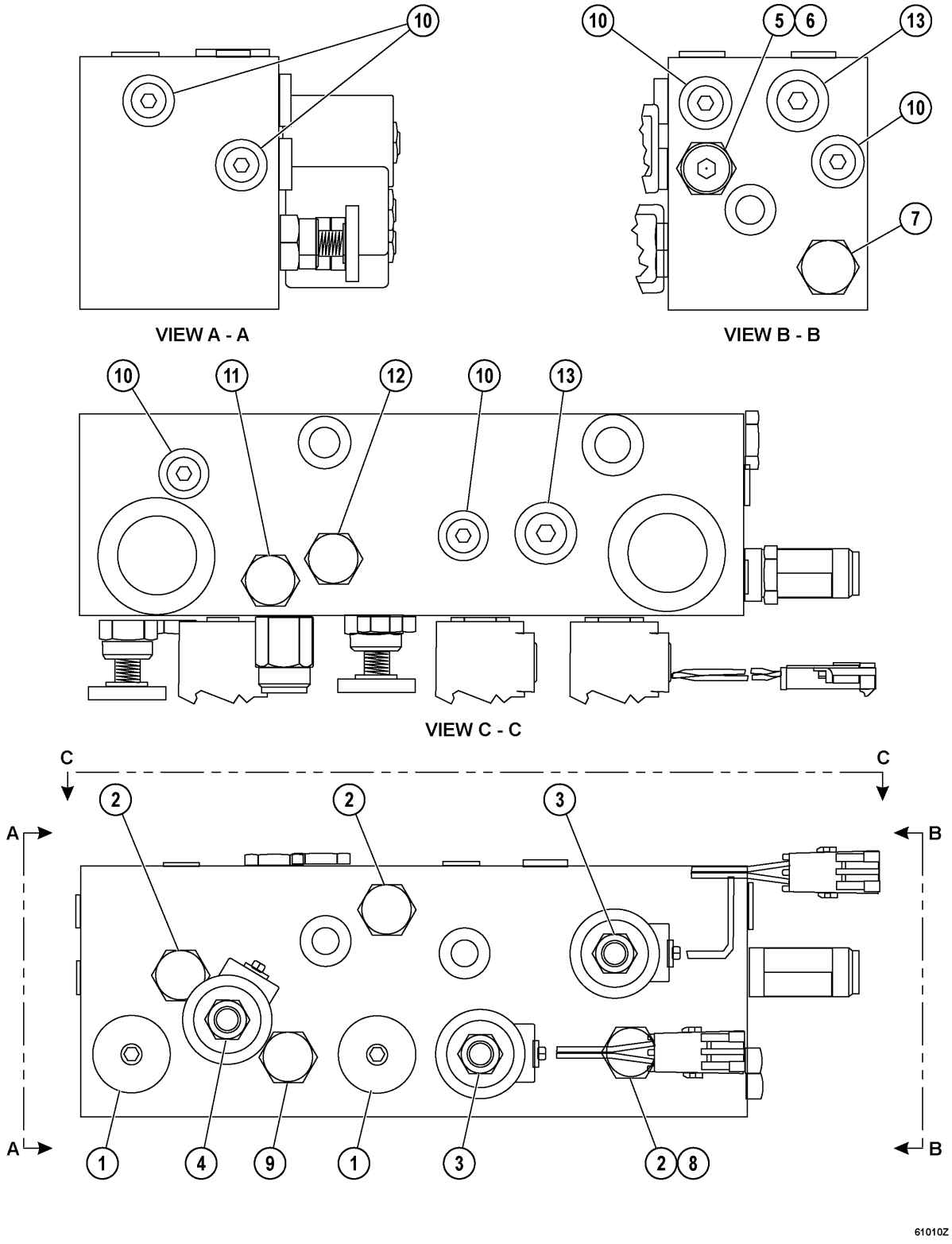
10
VIEW A - A
10
5
6
13
10
7
VIEW B - B
10
11
12
10
13
VIEW C - C
C
C
A
A
B
B
2
2
3
1
4
9
1
3
2
8
61010Z

REF.	PART NUM.	QTY.	DESCRIPTION
1.00	BF2839	2	VALVE, NEEDLE
1.01	BF2864	2	O-RING (1)
1.02	BF2860	2	O-RING (1)
1.03	BF2863	4	RING, BACKUP (1)
2.00	BF2840	3	VALVE, CHECK
2.01	BF2860	3	O-RING (2)
2.02	BF2864	3	O-RING (2)
2.03	BF2865	3	RING, BACKUP (2)
3.00	XA3347	2	VALVE, SOLENOID
4.00	XA3348	1	VALVE, SOLENOID
5.00	BF3523	1	VALVE, PRESSURE REDUCTION
5.01	BF2860	1	O-RING (4)
5.02	BF2866	1	O-RING (4)
5.03	BF2864	1	O-RING (4)
5.04	BF2872	1	RING, BACKUP (4)
5.05	BF2863	2	RING, BACKUP (4)
6.00	BF2851	1	DISC, ORIFICE
7.00	BF2845	1	PLUG, CAVITY
7.01		1	O-RING (3)
8.00	BF2850	1	DISC, ORIFICE
9.00	BF2841	1	VALVE, PILOT (AUTOMATIC APPLY)
9.01	BF2860	1	O-RING (5)
9.02	BF2866	1	O-RING (5)
9.03	BF2867	1	O-RING (5)
9.04	BF2864	1	O-RING (5)
9.05	BF2865	1	RING, BACKUP (5)
9.06	BF2868	2	RING, BACKUP (5)
9.07	BF2869	2	RING, BACKUP (5)
10.00	BF3260	7	PLUG, PORT
10.01	TL3995	7	O-RING
11.00	BF2846	1	CARTRIDGE, LOAD SHUTTLE
11.01	BF2860	1	O-RING (3)
11.02	BF2866	1	O-RING (3)
11.03	BF2864	1	O-RING (3)
11.04	BF2863	1	RING, BACKUP (3)
11.05	BF2868	2	RING, BACKUP (3)
12.00	BF2847	1	CARTRIDGE, HOT OIL
12.01	BF2860	1	O-RING (7)
12.02	BF2864	1	O-RING (7)
12.03	BF2865	2	RING, BACKUP (7)

(SEE FOLLOWING PAGE FOR BALANCE OF PARTS...)

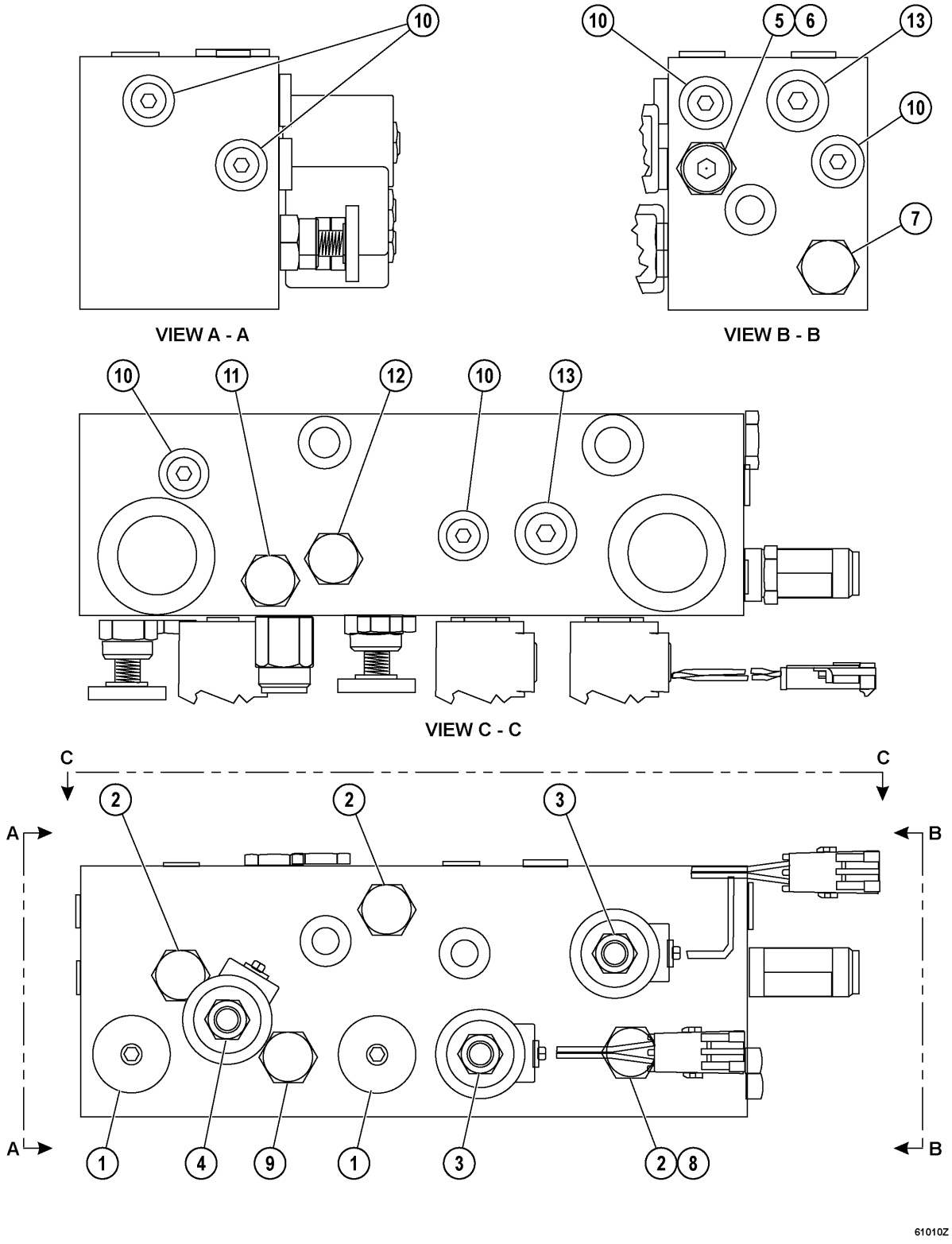
10
10
5
6
13
10
7
VIEW A - A
VIEW B - B
10
11
12
10
13
VIEW C - C
C
C
A
A
B
B
2
2
3
1
4
9
1
3
2
8
61010Z

REF.	PART NUM.	QTY.	DESCRIPTION
13.00	BF3261	2	PLUG, PORT
13.01	SV9812	2	O-RING
KT	BF2853		NOTE: (1) INCLUDED IN BF2853 SEAL KIT.
KT	BF2854		(2) INCLUDED IN BF2854 SEAL KIT.
KT	BF2856		(3) INCLUDED IN BF2856 SEAL KIT.
KT	BF2857		(4) INCLUDED IN BF2857 SEAL KIT.
KT	BF2855		(5) INCLUDED IN BF2855 SEAL KIT.
KT	BF2852		(6) INCLUDED IN BF2852 SEAL KIT.
KT	BF2858		(7) INCLUDED IN BF2858 SEAL KIT.

(SEE PRECEDING PAGE FOR BALANCE OF PARTS...)

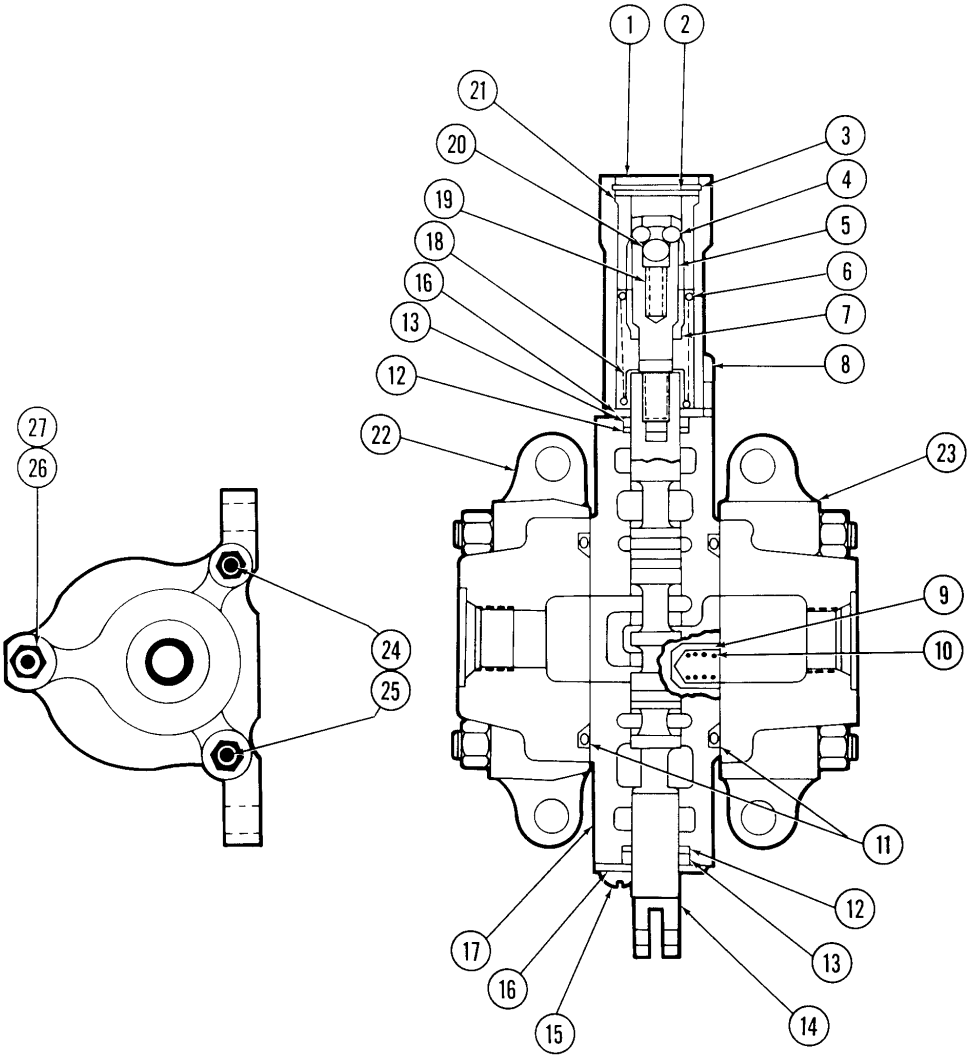
1
2
21
20
19
18
16
13
12
22
3
4
5
6
7
8
23
9
10
11
12
13
14
15
16
17
27
26
24
25
40064Z

REF.	PART NUM.	QTY.	DESCRIPTION
	VE3828	1	SPOOLING SECTION ASSEMBLY
1.00	VJ1967	1	CAP
2.00	VJ1962	1	SPACER
3.00	VJ1975	1	SNAP RING
4.00	VJ1972	4	BALL
5.00	VJ1964	1	PIN, DETENT
6.00	VJ1960	1	SPRING
7.00	VE3823	1	SPACER
8.00	VJ1957	2	CAPSCREW
9.00	1130246C1	1	POPPET, CHECK VALVE
10.00	VE3826	1	SPRING
11.00	VE3819	2	O-RING
12.00	VE3818	2	O-RING
13.00	VJ1947	2	WIPER
14.00	BF3536	1	SPOOL
15.00	VJ0012	2	MACHINE SCREW
16.00	VJ1943	2	PLATE, SEAL
17.00	BF3535	1	HOUSING, SPOOL
18.00	VJ1944	2	SEAT, SPRING
19.00	890613C1	1	SPRING
20.00	VJ1974	1	BALL
21.00	VE3825	1	SLEEVE, DETENT
22.00	VE3827	1	HOUSING, INLET
22.01	876077C1	1	O-RING
23.00	VE3829	1	HOUSING, OUTLET
24.00	VE3821	2	TIE ROD
25.00	VJ1934	4	NUT
26.00	VE3822	1	TIE ROD
27.00	VJ1933	2	NUT
NS	VE3830	1	PLUG, SHUT-OFF
NS	VE3980	1	VALVE, RELIEF

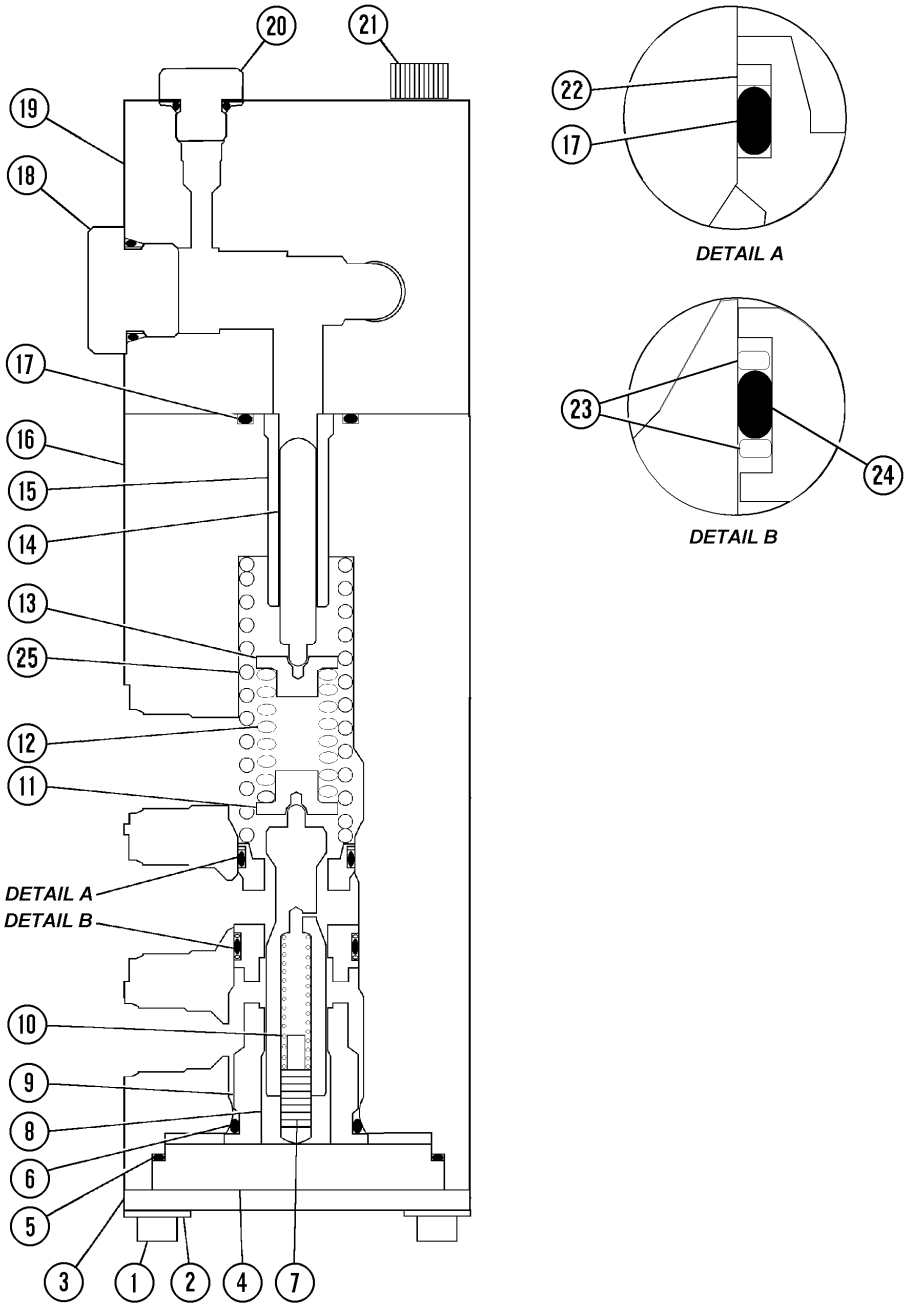
20
21
19
18
17
16
15
14
13
25
12
11
DETAIL A
DETAIL B
10
9
8
6
5
3
1
2
4
7
22
17
DETAIL A
23
24
DETAIL B

61000Z

REF.	PART NUM.	QTY.	DESCRIPTION
1.00		4	CAPSCREW (1)
2.00	C1546	4	FLAT WASHER - 1/4"
3.00	VE9421	1	RETAINER, SLEEVE
4.00	VE9418	1	PLUG
5.00		1	PACKING (1)/(4)
6.00		2	SEAL (1)/(4)
7.00		2	PLUNGER (1)/(2)
8.00	EF5752	2	SPOOL, REGULATING (2)
9.00		2	SLEEVE (1)/(2)
10.00		2	SPRING, SPOOL (1)/(3)
11.00	BF2597	2	SEAT, SPRING
12.00		2	SPRING, REGULATOR (1)/(3)
13.00	BF2597	2	SEAT, SPRING
14.00	BF2893	2	PLUNGER
15.00	BF2894	2	SLEEVE
16.00		1	BODY, VALVE (1)
17.00	WA0019	4	O-RING (4)
18.00	BF2896	2	PLUG - #8 SAE
19.00		1	BODY, MANIFOLD (1)
20.00	BF5637	2	PLUG - #4 SAE
21.00	BF5638	2	CAPSCREW, SOCKET HEAD
22.00		2	RING, BACKUP (1)/(4)
23.00		4	RING, BACKUP (1)/(4)
24.00		2	SEAL (1)/(4)
25.00	BF3557	2	SPRING (3)

NOTE: (1) NOT SERVICED SEPARATELY.
(2) INCLUDED IN BF3858 SPOOL/SLEEVE KIT.
(3) INCLUDED IN BF3859 SPRING KIT.
(4) INCLUDED IN BF3860 SEAL KIT.

KT	BF3858	
KT	BF3859	
KT	BF3860	

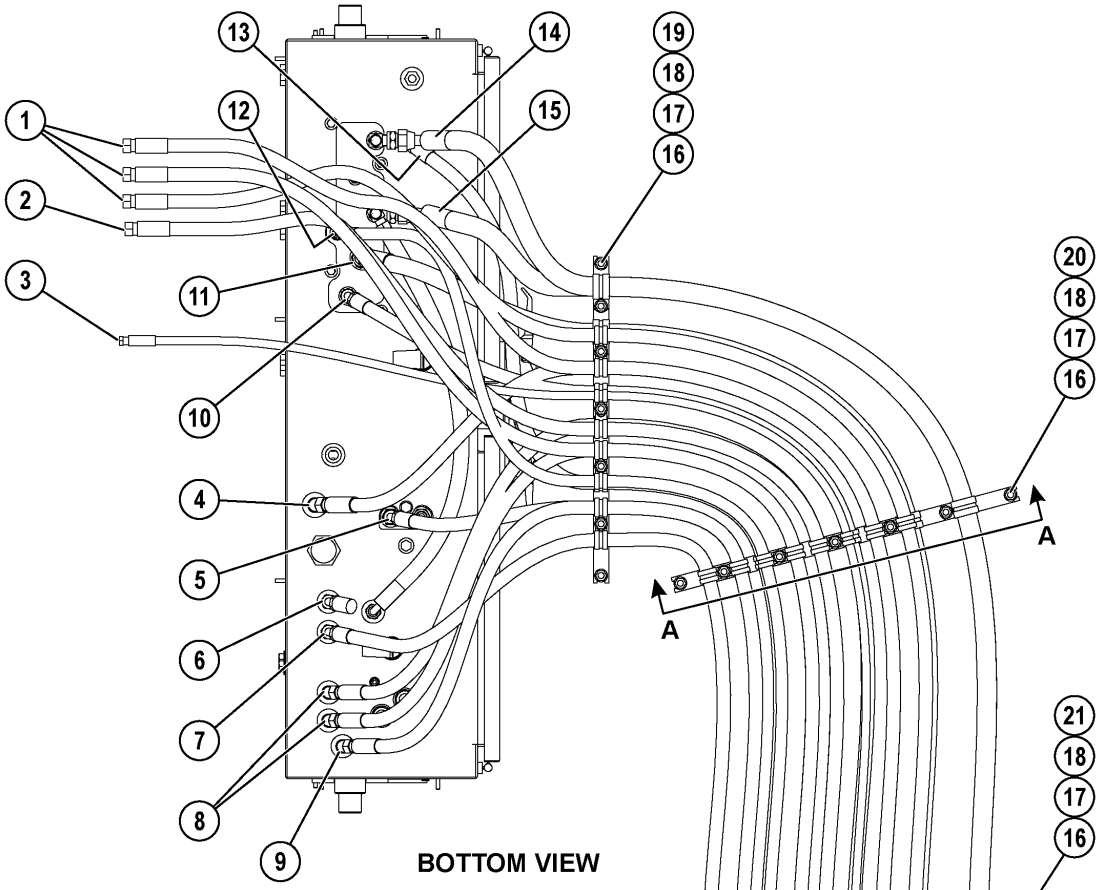

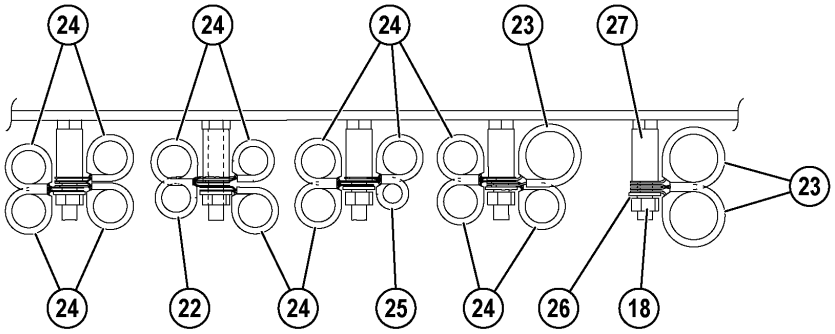

VIEW A - A
(TYPICAL - 3 PLACES)

61363Z

REF.	PART NUM.	QTY.	DESCRIPTION
1.00	HA7536	3	HOSE (STEERING VALVE PORT L, R & T)
2.00	HA6302	1	HOSE (STEERING VALVE PORT P)
3.00	HA7461	1	HOSE (STEERING VALVE PORT LS)
4.00	HA8093	1	HOSE (HOIST PILOT VALVE RETURN)
5.00	HA8087	1	HOSE (REAR BRAKE RELAY VALVE SIGNAL)
6.00	HA8095	1	HOSE (LEFT FRONT BRAKE APPLICATION)
7.00	HA8087	1	HOSE (RIGHT FRONT BRAKE APPLICATION)
8.00	HA8092	2	HOSE (HOIST PILOT POWER UP & POWER DOWN)
9.00	HA8091	1	HOSE (HOIST PILOT VALVE SUPPLY)
10.00	HA8094	1	HOSE (BRAKE SUPPLY)
11.00	HA7834	1	HOSE (BRAKE RETURN)
12.00	HA8090	1	HOSE (PARKING BRAKE)
13.00	HA8089	1	HOSE (REAR BRAKE RELAY VALVE PRESSURE)
14.00	HA8086	1	HOSE (REAR BRAKE ACCUMULATOR)
15.00	HA8085	1	HOSE (FRONT BRAKE ACCUMULATOR)
16.00	MM0605	6	CAPSCREW - M10 X 1.50 X 25
17.00	MM0713	6	FLAT WASHER - M10 (HARDENED)
18.00	MM0178	21	NUT - M10 X 1.50
19.00	EL3753	1	BRACKET, CLAMP
20.00	EL3752	1	BRACKET, CLAMP
21.00	EL3755	1	BRACKET, CLAMP
22.00	WB3091	3	CLAMP, CUSHIONED - 11/16"
23.00	WB3096	9	CLAMP, CUSHIONED - 1 1/4"
24.00	WB3092	39	CLAMP, CUSHIONED - 7/8"
25.00	WB3097	3	CLAMP, CUSHIONED - 1/2"
26.00	MM0461	15	FLAT WASHER - M10
27.00	TY8375	15	SPACER

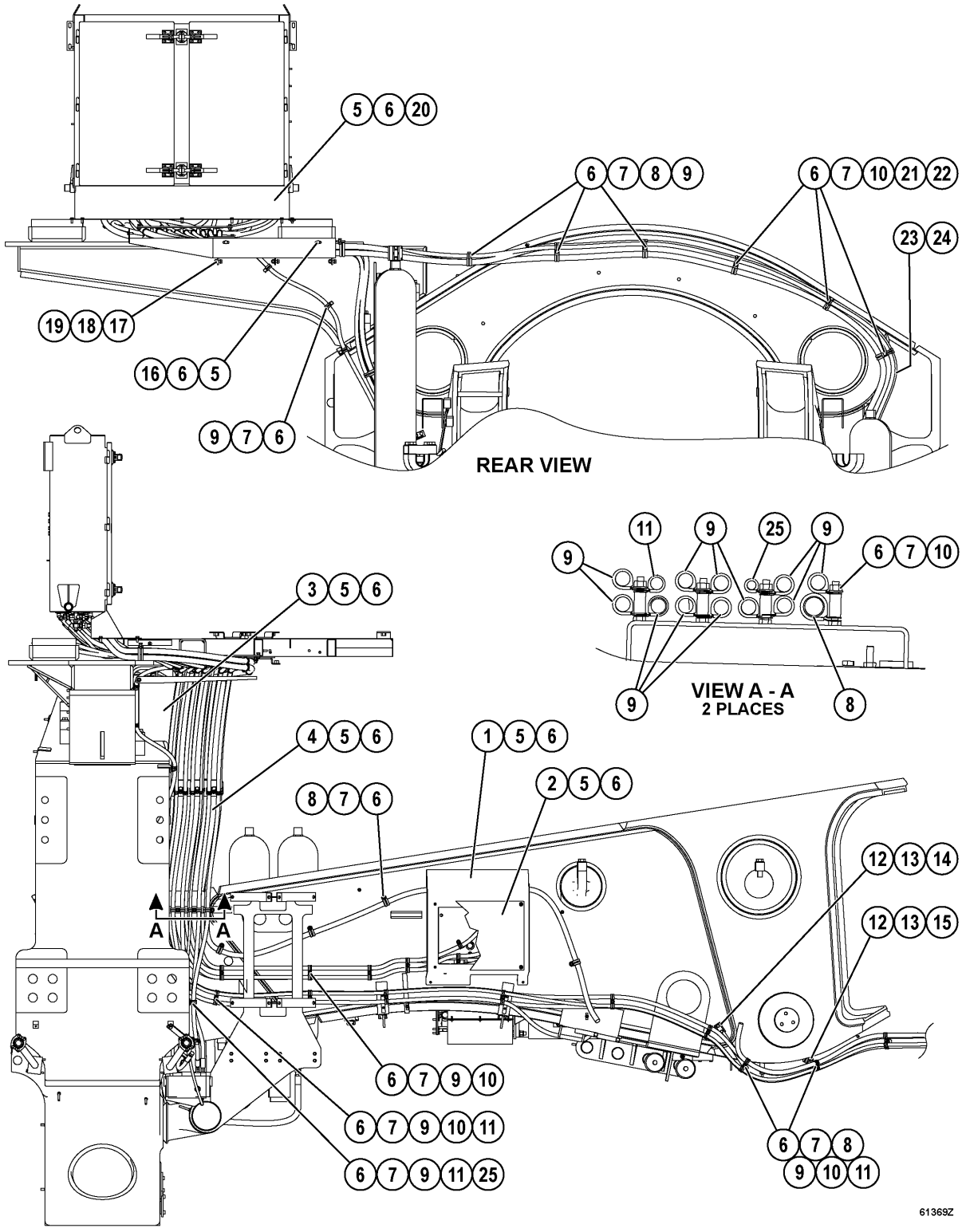
5 6 20
6 7 8 9
6 7 10 21 22
23 24
19 18 17
16 6 5
9 7 6
REAR VIEW
11 9 25 9
9
6 7 10
9
8
VIEW A - A
2 PLACES
3 5 6
4 5 6
8 7 6
1 5 6
2 5 6
12 13 14
12 13 15
A
A
6 7 9 10
6 7 9 10 11
6 7 9 11 25
6 7 8
9 10 11
61369Z

REF.	PART NUM.	QTY.	DESCRIPTION
1.00	EL3757	1	COVER
2.00	EJ3626	1	SHEET
3.00	EK6368	1	SHIELD
4.00	EK6386	1	SHIELD
5.00	MM0605	33	CAPSCREW - M10 X 1.50 X 25
6.00	MM0461	48	FLAT WASHER - M10
7.00	MM0178	21	NUT - M10 X 1.50
8.00	WB3096	8	CLAMP, CUSHIONED - 1 1/4"
9.00	WB3092	12	CLAMP, CUSHIONED - 7/8"
10.00	TY8375	14	SPACER
11.00	WB3091	4	CLAMP, CUSHIONED - 11/16"
12.00	MM0022	4	CAPSCREW - M8 X 1.25 X 20
13.00	MM0460	4	FLAT WASHER - M8
14.00	EL3762	1	BRACKET
15.00	EL3763	1	BRACKET
16.00	EL3988	1	COVER, HYDRAULIC HOSE
17.00	MM0619	3	CAPSCREW - M12 X 1.75 X 35
18.00	MM0462	6	FLAT WASHER - M12
19.00	MM0694	3	LOCKNUT - M12 X 1.75
20.00	EL6433	1	COVER
21.00	WB1305	10	CLAMP, CUSHIONED - 1 1/2"
22.00	WB3093	9	CLAMP, CUSHIONED - 1"
23.00	EK3964	2	SLEEVE, FIRE
24.00	EK3965	1	SLEEVE, FIRE
25.00	WB3097	4	CLAMP, CUSHIONED - 1/2"

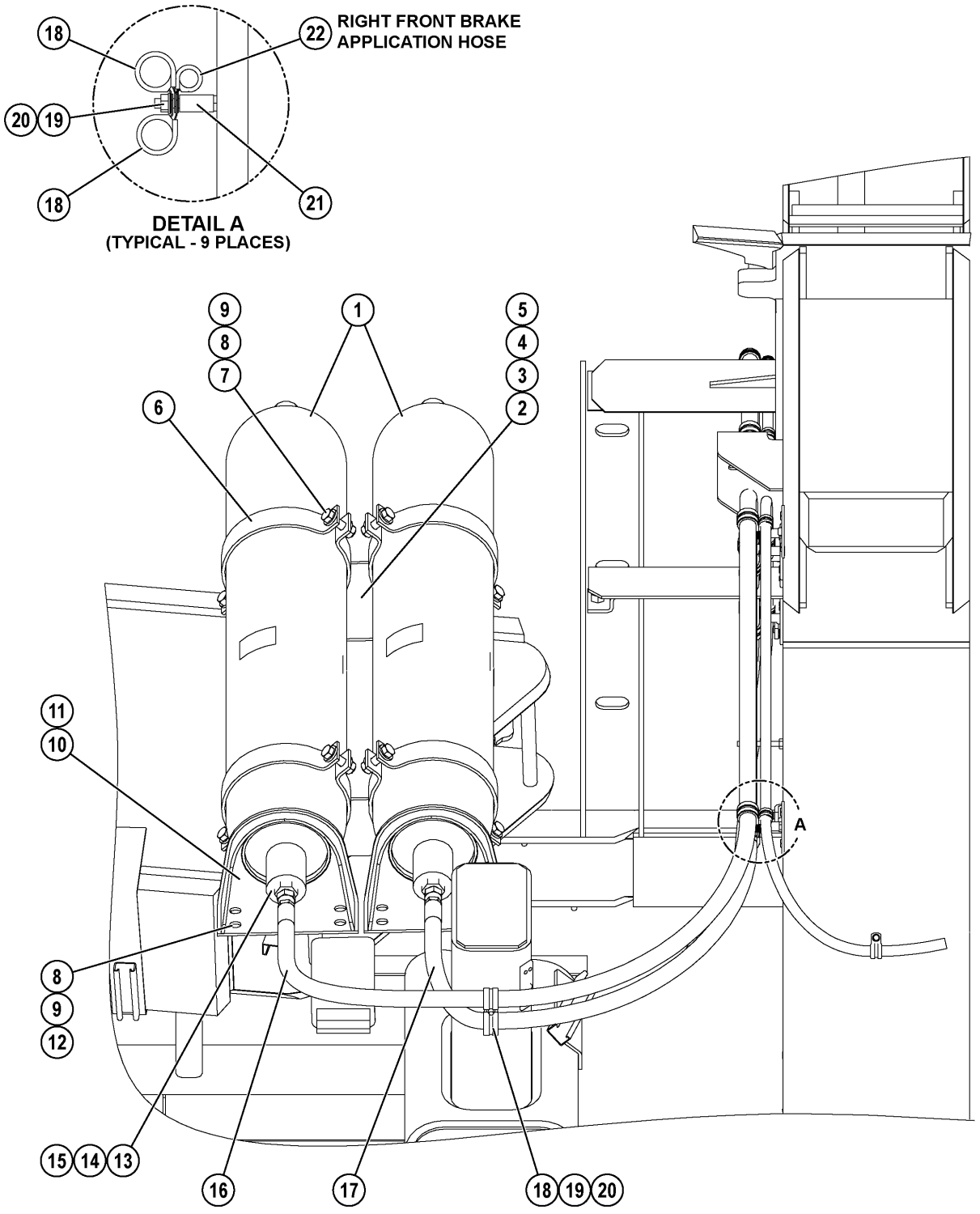
18
22
RIGHT FRONT BRAKE APPLICATION HOSE
20
19
18
21
DETAIL A
(TYPICAL - 9 PLACES)
9
8
7
6
1
5
4
3
2
11
10
A
8
9
12
15
14
13
16
17
18
19
20
61198Z

REF.	PART NUM.	QTY.	DESCRIPTION
1.00	PC1116	2	BRAKE ACCUMULATOR (SEE INDEX)
2.00	EG3874	2	CLAMP, ACCUMULATOR MOUNTING
3.00	C1603	8	CAPSCREW - 3/8" - 16NC X 1 1/4"
4.00	C0312	8	LOCKWASHER - 3/8"
5.00	C1547	8	FLAT WASHER - 3/8"
6.00	EC3036	4	CLAMP, HALF
7.00	MM0086	8	CAPSCREW - M16 X 2.00 X 60
8.00	MM0706	32	FLAT WASHER - M16 (HARDENED)
9.00	MM0696	16	LOCKNUT - M16 X 2.00
10.00	EJ7766	2	BRACKET, BASE
11.00	PC1118	2	RING, BASE
12.00	MM0071	8	CAPSCREW - M16 X 2.00 X 45
13.00	WB0594	2	FITTING, STRAIGHT
14.00	DA6756	2	REDUCER, O-RING BOSS
15.00	VN9912	2	O-RING
16.00	HA8085	1	HOSE (REAR BRAKE ACCUMULATOR)
17.00	HA8086	1	HOSE (FRONT BRAKE ACCUMULATOR)
18.00	WB3096	20	CLAMP, CUSHIONED - 1 1/4"
19.00	MM0461	10	FLAT WASHER - M10
20.00	MM0178	10	NUT - M10 X 1.50
21.00	TY8375	9	SPACER
22.00	WB1303	9	CLAMP, CUSHIONED - 3/4"

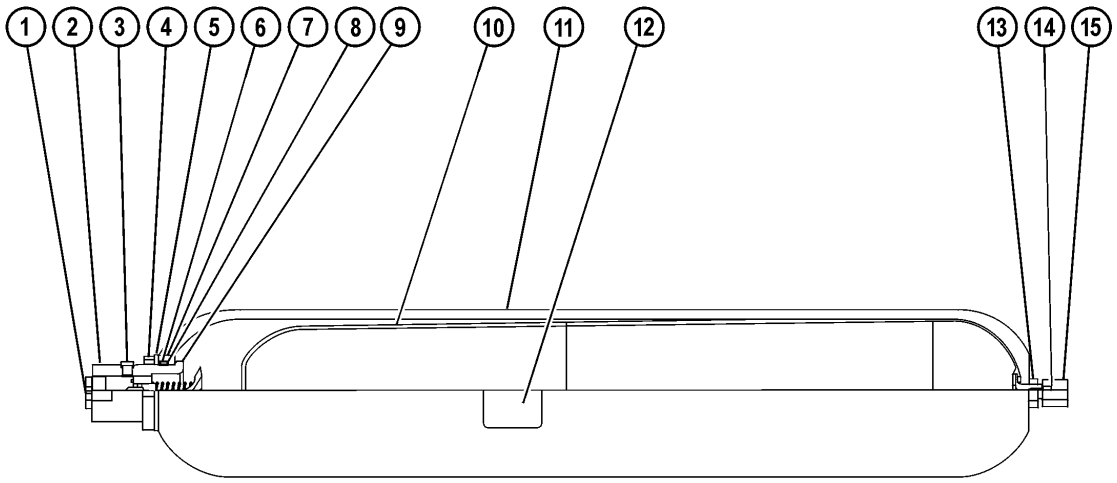

60599Z

REF.	PART NUM.	QTY.	DESCRIPTION
1.00	XA0076	1	PROTECTOR, PORT
2.00	XA0066	1	VALVE PORT ASSEMBLY
3.00	XA0077	1	PLUG, BLEED
4.00	XA0074	1	RING, LOCKING
5.00	XA0073	1	SPACER
6.00	XA0072	1	RING, BACKUP (1)
7.00	XA0071	1	O-RING (1)
8.00	XA1929	1	WASHER, BACKUP (1)
9.00	XA0067	1	RING, ANTI-EXTRUSION
10.00	XA1961	1	BLADDER ASSEMBLY (1)
11.00		1	HOUSING (2)
12.00		3	NAME PLATE (2)
13.00	XA1932	1	NUT
14.00	XA1931	1	GAS VALVE ASSEMBLY (1)
15.00	XA1933	1	PROTECTOR, VALVE
KT	AK4787		NOTE: (1) INCLUDED IN AK4787 BLADDER REPAIR KIT. (2) NOT SERVICED SEPARATELY.

OPTIONS & MISCELLANEOUS GROUP

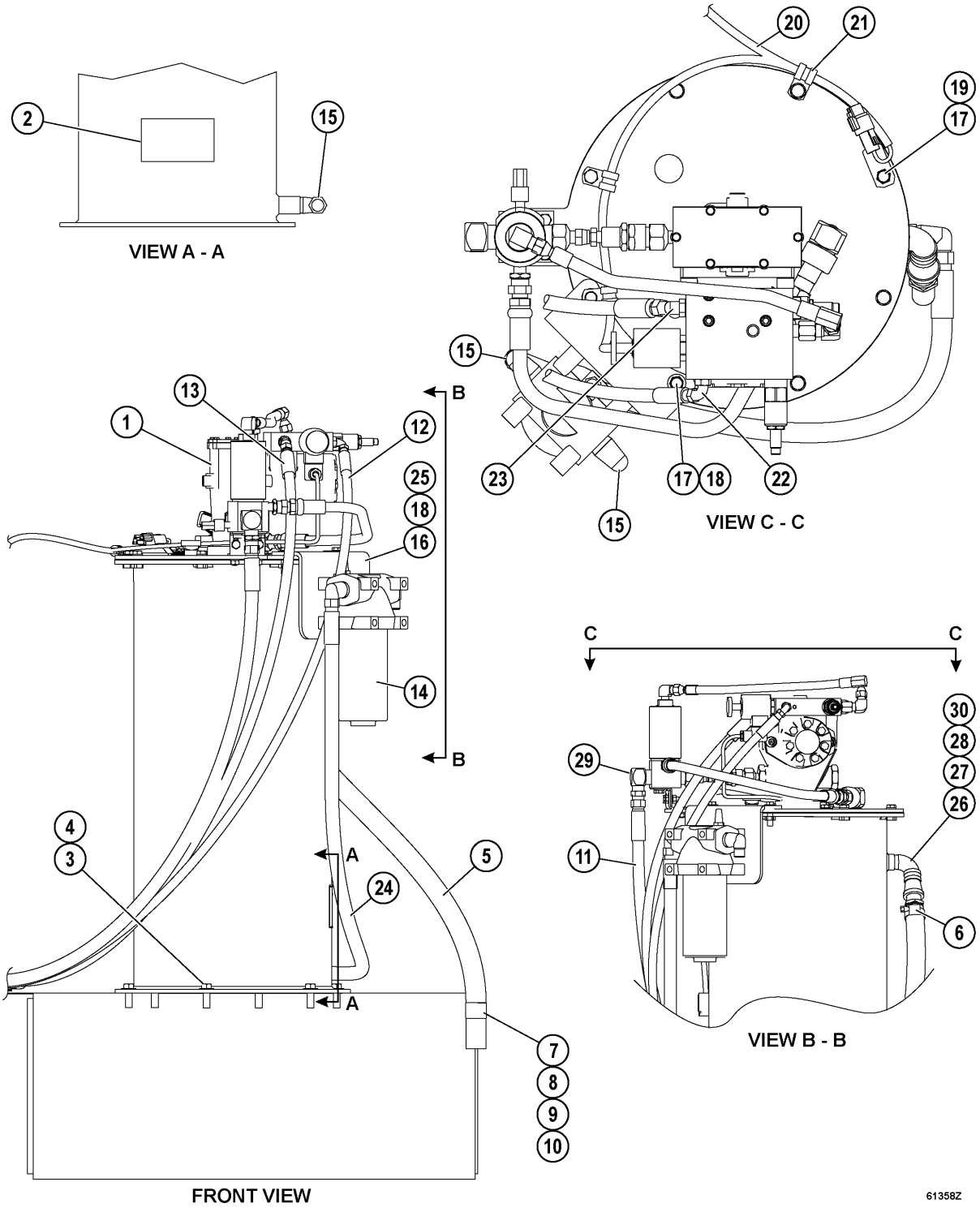
2
15
VIEW A - A
20
21
19
17
15
23
17
18
22
15
VIEW C - C
13
1
12
25
18
16
14
B
B
C
C
30
28
27
26
29
11
6
VIEW B - B
4
3
A
A
24
5
7
8
9
10
FRONT VIEW
61358Z

REF.	PART NUM.	QTY.	DESCRIPTION
1.00	PC2373	1	LUBE PUMP/CONTAINER (SEE INDEX)
2.00	WB2763	1	DECAL, WARNING - GREASE FILL
3.00	VC1387	6	CAPSCREW - 1/2" - 13NC X 1"
4.00	C1540	6	LOCKWASHER - 1/2"
5.00	EJ1518	1	HOSE
6.00	CD8419	1	CLAMP, WORM DRIVE
7.00	TR9441	1	CLAMP, VINYL - 1 1/4" I.D.
8.00	MM0461	1	FLAT WASHER - M10
9.00	MM0471	1	LOCKWASHER - M10
10.00	MM0178	1	NUT - M10 X 1.50
11.00	HA6769	1	HOSE (GREASE OUTLET)
12.00	HA7286	1	HOSE (OIL PRESSURE INLET)
13.00	HA8306	1	HOSE (OIL DRAIN TO TANK)
14.00	PC0811	1	FILTER, HYDRAULIC (SEE INDEX)
15.00	WB0268	3	FITTING, ELBOW - 90 DEG
16.00	EJ0966	1	BRACKET, MOUNTING
17.00	C1604	3	CAPSCREW - 3/8" - 16NC X 1 1/2"
18.00	WA4726	6	FLAT WASHER - 3/8" (HARDENED)
19.00	08193-20012	1	CLIP
20.00	EM5759	1	HARNESS, LUBE
21.00	WB3098	3	CLAMP, CUSHIONED - 3/8"
22.00	WB0499	1	FITTING, ELBOW - 90 DEG
23.00	WB0535	1	FITTING, ELBOW - 45 DEG
24.00	HA5843	1	HOSE
25.00	C1602	4	CAPSCREW - 3/8" - 16NC X 1"
26.00	F4037	1	FITTING, PIPE
27.00	SD5214	1	FITTING, PIPE
28.00	TG9242	1	CONNECTOR
29.00	WB0466	1	FITTING, STRAIGHT
30.00	E2579	1	NIPPLE

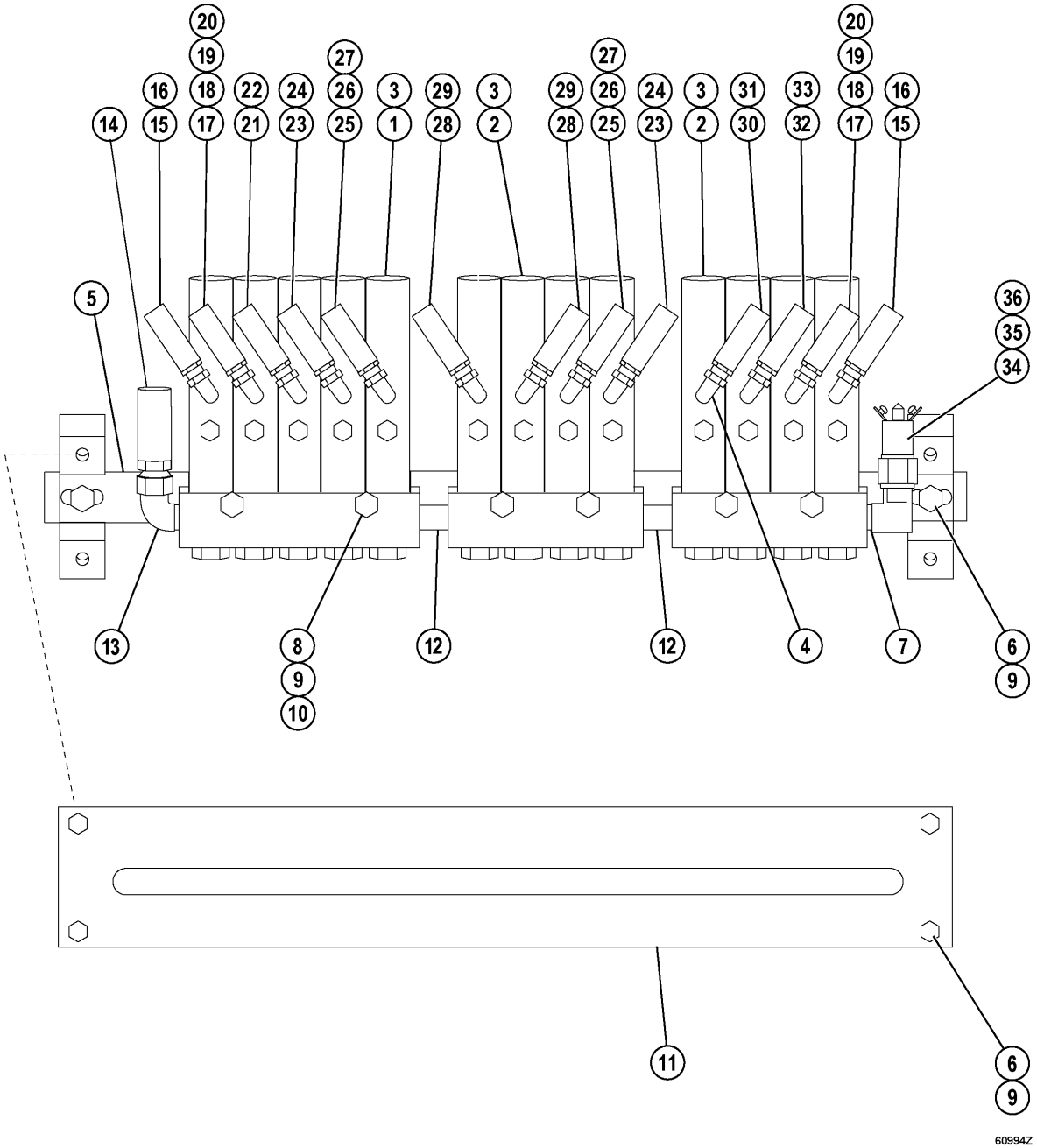
20
19
16
18
22
24
27
3
29
3
29
27
24
3
31
33
20
19
18
16
14
15
17
21
23
26
1
28
2
28
26
23
2
30
32
17
15
5
36
35
34
13
8
9
10
12
12
4
7
6
9
11
6
9
60994Z

REF.	PART NUM.	QTY.	DESCRIPTION
1.00	TA4411	1	INJECTOR, REAR (5 PIECE) (1)
1.01	XA2520	5	NIPPLE & CAP ASSEMBLY
2.00	VW7989	2	INJECTOR, REAR (4 PIECE) (1)
2.01	XA2520	8	NIPPLE & CAP ASSEMBLY
3.00	VW7990	13	CAP, PROTECTIVE
4.00	WB0252	13	FITTING, ELBOW - 90 DEG
5.00	EJ4053	1	PLATE, MOUNTING
6.00	MM0606	6	CAPSCREW - M10 X 1.50 X 30
7.00	R2508	1	FITTING, TEE
8.00	MM0611	6	CAPSCREW - M10 X 1.50 X 60
9.00	MM0461	8	FLAT WASHER - M10
10.00	MM0178	6	NUT - M10 X 1.50
11.00	EM2059	1	GRABRAIL, REAR HATCH
12.00	TB8803	2	NIPPLE, PIPE - 3/8"
13.00	WB0262	1	FITTING, ELBOW - 90 DEG
14.00	HA6766	1	HOSE (TO JUNCTION AT HORSECOLLAR)
15.00	HA1413	2	HOSE (TO BOTTOM OF REAR SUSPENSIONS)
16.00	WB0574	2	FITTING, STRAIGHT (AT BOTTOM OF REAR SUSPENSIONS)
16.01	WB0372	2	FITTING, ELBOW - 90 DEG
17.00	HA8048	2	HOSE (TO BOTTOM OF HOIST CYLINDERS)
18.00	WB0252	2	FITTING, ELBOW - 90 DEG (AT BOTTOM OF HOIST CYLINDERS)
19.00	DC5608	2	NIPPLE (AT BOTTOM OF HOIST CYLINDERS)
20.00	C1231	2	COUPLING, PIPE (AT BOTTOM OF HOIST CYLINDERS)
21.00	HA1413	1	HOSE (TO L.H. END OF SWAY BAR)
22.00	WB0281	1	FITTING, ELBOW - 45 DEG (AT L.H. END OF SWAY BAR)
23.00	HA0190	2	HOSE (TO TOP OF REAR SUSPENSIONS)
24.00	WB0499	2	FITTING, ELBOW - 90 DEG (AT TOP OF REAR SUSPENSIONS)
25.00	HA0578	2	HOSE (TO BODY PIVOT PINS)
26.00	WB0284	2	FITTING, ELBOW - 45 DEG (AT BODY PIVOT PINS)
27.00	HC1580	2	BUSHING, PIPE - 1/8" X 1/4" (AT BODY PIVOT PINS)
28.00	HA2482	2	HOSE (TO TOP OF HOIST CYLINDERS)
29.00	WB0252	2	FITTING, ELBOW - 90 DEG (AT TOP OF HOIST CYLINDERS)
30.00	HA0570	1	HOSE (TO R.H. END OF SWAY BAR)
31.00	WB0281	1	FITTING, ELBOW - 45 DEG (AT R.H. END OF SWAY BAR)
32.00	HA2965	1	HOSE (TO DRIVE CASE PIVOT)
33.00	WB0255	1	FITTING, ELBOW - 90 DEG (AT DRIVE CASE PIVOT)
34.00	PC1654	1	SWITCH, PRESSURE
35.00	R0086	1	BUSHING, PIPE - 1/4" X 3/8"
36.00	R2510	1	NIPPLE

NOTE: (1) FOR SINGLE INJECTOR, ORDER VS1947.

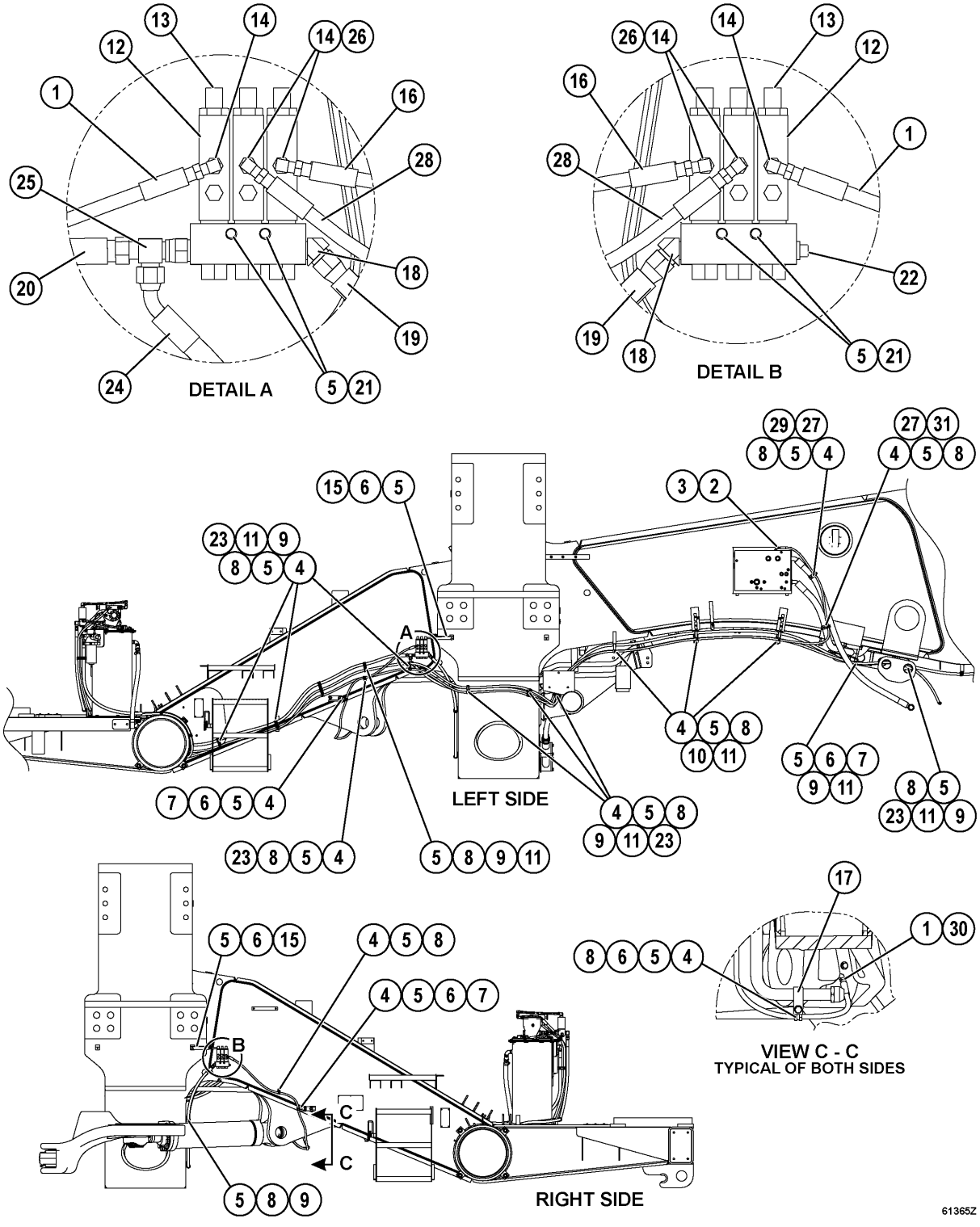
DETAIL A
DETAIL B
LEFT SIDE
RIGHT SIDE
VIEW C - C
TYPICAL OF BOTH SIDES
61365Z

REF.	PART NUM.	QTY.	DESCRIPTION
1.00	TA1968	2	HOSE
2.00	WB0501	1	FITTING, ELBOW - 90 DEG
3.00	HA7286	1	HOSE
4.00	WB3097	AR	CLAMP, CUSHIONED - 1/2"
5.00	MM0461	AR	FLAT WASHER - M10
6.00	MM0604	7	CAPSCREW - M10 X 1.50 X 20
7.00	42606-11570	3	BRACKET
8.00	MM0178	AR	NUT - M10 X 1.50
9.00	WB3092	AR	CLAMP, CUSHIONED - 7/8"
10.00	EK9883	3	SPACER
11.00	WB1300	AR	CLAMP, CUSHIONED - 5/8"
12.00	TA4410	2	INJECTOR, FRONT (3 PIECE) (1)
12.01	XA2520	6	NIPPLE & CAP ASSEMBLY
13.00	VW7990	6	CAP, PROTECTIVE
14.00	WB0252	6	FITTING, ELBOW - 90 DEG
15.00	EK9920	2	BRACKET, CLAMP
16.00	HA8049	2	HOSE
17.00	TC6058	2	CLAMP, VINYL - 1 1/2" I.D.
18.00	WB0289	2	FITTING, ELBOW - 45 DEG
19.00	HA7484	1	HOSE (R.H. INJECTOR TO L.H. INJECTOR)
20.00	HA6769	1	HOSE
21.00	MM0610	4	CAPSCREW - M10 X 1.50 X 50
22.00	C5770	1	PLUG, PIPE - 3/8"
23.00	TY8375	7	SPACER
24.00	HA8387	1	HOSE
25.00	WB0384	1	FITTING, TEE
26.00	SV7053	4	CAPSCREW - M10 X 1.50 X 50
27.00	MM0605	2	CAPSCREW - M10 X 1.50 X 25
28.00	HA3045	2	HOSE
29.00	WB3094	1	CLAMP, CUSHIONED - 1 3/4"
30.00	WB0531	2	FITTING, ELBOW - 45 DEG
31.00	WB1306	1	CLAMP, CUSHIONED - 2"
KT	VS1947		NOTE: (1) USE VS1947 FOR REPLACEMENT OF A SINGLE INJECTOR.

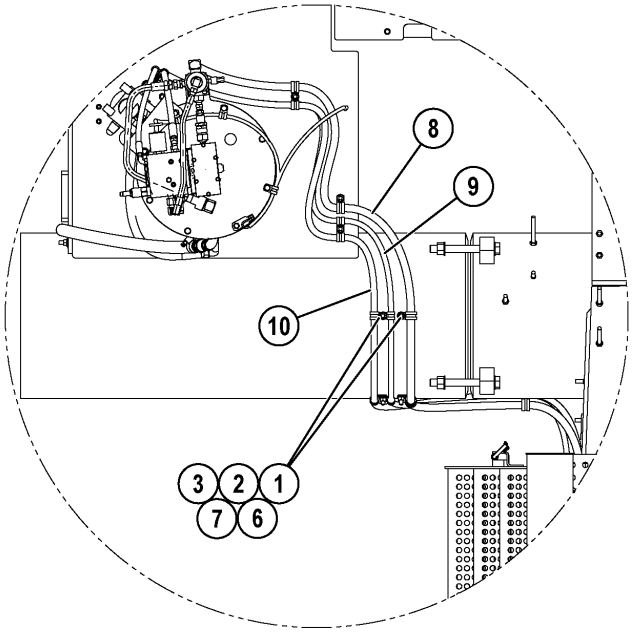

LUBE PUMP

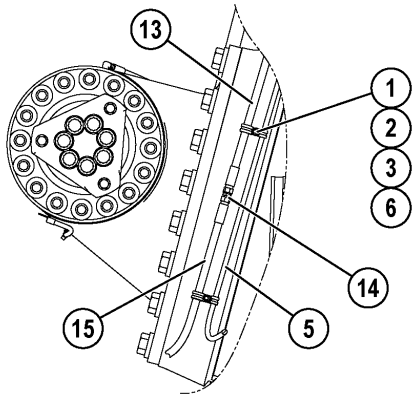

VIEW A - A

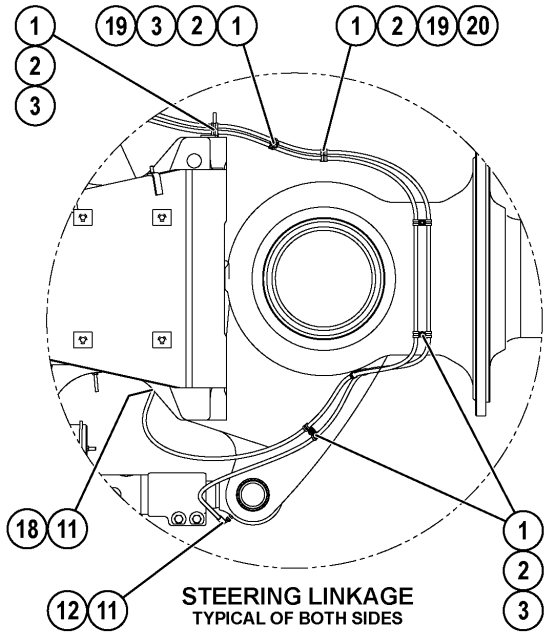

STEERING LINKAGE
TYPICAL OF BOTH SIDES

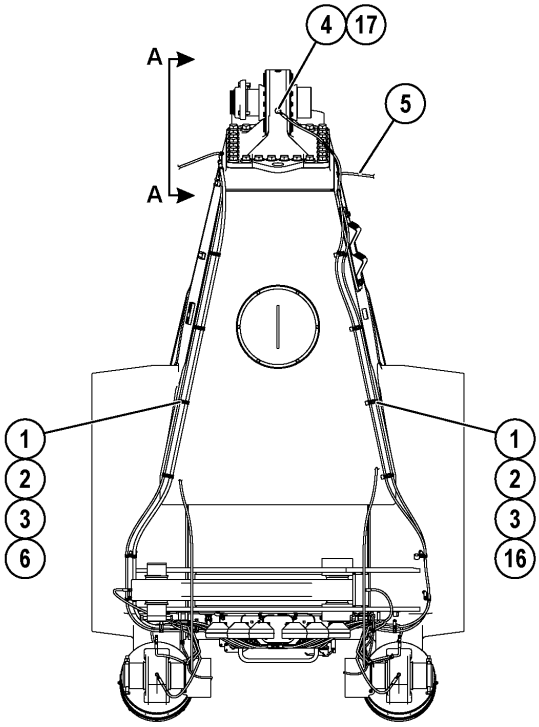

REAR AXLE

61366Z

REF.	PART NUM.	QTY.	DESCRIPTION
1.00	WB3097	AR	CLAMP, CUSHIONED - 1/2"
2.00	MM0461	AR	FLAT WASHER - M10
3.00	MM0178	AR	NUT - M10 X 1.50
4.00	WB0255	1	FITTING, ELBOW - 90 DEG
5.00	HA8048	2	HOSE
6.00	WB3092	AR	CLAMP, CUSHIONED - 7/8"
7.00	WB1300	AR	CLAMP, CUSHIONED - 5/8"
8.00	HA6769	1	HOSE
9.00	HA7286	1	HOSE
10.00	HA8306	1	HOSE
11.00	WB0574	8	FITTING, STRAIGHT
12.00	HA3045	2	HOSE
13.00	HA6766	1	HOSE
14.00	WB0403	1	FITTING, UNION
15.00	HA8387	1	HOSE
16.00	EK9883	16	SPACER
17.00	HA2965	1	HOSE
18.00	HA8049	2	HOSE
19.00	MM0604	4	CAPSCREW - M10 X 1.50 X 20
20.00	4260611570	4	BRACKET

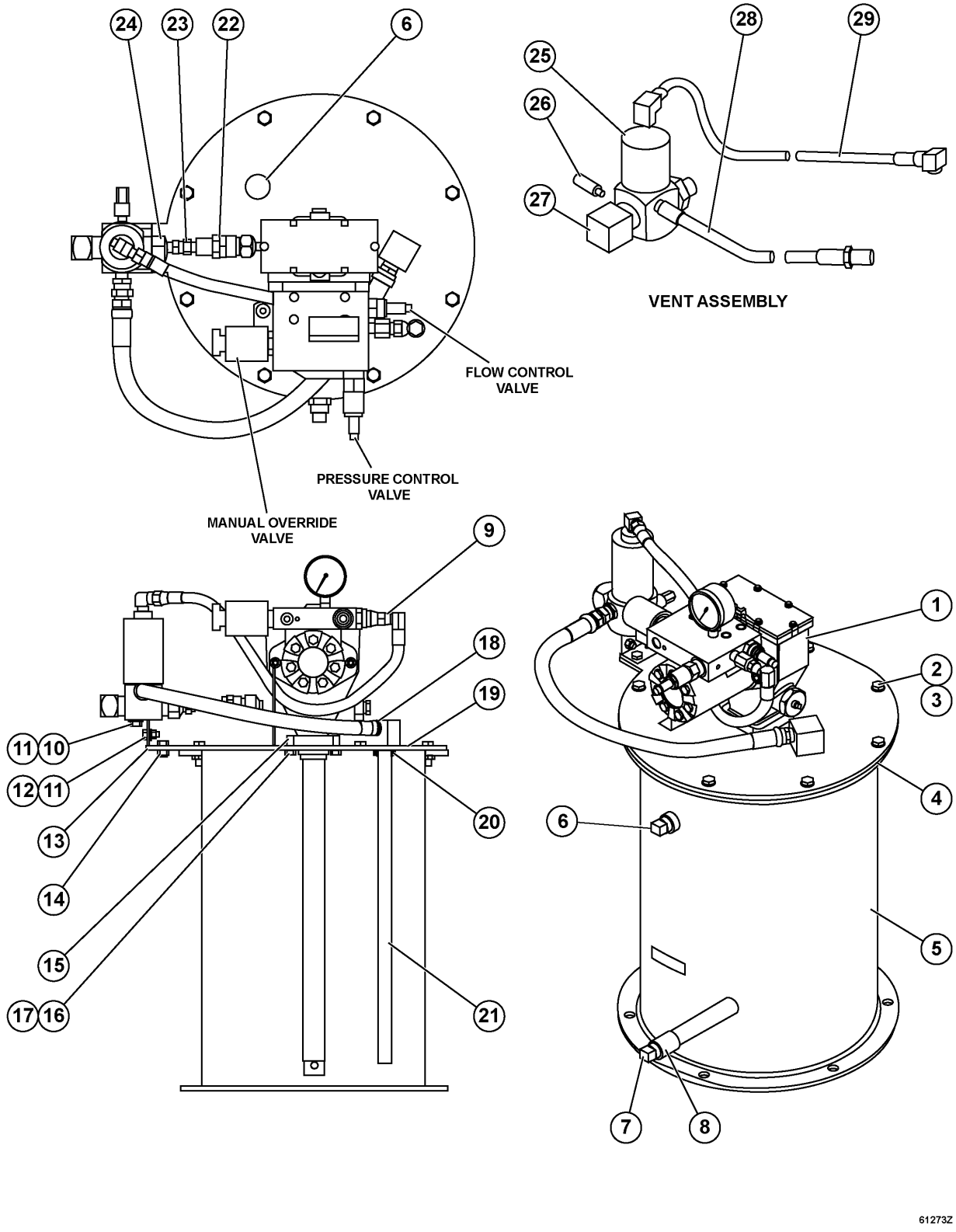
24
23
22
6
28
29
25
26
27
VENT ASSEMBLY
FLOW CONTROL VALVE
PRESSURE CONTROL VALVE
MANUAL OVERRIDE VALVE
9
18
19
11
10
12
11
13
14
15
17
16
20
21
1
2
3
4
6
5
7
8
61273Z

REF.	PART NUM.	QTY.	DESCRIPTION
1.00	XA4126	1	LUBE PUMP ASSEMBLY (SEE INDEX)
2.00	BF5439	5	CAPSCREW
3.00	LA1212	5	LOCKWASHER
4.00	BF5440	1	GASKET
5.00	XA1986	1	CONTAINER ASSEMBLY (90 LB.)
6.00	BF5442	2	PLUG, PIPE (VENT)
7.00	BF5443	1	PLUG, PIPE (FILL)
8.00	BF5435	1	TUBE, EXTENSION
9.00	BF5425	1	ELBOW
10.00	BF5085	2	CAPSCREW
11.00	BF5084	6	LOCKWASHER
12.00	BF5423	4	CAPSCREW
13.00	BF5424	2	BRACKET
14.00	BF5436	4	NUT
15.00	BF5450	1	GASKET
16.00	BF5447	4	SCREW
17.00	BF5086	4	NUT
18.00	BF5449	1	ELBOW
19.00	BF5422	1	COVER
20.00	XA1988	1	GASKET
21.00	XA1985	1	PIPE, VENT
22.00	LA1187	1	VALVE, CHECK (SEE INDEX)
23.00	BF5445	1	UNION
24.00	BF5082	1	NIPPLE
25.00	LA0912	1	VALVE, VENT (SEE INDEX)
26.00	LA0605	1	UNLOADER, SAFETY
27.00	BF2446	1	ELBOW
28.00	BF5426	1	HOSE
29.00	XA1983	1	HOSE

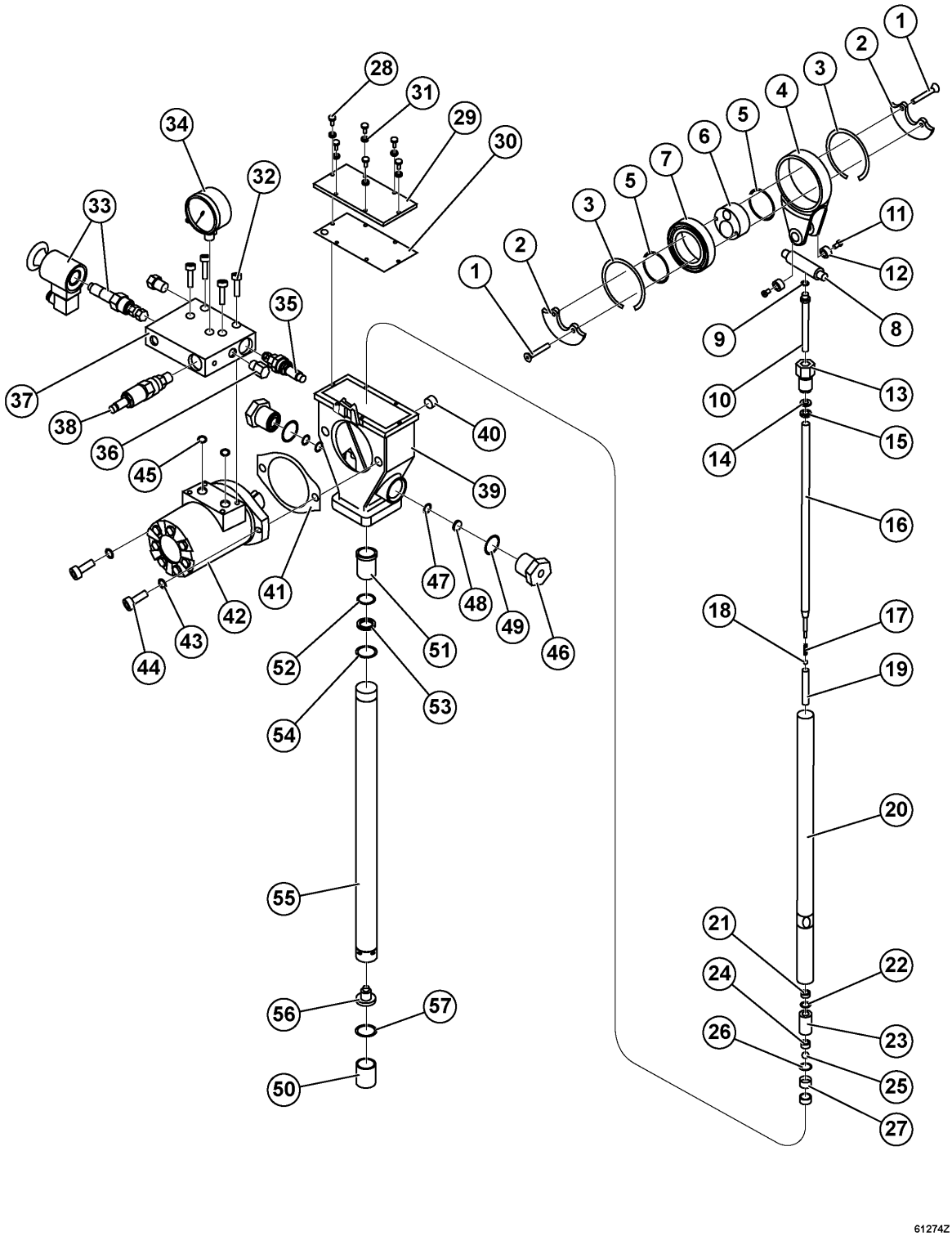
1
2
3
4
5
6
7
8
9
10
11
12
13
14
15
16
17
18
19
20
21
22
23
24
25
26
27
28
29
30
31
32
33
34
35
36
37
38
39
40
41
42
43
44
45
46
47
48
49
50
51
52
53
54
55
56
57
61274Z

REF.	PART NUM.	QTY.	DESCRIPTION
1.00	BF5470	2	SCREW, FLAT HEAD
2.00	BF5471	2	WEIGHT, OUTER
3.00	BF5473	2	RING, RETAINING
4.00	BF5474	1	CRANKROD
5.00	BF5511	2	RING, RETAINING
6.00	BF5475	1	CRANK, ECCENTRIC
7.00	BF5476	1	BEARING, BALL
8.00	BF5477	1	PIN, OUTLET
9.00		1	O-RING (1)
10.00	BF5478	1	TUBE, PLUNGER
11.00	XA2790	2	SCREW, BUTTON HEAD
12.00	BF5480	2	BUSHING, WRIST PIN
13.00	BF5481	1	ANCHOR, WRIST PIN
14.00		1	WASHER, BACKUP (1)
15.00		1	SEAL, CUP (1)
16.00	XA2791	1	ROD, PLUNGER
17.00	BF5483	1	SPRING
18.00	LA0906	1	BALL, STEEL
19.00	XA2017	1	PLUNGER
20.00	XA2792	1	TUBE, RECIPRICATING
21.00		1	SEAL, CUP (1)
22.00		1	O-RING (1)
23.00	BF5486	1	CYLINDER
24.00	BF5487	1	CAGE, BALL
25.00	BF3823	1	BALL, STEEL
26.00		1	O-RING (1)
27.00	BF5488	1	SEAT, CHECK
28.00	BF5489	6	SCREW, SELF-TAPPING
29.00	BF5490	1	COVER, HOUSING
30.00		1	GASKET, COVER (1)
31.00		6	GASKET (1)
32.00	BF5492	4	SCREW, SOCKET HEAD
33.00	PC2436	1	SWITCH, OVERRIDE (2)
33.01	XA4127	1	SEAL KIT
34.00	BF5491	1	GAUGE, PRESSURE
35.00	PC1769	1	VALVE, FLOW CONTROL
35.01	BF5509	1	SEAL KIT
36.00	BF5510	1	FITTING, ORIFICE
37.00	XA2018	1	MANIFOLD
38.00	PC1770	1	VALVE, PRESSURE REDUCING
38.01	BF5508	1	SEAL KIT
39.00	BF5501	1	HOUSING, PUMP

(SEE FOLLOWING PAGE FOR BALANCE OF PARTS...)

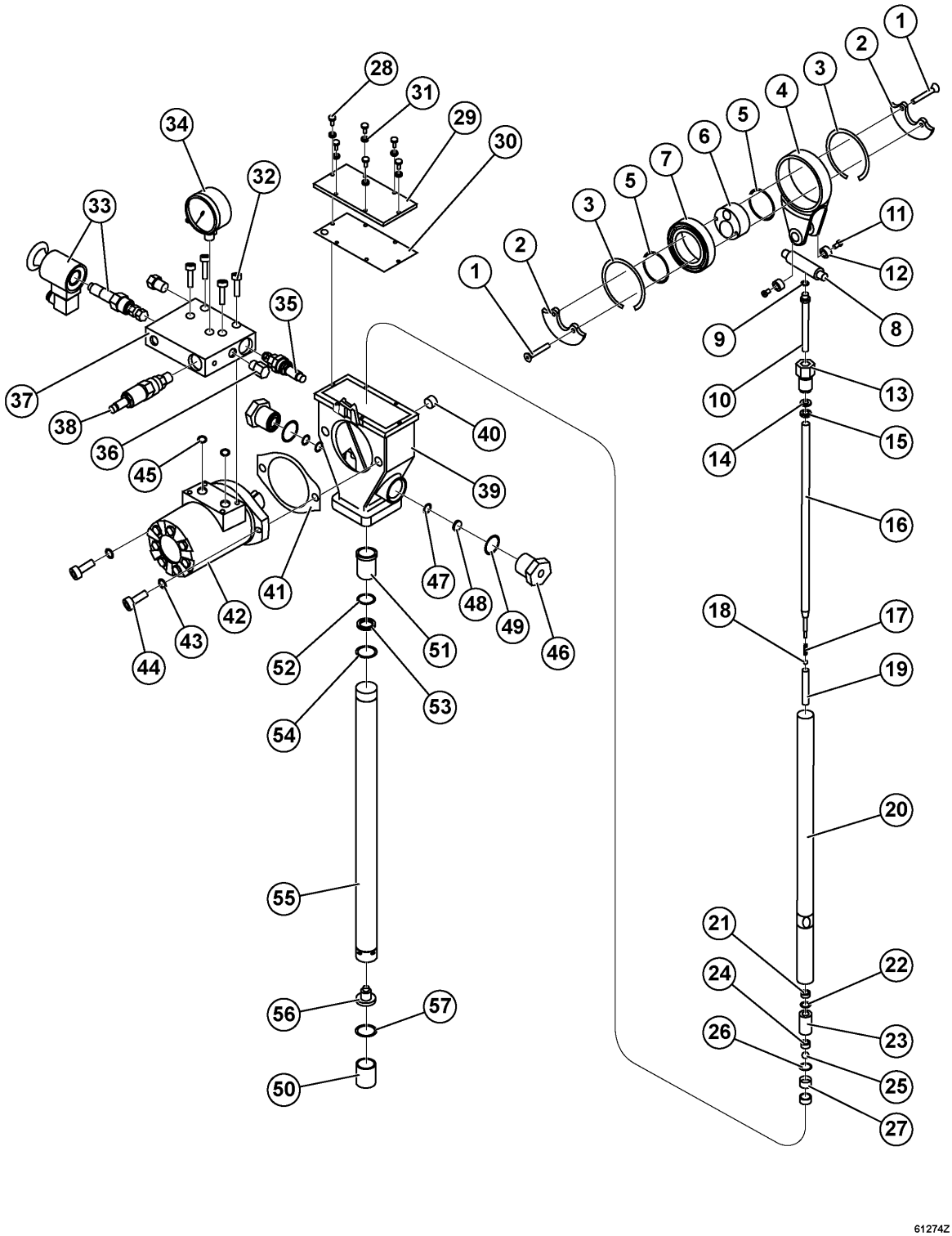
1
2
3
4
5
6
7
8
9
10
11
12
13
14
15
16
17
18
19
20
21
22
23
24
25
26
27
28
29
30
31
32
33
34
35
36
37
38
39
40
41
42
43
44
45
46
47
48
49
50
51
52
53
54
55
56
57
61274Z

REF.	PART NUM.	QTY.	DESCRIPTION
40.00	BF5500	1	PLUG, PIPE
41.00		1	GASKET (1)
42.00	BF5498	1	MOTOR, HYDRAULIC (INCLUDES REF. NOS. 40 & 41)
43.00	XA2147	2	WASHER
44.00	BF5499	2	SCREW, SOCKET HEAD
45.00		2	O-RING (1)
46.00	BF5502	2	NUT
47.00		2	RING, BACKUP (1)
48.00		2	O-RING (1)
49.00		2	O-RING (1)
50.00	XA2148	1	STRAINER, INLET
51.00	BF5503	1	BEARING, BRONZE
52.00		1	O-RING (1)
53.00		1	WASHER, BACKUP (1)
54.00		1	O-RING (1)
55.00	XA2793	1	TUBE, HOUSING
56.00	BF5505	1	PLUG, SHOVEL
57.00	BF5506	1	RING, RETAINING
KT	BF5513		NOTE: (1) NOT SERVICED SEPARATELY. INCLUDED IN BF5513 SOFT GOODS KIT. (2) SOLENOID NOT SERVICED SEPARATELY.

(SEE PRECEDING PAGE FOR BALANCE OF PARTS...)

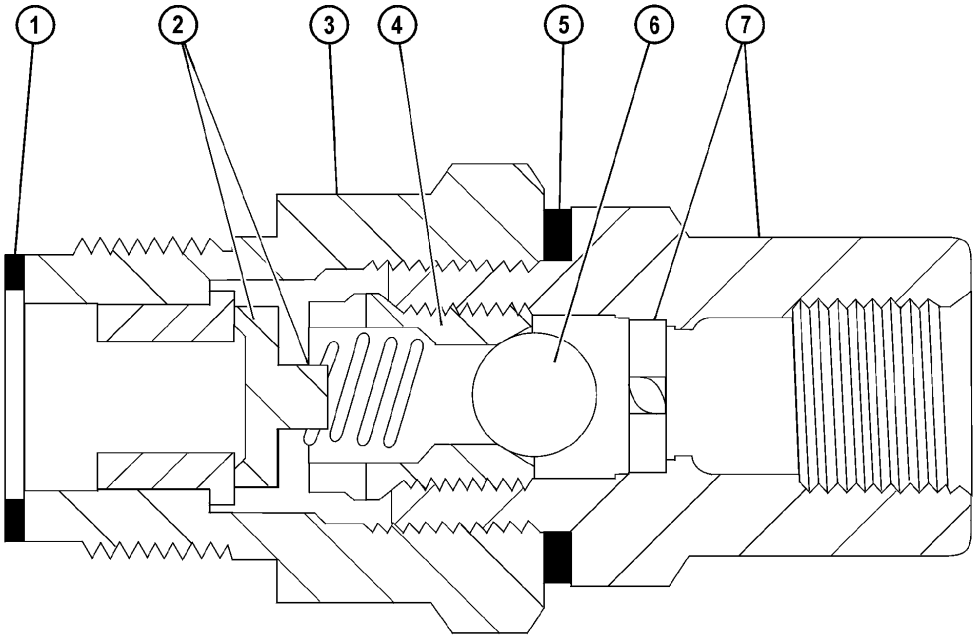

60398Z

REF.	PART NUM.	QTY.	DESCRIPTION
1.00	BF3822	1	GASKET
2.00	BF3824	1	PUMP/CHECK ASSEMBLY
3.00	BF3825	1	OUTLET, CHECK BUS
4.00	BF3820	1	SEAT, BALL CHECK
5.00	BF3821	1	GASKET
6.00	BF3823	1	BALL, STEEL
7.00	BF3826	1	OUTLET/CONNECTOR ASSEMBLY

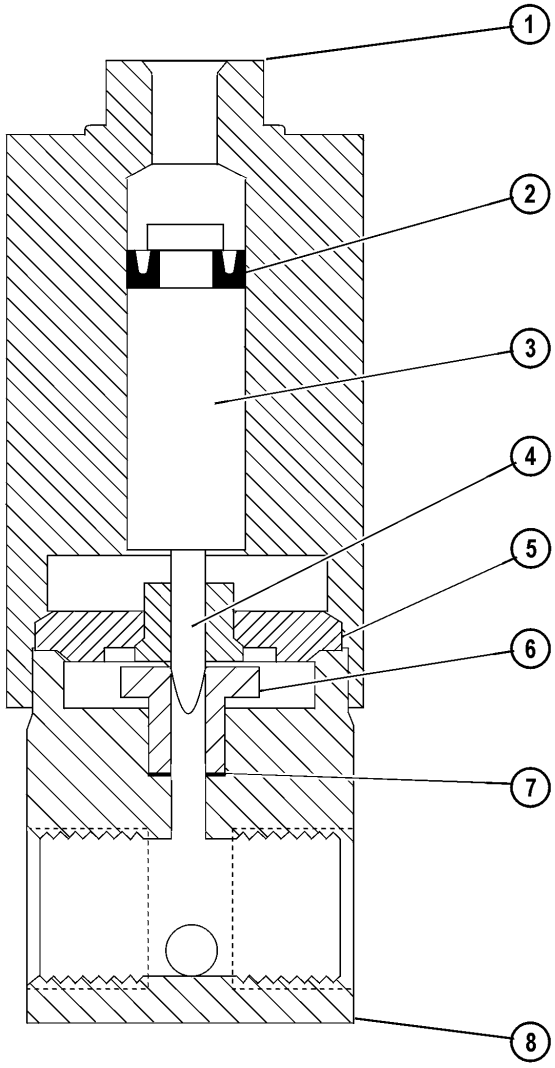

60397Z

REF.	PART NUM.	QTY.	DESCRIPTION
1.00	LA0913	1	CYLINDER
2.00	LA0914	1	U-CUP
3.00	BF5432	1	PISTON
4.00	VJ8523	1	NEEDLE
5.00	LA0641	1	PACKING, VALVE
6.00	VJ8524	1	SEAT, VALVE
7.00	LA0662	1	GASKET
8.00	LA0916	1	BODY

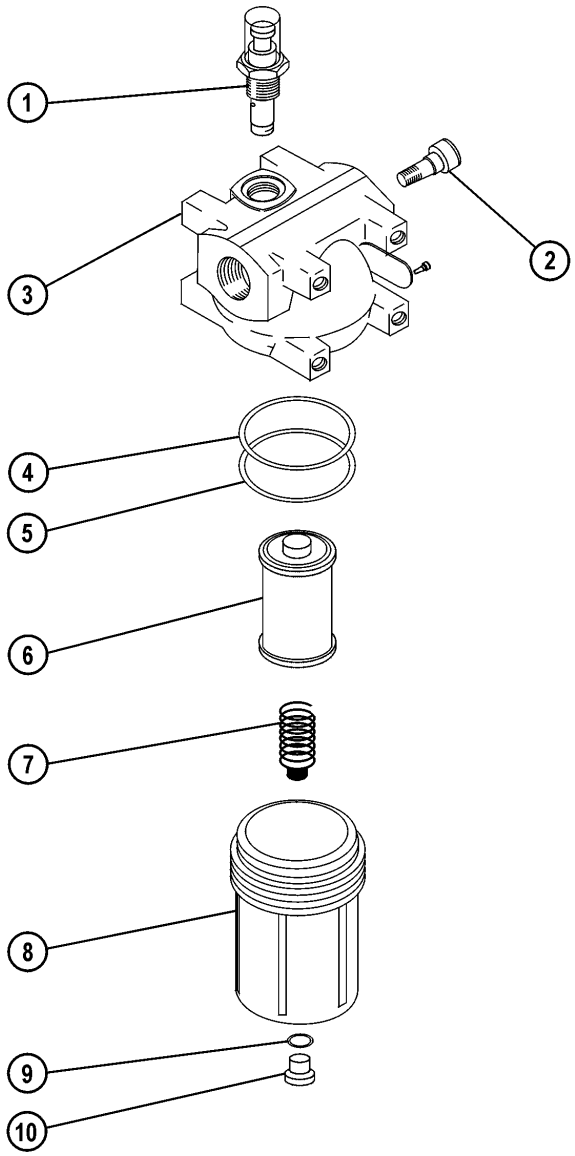

41606Z

REF.	PART NUM.	QTY.	DESCRIPTION
1.00	BF5456	1	INDICATOR
2.00	BF5457	1	VALVE, BYPASS
3.00	BF5458	1	HOUSING
4.00	BF5459	1	O-RING
5.00	BF5460	1	RING, BACKUP
6.00	BF5461	1	ELEMENT, FILTER
7.00	BF5462	1	SPRING, ELEMENT
8.00	BF5463	1	BOWL
9.00	BF5464	1	O-RING
10.00	BF5465	1	PLUG

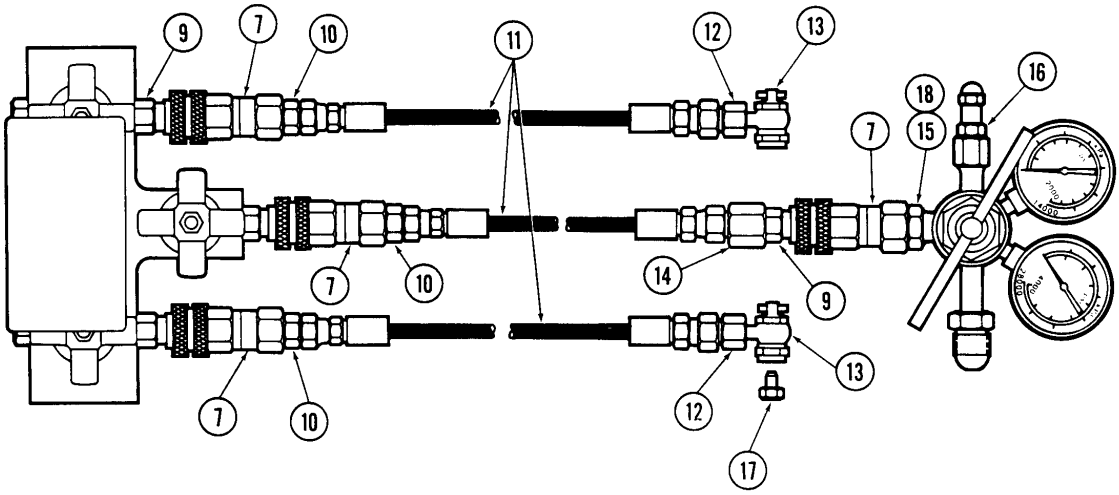
9
7
10
11
12
13
16
18
15
7
14
9
13
12
17
7
10
7
10

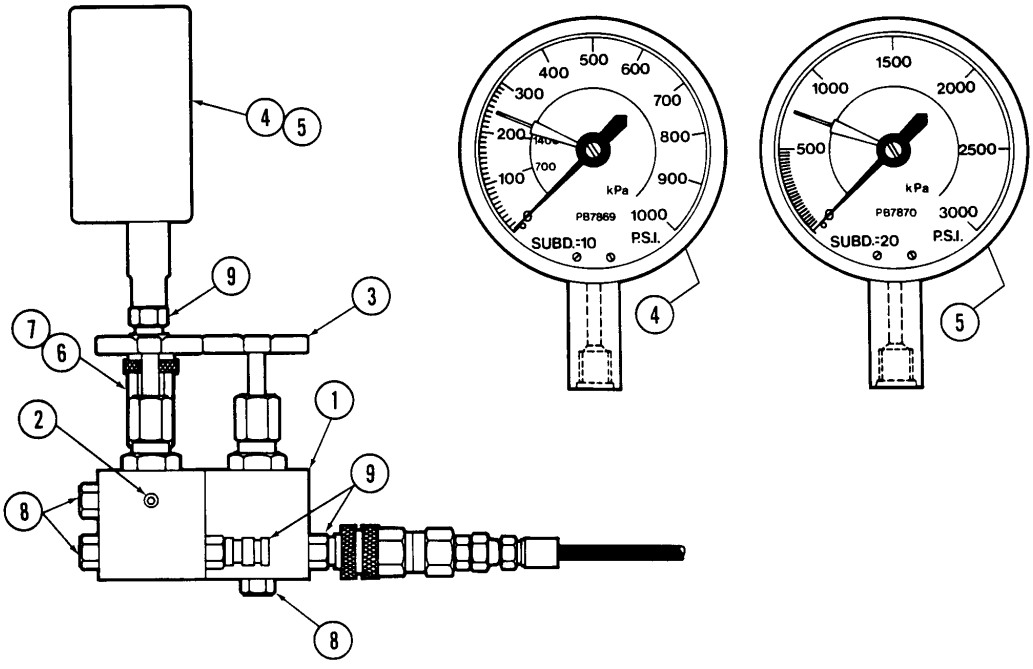
4
5
9
3
7
6
1
2
9
8
8
100
200
300
400
500
600
700
800
900
1000
kPa
PB7869
SUBD.-10
P.S.I.
4
500
1000
1500
2000
2500
3000
kPa
PB7870
SUBD.-20
P.S.I.
5

30333Z

REF.	PART NUM.	QTY.	DESCRIPTION
1.00	EB1756	1	MANIFOLD, CONTROL
2.00	SD5215	2	SETSCREW
3.00	PB7883	3	VALVE, NEEDLE
4.00	PB7869	1	GAUGE, PRESSURE
5.00	PB7870	1	GAUGE, PRESSURE
6.00	WA1724	1	UNION
7.00	PB7871	5	COUPLING, FEMALE QUICK DISCONNECT
8.00	VM0313	4	PLUG
9.00	PB7872	6	COUPLING, MALE QUICK DISCONNECT
10.00	TF5190	3	FITTING, TUBE CONNECTOR
11.00	HA5694	3	HOSE
12.00	WA2594	2	FITTING
13.00	VC5227	2	CONNECTION, VALVE
14.00	WA3081	1	FITTING (SPECIAL)
15.00	EB1757	1	FITTING
16.00	PB5866	1	REGULATOR, NITROGEN
17.00	SS0189	1	ADAPTER
18.00	TF5194	1	O-RING

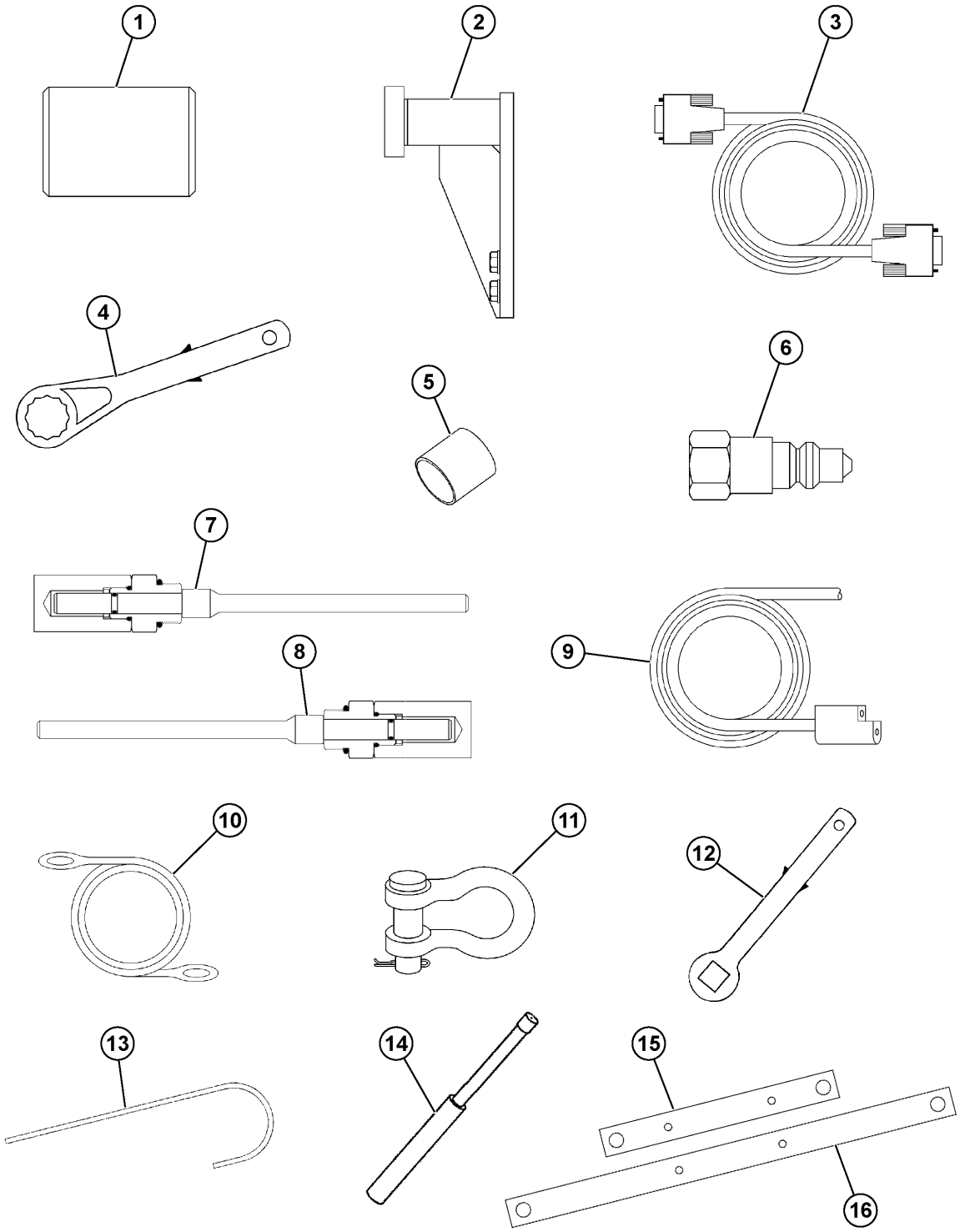
1
2
3
4
5
6
7
8
9
10
11
12
13
14
15
16
61311Z

REF.	PART NUM.	QTY.	DESCRIPTION
1.00	EK5877	1	TOOL, SLEEVE ALIGNMENT
2.00	EH8687	2	ROLLER ASSEMBLY
2.01	EH8681	1	MOUNT, ROLLER
2.02	PC0706	1	BEARING
2.03	TG9449	1	RING, RETAINING (BEARING)
2.04	TG1680	2	RING, RETAINING (ROLLER RING)
2.05	C1645	6	CAPSCREW - 3/4" - 10NC X 2 1/4"
2.06	C1542	6	LOCKWASHER - 3/4"
2.07	EH8686	1	RING, ROLLER
3.00	PC2525	1	CABLE, DB9 STRAIGHT THROUGH 6 FT.
4.00	PC1980	1	WRENCH, OFFSET - 1 11/16"
5.00	EH7817	1	TOOL, ALIGNMENT (UPPER HOIST PIN)
6.00	PB4684	2	COUPLING, HYDRAULIC
7.00	EM3708	2	WEAR INDICATOR ASSEMBLY - REAR BRAKE
7.01	EB1723	1	CAP, INDICATOR
7.02	EM3707	1	PIN, WEAR INDICATOR
7.03	WA0010	1	O-RING, WEAR INDICATOR PIN
7.04	TL3995	1	O-RING
7.05	EB4813	1	HOUSING, WEAR INDICATOR
7.06	SV9812	1	O-RING
8.00	EM1275	2	WEAR INDICATOR ASSEMBLY - FRONT BRAKE
8.01	EB1723	1	CAP, INDICATOR
8.02	EM1274	1	PIN, WEAR INDICATOR
8.03	WA0010	1	O-RING, WEAR INDICATOR PIN
8.04	TL3995	1	O-RING
8.05	EB4813	1	HOUSING, WEAR INDICATOR
8.06	SV9812	1	O-RING
9.00	PB9067	2	CONNECTOR, BULKHEAD (BATTERY JUMPER)
10.00	PC0370	2	SLING
11.00	PC0367	4	SHACKLE, ANCHOR
12.00	PC2228	1	WRENCH, 3/4" SQUARE DRIVE
13.00	EL8868	1	V-BELT ALIGNMENT TOOL
14.00	PC2061	1	BELT TENSION TESTER
15.00	EK6089	1	TOOL GROUP - FRONT BRAKE
15.01	EK2727	2	BAR, FLAT
15.02	EK3340	3	PLATE
15.03	EK3349	4	SPACER
15.04	C1540	4	LOCKWASHER - 1/2"
15.05	25691R1	4	CAPSCREW - 1/2" - 13NC X 9"
15.06	D1784	4	CAPSCREW - 1" - 8NC X 2 1/4"
15.07	TY2149	9	FLAT WASHER (HARDENED)
15.08	WB1134	3	NUT - 1 1/4" - 7NC
15.09	WA4174	4	FLAT WASHER - 1" (HARDENED)

(SEE FOLLOWING PAGE FOR BALANCE OF PARTS...)

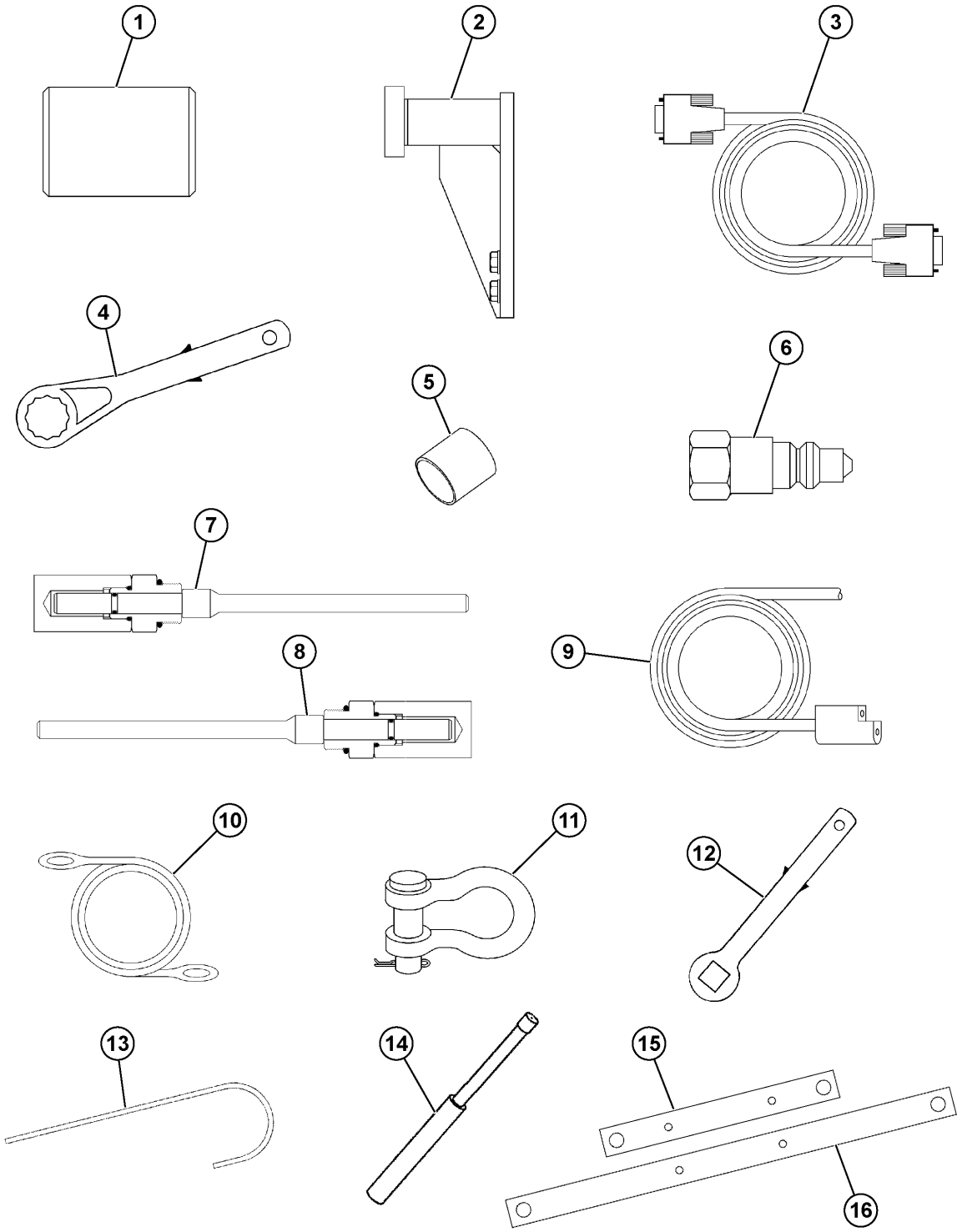
1
2
3
4
5
6
7
8
9
10
11
12
13
14
15
16
61311Z

REF.	PART NUM.	QTY.	DESCRIPTION
16.00	EK6090	1	TOOL GROUP - REAR BRAKE
16.01	EK5267	2	BAR, FLAT
16.02	EK5266	3	PLATE
16.03	EK5265	3	SPACER
16.04	EK5268	4	SPACER
16.05	C1540	4	LOCKWASHER - 1/2"
16.06	C1628	4	CAPSCREW - 1/2" - 13NC X 7"
16.07	C1670	3	CAPSCREW - 1" - 8NC X 4"
16.08	VM2358	4	CAPSCREW - 1" - 8NC X 4 1/2"
16.09	VN6848	3	CAPSCREW - 1" - 8NC X 4 1/2"
16.10	WA4174	10	FLAT WASHER - 1" (HARDENED)
NS	AK4720	1	SOFTWARE, PAYLOAD DATA MANAGER

(SEE PRECEDING PAGE FOR BALANCE OF PARTS...)

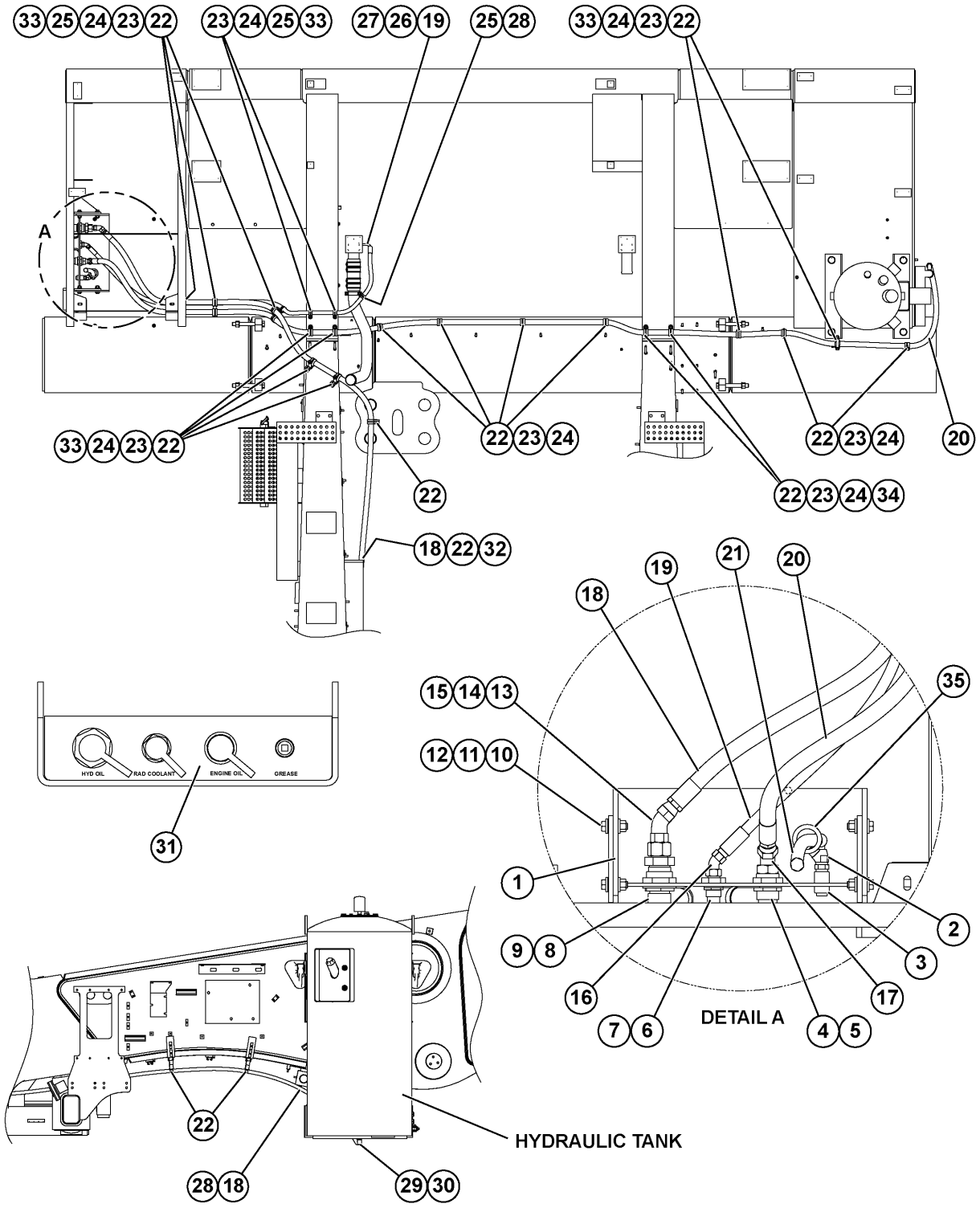
33 25 24 23 22
23 24 25 33
27 26 19
25 28
33 24 23 22
A
33 24 23 22
22 23 24
22
22 23 24
20
22 23 24 34
18 22 32
HYD OIL
RAD COOLANT
ENGINE OIL
GREASE
31
15 14 13
12 11 10
19
21
20
18
35
1
9 8
16
7 6
DETAIL A
4 5
17
3
2
22
28 18
29 30
HYDRAULIC TANK

61314Z

REF.	PART NUM.	QTY.	DESCRIPTION
1.00	EJ6559	1	MOUNT
2.00	WB0466	1	FITTING, STRAIGHT
3.00	C5771	1	PLUG, PIPE - 1/2"
4.00	PB9212	1	RECEIVER ASSEMBLY (ENGINE OIL)
5.00	WB0947	1	LOCKNUT, BULKHEAD - 1 5/8" - 12NC
6.00	PB9211	1	RECEIVER ASSEMBLY (COOLANT)
7.00	WB0945	1	LOCKNUT, BULKHEAD - 1 3/16" - 12NC
8.00	PB9213	1	RECEIVER ASSEMBLY (HYDRAULIC OIL)
9.00	WB0948	1	LOCKNUT, BULKHEAD - 1 7/8" - 12NC
10.00	MM0714	8	FLAT WASHER - M12 (HARDENED)
11.00	MM0179	4	NUT - M12 X 1.75
12.00	MM0620	4	CAPSCREW - M12 X 1.75 X 40
13.00	WB0600	1	FITTING, STRAIGHT
14.00	WB0364	1	FITTING, ADAPTER
15.00	WB0369	1	FITTING, ELBOW - 45 DEG
16.00	WB0538	1	FITTING, ELBOW - 45 DEG
17.00	WB0543	1	FITTING, ELBOW - 45 DEG
18.00	HA8278	1	HOSE (TO HYDRAULIC TANK)
19.00	HA8280	1	HOSE (TO RADIATOR)
20.00	HA2873	1	HOSE (TO ENGINE OIL RESERVE TANK)
21.00	HA8300	1	HOSE (TO AUTO LUBE PUMP)
22.00	WB3096	26	CLAMP, CUSHIONED - 1 1/4"
23.00	MM0461	19	FLAT WASHER - M10
24.00	MM0178	19	NUT - M10 X 1.50
25.00	WB3092	6	CLAMP, CUSHIONED - 7/8"
26.00	WB0265	1	FITTING, ELBOW - 90 DEG
27.00	ED9901	1	RING, SEAL
28.00	KC1255	1	CLAMP
29.00	TC8757	1	BUSHING, PIPE - 2" X 1"
30.00	WB0273	1	FITTING, ELBOW - 90 DEG
31.00	EK7400	1	DECAL, SERVICE CENTER
32.00	892124C1	3	SPACER
33.00	EK9883	12	SPACER
34.00	TY8375	2	SPACER
35.00	SG3146	1	GROMMET

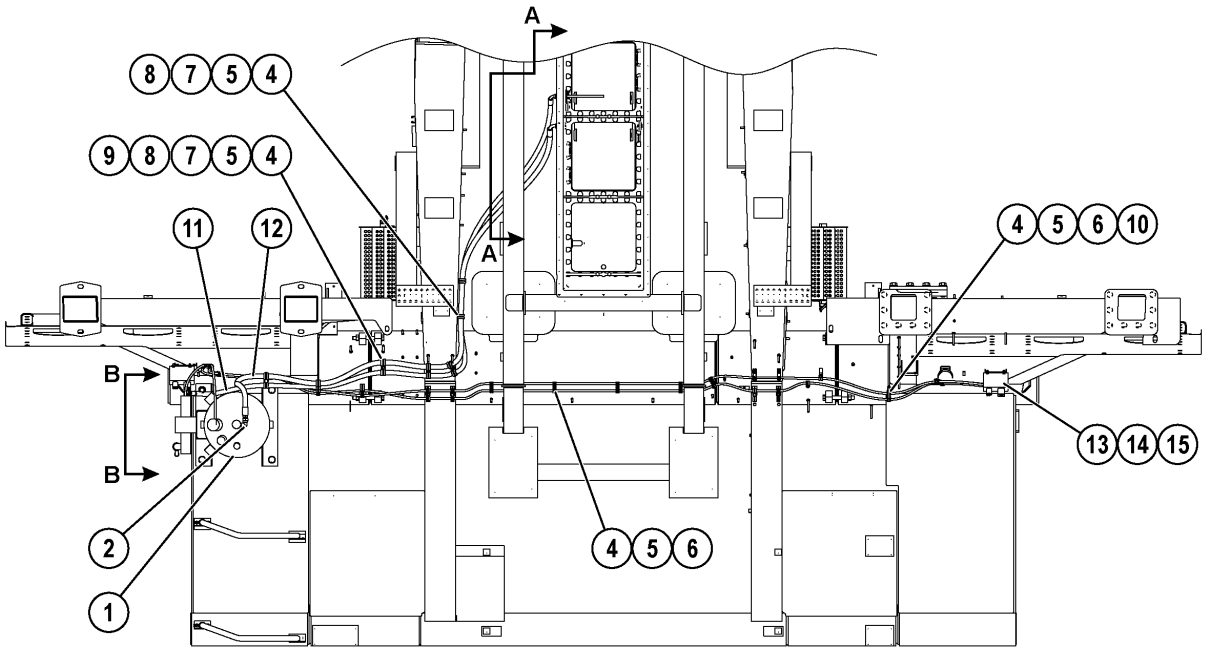

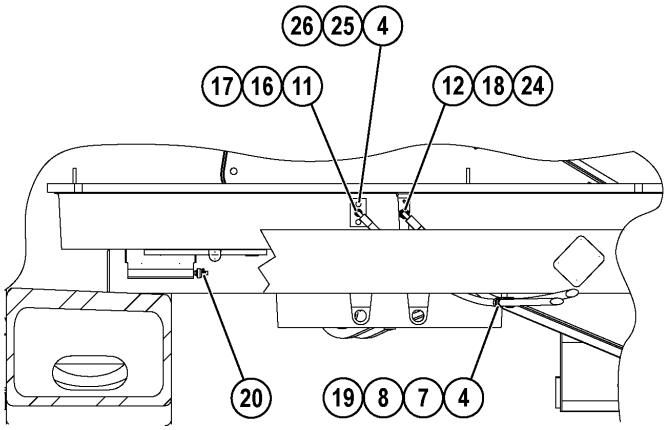

VIEW A - A

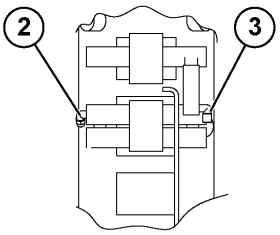

VIEW B - B

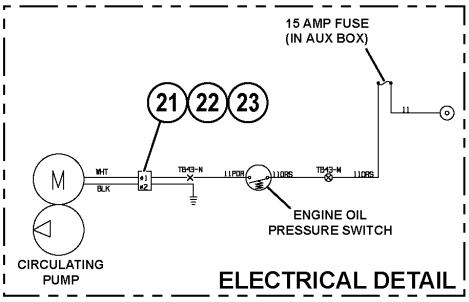

61315Z

REF.	PART NUM.	QTY.	DESCRIPTION
1.00	XA1894	1	TANK, OIL RESERVE (1)
2.00	WB0267	2	FITTING, ELBOW - 90 DEG
3.00	WB0266	1	FITTING, ELBOW - 90 DEG
4.00	MM0461	25	FLAT WASHER - M10
5.00	MM0178	21	NUT - M10 X 1.50
6.00	WB1300	39	CLAMP, CUSHIONED - 5/8"
7.00	WB3096	10	CLAMP, CUSHIONED - 1 1/4"
8.00	WB1308	10	CLAMP, CUSHIONED - 1 1/16" I.D.
9.00	EK9883	3	SPACER
10.00	TY8375	1	SPACER
11.00	HA8261	1	HOSE
12.00	HA8043	1	HOSE
13.00	BF3361	1	BOX, AUTOMATIC TANK FILL CONTROL
13.01	EK0195	1	PLATE, MOUNTING
14.00	C1546	4	FLAT WASHER - 1/4"
15.00	C3145	4	CAPSCREW - 1/4" - 20 X 5/8"
16.00	PC1918	1	ADAPTER, SUMP
17.00	WB0467	1	FITTING, STRAIGHT
18.00	PC1262	1	ADAPTER, STRAIGHT
19.00	MM0604	1	CAPSCREW - M10 X 1.50 X 20
20.00	SG3290	1	SWITCH, PRESSURE
21.00	08192-12100	1	BODY, RECEPTACLE CONNECTOR
22.00	08192-12300	1	WEDGE, RECEPTACLE CONNECTOR
23.00	08191-05320	2	PIN, CONTACT CONNECTOR
24.00	WA4896	1	FITTING
25.00	MM0605	2	CAPSCREW - M10 X 1.50 X 25
26.00	MM0471	2	LOCKWASHER - M10
KT	PC1135		NOTE: (1) INCLUDED IN PC1135 RESERVE SYSTEM KIT. SEE FOLLOWING PAGE.

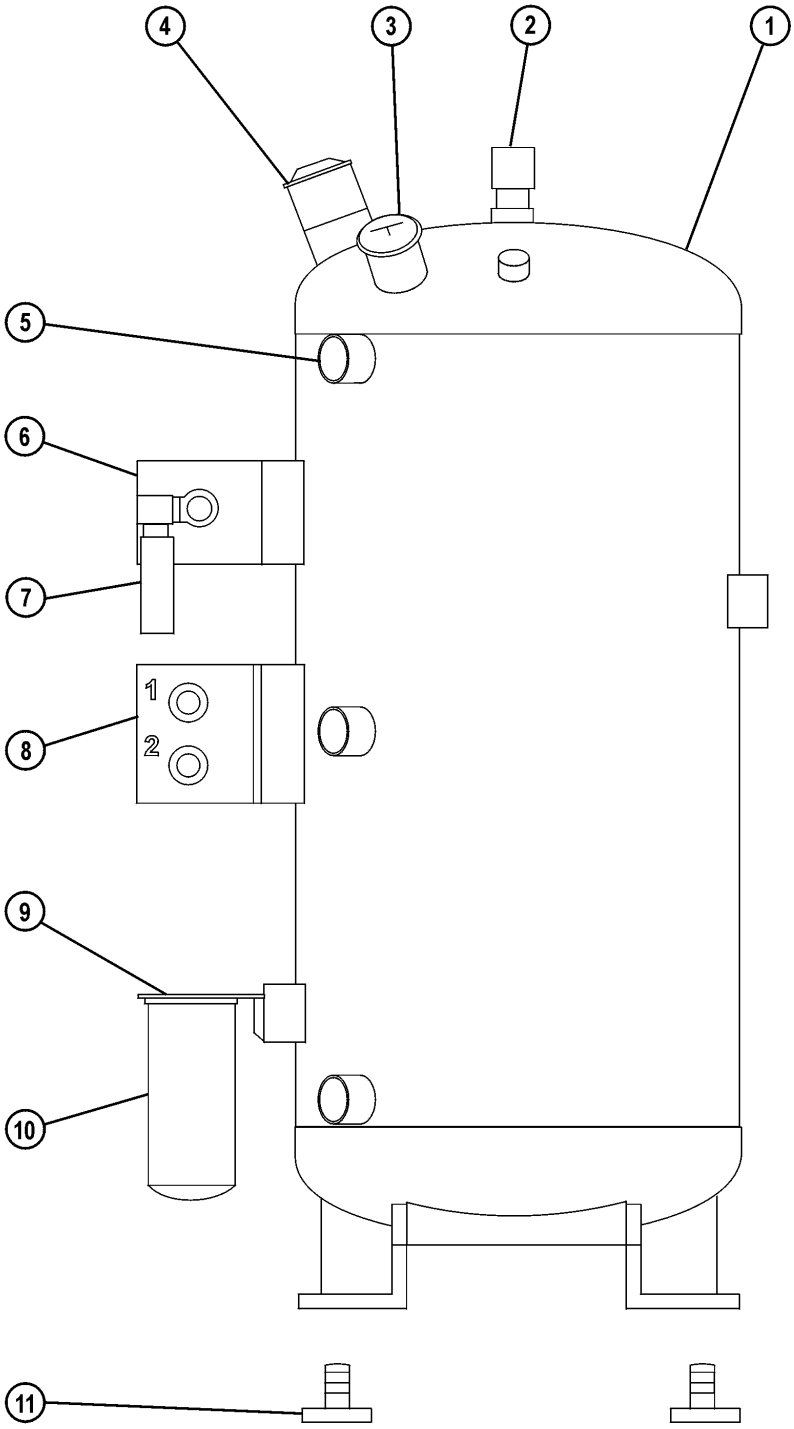

41654Z

REF.	PART NUM.	QTY.	DESCRIPTION
1.00	XA1894	1	TANK, OIL RESERVE
2.00	XA0003	1	VALVE, AIR RELIEF
3.00	BF3351	1	CAP, FILLER
4.00	BF3360	1	SWITCH, FLOAT
5.00	BF3352	4	GLASS, SIGHT
6.00	BF3357	1	VALVE, FILL
7.00	XA0002	1	SCREEN, IN-LINE
8.00	BF3347	1	PUMP
9.00	BF3349	1	HEAD, FILTER
10.00	VS7035	1	ELEMENT, FILTER (SPIN-ON)
11.00		2	PAD, WELD-ON MOUNTING (1)
NS	BF3361	1	BOX, AUTOMATIC TANK FILL CONTROL
NS	PC1895	1	KIT, ENGINE ADAPTATION
NS	BF3354	1	SWITCH, OIL PRESSURE
NS	XA0005	1	CABLES, ELECTRIC
NS	BF5020	1	LED, RED (6 VOLT)
NS	XA1896	1	SCREEN, TANK

NOTE: (1) NOT SERVICED SEPARATELY.

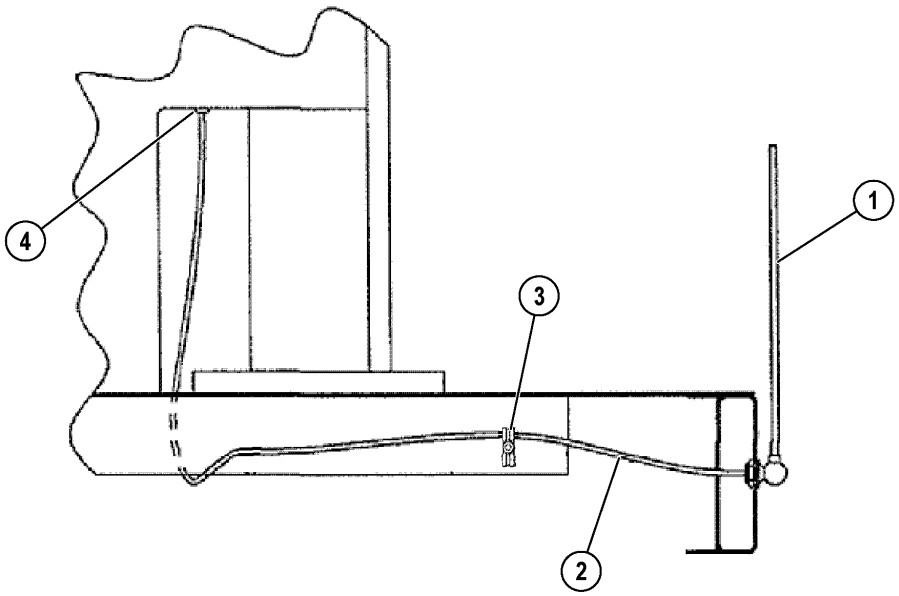

L.H. DECK

61312Z

REF.	PART NUM.	QTY.	DESCRIPTION
1.00	PB9985	1	ANTENNA, RADIO
2.00	PB9957	1	CABLE, ANTENNA EXTENSION
3.00	WB3097	2	CLAMP, CUSHIONED - 1/2"
4.00	VY2784	1	GROMMET, RUBBER

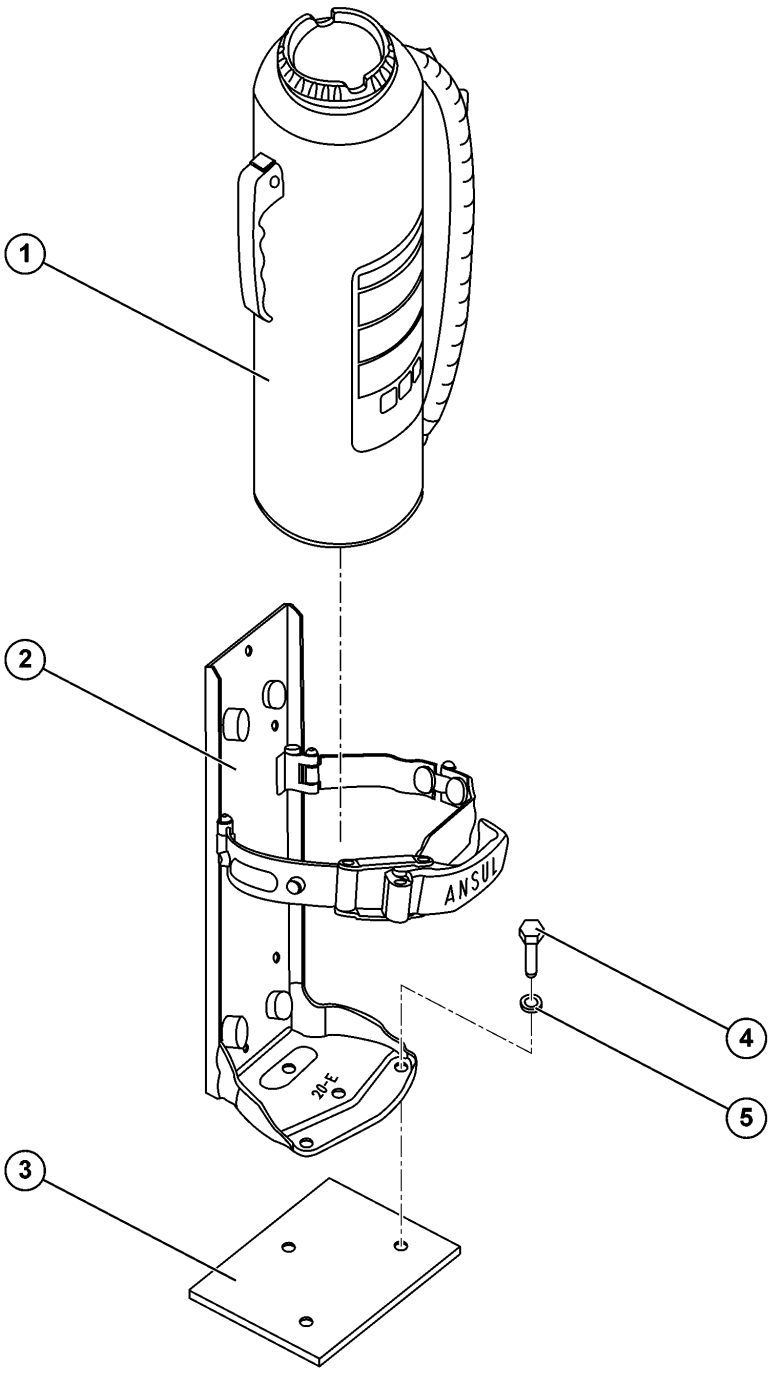

41823z

REF.	PART NUM.	QTY.	DESCRIPTION
1.00	PB2849	2	FIRE EXTINGUISHER
2.00	PB2850	2	BRACKET, FENDER
3.00	VW6804	1	PAD, TAPPED
4.00	H8524	6	CAPSCREW - 3/8" - 16NC X 5/8"
5.00	C0312	6	LOCKWASHER - 3/8"

CONTROL GROUP

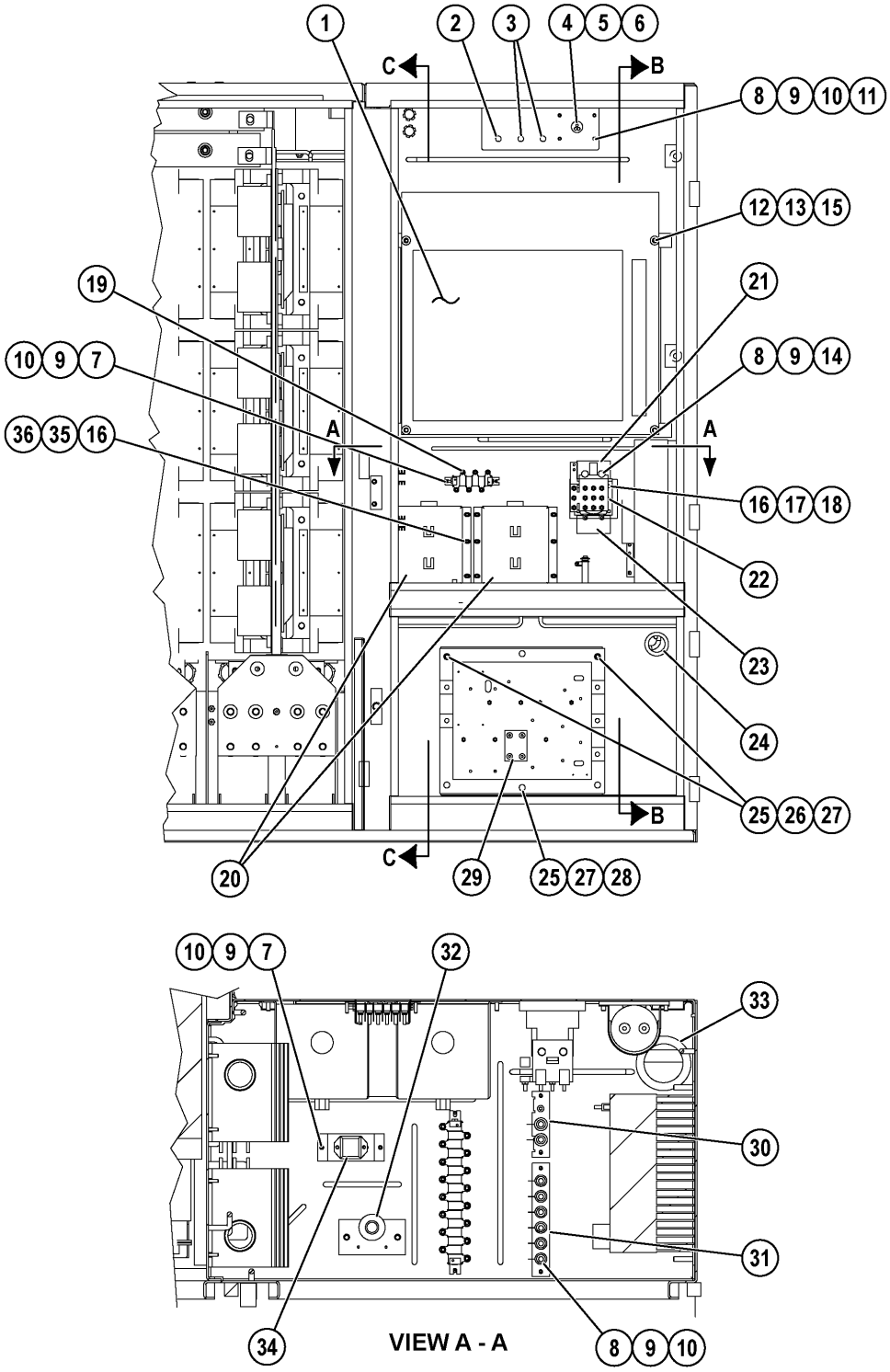
1
2
3
4
5
6
C
B
8
9
10
11
12
13
15
19
21
10
9
7
8
9
14
36
35
16
A
A
16
17
18
22
23
24
25
26
27
B
C
20
29
25
27
28
10
9
7
32
33
30
31
34
VIEW A - A
8
9
10

64312Z

REF.	PART NUM.	QTY.	DESCRIPTION
1.00	GE1302	1	PANEL, ICP (SEE INDEX)
2.00	GE0176	1	SWITCH, TOGGLE
3.00	GE0174	2	SWITCH, TOGGLE
4.00	GE0177	1	BOARD, PRINTED WIRE
5.00	XA3129	1	CAP, LENS
6.00	XA3130	1	ADAPTER
7.00	VE4655	AR	FLAT WASHER - #10
8.00	VS6662	AR	FLAT WASHER - #10
9.00	VE4601	AR	LOCKWASHER - #10
10.00	SF2755	AR	NUT - #10 - 32NF
11.00	PB3606	AR	SPACER
12.00	GE1381	AR	FLAT WASHER - 5/16"
13.00	VE4696	AR	LOCKWASHER - 5/16"
14.00	GE1386	2	MACHINE SCREW - #10 - 32NC X 1 5/8"
15.00	BF4222	4	CAPSCREW - 5/16" - 18NC X 3"
16.00	DC3584	AR	LOCKWASHER - 1/4"
17.00	VE7202	4	WASHER - 1/4" (SPECIAL)
18.00	VE5882	6	CAPSCREW - 1/4" - 20NC X 7/8"
19.00	VS6690	1	BOARD, TERMINAL
20.00	GE1257	2	CONVERTER, GATE DRIVER
21.00	VE7355	1	MODULE, DIODE
22.00	VG7043	1	RELAY - CPR & GFR (SEE INDEX)
23.00	BF4452	1	MODULE, SUPPRESSION
24.00	GE0240	1	GROMMET
25.00	VE4687	AR	LOCKWASHER - 3/8"
26.00	TC1233	AR	NUT - 3/8" - 16NC
27.00	GE0759	2	FLAT WASHER - 3/8" (HARDENED)
28.00	VE4641	AR	CAPSCREW - 3/8" - 16NC X 1 1/4"
29.00	GE0858	1	PANEL, A.F.S.E. (SEE INDEX)
30.00	GE1417	1	RESISTOR
31.00	GE0870	1	RESISTOR PANEL
32.00	XA3142	1	SENSOR, PRESSURE
33.00	XA3724	1	GROMMET
34.00	GE0510	1	DIODE ASSEMBLY
35.00	TD1549	AR	NUT - 1/4" - 20NC
36.00	VE7237	6	CAPSCREW - 1/4" - 20NC

(FOR VIEWS B-B & C-C, SEE THE FOLLOWING PAGE.)

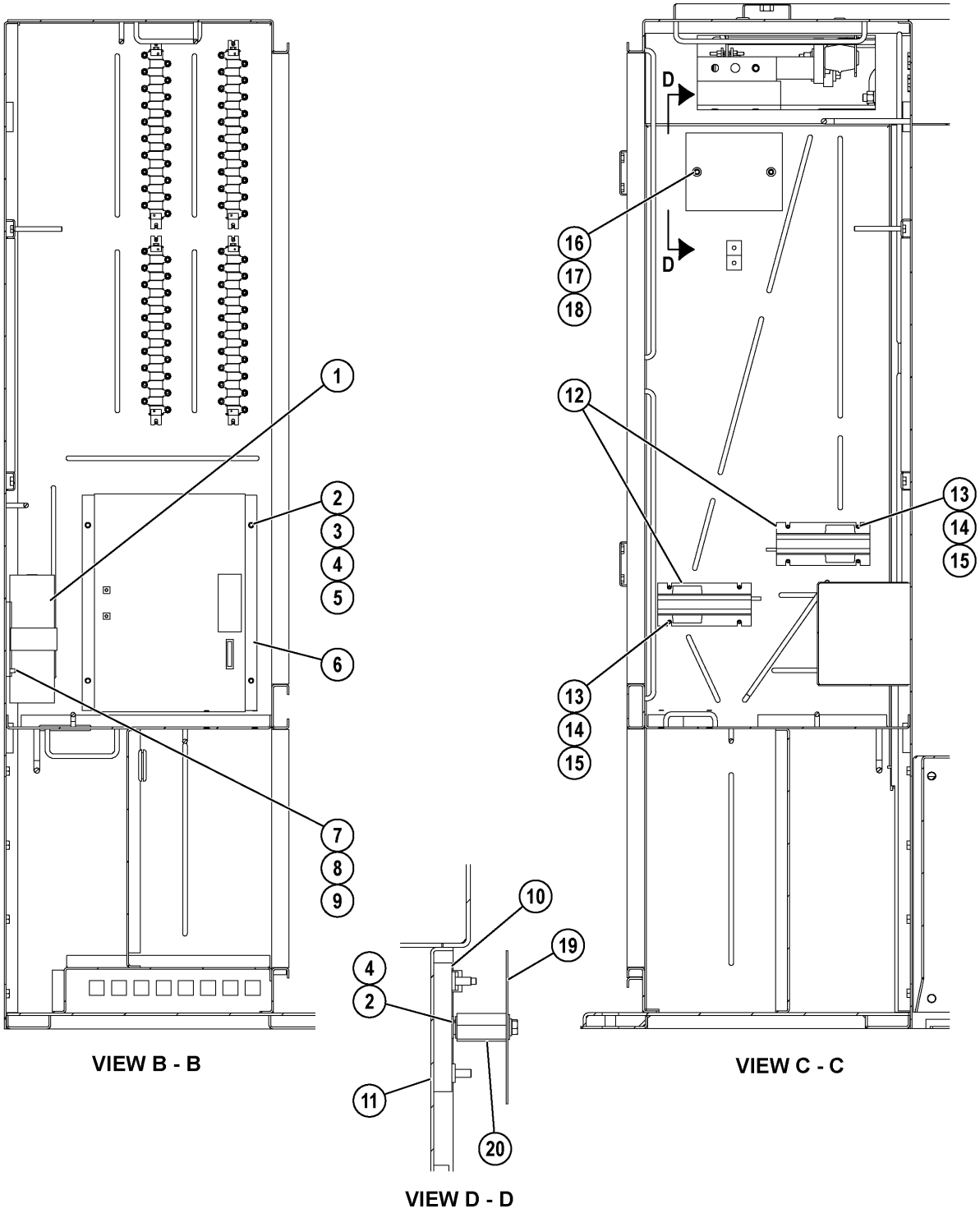

VIEW B - B

VIEW C - C

VIEW D - D

64313Z

REF.	PART NUM.	QTY.	DESCRIPTION
1.00	GE0865	1	CAPACITOR SUB-ASSEMBLY
1.01	GE0514	1	CAPACITOR
1.02	GE1175	1	CLAMP
1.03	GE1176	1	SUPPORT
2.00	GE1381	AR	FLAT WASHER - 5/16"
3.00	GE1383	AR	FLAT WASHER - 11/16"
4.00	VE4696	AR	LOCKWASHER - 5/16"
5.00	VE5013	AR	NUT - 5/16" - 18NC
6.00	GE0755	1	POWER SUPPLY
7.00	SP8417	AR	FLAT WASHER - 1/4"
8.00	DC3584	AR	LOCKWASHER - 1/4"
9.00	TD1549	AR	NUT - 1/4" - 20NC
10.00	GE0231	1	PANEL, FUSE
10.01	GE0232	1	FUSE LIMITER
11.00	BF3908	1	SHIELD
12.00	GE0170	4	SENSOR, AC-DC
13.00	VE4655	AR	FLAT WASHER - #10
14.00	VE4601	AR	LOCKWASHER - #10
15.00	SF2755	AR	NUT - #10 - 32NF
16.00	TV3461	2	CAPSCREW - 3/8" - 16NC X 5/8"
17.00	VE4687	AR	LOCKWASHER - 3/8"
18.00	VE4515	AR	FLAT WASHER - 3/8"
19.00	XA3591	1	SHIELD
20.00	XA3592	2	INSULATOR

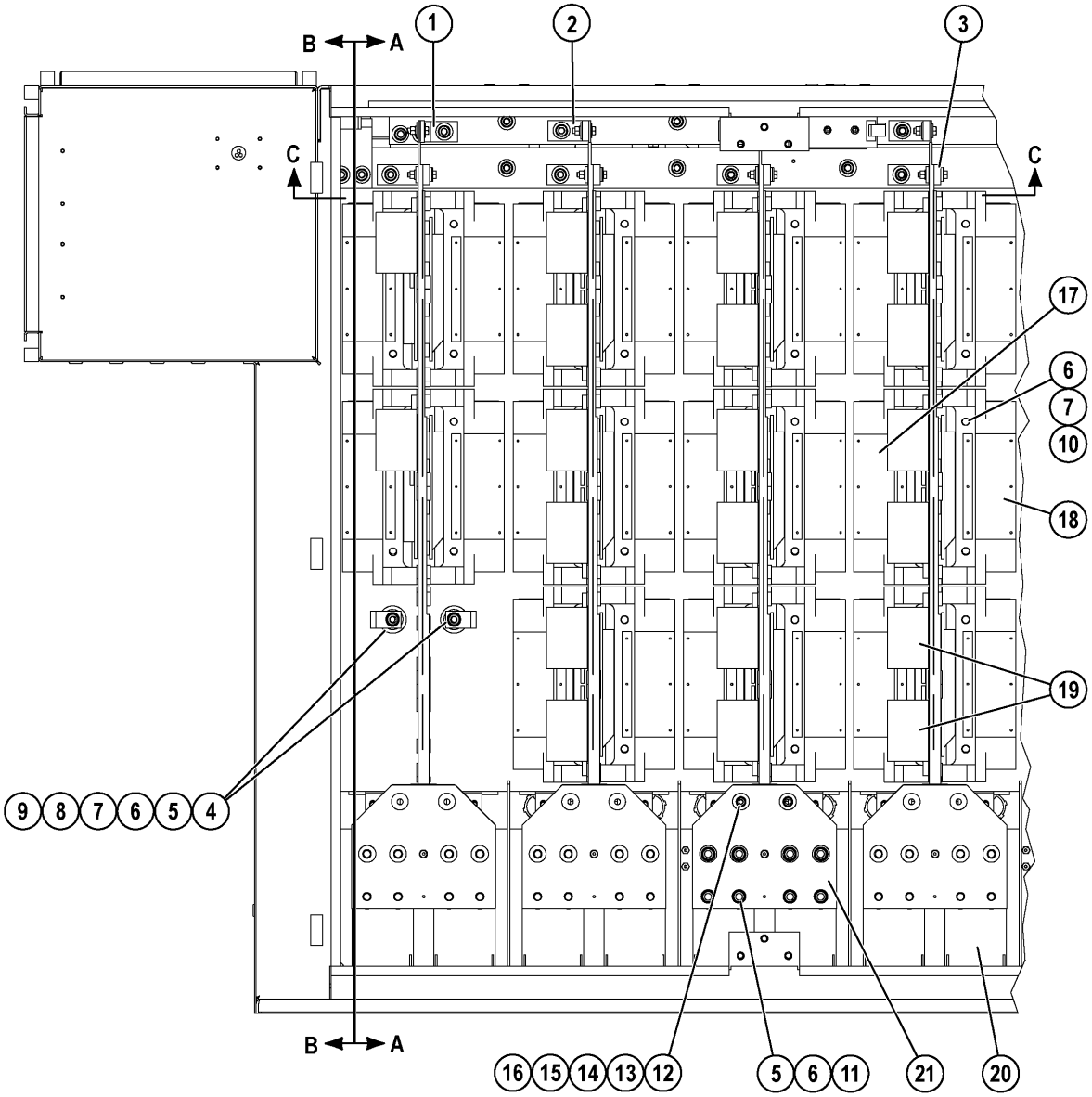

64338Z

REF.	PART NUM.	QTY.	DESCRIPTION
1.00	XA4250	1	BUS BAR
2.00	XA4328	4	BUS BAR
3.00	XA4249	5	BUS BAR
4.00	GE0579	2	STUD
5.00	VE4699	AR	LOCKWASHER - 1/2"
6.00	VE4698	AR	NUT - 1/2" - 13NC
7.00	VE4519	AR	FLAT WASHER - 1/2" (NARROW)
8.00	GE1409	2	BUS BAR
9.00	PB3348	2	INSULATOR
10.00	GE1384	56	STUD
11.00	VE4490	AR	FLAT WASHER - 1/2"
12.00	VE3918	AR	WASHER
13.00	VE4687	AR	LOCKWASHER - 3/8"
14.00	VE4515	AR	FLAT WASHER - 3/8"
15.00	TC1233	AR	NUT - 3/8" - 16NC
16.00	VE4640	AR	CAPSCREW - 3/8" - 16NC X 1 1/2"
17.00	GE1255	14	INVERTER, IGBT (+)
18.00	GE1256	14	INVERTER, IGBT (-)
19.00	GE1298	13	FUSE, IGBT
20.00	GE1296	10	CAPACITOR, FILTER
21.00	GE1413	5	BUS BAR

(FOR VIEWS A-A, B-B & C-C, SEE THE FOLLOWING PAGES.)

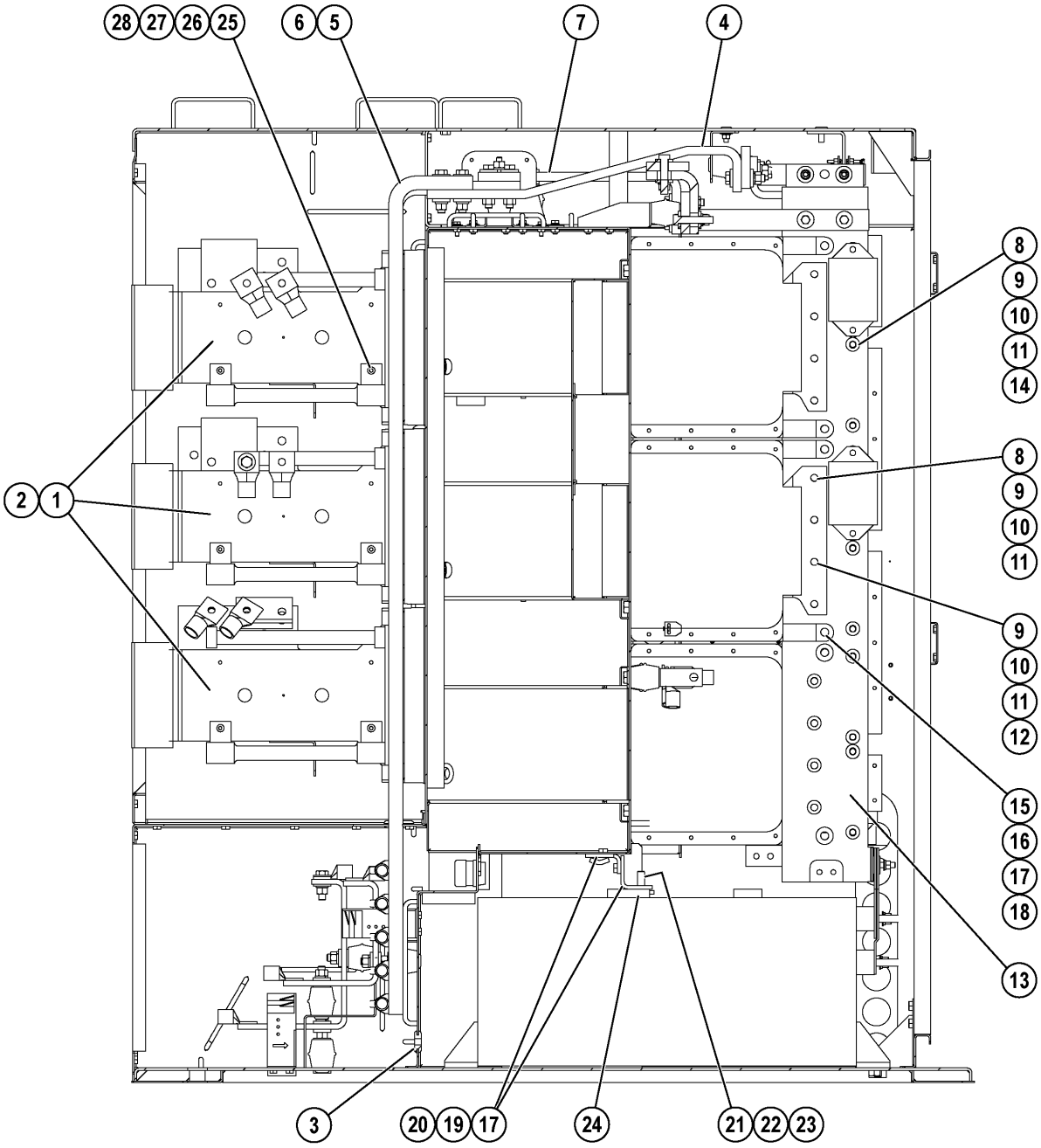

VIEW A - A

64315Z

REF.	PART NUM.	QTY.	DESCRIPTION
1.00	GE0876	3	BASE ASSEMBLY
2.00	GE1387	3	PANEL, RECTIFIER (IGBT)
3.00	GE0240	1	GROMMET
4.00	GE1400	1	BUS BAR
5.00	GE1403	1	BUS BAR
6.00	GE1404	1	BUS BAR
7.00	XA3594	1	BUS BAR
8.00	BF0543	AR	CAPSCREW - 5/16" - 18NC X 1 1/2"
9.00	GE1383	AR	FLAT WASHER - 11/16"
10.00	VE4696	AR	LOCKWASHER - 5/16"
11.00	VE5013	AR	NUT - 5/16" - 18NC
12.00	GE1380	AR	CAPSCREW - 5/16" - 18NC X 2"
13.00	GE1412	5	BUS BAR, VERTICAL
14.00	GE1381	AR	FLAT WASHER - 5/16"
15.00	GE1382	2	CAPSCREW - 3/8" - 16NC X 5 1/2"
16.00	VE3918	AR	WASHER
17.00	VE4687	AR	LOCKWASHER - 3/8"
18.00	TC1233	AR	NUT - 3/8" - 16NC
19.00	VE4515	AR	FLAT WASHER - 3/8"
20.00	VE4739	AR	CAPSCREW - 3/8" - 16NC X 1"
21.00	VE4699	AR	LOCKWASHER - 1/2"
22.00	VE4698	AR	NUT - 1/2" - 13NC
23.00	VE4519	AR	FLAT WASHER - 1/2" (NARROW)
24.00	GE1385	10	PLATE ASSEMBLY
25.00	GE0862	12	STUD
26.00	GE0045	12	NUT - 5/8" - 11NC
27.00	VC1390	12	LOCKWASHER - 5/8"
28.00	VE5169	12	FLAT WASHER - 5/8"

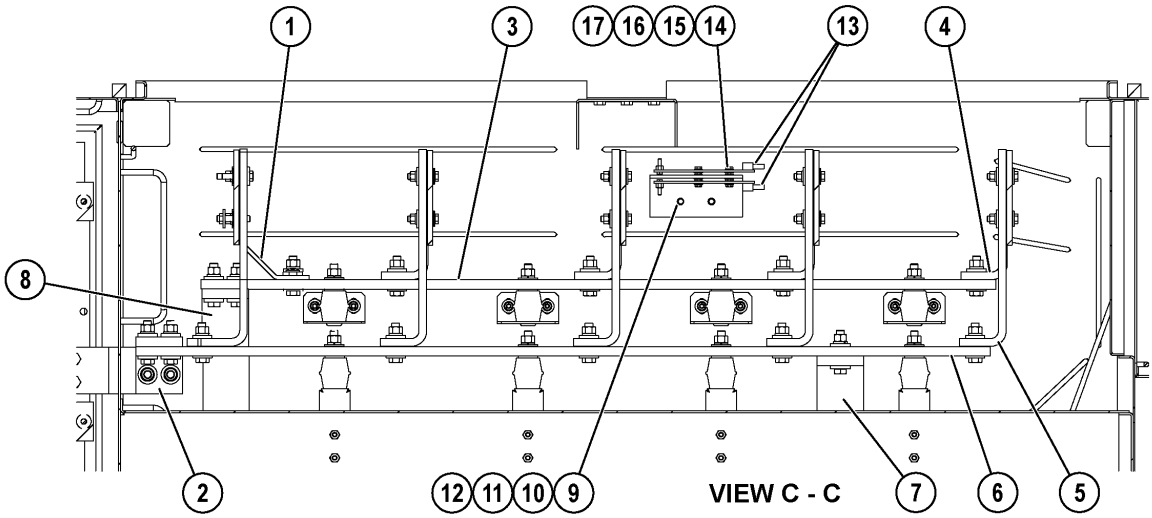
1
3
17
16
15
14
13
4
8
2
12
11
10
9
VIEW C - C
7
6
5

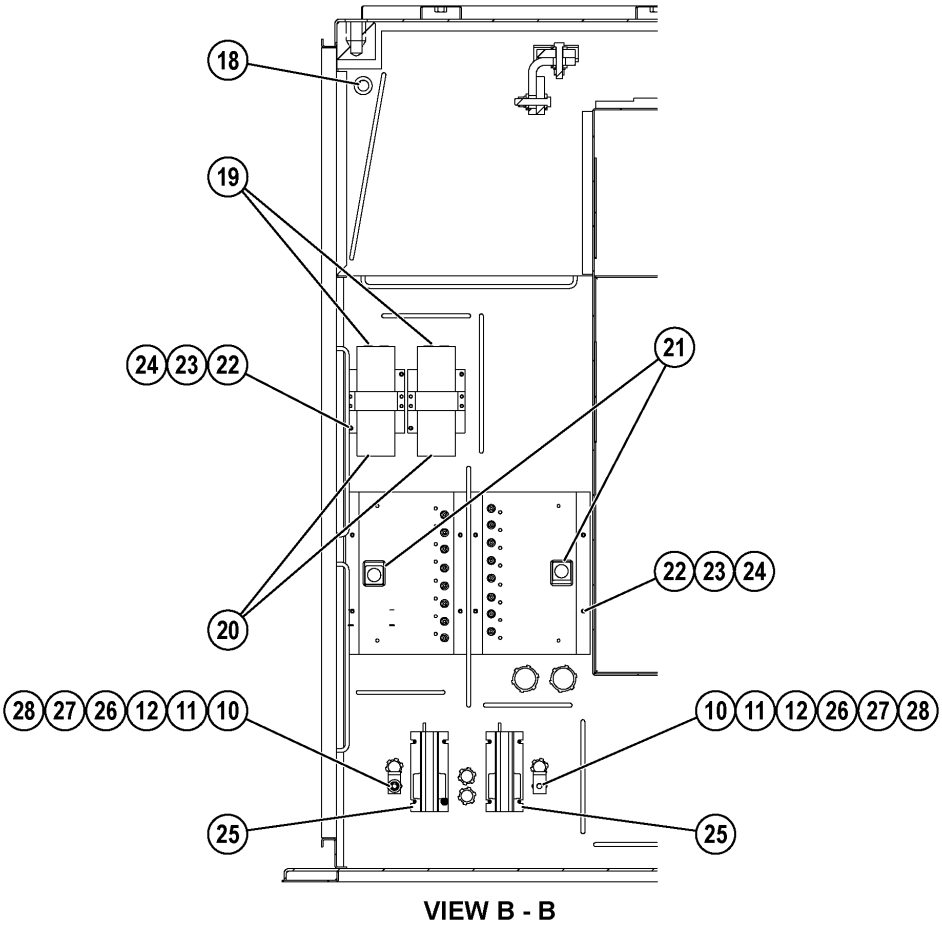
18
19
24
23
22
21
22
23
24
20
28
27
26
12
11
10
10
11
12
26
27
28
25
25
VIEW B - B

64339Z

REF.	PART NUM.	QTY.	DESCRIPTION
1.00	XA4250	1	BUS BAR
2.00	GE1396	1	BUS BAR
3.00	GE1401	1	BUS BAR
4.00	XA4249	1	BUS BAR
5.00	XA4328	1	BUS BAR
6.00	GE1402	1	BUS BAR
7.00	XA3594	1	BUS BAR
8.00	XA3593	1	BUS BAR
9.00	GE1389	1	SUPPORT
10.00	VE4687	AR	LOCKWASHER - 3/8"
11.00	VE4515	AR	FLAT WASHER - 3/8"
12.00	TC1233	AR	NUT - 3/8" - 16NC
13.00	GE0182	2	PANEL
14.00	VE4655	AR	FLAT WASHER - #10
15.00	SF2755	AR	NUT - #10 - 32NF
16.00	GE1388	2	STUD
17.00	VE4601	AR	LOCKWASHER - #10
18.00	GE1416	7	GROMMET
19.00	GE0761	2	PANEL, RESISTOR
20.00	GE0762	2	CAPACITOR ASSEMBLY
21.00	XA3720	2	PANEL ASSEMBLY (VAM)
22.00	SP8417	AR	FLAT WASHER - 1/4"
23.00	DC3584	AR	LOCKWASHER - 1/4"
24.00	TD1549	AR	NUT - 1/4" - 20NC
25.00	GE0170	2	SENSOR, AC-DC
26.00	GE1410	2	BUS BAR
27.00	GE0584	2	INSULATOR
28.00	GE1414	2	STUD

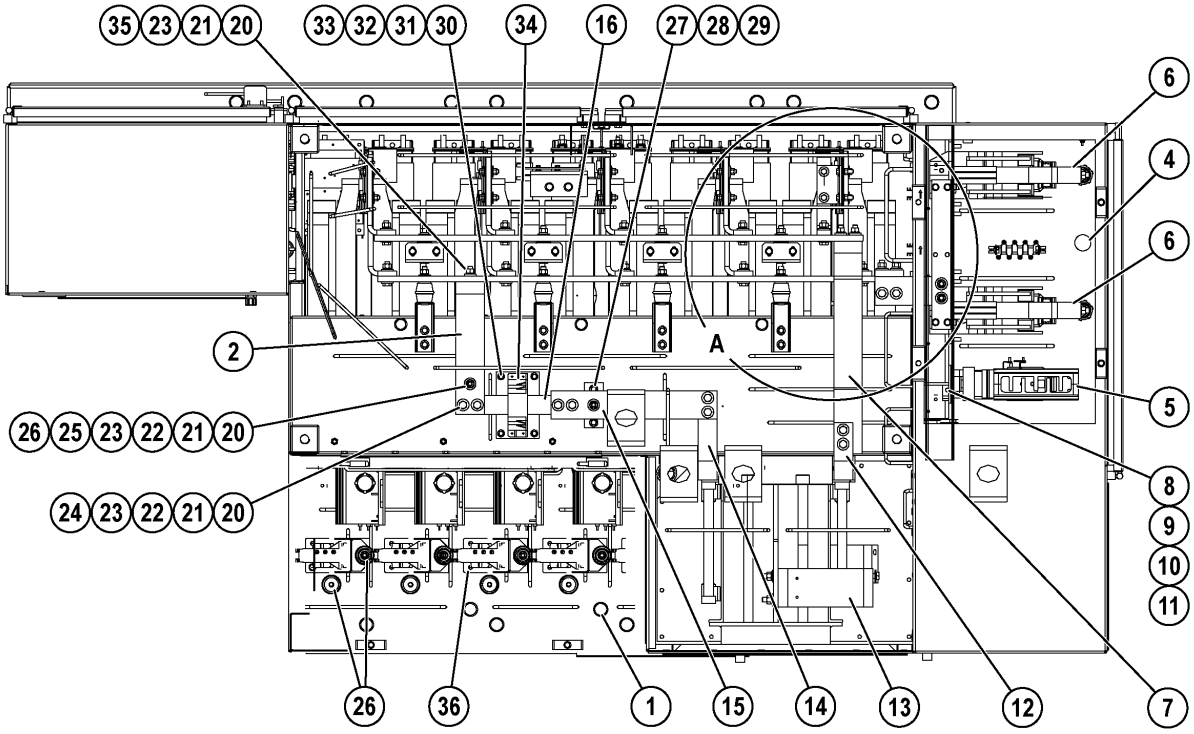

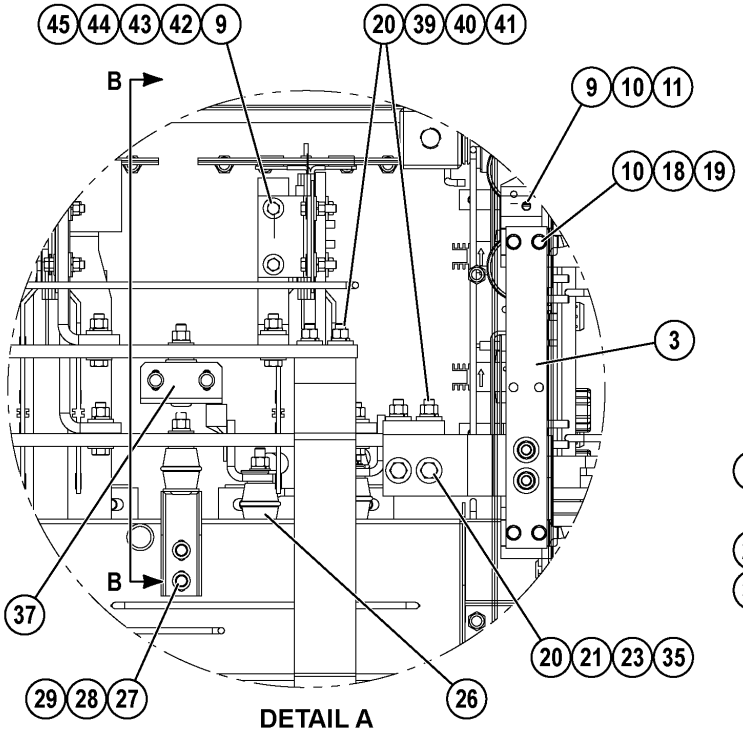

DETAIL A

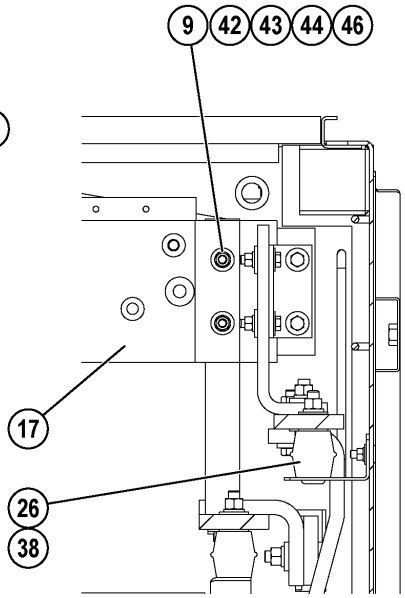

VIEW B - B

64317Z

REF.	PART NUM.	QTY.	DESCRIPTION
1.00	GE1379	8	PLUG
2.00	XA3594	1	BUS BAR
3.00	GE1395	1	BUS BAR
4.00	GE0594	1	BUSHING
5.00	PB6137	1	CONTACTOR ASSEMBLY
5.01	VE3530	1	INTERLOCK, POSITION SENSOR (SEE INDEX)
5.02	VE1317	1	CONTACTOR - GF & GFR (SEE INDEX)
6.00	GE0647	2	CONTACTOR ASSEMBLY - R.P. (SEE INDEX)
7.00	GE1400	1	BUS BAR
8.00	GE1408	1	BUS BAR
9.00	VE4687	AR	LOCKWASHER - 3/8"
10.00	VE4516	13	FLAT WASHER - 3/8" (NARROW)
11.00	VE4500	11	CAPSCREW - 3/8" - 16NC X 1 3/4"
12.00	GE1404	1	BUS BAR
13.00	GE1392	2	BUS BAR
14.00	GE1403	1	BUS BAR
15.00	XA3596	1	BUS BAR
16.00	GE1402	1	BUS BAR
17.00	GE1413	5	BUS BAR
18.00	VE4515	AR	FLAT WASHER - 3/8"
19.00	GE1420	4	CAPSCREW - 3/8" - 16NC X 2 1/2"
20.00	VE4699	AR	LOCKWASHER - 1/2"
21.00	VE4698	AR	NUT - 1/2" - 13NC
22.00	VE4519	AR	FLAT WASHER - 1/2" (NARROW)
23.00	VE3030	AR	FLAT WASHER - 1/2"
24.00	VE5062	4	CAPSCREW - 1/2" - 13NC X 2 1/2"
25.00	GE0581	2	STUD
26.00	PB3348	26	INSULATOR
27.00	GE1381	AR	FLAT WASHER - 5/16"
28.00	VE4696	AR	LOCKWASHER - 5/16"
29.00	TR4731	2	CAPSCREW - 5/16" - 18NC X 1"
30.00	XA3599	1	BASE ASSEMBLY
31.00	SP8417	AR	FLAT WASHER - 1/4"
32.00	DC3584	AR	LOCKWASHER - 1/4"
33.00	VE5882	6	CAPSCREW - 1/4" - 20NC X 7/8"
34.00	GE0756	1	LINK SENSOR
35.00	VE5061	6	CAPSCREW - 1/2" - 13NC X 2 1/2"
36.00	XA3722	6	BRACKET, MOUNTING
37.00	GE1415	4	BRACKET ASSEMBLY
38.00	GE0579	12	STUD
39.00	VE4490	AR	FLAT WASHER - 1/2"
40.00	GE1385	10	PLATE ASSEMBLY

(SEE FOLLOWING PAGE FOR BALANCE OF PARTS...)

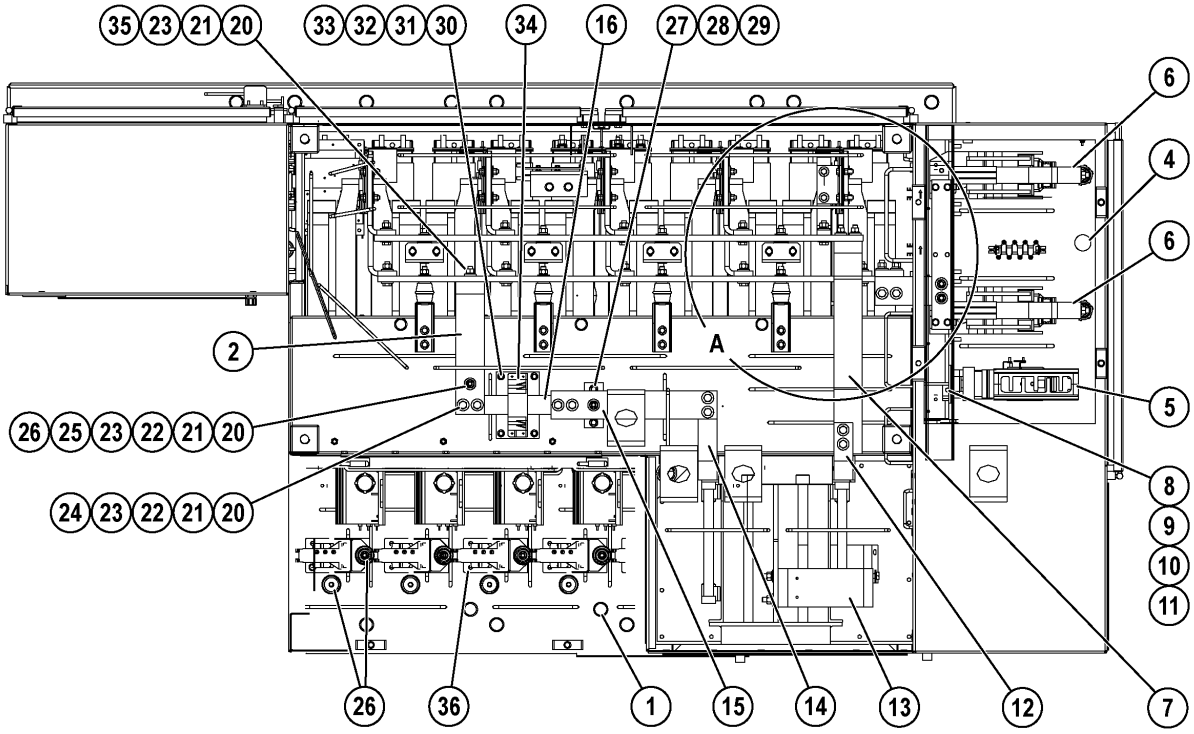

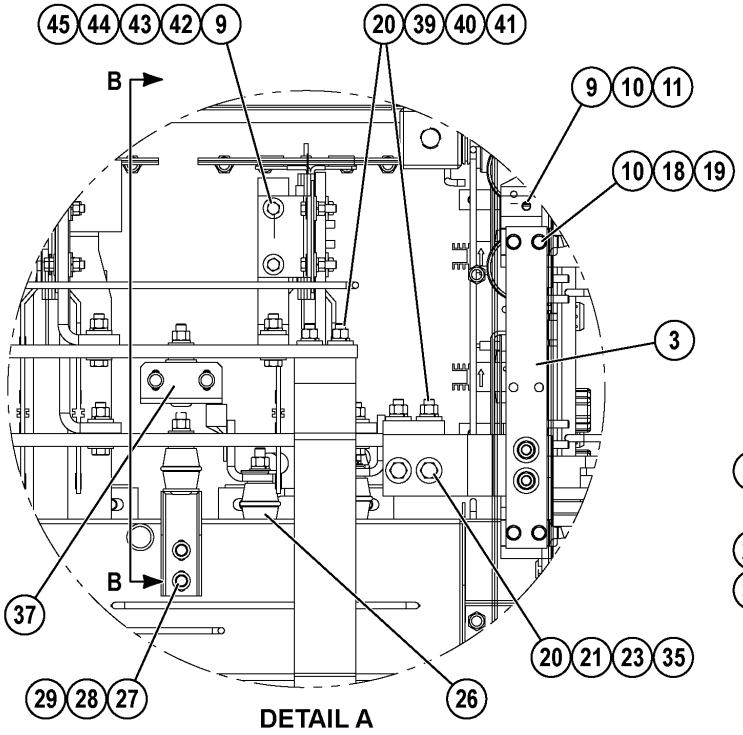

DETAIL A

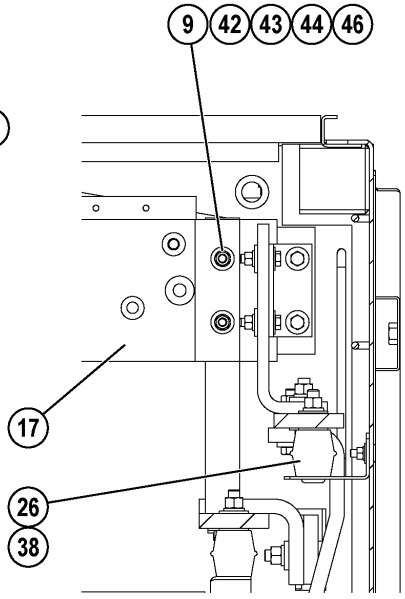

VIEW B - B

64317Z

REF.	PART NUM.	QTY.	DESCRIPTION
41.00	VS8440	4	WASHER
42.00	VE3918	AR	WASHER
43.00	TC1233	AR	NUT - 3/8" - 16NC
44.00	WA0720	AR	FLAT WASHER - 3/8" (HARDENED)
45.00	TR4434	13	CAPSCREW - 3/8" - 16NC X 2"
46.00	VE4640	AR	CAPSCREW - 3/8" - 16NC X 1 1/2"

(SEE PRECEDING PAGE FOR BALANCE OF PARTS...)

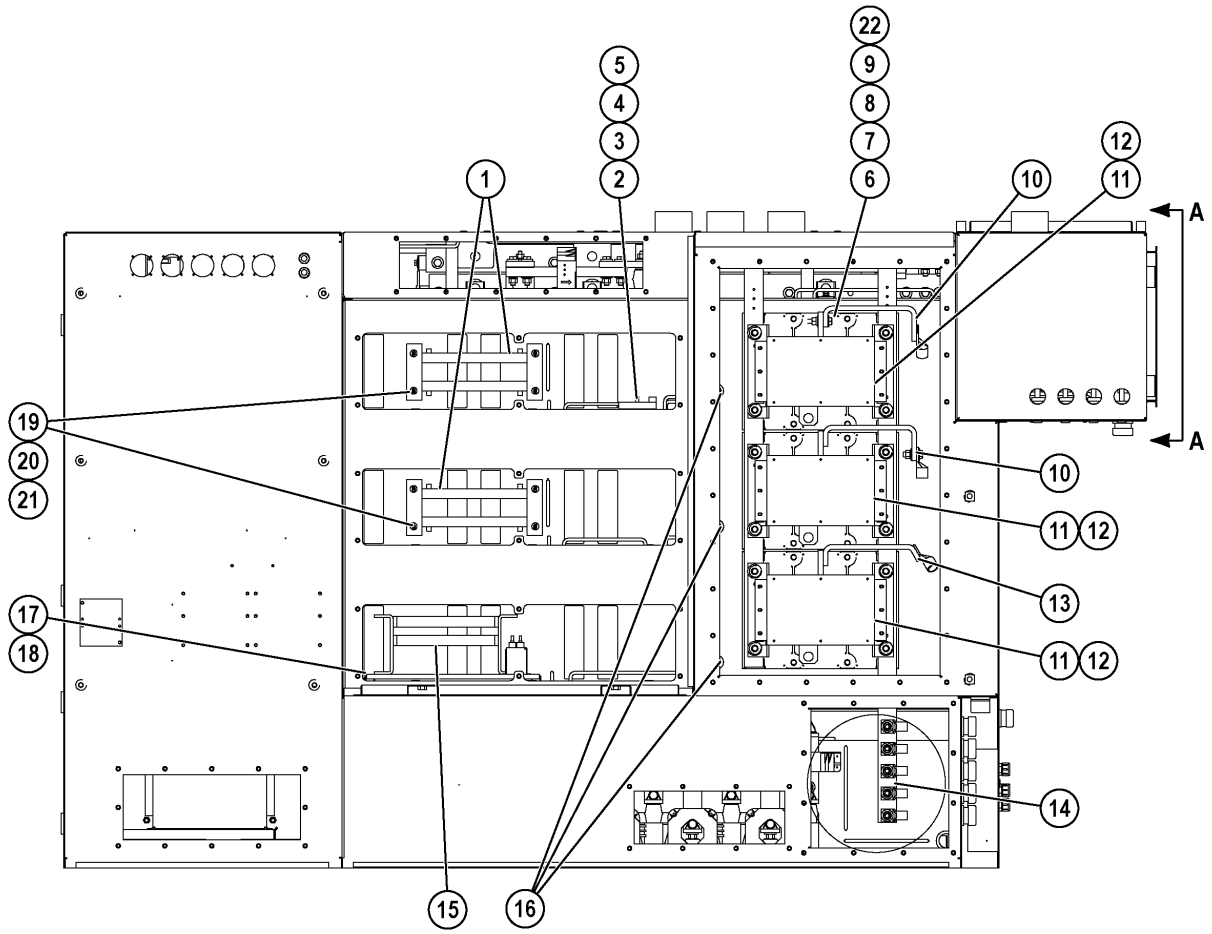

64318Z

REF.	PART NUM.	QTY.	DESCRIPTION
1.00	GE0860	2	RESISTOR ASSEMBLY
1.01	GE1177	1	RESISTOR
1.02	VE1959	1	BUSHING
1.03	GE1342	1	STRIP, CONNECTION
2.00	BF0931	1	PANEL, AIR TEMPERATURE
2.01	VE5042	1	BOARD, TERMINAL
2.02	BF0932	1	SENSOR, THERMISTOR
3.00	GE1381	AR	FLAT WASHER - 5/16"
4.00	VE4696	AR	LOCKWASHER - 5/16"
5.00	VE5013	AR	NUT - 5/16" - 18NC
6.00	VE4699	AR	LOCKWASHER - 1/2"
7.00	VE4698	AR	NUT - 1/2" - 13NC
8.00	VE4519	AR	FLAT WASHER - 1/2" (NARROW)
9.00	WA0471	AR	CAPSCREW - 1/2" - 13NC X 2 1/4"
10.00	GE1392	2	BUS BAR
11.00	GE0876	3	BASE ASSEMBLY
12.00	GE1387	3	PANEL, RECTIFIER (IGBT)
13.00	GE1405	1	BUS BAR
14.00	GE1404	1	BUS BAR
15.00	GE0148	1	PANEL, FILTER ASSEMBLY
15.01	VE4379	3	RESISTOR
15.02	VE0066	6	RESISTOR - 250 OHM
15.03	VE3846	3	CONDENSOR
16.00	GE1416	3	GROMMET
17.00	VE4601	AR	LOCKWASHER - #10
18.00	VJ6586	AR	CAPSCREW - #10 - 32NF X 3/4"
19.00	SP8417	AR	FLAT WASHER - 1/4"
20.00	DC3584	AR	LOCKWASHER - 1/4"
21.00	TD1549	AR	NUT - 1/4" - 20NC
22.00	VE3030	AR	FLAT WASHER - 1/2"

(FOR VIEW A-A, SEE THE FOLLOWING PAGE.)

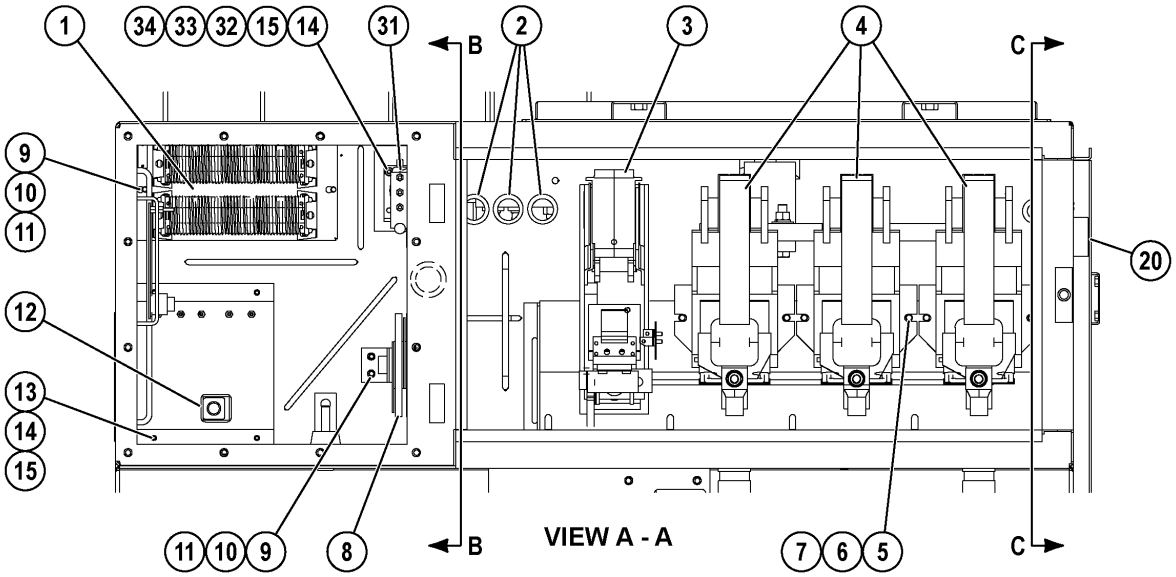

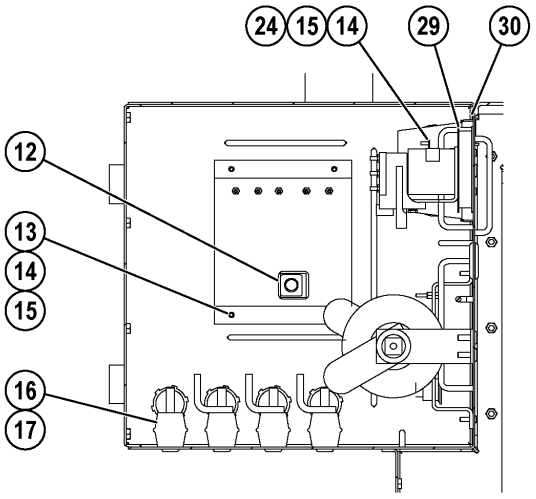

VIEW B - B

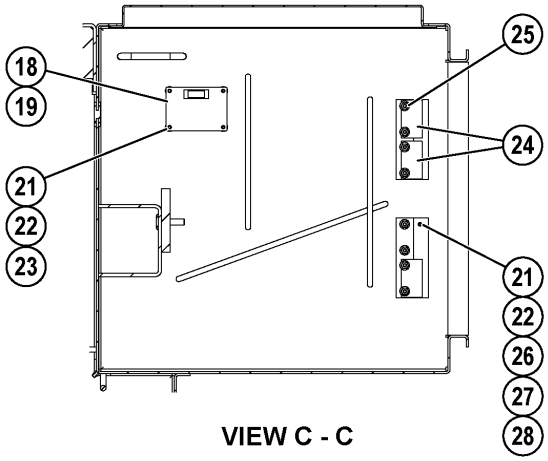

VIEW C - C

64344Z

REF.	PART NUM.	QTY.	DESCRIPTION
1.00	GE0152	1	RESISTOR PANEL
1.01	VJ9059	2	RESISTOR
1.02	PB2685	2	CONTACT CLIP ASSEMBLY
2.00	GE0861	3	GROMMET
3.00	PB6137	1	CONTACTOR ASSEMBLY
3.01	VE3530	1	INTERLOCK, POSITION SENSOR (SEE INDEX)
3.02	VE1317	1	CONTACTOR - GF & GFR (SEE INDEX)
4.00	GE0647	3	CONTACTOR ASSEMBLY - R.P. (SEE INDEX)
5.00	TC1231	AR	LOCKWASHER - 3/8"
6.00	TR4436	AR	FLAT WASHER - 3/8"
7.00	TC1233	AR	NUT - 3/8" - 16NC
8.00	PB5230	1	RESISTOR, THYRITE
9.00	GE1381	AR	FLAT WASHER - 5/16"
10.00	VE4696	AR	LOCKWASHER - 5/16"
11.00	VE5013	AR	NUT - 5/16" - 18NC
12.00	GE0857	1	PANEL ASSEMBLY
13.00	SP8417	AR	FLAT WASHER - 1/4"
14.00	DC3584	AR	LOCKWASHER - 1/4"
15.00	TD1549	AR	NUT - 1/4" - 20NC
16.00	PB3348	4	INSULATOR
17.00	XA3143	4	STUD
18.00	GE0177	1	BOARD, PRINTED WIRE
19.00	PB3606	1	SPACER
20.00	XA3129	2	CAP, LENS
21.00	VE4601	AR	LOCKWASHER - #10
22.00	SF2755	AR	NUT - #10 - 32NF
23.00	VS6662	AR	FLAT WASHER - #10
24.00	BF4452	5	MODULE, SUPPRESSION
25.00	VE4921	8	CAPSCREW - #10 - 32NF X 1"
26.00	VE4655	AR	FLAT WASHER - #10
27.00	GE0219	2	SUPPORT, MODULE
28.00	GE0220	2	SUPPORT, MODULE
29.00	VJ6457	1	SHIELD
30.00	VJ6456	1	SHIELD
31.00	VG7043	1	RELAY - CPR & GFR (SEE INDEX)
32.00	VE7237	4	CAPSCREW - 1/4" - 20NC
33.00	VE7202	4	WASHER - 1/4" (SPECIAL)
34.00	VJ6455	1	BASE

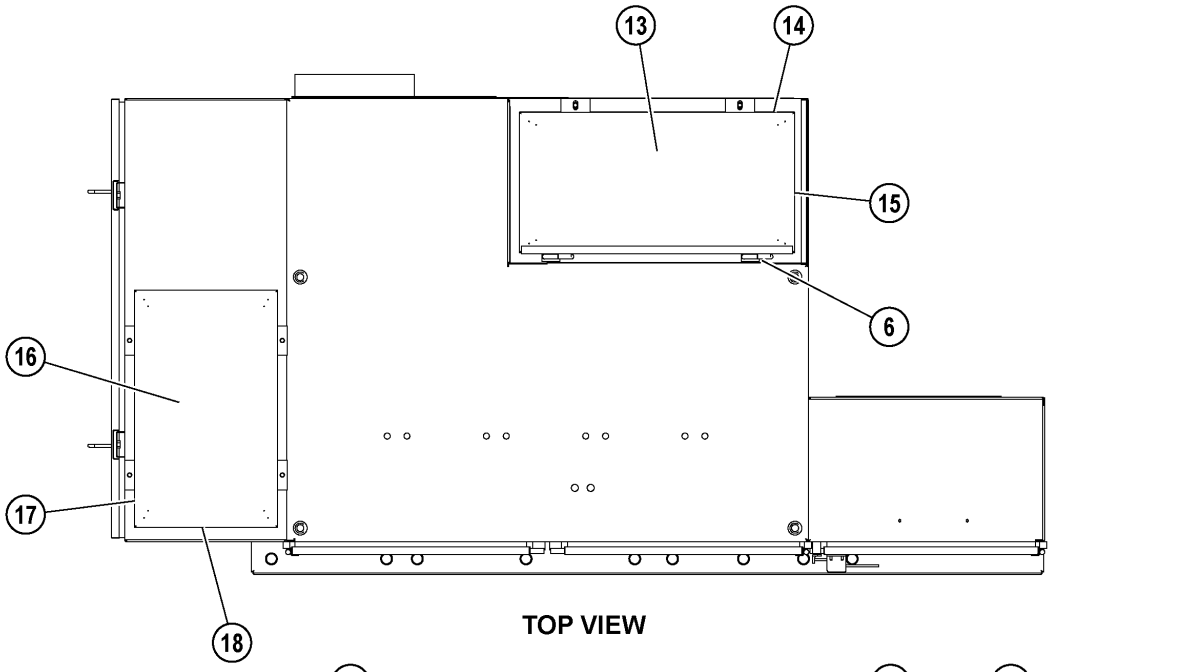

TOP VIEW

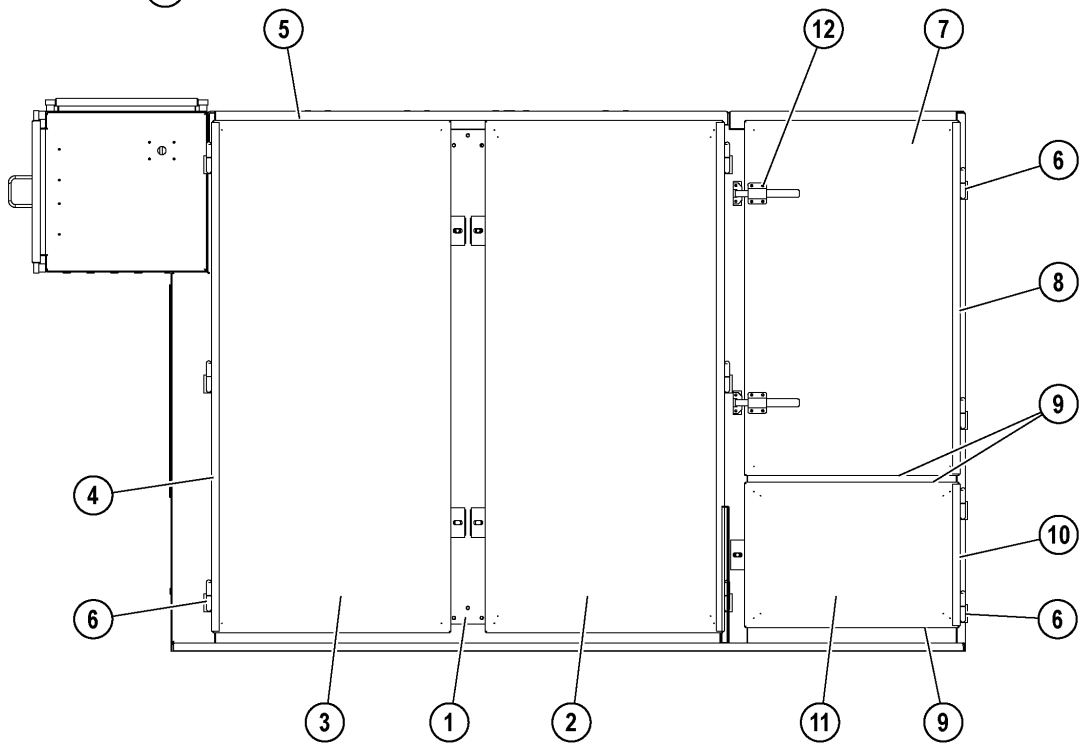

64320Z

REF.	PART NUM.	QTY.	DESCRIPTION
1.00	GE1768	1	DOOR POST
2.00	GE1783	1	DOOR ASSEMBLY
3.00	GE1786	1	DOOR ASSEMBLY
4.00	GE1784	4	GASKET - 64.06"
5.00	GE1785	4	GASKET - 29.57" (1)
6.00	GE1771	12	HINGE
7.00	GE1781	1	DOOR ASSEMBLY
8.00	GE1782	1	GASKET - 44.29"
9.00	GE1776	3	GASKET - 26.62"
10.00	GE1777	2	GASKET - 17.85" (1)
11.00	GE1775	1	DOOR ASSEMBLY
12.00	GE1242	2	LATCH & KEEPER
13.00	GE1778	1	DOOR ASSEMBLY
14.00	GE1779	2	GASKET - 34.17"
15.00	GE1780	2	GASKET - 17.30" (1)
16.00	GE1773	1	DOOR ASSEMBLY
17.00	GE1772	2	GASKET - 17.54" (1)
18.00	GE1774	2	GASKET - 29.41"
KT	VJ2672		NOTE: (1) USE VJ2672 CEMENT TO INSTALL THE GASKET.

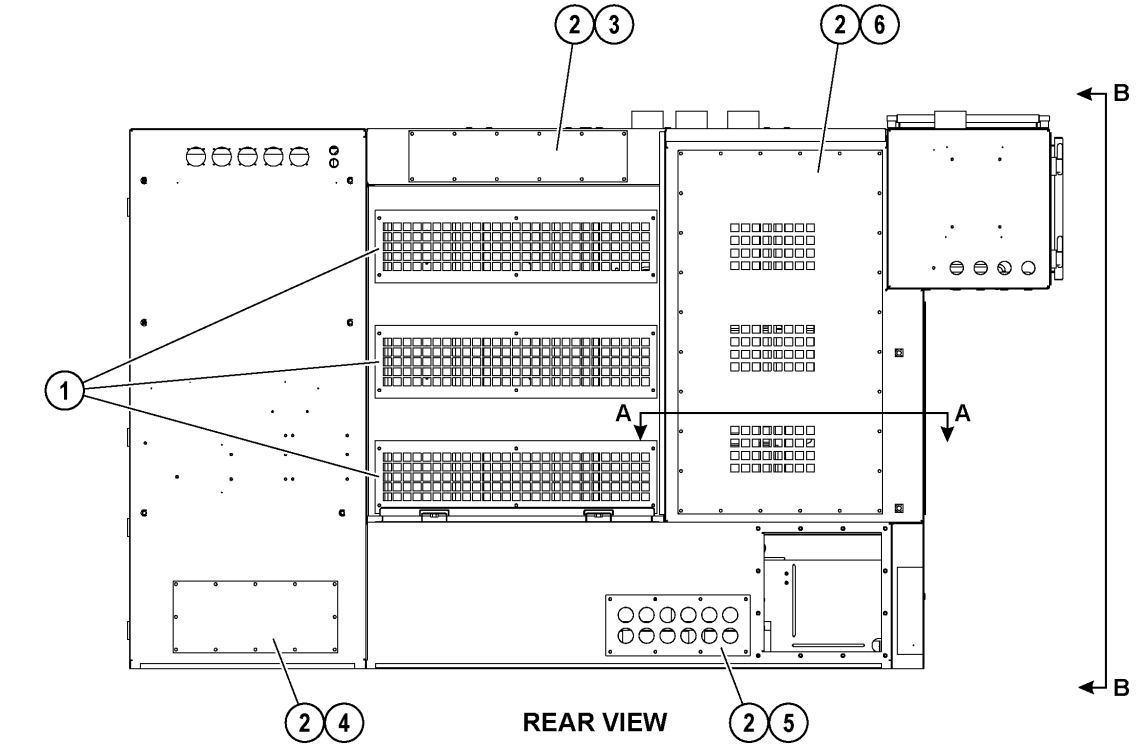

REAR VIEW

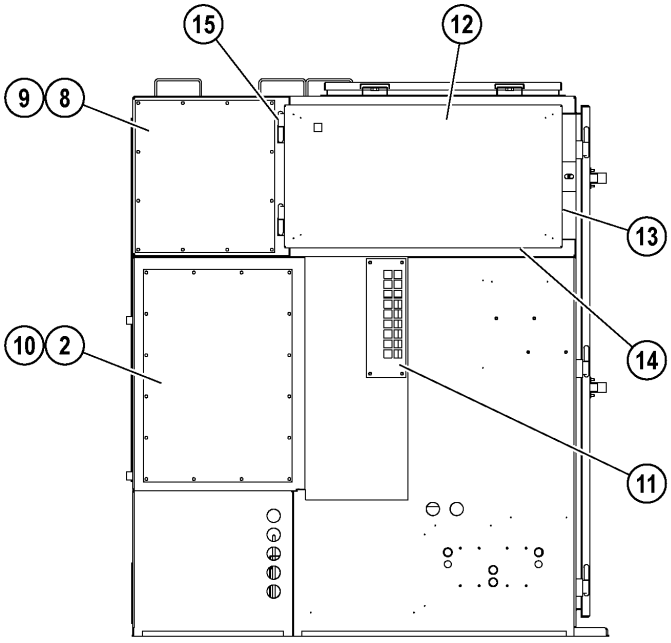

VIEW B - B

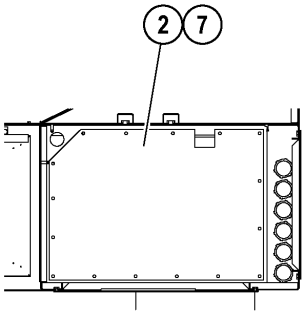

VIEW A - A

64321Z

REF.	PART NUM.	QTY.	DESCRIPTION
1.00	GE1790	3	COVER
2.00	GE0265	AR	GASKET (1)
3.00	GE1787	1	COVER ASSEMBLY
4.00	GE1789	1	COVER ASSEMBLY
5.00	GE1791	1	COVER ASSEMBLY
6.00	GE1792	1	COVER ASSEMBLY
7.00	GE1794	1	COVER ASSEMBLY
8.00	GE0297	AR	GASKET (1)
9.00	GE1793	1	COVER ASSEMBLY
10.00	GE1788	1	COVER ASSEMBLY
11.00	GE1795	1	COVER
12.00	GE1769	1	DOOR ASSEMBLY - CONTACTOR BOX
13.00	GE1772	1	GASKET - 17.54"
14.00	GE1770	1	GASKET - 34.50"
15.00	GE1771	2	HINGE
KT	VJ2672		NOTE: (1) USE VJ2672 CEMENT TO INSTALL THE GASKET

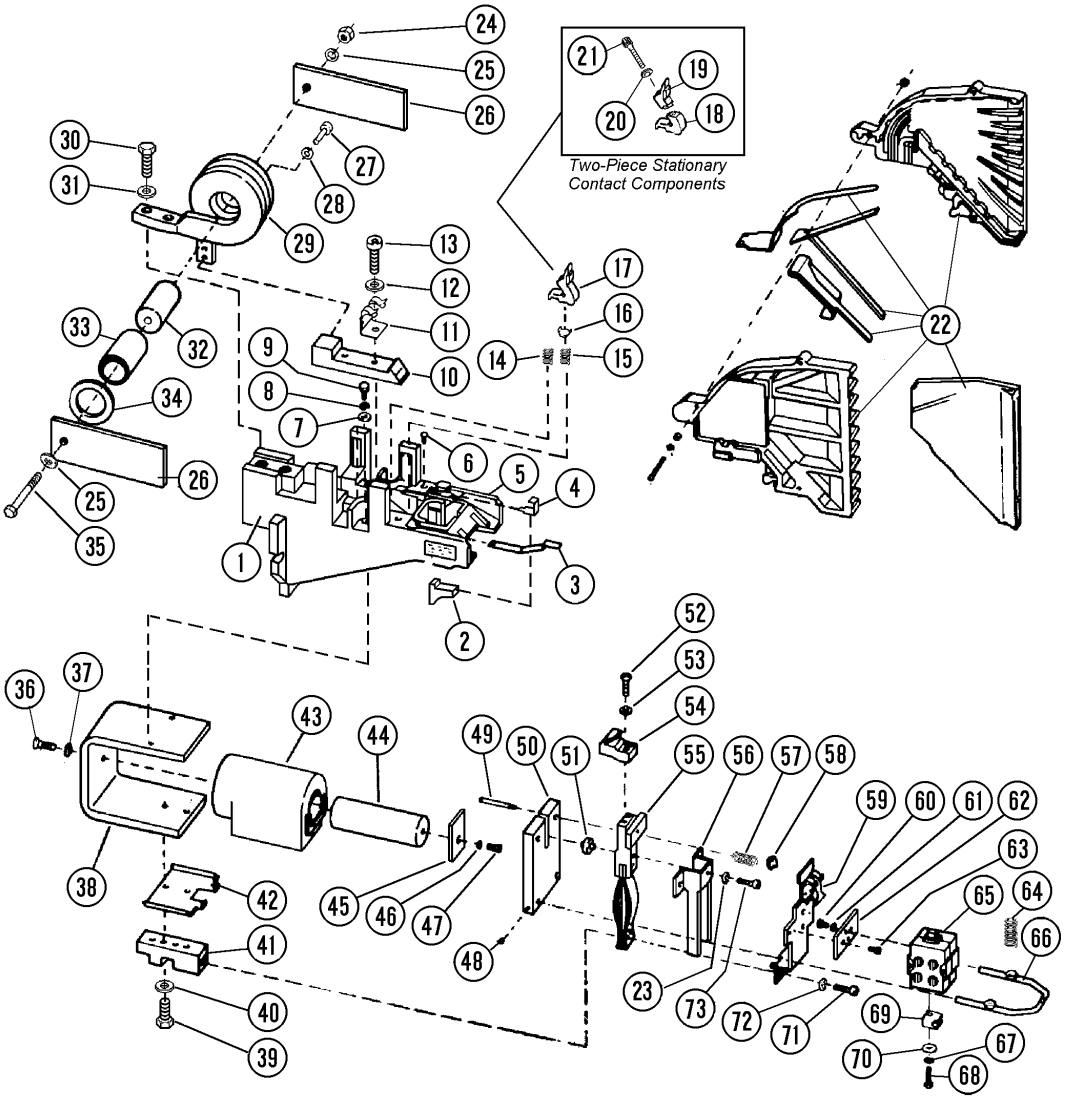
Two-Piece Stationary
Contact Components
64227Z

REF.	PART NUM.	QTY.	DESCRIPTION
1.00	GE1010	1	BRACKET, SUPPORT
2.00	GE1011	1	INTERLOCK, MECHANICAL
3.00	GE1012	1	LATCH SPRING, ARC CHUTE
4.00	GE1013	1	LEVER
5.00	GE1014	1	HOLD-ON IRON
6.00	GE1015	1	SCREW, SELF-TAPPING - #10
7.00	GE1016	4	FLAT WASHER - 5/16"
8.00	GE1017	2	LOCKWASHER - 5/16"
9.00	GE1018	2	CAPSCREW, SOCKET HEAD - 5/16" - 18NC X 1 1/2"
10.00	GE1019	1	TERMINAL, PIVOT
11.00	GE1020	1	SPRING, LEAF
12.00	GE1021	2	LOCKWASHER
13.00	GE1022	2	CAPSCREW, SOCKET HEAD - 5/16" - 18NC X 1 1/4"
14.00	GE1023	3	SPRING, WIPE
15.00	GE1024	3	SPRING, PIVOT
16.00	GE1025	3	CAP, PIVOT SPRING
17.00	VJ6523	3	CONTACT, STATIONARY - 1 PIECE
18.00	VJ3236	3	CONTACT, STATIONARY - 2 PIECE, LOWER
19.00	VJ3235	3	CONTACT, STATIONARY - 2 PIECE, UPPER
20.00	GE1026	3	LOCKWASHER - #10
21.00	VE7247	3	CAPSCREW, SOCKET HEAD - #10 - 32NF X 7/8"
22.00	GE0696	1	KIT, ARC CHUTE
23.00	GE1052	1	LOCKWASHER - 1/4"
24.00	C1520	1	NUT - 5/16" - 18NC
25.00	GE1028	2	LOCKWASHER - 5/16"
26.00	GE1029	2	PLATE, POLE
27.00	GE1022	2	CAPSCREW, SOCKET HEAD - 5/16" - 18NC X 1 1/4"
28.00	GE1017	2	LOCKWASHER - 5/16"
29.00	GE1030	1	KIT, BLOW OUT COIL
30.00	GE1031	2	CAPSCREW - 3/8" - 16NC X 1 1/4"
31.00	GE1032	2	FLAT WASHER - 3/8"
32.00	GE1033	1	CORE, MAGNET
33.00	GE1034	1	SHEET, INSULATING
34.00	GE1035	2	SPACER, INSULATING
35.00	GE1036	1	CAPSCREW - 5/16" - 18NC X 4 1/2"
36.00	GE1037	1	SCREW, FLAT HEAD - 3/8" - 16NC X 1"
37.00	GE1038	1	LOCKWASHER, COUNTERSUNK
38.00	GE1039	1	YOKE
39.00	GE1040	2	SCREW, SOCKET HEAD - 5/16" - 18NC X 1"
40.00	GE1017	2	LOCKWASHER - 5/16"
41.00	GE1041	1	TERMINAL, BOTTOM
42.00	GE1042	1	GUIDE, ARMATURE

(SEE FOLLOWING PAGE FOR BALANCE OF PARTS...)

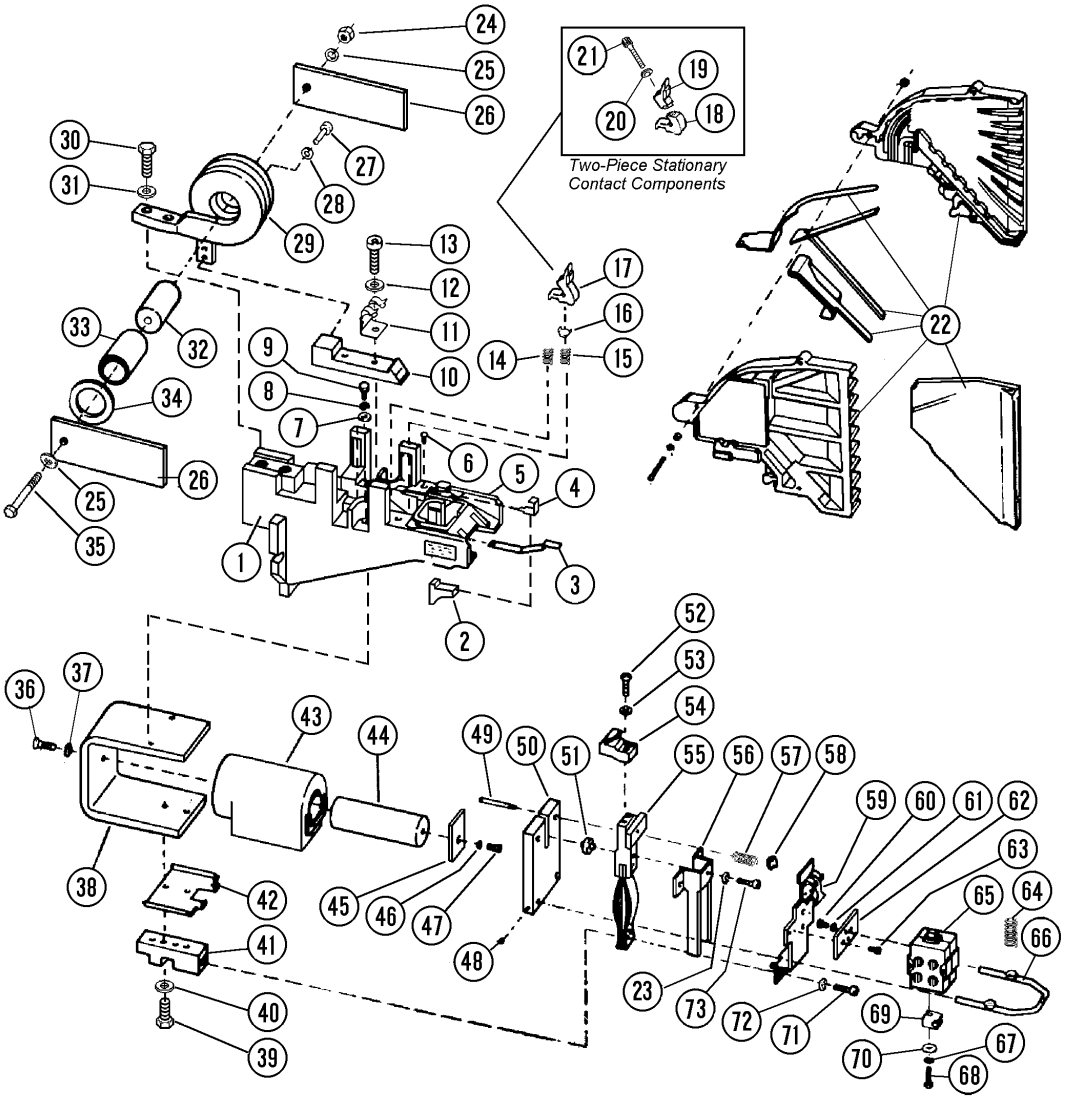
Two-Piece Stationary
Contact Components
64227Z

REF.	PART NUM.	QTY.	DESCRIPTION
43.00	GE1043	1	COIL
44.00	GE1044	1	CORE, MAGNET
45.00	GE1045	1	PLATE, POLE
46.00	VJ5672	1	LOCKWASHER, COUNTERSUNK - 1/4"
47.00	GE1046	1	SCREW - 1/4" - 20NC X 1/4"
48.00	GE1047	2	SETSCREW - 1/4" - 20NC X 1/4"
49.00	GE1048	2	PIN, SHOULDER
50.00	GE1049	1	ARMATURE ASSEMBLY
51.00	GE1050	1	OPEN STOP
52.00	GE1051	2	SCREW, SOCKET HEAD - 1/4" - 20NC X 1"
53.00	GE1052	2	LOCKWASHER - 1/4"
54.00	GE1053	1	CONTACT, MOVABLE
55.00	GE1054	1	SUPPORT, MOVABLE CONTACT
56.00	GE1055	1	MAGNET, HOLD-ON
57.00	GE1056	2	SPRING, CONTACT
58.00	GE1057	2	"X" WASHER
59.00	GE1058	1	BRACKET, SUPPORT
60.00	GE1059	2	SCREW - #10 - 32NF X 3/8"
61.00	GE1026	2	LOCKWASHER - #10
62.00	GE1060	1	SUPPORT, INTERLOCK
63.00	GE1061	2	SCREW - #10 - 32NF X 3/8" (SPECIAL)
64.00	GE1062	2	SPRING, RETURN
65.00	GE1063	1	SWITCH, INTERLOCK
66.00	GE1064	1	LEVER, OPENING
67.00	GE1065	1	LOCKWASHER - #10
68.00	GE1066	1	CAPSCREW - 1/4" - 20NC X 1"
69.00	GE1067	1	OPERATOR, INTERLOCK
70.00	GE1068	1	WASHER, BELLEVILLE
71.00	GE1051	2	SCREW, SOCKET HEAD - 1/4" - 20NC X 1"
72.00	GE1052	2	LOCKWASHER - 1/4"
73.00	GE1069	1	SCREW, SOCKET HEAD - 1/4" - 20NC X 1/2"

(SEE PRECEDING PAGE FOR BALANCE OF PARTS...)

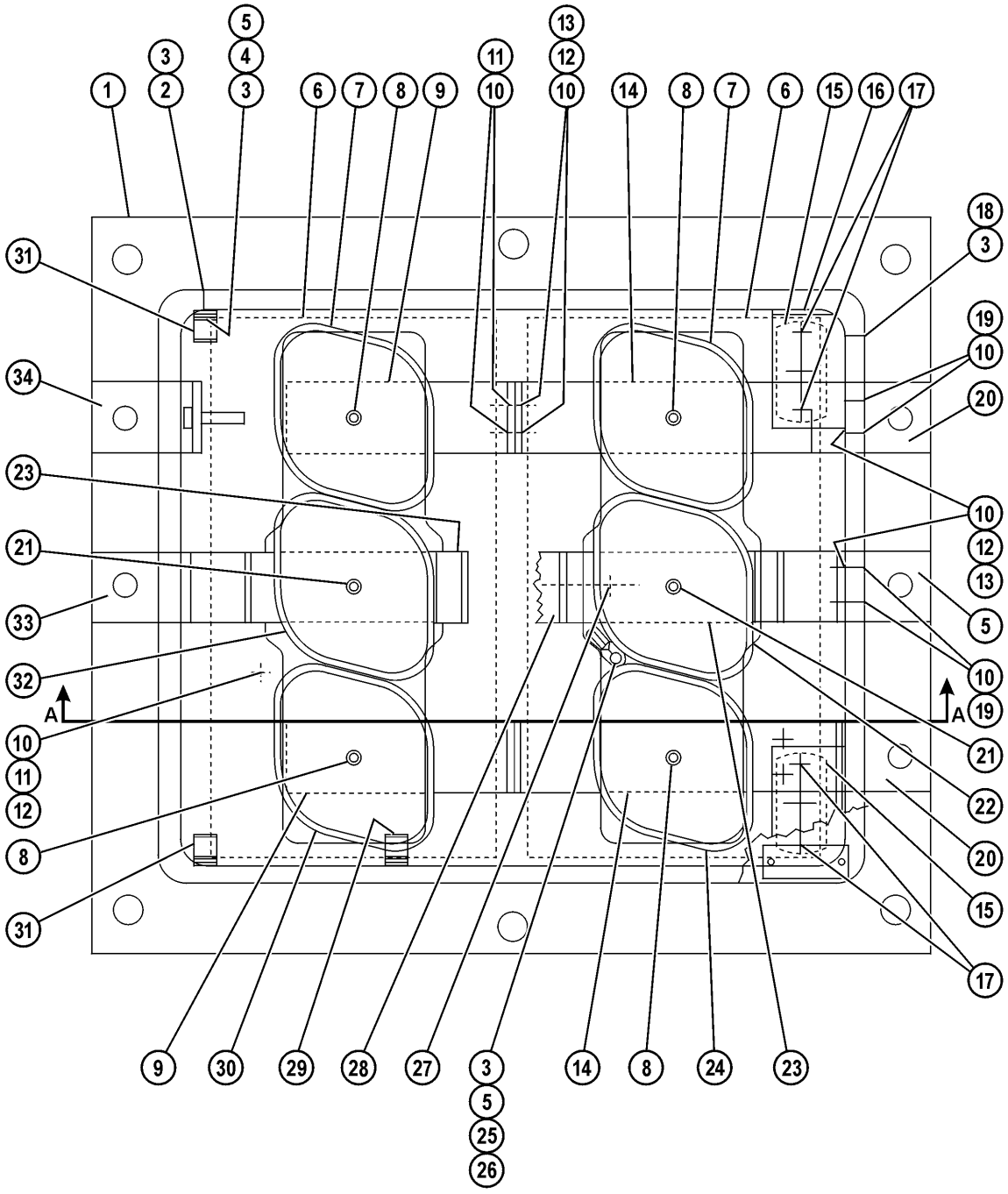
1
2
3
4
5
6
7
8
9
10
11
12
13
14
15
16
17
18
19
20
21
22
23
24
25
26
27
28
29
30
31
32
33
34
A
A
64228Z

REF.	PART NUM.	QTY.	DESCRIPTION
1.00	VE5127	1	BOX, PANEL
2.00	VE4921	3	CAPSCREW - #10 - 32NF X 1"
3.00	VS6662	AR	FLAT WASHER - #10
4.00	SF2755	3	NUT - #10 - 32NF
5.00	VE4601	9	LOCKWASHER - #10
6.00	VE5128	2	HEAT SINK
7.00	VE0036	2	DIODE
8.00	VP9525	4	PIN
9.00	VE0301	2	BAR, BUS
10.00	VE7202	AR	WASHER - 1/4" (SPECIAL)
11.00	VE4480	12	CAPSCREW - 1/4" - 20NC X 1"
12.00	DC3584	AR	LOCKWASHER - 1/4"
13.00	TD1549	AR	NUT - 1/4" - 20NC
14.00	VE0302	2	BAR, BUS
15.00	VE4382	2	RECEPTACLE
16.00	VE5098	2	SUPPORT
17.00	VE4383	4	SCREW - #4 - 40NC X 1/2"
18.00	VE5156	4	CAPSCREW - #10 - 32NF X 7/8"
19.00	VE6320	10	CAPSCREW - 1/4" - 20NC X 1 1/8"
20.00	VE0297	2	BAR, BUS
21.00	VE5136	2	ROLLPIN
22.00	GE1214	1	RECTIFIER
23.00	VE0299	2	BAR, BUS
24.00	GE1211	1	RECTIFIER
25.00	VJ9161	6	CAPSCREW - #10 - 32NF X 1/2"
25.01	VE7272	AR	SEALANT
26.00	BF0932	AR	SENSOR, THERMISTOR
27.00	VE5131	1	SCREW - 1/4" - 20NC X 1/2"
28.00	VE2604	1	BAR, BUS
29.00	VE6323	2	CLAMP, CABLE
30.00	GE1212	1	RECTIFIER
31.00	VE4917	3	CLAMP, CABLE
32.00	GE1213	1	RECTIFIER
33.00	VE3217	1	BAR, BUS
34.00	VE5129	1	BAR, BUS - W/ SCREW

(SEE FOLLOWING PAGE FOR VIEW A-A.)

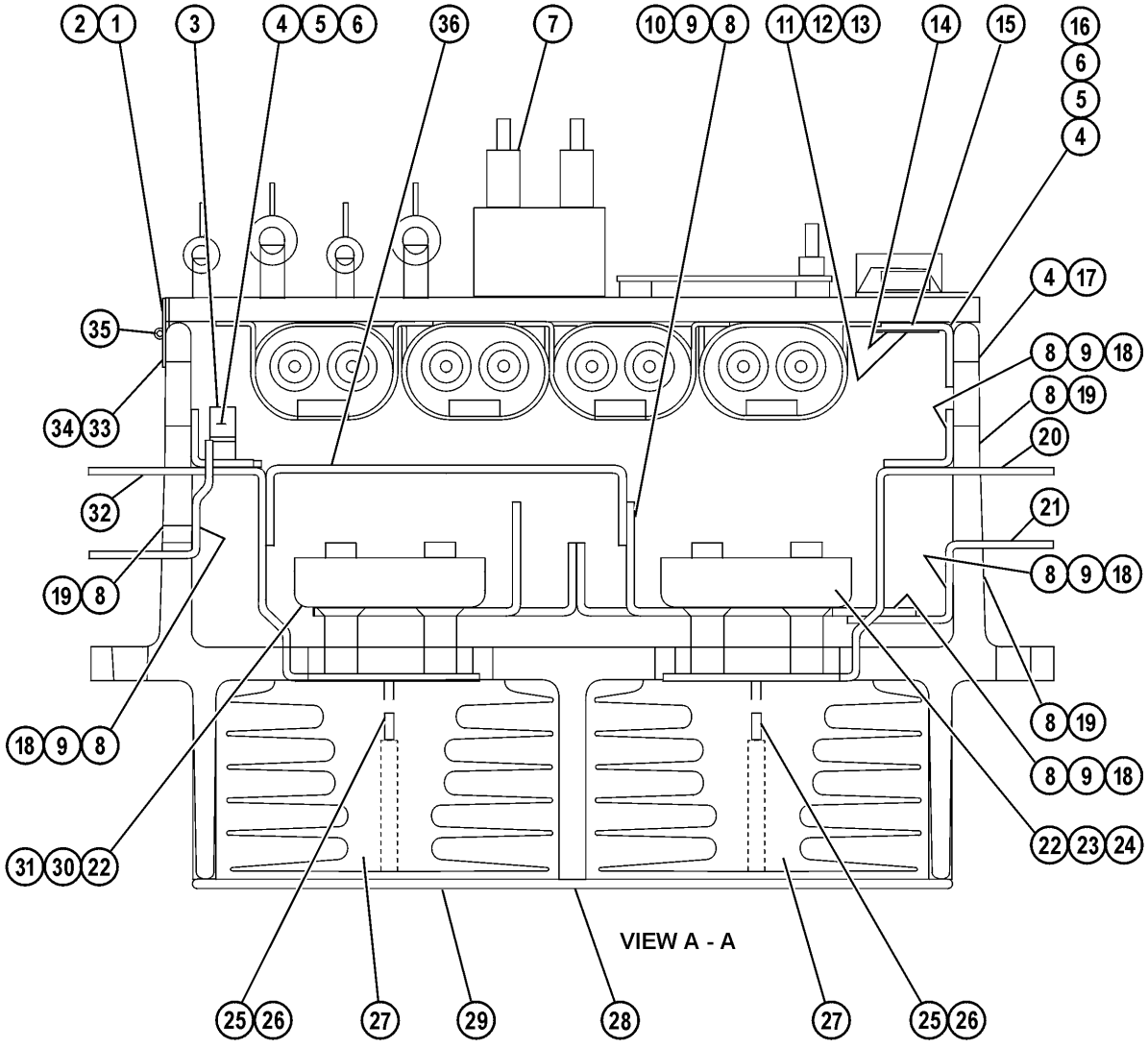
2 1
3
4 5 6
36
7
10 9 8
11 12 13
14
15
16
6
5
4
4 17
35
8 9 18
8 19
34 33
20
32
21
19 8
8 9 18
18 9 8
8 19
8 9 18
22 23 24
31 30 22
VIEW A - A
25 26
27
29
28
27
25 26

64229Z

REF.	PART NUM.	QTY.	DESCRIPTION
1.00	VE4913	5	SCREW (SPECIAL)
2.00	VE4604	AR	FLAT WASHER - #8 (NARROW)
3.00	VE4917	3	CLAMP, CABLE
4.00	VS6662	AR	FLAT WASHER - #10
5.00	VE4601	9	LOCKWASHER - #10
6.00	SF2755	3	NUT - #10 - 32NF
7.00	GE1210	1	PANEL COVER ASSEMBLY (SEE INDEX)
8.00	VE7202	AR	WASHER - 1/4" (SPECIAL)
9.00	DC3584	AR	LOCKWASHER - 1/4"
10.00	VE4650	2	CAPSCREW - 1/4" - 20NC X 3/4"
11.00	VE4907	4	FLAT WASHER - 1/4"
12.00	VE4908	4	LOCKWASHER - 1/4"
13.00	VE4909	4	NUT - #4 - 40NC
14.00	VE4382	2	RECEPTACLE
15.00	VE4383	4	SCREW - #4 - 40NC X 1/2"
16.00	VE5098	2	SUPPORT
17.00	VE5156	4	CAPSCREW - #10 - 32NF X 7/8"
18.00	TD1549	AR	NUT - 1/4" - 20NC
19.00	VE6320	10	CAPSCREW - 1/4" - 20NC X 1 1/8"
20.00	VE5130	1	BAR, BUS
21.00	VE0297	2	BAR, BUS
22.00	VE0036	2	DIODE
23.00	GE1211	1	RECTIFIER
24.00	GE1214	1	RECTIFIER
25.00	VP9525	4	PIN
26.00	VE5136	2	ROLLPIN
27.00	VE5128	2	HEAT SINK
28.00	VE4915	9	SCREW - #8 X 1/2"
29.00	VE4389	1	SHIELD, INSULATION
30.00	GE1212	1	RECTIFIER
31.00	GE1213	1	RECTIFIER
32.00	VE3217	1	BAR, BUS
33.00	VE4912	5	SCREW - #8 X 5/8"
34.00	VE4604	AR	FLAT WASHER - #8 (NARROW)
35.00	VE4911	1	HINGE
36.00	VE2604	1	BAR, BUS

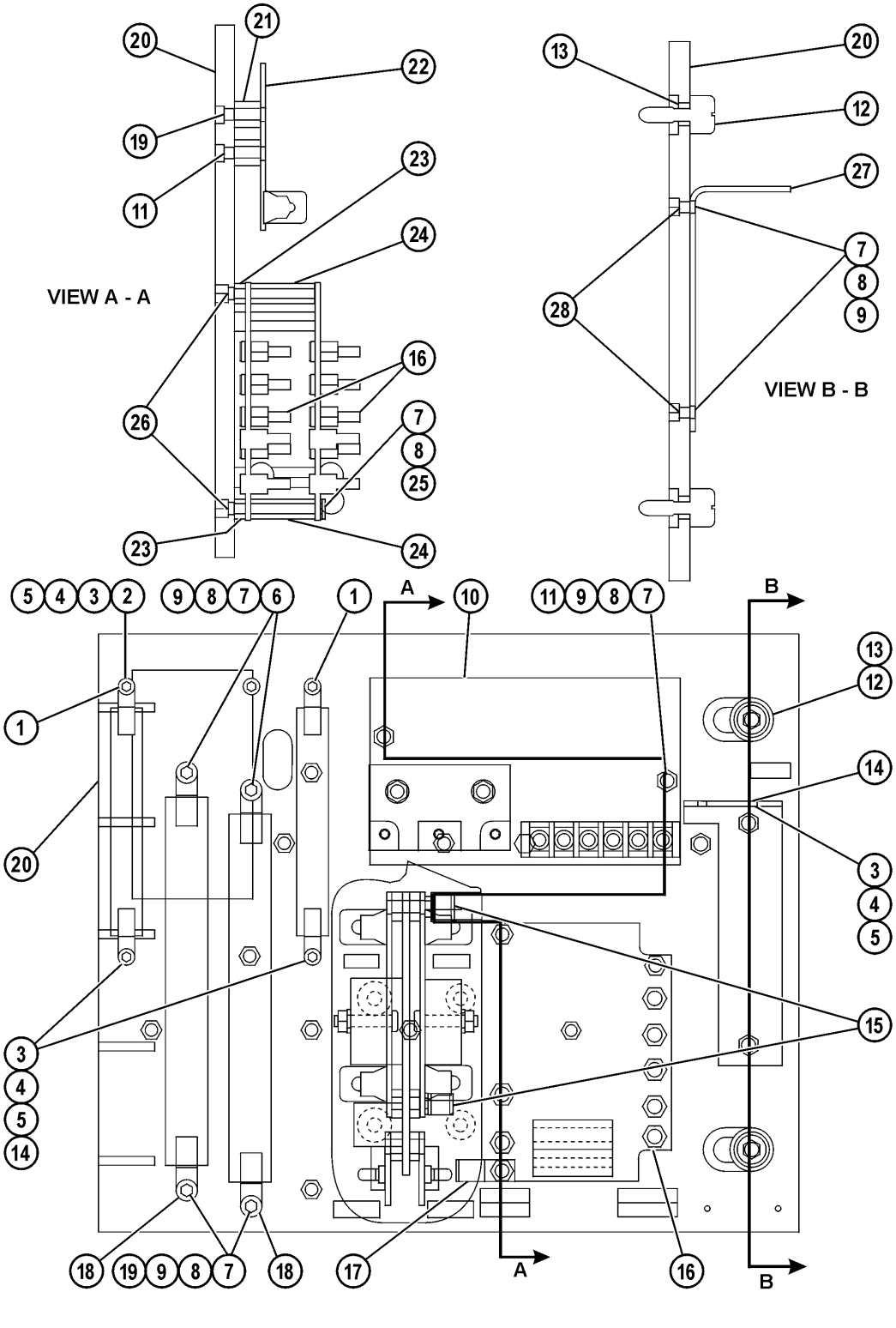
VIEW A - A
VIEW B - B
A
B
64232Z

REF.	PART NUM.	QTY.	DESCRIPTION
1.00	VS6823	2	RESISTOR
2.00	VE5976	1	SCREW - #6 - 40NF X 7/8"
3.00	HE5125	4	FLAT WASHER - #6
4.00	DF4944	4	LOCKWASHER - #6
5.00	VE5959	4	NUT
6.00	VJ6586	10	CAPSCREW - #10 - 32NF X 3/4"
7.00	VS6662	AR	FLAT WASHER - #10
8.00	VE4601	AR	LOCKWASHER - #10
9.00	SF2755	AR	NUT - #10 - 32NF
10.00	VE0687	1	MODULE
11.00	VE5974	5	SCREW - #10 - 32NF X 1 1/8"
12.00	VE5972	2	SCREW, CAPTIVE
13.00	VS7484	2	WASHER, RETAINING
14.00	VP9597	3	SCREW - #6 - 40NF X 5/8"
15.00	VE5133	2	CLAMP, CABLE
16.00	VS7373	2	MODULE
17.00	VE4917	1	CLAMP, CABLE
18.00	VS6824	2	RESISTOR
19.00	VE4921	7	CAPSCREW - #10 - 32NF X 1"
20.00	GE1216	1	BASE
21.00	PB3606	2	SPACER
21.01	VE7272	AR	SEALANT
22.00	VE0687	1	MODULE
23.00	VE5971	4	WASHER
24.00	GE1222	4	SPACER
25.00	VJ9161	4	CAPSCREW - #10 - 32NF X 1/2"
26.00	VE5156	4	CAPSCREW - #10 - 32NF X 7/8"
27.00	GE1218	1	BRACKET
28.00	VE4610	4	SCREW - #10 - 32NF X 5/8"

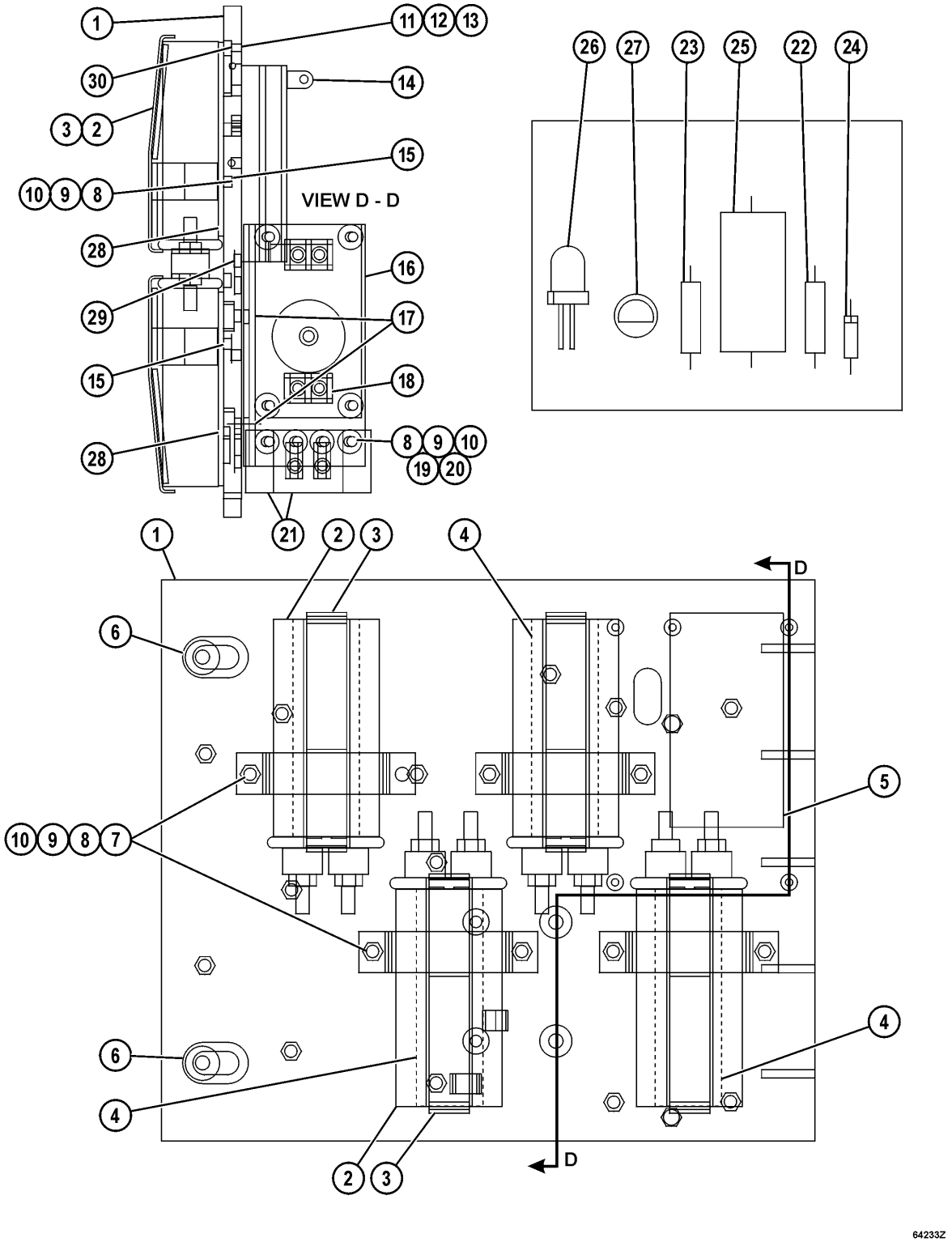
VIEW D - D
D
D
64233Z

REF.	PART NUM.	QTY.	DESCRIPTION
1.00	GE1216	1	BASE
2.00	VE3847	4	CONDENSER
3.00	VE5967	4	CLAMP
3.01	VE5968	4	GASKET
3.02	VE3035	AR	CEMENT
4.00	GE1221	4	GASKET
5.00		1	DECAL (1)
6.00	VS7484	2	WASHER, RETAINING
7.00	VJ6586	10	CAPSCREW - #10 - 32NF X 3/4"
8.00	VS6662	AR	FLAT WASHER - #10
9.00	VE4601	AR	LOCKWASHER - #10
10.00	SF2755	AR	NUT - #10 - 32NF
11.00	HE5125	4	FLAT WASHER - #6
12.00	DF4944	4	LOCKWASHER - #6
13.00	VE5959	4	NUT
14.00	VS6823	2	RESISTOR
15.00	VJ6586	10	CAPSCREW - #10 - 32NF X 3/4"
16.00	GE1219	1	BRACKET
17.00	VE4610	4	SCREW - #10 - 32NF X 5/8"
18.00	GE1217	2	MODULE
19.00	VE4597	8	WASHER - 1/2"
20.00	VE5974	5	SCREW - #10 - 32NF X 1 1/8"
21.00	VS6820	2	MODULE
22.00	VS6990	2	RESISTOR
23.00	VS6996	2	RESISTOR
24.00	VS2616	2	DIODE
25.00	VS7210	2	CAPACITOR
26.00	VS7214	2	DIODE
27.00	GE1220	2	TRANSIPAD
28.00	GE1221	4	GASKET
29.00	VP9597	3	SCREW - #6 - 40NF X 5/8"
30.00	VE5976	1	SCREW - #6 - 40NF X 7/8"

NOTE: (1) NOT SERVICED SEPARATELY.

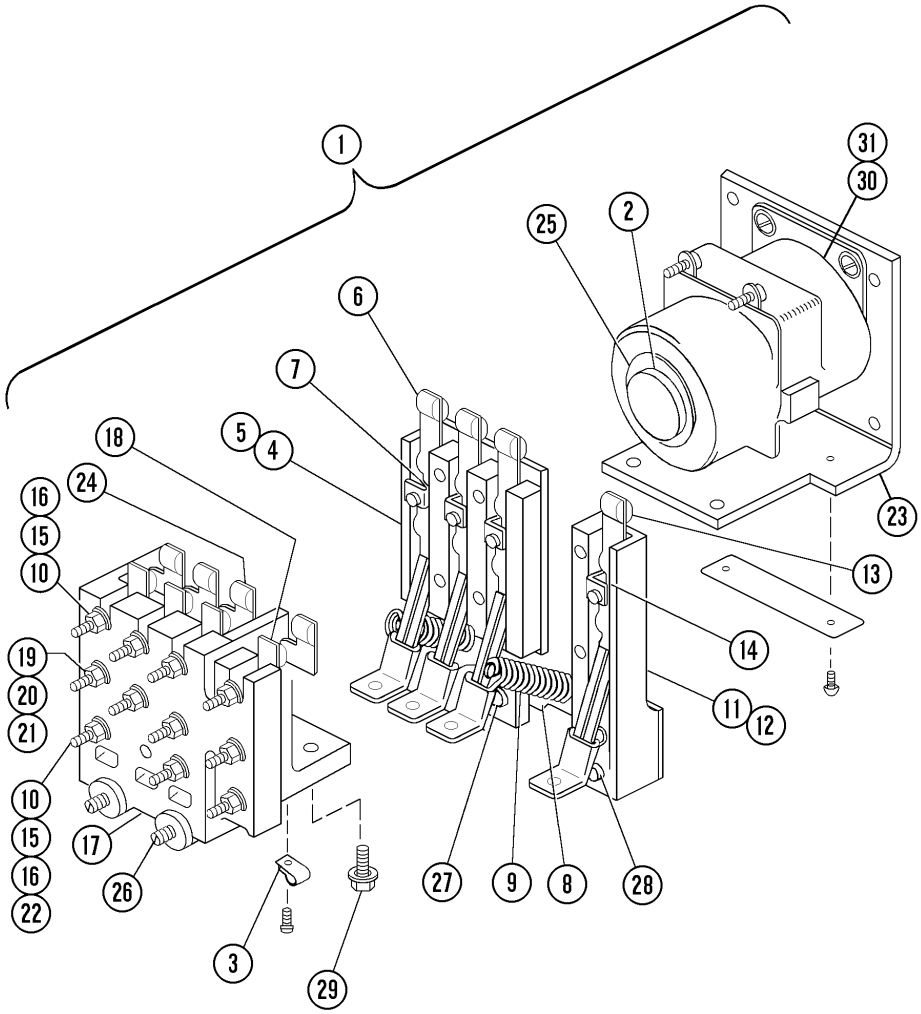
1
31
30
25
2
6
7
5
4
18
24
16
15
10
19
20
21
10
15
16
22
17
26
3
29
27
9
8
28
14
11
12
13
23

64037Z

REF.	PART NUM.	QTY.	DESCRIPTION
1.00	VG7043	1	RELAY - CPR & GFR
2.00	VS8980	1	CORE
3.00	VS9161	1	CLAMP
4.00	VP9576	1	ARMATURE
5.00	VS9254	1	ARMATURE
6.00	VM0251	3	FINGER/TIPS AND SHUNT
7.00	VM0240	3	SPRING
8.00	VS9224	1	SEAT, SPRING
9.00	VM0241	2	SPRING
10.00	DC3101	4	LOCKWASHER - #10
11.00	VP9587	1	FINGER
12.00	VS9255	1	BASE
13.00	VM0251	1	FINGER/TIPS AND SHUNT
14.00	VM0240	1	SPRING
15.00	VS6662	4	FLAT WASHER - #10
16.00	SF2755	4	NUT - #10 - 32NF
17.00	VS9223	1	SUPPORT
18.00	VM0226	4	CONTACT
19.00	VS6662	8	FLAT WASHER - #10
20.00	DC3101	8	LOCKWASHER - #10
21.00	SF2755	8	NUT - #10 - 32NF
22.00	VJ9235	4	MACHINE SCREW - #10 - 32NF X 7/8"
23.00	VS9284	1	MAGNET FRAME
24.00	VM0227	4	CONTACT
25.00	VJ9163	1	FLAT WASHER
26.00	VJ9159	2	MACHINE SCREW / WASHERS - #10 - 32NF X 3/8"
27.00	H2643	2	LOCKWASHER - #10
28.00	VP9593	2	CAPSCREW / WASHERS
29.00	VJ9162	2	CAPSCREW / WASHERS - 1/4" - 20NC X 3/4"
30.00	C5747	1	CAPSCREW - 5/16" - 18NC X 3/4"
31.00	VM0278	1	COIL, OPERATING

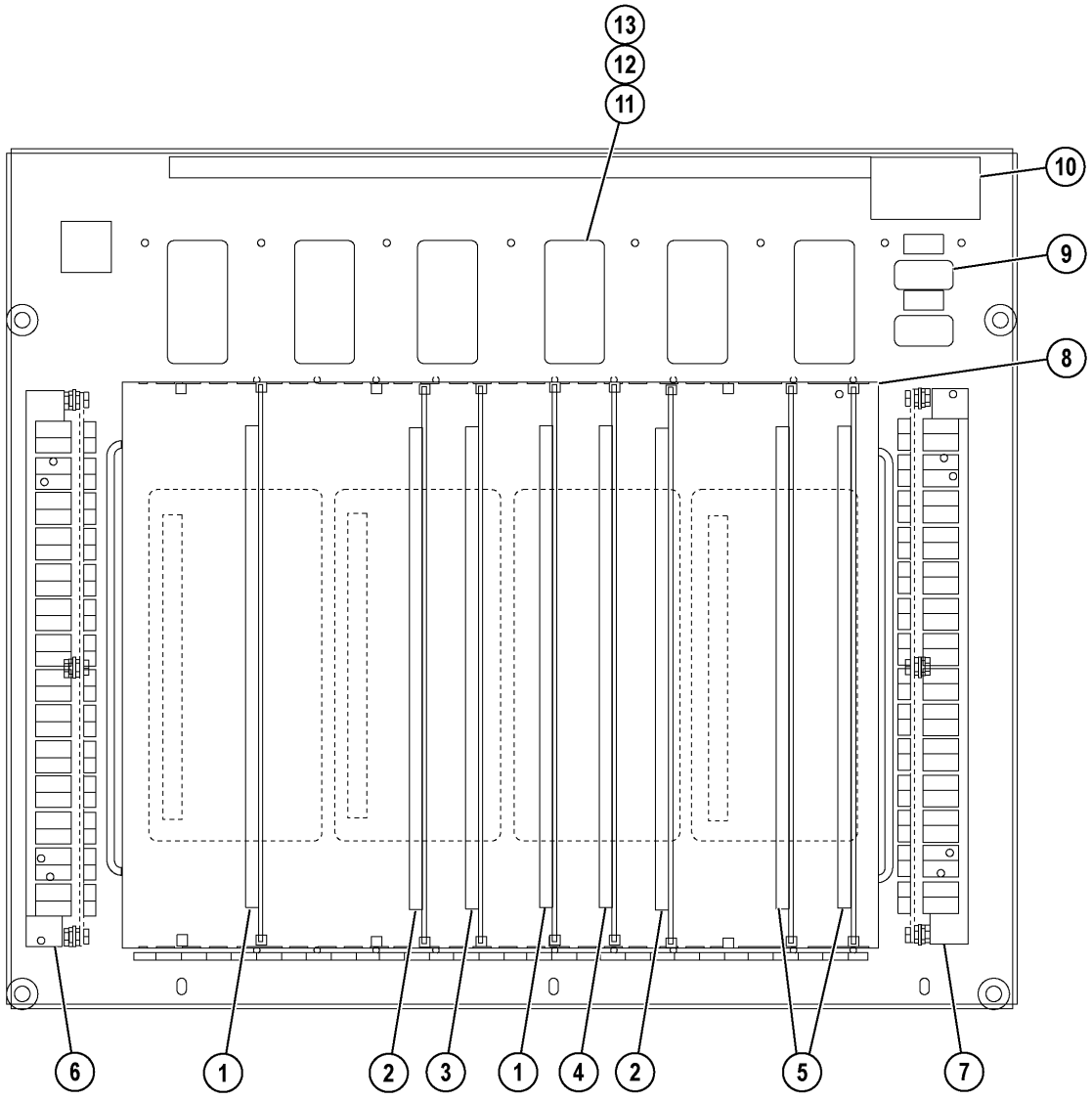
13
12
11
10
9
8
6
1
2
3
1
4
2
5
7
64307Z

REF.	PART NUM.	QTY.	DESCRIPTION
1.00	XA4403	2	CARD (174)
2.00	GE0309	2	CARD (104)
3.00	XA4404	1	CARD (173)
4.00	XA4228	1	CARD (160)
5.00	XA4229	2	CARD (179)
6.00	GE1486	1	MODULE ASSEMBLY
7.00	GE1487	1	MODULE ASSEMBLY
8.00	GE1500	1	COVER ASSEMBLY
9.00	GE1207	2	RECEPTACLE
10.00	VE8776	1	DECAL - WARNING
11.00	PB2076	12	PIN, GUIDE (MALE)
12.00	PB2075	12	PIN, GUIDE (FEMALE)
13.00	GE1206	6	CONNECTOR

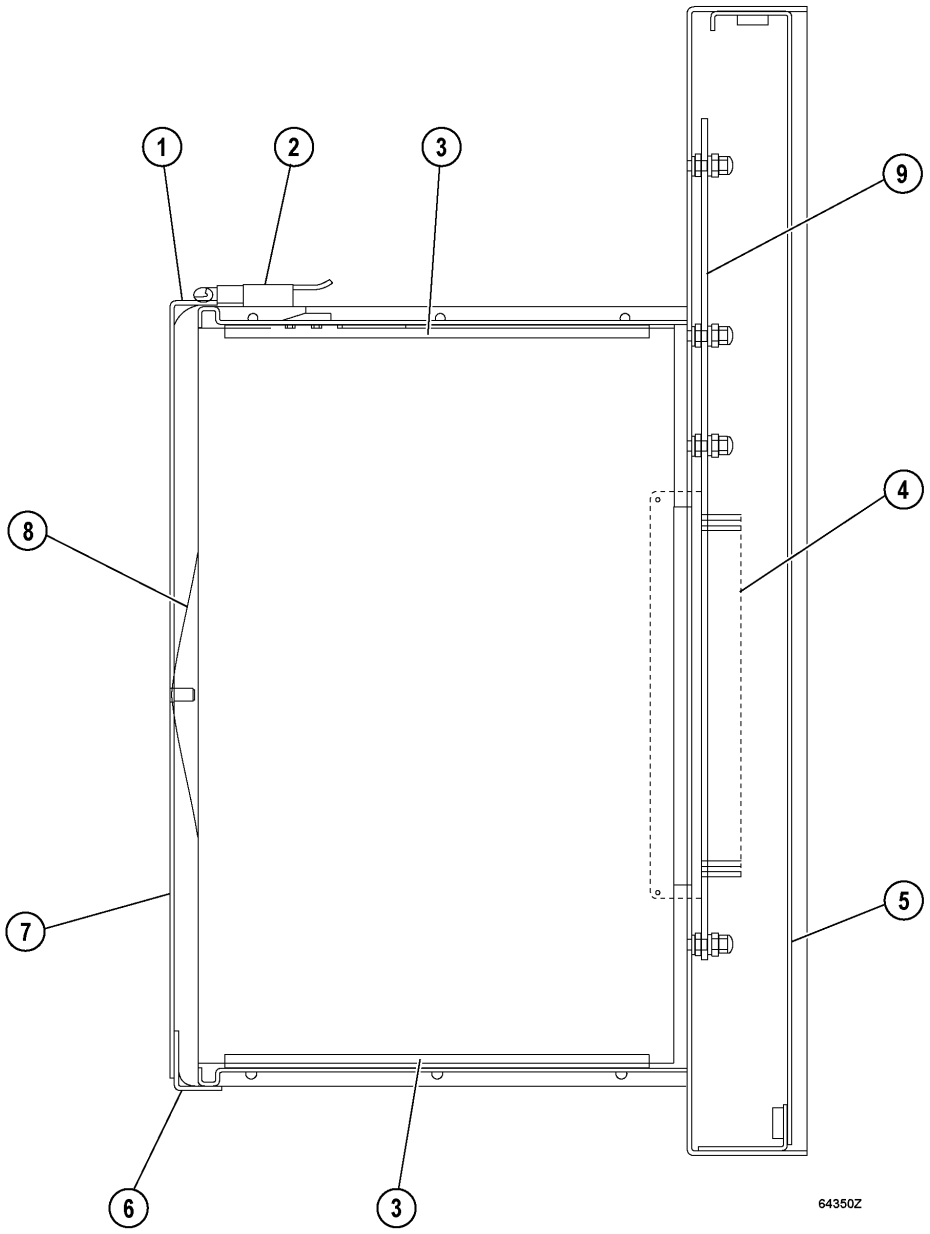
1
2
3
9
4
8
7
5
6
3
64350Z

REF.	PART NUM.	QTY.	DESCRIPTION
1.00	VE8183	2	STRIKE
2.00	VE8181	2	CATCH
3.00	VE8180	16	GUIDE, CARD
4.00	GE1205	12	CONNECTOR - 210 CIRCUITS
5.00	GE1204	1	COVER
6.00	GE1501	1	HINGE
7.00	VE8775	1	DECAL, CAUTION
8.00	VE8188	2	SPRING
9.00	GE1483	1	BACKPLANE

(SEE PRECEDING PAGE FOR BALANCE OF PARTS.)

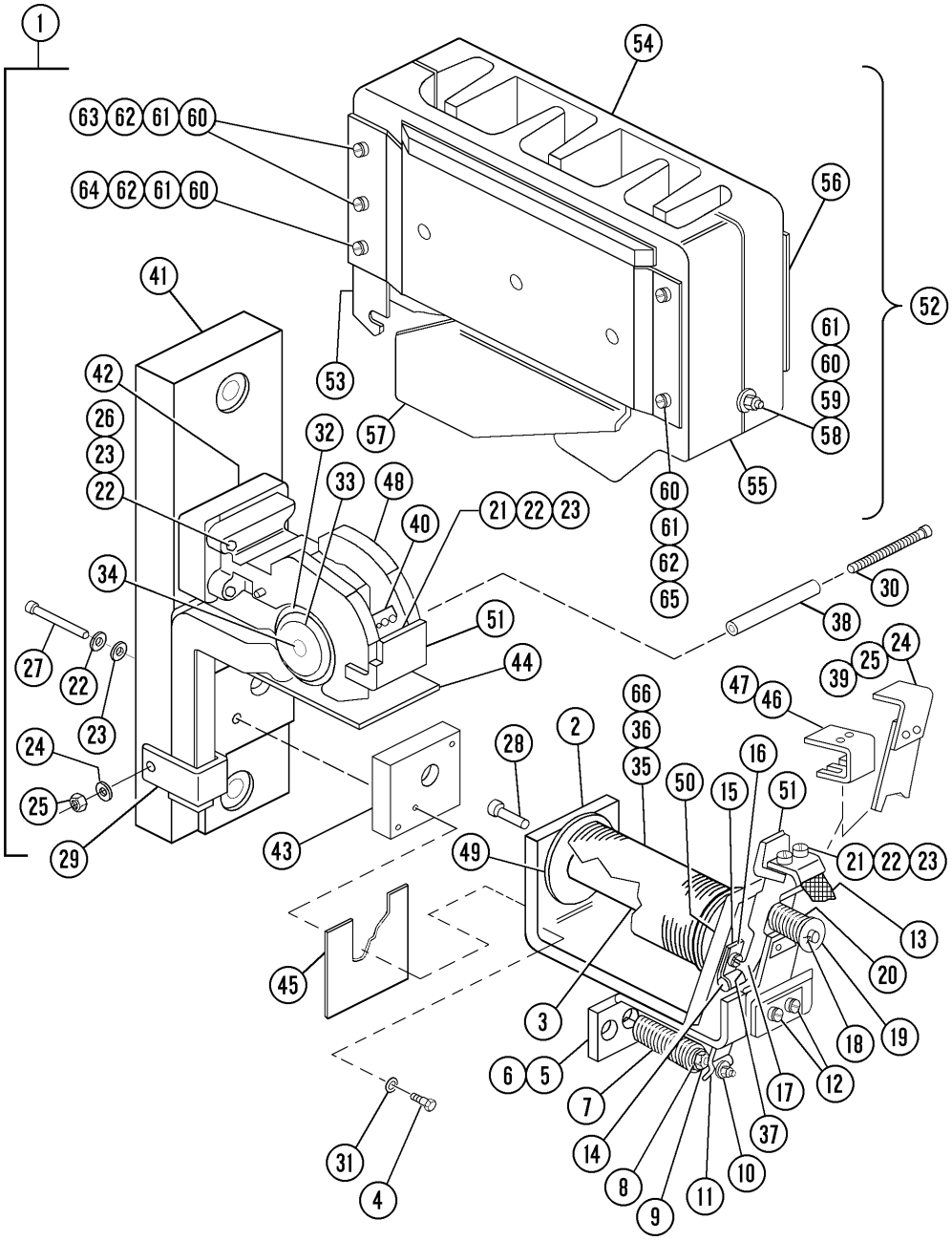
1
54
63 62 61 60
64 62 61 60
56
41
52
61
60
59
58
42
26
23
22
53
57
32
33
48
40
21 22 23
55
60
61
62
65
34
30
38
51
44
27
22
23
24
25
29
43
28
2
66
36
35
50
15
16
51
47
46
39
25
24
21 22 23
49
45
3
13
20
18
19
6
5
7
14
8
9
11
10
17
12
37
31
4

64069Z

REF.	PART NUM.	QTY.	DESCRIPTION
1.00	VE1317	1	CONTACTOR - GF & GFR (SEE INDEX)
2.00	VS8925	1	MAGNET, FRAME
3.00	VS8908	1	CORE
4.00	VS9207	1	MACHINE SCREW / LOCKWASHER - #8 - 36NF X 1/2"
5.00	VS9322	1	FRAME, SPRING BRACKET
6.00	VK0979	2	CAPSCREW / LOCKWASHER - 3/8" - 16NC X 3/4"
7.00	VM0242	1	SPRING W/ PLUG
8.00	VE5771	1	LOCKWASHER - #10 (EXTERNAL TOOTH)
9.00	SF2755	1	NUT - #10 - 32NF
10.00	VS9034	1	MACHINE SCREW - #10 - 32NF X 2 7/16"
11.00	BF1890	1	ARMATURE ASSEMBLY
12.00	R3869	2	CAPSCREW - 5/16" - 18NC X 5/8"
12.01	C1538	2	LOCKWASHER - 5/16"
13.00	VM0275	1	SHUNT
14.00	VS9172	1	PIN
15.00	VS9171	2	CLAMP
16.00	VS9209	2	MACHINE SCREW / LOCKWASHER - #10 - 32NF X 1/2"
17.00	VS8285	1	CONTACT ARM
18.00	VE5761	1	COTTER PIN
19.00	VS9175	1	SEAT, SPRING
20.00	VM0253	1	SPRING
21.00	VJ7860	4	CAPSCREW - 5/16" - 18NC X 1 1/4"
22.00	VE4696	8	LOCKWASHER - 5/16"
23.00	AK1960	8	FLAT WASHER - 5/16"
24.00	DC3584	3	LOCKWASHER - 1/4"
25.00	VE4347	3	NUT
26.00	VE2250	2	CAPSCREW - 5/16" - 18NC X 2 1/4"
27.00	VE2249	2	CAPSCREW - 5/16" - 18NC X 2"
28.00	C1603	1	CAPSCREW - 3/8" - 16NC X 1 1/4"
28.01	C0312	1	LOCKWASHER - 3/8"
29.00	VJ8979	1	CLAMP
30.00	VJ9150	1	CAPSCREW - 1/4" - 20NC X 3 1/2"
31.00	VE4604	1	FLAT WASHER - #8 (NARROW)
32.00	VJ8710	2	INSULATION FLANGE
33.00	BF1891	2	CORE FLANGE
34.00	BF1892	1	CORE
35.00	VS6662	2	FLAT WASHER - #10
36.00	VJ9158	2	MACHINE SCREW - #10 - 32NF X 3/8"
36.01	H2643	2	LOCKWASHER - #10
37.00	VS6881	2	FLAT WASHER - 5/16" (BRASS)
38.00	VS7830	1	SPACER
39.00	VM0217	1	HORN, ARC CHUTE

(SEE FOLLOWING PAGE FOR BALANCE OF PARTS...)

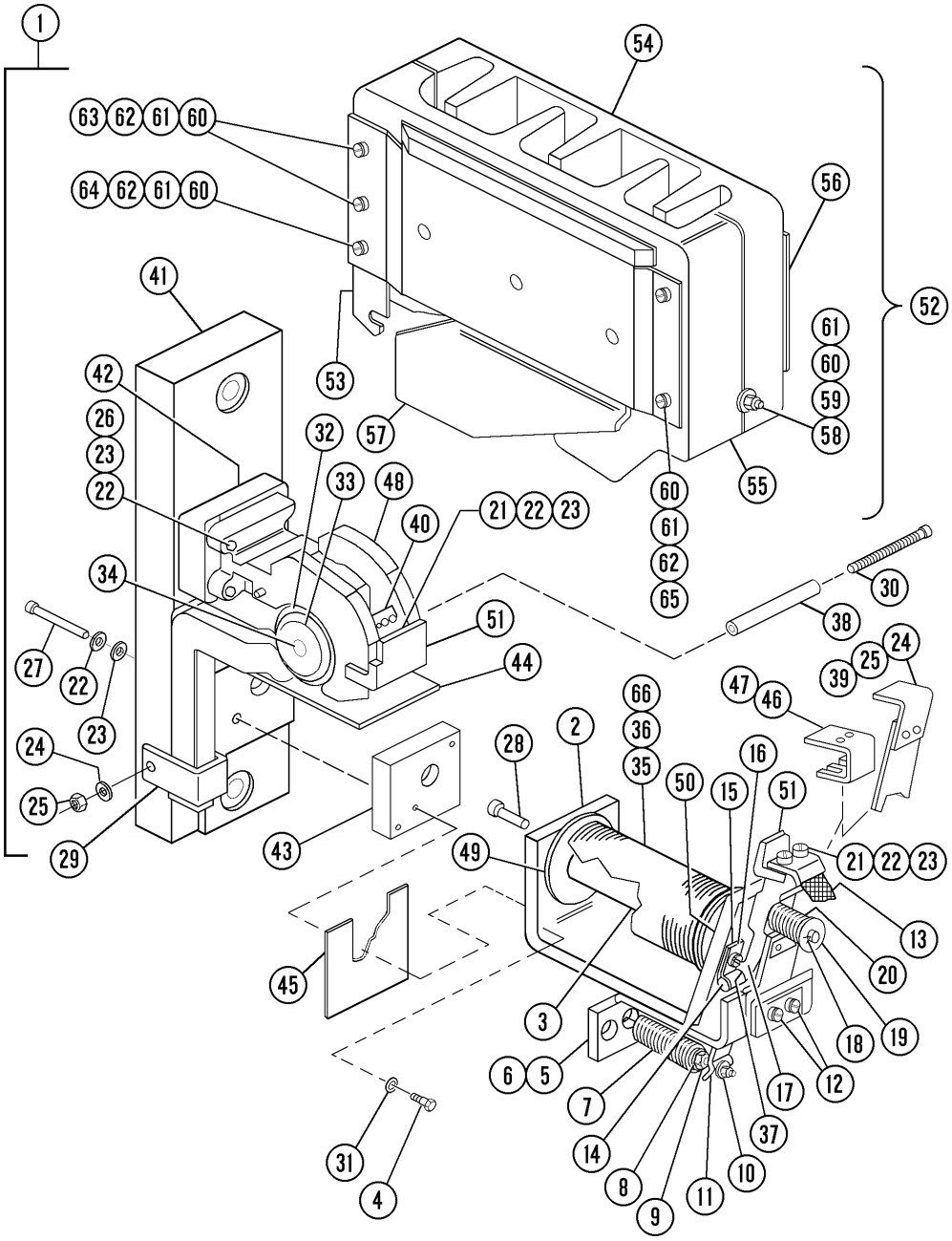
1
54
63 62 61 60
64 62 61 60
56
41
52
61
60
59
58
42
26
23
22
53
57
32
33
48
40
21 22 23
60
61
62
65
55
34
30
38
51
44
27
22
23
24
25
29
43
28
2
66
36
35
50
15
16
51
47
46
39
25
24
21 22 23
49
45
3
13
20
18
19
6
5
7
14
8
9
11
10
17
12
37
31
4

64069Z

REF.	PART NUM.	QTY.	DESCRIPTION
40.00	VM0229	1	HORN, ARCING
41.00	VE7738	1	BLOCK, SUPPORT
42.00	VS7165	1	BLOCK
43.00	VS7166	1	BLOCK
44.00	VS7132	1	INSULATION
45.00	VE2248	1	SHIM
46.00	VM0229	1	HORN, ARCING
47.00			(NOT USED IN THIS APPLICATION)
48.00	VJ1124	1	SUPPORT, BLOWOUT COIL
49.00	VE3288	1	PLATE, LOCKING
50.00	VE0252	1	WASHER, SPRING
51.00	VE1183	2	TIP, CONTACT
52.00	VJ0846	1	ARC CHUTE
53.00	VS6697	2	SUPPORT
54.00	VJ8965	1	R.H. SIDE, ARC CHUTE
55.00	VJ8966	1	L.H. SIDE, ARC CHUTE
56.00	VE5778	1	PIECE, POLE
57.00	VE1076	1	PIECE, POLE
58.00	VE5779	1	MACHINE SCREW - 1/4" - 20NC X 1 1/4"
59.00	VJ3711	2	FLAT WASHER - 1/4"
60.00	DC3584	6	LOCKWASHER - 1/4"
61.00	TD1549	6	NUT - 1/4" - 20NC
62.00	VE5781	5	CAPSCREW - 1/4" - 20NC X 3 1/4"
63.00	VF6144	2	FLAT WASHER - 1/4"
64.00	VS6695	4	BUSHING
65.00	VS6696	4	BUSHING
66.00	VM0250	1	COIL, OPERATING

(SEE PRECEDING PAGE FOR BALANCE OF PARTS...)

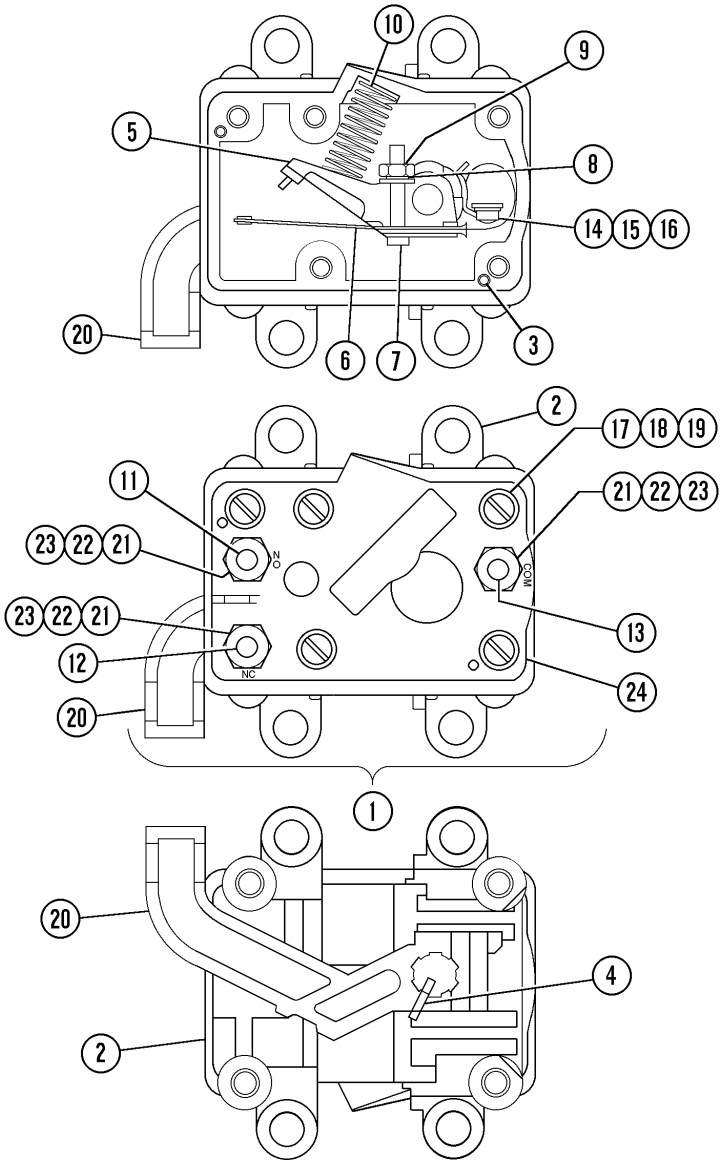
10
9
5
8
14
15
16
20
6
7
3
2
17
18
19
11
21
22
23
23
22
21
NO
COM
23
22
21
13
12
NC
24
20
1
20
4
2

64035Z

REF.	PART NUM.	QTY.	DESCRIPTION
1.00	VE3530	1	INTERLOCK, POSITION SENSOR
2.00		1	BOX
3.00	VE1142	2	PIN
4.00	VE1142	1	PIN
5.00	VE3616	1	INNER ARM ASSEMBLY
6.00	VE0735	1	SPRING
7.00	VE5751	1	MACHINE SCREW - #4 - 40NC X 5/8"
8.00	VE4908	1	LOCKWASHER - 1/4"
9.00	VE4909	1	NUT - #4 - 40NC
10.00	VE1143	1	SPRING
11.00	VE4405	1	STUD ASSEMBLY
12.00	VE4406	1	STUD ASSEMBLY
13.00	VE5752	1	STUD, TAPPED
14.00	VE5753	1	MACHINE SCREW - #4 - 40NC X 1/4"
15.00	VE4908	1	LOCKWASHER - 1/4"
16.00	VE4907	1	FLAT WASHER - 1/4"
17.00	BF0020	5	MACHINE SCREW - #6 - 32NC X 5/8"
18.00	TR5445	5	LOCKWASHER - 1/2"
19.00	HE5125	5	FLAT WASHER - #6
20.00	VE5757	1	OUTER ARM ASSEMBLY
21.00	SF2755	3	NUT - #10 - 32NF
22.00	VC1390	3	LOCKWASHER - 5/8"
23.00	VS6662	3	FLAT WASHER - #10
24.00	BF3174	1	COVER

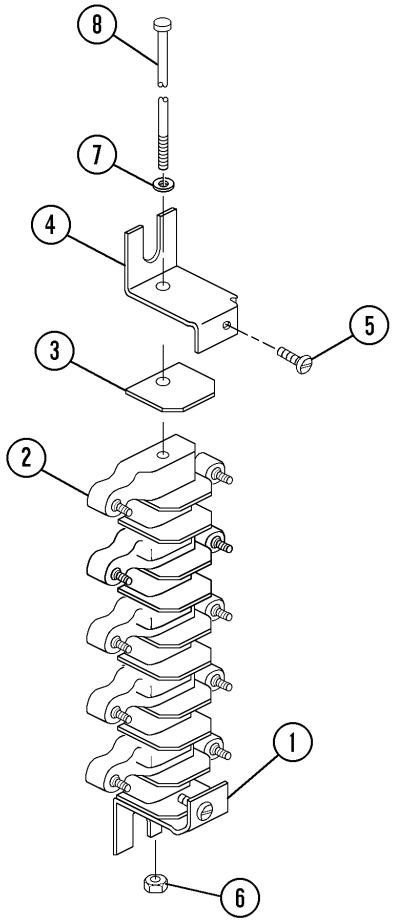

64070Z

REF.	PART NUM.	QTY.	DESCRIPTION
1.00	VS8193	1	BOARD, TERMINAL
2.00	VS9306	20	TERMINAL BLOCK/STUD
3.00	VS9188	30	SHIELD
4.00	VJ6996	2	BRACKET
5.00	VJ9168	2	FASTENER
6.00	SF2755	1	NUT - #10 - 32NF
7.00	DC3101	1	LOCKWASHER - #10
8.00	VJ9131	1	TIE ROD - 11 3/4" LONG

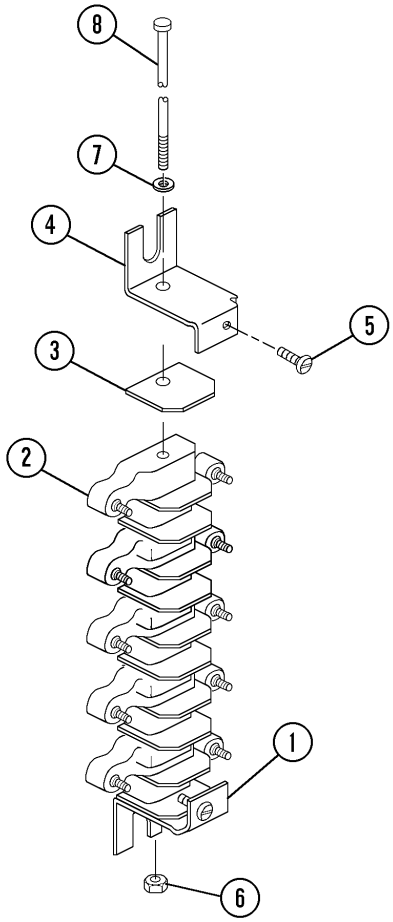

64070AZ

REF.	PART NUM.	QTY.	DESCRIPTION
1.00	VS8192	1	TERMINAL, BOARD
2.00	VS9306	12	TERMINAL BLOCK/STUD
3.00	VS9188	19	SHIELD
4.00	VJ6996	2	BRACKET
5.00	VJ9168	2	FASTENER
6.00	SF2755	1	NUT - #10 - 32NF
7.00	DC3101	1	LOCKWASHER - #10
8.00	VS9187	1	TIE ROD - 7 3/16" LONG

ALTERNATOR GROUP

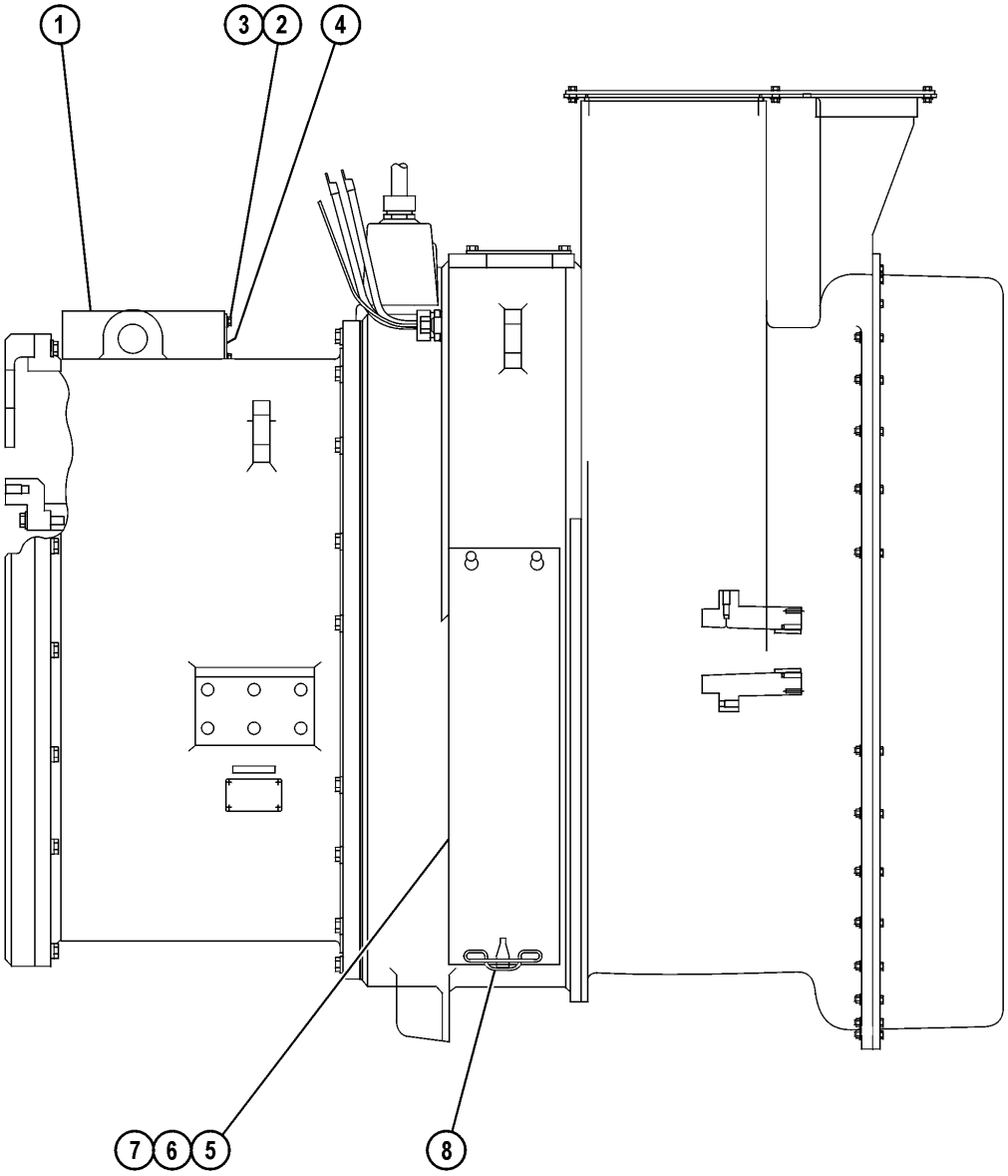

64237Z

REF.	PART NUM.	QTY.	DESCRIPTION
1.00	GE1161	1	COVER
2.00	TC1234	8	CAPSCREW - 3/8" - 16NC X 3/4"
3.00	VE4687	8	LOCKWASHER - 3/8"
4.00	GE0396	1	PLATE, FRONT
5.00	GE1162	2	COVER ASSEMBLY
6.00	GE1164	2	GASKET
7.00	VJ2672	AR	CEMENT
8.00	GE1163	2	LATCH
NS	GE1172	1	PLUG, PIPE (BOTTOM OF HEAD FRAME)

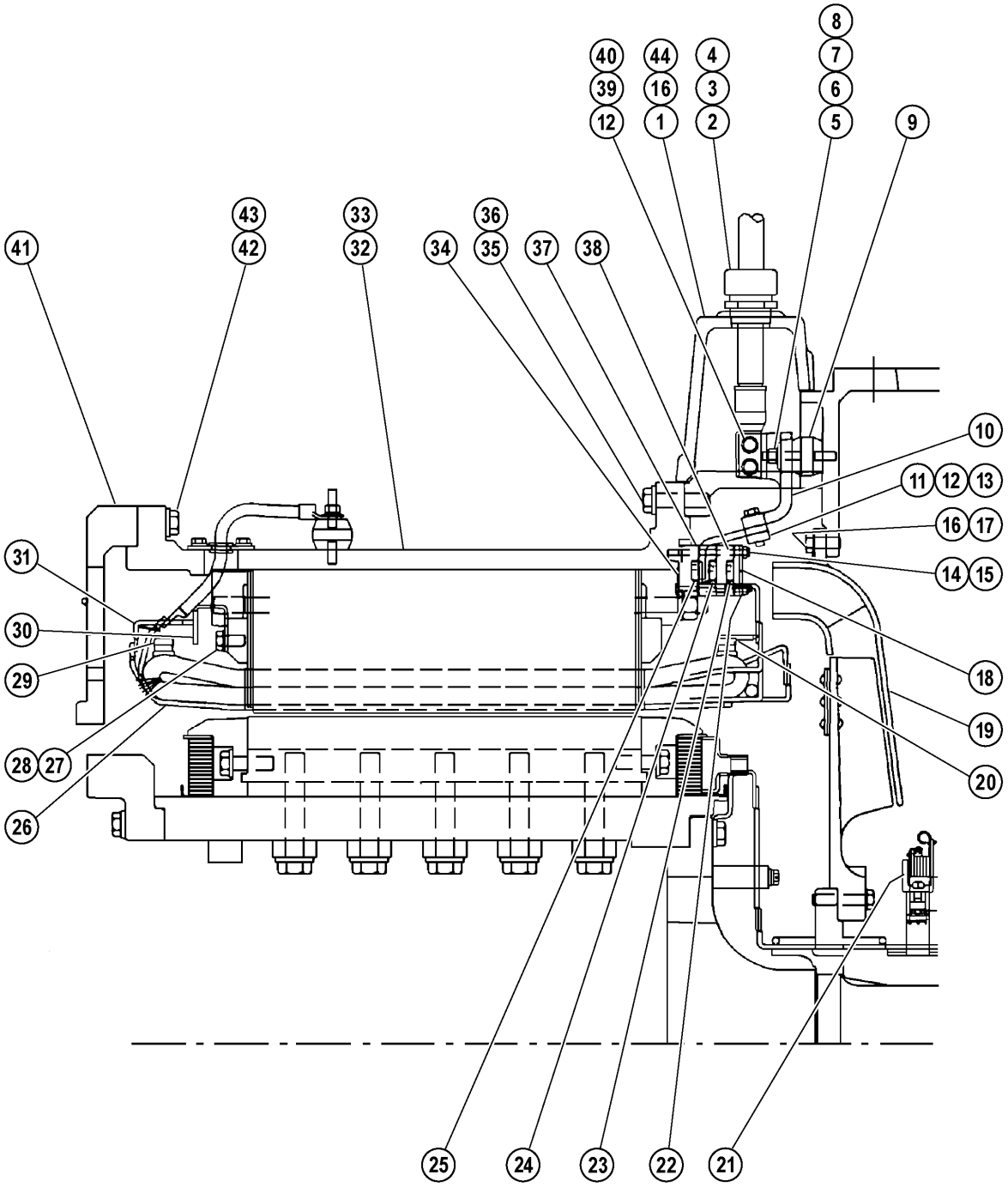
8
7
6
5
9
40
39
12
44
16
1
4
3
2
43
42
33
32
36
35
37
38
34
41
10
11
12
13
16
17
14
15
31
30
29
18
19
20
28
27
26
25
24
23
22
21
64331Z

REF.	PART NUM.	QTY.	DESCRIPTION
1.00	GE1150	1	COVER ASSEMBLY
1.01	GE1151	1	GASKET
1.02	VJ2672	AR	CEMENT
2.00	GE1158	2	CABLE ASSEMBLY - T1
3.00	GE1159	2	CABLE ASSEMBLY - T2
4.00	GE1160	2	CABLE ASSEMBLY - T3
5.00	VS6813	6	STUD, INSULATED
6.00	VE3918	6	WASHER
7.00	VE4687	6	LOCKWASHER - 3/8"
8.00	TC1233	6	NUT - 3/8" - 16NC
9.00	VE4750	6	INSULATOR W/STUD
10.00	GE1157	3	TERMINAL
11.00	GE1154	3	BLOCK, TAPPED
12.00	VE3027	6	FLAT WASHER - 3/8"
13.00	VE4640	6	CAPSCREW - 3/8" - 16NC X 1 1/2"
14.00	GE1340	9	STUD - 1/4" - 20NC X 3 3/4" (1)
15.00	VE4881	10	NUT - 1/4" - 20NC (1)
16.00	VE5185	24	FLAT WASHER - 1/2"
17.00	VE4518	20	CAPSCREW - 1/2" - 13NC X 1 1/2"
18.00	GE1139	5	BAR, CLAMP (1)
19.00	GE1145	1	SHROUD
20.00	GE1134	1	BUS RING, INSULATED (1)
21.00	VJ1024	6	BRUSH HOLDER ASSEMBLY (SEE INDEX)
22.00	GE1138	5	CLAMP, BUS RING (1)
23.00	GE1142	1	BUS RING, INSULATED (T3) (1)
24.00	GE1141	1	BUS RING, INSULATED (T2) (1)
25.00	GE1140	1	BUS RING, INSULATED (T1) (1)
26.00	GE1131	1	REWIND KIT, STATOR (1)
27.00	VE5185	18	FLAT WASHER - 1/2" (1)
28.00	VE4542	1	CAPSCREW - 1/2" - 13NC X 1" (1)
29.00	GE1133	1	TIE RING, INSULATED (1)
30.00	VE4342	9	BRACKET (1)
31.00	GE1143	1	STRAP, NEUTRALIZING (1)
32.00	GE1132	1	STATOR FRAME & CORE ASSEMBLY (1)
33.00	GE1130	1	STATOR ASSEMBLY
34.00	GE1135	5	BRACKET ASSEMBLY (1)
35.00	VJ8959	18	FLAT WASHER - 5/8"
36.00	VS6852	AR	CAPSCREW - 5/8" - 11NC X 2 1/2"
37.00	GE1137	15	C-CLAMP, BUS RING (1)
38.00	GE1136	10	SLEEVE, INSULATED (1)
39.00	GE1153	3	BLOCK, TAPPED
40.00	VE4702	6	CAPSCREW - 3/8" - 16NC X 2 3/4"

(SEE FOLLOWING PAGE FOR BALANCE OF PARTS...)

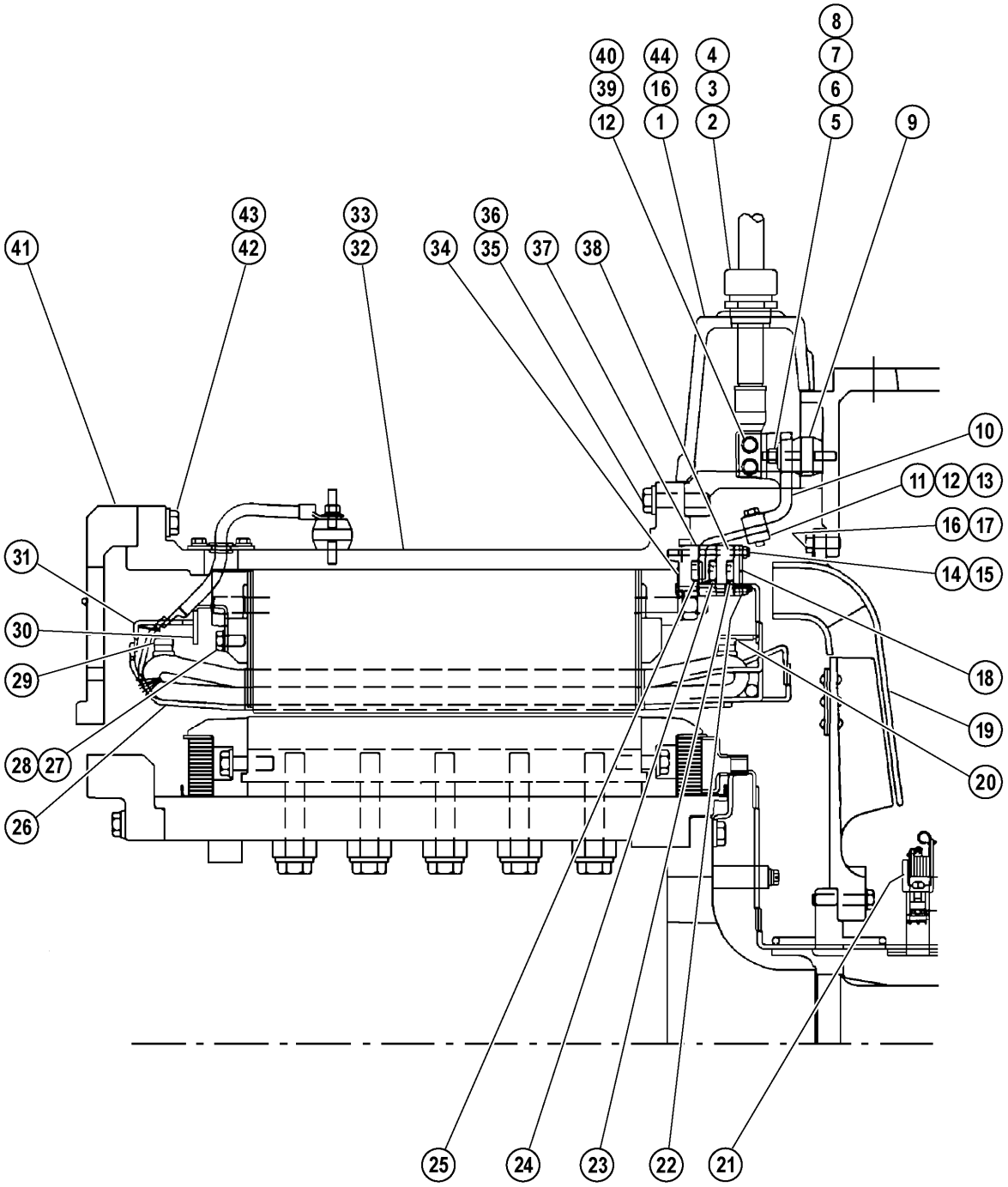
8
7
6
5
9
40
39
12
44
16
1
4
3
2
43
42
33
32
36
35
41
34
37
38
10
11
12
13
16
17
14
15
31
30
29
18
19
20
28
27
26
25
24
23
22
21
64331Z

REF.	PART NUM.	QTY.	DESCRIPTION
41.00	GE1378	1	ADAPTER, FRAME (1)
42.00	VS6852	18	CAPSCREW - 5/8" - 11NC X 2 1/2" (1)
43.00	VJ8959	18	FLAT WASHER - 5/8" (1)
44.00	VE4999	4	CAPSCREW - 1/2" - 13NC X 2"
NS	VJ2743	2	PIN, SPRING DOWEL (FRAME ADAPTER TO STATOR FRAME)

NOTE: (1) INCLUDED IN ITEM 33, GE1130 STATOR ASSEMBLY.

(SEE PRECEDING PAGE FOR BALANCE OF PARTS...)

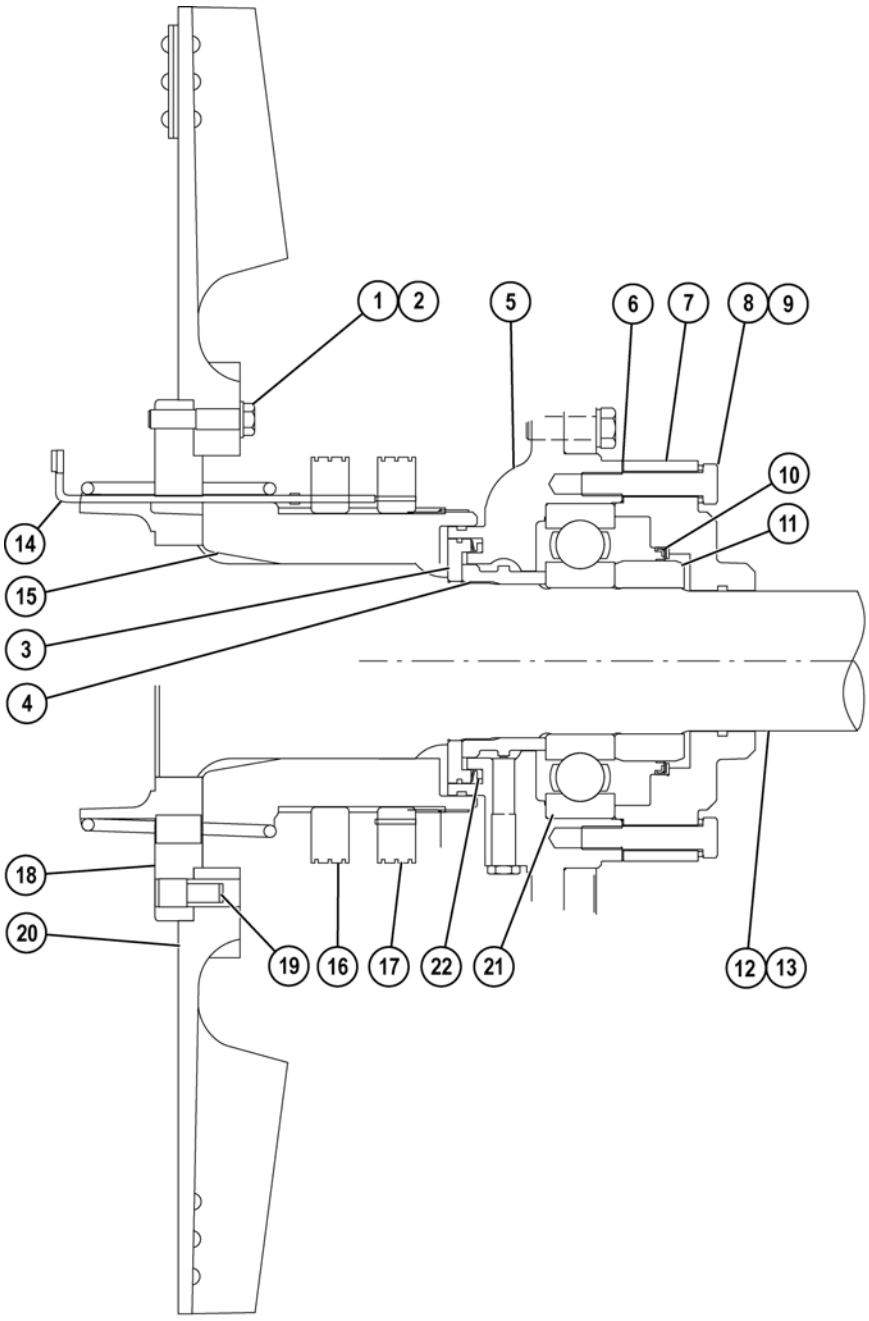

64343Z

REF.	PART NUM.	QTY.	DESCRIPTION
1.00	VE5061	15	CAPSCREW - 1/2" - 13NC X 2 1/2"
2.00	VE5185	17	FLAT WASHER - 1/2" (1)
3.00	XA4331	1	FLINGER
4.00	GE1103	1	HUB
5.00	XA4329	1	HOUSING, BEARING
6.00	VE4248	1	GASKET
7.00	XA4330	1	CAP, BEARING
8.00	GE1171	6	CAPSCREW - 5/8" - 11NC X 3 1/4"
9.00	VE5184	6	FLAT WASHER
10.00	GE1101	1	SEAL
11.00	XA4332	1	SLEEVE
12.00	XA4097	1	SHAFT ASSEMBLY (1)
13.00	XA4098	1	SHAFT
14.00	GE1116	2	INSULATION
15.00	GE1117	1	HUB ASSEMBLY
16.00	GE1118	1	RING, COLLECTOR
17.00	GE1119	1	RING, COLLECTOR
18.00	GE1115	1	SUPPORT, IMPELLER
19.00	VE3620	1	PIN, DOWEL
20.00	GE1096	1	IMPELLER
21.00	GE1823	1	BEARING, BALL
22.00	VE7209	1	SEAL, V-RING
22.01	XA4128	1	ROTOR ASSEMBLY

NOTE: (1) INCLUDED IN XA4128 ROTOR ASSEMBLY.

(SEE FOLLOWING PAGE FOR BALANCE OF PARTS.)

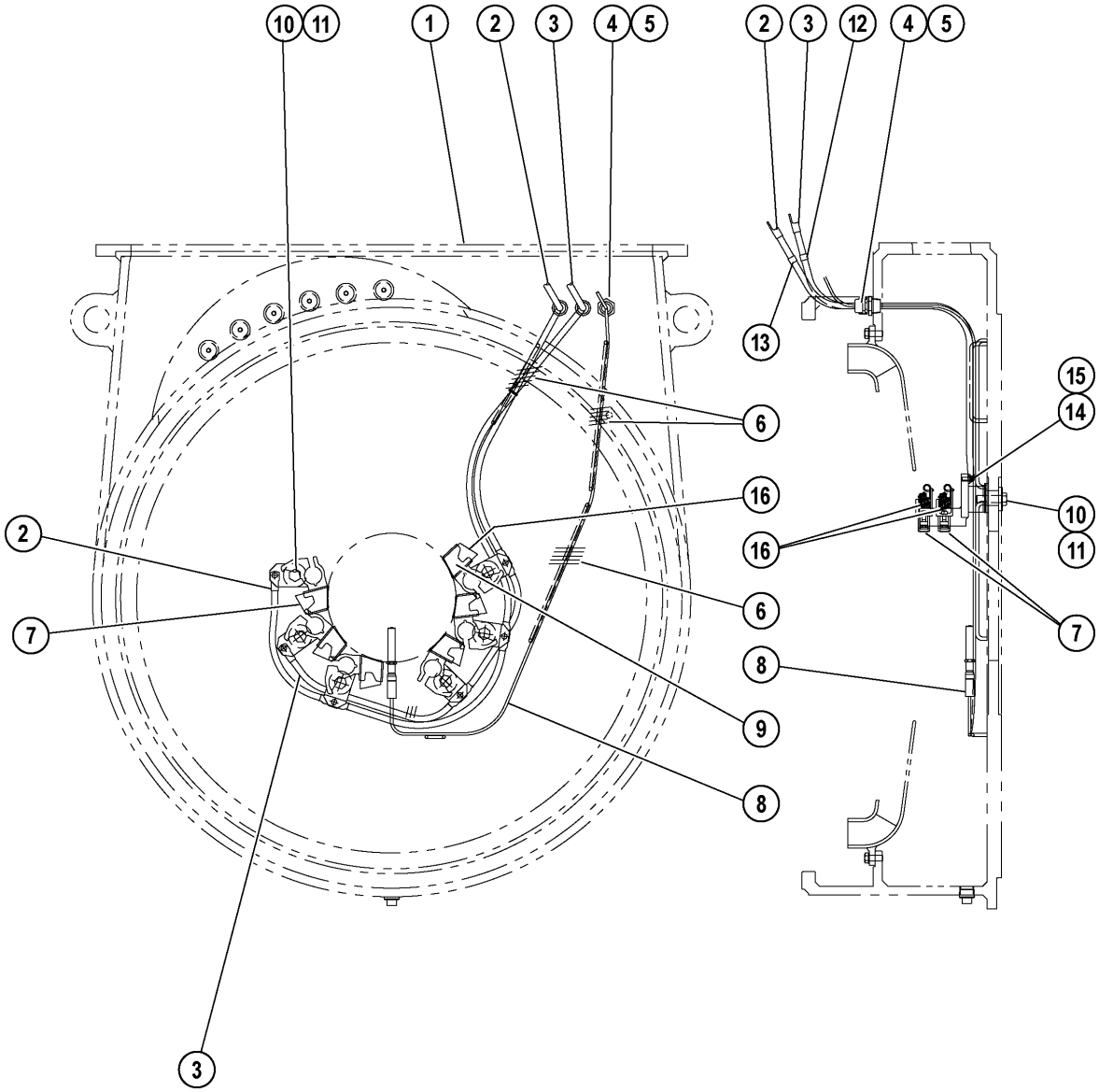
10
11
1
2
3
4
5
2
3
12
4
5
13
15
14
6
16
10
16
11
2
6
7
7
8
9
8
3
64240

REF.	PART NUM.	QTY.	DESCRIPTION
1.00	GE1144	1	FRAME, HEAD
2.00	GE1146	1	CABLE
3.00	GE1147	1	CABLE
4.00	VE4639	1	BUSHING, REDUCING
5.00	VS7922	1	CONNECTOR
6.00	GE0334	AR	TAPE, FIBERGLASS
7.00	VE4034	6	BRUSH
8.00	GE0328	1	CABLE, SPEED SENSOR
9.00	VJ1028	6	SUPPORT W/STUD & KEY
10.00	VE4631	6	FLAT WASHER
11.00	GE0141	6	CAPSCREW - 5/8" - 11NC X 2 1/4"
12.00	VE4629	1	MARKER, CABLE (MARKED F1)
13.00	VE4628	1	MARKER, CABLE (MARKED F2)
14.00	VE4630	6	CAPSCREW - 1/4" - 20NC X 3/4"
15.00	VE2764	6	WASHER, CONCAVE
16.00	VJ1024	6	BRUSH HOLDER ASSEMBLY (SEE INDEX)

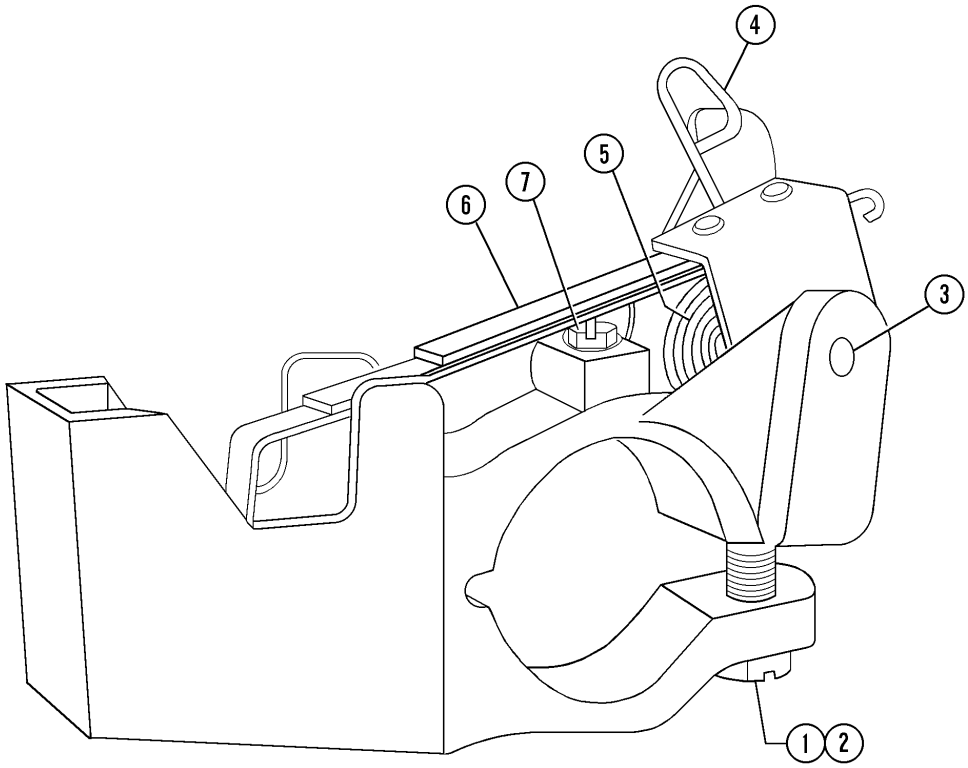

64030Z

REF.	PART NUM.	QTY.	DESCRIPTION
1.00	VE4625	1	CAPSCREW - 5/16" - 18NC X 1 1/4"
2.00	VE4626	1	NUT - 5/16" - 18NC
3.00	VJ7853	1	PIN, SPRING DOWEL
4.00	VJ1026	1	SPRING
5.00	VS8323	1	WASHER, BRASS
6.00	VJ1025	1	ARM, PRESSURE
7.00	VS7587	1	CAPSCREW/WASHER - 1/4" - 20NC X 1/2"

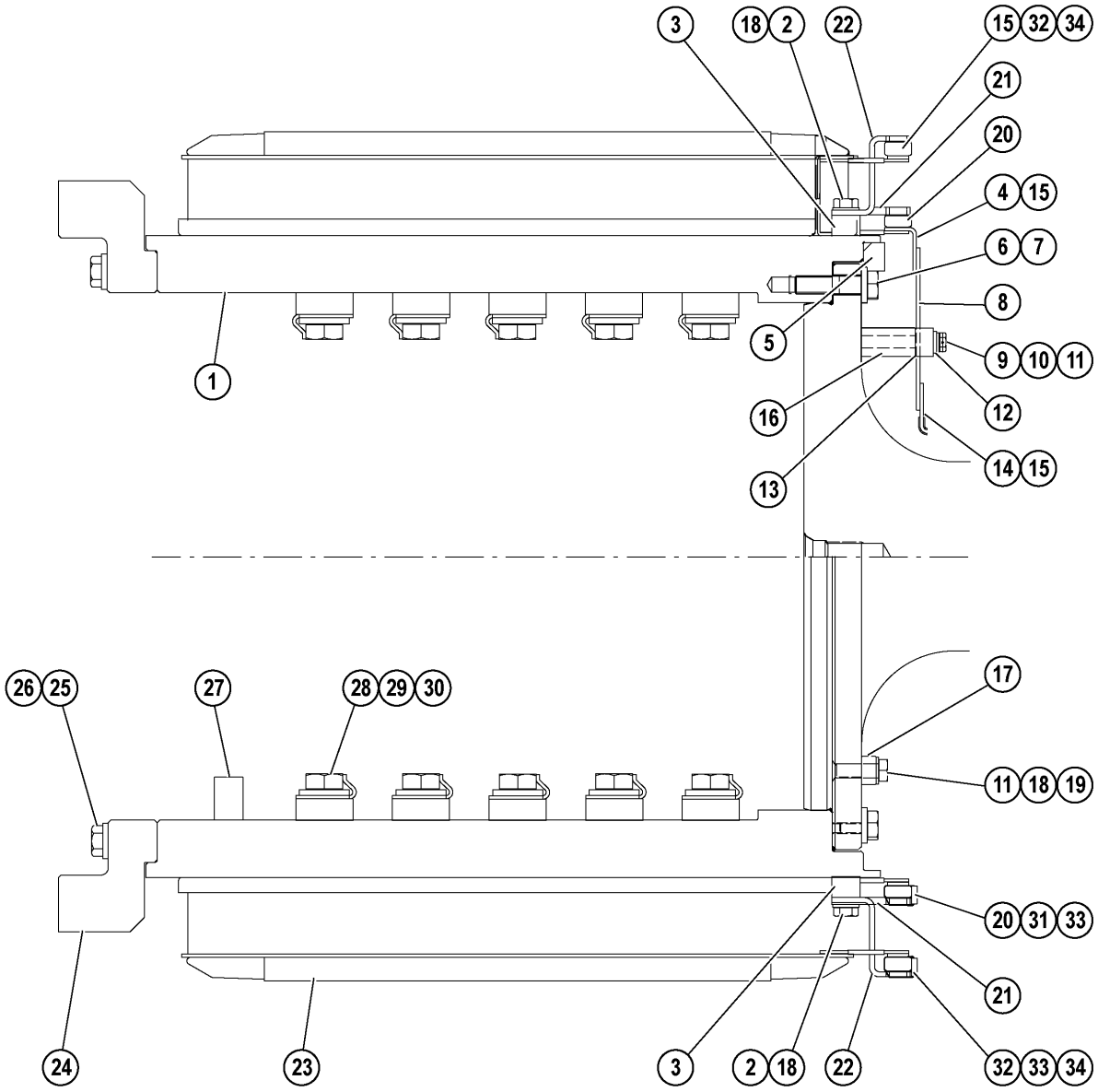
3
18
2
22
15
32
34
21
20
4
15
6
7
8
5
9
10
11
1
16
12
14
15
13
26
25
27
28
29
30
17
11
18
19
20
31
33
21
24
23
3
2
18
22
32
33
34

64330Z

REF.	PART NUM.	QTY.	DESCRIPTION
1.00	XA4129	1	YOKE ASSEMBLY (1)
2.00	VN9057	20	CAPSCREW - 1/2" - 13NC X 1 3/4" (1)
3.00	XA4100	10	BLOCK, SUPPORT (1)
4.00	GE1110	2	STRAP, CONNECTION (1)
5.00	GE1095	AR	WEIGHT, BALANCE (1)
6.00	VF7377	15	CAPSCREW - 5/8" - 11NC X 2 1/2" (1)
7.00	VJ8959	15	FLAT WASHER - 5/8" (1)
8.00	XA4102	2	JUMPER (1)
9.00	XA4134	10	FLAT WASHER (1)
10.00	XA4133	2	CAPSCREW - 3/8" - 16NC X 3 1/2"
11.00	BF3896	2	WIRE (1)
12.00	XA4132	1	CLAMP (1)
13.00	XA4131	1	CLEAT, NOTCHED (1)
14.00	GE1116	2	INSULATION
15.00	VS8325	24	STRIP, BRAZING (1)
16.00	GE1123	1	BASE, CLEAT (1)
17.00	GE1127	1	WEIGHT, BALANCE (1)
18.00	VE5185	22	FLAT WASHER - 1/2" (1)
19.00	GE1128	2	CAPSCREW - 1/2" - 13NC X 1 1/2" (1)
20.00	XA4101	1	RING, TIE (1)
21.00	XA4106	5	BRACKET, SUPPORT (1)
22.00	XA4103	5	BRACKET, SUPPORT (1)
23.00	XA4093	10	COIL
24.00	GE1111	1	ADAPTER
25.00	VJ8959	20	FLAT WASHER - 5/8"
26.00	XA4095	20	CAPSCREW - 5/8" - 11NC X 3"
27.00	GE1094	AR	WEIGHT, BALANCE
28.00	GE1106	50	BLOCK, WASHER
29.00	VE5063	100	FLAT WASHER
30.00	XA4130	100	CAPSCREW - 7/8" - 9NC X 5"
31.00	XA4105	4	STRAP, CONNECTION (1)
32.00	XA4099	1	RING, TIE (1)
33.00	VE4643	15	FASTENING (1)
34.00	XA4104	5	STRAP, CONNECTION (1)
34.01	GE0334	AR	TAPE, FIBERGLASS (1)
34.02	XA4128	1	ROTOR ASSEMBLY

NOTE: (1) INCLUDED IN XA4128 ROTOR ASSEMBLY.

(SEE PRECEDING PAGE FOR BALANCE OF PARTS.)

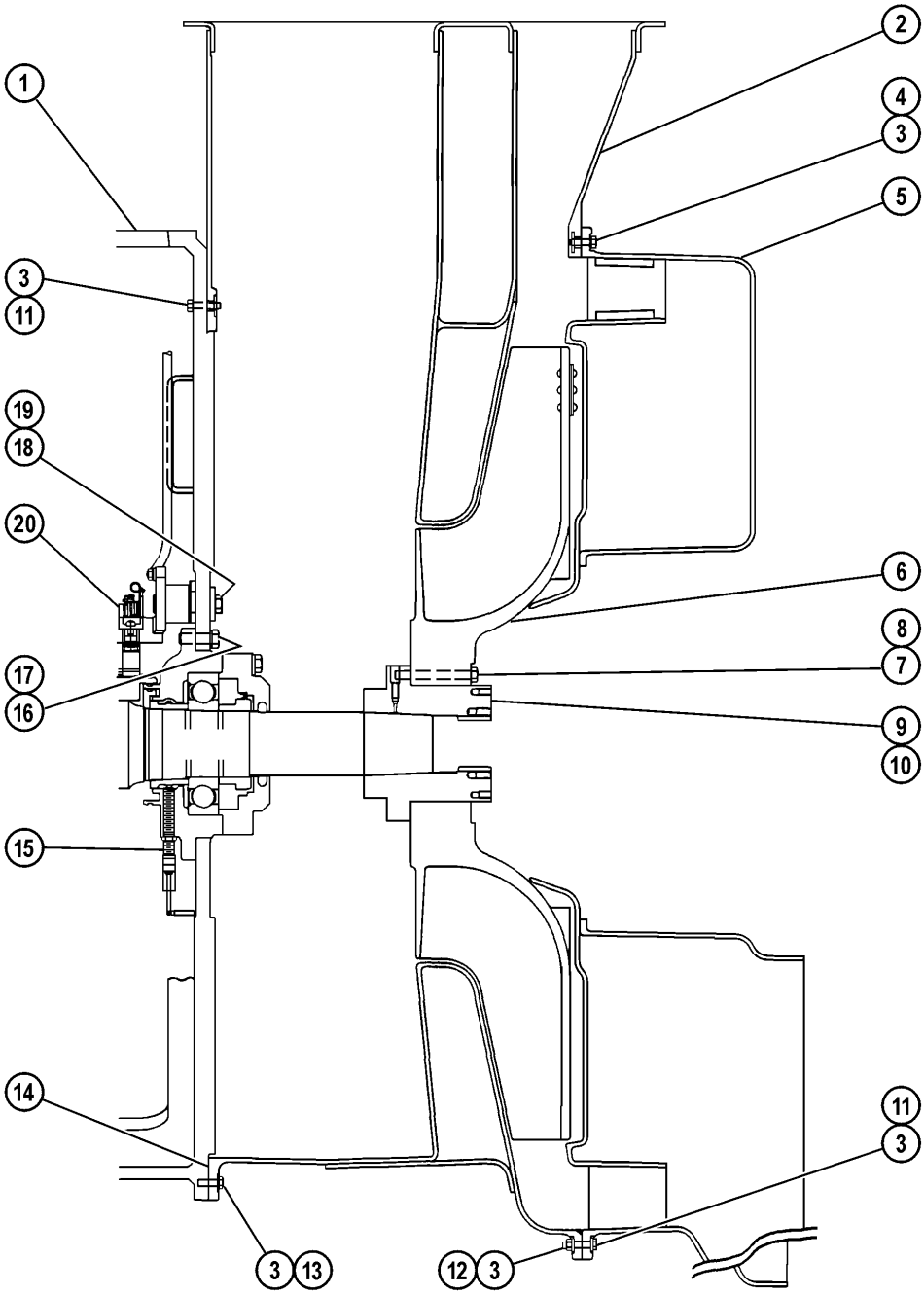

64242Z

REF.	PART NUM.	QTY.	DESCRIPTION
1.00	GE1144	1	FRAME, HEAD
2.00	XA4108	1	HOUSING, INLET
3.00	VE3027	AR	FLAT WASHER - 3/8"
4.00	VE4641	AR	CAPSCREW - 3/8" - 16NC X 1 1/4"
5.00	XA4109	1	HOUSING, OUTLET
6.00	GE1082	1	IMPELLER
7.00	VE5185	16	FLAT WASHER - 1/2"
8.00	VE4998	AR	CAPSCREW - 1/2" - 13NC X 4 1/2"
9.00	GE1156	1	HUB
10.00	VE3620	2	PIN, DOWEL
11.00	VE4500	AR	CAPSCREW - 3/8" - 16NC X 1 3/4"
12.00	TC1233	AR	NUT - 3/8" - 16NC
13.00	VE4641	AR	CAPSCREW - 3/8" - 16NC X 1 1/4"
14.00	VJ9656	AR	ADHESIVE, RTV
15.00	GE1155	1	SENSOR, SPEED
16.00	VE5184	6	FLAT WASHER
17.00	C1630	6	CAPSCREW - 5/8" - 11NC X 2"
18.00	GE0141	6	CAPSCREW - 5/8" - 11NC X 2 1/4"
19.00	VE4631	6	FLAT WASHER
20.00	VJ1024	1	BRUSH HOLDER ASSEMBLY (SEE INDEX)

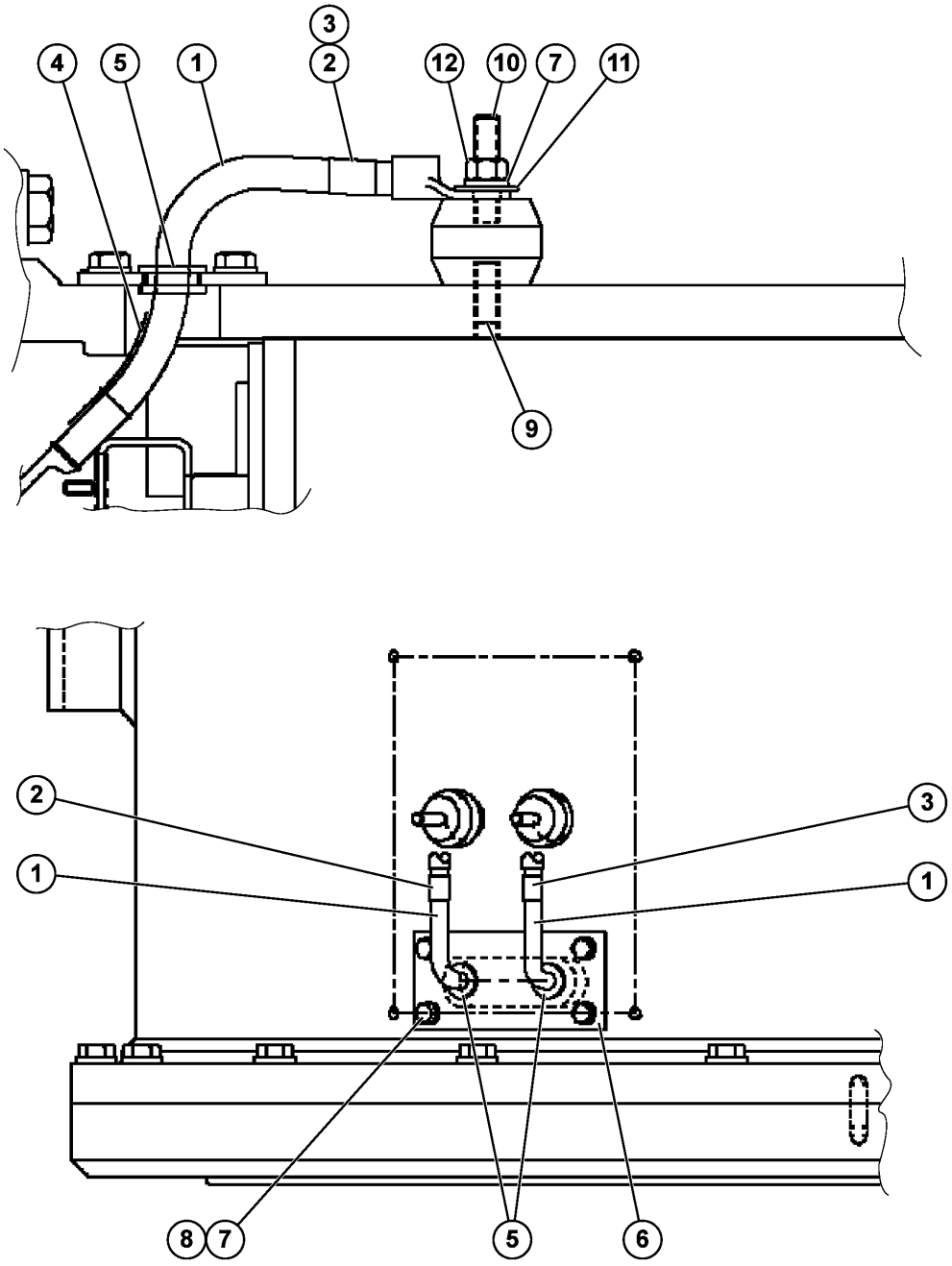

60806Z

REF.	PART NUM.	QTY.	DESCRIPTION
	GE1130		STATOR ASSEMBLY
1.00	VS6837	2	CABLE
2.00	GE1168	1	CABLE MARKER
3.00	GE1169	1	CABLE MARKER
4.00	GE1347	1	PAD
5.00	VE1200	2	GROMMET
6.00	XA4107	1	COVER
7.00	VE4687	6	LOCKWASHER - 3/8"
8.00	TC1234	4	CAPSCREW - 3/8" - 16NC X 3/4"
9.00	VS6813	2	STUD, INSULATED
10.00	VE4750	2	INSULATOR W/STUD
11.00	VE4515	2	FLAT WASHER - 3/8"
12.00	TC1233	2	NUT - 3/8" - 16NC

RETARDER GRID GROUP

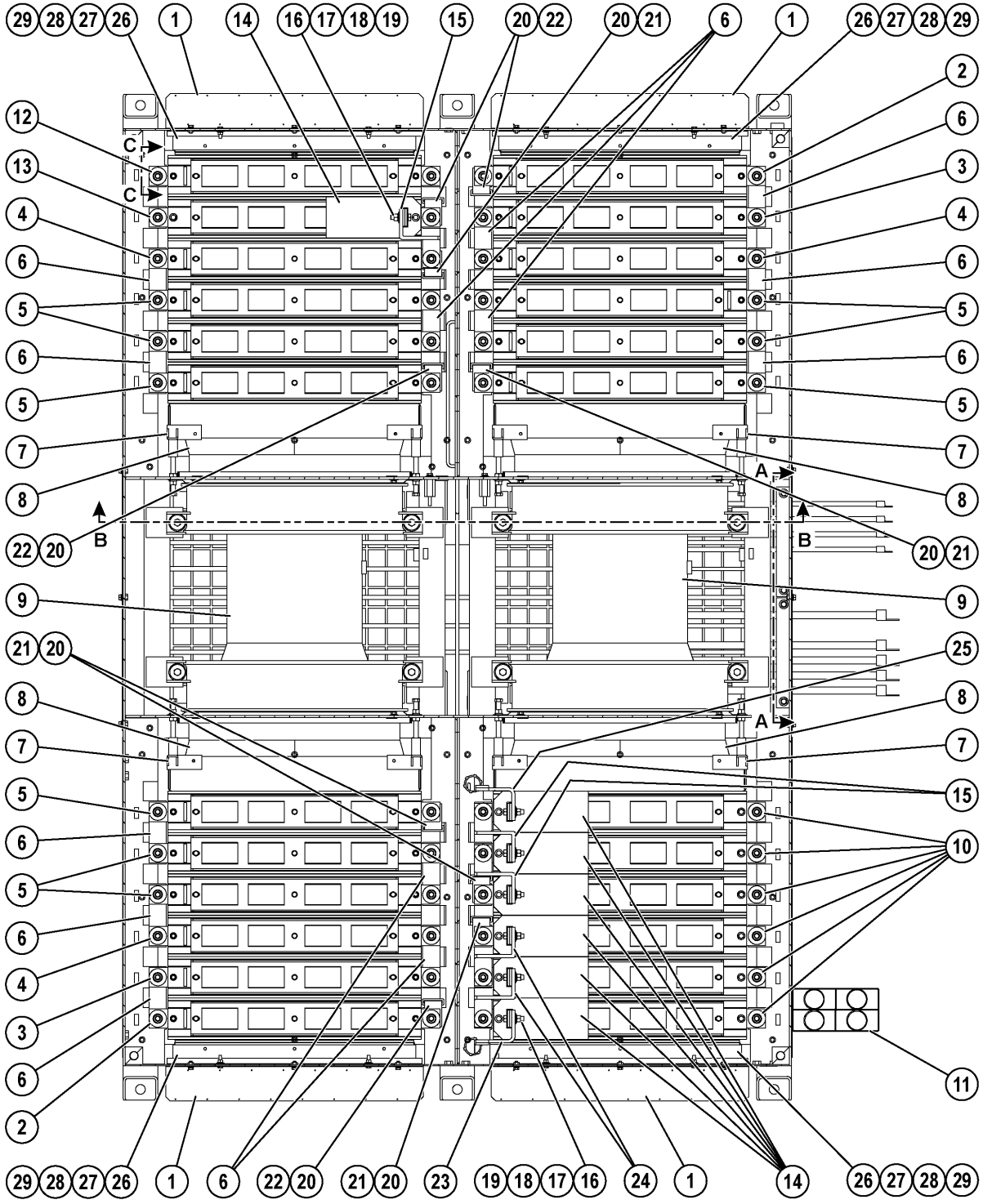
29 28 27 26 1 14 16 17 18 19 15 20 22 20 21 6 1 26 27 28 29
12 13 4 6 5 6 5 7 8 22 20 9 21 20 8 7 5 6 5 6 4 3 6 2
C C B A
2 6 3 4 6 5 6 5 7 8 20 21 9 25 8 7 15 10 11
29 28 27 26 1 6 22 20 21 20 23 19 18 17 16 24 1 14 26 27 28 29
61024Z

REF.	PART NUM.	QTY.	DESCRIPTION
1.00	GE0013	4	LOUVER ASSEMBLY
2.00	GE1174	2	RESISTOR
3.00	GE0850	2	RESISTOR
4.00	GE0851	3	RESISTOR
5.00	GE0852	9	RESISTOR
6.00	GE0855	13	BAR, BUS
7.00	GE0021	4	COLLAR ASSEMBLY
8.00	GE0018	4	DIFFUSER ASSEMBLY
8.01	GE0019	8	GASKET
8.02	GE0020	8	GASKET
8.03	VE3035	AR	CEMENT
9.00	GE0017	2	MOTOR, BLOWER (SEE INDEX)
10.00	GE1300	6	RESISTOR
11.00	GE0620	1	STEP KIT
12.00	GE0024	1	SPACER
13.00	GE0025	1	RESISTOR
14.00	GE0034	7	INSULATOR
15.00	GE0030	3	BAR, BUS
16.00	VE4999	7	CAPSCREW - 1/2" - 13NC X 2"
17.00	GE0041	14	FLAT WASHER (SPECIAL)
18.00	VE4699	7	LOCKWASHER - 1/2"
19.00	VE4698	7	NUT - 1/2" - 13NC
20.00	GE0029	9	TUBE
21.00	GE0028	4	BAR, BUS (INSULATED)
22.00	GE0027	5	BAR, BUS (INSULATED)
23.00	XA3150	1	BAR, BUS
24.00	GE0031	2	BAR, BUS
25.00	XA3149	1	BAR, BUS
26.00	PB8171	4	SPACER, END
27.00	VE4648	16	FLAT WASHER - 5/16"
28.00	VE4696	16	LOCKWASHER - 5/16"
29.00	VE5013	16	NUT - 5/16" - 18NC

(FOR VIEWS A-A, B-B & C-C, SEE FOLLOWING PAGE.)

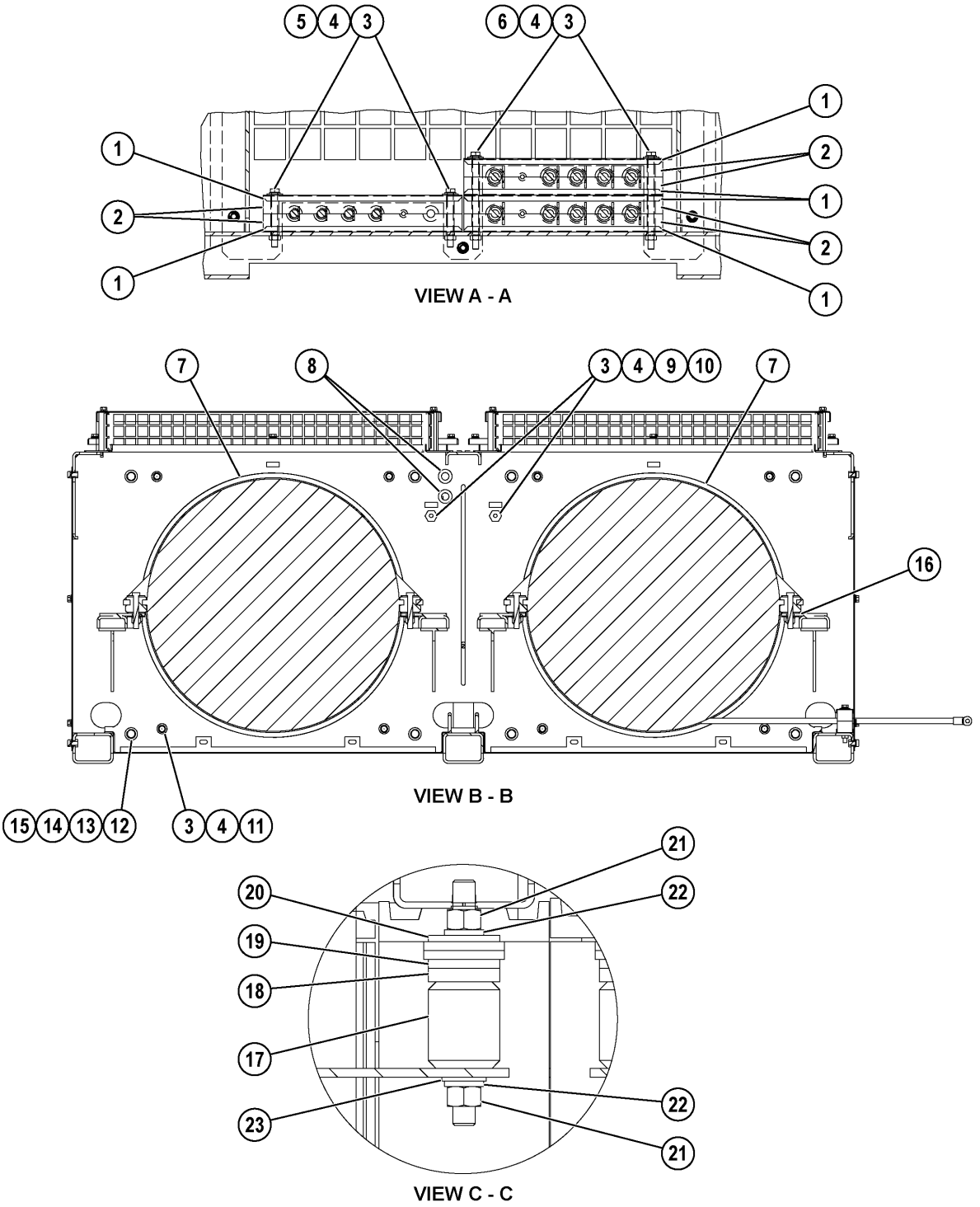
5
4
3
6
4
3
1
2
1
2
1
2
1
1
VIEW A - A
7
8
3
4
9
10
7
16
15
14
13
12
3
4
11
VIEW B - B
21
20
22
19
18
17
22
23
21
VIEW C - C
61025Z

REF.	PART NUM.	QTY.	DESCRIPTION
1.00	GE0035	6	CLAMP, CABLE
2.00	GE0036	6	CLEAT, CABLE
3.00	VE4515	22	FLAT WASHER - 3/8"
4.00	VE4687	22	LOCKWASHER - 3/8"
5.00	GE0040	2	CAPSCREW - 3/8" - 16NC X 3 1/2"
6.00	XA3152	2	CAPSCREW - 3/8" - 16NC X 6"
7.00	GE0017	2	MOTOR, BLOWER (SEE INDEX)
8.00	GE0037	2	GROMMET
9.00	GE0479	2	INSULATOR
10.00	TC1234	2	CAPSCREW - 3/8" - 16NC X 3/4"
11.00	VE4739	16	CAPSCREW - 3/8" - 16NC X 1"
12.00	VE4519	16	FLAT WASHER - 1/2" (NARROW)
13.00	VE4699	16	LOCKWASHER - 1/2"
14.00	PB8167	16	CAPSCREW - 1/2" - 13NC X 6 1/2"
15.00	VE4698	16	NUT - 1/2" - 13NC
16.00	BF1888	8	FLAT WASHER - 1/2"
17.00	GE0023	48	INSULATOR W/BOLTS
18.00	XA2741	48	NUT - 5/8" - 11NC
19.00	GE0038	48	SPACER
20.00	GE0044	48	FLAT WASHER (SPECIAL)
21.00	GE0045	96	NUT - 5/8" - 11NC
22.00	VE5171	96	LOCKWASHER - 5/8"
23.00	GE0042	48	FLAT WASHER - 5/8" (NARROW)

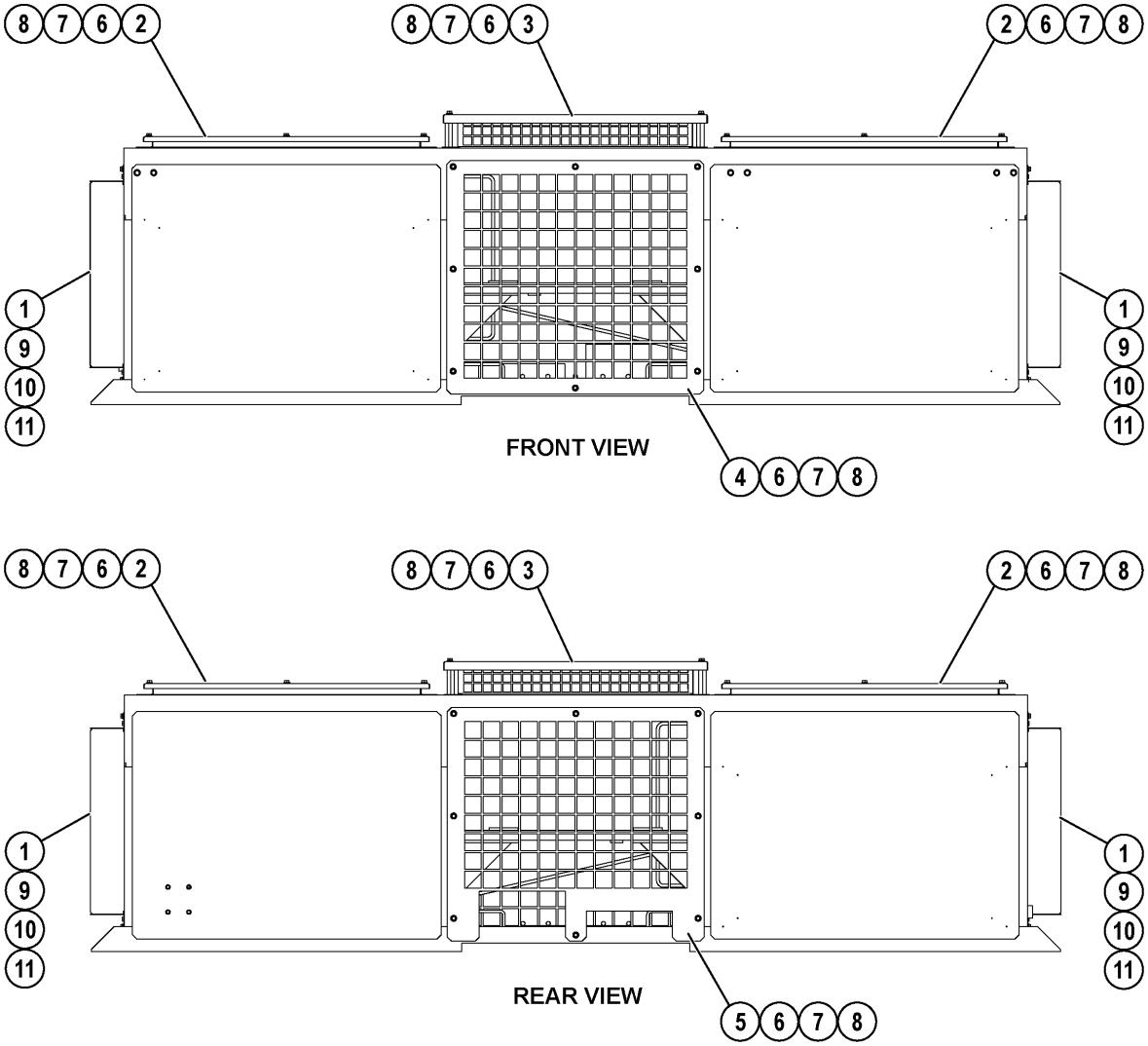
8 7 6 2
8 7 6 3
2 6 7 8
1
9
10
11
1
9
10
11
FRONT VIEW
4 6 7 8
8 7 6 2
8 7 6 3
2 6 7 8
1
9
10
11
1
9
10
11
REAR VIEW
5 6 7 8

61026Z

REF.	PART NUM.	QTY.	DESCRIPTION
1.00	GE0013	4	LOUVER ASSEMBLY
2.00		4	COVER
3.00	XA2740	2	COVER ASSEMBLY
4.00	XA3144	1	COVER
5.00	XA3145	1	COVER W/ CUTOUTS
6.00	TC1234	48	CAPSCREW - 3/8" - 16NC X 3/4"
7.00	VE4516	48	FLAT WASHER - 3/8" (NARROW)
8.00	VE4687	48	LOCKWASHER - 3/8"
9.00	BF0699	16	CAPSCREW - 5/16" - 18NC X 3/4"
10.00	VE5762	16	FLAT WASHER - 5/16" (NARROW)
11.00	VE4696	16	LOCKWASHER - 5/16"

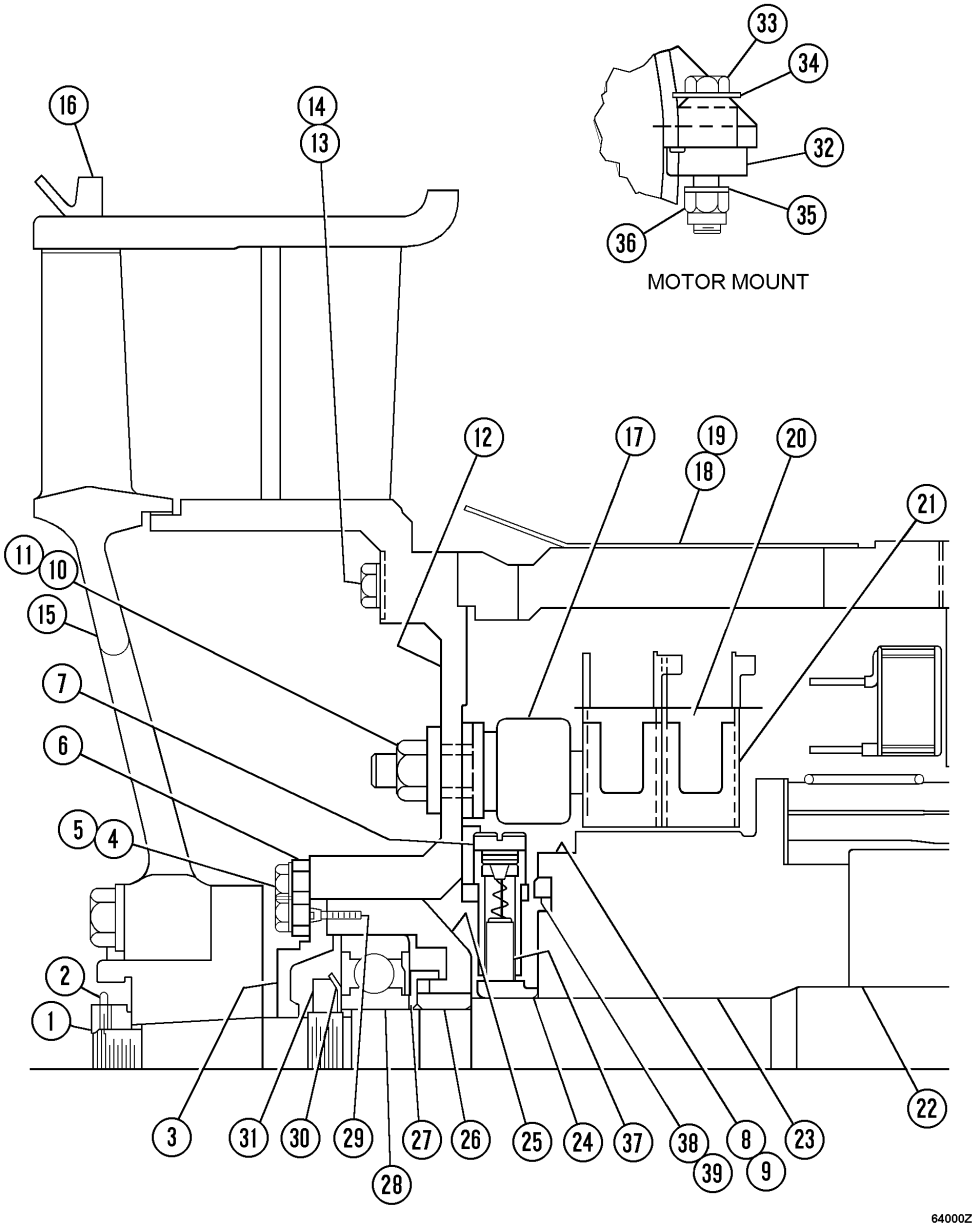
33
34
32
35
36
MOTOR MOUNT
16
14
13
12
17
19
18
20
21
11
10
15
7
6
5
4
2
1
3
31
30
29
28
27
26
25
24
37
38
39
8
9
23
22
64000Z

REF.	PART NUM.	QTY.	DESCRIPTION
1.00	VS9062	1	NUT - 1 1/8"
2.00	BF1889	1	COTTER PIN
3.00	VS9222	1	CAP, BEARING
4.00	VE4696	8	LOCKWASHER - 5/16"
5.00	BF1006	8	CAPSCREW - 5/16" - 18NC X 1"
6.00	VJ7666	1	PLATE, END
7.00	GE0052	1	CAP, BRUSH HOLDER
8.00	BF1002	AR	CORD - .070" DIAMETER (1)
9.00	BF1003	AR	VARNISH (1)
10.00	VE3030	4	FLAT WASHER - 1/2"
11.00	VS9203	4	LOCKNUT - 1/2" - 13NC
12.00	BF1886	1	HEAD, FRAME
13.00	VE4687	8	LOCKWASHER - 3/8"
14.00	VE4641	8	CAPSCREW - 3/8" - 16NC X 1 1/4"
15.00	VE4256	1	FAN
16.00	VE8978	1	SEAL, V-RING
17.00	VJ7941	4	SUPPORT
18.00	VS8162	1	COVER W/ LATCH
18.01	VS7026	1	LATCH
19.00	VS8161	1	COVER W/ LATCH
19.01	VS7026	1	LATCH
20.00	VE8445	8	BRUSH, CARBON
21.00	VS8587	8	BRUSH HOLDER ASSEMBLY (SEE INDEX)
22.00	BF1000	1	SPACER (1)
23.00	BF0999	1	COMMUTATOR (1)
24.00	GE0047	1	RING, GROUND BRUSH (1)
25.00	VJ6359	1	HOUSING, BEARING
26.00	VS9059	1	SLEEVE (1)
27.00	VS9032	1	FLINGER
28.00	VS9262	1	BEARING, BALL
29.00	DC4579	2	MACHINE SCREW - #10 - 32NF X 5/8"
30.00	VS9031	1	LOCKWASHER - 1 23/32" I.D.
31.00	VS8884	1	NUT - 1 11/16"
32.00	VE4258	4	MOUNT, RUBBER
33.00	BF1887	4	CAPSCREW - 1/2" - 13NC X 3 1/4"
34.00	BF1888	4	FLAT WASHER - 1/2"
35.00	VE4699	4	LOCKWASHER - 1/2"
36.00	VE2754	4	NUT - 1/2" - 13NC
37.00	VE4409	1	BRUSH
38.00	VS9061	AR	WEIGHT, BALANCE (1)
39.00	GE0048	1	WEIGHT, BALANCE (1)

NOTE: (1) INCLUDED IN GE0046 ARMATURE ASSEMBLY.

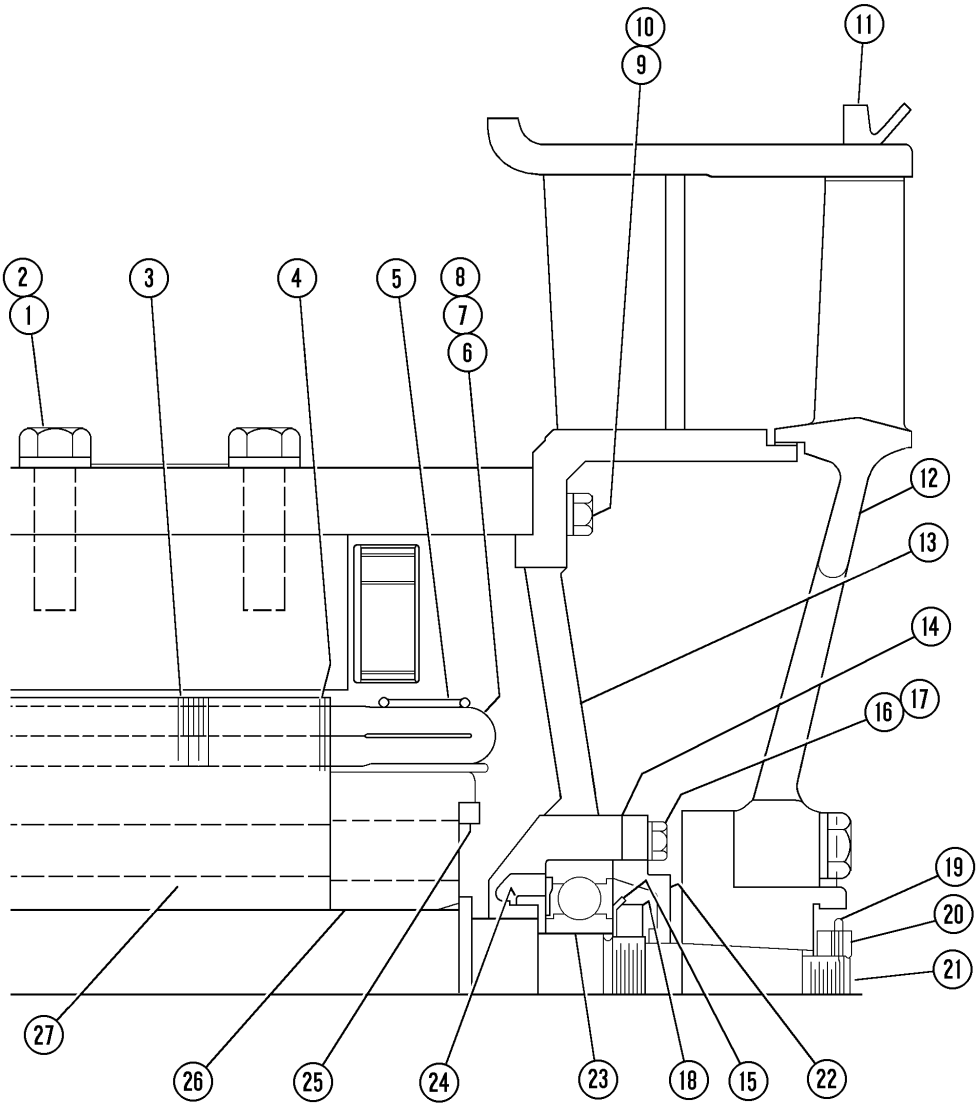
10
9
11
2
1
3
4
5
8
7
6
12
13
14
16
17
19
20
21
27
26
25
24
23
18
15
22
64001Z

REF.	PART NUM.	QTY.	DESCRIPTION
1.00	VC1390	16	LOCKWASHER - 5/8"
2.00	C1630	16	CAPSCREW - 5/8" - 11NC X 2"
3.00	VE4818	256	PUNCHING, MAIN (1)
4.00	VE4819	4	PUNCHING, END (1)
5.00	VE7206	AR	TAPE, GLASS - .014 (1)
6.00	VE2761	1	ARMATURE REWIND KIT (1)
7.00	VE3915	AR	VARNISH (1 GALLON) (1)
8.00	BF1001	AR	PUTTY, PERMAFIL (1)
9.00	VE4687	8	LOCKWASHER - 3/8"
10.00	VE4641	8	CAPSCREW - 3/8" - 16NC X 1 1/4"
11.00	VE8978	1	SEAL, V-RING
12.00	VE4257	1	FAN
13.00	BF1885	1	HEAD, FRAME
14.00	VJ9656	AR	ADHESIVE, RTV
15.00	VS9031	1	LOCKWASHER - 1 23/32" I.D.
16.00	VE4696	6	LOCKWASHER - 5/16"
17.00	TR4731	6	CAPSCREW - 5/16" - 18NC X 1"
18.00	VS8884	1	NUT - 1 11/16"
19.00	BF1889	1	COTTER PIN
20.00	VS9062	1	NUT - 1 1/8"
21.00	BF0997	1	SHAFT (1)
22.00	VS9221	1	CAP, BEARING
23.00	VS9262	1	BEARING, BALL
24.00	VS9032	1	FLINGER
25.00	VS9061	AR	WEIGHT, BALANCE (1)
26.00	BF0998	1	HEAD, ARMATURE (1)
27.00	GE0046	1	ARMATURE ASSEMBLY

NOTE: (1) INCLUDED IN GE0046 ARMATURE ASSEMBLY.

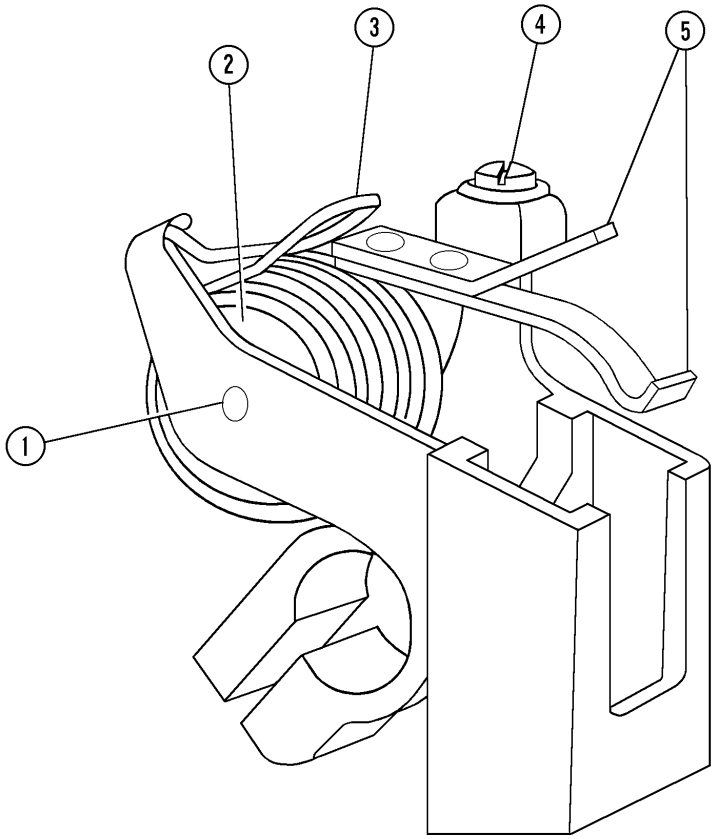

64002Z

REF.	PART NUM.	QTY.	DESCRIPTION
1.00	VJ1085	1	PIN, SPRING DOWEL
2.00	VJ1086	1	HUB, SPRING
3.00	VS9076	1	SPRING
4.00	VS5829	1	SCREW - #10 - 32NF X 1/2"
5.00	VJ1083	1	ARM, PRESSURE

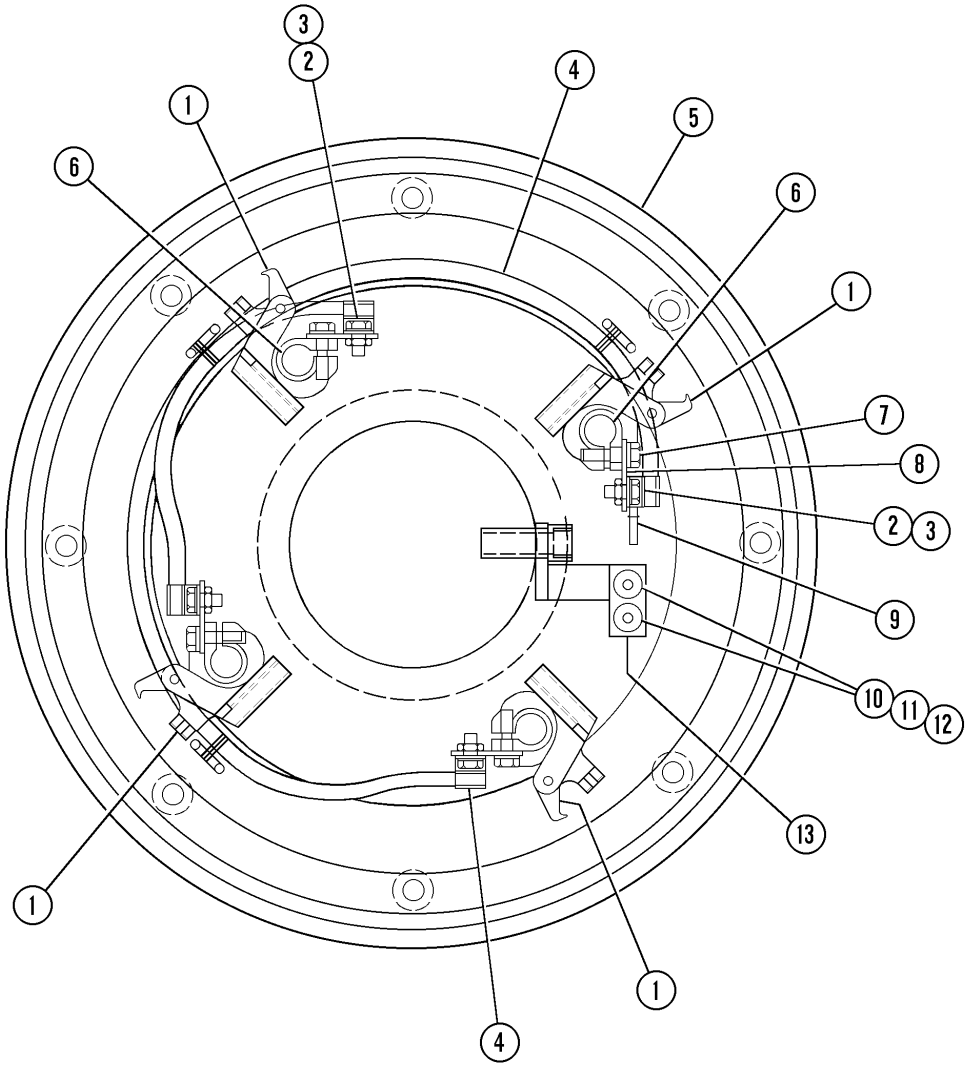
3
2
1
6
4
5
6
1
7
8
2
3
9
10
11
12
13
1
1
4
64003Z

REF.	PART NUM.	QTY.	DESCRIPTION
1.00	VS8587	8	BRUSH HOLDER ASSEMBLY (SEE INDEX)
2.00	DC3584	4	LOCKWASHER - 1/4"
3.00	VE4642	2	CAPSCREW - 1/4" - 20NC X 5/8"
3.01	VE4630	2	CAPSCREW - 1/4" - 20NC X 3/4"
4.00	VE4825	2	CABLE ASSEMBLY - 17 3/4" LONG
5.00	BF1886	1	HEAD, FRAME
6.00	VJ7941	4	SUPPORT
7.00	VS8952	8	CAPSCREW - 1/4" - 20NC X 1"
8.00	VS9082	4	STRAP, CONNECTION
9.00	VS9081	1	CONNECTOR, FLEXIBLE
10.00	VE4687	2	LOCKWASHER - 3/8"
11.00	GE0831	2	CAPSCREW - 3/8" - 16NC X 3/8"
12.00	GE0051	AR	CEMENT
13.00	GE0830	1	BRACKET, GROUND BRUSH

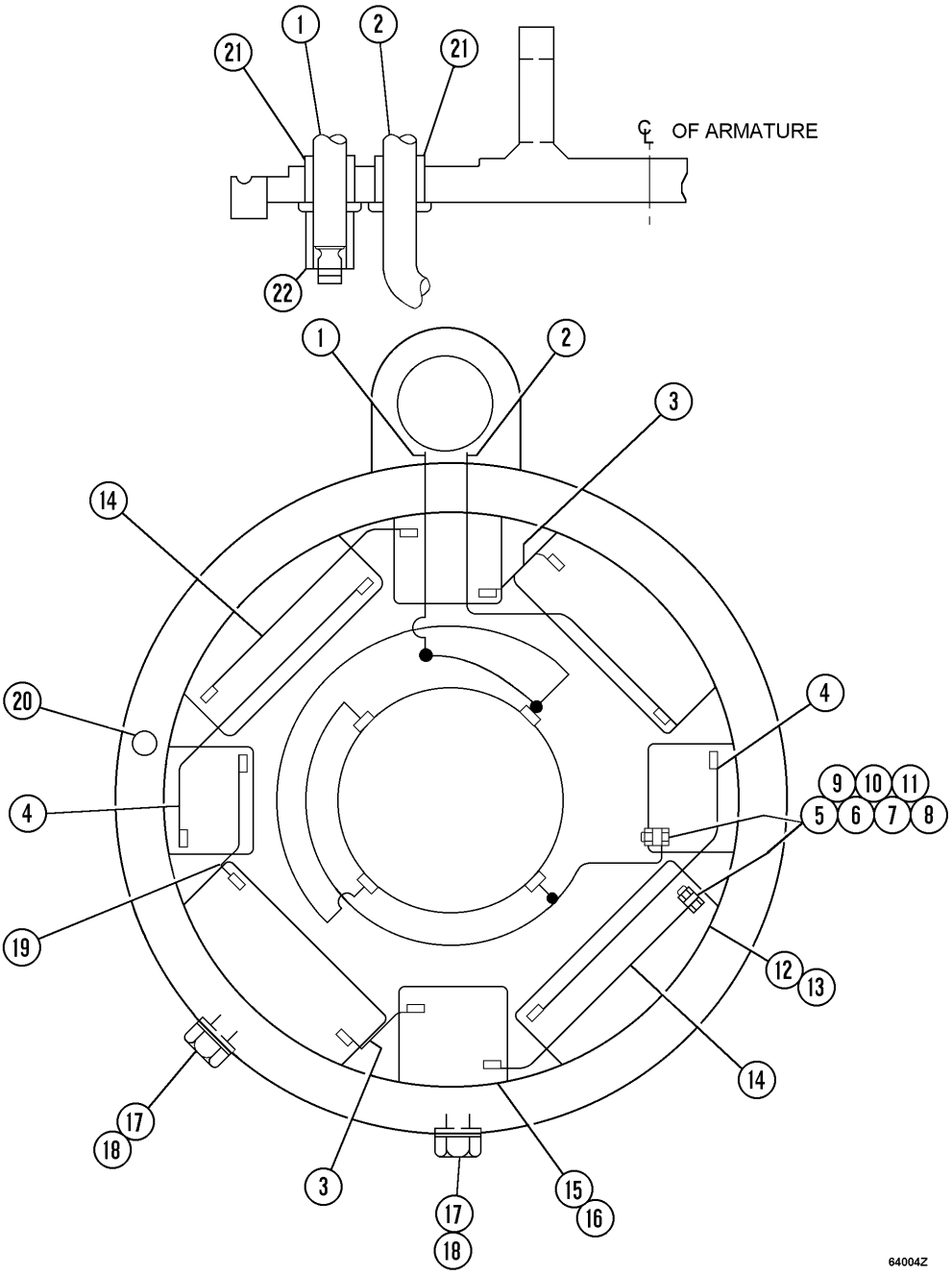
21
1
2
21
℄ OF ARMATURE
22
1
2
3
14
20
4
4
9
10
11
5
6
7
8
19
12
13
14
17
18
3
15
16
17
18
64004Z

REF.	PART NUM.	QTY.	DESCRIPTION
1.00	GE0833	1	CABLE ASSEMBLY - 102" LONG
2.00	GE0832	1	CABLE ASSEMBLY - 108" LONG
3.00	VS9089	2	STRAP, CONNECTION
4.00	VS9086	2	STRAP, CONNECTION
5.00	SP8417	16	FLAT WASHER - 1/4"
6.00	DC3584	16	LOCKWASHER - 1/4"
7.00	VE4642	14	CAPSCREW - 1/4" - 20NC X 5/8"
7.01	VE4630	2	CAPSCREW - 1/4" - 20NC X 3/4"
8.00	TD1549	16	NUT - 1/4" - 20NC
9.00	VE4332	AR	TAPE
10.00	VE4335	AR	TAPE, FIBERGLASS
11.00	VE3915	AR	VARNISH (1 GALLON)
12.00	BF1004	4	COIL, EXCITING
13.00	VS9084	4	PIECE, POLE
14.00	VS9087	2	STRAP, CONNECTION
15.00	BF1005	4	COIL, COMMUTATING
16.00	VS9083	4	PIECE, POLE
17.00	C1630	16	CAPSCREW - 5/8" - 11NC X 2"
18.00	VC1390	16	LOCKWASHER - 5/8"
19.00	VS9088	1	STRAP, CONNECTION
20.00	VE4832	2	PIN, DOWEL
21.00	VE4835	2	BUSHING
22.00	VS7010	1	BUSHING

WHEEL MOTOR GROUP

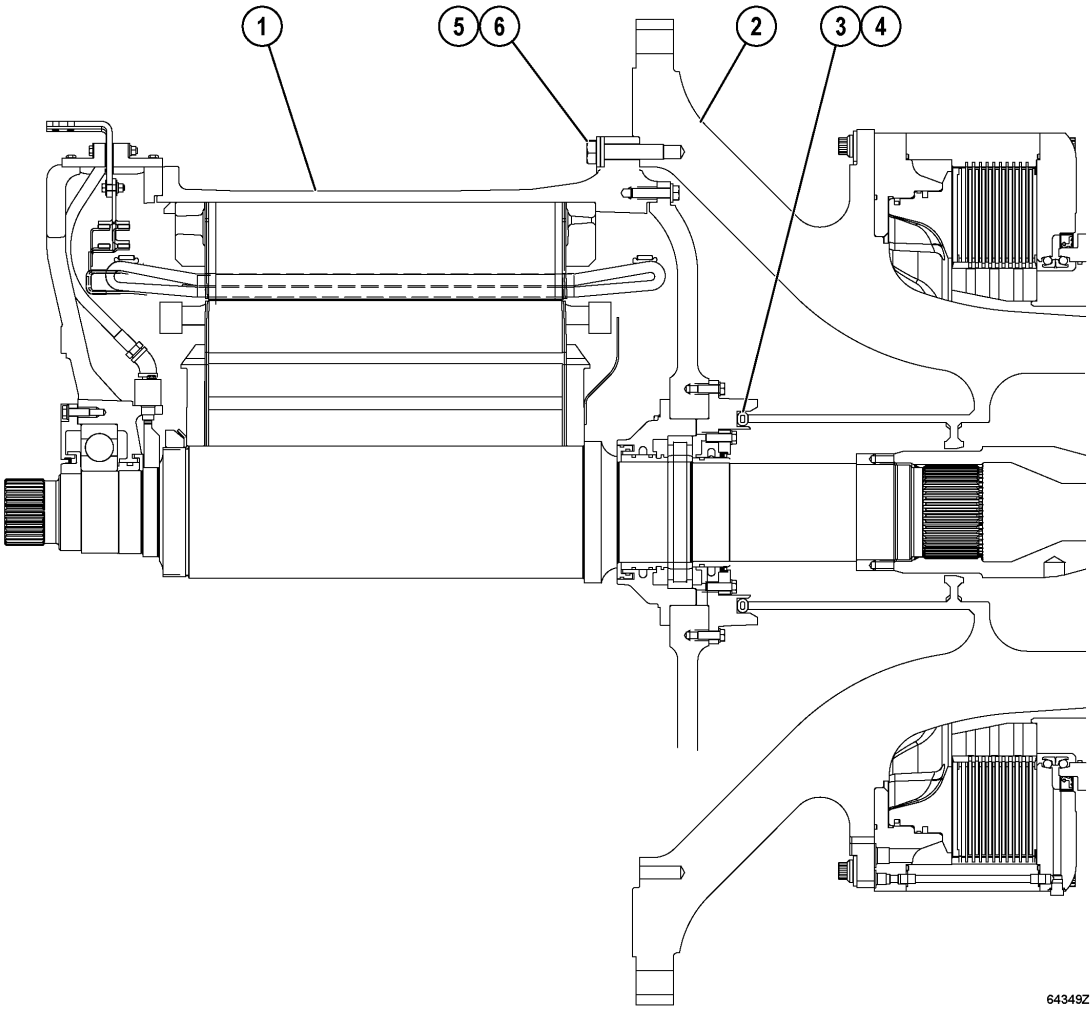
1
5
6
2
3
4
64349Z

REF.	PART NUM.	QTY.	DESCRIPTION
1.00	PC1484	1	MOTOR ASSEMBLY - WHEEL (SEE INDEX)
2.00	PC1504	1	TRANSMISSION, MOTORIZED WHEEL (SEE INDEX)
3.00	VE1273	1	RING, SEAL
4.00	VJ2672	AR	CEMENT
5.00	GE0111	34	CAPSCREW - 1" - 8NC X 4 1/2"
6.00	VE3922	34	FLAT WASHER - 1" (HARDENED)

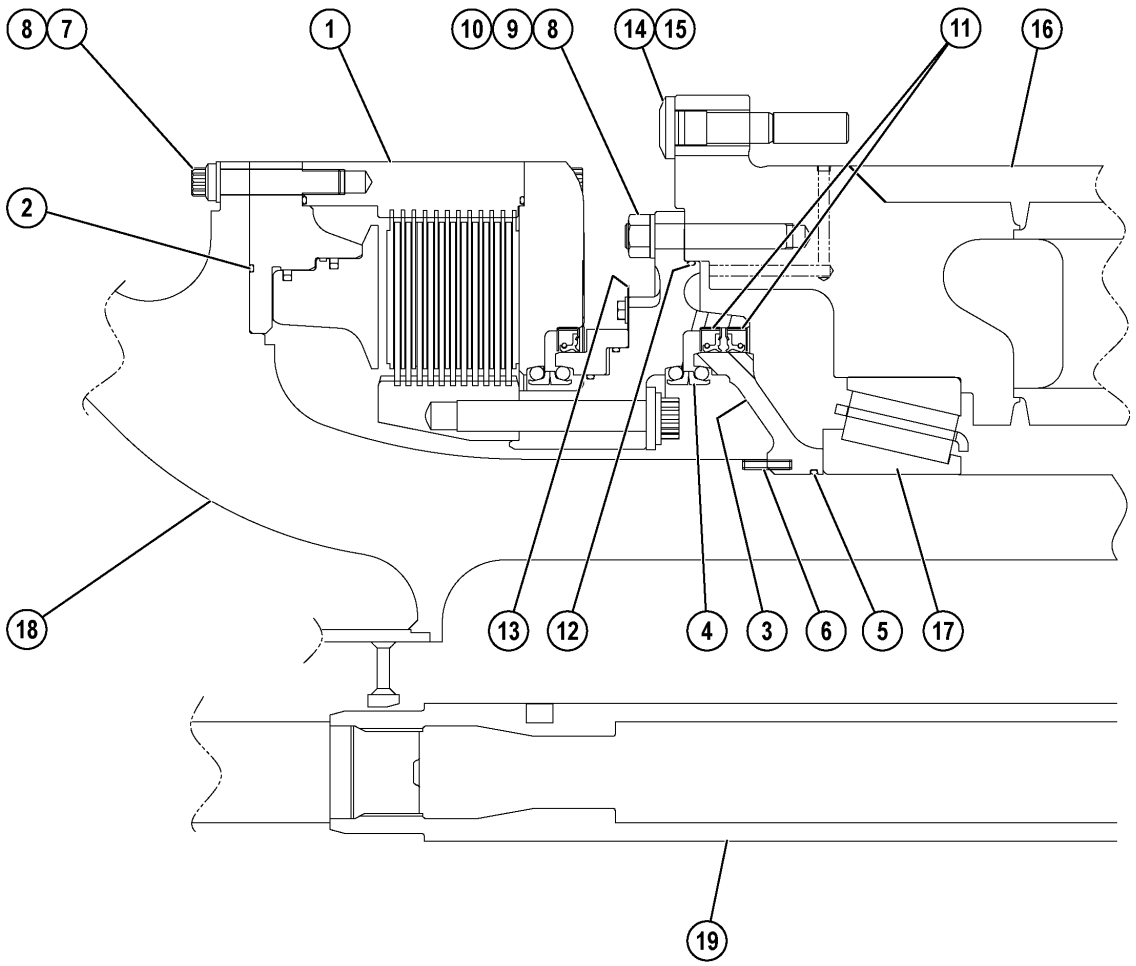

64287Z

REF.	PART NUM.	QTY.	DESCRIPTION
1.00	EM1143	1	REAR BRAKE ASSEMBLY (SEE INDEX) (1)
2.00	EK3788	1	SEAL, O-RING (1)
3.00	EK3517	1	CARRIER, SEAL (1)
4.00	PC0651	1	SEAL ASSEMBLY (1)
5.00	EK3791	1	SEAL, O-RING (1)
6.00	SL7740	1	ROLLPIN (1)
7.00	GE1445	42	CAPSCREW - 1" - 8NC X 5" (12 PT)
8.00	VE3922	90	FLAT WASHER - 1" (HARDENED)
9.00	GE1442	48	STUD - 1" - 12NC X 6 1/8"
10.00	GE1443	48	NUT - 1" - 12NC
11.00	PC1431	2	SEAL, OIL (1)
12.00	EJ9381	1	SEAL, O-RING (1)
13.00	ED3755	AR	SHIM (1)
14.00	GE1441	57	STUD
15.00	GE0088	AR	NEVER - SEEZ
16.00	GE1427	1	HUB, WHEEL
17.00	GE1428	1	BEARING, ROLLER
18.00	XA3346	1	FRAME, WHEEL MOTOR
19.00	GE1440	1	SHAFT, DRIVE

NOTE: (1) NOT INCLUDED IN ASSEMBLY

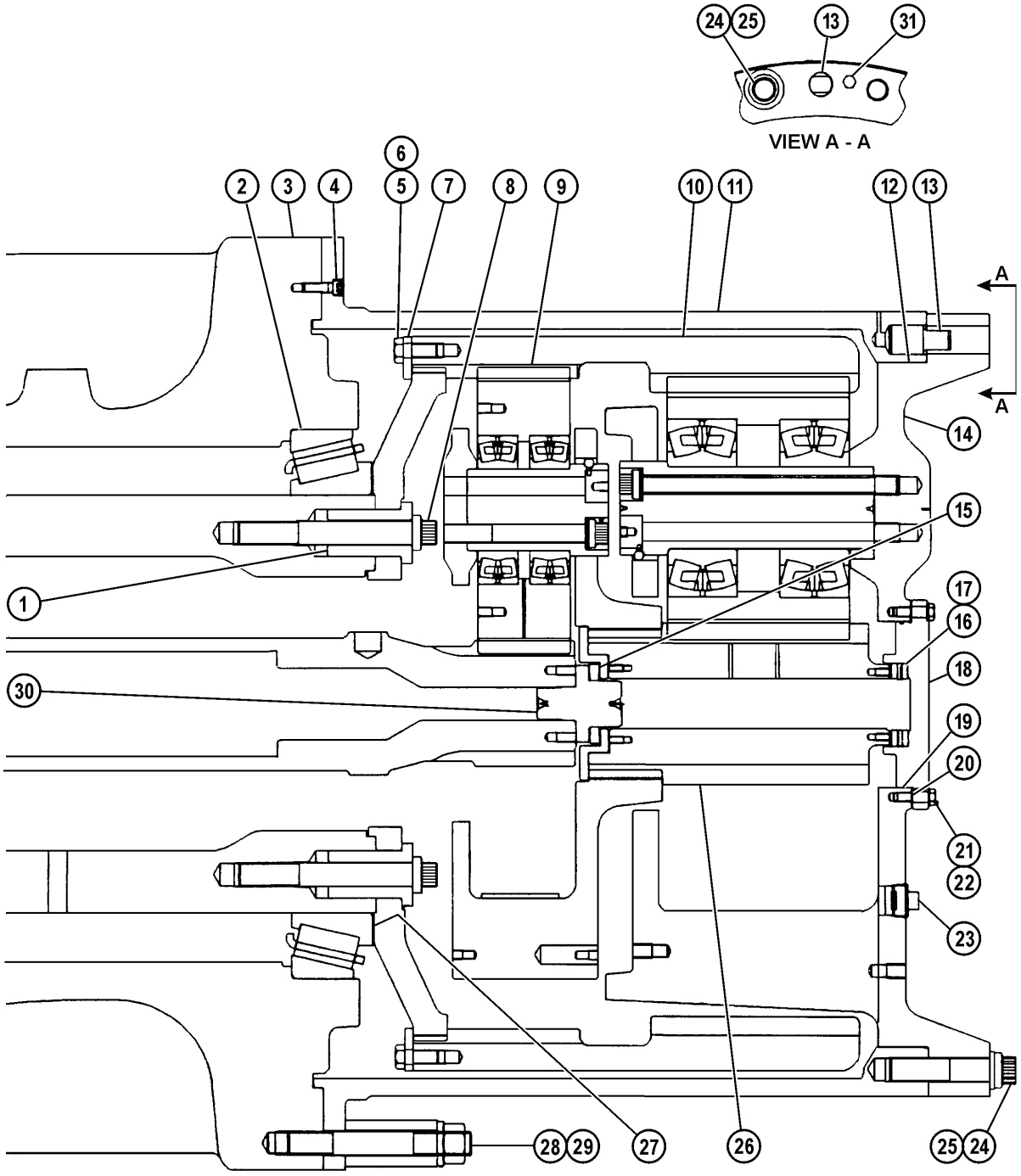
24
25
13
31
VIEW A - A
6
2
3
4
5
7
8
9
10
11
12
13
A
A
14
15
1
17
16
18
30
19
20
21
22
23
28
29
27
26
25
24
64253Z

REF.	PART NUM.	QTY.	DESCRIPTION
1.00	GE0896	19	BUSHING
1.01	GE0448	AR	LUBRICANT, BONDED
2.00	GE1429	1	BEARING, ROLLER
3.00	GE1427	1	HUB, WHEEL
4.00	GE0069	18	CAPSCREW, SOCKET HEAD - 1/2" - 13NC X 1 3/4"
5.00	TD7882	16	CAPSCREW - 3/4" - 10NC X 1 3/4"
6.00	BF4617	16	FLAT WASHER - 3/4"
7.00	GE0895	8	PLATE, CLAMP
8.00	GE1490	19	CAPSCREW - 1 1/4" - 12NF X 9" (12 PT) (SPECIAL)
9.00	GE1315	1	CARRIER ASSEMBLY - HIGH SPEED (SEE INDEX)
10.00	GE0933	1	GEAR, RING
11.00	GE1430	1	TUBE, TORQUE
12.00	VS7492	AR	LIQUID GASKET
13.00	GE0067	1	PIN, LOCATING
14.00	GE1431	1	CARRIER ASSEMBLY - LOW SPEED (SEE INDEX)
15.00	GE1309	1	WASHER, THRUST
16.00	GE0889	2	WASHER, THRUST
17.00	GE1313	1	WASHER, THRUST
18.00	GE0914	1	COVER, LOW SPEED CARRIER
19.00	GE0887	1	O-RING
20.00	GE0897	1	SHIM SET
20.01	GE0898	12	SHIM - .015
20.02	GE0899	6	SHIM - .030
21.00	VE5185	12	FLAT WASHER - 1/2"
22.00	TV1918	12	CAPSCREW - 1/2" - 13NC X 1 3/4"
23.00	GE0086	8	PLUG, PIPE
24.00	GE0449	35	FLAT WASHER - 1 1/4"
25.00	GE0068	35	CAPSCREW - 1 1/4" - 12NF X 5 1/2" (12 PT)
26.00	GE1288	1	PINION SUN - LOW SPEED
27.00	GE1436	1	SHIM SET
27.01	GE1437	5	SHIM - .005
27.02	GE1438	4	SHIM - .007
27.03	GE1439	4	SHIM - .229
28.00	GE1444	54	STUD - 1 1/4" - 7NC
29.00	GE0449	9	FLAT WASHER - 1 1/4" (1)
29.01	GE0536	9	NUT - 1 1/4" - 7NC (1)
29.02	GE0535	9	BLOCK (1)
30.00	GE1308	1	PLUG, LONG
31.00	GE0829	8	PLUG

NOTE: (1) USED FOR SHIPPING ASSEMBLY ONLY OR DURING OVERHAUL AND STORAGE OF WHEEL MOTOR.

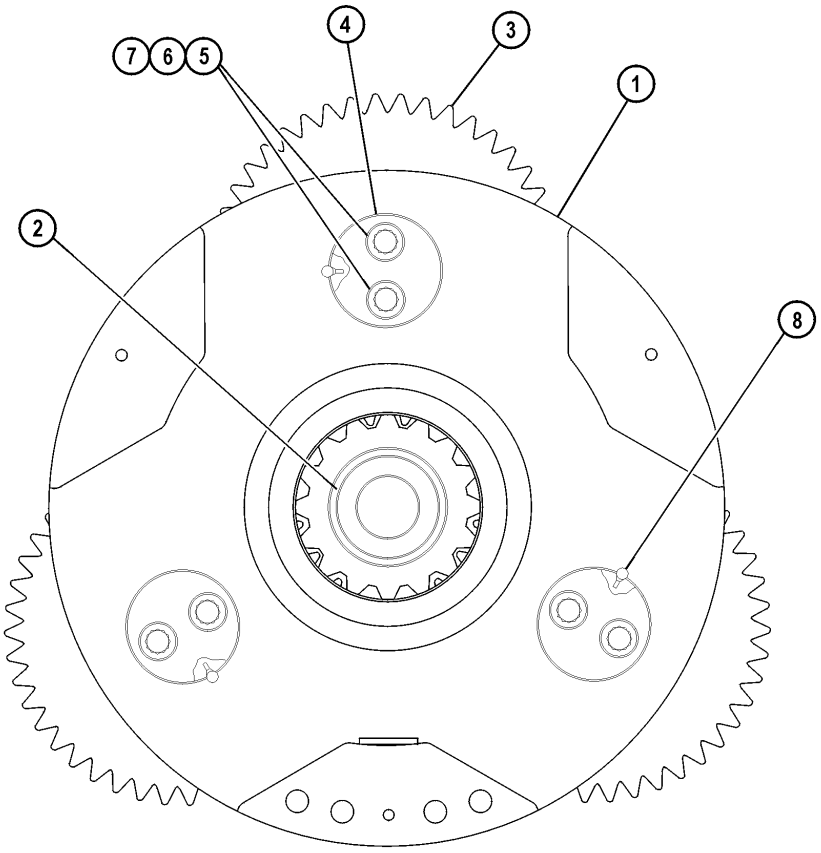

64160Z

REF.	PART NUM.	QTY.	DESCRIPTION
1.00	GE0923	1	CARRIER, HIGH SPEED
2.00	GE1293	1	RETAINER, HIGH SPEED THRUST BEARING
2.01	GE1310	1	COLLAR
2.02	GE1311	1	RETAINER
2.03	GE1312	1	RING, LOCKING
3.00	GE0915	3	GEAR, PLANETARY PINION - HIGH SPEED
4.00	GE0906	3	SHAFT, PLANETARY PINION GEAR
4.01	GE1354	6	BEARING, ROLLER
5.00	GE0095	6	FLAT WASHER (SPECIAL)
6.00	GE0938	6	CAPSCREW - 1" - 8NC X 7 1/2" (12 PT)
7.00	GE0096	AR	THREAD LOCK
8.00	H2980	3	BALL, LOCK - PINION PIN LOCK

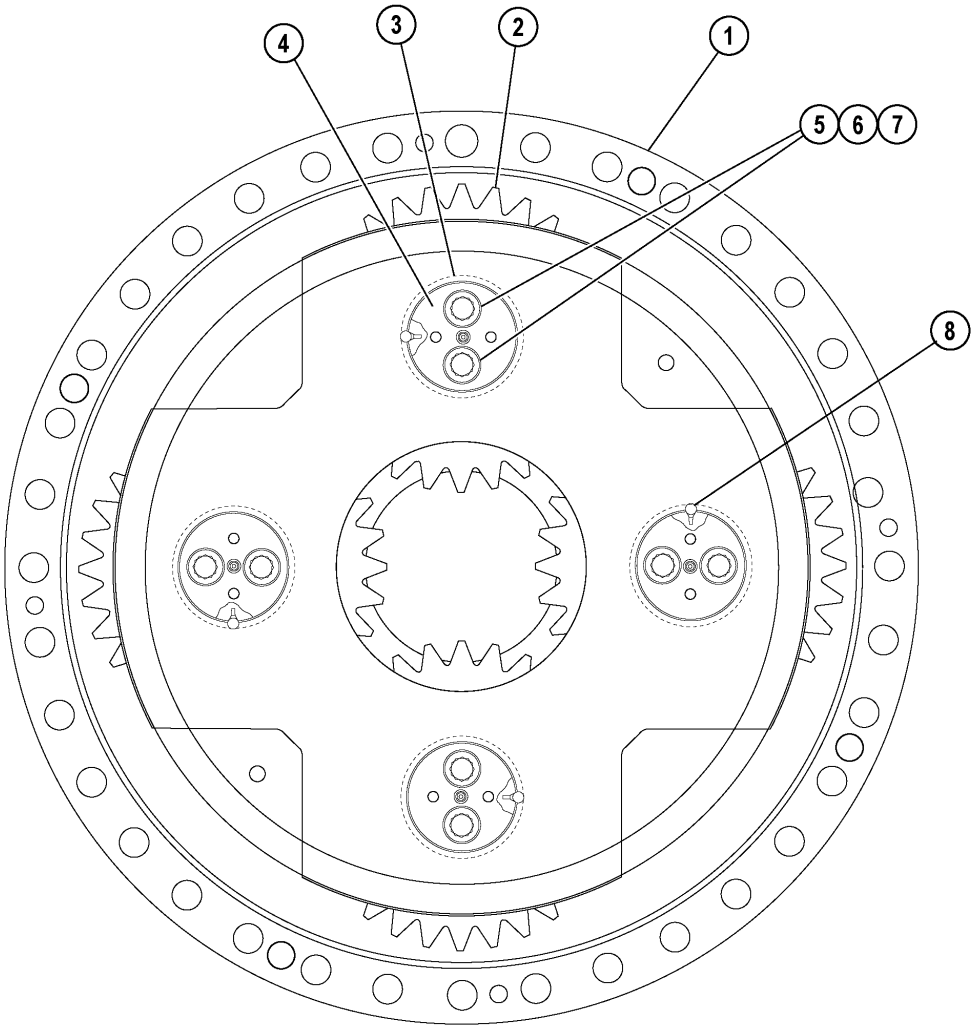
4
3
2
1
5
6
7
8
64161Z

REF.	PART NUM.	QTY.	DESCRIPTION
1.00	GE1433	1	CARRIER, LOW SPEED
2.00	GE1434	4	GEAR, PLANETARY PINION - LOW SPEED
3.00	GE1432	4	SHAFT, PLANETARY PINION GEAR
4.00	GE1435	8	BEARING, ROLLER
5.00	GE0902	8	CAPSCREW - 1" - 8NC X 13" (12 PT)
6.00	GE0095	8	FLAT WASHER (SPECIAL)
7.00	GE0096	AR	THREAD LOCK
8.00	H2980	4	BALL, LOCK - PINION PIN LOCK

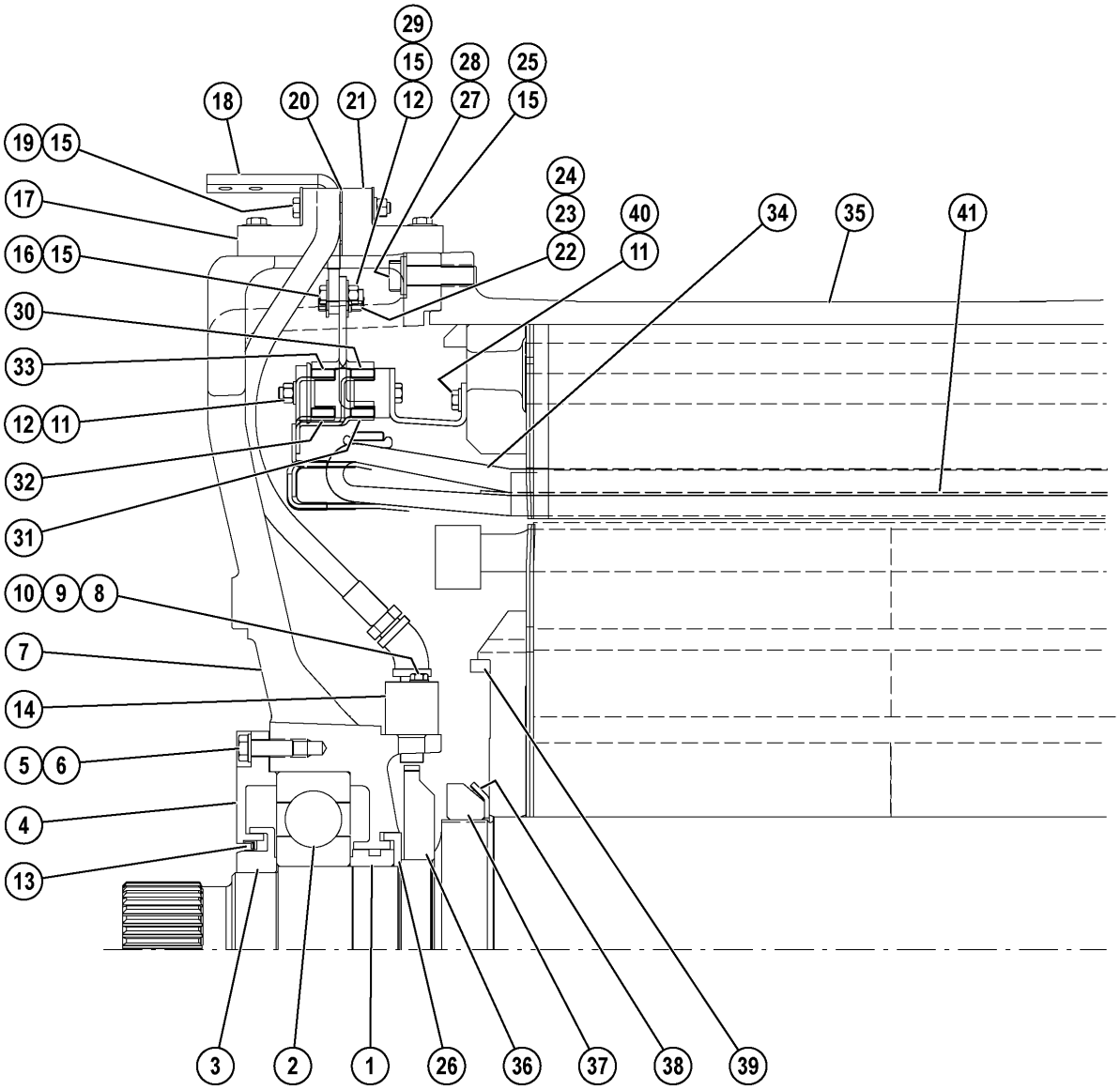
29
15
28
25
18
20
21
12
27
15
19
15
24
17
23
40
34
35
41
16
15
22
11
30
33
12
11
32
31
10
9
8
7
14
5
6
4
13
3
2
1
26
36
37
38
39

64289Z

REF.	PART NUM.	QTY.	DESCRIPTION
1.00	XA4311	1	COLLAR (INNER)
2.00	XA4310	1	BEARING
3.00	XA4309	1	COLLAR (OUTER)
4.00	XA4308	1	CAP, BEARING
5.00	VE5185	16	FLAT WASHER - 1/2"
6.00	TV1918	8	CAPSCREW - 1/2" - 13NC X 1 3/4"
7.00	XA4307	1	FRAME, HEAD
8.00	AK1960	2	FLAT WASHER - 5/16"
9.00	GE0628	2	CAPSCREW - 5/16" - 18NC X 2 1/4"
10.00	XA4257	AR	LOCTITE
11.00	VE3027	27	FLAT WASHER - 3/8"
12.00	TC1233	14	NUT - 3/8"- 16NC
13.00	BF1660	1	SEAL, LIP
14.00	XA4256	1	SENSOR, SPEED
15.00	VE4515	14	FLAT WASHER - 3/8"
16.00	VE4641	3	CAPSCREW - 3/8" - 16NC X 1 1/4"
17.00	XA4323	1	CLAMP
18.00	XA4324	3	STRAP, CONNECTION
19.00	VE4701	2	CAPSCREW - 3/8" - 16NC X 3"
20.00	VE7272	AR	SEALANT
21.00	XA4326	1	BLOCK
22.00	VE4783	AR	PUTTY
23.00	VE4334	AR	TAPE
24.00	VE4335	AR	TAPE, FIBERGLASS
25.00	VE4640	4	CAPSCREW - 3/8" - 16NC X 1 1/2"
26.00	XA4312	1	FLINGER
27.00	XA4136	15	FLAT WASHER - 5/8" (HARDENED)
28.00	VS6852	15	CAPSCREW - 5/8" - 11NC X 2 1/2"
29.00	VE4687	5	LOCKWASHER - 3/8"
30.00	XA4297	1	RING, BUS (TB)
31.00	XA4298	1	RING, BUS (TA)
32.00	XA4299	1	RING, BUS (N)
33.00	XA4296	1	RING, BUS (TC)
34.00	XA4295	1	STATOR REWIND KIT
35.00	XA4294	1	STATOR ASSEMBLY
36.00	XA4306	1	WHEEL, SENSOR
37.00	XA4302	1	NUT
38.00	XA4304	1	LOCKWASHER
39.00	GE0122	AR	WEIGHT, BALANCING
40.00	VE4739	18	CAPSCREW - 3/8" - 16NC X 1"
41.00	XA4300	1	SENSOR, TEMPERATURE

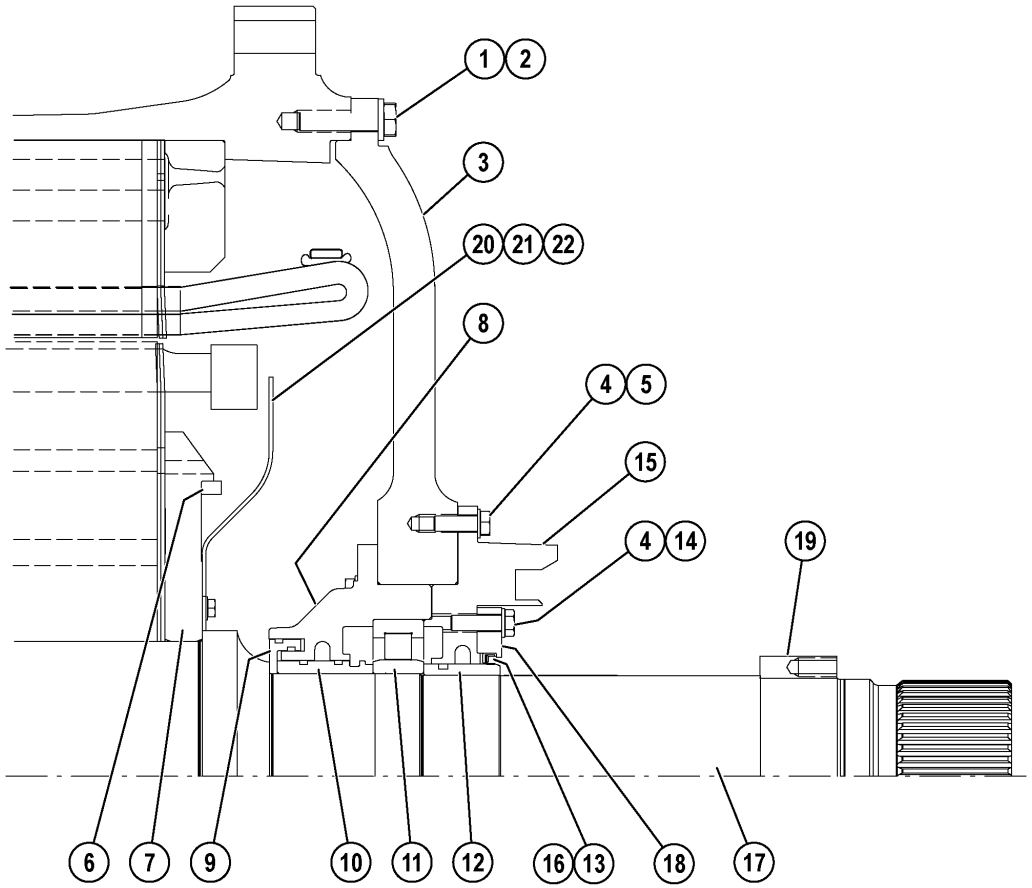

64290Z

REF.	PART NUM.	QTY.	DESCRIPTION
1.00	XA4136	12	FLAT WASHER - 5/8" (HARDENED)
2.00	XA4322	12	CAPSCREW - 5/8" - 11NC X 2 1/4"
3.00	XA4313	1	FRAME, HEAD
4.00	VE5185	8	FLAT WASHER - 1/2"
5.00	VE4518	12	CAPSCREW - 1/2" - 13NC X 1 1/2"
6.00	GE0122	AR	WEIGHT, BALANCING
7.00	XA4301	1	ROTOR ASSEMBLY
8.00	XA4314	1	HOUSING, BEARING
9.00	XA4317	1	FLINGER
10.00	XA4318	1	COLLAR
11.00	XA4320	1	BEARING, ROLLER
12.00	XA4319	1	COLLAR
13.00	VJ9656	AR	ADHESIVE, RTV
14.00	TV1918	4	CAPSCREW - 1/2" - 13NC X 1 3/4"
15.00	XA4315	1	CAP, BEARING
16.00	XA4321	1	SEAL, LIP
17.00	XA4303	1	SHAFT
18.00	XA4316	1	CAP, BEARING SEAL
19.00	XA4325	1	SLEEVE, SHAFT
20.00	XA4305	1	AIR DEFLECTOR
21.00	VE4739	8	CAPSCREW - 3/8" - 16NC X 1"
22.00	VE4516	8	FLAT WASHER - 3/8" (NARROW)

PART NUMBER INDEX

PART NUMBER INDEX

Part Number	Page	Part Number	Page	Part Number	Page
01010-81865	126	1216225H1	388	707-52-90680	126
01011-81690	50	1439428H1	184	707-56-90580	126
01310-01216	126	1439428H1	186	707-58-90A10	126
01643-30823	192	2048889R1	146	722187	396
01643-30823	212	2048889R1	150	736131C2	340
01643-31645	14	20D0911130	216	78261-22302	280
01643-31645	50	25527R1	408	78261-74500	280
01643-31845	126	25632R1	408	78261-74500	284
01643-32060	14	25691R1	474	78619-23320	354
01643-32060	28	27705R1	170	78619-25330	278
01643-32060	34	31006R1	146	876077C1	438
01643-32460	14	31006R1	150	890613C1	438
07000-15090	126	31126R1	146	892124C1	216
07000-15170	126	31126R1	150	892124C1	478
07000-51009	292	31127R1	146	AK1284	348
07000-51009	298	31127R1	148	AK1284	350
07146-05172	126	31127R1	150	AK1960	530
07156-01822	126	31127R1	152	AK1960	590
07179-13104	126	31127R1	172	AK3335	348
08021-00400	204	31127R1	180	AK3336	348
0803800035	324	31127R1	210	AK3337	350
08038-00035	336	31154R1	144	AK3341	348
08038-00519	334	31154R1	146	AK3342	348
08038-02027	332	31154R1	148	AK3570	420
08038-02027	334	31154R1	150	AK3572	138
08038-04030	336	31154R1	152	AK3761	114
08041-00500	266	4260611570	374	AK3761	90
08041-01000	266	42606-11570	456	AK4321	106
08041-01500	266	4260611570	458	AK4695	350
08041-02000	266	53890V	388	AK4696	350
08053-01512	354	56106A4130	324	AK4720	476
08053-01512	358	56106A4140	324	AK4787	448
08086-10000	186	56106A4160	324	AK4789	134
08191-05320	480	562-22-32290	80	AK4790	104
08192-12100	480	56906-61711	190	AK4791	104
08192-12300	480	603517C1	130	AK4896	104
08193-20012	338	656658C1	366	AK5063	198
08193-20012	342	677161R94	334	AK5177	102
08193-20012	452	70653	388	AK5177	104
08193-21012	164	70655	388	AK5177	86
08193-21012	334	70657	388	AK5178	104
09690-F1250	10	707-13-18850	126	AK5211	122
09690-P0710	10	707-27-18880	126	AK5212	106
09690-P1800	10	707-35-90010	126	AK5213	242
09690-P2500	10	707-36-18620	126	AK5214	112
09842-A0481	336	707-44-18180	126	AK5238	90
1130246C1	438	707-51-90030	126	AK5239	114
1133800C1	410	707-51-90640	126	AK5240	126

PART NUMBER INDEX

Part Number	Page	Part Number	Page	Part Number	Page
AK5416	82	BF0849	52	BF2185	402
AK5629	84	BF0883	52	BF2188	402
AK5630	396	BF0884	52	BF2192	420
AK7339	358	BF0885	52	BF2194	420
AK7339	364	BF0931	504	BF2196	420
AK7503	342	BF0932	504	BF2197	420
AK7503	344	BF0932	516	BF2198	420
AK7513	340	BF0997	570	BF2213	138
AK7519	314	BF0998	570	BF2226	402
AK7519	316	BF0999	568	BF2227	402
AK7524	344	BF1000	568	BF2239	402
AK7525	344	BF1001	570	BF2446	460
AK7526	344	BF1002	568	BF2582	194
AK7533	348	BF1003	568	BF2584	194
AK7534	350	BF1004	576	BF2585	194
AK7536	348	BF1005	576	BF2587	194
AK7537	348	BF1006	568	BF2588	194
AK7546	348	BF1287	120	BF2591	198
AK7551	348	BF1355	200	BF2592	198
AK7552	350	BF1368	402	BF2593	198
AK7554	348	BF1368	404	BF2594	198
AK7554	350	BF1369	398	BF2595	198
AK7556	348	BF1369	400	BF2596	198
AK7556	350	BF1369	402	BF2597	198
AK7559	348	BF1369	404	BF2597	440
AK7559	350	BF1492	200	BF2597	440
AK7560	350	BF1493	200	BF2598	198
AK7561	348	BF1494	200	BF2599	198
AK7561	350	BF1495	200	BF2616	400
AK7575	348	BF1497	200	BF2617	400
AK7575	350	BF1498	200	BF2662	46
BF0020	534	BF1660	590	BF2663	46
BF0033	408	BF1731	402	BF2664	46
BF0065	408	BF1854	194	BF2665	46
BF0136	52	BF1857	194	BF2666	46
BF0138	52	BF1858	194	BF2668	46
BF0139	52	BF1885	570	BF2670	46
BF0140	52	BF1886	568	BF2671	46
BF0141	52	BF1886	574	BF2673	408
BF0142	52	BF1887	568	BF2674	408
BF0143	52	BF1888	564	BF2675	408
BF0144	52	BF1888	568	BF2676	408
BF0147	52	BF1889	568	BF2744	146
BF0293	398	BF1889	570	BF2744	150
BF0543	496	BF1890	530	BF2839	434
BF0699	566	BF1891	530	BF2840	434
BF0842	52	BF1892	530	BF2841	434
BF0848	52	BF2071	206	BF2845	434

PART NUMBER INDEX

Part Number	Page	Part Number	Page	Part Number	Page
BF2846	434	BF3035	120	BF3825	466
BF2847	434	BF3036	120	BF3826	466
BF2850	434	BF3037	120	BF3858	440
BF2851	434	BF3038	120	BF3859	440
BF2852	436	BF3042	416	BF3860	440
BF2853	436	BF3043	416	BF3896	554
BF2854	436	BF3044	416	BF3908	492
BF2855	436	BF3045	410	BF4032	52
BF2856	436	BF3046	410	BF4043	52
BF2857	436	BF3047	410	BF4193	38
BF2858	436	BF3047	414	BF4193	38
BF2860	434	BF3047	416	BF4194	38
BF2860	434	BF3048	410	BF4194	38
BF2860	434	BF3048	414	BF4201	36
BF2860	434	BF3048	416	BF4222	490
BF2860	434	BF3049	410	BF4452	490
BF2860	434	BF3050	410	BF4452	506
BF2863	434	BF3174	534	BF4461	36
BF2863	434	BF3176	400	BF4462	36
BF2863	434	BF3260	434	BF4463	36
BF2864	434	BF3261	436	BF4464	36
BF2864	434	BF3347	482	BF4490	138
BF2864	434	BF3349	482	BF4491	138
BF2864	434	BF3351	482	BF4617	584
BF2864	434	BF3352	482	BF4796	418
BF2864	434	BF3354	482	BF4797	418
BF2865	434	BF3357	482	BF4798	418
BF2865	434	BF3360	482	BF4801	420
BF2865	434	BF3361	480	BF4949	36
BF2866	434	BF3361	482	BF4991	50
BF2866	434	BF3523	434	BF4994	336
BF2866	434	BF3535	438	BF5020	482
BF2867	434	BF3536	438	BF5073	36
BF2868	434	BF3557	440	BF5082	460
BF2868	434	BF3625	36	BF5084	460
BF2869	434	BF3632	420	BF5085	460
BF2872	434	BF3727	400	BF5086	460
BF2893	440	BF3727	402	BF5167	206
BF2894	440	BF3727	404	BF5168	206
BF2896	440	BF3732	402	BF5169	206
BF3012	38	BF3732	404	BF5170	206
BF3013	38	BF3733	398	BF5171	206
BF3020	38	BF3820	466	BF5172	206
BF3031	120	BF3821	466	BF5173	206
BF3031	120	BF3822	466	BF5174	206
BF3032	120	BF3823	462	BF5175	206
BF3033	120	BF3823	466	BF5176	206
BF3034	120	BF3824	466	BF5189	146

PART NUMBER INDEX

Part Number	Page	Part Number	Page	Part Number	Page
BF5189	150	BF5481	462	C0312	74
BF5190	146	BF5483	462	C0312	76
BF5190	150	BF5486	462	C0312	86
BF5191	146	BF5487	462	C1231	454
BF5191	150	BF5488	462	C1520	512
BF5194	146	BF5489	462	C1521	124
BF5194	150	BF5490	462	C1521	216
BF5201	136	BF5491	462	C1521	334
BF5202	136	BF5492	462	C1521	36
BF5204	136	BF5498	464	C1521	38
BF5207	428	BF5499	464	C1521	56
BF5359	52	BF5500	464	C1521	58
BF5366	52	BF5501	462	C1521	74
BF5422	460	BF5502	464	C1521	76
BF5423	460	BF5503	464	C1523	18
BF5424	460	BF5505	464	C1523	306
BF5425	460	BF5506	464	C1523	380
BF5426	460	BF5508	462	C1523	42
BF5432	468	BF5509	462	C1525	130
BF5435	460	BF5510	462	C1525	264
BF5436	460	BF5511	462	C1525	366
BF5439	460	BF5513	464	C1525	380
BF5440	460	BF5621	208	C1525	40
BF5442	460	BF5622	208	C1525	44
BF5443	460	BF5626	208	C1527	74
BF5445	460	BF5627	208	C1529	380
BF5447	460	BF5629	208	C1532	34
BF5449	460	BF5630	208	C1538	530
BF5450	460	BF5631	208	C1540	128
BF5456	470	BF5632	208	C1540	130
BF5457	470	BF5637	440	C1540	306
BF5458	470	BF5638	440	C1540	36
BF5459	470	C0312	102	C1540	366
BF5460	470	C0312	114	C1540	372
BF5461	470	C0312	124	C1540	376
BF5462	470	C0312	128	C1540	38
BF5463	470	C0312	130	C1540	38
BF5464	470	C0312	248	C1540	380
BF5465	470	C0312	298	C1540	384
BF5470	462	C0312	334	C1540	390
BF5471	462	C0312	384	C1540	392
BF5473	462	C0312	388	C1540	452
BF5474	462	C0312	446	C1540	474
BF5475	462	C0312	48	C1540	476
BF5476	462	C0312	486	C1540	80
BF5477	462	C0312	530	C1541	106
BF5478	462	C0312	56	C1541	130
BF5480	462	C0312	58	C1541	132

PART NUMBER INDEX

Part Number	Page	Part Number	Page	Part Number	Page
C1541	366	C1609	128	C1647	74
C1541	380	C1609	130	C1663	380
C1541	384	C1609	366	C1667	34
C1541	40	C1609	392	C1669	306
C1541	44	C1612	248	C1669	362
C1542	392	C1612	96	C1670	476
C1542	474	C1613	216	C2303	110
C1542	70	C1613	36	C3145	480
C1542	74	C1614	366	C5542	98
C1543	380	C1614	370	C5733	340
C1544	306	C1614	376	C5747	38
C1544	70	C1614	380	C5747	524
C1546	198	C1614	384	C5759	42
C1546	334	C1614	390	C5768	334
C1546	440	C1614	392	C5770	40
C1546	480	C1614	80	C5770	456
C1547	102	C1615	130	C5771	364
C1547	218	C1615	366	C5771	44
C1547	248	C1615	372	C5771	478
C1547	36	C1615	380	C5772	364
C1547	376	C1615	384	C5774	338
C1547	38	C1616	216	C5774	428
C1547	446	C1616	372	C5775	128
C1547	86	C1616	80	C5775	130
C1549	370	C1619	368	C5775	366
C1549	372	C1623	128	C5775	392
C1550	44	C1624	372	C5780	428
C1598	310	C1628	476	C7595	384
C1601	102	C1629	366	CC6103	182
C1601	428	C1629	384	CC6807	304
C1601	86	C1629	56	CD8419	452
C1602	36	C1629	58	CD9707	40
C1602	376	C1630	384	CD9707	42
C1602	452	C1630	44	CH2236	256
C1602	48	C1630	556	CH2237	256
C1602	90	C1630	570	CH2238	256
C1603	114	C1630	576	CH2239	256
C1603	124	C1631	132	CH2240	256
C1603	128	C1631	386	CH2241	256
C1603	130	C1635	252	CH2242	256
C1603	218	C1637	380	CH2243	256
C1603	248	C1640	366	CH2244	256
C1603	298	C1641	56	CH2245	256
C1603	446	C1641	58	CH2246	256
C1603	530	C1643	392	CH2247	256
C1604	452	C1645	474	CH3423	334
C1605	216	C1647	380	CH3625	256
C1608	130	C1647	406	CH3626	256

PART NUMBER INDEX

Part Number	Page	Part Number	Page	Part Number	Page
CH3867	258	DC3584	274	EB0256	226
CH3885	320	DC3584	282	EB1723	474
CH4066	258	DC3584	304	EB1723	474
CH4070	324	DC3584	322	EB1756	472
CH4075	336	DC3584	490	EB1757	472
CH4172	336	DC3584	492	EB3432	338
CH4173	336	DC3584	498	EB3976	386
CH4323	332	DC3584	500	EB3976	406
CH4452	332	DC3584	504	EB4084	352
CH4503	336	DC3584	506	EB4813	474
CH4519	330	DC3584	516	EB4813	474
CH4520	330	DC3584	518	EB5598	248
CH4605	336	DC3584	530	EB5600	248
CH5415	336	DC3584	532	EB7417	272
CH5421	332	DC3584	574	EB7418	214
CH5701	336	DC3584	576	EB7418	272
CH5707	324	DC4579	568	EB7418	280
CH5708	332	DC4979	338	EB8590	396
CH5801	324	DC5608	454	EB9885	264
CH5802	324	DC7524	114	EB9886	264
CH5803	324	DC7524	384	EC1015	134
D0312	428	DC9822	182	EC1089	264
D104556	26	DD2468	210	EC1090	264
D104556	28	DD5640	430	EC1090	338
D1423	376	DF0017	352	EC1447	134
D1784	474	DF0017	356	EC1725	326
D5576	304	DF3042	124	EC1733	30
DA0557	216	DF3042	304	EC1734	30
DA0557	226	DF3042	428	EC3036	128
DA5893	364	DF3042	90	EC3036	446
DA6756	128	DF3445	212	EC6228	430
DA6756	446	DF3500	12	EC6799	30
DC0859	306	DF3500	18	EC7457	268
DC3101	214	DF3500	216	EC7458	266
DC3101	266	DF3500	56	EC7459	266
DC3101	294	DF3500	58	EC7460	268
DC3101	296	DF3500	74	EC7462	266
DC3101	300	DF4944	210	EC7589	26
DC3101	346	DF4944	342	EC7589	28
DC3101	352	DF4944	520	EC7594	26
DC3101	356	DF4944	522	EC7594	28
DC3101	430	DF6928	410	EC8819	276
DC3101	524	DL4172	430	EC8821	276
DC3101	524	E2579	364	EC8822	276
DC3101	536	E2579	44	EC8823	276
DC3101	538	E2579	452	EC8824	276
DC3584	266	E3909	34	EC8824	278
DC3584	270	E5222	70	EC8825	276

PART NUMBER INDEX

Part Number	Page	Part Number	Page	Part Number	Page
EC8825	278	EF4831	246	EG9126	326
EC8893	226	EF4832	246	EG9144	26
EC8894	226	EF4835	394	EG9194	314
ED0020	42	EF4836	394	EG9194	316
ED0108	156	EF4837	394	EH0431	44
ED0109	156	EF5480	90	EH0753	356
ED0110	156	EF5752	198	EH0944	428
ED0112	156	EF5752	440	EH1241	390
ED0675	100	EF6157	100	EH1242	132
ED0913	270	EF6158	100	EH1249	132
ED0913	274	EF6160	98	EH1251	292
ED0913	280	EF6161	100	EH1251	298
ED0913	322	EF6605	244	EH1552	132
ED2863	210	EF6606	244	EH1785	264
ED3070	394	EF6665	44	EH2022	42
ED3755	582	EF8143	12	EH3010	274
ED3755	94	EF8174	424	EH3010	278
ED3755	96	EF8177	424	EH3192	50
ED4276	100	EF8197	432	EH3376	42
ED4280	100	EF8198	432	EH3380	44
ED4300	100	EF9609	376	EH3596	380
ED4418	320	EF9801	160	EH3653	218
ED5327	100	EG0554	372	EH5046	216
ED6147	380	EG0555	372	EH5046	218
ED6147	386	EG0601	430	EH5306	84
ED6514	376	EG0603	430	EH5306	96
ED7468	282	EG0604	430	EH5307	84
ED7521	314	EG0605	430	EH5307	96
ED7962	242	EG0606	260	EH5380	246
ED8256	42	EG0606	364	EH5392	346
ED8936	264	EG0607	430	EH5393	346
ED8940	264	EG0659	342	EH6156	286
ED9901	478	EG0664	278	EH6529	90
EF0745	242	EG0735	234	EH6536	90
EF2186	346	EG1107	314	EH6686	44
EF2781	44	EG1107	316	EH7186	98
EF3013	270	EG1834	338	EH7195	80
EF3015	270	EG3874	446	EH7195	96
EF3016	270	EG3904	234	EH7197	84
EF3017	270	EG4511	164	EH7197	96
EF3305	44	EG4754	356	EH7284	278
EF3378	34	EG6269	40	EH7285	278
EF3391	246	EG6269	42	EH7286	278
EF3394	246	EG8033	60	EH7492	322
EF3449	198	EG8033	62	EH7492	324
EF4813	244	EG8098	242	EH7492	330
EF4827	246	EG8333	278	EH7494	256
EF4828	246	EG9090	396	EH7671	364

PART NUMBER INDEX

Part Number	Page	Part Number	Page	Part Number	Page
EH7672	364	EH9965	60	EJ5567	56
EH7673	364	EH9965	62	EJ5568	58
EH7674	364	EH9967	74	EJ5570	124
EH7675	364	EJ0043	324	EJ5572	370
EH7713	70	EJ0216	328	EJ5576	330
EH7714	70	EJ0508	254	EJ5609	42
EH7753	42	EJ0509	254	EJ5611	40
EH7754	42	EJ0510	254	EJ5612	42
EH7764	42	EJ0520	254	EJ5615	336
EH7766	42	EJ0521	254	EJ5625	334
EH7767	40	EJ0522	254	EJ5637	34
EH7768	42	EJ0609	60	EJ5709	244
EH7773	40	EJ0609	62	EJ5710	244
EH7791	42	EJ0676	254	EJ5849	84
EH7794	42	EJ0677	254	EJ5849	96
EH7811	106	EJ0678	252	EJ6260	12
EH7812	106	EJ0689	106	EJ6371	282
EH7813	106	EJ0966	452	EJ6559	478
EH7816	394	EJ1033	70	EJ6569	18
EH7817	474	EJ1055	70	EJ6571	18
EH7921	394	EJ1056	70	EJ6634	364
EH7939	396	EJ1068	222	EJ6733	114
EH8107	34	EJ1087	218	EJ6733	298
EH8108	34	EJ1121	372	EJ6985	84
EH8123	12	EJ1518	452	EJ6985	96
EH8490	380	EJ1556	176	EJ6986	84
EH8490	386	EJ1946	106	EJ6986	96
EH8492	380	EJ1949	106	EJ6987	84
EH8681	474	EJ1952	76	EJ6987	96
EH8686	474	EJ2279	252	EJ6990	84
EH8687	474	EJ2283	102	EJ6990	96
EH8954	430	EJ2443	26	EJ6991	84
EH8955	430	EJ2443	28	EJ6991	96
EH8957	386	EJ2479	12	EJ6997	96
EH9389	74	EJ3060	280	EJ7406	368
EH9391	74	EJ3060	284	EJ7766	128
EH9397	74	EJ3080	372	EJ7766	446
EH9563	74	EJ3083	372	EJ7781	326
EH9682	60	EJ3626	444	EJ7875	176
EH9685	60	EJ3805	324	EJ7887	134
EH9691	62	EJ3891	260	EJ7888	354
EH9693	62	EJ3891	330	EJ8368	344
EH9694	62	EJ3891	336	EJ9089	280
EH9696	62	EJ4053	454	EJ9089	284
EH9697	62	EJ4756	244	EJ9295	254
EH9852	44	EJ4757	244	EJ9381	582
EH9858	40	EJ5116	114	EJ9381	94
EH9890	336	EJ5117	114	EJ9729	106

PART NUMBER INDEX

Part Number	Page	Part Number	Page	Part Number	Page
EJ9742	264	EK1995	122	EK3344	80
EJ9742	338	EK1998	122	EK3349	474
EJ9842	118	EK2075	266	EK3395	58
EJ9843	118	EK2151	90	EK3399	58
EJ9909	56	EK2341	56	EK3488	286
EJ9909	58	EK2501	266	EK3490	288
EJ9910	56	EK2502	266	EK3491	288
EJ9910	58	EK2503	266	EK3492	288
EJ9915	56	EK2505	266	EK3501	84
EJ9919	60	EK2508	266	EK3508	80
EJ9919	62	EK2509	266	EK3510	96
EK0195	480	EK2510	266	EK3514	96
EK0731	274	EK2511	266	EK3515	96
EK0731	280	EK2512	266	EK3517	582
EK0732	270	EK2513	266	EK3517	94
EK0733	270	EK2545	44	EK3519	80
EK0734	270	EK2557	218	EK3697	366
EK0735	280	EK2558	218	EK3776	80
EK0736	280	EK2559	218	EK3777	80
EK0737	280	EK2567	44	EK3787	80
EK0738	280	EK2568	44	EK3788	582
EK0739	280	EK2570	44	EK3788	94
EK0742	280	EK2571	44	EK3791	582
EK0744	278	EK2573	42	EK3791	94
EK1048	122	EK2600	106	EK3799	80
EK1050	122	EK2600	108	EK3800	80
EK1286	80	EK2612	380	EK3803	274
EK1287	88	EK2613	380	EK3803	286
EK1288	80	EK2614	380	EK3804	286
EK1289	122	EK2618	380	EK3804	286
EK1290	122	EK2619	380	EK3806	274
EK1300	80	EK2623	128	EK3806	286
EK1411	294	EK2624	128	EK3808	274
EK1411	296	EK2723	282	EK3808	286
EK1411	300	EK2727	474	EK3811	274
EK1413	298	EK2731	80	EK3811	286
EK1413	340	EK2732	80	EK3852	352
EK1650	74	EK2733	80	EK3934	282
EK1694	122	EK2738	84	EK3957	432
EK1695	122	EK2770	172	EK3963	98
EK1699	122	EK2811	170	EK3964	444
EK1700	122	EK2816	170	EK3965	444
EK1727	74	EK2817	170	EK4001	74
EK1742	106	EK2970	52	EK4002	74
EK1743	106	EK3018	372	EK4010	214
EK1744	106	EK3019	368	EK4014	264
EK1746	106	EK3336	14	EK4176	174
EK1747	106	EK3340	474	EK4230	176

PART NUMBER INDEX

Part Number	Page	Part Number	Page	Part Number	Page
EK4254	174	EK5273	80	EK6259	284
EK4275	204	EK5290	90	EK6273	242
EK4352	102	EK5332	268	EK6277	246
EK4352	80	EK5337	282	EK6278	246
EK4352	86	EK5339	284	EK6280	246
EK4354	102	EK5340	284	EK6281	246
EK4356	102	EK5341	284	EK6302	308
EK4384	338	EK5448	14	EK6368	444
EK4582	396	EK5507	230	EK6383	338
EK4585	396	EK5527	186	EK6384	338
EK4588	396	EK5528	190	EK6385	338
EK4591	396	EK5538	190	EK6386	444
EK4596	396	EK5539	186	EK6397	264
EK4965	14	EK5634	106	EK6400	380
EK4982	286	EK5643	338	EK6443	306
EK4982	290	EK5651	292	EK6446	306
EK4982	290	EK5651	314	EK6522	114
EK4983	286	EK5652	292	EK6679	74
EK4983	290	EK5652	316	EK6684	74
EK4983	290	EK5653	62	EK6685	74
EK4984	286	EK5654	60	EK6686	74
EK4985	286	EK5656	60	EK6689	76
EK4986	286	EK5657	60	EK6696	242
EK4987	288	EK5664	56	EK6697	88
EK4988	290	EK5664	58	EK6698	88
EK4988	290	EK5666	60	EK6756	262
EK4989	286	EK5667	56	EK6757	262
EK4990	286	EK5668	74	EK7044	252
EK4991	278	EK5807	14	EK7045	252
EK4991	290	EK5822	262	EK7088	396
EK4993	278	EK5822	292	EK7337	304
EK4993	290	EK5824	262	EK7400	478
EK5035	364	EK5824	292	EK7515	278
EK5251	122	EK5877	474	EK7516	278
EK5251	88	EK5878	122	EK7517	322
EK5252	122	EK6089	474	EK7521	316
EK5252	88	EK6090	476	EK7544	256
EK5254	84	EK6183	380	EK7545	278
EK5257	84	EK6183	384	EK7547	282
EK5259	80	EK6184	372	EK7547	284
EK5260	84	EK6240	74	EK7573	382
EK5262	80	EK6241	74	EK7585	22
EK5265	476	EK6251	282	EK7589	22
EK5266	476	EK6252	282	EK7594	256
EK5267	476	EK6255	282	EK7876	172
EK5268	476	EK6256	282	EK7907	382
EK5269	112	EK6257	282	EK7941	230
EK5271	112	EK6258	284	EK7943	230

PART NUMBER INDEX

Part Number	Page	Part Number	Page	Part Number	Page
EK7946	182	EL0129	224	EL1087	178
EK7947	182	EL0144	18	EL1094	156
EK7948	230	EL0156	110	EL1158	112
EK8138	114	EL0163	16	EL1526	48
EK8243	364	EL0234	14	EL1527	48
EK8720	216	EL0235	14	EL1528	48
EK8761	216	EL0247	248	EL1529	70
EK8961	182	EL0296	174	EL1698	236
EK8962	182	EL0309	280	EL1886	106
EK8966	230	EL0311	274	EL1894	102
EK9055	22	EL0312	274	EL1897	22
EK9073	24	EL0316	258	EL1918	124
EK9094	18	EL0316	268	EL1918	130
EK9095	18	EL0584	324	EL1919	124
EK9197	204	EL0585	324	EL1919	130
EK9210	172	EL0588	248	EL1920	130
EK9210	202	EL0611	72	EL1921	130
EK9211	172	EL0612	72	EL1922	372
EK9211	204	EL0618	72	EL1924	124
EK9239	274	EL0619	72	EL1939	330
EK9380	352	EL0712	110	EL1939	336
EK9381	352	EL0714	110	EL1982	172
EK9382	352	EL0769	106	EL2220	430
EK9576	202	EL0827	18	EL2322	102
EK9879	264	EL0828	18	EL2322	86
EK9883	128	EL0839	218	EL2512	58
EK9883	260	EL0852	110	EL2513	56
EK9883	318	EL0854	318	EL2721	210
EK9883	456	EL0855	338	EL2722	210
EK9883	458	EL0856	318	EL2723	210
EK9883	478	EL0874	20	EL2724	146
EK9883	480	EL0926	122	EL2724	150
EK9885	364	EL0926	122	EL2730	146
EK9907	308	EL0932	88	EL2731	150
EK9909	370	EL0945	88	EL2746	146
EK9910	370	EL0968	88	EL2747	150
EK9913	372	EL0974	90	EL2765	180
EK9914	370	EL1021	144	EL2767	180
EK9914	372	EL1021	148	EL2822	14
EK9917	380	EL1021	152	EL2823	14
EK9920	132	EL1022	144	EL2824	14
EK9920	262	EL1022	148	EL2941	158
EK9920	374	EL1022	152	EL3143	184
EK9920	456	EL1046	156	EL3144	184
EK9922	106	EL1060	230	EL3328	304
EK9927	218	EL1084	178	EL3330	304
EK9945	326	EL1086	172	EL3331	70
EL0128	224	EL1086	174	EL3332	70

PART NUMBER INDEX

Part Number	Page	Part Number	Page	Part Number	Page
EL3397	124	EL5181	324	EL8944	254
EL3398	124	EL5675	182	EL8946	254
EL3414	396	EL5676	228	EL8980	390
EL3415	396	EL5676	230	EL8991	376
EL3417	396	EL5721	148	EL9245	266
EL3494	182	EL5721	152	EL9267	254
EL3495	182	EL5745	226	EL9286	252
EL3752	442	EL5797	228	EL9288	254
EL3753	442	EL5798	176	EL9860	256
EL3755	442	EL5801	256	EL9925	338
EL3757	444	EL5817	258	EM0006	172
EL3762	444	EL5817	260	EM0006	174
EL3763	444	EL5817	338	EM0048	144
EL3783	262	EL6147	258	EM0049	144
EL3784	262	EL6401	328	EM0051	228
EL3792	252	EL6402	328	EM0052	228
EL3802	242	EL6406	322	EM0053	228
EL3806	246	EL6412	328	EM0054	228
EL3810	174	EL6424	384	EM0055	228
EL3813	262	EL6425	384	EM0056	228
EL3819	324	EL6433	444	EM0057	228
EL3820	326	EL6434	68	EM0059	228
EL3821	320	EL6435	68	EM0060	228
EL3825	80	EL6436	18	EM0061	228
EL3952	124	EL6438	18	EM0062	228
EL3954	370	EL6439	18	EM0063	228
EL3961	304	EL6441	20	EM0064	228
EL3967	372	EL6443	20	EM0065	228
EL3986	20	EL7294	88	EM0066	228
EL3987	156	EL7470	346	EM0067	228
EL3988	444	EL7471	346	EM0068	228
EL3997	326	EL7626	266	EM0069	228
EL3998	326	EL7627	266	EM0070	228
EL4085	246	EL7628	274	EM0071	228
EL4087	246	EL7628	278	EM0072	228
EL4089	246	EL7629	270	EM0073	228
EL4090	246	EL7630	280	EM0074	228
EL4091	246	EL7794	320	EM0075	228
EL4093	246	EL8050	258	EM0076	228
EL4095	246	EL8250	266	EM0078	228
EL4096	246	EL8292	106	EM0082	228
EL4097	246	EL8825	142	EM0083	228
EL4131	210	EL8830	264	EM0084	228
EL4141	212	EL8840	254	EM0085	228
EL4826	394	EL8841	254	EM0086	228
EL4827	392	EL8842	252	EM0087	228
EL4827	394	EL8868	474	EM0088	228
EL4841	90	EL8938	254	EM0089	228

PART NUMBER INDEX

Part Number	Page	Part Number	Page	Part Number	Page
EM0090	228	EM1420	24	EM3894	20
EM0091	228	EM1421	24	EM4051	166
EM0092	228	EM1428	24	EM4052	166
EM0093	228	EM1438	22	EM4053	166
EM0094	228	EM1468	274	EM4054	166
EM0177	174	EM1565	90	EM4055	166
EM0178	180	EM1578	112	EM4056	166
EM0228	122	EM1580	112	EM4057	168
EM0228	124	EM1582	114	EM4058	168
EM0308	28	EM2053	322	EM4059	166
EM0308	30	EM2054	320	EM4061	168
EM0309	252	EM2059	454	EM4062	168
EM0309	30	EM2060	326	EM4063	168
EM0317	22	EM2064	342	EM4064	168
EM0321	20	EM2071	304	EM4065	168
EM0323	18	EM2072	304	EM4066	166
EM0326	20	EM2230	342	EM4067	168
EM0338	18	EM2231	342	EM4068	166
EM0345	20	EM2505	254	EM4069	166
EM0501	376	EM2521	254	EM4070	166
EM0524	428	EM2601	74	EM4071	166
EM0527	426	EM2605	74	EM4072	166
EM0545	108	EM2607	74	EM4074	166
EM0545	98	EM2608	74	EM4075	166
EM0558	20	EM2609	74	EM4076	168
EM0561	20	EM2610	74	EM4078	166
EM0567	18	EM2611	74	EM4079	166
EM0570	330	EM2612	74	EM4080	166
EM0573	18	EM2720	258	EM4323	320
EM0636	362	EM2720	268	EM4603	18
EM0764	14	EM2767	258	EM4622	26
EM0774	74	EM3203	88	EM4622	30
EM0775	74	EM3205	90	EM4624	262
EM0779	344	EM3247	18	EM4625	262
EM0818	20	EM3364	332	EM4628	370
EM0820	20	EM3364	334	EM4638	212
EM0823	20	EM3429	344	EM4640	212
EM1131	96	EM3471	252	EM4642	212
EM1140	96	EM3590	174	EM4701	16
EM1141	96	EM3707	474	EM4704	16
EM1142	96	EM3708	474	EM4705	16
EM1143	582	EM3796	252	EM4706	16
EM1143	94	EM3810	334	EM4832	406
EM1179	338	EM3823	20	EM5135	298
EM1274	474	EM3855	12	EM5135	338
EM1275	474	EM3862	20	EM5415	280
EM1398	332	EM3863	20	EM5444	70
EM1406	20	EM3891	20	EM5499	70

PART NUMBER INDEX

Part Number	Page	Part Number	Page	Part Number	Page
EM5630	256	EM6534	282	GE0095	586
EM5631	268	EM6535	258	GE0095	588
EM5631	272	EM6536	258	GE0096	586
EM5636	258	EM6538	280	GE0096	588
EM5636	292	EM6538	284	GE0111	580
EM5637	258	EM6787	70	GE0122	590
EM5637	292	EM7213	306	GE0122	592
EM5638	258	EM7216	10	GE0141	550
EM5638	260	EM7217	12	GE0141	556
EM5638	298	EM8612	274	GE0148	504
EM5638	340	F4037	452	GE0152	506
EM5641	268	GE0013	562	GE0170	492
EM5643	182	GE0013	566	GE0170	498
EM5644	280	GE0017	562	GE0174	490
EM5644	284	GE0017	564	GE0176	490
EM5646	210	GE0018	562	GE0177	490
EM5648	210	GE0019	562	GE0177	506
EM5649	160	GE0020	562	GE0182	498
EM5649	214	GE0021	562	GE0219	506
EM5754	340	GE0023	564	GE0220	506
EM5755	304	GE0024	562	GE0231	492
EM5756	258	GE0025	562	GE0232	492
EM5756	260	GE0027	562	GE0240	490
EM5757	258	GE0028	562	GE0240	496
EM5757	260	GE0029	562	GE0265	510
EM5758	258	GE0030	562	GE0297	510
EM5758	260	GE0031	562	GE0309	526
EM5759	452	GE0034	562	GE0328	550
EM6151	334	GE0035	564	GE0334	550
EM6151	336	GE0036	564	GE0334	554
EM6152	334	GE0037	564	GE0396	542
EM6153	336	GE0038	564	GE0448	584
EM6387	246	GE0040	564	GE0449	584
EM6389	246	GE0041	562	GE0449	584
EM6390	246	GE0042	564	GE0479	564
EM6435	308	GE0044	564	GE0510	490
EM6442	308	GE0045	496	GE0514	492
EM6461	74	GE0045	564	GE0534	102
EM6462	74	GE0046	570	GE0535	584
EM6528	160	GE0047	568	GE0536	584
EM6529	210	GE0048	568	GE0579	494
EM6530	212	GE0051	574	GE0579	500
EM6530	214	GE0052	568	GE0581	500
EM6531	212	GE0067	584	GE0584	498
EM6531	214	GE0068	584	GE0594	500
EM6531	236	GE0069	584	GE0620	562
EM6532	214	GE0086	584	GE0628	590
EM6534	258	GE0088	582	GE0647	500

PART NUMBER INDEX

Part Number	Page	Part Number	Page	Part Number	Page
GE0647	506	GE1017	512	GE1061	514
GE0696	512	GE1018	512	GE1062	514
GE0755	492	GE1019	512	GE1063	514
GE0756	500	GE1020	512	GE1064	514
GE0759	490	GE1021	512	GE1065	514
GE0761	498	GE1022	512	GE1066	514
GE0762	498	GE1022	512	GE1067	514
GE0829	584	GE1023	512	GE1068	514
GE0830	574	GE1024	512	GE1069	514
GE0831	574	GE1025	512	GE1082	556
GE0832	576	GE1026	512	GE1094	554
GE0833	576	GE1026	514	GE1095	554
GE0850	562	GE1028	512	GE1096	548
GE0851	562	GE1029	512	GE1101	548
GE0852	562	GE1030	512	GE1103	548
GE0855	562	GE1031	512	GE1106	554
GE0857	506	GE1032	512	GE1110	554
GE0858	490	GE1033	512	GE1111	554
GE0860	504	GE1034	512	GE1115	548
GE0861	506	GE1035	512	GE1116	548
GE0862	496	GE1036	512	GE1116	554
GE0865	492	GE1037	512	GE1117	548
GE0870	490	GE1038	512	GE1118	548
GE0876	496	GE1039	512	GE1119	548
GE0876	504	GE1040	512	GE1123	554
GE0887	584	GE1041	512	GE1127	554
GE0889	584	GE1042	512	GE1128	554
GE0895	584	GE1043	514	GE1130	544
GE0896	584	GE1044	514	GE1130	558
GE0897	584	GE1045	514	GE1131	544
GE0898	584	GE1046	514	GE1132	544
GE0899	584	GE1047	514	GE1133	544
GE0902	588	GE1048	514	GE1134	544
GE0906	586	GE1049	514	GE1135	544
GE0914	584	GE1050	514	GE1136	544
GE0915	586	GE1051	514	GE1137	544
GE0923	586	GE1051	514	GE1138	544
GE0933	584	GE1052	512	GE1139	544
GE0938	586	GE1052	514	GE1140	544
GE1010	512	GE1052	514	GE1141	544
GE1011	512	GE1053	514	GE1142	544
GE1012	512	GE1054	514	GE1143	544
GE1013	512	GE1055	514	GE1144	550
GE1014	512	GE1056	514	GE1144	556
GE1015	512	GE1057	514	GE1145	544
GE1016	512	GE1058	514	GE1146	550
GE1017	512	GE1059	514	GE1147	550
GE1017	512	GE1060	514	GE1150	544

PART NUMBER INDEX

Part Number	Page	Part Number	Page	Part Number	Page
GE1151	544	GE1293	586	GE1404	500
GE1153	544	GE1296	494	GE1404	504
GE1154	544	GE1298	494	GE1405	504
GE1155	556	GE1300	562	GE1408	500
GE1156	556	GE1302	490	GE1409	494
GE1157	544	GE1308	584	GE1410	498
GE1158	544	GE1309	584	GE1412	496
GE1159	544	GE1310	586	GE1413	494
GE1160	544	GE1311	586	GE1413	500
GE1161	542	GE1312	586	GE1414	498
GE1162	542	GE1313	584	GE1415	500
GE1163	542	GE1315	584	GE1416	498
GE1164	542	GE1340	544	GE1416	504
GE1168	558	GE1342	504	GE1417	490
GE1169	558	GE1347	558	GE1420	500
GE1171	548	GE1354	586	GE1427	582
GE1172	542	GE1378	546	GE1427	584
GE1174	562	GE1379	500	GE1428	582
GE1175	492	GE1380	496	GE1429	584
GE1176	492	GE1381	490	GE1430	584
GE1177	504	GE1381	492	GE1431	584
GE1204	528	GE1381	496	GE1432	588
GE1205	528	GE1381	500	GE1433	588
GE1206	526	GE1381	504	GE1434	588
GE1207	526	GE1381	506	GE1435	588
GE1210	518	GE1382	496	GE1436	584
GE1211	516	GE1383	492	GE1437	584
GE1211	518	GE1383	496	GE1438	584
GE1212	516	GE1384	494	GE1439	584
GE1212	518	GE1385	496	GE1440	582
GE1213	516	GE1385	500	GE1441	582
GE1213	518	GE1386	490	GE1442	582
GE1214	516	GE1387	496	GE1442	94
GE1214	518	GE1387	504	GE1443	582
GE1216	520	GE1388	498	GE1443	94
GE1216	522	GE1389	498	GE1444	584
GE1217	522	GE1392	500	GE1445	582
GE1218	520	GE1392	504	GE1445	94
GE1219	522	GE1395	500	GE1483	528
GE1220	522	GE1396	498	GE1486	526
GE1221	522	GE1400	496	GE1487	526
GE1221	522	GE1400	500	GE1490	584
GE1222	520	GE1401	498	GE1500	526
GE1242	508	GE1402	498	GE1501	528
GE1255	494	GE1402	500	GE1768	508
GE1256	494	GE1403	496	GE1769	510
GE1257	490	GE1403	500	GE1770	510
GE1288	584	GE1404	496	GE1771	508

PART NUMBER INDEX

Part Number	Page	Part Number	Page	Part Number	Page
GE1771	510	HA1413	454	HA7699	368
GE1772	508	HA2482	454	HA7700	368
GE1772	510	HA2497	124	HA7702	366
GE1773	508	HA2873	478	HA7702	372
GE1774	508	HA2965	454	HA7703	366
GE1775	508	HA2965	458	HA7703	372
GE1776	508	HA3045	456	HA7704	366
GE1777	508	HA3045	458	HA7705	366
GE1778	508	HA3619	376	HA7706	368
GE1779	508	HA3629	376	HA7707	366
GE1780	508	HA5133	124	HA7719	378
GE1781	508	HA5569	422	HA7731	392
GE1782	508	HA5579	376	HA7736	132
GE1783	508	HA5694	472	HA7737	132
GE1784	508	HA5698	380	HA7751	370
GE1785	508	HA5843	452	HA7751	372
GE1786	508	HA5913	378	HA7755	428
GE1787	510	HA6302	442	HA7755	430
GE1788	510	HA6752	128	HA7817	366
GE1789	510	HA6766	454	HA7817	370
GE1790	510	HA6766	458	HA7817	372
GE1791	510	HA6769	452	HA7818	366
GE1792	510	HA6769	456	HA7818	370
GE1793	510	HA6769	458	HA7818	372
GE1794	510	HA7190	226	HA7824	308
GE1795	510	HA7286	452	HA7829	128
GE1823	548	HA7286	456	HA7829	132
H0593	366	HA7286	458	HA7834	374
H0595	124	HA7331	128	HA7834	442
H0989	386	HA7331	424	HA7868	308
H0989	406	HA7358	422	HA7895	370
H2643	524	HA7360	424	HA7896	370
H2643	530	HA7368	376	HA7897	370
H2980	586	HA7368	378	HA7899	390
H2980	588	HA7382	422	HA7904	392
H2981	90	HA7387	366	HA7905	390
H5769	304	HA7389	424	HA7906	390
H8136	338	HA7404	372	HA7907	390
H8136	428	HA7461	442	HA7908	390
H8524	124	HA7484	456	HA7910	376
H8524	304	HA7536	442	HA7910	378
H8524	486	HA7598	40	HA7916	366
HA0188	332	HA7598	42	HA7916	372
HA0188	334	HA7601	226	HA7925	304
HA0190	454	HA7687	132	HA7977	366
HA0570	454	HA7691	128	HA7977	372
HA0578	454	HA7692	128	HA7978	308
HA1413	454	HA7698	368	HA7984	390

PART NUMBER INDEX

Part Number	Page	Part Number	Page	Part Number	Page
HA7985	128	HA8270	218	LA0912	460
HA7985	132	HA8272	216	LA0913	468
HA7986	132	HA8275	40	LA0914	468
HA8022	378	HA8275	42	LA0916	468
HA8023	376	HA8276	40	LA1187	460
HA8024	376	HA8276	42	LA1212	460
HA8024	378	HA8277	40	MM0012	20
HA8043	480	HA8278	478	MM0019	292
HA8048	454	HA8280	478	MM0021	394
HA8048	458	HA8300	478	MM0022	234
HA8049	456	HA8306	368	MM0022	324
HA8049	458	HA8306	452	MM0022	444
HA8059	370	HA8306	458	MM0025	278
HA8061	370	HA8387	456	MM0025	298
HA8063	128	HA8387	458	MM0025	336
HA8072	128	HA8464	392	MM0025	340
HA8073	128	HA8488	378	MM0026	226
HA8085	442	HA8489	378	MM0027	160
HA8085	446	HA8490	376	MM0027	214
HA8086	442	HA8490	378	MM0027	216
HA8086	446	HC0908	224	MM0029	34
HA8087	374	HC0908	226	MM0031	26
HA8087	374	HC0908	232	MM0031	28
HA8087	442	HC0920	230	MM0032	320
HA8087	442	HC1580	454	MM0036	156
HA8088	374	HC1851	304	MM0036	158
HA8089	374	HD6007	204	MM0036	334
HA8089	442	HD6007	352	MM0036	48
HA8090	374	HE2467	210	MM0038	70
HA8090	442	HE5125	210	MM0042	10
HA8091	442	HE5125	520	MM0042	12
HA8092	442	HE5125	522	MM0042	226
HA8093	442	HE5125	534	MM0042	264
HA8094	442	HE5611	382	MM0042	40
HA8095	374	HE5611	60	MM0042	74
HA8095	442	HE5611	62	MM0044	128
HA8120	372	HK0425	232	MM0045	72
HA8122	370	JG8379	226	MM0047	372
HA8123	370	KC1255	40	MM0053	70
HA8207	304	KC1255	478	MM0055	70
HA8208	304	KC3835	232	MM0056	364
HA8214	216	KC6842	304	MM0056	430
HA8214	218	KD0252	146	MM0057	226
HA8215	216	KD0252	150	MM0058	14
HA8216	216	LA0605	460	MM0059	72
HA8261	480	LA0641	468	MM0062	72
HA8269	306	LA0662	468	MM0067	244
HA8270	216	LA0906	462	MM0071	14

PART NUMBER INDEX

Part Number	Page	Part Number	Page	Part Number	Page
MM0071	18	MM0178	314	MM0181	72
MM0071	446	MM0178	316	MM0182	14
MM0073	364	MM0178	318	MM0182	252
MM0075	252	MM0178	320	MM0182	28
MM0075	70	MM0178	322	MM0182	34
MM0085	28	MM0178	324	MM0184	252
MM0086	128	MM0178	330	MM0206	174
MM0086	338	MM0178	332	MM0206	320
MM0086	446	MM0178	334	MM0207	172
MM0091	28	MM0178	338	MM0207	174
MM0091	34	MM0178	340	MM0331	212
MM0093	72	MM0178	342	MM0345	212
MM0109	14	MM0178	344	MM0348	236
MM0124	252	MM0178	346	MM0349	230
MM0135	26	MM0178	354	MM0349	314
MM0149	394	MM0178	358	MM0349	316
MM0159	362	MM0178	374	MM0352	278
MM0163	306	MM0178	376	MM0353	236
MM0164	28	MM0178	378	MM0353	322
MM0168	14	MM0178	40	MM0357	146
MM0173	106	MM0178	42	MM0357	148
MM0176	174	MM0178	424	MM0357	150
MM0176	234	MM0178	430	MM0357	152
MM0176	274	MM0178	442	MM0357	214
MM0176	278	MM0178	444	MM0357	236
MM0176	280	MM0178	446	MM0358	342
MM0176	320	MM0178	452	MM0370	212
MM0176	330	MM0178	454	MM0372	212
MM0176	332	MM0178	456	MM0373	174
MM0176	334	MM0178	458	MM0373	274
MM0176	336	MM0178	478	MM0373	278
MM0177	160	MM0178	480	MM0373	280
MM0177	214	MM0178	68	MM0373	314
MM0177	274	MM0179	18	MM0373	316
MM0177	280	MM0179	20	MM0373	320
MM0177	326	MM0179	22	MM0373	322
MM0178	106	MM0179	222	MM0376	212
MM0178	124	MM0179	24	MM0378	212
MM0178	128	MM0179	254	MM0379	236
MM0178	132	MM0179	314	MM0379	274
MM0178	216	MM0179	330	MM0379	278
MM0178	218	MM0179	426	MM0379	280
MM0178	224	MM0179	44	MM0379	314
MM0178	232	MM0179	478	MM0379	316
MM0178	260	MM0179	72	MM0379	320
MM0178	262	MM0179	76	MM0379	322
MM0178	292	MM0181	264	MM0401	280
MM0178	298	MM0181	338	MM0459	212

PART NUMBER INDEX

Part Number	Page	Part Number	Page	Part Number	Page
MM0459	214	MM0461	262	MM0462	364
MM0459	216	MM0461	264	MM0462	444
MM0459	236	MM0461	292	MM0462	56
MM0459	274	MM0461	298	MM0462	58
MM0459	278	MM0461	314	MM0462	60
MM0459	280	MM0461	316	MM0462	62
MM0459	298	MM0461	318	MM0464	264
MM0459	320	MM0461	320	MM0464	338
MM0459	322	MM0461	322	MM0465	14
MM0459	328	MM0461	324	MM0465	252
MM0459	330	MM0461	328	MM0467	252
MM0459	332	MM0461	332	MM0469	146
MM0459	334	MM0461	334	MM0469	150
MM0459	336	MM0461	338	MM0469	160
MM0459	340	MM0461	340	MM0469	214
MM0459	344	MM0461	342	MM0469	234
MM0460	160	MM0461	344	MM0469	234
MM0460	214	MM0461	346	MM0469	274
MM0460	218	MM0461	356	MM0469	278
MM0460	22	MM0461	358	MM0469	280
MM0460	226	MM0461	372	MM0469	298
MM0460	234	MM0461	374	MM0469	320
MM0460	274	MM0461	376	MM0469	322
MM0460	280	MM0461	378	MM0469	336
MM0460	314	MM0461	40	MM0469	340
MM0460	316	MM0461	42	MM0469	342
MM0460	320	MM0461	424	MM0469	344
MM0460	322	MM0461	430	MM0469	428
MM0460	326	MM0461	442	MM0470	144
MM0460	344	MM0461	444	MM0470	158
MM0460	444	MM0461	446	MM0470	160
MM0461	106	MM0461	452	MM0470	192
MM0461	110	MM0461	454	MM0470	218
MM0461	12	MM0461	456	MM0470	22
MM0461	124	MM0461	458	MM0470	226
MM0461	128	MM0461	478	MM0470	234
MM0461	132	MM0461	480	MM0470	236
MM0461	216	MM0461	68	MM0470	274
MM0461	218	MM0461	74	MM0470	280
MM0461	224	MM0462	16	MM0470	314
MM0461	226	MM0462	18	MM0470	316
MM0461	232	MM0462	20	MM0470	320
MM0461	244	MM0462	314	MM0470	322
MM0461	244	MM0462	320	MM0470	326
MM0461	246	MM0462	330	MM0470	344
MM0461	252	MM0462	332	MM0471	10
MM0461	254	MM0462	334	MM0471	106
MM0461	260	MM0462	336	MM0471	110

PART NUMBER INDEX

Part Number	Page	Part Number	Page	Part Number	Page
MM0471	118	MM0523	328	MM0605	342
MM0471	12	MM0581	234	MM0605	364
MM0471	134	MM0581	322	MM0605	376
MM0471	156	MM0581	344	MM0605	424
MM0471	158	MM0581	428	MM0605	442
MM0471	202	MM0583	428	MM0605	444
MM0471	216	MM0592	234	MM0605	456
MM0471	218	MM0593	192	MM0605	480
MM0471	222	MM0593	210	MM0606	106
MM0471	226	MM0593	212	MM0606	330
MM0471	244	MM0593	218	MM0606	454
MM0471	246	MM0593	314	MM0607	106
MM0471	252	MM0593	322	MM0607	110
MM0471	318	MM0593	344	MM0607	218
MM0471	330	MM0594	160	MM0607	244
MM0471	342	MM0594	192	MM0607	246
MM0471	354	MM0594	22	MM0607	42
MM0471	356	MM0594	280	MM0608	22
MM0471	358	MM0594	316	MM0608	24
MM0471	364	MM0594	320	MM0610	22
MM0471	376	MM0594	326	MM0610	456
MM0471	42	MM0595	158	MM0611	222
MM0471	424	MM0596	326	MM0611	454
MM0471	430	MM0603	134	MM0616	56
MM0471	452	MM0603	314	MM0616	58
MM0471	48	MM0603	316	MM0616	60
MM0471	480	MM0603	354	MM0616	62
MM0472	16	MM0603	358	MM0617	314
MM0472	18	MM0604	118	MM0618	16
MM0472	20	MM0604	202	MM0618	20
MM0472	218	MM0604	262	MM0618	22
MM0472	22	MM0604	318	MM0618	222
MM0472	24	MM0604	320	MM0618	24
MM0472	254	MM0604	330	MM0618	264
MM0472	314	MM0604	342	MM0619	16
MM0472	320	MM0604	356	MM0619	18
MM0472	364	MM0604	374	MM0619	20
MM0472	426	MM0604	456	MM0619	218
MM0472	44	MM0604	458	MM0619	22
MM0474	264	MM0604	480	MM0619	24
MM0474	338	MM0605	124	MM0619	330
MM0474	50	MM0605	128	MM0619	444
MM0475	252	MM0605	132	MM0620	22
MM0475	28	MM0605	252	MM0620	24
MM0475	34	MM0605	254	MM0620	254
MM0475	70	MM0605	262	MM0620	364
MM0476	306	MM0605	318	MM0620	426
MM0476	362	MM0605	330	MM0620	478

PART NUMBER INDEX

Part Number	Page	Part Number	Page	Part Number	Page
MM0620	76	MM0712	324	PB3606	506
MM0621	18	MM0713	118	PB3606	520
MM0621	44	MM0713	202	PB4177	70
MM0622	18	MM0713	22	PB4307	356
MM0623	18	MM0713	222	PB4673	338
MM0623	20	MM0713	24	PB4684	474
MM0623	426	MM0713	318	PB4685	384
MM0624	18	MM0713	320	PB4767	174
MM0624	20	MM0713	324	PB4767	236
MM0624	76	MM0713	330	PB5230	506
MM0626	12	MM0713	364	PB5526	364
MM0671	332	MM0713	442	PB5556	364
MM0690	112	MM0714	12	PB5557	364
MM0693	22	MM0714	18	PB5732	270
MM0693	24	MM0714	20	PB5732	280
MM0693	244	MM0714	218	PB5866	472
MM0693	324	MM0714	22	PB5916	136
MM0694	12	MM0714	24	PB5957	210
MM0694	16	MM0714	254	PB5993	326
MM0694	18	MM0714	426	PB6041	124
MM0694	20	MM0714	44	PB6041	374
MM0694	444	MM0714	478	PB6041	384
MM0696	128	MM0714	76	PB6041	430
MM0696	446	MM0717	328	PB6041	82
MM0697	106	MM0720	18	PB6073	322
MM0697	112	PB0027	106	PB6091	64
MM0697	26	PB0699	364	PB6137	500
MM0697	28	PB1006	110	PB6137	506
MM0700	394	PB1006	428	PB6528	124
MM0704	48	PB1255	130	PB6528	374
MM0705	70	PB1597	60	PB6528	384
MM0705	72	PB1597	62	PB6528	430
MM0706	128	PB1951	176	PB6528	82
MM0706	18	PB2020	306	PB6770	130
MM0706	20	PB2075	526	PB6770	138
MM0706	34	PB2076	526	PB6770	368
MM0706	446	PB2154	306	PB6770	380
MM0706	70	PB2194	114	PB6770	420
MM0706	72	PB2194	134	PB6803	432
MM0707	26	PB2194	90	PB6831	34
MM0707	28	PB2685	506	PB6850	60
MM0707	70	PB2849	486	PB6850	62
MM0708	306	PB2850	486	PB6877	12
MM0711	190	PB3019	364	PB6893	210
MM0711	234	PB3348	494	PB6895	430
MM0711	292	PB3348	500	PB6922	430
MM0712	210	PB3348	506	PB7001	156
MM0712	234	PB3606	490	PB7001	226

PART NUMBER INDEX

Part Number	Page	Part Number	Page	Part Number	Page
PB7034	138	PB8735	342	PB9910	396
PB7034	420	PB8769	408	PB9911	396
PB7202	274	PB8908	396	PB9912	396
PB7202	282	PB8931	394	PB9916	176
PB7207	428	PB8987	178	PB9923	234
PB7276	278	PB9008	384	PB9925	234
PB7276	322	PB9008	388	PB9926	234
PB7509	100	PB9008	406	PB9957	174
PB7514	234	PB9050	174	PB9957	484
PB7619	216	PB9050	178	PB9985	484
PB7740	138	PB9051	174	PB9996	80
PB7740	420	PB9051	178	PC0002	80
PB7743	138	PB9056	174	PC0007	364
PB7743	420	PB9056	178	PC0119	332
PB7869	472	PB9067	474	PC0171	366
PB7870	472	PB9072	342	PC0183	384
PB7871	472	PB9075	342	PC0183	388
PB7872	472	PB9112	326	PC0244	314
PB7883	472	PB9152	218	PC0246	324
PB7940	386	PB9211	478	PC0247	324
PB7940	388	PB9212	478	PC0254	266
PB7940	406	PB9213	478	PC0284	338
PB8167	564	PB9506	172	PC0291	326
PB8171	562	PB9506	192	PC0367	474
PB8205	214	PB9513	304	PC0370	474
PB8206	214	PB9661	100	PC0371	304
PB8207	214	PB9662	100	PC0490	210
PB8211	214	PB9710	336	PC0493	184
PB8256	212	PB9785	212	PC0522	384
PB8256	280	PB9796	44	PC0566	236
PB8318	390	PB9799	396	PC0579	102
PB8319	172	PB9800	396	PC0579	86
PB8319	230	PB9802	396	PC0580	102
PB8320	172	PB9803	396	PC0580	86
PB8333	134	PB9804	396	PC0583	102
PB8333	354	PB9806	396	PC0583	86
PB8334	212	PB9807	396	PC0606	278
PB8460	320	PB9808	396	PC0607	332
PB8615	396	PB9810	396	PC0616	284
PB8618	396	PB9828	212	PC0618	284
PB8624	210	PB9829	172	PC0625	114
PB8658	162	PB9829	182	PC0626	114
PB8658	172	PB9829	212	PC0627	114
PB8658	174	PB9864	418	PC0651	582
PB8658	180	PB9881	118	PC0651	80
PB8658	182	PB9881	422	PC0651	94
PB8658	230	PB9887	306	PC0651	96
PB8689	216	PB9890	12	PC0665	50

PART NUMBER INDEX

Part Number	Page	Part Number	Page	Part Number	Page
PC0673	114	PC1345	266	PC1531	376
PC0678	366	PC1374	210	PC1531	378
PC0683	172	PC1375	210	PC1531	430
PC0683	202	PC1376	210	PC1537	358
PC0691	366	PC1377	210	PC1537	432
PC0706	474	PC1381	112	PC1538	358
PC0724	174	PC1385	286	PC1557	430
PC0760	74	PC1385	286	PC1558	430
PC0780	306	PC1385	286	PC1578	292
PC0799	304	PC1385	286	PC1578	298
PC0811	452	PC1392	90	PC1615	274
PC0818	42	PC1393	70	PC1621	202
PC0843	332	PC1400	218	PC1654	454
PC0902	114	PC1427	84	PC1677	354
PC0903	114	PC1431	582	PC1677	432
PC0936	70	PC1431	80	PC1678	432
PC0938	320	PC1431	94	PC1692	238
PC1000	334	PC1431	96	PC1693	354
PC1003	22	PC1433	286	PC1701	160
PC1050	396	PC1433	286	PC1701	258
PC1081	326	PC1435	396	PC1709	204
PC1112	330	PC1436	396	PC1766	184
PC1113	332	PC1437	396	PC1769	462
PC1115	60	PC1447	204	PC1770	462
PC1115	62	PC1452	102	PC1804	216
PC1116	446	PC1462	124	PC1816	218
PC1118	128	PC1482	384	PC1817	210
PC1118	446	PC1484	580	PC1818	90
PC1119	218	PC1493	130	PC1819	90
PC1130	80	PC1496	190	PC1823	234
PC1131	80	PC1498	430	PC1826	102
PC1135	480	PC1500	190	PC1826	86
PC1141	384	PC1501	190	PC1828	146
PC1247	18	PC1502	190	PC1828	150
PC1247	56	PC1504	580	PC1830	216
PC1247	58	PC1505	288	PC1831	218
PC1247	74	PC1506	286	PC1834	180
PC1262	480	PC1506	290	PC1838	236
PC1289	122	PC1506	290	PC1866	346
PC1289	122	PC1507	286	PC1867	314
PC1289	126	PC1508	286	PC1867	316
PC1317	106	PC1508	288	PC1870	102
PC1320	90	PC1509	286	PC1895	482
PC1321	90	PC1510	286	PC1898	430
PC1322	90	PC1515	286	PC1903	322
PC1337	130	PC1516	286	PC1913	340
PC1339	128	PC1516	290	PC1914	340
PC1341	216	PC1516	290	PC1918	480

PART NUMBER INDEX

Part Number	Page	Part Number	Page	Part Number	Page
PC1920	226	PC2525	474	SG3290	334
PC1927	182	PC2661	150	SG3290	480
PC1929	182	R0086	454	SG3566	80
PC1932	188	R2028	364	SG7814	388
PC1933	188	R2508	454	SL6447	232
PC1934	188	R2510	454	SL7366	346
PC1935	188	R2634	204	SL7740	582
PC1936	188	R3869	530	SL7740	94
PC1937	188	R5011	232	SL8698	408
PC1938	182	RK1887	114	SL9490	148
PC1939	182	RK1887	134	SL9490	152
PC1942	188	RK1887	90	SM0190	156
PC1943	188	SC4174	164	SM0628	210
PC1944	190	SC4174	200	SM0721	214
PC1945	190	SC4174	210	SM0926	146
PC1950	328	SC4174	274	SM0926	148
PC1955	172	SC4174	282	SM0926	150
PC1955	192	SC4174	356	SM0926	152
PC1955	424	SD1979	40	SM0926	172
PC1962	258	SD4235	146	SM0926	180
PC1963	214	SD4235	150	SM0926	190
PC1964	238	SD4245	320	SM0926	210
PC1980	474	SD4245	352	SM0991	158
PC2057	390	SD5209	224	SM0992	158
PC2058	390	SD5214	452	SM1094	154
PC2061	474	SD5215	472	SM1602	286
PC2145	234	SD5390	266	SM1603	286
PC2146	186	SF2755	490	SM1624	286
PC2166	146	SF2755	492	SM2014	426
PC2169	34	SF2755	498	SM2045	154
PC2172	176	SF2755	506	SM2052	142
PC2208	354	SF2755	516	SM2106	226
PC2212	220	SF2755	518	SM2111	226
PC2227	24	SF2755	520	SM2117	214
PC2228	474	SF2755	522	SM2117	80
PC2317	186	SF2755	524	SM2163	286
PC2322	20	SF2755	524	SM2165	144
PC2325	20	SF2755	530	SM2165	148
PC2368	256	SF2755	534	SM2165	152
PC2373	452	SF2755	536	SM2189	158
PC2399	266	SF2755	538	SM2192	214
PC2406	164	SF4076	40	SM2256	146
PC2436	462	SF9896	266	SM2260	148
PC2511	332	SF9896	430	SM2260	152
PC2516	388	SG2103	12	SM2261	148
PC2516	70	SG2103	428	SM2261	152
PC2522	252	SG2106	172	SM2263	146
PC2522	256	SG3146	478	SM2263	150

PART NUMBER INDEX

Part Number	Page	Part Number	Page	Part Number	Page
SM2264	146	SM3035	286	SR7215	314
SM2264	150	SM3043	286	SR7215	316
SM2274	150	SM3124	278	SR7215	380
SM2294	148	SM3124	290	SR7222	130
SM2294	152	SM3189	286	SS0189	472
SM2297	146	SM3189	286	SV6653	306
SM2300	148	SM3189	290	SV7053	456
SM2300	152	SM4274	212	SV9812	420
SM2322	144	SM4345	234	SV9812	436
SM2322	148	SM4377	154	SV9812	474
SM2322	152	SM4477	234	SV9812	474
SM2354	146	SM5048	170	TA0602	174
SM2354	150	SM5049	212	TA0603	174
SM2355	146	SM5115	210	TA0603	338
SM2355	150	SM5115	236	TA0603	68
SM2402	144	SM5145	182	TA1432	42
SM2405	146	SM5244	172	TA1683	304
SM2405	150	SM5390	148	TA1691	304
SM2406	146	SM5391	152	TA1691	304
SM2406	150	SM5403	286	TA1968	456
SM2406	230	SM5404	286	TA2968	384
SM2489	226	SM5405	286	TA4410	456
SM2544	146	SM5406	290	TA4411	454
SM2544	150	SM5408	290	TA6483	56
SM2548	146	SM5434	170	TA6483	58
SM2548	150	SM5435	170	TA6483	76
SM2582	144	SM5646	286	TA6490	56
SM2646	182	SM5652	286	TA6490	58
SM2648	182	SM6022	232	TA6490	76
SM2682	174	SM6023	232	TA6491	56
SM2682	230	SM6037	204	TA6491	58
SM2701	176	SM6046	226	TA6491	76
SM2709	190	SM6047	226	TA7047	68
SM2738	148	SP7846	330	TA7409	274
SM2739	152	SP7847	260	TA7409	280
SM2740	148	SP8417	110	TA7409	322
SM2741	152	SP8417	160	TA9974	304
SM2783	182	SP8417	322	TB0623	364
SM2832	148	SP8417	492	TB1017	60
SM2832	152	SP8417	498	TB1017	62
SM2853	190	SP8417	500	TB1018	60
SM2877	154	SP8417	504	TB1018	62
SM2879	154	SP8417	506	TB1019	60
SM2897	154	SP8417	576	TB1019	62
SM2898	154	SP8708	340	TB1406	60
SM2899	154	SR6301	428	TB1406	62
SM3010	148	SR6320	430	TB8803	454
SM3010	152	SR6747	430	TC1231	118

PART NUMBER INDEX

Part Number	Page	Part Number	Page	Part Number	Page
TC1231	124	TC1233	506	TD1549	532
TC1231	212	TC1233	544	TD1549	576
TC1231	226	TC1233	556	TD1649	308
TC1231	252	TC1233	558	TD1684	274
TC1231	254	TC1233	590	TD1684	282
TC1231	258	TC1234	102	TD1684	308
TC1231	260	TC1234	146	TD1809	110
TC1231	264	TC1234	150	TD1809	160
TC1231	268	TC1234	258	TD2186	164
TC1231	274	TC1234	268	TD3705	80
TC1231	278	TC1234	274	TD5915	380
TC1231	280	TC1234	280	TD7179	114
TC1231	304	TC1234	334	TD7179	134
TC1231	304	TC1234	42	TD7179	134
TC1231	306	TC1234	44	TD7179	292
TC1231	314	TC1234	542	TD7179	298
TC1231	316	TC1234	558	TD7179	90
TC1231	320	TC1234	564	TD7426	304
TC1231	322	TC1234	566	TD7882	584
TC1231	324	TC1565	226	TD9743	40
TC1231	338	TC2410	304	TF1144	114
TC1231	340	TC5943	346	TF1144	134
TC1231	364	TC6058	456	TF1144	90
TC1231	382	TC6967	308	TF2449	428
TC1231	392	TC8757	478	TF3231	366
TC1231	42	TC8793	304	TF3231	380
TC1231	44	TC9899	134	TF3231	386
TC1231	506	TD0791	226	TF3231	390
TC1233	124	TD0791	304	TF3231	392
TC1233	226	TD0791	320	TF3237	128
TC1233	252	TD0791	322	TF3237	130
TC1233	254	TD0791	324	TF3237	366
TC1233	264	TD0791	382	TF3237	392
TC1233	304	TD0794	164	TF3238	370
TC1233	306	TD0794	356	TF5190	472
TC1233	314	TD0795	164	TF5194	138
TC1233	316	TD1549	266	TF5194	420
TC1233	320	TD1549	270	TF5194	472
TC1233	322	TD1549	274	TF6248	266
TC1233	324	TD1549	282	TF6380	234
TC1233	338	TD1549	322	TF6957	364
TC1233	340	TD1549	490	TF6957	44
TC1233	392	TD1549	492	TF7982	210
TC1233	490	TD1549	498	TF8077	124
TC1233	494	TD1549	504	TF8077	128
TC1233	496	TD1549	506	TF8077	130
TC1233	498	TD1549	516	TF8090	366
TC1233	502	TD1549	518	TF8090	370

PART NUMBER INDEX

Part Number	Page	Part Number	Page	Part Number	Page
TF8090	376	TL5327	132	TR4436	364
TF8090	384	TL8151	56	TR4436	392
TF8481	124	TL8151	58	TR4436	42
TG0545	306	TL8151	74	TR4436	44
TG1680	474	TM2966	40	TR4436	506
TG1929	214	TM2966	42	TR4731	256
TG1929	352	TM4777	174	TR4731	500
TG1993	232	TM9090	266	TR4731	570
TG2341	124	TM9090	430	TR4735	428
TG2562	346	TN1018	70	TR4977	320
TG2563	260	TN1019	70	TR5445	12
TG2563	262	TR1306	322	TR5445	142
TG2568	422	TR1306	334	TR5445	242
TG2568	424	TR1307	230	TR5445	248
TG2960	422	TR1307	266	TR5445	256
TG2960	424	TR1307	270	TR5445	278
TG3789	408	TR1307	274	TR5445	322
TG4083	420	TR1307	282	TR5445	324
TG5601	226	TR1376	12	TR5445	326
TG5720	260	TR1376	306	TR5445	330
TG5720	278	TR2961	60	TR5445	42
TG5720	306	TR2961	62	TR5445	534
TG5720	314	TR3662	306	TR6008	12
TG5720	316	TR4434	502	TR6008	306
TG5720	364	TR4434	60	TR6008	322
TG5720	382	TR4434	62	TR6008	324
TG6760	34	TR4436	102	TR6008	326
TG9225	146	TR4436	212	TR6008	330
TG9225	150	TR4436	216	TR6008	378
TG9226	252	TR4436	226	TR6008	390
TG9242	452	TR4436	252	TR6008	42
TG9449	474	TR4436	254	TR6643	242
TH0031	226	TR4436	258	TR6643	256
TH3747	380	TR4436	260	TR6643	26
TH3747	406	TR4436	264	TR6643	278
TH5604	364	TR4436	268	TR6643	28
TH7238	68	TR4436	274	TR6643	324
TH7435	388	TR4436	278	TR6643	330
TH7965	408	TR4436	280	TR6643	390
TK6566	34	TR4436	304	TR8279	314
TK6567	34	TR4436	306	TR8279	316
TK7603	338	TR4436	314	TR8960	428
TK7738	110	TR4436	316	TR9008	278
TL3995	134	TR4436	320	TR9082	264
TL3995	138	TR4436	322	TR9082	60
TL3995	434	TR4436	324	TR9082	62
TL3995	474	TR4436	334	TR9441	260
TL3995	474	TR4436	338	TR9441	262

PART NUMBER INDEX

Part Number	Page	Part Number	Page	Part Number	Page
TR9441	340	TY7922	364	VC1387	322
TR9441	452	TY8375	132	VC1387	324
TR9993	114	TY8375	216	VC1387	326
TR9993	134	TY8375	260	VC1387	452
TR9993	90	TY8375	262	VC1390	264
TV0177	164	TY8375	318	VC1390	496
TV0177	210	TY8375	320	VC1390	534
TV0177	256	TY8375	322	VC1390	570
TV0177	274	TY8375	324	VC1390	576
TV0177	282	TY8375	374	VC1390	60
TV0177	308	TY8375	376	VC1390	62
TV0177	356	TY8375	378	VC2629	90
TV1294	134	TY8375	424	VC4571	370
TV1748	16	TY8375	442	VC4898	18
TV1918	256	TY8375	444	VC4899	110
TV1918	584	TY8375	446	VC5227	472
TV1918	590	TY8375	456	VC5344	214
TV1918	592	TY8375	478	VC5344	266
TV2179	266	TY8375	480	VC5344	352
TV2642	224	TY8684	226	VC5344	356
TV2642	226	TY8687	226	VC6561	256
TV3461	314	TY8879	114	VC6561	324
TV3461	316	TY8879	90	VC6561	330
TV3461	492	TY9254	30	VC6561	378
TV3555	268	TY9256	30	VC7083	56
TV3555	322	TY9258	30	VC7083	58
TV6025	146	TY9260	432	VC7083	74
TV6025	150	TY9293	242	VC7674	214
TV7355	96	TY9407	242	VC7828	70
TW2477	356	TY9627	392	VC7836	256
TX6040	60	TZ0880	342	VC8762	118
TX6040	62	TZ3104	248	VC8762	212
TX6079	356	TZ3112	248	VC8762	252
TX7829	182	TZ3113	248	VC8762	254
TX8110	106	TZ5901	124	VC8762	338
TY0616	314	TZ6931	342	VC8762	392
TY0616	316	TZ7377	274	VC8920	234
TY1503	396	TZ7378	274	VC9049	200
TY2148	80	TZ8035	306	VD4460	156
TY2149	474	TZ8627	292	VD5076	114
TY2149	80	TZ8627	298	VD5076	134
TY2149	88	TZ8637	90	VD5076	90
TY2149	96	VA0010	60	VD7129	210
TY2734	106	VA0010	62	VE0036	516
TY4907	306	VA0609	264	VE0036	518
TY4907	362	VA1833	142	VE0066	504
TY5960	242	VA2826	342	VE0171	64
TY7538	12	VA2828	342	VE0252	532

PART NUMBER INDEX

Part Number	Page	Part Number	Page	Part Number	Page
VE0297	516	VE3035	522	VE3547	414
VE0297	518	VE3035	562	VE3548	414
VE0299	516	VE3054	136	VE3549	414
VE0301	516	VE3080	120	VE3549	416
VE0302	516	VE3081	120	VE3551	410
VE0687	520	VE3082	120	VE3552	410
VE0687	520	VE3083	120	VE3553	410
VE0735	534	VE3084	120	VE3554	410
VE1076	532	VE3085	120	VE3555	410
VE1142	534	VE3091	120	VE3556	410
VE1142	534	VE3217	516	VE3557	410
VE1143	534	VE3217	518	VE3558	410
VE1183	532	VE3288	532	VE3559	410
VE1200	558	VE3436	388	VE3560	410
VE1219	38	VE3438	388	VE3561	410
VE1219	38	VE3439	388	VE3562	410
VE1223	36	VE3460	36	VE3563	410
VE1273	580	VE3460	38	VE3564	410
VE1285	38	VE3460	38	VE3565	410
VE1297	52	VE3461	36	VE3567	410
VE1304	52	VE3504	200	VE3568	410
VE1317	500	VE3510	200	VE3569	410
VE1317	506	VE3517	200	VE3571	408
VE1317	530	VE3522	200	VE3572	408
VE1474	36	VE3526	410	VE3573	408
VE1783	408	VE3527	414	VE3574	408
VE1959	504	VE3528	410	VE3575	408
VE1978	138	VE3528	414	VE3580	408
VE1978	420	VE3530	500	VE3581	408
VE2232	66	VE3530	506	VE3582	408
VE2248	532	VE3530	534	VE3583	408
VE2249	530	VE3533	410	VE3584	408
VE2250	530	VE3533	414	VE3586	408
VE2604	516	VE3533	416	VE3588	408
VE2604	518	VE3534	410	VE3589	408
VE2607	138	VE3534	414	VE3592	408
VE2607	420	VE3535	414	VE3593	408
VE2754	568	VE3536	414	VE3594	408
VE2761	570	VE3538	414	VE3603	414
VE2764	550	VE3539	414	VE3609	410
VE2941	234	VE3540	414	VE3610	412
VE2942	234	VE3541	414	VE3616	534
VE3027	544	VE3541	416	VE3620	548
VE3027	556	VE3542	414	VE3620	556
VE3027	590	VE3543	414	VE3738	408
VE3030	500	VE3544	414	VE3803	410
VE3030	504	VE3545	414	VE3804	410
VE3030	568	VE3546	414	VE3806	410

PART NUMBER INDEX

Part Number	Page	Part Number	Page	Part Number	Page
VE3807	410	VE4342	544	VE4604	518
VE3810	410	VE4347	530	VE4604	530
VE3818	438	VE4379	504	VE4610	520
VE3819	438	VE4382	516	VE4610	522
VE3821	438	VE4382	518	VE4625	552
VE3822	438	VE4383	516	VE4626	552
VE3823	438	VE4383	518	VE4628	550
VE3825	438	VE4389	518	VE4629	550
VE3826	438	VE4405	534	VE4630	550
VE3827	438	VE4406	534	VE4630	574
VE3828	438	VE4409	568	VE4630	576
VE3829	438	VE4440	36	VE4631	550
VE3830	438	VE4441	36	VE4631	556
VE3833	136	VE4480	516	VE4639	550
VE3839	136	VE4490	494	VE4640	494
VE3846	504	VE4490	500	VE4640	502
VE3847	522	VE4500	500	VE4640	544
VE3915	570	VE4500	556	VE4640	590
VE3915	576	VE4515	492	VE4641	490
VE3918	494	VE4515	494	VE4641	556
VE3918	496	VE4515	496	VE4641	556
VE3918	502	VE4515	498	VE4641	568
VE3918	544	VE4515	500	VE4641	570
VE3922	580	VE4515	558	VE4641	590
VE3922	582	VE4515	564	VE4642	574
VE3922	94	VE4515	590	VE4642	576
VE3980	438	VE4516	500	VE4643	554
VE3999	310	VE4516	566	VE4648	562
VE4000	310	VE4516	592	VE4650	518
VE4005	38	VE4518	544	VE4655	490
VE4034	550	VE4518	592	VE4655	492
VE4064	120	VE4519	494	VE4655	498
VE4069	120	VE4519	496	VE4655	506
VE4071	120	VE4519	500	VE4687	490
VE4072	120	VE4519	504	VE4687	492
VE4213	200	VE4519	564	VE4687	494
VE4248	548	VE4542	544	VE4687	496
VE4256	568	VE4597	522	VE4687	498
VE4257	570	VE4601	490	VE4687	500
VE4258	568	VE4601	492	VE4687	542
VE4299	206	VE4601	498	VE4687	544
VE4309	206	VE4601	504	VE4687	558
VE4310	206	VE4601	506	VE4687	564
VE4311	206	VE4601	516	VE4687	566
VE4332	576	VE4601	518	VE4687	568
VE4334	590	VE4601	520	VE4687	570
VE4335	576	VE4601	522	VE4687	574
VE4335	590	VE4604	518	VE4687	590

PART NUMBER INDEX

Part Number	Page	Part Number	Page	Part Number	Page
VE4696	490	VE4913	518	VE5339	234
VE4696	492	VE4915	518	VE5442	310
VE4696	496	VE4917	516	VE5472	414
VE4696	500	VE4917	518	VE5751	534
VE4696	504	VE4917	520	VE5752	534
VE4696	506	VE4921	506	VE5753	534
VE4696	530	VE4921	516	VE5757	534
VE4696	562	VE4921	520	VE5761	530
VE4696	566	VE4998	556	VE5762	566
VE4696	568	VE4999	546	VE5771	530
VE4696	570	VE4999	562	VE5778	532
VE4698	494	VE5013	492	VE5779	532
VE4698	496	VE5013	496	VE5781	532
VE4698	500	VE5013	504	VE5837	162
VE4698	504	VE5013	506	VE5882	490
VE4698	562	VE5013	562	VE5882	500
VE4698	564	VE5042	504	VE5959	520
VE4699	494	VE5061	500	VE5959	522
VE4699	496	VE5061	548	VE5967	522
VE4699	500	VE5062	500	VE5968	522
VE4699	504	VE5063	554	VE5971	520
VE4699	562	VE5098	516	VE5972	520
VE4699	564	VE5098	518	VE5974	520
VE4699	568	VE5127	516	VE5974	522
VE4701	590	VE5128	516	VE5976	520
VE4702	544	VE5128	518	VE5976	522
VE4739	496	VE5129	516	VE6312	38
VE4739	564	VE5130	518	VE6320	516
VE4739	590	VE5131	516	VE6320	518
VE4739	592	VE5133	520	VE6323	516
VE4750	544	VE5136	516	VE6598	234
VE4750	558	VE5136	518	VE7202	490
VE4783	590	VE5156	516	VE7202	506
VE4818	570	VE5156	518	VE7202	516
VE4819	570	VE5156	520	VE7202	518
VE4825	574	VE5169	496	VE7206	570
VE4832	576	VE5171	564	VE7209	548
VE4835	576	VE5184	548	VE7237	490
VE4881	544	VE5184	556	VE7237	506
VE4907	518	VE5185	544	VE7247	512
VE4907	534	VE5185	544	VE7272	516
VE4908	518	VE5185	548	VE7272	520
VE4908	534	VE5185	554	VE7272	590
VE4908	534	VE5185	556	VE7350	388
VE4909	518	VE5185	584	VE7355	490
VE4909	534	VE5185	590	VE7366	46
VE4911	518	VE5185	592	VE7367	46
VE4912	518	VE5201	408	VE7502	64

PART NUMBER INDEX

Part Number	Page	Part Number	Page	Part Number	Page
VE7549	200	VE9403	198	VE9573	400
VE7551	200	VE9411	196	VE9574	400
VE7556	200	VE9418	198	VE9575	400
VE7557	200	VE9418	440	VE9577	400
VE7561	200	VE9419	196	VE9578	400
VE7572	400	VE9420	196	VE9579	400
VE7619	414	VE9421	198	VE9580	400
VE7619	416	VE9421	440	VE9580	404
VE7634	200	VE9530	398	VE9581	400
VE7636	200	VE9531	400	VE9581	404
VE7638	200	VE9532	398	VE9582	400
VE7738	532	VE9532	404	VE9582	404
VE7795	408	VE9533	400	VE9583	400
VE7797	408	VE9534	398	VE9583	404
VE8070	198	VE9535	398	VE9584	400
VE8080	198	VE9536	398	VE9585	400
VE8122	52	VE9536	402	VE9585	404
VE8123	52	VE9537	402	VE9586	400
VE8125	52	VE9538	398	VE9586	404
VE8126	52	VE9539	400	VE9588	402
VE8127	52	VE9539	404	VE9590	402
VE8128	52	VE9540	398	VE9590	404
VE8180	528	VE9541	398	VE9591	400
VE8181	528	VE9541	402	VE9592	402
VE8183	528	VE9541	404	VE9595	398
VE8188	528	VE9541	404	VE9597	398
VE8326	36	VE9542	398	VE9598	398
VE8445	568	VE9543	398	VE9598	404
VE8524	52	VE9544	398	VE9600	402
VE8525	52	VE9545	398	VE9601	402
VE8530	196	VE9546	398	VE9603	402
VE8533	198	VE9548	402	VE9606	402
VE8538	194	VE9549	402	VE9607	398
VE8544	196	VE9549	404	VE9607	402
VE8545	196	VE9550	402	VE9608	402
VE8546	196	VE9551	402	VE9609	402
VE8547	196	VE9551	404	VE9610	402
VE8559	36	VE9553	400	VE9611	402
VE8635	162	VE9554	400	VE9612	402
VE8636	162	VE9556	400	VE9613	402
VE8775	528	VE9559	400	VE9614	402
VE8776	526	VE9562	398	VE9614	404
VE8835	194	VE9564	400	VE9615	402
VE8966	408	VE9566	398	VE9616	402
VE8967	408	VE9567	398	VE9617	402
VE8978	568	VE9568	398	VE9618	402
VE8978	570	VE9569	398	VE9618	404
VE9401	198	VE9570	398	VE9668	66

PART NUMBER INDEX

Part Number	Page	Part Number	Page	Part Number	Page
VF2231	294	VJ0846	532	VJ2743	546
VF2231	296	VJ1024	544	VJ2946	414
VF2231	300	VJ1024	550	VJ2946	416
VF2231	430	VJ1024	556	VJ3235	512
VF4420	372	VJ1025	552	VJ3236	512
VF6144	234	VJ1026	552	VJ3711	532
VF6144	532	VJ1028	550	VJ3911	114
VF7377	554	VJ1083	572	VJ3911	90
VG1621	210	VJ1085	572	VJ4014	64
VG2833	226	VJ1086	572	VJ4014	66
VG6711	306	VJ1124	532	VJ4023	200
VG7000	380	VJ1933	438	VJ4028	64
VG7043	490	VJ1934	438	VJ4035	66
VG7043	506	VJ1943	438	VJ5175	64
VG7043	524	VJ1944	438	VJ5175	66
VG7146	12	VJ1947	438	VJ5176	64
VG7407	100	VJ1957	438	VJ5176	66
VG7811	256	VJ1960	438	VJ5672	514
VG7811	314	VJ1962	438	VJ6359	568
VG7811	316	VJ1964	438	VJ6455	506
VG9058	384	VJ1967	438	VJ6456	506
VG9095	132	VJ1972	438	VJ6457	506
VG9095	366	VJ1974	438	VJ6523	512
VG9095	384	VJ1975	438	VJ6586	504
VG9096	128	VJ1983	414	VJ6586	520
VG9096	130	VJ1983	416	VJ6586	522
VG9096	132	VJ1985	410	VJ6586	522
VG9096	366	VJ1987	414	VJ6996	536
VG9096	384	VJ1988	410	VJ6996	538
VG9096	392	VJ1989	410	VJ7666	568
VG9097	124	VJ1990	410	VJ7853	552
VG9097	128	VJ2002	410	VJ7860	530
VG9097	130	VJ2008	412	VJ7941	568
VG9098	84	VJ2010	412	VJ7941	574
VH2929	148	VJ2011	412	VJ8523	468
VH2929	152	VJ2012	412	VJ8524	468
VH3402	364	VJ2014	412	VJ8710	530
VH5017	164	VJ2015	412	VJ8959	544
VH6718	128	VJ2016	412	VJ8959	546
VH6718	366	VJ2017	412	VJ8959	554
VH6718	372	VJ2018	412	VJ8959	554
VH6718	380	VJ2020	412	VJ8965	532
VH6718	384	VJ2022	412	VJ8966	532
VH6864	304	VJ2672	508	VJ8979	530
VH8186	34	VJ2672	510	VJ9059	506
VJ0011	410	VJ2672	542	VJ9131	536
VJ0012	438	VJ2672	544	VJ9150	530
VJ0435	410	VJ2672	580	VJ9158	530

PART NUMBER INDEX

Part Number	Page	Part Number	Page	Part Number	Page
VJ9159	524	VM0317	84	VN9087	106
VJ9161	516	VM0317	96	VN9088	396
VJ9161	520	VM0319	130	VN9104	122
VJ9162	524	VM0319	364	VN9105	90
VJ9163	524	VM0320	430	VN9106	34
VJ9168	536	VM0322	366	VN9140	114
VJ9168	538	VM1464	346	VN9140	122
VJ9235	524	VM2202	396	VN9149	84
VJ9656	556	VM2358	476	VN9149	96
VJ9656	570	VM2951	214	VN9152	90
VJ9656	592	VM2951	270	VN9169	70
VK0979	530	VM2951	280	VN9172	106
VL2993	122	VM2951	294	VN9172	108
VL4293	394	VM2951	296	VN9193	88
VL4462	306	VM2951	300	VN9202	70
VL4534	364	VM3450	370	VN9210	366
VL7792	362	VM3655	320	VN9350	394
VL9963	366	VM3891	70	VN9351	106
VL9963	384	VM3917	308	VN9353	394
VM0217	530	VM5587	300	VN9357	112
VM0226	524	VM5737	300	VN9708	210
VM0227	524	VM7598	378	VN9762	210
VM0229	532	VM8258	80	VN9773	428
VM0229	532	VM9910	266	VN9780	26
VM0240	524	VN0137	234	VN9780	28
VM0240	524	VN0137	322	VN9908	318
VM0241	524	VN0137	324	VN9912	128
VM0242	530	VN2882	146	VN9912	446
VM0250	532	VN2882	150	VN9913	260
VM0251	524	VN5153	106	VN9913	424
VM0251	524	VN5153	314	VN9952	16
VM0253	530	VN5153	316	VN9952	364
VM0275	530	VN5529	264	VN9952	384
VM0278	524	VN6187	264	VN9953	106
VM0313	114	VN6280	224	VN9993	306
VM0313	130	VN6454	390	VN9994	306
VM0313	472	VN6848	476	VP0359	64
VM0314	100	VN7129	342	VP0359	66
VM0314	130	VN7716	366	VP3271	212
VM0314	366	VN7716	384	VP3771	18
VM0314	378	VN7967	354	VP9525	516
VM0314	430	VN9037	384	VP9525	518
VM0314	90	VN9037	388	VP9576	524
VM0315	130	VN9039	142	VP9587	524
VM0315	84	VN9057	554	VP9593	524
VM0315	96	VN9057	72	VP9597	520
VM0317	130	VN9077	98	VP9597	522
VM0317	366	VN9079	70	VS0035	266

PART NUMBER INDEX

Part Number	Page	Part Number	Page	Part Number	Page
VS0035	430	VS6852	590	VS9061	570
VS0629	408	VS6881	530	VS9062	568
VS1349	64	VS6990	522	VS9062	570
VS1349	66	VS6996	522	VS9076	572
VS1351	64	VS7009	136	VS9081	574
VS1351	66	VS7010	576	VS9082	574
VS1947	456	VS7026	568	VS9083	576
VS2187	64	VS7026	568	VS9084	576
VS2187	66	VS7035	482	VS9086	576
VS2188	64	VS7132	532	VS9087	576
VS2188	66	VS7165	532	VS9088	576
VS2190	64	VS7166	532	VS9089	576
VS2190	66	VS7210	522	VS9161	524
VS2193	64	VS7214	522	VS9171	530
VS2194	64	VS7373	520	VS9172	530
VS2194	66	VS7484	520	VS9175	530
VS2195	64	VS7484	522	VS9187	538
VS2195	66	VS7492	584	VS9188	536
VS2196	64	VS7587	552	VS9188	538
VS2196	66	VS7830	530	VS9203	568
VS2616	522	VS7922	550	VS9207	530
VS5829	572	VS8161	568	VS9209	530
VS6253	162	VS8162	568	VS9221	570
VS6253	172	VS8192	214	VS9222	568
VS6662	490	VS8192	538	VS9223	524
VS6662	506	VS8193	536	VS9224	524
VS6662	516	VS8285	530	VS9254	524
VS6662	518	VS8323	552	VS9255	524
VS6662	520	VS8325	554	VS9262	568
VS6662	522	VS8440	502	VS9262	570
VS6662	524	VS8479	294	VS9284	524
VS6662	524	VS8479	296	VS9306	536
VS6662	530	VS8479	300	VS9306	538
VS6662	534	VS8587	568	VS9322	530
VS6690	490	VS8587	574	VW1231	304
VS6695	532	VS8884	568	VW4075	372
VS6696	532	VS8884	570	VW4451	90
VS6697	532	VS8908	530	VW4748	304
VS6704	64	VS8925	530	VW6420	304
VS6813	544	VS8952	574	VW6804	486
VS6813	558	VS8980	524	VW6877	306
VS6820	522	VS9031	568	VW6877	362
VS6823	520	VS9031	570	VW7882	60
VS6823	522	VS9032	568	VW7882	62
VS6824	520	VS9032	570	VW7989	454
VS6837	558	VS9034	530	VW7990	454
VS6852	544	VS9059	568	VW7990	456
VS6852	546	VS9061	568	VX1156	70

PART NUMBER INDEX

Part Number	Page	Part Number	Page	Part Number	Page
VY2784	236	WA0262	408	WA0879	396
VY2784	314	WA0360	100	WA0908	80
VY2784	316	WA0360	110	WA0908	84
VY2784	484	WA0360	132	WA0908	94
VY8331	68	WA0360	380	WA0908	96
VY9850	216	WA0360	408	WA1456	396
VZ0589	334	WA0360	72	WA1578	338
VZ0598	430	WA0360	80	WA1724	472
VZ0639	324	WA0360	96	WA1731	216
VZ1369	268	WA0361	122	WA1731	226
VZ1369	320	WA0361	130	WA1732	216
VZ1369	322	WA0361	366	WA1732	218
VZ1912	214	WA0361	380	WA1733	216
VZ1912	214	WA0361	384	WA1733	218
VZ1912	266	WA0361	56	WA1733	226
VZ2686	322	WA0361	58	WA2237	224
VZ3028	320	WA0361	70	WA2237	40
VZ3046	300	WA0362	114	WA2522	90
VZ3250	430	WA0362	380	WA2567	82
VZ4843	174	WA0362	406	WA2572	382
VZ4843	204	WA0362	98	WA2573	382
VZ4843	204	WA0363	380	WA2586	390
WA0010	474	WA0363	396	WA2591	252
WA0010	474	WA0363	90	WA2594	472
WA0019	198	WA0366	34	WA2746	88
WA0019	440	WA0366	98	WA2853	352
WA0052	114	WA0368	88	WA2858	180
WA0052	134	WA0386	384	WA2859	322
WA0052	90	WA0386	388	WA2892	114
WA0098	384	WA0404	88	WA3038	40
WA0098	408	WA0406	88	WA3081	472
WA0100	138	WA0456	396	WA3134	114
WA0155	408	WA0471	242	WA3134	172
WA0158	408	WA0471	390	WA3134	6
WA0180	114	WA0471	504	WA3364	12
WA0187	366	WA0471	56	WA3367	174
WA0187	380	WA0471	58	WA3367	214
WA0187	390	WA0471	74	WA3367	270
WA0187	392	WA0720	114	WA3367	280
WA0232	128	WA0720	298	WA3367	286
WA0232	366	WA0720	334	WA3367	288
WA0232	372	WA0720	382	WA3367	294
WA0232	380	WA0720	384	WA3367	296
WA0232	386	WA0720	48	WA3367	300
WA0237	366	WA0720	502	WA3568	384
WA0237	390	WA0724	268	WA3574	370
WA0245	366	WA0839	44	WA3574	376
WA0245	390	WA0878	384	WA3597	210

PART NUMBER INDEX

Part Number	Page	Part Number	Page	Part Number	Page
WA3688	304	WA4733	362	WB0403	458
WA3925	112	WA4736	242	WB0427	422
WA3925	88	WA4770	356	WB0427	424
WA4174	474	WA4817	88	WB0430	422
WA4174	476	WA4855	124	WB0430	424
WA4174	80	WA4863	16	WB0430	428
WA4174	84	WA4863	364	WB0432	424
WA4174	94	WA4896	480	WB0466	452
WA4174	96	WA5460	42	WB0466	478
WA4497	254	WA5629	132	WB0467	480
WA4513	182	WA5629	386	WB0474	306
WA4513	212	WA5630	130	WB0479	306
WA4513	344	WA5630	384	WB0499	130
WA4605	182	WA5642	214	WB0499	452
WA4605	184	WA5642	338	WB0499	454
WA4605	186	WA5642	80	WB0501	456
WA4605	190	WA5653	156	WB0505	376
WA4605	210	WA5654	162	WB0508	130
WA4709	128	WA5664	100	WB0508	380
WA4709	370	WA5665	100	WB0508	430
WA4709	380	WA5686	40	WB0520	384
WA4709	386	WA6628	4	WB0522	128
WA4710	308	WB0249	428	WB0524	372
WA4710	370	WB0252	454	WB0531	378
WA4711	370	WB0252	454	WB0531	456
WA4712	132	WB0252	454	WB0535	374
WA4712	304	WB0252	456	WB0535	378
WA4712	308	WB0255	454	WB0535	452
WA4712	380	WB0255	458	WB0537	130
WA4713	370	WB0262	454	WB0537	374
WA4713	372	WB0265	478	WB0537	378
WA4713	376	WB0266	480	WB0537	82
WA4719	252	WB0267	480	WB0538	478
WA4726	452	WB0268	452	WB0542	374
WA4726	60	WB0273	478	WB0542	378
WA4726	62	WB0281	454	WB0543	478
WA4727	164	WB0281	454	WB0547	124
WA4727	252	WB0283	334	WB0547	384
WA4728	18	WB0284	454	WB0549	378
WA4728	216	WB0289	456	WB0551	372
WA4728	242	WB0320	124	WB0551	378
WA4728	256	WB0364	478	WB0556	376
WA4728	56	WB0369	478	WB0557	380
WA4728	58	WB0372	454	WB0557	428
WA4728	74	WB0375	384	WB0574	130
WA4729	252	WB0384	378	WB0574	378
WA4729	264	WB0384	428	WB0574	384
WA4732	70	WB0384	456	WB0574	422

PART NUMBER INDEX

Part Number	Page	Part Number	Page	Part Number	Page
WB0574	424	WB1059	106	WB1258	270
WB0574	428	WB1063	224	WB1259	270
WB0574	454	WB1088	40	WB1260	270
WB0574	458	WB1088	42	WB1261	270
WB0581	368	WB1089	164	WB1262	270
WB0581	428	WB1134	102	WB1264	270
WB0583	430	WB1134	474	WB1265	272
WB0584	130	WB1134	86	WB1300	216
WB0584	376	WB1139	104	WB1300	334
WB0584	378	WB1141	224	WB1300	340
WB0584	384	WB1142	42	WB1300	344
WB0584	422	WB1169	60	WB1300	378
WB0584	424	WB1169	62	WB1300	40
WB0584	428	WB1177	60	WB1300	42
WB0584	430	WB1177	62	WB1300	456
WB0585	378	WB1179	60	WB1300	458
WB0585	428	WB1179	62	WB1300	480
WB0585	430	WB1182	242	WB1301	262
WB0586	130	WB1183	242	WB1301	320
WB0586	430	WB1185	332	WB1301	344
WB0593	374	WB1186	304	WB1301	40
WB0593	378	WB1186	376	WB1302	314
WB0593	424	WB1190	252	WB1302	316
WB0593	428	WB1191	106	WB1302	320
WB0594	446	WB1192	224	WB1302	322
WB0599	124	WB1193	70	WB1302	336
WB0599	128	WB1199	80	WB1303	260
WB0600	478	WB1201	428	WB1303	304
WB0601	372	WB1231	80	WB1303	318
WB0604	380	WB1231	96	WB1303	322
WB0810	344	WB1232	300	WB1303	324
WB0816	236	WB1234	300	WB1303	332
WB0817	236	WB1235	300	WB1303	334
WB0818	236	WB1242	296	WB1303	40
WB0819	236	WB1243	296	WB1303	446
WB0820	214	WB1244	296	WB1304	318
WB0904	338	WB1245	296	WB1305	124
WB0945	478	WB1246	294	WB1305	128
WB0947	478	WB1247	294	WB1305	444
WB0948	478	WB1248	294	WB1306	392
WB1024	430	WB1249	294	WB1306	456
WB1027	216	WB1251	270	WB1307	392
WB1027	218	WB1252	270	WB1308	480
WB1047	42	WB1253	270	WB2200	266
WB1049	44	WB1254	270	WB2222	8
WB1051	42	WB1255	270	WB2223	8
WB1053	372	WB1256	270	WB2224	6
WB1057	82	WB1257	270	WB2225	6

PART NUMBER INDEX

Part Number	Page	Part Number	Page	Part Number	Page
WB2227	4	WB2941	266	WB3094	40
WB2228	6	WB2942	266	WB3094	42
WB2246	4	WB2970	376	WB3094	456
WB2248	342	WB3020	106	WB3095	376
WB2249	6	WB3026	106	WB3096	214
WB2273	270	WB3053	8	WB3096	260
WB2274	270	WB3054	8	WB3096	262
WB2275	270	WB3055	10	WB3096	318
WB2276	270	WB3056	10	WB3096	374
WB2277	270	WB3057	10	WB3096	376
WB2278	270	WB3058	172	WB3096	442
WB2279	270	WB3060	6	WB3096	444
WB2280	276	WB3091	216	WB3096	446
WB2280	278	WB3091	322	WB3096	478
WB2289	274	WB3091	338	WB3096	480
WB2289	278	WB3091	340	WB3097	132
WB2303	274	WB3091	374	WB3097	216
WB2382	270	WB3091	442	WB3097	260
WB2383	270	WB3091	444	WB3097	262
WB2384	270	WB3092	132	WB3097	292
WB2385	270	WB3092	332	WB3097	298
WB2386	270	WB3092	334	WB3097	306
WB2437	4	WB3092	338	WB3097	314
WB2438	4	WB3092	344	WB3097	316
WB2439	4	WB3092	374	WB3097	318
WB2441	6	WB3092	376	WB3097	322
WB2442	6	WB3092	378	WB3097	332
WB2443	8	WB3092	442	WB3097	336
WB2444	4	WB3092	444	WB3097	338
WB2445	4	WB3092	456	WB3097	340
WB2446	8	WB3092	458	WB3097	342
WB2448	4	WB3092	478	WB3097	344
WB2452	6	WB3093	212	WB3097	358
WB2477	6	WB3093	216	WB3097	442
WB2490	182	WB3093	224	WB3097	444
WB2654	270	WB3093	232	WB3097	456
WB2691	6	WB3093	260	WB3097	458
WB2724	4	WB3093	262	WB3097	484
WB2733	276	WB3093	292	WB3098	212
WB2733	278	WB3093	314	WB3098	318
WB2752	6	WB3093	316	WB3098	322
WB2763	452	WB3093	318	WB3098	340
WB2835	274	WB3093	378	WB3098	344
WB2835	278	WB3093	444	WB3098	452
WB2836	274	WB3094	128	WB3102	204
WB2836	278	WB3094	132	WB3103	204
WB2838	282	WB3094	372	WB3104	204
WB2879	280	WB3094	376	WB3105	204

PART NUMBER INDEX

Part Number	Page	Part Number	Page	Part Number	Page
WB3114	212	XA0073	134	XA2347	208
WB3115	212	XA0073	448	XA2348	208
WB3116	212	XA0074	134	XA2349	208
WB3117	212	XA0074	448	XA2374	208
WB3118	212	XA0076	448	XA2379	136
WB3119	212	XA0077	134	XA2380	136
WB3120	212	XA0077	448	XA2442	418
WB3216	8	XA0200	136	XA2443	418
WB3217	8	XA0201	136	XA2444	418
WB3233	300	XA1894	480	XA2520	454
WB3234	272	XA1894	482	XA2520	454
WB3237	274	XA1896	482	XA2520	456
WB3237	278	XA1929	448	XA2704	194
WB3238	274	XA1931	448	XA2708	36
WB3239	274	XA1932	448	XA2709	308
WB3250	280	XA1933	448	XA2709	36
WB3295	182	XA1959	134	XA2710	36
WB3297	272	XA1960	134	XA2711	36
WB3298	278	XA1961	448	XA2720	38
WB3299	8	XA1983	460	XA2720	38
WB3300	8	XA1985	460	XA2721	38
WB3301	8	XA1986	460	XA2721	38
WB3313	266	XA1988	460	XA2740	566
WB3314	212	XA2017	462	XA2741	564
WB3357	280	XA2018	462	XA2790	462
WB3414	214	XA2095	234	XA2791	462
WB3415	212	XA2134	70	XA2792	462
WB3418	280	XA2138	66	XA2793	464
WB3419	280	XA2139	66	XA2806	38
WB3420	280	XA2147	464	XA3071	234
WB3421	272	XA2148	464	XA3129	490
WB3422	270	XA2204	36	XA3129	506
WB3424	272	XA2206	36	XA3130	490
WB3503	272	XA2215	70	XA3142	490
XA0002	482	XA2216	70	XA3143	506
XA0003	482	XA2217	70	XA3144	566
XA0005	482	XA2271	52	XA3145	566
XA0011	332	XA2272	52	XA3149	562
XA0066	134	XA2273	52	XA3150	562
XA0066	448	XA2274	52	XA3152	564
XA0067	134	XA2275	52	XA3346	582
XA0067	448	XA2277	52	XA3347	434
XA0069	134	XA2278	52	XA3348	434
XA0070	134	XA2279	52	XA3389	194
XA0071	134	XA2283	134	XA3392	194
XA0071	448	XA2334	52	XA3393	194
XA0072	134	XA2335	50	XA3394	194
XA0072	448	XA2336	52	XA3395	194

PART NUMBER INDEX

Part Number	Page
XA3458	194
XA3591	492
XA3592	492
XA3593	498
XA3594	496
XA3594	498
XA3594	500
XA3596	500
XA3599	500
XA3720	498
XA3722	500
XA3724	490
XA3747	412
XA3748	412
XA3749	412
XA3750	412
XA3847	70
XA4058	168
XA4059	168
XA4060	166
XA4061	166
XA4062	168
xa4063	168
XA4064	168
XA4065	166
XA4066	166
XA4067	168
XA4068	168
XA4069	168
XA4070	168
XA4071	168
XA4072	168
XA4073	168
XA4074	168
XA4075	168
XA4076	168
XA4093	554
XA4095	554
XA4097	548
XA4098	548
XA4099	554
XA4100	554
XA4101	554
XA4102	554
XA4103	554
XA4104	554
XA4105	554
XA4106	554
XA4107	558
XA4108	556
XA4109	556
XA4126	460
XA4127	462
XA4128	548
XA4128	554
XA4129	554
XA4130	554
XA4131	554
XA4132	554
XA4133	554
XA4134	554
XA4136	590
XA4136	592
XA4162	36
XA4162	38
XA4163	36
XA4163	38
XA4164	36
XA4165	36
XA4167	38
XA4168	38
XA4169	38
XA4170	38
XA4171	38
XA4172	38
XA4172	38
XA4173	38
XA4174	38
XA4175	38
XA4176	38
XA4177	38
XA4178	38
XA4179	38
XA4180	38
XA4181	310
XA4182	310
XA4183	310
XA4228	526
XA4229	526
XA4249	494
XA4249	498
XA4250	494
XA4250	498
XA4256	590
XA4257	590
XA4294	590
XA4295	590
XA4296	590
XA4297	590
XA4298	590
XA4299	590
XA4300	590
XA4301	592
XA4302	590
XA4303	592
XA4304	590
XA4305	592
XA4306	590
XA4307	590
XA4308	590
XA4309	590
XA4310	590
XA4311	590
XA4312	590
XA4313	592
XA4314	592
XA4315	592
XA4316	592
XA4317	592
XA4318	592
XA4319	592
XA4320	592
XA4321	592
XA4322	592
XA4323	590
XA4324	590
XA4325	592
XA4326	590
XA4328	494
XA4328	498
XA4329	548
XA4330	548
XA4331	548
XA4332	548
XA4403	526
XA4404	526