CATERPILLAR®

SEBP4283-01
November 2005

RUTHZIL TRATOR COMERCIAL DE PEÇAS LTDA 11 97083-6812 ROLANDO

Parts Manual

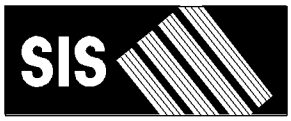

See "General Information" for New Parts Manual Features.

962H Wheel Loader

M3G1-Up (Machine)
KHX1-Up (Engine)
FAK1-Up (Transmission)
CJF1-Up (Torque Converter)

Powered By C7 Engine
This Parts Manual is also Available in .PDF Format on Compact Disc(CD-ROM)-Caterpillar Form No. SERP4283

Product and Dealer Information

Note: For product identification plate locations, see the section “Product Identification Information” in the Operation and Maintenance Manual.

Delivery Date: _____

Product Information

Model: _____

Product Identification Number: _____

Engine Serial Number: _____

Transmission Serial Number: _____

Generator Serial Number: _____

Attachment Serial Numbers: _____

Attachment Information: _____

Customer Equipment Number: _____

Dealer Equipment Number: _____

Dealer Information

Name: _____ Branch: _____

Address: _____

_____

_____

	Dealer Contact	Phone Number	Hours
Sales:	_____	_____	_____
Parts:	_____	_____	_____
Service:	_____	_____	_____

Informations produit et concessionnaire

Nota: Voir l'emplacement de la plaque signalétique du produit au chapitre "Informations produit" du guide d'utilisation et d'entretien.

Date de livraison: _____

Informations produit

Modèle: _____

Numéro d'identification produit: _____

Numéro de série du moteur: _____

Numéro de série de la boîte de vitesses: _____

Numéro de série de l'alternateur: _____

Numéros de série d'équipement: _____

Informations sur l'équipement: _____

Numéro matériel client: _____

Numéro matériel concessionnaire: _____

Informations concessionnaire

Nom: _____ Agence: _____

Adresse: _____

_____

_____

	Contact concessionnaire	Numéro de téléphone	Heures
Ventes:			
Pièces:			
Service:			

Información del Producto/Distribuidor

Nota: Para saber la ubicación de las placas de identificación del producto, ver la sección “Información sobre identificación del producto” en el Manual de Operación y Mantenimiento.

Fecha de entrega: _____

Información del producto

Modelo: _____

Número de identificación del producto: _____

Número de serie del motor: _____

Número de serie de la transmisión: _____

Número de serie del generador: _____

Números de serie de los accesorios: _____

Información sobre los accesorios: _____

Número del equipo del cliente: _____

Número del equipo del distribuidor: _____

Información del distribuidor

Nombre: _____ Sucursal: _____

Dirección: _____

_____

_____

Comunicación con el distribuidor	Número de teléfono	Horas
Ventas: _____	_____	_____
Piezas: _____	_____	_____
Servicio: _____	_____	_____

Informações Sobre Produto e Revendedor

Nota: Para localizações da placa de identificação do produto, consulte a seção, “Informações Sobre Identificação do Produto” no Manual de Operação e Manutenção.

Data de Entrega: _____

Informações Sobre o Produto

Modelo: _____

Número de Identificação do Produto: _____

Número de Série do Motor: _____

Número de Série da Transmissão: _____

Número de Série do Gerador: _____

Números de Série de Acessórios: _____

Informações Sobre Acessórios: _____

Número do Equipamento do Cliente: _____

Número do Equipamento do Revendedor: _____

Informações Sobre o Revendedor

Nome: _____ Filial: _____

Endereço: _____

_____

_____

	Contato do Revendedor	Telefone	Horas
Vendas:	_____	_____	_____
Peças:	_____	_____	_____
Serviço:	_____	_____	_____

Produkt- und Händlerinformation

Anmerkung: Für die Lage der Produkt-Identnummer und Seriennummern siehe Abschnitt “Produkt-Identinformation” im Betriebs- und Wartungshandbuch.

Lieferdatum: _____

Produkt-Identinformation

Modell: _____

Produkt-Identnummer: _____

Seriennummer des Motors: _____

Seriennummer des Getriebes: _____

Seriennummer des Generators: _____

Seriennummern der Arbeitsgeräte: _____

Arbeitsgeräteinformation: _____

Kundennummer: _____

Händlernummer: _____

Händlerinformation

Name: _____ Niederlassung: _____

Adresse: _____

_____

_____

	Kontaktperson beim Händler	Telefon	Dienststunden
Verkauf:	_____	_____	_____
Ersatzteile:	_____	_____	_____
Service:	_____	_____	_____

MEMORANDA

TABLE OF CONTENTS

Name	Page
GENERAL INFORMATION	A27
REPAIR ALTERNATIVES	A46
SUPPLEMENTAL COOLANT ADDITIVES	A51
ENGLISH-PORTUGUESE PARTS NOMENCLATURE	A56
MAINTENANCE PARTS	A64
INDEX	A82
MACHINE ARRANGEMENT	1
CHASSIS AR	1
GENERAL AR	2
MACHINE AR	2
WASTE HANDLING AR	3
ENGINE ARRANGEMENT	4
ENGINE AR-COMPLETE	4
ENGINE AR-CORE	5
INSTALLATION AR-ENGINE	6
BASIC ENGINE	7
CAMSHAFT GP	7
CARRIER GP-SEAL	8
COVER GP-CYLINDER BLOCK	9
COVER GP-FRONT HOUSING	10
COVER GP-VALVE MECHANISM	12
CRANKSHAFT GP	15
CYLINDER BLOCK GP	17
CYLINDER HEAD AS	21
CYLINDER HEAD GP	22
DAMPER & PULLEY GP	25
DRAIN GP-ENGINE OIL	26
FASTENER GP-DAMPER & PULLEY	27
FASTENER GP-FRONT HOUSING	28
FASTENER GP-VALVE COVER	30
FASTENER GP-VALVE MECHANISM	31
FLYWHEEL GP	32
GEAR GP-FRONT	33
HOUSING GP-FLYWHEEL	34
HOUSING GP-FRONT	35
IDLER GP-BELT	36
LIFTER GP-VALVE	37
LIFTING GP-ENGINE	38
MOUNTING GP-ALTERNATOR	39
MOUNTING GP-ENGINE & TMSN	40
PAN GP-OIL	41
PISTON & ROD GP	42
PLUG GP-CYLINDER BLOCK	43
PLUG GP-ENGINE	44
PULLEY GP-IDLER	45
SEAL GP-CRANKSHAFT	46
SEAL GP-FLYWHEEL HOUSING	47
VALVE MECHANISM GP	48
LUBRICATION SYSTEM	51
ADAPTER GP-OIL LINE	51
BREATHER GP	52
FILLER GP-ENGINE OIL	53
FILTER GP-ENGINE OIL	54
FUMES DISPOSAL GP	55
GAUGE GP-OIL LEVEL (DIPSTICK)	56
LINES GP-ENGINE OIL	58
LINES GP-ENGINE OIL DRAIN	59
LINES GP-TURBOCHARGER OIL	60
PUMP GP-ENGINE OIL	61
COOLING SYSTEM	63
COOLER GP-ENGINE OIL	63
COOLING AR-HIGH AMBIENT TEMP	64
ELBOW GP-WATER	65
LINES GP-WATER	66
PUMP GP-WATER	73
RADIATOR & FAN GP	75
TANK GP-RADIATOR TOP	79
AIR INLET AND EXHAUST SYSTEM	80
AIR CLEANER GP	80
COVER GP-AIR INLET	82
ELBOW GP-AIR INLET	84
LINES GP-AFTERCOOLER AIR	85
LINES GP-AIR	86
MANIFOLD GP-EXHAUST	87
MUFFLER GP	88
PIPE GP-EXHAUST	89
PRECLEANER GP	90
TURBOCHARGER GP	92
FUEL SYSTEM	93
FILTER & LINES GP-FUEL	93
FILTER GP-WATER SEP & FUEL	96
INJECTOR GP-FUEL	97
LINES GP-FUEL	98
LINES GP-FUEL DRAIN	100
LINES GP-INJECTOR HYD PUMP	101
PUMP & MTG GP-UNIT INJ HYD	102
PUMP GP-FUEL INJECTION	104
PUMP GP-FUEL PRM & PRIM FILTER	105
PUMP GP-UNIT INJECTOR HYD	110
REGULATOR GP-FUEL PRESSURE	111
TANK GP-FUEL	112
WATER SEP & FUEL PRM PUMP GP	114
ELECTRICAL AND STARTING SYSTEM	115
ALARM GP	115
ALTERNATOR GP-CHARGING	117

TABLE OF CONTENTS

Name	Page
BATTERY & WIRING GP	121
CONTROL & MTG GP-COMMUNICATION	124
CONTROL & MTG GP-ENGINE ELEK	126
CONTROL AR-AUTODIG	128
CONTROL GP-AUTODIG	129
CONTROL GP-UNPROGRAMMED	131
ELECTRICAL AR	132
ELECTRONICS GP-COMMUNICATION	133
ELECTRONICS GP-IMPLEMENT	134
ELECTRONICS GP-MONITOR	134
ELECTRONICS GP-POWER TRAIN	134
HEATER GP-JACKET WATER	135
INSTALLATION AR-COMMUNICATION	137
INSTALLATION AR-SECURITY	137
INSTALLATION GP-SECURITY	138
LAMP GP-DOME	140
LAMP GP-FLOOD	141
LAMP GP-HEAD & SIGNAL	145
LAMP GP-SIGNAL	149
LAMP GP-STOP & TAIL	151
LAMP GP-WARNING BEACON	152
LIGHTING AR-ROADING	153
LIGHTING AR-SIGNAL	153
LIGHTING GP-FLOOD	154
LIGHTING GP-FLOOD & SIGNAL	157
LIGHTING GP-ROADING	162
LIGHTING GP-WARNING BEACON	163
PLUG GP-CONNECTOR	165
RECEPTACLE GP-AUXILIARY START	166
SENSOR & MTG GP-LIFT POSITION	167
SENSOR & MTG GP-PRESSURE	169
SENSOR & MTG GP-TILT POSITION	170
SENSOR GP-ENGINE	172
SENSOR GP-POSITION	174
SENSOR GP-PRESSURE	176
SENSOR GP-SPEED	184
SENSOR GP-TEMPERATURE	186
STARTING AID AR-ETHER	190
STARTING AID GP	191
STARTING AID GP-ETHER	192
STARTING MOTOR GP-ELECTRIC	194
SWITCH GP-BYPASS	197
SWITCH GP-DIMMER	198
SWITCH GP-DISCONNECT	199
SWITCH GP-MAGNETIC	200
SWITCH GP-PRESSURE	203
SWITCH GP-REVERSING FAN	204
SWITCH GP-RIDE CONTROL	205
SWITCH GP-ROCKER	206
SWITCH GP-ROTARY	209
SWITCH GP-SECONDARY STEERING	210
SWITCH GP-SIGNAL	211
SWITCH GP-TOGGLE	213
SWITCH GP-TRANSMISSION	214
VALVE GP-ETHER STARTING	215
WIRING GP-AIR CONDITIONER	216
WIRING GP-AXLE MONITORING	218
WIRING GP-CAB	220
WIRING GP-CHASSIS	228
WIRING GP-COUPLER	234
WIRING GP-ELECTRIC CLUTCH	235
WIRING GP-ENGINE	236
WIRING GP-ETHER STARTING AID	241
WIRING GP-FRONT	242
WIRING GP-LIGHTING	245
WIRING GP-OPEN ROPS	248
WIRING GP-SECONDARY STEERING	259
WIRING GP-SENSOR	262
WIRING GP-WASTE HANDLER	263
POWER TRAIN	265
AXLE AR-FIXED	265
AXLE AR-OSCILLATING	265
BRAKE & PLANETARY GP	267
CONTROL GP-TRANSMISSION	271
CONTROL GP-TRANSMISSION HYD	273
COOLER & MTG GP-TRANSMISSION	275
COOLER AR-AXLE OIL	276
DIFFERENTIAL GP	277
DIFFERENTIAL GP-LIMITED SLIP	278
DIFFERENTIAL GP-NOSPIN	279
DRAIN GP-ECOLOGY	281
FILLER GP-POWER TRAIN OIL	282
FILTER & LINES GP-TRANSMISSION	285
FILTER GP-OIL	287
GEAR GP-BEVEL & PINION	288
GEAR GP-OUTPUT TRANSFER	292
HOUSING GP-FIXED AXLE	296
HOUSING GP-OSCILLATING AXLE	298
LINES GP-AXLE OIL COOLER	300
LINES GP-TORQUE CONV COOLER	304
MOUNTING GP-AXLE	307
MOUNTING GP-AXLE OIL COOLER	309
MOUNTING GP-RIM	310
PLANETARY GP-TRANSMISSION	311
POWER TRAIN AR	315
PUMP & MTG GP-AXLE OIL COOLER	316
PUMP GP-TRANSMISSION	317
RIM AR	320
RIM GP-DEMOUNTABLE	321
SHAFT GP-DRIVE	322
SLIP JOINT GP	324
SPIDER & BEARING GP	325
TIRE & RIM AR	326
TORQUE CONVERTER & HOUSING GP	332

TABLE OF CONTENTS

Name	Page
TORQUE CONVERTER GP	334
TRANSMISSION AR	336
UNIVERSAL JOINT GP	337
VALVE GP-MODULATING	339
VALVE GP-RELIEF	340
FRAME AND BODY	342
ACTUATOR GP-HOOD TILT	342
ACTUATOR GP-POWER	344
ACTUATOR GP-POWER GUARD	345
BAFFLE GP	346
BLOCK GP-AXLE OSC LIMITER	347
BOX GP-BATTERY	348
COUNTERWEIGHT GP	349
COVER GP-BUMPER	350
DOOR GP-ACCESS	351
FENDER AR-ROADING	353
FENDER GP	354
FENDER GP-FRONT	358
FENDER GP-ROADING	360
FRAME AS-LOADER	364
FRAME AS-REAR	367
GRILL GP-RADIATOR	369
GUARD GP-ARTICULATION	371
GUARD GP-AXLE OIL COOLER	373
GUARD GP-AXLE SEAL	374
GUARD GP-DRIVE SHAFT	375
GUARD GP-FRONT	376
GUARD GP-LIGHTING	377
GUARD GP-POWER TRAIN	378
HARDWARE GP-LOADER FRAME	381
HARDWARE GP-MOUNTING	383
HARDWARE GP-REAR FRAME	385
HITCH GP-ARTICULATING	388
HOOD & GUARD GP	390
LADDER GP	397
LINES GP-GREASE	399
LINK GP-STEERING FRAME LOCK	401
PANEL GP-HOOD	402
PANEL GP-SIDE	407
SHIELD GP-ENGINE COMPARTMENT	409
STEP GP	411
SUPPORT GP-AIR INLET	413
SUPPORT GP-VALVE & FILTER	414
SUPPRESSION AR-SOUND	416
SUPPRESSION GP-SOUND	417
TILT GP-HOOD	420
BRAKING SYSTEM	421
ACCUMULATOR GP-BRAKE	421
ACTUATOR GP-PARKING BRAKE	423
BASE GP-FOOT BRAKE	424
BRAKE GP-PARKING	427
CONTROL GP-FOOT BRAKE	428
CONTROL GP-PARKING BRAKE	430
CONTROL GP-SERVICE BRAKE	431
VALVE GP-BRAKE CONTROL	436
STEERING SYSTEM	437
CONTROL GP-STEERING	437
CYLINDER & MTG GP-STEERING	438
CYLINDER GP-HYDRAULIC	439
LINES GP-SECONDARY STEERING	440
LINES GP-STEERING	443
PUMP & MOTOR GP-SEC STEERING	449
PUMP & MTG GP-SECONDARY STEER	450
PUMP GP-PISTON	451
ROTATING GP-PUMP	453
STEERING AR-SECONDARY	454
VALVE GP-PUMP CONTROL	455
VALVE GP-RELIEF	456
VALVE GP-SECONDARY STEERING	458
VALVE GP-STEERING	459
VALVE GP-STEERING NEUTRALIZER	462
HYDRAULIC SYSTEM	463
ACCUMULATOR GP-PILOT OIL	463
ACCUMULATOR GP-RIDE CONTROL	465
CONTROL & LINES GP-FAN	467
CONTROL & LINES GP-RIDE	469
CONTROL AR-FAN	470
CONTROL AR-RIDE	470
CONTROL GP-ELECTROHYDRAULIC	471
CONTROL GP-HANDLE	479
CONTROL GP-JOYSTICK	480
CYLINDER & SEAL GP-LIFT	482
CYLINDER & SEAL GP-TILT	484
CYLINDER GP-COUPLER	487
CYLINDER GP-LIFT	488
CYLINDER GP-TILT	490
FILTER GP-OIL	496
GUARD GP-LIFT CYLINDER	498
HYDRAULIC AR-2 VALVE	501
HYDRAULIC AR-3 VALVE	501
LINES GP-COUPLER	502
LINES GP-FRONT	507
LINES GP-HYDRAULIC	510
LINES GP-HYDRAULIC OIL COOLER	514
LINES GP-LIFT CYLINDER	518
LINES GP-TILT CYLINDER	520
MANIFOLD GP-CONTROL	522
MANIFOLD GP-VALVE	524
MOTOR GP-GEAR	527
MOTOR GP-PISTON	528
MOUNTING GP-HYDRAULIC TANK	530
PUMP & MTG GP-BRAKE & HYD FAN	531
PUMP & MTG GP-HYDRAULIC	533
PUMP GP-PISTON	534
ROTATING GP-MOTOR	539

TABLE OF CONTENTS

Name	Page
ROTATING GP-PUMP	540
TANK GP-HYDRAULIC	541
VALVE & MTG GP-MAIN CONTROL	543
VALVE GP-CHECK	555
VALVE GP-CHECK & RELIEF	557
VALVE GP-CONTROL	558
VALVE GP-DIVERTER	567
VALVE GP-DRAIN	569
VALVE GP-LOWERING CONTROL	570
VALVE GP-MAIN CONTROL	572
VALVE GP-MANUAL	579
VALVE GP-PRESSURE REDUCING	580
VALVE GP-PUMP CONTROL	581
VALVE GP-RELIEF	585
VALVE GP-RIDE CONTROL	586
VALVE GP-SHUTTLE	588
VALVE GP-SOLENOID	592
IMPLEMENTS	595
ARM AS-LIFT	595
CONTROL GP-BUCKET	597
LIFT AR	603
WORK TOOLS	605
ADAPTER GP-TIP	605
ARM GP-MATERIAL HANDLING	606
BUCKET AS-GENERAL PURPOSE	607
BUCKET AS-MATERIAL HANDLING	610
BUCKET AS-ROCK	614
BUCKET GP-GENERAL PURPOSE	616
BUCKET GP-MATERIAL HANDLING	619
BUCKET GP-ROCK	620
CARRIAGE GP-FORK	622
CONTROL AR-QUICK COUPLER	624
COUPLER GP-QUICK	625
EDGE GP-CUTTING	626
EDGE GP-SEGMENT	626
FRAME GP-QUICK COUPLER	627
TIP GP-EXTRA DUTY	628
TIP GP-GENERAL PURPOSE	629
TIP GP-LONG	631
TIP GP-PENETRATION	632
TIP GP-SHORT	634
OPERATOR STATION	636
ADJUSTER GP-SEAT	636
AIR CONDITIONER AR	637
AIR CONDITIONER GP	638
ARM GP-WINDOW WIPER	643
ARMREST GP	645
CAB AR-ENCLOSED ROPS	646
CANOPY AR-OPEN ROPS	647
COMPRESSOR GP-REFRIGERANT	648
CONDENSER & MTG GP-REFRIGERANT	650
CONTROL GP-MONITOR	652
CONTROL GP-UNPRGMED MONITOR	654
DOOR GP-CAB	655
DUCT & FILTER GP-AIR	657
DUCT GP-AIR	659
FLOOR GP-SOUND SUPPRESSION	662
GUARD GP-VANDALISM	665
GUARD GP-WINDOW	666
HEATER GP-CAB	670
HORN GP-ELECTRIC	674
INSTALLATION GP-CONTROLS	675
INSTALLATION GP-RADIO	676
LINER GP-CAB	679
LINES GP-AIR CONDITIONER	685
LINES GP-CAB HEATER	691
MIRROR GP-REAR VIEW	694
MODULE GP-QUAD GAUGE	706
MODULE GP-SPEEDOMETER & TACH	707
MONITOR AR-PAYLOAD	708
MONITOR GP-PAYLOAD	709
MOTOR GP-WINDOW WIPER	711
MOUNTING GP-CAB	713
OPERATOR AR-ENCLOSED ROPS	715
OPERATOR AR-OPEN ROPS	715
PAN GP-BACKREST	716
PANEL GP-INSTRUMENT	719
PEDAL GP-GOVERNOR	726
RADIO GP	728
RECLINER GP-SEAT	730
ROPS GP-ENCLOSED	731
ROPS GP-OPEN	738
SEAT BELT GP	741
SEAT GP	742
SEAT GP-SUSPENSION	748
SUPPORT GP-HYDRAULIC CONTROL	753
SUPPRESSION GP-CAB SOUND	757
SUSPENSION GP-SEAT	763
VISOR GP-CAB	765
WASHER GP-WINDOW	766
WINDOW GP-DOOR	767
WIPER GP-WINDOW	769
SERVICE EQUIPMENT AND SUPPLIES	772
BOX GP-TOOL	772
FILM GP	775
LINES GP-DIAGNOSTIC	777
PLATE & FILM GP	783
PLATE GP-AXLE IDENTIFICATION	784
PART NUMBER INDEX	B1

TABLE DES MATIÈRES

Désignation	Page
GÉNÉRALITÉS	A30
OPTIONS DE RÉPARATION	A47
ADDITIFS POUR LIQUIDE DE REFROIDISSEMENT	A52
PIÈCES DE RECHANGE	A67
INDEX	A93
VERSION DE MACHINE	1
VERSION DE CHASSIS	1
VUE DU MODÈLE	2
VERSION DE MACHINE	2
ÉLIMINATION DES DÉCHETS (VERSION)	3
MOTEUR (VERSION)	4
VERSION DE MOTEUR COMPLET	4
MOTEUR - PARTIE CENTRALE (VERSION)	5
MONTAGE DE MOTEUR (VERSION)	6
MOTEUR STANDARD	7
ARBRE A CAMES (ASS)	7
CHÂSSIS-PORTEUR DE JOINT (ASS)	8
BLOC-CYLINDRES - COUVERCLE (ASS)	9
COUVERCLE DE CARTER AV (ASS)	10
CACHE-SOUPAPES (ASS)	12
VILEBREQUIN (ASS)	15
BLOC-CYLINDRES (ASS)	17
CULASSE (ENS)	21
CULASSE (ASS)	22
AMORTISSEUR DE VIBRATIONS ET POULIE (ASS)	25
VIDANGE-HUILE DE MOTEUR (ASS)	26
BOULONNERIE D'AMORTISSEUR ET DE POULIE	27
BOULONNERIE DE CARTER AV (ASS)	28
CACHE-SOUPAPE - BOULONNERIE (ASS)	30
CULBUTERIE - BOULONNERIE (ASS)	31
VOLANT MOTEUR (ASS)	32
PIGNONNERIE AV (ASS)	33
CARTER DE VOLANT (ASS)	34
CARTER AV (ASS)	35
COURROIE INTERMÉDIAIRE (ASS)	36
POUSSOIR DE SOUPAPE (ASS)	37
OEILLETONS DE LEVAGE MOTEUR (ASS)	38
MONTAGE D'ALTERNATEUR (ASS)	39
MONTAGE DE MOTEUR ET BOÎTE (ASS)	40
HUILE MOTEUR - CARTER (ASS)	41
PISTON ET BIELLE (ASS)	42
BOUCHON DE BLOC-CYLINDRES (ASS)	43
BOUCHON DE MOTEUR (ASS)	44
POULIE-ROUE AVANT (ASS)	45
JOINT DE VILEBREQUIN (ASS)	46
JOINT DE CARTER DE VOLANT (ASS)	47
CULBUTERIE (ASS)	48
CIRCUIT DE GRAISSAGE	51
RACCORD DE CANALISATION D'HUILE (ASS)	51
RENIFLARD (ASS)	52
BOUCHON DE REMPLISSAGE D'HUILE MOTEUR (ASS)	53
FILTRE À HUILE MOTEUR (ASS)	54
DISPOSITIF D'EVACUATION DES VAPEURS DE CARTER	55
JAUGE D'HUILE MOTEUR (BAIONNETTE) (ASS)	56
CANALISATIONS D'HUILE MOTEUR (ASS)	58
CANALISATIONS-VIDANGE D'HUILE DE MOTEUR (ASS)	59
CANALISATIONS D'HUILE DE TURBOCOMPRESSEUR (ASS)	60
POMPE A HUILE MOTEUR (ASS)	61
CIRCUIT DE REFROIDISSEMENT	63
REFROIDISSEUR D'HUILE MOTEUR (ASS)	63
REFROIDISSEMENT AUX TEMPÉRATURES ÉLEVÉES (VERSION)	64
COUDE D'EAU (ASS)	65
CANALISATIONS D'EAU (ASS)	66
POMPE A EAU (ASS)	73
RADIATEUR ET VENTILATEUR (ASS)	75
RÉSERVOIR DU COUVERCLE DE RADIATEUR (ASS)	79
CIRCUIT D'ADMISSION D'AIR ET D'ÉCHAPPEMENT	80
FILTRE A AIR (ASS)	80
COUVERCLE DE COLLECTEUR D'ADMISSION (ASS)	82
COUDE D'ADMISSION D'AIR (ASS)	84
CANALISATIONS D'AIR DE REFROIDISSEUR D'ADMISSION (ASS)	85

* TRADUCTION NON DISPONIBLE AU MOMENT DE LA PUBLICATION

TABLE DES MATIÈRES

Désignation	Page
CANALISATIONS D'AIR (ASS)	86
COLLECTEUR D'ÉCHAPPEMENT (ASS)	87
SILENCIEUX (ASS)	88
ECHAPPEMENT - TUYAU (ASS)	89
PREFILTRE (ASS)	90
TURBOCOMPRESSEUR (ASS)	92
CIRCUIT DE CARBURANT	93
FILTRE ET CANALISATIONS DE CARBURANT (ASS)	93
FILTRE DE SÉPARATEUR D'EAU ET DE CARBURANT (ASS)	96
INJECTEUR DE CARBURANT (ASS)	97
CANALISATIONS DE CARBURANT (ASS)	98
CARBURANT - CANALISATIONS DE VIDANGE (ASS)	100
CANALISATIONS - INJECTEURS-POMPES HYDRAULIQUES	101
POMPE D'INJECTEURS-POMPES HYDRAU. ET MONTAGE	102
POMPE D'INJECTION DE CARBURANT (ASS)	104
POMPE D'AMORÇAGE DE CARBURANT ET FILTRE PRINCIPAL	105
INJECTEURS-POMPES HYDRAULIQUES (ENS)	110
REGULATEUR DE PRESSION DE CARBURANT (ASS)	111
RÉSERVOIR DE CARBURANT (ASS)	112
POMPE DE SÉPARATEUR D'EAU ET D'AMORÇAGE DE CARBURANT (ASS)	114
CIRCUIT ELECTRIQUE ET DE DEMARRAGE	115
AVERTISSEUR (ASS)	115
ALTERNATEUR DE CHARGE (ASS)	117
BATTERIE ET CÂBLAGE	121
COMMANDE ET MONTAGE-COMMUNICATION (ASS)	124
COMMANDE ET MONTAGE - MOTEUR	126
VERSION DE COMMANDE-AUTODIG	128
COMMANDE DE CREUSAGE AUTOMATIQUE AUTODIG (ASS)	129
COMMANDE NON PROGRAMMEE (ASS)	131
VERSION ÉLECTRIQUE	132
ÉLECTRONIQUE - COMMUNICATION (ASS)	133
COMMANDE ÉLECTRONIQUE D'ÉQUIPEMENT (ASS)	134
ÉLECTRONIQUE-MONITEUR (ASS)	134
ÉLECTRONIQUE DE TRANSMISSION (ASS)	134
EAU DES CHEMISES - RECHAUFFEUR (ASS)	135
VERSION DE MONTAGE-COMMUNICATION	137
VERSION DE MONTAGE-SÉCURITÉ	137
MONTAGE-SÉCURITÉ (ASS)	138
PLAFONNIER (ASS)	140
LAMPE - PHARE (ASS)	141
LAMPE - PHARE ET CLIGNOTANT	145
LAMPE - CLIGNOTANT DE DIRECTION (ASS)	149
FEUX ARRIÈRE ET FEUX D'ARRÊT	151
LAMPE - GYROPHARE (ASS)	152
ÉCLAIRAGE - FEUX DE ROUTE (VERSION)	153
ÉCLAIRAGE - CLIGNOTANT (VERSION)	153
ÉCLAIRAGE - PROJECTEURS (ASS)	154
ÉCLAIRAGE - PROJECTEURS ET CLIGNOTANTS (ASS)	157
ÉCLAIRAGE - FEUX DE ROUTE (ASS)	162
ÉCLAIRAGE - GYROPHARE (ASS)	163
PRISE (ASS)	165
PRISE DE BATTERIE AUXILIAIRE (ASS)	166
CAPTEUR ET MONTAGE-POSITION DE LEVAGE (ASS)	167
CAPTEUR DE PRESSION ET MONTAGE	169
CAPTEUR ET MONTAGE-POSITION D'INCLINAISON (ASS)	170
CAPTEUR - MOTEUR (ASS)	172
SONDE - CIRCUIT DE CARBURANT	174
CAPTEUR DE PRESSION (ASS)	176
CAPTEUR DE VITESSE (ASS)	184
CAPTEUR DE TEMPERATURE (ASS)	186
AUXILIAIRE DE DÉMARRAGE À L'ÉTHER (VERSION)	190
AUXILIAIRE DE DÉMARRAGE (ASS)	191
AUXILIAIRE DE DÉMARRAGE À L'ÉTHER	192
DÉMARREUR ÉLECTRIQUE (ASS)	194
INTERRUPTEUR - DÉRIVATION (ASS)	197
INVERSEUR D'ÉCLAIRAGE (ASS)	198
ROBINET DE BATTERIE (ASS)	199
CONTACTEUR MAGNETIQUE (ASS)	200
MANOCONTACT	203

* TRADUCTION NON DISPONIBLE AU MOMENT DE LA PUBLICATION

TABLE DES MATIÈRES

Désignation	Page
CONTACTEUR DE MARCHE ARRIÈRE DES PALES DE VENTILATEUR	204
CONTACTEUR DE COMMANDE DU SYSTÈME ANTITANGAGE (ASS)	205
INTERRUPTEUR À BASCULE (ASS)	206
CONTACTEUR ROTATIF (ASS)	209
INTERRUPTEUR DE DIRECTION AUXILIAIRE (ASS)	210
INTERRUPTEUR - SIGNAL (ASS)	211
INTERRUPTEUR À BASCULE (ASS)	213
INTERRUPTEUR DE BOITE DE VITESSES (ASS)	214
SOUPAPE DE DÉMARRAGE À L'ÉTHER (ASS)	215
CABLAGE - CLIMATISEUR (ASS)	216
CÂBLE DE SURVEILLANCE D'ESSIEU (ASS)	218
CABLAGE DE CABINE (ASS)	220
CABLAGE DE CHASSIS (ASS)	228
CÂBLAGE-COUPLEUR (ASS)	234
CABLAGE - EMBRAYAGE ÉLECTRIQUE (ASS)	235
CABLAGE DE MOTEUR (ASS)	236
CÂBLAGE-AUXILIAIRE DE DÉMARRAGE À L'ÉTHER	241
CABLAGE AV (ASS)	242
CABLAGE D'ÉCLAIRAGE (ASS)	245
CABLAGE DE TOIT ROPS OUVERT (ASS)	248
CABLAGE DE DIRECTION AUXILIAIRE (ASS)	259
CABLAGE - CAPTEUR (ASS)	262
*WIRING GP-WASTE HANDLER	263
TRANSMISSION	265
ESSIEU FIXE (VERSION)	265
ESSIEU OSCILLANT (VERSION)	265
FREIN ET TRAINS PLANÉTAIRES (ASS)	267
COMMANDE DE BOITE DE VITESSES (ASS)	271
COMMANDE HYDRAULIQUE DE BOÎTE (ASS)	273
REFROIDISSEUR DE BOÎTE DE VITESSES ET MONTAGE (ASS)	275
REFROIDISSEUR D'HUILE D'ESSIEU (VERSION)	276
DIFFERENTIEL (ASS)	277
DIFFÉRENTIEL - GLISSEMENT LIMITÉ (ASS)	278
DIFFÉRENTIEL NOSPIN (ASS)	279
VIDANGE-ÉCOLOGIE (ASS)	281
GOULOTTE DE REMPLISSAGE D'HUILE DE TRANSMISSION	282
FILTRE ET CANALISATIONS - BOÎTE DE VITESSE (ASS)	285
FILTRE A HUILE (ASS)	287
COURONNE CONIQUE ET PIGNON	288
ENGRENAGE DE TRANSFERT DE RENDEMENT (ASS)	292
CARTER D'ESSIEU FIXE	296
CARTER D'ESSIEU OSCILLANT	298
CANALISATIONS DE REFROIDISSEUR D'HUILE D'ESSIEU (ASS)	300
CANALIS. DE REFROIDISSEMENT DU CONV. DE COUPLE	304
MONTAGE D'ESSIEU (ASS)	307
MONTAGE DE REFROIDISSEUR D'HUILE D'ESSIEU (ASS)	309
MONTAGE DE JANTE (ASS)	310
BOÎTE PLANÉTAIRE (ASS)	311
TRANSMISSION (VERSION)	315
POMPE ET MONTAGE DE REFROIDISSEUR D'HUILE D'ESSIEU	316
POMPE DE BOÎTE DE VITESSES (ASS)	317
JANTE (VERSION)	320
JANTE DÉMONTABLE (ASS)	321
ARBRE D'ENTRAÎNEMENT (ASS)	322
CARDAN COULISSANT (ASS)	324
CROISILLON ET ROULEMENT	325
PNEU ET JANTE (VERSION)	326
CONVERTISSEUR DE COUPLE ET CARTER (ASS)	332
CONVERTISSEUR DE COUPLE (ASS)	334
BOÎTE DE VITESSES (VERSION)	336
JOINT UNIVERSEL (ASS)	337
SOUPAPE DE MODULATION (ASS)	339
CLAPET DE DECHARGE (ASS)	340
CHÂSSIS ET BENNE	342
MÉCANISME DE COMMANDE D'INCLINAISON (ASS)	342
MÉCANISME DE COMMANDE - PUISSANCE (ASS)	344
MÉCANISME DE COMMANDE DE GR. MOTO-PROPUL. (ASS)	345
DEFLECTEUR (ASS)	346
BLOC - LIMITEUR D'ESSIEU OSCILLANT (ASS)	347
COMPARTIMENT DE BATTERIE (ASS)	348
CONTREPOIDS (ASS)	349
COUVERCLE-PARE-CHOCS (ASS)	350
PORTE DE VISITE (ASS)	351

* TRADUCTION NON DISPONIBLE AU MOMENT DE LA PUBLICATION

TABLE DES MATIÈRES

Désignation	Page
GARDE-BOUE (VERSION)	353
GARDE-BOUE (ASS)	354
GARDE-BOUE AV (ASS)	358
GARDE-BOUE (ASS)	360
BÂTI - CHARGEUSE (ENS)	364
BÂTI AR (ENS)	367
GRILLE DE RADIATEUR (ASS)	369
PROTECTION-ARTICULATION (ASS)	371
PROTECTION DE REFROIDISSEUR D'HUILE D'ESSIEU	373
GROUPE DE PROTECTION (ASS)-JOINT D'ESSIEU	374
BLINDAGE D'ARBRE DE TRANSMISSION (ASS)	375
PROTECTION AV (ASS)	376
PROTECTION - ÉCLAIRAGE (ASS)	377
BLINDAGE DE TRANSMISSION (ASS)	378
BOULONNERIE DE BÂTI DE CHARGEUSE (ASS)	381
FIXATION DE MONTAGE (ASS)	383
BOULONNERIE DE BÂTI ARRIÈRE (ASS)	385
ATTELAGE D'ARTICULATION (ASS)	388
CAPOT ET PROTECTION (ASS)	390
ECHELLE (ASS)	397
CANALISATIONS DE GRAISSAGE (ASS)	399
LIAISON - VERROUILLAGE DE CHÂSSIS DE DIRECTION (ASS)	401
TABLEAU - CAISSON (ASS)	402
PANNEAU LATERAL (ASS)	407
ÉCRAN THERMIQUE DE COMPARTIMENT MOTEUR	409
MARCHEPIED (ASS)	411
SUPPORTS D'ADMISSION D'AIR (ASS)	413
SUPPORT DE SOUPAPE ET FILTRE (ASS)	414
INSONORISATION (VERSION)	416
INSONORISATION (ASS)	417
INCLINAISON DU CAPOT (ASS)	420
CIRCUIT DE FREINS	421
ACCUMULATEUR - FREIN	421
COMMANDE DE FREIN DE STATIONNEMENT (ASS)	423
SUPPORT - PÉDALE DE FREIN (ASS)	424
FREIN DE STATIONNEMENT (ASS)	427
COMMANDE DE LA PÉDALE DE FREIN (ASS)	428
COMMANDE DE FREIN DE STATIONNEMENT (ASS)	430
FREIN DE MANOEUVRE - COMMANDE (ASS)	431
DISTRIBUTEUR DE FREIN (ASS)	436
CIRCUIT DE DIRECTION	437
COMMANDE DE DIRECTION (ASS)	437
VERIN DE DIRECTION ET MONTAGE (ASS)	438
VÉRIN HYDRAULIQUE (ASS)	439
CANALISATION DE DIRECTION AUXILIAIRE	440
CANALISATIONS DE DIRECTION (ASS)	443
POMPE DE DIRECTION AUXILIAIRE ET MONTAGE (ASS)	449
POMPE A PISTONS (ASS)	451
GROUPE DE ROTATION DE POMPE	453
DIRECTION AUXILIAIRE (VERSION)	454
DISTRIBUTEUR DE POMPE (ASS)	455
CLAPET DE DECHARGE (ASS)	456
SOUPAPE DE DIRECTION AUXILIAIRE (ASS)	458
SOUPAPE DE DIRECTION (ASS)	459
SOUPAPE DE NEUTRALISATION DE DIRECTION (ASS)	462
CIRCUIT HYDRAULIQUE	463
ACCUMULATEUR - HUILE PILOTE (ASS)	463
ACCUMULATEUR - COMMANDE DE TRANSLATION (ASS)	465
COMMANDE ET CANALISATIONS DE VENTILATEUR (ASS)	467
COMMANDE ET CANALIS. - TRANSLATION (ASS)	469
COMMANDE (VERSION)-VENTILATEUR	470
COMMANDE DE TRANSLATION (VERSION)	470
COMMANDE ÉLECTROHYDRAULIQUE (ASS)	471
COMMANDE DE POIGNÉE (ASS)	479
PALONNIER - GROUPE DE COMMANDE (ASS)	480
VÉRIN DE LEVAGE ET JOINT (ASS)	482
VÉRIN D'INCLINAISON ET JOINT (ASS)	484
VÉRIN DE COUPLEUR (ASS)	487
VÉRIN DE LEVAGE (ASS)	488
VÉRIN D'INCLINAISON (ASS)	490
FILTRE A HUILE (ASS)	496
PROTECTION DE VÉRIN DE LEVAGE (ASS)	498

* TRADUCTION NON DISPONIBLE AU MOMENT DE LA PUBLICATION

TABLE DES MATIÈRES

Désignation	Page
DISTRIBUTEUR - 2 VOIES (VERSION)	501
DISTRIBUTEUR - 3 VOIES (VERSION)	501
CANALISATIONS DE COUPLEUR (ASS)	502
CANALISATIONS AV	507
CANALISATIONS HYDRAULIQUES (ASS)	510
CANALISATIONS DE REFROIDISSEUR D'HUILE HYDR. (ASS)	514
CANALISATIONS DE VÉRIN DE LEVAGE (ASS)	518
CANALISATIONS DU VÉRIN D'INCLINAISON (ASS)	520
COLLECTEUR - COMMANDE (ASS)	522
COLLECTEUR - SOUPAPE (ASS)	524
MOTEUR À ENGRENAGES (ASS)	527
GROUPE DE MOTEUR A PISTONS	528
RÉSERVOIR HYDRAULIQUE - MONTAGE (ASS)	530
POMPE DE VENTILATEUR HYDRAULIQUE ET DE FREIN ET MONTAGE (ASS)	531
POMPE ET MONTAGE - HYDRAULIQUE (ASS)	533
POMPE A PISTONS (ASS)	534
GROUPE DE ROTATION DE MOTEUR	539
GROUPE DE ROTATION DE POMPE	540
RÉSERVOIR HYDRAULIQUE (ASS)	541
COMMANDE PRINCIPALE DE SOUPAPE ET MONTAGE (ASS)	543
CLAPET DE RETENUE (ENS)	555
CLAPET DE DECHARGE ET ANTI-RETOUR	557
DISTRIBUTEUR (ASS)	558
SOUPAPE DE DERIVATION (ASS)	567
SOUPAPE DE VIDANGE	569
SOUPAPE DE COMMANDE D'ABAISSEMENT (ASS)	570
SOUPAPE DE COMMANDE PRINCIPALE (ASS)	572
SOUPAPE A COMMANDE MANUELLE (ASS)	579
SOUPAPE RÉDUCTRICE DE PRESSION (ASS)	580
DISTRIBUTEUR DE POMPE (ASS)	581
CLAPET DE DECHARGE (ASS)	585
DISTRIBUTEUR DE COMMANDE ANTI-TANGAGE	586
VANNE PILOTE (ASS)	588
SOUPAPE - SOLÉNOÏDE (ASS)	592
ÉQUIPEMENTS	595
BRAS DE LEVAGE (ENS)	595
COMMANDE DE GODET (ASS)	597
LEVAGE (VERSION)	603
OUTILS DE TRAVAIL	605
PORTE-POINTE (ASS)	605
BRAS DE MANUTENTION (ASS)	606
GODET NORMAL (ENS)	607
GODET DE MANUTENTION	610
GODET-ROCHE (ENS)	614
GODET NORMAL (ASS)	616
GODET POUR MANUTENTION	619
GODET-ROCHE (ASS)	620
TABLIER - FOURCHE (ASS)	622
COMMANDE - COUPLEUR EXPRESS (VERSION)	624
COUPLEUR EXPRESS (ASS)	625
LAME DE COUPE (ASS)	626
SEGMENT DE LAME DE COUPE (ASS)	626
CHÂSSIS ARRIÈRE-COUPLEUR EXPRESS	627
POINTE EXTRA-ROBUSTE (ASS)	628
POINTE - UNIVERSELLE (ASS)	629
POINTE LONGUE (ASS)	631
POINTE PENETRATION	632
POINTE COURTE (ASS)	634
POSTE DE CONDUITE	636
REGLAGE DE SIEGE (ASS)	636
CLIMATISEUR (VERSION)	637
CLIMATISEUR (ASS)	638
BRAS D'ESSUIE-GLACE (ASS)	643
ACCOUDOIR (ASS)	645
CABINE ROPS FERMÉE (VERSION)	646
VERSION DE TOIT - ROPS OUVERT	647
COMPRESSEUR DE REFRIGERANT (ASS)	648
CONDENSATEUR ET MONTAGE (RÉFRIGÉRANT)	650
GROUPE DE CONTROLE	652
COMMANDE DE MONITEUR NON PROGRAMMÉE (ASS)	654
PORTIÈRE DE CABINE (ASS)	655
CONDUIT ET FILTRE À AIR (ASS)	657
GAINE D'AIR (ASS)	659
PLANCHER-ISOLATION (ASS)	662
PROTECTION ANTIVANDALISME (ASS)	665
PROTECTION DE GLACE (ASS)	666
CHAUFFAGE DE CABINE (ASS)	670
KLAXON ÉLECTRIQUE (ASS)	674
MONTAGE DES COMMANDES (ASS)	675
MONTAGE DE RADIO (ASS)	676
CABINE - REVÊTEMENT (ASS)	679

* TRADUCTION NON DISPONIBLE AU MOMENT DE LA PUBLICATION

TABLE DES MATIÈRES

Désignation	Page
CANALISATIONS DE CLIMATISEUR (ASS)	685
CANALISATIONS DE CHAUFFAGE DE CABINE (ASS)	691
RÉTROVISEUR (ASS)	694
MODULE - QUATRE INSTRUMENTS (ASS)	706
MODULE D'INDICATEUR DE VITESSE ET COMPTE-TOURS (ASS)	707
ELECTROMODULE DE CHARGE UTILE DE BENNE	708
ÉLECTROMODULE DE CHARGE UTILE DE BENNE	709
MOTEUR D'ESSUIE-GLACE (ASS)	711
MONTAGE DE CABINE (ASS)	713
CABINE ROPS FERMÉE (VERSION)	715
CABINE ROPS OUVERTE (VERSION)	715
COUVERCLE INFÉRIEUR-DOSSIER (ASS)	716
TABLEAU DE BORD (ASS)	719
RÉGULATEUR - PÉDALE (ASS)	726
RADIO (ASS)	728
SIÈGE INCLINABLE (ASS)	730
CABINE ROPS FERMÉE (ASS)	731
TOIT ROPS - OUVERT (ASS)	738
CEINTURE DE SECURITE (ASS)	741
SIÈGE (ASS)	742
SIÈGE AVEC SUSPENSION (ASS)	748
SUPPORT DE COMMANDE HYDRAULIQUE (ASS)	753
INSONORISATION DE CABINE (ASS)	757
SIÈGE AVEC SUSPENSION (ASS)	763
RETROVISEUR - CABINE (ASS)	765
LAVE-GLACE - VITRE (ASS)	766
GLACE DE PORTIÈRE (ASS)	767
ESSUIE-GLACE (ASS)	769
MATÉRIEL ET FOURNITURES D'ENTRETIEN	772
COFFRE A OUTILS (ASS)	772
PLAQUE SIGNALÉTIQUE (ASS)	775
CANALISATIONS DE DIAGNOSTIC (ASS)	777
PLAQUES SIGNALETIQUES ET AUTOCOLLANTS (ASS)	783
PLAQUE SIGNALÉTIQUE D'ESSIEU (ASS)	784
INDEX DE NUMÉROS DE PIÈCES	B1

* TRADUCTION NON DISPONIBLE AU MOMENT DE LA PUBLICATION

CONTENIDO

Nombre	Página
INFORMACIÓN GENERAL	A34
ALTERNATIVAS DE REPARACIÓN	A48
ADITIVOS DE REFRIGERANTE SUPLEMENTARIOS	A53
PIEZAS DE MANTENIMIENTO	A71
INDICE	A106
CONFIGURACIÓN DE MÁQUINAS	1
CHASIS (CONFIG)	1
CONFIGURACIÓN GENERAL	2
MÁQUINA (CONFIG)	2
CONFIGURACIÓN DE ELIMINACIÓN DE BASURAS	3
CONFIGURACION DE MOTOR	4
MOTOR COMPLETO (CONFIG)	4
MOTOR - NÚCLEO (CONFIG)	5
CONFIGURACIÓN DE INSTALACIÓN DEL MOTOR	6
MOTOR BÁSICO	7
ÁRBOL DE LEVAS (GR)	7
SELLO DEL PORTADOR (GR)	8
TAPA DEL BLOQUE MOTOR (GR)	9
TAPA DE LA CAJA DELANTERA (GR)	10
TAPA DEL MECANISMO DE VÁLVULAS (GR)	12
CIGÜEÑAL (GR)	15
BLOQUE MOTOR (GR)	17
CULATA DE CILINDROS (CONJ)	21
CULATA DE CILINDROS (GR)	22
AMORTIGUADOR Y POLEA (GR)	25
DRENAJE DEL ACEITE DE MOTOR	26
GRUPO DE TORNILLERIA-AMORTIGUADOR Y POLEA	27
CAJA DELANTERA - TORNILLERÍA DE LA (GR)	28
TORNILLERÍA DE LA TAPA DE VÁLVULAS (GR)	30
TORNILLERÍA DEL MECANISMO DE VÁLVULAS (GR)	31
VOLANTE (GR)	32
ENGRANAJE DELANTERO (GR)	33
VOLANTE - CAJA DE (GR)	34
CAJA DELANTERA (GR)	35
GRUPO DE GUIA, CORREA	36
VÁLVULA DE LEVANTAMIENTO (GR)	37
CÁNCAMOS DE LEVANTAMIENTO DEL MOTOR (GR)	38
MONTAJE DEL ALTERNADOR (GR)	39
MONTAJE DEL MOTOR Y LA TRANSMISIÓN (GR)	40
CÁRTER - COLECTOR DEL (GR)	41
PISTÓN Y BIELA (GR)	42
TAPÓN DEL BLOQUE MOTOR (GR)	43
TAPÓN DEL MOTOR (GR)	44
POLEA DE RUEDA GUIA (GR)	45
SELLO DE CIGÜEÑAL (GR)	46
SELLO DE LA CAJA DE VOLANTE (GR)	47
MECANISMO DE VÁLVULAS (GR)	48
SISTEMA DE LUBRICACIÓN	51
GRUPO ADAPTADOR-TUBERIA DE ACEITE	51
RESPIRADERO (GR)	52
TUBO DE LLENADO DE ACEITE (GR)	53
FILTRO DE ACEITE DEL MOTOR (GR)	54
ESCAPE DE GASES (GR)	55
INDICADOR DEL NIVEL DE ACEITE (VARILLA) (GR)	56
TUBERÍAS DE ACEITE DEL MOTOR (GR)	58
TUBERIAS DE DRENAJE DE ACEITE DE MOTOR (GR)	59
TURBOCOMPRESOR - TUBERÍAS DE ACEITE DEL (GR)	60
BOMBA DE ACEITE DEL MOTOR (GR)	61
SISTEMA DE ENFRIAMIENTO	63
ENFRIADOR DE ACEITE DEL MOTOR (GR)	63
ENFRIADOR PARA ALTA TEMPERATURA DE AMBIENTE (CONFIG)	64
CODO DE AGUA (GR)	65
TUBERÍAS DEL AGUA (GR)	66
BOMBA DE AGUA (GR)	73
RADIADOR Y VENTILADOR (GR)	75
TAPA DEL TANQUE DE RADIADOR (GR)	79
SISTEMA DE AIRE DE ADMISIÓN Y ESCAPE	80
FILTRO DE AIRE (GR)	80
TAPA DE ADMISIÓN DE AIRE (GR)	82
CODO DE ADMISIÓN DE AIRE (GR)	84
TUBERÍAS DE POSENFRIADOR DE AIRE (CONJ)	85
AIRE - TUBERÍAS DE (GR)	86
MÚLTIPLE DE ESCAPE (GR)	87
SILENCIADOR (GR)	88

* NO HAY TRADUCCION DISPONIBLE EN EL MOMENTO DE LA IMPRESION

CONTENIDO

Nombre	Página
TUBO DE ESCAPE (GR)	89
ANTEFILTRO (GR)	90
TURBOCOMPRESOR (GR)	92
SISTEMA DE COMBUSTIBLE	93
FILTRO Y TUBERÍAS DE COMBUSTIBLE (GR)	93
FILTRO DE COMBUSTIBLE Y SEPARADOR DE AGUA (GR)	96
INYECTOR DE COMBUSTIBLE (GR)	97
TUBERÍAS DE COMBUSTIBLE (GR)	98
COMBUSTIBLE - TUBERÍAS DE DRENAJE DE (GR)	100
TUBERÍAS DE BOMBA HIDRÁULICA DE INYECCIÓN (GR)	101
BOMBA HIDRÁULICA DEL INYECTOR UNITARIO Y MONTAJE	102
BOMBA DE INYECCIÓN DE COMBUSTIBLE (GR)	104
BOMBA DE CEBADO Y FILTRO PRIMARIO DE COMBUSTIBLE (GR)	105
BOMBA HIDRÁULICA DEL INYECTOR UNITARIO (GR)	110
REGULADOR DE LA PRESION DE COMBUSTIBLE (GR)	111
COMBUSTIBLE - TANQUE DE (GR)	112
SEPARADOR DE AGUA Y BOMBA DE CEBADO DE COMBUSTIBLE (GR)	114
SISTEMA ELECTRICO Y DE ARRANQUE	115
ALARMA (GR)	115
CARGA - ALTERNADOR DE (GR)	117
BATERÍA Y CABLES (GR)	121
CONTROL DE COMUNICACION Y MONTAJE (GR)	124
CONTROL ELECTRÓNICO DEL MOTOR Y MONTAJE	126
CONTROL DE AUTOCARGA (CONFIG)	128
CONTROL DE AUTOCARGA (GR)	129
CONTROL NO PROGRAMADO (GR)	131
CONFIGURACIÓN ELÉCTRICA	132
GRUPO ELECTRONICO-COMUNICACION	133
IMPLEMENTOS (GR ELECTRÓNICO)	134
ELECTRONICA DE MONITOR (GR)	134
TREN DE FUERZA-GRUPO ELECTRÓNICO	134
AGUA DE LAS CAMISAS - CALENTADOR DEL (GR)	135
INSTALACION DE COMUNICATION (CONFIG)	137
INSTALACION DE SEGURIDAD (CONFIG)	137
INSTALACION DE SEGURIDAD (GR)	138
LÁMPARA DEL TECHO (GR)	140
REFLECTOR (GR)	141
LÁMPARA DE LUZ DELANTERA Y DE SEÑAL (GR)	145
LUZ DE SEÑAL DE GIRO (GR)	149
LUCES DE PARADA Y COLA (GR)	151
LÁMPARA DE BALIZA DE ADVERTENCIA (GR)	152
LUCES DE DESPLAZAMIENTO (CONFIG)	153
SEÑAL DE LUCES (CONFIG)	153
LUCES DE REFLECTOR (GR)	154
LUCES DE REFLECTOR Y CAMBIO DE DIRECCION (GR)	157
LUCES DE DESPLAZAMIENTO (GR)	162
LUZ DE BALIZA (GR)	163
*PLUG GP-CONNECTOR	165
ENCHUFE DE ARRANQUE AUXILIAR (GR)	166
SENSOR DE LA POSICION DE LEVANTAMIENTO Y MONTAJE (GR)	167
SENSOR DE PRESIÓN Y MONTAJE (GR)	169
SENSOR DE LA POSICION DE INCLINACION Y MONTAJE (GR)	170
SENSOR DEL MOTOR (GR)	172
DETECTOR DE POSICIÓN (SISTEMA DE COMBUST.) (GR)	174
SENSOR DE PRESIÓN (GR)	176
SENSOR DE VELOCIDAD (GR)	184
SENSOR DE TEMPERATURA (GR)	186
AUXILIAR DE ARRANQUE CON ÉTER (CONFIG)	190
AUXILIAR DE ARRANQUE (GR)	191
AUXILIAR DE ARRANQUE CON ÉTER (GR)	192
MOTOR DE ARRANQUE ELÉCTRICO (GR)	194
INTERRUPTOR DE DERIVACIÓN	197
REDUCTOR DE INTENSIDAD DE LUCES (GR)	198
DISYUNTOR (GR)	199
INTERRUPTOR MAGNÉTICO (GR)	200
INTERRUPTOR DE PRESIÓN (GR)	203
*SWITCH GP-REVERSING FAN	204
INTERRUPTOR DEL CONTROL DE AMORTIGUACIÓN (GR)	205
INTERRUPTOR DE VOLQUETE (GR)	206
GRUPO DE INTERRUPTOR ROTATORIO	209

* NO HAY TRADUCCION DISPONIBLE EN EL MOMENTO DE LA IMPRESION

CONTENIDO

Nombre	Página
INTERRUPTOR DE DIRECCIÓN SECUNDARIA (GR)	210
INTERRUPTOR DEL SEÑALERO (GR)	211
INTERRUPTOR DE VOLQUETE (GR)	213
INTERRUPTOR DE TRANSMISION (GR)	214
GRUPO DE VÁLVULA-ARRANQUE CON ÉTER	215
CABLES DEL ACONDICIONADOR DE AIRE (GR)	216
GRUPO DE CABLES, MONITOREO DEL EJE	218
CABLES DE LA CABINA (GR)	220
CABLES DEL CHASIS (GR)	228
ALAMBRADO DE ACOPLADOR (GR)	234
CABLES DEL SISTEMA ELÉCTRICO DE EMBRAGUE	235
CABLES DEL MOTOR (GR)	236
ALAMBRADO DE AUXILIAR DE ARRANQUE CON ETER (GR)	241
CABLES DELANTEROS (GR)	242
CABLES DE LAS LUCES (GR)	245
CABLES DE LA ESTRUCTURA ROPS ABIERTA (GR)	248
CABLES DE LA DIRECCIÓN SECUNDARIA	259
CABLES DE SENSOR (GR)	262
*WIRING GP-WASTE HANDLER	263
TREN DE FUERZA	265
EJE FIJO (CONFIG)	265
EJE OSCILANTE (CONFIG)	265
FRENO Y PLANETARIOS (GR)	267
CONTROL DE LA TRANSMISIÓN (GR)	271
CONTROL HIDRÁULICO DE LA TRANSMISIÓN (GR)	273
GRUPO DE MONTAJE Y ENFRIAMIENTO DE LA TRANSMISIÓN	275
ENFRIADOR DEL ACEITE DEL EJE (CONFIG)	276
DIFERENCIAL (GR)	277
DIFERENCIAL DE DESLIZAMIENTO LIMITADO (GR)	278
DIFERENCIAL NOSPIN (GR)	279
DRENAJE DE SEGURIDAD ECOLÓGICA (GR)	281
TUBO DE LLENADO DE ACEITE DE LA TRANSMISIÓN (GR)	282
TUBERÍAS DEL FILTRO Y LA TRANSMISIÓN (GR)	285
FILTRO DE ACEITE (GR)	287
ENGRANAJE DE CORONA Y PIÑÓN (GR)	288
ENGRANAJE DE TRANSFERENCIA DE SALIDA	292
CAJA DEL EJE OSCILANTE (GR)	296
CAJA DE EJE OSCILANTE (GR)	298
TUBERÍAS DEL ENFRIADOR DE ACEITE DEL EJE (GR)	300
TUBERIAS DEL ENFRIADOR DEL CONVERTIDOR DE PAR	304
EJE - GRUPO DE MONTAJE	307
MONTAJE DE ENFRIADOR DE ACEITE DE EJE (GR)	309
MONTAJE DE ARO	310
TRANSMISIÓN PLANETARIA (GR)	311
TREN DE FUERZA (CONFIG)	315
BOMBA DEL ENFRIADOR DE ACEITE DEL EJE Y MONTAJE (GR)	316
BOMBA DE LA TRANSMISIÓN (GR)	317
LLANTA (CONFIG)	320
ARO DESMONTABLE (GR)	321
EJE DE MANDO (GR)	322
JUNTA DESLIZANTE (GR)	324
CRUCETA Y COJINETE (GR)	325
ARO Y RUEDA	326
CONVERTIDOR DE PAR Y CAJA (GR)	332
CONVERTIDOR DE PAR (GR)	334
TRANSMISION (CONFIG)	336
JUNTA UNIVERSAL (GR)	337
VÁLVULA DE MODULACIÓN (GR)	339
VÁLVULA DE ALIVIO (GR)	340
BASTIDOR Y CAJA	342
ACCIONADOR DE INCLINACIÓN DEL CAPO (GR)	342
ACCIONADOR DEL PROTECTOR (GR)	344
ACCIONADOR DEL PROTECTOR DEL TREN DE FUERZA (GR)	345
DEFLECTOR (GR)	346
BLOQUE LIMITADOR DEL EJE OSCILANTE (GR)	347
CAJA DE BATERÍA	348
CONTRAPESO (GR)	349
TAPA DEL PARAGOLPES (GR)	350
PUERTA DE ACCESO (GR)	351
GUARDABARROS (CONFIG)	353
GUARDABARROS (GR)	354
GUARDABARROS DELANTERO (GR)	358
GUARDABARROS PARA DESPLAZAMIENTO EN CARRETERA (GR)	360
BASTIDOR DEL CARGADOR (CONJ)	364
BASTIDOR TRASERO (CONJ)	367
REJILLA DEL RADIADOR (GR)	369

* NO HAY TRADUCCION DISPONIBLE EN EL MOMENTO DE LA IMPRESION

CONTENIDO

Nombre	Página
PROTECTOR DE ARTICULACION (GR)	371
PROTECTOR DEL ENFRIADOR DE ACEITE DEL EJE (GR)	373
PROTECTOR DE SELLO DEL EJE (GR)	374
PROTECTOR DEL EJE IMPULSOR (GR)	375
PROTECTOR DELANTERO (GR)	376
PROTECTOR DE LAS LUCES (GR)	377
PROTECTOR DEL TREN DE FUERZA (GR)	378
TORNILLERIA GR-BASTIDOR CARGADOR	381
GRUPO DE TORNILLERIA- MONTAJE	383
TORNILLERIA GR-BASTIDOR TRASERO	385
ENGANCHE ARTICULADO (GR)	388
CAPO Y PROTECTOR (GR)	390
ESCALERILLA (GR)	397
TUBERÍAS DE ENGRASE (GR)	399
TIRANTE DE TRABA DEL BASTIDOR DE DIRECCIÓN (GR)	401
PANEL DEL CAPÓ (GR)	402
PANEL LATERAL (GR)	407
PROTECTOR TÉRMICO DEL COMPARTIMIENTO DEL MOTOR (GR)	409
ESTRIBO DEL OPERADOR (GR)	411
SOPORTE DE LA ADMISIÓN DE AIRE (GR)	413
*SUPPORT GP-VALVE & FILTER	414
INSONORIZADOR (CONFIG)	416
INSONORIZADOR (GR)	417
INCLINACIÓN DEL CAPÓ (GR)	420
SISTEMA DE FRENOS	421
ACUMULADOR DEL FRENO (GR)	421
ACCIONADOR DEL FRENO DE ESTACIONAMIENTO (GR)	423
BASE DEL FRENO DE PIE (GR)	424
FRENO DE ESTACIONAMIENTO (GR)	427
CONTROL DEL PEDAL DE FRENO (GR)	428
CONTROL DEL FRENO DE ESTACIONAMIENTO	430
FRENO DE SERVICIO - CONTROL (GR)	431
VÁLVULA DE CONTROL DEL FRENO (GR)	436
SISTEMA DE DIRECCIÓN	437
CONTROL DE DIRECCIÓN (GR)	437
CILINDRO DE DIRECCIÓN Y MONTAJE (GR)	438
CILINDRO HIDRÁULICO (GRUPO)	439
TUBERÍAS DE LA DIRECCIÓN SECUNDARIA (GR)	440
TUBERÍAS DE DIRECCIÓN (GR)	443
BOMBA Y MOTOR DE DIRECCION SECUNDARIA (GR)	449
BOMBA Y MONTAJE DE LA DIRECCIÓN SECUNDARIA (GR)	450
BOMBA DE PISTONES (GR)	451
GRUPO GIRATORIO DE BOMBA	453
DIRECCIÓN SECUNDARIA (CONFIG)	454
VALVULA DE CONTROL DE LA BOMBA (GR)	455
VÁLVULA DE ALIVIO (GR)	456
VALVULA DE DIRECCION SECUNDARIA (GR)	458
VÁLVULAS DE LA DIRECCIÓN (GR)	459
VÁLVULA NEUTRALIZADORA DE DIRECCIÓN (GR)	462
SISTEMA HIDRÁULICO	463
ACUMULADOR DE ACEITE PILOTO (GR)	463
ACUMULADOR DE CONTROL DE AMORTIGUACION (GR)	465
*CONTROL & LINES GP-FAN	467
CONTROL DE DESPLAZAMIENTO Y TUBERÍAS (GR)	469
CONFIGURACIÓN DE CONTROL DEL VENTILADOR	470
CONTROL DE AMORTIGUACIÓN (CONFIG)	470
CONTROL ELECTROHIDRAULICO (GR)	471
CONTROL DE MANIJA (GR)	479
PALANCA UNIVERSAL DE CONTROL (GR)	480
CILINDRO DE LEVANTAMIENTO Y SELLO (GR)	482
CILINDRO DE INCLINACIÓN Y SELLO (GR)	484
CILINDRO DEL ACOPLADOR (GR)	487
CILINDRO DE LEVANTAMIENTO (GR)	488
INCLINACIÓN HORIZONTAL - CILINDRO DE (GR)	490
FILTRO DE ACEITE (GR)	496
GRUPO DE PROTECTOR DE CILINDRO DE LEVANTAMIENTO	498
CONFIGURACIÓN HIDRÁULICA DE 2 VÁLVULAS	501

* NO HAY TRADUCCION DISPONIBLE EN EL MOMENTO DE LA IMPRESION

CONTENIDO

Nombre	Página
VÁLVULA HIDRÁULICA DE 3 VÍAS (CONFIG)	501
ACOPLADOR - TUBERÍAS DE (GR)	502
TUBERÍAS DELANTERAS (GR)	507
TUBERÍAS HIDRÁULICAS (GR)	510
TUBERÍAS DEL ENFRIADOR DE ACEITE HIDRÁULICO (GR)	514
CILINDRO DE LEVANTAMIENTO - TUBERÍAS DEL (GR)	518
TUBERÍAS DEL CILINDRO DE INCLINACIÓN (GR)	520
CONTROL DEL MULTIPLE (GR)	522
MULTIPLE DE VALVULA (GR)	524
MOTOR DE ENGRANAJES (GR)	527
PISTONES DEL MOTOR (GR)	528
MONTAJE DEL TANQUE HIDRÁULICO (GR)	530
GRUPO DE BOMBA Y MONTAJE, FRENOS Y VENTILADOR HIDRÁULICO	531
BOMBA HIDRÁULICA Y MONTAJE (GR)	533
BOMBA DE PISTONES (GR)	534
GRUPO DE ROTACIÓN DEL MOTOR (GR)	539
GRUPO GIRATORIO DE BOMBA	540
TANQUE HIDRÁULICO (GR)	541
MONTAJE Y VALVULA DEL CONTROL PRINCIPAL (GR)	543
VÁLVULA DE RETENCIÓN (GR)	555
VALVULA DE RETENCIÓN Y ALIVIO (GR)	557
VÁLVULA DE CONTROL (GR)	558
VÁLVULA DE DERIVACIÓN (GR)	567
VÁLVULA DE DRENAJE (GR)	569
VÁLVULA DE CONTROL DE BAJADA (GR)	570
VÁLVULA DEL CONTROL PRINCIPAL (GR)	572
VÁLVULA DE CONTROL MANUAL (GR)	579
VÁLVULA REDUCTORA DE PRESIÓN (GR)	580
VALVULA DE CONTROL DE LA BOMBA (GR)	581
VÁLVULA DE ALIVIO (GR)	585
VÁLVULA DE CONTROL DE LA AMORTIGUACIÓN (GR)	586
VÁLVULA DE LANZADERA (GR)	588
VÁLVULA DE SOLENOIDE (GR)	592
IMPLEMENTOS	595
BRAZO DE LEVANTAMIENTO (CONJ)	595
CONTROL DEL CUCHARÓN (GR)	597
LEVANTAMIENTO (CONFIG)	603
HERRAMIENTAS	605
GRUPO DE PUNTA Y ADAPTADOR	605
AGUILÓN TELESCÓPICO (GR)	606
CUCHARÓN DE USO GENERAL (CONJ)	607
CUCHARÓN DE MANEJO DE MATERIAL (CONJ)	610
CUCHARÓN PARA ROCA (CONJ)	614
CUCHARÓN DE USO GENERAL (GR)	616
CUCHARÓN DE MANEJO DE MATERIAL (GR)	619
CUCHARÓN PARA ROCA (GR)	620
PORTAHORQUILLAS (GR)	622
CONTROL DE ACOPLADOR RÁPIDO (CONFIG)	624
ACOPLADOR RÁPIDO (GR)	625
CUCHILLA (GR)	626
SEGMENTO DE CUCHILLA (GR)	626
BASTIDOR DEL ACOPLADOR RAPIDO (GR)	627
GRUPO DE PUNTA-SERVICIO ADICIONAL	628
PUNTA PARA CUCHARON DE USO GENERAL (GR)	629
PUNTA LARGA (GR)	631
PUNTA PARA PENETRACIÓN (GR)	632
PUNTA CORTA (GR)	634
PUESTO DEL OPERADOR	636
AJUSTADOR DEL ASIENTO (GR)	636
ACONDICIONADOR DE AIRE (CONFIG)	637
ACONDICIONADOR DE AIRE (GR)	638
BRAZO DE LIMPIAPARABRISAS (GR)	643
POSABRAZOS (GR)	645
SISTEMA ROPS DE CABINA CERRADA (CONFIG)	646
TECHO ROPS ABIERTO (CONFIG)	647
COMPRESOR DE REFRIGERANTE (GR)	648
CONDENSADOR DEL REFRIGERANTE Y MONTAJE (GR)	650
CONTROL DE MONITOR (GR)	652
GRUPO DE CONTROL-MONITOR NO PROGRAMADO	654
PUERTA DE CABINA	655
CONDUCTO Y FILTRO DE AIRE (GR)	657
CONDUCTO DE AIRE (GR)	659
*FLOOR GP-SOUND SUPPRESSION	662
PROTECTOR CONTRA EL VANDALISMO (GR)	665

* NO HAY TRADUCCION DISPONIBLE EN EL MOMENTO DE LA IMPRESION

CONTENIDO

Nombre	Página
PROTECTOR DE LA VENTANA	666
CALEFACCIÓN DE LA CABINA (GR)	670
BOCINA ELÉCTRICA (GR)	674
INSTALACIÓN DE CONTROLES (GR)	675
INSTALACIÓN DE RADIO (GR)	676
REVESTIMIENTO DE LA CABINA (GR)	679
TUBERÍAS DE ACONDICIONADOR DE AIRE (GR)	685
TUBERÍAS DE CALEFACCIÓN DE LA CABINA	691
RETROVISOR (GR)	694
MODULO ELECTRÓNICO DE CUATRO INDICADORES (GR)	706
MÓDULO DEL TACÓMETRO Y DEL VELOCÍMETRO (GR)	707
MONITOR DE CARGA ÚTIL (CONFIG)	708
MONITOR DE CARGA ÚTIL (GR)	709
MOTOR-LIMPIAPARABRISAS (GR)	711
GRUPO DE MONTAJE DE LA CABINA	713
CABINA ROPS CERRADA (CONFIG)	715
CABINA ROPS ABIERTA (CONFIG)	715
SOPORTE DEL RESPALDO (GR)	716
TABLERO DE INSTRUMENTOS (GR)	719
REGULADOR - PEDAL DEL (GR)	726
RADIO (GR)	728
RECLINACION DE ASIENTO (GR)	730
CABINA ROPS CERRADA (GR)	731
ESTRUCTURA ROPS ABIERTA (GR)	738
CINTURÓN DE SEGURIDAD (GR)	741
ASIENTO (GR)	742
SUSPENSIÓN - ASIENTO CON (GR)	748
SOPORTE DEL CONTROL HIDRÁULICO (GR)	753
INSONORIZACION DE CABINA (GR)	757
ASIENTO CON SUSPENSIÓN (GR)	763
VISERA (GR)	765
LAVAPARABRISAS DE LA VENTANA (GR)	766
VENTANA DE LA PUERTA (GR)	767
LIMPIAPARABRISAS DE LA VENTANA (GR)	769
EQUIPO DE SERVICIO Y SUMINISTROS	772
CAJA DE HERRAMIENTAS (GR)	772
ETIQUETA DE ADVERTENCIA (GR)	775
GRUPO DE TUBERIAS DE DIAGNÓSTICO	777
CALCOMANÍAS Y PLACAS DE IDENTIFICACIÓN (GR)	783
GRUPO DE PLACA DE IDENTIFICACIÓN DEL EJE	784

Nombre	Página
INDICE DE NUMEROS DE PIEZA	B1

* NO HAY TRADUCCION DISPONIBLE EN EL MOMENTO DE LA IMPRESION

ÍNDICE

Designação	Página
INFORMAÇÃO GERAL	A38
ALTERNATIVAS DE REPARO	A49
ADITIVOS SUPLEMENTARES DO LÍQUIDO ARREFECEDOR	A54
NOMENCLATURA DE PEÇAS INGLÊS-PORTUGUÊS	A56
PEÇAS DE MANUTENÇÃO	A75
ÍNDICE	A119
MÁQUINA - ARRANJO	1
CHASSI	1
ARRANJO GERAL	2
MÁQUINA	2
ATERRO SANITÁRIO	3
MOTOR - ARRANJO	4
MOTOR COMPLETO	4
MOTOR - NÚCLEO	5
GRUPO DE INSTALAÇÃO - MOTOR	6
MOTOR BÁSICO	7
EIXO-COMANDO DE VÁLVULA	7
SUPORTE DO RETENTOR	8
TAMPA - BLOCO DO MOTOR	9
TAMPA - CAIXA DIANTEIRA	10
TAMPA - MECANISMO DAS VÁLVULAS	12
VIRABREQUIM	15
BLOCO DO MOTOR	17
CABEÇOTE DO MOTOR	21
AMORTECEDOR DE VIBRAÇÕES E POLIA	25
DRENO - ÓLEO DO MOTOR	26
FIXADOR - AMORTECEDOR E POLIA	27
FIXADORES - CAIXA DIANTEIRA	28
FIXADORES - TAMPA DA VÁLVULA	30
FIXADORES - MECANISMO DAS VÁLVULAS	31
VOLANTE DO MOTOR	32
ENGRENAGENS DE DISTRIBUIÇÃO	33
CAIXA DO VOLANTE DO MOTOR	34
CAIXA DIANTEIRA	35
RODA-GUIA - CORREIA	36
TUCHO DA VÁLVULA	37
LEVANTAMENTO DO MOTOR	38
MONTAGEM - ALTERNADOR	39
MONTAGEM - MOTOR E TRANSMISSÃO	40
CÁRTER DO ÓLEO DO MOTOR	41
PISTÃO E BIELA	42
BUJÃO DO BLOCO DO CILINDRO	43
BUJÃO DO MOTOR	44
POLIA DA RODA-GUIA	45
RETENTOR DO VIRABREQUIM	46
RETENTOR - CAIXA DO VOLANTE	47
MECANISMO DAS VÁLVULAS	48
SISTEMA DE LUBRIFICAÇÃO	51
ADAPTADOR-TUBULAÇÃO DE ÓLEO	51
RESPIRO	52
BOCAL DE ENCHIMENTO DE ÓLEO DO MOTOR	53
FILTRO - ÓLEO DO MOTOR	54
ELIMINAÇÃO DE VAPORES DO CÁRTER	55
INDICADOR - NÍVEL DO ÓLEO (VARETA)	56
TUBOS - ÓLEO DO MOTOR	58
TUBULAÇÕES - DRENAGEM DE ÓLEO DO MOTOR	59
TUBOS - ÓLEO DO TURBOALIMENTADOR	60
BOMBA DE ÓLEO - MOTOR	61
SISTEMA DE ARREFECIMENTO	63
ARREFECEDOR - ÓLEO DO MOTOR	63
ARREFECIMENTO - TEMP. AMBIENTE ALTA	64
COTOVELO D'ÁGUA	65
TUBOS - ÁGUA	66
BOMBA DE ÁGUA	73
RADIADOR E VENTILADOR	75
TANQUE SUPERIOR DO RADIADOR	79
SISTEMA DA ADMISSÃO DE AR E DE ESCAPE	80
PURIFICADOR DE AR	80
TAMPA - ADMISSÃO DE AR	82
COTOVELO DE ADMISSÃO DE AR	84
TUBULAÇÕES - AR DO PÓS-ARREFECEDOR	85
TUBOS - AR	86
COLETOR DE ESCAPE	87
SILENCIADOR	88
CANO DE ESCAPE	89
PRÉ-PURIFICADOR	90
TURBOALIMENTADOR	92
SISTEMA DE COMBUSTÍVEL	93
FILTRO E TUBOS - COMBUSTÍVEL	93
FILTRO DE COMBUSTÍVEL E SEPARADOR DE ÁGUA	96
INJETOR DE COMBUSTÍVEL	97
TUBOS - COMBUSTÍVEL	98

ÍNDICE

Designação	Página
TUBOS - DRENAGEM DO COMBUSTÍVEL	100
TUBOS - INJETOR DA BOMBA HIDRÁULICA	101
BOMBA HIDRÁULICA E MONTAGEM - UNIDADE INJETORA	102
BOMBA DE INJEÇÃO DO COMBUSTÍVEL	104
BOMBA DE ESCORVA DO COMBUSTÍVEL E DO FILTRO PRIMÁRIO	105
BOMBA HIDRÁULICA - UNIDADE INJETORA	110
REGULADOR DE PRESSÃO DO COMBUSTÍVEL	111
TANQUE DE COMBUSTÍVEL	112
SEPARADOR DE ÁGUA E BOMBA DE ESCORVA DE COMBUSTÍVEL	114
SISTEMA ELÉTRICO E DE PARTIDA	115
ALARME	115
ALTERNADOR DE CORRENTE	117
BATERIA E CABOS / FIOS ELÉTRICOS	121
CONTROLE & MONTAGEM-COMUNICAÇÃO	124
CONTROLE ELETRÔNICO E MONTAGEM - MOTOR	126
CONTROLE-ESCAVAÇÃO AUTOMÁTICA	128
CONTROLE - NÃO PROGRAMADO	131
SISTEMA ELÉTRICO	132
SISTEMA ELETRÔNICO-COMUNICAÇÃO	133
SIST. ELETRÔNICO - ACESSÓRIO	134
SISTEMA ELETRÔNICO - MONITOR	134
SISTEMA ELETRÔNICO - TREM DE FORÇA	134
AQUECEDOR DA ÁGUA DO MOTOR	135
INSTALAÇÃO-COMUNICAÇÃO	137
INSTALAÇÃO-SEGURANÇA	137
LÂMPADA - TETO	140
LÂMPADA - FAROL	141
LÂMPADA DIANTEIRA E DE SINAL	145
LÂMPADA - SINALIZAÇÃO	149
LUZ TRASEIRA E DE FREIO	151
LUZ GIRATÓRIA DE ALARME	152
ILUMINAÇÃO RODOVIÁRIA	153
ILUMINAÇÃO - SINALIZAÇÃO	153
SISTEMA DE ILUMINAÇÃO - FARÓIS	154
SISTEMA DE ILUMINAÇÃO - FARÓIS E SINAL	157
ILUMINAÇÃO - RODOVIÁRIA	162
SIST. DE ILUMINAÇÃO - PISCA-PISCA GIRATÓRIO DE ADVERTÊNCIA	163
BUJÃO - CONECTOR	165
RECEPTÁCULO-PARTIDA AUXILIAR	166
SENSOR - POSIÇÃO DE LEVANTAMENTO E MONTAGEM	167
SENSOR DE PRESSÃO E MONTAGEM	169
SENSOR - POSIÇÃO DE INCLINAÇÃO E MONTAGEM	170
SENSOR DO MOTOR	172
EMISSOR - POSIÇÃO	174
SENSOR - PRESSÃO	176
SENSOR DE VELOCIDADE	184
SENSOR - TEMPERATURA	186
AUXILIAR DE PARTIDA A ÉTER	190
AUXILIAR DE PARTIDA	191
AUXILIAR DE PARTIDA A ÉTER	192
MOTOR ELÉTRICO DE PARTIDA	194
INTERRUPTOR DE DERIVAÇÃO	197
COMUTADOR-LUZ ALTA/BAIXA	198
CHAVE GERAL	199
INTERRUPTOR - MAGNÉTICO	200
INTERRUPTOR - PRESSÃO	203
INTERRUPTOR-VENTILADOR DE INVERSÃO	204
INTERRUPTOR - SISTEMA DE ABSORCAO DE IMPACTOS	205
INTERRUPTOR - BALANCIM	206
INTERRUPTOR GIRATÓRIO	209
INTERRUPTOR - DIREÇÃO SECUNDÁRIA	210
INTERRUPTOR DE SINALIZAÇÃO	211
INTERRUPTOR - BALANCIM	213
INTERRUPTOR - TRANSMISSÃO	214
VALVULA - PARTIDA A ETER	215
CABOS/FIOS ELÉTRICOS - AR CONDICIONADO	216
FIAÇÃO - MONITORAÇÃO DO EIXO	218
CABOS/FIOS ELÉTRICOS - CABINE	220
CABOS/FIOS ELÉTRICOS - CHASSI	228
CABOS/FIOS ELÉTRICOS - ACOPLADOR	234
CABOS/FIOS ELÉTRICOS - EMBREAGEM	235
CABOS/FIOS ELÉTRICOS - MOTOR	236
CABOS/FIOS ELÉTRICOS - AUXILIAR DE PARTIDA A ETER	241
CABOS/FIOS ELÉTRICOS - DIANTEIROS	242
CABOS/FIOS ELÉTRICOS DE ILUMINAÇÃO	245
CABOS/FIOS ELÉTRICOS - ESTRUTURA ROPS ABERTA	248
CABOS/FIOS ELÉTRICOS - DIREÇÃO SECUNDÁRIA	259
CABOS/FIOS ELÉTRICOS - SENSOR	262

ÍNDICE

Designação	Página
FIAÇÃO - MANIPULADOR DE RESÍDUOS	263
TREM DE FORÇA	265
EIXO FIXO	265
EIXO OSCILANTE	265
FREIOS E ENGRENAGENS PLANETARIAS	267
CONTROLE DA TRANSMISSÃO	271
CONTROLE HIDRÁULICO DA TRANSMISSÃO	273
ARREFECEDOR E MONTAGEM - TRANSMSSÃO	275
ARREFECEDOR DO ÓLEO DO EIXO	276
DIFERENCIAL	277
DIFERENCIAL - DESLIZAMENTO LIMITADO	278
DIFERENCIAL - NOSPIN	279
DRENO - ECOLOGIA	281
BOCAL DE ENCHIMENTO DE ÓLEO DO TREM DE FORÇA	282
FILTRO E TUBOS - TRANSMISSÃO	285
FILTRO - ÓLEO	287
ENGRENAGEM-COROA E PINHÃO	288
ENGRENAGENS DE SAÍDA DE TRANSFERÊNCIA	292
CAIXA - EIXO FIXO	296
CAIXA - EIXO OSCILANTE	298
TUBOS - ARREFECEDOR DE ÓLEO DO EIXO	300
TUBOS - ARREFECEDOR DO CONVERSOR DE TORQUE	304
MONTAGEM DO EIXO	307
MONTAGEM - ARREFECEDOR DE ÓLEO DO EIXO	309
MONTAGEM - ARO	310
ENGRENAGENS PLANETÁRIAS - TRANSMISSÃO	311
TREM DE FORÇA	315
BOMBA DO ARREFECEDOR DE ÓLEO DO EIXO E MONTAGEM	316
BOMBA DA TRANSMISSÃO	317
ARO	320
ARO DESMONTÁVEL	321
EIXO DE TRANSMISSÃO	322
JUNTA CORREDIÇA	324
CRUZETA E MANCAL	325
PNEU E ARO	326
CONVERSOR DE TORQUE E CARCAÇA	332
CONVERSOR DE TORQUE	334
TRANSMISSÃO	336
JUNTA UNIVERSAL	337
VÁLVULA DE MODULAÇÃO	339
VÁLVULA DE ALÍVIO	340
CHASSI E CARROCERIA	342
ACIONADOR - INCLINAÇÃO DO CAPÔ	342
ACIONADOR DE POTÊNCIA	344
ACIONADOR - PROTETOR DE POTÊNCIA	345
DEFLETOR	346
BLOCO LIMITADOR DE OSCILAÇÃO DO EIXO	347
CAIXA - BATERIA	348
CONTRAPESO	349
TAMPA - PÁRA-CHOQUE	350
PORTA DE ACESSO	351
PÁRA-LAMA	353
PÁRA-LAMA DIANTEIRO	358
PÁRA-LAMA	360
CHASSI DIANTEIRO	364
CHASSI TRASEIRO	367
GRADE DO RADIADOR	369
PROTETOR - ARTICULAÇÃO	371
PROTETOR - ARREFECEDOR DO ÓLEO DO EIXO	373
PROTETOR - VEDADOR DO EIXO	374
PROTETOR - EIXO DE TRANSMISSÃO	375
PROTETOR - DIANTEIRO	376
PROTETOR - ILUMINAÇÃO	377
PROTETOR - TREM DE FORÇA	378
FERRAGEM - CHASSI DA CARREGADEIRA	381
FERRAGENS-MONTAGEM	383
FERRAGEM - CHASSI TRASEIRO	385
ENGATE - ARTICULAÇÃO	388
CAPÔ E PROTETOR	390
ESCADA	397
TUBOS - GRAXA	399
ELO - TRAVA DA ARMAÇÃO DA DIREÇÃO	401
PAINEL DO CAPÔ	402
PAINEL LATERAL	407
BLINDAGEM DO COMPARTIMENTO DO MOTOR	409
DEGRAU	411
SUPORTE - ADMISSÃO DE AR	413
SUPORTE - VALVULA E FILTRO	414
RUÍDO - ARRANJO PARA SUPRESSÃO	416
REDUÇÃO DE RUÍDO	417
INCLINAÇÃO - CAPÔ	420
SISTEMA DE FREIO	421
ACUMULADOR - FREIO	421
ACIONADOR DO FREIO DE ESTACIONAMENTO	423
BASE DO FREIO - PEDAL	424

ÍNDICE

Designação	Página
FREIO DE ESTACIONAMENTO	427
CONTROLE DO PEDAL DO FREIO	428
CONTROLE DO FREIO DE ESTACIONAMENTO	430
CONTROLE DO FREIO DE SERVIÇO	431
VÁLVULA DE CONTROLE DOS FREIOS	436
SISTEMA DE DIREÇÃO	437
CONTROLE DE DIREÇÃO	437
CILINDRO DE DIREÇÃO E MONTAGEM	438
CILINDRO HIDRÁULICO	439
TUBOS - DIREÇÃO SECUNDÁRIA	440
TUBOS - DIREÇÃO	443
BOMBA DE DIREÇÃO SECUNDÁRIA E MOTOR	449
BOMBA DA DIREÇÃO SECUNDÁRIA E MONTAGEM	450
BOMBA DE PISTÃO	451
GRUPO ROTATIVO DA BOMBA	453
DIREÇÃO SECUNDÁRIA	454
VÁLVULA DE CONTROLE DA BOMBA	455
VÁLVULA DE ALÍVIO	456
VÁLVULA DE DIREÇÃO SECUNDÁRIA	458
VÁLVULA DA DIREÇÃO	459
VÁLVULA - NEUTRALIZADOR DA DIREÇÃO	462
SISTEMA HIDRÁULICO	463
ACUMULADOR D ÓLEO - PILOTO	463
ACUMULADOR DO SISTEMA DE ABSORÇÃO DE IMPACTOS	465
CONTROLE E TUBULAÇÕES - VENTILADOR	467
SISTEMA DE ABSORÇÃO DE IMPACTOS E TUBOS	469
CONTROLE DO VENTILADOR	470
SISTEMA DE ABSORÇÃO DE IMPACTOS	470
CONTROLE-ELETROIDRÁULICO	471
CONTROLE-CABO	479
CONTROLE - ALAVANCA	480
CILINDRO DE LEVANTAMENTO E RETENTOR	482
CILINDRO DE INCLINAÇÃO E RETENTOR	484
CILINDRO - ACOPLADOR	487
CILINDRO DE LEVANTAMENTO	488
CILINDRO DE INCLINAÇÃO	490
FILTRO - ÓLEO	496
PROTETOR - CILINDRO DE LEVANTAMENTO	498
ARRANJO HIDRÁULICO - 2 VÁLVULAS	501
ARRANJO HIDRÁULICO - 3 VÁLVULAS	501
TUBOS - ACOPLADOR	502
TUBOS - DIANTEIROS	507
TUBOS - ÓLEO HIDRÁULICO	510
TUBOS - ARREFECEDOR DE ÓLEO HIDRÁULICO	514
TUBOS - CILINDRO DE LEVANTAMENTO	518
TUBOS - CILINDRO DE INCLINAÇÃO	520
COLETOR - CONTROLE	522
COLETOR - VÁLVULA	524
MOTOR - ENGRENAGENS	527
MOTOR - PISTÃO	528
MONTAGEM - TANQUE HIDRÁULICO	530
BOMBA E MONTAGEM - FREIO E VENTILADOR HIDRÁULICO	531
BOMBA HIDRÁULICA E MONTAGEM	533
BOMBA DE PISTÃO	534
MOTOR DO GRUPO ROTATIVO	539
GRUPO ROTATIVO DA BOMBA	540
TANQUE HIDRÁULICO	541
VÁLVULA DO CONTROLE PRINCIPAL E MONTAGEM	543
VÁLVULA DE RETENÇÃO	555
VÁLVULA DE RETENÇÃO E DE ALÍVIO	557
VÁLVULA DE CONTROLE	558
VÁLVULA DESVIADORA	567
VÁLVULA DE DRENAGEM	569
VÁLVULA DE CONTROLE DE ABAIXAMENTO	570
VÁLVULA - CONTROLE PRINCIPAL	572
VÁLVULA MANUAL	579
VÁLVULA DE REDUÇÃO DE PRESSÃO	580
VÁLVULA DE CONTROLE DA BOMBA	581
VÁLVULA DE ALÍVIO	585
VÁLVULA DE CONTROLE DE ABSORÇÃO DE IMPACTOS	586
VÁLVULA DE SEPARAÇÃO	588
VÁLVULA SOLENÓIDE	592
ACESSÓRIOS	595
BRAÇO DE LEVANTAMENTO	595
CONTROLE DA CAÇAMBA	597
LEVANTAMENTO - ARRANJO	603
FERRAMENTAS DE TRABALHO	605
ADAPTADOR DA PONTA	605
BRAÇO - MANIPULADOR DE MATERIAIS	606
CAÇAMBA PARA APLICAÇÃO GERAL	607

ÍNDICE

Designação	Página
CAÇAMBA - MANUSEIO DE MATERIAL	610
CAÇAMBA PARA ROCHAS	614
CAÇAMBA PARA APLICAÇÃO GERAL	616
CAÇAMBA - MANUSEIO DE MATERIAL	619
CAÇAMBA PARA ROCHAS	620
SUPORTE - GARFO	622
CONTROLE - ACOPLADOR RÁPIDO	624
ACOPLADOR RÁPIDO	625
BORDA CORTANTE	626
BORDA SEGMENTADA DA CAÇAMBA	626
CHASSI - ACOPLADOR RÁPIDO	627
PONTA-SERVIÇO PESADO	628
PONTA PARA APLICAÇÕES GERAIS	629
PONTA LONGA	631
PONTA - PENETRAÇÃO	632
PONTA CURTA	634
ESTAÇÃO DO OPERADOR	636
AJUSTADOR DO ASSENTO	636
CONDICIONADOR DE AR	637
BRACO DO LIMPADOR	643
BRAÇO DO ASSENTO	645
CABINE - ESTRUTURA ROPS COBERTA	646
TOLDO - ROPS ABERTA	647
COMPRESSOR DE REFRIGERANTE	648
CONDENSADOR DO REFRIGERANTE E MONTAGEM	650
CONTROLE DO PAINEL MONITOR	652
CONTROLE-MONITOR NÃO PROGRAMADO	654
PORTA DA CABINE	655
DUCTO E FILTRO	657
DUCTO DE AR	659
PISO-SUPRESSÃO DE RUÍDOS	662
PROTETOR CONTRA VANDALISMO	665
PROTETOR - JANELA	666
AQUECEDOR DA CABINE	670
BUZINA ELÉTRICA	674
INSTALAÇÃO DOS CONTROLES	675
INSTALAÇÃO DO RÁDIO	676
REVESTIMENTO DA CABINE	679
TUBOS - AR CONDICIONADO	685
TUBOS - AQUECEDOR DA CABINE	691
ESPELHO RETROVISOR	694
MÓDULO ELETRÔNICO DE QUATRO INDICADORES	706
MÓDULO - VELOCÍMETRO E TACÔMETRO	707
PAINEL MONITOR DE CARGA ÚTIL	708
MOTOR - LIMPADOR DO VIDRO	711
MONTAGEM - CABINE	713
CABINE - ESTRUTURA ROPS COBERTA	715
CABINE - ROPS ABERTA	715
FUNDO - ENCOSTO	716
PAINEL DE INSTRUMENTOS	719
PEDAL DO GOVERNADOR	726
RÁDIO	728
RECLINAÇÃO - ASSENTO	730
ROPS FECHADA	731
ROPS ABERTA	738
CINTO DE SEGURANÇA	741
ASSENTO	742
ASSENTO COM SUSPENSÃO	748
SUPORTE - CONTROLE HIDRÁULICO	753
SUPRESSÃO DE RUÍDOS - CABINE	757
SUSPENSÃO - ASSENTO	763
PÁRA-SOL DA CABINE	765
LAVADOR DO VIDRO	766
VIDRO DA PORTA	767
LIMPADOR DO VIDRO	769
EQUIPAMENTOS DE SERVIÇO E SUPRIMENTOS	772
CAIXA DE FERRAMENTAS	772
DECALQUE	775
TUBULAÇÕES DE DIAGNÓSTICO	777
PLACA E DECALQUE	783
PLACA - IDENTIFICAÇÃO DO EIXO	784
ÍNDICE DE NÚMERO DE PEÇA	B1

INHALTSVERZEICHNIS

Bezeichnung	Seite
ALLGEMEINE HINWEISE	A42
REPARATURALTERNATIVEN	A50
KÜHLMITTELZUSATZ	A55
WARTUNGSTEILE	A78
STICHWORTVERZEICHNIS	A130
MASCHINE	1
FAHRWERK	1
GRUNDAUSFÜHRUNG	2
MASCHINE	2
ABFALLBESEITIGUNGSMONTAGE	3
MOTOR	4
MOTOR, KOMPLETT	4
MOTORKÜHLERBLOCK	5
MOTOR-EINBAUSATZ	6
MOTOR (GRUNDAUSFÜHRUNG)	7
NOCKENWELLE	7
DICHTUNGSTRÄGER	8
MOTORBLOCKDECKEL	9
STIRNRADGEHÄUSEDECKEL	10
VENTILDECKEL	12
KURBELWELLE	15
MOTORBLOCK	17
ZYLINDERKOPF	21
DÄMPFER UND RIEMENSCHEIBE	25
MOTORÖLABLASS	26
BEFESTIGUNG - DÄMPFER U. RIEMENSCHEIBE	27
STIRNRADGEHÄUSE-HALTETEILE	28
VENTILDECKELBEFESTIGUNG	30
VENTILMECHANISMUS-HALTETEILE	31
SCHWUNGRAD	32
STIRNRAD	33
SCHWUNGRADGEHÄUSE	34
STIRNRADGEHÄUSE	35
LEITRAD - RIEMEN	36
HUBVENTIL	37
MOTORHUBÖSE	38
DREHSTROMGENERATOR - BEFESTIGUNG	39
MOTOR- UND GETRIEBEAUFLAGER	40
ÖLWANNE	41
PLEUELSTANGE UND KOLBEN	42
ZYLINDERBLOCKSCHRAUBE	43
MOTORSTOPFEN	44
RIEMENSPANNER	45
KURBELWELLENDICHTUNG	46
SCHWUNGRADGEHÄUSEDICHTUNG	47
VENTILSTEUERUNG	48
SCHMIERSYSTEM	51
ADAPTER - ÖLLEITUNG	51
ENTLÜFTER	52
MOTORÖLEINFÜLLSTUTZEN	53
ÖLFILTER	54
ENTDUNSTER	55
ÖLMESSSTAB	56
MOTORÖLLEITUNGEN	58
MOTORÖLABLASSLEITUNGEN	59
TURBOLADERÖLLEITUNGEN	60
SCHMIERPUMPE	61
KÜHLSYSTEM	63
MOTORÖLKÜHLER	63
KÜHLSYSTEM - HOHE UMGEBUNGSTEMPERATUREN	64
WASSERKNIESTÜCK	65
KÜHLWASSERLEITUNGEN	66
KÜHLWASSERPUMPE	73
KÜHLER UND LÜFTER	75
KÜHLERWASSERKASTEN, OBEN	79
LUFTANSAUG- UND ABGASSYSTEM	80
LUFTREINIGER	80
LUFTEINLASSDECKEL	82
LUFTEINLASSBOGEN	84
LADELUFTKÜHLERLEITUNGEN	85
DRUCKLUFTLEITUNGEN	86
AUSPUFFKRÜMMER	87
SCHALLDÄMPFER	88
AUSPUFFROHR	89
VORREINIGER	90
TURBOLADER	92
KRAFTSTOFFSYSTEM	93
KRAFTSTOFFILTER UND LEITUNGEN	93
WASSERABSCHEIDER- U. KRAFTSTOFFILTER	96
KRAFTSTOFFEINSPRITZDÜSE	97
KRAFTSTOFFLEITUNGEN	98
KRAFTSTOFFABLASSLEITUNGEN	100
EINSPRITZLEITUNGEN - HYDRAULIKPUMPE	101
PUMPE UND BEFESTIGUNGSTEILE	102
KRAFTSTOFFEINSPRITZPUMPE	104
KRAFTSTOFFENTLÜFTUNGSPUMPE UND -HAUPTFILTER	105
PUMPENDÜSE, HYDRAULISCH	110

* ÜBERSETZUNG ZUM ZEITPUNKT DER DRUCKLEGUNG NICHT VORHANDEN

INHALTSVERZEICHNIS

Bezeichnung	Seite
KRAFTSTOFFDRUCKREGLER	111
KRAFTSTOFFTANK	112
WASSERABSCHEIDER U. KRAFTSTOFFENTLÜFTUNGSPUMPE	114
ELEKTRISCHE ANLAGE U. STARTSYSTEM	115
WARNVORRICHTUNG	115
DREHSTROMGENERATOR	117
BATTERIE UND VERDRAHTUNG	121
ÜBERTRAGUNGSSTEUERUNG U. BEFESTIGUNG	124
STEUERUNGSEINHEIT, ELEKTRON. FÜR MOTOR UND BEFEST.	126
AUTOMATISCHES LADESYSTEM (AUTODIG) - STEUERUNG	128
STEUERUNG - NICHT PROGRAMMIERT	131
ELEKTR. ANLAGE	132
ELEKTRONIK, KOMMUNIKATION	133
ARBEITSGERÄTEELEKTRONIK	134
ELEKTRONIK - MONITOR	134
KRAFTÜBERTRAGUNGSELEKTRONIK	134
UMLAUFKÜHLWASSERHEIZUNG	135
ÜBERTRAGUNGSEINBAUSATZ	137
SICHERHEITSEINBAUSATZ	137
FAHRERHAUSBELEUCHTUNG	140
ARBEITSLEUCHTEN	141
SCHEINWERFER U. RICHTUNGSLEUCHTE	145
BLINKLEUCHTE	149
BREMS- UND RÜCKLEUCHTE	151
RUNDUM-KENNLEUCHTE	152
BELEUCHTUNGSANLAGE (STRASSENAUSRÜSTUNG)	153
BLINKERLEUCHTEN	153
ARBEITSLEUCHTEN	154
ARBEITS- U. SIGNALLEUCHTE	157
BELEUCHTUNGSANLAGE (STRASSENAUSRÜSTUNG)	162
RUNDUM-KENNLEUCHTE	163
VERBINDUNGSSTECKER	165
STARTHILFEANSCHLUSS	166
HUBSTELLUNGSSENSOR U. BEFESTIGUNGSTEILE	167
DRUCKSENSOR UND BEFESTIGUNGSTEILE	169
KIPPSTELLUNGS-SENSOR U. BEFESTIGUNGSTEILE	170
MOTORSENSOR	172
STELLUNGSSENSOR	174
DRUCKSENSOR	176
DREHZAHLSENSOR	184
TEMPERATURSENSOR	186
ÄTHERSTARTHILFE	190
STARTHILFE	191
ÄTHERSTARTHILFE	192
STARTERMOTOR	194
UMGEHUNGSSCHALTER	197
HELLIGKEITSREGLER	198
TRENNSCHALTER	199
MAGNETSCHALTER	200
DRUCKSCHALTER	203
SCHALTER - UMKEHRLÜFTER	204
SCHALTER FÜR HYDRAULISCHE SCHWINGUNGSDÄMPFUNG	205
KIPPSCHALTER	206
DREHSCHALTER	209
NOTLENKUNGSSCHALTER	210
RICHTUNGSSIGNALSCHALTER	211
KIPPSCHALTER	213
GETRIEBESCHALTER	214
ÄTHERSTARTVENTIL	215
KLIMAANLAGENVERDRAHTUNG	216
ACHSENÜBERWACHUNG - VERDRAHTUNG	218
FAHRERHAUSVERDRAHTUNG	220
FAHRGESTELLVERDRAHTUNG	228
SCHNELLWECHSELEINRICHTUNG - VERDRAHTUNG	234
VERDRAHTUNG - ELEKTR. KUPPLUNG	235
MOTORVERDRAHTUNG	236
ÄTHERSTARTHILFE - VERDRAHTUNG	241
VERDRAHTUNG, VORNE	242
BELEUCHTUNGSVERDRAHTUNG	245
VERDRAHTUNG - OFFENES FAHRERHAUS MIT ÜBERROLLSCHUTZ	248
NOTLENKUNGSVERDRAHTUNG	259
SENSORVERDRAHTUNG	262
ABFALLBESEITIGUNGSAUSFÜHRUNG - VERDRAHTUNG	263
KRAFTÜBERTRAGUNG	265
STARRACHSE	265
PENDELACHSE	265
BREMSE UND PLANETENGETRIEBE	267
GETRIEBESTEUERUNG	271
GETRIEBEHYDRAULIK	273
GETRIEBEKÜHLER U. BEFESTIGUNG	275
ACHSÖLKÜHLER	276
DIFFERENTIAL	277

* ÜBERSETZUNG ZUM ZEITPUNKT DER DRUCKLEGUNG NICHT VORHANDEN

INHALTSVERZEICHNIS

Bezeichnung	Seite
DIFFERENTIAL (BEGRENZTER SCHLUPF)	278
NOSPIN-DIFFERENTIAL	279
ABLASS (UMWELTFREUNDLICH)	281
GETRIEBEÖLFÜLLSTUTZEN	282
GETRIEBEFILTER UND -LEITUNGEN	285
ÖLFILTER	287
TELLER- UND KEGELRAD	288
VERTEILERGETRIEBEANTRIEB	292
GEHÄUSE - STARRACHSE	296
GEHÄUSE - PENDELACHSE	298
ACHSENÖLKÜHLERLEITUNGEN	300
DREHMOMENTWANDLER-KÜHLERLEITUNGEN	304
ACHSENANBAUSATZ	307
BEFESTIGUNGSSATZ - ACHSÖLKÜHLER	309
FELGENAUFHÄNGUNG	310
PLANETENGETRIEBE	311
KRAFTÜBERTRAGUNG	315
ACHSENÖLKÜHLERPUMPE U. BEFESTIGUNGSTEILE	316
GETRIEBEPUMPE	317
FELGE	320
FELGE (TEILBAR)	321
ANTRIEBSWELLE	322
ANTRIEBSWELLEN-KEILVERZAHNUNG	324
KREUZGELENK UND LAGER	325
REIFEN UND FELGE	326
DREHZAHLWANDLER U. GEHÄUSE	332
DREHMOMENTWANDLER	334
GETRIEBE	336
KREUZGELENK	337
MODULATORVENTIL	339
ÜBERDRUCKVENTIL	340
RAHMEN UND FAHRGESTELL	342
MOTORHAUBENKIPPBETÄTIGUNG	342
STROMBETÄTIGUNG	344
STROMSCHUTZSCHALTER	345
LEITBLECH	346
PENDELACHSBEGRENZUNGSBLOCK	347
BATTERIEKASTEN	348
GEGENGEWICHT	349
STOSSSTANGENVERKLEIDUNG	350
ZUGANGSKLAPPE	351
SCHUTZBLECHE (STRASSENAUSRÜSTUNG)	353
SCHUTZBLECHE	354
SCHUTZBLECHE, VORNE	358
SCHUTZBLECHE (STRASSENAUSRÜSTUNG)	360
LADERRAHMEN	364
HINTERRAHMEN	367
KÜHLERGRILL	369
KNICKGELENKSCHUTZ	371
ACHSENÖLKÜHLERSCHUTZ	373
ACHSDICHTUNGSABDECKUNG	374
ANTRIEBSWELLENVERKLEIDUNG	375
VERKLEIDUNGEN, VORN	376
BLITZSCHUTZ	377
ANTRIEBSSCHUTZ	378
RAHMEN - BEFESTIGUNGSTEILE	381
BEFESTIGUNGSTEILE	383
HARDWARE, HINTERRAHMEN	385
KNICKGELENK-ANHÄNGUNG	388
MOTORHAUBE UND VERKLEIDUNG	390
STEIGLEITER	397
SCHMIERLEITUNGEN	399
KNICKGELENKSPERRE	401
HAUBENBLENDE	402
SEITENVERKLEIDUNG	407
MOTORRAUM-SCHUTZVERKLEIDUNG	409
STEIGLEITER	411
LUFTEINLASS-TRÄGER	413
BEFESTIGUNG - VENTIL U. FILTER	414
SCHALLDÄMPFUNG	416
MOTORHAUBEN-KIPPSTELLUNG	420
BREMSSYSTEM	421
BREMSDRUCKSPEICHER	421
FESTSTELLBREMSBETÄTIGUNG	423
FUSSBREMSSOCKEL	424
FESTSTELLBREMSE	427
FUSSBREMSGESTÄNGE	428
FESTSTELLBREMSGESTÄNGE	430
BREMSGESTÄNGE	431
BREMSSTEUERVENTIL	436
LENKSYSTEM	437
LENKBETÄTIGUNG	437
LENKZYLINDER UND AUFHÄNGUNG	438
HYDRAULIKZYLINDER	439
NOTLENKUNGSLEITUNGEN	440
LENKÖLLEITUNGEN	443
NOTLENKUNGSPUMPE UND -MOTOR	449
NOTLENKUNGSPUMPE UND BEFESTIGUNGSTEILE	450
KOLBENPUMPE	451
KOLBENPUMPENUMLAUFSATZ	453
NOTLENKUNG	454

* ÜBERSETZUNG ZUM ZEITPUNKT DER DRUCKLEGUNG NICHT VORHANDEN

INHALTSVERZEICHNIS

Bezeichnung	Seite
PUMPENSTEUERVENTIL	455
ÜBERDRUCKVENTIL	456
NOTLENKUNGSVENTIL	458
LENKVENTIL	459
LENKNEUTRALISIERVENTIL	462
HYDRAULIKSYSTEM	463
VORSTEUERÖLDRUCKSAMMLER	463
DRUCKSPEICHER, HYDRAULISCHE SCHWINGUNGSDÄMPFUNG	465
*CONTROL & LINES GP-FAN	467
SCHWINGUNGSDÄMPFUNG U. LEITUNGEN	469
LÜFTERSTEUERUNG	470
HYDRAULISCHE SCHWINGUNGSDÄMPFUNG	470
ELEKTROHYDRAULISCHE STEUERUNG	471
STEUERHEBEL	479
JOYSTICK -STEUERUNG	480
HUBZYLINDER UND DICHTUNG	482
KIPPZYLINDER UND DICHTUNG	484
SCHNELLWECHSELANSCHLUSSZYLINDER	487
HUBZYLINDER	488
KIPPZYLINDER	490
ÖLFILTER	496
SCHUTZ - HUBZYLINDER	498
HYDRAULIKANORDNUNG (2-VENTIL-HYDRAULIK)	501
HYDRAULIKANORDNUNG (3-VENTIL-HYDRAULIK)	501
ANSCHLUSSKUPPLUNGSLEITUNGEN	502
LEITUNGEN, VORNE	507
HYDRAULIKLEITUNGEN	510
HYDRAULIKÖLKÜHLERLEITUNGEN	514
HUBZYLINDERLEITUNGEN	518
NEIGEZYLINDERLEITUNGEN	520
STEUERKRÜMMER	522
*MANIFOLD GP-VALVE	524
MOTORANTRIEB	527
KOLBENMOTOR	528
HYDRAULIKTANK UND ANBAUSATZ	530
PUMPE U. BEFESTIGUNG - BREMSE U. HYDRAULIKLÜFTER	531
HYDRAULIKPUMPE UND BEFESTIGUNGSTEILE	533
KOLBENPUMPE	534
MOTORDREHVORRICHTUNG	539
KOLBENPUMPENUMLAUFSATZ	540
HYDRAULIKTANK	541
VENTIL UND BEFESTIGUNGSTEILE - HAUPTSTEUERUNG	543
SPERRVENTIL	555
RÜCKSCHLAG- U. DRUCKBEGRENZUNGSVENTIL	557
STEUERVENTIL	558
UMLEITVENTIL	567
ABLASSVENTIL	569
ABSENKSTEUERVENTIL	570
HAUPTSTEUERVENTIL	572
VENTIL, MECH.	579
DRUCKREDUZIERVENTIL	580
PUMPENSTEUERVENTIL	581
ÜBERDRUCKVENTIL	585
VENTIL - HYDRAULISCHE SCHWINGUNGSDÄMPFUNG	586
PENDELVENTIL	588
MAGNETVENTIL	592
ARBEITSGERÄTE	595
HUBARM	595
SCHAUFELSTEUERUNG	597
HUBVORRICHTUNG	603
ARBEITSGERÄTE	605
ZAHNHALTER	605
TRAGARM	606
UNIVERSALSCHAUFEL	607
MATERIALUMSCHLAGSCHAUFEL	610
FELSSCHAUFEL	614
UNIVERSALSCHAUFEL	616
MATERIALUMSCHLAGSCHAUFEL	619
FELSSCHAUFEL	620
GABELTRÄGER	622
SCHNELLWECHSELANSCHLUSSSTEUERUNG	624
SCHNELLWECHSELEINRICHTUNG	625
SCHNEIDMESSER	626
SCHNEIDMESSERSEGMENT	626
SCHNELLWECHSELEINRICHTUNGSRAHMEN	627
ZAHN, HD AUSFÜHRUNG	628
NORMALZAHNSPITZE	629
ZAHNSPITZE, LANG	631
ZAHNSPITZE, SCHARF	632
ZAHNSPITZE, KURZ	634
FAHRERHAUS	636
FAHRERSITZVERSTELLER	636
KLIMAANLAGE	637
SCHEIBENWISCHERARM	643
ARMLEHNE	645

* ÜBERSETZUNG ZUM ZEITPUNKT DER DRUCKLEGUNG NICHT VORHANDEN

INHALTSVERZEICHNIS

Bezeichnung	Seite
FAHRERHAUS MIT ÜBERROLL-SCHUTZ	646
OFFENES FAHRERHAUS MIT ÜBERROLLSCHUTZ	647
KÄLTEMITTELKOMPRESSOR	648
KÄLTEMITTELKONDENSATOR U. BEFESTIGUNGSTEILE	650
MONITORSTEUERUNG	652
STEUERUNG, NICHT PROGRAMMIERTER MONITOR	654
FAHRERHAUSTÜR	655
LUFTKANAL U. FILTER	657
LUFTKANAL	659
BODEN - GERÄUSCHSCHUTZ	662
SCHUTZVERKLEIDUNG	665
SCHEIBENSCHUTZ	666
FAHRERHAUSHEIZUNG	670
WARNHORN, ELEKTR.	674
BEDIENUNGSEINBAUSATZ	675
RADIOEINBAUSATZ	676
FAHRERHAUSAUSKLEIDUNG	679
KLIMAANLAGENLEITUNGEN	685
FAHRERHAUSHEIZUNGSLEITUN-GEN	691
RÜCKSPIEGEL	694
MODUL - VIER ELEKTRON. ANZEIGEN	706
GESCHWINDIGKEITS- U. DREHZAHLMES-SERMODUL	707
WÄGEEINRICHTUNG - MONITOR	708
WÄGEEINRICHTUNG	709
SCHEIBENWISCHERMOTOR	711
FAHRERHAUSANBAUSATZ	713
FAHRERHAUSAUSFÜHRUNG MIT GESCHL. ÜBERROLLSCHUTZ	715
FAHRERHAUS - OFFEN MIT ÜBERROLLSCHUTZ	715
SCHALE - RÜCKENLEHNE	716
INSTRUMENTENTAFEL	719
GASPEDAL	726
RADIO	728
VERSTELLBARER SITZ	730
ÜBERROLL-SCHUTZKABINE	731
ÜBERROLL-SCHUTZDACH	738
SICHERHEITSGURT	741
FAHRERSITZ	742
SCHWINGSITZ	748
HYDRAULIKSTEUERAUFHÄNGUNG	753
FAHRERHAUSLÄRMDÄMPFUNG	757
FAHRERSITZFEDERUNG	763
FAHRERHAUS, SONNENBLENDE	765
SCHEIBENWASCHANLAGE	766
TÜRFENSTER	767
SCHEIBENWISCHER	769
WARTUNGSAUSRÜSTUNG UND -ZUBEHÖR	772
WERKZEUGKASTEN	772
AUFKLEBER	775
DIAGNOSELEITUNGEN	777
SCHILD UND AUFKLEBER	783
ACHSE - IDENTIFIKATIONSSCHILD	784
ERSATZTEILNUMMERNINDEX	B1

* ÜBERSETZUNG ZUM ZEITPUNKT DER DRUCKLEGUNG NICHT VORHANDEN

GENERAL INFORMATION

1. MACHINE IDENTIFICATION

Caterpillar machines are identified by Product Identification Numbers (PIN). Some components included in a machine may be identified by Serial Numbers (S/N). Typical components that will be serialized include engines, transmissions, bulldozers, and rippers. The machine and engine are further identified by arrangement numbers and in some cases modification numbers. These numbers are shown on the product identification plate(s) and on the master plate in the operator's compartment.

Caterpillar dealers need all of these numbers to determine accurate parts identification.

SIS *New Feature*

Effective First Quarter 2001 the Caterpillar Product Identification Number (PIN) changed from 8 to 17 characters. In an effort to provide uniform equipment identification, Caterpillar and other construction equipment manufacturers are moving to comply with the latest version of the product identification numbering standard. Non-road machine PINs are defined by ISO 10261. The new PIN format will apply to all Caterpillar machines and generator sets. The PIN plates and frame marking will display the 17 character PIN. The new format will look like the following:

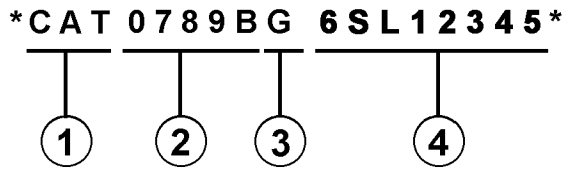

Where:

1. Caterpillar's World Manufacturing Code (characters 1-3)

2. Machine Descriptor (characters 4-8)

3. Check Character (character 9)

4. Machine Indicator Section (MIS) or Product Sequence Number (characters 10-17). These were previously referred to as the Serial Number.

Machines and generator sets produced before First Quarter 2001 will maintain their 8 character PIN format.

Components such as engines, transmissions, axles, etc. and work tools will continue to use an 8 character Serial Number (S/N).

2. ORDERING PARTS

WARNING

When replacement parts are required for this product Caterpillar recommends using Caterpillar replacement parts or parts with equivalent specifications including, but not limited to, physical dimensions, type, strength and material.

Failure to heed this warning can lead to premature failures, product damage, personal injury or death.

Quality Caterpillar replacement parts are available from Caterpillar dealers throughout the world. Their parts inventories are up to date and include all parts normally required to protect your investment in Caterpillar machines. Dealers may offer repair kits or remanufactured parts to allow selection of the most effective repair alternative for a particular situation. When ordering parts, your order should specify the quantity, part number, part name, and the serial number/product identification number of the machine for which the parts are needed.

3. PARTS MANUAL ORGANIZATION

Product information in this manual is presented as "information elements" that represent all of the components for the specific model. Engine Arrangement and Seat Group are examples of information elements. The information elements are organized alphabetically by part name and secondarily by part number within each major section of the manual.

4. TABLE OF CONTENTS

A table of contents (TOC) is found at the beginning of the manual. The TOC lists each section of the manual with a complete list of all information elements organized as they appear in the manual. Page numbers are provided for quick reference to detailed parts identification illustrations and serviceable consist lists.

5. MAINTENANCE PARTS INDEX

The Maintenance Parts Index, located near the beginning of the manual, references most frequently used maintenance part numbers, providing description, quantity, usage and page number. This information is organized alphabetically by part description.

6. INDEX

The index located near the front of the manual is an alphabetical listing of all information elements included in the manual. Page numbers are provided for quick reference to detailed parts identification illustrations and serviceable consist lists.

7. PART NUMBER INDEX

A numerical index listing all part numbers and the corresponding page number(s) appears at the back of the manual.

8. CAPTIONS

Captions located at the beginning of each information element identify the part number and part name along with additional descriptive information. PIN and S/N information found in each caption should be used to select correct information for a specific machine. Field replacement options, identification of optional attachment components, and where used ("part of") information is also provided.

The first line of a caption is shown in larger type font to indicate the beginning of an information element. Captions for additional pages that may be required to illustrate an information element will be shown in standard type font and will include the term *(contd.)* .

9. NON-SERVICED PARTS

In some instances it is necessary to display non-serviced parts that are a link to a lower level serviceable consist lists. These non-serviced part numbers are shown in *italic* type indicating that they are not available.

10. PARTS LIST REFERENCE NUMBERS

Numbers shown in the Ref No column correspond to numbers used in the associated graphic(s). An alphabetic suffix may be added to a reference number to identify lower level consist items. Numbers shown in the Graphic Ref column refer to the graphic number identifier displayed in the lower left corner of each illustration. The Graphic Ref number may be used in combination with the item Ref No to determine the correct part number. There may be intentional omission of a Ref No in a consist list as information is updated to reflect the latest serviceable part numbers.

11. INDENTED PART NAMES

When a part name is indented in a parts list, it is part of (included in) the group or assembly under which it is indented.

12. ILLUSTRATION REFERENCE LETTERS

When necessary, illustrations contain reference letters (A, B, C etc.) that are intended to track lines and harnesses from one point to another. They are also used to show where to reconnect illustrations that have been separated.

13. ABBREVIATIONS AND SYMBOLS

O.D. – Outside Diameter
I.D. – Inside Diameter
A – Not Part Of This Group
B – Use As Required
C – Change From Previous Type
D – Order By The Meter
E – Order By The Centimeter
F – Not Shown
G – Order By The Inch
I – Refer To Hydraulic Information System
M – Metric Part
R – Remfg Part May Be Available
Y – Separate Illustration
Z – Not Serviced Separately

SIS *New Feature*

14.<END>

This symbol indicates the end of an information element.

NOTE:

Continuing improvement and advancement of product design may cause changes to your machine which may not be included in this publication. Whenever a question arises regarding your caterpillar product or this publication, please consult your caterpillar dealer for the latest available information.

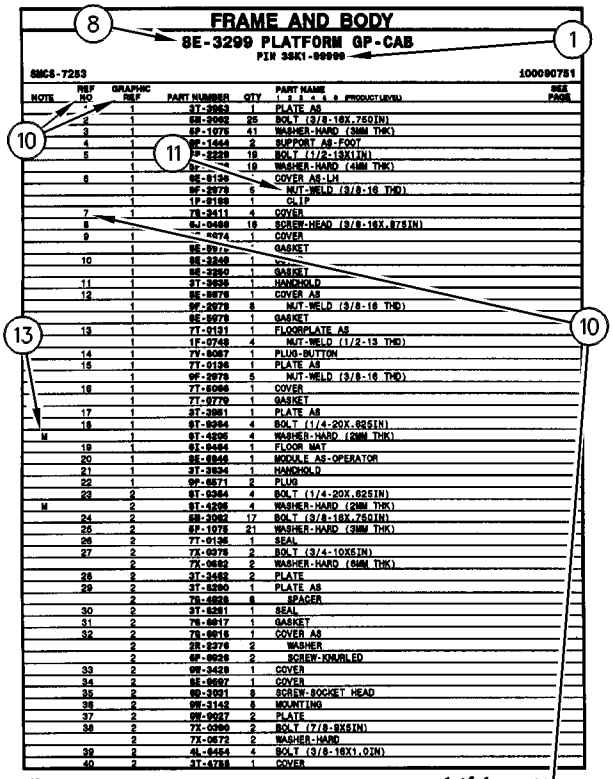

12 FRAME AND BODY 1 of 4 SELP4570-01

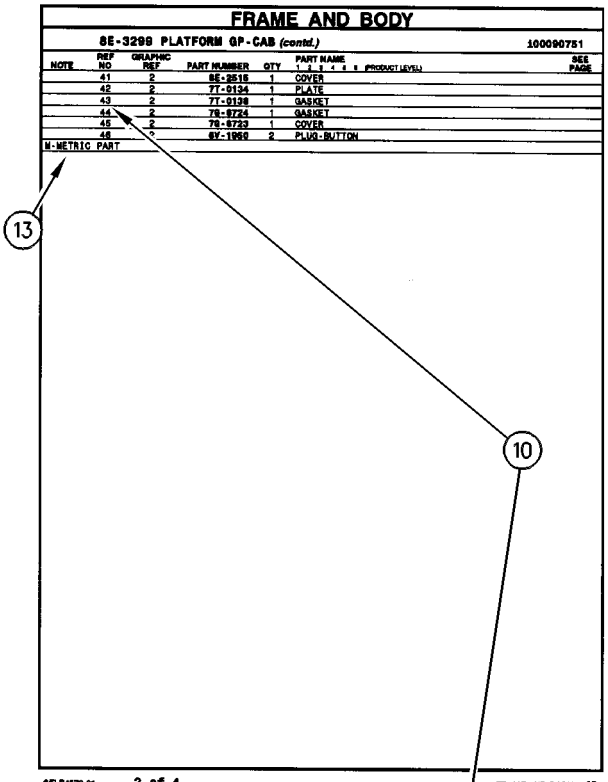

SELP4570-01 2 of 4 FRAME AND BODY 13

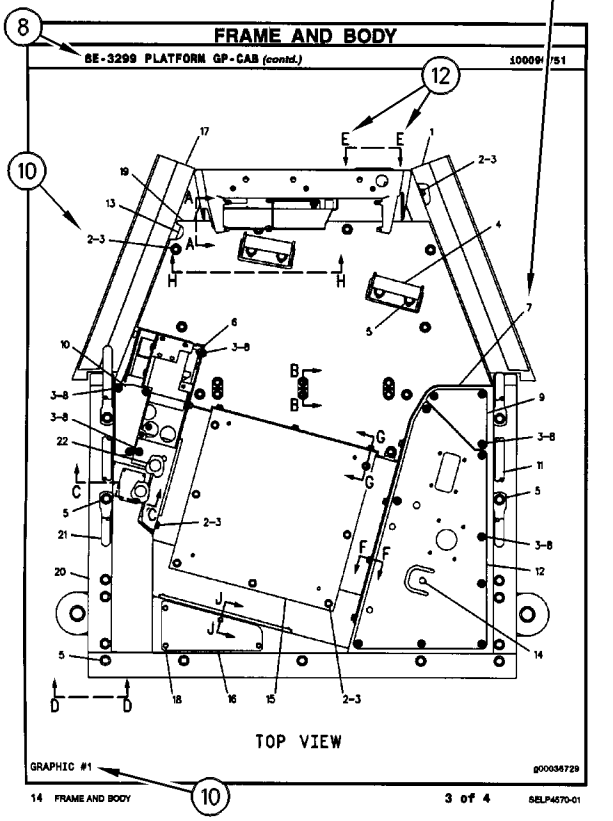

14 FRAME AND BODY 3 of 4 SELP4570-01

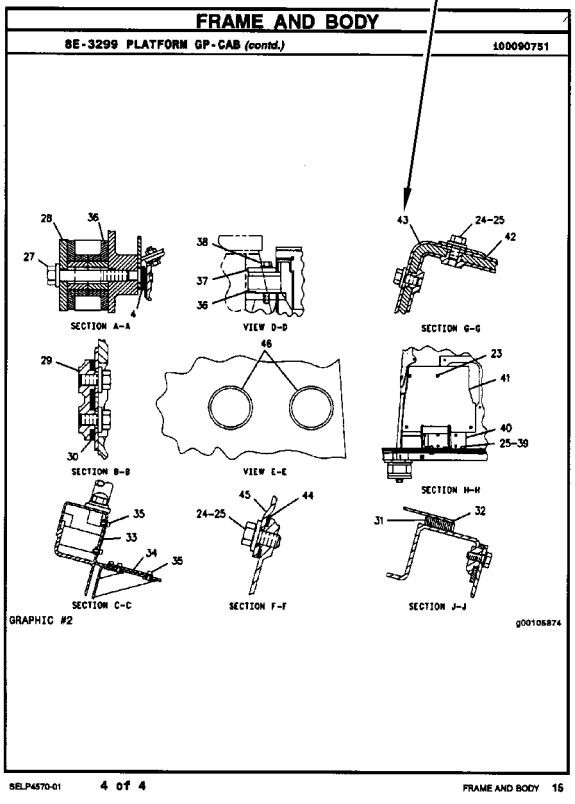

SELP4570-01 4 of 4 FRAME AND BODY 16

GÉNÉRALITÉS

1. IDENTIFICATION DE LA MACHINE

Toutes les machines Caterpillar portent un numéro d'identification (PIN). Certains composants des machines peuvent porter des numéros de série (S/N). En général, parmi les composants qui portent des numéros de série il y a les moteurs, les transmissions, les bulldozers et les rippers. En plus, la machine et le moteur peuvent recevoir des numéros de version, et dans certains cas, de modification. Ces numéros figurent sur les plaques de numéro de série et sur la plaque signalétique principale qui se trouve dans le poste de conduite.

Les concessionnaires Caterpillar doivent connaître tous ces numéros pour identifier correctement les pièces.

SIS *Nouvelle Caractéristique*

À partir du premier trimestre 2001, le numéro d'identification produit (PIN) Caterpillar passe de 8 à 17 caractères. Afin de permettre une identification uniforme des matériels, Caterpillar et d'autres constructeurs de machines de travaux publics s'efforcent de se conformer à la norme la plus récente portant sur les numéros d'identification des produits. Les numéros d'identification (PIN) de machines de chantier sont définis par la norme ISO 10261. Le nouveau format du numéro d'identification est valable pour toutes les machines et tous les groupes électrogènes Caterpillar. Le numéro d'identification produit (PIN) figurant sur la plaque et sur le châssis se composera de 17 caractères. Le nouveau format ressemblera à ceci:

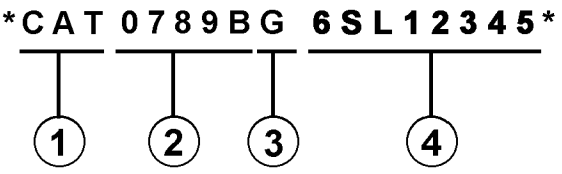

Il se décomposera de la façon suivante:

1. Code international de fabrication de Caterpillar (caractères 1 à 3)

2. Descriptif de la machine (caractères 4 à 8)

3. Contrôle (caractère 9)

4. Indicateur machine (MIS) ou numéro de séquence produit (caractères 10 à 17). Ceux-ci étaient auparavant désignés sous le terme de numéro de série.

Les machines et les groupes électrogènes construits avant le premier trimestre 2001 garderont le format à 8 caractères du numéro d'identification produit (PIN).

Les organes tels que les moteurs, les boîtes de vitesses, les essieux, etc., continueront d'être désignés par un numéro de série (S/N) à 8 caractères.

2. COMMANDE DE PIÈCES

⚠ DANGER

Lorsqu'il faut remplacer des pièces de rechange pour ce produit Caterpillar recommande d'utiliser les pièces de rechange Caterpillar ou les pièces qui ont des spécifications équivalentes dont les dimensions physiques, le type, la force et le matériau. Ces équivalences ne se limitent pas à l'énoncé précédent.

L'inobservation de cette mise en garde peut entraîner des défaillances prématurées, des dommages au produit, des blessures ou même la mort.

Les concessionnaires Caterpillar fournissent dans le monde entier des pièces de rechange de qualité Caterpillar. Leurs stocks de pièces sont constamment réapprovisionnés et comptent toutes les pièces nécessaires pour assurer la bonne marche de vos machines Caterpillar. Certains concessionnaires proposent également des kits de réparation ou des pièces rénovées, ce qui permet de choisir la solution la plus économique dans une situation donnée. Lors des commandes de pièces, mentionner la quantité, le numéro et la désignation des pièces ainsi que le numéro de série ou le numéro d'identification (PIN) de la machine pour laquelle ces pièces sont requises.

3. ORGANISATION DU CATALOGUE DE PIÈCES

Les renseignements sur les produits sont présentés sous forme de "Information element" (élément d'information) représentant tous les composants d'un modèle donné. "Engine Arrangement" (version de moteur) et "Seat Group" (assemblage de siège)" sont des exemples d'éléments d'information. Les éléments d'information sont classés par ordre alphabétique par la désignation standard des pièces et par numéros de pièces dans chaque partie importante du manuel.

4. TABLE DES MATIÈRES

SIS *Nouvelle Caractéristique*

La table des matières se trouve au début du manuel. La table des matières fournit la liste de tous les chapitres du manuel avec une liste complète de tous les éléments d'information classés par ordre d'apparition dans le manuel. Les numéros de page sont fournis afin que l'utilisateur puisse trouver rapidement les illustrations détaillées concernant l'identification des pièces et les listes des pièces d'entretien.

5. INDEX DES PIÈCES D'ENTRETIEN

La rubrique "Index des pièces d'entretien" qui se trouve au début du manuel renvoie aux pièces d'entretien les plus fréquemment utilisées en précisant la désignation, la quantité, là où la pièce est utilisée et le numéro de page. Ces pièces sont classés par ordre alphabétique.

6. INDEX

L'index qui se trouve vers le début du manuel est une liste alphabétique de tous les éléments d'information du manuel. Les numéros de page sont fournis afin que l'utilisateur puisse trouver rapidement les illustrations détaillées concernant l'identification des pièces et les listes des pièces d'entretien.

7. INDEX DES NUMÉROS DE PIÈCES

Une liste numérique de tous les numéros de pièces et des pages correspondantes se trouve à la fin du manuel.

8. LÉGENDES

Les légendes qui se trouvent en haut de chaque page de chaque élément d'information fournissent le numéro de pièce, la désignation ainsi que des renseignements supplémentaires sur les pièces. Les renseignements concernant les numéros de série (S/N) qui se trouvent dans chaque légende doivent être utilisés pour sélectionner les informations correctes pour un moteur donné. Les informations concernant les options de remplacement sur le chantier, l'identification des composants des équipements offerts en option et les lieux d'application sont aussi fournies.

SIS *Nouvelle Caractéristique*

Les lettres de la première ligne d'une légende sont présentées en police plus grande afin d'indiquer le début d'une unité d'information. Les légendes qui pourraient être requises pour des pages supplémentaires afin d'illustrer une unité d'information seront présentées en police standard et comprendront le terme (à suivre).

9. PIÈCES NON FOURNIES

SIS *Nouvelle Caractéristique*

Dans certains cas, il est nécessaire d'indiquer les pièces non fournies qui sont en aval de la liste des pièces d'entretien. Les numéros des pièces non fournies dans la liste des pièces et les légendes seront en italique pour signaler qu'ils ne sont pas disponibles.

10. NUMÉROS DE RÉFÉRENCE DE LA LISTE DES PIÈCES

SIS *Nouvelle Caractéristique*

Les numéros indiqués dans la colonne des numéros de références correspondent aux numéros utilisés dans les illustrations auxquelles ils sont associés. Un suffixe alphabétique peut être ajouté à un numéro de référence pour identifier la liste des articles en aval. Les numéros indiqués dans la colonne de référence de l'illustration renvoient à l'identification du numéro affiché dans le coin inférieur gauche de chaque illustration. Le numéro de référence de l'illustration pourrait être utilisé avec le numéro de référence de l'article pour déterminer le numéro de pièce correct. Il peut y avoir une omission intentionnelle d'un numéro de référence dans une liste de pièces suite à la mise à jour des informations en vue de refléter les numéros de pièces les plus récentes.

11. DÉSIGNATIONS DE PIÈCES EN RETRAIT

Lorsqu'une désignation de pièce est en retrait, cela veut dire que l'article en regard fait partie de l'ensemble sous lequel il figure.

12. LETTRES DE RÉFÉRENCE DES ILLUSTRATIONS

Quand cela est nécessaire, les illustrations comportent des lettres de référence (A, B, C, etc.) pour montrer le trajet des canalisations et faisceaux de câbles d'un point à l'autre. Elles sont utilisées également pour indiquer où relier les illustrations séparées auparavant.

13. ABRÉVIATIONS ET SYMBOLES

O.D. – Diamètre extérieur
I.D. – Diamètre intérieur
A – Ne fait pas partie de ce groupe
B – Utiliser selon besoin
C – Modification
D – Commander par mètre
E – Commander par centimètre
F – Non représenté
G – Commander par pouce
I – Voir "Hydraulic Information System"
M – Pièce métrique
R – Pièce rénovée éventuellement disponible
Y – Illustration séparée
Z – Non fourni séparément

NOTA:

En raison du progrès technique et des améliorations continuelles apportées au matériel, votre machine comporte peut-être des modifications qui n'apparaissent pas dans la présente publication. En cas de doute sur un détail de votre machine Caterpillar ou sur le texte de la présente publication, adressez-vous à votre concessionnaire Caterpillar.

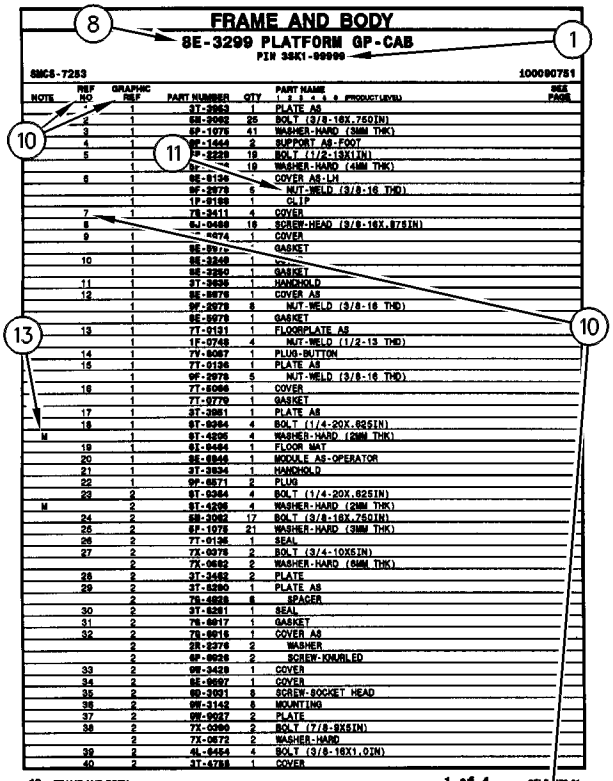
FRAME AND BODY
8E-3299 PLATFORM GP-CAB
PIN 3SK1-99999
SMCS-7253
100090751
NOTE | REF NO | GRAPHIC REF | PART NUMBER | QTY | PART NAME (1 2 3 4 5 6 PRODUCT LEVEL) | SEE PAGE
1 | 3T-2953 | 1 | PLATE AS
2 | 6B-2062 | 25 | BOLT (3/8-16X.750IN)
3 | 6P-1076 | 41 | WASHER-HARD (38MM THK)
4 | 9W-1444 | 2 | SUPPORT AS-FOOT
5 | 7P-2229 | 19 | BOLT (1/2-13X1IN)
19 | WASHER-HARD (41MM THK)
6 | 8E-6136 | COVER AS-LH
6 | 9F-2978 | 5 | NUT-WELD (3/8-16 THD)
1P-0189 | 1 | CLIP
7 | 7B-3411 | 4 | COVER
8 | 9J-0498 | 18 | SCREW-HEAD (3/8-16X.875IN)
9 | 4474 | 1 | COVER
GASKET
10 | 8E-3248 | 1
GASKET
11 | 3T-2636 | 1 | HANDHOLD
12 | 8E-9979 | 1 | COVER AS
9F-2978 | 8 | NUT-WELD (3/8-16 THD)
8E-9978 | 1 | GASKET
13 | 7T-0131 | 1 | FLOORPLATE AS
1F-0748 | 4 | NUT-WELD (1/2-13 THD)
14 | 7V-8087 | 1 | PLUG-BUTTON
15 | 7T-0136 | 1 | PLATE AS
16 | 9F-2978 | 5 | NUT-WELD (3/8-16 THD)
7T-8066 | 1 | COVER
7T-9779 | 1 | GASKET
17 | 3T-3951 | 1 | PLATE AS
18 | 6T-0364 | 4 | BOLT (1/4-20X.625IN)
M | 9T-4205 | 4 | WASHER-HARD (20MM THK)
19 | 6L-8494 | 1 | FLOOR MAT
20 | 8E-8846 | 1 | MODULE AS-OPERATOR
21 | 3T-3834 | 1 | HANDHOLD
22 | 9P-8571 | 2 | PLUG
23 | 6T-0364 | 4 | BOLT (1/4-20X.625IN)
M | 9T-4205 | 4 | WASHER-HARD (20MM THK)
24 | 6B-2062 | 17 | BOLT (3/8-16X.750IN)
25 | 6P-1076 | 21 | WASHER-HARD (38MM THK)
26 | 7T-0135 | 1 | SEAL
27 | 7X-0078 | 2 | BOLT (3/4-10X5IN)
7X-0682 | 2 | WASHER-HARD (64MM THK)
28 | 3T-3452 | 2 | PLATE
29 | 3T-8290 | 1 | PLATE AS
2 | 7B-4828 | 8 | SPACER
30 | 3T-8281 | 1 | SEAL
31 | 7B-8817 | 1 | GASKET
32 | 7B-8815 | 1 | COVER AS
2 | 2R-2276 | 2 | WASHER
2 | 6P-8926 | 2 | SCREW-KNURLED
33 | 2 | 9W-3429 | 1 | COVER
34 | 2 | 8E-8697 | 1 | COVER
35 | 2 | 6D-3031 | 8 | SCREW-SOCKET HEAD
36 | 2 | 9W-3142 | 8 | MOUNTING
37 | 2 | 9W-8027 | 2 | PLATE
38 | 2 | 7X-0390 | 2 | BOLT (7/8-9X8IN)
2 | 7X-0672 | 2 | WASHER-HARD
39 | 2 | 4L-8454 | 4 | BOLT (3/8-16X1.0IN)
40 | 2 | 3T-4788 | 1 | COVER

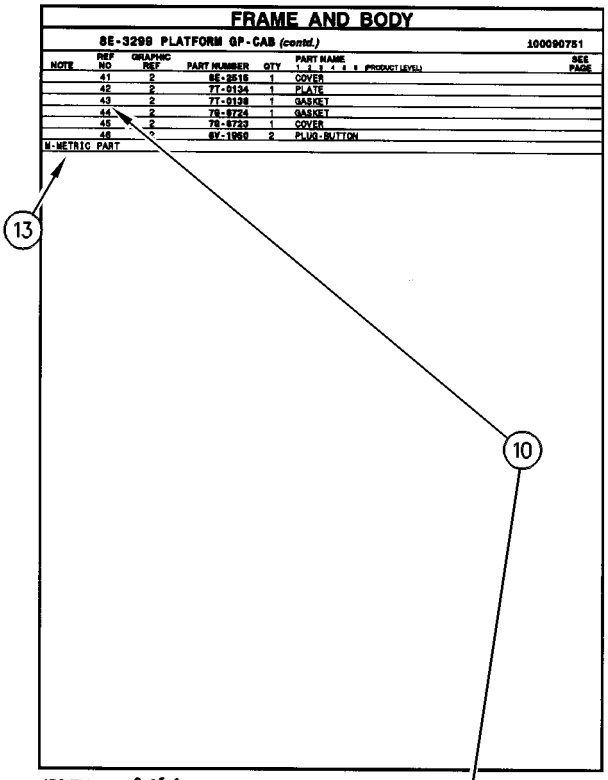
FRAME AND BODY
8E-3299 PLATFORM GP-CAB (contd.)
100090751
NOTE | REF NO | GRAPHIC REF | PART NUMBER | QTY | PART NAME (1 2 3 4 5 6 PRODUCT LEVEL) | SEE PAGE
41 | 2 | 8E-2516 | 1 | COVER
42 | 2 | 7T-0134 | 1 | PLATE
43 | 2 | 7T-0138 | 1 | GASKET
44 | 2 | 7B-8724 | 1 | GASKET
45 | 2 | 7B-8723 | 1 | COVER
46 | 2 | 6V-1950 | 2 | PLUG-BUTTON
M-METRIC PART

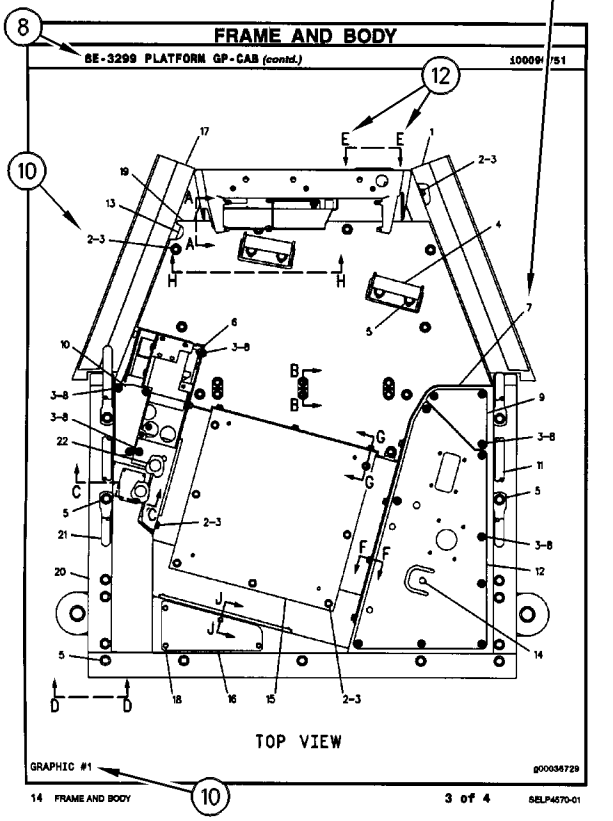
FRAME AND BODY
8E-3299 PLATFORM GP-CAB (contd.)
100090751
TOP VIEW
GRAPHIC #1
g00036729

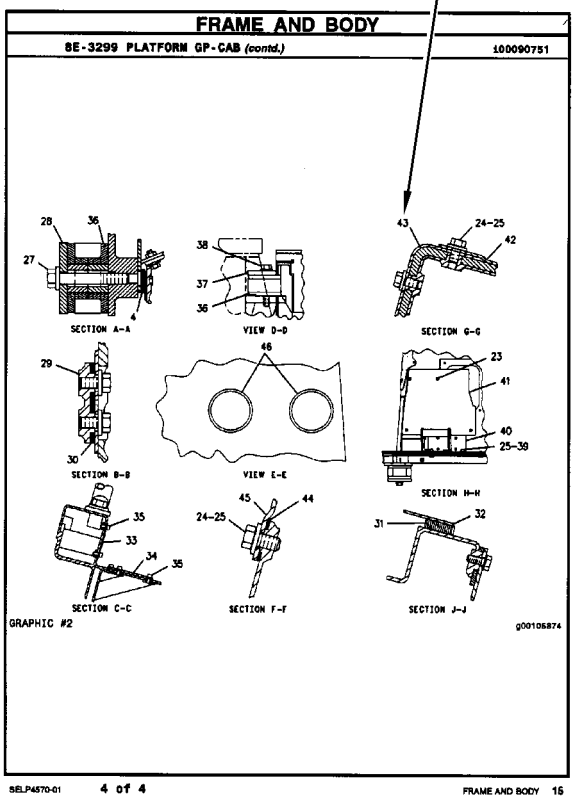
FRAME AND BODY
8E-3299 PLATFORM GP-CAB (contd.)
100090751
SECTION A-A
VIEW D-D
SECTION G-G
SECTION B-B
VIEW E-E
SECTION H-H
SECTION C-C
SECTION F-F
SECTION J-J
GRAPHIC #2
g00105874

INFORMACIÓN GENERAL

1. MÁQUINAS

Las máquinas Caterpillar se identifican con Números de Identificación del Producto (PIN). Algunos componentes incluídos en la máquina pueden estar identificados con Números de Serie (N/S). Los componentes que tienen típicamente esta identificación incluyen motores, transmisiones, hojas topadoras y desgarradores. La máquina y el motor se identifican además con Números de Configuración y en algunos casos, Números de Modificación. Estos números están en las placas de identificación del producto o en la placa principal en la cabina del operador.

Los distribuidores Caterpillar necesitan estos números para identificar con exactitud los números de piezas de repuesto.

SIS *Nueva Característica*

A partir del primer trimestre del 2001, el Número de Identificación de Producto (PIN) de Caterpillar cambió de 8 a 17 caracteres. Para hacer más uniforme el método de identificación de equipos, Caterpillar y otros fabricantes de equipo de construcción han tomado medidas para cumplir con la versión más reciente de la norma de numeración de identificación de productos. Los Números de Identificación de Producto para máquinas que no se operan en carreteras son definidos por la norma ISO 10261. El nuevo formato PIN corresponderá a todas las máquinas y grupos electrógenos Caterpillar. Las placas y los caracteres PIN estampados en el bastidor mostrarán el PIN de 17 caracteres. El nuevo formato tendrá la apariencia siguiente:

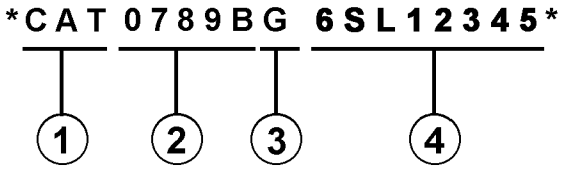

Significado de los caracteres:

1. Código de Fabricación Mundial de Caterpillar (caracteres 1-3)

2. Sección Descriptor de la Máquina (caracteres 4-8)

3. Carácter de Verificación (carácter 9)

4. Sección Indicador de la Máquina (MIS) o Número de Secuencia de Producto (caracteres 10-17). Anteriormente, estos caracteres constituían el Número de Serie.

Las máquinas y grupos electrógenos producidos antes del primer semestre del 2001 mantendrán su formato PIN de 8 caracteres.

Los componentes como motores, transmisiones, ejes, herramientas de trabajo, etc., continuarán usando un Número de Serie (S/N) de 8 caracteres.

2. COMO PEDIR REPUESTOS

⚠ ADVERTENCIA

Cuando se necesiten piezas de repuesto para este producto, Caterpillar recomienda usar piezas de repuesto Caterpillar o piezas que tengan especificaciones equivalentes incluyendo, pero sin estar limitadas a, dimensiones físicas, tipo, fortaleza y material.

El no hacer caso de esta advertencia puede llevar a fallas prematuras, daños al producto y lesiones graves o mortales.

Las piezas de repuesto Caterpillar de calidad están a la disposición de los distribuidores Caterpillar en todo el mundo. Sus existencias actualizadas incluyen todas las piezas normalmente requeridas para proteger su inversión en máquinas Caterpillar. Los distribuidores pueden tener juegos de reparación o piezas remanufacturadas para permitir la selección de la mejor alternativa de reparación en un caso en particular. Al pedir piezas de repuesto, especifique en su pedido la cantidad, el número de pieza, el nombre de la pieza y el número de serie/número de identificación del producto, de la máquina para la cual se necesitan estas piezas.

3. ORGANIZACION DEL MANUAL DE PIEZAS

La información sobre el producto, se presenta en este manual, como "elementos de información" que representan todos los componentes de un modelo específico. Las configuraciones de motores y los grupos de asientos son ejemplos de elementos de información. Los elementos de información están organizados primeramente por nombres de piezas en orden alfabético y en segundo lugar, por el número de pieza dentro de cada sección principal del manual.

4. CONTENIDO

La página de Contenido se encuentra al principio del manual. El Contenido indica cada sección del manual con una lista completa de todos los elementos de información organizados en el orden que aparecen en el manual. Los números de página proporcionan una referencia rápida a las ilustraciones detalladas de identificación de piezas y a las listas de componentes de repuesto de dichas piezas.

5. ÍNDICE DE PIEZAS DE MANTENIMIENTO

Al principio de este catálogo se encuentra un índice de los números de piezas utilizadas más frecuentemente para el mantenimiento, que incluye descripción, cantidad necesaria, lugar de utilización y número de página. Esta información está organizada alfabéticamente, por descripción de la pieza.

6. ÍNDICE

El Índice, ubicado cerca del principio del manual, es una lista en orden alfabético de todos los elementos de información incluídos en el manual. Los números de página proporcionan una referencia rápida a las ilustraciones detalladas de identificación de piezas y a las listas de componentes de repuesto de dichas piezas.

7. INDICE NUMÉRICO DE PIEZAS

Un índice numérico de piezas con el correspondiente número de página aparece al final de este catálogo.

8. TÍTULOS

Los títulos ubicados al principio de cada elemento de información identifican el número y el nombre de la pieza junto con información descriptiva. Se debe usar información sobre los Números de Identificación de Pieza (PIN) y los números de serie (S/N) para seleccionar la información que corresponda a una máquina en particular. También se suministra información sobre las opciones de reparación en el campo, la identificación de componentes de accesorios optativos y el lugar de ubicación de la pieza ("es parte de").

La primera línea del título se muestra con un tipo de letra más grande para indicar el comienzo de un elemento de información. Si se requieren páginas adicionales para ilustrar un elemento de información, los títulos se muestran con un tipo de letra normal y la continuación se indica entre paréntesis.

9. PIEZAS QUE NO SE SUMINISTRAN COMO REPUESTO

En algunos casos es necesario indicar piezas que no se suministran como repuesto pero que pueden estar conectadas a listas de componentes de otras piezas de repuesto. En tal caso, dichas piezas se muestran en cursiva para indicar que no son piezas disponibles.

10. NÚMEROS DE REFERENCIA

Los números en la columna de No. de Referencia corresponden a los números indicados en la ilustración que pertenece a ese número de pieza. Los números que tienen un sufijo alfabético identifican artículos de las listas de componentes de piezas. Los números en la columna de Referencia de la ilustración se identifican en la esquina inferior izquierda de cada ilustración. Para determinar el número de pieza correcto se puede utilizar tanto el No. de Referencia de la ilustración como el No. de Referencia del artículo. A medida que se actualiza la información para indicar los más recientes números de piezas de repuesto, puede omitirse intencionalmente un No. de Referencia en una lista de componentes de piezas.

11. NOMBRES DE PIEZA SANGRADOS

Cuando el nombre de una pieza está sangrado en una lista, significa que esta pieza forma parte del grupo o conjunto del renglón inmediatamente superior.

12. LETRAS DE REFERENCIA DE ILUSTRACIONES

Las ilustraciones contienen algunas veces letras de referencia (A, B, C etc.) cuyo propósito es seguir el trayecto de líneas y mazos de cables de un punto a otro. También se utilizan para mostrar dónde volver a unir ilustraciones que se habían separado.

13. ABREVIATURAS Y SIMBOLOS

O.D. – Diámetro exterior
I.D. – Diámetro interior
A – No es pieza de este grupo
B – Utilizado según la demanda
C – Indica cambio
D – Se pide por metro
E – Se pide por centímetro
F – No se muestra
G – Se pide por pulgada
I – Consulte el sistema de información hidráulica
M – Pieza métrica
R – Puede estar disponible como pieza remanufacturada
Y – Ilustración separada
Z – No se suministra por separado

SIS *Nueva Característica*

14.<END>

Este símbolo indica el final de un elemento de información.

NOTA:

Las contínuas mejoras y adelantos en diseño podrían originar cambios a su máquina que no se incluyen en esta publicación. Cuando tenga alguna pregunta acerca de su producto Caterpillar o de esta publicación, consulte al distribuidor Caterpillar para obtener la información más reciente.

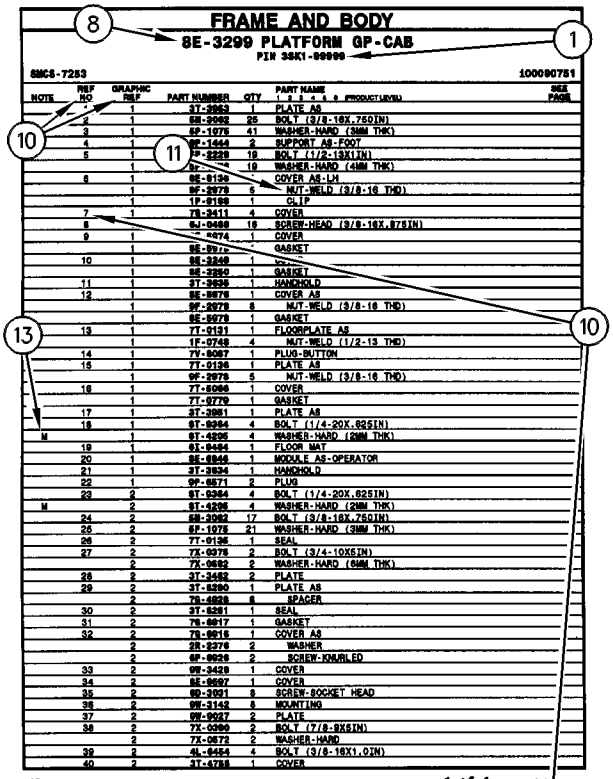

FRAME AND BODY

8E-3299 PLATFORM GP-CAB

PIN 3SK1-09999

SMCS-7283 100090751

NOTE	REF NO	GRAPHIC REF	PART NUMBER	QTY	PART NAME 1 2 3 4 5 6 (PRODUCT LEVEL)	SEE PAGE
	*	1	3T-2953	1	PLATE AS	
	2	1	6B-2062	25	BOLT (3/8-16X.750IN)	
	3	1	9F-1075	41	WASHER-HARD (38MM THK)	
	4	1	9F-1444	2	SUPPORT AS-FOOT	
	5	1	7P-2229	18	BOLT (1/2-13X1IN)	
		1	9F-	18	WASHER-HARD (41MM THK)	
	6	1	8E-6136	*	COVER AS-LH	
		1	9F-2978	6	NUT-WELD (3/8-16 THD)	
		1	1P-0188	1	CLIP	
	7	1	7B-3411	4	COVER	
	8	1	9J-0498	18	SCREW-HEAD (3/8-16X.875IN)	
	9	1	-4474	1	COVER	
		1	8E-897	*	GASKET	
	10	1	8E-3248	1	*	
		1	8E-3250	1	GASKET	
	11	1	3T-2636	1	HANDHOLD	
	12	1	8E-8678	1	COVER AS	
		1	9F-2978	8	NUT-WELD (3/8-16 THD)	
		1	8E-8679	1	GASKET	
	13	1	7T-0131	1	FLOORPLATE AS	
		1	1F-0748	4	NUT-WELD (1/2-13 THD)	
	14	1	7V-8087	1	PLUG-BUTTON	
	15	1	7T-0136	1	PLATE AS	
		1	9F-2978	5	NUT-WELD (3/8-16 THD)	
	16	1	7T-8066	1	COVER	
		1	7T-8779	1	GASKET	
	17	1	3T-3951	1	PLATE AS	
	18	1	6T-8364	4	BOLT (1/4-20X.625IN)	
M		1	9T-4205	4	WASHER-HARD (20MM THK)	
	19	1	6L-8494	1	FLOOR MAT	
	20	1	8E-8846	1	MODULE AS-OPERATOR	
	21	1	3T-3834	1	HANDHOLD	
	22	1	9P-8671	2	PLUG	
	23	2	6T-8364	4	BOLT (1/4-20X.625IN)	
M		2	9T-4205	4	WASHER-HARD (20MM THK)	
	24	2	6B-2062	17	BOLT (3/8-16X.750IN)	
	25	2	9F-1075	21	WASHER-HARD (38MM THK)	
	26	2	7T-0135	1	SEAL	
	27	2	7X-0075	2	BOLT (3/4-10X5IN)	
		2	7X-0662	2	WASHER-HARD (64MM THK)	
	28	2	3T-3452	2	PLATE	
	29	2	3T-8290	1	PLATE AS	
		2	7B-4828	8	SPACER	
	30	2	3T-8281	1	SEAL	
	31	2	7B-8817	1	GASKET	
	32	2	7B-8815	1	COVER AS	
		2	2R-2276	2	WASHER	
		2	9F-8926	2	SCREW-KNURLED	
	33	2	9W-3429	1	COVER	
	34	2	8E-8697	1	COVER	
	35	2	9D-3931	8	SCREW-SOCKET HEAD	
	36	2	9W-3142	8	MOUNTING	
	37	2	9W-8027	2	PLATE	
	38	2	7X-0090	2	BOLT (7/8-9X8IN)	
		2	7X-0672	2	WASHER-HARD	
	39	2	4L-8454	4	BOLT (3/8-16X1.0IN)	
	40	2	3T-4788	1	COVER	

12 FRAME AND BODY 1 of 4 SELP4570-01

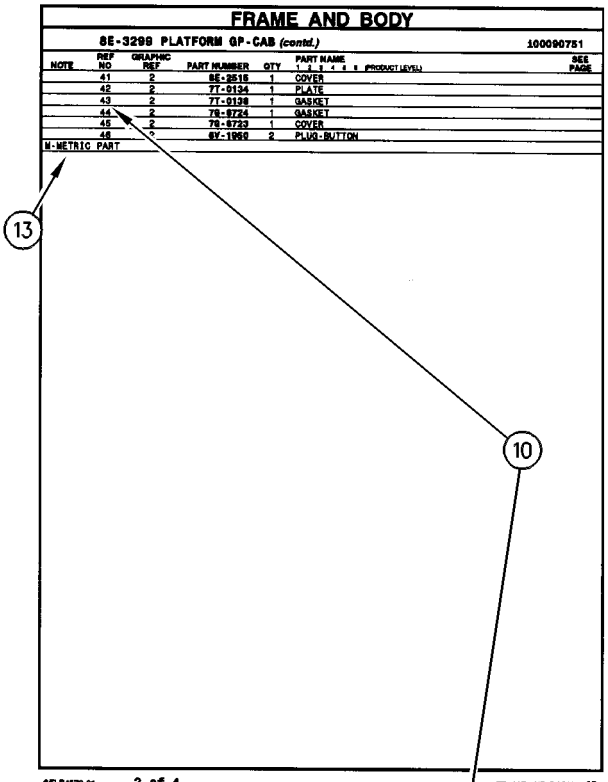

FRAME AND BODY

8E-3299 PLATFORM GP-CAB (contd.) 100090751

NOTE	REF NO	GRAPHIC REF	PART NUMBER	QTY	PART NAME 1 2 3 4 5 6 (PRODUCT LEVEL)	SEE PAGE
	41	2	8E-2516	1	COVER	
	42	2	7T-0134	1	PLATE	
	43	2	7T-0138	1	GASKET	
	44	2	7B-8724	1	GASKET	
	45	2	7B-8723	1	COVER	
	46	2	8V-1950	2	PLUG-BUTTON	

M-METRIC PART

SELP4570-01 2 of 4 FRAME AND BODY 13

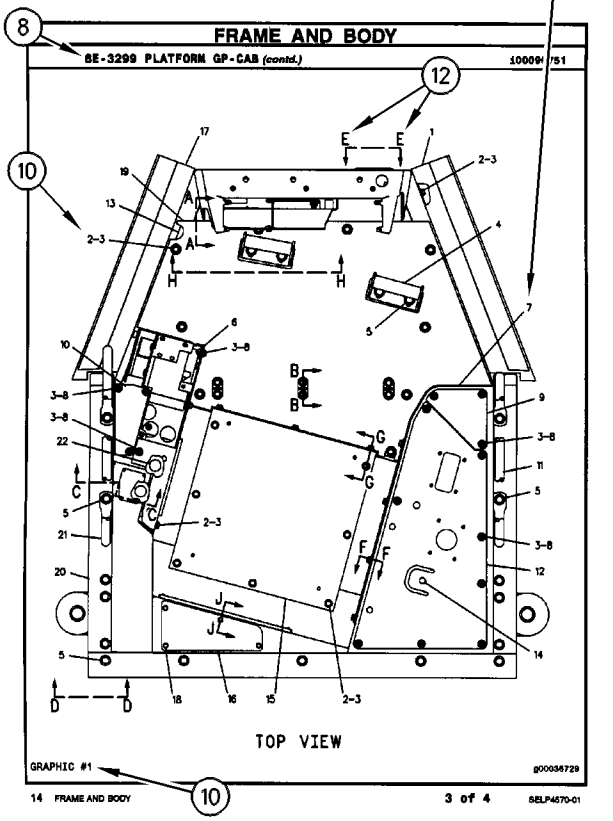

FRAME AND BODY

8E-3299 PLATFORM GP-CAB (contd.) 100090751

GRAPHIC #1 g00036729

TOP VIEW

14 FRAME AND BODY 3 of 4 SELP4570-01

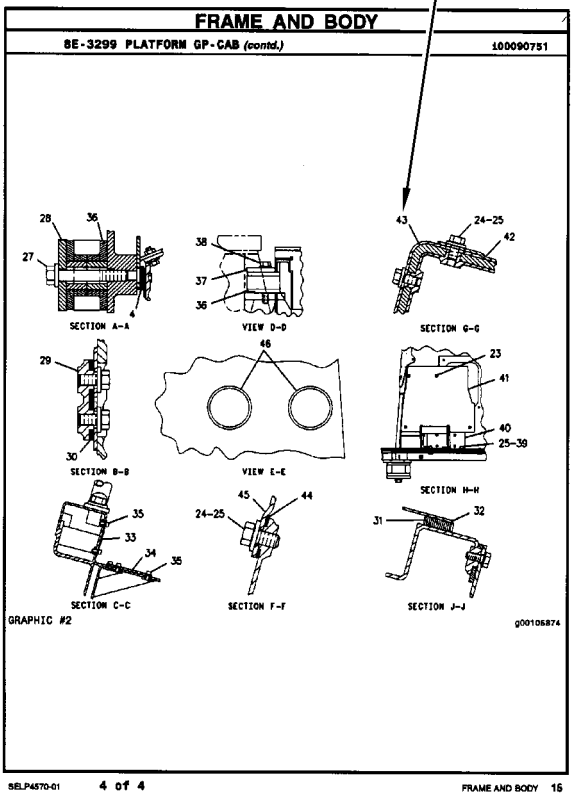

FRAME AND BODY

8E-3299 PLATFORM GP-CAB (contd.) 100090751

SECTION A-A

VIEW D-D

SECTION G-G

SECTION B-B

VIEW E-E

SECTION H-H

SECTION C-C

SECTION F-F

SECTION J-J

GRAPHIC #2 g00105874

SELP4570-01 4 of 4 FRAME AND BODY 16

INFORMAÇÃO GERAL

1. IDENTIFICAÇÃO DA MÁQUINA

As máquinas Caterpillar são identificadas pelos Números de Informação do Produto (PIN). Alguns componentes incluídos numa máquina podem ser identificados por Números de Série (S/N). Componentes típicos que serão enumerados com números de série incluem motores, transmissões, lâminas e ríperes. Além do número de série, a máquina e o motor são ainda identificados por números de arranjo e, em alguns casos, números de modificações. Tais números encontram-se na(s) placa(s) de identificação do produto e na placa mestre no compartimento do operador.

SIS *Novidades*

A partir do primeiro trimestre de 2001 o Número de Identificação de Produto da Caterpillar (PIN) precisa ser mudado de 8 para 17 caracteres. Esforçando-se para fornecer uma identificação uniforme de equipamentos, a Caterpillar e outros fabricantes de equipamento de construção estão mudando para atender a versão mais atualizada do padrão de identificação de produtos. Os números de PIN para produtos de aplicações não rodoviárias são definidos pela ISO 10261. O novo formato de número PIN será adotado em todas as máquinas e grupos geradores Caterpillar. As placas e as marcações do chassi mostrarão os 17 dígitos de PIN. O novo formato terá a seguinte disposição:

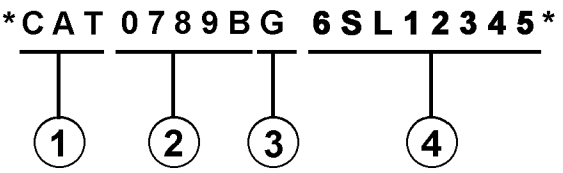

Onde:

1. Código de Fabricação Mundial da Caterpillar (dígitos 1-3)

2. Descrição da Máquina (dígitos 4-8)

3. Dígito de Verificação (dígito 9)

4. Seção de Indicador da Máquina (MIS) ou Número de Seqüência de Produto (dígitos 10-17). Estes eram anteriormente chamados de Número de Série.

Máquinas e grupos geradores produzidos antes do primeiro trimestre de 2001 manterão o formato de 8 caracteres de PIN.

Componentes como motores, transmissões, eixos, ferramentas de trabalho, etc. continuarão a usar Número de Série (S/N) com oito caracteres.

2. COMO OBTER PEÇAS

⚠ CUIDADO

Quando peças de substituição são exigidas para este produto, a Caterpillar recomenda a utilização de peças de substituição Caterpillar ou peças com as especificações equivalentes incluindo, mas não limitadas, à dimensões físicas, tipos, resistência e materiais.

A inobservância desta advertência poderá resultar em falhas prematuras, danos ao produto, ferimentos ou morte.

As Peças de Reposição de Qualidade Caterpillar encontram-se disponíveis nos revendedores Caterpillar no mundo inteiro. Seus estoques de peças são atualizados e incluem todas as peças normalmente necessárias para proteger seu investimento em máquinas Caterpillar. Alguns revendedores podem oferecer jogos de reparo ou peças de troca/remanufaturadas disponíveis como uma opção da alternativa de reparo mais eficaz para uma situação específica. Ao encomendar peças, seu pedido deve especificar a quantidade, o número e o nome da peça e o número de série/número de identificação do produto referentes à máquina para a qual as peças se destinam.

3. ORGANIZAÇÃO DO MANUAL DE PEÇAS

A informação do produto neste manual é apresentada em forma de "elementos de informação" que representam todos os componentes para o modelo específico. Arranjo de Motor e Grupo de Assento são exemplos de elementos de informação. Os elementos de informação são organizados em ordem alfabética por nome de peça ou secundariamente, por número de peça incluído em cada seção principal do manual.

4. LISTA DE CONTEÚDOS

A Lista de Conteúdos (TOC) se encontra no princípio do manual. A Lista de Conteúdos (TOC) relaciona em cada seção do manual uma lista completa com todos os elementos de informação organizados conforme aparecem no manual. Números de página são fornecidos para que se tenha referência rápida de ilustrações de peças detalhadas e listas de conteúdos que podem receber serviço de manutenção.

5. ÍNDICE DE PEÇAS DE MANUTENÇÃO

O Índice de Peças de Manutenção, localizado perto do princípio do manual, faz referência aos números de peça de manutenção usados com maior frequência, fornecendo uma descrição, a quantidade, o uso e o número de página. Esta informação é organizada com a descrição da peça em ordem alfabética.

6. ÍNDICE

O Índice localizado perto do princípio do manual, consiste de uma lista em ordem alfabética de todos os elementos de informação incluídos no manual. Números de página são fornecidos para que se tenha referência rápida de ilustrações de peças detalhadas e listas de conteúdos que podem receber serviço de manutenção.

7. ÍNDICE DE NÚMERO DE PEÇA

Um índice numérico relacionando todos os números de peça e a(s) página(s) correspondentes, aparece no final do manual.

8. LEGENDAS

As legendas localizadas no início de cada elemento de informação identificam o número e o nome de peça, juntamente com informação descritiva adicional. Informações sobre o Número de Informação do Produto (PIN) e o Número de Série (S/N) encontradas em cada legenda devem ser usadas para selecionar a informação correta sobre uma máquina específica. Opções de substituição no campo, identificação de componentes de acessórios opcionais e informações sobre onde são utilizados ("parte de") são também fornecidas.

A primeira linha de uma legenda é indicada em tipo maior para indicar o princípio de um elemento de informação. Legendas para páginas adicionais que podem ser necessárias para ilustrar um elemento de informação serão apresentadas em tipo padrão e incluirão o termo *(continua)* .

9. NÃO DISPONÍVEL SEPARADAMENTE

Em alguns casos, é necessário mostrar peças não disponíveis separadamente que têm uma ligação com listas de conteúdos de nível inferior que podem receber serviço de manutenção. Os números de peça destes componentes não disponíveis aparecerão em *itálico* , a fim de indicar que não estão disponíveis.

10. NÙMEROS DE REFERÊNCIA À LISTA DE PEÇAS

Os números indicados na coluna Ref No (No. de Referência) correspondem-se aos números usados no(s) gráfico(s) correspondente(s). Um sufixo com letras pode ser acrescentado a um número de referência para identificar itens de conteúdo de nível inferior. Os números indicados na coluna Graphic Ref (Referência de Gráfico) referem-se ao identificador de número de gráfico presente no canto esquerdo inferior de cada ilustração. O número de Referência de Gráfico pode ser usado em combinação com o item Ref No para determinar-se o número de peça correto. Poderá haver omissão intencional de um número de referência (Ref No) de uma lista de conteúdos uma vez que as informações são atualizadas para refletir os números de peça mais recentes que podem receber serviço de manutenção.

11. NOMES DE PEÇAS DESALINHADOS

Quando um nome de peça encontra-se desalinhado numa lista de peças, significa que tal item faz parte do (está incluído no) grupo ou conjunto sob o qual está relacionado.

12. LETRAS DE REFERÊNCIA NAS ILUSTRAÇÕES

Quando necessário, as ilustrações contêm letras de referência (A, B, C, etc.) que são utilizadas para seguir tubulações e cabos elétricos de um ponto a outro. Também foram utilizadas para indicar onde se pode reconectar as ilustrações que foram separadas.

13. ABREVIAÇÕES E SÍMBOLOS

O.D. – "Outside Diameter" (Diâmetro Externo)
I.D. – "Inside Diameter" (Diâmetro Interno)
A – Não faz parte deste grupo
B – Use conforme necessário
C – Indica modificação
D – Vendido por metro
E – Vendido por centímetro
F – Não ilustrado
G – Vendido por polegada
I – Consultar o Sistema de Informações Hidráulicas
M – Peça métrica
R – Peça remanufaturada pode estar disponível; consulte o seu revendedor Cat
Y – Ilustração separada
Z – Não disponível separadamente

SIS *Novidades*

14. <END>

Este símbolo indica o final de um elemento de informação.

INFORMAÇÃO GERAL

NOTA:

Os contínuos aperfeiçoamentos e avanços no projeto do produto podem ocasionar modificações em sua máquina que talvez ainda não estejam incluídas nesta publicação. Sempre que surgirem dúvidas quanto a um produto Caterpillar ou quanto à presente publicação, consulte o seu revendedor Caterpillar para obter as informações mais recentes disponíveis.

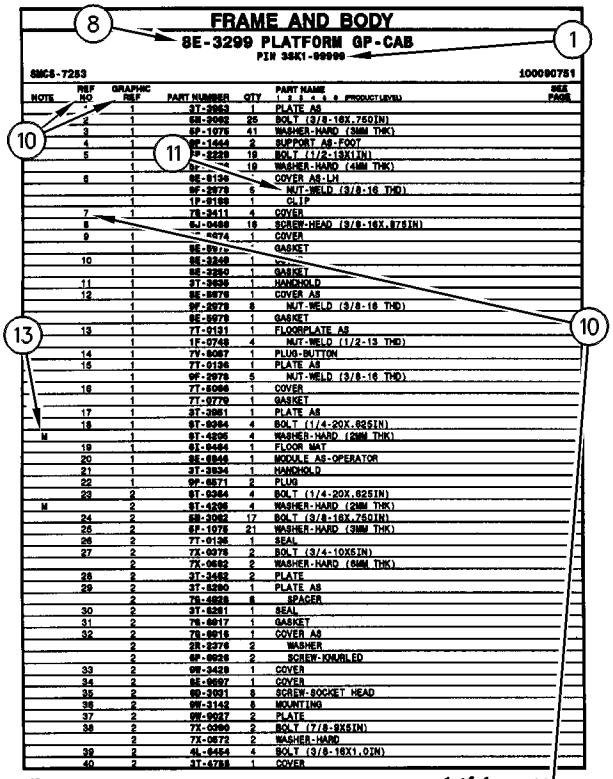

FRAME AND BODY

8E-3299 PLATFORM GP-CAB

PIN 35K1-99999

SMCS-7253 100090751

NOTE	REF NO	GRAPHIC REF	PART NUMBER	QTY	PART NAME 1 2 3 4 5 6 (PRODUCT LEVEL)	SEE PAGE
		1	3T-2953	1	PLATE AS	
	2	1	6E-2062	25	BOLT (3/8-16X.750IN)	
	3	1	6P-1076	41	WASHER-HARD (38MM THK)	
	4	1	9F-1444	2	SUPPORT AS-FOOT	
	5	1	7P-2229	18	BOLT (1/2-13X1IN)	
		1	9F-	18	WASHER-HARD (41MM THK)	
	6	1	8E-6136	1	COVER AS-LH	
		1	9F-2978	6	NUT-WELD (3/8-16 THD)	
		1	1P-0169	1	CLIP	
	7	1	7S-2411	4	COVER	
	8	1	9J-0498	18	SCREW-HEAD (3/8-16X.875IN)	
	9	1	-4474	1	COVER	
		1	8E-897		GASKET	
	10	1	8E-3249	1		
		1	8E-3250	1	GASKET	
	11	1	3T-2636	1	HANDHOLD	
	12	1	8E-6078	1	COVER AS	
		1	9F-2978	8	NUT-WELD (3/8-16 THD)	
		1	8E-6079	1	GASKET	
	13	1	7T-0131	1	FLOORPLATE AS	
		1	1F-0748	4	NUT-WELD (1/2-13 THD)	
	14	1	7V-8067	1	PLUG-BUTTON	
	15	1	7T-0136	1	PLATE AS	
		1	9F-2978	5	NUT-WELD (3/8-16 THD)	
	16	1	7T-8066	1	COVER	
		1	7T-0779	1	GASKET	
	17	1	3T-3951	1	PLATE AS	
	18	1	6T-0364	4	BOLT (1/4-20X.625IN)	
M		1	9T-4205	4	WASHER-HARD (20MM THK)	
	19	1	6L-8494	1	FLOOR MAT	
	20	1	8E-6846	1	MODULE AS-OPERATOR	
	21	1	3T-3834	1	HANDHOLD	
	22	1	9P-8571	2	PLUG	
	23	2	6T-0364	4	BOLT (1/4-20X.625IN)	
M		2	9T-4205	4	WASHER-HARD (20MM THK)	
	24	2	6E-2062	17	BOLT (3/8-16X.750IN)	
	25	2	6P-1076	21	WASHER-HARD (38MM THK)	
	26	2	7T-0135	1	SEAL	
	27	2	7X-0078	2	BOLT (3/4-10X5IN)	
		2	7X-0682	2	WASHER-HARD (64MM THK)	
	28	2	3T-3452	2	PLATE	
	29	2	3T-8290	1	PLATE AS	
		2	7S-4828	8	SPACER	
	30	2	3T-8281	1	SEAL	
	31	2	7S-8817	1	GASKET	
	32	2	7S-8815	1	COVER AS	
		2	2R-3276	2	WASHER	
		2	6P-8926	2	SCREW-KNURLED	
	33	2	9W-3429	1	COVER	
	34	2	8E-8697	1	COVER	
	35	2	6D-3031	8	SCREW-SOCKET HEAD	
	36	2	9W-3142	8	MOUNTING	
	37	2	9W-8027	2	PLATE	
	38	2	7X-0390	2	BOLT (7/8-9X8IN)	
		2	7X-0672	2	WASHER-HARD	
	39	2	4L-8454	4	BOLT (3/8-16X1.0IN)	
	40	2	3T-4788	1	COVER	

12 FRAME AND BODY 1 of 4 SELP4570-01

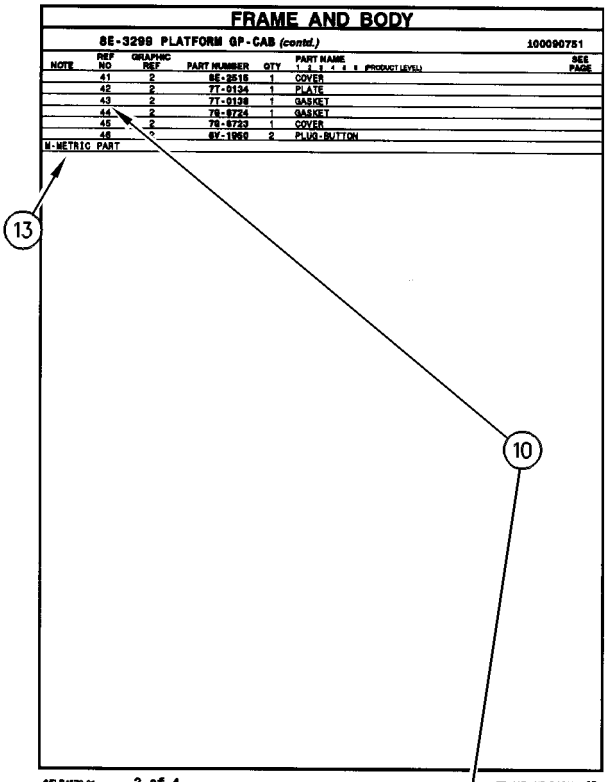

FRAME AND BODY

8E-3299 PLATFORM GP-CAB (contd.) 100090751

NOTE	REF NO	GRAPHIC REF	PART NUMBER	QTY	PART NAME 1 2 3 4 5 6 (PRODUCT LEVEL)	SEE PAGE
	41	2	8E-2516	1	COVER	
	42	2	7T-0134	1	PLATE	
	43	2	7T-0138	1	GASKET	
	44	2	7S-8724	1	GASKET	
	45	2	7S-8723	1	COVER	
	46	2	6V-1950	2	PLUG-BUTTON	

M-METRIC PART

SELP4570-01 2 of 4 FRAME AND BODY 13

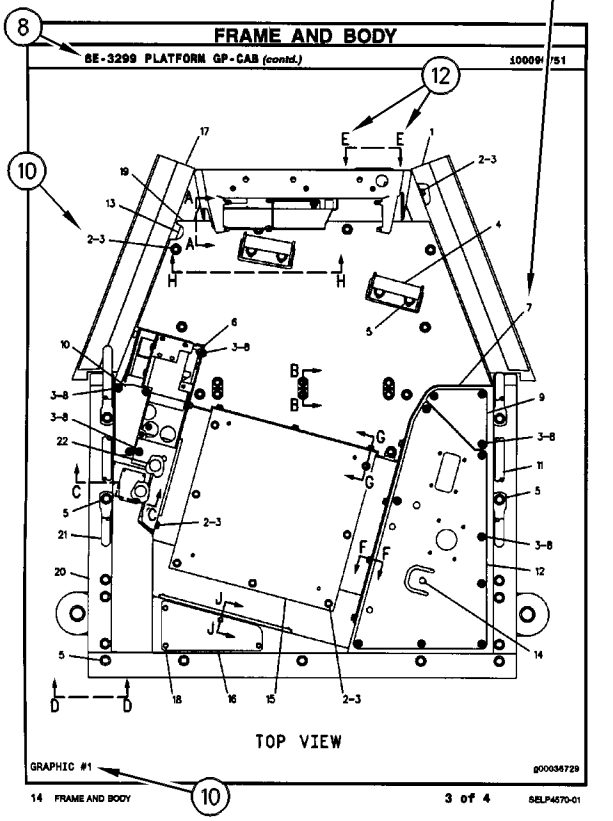

FRAME AND BODY

8E-3299 PLATFORM GP-CAB (contd.) 100090751

TOP VIEW

GRAPHIC #1 g00036729

14 FRAME AND BODY 3 of 4 SELP4570-01

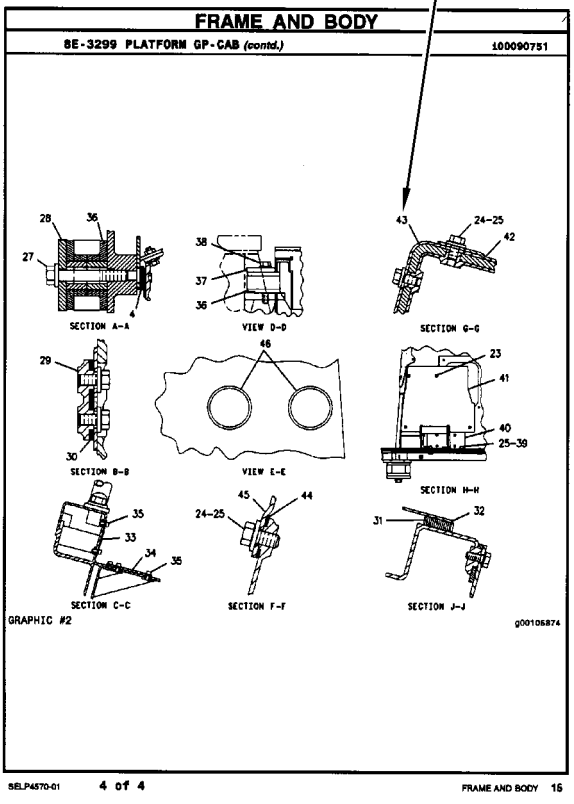

FRAME AND BODY

8E-3299 PLATFORM GP-CAB (contd.) 100090751

SECTION A-A

VIEW D-D

SECTION G-G

SECTION B-B

VIEW E-E

SECTION H-H

SECTION C-C

SECTION F-F

SECTION J-J

GRAPHIC #2 g00105874

SELP4570-01 4 of 4 FRAME AND BODY 16

ALLGEMEINE HINWEISE

1. MASCHINENKENNZEICHNUNG

Caterpillar-Maschinen sind mit PRODUCT IDENTIFICATION NUMBERS (PIN) (Produkt-Identnummern) gekennzeichnet. Einige Baugruppen, z.B. Motoren, Getriebe, Planierschilde und Aufreißer, sind mit SERIAL NUMBERS (S/N) (Seriennummern) gekennzeichnet. An der Maschine und am Motor befinden sich außerdem ARRANGEMENT NUMBERS (Ausrüstungsnummern) sowie in einigen Fällen MODIFICATION NUMBERS (Änderungsnummern). Sie befinden sich auf den PIN-Schildern und auf dem Typenschild im Fahrerhaus.

Bei Ersatzteilbestellungen müssen dem Händler alle diese Nummern zur Verfügung gestellt werden.

SIS *Neu im Parts Manual*

Vom ersten Quartal 2001 ab wurde die Caterpillar Produkt-Identnummer (PIN) von 8 auf 17 Zeichen geändert. Um zur Standardisierung der Produkt-Identnummer beizutragen, sind Caterpillar und andere Baumaschinenhersteller bestrebt, die aktuellste Norm zur Produkt-Identnummerierung einzuführen. Produkt-Identnummern für Baumaschinen sind durch ISO 10261 definiert. Das neue Format der Produkt-Identnummern gilt für alle Caterpillar-Maschinen und -Stromaggregate. Die Produkt-Identschilder und -Identrahmenmarkierung enthalten die aus 17 Zeichen bestehende Identnummer. Das neue Format hat folgende Abschnitte:

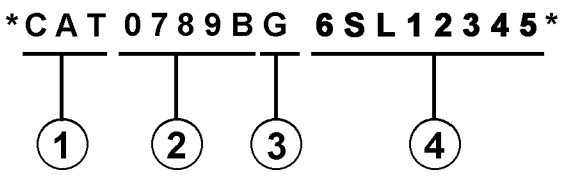

Abschnitte:

1. Caterpillars weltweiter Herstellungscode (Zeichen 1-3)

2. Modell (Zeichen 4-8)

3. Kontrollzeichen (Zeichen 9)

4. Maschinenspezifische Kennung (MIS) oder Produktsequenznummer (Zeichen 10-17). Diese wurde früher als Seriennummer bezeichnet.

Für vor dem ersten Quartal 2001 hergestellte Maschinen und Stromaggregate wird das aus 8 Zeichen bestehende PIN-Format beibehalten.

Bauteile wie z.B. Motoren, Getriebe, Achsen sowie Arbeitsgeräte werden weiterhin eine aus 8 Zeichen bestehende Seriennummer (S/N) aufweisen.

2. BESTELLEN VON ERSATZTEILEN

⚠ WARNUNG

Wenn für diese Maschine Ersatzteile benötigt werden, empfiehlt Caterpillar, ausschließlich Caterpillar-Ersatzteile oder solche zu verwenden, die die gleichen technischen Merkmale hinsichtlich Typ, Festigkeit, Werkzeugeigenschaften und die gleichen Maße aufweisen.

Bei Nichtbeachtung dieser Warnung besteht Verletzungs- oder sogar Lebensgefahr! Ferner kann Nichtbeachtung vorzeitige Ausfälle der Teile und Beschädigung der Maschine zur Folge haben.

Original Caterpillar-Ersatzteile können weltweit bei jedem Caterpillar-Händlern bestellt werden. Die umfangreichen Händlerlager enthalten normalerweise alle Teile, die Sie für Ihre Caterpillar-Maschine benötigen. Einige Händler bieten Reparatursätze, Austausch- oder werküberholte Teile an, so daß Sie eine Auswahl unter verschiedenen Reparaturmöglichkeiten treffen können. Ihre Bestellung muß folgende Angaben enthalten: Anzahl der benötigten Teile, Bestellnummer, Bezeichnung des Teils, Serien-Nr./Produkt-Ident-Nr., Ausrüstungs-Nr. und Änderungs-Nr. der Maschine, für die diese Teile benötigt werden.

3. AUFBAU DES PARTS MANUAL

Die Produktinformationen für alle Komponenten eines bestimmten Modells sind in INFORMATION ELEMENTS (Informationseinheiten) gegliedert. ENGINE ARRANGEMENT (Motorausführung) und SEAT GROUP (Fahrersitz) sind Beispiele für solche Informationseinheiten. Sie sind innerhalb jeder Gruppe alphabetisch, entsprechend der Ersatzteilbezeichnung, und zusätzlich numerisch, entsprechend der Ersatzteilnummer, geordnet.

4. INHALTSVERZEICHNIS

Das Inhaltsverzeichnis befindet sich am Anfang des Buches. Im Inhaltsverzeichnis werden die einzelnen Abschnitte des Buches aufgeführt. Die Abschnitte enthalten eine vollständige Aufstellung aller Informationseinheiten. Diese sind entsprechend ihrem Erscheinen im Buch geordnet. Das Inhaltsverzeichnis enthält Seitenangaben für Schnellverweise auf detaillierte Abbildungen und Teillisten.

ALLGEMEINE HINWEISE

5. INDEX FÜR WARTUNGSTEILE

Der Index für Wartungsteile vorn im Buch enthält die Bestellnummern, Seitenangaben, Mengenangaben und Informationen über den Einsatzbereich für die am häufigsten benötigten Ersatzteile. Die Angaben sind alphabetisch entsprechend der Teilebezeichnung geordnet.

6. INDEX

Der Index vorn im Buch enthält eine alphabetische Liste aller Informationseinheiten. Er enthält Seitenangaben für Schnellverweise auf detaillierte Abbildungen und Teillisten.

7. INDEX FÜR BESTELLNUMMERN

Hinten im Buch befindet sich ein numerischer Index, mit allen Bestellnummern und dem Hinweis auf die Seite, auf der sich die betreffende Abbildung befindet.

8. ÜBERSCHRIFTEN

Die Überschriften, die sich am Anfang jeder der Informationseinheiten befinden, enthalten Bestellnummern, Ersatzteilbezeichnungen und zusätzliche beschreibende Informationen. Produkt-Ident- und Seriennummern in den Überschriften sollten zur Auswahl der richtigen Informationen für die betreffende Maschine verwendet werden. Die Überschriften enthalten außerdem Informationen über möglichen Außendienstersatz, mögliche Baugerätekomponenten und die Baugruppe, zu der das Teil gehört.

Die erste Zeile einer Überschrift erscheint in einer größeren Schriftart, um den Anfang einer Informationseinheit zu kennzeichnen. Überschriften für zusätzliche Seiten, die zur Erläuterung einer Informationseinheit notwendig sind, erscheinen in normaler Schriftart und enthalten den Begriff "(contd.)".

9. NICHT EINZELN LIEFERBARE TEILE

In einigen Fällen ist es notwendig nicht lieferbare Teile, die selbst mit einer eigenen Teilliste im Buch vertreten sind, aufzuführen. Die Bestellnummern dieser nicht einzeln lieferbaren Teile erscheinen kursiv, wodurch angezeigt wird, daß sie nur in Verbindung mit anderen Teilen lieferbar sind.

10. REFERENZNUMMER FÜR ERSATZTEILE

Die Zahlen, die in der Spalte "Ref No" aufgeführt sind, stimmen mit den Zahlen in den beigefügten Abbildungen überein. Ein Buchstaben-Suffix kann zu einer Referenznummer hinzugefügt werden, um zu kennzeichnen, daß das Teil mit einer eigenen Teilliste im Buch aufgeführt ist. Die in der Spalte "Graphic Ref" angeführten Zahlen verweisen auf die Identifikationsnummer der Abbildung, die sich in der linken unteren Ecke der Abbildung befindet. Diese Nummer kann zusammen mit der Referenznummer des Teils angegeben werden, um die richtige Ersatzteilnummer zu ermitteln. Referenznummern können absichtlich weggelassen werden, da die Nummern der lieferbaren Ersatzteile ständig aktualisiert werden.

11. EINGERÜCKTE BEZEICHNUNGEN

Wenn eine Bezeichnung eingerückt ist, wird dadurch angezeigt, daß das Teil zu einer Baugruppe gehört, unter deren Bezeichnung es eingerückt ist.

12. REFERENZBUCHSTABEN

Falls erforderlich sind in den Abbildungen Referenzbuchstaben enthalten (z.B. A, B, C, usw.), die Leitungen und Kabelbäume von einem Punkt zum anderen verfolgen. Außerdem geben sie die Stelle an, an der getrennte Abbildungen fortgesetzt werden.

13. ABKÜRZUNGEN UND SYMBOLE

O.D. – Außendurchmesser
I.D. – Innendurchmesser
A – kein Teil dieser Gruppe
B – nach Bedarf verwenden
C – Hinweis auf eine Änderung
D – in Meter-Länge bestellen
E – in Zentimeter-Länge bestellen
F – nicht gezeigt
G – in Zoll-Länge bestellen
I – siehe Hydraulikinformationssystem
M – metrisches Teil
R – werküberholtes Teil unter Umständen lieferbar
Y – separate Abbildung
Z – nicht einzeln lieferbar

SIS *Neu im Parts Manual*

14. <END>

Dieses Symbol zeigt das Ende eines Informationselements an.

ALLGEMEINE HINWEISE

ANMERKUNG:

Ständig vorgenommene Verbesserungen und Weiterentwicklungen an Ihrer Maschine können Änderungen verursachen, die in der vorliegenden Ausgabe noch nicht berücksichtigt sind. Fragen zu Ihrer Caterpillar-Maschine oder diesem Ersatzteilbuch beantwortet Ihr Caterpillar-Händler.

ALLGEMEINE HINWEISE

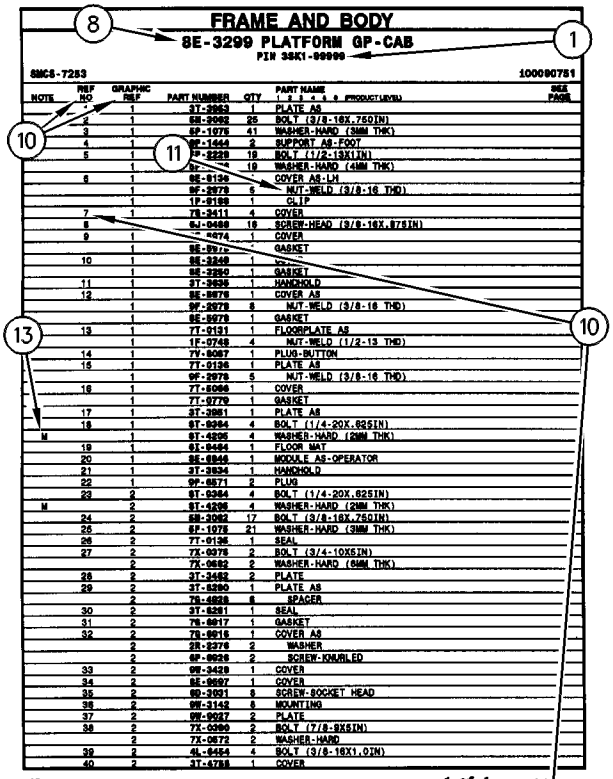

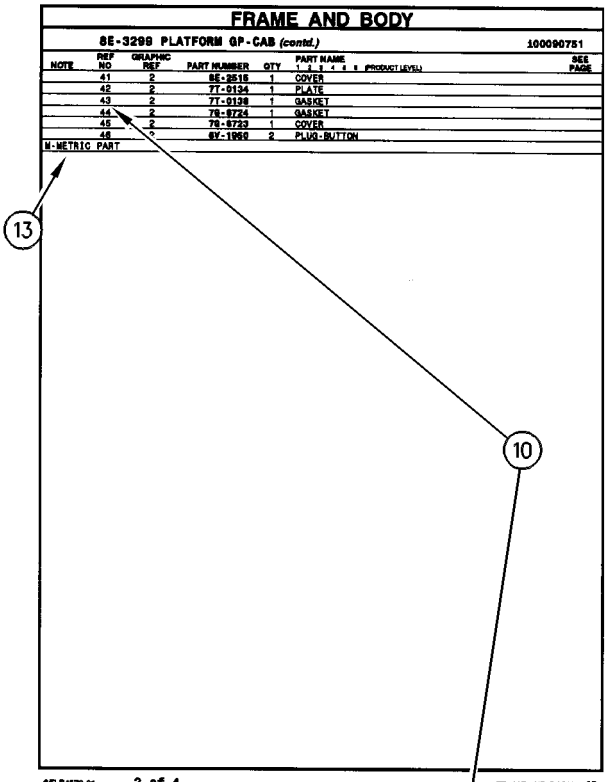

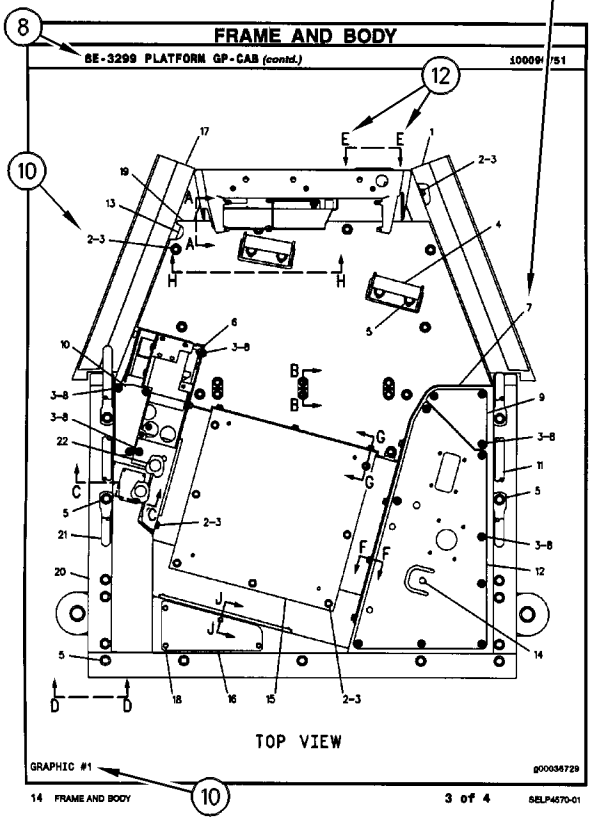

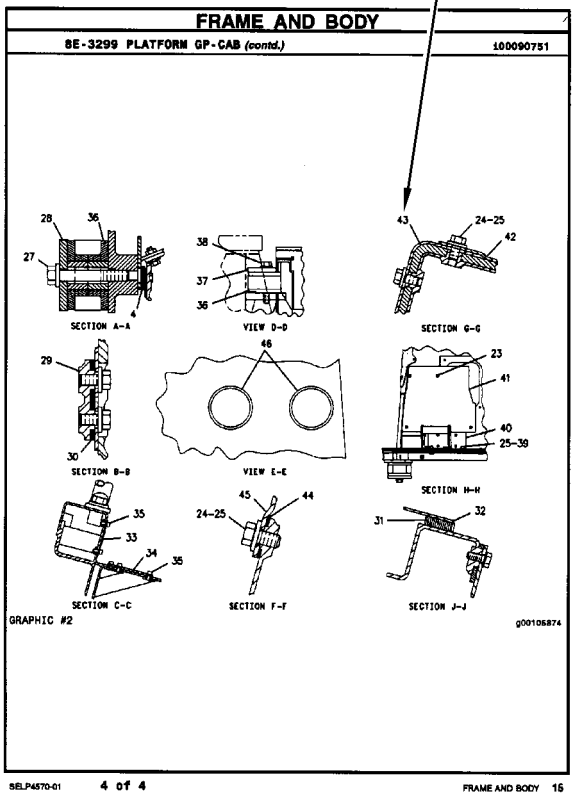

REPAIR ALTERNATIVES

REMANUFACTURED COMPONENTS

As an option when making repairs consider Caterpillar Remanufactured Components. Components that are available through the Caterpillar Remanufactured Program are identified three ways in the parts book:

- with the letter R in the note field of the parts list
- with an R* at the beginning of the first line of the caption
- with an *R at the end of the first line of the caption

Typical components included in the Remanufacturing Program include:

ALTERNATORS
CONNECTING RODS
CRANKSHAFTS - UNDERSIZE
CRANKSHAFTS - UPGRADE TO NEW
CYLINDER HEADS
ELECTRONIC CONTROL MODULES (ECM)
ELECTRONIC SENSORS
FUEL INJECTORS
FUEL NOZZLES
FUEL PUMPS
GOVERNORS
OIL PUMPS
PISTONS
SHORT BLOCKS
STARTERS
TURBOCHARGERS - COMPLETE
TURBOCHARGER CARTRIDGES
WATER PUMPS

Caterpillar Remanufactured engines for many engine arrangements are also available.

OPTIONS DE RÉPARATION

COMPOSANTS RÉNOVÉS

Comme option de réparation, considérer les composants rénovés Caterpillar. Les composants disponibles dans le cadre du programme Caterpillar de composants rénovés sont identifiés de trois façons dans le catalogue de pièces:

- avec la lettre "R" dans l'espace note de la liste des pièces
- avec R* au début de la première ligne des légendes
- avec *R à la fin de la première ligne des légendes

Les composants suivants figurent parmi les composants typiques du programme de rénovation:

ALTERNATEURS
BIELLES
VILEBREQUINS - SOUS-DIMENSIONNÉS
VILEBREQUINS - REMIS À NEUF
CULASSES
MODULES DE COMMANDE ÉLECTRONIQUE (ECM)
CAPTEURS ÉLECTRONIQUES
INJECTEURS
TÊTES D'INJECTEURS
POMPES À CARBURANT
RÉGULATEURS
POMPES À HUILE
PISTONS
BLOCS EMBIELLÉS
DÉMARREURS
TURBOCOMPRESSEURS - COMPLETS
CARTOUCHES DE TURBOCOMPRESSEUR
POMPES À EAU

Des moteurs rénovés sont aussi disponibles pour plusieurs versions de moteur.

ALTERNATIVAS DE REPARACIÓN

COMPONENTES REMANUFACTURADOS

Al hacer reparaciones, tenga en cuenta la opción de Componentes Remanufacturados Caterpillar. Los componentes que están disponibles por medio del programa de Productos Remanufacturados Caterpillar se identifican de tres maneras en el manual de piezas:

- con la letra R en el espacio de Nota de la lista de piezas
- con una R* al comienzo de la primera línea de la leyenda
- con una *R al final de la primera línea de la leyenda

Los componentes que se incluyen típicamente en el Programa de Productos Remanufacturados son:

ALTERNADORES
BIELAS
CIGÜEÑALES - BAJOMEDIDA
CIGÜEÑALES - REMANUFACTURADOS A NUEVO
CULATAS
MÓDULOS DE CONTROL ELECTRÓNICO (ECM)
SENSORES ELECTRONICOS
INYECTORES
BOQUILLAS
BOMBAS DE COMBUSTIBLE
REGULADORES
BOMBAS DE ACEITE
PISTONES
MONOBLOQUES
MOTORES DE ARRANQUE
TURBOCOMPRESORES - COMPLETOS
NÚCLEOS DE TURBOCOMPRESOR
BOMBAS DE AGUA

También hay disponibles motores Remanufacturados Caterpillar para muchas de las configuraciones de motores.

ALTERNATIVAS DE REPARO

COMPONENTES REMANUFATURADOS

Considere o uso de Componentes Remanufaturados Caterpillar ao efetuar reparos. Os componentes disponíveis através do Programa de Remanufatura Caterpillar são identificados de três formas no manual de peças:

- com um R na área da nota da lista de peças
- com um R* no princípio da primeira linha da legenda
- com um *R no final da primeira linha da legenda

Os componentes típicos que constam no Programa de Remanufatura incluem:

ALTERNADORES
BIELAS
VIRABREQUINS - SUBMEDIDAS
VIRABREQUINS - ATUALIZAÇÃO
CABEÇOTES
MÓDULOS DE CONTROLE ELETRÔNICO (ECM)
SENSORES ELETRÔNICOS
INJETORES DE COMBUSTÍVEL
BICOS DE ABASTECIMENTO DE COMBUSTÍVEL
BOMBAS DE COMBUSTÍVEL
GOVERNADORES
BOMBAS DE ÓLEO
PISTÕES
BLOCOS BÁSICOS DO MOTOR
MOTORES DE PARTIDA
TURBOALIMENTADORES - COMPLETOS
CARTUCHOS DE TURBOALIMENTADORES
BOMBAS D'ÁGUA

Motores Remanufaturados Caterpillar também encontram-se disponíveis para diversos arranjos de motor.

REPARATURALTERNATIVEN

WERKÜBERHOLTE AT-PRODUKTE

Bei Reparaturen sollten werküberholte AT-Produkte von Caterpillar in Betracht gezogen werden. Die durch das AT-Programm von Caterpillar erhältlichen Teile sind im Parts Book auf drei verschiedene Arten gekennzeichnet:

- mit dem Buchstaben R in der Spalte NOTE der Ersatzteilliste
- mit einem R* am Anfang der ersten Zeile der Überschrift
- mit einem *R am Ende der ersten Zeile der Überschrift

Das AT-Programm umfaßt u.a. folgende Produkte:

DREHSTROMGENERATOREN
PLEUELSTANGEN
KURBELWELLEN - MIT UNTERMASS
KURBELWELLEN - MIT ORIGINALMASS
ZYLINDERKÖPFE
ELEKTRONISCHE STEUEREINHEITEN (EMC)
ELEKTRONISCHE SENSOREN
PUMPENDÜSEN
EINSPRITZDÜSEN
KRAFTSTOFFPUMPEN
DREHZAHLREGLER
ÖLPUMPEN
KOLBEN
TEILMOTOREN
ANLASSER
TURBOLADER - KOMPLETT
TURBOLADERLAUFZEUGE
KÜHLWASSERPUMPEN

Viele Motoren können durch werküberholte AT-Motoren von Caterpillar ersetzt werden.

SUPPLEMENTAL COOLANT ADDITIVES

CUSTOMER BENEFITS:

Protects against cavitation, foam, erosion, corrosion, and scale buildup in cooling systems.

- Provides measured coolant conditioner.

DESCRIPTION:

Additives deplete from the coolant with normal operation. For this reason, Supplemental Coolant Additives (SCA) must be added to all heavy duty coolants at regular intervals. In addition, when not using a fully formulated, pre-charged antifreeze, like Caterpillar's DEAC, an initial charge of SCA must be added to the cooling system. The amount of SCA added to the system is dependent on the capacity of the system.

The SCA for initial fill is provided as a liquid. SCA's for maintenance intervals are available in liquid form and as a spin-on element. (No Spin-on available for 3600 Family of Engines)

NOTE:

The amount of SCA added at initial fill is not the same as the amount added at maintenance intervals.

The coolant additive elements can be used with any ethylene or propylene glycol type antifreeze which meets ASTM D4985 or ASTM D5345 Specifications.

NOTE:

For use with standard heavy duty coolant only, not for use with Extended Life Coolant.

PARTS NEEDED:

Cooling System Capacity		Liquid SCA at Initial Fill	Liquid SCA at Maintenance*	Spin-on SCA Maintenance Element*
Liters	Gallons			
22-30	(6-8)	3P-2044 (1)	6V-3542 (1)	111-2370 (1)
30-38	(8-10)	3P-2044 (1) 6V-3542 (1)	111-2372 (1)	111-2369 (1)
38-49	(10-13)	3P-2044 (1) 8T-1589 (1)	111-2372 (1)	111-2369 (1)
49-64	(13-17)	3P-2044 (2)	8T-1589 (1)	9N-3368 (1)
64-83	(17-22)	3P-2044 (2) 8T-1589 (1)	111-2372 (1) 6V-3542 (1)	111-2371 (1)
83-114	(22-30)	3P-2044 (3) 8T-1589 (1)	3P-2044 (1)	9N-3718 (1)
114-163	(30-43)	3P-2044 (5)	3P-2044 (1) 6V-3542 (1)	111-2371 (2)
163-242	(43-64)	3P-2044 (8)	3P-2044 (2)	9N-3718 (2)

** Normal maintenance period is 250 hrs. See your Operation and Maintenance Manual for complete coolant maintenance instructions.*

( ) Indicates quantity required.

ADDITIFS POUR LIQUIDE DE REFROIDISSEMENT

AVANTAGES POUR LE CLIENT

L'additif protège contre la cavitation, la mousse, l'érosion, la corrosion et l'accumulation de dépôts dans le circuit de refroidissement.

- L'additif complémentaire fournit une quantité mesurée d'additif.

DESCRIPTION:

Les additifs s'épuisent pendant l'utilisation du moteur. C'est pourquoi l'on doit ajouter de l'additif au liquide de refroidissement/antigel pour moteurs diesel à intervalles réguliers. En plus, si l'on n'utilise pas de l'antigel entièrement formulé et pré-chargé comme le liquide de refroidissement/antigel Caterpillar pour moteurs diesel, une quantité initiale d'additif doit être ajoutée au circuit de refroidissement. La quantité d'additif à ajouter au circuit dépend de la contenance du circuit.

L'additif pour le remplissage initial est fourni sous forme liquide. L'additif pour l'entretien ultérieur est disponible sous forme liquide et sous forme d'élément à visser. (Il n'y a pas d'élément à visser pour les moteurs de la famille 3600).

NOTA:

La quantité d'additif à ajouter au remplissage initial diffère de la quantité à ajouter aux intervalles d'entretien.

Les éléments d'additif peuvent être utilisés avec tout antigel de type éthylène ou propylène-glycol conforme à la norme ASTM D4985 ou ASTM D5345.

NOTA:

A utiliser uniquement avec du liquide de refroidissement pour moteurs diesel et non avec le liquide de refroidissement longue durée.

PIÈCES NÉCESSAIRES:

Contenance du circuit de refroidissement		Additif liquide au remplissage initial	Additif liquide aux intervalles d'entretien*	Elément d'additif à visser aux intervalles d'entretien*
Litres	Gallons U.S.			
22-30	(6-8)	3P-2044 (1)	6V-3542 (1)	111-2370 (1)
30-38	(8-10)	3P-2044 (1) 6V-3542 (1)	111-2372 (1)	111-2369 (1)
38-49	(10-13)	3P-2044 (1) 8T-1589 (1)	111-2372 (1)	111-2369 (1)
49-64	(13-17)	3P-2044 (2)	8T-1589 (1)	9N-3368 (1)
64-83	(17-22)	3P-2044 (2) 8T-1589 (1)	111-2372 (1) 6V-3542 (1)	111-2371 (1)
83-114	(22-30)	3P-2044 (3) 8T-1589 (1)	3P-2044 (1)	9N-3718 (1)
114-163	(30-43)	3P-2044 (5)	3P-2044 (1) 6V-3542 (1)	111-2371 (2)
163-242	(43-64)	3P-2044 (8)	3P-2044 (2)	9N-3718 (2)

** L'intervalle d'entretien normal est de 250 heures-service. Voir le Guide d'utilisation et d'entretien pour de plus amples renseignements concernant l'entretien du circuit de refroidissement.*

( ) Indique la quantité exigée.

ADITIVOS DE REFRIGERANTE SUPLEMENTARIOS

VENTAJAS PARA EL USUARIO:

Protegen contra la cavitación, la formación de espuma, la corrosión y la acumulación de escamas en los sistemas de enfriamiento.

- Suministra un acondicionador dosificado de refrigerante.

DESCRIPCIÓN:

Los aditivos en el refrigerante se agotan con la operación normal. Por esta razón, se debe agregar Aditivo de refrigerante suplementario (SCA) a todos los refrigerantes para servicio pesado, a intervalos regulares. Además, cuando no se usa un anticongelante de precarga completo, tal como el DEAC de Caterpillar, es necesario agregar una cantidad de aditivo de refrigerante suplementario inicial al sistema de enfriamiento. La cantidad de aditivo que se debe agregar depende de la capacidad del sistema.

El SCA de llenado inicial es líquido. El que se usa para el mantenimiento está disponible tanto en líquido como en un elemento enroscable. (No hay elemento enroscable disponible para la Familia de Motores 3600).

NOTA:

La cantidad de aditivo de llenado inicial no es la misma que se agrega en los intervalos de mantenimiento.

Los elementos de aditivo de refrigerante se pueden usar con cualquier anticongelante de tipo glicol etilénico o propílico que esté de acuerdo con las especificaciones de las normas ASTM D4985 o ASTM D5345.

NOTA:

Se debe utilizar únicamente con refrigerante estándar para servicio pesado; no se debe usar con Refrigerante de Larga Duración.

PIEZAS NECESARIAS:

Capacidad del Sistema de Enfriamiento		SCA líquido de llenado inicial	SCA líquido de mantenimiento*	Elemento de mantenimiento enroscable*
litros	gal EE.UU.			
22-30	6-8	3P-2044 (1)	6V-3542 (1)	111-2370 (1)
30-38	8-10	3P-2044 (1) 6V-3542 (1)	111-2372 (1)	111-2369 (1)
38-49	10-13	3P-2044 (1) 8T-1589 (1)	111-2372 (1)	111-2369 (1)
49-64	13-17	3P-2044 (2)	8T-1589 (1)	9N-3368 (1)
64-83	17-22	3P-2044 (2) 8T-1589 (1)	111-2372 (1) 6V-3542 (1)	111-2371 (1)
83-114	22-30	3P-2044 (3) 8T-1589 (1)	3P-2044 (1)	9N-3718 (1)
114-163	30-43	3P-2044 (5)	3P-2044 (1) 6V-3542 (1)	111-2371 (2)
163-242	43-64	3P-2044 (8)	3P-2044 (2)	9N-3718 (2)

** El período normal de mantenimiento es de 250 horas. Para ver las instrucciones completas sobre el mantenimiento del refrigerante, consulte el Manual de Operación y Mantenimiento.*

( ) Indica la cantidad necesaria.

ADITIVOS SUPLEMENTARES DO LÍQUIDO ARREFECEDOR

BENEFÍCIOS PARA O CLIENTE:

Protege contra cavitação, espuma, erosão, corrosão e acúmulo de crostas nos sistemas de arrefecimento.

- Fornece uma quantidade pré-determinada de condicionador de arrefecimento.

DESCRIÇÃO:

Com a operação normal, os aditivos se esgotam do líquido arrefecedor. Por isso, Aditivos Suplementares do Líquido Arrefecedor (SCA) devem ser acrescentados a todos os líquidos arrefecedores para serviço pesado em intervalos regulares. Além disso, quando um anticongelante pré-carregado, totalmente formulado não for usado, como o DEAC Caterpillar, uma carga inicial de SCA deve ser acrescentada ao sistema de arrefecimento. A quantidade de SCA acrescentada ao sistema depende da capacidade do sistema.

O SCA para abastecimento inicial é fornecido em forma de líquido. Os aditivos suplementares (SCA) para intervalos de manutenção estão à disposição em forma líquida e como um elemento com roscas. (Exceto os Motores da Família 3600)

NOTA:

A quantidade de SCA adicionada no abastecimento inicial não é a mesma que a acrescentada nos intervalos de manutenção.

Os elementos do aditivo do líquido arrefecedor podem ser usados com qualquer tipo de anticongelante etileno ou propileno que satisfaz as Especificações ASTM D4985 ou ASTM D5345.

NOTA:

Para uso apenas com líquido arrefecedor para serviço pesado padrão, não deve ser usado com Líquido Arrefecedor de Vida Longa.

PEÇAS NECESSÁRIAS:

Capacidade do Sistema de Arrefecimento		Líquido SCA Durante Abastecimento Inicial	Líquido SCA Durante Manutenção*	Elemento de Manutenção de SCA com Roscas*
Litros	Galões			
22-30	6-8	3P-2044 (1)	6V-3542 (1)	111-2370 (1)
30-38	8-10	3P-2044 (1) 6V-3542 (1)	111-2372 (1)	111-2369 (1)
38-49	10-13	3P-2044 (1) 8T-1589 (1)	111-2372 (1)	111-2369 (1)
49-64	13-17	3P-2044 (2)	8T-1589 (1)	9N-3368 (1)
64-83	17-22	3P-2044 (2) 8T-1589 (1)	111-2372 (1) 6V-3542 (1)	111-2371 (1)
83-114	22-30	3P-2044 (3) 8T-1589 (1)	3P-2044 (1)	9N-3718 (1)
114-163	30-43	3P-2044 (5)	3P-2044 (1) 6V-3542 (1)	111-2371 (2)
163-242	43-64	3P-2044 (8)	3P-2044 (2)	9N-3718 (2)

** O período normal de manutenção é de 250 horas. Consulte o Manual de Operação e Manutenção para obter instruções completas quanto à manutenção do líquido arrefecedor.*

( ) Indica a quantidade exigida.

KÜHLMITTELZUSATZ

VORTEILE FÜR DEN KUNDEN:

Schutz gegen Kavitation, Schaumbildung, Erosion, Korrosion und Kesselsteinbildung in Kühlsystemen.

- Richtig dosierter Kühlmittelzusatz

BESCHREIBUNG:

Additive erschöpfen sich während des Motorbetriebs. Deshalb muß allen HD-Kühlmitteln regelmäßig Kühlmittelzusatz beigefügt werden. Wenn bei Erstfüllung kein vollwertiges Fertigkühlmittel, wie das Frostschutz- und Kühlmittel für Dieselmotoren von Caterpiller (DEAC), verwendet wird, muß bei Erstfüllung Kühlmittelzusatz beigefügt werden. Wieviel Kühlmittelzusatz beigefügt werden muß, hängt vom Inhalt des Kühlsystems ab.

Für Erstfüllung ist Kühlmittelzusatz nur in flüssiger Form erhältlich. Für Wartungsintervalle ist Kühlmittelzusatz in flüssiger Form und als Zusatzelement erhältlich. (Für die Motorbaureihe 3600 sind keine Zusatzelemente erhältlich.)

ANMERKUNG:

Die Kühlmittelmenge bei Erstfüllung ist nicht die gleiche Menge, die bei Wartungsintervallen beigefügt werden muß.

Die Kühlmittelzusatzelemente können mit allen Frostschutzmitteln auf Ethylen- oder Propylenglykolbasis verwendet werden, die den Standards nach ASTM D4985 oder ASTM D5345 entsprechen.

ANMERKUNG:

Den Kühlmittelzusatz nicht mit Langzeitkühlmittel (ELC) von Caterpillar verwenden. Der Kühlmittelzusatz ist nur für HD-Kühlmittel bestimmt.

TEILEBEZEICHNUNG:

Kühlsysteminhalt		Kühlmittelzusatz bei Erstfüllung	Flüssiger Kühlmittelzusatz bei Wartung*	Kühlmittelzusatzelement bei Wartung*
Liter	US-Gall.			
22-30	(6-8)	3P-2044 (1)	6V-3542 (1)	111-2370 (1)
30-38	(8-10)	3P-2044 (1) 6V-3542 (1)	111-2372 (1)	111-2369 (1)
38-49	(10-13)	3P-2044 (1) 8T-1589 (1)	111-2372 (1)	111-2369 (1)
49-64	(13-17)	3P-2044 (2)	8T-1589 (1)	9N-3368 (1)
64-83	(17-22)	3P-2044 (2) 8T-1589 (1)	111-2372 (1) 6V-3542 (1)	111-2371 (1)
83-114	(22-30)	3P-2044 (3) 8T-1589 (1)	3P-2044 (1)	9N-3718 (1)
114-163	(30-43)	3P-2044 (5)	3P-2044 (1) 6V-3542 (1)	111-2371 (2)
163-242	(43-64)	3P-2044 (8)	3P-2044 (2)	9N-3718 (2)

** Der normale Wartungsintervall beträgt 250 Betriebsstunden. Für vollständige Anweisungen zur Wartung des Kühlsystems, siehe Betriebs- und Wartungshandbuch.*

( ) Erforderliche Anzahl

NOMENCLATURA DE PEÇAS INGLÊS-PORTUGUÊS

INGLÊS	PORTUGUÊS
ABOVE	Acima
ABSORBER	Amortecedor
ACCESSORY	Acessório
ACTUATOR	Acionador
ADAPTER	Adaptador
ADHESIVE	Adesivo
ADJUSTER	Adjustador
AFTERCOOLER	Pós-resfriador
AIR	Ar
AIR CLEANER	Purificador de ar
AIR SYSTEM	Sistema de ar
ALARM	Alarme
ALTERNATOR	Alternador
AMMETER	Amperímetro
ANCHOR	Âncora, fixador
ANGLE	Ângulo, canto
ANVIL A.	Bigorna conj.
ARBOR	Mandril, eixo
ARM	Braço
ARMATURE	Armadura, Induzida
ARM REST	Apoio para braço
ARRESTER	Detentor
ASSEM. = ASSEMBLY	Conjunto
ATTACHMENT	Acessório
AVAILABLE	Disponível
AXLE	Eixo
AXLE SHAFT	Semi-eixo, ponta
BACK-UP ALARM	Alarme de marcha à ré
BACK-UP LIGHT	Luz da marcha à ré
BACK-UP SWITCH	Interruptor de marcha à ré
BACKBOARD	Prancha traseira
BACK CUSHION	Encosto
BACKHOE	Retroescavadeira
BAFFLE	Defletor
BAG	Saco, sacola
BAIL	Alça
BALANCER	Balanceador
BALL	Esfera
BALLCHECK ASSEMBLY	Conjunto de (válvula) de esfera de retenção
BALL JOINT	Junta esférica
BALLSTUD	Munhão esférica
BAND	Banda, cinta, tira
BAND & LINING	Banda e revestimento
BAR	Barra
BARREL	Cilindro
BARRIER	Barreira
BASE	Base
BASIN	Bacia, coletor
BATTERY	Bateria
BEAM	Barra, viga, trave
BEARING	Mancal, rolamento
BEARING BALL	Rolamento de esferas
BEARING-SLEEVE	Mancal tipo luva
BEARING-NEEDLE	Rolamento de agulha
BEARING-ROLLER	Rolamento tipo roletes
BELL	Campânula
BELLCRANK	Alavanca angular
BELLOWS	Fole
BELOW	Abaixo
BELT	Correia, cinto
BELT TIGHTENER	Ajustador de correia
BEVEL GEAR	Coroa
BIT-CUTTER	Broca, fresa
BLACK	Preto
BLADE	Lâmina
BLEEDER	Sangrador
BLOCK	Bloco, calço
BLOWER	Ventilador
BLUE	Azul
BOARD	Prancha, tábua
BODY	Corpo
BOLT	Parafuso
BONNET	Tampa
BOOM	Lança
BOOSTER	Reforçador
BOOT	Protetor contra poeira
BORE	Furo
BOSS	Ressalto
BOTH	Ambos (as)
BOTTOM	Fundo
BOWL	Caçamba
BOX	Caixa
BRACE	Tirante
BRACKET	Suporte
BRAKE	Freio
BREAKER	Interruptor
BREATHER	Respiro
BRIDGE	Braço
BROWN	Marrom
BRUSH	Escova
BUCKET	Caçamba
BULB	Bulbo
BULLDOZER	Bulldozer
BUMPER	Pára-choque
BUSHING	Bucha
BUTTON	Botão
BUZZER WARNING	Alarme sonoro
C = CHANGE	Alteração
CAB	Cabina
CABINET	Gabinete
CABLE	Cabo
CAGE	Alojamento
CALIPER	Calibrador
CAM	Excêntrico, ressalto
CAMSHAFT	Eixo-comando-de-válvulas
CANOPY	Coberta, toldo

NOMENCLATURA DE PEÇAS INGLÊS-PORTUGUÊS

INGLÊS	PORTUGUÊS
CAP	Tampa
CAPACITOR	Capacitor, condensador
CARBURETOR	Caburador
CARCASS	Carcaça
CARRIER	Suporte
CARTON	Caixa de papelão
CARTRIDGE	Cartucho
CASE	Caixa, alojamento
CASING	Invólucro, revestimento
CASTER	Rolete, roldana
CAST IRON	Ferro fundido
CATWALK	Passadiço
CENTER	Centro
CHAIN	Corrente
CHAMBER	Câmara
CHANGEOVER	Modificação
CHANNEL	Canal
CHASSIS	Chassi, armação
CHECK-VALVE	Válvula de retenção
CIRCUIT	Circuito
CIRCUIT BREAKER	Interruptor de circuito
CLAMP	Braçadeira
CLASP	Fecho, grampo
CLEANER	Purificador
CLEVIS	Forquilha, garfo
CLIP	Clipe, presilha, grampo
CLOSURE	Fecho
CLUTCH	Embreagem
COARSE	Grosso, áspero
COATING	Capa, revestimento
COCK	Torneira
COIL	Bobina, serpentina
COLLAR	Colar
COLLECTOR	Coletor
COLLET	Mandril
COLUMN	Coluna
COMPACTOR	Compactador
COMPARTMENT	Compartimento
COMPLETE	Completo
COMPOUND	Composto
COMPRESSOR	Compressor
CONCAVE	Côncavo
CONDITIONER	Condicionador
CONDUIT	Conduite, eletroduto
CONE	Cone
CONNECTING	Ligação
CONNECTED ROD	Biela
CONNECTION	Conexão
CONNECTOR	Conetor
CONSISTS OF	Consiste de
CONSOLE	Consolo
CONTACT	Contato, platinado
CONTACTOR	Contactador
CONTINUED FROM	Continuação de
CONTROL	Controle
CONVERSION	Conversão
CONVERTER	Conversor
COOLER	Arrefecedor
COOLING	Arrefecimento
CORK	Cortiça
CORE	Núcleo
CORNER	Canto
COTTER PIN	Contrapino
COUNTER	Contador, tacômetro
COUNTERWEIGHT	Contrapeso
COUPLER	Acoplador, engate
COUPLING	Acoplamento, conexão
COVER	Tampa
COWL	Capota
COWLING	Capota
CRADLE	Armação, suporte
CRANK	Manivela
CRANKCASE	Cárter
CRANKSHAFT	Virabrequim
CROSS UNION	Junta transversal
CROSSBAR	Barra transversal
CUP	Capa, anel externa
CURTAIN	Cortina
CUSHION	Almofada, amortecedor
CUTTER	Fresa, cortador
CUTTING EDGE	Borda cortante
CYLINDER	Cilindro
CYLINDER BLOCK	Bloco do motor
CYLINDER HEAD	Cabeçote
DAMPER	Amortecedor
DARK GREEN	Verde escuro
DASH	Painel
DASH PANEL	Painel de Instrumento
DECELERATOR	Desacelerador
DEFLECTOR	Defletor
DETENT	Retém, pino de trava
DIAGRAM-WIRING	Diagrama dos circuitos elétricos
DIAL	Medidor de dial
DIAPHRAGM	Diafragma
DIESEL ENGINE COMPLETE	Motor diesel completo
DIFFERENTIAL	Diferencial
DIFFUSER	Difusor
DIMMER	Redutor de luminosidade
DIODE	Diodo
DIRECTOR	Diretor
DISC	Disco
DISCONNECT	Desligar
DISPOSABLE	Disponível, substituível
DISSIPATOR	Dissipador de calor
DISTRIBUTOR	Distribuidor
DM = DECIMETER	dm = decímetro

NOMENCLATURA DE PEÇAS INGLÊS-PORTUGUÊS

INGLÊS	PORTUGUÊS
DOME LIGHT	Lâmpada do teto
DOOR	Porta
DOWEL	Pino-guia, cavilha
DOWNSHIFT	Mudança para marcha mais baixa
DOZER	Bulldozer (lâmina)
DRAIN	Dreno
DRAWBAR	Barra de tração
DRILL	Broca
DRILLED	Broqueado, perturado
DRIVE	Comando, acionamento, propulsão
DRIVER	Acionador, mecanismo propulsor
DRIVESHAFT	Eixo acionador, eixo de transmissão
DRUM	Tambor
DUCT	Conduto, canal
EACH	Cada
EDGE	Borda, canto
EFFECTIVE WITH	Efetivo a partir de
EJECTOR	Ejetor
ELBOW	Cotovelo
ELEMENT	Elemento
ENCLOSURE	Cobertura
END	Extremidade
END BIT	Canto de lâmina
END VIEW	Vista traseira
ENGINE	Motor
ENGINE ARRANGEMENT	Arranjo do motor
EXCEPT	Exceto
EXHAUST	Escape
EXHAUST PIPE	Cano de escape
EXPANDER	Expansor
EXPANSION PLUG	Bujão de expansão
EXTENSION	Extensão
EXTINGUISHER	Extintor
EXTRACTOR	Extrator
EYE	Olhal
EYEBOLT	Parafuso de olhal
FABRIC	Tecido, tela textura
FACING	Revestimento, forro
FAN	Ventilador
FASTENED	Fixo, preso
FASTENER	Fixador, prendedor
FENDER	Pára-lamas
FERRULE	Virola
FIELD COIL	Bobina indutora, ou de campo
FIELD REPLACEMENT	Reposicão ou substituicão no campo
FILLER	Bocal de enchimento
FILM	Película
FILTER	Filtro
FINAL DRIVE	Comando final
FINGER	Dedo
FIREWALL	Parede contra fogo
FITTING	Graxeira, conexão
FIXTURE	Dispositivo, Aparelho
FLANGE	Flange
FLASHER	Luz intermitente
FLOAT	Flutuar, livre
FLOOD-LAMP	Farol
FLOOR	Piso
FLOORMAT	Tapete
FLOORPLATE	Chapa do piso
FLYWEIGHT	Peso volante
FLYWHEEL	Volante
FOLLOWER	Seguidor
FOOT	Pé
FORK	Garfo
FOR USE WITH	Para usar com
FOUNDATION	Assentamento, alicerce
FRAME	Armacão, chassi
FRONT	Frente, dianteiro
FT = FOOT	Pé
FUEL INJECTION	Injecão de combustível
FUEL PUMP	Bomba de combustível
FUEL RATIO	Limitador de combustível
FUEL SYSTEM	Sistema do combustível
FUEL TANK	Tanque do combustível
FUMES DISPOSAL	Eliminação de vapores do cárter
FUSE	Fusível
G = GROUP	Grupo
GAGE	Indicador, manômetro
GAP	Folga, lacuna, intervalo
GASKET	Junta
GASKET KIT	Jogo de junta
GATE	Entrada, trava
GAUGE	Indicador, manômetro
GEAR	Engrenagem, marcha
GEAR BOX	Caixa de engrenagem
GEAR PUMP	Bomba de engrenagem
GENERATOR	Gerador
GLAND	Junta, gaxeta, vedacão sobreposta
GLASS	Vidro
GLOW PLUG	Vela incandescente
GOVERNOR	Governador
GRAB IRON	Balaústre corrimão
GRATE	Grade, grelha
GRAY	Cinza
GRID	Grade, grelha
GRILL	Grade, grelha
GRIP	Pega, garra, cabo

NOMENCLATURA DE PEÇAS INGLÊS-PORTUGUÊS

INGLÊS	PORTUGUÊS
GROMMET	Ilhós
GROUND BRUSH	Escova-terra
GROUND (ELECTRIC)	Terra (eletricidade)
GROUSER	Garra (de sapata)
GUARD	Protetor
GUIDE	Guia
GUSSET	Cantoneira
HACKSAW	Serra para metais
HALF	Metade, meio (a)
HALF LINK	Semi-elo
HAMMER	Martelo
HAND CONTROL	Controle manual
HANDLE	Cabo, alça
HANDRAIL	Corrimão, balaústre
HANGER	Suporte, dispositivo de suspensão
HARDWARE	Ferragem
HARDWARE KIT	Jogo de ferragem
HARNESS	Chicote
HEAD = HD	Cabeça
HEADER	Coletor
HEADLAMP	Farol dianteiro
HEADLIGHT	Farol dianteiro
HEAT SINK	Difusor de calor
HEATER	Aquecedor
HIGH-IDLE	Marcha acelerada em vazio
HINGE	Dobradiça, articulacão
HITCH	Engate
HOIST	Guincho, talha
HOLD	Suporte, fixador
HOLD DOWN	Fixar, reter, manter abaixado
HOLDER	Fixador, suporte
HOLE	Furo, buraco
HOOD	Capô
HOOD & DASH	Capô e painel
HOOK	Gancho
HORN	Buzina
HOSE	Mangueira
HOUSING	Alojamento
HUB	Cubo
HYDRAULIC	Hidráulico
ID = INSIDE DIAMETER	Diâmetro interno
IDLER	Roda-guia
IDLER & SHAFT	Roda-guia e eixo
IDLER GEAR	Engrenagem intermediária
IDLER PULLEY	Polia intermediária
IMPELLER	Impulsor, rotor
IN = INCH	Polegada
INCLUDES	Inclui
INDICATE	Indicam
INDICATOR	Indicador
INLAY	Incrustação
INLET	Admissão, entrada
INPUT	Entrada
INSERT	Inserção
INSTALLATION	Instalação
INSTALLED ON MODEL	Instalação no modelo
INSTRUCTION	Instrução
INSTRUMENT	Instrumento
INSULATED BRUSH	Escova isolada
INSULATION	Isolação, isolamento
INSULATOR	Isolante, isolador
INTAKE	Admissão
INTERLOCK	Trava interna
INTERMEDIATE	Intermediário
INTERNAL	Interno
INVERTER	Inversor
IRON	Ferro
JACK	Macaco
JAW	Mandíbula, garra
JET	Jato, vaporizador
JOINT	Junta, articulação
JUNCTION	Junção
KEY	Chaveta
KINGBOLT	Pino de engate
KNIFE	Faca, lâmina
KNOB	Maçaneta, botão
LADDER	Escada
LAMP	Lâmpada
LARGE	Grande
LATCH	Trinco, lingüeta
LEAD	Condutor, cabo
LEG	Perna
LENS	Lente
LEVEL	Nível
LEVER	Alavanca
L.H. = LEFT HAND	Lado esquerdo
LID	Placa, tampa
LIFT	Levantar
LIFT CYLINDER	Cilindro de levantamento
LIFTER	Tucho
LIFTING EYE	Olhal de levantamento
LIGHT GREEN	Verde claro
LIGHTING	Sistema de iluminação
LINE	Tubulação
LINER	Camisa
LINES & PUMP	Tubulação e bomba
LINES & VALVE	Tubulação e válvula
LINING	Revestimento, lona
LINK	Elo
LINKAGE	Articulação
LIP	Lábio, borda
LISTED	Relacionamento
LITERATURE	Literatura
LOCATED	Localizado

NOMENCLATURA DE PEÇAS INGLÊS-PORTUGUÊS

INGLÊS	PORTUGUÊS
LOCATOR	Localizador
LOCK	Trava
LOCKNUT	Contraporca
LOCKWASHER	Arruela de pressão
LOCKWIRE	Arame de trava
LONG	Longo
LOOM	Tubo isolador
LOW IDLE	Marcha lenta
LOUVER	Persiana
LOWER	Abaixar, inferior
LUBRICANT	Lubrificante
LUG	Ressalto, orelha
MACHINE SCREW	Parafuso de fenda
MAGNET	Imã magneto
MAIN	Principal
MAINTENANCE	Manutenção
MANIFOLD	Coletor
MARKED	Marcado (a)
MARKER	Marcador
MASTER PIN	Pino mestre
MAT	Capacho, esteira
METER	Medidor, contador
MINOR	Menor
MIRROR	Espelho
MISCELLANEOUS	Miscelânea
MODIFICATION	Modificação
MOLDBOARD	Armação da lâmina
MOTOR	Motor
MOULDING	Moldura
MOUNT	Montar
MOUNTED	Montado (a)
MOUNTING	Montagem
MUFFLER	Silenciador
NAMEPLATE	Plaqueta de identificação
N.C. (THREAD)	Rosca grossa
NEEDLE	Agulha
N.F. (THREAD)	Rosca fina
NIB	Ponta, bico
NIPPLE	Conexão
NONE	Nenhum (a)
NORMALIZING	Normalização
NOT PART OF	Não faz parte de
NOZZLE	Bocal, bico injetor
N/S = NOT SERVICED	Não vendável
NUMBER (No)	Número (No)
NUT	Porca
NUT-WING	Porca borboleta
NUT-CASTLE	Porca acastelada
NUT-WELD	Porca-soldada
NUT-CAP	Porca cega
NUT-HEX	Porca sextavada
NUT-LOCK	Contraporca
NUT-IMPERIAL	Porca imperial
NUT-JAM	Porca de trava, contraporca
NUT-LOW CROWN	Porca de meia coroa
NUT-RETAINING	Porca de retenção
NUT-SELF LOCK	Porca de autotravamento
NUT-SLOTTED	Porca fendada
NUT-SPANNER	Porca para chaves
O.D. = OUTSIDE DIAMETER	Diâmetro externo
O-RING	Anel "O"
OIL	Óleo
OILPAN	Cárter
OIL PUMP	Bomba de óleo
OIL SYSTEM	Sistema de lubrificação
OILER	Almotolia, lubrificador
ORANGE	Laranja
TO ORDER	Para pedir
ORIFICE	Orifício
OUTER	Externo
OUTER RACE	Anel externo
OUTPUT	Saída
OVERALL	Geral, total
OVERHAUL	Revisão
OVER SIZE	Sobremedida
PACKING	Embalagem, gaxeta
PAD	Coxim, calço
PADLOCK	Cadeado
PAINT	Pintura
PAN	Cárter
PANEL	Painel
PARKING BRAKE	Freio de estacionamento
PARTITION	Separacão
PARTS G	Grupo de peças
PARTS OF	Peça de
PARTS OF ALL ENGINE ARRANGEMENTS	Peças de todos os arranjos do motor exceto
PAWL	Garra
PEDAL	Pedal
PEDESTAL	Pedestal
PERFORMANCE	Desempenho
PILOT	Piloto
PIN	Pino
PIN & BUSHING	Pino e bucha
PIN-COTTER	Contrapino
PINCH BAR	Pé de cabra
PINION	Pinhão
PIPE	Tubo
PISTON	Pistão
PIVOT	Articulação, pivô
PLANETARY	Planetário
PLATE	Placa
PLATFORM	Plataforma
PLUG	Bujão
PLUNGER	Pistão, êmbolo

NOMENCLATURA DE PEÇAS INGLÊS-PORTUGUÊS

INGLÊS	PORTUGUÊS
POINT	Ponta, ponto
POINTER	Ponteiro
POLE & COIL	Polo e bobina
POLE	Polo, lança, vara
POPPET	Gatilho
POST	Poste, coluna
POTENTIOMETER	Potenciômetro
POWER TAKE OFF	Tomada de força
POWER TRAIN	Trem de força
PRE-SCREENER	Tela protetora
PRECHAMBER	Câmara de pré-combustão
PRECLEANER	Pré-purificador
PRECOMBUSTION	Pré-combustão
PRESS	Prensa
PRESS = PRESSURE	Pressão
PREVIOUS	Prévio, anterior
PRIMARY	Primário, principal
PROBE	Prova
PROJECTOR	Projeter
PROTECTION	Proteção
PROTECTOR	Proteter
PULLER	Extrator, sacador
PULLEY	Polia
PUMP	Bomba
PURPLE	Roxo
PUSHROD	Haste de empuxo
QTY = QUANTITY	Quantidade
RACE	Pista
RACE & ROLLER	Pista e rolete
RACK	Cremalheira
RADIATOR	Radiador
RAIL	Trilho, guia
RANGE TRANSM	Transmissão manual
RATCHET	Catraca
REAR	Traseiro (a)
REBORED	Escareado, alargado
REBUILD KIT	Jogo de recondicionamento
RECEPTACLE	Recipiente
RECTIFIER	Retificador
RED	Vermelho
REDUCER	Redutor
REFER	Referir
REGULATOR	Regulador
RELATED REPAIR ITEMS	Itens de reparos relacionados
RELAY	Relé
RELIEF VALVE	Válvula de alívio
REPAIR G	Grupo de reparo
REPAIR KIT	Jogo de reparo
REPAIR ITEMS	Itens de reparo
REPLACEMENT	Reposição, substituição
REQUIRED	Necessário
RESERVOIR A	Reservatôrio
RESIN	Resina
RESISTOR	Resistência
RETAINER	Fixador
RETARDER	Retardador
REVERSIBLE	Reversível
R.H. = RIGHT HAND	Lado direito
RIM	Aro
RIM & TIRE	Aro e pneu
RING	Anel
RIVET	Rebite
ROCKET	Balancim
ROD	Haste
ROD END	Extremidade da haste
ROLLER	Rolete
ROPE-STARTING	Partida à corda
ROTATOR	Girador
ROTOCHAMBER	Càmara pneumática
ROTOCOIL	Girador de válvula
ROTOR	Rotor
RUST INHIBITOR	Antioxidante
SADDLE	Sela, assento
SAFETY	Segurança
SAFETY TREAD	Tiras antiderrapante
SCRAPER	Tampa
SCREEN	Tela
SCREW	Parafuso
SCREW-HEX HD	Parafuso de cabeça hexagonal
SCREW-KIT	Jogos de parafuso
SCREW-MACHINE	Parafuso de fenda
SCREW-ROUND HD	Parafuso de cabeça redonda
SCREW-FLANGED	Parafuso com flange
SCREW-LOCKING	Parafuso de trava
SCREW-THUMB	Parafuso de orelhas
SCREWDRIVER	Chave de fenda
SEAL	Retentor
SEALED UNIT	Unidade vedada
SEALER	Vedador isolante
SEAT	Assento
SECONDARY	Secundário
SECTION	Seção
SEGMENT	Segmento
SENDER	Emissor
SENSOR	Sensor
SEPARATE	Separar, separado
SEPARATOR	Separador
SERIAL NUMBER PLATE	Placa de número de série
SERVICE	Serviço, manutenção
SERVICE KIT	Jogo de manutenção
SERVICE METER	Horômetro
SETSCREW	Parafuso de fixação
SHACKLE	Grilheto, anel, manilha
SHAFT	Eixo

NOMENCLATURA DE PEÇAS INGLÊS-PORTUGUÊS

INGLÊS	PORTUGUÊS
SHANK	Porta-ponta do escarificador
SHEAVE	Polia, roldana
SHEET	Folha, lâmina
SHELL	Invólucro, cápsula, casquilho
SHIELD	Blindagem, protetor
SHIFT	Mudança
SHIM	Calço
SHIPPING	Embarque
SHOCK ABSORBER	Amortecedor de choques
SHOCKMOUNT	Montagem a prova de choques
SHOE	Sapata
SHORT	Curto
SHOWN	Ilustrado, mostrado
SHROUD	Tampa de proteção
SHUNT	Derivação
SHUT OFF	Desligar, parada
SHUTTLE	Pistão de vaivém
SIDE	Lateral
SIDE VIEW	Vista lateral
SILICONE	Silicone
SINK	Absorvente de calor
SKIVING	Desbaste
SLACK ADJUSTER	Adjustador de folga
SLEEVE	Luva, manga, camisa
SLIDER	Cursor, deslizador
SLIDE RAIL	Trilho deslizante
SLING	Cabos, amarras, linga
SLINGER	Defletor
SLUG	Pistão de reação, pistãozinho
SMALL	Pequeno
SNAP RING	Anel de retenção, anel de pressão
SNUBBER	Amortecedor
SOCKET	Soquete, tomada
SOLENOID	Solenóide
SPACER	Espaçador
SPARE	Sobressalente
SPARK PLUG	Vela de ignição
SPECIAL	Especial
SPEEDOMETER	Velocimetro
SPIDER	Cruzeta
SPINDLE	Ponta de eixo
SPLINE	Estria
SPOOL	Carretel
SPOUT	Calha, tubo
SPRING	Mola
SPROCKET	Roda motriz, roda dentada
STABILIZER	Estabilizador
STACK	Chaminé, cano de escapamento
STAND	Suporte, cavalete
STANDPIPE	Suporte vertical de sucção
STAPLE	Grampo
STARTER	Arranque motor de partida
STATOR	Estator
STEERING	Direção
STEM	Haste
STEP	Degrau
STICK	Vareta
STOP	Parar
STORAGE	Armazenagem
STRAINER	Tela filtrante
STRAP	Tira, cinta, suporte de fixação
STREET ELL	Conexão cotovelo
STRIP	Tira, fita, listra
STROKE	Curso do pistão
STUD	Prisioneiro
SUMP	Tanque, reservatório
SUPPLY VALVE	Válvula de suprimento
SUPPORT	Suporte
SUSPENSION	Suspensão
SWITCH	Interruptor
SWIVEL	Articulação giratória
TAB	Tira, aba, lingüeta
TABLE	Mesa
TACHOGRAPH	Tacógrafo
TACHOMETER	Tacômetro
TAG	Etiqueta
TAIL LAMP	Farol traseiro
TAN	Castanho
TANG	Lingüeta
TANK	Tanque
TAP	Macho
TAPE	Fita
TAPPET	Tucho
TEE	Conexão em "T"
TEMP. = TEMPERATURE	Temperatura
TERMINAL	Terminal
TEST UNIT	Unidade de teste
TESTER	Aparelho de teste
THERMISTOR	Termistor
THERMOCOUPLE	Termopar
THERMOMETER	Termômetro
THERMOSTAT	Termostato
THERMOSWITCH	Interruptor térmico
THICK	Grosso (a) espesso (a)
TIE	Ligação, tirante
THREAD (OF NUT)	Rosca (de porca)
THROTTLE	Acelerador de
THROWER	Defletor
THRU = THROUGH	Através de
TIGHTENER	Tensor
TILT CYLINDER	Cilindro de inclinação
TIMING	Sincronização, Distribuição

NOMENCLATURA DE PEÇAS INGLÊS-PORTUGUÊS

INGLÊS	PORTUGUÊS
TIP	Ponta
TIRE	Pneu
TIRE & RIM	Pneu e aro
TONGUE	Língua, lingueta
TOOL	Ferramenta
TOOLCABINET	Armário para ferramenta
TOOTH/TEETH	Dente/dentes
TOP	Topo, parte superior
TORQUE	Torque
TORQ. CONV.	Conversor de torque
TORQ. DIVIDER	Divisor de torque
TOWER	Torre
TRACK	Esteira
TRACK PIN	Pino de esteira
TRACTOR	Trator
TRAILING UNIT	Unidade rebocada
TRANSFER	Decalcomania
TRANSFORMER	Transformador
TRANSISTOR	Transistor
TRANSMISSION	Transmissão
TRANSMISSION OVERHAUL	Revisão da transmissão
TREAD	Piso, banda de rodagem
TREADLE	Pedal
TROLLY	Carrinho
TRUCK	Caminhão
TRUNNION	Munhão
TUBE	Tubo, cano
TUBING	Tubulagem canalização
TURBINE	Turbina
TURBOCHARGER	Turboalimentador
U-BOLT	Parafuso em "U"
U-JOINT	Junta universal
UNDERSIZE	Submedida
UNION	União
UPPER	Superior
USE AS REQUIRED	Usar conforme necessitar
VALUE	Valor
VALVE	Válvula
VALVE GRINDING	Retificação das válvulas
VEE BELT	Correia "V"
VEE BELT SET	Jogo de correia em "V"
VENT	Respiro
VIEW	Vista
VISE	Morsa, torno
VISOR	Pára-sol
WALKWAY	Passadiço, corredor
WARNING G.	Grupo de alarma
WASHER	Arruela
WATER PUMP	Bomba d'água
WEARPLATE	Placa de desgaste
WEDGE	Cunha
WEIGHT	Peso
WELD	Solda
WELDNUT	Porca soldada
WHEEL	Roda
WHITE	Branco
WICK	Mecha, pavio
WINCH	Guincho
WINDOW	Janela
WINDSHIELD	Pára-brisa
WIPER	Limpador
WIRE	Fio
WIRING	Sistema elétrico
WIRING DIAGRAM	Diagrama do sistema elétrico
WITH	Com
WRAPPER	Invólucro, envoltório
WRENCH	Chave
YELLOW	Amarelo
YOKE	Garfo

MAINTENANCE PARTS

DESCRIPTION	PART NUMBER	QTY	WHERE USED	PAGE
AIR INLET AND EXHAUST SYSTEM				
FILTER ELEMENT AS-AIR (PRIMARY)	245-6375	1	AIR CLEANER GP	81
FILTER ELEMENT AS-AIR (SECONDARY)	245-6376	1	AIR CLEANER GP	81
COOLING SYSTEM				
CAP-RADIATOR (7-PSI)	6L-8617	1	TANK GP-RADIATOR TOP	79
GASKET (TEMPERATURE REGULATOR HOUSING)	222-5915	1	LINES GP-WATER	69
REGULATOR-WATER TEMPERATURE (94-DEG C) (COOLANT)	119-3075	2	LINES GP-WATER	69
ELECTRICAL AND STARTING SYSTEM				
BELT-SERPENTINE	246-6296	1	ALTERNATOR GP-CHARGING	119
CIRCUIT BREAKER AS (105-AMPERE) (ALTERNATOR)	171-2212	1	WIRING GP-CHASSIS	229
CIRCUIT BREAKER AS (15-AMPERE) (POWER GUARD ACTUATOR)	3T-2662	1	WIRING GP-WASTE HANDLER	263
CIRCUIT BREAKER AS (15-AMPERE) (RUNNING LIGHTS)	3T-2662	1	WIRING GP-CHASSIS	229
CIRCUIT BREAKER AS (50-AMPERE) (START)	171-2206	1	WIRING GP-CHASSIS	229
CIRCUIT BREAKER AS (80-AMPERE) (MAIN)	171-2210	1	WIRING GP-CHASSIS	229
CIRCUIT BREAKER AS (90-AMPERE) (STARTING AID)	171-2211	1	WIRING GP-CHASSIS	229
CIRCUIT BREAKER GP (20-AMPERE) (HOOD TILT ACTUATOR)	6T-3644	1	WIRING GP-CHASSIS	229
CIRCUIT BREAKER GP (20-AMPERE) (UNSWITCHED BAT POWER TO CAB)	6T-3644	1	WIRING GP-CHASSIS	229
ELEMENT AS-JACKET WATER HEATER (120-VOLT, 1000-WATT)	246-8628	1	HEATER GP-JACKET WATER	136
ELEMENT AS-JACKET WATER HEATER (240-VOLT, 1000-WATT)	246-8627	1	HEATER GP-JACKET WATER	135
FLASHER AS (24-VOLT)	217-8166	1	SWITCH GP-SIGNAL	211
FUSE (10-AMPERE)	9W-1442	24	WIRING GP-CAB	220
		24	WIRING GP-OPEN ROPS	248
FUSE (15-AMPERE)	9W-1441	7	WIRING GP-CAB	220
		6	WIRING GP-OPEN ROPS	248
FUSE (20-AMPERE)	9W-1446	1	WIRING GP-CAB	220
		2	WIRING GP-OPEN ROPS	248
KEY AS-ELECTRONIC (SECURITY)	206-5162	2	INSTALLATION GP-SECURITY	138
LAMP-HALOGEN (24-VOLT, 65-WATT) (FLOODLIGHT)	9X-3463	1	LAMP GP-FLOOD	143
		1	LAMP GP-FLOOD	144
LAMP (12-VOLT, 24-VOLT, 35-WATT)	209-6638	1	LAMP GP-FLOOD	141
		1	LAMP GP-FLOOD	142
LAMP (24-VOLT)	7N-5876	4	WIRING GP-CAB	220
		4	WIRING GP-OPEN ROPS	248
	7N-9943	1	LAMP GP-DOME	140
	100-3245	2	LAMP GP-HEAD & SIGNAL	145
LAMP (24-VOLT) (SIGNAL)	100-3245	2	LAMP GP-HEAD & SIGNAL	147
LAMP (24-VOLT, 21-WATT)	9X-4493	1	LAMP GP-SIGNAL	149
		1	LAMP GP-STOP & TAIL	151

MAINTENANCE PARTS

DESCRIPTION	PART NUMBER	QTY	WHERE USED	PAGE
LAMP (24-VOLT, 21-WATT) (SIGNAL)	9X-4493	1	LAMP GP-HEAD & SIGNAL	145
		1	LAMP GP-HEAD & SIGNAL	147
LAMP (24-VOLT, 5-WATT)	9X-4492	1	LAMP GP-STOP & TAIL	151
LAMP (24-VOLT, 70-WATT)	9X-7849	1	LAMP GP-WARNING BEACON	152
LAMP (24-VOLT, 75/70-WATT)	9X-3465	1	LAMP GP-HEAD & SIGNAL	145
LAMP (24-VOLT, 75/70-WATT) (HEAD)	9X-3465	1	LAMP GP-HEAD & SIGNAL	147
LENS-AMBER	9X-3066	1	LAMP GP-SIGNAL	149
LENS (AMBER) (SIGNAL)	100-3250	1	LAMP GP-HEAD & SIGNAL	145
		1	LAMP GP-HEAD & SIGNAL	147
LENS AS (AMBER) (SIGNAL)	136-3848	1	LAMP GP-HEAD & SIGNAL	145
		1	LAMP GP-HEAD & SIGNAL	147
LENS AS (HEADLIGHT)	100-3248	1	LAMP GP-HEAD & SIGNAL	145
		1	LAMP GP-HEAD & SIGNAL	147
FUEL SYSTEM				
CAP-FUEL	246-1479	1	TANK GP-FUEL	112
FILTER AS-FUEL (FILLER NECK SCREEN)	180-3730	1	TANK GP-FUEL	112
FILTER AS-FUEL (SECONDARY)	1R-0762	1	FILTER & LINES GP-FUEL	94
FILTER AS-WATER SEP & FUEL (PRIMARY)	1R-0770	1	FILTER GP-WATER SEP & FUEL	96
SEAL	220-8678	1	FILTER GP-WATER SEP & FUEL	96
VALVE-BREAKER RELIEF	188-8844	1	TANK GP-FUEL	112
HYDRAULIC SYSTEM				
CAP-FILLER (HYDRAULIC TANK)	7H-1447	1	TANK GP-HYDRAULIC	541
FILTER AS-OIL (HYDRAULIC CASE DRAIN)	144-0832	1	FILTER GP-OIL	497
FILTER ELEMENT AS-OIL (HYDRAULIC)	225-4118	1	FILTER GP-OIL	496
PLUG-DRAIN	9J-7031	1	VALVE GP-DRAIN	569
SCREEN	6E-5066	1	MANIFOLD GP-VALVE	524
		1	MANIFOLD GP-VALVE	526
SCREEN AS (HYDRAULIC TANK)	9T-9227	2	TANK GP-HYDRAULIC	541
SCREEN (CONTROL VALVE MANIFOLD)	6E-5066	1	MANIFOLD GP-CONTROL	522
STRAINER AS (HYDRAULIC TANK FILL)	5D-7927	1	TANK GP-HYDRAULIC	541
LUBRICATION SYSTEM				
BREATHER AS (CRANKCASE)	164-0210	1	BREATHER GP	52
CAP AS-FILLER (ENGINE OIL)	5L-2952	1	FILLER GP-ENGINE OIL	53
FILTER AS-ENGINE OIL	1R-1807	1	FILTER GP-ENGINE OIL	54

MAINTENANCE PARTS

DESCRIPTION	PART NUMBER	QTY	WHERE USED	PAGE
OPERATOR STATION				
ACCUMULATOR GP-REFRIGERANT	186-6189	1	LINES GP-AIR CONDITIONER	687
BATTERY (LITHIUM)	101-1785	1	CONTROL GP-MONITOR	653
BELT-SERPENTINE	253-4531	1	COMPRESSOR GP-REFRIGERANT	649
BLADE AS-WIPER	6V-7419	2	WIPER GP-WINDOW	769
FILTER-CAB AIR	7X-6041	2	DUCT & FILTER GP-AIR	657
FUSE (15-AMPERE)	133-9012	1	AIR CONDITIONER GP	639
		1	HEATER GP-CAB	672
KEY-HANDLE	3V-7476	1	DUCT & FILTER GP-AIR	657
LAMP (24-VOLT)	7N-5876	1	MONITOR GP-PAYLOAD	709
PADLOCK GP	5P-8502	2	GUARD GP-VANDALISM	665
RECEIVER-DRYER GP (AIR CONDITIONER)	175-7162	1	LINES GP-AIR CONDITIONER	687
SEAT BELT GP	236-7019	1	SEAT GP-SUSPENSION	748
		1	SEAT GP-SUSPENSION	749
POWER TRAIN				
BELT-SERPENTINE	215-3015	1	PUMP & MTG GP-AXLE OIL COOLER	316
	217-3031	1	PUMP & MTG GP-AXLE OIL COOLER	316
BREATHER AS	9C-4937	1	GEAR GP-OUTPUT TRANSFER	293
CAP-FILLER (POWER TRAIN)	5K-1568	1	FILLER GP-POWER TRAIN OIL	282
		1	FILLER GP-POWER TRAIN OIL	284
FILTER ELEMENT (POWER TRAIN)	1G-8878	1	FILTER GP-OIL	287
FILTER-MAGNETIC (AXLE OIL COOLER)	251-6351	2	LINES GP-AXLE OIL COOLER	300
PLUG	138-1510	1	GEAR GP-OUTPUT TRANSFER	292
	175-4966	1	DRAIN GP-ECOLOGY	281
PLUG-MAGNETIC	5P-4484	1	HOUSING GP-FIXED AXLE	296
		1	HOUSING GP-OSCILLATING AXLE	298
SCREEN GP-MAGNETIC	4S-8603	1	GEAR GP-OUTPUT TRANSFER	292
SCREEN-SUCTION	4S-8598	1	GEAR GP-OUTPUT TRANSFER	292

PIÈCES DE RECHANGE

DESCRIPTION	NUMÉRO DE PIECÈS	QTÉ	DOMAINE D'APPLICATION	PAGE
CIRCUIT D'ADMISSION D'AIR ET D'ÉCHAPPEMENT				
ÉLÉMENT DE FILTRE À AIR (ENS) (PRINCIPAL)	245-6375	1	FILTRE A AIR (ASS)	81
ÉLÉMENT DE FILTRE À AIR (ENS) (SECONDAIRE)	245-6376	1	FILTRE A AIR (ASS)	81
CIRCUIT DE CARBURANT				
BOUCHON DE CARBURANT	246-1479	1	RÉSERVOIR DE CARBURANT (ASS)	112
BOURRELET D'ÉTANCHÉITÉ	220-8678	1	FILTRE DE SÉPARATEUR D'EAU ET DE CARBURANT (ASS)	96
CLAPET DE DÉCHARGE HYDRAULIQUE	188-8844	1	RÉSERVOIR DE CARBURANT (ASS)	112
FILTRE - SÉPARATEUR D'EAU ET DE CARBURANT (ENS) (PRINCIPAL)	1R-0770	1	FILTRE DE SÉPARATEUR D'EAU ET DE CARBURANT (ASS)	96
FILTRE A CARBURANT (ENS) (AUXILIAIRE)	1R-0762	1	FILTRE ET CANALISATIONS DE CARBURANT (ASS)	94
FILTRE A CARBURANT (ENS) (TAMIS DE GOULOTTE DE REMPLISSAGE)	180-3730	1	RÉSERVOIR DE CARBURANT (ASS)	112
CIRCUIT DE GRAISSAGE				
BOUCHON DE GOULOTTE DE REMPLISSAGE (ENS) (HUILE MOTEUR)	5L-2952	1	BOUCHON DE REMPLISSAGE D'HUILE MOTEUR (ASS)	53
FILTRE A HUILE MOTEUR (ENS)	1R-1807	1	FILTRE À HUILE MOTEUR (ASS)	54
RENIFLARD (ENS) (CARTER)	164-0210	1	RENIFLARD (ASS)	52
CIRCUIT DE REFROIDISSEMENT				
CHAPEAU - RADIATEUR (7-PSI)	6L-8617	1	RÉSERVOIR DU COUVERCLE DE RADIATEUR (ASS)	79
JOINT PLAT (BOÎTIER DE RÉGULATEUR DE TEMPÉRATURE)	222-5915	1	CANALISATIONS D'EAU (ASS)	69
THERMOSTAT-TEMPÉRATURE D'EAU (94-DEG C) (LIQUIDE DE REFROIDISSEMENT)	119-3075	2	CANALISATIONS D'EAU (ASS)	69
CIRCUIT ELECTRIQUE ET DE DEMARRAGE				
AMPOULE (12V, 24V, 35W)	209-6638	1	LAMPE - PHARE (ASS)	141
		1	LAMPE - PHARE (ASS)	142
AMPOULE (24 VOLTS)	7N-5876	4	CABLAGE DE TOIT ROPS OUVERT (ASS)	248
	7N-9943	1	PLAFONNIER (ASS)	140
	7N-5876	4	CABLAGE DE CABINE (ASS)	220
	100-3245	2	LAMPE - PHARE ET CLIGNOTANT	145
AMPOULE (24 VOLTS) (SIGNAL)	100-3245	2	LAMPE - PHARE ET CLIGNOTANT	147
AMPOULE (24V, 21W)	9X-4493	1	FEUX ARRIÈRE ET FEUX D'ARRÊT	151
		1	LAMPE - CLIGNOTANT DE DIRECTION (ASS)	149
AMPOULE (24V, 21W) (SIGNAL)	9X-4493	1	LAMPE - PHARE ET CLIGNOTANT	145
		1	LAMPE - PHARE ET CLIGNOTANT	147
AMPOULE (24V, 5W)	9X-4492	1	FEUX ARRIÈRE ET FEUX D'ARRÊT	151
AMPOULE (24V, 70W)	9X-7849	1	LAMPE - GYROPHARE (ASS)	152
AMPOULE (24V, 75/70W)	9X-3465	1	LAMPE - PHARE ET CLIGNOTANT	145

* TRADUCTION NON DISPONIBLE AU MOMENT DE LA PUBLICATION

PIÈCES DE RECHANGE

DESCRIPTION	NUMÉRO DE PIECÈS	QTÉ	DOMAINE D'APPLICATION	PAGE
AMPOULE (24V, 75/70W) (TÊTE)	9X-3465	1	LAMPE - PHARE ET CLIGNOTANT	147
CLÉ ÉLECTRONIQUE (ENS) (SÉCURITÉ)	206-5162	2	MONTAGE-SÉCURITÉ (ASS)	138
CLIGNOTANT (ENS) (24 VOLTS)	217-8166	1	INTERRUPTEUR - SIGNAL (ASS)	211
COURROIE MULTIPLE	246-6296	1	ALTERNATEUR DE CHARGE (ASS)	119
DISJONCTEUR (ASS) (20A) (ALIM BAT NON RELIÉE À LA CABINE)	6T-3644	1	CABLAGE DE CHASSIS (ASS)	229
DISJONCTEUR (ASS) (20A) (COMMANDE VÉRIN DE CAPOT)	6T-3644	1	CABLAGE DE CHASSIS (ASS)	229
DISJONCTEUR (ENS) (105A) (ALTERNATEUR)	171-2212	1	CABLAGE DE CHASSIS (ASS)	229
DISJONCTEUR (ENS) (15A) (COMMANDE DE PROTECTION À ASSISTANCE)	3T-2662	1	*WIRING GP-WASTE HANDLER	263
DISJONCTEUR (ENS) (15A) (FEUX DE ROUTE)	3T-2662	1	CABLAGE DE CHASSIS (ASS)	229
DISJONCTEUR (ENS) (32-AMPÈRES) (DÉMARRAGE)	171-2206	1	CABLAGE DE CHASSIS (ASS)	229
DISJONCTEUR (ENS) (80A) (PRINCIPAL)	171-2210	1	CABLAGE DE CHASSIS (ASS)	229
DISJONCTEUR (ENS) (90A) (AUXILIAIRE DE DÉMARRAGE)	171-2211	1	CABLAGE DE CHASSIS (ASS)	229
ÉLÉMENT DU RÉCHAUFFEUR D'EAU DES CHEMISES (ENS) (120-VOLT, 1000-WATT)	246-8628	1	EAU DES CHEMISES - RECHAUFFEUR (ASS)	136
ÉLÉMENT DU RÉCHAUFFEUR D'EAU DES CHEMISES (ENS) (240V, 1000W)	246-8627	1	EAU DES CHEMISES - RECHAUFFEUR (ASS)	135
FUSIBLE (10A)	9W-1442	24	CABLAGE DE CABINE (ASS)	220
		24	CABLAGE DE TOIT ROPS OUVERT (ASS)	248
FUSIBLE (15A)	9W-1441	7	CABLAGE DE CABINE (ASS)	220
		6	CABLAGE DE TOIT ROPS OUVERT (ASS)	248
FUSIBLE (20A)	9W-1446	1	CABLAGE DE CABINE (ASS)	220
		2	CABLAGE DE TOIT ROPS OUVERT (ASS)	248
LAMPE HALOGÈNE (24V, 65W) (PROJECTEUR)	9X-3463	1	LAMPE - PHARE (ASS)	143
		1	LAMPE - PHARE (ASS)	144
LENTILLE (ENS) (JAUNE) (SIGNAL)	136-3848	1	LAMPE - PHARE ET CLIGNOTANT	145
		1	LAMPE - PHARE ET CLIGNOTANT	147
LENTILLE (ENS) (PHARE AVANT)	100-3248	1	LAMPE - PHARE ET CLIGNOTANT	147
		1	LAMPE - PHARE ET CLIGNOTANT	145
LENTILLE (JAUNE) (SIGNAL)	100-3250	1	LAMPE - PHARE ET CLIGNOTANT	145
		1	LAMPE - PHARE ET CLIGNOTANT	147
LENTILLE ORANGE	9X-3066	1	LAMPE - CLIGNOTANT DE DIRECTION (ASS)	149

* TRADUCTION NON DISPONIBLE AU MOMENT DE LA PUBLICATION

PIÈCES DE RECHANGE

DESCRIPTION	NUMÉRO DE PIECÈS	QTÉ	DOMAINE D'APPLICATION	PAGE
CIRCUIT HYDRAULIQUE				
BOUCHON DE GOULOTTE DE REMPLISSAGE (RÉSERVOIR HYDRAULIQUE)	7H-1447	1	RÉSERVOIR HYDRAULIQUE (ASS)	541
BOUCHON DE VIDANGE	9J-7031	1	SOUPAPE DE VIDANGE	569
CREPINE (ENS) (REMPLISSAGE DE RÉSERVOIR HYDRAULIQUE)	5D-7927	1	RÉSERVOIR HYDRAULIQUE (ASS)	541
ÉCRAN	6E-5066	1	COLLECTEUR - SOUPAPE (ASS)	524
		1	COLLECTEUR - SOUPAPE (ASS)	526
ÉCRAN (COLLECTEUR DE DISTRIBUTEUR)	6E-5066	1	COLLECTEUR - COMMANDE (ASS)	522
ÉCRAN (ENS) (RÉSERVOIR HYDRAULIQUE)	9T-9227	2	RÉSERVOIR HYDRAULIQUE (ASS)	541
ÉLÉMENT DE FILTRE À HUILE (ENS) (HYDRAULIQUE)	225-4118	1	FILTRE A HUILE (ASS)	496
FILTRE À HUILE (ENS) (*HYDRAULIC CASE DRAIN)	144-0832	1	FILTRE A HUILE (ASS)	497
POSTE DE CONDUITE				
ACCUMULATEUR - CLIMATISEUR (ASS)	186-6189	1	CANALISATIONS DE CLIMATISEUR (ASS)	687
AMPOULE (24 VOLTS)	7N-5876	1	ÉLECTROMODULE DE CHARGE UTILE DE BENNE	709
BALAI D'ESSUIE-GLACE (ENS)	6V-7419	2	ESSUIE-GLACE (ASS)	769
BATTERIE (LITHIUM)	101-1785	1	GROUPE DE CONTROLE	653
CADENAS (ASS)	5P-8502	2	PROTECTION ANTIVANDALISME (ASS)	665
CEINTURE DE SECURITE (ASS)	236-7019	1	SIÈGE AVEC SUSPENSION (ASS)	748
		1	SIÈGE AVEC SUSPENSION (ASS)	749
CLAVETTE - POIGNÉE	3V-7476	1	CONDUIT ET FILTRE À AIR (ASS)	657
COURROIE MULTIPLE	253-4531	1	COMPRESSEUR DE REFRIGERANT (ASS)	649
FILTRE À AIR DE CABINE	7X-6041	2	CONDUIT ET FILTRE À AIR (ASS)	657
FUSIBLE (15A)	133-9012	1	CHAUFFAGE DE CABINE (ASS)	672
		1	CLIMATISEUR (ASS)	639
RÉCEPTEUR-DÉSHYDRATEUR (ASS) (CLIMATISEUR)	175-7162	1	CANALISATIONS DE CLIMATISEUR (ASS)	687

* TRADUCTION NON DISPONIBLE AU MOMENT DE LA PUBLICATION

PIÈCES DE RECHANGE

DESCRIPTION	NUMÉRO DE PIECÈS	QTÉ	DOMAINE D'APPLICATION	PAGE
TRANSMISSION				
BOUCHON AIMANTÉ	5P-4484	1	CARTER D'ESSIEU FIXE	296
		1	CARTER D'ESSIEU OSCILLANT	298
BOUCHON DE GOULOTTE DE REMPLISSAGE (TRANSMISSION)	5K-1568	1	GOULOTTE DE REMPLISSAGE D'HUILE DE TRANSMISSION	282
		1	GOULOTTE DE REMPLISSAGE D'HUILE DE TRANSMISSION	284
BOUCHON FILETÉ	138-1510	1	ENGRENAGE DE TRANSFERT DE RENDEMENT (ASS)	292
	175-4966	1	VIDANGE-ÉCOLOGIE (ASS)	281
COURROIE MULTIPLE	215-3015	1	POMPE ET MONTAGE DE REFROIDISSEUR D'HUILE D'ESSIEU	316
	217-3031	1	POMPE ET MONTAGE DE REFROIDISSEUR D'HUILE D'ESSIEU	316
ÉCRAN MAGNÉTIQUE (ASS)	4S-8603	1	ENGRENAGE DE TRANSFERT DE RENDEMENT (ASS)	292
ÉCRAN MAGNÉTIQUE (REFROIDISSEUR D'HUILE D'ESSIEU)	251-6351	2	CANALISATIONS DE REFROIDISSEUR D'HUILE D'ESSIEU (ASS)	300
ÉLÉMENT DE FILTRE (TRANSMISSION)	1G-8878	1	FILTRE A HUILE (ASS)	287
RENIFLARD (ENS)	9C-4937	1	ENGRENAGE DE TRANSFERT DE RENDEMENT (ASS)	293
TAMIS D'ASPIRATION	4S-8598	1	ENGRENAGE DE TRANSFERT DE RENDEMENT (ASS)	292

* TRADUCTION NON DISPONIBLE AU MOMENT DE LA PUBLICATION

PIEZAS DE MANTENIMIENTO

DESCRIPCION	NUMERO DE PIEZA	CANT	SE UTILIZA EN	PAGINA
PUESTO DEL OPERADOR				
ACUMULADOR DEL ACONDICIONADOR DE AIRE (GR)	186-6189	1	TUBERÍAS DE ACONDICIONADOR DE AIRE (GR)	687
BATERÍA (LITIO)	101-1785	1	CONTROL DE MONITOR (GR)	653
CANDADO (GR)	5P-8502	2	PROTECTOR CONTRA EL VANDALISMO (GR)	665
CINTURÓN DE SEGURIDAD (GR)	236-7019	1	SUSPENSIÓN - ASIENTO CON (GR)	748
		1	SUSPENSIÓN - ASIENTO CON (GR)	749
CORREA-SERPENTIN	253-4531	1	COMPRESOR DE REFRIGERANTE (GR)	649
FILTRO DE AIRE DE CABINA	7X-6041	2	CONDUCTO Y FILTRO DE AIRE (GR)	657
FUSIBLE (15 AMPERIOS)	133-9012	1	ACONDICIONADOR DE AIRE (GR)	639
		1	CALEFACCIÓN DE LA CABINA (GR)	672
HOJA DE LIMPIAPARABRISAS (CONJ)	6V-7419	2	LIMPIAPARABRISAS DE LA VENTANA (GR)	769
LÁMPARA (24 VOLTIOS)	7N-5876	1	MONITOR DE CARGA ÚTIL (GR)	709
LLAVE - MANIJA	3V-7476	1	CONDUCTO Y FILTRO DE AIRE (GR)	657
RECEPTOR-SECADOR (GR) (ACONDICIONADOR DE AIRE)	175-7162	1	TUBERÍAS DE ACONDICIONADOR DE AIRE (GR)	687
SISTEMA DE AIRE DE ADMISIÓN Y ESCAPE				
ELEMENTO DEL FILTRO DE AIRE (CONJ) (PRIMARIO)	245-6375	1	FILTRO DE AIRE (GR)	81
ELEMENTO DEL FILTRO DE AIRE (CONJ) (SECUNDARIO)	245-6376	1	FILTRO DE AIRE (GR)	81
SISTEMA DE COMBUSTIBLE				
FILTRO DE COMBUSTIBLE (CONJ) (REJILLA DE TUBO DE LLENADO)	180-3730	1	COMBUSTIBLE - TANQUE DE (GR)	112
FILTRO DE COMBUSTIBLE (CONJ) (SECUNDARIO(A))	1R-0762	1	FILTRO Y TUBERÍAS DE COMBUSTIBLE (GR)	94
FILTRO DE COMBUSTIBLE Y SEPARADOR DE AGUA (CONJ) (PRIMARIO)	1R-0770	1	FILTRO DE COMBUSTIBLE Y SEPARADOR DE AGUA (GR)	96
SELLO	220-8678	1	FILTRO DE COMBUSTIBLE Y SEPARADOR DE AGUA (GR)	96
TAPA PARA EL COMBUSTIBLE	246-1479	1	COMBUSTIBLE - TANQUE DE (GR)	112
VÁLVULA DE ALIVIO DEL FRENO	188-8844	1	COMBUSTIBLE - TANQUE DE (GR)	112
SISTEMA DE ENFRIAMIENTO				
EMPAQUETADURA (CAJA DEL REGULADOR DE TEMPERATURA)	222-5915	1	TUBERÍAS DEL AGUA (GR)	69
REGULADOR DE TEMPERATURA DEL AGUA (94-GRADOS C) (REFRIGERANTE)	119-3075	2	TUBERÍAS DEL AGUA (GR)	69
TAPA DEL RADIADOR (7 LB/PULG2)	6L-8617	1	TAPA DEL TANQUE DE RADIADOR (GR)	79

* NO HAY TRADUCCION DISPONIBLE EN EL MOMENTO DE LA IMPRESION

PIEZAS DE MANTENIMIENTO

DESCRIPCION	NUMERO DE PIEZA	CANT	SE UTILIZA EN	PAGINA
SISTEMA DE LUBRICACIÓN				
FILTRO DE ACEITE DEL MOTOR (CONJ)	1R-1807	1	FILTRO DE ACEITE DEL MOTOR (GR)	54
RESPIRADERO (CONJ) (CÁRTER DEL MOTOR)	164-0210	1	RESPIRADERO (GR)	52
TAPA DE LLENADO (CONJ) (ACEITE DEL MOTOR)	5L-2952	1	TUBO DE LLENADO DE ACEITE (GR)	53
SISTEMA ELECTRICO Y DE ARRANQUE				
CONJUNTO DE DESTELLADOR (24 VOLTIOS)	217-8166	1	INTERRUPTOR DEL SEÑALERO (GR)	211
CONJUNTO DE LLAVE, ELECTRONICA (SEGURIDAD)	206-5162	2	INSTALACION DE SEGURIDAD (GR)	138
CORREA-SERPENTIN	246-6296	1	CARGA - ALTERNADOR DE (GR)	119
CRISTAL (AMBAR) (SEÑAL)	100-3250	1	LÁMPARA DE LUZ DELANTERA Y DE SEÑAL (GR)	145
		1	LÁMPARA DE LUZ DELANTERA Y DE SEÑAL (GR)	147
DISYUNTOR (CONJ) (105 AMPERIOS) (ALTERNADOR)	171-2212	1	CABLES DEL CHASIS (GR)	229
DISYUNTOR (CONJ) (15 AMPERIOS) (ACCIONADOR DE PROTECTOR ELÉCTRICO)	3T-2662	1	*WIRING GP-WASTE HANDLER	263
DISYUNTOR (CONJ) (15 AMPERIOS) (LUCES DE TRABAJO)	3T-2662	1	CABLES DEL CHASIS (GR)	229
DISYUNTOR (CONJ) (50 AMPERIOS) (ARRANQUE)	171-2206	1	CABLES DEL CHASIS (GR)	229
DISYUNTOR (CONJ) (80 AMPERIOS) (PRINCIPAL)	171-2210	1	CABLES DEL CHASIS (GR)	229
DISYUNTOR (CONJ) (90-AMPERIOS) (AUXILIAR DE ARRANQUE)	171-2211	1	CABLES DEL CHASIS (GR)	229
DISYUNTOR DE CIRCUITO (GR) (20-AMPERIOS) (ACCIONADOR DE INCLINACION DE CAPO)	6T-3644	1	CABLES DEL CHASIS (GR)	229
DISYUNTOR DE CIRCUITO (GR) (20-AMPERIOS) (*UNSWITCHED BAT POWER TO CAB)	6T-3644	1	CABLES DEL CHASIS (GR)	229
ELEMENTO DEL CALENTADOR DEL AGUA DE LAS CAMISAS (120 VOLTIOS, 1000 VATIOS)	246-8628	1	AGUA DE LAS CAMISAS - CALENTADOR DEL (GR)	136
ELEMENTO DEL CALENTADOR DEL AGUA DE LAS CAMISAS (240 VOLTIOS, 1000 VATIOS)	246-8627	1	AGUA DE LAS CAMISAS - CALENTADOR DEL (GR)	135
FUSIBLE (10-AMPERIOS)	9W-1442	24	CABLES DE LA CABINA (GR)	220
		24	CABLES DE LA ESTRUCTURA ROPS ABIERTA (GR)	248
FUSIBLE (15 AMPERIOS)	9W-1441	7	CABLES DE LA CABINA (GR)	220
		6	CABLES DE LA ESTRUCTURA ROPS ABIERTA (GR)	248
FUSIBLE (20-AMPERIOS)	9W-1446	1	CABLES DE LA CABINA (GR)	220
		2	CABLES DE LA ESTRUCTURA ROPS ABIERTA (GR)	248

* NO HAY TRADUCCION DISPONIBLE EN EL MOMENTO DE LA IMPRESION

PIEZAS DE MANTENIMIENTO

DESCRIPCION	NUMERO DE PIEZA	CANT	SE UTILIZA EN	PAGINA
LÁMPARA (12 VOLTIOS, 24 VOLTIOS, 35 VATIOS)	209-6638	1	REFLECTOR (GR)	141
		1	REFLECTOR (GR)	142
LÁMPARA (24 VOLTIOS)	7N-5876	4	CABLES DE LA CABINA (GR)	220
		4	CABLES DE LA ESTRUCTURA ROPS ABIERTA (GR)	248
	7N-9943	1	LÁMPARA DEL TECHO (GR)	140
	100-3245	2	LÁMPARA DE LUZ DELANTERA Y DE SEÑAL (GR)	145
LÁMPARA (24 VOLTIOS) (SEÑAL)	100-3245	2	LÁMPARA DE LUZ DELANTERA Y DE SEÑAL (GR)	147
LÁMPARA (24-VOLTIOS, 21 VATIOS)	9X-4493	1	LUCES DE PARADA Y COLA (GR)	151
		1	LUZ DE SEÑAL DE GIRO (GR)	149
LÁMPARA (24-VOLTIOS, 21 VATIOS) (SEÑAL)	9X-4493	1	LÁMPARA DE LUZ DELANTERA Y DE SEÑAL (GR)	145
		1	LÁMPARA DE LUZ DELANTERA Y DE SEÑAL (GR)	147
LÁMPARA (24 VOLTIOS, 5 VATIOS)	9X-4492	1	LUCES DE PARADA Y COLA (GR)	151
LÁMPARA (24-VOLTIOS, 70-VATIOS)	9X-7849	1	LÁMPARA DE BALIZA DE ADVERTENCIA (GR)	152
LÁMPARA (24 VOLTIOS, 75/70 VATIOS)	9X-3465	1	LÁMPARA DE LUZ DELANTERA Y DE SEÑAL (GR)	145
LÁMPARA (24 VOLTIOS, 75/70 VATIOS) (DELANTERA)	9X-3465	1	LÁMPARA DE LUZ DELANTERA Y DE SEÑAL (GR)	147
LENTE AMBAR	9X-3066	1	LUZ DE SEÑAL DE GIRO (GR)	149
LUCES DE ALÓGENO (24 VOLTIOS, 65 VATIOS) (REFLECTOR)	9X-3463	1	REFLECTOR (GR)	143
		1	REFLECTOR (GR)	144
VIDRIO (CONJ) (AMBAR) (SEÑAL)	136-3848	1	LÁMPARA DE LUZ DELANTERA Y DE SEÑAL (GR)	145
		1	LÁMPARA DE LUZ DELANTERA Y DE SEÑAL (GR)	147
VIDRIO (CONJ) (FARO DELANTERO)	100-3248	1	LÁMPARA DE LUZ DELANTERA Y DE SEÑAL (GR)	145
		1	LÁMPARA DE LUZ DELANTERA Y DE SEÑAL (GR)	147

* NO HAY TRADUCCION DISPONIBLE EN EL MOMENTO DE LA IMPRESION

PIEZAS DE MANTENIMIENTO

DESCRIPCION	NUMERO DE PIEZA	CANT	SE UTILIZA EN	PAGINA
SISTEMA HIDRÁULICO				
COLADOR (CONJ) (LLENADO DEL TANQUE HIDRÁULICO)	5D-7927	1	TANQUE HIDRÁULICO (GR)	541
ELEMENTO DE FILTRO DE ACEITE (CONJ) (HIDRAULICO)	225-4118	1	FILTRO DE ACEITE (GR)	496
FILTRO DE ACEITE (CONJ) (*HYDRAULIC CASE DRAIN)	144-0832	1	FILTRO DE ACEITE (GR)	497
PANTALLA (CONJ) (TANQUE HIDRAULICO)	9T-9227	2	TANQUE HIDRÁULICO (GR)	541
REJILLA	6E-5066	1	MULTIPLE DE VALVULA (GR)	524
		1	MULTIPLE DE VALVULA (GR)	526
REJILLA (VÁLVULA DE CONTROL DEL MULTIPLE)	6E-5066	1	CONTROL DEL MULTIPLE (GR)	522
TAPA DEL TUBO DE LLENADO (TANQUE HIDRÁULICO)	7H-1447	1	TANQUE HIDRÁULICO (GR)	541
TAPÓN DE DRENAJE	9J-7031	1	VÁLVULA DE DRENAJE (GR)	569
TREN DE FUERZA				
CORREA-SERPENTIN	215-3015	1	BOMBA DEL ENFRIADOR DE ACEITE DEL EJE Y MONTAJE (GR)	316
	217-3031	1	BOMBA DEL ENFRIADOR DE ACEITE DEL EJE Y MONTAJE (GR)	316
ELEMENTO DE FILTRO (TREN DE FUERZA)	1G-8878	1	FILTRO DE ACEITE (GR)	287
FILTRO MAGNÉTICO (ENFRIADOR DE ACEITE DE EJE)	251-6351	2	TUBERÍAS DEL ENFRIADOR DE ACEITE DEL EJE (GR)	300
REJILLA DE SUCCIÓN	4S-8598	1	ENGRANAJE DE TRANSFERENCIA DE SALIDA	292
REJILLA MAGNÉTICA (GR)	4S-8603	1	ENGRANAJE DE TRANSFERENCIA DE SALIDA	292
RESPIRADERO (CONJ)	9C-4937	1	ENGRANAJE DE TRANSFERENCIA DE SALIDA	293
TAPA DEL TUBO DE LLENADO (TREN DE FUERZA)	5K-1568	1	TUBO DE LLENADO DE ACEITE DE LA TRANSMISIÓN (GR)	282
		1	TUBO DE LLENADO DE ACEITE DE LA TRANSMISIÓN (GR)	284
TAPÓN	138-1510	1	ENGRANAJE DE TRANSFERENCIA DE SALIDA	292
	175-4966	1	DRENAJE DE SEGURIDAD ECOLÓGICA (GR)	281
TAPÓN MAGNÉTICO	5P-4484	1	CAJA DE EJE OSCILANTE (GR)	298
		1	CAJA DEL EJE OSCILANTE (GR)	296

* NO HAY TRADUCCION DISPONIBLE EN EL MOMENTO DE LA IMPRESION

PEÇAS DE MANUTENÇÃO

DESCRIÇÃO	NÚMERO DE PEÇA	QUANT	UTILIZADA EM	PÁGINA
ESTAÇÃO DO OPERADOR				
ACUMULADOR - AR CONDICIONADO	186-6189	1	TUBOS - AR CONDICIONADO	687
BATERIA (LÍTIO)	101-1785	1	CONTROLE DO PAINEL MONITOR	653
CADEADO	5P-8502	2	PROTETOR CONTRA VANDALISMO	665
CHAVE - ALAVANCA	3V-7476	1	DUCTO E FILTRO	657
CINTO DE SEGURANÇA	236-7019	1	ASSENTO COM SUSPENSÃO	748
		1	ASSENTO COM SUSPENSÃO	749
CORREIA- SERPENTINA	253-4531	1	COMPRESSOR DE REFRIGERANTE	649
FILTRO DE AR DE CABINA	7X-6041	2	DUCTO E FILTRO	657
FUSÍVEL (15 AMPERES)	133-9012	1	AQUECEDOR DA CABINE	672
		1	CONDICIONADOR DE AR	639
LÂMINA DO LIMPADOR DE PÁRA-BRISA	6V-7419	2	LIMPADOR DO VIDRO	769
LÂMPADA (24 VOLTS)	7N-5876	1	PAINEL MONITOR DE CARGA ÚTIL	709
RECEPTOR - SECADOR (CONDICIONADOR DE AR)	175-7162	1	TUBOS - AR CONDICIONADO	687
SISTEMA DA ADMISSÃO DE AR E DE ESCAPE				
ELEMENTO DO FILTRO DE AR (PRIMÁRIO)	245-6375	1	PURIFICADOR DE AR	81
ELEMENTO DO FILTRO DE AR (SECUNDÁRIO)	245-6376	1	PURIFICADOR DE AR	81
SISTEMA DE ARREFECIMENTO				
JUNTA (ALOJAMENTO DO REGULADOR DE TEMPERATURA)	222-5915	1	TUBOS - ÁGUA	69
REGULADOR DE TEMPERATURA DA ÁGUA (94 GRAUS C) (LÍQUIDO ARREFECEDOR)	119-3075	2	TUBOS - ÁGUA	69
TAMPA - RADIADOR (7 PSI)	6L-8617	1	TANQUE SUPERIOR DO RADIADOR	79
SISTEMA DE COMBUSTÍVEL				
FILTRO - COMBUSTÍVEL (SECUNDÁRIO)	1R-0762	1	FILTRO E TUBOS - COMBUSTÍVEL	94
FILTRO - COMBUSTÍVEL (TELA DO BOCAL DE ENCHIMENTO)	180-3730	1	TANQUE DE COMBUSTÍVEL	112
FILTRO - SEPARADOR DE ÁGUA E COMBUSTÍVEL (PRIMÁRIO)	1R-0770	1	FILTRO DE COMBUSTÍVEL E SEPARADOR DE ÁGUA	96
RETENTOR	220-8678	1	FILTRO DE COMBUSTÍVEL E SEPARADOR DE ÁGUA	96
TAMPA - TANQUE DE COMBUSTÍVEL	246-1479	1	TANQUE DE COMBUSTÍVEL	112
VÁLVULA DISJUNTORA	188-8844	1	TANQUE DE COMBUSTÍVEL	112
SISTEMA DE LUBRIFICAÇÃO				
FILTRO - ÓLEO DO MOTOR	1R-1807	1	FILTRO - ÓLEO DO MOTOR	54
RESPIRO (CÁRTER DO MOTOR)	164-0210	1	RESPIRO	52
TAMPA - BOCAL DE ENCHIMENTO (ÓLEO DO MOTOR)	5L-2952	1	BOCAL DE ENCHIMENTO DE ÓLEO DO MOTOR	53
SISTEMA ELÉTRICO E DE PARTIDA				
CHAVE - ELETRÔNICO (SEGURANÇA)	206-5162	2	INSTALAÇÃO-SEGURANÇA	138
CORREIA- SERPENTINA	246-6296	1	ALTERNADOR DE CORRENTE	119

PEÇAS DE MANUTENÇÃO

DESCRIÇÃO	NÚMERO DE PEÇA	QUANT	UTILIZADA EM	PÁGINA
DISJUNTOR AUTOMÁTICO DE CIRCUITO (105 AMPERES) (ALTERNADOR)	171-2212	1	CABOS/FIOS ELÉTRICOS - CHASSI	229
DISJUNTOR AUTOMÁTICO DE CIRCUITO (15 AMPERES) (ACIONADOR DO PROTETOR DE ENERGIA)	3T-2662	1	FIAÇÃO - MANIPULADOR DE RESÍDUOS	263
DISJUNTOR AUTOMÁTICO DE CIRCUITO (15 AMPERES) (ILUMINAÇÃO DE OPERAÇÃO)	3T-2662	1	CABOS/FIOS ELÉTRICOS - CHASSI	229
DISJUNTOR AUTOMÁTICO DE CIRCUITO (50 AMPÈRES) (PARTIDA)	171-2206	1	CABOS/FIOS ELÉTRICOS - CHASSI	229
DISJUNTOR AUTOMÁTICO DE CIRCUITO (80 AMPERES) (PRINCIPAL)	171-2210	1	CABOS/FIOS ELÉTRICOS - CHASSI	229
DISJUNTOR AUTOMÁTICO DE CIRCUITO (90 AMPERES) (AUXILIAR DE PARTIDA)	171-2211	1	CABOS/FIOS ELÉTRICOS - CHASSI	229
ELEMENTO - AQUECEDOR DE ÁGUA DA CAMISA (120 VOLTS, 1.000 WATTS)	246-8628	1	AQUECEDOR DA ÁGUA DO MOTOR	136
ELEMENTO - AQUECEDOR DE ÁGUA DA CAMISA (240 VOLTS, 1.000 WATTS)	246-8627	1	AQUECEDOR DA ÁGUA DO MOTOR	135
FUSÍVEL (10 AMPERES)	9W-1442	24	CABOS/FIOS ELÉTRICOS - CABINE	220
		24	CABOS/FIOS ELÉTRICOS - ESTRUTURA ROPS ABERTA	248
FUSÍVEL (15 AMPERES)	9W-1441	7	CABOS/FIOS ELÉTRICOS - CABINE	220
		6	CABOS/FIOS ELÉTRICOS - ESTRUTURA ROPS ABERTA	248
FUSÍVEL (20-AMPERES)	9W-1446	1	CABOS/FIOS ELÉTRICOS - CABINE	220
		2	CABOS/FIOS ELÉTRICOS - ESTRUTURA ROPS ABERTA	248
INTERRUPTOR - CIRCUITO (20-AMPERES) (ACIONADOR DE INCLINAÇÃO DO CAPÔ)	6T-3644	1	CABOS/FIOS ELÉTRICOS - CHASSI	229
INTERRUPTOR - CIRCUITO (20-AMPERES) (ENERGIA DA BATERIA PARA CABINE DESLIGADA)	6T-3644	1	CABOS/FIOS ELÉTRICOS - CHASSI	229
LÂMPADA - HALOGÊNEO (24 VOLTS, 65 WATTS) (FAROL)	9X-3463	1	LÂMPADA - FAROL	143
		1	LÂMPADA - FAROL	144
LÂMPADA (12 VOLTS, 24 VOLTS, 35 WATTS)	209-6638	1	LÂMPADA - FAROL	141
		1	LÂMPADA - FAROL	142
LÂMPADA (24 VOLTS)	7N-5876	4	CABOS/FIOS ELÉTRICOS - CABINE	220
		4	CABOS/FIOS ELÉTRICOS - ESTRUTURA ROPS ABERTA	248
	100-3245	2	LÂMPADA DIANTEIRA E DE SINAL	145
	7N-9943	1	LÂMPADA - TETO	140
LÂMPADA (24 VOLTS) (SINAL)	100-3245	2	LÂMPADA DIANTEIRA E DE SINAL	147
LÂMPADA (24 VOLTS, 21 WATTS)	9X-4493	1	LÂMPADA - SINALIZAÇÃO	149
		1	LUZ TRASEIRA E DE FREIO	151
LÂMPADA (24 VOLTS, 21 WATTS) (SINAL)	9X-4493	1	LÂMPADA DIANTEIRA E DE SINAL	145
		1	LÂMPADA DIANTEIRA E DE SINAL	147
LÂMPADA (24 VOLTS, 5 WATTS)	9X-4492	1	LUZ TRASEIRA E DE FREIO	151

PEÇAS DE MANUTENÇÃO

DESCRIÇÃO	NÚMERO DE PEÇA	QUANT	UTILIZADA EM	PÁGINA
LÂMPADA (24 VOLTS, 70 WATTS)	9X-7849	1	LUZ GIRATÓRIA DE ALARME	152
LÂMPADA (24 VOLTS, 75-70 WATTS)	9X-3465	1	LÂMPADA DIANTEIRA E DE SINAL	145
LÂMPADA (24 VOLTS, 75-70 WATTS) (CABEÇA)	9X-3465	1	LÂMPADA DIANTEIRA E DE SINAL	147
LENTE ÂMBAR	9X-3066	1	LÂMPADA - SINALIZAÇÃO	149
LENTE (ÂMBER) (SINAL)	100-3250	1	LÂMPADA DIANTEIRA E DE SINAL	145
		1	LÂMPADA DIANTEIRA E DE SINAL	147
	136-3848	1	LÂMPADA DIANTEIRA E DE SINAL	145
		1	LÂMPADA DIANTEIRA E DE SINAL	147
LENTE (LUZES DIANTEIRAS)	100-3248	1	LÂMPADA DIANTEIRA E DE SINAL	145
		1	LÂMPADA DIANTEIRA E DE SINAL	147
LUZ INTERMITENTE (24 VOLTS)	217-8166	1	INTERRUPTOR DE SINALIZAÇÃO	211
SISTEMA HIDRÁULICO				
BUJÃO DO DRENO	9J-7031	1	VÁLVULA DE DRENAGEM	569
ELEMENTO FILTRANTE - ÓLEO (HIDRÁULICO)	225-4118	1	FILTRO - ÓLEO	496
FILTRO - ÓLEO (DRENO DA CAIXA HIDRÁULICA)	144-0832	1	FILTRO - ÓLEO	497
TAMPA - BOCAL DE ENCHIMENTO (TANQUE HIDRÁULICO)	7H-1447	1	TANQUE HIDRÁULICO	541
TELA FILTRANTE	6E-5066	1	COLETOR - VÁLVULA	524
		1	COLETOR - VÁLVULA	526
TELA FILTRANTE (COLETOR DA VÁLVULA DE CONTROLE)	6E-5066	1	COLETOR - CONTROLE	522
TELA FILTRANTE (ENCHIMENTO DO TANUQE HIDRÁULICO)	5D-7927	1	TANQUE HIDRÁULICO	541
TELA FILTRANTE (TANQUE HIDRÁULICO)	9T-9227	2	TANQUE HIDRÁULICO	541
TREM DE FORÇA				
BUJÃO MAGNÉTICO	5P-4484	1	CAIXA - EIXO FIXO	296
		1	CAIXA - EIXO OSCILANTE	298
CORREIA- SERPENTINA	215-3015	1	BOMBA DO ARREFECEDOR DE ÓLEO DO EIXO E MONTAGEM	316
	217-3031	1	BOMBA DO ARREFECEDOR DE ÓLEO DO EIXO E MONTAGEM	316
ELEMENTO FILTRANTE (TREM DE FORÇA)	1G-8878	1	FILTRO - ÓLEO	287
FILTRO - MAGNÉTICO	4S-8603	1	ENGRENAGENS DE SAÍDA DE TRANSFERÊNCIA	292
FILTRO - MAGNÉTICO (ARREFECEDOR DO ÓLEO DO EIXO)	251-6351	2	TUBOS - ARREFECEDOR DE ÓLEO DO EIXO	300
RESPIRO	9C-4937	1	ENGRENAGENS DE SAÍDA DE TRANSFERÊNCIA	293
TAMPA - BOCAL DE ENCHIMENTO (TREM DE FORÇA)	5K-1568	1	BOCAL DE ENCHIMENTO DE ÓLEO DO TREM DE FORÇA	282
		1	BOCAL DE ENCHIMENTO DE ÓLEO DO TREM DE FORÇA	284
TAMPÃO	138-1510	1	ENGRENAGENS DE SAÍDA DE TRANSFERÊNCIA	292
	175-4966	1	DRENO - ECOLOGIA	281
TELA DE SUCÇÃO	4S-8598	1	ENGRENAGENS DE SAÍDA DE TRANSFERÊNCIA	292

WARTUNGSTEILE

BESCHREIBUNG	ERSATZTEIL-NUMMER	MENGE	VERWENDET IN	SEITE
ELEKTRISCHE ANLAGE U. STARTSYSTEM				
ABDECKGLAS (FRONTSCHEINWERFER)	100-3248	1	SCHEINWERFER U. RICHTUNGSLEUCHTE	145
		1	SCHEINWERFER U. RICHTUNGSLEUCHTE	147
ABDECKGLAS (GELB)	9X-3066	1	BLINKLEUCHTE	149
ABDECKGLAS (GELB) (SIGNAL)	100-3250	1	SCHEINWERFER U. RICHTUNGSLEUCHTE	145
		1	SCHEINWERFER U. RICHTUNGSLEUCHTE	147
	136-3848	1	SCHEINWERFER U. RICHTUNGSLEUCHTE	145
		1	SCHEINWERFER U. RICHTUNGSLEUCHTE	147
BLINKER (24 V)	217-8166	1	RICHTUNGSSIGNALSCHALTER	211
ELEKTRONISCHER SCHLÜSSEL (SICHERHEIT)	206-5162	2	SICHERHEITSEINBAUSATZ	138
HALOGENSCHINWERFER (24V)(65W) (ARBEITSSCHEINWERFER)	9X-3463	1	ARBEITSLEUCHTEN	143
		1	ARBEITSLEUCHTEN	144
LEUCHTE (12 V, 24 V, 35 W)	209-6638	1	ARBEITSLEUCHTEN	141
		1	ARBEITSLEUCHTEN	142
LEUCHTE (24 V)	7N-5876	4	FAHRERHAUSVERDRAHTUNG	220
		4	VERDRAHTUNG - OFFENES FAHRERHAUS MIT ÜBERROLLSCHUTZ	248
	7N-9943	1	FAHRERHAUSBELEUCHTUNG	140
	100-3245	2	SCHEINWERFER U. RICHTUNGSLEUCHTE	145
LEUCHTE (24 V) (SIGNAL)	100-3245	2	SCHEINWERFER U. RICHTUNGSLEUCHTE	147
LEUCHTE (24 V, 5 W)	9X-4492	1	BREMS- UND RÜCKLEUCHTE	151
LEUCHTE (24 V, 70 W)	9X-7849	1	RUNDUM-KENNLEUCHTE	152
LEUCHTE (24 V, 75/70 W)	9X-3465	1	SCHEINWERFER U. RICHTUNGSLEUCHTE	145
LEUCHTE (24 V, 75/70 W) (FRONTSCHEINWERFER)	9X-3465	1	SCHEINWERFER U. RICHTUNGSLEUCHTE	147
LEUCHTE (24V, 21W)	9X-4493	1	BLINKLEUCHTE	149
		1	BREMS- UND RÜCKLEUCHTE	151
LEUCHTE (24V, 21W) (SIGNAL)	9X-4493	1	SCHEINWERFER U. RICHTUNGSLEUCHTE	147
		1	SCHEINWERFER U. RICHTUNGSLEUCHTE	145
SERPENTINENFÖRMIGER RIEMEN	246-6296	1	DREHSTROMGENERATOR	119
SICHERUNG (10 A)	9W-1442	24	FAHRERHAUSVERDRAHTUNG	220
		24	VERDRAHTUNG - OFFENES FAHRERHAUS MIT ÜBERROLLSCHUTZ	248
SICHERUNG (15 A)	9W-1441	7	FAHRERHAUSVERDRAHTUNG	220
		6	VERDRAHTUNG - OFFENES FAHRERHAUS MIT ÜBERROLLSCHUTZ	248

* ÜBERSETZUNG ZUM ZEITPUNKT DER DRUCKLEGUNG NICHT VORHANDEN

WARTUNGSTEILE

BESCHREIBUNG	ERSATZTEIL-NUMMER	MENGE	VERWENDET IN	SEITE
SICHERUNG (20 A)	9W-1446	1	FAHRERHAUSVERDRAHTUNG	220
		2	VERDRAHTUNG - OFFENES FAHRERHAUS MIT ÜBERROLLSCHUTZ	248
UMLAUFKÜHLWASSERHEIZUNGS-ELEMENT (120 V, 1000 W)	246-8628	1	UMLAUFKÜHLWASSERHEIZUNG	136
UMLAUFKÜHLWASSERHEIZUNGS-ELEMENT (240 V, 1000 W)	246-8627	1	UMLAUFKÜHLWASSERHEIZUNG	135
UNTERBRECHER (105 A) (DREHSTROMGENERATOR)	171-2212	1	FAHRGESTELLVERDRAHTUNG	229
UNTERBRECHER (15 A) (FAHRSCHEINWERFER)	3T-2662	1	FAHRGESTELLVERDRAHTUNG	229
UNTERBRECHER (15 A) (STELLGLIED - ELEKTRISCH BETRIEBENE SCHUTZVORRICHTUNG)	3T-2662	1	ABFALLBESEITIGUNGSAUSFÜHRUNG - VERDRAHTUNG	263
UNTERBRECHER (20 A) (HAUBENNEIGESTELLGLIED)	6T-3644	1	FAHRGESTELLVERDRAHTUNG	229
UNTERBRECHER (20 A) (UNGESCHALTETER BATTREIESTROM ZUM FAHRERHAUS)	6T-3644	1	FAHRGESTELLVERDRAHTUNG	229
UNTERBRECHER (50 A) (STARTEN)	171-2206	1	FAHRGESTELLVERDRAHTUNG	229
UNTERBRECHER (80 A) (HAUPTUNTERBRECHER)	171-2210	1	FAHRGESTELLVERDRAHTUNG	229
UNTERBRECHER (90 A) (STARTHILFE)	171-2211	1	FAHRGESTELLVERDRAHTUNG	229
FAHRERHAUS				
BATTERIE (LITHIUM)	101-1785	1	MONITORSTEUERUNG	653
FAHRERHAUSLUFTFILTER	7X-6041	2	LUFTKANAL U. FILTER	657
KÄLTEMITTELTROCKNER (KLIMAANLAGE)	175-7162	1	KLIMAANLAGENLEITUNGEN	687
KLIMAANLAGENDRUCKSPEICHER	186-6189	1	KLIMAANLAGENLEITUNGEN	687
LEUCHTE (24 V)	7N-5876	1	WÄGEEINRICHTUNG	709
SCHEIBENWISCHERBLATT	6V-7419	2	SCHEIBENWISCHER	769
SCHLÜSSELGRIFF	3V-7476	1	LUFTKANAL U. FILTER	657
SERPENTINENFÖRMIGER RIEMEN	253-4531	1	KÄLTEMITTELKOMPRESSOR	649
SICHERHEITSGURT	236-7019	1	SCHWINGSITZ	748
		1	SCHWINGSITZ	749
SICHERUNG (15 A)	133-9012	1	FAHRERHAUSHEIZUNG	672
		1	KLIMAANLAGE	639
VORHÄNGESCHLOSS	5P-8502	2	SCHUTZVERKLEIDUNG	665

* ÜBERSETZUNG ZUM ZEITPUNKT DER DRUCKLEGUNG NICHT VORHANDEN

WARTUNGSTEILE

BESCHREIBUNG	ERSATZTEIL-NUMMER	MENGE	VERWENDET IN	SEITE
HYDRAULIKSYSTEM				
ABLASSSTOPFEN	9J-7031	1	ABLASSVENTIL	569
EINFÜLLSTUTZENKAPPE (HYDRAULIKTANK)	7H-1447	1	HYDRAULIKTANK	541
FILTERSIEB (HYDRAULIKTANKEIN-FÜLLSIEB)	5D-7927	1	HYDRAULIKTANK	541
ÖLFILTER (*HYDRAULIC CASE DRAIN)	144-0832	1	ÖLFILTER	497
ÖLFILTERELEMENT (HYDRAULISCH)	225-4118	1	ÖLFILTER	496
SCREEN	6E-5066	1	*MANIFOLD GP-VALVE	524
		1	*MANIFOLD GP-VALVE	526
SCREEN (STEUERVENTIL-KRÜMMER)	6E-5066	1	STEUERKRÜMMER	522
SIEB (HYDRAULIKTANK)	9T-9227	2	HYDRAULIKTANK	541
KRAFTSTOFFSYSTEM				
DICHTUNG	220-8678	1	WASSERABSCHEIDER- U. KRAFTSTOFFILTER	96
KRAFTSTOFFILTER (AUSFALLSCHUTZ)	1R-0762	1	KRAFTSTOFFILTER UND LEITUNGEN	94
KRAFTSTOFFILTER (EINFÜLLSTURZENSIEB)	180-3730	1	KRAFTSTOFFTANK	112
KRAFTSTOFFTANKKAPPE	246-1479	1	KRAFTSTOFFTANK	112
RÜCKSCHLAGVENTIL (GEGEN VAKUUM)	188-8844	1	KRAFTSTOFFTANK	112
WASSERABSCHEIDER UND KRAFTSTOFFILTER (HAUPTELEMENT)	1R-0770	1	WASSERABSCHEIDER- U. KRAFTSTOFFILTER	96
KRAFTÜBERTRAGUNG				
ANSAUGSIEB	4S-8598	1	VERTEILERGETRIEBEANTRIEB	292
EINFÜLLSTUTZENKAPPE (KRAFTÜBERTRAGUNG)	5K-1568	1	GETRIEBEÖLFÜLLSTUTZEN	282
		1	GETRIEBEÖLFÜLLSTUTZEN	284
ENTLÜFTER	9C-4937	1	VERTEILERGETRIEBEANTRIEB	293
FILTER (KRAFTÜBERTRAGUNG)	1G-8878	1	ÖLFILTER	287
MAGNETFILTER (ACHSÖLKÜHLER)	251-6351	2	ACHSENÖLKÜHLERLEITUNGEN	300
MAGNETSIEB	4S-8603	1	VERTEILERGETRIEBEANTRIEB	292
MAGNETSTOPFEN	5P-4484	1	GEHÄUSE - PENDELACHSE	298
		1	GEHÄUSE - STARRACHSE	296
SCHRAUBE	138-1510	1	VERTEILERGETRIEBEANTRIEB	292
	175-4966	1	ABLASS (UMWELTFREUNDLICH)	281
SERPENTINENFÖRMIGER RIEMEN	215-3015	1	ACHSENÖLKÜHLERPUMPE U. BEFESTIGUNGSTEILE	316
	217-3031	1	ACHSENÖLKÜHLERPUMPE U. BEFESTIGUNGSTEILE	316
KÜHLSYSTEM				
DICHTUNG (TEMPERATURREGELGE-HÄUSE)	222-5915	1	KÜHLWASSERLEITUNGEN	69
KÜHLERKAPPE (7 PSI)	6L-8617	1	KÜHLERWASSERKASTEN, OBEN	79
WASSERTEMPERATURREGLER (94 GRAD CELSIUS) (KÜHLMITTEL)	119-3075	2	KÜHLWASSERLEITUNGEN	69

* ÜBERSETZUNG ZUM ZEITPUNKT DER DRUCKLEGUNG NICHT VORHANDEN

WARTUNGSTEILE

BESCHREIBUNG	ERSATZTEIL-NUMMER	MENGE	VERWENDET IN	SEITE
LUFTANSAUG- UND ABGASSYSTEM				
LUFTFILTER (HAUPTELEMENT)	245-6375	1	LUFTREINIGER	81
LUFTFILTER (HILFSELEMENT)	245-6376	1	LUFTREINIGER	81
SCHMIERSYSTEM				
EINFÜLLKAPPE (MOTORÖL)	5L-2952	1	MOTORÖLEINFÜLLSTUTZEN	53
ENTLÜFTER (KURBELGEHÄUSE)	164-0210	1	ENTLÜFTER	52
ÖLFILTER	1R-1807	1	ÖLFILTER	54

* ÜBERSETZUNG ZUM ZEITPUNKT DER DRUCKLEGUNG NICHT VORHANDEN

INDEX

Name	Page

A

ACCUMULATOR GP-BRAKE–CHARGED 421
ACCUMULATOR GP-BRAKE–UNCHARGED . . . 422
ACCUMULATOR GP-PILOT OIL–CHARGED–DEAD ENGINE, LIFT ARM LOWER 463
ACCUMULATOR GP-PILOT OIL–UNCHARGED–DEAD ENGINE, LIFT ARM LOWER 464
ACCUMULATOR GP-REFRIGERANT 687
ACCUMULATOR GP-RIDE CONTROL–CHARGED 465, 466
ACTUATOR GP-HOOD TILT 342
ACTUATOR GP-PARKING BRAKE 423
ACTUATOR GP-POWER 344
ACTUATOR GP-POWER GUARD 345
ADAPTER GP 71, 691
ADAPTER GP-OIL LINE–ENGINE 51
ADAPTER GP-TIP 605
ADJUSTER GP-SEAT 636
AIR CLEANER GP 80, 81
AIR CONDITIONER AR 637
AIR CONDITIONER GP 638, 639
ALARM GP–ACTION 115, 116
ALTERNATOR GP-CHARGING 117, 119
ARM AS-LIFT 596
ARM AS-LIFT–HIGH LIFT MACHINES 595
ARM GP-MATERIAL HANDLING 606
ARM GP-WINDOW WIPER–FRONT 644
ARM GP-WINDOW WIPER–REAR 643
ARMREST GP 645
AXLE AR-FIXED–FRONT, LIMITED SLIP DIFFERENTIAL 265
AXLE AR-FIXED–FRONT, STANDARD DIFFERENTIAL 265
AXLE AR-OSCILLATING–REAR, LIMITED SLIP DIFFERENTIAL 266
AXLE AR-OSCILLATING–REAR, NOSPIN DIFFERENTIAL 266
AXLE AR-OSCILLATING–REAR, STANDARD DIFFERENTIAL 265

B

BAFFLE GP 346
BASE GP-FOOT BRAKE–PEDAL, LH 425
BASE GP-FOOT BRAKE–PEDAL, RH 424
BATTERY & WIRING GP 121
BATTERY (LITHIUM) 653
BEARING GP-MAIN 15
BELT-SERPENTINE 119, 316, 649
BLADE AS-WIPER 769
BLOCK GP-AXLE OSC LIMITER 347
BOX GP-BATTERY 348
BOX GP-TOOL 772, 773
BRACKET AS-ADJUSTABLE SWITCH 425
BRAKE & PLANETARY GP 267, 269
BRAKE GP-PARKING 427
BREATHER AS 293
BREATHER AS (CRANKCASE) 52
BREATHER GP 52
BUCKET AS-GENERAL PURPOSE 607, 608, 609
BUCKET AS-MATERIAL HANDLING 610, 612, 613
BUCKET AS-ROCK 614, 615
BUCKET GP-GENERAL PURPOSE 616, 617, 618
BUCKET GP-MATERIAL HANDLING 619, 620
BUCKET GP-ROCK 620, 621

C

CAB AR-ENCLOSED ROPS 646
CAMSHAFT GP 7
CANOPY AR-OPEN ROPS 647
CAP AS-FILLER (ENGINE OIL) 53
CAP-FILLER (HYDRAULIC TANK) 541
CAP-FILLER (POWER TRAIN) 282, 284
CAP-FUEL 112
CAP-RADIATOR (7-PSI) 79
CARRIAGE GP-FORK 622, 623
CARRIER GP-SEAL 8
CHASSIS AR 1
CIRCUIT BREAKER AS (105-AMPERE) (ALTERNATOR) 229
CIRCUIT BREAKER AS (15-AMPERE) (POWER GUARD ACTUATOR) 263
CIRCUIT BREAKER AS (15-AMPERE) (RUNNING LIGHTS) 229
CIRCUIT BREAKER AS (50-AMPERE) (START) 229
CIRCUIT BREAKER AS (80-AMPERE) (MAIN) . . . 229

INDEX

Name	Page
CIRCUIT BREAKER AS (90-AMPERE) (STARTING AID)	229
CIRCUIT BREAKER GP (20-AMPERE) (HOOD TILT ACTUATOR)	229
CIRCUIT BREAKER GP (20-AMPERE) (UNSWITCHED BAT POWER TO CAB)	229
COMPRESSOR GP-REFRIGERANT	648 649
CONDENSER & MTG GP-REFRIGERANT	650
CONTROL & LINES GP-FAN–AUTOMATIC REVERSING	467
CONTROL & LINES GP-RIDE	469
CONTROL & MTG GP-COMMUNICATION–PRODUCT LINK 321SR	124
CONTROL & MTG GP-ENGINE ELEK	126 127
CONTROL AR-AUTODIG–HMU STEERING	128
CONTROL AR-FAN–AUTOMATIC REVERSING	470
CONTROL AR-QUICK COUPLER–MID LIFT MACHINES–QUICK COUPLER READY	624
CONTROL AR-RIDE–2-VALVE	470
CONTROL AR-RIDE–3-VALVE	470
CONTROL GP-AUTODIG–HMU STEERING	129
CONTROL GP-BUCKET	597 599 603
CONTROL GP-BUCKET–HIGH LIFT MACHINES	601
CONTROL GP-DISPLAY ELECTRONIC (INDICATOR PANEL, CENTER)	129
CONTROL GP-DISPLAY ELECTRONIC (INDICATOR PANEL, RH, LH)	222
CONTROL GP-DISPLAY ELECTRONIC (INDICATOR PANEL, RH, LH)	250
CONTROL GP-ELECTROHYDRAULIC–JOYSTICK, 2-FUNCTION	475
CONTROL GP-ELECTROHYDRAULIC–JOYSTICK, 3-FUNCTION	477
CONTROL GP-ELECTROHYDRAULIC–2-FUNCTION	471
CONTROL GP-ELECTROHYDRAULIC–3-FUNCTION	473
CONTROL GP-FOOT BRAKE	428 429
CONTROL GP-HANDLE	479
CONTROL GP-JOYSTICK	480
CONTROL GP-JOYSTICK (3-FUNCTION, WITH DOWNSHIFT)	477
CONTROL GP-MACHINE	126
CONTROL GP-MONITOR–DIMMER	652
CONTROL GP-MONITOR–PAYLOAD	653
CONTROL GP-PARKING BRAKE	430
CONTROL GP-SERVICE BRAKE	431
CONTROL GP-STEERING–HMU STEERING	437
CONTROL GP-TRANSMISSION–HMU STEERING	271 272
CONTROL GP-TRANSMISSION HYD	273
CONTROL GP-UNPRGMED MONITOR–CATERPILLAR MONITORING SYSTEM	654
CONTROL GP-UNPRGMED MONITOR (CATERPILLAR MONITORING SYSTEM)	221 248
CONTROL GP-UNPROGRAMMED–PRODUCT LINK 300	131
CONTROL GP-UNPROGRAMMED (ENGINE)	127
COOLANT HEATER LINES	691 693
COOLER & MTG GP-TRANSMISSION	275
COOLER AR-AXLE OIL	276
COOLER AS-TRANSMISSION OIL	275
COOLER GP-ENGINE OIL	63
COOLING AR-HIGH AMBIENT TEMP	64
CORE AS-AXLE OIL COOLER	309
CORE AS-CONDENSER (REFRIGERANT)	64 650
CORE AS-ENGINE OIL COOLER	63
CORE AS-HYDRAULIC OIL COOLER	76
CORE AS-POWER TRAIN OIL COOLER	275
CORE AS-RADIATOR	76
COUNTERWEIGHT GP	349
COUPLER GP-QUICK	625
COVER GP-AIR INLET–STARTING AID HEATER	82 83
COVER GP-BUMPER	350
COVER GP-CYLINDER BLOCK	9
COVER GP-FRONT HOUSING	10 11
COVER GP-VALVE MECHANISM	12 13 14
CRANKSHAFT GP	15
CYLINDER & MTG GP-STEERING	438
CYLINDER & SEAL GP-LIFT–LH	482
CYLINDER & SEAL GP-LIFT–RH	483
CYLINDER & SEAL GP-TILT	484 486
CYLINDER & SEAL GP-TILT–HIGH LIFT MACHINES	485
CYLINDER AS-ETHER	192
CYLINDER BLOCK GP	17 18 20
CYLINDER GP-COUPLER	487
CYLINDER GP-HYDRAULIC–STEERING	439
CYLINDER GP-LIFT–LH	489
CYLINDER GP-LIFT–RH	488

INDEX

Name	Page
CYLINDER GP-TILT	490
	494
CYLINDER GP-TILT–HIGH LIFT MACHINES	492
CYLINDER HEAD AS	21
CYLINDER HEAD GP	22
	23
	24
D	
DAMPER & PULLEY GP	25
DAMPER AS-ALARM	129
DIFFERENTIAL GP	277
DIFFERENTIAL GP-LIMITED SLIP	278
DIFFERENTIAL GP-NOSPIN	279
	280
DOOR GP-ACCESS–HOOD SIDE, LH	352
DOOR GP-ACCESS–HOOD SIDE, RH	351
DOOR GP-CAB	656
DOOR GP-CAB–SLIDING WINDOW, RH	655
DRAIN GP-ECOLOGY–POWER TRAIN	281
DRAIN GP-ENGINE OIL	26
DUCT & FILTER GP-AIR	657
DUCT GP-AIR	659
E	
EDGE GP-CUTTING	626
EDGE GP-SEGMENT	626
ELBOW GP-AIR INLET	84
ELBOW GP-WATER	65
ELECTRICAL AR	132
ELECTRONICS GP-COMMUNICATION–PRODUCT LINK 300	133
ELECTRONICS GP-IMPLEMENT	134
ELECTRONICS GP-MONITOR–CATERPILLAR MONITORING SYSTEM	134
ELECTRONICS GP-POWER TRAIN	134
ELEMENT AS-JACKET WATER HEATER (120-VOLT, 1000-WATT)	136
ELEMENT AS-JACKET WATER HEATER (240-VOLT, 1000-WATT)	135
ENGINE AR-COMPLETE	4
ENGINE AR-CORE	5
EXTENSION GP-BACKREST (CLOTH)	744
EXTENSION GP-BACKREST (VINYL)	747
F	
FASTENER GP-CYLINDER HEAD	24
FASTENER GP-DAMPER & PULLEY	27
FASTENER GP-FRONT HOUSING	28
	29
FASTENER GP-VALVE COVER	30
FASTENER GP-VALVE MECHANISM	31
FENDER AR-ROADING	353
FENDER GP	354
	357
FENDER GP-FRONT	358
	359
FENDER GP-ROADING	360
FILLER GP-ENGINE OIL	53
FILLER GP-POWER TRAIN OIL	282
	284
FILM (AUTODIG)	129
FILM-CONTROL (DUMP, TILT BACK)	471
	473
FILM-CONTROL (JOYSTICK, 2-FCTN, DOWNSHIFT SW)	475
FILM-CONTROL (JOYSTICK, 3-FCTN, D0WNSHIFT SW)	477
FILM-CONTROL (LIFT, FLOAT, LOWER)	471
	473
FILM-CONTROL (UPPER PANEL)	221
	249
	719
FILM-CONTROLS	723
FILM-EXIT (SECONDARY)	709
FILM-FUSE PANEL	679
	682
FILM GP–962H WASTE HANDLER	775
FILM-IDENTIFICATION (AUXILIARY HYDRAULIC)	473
FILM-IDENTIFICATION (HMU)	721
FILM-IDENTIFICATION (HORN)	471
	473
FILM-IDENTIFICATION (IGNITION SWITCH)	138
FILM-IDENTIFICATION (POWER GUARD ACTUATOR SWITCH)	263
FILM-IDENTIFICATION (WASTE HANDLER)	3
FILM-IDENTIFICATION (12-VOLT)	723
FILM-INFORMATION (INPUT/OUTPUT)	723
FILM-INFORMATION (KEY)	138
FILM-INSTRUCTION (ALTERNATE EXIT)	679
FILM-INSTRUCTION (ENGINE START)	723
FILM-INSTRUCTION (MAINTENANCE)	475
	477
FILM-INSTRUCTION (MAINTENANCE)	471
	473
FILM-INSTRUCTION (NO STEP)	783
FILM-INSTRUCTION (READ OMM)	138
FILM-INSTRUCTION (SEAT ADJUSTMENT)	763
FILM-MONITOR (CATERPILLAR MONITORING SYSTEM)	719
	721
FILM-PANEL (CENTER)	723
FILM-PANEL (LH)	723
FILM-PANEL (RH)	723
FILM-TRANSMISSION (DOWNSHIFT SWITCH)	471

INDEX

Name	Page
	473
FILM-WARNING (NO WELD, NO DRILL, READ OMM)	784
FILM-WARNING (PRODUCT LINK RADIO, NON NACD)	137
FILM-WARNING (READ OPERATION MANUAL)	606
FILTER & LINES GP-FUEL	93
FILTER & LINES GP-TRANSMISSION	285
FILTER AS-ENGINE OIL	54
FILTER AS-FUEL (FILLER NECK SCREEN)	112
FILTER AS-FUEL (SECONDARY)	94
FILTER AS-OIL (HYDRAULIC CASE DRAIN)	497
FILTER AS-WATER SEP & FUEL (PRIMARY)	96
FILTER-CAB AIR	657
FILTER ELEMENT AS-AIR (PRIMARY)	81
FILTER ELEMENT AS-AIR (SECONDARY)	81
FILTER ELEMENT AS-OIL (HYDRAULIC)	496
FILTER ELEMENT (POWER TRAIN)	287
FILTER GP-ENGINE OIL	54
FILTER GP-OIL	287
FILTER GP-OIL–HYDRAULIC	496
FILTER GP-OIL–HYDRAULIC CASE DRAIN	497
FILTER GP-WATER SEP & FUEL	96
FILTER-MAGNETIC (AXLE OIL COOLER)	300
FLASHER AS (24-VOLT)	211
FLOOR GP-SOUND SUPPRESSION	662 663
FLOOR MAT	679 682
FLYWHEEL GP	32
FRAME AS-LOADER	364
FRAME AS-REAR	367
FRAME GP-QUICK COUPLER	627
FUMES DISPOSAL GP	55
FUSE (10-AMPERE)	220 248
FUSE (15-AMPERE)	220 248 639 672
FUSE (20-AMPERE)	220 248

G

Name	Page
GASKET (TEMPERATURE REGULATOR HOUSING)	69
GAUGE AS-OIL LEVEL	282 284
GAUGE GP-OIL LEVEL (DIPSTICK)–ENGINE	56
GAUGE-LIQUID LEVEL (SIGHT GLASS)	541
GAUGE-SIGHT	66
GEAR GP-BEVEL & PINION–FIXED AXLE	290
GEAR GP-BEVEL & PINION–OSCILLATING AXLE	288
GEAR GP-FRONT	33
GEAR GP-OUTPUT TRANSFER	292
GENERAL AR	2
GRILL GP-RADIATOR	369
GUARD GP-ARTICULATION	371
GUARD GP-AXLE OIL COOLER	373
GUARD GP-AXLE SEAL	374
GUARD GP-DRIVE SHAFT	375
GUARD GP-FRONT	376
GUARD GP-LIFT CYLINDER	498
GUARD GP-LIFT CYLINDER–LH	499
GUARD GP-LIFT CYLINDER–RH	500
GUARD GP-LIGHTING	377
GUARD GP-POWER TRAIN	378
GUARD GP-POWER TRAIN–AXLE OIL COOLER	379
GUARD GP-POWER TRAIN–TRANSMISSION, HINGED	380
GUARD GP-VANDALISM–INSTRUMENT PANEL	665
GUARD GP-WINDOW	666 668

H

Name	Page
HARDWARE GP-LOADER FRAME–AXLE OIL COOLER MOUNTING	382
HARDWARE GP-LOADER FRAME–WASTE HANDLER	381
HARDWARE GP-MOUNTING–FENDER	384
HARDWARE GP-MOUNTING–SECONDARY STEERING	383
HARDWARE GP-REAR FRAME	387
HARDWARE GP-REAR FRAME–AXLE OIL COOLER MOUNTING	386
HARDWARE GP-REAR FRAME–WASTE HANDLER	385
HARNESS AS-BRAKE (STOP LIGHT)	425
HARNESS AS-CAB	222 249
HARNESS AS-CHASSIS (HYDRAULIC TANK)	229
HARNESS AS-CHASSIS (MAIN)	228
HARNESS AS-CONTROL	124
HARNESS AS-CONTROL (HEATED MIRRORS)	702 704
HARNESS AS-CONTROL (POWER GUARD ACTUATOR)	263
HARNESS AS-ENGINE	238
HARNESS AS-ENGINE (ELECTRONIC CONTROL MODULE)	236
HARNESS AS-ENGINE (FUEL INJECTION)	236
HARNESS AS-FRONT CHASSIS	242

INDEX

Name	Page
HARNESS AS-HEATER & AIR COND	639, 672
HARNESS AS-LIGHTING	155, 245
HARNESS AS-LIGHTING (CAB FLOODLIGHTS)	221, 249
HARNESS AS-LIGHTING (LH)	246, 247
HARNESS AS-LIGHTING (RH)	246, 247
HARNESS AS-LIGHTING (TURN SIGNAL)	211
HARNESS AS-LIGHTING (WARNING BEACON)	163
HARNESS AS-MONITOR (PAYLOAD CONTROL)	709
HARNESS AS-OPERATOR CONTROLS	221, 249
HARNESS AS-OPERATOR CONTROLS (ELECTROHYDRAULIC, JOYSTICK)	477
HARNESS AS-OPERATOR CONTROLS (ELECTROHYDRAULIC, JOYSTICK)	475
HARNESS AS-RADIO (SPEAKER)	728
HARNESS AS-SENSOR (AXLE, FRONT)	218
HARNESS AS-SENSOR (REAR AXLE)	218
HARNESS AS-STEERING (SECONDARY)	259
HARNESS AS-VALVE (SEAT AIR COMPRESSOR)	763
HARNESS AS-WIRING (FUEL PRESSURE)	93
HARNESS AS-WIRING (SERVICE TOOL)	221, 249
HARNESS AS-WORK TOOL (QUICK COUPLER)	234
HEATER GP-CAB	670, 672
HEATER GP-JACKET WATER	135, 136
HITCH GP-ARTICULATING	388
HOOD & GUARD GP	390, 393
HORN GP-ELECTRIC	674
HOUSING GP-FIXED AXLE	296
HOUSING GP-FLYWHEEL	34
HOUSING GP-FRONT	35
HOUSING GP-OSCILLATING AXLE	298
HYDRAULIC AR-2 VALVE	501
HYDRAULIC AR-3 VALVE	501
HYDRAULIC AR-3 VALVE–MID LIFT MACHINES	501

I

Name	Page
IDLER GP-BELT–ALTERNATOR, REFRIGERANT COMPRESSOR–AXLE OIL COOLER PUMP	36
INJECTOR GP-FUEL	97
INSTALLATION AR-COMMUNICATION–PRODUCT LINK 321SR	137
INSTALLATION AR-ENGINE	6
INSTALLATION AR-SECURITY	137
INSTALLATION GP-CONTROLS–PARKING BRAKE CABLE	675
INSTALLATION GP-RADIO	676, 678
INSTALLATION GP-SECURITY	138

K

Name	Page
KEY AS-ELECTRONIC (SECURITY)	138
KEY-HANDLE	657
KIT-AIR VALVE (SUSPENSION SEAT)	763
KIT-BEARING (ALTERNATOR)	117
KIT-BIAS PISTON	451
KIT-BOLT (ELECTRICAL CONNECTORS)	228, 242
KIT-BRAKE LINING	427
KIT-BRUSH (STARTING MOTOR)	195
KIT-BUSHING (STARTING MOTOR)	195
KIT-DISC	278
KIT-HARDWARE (ALTERNATOR)	117
KIT-INSULATOR (STARTING MOTOR)	195
KIT-KNOB (RADIO)	728
KIT-LEVER (STARTING MOTOR)	195
KIT-PISTON CONTROL	451
KIT-PUMP REPAIR (SECONDARY STEERING)	449
KIT-RELIEF VALVE (SECONDARY STEERING)	449
KIT-ROLLER	726
KIT-SEAL	431, 457, 465, 487, 524, 579
KIT-SEAL (DIVERTER VALVE)	522
KIT-SEAL (DIVERTER VALVE) (HYDRAULIC FAN FLUID FLOW)	568
KIT-SEAL (METERING PUMP, STEERING)	445
KIT-SEAL (RELIEF VALVE)	522, 526
KIT-SEAL (SHUTTLE VALVE)	522
KIT-SERVICE	288
KIT-SHAFT SHIM (INCLUDES 17-SHIMS)	451
KIT-SHOCK ABSORBER (SUSPENSION SEAT)	763
KIT-SLIDER BLOCK	750, 751
KIT-SOLENOID (STARTING MOTOR)	195
KIT-TERMINAL (ALTERNATOR)	117

INDEX

Name	Page
KIT-TETHER (SUSPENSION SEAT)	763
KIT-TREADLE PIN	726

L

Name	Page
LADDER GP	397
LAMP GP-DOME	140
LAMP GP-FLOOD–HID, SUSPENDED MOUNT	141
LAMP GP-FLOOD–HID, VERTCAL MOUNT	142
LAMP GP-FLOOD–SUSPENDED MOUNT	144
LAMP GP-FLOOD–VERTICAL MOUNT	143
LAMP GP-HEAD & SIGNAL–LH	145
LAMP GP-HEAD & SIGNAL–RH	147
LAMP GP-SIGNAL–FRONT TURN	149
LAMP GP-SIGNAL–STOP/TAIL	150
LAMP GP-STOP & TAIL	151
LAMP GP-WARNING BEACON–AMBER	152
LAMP-HALOGEN (24-VOLT, 65-WATT) (FLOODLIGHT)	143, 144
LAMP (12-VOLT, 24-VOLT, 35-WATT)	141, 142
LAMP (24-VOLT)	140, 220, 248, 709
LAMP (24-VOLT)	145
LAMP (24-VOLT) (SIGNAL)	147
LAMP (24-VOLT, 21-WATT)	149, 151
LAMP (24-VOLT, 21-WATT) (SIGNAL)	145
LAMP (24-VOLT, 21-WATT) (SIGNAL)	147
LAMP (24-VOLT, 5-WATT)	151
LAMP (24-VOLT, 70-WATT)	152
LAMP (24-VOLT, 75/70-WATT)	145
LAMP (24-VOLT, 75/70-WATT) (HEAD)	147
LENS-AMBER	149
LENS (AMBER) (SIGNAL)	145, 147
LENS AS (AMBER) (SIGNAL)	145, 147
LENS AS (HEADLIGHT)	145, 147
LIFT AR–HIGH LIFT MACHINES	603, 604
LIFT AR–WITH QUICK COUPLER	603
LIFTER GP-VALVE	37
LIFTING GP-ENGINE	38
LIGHTER GP-CIGAR (12-VOLT)	221, 249
LIGHTING AR-ROADING–HMU STEERING	153
LIGHTING AR-SIGNAL–HMU STEERING	153
LIGHTING GP-FLOOD–4-LAMP, CAB FRONT, REAR	154
LIGHTING GP-FLOOD–4-LAMP, HID, CAB FRONT, REAR	155
LIGHTING GP-FLOOD & SIGNAL–4-LAMP, FRONT, REAR	157
LIGHTING GP-FLOOD & SIGNAL–6-LAMP, FRONT, REAR	158, 160
LIGHTING GP-ROADING	162
LIGHTING GP-WARNING BEACON	163
LINER GP-CAB	679, 682
LINES GP-AFTERCOOLER AIR	85
LINES GP-AIR	86
LINES GP-AIR CONDITIONER	685, 687
LINES GP-AXLE OIL COOLER	300
LINES GP-CAB HEATER	691, 693
LINES GP-COUPLER–FRONT	505
LINES GP-COUPLER–REAR	502
LINES GP-DIAGNOSTIC–REMOTE PRESSURE TAPS	777
LINES GP-DIAGNOSTIC–REMOTE PRESSURE TAPS–TRANSMISSION CLUTCH	780
LINES GP-ENGINE OIL	58
LINES GP-ENGINE OIL DRAIN	59
LINES GP-FRONT	507
LINES GP-FUEL	98
LINES GP-FUEL DRAIN	100
LINES GP-GREASE	399
LINES GP-HYDRAULIC	510
LINES GP-HYDRAULIC OIL COOLER	514
LINES GP-INJECTOR HYD PUMP	101
LINES GP-LIFT CYLINDER	518
LINES GP-SECONDARY STEERING	440
LINES GP-STEERING–HMU STEERING	443
LINES GP-TILT CYLINDER	520
LINES GP-TORQUE CONV COOLER	304
LINES GP-TURBOCHARGER OIL	60
LINES GP-WATER	71
LINES GP-WATER–ENGINE	69
LINES GP-WATER–RADIATOR	66
LINK GP-STEERING FRAME LOCK	401

M

Name	Page
MACHINE AR–VALUE PACKAGE	2
MANIFOLD GP-CONTROL–BRAKE CHARGE, HYD FAN CONTROL	522
MANIFOLD GP-EXHAUST	87
MANIFOLD GP-VALVE–END COVER	524
MANIFOLD GP-VALVE–INLET	526
MIRROR GP-REAR VIEW	694
MIRROR GP-REAR VIEW–HEATED	702

INDEX

Name	Page
	704
MIRROR GP-REAR VIEW–HEATED, LH	697
	700
MIRROR GP-REAR VIEW–HEATED, RH	698
	699
MIRROR GP-REAR VIEW–LH	696
MIRROR GP-REAR VIEW–RH	695
MODULE GP-INTERFACE (KEY)	138
MODULE GP-PAYLOAD KEYPAD	709
MODULE GP-QUAD GAUGE	706
MODULE GP-SPEEDOMETER & TACH	707
MONITOR AR-PAYLOAD	708
MONITOR GP-PAYLOAD	709
MOTOR GP-GEAR–HYDRAULIC FAN	527
MOTOR GP-PISTON–AUTOMATIC REVERSING FAN	528
MOTOR GP-WINDOW WIPER–FRONT	712
MOTOR GP-WINDOW WIPER–REAR	711
MOUNTING GP-ALTERNATOR	39
MOUNTING GP-AXLE	307
MOUNTING GP-AXLE OIL COOLER	309
MOUNTING GP-CAB	713
MOUNTING GP-ENGINE & TMSN	40
MOUNTING GP-HYDRAULIC TANK	530
MOUNTING GP-RIM	310
MUFFLER GP	88

O

OPERATOR AR-ENCLOSED ROPS–HMU STEERING	715
OPERATOR AR-OPEN ROPS–HMU STEERING	715

P

PADLOCK GP	665
PAN GP-BACKREST	717
PAN GP-BACKREST–CLOTH	716
PAN GP-BACKREST–VINYL SEAT	718
PAN GP-OIL	41
PANEL GP-HOOD–SIDE, LH	404
	406
PANEL GP-HOOD–SIDE, RH	403
	405
PANEL GP-HOOD–TOP	402
PANEL GP-INSTRUMENT–LOWER	723
PANEL GP-INSTRUMENT–UPPER	719
PANEL GP-INSTRUMENT–UPPER, OPEN ROPS	721
PANEL GP-SIDE	407
PEDAL GP-GOVERNOR	726
	727
PIPE GP-EXHAUST	89
PISTON & ROD GP	42
PLANETARY GP-TRANSMISSION	311
PLATE & FILM GP	783
	784
PLATE GP-AXLE IDENTIFICATION	784
PLATE-INFORMATION (MANUAL FUEL)	108
PLATE-INSTRUCTION (BATTERY)	121
PLATE-SERIAL NUMBER (TRANSMISSION)	293
PLUG	281
	292
PLUG-DRAIN	569
PLUG GP-CONNECTOR–ENGINE HARNESS, PROTECTIVE COVER	165
PLUG GP-CYLINDER BLOCK	43
PLUG GP-ENGINE	44
PLUG-MAGNETIC	296
	298
POWER TRAIN AR	315
PRECLEANER GP	90
	91
PULLEY GP-IDLER–BELT TENSIONER	45
PUMP & MOTOR GP-SEC STEERING	449
PUMP & MTG GP-AXLE OIL COOLER	316
PUMP & MTG GP-BRAKE & HYD FAN	531
PUMP & MTG GP-HYDRAULIC	533
PUMP & MTG GP-SECONDARY STEER	450
PUMP & MTG GP-UNIT INJ HYD	102
PUMP GP-ENGINE OIL	61
	62
PUMP GP-FUEL INJECTION	104
PUMP GP-FUEL PRM & PRIM FILTER	105
	108
PUMP GP-FUEL PRM & WATER SEP	114
PUMP GP-FUEL TRANSFER	110
PUMP GP-GEAR (AXLE OIL COOLER)	316
PUMP GP-METERING (HMU STEERING)	443
PUMP GP-PISTON–BRAKE, HYDRAULIC FAN	537
PUMP GP-PISTON–IMPLEMENT, PILOT	534
PUMP GP-PISTON–STEERING	451
PUMP GP-TRANSMISSION	317
	318
PUMP GP-UNIT INJECTOR HYD	110
PUMP GP-WATER	73
	74

R

RADIATOR & FAN GP	75
RADIO GP–AM/FM CASSETTE	728
	729
RADIO GP-COMMUNICATION (PRODUCT LINK 121SR)	124
RECEIVER-DRYER GP (AIR CONDITIONER)	687
RECEPTACLE GP-AUXILIARY START–JUMP START	166

INDEX

Name	Page
RECLINER GP-SEAT	730
REGULATOR AS (FUEL PRESSURE)	111
REGULATOR AS-VOLTAGE (24-VOLT)	117
REGULATOR GP-FUEL PRESSURE	111
REGULATOR-WATER TEMPERATURE (94-DEG C) (COOLANT)	69
RELAY AS (24-VOLT) (AXLE OIL COOLER)	235
RELAY AS (24-VOLT) (FRONT CAB FLOODLIGHTS)	220
RELAY AS (24-VOLT) (FRONT CAB FLOODLIGHTS)	248
RELAY AS (24-VOLT) (HEATED MIRRORS)	702
	704
RELAY AS (24-VOLT) (HOOD TILT MOTOR)	228
RELAY AS (24-VOLT) (HORN)	220
	248
RELAY AS (24-VOLT) (REAR FLOODLIGHT)	220
	248
RELAY AS (24-VOLT) (SECONDARY STEER INTERMEDIATE)	259
RIM AR	320
RIM GP-DEMOUNTABLE	321
ROCKER ARM GP (EXHAUST)	49
ROCKER ARM GP (INTAKE)	49
ROPS GP-ENCLOSED	731
ROPS GP-OPEN	738
ROTATING GP-MOTOR–AUTOMATIC REVERSING FAN	539
ROTATING GP-PUMP–BRAKE, HYDRAULIC FAN	540
ROTATING GP-PUMP–STEERING	453

S

Name	Page
SCREEN	524
	526
SCREEN AS (HYDRAULIC TANK)	541
SCREEN (CONTROL VALVE MANIFOLD)	522
SCREEN GP-MAGNETIC	292
SCREEN-SUCTION	292
SEAL	96
SEAL GP-CRANKSHAFT	46
SEAL GP-FLYWHEEL HOUSING	47
SEAT BELT GP	741
	748
	749
SEAT GP	744
SEAT GP–CLOTH	742
SEAT GP–VINYL	745
	747
SEAT GP-SUSPENSION	748
	749
	750
	751
SENDER AS-FUEL LEVEL	112
SENSOR & MTG GP-LIFT POSITION	167
SENSOR & MTG GP-PRESSURE–LIFT CYLINDER OIL	169
SENSOR & MTG GP-TILT POSITION	170
SENSOR AS-POSITION	174
SENSOR GP-ENGINE–TEMPERATURE, PRESSURE, SPEED	172
SENSOR GP-POSITION–LIFT, TILT	174
SENSOR GP-POSITION–THROTTLE	175
SENSOR GP-PRESSURE	178
	179
	180
	183
SENSOR GP-PRESSURE–ATMOSPHERIC AIR	178
SENSOR GP-PRESSURE–BOOST	180
SENSOR GP-PRESSURE–ENGINE OIL	179
SENSOR GP-PRESSURE–FUEL	177
SENSOR GP-PRESSURE–INJECTION ACTUATION	182
	183
SENSOR GP-PRESSURE–LIFT CYLINDER OIL	181
SENSOR GP-PRESSURE–TURBOCHARGER INLET	176
SENSOR GP-PRESSURE (FUEL)	93
SENSOR GP-PRESSURE (LIFT CYLINDER OIL)	169
SENSOR GP-SPEED–ENGINE TIMING	185
SENSOR GP-SPEED–TMSN, TORQUE CONVERTER OUTPUT	184
SENSOR GP-SPEED (TORQUE CONVERTER OUTPUT)	332
SENSOR GP-SPEED (TRANSMISSION OUTPUT 1)	292
SENSOR GP-SPEED (TRANSMISSION OUTPUT 2)	292
SENSOR GP-TEMPERATURE	186
SENSOR GP-TEMPERATURE–AIR INLET MANIFOLD	188
SENSOR GP-TEMPERATURE–ENGINE COOLANT	189
SENSOR GP-TEMPERATURE–TMSN, TORQUE CONVERTER OIL	187
SENSOR GP-TEMPERATURE (2-PIN)	188
SENSOR GP-TEMPERATURE (2-PIN) (FRONT AXLE OIL)	218
SENSOR GP-TEMPERATURE (2-PIN) (HYDRAULIC OIL)	228
SENSOR GP-TEMPERATURE (2-PIN) (REAR AXLE OIL)	218
SHAFT GP-DRIVE	322
	323
SHIELD GP-ENGINE COMPARTMENT	409
SLIP JOINT GP	324

INDEX

Name	Page
SOFTWARE GP-COMMUNICATION (PRODUCT LINK 121SR)	124
SPIDER & BEARING GP	324 325 337 338
STARTING AID AR-ETHER	190
STARTING AID GP–STARTING AID	191
STARTING AID GP-ETHER	192
STARTING MOTOR GP-ELECTRIC	194 195
STEERING AR-SECONDARY	454
STEP GP	411
STRAINER AS (HYDRAULIC TANK FILL)	541
STRAP-CABLE	124
SUN VISOR	765
SUPPORT GP-AIR INLET	413
SUPPORT GP-HYDRAULIC CONTROL	753
SUPPORT GP-VALVE & FILTER– SERVICE CENTER	414
SUPPRESSION AR-SOUND	416
SUPPRESSION GP-CAB SOUND– AIR CONDITIONER, HEATER	759
SUPPRESSION GP-CAB SOUND– CAB REAR, CAB ROOF	761
SUPPRESSION GP-CAB SOUND–FRONT	757
SUPPRESSION GP-CAB SOUND–REAR	760
SUPPRESSION GP-SOUND–REAR FRAME	417
SUSPENSION GP-SEAT–AIR	763
SWITCH AS-DIMMER (ROADING)	198
SWITCH AS-LIMIT (STOP LIGHT)	425
SWITCH AS-MAGNETIC (24-VOLT) (AIR INLET HEATER)	201
SWITCH AS-PRESSURE (DIFFERENTIAL)	496
SWITCH AS-PRESSURE (PARKING BRAKE OIL)	228
SWITCH AS-PRESSURE (PRIMARY STEERING OIL)	259
SWITCH AS-PRESSURE (REFRIGERANT)	216
SWITCH AS-PRESSURE (SECONDARY STEERING OIL)	259
SWITCH AS-PRESSURE (SERVICE BRAKE OIL)	238
SWITCH AS-PUSH BUTTON (AUTODIG TRIGGER)	129
SWITCH AS-PUSH BUTTON (DOWNSHIFT)	249
SWITCH AS-PUSH BUTTON (HORN)	221 248
SWITCH AS-PUSH BUTTON (THROTTLE LOCK RESUME)	222
SWITCH AS-ROCKER (AIR CONDITIONER, HEATER)	222
SWITCH AS-ROCKER (AUTO LOADING KICKOUT SET)	129
SWITCH AS-ROCKER (AUTO LOADING MODE SELECT)	129
SWITCH AS-ROCKER (AUTO REVERSING FAN)	204
SWITCH AS-ROCKER (BUCKET, FORK SELECT)	206 208
SWITCH AS-ROCKER (FAN BLOWER SPEED)	222
SWITCH AS-ROCKER (FINE MODULATION)	222 250
SWITCH AS-ROCKER (FORWARD, NEUTRAL, REVERSE)	214
SWITCH AS-ROCKER (FRONT, REAR FLOODLIGHTS)	155
SWITCH AS-ROCKER (HAZARD)	211
SWITCH AS-ROCKER (HEATED MIRRORS)	702 704
SWITCH AS-ROCKER (HYDRAULIC LOCKOUT)	223 250
SWITCH AS-ROCKER (LIFT, TILT KICKOUT)	222 250
SWITCH AS-ROCKER (LIFT, TILT KICKOUT)	206 208
SWITCH AS-ROCKER (MODE SELECT)	222 250
SWITCH AS-ROCKER (QUICK COUPLER)	206 208 624
SWITCH AS-ROCKER (RIDE CONTROL)	205
SWITCH AS-ROCKER (SECONDARY STEERING)	210
SWITCH AS-ROCKER (TMSN NEUTRALIZER OVERRIDE)	222 250
SWITCH AS-ROCKER (WARNING BEACON)	163
SWITCH AS-ROCKER (3RD FUNCTION SELECT)	477
SWITCH AS-ROCKER (3RD FUNCTION SELECT)	473
SWITCH AS-ROTARY (24-VOLT) (AUTOSHIFT CONTROL)	221 249
SWITCH AS-ROTARY (24-VOLT) (REAR WIPER)	220
SWITCH AS-ROTARY (24-VOLT) (RUNNING LIGHTS)	220 248
SWITCH AS-ROTARY (24-VOLT) (VARIABLE SHIFT CONTROL)	221 249
SWITCH AS-TEMPERATURE (AIR CONDITIONER)	639

INDEX

Name	Page
SWITCH AS-TOGGLE (POWER GUARD ACTUATOR)	263
SWITCH AS-TURN SIGNAL	211
SWITCH AS-WIPER (24-VOLT) (FRONT INTERMITTENT)	220
SWITCH GP-BYPASS– POWER TRAIN OIL FILTER	197
SWITCH GP-DIMMER–ROADING	198
SWITCH GP-DISCONNECT–BATTERY	199
SWITCH GP-MAGNETIC– AIR INLET HEATER RELAY	201
SWITCH GP-MAGNETIC–MAIN RELAY	202
SWITCH GP-MAGNETIC–START RELAY	200
SWITCH GP-MAGNETIC (24-VOLT) (MAIN RELAY)	229
SWITCH GP-PRESSURE–FUEL	203
SWITCH GP-PRESSURE (OIL FILTER BYPASS)	287
SWITCH GP-REVERSING FAN	204
SWITCH GP-RIDE CONTROL	205
SWITCH GP-ROCKER–QUICK COUPLER, BUCKET/FORK SELECT, KICKOUT	206 208
SWITCH GP-ROTARY– AUTODIG MATERIAL SELECT	209
SWITCH GP-ROTARY (AUTODIG MATERIAL SELECT)	129
SWITCH GP-SECONDARY STEERING	210
SWITCH GP-SIGNAL–TURN	211
SWITCH GP-START (KEY)	220 248
SWITCH GP-TOGGLE– FUEL PRIMING PUMP	213
SWITCH GP-TOGGLE (GROUND LEVEL SHUTDOWN)	228
SWITCH GP-TOGGLE (HOOD TILT ACTUATOR)	228
SWITCH GP-TRANSMISSION–REMOTE FORWARD, NEUTRAL, REVERSE CONTROL	214

T

Name	Page
TANK GP-FUEL	112
TANK GP-HYDRAULIC	541
TANK GP-RADIATOR TOP	79
TILT GP-HOOD	420
TIP GP-EXTRA DUTY	628
TIP GP-GENERAL PURPOSE	629 630
TIP GP-LONG	631
TIP GP-PENETRATION	632 633
TIP GP-SHORT	634 635
TIRE & RIM AR	326 327 328 329 330 331
TORQUE CONVERTER & HOUSING GP– FREEWHEEL STATOR	332
TORQUE CONVERTER GP– FREEWHEEL STATOR	334
TRANSMISSION AR–FREEWHEEL STATOR TORQUE CONVERTER	336
TURBOCHARGER GP	92

U

Name	Page
UNIVERSAL JOINT GP	337 338

V

Name	Page
VALVE & MTG GP-MAIN CONTROL– 2-FUNCTION	543
VALVE & MTG GP-MAIN CONTROL– 2-FUNCTION, WITH RIDE CONTROL	549
VALVE & MTG GP-MAIN CONTROL– 3-FUNCTION	546
VALVE & MTG GP-MAIN CONTROL– 3-FUNCTION, WITH RIDE CONTROL	552
VALVE AS-BYPASS (ENGINE OIL FILTER)	54
VALVE-BREAKER RELIEF	112
VALVE GP-BRAKE CONTROL–PARKING	436
VALVE GP-BRAKE CONTROL (SERVICE)	431
VALVE GP-CHECK	555 556
VALVE GP-CHECK & RELIEF–LINE	557
VALVE GP-CHECK (AXLE OIL COOLER BYPASS)	309
VALVE GP-CONTROL–AUXILIARY	560
VALVE GP-CONTROL–HYDRAULIC BLOCK	558
VALVE GP-CONTROL–LIFT	565
VALVE GP-CONTROL–TILT	562
VALVE GP-DIVERTER–HYDRAULIC FAN	568
VALVE GP-DIVERTER–QUICK COUPLER	567
VALVE GP-DIVERTER (HYDRAULIC TANK)	522
VALVE GP-DRAIN–ECOLOGY, HYDRAULIC	569
VALVE GP-ETHER STARTING	215
VALVE GP-LOWERING CONTROL	570
VALVE GP-MAIN CONTROL–2-FUNCTION	576
VALVE GP-MAIN CONTROL– 2-FUNCTION, WITH RIDE CONTROL	572
VALVE GP-MAIN CONTROL–3-FUNCTION	577
VALVE GP-MAIN CONTROL– 3-FUNCTION, WITH RIDE CONTROL	574
VALVE GP-MANUAL–LOWERING CONTROL	579

INDEX

Name	Page
VALVE GP-MODULATING–TRANSMISSION CLUTCH	339
VALVE GP-PRESSURE REDUCING–SIGNAL DUPLICATION	580
VALVE GP-PUMP CONTROL–PRESSURE, FLOW COMPENSATOR–BRAKE, HYDRAULIC FAN	581
VALVE GP-PUMP CONTROL–PRESSURE, FLOW COMPENSATOR–IMPLEMENT, PILOT	583
VALVE GP-PUMP CONTROL–PRESSURE, FLOW COMPENSATOR–STEERING	455
VALVE GP-RELIEF–PUMP BACKUP	457
VALVE GP-RELIEF–RIDE CONTROL	585
VALVE GP-RELIEF–STEERING CYLINDER CROSSOVER	456
VALVE GP-RELIEF–TRANSMISSION HYDRAULIC CONTROL	340
VALVE GP-RELIEF (BRAKE)	522
VALVE GP-RELIEF (HYDRAULIC TANK)	522
VALVE GP-RELIEF (REFRIGERANT COMPRESSOR)	648
VALVE GP-RIDE CONTROL	586
VALVE GP-SECONDARY STEERING	458
VALVE GP-SELECTOR (STEERING)	459
VALVE GP-SHUTOFF	510
VALVE GP-SHUTOFF (RADIATOR DRAIN)	275
VALVE GP-SHUTTLE	549 588 591
VALVE GP-SHUTTLE–BALL RESOLVER	590
VALVE GP-SHUTTLE–BRAKE ACCUMULATOR	589
VALVE GP-SHUTTLE (BRAKE, HYDRAULIC FAN)	522
VALVE GP-SOLENOID–BRAKE, HYDRAULIC FAN	592
VALVE GP-SOLENOID–DRIFT REDUCTION	594
VALVE GP-SOLENOID–PILOT PROPORTIONING	593
VALVE GP-SOLENOID (24-VOLT) (BRAKE, HYDRAULIC FAN)	522
VALVE GP-STEERING–HMU STEERING	459
VALVE GP-STEERING NEUTRALIZER	443 462
VALVE GP-TIRE	321
VALVE MECHANISM GP	48 49
VISOR GP-CAB	765

W

Name	Page
WASHER GP-WINDOW	766
WASTE HANDLING AR	3
WATER SEP & FUEL PRM PUMP GP	114
WINDOW GP-DOOR–RH	767
WIPER GP-WINDOW	769
WIRING GP-AIR CONDITIONER	216
WIRING GP-AXLE MONITORING–OIL TEMPERATURE	218
WIRING GP-CAB	220
WIRING GP-CHASSIS	228
WIRING GP-COUPLER	234
WIRING GP-ELECTRIC CLUTCH–AXLE OIL COOLER PUMP	235
WIRING GP-ENGINE	236 238
WIRING GP-ETHER STARTING AID	241
WIRING GP-FRONT	242
WIRING GP-LIGHTING–LOADER FRAME	245 246 247
WIRING GP-OPEN ROPS	248
WIRING GP-SECONDARY STEERING	259
WIRING GP-SENSOR–TILT POSITION	262
WIRING GP-WASTE HANDLER	263

INDEX

Désignation	Page
A	
ACCOUDOIR (ASS)	645
ACCUMULATEUR - CLIMATISEUR (ASS)	687
ACCUMULATEUR - COMMANDE DE TRANSLATION (ASS)	465, 466
ACCUMULATEUR - FREIN	421, 422
ACCUMULATEUR - HUILE PILOTE (ASS)	463, 464
ADAPTATEUR (ASS)	71, 691
ALLUME-CIGARETTES (ASS) (12 VOLTS)	221, 249
ALTERNATEUR DE CHARGE (ASS)	117, 119
AMORTISSEUR DE VIBRATIONS ET POULIE (ASS)	25
AMPOULE (12V, 24V, 35W)	141, 142
AMPOULE (24 VOLTS)	140, 220, 248, 709
AMPOULE (24 VOLTS)	145
AMPOULE (24 VOLTS) (SIGNAL)	147
AMPOULE (24V, 21W)	149, 151
AMPOULE (24V, 21W) (SIGNAL)	145, 147
AMPOULE (24V, 5W)	151
AMPOULE (24V, 70W)	152
AMPOULE (24V, 75/70W)	145
AMPOULE (24V, 75/70W) (TÊTE)	147
ARBRE A CAMES (ASS)	7
ARBRE D'ENTRAÎNEMENT (ASS)	322, 323
ATTELAGE D'ARTICULATION (ASS)	388
AUTOCOLLANT (AUTODIG)	129
AUTOCOLLANT-COMMANDE (*JOYSTICK, 2-FCTN, DOWNSHIFT SW)	475
AUTOCOLLANT-COMMANDE (*JOYSTICK, 3-FCTN, D0WNSHIFT SW)	477
AUTOCOLLANT-COMMANDE (RELEVAGE, LIBRE, ABAISSEMENT)	471, 473
AUTOCOLLANT-COMMANDE (*UPPER PANEL)	221, 249, 719
AUTOCOLLANT-COMMANDE (VIDAGE, REDRESSEMENT)	471, 473
AUTOCOLLANT DE MISE EN GARDE (LIRE LE GUIDE D'UTILISATION)	606
AUTOCOLLANT DE MISE EN GARDE (PAS DE SOUDAGE, PAS DE PERÇAGE, LIRE LE GUIDE D'UTILISATION ET D'ENTRETIEN)	784
AUTOCOLLANT DE MISE EN GARDE (RADIO PRODUCT LINK, AUTRE QUE NACD)	137
AUTOCOLLANT DE PANNEAU DE FUSIBLES	679, 682
AUTOCOLLANT DES COMMANDES	723
AUTOCOLLANT D'IDENTIFICATION (CONTACTEUR D'ALLUMAGE)	138
AUTOCOLLANT D'IDENTIFICATION (CONTACTEUR D'ALLUMAGE)	138
AUTOCOLLANT D'IDENTIFICATION (CONTACTEUR DE COMMANDE DE BLINDAGE HYDRAULIQUE)	263
AUTOCOLLANT D'IDENTIFICATION (HYDRAULIQUE AUXILIAIRE)	473
AUTOCOLLANT D'IDENTIFICATION (KLAXON)	471, 473
AUTOCOLLANT D'IDENTIFICATION (MANUTENTION DES DÉCHETS)	3
AUTOCOLLANT D'IDENTIFICATION (MODULE DE RÉGULATION)	721
AUTOCOLLANT D'IDENTIFICATION (12 VOLTS)	723
AUTOCOLLANT DU PANNEAU (CENTRE)	723
AUTOCOLLANT DU PANNEAU (DROITE)	723
AUTOCOLLANT DU PANNEAU (GAUCHE)	723
AUTOCOLLANT-INFORMATION (CLAVETTE)	138
AUTOCOLLANT-INFORMATION (ENTRÉE/ SORTIE)	723
AUTOCOLLANT, SORTIE (SECONDAIRE)	709
AUTOCOLLANT-TRANSMISSION (*DOWNSHIFT SWITCH)	471, 473
AUXILIAIRE DE DÉMARRAGE À L'ÉTHER	192
AUXILIAIRE DE DÉMARRAGE À L'ÉTHER (VERSION)	190
AUXILIAIRE DE DÉMARRAGE (ASS)	191
AVERTISSEUR (ASS)	115, 116
AXE DE CULBUTEUR (ASS) (ADMISSION)	49
AXE DE CULBUTEUR (ASS) (ÉCHAPPEMENT)	49
B	
BALAI D'ESSUIE-GLACE (ENS)	769
BÂTI - CHARGEUSE (ENS)	364

* TRADUCTION NON DISPONIBLE AU MOMENT DE LA PUBLICATION

INDEX

Désignation	Page
BÂTI AR (ENS)	367
BATTERIE ET CÂBLAGE	121
BATTERIE (LITHIUM)	653
BLINDAGE D'ARBRE DE TRANSMISSION (ASS)	375
BLINDAGE DE TRANSMISSION (ASS)	378 379 380
BLOC - LIMITEUR D'ESSIEU OSCILLANT (ASS)	347
BLOC-CYLINDRES - COUVERCLE (ASS)	9
BLOC-CYLINDRES (ASS)	17 18 20
BOÎTE DE VITESSES (VERSION)	336
BOÎTE PLANÉTAIRE (ASS)	311
BOUCHON AIMANTÉ	296 298
BOUCHON DE BLOC-CYLINDRES (ASS)	43
BOUCHON DE CARBURANT	112
BOUCHON DE GOULOTTE DE REMPLISSAGE (ENS) (HUILE MOTEUR)	53
BOUCHON DE GOULOTTE DE REMPLISSAGE (RÉSERVOIR HYDRAULIQUE)	541
BOUCHON DE GOULOTTE DE REMPLISSAGE (TRANSMISSION)	282 284
BOUCHON DE MOTEUR (ASS)	44
BOUCHON DE REMPLISSAGE D'HUILE MOTEUR (ASS)	53
BOUCHON DE VIDANGE	569
BOUCHON FILETÉ	281 292
BOULONNERIE D'AMORTISSEUR ET DE POULIE	27
BOULONNERIE DE BÂTI ARRIÈRE (ASS)	385 386 387
BOULONNERIE DE BÂTI DE CHARGEUSE (ASS)	381 382
BOULONNERIE DE CARTER AV (ASS)	28 29
BOULONNERIE DE LA CULASSE (ASS)	24
BOURRELET D'ÉTANCHÉITÉ	96
BRAS DE LEVAGE (ENS)	595 596
BRAS DE MANUTENTION (ASS)	606
BRAS D'ESSUIE-GLACE (ASS)	643 644

C

Désignation	Page
CABINE - REVÊTEMENT (ASS)	679 682
CABINE-FAISCEAU DE CÂBLES (ENS)	222 249
CABINE ROPS FERMÉE (ASS)	731
CABINE ROPS FERMÉE (VERSION)	646 715
CABINE ROPS OUVERTE (VERSION)	715
CABLAGE - CAPTEUR (ASS)	262
CABLAGE - CLIMATISEUR (ASS)	216
CABLAGE - EMBRAYAGE ÉLECTRIQUE (ASS)	235
CÂBLAGE-AUXILIAIRE DE DÉMARRAGE À L'ÉTHER	241
CABLAGE AV (ASS)	242
CÂBLAGE-COUPLEUR (ASS)	234
CABLAGE DE CABINE (ASS)	220
CABLAGE DE CHASSIS (ASS)	228
CABLAGE DE DIRECTION AUXILIAIRE (ASS)	259
CABLAGE DE MOTEUR (ASS)	236 238
CABLAGE DE TOIT ROPS OUVERT (ASS)	248
CABLAGE D'ÉCLAIRAGE (ASS)	245
CABLAGE D'ÉCLAIRAGE (ASS)	246 247
CÂBLAGE-MONITEUR (COMMANDE DE CHARGE UTILE)	709
CABLAGE MOTEUR (ENS)	238
CABLAGE MOTEUR (ENS) (INJECTION DE CARBURANT)	236
CABLAGE MOTEUR (ENS) (MODULE DE COMMANDE ÉLECTRONIQUE)	236
CÂBLE DE COURROIE	124
CÂBLE DE SURVEILLANCE D'ESSIEU (ASS)	218
CACHE-SOUPAPE - BOULONNERIE (ASS)	30
CACHE-SOUPAPES (ASS)	12 13 14
CADENAS (ASS)	665
CANALIS. DE REFROIDISSEMENT DU CONV. DE COUPLE	304
CANALISATION DE DIRECTION AUXILIAIRE	440
CANALISATIONS - INJECTEURS-POMPES HYDRAULIQUES	101
CANALISATIONS AV	507
CANALISATIONS D'AIR (ASS)	86
CANALISATIONS D'AIR DE REFROIDISSEUR D'ADMISSION (ASS)	85
CANALISATIONS DE CARBURANT (ASS)	98
CANALISATIONS DE CHAUFFAGE DE CABINE (ASS)	691

* TRADUCTION NON DISPONIBLE AU MOMENT DE LA PUBLICATION

INDEX

Désignation	Page
	693
CANALISATIONS DE CLIMATISEUR (ASS)	685
	687
CANALISATIONS DE COUPLEUR (ASS)	502
	505
CANALISATIONS DE DIAGNOSTIC (ASS)	777
	780
CANALISATIONS DE DIRECTION (ASS)	443
CANALISATIONS DE GRAISSAGE (ASS)	399
CANALISATIONS DE RÉCHAUFFEUR DE LIQUIDE DE REFROIDISSEMENT	691
	693
CANALISATIONS DE REFROIDISSEUR D'HUILE D'ESSIEU (ASS)	300
CANALISATIONS DE REFROIDISSEUR D'HUILE HYDR. (ASS)	514
CANALISATIONS DE VÉRIN DE LEVAGE (ASS)	518
CANALISATIONS D'EAU (ASS)	66
	69
	71
CANALISATIONS D'HUILE DE TURBOCOMPRESSEUR (ASS)	60
CANALISATIONS D'HUILE MOTEUR (ASS)	58
CANALISATIONS DU VÉRIN D'INCLINAISON (ASS)	520
CANALISATIONS HYDRAULIQUES (ASS)	510
CANALISATIONS-VIDANGE D'HUILE DE MOTEUR (ASS)	59
CAPOT ET PROTECTION (ASS)	390
	393
CAPTEUR - MOTEUR (ASS)	172
CAPTEUR DE POSITION (ENS)	174
CAPTEUR DE PRESSION (ASS)	176
	177
	178
	179
	180
	181
	182
	183
CAPTEUR DE PRESSION (ASS) (CARBURANT)	93
CAPTEUR DE PRESSION (ASS) (*LIFT CYLINDER OIL)	169
CAPTEUR DE PRESSION ET MONTAGE	169
CAPTEUR DE TEMPERATURE (ASS)	186
	187
	188
	189
CAPTEUR DE TEMPERATURE (ASS) (2 BROCHES)	188
CAPTEUR DE TEMPERATURE (ASS) (2 BROCHES) (HUILE D'ESSIEU ARRIÈRE)	218
CAPTEUR DE TEMPERATURE (ASS) (2 BROCHES) (HUILE D'ESSIEU AVANT)	218
CAPTEUR DE TEMPERATURE (ASS) (2 BROCHES) (HUILE HYDRAULIQUE)	228
CAPTEUR DE VITESSE (ASS)	184
	185
CAPTEUR DE VITESSE (ASS) (SORTIE DU CONVERTISSEUR DE COUPLE)	332
CAPTEUR DE VITESSE (ASS) (SORTIE 1 DE BOÎTE)	292
CAPTEUR DE VITESSE (ASS) (SORTIE 2 DE BOÎTE)	292
CAPTEUR ET MONTAGE-POSITION DE LEVAGE (ASS)	167
CAPTEUR ET MONTAGE-POSITION D'INCLINAISON (ASS)	170
CARBURANT - CANALISATIONS DE VIDANGE (ASS)	100
CARDAN COULISSANT (ASS)	324
CARTER AV (ASS)	35
CARTER DE VOLANT (ASS)	34
CARTER D'ESSIEU FIXE	296
CARTER D'ESSIEU OSCILLANT	298
CEINTURE DE SECURITE (ASS)	741
CEINTURE DE SECURITE (ASS)	748
	749
CHAPEAU - RADIATEUR (7-PSI)	79
CHÂSSIS ARRIÈRE-COUPLEUR EXPRESS	627
CHÂSSIS-PORTEUR DE JOINT (ASS)	8
CHAUFFAGE DE CABINE (ASS)	670
	672
CLAPET DE DECHARGE (ASS)	340
	456
	457
	585
CLAPET DE DECHARGE (ASS) (COMPRESSEUR DE RÉFRIGÉRANT)	648
CLAPET DE DECHARGE (ASS) (FREIN)	522
CLAPET DE DECHARGE (ASS) (RÉSERVOIR HYDRAULIQUE)	522
CLAPET DE DECHARGE ET ANTI-RETOUR	557
CLAPET DE DÉCHARGE HYDRAULIQUE	112
CLAPET DE RETENUE (ENS)	555
	556
CLAPET DE RETENUE (ENS) (DÉRIVATION DE REFROIDISSEUR D'HUILE D'ESSIEU)	309
CLAVETTE - POIGNÉE	657
CLÉ ÉLECTRONIQUE (ENS) (SÉCURITÉ)	138
CLIGNOTANT (ENS) (24 VOLTS)	211
CLIMATISEUR (ASS)	638

* TRADUCTION NON DISPONIBLE AU MOMENT DE LA PUBLICATION

INDEX

Désignation	Page
	639
CLIMATISEUR (VERSION)	637
COFFRE A OUTILS (ASS)	772
	773
COLLECTEUR - COMMANDE (ASS)	522
COLLECTEUR - SOUPAPE (ASS)	524
	526
COLLECTEUR D'ÉCHAPPEMENT (ASS)	87
COMMANDE - COUPLEUR EXPRESS (VERSION)	624
COMMANDE D'AFFICHAGE ÉLECTRONIQUE (PANNEAU DE TÉMOINS, DROIT, GAUCHE)	222
	250
COMMANDE D'AFFICHAGE ÉLECTRONIQUE (TABLEAU DE TÉMOINS, CENTRE)	129
COMMANDE DE BOITE DE VITESSES (ASS)	271
	272
COMMANDE DE CREUSAGE AUTOMATIQUE AUTODIG (ASS)	129
COMMANDE DE DIRECTION (ASS)	437
COMMANDE DE FAISCEAU (ENS)	124
COMMANDE DE FAISCEAU (ENS) (COMMANDE DE BLINDAGE HYDRAULIQUE)	263
COMMANDE DE FAISCEAU (ENS) (*HEATED MIRRORS)	702
	704
COMMANDE DE FREIN DE STATIONNEMENT (ASS)	423
COMMANDE DE FREIN DE STATIONNEMENT (ASS)	430
COMMANDE DE GODET (ASS)	597
	599
	601
	603
COMMANDE DE LA PÉDALE DE FREIN (ASS)	428
	429
COMMANDE DE MACHINE (ASS)	126
COMMANDE DE MONITEUR NON PROGRAMMÉE (ASS)	654
COMMANDE DE MONITEUR NON PROGRAMMÉE (ASS) (SYSTÈME DE SURVEILLANCE CATERPILLAR)	248
COMMANDE DE MONITEUR NON PROGRAMMÉE (ASS) (SYSTÈME DE SURVEILLANCE CATERPILLAR)	221
COMMANDE DE POIGNÉE (ASS)	479
COMMANDE DE TRANSLATION (VERSION)	470
COMMANDE ÉLECTROHYDRAULIQUE (ASS)	471
	473
	475
	477
COMMANDE ÉLECTRONIQUE D'ÉQUIPEMENT (ASS)	134
COMMANDE ET CANALIS. - TRANSLATION (ASS)	469
COMMANDE ET CANALISATIONS DE VENTILATEUR (ASS)	467
COMMANDE ET MONTAGE - MOTEUR	126
	127
COMMANDE ET MONTAGE-COMMUNICATION (ASS)	124
COMMANDE HYDRAULIQUE DE BOÎTE (ASS)	273
COMMANDE NON PROGRAMMEE (ASS)	131
COMMANDE NON PROGRAMMEE (ASS) (MOTEUR)	127
COMMANDE PRINCIPALE DE SOUPAPE ET MONTAGE (ASS)	543
	546
	549
	552
COMMANDE (VERSION)-VENTILATEUR	470
COMPARTIMENT DE BATTERIE (ASS)	348
COMPRESSEUR DE REFRIGERANT (ASS)	648
	649
CONDENSATEUR ET MONTAGE (RÉFRIGÉRANT)	650
CONDUIT ET FILTRE À AIR (ASS)	657
CONTACTEUR DE CLIGNOTANT (ENS)	211
CONTACTEUR DE COMMANDE DU SYSTÈME ANTITANGAGE (ASS)	205
CONTACTEUR DE MARCHE ARRIÈRE DES PALES DE VENTILATEUR	204
CONTACTEUR MAGNETIQUE (ASS)	200
	201
	202
CONTACTEUR MAGNETIQUE (ASS) (24 VOLTS) (RELAIS PRINCIPAL)	229
CONTACTEUR MAGNETIQUE (ENS) (24 VOLTS) (RÉCHAUFFEUR D'ADMISSION D'AIR)	201
CONTACTEUR RÉGLABLE DE SUPPORT (ENS)	425
CONTACTEUR ROTATIF (ASS)	209
CONTACTEUR ROTATIF (ASS) (SÉLECTION DU MATÉRIEL AUTODIG)	129
CONTREPOIDS (ASS)	349
CONVERTISSEUR DE COUPLE (ASS)	334
CONVERTISSEUR DE COUPLE ET CARTER (ASS)	332
COUDE D'ADMISSION D'AIR (ASS)	84
COUDE D'EAU (ASS)	65
COUPLEUR EXPRESS (ASS)	625
COURONNE CONIQUE ET PIGNON	288

* TRADUCTION NON DISPONIBLE AU MOMENT DE LA PUBLICATION

INDEX

Désignation	Page
	290
COURROIE INTERMÉDIAIRE (ASS)	36
COURROIE MULTIPLE	119
	316
	649
COUVERCLE DE CARTER AV (ASS)	10
	11
COUVERCLE DE COLLECTEUR D'ADMISSION (ASS)	82
	83
COUVERCLE INFÉRIEUR-DOSSIER (ASS)	716
	717
	718
COUVERCLE-PARE-CHOCS (ASS)	350
CREPINE (ENS) (REMPLISSAGE DE RÉSERVOIR HYDRAULIQUE)	541
CROISILLON ET ROULEMENT	324
	325
	337
	338
CULASSE (ASS)	22
	23
	24
CULASSE (ENS)	21
CULBUTERIE - BOULONNERIE (ASS)	31
CULBUTERIE (ASS)	48
	49
CYLINDRE D'ETHER (ENS)	192

D

DEFLECTEUR (ASS)	346
DÉMARREUR ÉLECTRIQUE (ASS)	194
	195
DIFFÉRENTIEL - GLISSEMENT LIMITÉ (ASS)	278
DIFFERENTIEL (ASS)	277
DIFFÉRENTIEL NOSPIN (ASS)	279
	280
DIRECTION AUXILIAIRE (VERSION)	454
DISJONCTEUR (ASS) (20A) (ALIM BAT NON RELIÉE À LA CABINE)	229
DISJONCTEUR (ASS) (20A) (COMMANDE VÉRIN DE CAPOT)	229
DISJONCTEUR DE SECURITE (ENS) (FEUX D'ARRÊT)	425
DISJONCTEUR (ENS) (105A) (ALTERNATEUR)	229
DISJONCTEUR (ENS) (15A) (COMMANDE DE PROTECTION À ASSISTANCE)	263
DISJONCTEUR (ENS) (15A) (FEUX DE ROUTE)	229
DISJONCTEUR (ENS) (32-AMPÈRES) (DÉMARRAGE)	229
DISJONCTEUR (ENS) (80A) (PRINCIPAL)	229
DISJONCTEUR (ENS) (90A) (AUXILIAIRE DE DÉMARRAGE)	229
DISPOSITIF D'EVACUATION DES VAPEURS DE CARTER	55
DISTRIBUTEUR - 2 VOIES (VERSION)	501
DISTRIBUTEUR - 3 VOIES (VERSION)	501
DISTRIBUTEUR (ASS)	558
	560
	562
	565
DISTRIBUTEUR DE COMMANDE ANTI-TANGAGE	586
DISTRIBUTEUR DE FREIN (ASS)	436
DISTRIBUTEUR DE FREIN (ASS) (ENTRETIEN)	431
DISTRIBUTEUR DE POMPE (ASS)	455
	581
	583

E

EAU DES CHEMISES - RECHAUFFEUR (ASS)	135
	136
ECHAPPEMENT - TUYAU (ASS)	89
ECHELLE (ASS)	397
ÉCLAIRAGE - CLIGNOTANT (VERSION)	153
ÉCLAIRAGE - FEUX DE ROUTE (ASS)	162
ÉCLAIRAGE - FEUX DE ROUTE (VERSION)	153
ÉCLAIRAGE - GYROPHARE (ASS)	163
ÉCLAIRAGE - PROJECTEURS (ASS)	154
	155
ÉCLAIRAGE - PROJECTEURS ET CLIGNOTANTS (ASS)	157
	158
	160
ÉCRAN	524
	526
ÉCRAN (COLLECTEUR DE DISTRIBUTEUR)	522
ÉCRAN (ENS) (RÉSERVOIR HYDRAULIQUE)	541
ÉCRAN MAGNÉTIQUE (ASS)	292
ÉCRAN MAGNÉTIQUE (REFROIDISSEUR D'HUILE D'ESSIEU)	300
ÉCRAN THERMIQUE DE COMPARTIMENT MOTEUR	409
ELECTROMODULE DE CHARGE UTILE DE BENNE	708
ÉLECTROMODULE DE CHARGE UTILE DE BENNE	709
ÉLECTRONIQUE - COMMUNICATION (ASS)	133

* TRADUCTION NON DISPONIBLE AU MOMENT DE LA PUBLICATION

INDEX

Désignation	Page
ÉLECTRONIQUE DE TRANSMISSION (ASS)	134
ÉLECTRONIQUE-MONITEUR (ASS)	134
ÉLÉMENT DE FILTRE À AIR (ENS) (PRINCIPAL)	81
ÉLÉMENT DE FILTRE À AIR (ENS) (SECONDAIRE)	81
ÉLÉMENT DE FILTRE À HUILE (ENS) (HYDRAULIQUE)	496
ÉLÉMENT DE FILTRE (TRANSMISSION)	287
ÉLÉMENT DU RÉCHAUFFEUR D'EAU DES CHEMISES (ENS) (120-VOLT, 1000-WATT)	136
ÉLÉMENT DU RÉCHAUFFEUR D'EAU DES CHEMISES (ENS) (240V, 1000W)	135
ÉLIMINATION DES DÉCHETS (VERSION)	3
ENGRENAGE DE TRANSFERT DE RENDEMENT (ASS)	292
ESSIEU FIXE (VERSION)	265
ESSIEU OSCILLANT (VERSION)	265 266
ESSUIE-GLACE (ASS)	769

F

Désignation	Page
FAISCEAU DE CABLES - CAPTEUR (ENS) (ESSIEU ARRIÈRE)	218
FAISCEAU DE CABLES - CAPTEUR (ENS) (ESSIEU AVANT)	218
FAISCEAU DE CÂBLES DE FREINS (ENS) (FEU DE STOP)	425
FAISCEAU DE CABLES (ENS) (OUTIL D'ENTRETIEN)	221 249
FAISCEAU DE CABLES (ENS) (PRESSION DU CARBURANT)	93
FAISCEAU DE CHÂSSIS AVANT (ENS)	242
FAISCEAU DE CHÂSSIS (ENS) (PRINCIPAL)	228
FAISCEAU DE CHÂSSIS (ENS) (RÉSERVOIR HYDRAULIQUE)	229
FAISCEAU DE CHAUFFAGE ET CLIMATISATION	639 672
FAISCEAU DE COMMANDES (ENS)	221 249
FAISCEAU DE COMMANDES (ENS) (*ELECTROHYDRAULIC, JOYSTICK)	475
FAISCEAU DE COMMANDES (ENS) (*ELECTROHYDRAULIC, JOYSTICK)	477
FAISCEAU DE CONDENSEUR (ENS) (RÉFRIGÉRANT)	64
FAISCEAU DE CONDENSEUR (ENS) (RÉFRIGÉRANT)	650
FAISCEAU DE DIRECTION (ENS) (SECONDAIRE)	259
FAISCEAU DE RADIO (ENS) (HAUT-PARLEUR)	728
FAISCEAU DE REFROIDISSEUR D'HUILE DE TRANSMISSION (ENS)	275
FAISCEAU DE REFROIDISSEUR D'HUILE D'ESSIEU	309
FAISCEAU DE REFROIDISSEUR D'HUILE HYDRAULIQUE (ENS)	76
FAISCEAU DE REFROIDISSEUR D'HUILE MOTEUR (ENS)	63
FAISCEAU DE SOUPAPE (ENS) (COMPRESSEUR PNEUMATIQUE DE SIÈGE)	763
FAISCEAU D'ÉCLAIRAGE (ENS)	245
FAISCEAU D'ÉCLAIRAGE (ENS)	155
FAISCEAU D'ÉCLAIRAGE (ENS) (CLIGNOTANT)	211
FAISCEAU D'ÉCLAIRAGE (ENS) (DROITE)	246 247
FAISCEAU D'ÉCLAIRAGE (ENS) (GAUCHE)	246 247
FAISCEAU D'ÉCLAIRAGE (ENS) (GYROPHARE)	163
FAISCEAU D'ÉCLAIRAGE (ENS) (PROJECTEURS DE CABINE)	221 249
FAISCEAU D'OUTIL DE TRAVAIL (ENS) (COUPLEUR EXPRESS)	234
FEUX ARRIÈRE ET FEUX D'ARRÊT	151
FILTRE - SÉPARATEUR D'EAU ET DE CARBURANT (ENS) (PRINCIPAL)	96
FILTRE A AIR (ASS)	80 81
FILTRE À AIR DE CABINE	657
FILTRE A CARBURANT (ENS) (AUXILIAIRE)	94
FILTRE A CARBURANT (ENS) (TAMIS DE GOULOTTE DE REMPLISSAGE)	112
FILTRE A HUILE (ASS)	287 497
FILTRE A HUILE (ASS)	496
FILTRE À HUILE (ENS) (*HYDRAULIC CASE DRAIN)	497
FILTRE À HUILE MOTEUR (ASS)	54
FILTRE A HUILE MOTEUR (ENS)	54
FILTRE DE SÉPARATEUR D'EAU ET DE CARBURANT (ASS)	96
FILTRE ET CANALISATIONS - BOÎTE DE VITESSE (ASS)	285
FILTRE ET CANALISATIONS DE CARBURANT (ASS)	93
FIXATION DE MONTAGE (ASS)	383 384

* TRADUCTION NON DISPONIBLE AU MOMENT DE LA PUBLICATION

INDEX

Désignation	Page
FREIN DE MANOEUVRE - COMMANDE (ASS)	431
FREIN DE STATIONNEMENT (ASS)	427
FREIN ET TRAINS PLANÉTAIRES (ASS)	267
	269
FUSIBLE (10A)	220
	248
FUSIBLE (15A)	220
	248
	672
FUSIBLE (15A)	639
FUSIBLE (20A)	220
	248
G	
GAINE D'AIR (ASS)	659
GARDE-BOUE (ASS)	354
	357
	360
GARDE-BOUE AV (ASS)	358
	359
GARDE-BOUE (VERSION)	353
GLACE DE PORTIÈRE (ASS)	767
GODET DE MANUTENTION	610
	612
	613
GODET NORMAL (ASS)	616
	617
	618
GODET NORMAL (ENS)	607
	608
	609
GODET POUR MANUTENTION	619
	620
GODET-ROCHE (ASS)	620
	621
GODET-ROCHE (ENS)	614
	615
GOULOTTE DE REMPLISSAGE D'HUILE DE TRANSMISSION	282
	284
GRILLE DE RADIATEUR (ASS)	369
GROUPE DE CONTROLE	652
	653
GROUPE DE MOTEUR A PISTONS	528
GROUPE DE PROTECTION (ASS)-JOINT D'ESSIEU	374
GROUPE DE ROTATION DE MOTEUR	539
GROUPE DE ROTATION DE POMPE	453
	540
H	
HUILE DE TRANSMISSION DE REFROIDISSEUR (ENS)	275
HUILE MOTEUR - CARTER (ASS)	41
I	
INCLINAISON DU CAPOT (ASS)	420
INJECTEUR DE CARBURANT (ASS)	97
INJECTEURS-POMPES HYDRAULIQUES (ENS)	110
INSONORISATION (ASS)	417
INSONORISATION DE CABINE (ASS)	757
	759
	760
	761
INSONORISATION (VERSION)	416
INTERRUPTEUR - BOUTON-POUSSOIR (ENS) (CHANG. DE VITESSE)	249
INTERRUPTEUR - BOUTON-POUSSOIR (ENS) (DÉCLENCHEUR DE FONCTION AUTODIG)	129
INTERRUPTEUR - BOUTON-POUSSOIR (ENS) (KLAXON)	221
	248
INTERRUPTEUR - BOUTON-POUSSOIR (ENS) (RÉENCLENCHEMENT DU VERROU DE LA MANETTE DE GAZ)	222
INTERRUPTEUR - DÉRIVATION (ASS)	197
INTERRUPTEUR - SIGNAL (ASS)	211
INTERRUPTEUR À BASCULE (ASS)	206
	208
INTERRUPTEUR À BASCULE (ASS)	213
INTERRUPTEUR À BASCULE (ASS) (ARRÊT DEPUIS LE SOL)	228
INTERRUPTEUR À BASCULE (ASS) (COMMANDE VÉRIN DE CAPOT)	228
INTERRUPTEUR À BASCULE (ENS) (COMMANDE DE PROTECTION À ASSISTANCE)	263
INTERRUPTEUR BALANCIER (ENS) (BLOCAGE HYDRAULIQUE)	223
	250
INTERRUPTEUR BALANCIER (ENS) (CLIMATISATION, CHAUFFAGE)	222
INTERRUPTEUR BALANCIER (ENS) (COMMANDE DE TRANSLATION)	205
INTERRUPTEUR BALANCIER (ENS) (COUPLEUR EXPRESS)	206
	208
INTERRUPTEUR BALANCIER (ENS) (COUPLEUR EXPRESS)	624

* TRADUCTION NON DISPONIBLE AU MOMENT DE LA PUBLICATION

INDEX

Désignation	Page
INTERRUPTEUR BALANCIER (ENS) (DIRECTION AUXILIAIRE)	210
INTERRUPTEUR BALANCIER (ENS) (FEUX DE DÉTRESSE)	211
INTERRUPTEUR BALANCIER (ENS) (GYROPHARE)	163
INTERRUPTEUR BALANCIER (ENS) (LIMITEUR DE LEVAGE , D'INCLINAISON)	206 208 222 250
INTERRUPTEUR BALANCIER (ENS) (MARCHE ARRIÈRE AUTOMATIQUE DES PALES DE VENTILATEUR)	204
INTERRUPTEUR BALANCIER (ENS) (MARCHE AVANT, POINT MORT, MARCHE ARRIÈRE)	214
INTERRUPTEUR BALANCIER (ENS) (MODULATION PRÉCISE)	222 250
INTERRUPTEUR BALANCIER (ENS) (NEUTRALISATION DE LA BOÎTE DE VITESSES)	222 250
INTERRUPTEUR BALANCIER (ENS) (PROJECTEURS AVANT, ARRIÈRE)	155
INTERRUPTEUR BALANCIER (ENS) (RÉGLAGE DU LIMITEUR DE CHARGEMENT AUTOMATIQUE)	129
INTERRUPTEUR BALANCIER (ENS) (RÉTROVISEURS À CHAUFFAGE INTÉGRÉ)	702
INTERRUPTEUR BALANCIER (ENS) (RÉTROVISEURS À CHAUFFAGE INTÉGRÉ)	704
INTERRUPTEUR BALANCIER (ENS) (SÉLECTEUR DE GODET, FOURCHE)	206
INTERRUPTEUR BALANCIER (ENS) (SÉLECTEUR DE GODET, FOURCHE)	208
INTERRUPTEUR BALANCIER (ENS) (SÉLECTEUR DE MODE DE CHARGEMENT AUTOMATIQUE)	129
INTERRUPTEUR BALANCIER (ENS) (SÉLECTION DE MODE)	222 250
INTERRUPTEUR BALANCIER (ENS) (VITESSE DU VENTILATEUR SOUFFLANT)	222
INTERRUPTEUR BALANCIER (ENS) (*3RD FUNCTION SELECT)	473 477
INTERRUPTEUR DE BOITE DE VITESSES (ASS)	214
INTERRUPTEUR DE DÉMARRAGE (ASS) (CLAVETTE)	220 248
INTERRUPTEUR DE DIRECTION AUXILIAIRE (ASS)	210
INTERRUPTEUR D'ESSUIE-GLACE (24 VOLTS) (AV, INTERMITTENT)	220
INTERRUPTEUR ROTATIF (ENS) (24 VOLTS) (COMMANDE DE CHANGEMENT DE VITESSES VARIABLE)	221 249
INTERRUPTEUR ROTATIF (ENS) (24 VOLTS) (COMMANDE DE PASSAGE AUTOMATIQUE DES VITESSES)	221 249
INTERRUPTEUR ROTATIF (ENS) (24 VOLTS) (ESSUIE-GLACE ARRIÈRE)	220
INTERRUPTEUR ROTATIF (ENS) (24 VOLTS) (FEUX DE ROUTE)	220 248
INVERSEUR D'ÉCLAIRAGE (ASS)	198
INVERSEUR D'ECLAIRAGE (ENS) (DÉPLACEMENT ROUTIER)	198

J

JANTE DÉMONTABLE (ASS)	321
JANTE (VERSION)	320
JAUGE DE NIVEAU D'HUILE (ENS)	282 284
JAUGE DE NIVEAU D'HUILE (REGARD)	541
JAUGE D'HUILE MOTEUR (BAIONNETTE) (ASS)	56
JOINT DE CARTER DE VOLANT (ASS)	47
JOINT DE VILEBREQUIN (ASS)	46
JOINT PLAT (BOÎTIER DE RÉGULATEUR DE TEMPÉRATURE)	69
JOINT UNIVERSEL (ASS)	337 338

K

KIT D'AMORTISSEUR (SIEGE A SUSPENSION)	763
KIT D'ATTACHE (SIEGE A SUSPENSION)	763
KIT D'AXE À PÉDALE	726
KIT DE BAGUE (DÉMARREUR)	195
KIT DE BALAIS (DÉMARREUR)	195
KIT DE BLOC COULISSANT	750 751
KIT DE BORNE (ALTERNATEUR)	117
KIT DE BOULONNERIE (ALTERNATEUR)	117
KIT DE BOUTON (RADIO)	728

* TRADUCTION NON DISPONIBLE AU MOMENT DE LA PUBLICATION

INDEX

Désignation	Page
KIT DE CALE D'ÉPAISSEUR D'ARBRE (COMPREND 17 CALES)	451
KIT DE CLAPET DE DECHARGE (DIRECTION AUXILIAIRE)	449
KIT DE COMMANDE DE PISTON	451
KIT DE COUSSINET (ALTERNATEUR)	117
KIT DE DISQUE	278
KIT DE GARNITURE DE FREIN	427
KIT DE JOINTS	431
	457
	465
	487
	524
	579
KIT DE JOINTS (CLAPET DE DÉCHARGE)	522
	526
KIT DE JOINTS (POMPE RÉGULATRICE, DIRECTION)	445
KIT DE JOINTS (SOUPAPE DE DÉRIVATION)	522
KIT DE JOINTS (SOUPAPE DE DÉRIVATION) (DÉBIT DE LIQUIDE DE VENTILATEUR HYDRAULIQUE)	568
KIT DE JOINTS (VANNE-PILOTE)	522
KIT DE LEVIER (DÉMARREUR)	195
KIT DE PISTON EXCENTRIQUE	451
KIT DE RÉPARATION DE POMPE (DIRECTION AUXILIAIRE)	449
KIT DE ROULEAU	726
KIT DE SOLÉNOÏDE (DÉMARREUR)	195
KIT DE SOUPAPE PNEUMATIQUE (SIEGE A SUSPENSION)	763
KIT DE VIS (CONNECTEURS ÉLECTRIQUES)	228
	242
KIT D'ENTRETIEN	288
KIT D'ISOLANT (DÉMARREUR)	195
KLAXON ÉLECTRIQUE (ASS)	674

L

Désignation	Page
LAME DE COUPE (ASS)	626
LAMPE - CLIGNOTANT DE DIRECTION (ASS)	149
	150
LAMPE - GYROPHARE (ASS)	152
LAMPE - PHARE (ASS)	141
	142
	143
LAMPE - PHARE (ASS)	144
LAMPE - PHARE ET CLIGNOTANT	145
	147
LAMPE HALOGÈNE (24V, 65W) (PROJECTEUR)	143
	144
LAVE-GLACE - VITRE (ASS)	766
LENTILLE (ENS) (JAUNE) (SIGNAL)	145
	147
LENTILLE (ENS) (PHARE AVANT)	145
	147
LENTILLE (JAUNE) (SIGNAL)	145
	147
LENTILLE ORANGE	149
LEVAGE (VERSION)	603
	604
LIAISON - VERROUILLAGE DE CHÂSSIS DE DIRECTION (ASS)	401
LOGICIEL DE COMMUNICATION (ASS) (PRODUCT LINK 121SR)	124

M

Désignation	Page
MANOCONTACT	203
MANOCONTACT (DÉRIVATION DU FILTRE À HUILE)	287
MANOCONTACT (ENS) (DIFFÉRENTIEL)	496
MANOCONTACT (ENS) (HUILE DE DIRECTION AUXILIAIRE)	259
MANOCONTACT (ENS) (HUILE DE DIRECTION PRINCIPALE)	259
MANOCONTACT (ENS) (HUILE DE FREIN DE MANOEUVRE)	238
MANOCONTACT (ENS) (HUILE DE FREIN DE STATIONNEMENT)	228
MANOCONTACT (ENS) (RÉFRIGÉRANT)	216
MARCHEPIED (ASS)	411
MÉCANISME DE COMMANDE - PUISSANCE (ASS)	344
MÉCANISME DE COMMANDE DE GR. MOTO-PROPUL. (ASS)	345
MÉCANISME DE COMMANDE D'INCLINAISON (ASS)	342
MODULE - QUATRE INSTRUMENTS (ASS)	706
MODULE (ASS)-TOUCHE DE CHARGE UTILE	709
MODULE D'INDICATEUR DE VITESSE ET COMPTE-TOURS (ASS)	707
MODULE-INTERFACE (ASS) (CLAVETTE)	138
MONTAGE D'ALTERNATEUR (ASS)	39
MONTAGE DE CABINE (ASS)	713
MONTAGE DE JANTE (ASS)	310
MONTAGE DE MOTEUR ET BOÎTE (ASS)	40
MONTAGE DE MOTEUR (VERSION)	6
MONTAGE DE RADIO (ASS)	676
	678
MONTAGE DE REFROIDISSEUR D'HUILE D'ESSIEU (ASS)	309

* TRADUCTION NON DISPONIBLE AU MOMENT DE LA PUBLICATION

INDEX

Désignation	Page
MONTAGE DES COMMANDES (ASS)	675
MONTAGE D'ESSIEU (ASS)	307
MONTAGE-SÉCURITÉ (ASS)	138
MOTEUR - PARTIE CENTRALE (VERSION)	5
MOTEUR À ENGRENAGES (ASS)	527
MOTEUR D'ESSUIE-GLACE (ASS)	711
	712
O	
OEILLETONS DE LEVAGE MOTEUR (ASS)	38
P	
PALIER PRINCIPAL (ASS)	15
PALONNIER - GROUPE DE COMMANDE (ASS)	480
PALONNIER - GROUPE DE COMMANDE (ASS) (*3-FUNCTION, WITH DOWNSHIFT)	477
PANNEAU LATERAL (ASS)	407
PARE-SOLEIL	765
PIGNONNERIE AV (ASS)	33
PISTON ET BIELLE (ASS)	42
PLAFONNIER (ASS)	140
PLANCHER-ISOLATION (ASS)	662
	663
PLAQUE DE NUMÉRO DE SÉRIE (BOITE DE VITESSE)	293
PLAQUE D'INSTRUCTIONS (BATTERIE)	121
PLAQUE SIGNALÉTIQUE (ASS)	775
PLAQUE SIGNALÉTIQUE (CARBURANT MANUEL)	108
PLAQUE SIGNALÉTIQUE DE CONTROLEUR (SYSTÈME DE SURVEILLANCE CATERPILLAR)	719
	721
PLAQUE SIGNALÉTIQUE D'ESSIEU (ASS)	784
PLAQUES SIGNALETIQUES ET AUTOCOLLANTS (ASS)	784
PLAQUES SIGNALETIQUES ET AUTOCOLLANTS (ASS)	783
PNEU - GROUPE DE VALVE	321
PNEU ET JANTE (VERSION)	326
	327
	328
	329
	330
	331
POINTE - UNIVERSELLE (ASS)	629
	630
POINTE COURTE (ASS)	634
	635
POINTE EXTRA-ROBUSTE (ASS)	628
POINTE LONGUE (ASS)	631
POINTE PENETRATION	632
	633
POMPE A EAU (ASS)	73
	74
POMPE A ENGRENAGES (ASS) (REFROIDISSEUR D'HUILE D'ESSIEU)	316
POMPE A HUILE MOTEUR (ASS)	61
	62
POMPE A PISTONS (ASS)	451
	534
	537
POMPE D'ALIMENTATION EN CARBURANT (ASS)	110
POMPE D'AMORÇAGE DE CARBURANT ET FILTRE PRINCIPAL	105
	108
POMPE D'AMORÇAGE DE CARBURANT ET SÉPARATEUR D'EAU (ASS)	114
POMPE DE BOÎTE DE VITESSES (ASS)	317
	318
POMPE DE DIRECTION AUXILIAIRE ET MONTAGE (ASS)	449
	450
POMPE DE REGULARISATION DE DEBIT (ASS) (*HMU STEERING)	443
POMPE DE SÉPARATEUR D'EAU ET D'AMORÇAGE DE CARBURANT (ASS)	114
POMPE DE VENTILATEUR HYDRAULIQUE ET DE FREIN ET MONTAGE (ASS)	531
POMPE D'INJECTEURS-POMPES HYDRAU. ET MONTAGE	102
POMPE D'INJECTION DE CARBURANT (ASS)	104
POMPE ET MONTAGE - HYDRAULIQUE (ASS)	533
POMPE ET MONTAGE DE REFROIDISSEUR D'HUILE D'ESSIEU	316
PORTE DE VISITE (ASS)	351
	352
PORTE-POINTE (ASS)	605
PORTIÈRE DE CABINE (ASS)	655
	656
POULIE-ROUE AVANT (ASS)	45
POUSSOIR DE SOUPAPE (ASS)	37
PREFILTRE (ASS)	90
	91
PRISE (ASS)	165
PRISE DE BATTERIE AUXILIAIRE (ASS)	166
PROTECTION - ÉCLAIRAGE (ASS)	377
PROTECTION ANTIVANDALISME (ASS)	665
PROTECTION-ARTICULATION (ASS)	371
PROTECTION AV (ASS)	376

* TRADUCTION NON DISPONIBLE AU MOMENT DE LA PUBLICATION

INDEX

Désignation	Page
PROTECTION DE GLACE (ASS)	666, 668
PROTECTION DE REFROIDISSEUR D'HUILE D'ESSIEU	373
PROTECTION DE VÉRIN DE LEVAGE (ASS)	498, 499, 500

R

RACCORD DE CANALISATION D'HUILE (ASS)	51
RADIATEUR-CORPS (ENS)	76
RADIATEUR ET VENTILATEUR (ASS)	75
RADIO -COMMUNICATION (ASS) (PRODUCT LINK 121SR)	124
RADIO (ASS)	728, 729
RALLONGE DU DOSSIER DE SIEGE (TOILE)	744
RALLONGE DU DOSSIER DE SIEGE (VINYLE)	747
RÉCEPTEUR-DÉSHYDRATEUR (ASS) (CLIMATISEUR)	687
REFROIDISSEMENT AUX TEMPÉRATURES ÉLEVÉES (VERSION)	64
REFROIDISSEMENT AUX TEMPÉRATURES ÉLEVÉES (VERSION)	64
REFROIDISSEUR DE BOÎTE DE VITESSES ET MONTAGE (ASS)	275
REFROIDISSEUR D'HUILE D'ESSIEU (VERSION)	276
REFROIDISSEUR D'HUILE MOTEUR (ASS)	63
REGARD DE NIVEAU	66
REGISTRE D'AVERTISSEUR	129
REGLAGE DE SIEGE (ASS)	636
RÉGULATEUR - PÉDALE (ASS)	726, 727
REGULATEUR DE LA TENSION (ENS) (24 VOLTS)	117
REGULATEUR DE PRESSION DE CARBURANT (ASS)	111
RÉGULATEUR (ENS) (PRESSION DE CARBURANT)	111
RELAIS (ENS) (24 VOLTS) (DIRECTION SECONDAIRE INTERMÉDIAIRE)	259
RELAIS (ENS) (24 VOLTS) (KLAXON)	248
RELAIS (ENS) (24 VOLTS) (KLAXON)	220
RELAIS (ENS) (24 VOLTS) (MOTEUR D'INCLINAISON DE CAPOT)	228
RELAIS (ENS) (24 VOLTS) (PROJECTEUR ARRIÈRE)	248
RELAIS (ENS) (24 VOLTS) (PROJECTEUR ARRIÈRE)	220
RELAIS (ENS) (24 VOLTS) (PROJECTEURS DE CABINE AVANT)	248
RELAIS (ENS) (24 VOLTS) (PROJECTEURS DE CABINE AVANT)	220
RELAIS (ENS) (24 VOLTS) (REFROIDISSEUR D'HUILE D'ESSIEU)	235
RELAIS (ENS) (24 VOLTS) (RÉTROVISEURS À CHAUFFAGE INTÉGRÉ)	702
RELAIS (ENS) (24 VOLTS) (RÉTROVISEURS À CHAUFFAGE INTÉGRÉ)	704
RENIFLARD (ASS)	52
RENIFLARD (ENS)	293
RENIFLARD (ENS) (CARTER)	52
RÉSERVOIR DE CARBURANT (ASS)	112
RÉSERVOIR DU COUVERCLE DE RADIATEUR (ASS)	79
RÉSERVOIR HYDRAULIQUE - MONTAGE (ASS)	530
RÉSERVOIR HYDRAULIQUE (ASS)	541
RETROVISEUR - CABINE (ASS)	765
RÉTROVISEUR (ASS)	694, 695, 696, 697, 698, 699, 700, 702, 704
ROBINET DE BATTERIE (ASS)	199
ROTATION DE LA ROUE DU VENTILATEUR SOUFFLANT (DÉMARRAGE DU MOTEUR)	723
ROTATION DE LA ROUE DU VENTILATEUR SOUFFLANT (ENTRETIEN)	471, 473, 475, 477
ROTATION DE LA ROUE DU VENTILATEUR SOUFFLANT (ISSUE DE SECOURS)	679
ROTATION DE LA ROUE DU VENTILATEUR SOUFFLANT (LIRE LE GUIDE D'UTILISATION ET D'ENTRETIEN)	138
ROTATION DE LA ROUE DU VENTILATEUR SOUFFLANT (N. D'ÉTAPE)	783
ROTATION DE LA ROUE DU VENTILATEUR SOUFFLANT (RÉGLAGE DU SIÈGE)	763

S

SEGMENT DE LAME DE COUPE (ASS)	626
SIÈGE (ASS)	742, 744

* TRADUCTION NON DISPONIBLE AU MOMENT DE LA PUBLICATION

INDEX

Désignation	Page
	745
	747
SIÈGE AVEC SUSPENSION (ASS)	748
	749
	750
	751
	763
SIÈGE INCLINABLE (ASS)	730
SILENCIEUX (ASS)	88
SONDE - CIRCUIT DE CARBURANT	174
	175
SONDE - NIVEAU DE CARBURANT (ENS)	112
SOUPAPE - SOLÉNOÏDE (ASS)	592
	593
	594
SOUPAPE - SOLÉNOÏDE (ASS) (24 VOLTS) (FREIN, VENTILATEUR HYDRAULIQUE)	522
SOUPAPE A COMMANDE MANUELLE (ASS)	579
SOUPAPE D'ARRÊT (ASS)	510
SOUPAPE D'ARRÊT (ASS) (VIDANGE DE RADIATEUR)	275
SOUPAPE DE COMMANDE D'ABAISSEMENT (ASS)	570
SOUPAPE DE COMMANDE PRINCIPALE (ASS)	572
	574
	576
	577
SOUPAPE DE DÉMARRAGE À L'ÉTHER (ASS)	215
SOUPAPE DE DERIVATION (ASS)	567
	568
SOUPAPE DE DERIVATION (ASS) (RÉSERVOIR HYDRAULIQUE)	522
SOUPAPE DE DIRECTION (ASS)	459
SOUPAPE DE DIRECTION AUXILIAIRE (ASS)	458
SOUPAPE DE MODULATION (ASS)	339
SOUPAPE DE NEUTRALISATION DE DIRECTION (ASS)	443
	462
SOUPAPE DE VIDANGE	569
SOUPAPE (ENS)-DÉRIVATION (FILTRE A HUILE MOTEUR)	54
SOUPAPE RÉDUCTRICE DE PRESSION (ASS)	580
SOUPAPE SÉLECTRICE (ASS) (DIRECTION)	459
SUPPORT - PÉDALE DE FREIN (ASS)	424
	425
SUPPORT DE COMMANDE HYDRAULIQUE (ASS)	753
SUPPORT DE SOUPAPE ET FILTRE (ASS)	414
SUPPORTS D'ADMISSION D'AIR (ASS)	413

T

Désignation	Page
TABLEAU - CAISSON (ASS)	402
	403
	404
	405
	406
TABLEAU DE BORD (ASS)	719
	721
	723
TABLIER - FOURCHE (ASS)	622
	623
TAMIS D'ASPIRATION	292
TAPIS DE PLANCHER	679
	682
THERMOCONTACT (ENS) (CLIMATISEUR)	639
THERMOSTAT-TEMPÉRATURE D'EAU (94-DEG C) (LIQUIDE DE REFROIDISSEMENT)	69
TOIT ROPS - OUVERT (ASS)	738
TRANSMISSION (VERSION)	315
TURBOCOMPRESSEUR (ASS)	92

V

Désignation	Page
VANNE PILOTE (ASS)	549
	588
	589
	590
	591
VANNE PILOTE (ASS) (FREIN, VENTILATEUR HYDRAULIQUE)	522
VÉRIN DE COUPLEUR (ASS)	487
VERIN DE DIRECTION ET MONTAGE (ASS)	438
VÉRIN DE LEVAGE (ASS)	488
	489
VÉRIN DE LEVAGE ET JOINT (ASS)	482
	483
VÉRIN D'INCLINAISON (ASS)	490
	492
	494
VÉRIN D'INCLINAISON ET JOINT (ASS)	484
	485
	486
VÉRIN HYDRAULIQUE (ASS)	439
VERSION DE CHASSIS	1
VERSION DE COMMANDE-AUTODIG	128
VERSION DE MACHINE	2
VERSION DE MONTAGE-COMMUNICATION	137
VERSION DE MONTAGE-SÉCURITÉ	137
VERSION DE MOTEUR COMPLET	4
VERSION DE TOIT - ROPS OUVERT	647
VERSION ÉLECTRIQUE	132
VIDANGE-ÉCOLOGIE (ASS)	281

* TRADUCTION NON DISPONIBLE AU MOMENT DE LA PUBLICATION

INDEX

Désignation	Page	Désignation	Page
VIDANGE-HUILE DE MOTEUR (ASS)	26		
VILEBREQUIN (ASS)	15		
VOLANT MOTEUR (ASS)	32		
VUE DU MODÈLE	2		

W

*WIRING GP-WASTE HANDLER	263		

* TRADUCTION NON DISPONIBLE AU MOMENT DE LA PUBLICATION

INDICE

Nombre	Página

A

ACCIONADOR DE INCLINACIÓN DEL CAPO (GR) 342
ACCIONADOR DEL FRENO DE ESTACIONAMIENTO (GR) 423
ACCIONADOR DEL PROTECTOR DEL TREN DE FUERZA (GR) 345
ACCIONADOR DEL PROTECTOR (GR) 344
ACONDICIONADOR DE AIRE (CONFIG) 637
ACONDICIONADOR DE AIRE (GR) 638
639
ACOPLADOR - TUBERÍAS DE (GR) 502
505
ACOPLADOR RÁPIDO (GR) 625
ACUMULADOR DE ACEITE PILOTO (GR) 463
464
ACUMULADOR DE CONTROL DE AMORTIGUACION (GR) 465
466
ACUMULADOR DEL ACONDICIONADOR DE AIRE (GR) 687
ACUMULADOR DEL FRENO (GR) 421
422
ADAPTADOR (GR) 71
691
AGUA DE LAS CAMISAS - CALENTADOR DEL (GR) 136
AGUA DE LAS CAMISAS - CALENTADOR DEL (GR) 135
AGUILÓN TELESCÓPICO (GR) 606
AIRE - TUBERÍAS DE (GR) 86
AJUSTADOR DEL ASIENTO (GR) 636
ALAMBRADO DE ACOPLADOR (GR) 234
ALAMBRADO DE AUXILIAR DE ARRANQUE CON ETER (GR) 241
ALARMA (GR) 115
116
ALFOMBRILLA DEL PISO 679
682
AMORTIGUADOR Y POLEA (GR) 25
ANTEFILTRO (GR) 90
91
ÁRBOL DE LEVAS (GR) 7
ARO DESMONTABLE (GR) 321
ARO Y RUEDA 326
327
328
329
330
331
ARRANQUE - INTERRUPTOR DE (GR) (LLAVE) 220
ARRANQUE - INTERRUPTOR DE (GR) (LLAVE) 248
ASIENTO CON SUSPENSIÓN (GR) 763
ASIENTO (GR) 742
744
745
747
AUXILIAR DE ARRANQUE CON ÉTER (CONFIG) 190
AUXILIAR DE ARRANQUE CON ÉTER (GR) 192
AUXILIAR DE ARRANQUE (GR) 191

B

BALANCÍN (GR) (ADMISION) 49
BALANCÍN (GR) (ESCAPE) 49
BASE DEL FRENO DE PIE (GR) 424
425
BASTIDOR DEL ACOPLADOR RAPIDO (GR) . . . 627
BASTIDOR DEL CARGADOR (CONJ) 364
BASTIDOR TRASERO (CONJ) 367
BATERÍA (LITIO) 653
BATERÍA Y CABLES (GR) 121
BLOQUE DESLIZANTE-JUEGO 750
751
BLOQUE LIMITADOR DEL EJE OSCILANTE (GR) 347
BLOQUE MOTOR (GR) 17
18
20
BOCINA ELÉCTRICA (GR) 674
BOMBA DE ACEITE DEL MOTOR (GR) 61
62
BOMBA DE AGUA (GR) 73
74
BOMBA DE CEBADO Y FILTRO PRIMARIO DE COMBUSTIBLE (GR) 105
108
BOMBA DE ENGRANAJES (GR) (ENFRIADOR DE ACEITE DE EJE) 316
BOMBA DE INYECCIÓN DE COMBUSTIBLE (GR) 104
BOMBA DE LA TRANSMISIÓN (GR) 317
318
BOMBA DE PISTONES (GR) 451
534
537
BOMBA DE SEPARADOR DE AGUA Y CEBADO DE COMBUSTIBLE (GR) 114
BOMBA DE TRANSFERENCIA DE COMBUSTIBLE (GR) 110
BOMBA DEL ENFRIADOR DE ACEITE DEL EJE Y MONTAJE (GR) 316

* NO HAY TRADUCCION DISPONIBLE EN EL MOMENTO DE LA IMPRESION

INDICE

Nombre	Página
BOMBA HIDRÁULICA DEL INYECTOR UNITARIO (GR)	110
BOMBA HIDRÁULICA DEL INYECTOR UNITARIO Y MONTAJE	102
BOMBA HIDRÁULICA Y MONTAJE (GR)	533
BOMBA Y MONTAJE DE LA DIRECCIÓN SECUNDARIA (GR)	450
BOMBA Y MOTOR DE DIRECCION SECUNDARIA (GR)	449
*BRACKET AS-ADJUSTABLE SWITCH	425
BRAZO DE LEVANTAMIENTO (CONJ)	595
	596
BRAZO DE LIMPIAPARABRISAS (GR)	643
	644

C

Nombre	Página
CABINA - MAZO DE CABLES DE LA	222
	249
CABINA ROPS ABIERTA (CONFIG)	715
CABINA ROPS CERRADA (CONFIG)	715
CABINA ROPS CERRADA (GR)	731
CABLES DE LA CABINA (GR)	220
CABLES DE LA DIRECCIÓN SECUNDARIA	259
CABLES DE LA ESTRUCTURA ROPS ABIERTA (GR)	248
CABLES DE LAS LUCES (GR)	245
	246
	247
CABLES DE SENSOR (GR)	262
CABLES DEL ACONDICIONADOR DE AIRE (GR)	216
CABLES DEL CHASIS (GR)	228
CABLES DEL MOTOR (GR)	236
	238
CABLES DEL SISTEMA ELÉCTRICO DE EMBRAGUE	235
CABLES DELANTEROS (GR)	242
CAJA DE BATERÍA	348
CAJA DE EJE OSCILANTE (GR)	298
CAJA DE HERRAMIENTAS (GR)	772
	773
CAJA DEL EJE OSCILANTE (GR)	296
CAJA DELANTERA - TORNILLERÍA DE LA (GR)	28
	29
CAJA DELANTERA (GR)	35
CALCOMANÍA (AUTOCARGA)	129
CALCOMANÍA DE ADVERTENCIA (ARRANQUE DEL MOTOR)	723
CALCOMANÍA DE ADVERTENCIA (ASIENTO AJUSTABLE)	763
CALCOMANÍA DE ADVERTENCIA (LEA EL OMM)	138
CALCOMANÍA DE ADVERTENCIA (LEER EL MANUAL DE OPERACIÓN)	606
CALCOMANÍA DE ADVERTENCIA (MANTENIMIENTO)	471
	473
	475
CALCOMANÍA DE ADVERTENCIA (MANTENIMIENTO)	477
CALCOMANÍA DE ADVERTENCIA (NO PISAR)	783
CALCOMANÍA DE ADVERTENCIA (NO SUELDE, NO TALADRE, LEA EL OMM)	784
CALCOMANÍA DE ADVERTENCIA (PRODUCTO DE ENLACE DE RADIO, NO NACD)	137
CALCOMANÍA DE ADVERTENCIA (SALIDA ALTERNATIVA)	679
CALCOMANÍA DE IDENTIFICACIÓN (BOCINA)	471
	473
CALCOMANÍA DE IDENTIFICACIÓN (HIDRAULICO AUXILIAR)	473
CALCOMANÍA DE IDENTIFICACIÓN (HMU)	721
CALCOMANÍA DE IDENTIFICACIÓN (INTERRUPTOR DE ENCENDIDO)	138
CALCOMANÍA DE IDENTIFICACIÓN (MANIPULADOR DE DESPERDICIOS)	3
CALCOMANÍA DE IDENTIFICACIÓN (*POWER GUARD ACTUATOR SWITCH)	263
CALCOMANÍA DE IDENTIFICACIÓN (12 VOLTIOS)	723
CALCOMANIA-SALIDA (SECUNDARIO)	709
CALCOMANIA, TABLERO DE FUSIBLE	679
	682
CALCOMANÍAS Y PLACAS DE IDENTIFICACIÓN (GR)	784
CALCOMANÍAS Y PLACAS DE IDENTIFICACIÓN (GR)	783
CALEFACCIÓN DE LA CABINA (GR)	670
	672
CÁNCAMOS DE LEVANTAMIENTO DEL MOTOR (GR)	38
CANDADO (GR)	665
CAPO Y PROTECTOR (GR)	390
	393
CARGA - ALTERNADOR DE (GR)	117
	119
CÁRTER - COLECTOR DEL (GR)	41
CHASIS (CONFIG)	1
CIGÜEÑAL (GR)	15
CILINDRO DE DIRECCIÓN Y MONTAJE (GR)	438
CILINDRO DE ÉTER (CONJ)	192

* NO HAY TRADUCCION DISPONIBLE EN EL MOMENTO DE LA IMPRESION

INDICE

Nombre	Página
CILINDRO DE INCLINACIÓN Y SELLO (GR)	484, 485, 486
CILINDRO DE LEVANTAMIENTO - TUBERÍAS DEL (GR)	518
CILINDRO DE LEVANTAMIENTO (GR)	488, 489
CILINDRO DE LEVANTAMIENTO Y SELLO (GR)	482, 483
CILINDRO DEL ACOPLADOR (GR)	487
CILINDRO HIDRÁULICO (GRUPO)	439
CINTURÓN DE SEGURIDAD (GR)	741, 748, 749
CODO DE ADMISIÓN DE AIRE (GR)	84
CODO DE AGUA (GR)	65
COLADOR (CONJ) (LLENADO DEL TANQUE HIDRÁULICO)	541
COMBUSTIBLE - TANQUE DE (GR)	112
COMBUSTIBLE - TUBERÍAS DE DRENAJE DE (GR)	100
COMPRESOR DE REFRIGERANTE (GR)	649
COMPRESOR DE REFRIGERANTE (GR)	648
CONDENSADOR DEL REFRIGERANTE Y MONTAJE (GR)	650
CONDUCTO DE AIRE (GR)	659
CONDUCTO Y FILTRO DE AIRE (GR)	657
(CONFIG) CABLERIA, CHASIS DELANTERO	242
CONFIGURACIÓN DE CABLERIA, CALENTADOR Y ACONDICIONADOR DE AIRE	639, 672
CONFIGURACIÓN DE CONTROL DEL VENTILADOR	470
CONFIGURACIÓN DE ELIMINACIÓN DE BASURAS	3
CONFIGURACIÓN DE INSTALACIÓN DEL MOTOR	6
CONFIGURACIÓN ELÉCTRICA	132
CONFIGURACIÓN GENERAL	2
CONFIGURACIÓN HIDRÁULICA DE 2 VÁLVULAS	501
CONJUNTO DE ALARMA Y DEFLECTOR	129
CONJUNTO DE CABLERIA, RADIO (ALTAVOZ)	728
CONJUNTO DE CABLES, VÁLVULA (COMPRESOR DE AIRE DEL ASIENTO)	763
CONJUNTO DE DESTELLADOR (24 VOLTIOS)	211
CONJUNTO DE INTERRUPTOR DE SEÑAL DE GIRO	211
CONJUNTO DE LLAVE, ELECTRONICA (SEGURIDAD)	138
CONJUNTO DE NÚCLEO-CONDENSADOR (REFRIGERANTE)	64, 650
CONJUNTO MAZO DE CABLES-CONTROLES DEL OPERADOR	221, 249
CONJUNTO MAZO DE CABLES-CONTROLES DEL OPERADOR (*ELECTROHYDRAULIC, JOYSTICK)	475
CONJUNTO MAZO DE CABLES-CONTROLES DEL OPERADOR (*ELECTROHYDRAULIC, JOYSTICK)	477
CONTRAPESO (GR)	349
*CONTROL & LINES GP-FAN	467
CONTROL DE ACOPLADOR RÁPIDO (CONFIG)	624
CONTROL DE AMORTIGUACIÓN (CONFIG)	470
CONTROL DE AUTOCARGA (CONFIG)	128
CONTROL DE AUTOCARGA (GR)	129
CONTROL DE COMUNICACION Y MONTAJE (GR)	124
CONTROL DE DESPLAZAMIENTO Y TUBERÍAS (GR)	469
CONTROL DE DIRECCIÓN (GR)	437
CONTROL DE LA TRANSMISIÓN (GR)	271, 272
CONTROL DE MANIJA (GR)	479
CONTROL DE MAQUINA (GR)	126
CONTROL DE MONITOR (GR)	652, 653
CONTROL DEL CUCHARÓN (GR)	597, 599, 601, 603
CONTROL DEL FRENO DE ESTACIONAMIENTO	430
CONTROL DEL MULTIPLE (GR)	522
CONTROL DEL PEDAL DE FRENO (GR)	428, 429
CONTROL ELECTROHIDRAULICO (GR)	471, 473, 475
CONTROL ELECTROHIDRAULICO (GR)	477
CONTROL ELECTRÓNICO DEL MOTOR Y MONTAJE	126, 127
CONTROL HIDRÁULICO DE LA TRANSMISIÓN (GR)	273
CONTROL NO PROGRAMADO (GR)	131
CONTROL NO PROGRAMADO (GR) (MOTOR)	127

* NO HAY TRADUCCION DISPONIBLE EN EL MOMENTO DE LA IMPRESION

INDICE

Nombre	Página
CONVERTIDOR DE PAR (GR)	334
CONVERTIDOR DE PAR Y CAJA (GR)	332
*COOLER AS-TRANSMISSION OIL	275
*CORE AS-AXLE OIL COOLER	309
CORREA PARA CABLES	124
CORREA-SERPENTIN	119
	316
	649
CRISTAL (AMBAR) (SEÑAL)	145
	147
CRUCETA Y COJINETE (GR)	324
	325
CRUCETA Y COJINETE (GR)	337
	338
CUCHARÓN DE MANEJO DE MATERIAL (CONJ)	610
	612
	613
CUCHARÓN DE MANEJO DE MATERIAL (GR)	619
	620
CUCHARÓN DE USO GENERAL (CONJ)	607
	608
	609
CUCHARÓN DE USO GENERAL (GR)	616
	617
	618
CUCHARÓN PARA ROCA (CONJ)	614
	615
CUCHARÓN PARA ROCA (GR)	620
	621
CUCHILLA (GR)	626
CULATA DE CILINDROS - TORNILLERÍA DE LA (GR)	24
CULATA DE CILINDROS (CONJ)	21
CULATA DE CILINDROS (GR)	22
	23
	24

D

DEFLECTOR (GR)	346
DETECTOR DE NIVEL DEL COMBUSTIBLE	112
DETECTOR DE POSICIÓN (SISTEMA DE COMBUST.) (GR)	174
	175
DIFERENCIAL DE DESLIZAMIENTO LIMITADO (GR)	278
DIFERENCIAL (GR)	277
DIFERENCIAL NOSPIN (GR)	279
	280
DIRECCIÓN SECUNDARIA (CONFIG)	454
DISYUNTOR (CONJ) (105 AMPERIOS) (ALTERNADOR)	229
DISYUNTOR (CONJ) (15 AMPERIOS) (ACCIONADOR DE PROTECTOR ELÉCTRICO)	263
DISYUNTOR (CONJ) (15 AMPERIOS) (LUCES DE TRABAJO)	229
DISYUNTOR (CONJ) (50 AMPERIOS) (ARRANQUE)	229
DISYUNTOR (CONJ) (80 AMPERIOS) (PRINCIPAL)	229
DISYUNTOR (CONJ) (90-AMPERIOS) (AUXILIAR DE ARRANQUE)	229
DISYUNTOR DE CIRCUITO (GR) (20-AMPERIOS) (ACCIONADOR DE INCLINACION DE CAPO)	229
DISYUNTOR DE CIRCUITO (GR) (20-AMPERIOS) (*UNSWITCHED BAT POWER TO CAB)	229
DISYUNTOR (GR)	199
DOSIFICACIÓN - BOMBA DE (GR) (*HMU STEERING)	443
DRENAJE DE SEGURIDAD ECOLÓGICA (GR)	281
DRENAJE DEL ACEITE DE MOTOR	26

E

EJE - GRUPO DE MONTAJE	307
EJE DE MANDO (GR)	322
	323
EJE FIJO (CONFIG)	265
EJE OSCILANTE (CONFIG)	265
	266
ELECTRONICA DE MONITOR (GR)	134
ELEMENTO DE FILTRO DE ACEITE (CONJ) (HIDRAULICO)	496
ELEMENTO DE FILTRO (TREN DE FUERZA)	287
ELEMENTO DEL CALENTADOR DEL AGUA DE LAS CAMISAS (120 VOLTIOS, 1000 VATIOS)	136
ELEMENTO DEL CALENTADOR DEL AGUA DE LAS CAMISAS (240 VOLTIOS, 1000 VATIOS)	135
ELEMENTO DEL FILTRO DE AIRE (CONJ) (PRIMARIO)	81
ELEMENTO DEL FILTRO DE AIRE (CONJ) (SECUNDARIO)	81
EMPAQUETADURA (CAJA DEL REGULADOR DE TEMPERATURA)	69
ENCENDEDOR DE CIGARRILLOS (GR) (12 VOLTIOS)	221
	249

* NO HAY TRADUCCION DISPONIBLE EN EL MOMENTO DE LA IMPRESION

INDICE

Nombre	Página
ENCHUFE DE ARRANQUE AUXILIAR (GR)	166
ENFRIADOR DE ACEITE DEL MOTOR (GR)	63
ENFRIADOR DEL ACEITE DEL EJE (CONFIG)	276
ENFRIADOR PARA ALTA TEMPERATURA DE AMBIENTE (CONFIG)	64
ENGANCHE ARTICULADO (GR)	388
ENGRANAJE DE CORONA Y PIÑÓN (GR)	288
	290
ENGRANAJE DE TRANSFERENCIA DE SALIDA	292
ENGRANAJE DELANTERO (GR)	33
ESCALERILLA (GR)	397
ESCAPE DE GASES (GR)	55
ESTRIBO DEL OPERADOR (GR)	411
ESTRUCTURA ROPS ABIERTA (GR)	738
ETIQUETA DE ADVERTENCIA (GR)	775
EXTENSIÓN DEL RESPALDO (GR) (DE TELA)	744
EXTENSIÓN DEL RESPALDO (GR) (VINILO)	747

F

*FILM-TRANSMISSION (*DOWNSHIFT SWITCH)	471
	473
FILTRO DE ACEITE (CONJ) (*HYDRAULIC CASE DRAIN)	497
FILTRO DE ACEITE DEL MOTOR (CONJ)	54
FILTRO DE ACEITE DEL MOTOR (GR)	54
FILTRO DE ACEITE (GR)	287
	496
	497
FILTRO DE AIRE DE CABINA	657
FILTRO DE AIRE (GR)	80
	81
FILTRO DE COMBUSTIBLE (CONJ) (REJILLA DE TUBO DE LLENADO)	112
FILTRO DE COMBUSTIBLE (CONJ) (SECUNDARIO(A))	94
FILTRO DE COMBUSTIBLE Y SEPARADOR DE AGUA (CONJ) (PRIMARIO)	96
FILTRO DE COMBUSTIBLE Y SEPARADOR DE AGUA (GR)	96
FILTRO MAGNÉTICO (ENFRIADOR DE ACEITE DE EJE)	300
FILTRO Y TUBERÍAS DE COMBUSTIBLE (GR)	93
*FLOOR GP-SOUND SUPPRESSION	662
	663
FRENO DE ESTACIONAMIENTO (GR)	427
FRENO DE SERVICIO - CONTROL (GR)	431
FRENO Y PLANETARIOS (GR)	267
	269
FUSIBLE (10-AMPERIOS)	220
	248
FUSIBLE (15 AMPERIOS)	220
	248
	639
	672
FUSIBLE (20-AMPERIOS)	220
	248

G

GRUPO ADAPTADOR-TUBERIA DE ACEITE	51
GRUPO DE BOMBA Y MONTAJE, FRENOS Y VENTILADOR HIDRÁULICO	531
GRUPO DE CABLES, MONITOREO DEL EJE	218
GRUPO DE COJINETES DE BANCADA	15
GRUPO DE CONTROL-MONITOR NO PROGRAMADO	654
GRUPO DE CONTROL-MONITOR NO PROGRAMADO (SISTEMA MONITOR CATERPILLAR)	221
GRUPO DE CONTROL-MONITOR NO PROGRAMADO (SISTEMA MONITOR CATERPILLAR)	248
GRUPO DE GUIA, CORREA	36
GRUPO DE INTERRUPTOR ROTATORIO	209
GRUPO DE INTERRUPTOR ROTATORIO (*AUTODIG MATERIAL SELECT)	129
GRUPO DE MONTAJE DE LA CABINA	713
GRUPO DE MONTAJE Y ENFRIAMIENTO DE LA TRANSMISIÓN	275
GRUPO DE PLACA DE IDENTIFICACIÓN DEL EJE	784
GRUPO DE PROTECTOR DE CILINDRO DE LEVANTAMIENTO	498
	499
	500
GRUPO DE PUNTA-SERVICIO ADICIONAL	628
GRUPO DE PUNTA Y ADAPTADOR	605
GRUPO DE ROTACIÓN DEL MOTOR (GR)	539
GRUPO DE SOFTWARE, COMUNICACIÓN (*PRODUCT LINK 121SR)	124
GRUPO DE TORNILLERIA- MONTAJE	383
	384
GRUPO DE TORNILLERIA-AMORTIGUADOR Y POLEA	27
GRUPO DE TUBERIAS DE DIAGNÓSTICO	777
	780
GRUPO DE VÁLVULA-ARRANQUE CON ÉTER	215
GRUPO ELECTRONICO-COMUNICACION	133
GRUPO GIRATORIO DE BOMBA	453

* NO HAY TRADUCCION DISPONIBLE EN EL MOMENTO DE LA IMPRESION

INDICE

Nombre	Página
	540
GUARDABARROS (CONFIG)	353
GUARDABARROS DELANTERO (GR)	358
	359
GUARDABARROS (GR)	354
	357
GUARDABARROS PARA DESPLAZAMIENTO EN CARRETERA (GR)	360
H	
HOJA DE LIMPIAPARABRISAS (CONJ)	769
I	
IMPLEMENTOS (GR ELECTRÓNICO)	134
INCLINACIÓN DEL CAPÓ (GR)	420
INCLINACIÓN HORIZONTAL - CILINDRO DE (GR)	490
	492
	494
INDICADOR DEL NIVEL DE ACEITE (VARILLA) (GR)	56
INSONORIZACION DE CABINA (GR)	757
	759
	760
	761
INSONORIZADOR (CONFIG)	416
INSONORIZADOR (GR)	417
INSTALACION DE COMUNICATION (CONFIG)	137
INSTALACIÓN DE CONTROLES (GR)	675
INSTALACIÓN DE RADIO (GR)	676
	678
INSTALACION DE SEGURIDAD (CONFIG)	137
INSTALACION DE SEGURIDAD (GR)	138
INTERRUPTOR DE DERIVACIÓN	197
INTERRUPTOR DE DIRECCIÓN SECUNDARIA (GR)	210
INTERRUPTOR DE LÍMITE (CONJ) (LUZ DE PARADA)	425
INTERRUPTOR DE PRESIÓN (CONJ) (ACEITE DE FRENO DE ESTACIONAMIENTO)	228
INTERRUPTOR DE PRESIÓN (CONJ) (ACEITE DE LA DIRECCION PRIMARIA)	259
INTERRUPTOR DE PRESIÓN (CONJ) (ACEITE DE LA DIRECCION SECUNDARIA)	259
INTERRUPTOR DE PRESIÓN (CONJ) (ACEITE DEL FRENO DE SERVICIO)	238
INTERRUPTOR DE PRESIÓN (CONJ) (DIFERENCIAL)	496
INTERRUPTOR DE PRESIÓN (CONJ) (REFRIGERANTE)	216
INTERRUPTOR DE PRESIÓN (GR)	203
INTERRUPTOR DE PRESIÓN (GR) (DERIVADOR DE FILTRO DE ACEITE)	287
INTERRUPTOR DE TEMPERATURA (CONJ) (AIRE ACONDICIONADO)	639
INTERRUPTOR DE TRANSMISION (GR)	214
INTERRUPTOR DE VOLQUETE (CONJ) (ACCIONADOR DE PROTECTOR ELÉCTRICO)	263
INTERRUPTOR DE VOLQUETE (CONJ) (ACOPLADOR RAPIDO)	624
INTERRUPTOR DE VOLQUETE (CONJ) (ACOPLADOR RAPIDO)	206
	208
INTERRUPTOR DE VOLQUETE (CONJ) (AIRE ACONDICIONADO, CALENTADOR)	222
INTERRUPTOR DE VOLQUETE (CONJ) (ANULACIÓN DEL NEUTRALIZADOR DE LA TRANSMISIÓN)	222
	250
INTERRUPTOR DE VOLQUETE (CONJ) (*AUTO REVERSING FAN)	204
INTERRUPTOR DE VOLQUETE (CONJ) (BALIZA DE ADVERTENCIA)	163
INTERRUPTOR DE VOLQUETE (CONJ) (CONTROL DE AMORT.)	205
INTERRUPTOR DE VOLQUETE (CONJ) (DESCONEXIÓN HIDRÁULICA)	223
	250
INTERRUPTOR DE VOLQUETE (CONJ) (DIRECCIÓN SECUNDARIA)	210
INTERRUPTOR DE VOLQUETE (CONJ) (*FORWARD, NEUTRAL, REVERSE)	214
INTERRUPTOR DE VOLQUETE (CONJ) (*FRONT, REAR FLOODLIGHTS)	155
INTERRUPTOR DE VOLQUETE (CONJ) (*HAZARD)	211
INTERRUPTOR DE VOLQUETE (CONJ) (*HEATED MIRRORS)	702
	704
INTERRUPTOR DE VOLQUETE (CONJ) (JUEGO DE DESCONEXIÓN DE CARGADOR AUTOMÁTICO)	129
INTERRUPTOR DE VOLQUETE (CONJ) (*LIFT, TILT KICKOUT)	206
	208
	222
	250
INTERRUPTOR DE VOLQUETE (CONJ) (MODULACIÓN PRECISA)	222
	250
INTERRUPTOR DE VOLQUETE (CONJ) (SELECCIÓN DE MODALIDAD)	222

* NO HAY TRADUCCION DISPONIBLE EN EL MOMENTO DE LA IMPRESION

INDICE

Nombre	Página
	250
INTERRUPTOR DE VOLQUETE (CONJ) (SELECTOR CUCHARÓN, HORQUILLA)	208
INTERRUPTOR DE VOLQUETE (CONJ) (SELECTOR CUCHARÓN, HORQUILLA)	206
INTERRUPTOR DE VOLQUETE (CONJ) (SELECTOR DE MODALIDAD DE CARGADOR AUTOMÁTICO)	129
INTERRUPTOR DE VOLQUETE (CONJ) (VELOCIDAD DEL VENTILADOR SOPLADOR)	222
INTERRUPTOR DE VOLQUETE (CONJ) (*3RD FUNCTION SELECT)	473
	477
INTERRUPTOR DE VOLQUETE (GR)	206
	208
	213
INTERRUPTOR DE VOLQUETE (GR) (ACCIONADOR DE INCLINACION DE CAPO)	228
INTERRUPTOR DE VOLQUETE (GR) (APAGADO A NIVEL DEL SUELO)	228
INTERRUPTOR DEL CONTROL DE AMORTIGUACIÓN (GR)	205
INTERRUPTOR DEL LIMPIAPARABRISAS (CONJ) (24 VOLTIOS) (INTERMITENTE DELANTERO)	220
INTERRUPTOR DEL SEÑALERO (GR)	211
INTERRUPTOR MAGNÉTICO (CONJ) (24 VOLTIOS) (AIRE DE ADMISIÓN DE LA CALEFACCIÓN)	201
INTERRUPTOR MAGNÉTICO (GR)	200
	201
	202
INTERRUPTOR MAGNÉTICO (GR) (24 VOLTIOS) (RELE PRINCIPAL)	229
INTERRUPTOR PULSADOR (CONJ) (*AUTODIG TRIGGER)	129
INTERRUPTOR PULSADOR (CONJ) (BOCINA)	221
	248
INTERRUPTOR PULSADOR (CONJ) (CAMBIO DESCENDENTE)	249
INTERRUPTOR PULSADOR (CONJ) (RESUMICION DEL AJUSTE DE LA TRABA DE ACELERACION)	222
INTERRUPTOR ROTATIVO (CONJ) (24 VOLTIOS) (CONTROL DE CAMBIO AUTOMATICO)	221
	249
INTERRUPTOR ROTATIVO (CONJ) (24 VOLTIOS) (CONTROL VARIABLE DE PALANCA)	249
INTERRUPTOR ROTATIVO (CONJ) (24 VOLTIOS) (CONTROL VARIABLE DE PALANCA)	221
INTERRUPTOR ROTATIVO (CONJ) (24 VOLTIOS) (LIMPIAPARABRISAS TRASERO)	220
INTERRUPTOR ROTATIVO (CONJ) (24 VOLTIOS) (LUCES DE TRABAJO)	220
	248
INYECTOR DE COMBUSTIBLE (GR)	97

J

Nombre	Página
JUEGO (AISLADOR) (MOTOR DE ARRANQUE)	195
JUEGO DE AMORTIGUADOR (ASIENTO DE SUSPENSION)	763
JUEGO DE ATADURA (ASIENTO DE SUSPENSION)	763
JUEGO DE BOTÓN (RADIO)	728
JUEGO DE BUJES (MOTOR DE ARRANQUE)	195
JUEGO DE CALCE DE EJE (*INCLUDES 17-SHIMS)	451
JUEGO DE COJINETES (ALTERNADOR)	117
JUEGO DE CONTROL DE PISTÓN	451
JUEGO DE DISCO	278
JUEGO DE ESCOBILLAS (MOTOR DE ARRANQUE)	195
JUEGO DE PALANCA (MOTOR DE ARRANQUE)	195
JUEGO DE PASADOR DE PEDAL	726
JUEGO DE PERNOS (CONECTORES ELECTRICOS)	228
JUEGO DE PERNOS (CONECTORES ELECTRICOS)	242
JUEGO DE PISTÓN	451
JUEGO DE REPARACIÓN DE LA BOMBA (DIRECCIÓN SECUNDARIA)	449
JUEGO DE REVESTIMIENTO DE FRENO	427
JUEGO DE RODILLO	726
JUEGO DE SELLOS	431
	457
	465
	487
	524
	579
JUEGO DE SELLOS (BOMBA DOSIFICADORA, DIRECCIÓN)	445
JUEGO DE SELLOS (VALVULA DE ALIVIO)	522
	526
JUEGO DE SELLOS (VÁLVULA DE DERIVADOR)	522

* NO HAY TRADUCCION DISPONIBLE EN EL MOMENTO DE LA IMPRESION

INDICE

Nombre	Página
JUEGO DE SELLOS (VÁLVULA DE DERIVADOR) (*HYDRAULIC FAN FLUID FLOW)	568
JUEGO DE SELLOS (VÁLVULA DE LANZADERA)	522
JUEGO DE SERVICIO	288
JUEGO DE SOLENOIDE (MOTOR DE ARRANQUE)	195
JUEGO DE TERMINAL (ALTERNADOR)	117
JUEGO DE TERMINAL (ALTERNADOR)	117
JUEGO DE TORNILLERÍA (ALTERNADOR)	117
JUEGO DE VALVULA DE AIRE (ASIENTO DE SUSPENSION)	763
JUEGO DE VÁLVULA DE ALIVIO (DIRECCIÓN SECUNDARIA)	449
JUNTA DESLIZANTE (GR)	324
JUNTA UNIVERSAL (GR)	337 338

L

LÁMPARA DE BALIZA DE ADVERTENCIA (GR)	152
LÁMPARA DE LUZ DELANTERA Y DE SEÑAL (GR)	147
LÁMPARA DE LUZ DELANTERA Y DE SEÑAL (GR)	145
LÁMPARA DEL TECHO (GR)	140
LÁMPARA (12 VOLTIOS, 24 VOLTIOS, 35 VATIOS)	141 142
LÁMPARA (24 VOLTIOS)	140 145 220 248 709
LÁMPARA (24 VOLTIOS) (SEÑAL)	147
LÁMPARA (24-VOLTIOS, 21 VATIOS)	151
LÁMPARA (24-VOLTIOS, 21 VATIOS)	149
LÁMPARA (24-VOLTIOS, 21 VATIOS) (SEÑAL)	145 147
LÁMPARA (24 VOLTIOS, 5 VATIOS)	151
LÁMPARA (24-VOLTIOS, 70-VATIOS)	152
LÁMPARA (24 VOLTIOS, 75/70 VATIOS)	145
LÁMPARA (24 VOLTIOS, 75/70 VATIOS) (DELANTERA)	147
LAVAPARABRISAS DE LA VENTANA (GR)	766
LENTE AMBAR	149
LEVANTAMIENTO (CONFIG)	603 604
LIMPIAPARABRISAS DE LA VENTANA (GR)	769
LLANTA (CONFIG)	320
LLAVE - MANIJA	657
LUCES DE ALÓGENO (24 VOLTIOS, 65 VATIOS) (REFLECTOR)	143 144
LUCES DE DESPLAZAMIENTO (CONFIG)	153
LUCES DE DESPLAZAMIENTO (GR)	162
LUCES DE PARADA Y COLA (GR)	151
LUCES DE REFLECTOR (GR)	154 155
LUCES DE REFLECTOR Y CAMBIO DE DIRECCION (GR)	157 158 160
LUZ DE BALIZA (GR)	163
LUZ DE SEÑAL DE GIRO (GR)	149 150

M

MÁQUINA (CONFIG)	2
MAZO DE CABLES (CONJ) (HERRAMIENTA DE SERVICIO)	221 249
MAZO DE CABLES (CONJ) (PRESION DE COMBUSTIBLE)	93
MAZO DE CABLES DE CONTROL (CONJ)	124
MAZO DE CABLES DE CONTROL (CONJ) (*HEATED MIRRORS)	702 704
MAZO DE CABLES DE CONTROL (CONJ) (*POWER GUARD ACTUATOR)	263
MAZO DE CABLES DE DIRECCION (CONJ) (SECUNDARIO)	259
MAZO DE CABLES DE LA HERRAMIENTA (ACOPLADOR RAPIDO)	234
MAZO DE CABLES DE LOS FRENOS (CONJ) (LUZ DE PARADA)	425
MAZO DE CABLES DE SENSOR (CONJ) (*AXLE, FRONT)	218
MAZO DE CABLES DE SENSOR (CONJ) (*REAR AXLE)	218
MAZO DE CABLES DEL CHASIS (CONJ) (PRINCIPAL)	228
MAZO DE CABLES DEL CHASIS (CONJ) (TANQUE HIDRAULICO)	229
MAZO DE CABLES DEL MONITOR (CONJ) (CONTROL DE CARGA ÚTIL)	709
MAZO DE CABLES DEL MOTOR (CONJ)	238
MAZO DE CABLES DEL MOTOR (CONJ) (INYECCIÓN DE COMBUSTIBLE)	236
MAZO DE CABLES DEL MOTOR (CONJ) (MODULO DE CONTROL ELECTRONICO)	236
MAZO DE CABLES, LUCES	155 245

* NO HAY TRADUCCION DISPONIBLE EN EL MOMENTO DE LA IMPRESION

INDICE

Nombre	Página
MAZO DE CABLES, LUCES (BALIZA DE ADVERTENCIA)	163
MAZO DE CABLES, LUCES (*CAB FLOODLIGHTS)	221, 249
MAZO DE CABLES, LUCES (IZQUIERDO)	246, 247
MAZO DE CABLES, LUCES (LADO DERECHO)	246, 247
MAZO DE CABLES, LUCES (SEÑAL DE GIRO)	211
MECANISMO DE VÁLVULAS (GR)	48, 49
MEDIDOR DEL NIVEL DE LÍQUIDO (MIRILLA DE CRISTAL)	541
MIRILLA	66
MODULO DE INTERFAZ (GR) (LLAVE)	138
MÓDULO DEL TACÓMETRO Y DEL VELOCÍMETRO (GR)	707
MODULO DEL TECLADO DE CARGA UTIL (GR)	709
MODULO ELECTRÓNICO DE CUATRO INDICADORES (GR)	706
MONITOR DE CARGA ÚTIL (CONFIG)	708
MONITOR DE CARGA ÚTIL (GR)	709
MONTAJE DE ARO	310
MONTAJE DE ENFRIADOR DE ACEITE DE EJE (GR)	309
MONTAJE DEL ALTERNADOR (GR)	39
MONTAJE DEL MOTOR Y LA TRANSMISIÓN (GR)	40
MONTAJE DEL TANQUE HIDRÁULICO (GR)	530
MONTAJE Y VALVULA DEL CONTROL PRINCIPAL (GR)	543, 546, 549, 552
MOTOR - NÚCLEO (CONFIG)	5
MOTOR COMPLETO (CONFIG)	4
MOTOR DE ARRANQUE ELÉCTRICO (GR)	194, 195
MOTOR DE ENGRANAJES (GR)	527
MOTOR-LIMPIAPARABRISAS (GR)	711, 712
MÚLTIPLE DE ESCAPE (GR)	87
MULTIPLE DE VALVULA (GR)	524, 526

N

Nombre	Página
NÚCLEO CONJ.-ENFRIADOR DE ACEITE DE TREN DE FUERZA	275
NUCLEO DE ENFRIADOR DE ACEITE DE MOTOR (CONJ)	63
NUCLEO DE RADIADOR (CONJ)	76

P

Nombre	Página
PALANCA UNIVERSAL DE CONTROL (GR)	480
PALANCA UNIVERSAL DE CONTROL (GR) (*3-FUNCTION, WITH DOWNSHIFT)	477
PANEL DEL CAPÓ (GR)	402, 403, 404, 405, 406
PANEL LATERAL (GR)	407
PANTALLA (CONJ) (TANQUE HIDRAULICO)	541
PISTÓN Y BIELA (GR)	42
PISTONES DEL MOTOR (GR)	528
PLACA DE CONTROL (*DUMP, TILT BACK)	471, 473
PLACA DE CONTROL (*JOYSTICK, 2-FCTN, DOWNSHIFT SW)	475
PLACA DE CONTROL (*JOYSTICK, 3-FCTN, D0WNSHIFT SW)	477
PLACA DE CONTROL (*LIFT, FLOAT, LOWER)	471, 473
PLACA DE CONTROL (SISTEMA MONITOR CATERPILLAR)	719, 721
PLACA DE CONTROL (*UPPER PANEL)	221, 249, 719
PLACA DE INFORMACION (COMBUSTIBLE MANUAL)	108
PLACA DE INFORMACION (ENTRADA/SALIDA)	723
PLACA DE INFORMACION (LLAVE)	138
PLACA DE INSTRUCCIONES (BATERÍA)	121
PLACA DE PATRÓN DE LOS CONTROLES	723
PLACA DEL NÚMERO DE SERIE (TRANSMISION)	293
PLACA DEL TABLERO (CENTRAL)	723
PLACA DEL TABLERO (IZQUIERDO)	723
PLACA DEL TABLERO (LADO DERECHO)	723
*PLUG GP-CONNECTOR	165
POLEA DE RUEDA GUIA (GR)	45
PORTAHORQUILLAS (GR)	622, 623
POSABRAZOS (GR)	645
POSICIÓN DEL SENSOR (CONJ)	174
PROTECTOR CONTRA EL VANDALISMO (GR)	665

* NO HAY TRADUCCION DISPONIBLE EN EL MOMENTO DE LA IMPRESION

INDICE

Nombre	Página
PROTECTOR DE ARTICULACION (GR)	371
PROTECTOR DE LA VENTANA	666
	668
PROTECTOR DE LAS LUCES (GR)	377
PROTECTOR DE SELLO DEL EJE (GR)	374
PROTECTOR DEL EJE IMPULSOR (GR)	375
PROTECTOR DEL ENFRIADOR DE ACEITE DEL EJE (GR)	373
PROTECTOR DEL TREN DE FUERZA (GR)	378
	379
	380
PROTECTOR DELANTERO (GR)	376
PROTECTOR TÉRMICO DEL COMPARTIMIENTO DEL MOTOR (GR)	409
PUERTA DE ACCESO (GR)	351
	352
PUERTA DE CABINA	655
	656
PUNTA CORTA (GR)	634
	635
PUNTA LARGA (GR)	631
PUNTA PARA CUCHARON DE USO GENERAL (GR)	629
	630
PUNTA PARA PENETRACIÓN (GR)	632
	633

R

RADIADOR Y VENTILADOR (GR)	75
*RADIO GP-COMMUNICATION (*PRODUCT LINK 121SR)	124
RADIO (GR)	728
	729
RECEPTOR-SECADOR (GR) (ACONDICIONADOR DE AIRE)	687
RECLINACION DE ASIENTO (GR)	730
REDUCTOR DE INTENSIDAD DE LAS LUCES (CONJ) (DESPLAZAMIENTO POR CARRETERA)	198
REDUCTOR DE INTENSIDAD DE LUCES (GR)	198
REFLECTOR (GR)	141
	142
	143
	144
REFRIGERANTE DE ACEITE, NÚCLEO (CONJ)	76
REGULADOR - PEDAL DEL (GR)	726
	727
REGULADOR (CONJ) (PRESIÓN DE COMBUSTIBLE)	111
REGULADOR DE LA PRESION DE COMBUSTIBLE (GR)	111
REGULADOR DE TEMPERATURA DEL AGUA (94-GRADOS C) (REFRIGERANTE)	69
REGULADOR DE VOLTAJE (24 VOLTIOS)	117
REJILLA	524
	526
REJILLA DE SUCCIÓN	292
REJILLA DEL RADIADOR (GR)	369
REJILLA MAGNÉTICA (GR)	292
REJILLA (VÁLVULA DE CONTROL DEL MULTIPLE)	522
RELÉ (CONJ) (24 VOLTIOS) (BOCINA)	220
	248
RELÉ (CONJ) (24 VOLTIOS) (ENFRIADOR DE ACEITE DE EJE)	235
RELÉ (CONJ) (24 VOLTIOS) (*FRONT CAB FLOODLIGHTS)	220
	248
RELÉ (CONJ) (24 VOLTIOS) (*HEATED MIRRORS)	702
	704
RELÉ (CONJ) (24 VOLTIOS) (MOTOR, INCLINACION DEL CAPO)	228
RELÉ (CONJ) (24 VOLTIOS) (REFLECTOR TRASERO)	220
	248
RELÉ (CONJ) (24 VOLTIOS) (*SECONDARY STEER INTERMEDIATE)	259
RESPIRADERO (CONJ)	293
RESPIRADERO (CONJ) (CÁRTER DEL MOTOR)	52
RESPIRADERO (GR)	52
RETROVISOR (GR)	694
	695
	696
	697
	698
	699
	700
	702
	704
REVESTIMIENTO DE LA CABINA (GR)	679
	682

S

SEGMENTO DE CUCHILLA (GR)	626
SELLO	96
SELLO DE CIGÜEÑAL (GR)	46
SELLO DE LA CAJA DE VOLANTE (GR)	47
SELLO DEL PORTADOR (GR)	8
SEÑAL DE LUCES (CONFIG)	153

* NO HAY TRADUCCION DISPONIBLE EN EL MOMENTO DE LA IMPRESION

INDICE

Nombre	Página
SENSOR DE LA POSICION DE INCLINACION Y MONTAJE (GR)	170
SENSOR DE LA POSICION DE LEVANTAMIENTO Y MONTAJE (GR)	167
SENSOR DE PRESIÓN (GR)	176
	177
	178
	179
	180
	181
	182
	183
SENSOR DE PRESIÓN (GR) (COMBUSTIBLE)	93
SENSOR DE PRESIÓN (GR) (*LIFT CYLINDER OIL)	169
SENSOR DE PRESIÓN Y MONTAJE (GR)	169
SENSOR DE TEMPERATURA (GR)	186
	187
	188
	189
SENSOR DE TEMPERATURA (GR) (2 CLAVIJAS)	188
SENSOR DE TEMPERATURA (GR) (2 CLAVIJAS) (ACEITE DEL EJE DELANTERO)	218
SENSOR DE TEMPERATURA (GR) (2 CLAVIJAS) (ACEITE DEL EJE POSTERIOR)	218
SENSOR DE TEMPERATURA (GR) (2 CLAVIJAS) (ACEITE HIDRÁULICO)	228
SENSOR DE VELOCIDAD (GR)	184
	185
SENSOR DE VELOCIDAD (GR) (SALIDA DE TRANSMISIÓN 1)	292
SENSOR DE VELOCIDAD (GR) (SALIDA DE TRANSMISIÓN 2)	292
SENSOR DE VELOCIDAD (GR) (SALIDA DEL CONVERTIDOR DE PAR)	332
SENSOR DEL MOTOR (GR)	172
SEPARADOR DE AGUA Y BOMBA DE CEBADO DE COMBUSTIBLE (GR)	114
SILENCIADOR (GR)	88
SISTEMA ROPS DE CABINA CERRADA (CONFIG)	646
SOPORTE DE LA ADMISIÓN DE AIRE (GR)	413
SOPORTE DEL CONTROL HIDRÁULICO (GR)	753
SOPORTE DEL RESPALDO (GR)	716
	717
	718
*SUPPORT GP-VALVE & FILTER	414
SUSPENSIÓN - ASIENTO CON (GR)	748
SUSPENSIÓN - ASIENTO CON (GR)	749
	750
	751
*SWITCH GP-REVERSING FAN	204

T

Nombre	Página
TABLERO DE INSTRUMENTOS (GR)	721
TABLERO DE INSTRUMENTOS (GR)	723
TABLERO DE INSTRUMENTOS (GR)	719
TABLERO ELECTRÓNICO DE CONTROL (GR) (*INDICATOR PANEL, CENTER)	129
TABLERO ELECTRÓNICO DE CONTROL (GR) (*INDICATOR PANEL, RH, LH)	222
	250
TANQUE HIDRÁULICO (GR)	541
TAPA DE ADMISIÓN DE AIRE (GR)	82
	83
TAPA DE LA CAJA DELANTERA (GR)	10
	11
TAPA DE LLENADO (CONJ) (ACEITE DEL MOTOR)	53
TAPA DEL BLOQUE MOTOR (GR)	9
TAPA DEL MECANISMO DE VÁLVULAS (GR)	12
	13
	14
TAPA DEL PARAGOLPES (GR)	350
TAPA DEL RADIADOR (7 LB/PULG2)	79
TAPA DEL TANQUE DE RADIADOR (GR)	79
TAPA DEL TUBO DE LLENADO (TANQUE HIDRÁULICO)	541
TAPA DEL TUBO DE LLENADO (TREN DE FUERZA)	282
	284
TAPA PARA EL COMBUSTIBLE	112
TAPÓN	281
	292
TAPÓN DE DRENAJE	569
TAPÓN DEL BLOQUE MOTOR (GR)	43
TAPÓN DEL MOTOR (GR)	44
TAPÓN MAGNÉTICO	296
	298
TECHO ROPS ABIERTO (CONFIG)	647
TIRANTE DE TRABA DEL BASTIDOR DE DIRECCIÓN (GR)	401
TORNILLERÍA DE LA TAPA DE VÁLVULAS (GR)	30
TORNILLERÍA DEL MECANISMO DE VÁLVULAS (GR)	31
TORNILLERIA GR-BASTIDOR CARGADOR	381
	382
TORNILLERIA GR-BASTIDOR TRASERO	385
	386
	387
TRANSMISION (CONFIG)	336

* NO HAY TRADUCCION DISPONIBLE EN EL MOMENTO DE LA IMPRESION

INDICE

Nombre	Página
TRANSMISIÓN PLANETARIA (GR)	311
TREN DE FUERZA (CONFIG)	315
TREN DE FUERZA-GRUPO ELECTRÓNICO	134
TUBERÍAS DE ACEITE DEL MOTOR (GR)	58
TUBERÍAS DE ACONDICIONADOR DE AIRE (GR)	685 687
TUBERÍAS DE BOMBA HIDRÁULICA DE INYECCIÓN (GR)	101
TUBERIAS DE CALEFACCION	691 693
TUBERÍAS DE CALEFACCIÓN DE LA CABINA	691 693
TUBERÍAS DE COMBUSTIBLE (GR)	98
TUBERÍAS DE DIRECCIÓN (GR)	443
TUBERIAS DE DRENAJE DE ACEITE DE MOTOR (GR)	59
TUBERÍAS DE ENGRASE (GR)	399
TUBERÍAS DE LA DIRECCIÓN SECUNDARIA (GR)	440
TUBERÍAS DE POSENFRIADOR DE AIRE (CONJ)	85
TUBERÍAS DEL AGUA (GR)	66 69 71
TUBERÍAS DEL CILINDRO DE INCLINACIÓN (GR)	520
TUBERÍAS DEL ENFRIADOR DE ACEITE DEL EJE (GR)	300
TUBERÍAS DEL ENFRIADOR DE ACEITE HIDRÁULICO (GR)	514
TUBERIAS DEL ENFRIADOR DEL CONVERTIDOR DE PAR	304
TUBERÍAS DEL FILTRO Y LA TRANSMISIÓN (GR)	285
TUBERÍAS DELANTERAS (GR)	507
TUBERÍAS HIDRÁULICAS (GR)	510
TUBO DE ESCAPE (GR)	89
TUBO DE LLENADO DE ACEITE DE LA TRANSMISIÓN (GR)	282 284
TUBO DE LLENADO DE ACEITE (GR)	53
TURBOCOMPRESOR - TUBERÍAS DE ACEITE DEL (GR)	60
TURBOCOMPRESOR (GR)	92

V

Nombre	Página
VÁLVULA DE ALIVIO DEL FRENO	112
VÁLVULA DE ALIVIO (GR)	456 457 585
VÁLVULA DE ALIVIO (GR)	340
VÁLVULA DE ALIVIO (GR) (COMPRESOR DEL REFRIGERANTE)	648
VÁLVULA DE ALIVIO (GR) (FRENO)	522
VÁLVULA DE ALIVIO (GR) (TANQUE HIDRÁULICO)	522
VÁLVULA DE CONTROL DE BAJADA (GR)	570
VÁLVULA DE CONTROL DE LA AMORTIGUACIÓN (GR)	586
VALVULA DE CONTROL DE LA BOMBA (GR)	455 581 583
VÁLVULA DE CONTROL DEL FRENO (GR)	436
VÁLVULA DE CONTROL DEL FRENO (GR) (SERVICIO)	431
VÁLVULA DE CONTROL (GR)	558 560 562 565
VÁLVULA DE CONTROL MANUAL (GR)	579
VÁLVULA DE CORTE (GR)	510
VÁLVULA DE CORTE (GR) (DRENAJE DEL RADIADOR)	275
VALVULA DE DERIVACION (CONJ) (FILTRO DE ACEITE DEL MOTOR)	54
VÁLVULA DE DERIVACIÓN (GR)	567 568
VÁLVULA DE DERIVACIÓN (GR) (TANQUE HIDRÁULICO)	522
VALVULA DE DIRECCION SECUNDARIA (GR)	458
VÁLVULA DE DRENAJE (GR)	569
VÁLVULA DE LANZADERA (GR)	549 588 589 590 591
VÁLVULA DE LANZADERA (GR) (*BRAKE, HYDRAULIC FAN)	522
VÁLVULA DE LEVANTAMIENTO (GR)	37
VÁLVULA DE MODULACIÓN (GR)	339
VÁLVULA DE RETENCIÓN (GR)	555 556
VÁLVULA DE RETENCIÓN (GR) (DERIVACION DE ENFRIADOR DE ACEITE DEL EJE)	309
VALVULA DE RETENCIÓN Y ALIVIO (GR)	557
VÁLVULA DE SOLENOIDE (GR)	592 593 594
VÁLVULA DE SOLENOIDE (GR) (24 VOLTIOS) (*BRAKE, HYDRAULIC FAN)	522
VÁLVULA DEL CONTROL PRINCIPAL (GR)	572 574

* NO HAY TRADUCCION DISPONIBLE EN EL MOMENTO DE LA IMPRESION

INDICE

Nombre	Página
	576
	577
VÁLVULA DEL NEUMÁTICO (GR)	321
VÁLVULA HIDRÁULICA DE 3 VÍAS (CONFIG)	501
VÁLVULA NEUTRALIZADORA DE DIRECCIÓN (GR)	443
VÁLVULA NEUTRALIZADORA DE DIRECCIÓN (GR)	462
VÁLVULA REDUCTORA DE PRESIÓN (GR)	580
VÁLVULA SELECTORA (GR) (DIRECCIÓN)	459
VÁLVULAS DE LA DIRECCIÓN (GR)	459
VARILLA DE NIVEL DE ACEITE (CONJ)	282
	284
VENTANA DE LA PUERTA (GR)	767
VIDRIO (CONJ) (AMBAR) (SEÑAL)	145
	147
VIDRIO (CONJ) (FARO DELANTERO)	145
	147
VISERA	765
VISERA (GR)	765
VOLANTE - CAJA DE (GR)	34
VOLANTE (GR)	32

W

*WIRING GP-WASTE HANDLER	263

* NO HAY TRADUCCION DISPONIBLE EN EL MOMENTO DE LA IMPRESION

ÍNDICE

Designação	Página
A	
ACENDEDOR DE CIGARROS (12-VOLTS)	221, 249
ACIONADOR - INCLINAÇÃO DO CAPÔ	342
ACIONADOR - PROTETOR DE POTÊNCIA	345
ACIONADOR DE POTÊNCIA	344
ACIONADOR DO FREIO DE ESTACIONAMENTO	423
ACOPLADOR RÁPIDO	625
ACUMULADOR - AR CONDICIONADO	687
ACUMULADOR - FREIO	421, 422
ACUMULADOR D ÓLEO - PILOTO	463, 464
ACUMULADOR DO SISTEMA DE ABSORÇÃO DE IMPACTOS	465, 466
ADAPTADOR	71, 691
ADAPTADOR DA PONTA	605
ADAPTADOR-TUBULAÇÃO DE ÓLEO	51
ADESIVO - PAINEL DE FUSÍVEIS	679, 682
ADESIVO-SAÍDA (SECUNDÁRIO)	709
ADESIVO-TRANSMISSÃO (INTERRUPTOR DE REDUÇÃO DE MARCHA)	473
ADESIVO-TRANSMISSÃO (INTERRUPTOR DE REDUÇÃO DE MARCHA)	471
AJUSTADOR DO ASSENTO	636
ALARME	115, 116
ALCA FIXADOR DE CABO	124
ALTERNADOR DE CORRENTE	117, 119
AMORTECEDOR - ALARME	129
AMORTECEDOR DE VIBRAÇÕES E POLIA	25
AQUECEDOR DA ÁGUA DO MOTOR	135, 136
AQUECEDOR DA CABINE	670, 672
ARO	320
ARO DESMONTÁVEL	321
ARRANJO GERAL	2
ARRANJO HIDRÁULICO - 2 VÁLVULAS	501
ARRANJO HIDRÁULICO - 3 VÁLVULAS	501
ARREFECEDOR - ÓLEO DO MOTOR	63
ARREFECEDOR DO ÓLEO DO EIXO	276
ARREFECEDOR E MONTAGEM - TRANSMSSÃO	275
ARREFECEDOR-ÓLEO DA TRANSMISSÃO	275
ARREFECIMENTO - TEMP. AMBIENTE ALTA	64
ASSENTO	742, 744, 745, 747
ASSENTO COM SUSPENSÃO	748, 749, 750, 751
ATERRO SANITÁRIO	3
AUXILIAR DE PARTIDA	191
AUXILIAR DE PARTIDA A ÉTER	190, 192
B	
BALANCIM (ADMISSÃO)	49
BALANCIM (ESCAPE)	49
BASE DO FREIO - PEDAL	424, 425
BATERIA E CABOS / FIOS ELÉTRICOS	121
BATERIA (LÍTIO)	653
BLINDAGEM DO COMPARTIMENTO DO MOTOR	409
BLOCO DO MOTOR	17, 18, 20
BLOCO LIMITADOR DE OSCILAÇÃO DO EIXO	347
BOCAL DE ENCHIMENTO DE ÓLEO DO MOTOR	53
BOCAL DE ENCHIMENTO DE ÓLEO DO TREM DE FORÇA	282, 284
BOMBA - ESCORVA DE COMBUSTÍVEL E SEPARADOR DE ÁGUA	114
BOMBA DA DIREÇÃO SECUNDÁRIA E MONTAGEM	450
BOMBA DA TRANSMISSÃO	317, 318
BOMBA DE ÁGUA	73, 74
BOMBA DE DIREÇÃO SECUNDÁRIA E MOTOR	449
BOMBA DE ENGRENAGENS (ARREFECEDOR DO ÓLEO DO EIXO)	316
BOMBA DE ESCORVA DO COMBUSTÍVEL E DO FILTRO PRIMÁRIO	105, 108
BOMBA DE INJEÇÃO DO COMBUSTÍVEL	104
BOMBA DE ÓLEO - MOTOR	61, 62
BOMBA DE PISTÃO	451, 534, 537
BOMBA DE TRANSFERÊNCIA DO COMBUSTÍVEL	110
BOMBA DO ARREFECEDOR DE ÓLEO DO EIXO E MONTAGEM	316

ÍNDICE

Designação	Página
BOMBA E MONTAGEM - FREIO E VENTILADOR HIDRÁULICO	531
BOMBA HIDRÁULICA - UNIDADE INJETORA	110
BOMBA HIDRÁULICA E MONTAGEM	533
BOMBA HIDRÁULICA E MONTAGEM - UNIDADE INJETORA	102
BOMBA REGULADORA (DIREÇÃO HMU)	443
BORDA CORTANTE	626
BORDA SEGMENTADA DA CAÇAMBA	626
BRAÇO - MANIPULADOR DE MATERIAIS	606
BRAÇO DE LEVANTAMENTO	595
	596
BRAÇO DO ASSENTO	645
BRACO DO LIMPADOR	643
	644
BUJÃO - CONECTOR	165
BUJÃO DO BLOCO DO CILINDRO	43
BUJÃO DO DRENO	569
BUJÃO DO MOTOR	44
BUJÃO MAGNÉTICO	296
	298
BUZINA ELÉTRICA	674

C

CABEÇOTE DO MOTOR	21
	22
	23
	24
CABINE - ESTRUTURA ROPS COBERTA	646
	715
CABINE - ROPS ABERTA	715
CABOS/FIOS ELÉTRICOS - ACOPLADOR	234
CABOS/FIOS ELÉTRICOS - AR CONDICIONADO	216
CABOS/FIOS ELÉTRICOS - AUXILIAR DE PARTIDA A ETER	241
CABOS/FIOS ELÉTRICOS - CABINE	220
CABOS/FIOS ELÉTRICOS - CHASSI	228
CABOS/FIOS ELÉTRICOS - DIANTEIROS	242
CABOS/FIOS ELÉTRICOS - DIREÇÃO SECUNDÁRIA	259
CABOS/FIOS ELÉTRICOS - EMBREAGEM	235
CABOS/FIOS ELÉTRICOS - ESTRUTURA ROPS ABERTA	248
CABOS/FIOS ELÉTRICOS - MOTOR	236
	238
CABOS/FIOS ELÉTRICOS - SENSOR	262
CABOS/FIOS ELÉTRICOS DE ILUMINAÇÃO	245
	246
	247
CAÇAMBA - MANUSEIO DE MATERIAL	610
	612
	613
	619
	620
CAÇAMBA PARA APLICAÇÃO GERAL	607
	608
	609
	616
	617
	618
CAÇAMBA PARA ROCHAS	614
	615
	620
	621
CADEADO	665
CAIXA - BATERIA	348
CAIXA - EIXO FIXO	296
CAIXA - EIXO OSCILANTE	298
CAIXA DE FERRAMENTAS	772
	773
CAIXA DIANTEIRA	35
CAIXA DO VOLANTE DO MOTOR	34
CANO DE ESCAPE	89
CAPÔ E PROTETOR	390
	393
CÁRTER DO ÓLEO DO MOTOR	41
CHASSI	1
CHASSI - ACOPLADOR RÁPIDO	627
CHASSI DIANTEIRO	364
CHASSI TRASEIRO	367
CHAVE - ALAVANCA	657
CHAVE - ELETRÔNICO (SEGURANÇA)	138
CHAVE GERAL	199
CHICOTE - CABINE	222
	249
CHICOTE - CABOS ELÉTRICOS (FERRAMENTA DE SERVIÇO)	221
	249
CHICOTE - CABOS ELÉTRICOS (PRESSÃO DO COMBUSTÍVEL)	93
CHICOTE - CHASSI (PRINCIPAL)	228
CHICOTE - CHASSI (TANQUE HIDRÁULICO)	229
CHICOTE - FREIOS (LUZ DO FREIO)	425
CHICOTE - ILUMINAÇÃO	155
	245
CHICOTE - ILUMINAÇÃO (FARÓIS DA CABINE)	221
	249
CHICOTE - ILUMINAÇÃO (LADO DIREITO)	246
	247
CHICOTE - ILUMINAÇÃO (LADO ESQUERDO)	246
	247
CHICOTE - ILUMINAÇÃO (PISCA-ALERTA)	163
CHICOTE - ILUMINAÇÃO (SETA DE DIREÇÃO)	211
CHICOTE - MONITOR (CONTROLE DE CARGA ÚTIL)	709

ÍNDICE

Designação	Página
CHICOTE - MOTOR	238
CHICOTE - MOTOR (INJEÇÃO DE COMBUSTÍVEL)	236
CHICOTE - MOTOR (MÓDULO DE CONTROLE ELETRÔNICO)	236
CHICOTE - SENSOR (EIXO, DIANTEIRO)	218
CHICOTE - SENSOR (EIXO TRASEIRO)	218
CHICOTE - VÁLVULA (COMPRESSOR DE AR DO ASSENTO)	763
CHICOTE-CHASSI DIANTEIRO	242
CHICOTE-DIREÇÃO (SECUNDÁRIO)	259
CILINDRO - ACOPLADOR	487
CILINDRO DE DIREÇÃO E MONTAGEM	438
CILINDRO DE ÉTER	192
CILINDRO DE INCLINAÇÃO	490
	492
	494
CILINDRO DE INCLINAÇÃO E RETENTOR	484
	485
	486
CILINDRO DE LEVANTAMENTO	488
	489
CILINDRO DE LEVANTAMENTO E RETENTOR	482
	483
CILINDRO HIDRÁULICO	439
CINTO DE SEGURANÇA	741
	748
	749
COLETOR - CONTROLE	522
COLETOR - VÁLVULA	524
	526
COLETOR DE ESCAPE	87
COLMÉIA - ARREFECEDOR DE ÓLEO HIDRÁULICO	76
COLMÉIA-ARREFECEDOR DE ÓLEO DO MOTOR	63
COLMÉIA-ARREFECEDOR DO ÓLEO DO EIXO	309
COLMÉIA-ARREFECEDOR DO ÓLEO DO TREM DE FORÇA	275
COLMEIA DO CONDENSADOR (REFRIGERANTE)	64
	650
COLMEIA DO RADIADOR	76
COMPRESSOR DE REFRIGERANTE	648
	649
COMUTADOR-LUZ ALTA/BAIXA	198
CONDENSADOR DO REFRIGERANTE E MONTAGEM	650
CONDICIONADOR DE AR	637
	638
	639
CONTRAPESO	349
CONTROLE - ACOPLADOR RÁPIDO	624
CONTROLE - ALAVANCA	480
CONTROLE - ALAVANCA (3 FUNÇÕES, COM REDUÇÃO DE MARCHA)	477
CONTROLE - NÃO PROGRAMADO	131
CONTROLE - NÃO PROGRAMADO (MOTOR)	127
CONTROLE & MONTAGEM-COMUNICAÇÃO	124
CONTROLE-CABO	479
CONTROLE DA CAÇAMBA	597
	599
	601
	603
CONTROLE DA MÁQUINA	126
CONTROLE DA TRANSMISSÃO	271
	272
CONTROLE DE DIREÇÃO	437
CONTROLE DO FREIO DE ESTACIONAMENTO	430
CONTROLE DO FREIO DE SERVIÇO	431
CONTROLE DO PAINEL MONITOR	652
	653
CONTROLE DO PEDAL DO FREIO	428
	429
CONTROLE DO VENTILADOR	470
CONTROLE E TUBULAÇÕES - VENTILADOR	467
CONTROLE-ELETROIDRÁULICO	471
	473
	475
	477
CONTROLE ELETRÔNICO - VISOR (PAINEL DE INDICADORES, CENTRAL)	129
CONTROLE ELETRÔNICO - VISOR (PAINEL DE INDICADORES, DIREITO, ESQUERDO)	222
	250
CONTROLE ELETRÔNICO E MONTAGEM - MOTOR	126
	127
CONTROLE-ESCAVAÇÃO AUTOMÁTICA	128
	129
CONTROLE HIDRÁULICO DA TRANSMISSÃO	273
CONTROLE-MONITOR NÃO PROGRAMADO	654
CONTROLE-MONITOR NÃO PROGRAMADO (SISTEMA DE MONITORIZAÇÃO CATERPILLAR)	221
	248
CONVERSOR DE TORQUE	334
CONVERSOR DE TORQUE E CARCAÇA	332
CORREIA- SERPENTINA	119
	316
	649
COTOVELO D'ÁGUA	65
COTOVELO DE ADMISSÃO DE AR	84
CRUZETA E MANCAL	324
	325
	337

ÍNDICE

Designação	Página
	338

D

DECALQUE	775
DECALQUE - ADVERTÊNCIA (LER MANUAL DE OPERAÇÃO)	606
DECALQUE - ADVERTÊNCIA (NÃO SOLDAR, NÃO PERFURAR, CONSULTAR OMM)	784
DECALQUE - ADVERTÊNCIA (RÁDIO DO PRODUCT LINK, NÃO NACD)	137
DECALQUE - CONTROLE (ALAVANCA DE CONTROLE, 2 FUNÇÕES, INTERRUPTOR DE REDUÇÃO DE MARCHA)	475
DECALQUE - CONTROLE (ALAVANCA DE CONTROLE, 3 FUNÇÕES, INTERRUPTOR DE REDUÇÃO DE MARCHA)	477
DECALQUE - CONTROLE (DESPEJAR, INCLINAR PARA TRÁS)	471 473
DECALQUE - CONTROLE (LEVANTAR, FLUTUAR, ABAIXAR)	473
DECALQUE - CONTROLE (LEVANTAR, FLUTUAR, ABAIXAR)	471
DECALQUE - CONTROLE (PAINEL SUPERIOR)	221 249 719
DECALQUE - CONTROLES	723
DECALQUE - IDENTIFICAÇÃO (AUXILIAR HIDRÁULICO)	473
DECALQUE - IDENTIFICAÇÃO (BUZINA)	471 473
DECALQUE - IDENTIFICAÇÃO (HMU)	721
DECALQUE - IDENTIFICAÇÃO (IGNIÇÃO)	138
DECALQUE - IDENTIFICAÇÃO (INTERRUPTOR DO ACIONADOR DO PROTETOR DE ENERGIA)	263
DECALQUE - IDENTIFICAÇÃO (MANIPULADOR DE RESÍDUOS)	3
DECALQUE - IDENTIFICAÇÃO (12-VOLTS)	723
DECALQUE - INFORMAÇÕES (CHAVE)	138
DECALQUE - INFORMAÇÕES (ENTRADA-SAÍDA)	723
DECALQUE - INSTRUÇÃO (AJUSTE DO ASSENTO)	763
DECALQUE - INSTRUÇÃO (CONSULTAR OMM)	138
DECALQUE - INSTRUÇÃO (MANUTENÇÃO)	471 473 475 477
DECALQUE - INSTRUÇÃO (PARTIDA DO MOTOR)	723
DECALQUE - INSTRUÇÃO (SAÍDA DE EMERGÊNCIA)	679
DECALQUE - INSTRUÇÃO (SEM DEGRAUS)	783
DECALQUE - PAINEL (CENTRAL)	723
DECALQUE - PAINEL (LADO DIREITO)	723
DECALQUE - PAINEL (LADO ESQUERDO)	723
DECALQUE (ESCAVAÇÃO AUTOMÁTICA)	129
DECALQUE MONITOR (SISTEMA DE MONITORIZAÇÃO CATERPILLAR)	719 721
DEFLETOR	346
DEGRAU	411
DIFERENCIAL	277
DIFERENCIAL - DESLIZAMENTO LIMITADO	278
DIFERENCIAL - NOSPIN	279 280
DIREÇÃO SECUNDÁRIA	454
DISJUNTOR AUTOMÁTICO DE CIRCUITO (105 AMPERES) (ALTERNADOR)	229
DISJUNTOR AUTOMÁTICO DE CIRCUITO (15 AMPERES) (ACIONADOR DO PROTETOR DE ENERGIA)	263
DISJUNTOR AUTOMÁTICO DE CIRCUITO (15 AMPERES) (ILUMINAÇÃO DE OPERAÇÃO)	229
DISJUNTOR AUTOMÁTICO DE CIRCUITO (50 AMPÈRES) (PARTIDA)	229
DISJUNTOR AUTOMÁTICO DE CIRCUITO (80 AMPERES) (PRINCIPAL)	229
DISJUNTOR AUTOMÁTICO DE CIRCUITO (90 AMPERES) (AUXILIAR DE PARTIDA)	229
DRENO - ECOLOGIA	281
DRENO - ÓLEO DO MOTOR	26
DUCTO DE AR	659
DUCTO E FILTRO	657

E

EIXO-COMANDO DE VÁLVULA	7
EIXO DE TRANSMISSÃO	322 323
EIXO FIXO	265
EIXO OSCILANTE	265 266
ELEMENTO - AQUECEDOR DE ÁGUA DA CAMISA (120 VOLTS, 1.000 WATTS)	136
ELEMENTO - AQUECEDOR DE ÁGUA DA CAMISA (240 VOLTS, 1.000 WATTS)	135
ELEMENTO DO FILTRO DE AR (PRIMÁRIO)	81
ELEMENTO DO FILTRO DE AR (SECUNDÁRIO)	81
ELEMENTO FILTRANTE - ÓLEO (HIDRÁULICO)	496
ELEMENTO FILTRANTE (TREM DE FORÇA)	287
ELIMINAÇÃO DE VAPORES DO CÁRTER	55

ÍNDICE

Designação	Página
ELO - TRAVA DA ARMAÇÃO DA DIREÇÃO	401
EMISSOR - NÍVEL DO COMBUSTÍVEL	112
EMISSOR - POSIÇÃO	174
	175
ENGATE - ARTICULAÇÃO	388
ENGRENAGEM-COROA E PINHÃO	288
	290
ENGRENAGENS DE DISTRIBUIÇÃO	33
ENGRENAGENS DE SAÍDA DE TRANSFERÊNCIA	292
ENGRENAGENS PLANETÁRIAS - TRANSMISSÃO	311
ESCADA	397
ESPELHO RETROVISOR	694
	695
	696
	697
	698
	699
	700
	702
	704
EXTENSÃO - ENCOSTO (TECIDO)	744
EXTENSÃO - ENCOSTO (VINIL)	747

F

FERRAGEM - CHASSI DA CARREGADEIRA	381
	382
FERRAGEM - CHASSI TRASEIRO	385
	386
	387
FERRAGENS-MONTAGEM	383
	384
FIAÇÃO - AQUECEDOR E AR CONDICIONADO	639
	672
FIAÇÃO - CONTROLE	124
FIAÇÃO - CONTROLE (ACIONADOR DO PROTETOR DE ENERGIA)	263
FIAÇÃO - CONTROLE (ESPELHOS AQUECIDOS)	702
	704
FIAÇAO - CONTROLES DO OPERADOR	221
	249
FIAÇAO - CONTROLES DO OPERADOR (ELETROIDRÁULICA, ALAVANCA DE CONTROLE)	475
	477
FIAÇÃO - FERRAMENTA DE TRABALHO (ACOPLADOR RAPIDO)	234
FIAÇÃO - MANIPULADOR DE RESÍDUOS	263
FIAÇÃO - MONITORAÇÃO DO EIXO	218
FIAÇÃO-RÁDIO (ALTO-FALANTE)	728
FILTRO - COMBUSTÍVEL (SECUNDÁRIO)	94
FILTRO - COMBUSTÍVEL (TELA DO BOCAL DE ENCHIMENTO)	112
FILTRO - MAGNÉTICO	292
FILTRO - MAGNÉTICO (ARREFECEDOR DO ÓLEO DO EIXO)	300
FILTRO - ÓLEO	287
	496
	497
FILTRO - ÓLEO DO MOTOR	54
FILTRO - ÓLEO (DRENO DA CAIXA HIDRÁULICA)	497
FILTRO - SEPARADOR DE ÁGUA E COMBUSTÍVEL (PRIMÁRIO)	96
FILTRO DE AR DE CABINA	657
FILTRO DE COMBUSTÍVEL E SEPARADOR DE ÁGUA	96
FILTRO E TUBOS - COMBUSTÍVEL	93
FILTRO E TUBOS - TRANSMISSÃO	285
FIXADOR - AMORTECEDOR E POLIA	27
FIXADORES - CABEÇOTE DO MOTOR	24
FIXADORES - CAIXA DIANTEIRA	28
	29
FIXADORES - MECANISMO DAS VÁLVULAS	31
FIXADORES - TAMPA DA VÁLVULA	30
FREIO DE ESTACIONAMENTO	427
FREIOS E ENGRENAGENS PLANETARIAS	267
	269
FUNDO - ENCOSTO	716
	717
	718
FUSÍVEL (10 AMPERES)	220
	248
FUSÍVEL (15 AMPERES)	220
	248
	639
	672
FUSÍVEL (20-AMPERES)	220
	248

G

GRADE DO RADIADOR	369
GRUPO DE INSTALAÇÃO - MOTOR	6
GRUPO ROTATIVO DA BOMBA	453
	540

I

ILUMINAÇÃO - RODOVIÁRIA	162
ILUMINAÇÃO - SINALIZAÇÃO	153
ILUMINAÇÃO RODOVIÁRIA	153
INCLINAÇÃO - CAPÔ	420
INDICADOR - NÍVEL DE LÍQUIDO (VISOR DE VIDRO)	541
INDICADOR - NÍVEL DE ÓLEO	282

ÍNDICE

Designação	Página
	284
INDICADOR - NÍVEL DO ÓLEO (VARETA)	56
INJETOR DE COMBUSTÍVEL	97
INSTALAÇÃO-COMUNICAÇÃO	137
INSTALAÇÃO DO RÁDIO	676
	678
INSTALAÇÃO DOS CONTROLES	675
INSTALAÇÃO-SEGURANÇA	137
	138
INTERRUPTOR - BALANCIM	206
	208
	213
INTERRUPTOR - BALANCIM (ACIONADOR DE INCLINAÇÃO DO CAPÔ)	228
INTERRUPTOR - BALANCIM (ACIONADOR DO PROTETOR DE ENERGIA)	263
INTERRUPTOR - BALANCIM (ACOPLADOR RÁPIDO)	206
	208
	624
INTERRUPTOR - BALANCIM (AJUSTE DE ATIVAÇÃO DE CARREGAMENTO AUTOMÁTICO)	129
INTERRUPTOR - BALANCIM (ANULAR NEUTRALIZADOR DA TRANSMISSÃO)	222
	250
INTERRUPTOR - BALANCIM (AQUECIMENTO DOS ESPELHOS)	702
	704
INTERRUPTOR - BALANCIM (CAÇAMBA, SELEÇÃO DO GARFO)	206
	208
INTERRUPTOR - BALANCIM (CONDICIONADOR DE AR, AQUECEDOR)	222
INTERRUPTOR - BALANCIM (DESENGATE AUTOMÁTICO DE LEVANTAMENTO, INCLINAÇÃO)	206
	208
	222
	250
INTERRUPTOR - BALANCIM (DIREÇÃO SECUNDÁRIA)	210
INTERRUPTOR - BALANCIM (FARÓIS DIANTEIRO, TRASEIRO)	155
INTERRUPTOR - BALANCIM (MARCHA AVANTE, NEUTRO, MARCHA À RÉ)	214
INTERRUPTOR - BALANCIM (MODULAÇÃO PRECISA)	222
	250
INTERRUPTOR - BALANCIM (PARADA A NÍVEL DO SOLO)	228
INTERRUPTOR - BALANCIM (PERIGO)	211
INTERRUPTOR - BALANCIM (PISCA-ALERTA)	163

Designação	Página
INTERRUPTOR - BALANCIM (SELEÇÃO DE MODO)	222
	250
INTERRUPTOR - BALANCIM (SELEÇÃO DE TERCEIRA FUNÇÃO)	473
	477
INTERRUPTOR - BALANCIM (SELETOR DE MODO DE CARREGAMENTO AUTOMÁTICO)	129
INTERRUPTOR - BALANCIM (SISTEMA DE ABSORÇÃO DE IMPACTOS)	205
INTERRUPTOR - BALANCIM (TRAVA HIDRÁULICA)	223
	250
INTERRUPTOR - BALANCIM (VELOCIDADE DO VENTILADOR)	222
INTERRUPTOR - BALANCIM (VENTILADOR DE INVERSÃO AUTOMÁTICA)	204
INTERRUPTOR - BOTÃO (ACIONADOR DO AUTODIG)	129
INTERRUPTOR - BOTÃO (BUZINA)	221
	248
INTERRUPTOR - BOTÃO (REDUÇÃO DE MARCHA)	249
INTERRUPTOR - BOTÃO (RETOMAR A TRAVA DO ACELERADOR)	222
INTERRUPTOR - CIRCUITO (20-AMPERES) (ACIONADOR DE INCLINAÇÃO DO CAPÔ)	229
INTERRUPTOR - CIRCUITO (20-AMPERES) (ENERGIA DA BATERIA PARA CABINE DESLIGADA)	229
INTERRUPTOR - DIREÇÃO SECUNDÁRIA	210
INTERRUPTOR - LIMITADOR (LUZ DE FREIO)	425
INTERRUPTOR - LIMPADOR (24 VOLTS) (PISCA-PISCA DIANTEIRA)	220
INTERRUPTOR - MAGNÉTICO	200
	201
	202
INTERRUPTOR - MAGNÉTICO (24 VOLTS) (AQUECEDOR DE ADMISSÃO DE AR)	201
INTERRUPTOR - MAGNÉTICO (24 VOLTS) (RELÉ PRINCIPAL)	229
INTERRUPTOR - PARTIDA (CHAVE)	220
	248
INTERRUPTOR - PISCA-PISCA	211
INTERRUPTOR - PRESSÃO	203
INTERRUPTOR - PRESSÃO (DERIVAÇÃO DO FILTRO DO ÓLEO)	287
INTERRUPTOR - PRESSÃO (DIFERENCIAL)	496
INTERRUPTOR - PRESSÃO (ÓLEO DA DIREÇÃO PRIMÁRIA)	259
INTERRUPTOR - PRESSÃO (ÓLEO DA DIREÇÃO SECUNDÁRIA)	259

ÍNDICE

Designação	Página
INTERRUPTOR - PRESSÃO (ÓLEO DO FREIO DE ESTACIONAMENTO)	228
INTERRUPTOR - PRESSÃO (ÓLEO DO FREIO DE SERVIÇO)	238
INTERRUPTOR - PRESSÃO (REFRIGERANTE)	216
INTERRUPTOR - REDUTOR DE LUMINOSIDADE (RODAGEM)	198
INTERRUPTOR - ROTATIVO (24 VOLTS) (CONTROLE DE MUDANÇA AUTOMÁTICA)	221 249
INTERRUPTOR - ROTATIVO (24 VOLTS) (CONTROLE VARÍAVEL DE MUDANÇA DAS MARCHAS)	221 249
INTERRUPTOR - ROTATIVO (24 VOLTS) (ILUMINAÇÃO DE OPERAÇÃO)	248
INTERRUPTOR - ROTATIVO (24 VOLTS) (ILUMINAÇÃO DE OPERAÇÃO)	220
INTERRUPTOR - ROTATIVO (24 VOLTS) (LIMPADOR TRASEIRO)	220
INTERRUPTOR - SISTEMA DE ABSORCAO DE IMPACTOS	205
INTERRUPTOR - TEMPERATURA (AR CONDICIONADO)	639
INTERRUPTOR - TRANSMISSÃO	214
INTERRUPTOR DE DERIVAÇÃO	197
INTERRUPTOR DE SINALIZAÇÃO	211
INTERRUPTOR GIRATÓRIO	209
INTERRUPTOR GIRATÓRIO (SELEÇÃO DE,O MATERIAL DE AUTOESCAVAÇÃO)	129
INTERRUPTOR-VENTILADOR DE INVERSÃO	204

J

Designação	Página
JOGO DE ALAVANCA (MOTOR DE PARTIDA)	195
JOGO DE AMORTECEDOR DE CHOQUES (ASSENTO DA SUSPENSÃO)	763
JOGO DE BLOCO DESLIZADOR	750 751
JOGO DE BUCHA (MOTOR DE PARTIDA)	195
JOGO DE CALÇO (INCLUI 17 CALÇOS)	451
JOGO DE CONTROLE DE PISTÃO	451
JOGO DE CORDÃO (ASSENTO DA SUSPENSÃO)	763
JOGO DE DISCO	278
JOGO DE ESCOVA (MOTOR DE PARTIDA)	195
JOGO DE FIXADORES (ALTERNADOR)	117
JOGO DE ISOLADOR (MOTOR DE PARTIDA)	195
JOGO DE LONA DO FREIO	427
JOGO DE MAÇANETA (RADIO)	728
JOGO DE MANCAL (ALTERNADOR)	117
JOGO DE MANUTENÇÃO	288
JOGO DE PARAFUSO (CONECTORES ELÉTRICOS)	228 242
JOGO DE PINO DO PEDAL	726
JOGO DE PISTÃO	451
JOGO DE REPARO DA BOMBA (DIREÇÃO SECUNDÁRIA)	449
JOGO DE RETENTOR	431 457 465 487 524 579
JOGO DE RETENTOR (BOMBA DE MEDIÇÃO, DIREÇÃO)	445
JOGO DE RETENTOR (VALVULA DE ALIVIO)	522 526
JOGO DE RETENTOR (VÁLVULA DE DESVIO)	522
JOGO DE RETENTOR (VÁLVULA DE DESVIO) (FLUXO DO FLUIDO DO VENTILADOR HIDRÁULICO)	568
JOGO DE RETENTOR (VÁLVULA DE VAIVÉM)	522
JOGO DE ROLO	726
JOGO DE SOLENÓIDE (MOTOR DE PARTIDA)	195
JOGO DE TERMINAL (ALTERNADOR)	117
JOGO DE VÁLVULA DE ALÍVIO (DIREÇÃO SECUNDÁRIA)	449
JOGO DE VÁLVULA DE AR (ASSENTO DA SUSPENSÃO)	763
JUNTA (ALOJAMENTO DO REGULADOR DE TEMPERATURA)	69
JUNTA CORREDIÇA	324
JUNTA UNIVERSAL	337 338

L

Designação	Página
LÂMINA DO LIMPADOR DE PÁRA-BRISA	769
LÂMPADA - FAROL	141 142 143 144
LÂMPADA - HALOGÊNEO (24 VOLTS, 65 WATTS) (FAROL)	143 144
LÂMPADA - SINALIZAÇÃO	149 150
LÂMPADA - TETO	140
LÂMPADA DIANTEIRA E DE SINAL	145 147
LÂMPADA (12 VOLTS, 24 VOLTS, 35 WATTS)	141 142

ÍNDICE

Designação	Página
LÂMPADA (24 VOLTS)	140, 145, 220, 248, 709
LÂMPADA (24 VOLTS) (SINAL)	147
LÂMPADA (24 VOLTS, 21 WATTS)	149, 151
LÂMPADA (24 VOLTS, 21 WATTS) (SINAL)	145, 147
LÂMPADA (24 VOLTS, 5 WATTS)	151
LÂMPADA (24 VOLTS, 70 WATTS)	152
LÂMPADA (24 VOLTS, 75-70 WATTS)	145
LÂMPADA (24 VOLTS, 75-70 WATTS) (CABEÇA)	147
LAVADOR DO VIDRO	766
LENTE ÂMBAR	149
LENTE (ÂMBER) (SINAL)	145, 147
LENTE (LUZES DIANTEIRAS)	145, 147
LEVANTAMENTO - ARRANJO	603, 604
LEVANTAMENTO DO MOTOR	38
LIMPADOR DO VIDRO	769
LUZ GIRATÓRIA DE ALARME	152
LUZ INTERMITENTE (24 VOLTS)	211
LUZ TRASEIRA E DE FREIO	151

M

MANCAL - PRINCIPAL	15
MÁQUINA	2
MECANISMO DAS VÁLVULAS	48, 49
MÓDULO - INTERFACE (CHAVE)	138
MÓDULO - TECLADO DA CARGA ÚTIL	709
MÓDULO - VELOCÍMETRO E TACÔMETRO	707
MÓDULO ELETRÔNICO DE QUATRO INDICADORES	706
MONTAGEM - ALTERNADOR	39
MONTAGEM - ARO	310
MONTAGEM - ARREFECEDOR DE ÓLEO DO EIXO	309
MONTAGEM - CABINE	713
MONTAGEM - MOTOR E TRANSMISSÃO	40
MONTAGEM - TANQUE HIDRÁULICO	530
MONTAGEM DO EIXO	307
MOTOR - ENGRENAGENS	527
MOTOR - LIMPADOR DO VIDRO	711, 712
MOTOR - NÚCLEO	5
MOTOR - PISTÃO	528
MOTOR COMPLETO	4
MOTOR DO GRUPO ROTATIVO	539
MOTOR ELÉTRICO DE PARTIDA	194, 195

P

PAINEL DE INSTRUMENTOS	719, 721, 723
PAINEL DO CAPÔ	402, 403, 404, 405, 406
PAINEL LATERAL	407
PAINEL MONITOR DE CARGA ÚTIL	708, 709
PÁRA-LAMA	353, 354, 357, 360
PÁRA-LAMA DIANTEIRO	358, 359
PÁRA-SOL	765
PÁRA-SOL DA CABINE	765
PEDAL DO GOVERNADOR	726, 727
PISO-SUPRESSÃO DE RUÍDOS	662, 663
PISTÃO E BIELA	42
PLACA - IDENTIFICAÇÃO DO EIXO	784
PLACA - NÚMERO DE SÉRIE (TRANSMISSÃO)	293
PLACA DE INFORMAÇÃO (COMBUSTIVEL MANUAL)	108
PLACA DE INSTRUÇÃO (BATERIA)	121
PLACA E DECALQUE	783, 784
PNEU E ARO	326, 327, 328, 329, 330, 331
POLIA DA RODA-GUIA	45
PONTA - PENETRAÇÃO	632, 633
PONTA CURTA	634, 635
PONTA LONGA	631
PONTA PARA APLICAÇÕES GERAIS	629, 630
PONTA-SERVIÇO PESADO	628
PORTA DA CABINE	655, 656
PORTA DE ACESSO	351

ÍNDICE

Designação	Página
	352
POSIÇÃO DO SENSOR	174
PRÉ-PURIFICADOR	90
	91
PROTETOR - ARREFECEDOR DO ÓLEO DO EIXO	373
PROTETOR - ARTICULAÇÃO	371
PROTETOR - CILINDRO DE LEVANTAMENTO	498
	499
	500
PROTETOR - DIANTEIRO	376
PROTETOR - EIXO DE TRANSMISSÃO	375
PROTETOR - ILUMINAÇÃO	377
PROTETOR - JANELA	666
	668
PROTETOR - TREM DE FORÇA	378
	379
	380
PROTETOR - VEDADOR DO EIXO	374
PROTETOR CONTRA VANDALISMO	665
PURIFICADOR DE AR	80
	81

R

RADIADOR E VENTILADOR	75
RÁDIO	728
	729
RÁDIO - COMUNICAÇÃO (PRODUCT LINK 121SR)	124
RECEPTÁCULO-PARTIDA AUXILIAR	166
RECEPTOR - SECADOR (CONDICIONADOR DE AR)	687
RECLINAÇÃO - ASSENTO	730
REDUÇÃO DE RUÍDO	417
REGULADOR DE PRESSÃO DO COMBUSTÍVEL	111
REGULADOR DE TEMPERATURA DA ÁGUA (94 GRAUS C) (LÍQUIDO ARREFECEDOR)	69
REGULADOR DE VOLTAGEM (24 VOLTS)	117
REGULADOR (PRESSÃO DO COMBUSTÍVEL)	111
RELÉ (CONJ) (24 VOLTS) (AQUECIMENTO DOS ESPELHOS)	702
	704
RELÉ (CONJ) (24 VOLTS) (ARREFECEDOR DO ÓLEO DO EIXO)	235
RELÉ (CONJ) (24 VOLTS) (BUZINA)	220
	248
RELÉ (CONJ) (24 VOLTS) (DIREÇÃO SECUNDÁRIA INTERMEDIÁRIA)	259
RELÉ (CONJ) (24 VOLTS) (FARÓIS DIANTEIROS DA CABINE)	248
RELÉ (CONJ) (24 VOLTS) (FARÓIS DIANTEIROS DA CABINE)	220
RELÉ (CONJ) (24 VOLTS) (FAROL TRASEIRO)	220
	248
RELÉ (CONJ) (24 VOLTS) (MOTOR DE INCLINAÇÃO DO CAPÔ)	228
RESPIRO	52
	293
RESPIRO (CÁRTER DO MOTOR)	52
RETENTOR	96
RETENTOR - CAIXA DO VOLANTE	47
RETENTOR DO VIRABREQUIM	46
REVESTIMENTO DA CABINE	679
	682
RODA-GUIA - CORREIA	36
ROPS ABERTA	738
ROPS FECHADA	731
RUÍDO - ARRANJO PARA SUPRESSÃO	416

S

SENSOR - POSIÇÃO DE INCLINAÇÃO E MONTAGEM	170
SENSOR - POSIÇÃO DE LEVANTAMENTO E MONTAGEM	167
SENSOR - PRESSÃO	176
	177
	178
	179
	180
	181
	182
	183
SENSOR - PRESSÃO (COMBUSTÍVEL)	93
SENSOR - PRESSÃO (ÓLEO DO CILINDRO DE LEVANTAMENTO)	169
SENSOR - TEMPERATURA	186
	187
	188
	189
SENSOR - TEMPERATURA (2 PINOS)	188
SENSOR - TEMPERATURA (2 PINOS) (ÓLEO DO EIXO DIANTEIRO)	218
SENSOR - TEMPERATURA (2 PINOS) (ÓLEO DO EIXO TRASEIRO)	218
SENSOR - TEMPERATURA (2 PINOS) (ÓLEO HIDRÁULICO)	228
SENSOR DE PRESSÃO E MONTAGEM	169
SENSOR DE VELOCIDADE	184
	185
SENSOR DE VELOCIDADE (SAÍDA DA TRANSMISSÃO 1)	292
SENSOR DE VELOCIDADE (SAÍDA DA TRANSMISSÃO 2)	292

ÍNDICE

Designação	Página
SENSOR DE VELOCIDADE (SAÍDA DO CONVERSOR DE TORQUE)	332
SENSOR DO MOTOR	172
SEPARADOR DE ÁGUA E BOMBA DE ESCORVA DE COMBUSTÍVEL	114
SILENCIADOR	88
SIST. DE ILUMINAÇÃO - PISCA-PISCA GIRATÓRIO DE ADVERTÊNCIA	163
SIST. ELETRÔNICO - ACESSÓRIO	134
SISTEMA DE ABSORÇÃO DE IMPACTOS	470
SISTEMA DE ABSORÇÃO DE IMPACTOS E TUBOS	469
SISTEMA DE ILUMINAÇÃO - FARÓIS	154 155
SISTEMA DE ILUMINAÇÃO - FARÓIS E SINAL	157 158 160
SISTEMA ELÉTRICO	132
SISTEMA ELETRÔNICO - MONITOR	134
SISTEMA ELETRÔNICO - TREM DE FORÇA	134
SISTEMA ELETRÔNICO-COMUNICAÇÃO	133
SOFTWARE - COMUNICAÇÃO (PRODUCT LINK 121SR)	124
SUPORTE - ADMISSÃO DE AR	413
SUPORTE - CONTROLE HIDRÁULICO	753
SUPORTE - GARFO	622 623
SUPORTE - VALVULA E FILTRO	414
SUPORTE DO RETENTOR	8
SUPORTE-INTERRUPTOR AJUSTÁVEL	425
SUPRESSÃO DE RUÍDOS - CABINE	757 759 760 761
SUSPENSÃO - ASSENTO	763

T

Designação	Página
TAMPA - ADMISSÃO DE AR	82 83
TAMPA - BLOCO DO MOTOR	9
TAMPA - BOCAL DE ENCHIMENTO (ÓLEO DO MOTOR)	53
TAMPA - BOCAL DE ENCHIMENTO (TANQUE HIDRÁULICO)	541
TAMPA - BOCAL DE ENCHIMENTO (TREM DE FORÇA)	282 284
TAMPA - CAIXA DIANTEIRA	10 11
TAMPA - MECANISMO DAS VÁLVULAS	12 13 14
TAMPA - PÁRA-CHOQUE	350
TAMPA - RADIADOR (7 PSI)	79
TAMPA - TANQUE DE COMBUSTÍVEL	112
TAMPÃO	281 292
TANQUE DE COMBUSTÍVEL	112
TANQUE HIDRÁULICO	541
TANQUE SUPERIOR DO RADIADOR	79
TAPETE	679 682
TELA DE SUCÇÃO	292
TELA FILTRANTE	524 526
TELA FILTRANTE (COLETOR DA VÁLVULA DE CONTROLE)	522
TELA FILTRANTE (ENCHIMENTO DO TANUQE HIDRÁULICO)	541
TELA FILTRANTE (TANQUE HIDRÁULICO)	541
TOLDO - ROPS ABERTA	647
TRANSMISSÃO	336
TREM DE FORÇA	315
TUBOS - ACOPLADOR	502 505
TUBOS - ÁGUA	66 69 71
TUBOS - AQUECEDOR DA CABINE	691 693
TUBOS - AR	86
TUBOS - AR CONDICIONADO	685 687
TUBOS - ARREFECEDOR DE ÓLEO DO EIXO	300
TUBOS - ARREFECEDOR DE ÓLEO HIDRÁULICO	514
TUBOS - ARREFECEDOR DO CONVERSOR DE TORQUE	304
TUBOS - CILINDRO DE INCLINAÇÃO	520
TUBOS - CILINDRO DE LEVANTAMENTO	518
TUBOS - COMBUSTÍVEL	98
TUBOS - DIANTEIROS	507
TUBOS - DIREÇÃO	443
TUBOS - DIREÇÃO SECUNDÁRIA	440
TUBOS - DRENAGEM DO COMBUSTÍVEL	100
TUBOS - GRAXA	399
TUBOS - INJETOR DA BOMBA HIDRÁULICA	101
TUBOS - ÓLEO DO MOTOR	58
TUBOS - ÓLEO DO TURBOALIMENTADOR	60
TUBOS - ÓLEO HIDRÁULICO	510
TUBOS DO AQUECEDOR	691 693
TUBULAÇÕES - AR DO PÓS-ARREFECEDOR	85
TUBULAÇÕES - DRENAGEM DE ÓLEO DO MOTOR	59
TUBULAÇÕES DE DIAGNÓSTICO	777

ÍNDICE

Designação	Página
	780
TUCHO DA VÁLVULA	37
TURBOALIMENTADOR	92
V	
VÁLVULA - CONTROLE PRINCIPAL	572
	574
	576
	577
VÁLVULA - NEUTRALIZADOR DA DIREÇÃO	443
	462
VALVULA - PARTIDA A ETER	215
VÁLVULA DA DIREÇÃO	459
VÁLVULA DE ALÍVIO	340
	456
	457
	585
VÁLVULA DE ALÍVIO (COMPRESSOR DO REFRIGERANTE)	648
VÁLVULA DE ALÍVIO (FREIO)	522
VÁLVULA DE ALÍVIO (TANQUE HIDRÁULICO)	522
VÁLVULA DE CONTROLE	558
	560
	562
	565
VÁLVULA DE CONTROLE DA BOMBA	455
	581
	583
VÁLVULA DE CONTROLE DE ABAIXAMENTO	570
VÁLVULA DE CONTROLE DE ABSORÇÃO DE IMPACTOS	586
VÁLVULA DE CONTROLE DOS FREIOS	436
VÁLVULA DE CONTROLE DOS FREIOS (SERVIÇO)	431
VÁLVULA DE DERIVAÇÃO (FILTRO DE ÓLEO DO MOTOR)	54
VÁLVULA DE DIREÇÃO SECUNDÁRIA	458
VÁLVULA DE DRENAGEM	569
VÁLVULA DE MODULAÇÃO	339
VÁLVULA DE PARADA	510
VÁLVULA DE PARADA (DRENO DO RADIAOR)	275
VÁLVULA DE PNEU	321
VÁLVULA DE REDUÇÃO DE PRESSÃO	580
VÁLVULA DE RETENÇÃO	555
	556
VÁLVULA DE RETENÇÃO (DERIVAÇÃO DO ARREFECEDOR DE ÓLEO DO EIXO)	309
VÁLVULA DE RETENÇÃO E DE ALÍVIO	557
VÁLVULA DE SEPARAÇÃO	549
	588
	589
	590
	591
VÁLVULA DE SEPARAÇÃO (FREIO, VENTILADOR HIDRÁULICO)	522
VÁLVULA DESVIADORA	567
	568
VÁLVULA DESVIADORA (TANQUE HIDRÁULICO)	522
VÁLVULA DISJUNTORA	112
VÁLVULA DO CONTROLE PRINCIPAL E MONTAGEM	543
	546
	549
	552
VÁLVULA MANUAL	579
VÁLVULA SELETORA (DIREÇÃO)	459
VÁLVULA SOLENÓIDE	592
	593
	594
VÁLVULA SOLENÓIDE (24 VOLTS) (FREIO, VENTILADOR HIDRÁULICO)	522
VIDRO DA PORTA	767
VIGIA	66
VIRABREQUIM	15
VOLANTE DO MOTOR	32

STICHWORTVERZEICHNIS

Bezeichnung	Seite
A	
ABBLENDSCHALTER (STRASSENFAHRT)	198
ABDECKGLAS (FRONTSCHEINWERFER)	145, 147
ABDECKGLAS (GELB)	149
ABDECKGLAS (GELB) (SIGNAL)	145, 147
ABFALLBESEITIGUNGSAUSFÜHRUNG - VERDRAHTUNG	263
ABFALLBESEITIGUNGSMONTAGE	3
ABLASS (UMWELTFREUNDLICH)	281
ABLASSSTOPFEN	569
ABLASSVENTIL	569
ABSENKSTEUERVENTIL	570
ABSPERRVENTIL	510
ABSPERRVENTIL (KÜHLERABLASS)	275
ACHSDICHTUNGSABDECKUNG	374
ACHSE - IDENTIFIKATIONSSCHILD	784
ACHSENANBAUSATZ	307
ACHSENÖLKÜHLERLEITUNGEN	300
ACHSENÖLKÜHLERPUMPE U. BEFESTIGUNGSTEILE	316
ACHSENÖLKÜHLERSCHUTZ	373
ACHSENÜBERWACHUNG - VERDRAHTUNG	218
ACHSÖLKÜHLER	276
ADAPTER - ÖLLEITUNG	51
ALARM - DÄMPFER	129
ANSAUGSIEB	292
ANSCHLUSS	71, 691
ANSCHLUSSKLEMMENSATZ (DREHSTROM-GENERATOR)	117
ANSCHLUSSKLEMMENSATZ (DREHSTROM-GENERATOR)	117
ANSCHLUSSKUPPLUNGSLEITUNGEN	502, 505
ANTRIEBSSCHUTZ	378, 379, 380
ANTRIEBSWELLE	322, 323
ANTRIEBSWELLEN-KEILVERZAHNUNG	324
ANTRIEBSWELLENVERKLEIDUNG	375
ANZUGSLEINE (SCHWINGSITZ)	763
ARBEITS- U. SIGNALLEUCHTE	157, 158, 160
ARBEITSGERÄTEELEKTRONIK	134
ARBEITSLEUCHTEN	141, 142, 143, 144
ARMLEHNE	154, 155, 645
ÄTHERSTARTHILFE	190, 192
ÄTHERSTARTHILFE - VERDRAHTUNG	241
ÄTHERSTARTHILFEZYLINDER	192
ÄTHERSTARTVENTIL	215
AUFKLEBER	775
AUFKLEBER - AUSGANG (HILFSELEMENT)	709
AUFKLEBER - GETRIEBE (*DOWNSHIFT SWITCH)	471, 473
AUFKLEBER - INFORMATION (EINGANG/AUSGANG)	723
AUFKLEBER - INFORMATION (TASTE)	138
AUFKLEBER - MONITOR (CATERPILLAR ÜBERWACHUNGSSYSTEM)	719
AUFKLEBER - MONITOR (CATERPILLAR ÜBERWACHUNGSSYSTEM)	721
AUFKLEBER - SICHERUNGSTAFEL	679, 682
AUFKLEBER (AUTODIG)	129
AUFKLEBER (KONTROLLE) (ABKIPPEN, ZURÜCKNEIGEN)	471, 473
AUFKLEBER (KONTROLLE) (ANHEBEN, SCHWIMMEN, ABSENKEN)	471, 473
AUFKLEBER (KONTROLLE) (*JOYSTICK, 2-FCTN, DOWNSHIFT SW)	475
AUFKLEBER (KONTROLLE) (*JOYSTICK, 3-FCTN, D0WNSHIFT SW)	477
AUFKLEBER (KONTROLLE) (*UPPER PANEL)	719
AUFKLEBER (KONTROLLE) (*UPPER PANEL)	221, 249
AUSPUFFKRÜMMER	87
AUSPUFFROHR	89
AUTOMATISCHES LADESYSTEM (AUTODIG) - STEUERUNG	128, 129
B	
BATTERIE (LITHIUM)	653
BATTERIE UND VERDRAHTUNG	121
BATTERIEKASTEN	348
BEDIENUNGSEINBAUSATZ	675
BEDIENUNGSELEMENTE - KABELSTRANG	221, 249

* ÜBERSETZUNG ZUM ZEITPUNKT DER DRUCKLEGUNG NICHT VORHANDEN

STICHWORTVERZEICHNIS

Bezeichnung	Seite
BEDIENUNGSELEMENTE - KABELSTRANG (*ELECTROHYDRAULIC, JOYSTICK)	477
BEDIENUNGSELEMENTE - KABELSTRANG (*ELECTROHYDRAULIC, JOYSTICK)	475
BEDIENUNGSHEBEL-AUFKLEBER	723
BEFESTIGUNG - DÄMPFER U. RIEMENSCHEIBE	27
BEFESTIGUNG - VENTIL U. FILTER	414
BEFESTIGUNGSSATZ - ACHSÖLKÜHLER	309
BEFESTIGUNGSTEILE	383 384
BEFESTIGUNGSTEILE (DREHSTROMGENERATOR)	117
BELEUCHTUNGSANLAGE (STRASSENAUSRÜSTUNG)	153 162
BELEUCHTUNGSKABELSTRANG	155 245
BELEUCHTUNGSKABELSTRANG (FAHRERHAUS-ARBEITSSCHEINWERFER)	221 249
BELEUCHTUNGSKABELSTRANG (FAHRTRICHTUNGSBLINKER)	211
BELEUCHTUNGSKABELSTRANG (LINKS)	246
BELEUCHTUNGSKABELSTRANG (LINKS)	247
BELEUCHTUNGSKABELSTRANG (RECHTS)	246 247
BELEUCHTUNGSKABELSTRANG (RUNDUM-KENNLEUCHTE)	163
BELEUCHTUNGSVERDRAHTUNG	245 246 247
BLINKER (24 V)	211
BLINKERLEUCHTEN	153
BLINKLEUCHTE	149 150
BLITZSCHUTZ	377
BODEN - GERÄUSCHSCHUTZ	662 663
BREMS- UND RÜCKLEUCHTE	151
BREMS-KABELBAUM (BREMSLEUCHTE)	425
BREMSBELAG-EINBAUSATZ	427
BREMSDRUCKSPEICHER	421 422
BREMSE UND PLANETENGETRIEBE	267 269
BREMSGESTÄNGE	431
BREMSSTEUERVENTIL	436
BREMSSTEUERVENTIL (SERVICE)	431
BUCHSEN-EINBAUSATZ (STARTERMOTOR)	195
BÜRSTEN-EINBAUSATZ (STARTERMOTOR)	195

C

Bezeichnung	Seite
*CONTROL & LINES GP-FAN	467
*COOLER AS-TRANSMISSION OIL	275
*CORE AS-AXLE OIL COOLER	309

D

Bezeichnung	Seite
DÄMPFER UND RIEMENSCHEIBE	25
DIAGNOSELEITUNGEN	777 780
DICHTUNG	96
DICHTUNG (TEMPERATURREGELGEHÄUSE)	69
DICHTUNGSSATZ	431 457 465 487 524 579
DICHTUNGSSATZ (AUSGELEICHSVENTIL)	522 526
DICHTUNGSSATZ (*METERING PUMP, STEERING)	445
DICHTUNGSSATZ (VERTEILERVENTIL)	522
DICHTUNGSSATZ (VERTEILERVENTIL) (HYDRAULIKLÜFTERFLUSS)	568
DICHTUNGSSATZ (WECHSELVENTIL)	522
DICHTUNGSTRÄGER	8
DIFFERENTIAL	277
DIFFERENTIAL (BEGRENZTER SCHLUPF)	278
DREHKNOPFSCHALTER (24 V) (AUTOSHIFT STEUERUNG)	221 249
DREHKNOPFSCHALTER (24 V) (FAHRSCHEINWERFER)	220 248
DREHKNOPFSCHALTER (24 V) (HINTERER SCHEIBENWISCHER)	220
DREHKNOPFSCHALTER (24 V) (VARIABLE SCHALTSTEUERUNG)	221 249
DREHMOMENTWANDLER	334
DREHMOMENTWANDLER-KÜHLERLEITUNGEN	304
DREHSCHALTER	209
DREHSCHALTER (AUTOGIG MATERIALWAHL)	129
DREHSTROMGENERATOR	117 119
DREHSTROMGENERATOR - BEFESTIGUNG	39
DREHZAHLSENSOR	184 185

* ÜBERSETZUNG ZUM ZEITPUNKT DER DRUCKLEGUNG NICHT VORHANDEN

STICHWORTVERZEICHNIS

Bezeichnung	Seite
DREHZAHLSENSOR (DREHMOMENTWANDLERAUSGANG)	332
DREHZAHLSENSOR (GETRIEBEAUSGANG 1)	292
DREHZAHLSENSOR (GETRIEBEAUSGANG 2)	292
DREHZAHLWANDLER U. GEHÄUSE	332
DRUCKKNOPFSCHALTER (AUTODIG AUSLÖSER)	129
DRUCKKNOPFSCHALTER (DREHZAHLSPERRE WIEDER AUFNEHMEN)	222
DRUCKKNOPFSCHALTER (HERUNTERSCHALTEN)	249
DRUCKKNOPFSCHALTER (HUPE)	221 248
DRUCKLUFTLEITUNGEN	86
DRUCKLUFTVENTILSATZ (SCHWINGSITZ)	763
DRUCKREDUZIERVENTIL	580
DRUCKSCHALTER	203
DRUCKSCHALTER (BETRIEBSBREMSENÖL)	238
DRUCKSCHALTER (DIFFERENTIAL)	496
DRUCKSCHALTER (FESTSTELLBREMSÖL)	228
DRUCKSCHALTER (HAUPTLENKUNGSÖL)	259
DRUCKSCHALTER (KÜHLMITTEL)	216
DRUCKSCHALTER (NOTLENKUNGSÖL)	259
DRUCKSCHALTER (ÖLFILTERUMGEHUNG)	287
DRUCKSENSOR	176 177 178 179 180 181 182 183
DRUCKSENSOR (KRAFTSTOFF)	93
DRUCKSENSOR (*LIFT CYLINDER OIL)	169
DRUCKSENSOR UND BEFESTIGUNGSTEILE	169
DRUCKSPEICHER, HYDRAULISCHE SCHWINGUNGSDÄMPFUNG	465 466

E

Bezeichnung	Seite
EINFÜLLKAPPE (MOTORÖL)	53
EINFÜLLSTUTZENKAPPE (HYDRAULIKTANK)	541
EINFÜLLSTUTZENKAPPE (KRAFTÜBERTRAGUNG)	282 284
EINSPRITZLEITUNGEN - HYDRAULIKPUMPE	101
ELEKTR. ANLAGE	132
ELEKTROHYDRAULISCHE STEUERUNG	471 473 475 477
ELEKTRONIK - MONITOR	134
ELEKTRONIK, KOMMUNIKATION	133
ELEKTRONISCHER SCHLÜSSEL (SICHERHEIT)	138
ENDSCHALTER (BREMSLEUCHTE)	425
ENTDUNSTER	55
ENTLÜFTER	52 293
ENTLÜFTER (KURBELGEHÄUSE)	52

F

Bezeichnung	Seite
FAHRERHAUS - OFFEN MIT ÜBERROLLSCHUTZ	715
FAHRERHAUS-KABELBAUM	222 249
FAHRERHAUS MIT ÜBERROLLSCHUTZ	646
FAHRERHAUS, SONNENBLENDE	765
FAHRERHAUSANBAUSATZ	713
FAHRERHAUSAUSFÜHRUNG MIT GESCHL. ÜBERROLLSCHUTZ	715
FAHRERHAUSAUSKLEIDUNG	679 682
FAHRERHAUSBELEUCHTUNG	140
FAHRERHAUSHEIZUNG	670 672
FAHRERHAUSHEIZUNGSLEITUNGEN	691 693
FAHRERHAUSLÄRMDÄMPFUNG	757 759 760 761
FAHRERHAUSLUFTFILTER	657
FAHRERHAUSTÜR	655 656
FAHRERHAUSVERDRAHTUNG	220
FAHRERSITZ	742 744 745 747
FAHRERSITZFEDERUNG	763
FAHRERSITZVERSTELLER	636
FAHRGESTELLVERDRAHTUNG	228
FAHRWERK	1
FAHRWERK-KABELBAUM (HAUPT)	228
FAHRWERK-KABELBAUM (HYDRAULIKTANK)	229
FELGE	320

* ÜBERSETZUNG ZUM ZEITPUNKT DER DRUCKLEGUNG NICHT VORHANDEN

STICHWORTVERZEICHNIS

Bezeichnung	Seite
FELGE (TEILBAR)	321
FELGENAUFHÄNGUNG	310
FELSSCHAUFEL	614
	615
	620
	621
FESTSTELLBREMSBETÄTIGUNG	423
FESTSTELLBREMSE	427
FESTSTELLBREMSGESTÄNGE	430
FILTER (KRAFTÜBERTRAGUNG)	287
FILTERSIEB (HYDRAULIKTANKEINFÜLL-SIEB)	541
FUSSBREMSGESTÄNGE	428
	429
FUSSBREMSSOCKEL	424
	425
FUSSMATTE	679
	682

G

GABELTRÄGER	622
	623
GASPEDAL	726
	727
GEGENGEWICHT	349
GEHÄUSE - PENDELACHSE	298
GEHÄUSE - STARRACHSE	296
GESCHWINDIGKEITS- U. DREHZAHLMESSER-MODUL	707
GETRIEBE	336
GETRIEBEFILTER UND -LEITUNGEN	285
GETRIEBEHYDRAULIK	273
GETRIEBEKÜHLER U. BEFESTIGUNG	275
GETRIEBEÖLFÜLLSTUTZEN	282
	284
GETRIEBEPUMPE	317
	318
GETRIEBESCHALTER	214
GETRIEBESTEUERUNG	271
	272
GLEITSCHIENENBLOCK-EINBAUSATZ	750
	751
GRUNDAUSFÜHRUNG	2

H

HALOGENSCHINWERFER (24V)(65W) (ARBEITSSCHEINWERFER)	143
	144
HALTERUNG, EINSTELLBARER SCHALTER	425
HARDWARE, HINTERRAHMEN	385
	386
	387
HAUBENBLENDE	402
	403
	404
	405
	406
HAUPTLAGER	15
HAUPTSTEUERVENTIL	572
	574
	576
	577
HEBEL-EINBAUSATZ (STARTERMOTOR)	195
HEIZUNGSLEITUNGEN	691
	693
HELLIGKEITSREGLER	198
HINTERRAHMEN	367
HUBARM	595
	596
HUBSTELLUNGSSENSOR U. BEFESTIGUNGS-TEILE	167
HUBVENTIL	37
HUBVORRICHTUNG	603
	604
HUBZYLINDER	488
	489
HUBZYLINDER UND DICHTUNG	482
	483
HUBZYLINDERLEITUNGEN	518
HYDRAULIKANORDNUNG (2-VENTIL-HYDRAULIK)	501
HYDRAULIKANORDNUNG (3-VENTIL-HYDRAULIK)	501
HYDRAULIKLEITUNGEN	510
HYDRAULIKÖLKÜHLERBLOCK	76
HYDRAULIKÖLKÜHLERLEITUNGEN	514
HYDRAULIKPUMPE UND BEFESTIGUNGSTEI-LE	533
HYDRAULIKSTEUERAUFHÄNGUNG	753
HYDRAULIKTANK	541
HYDRAULIKTANK UND ANBAUSATZ	530
HYDRAULIKZYLINDER	439
HYDRAULISCHE SCHWINGUNGSDÄMP-FUNG	470

I

IDENTIFIZIERUNGS-AUFKLEBER (ABFALLBESEITIGUNG)	3
IDENTIFIZIERUNGS-AUFKLEBER (HMU)	721
IDENTIFIZIERUNGS-AUFKLEBER (STARTSCHLÜSSELSCHALTER)	138
IDENTIFIZIERUNGS-AUFKLEBER (STROM-SCHUTZ - BETÄTIGUNGSSCHALTER)	263

* ÜBERSETZUNG ZUM ZEITPUNKT DER DRUCKLEGUNG NICHT VORHANDEN

STICHWORTVERZEICHNIS

Bezeichnung	Seite
IDENTIFIZIERUNGS-AUFKLEBER (WARNHORN)	471, 473
IDENTIFIZIERUNGS-AUFKLEBER (ZUSATZHYDRAULIK)	473
IDENTIFIZIERUNGS-AUFKLEBER (12 V)	723
INFORMATIONSSCHILD (MANUELL KRAFTSTOFF)	108
INSTRUKTIONS-AUFKLEBER (BETRIEBS- U. WARTUNGSHANDBUCH LESEN)	138
INSTRUKTIONS-AUFKLEBER (FÜR SITZVERSTELLUNG)	763
INSTRUKTIONS-AUFKLEBER (MOTOR-START)	723
INSTRUKTIONS-AUFKLEBER (NICHT BETRETEN)	783
INSTRUKTIONS-AUFKLEBER (NOTAUS-GANG)	679
INSTRUKTIONS-AUFKLEBER (WARTUNG)	475, 477
INSTRUKTIONS-AUFKLEBER (WARTUNG)	471, 473
INSTRUKTONSSCHILD (BATTERIE)	121
INSTRUMENTENBRETT-AUFKLEBER (LINKS)	723
INSTRUMENTENBRETT-AUFKLEBER (MITTE)	723
INSTRUMENTENBRETT-AUFKLEBER (RECHTS)	723
INSTRUMENTENTAFEL	719, 721, 723
ISOLATOR-EINBAUSATZ (STARTERMO-TOR)	195

J

Bezeichnung	Seite
JOYSTICK -STEUERUNG	480
JOYSTICK -STEUERUNG (*3-FUNCTION, WITH DOWNSHIFT)	477

K

Bezeichnung	Seite
KABELBINDER	124
KABELSTRANG - ARBEITSGERÄT (SCHNELLWECHSELEINRICHTUNG)	234
KABELSTRANG - HEIZUNG U. KLIMAANLAGE	639, 672
KABELSTRANG - LENKUNG (HILFSELE-MENT)	259
KABELSTRANG - VORDERES FAHRWERK	242
KÄLTEMITTELKOMPRESSOR	648, 649
KÄLTEMITTELKONDENSATOR U. BEFESTIGUNGSTEILE	650
KÄLTEMITTELTROCKNER (KLIMAANLAGE)	687
KIPPSCHALTER	206, 208, 213
KIPPSCHALTER (ABSTELLUNG AUF STANDEBENE)	228
KIPPSCHALTER (AUTO LOADING AUSSCHALTEINSTELLUNG)	129
KIPPSCHALTER (AUTO LOADING MODUSSCHALTER)	129
KIPPSCHALTER (AUTOM. UMKEHRLÜF-TER)	204
KIPPSCHALTER (BEHEIZTE SPIEGEL)	702, 704
KIPPSCHALTER (BETRIEBSART WÄHLEN)	222, 250
KIPPSCHALTER (FEINMODULATION)	222, 250
KIPPSCHALTER (GEBLÄSEGESCHWINDIG-KEIT)	222
KIPPSCHALTER (GEFAHR)	211
KIPPSCHALTER (GETRIEBENEUTRALISIER-ÜBERSTEUERUNG)	222, 250
KIPPSCHALTER (HAUBENNEIGESTELL-GLIED)	228
KIPPSCHALTER (HUB, NEIGUNG AUSSCHALTUNG)	206, 208, 222, 250
KIPPSCHALTER (HYDRAULIKSPERRE)	223, 250
KIPPSCHALTER (KLIMAANLAGE, HEIZUNG)	222
KIPPSCHALTER (NOTLENKUNG)	210
KIPPSCHALTER (RUNDUM-KENNLEUCH-TE)	163
KIPPSCHALTER (SCHAUFEL, GABELWAHL)	206, 208
KIPPSCHALTER (SCHNELLWECHSELEINRICH-TUNG)	206, 624
KIPPSCHALTER (SCHNELLWECHSELEINRICH-TUNG)	208
KIPPSCHALTER (SCHWINGUNGSDÄMP-FUNG)	205
KIPPSCHALTER (STELLGLIED - ELEKTRISCH BETRIEBENE SCHUTZVORRICHTUNG)	263
KIPPSCHALTER (VORN, HINTERE ARBEITSSCHEINWERFER)	155

* ÜBERSETZUNG ZUM ZEITPUNKT DER DRUCKLEGUNG NICHT VORHANDEN

STICHWORTVERZEICHNIS

Bezeichnung	Seite
KIPPSCHALTER (VORWÄRTS, NEUTRAL, RÜCKWÄRTS)	214
KIPPSCHALTER (*3RD FUNCTION SELECT)	473
	477
KIPPSTELLUNGS-SENSOR U. BEFESTIGUNGSTEILE	170
KIPPZYLINDER	490
	492
	494
KIPPZYLINDER UND DICHTUNG	484
	485
	486
KLIMAANLAGE	637
	638
	639
KLIMAANLAGENDRUCKSPEICHER	687
KLIMAANLAGENLEITUNGEN	685
	687
KLIMAANLAGENVERDRAHTUNG	216
KNICKGELENK-ANHÄNGUNG	388
KNICKGELENKSCHUTZ	371
KNICKGELENKSPERRE	401
KOLBENGESTÄNGE-EINBAUSATZ	451
KOLBENMOTOR	528
KOLBENPUMPE	451
	534
	537
KOLBENPUMPENUMLAUFSATZ	453
	540
KONDENSATORBLOCK (KÜHLMITTEL)	64
	650
KRAFTSTOFFABLASSLEITUNGEN	100
KRAFTSTOFFDRUCKREGLER	111
KRAFTSTOFFEINSPRITZDÜSE	97
KRAFTSTOFFEINSPRITZPUMPE	104
KRAFTSTOFFENTLÜFTUNGSPUMPE UND -HAUPTFILTER	105
	108
KRAFTSTOFFILTER (AUSFALLSCHUTZ)	94
KRAFTSTOFFILTER (EINFÜLLSTURZENSIEB)	112
KRAFTSTOFFILTER UND LEITUNGEN	93
KRAFTSTOFFLEITUNGEN	98
KRAFTSTOFFÖRDERPUMPE	110
KRAFTSTOFFSTANDGEBER	112
KRAFTSTOFFTANK	112
KRAFTSTOFFTANKKAPPE	112
KRAFTÜBERTRAGUNG	315
KRAFTÜBERTRAGUNGSELEKTRONIK	134
KRAFTÜBERTRAGUNGSÖLKÜHLERBLOCK	275
KREUZGELENK	337
	338
KREUZGELENK UND LAGER	324
	325
	337
	338
KÜHLER UND LÜFTER	75
KÜHLERBLOCK	76
KÜHLERGRILL	369
KÜHLERKAPPE (7 PSI)	79
KÜHLERWASSERKASTEN, OBEN	79
KÜHLSYSTEM - HOHE UMGEBUNGSTEMPERATUREN	64
KÜHLWASSERLEITUNGEN	66
	69
	71
KÜHLWASSERPUMPE	73
	74
KURBELWELLE	15
KURBELWELLENDICHTUNG	46

L

LADELUFTKÜHLERLEITUNGEN	85
LADERRAHMEN	364
LAGERSATZ (DREHSTROMGENERATOR)	117
LEITBLECH	346
LEITRAD - RIEMEN	36
LEITUNGEN, VORNE	507
LENKBETÄTIGUNG	437
LENKNEUTRALISIERVENTIL	443
	462
LENKÖLLEITUNGEN	443
LENKVENTIL	459
LENKZYLINDER UND AUFHÄNGUNG	438
LEUCHTE (12 V, 24 V, 35 W)	141
	142
LEUCHTE (24 V)	140
	145
	220
	248
	709
LEUCHTE (24 V) (SIGNAL)	147
LEUCHTE (24 V, 5 W)	151
LEUCHTE (24 V, 70 W)	152
LEUCHTE (24 V, 75/70 W)	145
LEUCHTE (24 V, 75/70 W) (FRONTSCHEINWERFER)	147
LEUCHTE (24V, 21W)	149
LEUCHTE (24V, 21W)	151
LEUCHTE (24V, 21W) (SIGNAL)	147
LEUCHTE (24V, 21W) (SIGNAL)	145
LUFTEINLASS-TRÄGER	413
LUFTEINLASSBOGEN	84
LUFTEINLASSDECKEL	82
	83

* ÜBERSETZUNG ZUM ZEITPUNKT DER DRUCKLEGUNG NICHT VORHANDEN

STICHWORTVERZEICHNIS

Bezeichnung	Seite
LÜFTERSTEUERUNG	470
LUFTFILTER (HAUPTELEMENT)	81
LUFTFILTER (HILFSELEMENT)	81
LUFTKANAL	659
LUFTKANAL U. FILTER	657
LUFTREINIGER	80
	81

M

MAGNETFILTER (ACHSÖLKÜHLER)	300
MAGNETSCHALTER	200
	201
	202
MAGNETSCHALTER (24 V) (ANSAUGLUFT-VORWÄRMANLAGE)	201
MAGNETSCHALTER (24 V) (HAUPTRELAIS)	229
MAGNETSIEB	292
MAGNETSTOPFEN	296
	298
MAGNETVENTIL	592
	593
	594
MAGNETVENTIL (24 V) (*BRAKE, HYDRAULIC FAN)	522
*MANIFOLD GP-VALVE	524
	526
MASCHINE	2
MASCHINENSTEUERUNG	126
MATERIALUMSCHLAGSCHAUFEL	610
	612
	613
	619
	620
MODUL - VIER ELEKTRON. ANZEIGEN	706
MODULATORVENTIL	339
MONITOR - KABELBAUM (NUTZLASTSTEUERUNG)	709
MONITORSTEUERUNG	652
	653
MOTOR- UND GETRIEBEAUFLAGER	40
MOTOR-EINBAUSATZ	6
MOTOR, KOMPLETT	4
MOTORANTRIEB	527
MOTORBLOCK	17
	18
	20
MOTORBLOCKDECKEL	9
MOTORDREHVORRICHTUNG	539
MOTORHAUBE UND VERKLEIDUNG	390
	393
MOTORHAUBEN-KIPPSTELLUNG	420
MOTORHAUBENKIPPBETÄTIGUNG	342
MOTORHUBÖSE	38
MOTORKABELSTRANG	238
MOTORKABELSTRANG (ELEKTRON. STEUERMODUL)	236
MOTORKABELSTRANG (KRAFTSTOFFEIN-SPRITZUNG)	236
MOTORKÜHLERBLOCK	5
MOTORÖLABLASS	26
MOTORÖLABLASSLEITUNGEN	59
MOTORÖLEINFÜLLSTUTZEN	53
MOTORÖLKÜHLER	63
MOTORÖLKÜHLERBLOCK	63
MOTORÖLLEITUNGEN	58
MOTORRAUM-SCHUTZVERKLEIDUNG	409
MOTORSENSOR	172
MOTORSTOPFEN	44
MOTORVERDRAHTUNG	236
	238

N

NEIGEZYLINDERLEITUNGEN	520
NOCKENWELLE	7
NORMALZAHNSPITZE	629
	630
NOSPIN-DIFFERENTIAL	279
	280
NOTLENKUNG	454
NOTLENKUNGSLEITUNGEN	440
NOTLENKUNGSPUMPE UND -MOTOR	449
NOTLENKUNGSPUMPE UND BEFESTIGUNGS-TEILE	450
NOTLENKUNGSSCHALTER	210
NOTLENKUNGSVENTIL	458
NOTLENKUNGSVERDRAHTUNG	259

O

OFFENES FAHRERHAUS MIT ÜBERROLL-SCHUTZ	647
ÖLFILTER	54
	287
	496
	497
ÖLFILTER (*HYDRAULIC CASE DRAIN)	497
ÖLFILTERELEMENT (HYDRAULISCH)	496
ÖLMESSSTAB	56
	282
	284
ÖLWANNE	41

* ÜBERSETZUNG ZUM ZEITPUNKT DER DRUCKLEGUNG NICHT VORHANDEN

STICHWORTVERZEICHNIS

Bezeichnung	Seite
P	
PEDALBOLZEN	726
PENDELACHSBEGRENZUNGSBLOCK	347
PENDELACHSE	265, 266
PENDELVENTIL	549, 588, 589, 590, 591
PENDELVENTIL (*BRAKE, HYDRAULIC FAN)	522
PLANETENGETRIEBE	311
PLEUELSTANGE UND KOLBEN	42
PUMPE FÜR KRAFTSTOFFENTLÜFTUNG U. WASSERABSCHEIDER	114
PUMPE U. BEFESTIGUNG - BREMSE U. HYDRAULIKLÜFTER	531
PUMPE UND BEFESTIGUNGSTEILE	102
PUMPENDÜSE, HYDRAULISCH	110
PUMPENREPARATURSATZ (NOTLENKUNG)	449
PUMPENSTEUERVENTIL	455, 581, 583
R	
RADIO	728, 729
RADIO - KABELSTRANG (LAUTSPRECHER)	728
RADIO - KOMMUNIKATION (PRODUCT LINK 212SR)	124
RADIOEINBAUSATZ	676, 678
RAHMEN - BEFESTIGUNGSTEILE	381, 382
REGLER (KRAFTSTOFFDRUCK)	111
REIFEN UND FELGE	326, 327, 328, 329, 330, 331
REIFENVENTIL	321
RELAIS (24 V) (ACHSÖLKÜHLER)	235
RELAIS (24 V) (BEHEIZTE SPIEGEL)	704
RELAIS (24 V) (BEHEIZTE SPIEGEL)	702
RELAIS (24 V) (HAUBENNEIGEMOTOR)	228
RELAIS (24 V) (HINTERER ARBEITSSCHEINWERFER)	220, 248
RELAIS (24 V) (HUPE)	220, 248
RELAIS (24 V) (NOTLENKUNG)	259
RELAIS (24 V) (VORDERE FAHRERHAUS-ARBEITSSCHEINWERFER)	220, 248
RICHTUNGSBLINKERSCHALTER	211
RICHTUNGSSIGNALSCHALTER	211
RIEMENSPANNER	45
ROLLENSATZ	726
RÜCKLEHNENVERLÄNGERUNG (PVC)	747
RÜCKLEHNENVERLÄNGERUNG (STOFF)	744
RÜCKSCHLAG- U. DRUCKBEGRENZUNGSVENTIL	557
RÜCKSCHLAGVENTIL (GEGEN VAKUUM)	112
RÜCKSPIEGEL	694, 695, 696, 697, 698, 699, 700, 702, 704
RUNDUM-KENNLEUCHTE	152, 163
S	
SCHALE - RÜCKENLEHNE	716, 717, 718
SCHALLDÄMPFER	88
SCHALLDÄMPFUNG	416, 417
SCHALTER - UMKEHRLÜFTER	204
SCHALTER FÜR HYDRAULISCHE SCHWINGUNGSDÄMPFUNG	205
SCHALTKNOPFEINBAUSATZ (RADIO)	728
SCHALTVENTIL (LENKUNG)	459
SCHAUFELSTEUERUNG	597, 599, 601, 603
SCHAUGLAS	66
SCHAUGLAS - FLÜSSIGKEITSSTAND (SCHAUGLAS)	541
SCHEIBENSATZ	278
SCHEIBENSCHUTZ	666, 668
SCHEIBENWASCHANLAGE	766
SCHEIBENWISCHER	769
SCHEIBENWISCHERARM	643, 644
SCHEIBENWISCHERBLATT	769

* ÜBERSETZUNG ZUM ZEITPUNKT DER DRUCKLEGUNG NICHT VORHANDEN

STICHWORTVERZEICHNIS

Bezeichnung	Seite
SCHEIBENWISCHERMOTOR	711, 712
SCHEIBENWISCHERSCHALTER (24 V) (VORN, INTERVALLSCHALTUNG)	220
SCHEINWERFER U. RICHTUNGSLEUCHTE	145, 147
SCHILD UND AUFKLEBER	783, 784
SCHLÜSSELGRIFF	657
SCHMIERLEITUNGEN	399
SCHMIERPUMPE	61, 62
SCHNEIDMESSER	626
SCHNEIDMESSERSEGMENT	626
SCHNELLWECHSELANSCHLUSSSTEUERUNG	624
SCHNELLWECHSELANSCHLUSSZYLINDER	487
SCHNELLWECHSELEINRICHTUNG	625
SCHNELLWECHSELEINRICHTUNG - VERDRAHTUNG	234
SCHNELLWECHSELEINRICHTUNGSRAHMEN	627
SCHNITTSTELLENMODUL (TASTE)	138
SCHRÄGKOLBEN-EINBAUSATZ	451
SCHRAUBE	281, 292
SCHRAUBENSATZ (ELEKTRISCHE VERBINDER)	228, 242
SCHUTZ - HUBZYLINDER	498, 499, 500
SCHUTZBLECHE	354, 357
SCHUTZBLECHE (STRASSENAUSRÜSTUNG)	353, 360
SCHUTZBLECHE, VORNE	358, 359
SCHUTZVERKLEIDUNG	665
SCHWINGSITZ	748, 749, 750, 751
SCHWINGUNGSDÄMPFUNG U. LEITUNGEN	469
SCHWUNGRAD	32
SCHWUNGRADGEHÄUSE	34
SCHWUNGRADGEHÄUSEDICHTUNG	47
SCREEN	524, 526
SCREEN (STEUERVENTIL-KRÜMMER)	522
SEITENVERKLEIDUNG	407
SENSOR, KABELSTRANG (*AXLE, FRONT)	218
SENSOR, KABELSTRANG (HINTERACHSE)	218
SENSORVERDRAHTUNG	262
SERIENNUMMERNSCHILD (GETRIEBE)	293
SERPENTINENFÖRMIGER RIEMEN	119, 316, 649
SICHERHEITSEINBAUSATZ	137, 138
SICHERHEITSGURT	741, 748, 749
SICHERUNG (10 A)	220, 248
SICHERUNG (15 A)	220, 248, 639, 672
SICHERUNG (20 A)	220, 248
SIEB (HYDRAULIKTANK)	541
SOFTWARE - KOMMUNIKATION (PRODUCT LINK 212SR)	124
SOLENOID-EINBAUSATZ (STARTERMOTOR)	195
SONNENBLENDE	765
SPANNUNGSREGLER (24 V)	117
SPERRVENTIL	555, 556
SPERRVENTIL (ACHSÖLKÜHLERNEBENSTROM-VENTIL)	309
STARRACHSE	265
STARTERMOTOR	194, 195
STARTHILFE	191
STARTHILFEANSCHLUSS	166
STARTSCHALTER (TASTE)	220, 248
STEIGLEITER	397, 411
STELLUNGSSENSOR	174, 175
STEUERHEBEL	479
STEUERKRÜMMER	522
STEUERUNG - NICHT PROGRAMMIERT	131
STEUERUNG - NICHT PROGRAMMIERT (MOTOR)	127
STEUERUNG, ELEKTRON. ANZEIGE (ANZEIGENTAFEL, RECHTS, LINKS)	222, 250
STEUERUNG, ELEKTRON. ANZEIGE (ANZEIGETAFEL, MITTE)	129
STEUERUNG, NICHT PROGRAMMIERTER MONITOR	654

* ÜBERSETZUNG ZUM ZEITPUNKT DER DRUCKLEGUNG NICHT VORHANDEN

STICHWORTVERZEICHNIS

Bezeichnung	Seite
STEUERUNG, NICHT PROGRAMMIERTER MONITOR (CATERPILLAR ÜBERWACHUNGSSYSTEM)	221, 248
STEUERUNGS-KABELSTRANG	124
STEUERUNGS-KABELSTRANG (*HEATED MIRRORS)	702, 704
STEUERUNGS-KABELSTRANG (STROMSCHUTZ - BETÄTIGER)	263
STEUERUNGSEINHEIT, ELEKTRON. FÜR MOTOR UND BEFEST.	126, 127
STEUERVENTIL	558, 560, 562, 565
STIRNRAD	33
STIRNRADGEHÄUSE	35
STIRNRADGEHÄUSE-HALTETEILE	28, 29
STIRNRADGEHÄUSEDECKEL	10, 11
STOSSDÄMPFER-REPARATURSATZ (SCHWINGSITZ)	763
STOSSSTANGENVERKLEIDUNG	350
STROMBETÄTIGUNG	344
STROMSCHUTZSCHALTER	345

T

TASTENFELDMODUL FÜR WÄGEEINRICHTUNG	709
TELLER- UND KEGELRAD	288, 290
TEMPERATURSCHALTER (KLIMAANLAGE)	639
TEMPERATURSENSOR	186, 187, 188, 189
TEMPERATURSENSOR (2POLIG)	188
TEMPERATURSENSOR (2POLIG) (HINTERACHSÖL)	218
TEMPERATURSENSOR (2POLIG) (HYDRAULIKÖL)	228
TEMPERATURSENSOR (2POLIG) (VORDERACHSÖL)	218
TRAGARM	606
TRENNSCHALTER	199
TURBOLADER	92
TURBOLADERÖLLEITUNGEN	60
TÜRFENSTER	767
ÜBERDRUCKVENTIL	340, 456, 457, 585
ÜBERDRUCKVENTIL (BREMSE)	522
ÜBERDRUCKVENTIL-EINBAUSATZ (NOTLENKUNG)	449
ÜBERDRUCKVENTIL (HYDRAULIKTANK)	522
ÜBERDRUCKVENTIL (KÄLTEMITTELKOMPRESSOR)	648
ÜBERROLL-SCHUTZDACH	738
ÜBERROLL-SCHUTZKABINE	731
ÜBERTRAGUNGSEINBAUSATZ	137
ÜBERTRAGUNGSSTEUERUNG U. BEFESTIGUNG	124
UMGEHUNGSSCHALTER	197
UMGEHUNGSVENTIL (MOTORLUFTFILTER)	54
UMLAUFKÜHLWASSERHEIZUNG	135, 136
UMLAUFKÜHLWASSERHEIZUNGS-ELEMENT (120 V, 1000 W)	136
UMLAUFKÜHLWASSERHEIZUNGS-ELEMENT (240 V, 1000 W)	135
UMLEITVENTIL	567, 568
UMLEITVENTIL (HYDRAULIKTANK)	522
UNIVERSALSCHAUFEL	607, 608, 609, 616, 617, 618
UNTERBRECHER (105 A) (DREHSTROMGENERATOR)	229
UNTERBRECHER (15 A) (FAHRSCHEINWERFER)	229
UNTERBRECHER (15 A) (STELLGLIED - ELEKTRISCH BETRIEBENE SCHUTZVORRICHTUNG)	263
UNTERBRECHER (20 A) (HAUBENNEIGESTELLGLIED)	229
UNTERBRECHER (20 A) (UNGESCHALTETER BATTREIESTROM ZUM FAHRERHAUS)	229
UNTERBRECHER (50 A) (STARTEN)	229
UNTERBRECHER (80 A) (HAUPTUNTERBRECHER)	229
UNTERBRECHER (90 A) (STARTHILFE)	229

U

V

VENTIL - HYDRAULISCHE SCHWINGUNGSDÄMPFUNG	586

* ÜBERSETZUNG ZUM ZEITPUNKT DER DRUCKLEGUNG NICHT VORHANDEN

STICHWORTVERZEICHNIS

Bezeichnung	Seite
VENTIL, MECH.	579
VENTIL UND BEFESTIGUNGSTEILE - HAUPTSTEUERUNG	543 546 549 552
VENTILDECKEL	12 13 14
VENTILDECKELBEFESTIGUNG	30
VENTILKABELSTRANG (SITZ LUFTKOMPRESSOR)	763
VENTILKIPPHEBEL (AUSLASS)	49
VENTILKIPPHEBEL (EINLASS)	49
VENTILMECHANISMUS-HALTETEILE	31
VENTILSTEUERUNG	48 49
VERBINDUNGSSTECKER	165
VERDRAHTUNG - ELEKTR. KUPPLUNG	235
VERDRAHTUNG - OFFENES FAHRERHAUS MIT ÜBERROLLSCHUTZ	248
VERDRAHTUNG, VORNE	242
VERDRAHTUNGSKABELBAUM (KRAFTSTOFFDRUCK)	93
VERDRAHTUNGSKABELBAUM (WARTUNGSWERKZEUG)	221 249
VERKLEIDUNGEN, VORN	376
VERSTELLBARER SITZ	730
VERTEILERGETRIEBEANTRIEB	292
VORHÄNGESCHLOSS	665
VORREINIGER	90 91
VORSTEUERÖLDRUCKSAMMLER	463 464

W

Bezeichnung	Seite
WÄGEEINRICHTUNG	709
WÄGEEINRICHTUNG - MONITOR	708
WARNAUFKLEBER (HANDBUCH LESEN)	606
WARNAUFKLEBER (NICHT SCHWEISSEN, NICHT BOHREN, HANDBUCH LESEN)	784
WARNAUFKLEBER (PRODUCT LINK RADIO, NICHT NACD)	137
WARNHORN, ELEKTR.	674
WARNVORRICHTUNG	115 116
WARTUNGSSATZ	288
WASSERABSCHEIDER- U. KRAFTSTOFFILTER	96
WASSERABSCHEIDER U. KRAFTSTOFFENTLÜFTUNGSPUMPE	114
WASSERABSCHEIDER UND KRAFTSTOFFILTER (HAUPTELEMENT)	96
WASSERKNIESTÜCK	65
WASSERTEMPERATURREGLER (94 GRAD CELSIUS) (KÜHLMITTEL)	69
WELLENSCHEIBEN-EINBAUSATZ (EINSCHL. 17 BEILAGSCHEIBEN)	451
WERKZEUGKASTEN	772 773

Z

Bezeichnung	Seite
ZAHN, HD AUSFÜHRUNG	628
ZAHNHALTER	605
ZAHNRADPUMPE (ACHSÖLKÜHLER)	316
ZAHNSPITZE, KURZ	634 635
ZAHNSPITZE, LANG	631
ZAHNSPITZE, SCHARF	632 633
ZIGARETTENANZÜNDER (12 V)	221 249
ZUGANGSKLAPPE	351 352
ZUMESSPUMPE (*HMU STEERING)	443
ZYLINDERBLOCKSCHRAUBE	43
ZYLINDERKOPF	21 22 23 24
ZYLINDERKOPF-HALTETEILE	24

* ÜBERSETZUNG ZUM ZEITPUNKT DER DRUCKLEGUNG NICHT VORHANDEN

MACHINE ARRANGEMENT

237-4933 CHASSIS AR

S/N: M3G1-UP

PART OF 237-4935 GENERAL AR

SMCS-7000 **i02304845**

NOTE	PART NUMBER	QTY	PART NAME 1 2 3 4 5 6 (PRODUCT LEVEL)	SEE PAGE
Y	*237-0423*	1	BOX GP-BATTERY	348
Y	*190-6728*	1	CONTROL GP-BUCKET	597
Y	*237-0421*	1	CONTROL GP-SERVICE BRAKE	431
Y	*241-2921*	1	COOLER & MTG GP-TRANSMISSION	275
Y	*237-4948*	1	COUNTERWEIGHT GP	349
Y	*112-6956*	1	CYLINDER & MTG GP-STEERING	438
Y	*237-0424*	1	FENDER GP	354
Y	**237-0426**	1	FRAME AS-LOADER	364
Y	**237-0425**	1	FRAME AS-REAR	367
Y	*237-0428*	1	GUARD GP-FRONT	376
Y	*112-6953*	1	HITCH GP-ARTICULATING	388
Y	*251-1700*	1	HOOD & GUARD GP	390
Y	*237-0430*	1	LADDER GP	397
Y	*237-0431*	1	LINES GP-AFTERCOOLER AIR	85
Y	*237-0434*	1	LINES GP-CAB HEATER	691
Y	*237-0432*	1	LINES GP-FUEL	98
Y	*237-0433*	1	LINES GP-GREASE	399
Y	*237-0435*	1	LINES GP-HYDRAULIC OIL COOLER	514
Y	*237-0436*	1	LINES GP-STEERING (HMU STEERING)	443
Y	*237-0438*	1	LINES GP-TORQUE CONV COOLER	304
Y	*237-0439*	1	LINES GP-WATER (RADIATOR)	66
Y	*112-6973*	1	LINK GP-STEERING FRAME LOCK	401
Y	*245-4083*	1	PANEL GP-SIDE	407
Y	*237-0441*	1	PLATE & FILM GP	783
Y	*237-0443*	1	RADIATOR & FAN GP	75
Y	*237-0445*	1	SHIELD GP-ENGINE COMPARTMENT	409
Y	*237-0447*	1	SUPPORT GP-AIR INLET	413
Y	*200-0008*	1	SUPPORT GP-VALVE & FILTER (SERVICE CENTER)	414
Y	*240-5150*	1	TANK GP-FUEL	112
Y	*236-9039*	1	WASHER GP-WINDOW	766
	6V-1970	1	LITERATURE GP	
	5P-7958	1	SLEEVE-CABLE SPLICE	
	5P-8500	1	KEY	

Y-SEPARATE ILLUSTRATION

<END>

MACHINE ARRANGEMENT

237-4935 GENERAL AR

S/N: M3G1-UP

SMCS-7000 **i02304810**

NOTE	PART NUMBER	QTY	PART NAME 1 2 3 4 5 6 (PRODUCT LEVEL)	SEE PAGE
Y	*237-4933*	1	CHASSIS AR	1
Y	*237-4931*	1	ELECTRICAL AR	132
Y	**235-1424**	1	ENGINE AR-COMPLETE	4
Y	*237-0238*	1	HYDRAULIC AR-2 VALVE	501
Y	*237-3995*	1	INSTALLATION AR-ENGINE	6
Y	*243-1076*	1	OPERATOR AR-ENCLOSED ROPS (HMU STEERING)	715
Y	*237-0271*	1	POWER TRAIN AR	315

Y-SEPARATE ILLUSTRATION

<END>

276-5456 MACHINE AR–VALUE PACKAGE

S/N: M3G1-UP

AN ATTACHMENT

SMCS-7000 **i02444706**

NOTE	PART NUMBER	QTY	PART NAME 1 2 3 4 5 6 (PRODUCT LEVEL)	SEE PAGE
Y	*248-7613*	1	FENDER GP	357
Y	*244-3599*	1	LIGHTING AR-SIGNAL (HMU STEERING)	153
Y	*235-8560*	1	LIGHTING GP-FLOOD (4-LAMP, HID, CAB FRONT, REAR)	155
Y	*197-6474*	1	MIRROR GP-REAR VIEW	694
Y	*227-9981*	1	RADIO GP (AM/FM CASSETTE)	729
Y	*131-2633*	1	VISOR GP-CAB	765

Y-SEPARATE ILLUSTRATION

<END>

MACHINE ARRANGEMENT

244-6607 WASTE HANDLING AR

S/N: M3G1-UP

AN ATTACHMENT

SMCS-7000 **i02449376**

NOTE	PART NUMBER	QTY	PART NAME 1 2 3 4 5 6 (PRODUCT LEVEL)	SEE PAGE
Y	*247-8561*	1	ACTUATOR GP-POWER GUARD	345
Y	*247-8559*	1	BAFFLE GP	346
Y	*276-4215*	1	BOX GP-TOOL	773
Y	*247-8560*	1	FENDER GP-FRONT	359
Y	*251-9754*	1	FILLER GP-POWER TRAIN OIL	284
Y	*247-8557*	1	GUARD GP-ARTICULATION	371
Y	*227-4094*	1	GUARD GP-AXLE SEAL	374
Y	*214-4141*	1	GUARD GP-DRIVE SHAFT	375
Y	*262-1379*	1	GUARD GP-LIGHTING	377
Y	*247-8558*	1	GUARD GP-POWER TRAIN (TRANSMISSION, HINGED)	380
Y	**251-9758**	1	HARDWARE GP-LOADER FRAME (WASTE HANDLER)	381
Y	**251-9759**	1	HARDWARE GP-REAR FRAME (WASTE HANDLER)	385
Y	*251-9760*	1	STEP GP	411
	199-2090	1	COVER AS	
	262-9762	2	FILM-IDENTIFICATION (WASTE HANDLER)	
	070-0384	1	SHROUD-LH	
	070-0385	1	SHROUD-RH	

Y-SEPARATE ILLUSTRATION

<END>

ENGINE ARRANGEMENT

235-1424 ENGINE AR-COMPLETE

S/N: KHX1-UP

PART OF 237-4935 GENERAL AR

SMCS-1000 **i02453559**

NOTE	PART NUMBER	QTY	PART NAME 1 2 3 4 5 6 (PRODUCT LEVEL)	SEE PAGE
Y	*222-5946*	1	BREATHER GP	52
Y	*4W-3462*	1	CARRIER GP-SEAL	8
Y	**246-9345**	1	CONTROL & MTG GP-ENGINE ELEK	127
			S/N: KHX1-410	
Y	**241-7602**	1	CONTROL & MTG GP-ENGINE ELEK	126
			S/N: KHX411-UP	
Y	*189-8780*	1	COVER GP-AIR INLET (STARTING AID HEATER)	83
Y	*238-0371*	1	COVER GP-CYLINDER BLOCK	9
Y	*118-1727*	1	COVER GP-FRONT HOUSING	10
Y	*222-5952*	1	COVER GP-VALVE MECHANISM	12
			S/N: KHX1-410	
Y	*261-3721*	1	COVER GP-VALVE MECHANISM	14
			S/N: KHX411-UP	
Y	*165-4557*	1	DAMPER & PULLEY GP	25
Y	*118-2073*	1	DRAIN GP-ENGINE OIL	26
Y	*246-2931*	1	ELBOW GP-AIR INLET	84
Y	*237-9821*	1	ELBOW GP-WATER	65
Y	*235-1425*	1	ENGINE AR-CORE	5
Y	*218-0859*	1	FASTENER GP-DAMPER & PULLEY	27
Y	*238-0373*	1	FASTENER GP-FRONT HOUSING	29
Y	*116-4556*	1	FASTENER GP-FRONT HOUSING	28
Y	*212-4287*	1	FASTENER GP-VALVE COVER	30
			S/N: KHX1-410	
Y	*258-8723*	1	FASTENER GP-VALVE MECHANISM	31
			S/N: KHX411-UP	
Y	*237-9836*	1	FILLER GP-ENGINE OIL	53
Y	*237-9823*	1	FILTER & LINES GP-FUEL (SECONDARY)	93
Y	*189-5433*	1	FILTER GP-ENGINE OIL	54
Y	*7E-0519*	1	FLYWHEEL GP	32
Y	*248-0369*	1	GAUGE GP-OIL LEVEL (DIPSTICK) (ENGINE)	56
Y	*197-5210*	1	HOUSING GP-FLYWHEEL	34
Y	*237-9822*	1	LIFTING GP-ENGINE	38
Y	*7C-2475*	1	LINES GP-ENGINE OIL	58
Y	*187-6279*	1	LINES GP-TURBOCHARGER OIL	60
Y	*238-4802*	1	LINES GP-WATER (ENGINE)	69
Y	*183-6845*	1	MANIFOLD GP-EXHAUST (DRY)	87
Y	*215-6982*	1	MOUNTING GP-ALTERNATOR	39
Y	*201-6850*	1	PAN GP-OIL	41
Y	*235-8200*	1	PLUG GP-CONNECTOR (ENGINE HARNESS, PROT COVER)	165
			S/N: KHX1-410	
Y	*159-0303*	1	PLUG GP-CYLINDER BLOCK	43
Y	*162-8068*	1	PLUG GP-ENGINE	44
Y	*172-5754*	1	PULLEY GP-IDLER (BELT TENSIONER)	45
Y	*238-4803*	1	PUMP GP-FUEL PRM & PRIM FILTER	105
Y	*209-4600*	1	PUMP GP-WATER	73
Y	*115-4210*	1	SEAL GP-CRANKSHAFT	46
Y	*7C-1770*	1	SEAL GP-FLYWHEEL HOUSING	47
Y	*238-4808*	1	SENSOR GP-ENGINE (TEMPERATURE, PRESSURE, SPEED)	172
Y	*198-2714*	1	WIRING GP-ENGINE	236
Y	*249-9223*	1	STARTING AID GP (MAGNETIC SWITCH)	191
			PLEASE USE THE GASKET KIT LINK IN SIS OR CONTACT YOUR LOCAL DEALER FOR THE LATEST GASKET KIT INFORMATION	

Y-SEPARATE ILLUSTRATION

ENGINE ARRANGEMENT

235-1425 ENGINE AR-CORE

S/N: KHX1-UP

PART OF 235-1424 ENGINE AR-COMPLETE

SMCS-1000 **i02215825**

NOTE	PART NUMBER	QTY	PART NAME 1 2 3 4 5 6 (PRODUCT LEVEL)	SEE PAGE
Y	*212-4289*	1	CAMSHAFT GP	7
Y	*117-3643*	1	COOLER GP-ENGINE OIL	63
Y	*211-9120*	1	COVER GP-FRONT HOUSING	11
Y	*210-5590*	1	CRANKSHAFT GP	15
Y	*221-4482*	1	CYLINDER BLOCK GP	20
Y	*219-5849*	1	CYLINDER HEAD GP	24
Y	*205-1321*	1	GEAR GP-FRONT	33
Y	*165-4446*	1	HOUSING GP-FRONT	35
Y	*191-0461*	1	LINES GP-INJECTOR HYD PUMP	101
Y	*212-3652*	6	PISTON & ROD GP	42
Y	*222-5900*	1	PUMP & MTG GP-UNIT INJ HYD	102
Y	*192-2981*	1	PUMP GP-ENGINE OIL	61
Y	*222-5958*	6	PUMP GP-FUEL INJECTION	104
Y	*258-2403*	1	TURBOCHARGER GP	92
Y	*232-3717*	1	VALVE MECHANISM GP	48
	247-0831	1	ELECTRONICS GP-ENGINE RATINGS	

Y-SEPARATE ILLUSTRATION

ENGINE ARRANGEMENT

237-3995 INSTALLATION AR-ENGINE

S/N: M3G1-UP

PART OF 237-4935 GENERAL AR

SMCS-1000 **i02443643**

NOTE	PART NUMBER	QTY	PART NAME 1 2 3 4 5 6 (PRODUCT LEVEL)	SEE PAGE
Y	*237-4848*	1	AIR CLEANER GP	80
Y	*237-4847*	1	ALTERNATOR GP-CHARGING	119
Y	*238-4804*	1	FUMES DISPOSAL GP	55
Y	*237-4850*	1	LINES GP-AIR	86
Y	*168-8976*	1	LINES GP-ENGINE OIL DRAIN	59
Y	*237-4851*	1	LINES GP-FUEL DRAIN	100
Y	*116-8666*	1	MOUNTING GP-ENGINE & TMSN	40
Y	*237-4853*	1	MUFFLER GP	88
Y	*111-4275*	1	STARTING MOTOR GP-ELECTRIC	194

Y-SEPARATE ILLUSTRATION

BASIC ENGINE

212-4289 CAMSHAFT GP

S/N: KHX1-UP

PART OF 235-1425 ENGINE AR-CORE

SMCS-1210, 1211, 1212 **i02215726**

NOTE	REF NO	GRAPHIC REF	PART NUMBER	QTY	PART NAME 1 2 3 4 5 6 (PRODUCT LEVEL)	SEE PAGE
	1	1	**107-7694**	1	PLATE-THRUST	
	2	1	**212-4288**	1	CAMSHAFT AS	
	2A	1	**1B-8705**	1	KEY-WOODRUFF	
	2B	1	**224-3247**	1	GEAR (100-TEETH)	
M	3	1	**6V-3940**	2	BOLT (M8X1.25X25-MM)	

M-METRIC PART

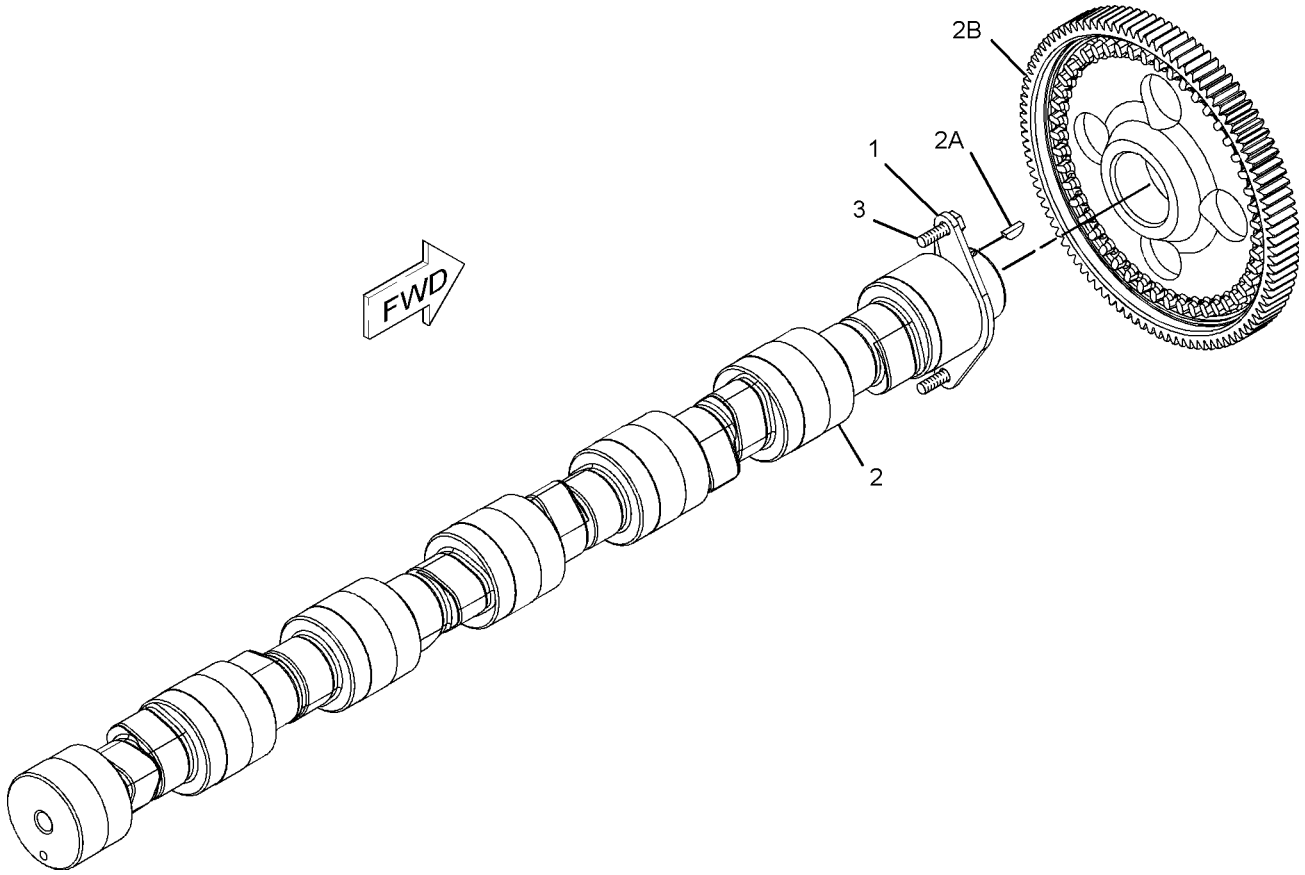

GRAPHIC #1 **<END>** g01099239

BASIC ENGINE

4W-3462 CARRIER GP-SEAL

S/N: KHX1-UP

PART OF 235-1424 ENGINE AR-COMPLETE

SMCS-1160, 1161 **i02041269**

NOTE	REF NO	GRAPHIC REF	PART NUMBER	QTY	PART NAME 1 2 3 4 5 6 (PRODUCT LEVEL)	SEE PAGE
	1	1	**2W-6546**	1	COVER	
	2	1	**8C-3091**	1	SEAL-O-RING	
	3	1	**239-0583**	1	GASKET	
	4	1	**6V-3538**	2	DOWEL	
M	5	1	**6V-3940**	8	BOLT (M8X1.25X25-MM)	
	6	1	**9M-1974**	8	WASHER-HARD (8.8X16X2-MM THK)	
B	7	1	**4C-9612**		SEALANT-SILICONE	

B-USE AS REQUIRED
M-METRIC PART

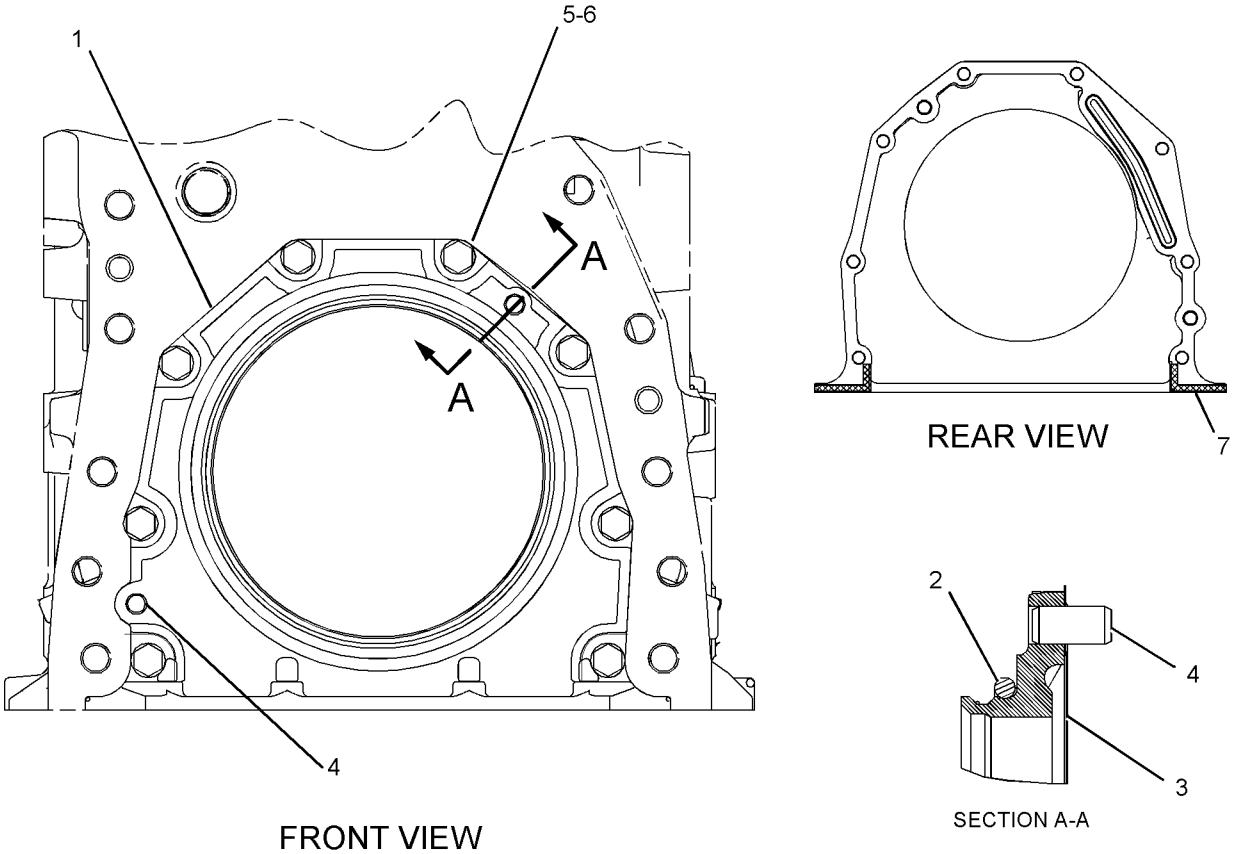

GRAPHIC #1 **<END>** g01051044

BASIC ENGINE

238-0371 COVER GP-CYLINDER BLOCK

S/N: KHX1-UP

PART OF 235-1424 ENGINE AR-COMPLETE

SMCS-1201 **i02215515**

NOTE	REF NO	GRAPHIC REF	PART NUMBER	QTY	PART NAME 1 2 3 4 5 6 (PRODUCT LEVEL)	SEE PAGE
	1	1	**2W-6544**	1	COVER	
	2	1	**4P-5918**	2	CLIP	
	3	1	**4Y-9652**	3	GASKET	
	4	1	**7W-3871**	2	COVER-SIDE	
	5	1	**7W-3872**	6	SLEEVE	
	6	1	**8E-9571**	8	WASHER-HARD (8.8X16X7-MM THK)	
M	7	1	**9X-2097**	1	STUD (M8X1.25 THD)	
	8	1	**110-7618**	3	BOLT AS	
	9	1	**222-5893**	1	COVER AS	
	10	1	**210-3321**	1	STUD (M8X1.25 THD)	
	11	1	**4P-7581**	1	CLIP	
M	12	1	**5C-7261**	1	NUT (M8X1.25-THD)	
M	13	1	**6V-2317**	23	BOLT (M8X1.25X30-MM)	
	14	1	**8T-4224**	1	WASHER-HARD (8.8X16X2-MM THK)	
	15	1	**9M-1974**	14	WASHER-HARD (8.8X16X2-MM THK)	
B	16	1	**1U-8846**		SEALANT-GASKET	

B-USE AS REQUIRED
M-METRIC PART

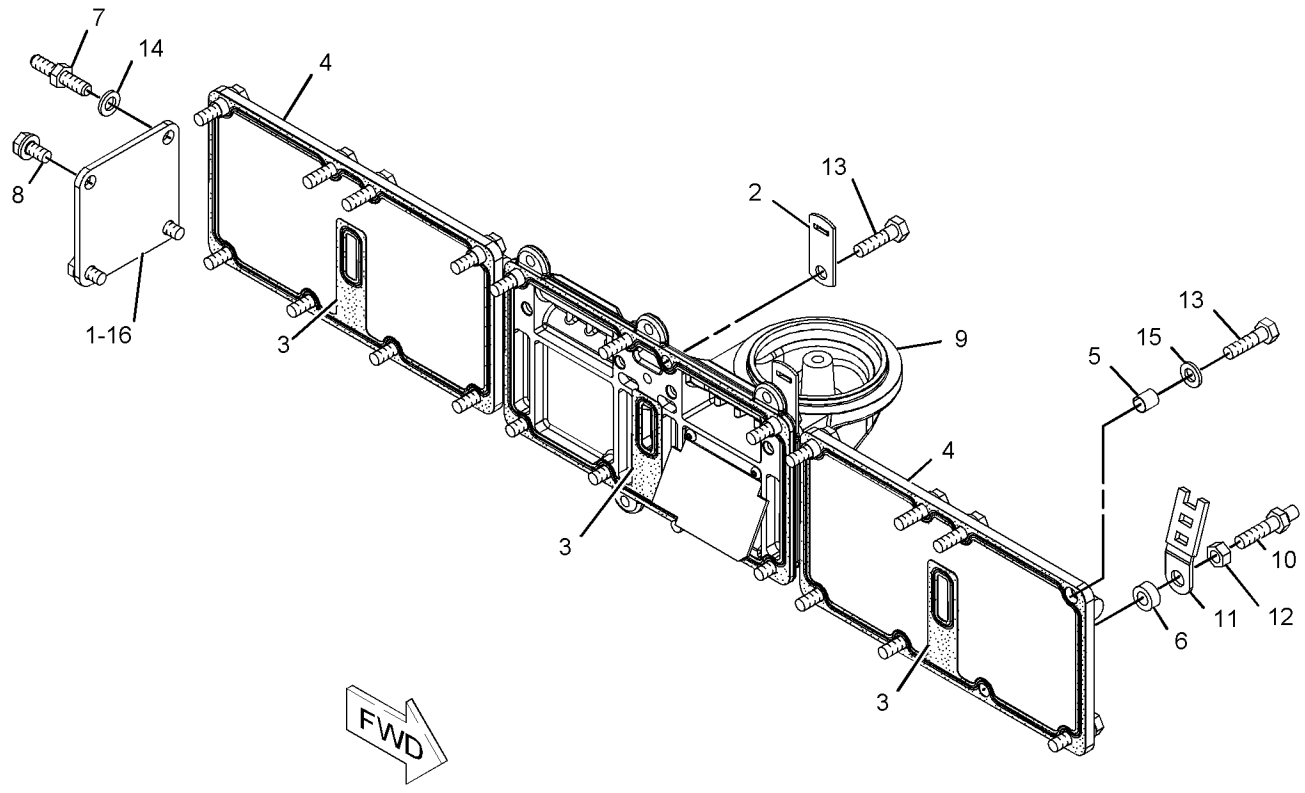

GRAPHIC #1 **<END>** g01118434

BASIC ENGINE

118-1727 COVER GP-FRONT HOUSING

S/N: KHX1-UP

PART OF 235-1424 ENGINE AR-COMPLETE

SMCS-1151, 1166 **i01671188**

NOTE	REF NO	GRAPHIC REF	PART NUMBER	QTY	PART NAME 1 2 3 4 5 6 (PRODUCT LEVEL)	SEE PAGE
	1	1	**5P-8245**	4	WASHER-HARD (13.5X25.5X3-MM THK)	
M	2	1	**6V-5696**	2	BOLT (M12X1.75X80-MM)	
	3	1	**4W-2026**	1	COVER	
	4	1	**135-9819**	1	SEAL	
M	5	1	**6V-8149**	2	NUT (M12X1.75-THD)	

M-METRIC PART

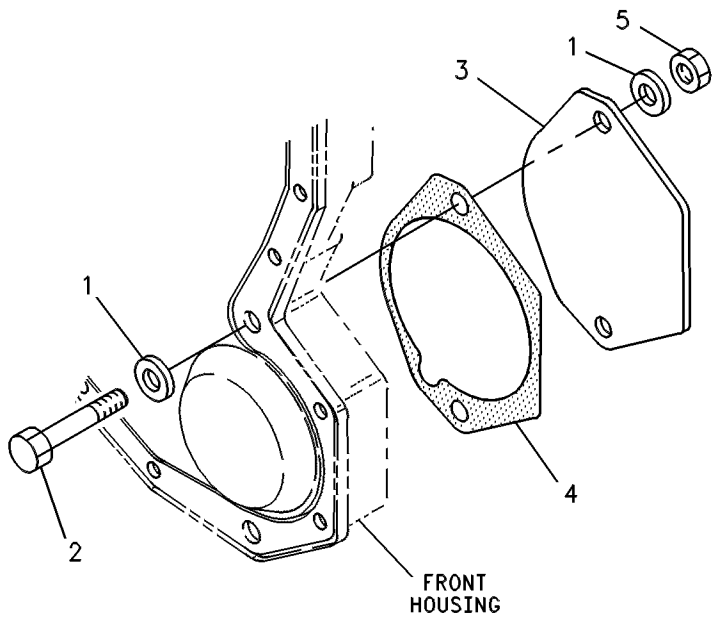

GRAPHIC #1 **<END>** g00245495

BASIC ENGINE

211-9120 COVER GP-FRONT HOUSING

S/N: KHX1-UP

PART OF 235-1425 ENGINE AR-CORE

SMCS-1151, 1166 **i01696333**

NOTE	REF NO	GRAPHIC REF	PART NUMBER	QTY	PART NAME 1 2 3 4 5 6 (PRODUCT LEVEL)	SEE PAGE
	1	1	**166-1776**	1	COVER AS-FRONT	
	1A	1	**126-1757**	2	WASHER	
	1B	1	**136-0822**	2	STUD	
	2	1	**166-1781**	1	GASKET	

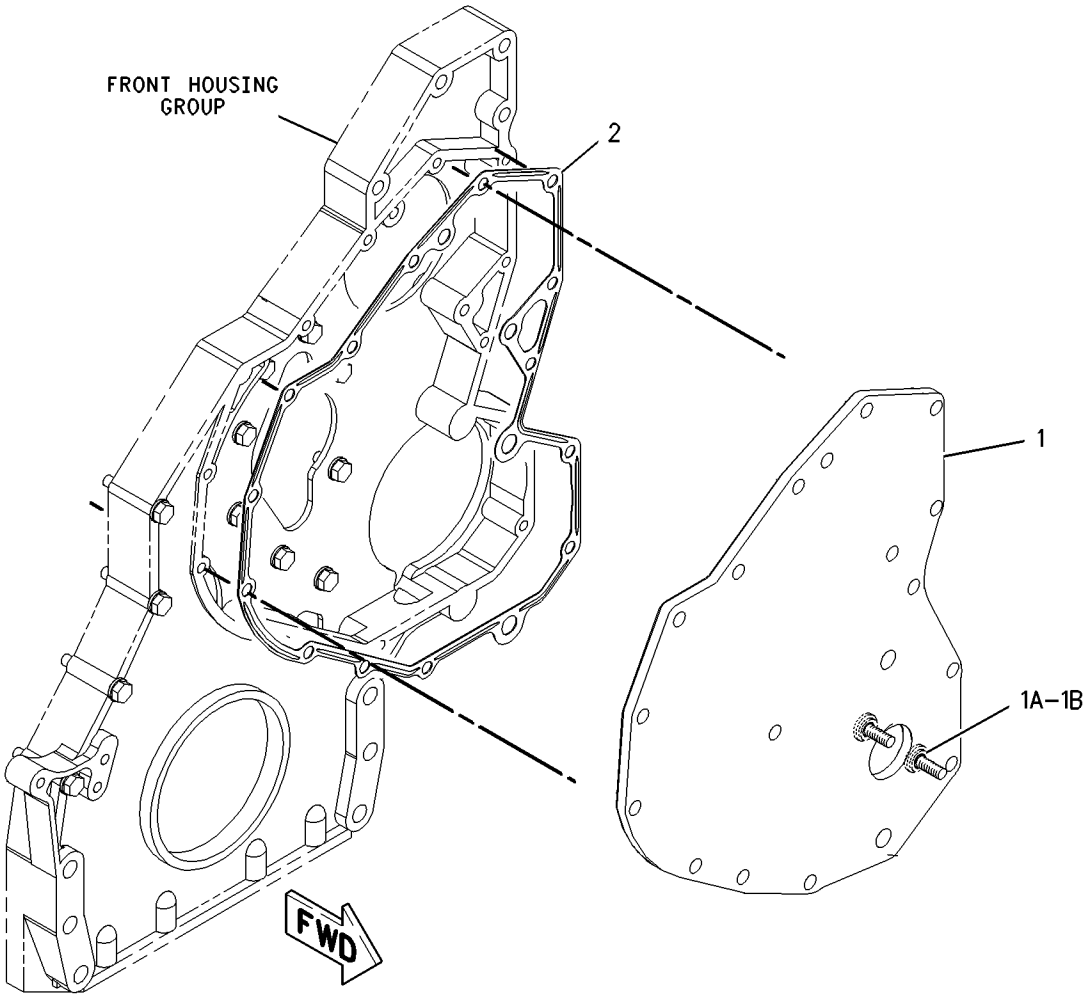

GRAPHIC #1 **<END>** g00873836

BASIC ENGINE

222-5952 COVER GP-VALVE MECHANISM

S/N: KHX1-410

PART OF 235-1424 ENGINE AR-COMPLETE

SMCS-1107 **i02301092**

NOTE	REF NO	GRAPHIC REF	PART NUMBER	QTY	PART NAME 1 2 3 4 5 6 (PRODUCT LEVEL)	SEE PAGE
	1	1	**246-5083**	13	SLEEVE-SPACER	
	2	1	**249-0150**	1	COVER GP-VALVE MECHANISM (BASE)	
J		1	**217-5701**		SEAL (21-DECIMETER)	
Y	3	1	**242-2411**	1	COVER GP-VALVE MECHANISM (TOP)	13
M	4	1	**6V-5219**	13	BOLT (M8X1.25X40-MM)	
	5	1	**9M-1974**	13	WASHER-HARD (8.8X16X2-MM THK)	

J-ORDER BY THE DECIMETER
M-METRIC PART
Y-SEPARATE ILLUSTRATION

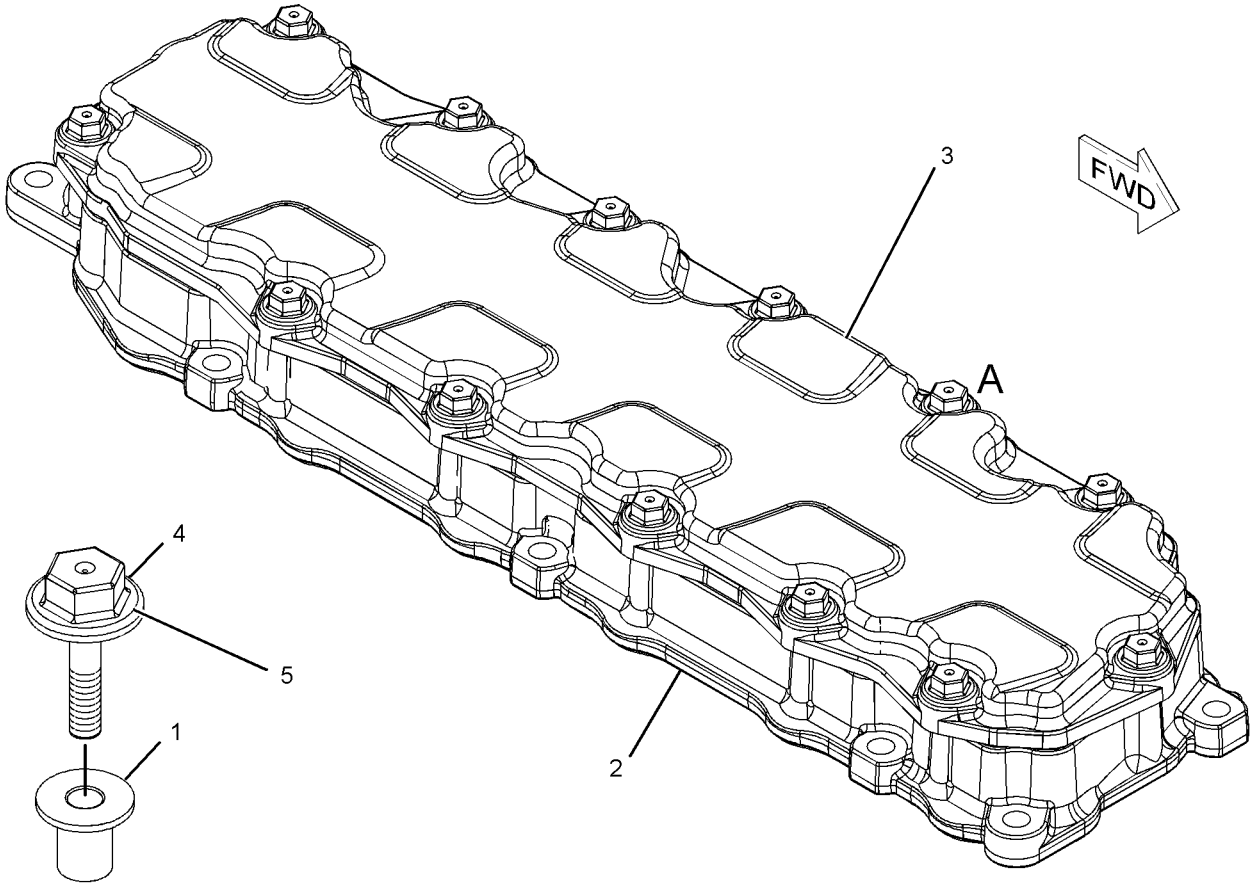

EXPLODED VIEW
OF AREA A

GRAPHIC #1

<END>

g01060391

BASIC ENGINE

242-2411 COVER GP-VALVE MECHANISM

S/N: KHX1-UP

PART OF 222-5952, 261-3721 COVER GP-VALVE MECHANISM

SMCS-1107 **i02214642**

NOTE	REF NO	GRAPHIC REF	PART NUMBER	QTY	PART NAME 1 2 3 4 5 6 (PRODUCT LEVEL)	SEE PAGE
L	1	1	**217-5701**		SEAL (21-DM)	

L-ORDER BY THE DECIMETER

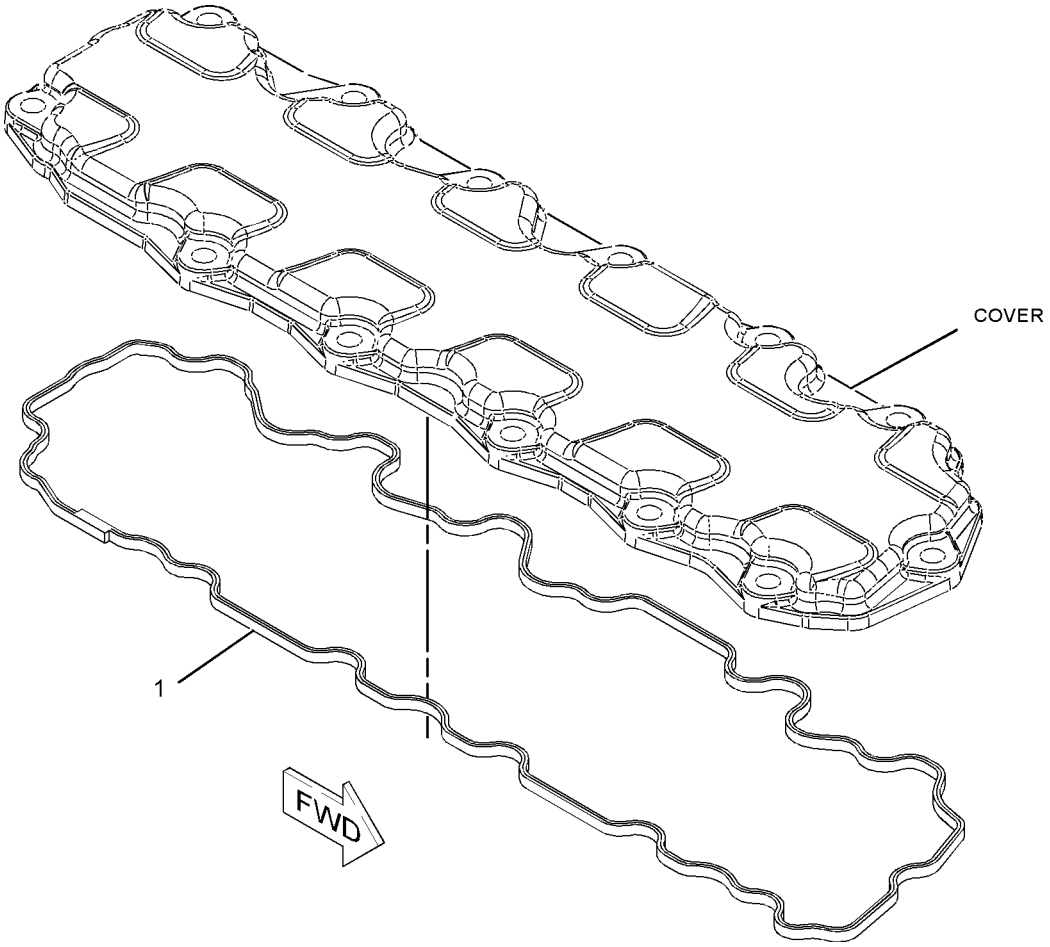

GRAPHIC #1 **<END>** g01118526

BASIC ENGINE

261-3721 COVER GP-VALVE MECHANISM

S/N: KHX411-UP

PART OF 235-1424 ENGINE AR-COMPLETE

SMCS-1107 **i02310965**

NOTE	REF NO	GRAPHIC REF	PART NUMBER	QTY	PART NAME 1 2 3 4 5 6 (PRODUCT LEVEL)	SEE PAGE
Y	1	1	**242-2411**	1	COVER GP-VALVE MECHANISM	13
	2	1	**244-4486**	1	SEAL-COVER (VALVE COVER BASE)	
	3	1	**245-6796**	1	COVER AS-BASE	
	4	1	**246-5083**	13	SLEEVE-SPACER	
M	5	1	**6V-5219**	13	BOLT (M8X1.25X40-MM)	
	6	1	**9M-1974**	13	WASHER-HARD (8.8X16X2-MM THK)	

M-METRIC PART
Y-SEPARATE ILLUSTRATION

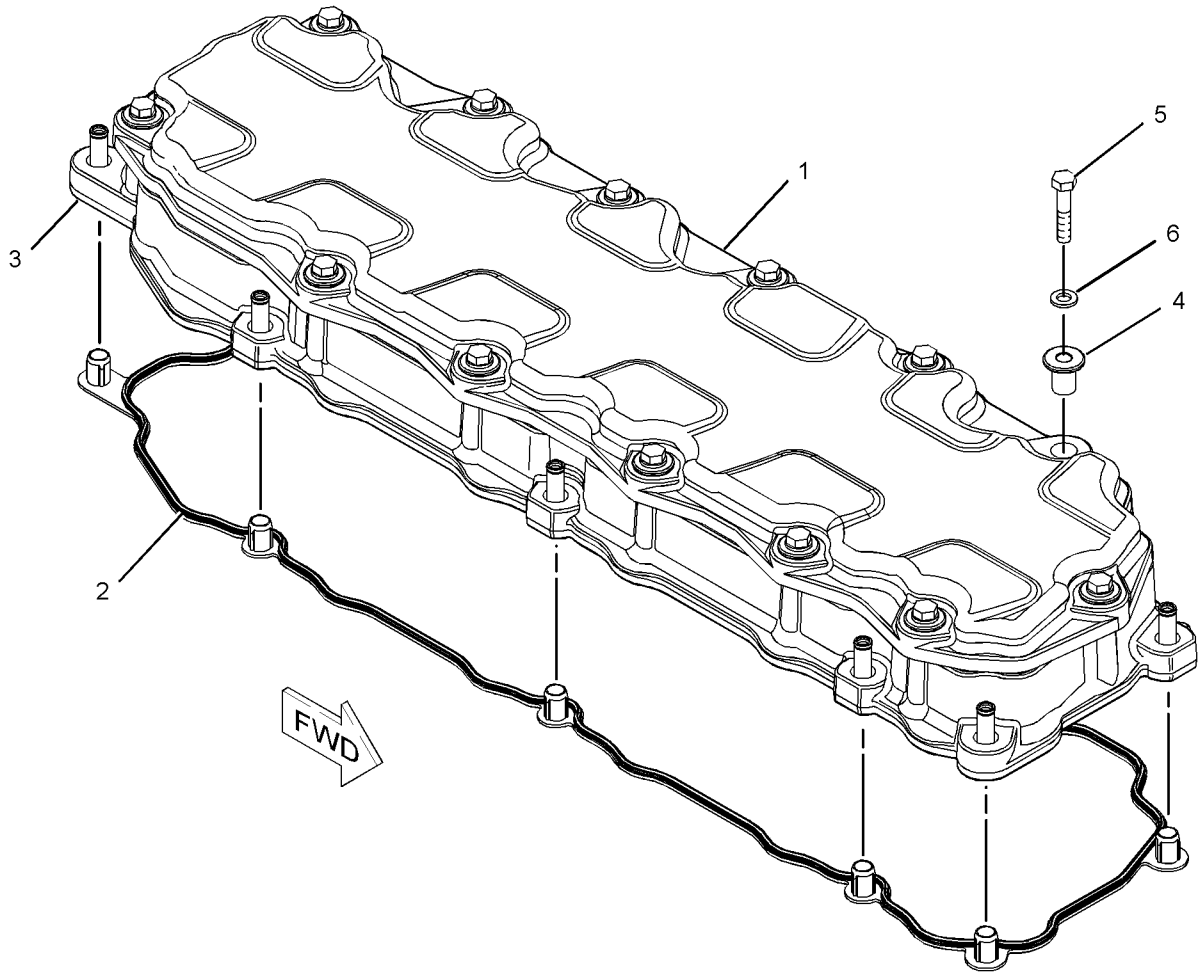

GRAPHIC #1 **<END>** g01130751

BASIC ENGINE

210-5590 CRANKSHAFT GP

S/N: KHX1-UP

PART OF 235-1425 ENGINE AR-CORE

SMCS-1202 **i02215729**

NOTE	REF NO	GRAPHIC REF	PART NUMBER	QTY	PART NAME 1 2 3 4 5 6 (PRODUCT LEVEL)	SEE PAGE
	1	1	**227-5480**	1	CRANKSHAFT AS	
	1A	1	**1B-8705**	1	KEY-WOODRUFF	
	1B	1	**2W-8147**	1	GEAR (50-TEETH)	
J	2	1	**212-4893**	1	BEARING-THRUST (STANDARD)	
AB		1	**229-5153**		BEARING-THRUST (0.25-MM US)	
AB		1	**229-5154**		BEARING-THRUST (0.5-MM US)	
AB		1	**229-5155**		BEARING-THRUST (0.5-MM OS)	
AB		1	**229-5156**		BEARING-THRUST (0.5-MM US - 0.5-MM OS)	
J	3	1	**107-7708**	6	BEARING-MAIN (STANDARD)	
AB		1	**145-0168**		BEARING-MAIN (0.5-MM OS)	
AB		1	**145-0170**		BEARING-MAIN (0.5-MM US - 0.5-MM OS)	
AB		1	**145-0162**		BEARING-MAIN (0.25-MM US)	
AB		1	**145-0164**		BEARING-MAIN (0.5-MM US)	
ABF		1	**7C-7980**	1	SLEEVE-OIL SEAL	
					(THIS WEAR SLEEVE IS USED ONLY TO SALVAGE (REPAIR) THE REAR SEAL SURFACE OF THE CRANKSHAFT)	
					AVAILABLE REPAIR KIT(S):	
AJ			**196-9519**		BEARING GP-MAIN	

A-NOT PART OF THIS GROUP
B-USE AS REQUIRED
F-NOT SHOWN
J-KIT MARKED J SERVICES PARTS MARKED J

210-5590 **CRANKSHAFT GP** *(contd.)* **i02215729**

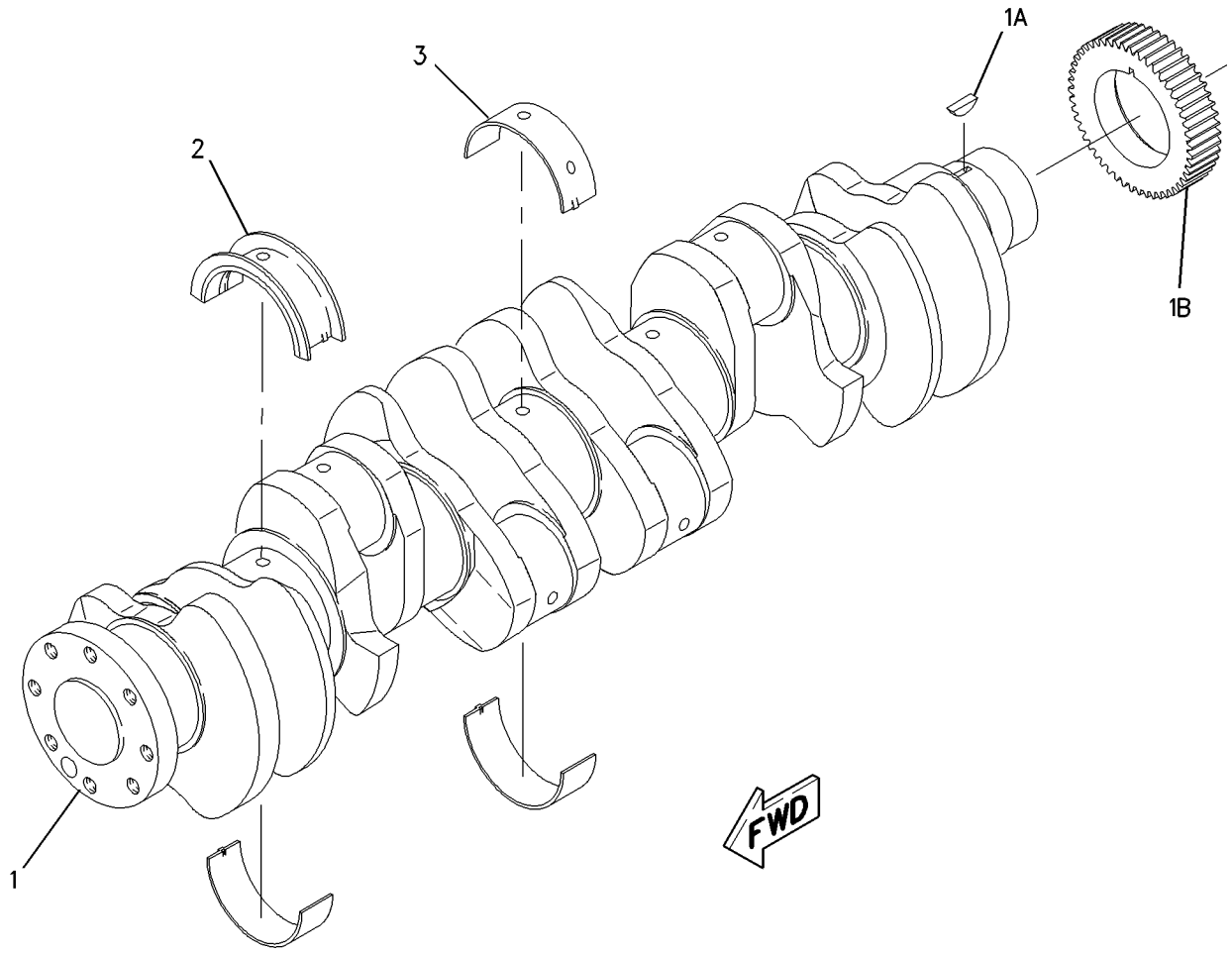

GRAPHIC #1 **<END>** g00977492

221-4480 CYLINDER BLOCK GP

S/N: KHX1-UP

PART OF 221-4481 CYLINDER BLOCK GP

SMCS-1201 **i02216301**

NOTE	REF NO	GRAPHIC REF	PART NUMBER	QTY	PART NAME 1 2 3 4 5 6 (PRODUCT LEVEL)	SEE PAGE
	2	1	**7E-2968**	7	CAP-CRANKSHAFT BEARING	
M	3	1	**9X-8916**	14	BOLT (M16X2X140-MM)	
	4	1	**5P-8247**	14	WASHER-HARD (17X32X3.5-MM THK)	

M-METRIC PART

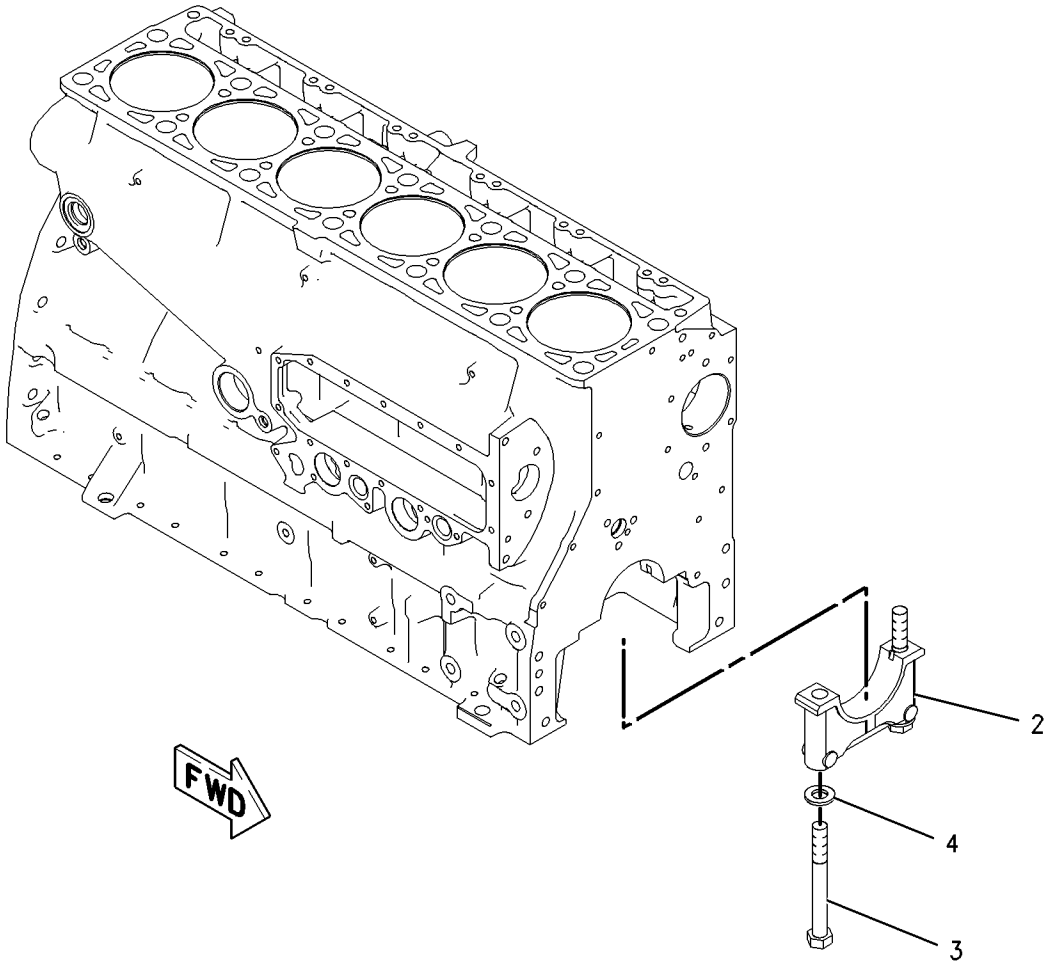

GRAPHIC #1 **<END>** g00948902

BASIC ENGINE

221-4481 CYLINDER BLOCK GP

S/N: KHX1-UP

PART OF 221-4482 CYLINDER BLOCK GP

SMCS-1201 **i02216292**

NOTE	REF NO	GRAPHIC REF	PART NUMBER	QTY	PART NAME 1 2 3 4 5 6 (PRODUCT LEVEL)	SEE PAGE
Y	1	1	*221-4480*	1	CYLINDER BLOCK GP	17
	2	1	**2M-6471**	2	PLUG-CUP	
	3	1	**3H-5552**	1	PLUG-CUP	
	4	1	**9S-8006**	1	PLUG	
	5	1	**2M-9780**	1	SEAL-O-RING	
	6	1	**216-5586**	1	BEARING-SLEEVE (CAMSHAFT)	
	7	1	**2W-7213**	6	BEARING-SLEEVE (CAMSHAFT)	

Y-SEPARATE ILLUSTRATION

221-4481 **CYLINDER BLOCK GP** *(contd.)* **i02216292**

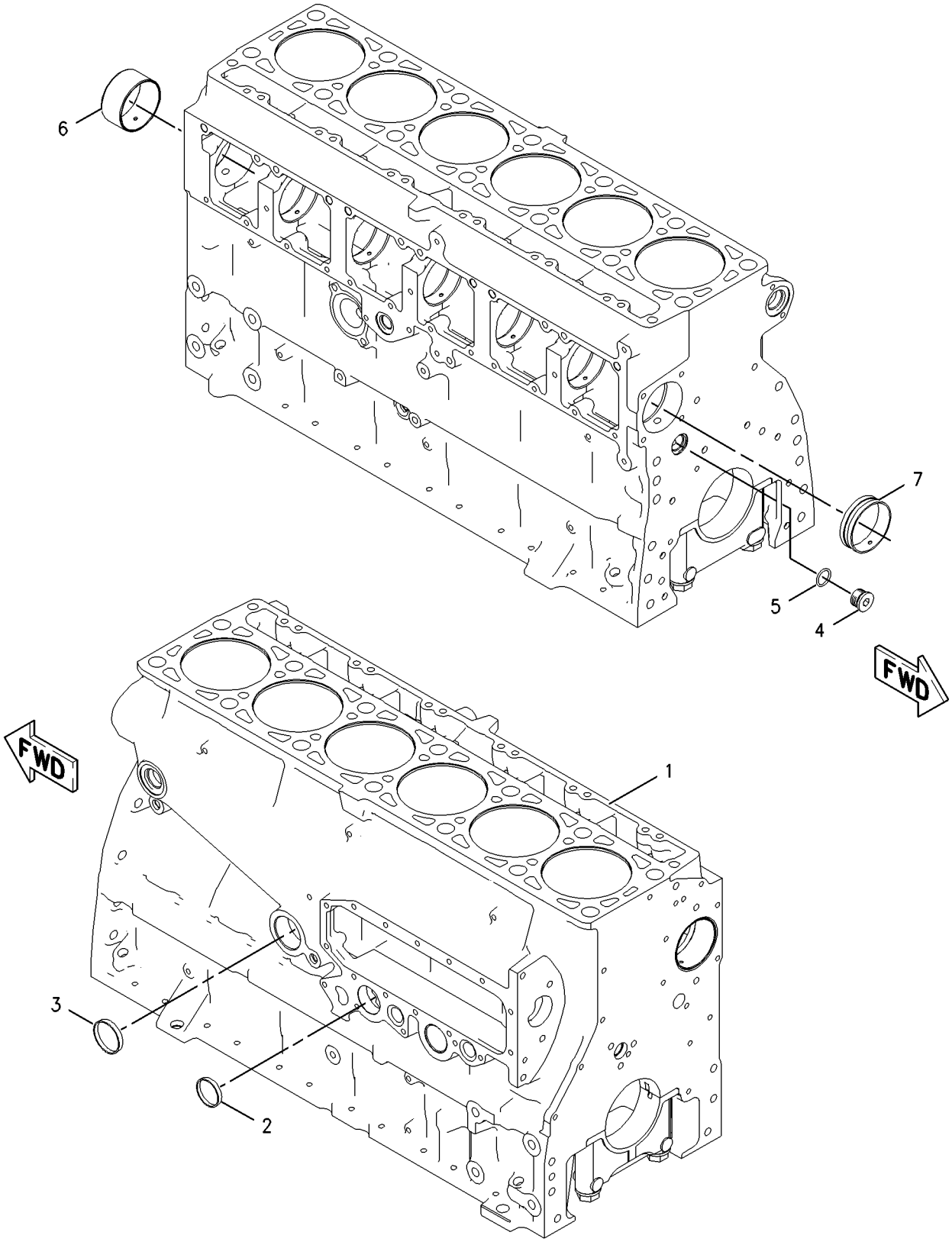

GRAPHIC #1 **<END>** g00947530

BASIC ENGINE

221-4482 CYLINDER BLOCK GP

S/N: KHX1-UP

PART OF 235-1425 ENGINE AR-CORE

SMCS-1201 **i02215754**

NOTE	REF NO	GRAPHIC REF	PART NUMBER	QTY	PART NAME 1 2 3 4 5 6 (PRODUCT LEVEL)	SEE PAGE
Y	1	1	**221-4481**	1	CYLINDER BLOCK GP	18
	2	1	**7N-5683**	2	DOWEL	
	3	1	**1W-8407**	2	SLEEVE	
	4	1	**6V-3538**	2	DOWEL	

Y-SEPARATE ILLUSTRATION

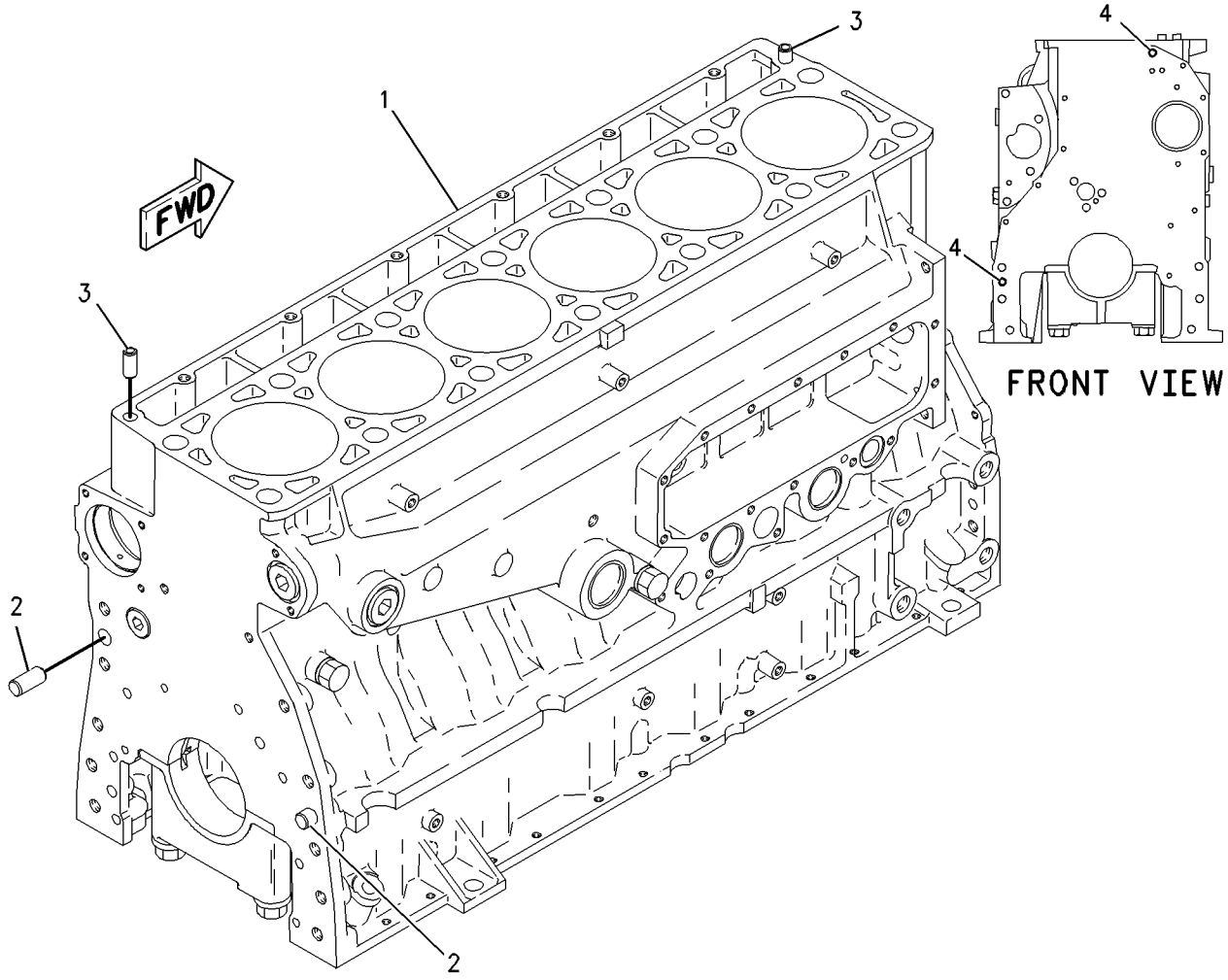

GRAPHIC #1 **<END>** g00800849

BASIC ENGINE

219-5844 CYLINDER HEAD AS

S/N: KHX1-UP

PART OF 219-5846 CYLINDER HEAD GP

SMCS-1100, 1101 **i02215799**

NOTE	REF NO	GRAPHIC REF	PART NUMBER	QTY	PART NAME 1 2 3 4 5 6 (PRODUCT LEVEL)	SEE PAGE
	2	1	**8M-5860**	12	PLUG-CUP	
	3	1	**4F-5695**	2	PLUG-CUP	
	4	1	**227-1200**	6	SLEEVE-INJECTOR	
	5	1	**217-5213**	12	INSERT-VALVE SEAT (INLET)	
	6	1	**147-8218**	6	INSERT-VALVE SEAT (EXHAUST)	
	7	1	**8C-0563**	12	SEAL-O-RING	
	8	1	**9S-9334**	1	PLUG	
	9	1	**9X-7712**	1	SEAL-O-RING	

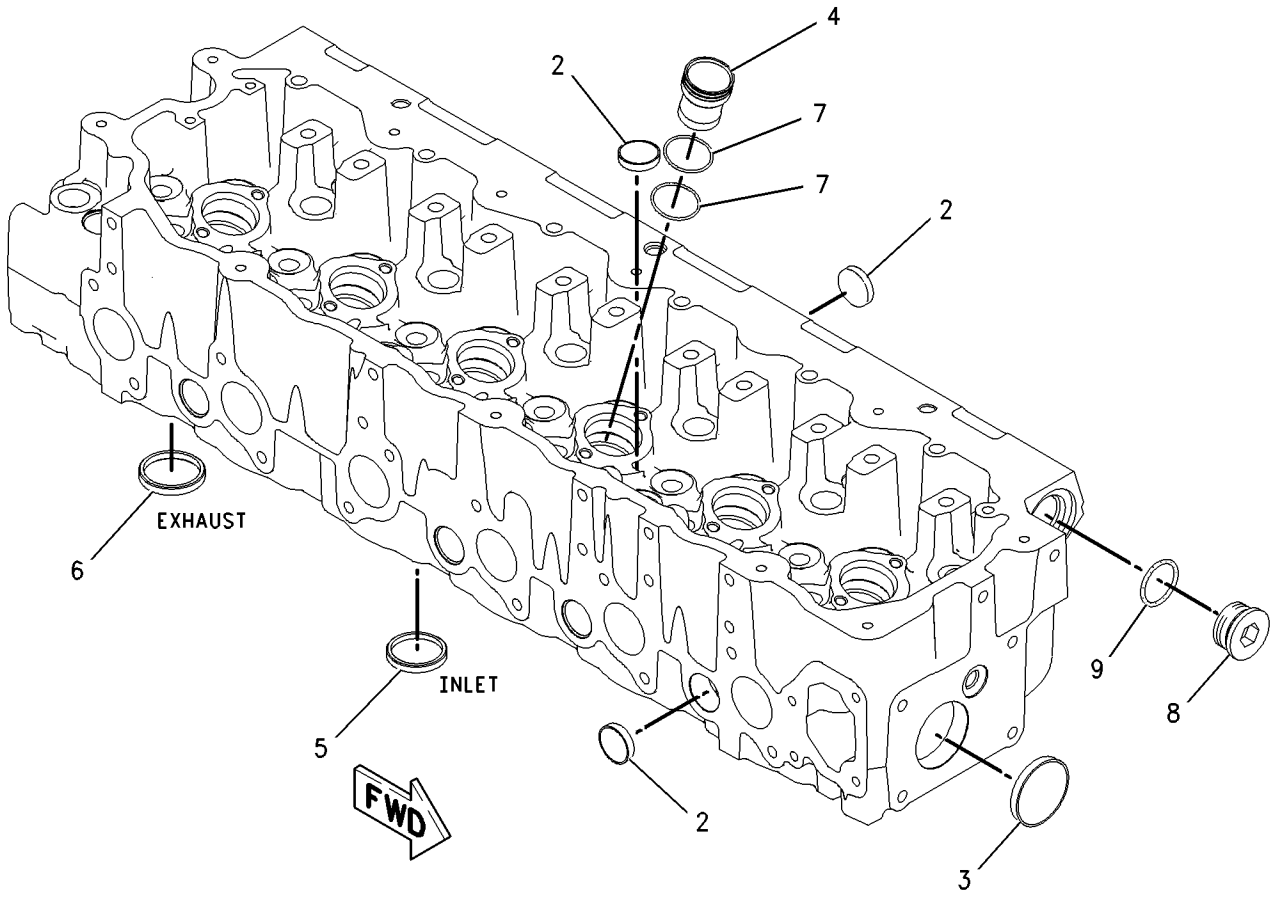

GRAPHIC #1 **<END>** g00948980

219-5846 CYLINDER HEAD GP*R

S/N: KHX1-UP

PART OF 219-5847 CYLINDER HEAD GP

SMCS-1100 **i02215801**

NOTE	REF NO	GRAPHIC REF	PART NUMBER	QTY	PART NAME 1 2 3 4 5 6 (PRODUCT LEVEL)	SEE PAGE
Y	1	1	*219-5844*	1	CYLINDER HEAD AS	21
	2	1	**145-7390**	12	VALVE-INLET	
	3	1	**147-8211**	6	VALVE-EXHAUST	
	4	1	**1W-2715**	24	LOCK-RETAINER	
	5	1	**7E-7779**	12	RETAINER-SPRING	
	6	1	**147-8214**	12	SEAL-VALVE STEM	
	7	1	**140-9670**	12	GUIDE-VALVE	
	8	1	**137-6718**	6	SPRING-VALVE	
	9	1	**140-6188**	12	SPRING-VALVE	
	10	1	**2A-4429**	12	LOCK-RETAINER	
	11	1	**134-4483**	6	RETAINER-SPRING	
	12	1	**147-8220**	6	GUIDE-VALVE	
	13	1	**163-2478**	6	SEAL-VALVE STEM	
	14	1	**137-6715**	6	SEAT-VALVE SPRING	

Y-SEPARATE ILLUSTRATION

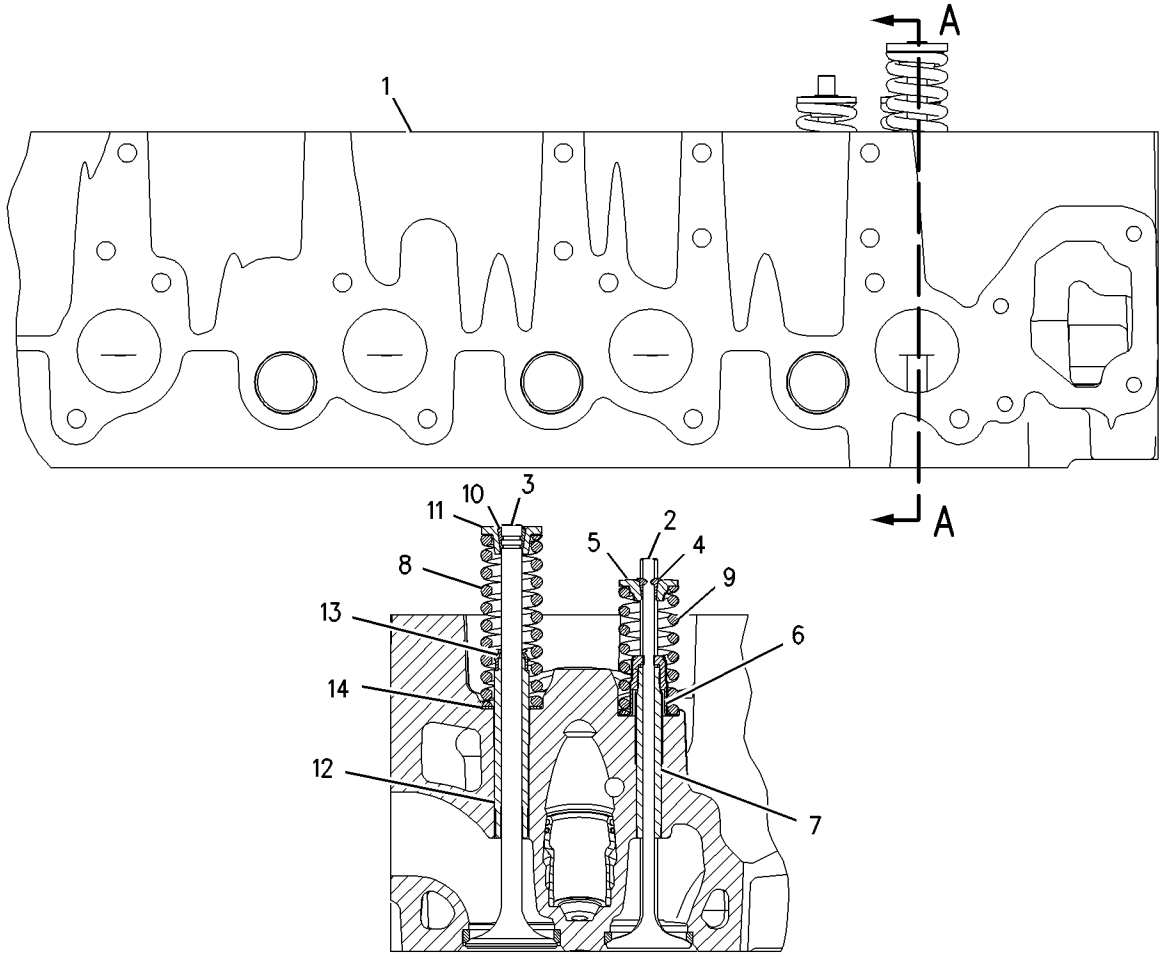

SECTION A-A

GRAPHIC #1 **<END>** g00947786

BASIC ENGINE

219-5847 CYLINDER HEAD GP

S/N: KHX1-UP

PART OF 219-5849 CYLINDER HEAD GP

SMCS-1100 **i02215791**

NOTE	REF NO	GRAPHIC REF	PART NUMBER	QTY	PART NAME 1 2 3 4 5 6 (PRODUCT LEVEL)	SEE PAGE
YR	1	1	**219-5846**	1	CYLINDER HEAD GP	22
	2	1	**1N-5999**	2	PLUG	
	3	1	**2M-9780**	1	SEAL-O-RING	
	4	1	**3J-1907**	2	SEAL-O-RING	
	5	1	**6V-5048**	6	SEAL-O-RING	
	6	1	**7J-0204**	2	SEAL-O-RING	
	7	1	**9S-8002**	6	PLUG	
	8	1	**9S-8004**	2	PLUG	
	9	1	**9S-8006**	1	PLUG	
	10	1	**9S-9334**	1	PLUG	
	11	1	**9X-7712**	1	SEAL-O-RING	

R-REMFG PART MAY BE AVAILABLE
Y-SEPARATE ILLUSTRATION

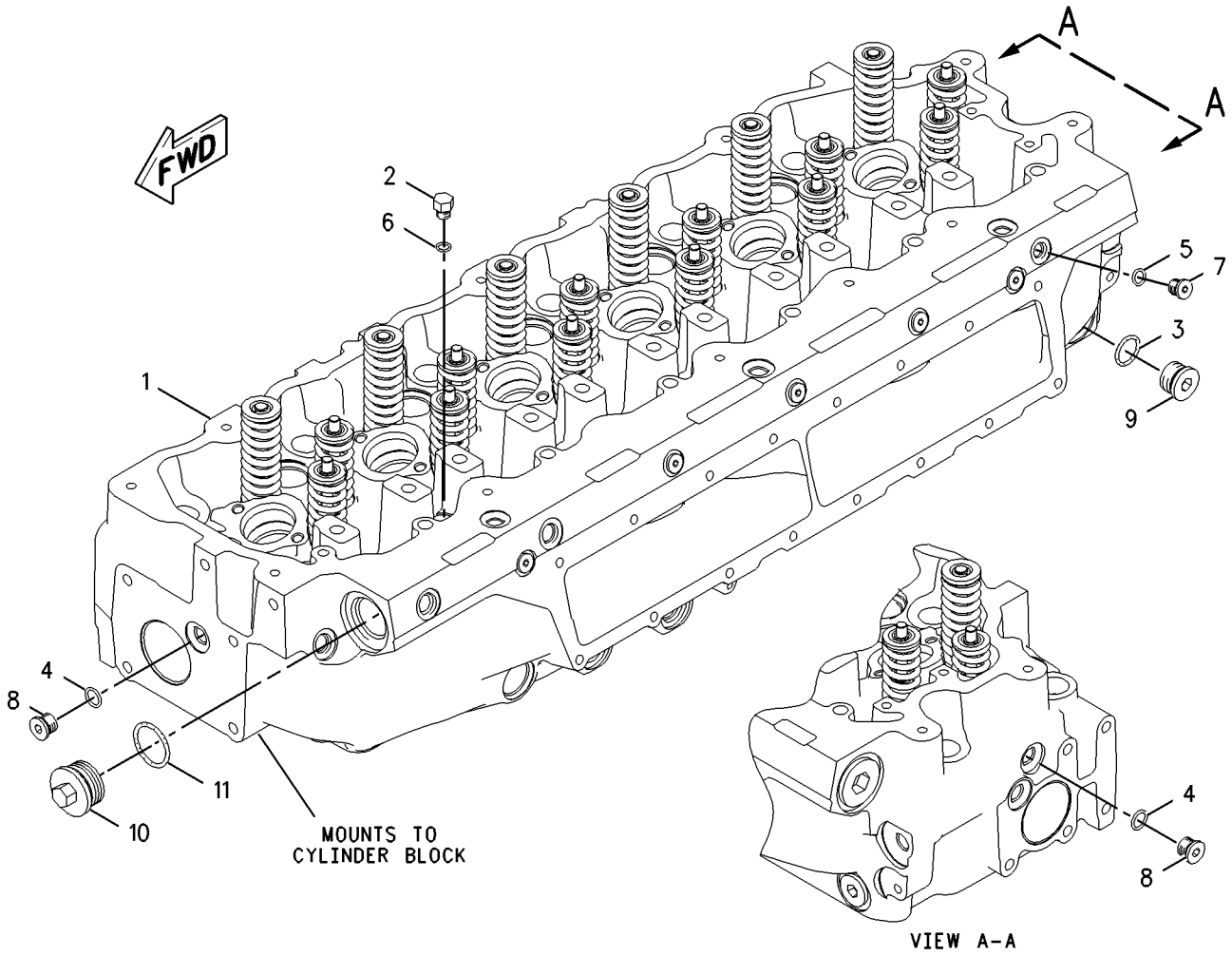

GRAPHIC #1 **<END>** g00947578

BASIC ENGINE

219-5849 CYLINDER HEAD GP

S/N: KHX1-UP

PART OF 235-1425 ENGINE AR-CORE

SMCS-1100 **i02260856**

NOTE	REF NO	GRAPHIC REF	PART NUMBER	QTY	PART NAME 1 2 3 4 5 6 (PRODUCT LEVEL)	SEE PAGE
Y	1	1	*219-5847*	1	CYLINDER HEAD GP	23
	2	1	**133-4995**	1	GASKET-CYLINDER HEAD	
	3	1	*142-7289*	14	FASTENER GP-CYLINDER HEAD	
					(EACH INCLUDES)	
		1	**138-3252**	1	BOLT-12 POINT HEAD	
		1	**8T-3282**	1	WASHER-HARD (22X35X3.5-MM THK)	
M	4	1	**8T-7950**	6	BOLT (M10X1.5X180-MM)	
	5	1	**6V-5839**	6	WASHER (11X21X2.5-MM THK)	

M-METRIC PART
Y-SEPARATE ILLUSTRATION

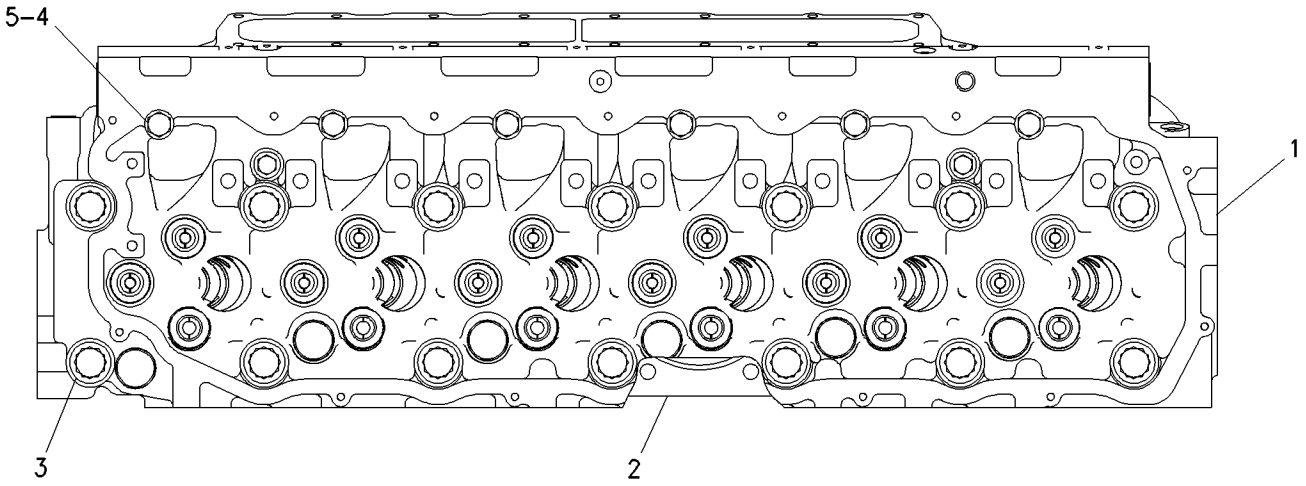

TOP VIEW

GRAPHIC #1 **<END>** g00760746

BASIC ENGINE

165-4557 DAMPER & PULLEY GP

S/N: KHX1-UP

PART OF 235-1424 ENGINE AR-COMPLETE

SMCS-1205 **i01743128**

NOTE	REF NO	GRAPHIC REF	PART NUMBER	QTY	PART NAME 1 2 3 4 5 6 (PRODUCT LEVEL)	SEE PAGE
	1	1	**2W-7381**	1	WASHER	
	2	1	**167-8121**	1	DAMPER AS	
	3	1	**153-1036**	1	PULLEY-CRANKSHAFT (8 GROOVE)	
M	4	1	**8T-3666**	4	BOLT (M14X60-MM)	

M-METRIC PART

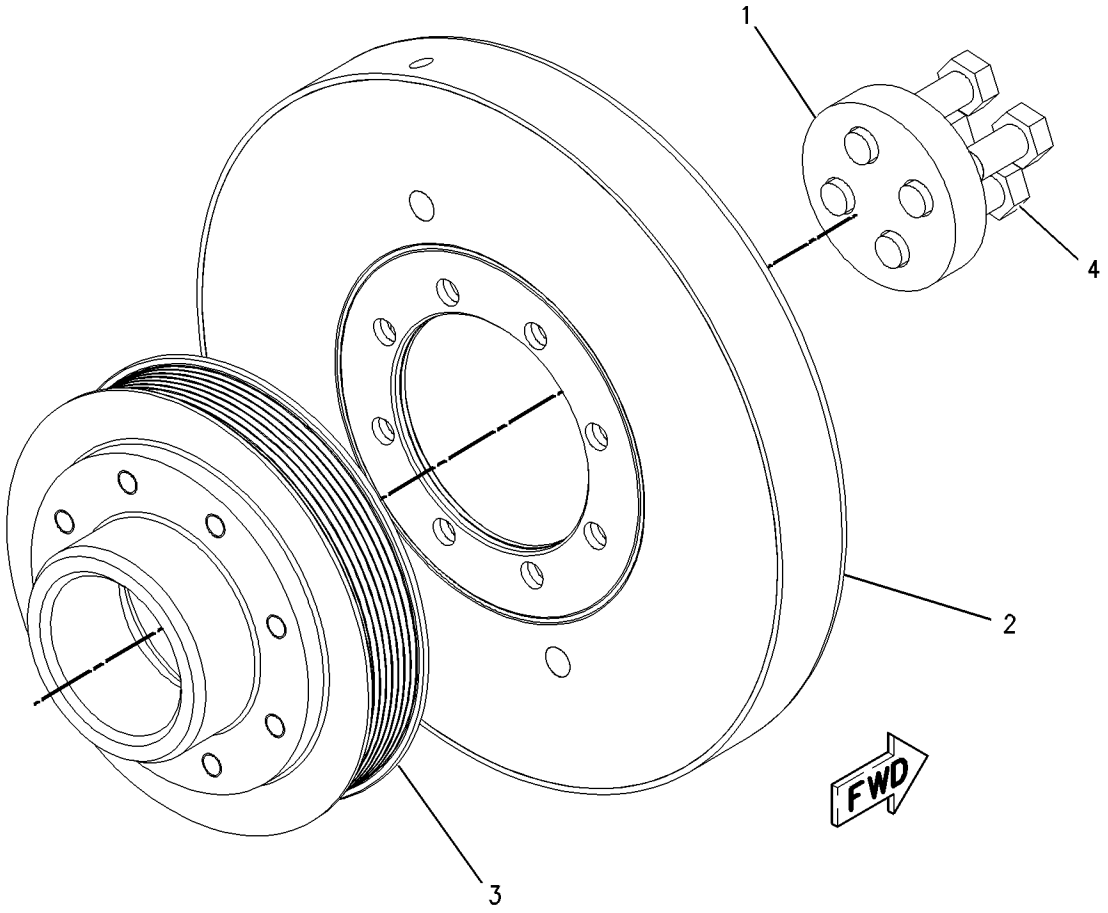

GRAPHIC #1 **<END>** g00836513

118-2073 DRAIN GP-ENGINE OIL

S/N: KHX1-UP

PART OF 235-1424 ENGINE AR-COMPLETE

SMCS-1302 **i01806403**

NOTE	REF NO	GRAPHIC REF	PART NUMBER	QTY	PART NAME 1 2 3 4 5 6 (PRODUCT LEVEL)	SEE PAGE
	1	1	**3K-0360**	1	SEAL-O-RING	
	2	1	**6V-7238**	1	VALVE-SHUTOFF (OIL DRAIN)	

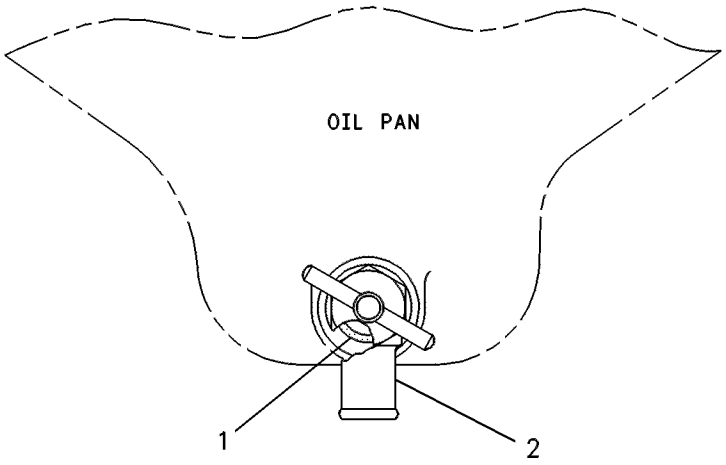

GRAPHIC #1 **<END>** g00117513

218-0859 FASTENER GP-DAMPER & PULLEY

S/N: KHX1-UP

PART OF 235-1424 ENGINE AR-COMPLETE

SMCS-1205, 7553 **i02214637**

NOTE	REF NO	GRAPHIC REF	PART NUMBER	QTY	PART NAME 1 2 3 4 5 6 (PRODUCT LEVEL)	SEE PAGE
	1	1	**228-3621**	1	SPACER	
M	2	1	**6V-4249**	8	BOLT (M10X1.5X50-MM)	

M-METRIC PART

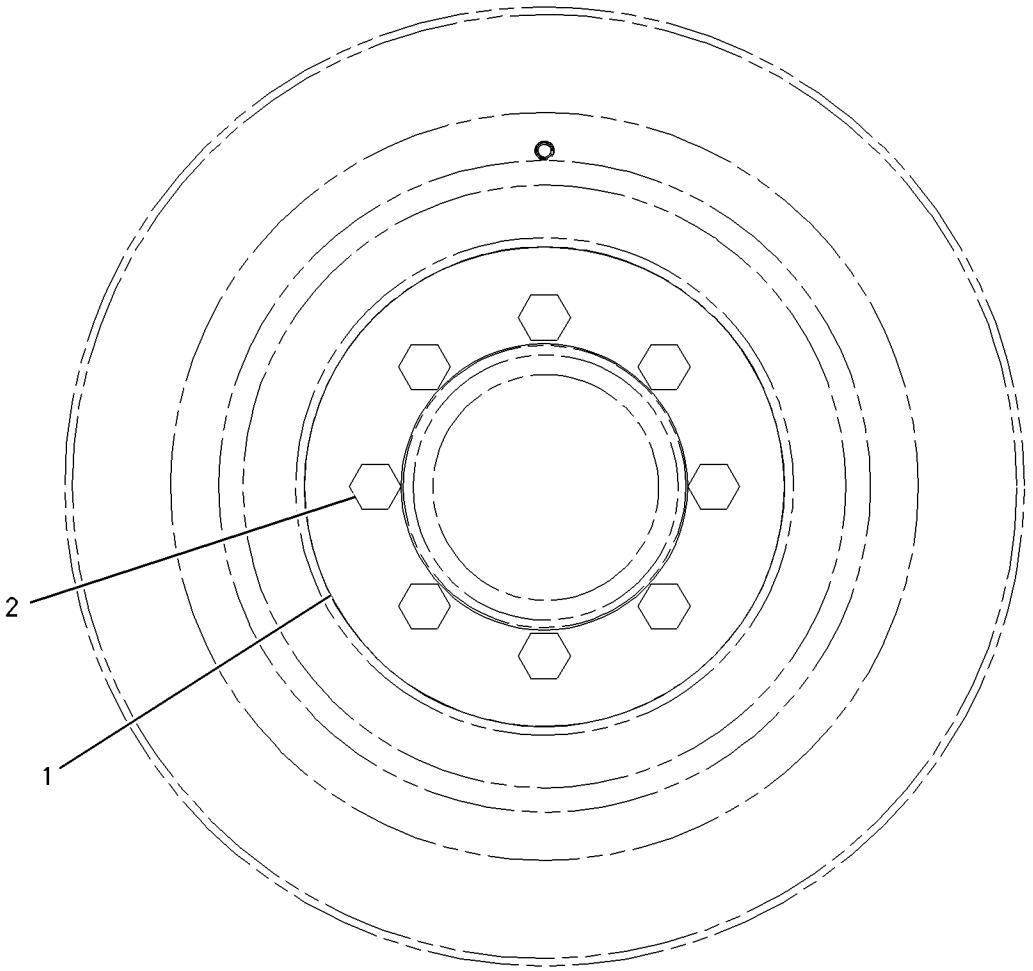

FRONT VIEW

GRAPHIC #1 **<END>** g00919524

116-4556 FASTENER GP-FRONT HOUSING

S/N: KHX1-UP

PART OF 235-1424 ENGINE AR-COMPLETE

SMCS-1151, 1162 **i01487429**

NOTE	REF NO	GRAPHIC REF	PART NUMBER	QTY	PART NAME 1 2 3 4 5 6 (PRODUCT LEVEL)	SEE PAGE
M	1	1	**6V-8336**	6	BOLT (M12X1.75X70-MM)	
		1	**5P-8245**	6	WASHER-HARD (13.5X25.5X3-MM THK)	

M-METRIC PART

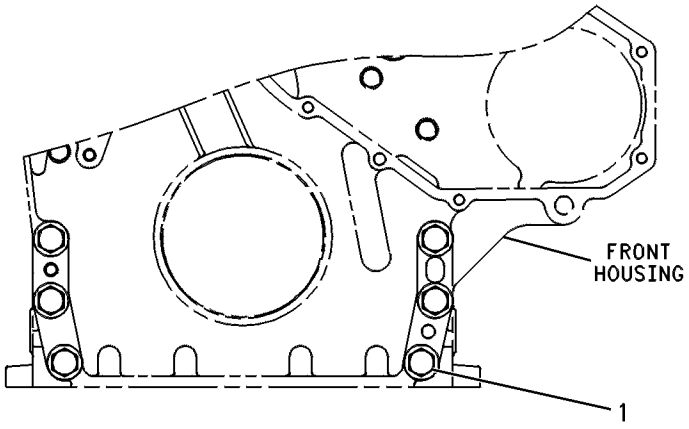

FRONT VIEW

GRAPHIC #1 **<END>** g00244671

238-0373 FASTENER GP-FRONT HOUSING

S/N: KHX1-UP

PART OF 235-1424 ENGINE AR-COMPLETE

SMCS-1151, 1162 **i02215537**

NOTE	REF NO	GRAPHIC REF	PART NUMBER	QTY	PART NAME 1 2 3 4 5 6 (PRODUCT LEVEL)	SEE PAGE
M	1	1	**9X-2099**	5	STUD (M8X1.25-THD) (MARKED Y)	
M	2	1	**185-9356**	1	STUD (M8X1.25-THD)	
	3	1	**210-3321**	1	STUD (M8X1.25-THD)	
M	4	1	**6V-2317**	6	BOLT (M8X1.25X30-MM) (MARKED X)	
M	5	1	**8T-0100**	1	BOLT (M8X1.25X60-MM)	

M-METRIC PART

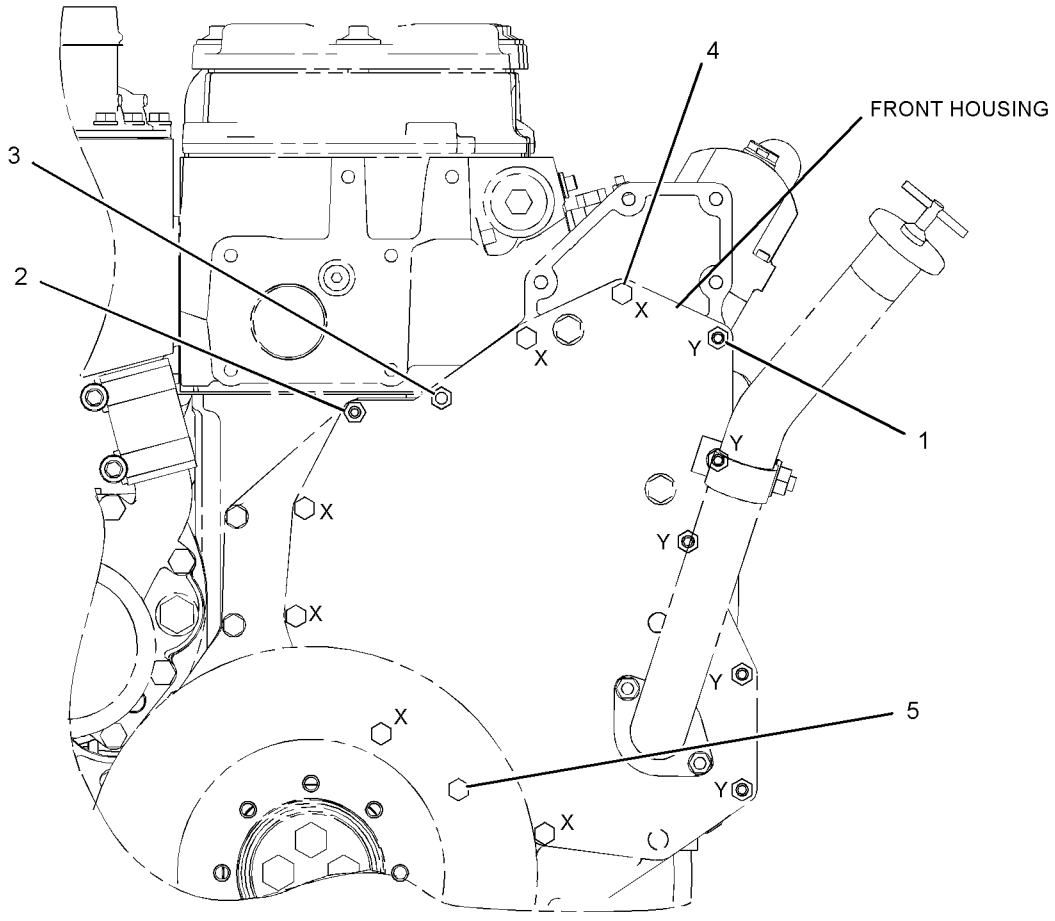

FRONT VIEW

GRAPHIC #1 **<END>** g01119959

212-4287 FASTENER GP-VALVE COVER

S/N: KHX1-410

PART OF 235-1424 ENGINE AR-COMPLETE

SMCS-1107 **i02214601**

NOTE	REF NO	GRAPHIC REF	PART NUMBER	QTY	PART NAME 1 2 3 4 5 6 (PRODUCT LEVEL)	SEE PAGE
	1	1	**208-0039**	8	FASTENER AS	
	2	1	**229-8198**	3	FASTENER AS	
	3	1	**241-4960**	11	SHIM	

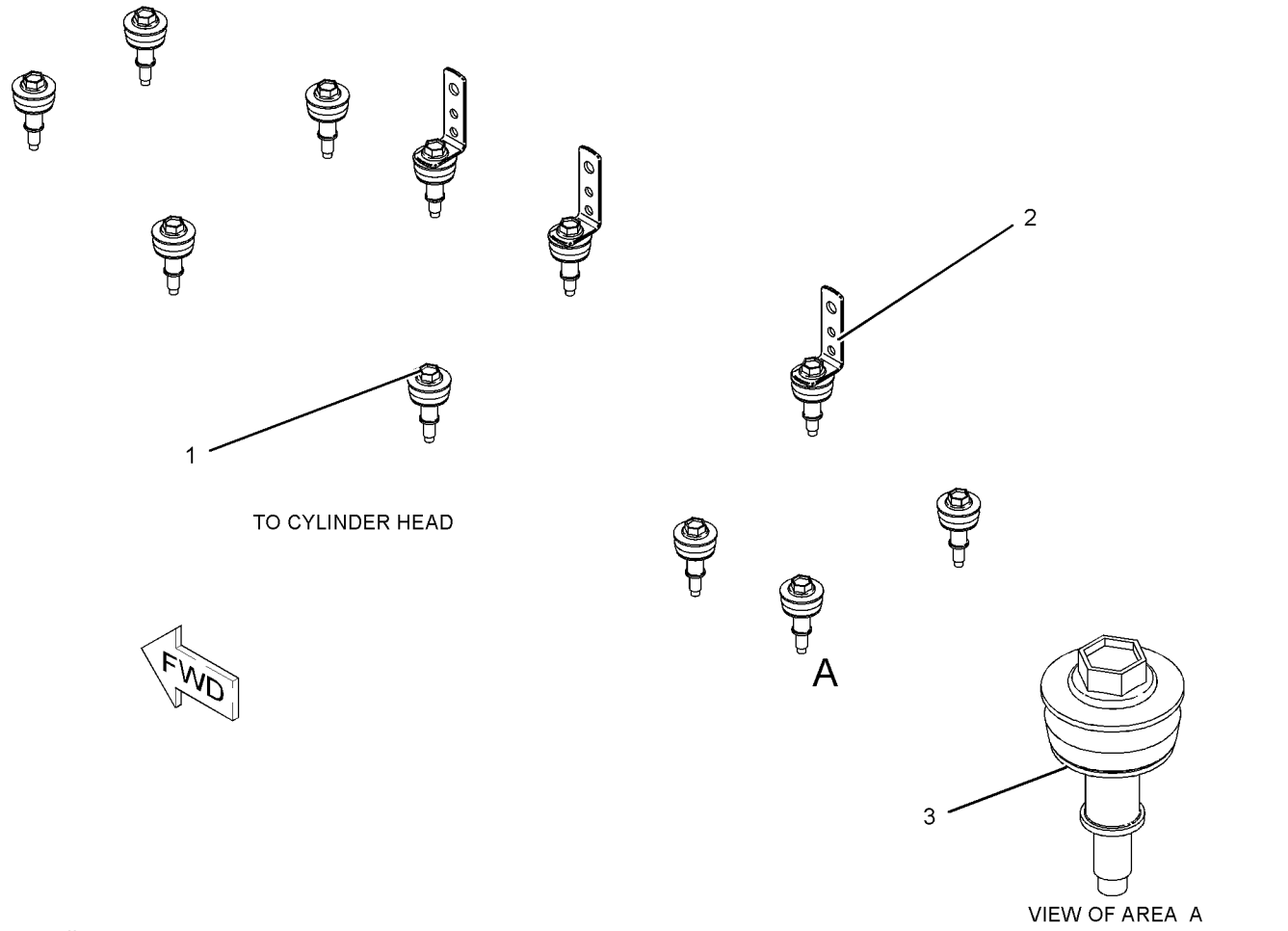

GRAPHIC #1 **<END>** g01047384

258-8723 FASTENER GP-VALVE MECHANISM

S/N: KHX411-UP

PART OF 235-1424 ENGINE AR-COMPLETE

SMCS-1102 **i02310961**

NOTE	REF NO	GRAPHIC REF	PART NUMBER	QTY	PART NAME 1 2 3 4 5 6 (PRODUCT LEVEL)	SEE PAGE
	1	1	**229-8844**	3	CLIP	
	2	1	**244-4500**	11	SPRING	
M	3	1	**8T-0100**	11	BOLT (M8X1.25X60-MM)	
	4	1	**9N-0869**	11	WASHER-HARD (8.8X25.5X2-MM THK)	

M-METRIC PART

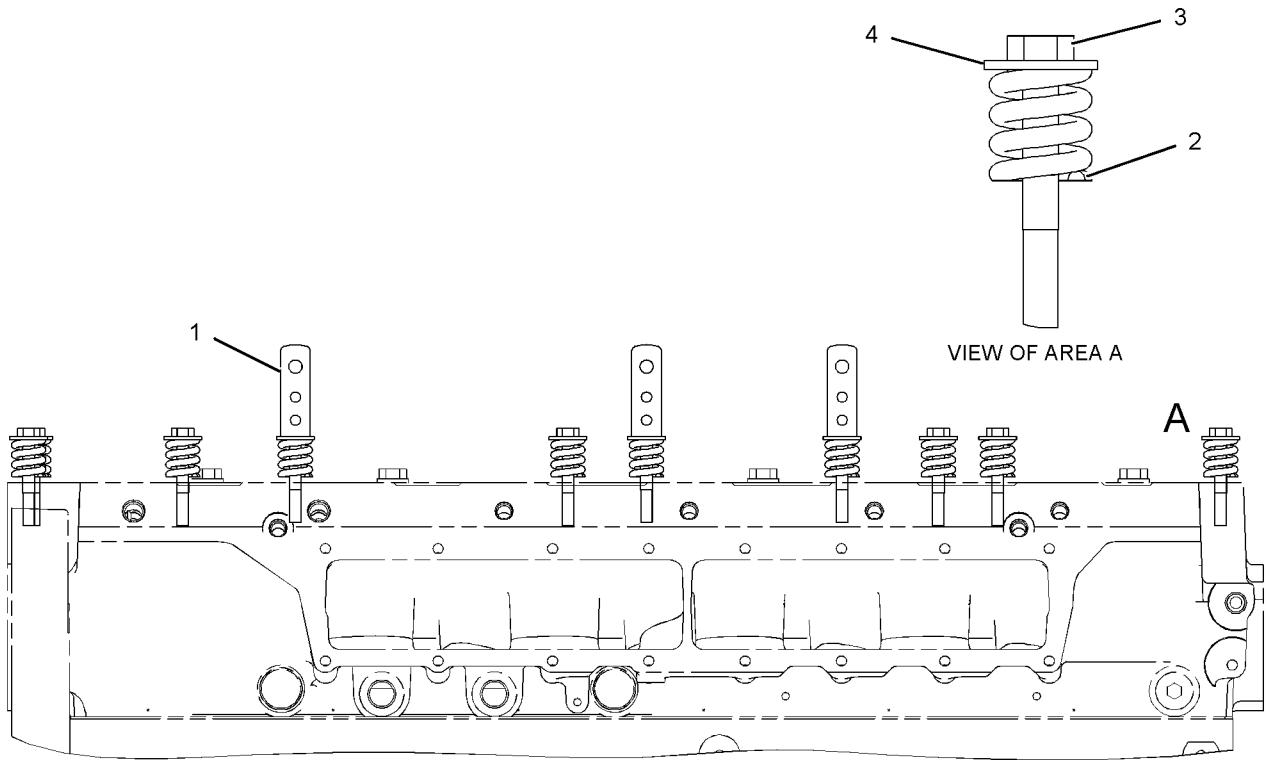

RIGHT SIDE VIEW

GRAPHIC #1 **<END>** g01125046

7E-0519 FLYWHEEL GP

S/N: KHX1-UP

PART OF 235-1424 ENGINE AR-COMPLETE

SMCS-1156 **i01451562**

NOTE	REF NO	GRAPHIC REF	PART NUMBER	QTY	PART NAME 1 2 3 4 5 6 (PRODUCT LEVEL)	SEE PAGE
	1	1	**160-8230**	1	FLYWHEEL AS	
		1	**7W-5095**	1	GEAR-FLYWHEEL (134-TEETH)	
	2	1	**5P-8245**	8	WASHER-HARD (13.5X25.5X3-MM THK)	
M	3	1	**6V-8197**	8	BOLT (M12X1.75X40-MM)	

M-METRIC PART

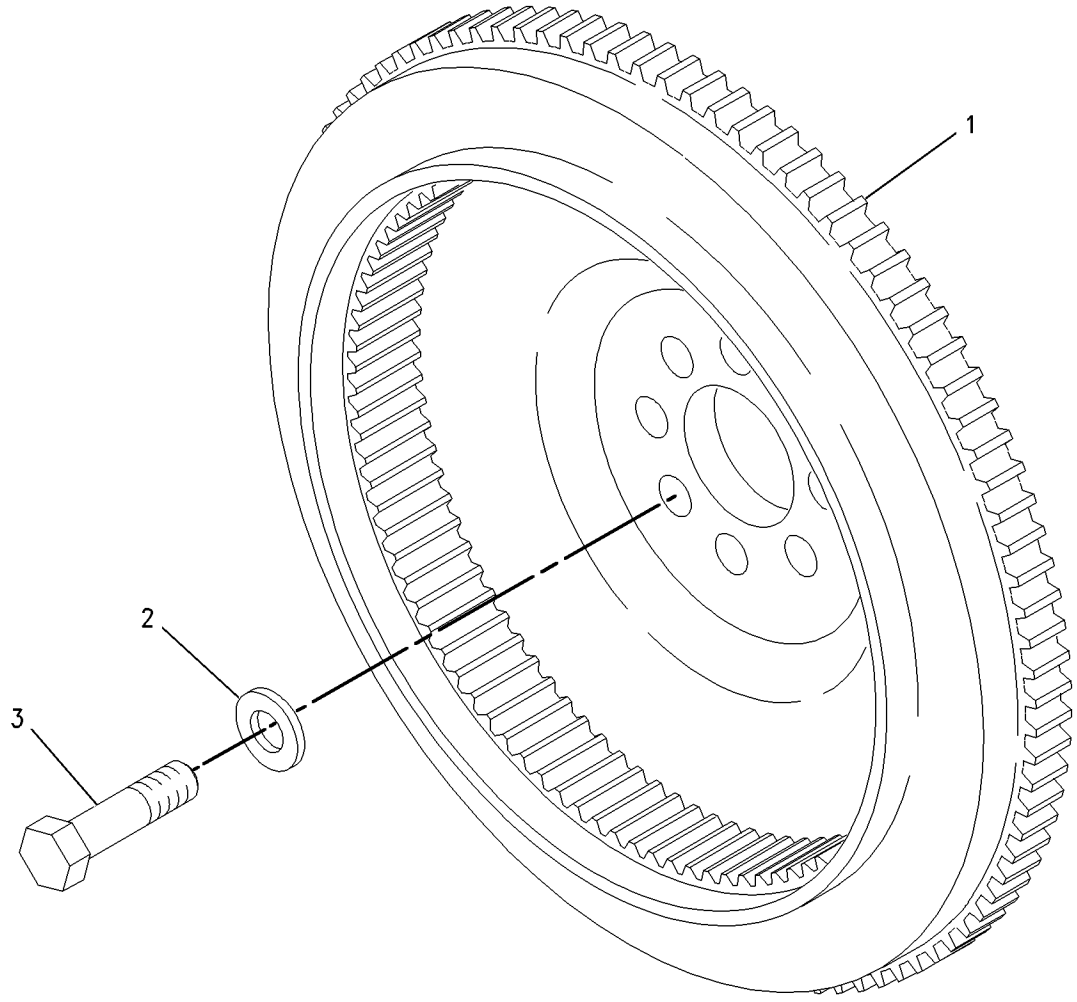

GRAPHIC #1 **<END>** g00759563

205-1321 GEAR GP-FRONT

S/N: KHX1-UP

PART OF 235-1425 ENGINE AR-CORE

SMCS-1206 **i01696307**

NOTE	REF NO	GRAPHIC REF	PART NUMBER	QTY	PART NAME 1 2 3 4 5 6 (PRODUCT LEVEL)	SEE PAGE
	1	1	**113-6069**	1	PLATE-THRUST	
	2	1	**115-4219**	1	PLATE-RETAINING	
	3	1	**200-4495**	1	SHAFT-IDLER	
	4	1	**205-1320**	1	GEAR AS-IDLER (50 TEETH)	
	4A	1	**115-4072**	1	BEARING	
M	5	1	**136-4183**	1	BOLT-12 POINT HEAD (M10X1.5X30MM)	
M	6	1	**6V-5843**	2	BOLT (M10X1.50X45MM)	

M-METRIC PART

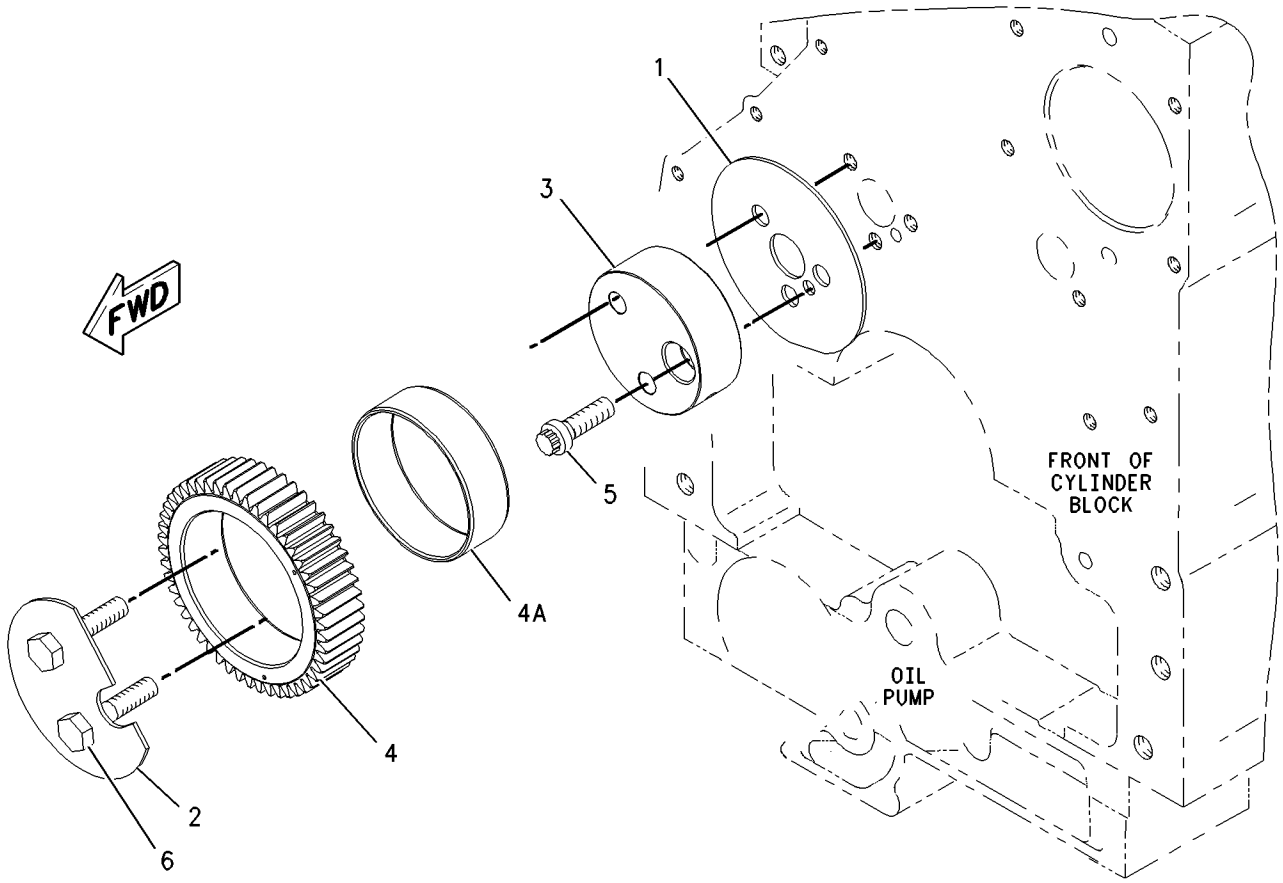

GRAPHIC #1 **<END>** g00873940

197-5210 HOUSING GP-FLYWHEEL

S/N: KHX1-UP

PART OF 235-1424 ENGINE AR-COMPLETE

SMCS-1157 **i02333440**

NOTE	REF NO	GRAPHIC REF	PART NUMBER	QTY	PART NAME 1 2 3 4 5 6 (PRODUCT LEVEL)	SEE PAGE
	1	1	**5F-0304**	1	PLUG	
	2	1	**100-6551**	1	HOUSING-FLYWHEEL	
	4	1	**2A-1162**	1	GASKET	
	5	1	**3D-2824**	1	SEAL-O-RING	
	6	1	**3J-7354**	1	SEAL-O-RING	
M	7	1	**6V-5842**	2	BOLT (M10X1.5X40-MM)	
M	9	1	**8T-0226**	10	BOLT (M14X2X45-MM)	
	10	1	**9S-4182**	1	PLUG	
	11	1	**9S-4183**	1	PLUG	
BF		1	**1U-8846**		SEALANT-GASKET	

B-USE AS REQUIRED
F-NOT SHOWN
M-METRIC PART

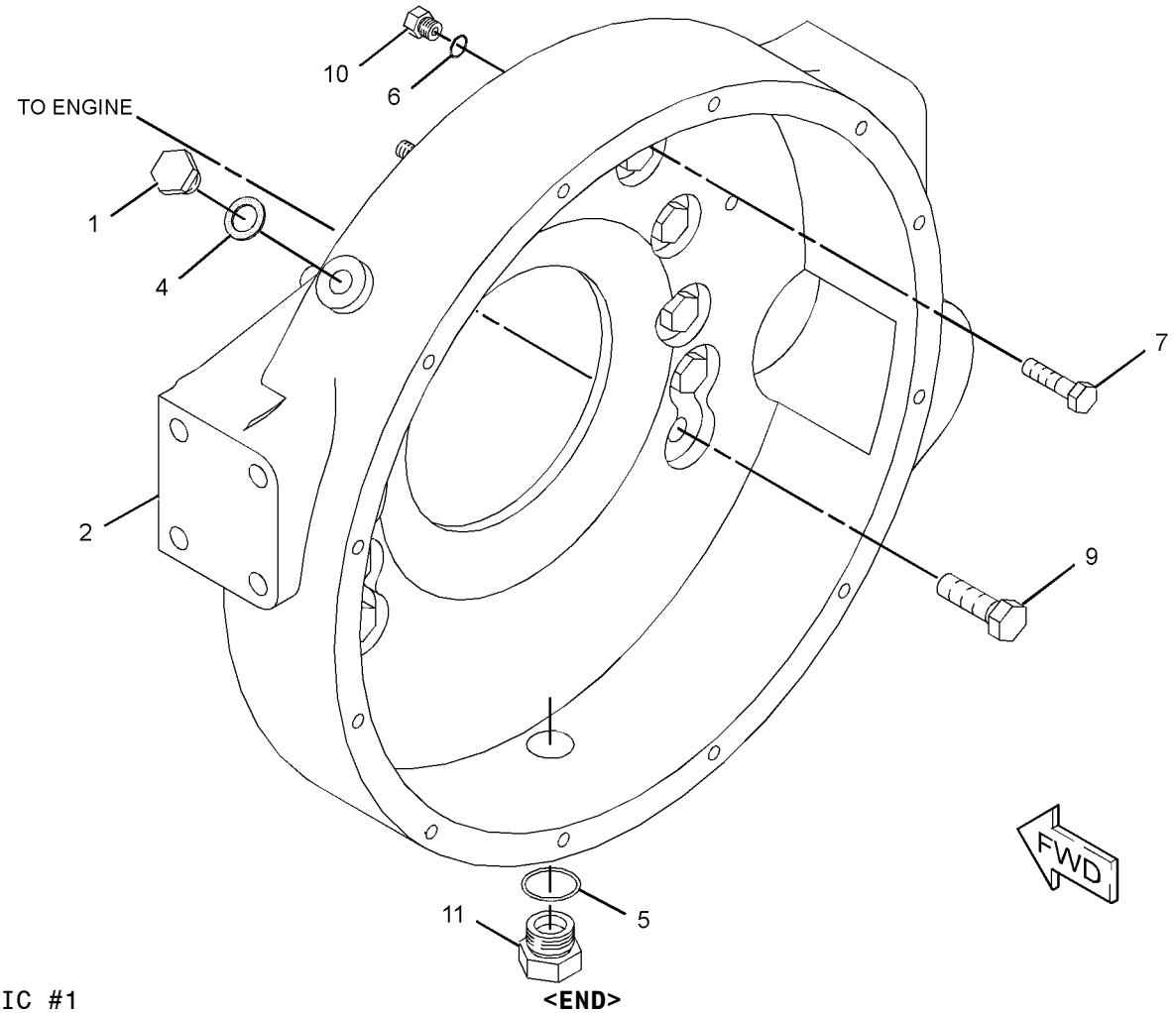

GRAPHIC #1 **<END>** g01170483

165-4446 HOUSING GP-FRONT

S/N: KHX1-UP

PART OF 235-1425 ENGINE AR-CORE

SMCS-1151, 1162 **i02061168**

NOTE	REF NO	GRAPHIC REF	PART NUMBER	QTY	PART NAME 1 2 3 4 5 6 (PRODUCT LEVEL)	SEE PAGE
	1	1	**236-2216**	1	HOUSING-FRONT	
M	2	1	**6V-3918**	4	BOLT (M8X1.25X50-MM)	
M	3	1	**6V-5217**	8	BOLT (M8X1.25X20-MM)	
	4	1	**9M-1974**	12	WASHER-HARD (8.8X16X2-MM THK)	
B	5	1	**1U-8846**		SEALANT-GASKET	

B-USE AS REQUIRED
M-METRIC PART

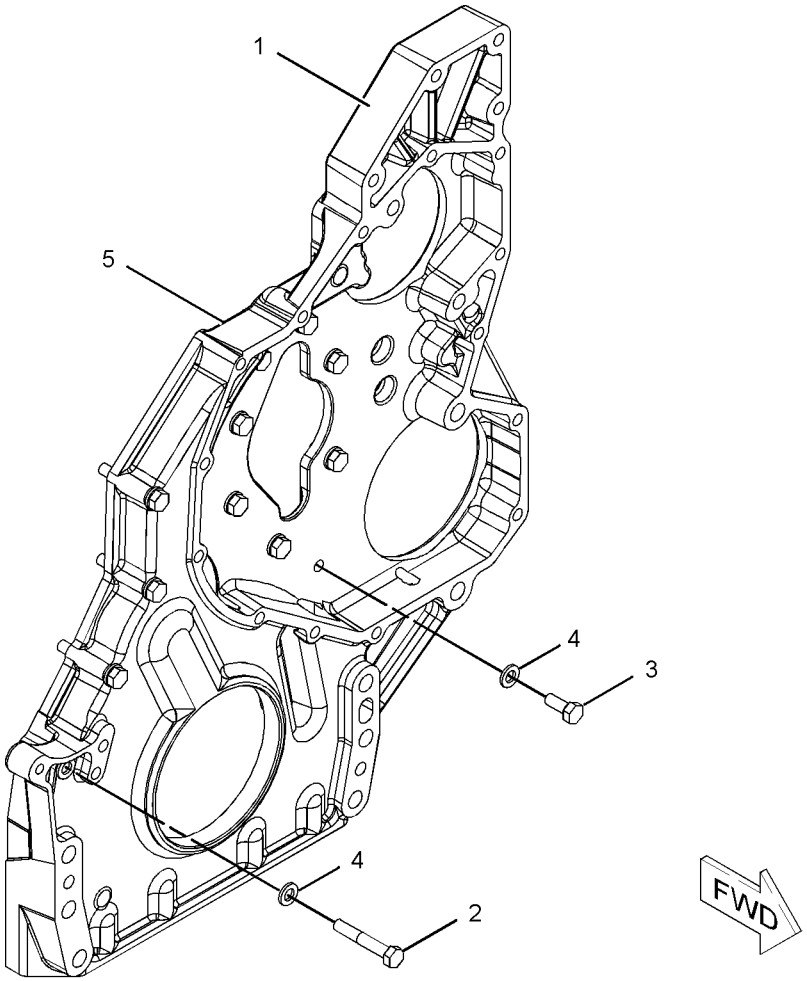

GRAPHIC #1 **<END>** g01060731

192-1563 IDLER GP-BELT–
ALTERNATOR, REFRIGERANT COMPRESSOR–
AXLE OIL COOLER PUMP

S/N: M3G1-UP

PART OF 237-4857 COMPRESSOR GP-REFRIGERANT, 241-0080 PUMP & MTG GP-AXLE OIL COOLER

AN ATTACHMENT

SMCS-1358, 1365, 1397, 1802 **i02046131**

NOTE	REF NO	GRAPHIC REF	PART NUMBER	QTY	PART NAME 1 2 3 4 5 6 (PRODUCT LEVEL)	SEE PAGE
	1	1	**151-2898**	1	SPACER (10.4X38.1X20-MM THK)	
	2	1	**144-5611**	1	PULLEY AS-IDLER	
	3	1	**145-2901**	1	COVER-DUST	
	4	1	**151-2900**	1	BOLT (M10X1.5X54.25-MM)	
	5	1	**6V-9027**	1	SEAL-O-RING	

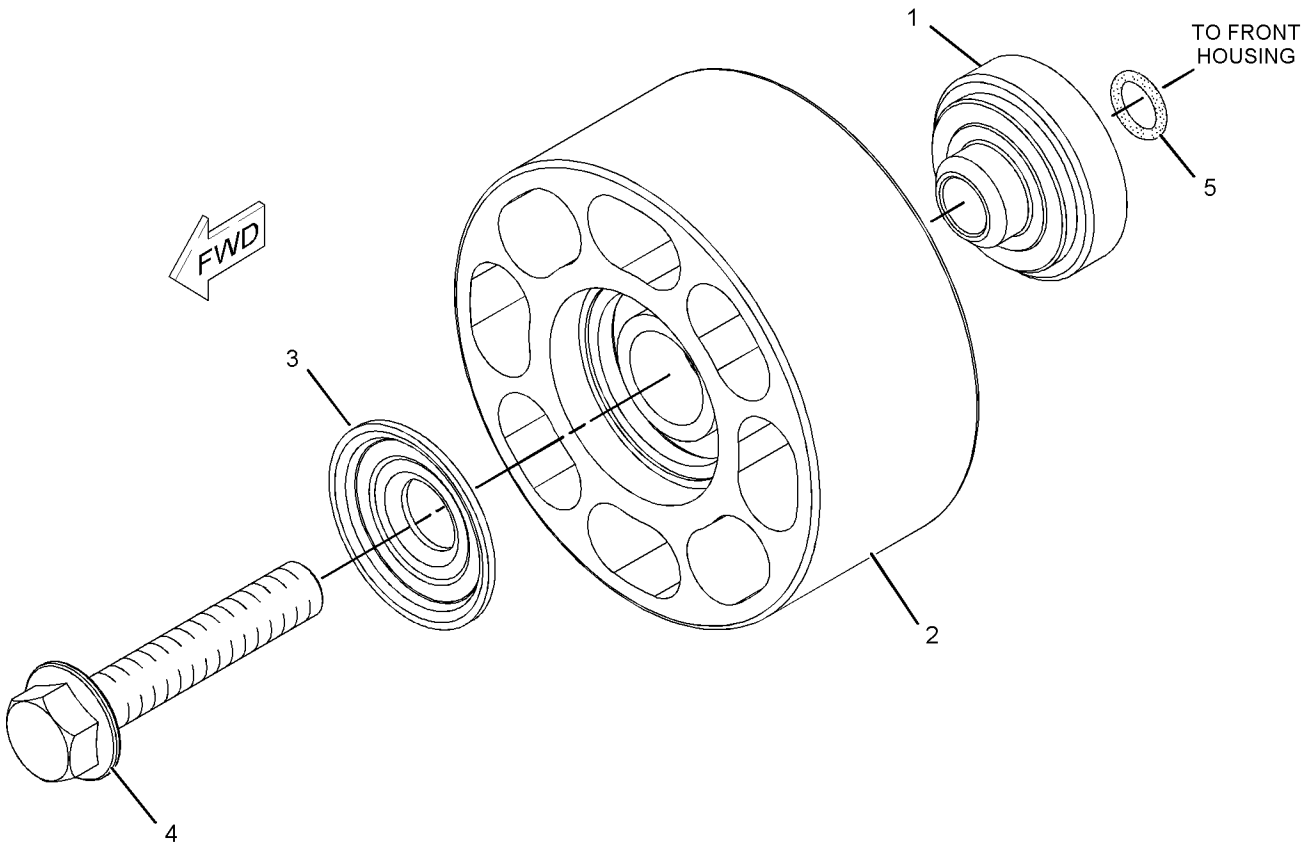

GRAPHIC #1 **<END>** g01051933

139-4081 LIFTER GP-VALVE

S/N: KHX1-UP

PART OF 232-3717 VALVE MECHANISM GP

SMCS-1209 **i01615435**

NOTE	REF NO	GRAPHIC REF	PART NUMBER	QTY	PART NAME 1 2 3 4 5 6 (PRODUCT LEVEL)	SEE PAGE
	1	1	**139-9476**	1	SHAFT AS-LIFTER	
		1	**2D-6642**	2	BALL	
	2	1	**7E-6794**	4	ARM AS-INJECTOR	
	3	1	**139-4084**	2	SPACER	

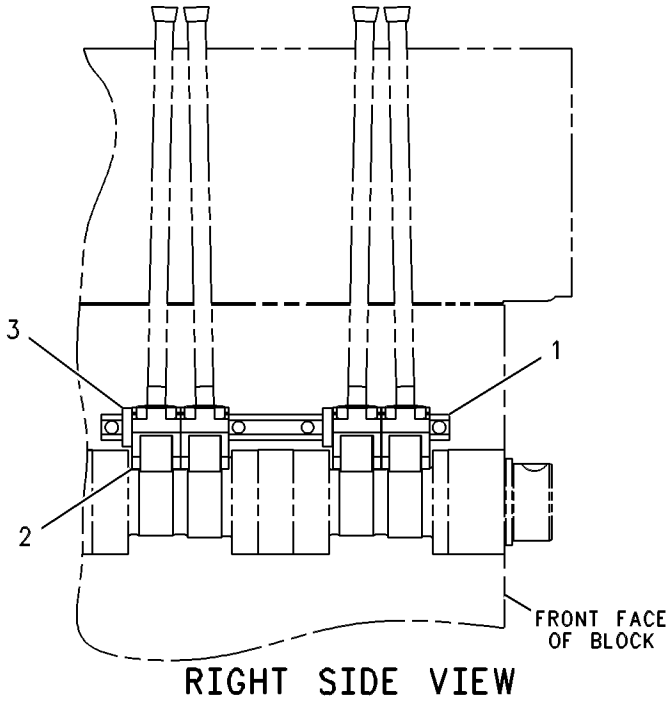

RIGHT SIDE VIEW

GRAPHIC #1 **<END>** g00288708

BASIC ENGINE

237-9822 LIFTING GP-ENGINE

S/N: KHX1-UP

PART OF 235-1424 ENGINE AR-COMPLETE

SMCS-1122 **i02215501**

NOTE	REF NO	GRAPHIC REF	PART NUMBER	QTY	PART NAME 1 2 3 4 5 6 (PRODUCT LEVEL)	SEE PAGE
	1	1	**154-0896**	1	PLATE-LIFTING	
	2	1	**8T-4121**	4	WASHER-HARD (11X21X2.5-MM THK)	
M	3	1	**8T-4136**	4	BOLT (M10X1.5X25-MM)	

M-METRIC PART

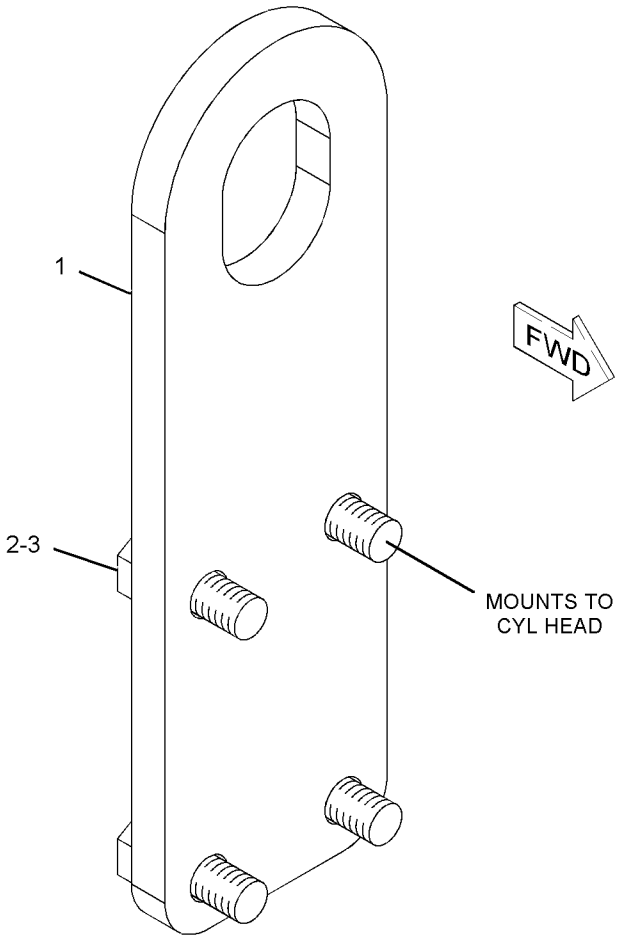

GRAPHIC #1 **<END>** g01118450

215-6982 MOUNTING GP-ALTERNATOR

S/N: KHX1-UP

PART OF 235-1424 ENGINE AR-COMPLETE

SMCS-1405 **i02214632**

NOTE	REF NO	GRAPHIC REF	PART NUMBER	QTY	PART NAME 1 2 3 4 5 6 (PRODUCT LEVEL)	SEE PAGE
	1	1	**211-2101**	2	SLEEVE	
	2	1	**215-6981**	1	BRACKET-MOUNTING	
M	3	1	**8T-4137**	1	BOLT (M10X1.5X20-MM)	
M	4	1	**8T-4195**	2	BOLT (M10X1.5X30-MM)	

M-METRIC PART

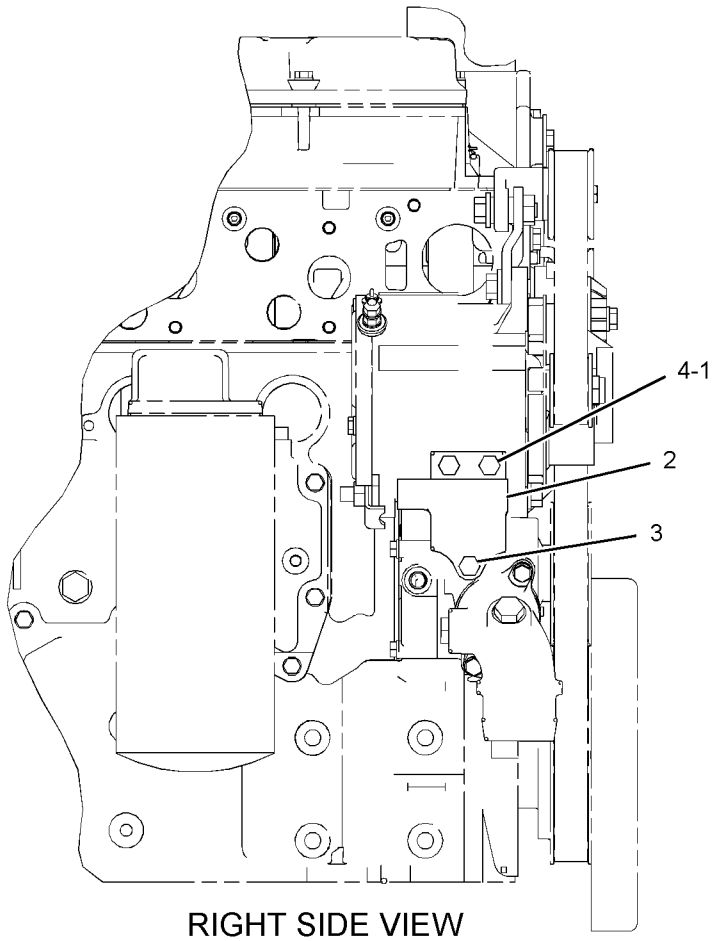

RIGHT SIDE VIEW

GRAPHIC #1 **<END>** g01108789

116-8666 MOUNTING GP-ENGINE & TMSN

S/N: M3G1-UP

PART OF 237-3995 INSTALLATION AR-ENGINE

SMCS-1152, 1154, 3082 **i01325505**

NOTE	REF NO	GRAPHIC REF	PART NUMBER	QTY	PART NAME 1 2 3 4 5 6 (PRODUCT LEVEL)	SEE PAGE
	1	1	**3E-4883**	4	SLEEVE	
	2	1	**7X-2622**	4	WASHER (22X115X10-MM THK)	
M	3	1	**8C-6855**	4	BOLT (M14X2-THD)	
M	4	1	**8T-3653**	4	BOLT (M14X2X80-MM)	
	5	1	**9W-9930**	4	MOUNT AS	
	6	1	**126-7757**	2	BRACKET AS	
	7	1	**128-1008**	2	SUPPORT	
	8	1	**7X-0510**	8	WASHER-HARD (15.5X29X3-MM THK)	
M	9	1	**7X-2563**	8	BOLT (M20X2.5X60-MM)	
	10	1	**8T-4121**	11	WASHER-HARD (11X21X2.5-MM THK)	
	11	1	**8T-4123**	12	WASHER-PLATED (22X35X3.5-MM THK)	
M	12	1	**8T-4195**	11	BOLT (M10X1.5X30-MM)	
M	13	1	**8T-6381**	4	BOLT (M20X2.5X120-MM)	
AB	14	1	**9S-3263**		COMPOUND-THREAD LOCK	

A-NOT PART OF THIS GROUP
B-USE AS REQUIRED
M-METRIC PART

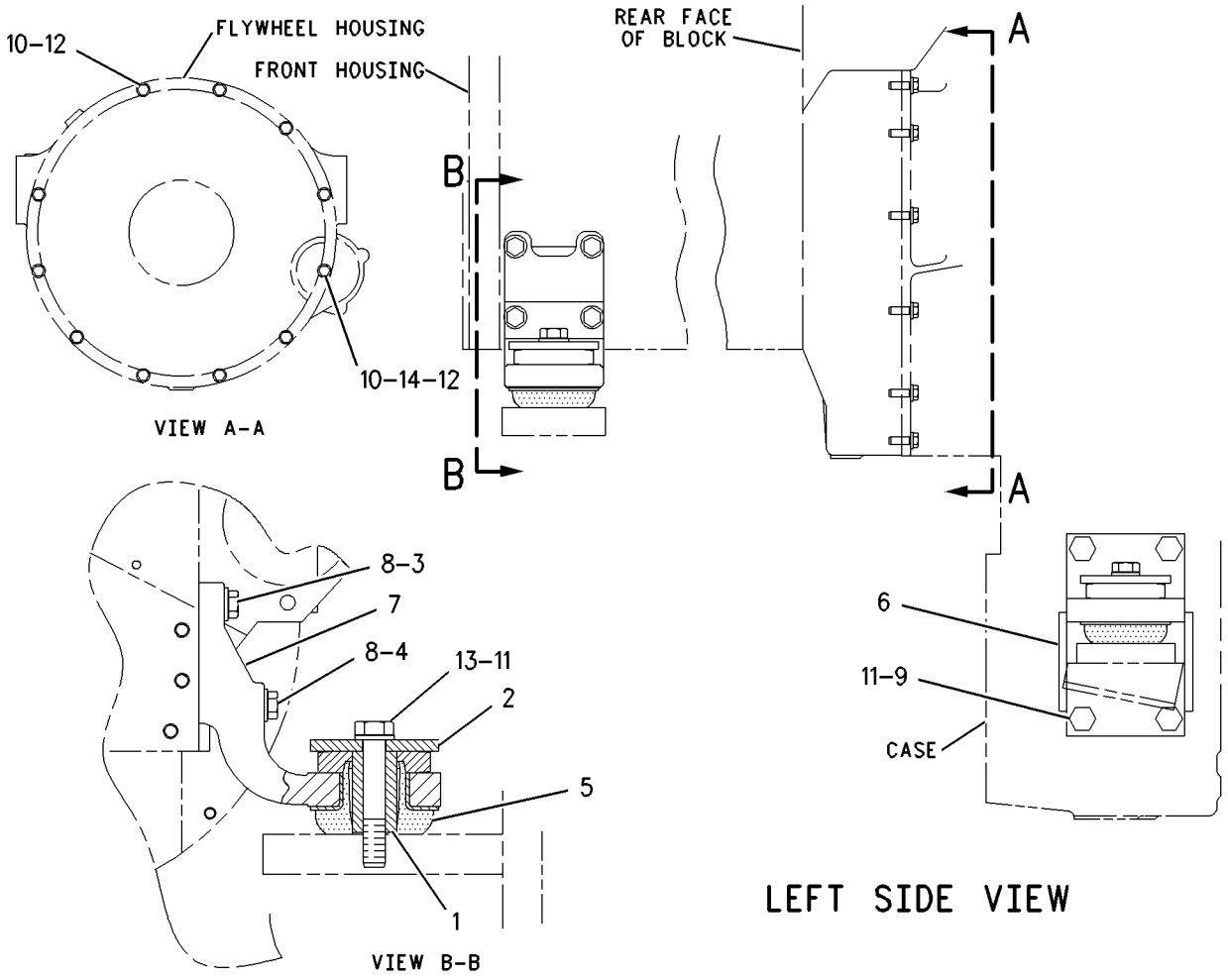

GRAPHIC #1 **<END>** g00701748

BASIC ENGINE

201-6850 PAN GP-OIL

S/N: KHX1-UP
PAN CAPACITY - 28L
PART OF 235-1424 ENGINE AR-COMPLETE

SMCS-1302 **i02048996**

NOTE	REF NO	GRAPHIC REF	PART NUMBER	QTY	PART NAME 1 2 3 4 5 6 (PRODUCT LEVEL)	SEE PAGE
	1	1	**166-2905**	1	SEAL-INTEGRAL	
	2	1	**200-4516**	1	PAN-OIL	
M	3	1	**6V-3918**	36	BOLT (M8X1.25X50-MM)	
	4	1	**9M-1974**	36	WASHER-HARD (8.8X16X2-MM THK)	
B	5	1	**4C-9612**		SEALANT-SILICONE	

B-USE AS REQUIRED
M-METRIC PART

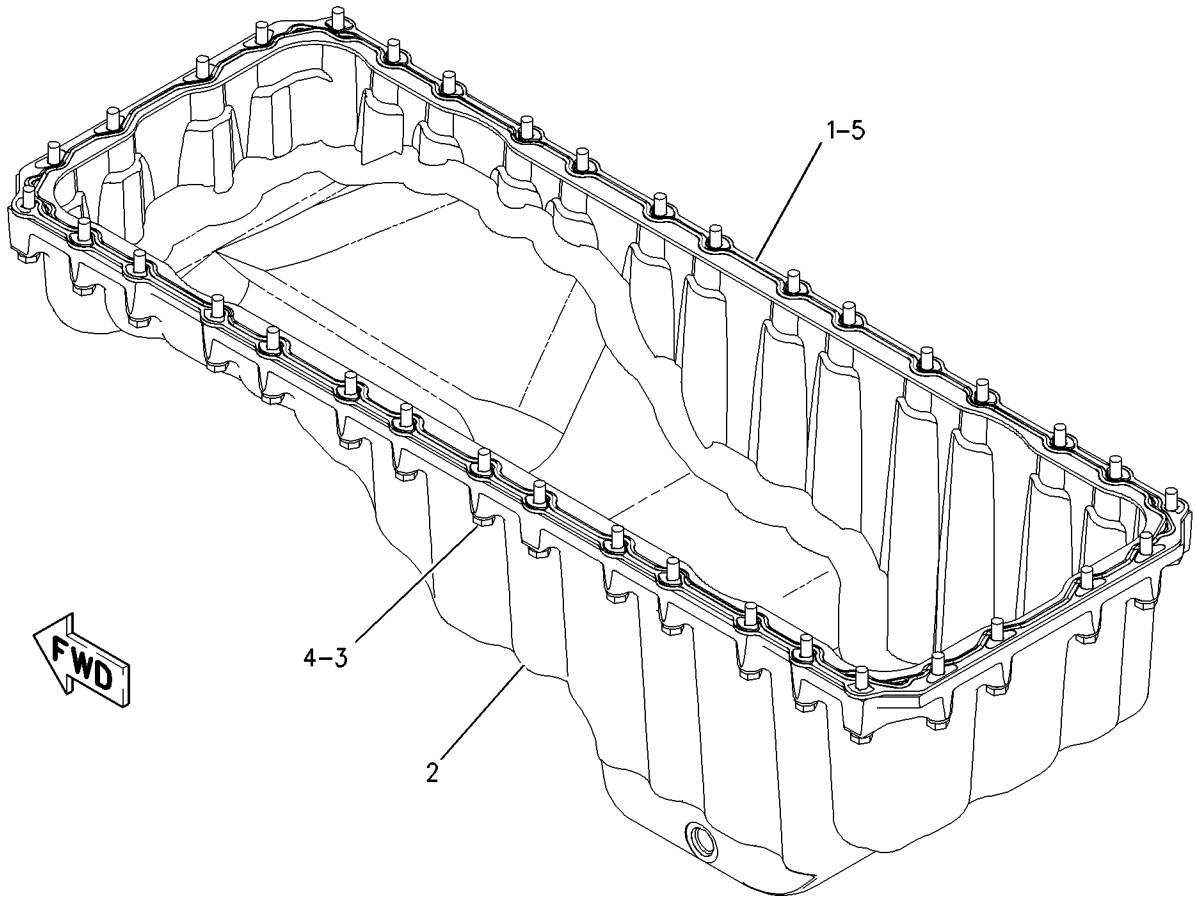

GRAPHIC #1 **<END>** g01001517

BASIC ENGINE

212-3652 PISTON & ROD GP

S/N: KHX1-UP
16.5:1 COMPRESSION RATIO
PART OF 235-1425 ENGINE AR-CORE

SMCS-1225 **i02421065**

NOTE	REF NO	GRAPHIC REF	PART NUMBER	QTY	PART NAME 1 2 3 4 5 6 (PRODUCT LEVEL)	SEE PAGE
R	1	1	**213-3193**	1	ROD AS-CONNECTING (NON-DRILLED)	
	1A	1	**2W-0027**	1	BEARING (EYE END)	
	1B	1	**195-0321**	2	BOLT	
	2	1	**224-6638**	1	BEARING-CONNECTING ROD (STANDARD)	
AB		1	**7C-6976**		BEARING-CONNECTING ROD (0.25-MM US)	
AB		1	**7C-6977**		BEARING-CONNECTING ROD (0.5-MM US)	
	3	1	**238-2706**	1	RING-PISTON-OIL	
	4	1	**197-9353**	1	RING-PISTON (INTERMEDIATE)	
	5	1	**197-9386**	1	RING-PISTON-TOP	
	6	1	**197-9371**	1	PIN-PISTON	
	7	1	**280-2748**	1	TUBE AS-OIL JET	
	8	1	**238-2720**	1	BODY AS-PISTON	
M	9	1	**6V-3940**	1	BOLT (M8X1.25X25-MM)	
	10	1	**197-9372**	2	RETAINER-PIN	

A-NOT PART OF THIS GROUP
B-USE AS REQUIRED
M-METRIC PART
R-REMFG PART MAY BE AVAILABLE

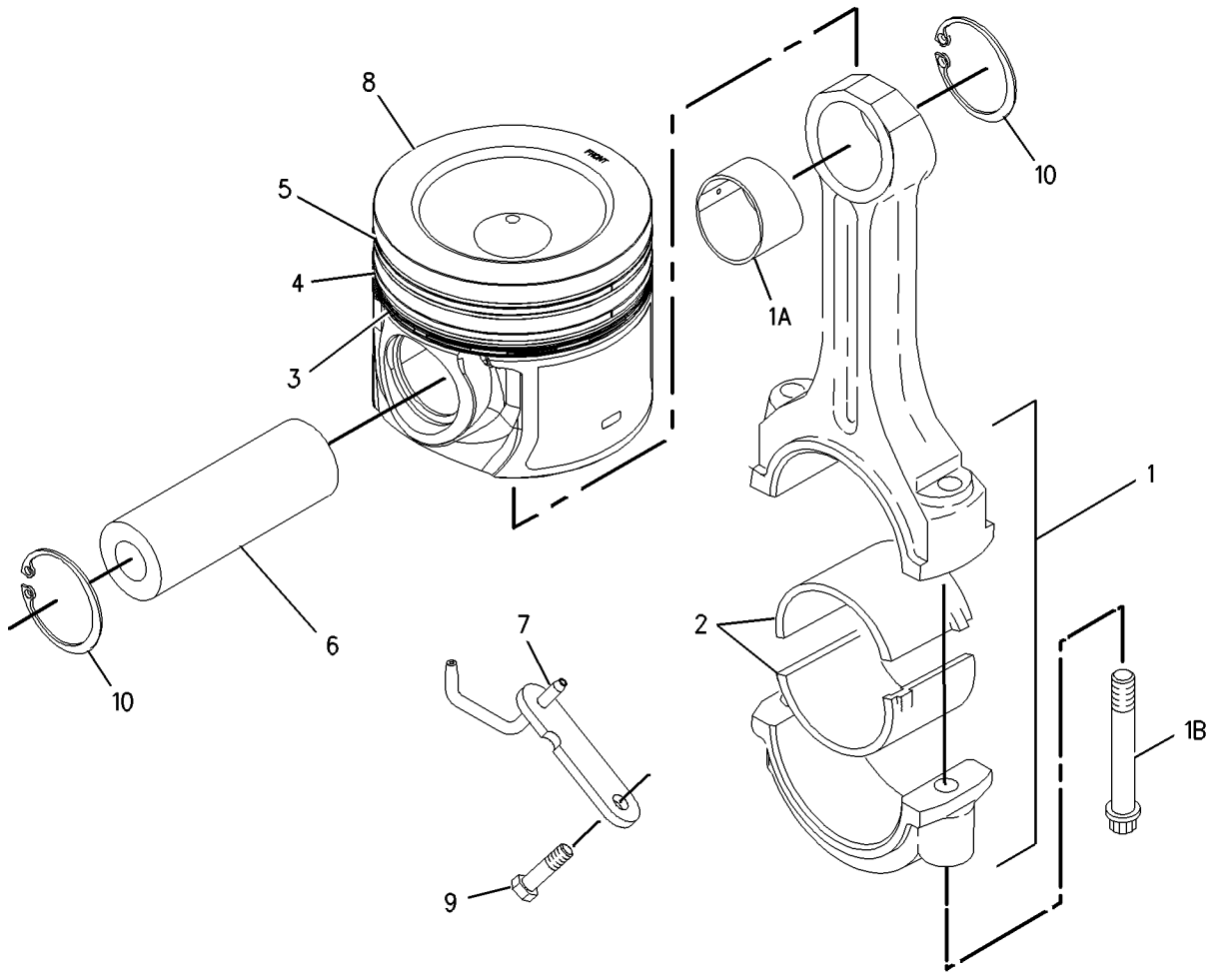

GRAPHIC #1 **<END>** g00903037

159-0303 PLUG GP-CYLINDER BLOCK

S/N: KHX1-UP

PART OF 235-1424 ENGINE AR-COMPLETE

SMCS-1201 **i01370005**

NOTE	REF NO	GRAPHIC REF	PART NUMBER	QTY	PART NAME 1 2 3 4 5 6 (PRODUCT LEVEL)	SEE PAGE
M	1	1	**8T-0293**	1	BOLT (M12X1.75X20-MM)	
	2	1	**6F-7062**	1	WASHER (12.7X19.05X1.83-MM THK)	
	3	1	**9S-8008**	2	PLUG	
	4	1	**3D-2824**	2	SEAL-O-RING	

M-METRIC PART

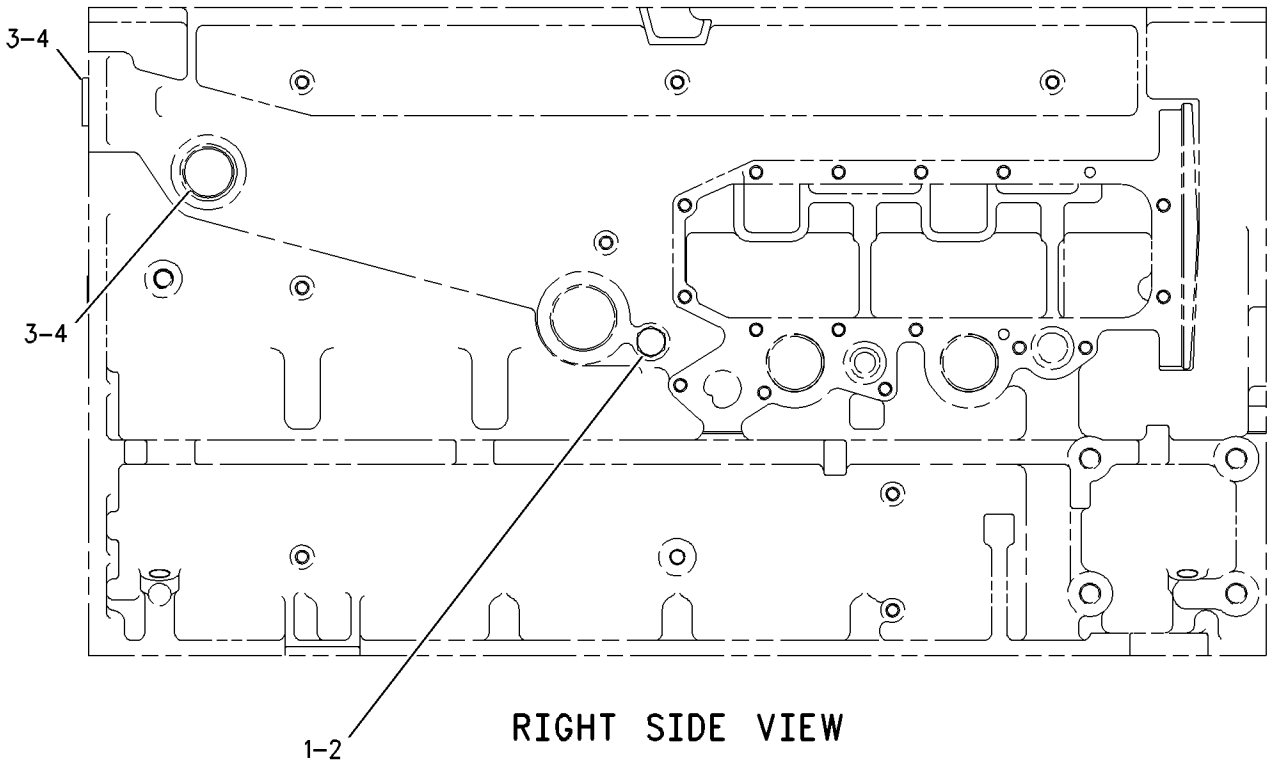

RIGHT SIDE VIEW

GRAPHIC #1 **<END>** g00677138

162-8068 PLUG GP-ENGINE

S/N: KHX1-UP

PART OF 235-1424 ENGINE AR-COMPLETE

SMCS-1000 **i01743134**

NOTE	REF NO	GRAPHIC REF	PART NUMBER	QTY	PART NAME 1 2 3 4 5 6 (PRODUCT LEVEL)	SEE PAGE
	1	1	**9S-8005**	1	PLUG-O RING	
	2	1	**3K-0360**	1	SEAL-O-RING	

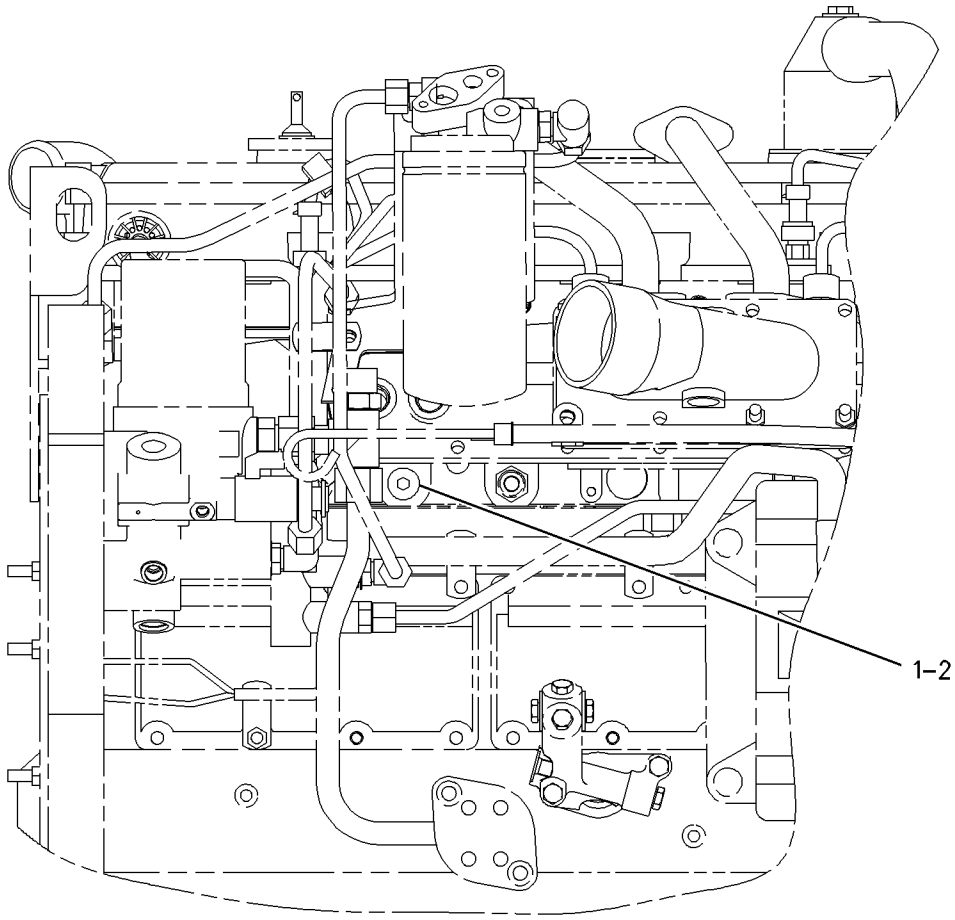

LEFT SIDE VIEW

GRAPHIC #1 **<END>** g00892422

172-5754 PULLEY GP-IDLER—BELT TENSIONER

S/N: KHX1-UP

PART OF 235-1424 ENGINE AR-COMPLETE

SMCS-1358 **i02056001**

NOTE	REF NO	GRAPHIC REF	PART NUMBER	QTY	PART NAME 1 2 3 4 5 6 (PRODUCT LEVEL)	SEE PAGE
	1	1	**173-1498**	1	PULLEY AS-IDLER (8-GROOVE)	
	1A	1	**166-6358**	1	COVER-DUST	
	1B	1	**151-2900**	1	BOLT (M10X1.5X54.25-MM)	
	2	1	**190-0643**	1	BELT TIGHTENER (IDLER PULLEY)	
	3	1	**8T-4121**	1	WASHER-HARD (11X21X2.5-MM THK)	
M	4	1	**8T-4172**	1	BOLT (M10X1.5X80-MM)	

M-METRIC PART

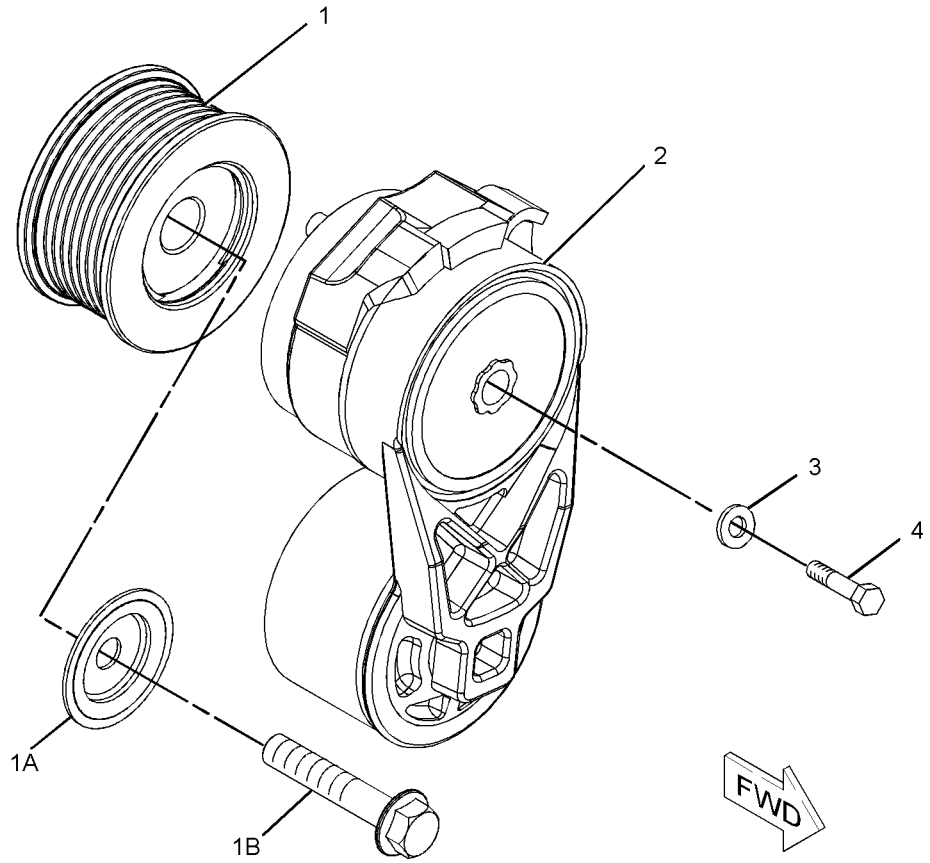

GRAPHIC #1 **<END>** g01060759

115-4210 SEAL GP-CRANKSHAFT

S/N: KHX1-UP

PART OF 235-1424 ENGINE AR-COMPLETE

SMCS-1160, 1161 **i01146413**

NOTE	REF NO	GRAPHIC REF	PART NUMBER	QTY	PART NAME 1 2 3 4 5 6 (PRODUCT LEVEL)	SEE PAGE
	1	1	**7E-7589**	1	SEAL GP-CRANKSHAFT	
	2	1	**119-2921**	1	SEAL GP-CRANKSHAFT	
	3	1	**4R-9999**	1	EXCLUDER-CRANKSHAFT SEAL	

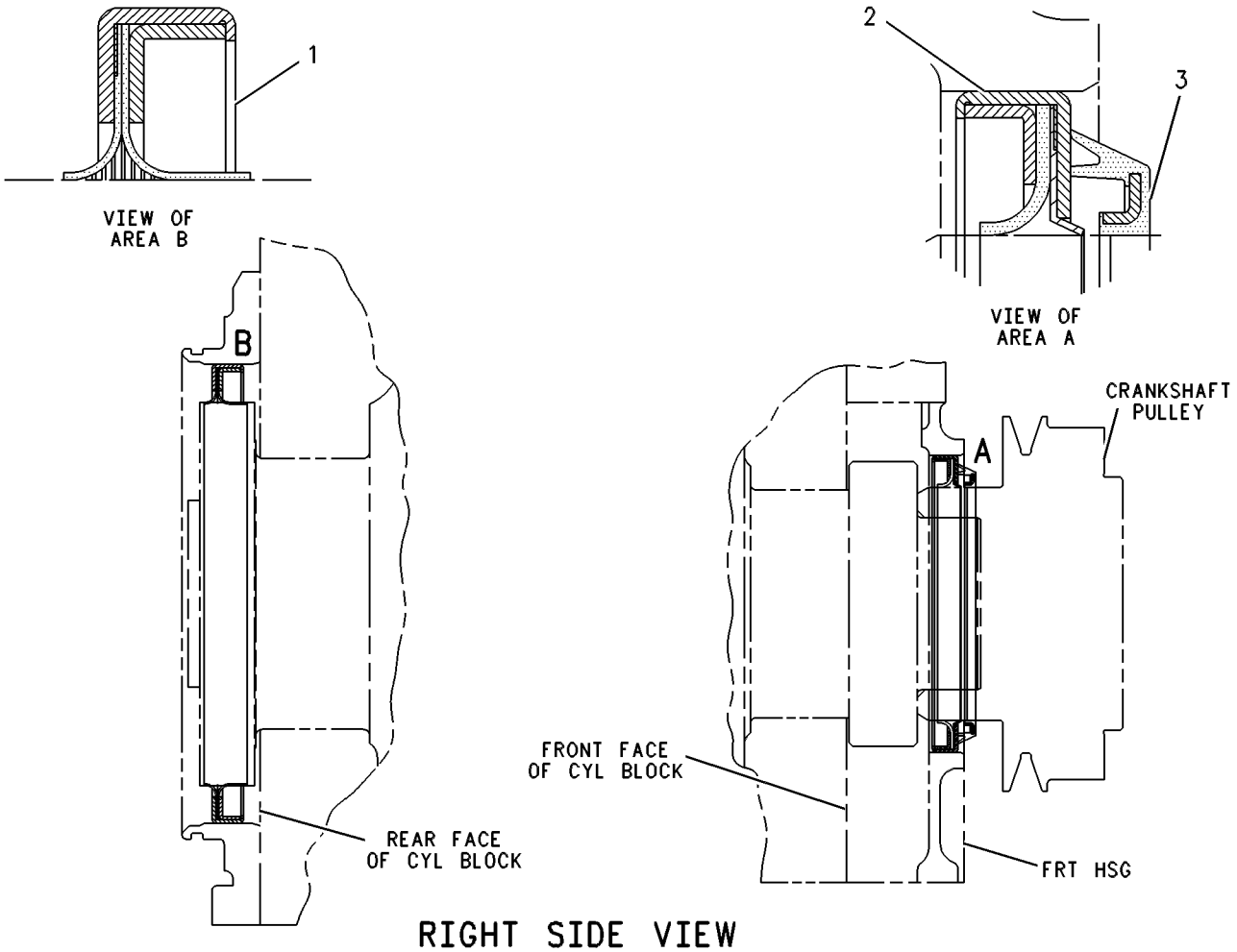

RIGHT SIDE VIEW

GRAPHIC #1 **<END>** g00109240

7C-1770 SEAL GP-FLYWHEEL HOUSING

S/N: KHX1-UP

PART OF 235-1424 ENGINE AR-COMPLETE

SMCS-1157 **i01746891**

NOTE	REF NO	GRAPHIC REF	PART NUMBER	QTY	PART NAME 1 2 3 4 5 6 (PRODUCT LEVEL)	SEE PAGE
B	1	1	**1U-8846**		SEALANT-GASKET	
	2	1	**3J-7354**	1	SEAL-O-RING (8.92MM ID)	
B	3	1	**3D-2824**	1	SEAL-O-RING (23.47MM ID)	

B-USE AS REQUIRED

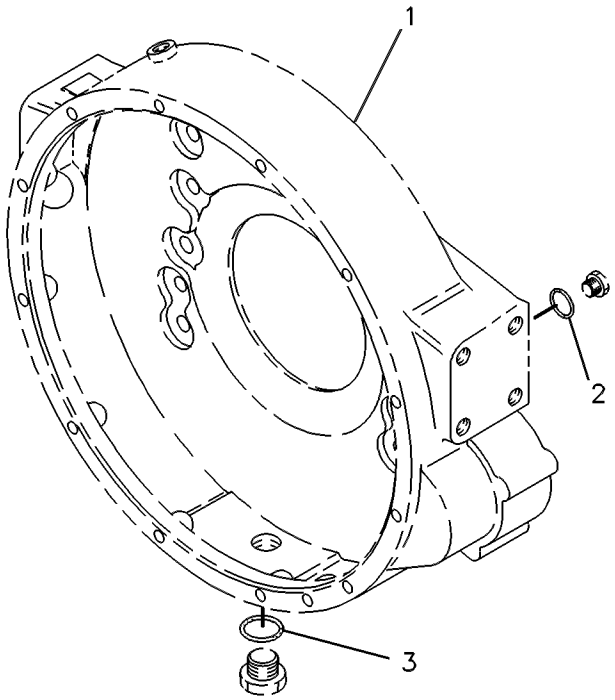

GRAPHIC #1 **<END>** g00108872

BASIC ENGINE

232-3717 VALVE MECHANISM GP

S/N: KHX1-UP

PART OF 235-1425 ENGINE AR-CORE

SMCS-1102, 1121, 1123 **i02215717**

NOTE	REF NO	GRAPHIC REF	PART NUMBER	QTY	PART NAME 1 2 3 4 5 6 (PRODUCT LEVEL)	SEE PAGE
	1	1	**133-6379**	12	ROD	
	2	1	**219-3309**	6	BRIDGE-VALVE	
Y	3	1	*139-4081*	3	LIFTER GP-VALVE	37
M	4	1	**8T-8442**	12	BOLT-SOCKET HEAD (M6X1X30-MM)	
	5	1	**3E-9412**	6	DOWEL	
Y	6	1	*235-5528*	1	VALVE MECHANISM GP	49
M	7	1	**6V-5696**	11	BOLT (M12X1.75X80-MM)	
	8	1	**9M-1974**	2	WASHER-HARD (8.8X16X2-MM THK)	
	9	1	**3H-7654**	9	WASHER-HARD (13.5X22.5X3-MM THK)	
M	10	1	**8T-0100**	2	BOLT (M8X1.25X60-MM)	
	11	1	**232-1754**	1	CLIP	

M-METRIC PART
Y-SEPARATE ILLUSTRATION

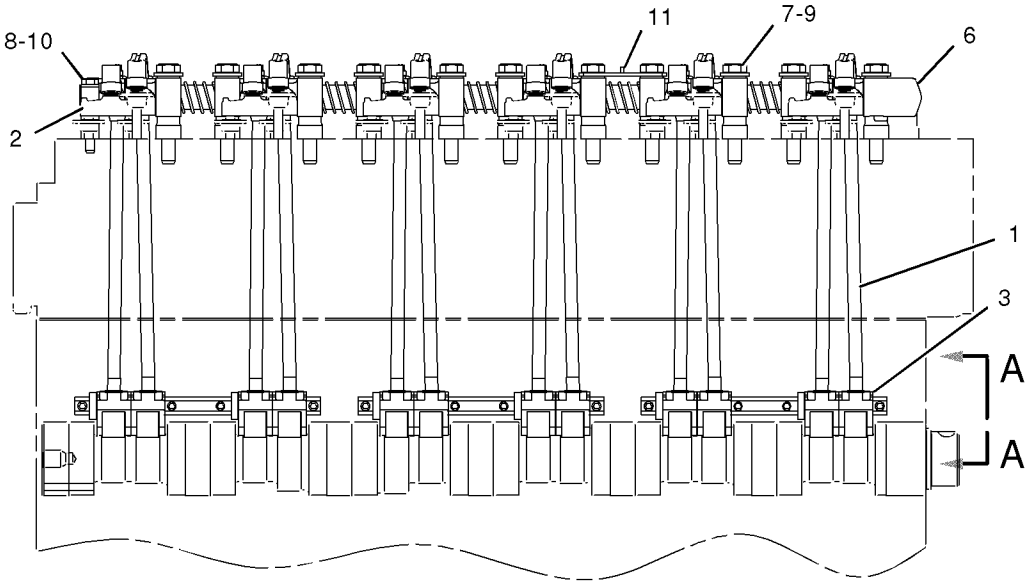

RIGHT SIDE VIEW

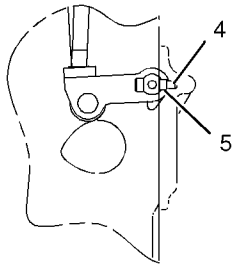

VIEW A-A

GRAPHIC #1

<END>

g01028897

235-5528 VALVE MECHANISM GP

S/N: KHX1-UP

PART OF 232-3717 VALVE MECHANISM GP

SMCS-1102, 1121, 1123 **i02215718**

NOTE	REF NO	GRAPHIC REF	PART NUMBER	QTY	PART NAME 1 2 3 4 5 6 (PRODUCT LEVEL)	SEE PAGE
	1	1	**137-6717**	5	SPRING	
	2	1	*222-1185*	6	ROCKER ARM GP (INTAKE)	
					(EACH INCLUDES)	
M	2A	1	**2Y-5829**	1	NUT (M10X1.5-THD)	
M		1	**183-4365**	1	SCREW-ADJUSTMENT (M10X1.5-THD)	
R	2B	1	**153-8467**	1	ROCKER ARM AS	
	2C	1	**173-5549**	1	SEAL-O-RING	
	2D	1	**145-7376**	1	INSERT	
	2E	1	**145-7385**	1	SOCKET	
	3	1	**138-8403**	1	STAND	
	4	1	*222-1186*	6	ROCKER ARM GP (EXHAUST)	
					(EACH INCLUDES)	
M	4A	1	**2Y-5829**	1	NUT (M10X1.5-THD)	
M		1	**183-4365**	1	SCREW-ADJUSTMENT (M10X1.5-THD)	
R	4B	1	**153-8470**	1	ROCKER ARM AS	
	4C	1	**173-5549**	1	SEAL-O-RING	
	4D	1	**145-7376**	1	INSERT	
	4E	1	**145-7385**	1	SOCKET	
	5	1	**235-5527**	10	STAND	
	6	1	**138-8402**	1	STAND (END)	
	7	1	**138-9868**	1	RING-RETAINING	
	8	1	**8H-5244**	1	DOWEL	
	9	1	**138-7198**	1	SHAFT AS	
		1	**5B-1866**	1	PLUG-CUP	

M-METRIC PART
R-REMFG PART MAY BE AVAILABLE

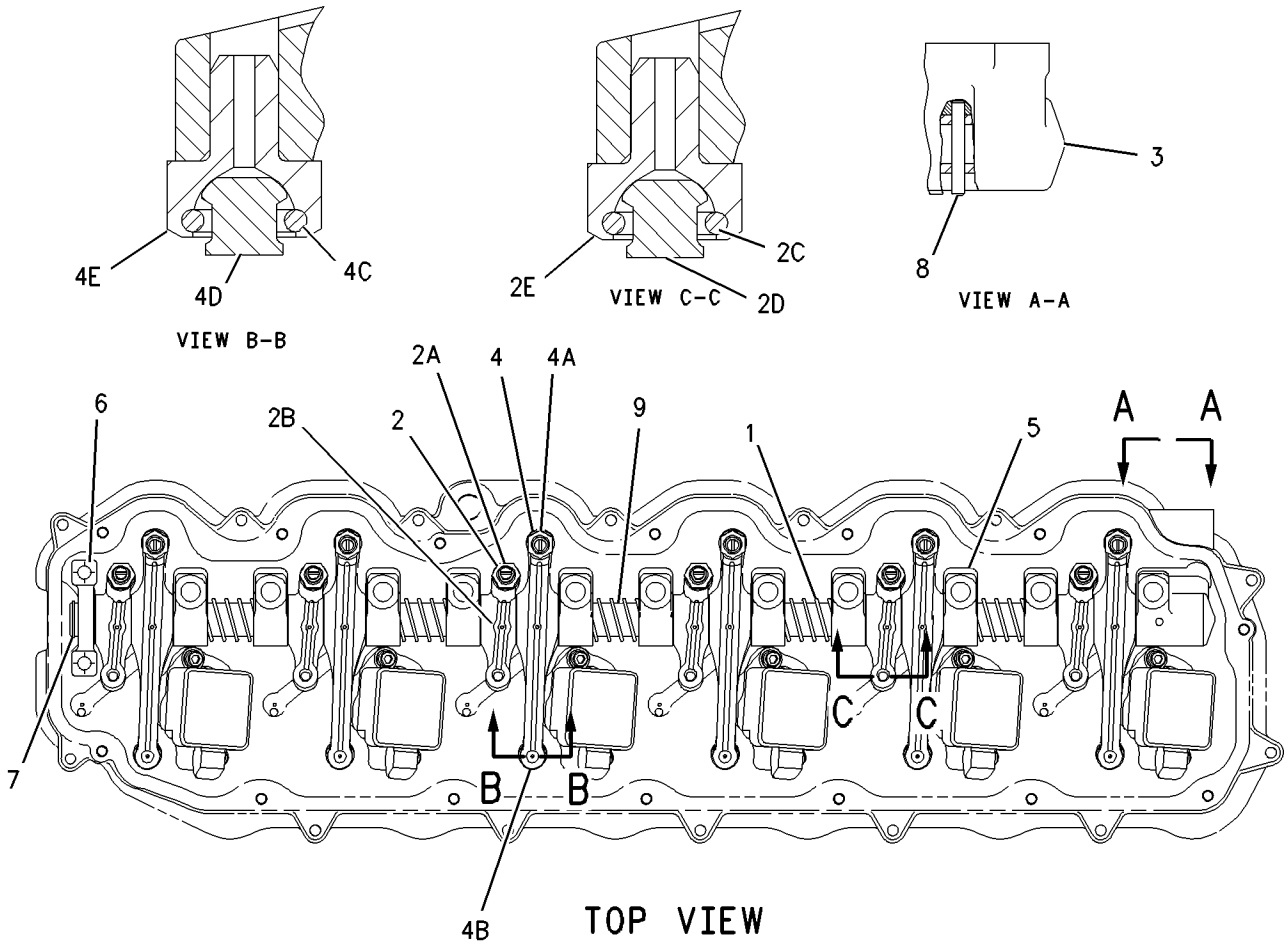

GRAPHIC #1 **<END>** g00901133

191-0523 ADAPTER GP-OIL LINE–ENGINE

S/N: KHX1-UP

PART OF 191-0461 LINES GP-INJECTOR HYD PUMP

SMCS-1307 **i02215823**

NOTE	REF NO	GRAPHIC REF	PART NUMBER	QTY	PART NAME 1 2 3 4 5 6 (PRODUCT LEVEL)	SEE PAGE
	1	1	**191-0522**	1	ADAPTER	
	2	1	**033-6027**	1	SEAL-O-RING	

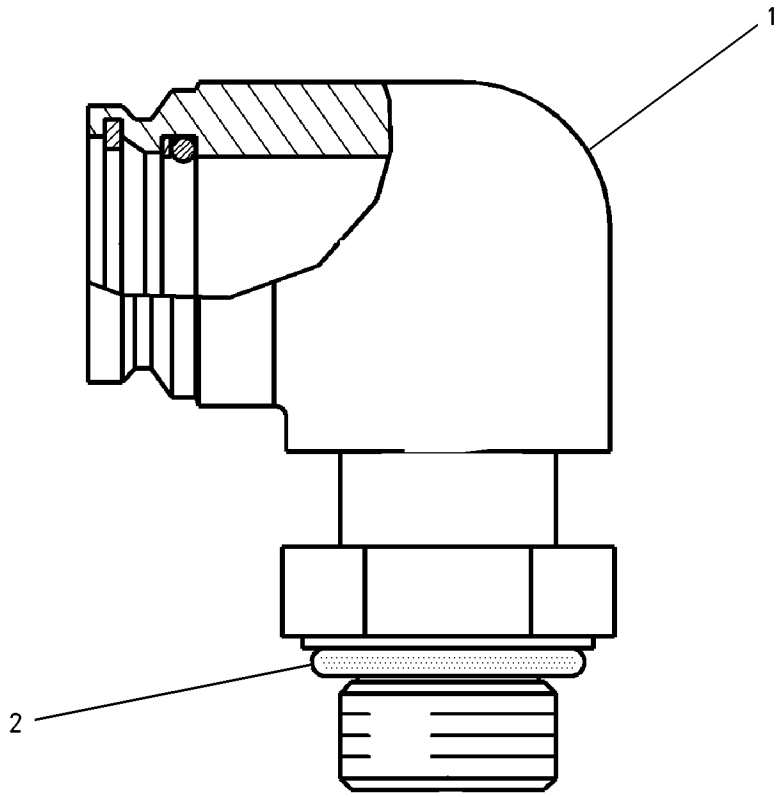

GRAPHIC #1 **<END>** g00807476

LUBRICATION SYSTEM

222-5946 BREATHER GP

S/N: KHX1-UP

PART OF 235-1424 ENGINE AR-COMPLETE

SMCS-1317 **i02214598**

NOTE	REF NO	GRAPHIC REF	PART NUMBER	QTY	PART NAME 1 2 3 4 5 6 (PRODUCT LEVEL)	SEE PAGE
	1	1	**164-0210**	1	BREATHER AS (CRANKCASE)	
M	2	1	**143-4654**	1	BOLT (M8X1.25X105-MM)	
	3	1	**8H-2046**	1	SEAL-O-RING (BREATHER)	
	4	1	**9N-0869**	1	WASHER-HARD (8.8X25.5X2-MM THK)	

M-METRIC PART

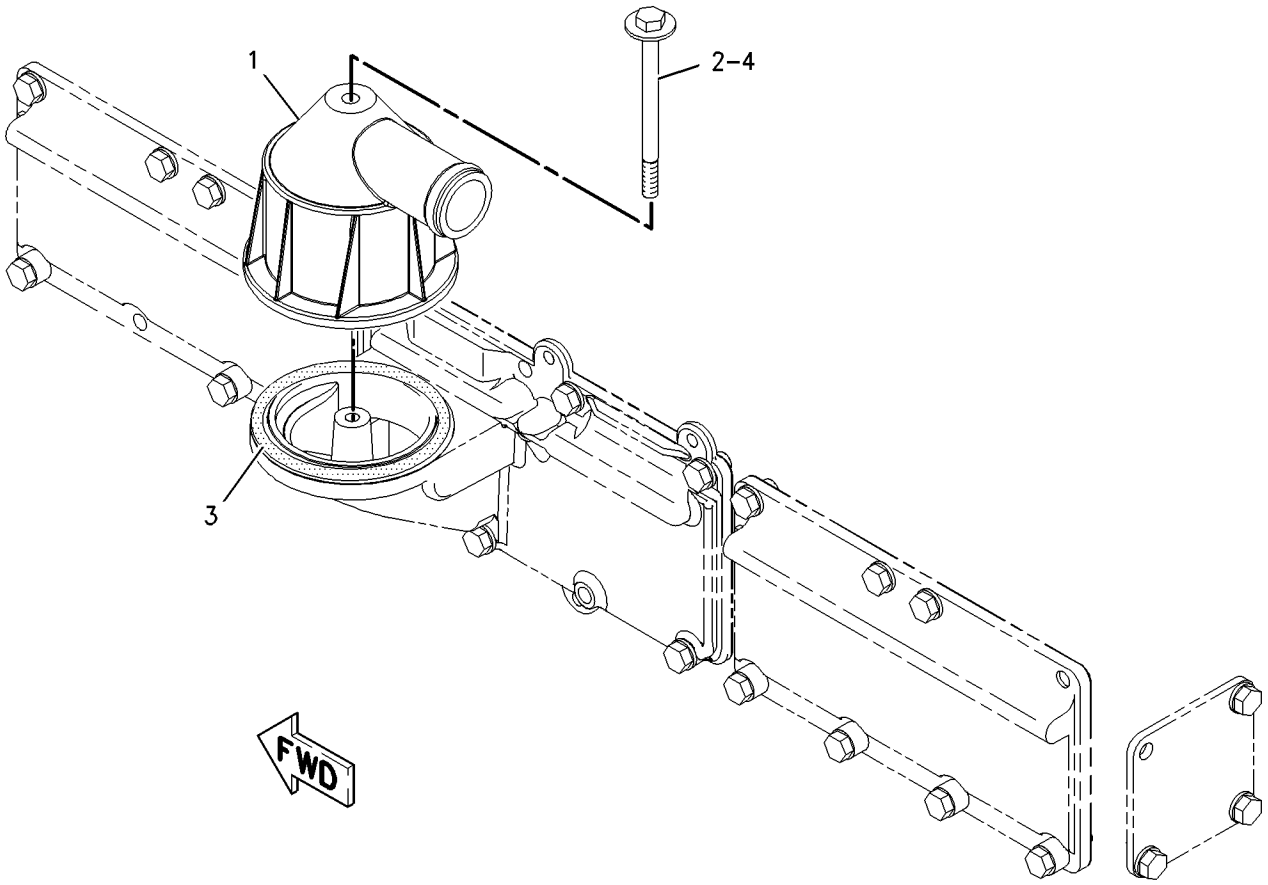

GRAPHIC #1 **<END>** g00947923

237-9836 FILLER GP-ENGINE OIL

S/N: KHX1-UP

PART OF 235-1424 ENGINE AR-COMPLETE

SMCS-1316 **i02215513**

NOTE	REF NO	GRAPHIC REF	PART NUMBER	QTY	PART NAME 1 2 3 4 5 6 (PRODUCT LEVEL)	SEE PAGE
	1	1	**5L-2952**	1	CAP AS-FILLER (ENGINE OIL)	
		1	**6L-2609**	1	SEAL-RUBBER	
	2	1	**191-5213**	1	TUBE AS	
	3	1	**191-7699**	1	BRACKET AS	
	4	1	**061-9455**	1	SEAL-O-RING	
M	5	1	**5P-7970**	3	NUT (M8X1.25-THD)	
	6	1	**6V-5839**	1	WASHER (11X21X2.5-MM THK)	
M	7	1	**6V-6317**	1	BOLT (M10X1.5X20-MM)	
	8	1	**7D-7233**	1	CLIP	
	9	1	**9M-1974**	4	WASHER-HARD (8.8X16X2-MM THK)	

M-METRIC PART

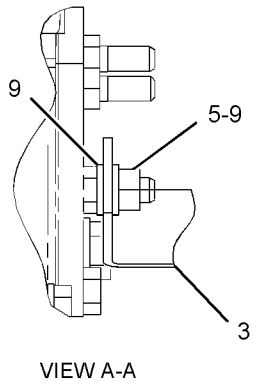

VIEW A-A

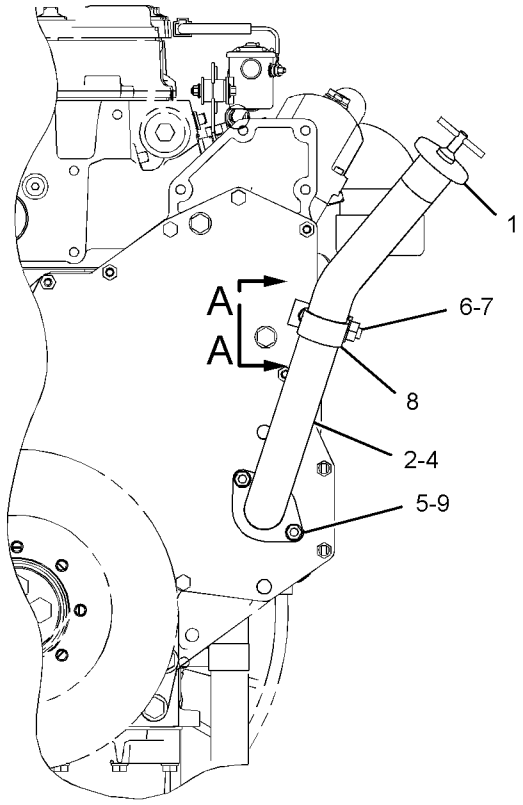

FRONT VIEW

GRAPHIC #1 **<END>** g01118435

LUBRICATION SYSTEM

189-5433 FILTER GP-ENGINE OIL

S/N: KHX1-UP

PART OF 235-1424 ENGINE AR-COMPLETE

SMCS-1306, 1308 **i02086250**

NOTE	REF NO	GRAPHIC REF	PART NUMBER	QTY	PART NAME 1 2 3 4 5 6 (PRODUCT LEVEL)	SEE PAGE
	1	1	**7C-1493**	2	VALVE AS-BYPASS (ENGINE OIL FILTER)	
	2	1	**8C-3445**	1	CAP-DUST	
	3	1	**068-9526**	2	CAP-TUBE	
	4	1	**201-9774**	1	BASE AS-OIL FILTER	
	4A	1	**2P-2537**	1	STUD-HOLLOW	
	5	1	**1R-1807**	1	FILTER AS-ENGINE OIL	
	6	1	**2M-9780**	2	SEAL-O-RING	
	7	1	**3J-7354**	1	SEAL-O-RING	
	8	1	**3P-1932**	1	ADAPTER	
M	9	1	**5P-8196**	2	PLUG	
M	10	1	**6V-2317**	10	BOLT (M8X1.25X30-MM)	
	11	1	**233-7654**	1	GASKET	
	12	1	**8C-3446**	1	VALVE-FLUID SAMPLING (ENGINE OIL)	
	13	1	**8L-2786**	1	SEAL-O-RING	
M	14	1	**8T-0276**	3	BOLT (M8X1.25X45-MM)	
	15	1	**242-3864**	2	SPRING	
	16	1	**9M-1974**	15	WASHER-HARD (8.8X16X2-MM THK)	
M	17	1	**9X-2098**	2	STUD-TAPERLOCK (BOLT)	

M-METRIC PART

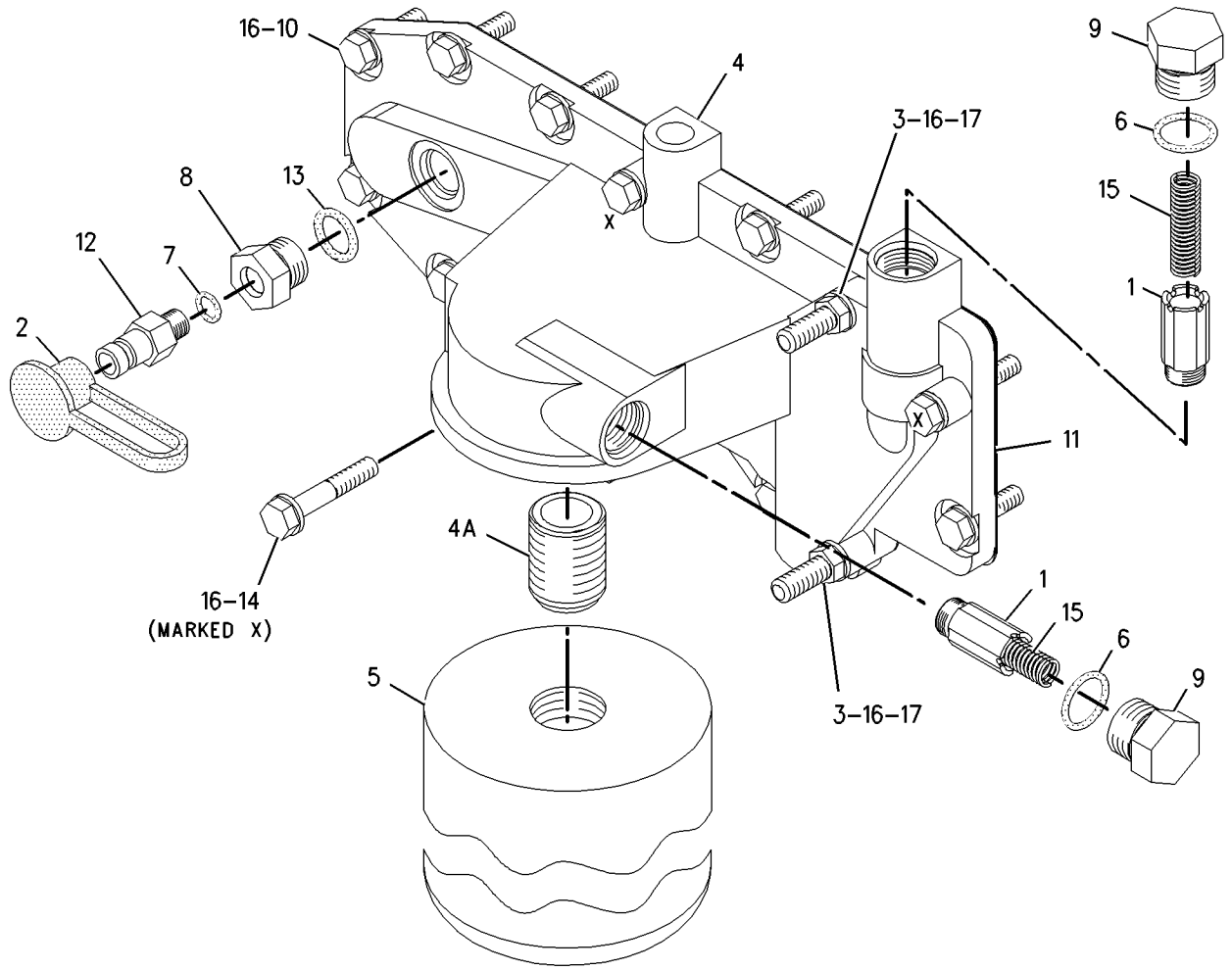

GRAPHIC #1 **<END>** g00943879

238-4804 FUMES DISPOSAL GP

S/N: M3G1-UP

PART OF 237-3995 INSTALLATION AR-ENGINE

SMCS-1317 **i02208364**

NOTE	REF NO	GRAPHIC REF	PART NUMBER	QTY	PART NAME 1 2 3 4 5 6 (PRODUCT LEVEL)	SEE PAGE
	1	1	**9M-2904**	1	CLAMP-HOSE	
	2	1	**238-4805**	1	HOSE-DISPOSAL	
	3	1	**2S-2053**	1	CLIP	

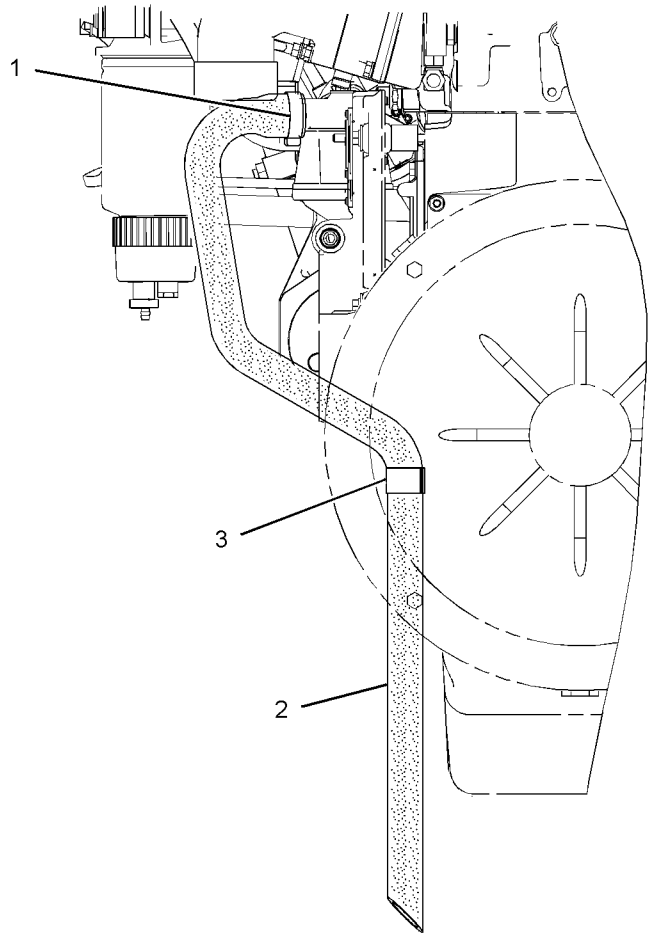

REAR VIEW
(OF ENGINE)

GRAPHIC #1 **<END>** g01120912

248-0369 GAUGE GP-OIL LEVEL (DIPSTICK)—ENGINE

S/N: KHX1-UP

PART OF 235-1424 ENGINE AR-COMPLETE

SMCS-1326 **i02401002**

NOTE	REF NO	GRAPHIC REF	PART NUMBER	QTY	PART NAME 1 2 3 4 5 6 (PRODUCT LEVEL)	SEE PAGE
J	1	1	**1S-2563**	3	PLUG	
	2	1	**225-1461**	1	BRACKET	
	3	1	**261-5689**	1	GAUGE AS (DIPSTICK) (ENGINE OIL LEVEL)	
	4	1	**261-5690**	1	TUBE AS	
M	5	1	**5C-7261**	2	NUT (M8X1.25-THD)	
	6	1	**6V-3265**	1	CLIP	
M	7	1	**8T-4200**	1	BOLT (M8X1.25X16-MM)	
	8	1	**8T-4224**	2	WASHER-HARD (8.8X16X2-MM THK)	
	9	1	**9M-1974**	2	WASHER-HARD (8.8X16X2-MM THK)	

J-USE TO PLUG OPTIONAL DIPSTICK LOCATIONS
M-METRIC PART

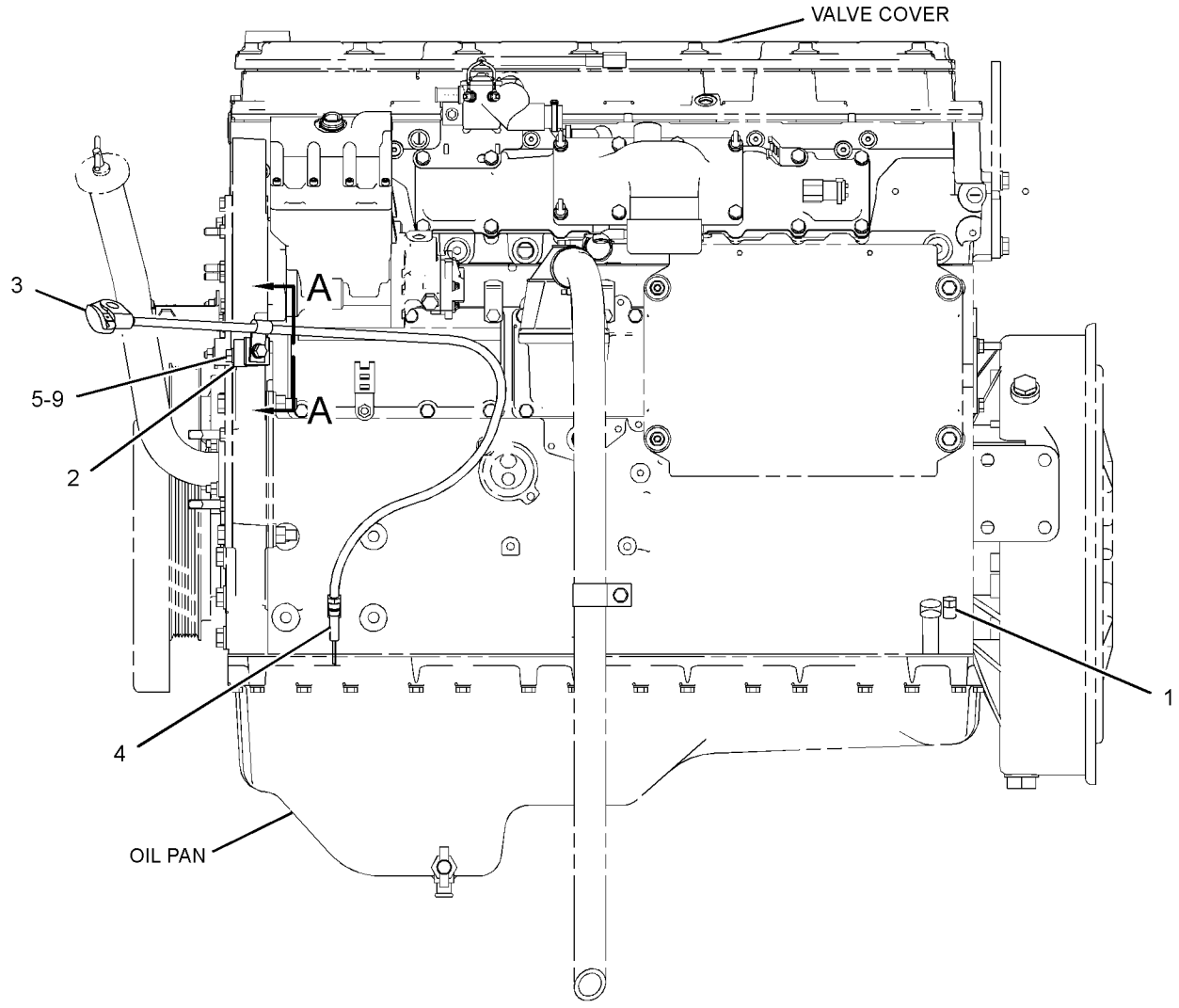

LEFT SIDE VIEW

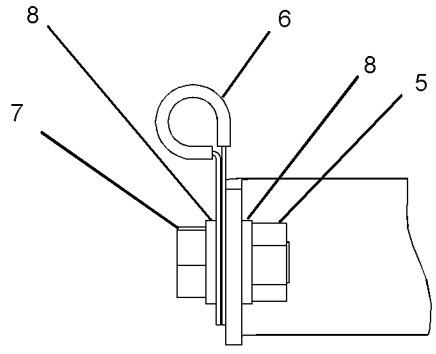

VIEW A-A

GRAPHIC #1 **<END>** g01209128

LUBRICATION SYSTEM

7C-2475 LINES GP-ENGINE OIL

S/N: KHX1-UP

PART OF 235-1424 ENGINE AR-COMPLETE

SMCS-1307 **i01743145**

NOTE	REF NO	GRAPHIC REF	PART NUMBER	QTY	PART NAME 1 2 3 4 5 6 (PRODUCT LEVEL)	SEE PAGE
	1	1	**7C-5403**	1	TUBE AS	
	2	1	**7W-5340**	1	GASKET	
	3	1	**9M-1974**	2	WASHER-HARD (8.8X16X2MM THK)	
M	4	1	**6V-3940**	4	BOLT (M8X1.25X25MM)	
	5	1	**4W-2232**	1	ELBOW-OUTLET	
	6	1	**3P-1156**	2	SEAL-O-RING	

M-METRIC PART

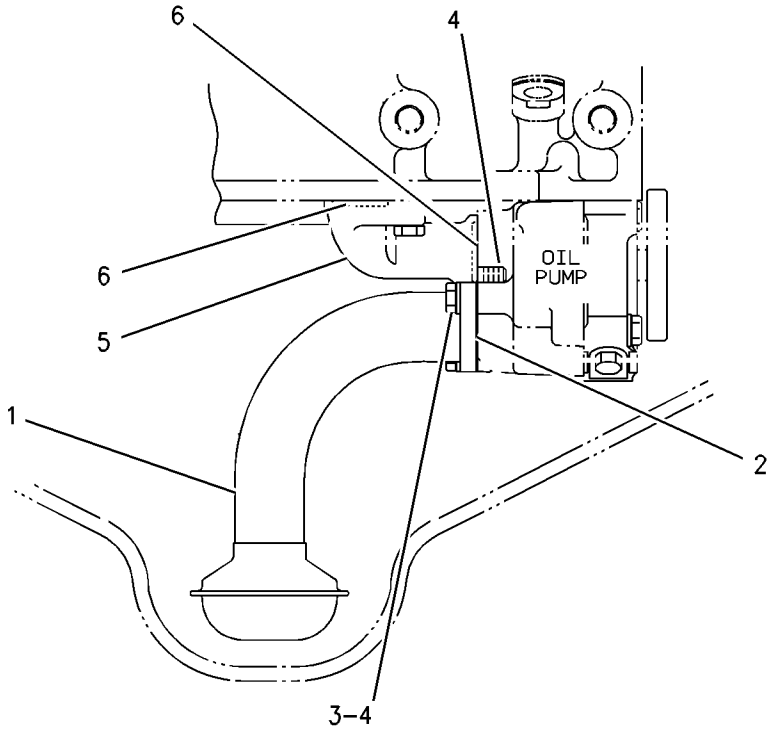

RIGHT SIDE VIEW

GRAPHIC #1 **<END>** g00891413

LUBRICATION SYSTEM

168-8976 LINES GP-ENGINE OIL DRAIN

S/N: M3G1-UP

PART OF 237-3995 INSTALLATION AR-ENGINE

SMCS-1307 **i01190829**

NOTE	PART NUMBER	QTY	PART NAME 1 2 3 4 5 6 (PRODUCT LEVEL)	SEE PAGE
	5D-1026	1	CLAMP-HOSE	
BE	**5P-0767**		HOSE	

B-USE AS REQUIRED
E-ORDER BY THE CENTIMETER

<END>

LUBRICATION SYSTEM

187-6279 LINES GP-TURBOCHARGER OIL

S/N: KHX1-UP

PART OF 235-1424 ENGINE AR-COMPLETE

SMCS-1052, 1307 **i02454069**

NOTE	REF NO	GRAPHIC REF	PART NUMBER	QTY	PART NAME 1 2 3 4 5 6 (PRODUCT LEVEL)	SEE PAGE
	1	1	**6V-8636**	1	CONNECTOR	
	1A	1	**214-7568**	1	SEAL-O-RING (11.89-MM ID)	
	1B	1	**221-3494**	1	SEAL-O-RING (12.83-MM OD)	
	2	1	**228-4709**	1	HOSE AS	
	3	1	**187-6294**	1	HOSE AS-OIL SUPPLY	
	4	1	**6V-8724**	1	ELBOW	
	4A	1	**3J-1907**	1	SEAL-O-RING (11.89-MM ID)	
	4B	1	**6V-8397**	1	SEAL-O-RING (12.83-MM OD)	
	5	1	**3P-1156**	1	SEAL-O-RING (21.82-MM ID)	
	6	1	**5P-8066**	1	SEAL-O-RING (32.92-MM ID)	
M	7	1	**9X-2099**	2	STUD (M8X1.25-THD)	
	8	1	**8T-4224**	4	WASHER-HARD (8.8X16X2-MM THK)	
M	9	1	**8T-7547**	2	BOLT (M8X1.25X30-MM)	

M-METRIC PART

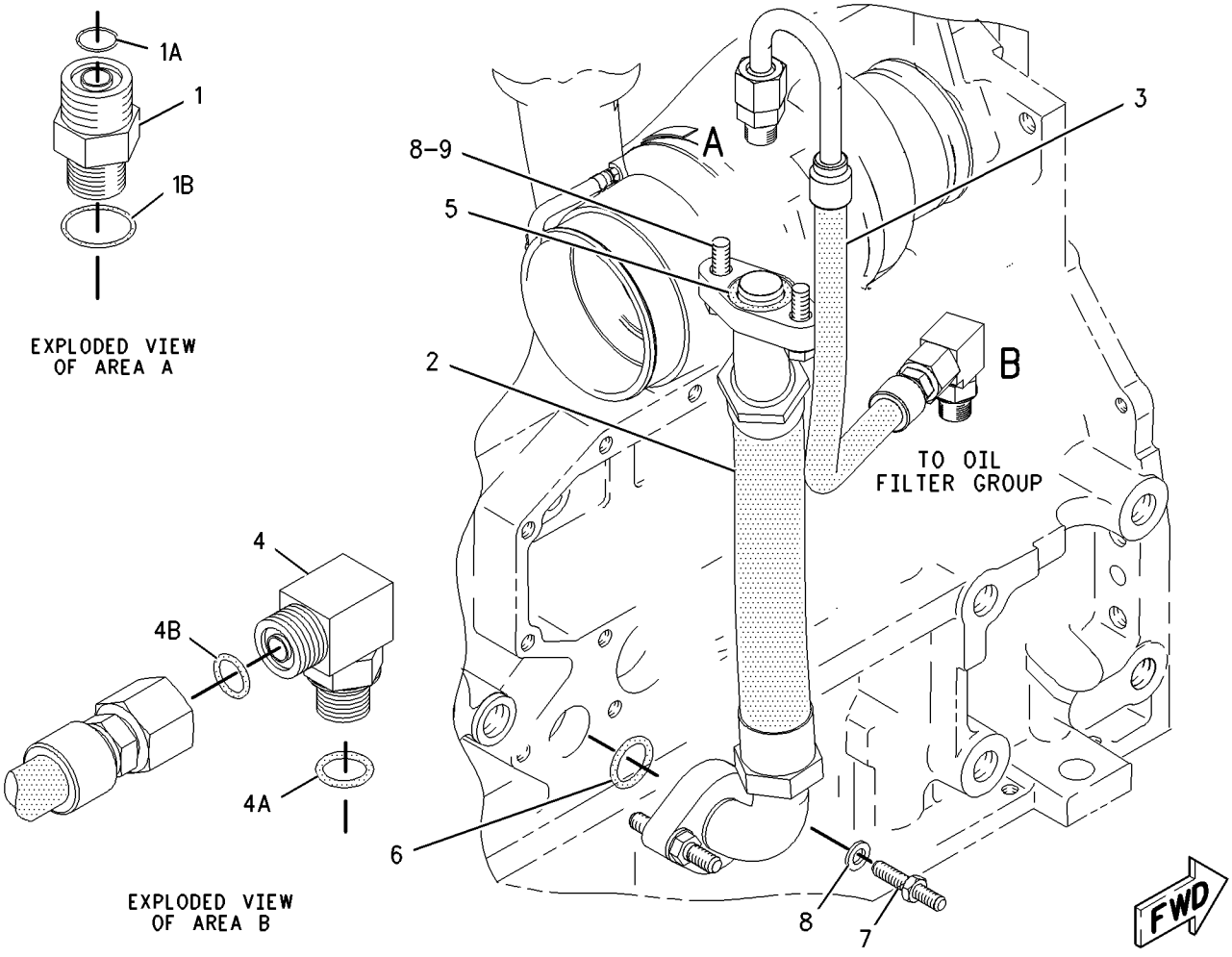

GRAPHIC #1 **<END>** g00993616

192-2981 PUMP GP-ENGINE OIL

S/N: KHX1-UP

PART OF 235-1425 ENGINE AR-CORE

SMCS-1304, 1315 **i01494802**

NOTE	REF NO	GRAPHIC REF	PART NUMBER	QTY	PART NAME 1 2 3 4 5 6 (PRODUCT LEVEL)	SEE PAGE
Y	1	1	*200-4497*	1	PUMP GP-ENGINE OIL	62
M	2	1	**6V-5815**	2	BOLT (M10X1.5X75MM)	
	3	1	**6V-5839**	2	WASHER (11X21X2.5MM THK)	

M-METRIC PART
Y-SEPARATE ILLUSTRATION

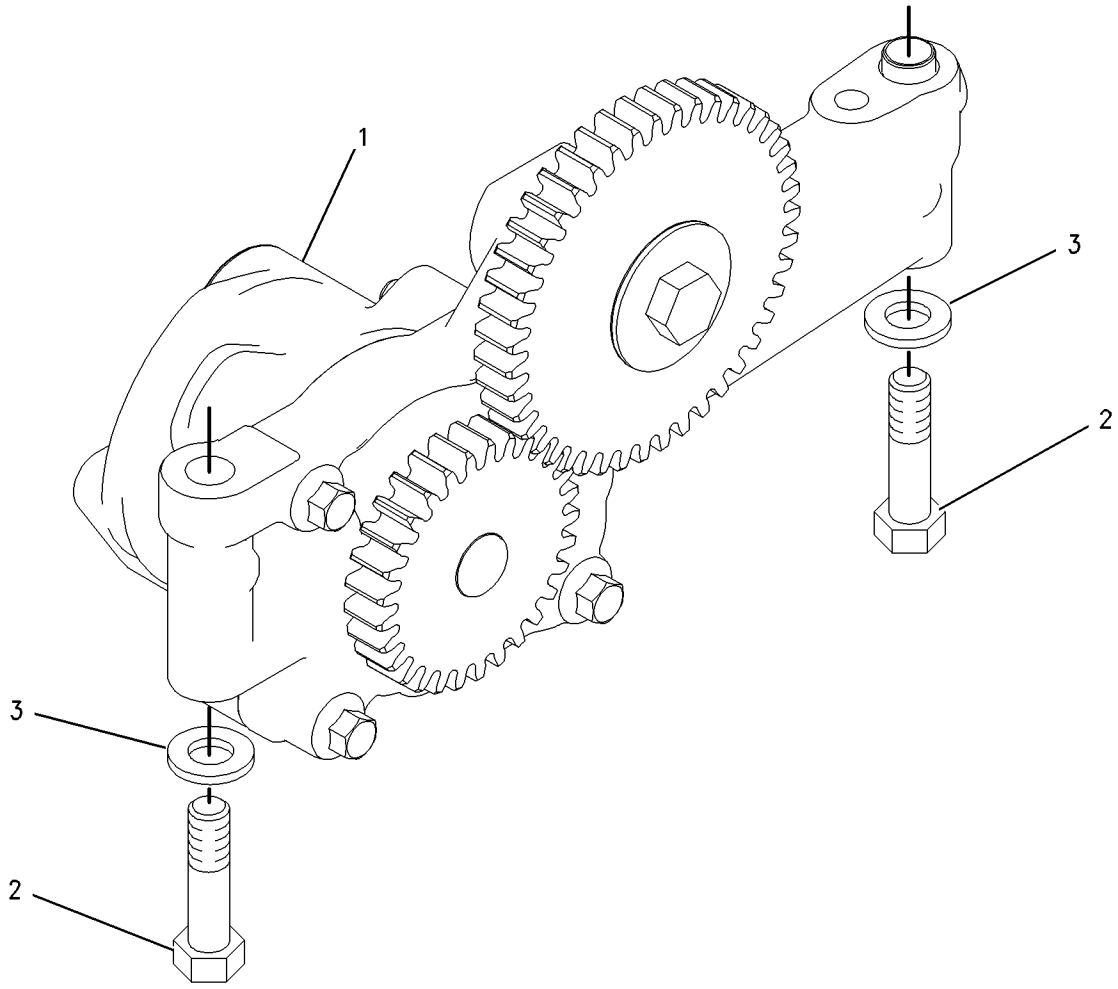

GRAPHIC #1 **<END>** g00775811

LUBRICATION SYSTEM

200-4497 PUMP GP-ENGINE OIL

S/N: KHX1-UP

PART OF 192-2981 PUMP GP-ENGINE OIL

SMCS-1304, 1315 **i02120062**

NOTE	REF NO	GRAPHIC REF	PART NUMBER	QTY	PART NAME 1 2 3 4 5 6 (PRODUCT LEVEL)	SEE PAGE
	1	1	**7W-9737**	1	SHAFT	
	2	1	**7W-9738**	1	WASHER (10.5X38X1.6-MM THK)	
	3	1	**7W-9740**	1	GEAR AS-IDLER (43-TEETH)	
	3A	1	**7W-9930**	1	BEARING-SLEEVE	
M	4	1	**9X-2305**	1	BOLT-LOCKING (M10X1.5X50-MM)	
	5	1	**189-8777**	1	PUMP GP-ENGINE OIL	

M-METRIC PART

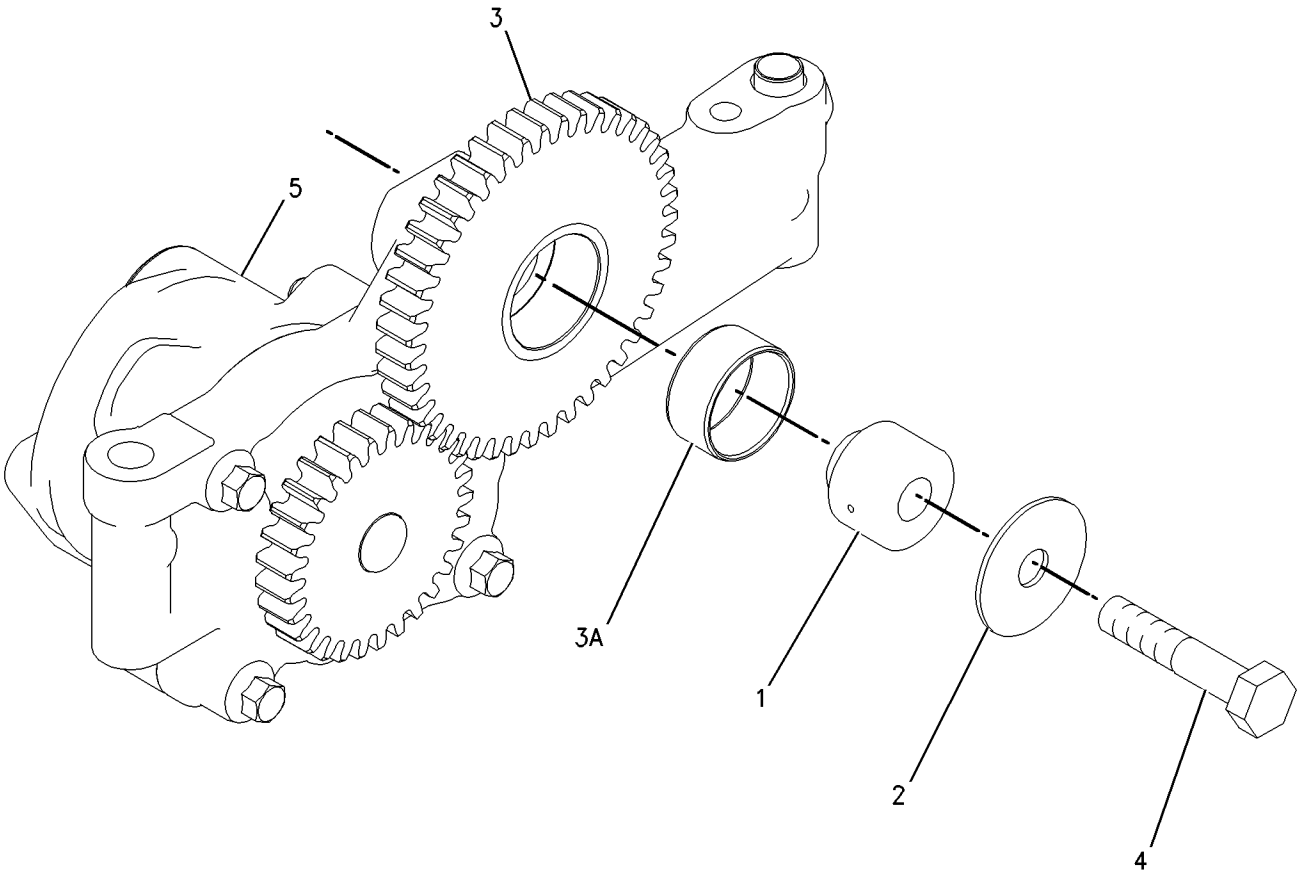

GRAPHIC #1 **<END>** g00775788

117-3643 COOLER GP-ENGINE OIL

S/N: KHX1-UP

PART OF 235-1425 ENGINE AR-CORE

SMCS-1378 **i02260858**

NOTE	REF NO	GRAPHIC REF	PART NUMBER	QTY	PART NAME 1 2 3 4 5 6 (PRODUCT LEVEL)	SEE PAGE
R	1	1	**187-8595**	1	CORE AS-ENGINE OIL COOLER	
	2	1	**233-7655**	1	GASKET	
	3	1	**3P-1156**	2	SEAL-O-RING	

R-REMFG PART MAY BE AVAILABLE

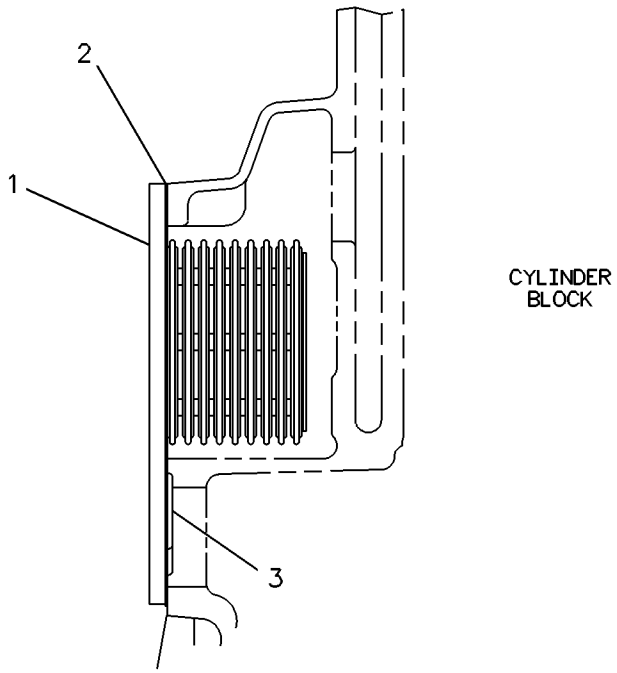

GRAPHIC #1 **<END>** g00117316

COOLING SYSTEM

260-5786 COOLING AR-HIGH AMBIENT TEMP

S/N: M3G1-UP

AN ATTACHMENT

SMCS-1350, 1353, 1374, 1386, 1387, 5057 **i02309046**

NOTE	PART NUMBER	QTY	PART NAME 1 2 3 4 5 6 (PRODUCT LEVEL)	SEE PAGE
	244-8840	1	CORE AS-CONDENSER (REFRIGERANT)	
	250-8327	1	CORE AS-HYDRAULIC OIL COOLER	
	256-6628	1	CORE AS-RADIATOR	

<END>

272-0181 COOLING AR-HIGH AMBIENT TEMP

S/N: M3G1-UP

AN ATTACHMENT

SMCS-1350, 1353, 1374, 1386, 1387, 5057 **i02309048**

NOTE	PART NUMBER	QTY	PART NAME 1 2 3 4 5 6 (PRODUCT LEVEL)	SEE PAGE
	250-8327	1	CORE AS-HYDRAULIC OIL COOLER	
	256-6628	1	CORE AS-RADIATOR	

<END>

237-9821 ELBOW GP-WATER

S/N: KHX1-UP

PART OF 235-1424 ENGINE AR-COMPLETE

SMCS-1380 **i02215490**

NOTE	REF NO	GRAPHIC REF	PART NUMBER	QTY	PART NAME 1 2 3 4 5 6 (PRODUCT LEVEL)	SEE PAGE
	1	1	**200-2258**	1	GASKET	
	2	1	**244-6602**	1	ELBOW	
	3	1	*148-8410*	2	PLUG AS	
					(EACH INCLUDES)	
	3A	1	**2M-9780**	1	SEAL-O-RING	
		1	**9S-4190**	1	PLUG	
	4	1	*241-6185*	1	PLUG AS	
	4A	1	**3D-2824**	2	SEAL-O-RING	
		1	**5P-9436**	2	PLUG-THREADED O-RING	
M	5	1	**6V-3940**	2	BOLT (M8X1.25X25-MM)	
	6	1	**9M-1974**	2	WASHER-HARD (8.8X16X2-MM THK)	

M-METRIC PART

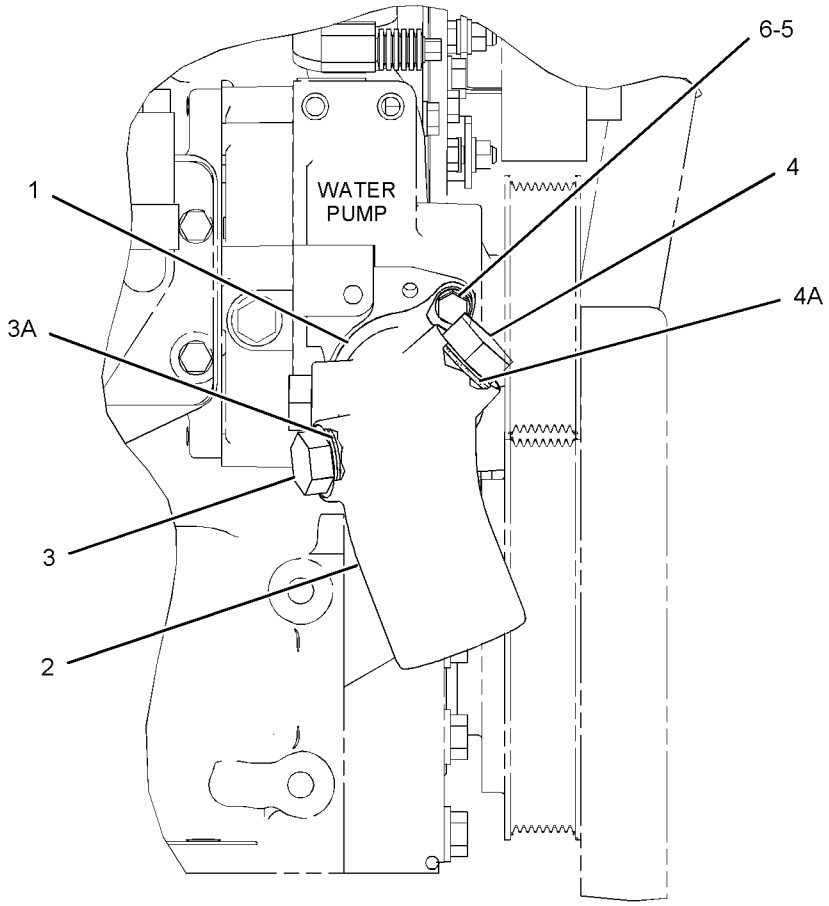

RIGHT SIDE VIEW

GRAPHIC #1 **<END>** g01118508

COOLING SYSTEM

237-0439 LINES GP-WATER—RADIATOR

S/N: M3G1-UP

PART OF 237-4933 CHASSIS AR

SMCS-1380 **i02305328**

NOTE	REF NO	GRAPHIC REF	PART NUMBER	QTY	PART NAME 1 2 3 4 5 6 (PRODUCT LEVEL)	SEE PAGE
	1	2	**1P-4278**	2	CLAMP-HOSE	
	2	1	**5P-1230**	1	CONNECTOR	
	3	2	**6V-1355**	1	ELBOW	
	4	1	**8T-4983**	2	CLAMP-HOSE	
E	5	1	**5P-1262**		HOSE (16-CM)	
	6	1	**9Y-9236**	1	GAUGE-SIGHT	
	7	2	**111-7092**	1	HOSE	
	8	1	**132-7370**	1	HOSE	
	9	1	**157-0670**	1	CAP-DUST	
	10	1	**158-0851**	1	CLIP	
	11	2	**230-4015**	1	CONNECTOR	
	12	2	**239-9884**	1	TUBE AS	
Y	13	1	*242-4340*	1	TANK GP-RADIATOR TOP	79
	14	1	**243-2372**	1	HOSE	
	15	1	**243-2373**	1	HOSE	
	16	1	**243-2374**	1	TUBE AS	
	17	2	**268-1497**	1	ELBOW	
	18	1	**154-9023**	1	VALVE-SAMPLING (WATER, COOLANT)	
	19	1,2	**209-4573**	7	CLAMP	
	20	1,2	**212-6934**	3	CLAMP	
	21	2	**3J-7354**	2	SEAL-O-RING	
M	22	1	**5C-7261**	1	NUT (M8X1.25-THD)	
	23	1	**5P-4116**	1	WASHER-HARD (8.8X20.5X2-MM THK)	
	24	1	**5P-9299**	2	CLIP	
	25	1	**7M-8485**	1	SEAL-O-RING	
	26	2	**7X-7729**	2	WASHER (11X25X3-MM THK)	
	27	1	**8T-4121**	2	WASHER-HARD (11X21X2.5-MM THK)	
M	28	1	**8T-4136**	2	BOLT (M10X1.5X25-MM)	
M	29	2	**8T-4137**	2	BOLT (M10X1.5X20-MM)	
E	30	1	**5P-6442**		HOSE (50-CM)	
E	31	1	**5P-1251**		HOSE (99-CM)	
E	32	1	**7Y-1976**		HOSE (221-CM)	
	33	2	**5P-4924**	1	ELBOW	
	34	2	**3J-1907**	1	SEAL-O-RING	
	35	2	**109-1145**	2	CLAMP-HOSE	
E	36	2	**5P-1442**		HOSE (20-CM)	
	37	1	**3D-2824**	1	SEAL-O-RING	

E-ORDER BY THE CENTIMETER
M-METRIC PART
Y-SEPARATE ILLUSTRATION

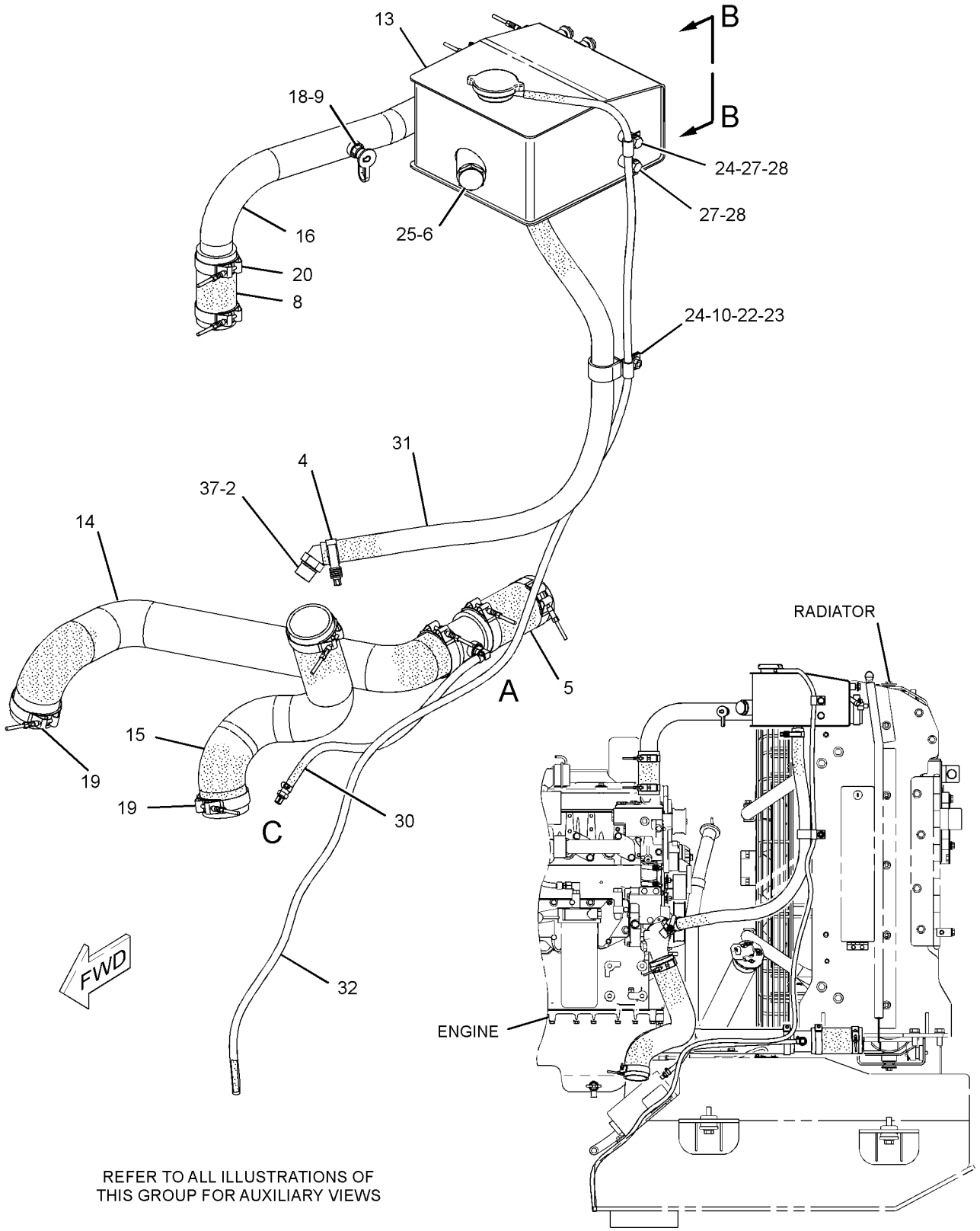

LEFT SIDE VIEW

GRAPHIC #1

g01155164

237-0439 **LINES GP-WATER** *(contd.)* **i02305328**

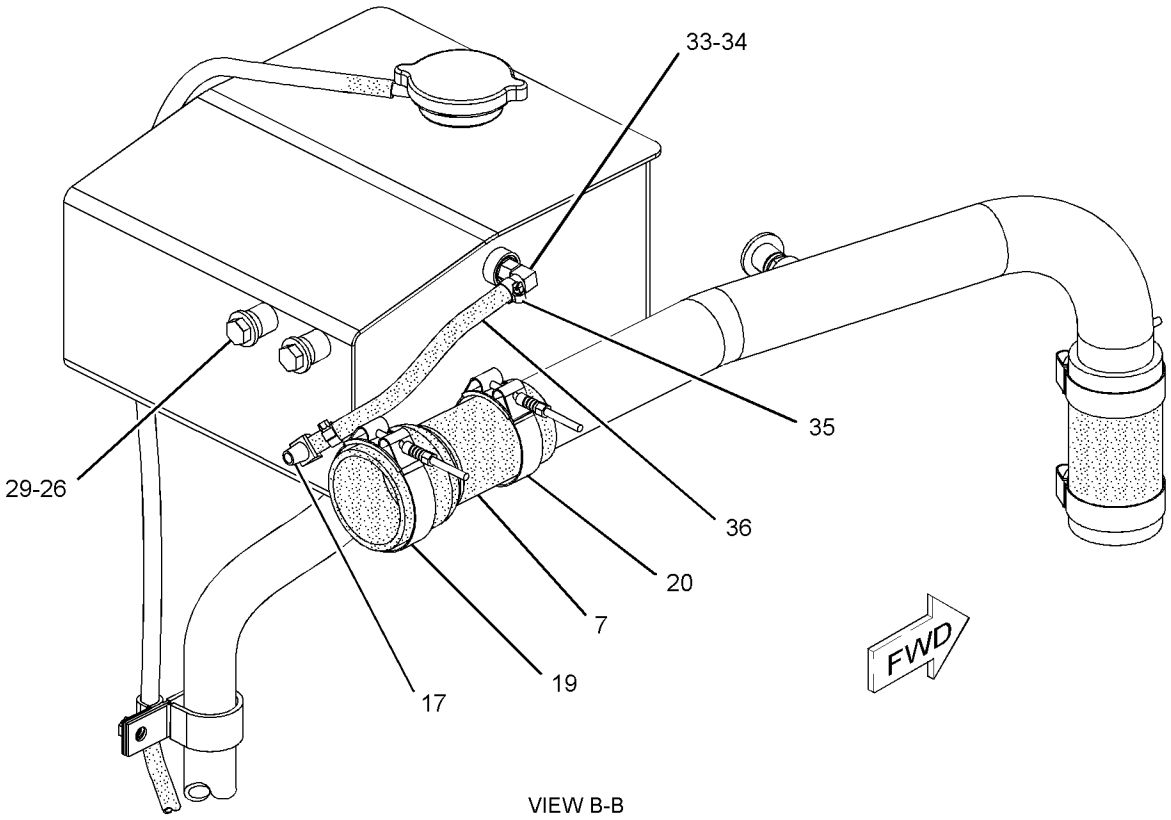

VIEW B-B

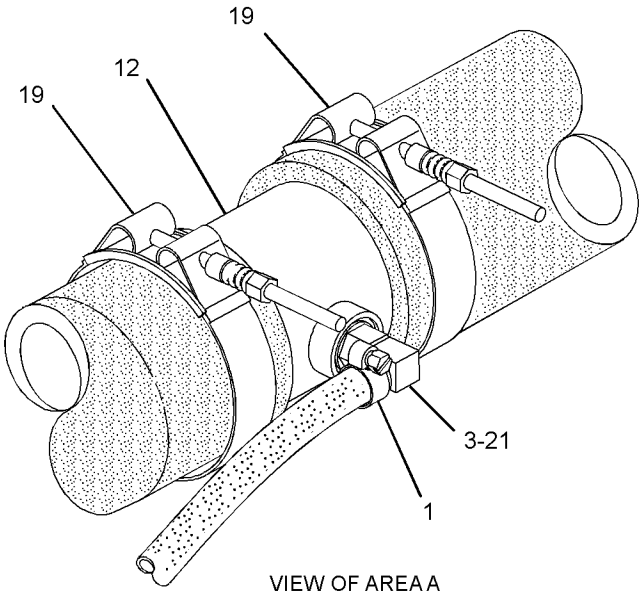

VIEW OF AREA A

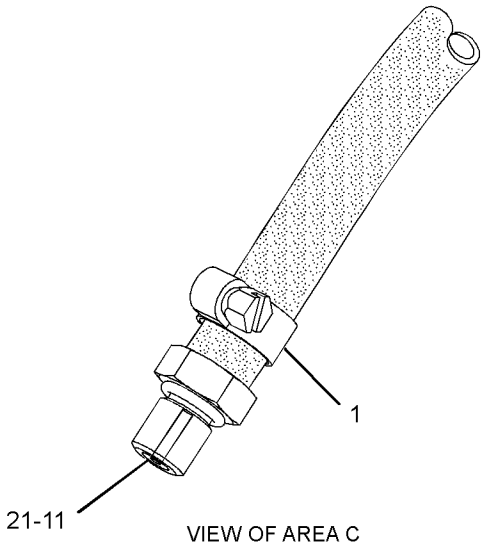

VIEW OF AREA C

GRAPHIC #2 **<END>** g01154656

238-4802 LINES GP-WATER—ENGINE

S/N: KHX1-UP

PART OF 235-1424 ENGINE AR-COMPLETE

SMCS-1380 **i02375321**

NOTE	REF NO	GRAPHIC REF	PART NUMBER	QTY	PART NAME 1 2 3 4 5 6 (PRODUCT LEVEL)	SEE PAGE
	1	1	**7E-0759**	1	HOSE	
	3	1	**237-5176**	2	CLAMP-BAND	
	4	1	**119-3075**	2	REGULATOR-WATER TEMPERATURE (94-DEG C) (COOLANT)	
	5	1	**126-5466**	1	GASKET	
	6	1	**222-5915**	1	GASKET (TEMPERATURE REGULATOR HOUSING)	
	7	1	**160-5131**	1	PIPE (OUTLET)	
	8	1	**227-5942**	1	HOUSING-WATER REGULATOR	
	9	1	*148-8395*	1	PLUG AS	
	9A	1	**3K-0360**	1	SEAL-O-RING	
		1	**9S-8005**	1	PLUG-O RING	
	10	1	*148-8411*	3	PLUG AS	
					(EACH INCLUDES)	
	10A	1	**3K-0360**	1	SEAL-O-RING	
		1	**9S-4185**	1	PLUG	
	11	1	*155-3624*	1	PLUG AS	
	11A	1	**3J-7354**	1	SEAL-O-RING	
		1	**9S-4182**	1	PLUG	
	12	1	*162-0177*	1	PLUG AS	
	12A	1	**3J-1907**	1	SEAL-O-RING	
		1	**9S-8004**	1	PLUG	
M	13	1	**5P-8347**	2	BOLT (M8X1.25X70-MM)	
M	14	1	**6V-3940**	6	BOLT (M8X1.25X25-MM)	
M	15	1	**6V-5223**	1	BOLT (M8X1.25X100-MM)	
	16	1	**9M-1974**	6	WASHER-HARD (8.8X16X2-MM THK)	

M-METRIC PART

238-4802 **LINES GP-WATER** *(contd.)* **i02375321**

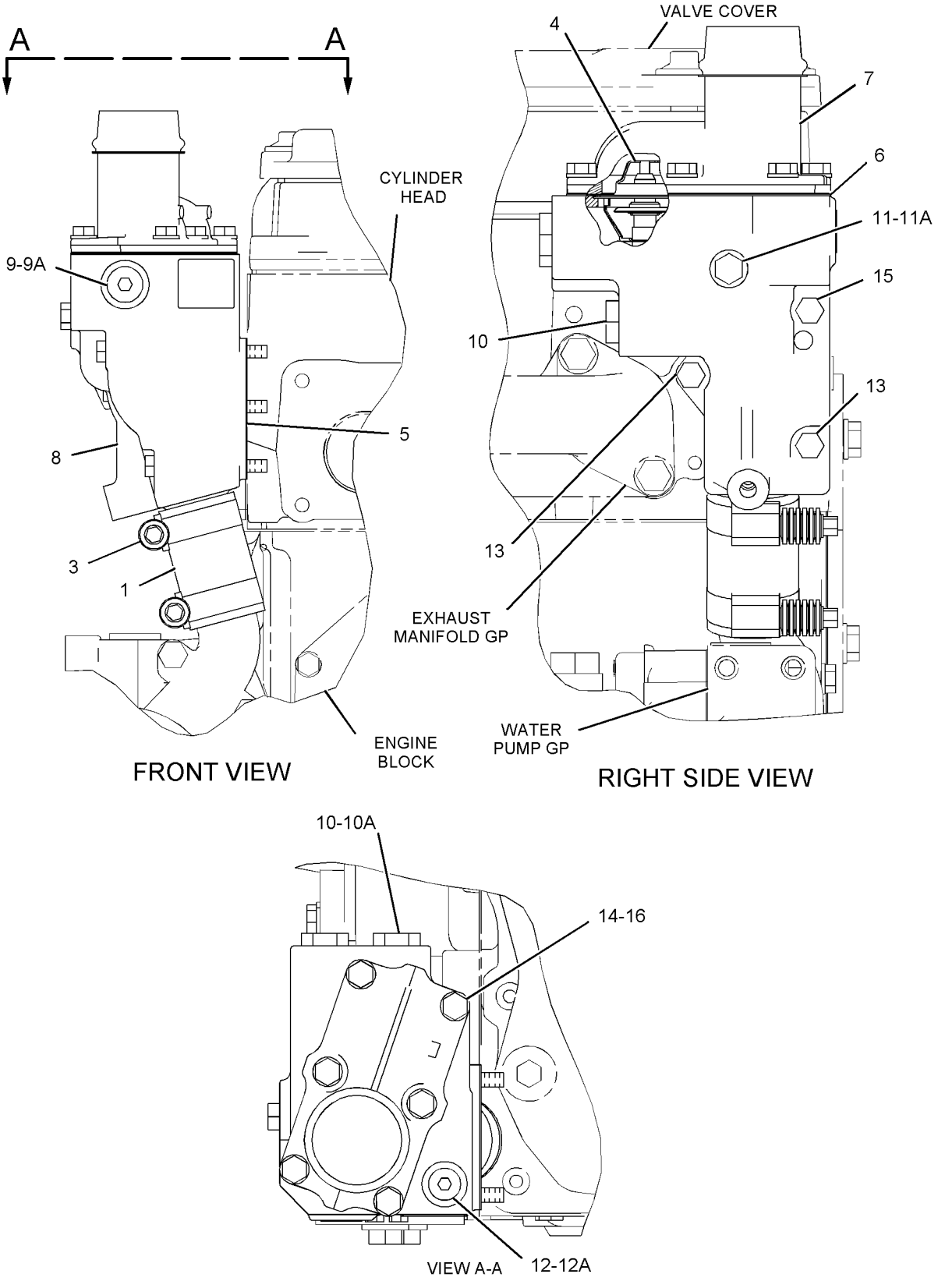

GRAPHIC #1 **<END>** g01118619

COOLING SYSTEM

241-0078 LINES GP-WATER

S/N: M3G1-UP
PART OF 241-0073 COOLER AR-AXLE OIL
FOR USE WITH AXLE OIL COOLER
AN ATTACHMENT

SMCS-1380 **i02223410**

NOTE	REF NO	GRAPHIC REF	PART NUMBER	QTY	PART NAME 1 2 3 4 5 6 (PRODUCT LEVEL)	SEE PAGE
	1	1	**5D-1026**	4	CLAMP-HOSE	
	2	1	**7K-1181**	2	STRAP-CABLE	
	3	1	**114-9224**	1	SPACER (11.13X19.05X47-MM THK)	
	4	1	*161-9916*	1	ADAPTER GP	
		1	**2M-9780**	1	SEAL-O-RING	
		1	**6V-7420**	1	ADAPTER	
	5	1	*170-0965*	2	CONNECTOR AS	
					(EACH INCLUDES)	
		1	**3K-0360**	1	SEAL-O-RING	
		1	**6V-1438**	1	CONNECTOR	
	6	1	**193-1034**	1	BRACKET AS	
	7	1	*155-7321*	1	ADAPTER GP	
		1	**3D-2824**	1	SEAL-O-RING	
		1	**6V-1722**	1	ADAPTER-O-RING	
	8	1	**3S-7608**	1	CLIP	
	9	1	**4S-1962**	5	CLIP	
M	10	1	**7X-2552**	1	BOLT (M16X2X30-MM)	
	11	1	**8M-2769**	1	CLIP	
	12	1	**8T-4121**	6	WASHER-HARD (11X21X2.5-MM THK)	
M	13	1	**8T-4133**	2	NUT (M10X1.5 THD)	
M	14	1	**8T-4136**	2	BOLT (M10X1.5X25-MM)	
M	15	1	**8T-4137**	1	BOLT (M10X1.5X20-MM)	
M	16	1	**8T-4172**	1	BOLT (M10X1.5X80-MM)	
	17	1	**9X-8257**	1	WASHER (17.5X30X3.5-MM THK)	
E	18	1	**5P-0767**		HOSE (228-CM)	
E	18A	1	**5P-0767**		HOSE (148-CM)	

E-ORDER BY THE CENTIMETER
M-METRIC PART

241-0078 **LINES GP-WATER** *(contd.)* **i02223410**

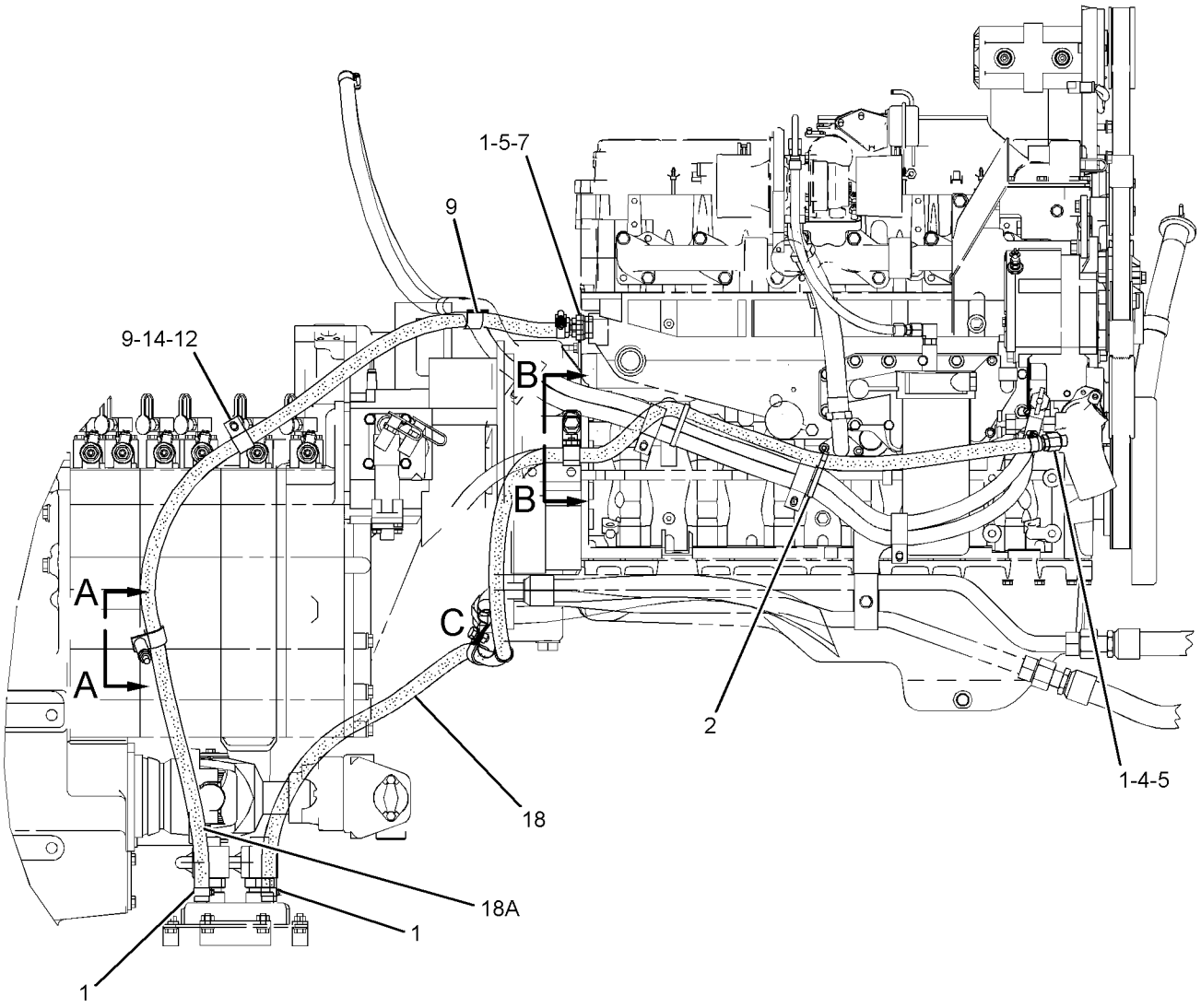

LEFT SIDE VIEW

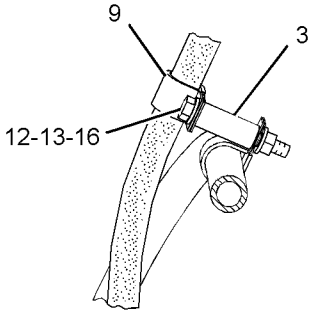

SECTION A-A

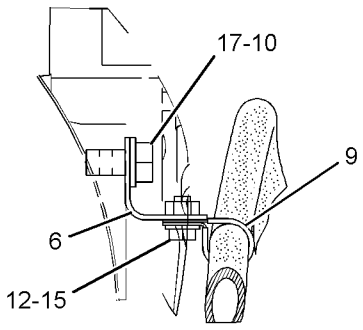

SECTION B-B

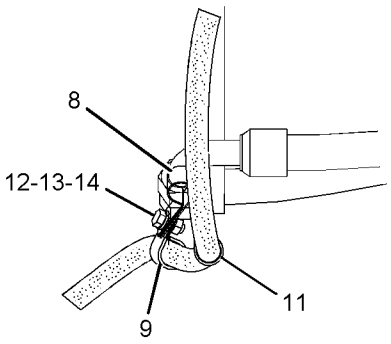

VIEW OF AREA C

GRAPHIC #1 **<END>** g01123048

COOLING SYSTEM

209-4600 PUMP GP-WATER

S/N: KHX1-UP

PART OF 235-1424 ENGINE AR-COMPLETE

SMCS-1361 **i02282609**

NOTE	REF NO	GRAPHIC REF	PART NUMBER	QTY	PART NAME 1 2 3 4 5 6 (PRODUCT LEVEL)	SEE PAGE
Y	1	1	**227-5464**	1	PUMP GP-WATER	74
	2	1	*148-8407*	1	PLUG AS	
		1	**3J-1907**	1	SEAL-O-RING	
		1	**9S-4191**	1	PLUG-O RING	
	3	1	*148-8409*	1	PLUG AS	
		1	**3D-2824**	1	SEAL-O-RING	
		1	**9S-8008**	1	PLUG	
	4	1	**2M-4453**	1	SEAL-O-RING	
	5	1	**4J-0525**	1	SEAL-O-RING	
M	6	1	**8T-0644**	4	BOLT (M10X1.5X90-MM)	
	7	1	**3K-0360**	1	SEAL-O-RING	
	8	1	**9S-4185**	1	PLUG	

M-METRIC PART
Y-SEPARATE ILLUSTRATION

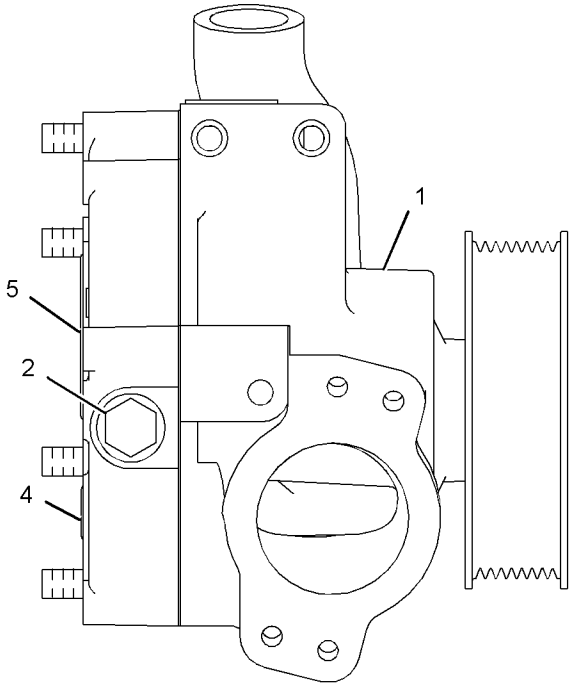

RIGHT SIDE VIEW

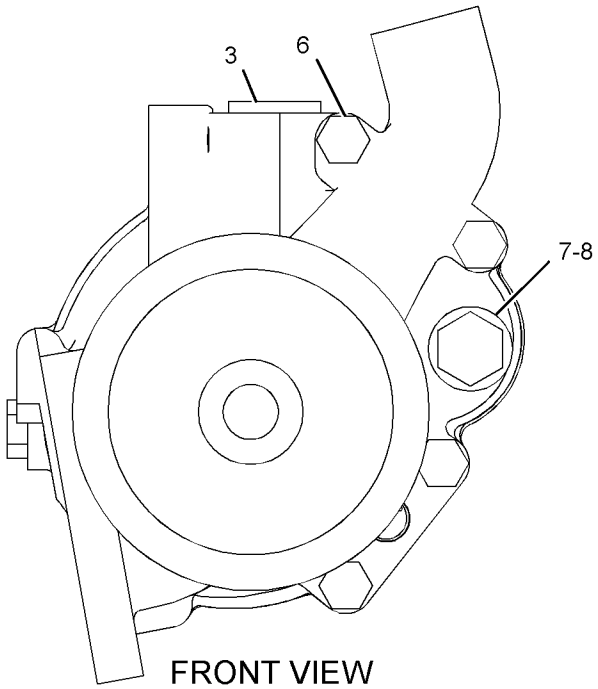

FRONT VIEW

GRAPHIC #1 **<END>** g01142678

COOLING SYSTEM

227-5464 PUMP GP-WATER

S/N: KHX1-UP

PART OF 209-4600 PUMP GP-WATER

SMCS-1361 **i02214629**

NOTE	REF NO	GRAPHIC REF	PART NUMBER	QTY	PART NAME 1 2 3 4 5 6 (PRODUCT LEVEL)	SEE PAGE
	1	1	*227-4301*	1	PUMP AS-WATER	
		1	**203-6093**	1	HOUSING	
	1A	1	**147-5088**	1	SEAL AS-WATER PUMP	
	1B	1	**177-1052**	1	SHAFT AS	
	1C	1	**177-1058**	1	PLUG	
	1D	1	**197-9581**	1	PULLEY	
	1E	1	**226-6039**	1	IMPELLER	
	2	1	**226-6051**	1	COVER	
	3	1	**197-9580**	1	GASKET	
	4	1	*183-2931*	3	BOLT AS	
					(EACH INCLUDES)	
M		1	**6V-3918**	1	BOLT (M8X1.25X50-MM)	
		1	**9M-1974**	1	WASHER-HARD (8.8X16X2-MM THK)	
	5	1	**3K-0360**	1	SEAL-O-RING	
	6	1	**9S-4185**	1	PLUG	

M-METRIC PART

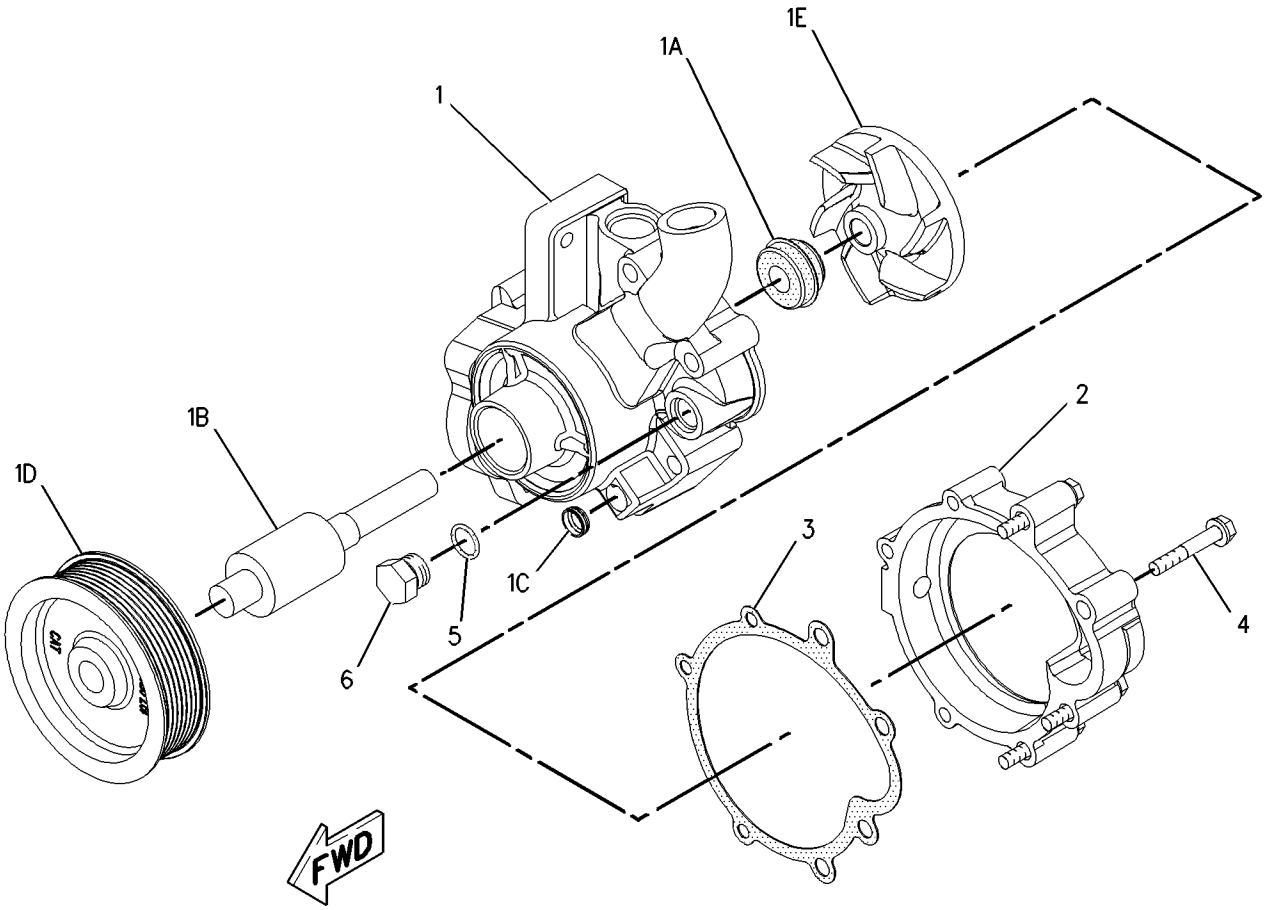

GRAPHIC #1 **<END>** g00947848

COOLING SYSTEM

237-0443 RADIATOR & FAN GP

S/N: M3G1-UP

PART OF 237-4933 CHASSIS AR

SMCS-1353, 1356 **i02443738**

NOTE	REF NO	GRAPHIC REF	PART NUMBER	QTY	PART NAME 1 2 3 4 5 6 (PRODUCT LEVEL)	SEE PAGE
	1	1	**4E-1384**	1	BUMPER-CONICAL	
	2	1	**4I-7889**	1	SPACER (11X25X45-MM THK)	
	3	1	**5V-8780**	1	KNOB	
	4	1	*8T-2893*	2	LOCK AS-CYLINDER	
					(EACH INCLUDES)	
		1	**226-0291**	1	LOCK AS	
		1	**226-0321**	1	CAM	
	5	1	**112-5344**	1	LATCH AS-DOOR	
	6	1	**121-3307**	2	MOUNT AS-RESILIENT	
	7	1	**124-3019**	2	BRACKET AS	
					(EACH INCLUDES)	
M		1	**8T-3490**	1	NUT-WELD (M10X1.5-THD)	
	8	1	**144-4613**	1	ANGLE AS	
	9	1	**189-5594**	2	COVER AS	
					(EACH INCLUDES)	
		1	**194-5278**	1	HINGE	
	10	1	**209-5528**	1	STRIKER	
	11	2	**235-9822**	1	CONE	
	12	1	**239-9840**	1	SUPPORT AS-LH	
M		1	**6V-9632**	2	NUT-WELD (M6X1-THD)	
M		1	**8T-3490**	11	NUT-WELD (M10X1.5-THD)	
M		1	**8T-3597**	2	NUT-WELD (M12X1.75-THD)	
M		1	**192-7979**	1	STUD-WELD	
	13	1	**239-9841**	1	SUPPORT AS-RH	
M		1	**6V-9632**	2	NUT-WELD (M6X1-THD)	
M		1	**8T-3490**	6	NUT-WELD (M10X1.5-THD)	
M		1	**8T-3597**	2	NUT-WELD (M12X1.75-THD)	
	14	2	**239-9843**	1	BAFFLE	
	15	1	**239-9845**	1	GUARD AS-FAN	
M		1	**8T-3490**	6	NUT-WELD (M10X1.5-THD)	
		1	**204-6529**	6	WASHER (13.8X50X5-MM)	
	16	2	**239-9848**	1	BRACKET AS	
M		2	**8T-3490**	2	NUT-WELD (M10X1.5-THD)	
	17	1	**275-8903**	1	BRACKET	
	18	2	**239-9851**	1	BAFFLE	
	19	2	**239-9852**	1	ANGLE AS	
M		2	**8T-3490**	6	NUT-WELD (M10X1.5-THD)	
	20	1	**239-9853**	1	SHROUD AS	
	21	1	**239-9854**	1	ANGLE AS	
M		1	**8T-3490**	13	NUT-WELD (M10X1.5-THD)	
	22	2	**239-9856**	1	ANGLE	
	23	2	**239-9857**	1	BAFFLE AS	
		2	**174-5807**	6	RIVET-POP	
	24	2	**239-9862**	1	SUPPORT AS-MOTOR	
M		2	**8T-3490**	8	NUT-WELD (M10X1.5-THD)	
M		2	**8T-3597**	12	NUT-WELD (M12X1.75-THD)	
	25	1	**239-9863**	1	BAFFLE AS	
M		1	**8T-3490**	4	NUT-WELD (M10X1.5-THD)	
	26	1	**239-9864**	1	BAFFLE	
	27	1	**239-9867**	1	HINGE AS	
	28	1	**239-9870**	1	BRACKET AS	
M		1	**6V-9632**	4	NUT-WELD (M6X1-THD)	
M		1	**8T-3490**	1	NUT-WELD (M10X1.5-THD)	
	29	1	**239-9876**	1	ANGLE	
	30	2	**239-9877**	1	ANGLE	
	31	2	**239-9880**	1	BRACKET AS	

237-0443 **RADIATOR & FAN GP** *(contd.)* **i02443738**

NOTE	REF NO	GRAPHIC REF	PART NUMBER	QTY	PART NAME 1 2 3 4 5 6 (PRODUCT LEVEL)	SEE PAGE
	32	2	**239-9881**	1	BRACKET AS	
	33	1	**239-9883**	1	SUPPORT AS	
M		1	**8T-3490**	2	NUT-WELD (M10X1.5-THD)	
	34	2	**243-2289**	2	MOUNT AS	
	35	2	**243-3416**	1	ADAPTER	
	36	1	**243-5063**	1	AFTERCOOLER AS	
	37	2	**244-5427**	1	CORE AS-HYDRAULIC OIL COOLER	
	38	2	**245-9890**	1	GROMMET	
	39	2	**246-0511**	1	SPACER	
	40	2	**246-0616**	1	SPIDER AS-FAN (8-BLADE)	
	41	2	**278-2656**	1	DEFLECTOR	
Y	42	2	**246-6152**	1	MOTOR GP-GEAR (HYDRAULIC FAN)	527
	43	1	**256-5310**	1	CORE AS-RADIATOR	
M	44	1	**5C-7261**	1	NUT (M8X1.25-THD)	
	45	1,2	**5P-1076**	10	WASHER-HARD (13.5X30X4-MM THK)	
	46	2	**6P-4467**	2	GROMMET	
	47	1	**6V-1889**	2	CLIP	
	48	2	**7X-0515**	1	WASHER-HARD (17X35X5-MM THK)	
M	49	2	**7X-2546**	4	BOLT (M10X1.5X180-MM)	
M	50	1	**7X-2553**	8	BOLT (M16X2X40-MM)	
	51	1,2	**7X-7729**	81	WASHER (11X25X3-MM THK)	
	52	1,2	**8T-4121**	13	WASHER-HARD (11X21X2.5-MM THK)	
M	53	2	**8T-4132**	1	NUT (M16X2-THD)	
M	54	1	**8T-4133**	17	NUT (M10X1.5 THD)	
M	55	1,2	**8T-4136**	11	BOLT (M10X1.5X25-MM)	
M	56	1	**8T-4137**	4	BOLT (M10X1.5X20-MM)	
M	57	1,2	**8T-4195**	41	BOLT (M10X1.5X30-MM)	
M	58	2	**8T-4196**	16	BOLT (M10X1.5X35-MM)	
	59	1,2	**8T-4226**	5	WASHER-PLATED (10.5X45X3-MM THK)	
M	60	1,2	**8T-4956**	10	BOLT (M12X1.75X35-MM)	
M	61	1	**8T-4971**	8	BOLT (M6X1X30-MM)	
M	62	1	**8T-5005**	1	BOLT (M10X1.5X70-MM)	
M	63	1	**8T-6466**	2	BOLT (M10X1.5X60-MM)	
	64	1	**9X-8256**	8	WASHER (6.6X12X2-MM THK)	
	65	1	**9X-8257**	8	WASHER (17.5X30X3.5-MM THK)	
D	66	2	**054-7915**	2	SEAL (0.7-M EACH)	
D	67	1	**5P-8309**	2	SEAL (0.9-M EACH)	
D	67A	1	**5P-8309**		SEAL (0.5-M)	
D	67B	1	**5P-8309**	2	SEAL (0.3-M EACH)	
E	68	1	**112-9736**		SEAL (313-CM)	
M	69	1	**8T-4186**	7	BOLT (M10X1.5X40-MM)	
	70	1	**277-8628**	2	MOUNT	

D-ORDER BY THE METER
E-ORDER BY THE CENTIMETER
M-METRIC PART
Y-SEPARATE ILLUSTRATION

237-0443 **RADIATOR & FAN GP** *(contd.)* **i02443738**

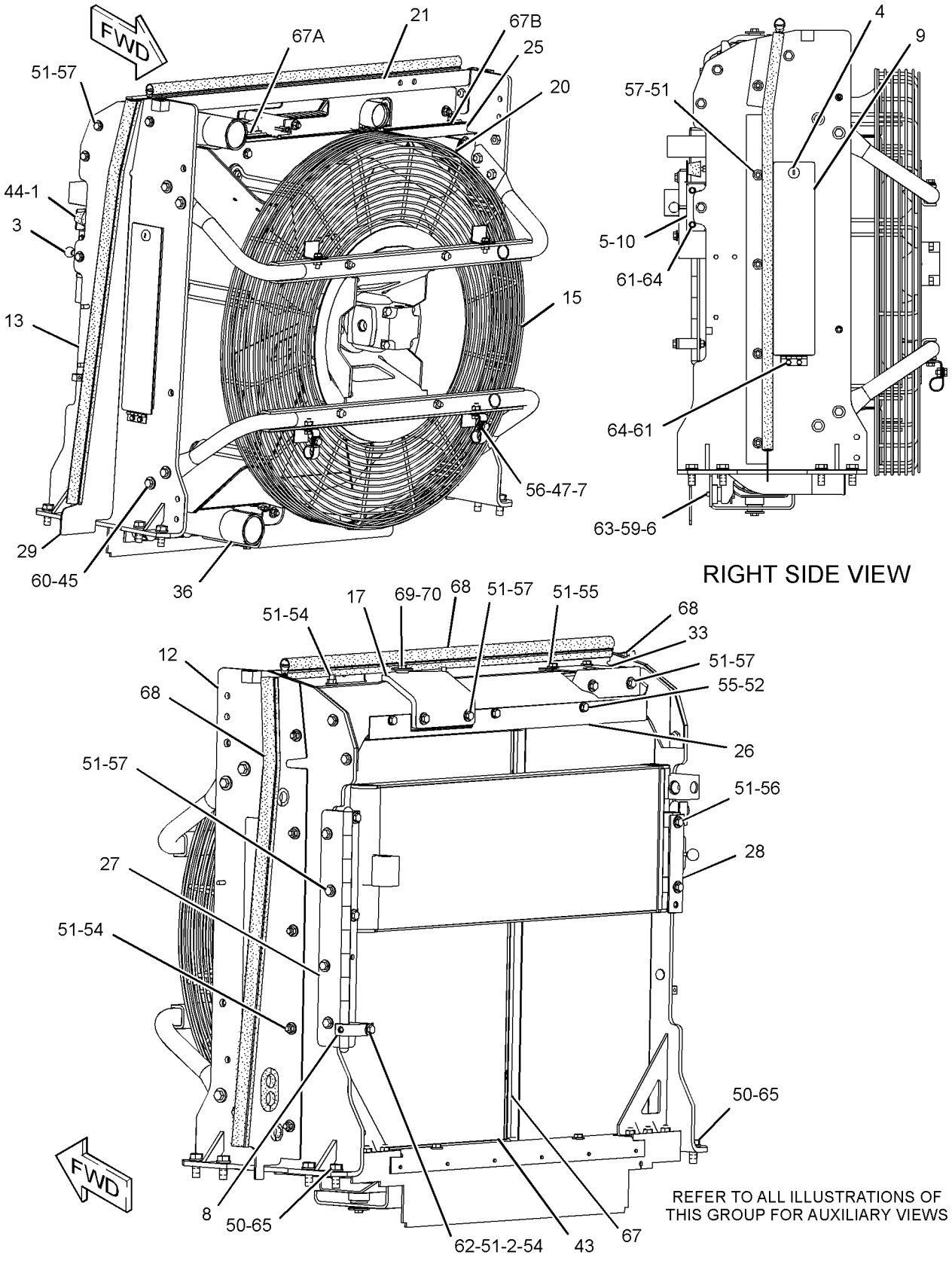

GRAPHIC #1 g01223419

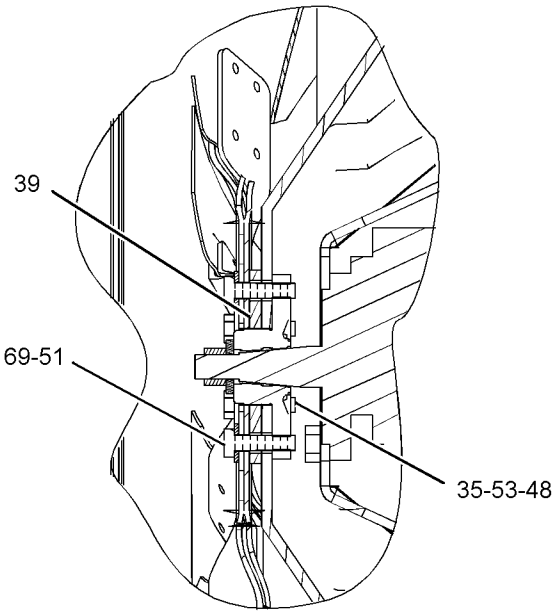

VIEW OF AREA B

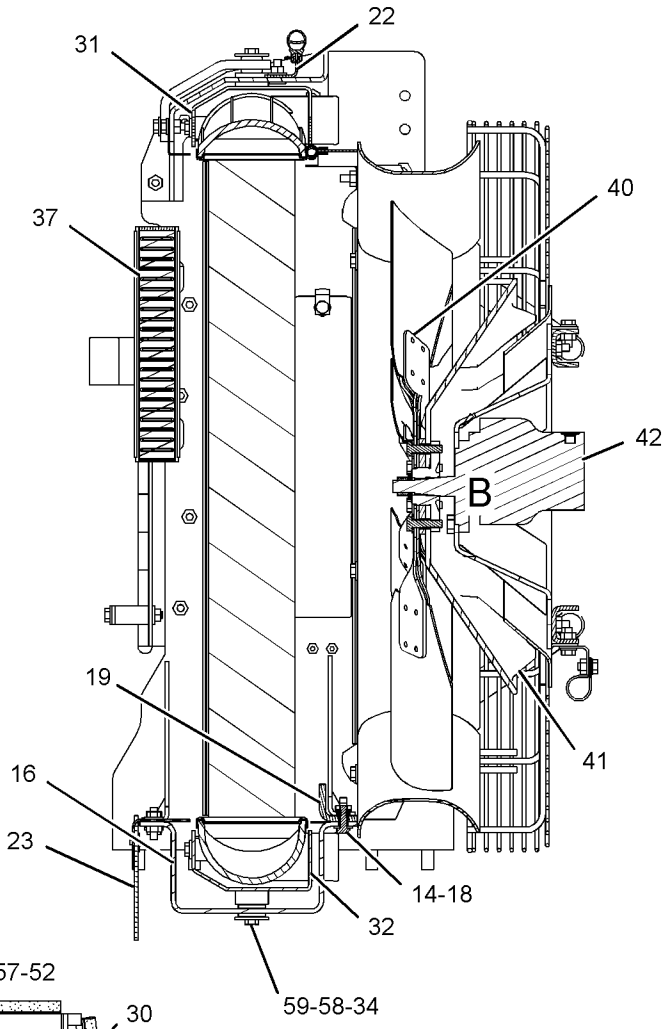

SECTION A-A

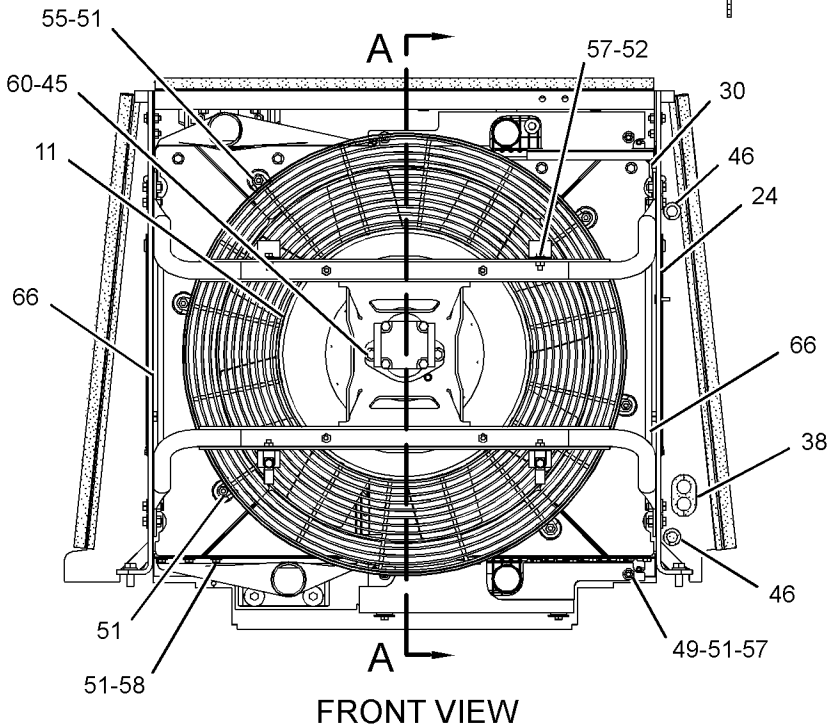

FRONT VIEW

GRAPHIC #2 **<END>** g01225407

242-4340 TANK GP-RADIATOR TOP

S/N: M3G1-UP

PART OF 237-0439 LINES GP-WATER

SMCS-1377 **i02443620**

NOTE	REF NO	GRAPHIC REF	PART NUMBER	QTY	PART NAME 1 2 3 4 5 6 (PRODUCT LEVEL)	SEE PAGE
	1	1	**6L-8617**	1	CAP-RADIATOR (7-PSI)	
	2	1	**280-3492**	1	TANK AS-WATER	

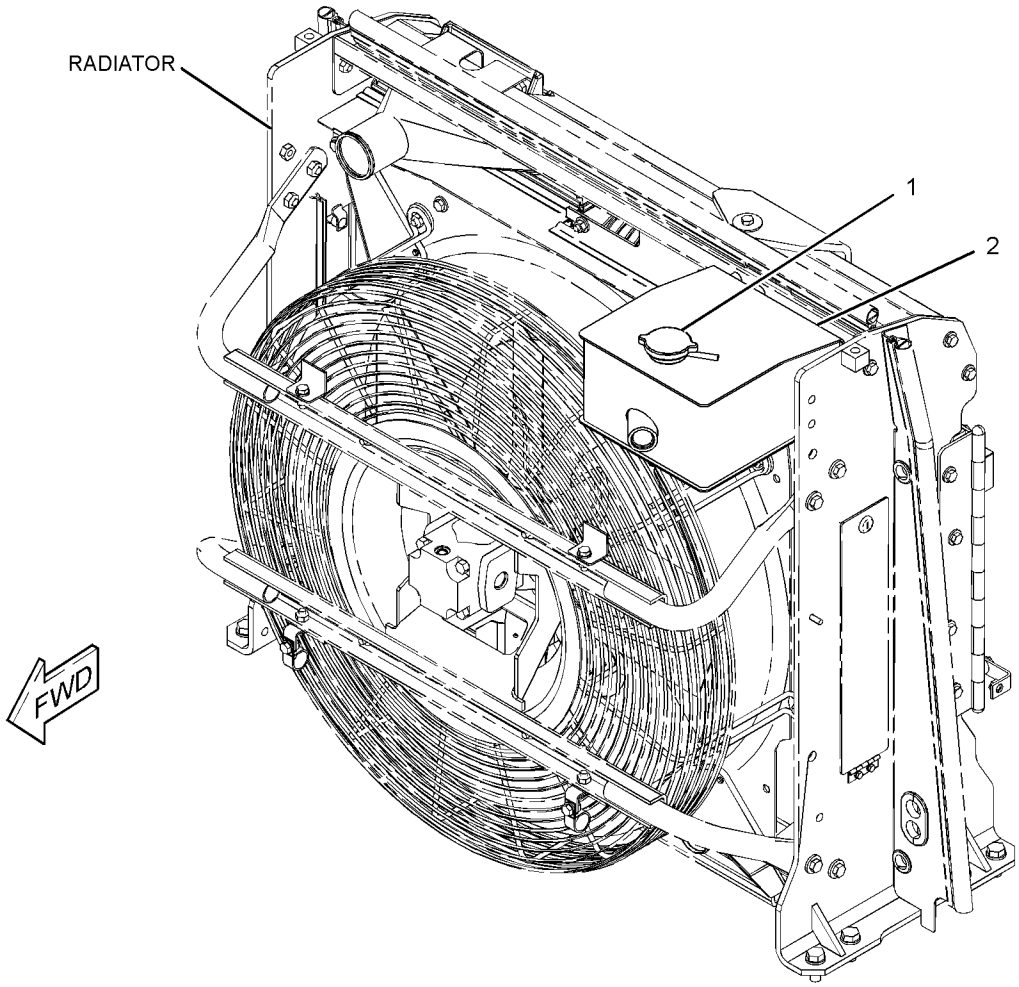

GRAPHIC #1 **<END>** g01196590

AIR INLET AND EXHAUST SYSTEM

237-4848 AIR CLEANER GP

S/N: M3G1-UP

PART OF 237-3995 INSTALLATION AR-ENGINE

SMCS-1051, 1054 **i02378845**

NOTE	REF NO	GRAPHIC REF	PART NUMBER	QTY	PART NAME 1 2 3 4 5 6 (PRODUCT LEVEL)	SEE PAGE
Y	1	1	**244-0357**	1	AIR CLEANER GP	81
	2	1	**246-1777**	1	PIPE-EXTENSION	
	3	1	**246-4611**	1	CAP AS-RAIN	
	4	1	**219-0314**	1	CLAMP	
	5	1	**7X-0579**	4	WASHER-HARD (8.8X25.5X2-MM THK)	
M	6	1	**7X-2537**	4	BOLT (M8X1.25X35-MM)	

M-METRIC PART
Y-SEPARATE ILLUSTRATION

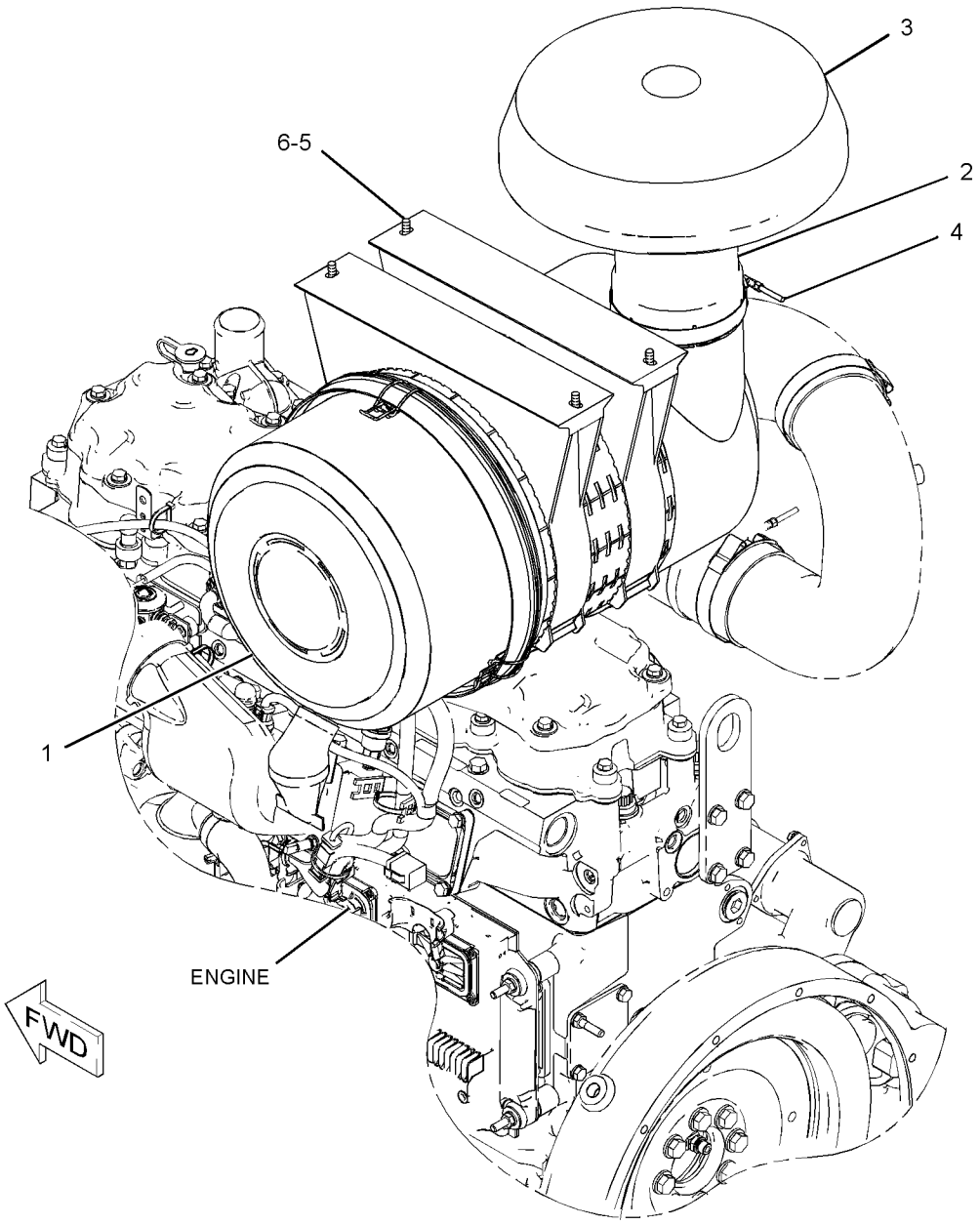

GRAPHIC #1 **<END>** g01102650

AIR INLET AND EXHAUST SYSTEM

244-0357 AIR CLEANER GP

S/N: M3G1-UP

PART OF 237-4848 AIR CLEANER GP

SMCS-1051, 1054 **i02219134**

NOTE	REF NO	GRAPHIC REF	PART NUMBER	QTY	PART NAME 1 2 3 4 5 6 (PRODUCT LEVEL)	SEE PAGE
	1	1	**245-6375**	1	FILTER ELEMENT AS-AIR (PRIMARY)	
	2	1	**245-6376**	1	FILTER ELEMENT AS-AIR (SECONDARY)	
	3	1	**246-4612**	1	VALVE-AIR CLEANER DUST	
	4	1	**246-4614**	1	COVER AS	
	5	1	**246-4615**	2	BRACKET AS	

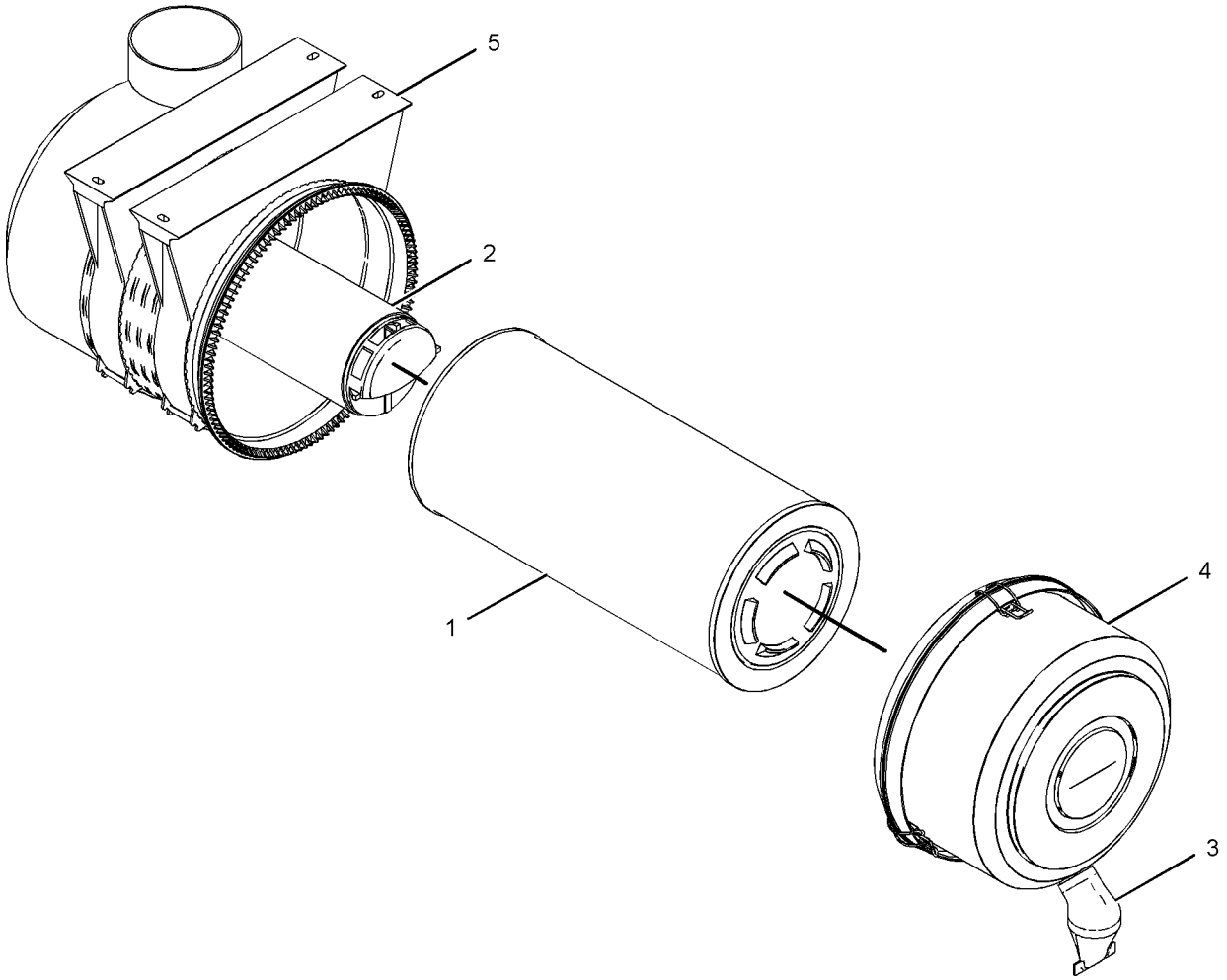

GRAPHIC #1 **<END>** g01102727

189-8779 COVER GP-AIR INLET—STARTING AID HEATER

S/N: KHX1-UP

PART OF 189-8780 COVER GP-AIR INLET

SMCS-1087 **i02092263**

NOTE	REF NO	GRAPHIC REF	PART NUMBER	QTY	PART NAME 1 2 3 4 5 6 (PRODUCT LEVEL)	SEE PAGE
	1	1	**9S-4191**	2	PLUG-O RING (STORAGE)	
	2	1	**3J-1907**	2	SEAL-O-RING	
	3	1	**245-6795**	1	INSULATOR (STARTING AID HEATER)	

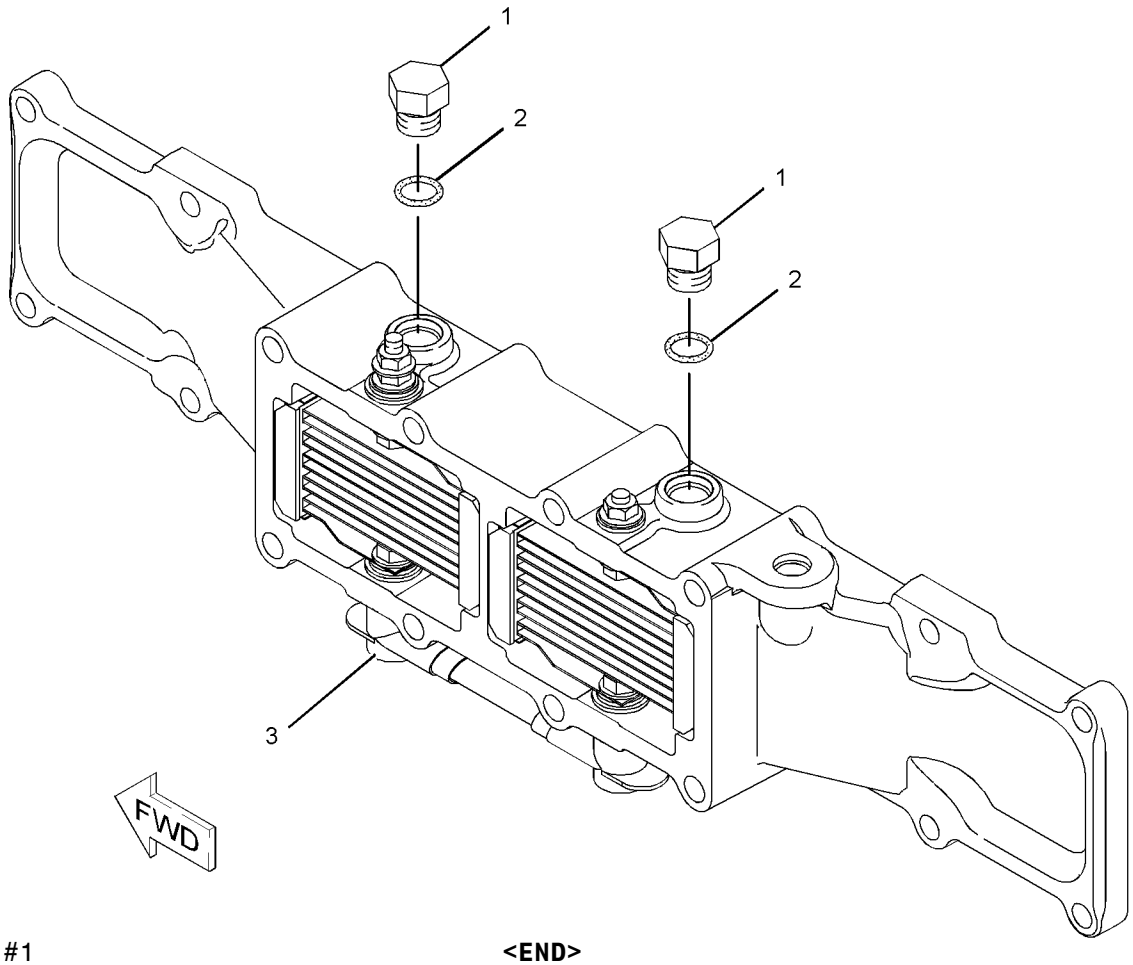

GRAPHIC #1 **<END>** g01071181

AIR INLET AND EXHAUST SYSTEM

189-8780 COVER GP-AIR INLET—STARTING AID HEATER

S/N: KHX1-UP

PART OF 235-1424 ENGINE AR-COMPLETE

SMCS-1087 **i02230414**

NOTE	REF NO	GRAPHIC REF	PART NUMBER	QTY	PART NAME 1 2 3 4 5 6 (PRODUCT LEVEL)	SEE PAGE
BC	1	1	**1U-8846**		SEALANT-GASKET	
Y	2	1	**189-8779**	1	COVER GP-AIR INLET (STARTING AID HEATER)	82

B-USE AS REQUIRED
C-CHANGE FROM PREVIOUS TYPE
Y-SEPARATE ILLUSTRATION

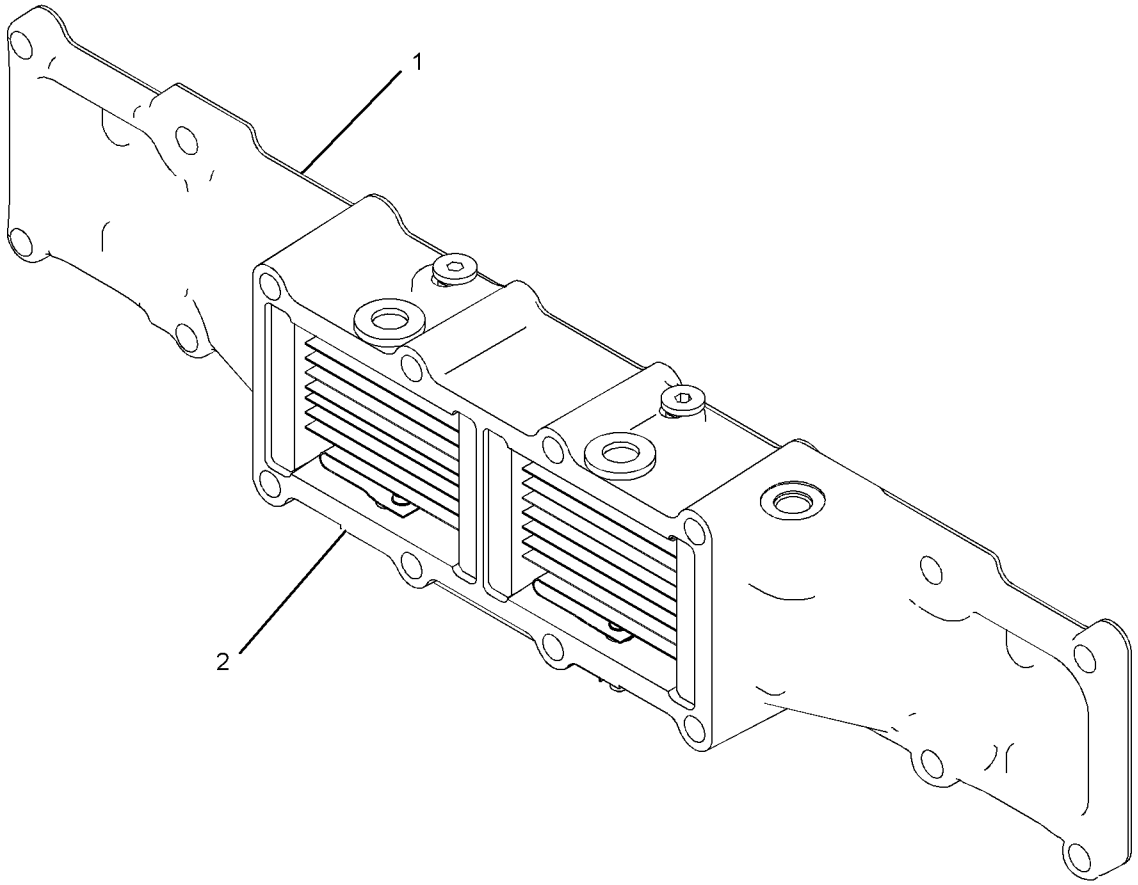

GRAPHIC #1 **<END>** g01125094

AIR INLET AND EXHAUST SYSTEM

246-2931 ELBOW GP-AIR INLET

S/N: KHX1-UP

PART OF 235-1424 ENGINE AR-COMPLETE

SMCS-1087 **i02215376**

NOTE	REF NO	GRAPHIC REF	PART NUMBER	QTY	PART NAME 1 2 3 4 5 6 (PRODUCT LEVEL)	SEE PAGE
	1	1	**4P-5918**	1	CLIP	
	2	1	**7S-6369**	1	WASHER (0.344X0.75X0.188-IN THK)	
M	3	1	**123-4511**	4	STUD (M8X1.25-THD)	
	4	1	**197-0416**	1	ELBOW	
	5	1	**3J-1907**	1	SEAL-O-RING	
M	6	1	**8T-4177**	4	BOLT (M8X1.25X90-MM)	
	7	1	**9M-1974**	7	WASHER-HARD (8.8X16X2-MM THK)	
	8	1	**9S-8004**	1	PLUG	
B	9	1	**1U-8846**		SEALANT-GASKET	

B-USE AS REQUIRED
M-METRIC PART

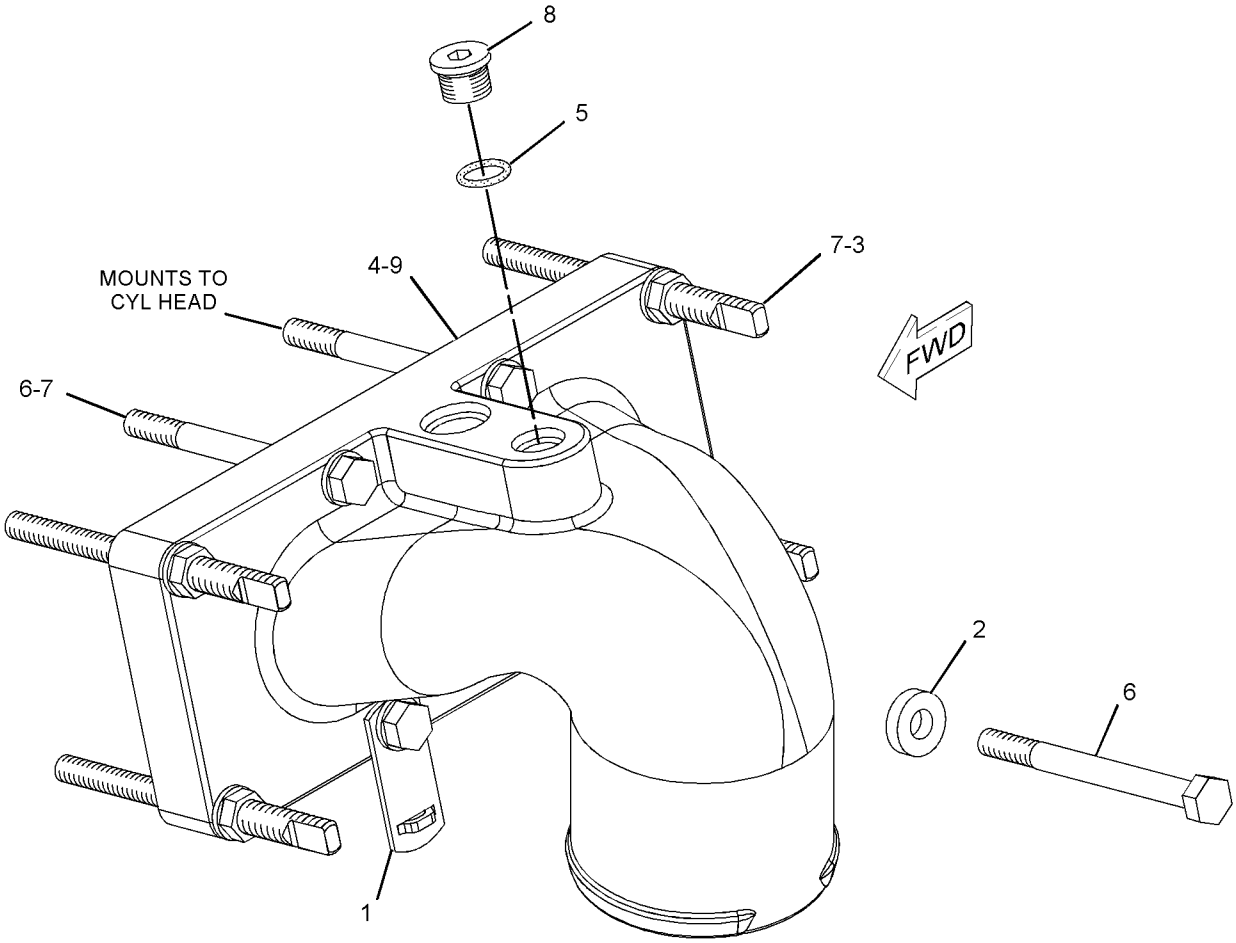

GRAPHIC #1 **<END>** g01118613

AIR INLET AND EXHAUST SYSTEM

237-0431 LINES GP-AFTERCOOLER AIR

S/N: M3G1-UP
AIR TO AIR AFTERCOOLER
PART OF 237-4933 CHASSIS AR

SMCS-1063, 1071 **i02444712**

NOTE	REF NO	GRAPHIC REF	PART NUMBER	QTY	PART NAME 1 2 3 4 5 6 (PRODUCT LEVEL)	SEE PAGE
	1	1	**177-0581**	1	HOSE	
	2	1	**202-7935**	1	HOSE	
	3	1	**209-6477**	2	HOSE	
	4	1	**239-9887**	1	BRACKET	
	5	1	**243-5745**	1	TUBE	
	6	1	**243-5746**	1	TUBE	
	7	1	**132-2155**	1	U-BOLT	
	8	1	**208-6055**	4	CLAMP	
	9	1	**209-4579**	4	CLAMP	
	10	1	**8T-4121**	2	WASHER-HARD (11X21X2.5-MM THK)	
M	11	1	**8T-4195**	2	BOLT (M10X1.5X30-MM)	
	12	1	**8T-4223**	2	WASHER-HARD (13.5X25.5X3-MM THK)	
M	13	1	**129-3180**	2	LOCKNUT (M12X1.75-THD)	

M-METRIC PART

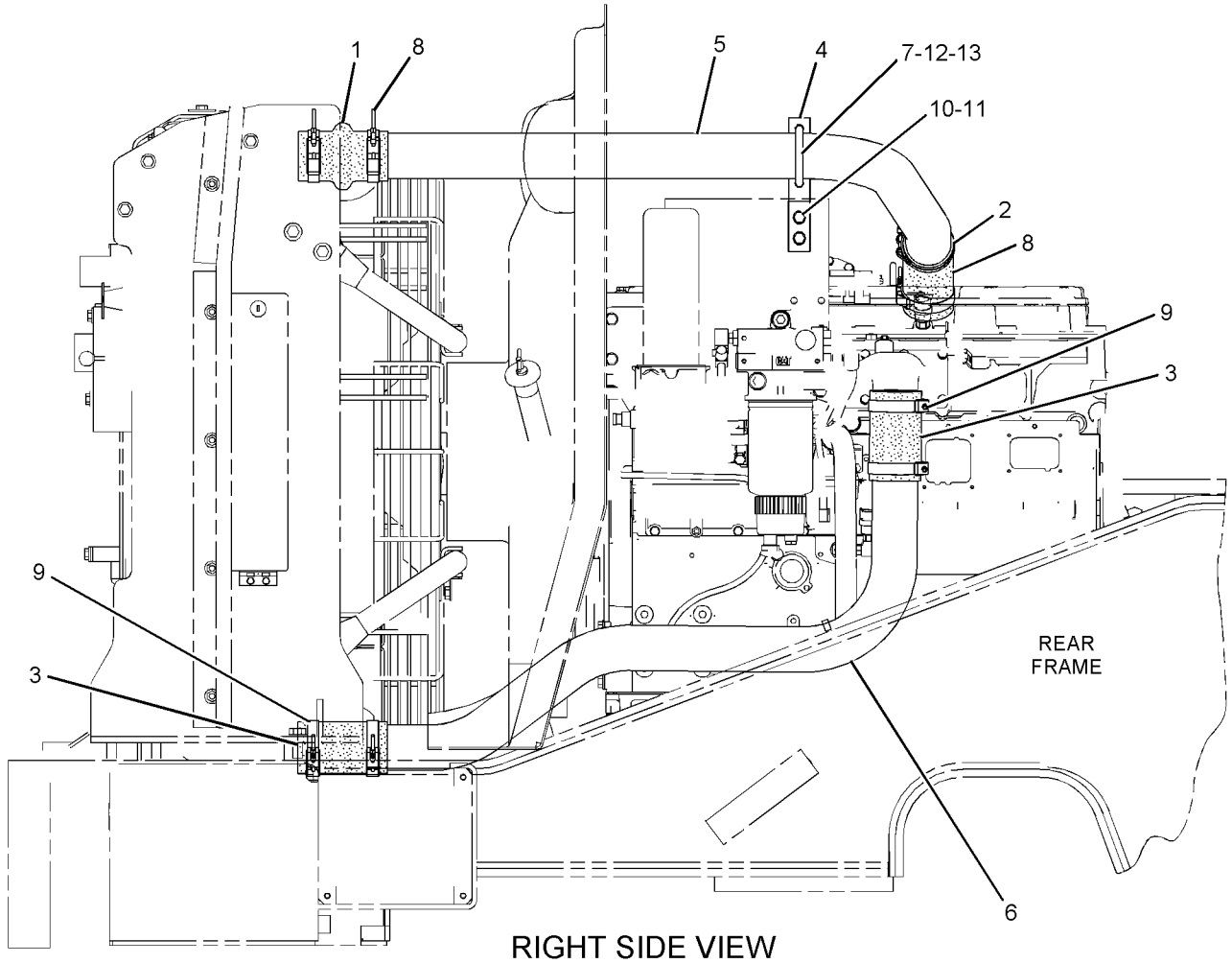

RIGHT SIDE VIEW

GRAPHIC #1 **<END>** g01122942

AIR INLET AND EXHAUST SYSTEM

237-4850 LINES GP-AIR

S/N: M3G1-UP

PART OF 237-3995 INSTALLATION AR-ENGINE

SMCS-1071 **i02207705**

NOTE	REF NO	GRAPHIC REF	PART NUMBER	QTY	PART NAME 1 2 3 4 5 6 (PRODUCT LEVEL)	SEE PAGE
	1	1	**1W-2431**	1	CLAMP - BAND	
	2	1	**9L-4244**	1	ELBOW	
	3	1	**135-6259**	1	CLAMP	
	4	1	**239-6135**	1	HOSE	
	5	1	**246-1883**	1	TUBE AS	
	6	1	**261-8531**	1	TUBE	
	7	1	**219-0314**	1	CLAMP	
	8	1	**237-0226**	2	CLAMP	

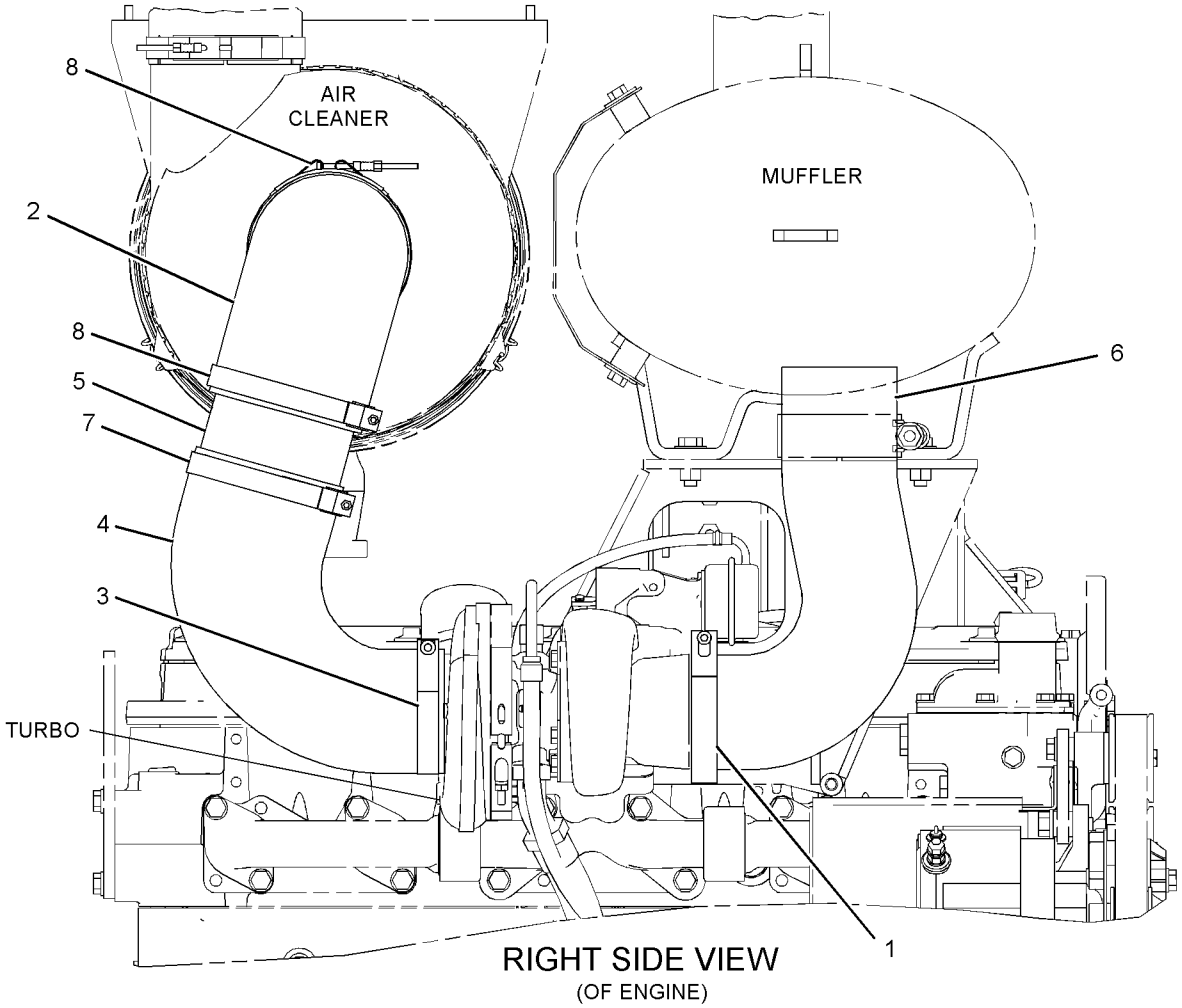

RIGHT SIDE VIEW
(OF ENGINE)

GRAPHIC #1 **<END>** g01120877

AIR INLET AND EXHAUST SYSTEM

183-6845 MANIFOLD GP-EXHAUST

S/N: KHX1-UP

PART OF 235-1424 ENGINE AR-COMPLETE

SMCS-1059 **i02419842**

NOTE	REF NO	GRAPHIC REF	PART NUMBER	QTY	PART NAME 1 2 3 4 5 6 (PRODUCT LEVEL)	SEE PAGE
M	1	1	**8T-7044**	4	STUD-TAPERLOCK (M10X1.5X40-MM)	
	2	1	**272-1956**	6	GASKET	
M	3	1	**172-6298**	8	BOLT-FLANGE HEAD (M10)	
	4	1	**183-6854**	1	MANIFOLD-EXHAUST (CENTER)	
	5	1	**183-6856**	2	MANIFOLD-EXHAUST (END)	
	6	1	**189-8772**	8	SPACER (11X16X35-MM THK)	
	7	1	**203-3768**	4	SPACER (11X16X60-MM THK)	
	8	1	**210-7722**	4	BOLT-FLANGE HEAD (M10)	

M-METRIC PART

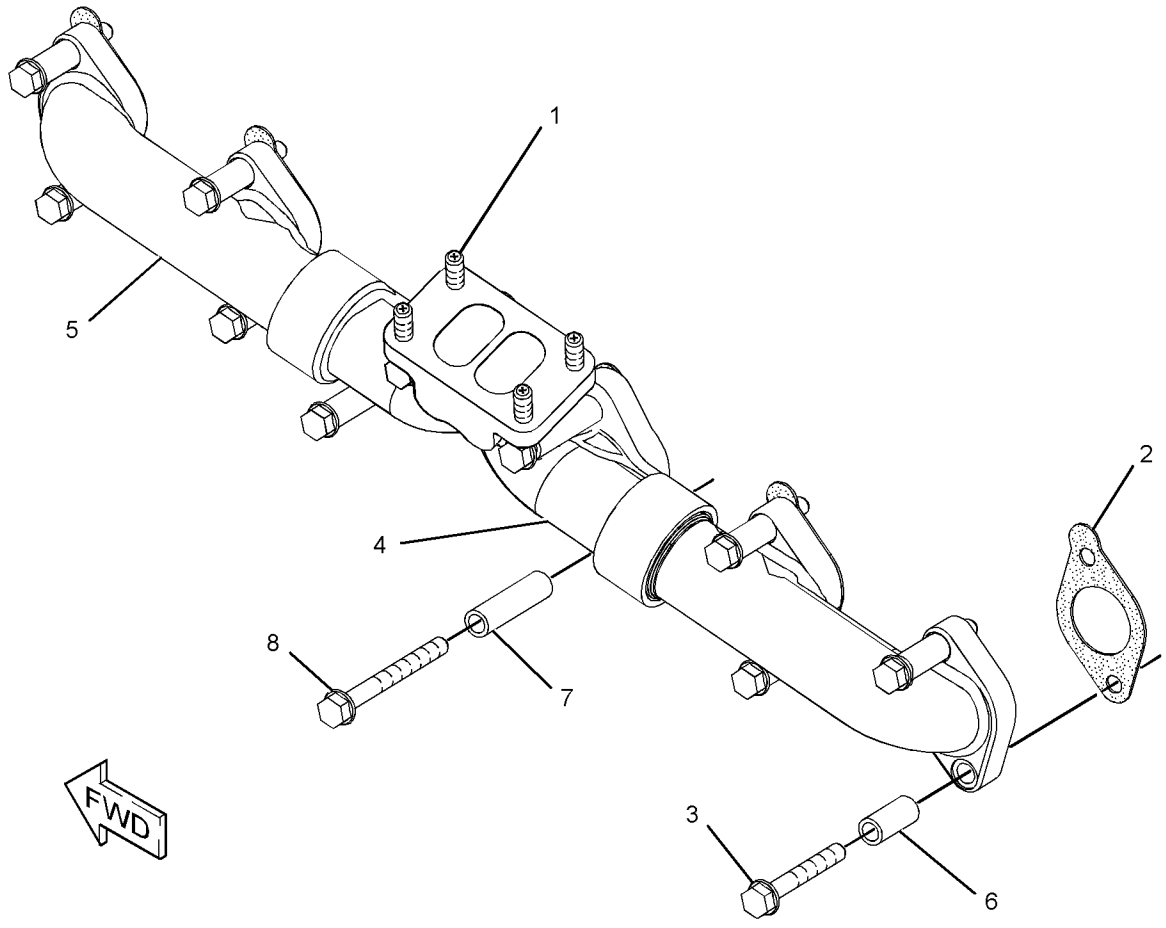

GRAPHIC #1 **<END>** g01211596

AIR INLET AND EXHAUST SYSTEM

237-4853 MUFFLER GP

S/N: M3G1-UP

PART OF 237-3995 INSTALLATION AR-ENGINE

SMCS-1062 **i02443678**

NOTE	REF NO	GRAPHIC REF	PART NUMBER	QTY	PART NAME 1 2 3 4 5 6 (PRODUCT LEVEL)	SEE PAGE
	1	1	**255-4954**	1	SHIELD-HEAT	
	2	1	**261-0441**	1	BRACKET AS	
	3	1	**261-6639**	1	MUFFLER AS	
		1	**7E-3870**	1	CLAMP	
	4	1	**122-4026**	4	SPACER (13X25X25-MM THK)	
M	5	1	**8T-4196**	2	BOLT (M10X1.5X35-MM)	
M	6	1	**8T-4137**	6	BOLT (M10X1.5X20-MM)	
	7	1	**7X-7729**	6	WASHER (11X25X3-MM THK)	
	8	1	**7X-0605**	8	WASHER-HARD (13X28X1.6-MM THK)	
	9	1	**264-3637**	2	BOLT	
M	10	1	**8T-4244**	4	NUT (M12X1.75-THD)	
	11	1	**8T-4121**	4	WASHER-HARD (11X21X2.5-MM THK)	
M	12	1	**8T-4910**	4	BOLT (M12X1.75X60-MM)	

M-METRIC PART

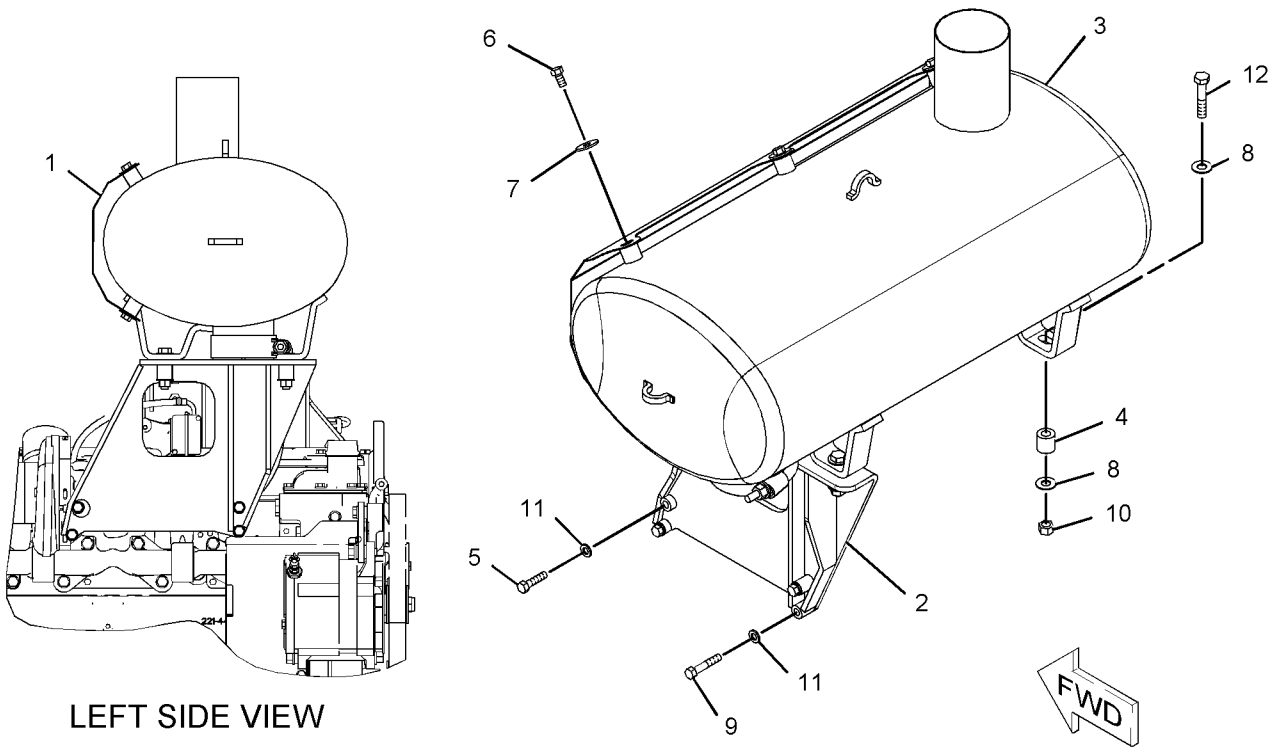

LEFT SIDE VIEW

GRAPHIC #1 **<END>** g01131591

AIR INLET AND EXHAUST SYSTEM

216-4515 PIPE GP-EXHAUST

S/N: M3G1-UP
PART OF 251-1700, 275-8310 HOOD & GUARD GP
ALSO AN ATTACHMENT

SMCS-1061 **i01719392**

NOTE	REF NO	GRAPHIC REF	PART NUMBER	QTY	PART NAME 1 2 3 4 5 6 (PRODUCT LEVEL)	SEE PAGE
	1	1	**127-9133**	1	CLAMP-BENT BOLT	

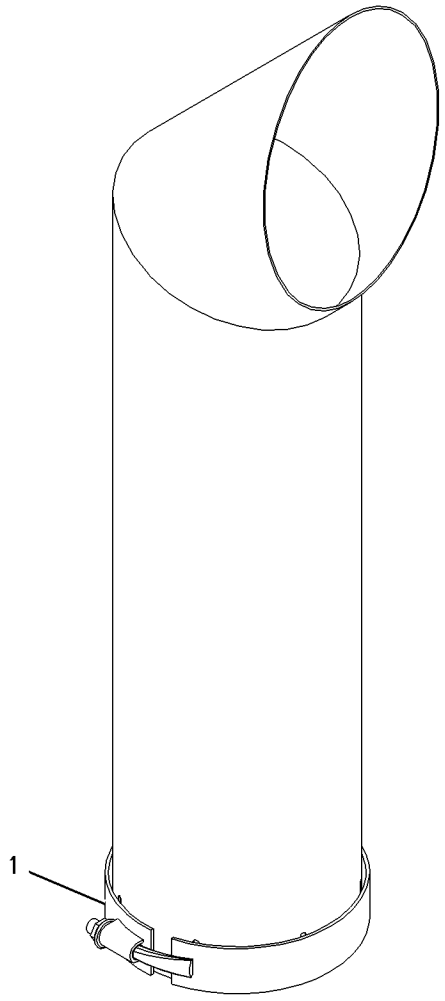

GRAPHIC #1 **<END>** g00884562

AIR INLET AND EXHAUST SYSTEM

244-6601 PRECLEANER GP

S/N: M3G1-UP

AN ATTACHMENT

SMCS-1055 **i02444702**

NOTE	REF NO	GRAPHIC REF	PART NUMBER	QTY	PART NAME 1 2 3 4 5 6 (PRODUCT LEVEL)	SEE PAGE
	1	1	*200-7138*	1	PRECLEANER AS	
		1	**116-2659**	1	DAMPER	
		1	**130-3280**	1	PRECLEANER AS	
	2	1	**251-9340**	1	PIPE-EXTENSION	
	3	1	**8T-4121**	6	WASHER-HARD (11X21X2.5-MM THK)	
M	4	1	**8T-4136**	3	BOLT (M10X1.5X25-MM)	
M	5	1	**8T-4133**	3	NUT (M10X1.5 THD)	

M-METRIC PART

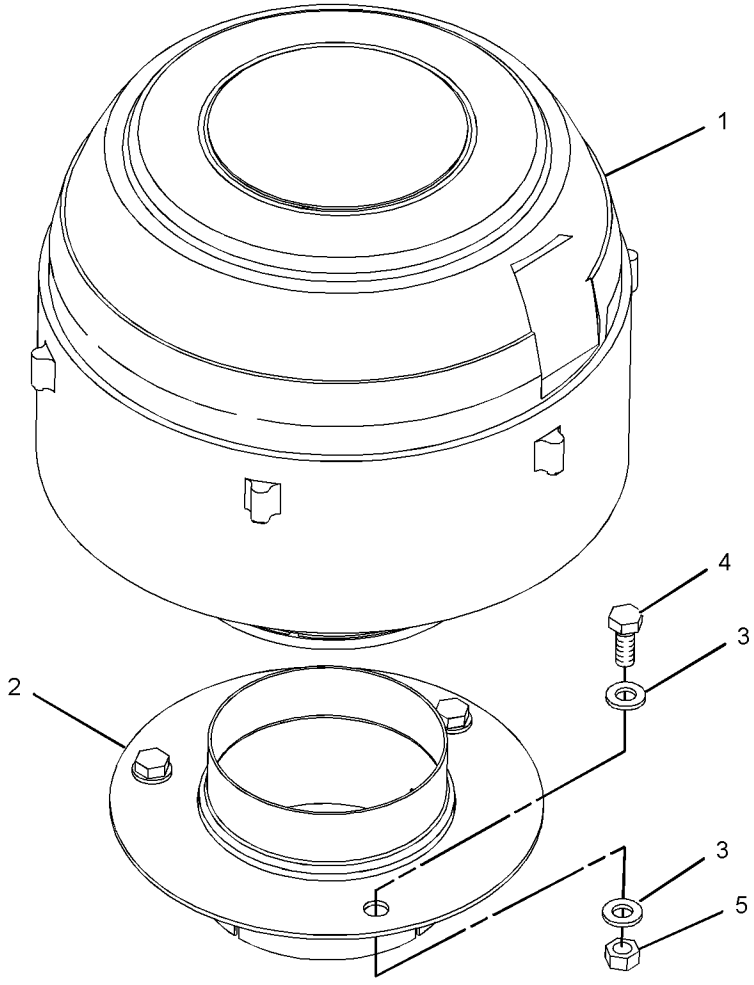

GRAPHIC #1 **<END>** g01218866

AIR INLET AND EXHAUST SYSTEM

244-6603 PRECLEANER GP

S/N: M3G1-UP

AN ATTACHMENT

SMCS-1055 **i02449343**

NOTE	REF NO	GRAPHIC REF	PART NUMBER	QTY	PART NAME 1 2 3 4 5 6 (PRODUCT LEVEL)	SEE PAGE
	1	1	*217-5288*	1	PRECLEANER AS	
		1	**130-3280**	1	PRECLEANER AS	
		1	**174-5415**	1	CLAMP	
		1	**217-5287**	1	PIPE	
M		1	**7X-3332**	6	SCREW-HEX FLANGE (M4X0.7X8-MM)	
		1	**116-2659**	2	DAMPER	
	2	1	**283-0660**	1	PIPE-EXTENSION	
	3	1	**222-2277**	1	CLAMP	
	4	1	**8T-4121**	6	WASHER-HARD (11X21X2.5-MM THK)	
M	5	1	**8T-4136**	3	BOLT (M10X1.5X25-MM)	
M	6	1	**8T-4133**	3	NUT (M10X1.5 THD)	

M-METRIC PART

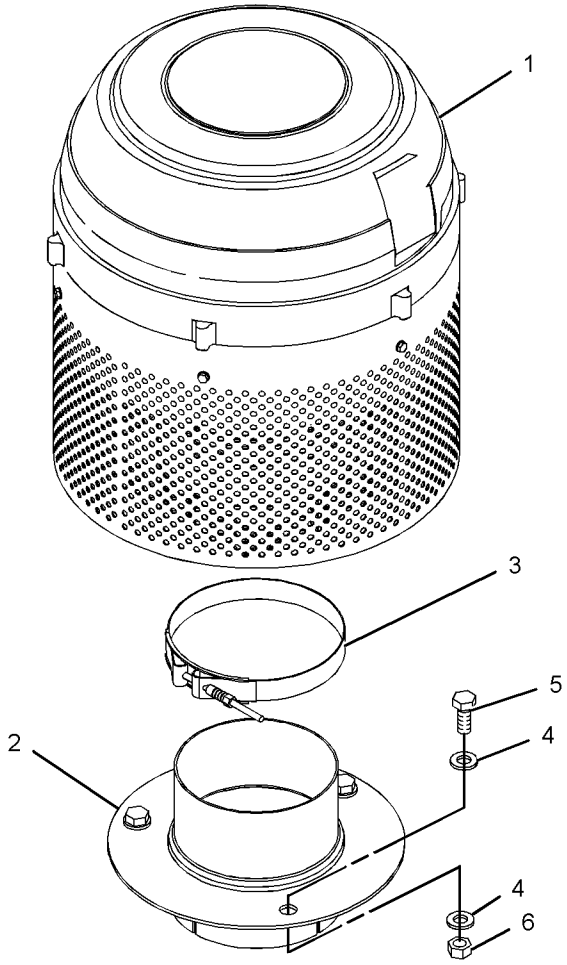

GRAPHIC #1 **<END>** g01218886

AIR INLET AND EXHAUST SYSTEM

258-2403 TURBOCHARGER GP

S/N: KHX1-UP

PART OF 235-1425 ENGINE AR-CORE

SMCS-1052, 1053 **i02215804**

NOTE	REF NO	GRAPHIC REF	PART NUMBER	QTY	PART NAME 1 2 3 4 5 6 (PRODUCT LEVEL)	SEE PAGE
	1	1	**7C-7431**	1	GASKET	
	2	1	**250-0841**	1	TURBOCHARGER GP	
M	3	1	**3E-8017**	4	LOCKNUT (M10X1.5-MM THD)	

M-METRIC PART

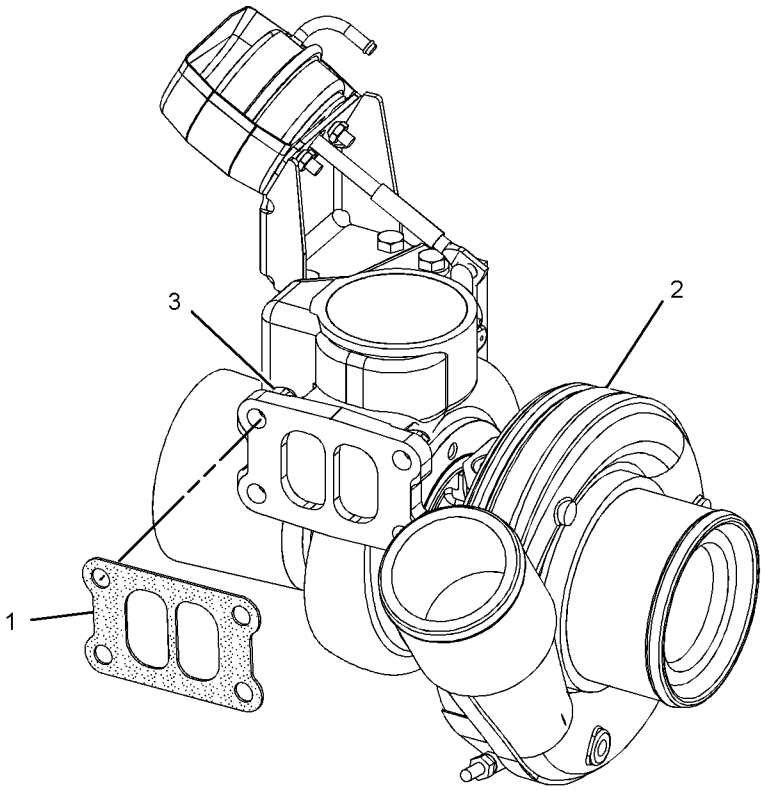

GRAPHIC #1 **<END>** g01118532

FUEL SYSTEM

237-9823 FILTER & LINES GP-FUEL

S/N: KHX1-UP

PART OF 235-1424 ENGINE AR-COMPLETE

SMCS-1261, 1274 **i02267015**

NOTE	REF NO	GRAPHIC REF	PART NUMBER	QTY	PART NAME 1 2 3 4 5 6 (PRODUCT LEVEL)	SEE PAGE
	1	1	**3S-2093**	3	STRAP-CABLE	
	2	1	*183-3406*	1	PLUG AS	
		1	**6V-5049**	1	SEAL-O-RING	
		1	**9S-4191**	1	PLUG-O RING	
Y	3	1	**194-6725**	1	SENSOR GP-PRESSURE (FUEL)	177
	4	1	**206-6876**	1	CAP-TUBE	
Y	5	1	*232-0343*	1	REGULATOR GP-FUEL PRESSURE	111
	6	1	**235-3596**	1	ADAPTER AS	
		1	**6V-5048**	2	SEAL-O-RING	
		1	**8L-2786**	2	SEAL-O-RING	
		1	**235-3595**	2	ADAPTER	
	7	1	**237-9308**	1	BASE AS	
		1	**9S-4167**	1	STUD-HOLLOW	
	8	1	**238-1112**	1	BRACKET	
I	9	1	**244-6604**	1	HOSE AS	
I	10	1	**244-6605**	1	HOSE AS	
	11	1	**254-1425**	1	BRACKET AS	
Y	12	1	**258-0883**	1	SWITCH GP-PRESSURE (DIFFERENTIAL) (FUEL)	203
	13	1	**260-4861**	1	HARNESS AS-WIRING (FUEL PRESSURE)	
		1	**102-8803**	1	KIT-RECEPTACLE (3-PIN)	
					(INCLUDES RECEPTACLE AS AND WEDGE)	
		1	**102-8806**	1	KIT-RECEPTACLE (8-PIN)	
					(INCLUDES RECEPTACLE AS AND WEDGE)	
		1	**8T-8737**	3	PLUG-SEAL	
		1	**155-2270**	1	KIT-CONNECTING PLUG (2-PIN)	
					(INCLUDES PLUG AS AND WEDGE)	
	14	1	**067-2551**	1	CLIP	
	15	1	**130-5301**	1	CLIP	
	16	1	**132-5789**	1	CLIP	
	17	1	**134-3988**	3	CLIP	
	18	1	**141-8275**	1	VALVE-DRAIN (FUEL)	
	19	1	*148-8313*	1	ADAPTER AS	
		1	**3K-0360**	1	SEAL-O-RING	
		1	**5P-6944**	1	ADAPTER	
	20	1	*148-8336*	1	CONNECTOR AS	
		1	**3J-1907**	1	SEAL-O-RING	
		1	**6V-8397**	1	SEAL-O-RING	
		1	**6V-8636**	1	CONNECTOR	
	21	1	*148-8363*	1	ELBOW AS	
		1	**3K-0360**	1	SEAL-O-RING	
		1	**6V-8397**	1	SEAL-O-RING	
		1	**6V-9876**	1	ELBOW	
	22	1	*148-8374*	1	ELBOW AS	
		1	**3K-0360**	1	SEAL-O-RING	
		1	**6V-8397**	1	SEAL-O-RING	
		1	**6V-8723**	1	ELBOW	
	23	1	*148-8378*	1	ELBOW AS	
		1	**3J-1907**	1	SEAL-O-RING	
		1	**6V-8397**	1	SEAL-O-RING	
		1	**6V-8724**	1	ELBOW	
	24	1	*148-8411*	2	PLUG AS	
					(EACH INCLUDES)	
		1	**3K-0360**	1	SEAL-O-RING	
		1	**9S-4185**	1	PLUG	
	25	1	*162-0177*	1	PLUG AS	
		1	**3J-1907**	1	SEAL-O-RING	

237-9823 **FILTER & LINES GP-FUEL** *(contd.)* **i02267015**

NOTE	REF NO	GRAPHIC REF	PART NUMBER	QTY	PART NAME 1 2 3 4 5 6 (PRODUCT LEVEL)	SEE PAGE
		1	**9S-8004**	1	PLUG	
	26	1	**174-5907**	1	CLIP	
	27	1	**1R-0762**	1	FILTER AS-FUEL (SECONDARY)	
M	28	1	**5C-7261**	3	NUT (M8X1.25-THD)	
M	29	1	**6V-3822**	2	BOLT (M10X1.5X35-MM)	
	30	1	**6V-5049**	1	SEAL-O-RING	
	31	1	**6V-5839**	7	WASHER (11X21X2.5-MM THK)	
M	32	1	**6V-6889**	2	NUT (M8X1.25-THD)	
M	33	1	**8T-4137**	3	BOLT (M10X1.5X20-MM)	
M	34	1	**8T-4185**	3	BOLT (M10X1.5X50-MM)	
	35	1	**8T-4224**	4	WASHER-HARD (8.8X16X2-MM THK)	
	36	1	**8T-4226**	1	WASHER-PLATED (10.5X45X3-MM THK)	
	37	1	**9M-1974**	2	WASHER-HARD (8.8X16X2-MM THK)	

I-REFER TO HYDRAULIC INFORMATION SYSTEM
M-METRIC PART
Y-SEPARATE ILLUSTRATION

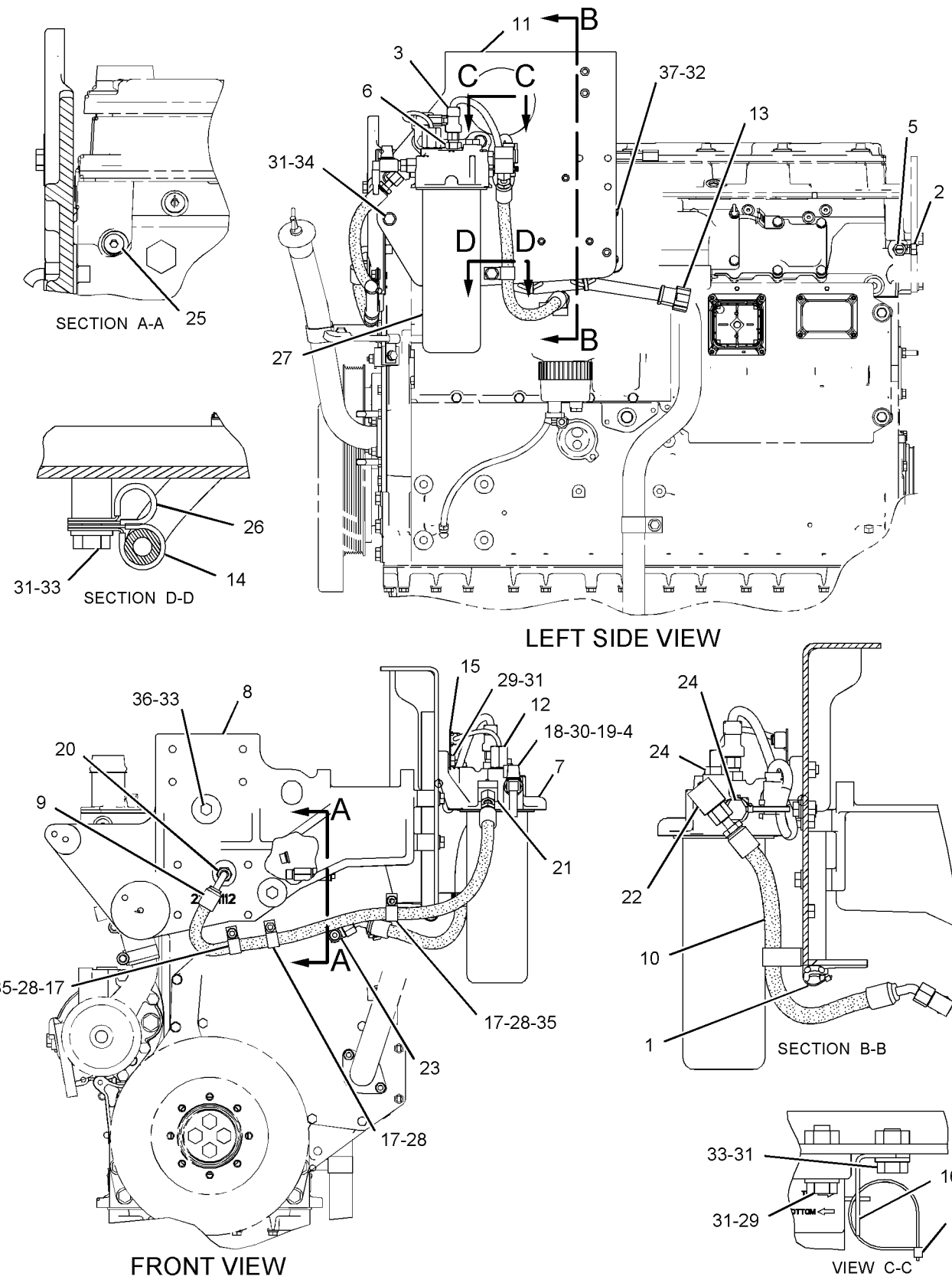

GRAPHIC #1 **<END>** g01118437

174-9570 FILTER GP-WATER SEP & FUEL

S/N: KHX1-UP

PART OF 212-3657 WATER SEP & FUEL PRM PUMP GP

SMCS-1261, 1263 **i02390251**

NOTE	REF NO	GRAPHIC REF	PART NUMBER	QTY	PART NAME 1 2 3 4 5 6 (PRODUCT LEVEL)	SEE PAGE
	1	1	**1R-0770**	1	FILTER AS-WATER SEP & FUEL (PRIMARY)	
	1A	1	**220-8678**	1	SEAL	
	2	1	**270-5320**	1	BOWL AS (FUEL, WATER SEPARATOR)	

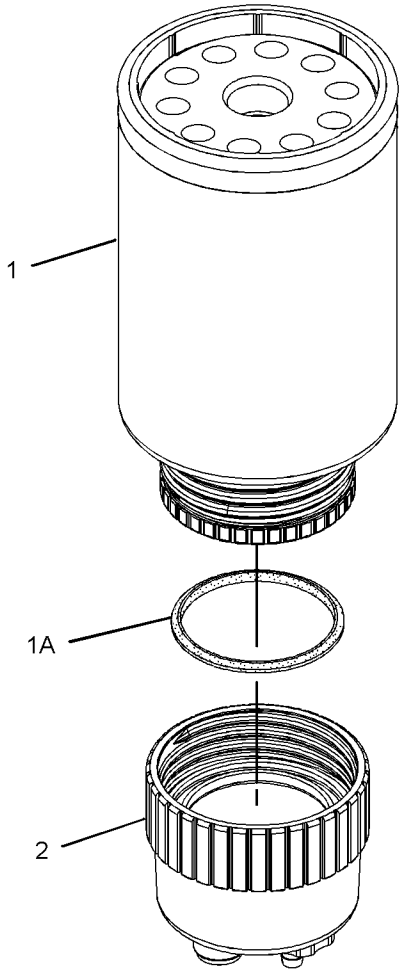

GRAPHIC #1 **<END>** g01179858

241-3400 INJECTOR GP-FUEL

S/N: KHX1-UP

PART OF 222-5958 PUMP GP-FUEL INJECTION

FOR USE WITH HIGH HP ENGINES

SMCS-1251, 1254, 1290, 1713 **i02216076**

NOTE	REF NO	GRAPHIC REF	PART NUMBER	QTY	PART NAME 1 2 3 4 5 6 (PRODUCT LEVEL)	SEE PAGE
	1	1	**149-5240**	1	RING-BACKUP	
	2	1	**169-3104**	1	RING-BACKUP	
	3	1	**169-8598**	1	SEAL-O-RING	
	5	1	**109-3207**	1	SEAL-O-RING	
	6	1	**148-2903**	1	SEAL-O-RING	
	7	1	**169-8586**	1	RING-BACKUP	

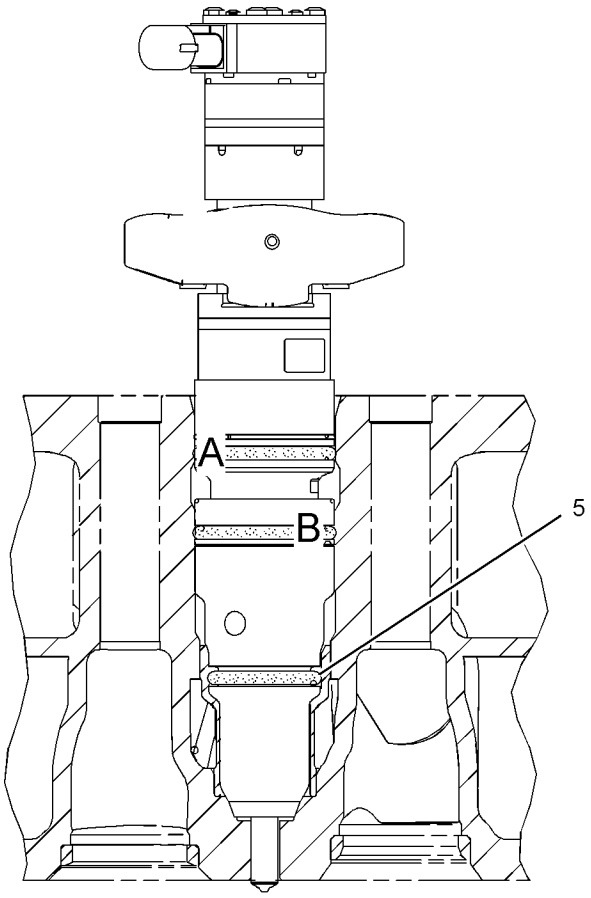

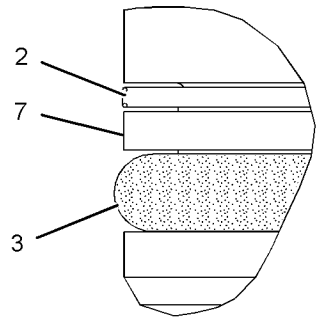

VIEW OF AREA A

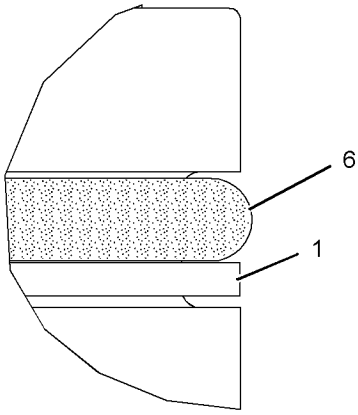

VIEW OF AREA B

GRAPHIC #1 **<END>** g01032697

FUEL SYSTEM

237-0432 LINES GP-FUEL

S/N: M3G1-UP

PART OF 237-4933 CHASSIS AR

SMCS-1274 **i02442957**

NOTE	REF NO	GRAPHIC REF	PART NUMBER	QTY	PART NAME 1 2 3 4 5 6 (PRODUCT LEVEL)	SEE PAGE
	1	1	**7K-1181**	3	STRAP-CABLE	
	2	1	**124-3019**	1	BRACKET AS	
M		1	**8T-3490**	1	NUT-WELD (M10X1.5-THD)	
I	3	1	**244-7595**	1	HOSE AS	
I	4	1	**250-0155**	1	HOSE AS	
	5	1	*148-8336*	1	CONNECTOR AS	
		1	**3J-1907**	1	SEAL-O-RING	
		1	**6V-8397**	1	SEAL-O-RING	
		1	**6V-8636**	1	CONNECTOR	
	6	1	*148-8369*	1	ELBOW AS	
		1	**3J-7354**	1	SEAL-O-RING	
		1	**4J-5477**	1	SEAL-O-RING	
		1	**6V-8628**	1	ELBOW	
	7	1	*148-8378*	1	ELBOW AS	
		1	**3J-1907**	1	SEAL-O-RING	
		1	**6V-8397**	1	SEAL-O-RING	
		1	**6V-8724**	1	ELBOW	
	8	1	**6V-8397**	1	SEAL-O-RING	
	9	1	**8M-2770**	1	CLIP	
	10	1	**8T-4121**	1	WASHER-HARD (11X21X2.5-MM THK)	
M	11	1	**8T-4195**	1	BOLT (M10X1.5X30-MM)	
	12	1	**9M-8406**	1	CLIP	

I-REFER TO HYDRAULIC INFORMATION SYSTEM
M-METRIC PART

237-0432 **LINES GP-FUEL** *(contd.)* **i02442957**

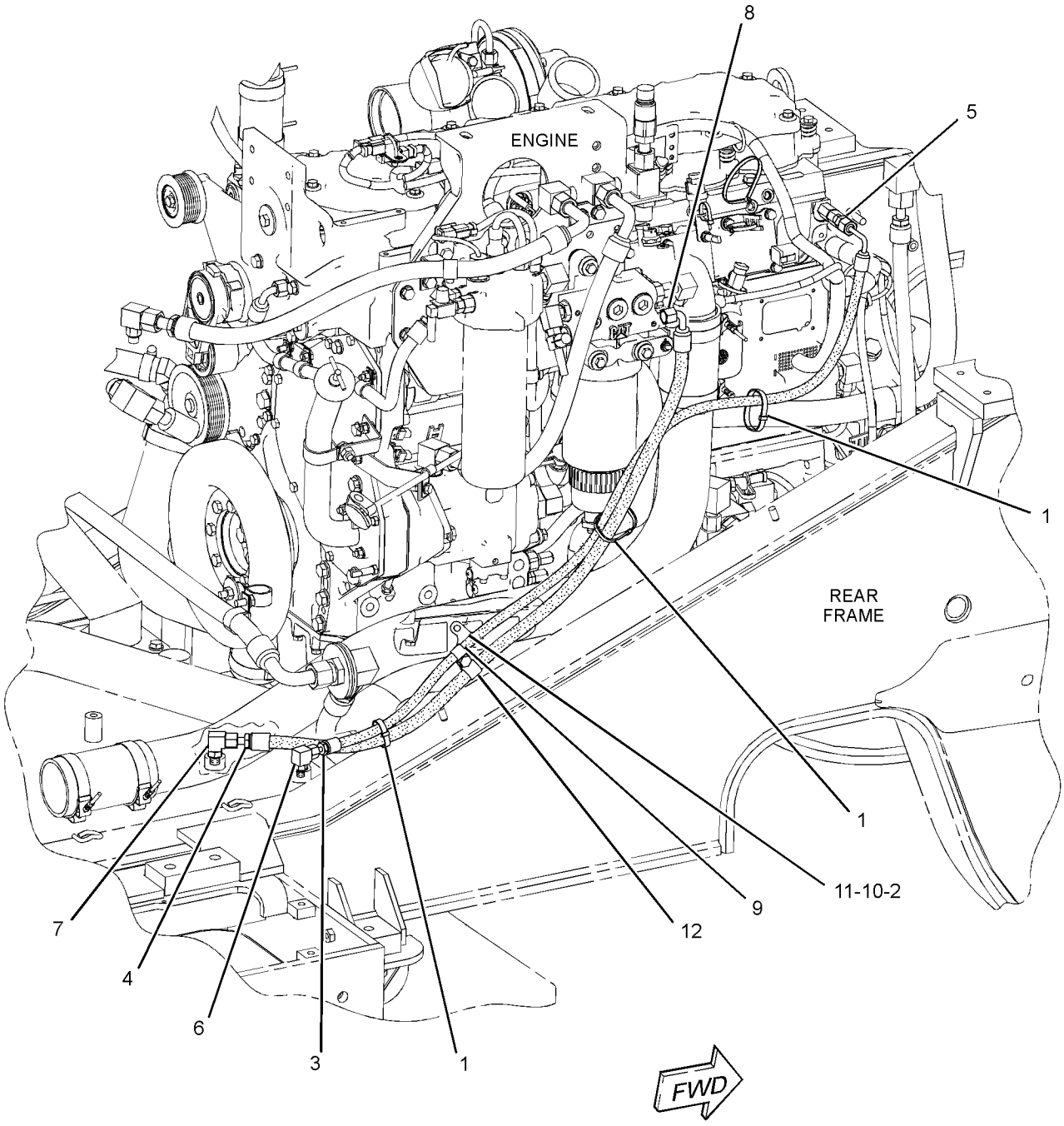

GRAPHIC #1 **<END>** g01220692

FUEL SYSTEM

237-4851 LINES GP-FUEL DRAIN

S/N: M3G1-UP

PART OF 237-3995 INSTALLATION AR-ENGINE

SMCS-1274 **i02443650**

NOTE	REF NO	GRAPHIC REF	PART NUMBER	QTY	PART NAME 1 2 3 4 5 6 (PRODUCT LEVEL)	SEE PAGE
	1	1	**3S-2093**	2	STRAP-CABLE	
	2	1	**1P-4278**	2	CLAMP-HOSE	
E	3	1	**103-2529**		HOSE (69.9-CM)	
E	3A	1	**103-2529**		HOSE (91.5-CM)	

E-ORDER BY THE CENTIMETER

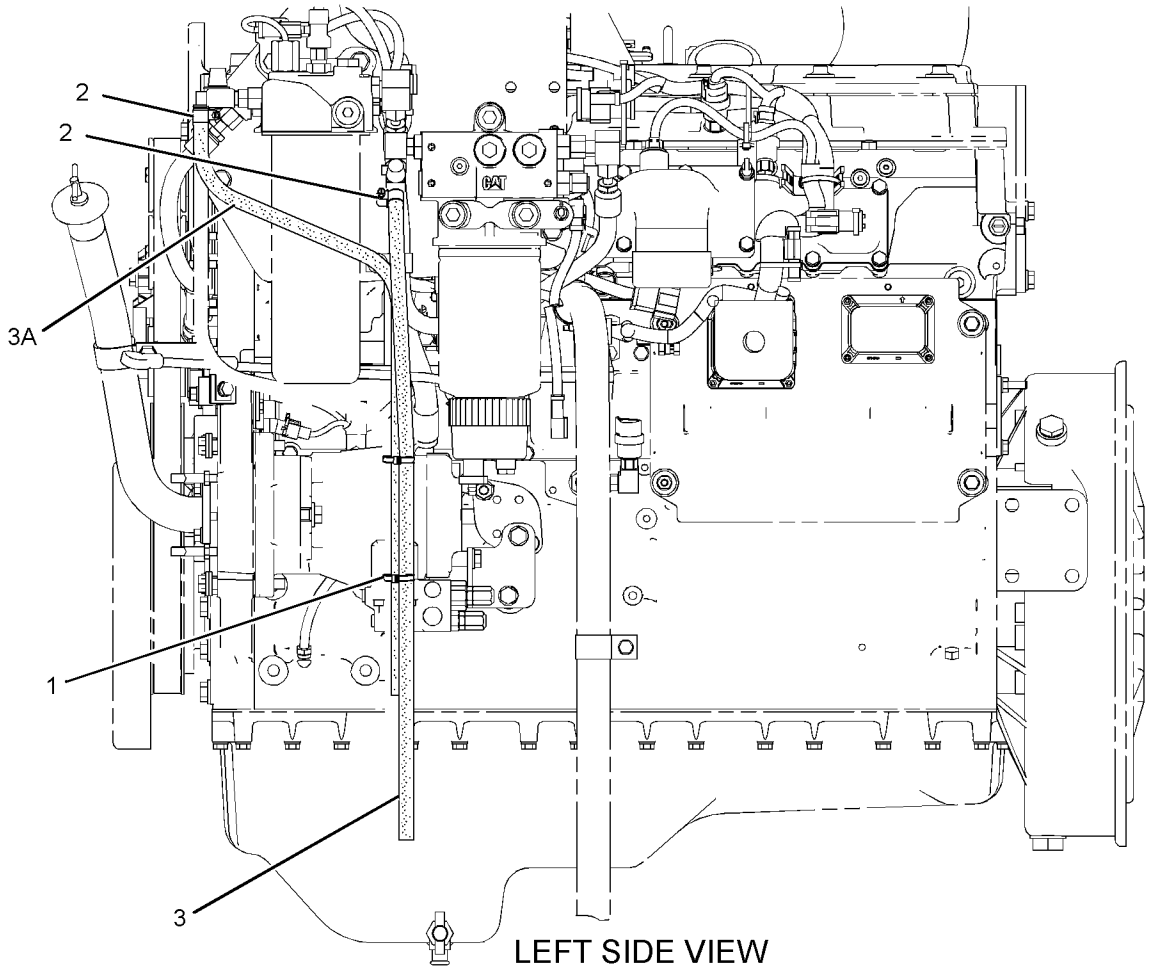

LEFT SIDE VIEW
(OF ENGINE)

GRAPHIC #1 **<END>** g01196666

191-0461 LINES GP-INJECTOR HYD PUMP

S/N: KHX1-UP

PART OF 235-1425 ENGINE AR-CORE

SMCS-1714 **i02215817**

NOTE	REF NO	GRAPHIC REF	PART NUMBER	QTY	PART NAME 1 2 3 4 5 6 (PRODUCT LEVEL)	SEE PAGE
	1	1	*183-3399*	2	CONNECTOR AS	
					(EACH INCLUDES)	
		1	**6V-8636**	1	CONNECTOR	
		1	**214-7568**	1	SEAL-O-RING	
		1	**221-3494**	1	SEAL-O-RING	
Y	2	1	*191-0523*	1	ADAPTER GP-OIL LINE	51
	3	1	**205-1280**	1	HOSE AS	
	4	1	**212-3706**	1	TUBE AS	
	5	1	**3V-2431**	2	WASHER (10.2X16X2-MM THK)	
	6	1	**4F-9653**	1	SEAL-O-RING	
M	7	1	**8T-1159**	2	BOLT-SOCKET HEAD (M10X1.5X25-MM)	

M-METRIC PART
Y-SEPARATE ILLUSTRATION

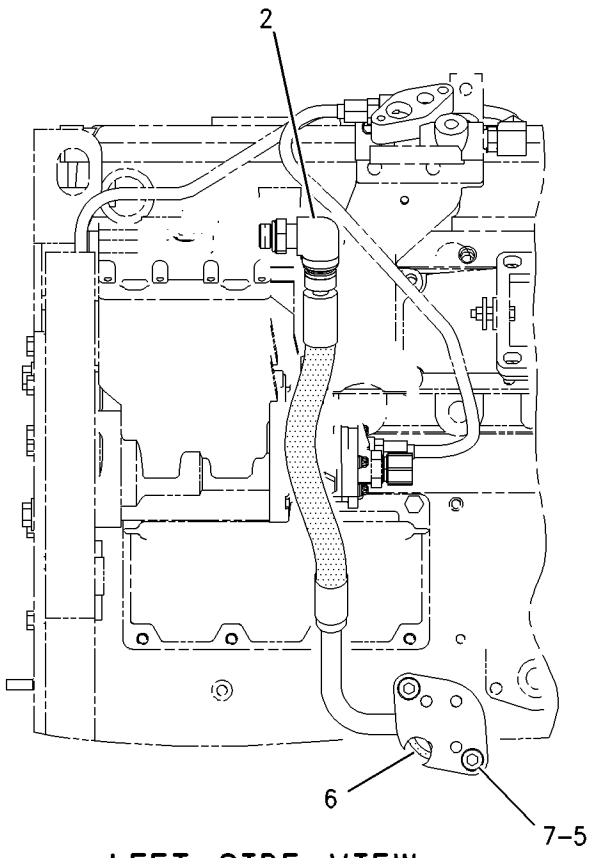

LEFT SIDE VIEW

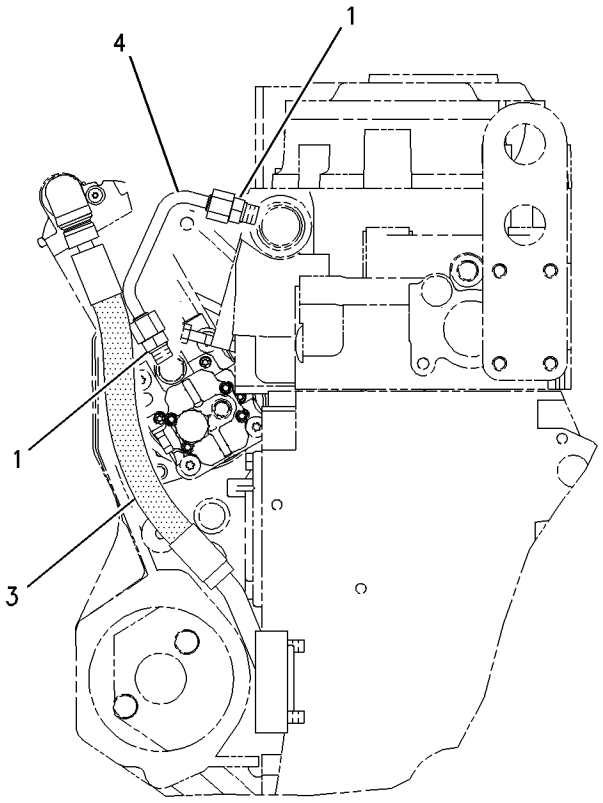

REAR VIEW

GRAPHIC #1 **<END>** g00881566

222-5900 PUMP & MTG GP-UNIT INJ HYD

S/N: KHX1-UP

PART OF 235-1425 ENGINE AR-CORE

SMCS-1714 **i02216073**

NOTE	REF NO	GRAPHIC REF	PART NUMBER	QTY	PART NAME 1 2 3 4 5 6 (PRODUCT LEVEL)	SEE PAGE
	1	1	**214-7568**	2	SEAL-O-RING	
	2	1	**227-5904**	1	SEAL-O-RING (UNIT INJECTOR HYD PUMP)	
YR	3	1	**254-4357**	1	PUMP GP-UNIT INJECTOR HYD	110
	4	1	**3E-9412**	1	DOWEL	
	5	1	**6V-5839**	2	WASHER (11X21X2.5-MM THK)	
M	6	1	**6V-7981**	2	BOLT (M10X1.5X70-MM)	
	7	1	**9S-8004**	2	PLUG	

M-METRIC PART
R-REMFG PART MAY BE AVAILABLE
Y-SEPARATE ILLUSTRATION

222-5900 **PUMP & MTG GP-UNIT INJ HYD** *(contd.)* **i02216073**

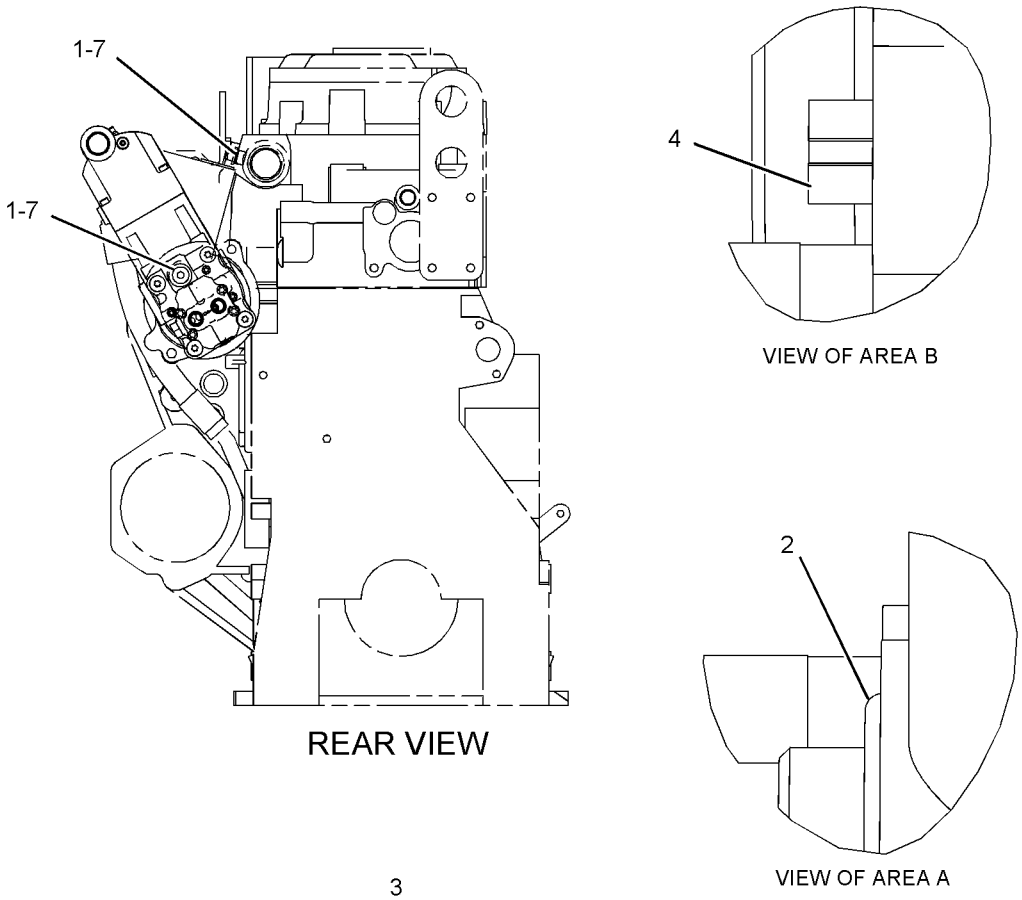

GRAPHIC #1 **<END>** g01017748

222-5958 PUMP GP-FUEL INJECTION

S/N: KHX1-UP
PART OF 235-1425 ENGINE AR-CORE
FOR USE WITH HIGH HP ENGINES

SMCS-1251, 1290 **i02216075**

NOTE	REF NO	GRAPHIC REF	PART NUMBER	QTY	PART NAME 1 2 3 4 5 6 (PRODUCT LEVEL)	SEE PAGE
	1	1	**235-9651**	2	BOLT-SOCKET HEAD (M8X1.25X65-MM)	
Y	2	1	**241-3400**	1	INJECTOR GP-FUEL	97

Y-SEPARATE ILLUSTRATION

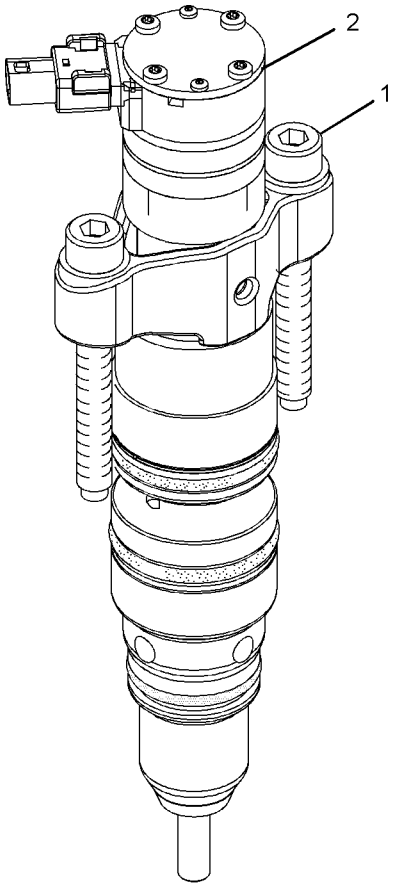

ISOMETRIC VIEW

GRAPHIC #1

<END>

g01038652

238-4803 PUMP GP-FUEL PRM & PRIM FILTER

S/N: KHX410-UP

PART OF 235-1424 ENGINE AR-COMPLETE

SMCS-1258, 1260 **i02425499**

NOTE	REF NO	GRAPHIC REF	PART NUMBER	QTY	PART NAME 1 2 3 4 5 6 (PRODUCT LEVEL)	SEE PAGE
I	1	2	**148-7027**	1	HOSE AS	
I	2	2	**155-3677**	1	HOSE AS	
Y	3	1	**165-5970**	1	SWITCH GP-TOGGLE (FUEL PRIMING PUMP)	213
	4	1	**179-9348**	1	VALVE-DRAIN (FUEL FILTER)	
	5	1	**191-1782**	1	SPACER (8.5X12.7X38.2-MM THK)	
	6	1	**206-6876**	1	CAP-TUBE	
Y	7	1	**212-3657**	1	WATER SEP & FUEL PRM PUMP GP	114
	8	1	**232-1374**	1	BRACKET	
	9	1	**232-1376**	2	SPACER (8.5X12.7X139.1-MM THK)	
	10	1	**276-5386**	1	TUBE AS	
	11	1	**119-5708**	1	CLIP	
	12	2	**130-5301**	1	CLIP	
	13	1	*148-8319*	2	CONNECTOR AS	
					(EACH INCLUDES)	
		1	**2M-9780**	1	SEAL-O-RING	
		1	**6V-8397**	1	SEAL-O-RING	
		1	**6V-8715**	1	CONNECTOR	
	14	2	*148-8336*	1	CONNECTOR AS	
		2	**3J-1907**	1	SEAL-O-RING	
		2	**6V-8397**	1	SEAL-O-RING	
		2	**6V-8636**	1	CONNECTOR	
	15	2	*148-8363*	1	ELBOW AS	
		2	**3K-0360**	1	SEAL-O-RING	
		2	**6V-8397**	1	SEAL-O-RING	
		2	**6V-9876**	1	ELBOW	
	16	1	*148-8367*	1	ELBOW AS	
		1	**6V-8397**	1	SEAL-O-RING	
		1	**6V-9850**	1	ELBOW	
	17	1	*150-3065*	1	ADAPTER AS	
		1	**3J-1907**	1	SEAL-O-RING	
		1	**6V-0484**	1	ADAPTER-O-RING	
	18	1	*150-4046*	1	ADAPTER AS	
		1	**2M-9780**	1	SEAL-O-RING	
		1	**5P-1404**	1	ADAPTER-O-RING	
	19	1	*155-7329*	1	ELBOW GP	
		1	**3K-0360**	1	SEAL-O-RING	
		1	**5H-8853**	1	SEAL-O-RING	
		1	**6V-8723**	1	ELBOW	
	20	2	**164-5619**	1	PLUG AS	
		2	**2M-9780**	1	SEAL-O-RING	
		2	**9S-8006**	1	PLUG	
	21	1	**5H-8853**	1	SEAL-O-RING	
M	22	1	**5P-7970**	1	NUT (M8X1.25-THD)	
	23	2	**8T-4121**	1	WASHER-HARD (11X21X2.5-MM THK)	
M	24	2	**8T-4137**	1	BOLT (M10X1.5X20-MM)	
M	25	1	**8T-6869**	1	BOLT (M8X1.25X60-MM)	
M	26	1	**8T-7352**	2	BOLT (M8X160-MM)	
	27	1	**8T-9655**	8	MOUNT-ISOLATION	
	28	1	**9M-1974**	1	WASHER-HARD (8.8X16X2-MM THK)	
	29	1	**9N-0869**	6	WASHER-HARD (8.8X25.5X2-MM THK)	

I-REFER TO HYDRAULIC INFORMATION SYSTEM
M-METRIC PART
Y-SEPARATE ILLUSTRATION

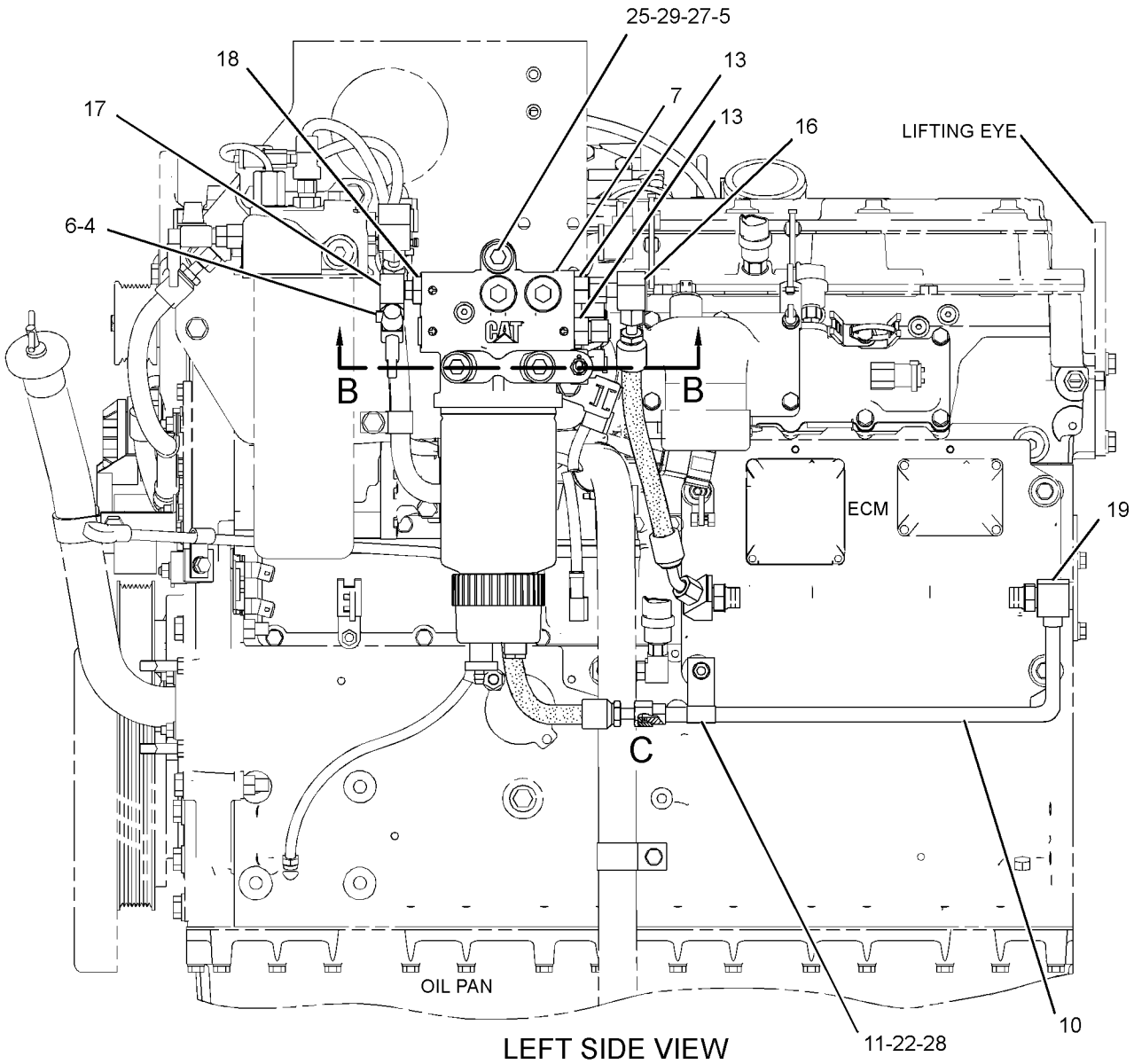

LEFT SIDE VIEW

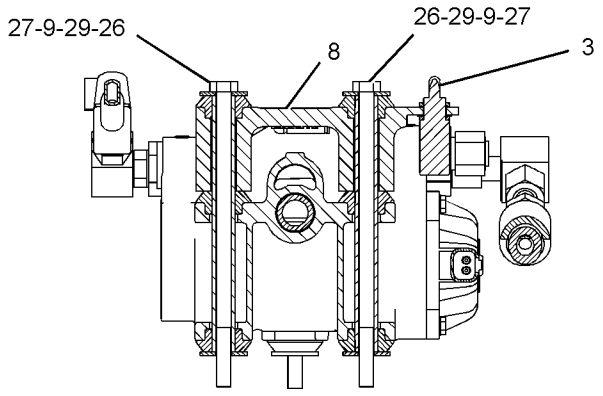

SECTION B-B

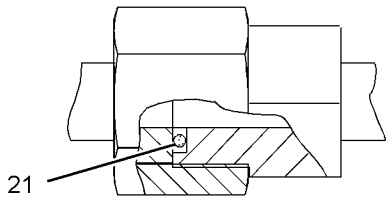

VIEW AREA C

GRAPHIC #1

g01221865

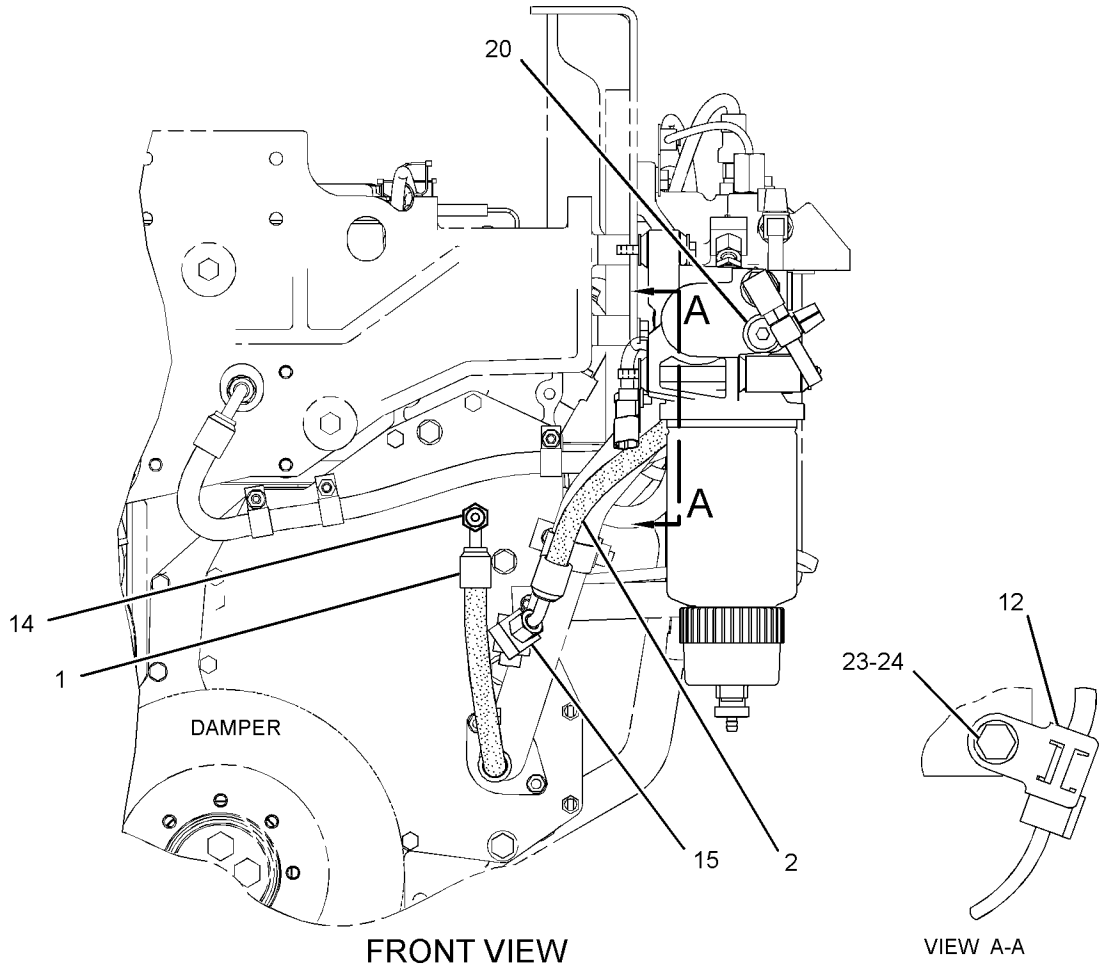

GRAPHIC #2 **<END>** g01221914

FUEL SYSTEM

238-4803 PUMP GP-FUEL PRM & PRIM FILTER

S/N: KHX1-409

PART OF 235-1424 ENGINE AR-COMPLETE

SMCS-1258, 1260 **i02310960**

NOTE	REF NO	GRAPHIC REF	PART NUMBER	QTY	PART NAME 1 2 3 4 5 6 (PRODUCT LEVEL)	SEE PAGE
Y	1	1	**165-5970**	1	SWITCH GP-TOGGLE (FUEL PRIMING PUMP)	213
	2	1	**179-9348**	1	VALVE-DRAIN (FUEL FILTER)	
	3	1	**191-1782**	1	SPACER (8.5X12.7X38.2-MM THK)	
	4	1	**206-6876**	1	CAP-TUBE	
	5	1	**209-7659**	1	PLATE-INFORMATION (MANUAL FUEL)	
Y	6	1	**212-3657**	1	WATER SEP & FUEL PRM PUMP GP (PRIMING FILTER)	114
	7	1	**232-1374**	1	BRACKET	
	8	1	**232-1376**	2	SPACER (8.5X12.7X139.1-MM THK)	
I	9	1	**244-6606**	1	HOSE AS	
	10	1	**130-5301**	1	CLIP	
	11	1	*148-8319*	2	CONNECTOR AS	
					(EACH INCLUDES)	
		1	**2M-9780**	1	SEAL-O-RING	
		1	**6V-8397**	1	SEAL-O-RING	
		1	**6V-8715**	1	CONNECTOR	
	12	1	*148-8336*	1	CONNECTOR AS	
		1	**3J-1907**	1	SEAL-O-RING	
		1	**6V-8397**	1	SEAL-O-RING	
		1	**6V-8636**	1	CONNECTOR	
	13	1	*148-8367*	1	ELBOW AS	
		1	**6V-8397**	1	SEAL-O-RING	
		1	**6V-9850**	1	ELBOW	
	14	1	*150-3065*	1	ADAPTER AS	
		1	**3J-1907**	1	SEAL-O-RING	
		1	**6V-0484**	1	ADAPTER-O-RING	
	15	1	*150-4046*	1	ADAPTER AS	
		1	**2M-9780**	1	SEAL-O-RING	
		1	**5P-1404**	1	ADAPTER-O-RING	
	16	1	**164-5619**	1	PLUG AS	
		1	**2M-9780**	1	SEAL-O-RING	
		1	**9S-8006**	1	PLUG	
	17	1	**8T-4121**	1	WASHER-HARD (11X21X2.5-MM THK)	
M	18	1	**8T-4137**	1	BOLT (M10X1.5X20-MM)	
M	19	1	**8T-6869**	1	BOLT (M8X1.25X60-MM)	
M	20	1	**8T-7352**	2	BOLT (M8X160-MM)	
	21	1	**8T-9655**	8	MOUNT-ISOLATION	
	22	1	**9N-0869**	6	WASHER-HARD (8.8X25.5X2-MM THK)	

I-REFER TO HYDRAULIC INFORMATION SYSTEM
M-METRIC PART
Y-SEPARATE ILLUSTRATION

238-4803 **PUMP GP-FUEL PRM & PRIM FILTER** *(contd.)* **i02310960**

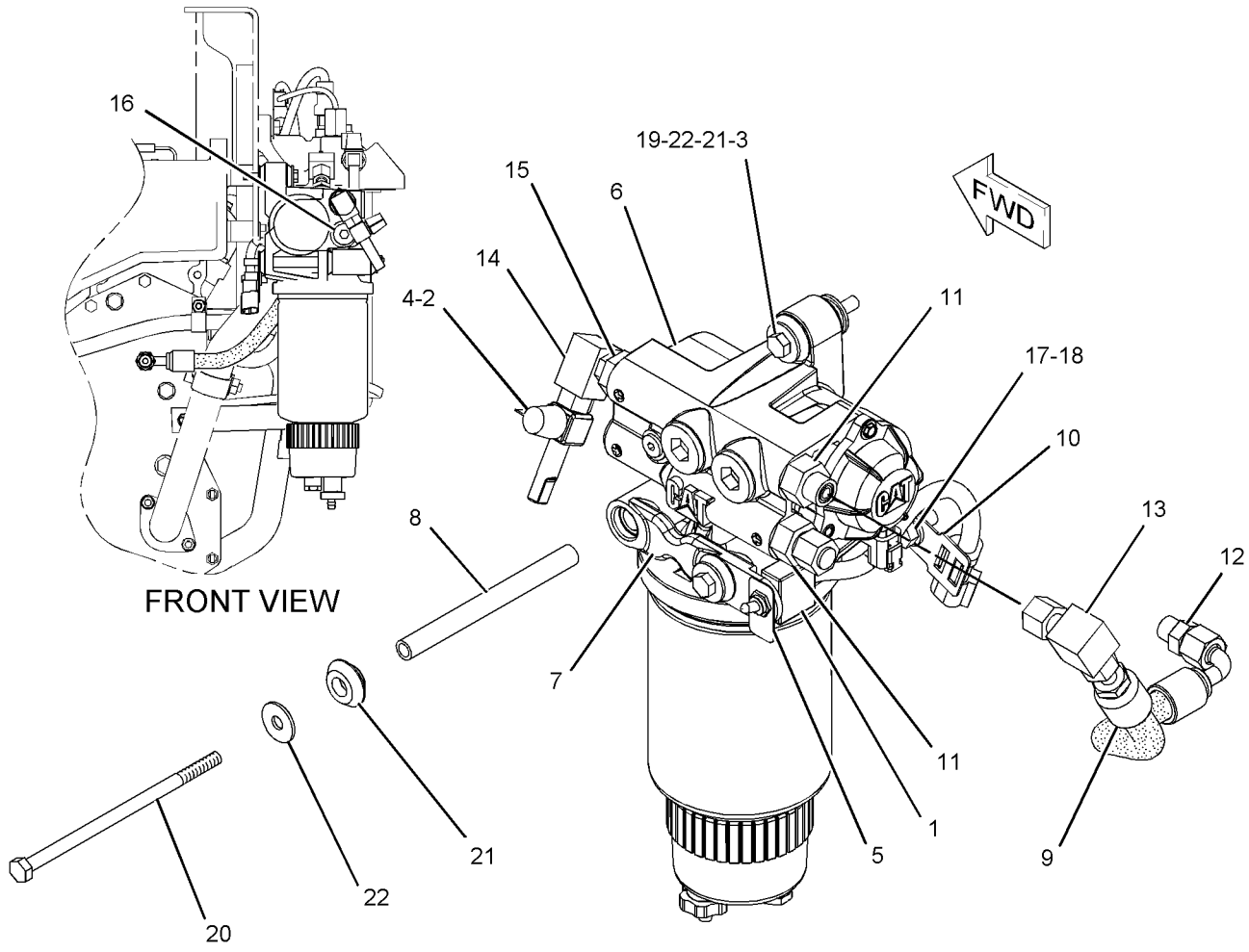

GRAPHIC #1 **<END>** g01130915

254-4357 PUMP GP-UNIT INJECTOR HYD*R

S/N: KHX1-UP

PART OF 222-5900 PUMP & MTG GP-UNIT INJ HYD

SMCS-1714 **i02455470**

NOTE	REF NO	GRAPHIC REF	PART NUMBER	QTY	PART NAME 1 2 3 4 5 6 (PRODUCT LEVEL)	SEE PAGE
	1	1	**178-2357**	1	PUMP GP-FUEL TRANSFER	
	2	1	**179-8128**	1	SEAL-O-RING (FUEL TRANSFER PUMP)	
	3	1	**227-5904**	1	SEAL-O-RING (UNIT INJECTOR HYD PUMP)	

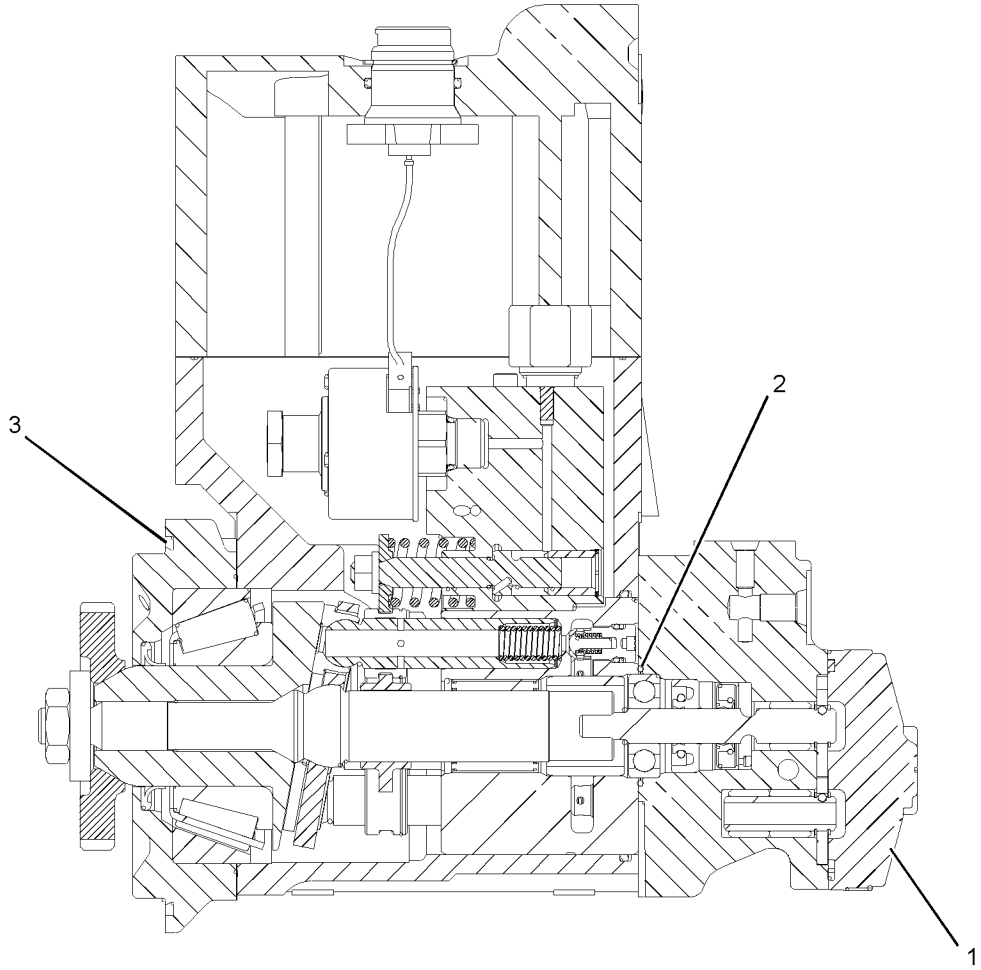

GRAPHIC #1 **<END>** g01225442

232-0343 REGULATOR GP-FUEL PRESSURE

S/N: KHX1-UP

PART OF 237-9823 FILTER & LINES GP-FUEL

SMCS-1715 **i02204851**

NOTE	REF NO	GRAPHIC REF	PART NUMBER	QTY	PART NAME 1 2 3 4 5 6 (PRODUCT LEVEL)	SEE PAGE
	1	1	**6V-5049**	1	SEAL-O-RING	
	2	1	**229-8870**	1	REGULATOR AS (FUEL PRESSURE)	

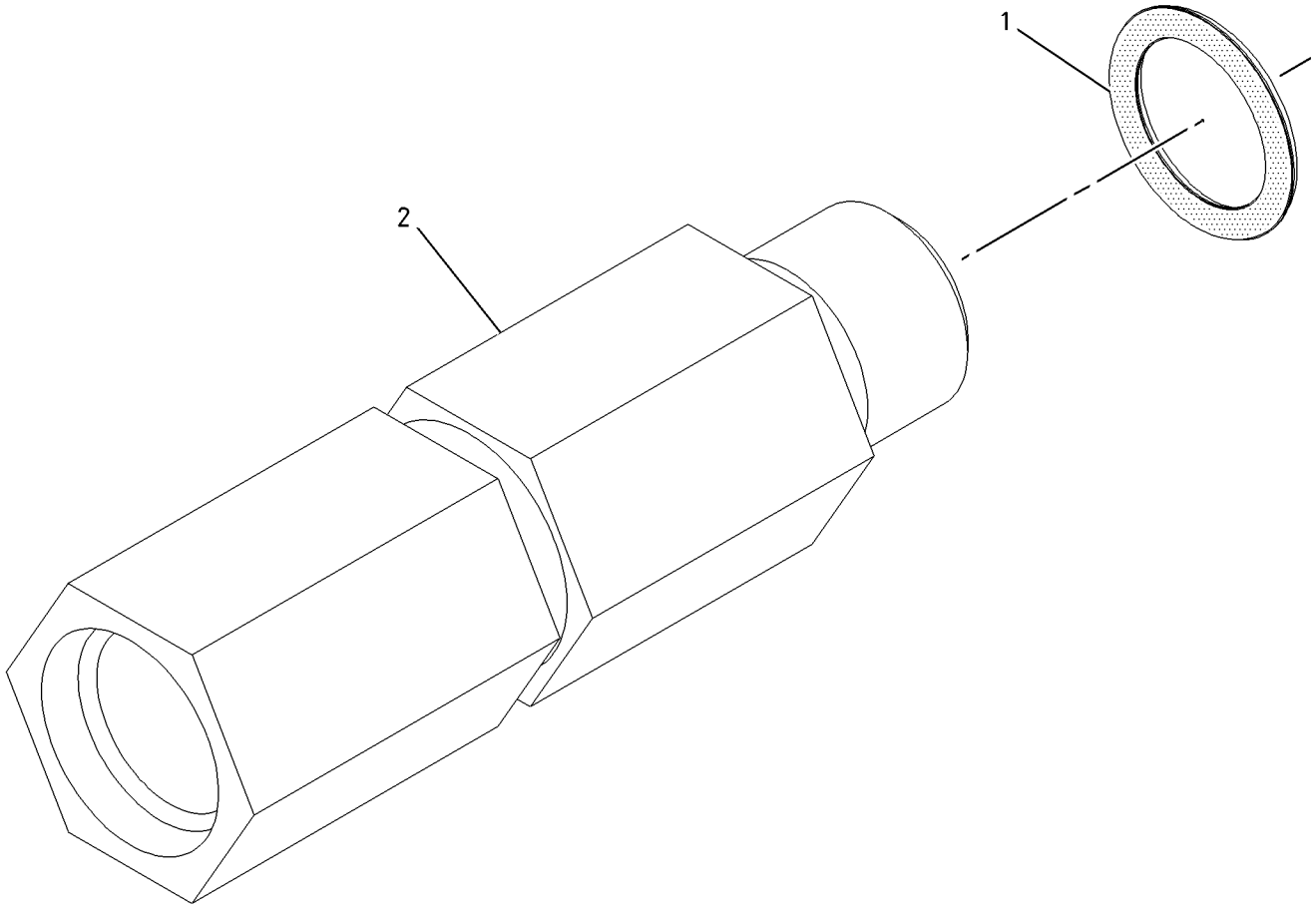

GRAPHIC #1 **<END>** g01004480

FUEL SYSTEM

240-5150 TANK GP-FUEL

S/N: M3G1-UP

PART OF 237-4933 CHASSIS AR

SMCS-1273 **i02370354**

NOTE	REF NO	GRAPHIC REF	PART NUMBER	QTY	PART NAME 1 2 3 4 5 6 (PRODUCT LEVEL)	SEE PAGE
	1	1	**1H-8306**	1	SCREW-PURGE (1/2-20X1.625-IN)	
B	2	1	**8C-8422**		SEALANT	
	3	1	**8T-4121**	3	WASHER-HARD (11X21X2.5-MM THK)	
	4	1	**187-7331**	8	MOUNT-RUBBER	
	5	1	**180-3730**	1	FILTER AS-FUEL (FILLER NECK SCREEN)	
	6	1	**188-8844**	1	VALVE-BREAKER RELIEF	
	7	1	**240-5151**	1	TANK AS-FUEL	
	8	1	**245-4659**	1	SENDER AS-FUEL LEVEL	
		1	**102-8802**	1	KIT-RECEPTACLE (2-PIN)	
					(INCLUDES RECEPTACLE AS AND WEDGE)	
		1	**186-3735**	2	PIN-CONNECTOR (16-GA TO 18-GA)	
	9	1	**246-1479**	1	CAP-FUEL	
	10	1	**247-0261**	1	TUBE AS	
	11	1	**3D-2824**	1	SEAL-O-RING	
	12	1	**7M-8485**	1	SEAL-O-RING	
	13	1	**7X-0607**	4	WASHER-HARD (20X55X8-MM THK)	
M	14	1	**7X-2554**	4	BOLT (M16X2X70-MM)	
M	15	1	**8C-3210**	5	BOLT (M6X1X16-MM)	
	16	1	**8C-5172**	1	SEAL-RECTANGULAR	
M	17	1	**8T-4136**	3	BOLT (M10X1.5X25-MM)	
	18	1	**9S-9334**	1	PLUG	
	19	1	**9X-8256**	5	WASHER (6.6X12X2-MM THK)	
	20	1	**9X-8257**	4	WASHER (17.5X30X3.5-MM THK)	

B-USE AS REQUIRED
M-METRIC PART

240-5150 **TANK GP-FUEL** *(contd.)* **i02370354**

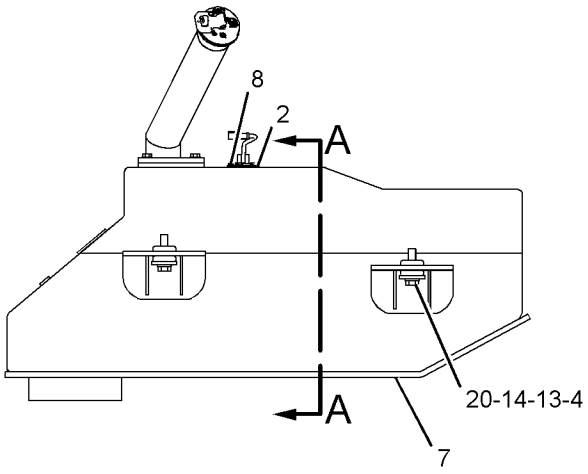

LEFT SIDE VIEW

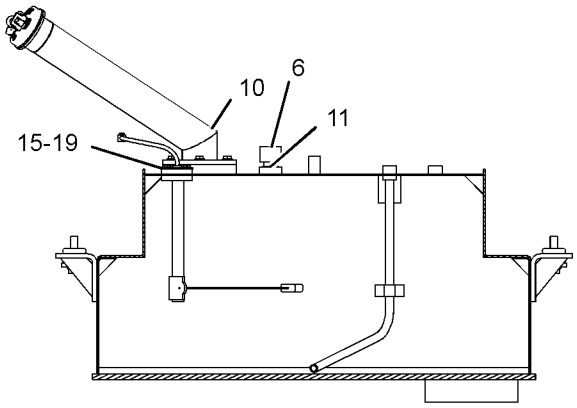

SECTION A-A

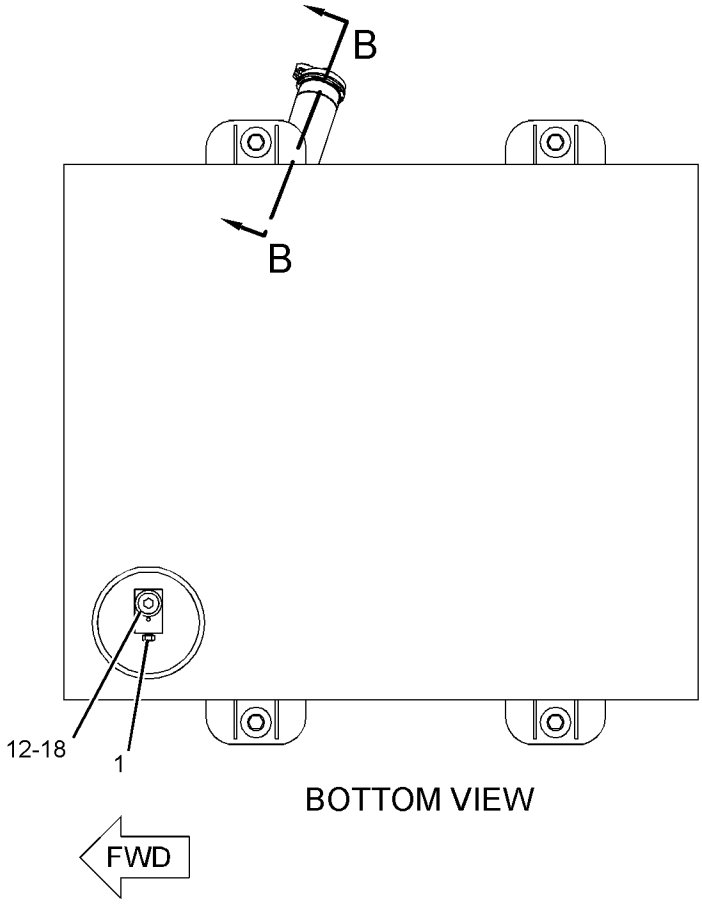

BOTTOM VIEW

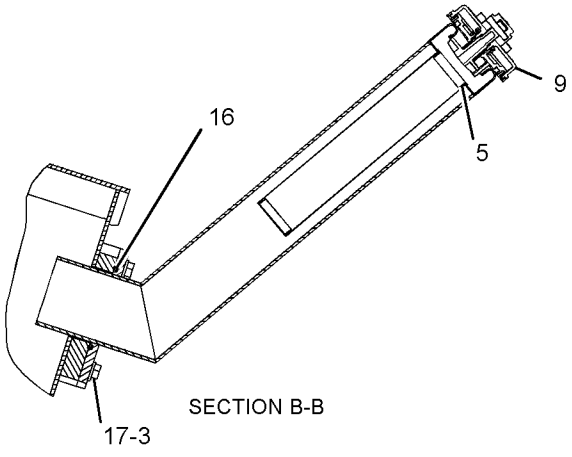

SECTION B-B

GRAPHIC #1 **<END>** g01223653

FUEL SYSTEM

212-3657 WATER SEP & FUEL PRM PUMP GP

S/N: KHX1-UP

PART OF 238-4803 PUMP GP-FUEL PRM & PRIM FILTER

SMCS-1258, 1263 **i02259296**

NOTE	REF NO	GRAPHIC REF	PART NUMBER	QTY	PART NAME 1 2 3 4 5 6 (PRODUCT LEVEL)	SEE PAGE
Y	1	1	*174-9570*	1	FILTER GP-WATER SEP & FUEL	96
	2	1	**217-8339**	1	BASE AS-FUEL FILTER	

Y-SEPARATE ILLUSTRATION

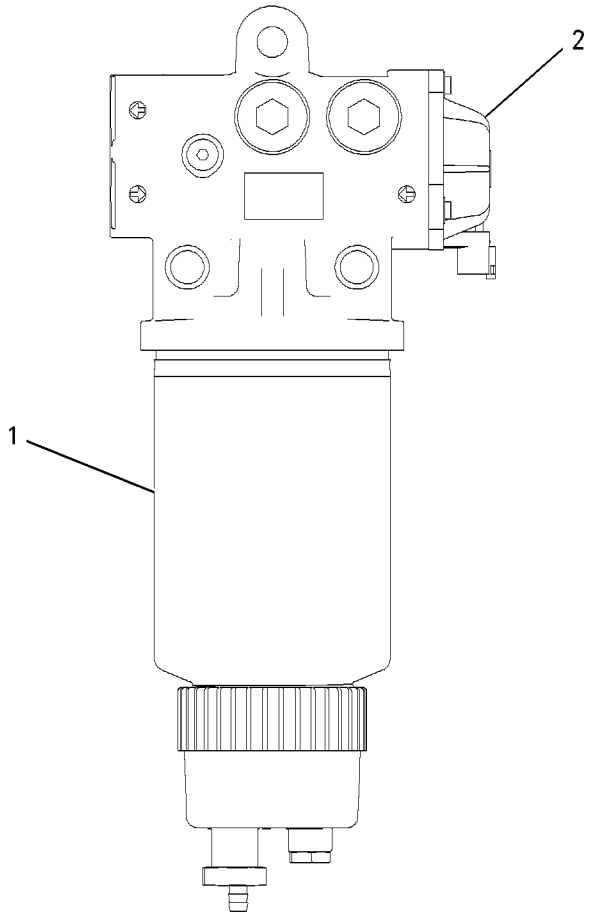

GRAPHIC #1 **<END>** g00875466

3E-6328 ALARM GP–ACTION

S/N: M3G1-UP
24 VOLT
PART OF 237-4910 WIRING GP-CAB, 262-9187 WIRING GP-OPEN ROPS
ALSO AN ATTACHMENT

SMCS-7400, 7402, 7407 **i02021590**

NOTE	REF NO	GRAPHIC REF	PART NUMBER	QTY	PART NAME 1 2 3 4 5 6 (PRODUCT LEVEL)	SEE PAGE
	1	1	**102-8802**	1	KIT-RECEPTACLE (2-PIN)	
					(INCLUDES RECEPTACLE AS & WEDGE)	
	2	1	**186-3735**	2	PIN-CONNECTOR (16-GA TO 18-GA)	

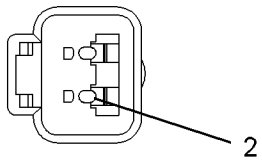

VIEW A–A

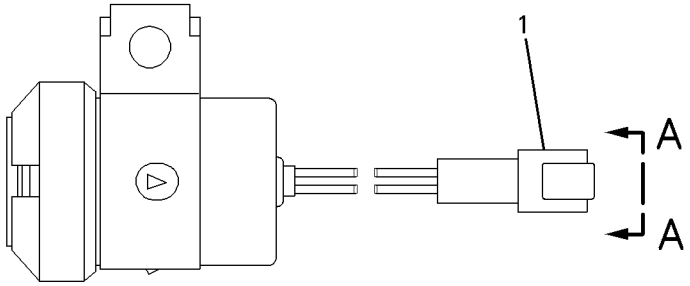

GRAPHIC #1 **<END>** g00697818

132-1829 ALARM GP–ACTION

S/N: M3G1-UP
24-VOLT
PART OF 263-4133, 263-4134 SWITCH GP-ROCKER
AN ATTACHMENT

SMCS-7400, 7402, 7407 **i02454082**

NOTE	REF NO	GRAPHIC REF	PART NUMBER	QTY	PART NAME 1 2 3 4 5 6 (PRODUCT LEVEL)	SEE PAGE
	1	1	**102-8802**	1	KIT-RECEPTACLE (2-PIN)	
					(KIT INCLUDES RECEPTACLE AS AND WEDGE)	
	2	1	**186-3735**	2	PIN-CONNECTOR (16-GA TO 18-GA)	

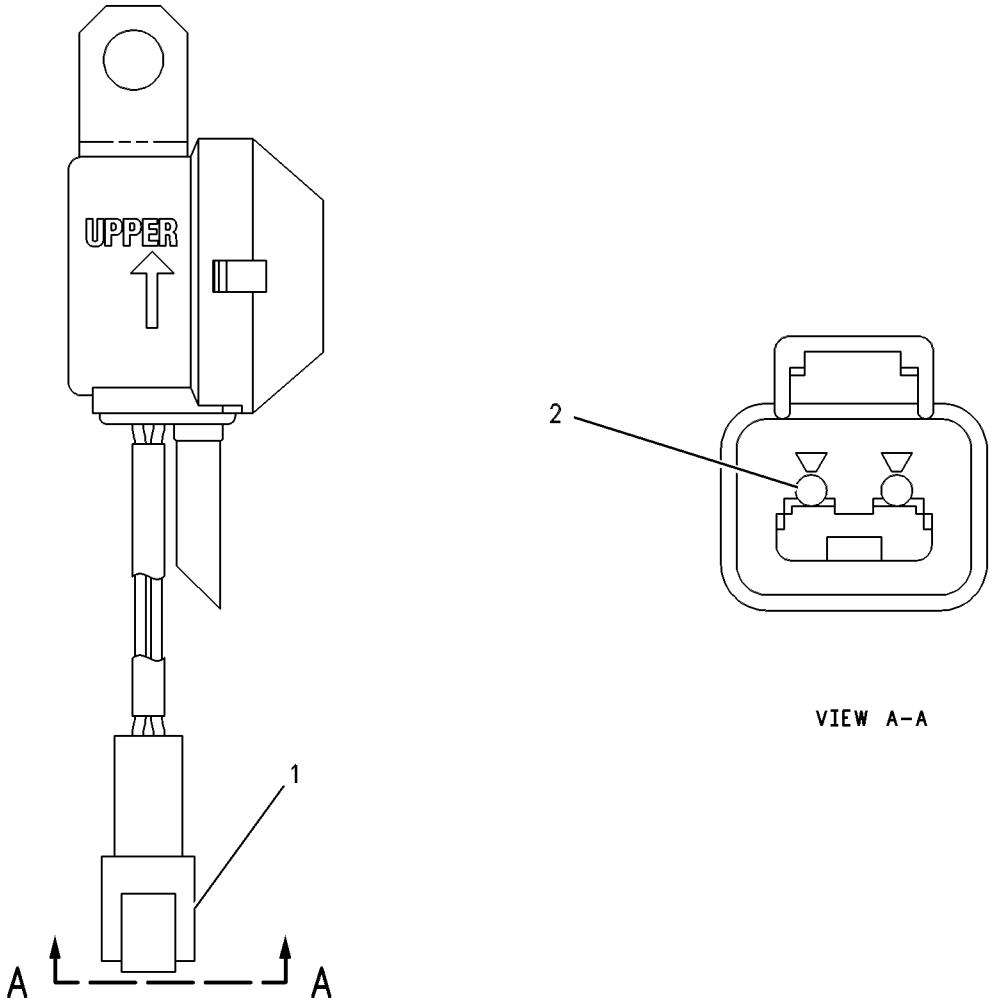

GRAPHIC #1 **<END>** g00272185

177-9953 ALTERNATOR GP-CHARGING*R

S/N: M3G1-UP
24 VOLT, 80 AMP
PART OF 237-4847 ALTERNATOR GP-CHARGING

SMCS-1405 **i01820527**

NOTE	REF NO	GRAPHIC REF	PART NUMBER	QTY	PART NAME 1 2 3 4 5 6 (PRODUCT LEVEL)	SEE PAGE
	1	1	**185-2653**	1	FRAME	
	2	1	**5S-7349**	1	BOLT (1/4-20X0.5-IN)	
	3	1	**185-2639**	1	FAN AS	
	4	1	**1H-3244**	1	LOCKWASHER	
	5	1	**185-2645**	1	FRAME	
	6	1	**2K-4821**	1	LOCKNUT (5/8-18-THD)	
	7	1	**5P-8247**	1	WASHER-HARD (17X32X3.5-MM THK)	
	8	1	**185-2651**	1	COVER	
	9	1	**8T-4205**	1	WASHER-HARD (7.2X14.5X2-MM THK)	
	10	1	**185-2647**	1	GROMMET	
	11	1	**9L-6770**	1	CAP	
	12	1	**185-2643**	1	STATOR AS	
	13	1	**185-2638**	2	COLLAR	
	14	1	**185-2654**	1	PLATE	
	15	1	**185-2650**	1	ROTOR AS	
	16	1	**185-2644**	1	COIL AS	
	17	1	**185-2648**	1	REGULATOR AS-VOLTAGE (24-VOLT)	
J	18	1	**6V-8189**	1	NUT (5/16-18-THD)	
J	19	1	**8T-4224**	1	WASHER-HARD (8.8X16X2-MM THK)	
J	20	1	**3F-9556**	1	LOCKWASHER	
					AVAILABLE REPAIR KIT(S):	
J			**199-7891**		KIT-TERMINAL (ALTERNATOR)	
					(INCLUDES INSULATORS, WASHERS, NUT, STEP NUT)	
			185-2655		KIT-BEARING (ALTERNATOR)	
					(INCLUDES 3 BEARINGS)	
			199-8436		KIT-TERMINAL (ALTERNATOR)	
					(INCLUDES HOLDER AS, PLATE, INSULATOR, PIN, BOLT, GROMMET, NUT)	
			185-2658		KIT-HARDWARE (ALTERNATOR)	
					(INCLUDES BOLTS)	

J-KIT MARKED J AVAILABLE FOR PARTS MARKED J

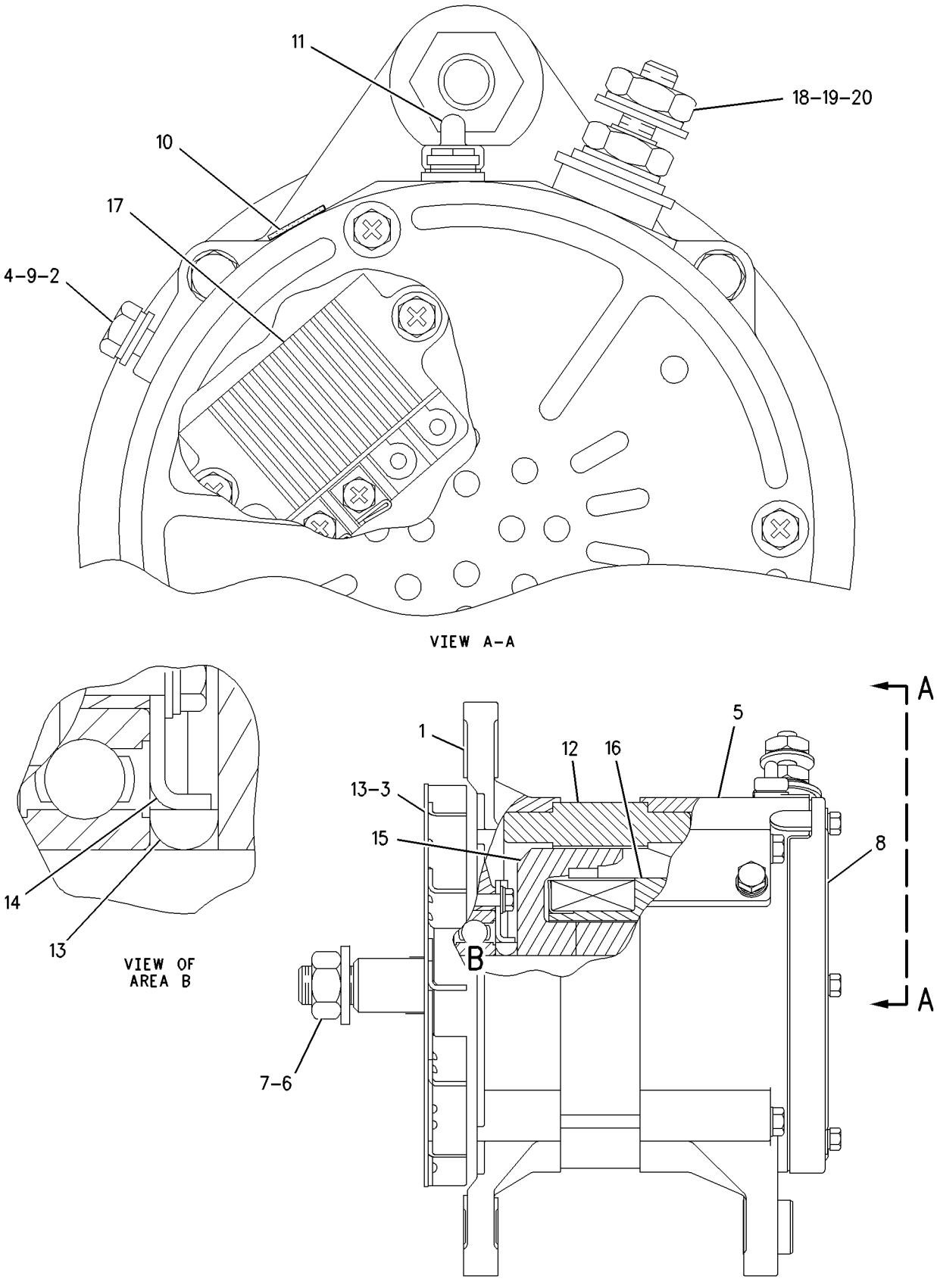

GRAPHIC #1 **<END>** g00795850

237-4847 ALTERNATOR GP-CHARGING

S/N: M3G1-UP

PART OF 237-3995 INSTALLATION AR-ENGINE

SMCS-1405 **i02443648**

NOTE	REF NO	GRAPHIC REF	PART NUMBER	QTY	PART NAME 1 2 3 4 5 6 (PRODUCT LEVEL)	SEE PAGE
	1	1	**4E-8329**	1	SPACER (10.5X16.545X34-MM THK)	
	2	1	**129-5096**	1	PULLEY-ALTERNATOR	
	3	1	**172-4211**	1	SPACER (10.5X22X50.8-MM THK)	
	4	1	**173-1498**	1	PULLEY AS-IDLER (8-GROOVE)	
		1	**151-2900**	1	BOLT (M10X1.5X54.25-MM)	
		1	**166-6358**	1	COVER-DUST	
YR	5	1	**177-9953**	1	ALTERNATOR GP-CHARGING (24-VOLT, 80-AMPERE)	117
	6	1	**238-1074**	1	BRACKET	
	7	1	**246-6296**	1	BELT-SERPENTINE	
	8	1	**262-4561**	1	SHIELD AS-HEAT	
	9	1	**5P-2566**	1	BOLT (1/2-13X1.5-IN)	
	10	1	**6V-8188**	1	NUT (1/2-13-THD)	
	11	1	**7X-0338**	1	BOLT (1/2-13X6-IN)	
M	12	1	**8T-3647**	2	BOLT (M8X1.25X80-MM)	
	13	1	**8T-4121**	3	WASHER-HARD (11X21X2.5-MM THK)	
M	14	1	**8T-4133**	1	NUT (M10X1.5 THD)	
M	15	1	**8T-4137**	1	BOLT (M10X1.5X20-MM)	
M	16	1	**8T-4196**	1	BOLT (M10X1.5X35-MM)	
	17	1	**8T-4223**	4	WASHER-HARD (13.5X25.5X3-MM THK)	
	18	1	**8T-4224**	2	WASHER-HARD (8.8X16X2-MM THK)	
	19	1	**8T-7934**	2	WASHER-HARD (11X21X5-MM THK)	
	20	1	**9S-2396**	1	BUSHING-TERMINAL	
M	21	1	**8T-4195**	1	BOLT (M10X1.5X30-MM)	

M-METRIC PART
R-REMFG PART MAY BE AVAILABLE
Y-SEPARATE ILLUSTRATION

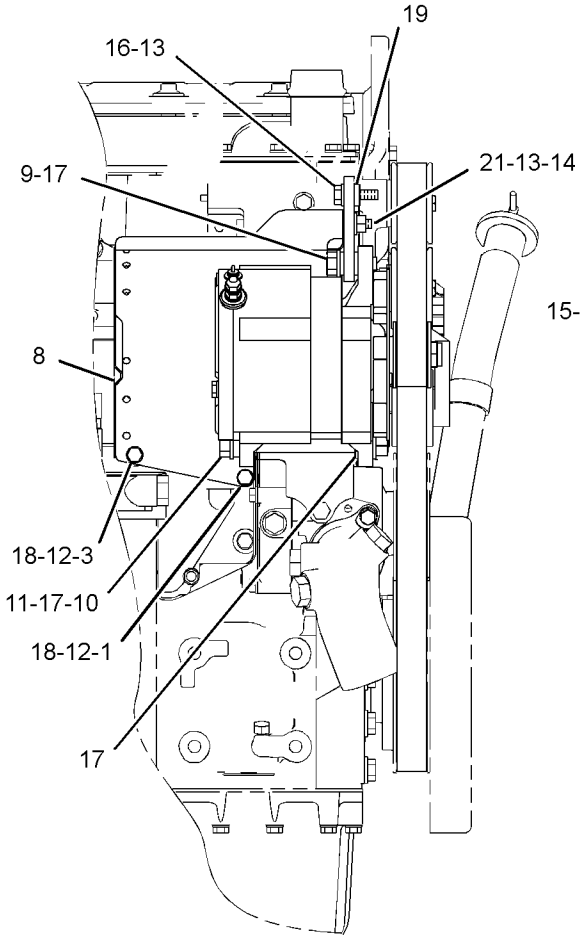

RIGHT SIDE VIEW

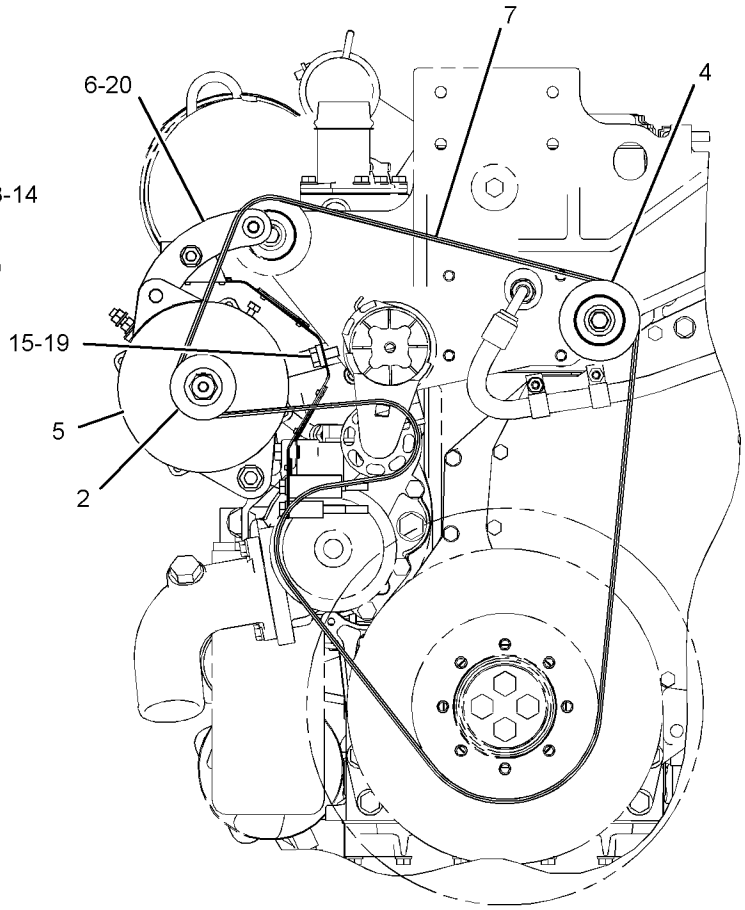

FRONT VIEW

GRAPHIC #1 **<END>** g01196638

ELECTRICAL AND STARTING SYSTEM

241-0639 BATTERY & WIRING GP

S/N: M3G1-UP

PART OF 237-4931 ELECTRICAL AR

SMCS-1401, 1402, 1408 **i02443719**

NOTE	REF NO	GRAPHIC REF	PART NUMBER	QTY	PART NAME 1 2 3 4 5 6 (PRODUCT LEVEL)	SEE PAGE
	1	1	**3E-8320**	1	PLATE-INSTRUCTION (BATTERY)	
	2	1	**3S-2093**	7	STRAP-CABLE	
	3	1	**5I-8304**	1	ROD	
	4	1	**6W-6005**	1	HOLD-DOWN-BATTERY	
Y	5	1	**7N-0718**	1	SWITCH GP-DISCONNECT (BATTERY)	199
	6	1	**116-0080**	1	CABLE AS	
E		1	**5P-0761**		CABLE (00-GA, RED) (31-CM)	
		1	**7N-5274**	1	COVER-TERMINAL (BLACK)	
		1	**8L-8413**	1	STRAP-CABLE	
		1	**8N-1725**	1	COVER-TERMINAL (RED)	
		1	**8L-8413**	1	STRAP-CABLE	
		1	**3S-6050**	1	TERMINAL AS-BATTERY (NEGATIVE)	
		1	**3S-6049**	1	TERMINAL AS-BATTERY (POSITIVE)	
					(EACH TERMINAL AS INCLUDES)	
		1	**1M-6119**	1	BOLT (5/16-18X1.375-IN)	
		1	**1M-6120**	1	NUT (5/16-18-THD)	
	7	1	**246-1696**	1	CABLE AS	
		1	**1S-7251**	1	TERMINAL-RING (FOR 1/2-IN BOLT)	
E		1	**5P-0761**		CABLE (00-GA, RED) (71-CM)	
		1	**8N-0869**	1	COVER-TERMINAL (RED)	
		1	**8N-1725**	1	COVER-TERMINAL (RED)	
		1	**8L-8413**	1	STRAP-CABLE	
		1	**3S-6049**	1	TERMINAL AS-BATTERY (POSITIVE)	
		1	**1M-6119**	1	BOLT (5/16-18X1.375-IN)	
		1	**1M-6120**	1	NUT (5/16-18-THD)	
	8	1	**246-1697**	1	CABLE AS	
E		1	**5P-0747**		CABLE (00-GA, BLACK) (59-CM)	
		1	**7N-5274**	1	COVER-TERMINAL (BLACK)	
		1	**8L-8413**	1	STRAP-CABLE	
		1	**8S-3020**	1	TERMINAL-CABLE	
		1	**3S-6050**	1	TERMINAL AS-BATTERY (NEGATIVE)	
		1	**1M-6119**	1	BOLT (5/16-18X1.375-IN)	
		1	**1M-6120**	1	NUT (5/16-18-THD)	
		1	**9X-5699**	1	BOOT	
	9	1	**246-1698**	1	CABLE AS	
		1	**1S-7251**	2	TERMINAL-RING (FOR 1/2-IN BOLT)	
E		1	**5P-0761**		CABLE (00-GA, RED) (173-CM)	
		1	**8N-0869**	2	COVER-TERMINAL (RED)	
	10	1	**246-1715**	1	CABLE AS	
		1	**1S-7251**	2	TERMINAL-RING (FOR 1/2-IN BOLT)	
E		1	**5P-0747**		CABLE (00-GA, BLACK) (72-CM)	
	11	1	**247-9989**	1	CABLE AS	
E		1	**5P-0747**		CABLE (00-GA, BLACK) (48-CM)	
		1	**8S-3020**	1	TERMINAL-CABLE	
		1	**216-7790**	1	TERMINAL-RING	
	12	1	**248-0072**	1	CABLE AS	
E		1	**8C-3056**		CABLE (02-GA, RED) (300-CM)	
		1	**8T-8827**	1	BOOT	
E		1	**6V-9023**		TUBE-HEAT SHRINK (3-CM)	
		1	**030-1712**	2	TERMINAL-RING (2-GA, 6.35-MM)	
		1	**231-4476**	1	TERMINAL AS	
E		1	**125-7876**		TUBE-HEAT SHRINK (4-CM)	
	13	1	**263-9574**	2	BATTERY (12-VOLT, MAINTENANCE FREE)	
	14	1	**272-6537**	1	BRACKET AS	
M		1	**8T-3490**	3	NUT-WELD (M10X1.5-THD)	
	15	1	**033-8248**	9	CLIP	

241-0639 **BATTERY & WIRING GP** *(contd.)* **i02443719**

NOTE	REF NO	GRAPHIC REF	PART NUMBER	QTY	PART NAME 1 2 3 4 5 6 (PRODUCT LEVEL)	SEE PAGE
	16	1	**132-7551**	3	SPACER (11X19X6-MM THK)	
	17	1	**133-9379**	2	GROMMET	
	18	1	**149-9129**	1	CLIP	
	19	1	**2W-7940**	1	BRACKET	
	20	1	**4D-9517**	2	CLIP	
	21	1	**4K-8864**	1	CLIP	
M	22	1	**5C-7261**	1	NUT (M8X1.25-THD)	
	23	1	**5G-6505**	2	WASHER (25X38X14-MM THK)	
	24	1	**5P-9299**	6	CLIP	
	25	1	**6V-8188**	4	NUT (1/2-13-THD)	
	26	1	**8C-6358**	1	BLOCK GP-JUNCTION	
		1	**1D-5117**	3	NUT-JAM (1/2-13-THD)	
		1	**8T-3519**	3	BOLT-BRONZE (1/2-13X2-IN)	
	27	1	**8M-2770**	1	CLIP	
M	28	1	**8T-0389**	1	LOCKNUT (M10X1.15-THD)	
	29	1	**8T-4121**	16	WASHER-HARD (11X21X2.5-MM THK)	
M	30	1	**8T-4133**	4	NUT (M10X1.5 THD)	
M	31	1	**8T-4136**	6	BOLT (M10X1.5X25-MM)	
M	32	1	**8T-4137**	6	BOLT (M10X1.5X20-MM)	
M	33	1	**8T-4189**	1	BOLT (M8X1.25X20-MM)	
M	34	1	**8T-4192**	2	BOLT (M12X1.75X25-MM)	
M	35	1	**8T-4196**	1	BOLT (M10X1.5X35-MM)	
	36	1	**8T-4223**	7	WASHER-HARD (13.5X25.5X3-MM THK)	
	37	1	**8T-4224**	2	WASHER-HARD (8.8X16X2-MM THK)	
	38	1	**8T-4226**	1	WASHER-PLATED (10.5X45X3-MM THK)	
	39	1	**9M-8406**	3	CLIP	

E-ORDER BY THE CENTIMETER
M-METRIC PART
Y-SEPARATE ILLUSTRATION

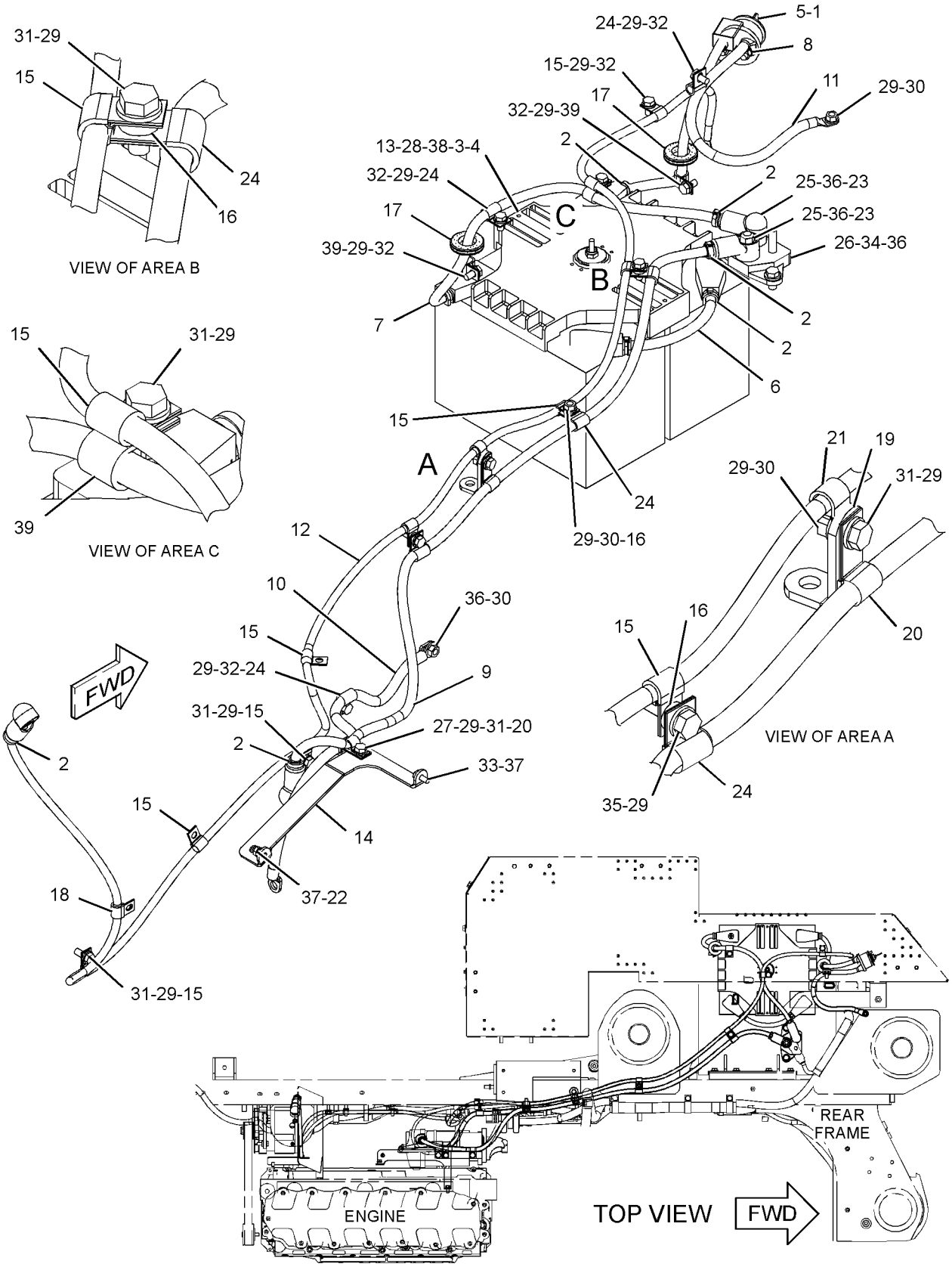

GRAPHIC #1 **<END>** g01201749

256-5068 CONTROL & MTG GP-COMMUNICATION–

PRODUCT LINK 321SR

S/N: M3G1-UP

PART OF 261-3037, 263-3322 INSTALLATION AR-COMMUNICATION

AN ATTACHMENT

SMCS-7606 **i02449372**

NOTE	REF NO	GRAPHIC REF	PART NUMBER	QTY	PART NAME 1 2 3 4 5 6 (PRODUCT LEVEL)	SEE PAGE
	1	1	**3S-2093**	3	STRAP-CABLE	
	2	1	**7K-1181**	9	STRAP-CABLE	
	3	1	**8C-5607**	8	MOUNT-ISOLATION	
	4	1	**8C-5608**	4	SPACER (6.5X9.5X25.4-MM THK)	
	5	1	**229-2704**	4	WASHER-RUBBER	
Y	6	1	**239-9954**	1	CONTROL GP-UNPROGRAMMED (PRODUCT LINK 300)	131
	7	1	**255-4369**	1	GROMMET	
	8	1	**263-8948**	1	ANTENNA AS	
	9	1	**263-9088**	1	RADIO GP-COMMUNICATION (PRODUCT LINK 121SR)	
		1	**267-4603**	1	SOFTWARE GP-COMMUNICATION (PRODUCT LINK 121SR)	
	10	1	**264-4872**	1	BRACKET AS	
	11	1	**264-7671**	1	BRACKET	
	12	1	**276-0031**	1	HARNESS AS-CONTROL	
		1	**102-8801**	2	KIT-RECEPTACLE (12-PIN)	
					(EACH KIT INCLUDES RECEPTACLE AS AND WEDGE)	
		1	**9X-6772**	2	STRAP-CABLE	
		1	**155-2255**	2	KIT-CONNECTING PLUG (12-PIN)	
					(EACH KIT INCLUDES PLUG AS AND WEDGE)	
		1	**160-7689**	1	PLUG AS-CONNECTOR (70-PIN)	
		1	**159-9322**	1	SEAL-O-RING	
	13	1	**122-8705**	1	U-BOLT	
	14	1	**156-6175**	2	CLIP	
M	15	1	**5C-9553**	1	BOLT (M6X1X16-MM)	
M	16	1	**8C-8451**	3	BOLT (M6X1X40-MM)	
M	17	1	**8T-2947**	1	BOLT (M6X1X45-MM)	
	18	1	**8T-4121**	2	WASHER-HARD (11X21X2.5-MM THK)	
M	19	1	**8T-4133**	2	NUT (M10X1.5 THD)	
M	20	1	**8T-4138**	4	BOLT (M6X1X20-MM)	
M	21	1	**9X-2046**	2	SCREW-TRUSS HEAD (M6X1X35-MM)	
	22	1	**9X-6165**	8	WASHER (6.5X22X2.5-MM THK)	
	23	1	**9X-8256**	6	WASHER (6.6X12X2-MM THK)	

M-METRIC PART
Y-SEPARATE ILLUSTRATION

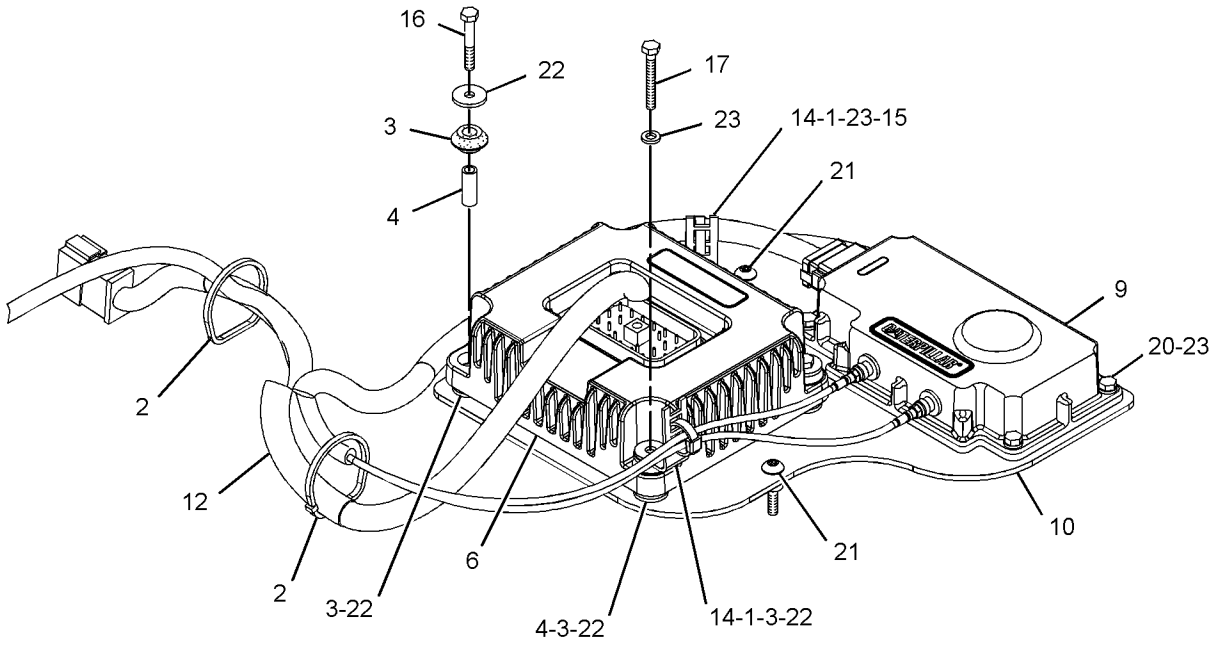

VIEW OF AREA A

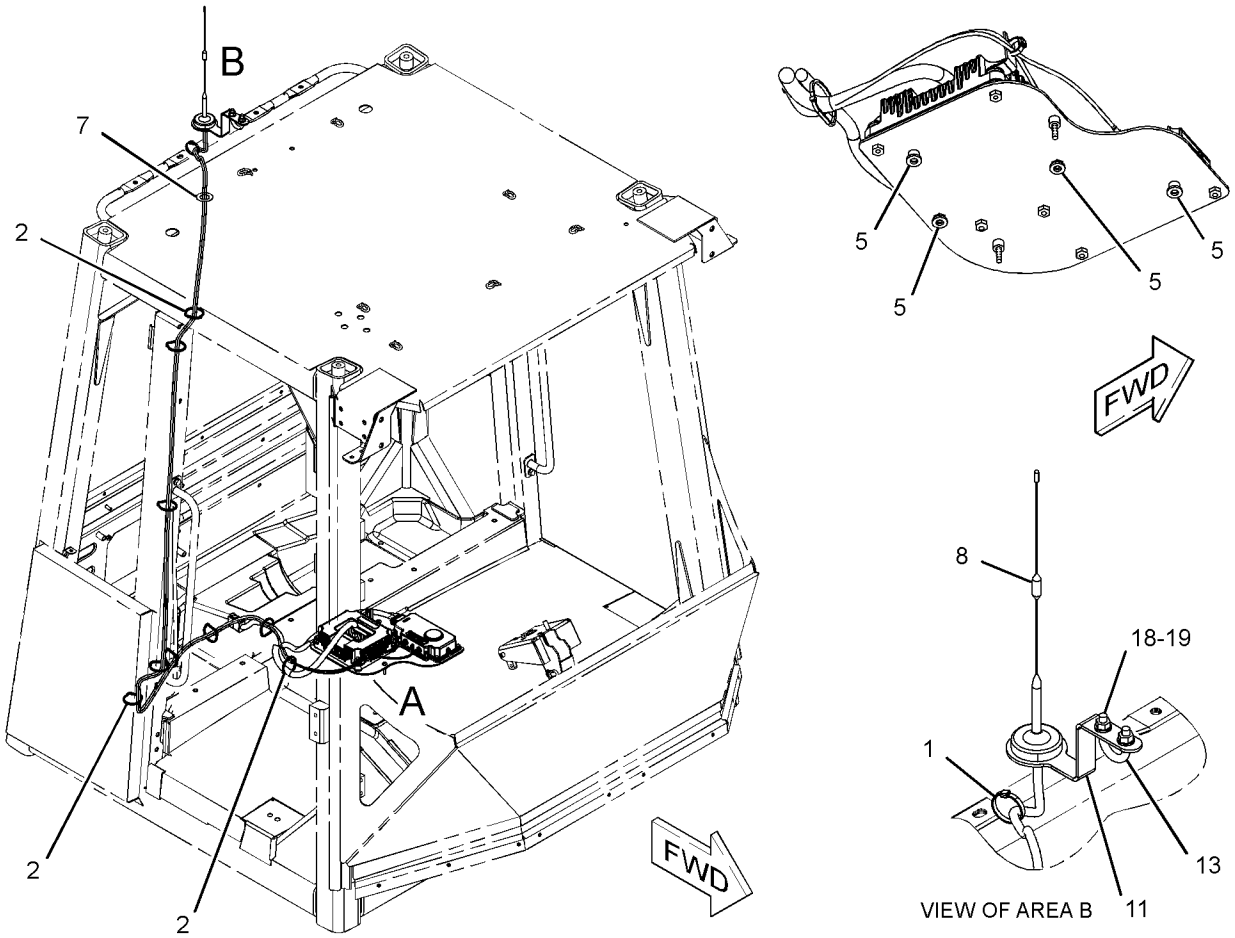

VIEW OF AREA B

GRAPHIC #1 **<END>** g01182804

241-7602 CONTROL & MTG GP-ENGINE ELEK

S/N: KHX411-UP

PART OF 235-1424 ENGINE AR-COMPLETE

SMCS-1901, 7620 **i02453692**

NOTE	REF NO	GRAPHIC REF	PART NUMBER	QTY	PART NAME 1 2 3 4 5 6 (PRODUCT LEVEL)	SEE PAGE
	1	1	**8T-9655**	8	MOUNT-ISOLATION	
	2	1	**101-3128**	4	SPACER	
M	3	1	**143-9392**	2	STUD (M8X1.25-THD)	
	5	1	**244-3168**	1	BRACKET AS	
		1	**232-1693**	1	SCREW-HEX HEAD	
	6	1	**255-5285**	1	CONTROL GP-MACHINE	
M	7	1	**5P-8347**	2	BOLT (M8X1.25X70-MM)	
	8	1	**9M-1974**	4	WASHER-HARD (8.8X16X2-MM THK)	
	9	1	**9N-0869**	4	WASHER-HARD (8.8X25.5X2-MM THK)	

M-METRIC PART

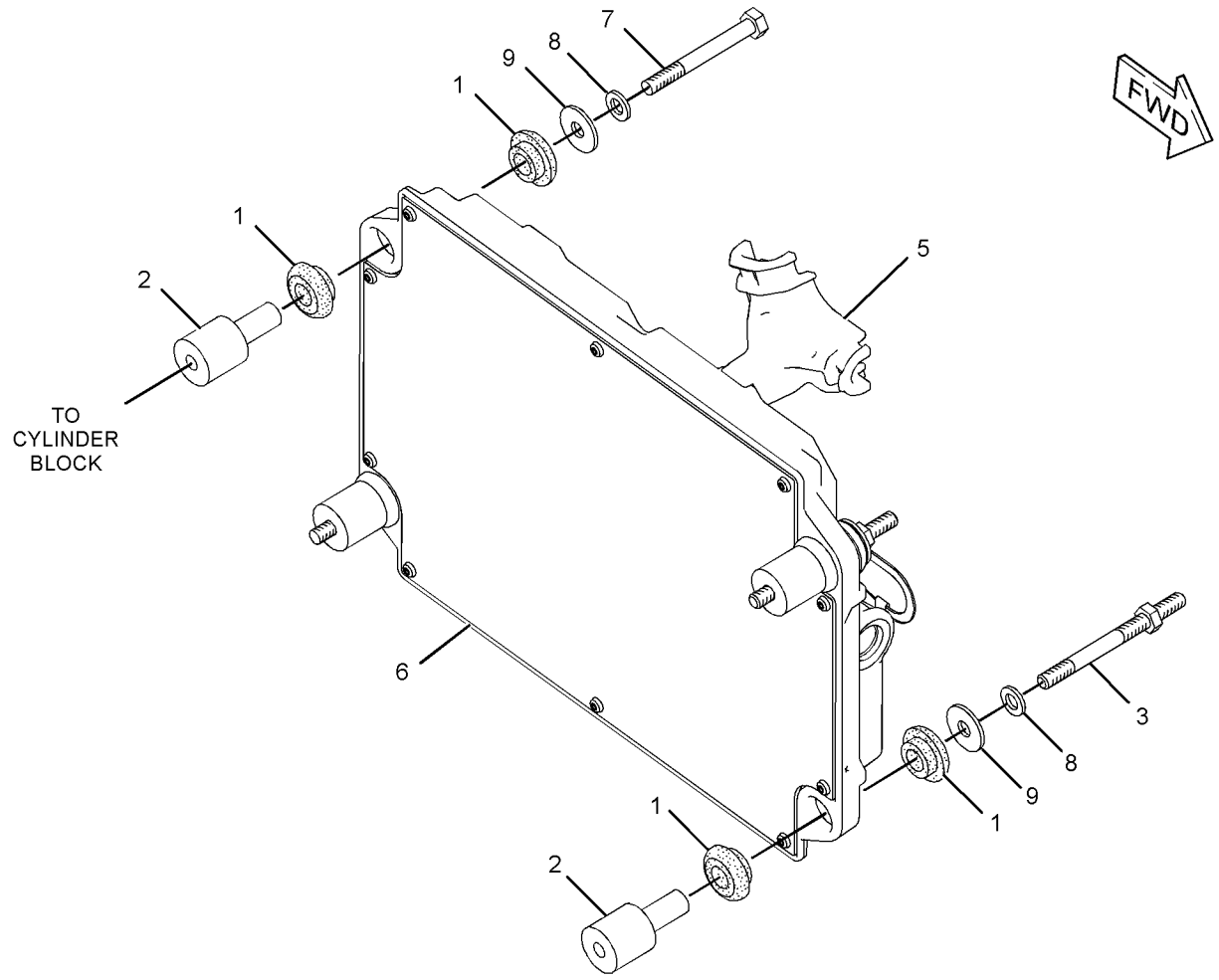

GRAPHIC #1 **<END>** g01217345

246-9345 CONTROL & MTG GP-ENGINE ELEK

S/N: KHX1-410

PART OF 235-1424 ENGINE AR-COMPLETE

SMCS-1901, 7620 **i02320629**

NOTE	REF NO	GRAPHIC REF	PART NUMBER	QTY	PART NAME 1 2 3 4 5 6 (PRODUCT LEVEL)	SEE PAGE
	1	1	**8T-9655**	8	MOUNT-ISOLATION	
	2	1	**101-3128**	4	SPACER	
M	3	1	**143-9392**	4	STUD (M8X1.25-THD)	
	4	1	**255-5284**	1	CONTROL GP-UNPROGRAMMED (ENGINE)	
	6	1	**244-3168**	1	BRACKET AS	
	7	1	**233-0891**	1	BRACKET AS	
	8	1	**9M-1974**	4	WASHER-HARD (8.8X16X2-MM THK)	
	9	1	**9N-0869**	4	WASHER-HARD (8.8X25.5X2-MM THK)	

M-METRIC PART

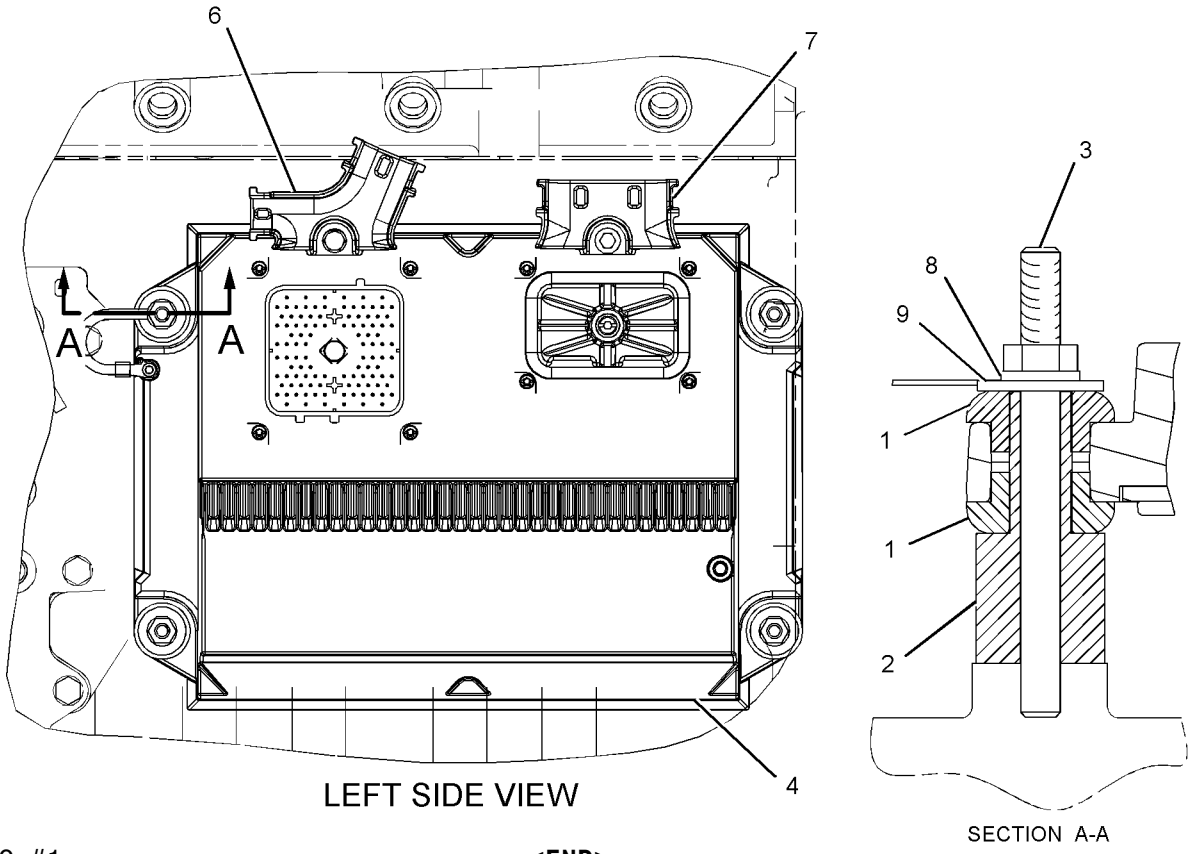

GRAPHIC #1 **<END>** g01093182

244-3253 CONTROL AR-AUTODIG—HMU STEERING

S/N: M3G1-UP

AN ATTACHMENT

SMCS-5741 **i02305695**

NOTE	PART NUMBER	QTY	PART NAME 1 2 3 4 5 6 (PRODUCT LEVEL)	SEE PAGE
Y	*253-3471*	1	CONTROL GP-AUTODIG (HMU STEERING)	129
Y	*239-4850*	1	SENSOR & MTG GP-PRESSURE (LIFT CYLINDER OIL)	169
	214-0113	1	SOFTWARE GP-IMPLEMENT (AUTODIG)	

Y-SEPARATE ILLUSTRATION

<END>

253-3471 CONTROL GP-AUTODIG—HMU STEERING

S/N: M3G1-UP
PART OF 244-3253 CONTROL AR-AUTODIG
AN ATTACHMENT

SMCS-5741 **i02305751**

NOTE	REF NO	GRAPHIC REF	PART NUMBER	QTY	PART NAME 1 2 3 4 5 6 (PRODUCT LEVEL)	SEE PAGE
	1	1	**4E-2229**	1	DAMPER AS-ALARM	
Y	2	1	**106-0107**	1	SWITCH GP-ROTARY (AUTODIG MATERIAL SELECT)	209
	3	1	**110-6109**	1	KNOB-CONTROL (AUTODIG SELECT SWITCH)	
	4	1	**123-9694**	1	HORN (AUDIBLE ALARM/AUTODIG CYCLE)	
	5	1	**265-8171**	1	SWITCH AS-PUSH BUTTON (AUTODIG TRIGGER)	
		1	**3E-3371**	1	WEDGE-RECEPTACLE LOCK (3-PIN)	
		1	**6F-0253**	1	LOCKWASHER	
		1	**102-8803**	1	KIT-RECEPTACLE (3-PIN)	
					(INCLUDES RECEPTACLE AS AND WEDGE)	
		1	**172-3511**	1	NUT (5/8-24-THD)	
		1	**186-3735**	3	PIN-CONNECTOR (16-GA TO 18-GA)	
	6	1	**201-1531**	1	FILM (AUTODIG)	
	7	1	**236-4620**	1	SWITCH AS-ROCKER (AUTO LOADING MODE SELECT)	
	8	1	**236-4621**	1	SWITCH AS-ROCKER (AUTO LOADING KICKOUT SET)	
	9	1	**249-2775**	1	CONTROL GP-DISPLAY ELECTRONIC (INDICATOR PANEL, CENTER)	
		1	**102-8805**	2	KIT-RECEPTACLE (6-PIN)	
					(EACH INCLUDES RECEPTACLE AS AND WEDGE)	
		1	**186-3735**	5	PIN-CONNECTOR (16-GA TO 18-GA)	
		1	**1S-9593**	1	STRAP-CABLE	
	10	1	**107-1964**	4	SCREW-PAN HEAD (6-19XO.5-IN)	
B	11	1	**251-1082**	1	FILM-CONTROL (AUTODIG)	
	12	1	**2H-3920**	1	LOCKWASHER	

B-USE AS REQUIRED
Y-SEPARATE ILLUSTRATION

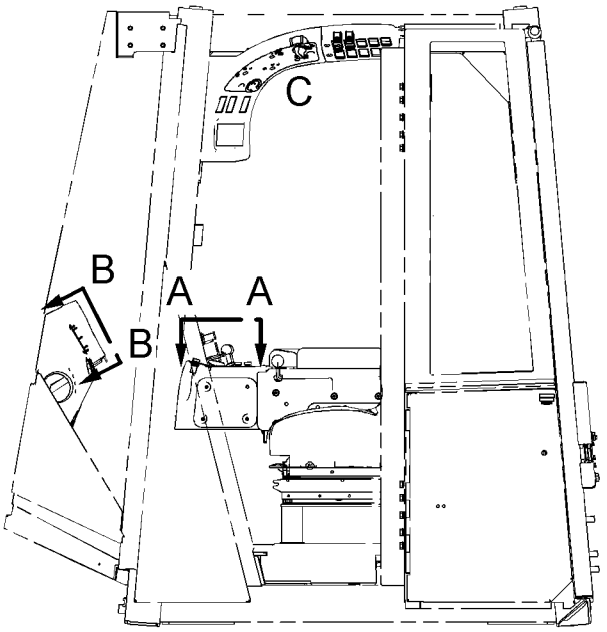

LEFT SIDE VIEW

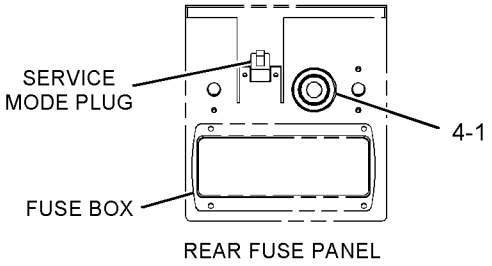

REAR FUSE PANEL

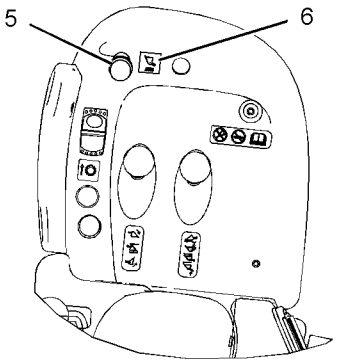

VIEW A-A

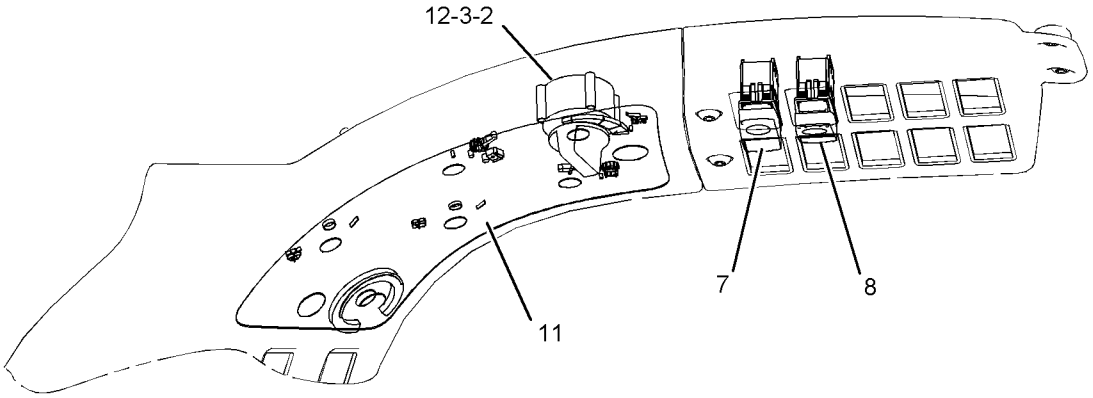

VIEW OF AREA C

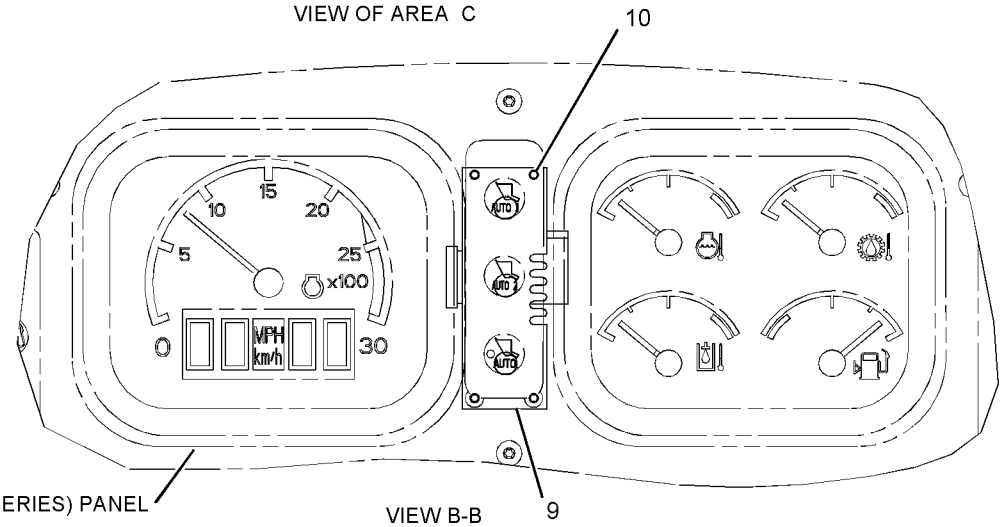

VIEW B-B

GRAPHIC #1 **<END>** g01130757

239-9954 CONTROL GP-UNPROGRAMMED–PRODUCT LINK 300

S/N: M3G1-UP

PART OF 256-5068 CONTROL & MTG GP-COMMUNICATION

AN ATTACHMENT

SMCS-7610 **i02363021**

NOTE	REF NO	GRAPHIC REF	PART NUMBER	QTY	PART NAME 1 2 3 4 5 6 (PRODUCT LEVEL)	SEE PAGE
	1	1	**7X-6315**	1	STRAP AS-GROUND	
	2	1	**126-7574**	1	SCREW-PAN HEAD (8-32X9.52-MM)	
	3	1	**134-4126**	1	WASHER (4.52X8.28X0.76-MM THK)	

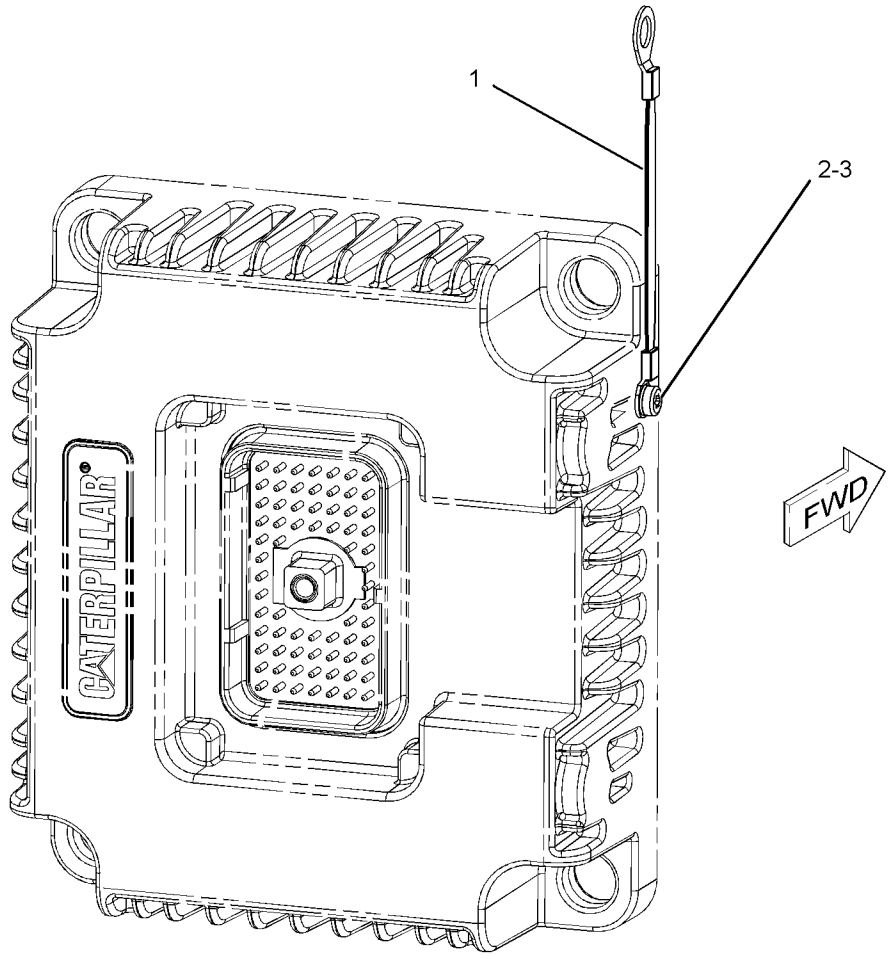

GRAPHIC #1 **<END>** g01145801

237-4931 ELECTRICAL AR

S/N: M3G1-UP

PART OF 237-4935 GENERAL AR

SMCS-1408, 1429, 7402, 7406 **i02449378**

NOTE	PART NUMBER	QTY	PART NAME 1 2 3 4 5 6 (PRODUCT LEVEL)	SEE PAGE
Y	*241-0639*	1	BATTERY & WIRING GP	121
Y	*237-0966*	1	ELECTRONICS GP-IMPLEMENT	134
Y	*237-0963*	1	ELECTRONICS GP-MONITOR (CATERPILLAR MONITORING SYSTEM)	134
Y	*236-8995*	1	ELECTRONICS GP-POWER TRAIN	134
Y	*248-0420*	1	HORN GP-ELECTRIC	674
Y	*235-5275*	1	LIGHTING GP-FLOOD & SIGNAL (4-LAMP, FRONT, REAR)	157
Y	*180-0156*	1	SENSOR & MTG GP-LIFT POSITION	167
Y	*180-0157*	1	SENSOR & MTG GP-TILT POSITION	170
Y	*237-0969*	1	TILT GP-HOOD	420
Y	*241-0638*	1	WIRING GP-AXLE MONITORING (OIL TEMPERATURE)	218
Y	*241-0642*	1	WIRING GP-CHASSIS	228
Y	*241-0640*	1	WIRING GP-ENGINE	238
Y	*241-0641*	1	WIRING GP-FRONT	242
Y	*271-4016*	1	WIRING GP-LIGHTING (LOADER FRAME)	245
Y	*271-4010*	1	WIRING GP-SENSOR (TILT POSITION)	262

Y-SEPARATE ILLUSTRATION

<END>

262-2043 ELECTRONICS GP-COMMUNICATION–

PRODUCT LINK 300

S/N: M3G1-UP

PART OF 261-3037, 263-3322 INSTALLATION AR-COMMUNICATION

AN ATTACHMENT

SMCS-7606, 7610, 7620 **i02308909**

NOTE	REF NO	GRAPHIC REF	PART NUMBER	QTY	PART NAME 1 2 3 4 5 6 (PRODUCT LEVEL)	SEE PAGE
	1	1	**265-9642**	1	SOFTWARE GP-COMMUNICATION (PRODUCT LINK 300)	
					-OR-	
					(OPTIONAL SERVICE REPLACEMENT)	
	2	1	**265-9643**	1	SERVICE GP-COMMUNICATION (PRODUCT LINK 300)	
					(INCLUDES CONTROL GP AND SOFTWARE)	
	3	1	**7X-6315**	1	STRAP AS-GROUND	
	4	1	**126-7574**	1	SCREW-PAN HEAD (8-32X9.52-MM)	
	5	1	**134-4126**	1	WASHER (4.52X8.28X0.76-MM THK)	

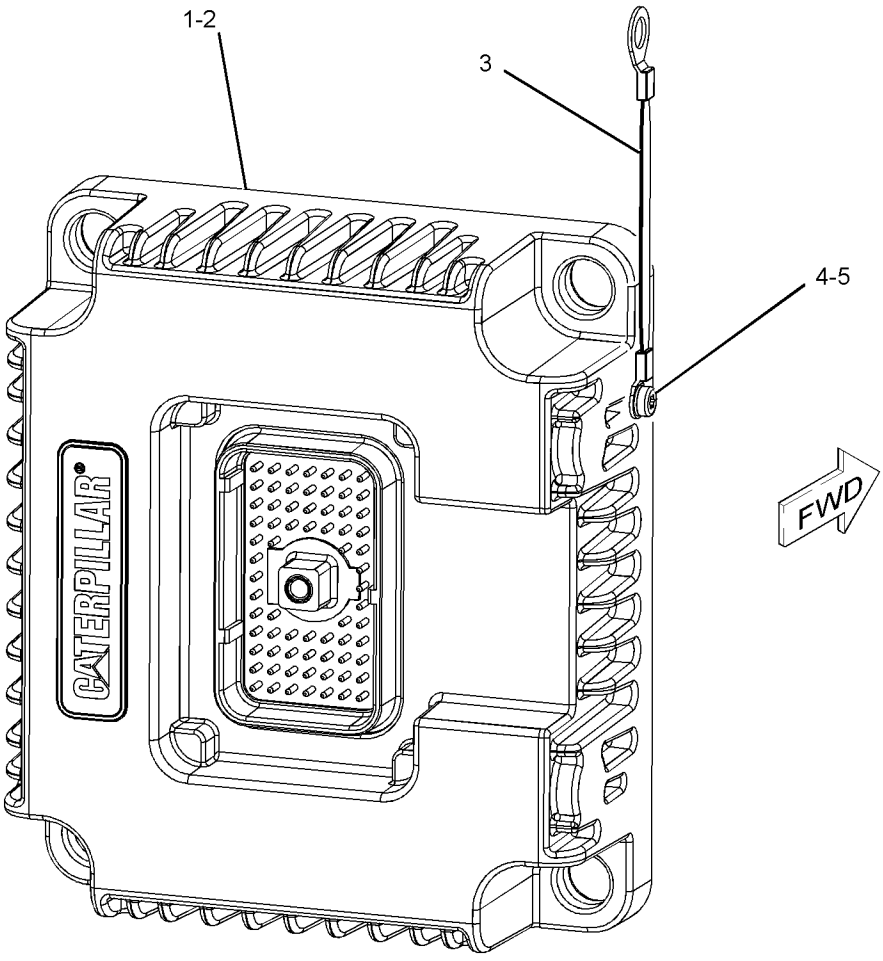

GRAPHIC #1 **<END>** g01157176

ELECTRICAL AND STARTING SYSTEM

237-0966 ELECTRONICS GP-IMPLEMENT

S/N: M3G1-UP

PART OF 237-4931 ELECTRICAL AR

SMCS-5701, 7610, 7620 **i02304952**

NOTE	PART NUMBER	QTY	PART NAME 1 2 3 4 5 6 (PRODUCT LEVEL)	SEE PAGE
	248-0388	1	SOFTWARE GP-IMPLEMENT	
			-OR-	
			(OPTIONAL SERVICE REPLACEMENT)	
	248-0389	1	SERVICE GP-IMPLEMENT	
			(INCLUDES CONTROL GP AND SOFTWARE)	

<END>

237-0963 ELECTRONICS GP-MONITOR—

CATERPILLAR MONITORING SYSTEM

S/N: M3G1-UP

PART OF 237-4931 ELECTRICAL AR

SMCS-7490, 7494, 7601, 7603, 7610, 7620 **i02304947**

NOTE	PART NUMBER	QTY	PART NAME 1 2 3 4 5 6 (PRODUCT LEVEL)	SEE PAGE
	248-0013	1	SOFTWARE GP-MONITOR (CATERPILLAR MONITORING SYSTEM)	
			-OR-	
			(OPTIONAL SERVICE REPLACEMENT)	
	248-0014	1	SERVICE GP-MONITOR (CATERPILLAR MONITORING SYSTEM)	
			(INCLUDES CONTROL GP AND SOFTWARE)	

<END>

236-8995 ELECTRONICS GP-POWER TRAIN

S/N: M3G1-UP

PART OF 237-4931 ELECTRICAL AR

SMCS-4800, 4808, 7610, 7620 **i02286059**

NOTE	PART NUMBER	QTY	PART NAME 1 2 3 4 5 6 (PRODUCT LEVEL)	SEE PAGE
	247-9760	1	SOFTWARE GP-POWER TRAIN	
			—OR—	
	247-9761	1	SERVICE GP-POWER TRAIN	
			(INCLUDES SOFTWARE)(OPTIONAL SERVICE REPLACEMENT)	

<END>

3T-8724 HEATER GP-JACKET WATER

S/N: M3G1-UP
240 VOLT/1000 WATT
CANNOT BE USED WITH 9X-3294—PAGE 136
AN ATTACHMENT

SMCS-1383 **i02238844**

NOTE	REF NO	GRAPHIC REF	PART NUMBER	QTY	PART NAME 1 2 3 4 5 6 (PRODUCT LEVEL)	SEE PAGE
C	1	1	**246-8630**	1	CORD AS-HEATER	
C	2	1	**246-8627**	1	ELEMENT AS-JACKET WATER HEATER (240-VOLT, 1000-WATT)	
	2A	1	**5F-9657**	1	SEAL-O-RING	

C-CHANGE FROM PREVIOUS TYPE

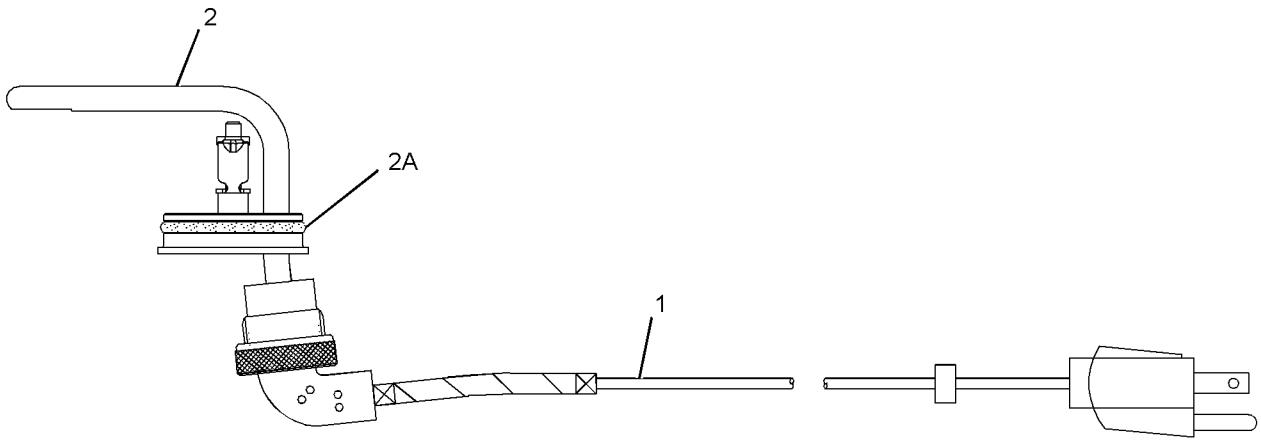

GRAPHIC #1 **<END>** g01135257

9X-3294 HEATER GP-JACKET WATER

S/N: M3G1-UP
120-VOLT/1000-WATT
CANNOT BE USED WITH 3T-8724—PAGE 135
AN ATTACHMENT

SMCS-1383 **i02252602**

NOTE	REF NO	GRAPHIC REF	PART NUMBER	QTY	PART NAME 1 2 3 4 5 6 (PRODUCT LEVEL)	SEE PAGE
	1	1	**246-8631**	1	CORD AS-HEATER	
	2	1	**246-8628**	1	ELEMENT AS-JACKET WATER HEATER (120-VOLT, 1000-WATT)	
	2A	1	**5F-9657**	1	SEAL-O-RING	

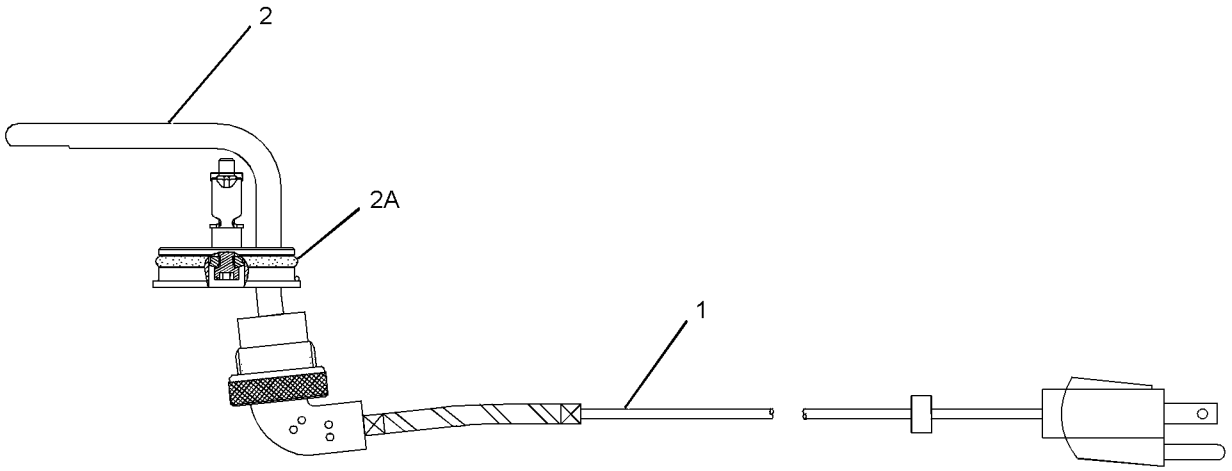

GRAPHIC #1 **<END>** g01135286

261-3037 INSTALLATION AR-COMMUNICATION–
PRODUCT LINK 321SR
S/N: M3G1-UP
AN ATTACHMENT

SMCS-7606 **i02308129**

NOTE	PART NUMBER	QTY	PART NAME 1 2 3 4 5 6 (PRODUCT LEVEL)	SEE PAGE
Y	*256-5068*	1	CONTROL & MTG GP-COMMUNICATION (PRODUCT LINK 321SR)	124
Y	*262-2043*	1	ELECTRONICS GP-COMMUNICATION (PRODUCT LINK 300)	133
	230-1341	1	FILM-WARNING (PRODUCT LINK RADIO, NON NACD)	
			(INSIDE CAB ON LEFT FRONT METAL POST 1200-MM ABOVE CAB FLOOR)	
Y-SEPARATE ILLUSTRATION				

<END>

263-3322 INSTALLATION AR-COMMUNICATION–
PRODUCT LINK 321SR
S/N: M3G1-UP
AN ATTACHMENT

SMCS-7606 **i02308239**

NOTE	PART NUMBER	QTY	PART NAME 1 2 3 4 5 6 (PRODUCT LEVEL)	SEE PAGE
Y	*256-5068*	1	CONTROL & MTG GP-COMMUNICATION (PRODUCT LINK 321SR)	124
Y	*262-2043*	1	ELECTRONICS GP-COMMUNICATION (PRODUCT LINK 300)	133
	230-1341	1	FILM-WARNING (PRODUCT LINK RADIO, NON NACD)	
			INSIDE CAB ON LEFT FRONT METAL POST 1200-MM ABOVE CAB FLOOR	
Y-SEPARATE ILLUSTRATION				

<END>

243-1945 INSTALLATION AR-SECURITY
S/N: M3G1-UP
AN ATTACHMENT

SMCS-7631 **i02317462**

NOTE	PART NUMBER	QTY	PART NAME 1 2 3 4 5 6 (PRODUCT LEVEL)	SEE PAGE
Y	*246-6291*	1	INSTALLATION GP-SECURITY	138
	264-0551	1	SOFTWARE GP-MACHINE (SECURITY)	
Y-SEPARATE ILLUSTRATION				

<END>

246-6291 INSTALLATION GP-SECURITY

S/N: M3G1-UP

PART OF 243-1945 INSTALLATION AR-SECURITY

AN ATTACHMENT

SMCS-7631 **i02308350**

NOTE	REF NO	GRAPHIC REF	PART NUMBER	QTY	PART NAME 1 2 3 4 5 6 (PRODUCT LEVEL)	SEE PAGE
	1	1	**3S-2093**	4	STRAP-CABLE	
	2	1	**8C-5607**	4	MOUNT-ISOLATION	
	3	1	**8C-5608**	2	SPACER (6.5X9.5X25.4-MM THK)	
	4	1	**198-5389**	1	FILM-IDENTIFICATION (IGNITION SWITCH)	
	5	1	**205-0826**	1	FILM-INSTRUCTION (READ OMM)	
	6	1	**206-5162**	2	KEY AS-ELECTRONIC (SECURITY)	
	7	1	*206-5203*	1	COIL AS (EXCITER)	
		1	**102-8802**	1	KIT-RECEPTACLE (2-PIN)	
					(INCLUDES RECEPTACLE AS AND WEDGE)	
		1	**3E-3365**	1	WEDGE-RECEPTACLE LOCK (2-PIN)	
		1	**198-5389**	2	FILM-IDENTIFICATION (IGNITION SWITCH)	
		1	**205-8257**	2	COIL AS (EXCITER)	
D		1	**5P-5677**		WIRE (18-GA, BLACK) (0.4-M)	
		1	**186-3735**	2	PIN-CONNECTOR (16-GA TO 18-GA)	
	8	1	**218-0404**	1	MODULE GP-INTERFACE (KEY)	
		1	**6V-6715**	1	SCREW-PAN HEAD (4-20X0.25-IN)	
		1	**8C-3095**	1	SEAL-O-RING	
	9	1	**219-6314**	2	KEY RING (IDENTIFICATION)	
	10	1	**219-6607**	2	FILM-INFORMATION (KEY)	
	11	1	**9X-6165**	2	WASHER (6.5X22X2.5-MM THK)	
M	12	1	**7X-2533**	2	BOLT (M6X1X35-MM)	

D-ORDER BY THE METER
M-METRIC PART

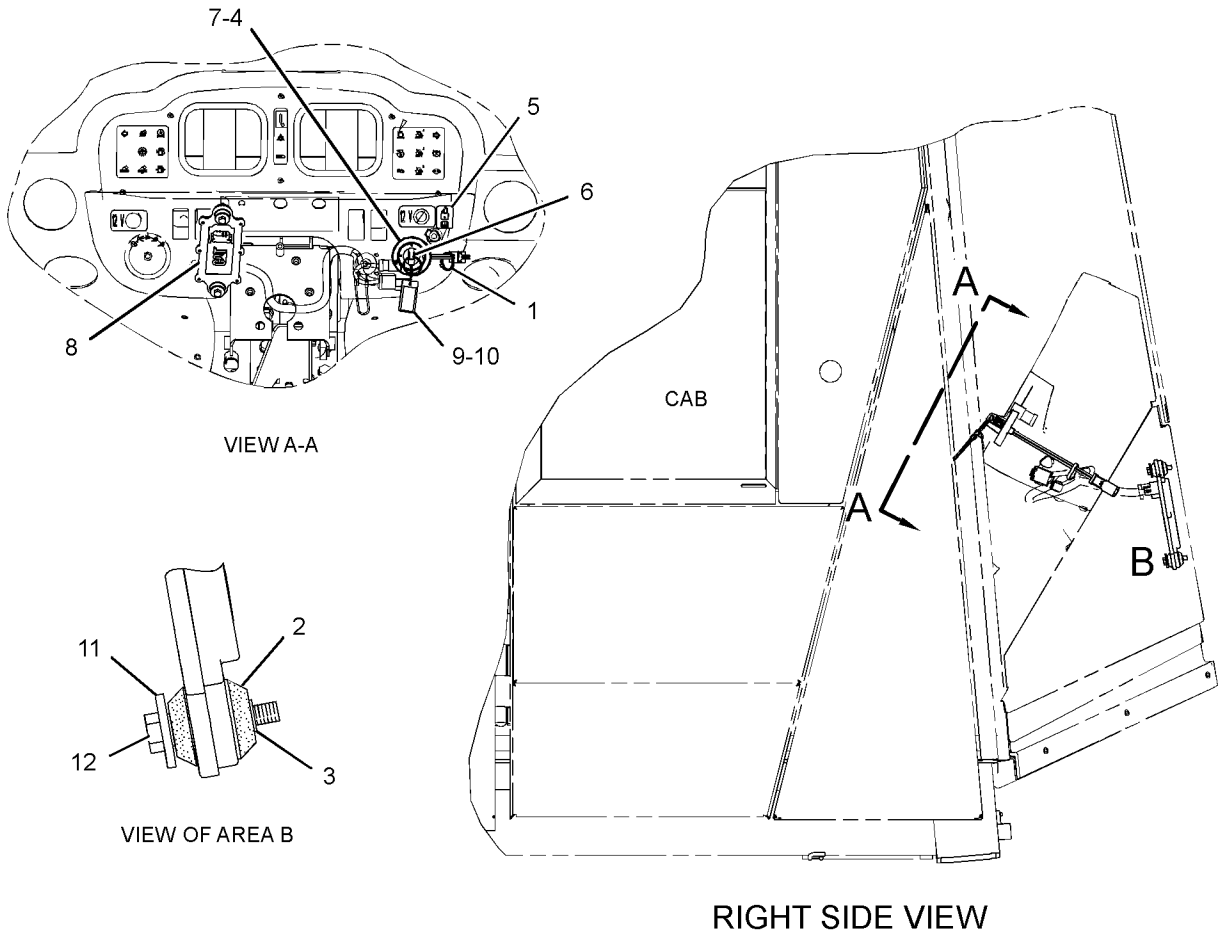

GRAPHIC #1 **<END>** g01156553

3E-6389 LAMP GP-DOME

S/N: M3G1-UP
24-VOLT, WITH SWITCH
PART OF 237-4910 WIRING GP-CAB, 262-9187 WIRING GP-OPEN ROPS
ALSO AN ATTACHMENT

SMCS-1433 **i02207309**

NOTE	REF NO	GRAPHIC REF	PART NUMBER	QTY	PART NAME 1 2 3 4 5 6 (PRODUCT LEVEL)	SEE PAGE
	1	1	**7N-9943**	1	LAMP (24-VOLT)	
	2	1	**102-8803**	1	KIT-RECEPTACLE (3-PIN)	
					(INCLUDES RECEPTACLE AS & WEDGE)	
		1	**3E-3371**	1	WEDGE-RECEPTACLE LOCK (3-PIN)	
		1	**8T-8729**	3	PIN-CONNECTOR	
	3	1	**7T-0020**	1	LENS-DOME LAMP	

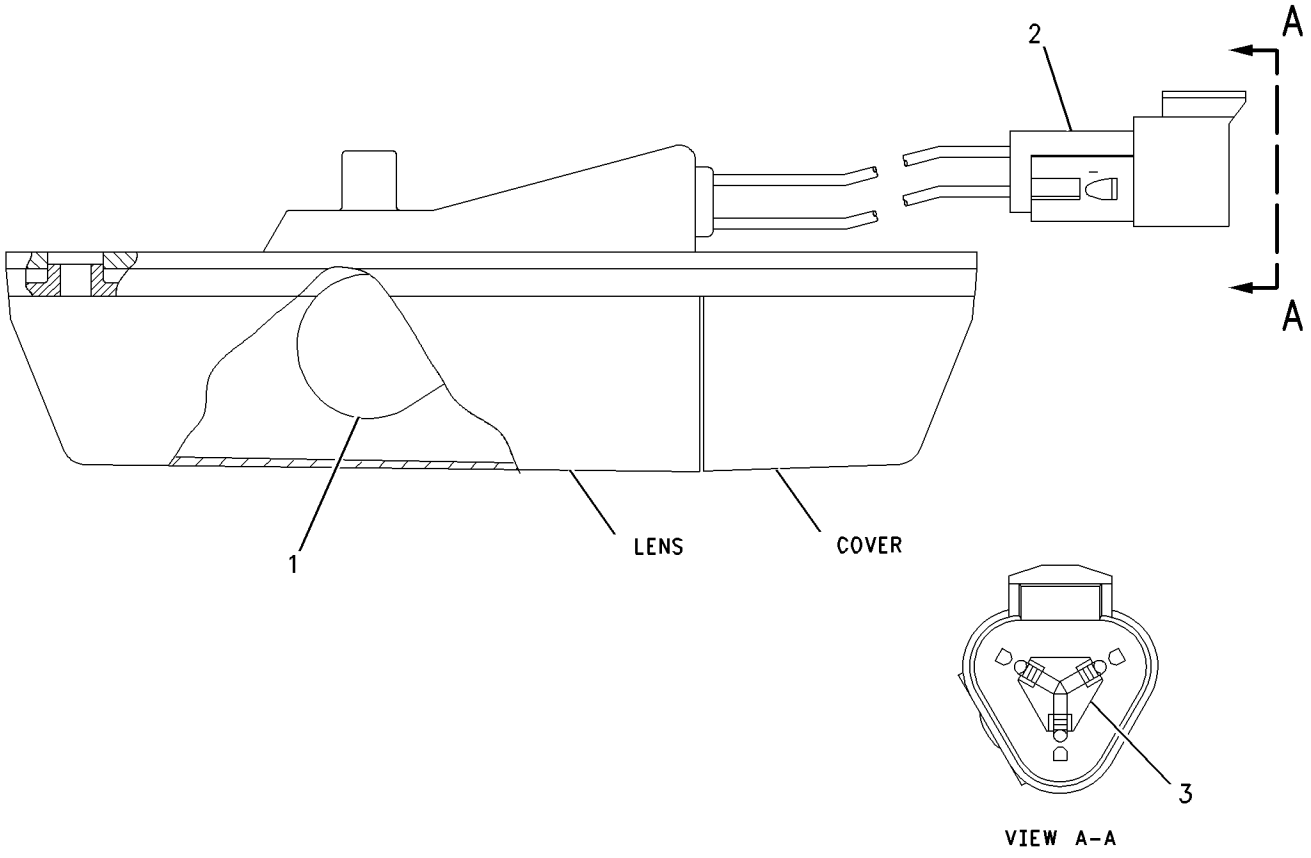

GRAPHIC #1 **<END>** g00892785

210-8422 LAMP GP-FLOOD–HID, SUSPENDED MOUNT

S/N: M3G1-UP
24-VOLT,35-WATT
PART OF 235-8560 LIGHTING GP-FLOOD
AN ATTACHMENT

SMCS-1434 **i02221376**

NOTE	REF NO	GRAPHIC REF	PART NUMBER	QTY	PART NAME 1 2 3 4 5 6 (PRODUCT LEVEL)	SEE PAGE
	1	1	**229-9969**	1	LENS AS	
	2	1	**209-6638**	1	LAMP (12-VOLT, 24-VOLT, 35-WATT)	
M	3	1	**151-8754**	1	BOLT (M10X1.5X40-MM)	
	4	1	**8T-4121**	1	WASHER-HARD (11X21X2.5-MM THK)	
M	5	1	**120-9027**	4	SCREW-PAN HEAD (M3X0.5X16-MM)	
M	6	1	**8T-4189**	2	BOLT (M8X1.25X20-MM)	
M	7	1	**6V-9189**	2	LOCKNUT (M8X1.25-THD)	
	8	1	**229-9972**	1	BRACKET AS	
	9	1	**229-9974**	1	BEZEL	

M-METRIC PART

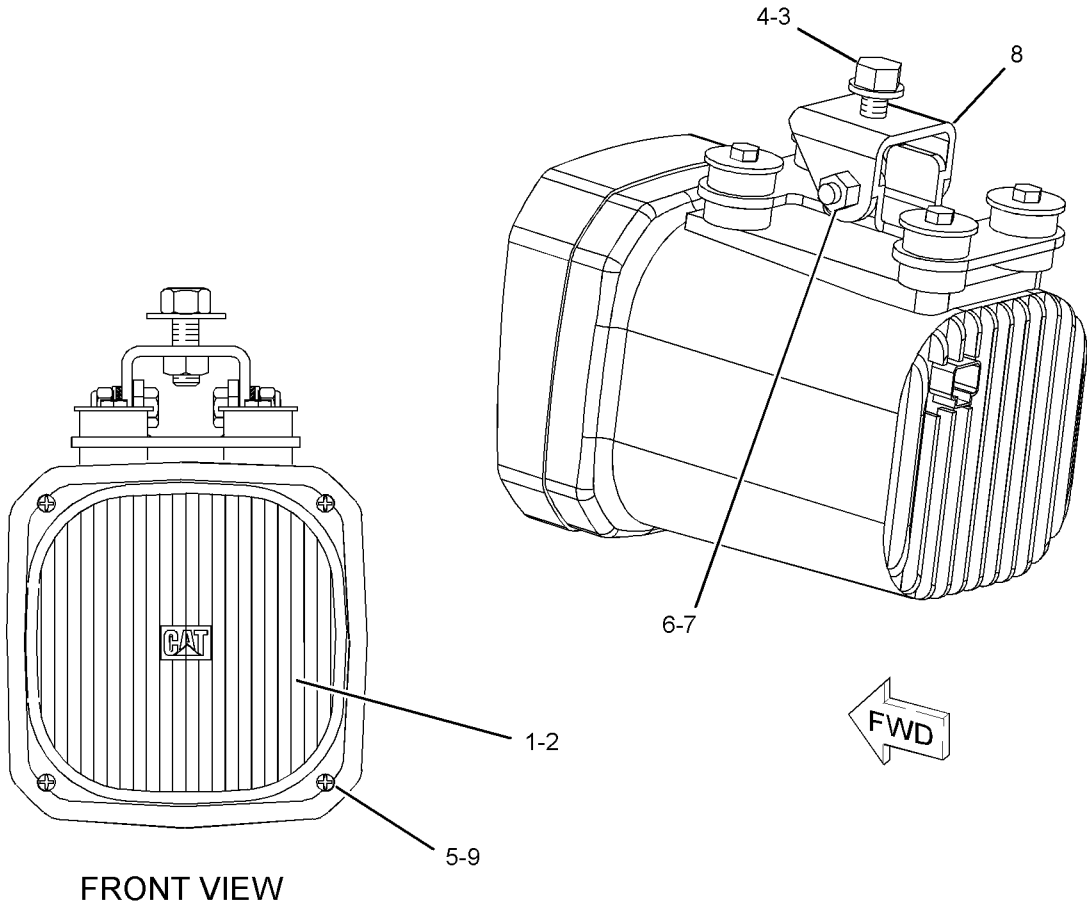

FRONT VIEW

GRAPHIC #1 **<END>** g01069665

210-8423 LAMP GP-FLOOD–HID, VERTCAL MOUNT

S/N: M3G1-UP
24-VOLT, 35-WATT
PART OF 235-8560 LIGHTING GP-FLOOD
AN ATTACHMENT

SMCS-1434 **i02221378**

NOTE	REF NO	GRAPHIC REF	PART NUMBER	QTY	PART NAME 1 2 3 4 5 6 (PRODUCT LEVEL)	SEE PAGE
	1	1	**229-9969**	1	LENS AS	
	2	1	**209-6638**	1	LAMP (12-VOLT, 24-VOLT, 35-WATT)	
M	3	1	**151-8754**	1	BOLT (M10X1.5X40-MM)	
	4	1	**8T-4121**	1	WASHER-HARD (11X21X2.5-MM THK)	
M	5	1	**120-9027**	4	SCREW-PAN HEAD (M3X0.5X16-MM)	
M	6	1	**8T-4189**	2	BOLT (M8X1.25X20-MM)	
M	7	1	**6V-9189**	2	LOCKNUT (M8X1.25-THD)	
	8	1	**229-9972**	1	BRACKET AS	
	9	1	**229-9974**	1	BEZEL	

M-METRIC PART

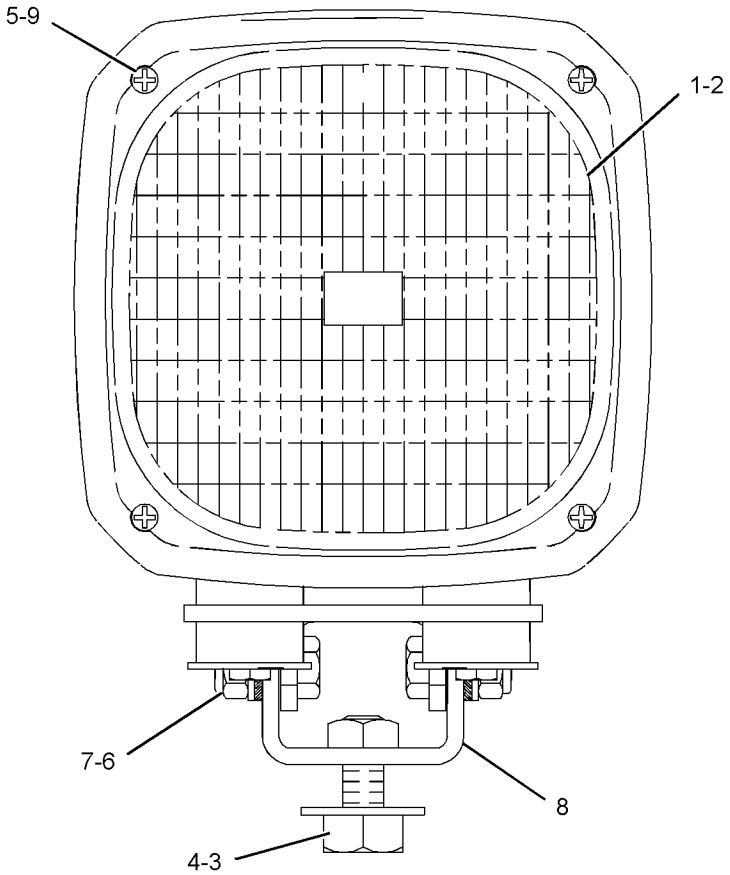

GRAPHIC #1 **<END>** g01022778

219-6485 LAMP GP-FLOOD–VERTICAL MOUNT

S/N: M3G1-UP
24-VOLT
PART OF 235-5275, 235-5276, 248-0422 LIGHTING GP-FLOOD & SIGNAL
ALSO AN ATTACHMENT

SMCS-1434 **i02325343**

NOTE	REF NO	GRAPHIC REF	PART NUMBER	QTY	PART NAME 1 2 3 4 5 6 (PRODUCT LEVEL)	SEE PAGE
	1	1	**9X-3463**	1	LAMP-HALOGEN (24-VOLT, 65-WATT) (FLOODLIGHT)	
	2	1	**9X-4244**	2	SCREW	
	3	1	**202-6614**	1	LENS AS (FLOODLIGHT)	
	4	1	**175-4292**	1	BODY AS	
	5	1	**164-7556**	1	CLIP	
	6	1	**247-4285**	1	BOLT (M8X1.25X50-MM)	
M	7	1	**5C-7261**	1	NUT (M8X1.25-THD)	
	8	1	**8T-4224**	2	WASHER-HARD (8.8X16X2-MM THK)	
	9	1	**175-4291**	1	BRACKET AS	

M-METRIC PART

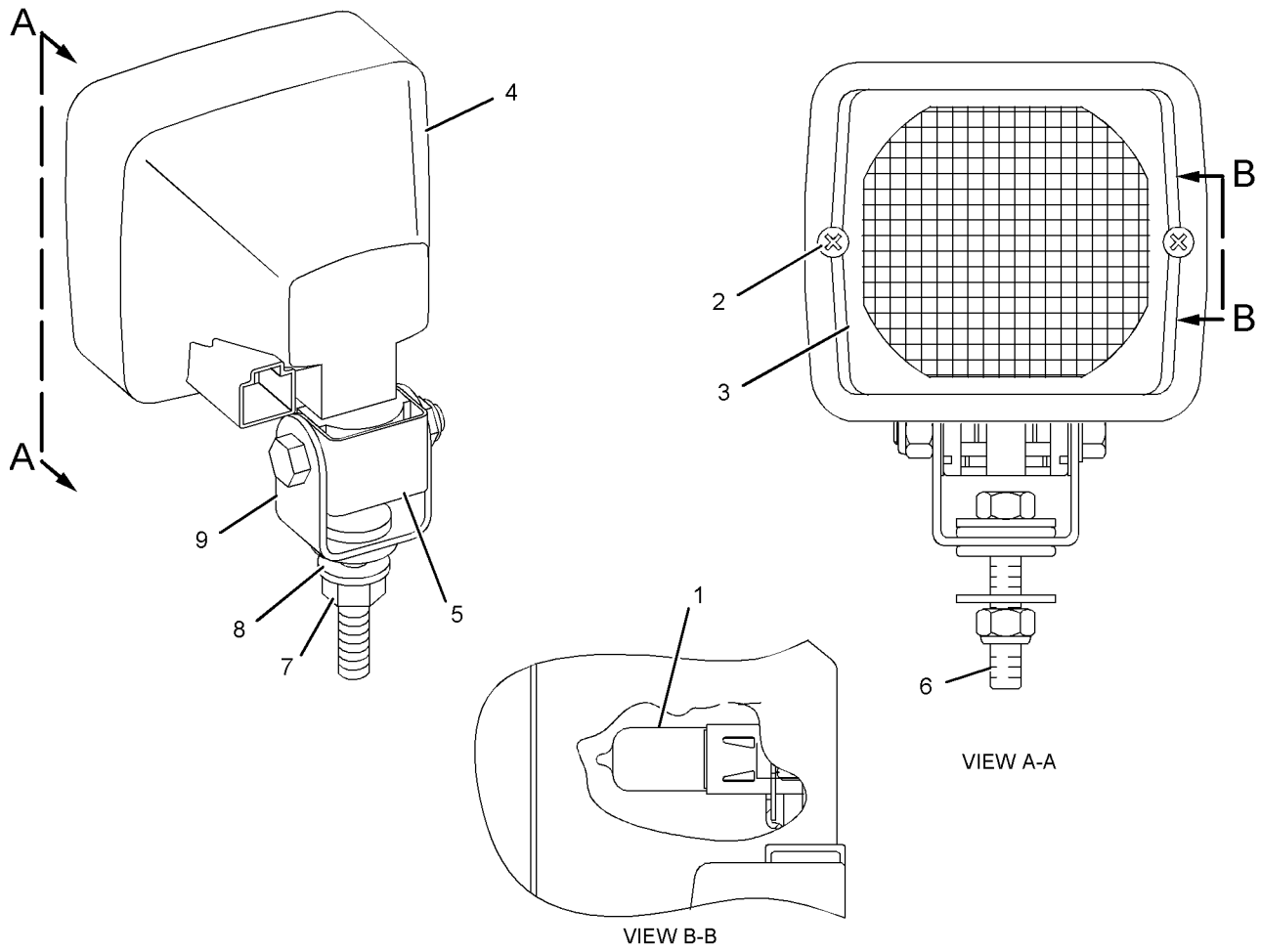

GRAPHIC #1 **<END>** g01071978

219-6487 LAMP GP-FLOOD–SUSPENDED MOUNT

S/N: M3G1-UP
24-VOLT
PART OF 235-8559 LIGHTING GP-FLOOD
ALSO AN ATTACHMENT

SMCS-1434 **i02286097**

NOTE	REF NO	GRAPHIC REF	PART NUMBER	QTY	PART NAME 1 2 3 4 5 6 (PRODUCT LEVEL)	SEE PAGE
	1	1	**9X-3463**	1	LAMP-HALOGEN (24-VOLT, 65-WATT) (FLOODLIGHT)	
M	2	1	**8T-6912**	1	BOLT (M8X1.25X50-MM)	
M	3	1	**5C-7261**	1	NUT (M8X1.25-THD)	
	4	1	**8T-4224**	2	WASHER-HARD (8.8X16X2-MM THK)	
	5	1	**9X-4244**	2	SCREW	
	6	1	**202-6612**	1	SEAL	
	7	1	**202-6614**	1	LENS AS (FLOODLIGHT) (ROPS)	
	8	1	**175-4292**	1	BODY AS	
	9	1	**164-7556**	1	CLIP	
	10	1	**175-4291**	1	BRACKET AS	

M-METRIC PART

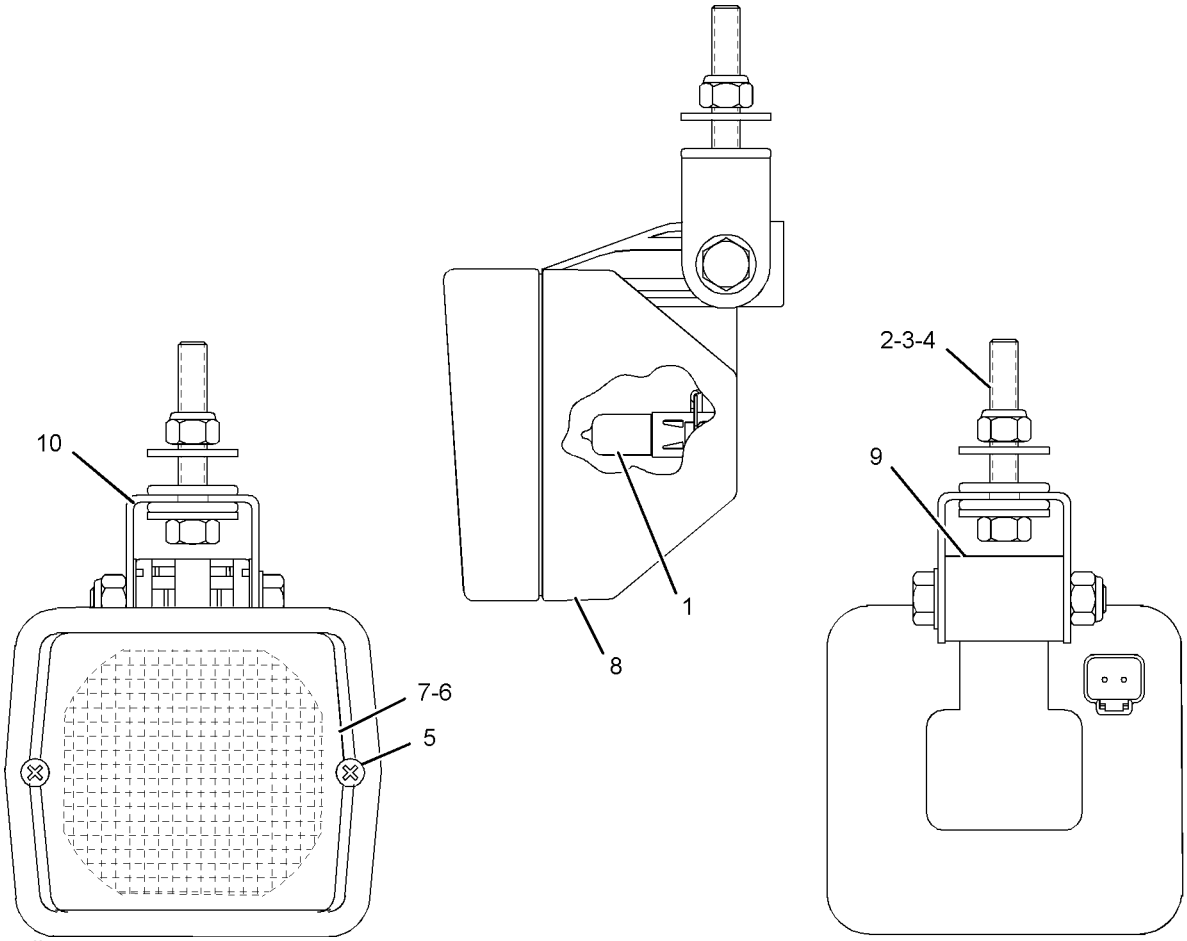

GRAPHIC #1 **<END>** g01021977

105-4849 LAMP GP-HEAD & SIGNAL–LH

S/N: M3G1-UP
PART OF 248-0414 LIGHTING GP-ROADING
AN ATTACHMENT

SMCS-1429, 1430 **i02205177**

NOTE	REF NO	GRAPHIC REF	PART NUMBER	QTY	PART NAME 1 2 3 4 5 6 (PRODUCT LEVEL)	SEE PAGE
	1	1	**9X-4244**	4	SCREW	
	2	1	**100-3251**	2	SCREW-LENS	
	3	1	**9X-9865**	1	SEAL	
	4	1	**100-3248**	1	LENS AS (HEADLIGHT)	
	5	1	**9X-3465**	1	LAMP (24-VOLT, 75/70-WATT)	
	6	1	**136-3848**	1	LENS AS (AMBER) (SIGNAL)	
M	7	1	**8T-5005**	1	BOLT (M10X1.5X70-MM)	
M	8	1	**8T-0389**	1	LOCKNUT (M10X1.5-THD)	
	9	1	**100-3253**	1	SPACER	
	10	1	**100-3254**	1	SPACER	
	11	1	**100-3255**	1	WASHER	
	13	1	**8T-8729**	5	PIN-CONNECTOR	
	14	1	**3E-3383**	1	WEDGE-RECEPTACLE LOCK (6-PIN)	
	15	1	**8T-8737**	1	PLUG-SEAL	
	16	1	**100-3245**	2	LAMP (24-VOLT)	
	17	1	**9X-4493**	1	LAMP (24-VOLT, 21-WATT) (SIGNAL)	
	18	1	**100-3250**	1	LENS (AMBER) (SIGNAL)	
	19	1	**136-3845**	1	BODY AS-LAMP	
	20	1	**102-8805**	1	KIT-RECEPTACLE (6-PIN)	
					(INCLUDES RECEPTACLE AS & WEDGE)	

M-METRIC PART

105-4849 LAMP GP-HEAD & SIGNAL *(contd.)* i02205177

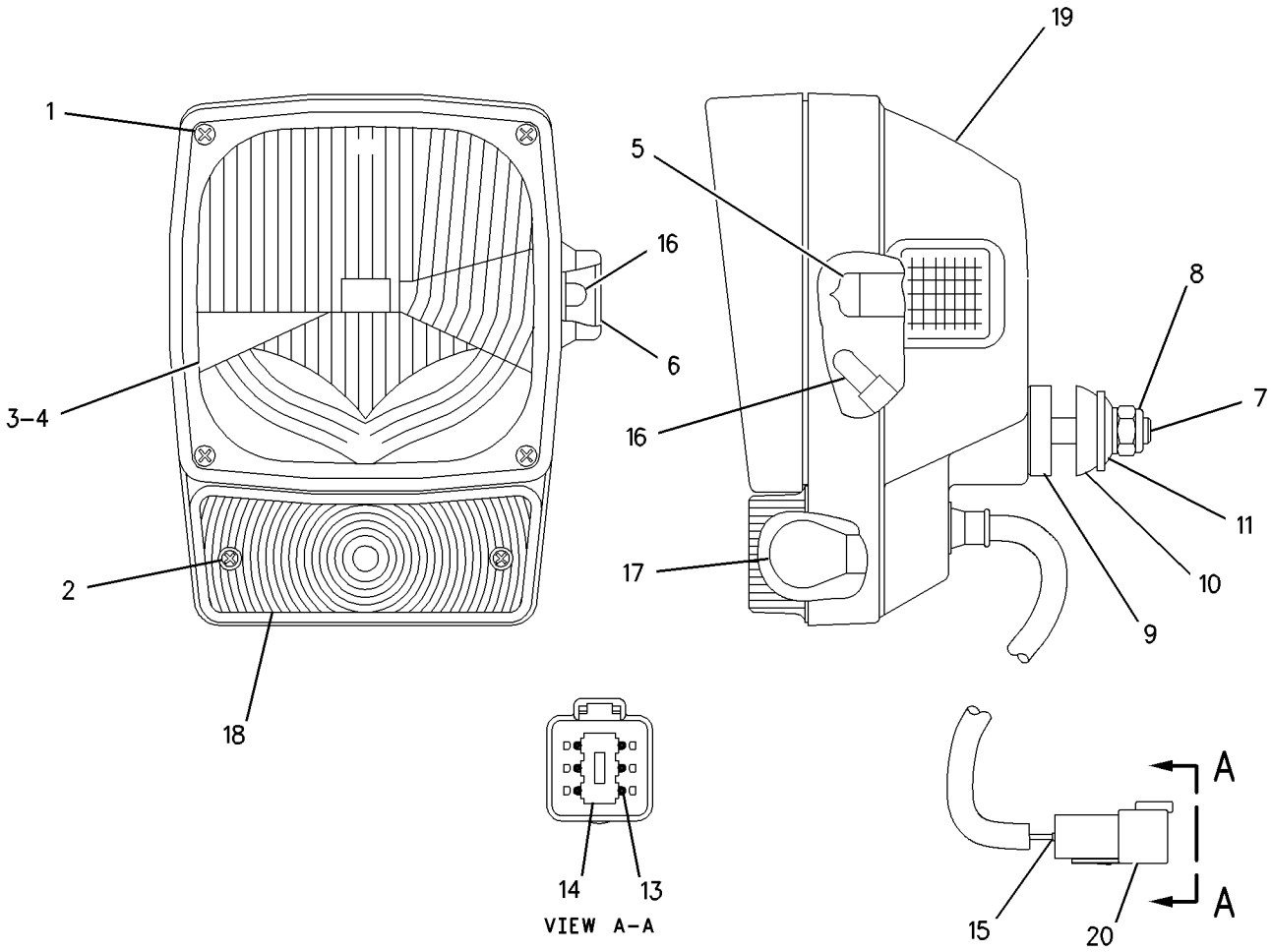

GRAPHIC #1 **<END>** g00661265

105-4850 LAMP GP-HEAD & SIGNAL–RH

S/N: M3G1-UP
PART OF 248-0414 LIGHTING GP-ROADING
AN ATTACHMENT

SMCS-1429, 1430 **i02205178**

NOTE	REF NO	GRAPHIC REF	PART NUMBER	QTY	PART NAME 1 2 3 4 5 6 (PRODUCT LEVEL)	SEE PAGE
	1	1	**9X-4244**	4	SCREW	
	2	1	**100-3251**	2	SCREW-LENS	
	3	1	**9X-9865**	1	SEAL	
	4	1	**100-3248**	1	LENS AS (HEADLIGHT)	
	5	1	**9X-3465**	1	LAMP (24-VOLT, 75/70-WATT) (HEAD)	
	6	1	**136-3848**	1	LENS AS (AMBER) (SIGNAL)	
M	7	1	**8T-5005**	1	BOLT (M10X1.5X70-MM)	
M	8	1	**8T-0389**	1	LOCKNUT (M10X1.5-THD)	
	9	1	**100-3253**	1	SPACER	
	10	1	**100-3254**	1	SPACER	
	11	1	**100-3255**	1	WASHER	
	12	1	**102-8805**	1	KIT-RECEPTACLE (6-PIN)	
					(INCLUDES RECEPTACLE AS & WEDGE)	
	13	1	**186-3735**	5	PIN-CONNECTOR (16-GA TO 18-GA)	
	14	1	**3E-3383**	1	WEDGE-RECEPTACLE LOCK (6-PIN)	
	15	1	**8T-8737**	1	PLUG-SEAL	
	16	1	**100-3245**	2	LAMP (24-VOLT) (SIGNAL)	
	17	1	**9X-4493**	1	LAMP (24-VOLT, 21-WATT) (SIGNAL)	
	18	1	**100-3250**	1	LENS (AMBER) (SIGNAL)	
	19	1	**136-3846**	1	BODY AS-LAMP	

M-METRIC PART

105-4850 LAMP GP-HEAD & SIGNAL *(contd.)* **i02205178**

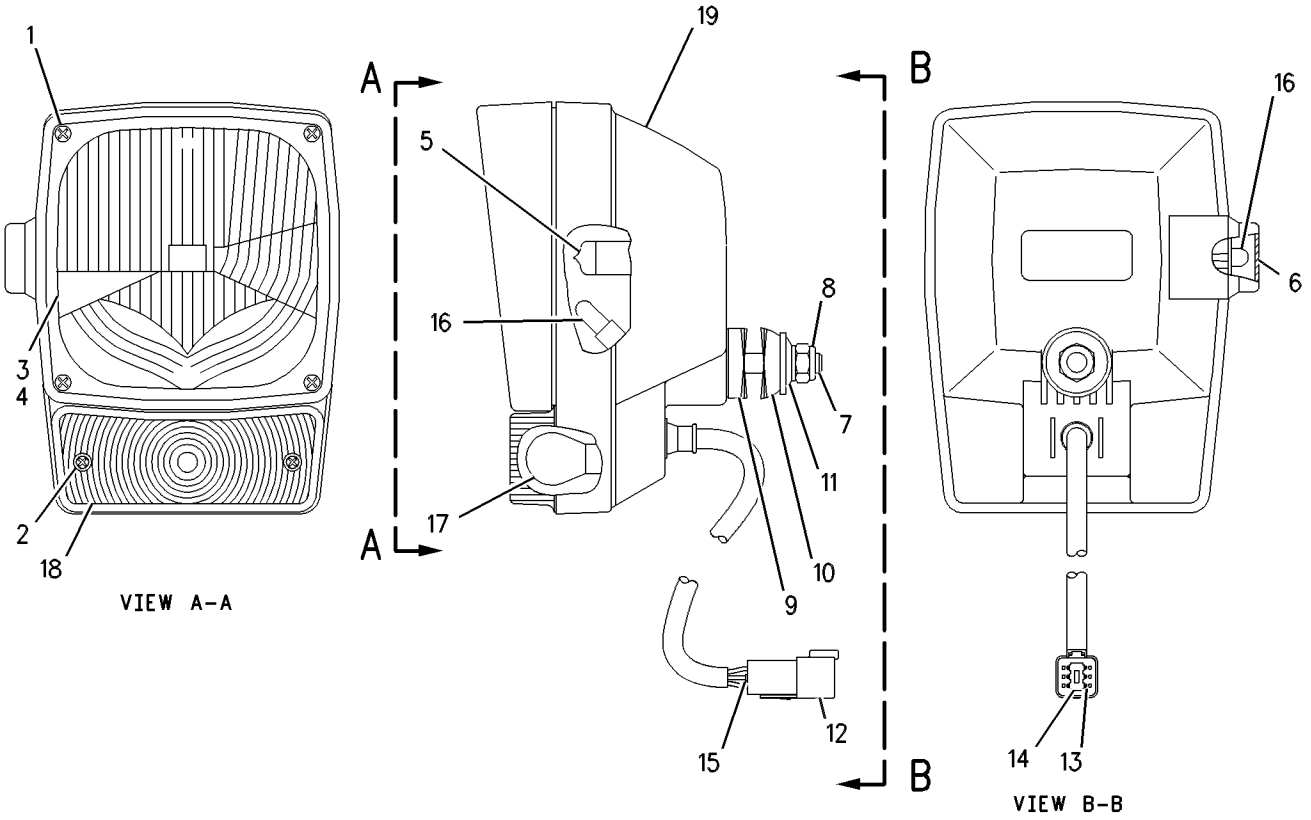

GRAPHIC #1 **<END>** g00610742

3E-6466 LAMP GP-SIGNAL–FRONT TURN

S/N: M3G1-UP
24-VOLT
PART OF 235-5276, 248-0422 LIGHTING GP-FLOOD & SIGNAL
AN ATTACHMENT

SMCS-1430 **i02454087**

NOTE	REF NO	GRAPHIC REF	PART NUMBER	QTY	PART NAME 1 2 3 4 5 6 (PRODUCT LEVEL)	SEE PAGE
	1	1	**9X-3066**	1	LENS-AMBER	
	2	1	**9X-4493**	1	LAMP (24-VOLT, 21-WATT)	
	3	1	**102-8802**	1	KIT-RECEPTACLE (2-PIN)	
					(KIT INCLUDES RECEPTACLE AS AND WEDGE)	
	4	1	**3E-3365**	1	WEDGE-RECEPTACLE LOCK (2-PIN)	
	5	1	**8T-8729**	2	PIN-CONNECTOR	

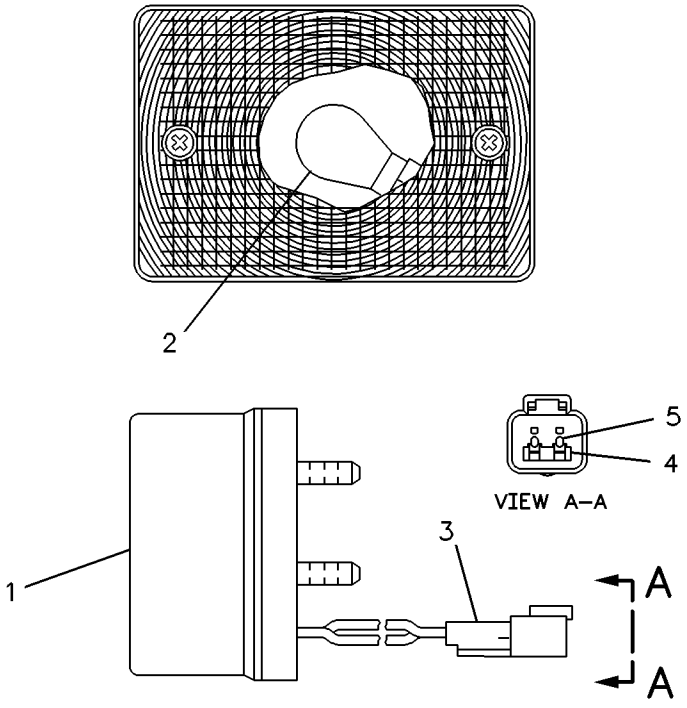

GRAPHIC #1 **<END>** g00083146

135-0426 LAMP GP-SIGNAL–STOP/TAIL

S/N: M3G1-UP
24 VOLT
PART OF 235-5275 LIGHTING GP-FLOOD & SIGNAL

SMCS-1430 **i02443767**

NOTE	REF NO	GRAPHIC REF	PART NUMBER	QTY	PART NAME 1 2 3 4 5 6 (PRODUCT LEVEL)	SEE PAGE
	1	1	**102-8803**	1	KIT-RECEPTACLE (3-PIN)	
					(INCLUDES RECEPTACLE AS & WEDGE)	
	2	1	**186-3735**	3	PIN-CONNECTOR (16-GA TO 18-GA)	

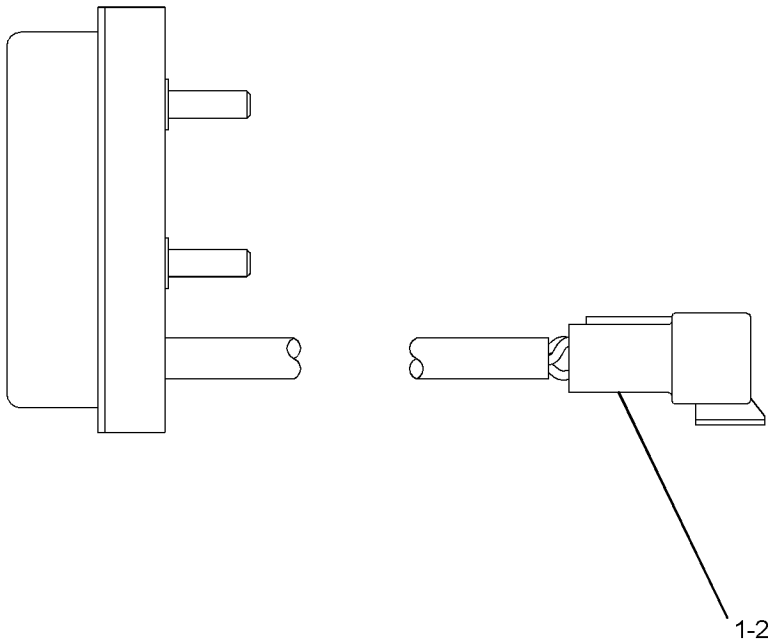

GRAPHIC #1 **<END>** g01213248

145-6929 LAMP GP-STOP & TAIL

S/N: M3G1-UP
PART OF 235-5276, 248-0422 LIGHTING GP-FLOOD & SIGNAL, 248-0414 LIGHTING GP-ROADING
AN ATTACHMENT

SMCS-1432 **i02307262**

NOTE	REF NO	GRAPHIC REF	PART NUMBER	QTY	PART NAME 1 2 3 4 5 6 (PRODUCT LEVEL)	SEE PAGE
	1	1	**186-3735**	5	PIN-CONNECTOR (16-GA TO 18-GA)	
	2	1	**9X-4492**	1	LAMP (24-VOLT, 5-WATT)	
	3	1	**9X-4493**	1	LAMP (24-VOLT, 21-WATT)	
	4	1	**102-8802**	1	KIT-RECEPTACLE (2-PIN)	
					(KIT INCLUDES RECEPTACLE AS AND WEDGE)	
	5	1	**102-8803**	1	KIT-RECEPTACLE (3-PIN)	
					(KIT INCLUDES RECEPTACLE AS AND WEDGE)	
	6	1	**267-2809**	1	LENS	

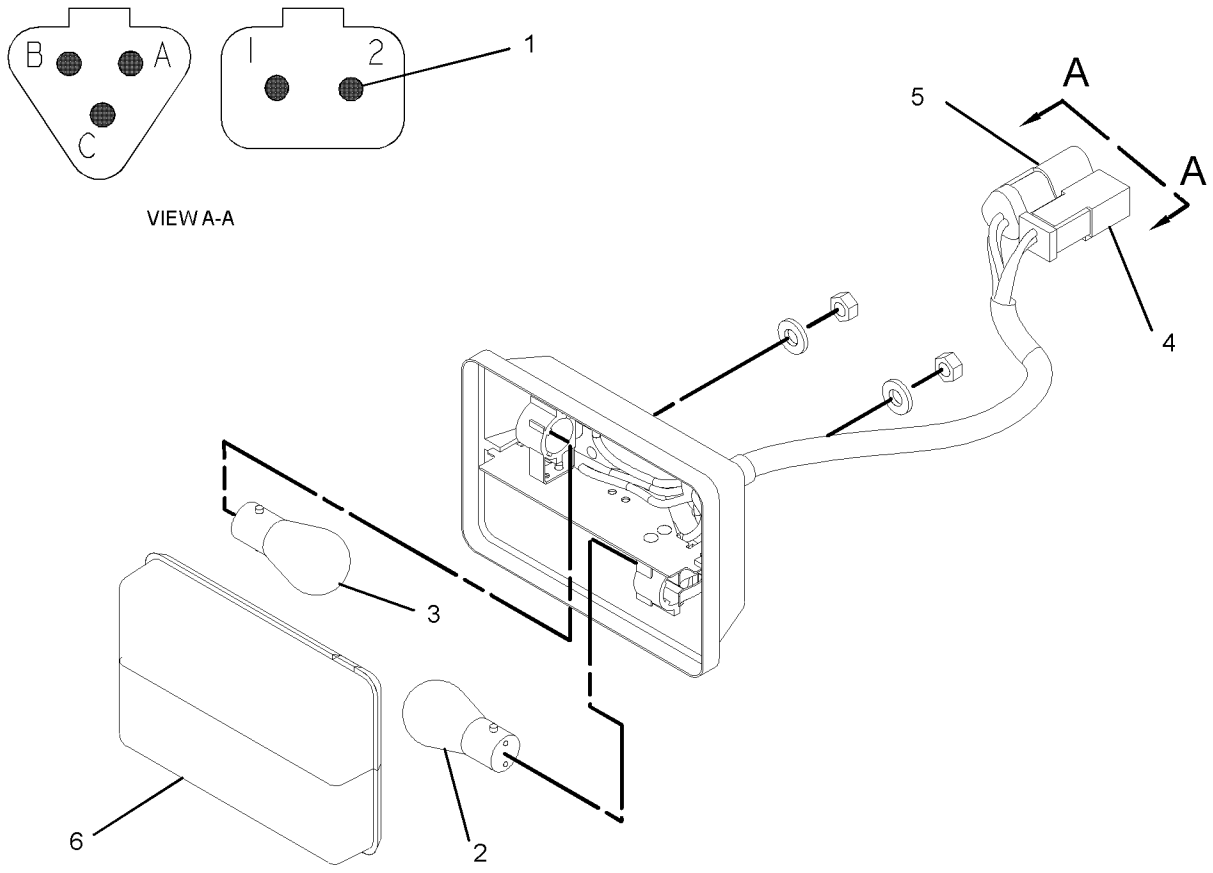

GRAPHIC #1 **<END>** g01155900

235-3937 LAMP GP-WARNING BEACON–AMBER

S/N: M3G1-UP
24-VOLT
PART OF 237-1012 LIGHTING GP-WARNING BEACON
AN ATTACHMENT

SMCS-1431 **i02011370**

NOTE	REF NO	GRAPHIC REF	PART NUMBER	QTY	PART NAME 1 2 3 4 5 6 (PRODUCT LEVEL)	SEE PAGE
	1	1	**215-6672**	1	LENS-AMBER (WARNING BEACON)	
	2	1	**9X-7849**	1	LAMP (24-VOLT, 70-WATT)	
	3	1	**215-6673**	1	BELT-WARNING BEACON	
	4	1	**215-6674**	1	CLIP	
M	5	1	**6V-8225**	3	NUT (M6X1-THD)	
	6	1	**5P-0537**	3	WASHER-HARD (7.2X14.5X2-MM THK)	
	7	1	**102-8802**	1	KIT-RECEPTACLE (2-PIN)	
					(KIT INCLUDES RECEPTACLE AS & WEDGE)	
	8	1	**3E-3365**	1	WEDGE-RECEPTACLE LOCK (2-PIN)	
	9	1	**186-3735**	2	PIN-CONNECTOR (16-GA TO 18-GA)	

M-METRIC PART

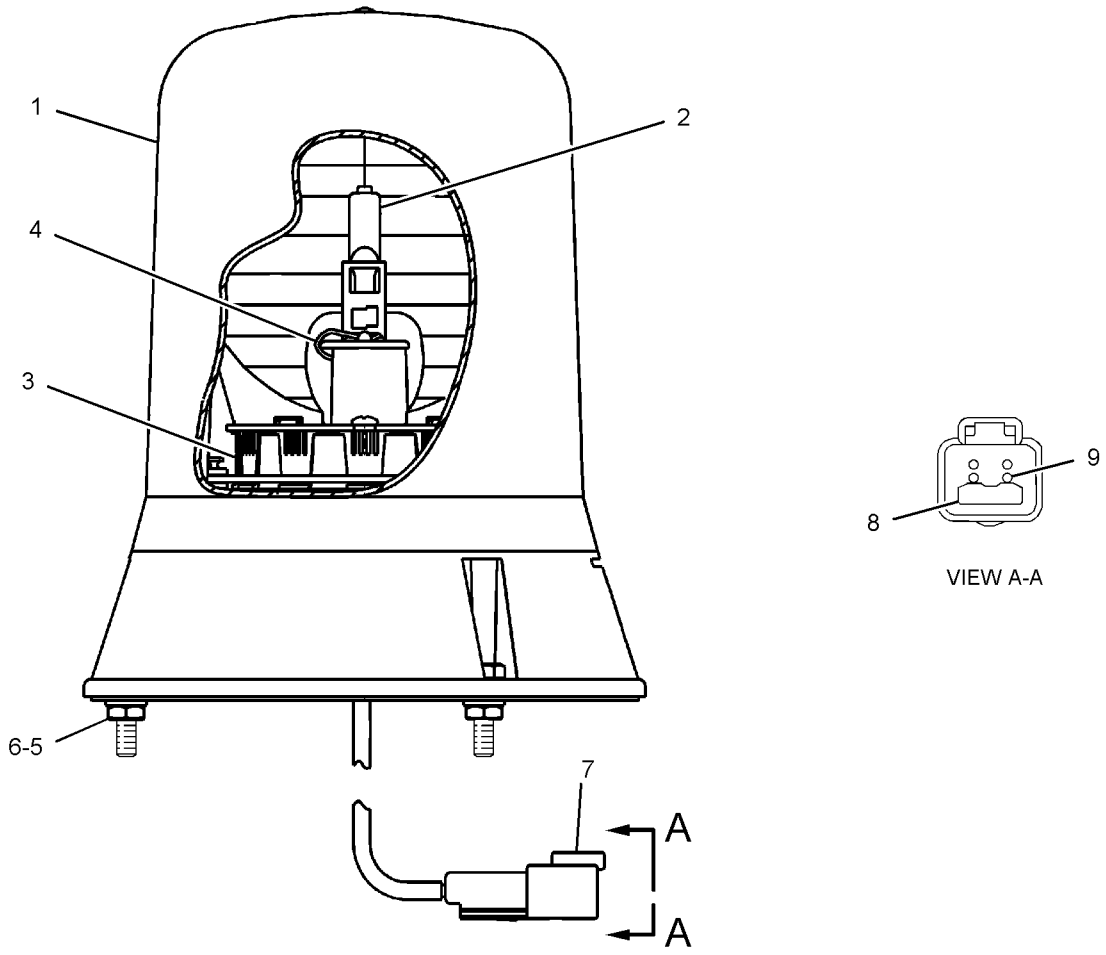

GRAPHIC #1 **<END>** g01047107

254-5525 LIGHTING AR-ROADING—HMU STEERING

S/N: M3G1-UP
AN ATTACHMENT

SMCS-1429 **i02449424**

NOTE	PART NUMBER	QTY	PART NAME 1 2 3 4 5 6 (PRODUCT LEVEL)	SEE PAGE
Y	*248-0414*	1	LIGHTING GP-ROADING	162
Y	*197-6475*	1	SWITCH GP-DIMMER (ROADING)	198
Y	*253-3951*	1	SWITCH GP-SIGNAL (TURN)	211
Y	*271-4037*	1	WIRING GP-LIGHTING (LOADER FRAME)	247
Y-SEPARATE ILLUSTRATION				

<END>

244-3599 LIGHTING AR-SIGNAL—HMU STEERING

S/N: M3G1-UP
PART OF 276-5456 MACHINE AR
AN ATTACHMENT

SMCS-1430 **i02445218**

NOTE	PART NUMBER	QTY	PART NAME 1 2 3 4 5 6 (PRODUCT LEVEL)	SEE PAGE
Y	*235-5276*	1	LIGHTING GP-FLOOD & SIGNAL (6-LAMP, FRONT, REAR)	158
Y	*253-3951*	1	SWITCH GP-SIGNAL (TURN)	211
Y	*271-4028*	1	WIRING GP-LIGHTING (LOADER FRAME)	246
Y-SEPARATE ILLUSTRATION				

<END>

275-5865 LIGHTING AR-SIGNAL—HMU STEERING

S/N: M3G1-UP
AN ATTACHMENT

SMCS-1430 **i02444731**

NOTE	PART NUMBER	QTY	PART NAME 1 2 3 4 5 6 (PRODUCT LEVEL)	SEE PAGE
Y	*273-1131*	1	COVER GP-BUMPER	350
Y	*275-8310*	1	HOOD & GUARD GP	393
Y	*248-0422*	1	LIGHTING GP-FLOOD & SIGNAL (6-LAMP, FRONT, REAR)	160
Y	*253-3951*	1	SWITCH GP-SIGNAL (TURN)	211
Y	*271-4034*	1	WIRING GP-LIGHTING	
Y-SEPARATE ILLUSTRATION				

<END>

235-8559 LIGHTING GP-FLOOD–4-LAMP, CAB FRONT, REAR

S/N: M3G1-UP

PART OF 243-1080 CAB AR-ENCLOSED ROPS, 258-1552 CANOPY AR-OPEN ROPS

ALSO AN ATTACHMENT

SMCS-1434 **i02207826**

NOTE	REF NO	GRAPHIC REF	PART NUMBER	QTY	PART NAME 1 2 3 4 5 6 (PRODUCT LEVEL)	SEE PAGE
Y	1	1	**219-6487**	4	LAMP GP-FLOOD (24-VOLT, SUSPENDED MOUNT)	144
	2	1	**236-9773**	1	BRACKET (LH)	
	3	1	**236-9774**	1	BRACKET (RH)	
	4	1	**122-8705**	2	U-BOLT	
	5	1	**8T-4121**	8	WASHER-HARD (11X21X2.5-MM THK)	
M	6	1	**8T-4133**	6	NUT (M10X1.5 THD)	
M	7	1	**8T-4195**	2	BOLT (M10X1.5X30-MM)	

M-METRIC PART
Y-SEPARATE ILLUSTRATION

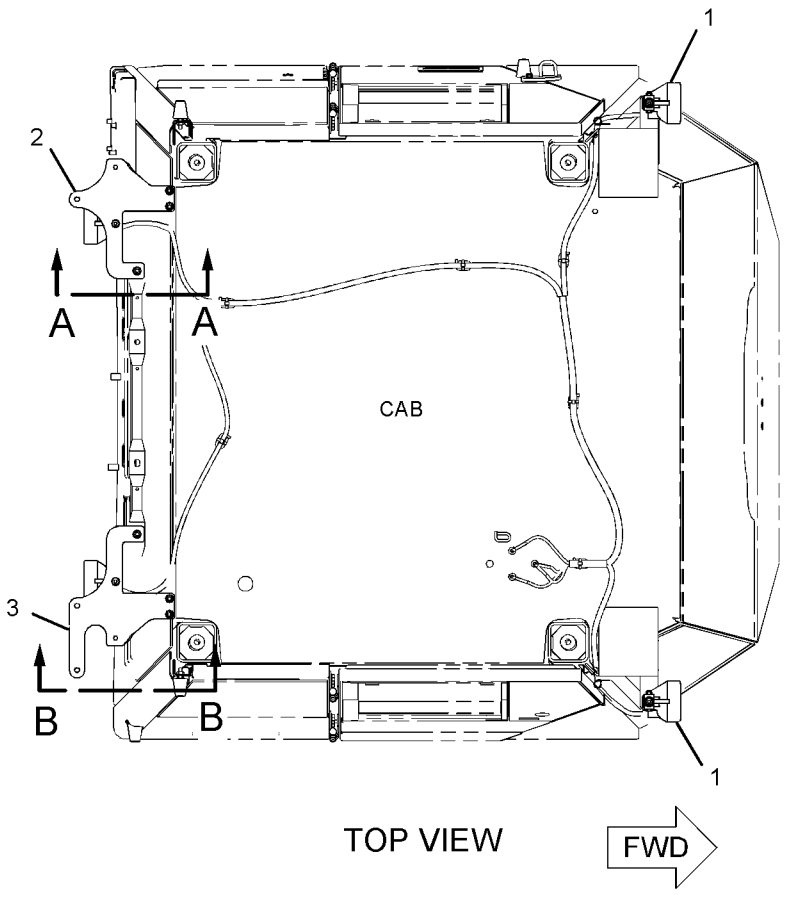

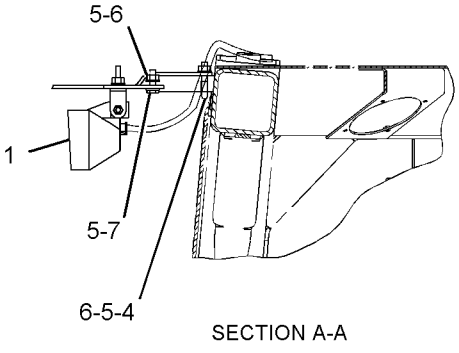

SECTION A-A

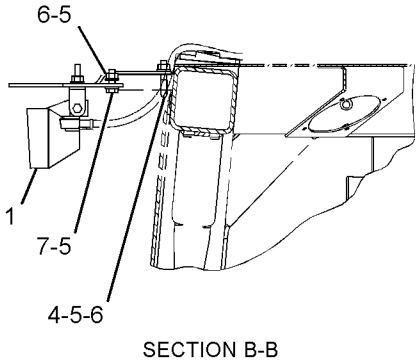

SECTION B-B

GRAPHIC #1 **<END>** g01116742

235-8560 LIGHTING GP-FLOOD—4-LAMP, HID, CAB FRONT, REAR

S/N: M3G1-UP
PART OF 276-5456 MACHINE AR
AN ATTACHMENT

SMCS-1434 **i02325344**

NOTE	REF NO	GRAPHIC REF	PART NUMBER	QTY	PART NAME 1 2 3 4 5 6 (PRODUCT LEVEL)	SEE PAGE
	1	1	**251-4339**	1	SWITCH AS-ROCKER (FRONT, REAR FLOODLIGHTS)	
	2	1	**3S-2093**	8	STRAP-CABLE	
	3	1	**236-7773**	1	HARNESS AS-LIGHTING	
		1	**155-2270**	8	KIT-CONNECTING PLUG (2-PIN)	
					(INCLUDES PLUG AS AND WEDGE)	
	4	1	**236-9775**	1	BRACKET AS (LH)	
	5	1	**236-9776**	1	BRACKET AS (RH)	
	6	1	**132-5789**	2	CLIP	
Y	7	1	**210-8422**	2	LAMP GP-FLOOD (24-VOLT, 35-WATT, HID, SUSP MT) (HIGH INTENSITY DISCHARGE, REAR)	141
Y	8	1	**210-8423**	2	LAMP GP-FLOOD (24-VOLT, 35-WATT, HID, VERT MT) (HIGH INTENSITY DISCHARGE, FR)	142
	9	1	**8T-4121**	4	WASHER-HARD (11X21X2.5-MM THK)	
M	10	1	**8T-4133**	2	NUT (M10X1.5 THD)	
M	11	1	**8T-4195**	2	BOLT (M10X1.5X30-MM)	
	12	1	**9M-8406**	4	CLIP	

M-METRIC PART
Y-SEPARATE ILLUSTRATION

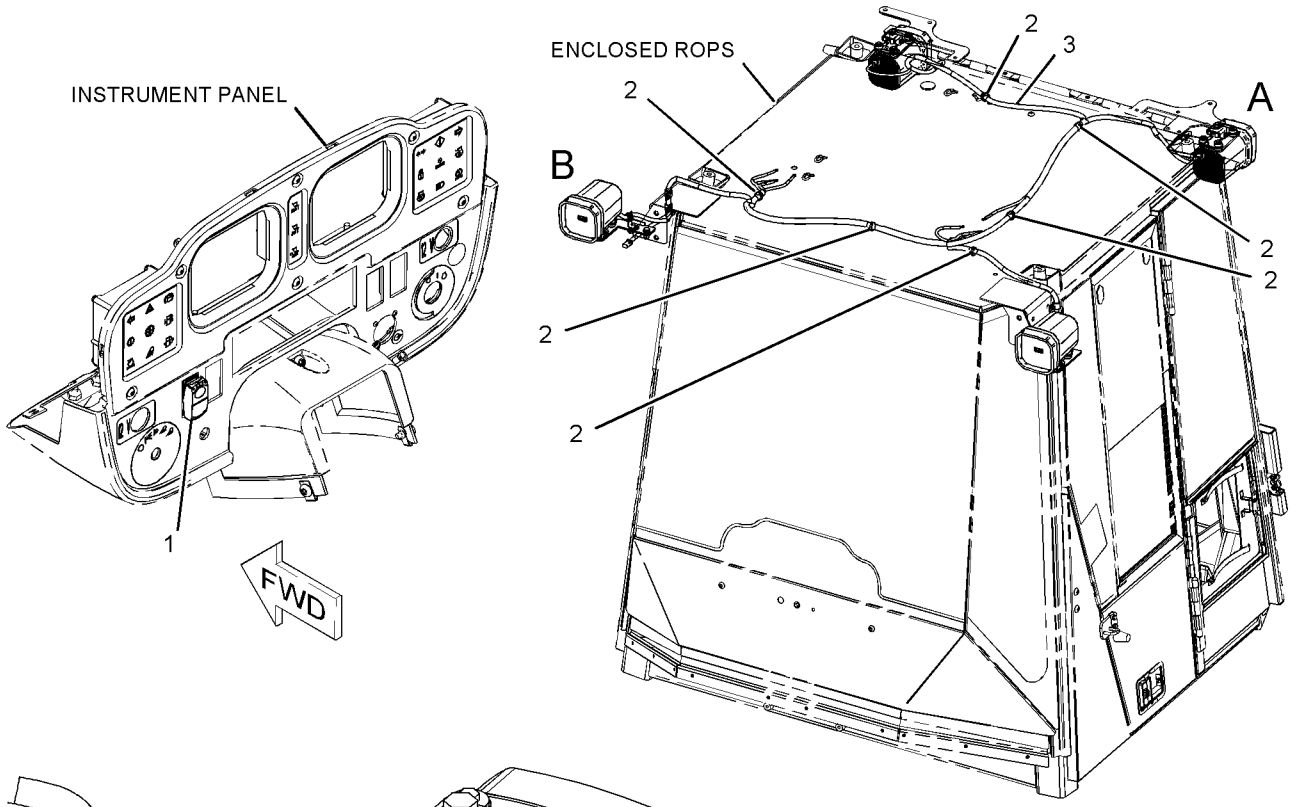

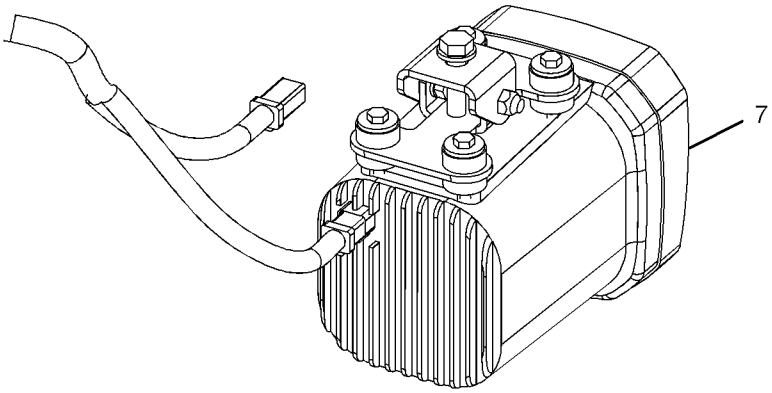

VIEW OF AREA A

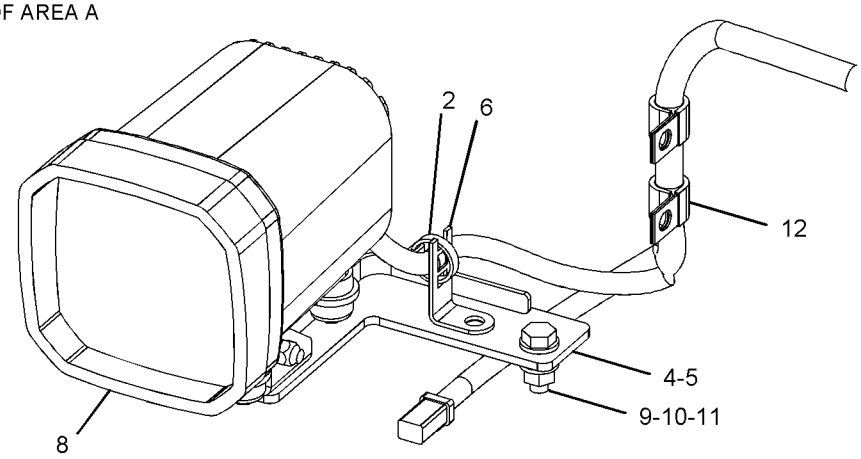

VIEW OF AREA B

GRAPHIC #1 **<END>** g01123572

235-5275 LIGHTING GP-FLOOD & SIGNAL–
4-LAMP, FRONT, REAR
S/N: M3G1-UP
PART OF 237-4931 ELECTRICAL AR

SMCS-1430, 1434 **i02207706**

NOTE	REF NO	GRAPHIC REF	PART NUMBER	QTY	PART NAME 1 2 3 4 5 6 (PRODUCT LEVEL)	SEE PAGE
Y	1	1	**135-0426**	2	LAMP GP-SIGNAL (24-VOLT, STOP, TAIL)	150
Y	2	1	**219-6485**	2	LAMP GP-FLOOD (24-VOLT, VERTICAL MOUNT)	143
	3	1	**261-2332**	1	BRACKET AS (RH)	
	4	1	**261-2333**	1	BRACKET AS (LH)	
	5	1	**246-3290**	2	PLATE AS	
					(EACH INCLUDES)	
M		1	**8T-4935**	1	BOSS-WELD (M10X1.5X45-MM)	
	6	1	**130-5300**	4	CLIP	
M	7	1	**5C-2890**	6	NUT (M6X1-THD)	
	8	1	**111-4013**	2	GROMMET	
	9	1	**8T-4121**	10	WASHER-HARD (11X21X2.5-MM THK)	
M	10	1	**8T-4136**	10	BOLT (M10X1.5X25-MM)	
M	11	1	**9X-2044**	8	SCREW-TRUSS HEAD (M6X1X16-MM)	
	12	1	**9X-8256**	6	WASHER (6.6X12X2-MM THK)	

M-METRIC PART
Y-SEPARATE ILLUSTRATION

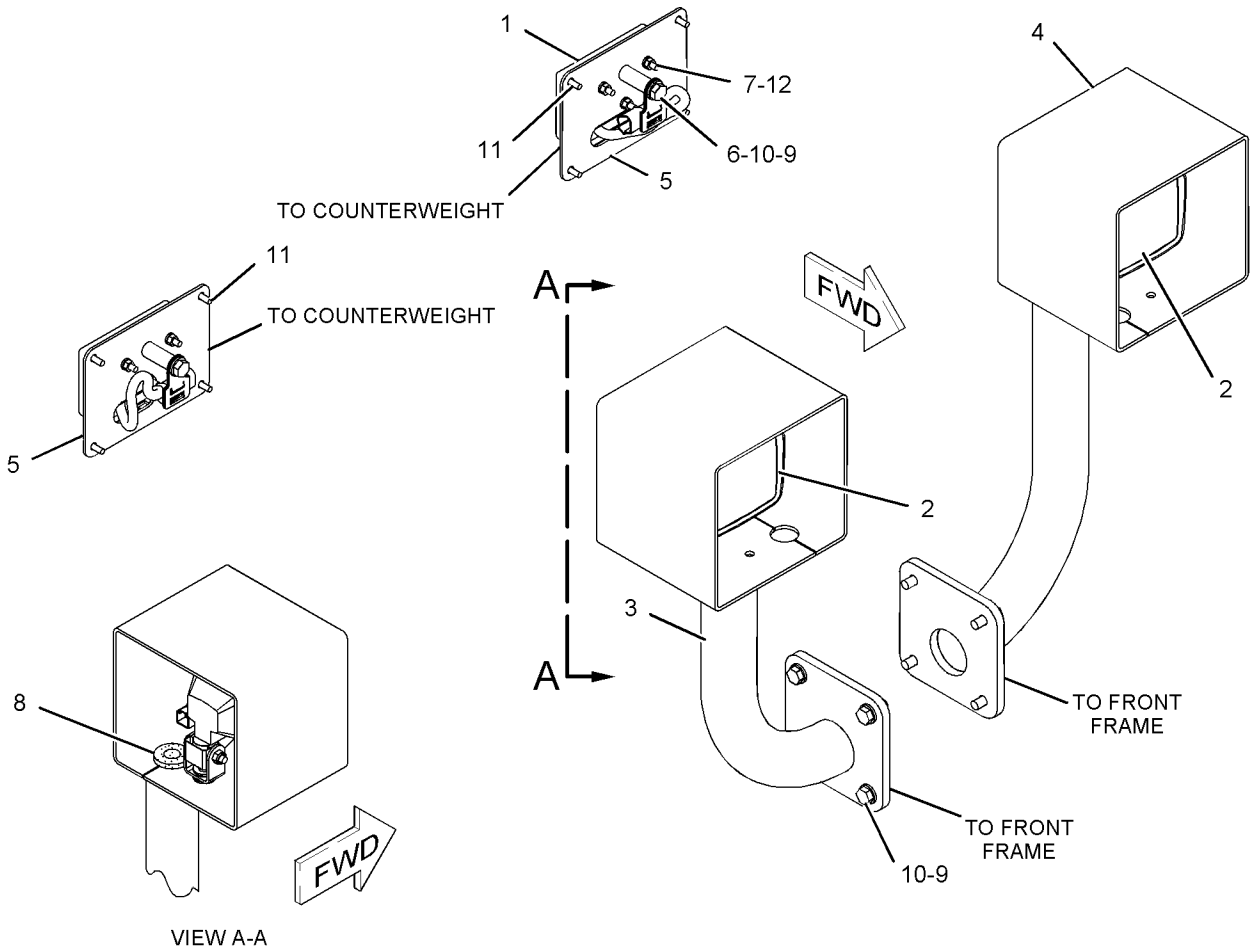

GRAPHIC #1 **<END>** g01117150

235-5276 LIGHTING GP-FLOOD & SIGNAL–

6-LAMP, FRONT, REAR

S/N: M3G1-UP

PART OF 244-3599 LIGHTING AR-SIGNAL

AN ATTACHMENT

SMCS-1430, 1434 **i02223840**

NOTE	REF NO	GRAPHIC REF	PART NUMBER	QTY	PART NAME 1 2 3 4 5 6 (PRODUCT LEVEL)	SEE PAGE
Y	1	1	**3E-6466**	2	LAMP GP-SIGNAL (24-VOLT) (FRONT TURN)	149
	2	1	**111-4013**	2	GROMMET	
Y	3	1	**145-6929**	2	LAMP GP-STOP & TAIL (24-VOLT)	151
Y	4	1	**219-6485**	2	LAMP GP-FLOOD (24-VOLT, VERTICAL MOUNT) (FRONT)	143
	5	1	**246-3295**	2	PLATE AS	
					(EACH INCLUDES)	
M		1	**8T-4935**	1	BOSS-WELD (M10X1.5X45-MM)	
	6	1	**261-4405**	1	BRACKET AS (RH)	
M		1	**6V-9632**	4	NUT-WELD (M6X1-THD)	
M		1	**8T-3851**	1	BOSS-WELD (M10X1.5X17.5-MM)	
	7	1	**261-4406**	1	BRACKET AS (LH)	
M		1	**6V-9632**	4	NUT-WELD (M6X1-THD)	
M		1	**8T-3851**	1	BOSS-WELD (M10X1.5X17.5-MM)	
	8	1	**261-4884**	2	COVER	
	9	1	**130-5300**	6	CLIP	
M	10	1	**5C-2890**	6	NUT (M6X1-THD)	
	11	1	**8T-4121**	12	WASHER-HARD (11X21X2.5-MM THK)	
M	12	1	**8T-4136**	10	BOLT (M10X1.5X25-MM)	
M	13	1	**8T-4137**	2	BOLT (M10X1.5X20-MM)	
M	14	1	**8T-4138**	8	BOLT (M6X1X20-MM)	
	15	1	**8T-4205**	8	WASHER-HARD (7.2X14.5X2-MM THK)	
M	16	1	**9X-2044**	8	SCREW-TRUSS HEAD (M6X1X16-MM)	
	17	1	**9X-8256**	6	WASHER (6.6X12X2-MM THK)	

M-METRIC PART
Y-SEPARATE ILLUSTRATION

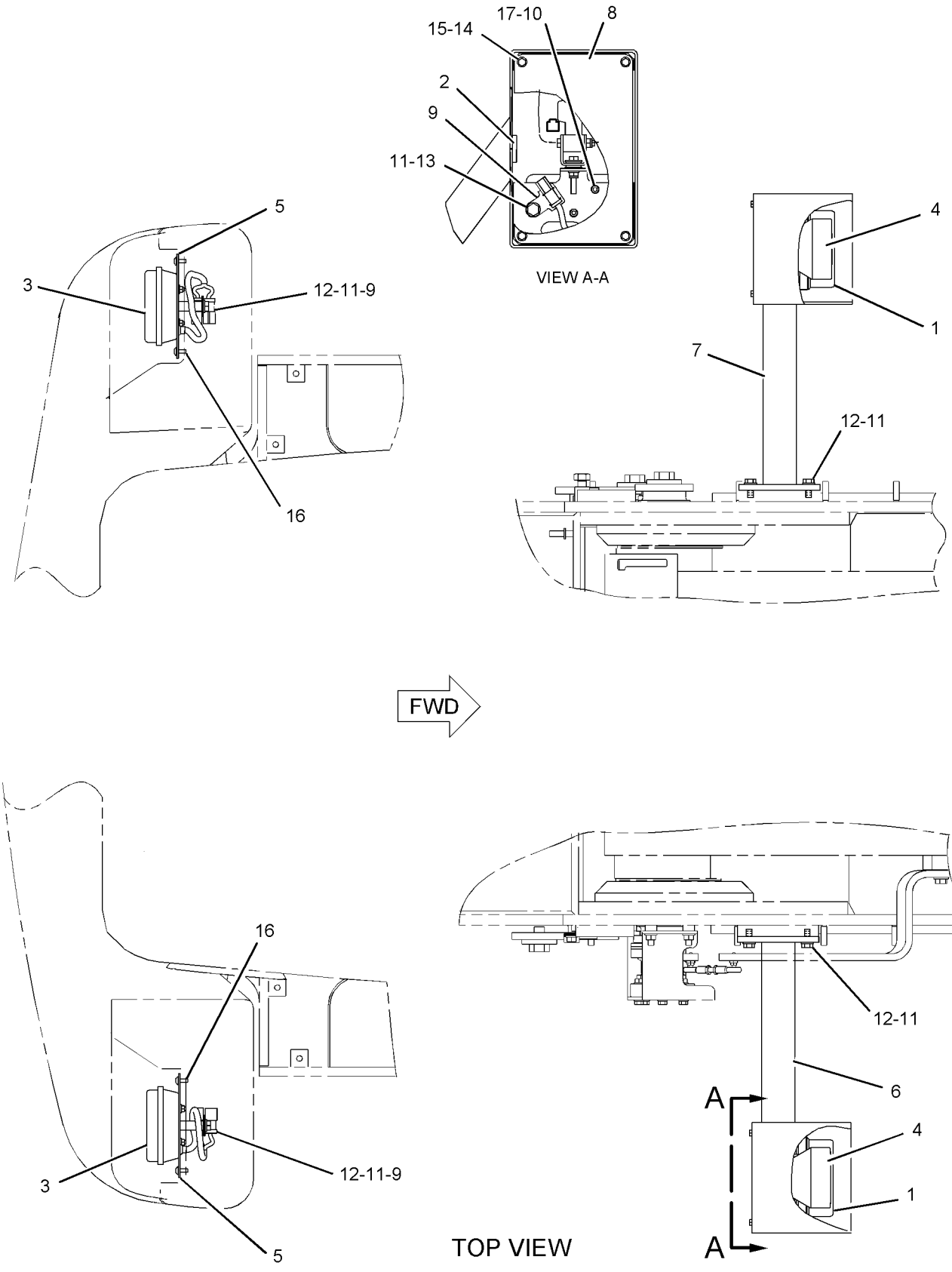

GRAPHIC #1 **<END>** g01122498

248-0422 LIGHTING GP-FLOOD & SIGNAL–

6-LAMP, FRONT, REAR

S/N: M3G1-UP

PART OF 275-5865 LIGHTING AR-SIGNAL

AN ATTACHMENT

SMCS-1430, 1434 **i02444769**

NOTE	REF NO	GRAPHIC REF	PART NUMBER	QTY	PART NAME 1 2 3 4 5 6 (PRODUCT LEVEL)	SEE PAGE
Y	1	1	**3E-6466**	2	LAMP GP-SIGNAL (24-VOLT)	149
	2	1	**111-4013**	2	GROMMET	
Y	3	1	**145-6929**	2	LAMP GP-STOP & TAIL (24-VOLT)	151
Y	4	1	**219-6485**	2	LAMP GP-FLOOD (24-VOLT, VERTICAL MOUNT)	143
	5	1	**248-0423**	1	BRACKET AS (RH)	
	6	1	**248-0424**	1	BRACKET AS (LH)	
	7	1	**248-0426**	2	COVER	
	8	1	**261-4405**	1	BRACKET AS (RH)	
	9	1	**261-4406**	1	BRACKET AS (LH)	
	10	1	**261-4884**	2	COVER	
	11	1	**130-5300**	6	CLIP	
M	12	1	**5C-2890**	6	NUT (M6X1-THD)	
M	13	1	**5C-9553**	4	BOLT (M6X1X16-MM)	
	14	1	**8T-4121**	16	WASHER-HARD (11X21X2.5-MM THK)	
M	15	1	**8T-4136**	14	BOLT (M10X1.5X25-MM)	
M	16	1	**8T-4137**	2	BOLT (M10X1.5X20-MM)	
M	17	1	**8T-4138**	8	BOLT (M6X1X20-MM)	
	18	1	**8T-4205**	8	WASHER-HARD (7.2X14.5X2-MM THK)	
	19	1	**9X-8256**	10	WASHER (6.6X12X2-MM THK)	

M-METRIC PART
Y-SEPARATE ILLUSTRATION

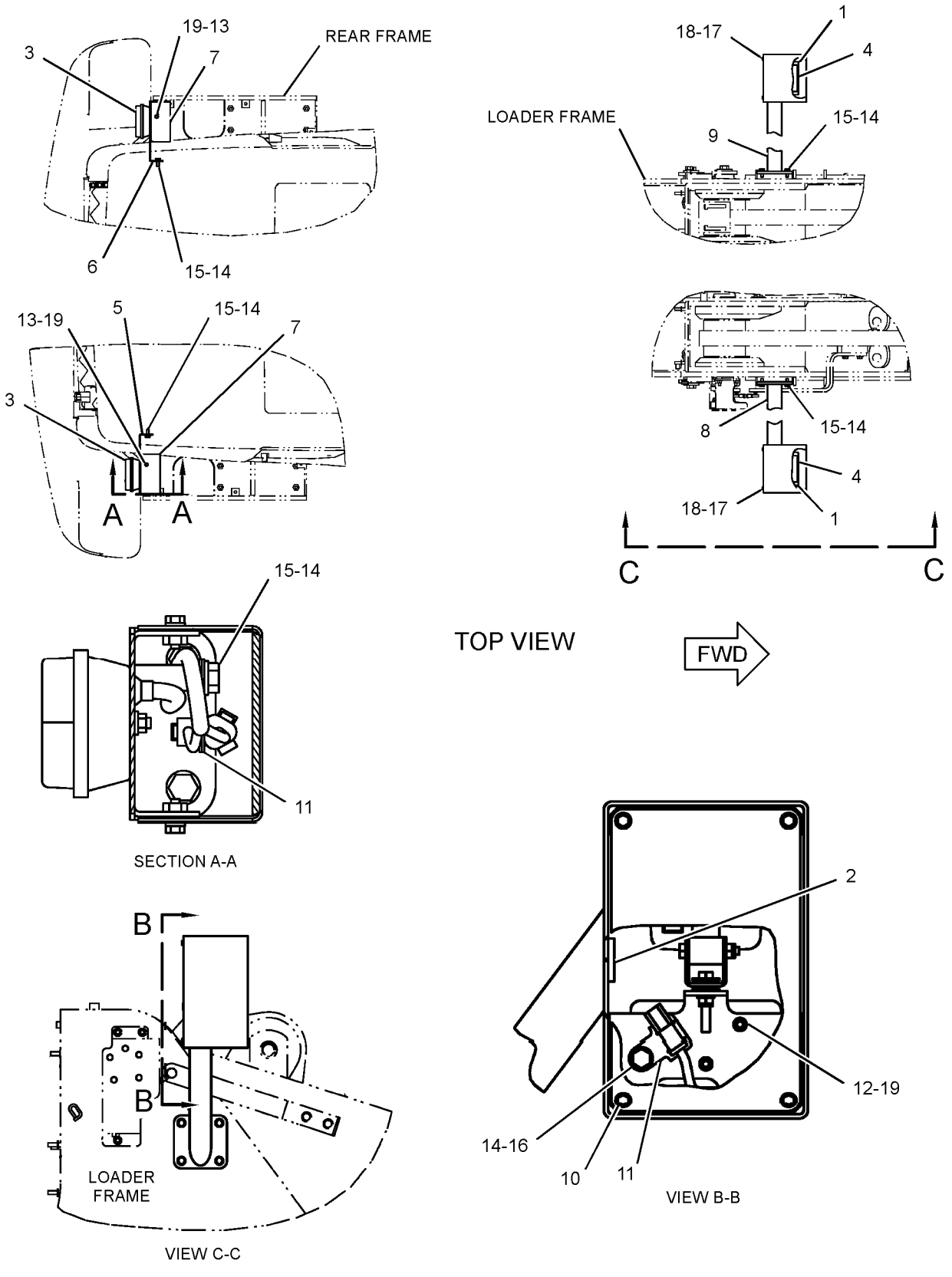

GRAPHIC #1 **<END>** g01202382

248-0414 LIGHTING GP-ROADING

S/N: M3G1-UP
PART OF 254-5525 LIGHTING AR-ROADING
AN ATTACHMENT

SMCS-1429 **i02225336**

NOTE	REF NO	GRAPHIC REF	PART NUMBER	QTY	PART NAME 1 2 3 4 5 6 (PRODUCT LEVEL)	SEE PAGE
Y	1	1	**105-4849**	1	LAMP GP-HEAD & SIGNAL (LH)	145
Y	2	1	**105-4850**	1	LAMP GP-HEAD & SIGNAL (RH)	147
	3	1	**111-4013**	2	GROMMET	
Y	4	1	**145-6929**	2	LAMP GP-STOP & TAIL (24-VOLT)	151
	5	1	**246-3295**	2	PLATE AS	
M		1	**8T-4935**	1	BOSS-WELD (M10X1.5X45-MM)	
	6	1	**260-9984**	1	BRACKET AS (RH)	
	7	1	**260-9985**	1	BRACKET AS (LH)	
	8	1	**130-5300**	4	CLIP	
	9	1	**8T-4121**	10	WASHER-HARD (11X21X2.5-MM THK)	
M	10	1	**8T-4136**	10	BOLT (M10X1.5X25-MM)	
M	11	1	**9X-2044**	8	SCREW-TRUSS HEAD (M6X1X16-MM)	

M-METRIC PART
Y-SEPARATE ILLUSTRATION

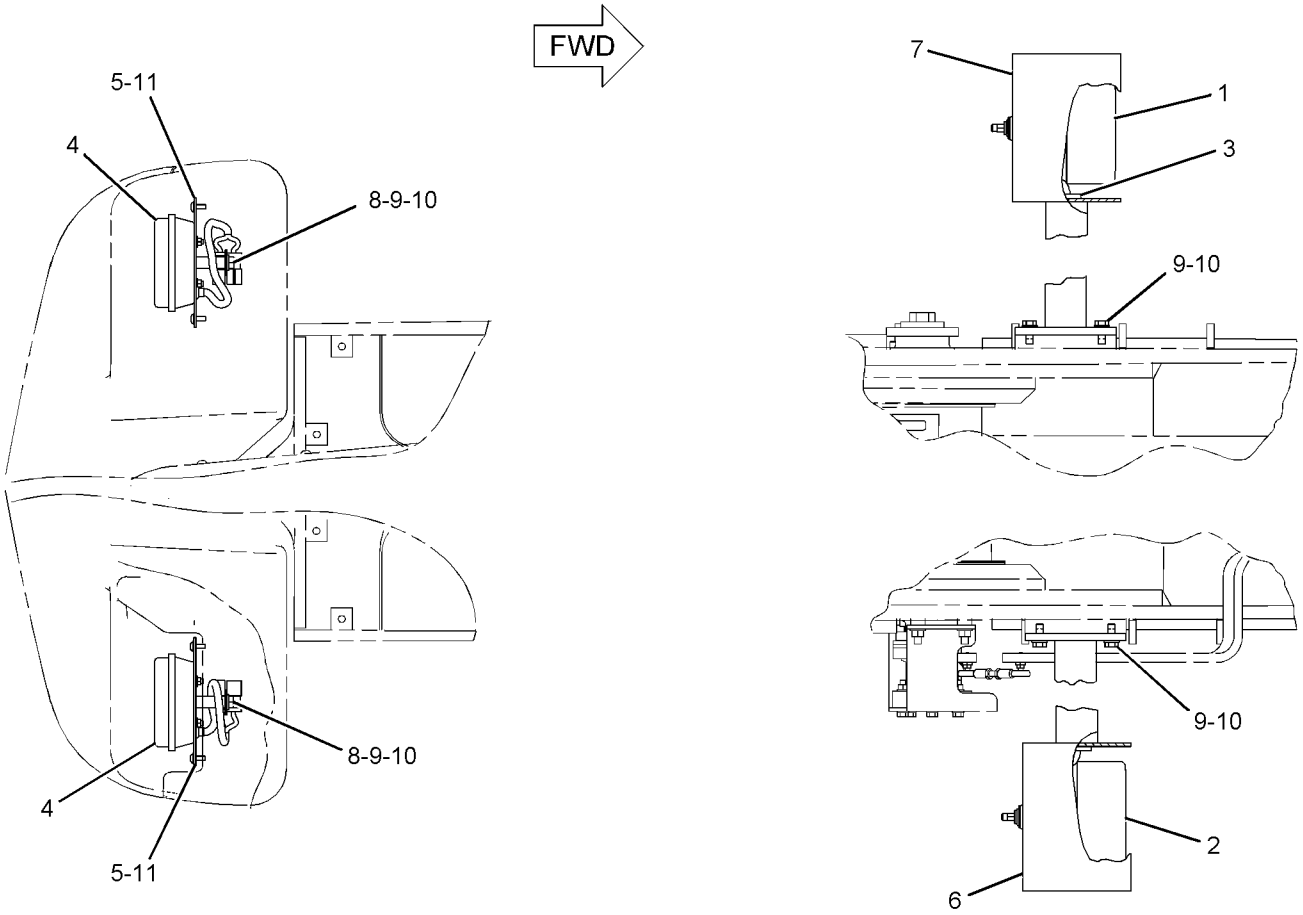

TOP VIEW

GRAPHIC #1 **<END>** g01116725

237-1012 LIGHTING GP-WARNING BEACON

S/N: M3G1-UP

AN ATTACHMENT

SMCS-1431 **i02305570**

NOTE	REF NO	GRAPHIC REF	PART NUMBER	QTY	PART NAME 1 2 3 4 5 6 (PRODUCT LEVEL)	SEE PAGE
	1	1	**3S-2093**	5	STRAP-CABLE	
	2	1	**9T-8556**	1	SPRING	
Y	3	1	**235-3937**	1	LAMP GP-WARNING BEACON (24-VOLT, AMBER)	152
	4	1	**236-7775**	1	HARNESS AS-LIGHTING (WARNING BEACON)	
		1	**155-2270**	1	KIT-CONNECTING PLUG (2-PIN)	
					(INCLUDES PLUG AS AND WEDGE)	
	5	1	**237-7262**	1	PLATE AS	
	6	1	**237-9736**	1	SWITCH AS-ROCKER (WARNING BEACON)	
	7	1	**255-4370**	1	BRACKET	
	8	1	**255-4371**	1	BRACKET	
	9	1	**122-8705**	2	U-BOLT	
M	10	1	**129-3180**	1	LOCKNUT (M12X1.75-THD)	
	11	1	**130-5300**	1	CLIP	
	12	1	**8T-0255**	1	PIN-SPRING	
	13	1	**8T-4121**	11	WASHER-HARD (11X21X2.5-MM THK)	
M	14	1	**8T-4122**	1	WASHER-HARD (17X32X3.5-MM THK)	
M	15	1	**8T-4133**	4	NUT (M10X1.5 THD)	
M	16	1	**8T-4137**	7	BOLT (M10X1.5X20-MM)	
	17	1	**8T-4223**	1	WASHER-HARD (13.5X25.5X3-MM THK)	

M-METRIC PART
Y-SEPARATE ILLUSTRATION

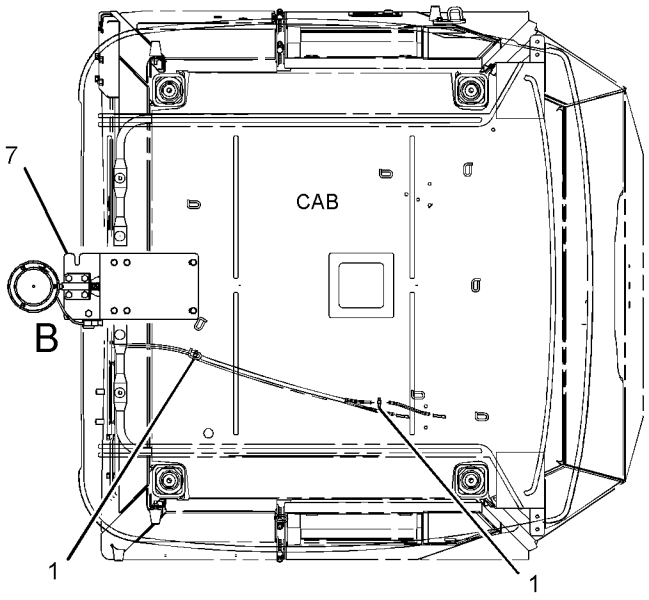

TOP VIEW

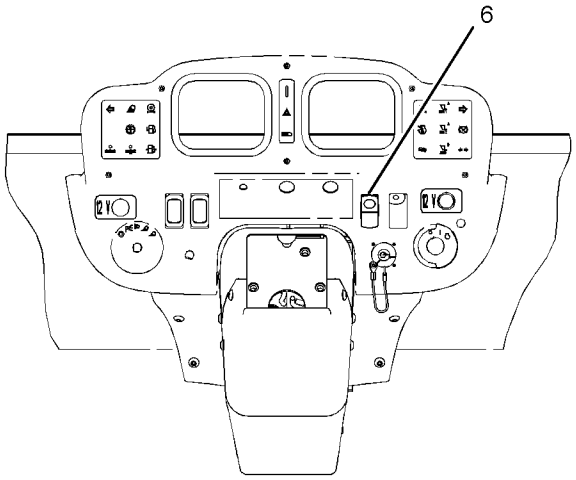

SECTION A-A

FWD

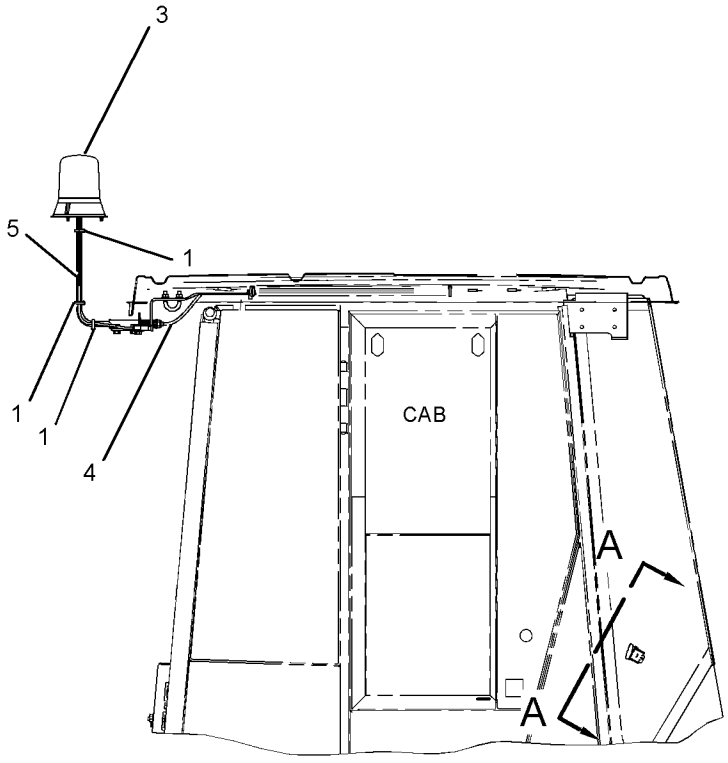

RIGHT SIDE VIEW

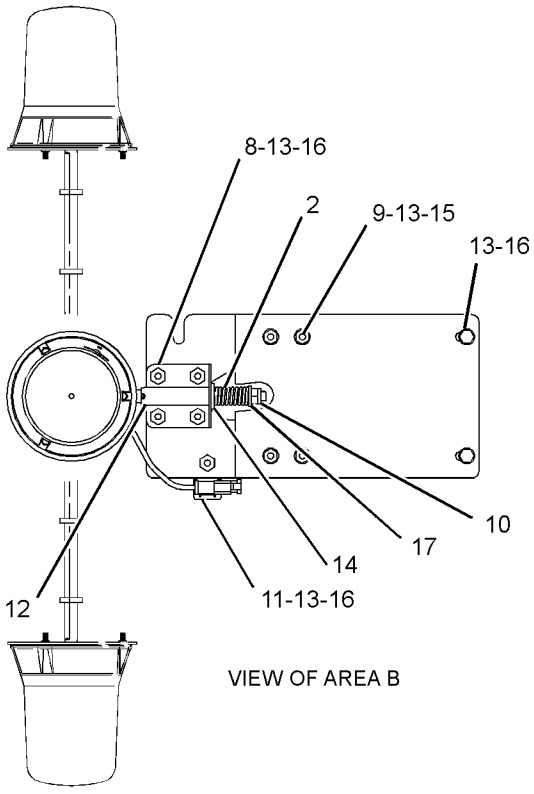

VIEW OF AREA B

GRAPHIC #1 **<END>** g01155151

235-8200 PLUG GP-CONNECTOR–
ENGINE HARNESS, PROTECTIVE COVER
S/N: KHX1-410
PART OF 235-1424 ENGINE AR-COMPLETE

SMCS-1403, 1408 **i02214655**

NOTE	REF NO	GRAPHIC REF	PART NUMBER	QTY	PART NAME 1 2 3 4 5 6 (PRODUCT LEVEL)	SEE PAGE
	1	1	**246-9353**	1	PLUG AS	
	1A	1	**8T-8737**	8	PLUG-SEAL	
	1B	1	**102-8806**	1	KIT-RECEPTACLE (8-PIN)	
					(INCLUDES RECEPTACLE AS AND WEDGE)	
	2	1	**3S-2093**	1	STRAP-CABLE	

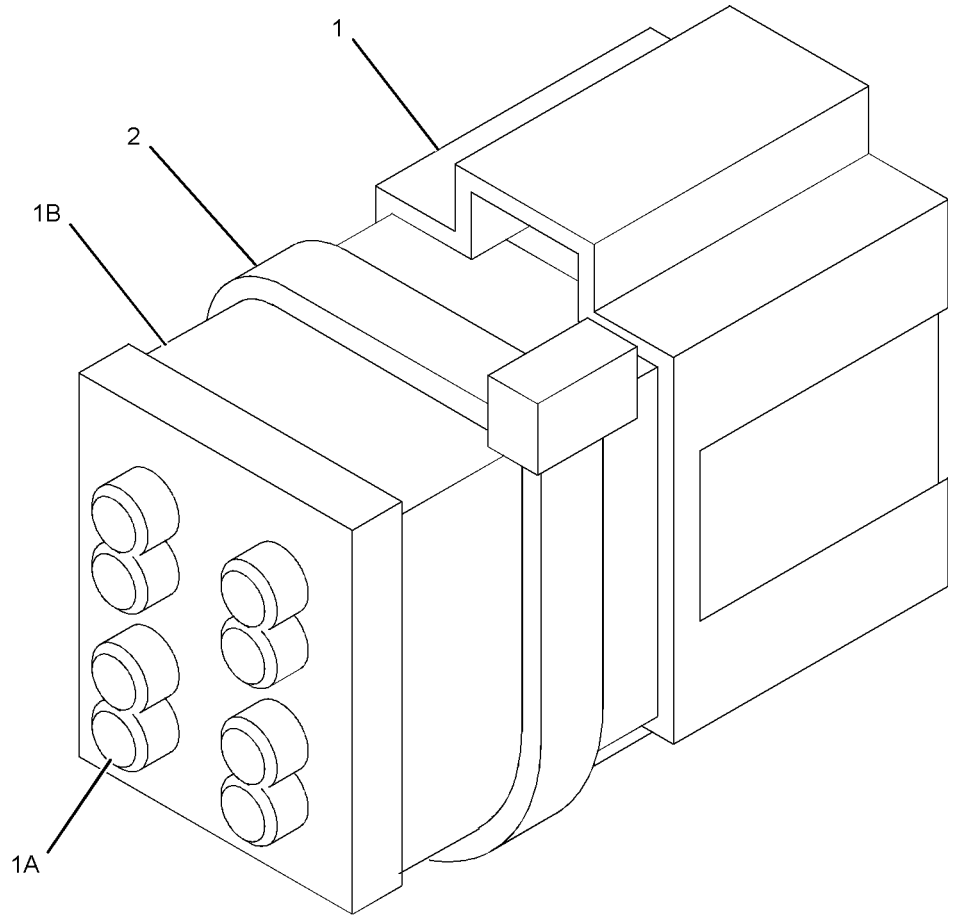

GRAPHIC #1 **<END>** g01105455

241-0645 RECEPTACLE GP-AUXILIARY START–JUMP START

S/N: M3G1-UP

AN ATTACHMENT

SMCS-1463 **i02226361**

NOTE	REF NO	GRAPHIC REF	PART NUMBER	QTY	PART NAME 1 2 3 4 5 6 (PRODUCT LEVEL)	SEE PAGE
	1	1	**246-6196**	1	RECEPTACLE AS	
		1	**1S-7251**	1	TERMINAL-RING (FOR 1/2-IN BOLT)	
E		1	**125-7876**		TUBE-HEAT SHRINK (10-CM)	
E		1	**159-8049**		CABLE (00-GA, RED) (53-CM)	
E		1	**159-8050**		CABLE (00-GA, BLACK) (26-CM)	
		1	**216-7790**	1	TERMINAL-RING	
	2	1	**205-7299**	1	CLIP	
M	3	1	**5C-7261**	4	NUT (M8X1.25-THD)	
	4	1	**8S-2634**	1	COVER AS	
		1	**2P-2975**	2	SEAL-O-RING	
	5	1	**8T-4121**	1	WASHER-HARD (11X21X2.5-MM THK)	
M	6	1	**8T-4137**	1	BOLT (M10X1.5X20-MM)	
	7	1	**8T-4224**	8	WASHER-HARD (8.8X16X2-MM THK)	
M	8	1	**8T-7547**	4	BOLT (M8X1.25X30-MM)	

E-ORDER BY THE CENTIMETER
M-METRIC PART

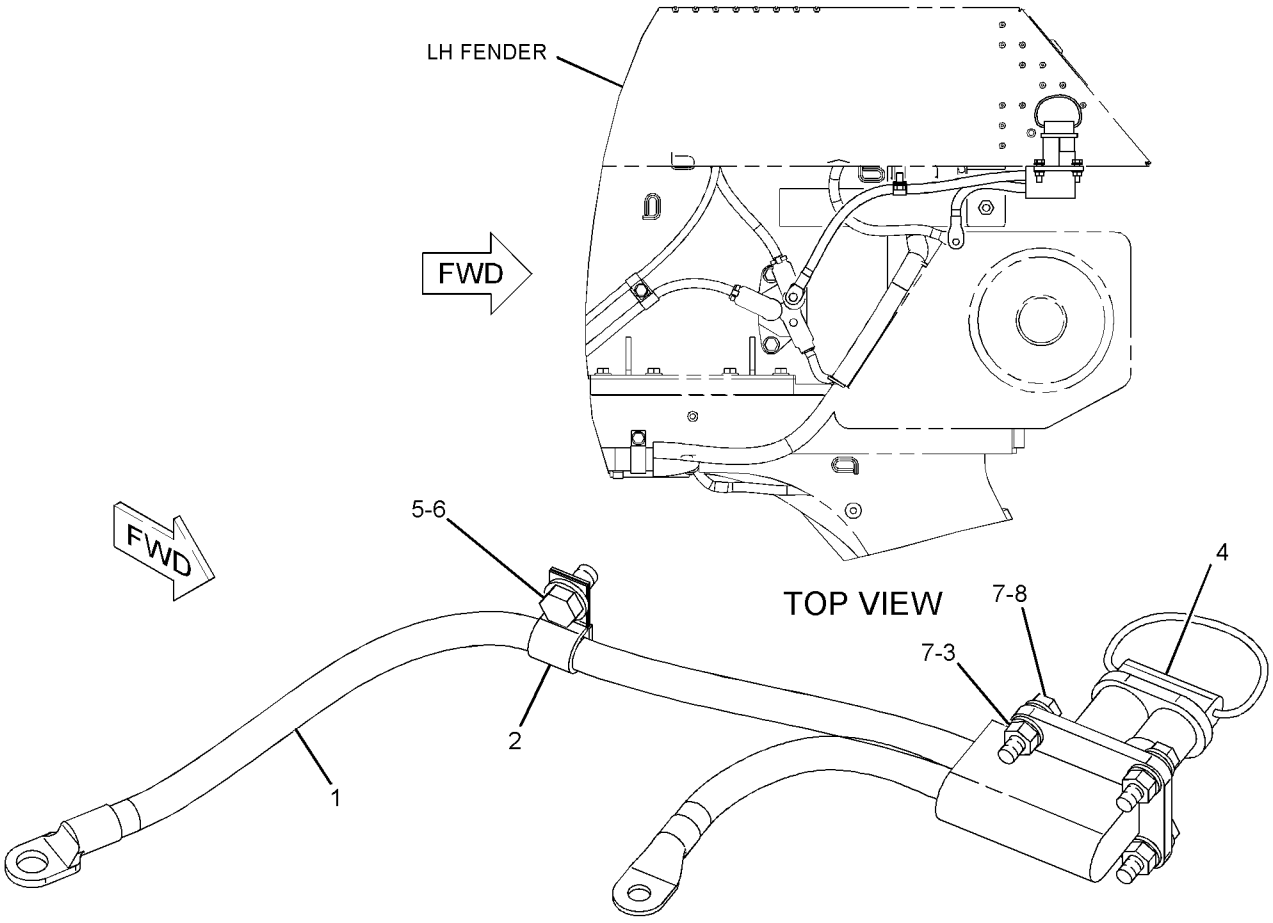

GRAPHIC #1 **<END>** g01123992

180-0156 SENSOR & MTG GP-LIFT POSITION

S/N: M3G1-UP

PART OF 237-4931 ELECTRICAL AR

SMCS-5736 **i01953130**

NOTE	REF NO	GRAPHIC REF	PART NUMBER	QTY	PART NAME 1 2 3 4 5 6 (PRODUCT LEVEL)	SEE PAGE
	1	1	**7X-7662**	2	ROD END	
	2	1	**126-2743**	3	SPACER (12X20X9-MM THK)	
	3	1	**130-5300**	1	CLIP	
	4	1	**166-0599**	1	ROD	
Y	5	1	**169-0417**	1	SENSOR GP-POSITION (LIFT)	174
	6	1	**179-7000**	1	ARM	
	7	1	**199-4064**	1	BRACKET AS	
M		1	**8T-3490**	1	NUT-WELD (M10X1.5-THD)	
	8	1	**214-3616**	1	PLATE	
	9	1	**214-3617**	1	PLATE	
M	10	1	**160-8500**	4	NUT (M8X1.25-THD)	
M	11	1	**5C-7261**	5	NUT (M8X1.25-THD)	
M	12	1	**7X-0818**	5	BOLT (M8X1.25X45-MM)	
	13	1	**8T-4121**	4	WASHER-HARD (11X21X2.5-MM THK)	
M	14	1	**8T-4133**	3	NUT (M10X1.5 THD)	
M	15	1	**8T-4137**	1	BOLT (M10X1.5X20-MM)	
	16	1	**8T-4223**	2	WASHER-HARD (13.5X25.5X3-MM THK)	
	17	1	**8T-4224**	10	WASHER-HARD (8.8X16X2-MM THK)	
M	18	1	**8T-4956**	2	BOLT (M12X1.75X35-MM)	
M	19	1	**8T-4971**	2	BOLT (M6X1X30-MM)	
	20	1	**9X-8256**	2	WASHER (6.6X12X2-MM THK)	

M-METRIC PART
Y-SEPARATE ILLUSTRATION

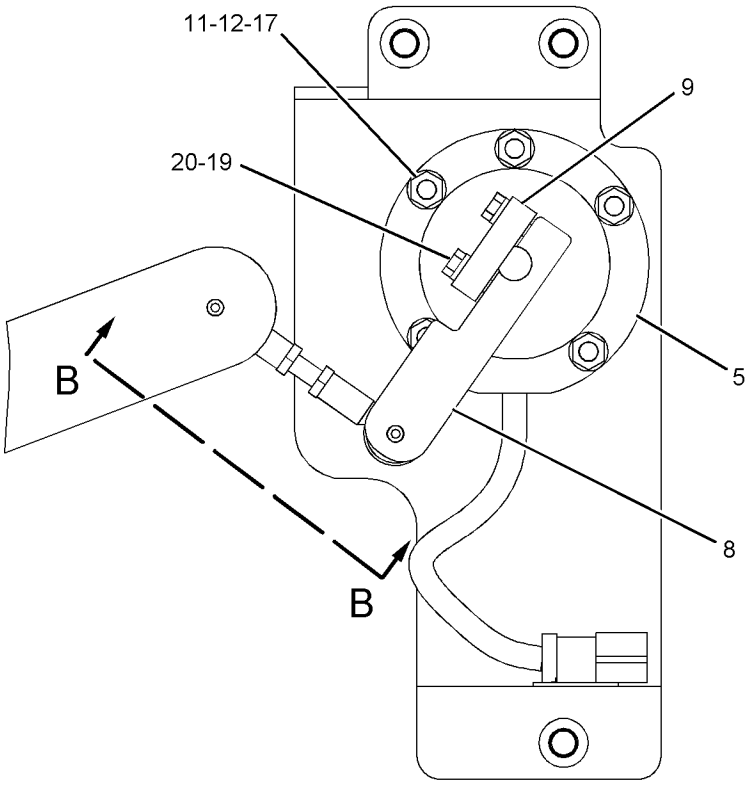

SECTION A-A

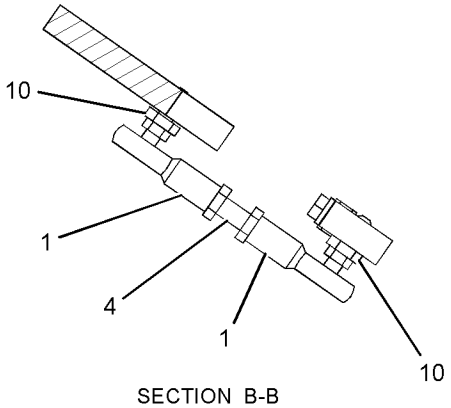

SECTION B-B

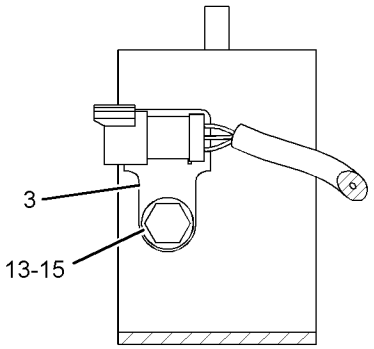

SECTION C-C

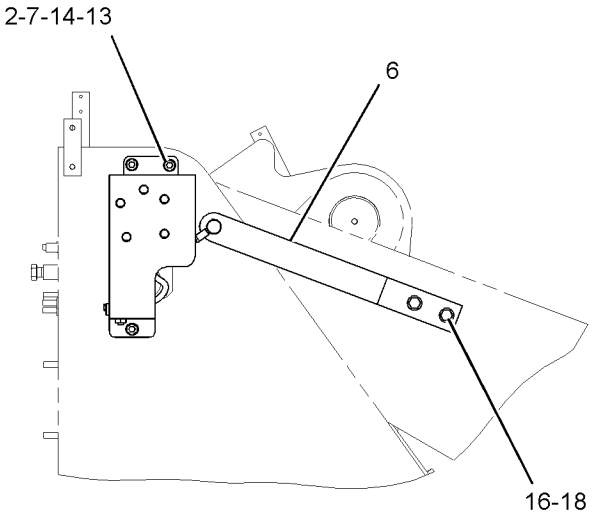

RIGHT SIDE VIEW

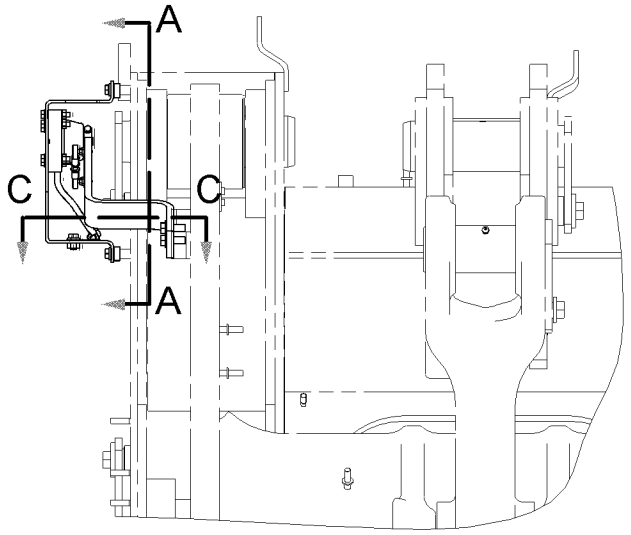

FRONT VIEW

GRAPHIC #1 **<END>** g01067473

239-4850 SENSOR & MTG GP-PRESSURE–LIFT CYLINDER OIL

S/N: M3G1-UP

PART OF 244-3253 CONTROL AR-AUTODIG, 244-4478 MONITOR AR-PAYLOAD AN ATTACHMENT

SMCS-1923 **i02449344**

NOTE	REF NO	GRAPHIC REF	PART NUMBER	QTY	PART NAME 1 2 3 4 5 6 (PRODUCT LEVEL)	SEE PAGE
	1	1	**5I-4376**	1	FITTING	
	2	1	**6V-0852**	1	CAP-DUST	
	3	1	**164-6871**	1	ADAPTER AS	
		1	**6V-8397**	1	SEAL-O-RING	
Y	4	1	**221-3416**	1	SENSOR GP-PRESSURE (LIFT CYLINDER OIL)	181
	5	1	*164-5567*	1	FITTING AS	
		1	**3J-1907**	1	SEAL-O-RING	
		1	**6V-3965**	1	FITTING AS (QUICK DISCONNECT)	
	6	1	**3J-1907**	1	SEAL-O-RING	

Y-SEPARATE ILLUSTRATION

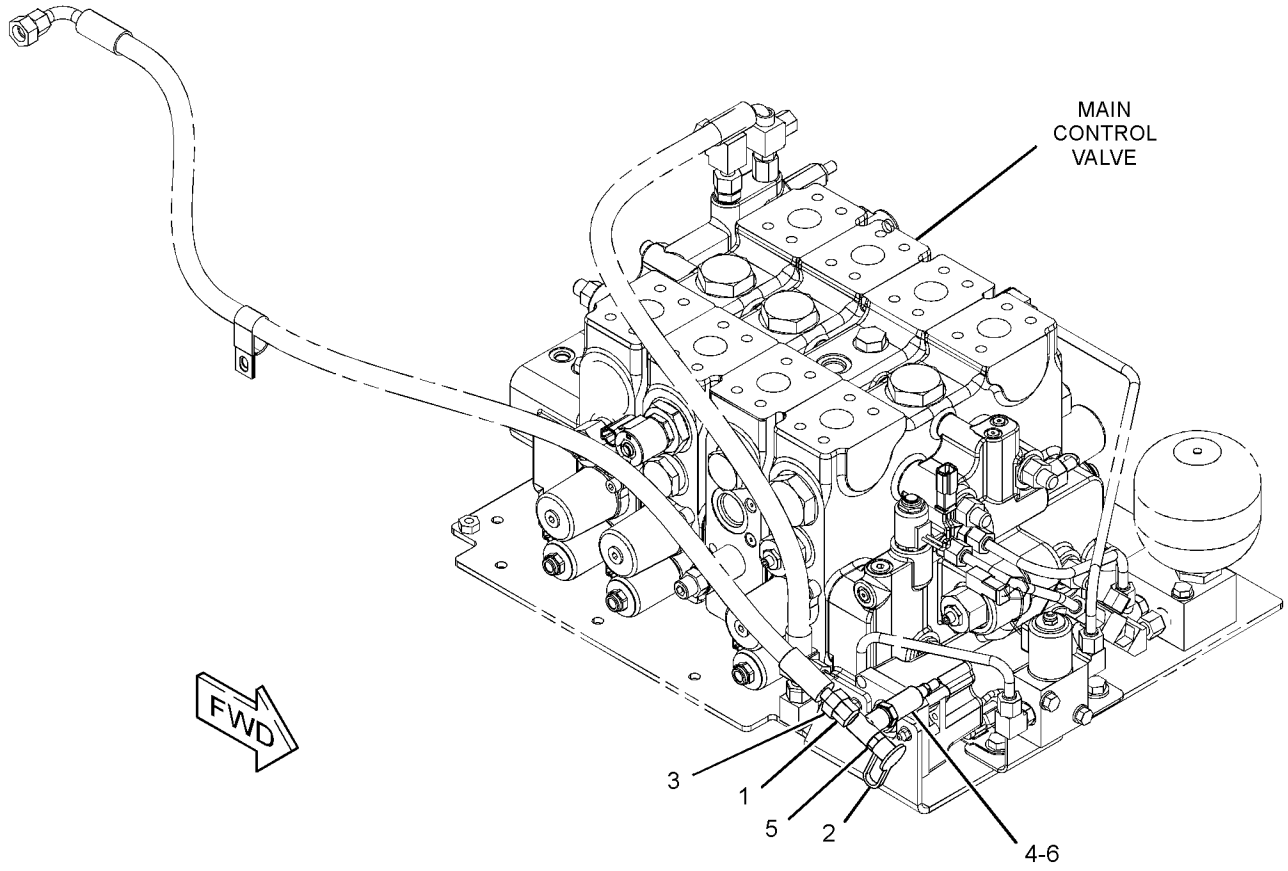

GRAPHIC #1 **<END>** g01198997

180-0157 SENSOR & MTG GP-TILT POSITION

S/N: M3G1-UP

PART OF 237-4931 ELECTRICAL AR

SMCS-5736 **i02304859**

NOTE	REF NO	GRAPHIC REF	PART NUMBER	QTY	PART NAME 1 2 3 4 5 6 (PRODUCT LEVEL)	SEE PAGE
	1	1	**7X-7662**	2	ROD END	
	2	1	**130-5300**	1	CLIP	
Y	3	1	**169-0417**	1	SENSOR GP-POSITION (TILT)	174
	4	1	**208-3908**	1	COVER	
	5	1	**210-5682**	1	ARM AS	
	6	1	**210-5683**	1	COVER AS	
	7	1	**213-0364**	1	BRACKET AS	
	8	1	**214-3616**	1	PLATE	
	9	1	**214-3617**	1	PLATE	
M	10	1	**160-8500**	2	NUT (M8X1.25-THD)	
	11	1	**4D-7794**	1	CLIP	
M	12	1	**5C-7261**	5	NUT (M8X1.25-THD)	
M	13	1	**7X-0818**	5	BOLT (M8X1.25X45-MM)	
	14	1	**7X-7729**	4	WASHER (11X25X3-MM THK)	
	15	1	**8T-4121**	6	WASHER-HARD (11X21X2.5-MM THK)	
M	16	1	**8T-4136**	4	BOLT (M10X1.5X25-MM)	
M	17	1	**8T-4137**	2	BOLT (M10X1.5X20-MM)	
M	18	1	**8T-4189**	1	BOLT (M8X1.25X20-MM)	
M	19	1	**8T-4195**	4	BOLT (M10X1.5X30-MM)	
	20	1	**8T-4224**	11	WASHER-HARD (8.8X16X2-MM THK)	
M	21	1	**8T-4971**	2	BOLT (M6X1X30-MM)	
	22	1	**9X-8256**	2	WASHER (6.6X12X2-MM THK)	

M-METRIC PART
Y-SEPARATE ILLUSTRATION

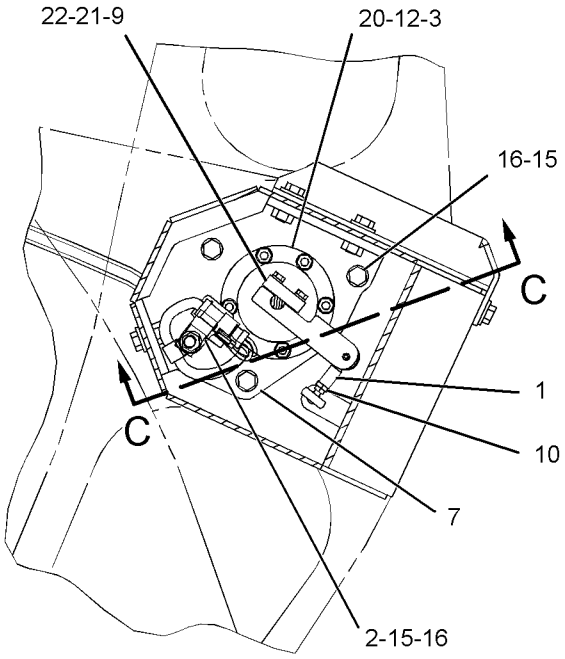

SECTION A-A

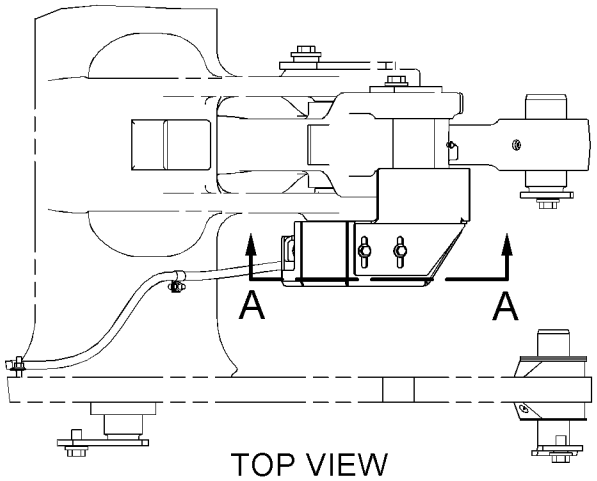

TOP VIEW

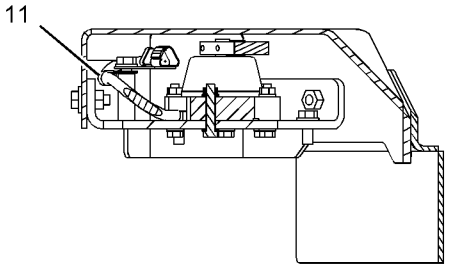

SECTION C-C

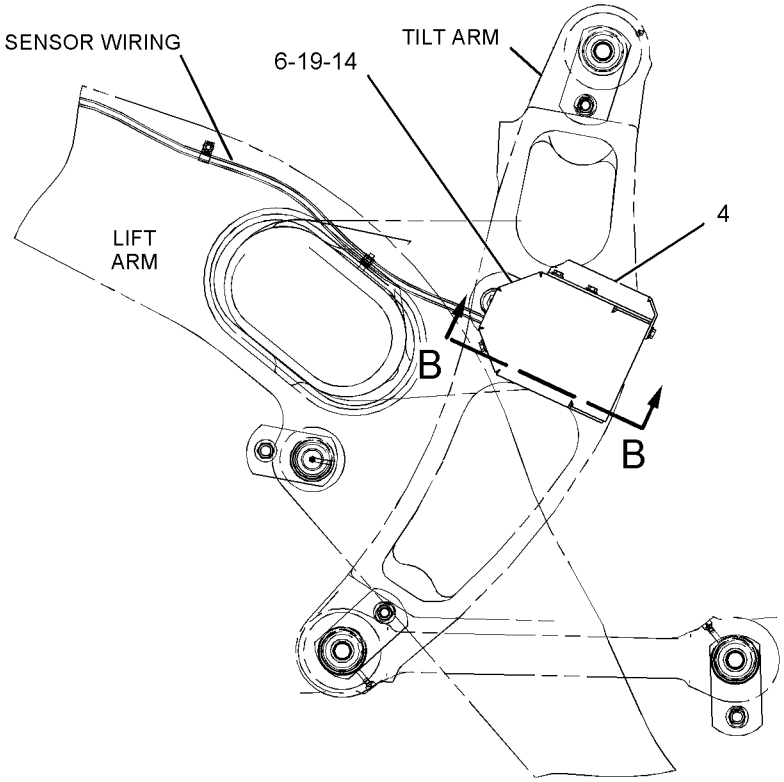

RIGHT SIDE VIEW

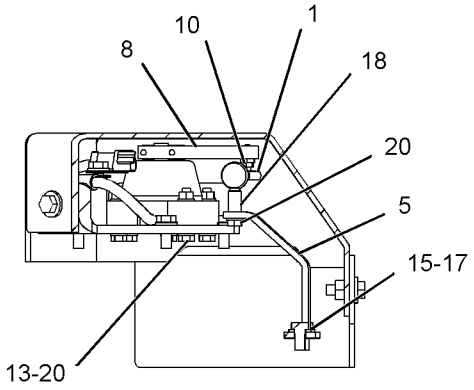

SECTION B-B

GRAPHIC #1 **<END>** g01137016

238-4808 SENSOR GP-ENGINE—TEMPERATURE, PRESSURE, SPEED

S/N: KHX1-UP

PART OF 235-1424 ENGINE AR-COMPLETE

SMCS-1718, 1906, 1907, 1912, 1917, 1923, 1924, 1928, 1929, 7400 **i02320628**

NOTE	REF NO	GRAPHIC REF	PART NUMBER	QTY	PART NAME 1 2 3 4 5 6 (PRODUCT LEVEL)	SEE PAGE
	1	1	**3E-2332**	1	ELBOW	
	2	1	**9X-0262**	1	ADAPTER	
	3	1	*171-6718*	1	TEE AS	
	3A	1	**3K-0360**	1	SEAL-O-RING	
		1	**105-7704**	1	TEE	
Y	4	1	*197-8391*	1	SENSOR GP-TEMPERATURE (AIR INLET MANIFOLD)	188
Y	5	1	*197-8392*	1	SENSOR GP-TEMPERATURE (WATER, COOLANT)	189
Y	6	1	*197-8393*	1	SENSOR GP-PRESSURE (ATMOSPHERIC)	178
Y	7	1	*197-8394*	1	SENSOR GP-PRESSURE (ENGINE OIL)	179
Y	8	1	*210-1747*	1	SENSOR GP-PRESSURE (BOOST)	180
Y	9	1	*236-6220*	1	SENSOR GP-PRESSURE (INJECTION ACTUATION)	183
Y	10	1	*236-6221*	1	SENSOR GP-SPEED (ENGINE)	185
	11	1	*244-3712*	1	PLUG AS	
	11A	1	**214-7568**	1	SEAL-O-RING	
		1	**9S-4191**	1	PLUG-O RING	
	12	1	*169-5861*	1	PLUG AS	
	12A	1	**5P-7814**	1	SEAL-O-RING	
		1	**3K-8460**	1	PLUG	
	13	1	*183-3406*	1	PLUG AS	
	13A	1	**6V-5049**	1	SEAL-O-RING	
		1	**9S-4191**	1	PLUG-O RING	
	14	1	*183-7263*	1	PLUG AS	
	14A	1	**3J-7354**	1	SEAL-O-RING	
		1	**9S-8002**	1	PLUG	
	15	1	**3E-4352**	1	WASHER-HARD (8.8X20.5X2.5-MM THK)	
M	16	1	**6V-3940**	1	BOLT (M8X1.25X25-MM)	
	17	1	**6V-5048**	1	SEAL-O-RING	
	18	1	**6V-5049**	1	SEAL-O-RING	

M-METRIC PART
Y-SEPARATE ILLUSTRATION

238-4808 **SENSOR GP-ENGINE** *(contd.)* **i02320628**

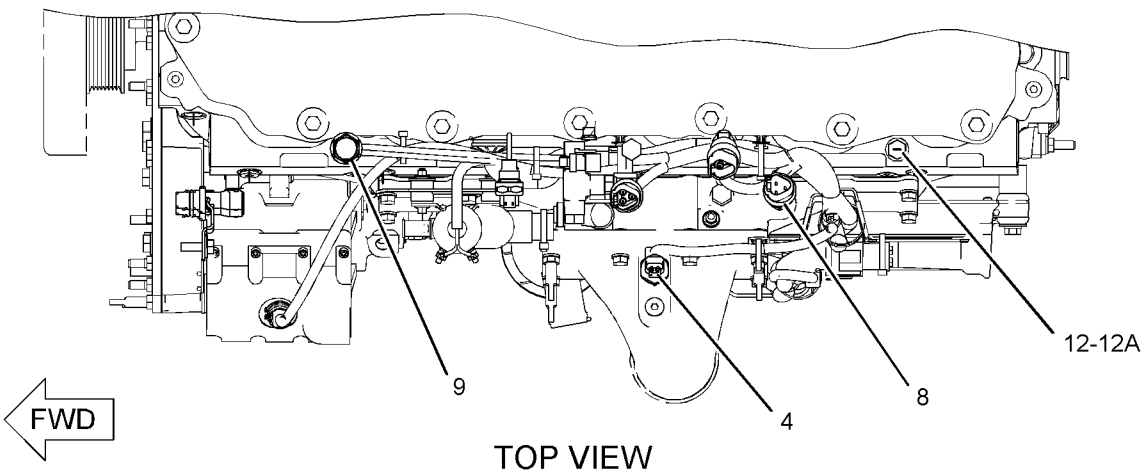

TOP VIEW

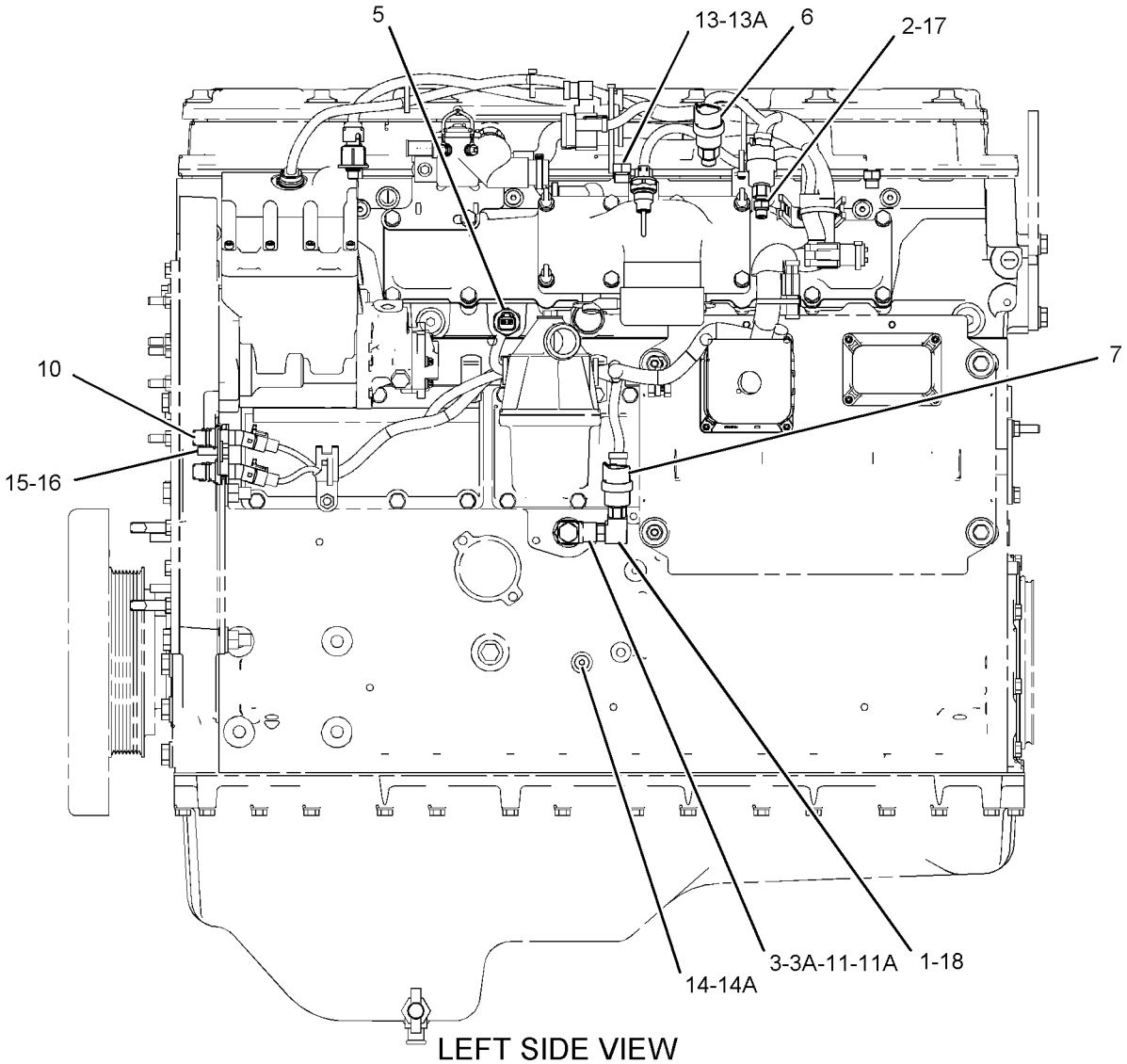

LEFT SIDE VIEW

GRAPHIC #1 **<END>** g01118746

169-0417 SENSOR GP-POSITION–LIFT, TILT

S/N: M3G1-UP

PART OF 180-0156 SENSOR & MTG GP-LIFT POSITION, 180-0157 SENSOR & MTG GP-TILT POSITION

SMCS-4269, 5702, 5736, 5737, 7494 **i02454090**

NOTE	REF NO	GRAPHIC REF	PART NUMBER	QTY	PART NAME 1 2 3 4 5 6 (PRODUCT LEVEL)	SEE PAGE
	1	1	*169-0418*	1	SENSOR AS-POSITION	
M		1	**6V-9671**	4	SCREW-MACHINE (M3X0.5X12-MM)	
	2	1	**102-8803**	1	KIT-RECEPTACLE (3-PIN)	
					(KIT INCLUDES RECEPTACLE AS AND WEDGE)	
	3	1	**9X-3401**	3	PIN-CONNECTOR (16-GA TO 18-GA)	
	4	1	**3E-3371**	1	WEDGE-RECEPTACLE LOCK (3-PIN)	
E	5	1	**119-3662**		TUBE-HEAT SHRINK (5CM)	
E	6	1	**9X-1813**		SLEEVE (17CM)	
	7	1	**172-1482**	1	CLAMP	
M	8	1	**3E-8048**	2	SCREW-MACHINE (M3X0.5X6-MM)	

E-ORDER BY THE CENTIMETER
M-METRIC PART

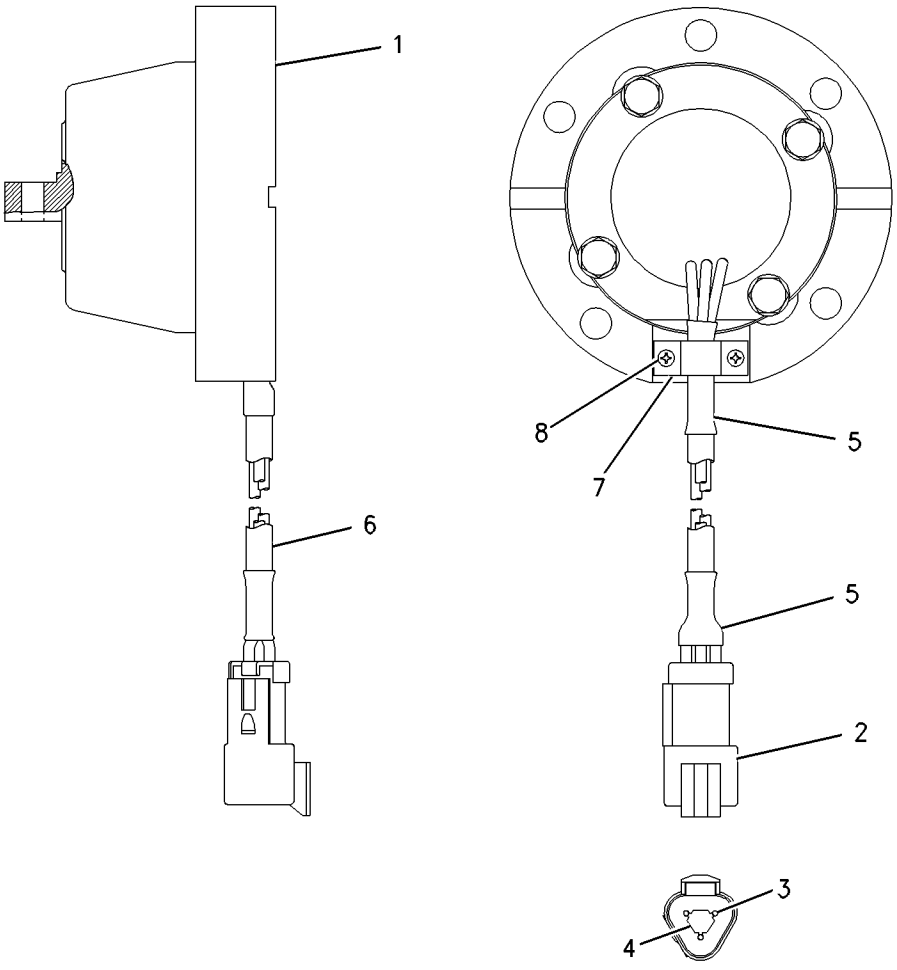

GRAPHIC #1 **<END>** g00887019

204-7949 SENSOR GP-POSITION–THROTTLE

S/N: M3G1-UP
ROTARY
PART OF 201-8616 PEDAL GP-GOVERNOR
ALSO AN ATTACHMENT

SMCS-4269, 5702, 5736, 5737, 7494 **i01806230**

NOTE	REF NO	GRAPHIC REF	PART NUMBER	QTY	PART NAME 1 2 3 4 5 6 (PRODUCT LEVEL)	SEE PAGE
	1	1	**102-8803**	1	KIT-RECEPTACLE (3-PIN)	
					(INCLUDES RECEPTACLE AS & WEDGE)	
	2	1	**3E-3371**	1	WEDGE-RECEPTACLE LOCK (3-PIN)	
	3	1	**186-3735**	3	PIN-CONNECTOR (16-GA TO 18-GA)	

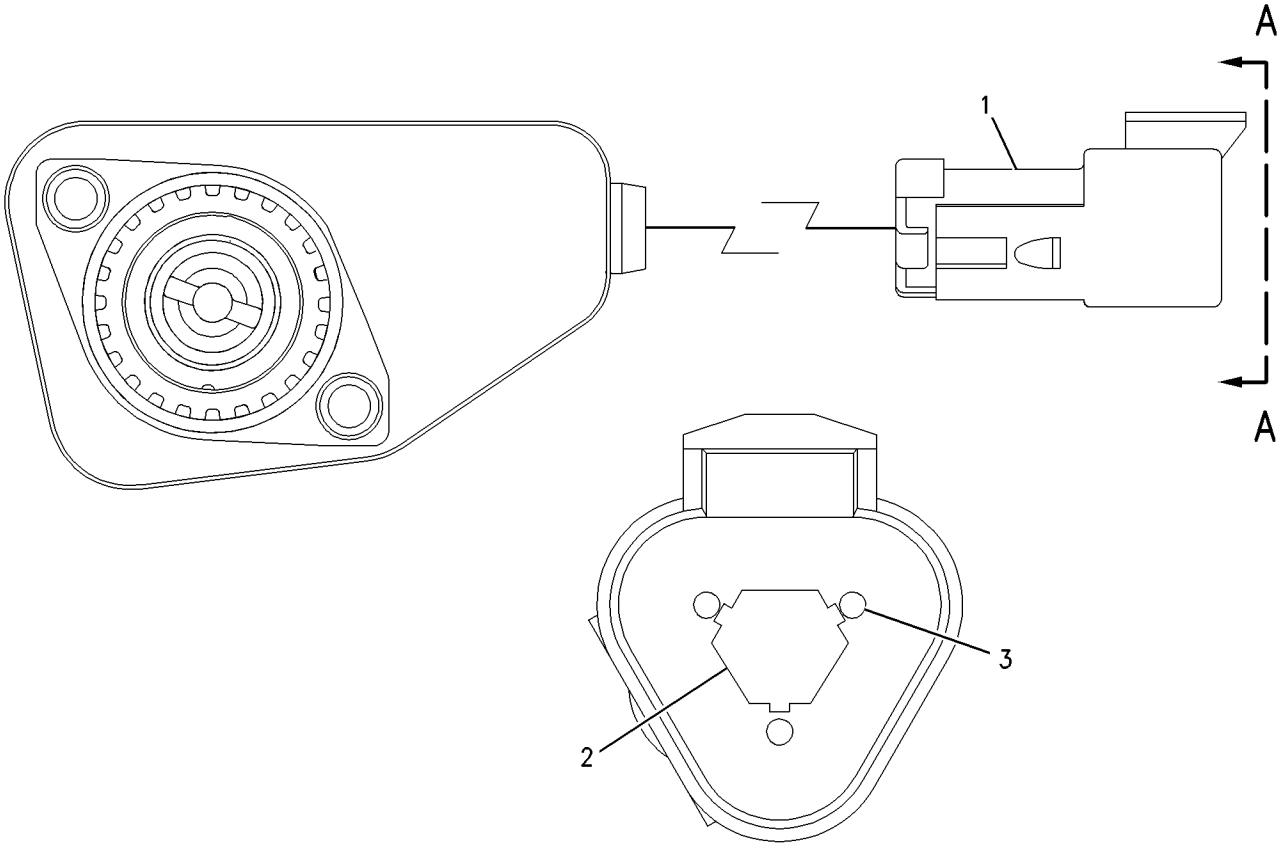

VIEW A–A

GRAPHIC #1 **<END>** g00923852

194-6722 SENSOR GP-PRESSURE–TURBOCHARGER INLET

S/N: M3G1-UP

PART OF 241-0640 WIRING GP-ENGINE

SMCS-1408, 1925, 7494 **i01821083**

NOTE	REF NO	GRAPHIC REF	PART NUMBER	QTY	PART NAME 1 2 3 4 5 6 (PRODUCT LEVEL)	SEE PAGE
E	1	1	**9X-1813**		SLEEVE (34CM)	
	2	1	**155-2260**	1	KIT-CONNECTING PLUG (3-PIN)	
					(INCLUDES PLUG AS AND WEDGE)	
	3	1	*180-9340*	3	SOCKET-CONNECTOR	
	4	1	**3E-3368**	1	WEDGE-PLUG LOCK (3-PIN)	

E-ORDER BY THE CENTIMETER

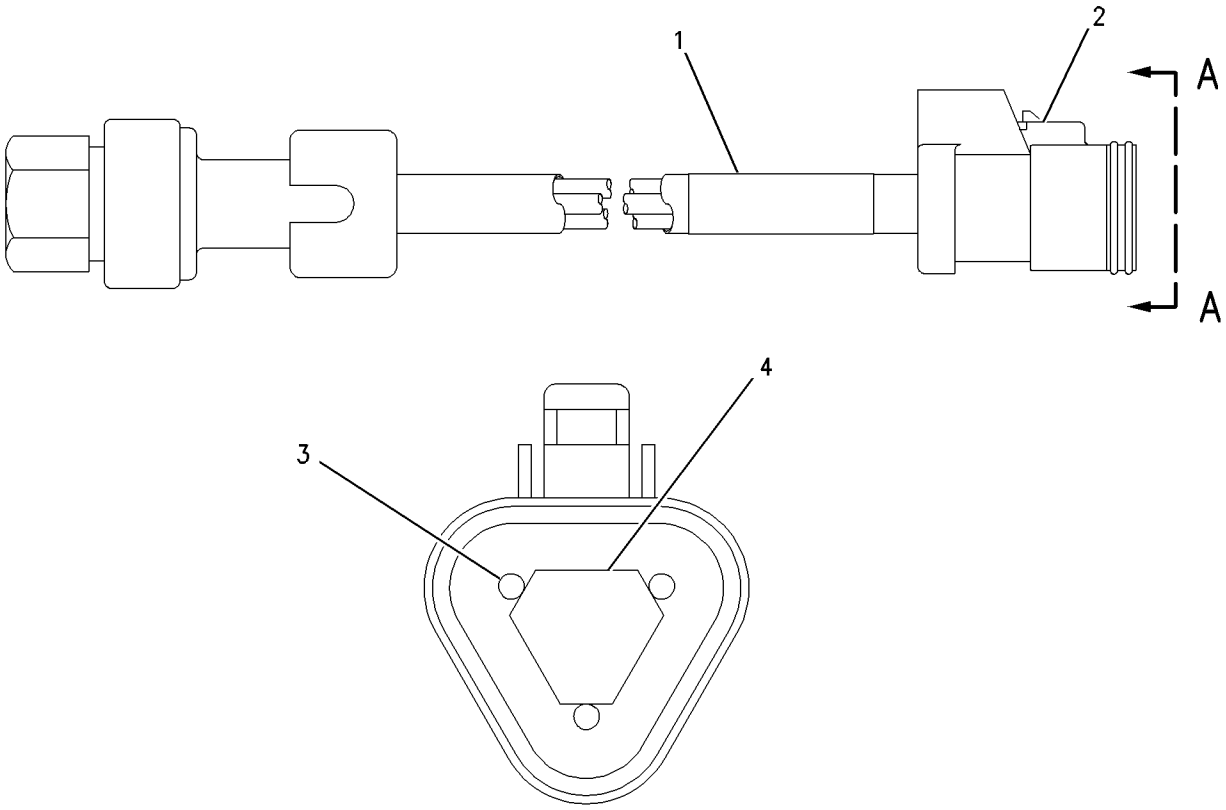

VIEW A-A

GRAPHIC #1 **<END>** g00851220

194-6725 SENSOR GP-PRESSURE–FUEL

S/N: KHX1-UP

PART OF 237-9823 FILTER & LINES GP-FUEL

SMCS-1408, 1925, 7494 **i01681907**

NOTE	REF NO	GRAPHIC REF	PART NUMBER	QTY	PART NAME 1 2 3 4 5 6 (PRODUCT LEVEL)	SEE PAGE
BE	1	1	**9X-1813**		SLEEVE (34 CM)	
	2	1	**155-2260**	1	KIT-CONNECTING PLUG (3-PIN)	
					(INCLUDES PLUG AS AND WEDGE)	
	3	1	**180-9340**	3	SOCKET-CONNECTOR	
	4	1	**3E-3368**	1	WEDGE-PLUG LOCK (3-PIN)	

B-USE AS REQUIRED
E-ORDER BY THE CENTIMETER

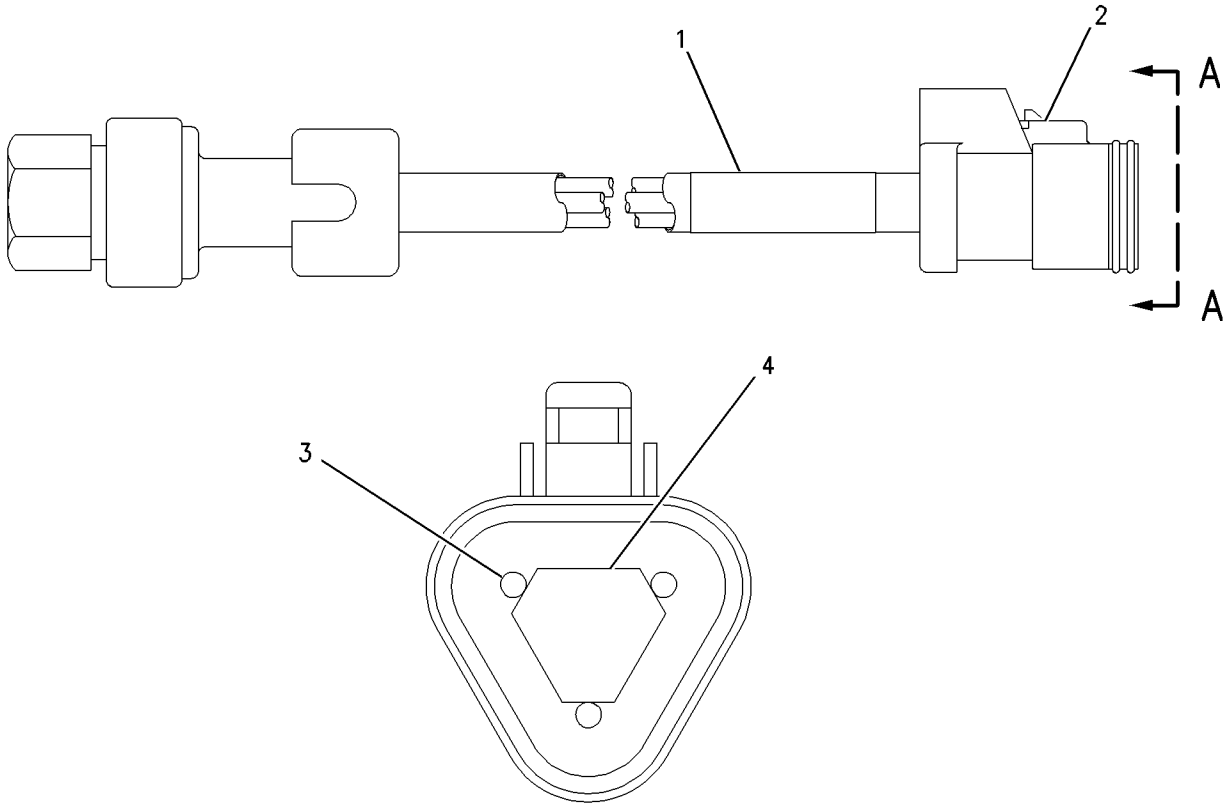

VIEW A-A

GRAPHIC #1 **<END>** g00851220

197-8393 SENSOR GP-PRESSURE–ATMOSPHERIC AIR

S/N: KHX1-UP

PART OF 238-4808 SENSOR GP-ENGINE

SMCS-1408, 1925, 7494 **i01855744**

NOTE	REF NO	GRAPHIC REF	PART NUMBER	QTY	PART NAME 1 2 3 4 5 6 (PRODUCT LEVEL)	SEE PAGE
	1	1	**161-1703**	1	SENSOR GP-PRESSURE	
	2	1	**6V-5049**	1	SEAL-O-RING	

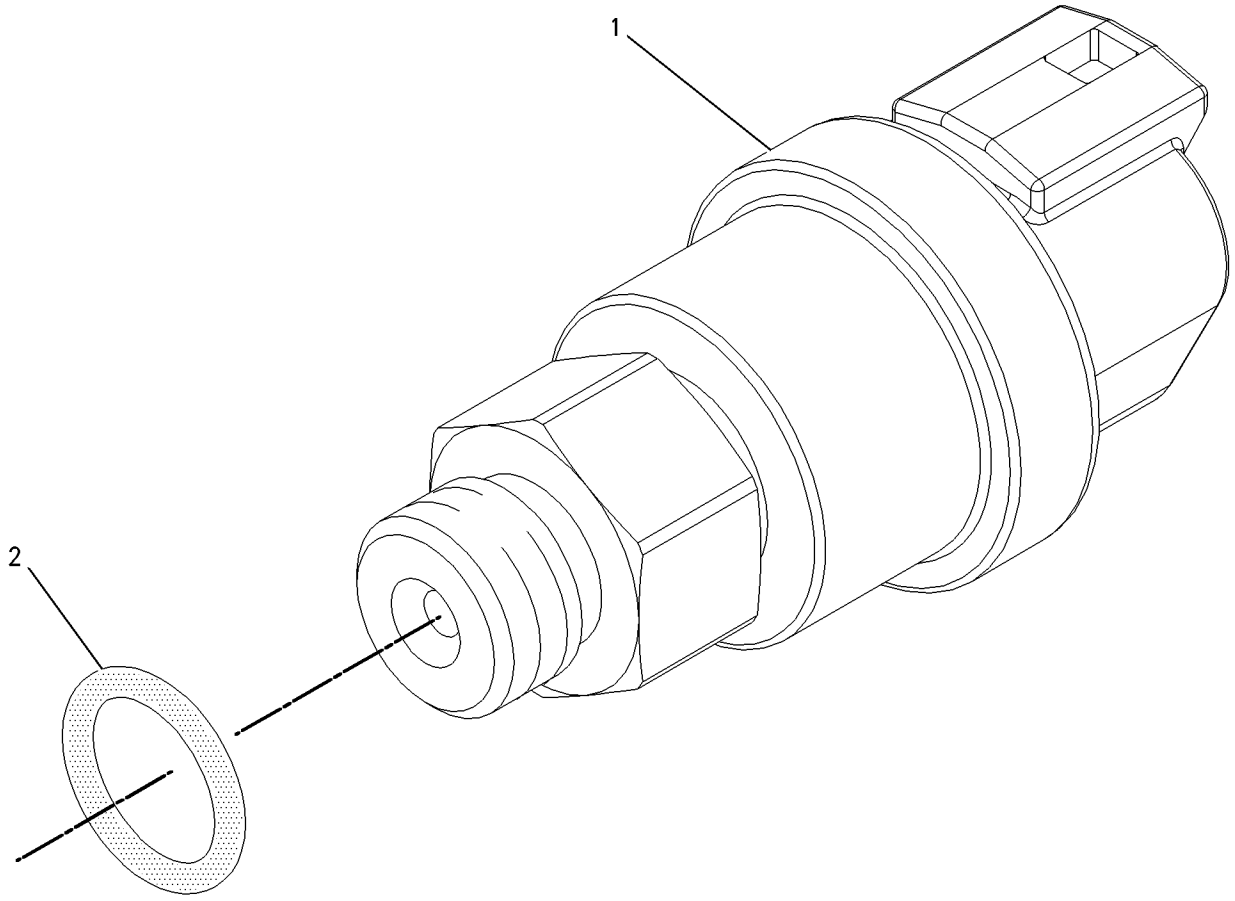

GRAPHIC #1 **<END>** g00855973

197-8394 SENSOR GP-PRESSURE–ENGINE OIL

S/N: KHX1-UP

PART OF 238-4808 SENSOR GP-ENGINE

SMCS-1408, 1925, 7494 **i01855745**

NOTE	REF NO	GRAPHIC REF	PART NUMBER	QTY	PART NAME 1 2 3 4 5 6 (PRODUCT LEVEL)	SEE PAGE
	1	1	**161-1705**	1	SENSOR GP-PRESSURE	
	2	1	**6V-5048**	1	SEAL-O-RING	

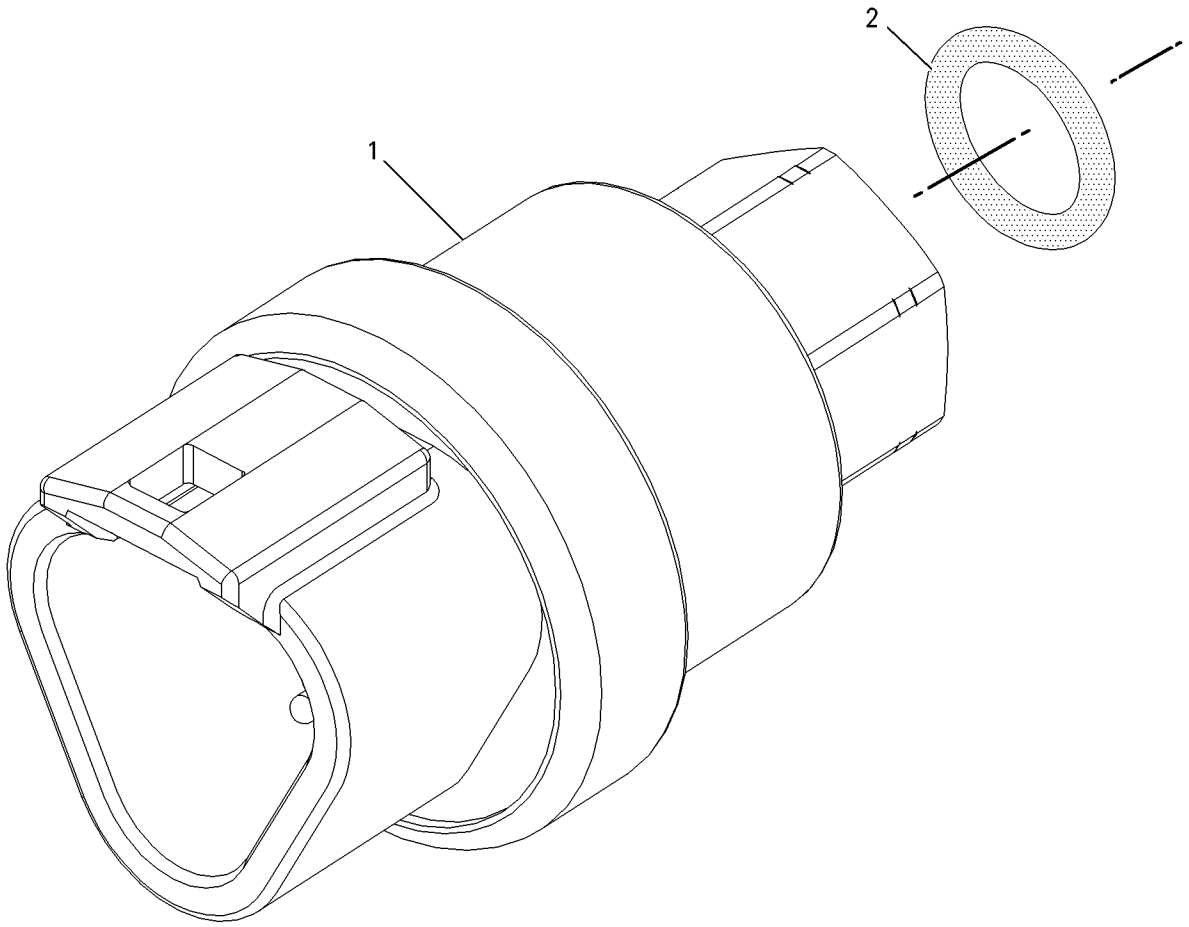

GRAPHIC #1 **<END>** g00856107

210-1747 SENSOR GP-PRESSURE–BOOST

S/N: KHX1-UP

PART OF 238-4808 SENSOR GP-ENGINE

SMCS-1408, 1925, 7494 **i02147083**

NOTE	REF NO	GRAPHIC REF	PART NUMBER	QTY	PART NAME 1 2 3 4 5 6 (PRODUCT LEVEL)	SEE PAGE
	1	1	**161-1704**	1	SENSOR GP-PRESSURE	
	2	1	**6V-5048**	1	SEAL-O-RING	

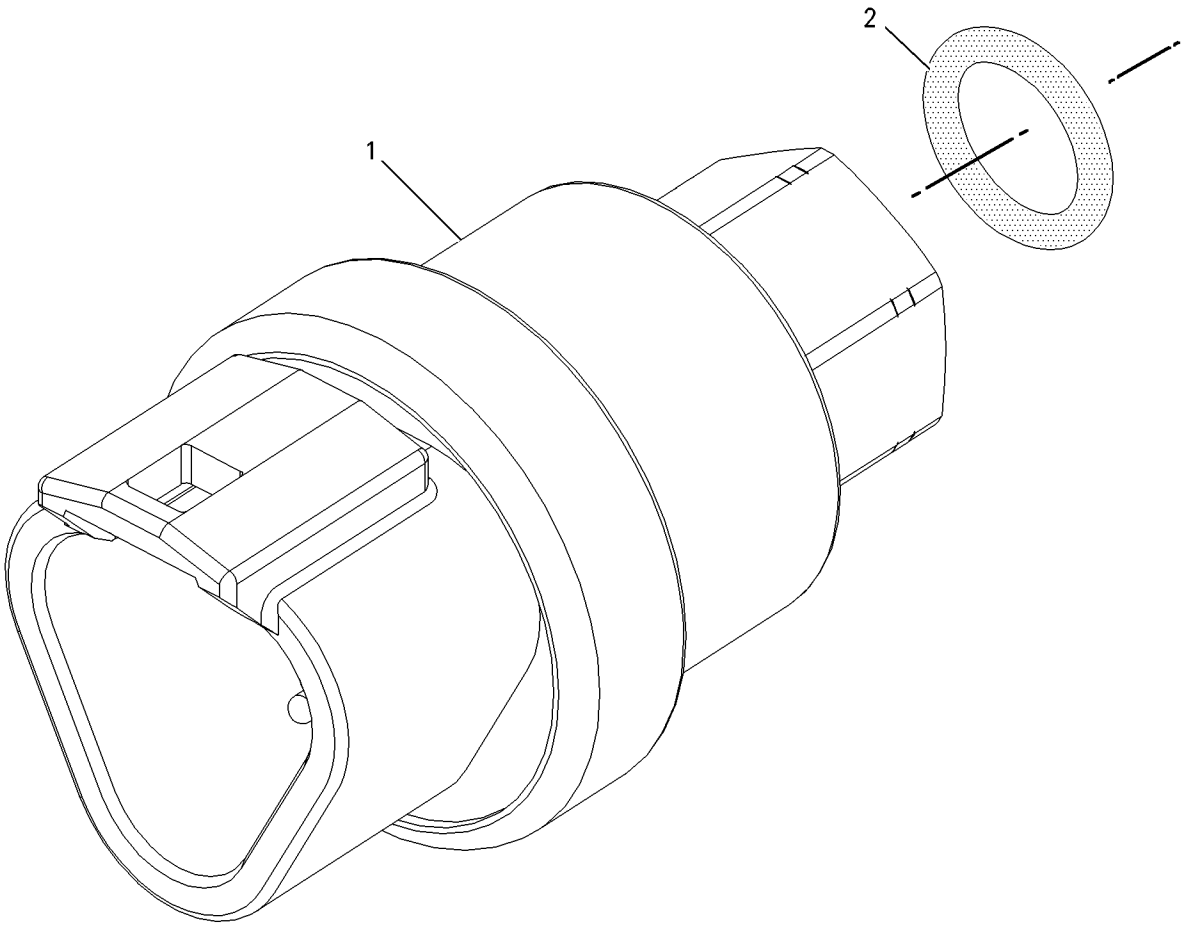

GRAPHIC #1 **<END>** g00856107

221-3416 SENSOR GP-PRESSURE–LIFT CYLINDER OIL

S/N: M3G1-UP

PART OF 239-4850 SENSOR & MTG GP-PRESSURE

AN ATTACHMENT

SMCS-1408, 1925, 7494 **i02449362**

NOTE	REF NO	GRAPHIC REF	PART NUMBER	QTY	PART NAME 1 2 3 4 5 6 (PRODUCT LEVEL)	SEE PAGE
	1	1	**155-2260**	1	KIT-CONNECTING PLUG (3-PIN)	
					(INCLUDES PLUG AS AND WEDGE)	
	2	1	**180-9340**	3	SOCKET-CONNECTOR	
	3	1	**155-2276**	1	WEDGE-PLUG LOCK (3-PIN)	

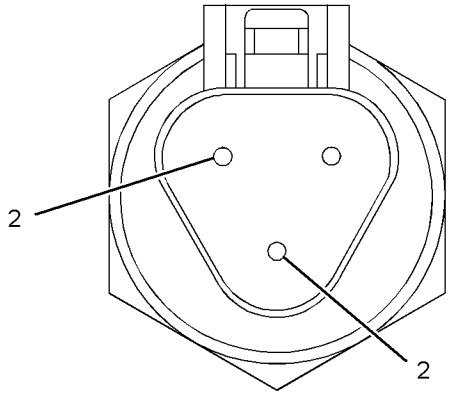

VIEW A-A

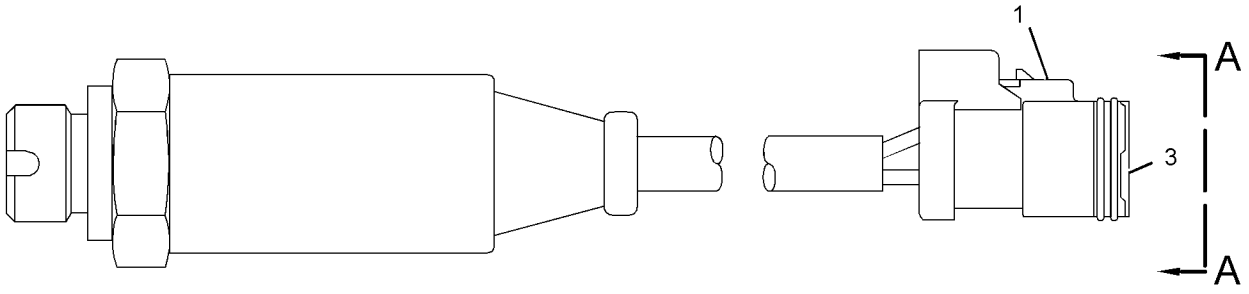

GRAPHIC #1 **<END>** g01175734

224-4536 SENSOR GP-PRESSURE–INJECTION ACTUATION

S/N: KHX1-UP

PART OF 236-6220 SENSOR GP-PRESSURE

SMCS-1408, 1925, 7494 **i02154692**

NOTE	REF NO	GRAPHIC REF	PART NUMBER	QTY	PART NAME 1 2 3 4 5 6 (PRODUCT LEVEL)	SEE PAGE
E	1	1	**9X-1813**		SLEEVE (35-CM)	
	2	1	**155-2260**	1	KIT-CONNECTING PLUG (3-PIN)	
					(INCLUDES PLUG AS AND WEDGE)	
	3	1	**194-5226**	1	WIRE AS-HARNESS (16-GA TO 18-GA) (INJECTION ACTUATION)	
					–OR–	
		1	**194-5227**	1	WIRE AS-HARNESS (14-GA WIRE) (INJECTION ACTUATION)	
	4	1	**155-2276**	1	WEDGE-PLUG LOCK (3-PIN)	

E-ORDER BY THE CENTIMETER

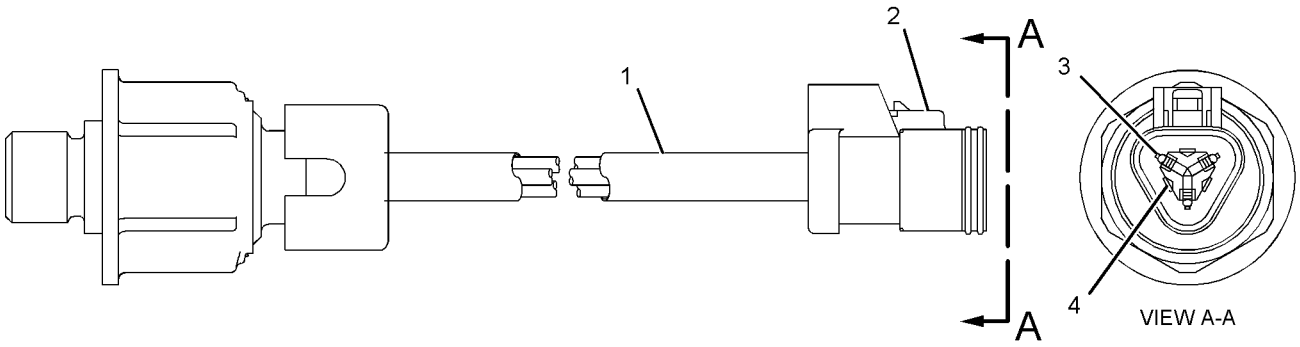

GRAPHIC #1 **<END>** g01040301

236-6220 SENSOR GP-PRESSURE–INJECTION ACTUATION

S/N: KHX1-UP

PART OF 238-4808 SENSOR GP-ENGINE

SMCS-1408, 1925, 7494 **i02421735**

NOTE	REF NO	GRAPHIC REF	PART NUMBER	QTY	PART NAME 1 2 3 4 5 6 (PRODUCT LEVEL)	SEE PAGE
	1	1	**214-7567**	1	SEAL-O-RING	
Y	2	1	**224-4536**	1	SENSOR GP-PRESSURE	182

Y-SEPARATE ILLUSTRATION

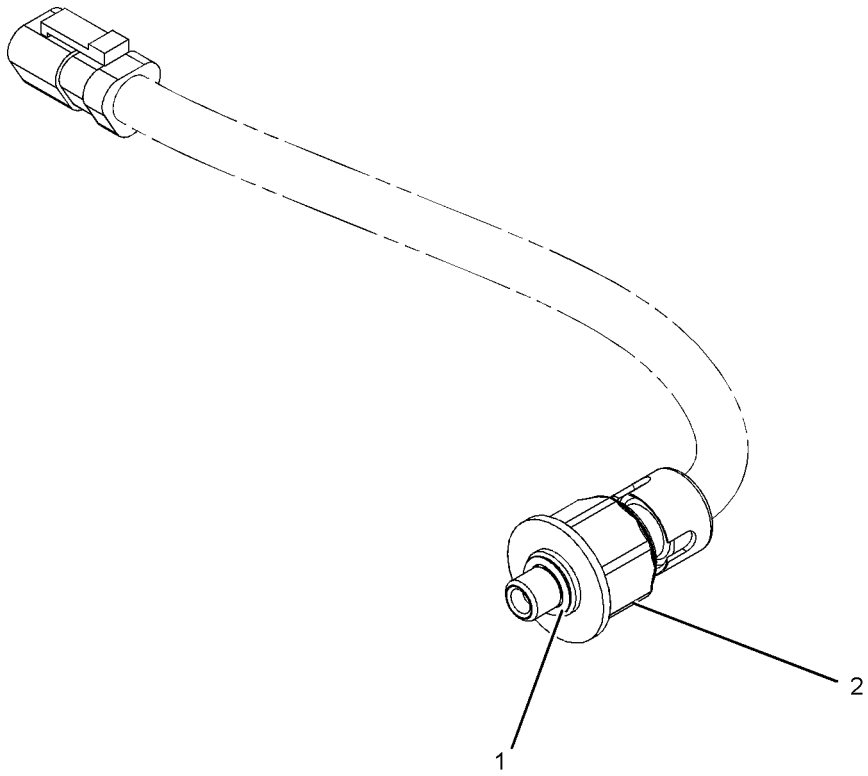

GRAPHIC #1 **<END>** g01054528

193-2550 SENSOR GP-SPEED—TMSN, TORQUE CONVERTER OUTPUT

S/N: FAK1-UP

PART OF 249-8175 GEAR GP-OUTPUT TRANSFER, 241-9022 TORQUE CONVERTER & HOUSING GP

SMCS-1907, 1912, 3175, 4803, 7493 **i01479454**

NOTE	REF NO	GRAPHIC REF	PART NUMBER	QTY	PART NAME 1 2 3 4 5 6 (PRODUCT LEVEL)	SEE PAGE
	1	1	**171-5349**	1	MARKER	
	2	1	**102-8802**	1	KIT-RECEPTACLE (2-PIN)	
					(INCLUDES RECEPTACLE AS & WEDGE)	
	3	1	**8T-8729**	2	PIN-CONNECTOR	
	4	1	**3E-3365**	1	WEDGE-RECEPTACLE LOCK (2-PIN)	
E	5	1	**9X-1813**		SLEEVE (14CM)	

E-ORDER BY THE CENTIMETER

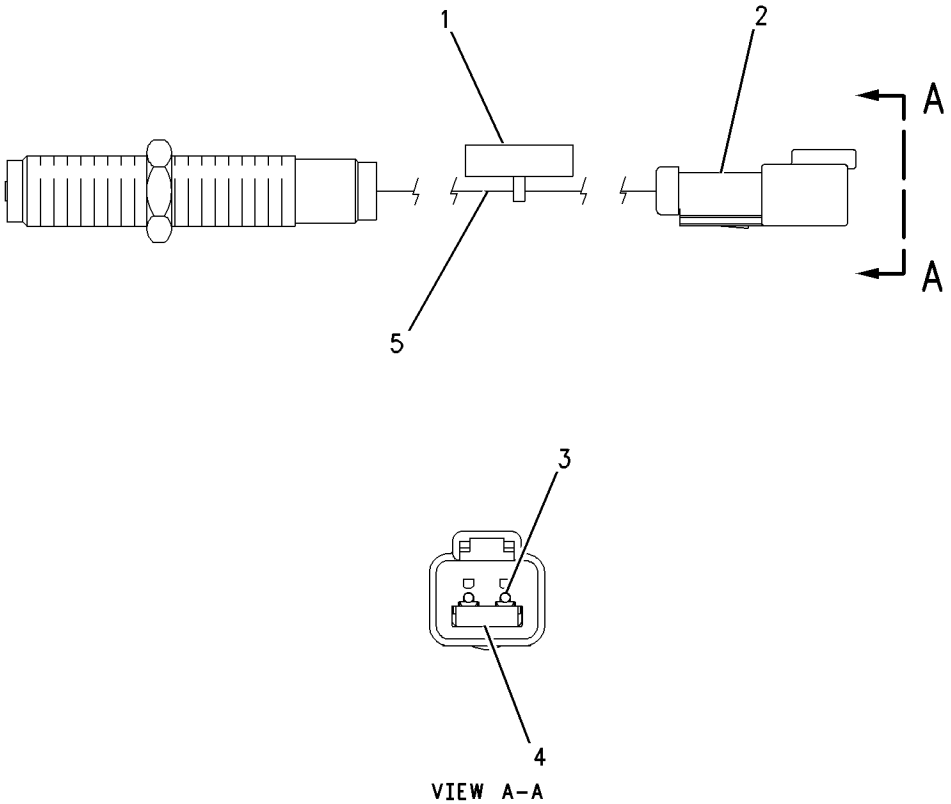

GRAPHIC #1 **<END>** g00690327

236-6221 SENSOR GP-SPEED—ENGINE TIMING

S/N: KHX1-UP

PART OF 238-4808 SENSOR GP-ENGINE

SMCS-1907, 1912, 3175, 4803, 7493 **i02421726**

NOTE	REF NO	GRAPHIC REF	PART NUMBER	QTY	PART NAME 1 2 3 4 5 6 (PRODUCT LEVEL)	SEE PAGE
	1	1	**203-3940**	2	SEAL-O-RING	
	2	1	**245-4630**	1	SENSOR GP-SPEED	

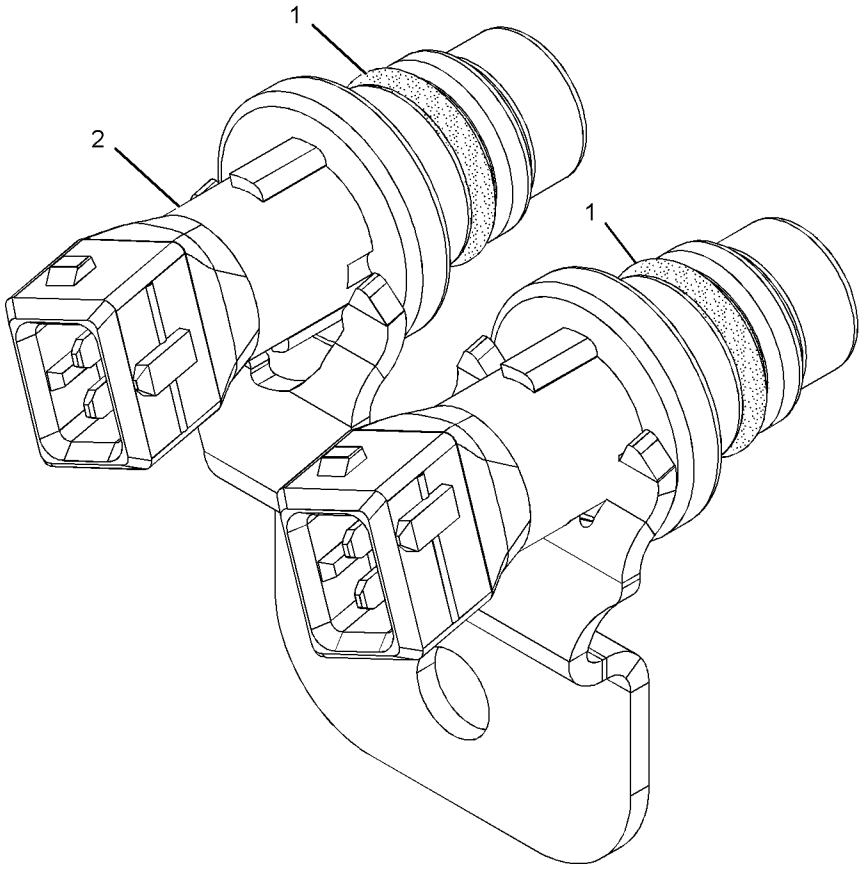

GRAPHIC #1 **<END>** g01013894

ELECTRICAL AND STARTING SYSTEM

130-9811 SENSOR GP-TEMPERATURE

S/N: M3G1-UP

PART OF 241-0642 WIRING GP-CHASSIS

SMCS-1408, 1906, 1921, 1922, 301T, 429T, 509T **i01872480**

NOTE	REF NO	GRAPHIC REF	PART NUMBER	QTY	PART NAME 1 2 3 4 5 6 (PRODUCT LEVEL)	SEE PAGE
					(NO SERVICED PARTS)	

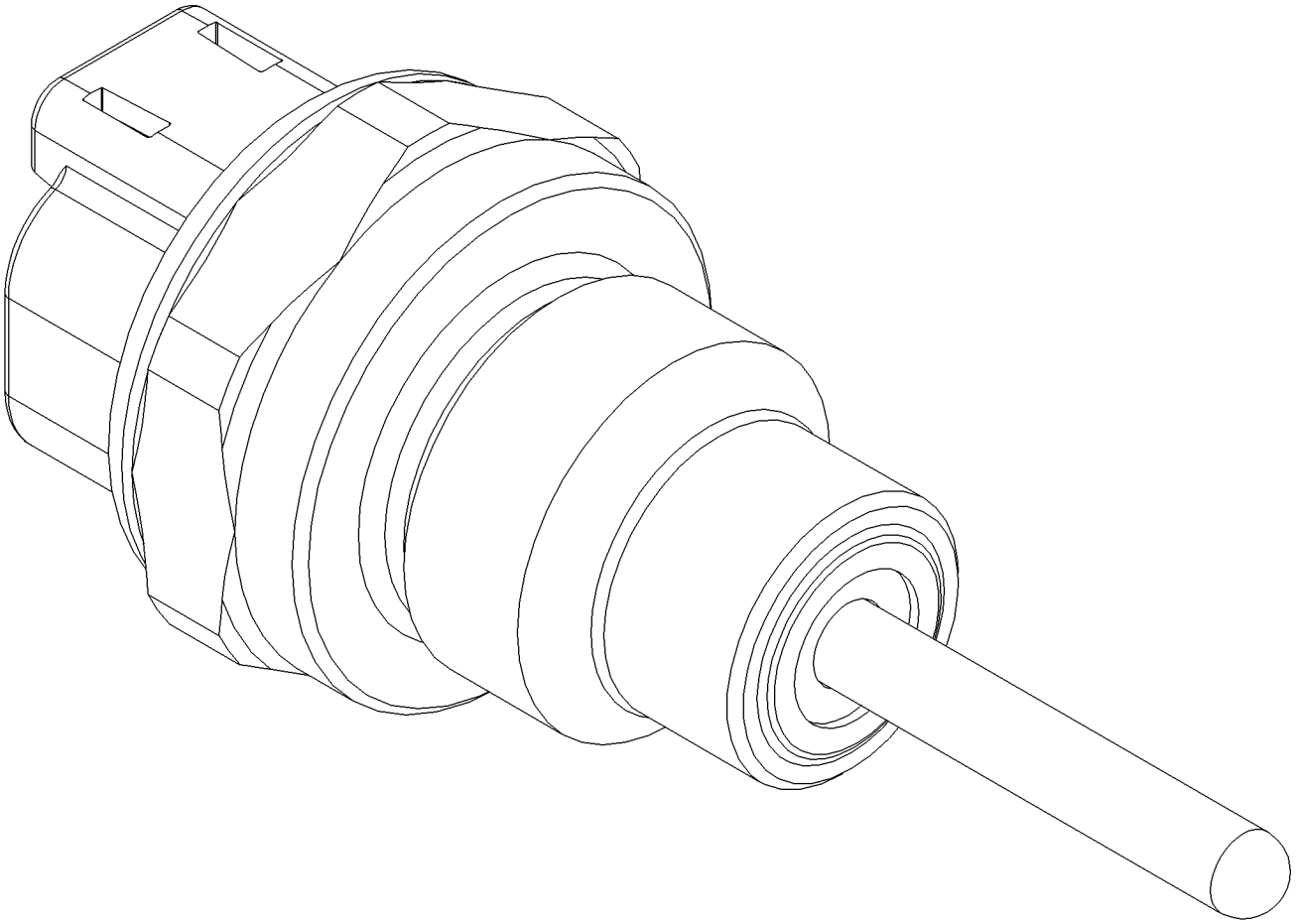

GRAPHIC #1 **<END>** g00954902

145-7028 SENSOR GP-TEMPERATURE–

TMSN, TORQUE CONVERTER OIL

S/N: M3G1-UP; FAK1-UP

PART OF 247-7830 CONTROL GP-TRANSMISSION HYD, 241-0640 WIRING GP-ENGINE

SMCS-1408, 1906, 1921, 1922, 301T, 429T, 509T **i01828633**

NOTE	REF NO	GRAPHIC REF	PART NUMBER	QTY	PART NAME 1 2 3 4 5 6 (PRODUCT LEVEL)	SEE PAGE
	1	1	**102-8802**	1	KIT-RECEPTACLE (2-PIN)	
					(INCLUDES RECEPTACLE AS & WEDGE)	
BJ	2	1	**153-5043**		SLEEVE	
	3	1	**8T-8729**	2	PIN-CONNECTOR	
	4	1	**3E-3365**	1	WEDGE-RECEPTACLE LOCK (2-PIN)	

B-USE AS REQUIRED
J-ORDER BY THE DECIMETER

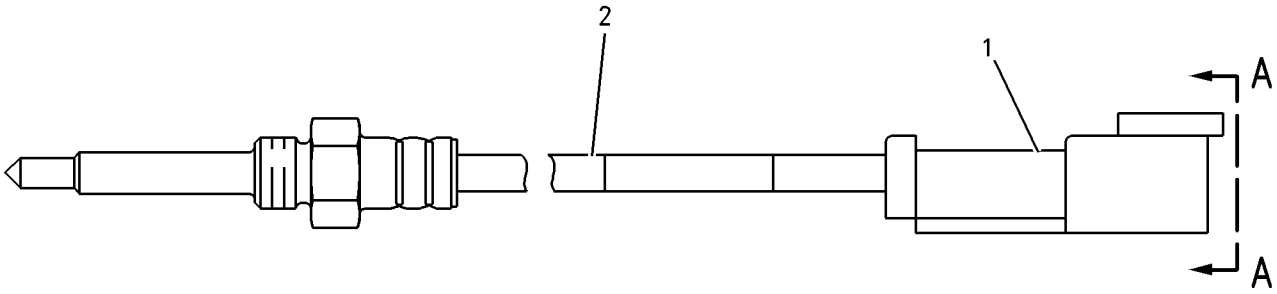

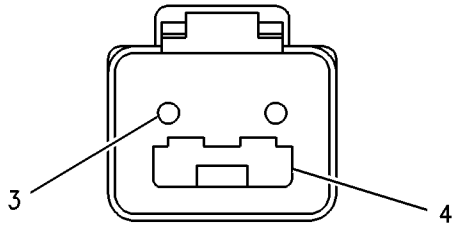

VIEW A-A

GRAPHIC #1 **<END>** g00917620

197-8391 SENSOR GP-TEMPERATURE–AIR INLET MANIFOLD

S/N: KHX1-UP

PART OF 238-4808 SENSOR GP-ENGINE

SMCS-1408, 1906, 1921, 1922, 301T, 429T, 509T **i02203394**

NOTE	REF NO	GRAPHIC REF	PART NUMBER	QTY	PART NAME 1 2 3 4 5 6 (PRODUCT LEVEL)	SEE PAGE
	1	1	**130-9811**	1	SENSOR GP-TEMPERATURE (2-PIN)	
	2	1	**8L-2786**	1	SEAL-O-RING	

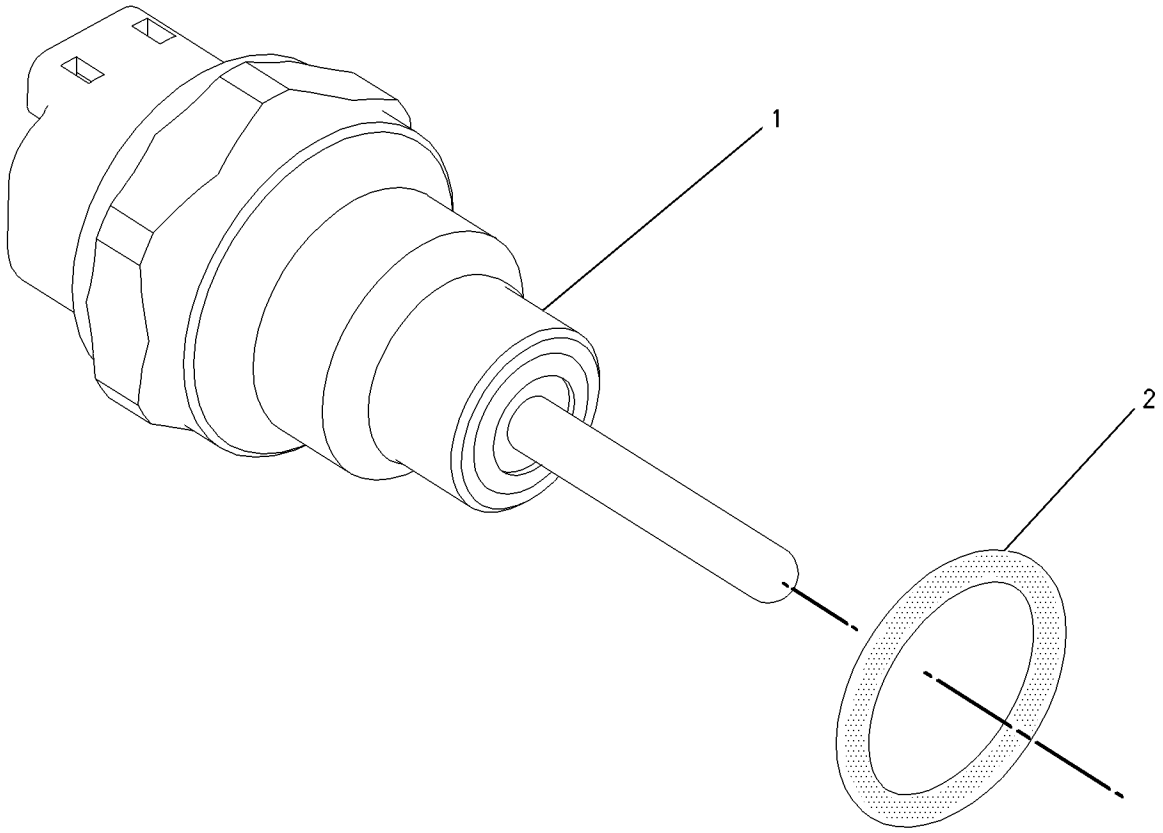

GRAPHIC #1 **<END>** g00856011

197-8392 SENSOR GP-TEMPERATURE–ENGINE COOLANT

S/N: KHX1-UP

PART OF 238-4808 SENSOR GP-ENGINE

SMCS-1408, 1906, 1921, 1922, 301T, 429T, 509T **i02203395**

NOTE	REF NO	GRAPHIC REF	PART NUMBER	QTY	PART NAME 1 2 3 4 5 6 (PRODUCT LEVEL)	SEE PAGE
	1	1	**130-9811**	1	SENSOR GP-TEMPERATURE	
	2	1	**6V-6609**	1	SEAL-O-RING	

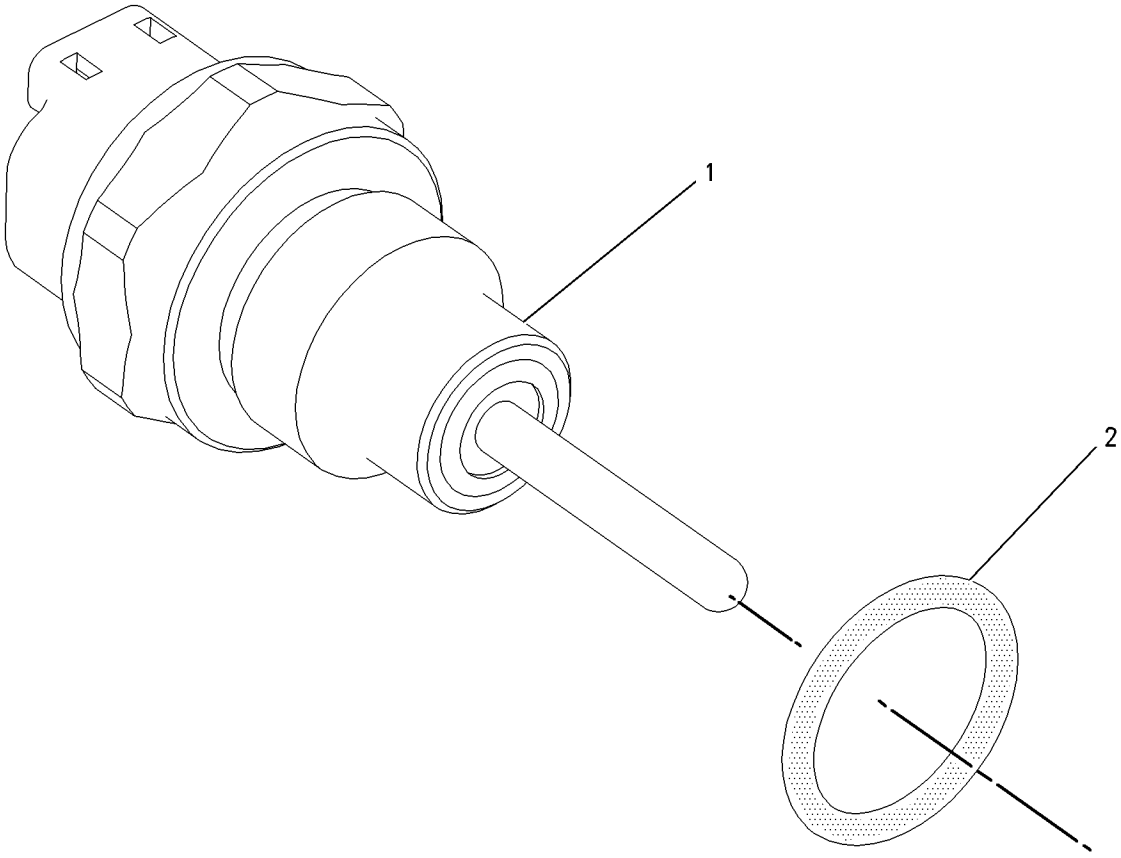

GRAPHIC #1 **<END>** g00856005

ELECTRICAL AND STARTING SYSTEM

263-6353 STARTING AID AR-ETHER

S/N: M3G1-UP

AN ATTACHMENT

SMCS-1456 **i02444749**

NOTE	PART NUMBER	QTY	PART NAME 1 2 3 4 5 6 (PRODUCT LEVEL)	SEE PAGE
Y	*261-3802*	1	STARTING AID GP-ETHER	192
Y	*263-6667*	1	WIRING GP-ETHER STARTING AID	241

Y-SEPARATE ILLUSTRATION

<END>

249-9223 STARTING AID GP–STARTING AID

S/N: KHX1-UP
24-VOLT
PART OF 235-1424 ENGINE AR-COMPLETE

SMCS-1090 **i02373266**

NOTE	REF NO	GRAPHIC REF	PART NUMBER	QTY	PART NAME 1 2 3 4 5 6 (PRODUCT LEVEL)	SEE PAGE
	2	1	**229-8851**	1	CABLE AS	
Y	3	1	**223-7577**	1	SWITCH GP-MAGNETIC (AIR INLET HEATER)	201
M	4	1	**6V-2317**	6	BOLT (M8X1.25X30-MM)	
M	5	1	**6V-5192**	1	BOLT-SOCKET HEAD (M8X1.25X30-MM)	
	7	1	**9M-1974**	7	WASHER-HARD (8.8X16X2-MM THK)	

M-METRIC PART
Y-SEPARATE ILLUSTRATION

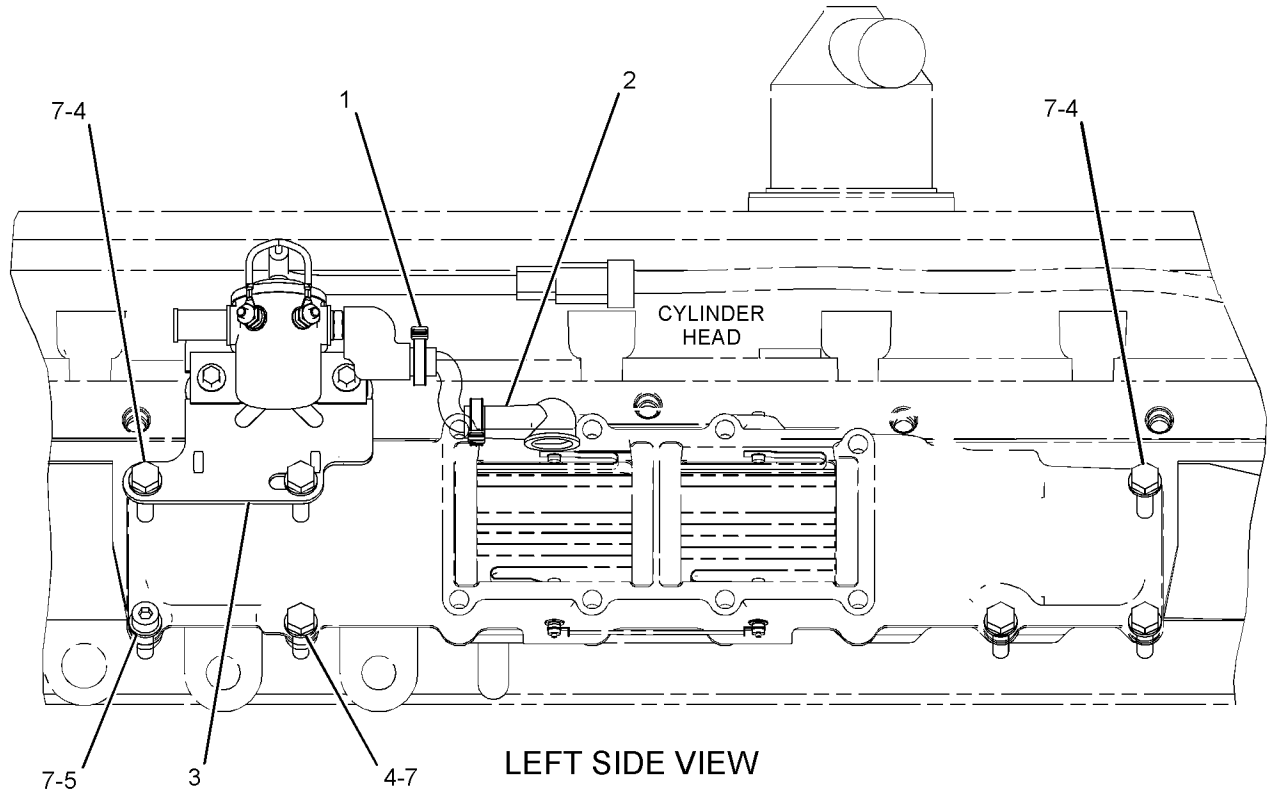

GRAPHIC #1 **<END>** g01186465

ELECTRICAL AND STARTING SYSTEM

261-3802 STARTING AID GP-ETHER

S/N: M3G1-UP

PART OF 263-6353 STARTING AID AR-ETHER

AN ATTACHMENT

SMCS-1456 **i02444751**

NOTE	REF NO	GRAPHIC REF	PART NUMBER	QTY	PART NAME 1 2 3 4 5 6 (PRODUCT LEVEL)	SEE PAGE
	1	1	**3Y-2888**	1	CONNECTOR	
	2	1	**5P-6313**	1	NUT-FLARELESS (5/16-24-THD)	
	3	1	**5P-6314**	1	SLEEVE	
	4	1	**7N-2059**	1	CLAMP AS	
	5	1	**144-4613**	1	ANGLE AS	
M		1	**8T-3490**	1	NUT-WELD (M10X1.5-THD)	
Y	6	1	**239-1134**	1	VALVE GP-ETHER STARTING (24-VOLT)	215
	7	1	**241-4194**	1	FITTING	
	8	1	**258-0733**	1	ATOMIZER AS	
	9	1	**263-1774**	1	PLATE AS	
M		1	**8T-3490**	1	NUT-WELD (M10X1.5-THD)	
M		1	**8T-3612**	4	NUT-WELD (M8X1.25-THD)	
	10	1	**130-5300**	1	CLIP	
	11	1	**3J-1907**	1	SEAL-O-RING	
M	12	1	**5C-7261**	1	NUT (M8X1.25-THD)	
	13	1	**6V-2686**	5	CLIP	
	14	1	**8T-4121**	7	WASHER-HARD (11X21X2.5-MM THK)	
M	15	1	**8T-4189**	4	BOLT (M8X1.25X20-MM)	
M	16	1	**8T-4191**	3	BOLT (M10X1.5X16-MM)	
M	17	1	**8T-4195**	4	BOLT (M10X1.5X30-MM)	
	18	1	**8T-4224**	5	WASHER-HARD (8.8X16X2-MM THK)	
E	19	1	**174-9169**		TUBE (150-CM)	
A		1	**7N-0296**	1	CYLINDER AS-ETHER	

A-NOT PART OF THIS GROUP
E-ORDER BY THE CENTIMETER
M-METRIC PART
Y-SEPARATE ILLUSTRATION

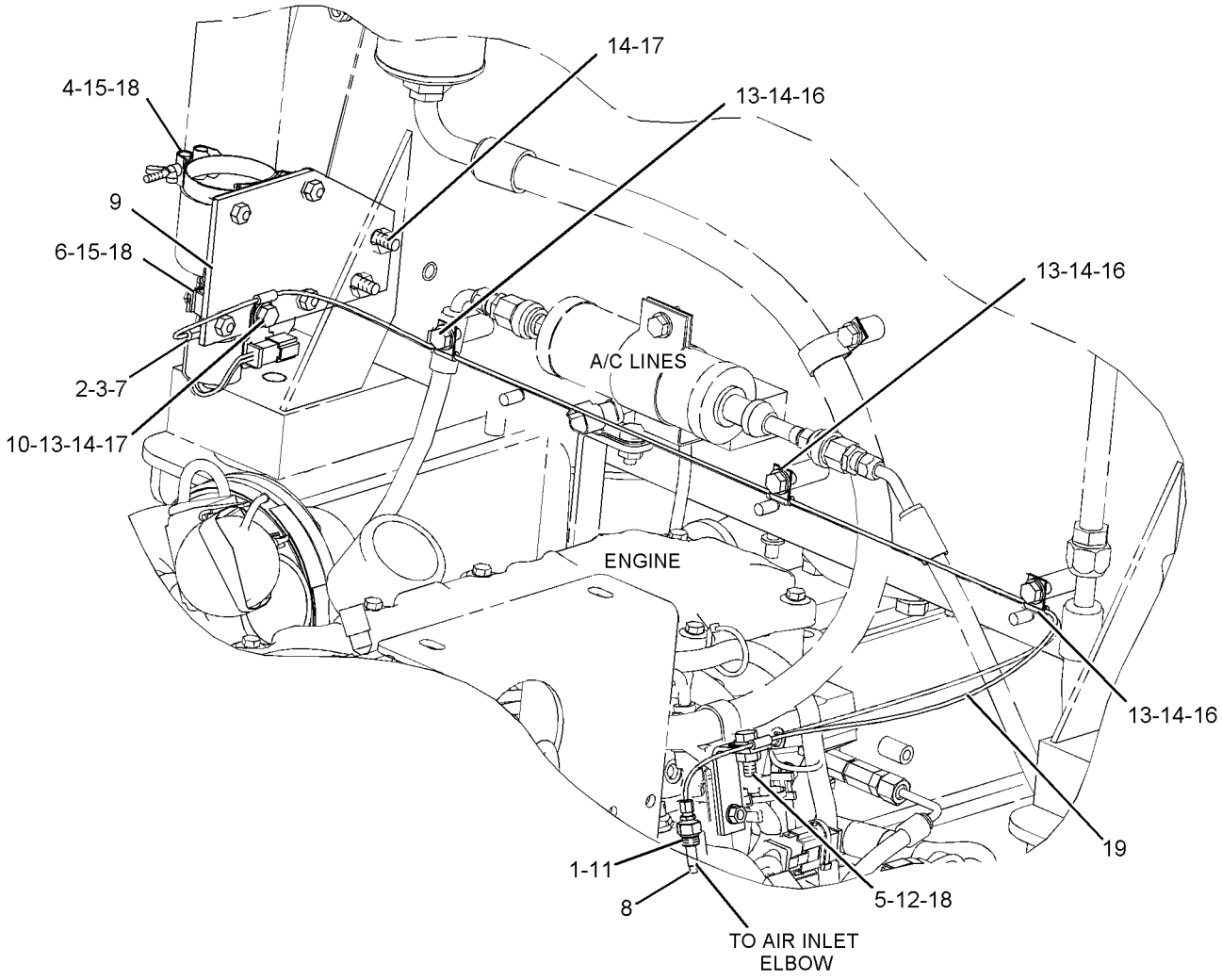

GRAPHIC #1 **<END>** g01145363

ELECTRICAL AND STARTING SYSTEM

111-4275 STARTING MOTOR GP-ELECTRIC

S/N: M3G1-UP
24 VOLT
PART OF 237-3995 INSTALLATION AR-ENGINE

SMCS-1453 **i01635526**

NOTE	REF NO	GRAPHIC REF	PART NUMBER	QTY	PART NAME 1 2 3 4 5 6 (PRODUCT LEVEL)	SEE PAGE
	1	1	**118-9573**	3	BOLT-12 POINT HEAD (M10X1.5-THD)	
CYR	2	1	**207-1517**	1	STARTING MOTOR GP-ELECTRIC	195
	3	1	**3K-3257**	1	GASKET	
M	4	1	**8T-4191**	1	BOLT (M10X1.5X16-MM)	
	5	1	**8Y-9603**	1	CABLE AS-STARTING MOTOR	
		1	**1S-7251**	1	TERMINAL-RING (FOR 1/2-IN BOLT)	
		1	**1S-7252**	1	TERMINAL-RING (FOR 3/8-IN BOLT)	
E		1	**5P-0747**		CABLE (00-GA, BLACK) (28CM)	
	6	1	**8T-4121**	4	WASHER-HARD (11X21X2.5-MM THK)	

C-CHANGE FROM PREVIOUS TYPE
E-ORDER BY THE CENTIMETER
M-METRIC PART
R-REMFG PART MAY BE AVAILABLE
Y-SEPARATE ILLUSTRATION

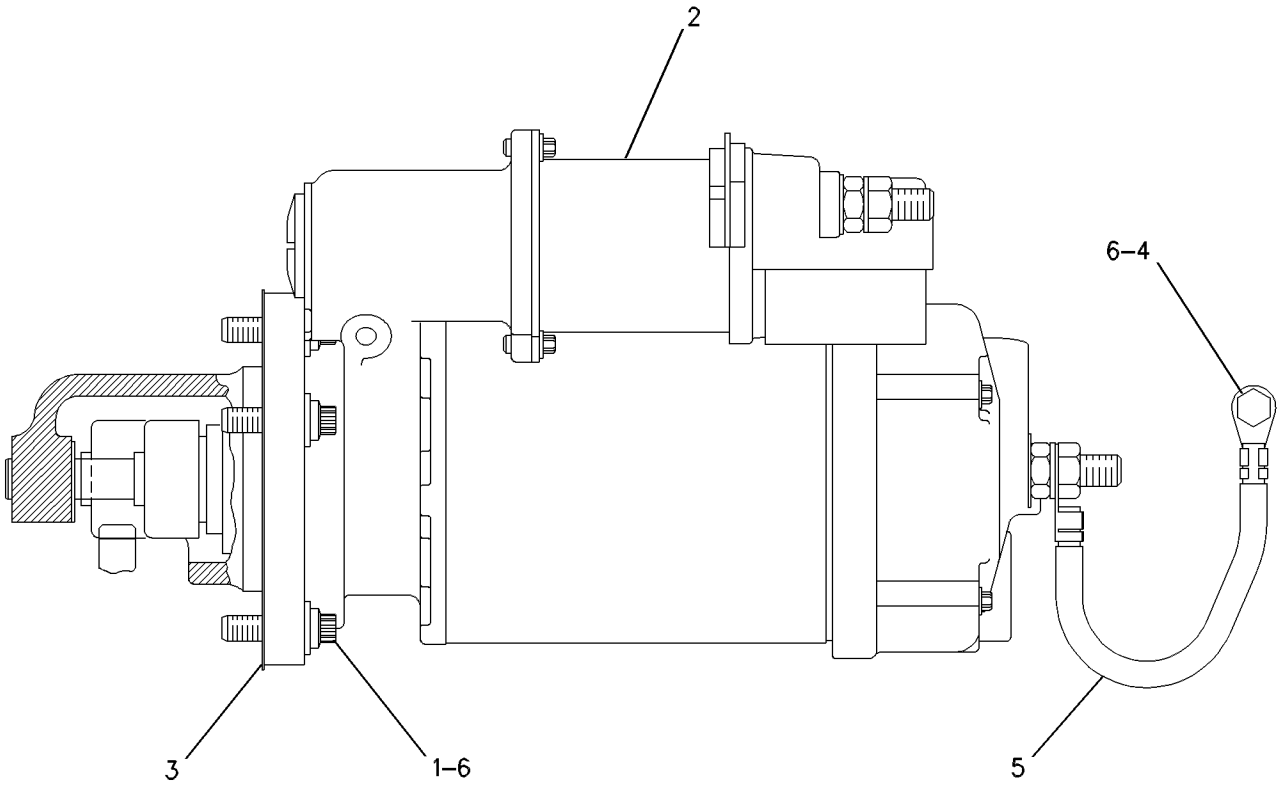

GRAPHIC #1 **<END>** g00613782

ELECTRICAL AND STARTING SYSTEM

207-1517 STARTING MOTOR GP-ELECTRIC*R

S/N: M3G1-UP
24 VOLT
PART OF 111-4275 STARTING MOTOR GP-ELECTRIC

SMCS-1453 **i01882840**

NOTE	REF NO	GRAPHIC REF	PART NUMBER	QTY	PART NAME 1 2 3 4 5 6 (PRODUCT LEVEL)	SEE PAGE
	1	1	**8T-9884**	1	KIT-INSULATOR (STARTING MOTOR)	
					(INCLUDES INSULATORS AND BUSHING)	
	2	1	**106-7149**	1	HOUSING AS	
	3	1	**102-9863**	1	TERMINAL AS	
	4	1	**6V-8188**	4	NUT (1/2-13 THD)	
	5	1	**7X-0562**	4	WASHER-HARD (13.5X19X0.8-MM THK)	
	6	1	**3E-7853**	1	TERMINAL	
	7	1	**9X-4821**	1	PLATE AS	
	8	1	**3E-7852**	1	COIL-STARTING MOTOR	
	9	1	**7T-3454**	1	INSULATOR	
	10	1	**9X-4271**	1	CONNECTOR	
	11	1	**7T-3451**	1	INSULATOR-TERMINAL	
	12	1	**8T-8569**	1	INSULATOR-TERMINAL	
	13	1	**5S-7349**	4	BOLT (1/4-20X0.5-IN)	
	14	1	**8T-4205**	4	WASHER-HARD (7.2X14.5X2-MM THK)	
	15	1	**7X-1950**	4	SHOE-POLE	
	16	1	**3E-7861**	1	KIT-LEVER (STARTING MOTOR)	
					(INCLUDES LEVER AS, SHAFT AS, GASKET, O-RINGS, RING, AND NUT)	
	17	1	**3F-0379**	8	SCREW-POLE SHOE (3/8-24-THD)	
	18	1	**3E-7855**	1	ARMATURE AS-STARTER (24-VOLT)	
	19	1	**7X-1952**	1	HOUSING AS-LEVER	
	20	1	**4M-1831**	1	PLUG-LEVER HOUSING	
	21	1	**7L-2894**	1	GASKET	
	22	1	**036-9823**	5	BOLT (1/4-28X1-IN)	
	23	1	**3E-7857**	1	DRIVE AS-STARTING MOTOR	
	24	1	**3E-7858**	1	HOUSING AS	
	25	1	**7X-3373**	6	BOLT (5/16-18X0.88-IN)	
	26	1	**206-8784**	1	KIT-SOLENOID (STARTING MOTOR)	
					(INCLUDES SOLENOID AS, BOLT, AND NUTS)	
	27	1	**6V-8378**	2	NUT (10-32-THD)	
	28	1	**8F-1434**	1	LOCKWASHER	
	29	1	**8T-0328**	2	WASHER-HARD (5.5X10X1-MM THK)	
	30	1	**9X-4824**	1	COVER-STARTING MOTOR	
	31	1	**9X-4825**	1	KIT-BRUSH (STARTING MOTOR)	
					(INCLUDES O-RING, SCREWS, BRUSH, AND SPRING)	
					AVAILABLE REPAIR KIT(S):	
			3E-7860	1	KIT-BUSHING (STARTING MOTOR)	
					(INCLUDES BUSHINGS, PLUG, CUP, SEALS, NUT, O-RINGS, GASKET, SPACERS, WASHERS, AND SCREWS)	

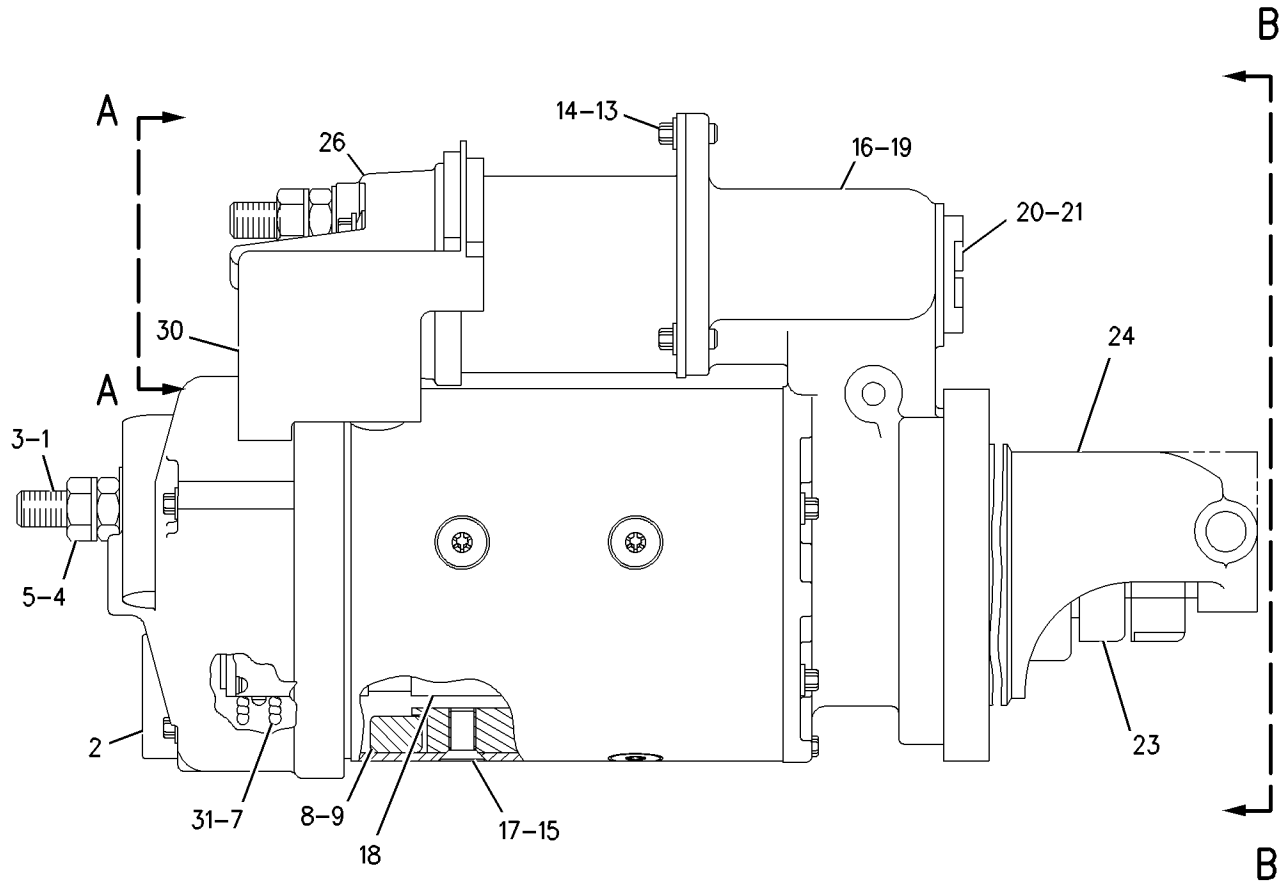

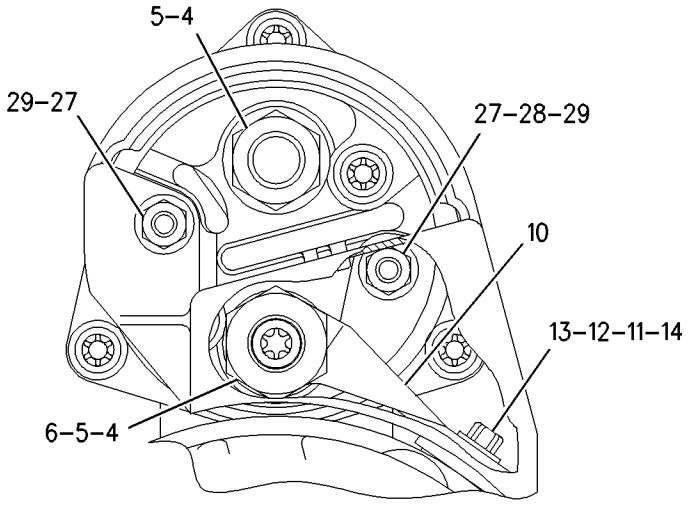

VIEW A–A

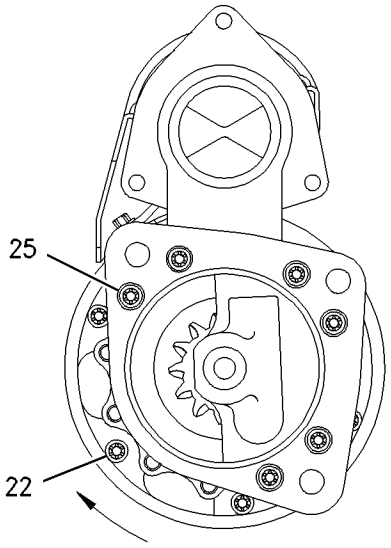

VIEW B–B

GRAPHIC #1 **<END>** g00839695

164-7577 SWITCH GP-BYPASS–POWER TRAIN OIL FILTER

S/N: M3G1-UP

PART OF 241-0642 WIRING GP-CHASSIS

SMCS-1408, 1435 **i02204195**

NOTE	REF NO	GRAPHIC REF	PART NUMBER	QTY	PART NAME 1 2 3 4 5 6 (PRODUCT LEVEL)	SEE PAGE
E	1	1	**9X-1813**		SLEEVE (19-CM)	
	2	1	**102-8802**	1	KIT-RECEPTACLE (2-PIN)	
					(INCLUDES RECEPTACLE AS & WEDGE)	
	3	1	**186-3735**	2	PIN-CONNECTOR (16-GA TO 18-GA)	
	4	1	**3E-3365**	1	WEDGE-RECEPTACLE LOCK (2-PIN)	
	5	1	**3D-2824**	1	SEAL-O-RING	
Z	6	1		1	SWITCH AS	

E-ORDER BY THE CENTIMETER
Z-NOT SERVICED SEPARATELY

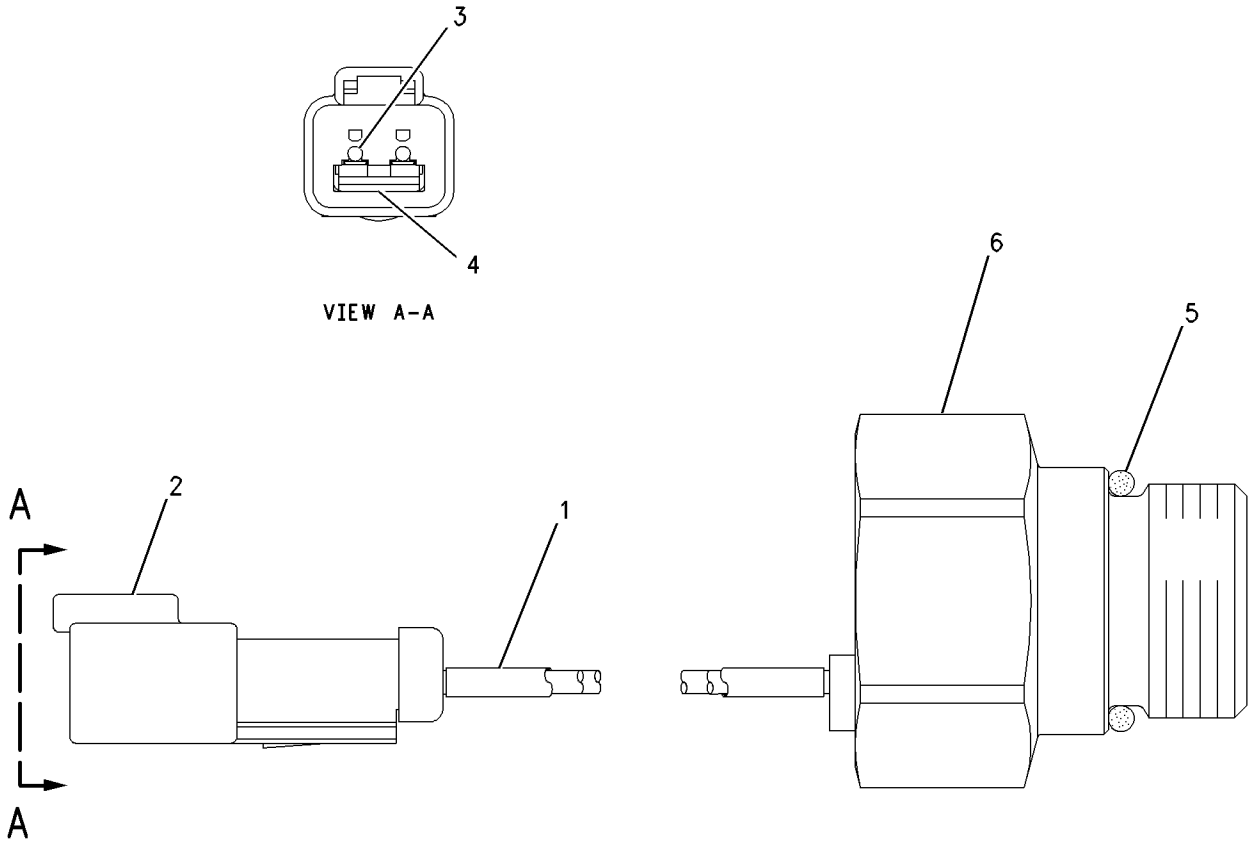

GRAPHIC #1 **<END>** g00750019

197-6475 SWITCH GP-DIMMER–ROADING

S/N: M3G1-UP
PART OF 254-5525 LIGHTING AR-ROADING
AN ATTACHMENT

SMCS-7332 **i02454102**

NOTE	REF NO	GRAPHIC REF	PART NUMBER	QTY	PART NAME 1 2 3 4 5 6 (PRODUCT LEVEL)	SEE PAGE
	1	1	**2H-1855**	1	SWITCH AS-DIMMER (ROADING)	
		1	**6V-8362**	3	SCREW-MACHINE (8-32X0.31-IN)	
		1	**9B-7233**	3	LOCKWASHER	
	2	1	**121-8039**	1	WIRE AS	
	3	1	**5S-7349**	3	BOLT (1/4-20X0.5-IN)	
	4	1	**8T-4205**	3	WASHER-HARD (7.2X14.5X2-MM THK)	

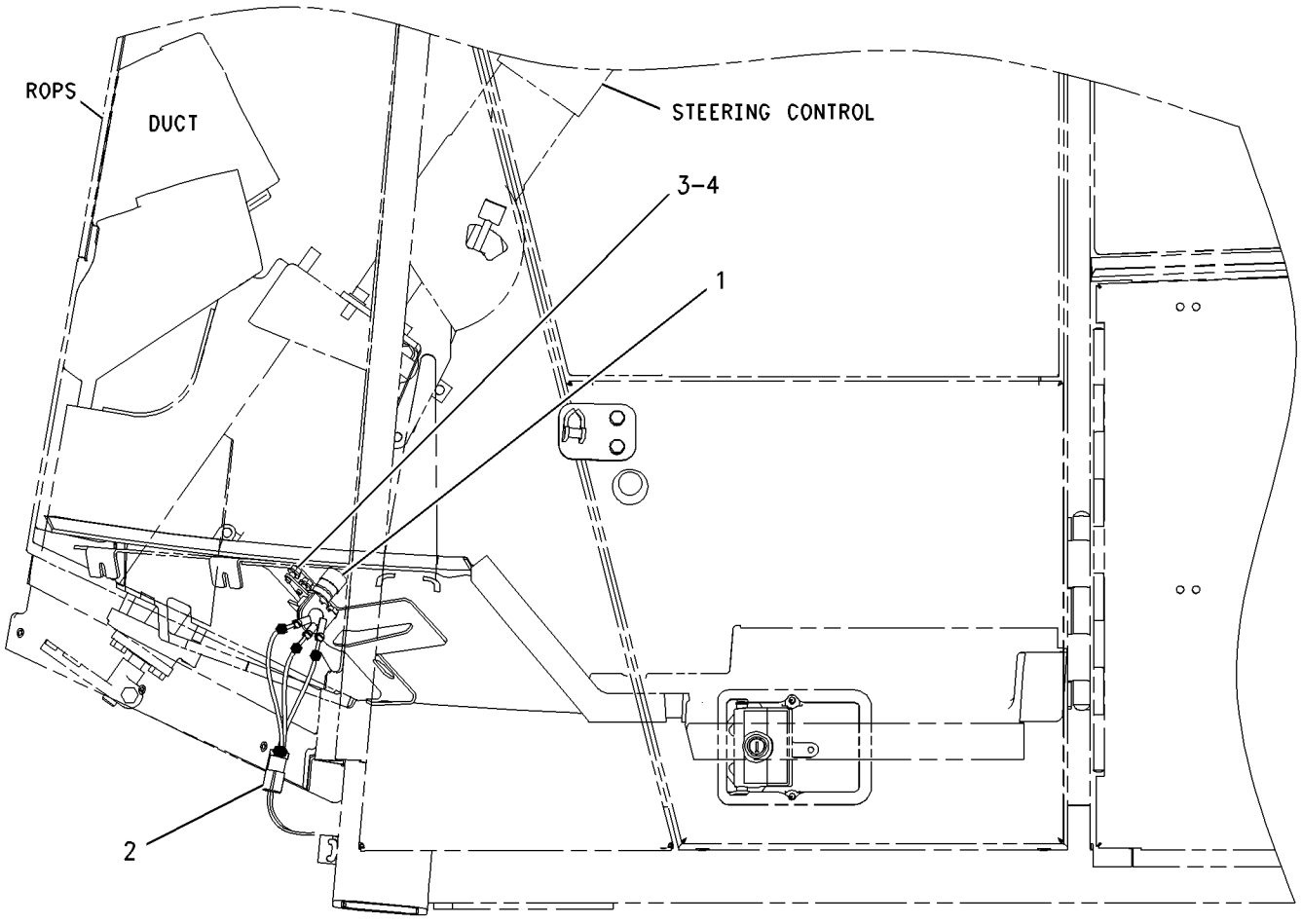

LEFT SIDE VIEW OF CAB

GRAPHIC #1 **<END>** g00799540

7N-0718 SWITCH GP-DISCONNECT–BATTERY

S/N: M3G1-UP

PART OF 241-0639 BATTERY & WIRING GP

SMCS-1411 **i01810002**

NOTE	REF NO	GRAPHIC REF	PART NUMBER	QTY	PART NAME 1 2 3 4 5 6 (PRODUCT LEVEL)	SEE PAGE
	1	1	**8H-5306**	1	KEY (BATTERY DISCONNECT)	
	2	1	**8H-5303**	1	NUT (3/4-16-THD)	
	3	1	**2H-3922**	2	LOCKWASHER	
	4	1	**9F-5644**	2	LOCKWASHER	
	5	1	**6F-7045**	2	NUT-FULL (3/8X24-THD)	

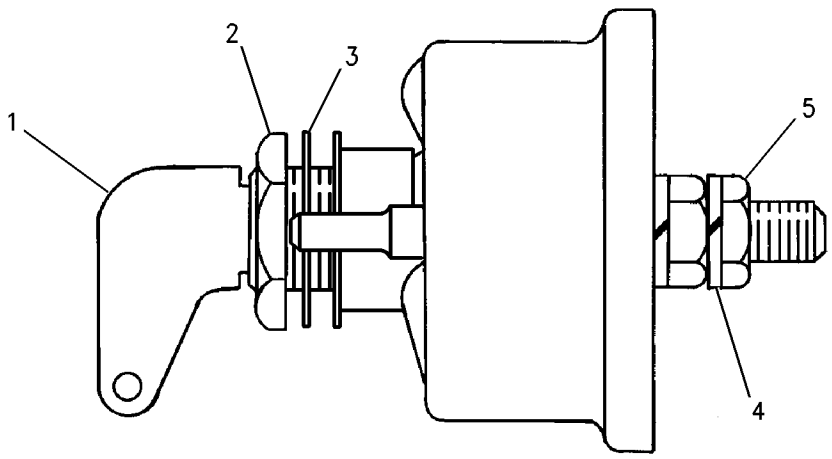

GRAPHIC #1 **<END>** g00715584

125-1302 SWITCH GP-MAGNETIC–START RELAY

S/N: M3G1-UP

PART OF 241-0642 WIRING GP-CHASSIS

SMCS-7499 **i01896616**

NOTE	REF NO	GRAPHIC REF	PART NUMBER	QTY	PART NAME 1 2 3 4 5 6 (PRODUCT LEVEL)	SEE PAGE
	1	1	**102-8802**	1	KIT-RECEPTACLE (2-PIN)	
					(INCLUDES RECEPTACLE AS & WEDGE)	
	2	1	**186-3735**	2	PIN-CONNECTOR (16-GA TO 18-GA)	
	3	1	**1H-3338**	2	LOCKWASHER	
	4	1	**012-0380**	2	LOCKWASHER	
M	5	1	**5C-2890**	2	NUT (M6X1-THD)	
E	6	1	**9X-1813**		SLEEVE (16CM)	

E-ORDER BY THE CENTIMETER
M-METRIC PART

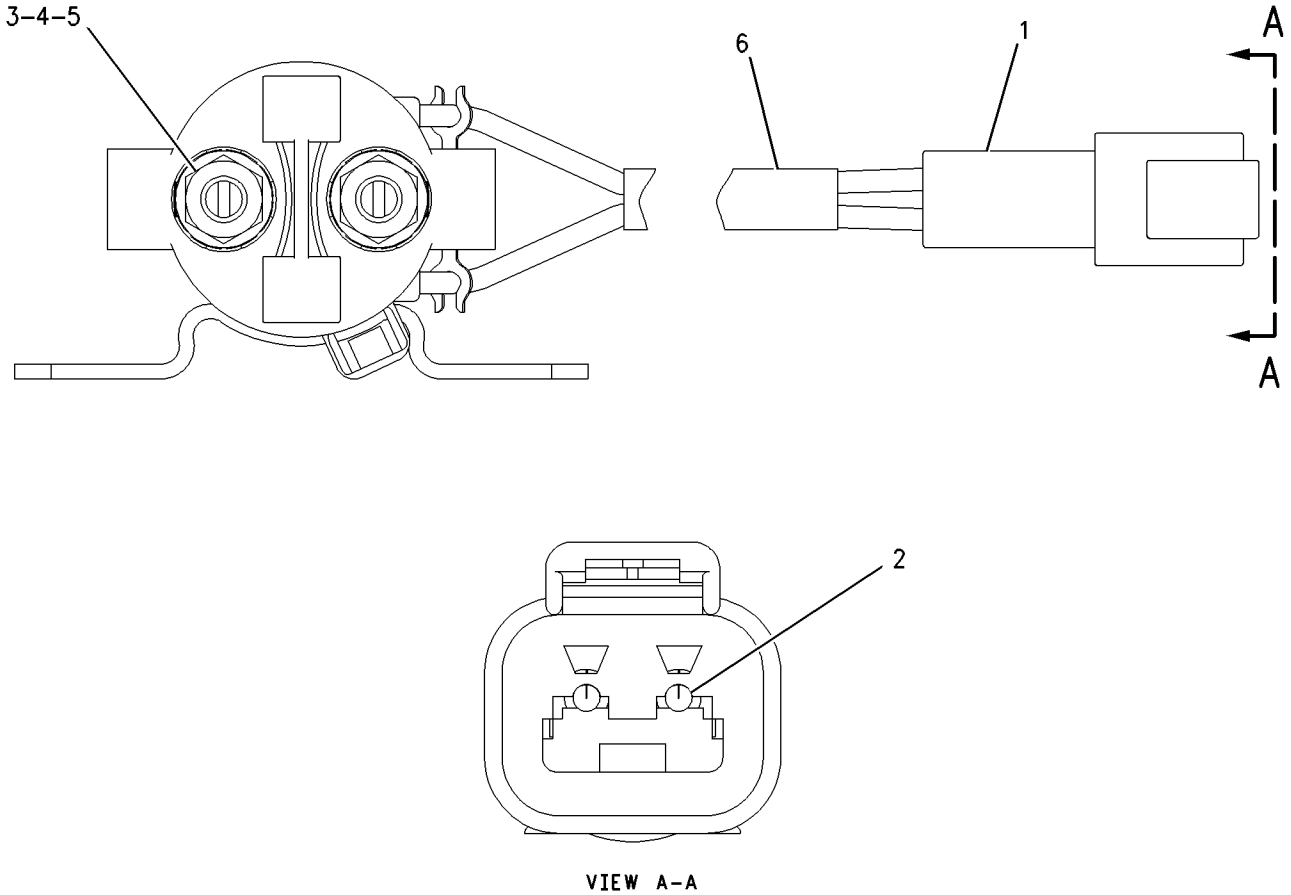

VIEW A–A

GRAPHIC #1 **<END>** g00987986

223-7577 SWITCH GP-MAGNETIC—AIR INLET HEATER RELAY

S/N: KHX1-UP
24 VOLT
PART OF 249-9223 STARTING AID GP

SMCS-7499 **i01942556**

NOTE	REF NO	GRAPHIC REF	PART NUMBER	QTY	PART NAME 1 2 3 4 5 6 (PRODUCT LEVEL)	SEE PAGE
	1	1	**209-5582**	1	SWITCH AS-MAGNETIC (24-VOLT) (AIR INLET HEATER)	
	1A	1	**102-8802**	1	KIT-RECEPTACLE (2-PIN) (AIR INLET HEATER SWITCH)	
					(INCLUDES RECEPTACLE AS AND WEDGE)	
	1B	1	**186-3735**	2	PIN-CONNECTOR (16-GA TO 18-GA)	
	1C	1	**3F-9556**	2	LOCKWASHER	
	1D	1	**6V-8186**	2	NUT-FULL (5/16-24-THD)	
	1E	1	**6V-8378**	2	NUT (10-32-THD)	
	1F	1	**8F-1434**	2	LOCKWASHER	

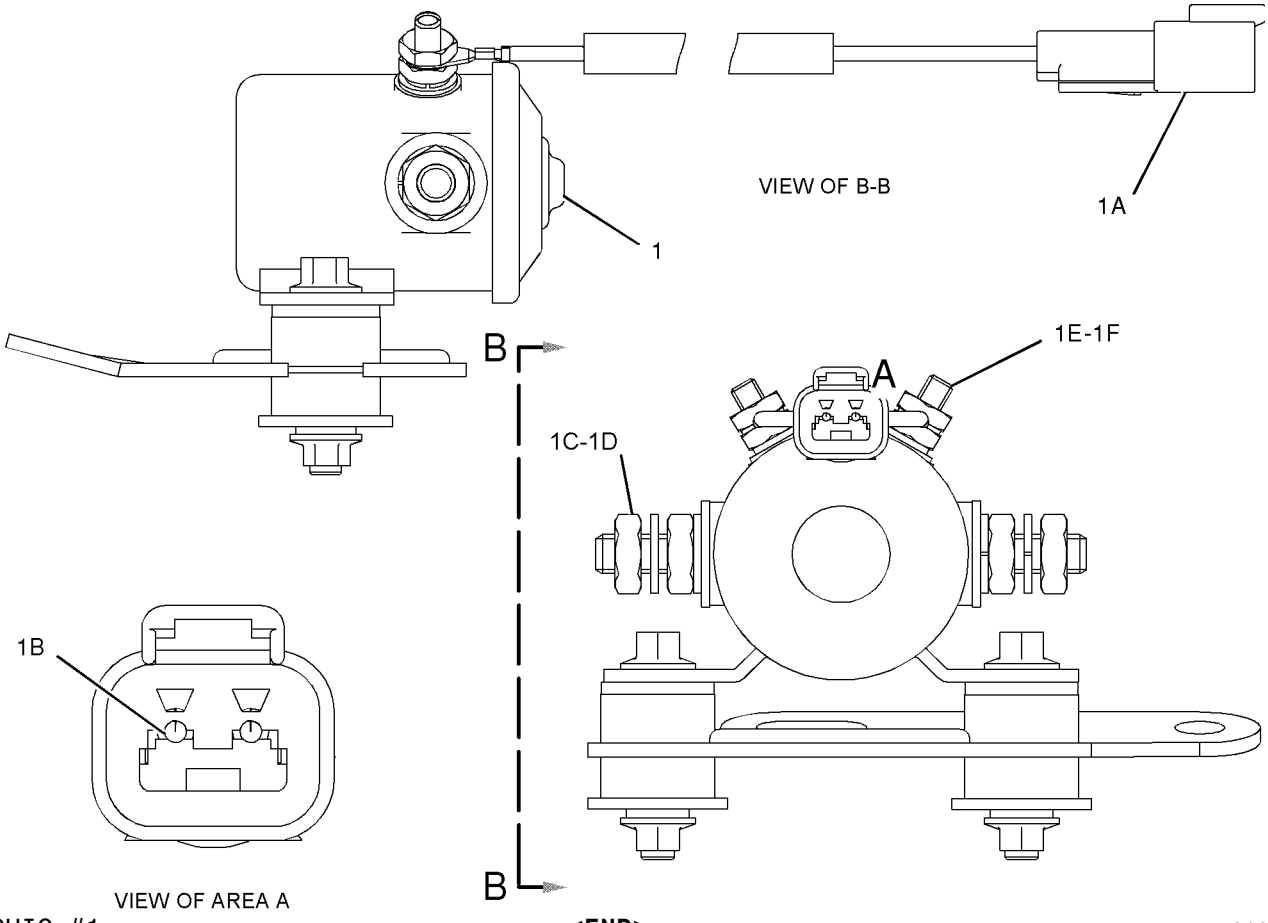

GRAPHIC #1 **<END>** g01022269

241-8368 SWITCH GP-MAGNETIC—MAIN RELAY

S/N: M3G1-UP

PART OF 241-0642 WIRING GP-CHASSIS

SMCS-7499 **i02290099**

NOTE	REF NO	GRAPHIC REF	PART NUMBER	QTY	PART NAME 1 2 3 4 5 6 (PRODUCT LEVEL)	SEE PAGE
	1	1	**155-2270**	1	KIT-CONNECTING PLUG (2-PIN)	
					(INCLUDES PLUG AS, WEDGE & INTERFACE SEAL)	
	2	1	**4F-2294**	2	NUT-JAM (5/16-24-THD)	
	3	1	**186-3736**	2	SOCKET-CONNECTOR (16-AWG TO 18-AWG)	

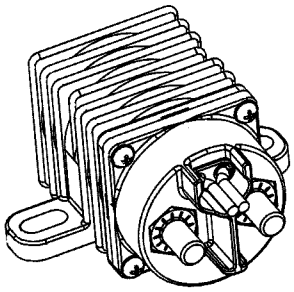

ISOMETRIC VIEW

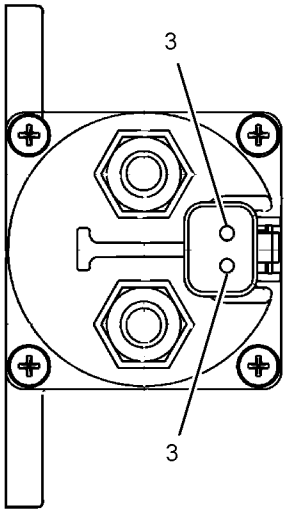

VIEW A-A

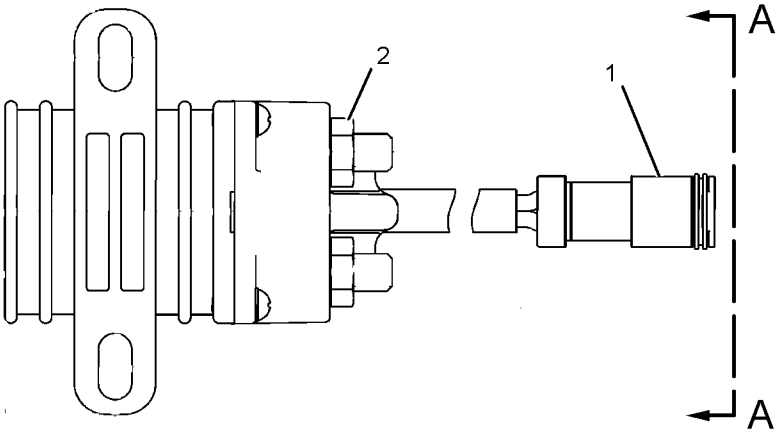

GRAPHIC #1 **<END>** g01077362

258-0883 SWITCH GP-PRESSURE–FUEL

S/N: KHX1-UP

PART OF 237-9823 FILTER & LINES GP-FUEL

SMCS-1435 **i02215509**

NOTE	REF NO	GRAPHIC REF	PART NUMBER	QTY	PART NAME 1 2 3 4 5 6 (PRODUCT LEVEL)	SEE PAGE
	1	1	**102-8802**	1	KIT-RECEPTACLE (2-PIN)	
					(INCLUDES RECEPTACLE AS AND WEDGE)	
	2	1	**3E-3365**	1	WEDGE-RECEPTACLE LOCK (2-PIN)	
	3	1	**186-3735**	2	PIN-CONNECTOR (16-GA TO 18-GA)	
BE	4	1	**9X-1813**		SLEEVE	
	5	1	**6V-4589**	1	SEAL-O-RING	
	6	1	**7L-9061**	1	SEAL-O-RING	

B-USE AS REQUIRED
E-ORDER BY THE CENTIMETER

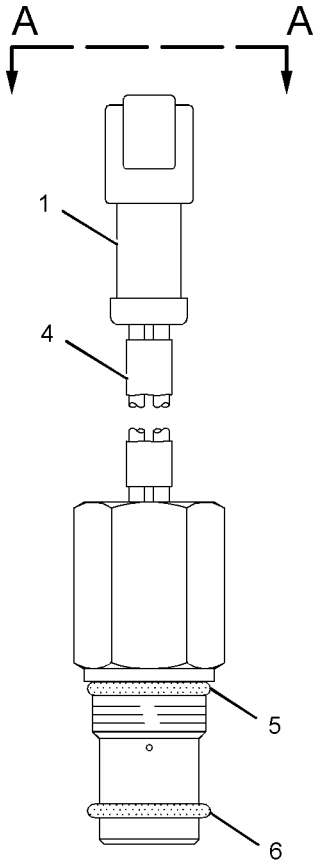

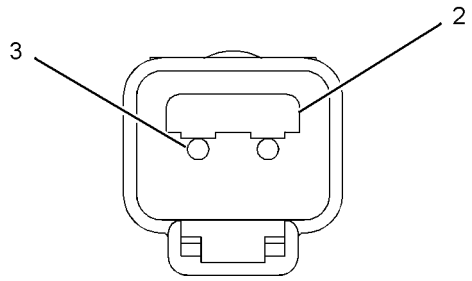

VIEW A-A

GRAPHIC #1 **<END>** g01072091

262-9949 SWITCH GP-REVERSING FAN

S/N: M3G1-UP
PART OF 244-3255 CONTROL AR-FAN
AN ATTACHMENT

SMCS-7332 **i02251383**

NOTE	REF NO	GRAPHIC REF	PART NUMBER	QTY	PART NAME 1 2 3 4 5 6 (PRODUCT LEVEL)	SEE PAGE
	1	1	**236-4623**	1	SWITCH AS-ROCKER (AUTO REVERSING FAN)	

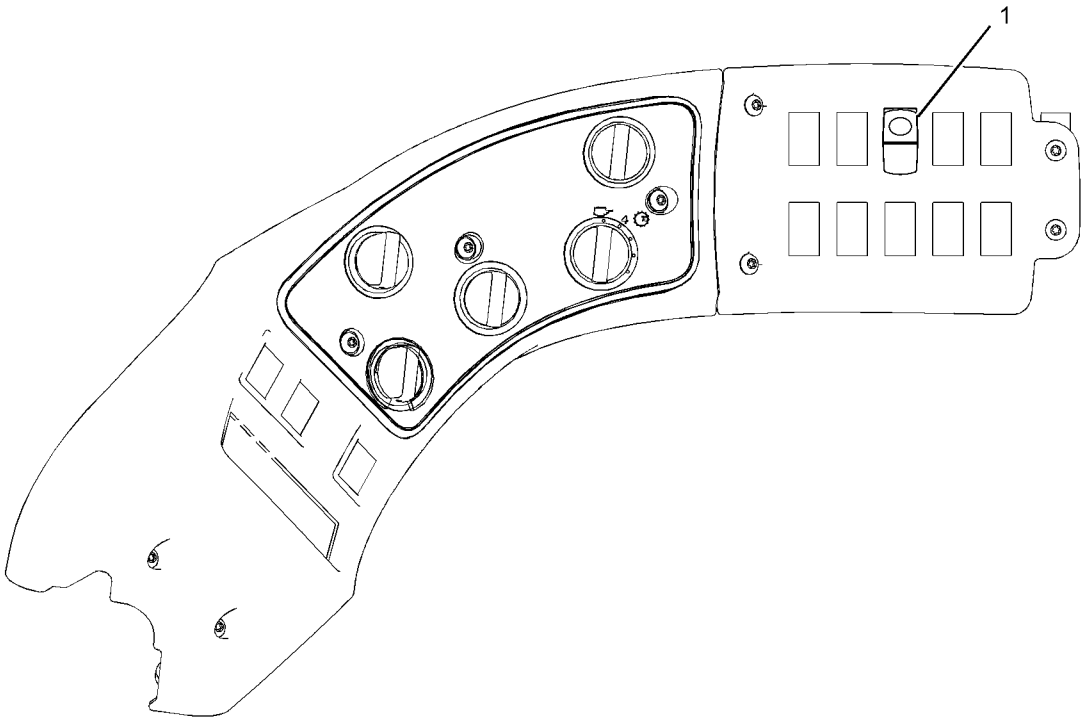

LEFT SIDE VIEW

GRAPHIC #1 **<END>** g01116598

252-5917 SWITCH GP-RIDE CONTROL

S/N: M3G1-UP

PART OF 244-3442, 244-3443 CONTROL AR-RIDE

AN ATTACHMENT

SMCS-7332 **i02305803**

NOTE	REF NO	GRAPHIC REF	PART NUMBER	QTY	PART NAME 1 2 3 4 5 6 (PRODUCT LEVEL)	SEE PAGE
	1	1	**236-4612**	1	SWITCH AS-ROCKER (RIDE CONTROL)	

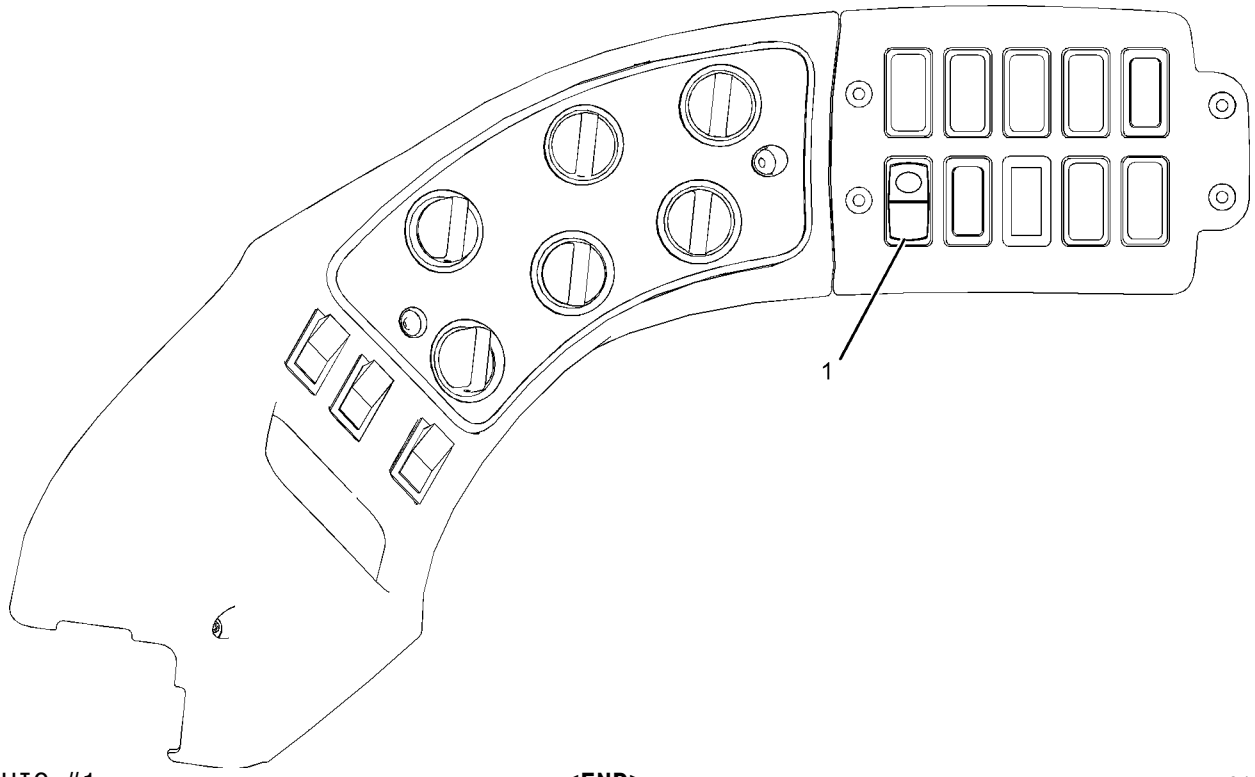

GRAPHIC #1 **<END>** g01080120

263-4133 SWITCH GP-ROCKER–

QUICK COUPLER, BUCKET/FORK SELECT, KICKOUT

S/N: M3G1-UP

AN ATTACHMENT

SMCS-7332 **i02321433**

NOTE	REF NO	GRAPHIC REF	PART NUMBER	QTY	PART NAME 1 2 3 4 5 6 (PRODUCT LEVEL)	SEE PAGE
	1	1	**3S-2093**	1	STRAP-CABLE	
	2	1	**7K-1181**	1	STRAP-CABLE	
Y	3	1	**132-1829**	1	ALARM GP (24-VOLT) (ACTION)	116
	4	1	**236-4625**	1	SWITCH AS-ROCKER (BUCKET, FORK SELECT)	
	5	1	**248-5081**	1	SWITCH AS-ROCKER (QUICK COUPLER)	
	6	1	**249-5602**	1	GUARD-SWITCH	
	7	1	**266-7269**	1	SWITCH AS-ROCKER (LIFT, TILT KICKOUT)	

Y-SEPARATE ILLUSTRATION

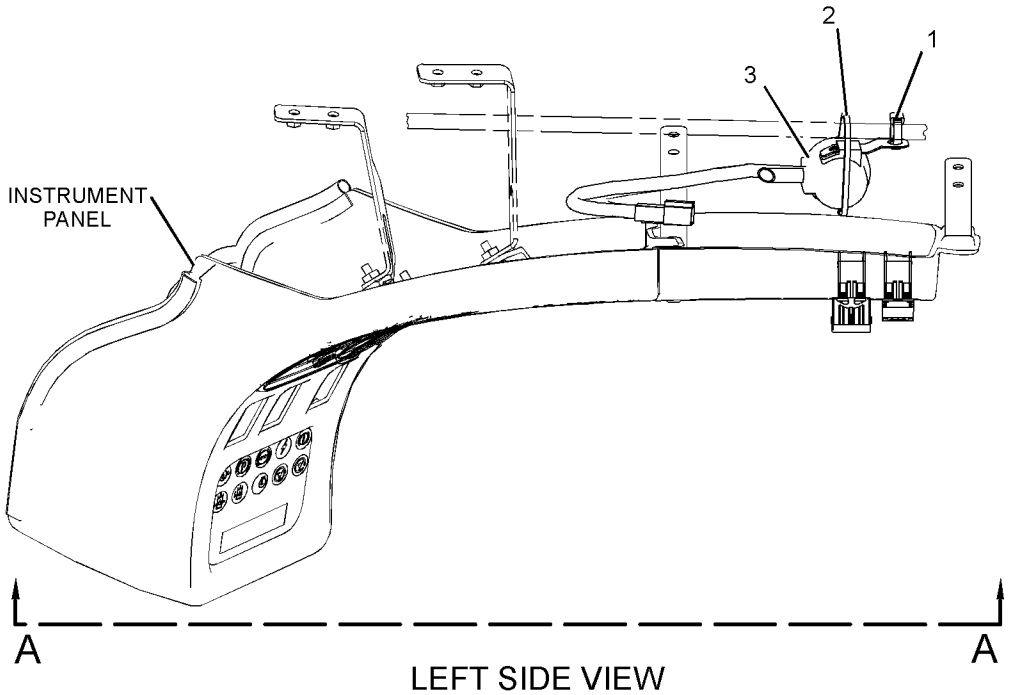

LEFT SIDE VIEW

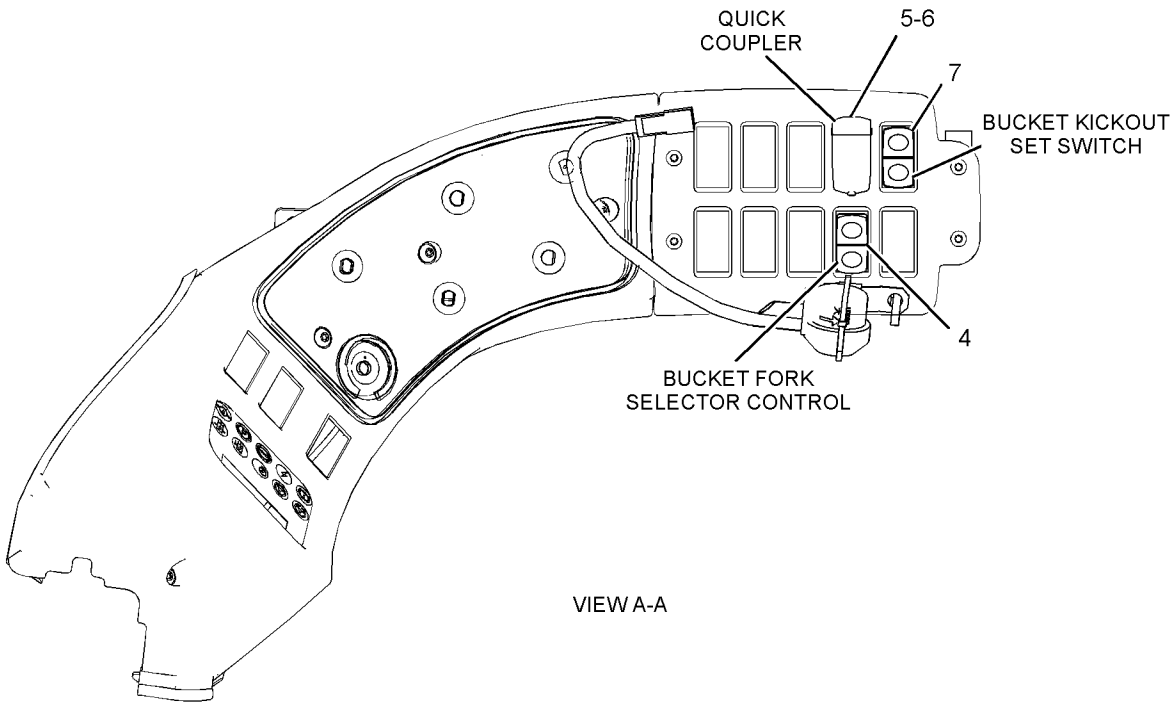

VIEW A-A

GRAPHIC #1 **<END>** g01159091

263-4134 SWITCH GP-ROCKER–

QUICK COUPLER, BUCKET/FORK SELECT, KICKOUT

S/N: M3G1-UP

AN ATTACHMENT

SMCS-7332 **i02421609**

NOTE	REF NO	GRAPHIC REF	PART NUMBER	QTY	PART NAME 1 2 3 4 5 6 (PRODUCT LEVEL)	SEE PAGE
	1	1	**3S-2093**	1	STRAP-CABLE	
	2	1	**7K-1181**	1	STRAP-CABLE	
Y	3	1	**132-1829**	1	ALARM GP (24-VOLT) (ACTION)	116
	4	1	**236-4625**	1	SWITCH AS-ROCKER (BUCKET, FORK SELECT)	
	5	1	**248-5081**	1	SWITCH AS-ROCKER (QUICK COUPLER)	
	6	1	**249-5602**	1	GUARD-SWITCH	
	7	1	**266-7269**	1	SWITCH AS-ROCKER (LIFT, TILT KICKOUT)	

Y-SEPARATE ILLUSTRATION

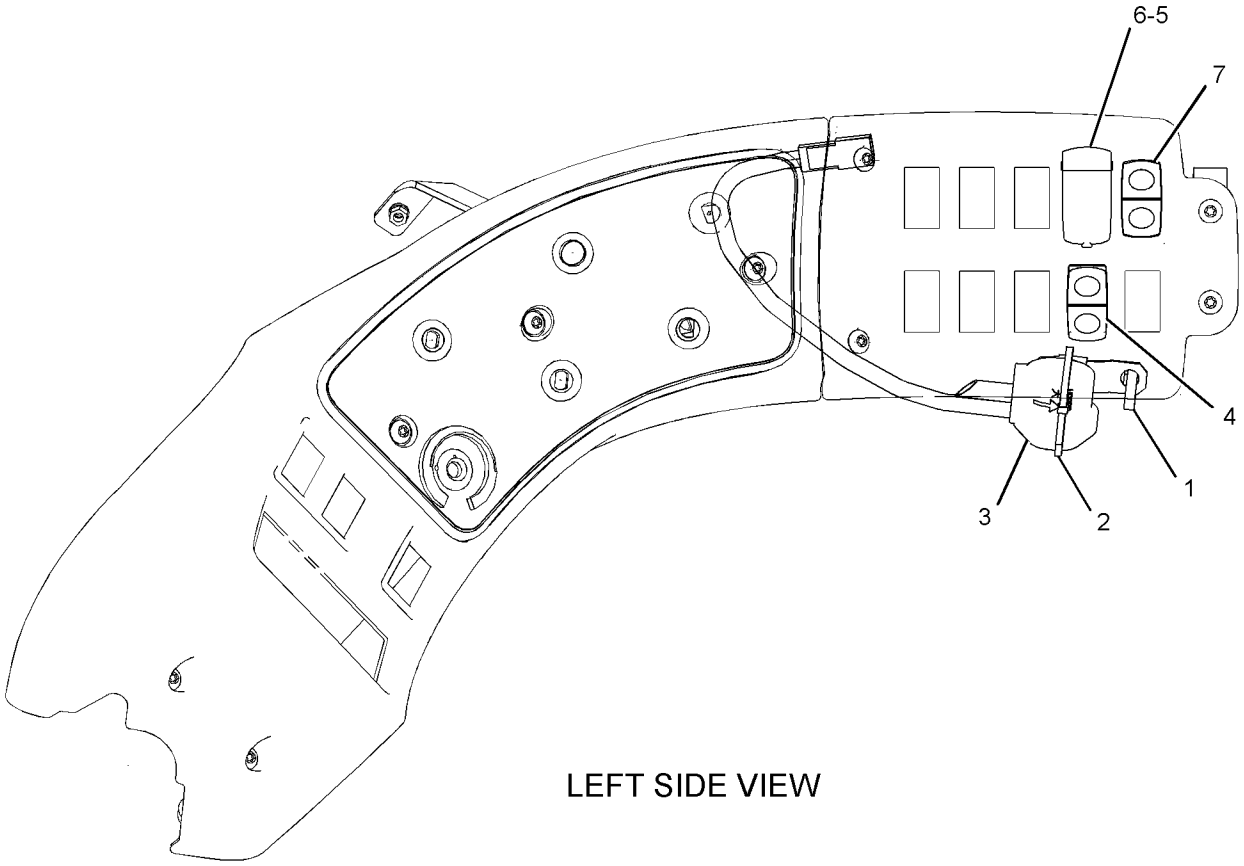

LEFT SIDE VIEW

GRAPHIC #1 **<END>** g01202327

106-0107 SWITCH GP-ROTARY—AUTODIG MATERIAL SELECT

S/N: M3G1-UP

PART OF 253-3471 CONTROL GP-AUTODIG

AN ATTACHMENT

SMCS-7332 **i02305918**

NOTE	REF NO	GRAPHIC REF	PART NUMBER	QTY	PART NAME 1 2 3 4 5 6 (PRODUCT LEVEL)	SEE PAGE
	1	1	**102-8805**	1	KIT-RECEPTACLE (6-PIN)	
					(INCLUDES RECEPTACLE AS & WEDGE)	
	2	1	**3E-3383**	1	WEDGE-RECEPTACLE LOCK (6-PIN)	
	3	1	**8T-8737**	1	PLUG-SEAL	
	4	1	**144-1636**	5	PIN-CONNECTOR	
M	5	1	**7Y-5458**	1	NUT (M12X1-THD)	
	6	1	**7Y-5464**	1	WASHER (M12.2X15.4X0.5-MM THK)	
	7	1	**106-0210**	1	SEAL	

M-METRIC PART

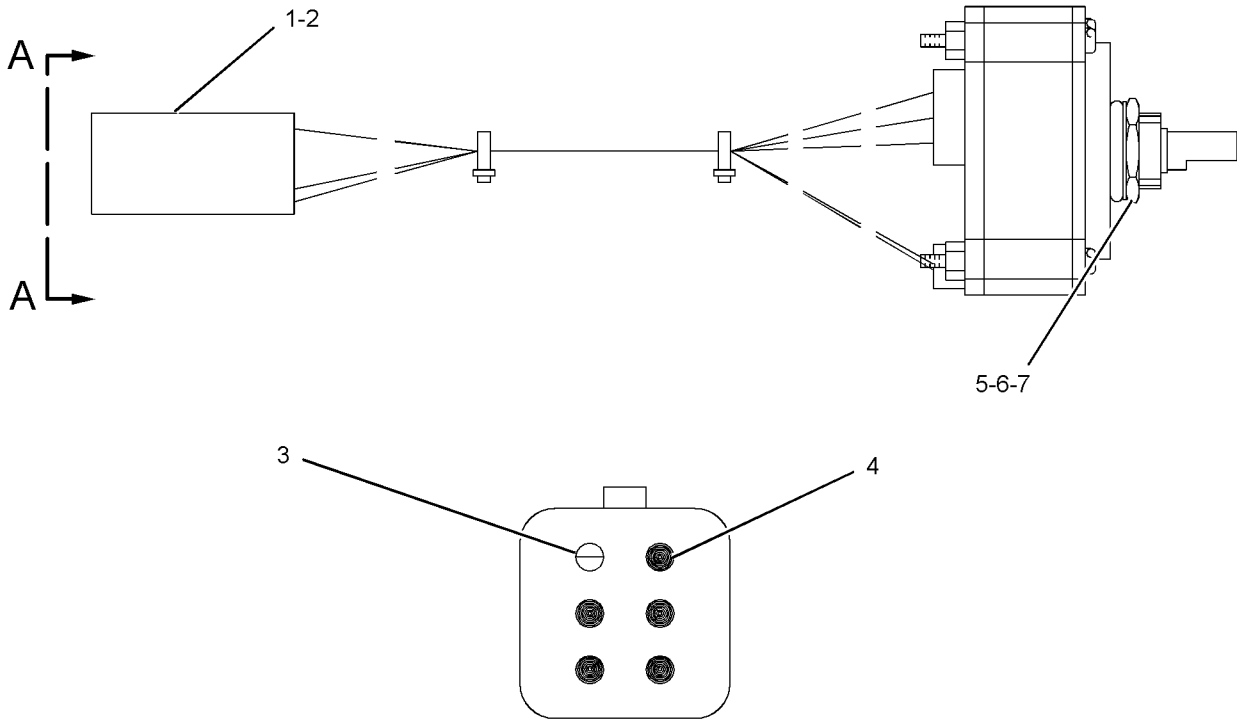

VIEW A-A

GRAPHIC #1 **<END>** g01098706

252-5924 SWITCH GP-SECONDARY STEERING

S/N: M3G1-UP
PART OF 244-5424 STEERING AR-SECONDARY
AN ATTACHMENT

SMCS-7332 **i02307749**

NOTE	REF NO	GRAPHIC REF	PART NUMBER	QTY	PART NAME 1 2 3 4 5 6 (PRODUCT LEVEL)	SEE PAGE
	1	1	**236-4615**	1	SWITCH AS-ROCKER (SECONDARY STEERING)	

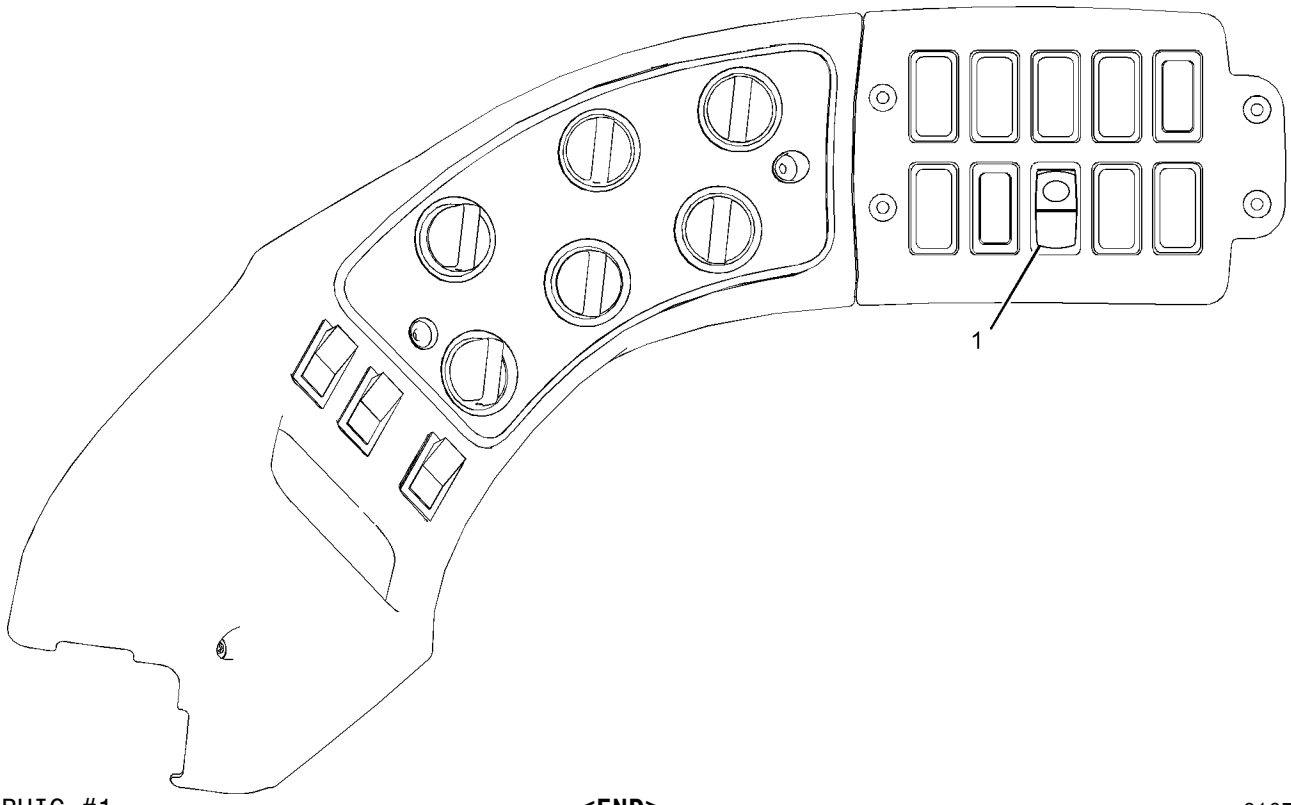

GRAPHIC #1 **<END>** g01079142

253-3951 SWITCH GP-SIGNAL–TURN

S/N: M3G1-UP

PART OF 254-5525 LIGHTING AR-ROADING, 244-3599, 275-5865 LIGHTING AR-SIGNAL AN ATTACHMENT

SMCS-7332 **i02223842**

NOTE	REF NO	GRAPHIC REF	PART NUMBER	QTY	PART NAME 1 2 3 4 5 6 (PRODUCT LEVEL)	SEE PAGE
	1	1	**8N-2622**	1	LEVER	
	2	1	**134-9569**	1	SWITCH AS-TURN SIGNAL	
		1	**5L-7200**	1	SCREW (8-32X0.375-IN)	
		1	**9B-7233**	1	LOCKWASHER	
	3	1	**149-0668**	1	COVER	
	4	1	**154-4563**	1	HARNESS AS-LIGHTING (TURN SIGNAL)	
		1	**102-8805**	1	KIT-RECEPTACLE (6-PIN)	
					(INCLUDES RECEPTACLE AS AND WEDGE)	
	5	1	**154-8262**	1	BRACKET AS	
	6	1	**172-9200**	1	SUPPRESSOR-ARC	
	7	1	**201-5555**	1	PLATE-INSTRUCTION (TURN SIGNAL)	
	8	1	**217-8166**	1	FLASHER AS (24-VOLT)	
	9	1	**236-4616**	1	SWITCH AS-ROCKER (HAZARD)	
	10	1	**189-3158**	1	SUPPRESSOR-ARC	
M	11	1	**7Y-3173**	3	SCREW-BUTTON HEAD (M4X0.7X12-MM)	
M	12	1	**8T-0288**	2	BOLT (M5X0.8X12-MM)	
	13	1	**8T-0328**	2	WASHER-HARD (5.5X10X1-MM THK)	
M	14	1	**8T-4200**	2	BOLT (M8X1.25X16-MM)	
	15	1	**8T-4205**	1	WASHER-HARD (7.2X14.5X2-MM THK)	
	16	1	**9M-8406**	1	CLIP	
	17	1	**9X-2038**	4	WASHER (7X19X2-MM THK)	
M	18	1	**9X-2042**	4	SCREW-TRUSS HEAD (M6X1X12-MM)	

M-METRIC PART

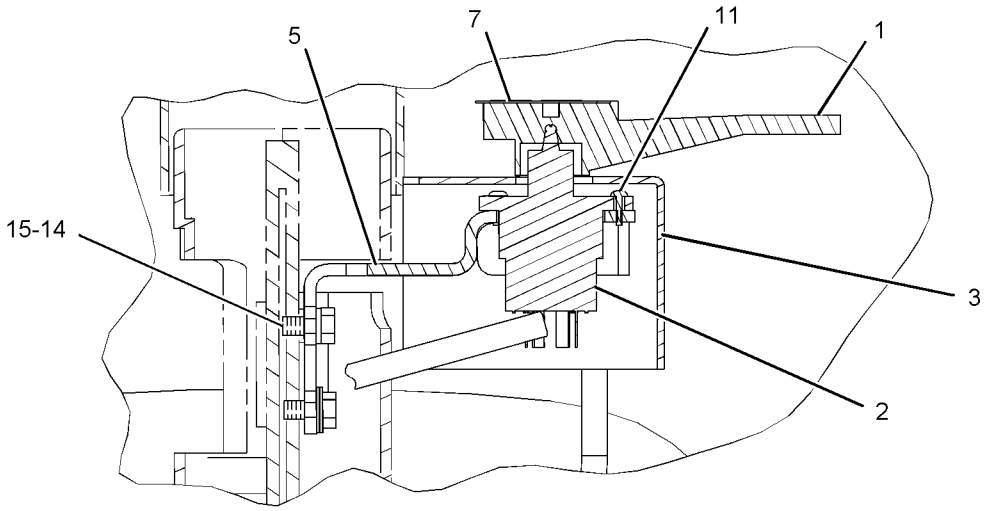

SECTION A-A

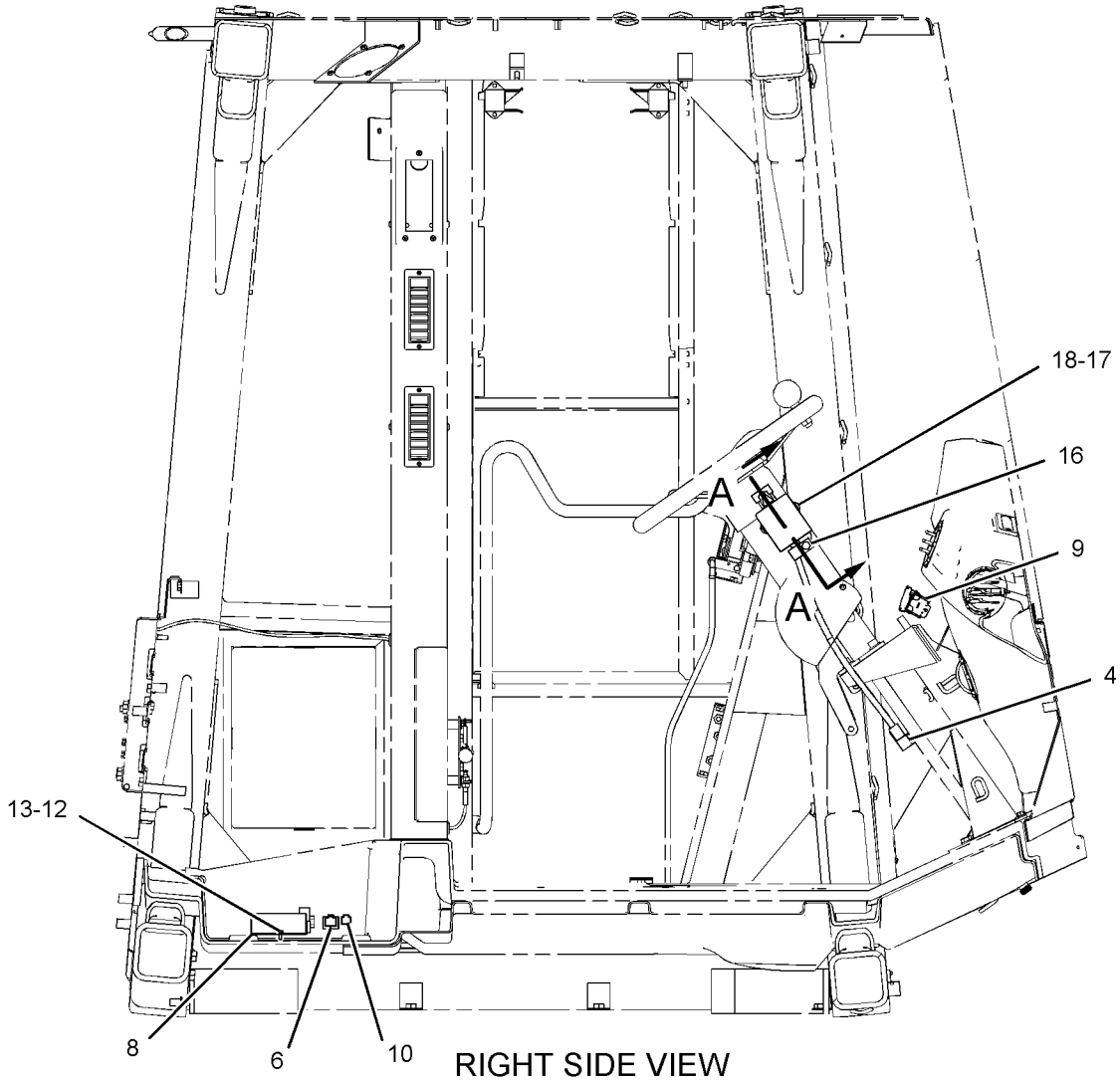

RIGHT SIDE VIEW

GRAPHIC #1 **<END>** g01108602

165-5970 SWITCH GP-TOGGLE–FUEL PRIMING PUMP

S/N: KHX1-UP

PART OF 238-4803 PUMP GP-FUEL PRM & PRIM FILTER

SMCS-7332 **i02299813**

NOTE	REF NO	GRAPHIC REF	PART NUMBER	QTY	PART NAME 1 2 3 4 5 6 (PRODUCT LEVEL)	SEE PAGE
	1	1	**6T-3631**	2	NUT-HEX (15/32-32 THD)	
	2	1	**6T-3632**	1	LOCKWASHER	
	3	1	**6T-3633**	1	RING-LOCKING	
	4	1	**102-8803**	1	KIT-RECEPTACLE (3-PIN)	
					(INCLUDES RECEPTACLE AS & WEDGE)	
	5	1	**3E-3371**	1	WEDGE-RECEPTACLE LOCK (3-PIN)	
	6	1	**186-3735**	3	PIN-CONNECTOR (16-GA TO 18-GA)	

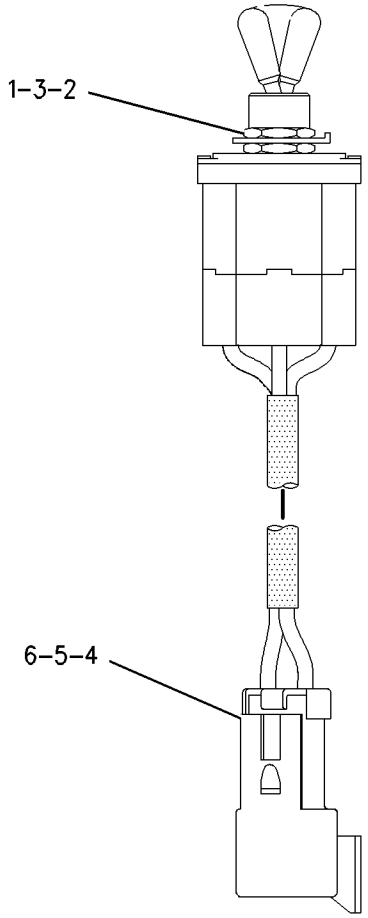

GRAPHIC #1 **<END>** g00749466

ELECTRICAL AND STARTING SYSTEM

243-1938 SWITCH GP-TRANSMISSION–
REMOTE FORWARD, NEUTRAL, REVERSE CONTROL
S/N: M3G1-UP
AN ATTACHMENT

SMCS-1611, 3065, 4309, 7332 **i02379778**

NOTE	REF NO	GRAPHIC REF	PART NUMBER	QTY	PART NAME 1 2 3 4 5 6 (PRODUCT LEVEL)	SEE PAGE
	1	1	**246-2642**	1	SWITCH AS-ROCKER (FORWARD, NEUTRAL, REVERSE)	

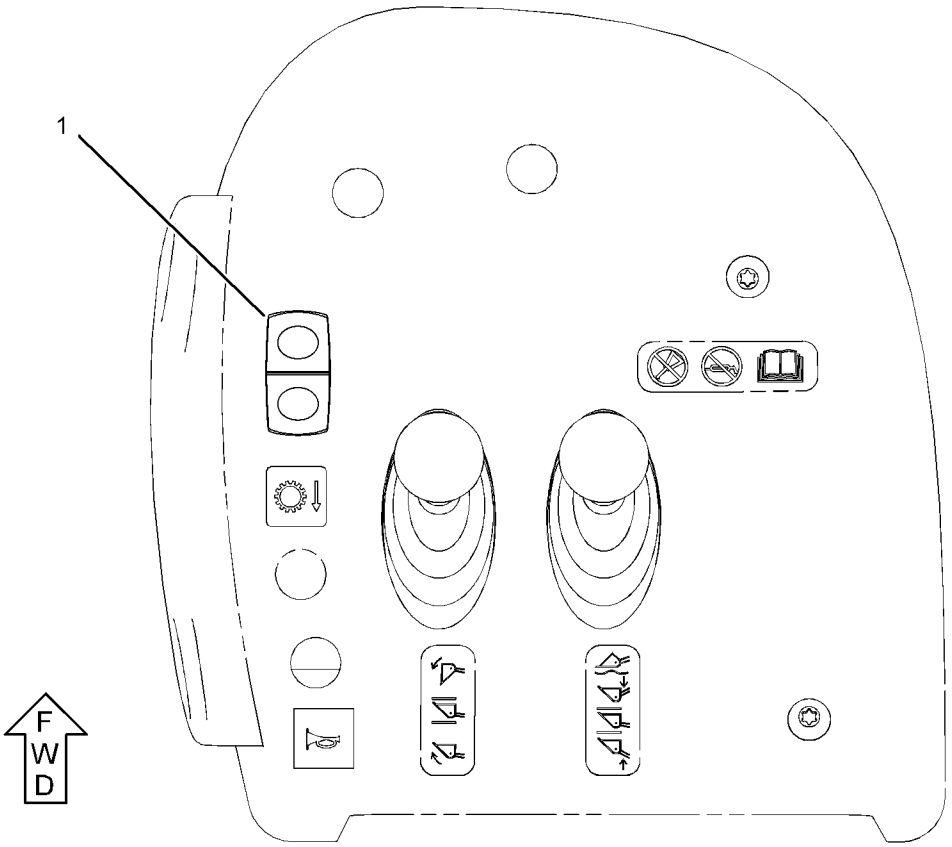

TOP VIEW

GRAPHIC #1 **<END>** g01202175

239-1134 VALVE GP-ETHER STARTING

S/N: M3G1-UP
PART OF 261-3802 STARTING AID GP-ETHER
AN ATTACHMENT

SMCS-1456 **i02236256**

NOTE	REF NO	GRAPHIC REF	PART NUMBER	QTY	PART NAME 1 2 3 4 5 6 (PRODUCT LEVEL)	SEE PAGE
	1	1	**3E-3365**	1	WEDGE-RECEPTACLE LOCK (2-PIN)	
	2	1	**7N-9801**	1	GASKET	
	3	1	**102-8802**	1	KIT-RECEPTACLE (2-PIN)	
					(KIT INCLUDES RECEPTACLE AS & WEDGE)	
	4	1	**186-3735**	2	PIN-CONNECTOR (16-GA TO 18-GA)	

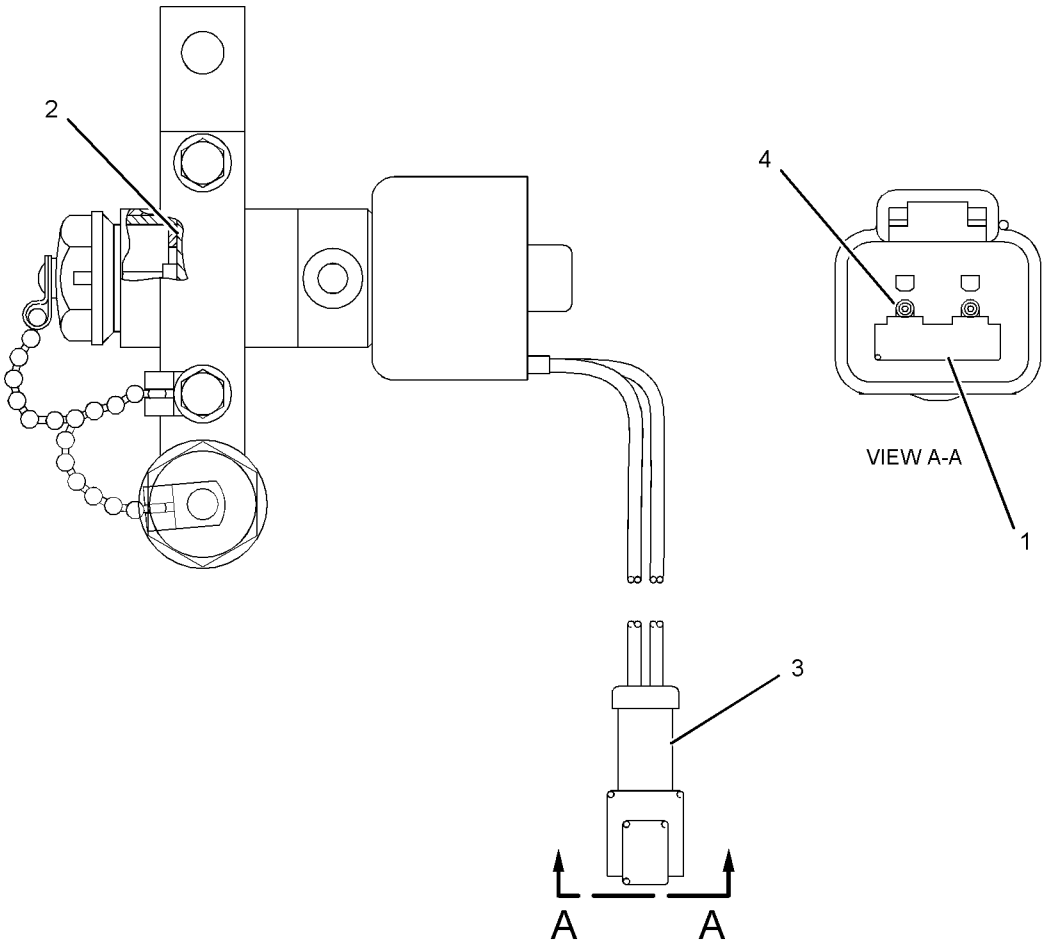

GRAPHIC #1 **<END>** g01053000

271-4024 WIRING GP-AIR CONDITIONER

S/N: M3G1-UP
PART OF 243-6623 AIR CONDITIONER AR
AN ATTACHMENT

SMCS-1408, 7320 **i02444742**

NOTE	REF NO	GRAPHIC REF	PART NUMBER	QTY	PART NAME 1 2 3 4 5 6 (PRODUCT LEVEL)	SEE PAGE
	1	1	**7K-1181**	2	STRAP-CABLE	
	2	1	**114-5333**	1	SWITCH AS-PRESSURE (REFRIGERANT)	
		1	**102-8802**	2	KIT-RECEPTACLE (2-PIN)	
					(EACH KIT INCLUDES RECEPTACLE AND WEDGE)	
	3	1	**218-4935**	1	SUPPRESSOR-ARC	
	4	1	**132-5789**	1	CLIP	
	5	1	**156-6175**	1	CLIP	
	6	1	**9X-7378**	1	SEAL-O-RING	

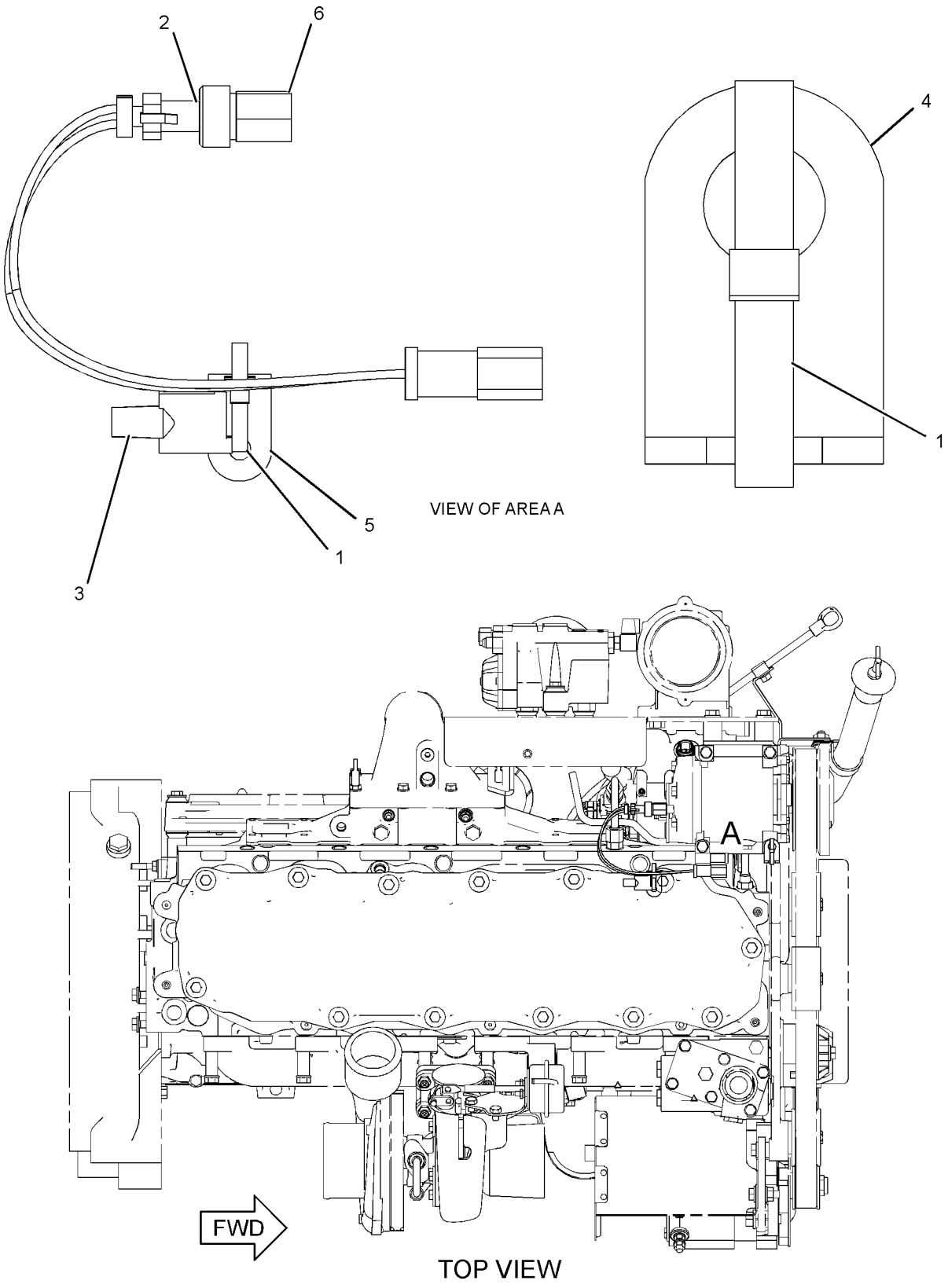

GRAPHIC #1 **<END>** g01198700

241-0638 WIRING GP-AXLE MONITORING–OIL TEMPERATURE

S/N: M3G1-UP

PART OF 237-4931 ELECTRICAL AR

SMCS-1408, 7490 **i02443703**

NOTE	REF NO	GRAPHIC REF	PART NUMBER	QTY	PART NAME 1 2 3 4 5 6 (PRODUCT LEVEL)	SEE PAGE
	1	1	**3S-2093**	2	STRAP-CABLE	
	2	1	**7K-1181**	1	STRAP-CABLE	
	3	1	**130-9811**	1	SENSOR GP-TEMPERATURE (2-PIN) (FRONT AXLE OIL)	
	3A	1	**130-9811**	1	SENSOR GP-TEMPERATURE (2-PIN) (REAR AXLE OIL)	
	4	1	**156-5892**	2	BRACKET	
	5	1	**247-8474**	1	HARNESS AS-SENSOR (REAR AXLE)	
		1	**102-8802**	1	KIT-RECEPTACLE (2-PIN)	
					(INCLUDES RECEPTACLE AS AND WEDGE)	
		1	**155-2270**	1	KIT-CONNECTING PLUG (2-PIN)	
					(INCLUDES PLUG AS AND WEDGE)	
	6	1	**247-8475**	1	HARNESS AS-SENSOR (AXLE, FRONT)	
		1	**155-2270**	1	KIT-CONNECTING PLUG (2-PIN)	
					(INCLUDES PLUG AS AND WEDGE)	
	7	1	**3K-0360**	2	SEAL-O-RING	
	8	1	**4D-7794**	1	CLIP	
	9	1	**5P-8247**	4	WASHER-HARD (17X32X3.5-MM THK)	
	10	1	**5P-9085**	4	CLIP	
M	11	1	**8T-0299**	4	BOLT (M16X2X30-MM)	
	12	1	**8T-4121**	8	WASHER-HARD (11X21X2.5-MM THK)	
M	13	1	**8T-4133**	1	NUT (M10X1.5 THD)	
M	14	1	**8T-4136**	1	BOLT (M10X1.5X25-MM)	
M	15	1	**8T-4137**	6	BOLT (M10X1.5X20-MM)	
	16	1	**9M-8406**	2	CLIP	
	17	1	**130-5300**	1	CLIP	

M-METRIC PART

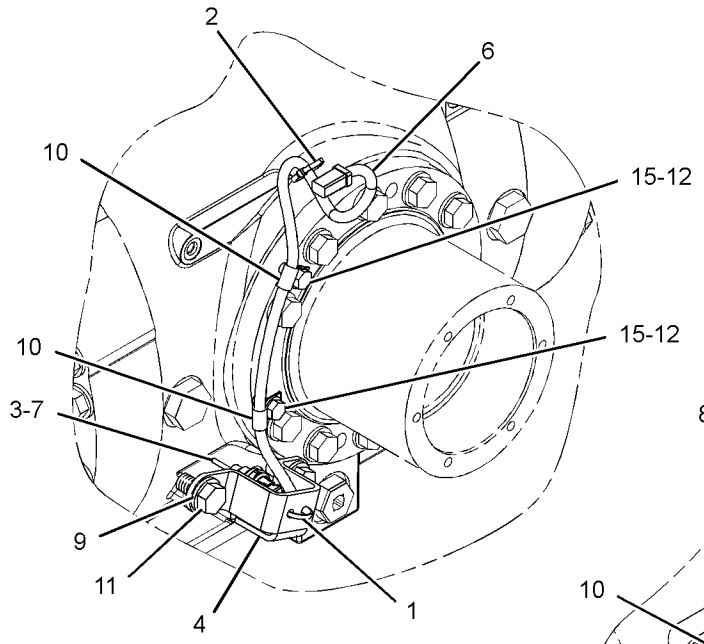

VIEW A-A

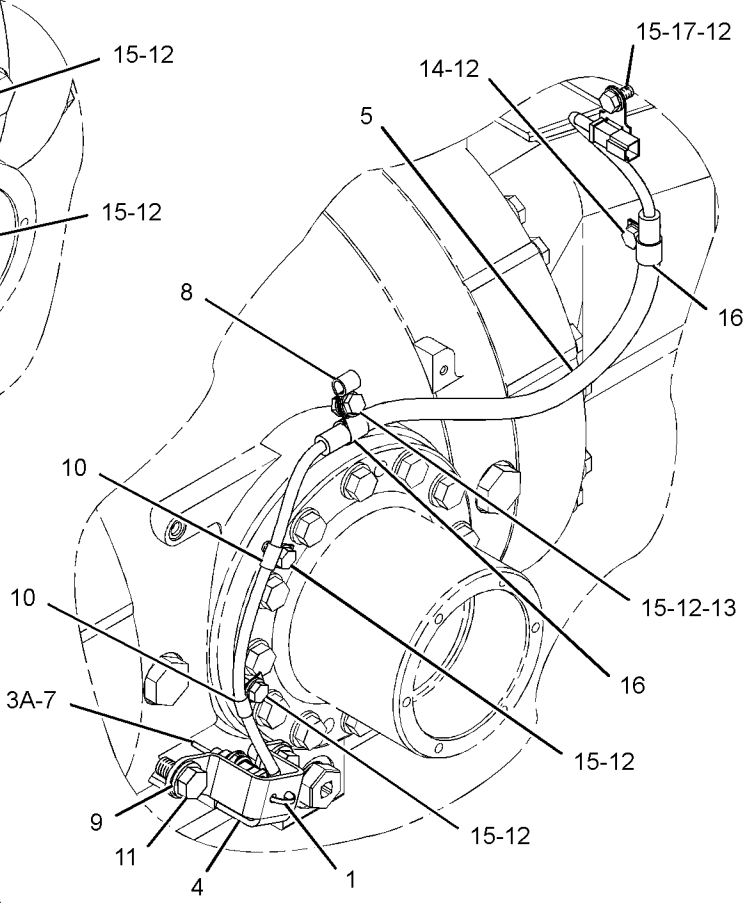

VIEW OF AREA B

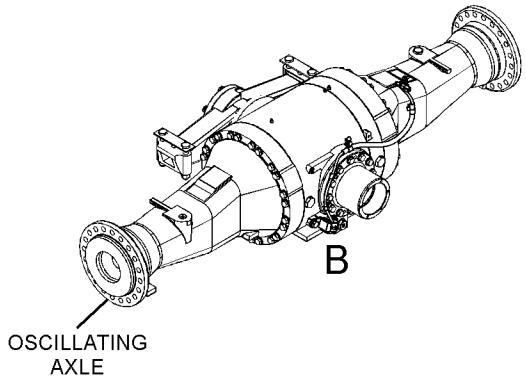

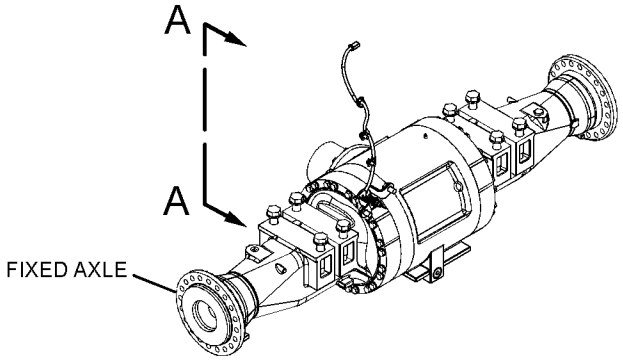



GRAPHIC #1 **<END>** g01221780

ELECTRICAL AND STARTING SYSTEM

237-4910 WIRING GP-CAB

S/N: M3G1-UP

PART OF 243-1080 CAB AR-ENCLOSED ROPS

SMCS-1408, 7301 **i02454746**

NOTE	REF NO	GRAPHIC REF	PART NUMBER	QTY	PART NAME 1 2 3 4 5 6 (PRODUCT LEVEL)	SEE PAGE
	1	4	**102-8802**	1	KIT-RECEPTACLE (2-PIN)	
	2	3	**102-8805**	1	KIT-RECEPTACLE (6-PIN)	
					(EACH KIT RECEPTACLE INCLUDES RECEPTACLE AS AND WEDGE)	
	3	2	**3E-5239**	1	RELAY AS (24-VOLT) (FRONT CAB FLOODLIGHTS)	
	3A	2	**3E-5239**	1	RELAY AS (24-VOLT) (REAR FLOODLIGHT)	
	3B	2	**3E-5239**	1	RELAY AS (24-VOLT) (HORN)	
Y	4	2	**3E-6328**	1	ALARM GP (24-VOLT) (ACTION)	115
Y	5	1	**3E-6389**	2	LAMP GP-DOME (24-VOLT, WITH SWITCH) (CAB)	140
	6	1,3,4	**3S-2093**	23	STRAP-CABLE	
	7	2	**4P-8525**	11	SPACER (9X16X30-MM THK)	
	8	1	**4V-4164**	16	BUSHING-TERMINAL	
	9	2	**6I-1418**	8	SPACER (8.2X12.7X28.7-MM THK)	
	10	1	**6V-8369**	2	NUT (7/16-28-THD)	
	11	1,2,3, 4	**7K-1181**	32	STRAP-CABLE	
	12	3	**7N-5876**	4	LAMP (24-VOLT)	
	13	3	**8C-6354**	1	CAP-RECEPTACLE (DUST)	
	14	3	**8T-8737**	6	PLUG-SEAL	
	15	2	**8T-9655**	16	MOUNT-ISOLATION	
	16	1	**8X-5804**	1	STRAP AS-GROUND	
	17	1	**9F-8125**	16	LOCKWASHER	
	18	2	**9W-1441**	7	FUSE (15-AMPERE)	
	19	2	**9W-1442**	24	FUSE (10-AMPERE)	
	20	2	**9W-1446**	1	FUSE (20-AMPERE)	
	21	1	**098-8968**	16	WASHER (5X16X1.2-MM THK)	
Y	22	4	**103-5526**	1	CONTROL GP-MONITOR (DIMMER)	652
	23	3	**108-3320**	1	SWITCH AS-ROTARY (24-VOLT) (RUNNING LIGHTS)	
		3	**3E-3389**	1	WEDGE-RECEPTACLE LOCK	
		3	**9W-0852**	8	PIN-CONNECTOR (14-GA)	
		3	**102-8806**	1	KIT-RECEPTACLE (8-PIN)	
					(INCLUDES RECEPTACLE AS AND WEDGE)	
	24	1,3	**110-6109**	6	KNOB-CONTROL (CONTROL PANEL SWITCHES)	
	25	1	**110-7886**	1	SWITCH AS-WIPER (24-VOLT) (FRONT INTERMITTENT)	
		1	**2H-3920**	1	LOCKWASHER	
		1	**6V-8369**	1	NUT (7/16-28-THD)	
		1	**8T-8737**	1	PLUG-SEAL	
		1	**9W-0852**	4	PIN-CONNECTOR (14-GA)	
		1	**102-8806**	2	KIT-RECEPTACLE (8-PIN)	
					(EACH INCLUDES RECEPTACLE AS AND WEDGE)	
		1	**186-3735**	3	PIN-CONNECTOR (16-GA TO 18-GA)	
	26	3	**110-7887**	1	SWITCH GP-START (KEY)	
		3	**7T-6799**	1	NUT-MOUNTING (1-32-THD)	
		3	**102-8804**	1	KIT-RECEPTACLE (4-PIN)	
					(INCLUDES RECEPTACLE AS AND WEDGE)	
		3	**186-3735**	4	PIN-CONNECTOR (16-GA TO 18-GA)	
	27	1	**112-6174**	1	SWITCH AS-ROTARY (24-VOLT) (REAR WIPER)	
		1	**2H-3920**	1	LOCKWASHER	
		1	**6V-8369**	1	NUT (7/16-28-THD)	
		1	**186-3735**	6	PIN-CONNECTOR (16-GA TO 18-GA)	
		1	**8T-8737**	2	PLUG-SEAL	
		1	**102-8806**	2	KIT-RECEPTACLE (8-PIN)	
					(EACH INCLUDES RECEPTACLE AS AND WEDGE)	
	28	3	**117-2311**	1	RECEPTACLE AS-POWER (12-VOLT) (AUXILIARY)	
	29	1	**121-8038**	1	RECEPTACLE AS (AUXILIARY)	

237-4910 **WIRING GP-CAB** ***(contd.)*** **i02454746**

NOTE	REF NO	GRAPHIC REF	PART NUMBER	QTY	PART NAME 1 2 3 4 5 6 (PRODUCT LEVEL)	SEE PAGE
		1	**102-8803**	1	KIT-RECEPTACLE (3-PIN)	
					(INCLUDES RECEPTACLE AS AND WEDGE)	
		1	**3E-3371**	1	WEDGE-RECEPTACLE LOCK (3-PIN)	
D		1	**5P-5624**		WIRE (14-GA, BLACK) (0.3-M)	
		1	**8T-8737**	1	PLUG-SEAL	
		1	**9W-0852**	2	PIN-CONNECTOR (14-GA)	
	30	1	**123-2896**	1	GASKET	
	31	1	**127-4540**	1	POTENTIOMETER AS (TEMPERATURE SELECT)	
		1	**102-8803**	1	KIT-RECEPTACLE (3-PIN)	
					(INCLUDES RECEPTACLE AS AND WEDGE)	
		1	**186-3735**	3	PIN-CONNECTOR (16-GA TO 18-GA)	
		1	**236-8722**	1	WASHER	
Y	32	1	**154-7443**	1	CONTROL GP-UNPRGMED MONITOR (CATERPILLAR MONITORING SYSTEM)	654
Y	33	3	**166-6928**	1	MODULE GP-QUAD GAUGE	706
	34	4	**170-1821**	1	SWITCH AS-PUSH BUTTON (HORN)	
		4	**6F-0253**	1	LOCKWASHER	
		4	**186-3735**	2	PIN-CONNECTOR (16-GA TO 18-GA)	
		4	**172-3511**	1	NUT (5/8-24-THD)	
	35	2	**173-2234**	1	PLATE AS	
	36	1	**185-6335**	1	SWITCH AS-ROTARY (24-VOLT) (AUTOSHIFT CONTROL)	
	36A	1	**185-6335**	1	SWITCH AS-ROTARY (24-VOLT) (VARIABLE SHIFT CONTROL)	
					(EACH INCLUDES)	
		1	**8T-8737**	2	PLUG-SEAL	
		1	**9W-0852**	4	PIN-CONNECTOR (14-GA)	
		1	**102-8805**	2	KIT-RECEPTACLE (6-PIN)	
					(EACH INCLUDES RECEPTACLE AS AND WEDGE)	
	37	1	**192-1954**	1	FILM-CONTROL (UPPER PANEL)	
	38	3	**198-6570**	1	LIGHTER GP-CIGAR (12-VOLT)	
		3	**198-6571**	1	ELEMENT AS	
	39	4	**209-0381**	1	CONVERTER-POWER (24-VOLT TO 12-VOLT)	
	40	1	**234-5925**	1	GASKET	
	41	1	**235-5506**	1	HARNESS AS-LIGHTING (CAB FLOODLIGHTS)	
		1	**155-2270**	4	KIT-CONNECTING PLUG (2-PIN)	
					(EACH INCLUDES PLUG AS AND WEDGE)	
	42	1,3,4	**236-4631**	20	BEZEL	
	43	4	**236-9993**	1	PLATE AS	
M		4	**6V-9632**	4	NUT-WELD (M6X1-THD)	
		4	**7T-1099**	5	LINK	
M		4	**8T-3490**	2	NUT-WELD (M10X1.5-THD)	
M		4	**8T-3612**	4	NUT-WELD (M8X1.25-THD)	
M		4	**8T-8874**	9	NUT-WELD (M5X0.8-THD)	
	44	1	**242-6099**	1	CLIP	
	45	2	**242-8421**	1	PLATE AS	
	46	4	**246-0578**	1	HARNESS AS-OPERATOR CONTROLS	
		4	**155-2255**	1	KIT-CONNECTING PLUG (12-PIN)	
		4	**155-2265**	1	KIT-CONNECTING PLUG (8-PIN)	
		4	**155-2260**	1	KIT-CONNECTING PLUG (3-PIN)	
		4	**155-2270**	1	KIT-CONNECTING PLUG (2-PIN)	
		4	**155-2271**	3	KIT-CONNECTING PLUG (4-PIN)	
					(EACH KIT PLUG INCLUDES PLUG AS AND WEDGE)	
		4	**102-8803**	2	KIT-RECEPTACLE (3-PIN)	
		4	**102-8804**	1	KIT-RECEPTACLE (4-PIN)	
					(EACH KIT RECEPTACLE INCLUDES RECEPTACLE AS AND WEDGE)	
	47	1	**246-5459**	1	PLATE	
	48	4	**249-5602**	1	GUARD-SWITCH	
	49	3	**260-9602**	1	HARNESS AS-WIRING (SERVICE TOOL)	

237-4910 **WIRING GP-CAB** *(contd.)* **i02454746**

NOTE	REF NO	GRAPHIC REF	PART NUMBER	QTY	PART NAME 1 2 3 4 5 6 (PRODUCT LEVEL)	SEE PAGE
		3	**102-8805**	1	KIT-RECEPTACLE (6-PIN)	
					(INCLUDES RECEPTACLE AS AND WEDGE)	
	50	2	**262-1408**	1	CONTROL GP-UNPROGRAMMED (IMPLEMENT)	
	50A	2	**262-1408**	1	CONTROL GP-UNPROGRAMMED (POWER TRAIN)	
	51	4	**263-1493**	1	SWITCH AS-PUSH BUTTON (THROTTLE LOCK RESUME)	
		4	**172-3511**	1	NUT (5/8-24-THD)	
		4	**6F-0253**	1	LOCKWASHER	
		4	**155-2260**	1	KIT-CONNECTING PLUG (3-PIN)	
					(EACH INCLUDES PLUG AS AND WEDGE)	
		4	**126-1766**	3	SOCKET-CONNECTOR	
	52	1	**273-0274**	1	HARNESS AS-CAB	
		1	**102-8802**	4	KIT-RECEPTACLE (2-PIN)	
		1	**102-8803**	1	KIT-RECEPTACLE (3-PIN)	
		1	**102-8804**	3	KIT-RECEPTACLE (4-PIN)	
		1	**102-8805**	4	KIT-RECEPTACLE (6-PIN)	
		1	**102-8806**	3	KIT-RECEPTACLE (8-PIN)	
		1	**102-8801**	3	KIT-RECEPTACLE (12-PIN)	
		1	**197-7565**	1	KIT-RECEPTACLE (4-PIN)	
					(EACH KIT RECEPTACLE INCLUDES RECEPTACLE AS AND WEDGE)	
		1	**3S-2093**	8	STRAP-CABLE	
		1	**8N-1532**	1	RECEPTACLE AS-CONNECTOR (6-PIN)	
		1	**8N-1536**	1	NUT (1-5/8-18-THD)	
		1	**8N-1535**	1	BELL AS-END	
		1	**9X-0145**	1	RECEPTACLE AS-CONNECTOR (24-PIN)	
		1	**9X-1054**	3	PLUG AS-CONNECTOR (4-PIN)	
		1	**9X-6772**	1	STRAP-CABLE	
		1	**147-1445**	2	PLUG AS-CONNECTOR (70-PIN)	
					(EACH INCLUDES)	
		1	**159-9322**	1	SEAL-O-RING	
		1	**147-1446**	2	PLUG AS-CONNECTOR (70-PIN)	
					(EACH INCLUDES)	
		1	**159-9322**	1	SEAL-O-RING	
		1	**155-2255**	6	KIT-CONNECTING PLUG (12-PIN)	
		1	**155-2265**	5	KIT-CONNECTING PLUG (8-PIN)	
		1	**155-2260**	7	KIT-CONNECTING PLUG (3-PIN)	
		1	**155-2270**	5	KIT-CONNECTING PLUG (2-PIN)	
		1	**155-2271**	5	KIT-CONNECTING PLUG (4-PIN)	
		1	**155-2274**	13	KIT-CONNECTING PLUG (6-PIN)	
					(EACH KIT PLUG INCLUDES PLUG AS AND WEDGE)	
		1	**214-4208**	1	RECEPTACLE AS-CONNECTOR (70-PIN)	
	53	4	**132-5789**	4	CLIP	
	54	2	**134-2540**	1	RECEPTACLE AS-CONNECTOR (3-PIN)	
	55	3,4	**156-6175**	3	CLIP	
	56	4	**198-4775**	2	WASHER-HARD (6.6X15X6-MM THK)	
	57	1,3,4	**228-6089**	14	PLUG	
	58	1	**236-4608**	1	SWITCH AS-ROCKER (MODE SELECT)	
	59	1	**236-4609**	1	SWITCH AS-ROCKER (TMSN NEUTRALIZER OVERRIDE)	
	60	1	**236-4610**	1	SWITCH AS-ROCKER (AIR CONDITIONER, HEATER)	
	61	1	**236-4611**	1	SWITCH AS-ROCKER (FAN BLOWER SPEED)	
	62	1	**236-4619**	1	SWITCH AS-ROCKER (LIFT, TILT KICKOUT)	
	63	4	**236-4622**	1	SWITCH AS-ROCKER (FINE MODULATION)	
	64	3	**249-2763**	2	CONTROL GP-DISPLAY ELECTRONIC (INDICATOR PANEL, RH, LH)	
					(EACH INCLUDES)	
		3	**1S-9593**	1	STRAP-CABLE	
		3	**102-8801**	1	KIT-RECEPTACLE (12-PIN)	
					(INCLUDES RECEPTACLE AS AND WEDGE)	
		3	**3E-5180**	1	WEDGE-RECEPTACLE LOCK (12-PIN)	
		3	**186-3735**	11	PIN-CONNECTOR (16-GA TO 18-GA)	

237-4910 **WIRING GP-CAB** ***(contd.)*** **i02454746**

NOTE	REF NO	GRAPHIC REF	PART NUMBER	QTY	PART NAME 1 2 3 4 5 6 (PRODUCT LEVEL)	SEE PAGE
	65	4	**251-1197**	1	SWITCH AS-ROCKER (HYDRAULIC LOCKOUT)	
	66	4	**2A-2677**	1	SPACER (0.75-IN THK)	
	67	1	**2H-3920**	6	LOCKWASHER	
	69	1	**4B-2049**	16	NUT (10-32-THD)	
	70	4	**4D-7388**	1	CLIP	
	71	3	**4P-7581**	1	CLIP	
M	72	2	**5C-7261**	2	NUT (M8X1.25-THD)	
M	73	2	**5C-8312**	4	NUT (M4X0.7-THD)	
	74	3	**5P-4116**	1	WASHER-HARD (8.8X20.5X2-MM THK)	
	75	1	**6D-1641**	1	CLIP	
	76	1	**6D-6146**	8	SCREW-MACHINE (10-32X1.25-IN)	
	77	3	**6V-1889**	1	CLIP	
	78	1	**6V-2687**	8	SCREW-PAN HEAD (10-24X1-IN)	
	79	1	**6V-3265**	4	CLIP	
	80	2	**6V-5645**	4	SCREW-MACHINE (10-32X0.87-IN)	
M	81	4	**6V-9673**	3	SCREW-MACHINE (M5X0.8X12-MM)	
M	82	2	**7X-0818**	3	BOLT (M8X1.25X45-MM)	
M	83	2	**8T-0337**	4	SCREW-MACHINE (M4X0.7X12-MM)	
	84	1,2,4	**8T-4121**	13	WASHER-HARD (11X21X2.5-MM THK)	
M	85	4	**8T-4133**	1	NUT (M10X1.5 THD)	
M	86	2	**8T-4136**	1	BOLT (M10X1.5X25-MM)	
M	87	1,4	**8T-4137**	10	BOLT (M10X1.5X20-MM)	
M	88	1,4	**8T-4138**	10	BOLT (M6X1X20-MM)	
M	89	1,4	**8T-4171**	2	BOLT (M6X1X12-MM)	
M	90	4	**8T-4186**	1	BOLT (M10X1.5X40-MM)	
M	91	3	**8T-4199**	1	BOLT (M8X1.25X12-MM)	
	92	1,2,4	**8T-4205**	9	WASHER-HARD (7.2X14.5X2-MM THK)	
	93	1,2	**8T-4223**	4	WASHER-HARD (13.5X25.5X3-MM THK)	
	94	2	**8T-4224**	2	WASHER-HARD (8.8X16X2-MM THK)	
M	95	1,2	**8T-4244**	4	NUT (M12X1.75-THD)	
M	96	2,3	**8T-4970**	5	BOLT (M6X1X14-MM)	
M	97	2	**8T-6870**	8	BOLT (M8X1.25X70-MM)	
	98	2	**9M-4972**	1	CLIP	
	99	1	**9M-5870**	8	GROMMET	
	100	2	**9N-0869**	11	WASHER-HARD (8.8X25.5X2-MM THK)	
M	101	1	**9X-1046**	6	SCREW (M4X0.7X18-MM)	
M	102	4	**9X-2480**	2	BOLT (M6X1X45-MM)	
	103	3	**9X-6165**	1	WASHER (6.5X22X2.5-MM THK)	
	104	1,3,4	**9X-8256**	7	WASHER (6.6X12X2-MM THK)	

D-ORDER BY THE METER
M-METRIC PART
Y-SEPARATE ILLUSTRATION

237-4910 **WIRING GP-CAB** *(contd.)* **i02454746**

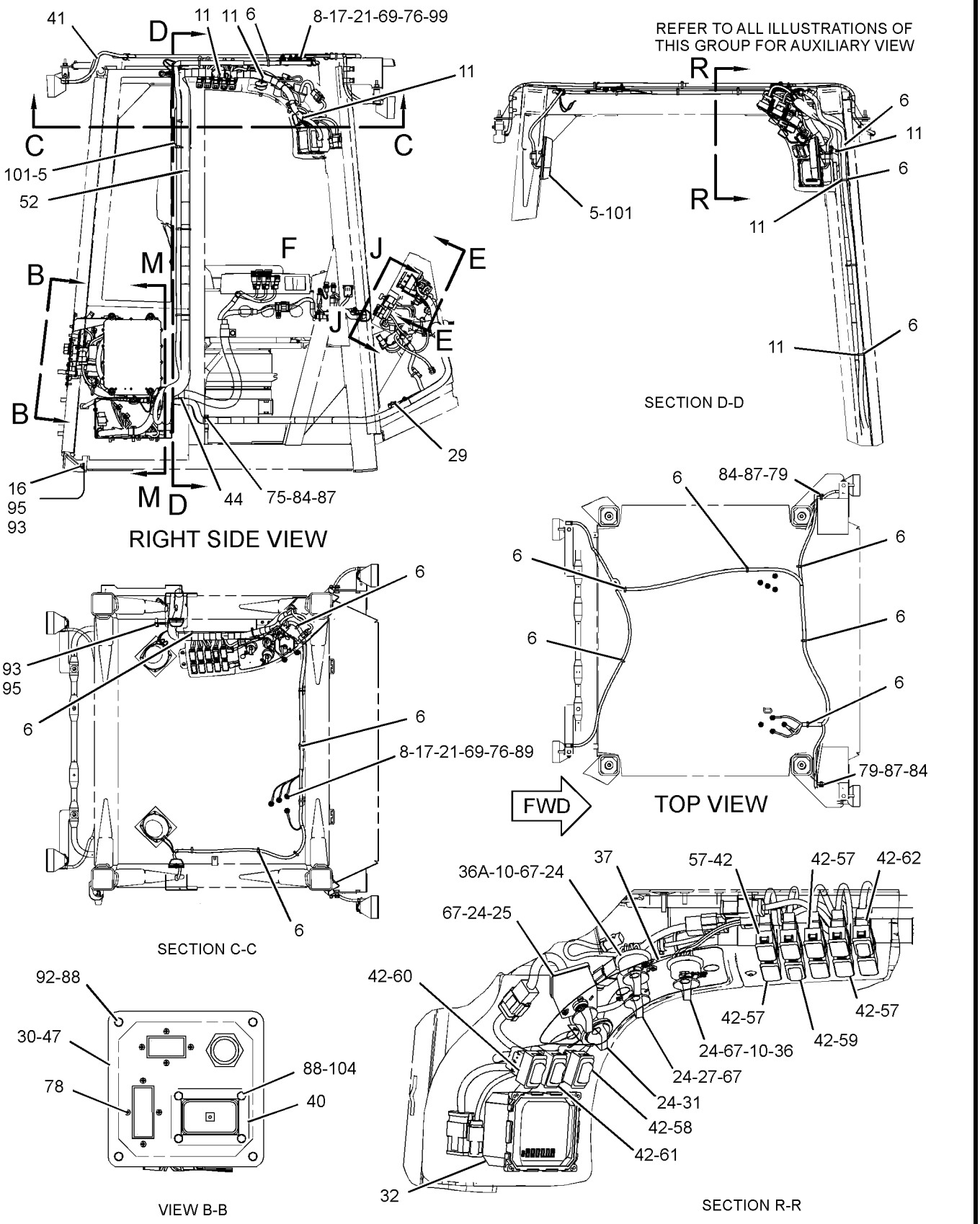

GRAPHIC #1 g01166384

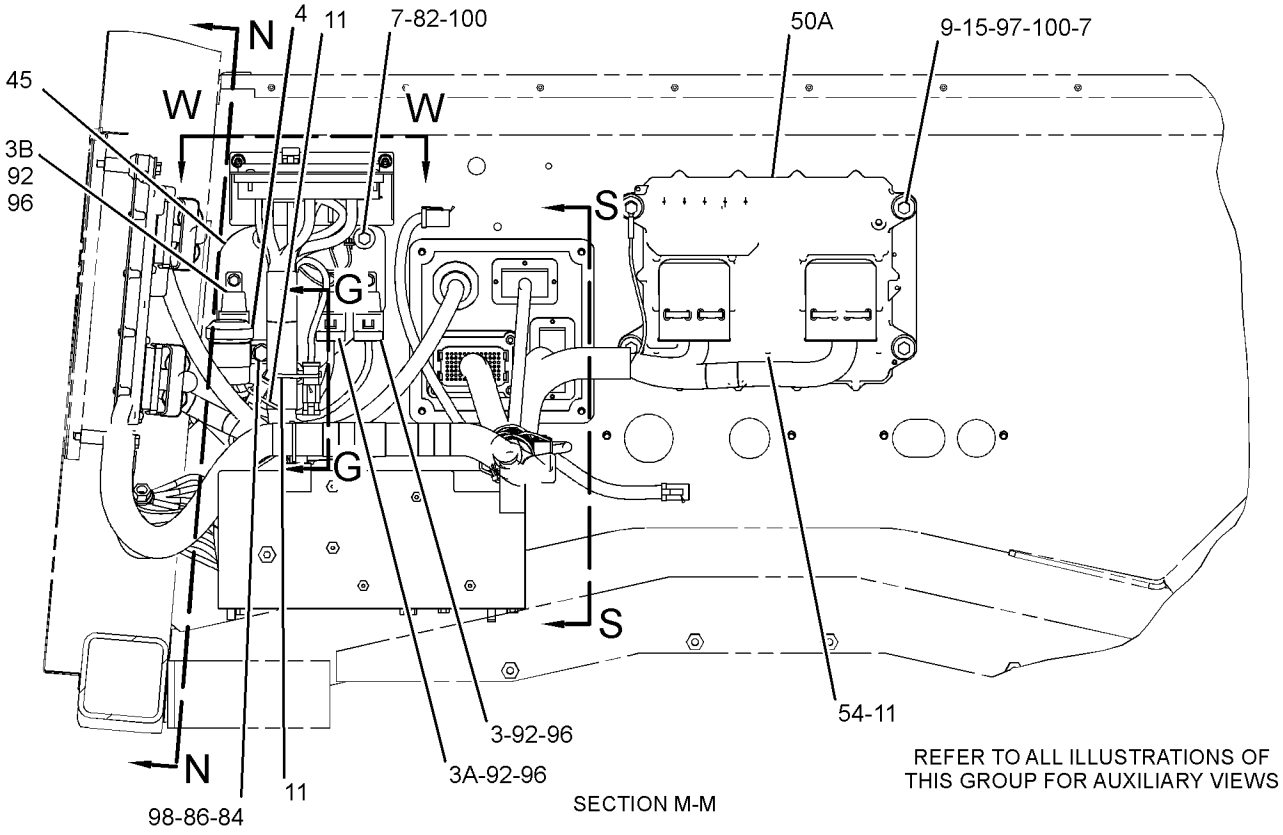

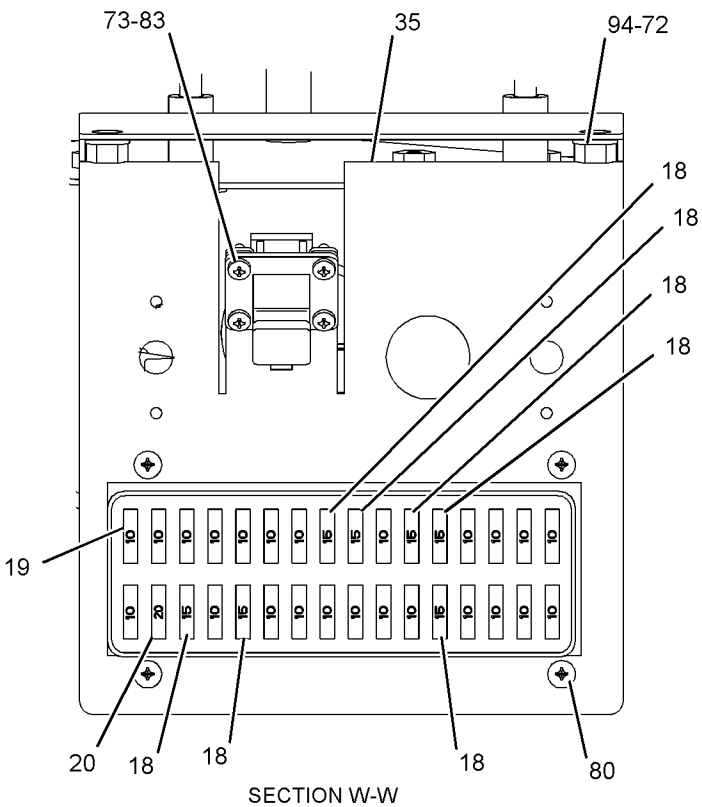

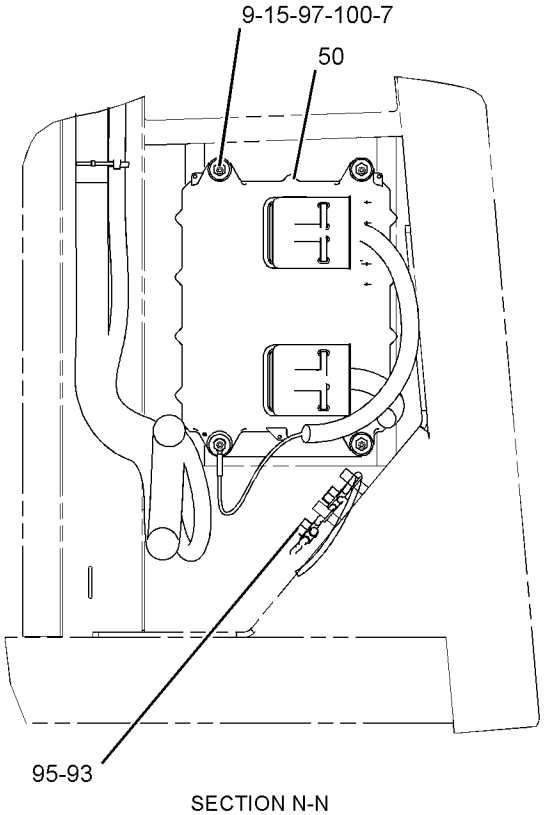

GRAPHIC #2 g01166395

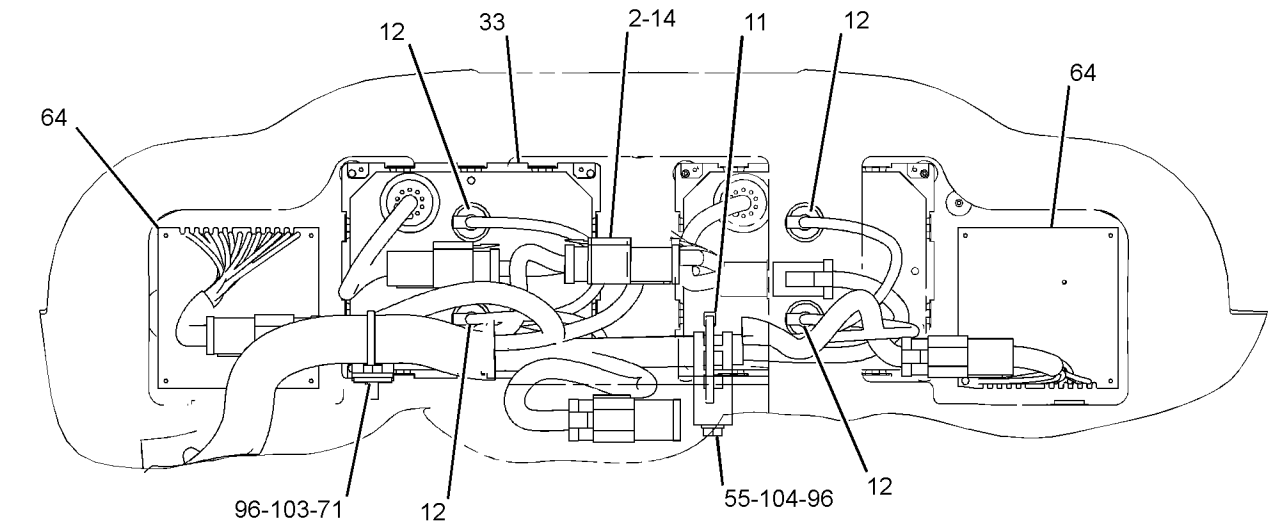

SECTION E-E

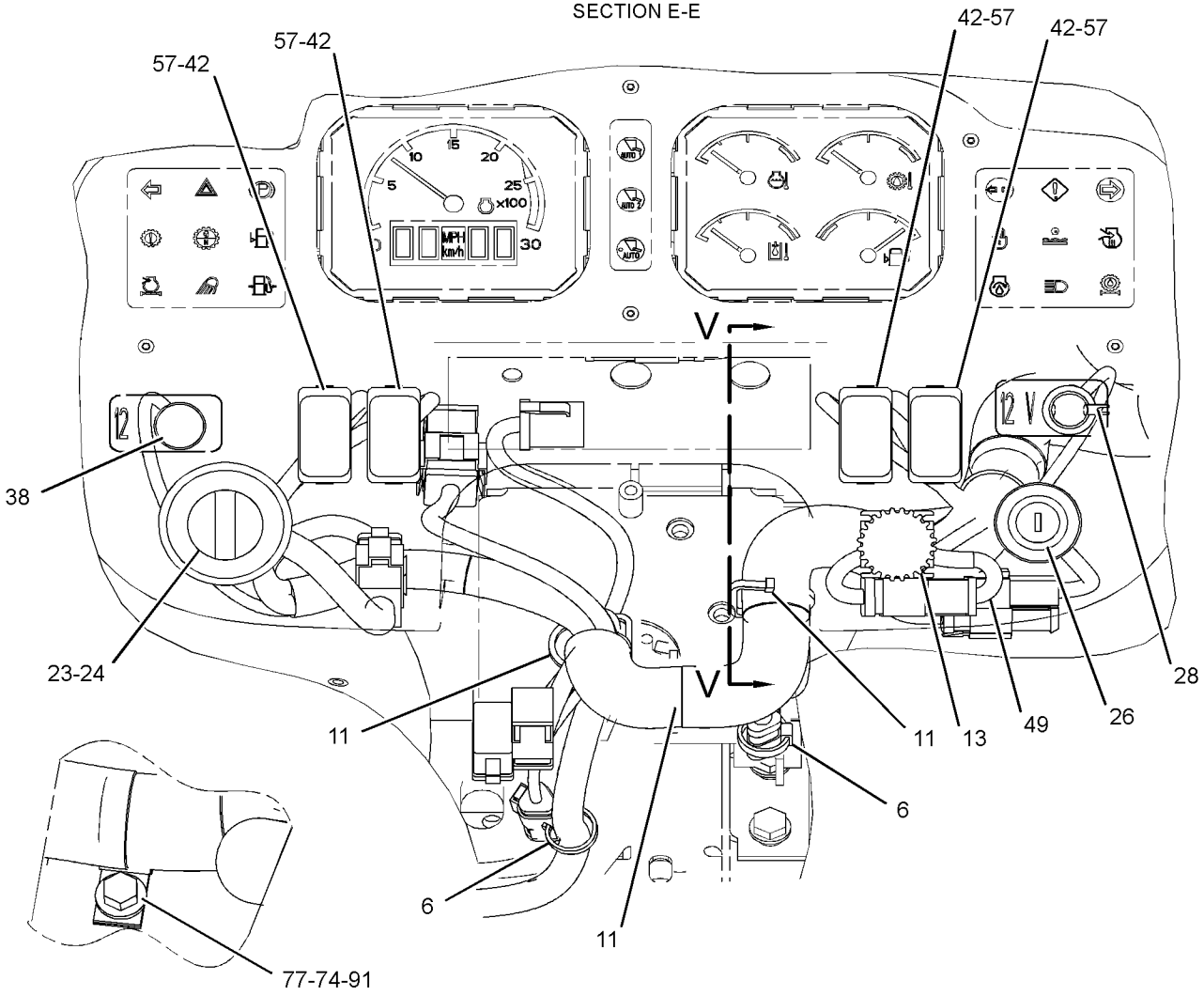

SECTION V-V

SECTION J-J

GRAPHIC #3

g01191288

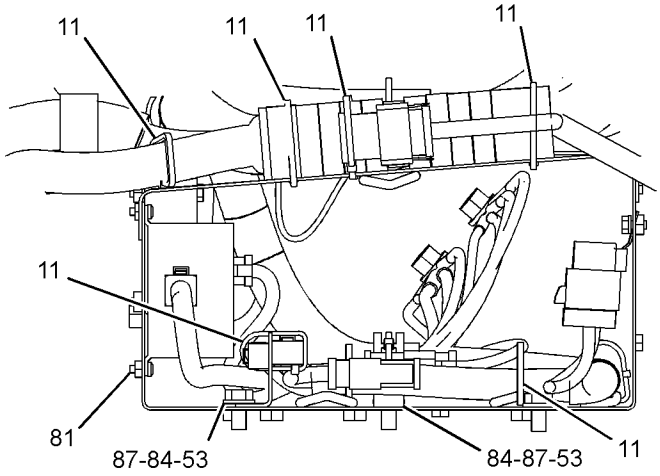

SECTION S-S

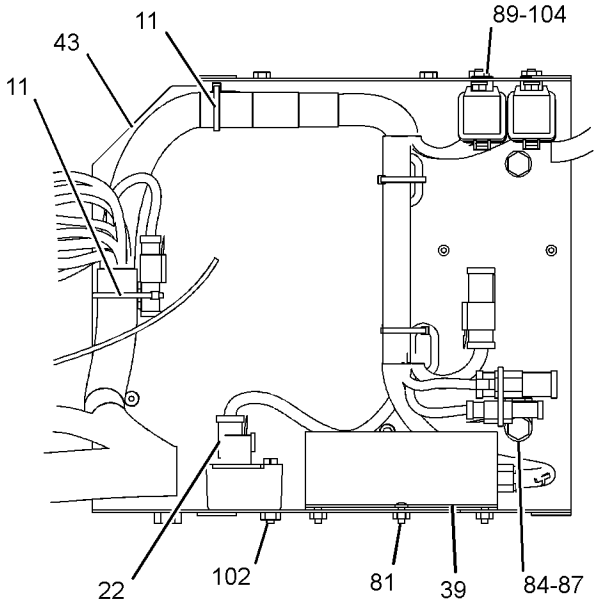

SECTION L-L

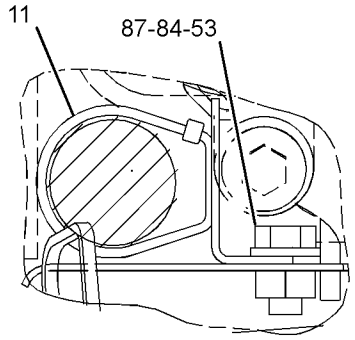

SECTION G-G

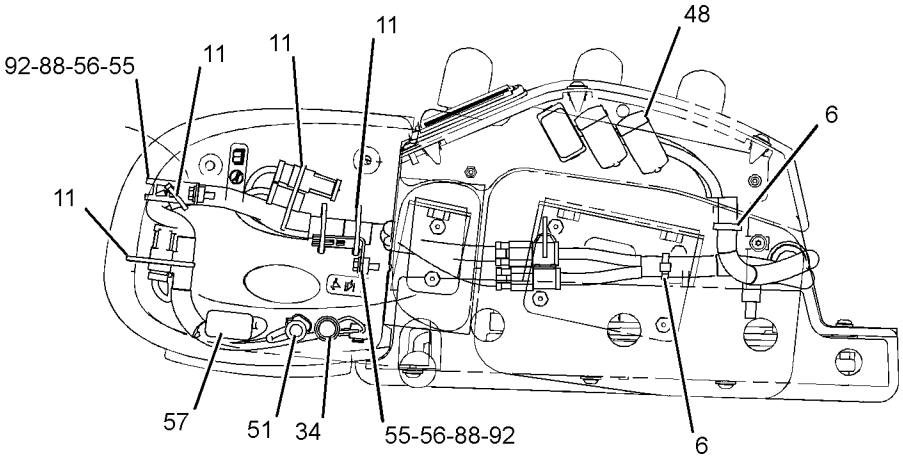

VIEW A-A

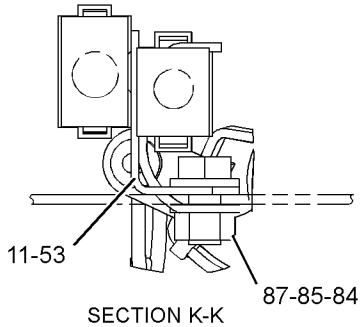

SECTION K-K

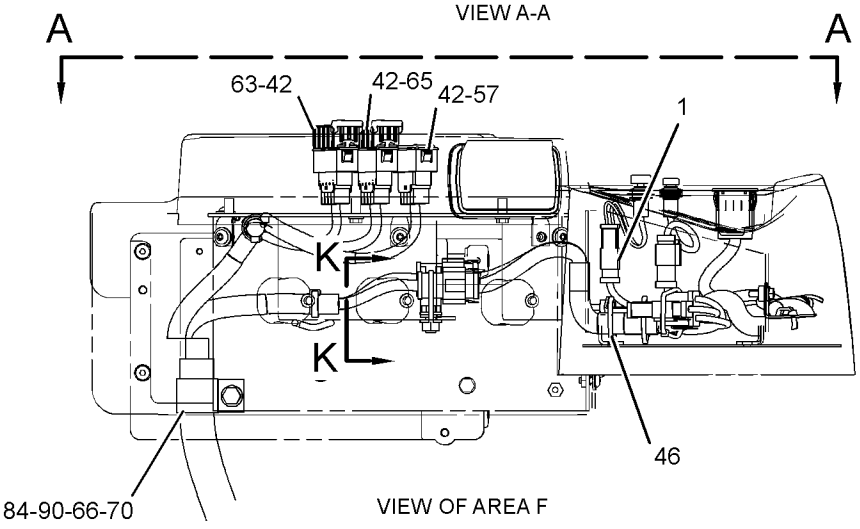

VIEW OF AREA F

GRAPHIC #4

<END>

g01223097

ELECTRICAL AND STARTING SYSTEM

241-0642 WIRING GP-CHASSIS

S/N: M3G1-UP

PART OF 237-4931 ELECTRICAL AR

SMCS-1408 **i02443591**

NOTE	REF NO	GRAPHIC REF	PART NUMBER	QTY	PART NAME 1 2 3 4 5 6 (PRODUCT LEVEL)	SEE PAGE
	1	3	**3E-5169**	1	GUARD-SWITCH	
	2	1,2,3	**7K-1181**	42	STRAP-CABLE	
Y	3	3	**125-1302**	1	SWITCH GP-MAGNETIC (24-VOLT) (START RELAY)	200
Y	4	2	**130-9811**	1	SENSOR GP-TEMPERATURE (2-PIN) (HYDRAULIC OIL)	186
	5	3	**146-0240**	1	SWITCH GP-TOGGLE (HOOD TILT ACTUATOR)	
		3	**3E-3371**	1	WEDGE-RECEPTACLE LOCK (3-PIN)	
		3	**6T-3631**	2	NUT-HEX (15/32-32-THD)	
		3	**6T-3632**	1	LOCKWASHER	
		3	**6T-3633**	1	RING-LOCKING	
		3	**186-3735**	3	PIN-CONNECTOR (16-GA TO 18-GA)	
		3	**102-8803**	1	KIT-RECEPTACLE (3-PIN)	
					(INCLUDES RECEPTACLE AS AND WEDGE	
	6	3	**149-2612**	1	RELAY AS (24-VOLT) (HOOD TILT MOTOR)	
		3	**186-3735**	2	PIN-CONNECTOR (16-GA TO 18-GA)	
		3	**9W-0852**	4	PIN-CONNECTOR (14-GA)	
		3	**102-8805**	1	KIT-RECEPTACLE (6-PIN)	
					(INCLUDES RECEPTACLE AS AND WEDGE)	
	7	3	**158-6634**	1	SWITCH GP-TOGGLE (GROUND LEVEL SHUTDOWN)	
		3	**3E-3377**	1	WEDGE-RECEPTACLE LOCK (4-PIN)	
		3	**6T-3631**	2	NUT-HEX (15/32-32-THD)	
		3	**6T-3632**	1	LOCKWASHER	
		3	**6T-3633**	1	RING-LOCKING	
		3	**186-3735**	3	PIN-CONNECTOR (16-GA TO 18-GA)	
		3	**9G-3695**	1	PLUG (GROMMET SEALING)	
		3	**102-8804**	1	KIT-RECEPTACLE (4-PIN)	
					(INCLUDES RECEPTACLE AS AND WEDGE)	
Y	8	2	**164-7577**	1	SWITCH GP-BYPASS (POWER TRAIN OIL FILTER)	197
	9	2	**172-4871**	2	CLAMP	
	10	1	**174-4312**	1	SWITCH AS-PRESSURE (PARKING BRAKE OIL)	
		1	**102-8803**	1	KIT-RECEPTACLE (3-PIN)	
					(INCLUDES RECEPTACLE AS AND WEDGE)	
		1	**3E-3371**	1	WEDGE-RECEPTACLE LOCK (3-PIN)	
D		1	**5P-6008**		TUBE (0.2-M)	
D		1	**8T-5677**		SLEEVE (0.6-M)	
		1	**186-3735**	3	PIN-CONNECTOR (16-GA TO 18-GA)	
	11	3	**178-3620**	1	STRAP	
	12	3	**246-4488**	1	BAR-BUS	
	13	3	**246-4489**	1	WIRE AS	
	14	1	**247-4506**	1	HARNESS AS-CHASSIS (MAIN)	
		1	**102-8802**	6	KIT-RECEPTACLE (2-PIN)	
		1	**102-8804**	1	KIT-RECEPTACLE (4-PIN)	
		1	**102-8801**	3	KIT-RECEPTACLE (12-PIN)	
					(EACH KIT INCLUDES RECEPTACLE AS AND WEDGE)	
		1	**110-6845**	1	PLUG AS-CONNECTOR (40-PIN)	
		1	**1U-9053**	1	CAPSULE-LUBRICANT	
		1	**110-6844**	1	SEAL	
		1	**8N-1533**	1	PLUG AS-CONNECTOR (7-PIN)	
		1	**8N-1535**	1	BELL AS-END	
		1	**9X-6772**	1	STRAP-CABLE	
		1	**113-0580**	1	RECEPTACLE AS-CONNECTOR (40-PIN)	
		1	**106-4155**	1	KIT-BOLT (ELECTRICAL CONNECTORS)	
		1	**127-5484**	1	RECEPTACLE AS-CONNECTOR (1-PIN)	
		1	**129-7163**	1	PLUG AS-CONNECTOR (1-PIN)	
		1	**129-7164**	1	RECEPTACLE AS-CONNECTOR (1-PIN)	
		1	**155-2255**	2	KIT-CONNECTING PLUG (12-PIN)	
		1	**155-2260**	3	KIT-CONNECTING PLUG (3-PIN)	

241-0642 **WIRING GP-CHASSIS** *(contd.)* **i02443591**

NOTE	REF NO	GRAPHIC REF	PART NUMBER	QTY	PART NAME 1 2 3 4 5 6 (PRODUCT LEVEL)	SEE PAGE
		1	**155-2270**	10	KIT-CONNECTING PLUG (2-PIN)	
		1	**155-2271**	2	KIT-CONNECTING PLUG (4-PIN)	
		1	**155-2274**	1	KIT-CONNECTING PLUG (6-PIN)	
					(EACH KIT INCLUDES PLUG AS AND WEDGE)	
		1	**160-7689**	1	PLUG AS-CONNECTOR (7O-PIN)	
		1	**159-9322**	1	SEAL-O-RING	
	15	1	**247-7569**	1	HARNESS AS-CHASSIS (HYDRAULIC TANK)	
		1	**155-2255**	1	KIT-CONNECTING PLUG (12-PIN)	
		1	**155-2260**	1	KIT-CONNECTING PLUG (3-PIN)	
		1	**155-2270**	2	KIT-CONNECTING PLUG (2-PIN)	
					(EACH KIT INCLUDES PLUG AS AND WEDGE)	
	16	3	**248-1545**	1	PLATE-FUSE	
	17	3	**271-3952**	1	BUSS BAR	
	18	3	**275-4024**	1	PANEL AS	
	19	3	**275-9916**	1	BUSS BAR	
	20	1,2	**033-8248**	4	CLIP	
	21	1,2,3	**130-5300**	6	CLIP	
	22	3	**132-5789**	2	CLIP	
	23	3	**171-2206**	1	CIRCUIT BREAKER AS (5O-AMPERE) (START)	
		3	**6V-8187**	2	NUT (1/4-28-THD)	
		3	**8T-4205**	2	WASHER-HARD (7.2X14.5X2-MM THK)	
		3	**253-2111**	2	LOCKWASHER	
	24	3	**171-2210**	1	CIRCUIT BREAKER AS (8O-AMPERE) (MAIN)	
		3	**6V-8187**	2	NUT (1/4-28-THD)	
		3	**8T-4205**	2	WASHER-HARD (7.2X14.5X2-MM THK)	
		3	**253-2111**	2	LOCKWASHER	
	25	3	**171-2211**	1	CIRCUIT BREAKER AS (9O-AMPERE) (STARTING AID)	
		3	**6V-8187**	2	NUT (1/4-28-THD)	
		3	**8T-4205**	2	WASHER-HARD (7.2X14.5X2-MM THK)	
		3	**253-2111**	2	LOCKWASHER	
	26	3	**171-2212**	1	CIRCUIT BREAKER AS (1O5-AMPERE) (ALTERNATOR)	
		3	**6V-8187**	2	NUT (1/4-28-THD)	
		3	**8T-4205**	2	WASHER-HARD (7.2X14.5X2-MM THK)	
		3	**253-2111**	2	LOCKWASHER	
	27	3	**189-3158**	1	SUPPRESSOR-ARC	
Y	28	3	**241-8368**	1	SWITCH GP-MAGNETIC (24-VOLT) (MAIN RELAY)	202
	29	3	**2M-4004**	1	BUTTON-PLUG	
	30	2	**3E-6769**	1	SEAL-O-RING	
	31	1	**3E-6909**	1	CLIP (SLOT)	
	32	1	**3J-1907**	1	SEAL-O-RING	
	33	2	**3P-3839**	1	GROMMET	
	34	3	**3T-2662**	1	CIRCUIT BREAKER AS (15-AMPERE) (RUNNING LIGHTS)	
		3	**6V-8376**	2	SCREW-MACHINE (8-32XO.25-IN)	
		3	**9B-7233**	2	LOCKWASHER	
	35	1	**4K-8864**	1	CLIP	
	36	2	**4P-8134**	1	CLIP	
	37	2	**4S-1962**	1	CLIP	
	38	3	**5L-4507**	8	SCREW-MACHINE (1O-32XO.875-IN)	
	39	3	**5M-6668**	6	SCREW-MACHINE (8-32XO.75-IN)	
	40	1	**6D-4244**	1	CLIP	
	41	3	**6T-3644**	1	CIRCUIT BREAKER GP (2O-AMPERE) (HOOD TILT ACTUATOR)	
	41A	3	**6T-3644**	1	CIRCUIT BREAKER GP (2O-AMPERE) (UNSWITCHED BAT POWER TO CAB)	
					(EACH INCLUDES)	
		3	**6V-8376**	2	SCREW-MACHINE (8-32XO.25-IN)	
		3	**9B-7233**	2	LOCKWASHER	
	42	2	**7C-4354**	3	CLIP	
	43	1,2	**7D-7233**	6	CLIP	

241-0642 **WIRING GP-CHASSIS** *(contd.)* **i02443591**

NOTE	REF NO	GRAPHIC REF	PART NUMBER	QTY	PART NAME 1 2 3 4 5 6 (PRODUCT LEVEL)	SEE PAGE
	44	2	**8M-2772**	1	CLIP	
	45	1	**8S-7583**	1	GROMMET	
	46	1,2,3	**8T-4121**	21	WASHER-HARD (11X21X2.5-MM THK)	
M	47	1,2	**8T-4133**	9	NUT (M10X1.5 THD)	
M	48	1,2,3	**8T-4137**	11	BOLT (M10X1.5X20-MM)	
M	49	3	**8T-4191**	1	BOLT (M10X1.5X16-MM)	
M	50	3	**8T-4970**	7	BOLT (M6X1X14-MM)	
	51	3	**9X-8256**	7	WASHER (6.6X12X2-MM THK)	

D-ORDER BY THE METER
M-METRIC PART
Y-SEPARATE ILLUSTRATION

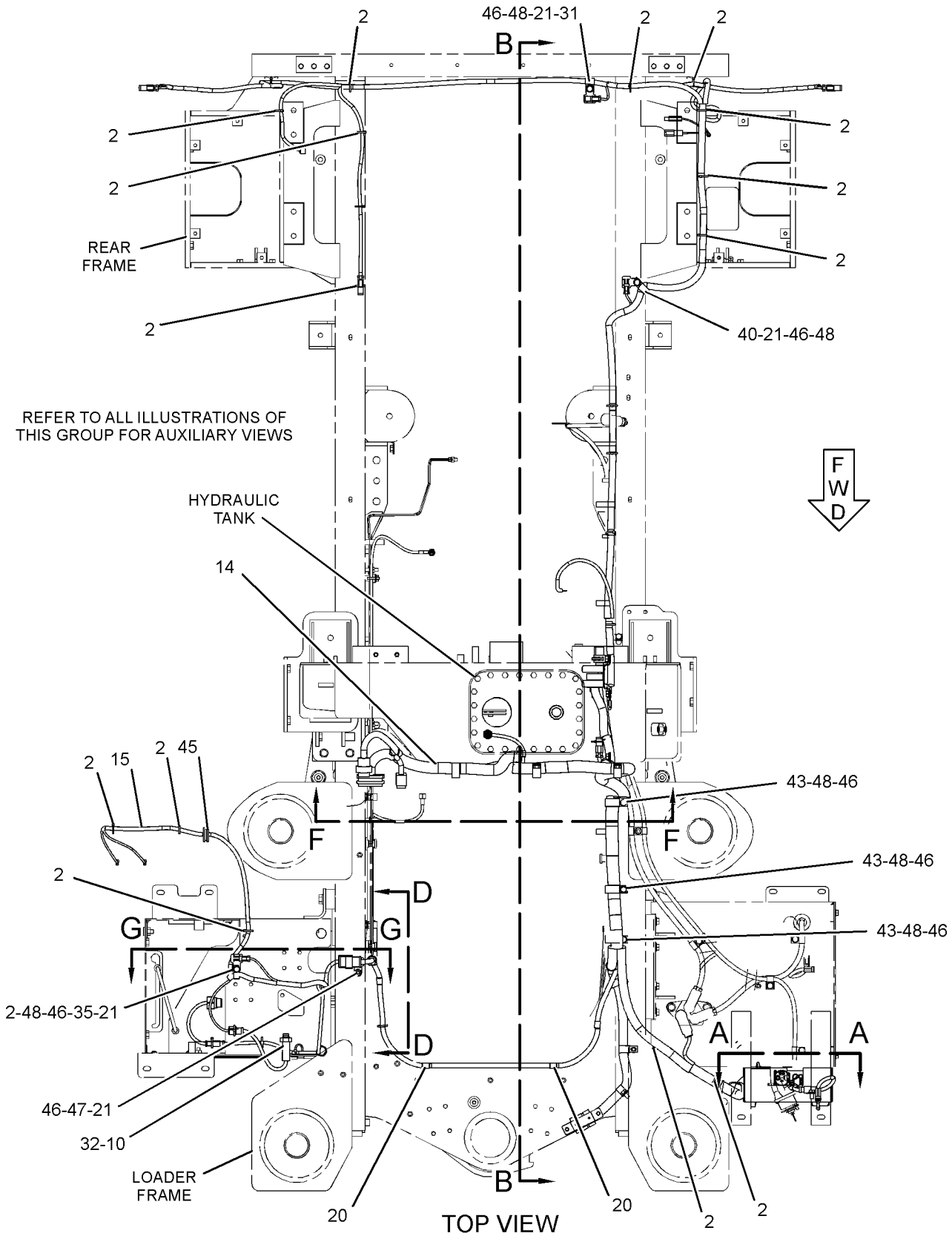

GRAPHIC #1

g01221755

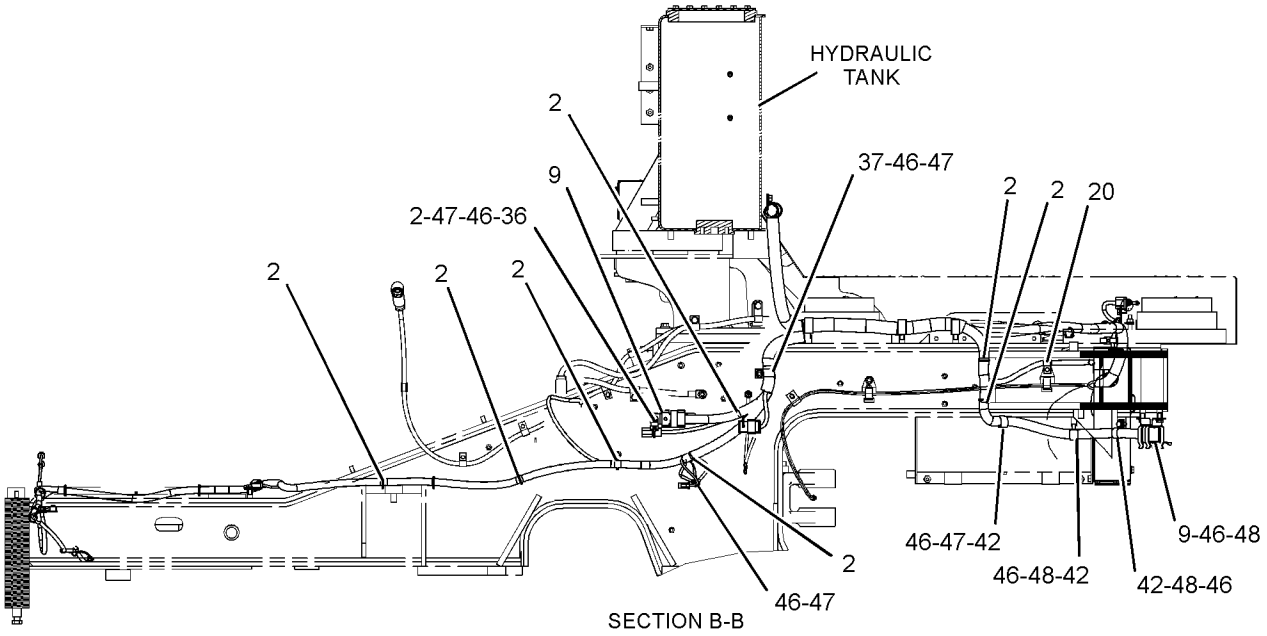

SECTION B-B

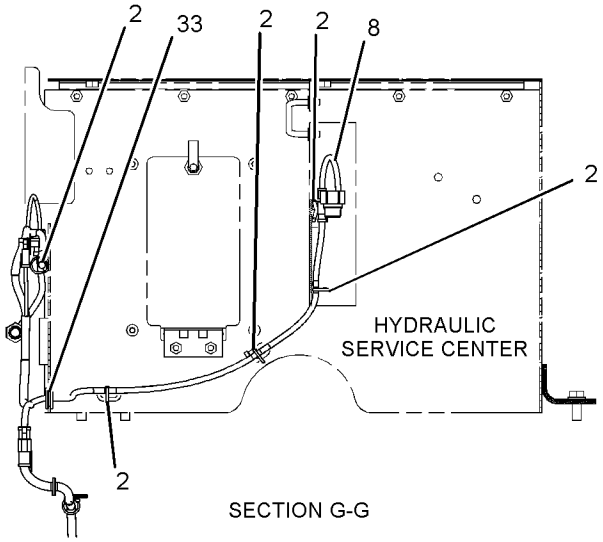

SECTION G-G

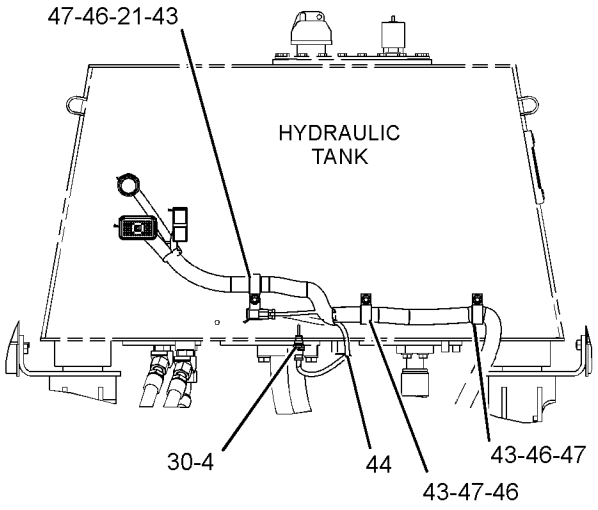

SECTION F-F

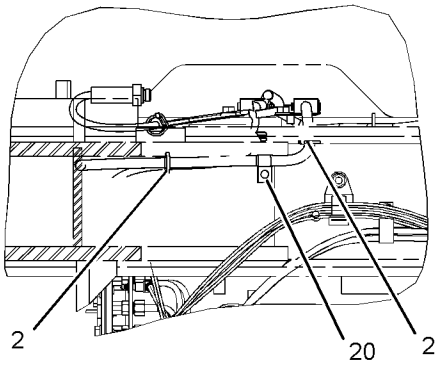

SECTION D-D

GRAPHIC #2

g01221756

241-0642 **WIRING GP-CHASSIS** *(contd.)* **i02443591**

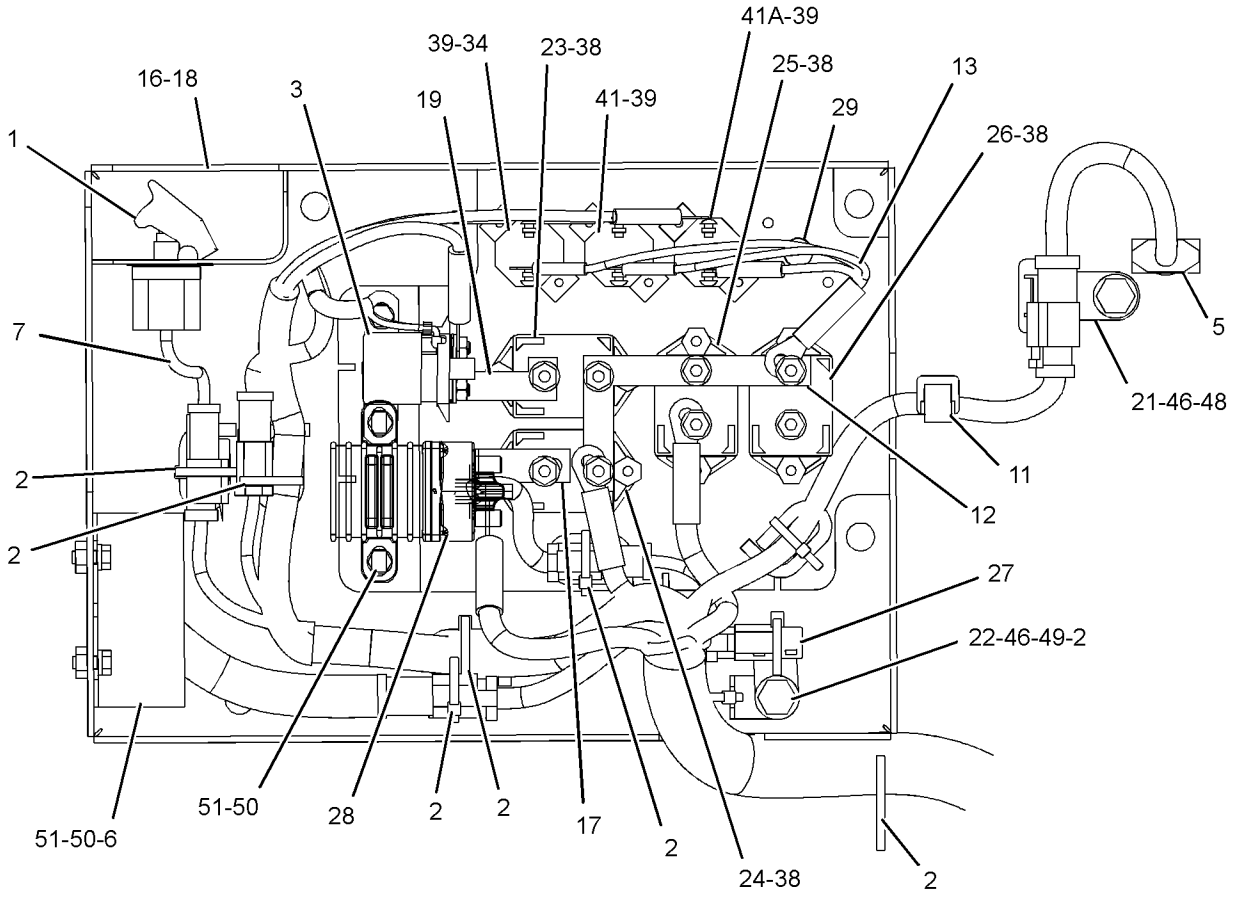

SECTION A-A

GRAPHIC #3 **<END>** g01221757

271-4026 WIRING GP-COUPLER

S/N: M3G1-UP
PART OF 244-2662 CONTROL AR-QUICK COUPLER
AN ATTACHMENT

SMCS-5734 **i02441381**

NOTE	REF NO	GRAPHIC REF	PART NUMBER	QTY	PART NAME 1 2 3 4 5 6 (PRODUCT LEVEL)	SEE PAGE
	1	1	**7K-1181**	4	STRAP-CABLE	
	2	1	**218-4935**	1	SUPPRESSOR-ARC	
	3	1	**271-4027**	1	HARNESS AS-WORK TOOL (QUICK COUPLER)	
		1	**8T-8737**	1	PLUG-SEAL	
		1	**155-2270**	4	KIT-CONNECTING PLUG (2-PIN)	
		1	**155-2260**	2	KIT-CONNECTING PLUG (3-PIN)	
					(KIT INCLUDES PLUG AS AND WEDGE)	

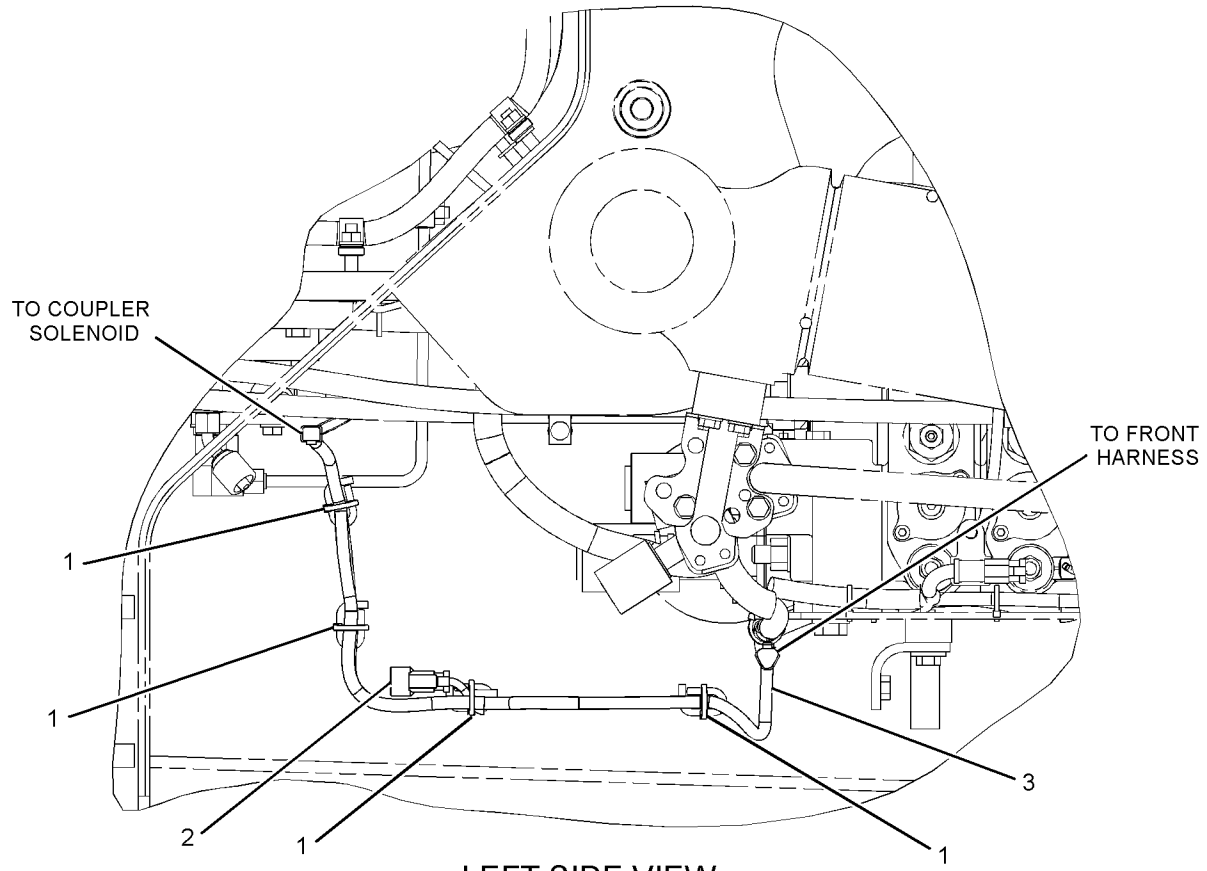

LEFT SIDE VIEW

GRAPHIC #1 **<END>** g01220808

244-6524 WIRING GP-ELECTRIC CLUTCH–

AXLE OIL COOLER PUMP

S/N: M3G1-UP

PART OF 241-0073 COOLER AR-AXLE OIL

AN ATTACHMENT

SMCS-1634 **i02232164**

NOTE	REF NO	GRAPHIC REF	PART NUMBER	QTY	PART NAME 1 2 3 4 5 6 (PRODUCT LEVEL)	SEE PAGE
	1	1	**3E-5239**	1	RELAY AS (24-VOLT) (AXLE OIL COOLER)	
	2	1	**7K-1181**	1	STRAP-CABLE	
	3	1	**191-7699**	1	BRACKET AS	
M		1	**8T-3490**	1	NUT-WELD (M10X1.5-THD)	
	4	1	**130-5300**	1	CLIP	
	5	1	**147-0385**	1	CLIP	
M	6	1	**3E-9854**	1	BOLT (M8X1.25X20-MM)	
	7	1	**8T-4121**	1	WASHER-HARD (11X21X2.5-MM THK)	
M	8	1	**8T-4136**	1	BOLT (M10X1.5X25-MM)	
	9	1	**8T-4224**	1	WASHER-HARD (8.8X16X2-MM THK)	

M-METRIC PART

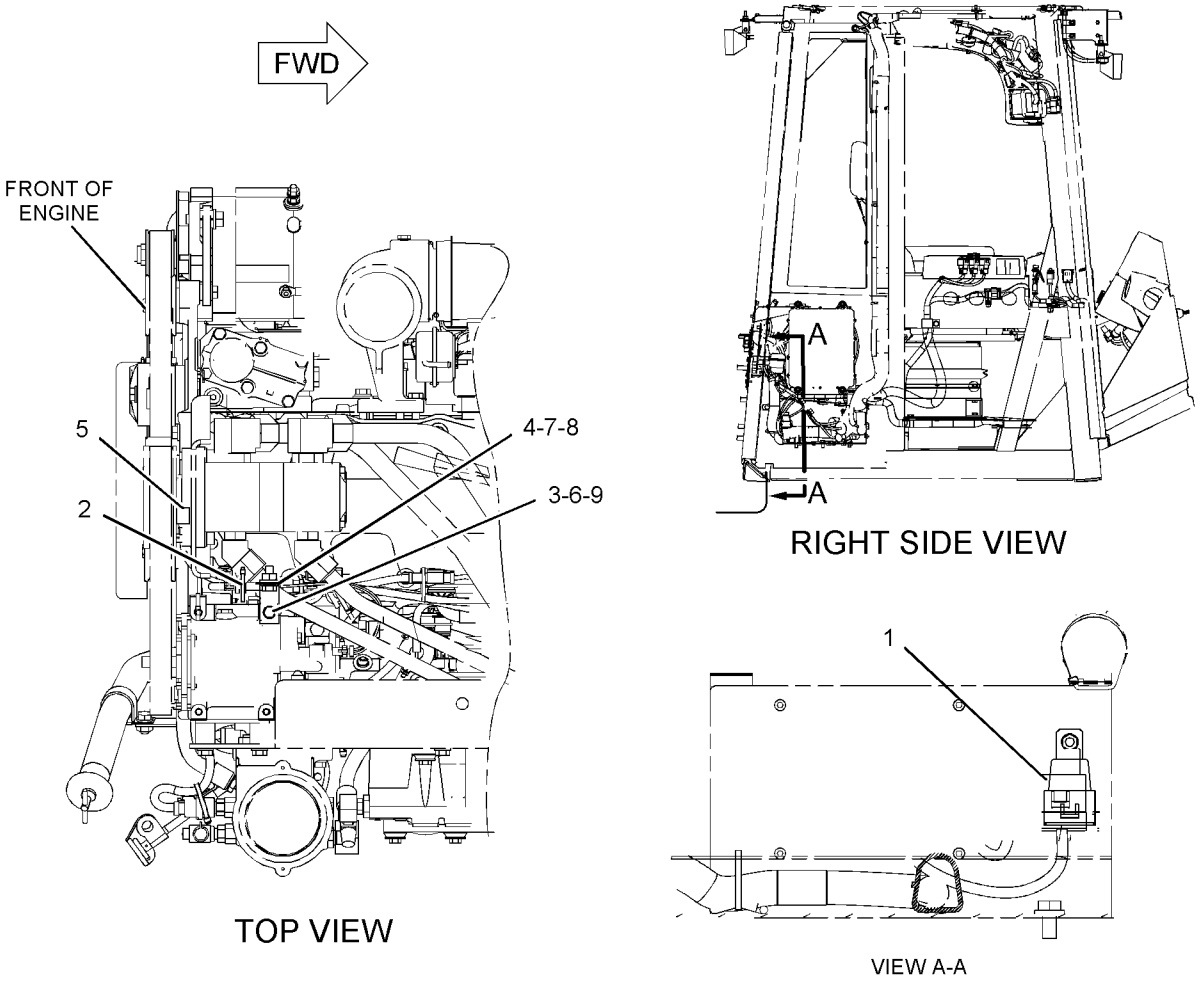

GRAPHIC #1 **<END>** g01127038

ELECTRICAL AND STARTING SYSTEM

198-2714 WIRING GP-ENGINE

S/N: KHX1-UP

PART OF 235-1424 ENGINE AR-COMPLETE

SMCS-1403, 1408 **i02352075**

NOTE	REF NO	GRAPHIC REF	PART NUMBER	QTY	PART NAME 1 2 3 4 5 6 (PRODUCT LEVEL)	SEE PAGE
	1	1	**3S-2093**	18	STRAP-CABLE	
	2	1	**4P-5918**	1	CLIP	
	3	1	**105-1797**	7	MOUNT	
	4	1	**198-2713**	1	HARNESS AS-ENGINE (ELECTRONIC CONTROL MODULE)	
		1	**102-8802**	1	KIT-RECEPTACLE (2-PIN)	
		1	**102-8803**	1	KIT-RECEPTACLE (3-PIN)	
		1	**102-8801**	1	KIT-RECEPTACLE (12-PIN)	
					(EACH KIT RECEPTACLE INCLUDES RECEPTACLE AS AND WEDGE)	
		1	**8T-8737**	77	PLUG-SEAL	
		1	**100-3320**	1	PLUG AS-CONNECTOR (2-PIN)	
		1	**126-5011**	1	SEAL-CONNECTOR	
		1	**111-2416**	1	PLUG AS-CONNECTOR (2-PIN)	
		1	**126-5011**	1	SEAL-CONNECTOR	
		1	**155-2265**	1	KIT-CONNECTING PLUG (8-PIN)	
		1	**155-2260**	3	KIT-CONNECTING PLUG (3-PIN)	
		1	**155-2270**	5	KIT-CONNECTING PLUG (2-PIN)	
					(EACH KIT CONNECTING PLUG INCLUDES PLUG AS AND WEDGE)	
		1	**227-4002**	1	PLUG AS-CONNECTOR (108-PIN)	
	5	1	**206-1345**	2	STRAP-CABLE	
	6	1	**222-5917**	1	HARNESS AS-ENGINE (FUEL INJECTION)	
		1	**6N-7523**	1	WASHER (6.48X11.9X1.57-MM THK)	
		1	**135-5975**	1	GROMMET-WIRING	
		1	**155-2255**	1	KIT-CONNECTING PLUG (12-PIN)	
					(INCLUDES PLUG AS AND WEDGE)	
	7	1	**4P-8134**	1	CLIP	
M	8	1	**6V-2317**	1	BOLT (M8X1.25X30-MM)	
	9	1	**9M-1974**	1	WASHER-HARD (8.8X16X2-MM THK)	

M-METRIC PART

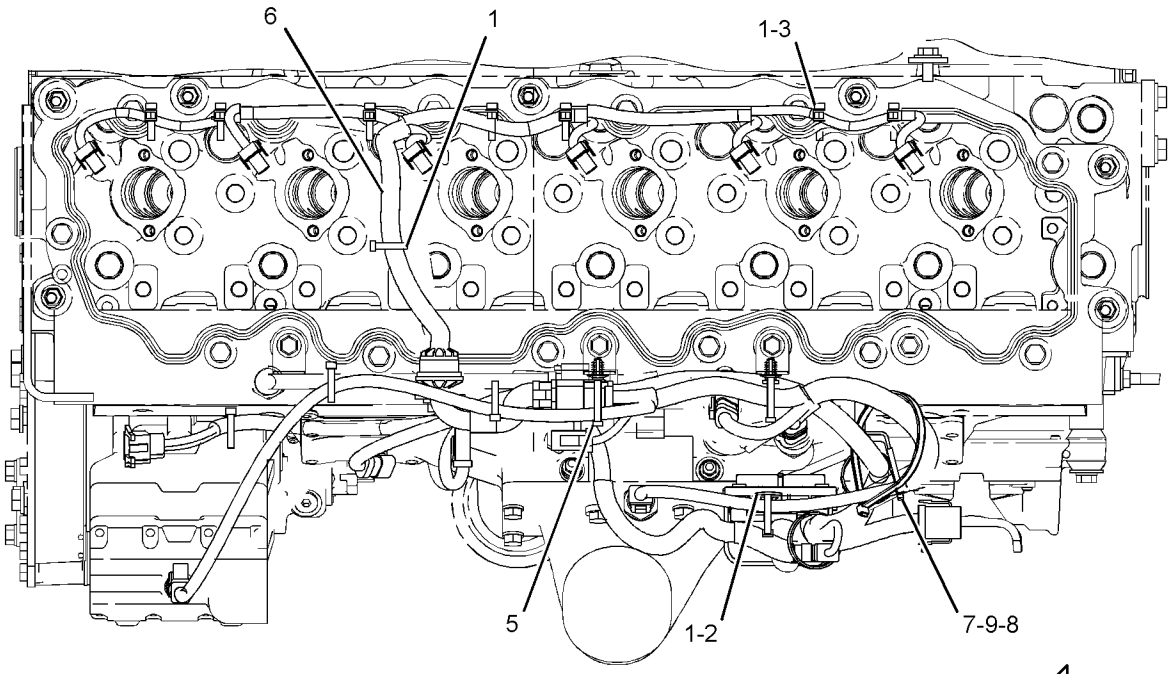

TOP VIEW

FWD

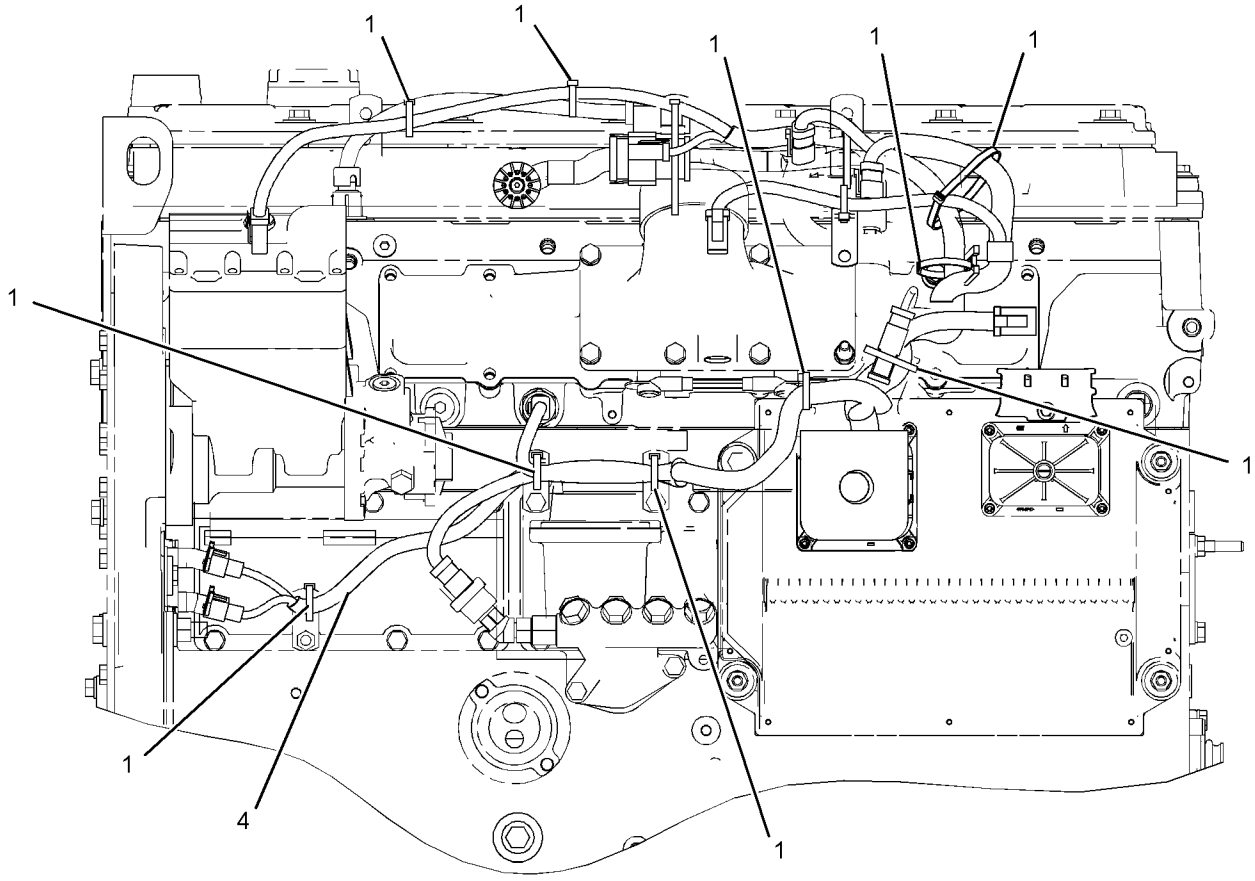

LEFT SIDE VIEW

GRAPHIC #1

<END>

g01175334

ELECTRICAL AND STARTING SYSTEM

241-0640 WIRING GP-ENGINE

S/N: M3G1-UP

PART OF 237-4931 ELECTRICAL AR

SMCS-1403, 1408 **i02443532**

NOTE	REF NO	GRAPHIC REF	PART NUMBER	QTY	PART NAME 1 2 3 4 5 6 (PRODUCT LEVEL)	SEE PAGE
	1	1,2	**7K-1181**	13	STRAP-CABLE	
	2	2	**118-6878**	1	BRACKET AS	
Y	3	2	**145-7028**	1	SENSOR GP-TEMPERATURE (TORQUE CONVERTER OIL)	187
	4	2	**164-3652**	1	ADAPTER	
	5	2	**175-3244**	1	SWITCH AS-PRESSURE (SERVICE BRAKE OIL)	
		2	**102-8803**	1	KIT-RECEPTACLE (3-PIN)	
					(INCLUDES RECEPTACLE AS AND WEDGE)	
	6	2	**247-4389**	1	CABLE AS	
		2	**3L-6513**	2	TERMINAL (FOR 1/2-IN BOLT)	
		2	**6V-9023**	3	TUBE-HEAT SHRINK	
E		2	**8C-0596**		CABLE (02-GA) (70-CM)	
		2	**6V-9023**	3	TUBE-HEAT SHRINK	
		2	**030-1712**	1	TERMINAL-RING (2-GA, 6.35-MM)	
	7	1,2	**130-5300**	5	CLIP	
	8	2	**132-5789**	3	CLIP	
M	9	2	**142-8545**	2	BOLT (M16X2X20-MM)	
	10	2	**149-9129**	4	CLIP	
Y	11	1	**194-6722**	1	SENSOR GP-PRESSURE (TURBOCHARGER INLET)	176
	12	2	**1S-0994**	1	CLIP	
	13	1	**247-1086**	1	HARNESS AS-ENGINE	
		1	**102-8802**	1	KIT-RECEPTACLE (2-PIN)	
		1	**102-8803**	1	KIT-RECEPTACLE (3-PIN)	
					(EACH RECEPTACLE KIT INCLUDES RECEPTACLE AS AND WEDGE)	
		1	**110-6845**	1	PLUG AS-CONNECTOR (40-PIN)	
		1	**1U-9053**	1	CAPSULE-LUBRICANT	
		1	**110-6844**	1	SEAL	
		1	**3S-2093**	2	STRAP-CABLE	
		1	**7K-1181**	3	STRAP-CABLE	
		1	**127-5483**	1	PLUG AS-CONNECTOR (1-PIN)	
		1	**174-0503**	1	KIT-CONNECTING PLUG (3-PIN)	
		1	**155-2260**	1	KIT-CONNECTING PLUG (3-PIN)	
		1	**155-2270**	1	KIT-CONNECTING PLUG (2-PIN)	
					(EACH PLUG KIT INCLUDES PLUG AS AND WEDGE)	
		1	**160-7689**	1	PLUG AS-CONNECTOR (70-PIN)	
		1	**159-9322**	1	SEAL-O-RING	
	14	1,2	**3J-1907**	2	SEAL-O-RING	
	15	2	**3K-0360**	1	SEAL-O-RING	
	16	2	**4N-9170**	2	CLIP	
	17	2	**4P-7582**	3	CLIP	
M	18	2	**5C-7261**	1	NUT (M8X1.25-THD)	
	19	1	**6D-4636**	2	CLIP	
	20	1	**6V-3265**	1	CLIP	
	21	2	**7J-0204**	1	SEAL-O-RING	
	22	2	**8T-4121**	5	WASHER-HARD (11X21X2.5-MM THK)	
M	23	2	**8T-4133**	1	NUT (M10X1.5 THD)	
M	24	2	**8T-4136**	2	BOLT (M10X1.5X25-MM)	
M	25	2	**8T-4137**	2	BOLT (M10X1.5X20-MM)	
M	26	2	**8T-4200**	1	BOLT (M8X1.25X16-MM)	
	27	2	**8T-4224**	2	WASHER-HARD (8.8X16X2-MM THK)	
	28	2	**9X-8257**	2	WASHER (17.5X30X3.5-MM THK)	

E-ORDER BY THE CENTIMETER
M-METRIC PART
Y-SEPARATE ILLUSTRATION

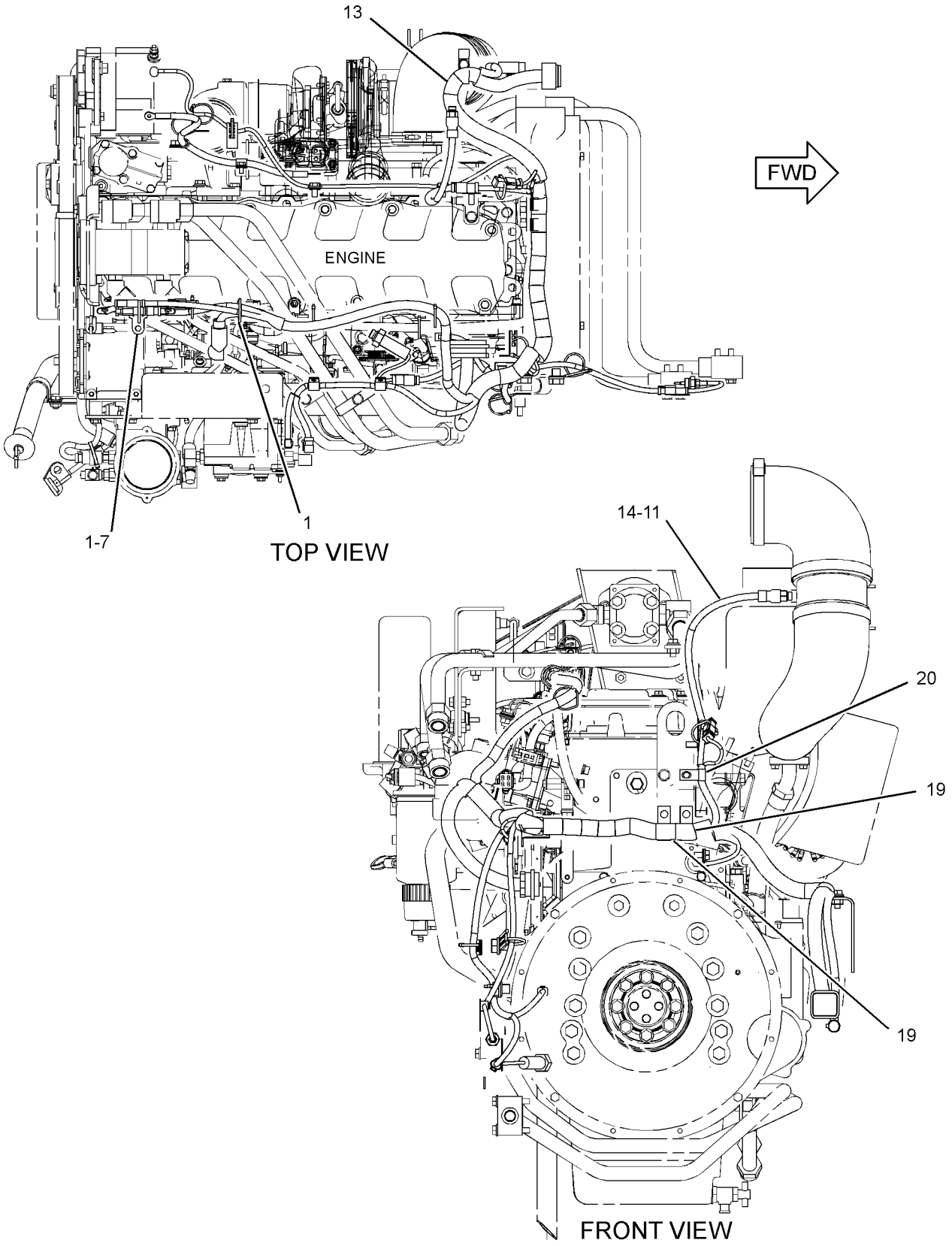

GRAPHIC #1 g01221839

241-0640 **WIRING GP-ENGINE** *(contd.)* **i02443532**

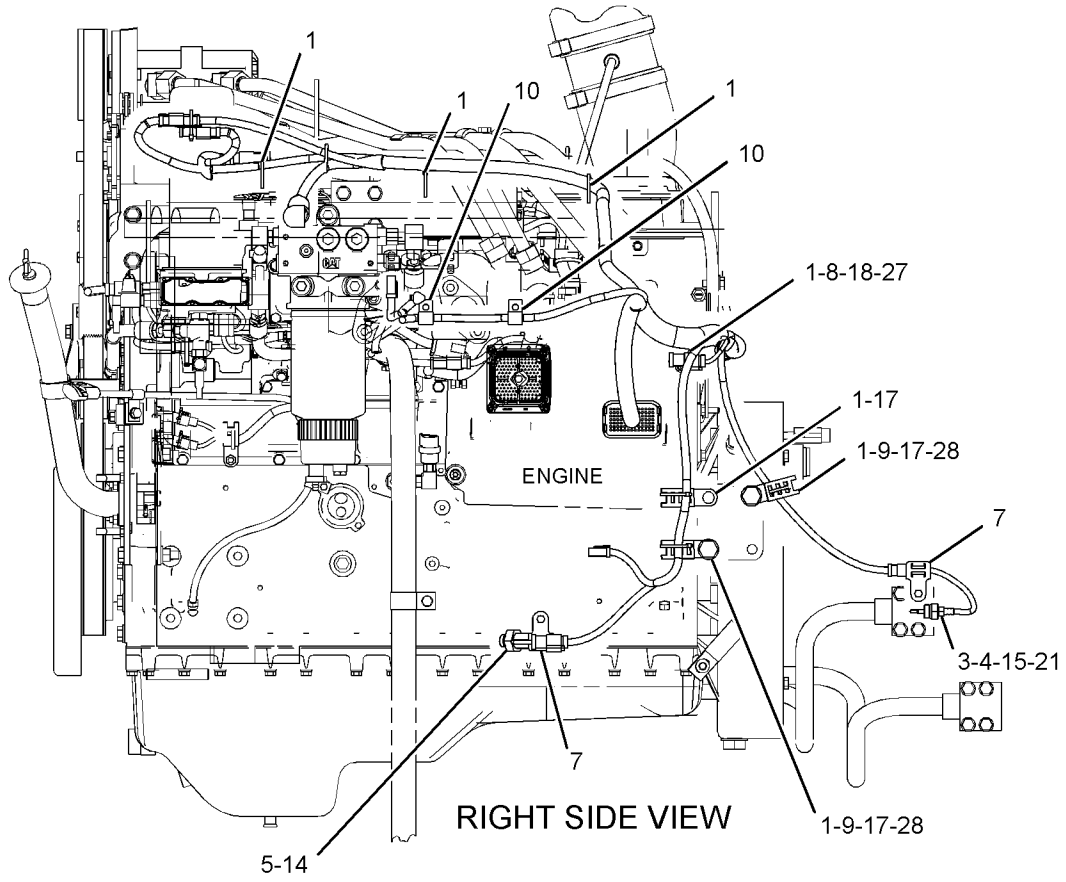

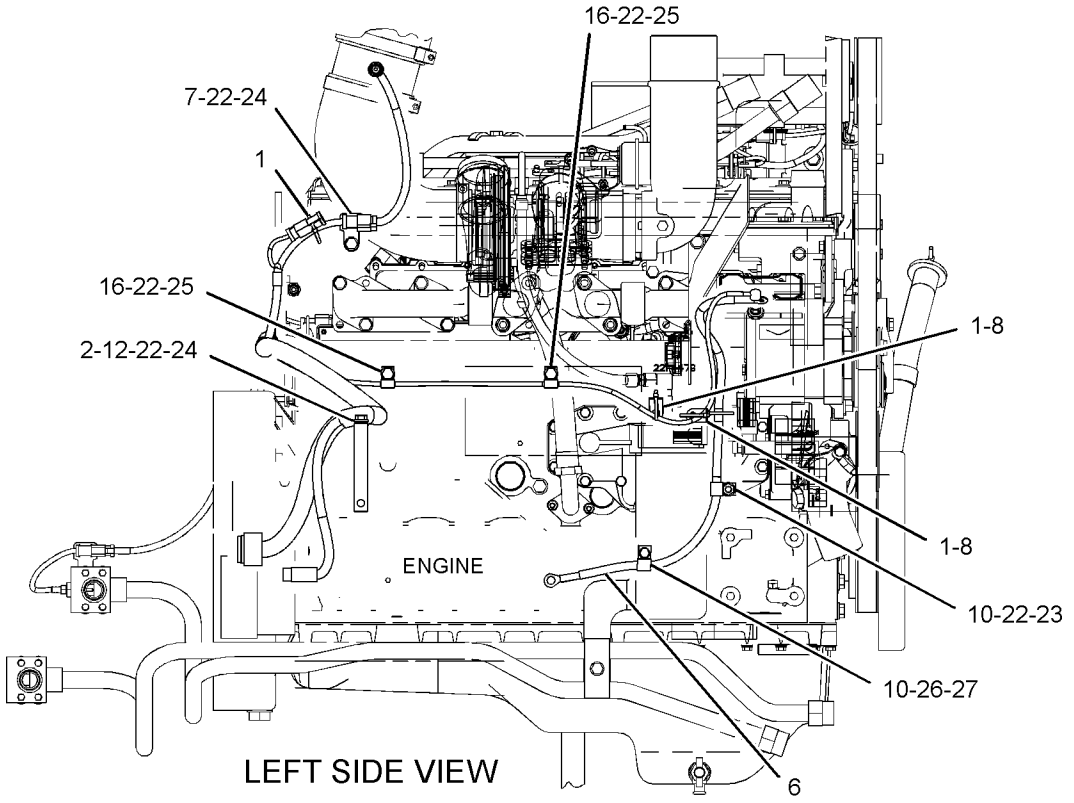

GRAPHIC #2 **<END>** g01221840

263-6667 WIRING GP-ETHER STARTING AID

S/N: M3G1-UP
PART OF 263-6353 STARTING AID AR-ETHER
AN ATTACHMENT

SMCS-1408, 1456 **i02444745**

NOTE	REF NO	GRAPHIC REF	PART NUMBER	QTY	PART NAME 1 2 3 4 5 6 (PRODUCT LEVEL)	SEE PAGE
	1	1	**263-6668**	1	HARNESS AS-STARTING AID (ETHER)	
		1	**102-8802**	1	KIT-RECEPTACLE (2-PIN)	
					(INCLUDES RECEPTACLE AS AND WEDGE)	
		1	**155-2270**	1	KIT-CONNECTING PLUG (2-PIN)	
					(INCLUDES PLUG AS AND WEDGE)	
	2	1	**5P-9085**	1	CLIP	

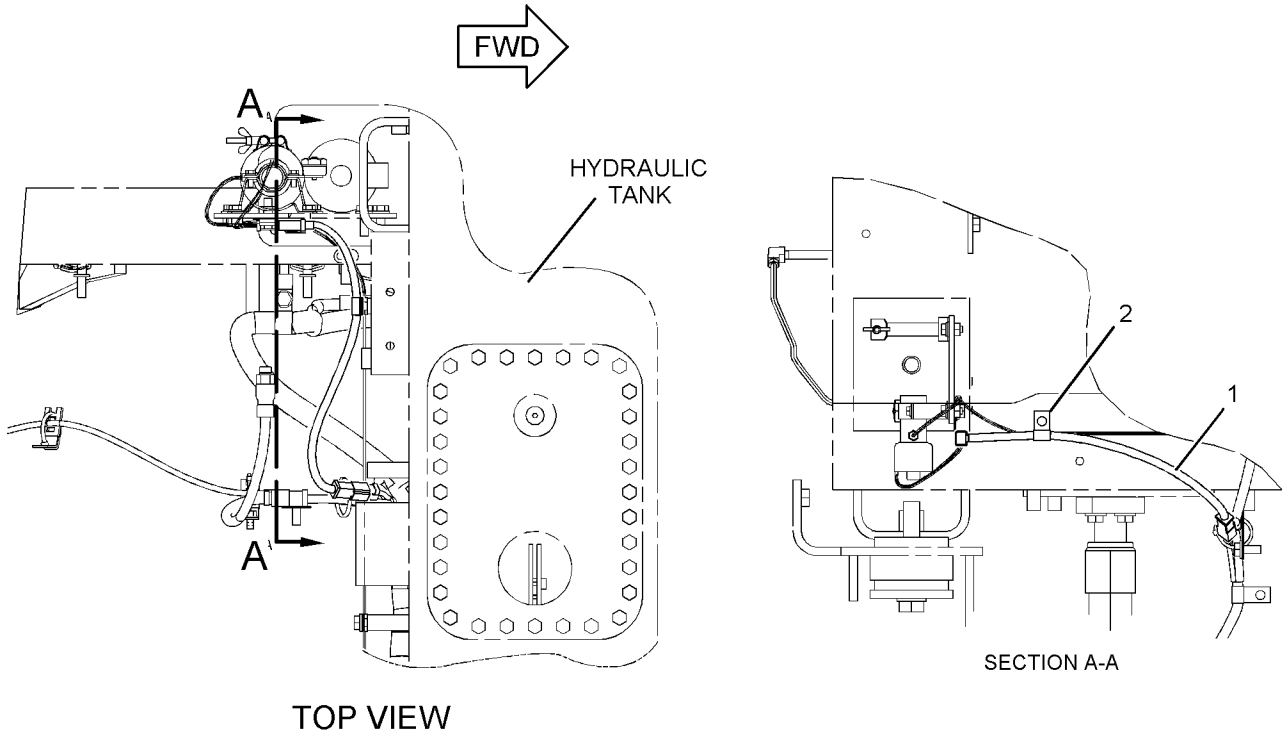

TOP VIEW

SECTION A-A

GRAPHIC #1 **<END>** g01223640

ELECTRICAL AND STARTING SYSTEM

241-0641 WIRING GP-FRONT

S/N: M3G1-UP

PART OF 237-4931 ELECTRICAL AR

SMCS-5734 **i02449345**

NOTE	REF NO	GRAPHIC REF	PART NUMBER	QTY	PART NAME 1 2 3 4 5 6 (PRODUCT LEVEL)	SEE PAGE
	1	1,2	**4H-1225**	6	WASHER (11X22X6-MM THK)	
	2	2	**5V-6152**	2	CLAMP	
	3	2	**5V-6153**	1	PLATE-COVER	
	4	2	**7K-1181**	19	STRAP-CABLE	
	5	1	**241-5688**	1	HARNESS AS-FRONT CHASSIS	
		1	**102-8802**	1	KIT-RECEPTACLE (2-PIN)	
		1	**102-8803**	1	KIT-RECEPTACLE (3-PIN)	
					(EACH KIT INCLUDES RECEPTACLE AS AND WEDGE)	
		1	**113-0580**	1	RECEPTACLE AS-CONNECTOR (40-PIN)	
		1	**106-4155**	1	KIT-BOLT (ELECTRICAL CONNECTORS)	
					(INCLUDES BOLT, RING, AND 2 SEALS)	
		1	**155-2260**	1	KIT-CONNECTING PLUG (3-PIN)	
		1	**155-2270**	1	KIT-CONNECTING PLUG (2-PIN)	
					(EACH KIT INCLUDES PLUG AS AND WEDGE)	
	6	1	**124-1479**	1	CLIP	
	7	1	**130-5300**	3	CLIP	
	8	1	**147-0385**	1	CLIP	
	9	2	**1S-0994**	3	CLIP	
	10	1	**4D-9517**	1	CLIP	
	11	2	**5P-7464**	2	CLIP (SLOT)	
	12	2	**5P-7465**	1	CLIP (TAB)	
	13	2	**5P-9085**	1	CLIP	
	14	1	**8M-2770**	4	CLIP	
	15	1,2	**8T-4121**	7	WASHER-HARD (11X21X2.5-MM THK)	
M	16	1,2	**8T-4133**	6	NUT (M10X1.5 THD)	
M	17	1	**8T-4137**	1	BOLT (M10X1.5X20-MM)	
M	18	2	**8T-4139**	1	BOLT (M12X1.75X30-MM)	
M	19	1	**8T-4195**	1	BOLT (M10X1.5X30-MM)	
	20	2	**8T-4223**	1	WASHER-HARD (13.5X25.5X3-MM THK)	
M	21	2	**8T-6974**	2	BOLT (M6X1X80-MM)	
	22	2	**9X-8256**	2	WASHER (6.6X12X2-MM THK)	

M-METRIC PART

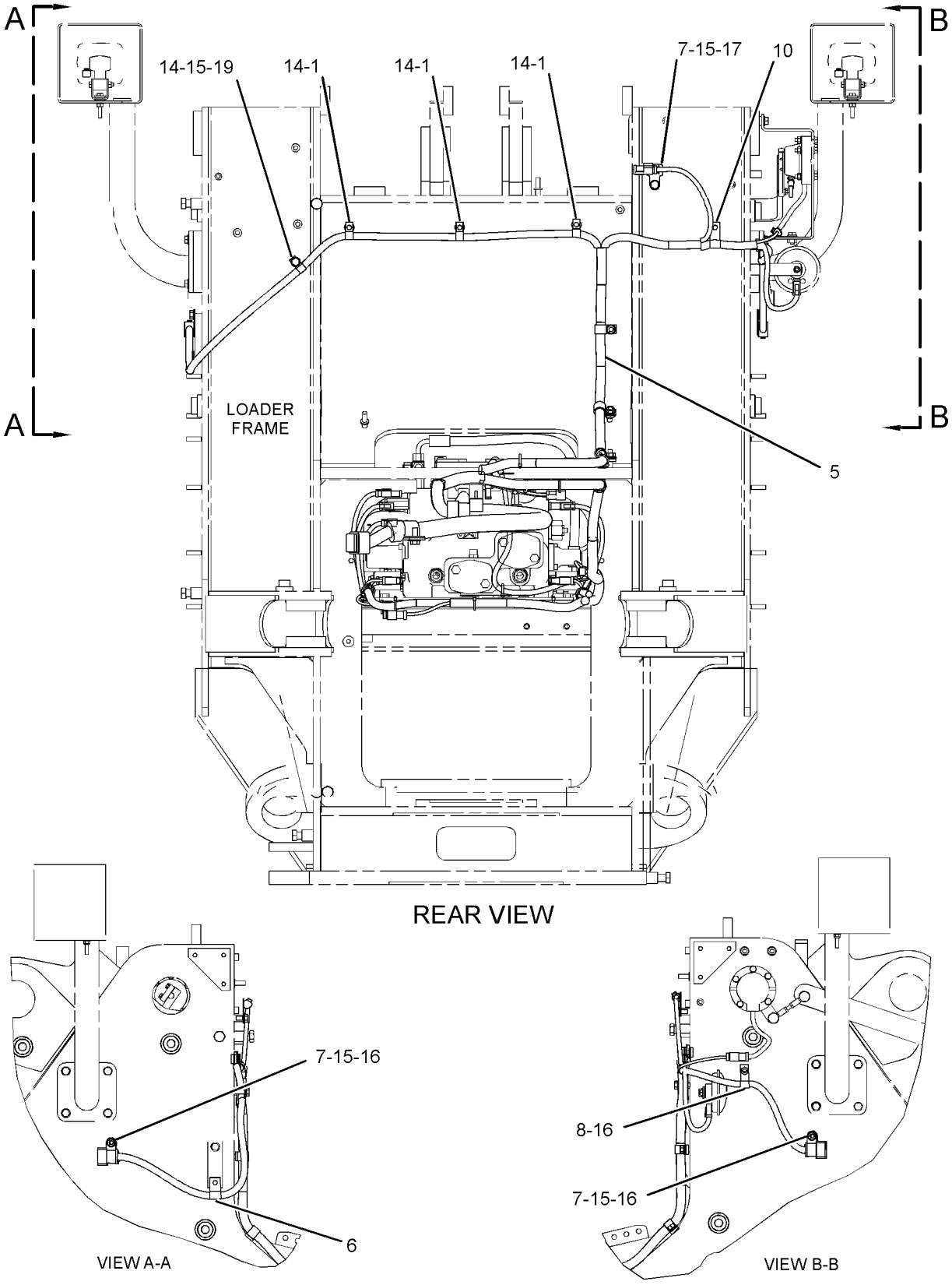

GRAPHIC #1 g01202673

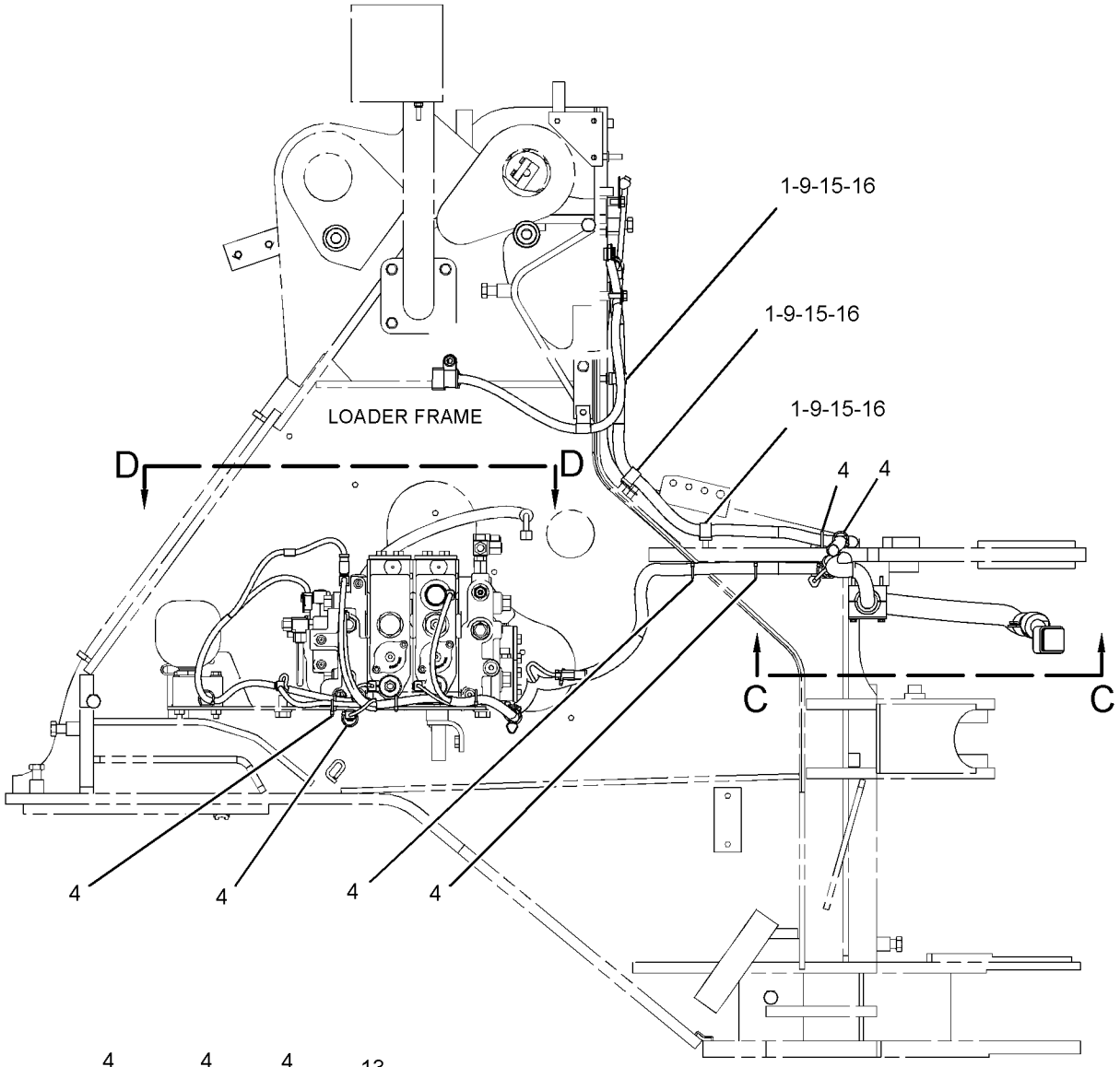

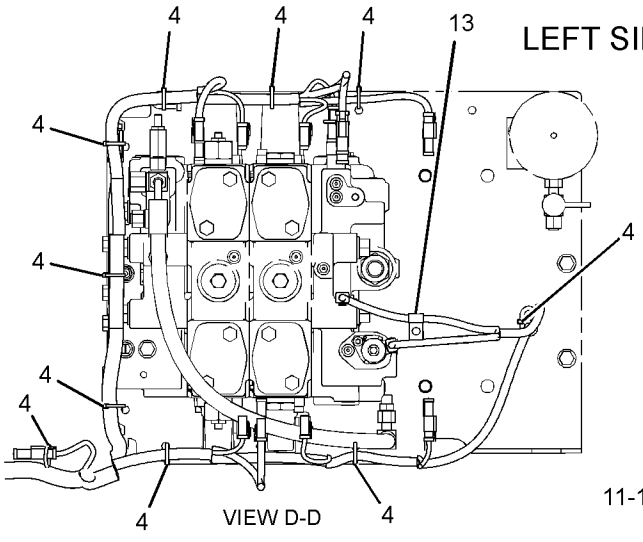

LEFT SIDE VIEW

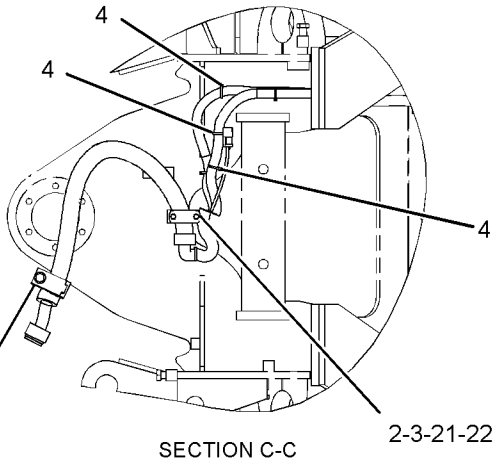

GRAPHIC #2 **<END>** g01202777

271-4016 WIRING GP-LIGHTING—LOADER FRAME

S/N: M3G1-UP

PART OF 237-4931 ELECTRICAL AR

SMCS-1408, 1429 **i02441378**

NOTE	REF NO	GRAPHIC REF	PART NUMBER	QTY	PART NAME 1 2 3 4 5 6 (PRODUCT LEVEL)	SEE PAGE
	1	1	**271-4017**	2	HARNESS AS-LIGHTING	
					(EACH INCLUDES)	
		1	**155-2255**	1	KIT-CONNECTING PLUG (12-PIN)	
		1	**155-2270**	1	KIT-CONNECTING PLUG (2-PIN)	
					(EACH INCLUDES PLUG AS AND WEDGE)	

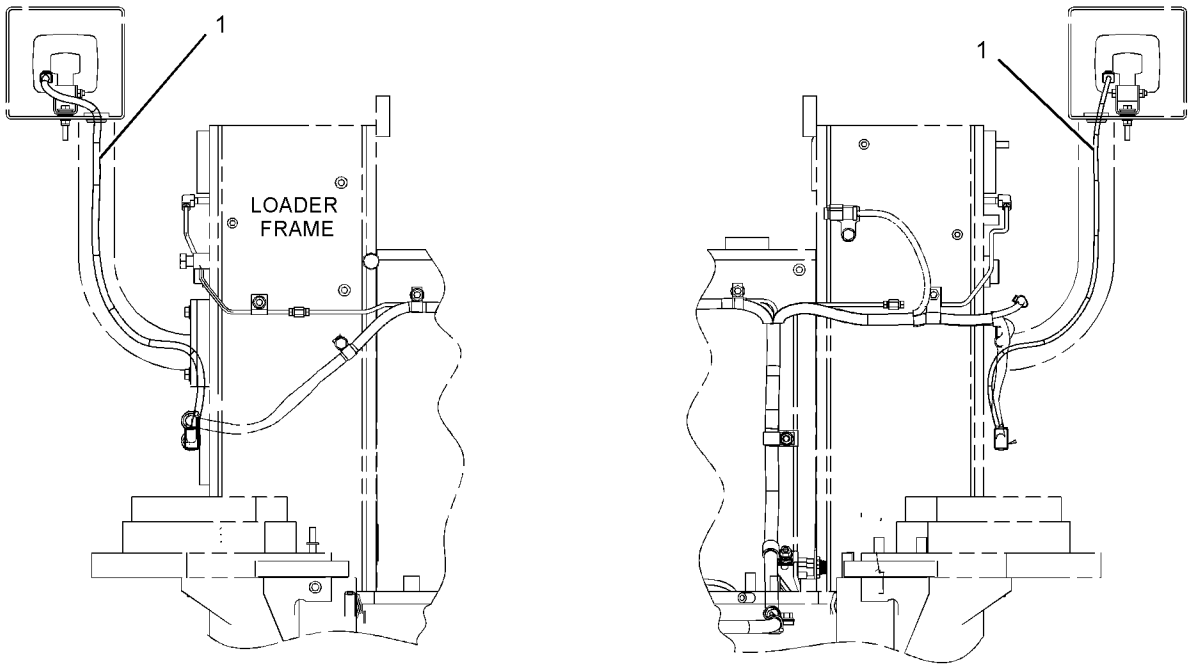

REAR VIEW

GRAPHIC #1 **<END>** g01201152

271-4028 WIRING GP-LIGHTING–LOADER FRAME

S/N: M3G1-UP
PART OF 244-3599 LIGHTING AR-SIGNAL
AN ATTACHMENT

SMCS-1408, 1429 **i02444739**

NOTE	REF NO	GRAPHIC REF	PART NUMBER	QTY	PART NAME 1 2 3 4 5 6 (PRODUCT LEVEL)	SEE PAGE
	1	1	**271-4029**	1	HARNESS AS-LIGHTING (LH)	
		1	**155-2255**	1	KIT-CONNECTING PLUG (12-PIN)	
		1	**155-2270**	1	KIT-CONNECTING PLUG (2-PIN)	
					(EACH KIT INCLUDES PLUG AS AND WEDGE)	
	2	1	**271-4030**	1	HARNESS AS-LIGHTING (RH)	
		1	**155-2255**	1	KIT-CONNECTING PLUG (12-PIN)	
		1	**155-2270**	1	KIT-CONNECTING PLUG (2-PIN)	
					(EACH KIT INCLUDES PLUG AS AND WEDGE)	

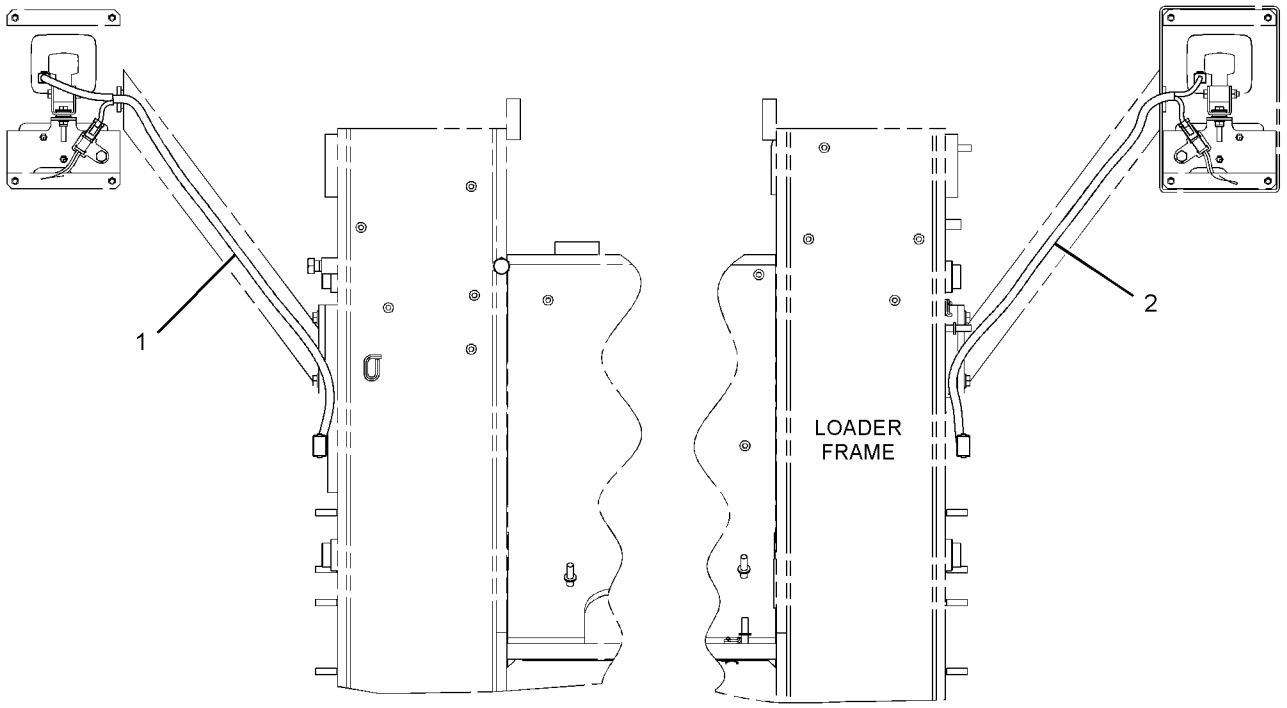

REAR VIEW

GRAPHIC #1 **<END>** g01195661

271-4037 WIRING GP-LIGHTING–LOADER FRAME

S/N: M3G1-UP
PART OF 254-5525 LIGHTING AR-ROADING
AN ATTACHMENT

SMCS-1408, 1429 **i02444737**

NOTE	REF NO	GRAPHIC REF	PART NUMBER	QTY	PART NAME 1 2 3 4 5 6 (PRODUCT LEVEL)	SEE PAGE
	1	1	**271-4038**	1	HARNESS AS-LIGHTING (LH)	
		1	**155-2255**	1	KIT-CONNECTING PLUG (12-PIN)	
		1	**155-2274**	1	KIT-CONNECTING PLUG (6-PIN)	
					(EACH KIT INCLUDES PLUG AS AND WEDGE)	
	2	1	**271-4039**	1	HARNESS AS-LIGHTING (RH)	
		1	**155-2255**	1	KIT-CONNECTING PLUG (12-PIN)	
		1	**155-2274**	1	KIT-CONNECTING PLUG (6-PIN)	
					(EACH KIT INCLUDES PLUG AS AND WEDGE)	

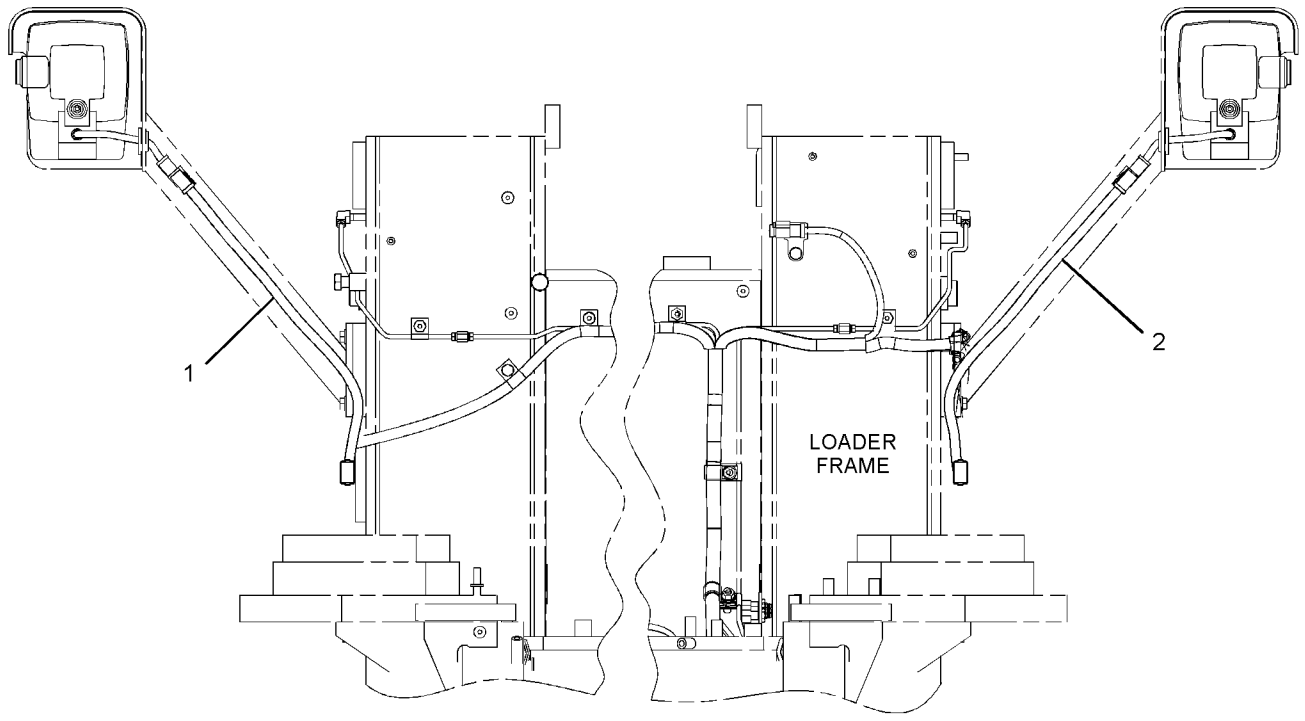

REAR VIEW

GRAPHIC #1 **<END>** g01195665

262-9187 WIRING GP-OPEN ROPS

S/N: M3G1-UP

PART OF 258-1552 CANOPY AR-OPEN ROPS

AN ATTACHMENT

SMCS-1408 **i02447816**

NOTE	REF NO	GRAPHIC REF	PART NUMBER	QTY	PART NAME 1 2 3 4 5 6 (PRODUCT LEVEL)	SEE PAGE
	1	7	**102-8802**	1	KIT-RECEPTACLE (2-PIN)	
	2	3,5	**102-8805**	3	KIT-RECEPTACLE (6-PIN)	
	3	4	**102-8806**	2	KIT-RECEPTACLE (8-PIN)	
					(EACH KIT RECEPTACLE INCLUDES RECEPTACLE AS AND WEDGE)	
	4	5	**3E-5239**	1	RELAY AS (24-VOLT) (FRONT CAB FLOODLIGHTS)	
	4A	5	**3E-5239**	1	RELAY AS (24-VOLT) (REAR FLOODLIGHT)	
	4B	5	**3E-5239**	1	RELAY AS (24-VOLT) (HORN)	
Y	5	5	**3E-6328**	1	ALARM GP (24-VOLT) (ACTION)	115
Y	6	2,3	**3E-6389**	2	LAMP GP-DOME (24-VOLT, WITH SWITCH)	140
	7	1,2,3, 4,5,7	**3S-2093**	23	STRAP-CABLE	
	8	5,6	**4P-8525**	11	SPACER (9X16X30-MM THK)	
	9	2	**4V-4164**	16	BUSHING-TERMINAL	
	10	5,6	**6I-1418**	8	SPACER (8.2X12.7X28.7-MM THK)	
	11	4	**6V-8369**	2	NUT (7/16-28-THD)	
	12	1,3,5, 6,7	**7K-1181**	32	STRAP-CABLE	
	13	3	**7N-5876**	4	LAMP (24-VOLT)	
	14	5	**8C-6354**	1	CAP-RECEPTACLE (DUST)	
	15	3,4,5	**8T-8737**	49	PLUG-SEAL	
	16	5,6	**8T-9655**	16	MOUNT-ISOLATION	
	17	1	**8X-5804**	1	STRAP AS-GROUND	
	18	2	**9F-8125**	16	LOCKWASHER	
	19	6	**9W-1441**	6	FUSE (15-AMPERE)	
	20	6	**9W-1442**	24	FUSE (10-AMPERE)	
	21	6	**9W-1446**	2	FUSE (20-AMPERE)	
	22	2	**098-8968**	16	WASHER (5X16X1.2-MM THK)	
Y	23	6	**103-5526**	1	CONTROL GP-MONITOR (DIMMER)	652
	24	5	**108-3320**	1	SWITCH AS-ROTARY (24-VOLT) (RUNNING LIGHTS)	
		5	**3E-3389**	1	WEDGE-RECEPTACLE LOCK	
		5	**9W-0852**	8	PIN-CONNECTOR (14-GA)	
		5	**102-8806**	1	KIT-RECEPTACLE (8-PIN)	
					(INCLUDES RECEPTACLE AS AND WEDGE)	
	25	4,5	**110-6109**	3	KNOB-CONTROL (CONTROL PANEL SWITCHES)	
	26	5	**110-7887**	1	SWITCH GP-START (KEY)	
		5	**7T-6799**	1	NUT-MOUNTING (1-32-THD)	
		5	**102-8804**	1	KIT-RECEPTACLE (4-PIN)	
					(INCLUDES RECEPTACLE AS AND WEDGE)	
		5	**186-3735**	4	PIN-CONNECTOR (16-GA TO 18-GA)	
	27	5	**117-2311**	1	RECEPTACLE AS-POWER (12-VOLT) (AUXILIARY)	
	28	2	**121-8038**	1	RECEPTACLE AS (AUXILIARY)	
		2	**102-8803**	1	KIT-RECEPTACLE (3-PIN)	
					(INCLUDES RECEPTACLE AS AND WEDGE)	
		2	**3E-3371**	1	WEDGE-RECEPTACLE LOCK (3-PIN)	
		2	**8T-8737**	1	PLUG-SEAL	
		2	**9W-0852**	2	PIN-CONNECTOR (14-GA)	
	29	4	**123-2896**	1	GASKET	
Y	30	4	**154-7443**	1	CONTROL GP-UNPRGMED MONITOR (CATERPILLAR MONITORING SYSTEM)	654
Y	31	3	**166-6928**	1	MODULE GP-QUAD GAUGE	706
	32	7	**170-1821**	1	SWITCH AS-PUSH BUTTON (HORN)	
		7	**6F-0253**	1	LOCKWASHER	
		7	**172-3511**	1	NUT (5/8-24-THD)	
	33	6	**173-2234**	1	PLATE AS	

262-9187 **WIRING GP-OPEN ROPS** *(contd.)* **i02447816**

NOTE	REF NO	GRAPHIC REF	PART NUMBER	QTY	PART NAME 1 2 3 4 5 6 (PRODUCT LEVEL)	SEE PAGE
	34	4	**185-6335**	1	SWITCH AS-ROTARY (24-VOLT) (VARIABLE SHIFT CONTROL)	
		4	**3E-3383**	1	WEDGE-RECEPTACLE LOCK (6-PIN)	
		4	**8T-8737**	2	PLUG-SEAL	
		4	**9W-0852**	4	PIN-CONNECTOR (14-GA)	
		4	**102-8805**	1	KIT-RECEPTACLE (6-PIN)	
					(INCLUDES RECEPTACLE AS AND WEDGE)	
	34A	4	**185-6335**	1	SWITCH AS-ROTARY (24-VOLT) (AUTOSHIFT CONTROL)	
		4	**3E-3383**	1	WEDGE-RECEPTACLE LOCK (6-PIN)	
		4	**8T-8737**	2	PLUG-SEAL	
		4	**9W-0852**	4	PIN-CONNECTOR (14-GA)	
		4	**102-8805**	1	KIT-RECEPTACLE (6-PIN)	
					(INCLUDES RECEPTACLE AS AND WEDGE)	
	35	4	**192-1954**	1	FILM-CONTROL (UPPER PANEL)	
	36	5	**198-6570**	1	LIGHTER GP-CIGAR (12-VOLT)	
		5	**198-6571**	1	ELEMENT AS	
	37	6	**209-0381**	1	CONVERTER-POWER (24-VOLT TO 12-VOLT)	
	38	4	**234-5925**	1	GASKET	
	39	2	**235-5506**	1	HARNESS AS-LIGHTING (CAB FLOODLIGHTS)	
		2	**155-2270**	4	KIT-CONNECTING PLUG (2-PIN)	
					(INCLUDES PLUG AS AND WEDGE)	
	40	4,5,7	**236-4631**	20	BEZEL	
	41	6	**236-9993**	1	PLATE AS	
M		6	**6V-9632**	4	NUT-WELD (M6X1-THD)	
		6	**7T-1099**	5	LINK	
M		6	**8T-3490**	2	NUT-WELD (M10X1.5-THD)	
M		6	**8T-3612**	4	NUT-WELD (M8X1.25-THD)	
M		6	**8T-8874**	9	NUT-WELD (M5X0.8-THD)	
	42	1	**242-6099**	1	CLIP	
	43	5	**242-8421**	1	PLATE AS	
	44	7	**246-0578**	1	HARNESS AS-OPERATOR CONTROLS	
		7	**102-8803**	2	KIT-RECEPTACLE (3-PIN)	
		7	**102-8804**	1	KIT-RECEPTACLE (4-PIN)	
					(EACH KIT INCLUDES RECEPTACLE AS AND WEDGE)	
		7	**155-2265**	1	KIT-CONNECTING PLUG (8-PIN)	
		7	**155-2260**	1	KIT-CONNECTING PLUG (3-PIN)	
		7	**155-2270**	1	KIT-CONNECTING PLUG (2-PIN)	
		7	**155-2271**	3	KIT-CONNECTING PLUG (4-PIN)	
					(EACH KIT INCLUDES PLUG AS AND WEDGE)	
	45	4	**246-5459**	1	PLATE	
	46	7	**249-5602**	2	GUARD-SWITCH	
	47	5	**260-9602**	1	HARNESS AS-WIRING (SERVICE TOOL)	
		5	**102-8805**	1	KIT-RECEPTACLE (6-PIN)	
					(INCLUDES RECEPTACLE AS AND WEDGE)	
	48	5	**262-1408**	1	CONTROL GP-UNPROGRAMMED (POWER TRAIN)	
	48A	6	**262-1408**	1	CONTROL GP-UNPROGRAMMED (IMPLEMENT)	
	49	7	**263-1493**	1	SWITCH AS-PUSH BUTTON (DOWNSHIFT)	
	50	2	**273-0274**	1	HARNESS AS-CAB	
		2	**102-8802**	4	KIT-RECEPTACLE (2-PIN)	
		2	**102-8803**	1	KIT-RECEPTACLE (3-PIN)	
		2	**102-8804**	3	KIT-RECEPTACLE (4-PIN)	
		2	**102-8805**	4	KIT-RECEPTACLE (6-PIN)	
		2	**102-8806**	3	KIT-RECEPTACLE (8-PIN)	
		2	**102-8801**	3	KIT-RECEPTACLE (12-PIN)	
		2	**197-7565**	1	KIT-RECEPTACLE (4-PIN)	
					(EACH KIT RECEPTACLE INCLUDES RECEPTACLE AS AND WEDGE)	
		2	**8N-1535**	1	BELL AS-END	
		2	**3S-2093**	8	STRAP-CABLE	

262-9187 **WIRING GP-OPEN ROPS** ***(contd.)*** **i02447816**

NOTE	REF NO	GRAPHIC REF	PART NUMBER	QTY	PART NAME 1 2 3 4 5 6 (PRODUCT LEVEL)	SEE PAGE
		2	**9X-6772**	1	STRAP-CABLE	
		2	**8N-1532**	1	RECEPTACLE AS-CONNECTOR (6-PIN)	
		2	**9X-0145**	1	RECEPTACLE AS-CONNECTOR (24-PIN)	
		2	**214-4208**	1	RECEPTACLE AS-CONNECTOR (70-PIN)	
		2	**8T-9834**	1	PLUG AS-CONNECTOR (40-PIN)	
		2	**9X-1054**	3	PLUG AS-CONNECTOR (4-PIN)	
		2	**147-1445**	2	PLUG AS-CONNECTOR (70-PIN)	
		2	**147-1446**	2	PLUG AS-CONNECTOR (70-PIN)	
		2	**155-2255**	6	KIT-CONNECTING PLUG (12-PIN)	
		2	**155-2265**	5	KIT-CONNECTING PLUG (8-PIN)	
		2	**155-2260**	7	KIT-CONNECTING PLUG (3-PIN)	
		2	**155-2270**	5	KIT-CONNECTING PLUG (2-PIN)	
		2	**155-2271**	5	KIT-CONNECTING PLUG (4-PIN)	
		2	**155-2274**	13	KIT-CONNECTING PLUG (6-PIN)	
					(EACH KIT PLUG INCLUDES PLUG AS AND WEDGE)	
	51	6,7	**132-5789**	4	CLIP	
	52	1	**134-2540**	1	RECEPTACLE AS-CONNECTOR (3-PIN)	
	53	3,7	**156-6175**	3	CLIP	
	54	7	**198-4775**	2	WASHER-HARD (6.6X15X6-MM THK)	
	55	4,5,7	**228-6089**	16	PLUG	
	56	4	**236-4608**	1	SWITCH AS-ROCKER (MODE SELECT)	
	57	4	**236-4609**	1	SWITCH AS-ROCKER (TMSN NEUTRALIZER OVERRIDE)	
	58	4	**236-4619**	1	SWITCH AS-ROCKER (LIFT, TILT KICKOUT)	
	59	7	**236-4622**	1	SWITCH AS-ROCKER (FINE MODULATION)	
	60	3	**249-2763**	2	CONTROL GP-DISPLAY ELECTRONIC (INDICATOR PANEL, RH, LH)	
	61	7	**251-1197**	1	SWITCH AS-ROCKER (HYDRAULIC LOCKOUT)	
	62	7	**2A-2677**	1	SPACER (0.75-IN THK)	
	63	4	**2H-3920**	4	LOCKWASHER	
	64	7	**102-8802**	1	KIT-RECEPTACLE (2-PIN)	
	65	4	**102-8803**	1	KIT-RECEPTACLE (3-PIN)	
	66	5	**102-8801**	1	KIT-RECEPTACLE (12-PIN)	
					(EACH KIT RECEPTACLE INCLUDES RECEPTACLE AS AND WEDGE)	
	67	2	**4B-2049**	16	NUT (10-32-THD)	
	68	5,7	**4D-7388**	2	CLIP	
	69	3	**4P-7581**	1	CLIP	
M	70	6	**5C-7261**	2	NUT (M8X1.25-THD)	
M	71	6	**5C-8312**	4	NUT (M4X0.7-THD)	
	72	5	**5P-4116**	1	WASHER-HARD (8.8X20.5X2-MM THK)	
	73	1	**6D-1641**	1	CLIP	
	74	2	**6D-6146**	8	SCREW-MACHINE (10-32X1.25-IN)	
	75	5	**6V-1889**	1	CLIP	
	76	4	**6V-2687**	8	SCREW-PAN HEAD (10-24X1-IN)	
	77	1,4	**6V-3265**	4	CLIP	
	78	6	**6V-5645**	4	SCREW-MACHINE (10-32X0.87-IN)	
M	79	6	**6V-9673**	3	SCREW-MACHINE (M5X0.8X12-MM)	
M	80	5	**7X-0818**	3	BOLT (M8X1.25X45-MM)	
M	81	6	**8T-0337**	4	SCREW-MACHINE (M4X0.7X12-MM)	
	82	1,4,5, 6,7	**8T-4121**	13	WASHER-HARD (11X21X2.5-MM THK)	
M	83	7	**8T-4133**	1	NUT (M10X1.5 THD)	
M	84	5	**8T-4136**	1	BOLT (M10X1.5X25-MM)	
M	85	1,4,6, 7	**8T-4137**	10	BOLT (M10X1.5X20-MM)	
M	86	4,7	**8T-4138**	10	BOLT (M6X1X20-MM)	
M	87	6	**8T-4171**	2	BOLT (M6X1X12-MM)	
M	88	7	**8T-4186**	1	BOLT (M10X1.5X40-MM)	
M	89	5	**8T-4199**	1	BOLT (M8X1.25X12-MM)	
	90	4,5,7	**8T-4205**	9	WASHER-HARD (7.2X14.5X2-MM THK)	

262-9187 **WIRING GP-OPEN ROPS** *(contd.)* **i02447816**

NOTE	REF NO	GRAPHIC REF	PART NUMBER	QTY	PART NAME 1 2 3 4 5 6 (PRODUCT LEVEL)	SEE PAGE
	91	1,2,6	**8T-4223**	4	WASHER-HARD (13.5X25.5X3-MM THK)	
	92	6	**8T-4224**	2	WASHER-HARD (8.8X16X2-MM THK)	
M	93	1,2,6	**8T-4244**	4	NUT (M12X1.75-THD)	
M	94	3,5	**8T-4970**	5	BOLT (M6X1X14-MM)	
M	95	5,6	**8T-6870**	8	BOLT (M8X1.25X70-MM)	
	96	5	**9M-4972**	1	CLIP	
	97	2	**9M-5870**	8	GROMMET	
	98	5,6	**9N-0869**	11	WASHER-HARD (8.8X25.5X2-MM THK)	
M	99	2,3	**9X-1046**	6	SCREW (M4X0.7X18-MM)	
M	100	6	**9X-2480**	2	BOLT (M6X1X45-MM)	
	101	3	**9X-6165**	1	WASHER (6.5X22X2.5-MM THK)	
	102	3,4,6	**9X-8256**	7	WASHER (6.6X12X2-MM THK)	

M-METRIC PART
Y-SEPARATE ILLUSTRATION

262-9187 **WIRING GP-OPEN ROPS** *(contd.)* **i02447816**

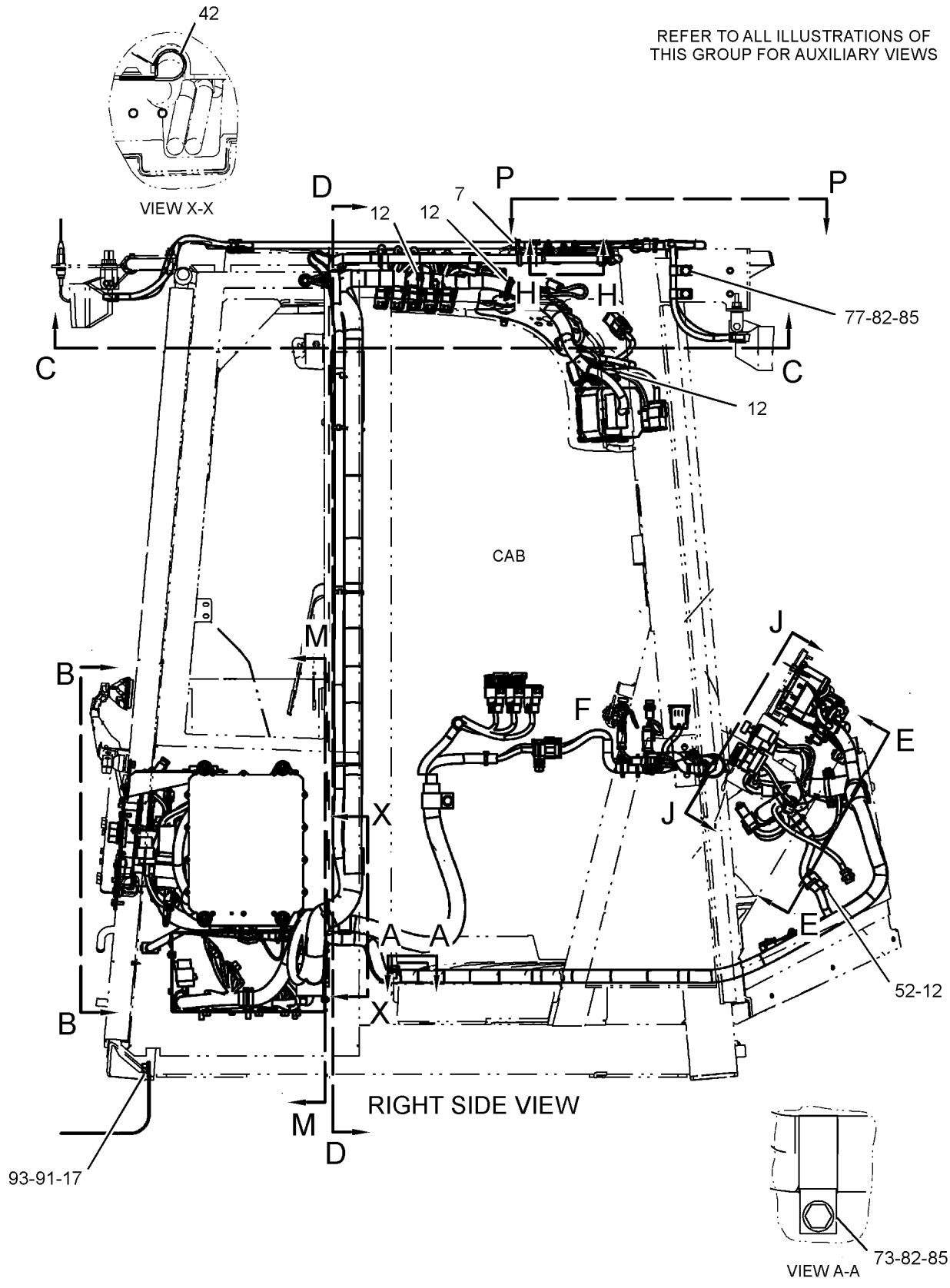

GRAPHIC #1 g01202988

262-9187 **WIRING GP-OPEN ROPS** *(contd.)* **i02447816**

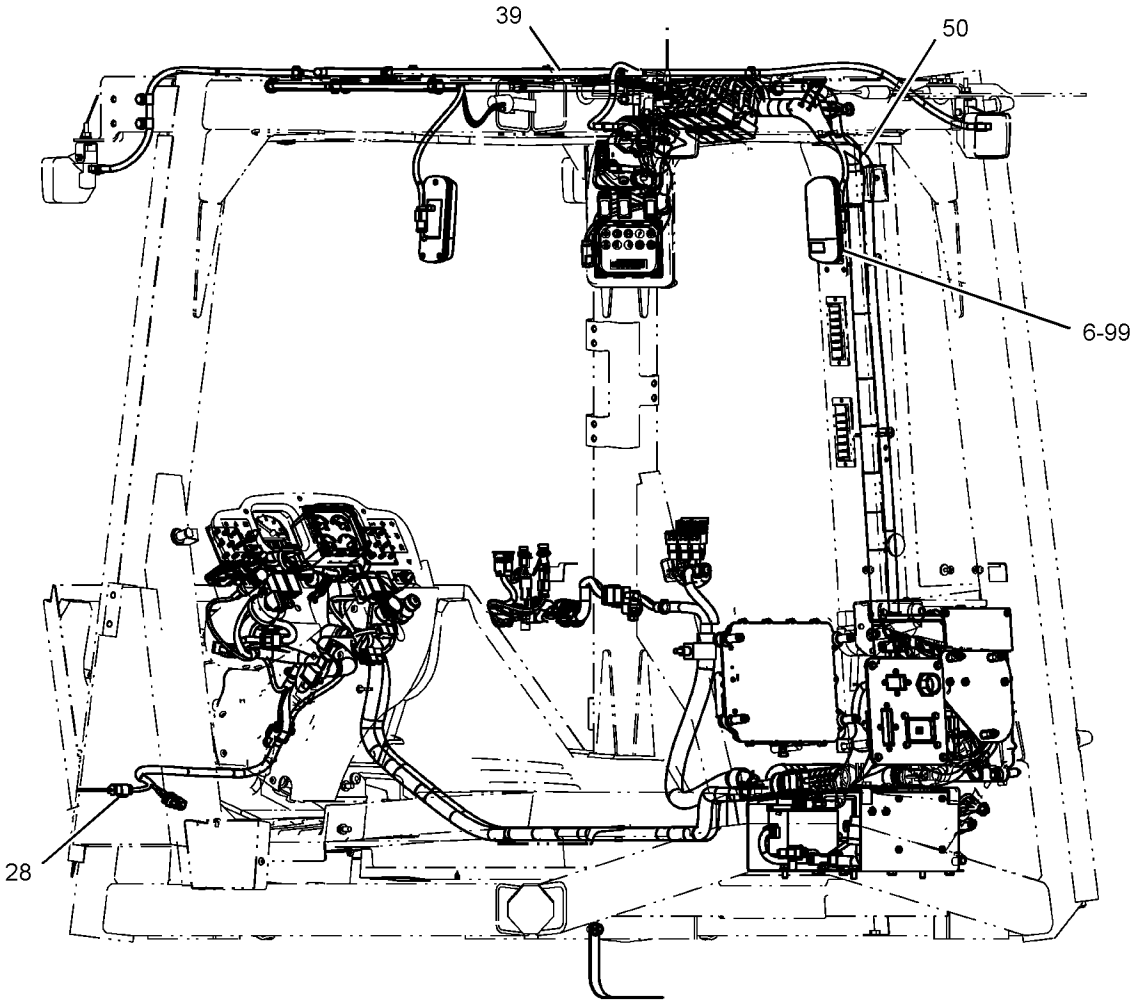

REAR VIEW
(LEFT SIDE)

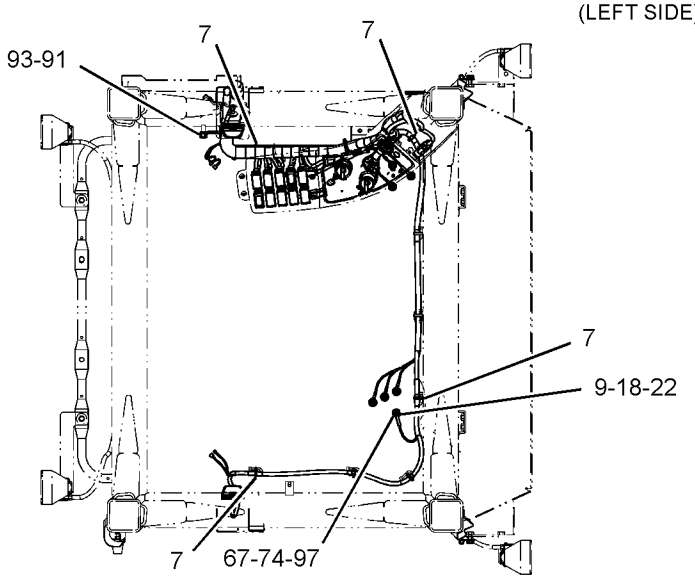

SECTION C-C

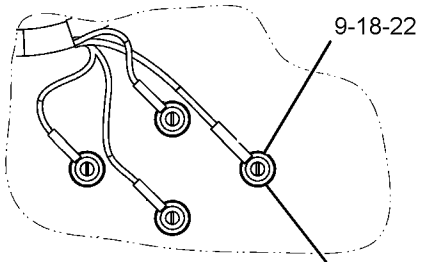

VIEW H-H

GRAPHIC #2

g01202989

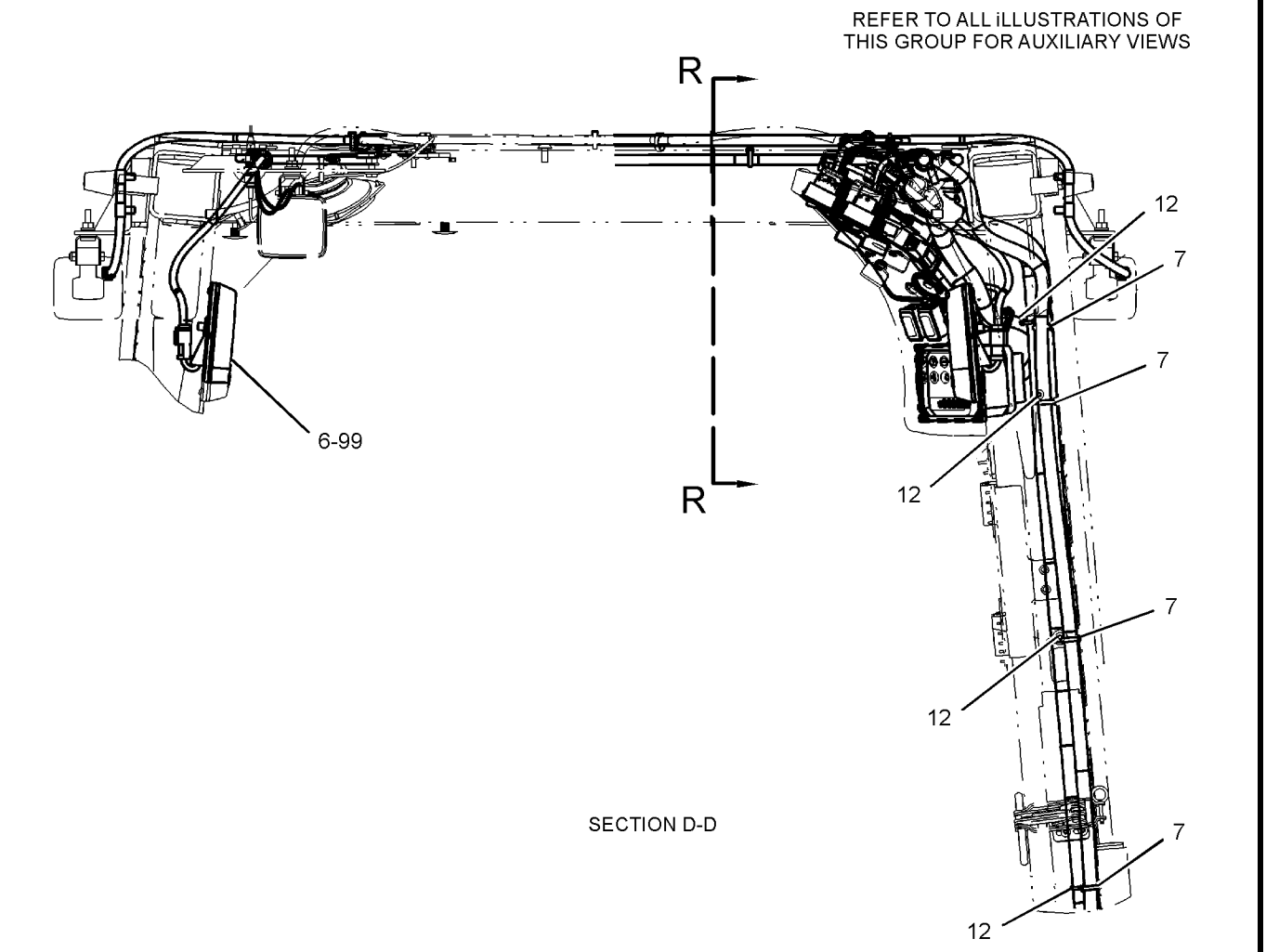

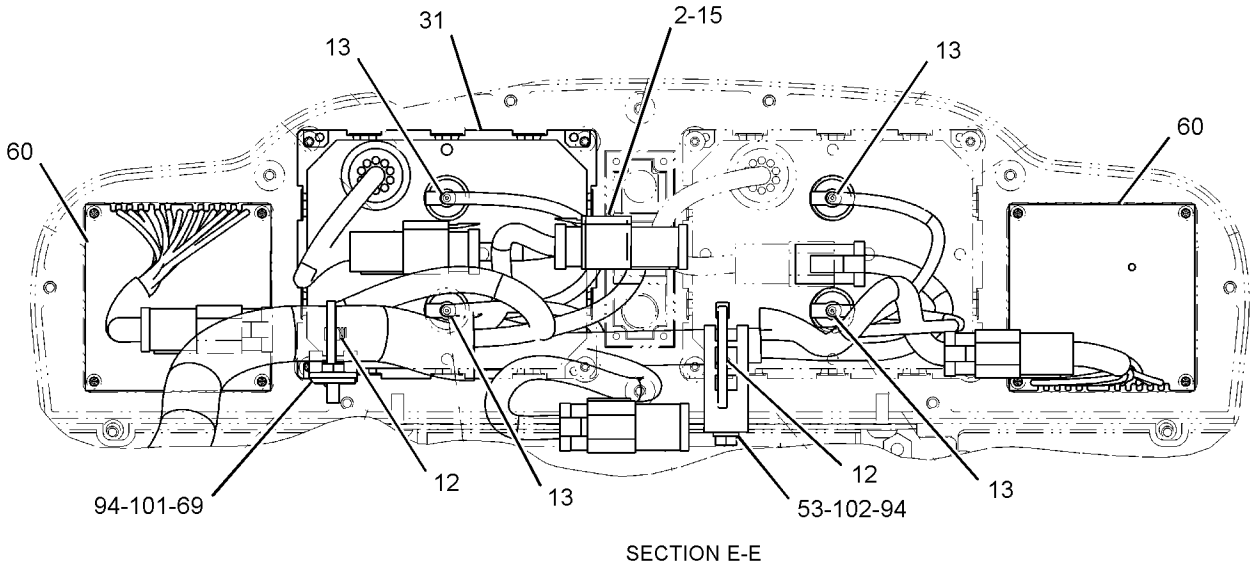

GRAPHIC #3

g01202990

262-9187 **WIRING GP-OPEN ROPS** *(contd.)* **i02447816**

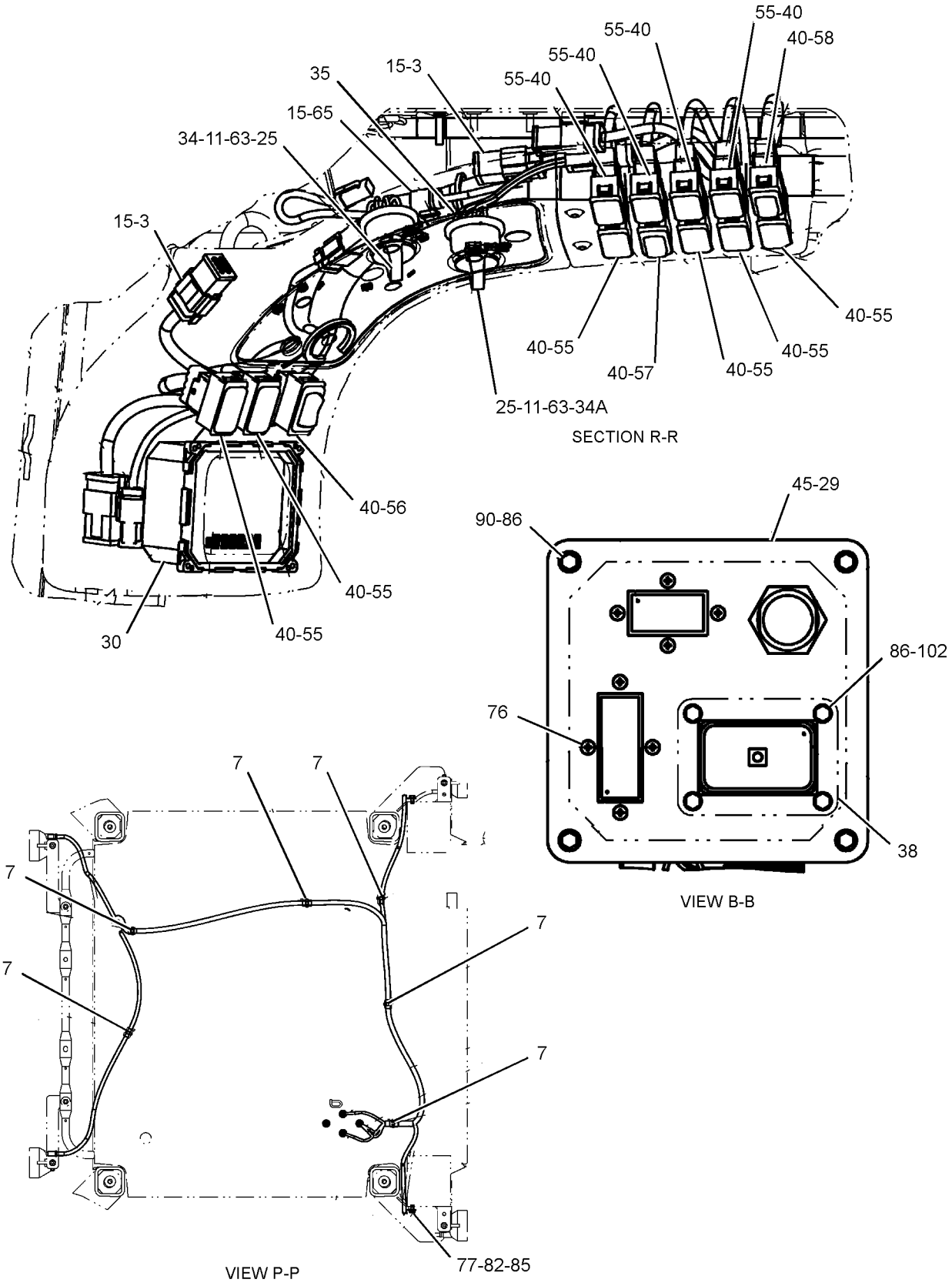

GRAPHIC #4 g01202991

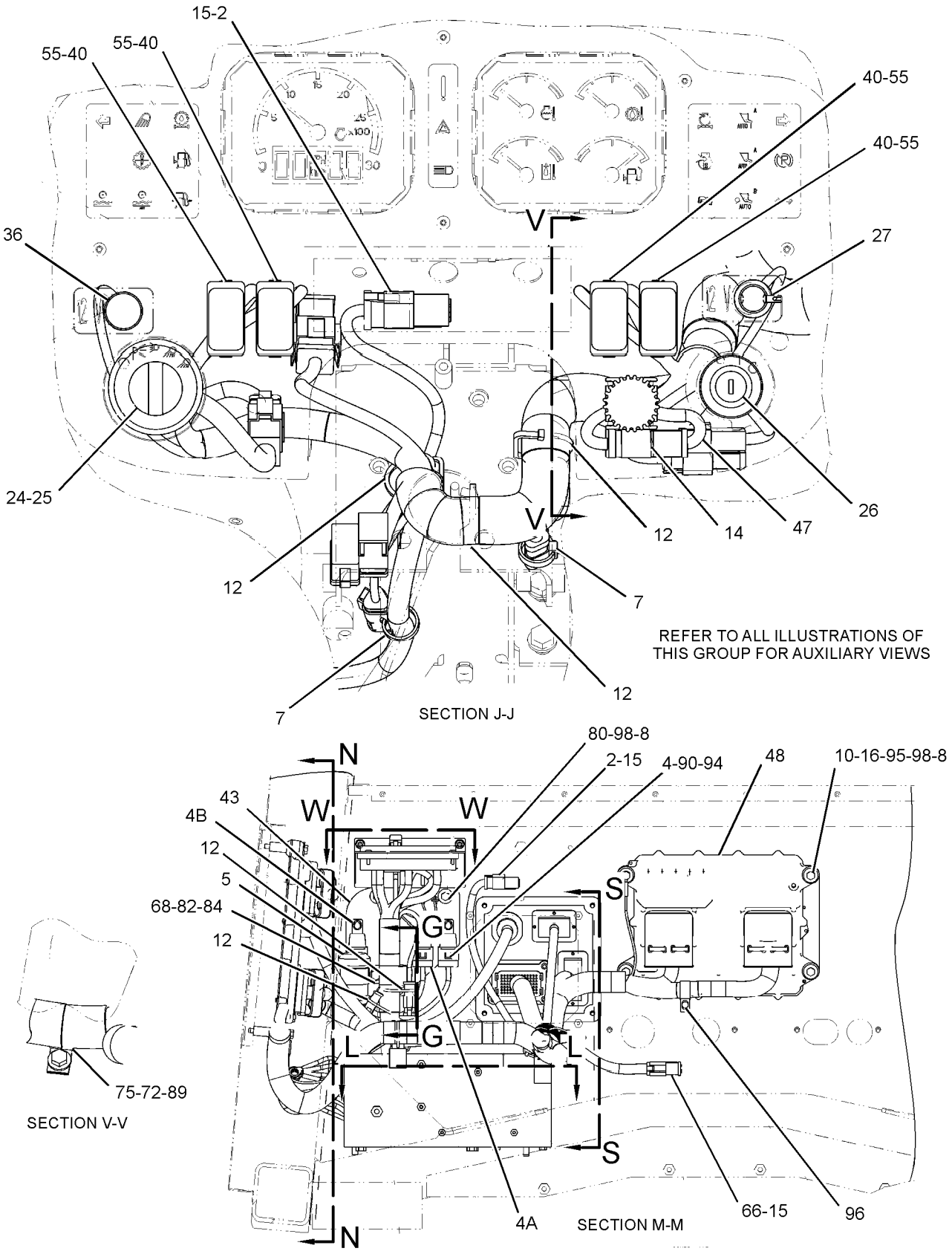

GRAPHIC #5 g01204306

262-9187 **WIRING GP-OPEN ROPS** *(contd.)* **i02447816**

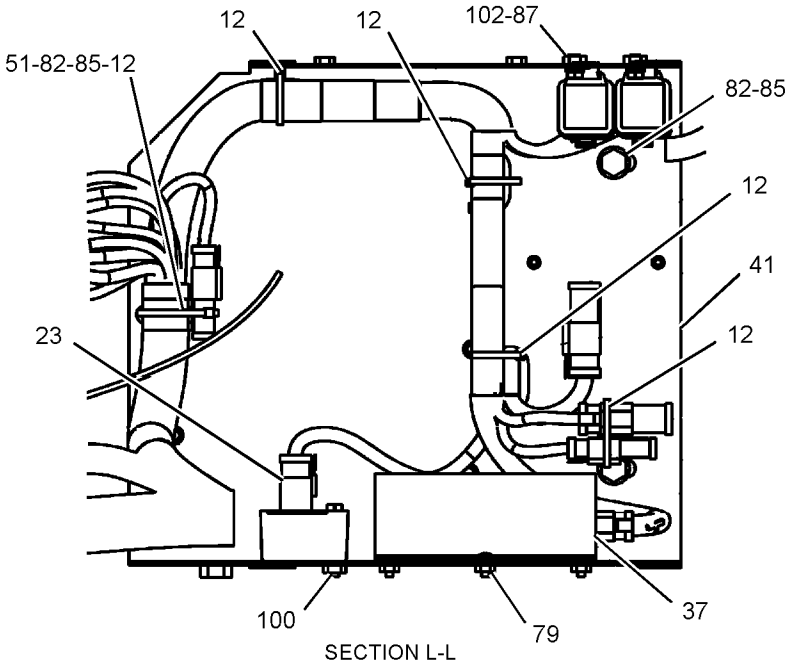

SECTION L-L

REFER TO ALL ILLUSTRATIONS OF THIS GROUP FOR AUXILIARY VIEWS

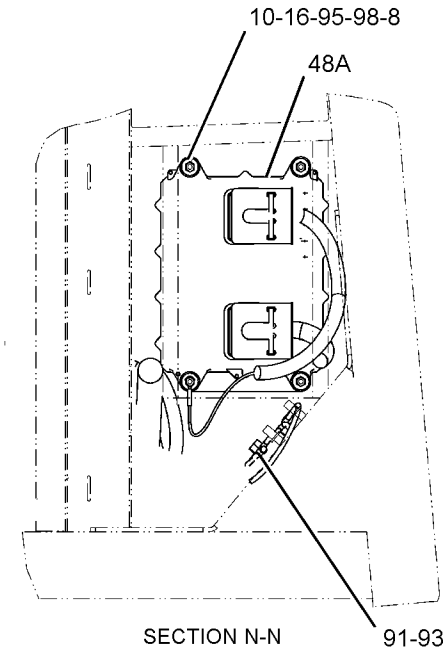

SECTION N-N

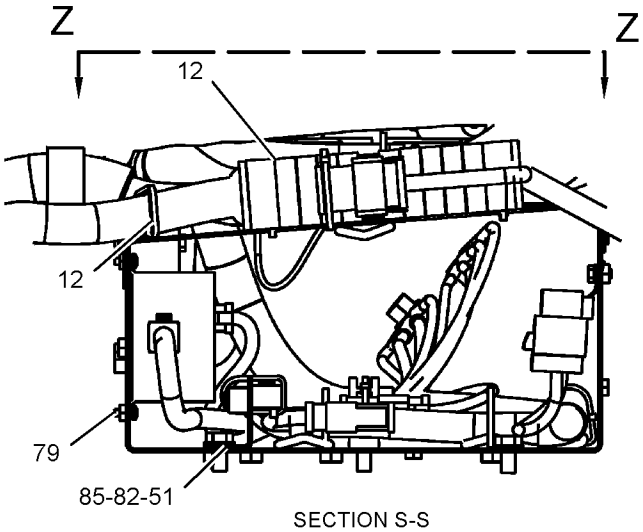

SECTION S-S

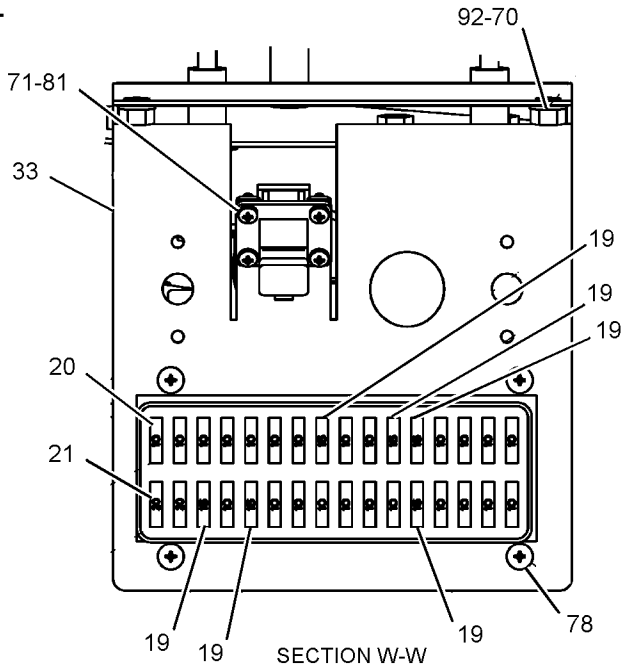

SECTION W-W

GRAPHIC #6

g01202993

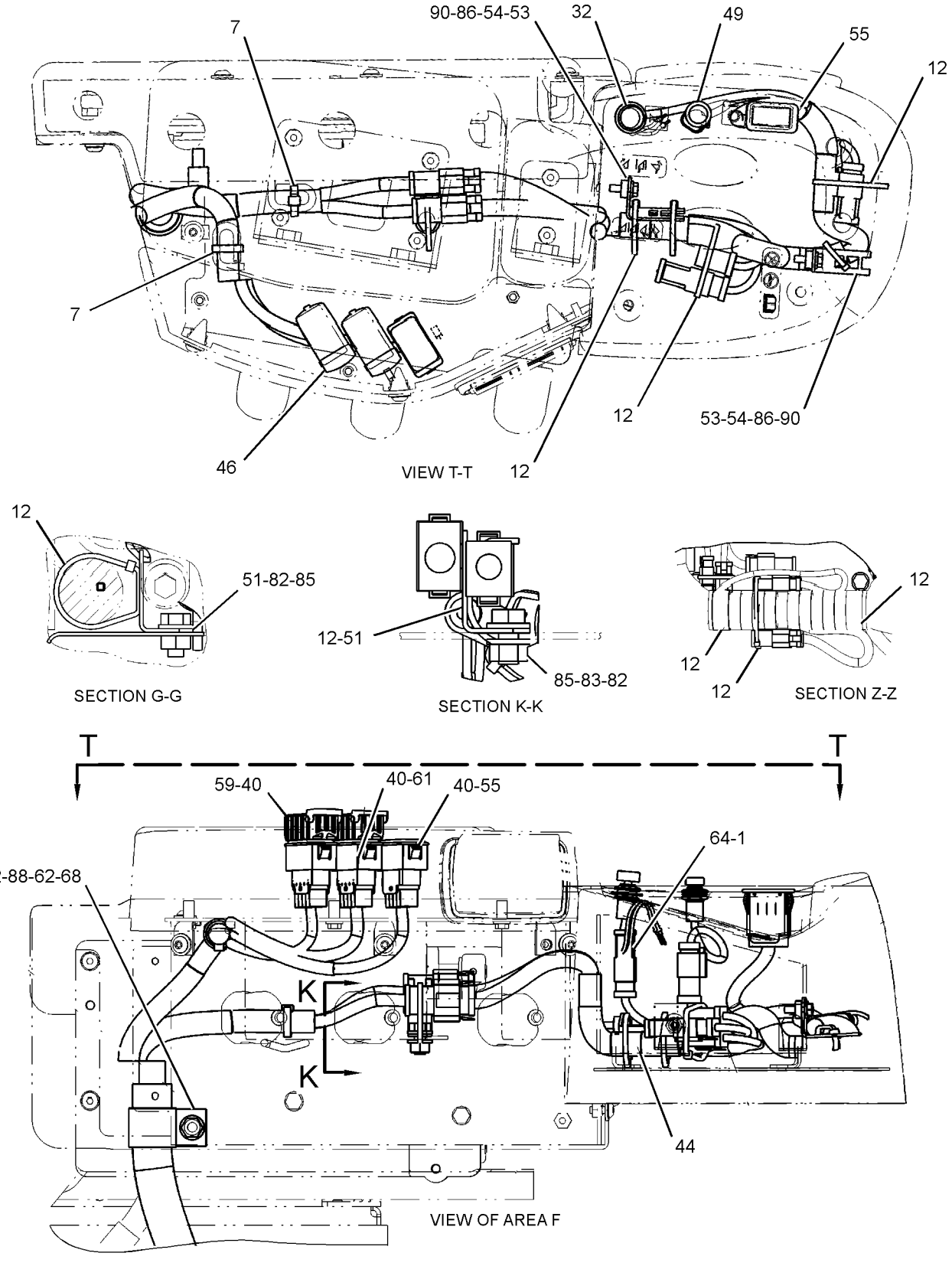

GRAPHIC #7 **<END>** g01202994

241-0643 WIRING GP-SECONDARY STEERING

S/N: M3G1-UP
PART OF 244-5424 STEERING AR-SECONDARY
AN ATTACHMENT

SMCS-1408, 4334 **i02445070**

NOTE	REF NO	GRAPHIC REF	PART NUMBER	QTY	PART NAME 1 2 3 4 5 6 (PRODUCT LEVEL)	SEE PAGE
	1	1	**3E-5239**	1	RELAY AS (24-VOLT) (SECONDARY STEER INTERMEDIATE)	
	2	2	**3S-2093**	3	STRAP-CABLE	
	3	2	**7K-1181**	2	STRAP-CABLE	
	4	2	**107-2111**	1	CABLE AS	
		2	**1S-7251**	1	TERMINAL-RING (FOR 1/2-IN BOLT)	
		2	**1S-7252**	1	TERMINAL-RING (FOR 3/8-IN BOLT)	
E		2	**5P-0746**		CABLE (0-GA, BLACK) (61-CM)	
E		2	**5P-0747**		CABLE (00-GA, BLACK) (1-CM)	
	5	2	**127-9323**	1	BRACKET AS	
M		2	**8T-3490**	1	NUT-WELD (M10X1.5-THD)	
	6	1	**189-5604**	1	PLATE AS	
	7	2	**201-8428**	1	BRACKET AS	
	8	1	**248-0220**	1	HARNESS AS-STEERING (SECONDARY)	
		1	**102-8801**	1	KIT-RECEPTACLE (12-PIN)	
					(INCLUDES RECEPTACLE AS AND WEDGE)	
		1	**9X-1054**	1	PLUG AS-CONNECTOR (4-PIN)	
		1	**155-2260**	2	KIT-CONNECTING PLUG (3-PIN)	
		1	**155-2270**	1	KIT-CONNECTING PLUG (2-PIN)	
					(EACH KIT INCLUDES PLUG AS AND WEDGE)	
	9	1	**248-0221**	1	CABLE AS	
		1	**1S-7251**	1	TERMINAL-RING (FOR 1/2-IN BOLT)	
		1	**1S-7252**	1	TERMINAL-RING (FOR 3/8-IN BOLT)	
E		1	**5P-0761**		CABLE (00-GA, RED) (167-CM)	
		1	**8N-0869**	1	COVER-TERMINAL (RED)	
	10	1,2	**130-5300**	3	CLIP	
	11	2	**130-5301**	1	CLIP	
	12	1,2	**205-7299**	8	CLIP	
	13	2	**230-5771**	1	SWITCH AS-PRESSURE (SECONDARY STEERING OIL)	
	13A	2	**230-5771**	1	SWITCH AS-PRESSURE (PRIMARY STEERING OIL)	
					(EACH SWITCH AS INCLUDES)	
		2	**102-8803**	1	KIT-RECEPTACLE (3-PIN)	
					(INCLUDES RECEPTACLE AS AND WEDGE)	
		2	**3E-3371**	1	WEDGE-RECEPTACLE LOCK (3-PIN)	
		2	**186-3735**	3	PIN-CONNECTOR (16-GA TO 18-GA)	
E		2	**9X-1813**		SLEEVE (30-CM)	
	14	2	**2A-2677**	2	SPACER (0.75-IN THK)	
	15	2	**3K-0360**	2	SEAL-O-RING	
	16	1	**3S-8664**	1	CLIP	
	17	2	**5P-9085**	1	CLIP	
	18	2	**5P-9297**	1	CLIP	
	19	1	**8M-2770**	3	CLIP	
	20	1,2	**8T-4121**	11	WASHER-HARD (11X21X2.5-MM THK)	
M	21	1,2	**8T-4137**	9	BOLT (M10X1.5X20-MM)	
M	22	1	**8T-4171**	1	BOLT (M6X1X12-MM)	
M	23	2	**8T-4186**	1	BOLT (M10X1.5X40-MM)	
M	24	2	**8T-4196**	1	BOLT (M10X1.5X35-MM)	
	25	2	**8T-4223**	2	WASHER-HARD (13.5X25.5X3-MM THK)	
M	26	2	**8T-4244**	1	NUT (M12X1.75-THD)	
	27	1	**9X-8267**	1	WASHER (6.6X12X2-MM THK)	

E-ORDER BY THE CENTIMETER
M-METRIC PART

241-0643 **WIRING GP-SECONDARY STEERING** *(contd.)* **i02445070**

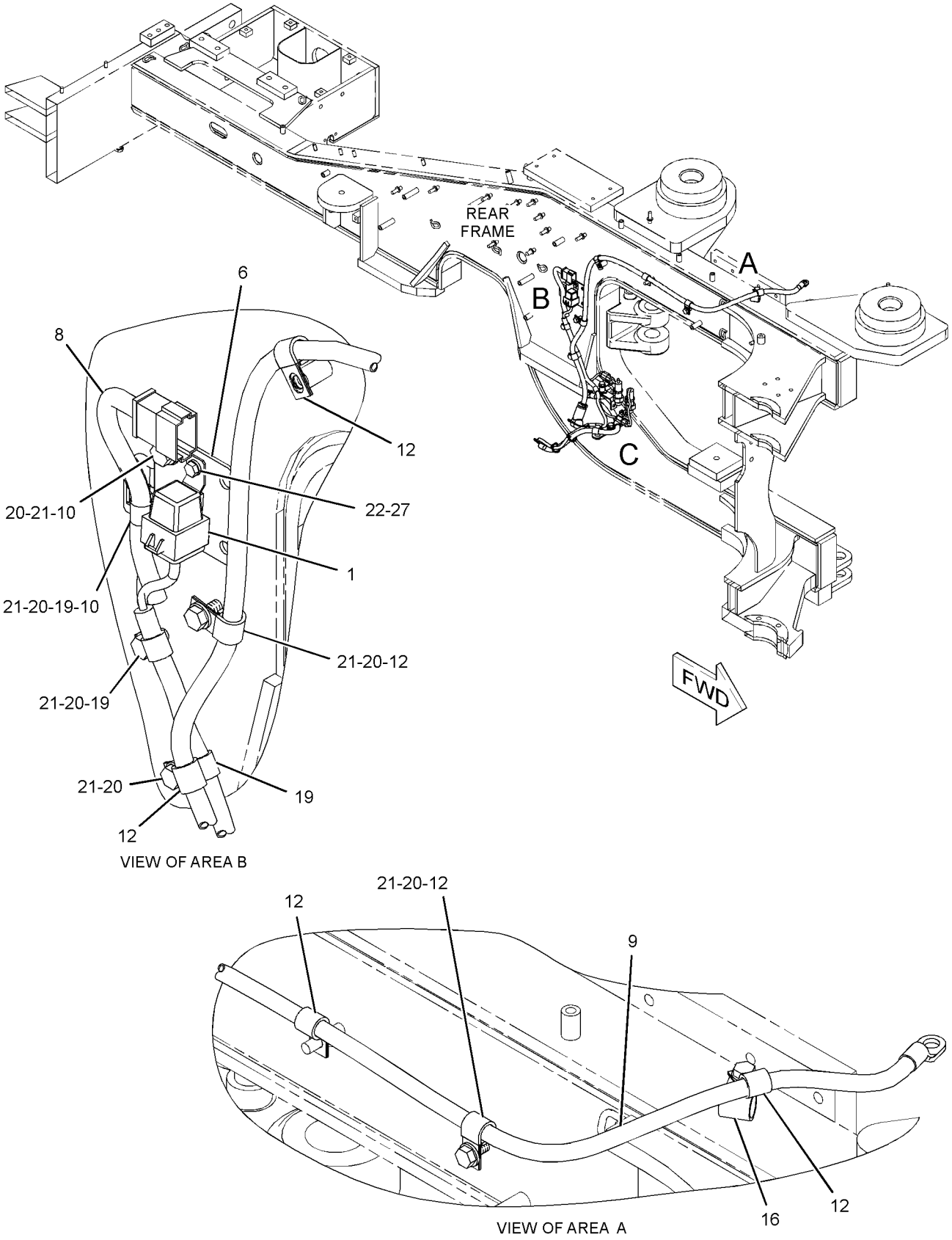

GRAPHIC #1

g01200520

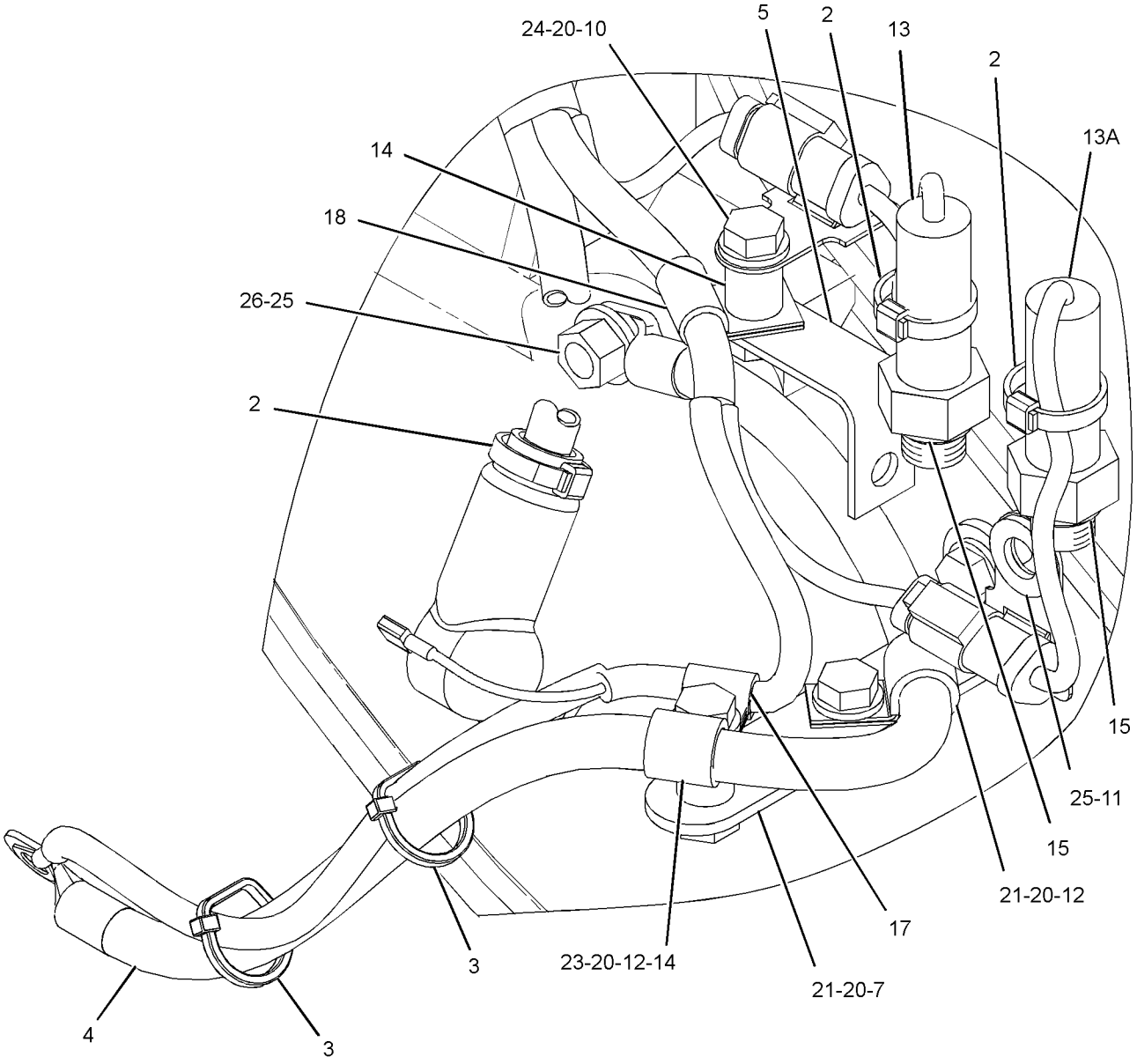

VIEW OF AREA C

GRAPHIC #2 **<END>** g01200522

271-4010 WIRING GP-SENSOR–TILT POSITION

S/N: M3G1-UP

PART OF 237-4931 ELECTRICAL AR

SMCS-1408 **i02449426**

NOTE	REF NO	GRAPHIC REF	PART NUMBER	QTY	PART NAME 1 2 3 4 5 6 (PRODUCT LEVEL)	SEE PAGE
	1	1	**4V-1939**	4	CLAMP	
	2	1	**107-4749**	1	PLATE	
	3	1	**271-4011**	1	HARNESS AS-SENSOR	
		1	**102-8803**	1	KIT-RECEPTACLE (3-PIN)	
					(INCLUDES RECEPTACLE AS AND WEDGE)	
		1	**155-2260**	1	KIT-CONNECTING PLUG (3-PIN)	
					(INCLUDES PLUG AS AND WEDGE)	
	4	1	**8T-4121**	2	WASHER-HARD (11X21X2.5-MM THK)	
M	5	1	**8T-4133**	2	NUT (M10X1.5 THD)	
	6	1	**9M-8406**	3	CLIP	
M	7	1	**9X-2480**	4	BOLT (M6X1X45-MM)	
	8	1	**9X-8256**	4	WASHER (6.6X12X2-MM THK)	

M-METRIC PART

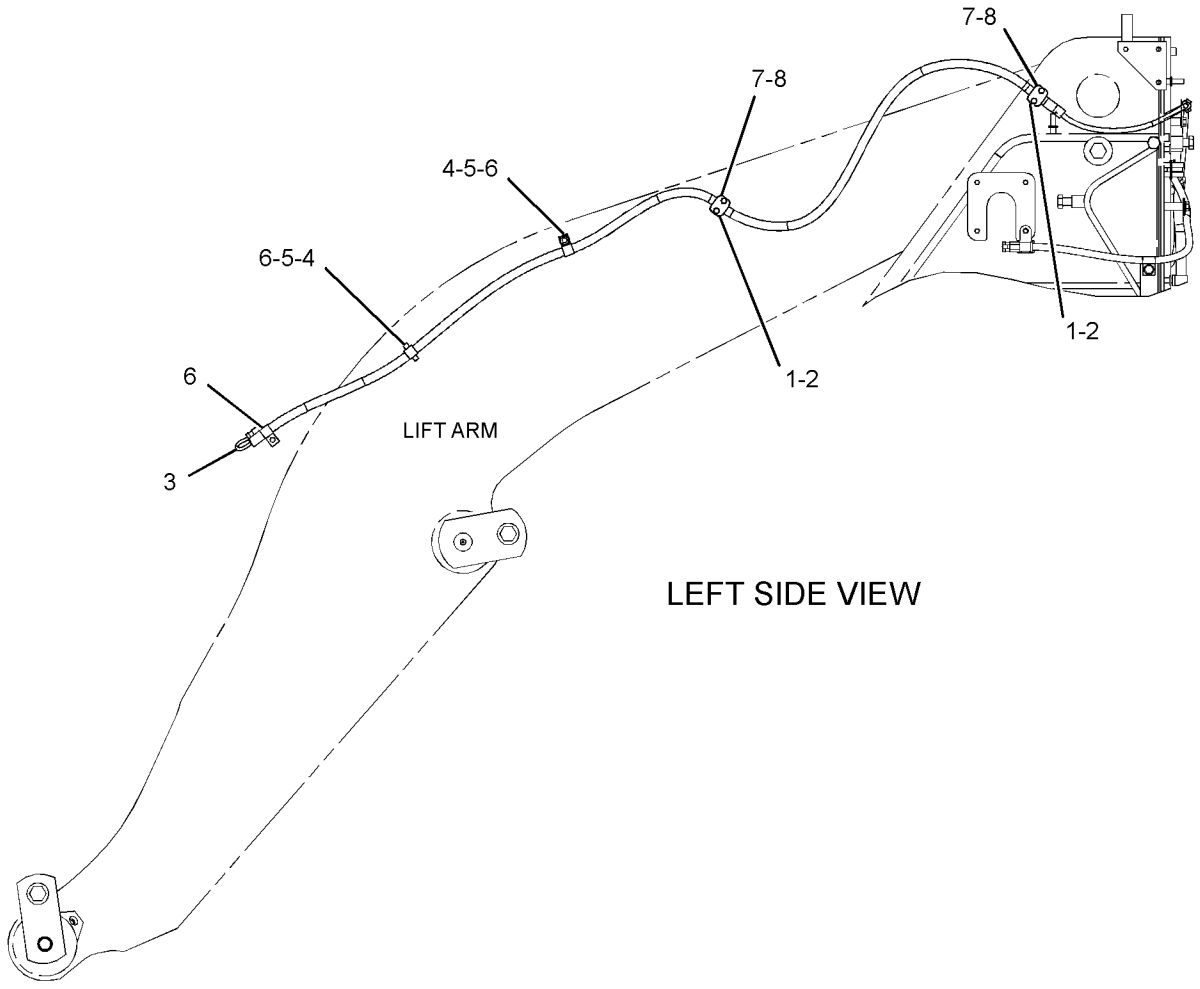

LEFT SIDE VIEW

GRAPHIC #1 **<END>** g01220238

253-3945 WIRING GP-WASTE HANDLER

S/N: M3G1-UP

PART OF 247-8561 ACTUATOR GP-POWER GUARD

AN ATTACHMENT

SMCS-1408 **i02306948**

NOTE	REF NO	GRAPHIC REF	PART NUMBER	QTY	PART NAME 1 2 3 4 5 6 (PRODUCT LEVEL)	SEE PAGE
	1	1	**7K-1181**	11	STRAP-CABLE	
	2	1	**157-1364**	1	SWITCH AS-TOGGLE (POWER GUARD ACTUATOR)	
		1	**102-8805**	1	KIT-RECEPTACLE (6-PIN)	
					(INCLUDES RECEPTACLE AS AND WEDGE)	
		1	**6T-3631**	2	NUT-HEX (15/32-32-THD)	
		1	**6T-3632**	1	LOCKWASHER	
		1	**6T-3633**	1	RING-LOCKING	
		1	**186-3735**	1	PIN-CONNECTOR (16-GA TO 18-GA)	
	3	1	**249-6463**	1	FILM-IDENTIFICATION (POWER GUARD ACTUATOR SWITCH)	
	4	1	**266-7230**	1	HARNESS AS-CONTROL (POWER GUARD ACTUATOR)	
		1	**155-2270**	1	KIT-CONNECTING PLUG (2-PIN)	
		1	**155-2274**	1	KIT-CONNECTING PLUG (6-PIN)	
					(EACH KIT INCLUDES PLUG AS AND WEDGE)	
	5	1	**130-5300**	1	CLIP	
	6	1	**186-3221**	1	WIRE AS	
	7	1	**3T-2662**	1	CIRCUIT BREAKER AS (15-AMPERE) (POWER GUARD ACTUATOR)	
		1	**6V-8376**	2	SCREW-MACHINE (8-32X0.25-IN)	
		1	**9B-7233**	2	LOCKWASHER	
	8	1	**4D-8123**	1	CLIP	
	9	1	**5M-6668**	2	SCREW-MACHINE (8-32X0.75-IN)	
	10	1	**5P-9085**	3	CLIP	

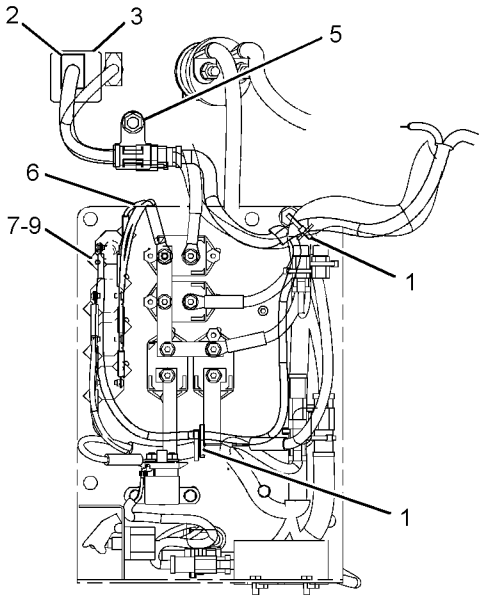

VIEW A-A

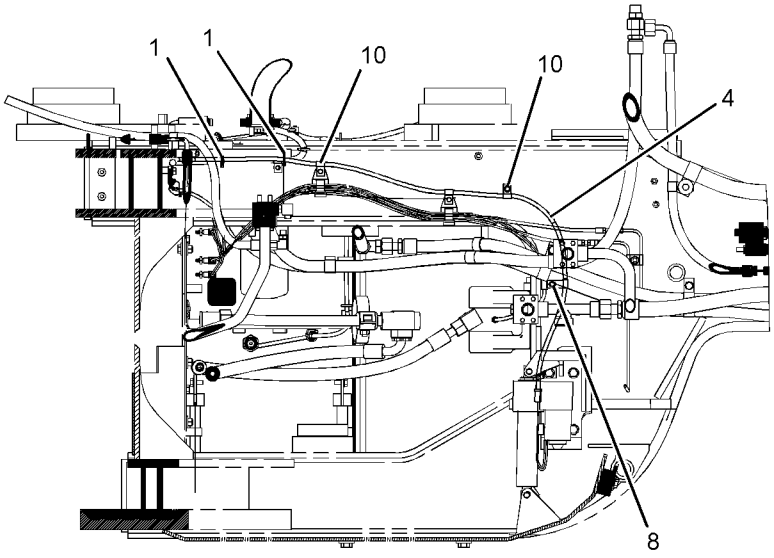

SECTION B-B

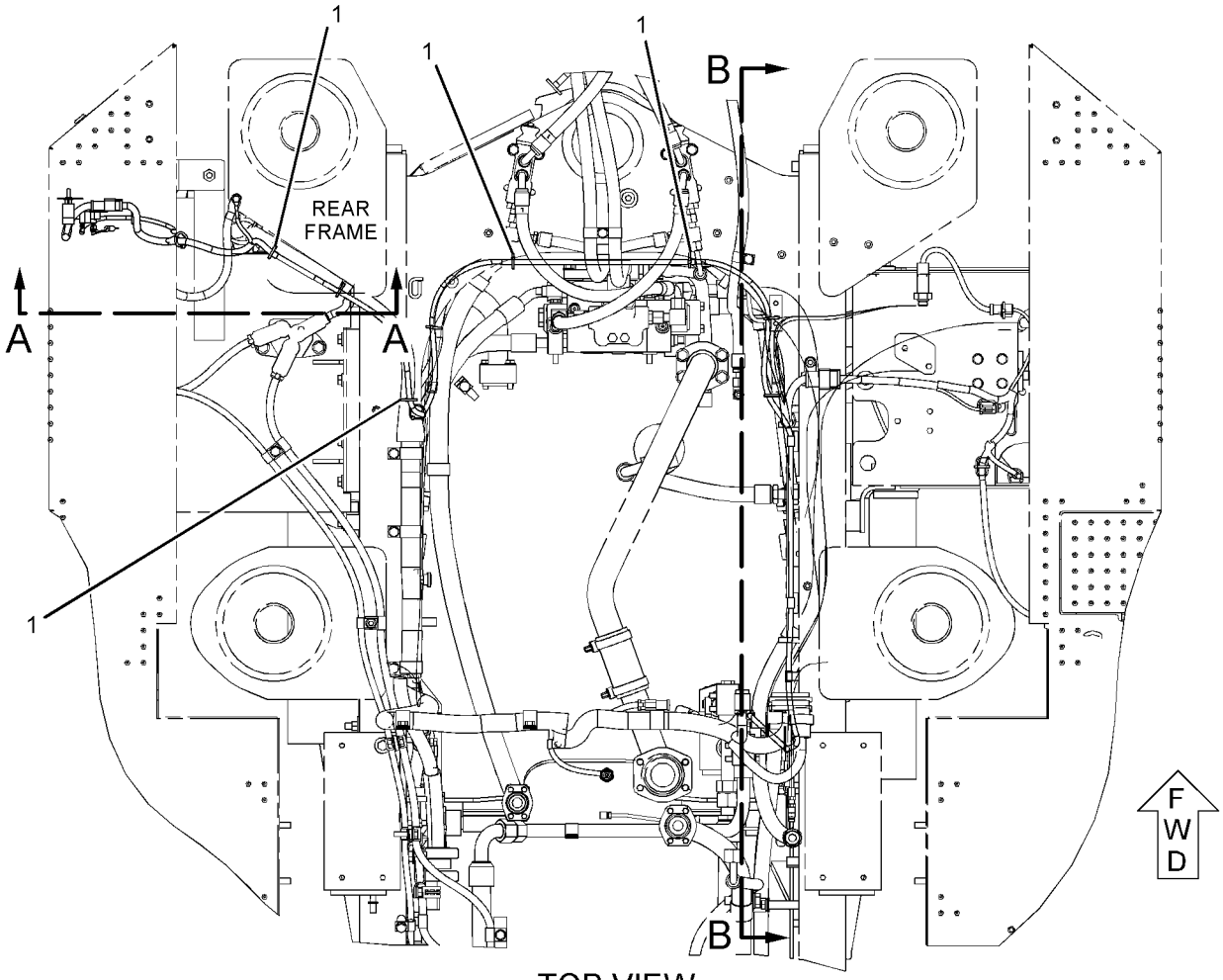

TOP VIEW

GRAPHIC #1

<END>

g01134237

214-6161 AXLE AR-FIXED—FRONT, STANDARD DIFFERENTIAL

S/N: M3G1-UP

PART OF 237-0271 POWER TRAIN AR

SMCS-3013, 3278 **i02454120**

NOTE	PART NUMBER	QTY	PART NAME 1 2 3 4 5 6 (PRODUCT LEVEL)	SEE PAGE
Y	*164-3018*	2	BRAKE & PLANETARY GP	269
Y	**137-1392**	1	DIFFERENTIAL GP	277
Y	*157-0340*	1	GEAR GP-BEVEL & PINION (FIXED AXLE)	290
Y	*214-6156*	1	HOUSING GP-FIXED AXLE	296
Y	**220-7925**	1	PLATE GP-AXLE IDENTIFICATION	784

Y-SEPARATE ILLUSTRATION

<END>

214-9397 AXLE AR-FIXED—FRONT, LIMITED SLIP DIFFERENTIAL

S/N: M3G1-UP

AN ATTACHMENT

SMCS-3013, 3278 **i02320490**

NOTE	PART NUMBER	QTY	PART NAME 1 2 3 4 5 6 (PRODUCT LEVEL)	SEE PAGE
Y	*164-3018*	2	BRAKE & PLANETARY GP	269
Y	**144-4465**	1	DIFFERENTIAL GP-LIMITED SLIP	278
Y	*157-0340*	1	GEAR GP-BEVEL & PINION (FIXED AXLE)	290
Y	*214-6156*	1	HOUSING GP-FIXED AXLE	296
Y	**220-7925**	1	PLATE GP-AXLE IDENTIFICATION	784

Y-SEPARATE ILLUSTRATION

<END>

112-0723 AXLE AR-OSCILLATING—REAR, STANDARD DIFFERENTIAL

S/N: M3G1-UP

PART OF 237-0271 POWER TRAIN AR

SMCS-3013, 3278 **i02449543**

NOTE	PART NUMBER	QTY	PART NAME 1 2 3 4 5 6 (PRODUCT LEVEL)	SEE PAGE
Y	*112-0757*	2	BRAKE & PLANETARY GP	267
Y	**137-1392**	1	DIFFERENTIAL GP	277
Y	*112-0778*	1	GEAR GP-BEVEL & PINION (OSCILLATING AXLE)	288
Y	*112-0724*	1	HOUSING GP-OSCILLATING AXLE	298
Y	**220-7925**	1	PLATE GP-AXLE IDENTIFICATION	784

Y-SEPARATE ILLUSTRATION

<END>

126-7845 AXLE AR-OSCILLATING–REAR, LIMITED SLIP DIFFERENTIAL

S/N: M3G1-UP

AN ATTACHMENT

SMCS-3013, 3278 **i02454712**

NOTE	PART NUMBER	QTY	PART NAME 1 2 3 4 5 6 (PRODUCT LEVEL)	SEE PAGE
Y	*112-0757*	2	BRAKE & PLANETARY GP	267
Y	**144-4465**	1	DIFFERENTIAL GP-LIMITED SLIP	278
Y	*112-0778*	1	GEAR GP-BEVEL & PINION (OSCILLATING AXLE)	288
Y	*112-0724*	1	HOUSING GP-OSCILLATING AXLE	298
Y	**220-7925**	1	PLATE GP-AXLE IDENTIFICATION	784

Y-SEPARATE ILLUSTRATION

<END>

126-7846 AXLE AR-OSCILLATING–REAR, NOSPIN DIFFERENTIAL

S/N: M3G1-UP

AN ATTACHMENT

SMCS-3013, 3278 **i02454710**

NOTE	PART NUMBER	QTY	PART NAME 1 2 3 4 5 6 (PRODUCT LEVEL)	SEE PAGE
Y	*112-0757*	2	BRAKE & PLANETARY GP	267
Y	*128-0745*	1	DIFFERENTIAL GP-NOSPIN	280
Y	*112-0778*	1	GEAR GP-BEVEL & PINION (OSCILLATING AXLE)	288
Y	*112-0724*	1	HOUSING GP-OSCILLATING AXLE	298
Y	**220-7925**	1	PLATE GP-AXLE IDENTIFICATION	784

Y-SEPARATE ILLUSTRATION

<END>

112-0757 BRAKE & PLANETARY GP

S/N: M3G1-UP

PART OF 112-0723, 126-7845, 126-7846 AXLE AR-OSCILLATING

ALSO AN ATTACHMENT

SMCS-4011, 4255 **i02325306**

NOTE	REF NO	GRAPHIC REF	PART NUMBER	QTY	PART NAME 1 2 3 4 5 6 (PRODUCT LEVEL)	SEE PAGE
	1	1	**8R-4568**	1	PISTON	
	2	1	**8R-9207**	1	SEAL (353.19-MM ID)	
	3	1	**228-0418**	1	SEAL AS	
	4	1	**6Y-2084**	1	DISC-FRICTION	
	5	1	**9C-8418**	1	PLATE-REACTION	
	6	1	**1F-5151**	3	DOWEL	
	7	1	**9C-7725**	3	GEAR-PLANETARY (30-TEETH)	
	8	1	**9C-7727**	3	BEARING-SLEEVE	
	9	1	**9C-9537**	6	WASHER-THRUST	
	10	1	**8T-2925**	3	PIN-SPRING	
	11	1	**8R-1888**	3	SHAFT-PLANETARY	
	12	1	**8R-4571**	1	CARRIER-PLANETARY	
	13	1	**9M-4335**	2	DOWEL-REACTION	
	14	1	**164-6476**	1	GEAR-SUN (18-TEETH)	
	15	1	**150-4651**	1	SEAL-O-RING	
	16	1	**8R-1893**	1	GEAR-RING (81-TEETH)	
	17	1	**2N-2658**	1	BOLT-SOCKET HEAD (8-32X15.88-MM)	
	18	1	**096-6166**	1	WASHER-HARD (4.5X9X1-MM THK)	
	19	1	**112-0759**	1	PLUG	
	20	1	**138-1645**	3	PIN-SPRING	
	21	1	**149-9114**	1	PIN (BRAKE DISC WEAR INDICATOR)	
	22	1	**149-9112**	1	DOWEL-HOLLOW	
	23	1	**112-0762**	3	SPRING	
	24	1	**117-1803**	1	CUP	
	25	1	**117-1801**	1	DOWEL	

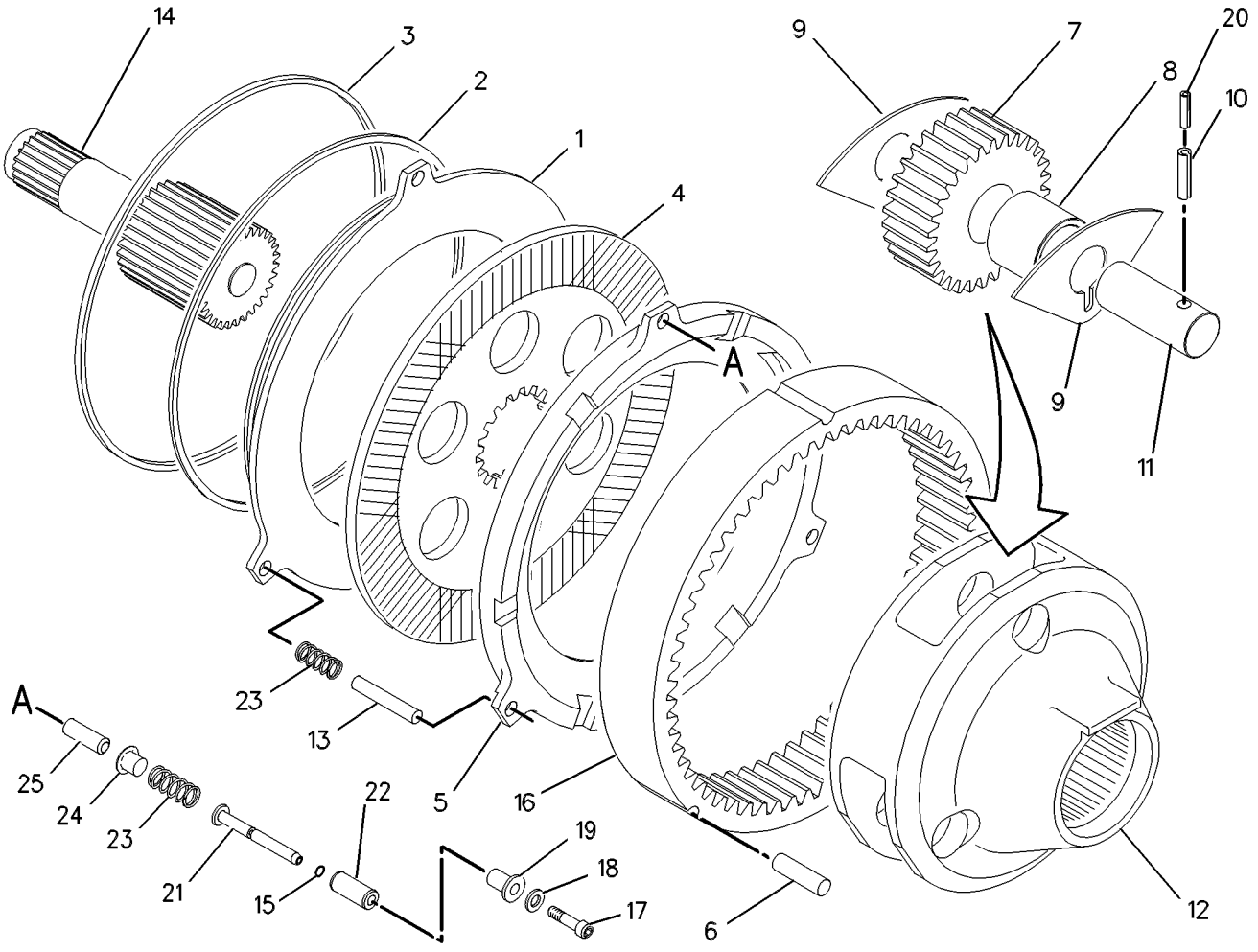

GRAPHIC #1 **<END>** g00381632

164-3018 BRAKE & PLANETARY GP

S/N: M3G1-UP

PART OF 214-6161, 214-9397 AXLE AR-FIXED

ALSO AN ATTACHMENT

SMCS-4011, 4255 **i02009492**

NOTE	REF NO	GRAPHIC REF	PART NUMBER	QTY	PART NAME 1 2 3 4 5 6 (PRODUCT LEVEL)	SEE PAGE
	1	1	**8R-4568**	1	PISTON	
	2	1	**8R-9207**	1	SEAL (353.19MM ID)	
	3	1	**228-0418**	1	SEAL AS	
	4	1	**6Y-2084**	1	DISC-FRICTION	
	5	1	**9C-8418**	1	PLATE-REACTION	
	6	1	**1F-5151**	3	DOWEL	
	7	1	**164-3071**	3	GEAR-PLANET (30 TEETH)	
	8	1	**9C-7727**	3	BEARING-SLEEVE	
	9	1	**9C-9537**	6	WASHER-THRUST	
	10	1	**8T-2925**	3	PIN-SPRING	
	11	1	**8R-1888**	3	SHAFT-PLANETARY	
	12	1	**8R-4571**	1	CARRIER-PLANETARY	
	13	1	**9M-4335**	2	DOWEL-REACTION	
	14	1	**164-6476**	1	GEAR-SUN (18 TEETH)	
	15	1	**149-9112**	1	DOWEL-HOLLOW	
	16	1	**117-1801**	1	DOWEL	
	17	1	**8R-1893**	1	GEAR-RING (81 TEETH)	
	18	1	**2N-2658**	1	BOLT-SOCKET HEAD (8-32X15.88MM)	
	19	1	**096-6166**	1	WASHER-HARD (4.5X9X1MM THK)	
	20	1	**112-0759**	1	PLUG	
	21	1	**138-1645**	3	PIN-SPRING	
	22	1	**149-9114**	1	PIN (BRAKE DISC WEAR INDICATOR)	
	23	1	**150-4651**	1	SEAL-O-RING	
	24	1	**112-0762**	3	SPRING	
	25	1	**117-1803**	1	CUP	

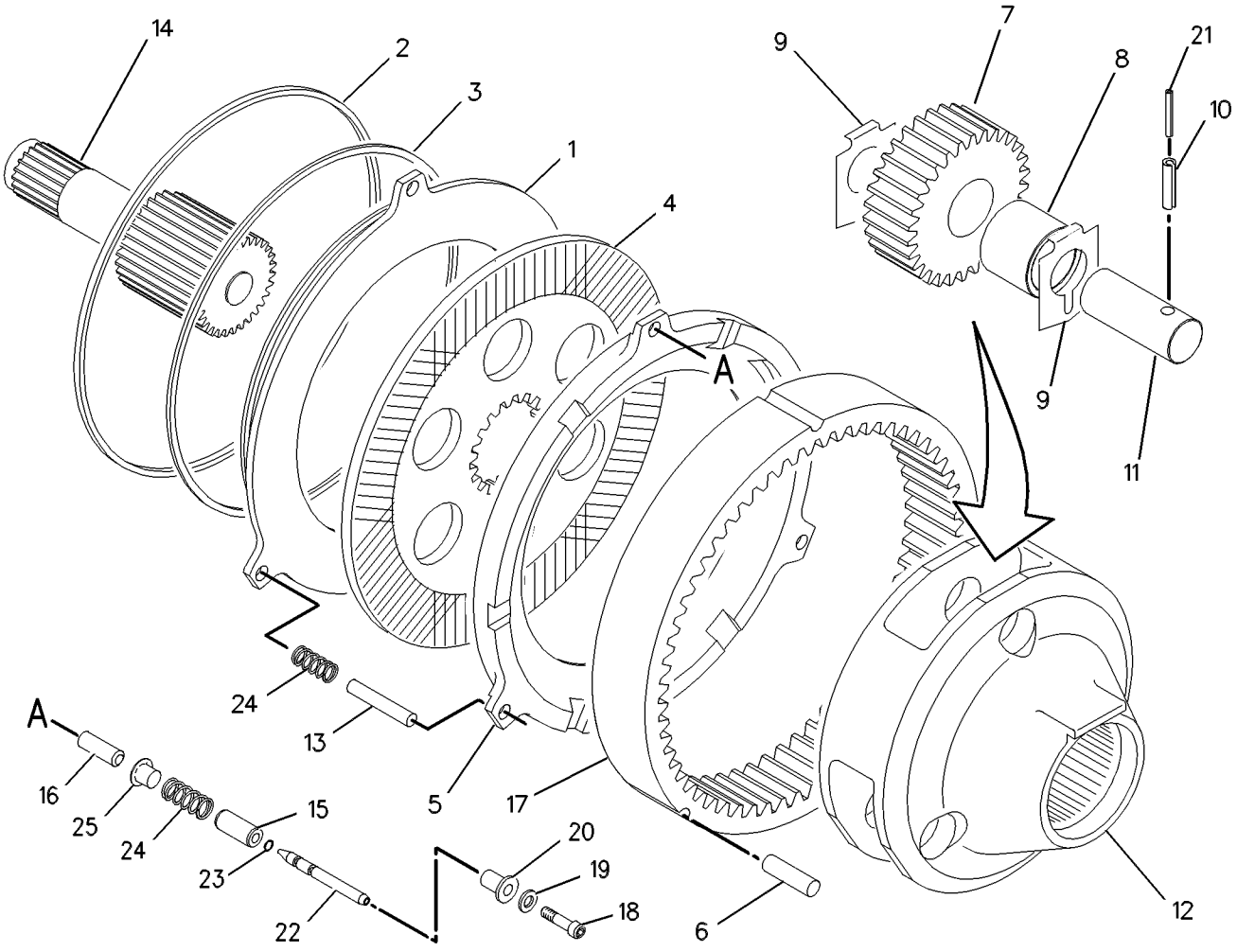

GRAPHIC #1 **<END>** g00455017

121-9300 CONTROL GP-TRANSMISSION—HMU STEERING

S/N: M3G1-UP

PART OF 243-1080 CAB AR-ENCLOSED ROPS, 258-1552 CANOPY AR-OPEN ROPS

ALSO AN ATTACHMENT

SMCS-3065 **i01632977**

NOTE	REF NO	GRAPHIC REF	PART NUMBER	QTY	PART NAME 1 2 3 4 5 6 (PRODUCT LEVEL)	SEE PAGE
	1	1	**3S-2093**	1	STRAP-CABLE	
	2	1	**7K-1181**	1	STRAP-CABLE	
CY	3	1	**201-0212**	1	CONTROL GP-TRANSMISSION	272
M	4	1	**134-1374**	4	BOLT-SOCKET HEAD (M5X0.8X20-MM)	
	5	1	**4P-7581**	1	CLIP	
	6	1	**8T-4121**	1	WASHER-HARD (11X21X2.5-MM THK)	
M	7	1	**8T-4137**	1	BOLT (M10X1.5X20-MM)	

C-CHANGE FROM PREVIOUS TYPE
M-METRIC PART
Y-SEPARATE ILLUSTRATION

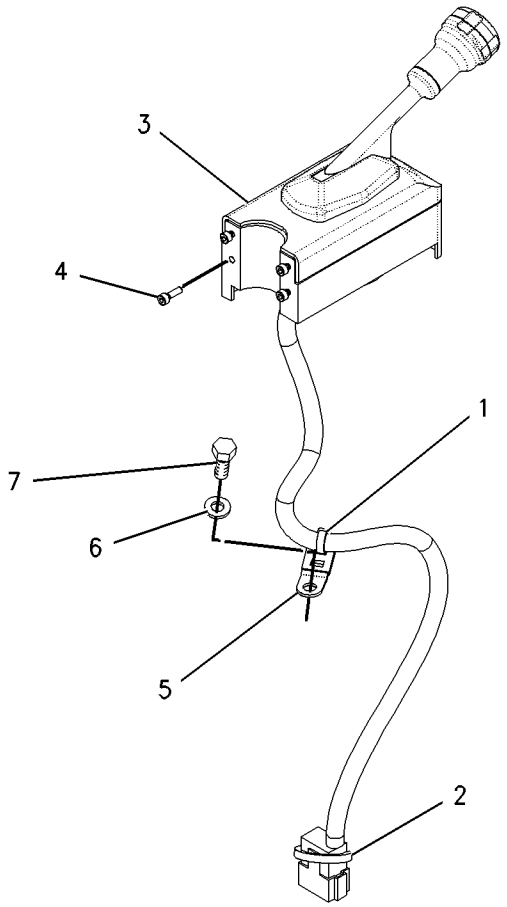

GRAPHIC #1 **<END>** g00845780

201-0212 CONTROL GP-TRANSMISSION–HMU STEERING

S/N: M3G1-UP

PART OF 121-9300 CONTROL GP-TRANSMISSION

ALSO AN ATTACHMENT

SMCS-3065 **i01555682**

NOTE	REF NO	GRAPHIC REF	PART NUMBER	QTY	PART NAME 1 2 3 4 5 6 (PRODUCT LEVEL)	SEE PAGE
	1	1	**102-8801**	1	KIT-RECEPTACLE (12-PIN)	
					(INCLUDES RECEPTACLE AS & WEDGE)	
	2	1	**3E-5180**	1	WEDGE-RECEPTACLE LOCK (12-PIN)	
	3	1	**186-3736**	4	SOCKET-CONNECTOR (16-GA TO 18-GA)	
	4	1	**186-3735**	9	PIN-CONNECTOR (16-GA TO 18-GA)	
	5	1	**101-9161**	1	WIRE AS	
	6	1	**155-2271**	1	KIT-CONNECTING PLUG (4-PIN)	
					(INCLUDES PLUG AS & WEDGE)	
	7	1	**155-2262**	1	WEDGE-PLUG LOCK (4-PIN)	
	8	1	**9G-3695**	3	PLUG (GROMMET SEALING)	

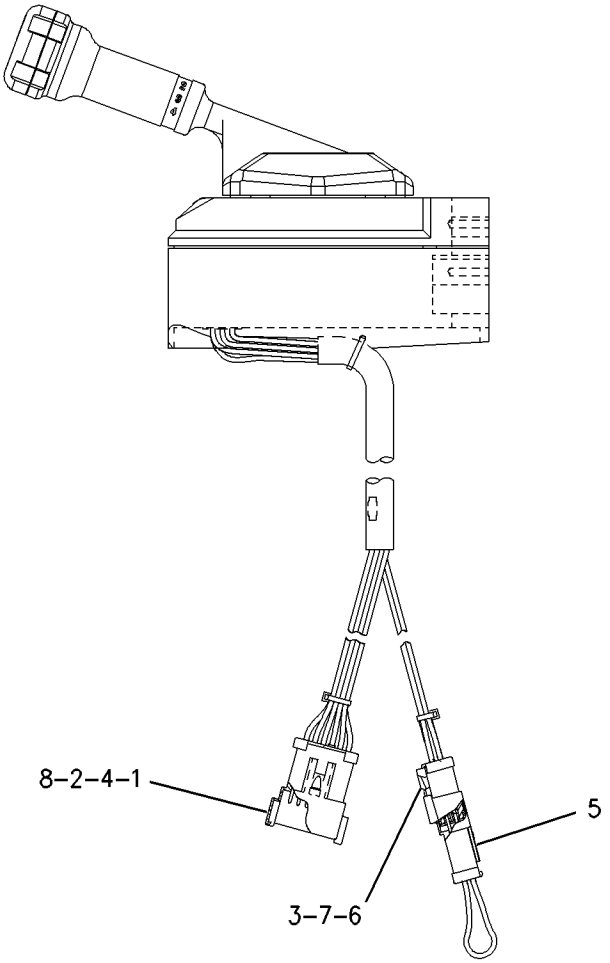

GRAPHIC #1 **<END>** g00802298

247-7830 CONTROL GP-TRANSMISSION HYD

S/N: FAK1-UP

PART OF 237-8187 TRANSMISSION AR

SMCS-3073, 3167 **i02248732**

NOTE	REF NO	GRAPHIC REF	PART NUMBER	QTY	PART NAME 1 2 3 4 5 6 (PRODUCT LEVEL)	SEE PAGE
Y	1	1	**202-8933**	1	VALVE GP-RELIEF (TRANSMISSION HYDRAULIC CONTROL)	340
	2	1	**4F-4097**	1	SEAL-O-RING	
Y	3	1	**244-3114**	6	VALVE GP-MODULATING (24-VOLT) (TRANSMISSION CLUTCH)	339
	4	1	**8S-0768**	6	SEAL-O-RING	
M	5	1	**8T-0100**	16	BOLT (M8X1.25X60-MM)	
	6	1	**9M-1974**	13	WASHER-HARD (8.8X16X2-MM THK)	
	7	1	**148-1928**	1	VALVE-RELIEF (TORQUE CONVERTER INLET)	
	8	1	**247-4865**	1	HARNESS AS-TRANSMISSION	
		1	**7X-6222**	1	PLUG AS-CONNECTOR (24-PIN)	
		1	**3E-4367**	1	RING-RETAINING	
M		1	**3E-8558**	1	BOLT (M5X0.8X39.37-MM)	
		1	**9X-3265**	2	SEAL-CONNECTOR (24-PIN)	
		1	**8T-8737**	7	PLUG-SEAL	
		1	**155-2270**	10	KIT-CONNECTING PLUG (2-PIN)	
					(INCLUDES PLUG AS AND WEDGE)	
	9	1	**9X-4609**	1	SEAL-O-RING	
	10	1	**5P-9085**	1	CLIP	
	11	1	**130-5300**	4	CLIP	
Y	12	1	**145-7028**	1	SENSOR GP-TEMPERATURE (TRANSMISSION OIL)	187
	13	1	**3J-1907**	7	SEAL-O-RING	
	14	1	**3S-2093**	10	STRAP-CABLE	
	15	1	**174-9603**	3	PLATE	
	16	1	**6V-0852**	6	CAP-DUST	
	17	1	**6D-4246**	1	CLIP	
	18	1	**4P-7428**	1	CLIP	
	19	1	**164-3651**	1	ADAPTER	
	20	1	**7J-0204**	1	SEAL-O-RING	
	21	1	**6V-0484**	6	ADAPTER-O-RING	
	22	1	**264-7757**	1	PLATE AS	
M		1	**8T-3490**	1	NUT-WELD (M10X1.5-THD)	

M-METRIC PART
Y-SEPARATE ILLUSTRATION

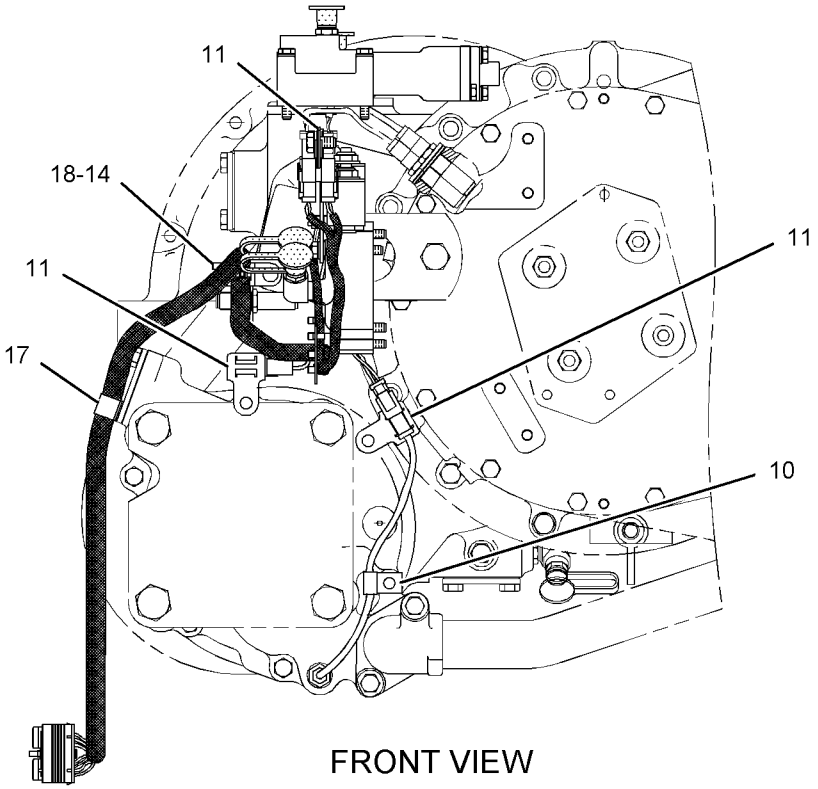

FRONT VIEW

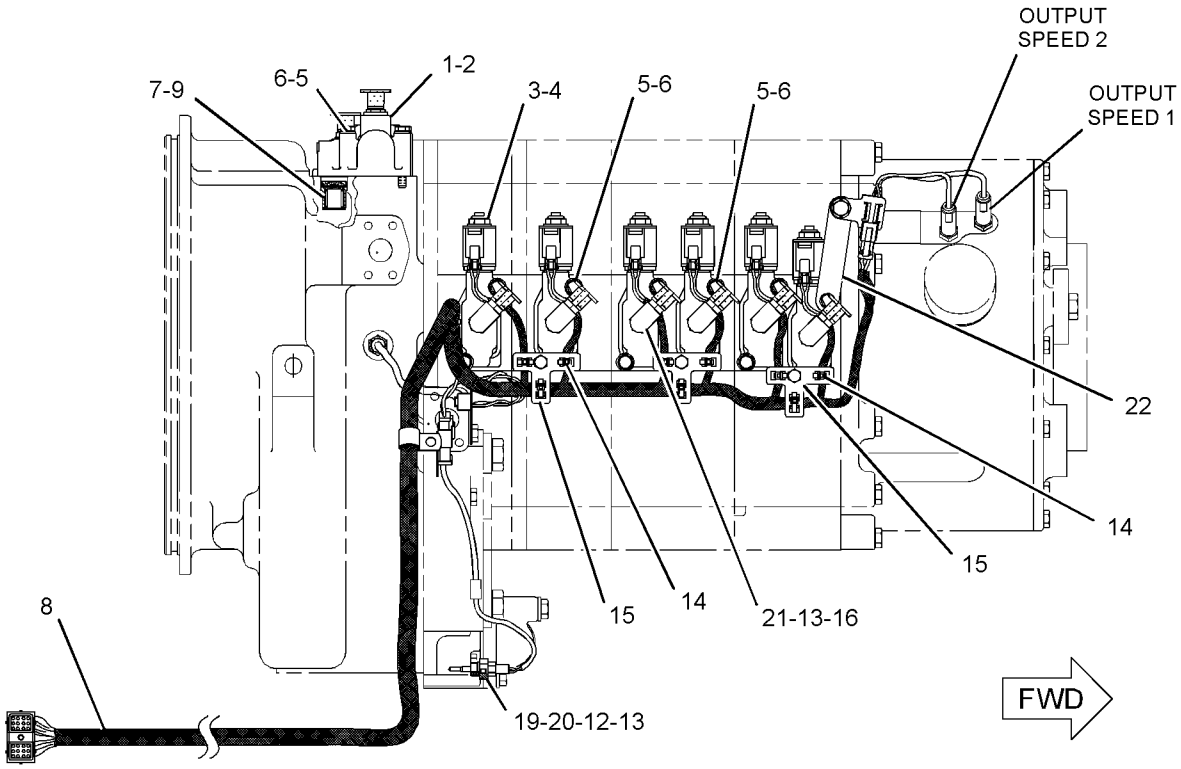

TOP VIEW

GRAPHIC #1 **<END>** g01128523

241-2921 COOLER & MTG GP-TRANSMISSION

S/N: M3G1-UP

PART OF 237-4933 CHASSIS AR

SMCS-1375 **i02260711**

NOTE	REF NO	GRAPHIC REF	PART NUMBER	QTY	PART NAME 1 2 3 4 5 6 (PRODUCT LEVEL)	SEE PAGE
	1	1	**5D-1026**	1	CLAMP-HOSE	
	2	1	*165-2273*	1	VALVE GP-SHUTOFF (RADIATOR DRAIN)	
		1	**3K-0360**	1	SEAL-O-RING	
		1	**6V-7238**	1	VALVE-SHUTOFF (RADIATOR DRAIN)	
	3	1	**242-3210**	1	COOLER AS-TRANSMISSION OIL	
		1	**7J-5544**	1	FITTING (3/4X16-THD)	
		1	**125-2871**	1	CORE AS-POWER TRAIN OIL COOLER	
	4	1	**7X-7729**	6	WASHER (11X25X3-MM THK)	
M	5	1	**8T-4137**	6	BOLT (M10X1.5X20-MM)	
E	6	1	**5P-0767**		HOSE (17.5-CM)	

E-ORDER BY THE CENTIMETER
M-METRIC PART

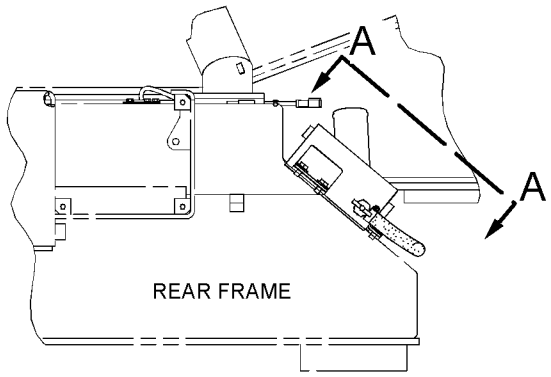

RIGHT SIDE VIEW

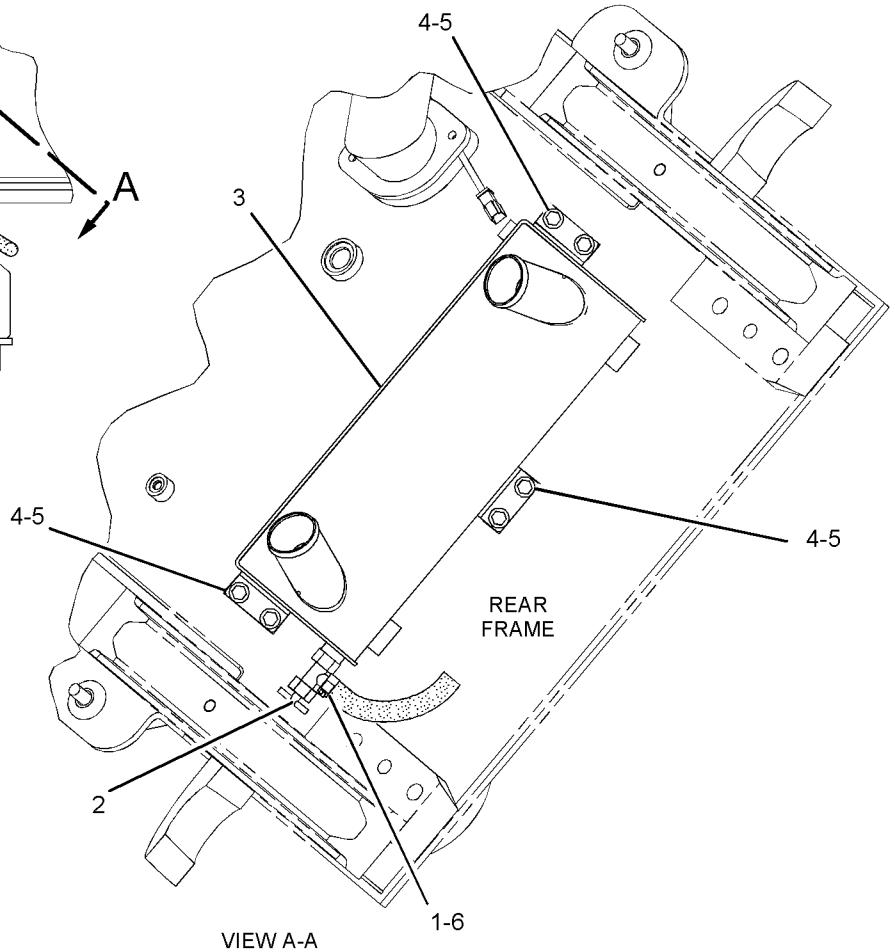

VIEW A-A

GRAPHIC #1 **<END>** g01119419

241-0073 COOLER AR-AXLE OIL

S/N: M3G1-UP
PART OF 250-2327 COOLER AR-AXLE OIL
AN ATTACHMENT

SMCS-1365 **i02306932**

NOTE	PART NUMBER	QTY	PART NAME 1 2 3 4 5 6 (PRODUCT LEVEL)	SEE PAGE
Y	*143-0001*	1	GUARD GP-AXLE OIL COOLER	373
Y	*156-1137*	1	GUARD GP-POWER TRAIN (AXLE OIL COOLER)	379
Y	*265-7929*	1	HARDWARE GP-LOADER FRAME (AXLE OIL COOLER MOUNTING)	382
Y	*260-1530*	1	HARDWARE GP-REAR FRAME (AXLE OIL COOLER MOUNTING)	386
Y	*241-0077*	1	LINES GP-AXLE OIL COOLER	300
Y	*241-0078*	1	LINES GP-WATER (FOR USE WITH AXLE OIL COOLER)	71
Y	*260-9584*	1	MOUNTING GP-AXLE OIL COOLER	309
Y	*241-0080*	1	PUMP & MTG GP-AXLE OIL COOLER	316
Y	*244-6524*	1	WIRING GP-ELECTRIC CLUTCH (AXLE OIL COOLER PUMP)	235

Y-SEPARATE ILLUSTRATION

<END>

250-2327 COOLER AR-AXLE OIL

S/N: M3G1-UP
AN ATTACHMENT

SMCS-1365 **i02307717**

NOTE	PART NUMBER	QTY	PART NAME 1 2 3 4 5 6 (PRODUCT LEVEL)	SEE PAGE
Y	*241-0073*	1	COOLER AR-AXLE OIL	276
	250-2324	1	PLATE AS	
M	**8T-3490**	2	NUT-WELD (M10X1.5 THD)	
	189-3812	1	PLATE AS	
	189-3816	1	PLATE AS	

M-METRIC PART
Y-SEPARATE ILLUSTRATION

<END>

137-1392 DIFFERENTIAL GP

S/N: M3G1-UP

PART OF 214-6161 AXLE AR-FIXED, 112-0723 AXLE AR-OSCILLATING

SMCS-3258 **i02299809**

NOTE	REF NO	GRAPHIC REF	PART NUMBER	QTY	PART NAME 1 2 3 4 5 6 (PRODUCT LEVEL)	SEE PAGE
	1	1	**136-6550**	1	CASE AS	
JM	1A	1	**8T-5001**	4	BOLT (M12X1.75X130-MM)	
J	1B	1	**5P-8245**	4	WASHER-HARD (13.5X25.5X3-MM THK)	
	2	1	**148-7383**	2	WASHER-THRUST	
	3	1	**136-6551**	2	GEAR (16-TEETH)	
	4	1	**217-3681**	4	WASHER-THRUST	
	5	1	**136-6545**	1	SPIDER	
	6	1	**151-4809**	4	BEARING-SLEEVE	
	7	1	**9C-6016**	4	PINION-DIFFERENTIAL BEVEL (11-TEETH)	
M	8	1	**127-1960**	8	SCREW-FLAT HEAD (M6X1X16-MM)	

J-PARTS MARKED J ARE FOR SHIPPING & STORAGE ONLY, REMOVE BEFORE INSTALLATION INTO AXLE
M-METRIC PART

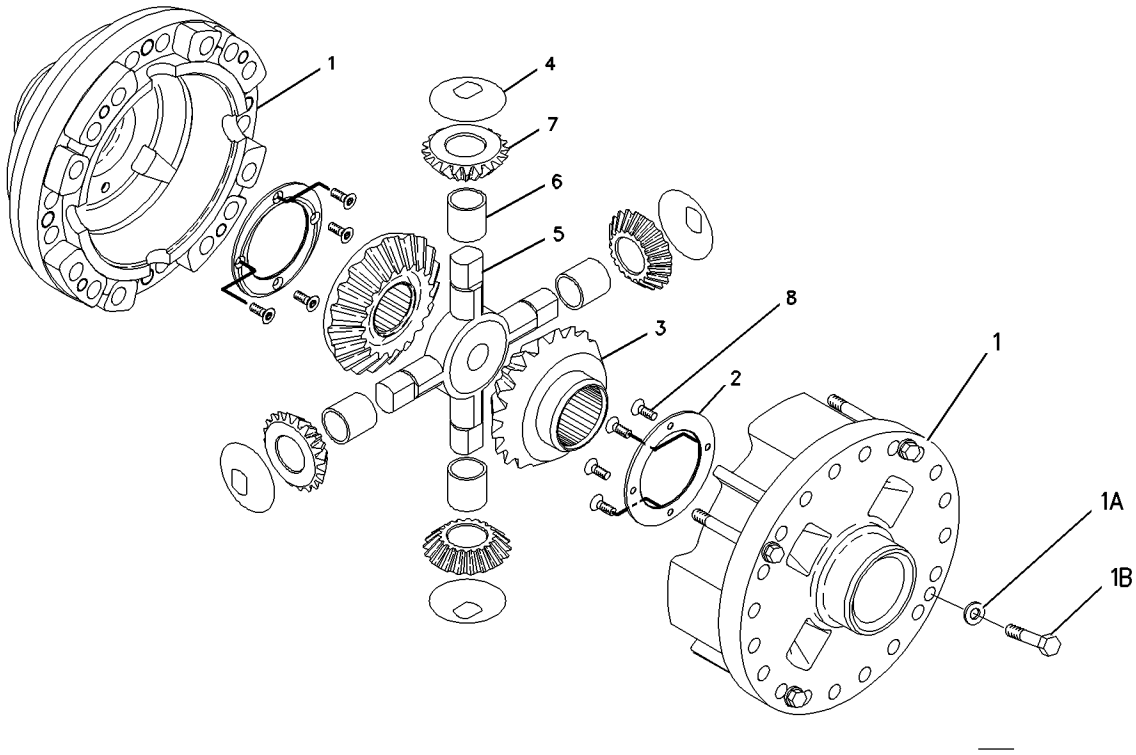

GRAPHIC #1 **<END>** g00857628

144-4465 DIFFERENTIAL GP-LIMITED SLIP

S/N: M3G1-UP

PART OF 214-9397 AXLE AR-FIXED, 126-7845 AXLE AR-OSCILLATING AN ATTACHMENT

SMCS-3263 **i01662494**

NOTE	REF NO	GRAPHIC REF	PART NUMBER	QTY	PART NAME 1 2 3 4 5 6 (PRODUCT LEVEL)	SEE PAGE
	1	1	**104-3358**	2	WASHER-THRUST	
	2	1	**104-3355**	2	HOUSING-ACTUATOR	
	3	1	**104-3353**	4	PINION-BEVEL	
	4	1	**104-3354**	2	SHAFT-PINION	
	5	1	**104-3351**	2	GEAR-DIFFERENTIAL	
	6	1	**144-4470**	2	KIT-DISC	
	7	1	**104-3359**	1	CASE AS	
JM	7A	1	**8T-9515**	2	BOLT-SOCKET HEAD (M10X1.5X40MM)	
	8	1	**144-4468**	2	KIT-DISC	

J-PARTS MARKED J ARE FOR SHIPPING & STORAGE ONLY, REMOVE BEFORE INSTALLATION INTO AXLE
M-METRIC PART

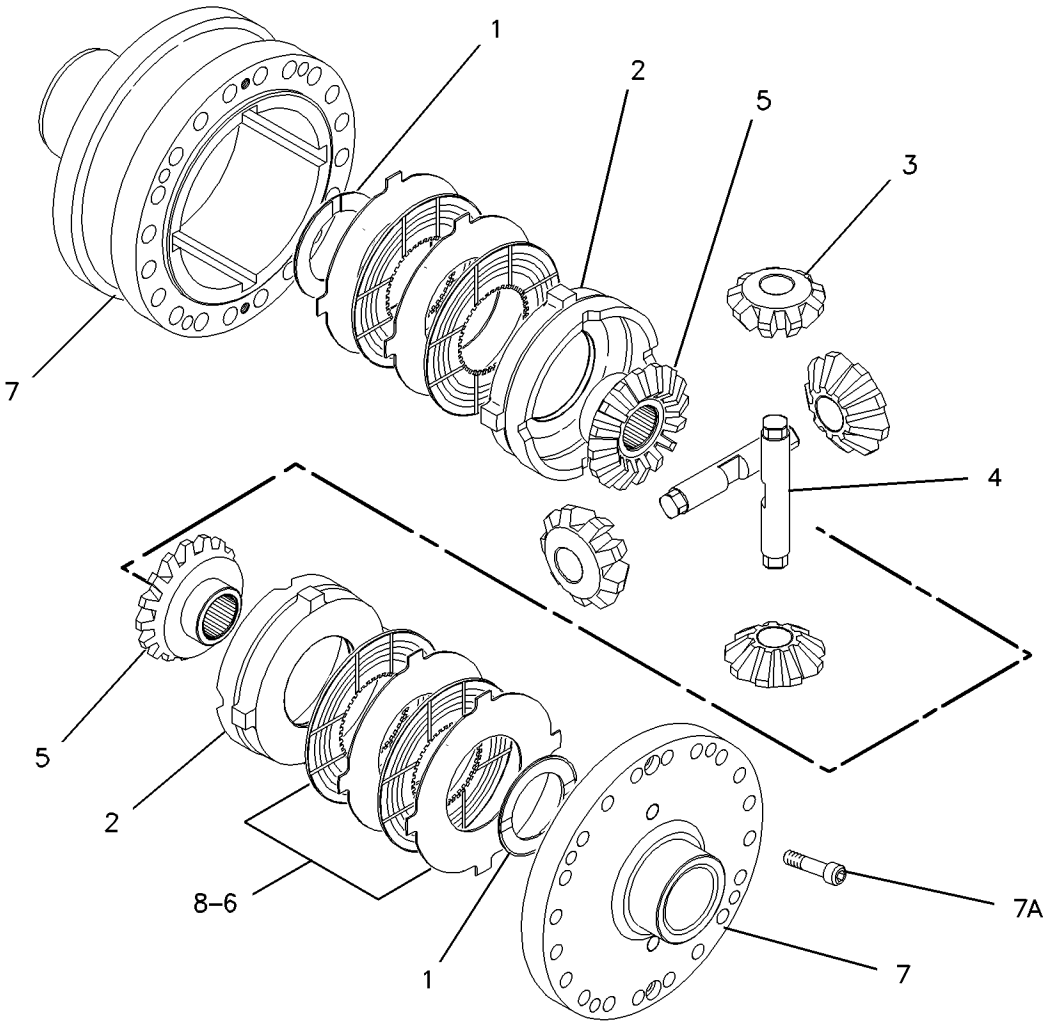

GRAPHIC #1 **<END>** g00857645

8R-9833 DIFFERENTIAL GP-NOSPIN

S/N: M3G1-UP
PART OF 128-0745 DIFFERENTIAL GP-NOSPIN
AN ATTACHMENT

SMCS-3265 **i01114426**

NOTE	REF NO	GRAPHIC REF	PART NUMBER	QTY	PART NAME 1 2 3 4 5 6 (PRODUCT LEVEL)	SEE PAGE
	1	1	**8R-9831**	1	CAM AS-SPIDER	
	2	1	**3V-0908**	2	CLUTCH & RING AS	
	3	1	**3V-0905**	2	SPRING-CONICAL	
	4	1	**3V-0906**	2	RETAINER	
	5	1	**8R-9830**	2	GEAR-SIDE (35 TEETH)	
	6	1	**8R-9832**	1	BLOCK-SPACER	

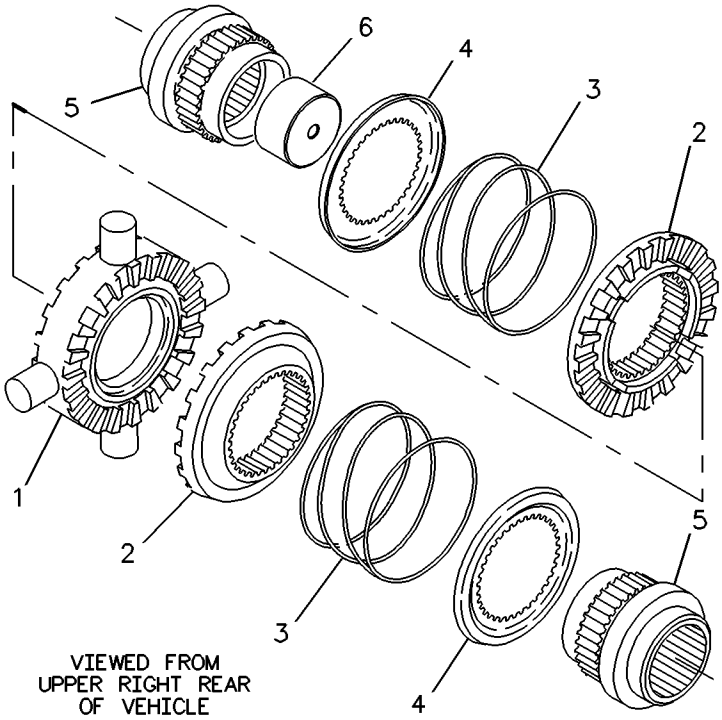

GRAPHIC #1 **<END>** g00118822

128-0745 DIFFERENTIAL GP-NOSPIN

S/N: M3G1-UP
PART OF 126-7846 AXLE AR-OSCILLATING
AN ATTACHMENT

SMCS-3265 **i01857654**

NOTE	REF NO	GRAPHIC REF	PART NUMBER	QTY	PART NAME 1 2 3 4 5 6 (PRODUCT LEVEL)	SEE PAGE
	1	1	**8R-9440**	1	CASE AS-DIFFERENTIAL	
JM	1A	1	**8T-5001**	4	BOLT (M12X1.75X130-MM)	
J	1B	1	**5P-8245**	4	WASHER-HARD (13.5X25.5X3-MM THK)	
Y	2	1	**8R-9833**	1	DIFFERENTIAL GP-NOSPIN	279

J-PARTS MARKED J ARE FOR SHIPPING & STORAGE ONLY, REMOVE BEFORE INSTALLATION INTO AXLE
M-METRIC PART
Y-SEPARATE ILLUSTRATION

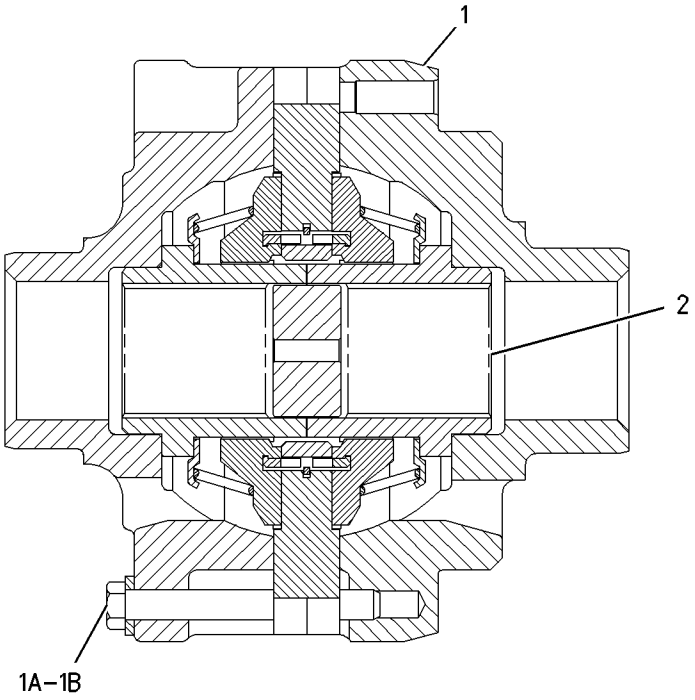

GRAPHIC #1 **<END>** g00946951

198-7248 DRAIN GP-ECOLOGY—POWER TRAIN

S/N: M3G1-UP
AN ATTACHMENT

SMCS-3260 **i01814174**

NOTE	REF NO	GRAPHIC REF	PART NUMBER	QTY	PART NAME 1 2 3 4 5 6 (PRODUCT LEVEL)	SEE PAGE
	1	1	**173-0566**	2	DRAIN GP-ECOLOGY	
					(EACH INCLUDES)	
	1A	1	**2K-8199**	1	SEAL-O-RING	
	1B	1	**077-3241**	1	SEAL-O-RING	
	1C	1	**175-4966**	1	PLUG	
	2	1	**7M-8485**	2	SEAL-O-RING	

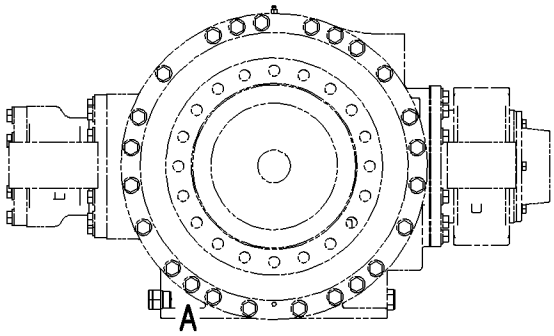

REAR AXLE

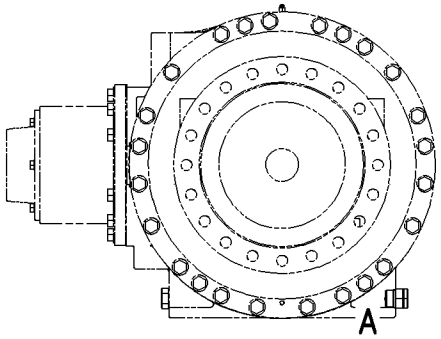

FRONT AXLE

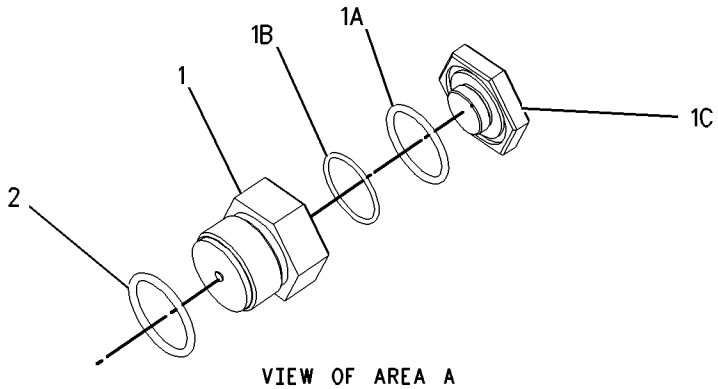

VIEW OF AREA A
COMMON BOTH AXLES

GRAPHIC #1 **<END>** g00886906

237-5114 FILLER GP-POWER TRAIN OIL

S/N: M3G1-UP

PART OF 237-0271 POWER TRAIN AR

SMCS-3005, 3081 **i02267008**

NOTE	REF NO	GRAPHIC REF	PART NUMBER	QTY	PART NAME 1 2 3 4 5 6 (PRODUCT LEVEL)	SEE PAGE
	1	1	**4B-9782**	1	BALL	
	2	1	**5K-1568**	1	CAP-FILLER (POWER TRAIN)	
	3	1	**5P-7084**	1	SEAL-RECTANGULAR	
	4	1	**6F-5188**	1	SEAL-RING	
	5	1	**6H-5139**	1	PLATE-PRESSURE	
	6	1	**9M-0164**	2	CLAMP-HOSE	
E	7	1	**5P-1291**		HOSE (21-CM)	
	8	1	**135-1708**	1	GAUGE AS-OIL LEVEL	
		1	**5J-2974**	4	SEAL-O-RING	
		1	**122-8353**	2	BOLT (M12X46.5-MM)	
	9	1	**229-6625**	1	TUBE AS	
	10	1	**246-5124**	1	TUBE AS	
	11	1	**4D-2886**	2	CLIP	
	12	1	**8T-4121**	4	WASHER-HARD (11X21X2.5-MM THK)	
M	13	1	**8T-4185**	2	BOLT (M10X1.5X50-MM)	
M	14	1	**8T-4195**	2	BOLT (M10X1.5X30-MM)	

E-ORDER BY THE CENTIMETER
M-METRIC PART

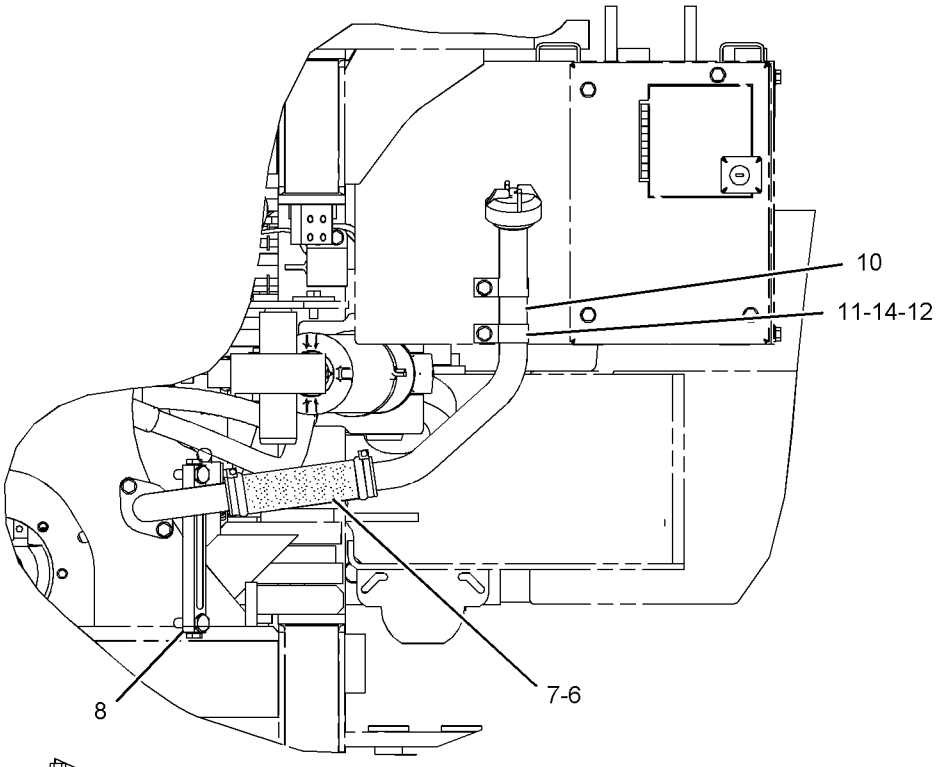

RIGHT SIDE VIEW

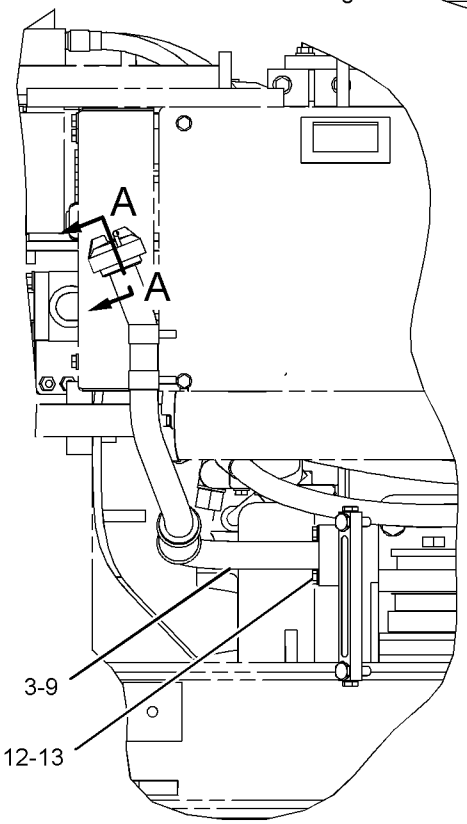

REAR VIEW

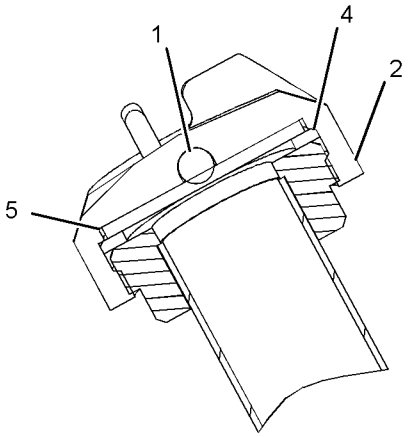

SECTION A-A

GRAPHIC #1 **<END>** g01123644

251-9754 FILLER GP-POWER TRAIN OIL

S/N: M3G1-UP
PART OF 244-6607 WASTE HANDLING AR
AN ATTACHMENT

SMCS-3005, 3081 **i02306923**

NOTE	REF NO	GRAPHIC REF	PART NUMBER	QTY	PART NAME 1 2 3 4 5 6 (PRODUCT LEVEL)	SEE PAGE
	1	1	**4B-9782**	1	BALL	
	2	1	**5K-1568**	1	CAP-FILLER (POWER TRAIN)	
	3	1	**5P-7084**	1	SEAL-RECTANGULAR	
	4	1	**6F-5188**	1	SEAL-RING	
	5	1	**6H-5139**	1	PLATE-PRESSURE	
	6	1	**9M-0164**	2	CLAMP-HOSE	
E	7	1	**5P-1291**	1	HOSE	
	8	1	**135-1708**	1	GAUGE AS-OIL LEVEL	
		1	**5J-2974**	1	SEAL-O-RING	
		1	**122-8353**	2	BOLT (M12X46.5-MM)	
	9	1	**251-9755**	1	TUBE AS	
	10	1	**251-9757**	1	TUBE AS	
	11	1	**4D-2886**	2	CLIP	
	12	1	**8T-4121**	4	WASHER-HARD (11X21X2.5-MM THK)	
M	13	1	**8T-4185**	2	BOLT (M10X1.5X50-MM)	
M	14	1	**8T-4195**	2	BOLT (M10X1.5X30-MM)	

E-ORDER BY THE CENTIMETER
M-METRIC PART

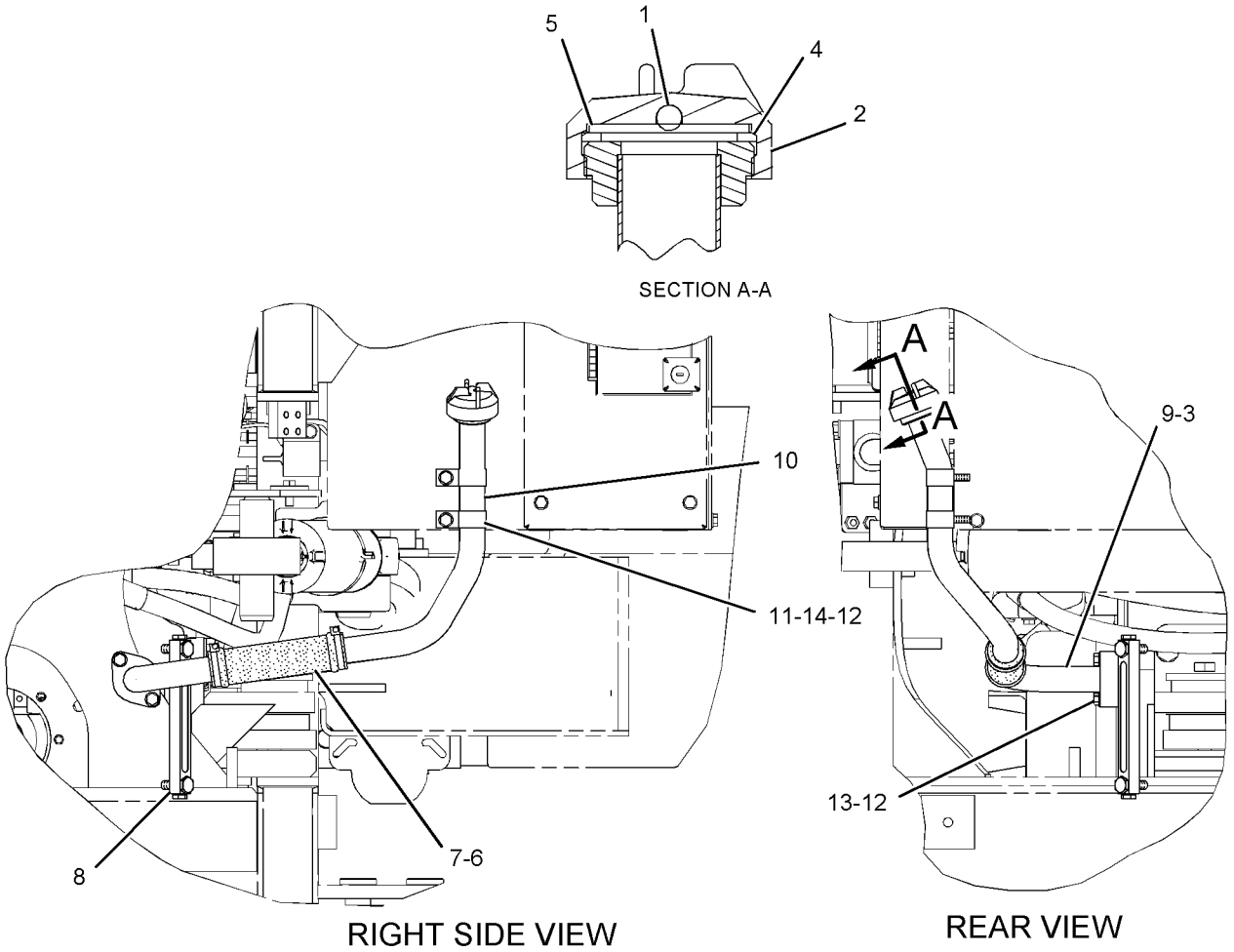

GRAPHIC #1 **<END>** g01134418

244-2339 FILTER & LINES GP-TRANSMISSION

S/N: M3G1-UP

PART OF 237-0271 POWER TRAIN AR

SMCS-3067, 3154 **i02433369**

NOTE	REF NO	GRAPHIC REF	PART NUMBER	QTY	PART NAME 1 2 3 4 5 6 (PRODUCT LEVEL)	SEE PAGE
	1	1	**203-2287**	1	CLIP	
Y	2	1	**249-1750**	1	FILTER GP-OIL (POWER TRAIN)	287
I	3	1	**276-4044**	1	HOSE AS	
I	4	1	**276-4045**	1	HOSE AS	
	5	1	**277-2935**	1	BRACKET AS	
	6	1	**277-2936**	1	BRACKET AS	
	7	1	**277-2941**	1	BRACKET	
	8	1	*148-8362*	2	ELBOW AS	
					(EACH INCLUDES)	
		1	**3D-2824**	1	SEAL-O-RING	
		1	**5K-9090**	1	SEAL-O-RING	
		1	**8T-6684**	1	ELBOW (90-DEG)	
	9	1	**4J-0520**	2	SEAL-O-RING	
	10	1	**7D-7233**	4	CLIP	
	11	1	**8C-3206**	4	FLANGE-HALF	
	12	1	**8T-4121**	16	WASHER-HARD (11X21X2.5-MM THK)	
M	13	1	**8T-4133**	1	NUT (M10X1.5 THD)	
M	14	1	**8T-4136**	2	BOLT (M10X1.5X25-MM)	
M	15	1	**8T-4137**	4	BOLT (M10X1.5X20-MM)	
M	16	1	**8T-4195**	1	BOLT (M10X1.5X30-MM)	
M	17	1	**8T-4196**	8	BOLT (M10X1.5X35-MM)	

I-REFER TO HYDRAULIC INFORMATION SYSTEM
M-METRIC PART
Y-SEPARATE ILLUSTRATION

244-2339 **FILTER & LINES GP-TRANSMISSION** *(contd.)* **i02433369**

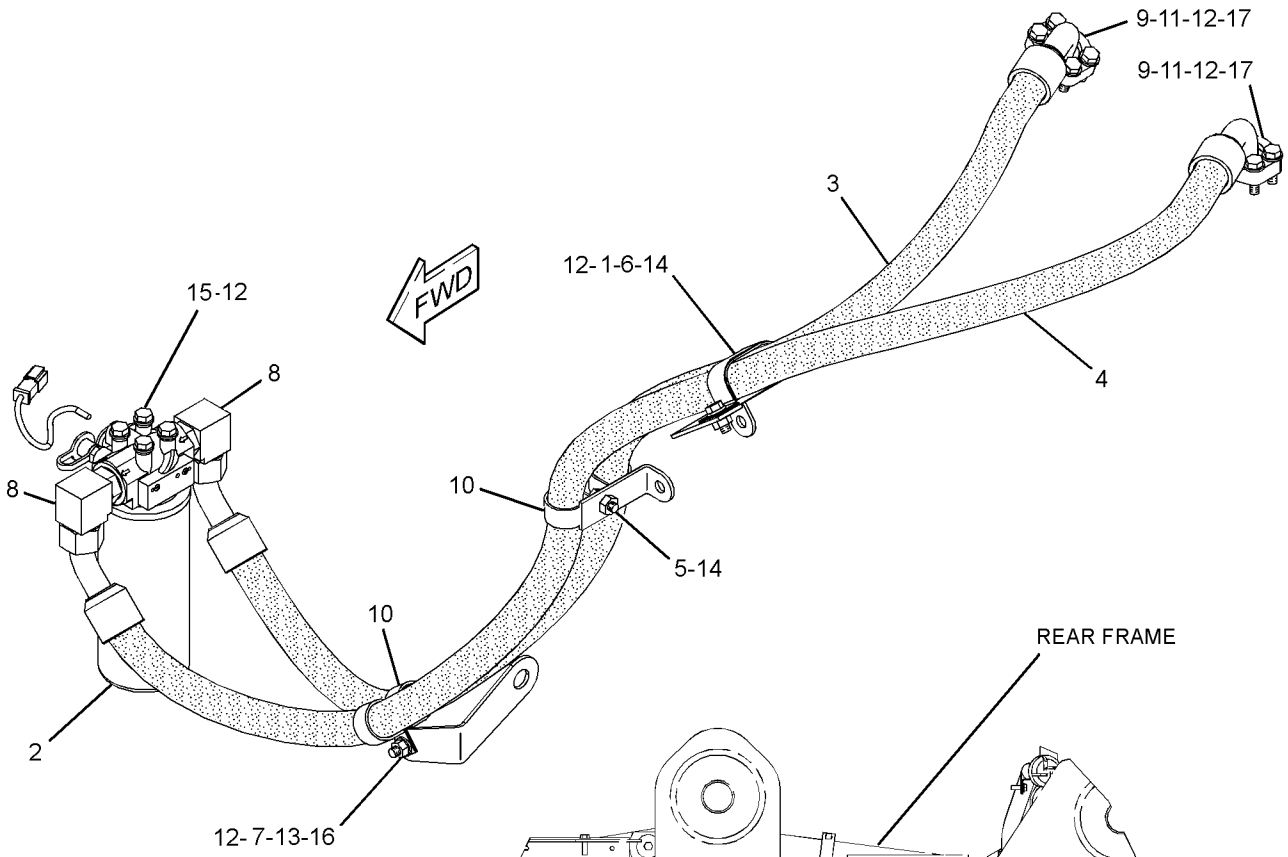

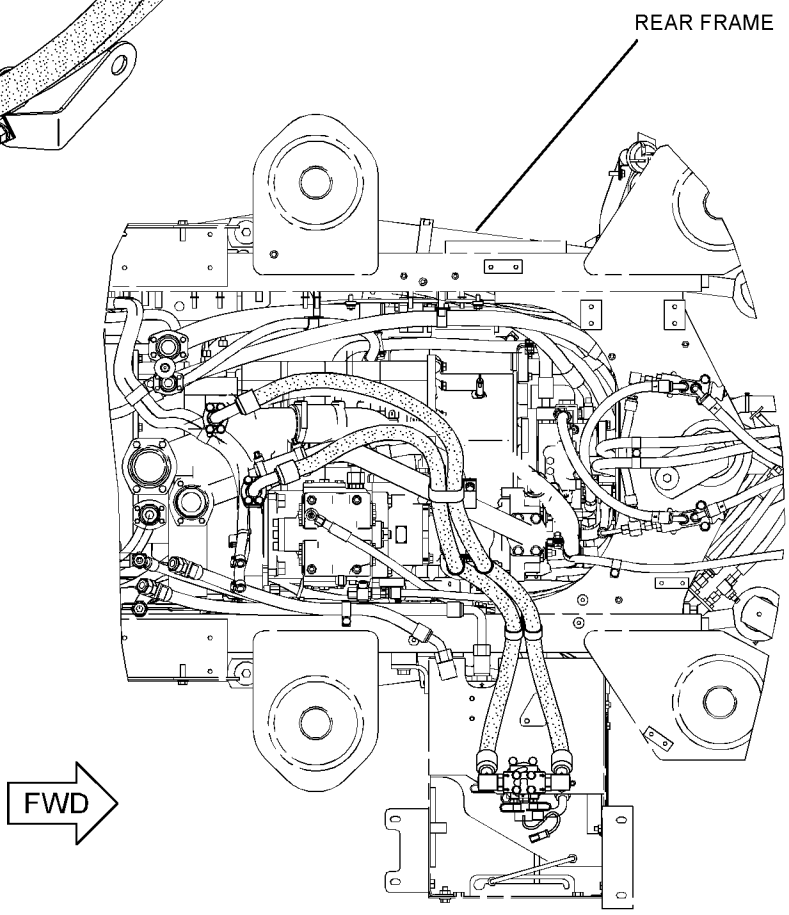

TOP VIEW

GRAPHIC #1 **<END>** g01221035

249-1750 FILTER GP-OIL

S/N: M3G1-UP

PART OF 244-2339 FILTER & LINES GP-TRANSMISSION

SMCS-3004, 3067 **i02421712**

NOTE	REF NO	GRAPHIC REF	PART NUMBER	QTY	PART NAME 1 2 3 4 5 6 (PRODUCT LEVEL)	SEE PAGE
	1	1	**6V-0852**	1	CAP-DUST	
	2	1	**8C-3447**	1	CAP-DUST	
	3	1	**227-6744**	1	SWITCH GP-PRESSURE (OIL FILTER BYPASS)	
		1	**102-8802**	1	KIT-RECEPTACLE (2-PIN)	
					(INCLUDES RECEPTACLE AS AND WEDGE)	
		1	**3E-3365**	1	WEDGE-RECEPTACLE LOCK (2-PIN)	
		1	**186-3735**	1	PIN-CONNECTOR (16-GA TO 18-GA)	
BE		1	**9X-1813**		SLEEVE	
	4	1	**1G-8878**	1	FILTER ELEMENT (POWER TRAIN)	
	5	1	**3J-1907**	2	SEAL-O-RING	
	6	1	**3J-7354**	1	SEAL-O-RING	
	7	1	**6V-3965**	1	FITTING AS (QUICK DISCONNECT)	
	8	1	**8C-3446**	1	VALVE-FLUID SAMPLING (POWER TRAIN OIL)	
	9	1	**8T-6850**	1	SEAL-O-RING	

B-USE AS REQUIRED
E-ORDER BY THE CENTIMETER

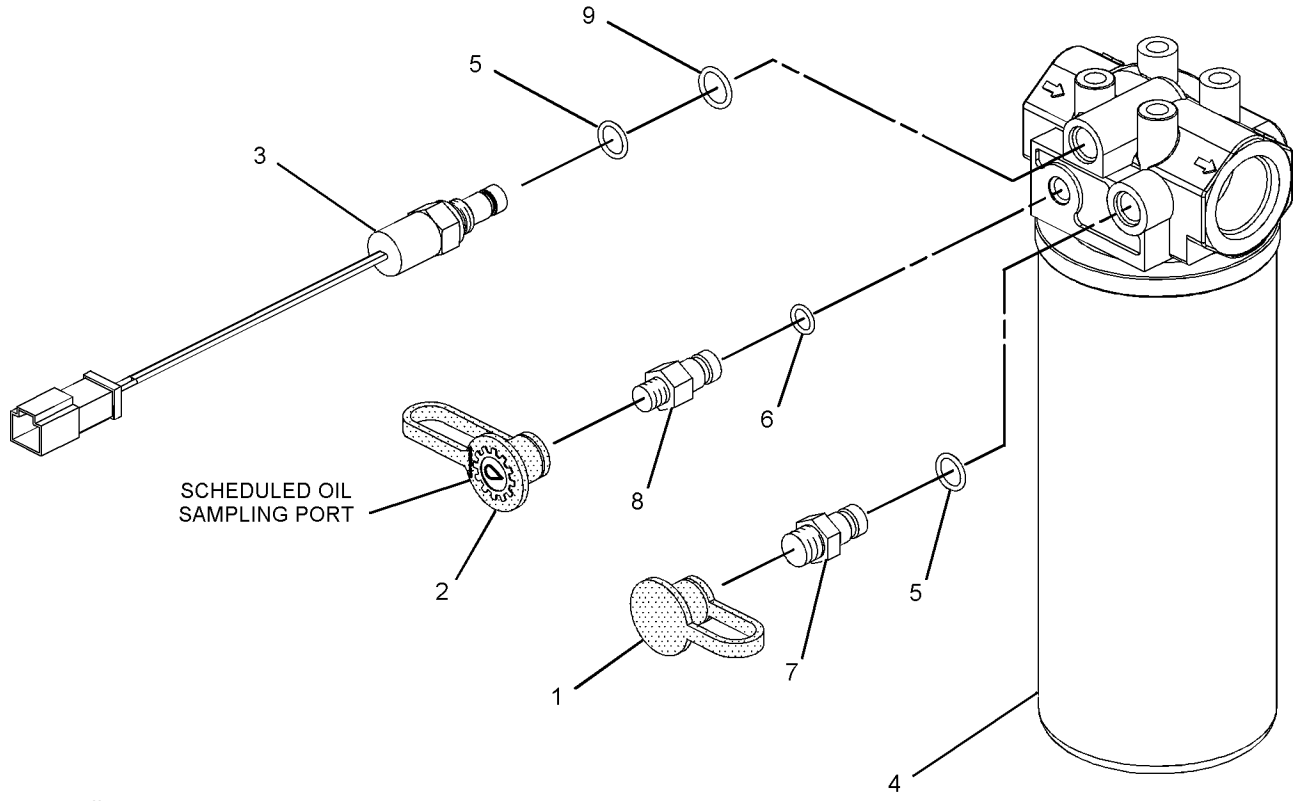

GRAPHIC #1 **<END>** g01063971

112-0778 GEAR GP-BEVEL & PINION—OSCILLATING AXLE

S/N: M3G1-UP

PART OF 112-0723, 126-7845, 126-7846 AXLE AR-OSCILLATING

ALSO AN ATTACHMENT

SMCS-3254, 3256 **i01144236**

NOTE	REF NO	GRAPHIC REF	PART NUMBER	QTY	PART NAME 1 2 3 4 5 6 (PRODUCT LEVEL)	SEE PAGE
	1	1	**9U-1913**	1	SLEEVE AS	
	2	1	**030-0060**	1	CUP-ROLLER BEARING	
	3	1	**030-0061**	1	CONE-ROLLER BEARING	
	4	1	**4E-3897**	2	LOCK	
M	5	1	**4E-3896**	2	BOLT (M6X1X14MM)	
	6	1	**4E-4031**	2	PIN	
	7	1	**1J-4757**	1	CONE-BEARING	
	8	1	**1J-2860**	1	CUP-ROLLER BEARING	
	9	1	**2D-9455**	1	CONE-ROLLER BEARING	
	10	1	**2D-9454**	1	CUP-ROLLER BEARING	
	11	1	**6W-1638**	1	WASHER	
M	12	1	**9C-8287**	1	LOCKNUT-STAKE (M70X1.5 THD)	
J	13	1	**156-1151**	1	YOKE AS	
	14	1	**7V-3791**	1	GUARD	
	15	1	**9X-2619**	4	PIN-SPRING	
	16	1	**9X-2620**	4	PIN-SPRING	
	17	1	**6Y-2539**	1	CONE-ROLLER BEARING	
	18	1	**4E-4029**	1	NUT-ADJUSTMENT (M190X2 SPL THD)	
	19	1	**9U-1912**	1	SLEEVE AS	
	20	1	**6Y-2540**	1	CUP-ROLLER BEARING	
	21	1	**4E-4030**	1	NUT-ADJUSTMENT (M160X2 SPL THD)	
M	22	1	**9X-6493**	20	BOLT (M16X2X180 MM)	
	23	1	**9C-5853**	1	SHAFT-PINION	
	24	1	**8R-9215**	1	GEAR-BEVEL (44 TEETH)	
					AVAILABLE REPAIR KIT(S):	
J			**156-1153**	1	KIT-SERVICE	

J-KIT MARKED J AVAILABLE FOR PART MARKED J
M-METRIC PART

112-0778 **GEAR GP-BEVEL & PINION** *(contd.)* **i01144236**

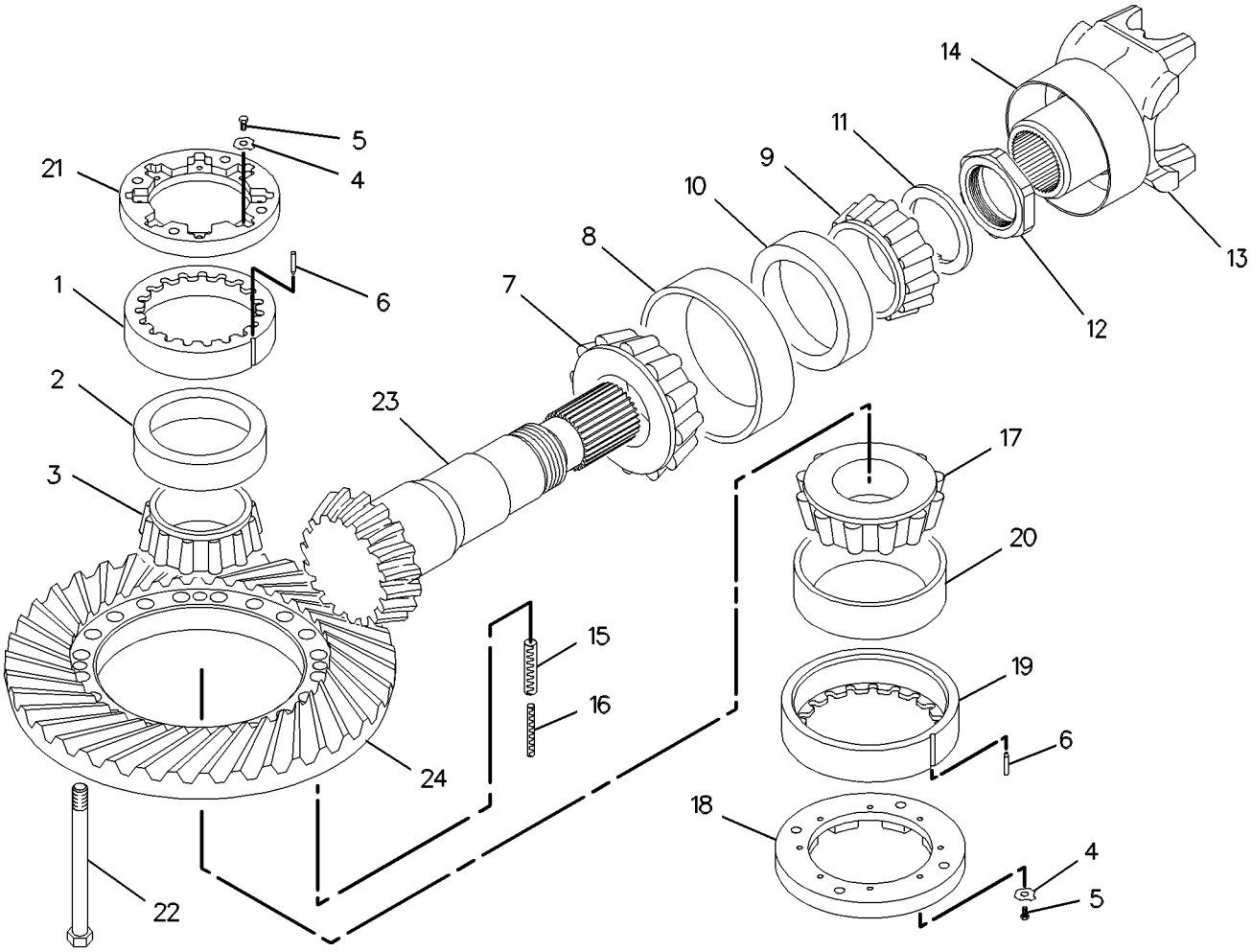

GRAPHIC #1 **<END>** g00606738

157-0340 GEAR GP-BEVEL & PINION—FIXED AXLE

S/N: M3G1-UP

PART OF 214-6161, 214-9397 AXLE AR-FIXED

ALSO AN ATTACHMENT

SMCS-3254, 3256 **i00811629**

NOTE	REF NO	GRAPHIC REF	PART NUMBER	QTY	PART NAME 1 2 3 4 5 6 (PRODUCT LEVEL)	SEE PAGE
	1	1	**9U-1913**	1	SLEEVE AS	
	2	1	**030-0060**	1	CUP-ROLLER BEARING	
	3	1	**030-0061**	1	CONE-ROLLER BEARING	
	4	1	**4E-3897**	2	LOCK	
M	5	1	**4E-3896**	2	BOLT (M6X1X14MM)	
	6	1	**4E-4031**	2	PIN	
	7	1	**1J-4757**	1	CONE-BEARING	
	8	1	**1J-2860**	1	CUP-ROLLER BEARING	
	9	1	**2D-9455**	1	CONE-ROLLER BEARING	
	10	1	**2D-9454**	1	CUP-ROLLER BEARING	
	11	1	**6W-1638**	1	WASHER	
M	12	1	**9C-8287**	1	LOCKNUT-STAKE (M70X1.5 THD)	
	13	1	**155-5602**	1	YOKE	
	14	1	**8R-9215**	1	GEAR-BEVEL (44 TEETH)	
	15	1	**9X-2619**	4	PIN-SPRING	
	16	1	**9X-2620**	4	PIN-SPRING	
	17	1	**6Y-2539**	1	CONE-ROLLER BEARING	
	18	1	**4E-4029**	1	NUT-ADJUSTMENT (M190X2 SPL THD)	
	19	1	**9U-1912**	1	SLEEVE AS	
	20	1	**6Y-2540**	1	CUP-ROLLER BEARING	
	21	1	**2H-3088**	1	SEAL-O-RING (50.17MM ID)	
M	22	1	**8T-0372**	1	BOLT (M12X1.75X90MM)	
	23	1	**9V-2429**	1	RETAINER	
	24	1	**112-0742**	1	SHAFT-BEVEL PINION	
	25	1	**4E-4030**	1	NUT-ADJUSTMENT (M160X2 SPL THD)	
M	26	1	**9X-6493**	20	BOLT (M16X2X180 MM)	

M-METRIC PART

157-0340 **GEAR GP-BEVEL & PINION** *(contd.)* **i00811629**

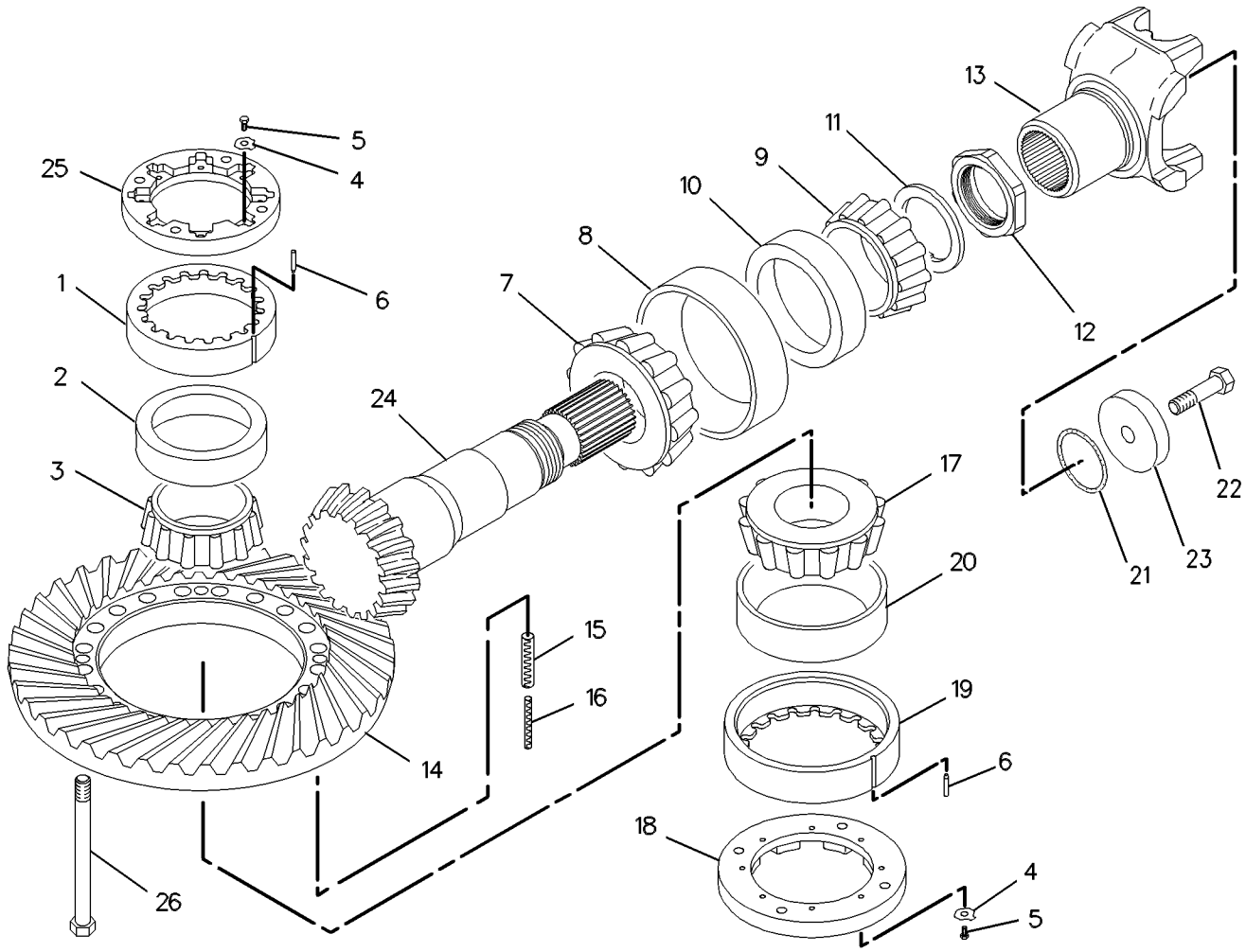

GRAPHIC #1 **<END>** g00386777

POWER TRAIN

249-8175 GEAR GP-OUTPUT TRANSFER

S/N: FAK1-UP

PART OF 237-8187 TRANSMISSION AR

SMCS-3075, 3159 **i02248734**

NOTE	REF NO	GRAPHIC REF	PART NUMBER	QTY	PART NAME 1 2 3 4 5 6 (PRODUCT LEVEL)	SEE PAGE
	1	1	**255-3686**	1	CASE-TRANSFER	
	2	1	**6T-7061**	1	EYE-LIFTING	
M	3	1,2	**6V-4248**	27	BOLT (M10X1.5X25-MM)	
	4	2	**4S-8603**	1	SCREEN GP-MAGNETIC	
		2	**8M-7160**	3	MAGNET	
	5	2	**4S-8598**	1	SCREEN-SUCTION	
	6	2	**8P-3251**	1	COVER AS	
		2	**7B-3028**	2	SCREW-DRIVE (NO 4X3/16-IN)	
		2	**7S-2962**	1	WASHER-SPRING (52.3X82.5X9.1-MM THK)	
		2	**8P-1722**	1	COVER	
	7	2	**8H-7521**	1	SEAL-O-RING	
M	8	2	**8T-0375**	1	BOLT (M16X2X45-MM)	
	9	2	**7S-8554**	1	SEAL-O-RING	
	10	2	**125-3375**	1	GEAR-TRANSFER (68-TEETH)	
	11	2	**155-6648**	1	CONE-BEARING	
	12	2	**155-6647**	1	CUP-BEARING	
	13	2	**157-5547**	1	SHAFT-OUTPUT	
	14	2	**2P-8987**	2	CONE-BEARING	
	15	2	**2P-8986**	2	CUP-BEARING	
	16	2	**223-3925**	1	CAGE-BEARING	
	17	2	**5F-3144**	1	SEAL-O-RING	
M	18	2	**8T-0358**	2	BOLT (M16X2X90-MM)	
	19	2	**138-1509**	1	DRAIN AS	
		2	**7M-8485**	1	SEAL-O-RING	
		2	**8F-0212**	1	SEAL-O-RING	
		2	**138-1510**	1	PLUG	
	20	2	**125-3376**	1	GEAR-TRANSFER (74-TEETH)	
	21	2	**9G-6258**	2	COVER-TRANSMISSION	
	22	2	**9G-6257**	2	GASKET-COVER	
M	23	2	**6V-6317**	12	BOLT (M10X1.5X20-MM)	
	24	2	**3J-0634**	1	SEAL-O-RING	
	25	2	**223-3924**	1	CAGE-BEARING	
B	26	2	**6I-8497**	1	SHIM PACK (INCLUDES 12-SHIMS)	
	27	2	**193-2200**	2	SEAL-LIP TYPE	
	28	2	**115-1326**	1	YOKE AS	
		2	**7S-8158**	1	GUARD	
	29	2	**155-1634**	2	RETAINER	
	30	2	**2H-3088**	2	SEAL-O-RING	
	31	1	**3E-4353**	10	WASHER-HARD (11X25X3-MM THK)	
	32	2	**188-5149**	1	CAGE AS-BEARING	
M		2	**8T-5414**	4	STUD (M12X1.75X50-MM)	
B	33	2	**188-5046**	1	SHIM PACK (INCLUDES 13-SHIMS)	
	34	2	**246-5423**	1	COVER	
	35	2	**2N-7007**	1	GASKET	
M	36	1	**6V-8149**	4	NUT (M12X1.75-THD)	
Y	37	1	**193-2550**	1	SENSOR GP-SPEED (TRANSMISSION OUTPUT 1)	184
Y	37A	1	**193-2550**	1	SENSOR GP-SPEED (TRANSMISSION OUTPUT 2)	184
Y	38	2	**200-1315**	1	BRAKE GP-PARKING	427
M	39	2	**6V-5686**	4	BOLT (M16X2X50-MM)	
	40	2	**155-5609**	1	DRUM	
	41	2	**7X-0622**	8	WASHER (13X24X2.5-MM THK)	
M	42	2	**6A-5591**	8	BOLT (M12X1.75X25-MM)	
	43	1	**129-6329**	1	LEVER	
	44	2	**191-1831**	1	YOKE	
M	45	1	**6V-3822**	1	BOLT (M10X1.5X35-MM)	
	46	1	**115-4783**	1	TUBE AS	

249-8175 **GEAR GP-OUTPUT TRANSFER** *(contd.)* **i02248734**

NOTE	REF NO	GRAPHIC REF	PART NUMBER	QTY	PART NAME 1 2 3 4 5 6 (PRODUCT LEVEL)	SEE PAGE
	47	2	**2H-3927**	1	SEAL-O-RING	
	48	1	**1H-9696**	1	SEAL-O-RING	
	49	2	**110-7453**	1	TUBE AS	
	50	2	**3H-2652**	1	SEAL-O-RING	
	51	1	**9C-4937**	1	BREATHER AS	
M	52	1	**6V-8197**	1	BOLT (M12X1.75X40-MM)	
M	53	1	**6V-5696**	1	BOLT (M12X1.75X80-MM)	
M	54	1	**6V-1820**	10	BOLT (M10X1.5X30-MM)	
	55	2	**1H-8720**	1	SEAL-O-RING	
	56	1	**6V-1720**	1	PLATE-SERIAL NUMBER (TRANSMISSION)	
	57	2	**6V-0852**	1	CAP-DUST	
	58	2	**3J-1907**	1	SEAL-O-RING	
	59	2	**6V-3965**	1	FITTING AS (QUICK DISCONNECT)	
	60	1	**9X-8268**	2	WASHER (17.5X30X3.5-MM THK)	
	61	1	**1V-6341**	2	SEAL	
	62	2	**9H-1024**	4	WASHER-HARD (17X30X6-MM THK)	
	63	1	**2M-0849**	2	WASHER-HARD (13.5X25.5X5-MM THK)	
	64	1	**4F-0186**	1	NIPPLE-PIPE	

B-USE AS REQUIRED
M-METRIC PART
Y-SEPARATE ILLUSTRATION

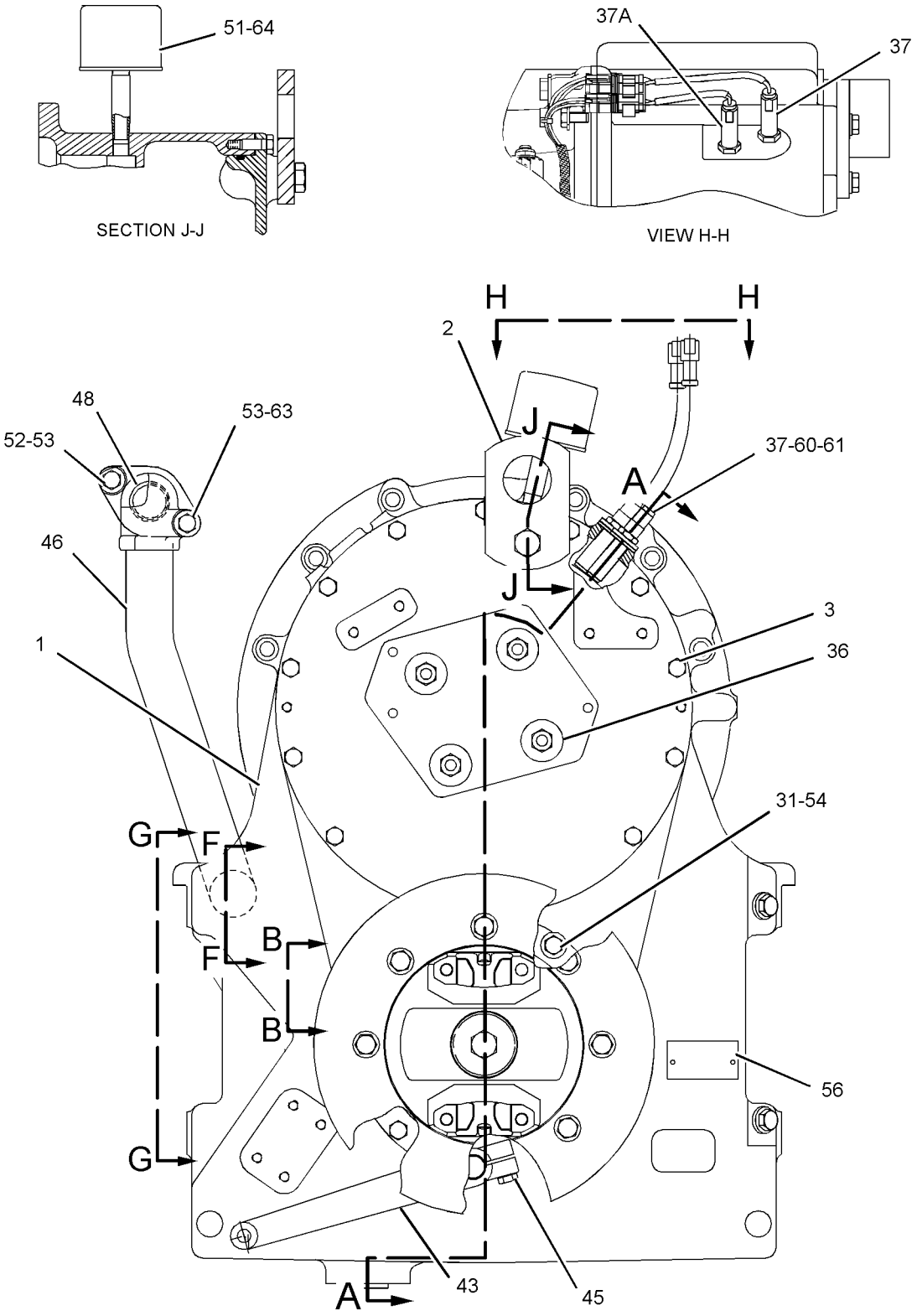

REFER TO ALL ILLUSTRATIONS OF THIS GROUP FOR AUXILIARY VIEWS

FRONT VIEW

GRAPHIC #1

g01128316

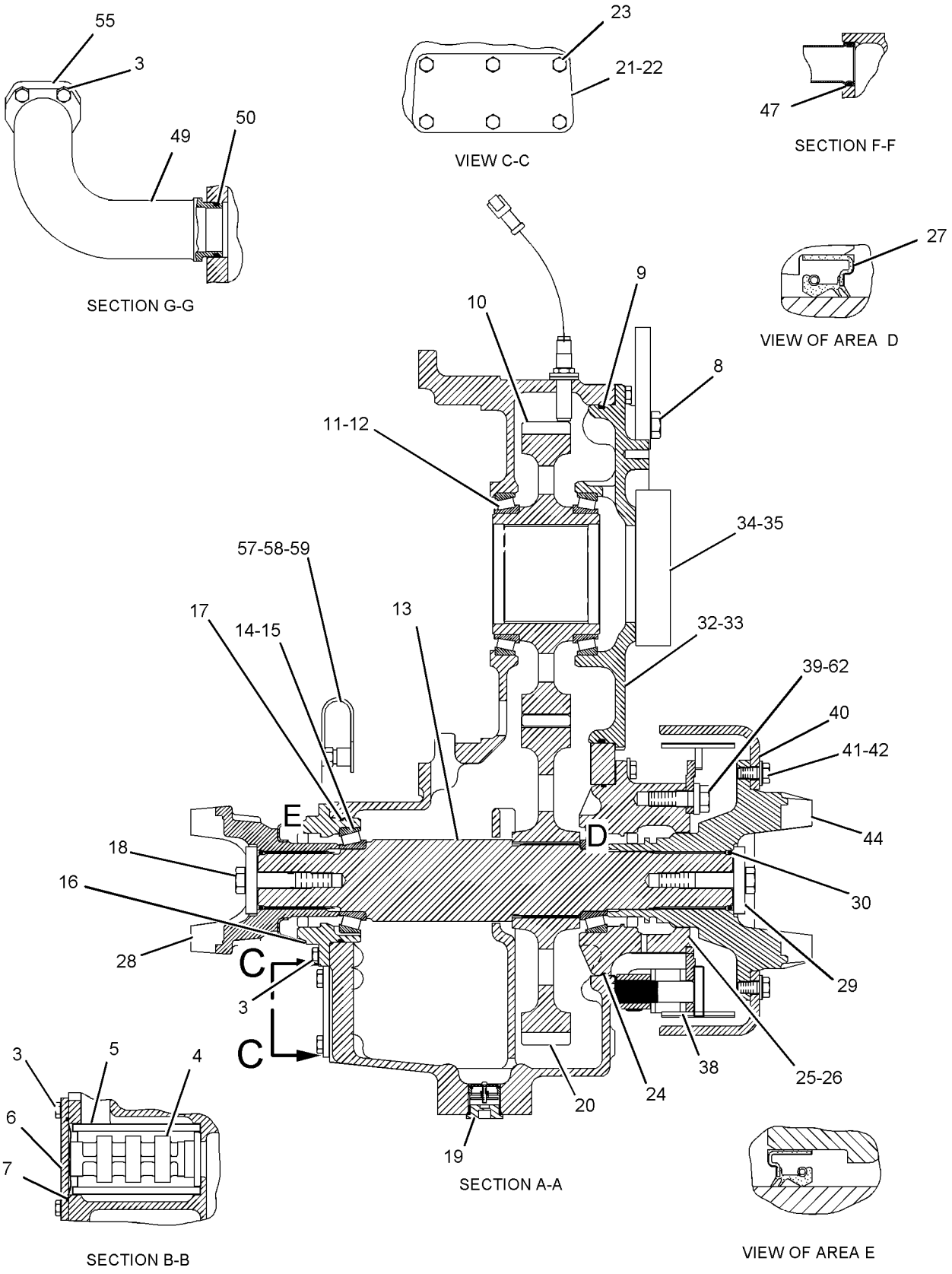

GRAPHIC #2 **<END>** g01128211

214-6156 HOUSING GP-FIXED AXLE

S/N: M3G1-UP
PART OF 214-6161, 214-9397 AXLE AR-FIXED
ALSO AN ATTACHMENT

SMCS-3260 **i01857663**

NOTE	REF NO	GRAPHIC REF	PART NUMBER	QTY	PART NAME 1 2 3 4 5 6 (PRODUCT LEVEL)	SEE PAGE
	1	1	**9G-5315**	2	SEAL GP-DUO-CONE	
	2	1	**6Y-2538**	2	CONE-BEARING	
	3	1	**2P-1373**	2	CUP-BEARING	
	4	1	**9C-6327**	1	GAUGE AS-OIL LEVEL (DIPSTICK)	
	5	1	**5H-3701**	2	SCREW-PURGE	
	6	1	**192-9121**	1	HOUSING AS	
M		1	**095-0673**	4	BOLT-SOCKET HEAD (M12X1.75X60-MM)	
	7	1	**8B-6343**	2	CUP-BEARING	
	8	1	**9C-8421**	2	SHAFT-AXLE	
M	9	1	**6V-7732**	6	BOLT (M10X1.5X25-MM)	
	10	1	**9X-2027**	6	WASHER (11X18X2-MM THK)	
M	11	1	**6V-5686**	10	BOLT (M16X2X50-MM)	
	12	1	**5P-8247**	58	WASHER-HARD (17X32X3.5-MM THK)	
	13	1	**8T-0336**	1	FITTING-PRESSURE RELIEF	
	14	1	**4H-6520**	1	SEAL-O-RING	
B	15	1	**9C-6021**	1	SHIM PACK (INCLUDES 11-SHIMS)	
	16	1	**9C-9194**	1	HOUSING-PINION	
	17	1	**4E-8534**	1	RETAINER-SEAL	
	18	1	**123-4003**	1	SEAL-LIP TYPE	
	19	1	**9C-6041**	3	DOWEL	
M	20	1	**8T-5002**	24	BOLT (M16X180-MM)	
	21	1	**214-6154**	2	HOUSING-AXLE	
	22	1	**5P-4484**	1	PLUG-MAGNETIC	
	23	1	**3B-0551**	1	PLUG-PIPE	
M	24	1	**8T-0649**	24	BOLT (M16X2X110-MM)	
	25	1	**7M-8485**	4	SEAL-O-RING	
	26	1	**9S-4181**	2	PLUG	
	27	1	**5P-3119**	2	RING-RETAINING	
	28	1	**9C-8419**	2	NUT-BEARING	
	29	1	**8B-6342**	2	CONE-BEARING	
	30	1	**9S-9334**	1	PLUG	

B-USE AS REQUIRED
M-METRIC PART

214-6156 **HOUSING GP-FIXED AXLE** *(contd.)* **i01857663**

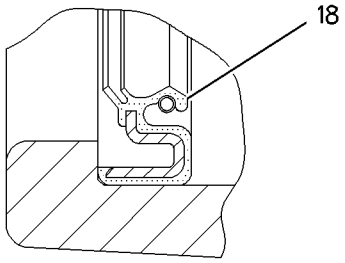

VIEW OF AREA D

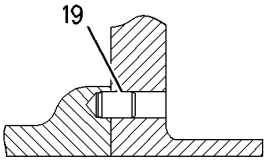

SECTION C-C

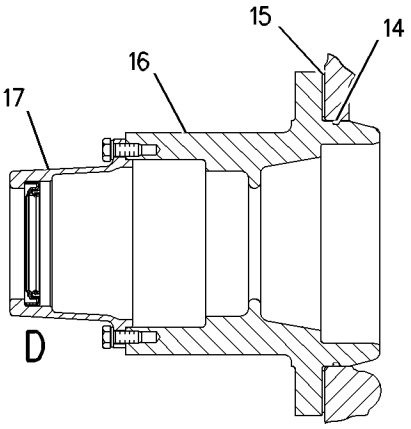

SECTION B-B

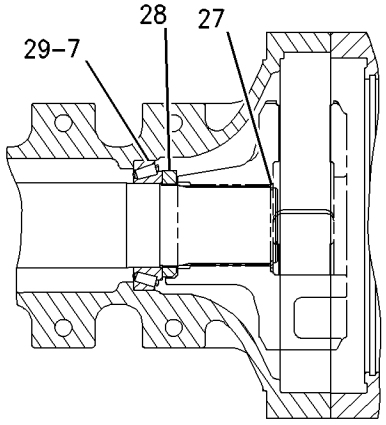

SECTION A-A

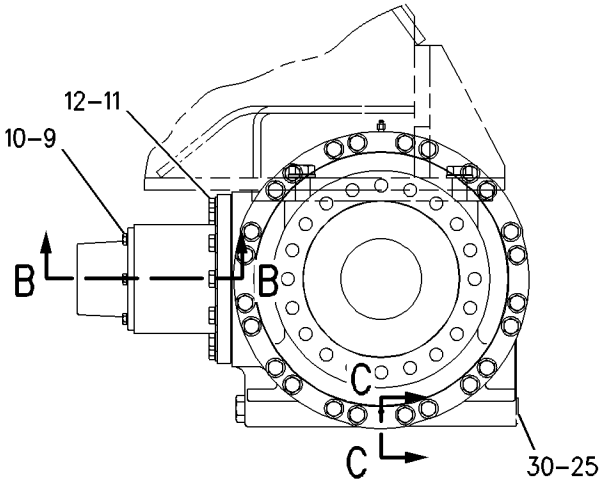

RIGHT SIDE VIEW

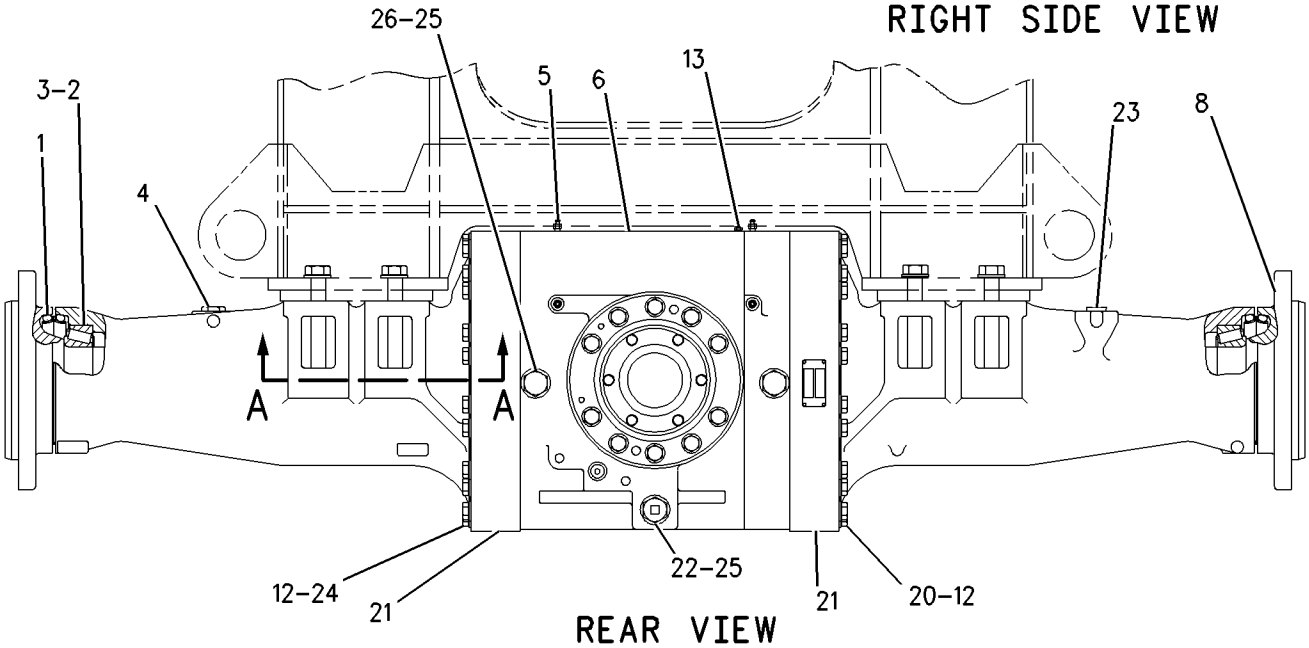

REAR VIEW

GRAPHIC #1

<END>

g00946955

112-0724 HOUSING GP-OSCILLATING AXLE

S/N: M3G1-UP

PART OF 112-0723, 126-7845, 126-7846 AXLE AR-OSCILLATING

ALSO AN ATTACHMENT

SMCS-3260, 3268 **i01857552**

NOTE	REF NO	GRAPHIC REF	PART NUMBER	QTY	PART NAME 1 2 3 4 5 6 (PRODUCT LEVEL)	SEE PAGE
	1	1	**9C-6041**	3	DOWEL	
	2	1	**5H-3701**	2	SCREW-PURGE	
	3	1	**8T-0336**	1	FITTING-PRESSURE RELIEF	
	4	1	**9S-4181**	2	PLUG	
	5	1	**7M-8485**	4	SEAL-O-RING	
	6	1	**5P-4484**	1	PLUG-MAGNETIC	
	7	1	**112-0764**	1	SUPPORT-TRUNNION	
	8	1	**5P-8247**	78	WASHER-HARD (17X32X3.5-MM THK)	
M	9	1	**6V-5686**	30	BOLT (M16X2X50-MM)	
	10	1	**112-0765**	1	SUPPORT-TRUNNION	
	11	1	**4V-5099**	1	COVER	
	12	1	**9C-8421**	2	SHAFT-AXLE	
	13	1	**9W-6671**	2	SEAL GP-DUO-CONE	
	14	1	**6Y-2538**	2	CONE-BEARING	
	15	1	**2P-1373**	2	CUP-BEARING	
	16	1	**8B-6342**	2	CONE-BEARING	
	17	1	**8B-6343**	2	CUP-BEARING	
	18	1	**127-5091**	2	HOUSING-AXLE	
B	19	1	**1U-8846**		SEALANT-GASKET	
	20	1	**4H-6520**	1	SEAL-O-RING	
M	21	1	**6V-7732**	6	BOLT (M10X1.5X25-MM)	
	22	1	**9X-2027**	6	WASHER (11X18X2-MM THK)	
	23	1	**4E-8534**	1	RETAINER-SEAL	
	24	1	**9C-9194**	1	HOUSING-PINION	
B	25	1	**9C-6021**	1	SHIM PACK (INCLUDES 11-SHIMS)	
	26	1	**5P-3119**	2	RING-RETAINING	
	27	1	**9C-8419**	2	NUT-BEARING	
	28	1	**3B-0551**	1	PLUG-PIPE	
M	29	1	**8T-0649**	24	BOLT (M16X2X110-MM)	
	30	1	**9C-9191**	1	TRUNNION	
	31	1	**2K-0715**	2	WASHER-THRUST (6.35-MM THK)	
	32	1	**109-4731**	1	PLATE	
M	33	1	**6V-3531**	4	BOLT (M20X2.5X50-MM)	
	34	1	**8T-3282**	4	WASHER-HARD (22X35X3.5-MM THK)	
	35	1	**213-1370**	1	BEARING-SLEEVE	
	36	1	**192-9128**	1	HOUSING AS-OSCILLATING	
M		1	**095-0673**	4	BOLT-SOCKET HEAD (M12X1.75X60-MM)	
M	37	1	**8T-5002**	24	BOLT (M16X180-MM)	
	38	1	**9C-6327**	1	GAUGE AS-OIL LEVEL (DIPSTICK)	
	39	1	**123-4003**	1	SEAL-LIP TYPE	
	40	1	**3K-0159**	1	RING-RETAINING	
	41	1	**213-1365**	1	BEARING-SLEEVE	
	42	1	**3K-0158**	2	SEAL-LIP TYPE	
	43	1	**6K-2430**	1	SEAL-LIP TYPE	
	44	1	**9S-9334**	1	PLUG	

B-USE AS REQUIRED
M-METRIC PART

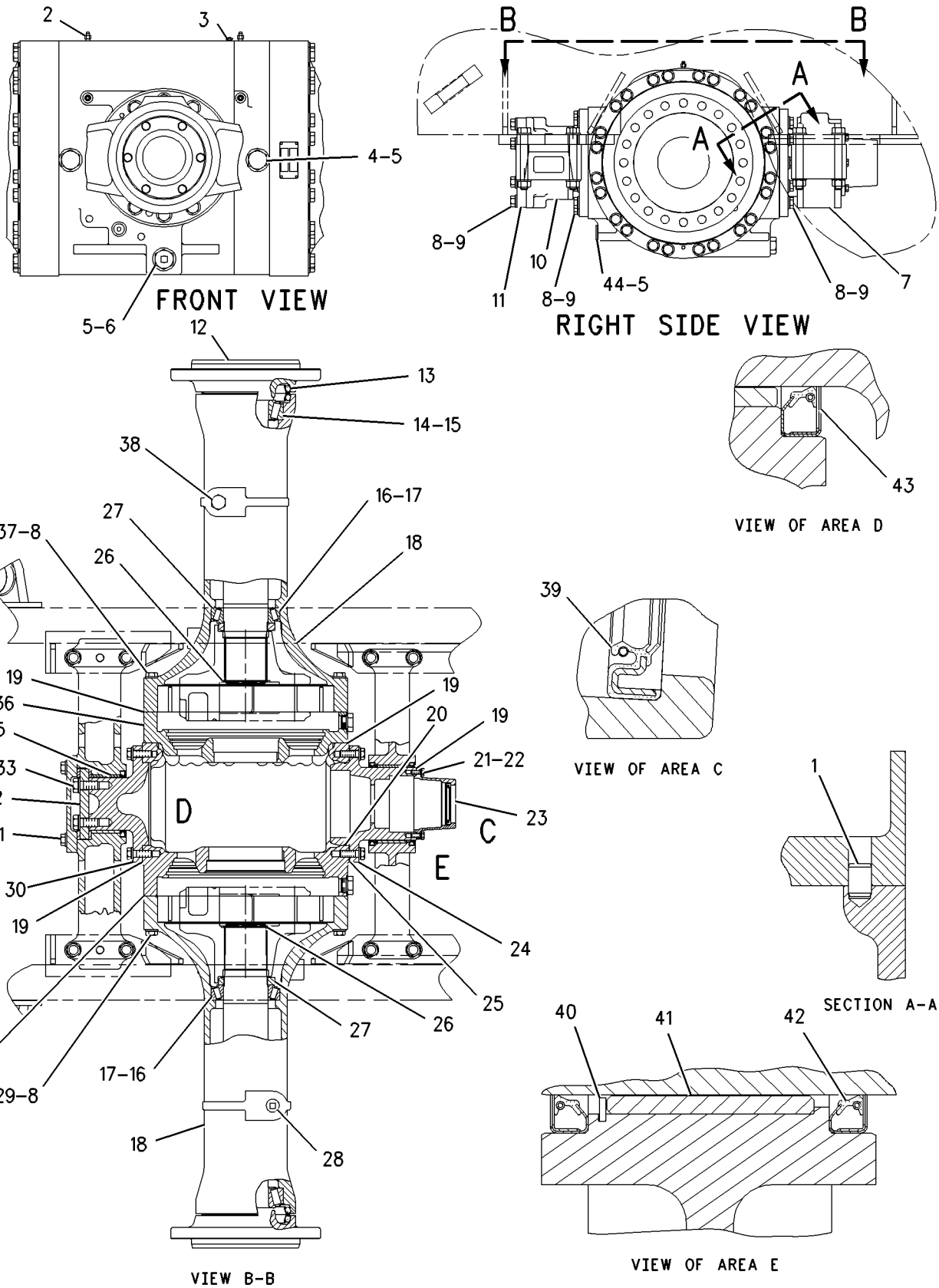

GRAPHIC #1 **<END>** g00946958

POWER TRAIN

241-0077 LINES GP-AXLE OIL COOLER

S/N: M3G1-UP
PART OF 241-0073 COOLER AR-AXLE OIL
AN ATTACHMENT

SMCS-1365, 3016 **i02445029**

NOTE	REF NO	GRAPHIC REF	PART NUMBER	QTY	PART NAME 1 2 3 4 5 6 (PRODUCT LEVEL)	SEE PAGE
	1	1,2	**7K-1181**	3	STRAP-CABLE	
	2	2	**8R-5144**	1	WASHER (12X30X9-MM THK)	
	3	2	**091-0081**	1	SPACER (10.5X20X10-MM THK)	
	4	1	**114-9224**	1	SPACER (11.13X19.05X47-MM THK)	
	5	1	**119-4167**	1	ROD	
	6	2	**123-9814**	1	SPACER	
	7	1	*150-3032*	2	ELBOW AS	
					(EACH INCLUDES)	
		1	**6V-9746**	1	SEAL-O-RING	
		1	**8C-8762**	1	ELBOW	
	8	1	**151-4506**	1	TUBE AS	
	9	1	**151-4507**	1	TUBE AS	
	10	1	**153-3495**	1	BRACKET AS	
	11	1	**155-5510**	1	BRACKET AS	
	12	1,2	**162-8352**	2	U-BOLT	
	13	1	**192-4263**	1	TUBE AS	
	14	1	**192-4264**	1	TUBE AS	
I	15	1	**241-0086**	1	HOSE AS	
I	16	1	**241-0087**	1	HOSE AS	
I	17	2	**241-0088**	1	HOSE AS	
I	18	2	**241-0089**	1	HOSE AS	
I	19	1	**241-0091**	1	HOSE AS	
I	20	1	**241-0092**	1	HOSE AS	
	21	1	**242-8414**	1	TUBE AS	
	22	1	**242-8415**	1	TUBE AS	
	23	1	**242-8416**	1	TUBE AS	
	24	1	**242-8417**	1	TUBE AS	
	25	2	**242-8418**	1	BRACKET AS	
	26	2	**242-8419**	1	BRACKET AS	
I	27	1	**242-9820**	1	HOSE AS	
	28	1,2	**251-6351**	2	FILTER-MAGNETIC (AXLE OIL COOLER)	
I	29	2	**275-9955**	1	HOSE AS	
	30	2	**279-6141**	1	BRACKET AS	
	31	1	**279-6143**	1	BRACKET AS	
	32	1	*148-8323*	2	CONNECTOR GP	
					(EACH INCLUDES)	
		1	**2S-4078**	1	SEAL-O-RING	
		1	**5K-9090**	1	SEAL-O-RING	
		1	**6V-9875**	1	CONNECTOR	
	33	1	*148-8335*	2	CONNECTOR AS	
					(EACH INCLUDES)	
		1	**5K-9090**	1	SEAL-O-RING	
		1	**6V-8635**	1	CONNECTOR	
		1	**7M-8485**	1	SEAL-O-RING	
	34	1	*148-8362*	2	ELBOW AS	
					(EACH INCLUDES)	
		1	**3D-2824**	1	SEAL-O-RING	
		1	**5K-9090**	1	SEAL-O-RING	
		1	**8T-6684**	1	ELBOW (90-DEG)	
	35	1	*148-8378*	4	ELBOW AS	
					(EACH INCLUDES)	
		1	**3J-1907**	1	SEAL-O-RING	
		1	**6V-8397**	1	SEAL-O-RING	
		1	**6V-8724**	1	ELBOW	

241-0077 LINES GP-AXLE OIL COOLER *(contd.)* i02445029

NOTE	REF NO	GRAPHIC REF	PART NUMBER	QTY	PART NAME 1 2 3 4 5 6 (PRODUCT LEVEL)	SEE PAGE
	36	2	*148-8391*	2	ELBOW AS	
					(EACH INCLUDES)	
		2	**2S-4078**	1	SEAL-O-RING	
		2	**5K-9090**	1	SEAL-O-RING	
		2	**8T-8987**	1	ELBOW	
	37	1	*148-8454*	2	TEE AS	
					(EACH INCLUDES)	
		1	**6V-8398**	3	SEAL-O-RING	
		1	**6V-8789**	1	TEE	
	38	1	*153-6244*	2	ELBOW GP	
					(EACH INCLUDES)	
		1	**2M-9780**	1	SEAL-O-RING	
		1	**6V-9746**	1	SEAL-O-RING	
		1	**8T-5389**	1	ELBOW	
	39	1	*164-5598*	4	PLUG AS	
					(EACH INCLUDES)	
		1	**7M-8485**	1	SEAL-O-RING	
		1	**8J-0426**	1	PLUG	
	40	2	**4H-7655**	1	CLAMP-TUBE	
	41	2	**5D-0718**	1	CLIP	
	42	2	**5K-2697**	1	CLIP	
	43	1	**5K-9090**	2	SEAL-O-RING	
	44	1,2	**5P-7468**	2	CLIP (SLOT)	
	45	1,2	**5P-7469**	2	CLIP (TAB)	
	46	1,2	**5P-8444**	2	GROMMET	
	47	1,2	**6V-1889**	6	CLIP	
	48	2	**6V-9746**	2	SEAL-O-RING	
	49	2	**7D-4092**	1	CLIP	
	50	1,2	**7D-7233**	5	CLIP	
	51	1,2	**8T-4121**	28	WASHER-HARD (11X21X2.5-MM THK)	
M	52	1,2	**8T-4133**	8	NUT (M10X1.5 THD)	
M	53	1,2	**8T-4136**	7	BOLT (M10X1.5X25-MM)	
M	54	1,2	**8T-4137**	2	BOLT (M10X1.5X20-MM)	
M	55	2	**8T-4186**	2	BOLT (M10X1.5X40-MM)	
M	56	1,2	**8T-4195**	10	BOLT (M10X1.5X30-MM)	
	57	1	**8T-4223**	2	WASHER-HARD (13.5X25.5X3-MM THK)	

I-REFER TO HYDRAULIC INFORMATION SYSTEM
M-METRIC PART

REFER TO ALL ILLUSTRATIONS OF
THIS GROUP FOR AUXILIARY VIEWS

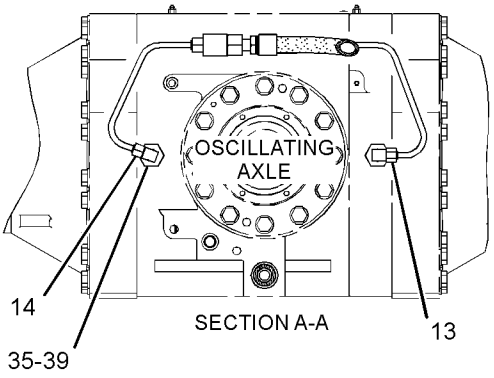

SECTION A-A

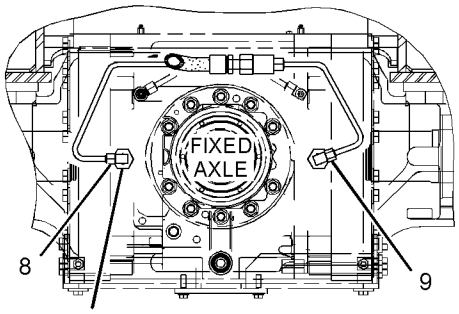

SECTION B-B

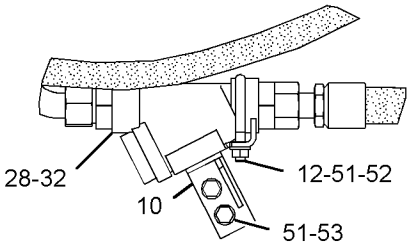

VIEW OF AREA D

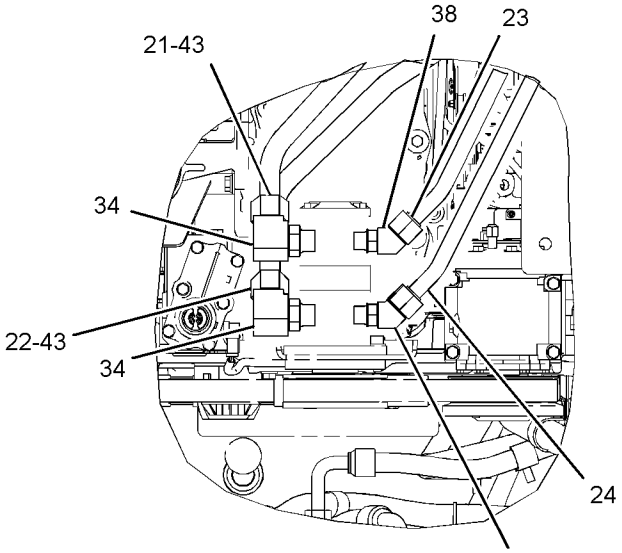

VIEW OF AREA G

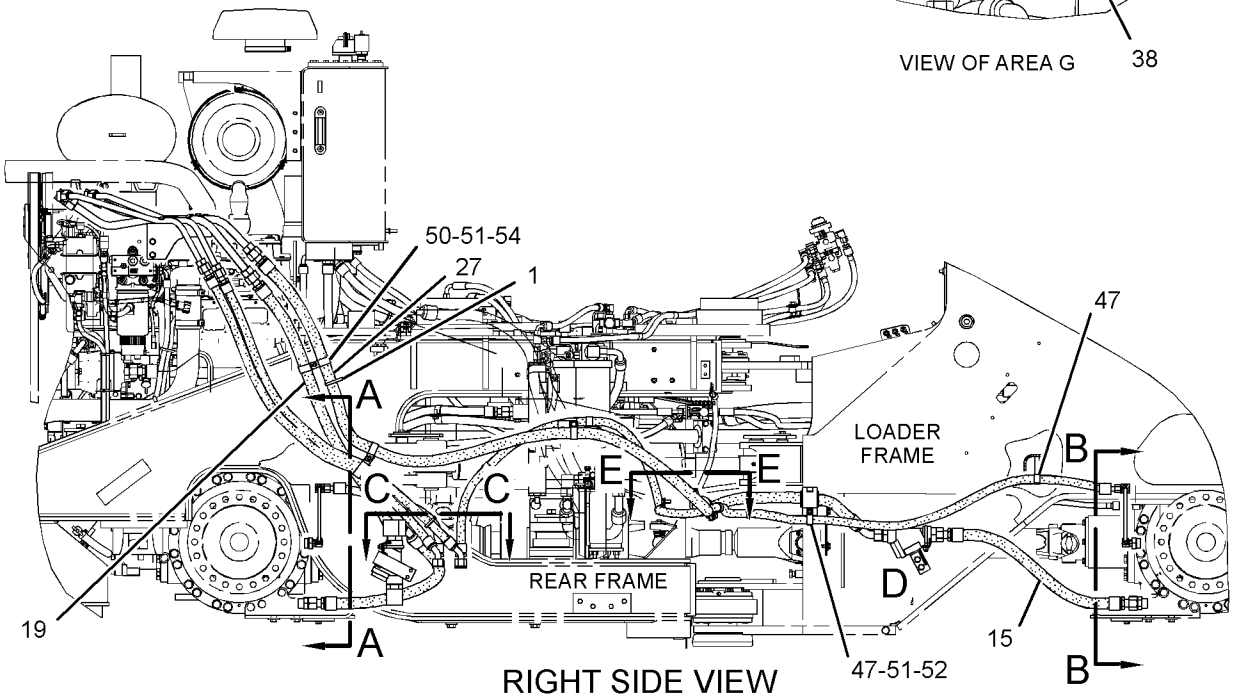

RIGHT SIDE VIEW

GRAPHIC #1

g01221327

241-0077 **LINES GP-AXLE OIL COOLER** *(contd.)* **i02445029**

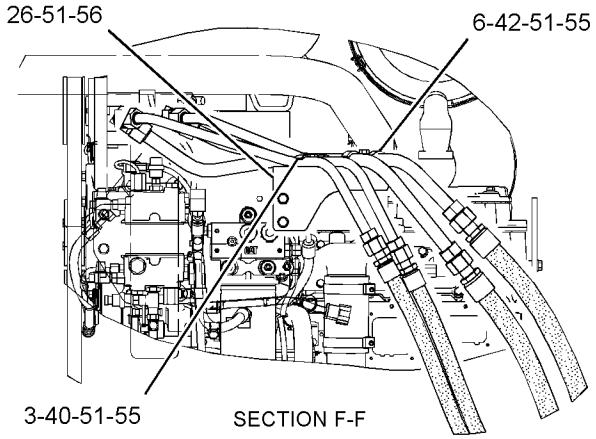

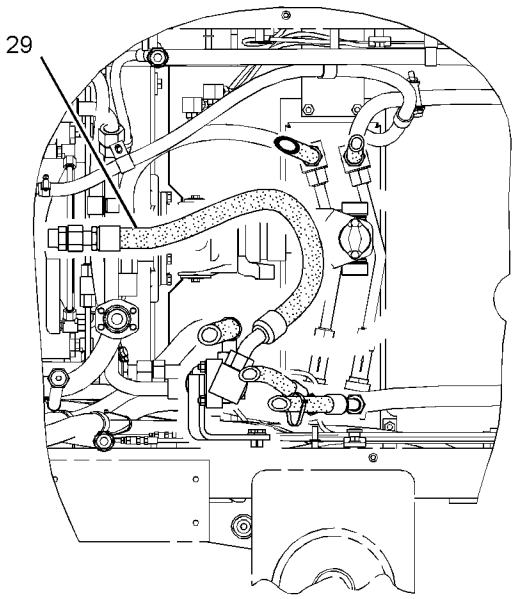

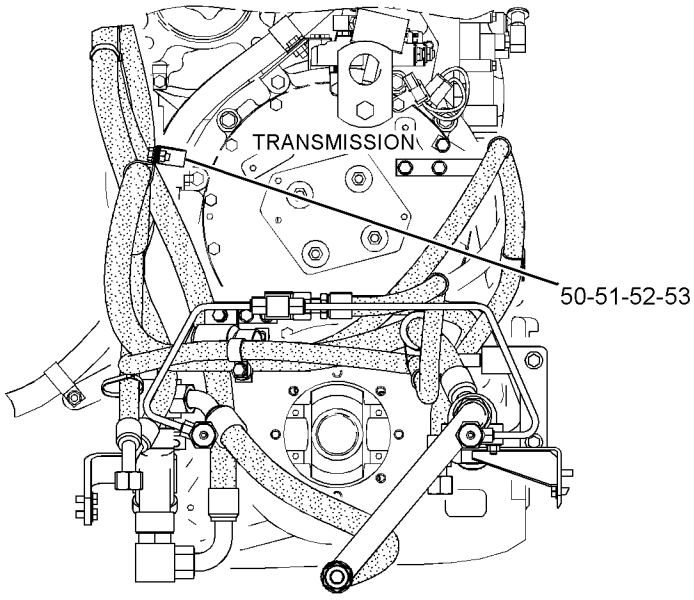

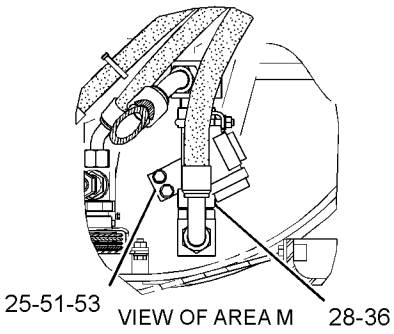

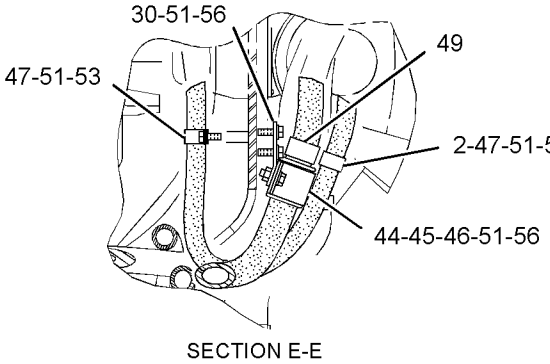

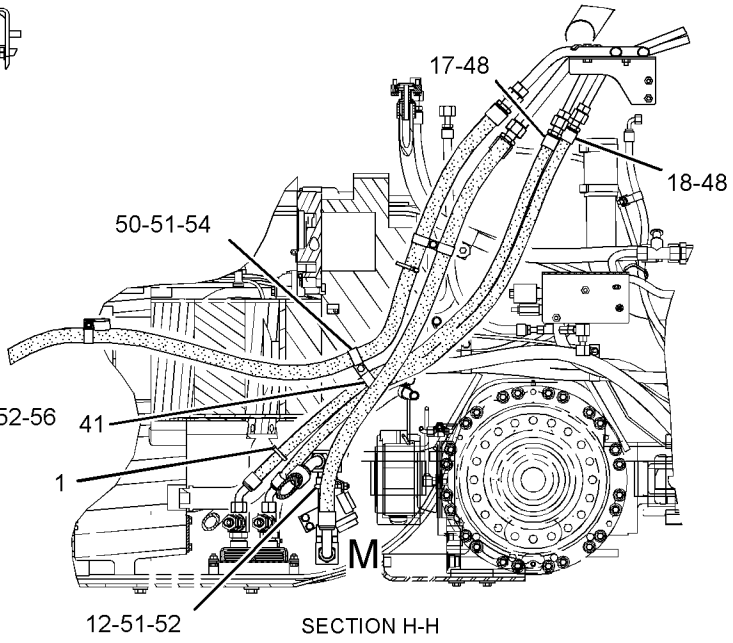

GRAPHIC #2 **<END>** g01221329

237-0438 LINES GP-TORQUE CONV COOLER

S/N: M3G1-UP

PART OF 237-4933 CHASSIS AR

SMCS-1375, 3016 **i02444537**

NOTE	REF NO	GRAPHIC REF	PART NUMBER	QTY	PART NAME 1 2 3 4 5 6 (PRODUCT LEVEL)	SEE PAGE
	1	2	**251-2009**	1	TUBE AS	
	2	2	**1P-3703**	2	SEAL-RECTANGULAR	
	3	2	**251-2008**	1	TUBE AS	
I	4	1	**251-2010**	1	HOSE AS	
I	5	1	**251-2011**	1	HOSE AS	
	6	2	*148-8357*	2	ELBOW AS	
					(EACH INCLUDES)	
		2	**5K-9090**	1	SEAL-O-RING	
		2	**6V-9008**	1	ELBOW	
		2	**7M-8485**	1	SEAL-O-RING	
	7	2	**3A-3692**	1	CLIP	
	8	1	**5K-9090**	2	SEAL-O-RING	
	9	2	**8T-4121**	9	WASHER-HARD (11X21X2.5-MM THK)	
M	10	2	**8T-6466**	8	BOLT (M10X1.5X60-MM)	
M	11	1	**8T-4196**	1	BOLT (M10X1.5X35-MM)	

I-REFER TO HYDRAULIC INFORMATION SYSTEM
M-METRIC PART

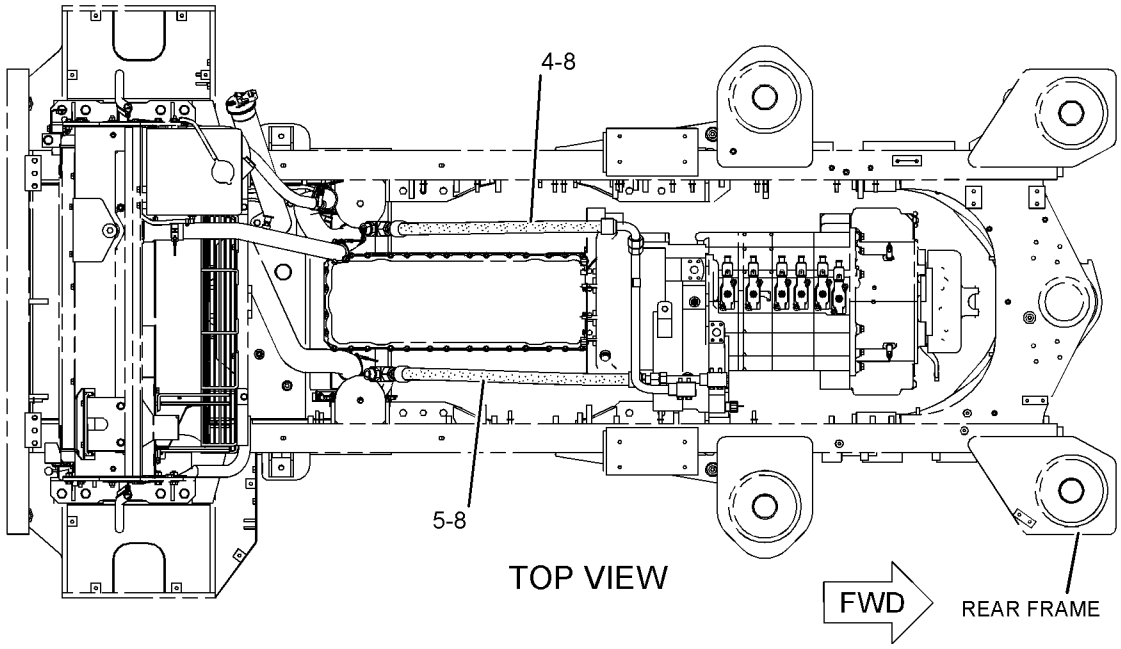

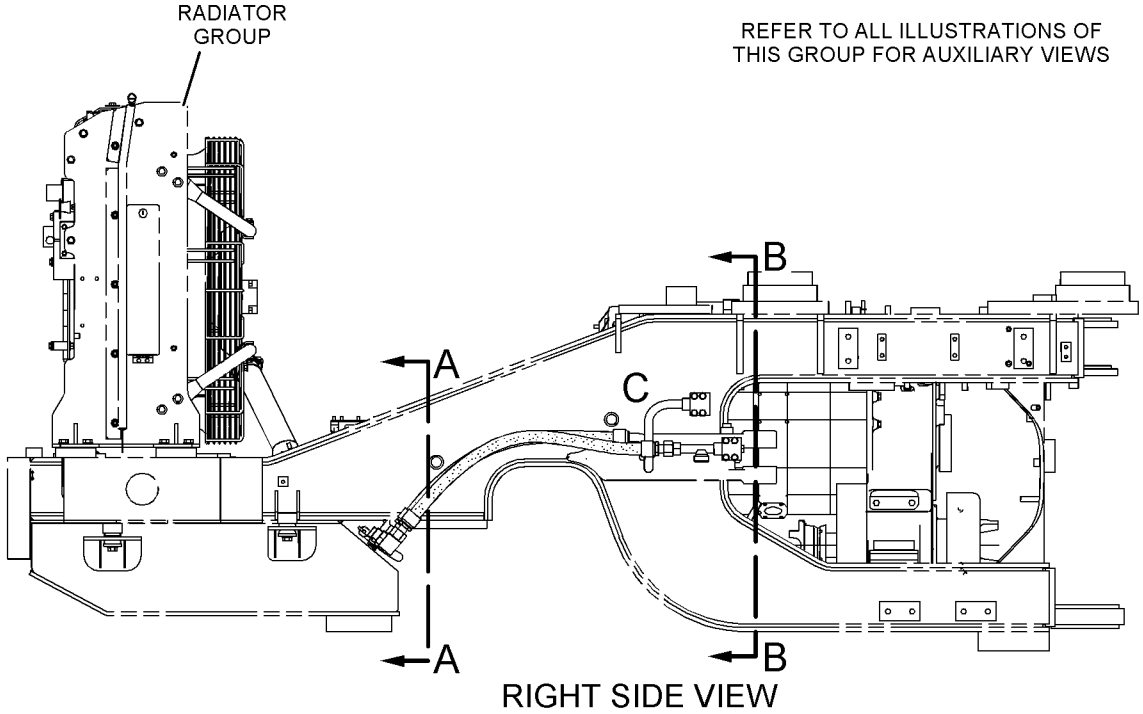

GRAPHIC #1 g01122522

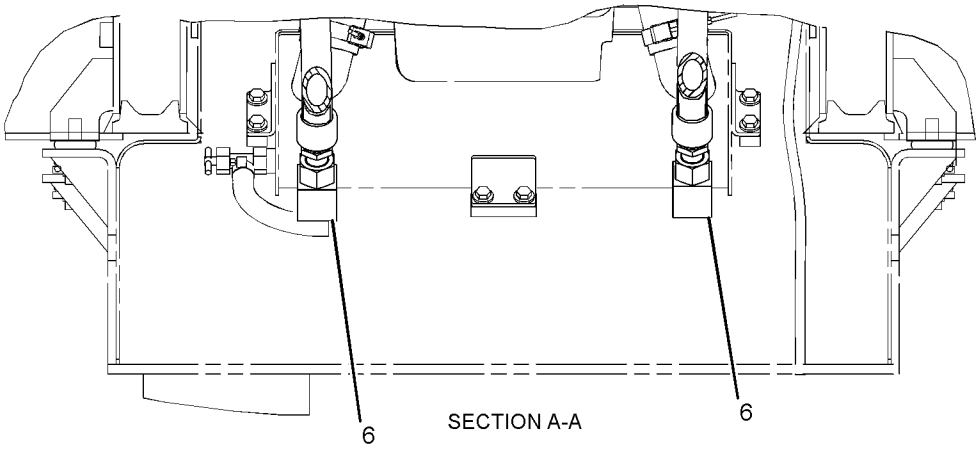

SECTION A-A

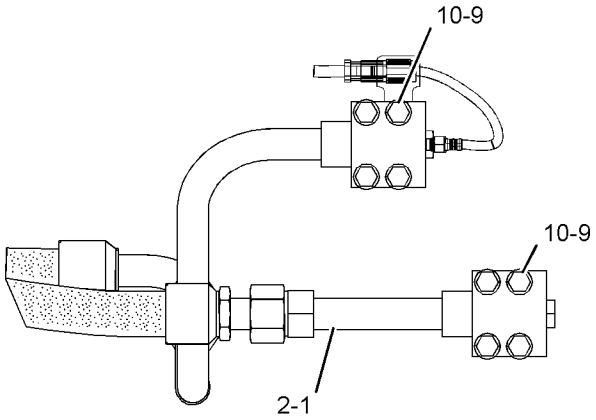

VIEW OF AREA C

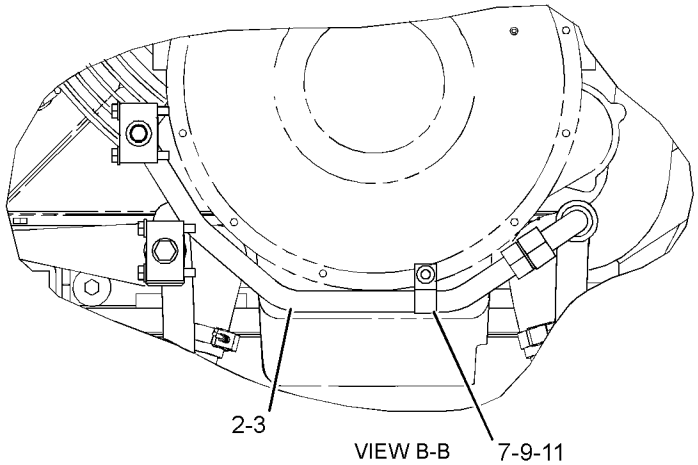

VIEW B-B

GRAPHIC #2 **<END>** g01221399

214-6162 MOUNTING GP-AXLE

S/N: M3G1-UP

PART OF 237-0271 POWER TRAIN AR

SMCS-3268, 3278 **i01857695**

NOTE	REF NO	GRAPHIC REF	PART NUMBER	QTY	PART NAME 1 2 3 4 5 6 (PRODUCT LEVEL)	SEE PAGE
M	1	1	**3E-8032**	8	BOLT (M30X3.5X200-MM)	
	2	1	**3S-7023**	8	WASHER (34X57X6-MM THK)	
	3	1	**6C-2356**	2	DOWEL	
M	4	1	**8T-4170**	8	BOLT (M20X2.5X150-MM)	
	5	1	**8T-4123**	16	WASHER-PLATED (22X35X3.5-MM THK)	
M	6	1	**8T-4131**	8	NUT (M20X2.5-THD)	
	7	1	**145-0050**	2	PLATE	
M	8	1	**8T-4137**	4	BOLT (M10X1.5X20-MM)	
	9	1	**8T-4121**	4	WASHER-HARD (11X21X2.5-MM THK)	
	10	1	**6C-8352**	2	PLATE	
	11	1	**6C-8353**	2	PLATE	

M-METRIC PART

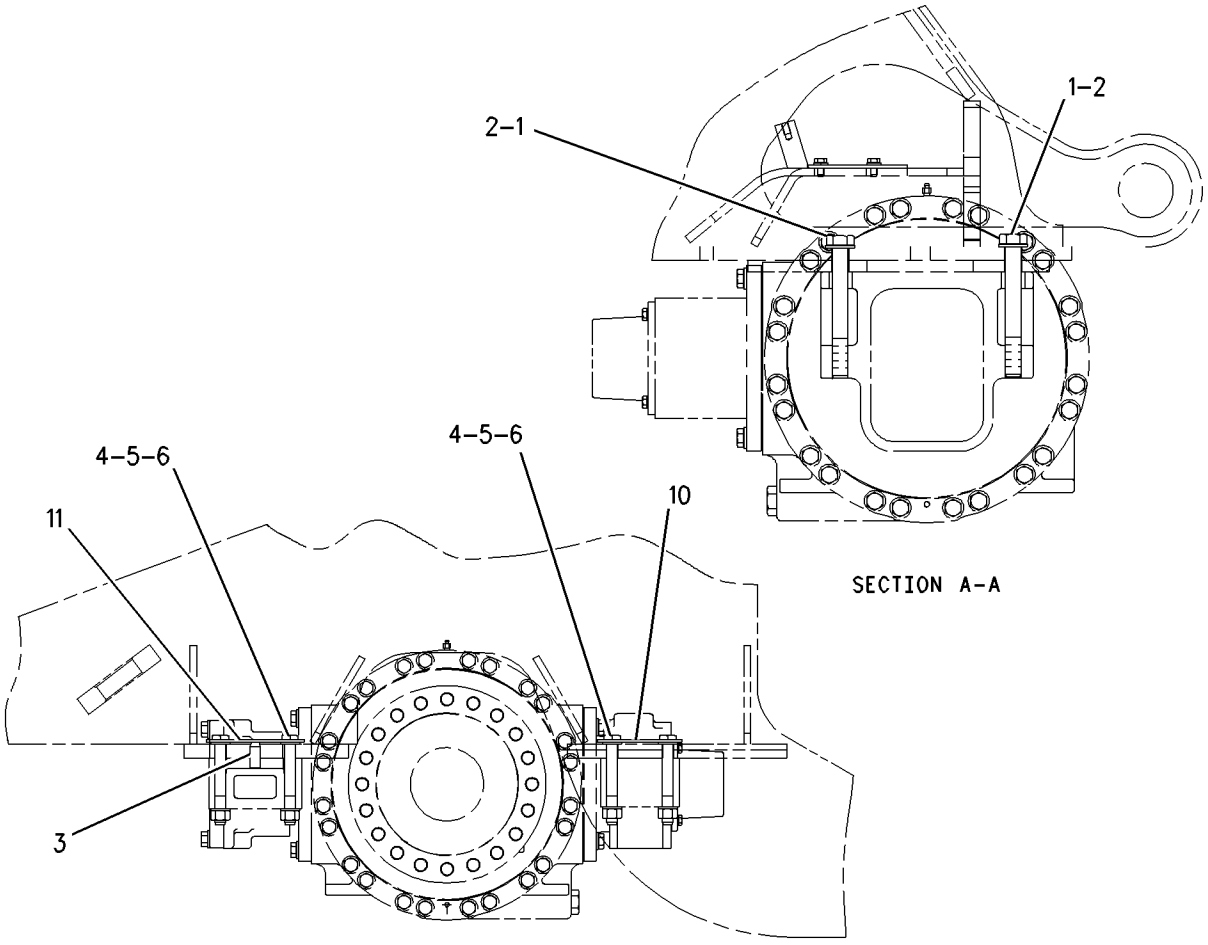

RIGHT SIDE VIEW

REAR AXLE

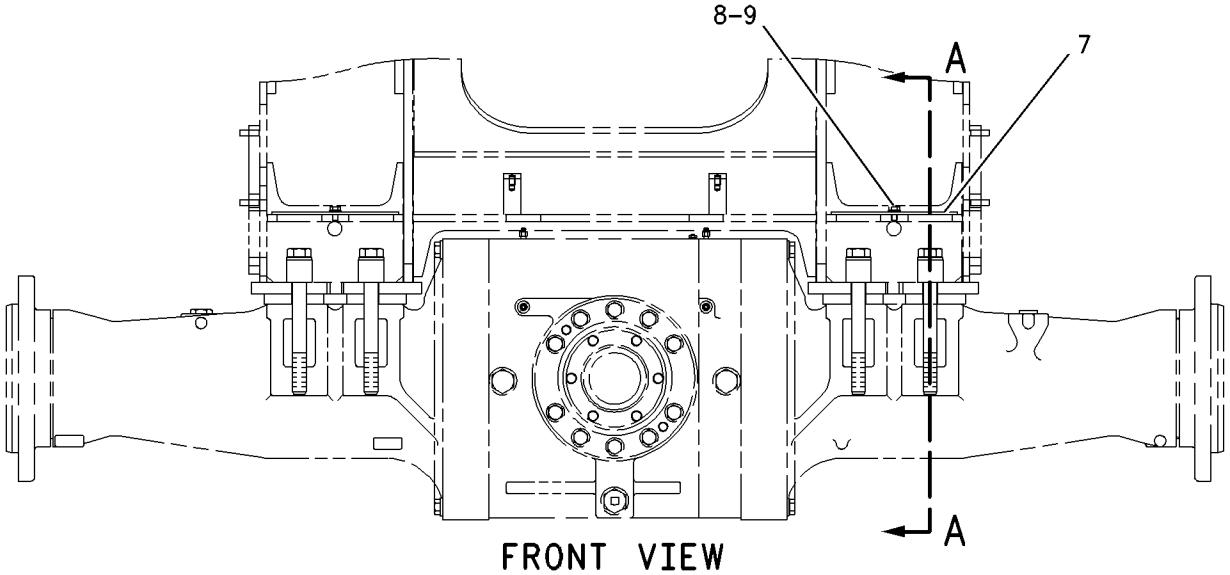

FRONT VIEW

GRAPHIC #1 **<END>** g00946982

260-9584 MOUNTING GP-AXLE OIL COOLER

S/N: M3G1-UP
PART OF 241-0073 COOLER AR-AXLE OIL
AN ATTACHMENT

SMCS-1365 **i02444658**

NOTE	REF NO	GRAPHIC REF	PART NUMBER	QTY	PART NAME 1 2 3 4 5 6 (PRODUCT LEVEL)	SEE PAGE
	1	1	**130-5202**	2	VALVE GP-CHECK (AXLE OIL COOLER BYPASS)	
					(EACH INCLUDES)	
		1	**3D-2824**	1	SEAL-O-RING	
		1	**6V-9746**	1	SEAL-O-RING	
	2	1	**151-5711**	1	CORE AS-AXLE OIL COOLER	
	3	1	**250-1441**	2	TEE	
	4	1	**260-6465**	2	TUBE AS	
	5	1	*148-8442*	2	TEE AS	
					(EACH INCLUDES)	
		1	**6V-9746**	2	SEAL-O-RING	
		1	**7M-8485**	1	SEAL-O-RING	
		1	**8T-1685**	1	TEE	
	6	1	**3D-2824**	2	SEAL-O-RING	
	7	1	**6V-9746**	4	SEAL-O-RING	
	8	1	**7M-8485**	2	SEAL-O-RING	
	9	1	**8T-4121**	4	WASHER-HARD (11X21X2.5-MM THK)	
M	10	1	**8T-4136**	4	BOLT (M10X1.5X25-MM)	

M-METRIC PART

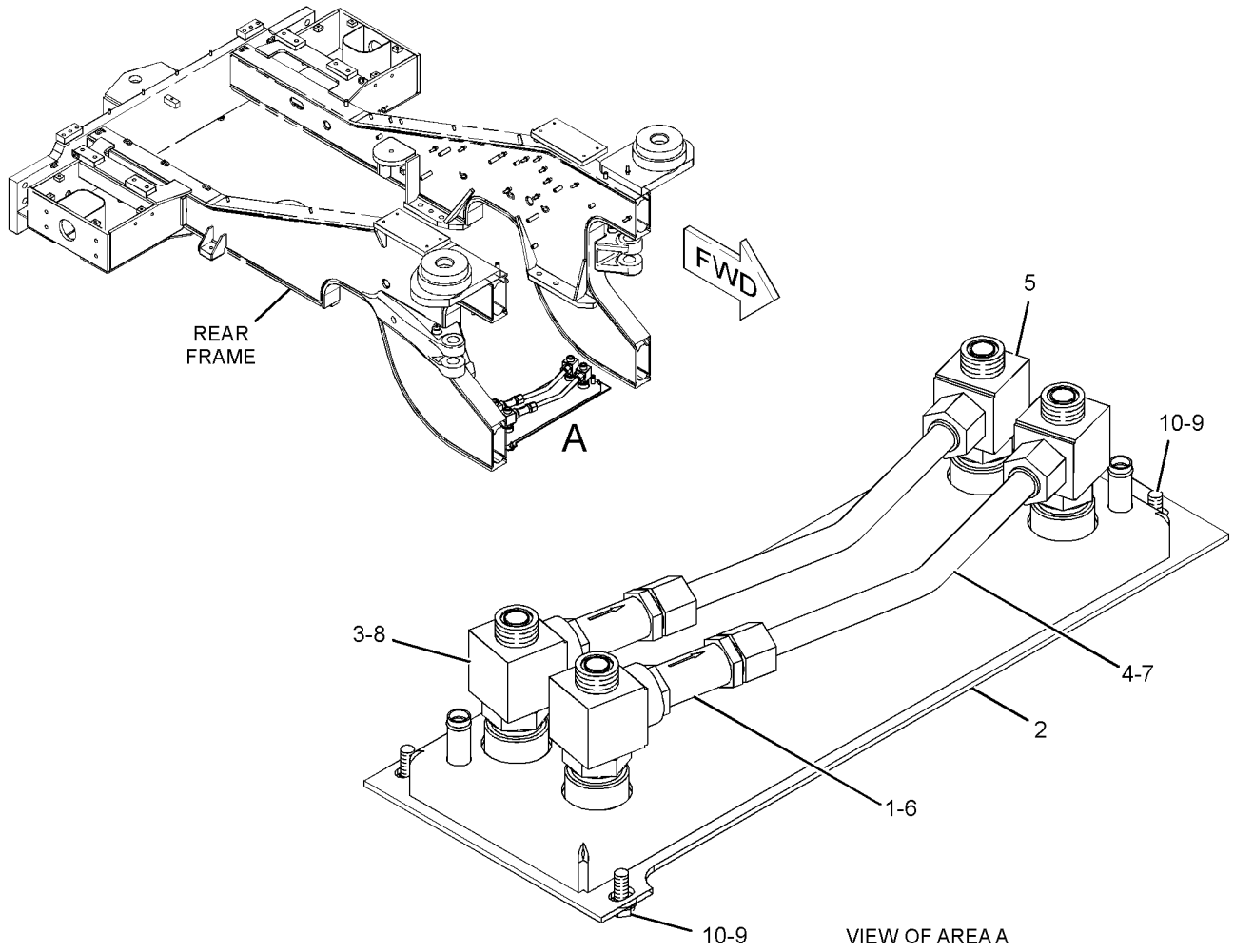

GRAPHIC #1 **<END>** g01219367

128-0678 MOUNTING GP-RIM

S/N: M3G1-UP
PART OF 138-2373 RIM AR
AN ATTACHMENT

SMCS-4202, 4209 **i00681014**

NOTE	PART NUMBER	QTY	PART NAME 1 2 3 4 5 6 (PRODUCT LEVEL)	SEE PAGE
M	**8T-0380**	20	BOLT (M24X3X60MM)	
	6V-8237	20	WASHER (4.0MM THK)	

M-METRIC PART

<END>

POWER TRAIN

186-2522 PLANETARY GP-TRANSMISSION

S/N: FAK1-UP

PART OF 237-8187 TRANSMISSION AR

SMCS-3160 **i01374925**

NOTE	REF NO	GRAPHIC REF	PART NUMBER	QTY	PART NAME 1 2 3 4 5 6 (PRODUCT LEVEL)	SEE PAGE
	1	2	**114-9036**	1	SHAFT-INPUT	
M	2	2	**6V-5696**	1	BOLT (M12X1.75X80-MM)	
	3	2	**4S-5824**	1	RETAINER	
	4	2	**8E-7476**	1	GEAR-TRANSFER (50-TEETH)	
	5	2	**118-4264**	1	HOUSING AS	
	5A	2	**1A-2223**	2	DOWEL	
	6	2	**3P-7019**	2	SEAL-METAL	
	7	2	**3K-1432**	2	RING-METAL SEAL	
	8	2	**9W-0517**	1	CARRIER-PLANETARY	
	9	2	**8P-8950**	2	RING-METAL SEAL	
	10	1,2	**6P-7773**	5	RING-SEAL	
	11	2	**7G-6061**	1	COUPLING	
	12	2	**6F-6673**	2	SEAL-O-RING	
	13	1,2	**6Y-5352**	15	DISC-FRICTION	
	14	1,2	**7G-0437**	15	PLATE-CLUTCH	
	15	2	**7G-5572**	1	GEAR-SUN (29-TEETH)	
	16	2	**110-7452**	1	PLATE	
	17	2	**9W-0518**	1	CARRIER-RING	
	18	1,2	**7G-8121**	2	RING-LOCK	
	19	2	**7G-5569**	1	GEAR-RING (83-TEETH)	
	20	2	**6V-1649**	2	BALL BEARING	
	21	2	**7G-5593**	1	GEAR-SUN (38-TEETH)	
	22	2	**7G-6062**	1	GEAR-RING (82-TEETH)	
	23	1,2	**110-7450**	5	PISTON-CLUTCH	
	24	2	**5L-2931**	1	RING-RETAINING	
	25	2	**6V-0834**	1	RING-RETAINING	
	26	2	**7G-5594**	1	GEAR-SUN (38-TEETH)	
	27	2	**9G-1491**	1	CARRIER-PLANETARY	
	28	1	**7G-3711**	1	GEAR-RING (82-TEETH)	
	29	2	**6V-0835**	1	RING-RETAINING	
	30	1	**7G-5444**	1	CARRIER-PLANETARY	
	31	1	**6Y-9713**	1	GEAR AS-SUN (44-TEETH)	
	31A	1	**8S-0527**	2	PLUG-CUP	
	32	1,2	**7G-5675**	5	RING-SEAL	
	33	1	**110-7455**	1	HOUSING	
	34	1	**9M-1503**	1	RING-METAL SEAL	
	35	1	**9G-1231**	1	PLATE	
	36	1	**6P-7983**	1	RING-RETAINING	
	37	1	**3T-9960**	5	DISC-FRICTION	
	38	1	**6P-7968**	4	PLATE-CLUTCH	
	39	1	**035-3360**	3	RING-RETAINING	
	40	1	**9H-5604**	1	RING-RETAINING	
	41	1	**8E-1666**	1	PLATE-RETAINER	
	42	1	**9G-1234**	5	SPRING-DISC	
	43	1	**9N-4460**	1	HOUSING AS-CLUTCH	
	43A	1	**3S-8109**	1	PIN-SPRING	
	43B	1	**4S-8537**	1	DOWEL	
	44	1	**186-3402**	1	HOUSING AS	
	44A	1	**1A-2223**	1	DOWEL	
	45	1	**6P-7985**	2	RING-SEAL	
	46	1	**7X-7608**	1	RING-RETAINING	
	47	1	**143-4642**	1	BEARING-SPECIAL	
	48	1	**3P-3441**	1	RING-RETAINING	
	49	1	**112-7847**	1	HOUSING	
	50	1	**6Y-7881**	1	GEAR-RING (86-TEETH)	
	51	1	**6Y-7879**	1	CARRIER-PLANETARY	

186-2522 **PLANETARY GP-TRANSMISSION** *(contd.)* **i01374925**

NOTE	REF NO	GRAPHIC REF	PART NUMBER	QTY	PART NAME 1 2 3 4 5 6 (PRODUCT LEVEL)	SEE PAGE
	52	1	**6Y-5952**	1	GEAR AS-SUN (42-TEETH)	
	52A	1	**6Y-2109**	1	CARRIER-SEAL	
	53	2	**7G-6952**	1	SHAFT AS-OUTPUT	
	53A	2	**8S-3426**	1	DOWEL	
	53B	2	**9G-7683**	2	BEARING-SLEEVE	
	54	1	**6P-2233**	3	GEAR-PLANETARY (20-TEETH)	
	55	1	**5P-3131**	3	BEARING AS-ROLLER	
	56	1	**7G-5614**	3	SHAFT-PLANETARY	
	57	1,2	**3S-8109**	15	PIN-SPRING	
	58	1	**8E-8297**	6	DISC-THRUST	
M	59	1,2	**114-9040**	15	BOLT (M12X1.75X500-MM THD)	
	60	2	**9W-0519**	1	DISC-THRUST	
	61	1,2	**7G-6945**	8	SPRING	
	62	1	**7G-5730**	1	RING-SEAL	
	63	1	**6V-1586**	1	RING-RETAINING	
	64	1	**6P-7772**	1	RING-SEAL	
	65	1	**176-9273**	1	PISTON	
	66	1	**186-2517**	1	GEAR-RING (82-TEETH)	
	67	1,2	**8E-8299**	32	DISC-THRUST	
	68	2	**5P-3930**	8	BEARING AS-ROLLER	
	69	2	**110-7454**	1	HOUSING-CLUTCH	
	70	2	**6P-8005**	8	GEAR (23-TEETH)	
	71	2	**3T-7584**	4	SPRING	
	72	2	**9P-5558**	1	RING-RETAINING	
	73	2	**6P-7743**	4	SHAFT-PLANETARY	
	74	1,2	**7S-4534**	8	BEARING-CAGED	
	75	2	**7G-3710**	4	ROD	
	76	2	**6P-8003**	4	GEAR (27-TEETH)	
	77	2	**6P-7742**	4	SHAFT-PLANETARY	
	78	2	**1M-8649**	1	RING-RETAINING	
	79	2	**7B-7515**	1	BALL BEARING	
	80	1	**9H-5546**	6	DOWEL	
	81	1	**1M-3151**	6	DOWEL-REACTION	
	82	1	**8P-9723**	1	RING-SEAL	
	83	1,2	**8D-2714**	6	SEAL-O-RING	
	84	1	**9G-5828**	4	SPRING	
	85	1	**4H-4737**	4	PIN-SPRING	
	86	2	**1M-3150**	6	DOWEL-REACTION	
M	87	2	**6V-8675**	2	BOLT (M12X1.75X35-MM)	
	88	1	**6Y-7880**	4	SHAFT-PLANETARY	
	89	1	**7T-3456**	4	DISC-FRICTION	
	90	1	**7T-3343**	5	PLATE-CLUTCH	
	91	1	**6Y-8030**	1	RING-SEAL	
	92	1	**7T-1285**	4	GEAR-PLANETARY (23-TEETH)	
M	93	1	**8T-0106**	1	BOLT (M12X1.75X100-MM)	
	94	1,2	**5P-8245**	12	WASHER-HARD (13.5X25.5X3-MM THK)	

M-METRIC PART

186-2522 **PLANETARY GP-TRANSMISSION** *(contd.)* **i01374925**

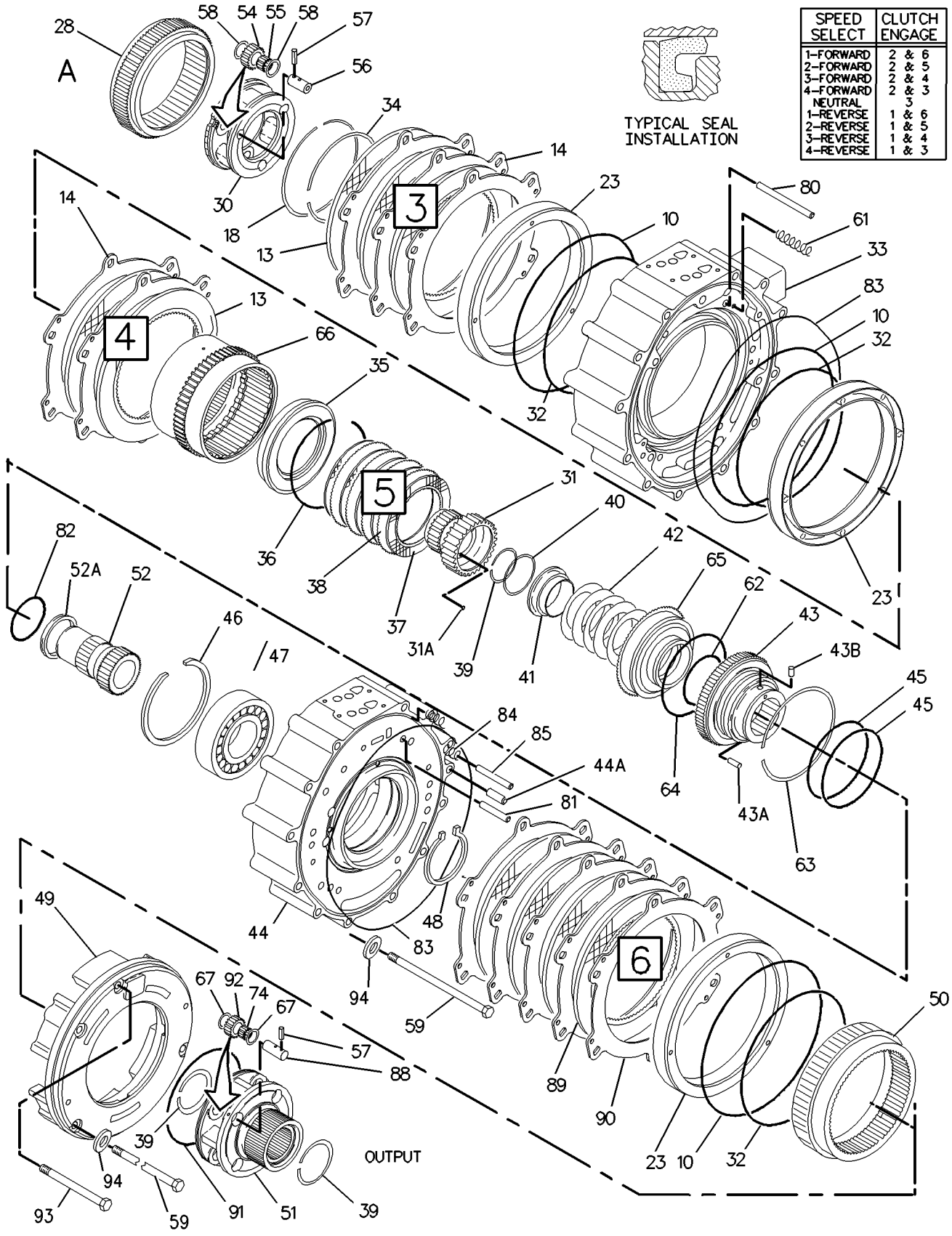

GRAPHIC #1 g00712124

186-2522 **PLANETARY GP-TRANSMISSION** *(contd.)* **i01374925**

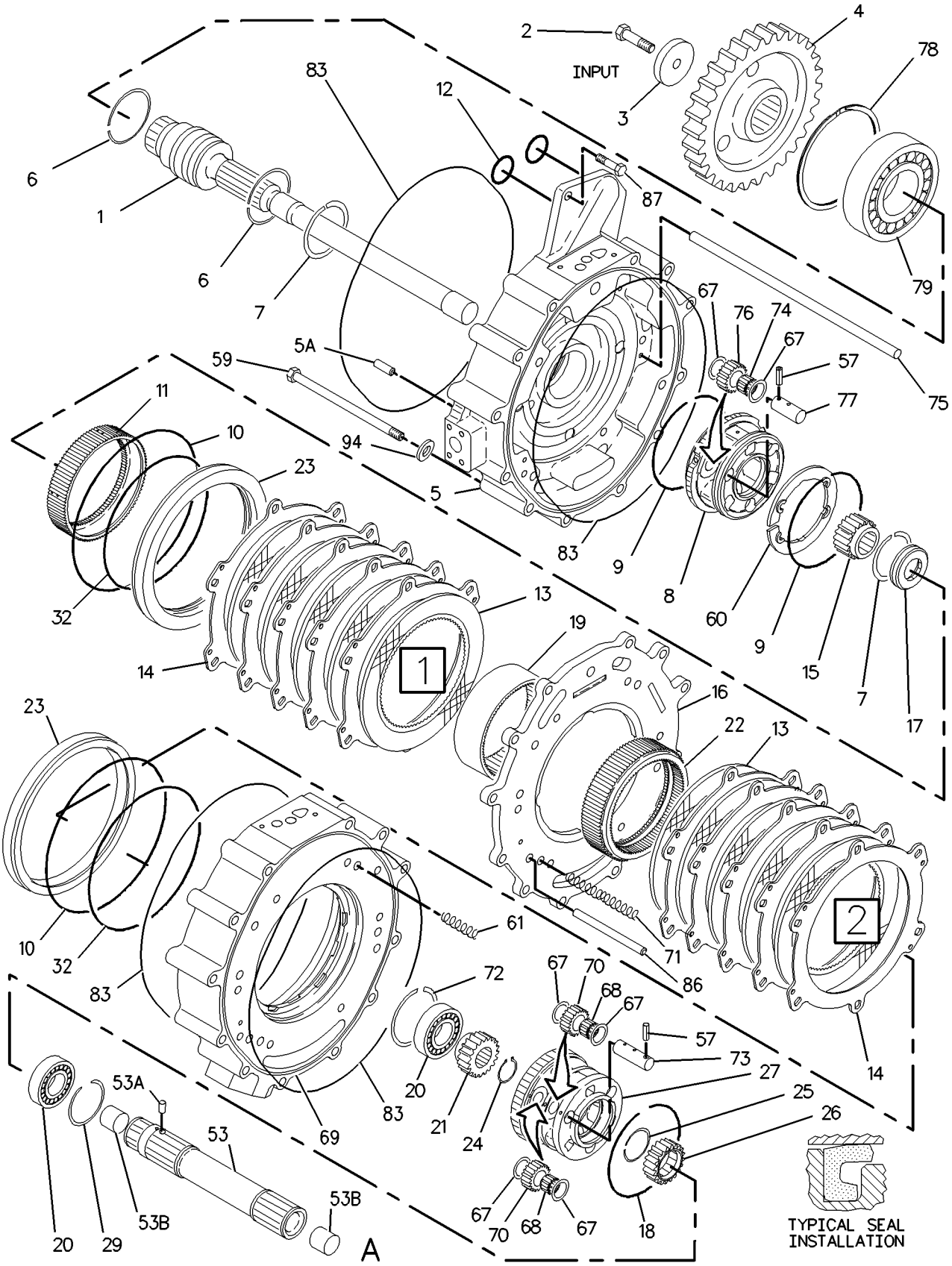

GRAPHIC #2 **<END>** g00712125

237-0271 POWER TRAIN AR

S/N: M3G1-UP

PART OF 237-4935 GENERAL AR

SMCS-3000, 4000 **i02207652**

NOTE	PART NUMBER	QTY	PART NAME 1 2 3 4 5 6 (PRODUCT LEVEL)	SEE PAGE
Y	*126-7698*	1	ACTUATOR GP-PARKING BRAKE	423
Y	*214-6161*	1	AXLE AR-FIXED (FRONT, STANDARD DIFFERENTIAL)	265
Y	*112-0723*	1	AXLE AR-OSCILLATING (REAR, STANDARD DIFFERENTIAL)	265
Y	*237-5114*	1	FILLER GP-POWER TRAIN OIL	282
Y	*244-2339*	1	FILTER & LINES GP-TRANSMISSION	285
Y	*214-6162*	1	MOUNTING GP-AXLE	307
Y	*155-5600*	1	SHAFT GP-DRIVE	322
Y	**237-8187**	1	TRANSMISSION AR (FREEWHEEL STATOR TORQUE CONV)	336

Y-SEPARATE ILLUSTRATION

<END>

241-0080 PUMP & MTG GP-AXLE OIL COOLER

S/N: M3G1-UP
PART OF 241-0073 COOLER AR-AXLE OIL
AN ATTACHMENT

SMCS-5073 **i02364895**

NOTE	REF NO	GRAPHIC REF	PART NUMBER	QTY	PART NAME 1 2 3 4 5 6 (PRODUCT LEVEL)	SEE PAGE
Y	1	1	**192-1563**	1	IDLER GP-BELT (ALTERNATOR, REFRIGERANT COMPR) (AXLE OIL COOLER PUMP)	36
	2	1	**215-3013**	1	PUMP GP-GEAR (AXLE OIL COOLER)	
	3	1	**215-3014**	1	CLUTCH GP-ELECTRIC (AXLE OIL COOLER PUMP)	
	4	1	**215-3015**	1	BELT-SERPENTINE	
	5	1	**217-3027**	1	BRACKET AS	
	6	1	**217-3031**	1	BELT-SERPENTINE	
	7	1	**6V-3960**	1	BOLT (1/4-28X0.875-IN)	
M	8	1	**8T-0271**	2	BOLT-SOCKET HEAD (M10X1.5X35-MM)	
	9	1	**8T-4121**	6	WASHER-HARD (11X21X2.5-MM THK)	
M	10	1	**8T-4196**	4	BOLT (M10X1.5X35-MM)	
	11	1	**8T-4205**	1	WASHER-HARD (7.2X14.5X2-MM THK)	

M-METRIC PART
Y-SEPARATE ILLUSTRATION

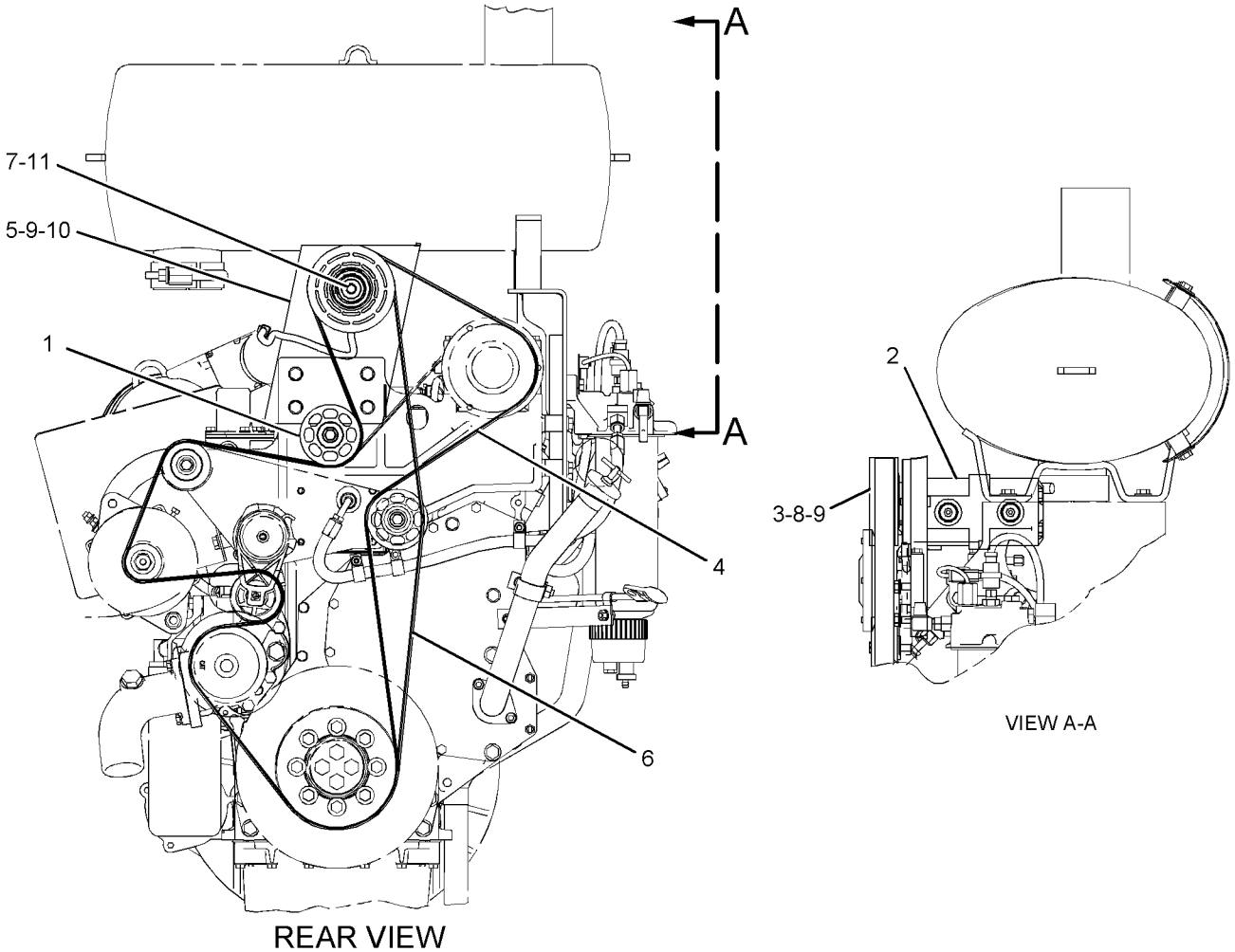

GRAPHIC #1 **<END>** g01123007

241-8692 PUMP GP-TRANSMISSION

S/N: FAK1-UP

PART OF 237-8187 TRANSMISSION AR

SMCS-3066 **i02248729**

NOTE	REF NO	GRAPHIC REF	PART NUMBER	QTY	PART NAME 1 2 3 4 5 6 (PRODUCT LEVEL)	SEE PAGE
Y	1	1	**241-8693**	1	PUMP GP-TRANSMISSION	318
M	2	1	**8T-5035**	6	BOLT (M10X1.5X65-MM)	
	3	1	**9M-5024**	1	SEAL-O-RING	

M-METRIC PART
Y-SEPARATE ILLUSTRATION

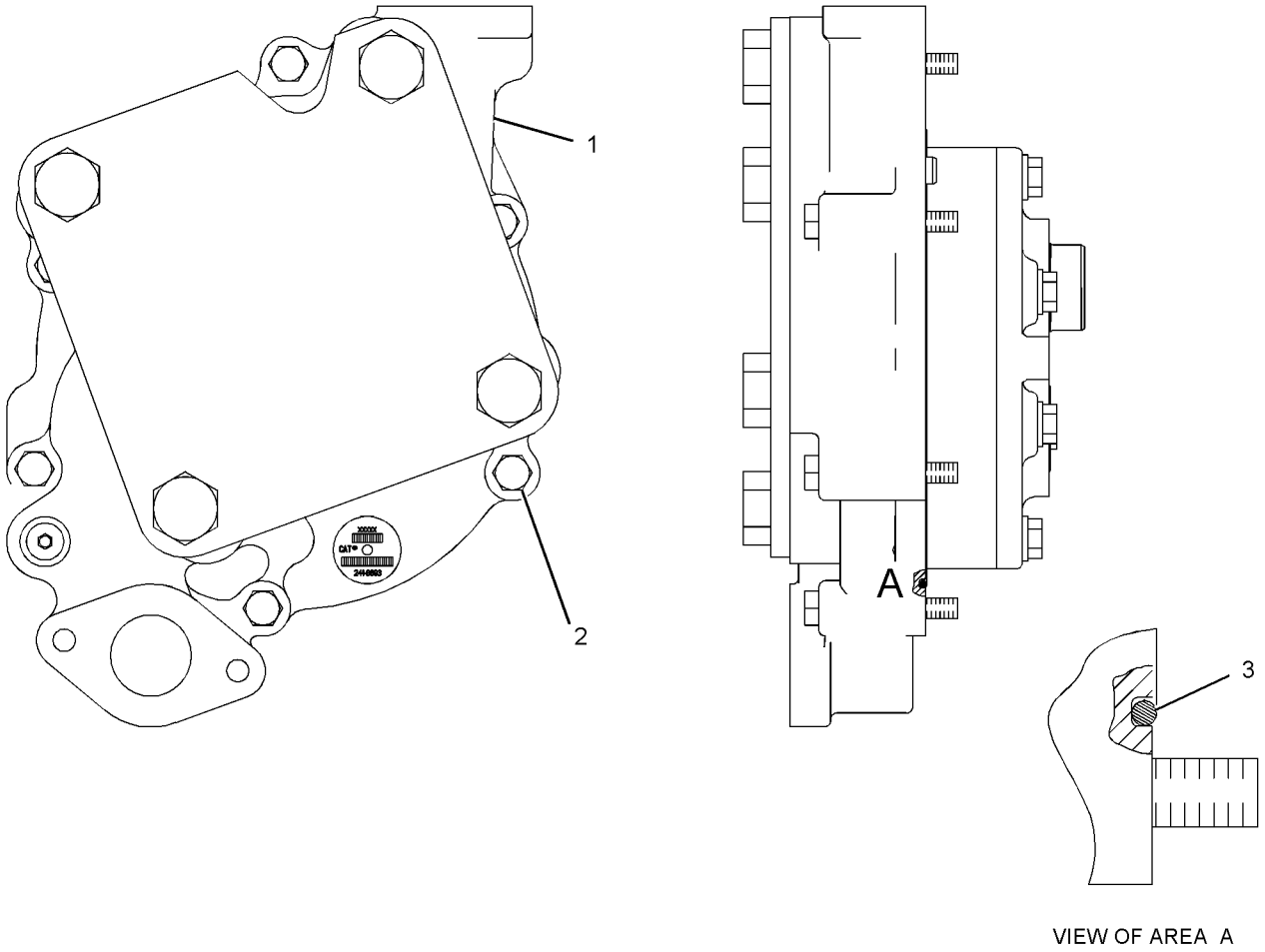

VIEW OF AREA A

GRAPHIC #1 **<END>** g01128148

241-8693 PUMP GP-TRANSMISSION

S/N: FAK1-UP

PART OF 241-8692 PUMP GP-TRANSMISSION

SMCS-3066 **i02250030**

NOTE	REF NO	GRAPHIC REF	PART NUMBER	QTY	PART NAME 1 2 3 4 5 6 (PRODUCT LEVEL)	SEE PAGE
M	1	1	**6V-7981**	6	BOLT (M10X1.5X70-MM)	
	2	1	**8P-1812**	1	COVER AS-OIL PUMP	
		1	**3P-7898**	2	BEARING-SLEEVE	
	3	1	**9G-7411**	1	GEAR-OIL PUMP DRIVE (17-TEETH)	
	4	1	**9G-7412**	1	GEAR AS-OIL PUMP (17-TEETH)	
		1	**2B-9373**	1	KEY-WOODRUFF	
	5	1	**122-6660**	1	BODY AS-OIL PUMP	
		1	**8M-8489**	4	DOWEL	
	6	1	**241-8694**	1	BODY AS	
		1	**1H-0974**	2	DOWEL	
		1	**3P-7898**	2	BEARING-SLEEVE	
	7	1	**6V-5839**	6	WASHER (11X21X2.5-MM THK)	

M-METRIC PART

241-8693 **PUMP GP-TRANSMISSION** *(contd.)* **i02250030**

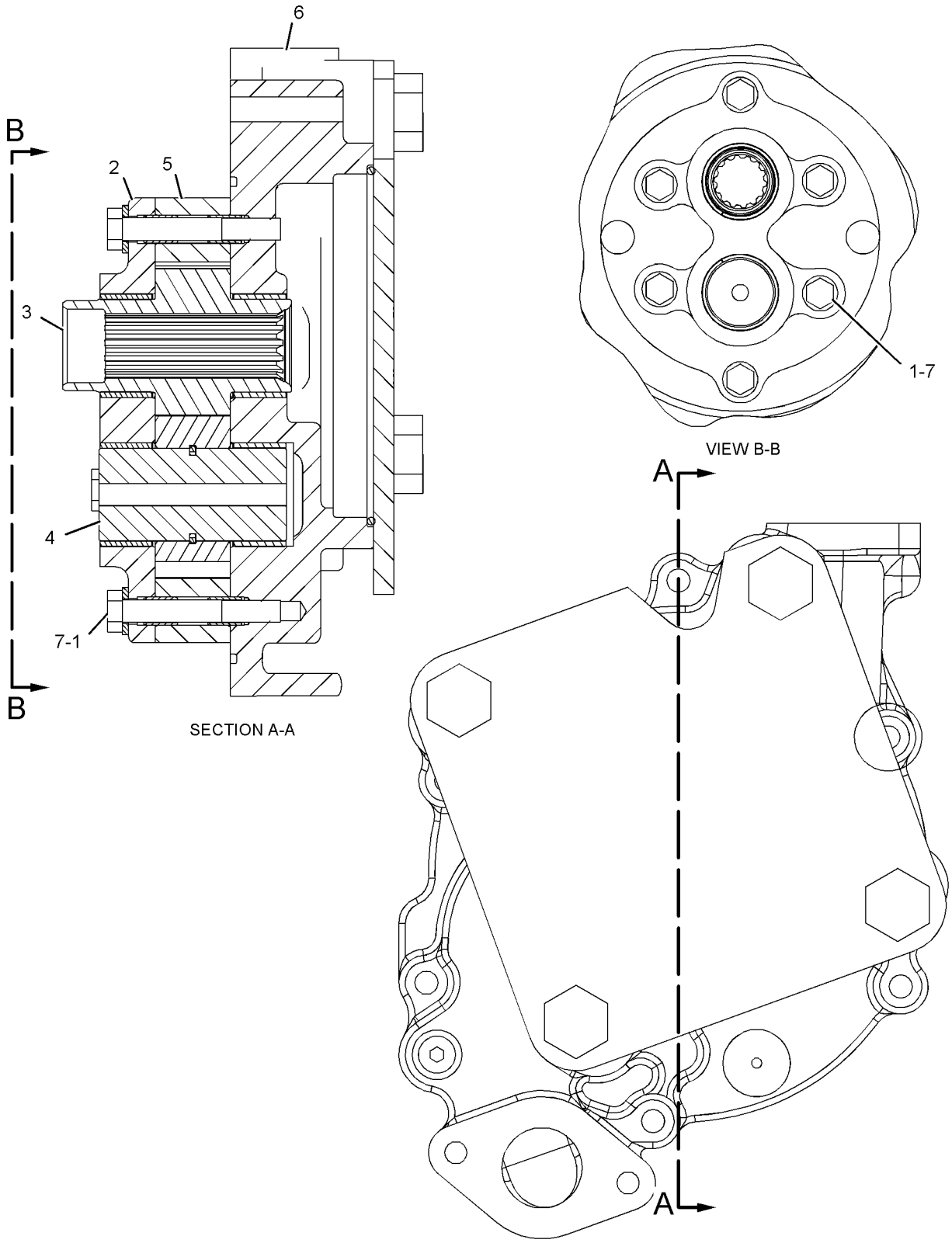

GRAPHIC #1 **<END>** g01128206

138-2373 RIM AR

S/N: M3G1-UP
19.50X25R - 5 PIECES
PART OF 138-2637, 138-2738, 138-2758, 138-2795, 138-2796, 138-2917, 139-6144, 139-6146, 139-6148, 139-6150, 139-6151, 141-0312, 142-1390, 142-1391, 142-5905, 231-4157, 231-4159, 245-9811 TIRE & RIM AR
AN ATTACHMENT

SMCS-4209 **i01674495**

NOTE	PART NUMBER	QTY	PART NAME 1 2 3 4 5 6 (PRODUCT LEVEL)	SEE PAGE
Y	*128-0678*	1	MOUNTING GP-RIM	310
Y	*206-9278*	4	RIM GP-DEMOUNTABLE	321

Y-SEPARATE ILLUSTRATION

<END>

206-9278 RIM GP-DEMOUNTABLE

S/N: M3G1-UP
19.5 X 25-3 PIECE
PART OF 138-2373 RIM AR
AN ATTACHMENT

SMCS-4209 **i02260730**

NOTE	REF NO	GRAPHIC REF	PART NUMBER	QTY	PART NAME 1 2 3 4 5 6 (PRODUCT LEVEL)	SEE PAGE
	1	1	**2D-2511**	1	VALVE GP-TIRE	
		1	**7D-5252**	1	SPUD AS	
		1	**2D-2508**	1	GROMMET	
		1	**2D-2509**	1	LOCKNUT (11/16-16-THD)	
	3	1	**206-9271**	1	RIM AS	
	4	1	**208-7472**	1	FLANGE AS	
	5	1	**7D-7469**	1	RING-LOCK	
	6	1	**2D-2443**	1	SEAL-O-RING	

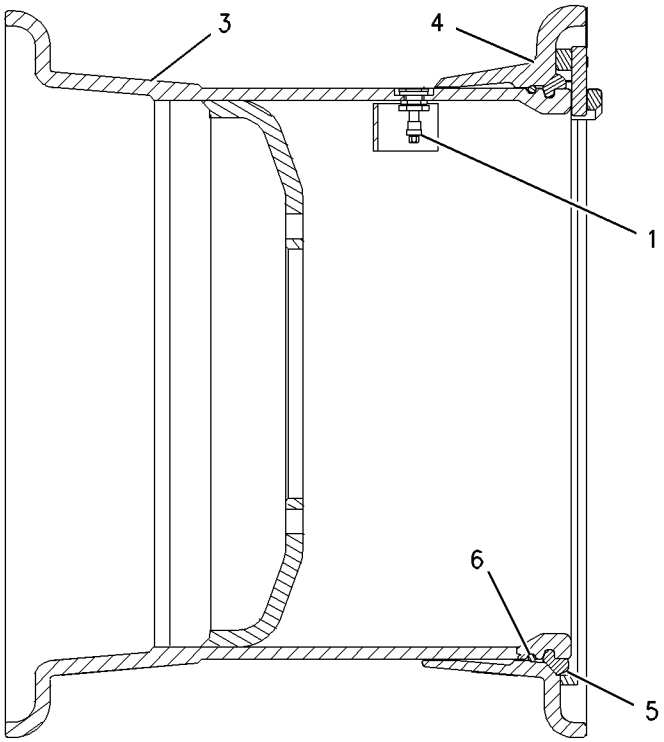

GRAPHIC #1 **<END>** g00946994

155-5600 SHAFT GP-DRIVE

S/N: M3G1-UP

PART OF 237-0271 POWER TRAIN AR

SMCS-3253 **i01700783**

NOTE	REF NO	GRAPHIC REF	PART NUMBER	QTY	PART NAME 1 2 3 4 5 6 (PRODUCT LEVEL)	SEE PAGE
	1	1	**4E-3273**	4	STRAP	
M	2	1	**4E-5985**	8	BOLT-12 POINT HEAD (M10X1.25X20-MM)	
Y	3	1	**115-1650**	1	UNIVERSAL JOINT GP	337
Y	4	1	**155-5607**	1	SLIP JOINT GP	324
M	5	1	**7X-2564**	2	BOLT (M20X2.5X90-MM)	
	6	1	**8T-4123**	2	WASHER-PLATED (22X35X3.5-MM THK)	
M	7	1	**8T-4131**	2	NUT (M20X2.5-THD)	
Y	8	1	*155-5604*	1	SHAFT GP-DRIVE	323
	9	1	**4V-7081**	6	STRAP	
	10	1	**138-3816**	12	BOLT-12 POINT HEAD (M12X1.25X30-MM)	
	11	1	**8T-5439**	2	WASHER (21.5X45X6-MM THK)	

M-METRIC PART
Y-SEPARATE ILLUSTRATION

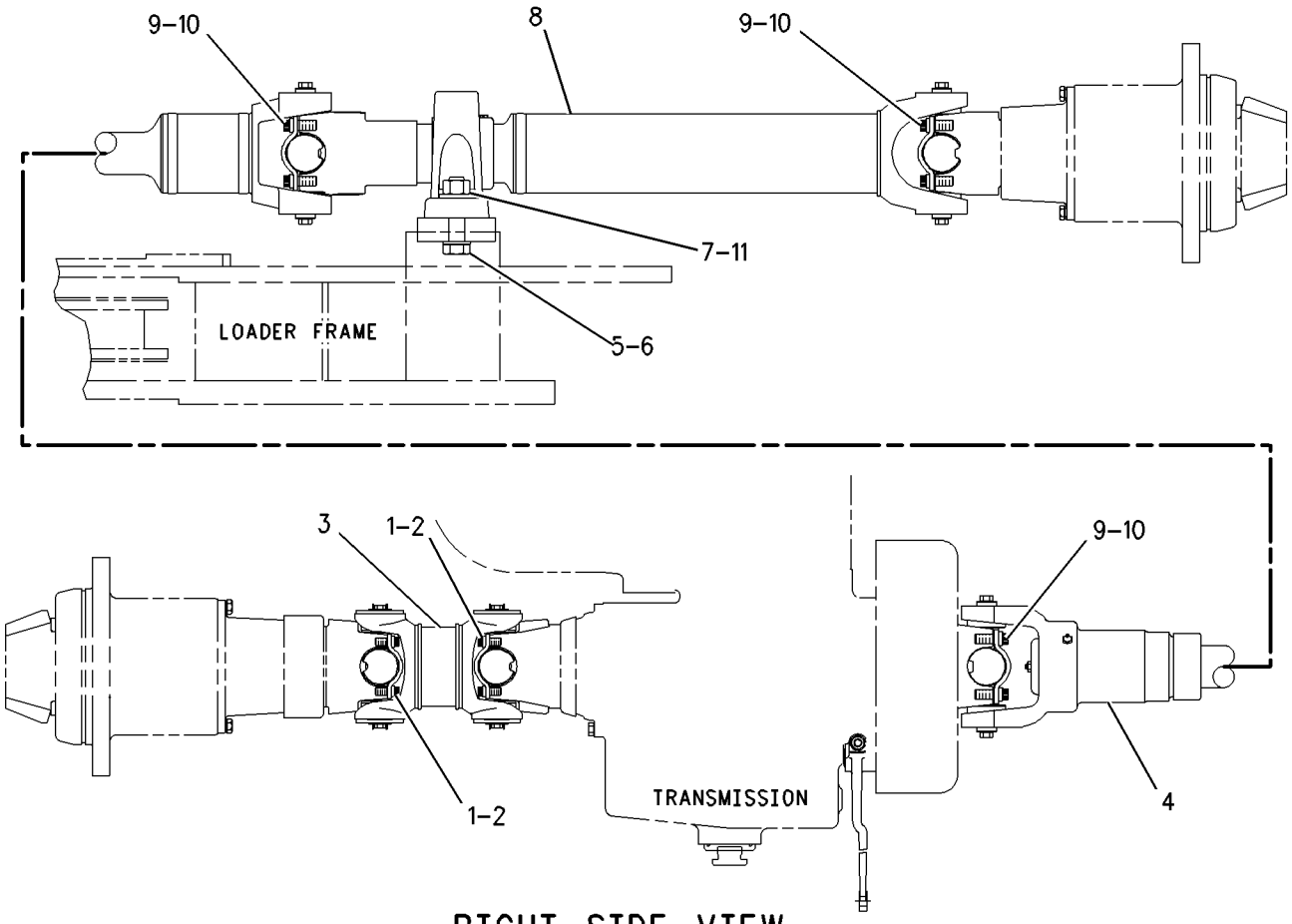

RIGHT SIDE VIEW

GRAPHIC #1 **<END>** g00875843

155-5604 SHAFT GP-DRIVE

S/N: M3G1-UP

PART OF 155-5600 SHAFT GP-DRIVE

SMCS-3253 **i01556536**

NOTE	REF NO	GRAPHIC REF	PART NUMBER	QTY	PART NAME 1 2 3 4 5 6 (PRODUCT LEVEL)	SEE PAGE
M	1	1	**8T-0372**	1	BOLT (M12X1.75X90MM)	
Y	2	1	**155-5605**	1	UNIVERSAL JOINT GP	338
J	3	1	**112-8971**	1	BEARING GP-PILLOW BLOCK	
		1	**102-9542**	2	FITTING	
	4	1	**155-5606**	1	YOKE	
	5	1	**4E-6986**	1	RETAINER	
					AVAILABLE REPAIR KIT(S):	
J			**197-7996**	1	KIT-SETSCREW	
					(INCLUDES 2 SETSCREW-SOCKETS, SETSCREW-LOCK, NUT & NUT-HEX)	

J-GP MARKED J INCLUDES KIT MARKED J
M-METRIC PART
Y-SEPARATE ILLUSTRATION

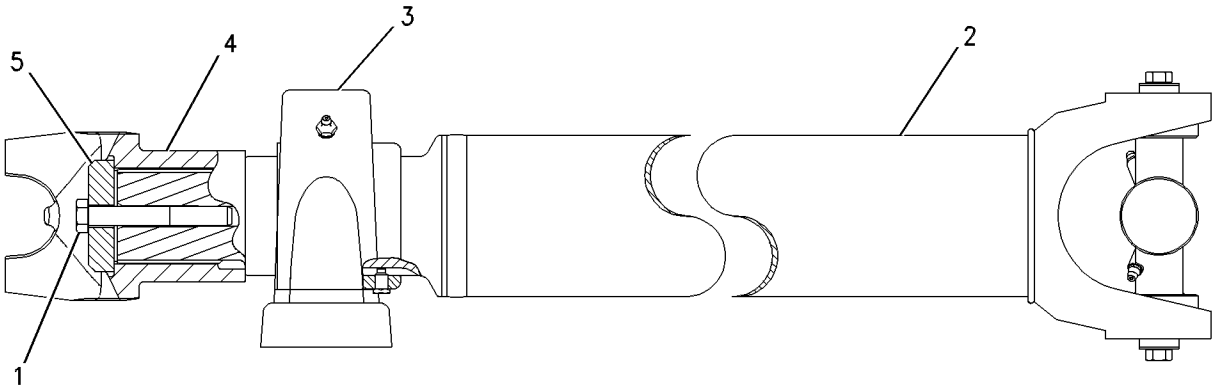

GRAPHIC #1 **<END>** g00387018

155-5607 SLIP JOINT GP

S/N: M3G1-UP

PART OF 155-5600 SHAFT GP-DRIVE

SMCS-3251 **i02119403**

NOTE	REF NO	GRAPHIC REF	PART NUMBER	QTY	PART NAME 1 2 3 4 5 6 (PRODUCT LEVEL)	SEE PAGE
	1	1	**3B-8489**	1	FITTING-GREASE	
Y	2	1	**125-8810**	2	SPIDER & BEARING GP	325
	3	1	**8V-1412**	1	RETAINER	
	4	1	**196-8490**	1	CAP-DUST	

Y-SEPARATE ILLUSTRATION

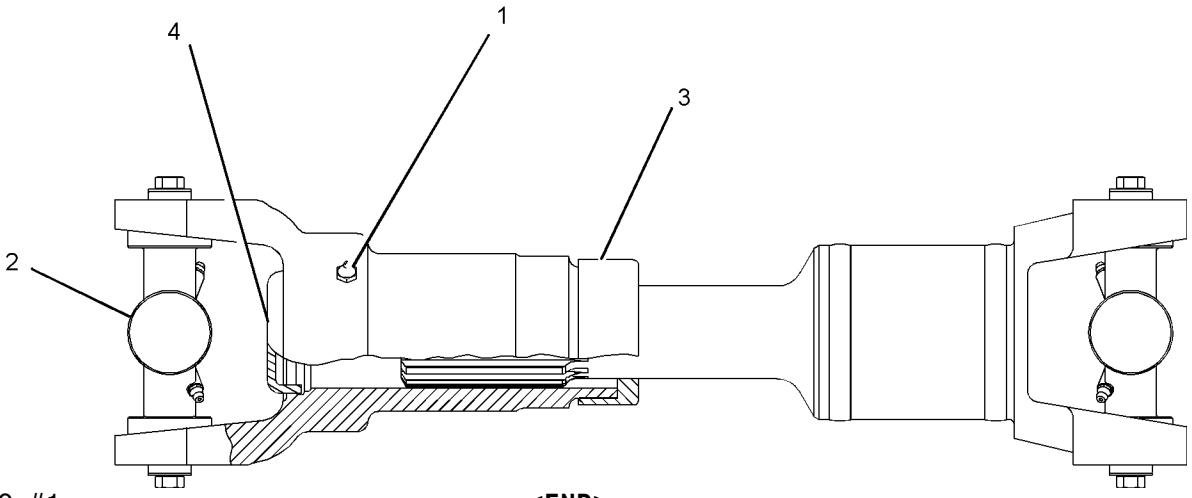

GRAPHIC #1 **<END>** g01015858

125-8810 SPIDER & BEARING GP

S/N: M3G1-UP

PART OF 155-5607 SLIP JOINT GP, 155-5605 UNIVERSAL JOINT GP

SMCS-3251, 3253 **i00811623**

NOTE	REF NO	GRAPHIC REF	PART NUMBER	QTY	PART NAME 1 2 3 4 5 6 (PRODUCT LEVEL)	SEE PAGE
M	1	1	**153-1185**	4	BOLT (HEX HEAD, M10X1.25X16-MM)	
	2	1	**027-1287**	2	FITTING-GREASE	
	3	1	**9C-9159**	2	PLATE	

M-METRIC PART

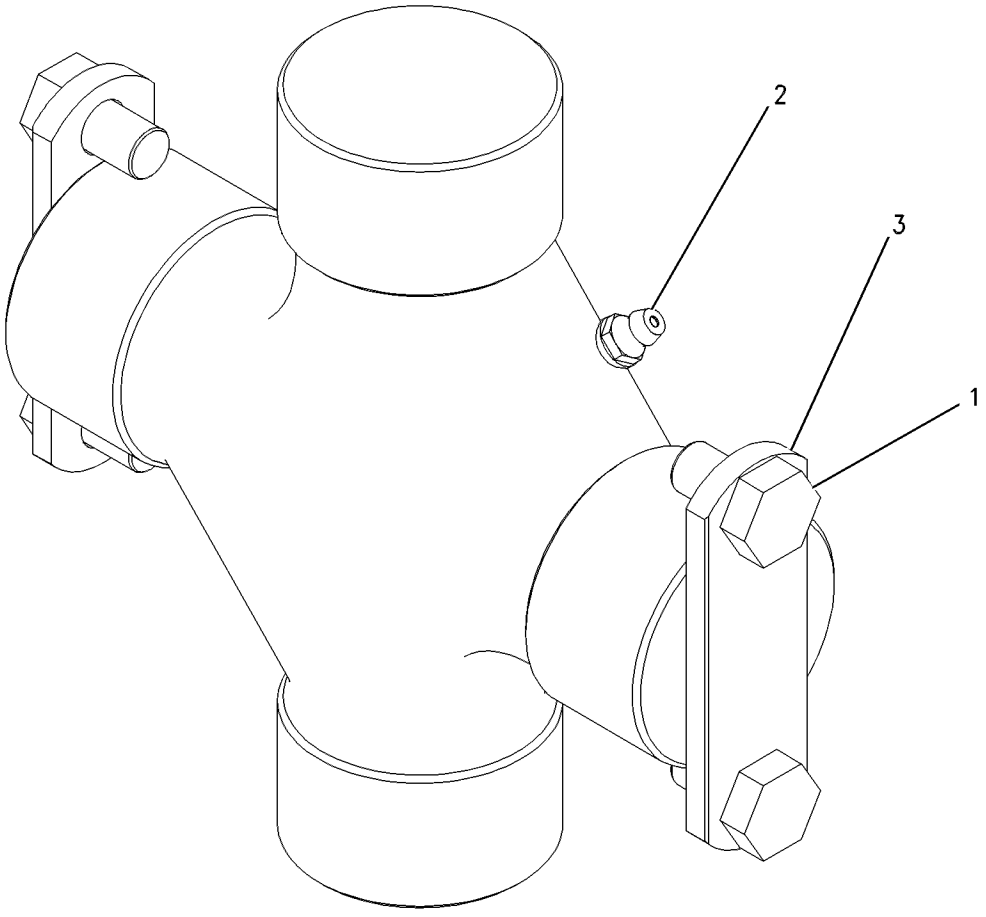

GRAPHIC #1 **<END>** g00389972

138-2637 TIRE & RIM AR

S/N: M3G1-UP
23.5-R25 1 STAR L2/3
AN ATTACHMENT

SMCS-4202 **i02454122**

NOTE	PART NUMBER	QTY	PART NAME 1 2 3 4 5 6 (PRODUCT LEVEL)	SEE PAGE
Y	*138-2373*	1	RIM AR	320
	127-4729	4	TIRE (23.5-25)	

Y-SEPARATE ILLUSTRATION

<END>

138-2738 TIRE & RIM AR

S/N: M3G1-UP
(23.5-25) 16 PR L-3
AN ATTACHMENT

SMCS-4202 **i02454128**

NOTE	PART NUMBER	QTY	PART NAME 1 2 3 4 5 6 (PRODUCT LEVEL)	SEE PAGE
Y	*138-2373*	1	RIM AR	320
	127-4731	4	TIRE (23.5-25)	

Y-SEPARATE ILLUSTRATION

<END>

138-2758 TIRE & RIM AR

S/N: M3G1-UP
23.5-25 16 PR L-3
AN ATTACHMENT

SMCS-4202 **i02454153**

NOTE	PART NUMBER	QTY	PART NAME 1 2 3 4 5 6 (PRODUCT LEVEL)	SEE PAGE
Y	*138-2373*	1	RIM AR	320
	127-4732	4	TIRE (23.5-25)	

Y-SEPARATE ILLUSTRATION

<END>

138-2795 TIRE & RIM AR

S/N: M3G1-UP
PART OF 163-4726 TIRE & RIM AR
AN ATTACHMENT

SMCS-4202 **i02286441**

NOTE	PART NUMBER	QTY	PART NAME 1 2 3 4 5 6 (PRODUCT LEVEL)	SEE PAGE
Y	*138-2373*	1	RIM AR	320
	6C-2791	4	TIRE (23.5-R25)	

Y-SEPARATE ILLUSTRATION

<END>

138-2796 TIRE & RIM AR

S/N: M3G1-UP
AN ATTACHMENT

SMCS-4202 **i02286446**

NOTE	PART NUMBER	QTY	PART NAME 1 2 3 4 5 6 (PRODUCT LEVEL)	SEE PAGE
Y	*138-2373*	1	RIM AR	320
	6C-7368	4	TIRE (23.5-R25)	

Y-SEPARATE ILLUSTRATION

<END>

138-2917 TIRE & RIM AR

S/N: M3G1-UP
PART OF 163-4725 TIRE & RIM AR
AN ATTACHMENT

SMCS-4202 **i02286458**

NOTE	PART NUMBER	QTY	PART NAME 1 2 3 4 5 6 (PRODUCT LEVEL)	SEE PAGE
Y	*138-2373*	1	RIM AR	320
	119-7463	4	TIRE (23.5-R25)	

Y-SEPARATE ILLUSTRATION

<END>

139-6144 TIRE & RIM AR

S/N: M3G1-UP
23.5-25 20 PR L-3
AN ATTACHMENT

SMCS-4202 **i02454157**

NOTE	PART NUMBER	QTY	PART NAME 1 2 3 4 5 6 (PRODUCT LEVEL)	SEE PAGE
Y	*138-2373*	1	RIM AR	320
	128-0911	4	TIRE (23.5-25)	

Y-SEPARATE ILLUSTRATION

<END>

139-6146 TIRE & RIM AR

S/N: M3G1-UP
AN ATTACHMENT

SMCS-4202 **i02406800**

NOTE	PART NUMBER	QTY	PART NAME 1 2 3 4 5 6 (PRODUCT LEVEL)	SEE PAGE
Y	*138-2373*	1	RIM AR	320
	128-0912	4	TIRE (23.5-25)	

Y-SEPARATE ILLUSTRATION

<END>

139-6148 TIRE & RIM AR

S/N: M3G1-UP
23.5-25 20 PR L-3
AN ATTACHMENT

SMCS-4202 **i02454163**

NOTE	PART NUMBER	QTY	PART NAME 1 2 3 4 5 6 (PRODUCT LEVEL)	SEE PAGE
	176-2444	1	BLOCK GP-AXLE OSC LIMITER	
	178-9167	2	BAR	
Y	*138-2373*	1	RIM AR	320
	128-0913	4	TIRE (23.5-25)	

Y-SEPARATE ILLUSTRATION

<END>

139-6150 TIRE & RIM AR

S/N: M3G1-UP
AN ATTACHMENT

SMCS-4202 **i02286481**

NOTE	PART NUMBER	QTY	PART NAME 1 2 3 4 5 6 (PRODUCT LEVEL)	SEE PAGE
Y	*138-2373*	1	RIM AR	320
	176-2444	1	BLOCK GP-AXLE OSC LIMITER	
	178-9167	2	BAR	
	135-6337	4	TIRE (23.5-25)	

Y-SEPARATE ILLUSTRATION

<END>

139-6151 TIRE & RIM AR

S/N: M3G1-UP
23.5R25 * L-5
AN ATTACHMENT

SMCS-4202 **i02454168**

NOTE	PART NUMBER	QTY	PART NAME 1 2 3 4 5 6 (PRODUCT LEVEL)	SEE PAGE
Y	*176-2444*	1	BLOCK GP-AXLE OSC LIMITER	347
Y	*138-2373*	1	RIM AR	320
	9C-2230	4	TIRE (23.5-R25)	

Y-SEPARATE ILLUSTRATION

<END>

141-0312 TIRE & RIM AR

S/N: M3G1-UP
23.5-25 16 PR L-5
AN ATTACHMENT

SMCS-4202 **i02454170**

NOTE	PART NUMBER	QTY	PART NAME 1 2 3 4 5 6 (PRODUCT LEVEL)	SEE PAGE
Y	*138-2373*	1	RIM AR	320
	9K-0443	4	TIRE (23.5-25)	

Y-SEPARATE ILLUSTRATION

<END>

142-1390 TIRE & RIM AR

S/N: M3G1-UP
23.5-25 16 PR L-2
AN ATTACHMENT

SMCS-4202 **i02454172**

NOTE	PART NUMBER	QTY	PART NAME 1 2 3 4 5 6 (PRODUCT LEVEL)	SEE PAGE
Y	*138-2373*	1	RIM AR	320
	4K-9547	4	TIRE (23.5-25)	

Y-SEPARATE ILLUSTRATION

<END>

142-1391 TIRE & RIM AR

S/N: M3G1-UP
23.5-25 16 PR L-2
AN ATTACHMENT

SMCS-4202 **i02454178**

NOTE	PART NUMBER	QTY	PART NAME 1 2 3 4 5 6 (PRODUCT LEVEL)	SEE PAGE
Y	*138-2373*	1	RIM AR	320
	142-1392	4	TIRE (23.5-25)	

Y-SEPARATE ILLUSTRATION

<END>

142-5905 TIRE & RIM AR

S/N: M3G1-UP
AN ATTACHMENT

SMCS-4202 **i02286571**

NOTE	PART NUMBER	QTY	PART NAME 1 2 3 4 5 6 (PRODUCT LEVEL)	SEE PAGE
Y	*138-2373*	1	RIM AR	320
	140-8314		TIRE (23.5-25)	

Y-SEPARATE ILLUSTRATION

<END>

163-4725 TIRE & RIM AR

S/N: M3G1-UP
AN ATTACHMENT

SMCS-4202 **i02305717**

NOTE	PART NUMBER	QTY	PART NAME 1 2 3 4 5 6 (PRODUCT LEVEL)	SEE PAGE
Y	*138-2917*	1	TIRE & RIM AR	327

Y-SEPARATE ILLUSTRATION

<END>

163-4726 TIRE & RIM AR

S/N: M3G1-UP
AN ATTACHMENT

SMCS-4202 **i01860072**

NOTE	PART NUMBER	QTY	PART NAME 1 2 3 4 5 6 (PRODUCT LEVEL)	SEE PAGE
Y	*138-2795*	1	TIRE & RIM AR	326

Y-SEPARATE ILLUSTRATION

<END>

231-4157 TIRE & RIM AR

S/N: M3G1-UP
AN ATTACHMENT

SMCS-4202 **i02153481**

NOTE	PART NUMBER	QTY	PART NAME 1 2 3 4 5 6 (PRODUCT LEVEL)	SEE PAGE
Y	*138-2373*	1	RIM AR	320
	231-4156	4	TIRE (23.5-R25)	

Y-SEPARATE ILLUSTRATION

<END>

231-4159 TIRE & RIM AR

S/N: M3G1-UP
AN ATTACHMENT

SMCS-4202 **i02153536**

NOTE	PART NUMBER	QTY	PART NAME 1 2 3 4 5 6 (PRODUCT LEVEL)	SEE PAGE
Y	*138-2373*	1	RIM AR	320
	196-7867	4	TIRE (23.5-R25)	

Y-SEPARATE ILLUSTRATION

<END>

POWER TRAIN

245-9811 TIRE & RIM AR

S/N: M3G1-UP

AN ATTACHMENT

SMCS-4202 **i02140570**

NOTE	PART NUMBER	QTY	PART NAME 1 2 3 4 5 6 (PRODUCT LEVEL)	SEE PAGE
Y	*138-2373*	1	RIM AR	320
	245-9810	4	TIRE (23.5-R25)	

Y-SEPARATE ILLUSTRATION

<END>

241-9022 TORQUE CONVERTER & HOUSING GP–

FREEWHEEL STATOR

S/N: FAK1-UP

PART OF 237-8187 TRANSMISSION AR

SMCS-3101, 3105 **i02443611**

NOTE	REF NO	GRAPHIC REF	PART NUMBER	QTY	PART NAME 1 2 3 4 5 6 (PRODUCT LEVEL)	SEE PAGE
	1	1	**241-9023**	1	HOUSING-TORQUE CONVERTER	
	2	1	**137-4549**	1	GEAR-PUMP DRIVE (79-TEETH)	
M	3	1	**6V-1820**	6	BOLT (M10X1.5X30-MM)	
	4	1	**6V-5839**	14	WASHER (11X21X2.5-MM THK)	
	5	1	**5F-1678**	1	SEAL-O-RING	
M	6	1	**8T-0372**	1	BOLT (M12X1.75X90-MM)	
	7	1	**5P-8245**	1	WASHER-HARD (13.5X25.5X3-MM THK)	
	8	1	**115-2021**	1	FLANGE-PUMP DRIVE	
M	9	1	**6V-5696**	1	BOLT (M12X1.75X80-MM)	
	10	1	**2S-6408**	1	WASHER-RETAINING (0.531X3.25X0.438-IN THK)	
	11	1	**8E-7475**	1	GEAR-DRIVE (59-TEETH)	
M	12	1	**6V-5842**	8	BOLT (M10X1.5X40-MM)	
Y	13	1	**168-5223**	1	TORQUE CONVERTER GP (FREEWHEEL STATOR)	334
	14	1	**144-8299**	1	SEAL-O-RING	
	15	1	**1T-1639**	1	RING	
	16	1	**3T-9958**	1	SHAFT	
	17	1	**1T-0043**	1	BALL BEARING	
	18	1	**6V-3965**	1	FITTING AS (QUICK DISCONNECT)	
	19	1	**3J-1907**	2	SEAL-O-RING	
	20	1	**6V-0852**	1	CAP-DUST	
Y	21	1	**193-2550**	1	SENSOR GP-SPEED (TORQUE CONVERTER OUTPUT)	184
	22	1	**6V-0484**	1	ADAPTER-O-RING	
	23	1	**8S-6365**	1	PLUG-CUP	
	24	1	**9X-8268**	1	WASHER (17.5X30X3.5-MM THK)	
	25	1	**1V-6341**	1	SEAL	

M-METRIC PART
Y-SEPARATE ILLUSTRATION

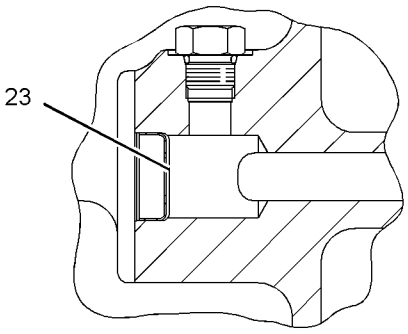

SECTION C-C

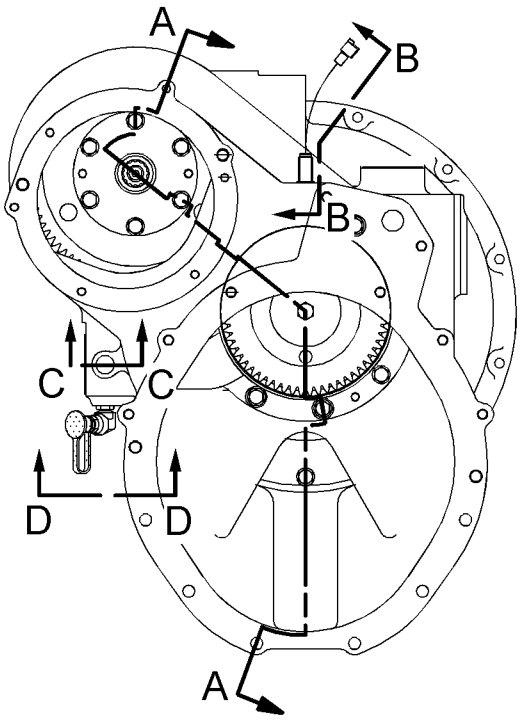

FRONT VIEW

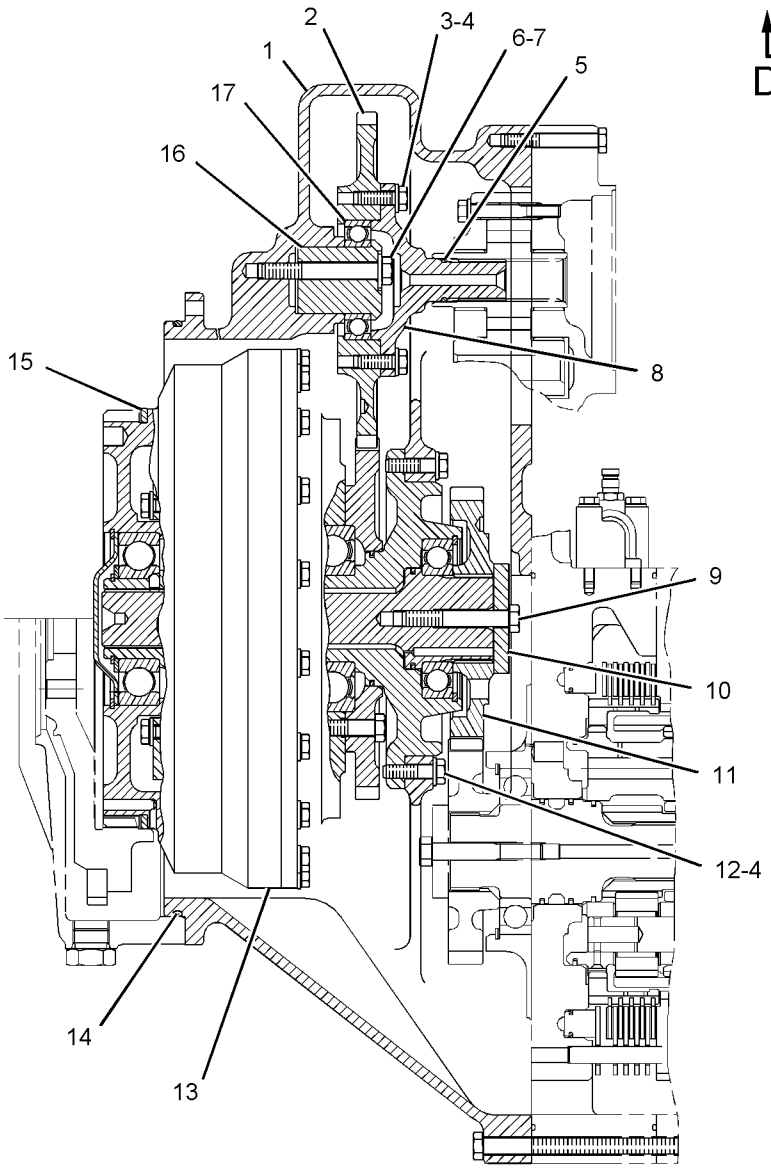

SECTION A-A

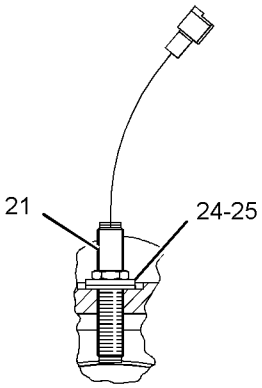

SECTION B-B

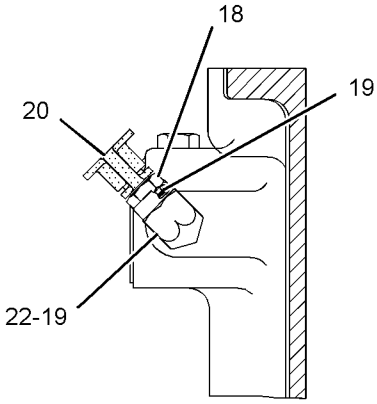

SECTION D-D

GRAPHIC #1 **<END>** g01122937

168-5223 TORQUE CONVERTER GP—FREEWHEEL STATOR

S/N: CJF1-UP

PART OF 241-9022 TORQUE CONVERTER & HOUSING GP

SMCS-3101 **i01857735**

NOTE	REF NO	GRAPHIC REF	PART NUMBER	QTY	PART NAME 1 2 3 4 5 6 (PRODUCT LEVEL)	SEE PAGE
	1	1	**6Y-4859**	1	HOUSING	
M	2	1	**6V-1820**	34	BOLT (M10X1.50X30MM)	
	3	1	**6V-5839**	34	WASHER (11X21X2.5MM THK)	
	4	1	**6Y-1085**	1	IMPELLER-CONVERTER	
	5	1	**137-4548**	1	GEAR-DRIVE (79 TEETH)	
	6	1	**1T-1621**	1	RING-SEAL	
	7	1	**171-1413**	1	CARRIER AS	
		1	**4S-8541**	1	DOWEL	
	8	1	**115-2023**	1	SHAFT-OUTPUT	
	9	1	**5P-6414**	3	RING-RETAINING	
	10	1	**1S-3743**	1	BALL BEARING	
	11	1	**1T-1622**	1	RING-SEAL	
M	12	1	**6V-7673**	8	BOLT (M12X1.75X50MM)	
	13	1	**129-2380**	1	BALL BEARING	
	14	1	**194-4411**	2	WASHER-THRUST	
	15	1	**6Y-3151**	1	STATOR-CONVERTER	
	16	1	**6Y-3149**	1	TURBINE-CONVERTER	
	17	1	**5K-9065**	1	RING-RETAINING	
	18	1	**191-8720**	1	PLATE-SPLINED	
	19	1	**8E-6539**	1	HUB AS	
		1	**4S-8541**	1	DOWEL	
	20	1	**6Y-1087**	1	COVER-END	
	21	1	**064-3843**	1	RING-SNAP	
	22	1	**8E-6648**	1	SPACER (60.2X80X3MM THK)	
	23	1	**8E-5247**	1	BALL BEARING	
	24	1	**6V-8128**	1	RING-RETAINING	
	25	1	**3E-6799**	1	SEAL-O-RING	
	26	1	**141-0752**	1	SPACER	
	27	1	**8P-7857**	9	ROLLER-FREEWHEEL	
	28	1	**8P-7858**	9	SPRING-FREEWHEEL	
	29	1	**7G-8430**	1	CAM-FREEWHEEL	
	30	1	**141-1236**	1	RACE-FREEWHEEL	

M-METRIC PART

168-5223 TORQUE CONVERTER GP *(contd.)* i01857735

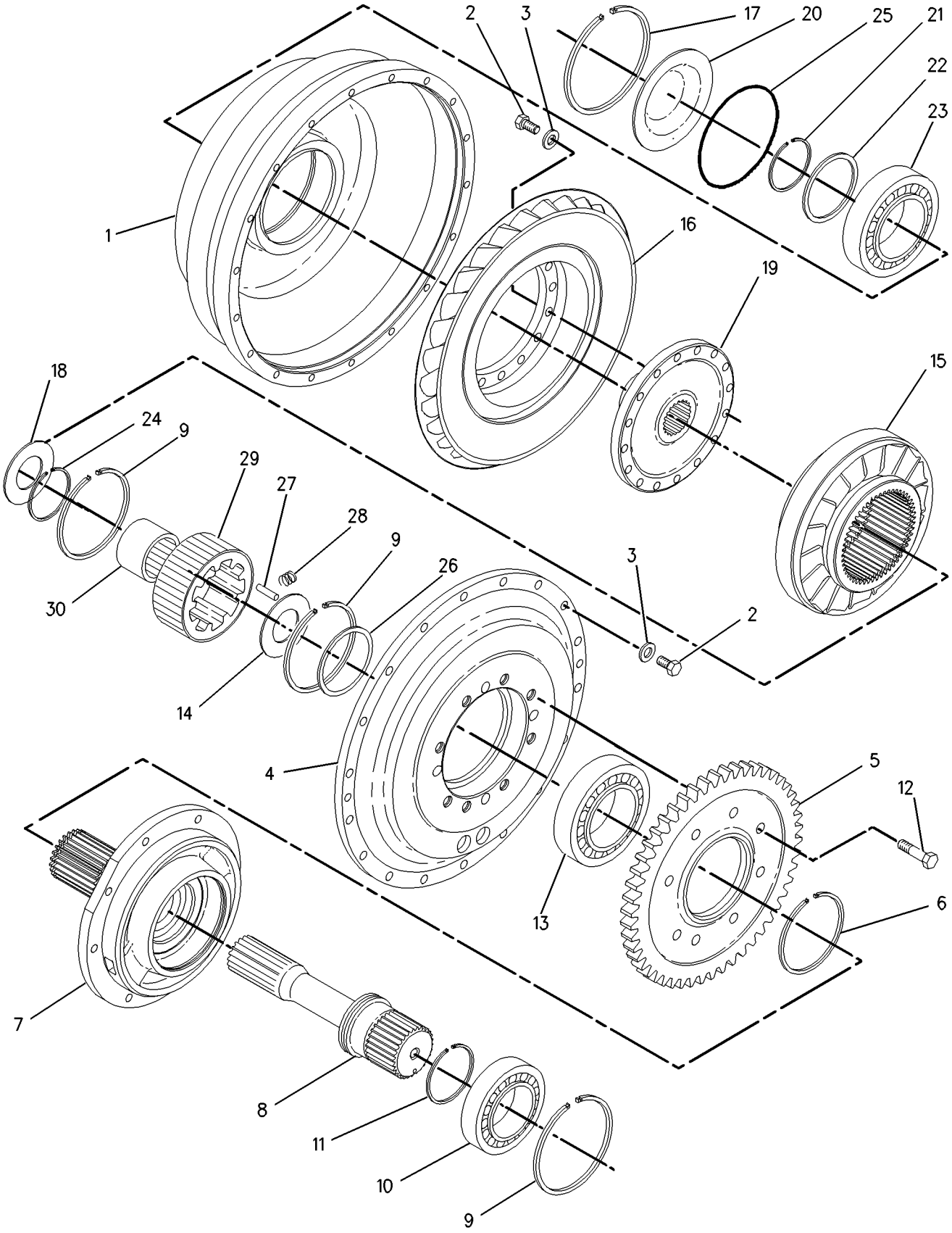

GRAPHIC #1 **<END>** g00847977

237-8187 TRANSMISSION AR–
FREEWHEEL STATOR TORQUE CONVERTER
S/N: FAK1-UP
PART OF 237-0271 POWER TRAIN AR

SMCS-3030 **i02207629**

NOTE	PART NUMBER	QTY	PART NAME 1 2 3 4 5 6 (PRODUCT LEVEL)	SEE PAGE
Y	*247-7830*	1	CONTROL GP-TRANSMISSION HYD	273
Y	*249-8175*	1	GEAR GP-OUTPUT TRANSFER	292
Y	*186-2522*	1	PLANETARY GP-TRANSMISSION	311
Y	*241-8692*	1	PUMP GP-TRANSMISSION	317
Y	*241-9022*	1	TORQUE CONVERTER & HOUSING GP (FREE WHEEL STATOR)	332

Y-SEPARATE ILLUSTRATION

<END>

115-1650 UNIVERSAL JOINT GP

S/N: M3G1-UP

PART OF 155-5600 SHAFT GP-DRIVE

SMCS-3251, 3253 **i00791619**

NOTE	REF NO	GRAPHIC REF	PART NUMBER	QTY	PART NAME 1 2 3 4 5 6 (PRODUCT LEVEL)	SEE PAGE
	1	1	**4E-9324**	2	SPIDER & BEARING GP	
					(EACH INCLUDES)	
M	2	1	**3E-4315**	4	BOLT-LOCKING (M8X1X14MM)	
	3	1	**6W-4126**	2	STRAP-LOCKING	
	4	1	**5P-8334**	1	FITTING-HYDRAULIC	

M-METRIC PART

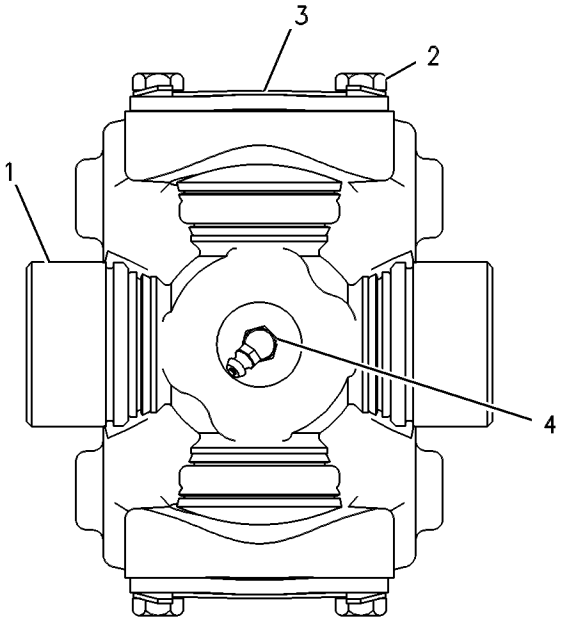

GRAPHIC #1 **<END>** g00269207

155-5605 UNIVERSAL JOINT GP

S/N: M3G1-UP

PART OF 155-5604 SHAFT GP-DRIVE

SMCS-3251, 3253 **i00811622**

NOTE	REF NO	GRAPHIC REF	PART NUMBER	QTY	PART NAME 1 2 3 4 5 6 (PRODUCT LEVEL)	SEE PAGE
Y	1	1	**125-8810**	1	SPIDER & BEARING GP	325

Y-SEPARATE ILLUSTRATION

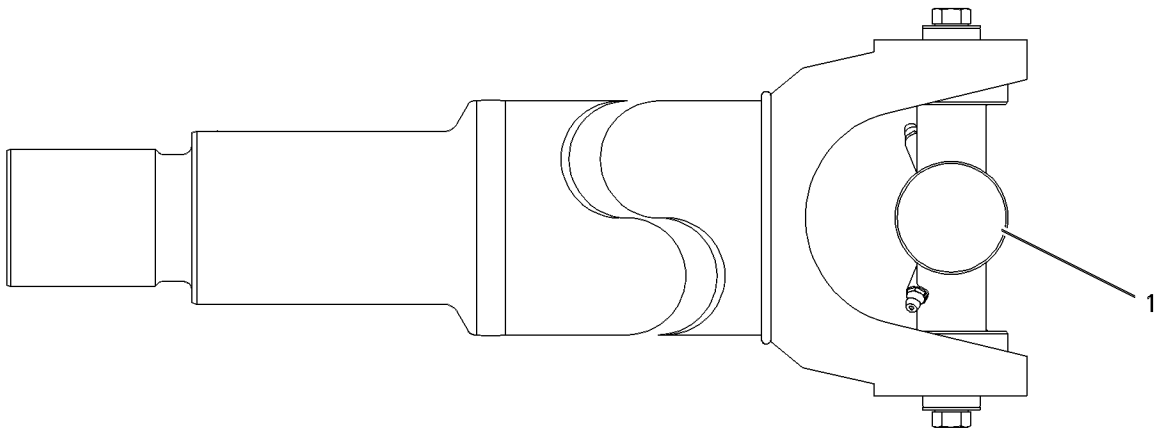

GRAPHIC #1 **<END>** g00387017

244-3114 VALVE GP-MODULATING—TRANSMISSION CLUTCH

S/N: FAK1-UP
24-VOLT
PART OF 247-7830 CONTROL GP-TRANSMISSION HYD

SMCS-3139 **i02288028**

NOTE	REF NO	GRAPHIC REF	PART NUMBER	QTY	PART NAME 1 2 3 4 5 6 (PRODUCT LEVEL)	SEE PAGE
	1	1	**6V-3965**	1	FITTING AS (QUICK DISCONNECT)	
	2	1	**145-1144**	1	COIL AS	
	3	1	**3J-1907**	1	SEAL-O-RING	
	4	1	**164-2108**	1	WASHER (13.03X25.4X2.38-MM THK)	
	5	1	**167-9524**	1	NUT-SELF-LOCKING (1/2-28-THD)	

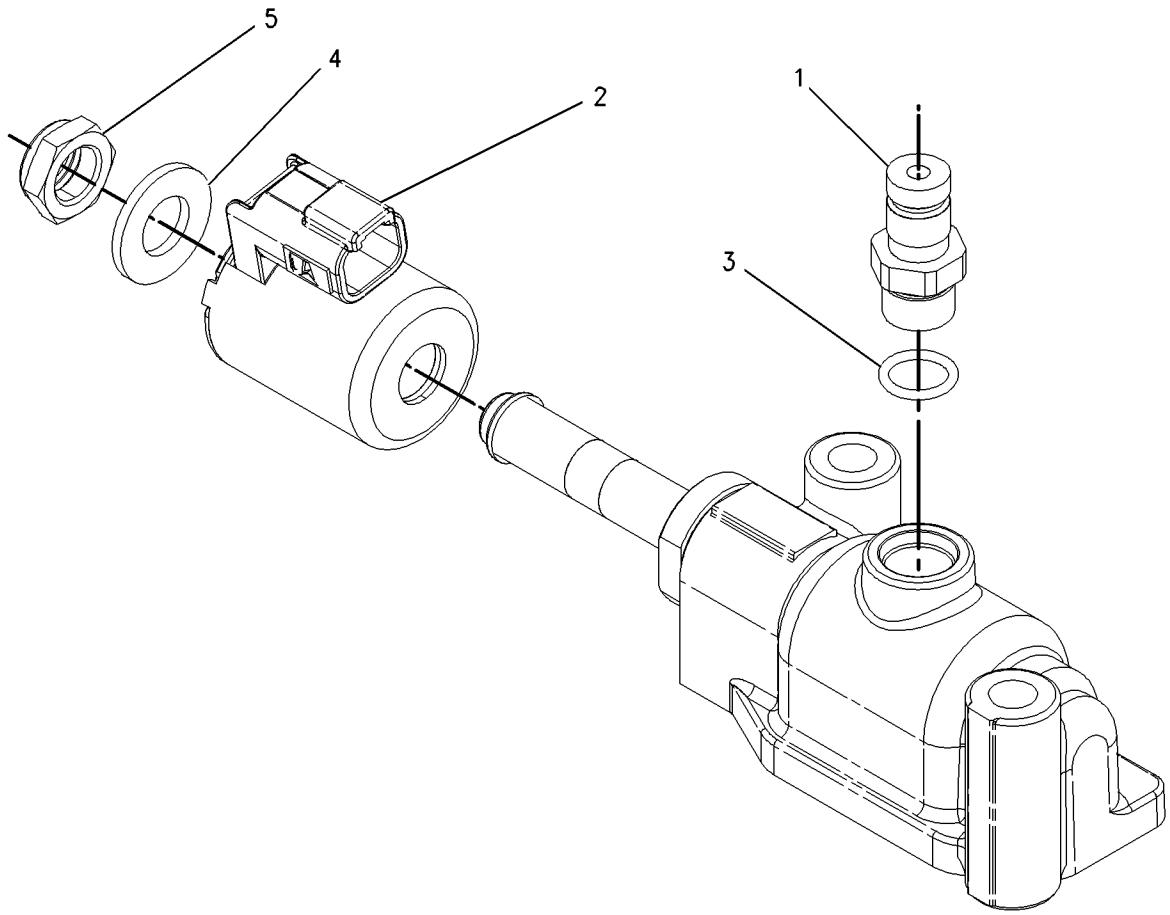

GRAPHIC #1 **<END>** g00919065

202-8933 VALVE GP-RELIEF—TRANSMISSION HYDRAULIC CONTROL

S/N: FAK1-UP

PART OF 247-7830 CONTROL GP-TRANSMISSION HYD

SMCS-3133, 3182, 3210, 3213 **i02288088**

NOTE	REF NO	GRAPHIC REF	PART NUMBER	QTY	PART NAME 1 2 3 4 5 6 (PRODUCT LEVEL)	SEE PAGE
	1	1	**2S-4663**	1	SEAL-O-RING	
	2	1	**6V-3965**	2	FITTING AS (QUICK DISCONNECT)	
	3	1	**3J-1907**	4	SEAL-O-RING	
	4	1	**6V-0852**	2	CAP-DUST	
	5	1	**9S-8006**	1	PLUG	
	6	1	**2M-9780**	1	SEAL-O-RING	
	7	1	**202-2005**	1	COVER	
	8	1	**9M-2110**	1	COVER-ADJUSTMENT	
	9	1	**9S-8001**	3	PLUG	
	10	1	**4J-7533**	3	SEAL-O-RING	
M	11	1	**6V-5218**	2	BOLT (M8X1.25X35-MM)	
	12	1	**9M-1974**	2	WASHER-HARD (8.8X16X2-MM THK)	
M	13	1	**6V-3940**	2	BOLT (M8X1.25X25-MM)	
	14	1	**8E-1143**	1	SLUG	
	15	1	**9U-8668**	1	SPOOL AS	
		1	**3D-8317**	1	RING-RETAINING	
		1	**4B-9880**	1	BALL	
		1	**4M-2381**	1	SPRING	
		1	**8E-9893**	1	SPOOL-RELIEF	
		1	**9U-8669**	1	RETAINER	
	16	1	**1M-9351**	1	SPRING	
	17	1	**2S-5835**	1	PISTON-LOAD	
	18	1	**202-2006**	1	SCREW-ADJUSTMENT	
	19	1	**8M-5253**	1	SEAL-O-RING	
	20	1	**6V-0484**	2	ADAPTER-O-RING	
	21	1	**111-3200**	1	BODY	

M-METRIC PART

202-8933 **VALVE GP-RELIEF** *(contd.)* **i02288088**

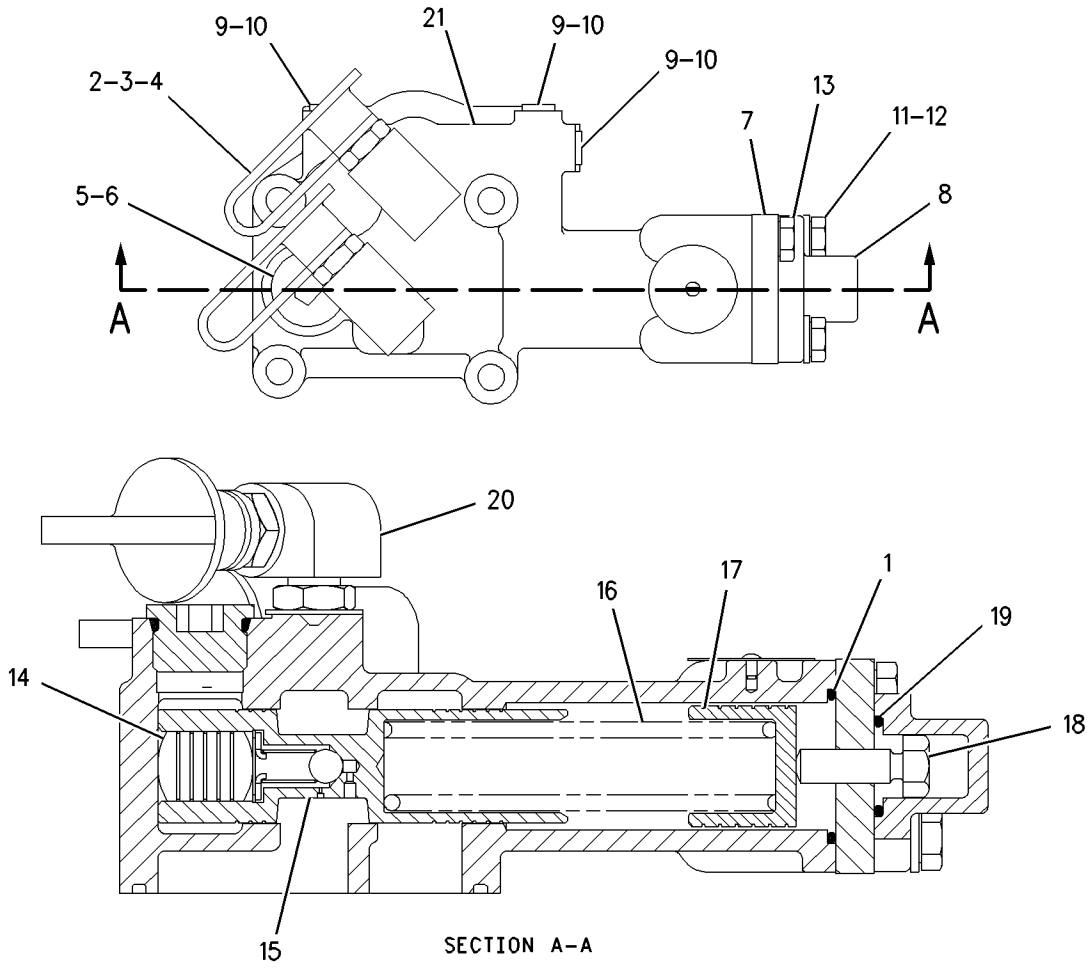

GRAPHIC #1 **<END>** g00905535

262-4914 ACTUATOR GP-HOOD TILT

S/N: M3G1-UP

PART OF 237-0969 TILT GP-HOOD

SMCS-1427, 7275 **i02284034**

NOTE	REF NO	GRAPHIC REF	PART NUMBER	QTY	PART NAME 1 2 3 4 5 6 (PRODUCT LEVEL)	SEE PAGE
	1	1	**117-1559**	1	MOUNT AS	
	2	1	**122-4233**	1	WIPER	
	3	1	**262-4917**	1	POST AS	
		1	**203-6473**	1	GASKET	
	4	1	**262-4918**	1	POWERHEAD AS	
JM	5	1	**179-4324**	2	LOCKNUT (M5X0.8-THD)	
J	6	1	**168-2166**	1	GASKET-MOTOR	
J	7	1	**203-6473**	1	GASKET	
	8	1	**205-6029**	1	MOTOR AS-ELECTRIC (HOOD TILT)	
		1	**8N-1540**	1	PIN-CONNECTOR	
		1	**8N-1541**	1	SOCKET-CONNECTOR (12-GA TO 14-GA)	
		1	**129-7163**	1	PLUG AS-CONNECTOR (1-PIN)	
		1	**129-7164**	1	RECEPTACLE AS-CONNECTOR (1-PIN)	
	9	1	**212-6854**	1	ROD END	
	10	1	**8T-4121**	4	WASHER-HARD (11X21X2.5-MM THK)	
M	11	1	**8T-4133**	4	NUT (M10X1.5 THD)	
M	12	1	**8T-4137**	2	BOLT (M10X1.5X20-MM)	
J	13	1	**171-3716**	1	GASKET-COVER	
					AVAILABLE REPAIR KIT(S):	
J			**203-6470**		KIT-GASKET	

J-KIT(S) MARKED J SERVICES PART(S) MARKED J
M-METRIC PART

262-4914 **ACTUATOR GP-HOOD TILT** *(contd.)* **i02284034**

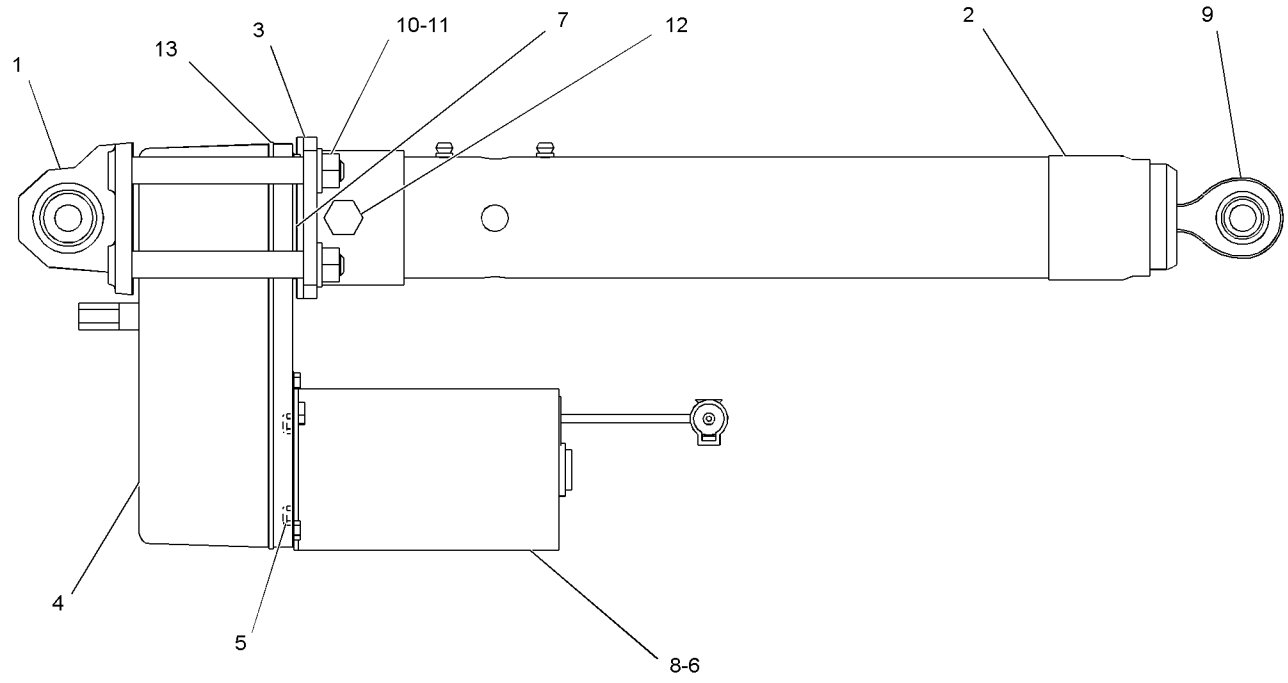

GRAPHIC #1 **<END>** g01128348

2Q-4181 ACTUATOR GP-POWER

S/N: M3G1-UP
PART OF 247-8561 ACTUATOR GP-POWER GUARD
AN ATTACHMENT

SMCS-1427, 7153 **i02307371**

NOTE	REF NO	GRAPHIC REF	PART NUMBER	QTY	PART NAME 1 2 3 4 5 6 (PRODUCT LEVEL)	SEE PAGE
	1	1	**2Q-4182**	1	ACTUATOR-POWER	
	2	1	**9W-0852**	2	PIN-CONNECTOR (14-GA)	
	3	1	**3E-3365**	1	WEDGE-RECEPTACLE LOCK (2-PIN)	
	4	1	**102-8802**	1	KIT-RECEPTACLE (2-PIN)	
					(INCLUDES RECEPTACLE AS AND WEDGE)	

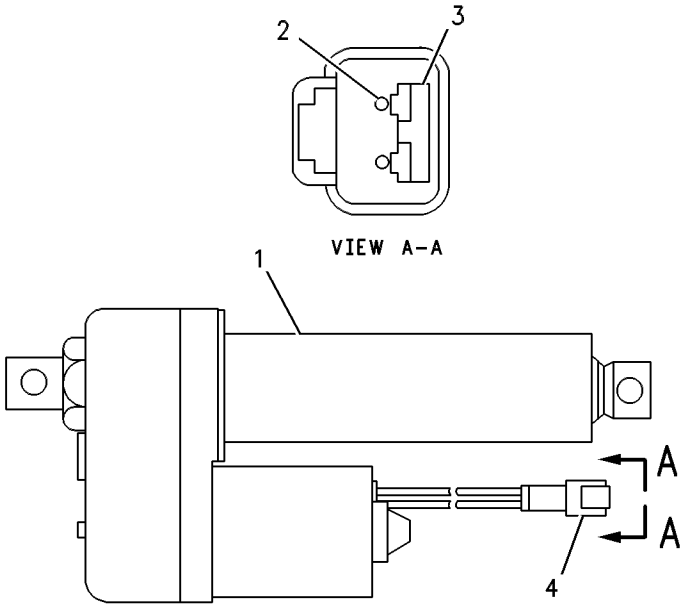

GRAPHIC #1 **<END>** g00121595

247-8561 ACTUATOR GP-POWER GUARD

S/N: M3G1-UP

PART OF 244-6607 WASTE HANDLING AR

AN ATTACHMENT

SMCS-1427, 7153 **i02306935**

NOTE	PART NUMBER	QTY	PART NAME 1 2 3 4 5 6 (PRODUCT LEVEL)	SEE PAGE
Y	*2Q-4181*	1	ACTUATOR GP-POWER	344
Y	*253-3945*	1	WIRING GP-WASTE HANDLER	263
M	**8T-4136**	1	BOLT (M10X1.5X25-MM)	
M	**8T-4183**	4	BOLT (M12X1.75X40-MM)	
	4S-1962	1	CLIP	
	5K-3294	2	CLIP	
M	**8T-4133**	1	NUT (M10X1.5 THD)	
	6B-2781	2	PIN	
	3B-4617	2	PIN-COTTER	
	250-2322	1	SUPPORT AS	
	8T-4121	2	WASHER-HARD (11X21X2.5-MM THK)	
	8T-4223	4	WASHER-HARD (13.5X25.5X3-MM THK)	

M-METRIC PART
Y-SEPARATE ILLUSTRATION

<END>

247-8559 BAFFLE GP

S/N: M3G1-UP
PART OF 244-6607 WASTE HANDLING AR
AN ATTACHMENT

SMCS-7076 **i02305489**

NOTE	REF NO	GRAPHIC REF	PART NUMBER	QTY	PART NAME 1 2 3 4 5 6 (PRODUCT LEVEL)	SEE PAGE
	1	1	**253-3555**	1	BAFFLE	

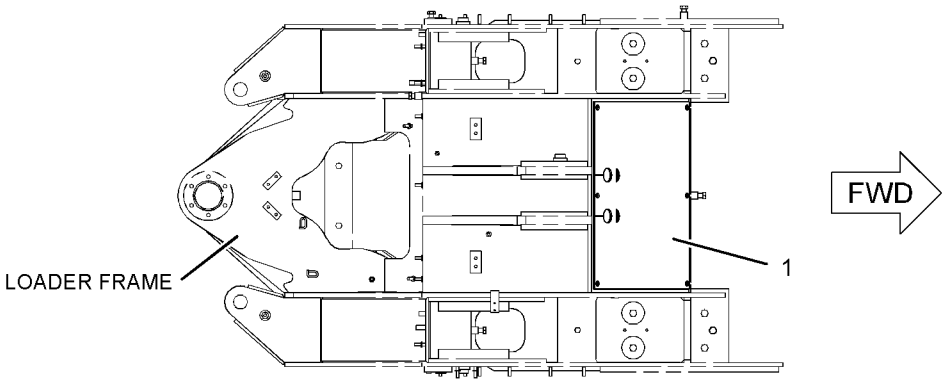

TOP VIEW

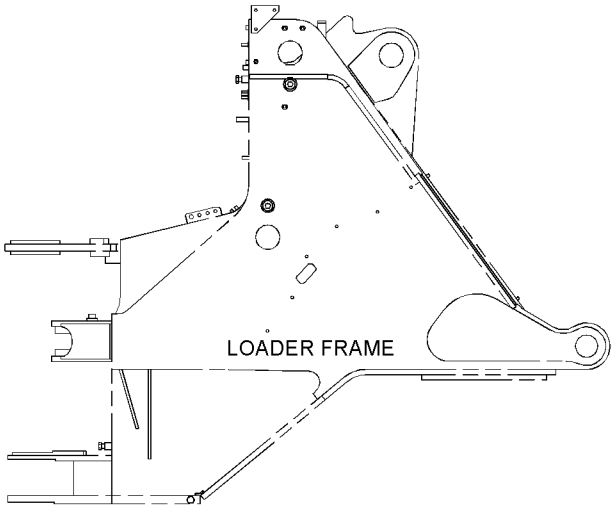

RIGHT SIDE VIEW

GRAPHIC #1 **<END>** g01134450

FRAME AND BODY

176-2444 BLOCK GP-AXLE OSC LIMITER

S/N: M3G1-UP

PART OF 139-6151 TIRE & RIM AR

AN ATTACHMENT

SMCS-3278, 7051 **i01857377**

NOTE	PART NUMBER	QTY	PART NAME 1 2 3 4 5 6 (PRODUCT LEVEL)	SEE PAGE
			(NO SERVICED PARTS)	

<END>

237-0423 BOX GP-BATTERY

S/N: M3G1-UP

PART OF 237-4933 CHASSIS AR

SMCS-7257 **i02444735**

NOTE	REF NO	GRAPHIC REF	PART NUMBER	QTY	PART NAME 1 2 3 4 5 6 (PRODUCT LEVEL)	SEE PAGE
	1	1	**8B-9294**	8	SPACER (13.5X38X30-MM THK)	
	2	1	**246-8110**	1	BOX AS-BATTERY	
	3	1	**275-5635**	1	COVER	
	4	1	**5P-1076**	8	WASHER-HARD (13.5X30X4-MM THK)	
	5	1	**8T-4121**	4	WASHER-HARD (11X21X2.5-MM THK)	
M	6	1	**8T-4137**	4	BOLT (M10X1.5X20-MM)	
M	7	1	**8T-4910**	8	BOLT (M12X1.75X60-MM)	

M-METRIC PART

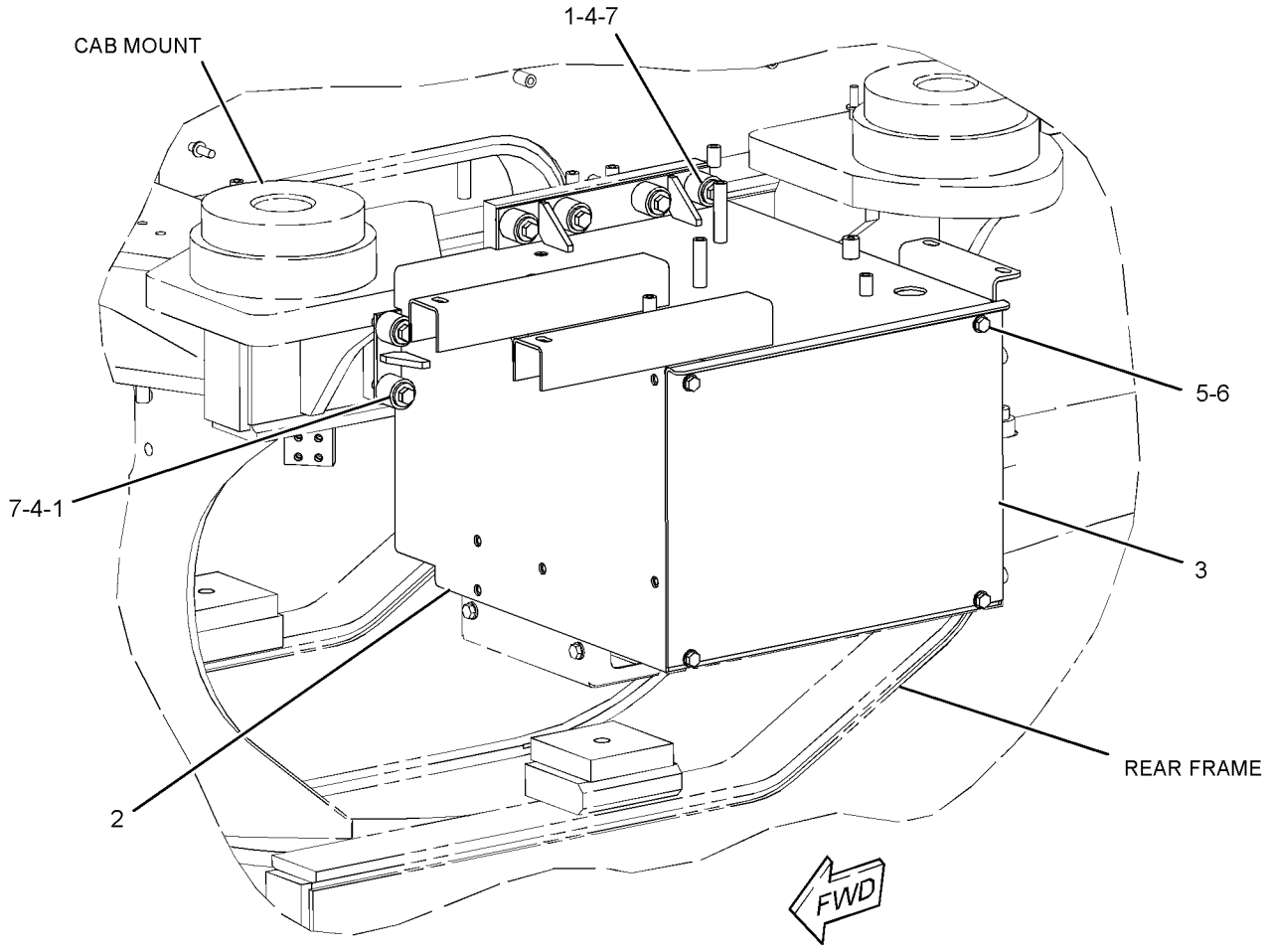

GRAPHIC #1 **<END>** g01219927

FRAME AND BODY

237-4948 COUNTERWEIGHT GP

S/N: M3G1-UP

PART OF 237-4933 CHASSIS AR

SMCS-7056 **i02304999**

NOTE	REF NO	GRAPHIC REF	PART NUMBER	QTY	PART NAME 1 2 3 4 5 6 (PRODUCT LEVEL)	SEE PAGE
	1	1	**103-5796**	1	PIN-KEEPER	
	2	1	**115-5669**	1	PIN	
	3	1	**265-7607**	1	COUNTERWEIGHT	
M	4	1	**7X-2586**	8	BOLT (M30X35X180-MM)	
	5	1	**9X-8258**	8	WASHER (33X56X6-MM THK)	

M-METRIC PART

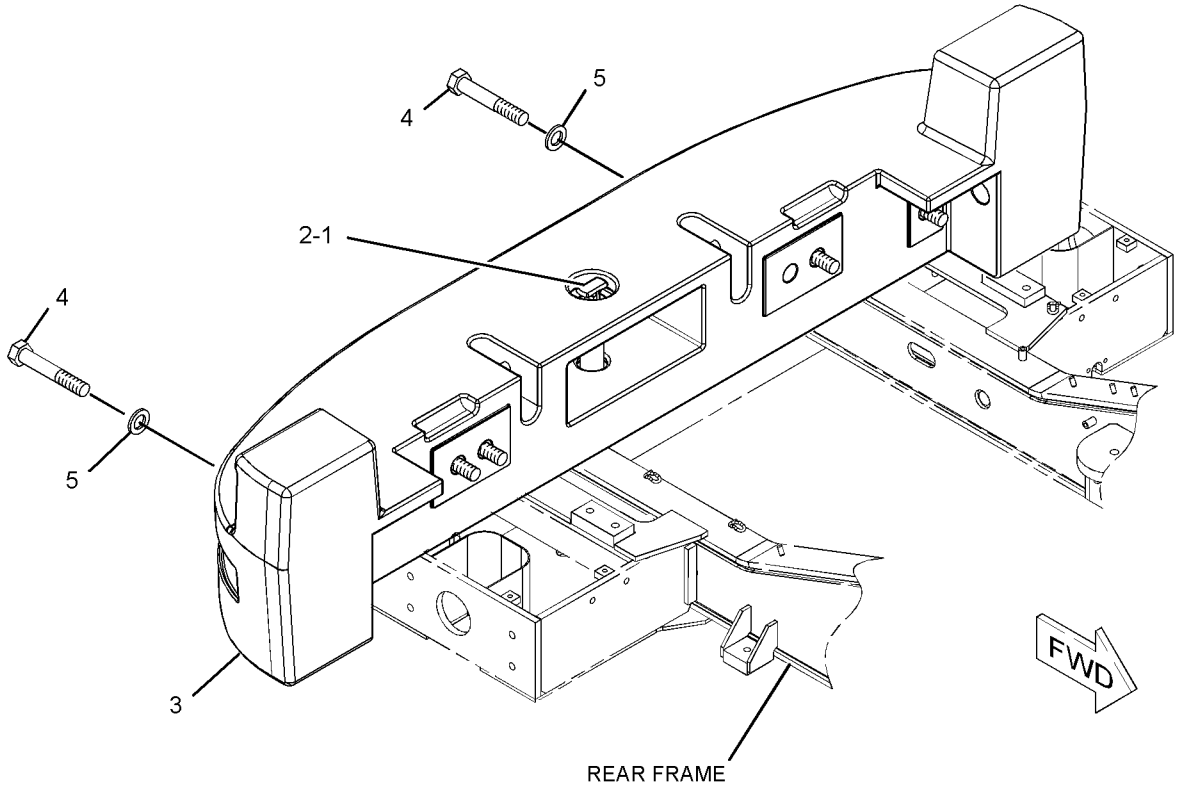

GRAPHIC #1 **<END>** g01133044

FRAME AND BODY

273-1131 COVER GP-BUMPER

S/N: M3G1-UP
PART OF 275-5865 LIGHTING AR-SIGNAL
AN ATTACHMENT

SMCS-7156 **i02444732**

NOTE	REF NO	GRAPHIC REF	PART NUMBER	QTY	PART NAME 1 2 3 4 5 6 (PRODUCT LEVEL)	SEE PAGE
	1	1	**270-8348**	2	COVER	
M	2	1	**9X-2044**	8	SCREW-TRUSS HEAD (M6X1X16-MM)	

M-METRIC PART

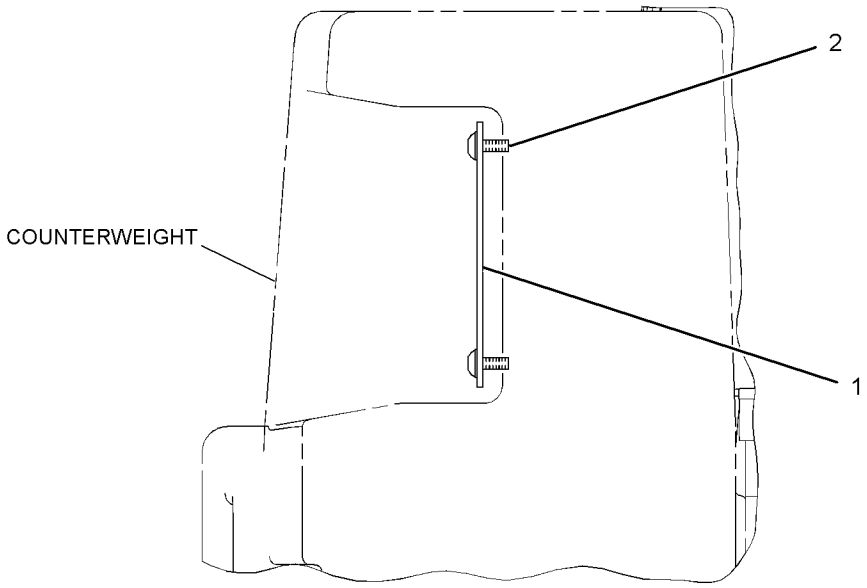

RIGHT SIDE VIEW

GRAPHIC #1 **<END>** g01224237

247-4668 DOOR GP-ACCESS—HOOD SIDE, RH

S/N: M3G1-UP

PART OF 251-1700, 275-8310 HOOD & GUARD GP

ALSO AN ATTACHMENT

SMCS-7273 **i02454188**

NOTE	REF NO	GRAPHIC REF	PART NUMBER	QTY	PART NAME 1 2 3 4 5 6 (PRODUCT LEVEL)	SEE PAGE
	1	1	**6V-4604**	1	RIVET-POP	
	2	1	**8V-7162**	1	CABLE	
	3	1	**9V-1820**	1	SPACER	
	4	1	**119-0281**	2	HINGE AS	
	5	1	**233-4463**	1	CAM	
	6	1	**233-4466**	1	LATCH AS	
	7	1	**247-4669**	1	DOOR-RH	

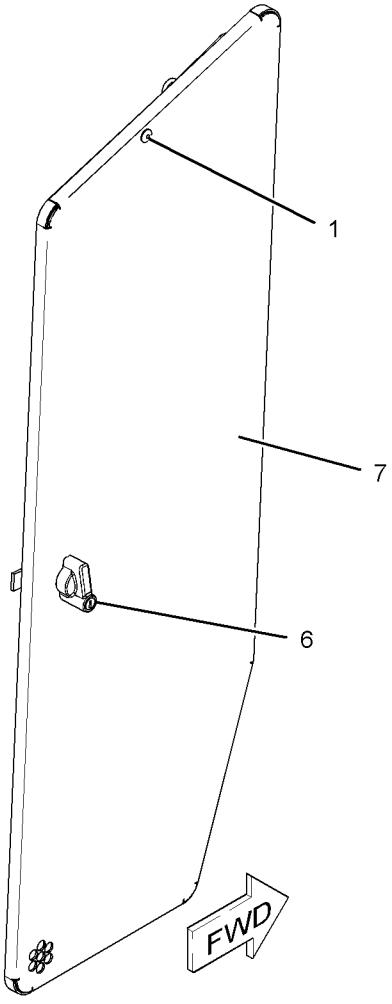

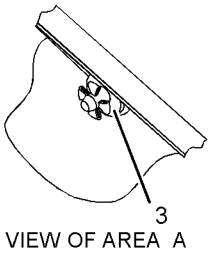

VIEW OF AREA A

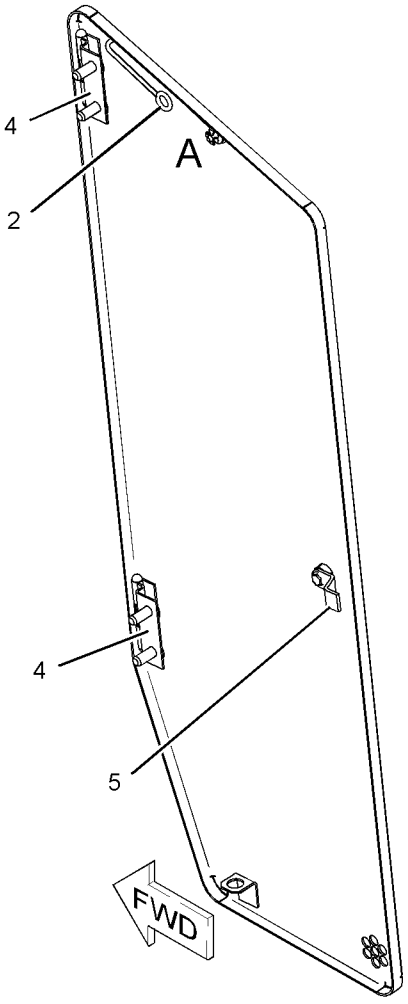

GRAPHIC #1

<END>

g01133480

247-4670 DOOR GP-ACCESS—HOOD SIDE, LH

S/N: M3G1-UP
PART OF 251-1700, 275-8310 HOOD & GUARD GP
ALSO AN ATTACHMENT

SMCS-7273 **i02454193**

NOTE	REF NO	GRAPHIC REF	PART NUMBER	QTY	PART NAME 1 2 3 4 5 6 (PRODUCT LEVEL)	SEE PAGE
	1	1	**6V-4604**	1	RIVET-POP	
	2	1	**8V-7162**	1	CABLE	
	3	1	**9V-1820**	1	SPACER	
	4	1	**119-0281**	2	HINGE AS	
	5	1	**233-4463**	1	CAM	
	6	1	**233-4466**	1	LATCH AS	
	7	1	**247-4671**	1	DOOR-LH	

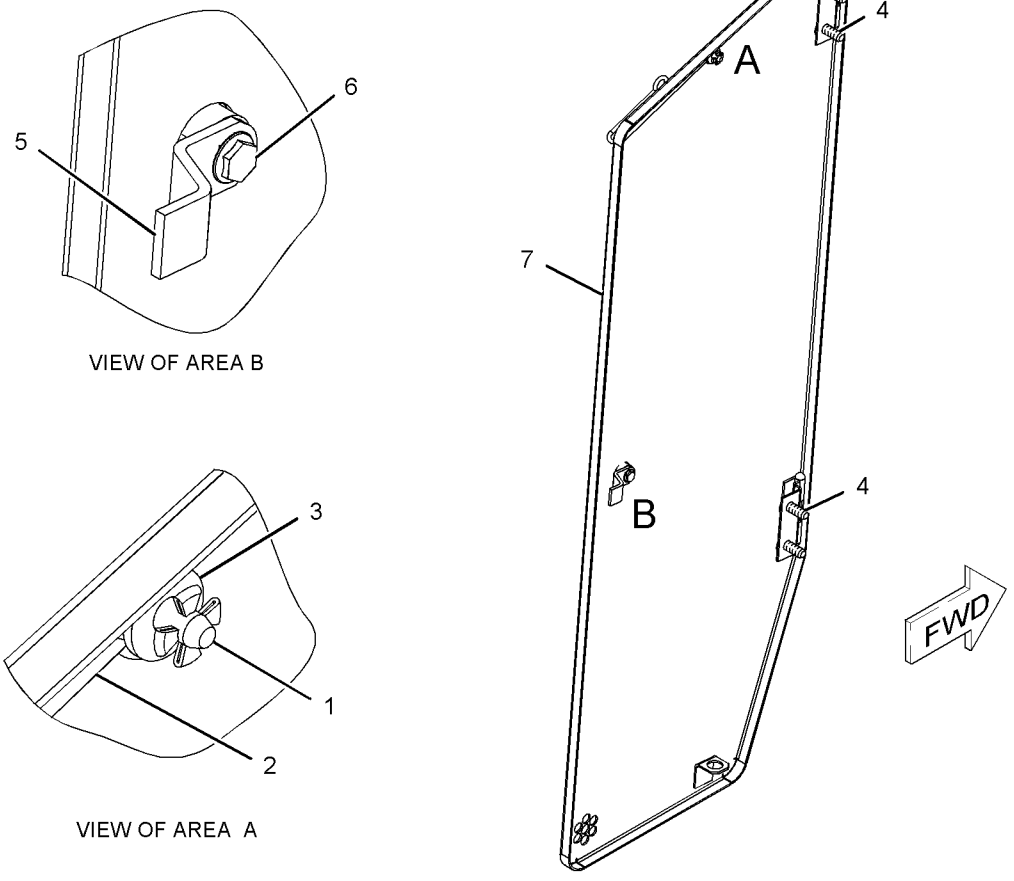

GRAPHIC #1 **<END>** g01133482

FRAME AND BODY

263-0056 FENDER AR-ROADING

S/N: M3G1-UP

AN ATTACHMENT

SMCS-7252 **i02308224**

NOTE	REF NO	GRAPHIC REF	PART NUMBER	QTY	PART NAME 1 2 3 4 5 6 (PRODUCT LEVEL)	SEE PAGE
Y	1	1	*246-8848*	1	FENDER GP-ROADING	360
Y	2	1	*260-1532*	1	HARDWARE GP-MOUNTING (FENDER)	384

Y-SEPARATE ILLUSTRATION

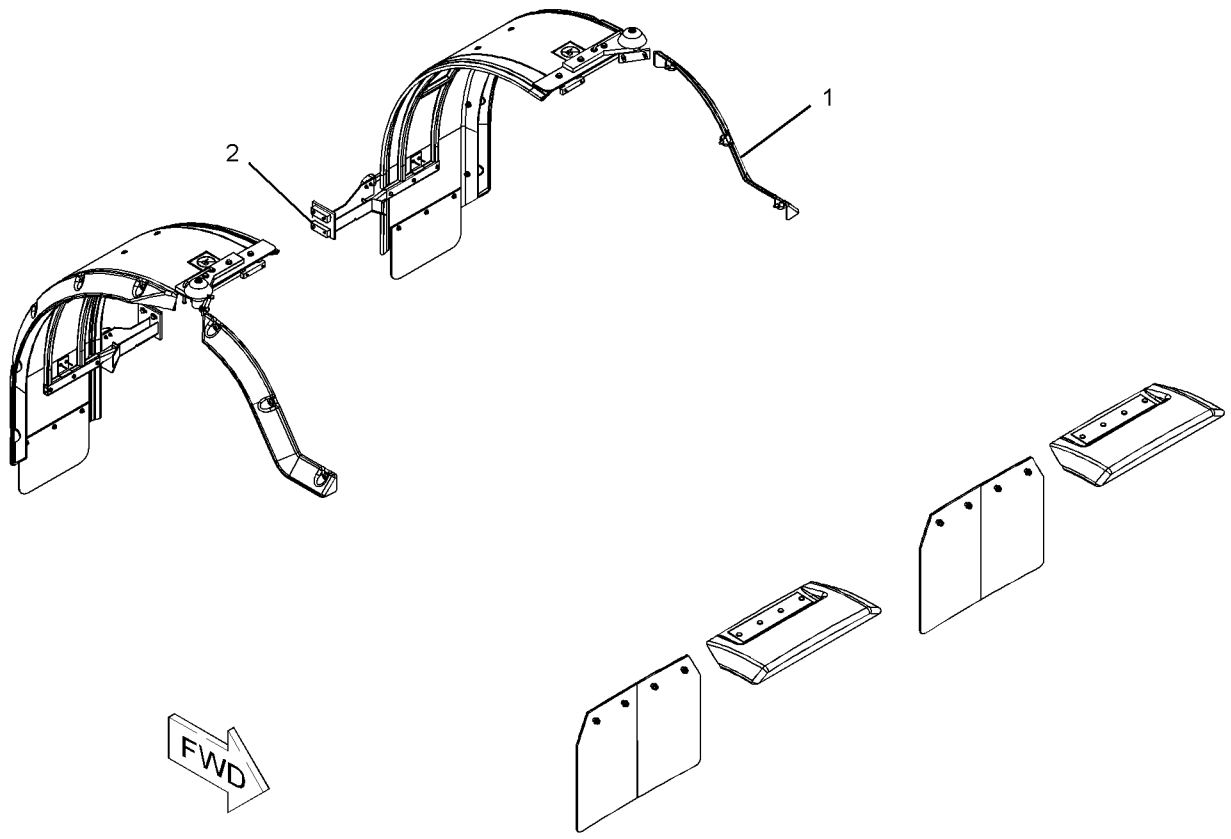

GRAPHIC #1 **<END>** g01134165

FRAME AND BODY

237-0424 FENDER GP

S/N: M3G1-UP

PART OF 237-4933 CHASSIS AR

SMCS-7252 **i02454196**

NOTE	REF NO	GRAPHIC REF	PART NUMBER	QTY	PART NAME 1 2 3 4 5 6 (PRODUCT LEVEL)	SEE PAGE
	1	1	**1K-8850**	1	SPRING	
	2	1	**172-6251**	1	FENDER AS-FRONT (LH)	
	3	1	**172-6252**	1	FENDER AS-FRONT (RH)	
	4	1	**243-5856**	1	FENDER AS-REAR (LH)	
		1	**4V-7785**	1	HINGE	
	5	1	**243-5857**	1	FENDER AS-REAR (RH)	
	6	2	**245-7727**	2	COVER	
	7	1	**247-8238**	1	DEFLECTOR AS-LH	
	8	1	**247-8239**	1	DEFLECTOR AS-RH	
					(EACH DEFLECTOR AS INCLUDES)	
M		1	**8T-3490**	4	NUT-WELD (M10X1.5-THD)	
	9	1	**275-0571**	1	CAM-LATCH	
	10	1	**275-0572**	1	LATCH AS	
M	11	2	**5C-9553**	2	BOLT (M6X1X16-MM)	
	12	2	**5P-1076**	12	WASHER-HARD (13.5X30X4-MM THK)	
	13	2	**7X-0589**	12	WASHER-HARD (12X28.5X5-MM THK)	
M	14	2	**8T-0389**	12	LOCKNUT (M10X1.15-THD)	
	15	2	**8T-4121**	6	WASHER-HARD (11X21X2.5-MM THK)	
M	16	2	**8T-4139**	12	BOLT (M12X1.75X30-MM)	
M	17	2	**8T-4195**	6	BOLT (M10X1.5X30-MM)	
	18	2	**9X-8256**	2	WASHER (6.6X12X2-MM THK)	

M-METRIC PART

REFER TO ALL ILLUSTRATIONS OF
THIS GROUP FOR AUXILIARY VIEWS

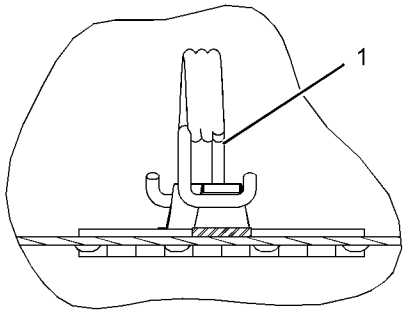

SECTION A-A

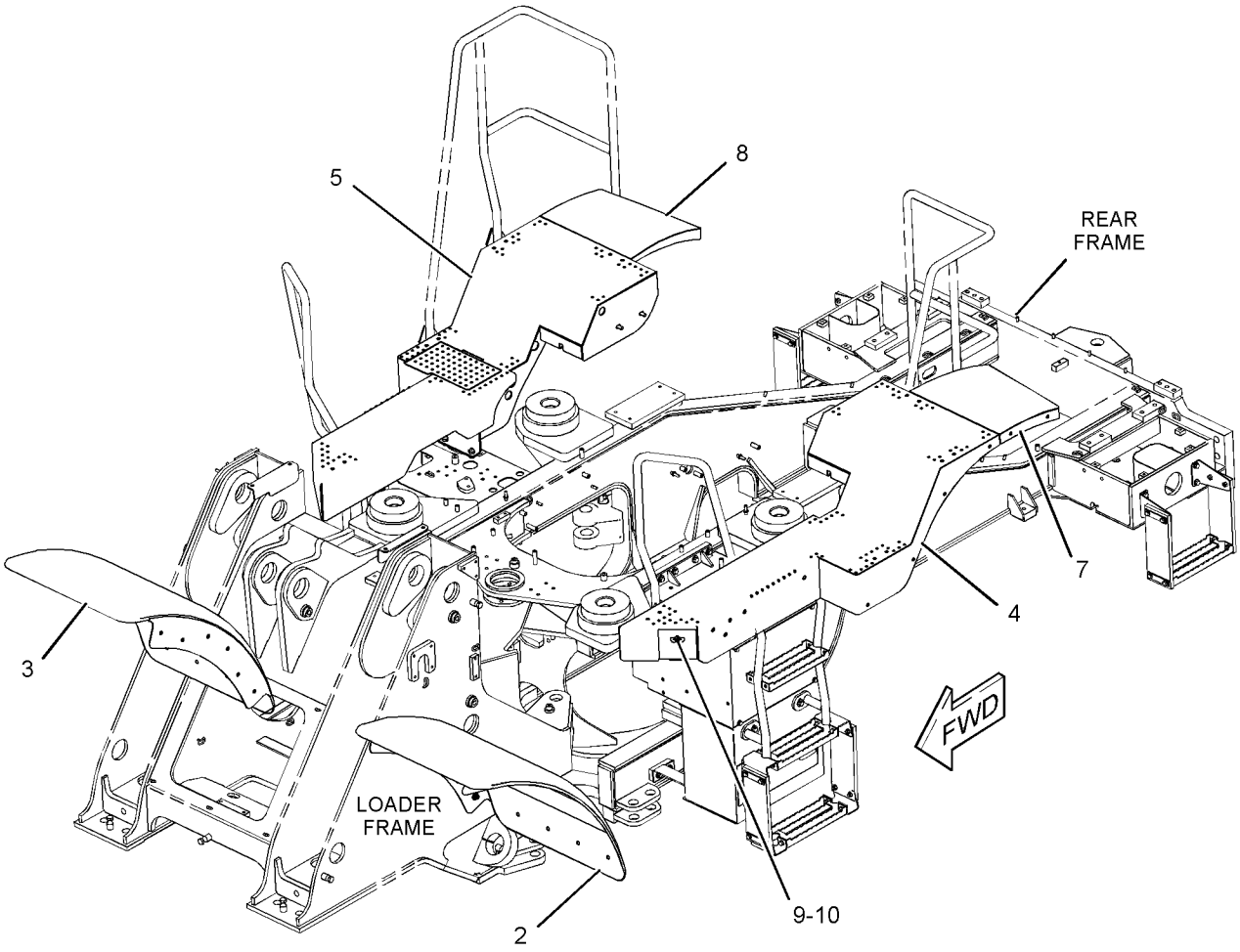

GRAPHIC #1 g01223679

237-0424 **FENDER GP** *(contd.)* **i02454196**

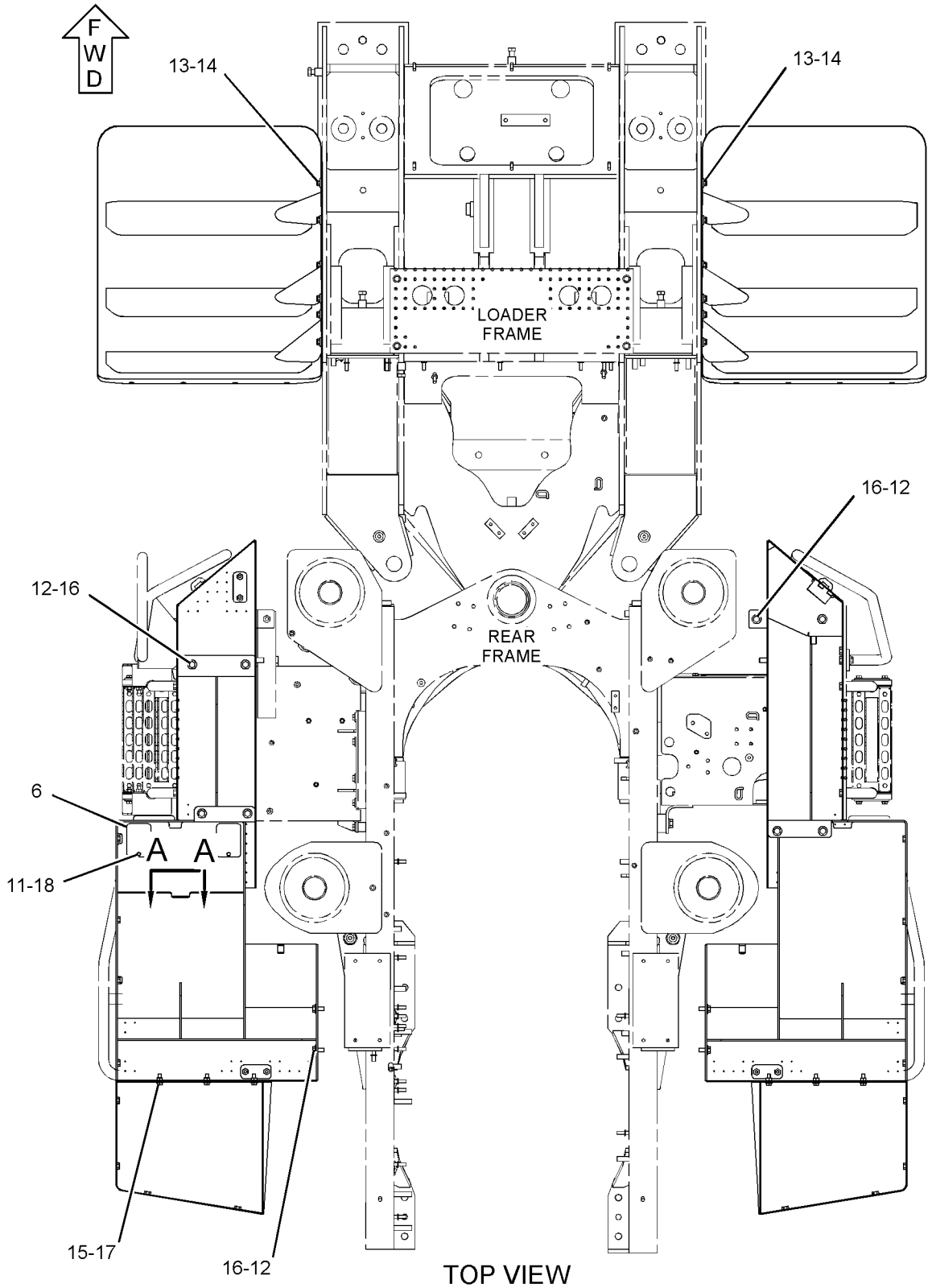

TOP VIEW

GRAPHIC #2 **<END>** g01223677

FRAME AND BODY

248-7613 FENDER GP

S/N: M3G1-UP
PART OF 276-5456 MACHINE AR
AN ATTACHMENT

SMCS-7252 **i02251387**

NOTE	REF NO	GRAPHIC REF	PART NUMBER	QTY	PART NAME 1 2 3 4 5 6 (PRODUCT LEVEL)	SEE PAGE
	1	1	**138-6814**	2	STRIP AS	
	2	1	**138-6819**	2	FLAP	
	3	1	**248-7607**	1	DEFLECTOR (LH)	
	4	1	**248-7608**	1	DEFLECTOR (RH)	
	5	1	**248-7609**	1	DEFLECTOR (LH)	
	6	1	**248-7610**	1	DEFLECTOR (RH)	
	7	1	**248-7611**	1	DEFLECTOR (LH)	
	8	1	**248-7612**	1	DEFLECTOR (RH)	
	9	1	**6V-5839**	14	WASHER (11X21X2.5-MM THK)	
	10	1	**7X-7729**	8	WASHER (11X25X3-MM THK)	
M	11	1	**8T-0389**	8	LOCKNUT (M10X1.5-THD)	
	12	1	**8T-4121**	2	WASHER-HARD (11X21X2.5-MM THK)	
M	13	1	**8T-4137**	2	BOLT (M10X1.5X20-MM)	
	14	1	**8T-4223**	2	WASHER-HARD (13.5X25.5X3-MM THK)	
M	15	1	**9X-2040**	14	SCREW-TRUSS HEAD (M10X1.5X25-MM)	

M-METRIC PART

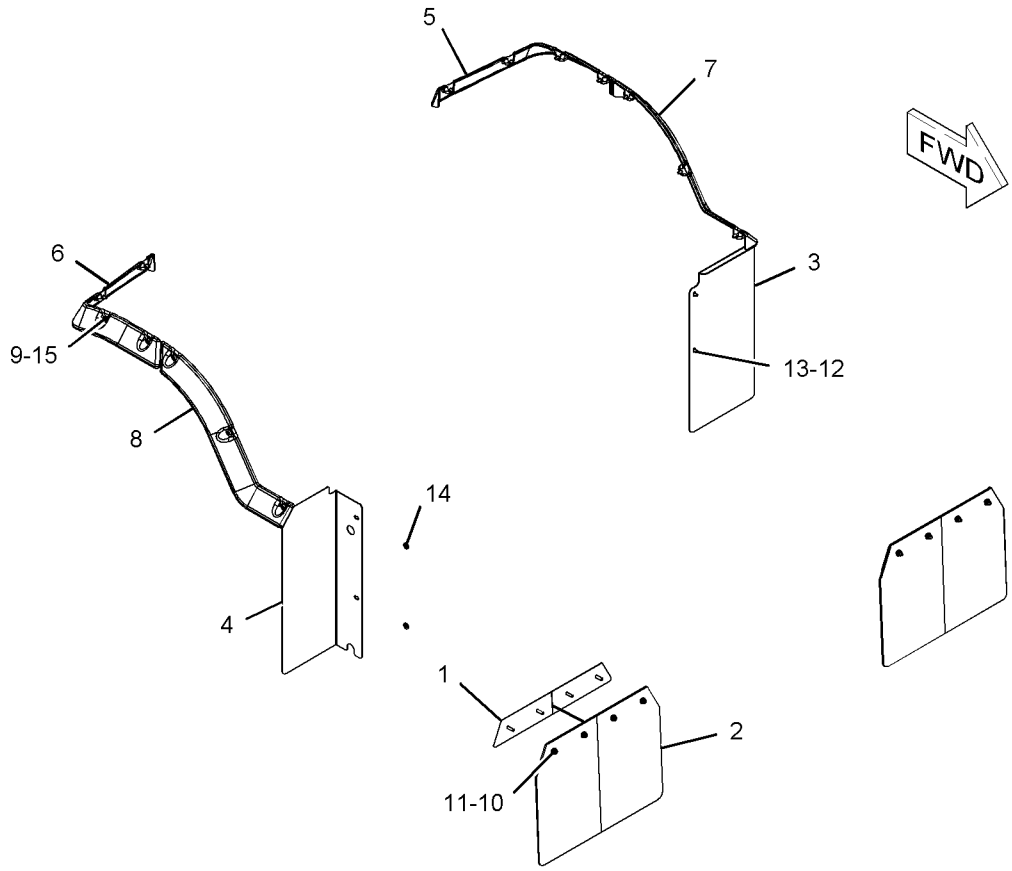

GRAPHIC #1 **<END>** g01128576

201-6779 FENDER GP-FRONT

S/N: M3G1-UP

AN ATTACHMENT

SMCS-7252 **i01705306**

NOTE	REF NO	GRAPHIC REF	PART NUMBER	QTY	PART NAME 1 2 3 4 5 6 (PRODUCT LEVEL)	SEE PAGE
	1	1	**201-6775**	1	FENDER AS-FRONT (LH)	
	2	1	**201-6776**	1	FENDER AS-FRONT (RH)	
	3	1	**201-6780**	1	PLATE (LH)	
	4	1	**201-6781**	1	PLATE (RH)	
	5	1	**8T-4121**	12	WASHER-HARD (11X21X2.5-MM THK)	
M	6	1	**8T-4133**	12	NUT (M10X1.5 THD)	
M	7	1	**8T-4183**	8	BOLT (M12X1.75X40-MM)	
	8	1	**8T-4223**	8	WASHER-HARD (13.5X25.5X3-MM THK)	

M-METRIC PART

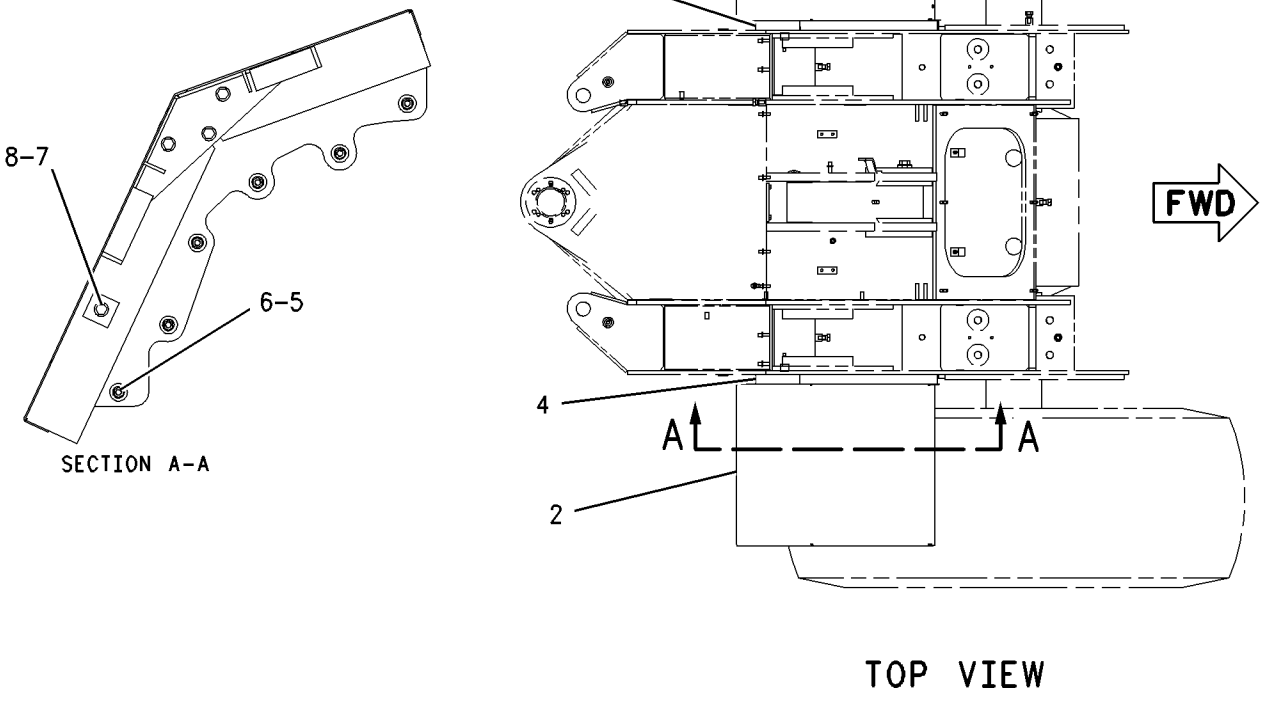

GRAPHIC #1 **<END>** g00877702

247-8560 FENDER GP-FRONT

S/N: M3G1-UP
PART OF 244-6607 WASTE HANDLING AR
AN ATTACHMENT

SMCS-7252 **i02305491**

NOTE	REF NO	GRAPHIC REF	PART NUMBER	QTY	PART NAME 1 2 3 4 5 6 (PRODUCT LEVEL)	SEE PAGE
	1	1	**201-6775**	1	FENDER AS-FRONT (LH)	
	2	1	**201-6776**	1	FENDER AS-FRONT (RH)	
	3	1	**201-6780**	1	PLATE (LH)	
	4	1	**201-6781**	1	PLATE (RH)	
	5	1	**8T-4121**	12	WASHER-HARD (11X21X2.5-MM THK)	
M	6	1	**8T-4133**	12	NUT (M10X1.5 THD)	
M	7	1	**8T-4183**	8	BOLT (M12X1.75X40-MM)	
	8	1	**8T-4223**	8	WASHER-HARD (13.5X25.5X3-MM THK)	

M-METRIC PART

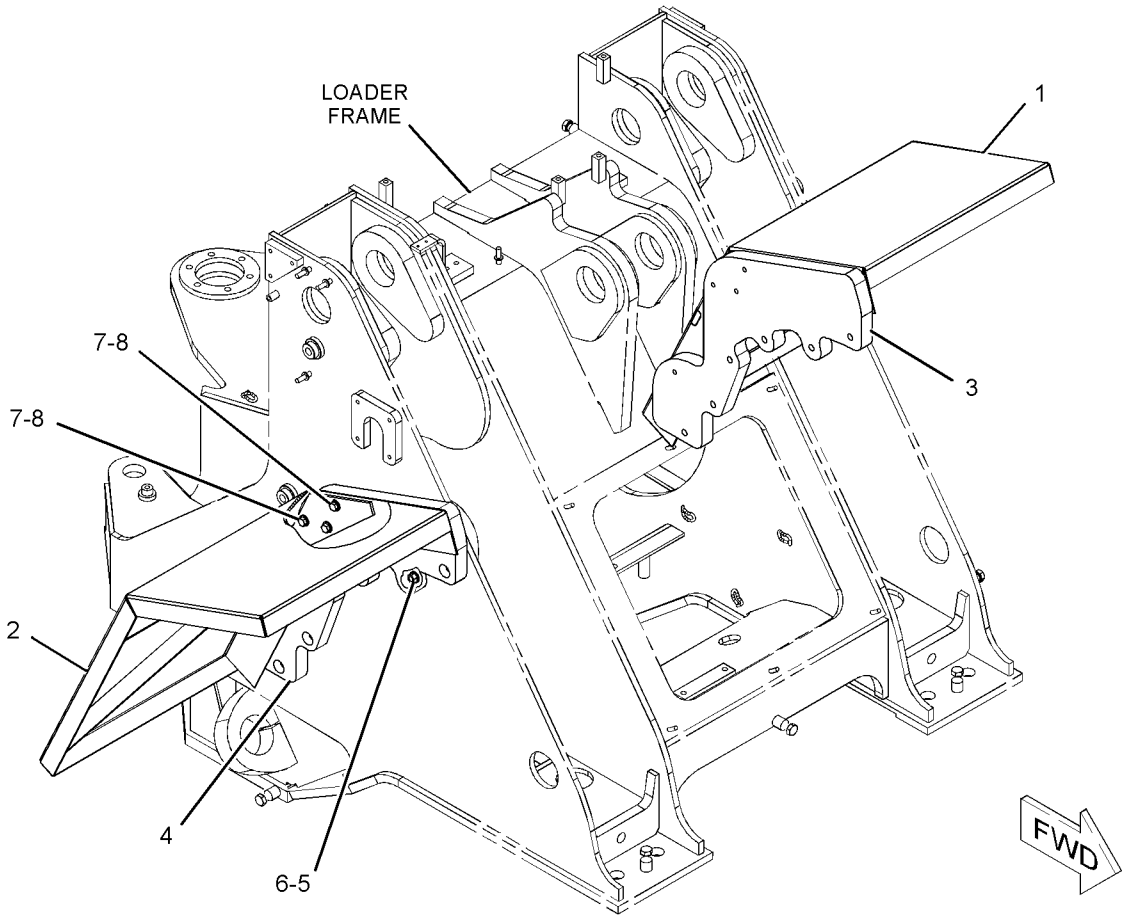

GRAPHIC #1 **<END>** g01133967

FRAME AND BODY

246-8848 FENDER GP-ROADING

S/N: M3G1-UP
PART OF 263-0056 FENDER AR-ROADING
AN ATTACHMENT

SMCS-7252 **i02307742**

NOTE	REF NO	GRAPHIC REF	PART NUMBER	QTY	PART NAME 1 2 3 4 5 6 (PRODUCT LEVEL)	SEE PAGE
	1	2	**009-3101**	2	RING-RETAINING	
	2	1	**124-2456**	2	FILM-INSTRUCTION (NO STEP)	
	3	2	**138-6814**	2	STRIP AS	
	4	2	**138-6819**	2	FLAP	
	5	2	**141-3889**	2	EXTENSION	
	6	1	**141-3890**	2	PLATE AS	
	7	2	**146-0098**	4	BUSHING	
	8	2	**163-4347**	2	GUIDE	
	9	2	**163-4348**	2	COVER	
M	10	2	**179-4324**	8	LOCKNUT (M5X0.8 THD)	
	11	2	**208-0011**	2	LATCH AS	
	12	2	**245-1193**	2	PIVOT AS	
	13	2	**245-8491**	1	PIVOT AS (RH)	
	14	2	**245-8492**	1	PIVOT AS (LH)	
	15	1	**246-8853**	1	FENDER (RH)	
	16	1	**246-8854**	1	DEFLECTOR (RH)	
	17	1	**246-8855**	1	FENDER (LH)	
	18	1	**246-8856**	1	DEFLECTOR-LH	
	19	2	**247-3136**	1	TUBE AS (RH)	
	20	2	**247-3137**	1	TUBE AS (LH)	
					(EACH TUBE AS INCLUDES)	
M		2	**6V-9632**	7	NUT-WELD (M6X1-THD)	
M		2	**8T-3490**	3	NUT-WELD (M10X1.5-THD)	
	21	2	**247-3138**	2	PLATE	
	22	2	**247-3139**	2	ROD	
	23	2	**247-3141**	2	DEFLECTOR	
	24	1	**248-7611**	1	DEFLECTOR (LH)	
	25	1	**248-7612**	1	DEFLECTOR (RH)	
	26	2	**258-7628**	2	ROD	
	27	2	**263-0051**	1	BRACKET AS (LH)	
	28	2	**263-0052**	1	BRACKET AS (RH)	
M	29	2	**129-3178**	6	LOCKNUT (M6X1 THD)	
	30	2	**204-0813**	14	BOLT (M6X1X40-MM)	
	31	2	**216-9528**	14	WASHER-HARD (7X19X2-MM THK)	
	32	2	**4B-4274**	16	WASHER (5.5X13X1.2-MM THK)	
	33	2	**5P-1076**	4	WASHER-HARD (13.5X30X4-MM THK)	
	34	2	**5P-4115**	14	WASHER-HARD (7.2X19X2-MM THK)	
	35	2	**6V-5839**	26	WASHER (11X21X2.5-MM THK)	
M	36	2	**6V-7357**	10	BOLT (M6X1X25-MM)	
	37	2	**6V-7644**	2	RING-RETAINING	
M	38	2	**6V-9493**	4	SCREW-MACHINE (M4X0.7X45-MM)	
	39	2	**7X-7729**	22	WASHER (11X25X3-MM THK)	
M	40	2	**8C-3210**	2	BOLT (M6X1X16-MM)	
M	41	2	**8T-0389**	26	LOCKNUT (M10X1.5 THD)	
	42	1,2	**8T-4121**	8	WASHER-HARD (11X21X2.5-MM THK)	
M	43	2	**8T-4127**	4	SCREW-MACHINE (M5X0.8X20-MM)	
M	44	2	**8T-4139**	4	BOLT (M12X1.75X30-MM)	
M	45	2	**8T-4182**	2	BOLT (M10X1.5X45-MM)	
M	46	2	**8T-4186**	6	BOLT (M10X1.5X40-MM)	
	47	2	**8T-4205**	4	WASHER-HARD (7.2X14.5X2-MM THK)	
M	48	2	**8T-6466**	4	BOLT (M10X1.5X60-MM)	
	49	2	**9L-6074**	2	GROMMET	
M	50	2	**9X-2040**	16	SCREW-TRUSS HEAD (M10X1.5X25-MM)	
E	51	2	**128-8423**	2	SEAL (157-CM EACH)	
E	51A	2	**128-8423**	2	SEAL (26-CM EACH)	

246-8848 **FENDER GP-ROADING** *(contd.)* **i02307742**

NOTE	REF NO	GRAPHIC REF	PART NUMBER	QTY	PART NAME 1 2 3 4 5 6 (PRODUCT LEVEL)	SEE PAGE
	52	1	**248-7608**	1	DEFLECTOR (RH)	
	53	1	**248-7607**	1	DEFLECTOR (LH)	
	54	1	**184-6260**	1	FENDER AS-FRONT (LH)	
	55	1	**184-6259**	1	FENDER AS-FRONT (RH)	
	56	2	**8T-4223**	2	WASHER-HARD (13.5X25.5X3-MM THK)	
M	57	1	**8T-4137**	2	BOLT (M10X1.5X20-MM)	

E-ORDER BY THE CENTIMETER
M-METRIC PART

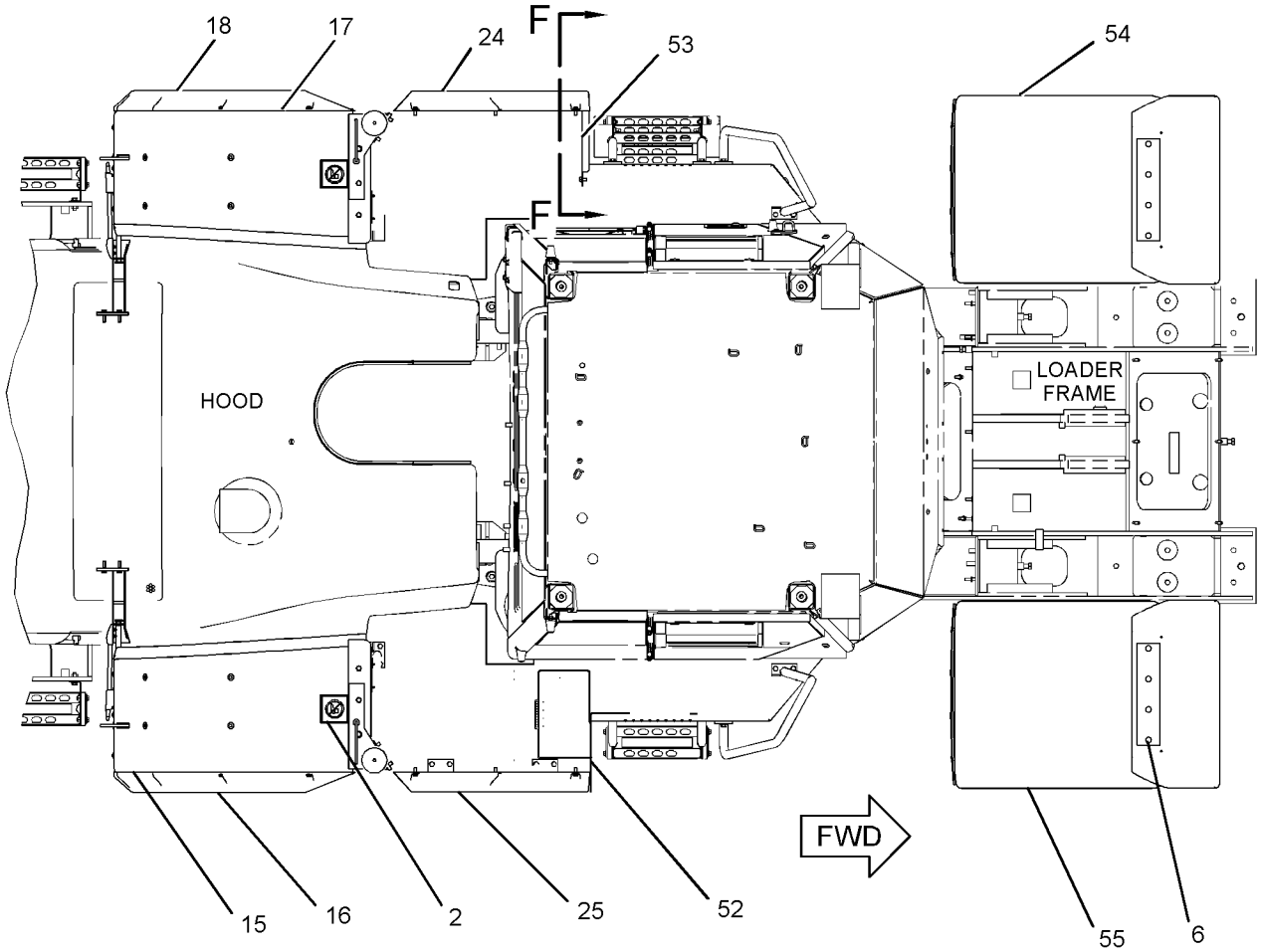

TOP VIEW

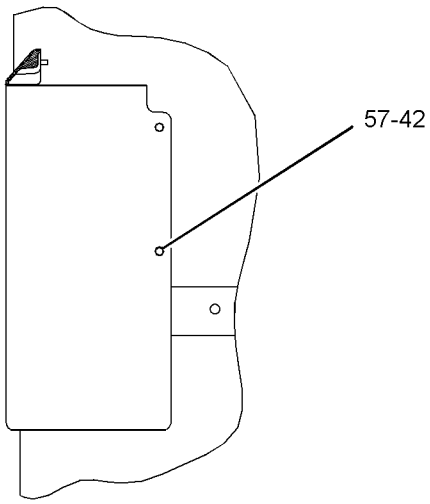

SECTION F-F

GRAPHIC #1

g01158415

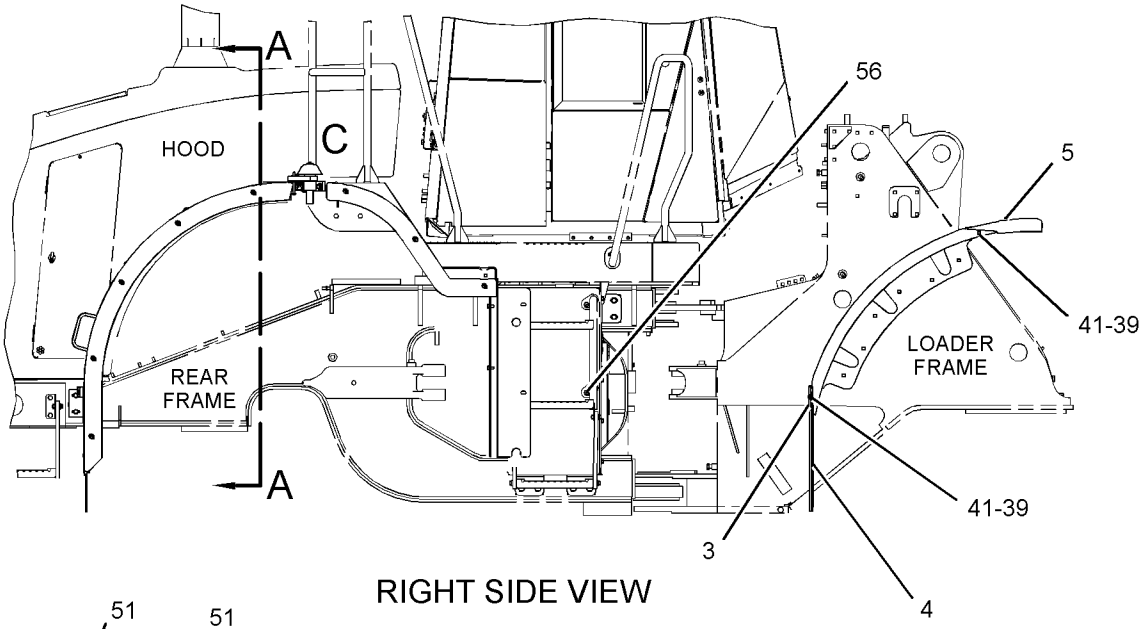

RIGHT SIDE VIEW

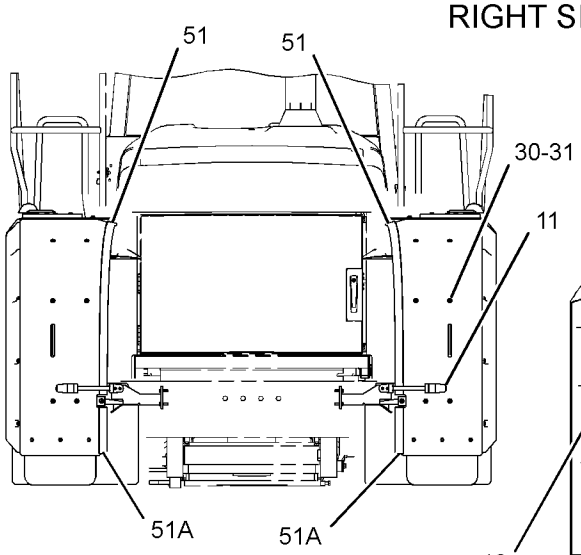

REAR VIEW

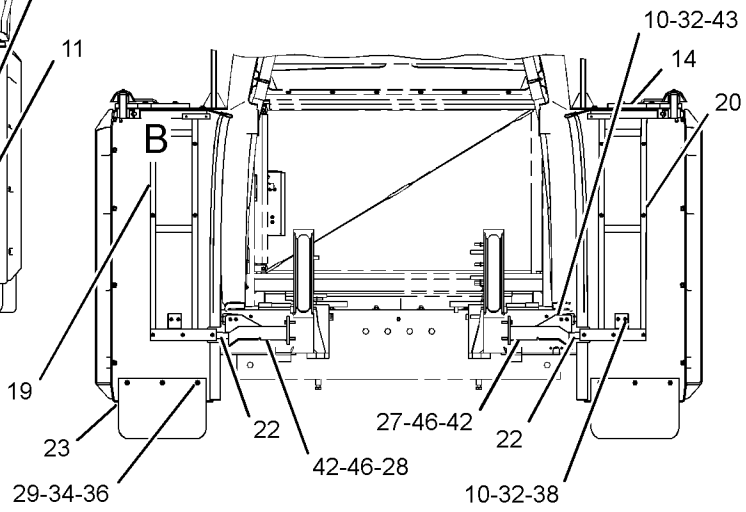

SECTION A-A

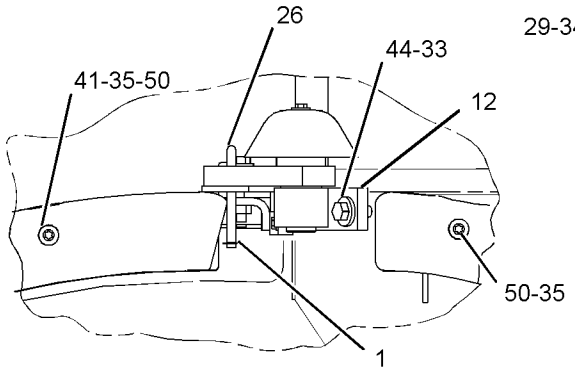

VIEW OF AREA C

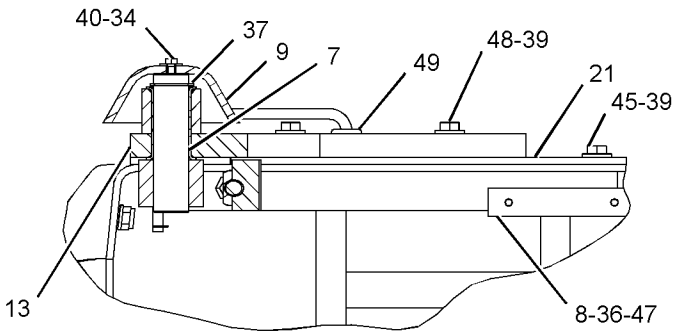

VIEW OF AREA B

GRAPHIC #2 **<END>** g01158417

FRAME AND BODY

237-0426 FRAME AS-LOADER

S/N: M3G1-UP

PART OF 237-4933 CHASSIS AR

SMCS-7054 **i02454199**

NOTE	REF NO	GRAPHIC REF	PART NUMBER	QTY	PART NAME 1 2 3 4 5 6 (PRODUCT LEVEL)	SEE PAGE
	1	1,2	**4V-0301**	11	BOLT-STOP (5/8-11X1.25-IN)	
M	2	2	**8T-4219**	6	STUD-WELD (M10X1.5X17.5-MM)	
	3	1	**9C-6809**	3	BLOCK	
	4	1	**112-6319**	1	HITCH AS-UPPER	
	5	1	**210-7760**	1	PLATE	
	6	2	*260-6596*	1	PLATE AS	
M	7	1	**110-2023**	16	STUD-WELD (M10X1.5X25-MM)	
	8	1,2	**1P-1413**	11	BOSS	
	9	2	**4I-3398**	1	PLATE	
	10	1,2	**7T-1099**	13	LINK	
M	11	1	**8T-3734**	2	BOSS-WELD (M10X1.5X40-MM)	
M	12	1	**8T-3851**	5	BOSS-WELD (M10X1.5X17.5-MM)	
M	13	1	**8T-4935**	1	BOSS-WELD (M10X1.5X45-MM)	
M	14	1	**8T-7501**	12	STUD-WELD (M10X1.5X38-MM)	
	15	2	**9R-1733**	1	BOSS (M10X1.5X66.5-MM)	
	16	1	**9R-2060**	1	BOSS (M10X1.5X21-MM)	
M	17	1	**9R-2640**	3	BOSS (M12X1.75X25-MM)	

M-METRIC PART

237-0426 FRAME AS-LOADER *(contd.)* **i02454199**

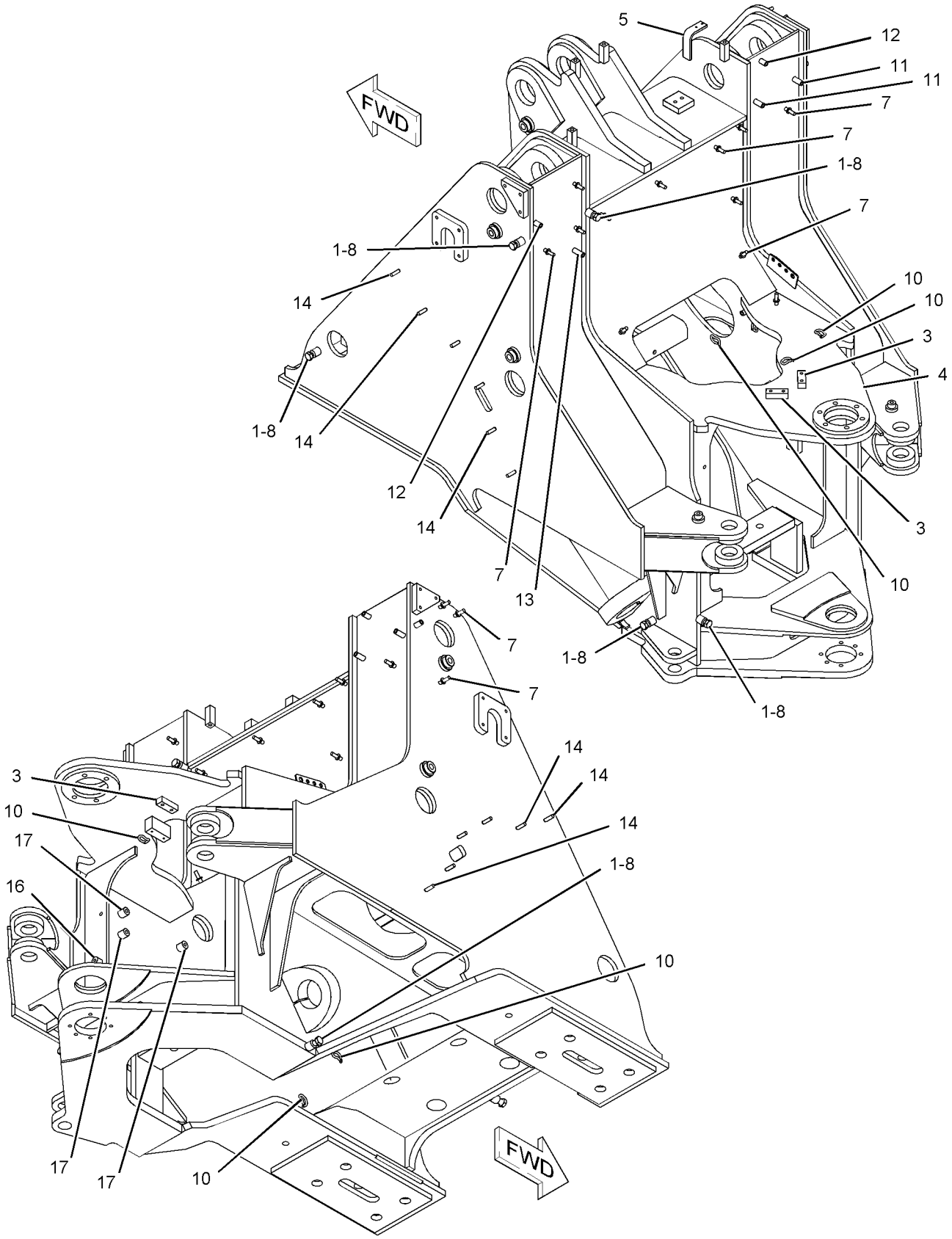

GRAPHIC #1 g01134619

237-0426 FRAME AS-LOADER *(contd.)* **i02454199**

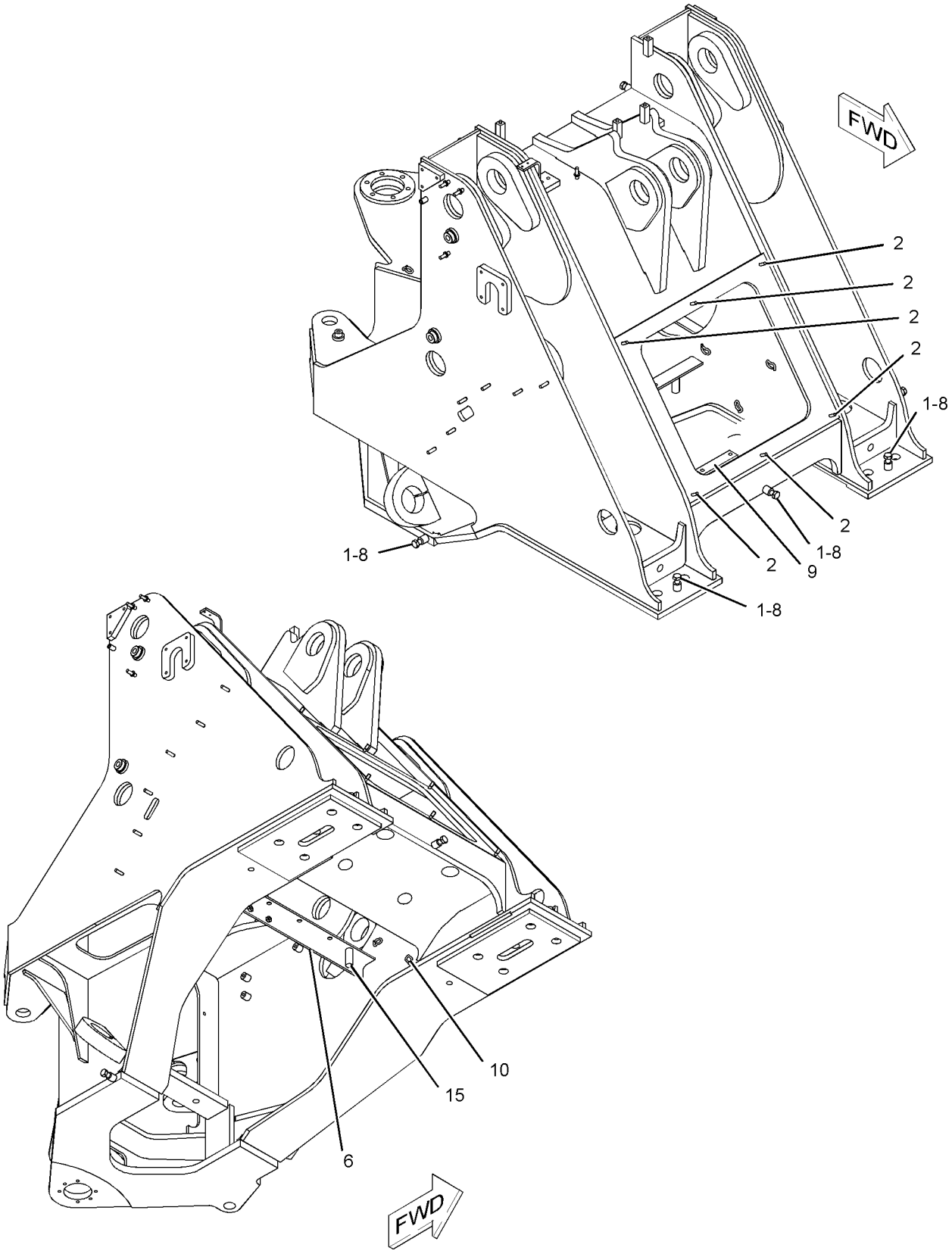

GRAPHIC #2 **<END>** g01134620

FRAME AND BODY

237-0425 FRAME AS-REAR

S/N: M3G1-UP

PART OF 237-4933 CHASSIS AR

SMCS-7051 **i02454203**

NOTE	REF NO	GRAPHIC REF	PART NUMBER	QTY	PART NAME 1 2 3 4 5 6 (PRODUCT LEVEL)	SEE PAGE
	1	1	**9C-6809**	1	BLOCK	
	2	1	**133-6299**	1	BRACKET AS	
M	3	1	**110-2023**	14	STUD-WELD (M10X1.5X25-MM)	
	4	1	**5I-3333**	1	PLATE	
	5	1	**7T-1099**	10	LINK	
M	6	1	**7X-0752**	15	BOSS-WELD (M10X1.5X65-MM OAL)	
M	7	1	**8T-3635**	2	STUD-WELD (M12X1.75X34.93-MM OAL)	
M	8	1	**8T-3851**	28	BOSS-WELD (M10X1.5X17.5-MM)	
M	9	1	**8T-4219**	1	STUD-WELD (M10X1.5X17.5-MM)	
M	10	1	**8T-4935**	6	BOSS-WELD (M10X1.5X45-MM)	
M	11	1	**8T-4967**	10	STUD-WELD (M10X1.5X23-MM OAL)	
M	12	1	**9R-2640**	1	BOSS (M12X1.75X25-MM)	
	13	1	**9R-2821**	2	BOSS (M10X15-MM)	
M	14	1	**9X-8487**	2	BOSS-WELD (M10X1.5X35-MM)	

M-METRIC PART

237-0425 FRAME AS-REAR *(contd.)* **i02454203**

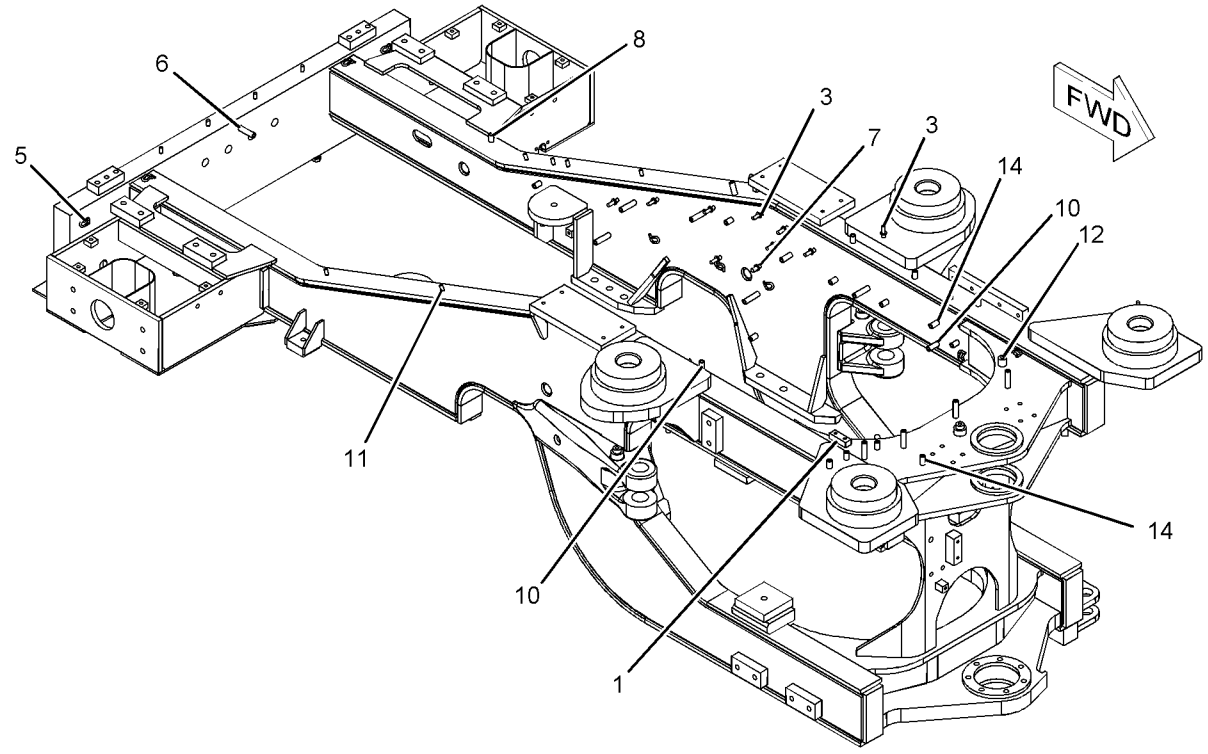

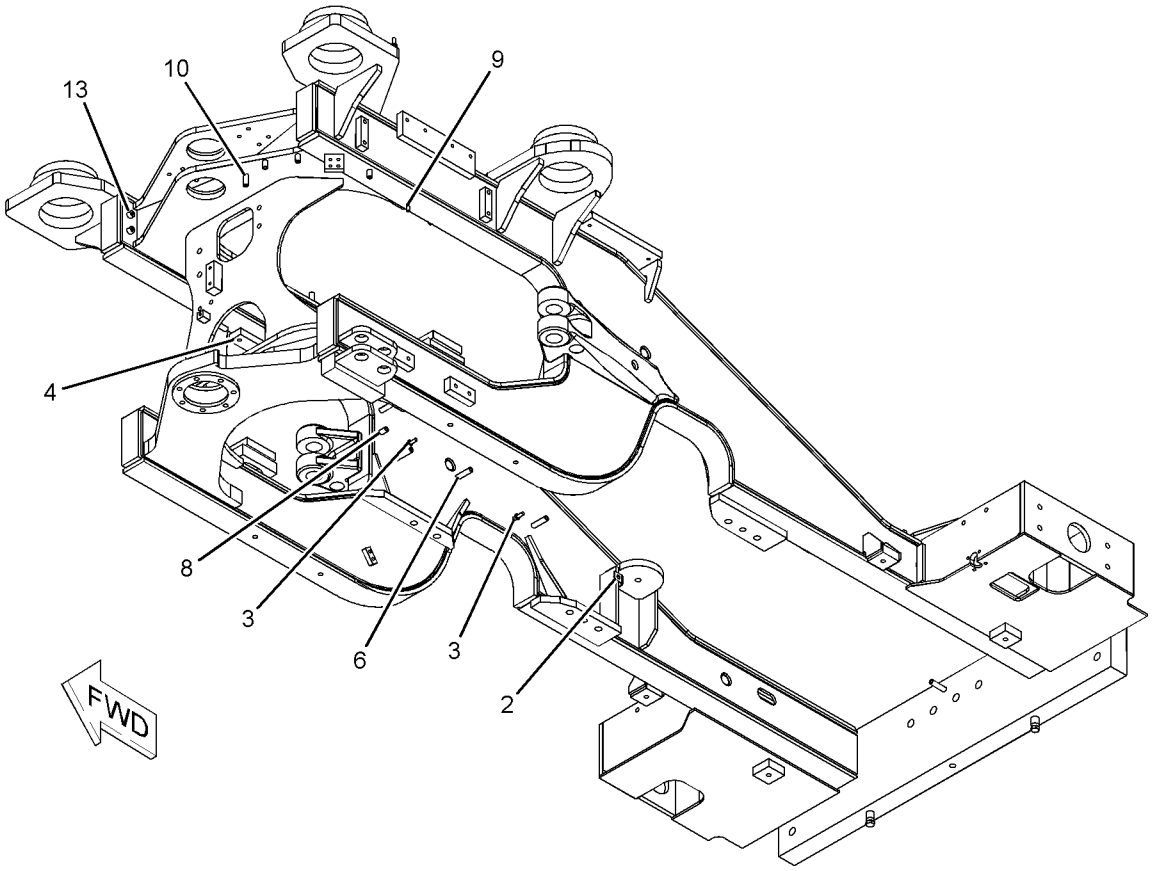

GRAPHIC #1 **<END>** g01120811

271-7220 GRILL GP-RADIATOR

S/N: M3G1-UP
PART OF 251-1700, 275-8310 HOOD & GUARD GP
ALSO AN ATTACHMENT

SMCS-7170 **i02454204**

NOTE	REF NO	GRAPHIC REF	PART NUMBER	QTY	PART NAME 1 2 3 4 5 6 (PRODUCT LEVEL)	SEE PAGE
	1	1	**6W-5817**	1	SPRING	
	2	1	**6W-5818**	1	LATCH	
	3	1	**174-3086**	1	PIN AS	
	4	1	**174-8663**	1	PIN	
	5	1	**229-7534**	1	LATCH AS	
	6	1	**236-9939**	1	PLATE AS	
	7	1	**247-4255**	1	SCREEN AS (RADIATOR)	
	8	1	**265-6681**	2	BAFFLE	
	9	1	**271-7219**	1	GRILL AS-REAR	
	10	1	**096-3781**	1	PIN-CLEVIS	
	11	1	**131-5879**	4	WASHER (11X32X3-MM THK)	
	12	1	**3B-4615**	1	PIN-COTTER	
	13	1	**7X-7729**	8	WASHER (11X25X3-MM THK)	
	14	1	**8T-4121**	4	WASHER-HARD (11X21X2.5-MM THK)	
M	15	1	**8T-4133**	6	NUT (M10X1.5 THD)	
M	16	1	**8T-4136**	8	BOLT (M10X1.5X25-MM)	
M	17	1	**9X-2040**	4	SCREW-TRUSS HEAD (M10X1.5X25-MM)	
D	18	1	**6V-2803**		SEAL (1-M)	
	19	1	**3B-2062**	1	PIN	
	20	1	**5P-0372**	1	LOCK PIN	

D-ORDER BY THE METER
M-METRIC PART

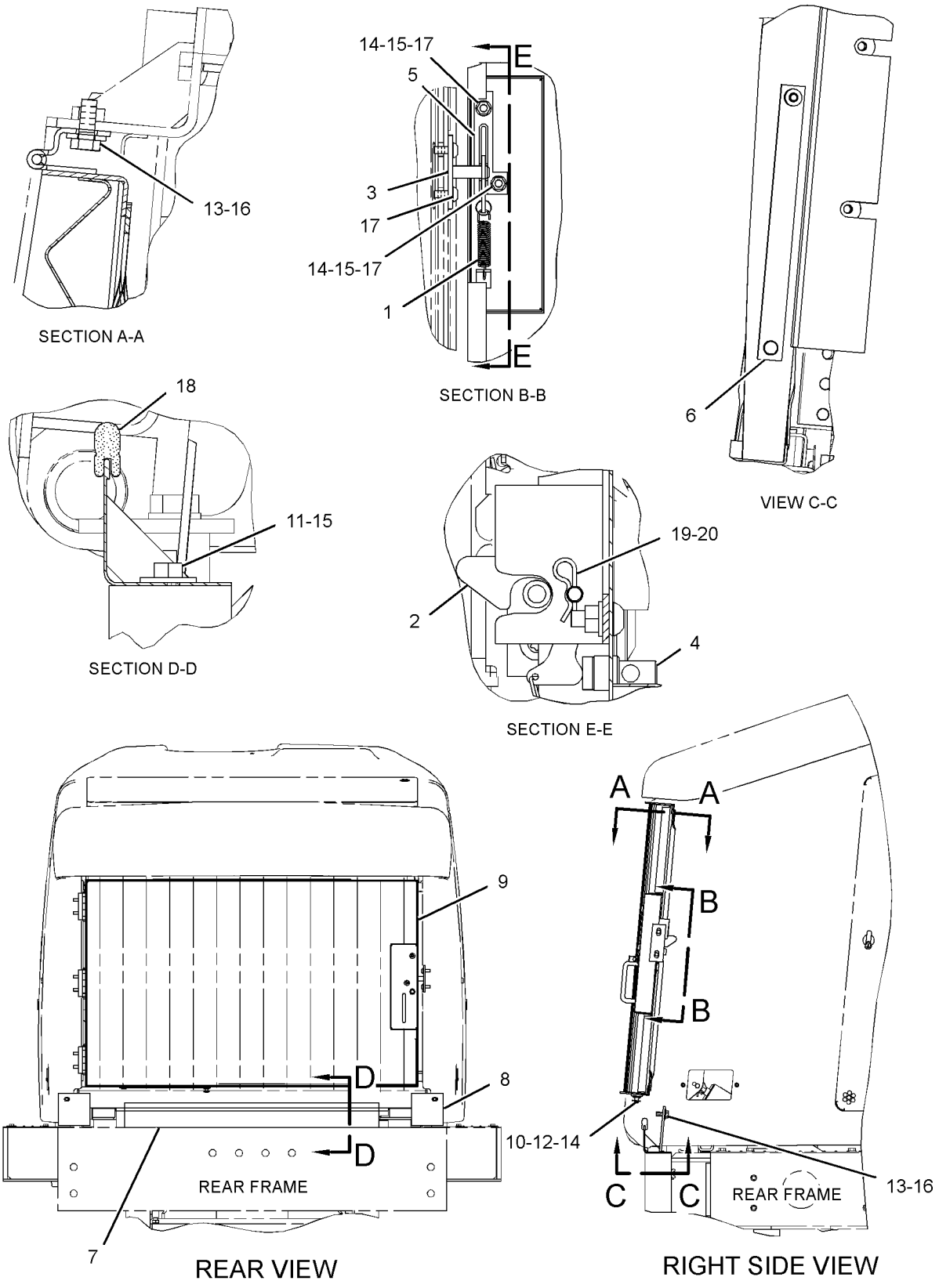

GRAPHIC #1 **<END>** g01222110

247-8557 GUARD GP-ARTICULATION

S/N: M3G1-UP

PART OF 244-6607 WASTE HANDLING AR

AN ATTACHMENT

SMCS-7150 **i02454687**

NOTE	REF NO	GRAPHIC REF	PART NUMBER	QTY	PART NAME 1 2 3 4 5 6 (PRODUCT LEVEL)	SEE PAGE
	1	1	**5P-7211**	1	SEAL (0.01-M)	
	2	1	**246-2392**	1	COVER AS (LH)	
	3	1	**246-2393**	1	COVER AS (RH)	
	4	1	**251-9739**	1	COVER AS-CYLINDER	
	5	1	**251-9742**	1	GUARD AS-HITCH	
	6	1	**251-9746**	1	BAFFLE AS	
	7	1	**251-9750**	1	PLATE	
	8	1	**251-9751**	1	BOX AS-BATTERY	
	9	1	**251-9752**	1	ENCLOSURE AS-SERVICE CENTER	
	10	1	**4Y-3046**	10	WASHER (13.5X38X3-MM THK)	
	11	1	**5P-1076**	9	WASHER-HARD (13.5X30X4-MM THK)	
	12	1	**8T-4121**	6	WASHER-HARD (11X21X2.5-MM THK)	
M	13	1	**8T-4133**	2	NUT (M10X1.5 THD)	
M	14	1	**8T-4137**	6	BOLT (M10X1.5X20-MM)	
M	15	1	**8T-4139**	1	BOLT (M12X1.75X30-MM)	
M	16	1	**8T-4244**	19	NUT (M12X1.75-THD)	
	17	1	**276-0038**	1	ANGLE AS	
	18	1	**8T-4223**	1	WASHER-HARD (13.5X25.5X3-MM THK)	
	19	1	**7X-7729**	2	WASHER (11X25X3-MM THK)	

M-METRIC PART

247-8557 **GUARD GP-ARTICULATION** *(contd.)* **i02454687**

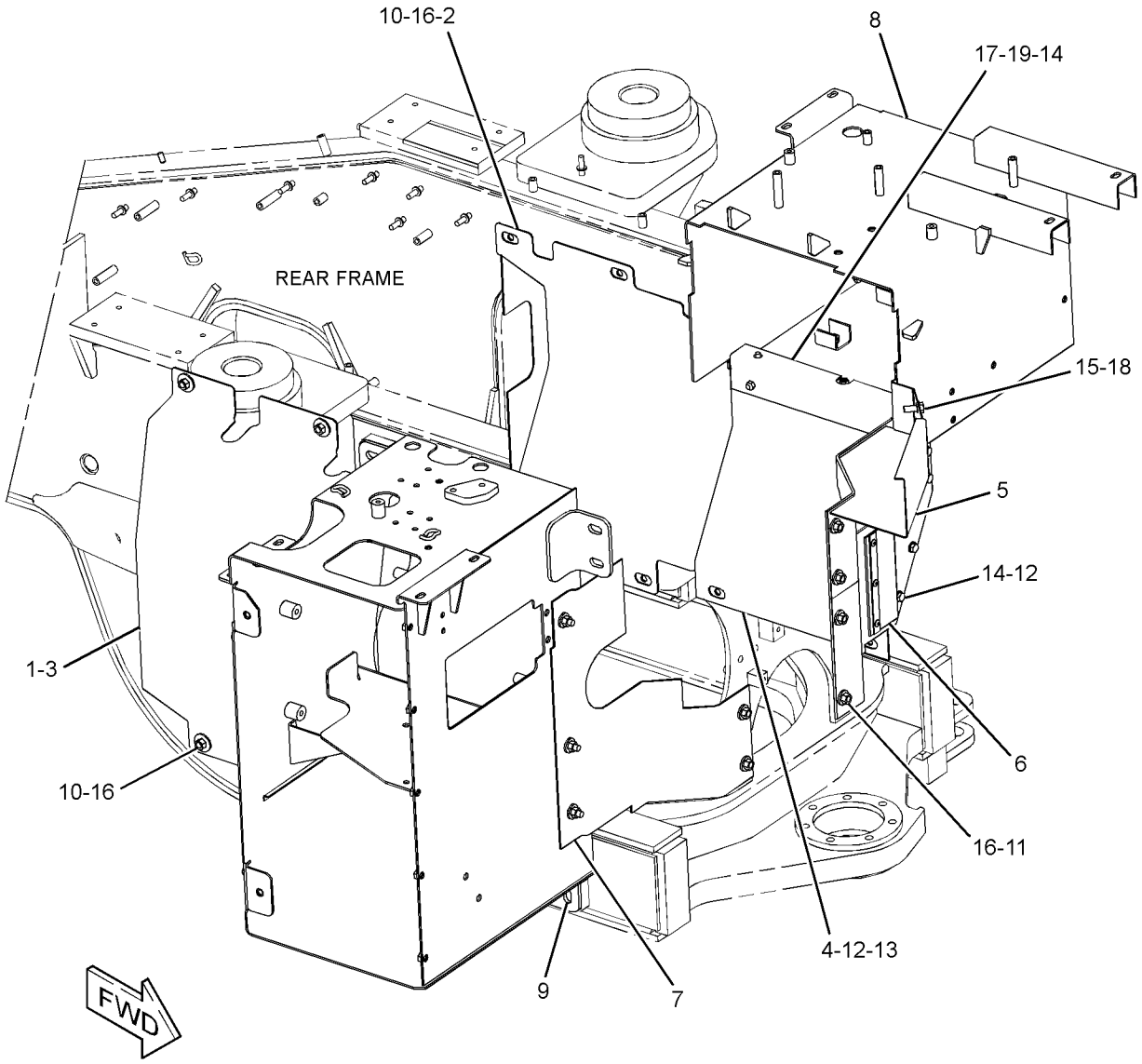

GRAPHIC #1 **<END>** g01211252

143-0001 GUARD GP-AXLE OIL COOLER

S/N: M3G1-UP
PART OF 241-0073 COOLER AR-AXLE OIL
AN ATTACHMENT

SMCS-7150 **i01744146**

NOTE	REF NO	GRAPHIC REF	PART NUMBER	QTY	PART NAME 1 2 3 4 5 6 (PRODUCT LEVEL)	SEE PAGE
M	1	1	**8T-0282**	6	BOLT (M16X2X120-MM)	
	2	1	**212-7753**	2	PLATE AS	
M	3	1	**6V-3668**	12	BOLT (M12X1.75X30-MM)	
	4	1	**7X-0618**	12	WASHER-HARD (13.5X40X5-MM THK)	
	5	1	**143-0004**	2	PLATE AS (LH)	
	6	1	**212-7754**	2	PLATE	
	7	1	**143-0003**	2	PLATE AS (RH)	
	8	1	**8T-4121**	4	WASHER-HARD (11X21X2.5-MM THK)	
M	9	1	**8T-4186**	4	BOLT (M10X1.5X40-MM)	
M	10	1	**9X-2075**	6	BOLT (M16X2X200-MM)	

M-METRIC PART

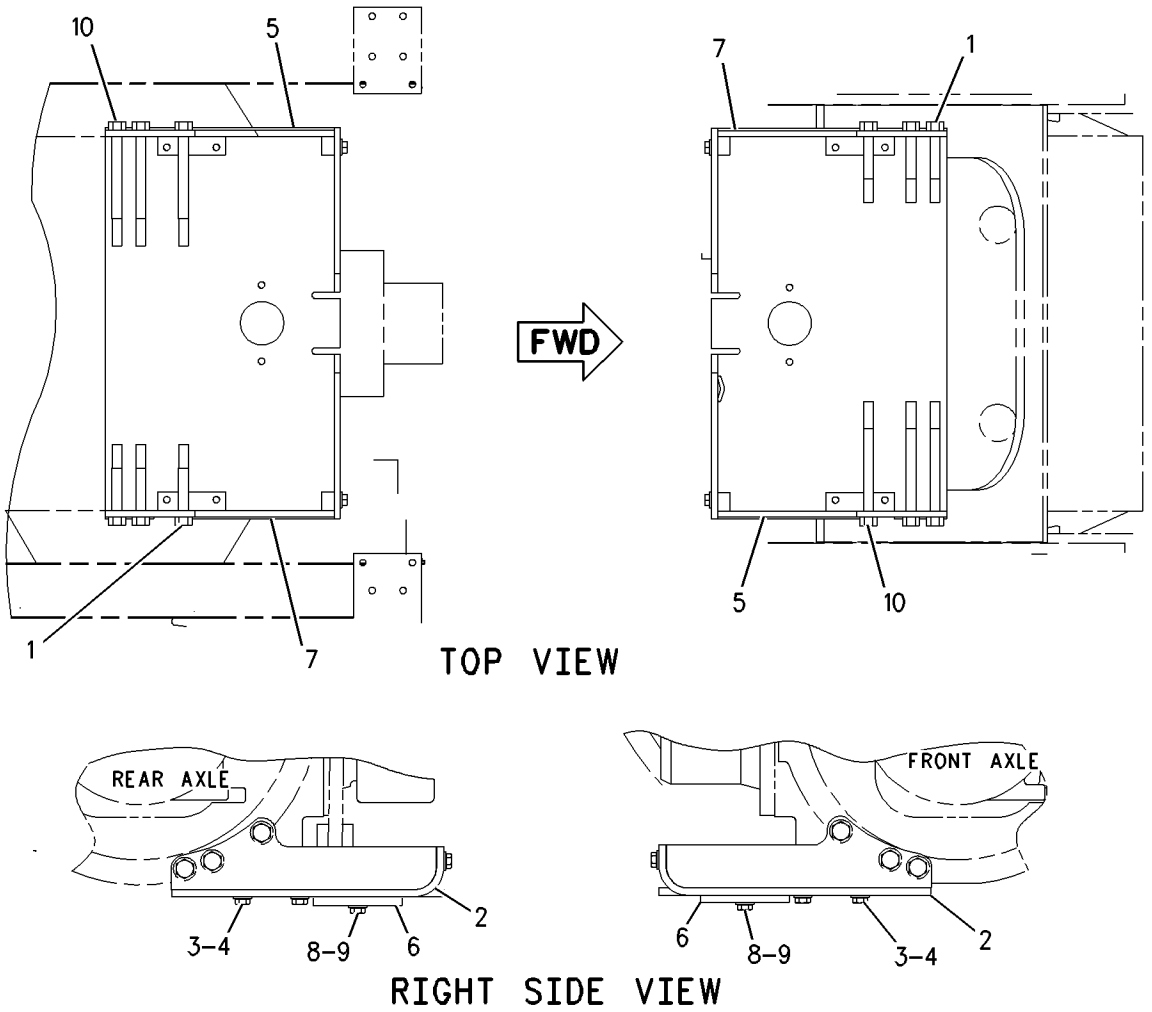

GRAPHIC #1 **<END>** g00892863

FRAME AND BODY

227-4094 GUARD GP-AXLE SEAL

S/N: M3G1-UP
PART OF 244-6607 WASTE HANDLING AR
AN ATTACHMENT

SMCS-3259, 3260 **i01971668**

NOTE	PART NUMBER	QTY	PART NAME 1 2 3 4 5 6 (PRODUCT LEVEL)	SEE PAGE
M	**8T-4196**	64	BOLT (M10X1.5X35-MM)	
	232-0928	8	PLATE	
	232-0929	8	PLATE AS	
	232-0931	4	SHAFT-AXLE	
	8T-4121	64	WASHER-HARD (11X21X2.5-MM THK)	

M-METRIC PART

<END>

214-4141 GUARD GP-DRIVE SHAFT

S/N: M3G1-UP
PART OF 244-6607 WASTE HANDLING AR
AN ATTACHMENT

SMCS-7153 **i01966399**

NOTE	REF NO	GRAPHIC REF	PART NUMBER	QTY	PART NAME 1 2 3 4 5 6 (PRODUCT LEVEL)	SEE PAGE
	1	1	**9X-8279**	1	U-BOLT	
	2	1	**214-4142**	1	CHANNEL AS	
	3	1	**214-4143**	1	CHANNEL AS	
	4	1	**5P-1076**	10	WASHER-HARD (13.5X30X4-MM THK)	
	5	1	**6V-8188**	2	NUT (1/2-13 THD)	
M	6	1	**8T-4956**	8	BOLT (M12X1.75X35-MM)	

M-METRIC PART

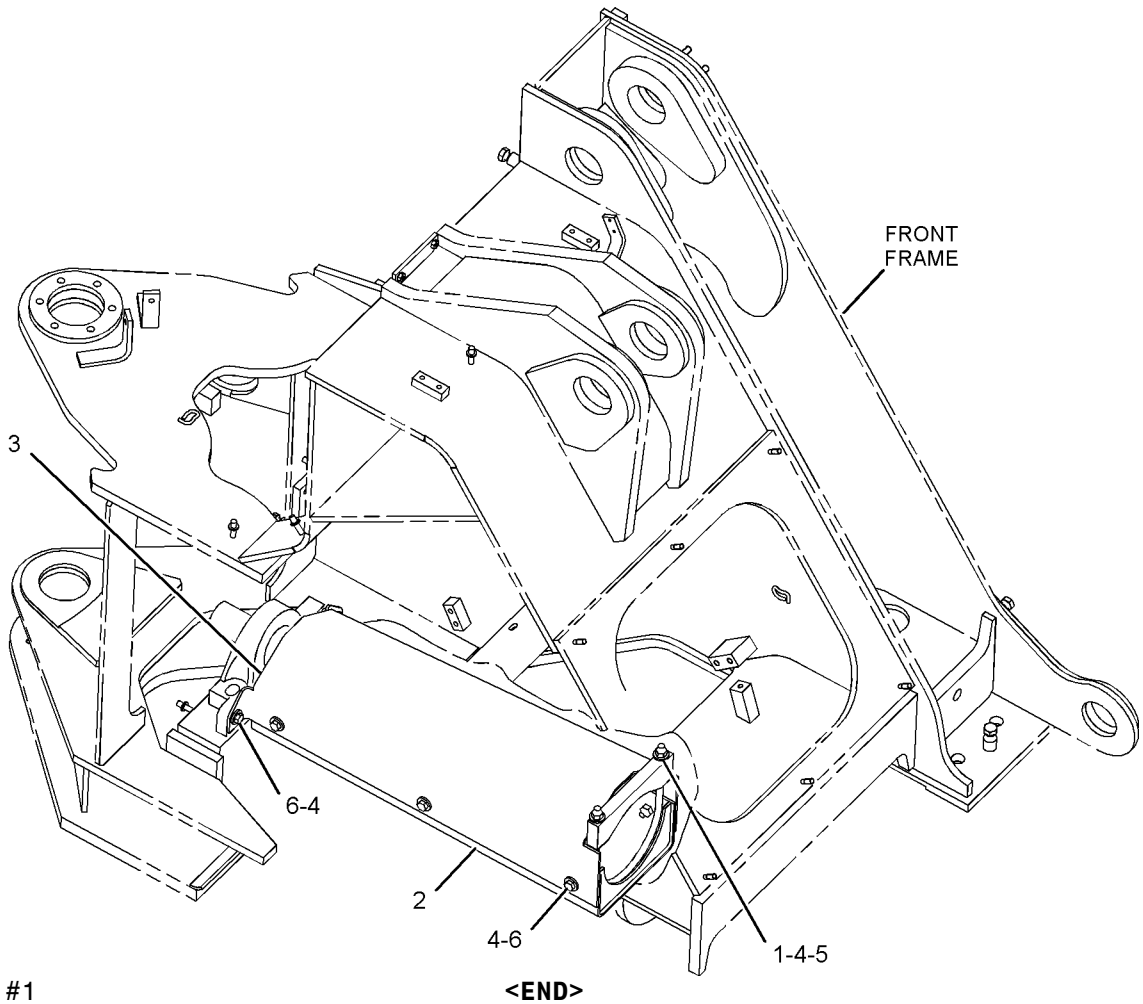

GRAPHIC #1 **<END>** g01062884

FRAME AND BODY

237-0428 GUARD GP-FRONT

S/N: M3G1-UP

PART OF 237-4933 CHASSIS AR

SMCS-7167 **i02304848**

NOTE	REF NO	GRAPHIC REF	PART NUMBER	QTY	PART NAME 1 2 3 4 5 6 (PRODUCT LEVEL)	SEE PAGE
	1	1	**241-7854**	1	PLATE	
	2	1	**8T-2561**	6	WASHER-HARD (10.5X28.5X5-MM THK)	
M	3	1	**8T-4133**	6	NUT (M10X1.5 THD)	

M-METRIC PART

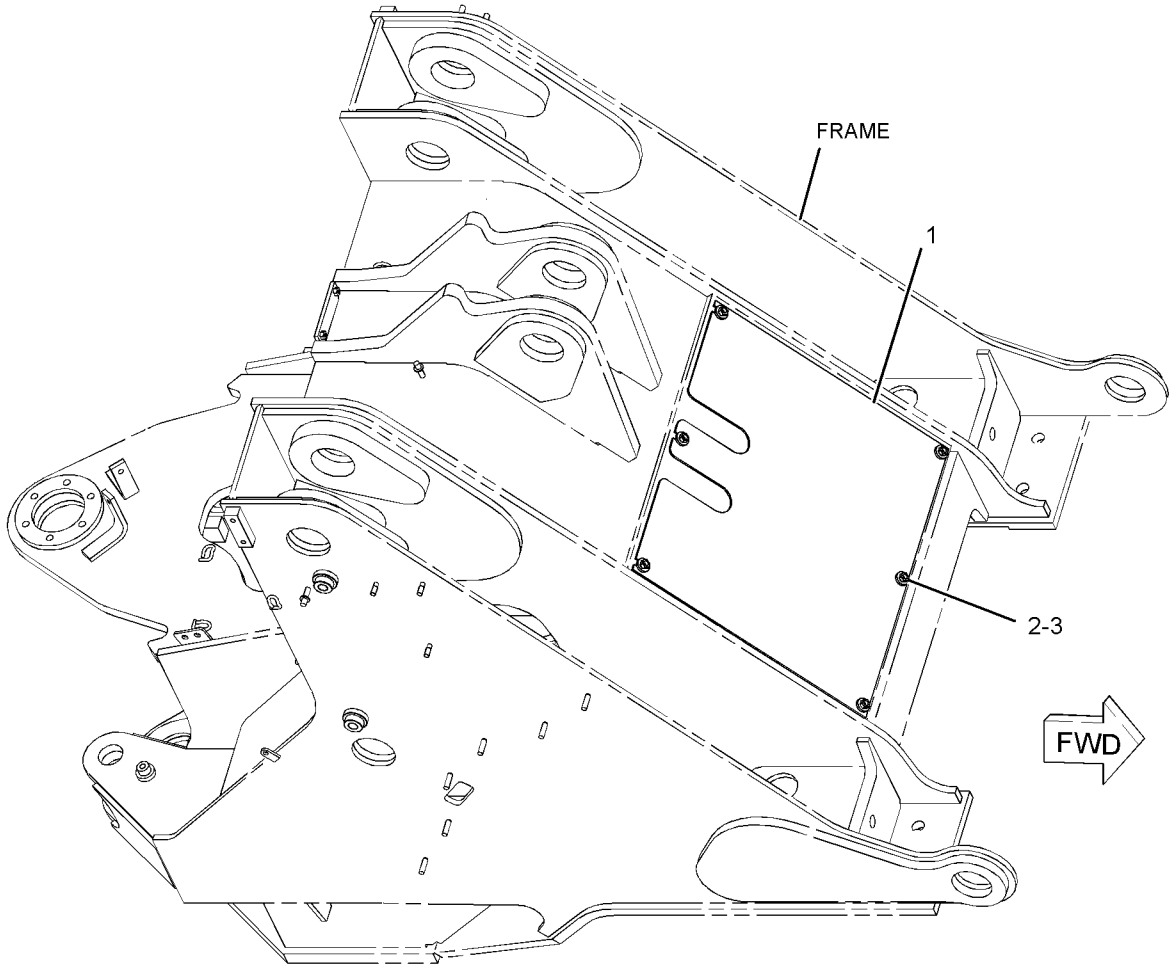

GRAPHIC #1 **<END>** g01128006

262-1379 GUARD GP-LIGHTING

S/N: M3G1-UP
PART OF 244-6607 WASTE HANDLING AR
AN ATTACHMENT

SMCS-715L **i02307385**

NOTE	REF NO	GRAPHIC REF	PART NUMBER	QTY	PART NAME 1 2 3 4 5 6 (PRODUCT LEVEL)	SEE PAGE
	1	1	**262-1380**	1	BRACKET AS (RH)	
M		1	**6V-9632**	4	NUT-WELD (M6X1-THD)	
	2	1	**262-1381**	1	BRACKET AS (LH)	
M		1	**6V-9632**	4	NUT-WELD (M6X1-THD)	
	3	1	**262-1383**	2	COVER	
M	4	1	**8T-4138**	8	BOLT (M6X1X20-MM)	
	5	1	**8T-4205**	8	WASHER-HARD (7.2X14.5X2-MM THK)	

M-METRIC PART

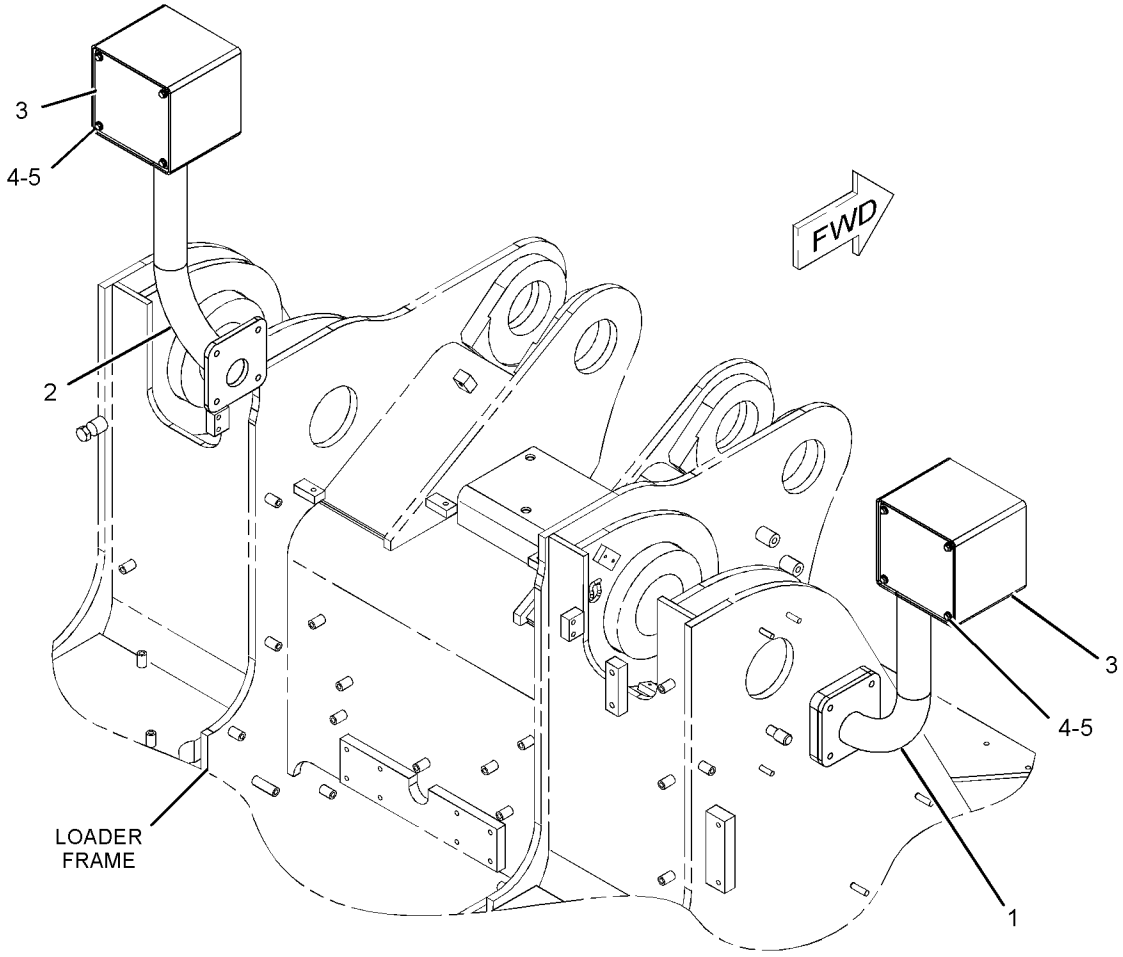

GRAPHIC #1 **<END>** g01155986

FRAME AND BODY

126-7710 GUARD GP-POWER TRAIN

S/N: M3G1-UP

AN ATTACHMENT

SMCS-7153 **i01781169**

NOTE	REF NO	GRAPHIC REF	PART NUMBER	QTY	PART NAME 1 2 3 4 5 6 (PRODUCT LEVEL)	SEE PAGE
	1	1	**131-0030**	1	PLATE	
M	2	1	**7X-2552**	4	BOLT (M16X2X30MM)	
	3	1	**3E-9411**	4	WASHER-HARD (17.5X38X6MM THK)	

M-METRIC PART

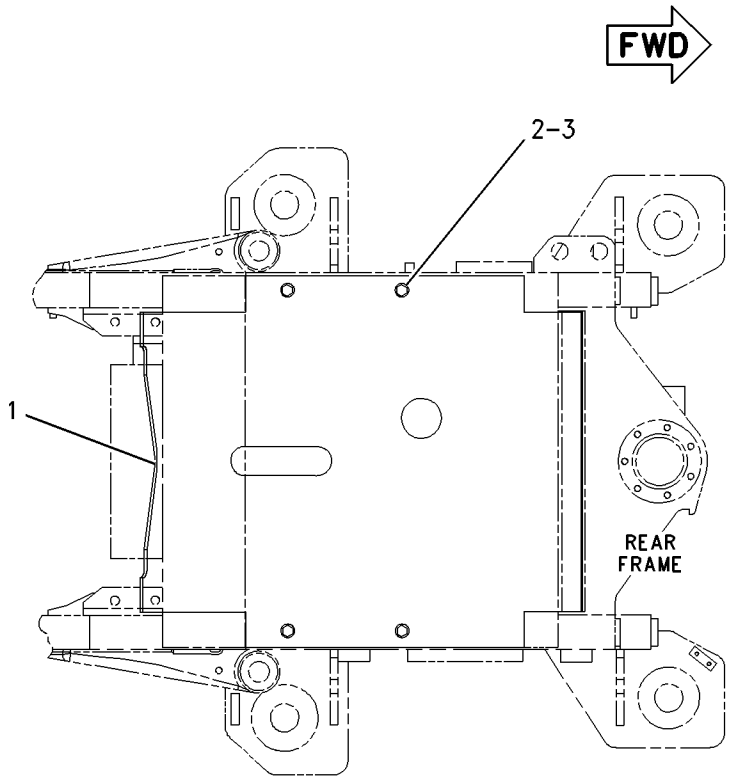

BOTTOM VIEW

GRAPHIC #1 **<END>** g00769652

156-1137 GUARD GP-POWER TRAIN–AXLE OIL COOLER

S/N: M3G1-UP
PART OF 241-0073 COOLER AR-AXLE OIL
AN ATTACHMENT

SMCS-7153 **i00857417**

NOTE	REF NO	GRAPHIC REF	PART NUMBER	QTY	PART NAME 1 2 3 4 5 6 (PRODUCT LEVEL)	SEE PAGE
	1	1	**153-3715**	1	PLATE	
	2	1	**3E-9411**	4	WASHER-HARD (17.5X38X6-MM THK)	
M	3	1	**7X-2552**	4	BOLT (M16X2X30-MM)	

M-METRIC PART

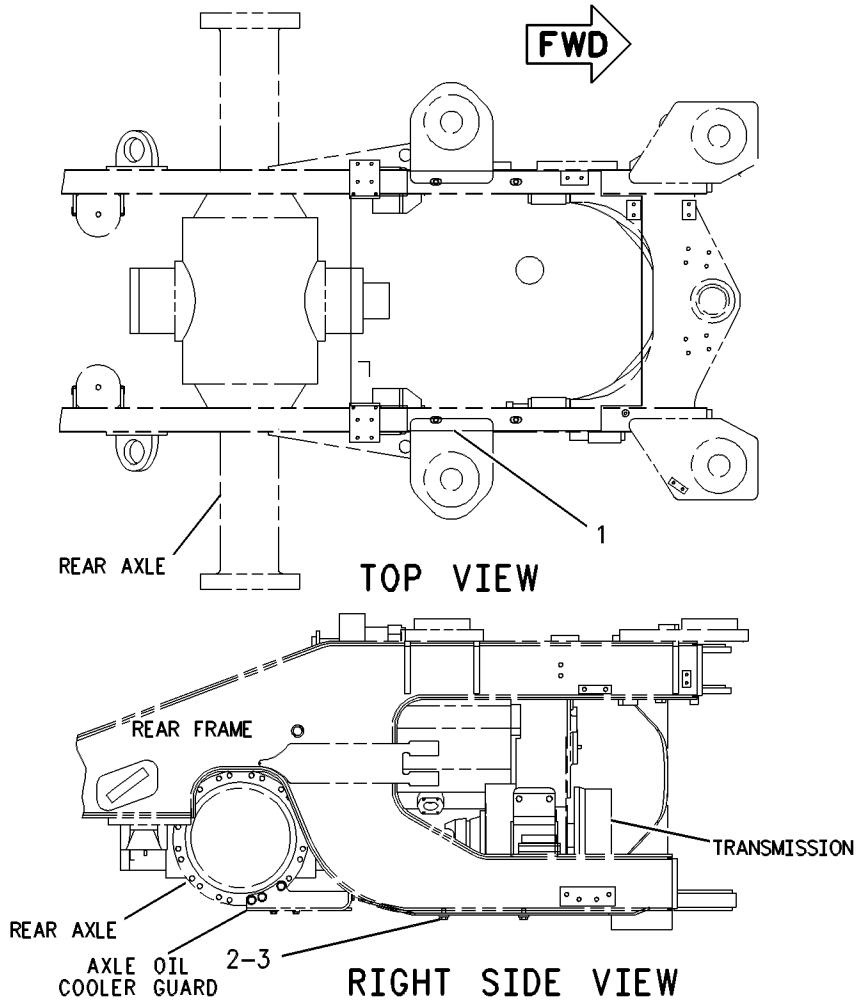

GRAPHIC #1 **<END>** g00423451

247-8558 GUARD GP-POWER TRAIN–TRANSMISSION, HINGED

S/N: M3G1-UP
PART OF 244-6607 WASTE HANDLING AR
AN ATTACHMENT

SMCS-7153 **i02305487**

NOTE	REF NO	GRAPHIC REF	PART NUMBER	QTY	PART NAME 1 2 3 4 5 6 (PRODUCT LEVEL)	SEE PAGE
	1	1	**196-1093**	1	BRACKET AS	
	2	1	**196-1094**	1	BRACKET AS	
	3	1	**250-2320**	1	PIN AS	
	4	1	**250-2321**	1	PIN AS	
	5	1	**250-2326**	1	DOOR AS	
	6	1	**3E-9411**	4	WASHER-HARD (17.5X38X6-MM THK)	
	7	1	**5P-1076**	6	WASHER-HARD (13.5X30X4-MM THK)	
M	8	1	**8T-4139**	6	BOLT (M12X1.75X30-MM)	
M	9	1	**8T-4779**	4	BOLT (M16X2X35-MM)	

M-METRIC PART

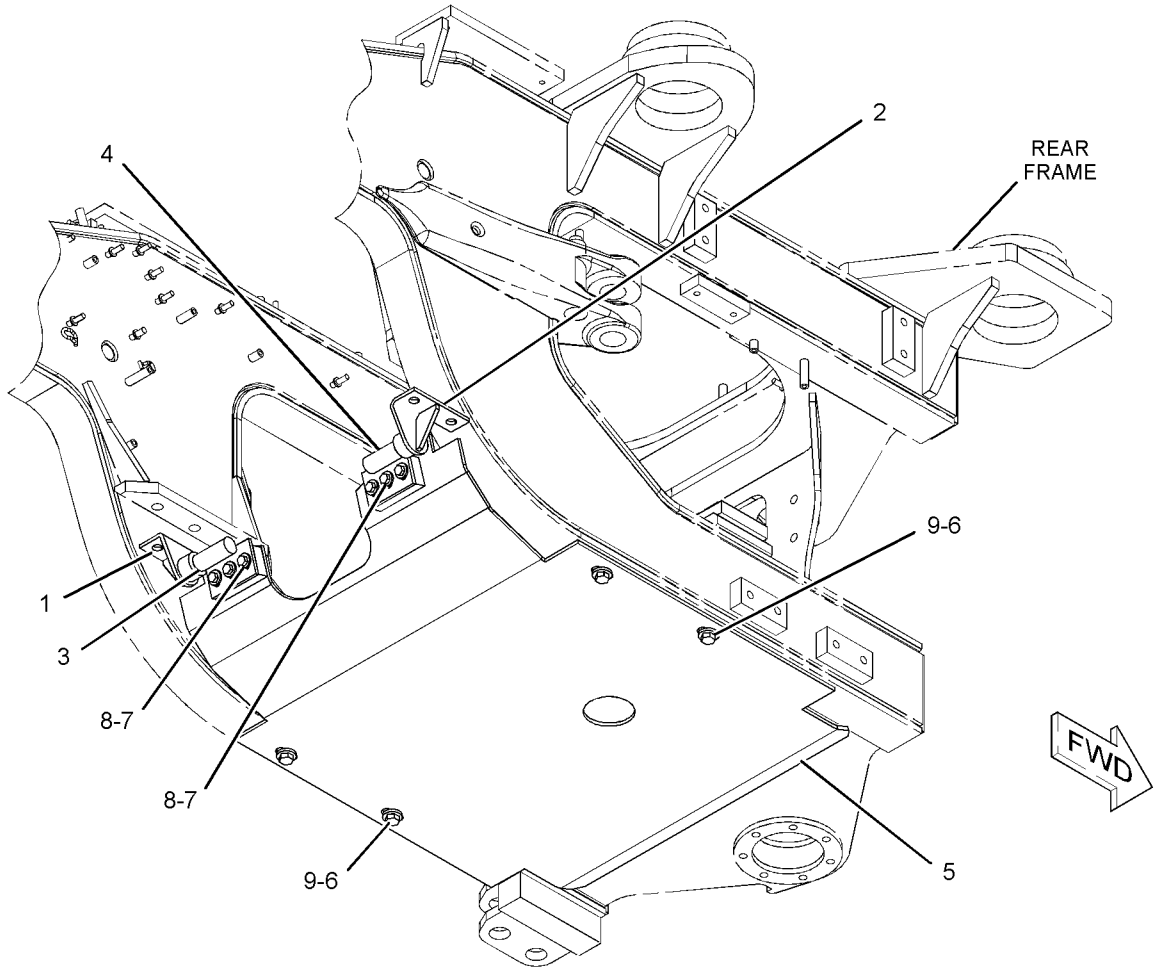

GRAPHIC #1 **<END>** g01134378

FRAME AND BODY

251-9758 HARDWARE GP-LOADER FRAME–WASTE HANDLER

S/N: M3G1-UP
PART OF 244-6607 WASTE HANDLING AR
AN ATTACHMENT

SMCS-7054, 7553 **i02306924**

NOTE	REF NO	GRAPHIC REF	PART NUMBER	QTY	PART NAME 1 2 3 4 5 6 (PRODUCT LEVEL)	SEE PAGE
	1	1	**168-5073**	2	BLOCK	

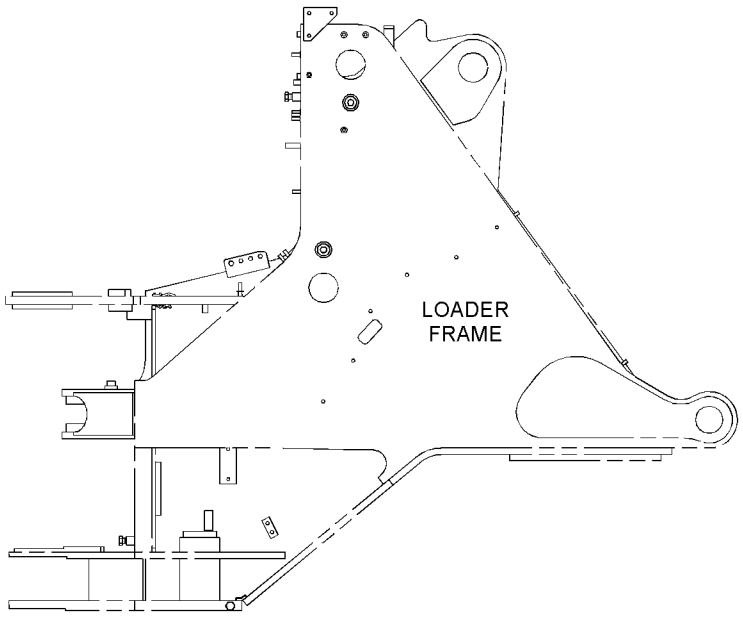

RIGHT SIDE VIEW

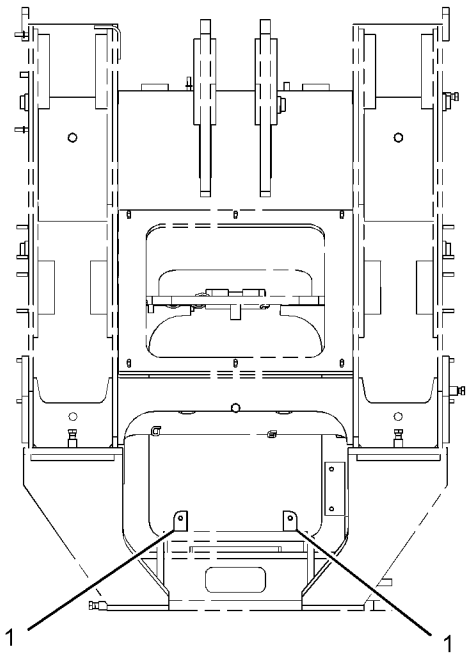

FRONT VIEW

GRAPHIC #1 **<END>** g01155997

265-7929 HARDWARE GP-LOADER FRAME–
AXLE OIL COOLER MOUNTING
S/N: M3G1-UP
PART OF 241-0073 COOLER AR-AXLE OIL
AN ATTACHMENT

SMCS-7054, 7553 **i02306041**

NOTE	REF NO	GRAPHIC REF	PART NUMBER	QTY	PART NAME 1 2 3 4 5 6 (PRODUCT LEVEL)	SEE PAGE
	1	1	*4I-2201*	1	BAR	
	2	1	*091-1735*	1	BLOCK	

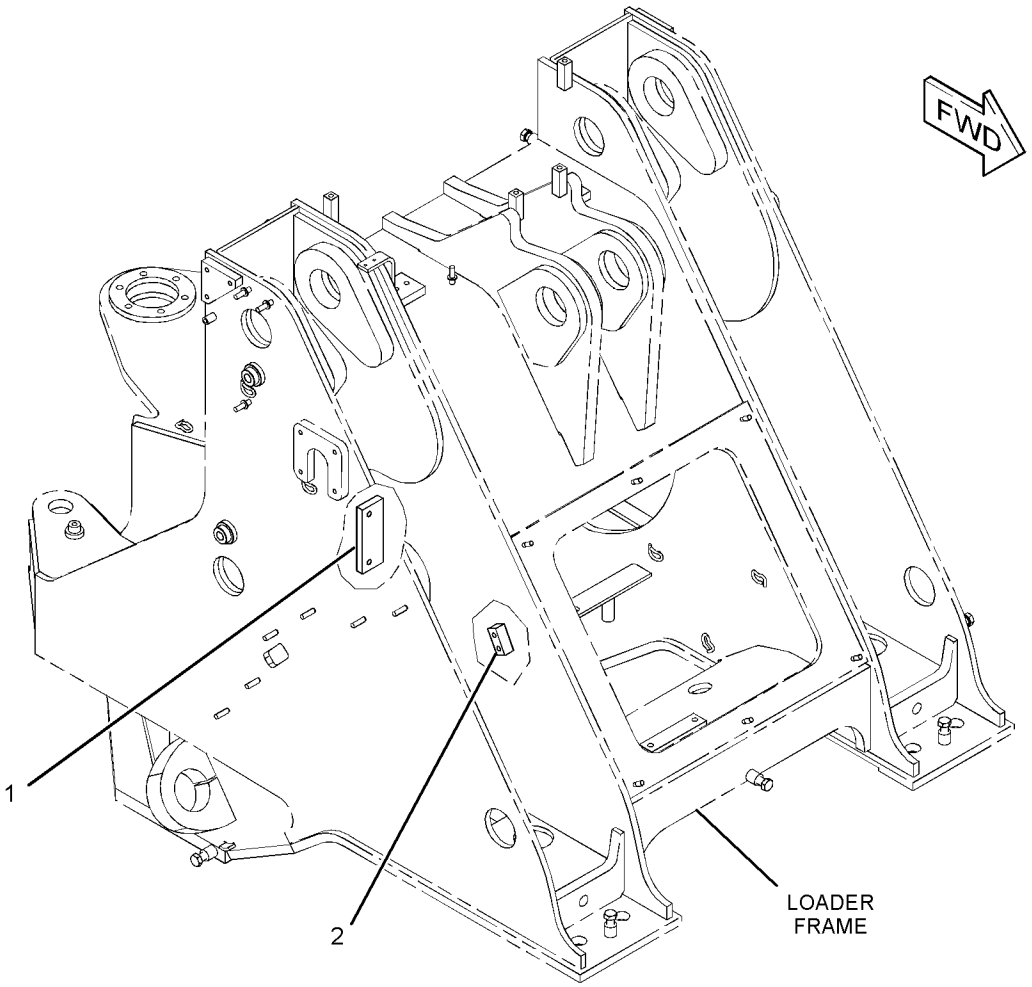

GRAPHIC #1 **<END>** g01155892

260-1531 HARDWARE GP-MOUNTING–SECONDARY STEERING

S/N: M3G1-UP

PART OF 244-5424 STEERING AR-SECONDARY

AN ATTACHMENT

SMCS-7050, 7553 **i02307744**

NOTE	REF NO	GRAPHIC REF	PART NUMBER	QTY	PART NAME 1 2 3 4 5 6 (PRODUCT LEVEL)	SEE PAGE
	1	1	**202-0686**	1	BRACKET	
	2	1	*264-1446*	1	ANGLE	
M	3	1	**7X-0752**	5	BOSS-WELD (M10X1.5X65-MM OAL)	
M	4	1	**8T-3635**	1	STUD-WELD (M12X1.75X34.93-MM OAL)	
M	5	1	**8T-3851**	1	BOSS-WELD (M10X1.5X17.5-MM)	
	6	1	*8X-5942*	1	BLOCK	

M-METRIC PART

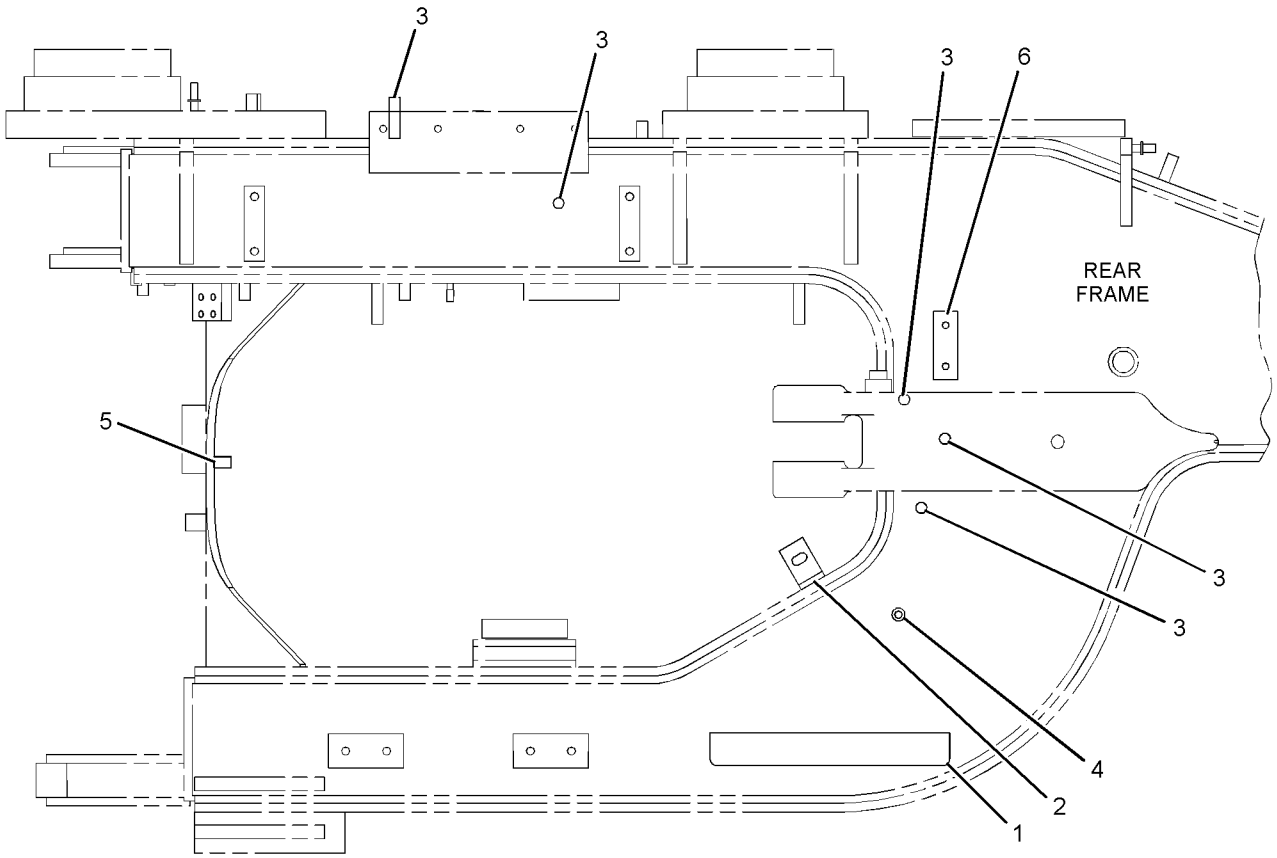

LEFT SIDE VIEW

GRAPHIC #1 **<END>** g01133245

260-1532 HARDWARE GP-MOUNTING–FENDER

S/N: M3G1-UP
PART OF 263-0056 FENDER AR-ROADING
AN ATTACHMENT

SMCS-7050, 7553 **i02308229**

NOTE	REF NO	GRAPHIC REF	PART NUMBER	QTY	PART NAME 1 2 3 4 5 6 (PRODUCT LEVEL)	SEE PAGE
	1	1	**9C-4935**	4	PLATE	

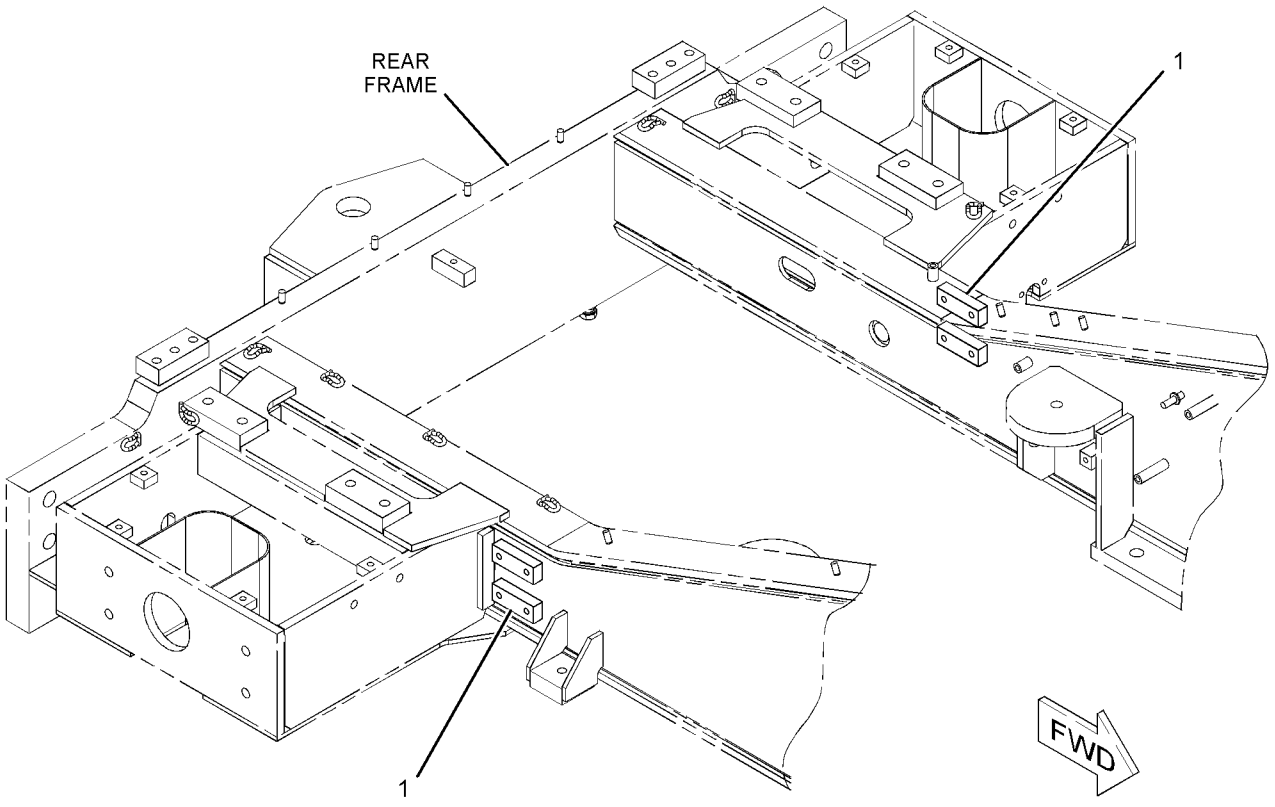

GRAPHIC #1 **<END>** g01134108

251-9759 HARDWARE GP-REAR FRAME–WASTE HANDLER

S/N: M3G1-UP
PART OF 244-6607 WASTE HANDLING AR
AN ATTACHMENT

SMCS-7051, 7553 **i02306928**

NOTE	REF NO	GRAPHIC REF	PART NUMBER	QTY	PART NAME 1 2 3 4 5 6 (PRODUCT LEVEL)	SEE PAGE
	1	1	**070-0079**	1	PLATE AS	
M	2	1	**112-9073**	16	STUD-WELD (M12X1.75X21.1-MM)	

M-METRIC PART

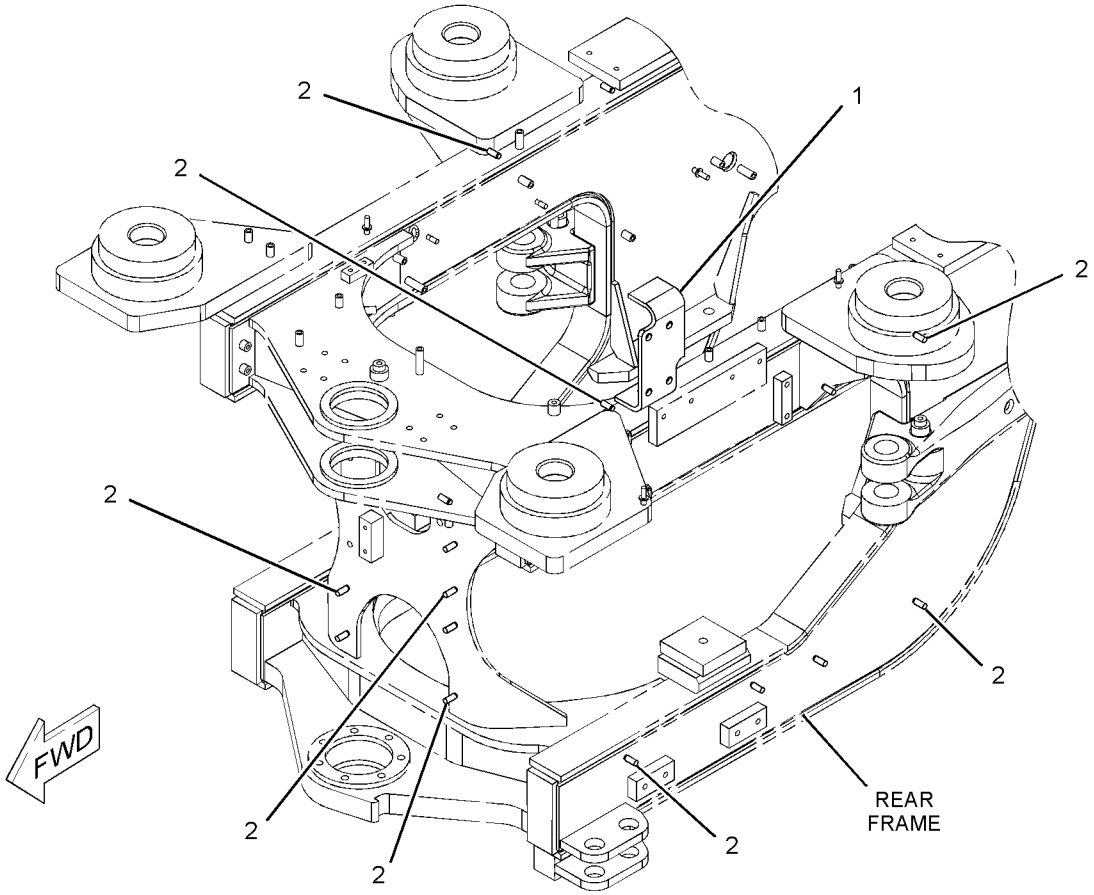

GRAPHIC #1 **<END>** g01134056

260-1530 HARDWARE GP-REAR FRAME–
AXLE OIL COOLER MOUNTING
S/N: M3G1-UP
PART OF 241-0073 COOLER AR-AXLE OIL
AN ATTACHMENT

SMCS-7051, 7553 **i02306043**

NOTE	REF NO	GRAPHIC REF	PART NUMBER	QTY	PART NAME 1 2 3 4 5 6 (PRODUCT LEVEL)	SEE PAGE
	1	1	*090-9767*	1	BLOCK	
	2	1	**151-4504**	1	BRACKET AS	
M		1	**8T-3490**	2	NUT-WELD (M10X1.5 THD)	
	3	1	**151-4505**	2	ANGLE AS	
					(EACH INCLUDES)	
M		1	**8T-3490**	1	NUT-WELD (M10X1.5 THD)	
M	4	1	**7X-0752**	2	BOSS-WELD (M10X1.5X65-MM OAL)	
M	5	1	*7X-7964*	1	BOSS-WELD	
M	6	1	**8T-3851**	1	BOSS-WELD (M10X1.5X17.5-MM)	
	7	1	*8X-6780*	1	BLOCK	

M-METRIC PART

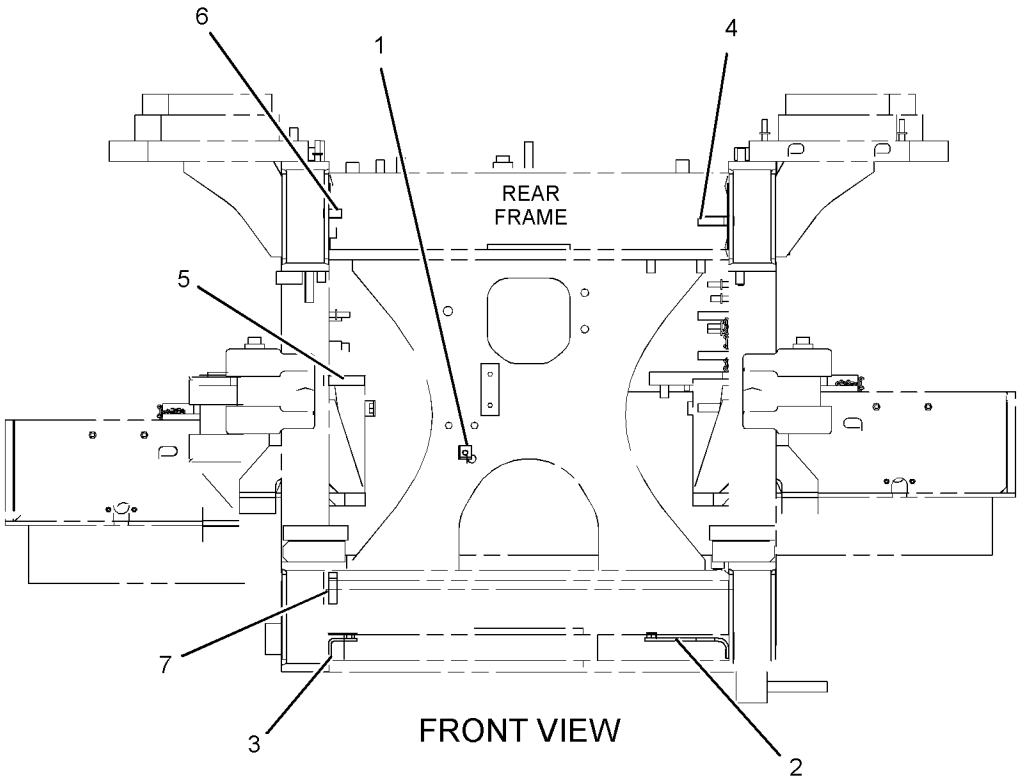

GRAPHIC #1 **<END>** g01156112

260-1533 HARDWARE GP-REAR FRAME

S/N: M3G1-UP
PART OF 262-1085 SUPPRESSION AR-SOUND
AN ATTACHMENT

SMCS-7051, 7553 **i02390793**

NOTE	REF NO	GRAPHIC REF	PART NUMBER	QTY	PART NAME 1 2 3 4 5 6 (PRODUCT LEVEL)	SEE PAGE
M	1	1	**112-9073**	8	STUD-WELD (M12X1.75X21.1-MM)	
	2	1	*141-0008*	4	PLATE	

M-METRIC PART

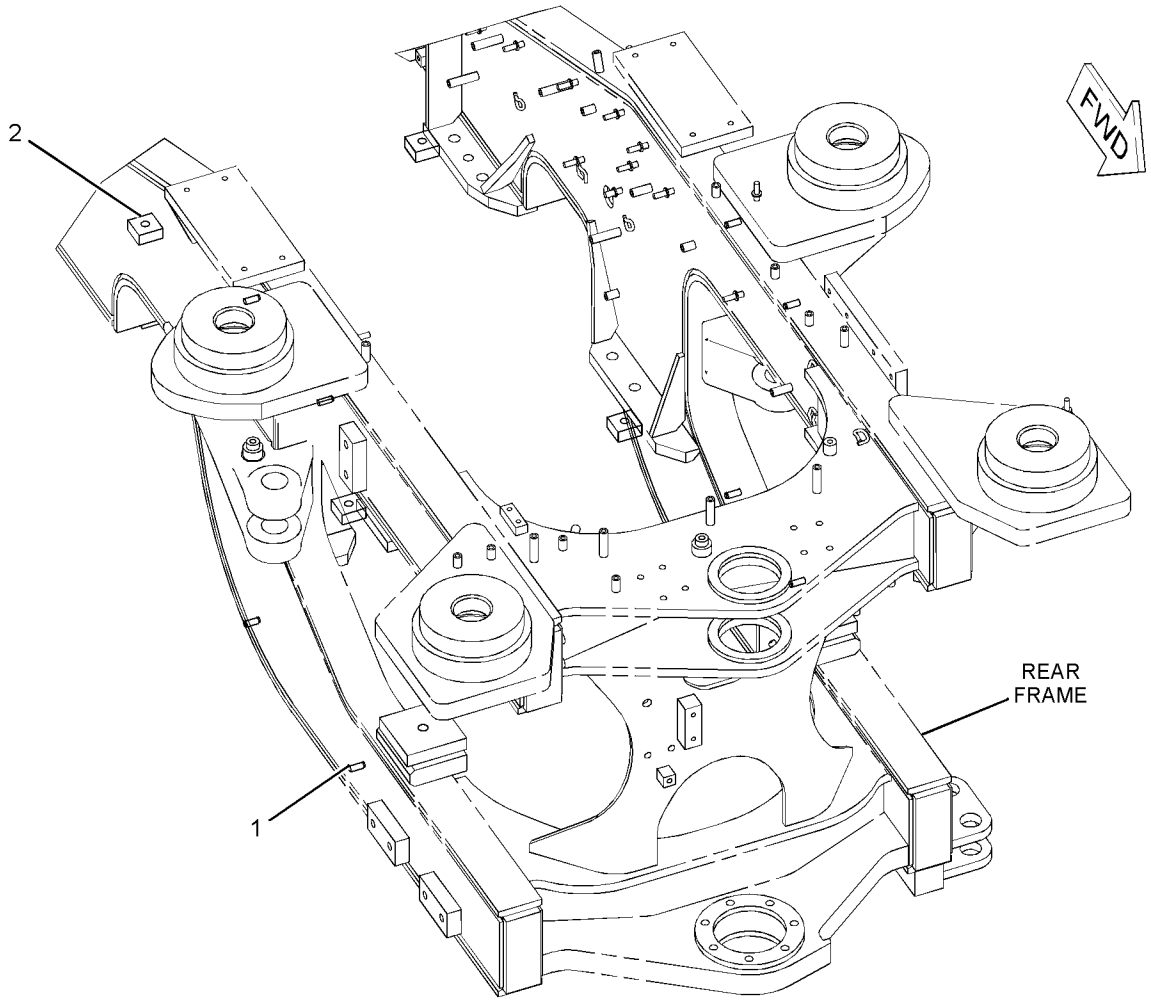

GRAPHIC #1 **<END>** g01135085

FRAME AND BODY

112-6953 HITCH GP-ARTICULATING

S/N: M3G1-UP

PART OF 237-4933 CHASSIS AR

SMCS-7057, 7100 **i01744127**

NOTE	REF NO	GRAPHIC REF	PART NUMBER	QTY	PART NAME 1 2 3 4 5 6 (PRODUCT LEVEL)	SEE PAGE
	1	1	**1B-3925**	2	CUP-BEARING	
	2	1	**3B-8489**	2	FITTING-GREASE	
	3	1	**3F-5950**	2	CONE-BEARING	
	4	1	**3K-2876**	2	SEAL-LIP TYPE	
	5	1	**5K-0983**	2	SEAL-LIP TYPE	
	6	1	**7D-8348**	2	CUP-BEARING	
	7	1	**7D-8349**	2	CONE-BEARING	
	8	1	**7G-8839**	1	SPACER (13.5X57X6-MM THK)	
	9	1	**7V-8632**	1	SPACER	
	10	1	**7V-8633**	1	SPACER	
	11	1	**118-8267**	1	PIN AS	
	12	1	**118-8269**	2	BEARING	
	13	1	**118-8270**	1	CAP	
	14	1	**118-8271**	1	PIN	
	15	1	**118-8272**	1	CAP	
	16	1	**118-8273**	1	CAP	
B	17	1	**118-8275**	1	SHIM PACK (INCLUDES 18-SHIMS)	
B	18	1	**118-8276**	1	SHIM PACK (INCLUDES 20-SHIMS)	
	19	1	**127-6513**	1	CAP	
B	20	1	**127-6514**	1	SHIM PACK (INCLUDES 20-SHIMS)	
	21	1	**134-3079**	1	PLATE	
M	22	1	**7X-2550**	7	BOLT (M12X1.75X110-MM)	
M	23	1	**8T-4139**	1	BOLT (M12X1.75X30-MM)	
M	24	1	**8T-4176**	6	BOLT (M12X1.75X90-MM)	
M	25	1	**8T-4183**	6	BOLT (M12X1.75X40-MM)	
	26	1	**8T-4223**	19	WASHER-HARD (13.5X25.5X3-MM THK)	
M	27	1	**106-4175**	2	BOLT (M20X2.5X60-MM) (M20X2.5X30MM)	
	28	1	**8T-4123**	2	WASHER-PLATED (22X35X3.5-MM THK)	

B-USE AS REQUIRED
M-METRIC PART

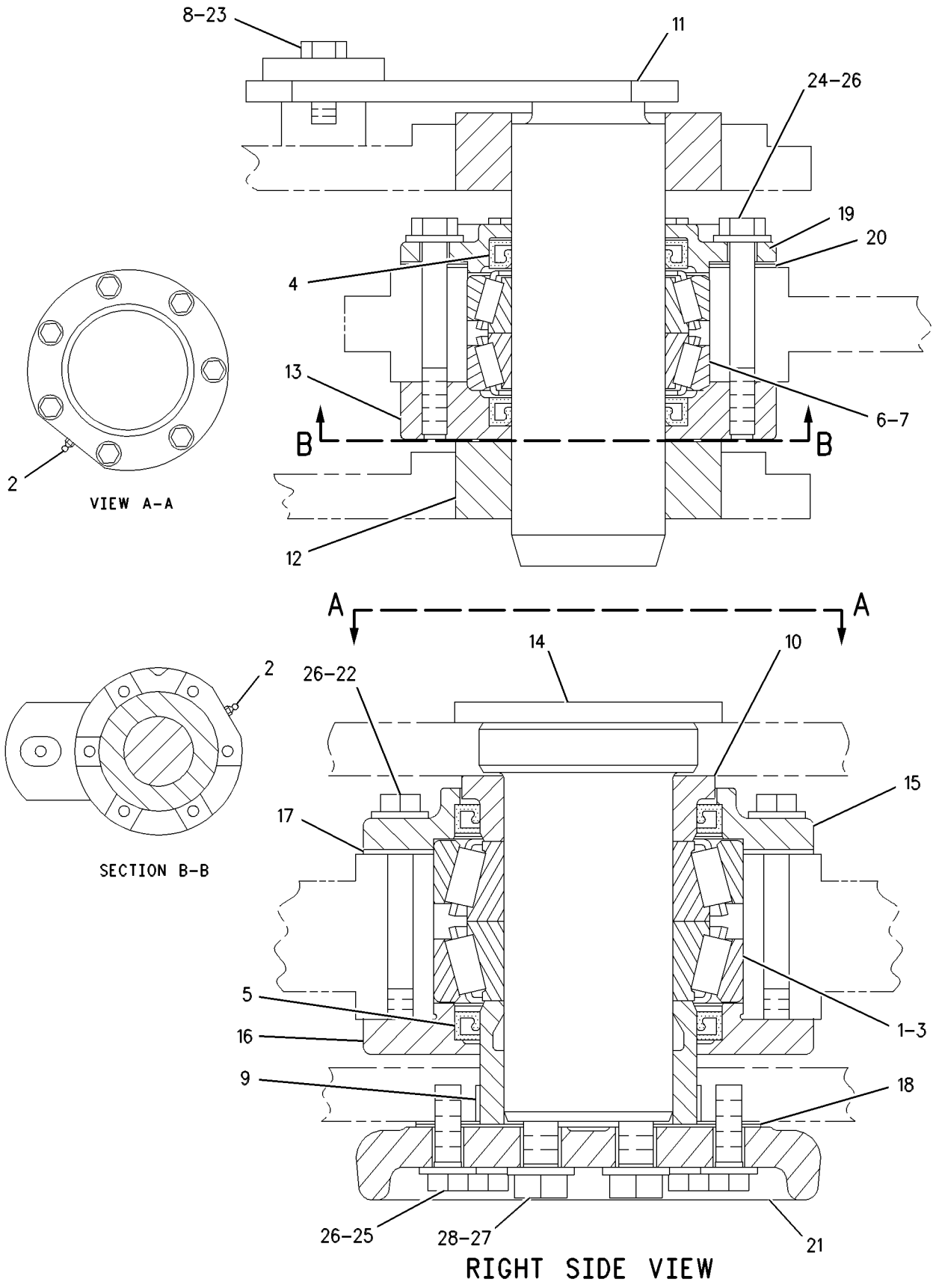

GRAPHIC #1 **<END>** g00382452

FRAME AND BODY

251-1700 HOOD & GUARD GP

S/N: M3G1-UP

PART OF 237-4933 CHASSIS AR

SMCS-7251 **i02441303**

NOTE	REF NO	GRAPHIC REF	PART NUMBER	QTY	PART NAME 1 2 3 4 5 6 (PRODUCT LEVEL)	SEE PAGE
	1	2	**125-7037**	1	INSERT	
Y	2	2	**216-4515**	1	PIPE GP-EXHAUST	89
	3	2	**239-8410**	1	PLATE	
	4	1	**243-1712**	2	BRACKET	
	5	2	**243-1718**	1	GRILL AS-TOP	
	6	1	**243-1722**	1	BRACKET (RH)	
	7	2	**243-1723**	1	BRACKET (LH)	
Y	8	1	**247-4668**	1	DOOR GP-ACCESS (HOOD SIDE, RH)	351
Y	9	1	**247-4670**	1	DOOR GP-ACCESS (HOOD SIDE, LH)	352
	10	1	**248-0706**	2	ROD AS	
					(EACH INCLUDES)	
		1	**6V-5839**	2	WASHER (11X21X2.5-MM THK)	
Y	11	2	*251-1701*	1	PANEL GP-HOOD (TOP)	402
Y	12	1	*251-1705*	1	PANEL GP-HOOD (SIDE, RH)	403
Y	13	2	*251-1708*	1	PANEL GP-HOOD (SIDE, LH)	404
	14	2	**251-1712**	1	TUBE	
	15	1	**251-4755**	1	BRACKET AS (RH)	
	16	2	**251-4756**	1	BRACKET AS (LH)	
	17	2	**251-4760**	1	SUPPORT AS	
Y	18	2	*271-7220*	1	GRILL GP-RADIATOR	369
	19	1	**3B-4611**	2	PIN-COTTER	
	20	1	**4M-7470**	6	GROMMET	
M	21	1	**5C-2890**	4	NUT (M6X1-THD)	
	22	1	**7X-7729**	38	WASHER (11X25X3-MM THK)	
	23	1	**8T-4121**	38	WASHER-HARD (11X21X2.5-MM THK)	
M	24	1	**8T-4133**	20	NUT (M10X1.5 THD)	
M	25	1,2	**8T-4138**	4	BOLT (M6X1X20-MM)	
M	26	1	**8T-4196**	54	BOLT (M10X1.5X35-MM)	
	27	1	**9M-5884**	6	BUMPER	
M	28	2	**9X-2044**	2	SCREW-TRUSS HEAD (M6X1X16-MM)	
	29	1	**9X-8256**	8	WASHER (6.6X12X2-MM THK)	
D	30	1	**6V-6604**		SEAL (0.8-M)	
E	31	1	**126-8472**		SEAL (7.5-CM EACH)	
D	32	1	**5P-6410**		SEAL (0.26-M EACH)	
D	32A	1	**5P-6410**		SEAL (1.27-M EACH)	
E	33	2	**112-9736**		SEAL (147-CM)	
E	34	2	**120-5281**		SEAL (88-CM EACH)	

D-ORDER BY THE METER
E-ORDER BY THE CENTIMETER
M-METRIC PART
Y-SEPARATE ILLUSTRATION

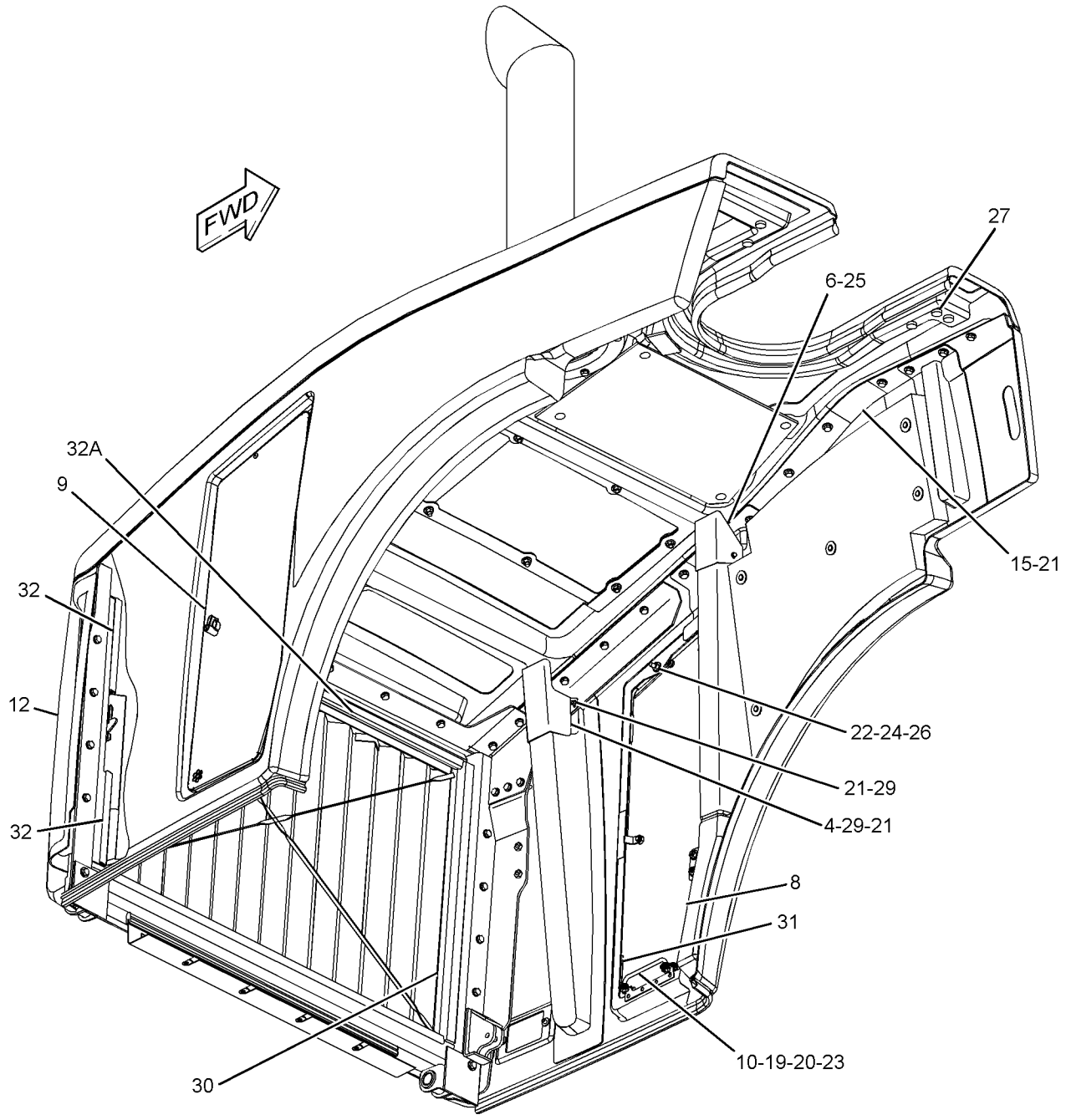

GRAPHIC #1 g01221666

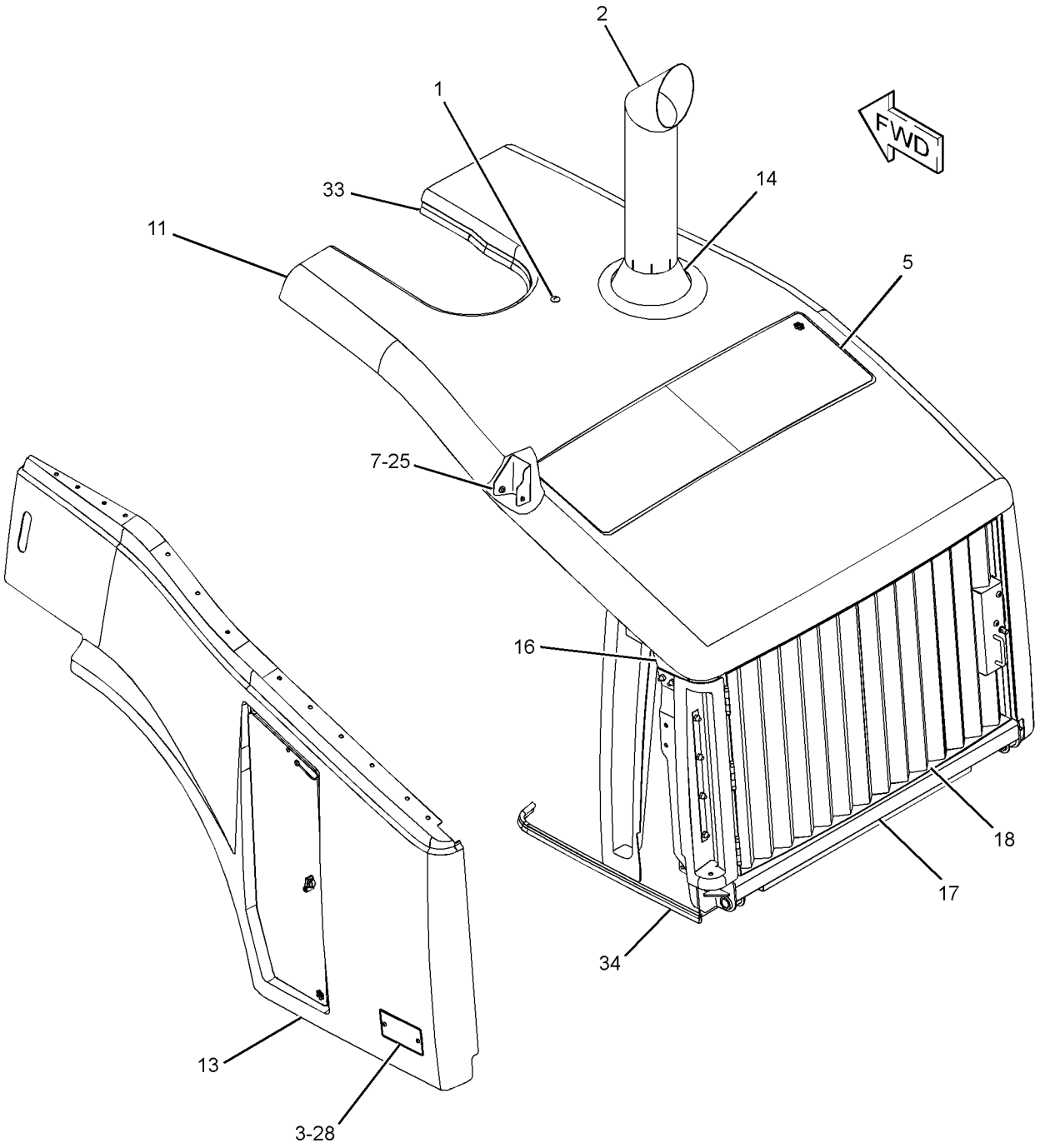

GRAPHIC #2 **<END>** g01221667

275-8310 HOOD & GUARD GP

S/N: M3G1-UP
PART OF 275-5865 LIGHTING AR-SIGNAL
AN ATTACHMENT

SMCS-7251 **i02444730**

NOTE	REF NO	GRAPHIC REF	PART NUMBER	QTY	PART NAME 1 2 3 4 5 6 (PRODUCT LEVEL)	SEE PAGE
	1	2	**125-7037**	1	INSERT	
Y	2	1	**216-4515**	1	PIPE GP-EXHAUST	89
	3	1	**239-8410**	1	PLATE	
	4	3	**243-1712**	2	BRACKET	
	5	2	**243-1718**	1	GRILL AS-TOP	
	6	2	**243-1722**	1	BRACKET (RH)	
	7	2	**243-1723**	1	BRACKET (LH)	
Y	8	2	**247-4668**	1	DOOR GP-ACCESS (HOOD SIDE, RH)	351
Y	9	2	**247-4670**	1	DOOR GP-ACCESS (HOOD SIDE, LH)	352
	10	2	**248-0706**	2	ROD AS	
					(EACH INCLUDES)	
		2	**6V-5839**	2	WASHER (11X21X2.5-MM THK)	
Y	11	2	*251-1701*	1	PANEL GP-HOOD (TOP)	402
	12	1	**251-1712**	1	TUBE	
	13	1	**251-4755**	1	BRACKET AS (RH)	
	14	1	**251-4756**	1	BRACKET AS (LH)	
	15	3	**251-4760**	1	SUPPORT AS	
Y	16	1	*271-7220*	1	GRILL GP-RADIATOR	369
Y	17	2	*275-8311*	1	PANEL GP-HOOD (SIDE, RH)	405
Y	18	2	*275-8313*	1	PANEL GP-HOOD (SIDE, LH)	406
	19	2	**3B-4611**	2	PIN-COTTER	
	20	2,3	**4M-7470**	6	GROMMET	
M	21	3	**5C-2890**	4	NUT (M6X1-THD)	
	22	1,3	**7X-7729**	38	WASHER (11X25X3-MM THK)	
	23	1,2,3	**8T-4121**	38	WASHER-HARD (11X21X2.5-MM THK)	
M	24	1,3	**8T-4133**	20	NUT (M10X1.5 THD)	
M	25	2	**8T-4138**	4	BOLT (M6X1X20-MM)	
M	26	1,3	**8T-4196**	54	BOLT (M10X1.5X35-MM)	
	27	3	**9M-5884**	6	BUMPER	
M	28	1	**9X-2044**	2	SCREW-TRUSS HEAD (M6X1X16-MM)	
	29	2,3	**9X-8256**	8	WASHER (6.6X12X2-MM THK)	
D	30	1	**6V-6604**		SEAL (0.8-M)	
E	31	1	**126-8472**		SEAL (7.5-CM EACH)	
D	32	1	**5P-6410**		SEAL (1.27-M EACH)	
D	32A	1	**5P-6410**		SEAL (0.26-M EACH)	
E	33	3	**112-9736**		SEAL (147-CM)	
	34	1	**120-5281**		SEAL (88-CM EACH)	

D-ORDER BY THE METER
E-ORDER BY THE CENTIMETER
M-METRIC PART
Y-SEPARATE ILLUSTRATION

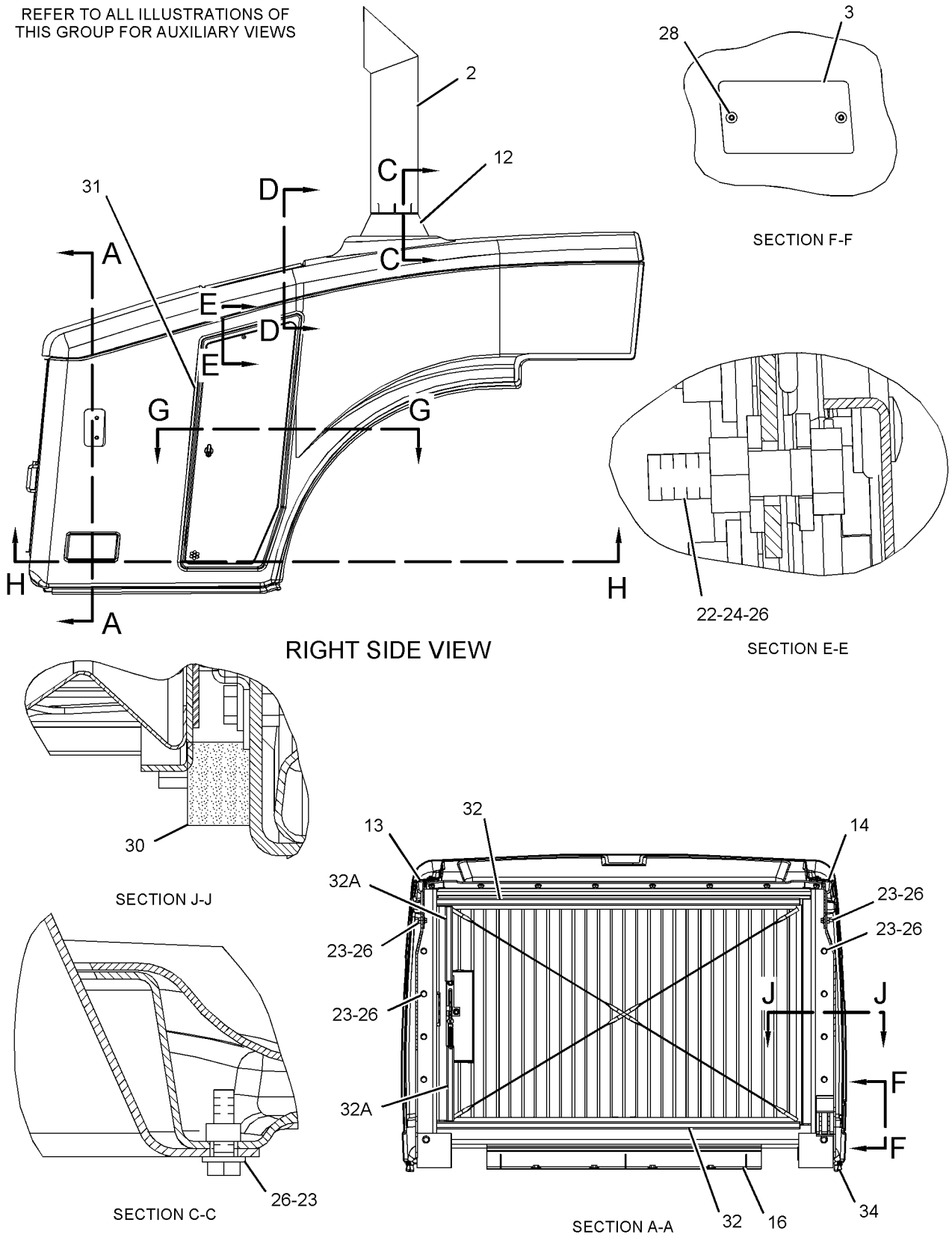

GRAPHIC #1

g01222402

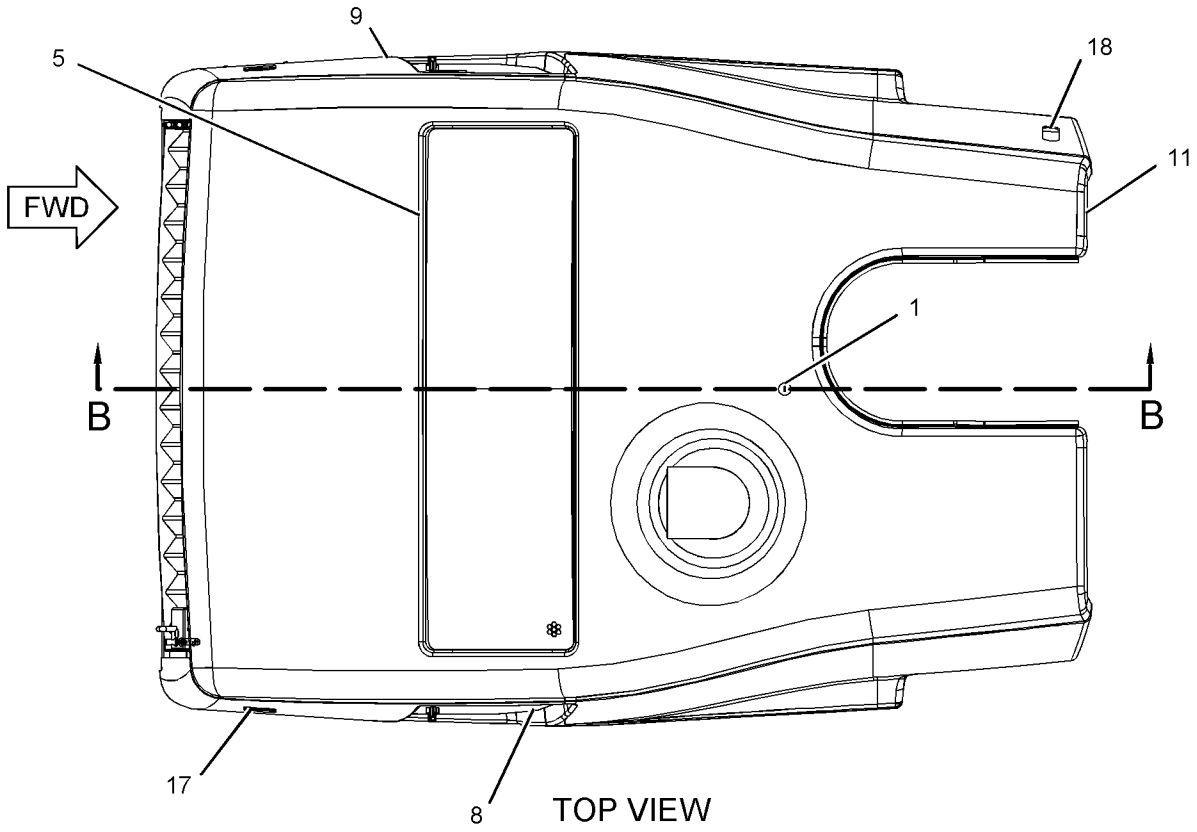

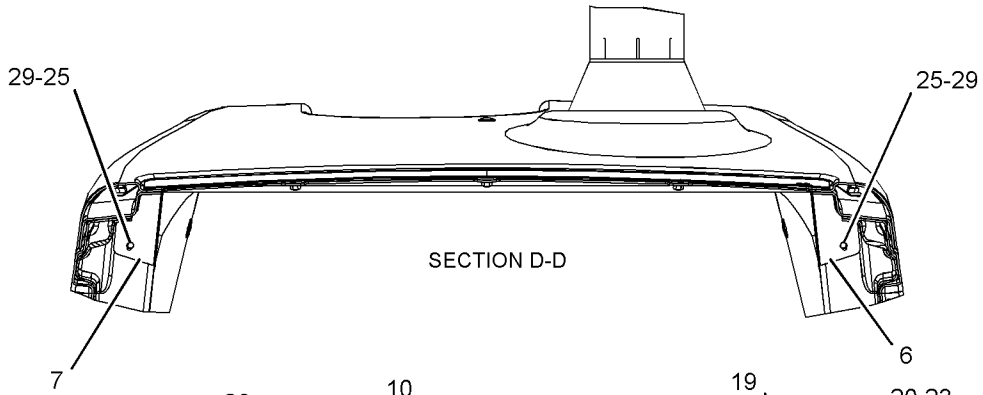

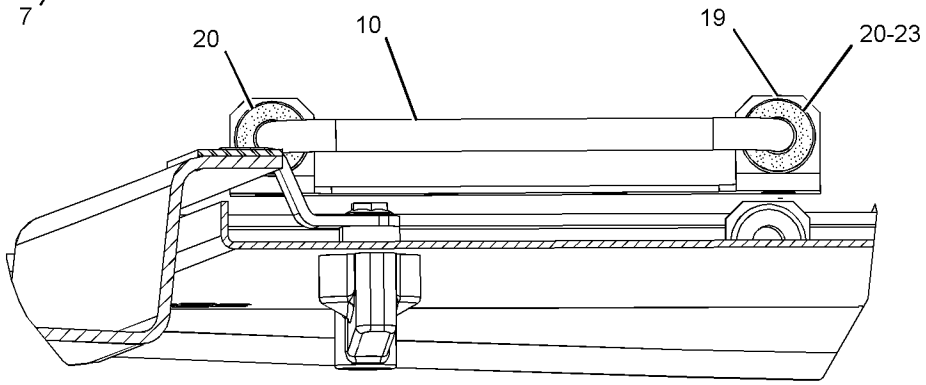

REFER TO ALL ILLUSTRATIONS OF THIS GROUP FOR AUXILIARY VIEWS

SECTION G-G

GRAPHIC #2

g01222515

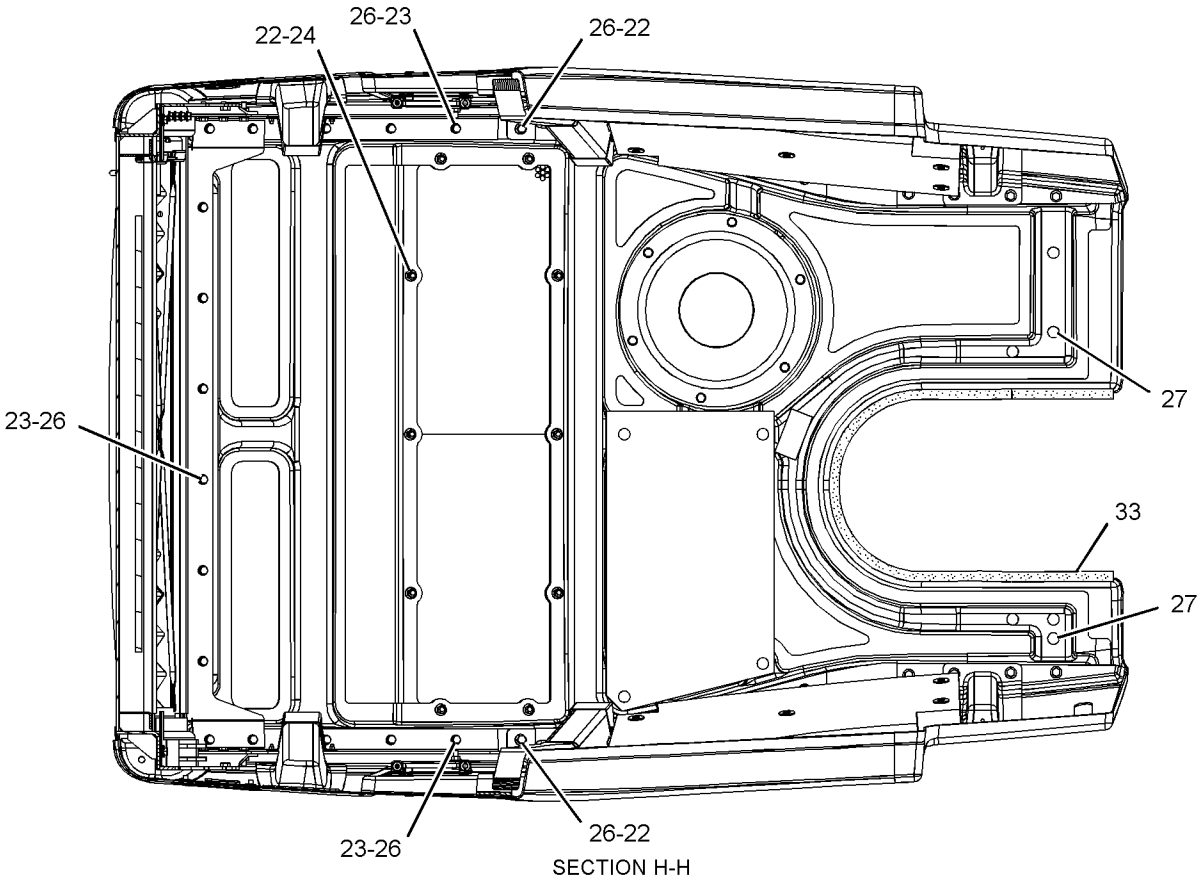

SECTION H-H

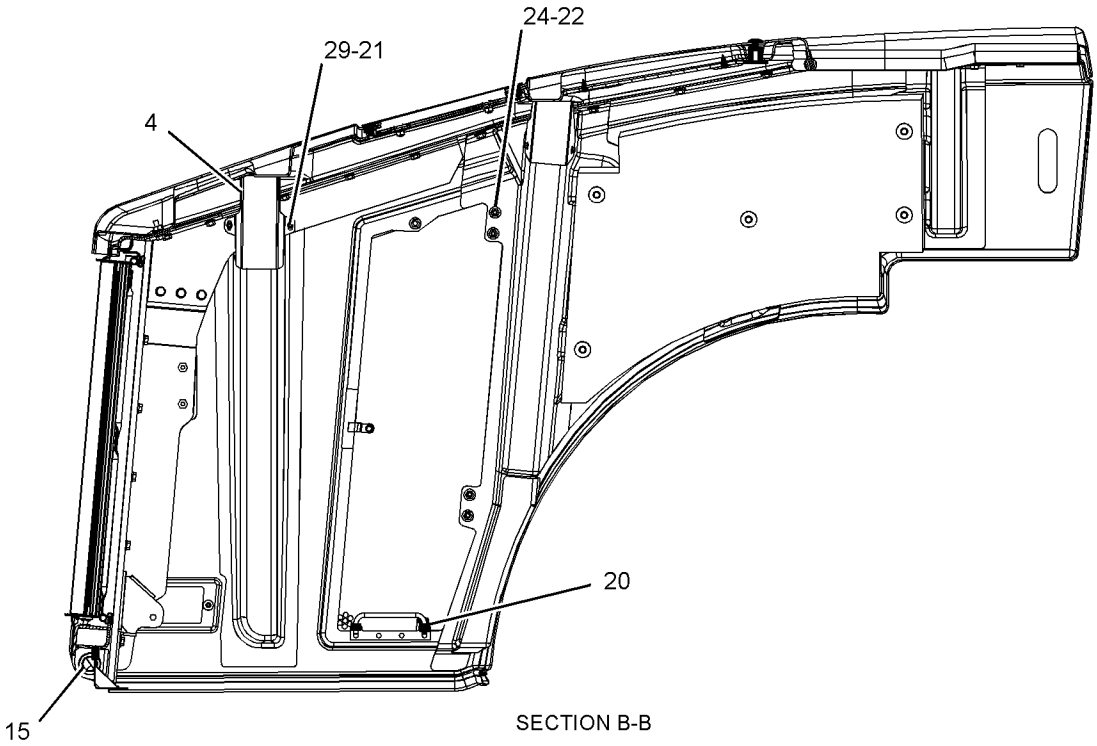

SECTION B-B

GRAPHIC #3 **<END>** g01222532

FRAME AND BODY

237-0430 LADDER GP

S/N: M3G1-UP

PART OF 237-4933 CHASSIS AR

SMCS-7254 **i02454208**

NOTE	REF NO	GRAPHIC REF	PART NUMBER	QTY	PART NAME 1 2 3 4 5 6 (PRODUCT LEVEL)	SEE PAGE
	1	1	**7W-8106**	32	SPACER (15-MM THK)	
	2	1	**234-1530**	4	STEP AS	
					(EACH INCLUDES)	
M		1	**8T-3490**	4	NUT-WELD (M10X1.5-THD)	
	3	1	**234-3545**	16	PLATE	
	4	1	**234-5107**	8	BELT-STEP	
	5	1	**234-5110**	2	PLATE	
	6	1	**245-3834**	1	HANDHOLD AS (LH)	
	7	1	**245-3835**	1	HANDHOLD AS (RH)	
	8	1	**245-3852**	1	HANDHOLD AS (LH)	
	9	1	**245-3853**	1	HANDHOLD AS (RH)	
	10	1	**246-6727**	4	BRACKET AS	
	11	1	**246-7934**	1	LADDER AS (LH)	
		1	**234-1530**	1	STEP AS	
M		1	**8T-3490**	4	NUT-WELD (M10X1.5-THD)	
	12	1	**246-7935**	1	LADDER AS (RH)	
M		1	**8T-3490**	4	NUT-WELD (M10X1.5-THD)	
	13	1	**246-7936**	1	BRACKET AS	
	14	1	**5P-1076**	8	WASHER-HARD (13.5X30X4-MM THK)	
	15	1	**8T-4121**	56	WASHER-HARD (11X21X2.5-MM THK)	
M	16	1	**8T-4133**	4	NUT (M10X1.5 THD)	
M	17	1	**8T-4183**	8	BOLT (M12X1.75X40-MM)	
M	18	1	**8T-4186**	32	BOLT (M10X1.5X40-MM)	
M	19	1	**8T-4195**	20	BOLT (M10X1.5X30-MM)	
	20	1	**8T-4223**	12	WASHER-HARD (13.5X25.5X3-MM THK)	
M	21	1	**8T-4139**	12	BOLT (M12X1.75X30-MM)	

M-METRIC PART

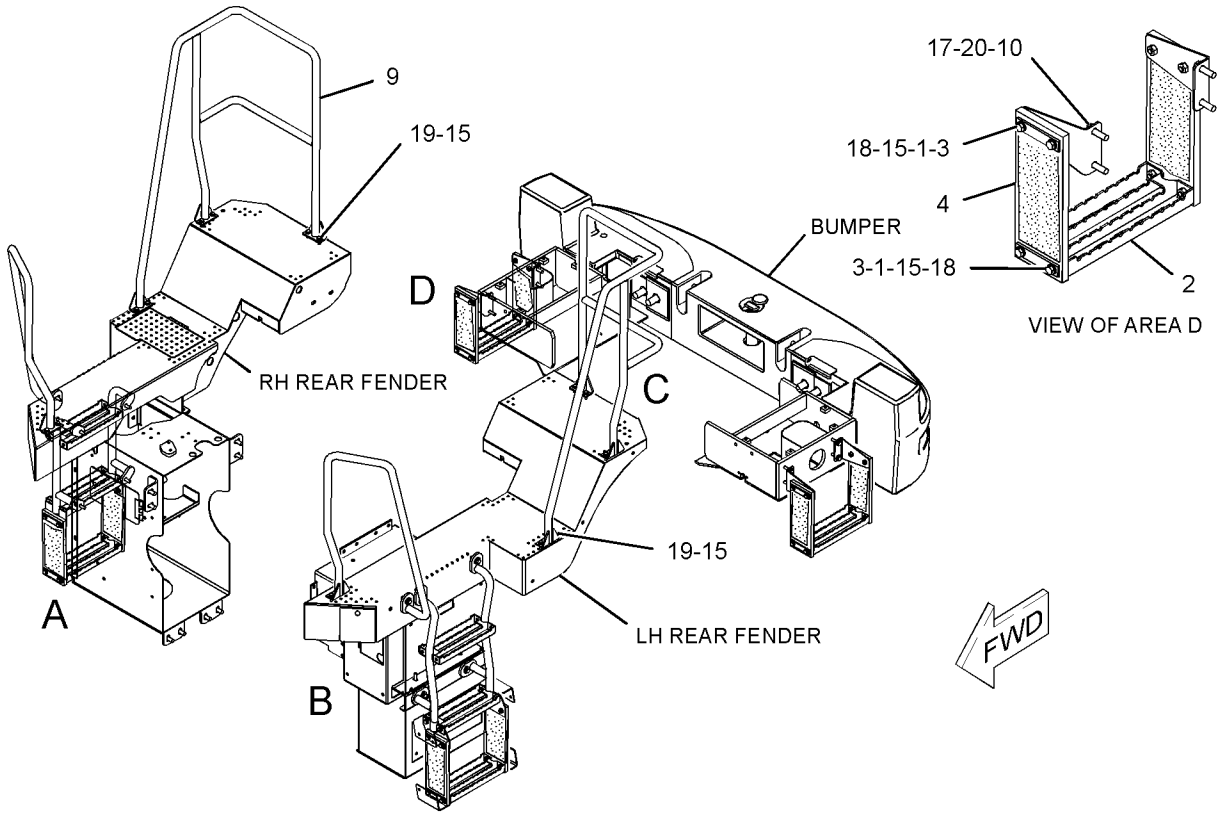

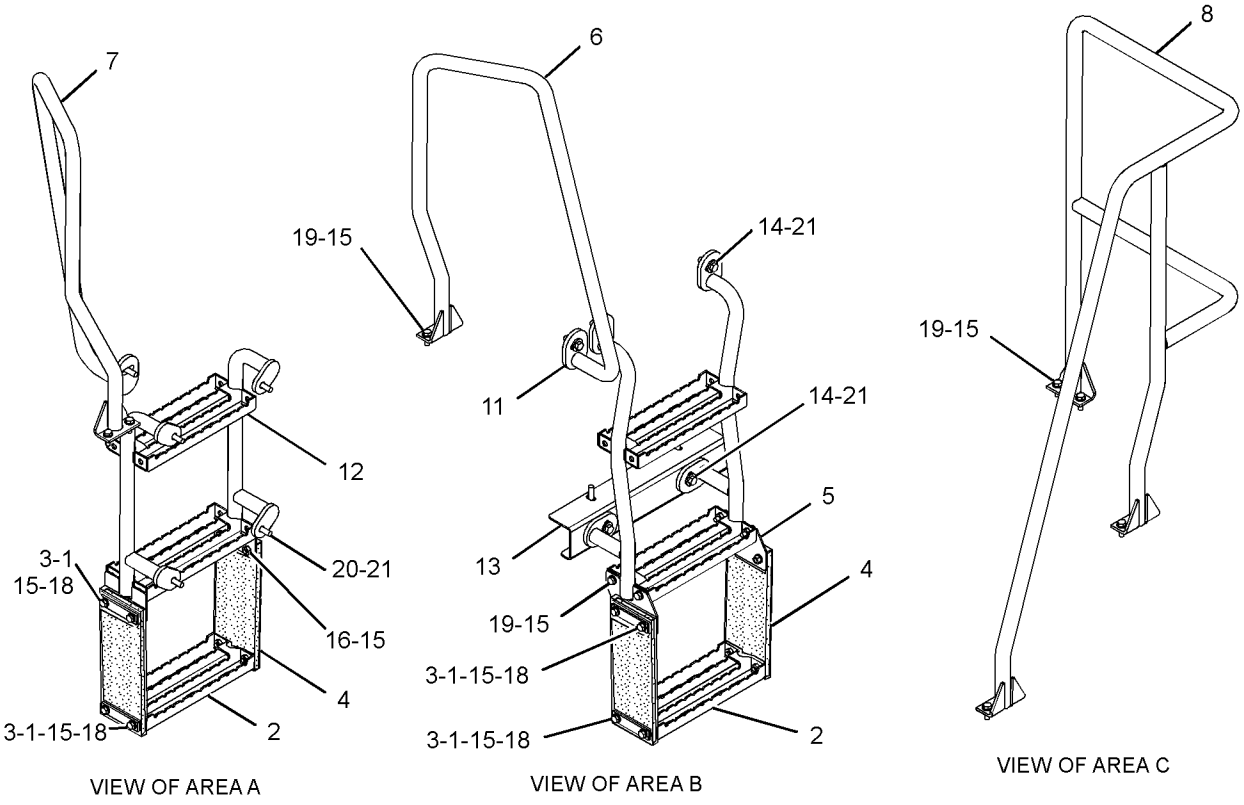

GRAPHIC #1 **<END>** g01220628

237-0433 LINES GP-GREASE

S/N: M3G1-UP

PART OF 237-4933 CHASSIS AR

SMCS-7510 **i02449346**

NOTE	REF NO	GRAPHIC REF	PART NUMBER	QTY	PART NAME 1 2 3 4 5 6 (PRODUCT LEVEL)	SEE PAGE
	1	1	**4H-1225**	2	WASHER (11X22X6-MM THK)	
	2	1	**5B-0935**	7	FITTING-GREASE	
	3	1	**5K-9242**	2	UNION-FLARED	
	4	1	**5K-9243**	5	ELBOW-FLARED	
	5	1	**5K-9979**	2	CONNECTOR	
	6	1	**5P-5461**	7	NUT (1/8-27-THD)	
	7	1	**5P-5463**	7	ADAPTER-LUBRICATION	
	8	1	**6L-3616**	1	CONNECTOR	
	9	1	**9S-7712**	2	ELBOW-FLARED	
	10	1	**111-4839**	6	STRAP	
	11	1	**201-5267**	1	TUBE AS	
	12	1	**201-8143**	1	TUBE AS	
	13	1	**244-8730**	1	TUBE AS	
	14	1	**244-8731**	1	TUBE AS	
	15	1	**244-8732**	1	TUBE AS	
	16	1	**256-7884**	1	HOSE AS	
	17	1	**256-7885**	1	HOSE AS	
	18	1	**256-7886**	1	HOSE AS	
	19	1	**256-7887**	1	HOSE AS	
	20	1	**260-3820**	1	TUBE AS	
	21	1	**260-3821**	1	TUBE AS	
	22	1	**111-4838**	6	CLIP	
	23	1	**2B-2404**	10	CLIP	
	24	1	**3B-6552**	4	ELBOW	
	25	1	**5K-2298**	3	CLIP	
	26	1	**033-8248**	2	CLIP	
	27	1	**8T-4121**	16	WASHER-HARD (11X21X2.5-MM THK)	
M	28	1,1	**8T-4133**	16	NUT (M10X1.5 THD)	
	29	1	**9S-1812**	2	FITTING (NIPPLE-PIPE)	

M-METRIC PART

237-0433 **LINES GP-GREASE** *(contd.)* **i02449346**

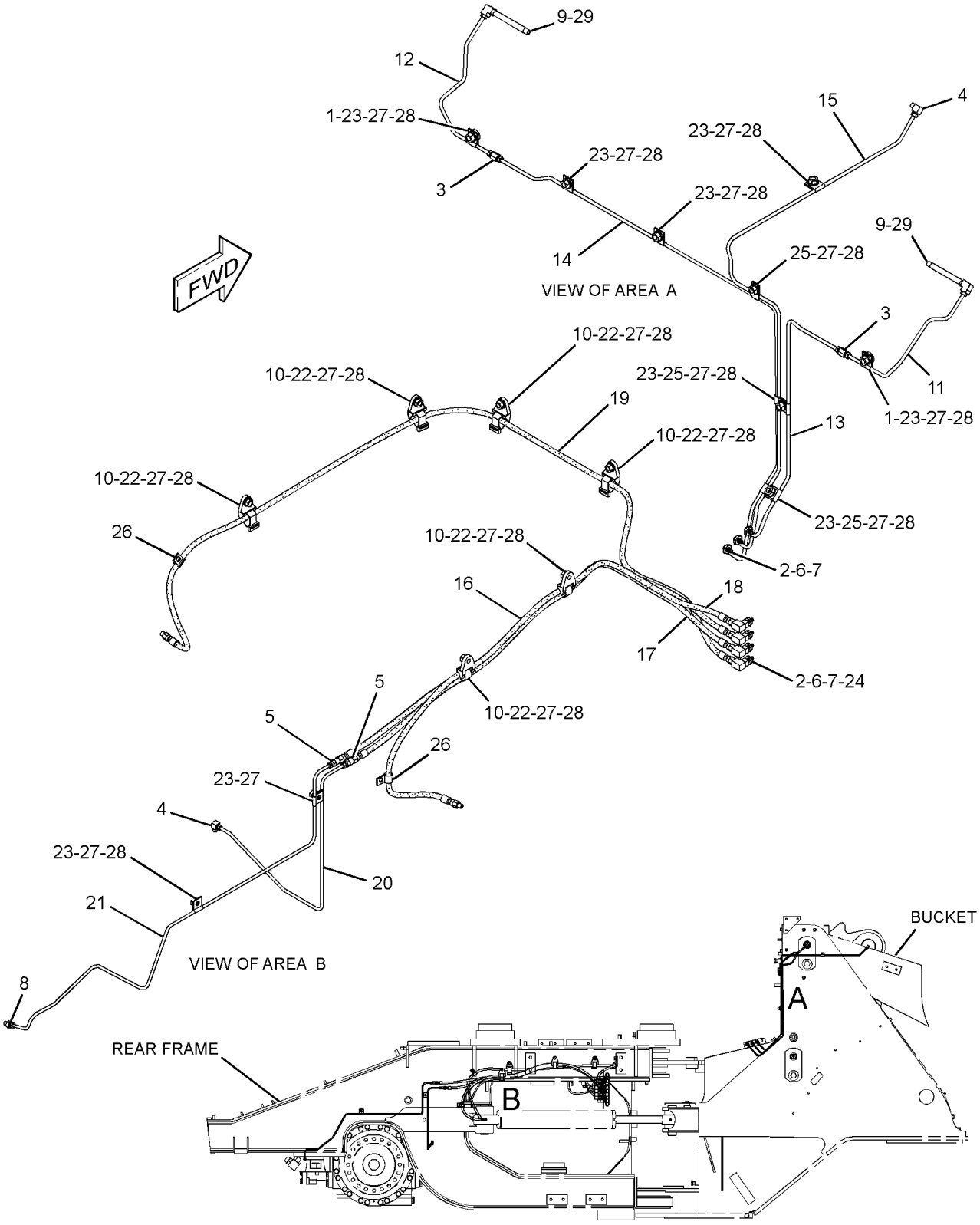

RIGHT SIDE VIEW

GRAPHIC #1 **<END>** g01225017

112-6973 LINK GP-STEERING FRAME LOCK

S/N: M3G1-UP

PART OF 237-4933 CHASSIS AR

SMCS-7506 **i00810329**

NOTE	REF NO	GRAPHIC REF	PART NUMBER	QTY	PART NAME 1 2 3 4 5 6 (PRODUCT LEVEL)	SEE PAGE
	1	1	**5V-6380**	2	PIN	
	2	1	**8D-3791**	2	PIN	
	3	1	**127-1579**	1	LINK	

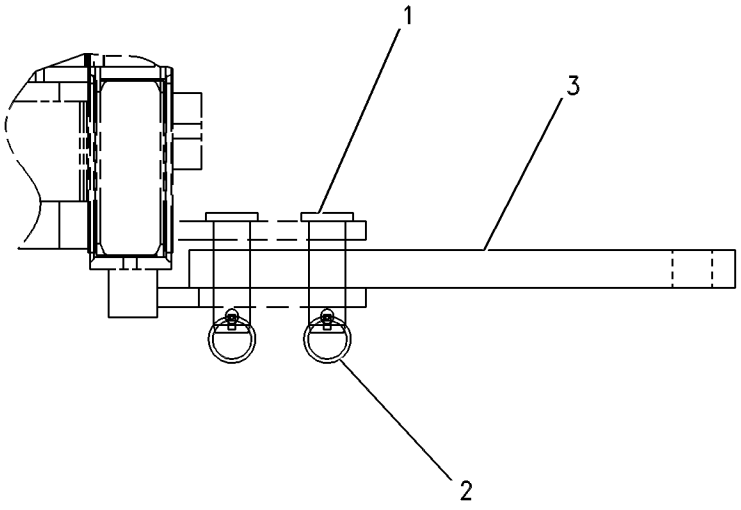

GRAPHIC #1 **<END>** g00262252

251-1701 PANEL GP-HOOD–TOP

S/N: M3G1-UP

PART OF 251-1700, 275-8310 HOOD & GUARD GP

ALSO AN ATTACHMENT

SMCS-7251 **i02443941**

NOTE	REF NO	GRAPHIC REF	PART NUMBER	QTY	PART NAME 1 2 3 4 5 6 (PRODUCT LEVEL)	SEE PAGE
	1	1	**224-9392**	4	FASTENER-SINGLE HEAD	
	2	1	**246-1888**	1	INSULATION	
	3	1	**251-1702**	1	PANEL AS (TOP)	

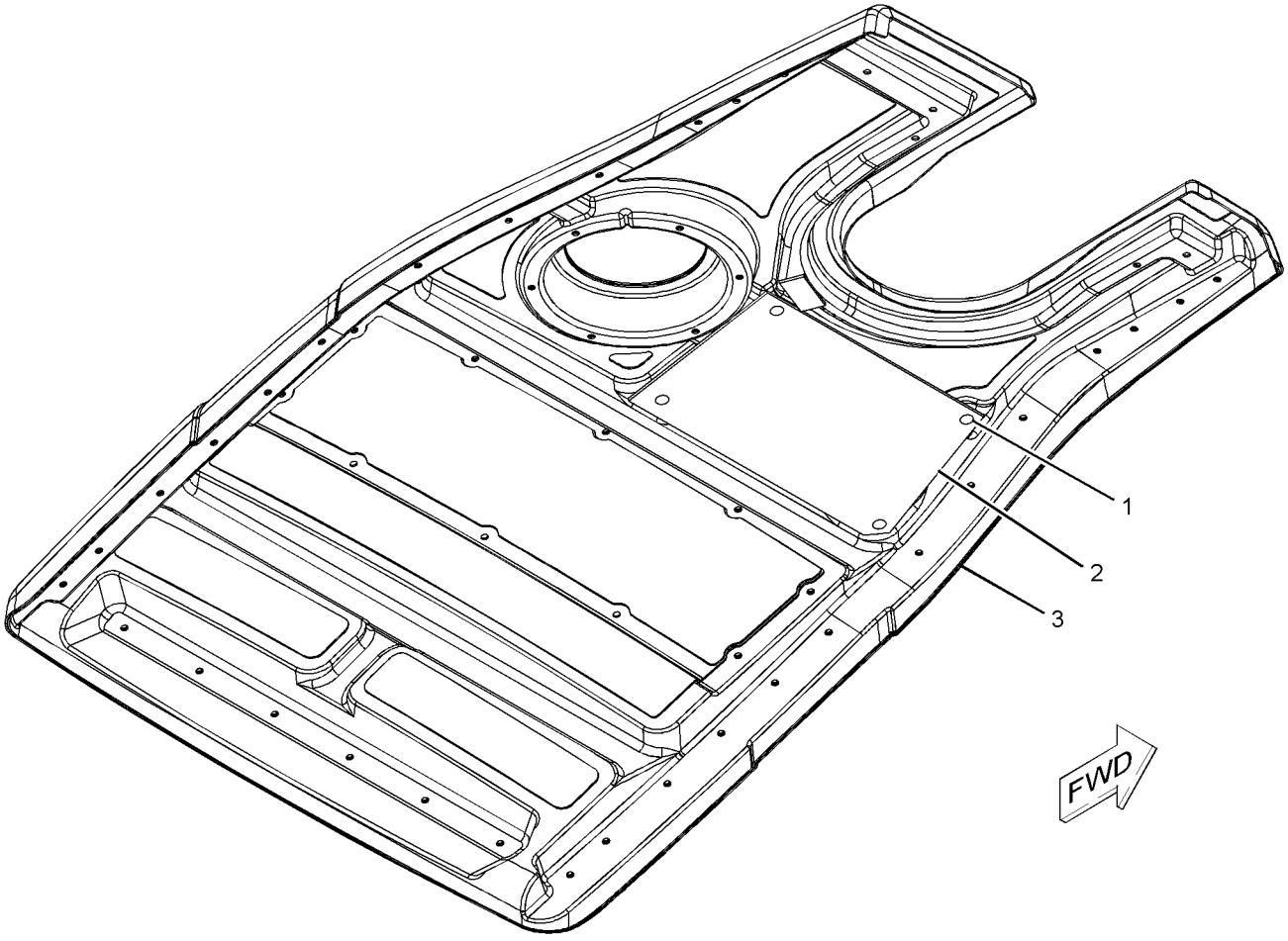

GRAPHIC #1 **<END>** g01133281

251-1705 PANEL GP-HOOD–SIDE, RH

S/N: M3G1-UP

PART OF 251-1700 HOOD & GUARD GP

SMCS-7251 **i02443925**

NOTE	REF NO	GRAPHIC REF	PART NUMBER	QTY	PART NAME 1 2 3 4 5 6 (PRODUCT LEVEL)	SEE PAGE
	1	1	**148-8240**	5	CLIP	
	2	1	**246-1890**	1	INSULATION	
	3	1	**251-1706**	1	PANEL AS (RH)	
	4	1	**7X-0603**	5	WASHER-HARD (9.9X35X2.5-MM THK)	

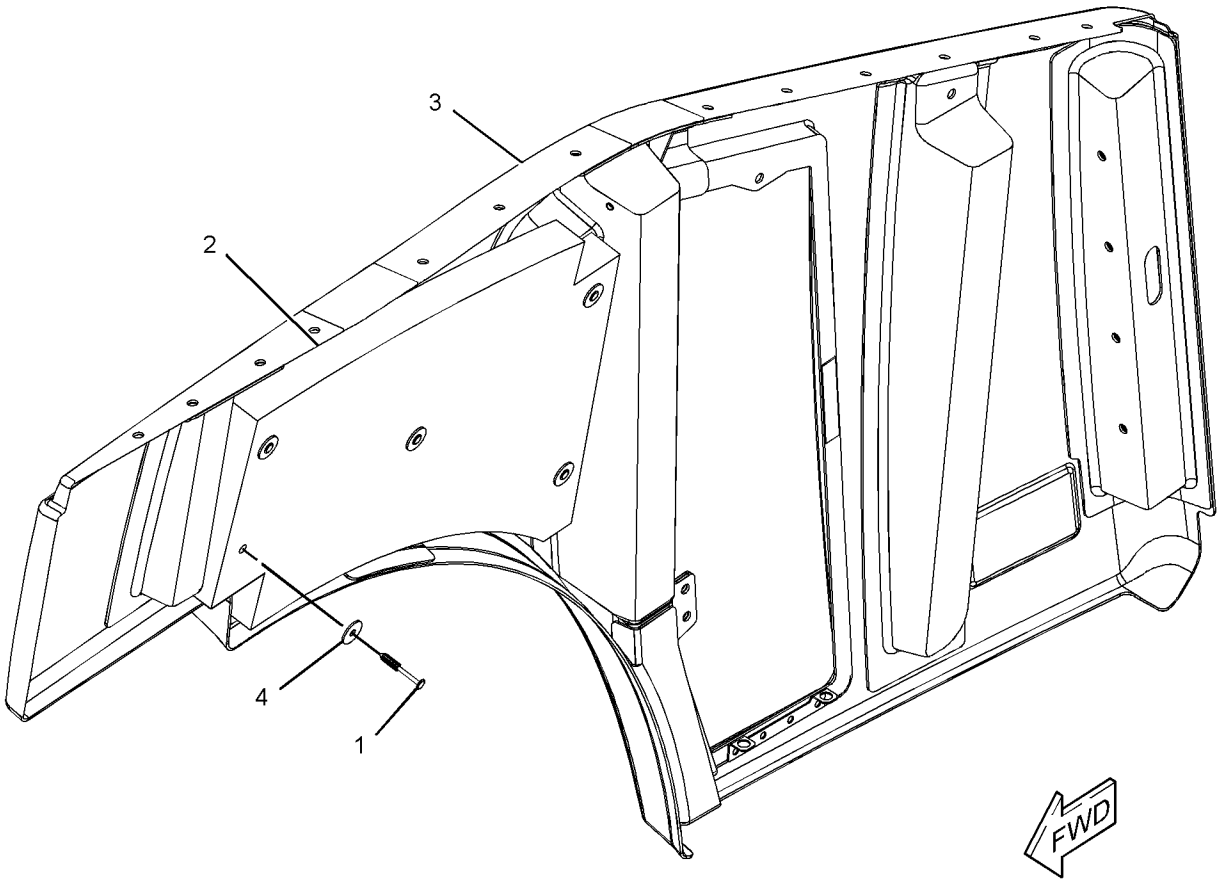

GRAPHIC #1 **<END>** g01220718

251-1708 PANEL GP-HOOD–SIDE, LH

S/N: M3G1-UP

PART OF 251-1700 HOOD & GUARD GP

SMCS-7251 **i02443913**

NOTE	REF NO	GRAPHIC REF	PART NUMBER	QTY	PART NAME 1 2 3 4 5 6 (PRODUCT LEVEL)	SEE PAGE
	1	1	**148-8240**	5	CLIP	
	2	1	**246-1889**	1	INSULATION	
	3	1	**251-1709**	1	PANEL AS (LH)	
	4	1	**7X-0603**	5	WASHER-HARD (9.9X35X2.5-MM THK)	

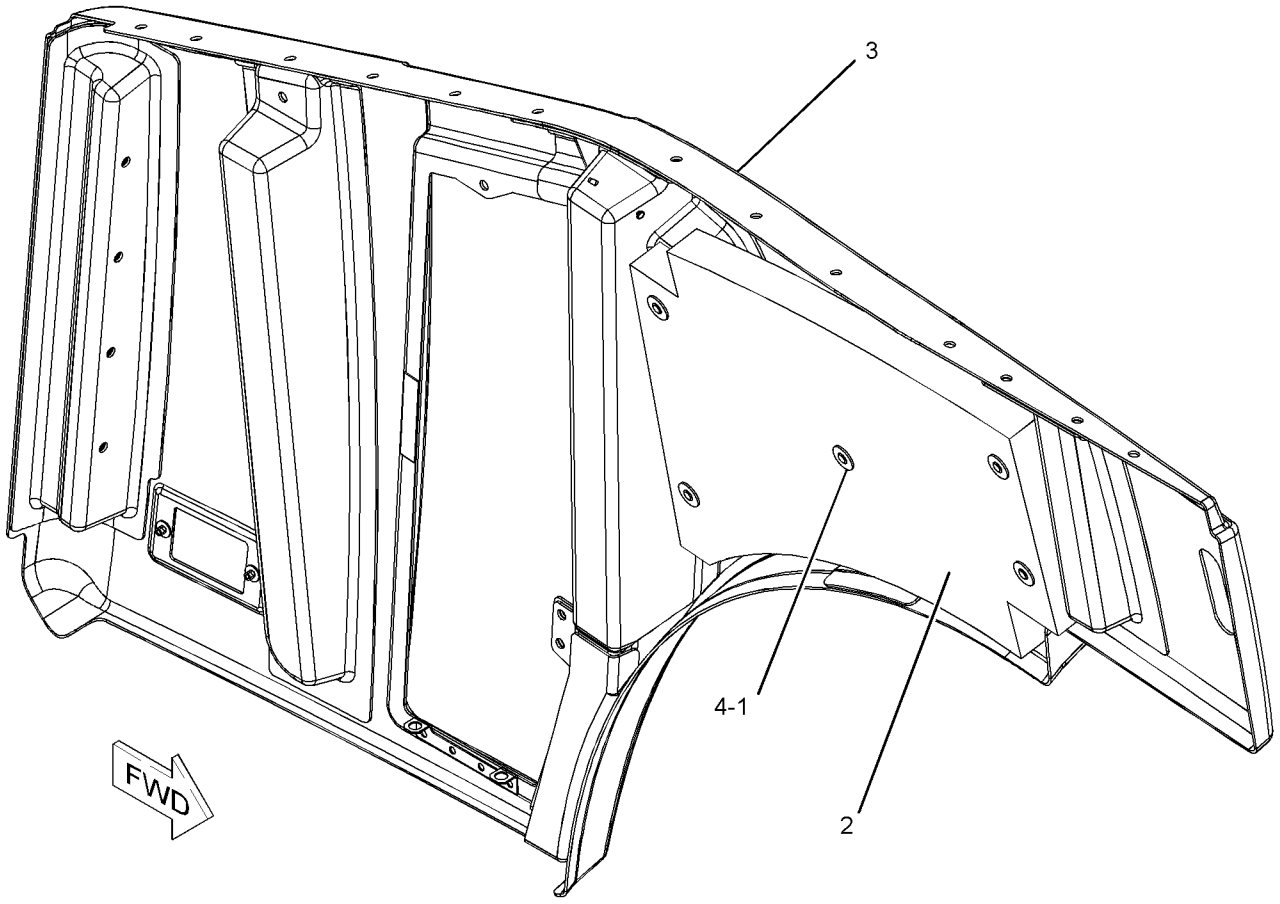

GRAPHIC #1 **<END>** g01133011

275-8311 PANEL GP-HOOD–SIDE, RH

S/N: M3G1-UP
PART OF 275-8310 HOOD & GUARD GP
AN ATTACHMENT

SMCS-7251 **i02444729**

NOTE	REF NO	GRAPHIC REF	PART NUMBER	QTY	PART NAME 1 2 3 4 5 6 (PRODUCT LEVEL)	SEE PAGE
	1	1	**148-8240**	5	CLIP	
	2	1	**246-1890**	1	INSULATION	
	3	1	**275-8312**	1	PANEL AS (RH)	
	4	1	**7X-0603**	5	WASHER-HARD (9.9X35X2.5-MM THK)	

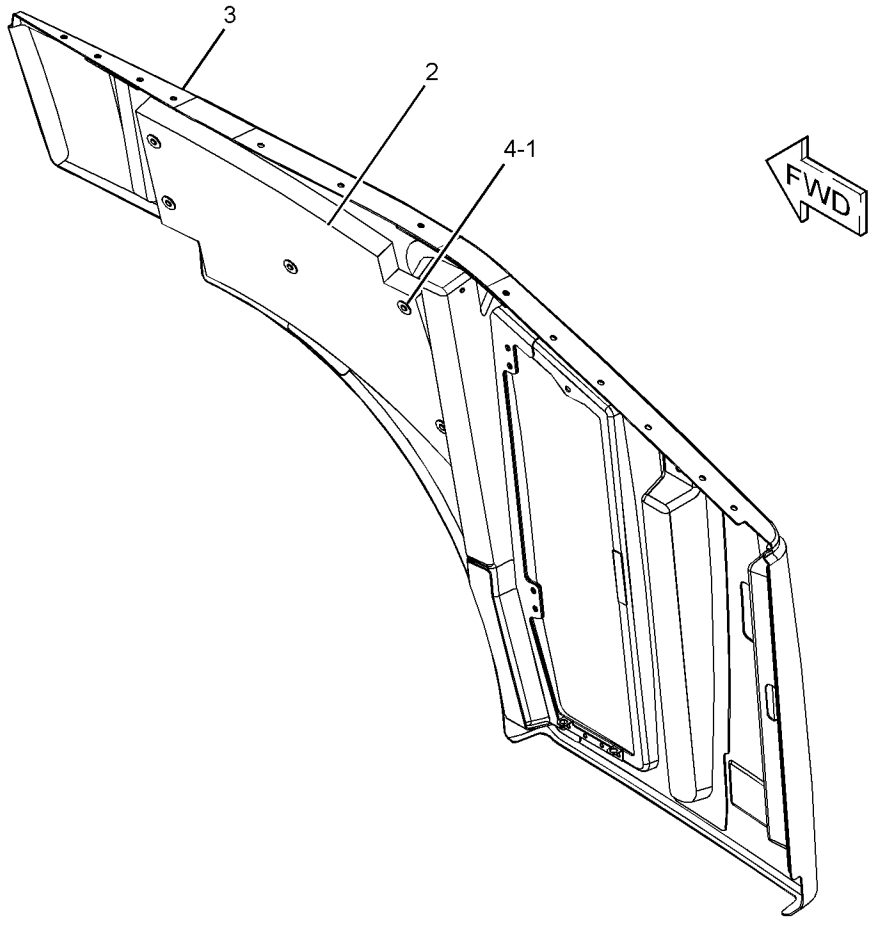

GRAPHIC #1 **<END>** g01222079

275-8313 PANEL GP-HOOD–SIDE, LH

S/N: M3G1-UP
PART OF 275-8310 HOOD & GUARD GP
AN ATTACHMENT

SMCS-7251 **i02444728**

NOTE	REF NO	GRAPHIC REF	PART NUMBER	QTY	PART NAME 1 2 3 4 5 6 (PRODUCT LEVEL)	SEE PAGE
	1	1	**148-8240**	5	CLIP	
	2	1	**246-1889**	1	INSULATION	
	3	1	**275-8314**	1	PANEL AS (LH)	
	4	1	**7X-0603**	5	WASHER-HARD (9.9X35X2.5-MM THK)	

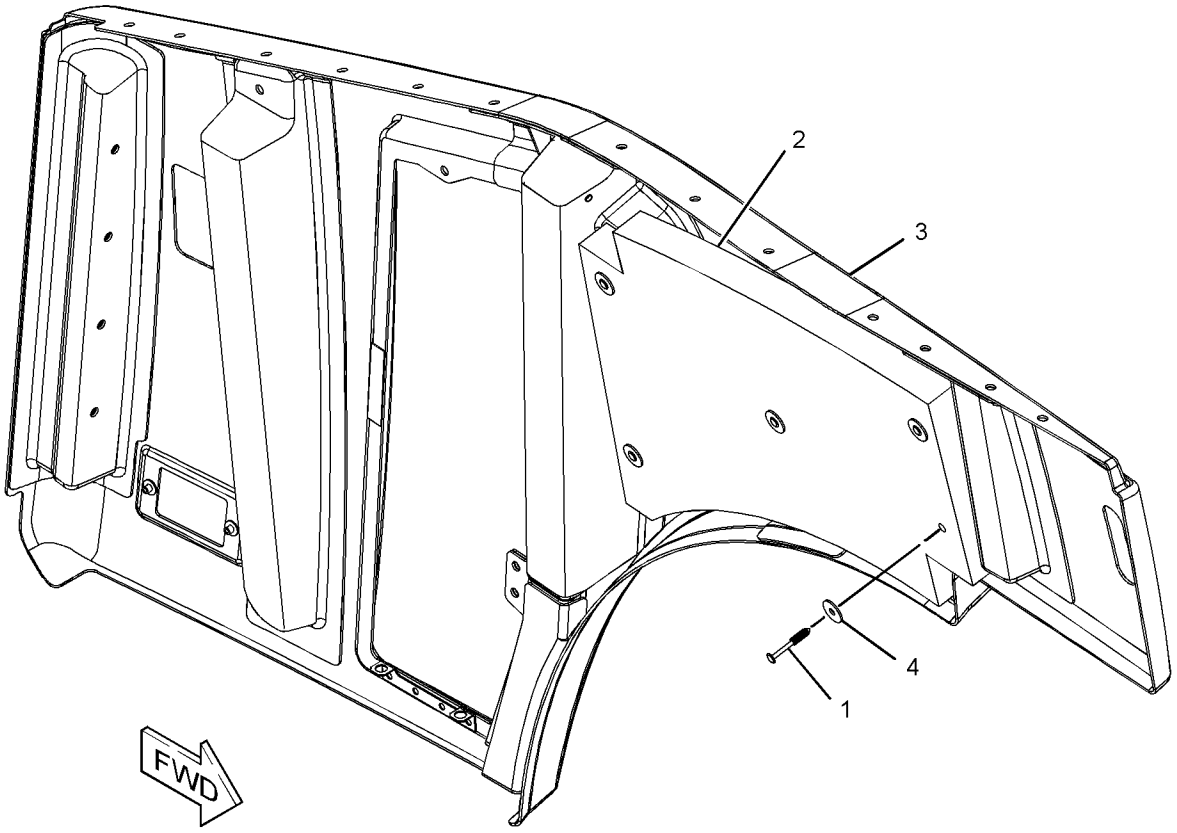

GRAPHIC #1 **<END>** g01220150

245-4083 PANEL GP-SIDE

S/N: M3G1-UP

PART OF 237-4933 CHASSIS AR

SMCS-7267 **i02444023**

NOTE	REF NO	GRAPHIC REF	PART NUMBER	QTY	PART NAME 1 2 3 4 5 6 (PRODUCT LEVEL)	SEE PAGE
	1	1	**4E-1384**	4	BUMPER-CONICAL	
	2	1	**245-4094**	1	INSULATION	
	3	1	**253-2538**	1	PANEL-OUTER (LH)	
	4	1	**253-2539**	1	PANEL-OUTER (RH)	
	5	1	**253-2540**	1	PLATE AS (LH)	
	6	1	**253-2541**	1	PLATE AS (RH)	
	7	1	**253-2547**	1	SUPPORT AS (RH)	
	8	1	**253-2548**	1	SUPPORT AS (LH)	
	9	1	**253-2550**	1	PLATE AS	
	10	1	**253-2553**	1	PLATE AS	
	11	1	**253-2555**	1	PLATE AS-SUPPORT	
	12	1	**253-2556**	1	PLATE AS-SUPPORT	
M	13	1	**5C-7261**	4	NUT (M8X1.25-THD)	
	14	1	**7X-0589**	4	WASHER-HARD (12X28.5X5-MM THK)	
	15	1	**7X-7729**	36	WASHER (11X25X3-MM THK)	
M	16	1	**8T-0389**	14	LOCKNUT (M10X1.15-THD)	
M	17	1	**8T-4133**	4	NUT (M10X1.5 THD)	
M	18	1	**8T-4183**	6	BOLT (M12X1.75X40-MM)	
M	19	1	**8T-4186**	4	BOLT (M10X1.5X40-MM)	
M	20	1	**8T-4195**	18	BOLT (M10X1.5X30-MM)	
	21	1	**8T-4223**	6	WASHER-HARD (13.5X25.5X3-MM THK)	
D	23	1	**5P-7483**	2	SEAL (0.1-M EACH)	
E	24	1	**167-0608**	2	SEAL (27.5-CM EACH)	
E	24A	1	**167-0608**	2	SEAL (9.5-CM EACH)	
E	25	1	**246-0435**	2	SEAL (132-CM EACH)	

D-ORDER BY THE METER
E-ORDER BY THE CENTIMETER
M-METRIC PART

245-4083 **PANEL GP-SIDE** *(contd.)* **i02444023**

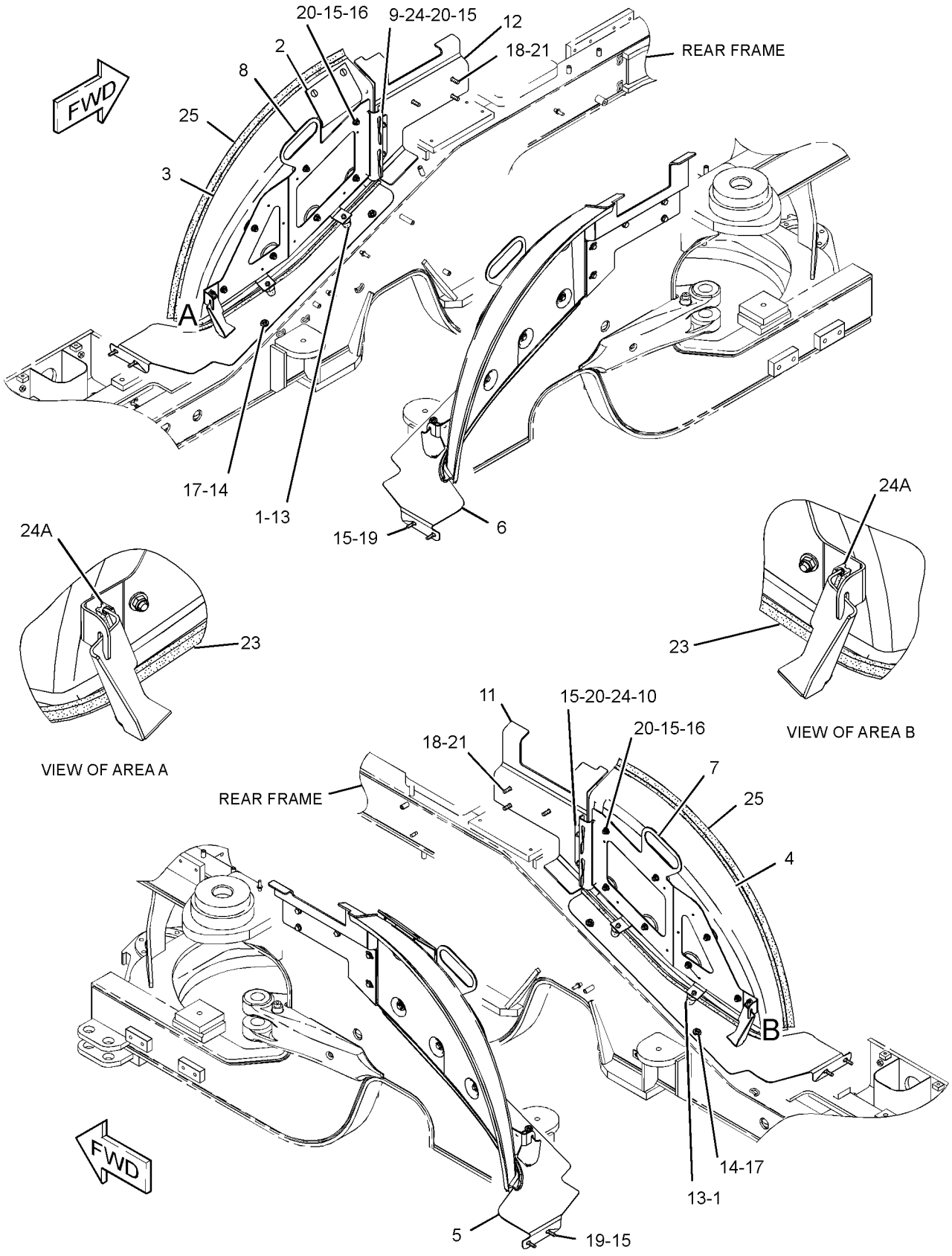

GRAPHIC #1 **<END>** g01208167

237-0445 SHIELD GP-ENGINE COMPARTMENT

S/N: M3G1-UP

PART OF 237-4933 CHASSIS AR

SMCS-7154, 7263 **i02444367**

NOTE	REF NO	GRAPHIC REF	PART NUMBER	QTY	PART NAME 1 2 3 4 5 6 (PRODUCT LEVEL)	SEE PAGE
	1	1	**134-5330**	1	GROMMET	
	2	1	**260-4698**	1	GROMMET	
	3	1	**262-0262**	1	SHIELD	
	4	1	**262-0263**	1	HANDHOLD AS	
	5	1	**262-0264**	1	HANDHOLD AS	
	6	1	**262-0265**	1	BAFFLE	
	7	1	**262-0266**	1	STRIP	
	8	1	**142-2624**	1	GROMMET	
	9	1	**190-1125**	1	GROMMET	
	10	1	**1M-4543**	2	GROMMET	
	11	1	**5P-1076**	4	WASHER-HARD (13.5X30X4-MM THK)	
	12	1	**6P-0699**	1	GROMMET	
	13	1	**7X-7729**	4	WASHER (11X25X3-MM THK)	
M	14	1	**8T-4133**	7	NUT (M10X1.5 THD)	
M	15	1	**8T-4183**	4	BOLT (M12X1.75X40-MM)	
M	16	1	**8T-4186**	4	BOLT (M10X1.5X40-MM)	
M	17	1	**8T-4195**	3	BOLT (M10X1.5X30-MM)	
	18	1	**8T-4226**	7	WASHER-PLATED (10.5X45X3-MM THK)	
D	19	1	**5P-7211**		SEAL (0.75-M)	
D	19A	1	**5P-7211**		SEAL (0.31-M)	
E	20	1	**112-9736**		SEAL (124.5-CM EACH)	
E	20A	1	**112-9736**		SEAL (115-CM)	

D-ORDER BY THE METER
E-ORDER BY THE CENTIMETER
M-METRIC PART

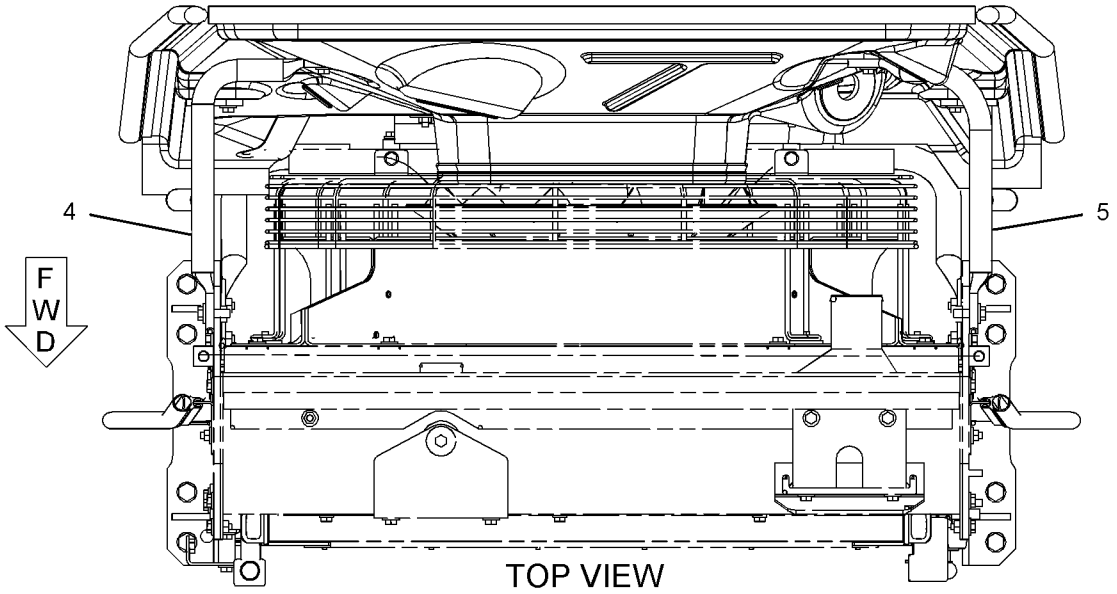

TOP VIEW

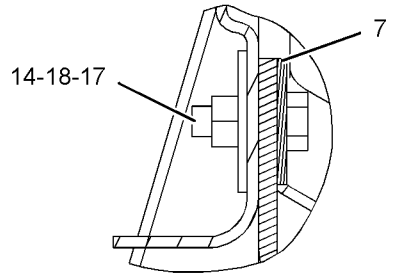

SECTION B-B

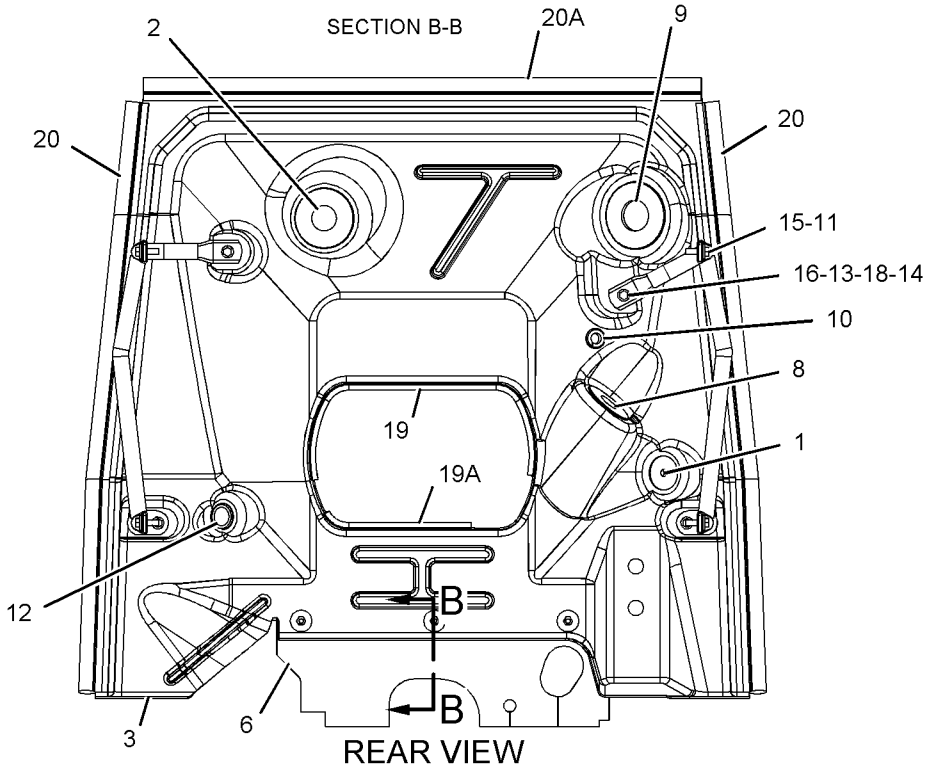

REAR VIEW

GRAPHIC #1 **<END>** g01123486

FRAME AND BODY

251-9760 STEP GP

S/N: M3G1-UP

PART OF 244-6607 WASTE HANDLING AR

AN ATTACHMENT

SMCS-7254 **i02449523**

NOTE	REF NO	GRAPHIC REF	PART NUMBER	QTY	PART NAME 1 2 3 4 5 6 (PRODUCT LEVEL)	SEE PAGE
	1	1	**234-1530**	1	STEP AS	
M		1	**8T-3490**	4	NUT-WELD (M10X1.5-THD)	
	2	1	**274-6580**	6	SPACER (13.5X22.2X60-MM THK)	
	3	1	**276-4188**	3	CABLE AS	
	4	1	**276-4191**	2	BRACKET AS.(RH)	
	5	1	**276-4194**	2	BRACKET AS	
	6	1	**276-4196**	1	LADDER AS (RH)	
	7	1	**276-4197**	1	BRACKET AS (RH)	
	8	1	**276-4199**	1	BRACKET AS (LH)	
	9	1	**276-4217**	2	SUPPORT-STEP	
	10	1	**276-4218**	2	ANGLE	
	11	1	**7D-1649**	12	WASHER-HARD (13.5X32X5-MM THK)	
	12	1	**8T-4121**	8	WASHER-HARD (11X21X2.5-MM THK)	
M	13	1	**8T-4136**	4	BOLT (M10X1.5X25-MM)	
M	14	1	**8T-4139**	8	BOLT (M12X1.75X30-MM)	
M	15	1	**8T-4176**	6	BOLT (M12X1.75X90-MM)	
M	16	1	**8T-4195**	4	BOLT (M10X1.5X30-MM)	
	17	1	**8T-4223**	8	WASHER-HARD (13.5X25.5X3-MM THK)	
M	18	1	**8T-4244**	6	NUT (M12X1.75-THD)	

M-METRIC PART

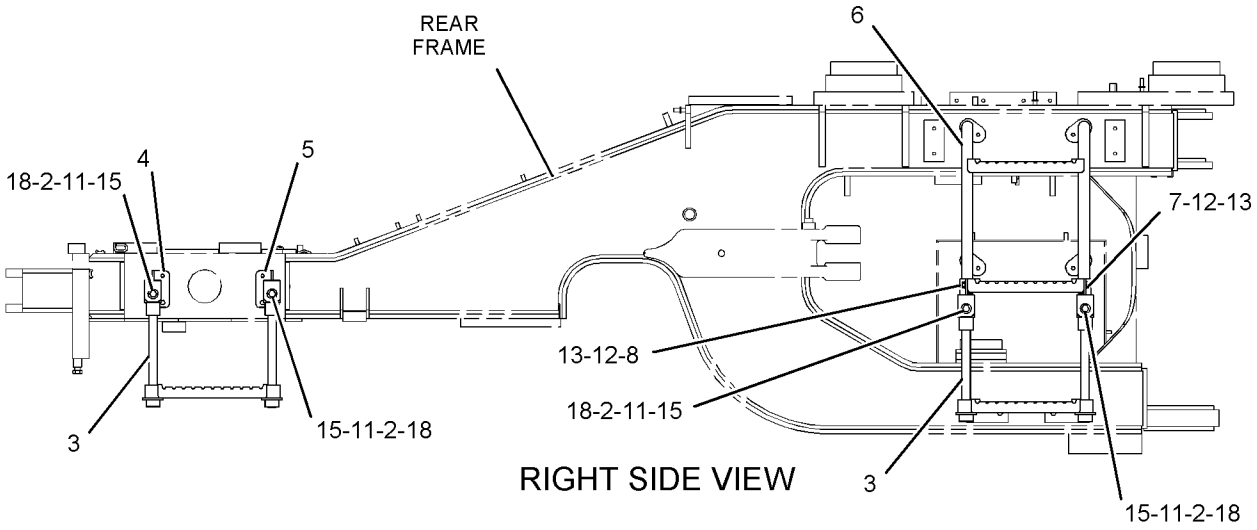

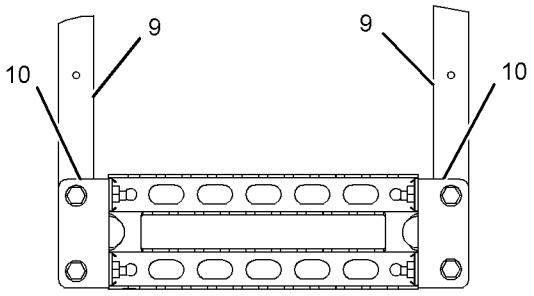

SECTION A-A

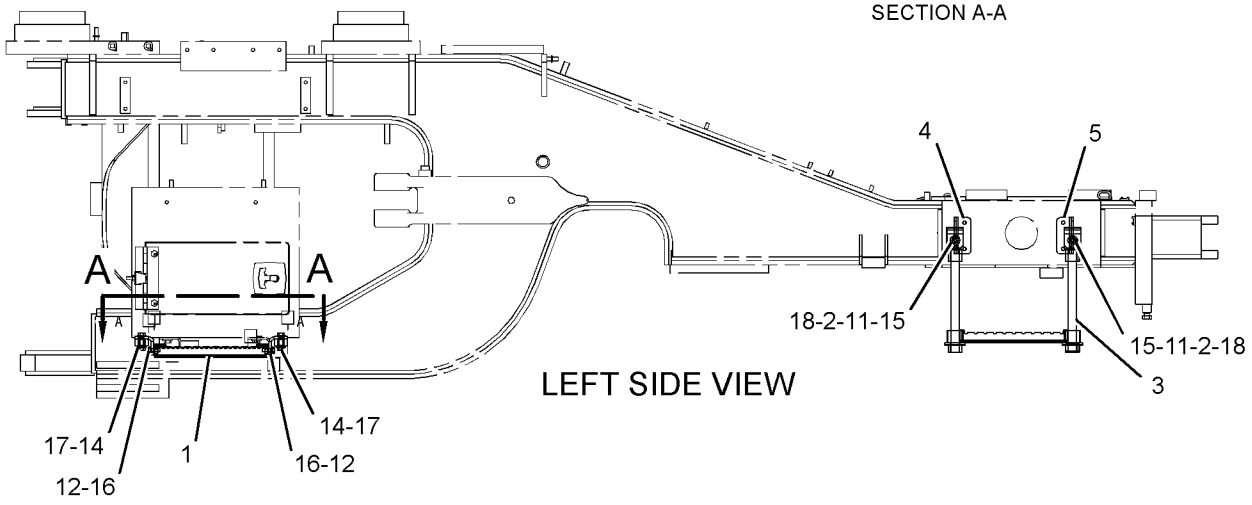

GRAPHIC #1 **<END>** g01198498

FRAME AND BODY

237-0447 SUPPORT GP-AIR INLET

S/N: M3G1-UP

PART OF 237-4933 CHASSIS AR

SMCS-1087 **i02454221**

NOTE	REF NO	GRAPHIC REF	PART NUMBER	QTY	PART NAME 1 2 3 4 5 6 (PRODUCT LEVEL)	SEE PAGE
	1	1	**243-5828**	1	BRACKET AS	
	2	1	**257-5064**	2	PLATE	
	3	1	**8T-4121**	14	WASHER-HARD (11X21X2.5-MM THK)	
M	4	1	**8T-4133**	4	NUT (M10X1.5 THD)	
M	5	1	**8T-4136**	9	BOLT (M10X1.5X25-MM)	
M	6	1	**8T-4196**	1	BOLT (M10X1.5X35-MM)	
D	7	1	**5P-7211**	2	SEAL (0.45-M EACH)	

D-ORDER BY THE METER
M-METRIC PART

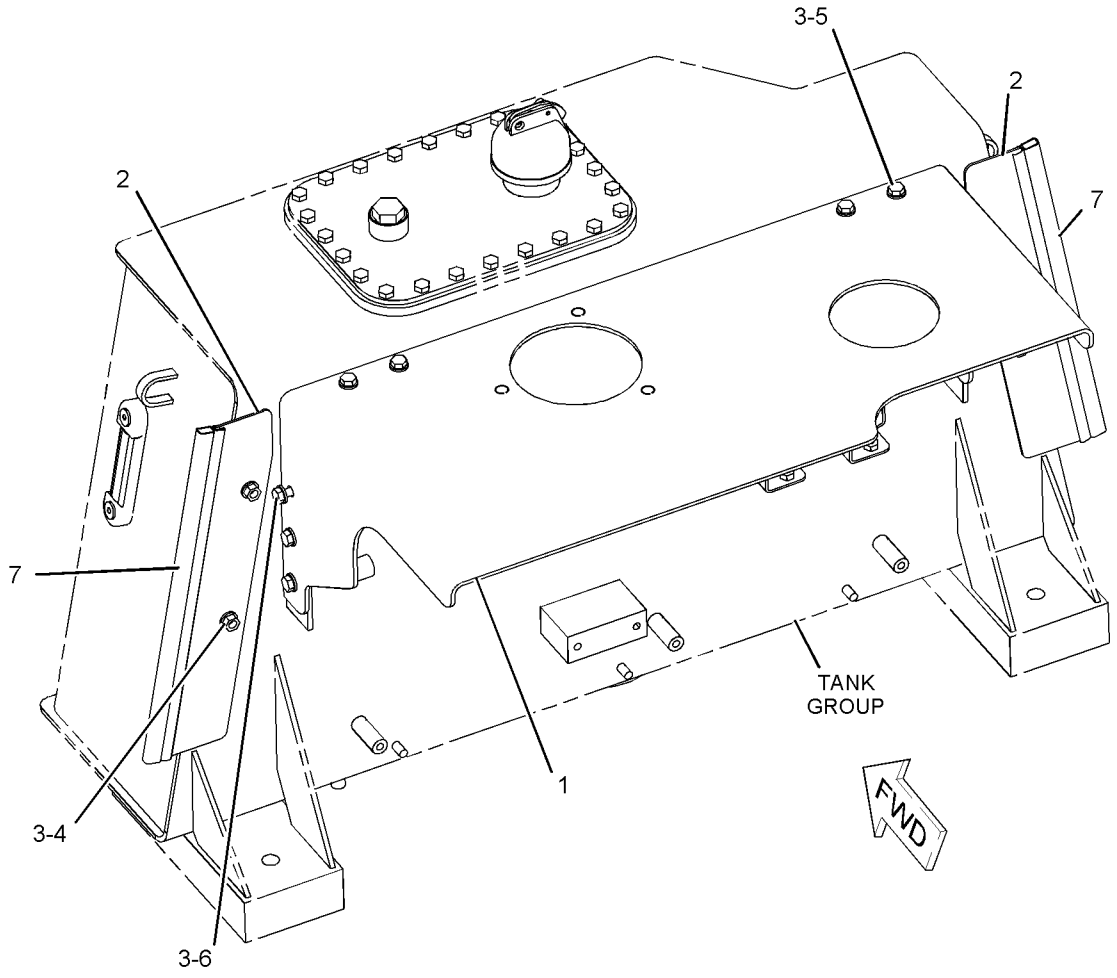

GRAPHIC #1 **<END>** g01123884

200-0008 SUPPORT GP-VALVE & FILTER–SERVICE CENTER

S/N: M3G1-UP

PART OF 237-4933 CHASSIS AR

SMCS-4263, 5068 **i02443775**

NOTE	REF NO	GRAPHIC REF	PART NUMBER	QTY	PART NAME 1 2 3 4 5 6 (PRODUCT LEVEL)	SEE PAGE
	1	1	**2G-1388**	1	LATCH	
	2	1	**3B-4611**	1	PIN-COTTER	
	3	1	**245-6175**	1	ROD AS	
	4	1	**246-4365**	1	ENCLOSURE AS-SERVICE CENTER	
	5	1	**246-4366**	1	DOOR AS-ACCESS (HYD FILTER, BRAKE ACCUMULATOR)	
	6	1	**246-4374**	1	DOOR GP-ACCESS (REMOTE PRESSURE TAPS)	
M	7	1	**7X-2553**	8	BOLT (M16X2X40-MM)	
	8	1	**8T-4121**	10	WASHER-HARD (11X21X2.5-MM THK)	
M	9	1	**8T-4133**	2	NUT (M10X1.5 THD)	
M	10	1	**8T-4136**	9	BOLT (M10X1.5X25-MM)	
M	11	1	**8T-4139**	2	BOLT (M12X1.75X30-MM)	
	12	1	**8T-4223**	2	WASHER-HARD (13.5X25.5X3-MM THK)	
	13	1	**9X-8257**	8	WASHER (17.5X30X3.5-MM THK)	

M-METRIC PART

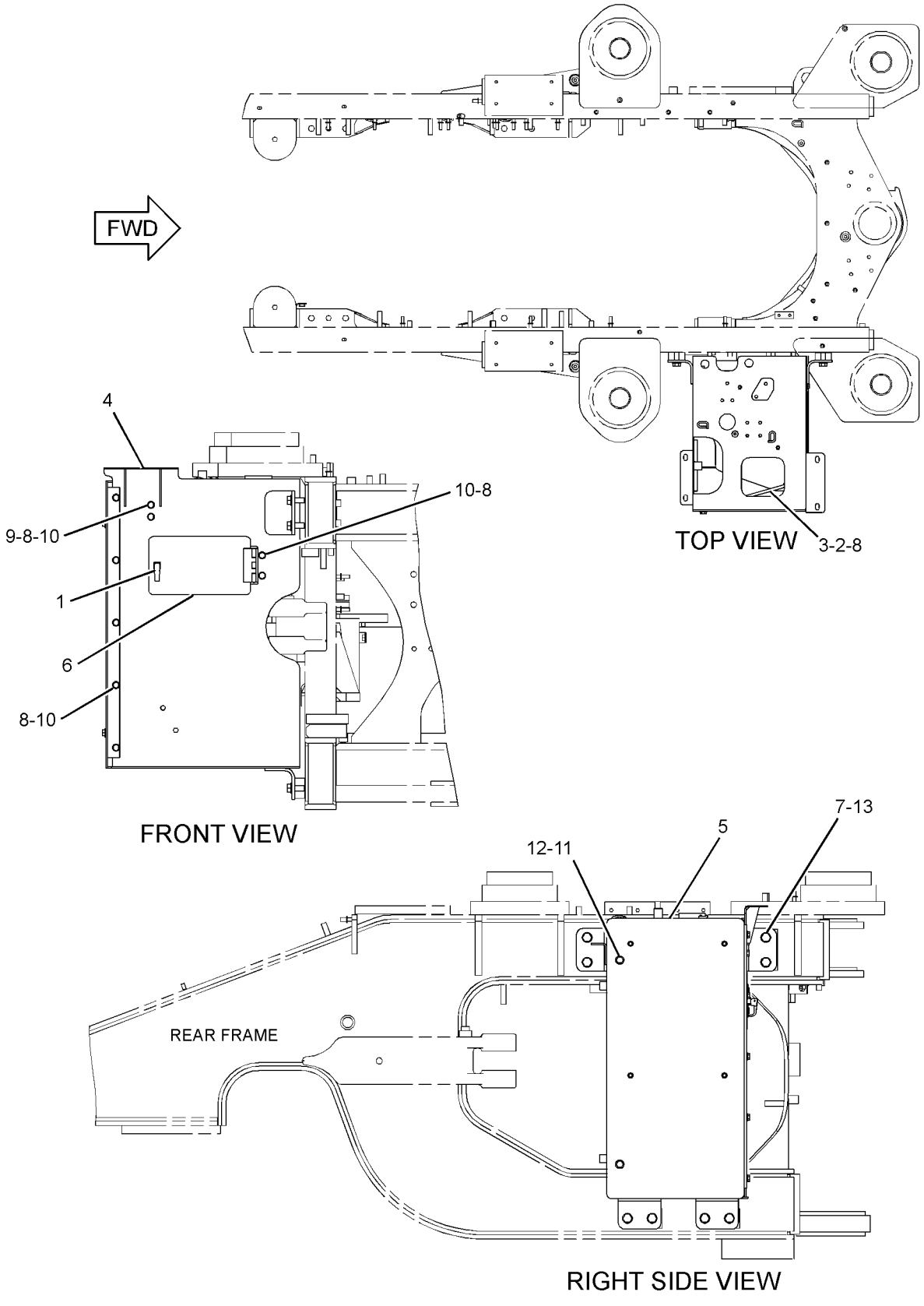

GRAPHIC #1 **<END>** g01220642

262-1085 SUPPRESSION AR-SOUND

S/N: M3G1-UP

AN ATTACHMENT

SMCS-7261 **i02449995**

NOTE	PART NUMBER	QTY	PART NAME 1 2 3 4 5 6 (PRODUCT LEVEL)	SEE PAGE
Y	*266-6594*	1	FLOOR GP-SOUND SUPPRESSION	663
Y	*260-1533*	1	HARDWARE GP-REAR FRAME	387
Y	*246-5231*	1	SUPPRESSION GP-CAB SOUND (CAB REAR, CAB ROOF)	761
Y	*240-8637*	1	SUPPRESSION GP-SOUND (REAR FRAME)	417

Y-SEPARATE ILLUSTRATION

<END>

240-8637 SUPPRESSION GP-SOUND–REAR FRAME

S/N: M3G1-UP

PART OF 262-1085 SUPPRESSION AR-SOUND

AN ATTACHMENT

SMCS-7076, 7261 **i02454347**

NOTE	REF NO	GRAPHIC REF	PART NUMBER	QTY	PART NAME 1 2 3 4 5 6 (PRODUCT LEVEL)	SEE PAGE
	2	1	**131-8641**	1	INSULATION	
	3	1	**131-8642**	1	INSULATION	
	4	1	**133-1644**	14	FASTENER	
	5	1	**140-6194**	1	INSULATION	
	6	1	**140-6197**	1	INSULATION	
	7	1	**140-8101**	1	INSULATION	
	8	1	**151-2171**	1	INSULATION	
	9	1	**195-5826**	1	INSULATION	
	10	1	**202-0669**	1	INSULATION	
	11	2	**246-1177**	1	INSULATION	
	12	1	**246-1184**	1	INSULATION AS	
	13	2	**246-1187**	1	BRACKET AS	
	14	2	**246-1884**	1	INSULATION	
	15	1	**246-1891**	1	INSULATION	
	16	1	**246-1892**	1	INSULATION	
	17	1	**246-2392**	1	COVER AS (LH)	
	18	1	**246-2393**	1	COVER AS (RH)	
	19	2	**246-2943**	1	SHEET	
	20	1	**246-4619**	1	INSULATION	
	21	2	**246-8907**	1	INSULATION	
	22	2	**246-9863**	1	INSULATION	
	23	2	**246-9864**	1	INSULATION	
	24	2	**246-9866**	1	INSULATION	
	25	2	**247-2699**	1	BRACKET AS (LH)	
	26	2	**247-2700**	1	BRACKET AS (RH)	
	27	1	**261-8716**	1	INSULATION	
	28	2	**115-6433**	9	WASHER (11X50X6-MM THK)	
	29	1	**4Y-3046**	8	WASHER (13.5X38X3-MM THK)	
	30	1	**7X-0603**	14	WASHER-HARD (9.9X35X2.5-MM THK)	
M	31	2	**7X-2552**	4	BOLT (M16X2X30-MM)	
	32	2	**7X-7729**	3	WASHER (11X25X3-MM THK)	
M	33	2	**8T-4133**	3	NUT (M10X1.5 THD)	
M	34	2	**8T-4136**	9	BOLT (M10X1.5X25-MM)	
M	35	1	**8T-4195**	3	BOLT (M10X1.5X30-MM)	
	36	1	**8T-4226**	3	WASHER-PLATED (10.5X45X3-MM THK)	
M	37	1	**8T-4244**	8	NUT (M12X1.75-THD)	
	38	2	**9X-8257**	4	WASHER (17.5X30X3.5-MM THK)	
D	39	1	**5P-7211**	2	SEAL (3.03-M EACH)	
D	39A	1	**5P-7211**		SEAL (7.91-M)	

D-ORDER BY THE METER
M-METRIC PART

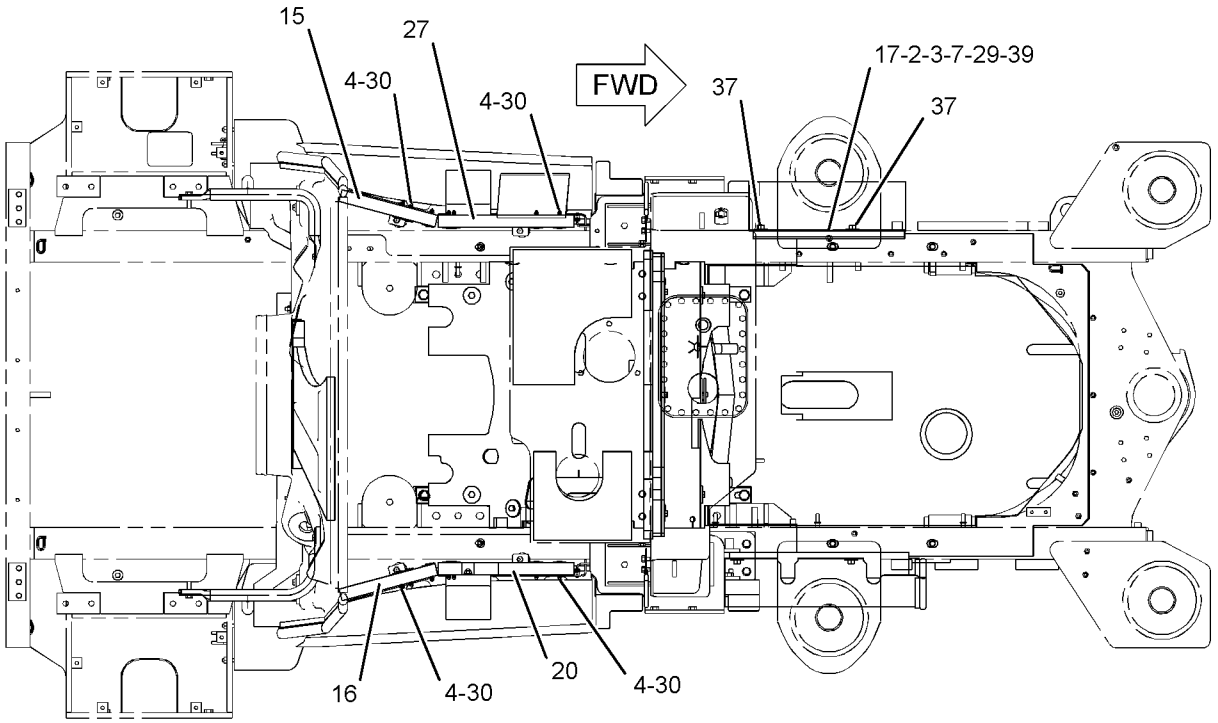

TOP VIEW

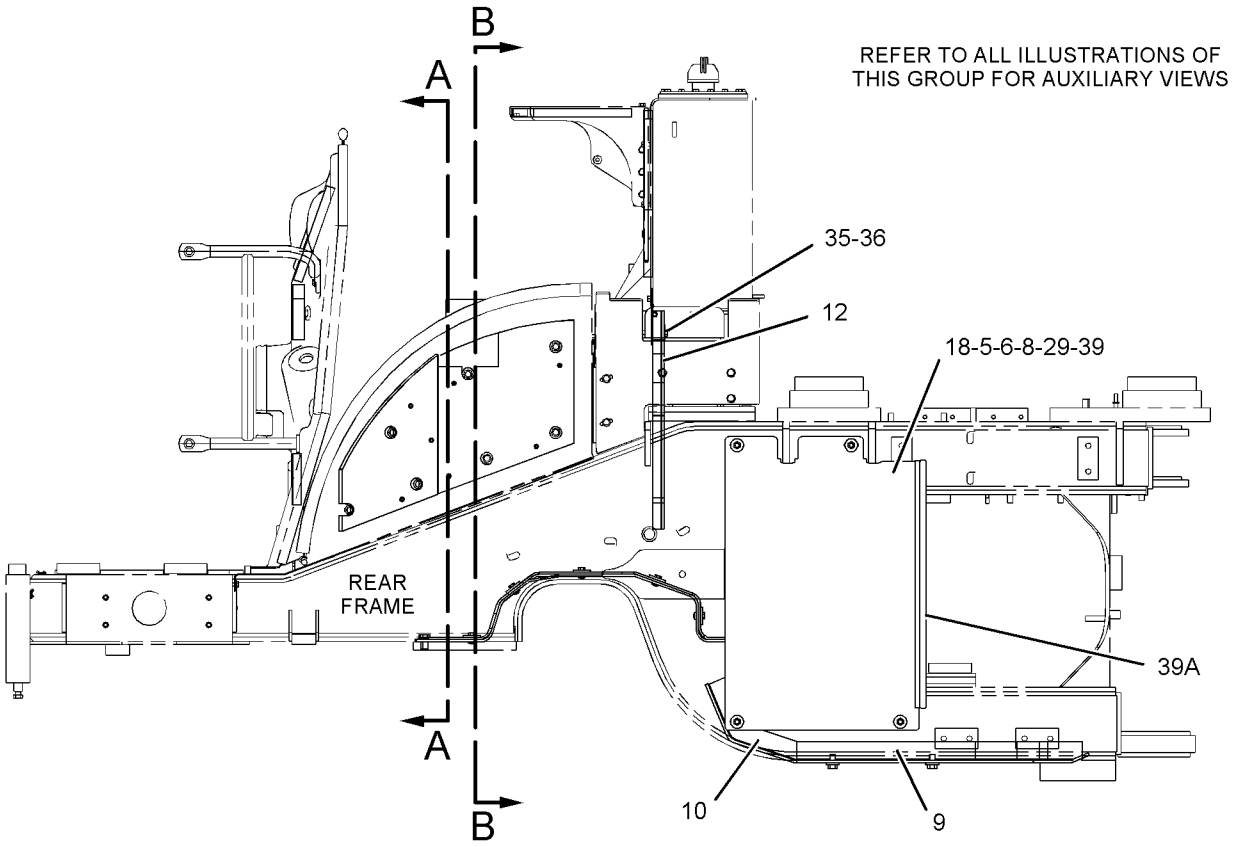

RIGHT SIDE VIEW

GRAPHIC #1 g01221633

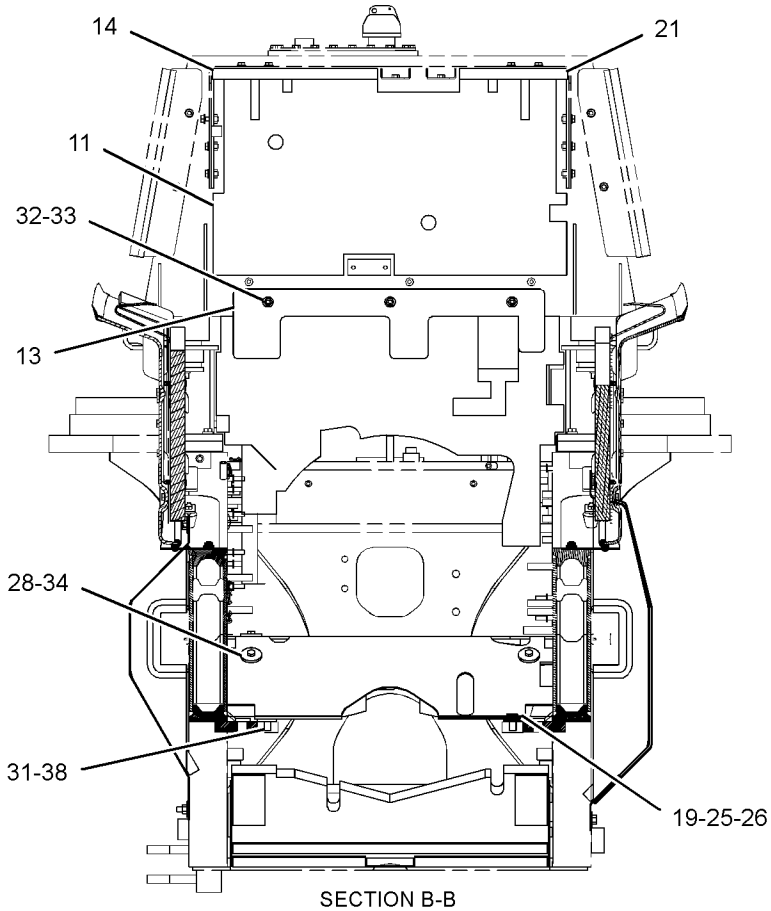

SECTION B-B

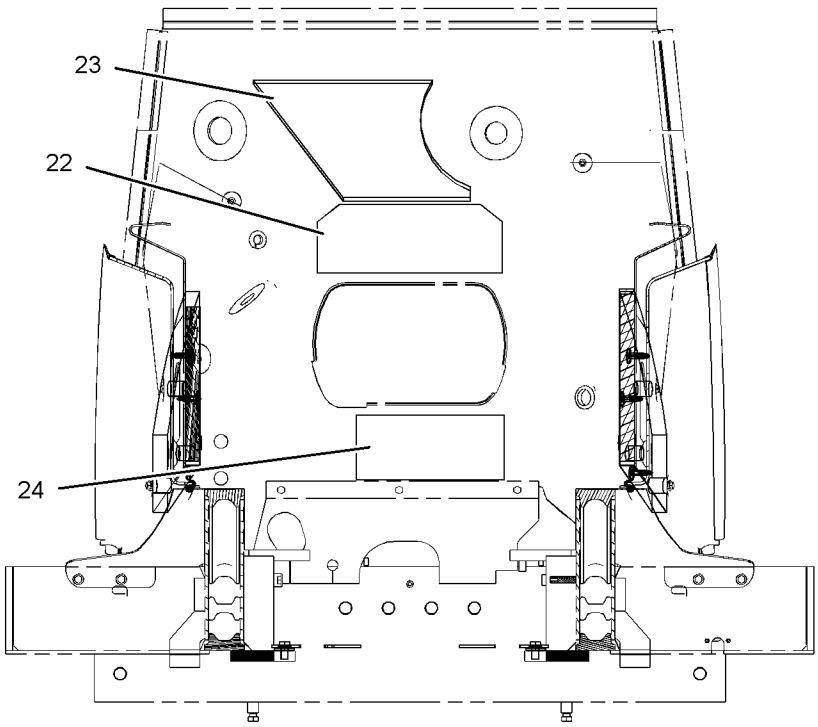

SECTION A-A

GRAPHIC #2 **<END>** g01221642

FRAME AND BODY

237-0969 TILT GP-HOOD

S/N: M3G1-UP

PART OF 237-4931 ELECTRICAL AR

SMCS-1427, 7251 **i02443840**

NOTE	REF NO	GRAPHIC REF	PART NUMBER	QTY	PART NAME 1 2 3 4 5 6 (PRODUCT LEVEL)	SEE PAGE
	1	1	**6S-6646**	2	PIN-COTTER	
	2	1	**280-7078**	1	PIN AS (RH)	
	3	1	**280-7076**	1	PIN AS (LH)	
	5	1	**209-2625**	1	COVER	
	6	1	**209-2626**	1	COVER	
	7	1	**209-2629**	1	COVER	
Y	8	1	**262-4914**	1	ACTUATOR GP-HOOD TILT	342
	10	1	**6W-5752**	2	PIN	
	11	1	**8T-4121**	8	WASHER-HARD (11X21X2.5-MM THK)	
M	12	1	**8T-4137**	8	BOLT (M10X1.5X20-MM)	
M	13	1	**8T-4138**	2	BOLT (M6X1X20-MM)	
M	14	1	**8T-4193**	6	BOLT (M16X2X50-MM)	
	15	1	**7X-0599**	1	WASHER-HARD (13X20X2-MM THK)	
M	16	1	**8T-4971**	2	BOLT (M6X1X30-MM)	
	18	1	**9X-8256**	4	WASHER (6.6X12X2-MM THK)	
	19	1	**9X-8257**	6	WASHER (17.5X30X3.5-MM THK)	

M-METRIC PART
Y-SEPARATE ILLUSTRATION

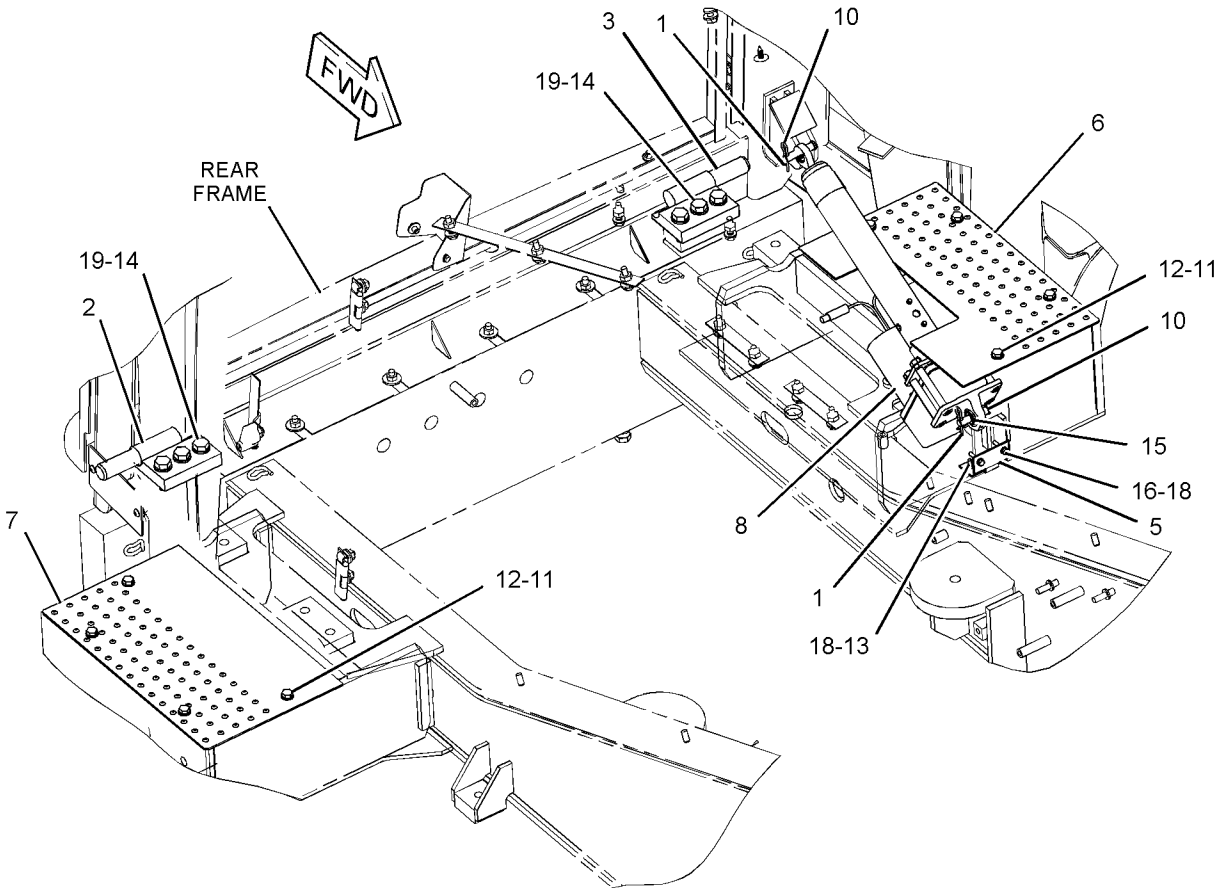

GRAPHIC #1 **<END>** g01220312

213-8773 ACCUMULATOR GP-BRAKE—CHARGED

S/N: M3G1-UP

PART OF 237-0421 CONTROL GP-SERVICE BRAKE

FIELD REPLACEMENT ORDER 223-3917—PAGE 422

SMCS-4263 **i02219143**

NOTE	REF NO	GRAPHIC REF	PART NUMBER	QTY	PART NAME 1 2 3 4 5 6 (PRODUCT LEVEL)	SEE PAGE
	1	1	**224-5132**	1	CAP	
	2	1	**224-5152**	1	VALVE-GAS	
	3	1	**3J-7354**	1	SEAL-O-RING	
					ON GAS VALVE CAP	
	4	1	**1J-9671**	1	SEAL-O-RING	
					ON GAS VALVE	

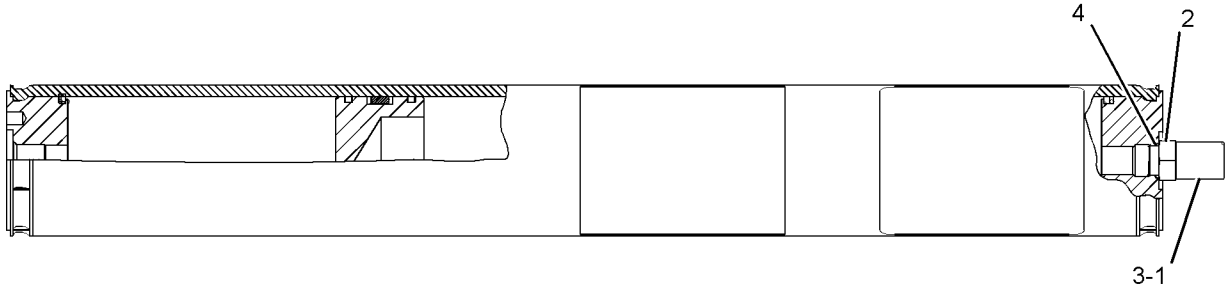

GRAPHIC #1 **<END>** g01115583

223-3917 ACCUMULATOR GP-BRAKE—UNCHARGED

S/N: M3G1-UP

FIELD REPLACEMENT FOR 213-8773—PAGE 421

SMCS-4263 **i02248722**

NOTE	REF NO	GRAPHIC REF	PART NUMBER	QTY	PART NAME 1 2 3 4 5 6 (PRODUCT LEVEL)	SEE PAGE
	1	1	**224-5132**	1	CAP	
	2	1	**224-5152**	1	VALVE-GAS	
	3	1	**3J-7354**	1	SEAL-O-RING	
	4	1	**1J-9671**	1	SEAL-O-RING	
	5	1	**5P-3779**	1	TAG-NOTICE (CYLINDER PRESSURE)	

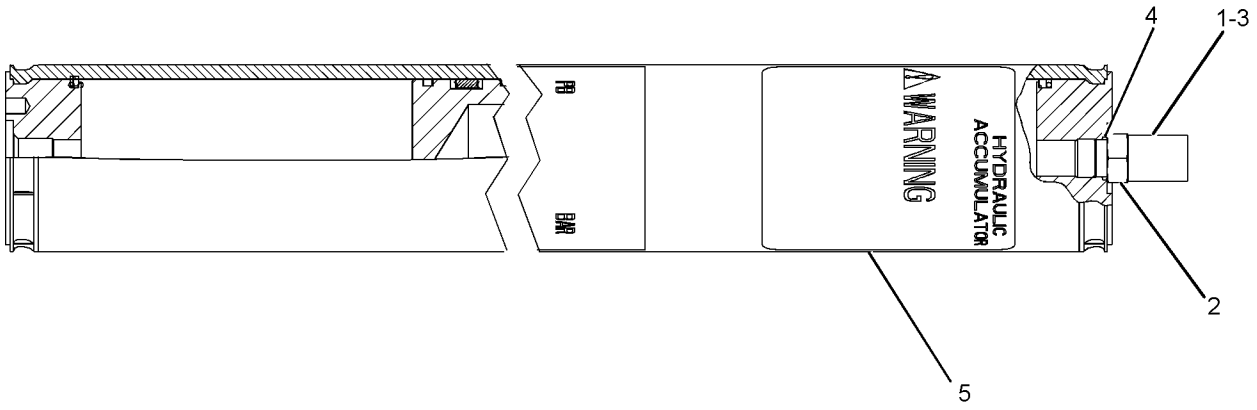

GRAPHIC #1 **<END>** g01109996

126-7698 ACTUATOR GP-PARKING BRAKE

S/N: M3G1-UP

PART OF 237-0271 POWER TRAIN AR

SMCS-4262, 4267 **i01734461**

NOTE	REF NO	GRAPHIC REF	PART NUMBER	QTY	PART NAME 1 2 3 4 5 6 (PRODUCT LEVEL)	SEE PAGE
	1	1	**3B-4617**	1	PIN-COTTER	
	2	1	**4K-1540**	1	PIN-CLEVIS	
	3	1	**209-0499**	1	END-YOKE ROD	
	4	1	**126-7730**	1	BRACKET AS	
	5	1	**129-8090**	1	ACTUATOR AS-PARKING BRAKE	
	6	1	**8T-4121**	3	WASHER-HARD (11X21X2.5-MM THK)	
M	7	1	**8T-4133**	1	NUT (M10X1.5 THD)	
M	8	1	**8T-4136**	3	BOLT (M10X1.5X25-MM)	
	9	1	**8T-4223**	2	WASHER-HARD (13.5X25.5X3-MM THK)	
M	10	1	**8T-4244**	2	NUT (M12X1.75-THD)	

M-METRIC PART

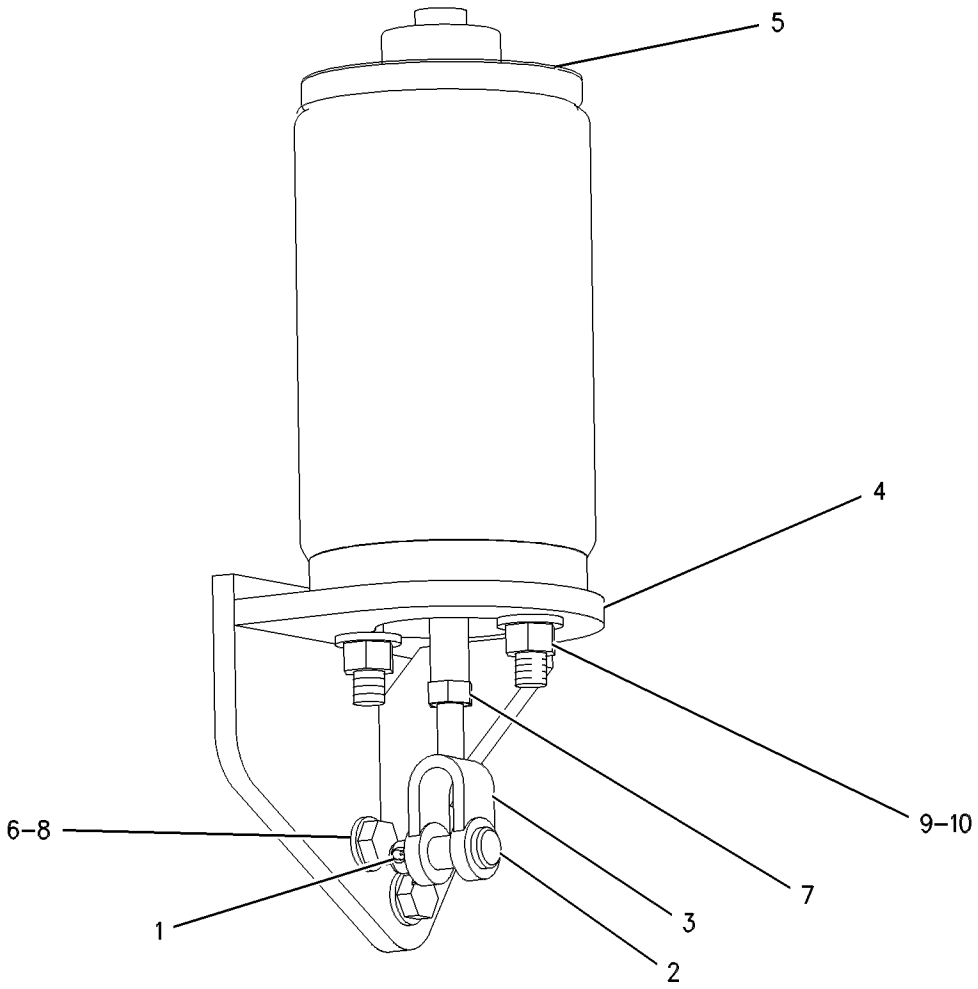

GRAPHIC #1 **<END>** g00368072

188-7497 BASE GP-FOOT BRAKE–PEDAL, RH

S/N: M3G1-UP
PART OF 271-0263 CONTROL GP-FOOT BRAKE
ALSO AN ATTACHMENT

SMCS-4269 **i01425691**

NOTE	REF NO	GRAPHIC REF	PART NUMBER	QTY	PART NAME 1 2 3 4 5 6 (PRODUCT LEVEL)	SEE PAGE
	1	1	**4E-8958**	1	PIN	
	2	1	**4E-9664**	1	PIN	
	3	1	**8S-2225**	1	SEAL-LIP TYPE	
	4	1	**009-3101**	4	RING-RETAINING	
	5	1	**113-7752**	1	PEDAL-BRAKE	
	6	1	**115-2247**	1	SPRING	
	7	1	**163-3926**	1	ROLLER	
	8	1	**180-3997**	1	BASE AS	

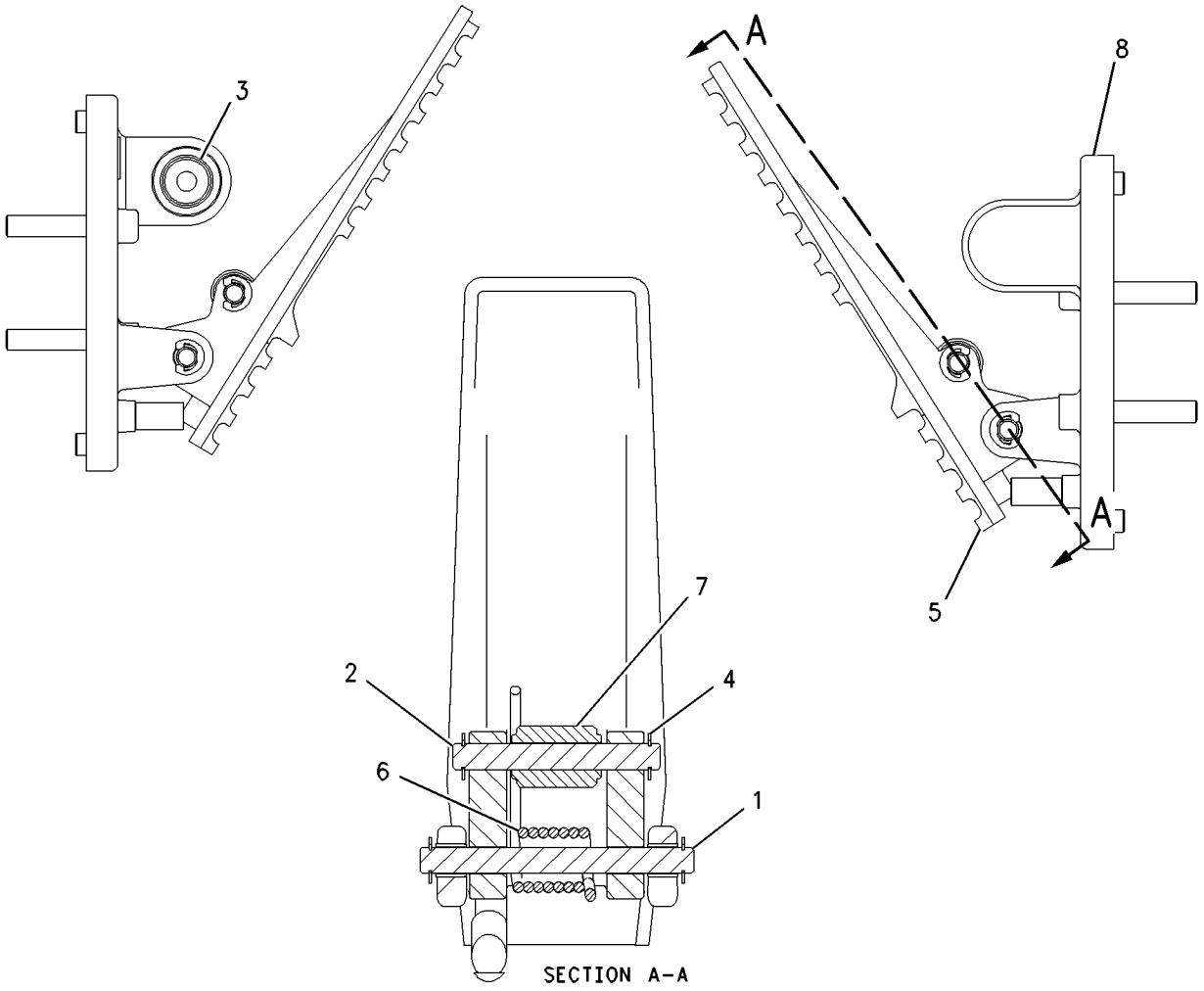

GRAPHIC #1 **<END>** g00748565

271-0264 BASE GP-FOOT BRAKE–PEDAL, LH

S/N: M3G1-UP

PART OF 271-0263 CONTROL GP-FOOT BRAKE

ALSO AN ATTACHMENT

SMCS-4269 **i02442946**

NOTE	REF NO	GRAPHIC REF	PART NUMBER	QTY	PART NAME 1 2 3 4 5 6 (PRODUCT LEVEL)	SEE PAGE
	1	1	**4E-9664**	1	PIN	
	2	1	**009-3101**	3	RING-RETAINING	
	3	1	**105-6117**	1	SWITCH AS-LIMIT (STOP LIGHT)	
	4	1	**113-7752**	1	PEDAL-BRAKE	
	5	1	**115-2247**	1	SPRING	
	6	1	**146-1892**	1	HARNESS AS-BRAKE (STOP LIGHT)	
		1	**155-2270**	1	KIT-CONNECTING PLUG (2-PIN)	
					(INCLUDES PLUG AS AND WEDGE)	
M	7	1	**153-6273**	1	SETSCREW	
	8	1	**200-2217**	1	COVER	
	9	1	**200-2218**	1	BRACKET AS-ADJUSTABLE SWITCH	
	10	1	**200-2219**	6	BOLT	
	11	1	**200-2220**	1	SEAL	
	12	1	**200-2221**	1	PIN	
	13	1	**230-7640**	1	ROLLER	
M	14	1	**125-3295**	2	SCREW-PAN HEAD (M2.5X0.45X12-MM)	
	15	1	**267-5222**	1	SENSOR GP-POSITION (ROTARY) (BRAKE PEDAL)	
		1	**186-3735**	3	PIN-CONNECTOR (16-GA TO 18-GA)	
E		1	**9X-1813**		SLEEVE (13-CM)	
		1	**230-4014**	1	RECEPTACLE AS	
M	16	1	**8T-2899**	2	SCREW-MACHINE (M2.5X0.45X6)	

E-ORDER BY THE CENTIMETER
M-METRIC PART

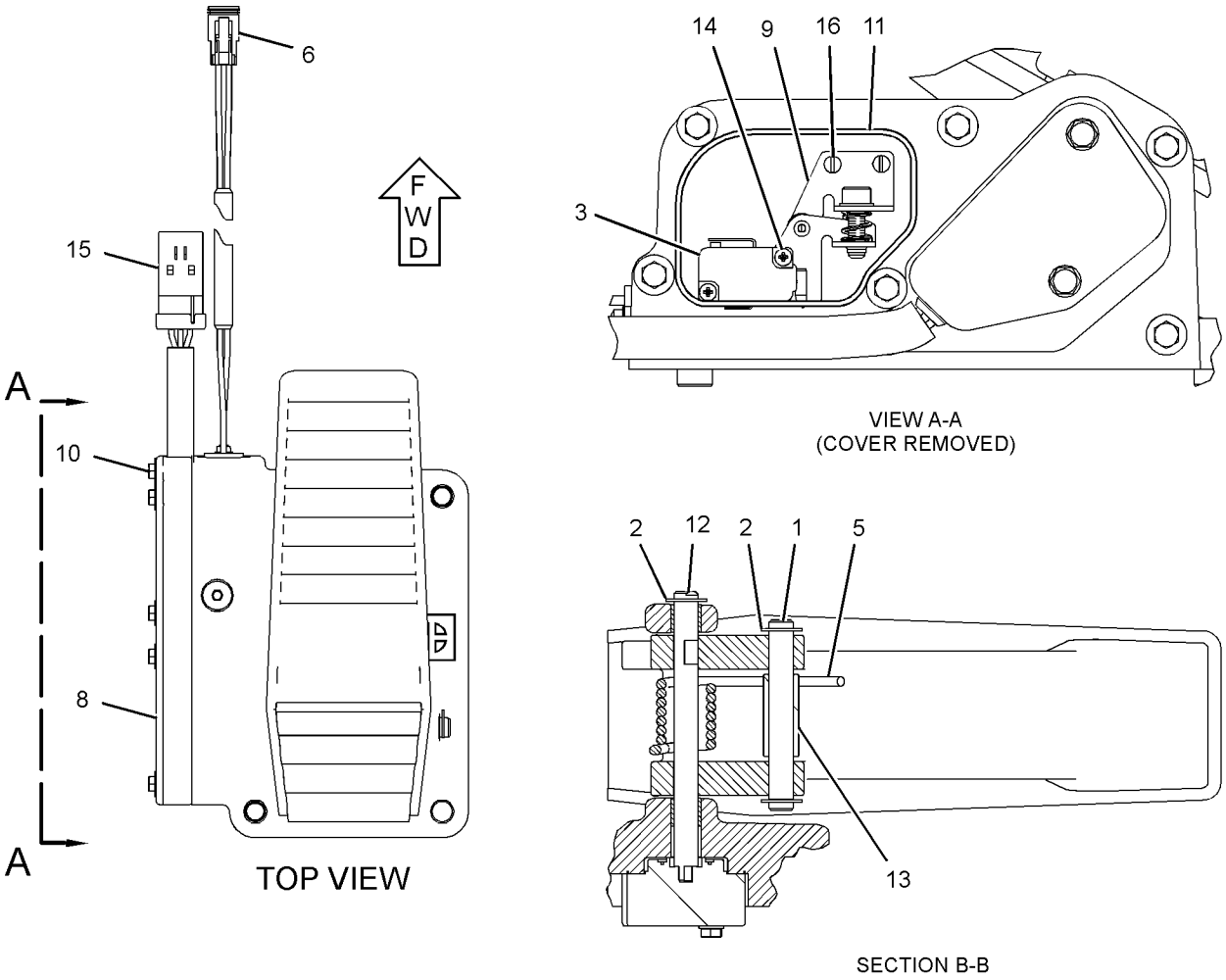

GRAPHIC #1

<END>

g01199507

200-1315 BRAKE GP-PARKING

S/N: FAK1-UP

PART OF 249-8175 GEAR GP-OUTPUT TRANSFER

SMCS-4267 **i02250009**

NOTE	REF NO	GRAPHIC REF	PART NUMBER	QTY	PART NAME 1 2 3 4 5 6 (PRODUCT LEVEL)	SEE PAGE
	1	1	**7F-9579**	1	SOCKET	
	2	1	**7F-9571**	1	SCREW-ADJUSTMENT	
	3	1	**7F-9572**	1	NUT	
	4	1	**7F-9578**	1	SPRING	
	5	1	**9M-5138**	2	PIN-ANCHOR	
	6	1	**9M-5137**	1	BRACE-ANCHOR PIN	
	7	1	**5D-1242**	1	BRACKET	
	8	1	**6V-8182**	2	NUT (3/4-10-THD)	
	9	1	**3B-4512**	2	LOCKWASHER	
	10	1	**9M-5139**	2	SPRING	
	11	1	**8W-8673**	2	SHOE AS-BRAKE	
	12	1	**9M-5140**	1	PLATE AS	
	13	1	**200-1316**	1	CAMSHAFT	
					AVAILABLE REPAIR KIT(S):	
			8W-8674		KIT-BRAKE LINING	
					(CONSISTS OF A COMPLETE SET OF LININGS AND RIVETS FOR ONE BRAKE)	

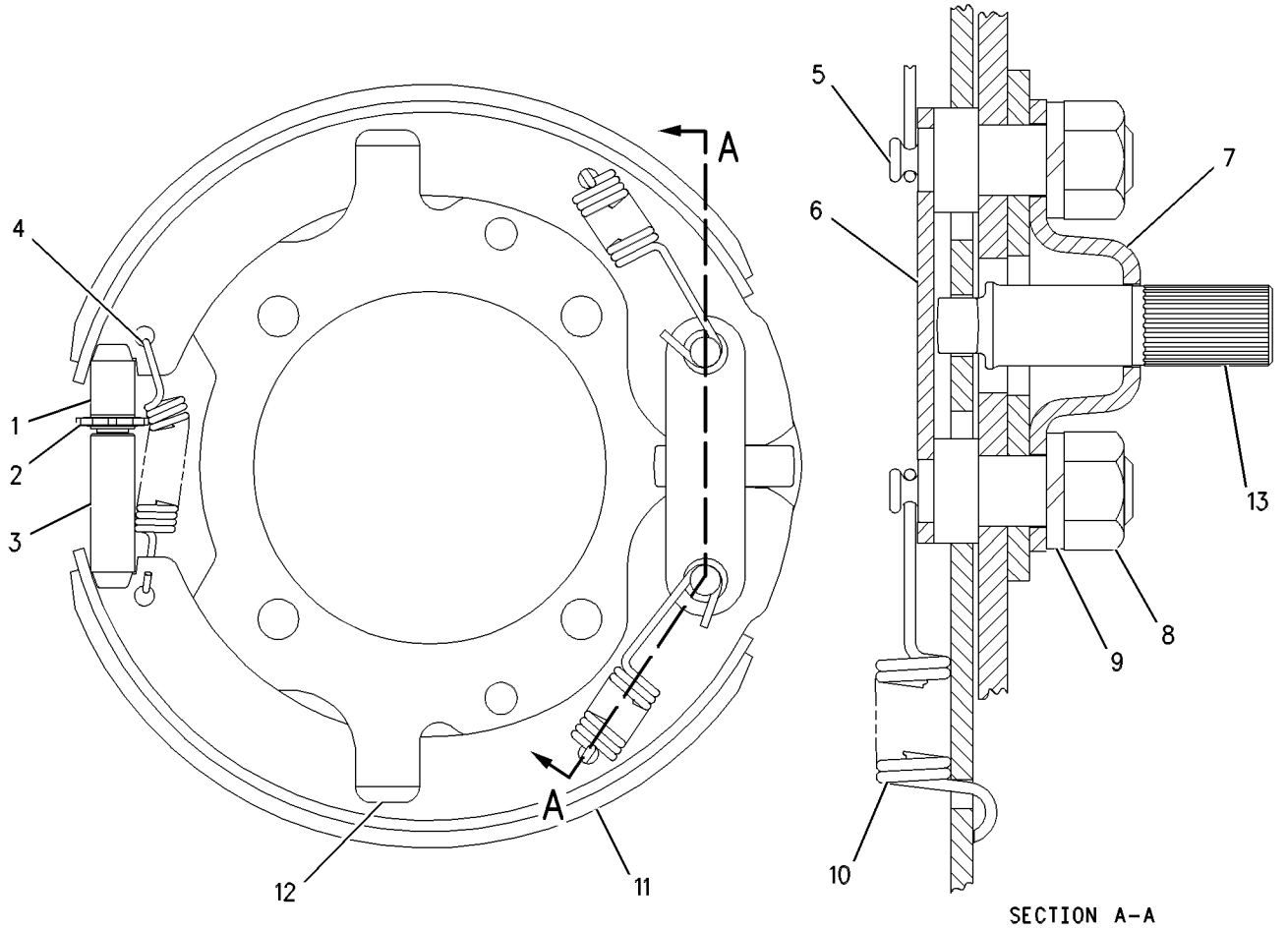

GRAPHIC #1 **<END>** g00391420

265-6695 CONTROL GP-FOOT BRAKE

S/N: M3G1-UP

PART OF 243-1080 CAB AR-ENCLOSED ROPS, 258-1552 CANOPY AR-OPEN ROPS

ALSO AN ATTACHMENT

SMCS-4269 **i02442560**

NOTE	REF NO	GRAPHIC REF	PART NUMBER	QTY	PART NAME 1 2 3 4 5 6 (PRODUCT LEVEL)	SEE PAGE
Y	1	1	**271-0263**	1	CONTROL GP-FOOT BRAKE	429
M	2	1	**099-3649**	6	BOLT (M8X1.25X40-MM)	
	3	1	**8T-4224**	6	WASHER-HARD (8.8X16X2-MM THK)	

M-METRIC PART
Y-SEPARATE ILLUSTRATION

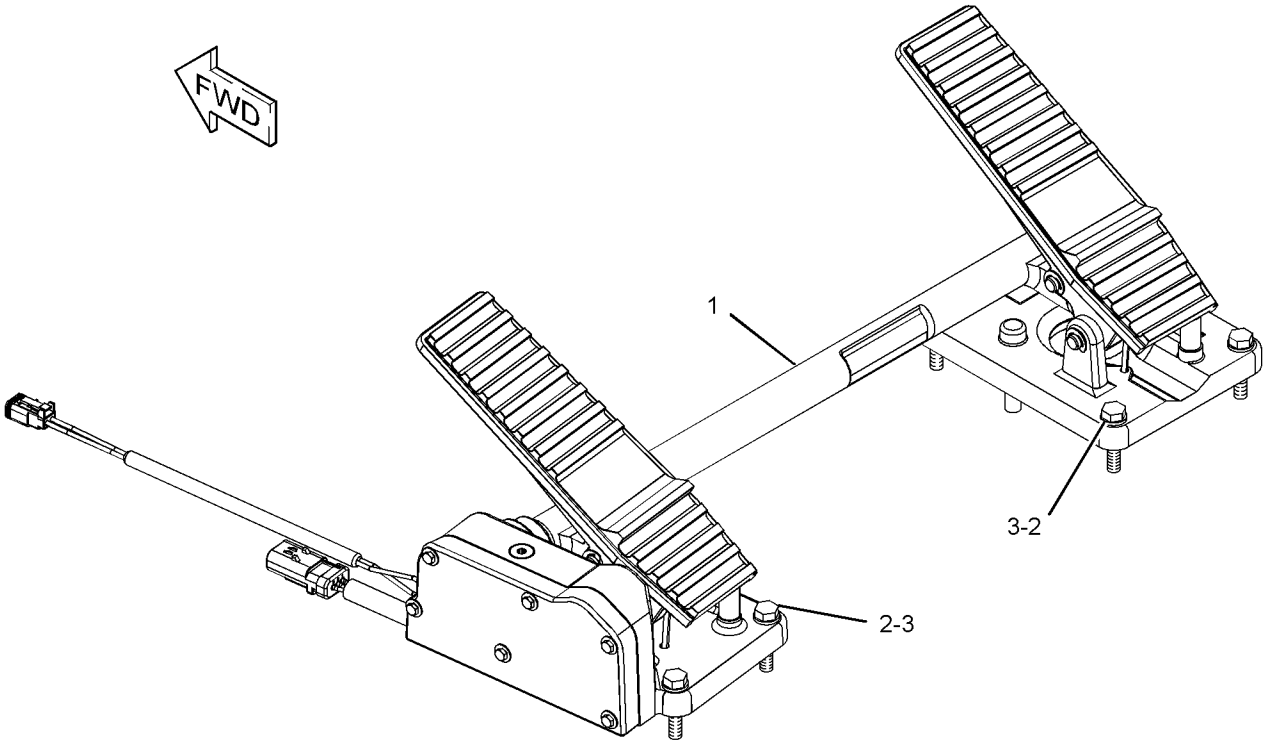

GRAPHIC #1 **<END>** g01202978

271-0263 CONTROL GP-FOOT BRAKE

S/N: M3G1-UP

PART OF 265-6695 CONTROL GP-FOOT BRAKE

ALSO AN ATTACHMENT

SMCS-4269 **i02454359**

NOTE	REF NO	GRAPHIC REF	PART NUMBER	QTY	PART NAME 1 2 3 4 5 6 (PRODUCT LEVEL)	SEE PAGE
	1	1	**180-3994**	1	SHAFT AS	
Y	2	1	**188-7497**	1	BASE GP-FOOT BRAKE (PEDAL, RH)	424
Y	3	1	**271-0264**	1	BASE GP-FOOT BRAKE (PEDAL, LH)	425

Y-SEPARATE ILLUSTRATION

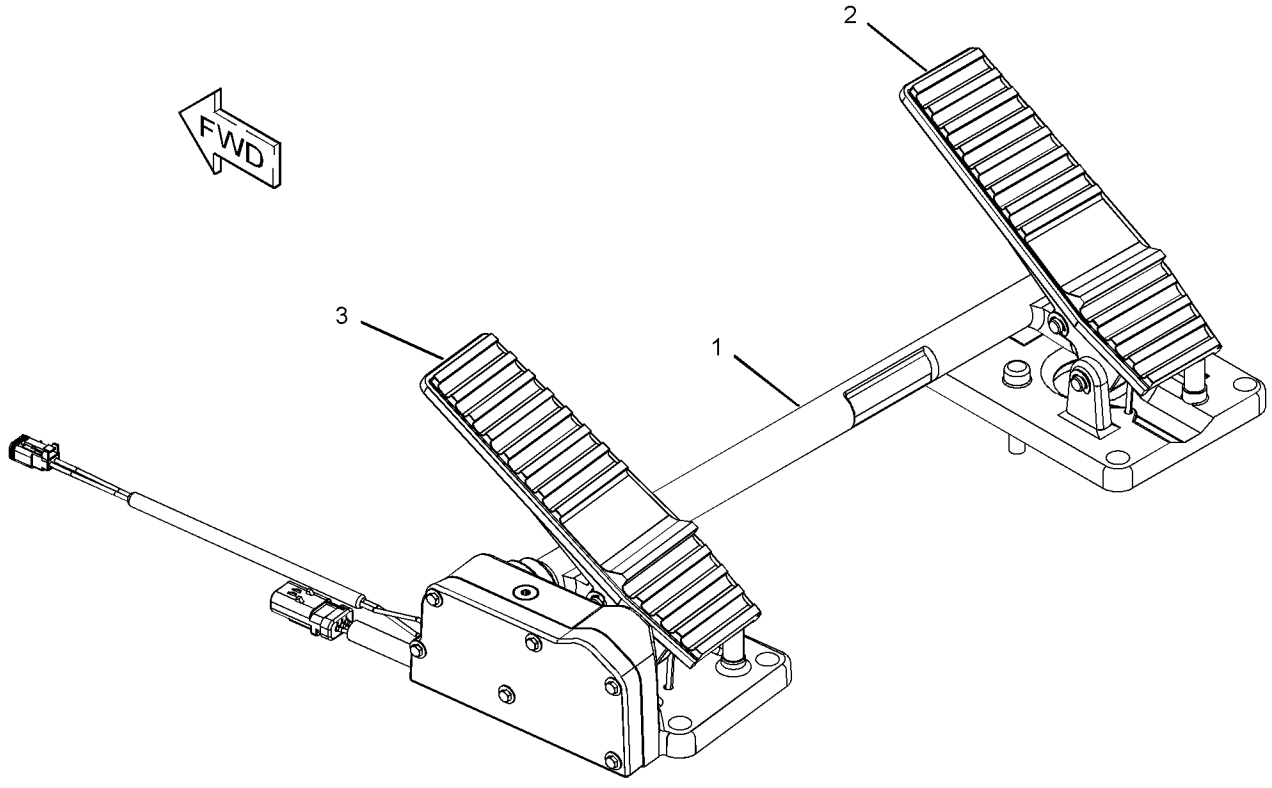

GRAPHIC #1 **<END>** g01202981

244-2747 CONTROL GP-PARKING BRAKE

S/N: M3G1-UP

PART OF 243-1080 CAB AR-ENCLOSED ROPS, 258-1552 CANOPY AR-OPEN ROPS

ALSO AN ATTACHMENT

SMCS-4282, 4284 **i02442951**

NOTE	REF NO	GRAPHIC REF	PART NUMBER	QTY	PART NAME 1 2 3 4 5 6 (PRODUCT LEVEL)	SEE PAGE
	1	1	**3S-2093**	1	STRAP-CABLE	
	2	1	**9C-9458**	1	BRACKET AS	
	3	1	**122-1671**	1	KNOB	
	4	1	**134-0165**	1	WASHER (13.8X45X3-MM THK)	
	5	1	**195-2187**	1	CABLE AS-PARKING BRAKE CONTROL	
		1	**8T-4223**	3	WASHER-HARD (13.5X25.5X3-MM THK)	
M		1	**8T-4244**	4	NUT (M12X1.75-THD)	
		1	**9B-0453**	2	LOCKWASHER	
M	7	1	**5C-2890**	1	NUT (M6X1-THD)	
	8	1	**6V-3265**	1	CLIP	
	9	1	**8T-4121**	2	WASHER-HARD (11X21X2.5-MM THK)	
M	10	1	**8T-4137**	1	BOLT (M10X1.5X20-MM)	

M-METRIC PART

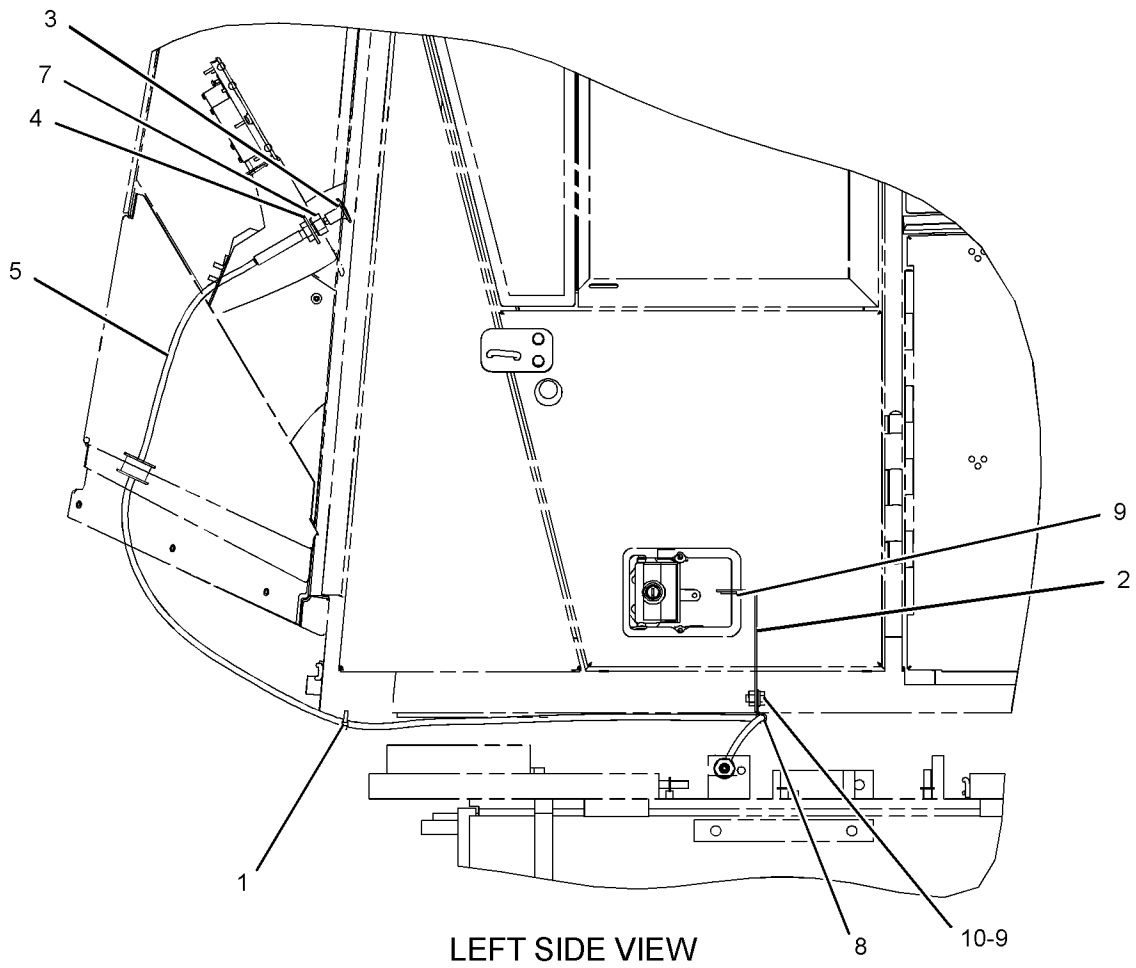

LEFT SIDE VIEW

GRAPHIC #1

<END>

g01190983

BRAKING SYSTEM

237-0421 CONTROL GP-SERVICE BRAKE

S/N: M3G1-UP

PART OF 237-4933 CHASSIS AR

SMCS-4257, 4258, 4263, 4265, 4269, 4280 **i02305324**

NOTE	REF NO	GRAPHIC REF	PART NUMBER	QTY	PART NAME 1 2 3 4 5 6 (PRODUCT LEVEL)	SEE PAGE
	1	2	**4E-2289**	1	ANGLE AS	
M		2	**8T-3490**	1	NUT-WELD (M10X1.5-THD)	
	2	3	**5P-6724**	1	BEARING-ROLLER	
	3	2	**6N-8744**	1	MOUNT	
	4	2	**6V-0852**	2	CAP-DUST	
	5	3	**7I-4078**	1	LEVER AS	
	9	3	**091-1745**	6	WASHER (16.6X24X1.2-MM THK)	
	10	3	**101-3846**	1	ROD-CONTROL	
	11	3	**105-4177**	2	TUBE AS	
Y	12	3	**106-1774**	1	VALVE GP-BRAKE CONTROL (PARKING)	436
	13	1	**144-4613**	1	ANGLE AS	
	14	2	*148-8443*	2	TEE GP	
					(EACH INCLUDES)	
		2	**3J-1907**	1	SEAL-O-RING	
		2	**6V-8397**	1	SEAL-O-RING	
		2	**7X-2459**	1	TEE-O-RING	
	15	1	**162-9728**	1	BRACKET AS	
	16	3	*165-7014*	1	FITTING GP-TEE	
		3	**3J-1907**	1	SEAL-O-RING	
		3	**4J-5477**	1	SEAL-O-RING	
		3	**8C-3309**	1	TEE	
Y	17	3	*213-8773*	2	ACCUMULATOR GP-BRAKE (CHARGED)	421
	18	3	**215-3687**	1	VALVE GP-BRAKE CONTROL (SERVICE)	
		3	**117-7799**	1	KIT-SEAL	
					(INCLUDES BOOT, QUAD RING, CUP, AND O'RINGS)	
		3	**117-7798**	1	BOOT	
	19	3	**243-0570**	1	BRACKET AS	
	20	2	**244-3274**	1	BRACKET AS	
M		2	**8T-3490**	1	NUT-WELD (M10X1.5-THD)	
I	21	3	**244-3288**	1	HOSE AS	
I	22	2	**244-3289**	1	HOSE AS	
I	23	3	**244-3290**	1	HOSE AS	
I	24	3	**246-4770**	1	HOSE AS	
I	25	2	**246-4771**	1	HOSE AS	
I	26	2	**246-4772**	1	HOSE AS	
I	27	2	**246-4774**	1	HOSE AS	
	28	2	**246-4777**	1	BRACKET	
I	29	3	**247-4593**	1	HOSE AS	
I	30	3	**247-4594**	1	HOSE AS	
I	31	2	**248-0334**	1	HOSE AS	
I	32	3	**248-0335**	1	HOSE AS	
	33	2	**097-4896**	1	SPACER (12X20X23-MM THK)	
M	34	3	**099-3649**	2	BOLT (M8X1.25X40-MM)	
	35	1	*148-8327*	1	CONNECTOR AS	
		1	**3D-2824**	1	SEAL-O-RING	
		1	**6V-8637**	1	CONNECTOR	
		1	**6V-9746**	1	SEAL-O-RING	
	36	2	*148-8336*	5	CONNECTOR AS	
					(EACH INCLUDES)	
		2	**3J-1907**	1	SEAL-O-RING	
		2	**6V-8397**	1	SEAL-O-RING	
		2	**6V-8636**	1	CONNECTOR	
	37	3	*148-8361*	2	ELBOW AS	
					(EACH INCLUDES)	
		3	**3J-7354**	1	SEAL-O-RING	

237-0421 CONTROL GP-SERVICE BRAKE *(contd.)* i02305324

NOTE	REF NO	GRAPHIC REF	PART NUMBER	QTY	PART NAME 1 2 3 4 5 6 (PRODUCT LEVEL)	SEE PAGE
		3	**6V-8397**	1	SEAL-O-RING	
		3	**6V-9200**	1	ELBOW	
	38	3	*148-8367*	2	ELBOW AS	
					(EACH INCLUDES)	
		3	**6V-8397**	1	SEAL-O-RING	
		3	**6V-9850**	1	ELBOW	
	39	2	*148-8371*	1	ELBOW AS	
		2	**6V-8397**	1	SEAL-O-RING	
		2	**8C-8988**	1	ELBOW	
	40	2,3	*148-8378*	2	ELBOW AS	
					(EACH INCLUDES)	
		2,3	**3J-1907**	1	SEAL-O-RING	
		2,3	**6V-8397**	1	SEAL-O-RING	
		2,3	**6V-8724**	1	ELBOW	
	41	3	*148-8433*	1	TEE AS	
		3	**6V-8397**	2	SEAL-O-RING	
		3	**6V-9836**	1	TEE-SWIVEL	
	42	3	*148-8435*	2	TEE AS	
					(EACH INCLUDES)	
		3	**3J-1907**	1	SEAL-O-RING	
		3	**6V-8397**	2	SEAL-O-RING	
		3	**6V-8781**	1	TEE-FACE SEAL	
	43	2	*164-5567*	2	FITTING AS	
					(EACH INCLUDES)	
		2	**3J-1907**	1	SEAL-O-RING	
		2	**6V-3965**	1	FITTING AS (QUICK DISCONNECT)	
	44	2	*164-5580*	1	TEE AS	
		2	**6V-8398**	2	SEAL-O-RING	
		2	**6V-9489**	1	TEE-BULKHEAD	
		2	**6V-9746**	1	SEAL-O-RING	
	45	2	*173-7225*	2	TEE AS	
					(EACH INCLUDES)	
		2	**3J-7354**	1	SEAL-O-RING	
		2	**6V-8397**	2	SEAL-O-RING	
		2	**6V-9161**	1	TEE	
	46	3	**3B-4607**	2	PIN-COTTER	
	47	3	**3B-4640**	1	PIN-COTTER	
	48	3	**4D-7794**	1	CLIP	
	49	2,3	**5K-5338**	8	CLIP	
	50	3	**6D-8305**	2	CLAMP	
	51	1	**6V-1889**	1	CLIP	
	52	2	**6V-9169**	1	NUT-BULKHEAD (13/16-16-THD)	
	53	3	**7S-0530**	1	CLIP	
	54	3	**7X-2618**	2	PIN	
	55	1,2,3	**8M-2773**	13	CLIP	
	56	3	**8T-0741**	2	SEAL-LIP TYPE	
	57	1,2,3	**8T-4121**	25	WASHER-HARD (11X21X2.5-MM THK)	
M	58	3	**8T-4133**	4	NUT (M10X1.5 THD)	
M	59	1,2,3	**8T-4136**	15	BOLT (M10X1.5X25-MM)	
M	60	2,3	**8T-4137**	3	BOLT (M10X1.5X20-MM)	
M	61	2,3	**8T-4139**	3	BOLT (M12X1.75X30-MM)	
M	62	2	**8T-4185**	1	BOLT (M10X1.5X50-MM)	
M	63	1,2	**8T-4196**	1	BOLT (M10X1.5X35-MM)	
	64	1,2	**8T-4222**	2	WASHER-PLATED (11X32X2.5-MM THK)	
	65	2,3	**8T-4223**	3	WASHER-HARD (13.5X25.5X3-MM THK)	
	66	3	**8T-4224**	2	WASHER-HARD (8.8X16X2-MM THK)	
	67	3	**9X-8257**	1	WASHER (17.5X30X3.5-MM THK)	

I-REFER TO HYDRAULIC INFORMATION SYSTEM
M-METRIC PART
Y-SEPARATE ILLUSTRATION

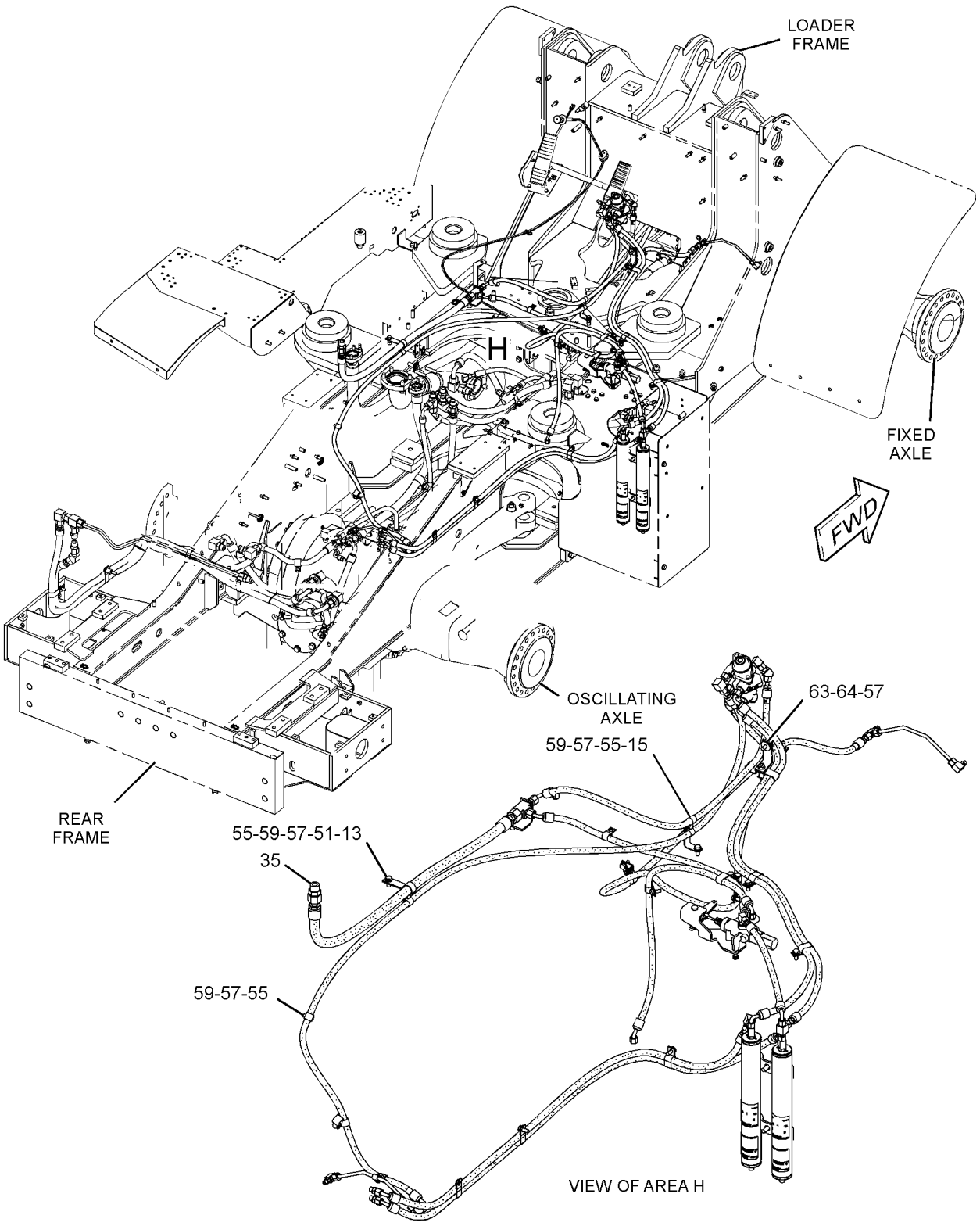

GRAPHIC #1 g01155003

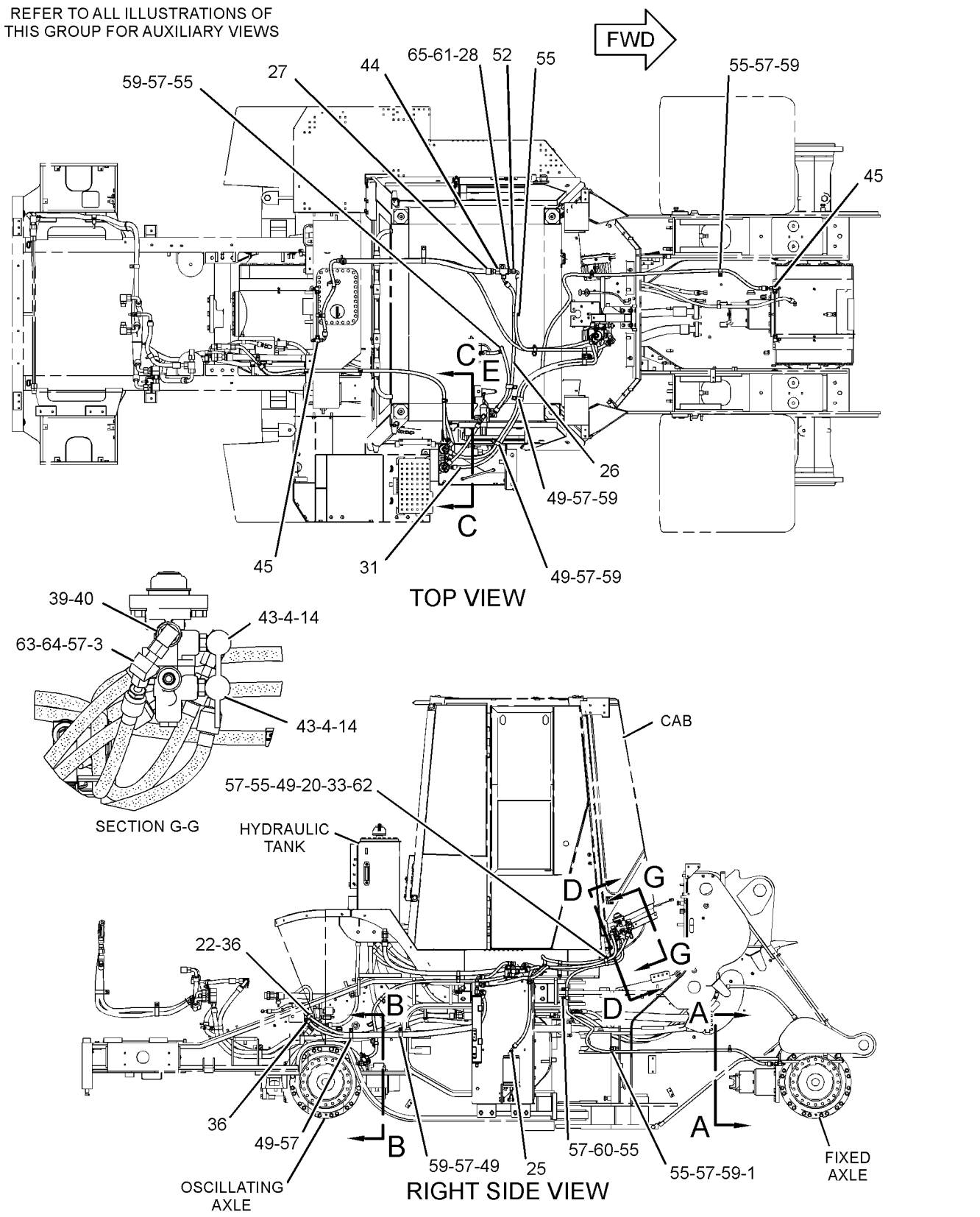

GRAPHIC #2 g01155005

237-0421 **CONTROL GP-SERVICE BRAKE** *(contd.)* **i02305324**

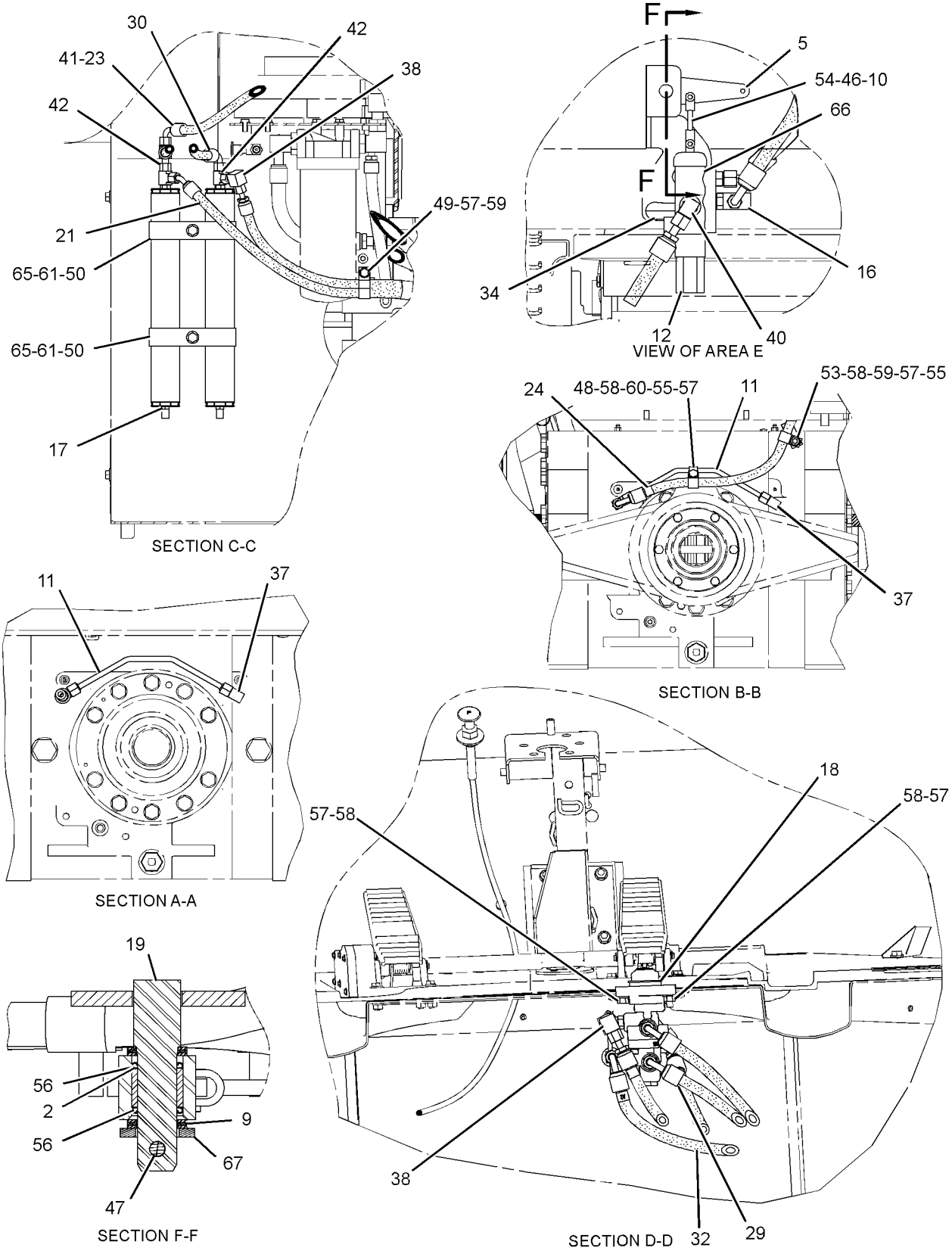

GRAPHIC #3 **<END>** g01155006

106-1774 VALVE GP-BRAKE CONTROL–PARKING

S/N: M3G1-UP

PART OF 237-0421 CONTROL GP-SERVICE BRAKE

SMCS-4265, 4282 **i02444766**

NOTE	REF NO	GRAPHIC REF	PART NUMBER	QTY	PART NAME 1 2 3 4 5 6 (PRODUCT LEVEL)	SEE PAGE
	1	1	**4J-7533**	2	SEAL-O-RING	
	2	1	**9S-8001**	2	PLUG	
	3	1	**257-7676**	1	KIT-REPAIR	
					(INCLUDES BOOT, SEALS, RETAINING, DETENT BALLS AND SPRINGS)	

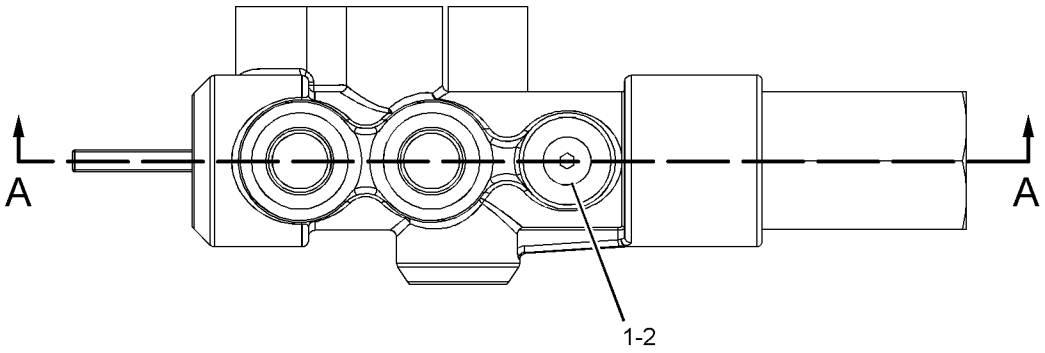

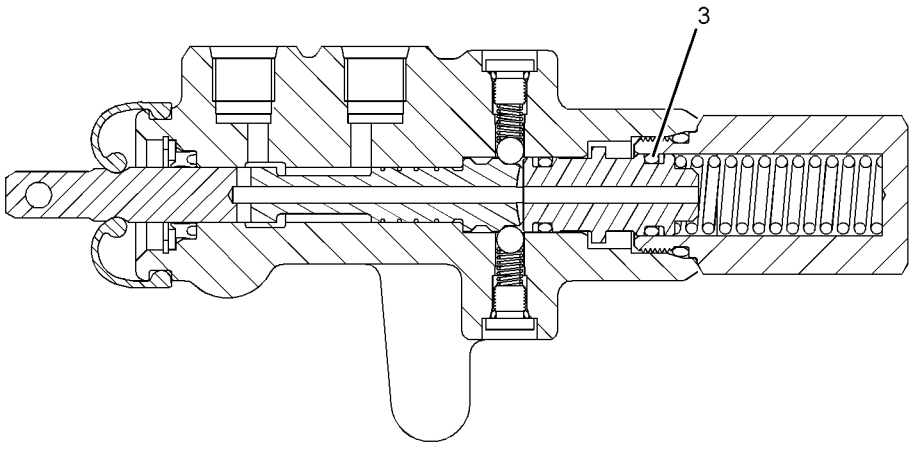

SECTION A-A

GRAPHIC #1 **<END>** g01118794

141-8802 CONTROL GP-STEERING–HMU STEERING

S/N: M3G1-UP

PART OF 243-1080 CAB AR-ENCLOSED ROPS, 258-1552 CANOPY AR-OPEN ROPS

ALSO AN ATTACHMENT

SMCS-4304, 4309, 4310, 4338 **i02449537**

NOTE	REF NO	GRAPHIC REF	PART NUMBER	QTY	PART NAME 1 2 3 4 5 6 (PRODUCT LEVEL)	SEE PAGE
	1	1	**2T-3360**	1	BUTTON AS-HORN	
	2	1	**8R-2918**	1	KNOB AS	
M	3	1	**105-3477**	1	BOLT-SOCKET HEAD (M10X1.5X45-MM)	
	4	1	**123-6713**	1	WEDGE	
	5	1	**223-3667**	1	STEERING COLUMN GP	
	6	1	**141-8808**	1	COVER AS (RH)	
	7	1	**141-8811**	1	COVER AS (LH)	
	8	1	**144-0896**	1	BRACKET AS	
M		1	**8T-3490**	4	NUT-WELD (M10X1.5-THD)	
	9	1	**146-3793**	1	STEERING WHEEL	
M	10	1	**6V-5683**	4	BOLT (M6X1X16-MM)	
M	11	1	**8T-1159**	4	BOLT-SOCKET HEAD (M10X1.5X25-MM)	
	12	1	**8T-4121**	10	WASHER-HARD (11X21X2.5-MM THK)	
M	13	1	**8T-4136**	4	BOLT (M10X1.5X25-MM)	
M	14	1	**8T-4185**	2	BOLT (M10X1.5X50-MM)	
	15	1	**124-0065**	1	BLOCK	
	16	1	**255-8545**	1	WASHER-RUBBER	

M-METRIC PART

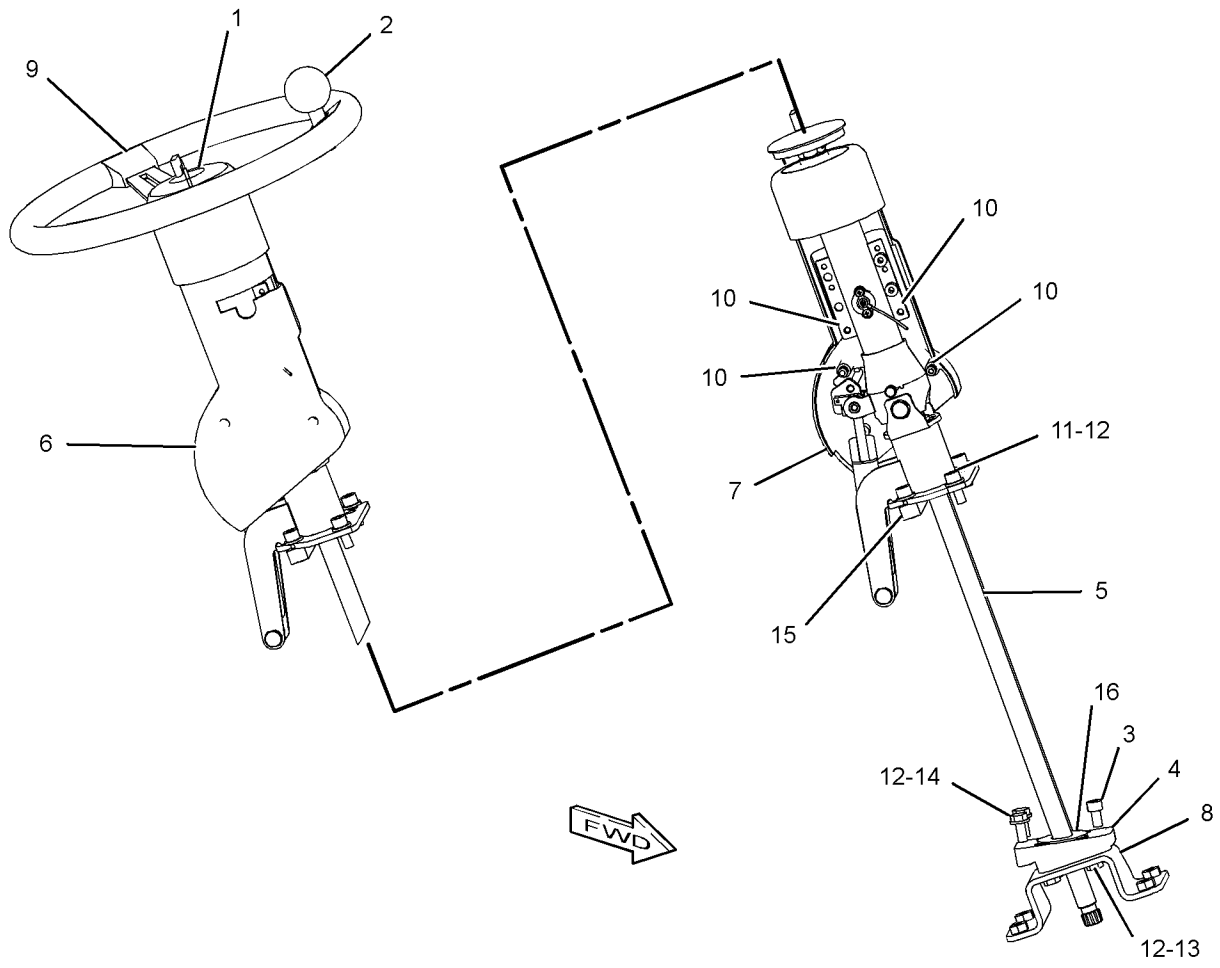

GRAPHIC #1 **<END>** g01195580

STEERING SYSTEM

112-6956 CYLINDER & MTG GP-STEERING

S/N: M3G1-UP

PART OF 237-4933 CHASSIS AR

SMCS-4303 **i02298008**

NOTE	REF NO	GRAPHIC REF	PART NUMBER	QTY	PART NAME 1 2 3 4 5 6 (PRODUCT LEVEL)	SEE PAGE
	1	1	**3B-8489**	2	FITTING-GREASE	
	2	1	**7G-8839**	4	SPACER (13.5X57X6-MM THK)	
CY	3	1	**163-0324**	2	CYLINDER GP-HYDRAULIC (STEERING)	439
	4	1	**136-1711**	4	PIN AS	
M	5	1	**8T-4139**	4	BOLT (M12X1.75X30-MM)	
	6	1	**094-1883**	2	PLUG	

C-CHANGE FROM PREVIOUS TYPE
M-METRIC PART
Y-SEPARATE ILLUSTRATION

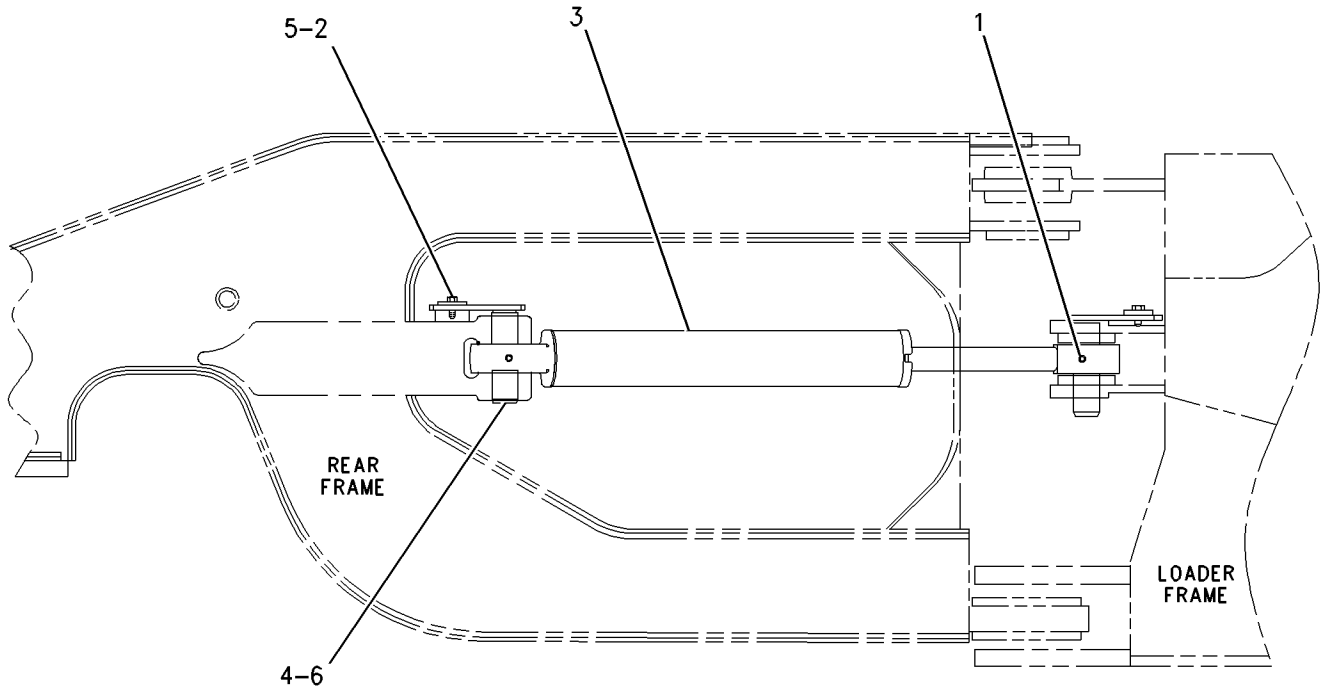

RIGHT SIDE VIEW

GRAPHIC #1 **<END>** g00948372

163-0324 CYLINDER GP-HYDRAULIC—STEERING

S/N: M3G1-UP
88.9 MM (3.5 IN) BORE X 549.0 MM (21.6 IN) STROKE
PART OF 112-6956 CYLINDER & MTG GP-STEERING

SMCS-4303 **i01972751**

NOTE	REF NO	GRAPHIC REF	PART NUMBER	QTY	PART NAME 1 2 3 4 5 6 (PRODUCT LEVEL)	SEE PAGE
R	1	1	**163-0325**	1	CYLINDER AS	
		1	**1K-6985**	2	RING-RETAINING	
		1	**9M-1328**	1	BEARING	
M	2	1	**173-9779**	1	BOLT (M24X3X80-MM)	
	3	1	**6V-8237**	1	WASHER (26X44X4-MM THK)	
	4	1	**163-0326**	1	PISTON	
	5	1	**175-7898**	1	SEAL-O-RING	
	6	1	**4J-9224**	1	RING-BACKUP	
	7	1	**163-0329**	1	HEAD	
R	8	1	**163-0327**	1	ROD AS	
		1	**1K-6985**	2	RING-RETAINING	
		1	**9M-1328**	1	BEARING	
	9	1	**7J-9885**	1	RING-WEAR	
	10	1	**4T-8054**	1	SEAL AS	
	11	1	**231-3539**	1	SEAL-WIPER	
	12	1	**167-2191**	1	SEAL AS-BUFFER	
	13	1	**167-2300**	1	SEAL-U-CUP	
	14	1	**4T-6907**	1	RING-WEAR	

M-METRIC PART
R-REMFG PART MAY BE AVAILABLE

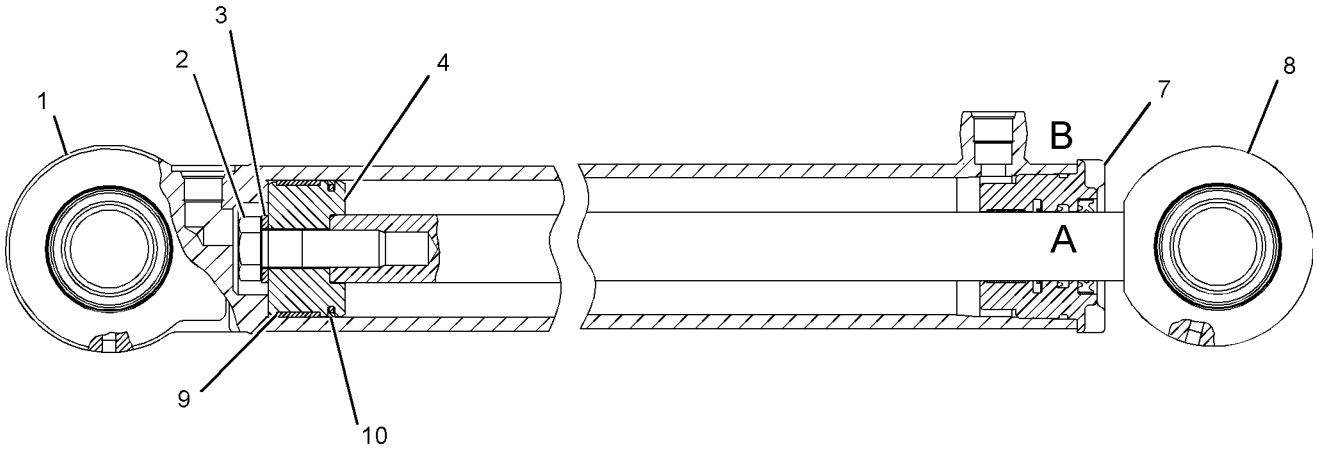

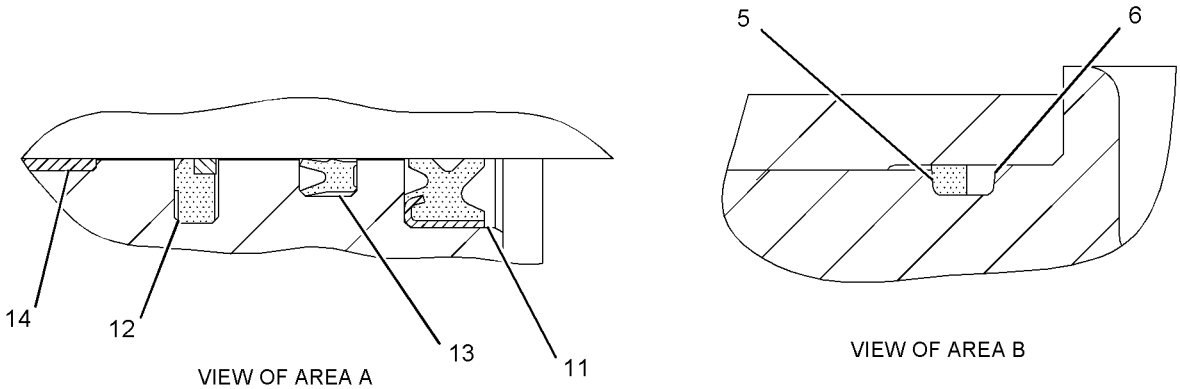

VIEW OF AREA A

VIEW OF AREA B

GRAPHIC #1 **<END>** g01074172

STEERING SYSTEM

244-5617 LINES GP-SECONDARY STEERING

S/N: M3G1-UP

PART OF 244-5424 STEERING AR-SECONDARY

AN ATTACHMENT

SMCS-4304 **i02444581**

NOTE	REF NO	GRAPHIC REF	PART NUMBER	QTY	PART NAME 1 2 3 4 5 6 (PRODUCT LEVEL)	SEE PAGE
	1	1	**4I-7889**	1	SPACER (11X25X45-MM THK)	
	2	2	**159-8329**	1	BRACKET AS	
I	3	1	**202-8928**	1	HOSE AS	
I	4	1	**246-5135**	1	HOSE AS	
I	5	2	**246-5136**	1	HOSE AS	
	6	2	**263-6703**	1	ELBOW	
I	7	1	**282-6661**	1	HOSE AS	
Y	8	2	**141-2597**	1	VALVE GP-SECONDARY STEERING	458
	9	2	*148-8307*	2	ADAPTER AS	
					(EACH INCLUDES)	
		2	**3J-1907**	1	SEAL-O-RING	
		2	**5P-8874**	1	ADAPTER	
	10	2	*148-8325*	1	CONNECTOR AS	
		2	**3J-1907**	2	SEAL-O-RING	
		2	**4J-5477**	2	SEAL-O-RING	
		2	**6V-8641**	2	CONNECTOR	
	11	1	*148-8327*	1	CONNECTOR AS	
		1	**3D-2824**	1	SEAL-O-RING	
		1	**6V-8637**	1	CONNECTOR	
		1	**6V-9746**	1	SEAL-O-RING	
	12	1	*148-8359*	1	ELBOW AS	
		1	**3K-0360**	1	SEAL-O-RING	
		1	**6V-9746**	1	SEAL-O-RING	
		1	**6V-9877**	1	ELBOW	
	13	2	*148-8364*	1	ELBOW AS	
		2	**3K-0360**	1	SEAL-O-RING	
		2	**6V-8398**	1	SEAL-O-RING	
		2	**6V-8625**	1	ELBOW	
	14	2	*148-8390*	1	ELBOW AS	
		2	**2M-9780**	1	SEAL-O-RING	
		2	**6V-8626**	1	ELBOW	
		2	**7J-9108**	1	SEAL-O-RING	
	15	1	*148-8392*	1	ELBOW AS	
		1	**6V-9746**	1	SEAL-O-RING	
		1	**6V-9853**	1	ELBOW	
	16	2	*150-3065*	2	ADAPTER AS	
					(EACH INCLUDES)	
		2	**3J-1907**	1	SEAL-O-RING	
		2	**6V-0484**	1	ADAPTER-O-RING	
	17	1	*150-4048*	1	ELBOW AS	
		1	**3K-0360**	1	SEAL-O-RING	
		1	**6V-8722**	1	ELBOW	
		1	**7J-9108**	1	SEAL-O-RING	
I	18	2	**263-9742**	1	HOSE AS	
	19	1,2	**1P-4577**	8	FLANGE-HALF	
	20	1,2	**4J-0520**	5	SEAL-O-RING	
	21	2	**6D-4244**	1	CLIP	
	22	2	**6V-1889**	1	CLIP	
	23	2	**7D-7233**	1	CLIP	
M	24	2	**7X-2550**	3	BOLT (M12X1.75X110-MM)	
	25	1,2	**8T-4121**	22	WASHER-HARD (11X21X2.5-MM THK)	
M	26	2	**8T-4136**	1	BOLT (M10X1.5X25-MM)	
M	27	2	**8T-4185**	2	BOLT (M10X1.5X50-MM)	
M	28	1	**8T-4186**	2	BOLT (M10X1.5X40-MM)	
M	29	1,2	**8T-4196**	16	BOLT (M10X1.5X35-MM)	

244-5617 **LINES GP-SECONDARY STEERING** *(contd.)* **i02444581**

NOTE	REF NO	GRAPHIC REF	PART NUMBER	QTY	PART NAME 1 2 3 4 5 6 (PRODUCT LEVEL)	SEE PAGE
	30	2	**8T-4223**	3	WASHER-HARD (13.5X25.5X3-MM THK)	
M	31	2	**8T-5005**	1	BOLT (M10X1.5X70-MM)	

I-REFER TO HYDRAULIC INFORMATION SYSTEM
M-METRIC PART
Y-SEPARATE ILLUSTRATION

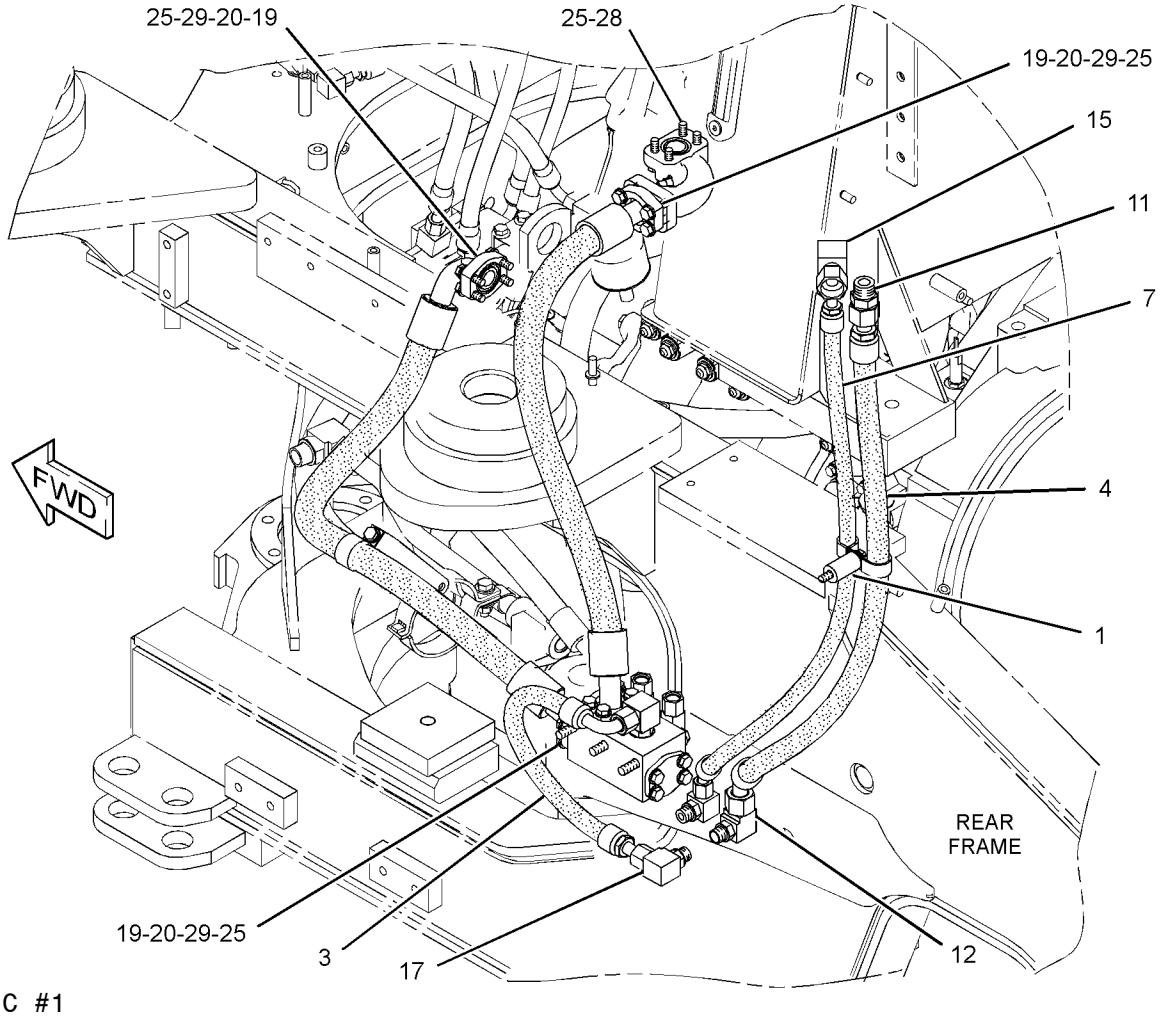

GRAPHIC #1 g01224790

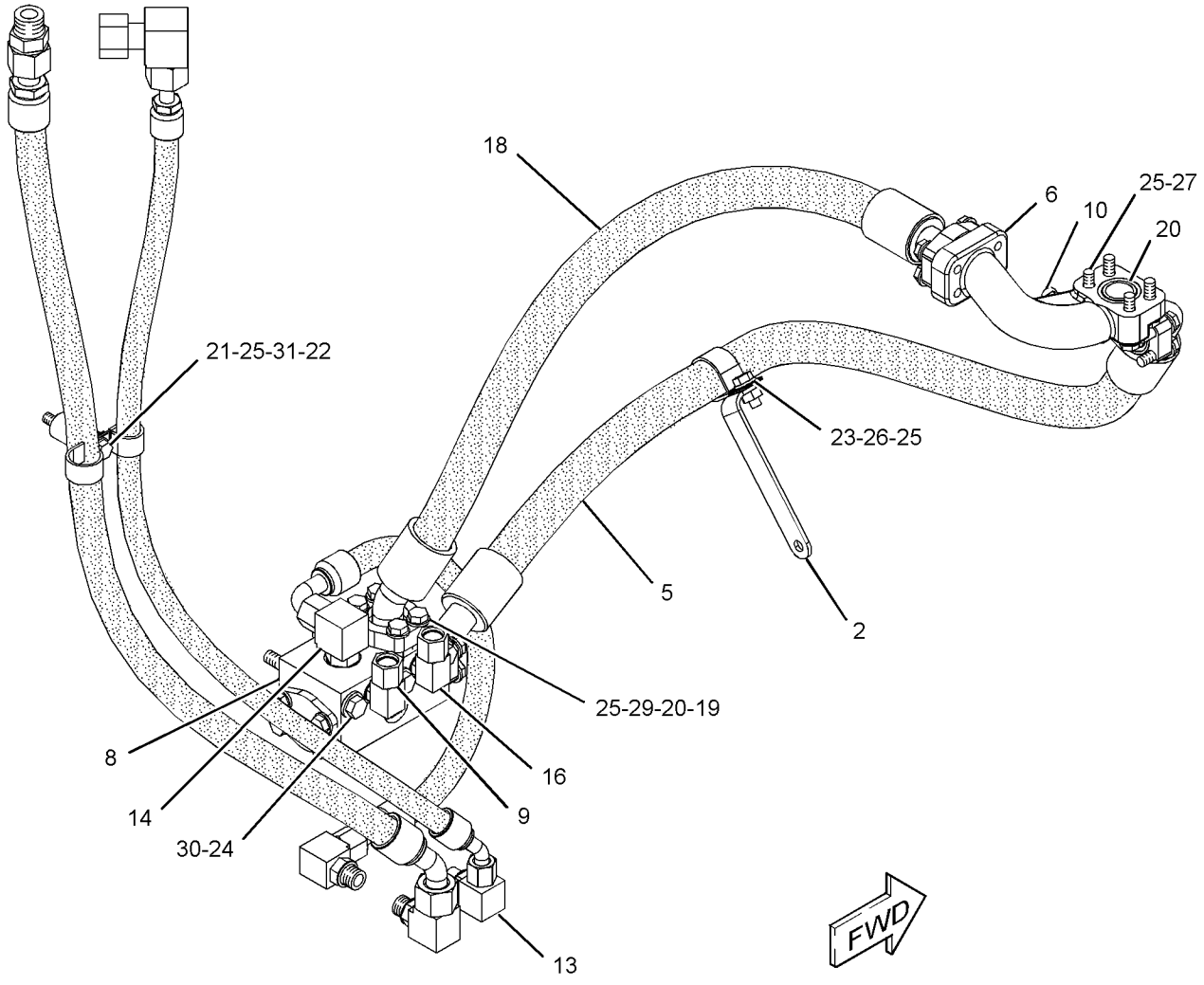

GRAPHIC #2 **<END>** g01224792

STEERING SYSTEM

237-0436 LINES GP-STEERING—HMU STEERING

S/N: M3G1-UP

PART OF 237-4933 CHASSIS AR

SMCS-4304 **i02444586**

NOTE	REF NO	GRAPHIC REF	PART NUMBER	QTY	PART NAME 1 2 3 4 5 6 (PRODUCT LEVEL)	SEE PAGE
	1	1	**1V-6274**	4	TAG-IDENTIFICATION	
	2	1	**1V-6275**	2	TAG-IDENTIFICATION	
	3	1	**1V-6276**	4	TAG-IDENTIFICATION	
	4	2	**1V-6277**	2	TAG-IDENTIFICATION	
E	5	2	**5P-1293**		HOSE (13-CM)	
	6	2	**6N-6984**	4	MOUNT-RUBBER	
	7	2	**6N-8744**	1	MOUNT	
	8	2	**6V-0852**	1	CAP-DUST	
	9	2	**8T-4984**	2	CLAMP-HOSE	
	10	2	**9J-3866**	1	ADAPTER	
I	11	1	**130-6692**	1	HOSE AS	
	12	3	**135-5038**	1	MANIFOLD	
I	13	1	**141-7687**	1	HOSE AS	
	14	2	**141-8807**	1	PLATE	
Y	15	1	**142-4000**	1	VALVE GP-STEERING (HMU STEERING)	459
I	16	3	**146-0112**	1	HOSE AS	
M	17	3	**146-6581**	2	BOLT-FLAT HEAD (M12-1.75X72-MM)	
Y	18	1	**146-7571**	2	VALVE GP-STEERING NEUTRALIZER	462
I	19	1	**146-9037**	1	HOSE AS	
	20	1	*148-8424*	1	TEE AS	
		1	**6V-8397**	1	SEAL-O-RING	
		1	**8T-8902**	1	TEE	
	21	1	*160-7627*	2	CONNECTOR AS	
					(EACH INCLUDES)	
		1	**3J-1907**	1	SEAL-O-RING	
		1	**6V-8397**	1	SEAL-O-RING	
		1	**122-2340**	1	CONNECTOR	
I	22	1	**214-9468**	1	HOSE AS	
	23	3	**220-1428**	1	BRACKET	
	24	3	**220-3995**	1	BRACKET	
J	25	2	**230-4176**	1	PUMP GP-METERING (HMU STEERING)	
	26	2	**244-3274**	1	BRACKET AS	
I	27	3	**244-5623**	1	HOSE AS	
I	28	3	**244-5624**	1	HOSE AS	
	29	3	**244-5625**	1	TUBE AS	
I	30	2	**245-1663**	1	HOSE AS	
I	31	1	**245-1664**	1	HOSE AS	
I	32	2	**245-1666**	1	HOSE AS	
I	33	3	**245-8175**	1	HOSE AS	
	34	2	**247-4596**	1	TUBE AS	
	35	2	**248-0402**	1	TUBE AS	
	36	2	**248-0403**	1	TUBE AS	
I	37	1	**248-7465**	1	HOSE AS	
I	38	1	**248-7466**	1	HOSE AS	
I	39	2	**248-7467**	1	HOSE AS	
	40	3	**250-0787**	1	TUBE AS	
	41	2	**132-7551**	4	SPACER (11X19X6-MM THK)	
	42	1	*148-8336*	4	CONNECTOR AS	
					(EACH INCLUDES)	
		1	**3J-1907**	1	SEAL-O-RING	
		1	**6V-8397**	1	SEAL-O-RING	
		1	**6V-8636**	1	CONNECTOR	
	43	2	*148-8340*	5	CONNECTOR AS	
					(EACH INCLUDES)	
		2	**3K-0360**	1	SEAL-O-RING	
		2	**6V-8398**	1	SEAL-O-RING	

237-0436 **LINES GP-STEERING** *(contd.)* **i02444586**

NOTE	REF NO	GRAPHIC REF	PART NUMBER	QTY	PART NAME 1 2 3 4 5 6 (PRODUCT LEVEL)	SEE PAGE
		2	**6V-8639**	1	CONNECTOR	
	44	3	*148-8347*	3	ELBOW AS	
					(EACH INCLUDES)	
		3	**3D-2824**	1	SEAL-O-RING	
		3	**6V-9007**	1	ELBOW	
		3	**6V-9746**	1	SEAL-O-RING	
	45	3	*148-8362*	2	ELBOW AS	
					(EACH INCLUDES)	
		3	**3D-2824**	1	SEAL-O-RING	
		3	**5K-9090**	1	SEAL-O-RING	
		3	**8T-6684**	1	ELBOW (90-DEG)	
	46	2	*148-8364*	1	ELBOW AS	
		2	**3K-0360**	1	SEAL-O-RING	
		2	**6V-8398**	1	SEAL-O-RING	
		2	**6V-8625**	1	ELBOW	
	47	2	*148-8368*	1	ELBOW AS	
		2	**3J-1907**	1	SEAL-O-RING	
		2	**4J-5477**	1	SEAL-O-RING	
		2	**6V-8627**	1	ELBOW	
	48	2	*148-8370*	3	ELBOW AS	
					(EACH INCLUDES)	
		2	**6V-8398**	1	SEAL-O-RING	
		2	**6V-9851**	1	ELBOW	
	49	1	*148-8378*	1	ELBOW AS	
		1	**3J-1907**	1	SEAL-O-RING	
		1	**6V-8397**	1	SEAL-O-RING	
		1	**6V-8724**	1	ELBOW	
	50	1	*148-8433*	1	TEE AS	
		1	**6V-8397**	2	SEAL-O-RING	
		1	**6V-9836**	1	TEE-SWIVEL	
	51	2	*148-8444*	1	TEE AS-SWIVEL	
		2	**6V-8398**	2	SEAL-O-RING	
		2	**6V-9837**	1	TEE-SWIVEL	
	52	3	*153-6237*	1	ELBOW AS	
		3	**3D-2824**	1	SEAL-O-RING	
		3	**6V-9004**	1	ELBOW	
		3	**6V-9746**	1	SEAL-O-RING	
	53	2	*164-5567*	1	FITTING AS	
		2	**3J-1907**	1	SEAL-O-RING	
		2	**6V-3965**	1	FITTING AS (QUICK DISCONNECT)	
	54	3	*164-5606*	1	CONNECTOR AS	
		3	**3D-2824**	1	SEAL-O-RING	
		3	**6V-9746**	1	SEAL-O-RING	
		3	**8T-0078**	1	CONNECTOR	
	55	1	*164-7908*	1	ELBOW AS	
		1	**3J-7354**	1	SEAL-O-RING	
		1	**6V-8397**	1	SEAL-O-RING	
		1	**8T-7546**	1	ELBOW	
	56	3	*171-6723*	1	ELBOW AS	
		3	**6V-9746**	1	SEAL-O-RING	
		3	**8T-8899**	1	ELBOW	
	57	3	*185-2271*	1	CONNECTOR GP	
		3	**3D-2824**	1	SEAL-O-RING	
		3	**6V-9746**	1	SEAL-O-RING	
		3	**8T-9023**	1	CONNECTOR	
	58	1	**1P-3703**	2	SEAL-RECTANGULAR	
	59	1	**1P-3704**	2	SEAL-RECTANGULAR	
	60	2	**1P-4582**	2	FLANGE-HALF	
	61	2	**1P-4584**	2	FLANGE-HALF	

237-0436 **LINES GP-STEERING** *(contd.)* **i02444586**

NOTE	REF NO	GRAPHIC REF	PART NUMBER	QTY	PART NAME 1 2 3 4 5 6 (PRODUCT LEVEL)	SEE PAGE
	62	1	**4D-7388**	2	CLIP	
	63	2	**4J-0520**	4	SEAL-O-RING	
	64	2	**4J-0527**	1	SEAL-O-RING	
	65	3	**4J-5267**	2	SEAL-O-RING	
	66	3	**5G-7020**	2	CLIP (SLOT)	
	67	3	**5G-7021**	2	CLIP (TAB)	
	68	1	**6D-1641**	2	CLIP	
	69	1	**6D-4244**	2	CLIP	
	70	1	**6D-4246**	1	CLIP	
	71	2	**6J-2680**	1	SEAL-O-RING	
	72	2	**6V-8398**	2	SEAL-O-RING	
M	73	2	**7X-2543**	1	BOLT (M10X1.5X120-MM)	
	74	3	**8C-3205**	4	FLANGE-HALF	
	75	2	**8C-3206**	6	FLANGE-HALF	
	76	3	**8T-1889**	2	CLIP (SLOT)	
	77	3	**8T-1890**	2	CLIP (TAB)	
	78	1,2,3	**8T-4121**	55	WASHER-HARD (11X21X2.5-MM THK)	
M	79	1	**8T-4133**	4	NUT (M10X1.5 THD)	
M	80	1,2	**8T-4137**	6	BOLT (M10X1.5X20-MM)	
M	81	1,2	**8T-4172**	8	BOLT (M10X1.5X80-MM)	
M	82	2,3	**8T-4184**	10	BOLT (M12X1.75X45-MM)	
M	83	1,2,3	**8T-4195**	6	BOLT (M10X1.5X30-MM)	
M	84	1,2,3	**8T-4196**	21	BOLT (M10X1.5X35-MM)	
M	85	3	**8T-4198**	8	BOLT (M10X1.5X100-MM)	
	86	2	**8T-4222**	1	WASHER-PLATED (11X32X2.5-MM THK)	
	87	2,3	**8T-4223**	12	WASHER-HARD (13.5X25.5X3-MM THK)	
	88	2	**8T-4226**	4	WASHER-PLATED (10.5X45X3-MM THK)	
M	89	3	**8T-4244**	4	NUT (M12X1.75-THD)	
M	90	2	**8T-5436**	2	BOLT (M10X1.5X130-MM)	
M	91	2	**8T-6466**	4	BOLT (M10X1.5X60-MM)	
					AVAILABLE REPAIR KIT(S):	
J			**257-8471**	1	KIT-SEAL (METERING PUMP, STEERING)	
					(INCLUDES U-CUP SEAL AND O'RING)	

E-ORDER BY THE CENTIMETER
I-REFER TO HYDRAULIC INFORMATION SYSTEM
J-KIT MARKED J SERVICES PART MARKED J
M-METRIC PART
Y-SEPARATE ILLUSTRATION

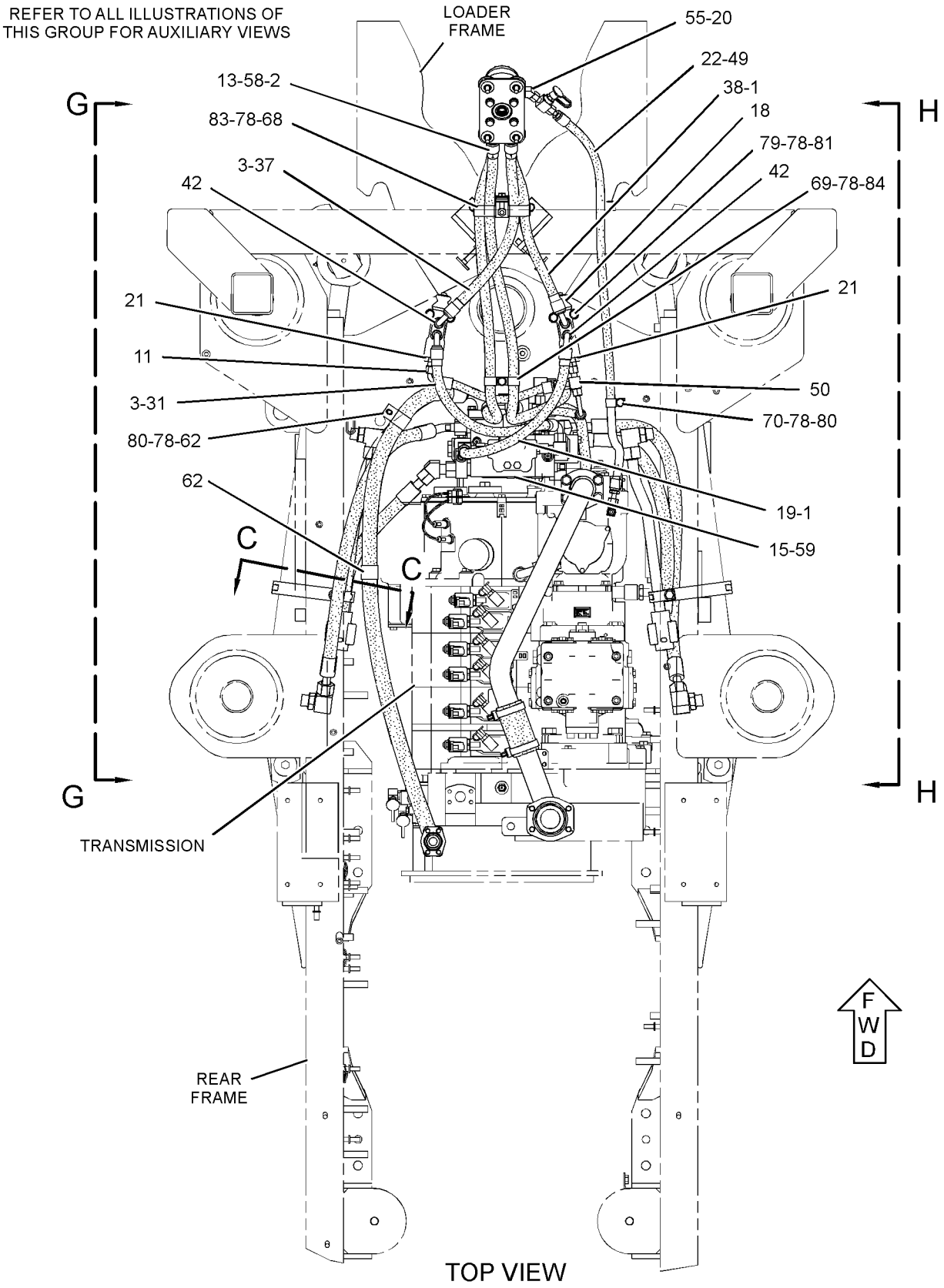

GRAPHIC #1

g01223172

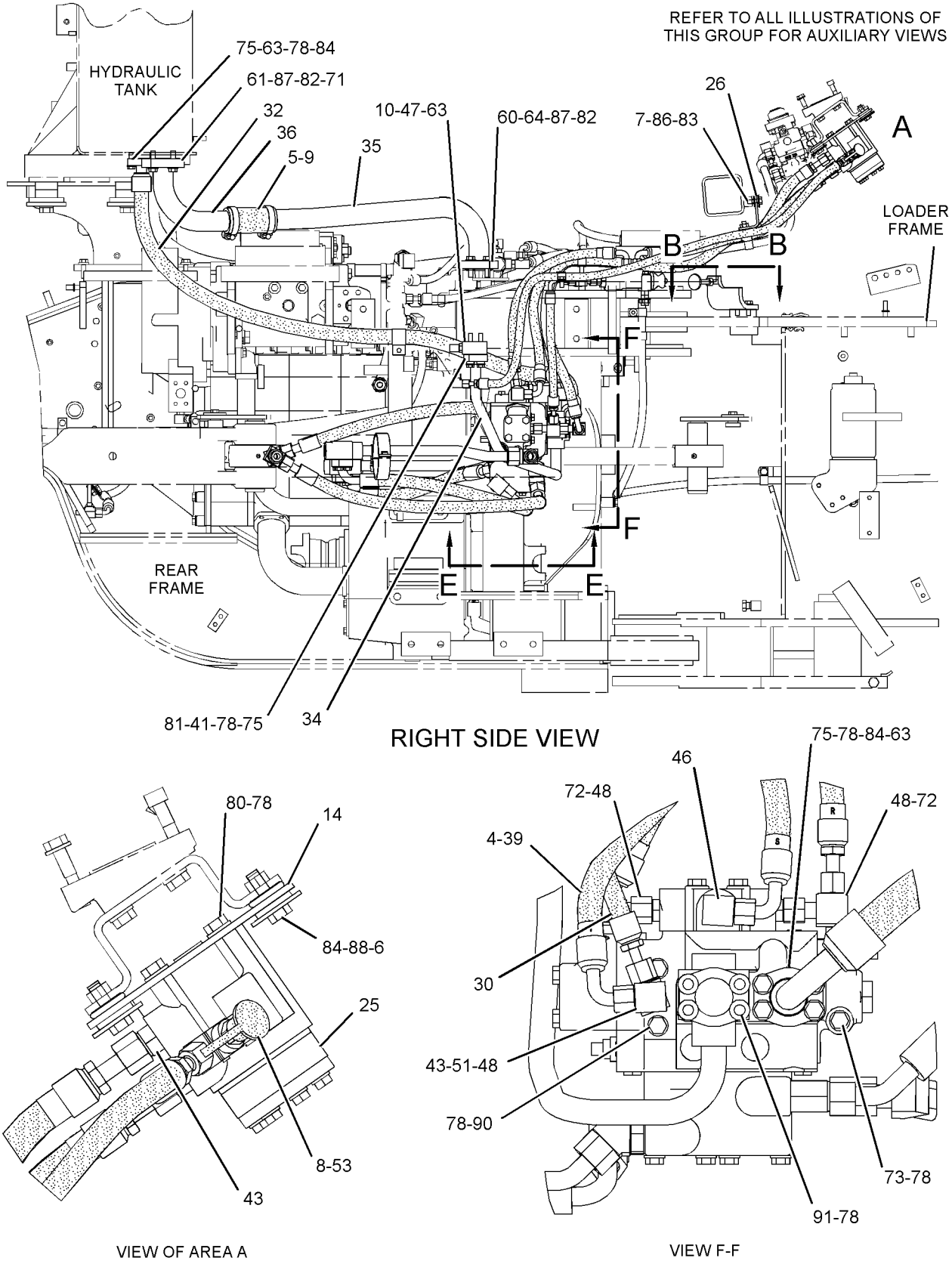

GRAPHIC #2

g01223173

237-0436 **LINES GP-STEERING** *(contd.)* **i02444586**

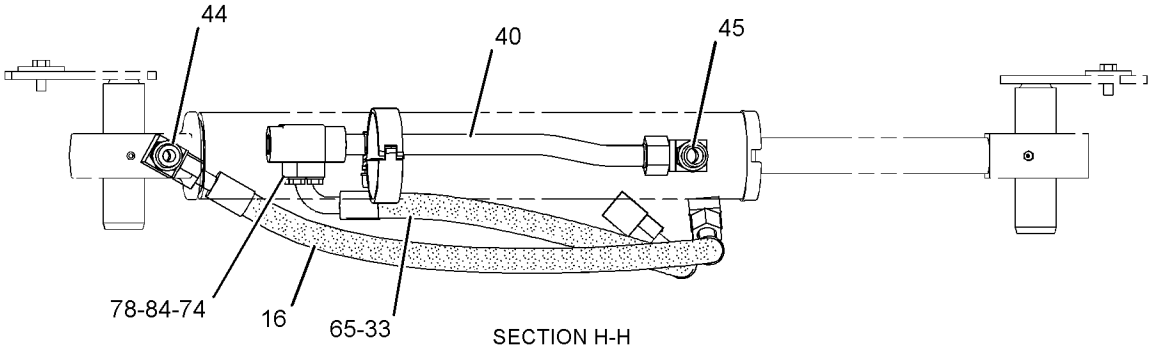

SECTION H-H

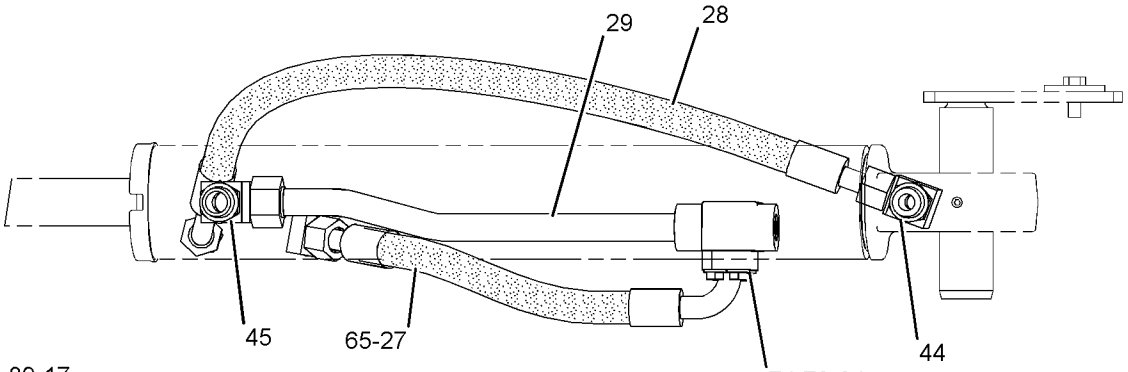

SECTION G-G

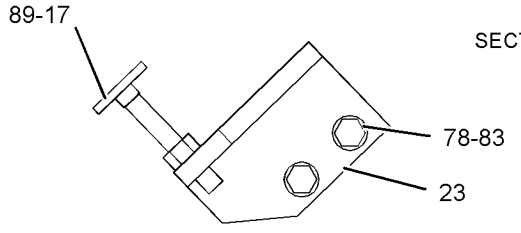

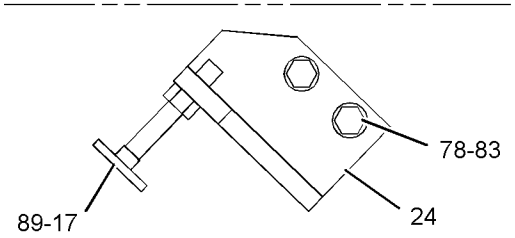

SECTION B-B

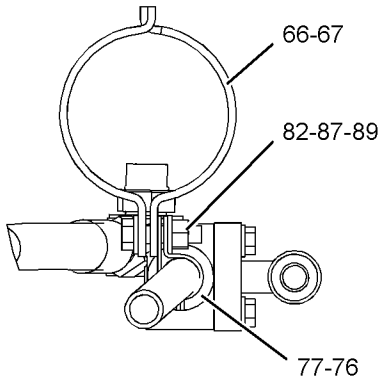

SECTION C-C

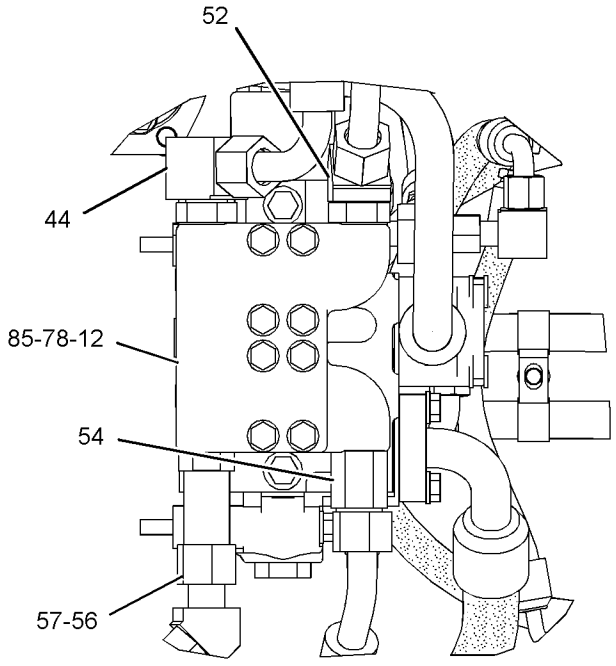

VIEW E-E

GRAPHIC #3 **<END>** g01223174

STEERING SYSTEM

237-9874 PUMP & MOTOR GP-SEC STEERING

S/N: M3G1-UP

PART OF 248-0639 PUMP & MTG GP-SECONDARY STEER

AN ATTACHMENT

SMCS-4324, 4325 **i02195281**

NOTE	REF NO	GRAPHIC REF	PART NUMBER	QTY	PART NAME 1 2 3 4 5 6 (PRODUCT LEVEL)	SEE PAGE
	1	1	**183-6967**	1	MOTOR GP-ELECTRIC (SECONDARY STEERING)	
	2	1	**237-9877**	1	KIT-PUMP REPAIR (SECONDARY STEERING)	
	3	1	**117-5268**	1	GASKET	
	4	1	**183-6970**	1	RELAY	
	5	1	**237-9878**	1	KIT-RELIEF VALVE (SECONDARY STEERING)	
	6	1	**183-6971**	1	CABLE AS	

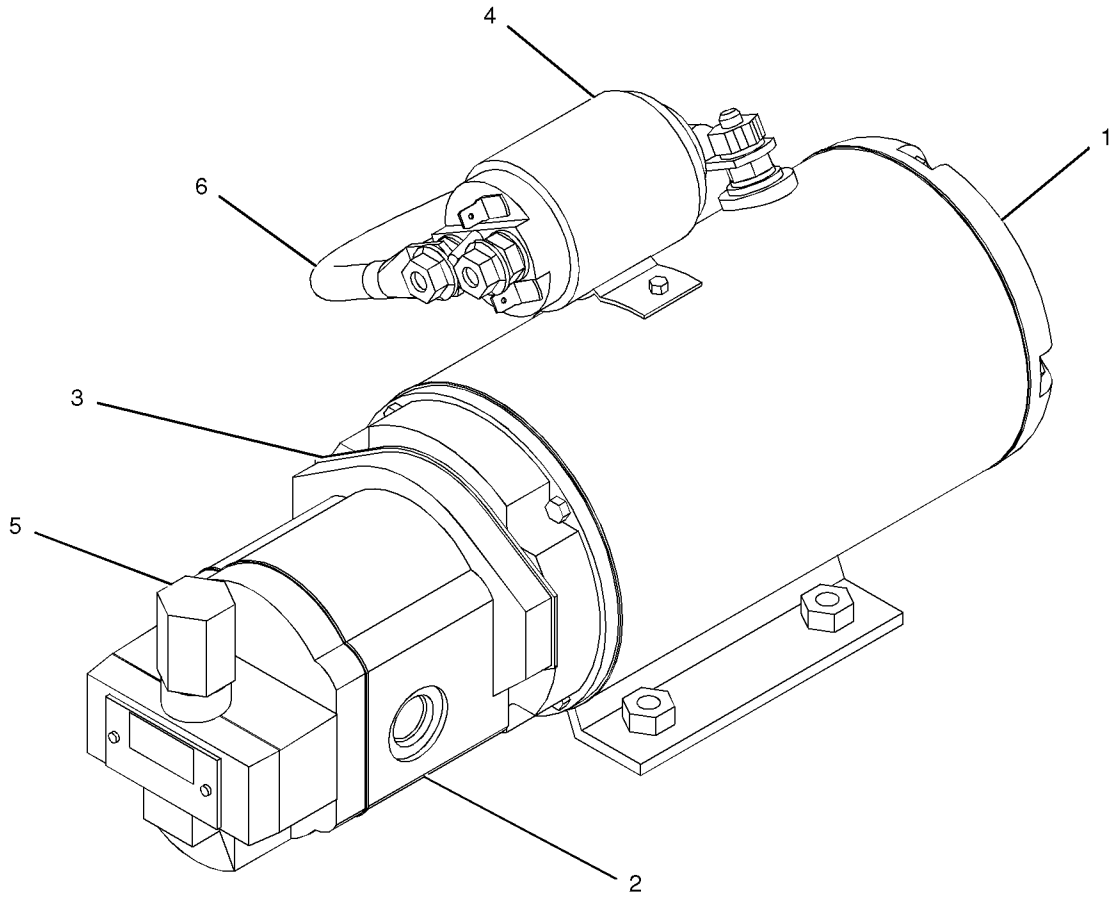

GRAPHIC #1 **<END>** g01024272

STEERING SYSTEM

248-0639 PUMP & MTG GP-SECONDARY STEER

S/N: M3G1-UP
PART OF 244-5424 STEERING AR-SECONDARY
AN ATTACHMENT

SMCS-4324 **i02232169**

NOTE	REF NO	GRAPHIC REF	PART NUMBER	QTY	PART NAME 1 2 3 4 5 6 (PRODUCT LEVEL)	SEE PAGE
	1	1	**202-0687**	1	BRACKET AS	
M		1	**8T-3597**	5	NUT-WELD (M12X1.75-THD)	
		1	**9R-2821**	1	BOSS (M10X15-MM)	
Y	2	1	**237-9874**	1	PUMP & MOTOR GP-SEC STEERING	449
	3	1	**5P-1076**	1	WASHER-HARD (13.5X30X4-MM THK)	
	4	1	**7X-7729**	4	WASHER (11X25X3-MM THK)	
M	5	1	**8T-4136**	4	BOLT (M10X1.5X25-MM)	
	6	1	**8T-4223**	3	WASHER-HARD (13.5X25.5X3-MM THK)	
M	7	1	**8T-4244**	1	NUT (M12X1.75-THD)	
M	8	1	**8T-4956**	3	BOLT (M12X1.75X35-MM)	

M-METRIC PART
Y-SEPARATE ILLUSTRATION

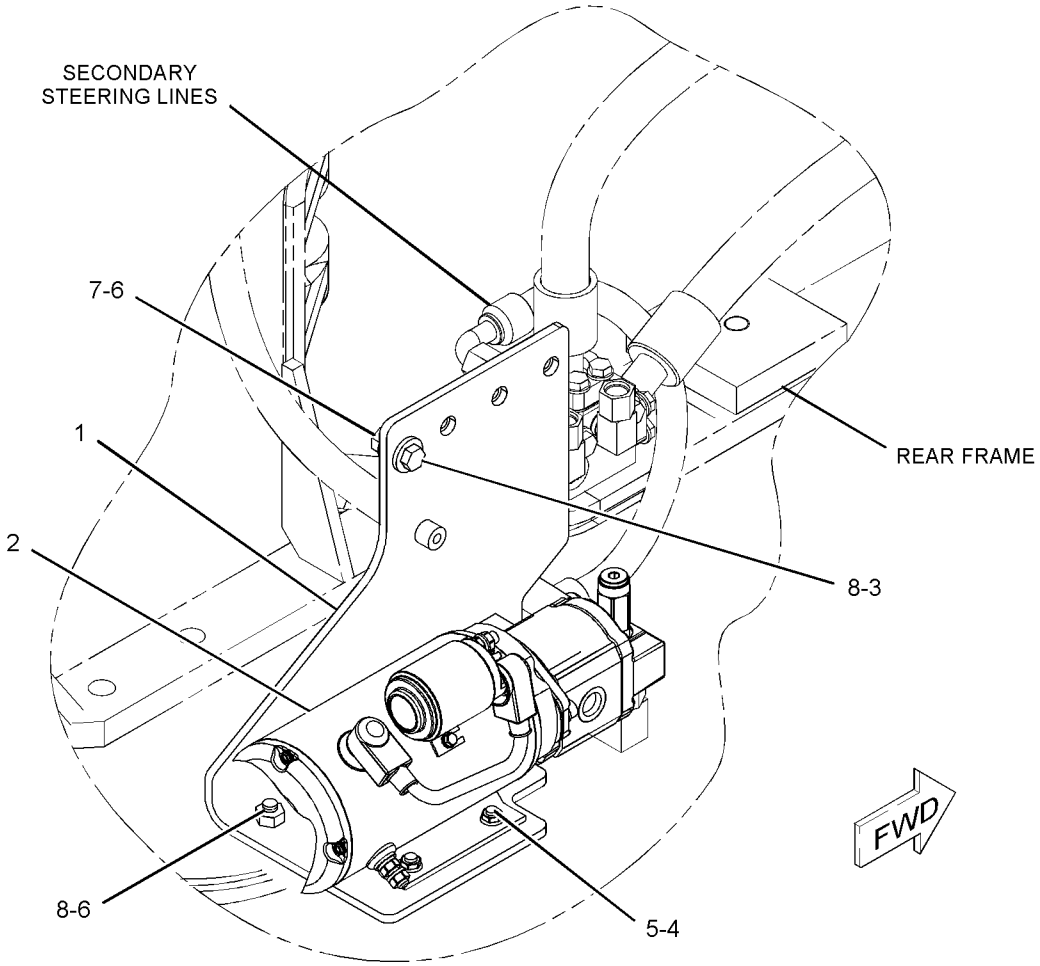

GRAPHIC #1 **<END>** g01127075

241-9299 PUMP GP-PISTON—STEERING

S/N: M3G1-UP

PART OF 246-2054 PUMP & MTG GP-HYDRAULIC

SMCS-4268, 4306, 5070 **i02325328**

NOTE	REF NO	GRAPHIC REF	PART NUMBER	QTY	PART NAME 1 2 3 4 5 6 (PRODUCT LEVEL)	SEE PAGE
	1	1	**6E-6594**	1	BEARING-SWASH	
	2	1	**6E-4224**	1	PLUG-SWASHPLATE	
	3	1	**033-6036**	1	SEAL-O-RING	
	4	1	**100-8252**	1	HEAD-PUMP	
	5	1	**9T-1699**	1	SPRING	
	6	1	**9T-1710**	1	POPPET	
	7	1	**9T-1636**	1	SEAT	
	8	1	**6E-6596**	1	COVER-TRUNNION	
	9	1	**6V-3834**	1	SEAL-O-RING	
M	10	1	**3E-4302**	2	SCREW-FLAT HEAD (M4X0.7X10-MM)	
M	11	1	**6V-8214**	3	BOLT (M6X1X20-MM)	
	12	1	**6E-6597**	1	BEARING-SWASH	
M	13	1	**6V-8004**	2	BOLT (M12X1.75X120-MM)	
M	14	1	**8T-0372**	1	BOLT (M12X1.75X90-MM)	
Y	15	1	**260-0411**	1	VALVE GP-PUMP CONTROL (PRESSURE, FLOW COMPENSATOR)	455
	16	1	**8T-5039**	3	SEAL-O-RING	
M	17	1	**6V-8337**	4	BOLT-SOCKET HEAD (M8X1.25X35-MM)	
	18	1	**095-0888**	2	PIN-SPRING	
	19	1	**140-8885**	1	SHAFT-PUMP	
	20	1	**100-8203**	1	HOUSING-PUMP	
	21	1	**006-8663**	1	RING	
	22	1	**8T-4750**	1	SEAL-LIP TYPE	
	23	1	**6E-6599**	1	KIT-BIAS PISTON	
					(INCLUDES SPRING, ROD, PISTON, SEAL)	
	24	1	**6E-6600**	1	SPRING-BIAS	
Y	25	1	**6E-6571**	1	ROTATING GP-PUMP	453
	26	1	**6E-6601**	1	GASKET	
	27	1	**7L-9061**	2	SEAL-O-RING	
	28	1	**3E-7417**	2	PLUG	
	29	1	**8T-7876**	2	SEAL-O-RING	
	30	1	**9T-1633**	1	PLATE	
B	31	1	**9T-2197**	1	KIT-SHAFT SHIM (INCLUDES 17-SHIMS)	
	32	1	**1P-6872**	1	CUP-BEARING	
	33	1	**004-9040**	1	CONE-BEARING	
	34	1	**9T-1652**	1	PIN	
	35	1	**6E-6602**	1	KIT-PISTON CONTROL	
					(INCLUDES PISTON, ROD, AND SEAL)	
	36	1	**167-1802**	1	SWASHPLATE GP	
		1	**1H-3937**	2	PIN	
		1	**167-1801**	2	STOP-SWASHPLATE	
	37	1	**7T-8273**	1	CUP-BEARING	
	38	1	**7T-8272**	1	CONE-BEARING	
	39	1	**3K-0360**	1	SEAL-O-RING	
	40	1	**9S-4185**	1	PLUG	
	41	1	**259-7060**	2	STUD	

B-USE AS REQUIRED
M-METRIC PART
Y-SEPARATE ILLUSTRATION

241-9299 PUMP GP-PISTON *(contd.)* **i02325328**

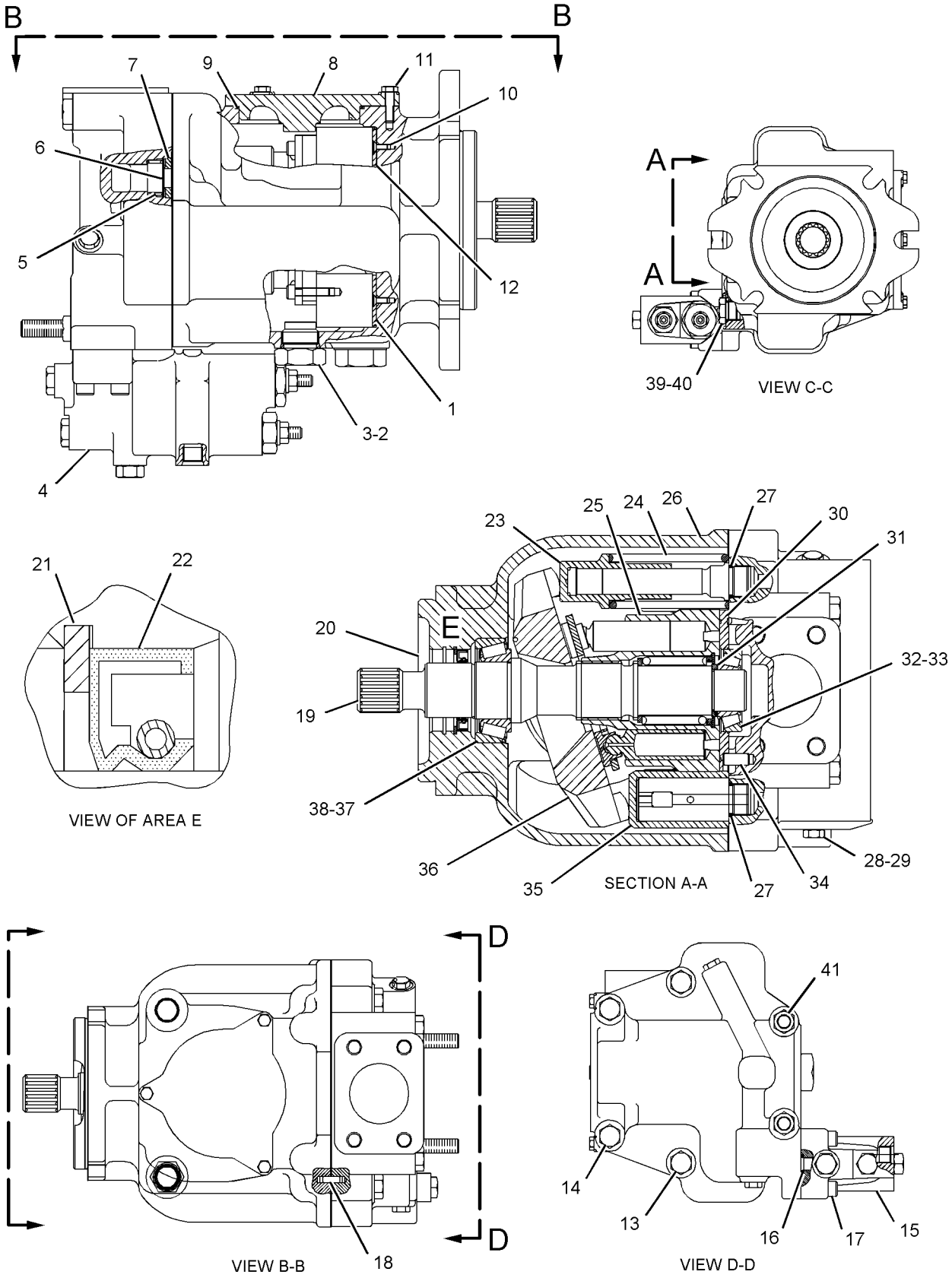

GRAPHIC #1 **<END>** g01122941

STEERING SYSTEM

6E-6571 ROTATING GP-PUMP–STEERING

S/N: M3G1-UP

PART OF 241-9299 PUMP GP-PISTON

SMCS-5070 **i00131155**

NOTE	REF NO	GRAPHIC REF	PART NUMBER	QTY	PART NAME 1 2 3 4 5 6 (PRODUCT LEVEL)	SEE PAGE
	1	1	**6E-6604**	2	PLATE-SPACER	
	2	1	**6E-6605**	2	PLATE-LIMITER	
M	3	1	**3T-0849**	4	BOLT-SOCKET HEAD (M6X1X25-MM)	
	4	1	**9T-7755**	1	SPRING	
	5	1	**009-2069**	1	RING	
	6	1	**9T-7754**	1	GUIDE-OUTER	
	7	1	**9T-7757**	1	BARREL	
	8	1	**9T-7756**	1	GUIDE-INNER	
	9	1	**9T-7759**	1	PLATE-RETAINING	
	10	1	**9T-7761**	9	PISTON	

M-METRIC PART

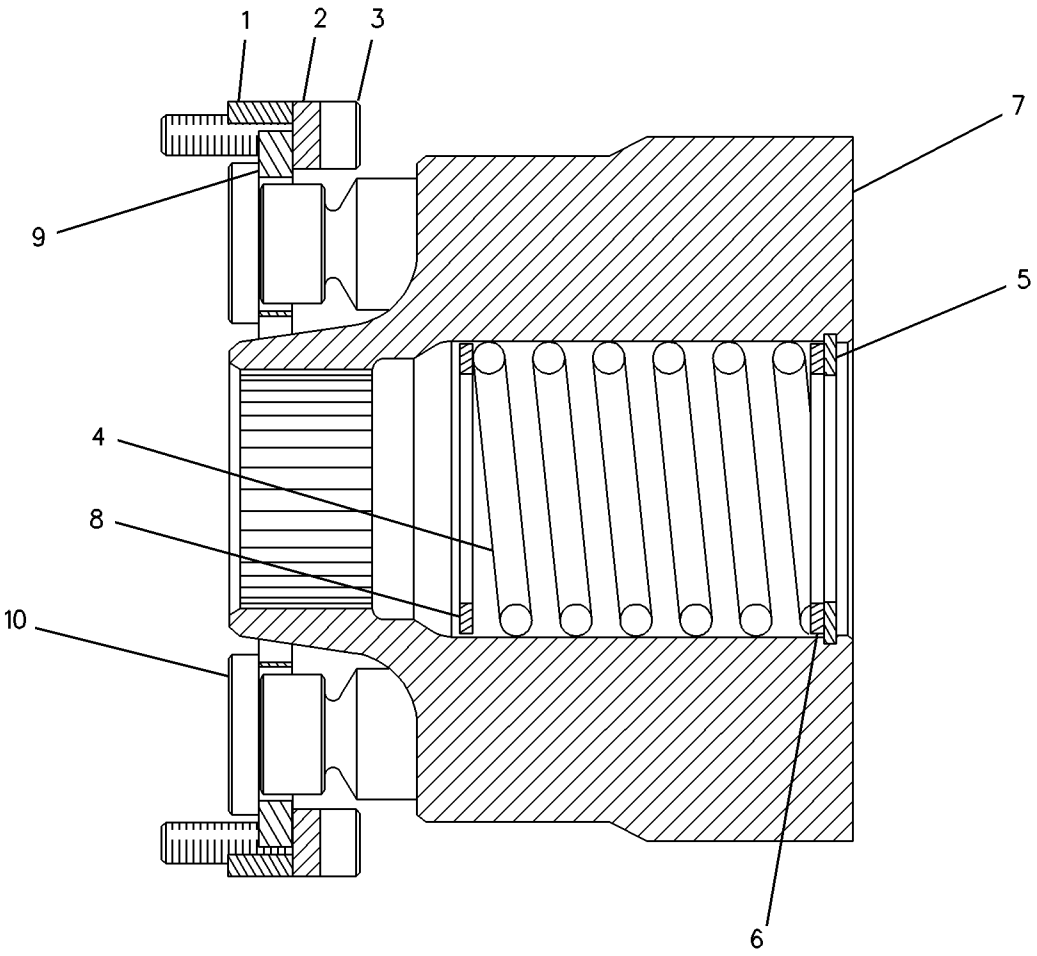

GRAPHIC #1 **<END>** g00083480

STEERING SYSTEM

244-5424 STEERING AR-SECONDARY

S/N: M3G1-UP

AN ATTACHMENT

SMCS-4300 **i02308273**

NOTE	PART NUMBER	QTY	PART NAME 1 2 3 4 5 6 (PRODUCT LEVEL)	SEE PAGE
Y	*260-1531*	1	HARDWARE GP-MOUNTING (SECONDARY STEERING)	383
Y	*244-5617*	1	LINES GP-SECONDARY STEERING	440
Y	*248-0639*	1	PUMP & MTG GP-SECONDARY STEER	450
Y	*252-5924*	1	SWITCH GP-SECONDARY STEERING	210
Y	*241-0643*	1	WIRING GP-SECONDARY STEERING	259

Y-SEPARATE ILLUSTRATION

<END>

260-0411 VALVE GP-PUMP CONTROL–
PRESSURE, FLOW COMPENSATOR–STEERING
S/N: M3G1-UP
PART OF 241-9299 PUMP GP-PISTON

SMCS-5455 **i02248422**

NOTE	REF NO	GRAPHIC REF	PART NUMBER	QTY	PART NAME 1 2 3 4 5 6 (PRODUCT LEVEL)	SEE PAGE
	1	1	**108-4814**	1	BODY-COMPENSATOR	
	2	1	**9S-4191**	1	PLUG-O RING	
	3	1	**3J-1907**	3	SEAL-O-RING	
	4	1	**6E-4241**	1	SPOOL-MARGIN	
	5	1	**9T-2186**	2	PLUG	
	6	1	**6E-4239**	1	SPOOL-CUTOFF	
	7	1	**6E-4230**	2	GUIDE-SPRING	
	8	1	**6E-4228**	1	SPRING	
	9	1	**6E-6140**	1	PLUG-COMPENSATOR	
	10	1	**033-6036**	1	SEAL-O-RING	
	11	1	**6E-6141**	2	LOCKNUT-SEALING	
M	12	1	**129-7632**	2	SCREW-ADJUSTMENT	
	13	1	**6E-6142**	1	PLUG-MARGIN	
	14	1	**033-6027**	1	SEAL-O-RING	
	15	1	**6E-4246**	1	SPRING-MARGIN	
	16	1	**6E-4318**	1	PIN-SPRING STOP	
	17	1	**6E-4242**	2	GUIDE-SPRING	

M-METRIC PART

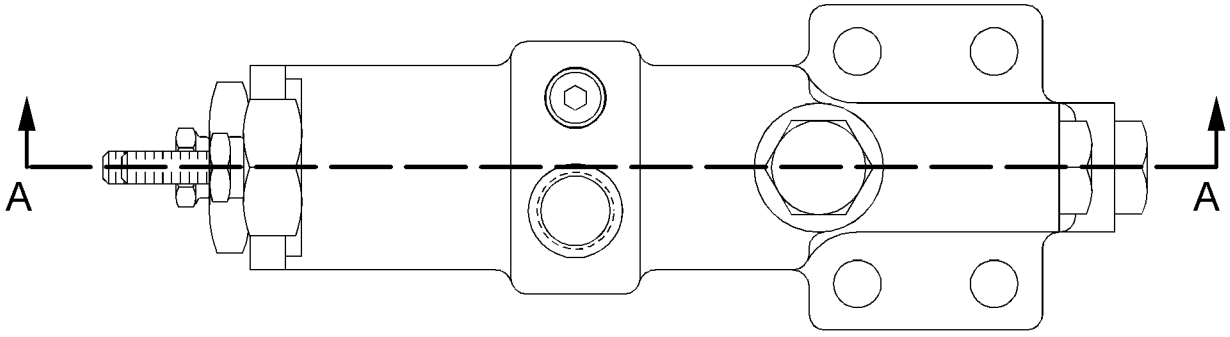

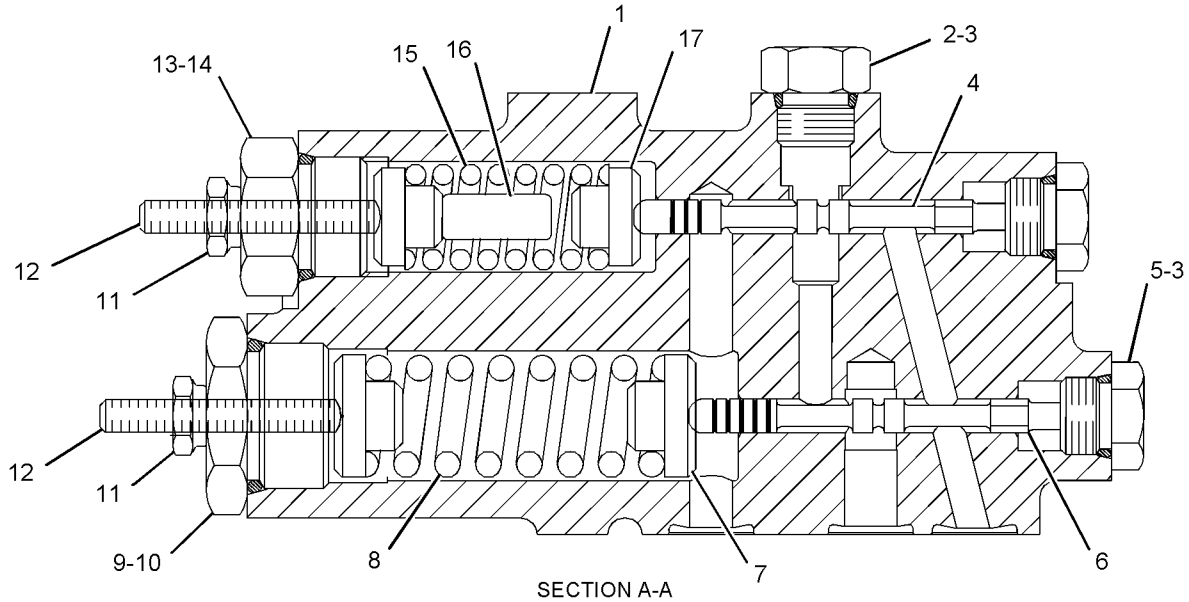

SECTION A-A

GRAPHIC #1 **<END>** g01133669

129-8222 VALVE GP-RELIEF—STEERING CYLINDER CROSSOVER

S/N: M3G1-UP

PART OF 142-4000 VALVE GP-STEERING

SMCS-4322, 5069, 7428 **i00808859**

NOTE	REF NO	GRAPHIC REF	PART NUMBER	QTY	PART NAME 1 2 3 4 5 6 (PRODUCT LEVEL)	SEE PAGE
	1	1	**2M-9780**	1	SEAL-O-RING	
	2	1	**6E-0410**	1	SEAL-O-RING	
	3	1	**5P-2199**	2	RING-BACKUP	

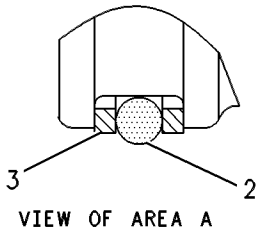

VIEW OF AREA A

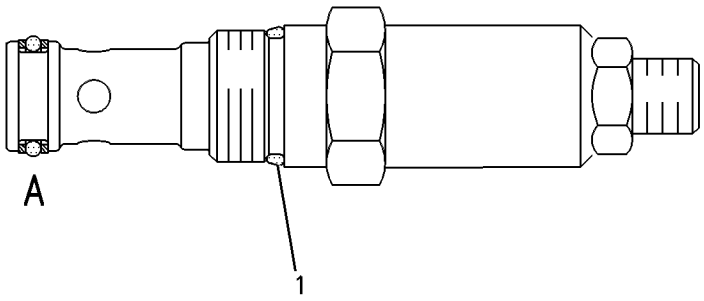

GRAPHIC #1 **<END>** g00262783

132-5258 VALVE GP-RELIEF–PUMP BACKUP

S/N: M3G1-UP

PART OF 142-4000 VALVE GP-STEERING

SMCS-4322, 5069, 7428 **i01193356**

NOTE	REF NO	GRAPHIC REF	PART NUMBER	QTY	PART NAME 1 2 3 4 5 6 (PRODUCT LEVEL)	SEE PAGE
	1	1	**7X-4776**	2	RING-BACKUP	
	2	1	**8C-3097**	1	SEAL-O-RING	
	3	1	**3K-0360**	1	SEAL-O-RING	
					AVAILABLE REPAIR KIT(S):	
			6E-4753	1	KIT-SEAL	
					(CONSISTS OF RINGS AND SEALS)	

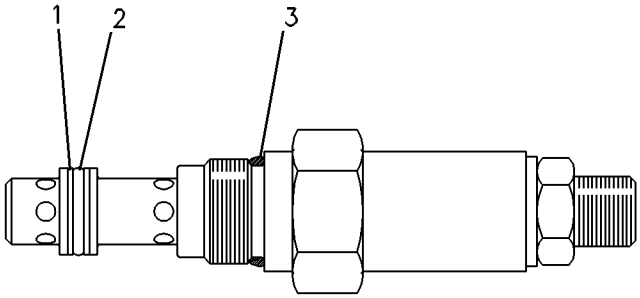

GRAPHIC #1 **<END>** g00119845

STEERING SYSTEM

141-2597 VALVE GP-SECONDARY STEERING

S/N: M3G1-UP

PART OF 244-5617 LINES GP-SECONDARY STEERING

AN ATTACHMENT

SMCS-4339 **i00717799**

NOTE	REF NO	GRAPHIC REF	PART NUMBER	QTY	PART NAME 1 2 3 4 5 6 (PRODUCT LEVEL)	SEE PAGE
	1	1	**2S-2596**	2	SPRING	
	2	1	**100-8010**	2	VALVE-CHECK	
	3	1	**100-8011**	2	PLUG	
M	4	1	**8T-4136**	4	BOLT (M10X1.5X25-MM)	
	5	1	**3J-7479**	1	COVER	
	6	1	**4J-0519**	1	SEAL-O-RING	
	7	1	**7M-8485**	2	SEAL-O-RING	
	8	1	**8T-4121**	4	WASHER-HARD (11X21X2.5-MM THK)	

M-METRIC PART

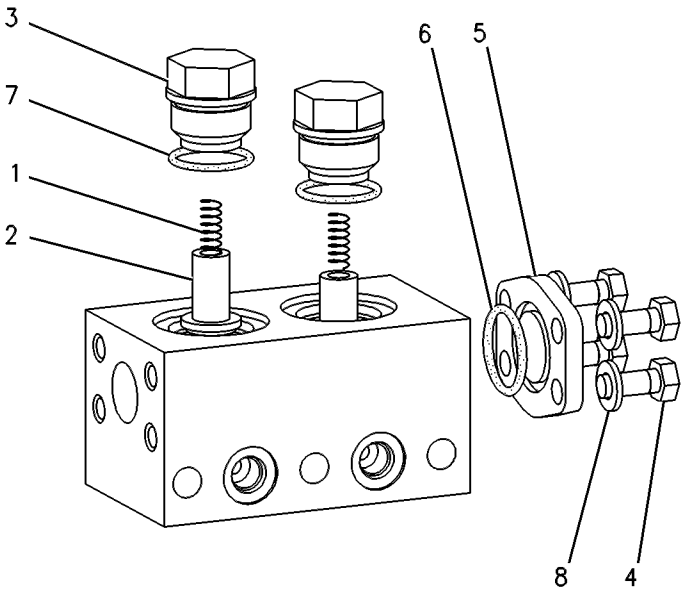

GRAPHIC #1 **<END>** g00130458

142-4000 VALVE GP-STEERING—HMU STEERING

S/N: M3G1-UP

PART OF 237-0436 LINES GP-STEERING

SMCS-4307 **i02307264**

NOTE	REF NO	GRAPHIC REF	PART NUMBER	QTY	PART NAME 1 2 3 4 5 6 (PRODUCT LEVEL)	SEE PAGE
	1	1,2	**2S-2596**	4	SPRING	
	3	1	*6E-5397*	1	VALVE GP-SELECTOR (STEERING)	
		1	**3K-0360**	2	SEAL-O-RING	
		1	**5H-3193**	2	PIN-SPRING	
		1	**6E-5289**	2	CONNECTOR	
	4	1	**6J-6506**	1	SPACER	
	5	1	**7J-4321**	1	RETAINER-SPRING	
	6	2	**8J-6815**	2	PLUG-ORIFICE	
	7	1	**9S-6154**	2	PLUG AS	
					(EACH INCLUDES)	
		1	**3J-1907**	1	SEAL-O-RING	
		1	**5H-3193**	1	PIN-SPRING	
		1	**7J-1089**	1	PLUG	
	8	1	**9T-7220**	1	COVER	
	10	1	**9T-8672**	1	RETAINER	
	11	1	**126-8473**	1	SPRING	
Y	14	2	**129-8222**	1	VALVE GP-RELIEF (STEERING CYLINDER CROSSOVER)	456
Y	15	1	**132-5258**	1	VALVE GP-RELIEF (PUMP BACKUP)	457
	16	1	*148-8408*	1	PLUG AS	
		1	**9S-4183**	1	PLUG	
		1	**3D-2824**	1	SEAL-O-RING	
	17	2	*148-8411*	1	PLUG AS	
		2	**9S-4185**	1	PLUG	
		2	**3K-0360**	1	SEAL-O-RING	
	18	1	**164-5619**	1	PLUG AS	
		1	**9S-8006**	1	PLUG	
		1	**2M-9780**	1	SEAL-O-RING	
	19	1,2	*183-7263*	11	PLUG AS	
					(EACH INCLUDES)	
		1,2	**9S-8002**	1	PLUG	
		1,2	**3J-7354**	1	SEAL-O-RING	
	20	1	**3J-1907**	2	SEAL-O-RING	
	21	1,2	**4B-9782**	4	BALL	
	22	1	**4J-0520**	1	SEAL-O-RING	
	23	2	**5J-2974**	2	SEAL-O-RING	
B	24	1	**6J-6516**	8	SHIM (0.01-IN THK)	
B	25	1	**6J-6517**	1	SHIM (0.12-MM THK)	
	26	2	**6T-6052**	1	PLUG-ORIFICE	
M	27	1	**6V-5195**	1	BOLT-SOCKET HEAD (M8X1.25X50-MM)	
	28	1	**8C-3206**	8	FLANGE-HALF	
	29	2	**8F-9206**	7	SEAL-O-RING	
	30	1	**8T-4121**	16	WASHER-HARD (11X21X2.5-MM THK)	
M	31	1	**8T-4196**	18	BOLT (M10X1.5X35-MM)	
M	32	1	**8T-5005**	4	BOLT (M10X1.5X70-MM)	
M	33	1	**8T-6466**	2	BOLT (M10X1.5X60-MM)	
	35	1	**9M-1974**	1	WASHER-HARD (8.8X16X2-MM THK)	

B-USE AS REQUIRED
M-METRIC PART
Y-SEPARATE ILLUSTRATION

142-4000 VALVE GP-STEERING *(contd.)* i02307264

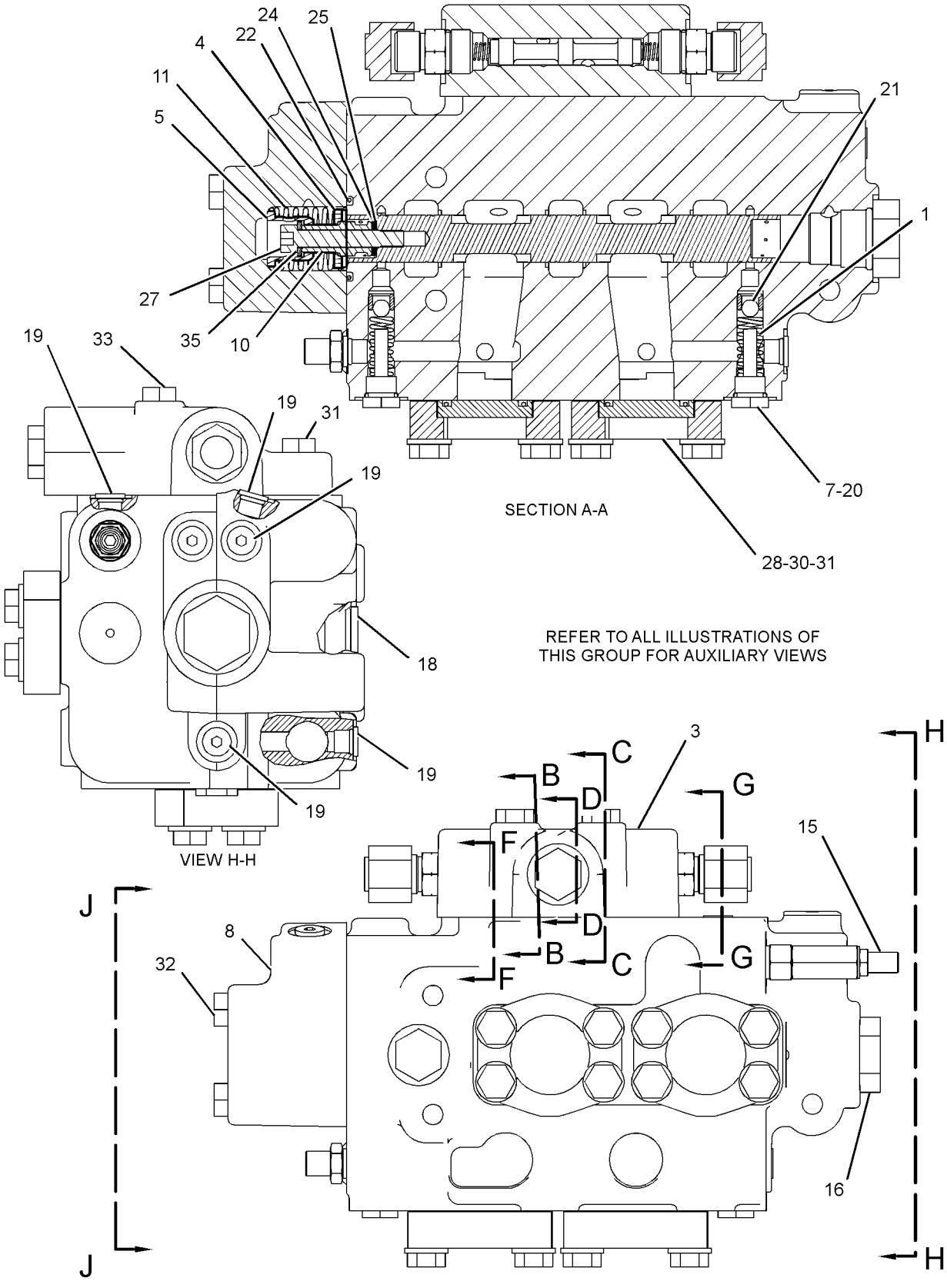

GRAPHIC #1 g01158783

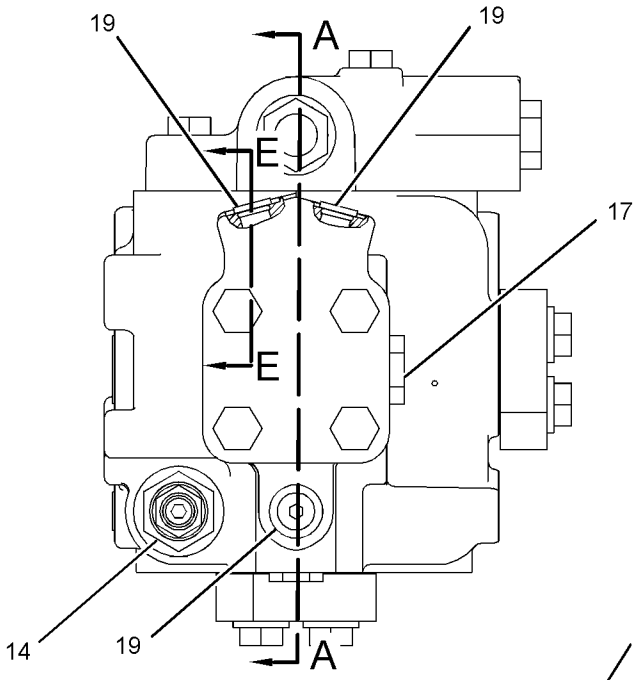

VIEW J-J

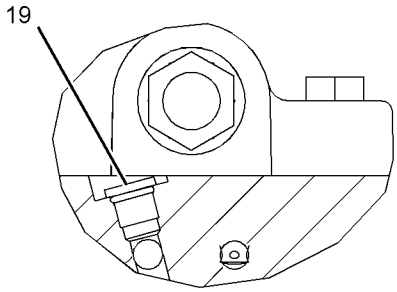

SECTION G-G

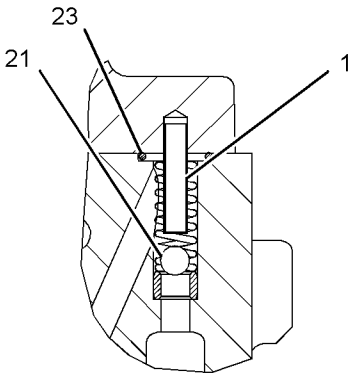

SECTION F-F

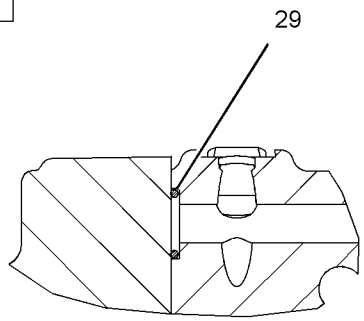

SECTION E-E

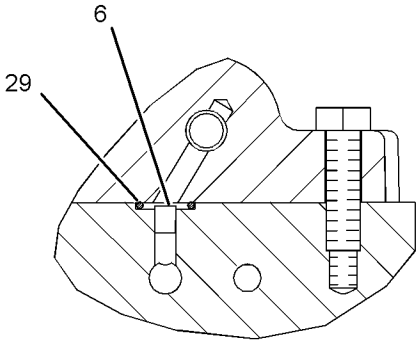

SECTION B-B

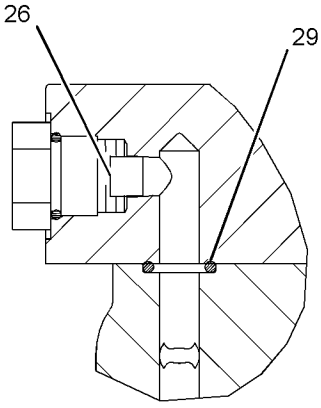

SECTION D-D

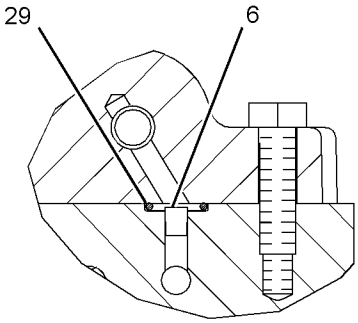

SECTION C-C

REFER TO ALL ILLUSTRATIONS OF
THIS GROUP FOR AUXILIARY VIEWS

GRAPHIC #2 **<END>** g01158873

STEERING SYSTEM

146-7571 VALVE GP-STEERING NEUTRALIZER

S/N: M3G1-UP

PART OF 237-0436 LINES GP-STEERING

SMCS-4330 **i02096238**

NOTE	REF NO	GRAPHIC REF	PART NUMBER	QTY	PART NAME 1 2 3 4 5 6 (PRODUCT LEVEL)	SEE PAGE
	1	1	**3D-2824**	1	SEAL-O-RING	
	2	1	**6J-4568**	1	BOOT	
	3	1	**5F-9035**	1	SPRING	
	4	1	**135-0349**	1	SEAL	

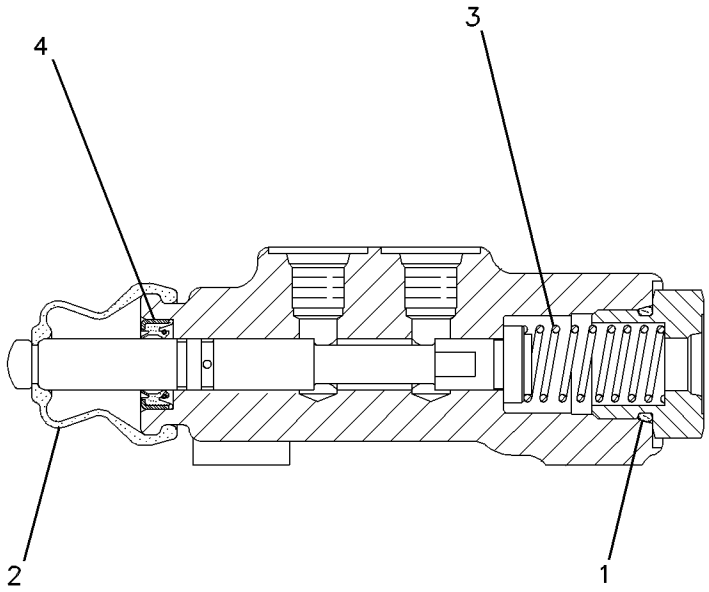

GRAPHIC #1 **<END>** g00494093

245-2975 ACCUMULATOR GP-PILOT OIL–CHARGED–

DEAD ENGINE, LIFT ARM LOWER

S/N: M3G1-UP

PART OF 237-0961, 237-4932, 243-0083, 243-0086 VALVE & MTG GP-MAIN CONTROL

FIELD REPLACEMENT ORDER 245-6566–PAGE 464

ALSO AN ATTACHMENT

SMCS-5077 **i02219985**

NOTE	REF NO	GRAPHIC REF	PART NUMBER	QTY	PART NAME 1 2 3 4 5 6 (PRODUCT LEVEL)	SEE PAGE
					(NO SERVICED PARTS)	

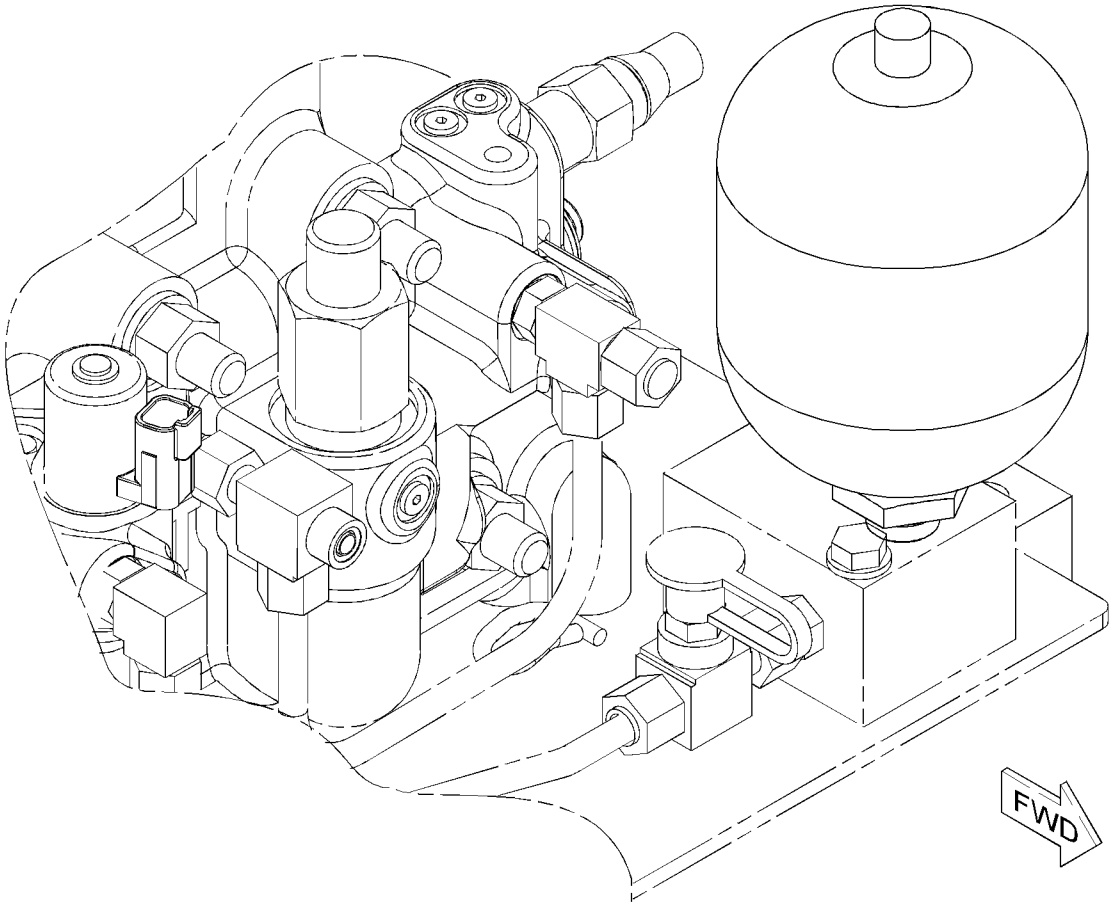

GRAPHIC #1 **<END>** g01114723

245-6566 ACCUMULATOR GP-PILOT OIL–UNCHARGED–

DEAD ENGINE, LIFT ARM LOWER

S/N: M3G1-UP

FIELD REPLACEMENT FOR 245-2975–PAGE 463

SMCS-5077 **i02248424**

NOTE	REF NO	GRAPHIC REF	PART NUMBER	QTY	PART NAME 1 2 3 4 5 6 (PRODUCT LEVEL)	SEE PAGE
	1	1	**5P-3779**	1	TAG-NOTICE (CYLINDER PRESSURE)	

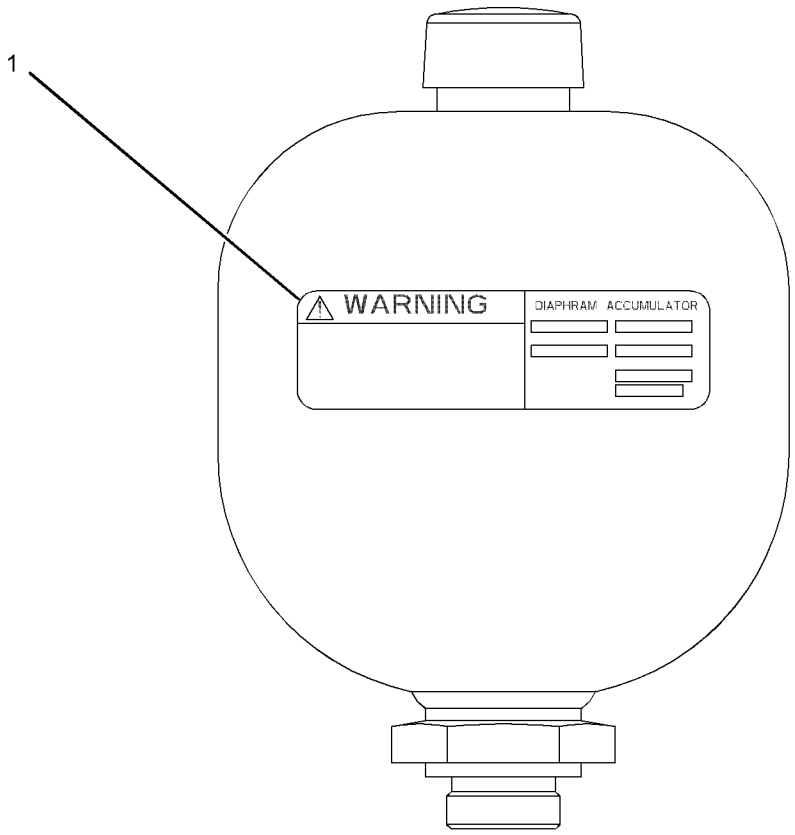

GRAPHIC #1 **<END>** g01132222

245-2973 ACCUMULATOR GP-RIDE CONTROL–CHARGED

S/N: M3G1-UP

PART OF 246-2052 ACCUMULATOR GP-RIDE CONTROL

AN ATTACHMENT

SMCS-5077 **i02454812**

NOTE	REF NO	GRAPHIC REF	PART NUMBER	QTY	PART NAME 1 2 3 4 5 6 (PRODUCT LEVEL)	SEE PAGE
	1	1	**1J-9671**	1	SEAL-O-RING	
	2	1	**222-2367**	1	VALVE-GAS	
	3	1	**111-9110**	1	PROTECTOR-GAS VALVE	
					AVAILABLE REPAIR KIT(S):	
			170-0494	1	KIT-SEAL	

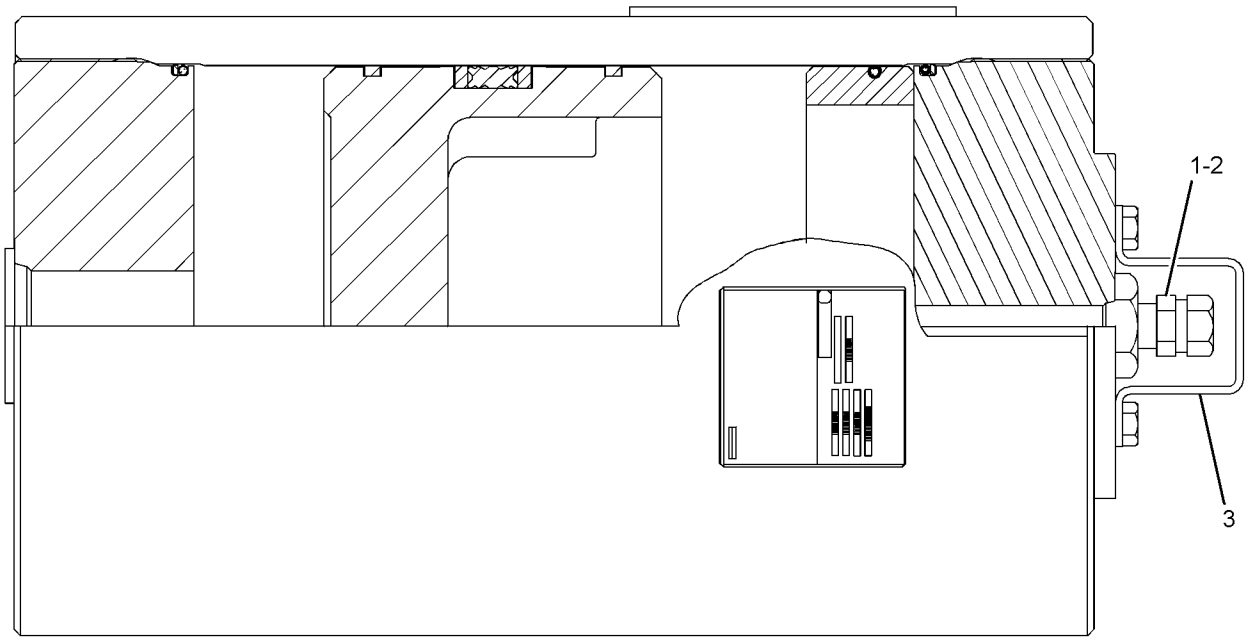

GRAPHIC #1 **<END>** g01225147

HYDRAULIC SYSTEM

246-2052 ACCUMULATOR GP-RIDE CONTROL—CHARGED

S/N: M3G1-UP
PART OF 239-4849 CONTROL & LINES GP-RIDE
AN ATTACHMENT

SMCS-5077 **i02305837**

NOTE	REF NO	GRAPHIC REF	PART NUMBER	QTY	PART NAME 1 2 3 4 5 6 (PRODUCT LEVEL)	SEE PAGE
Y	1	1	*245-2973*	1	ACCUMULATOR GP-RIDE CONTROL (CHARGED)	465
	2	1	**248-7407**	2	BRACKET	
	3	1	*148-8357*	1	ELBOW AS	
		1	**5K-9090**	1	SEAL-O-RING	
		1	**6V-9008**	1	ELBOW	
		1	**7M-8485**	1	SEAL-O-RING	
	4	1	**7X-7729**	6	WASHER (11X25X3-MM THK)	
M	5	1	**8T-4136**	6	BOLT (M10X1.5X25-MM)	

M-METRIC PART
Y-SEPARATE ILLUSTRATION

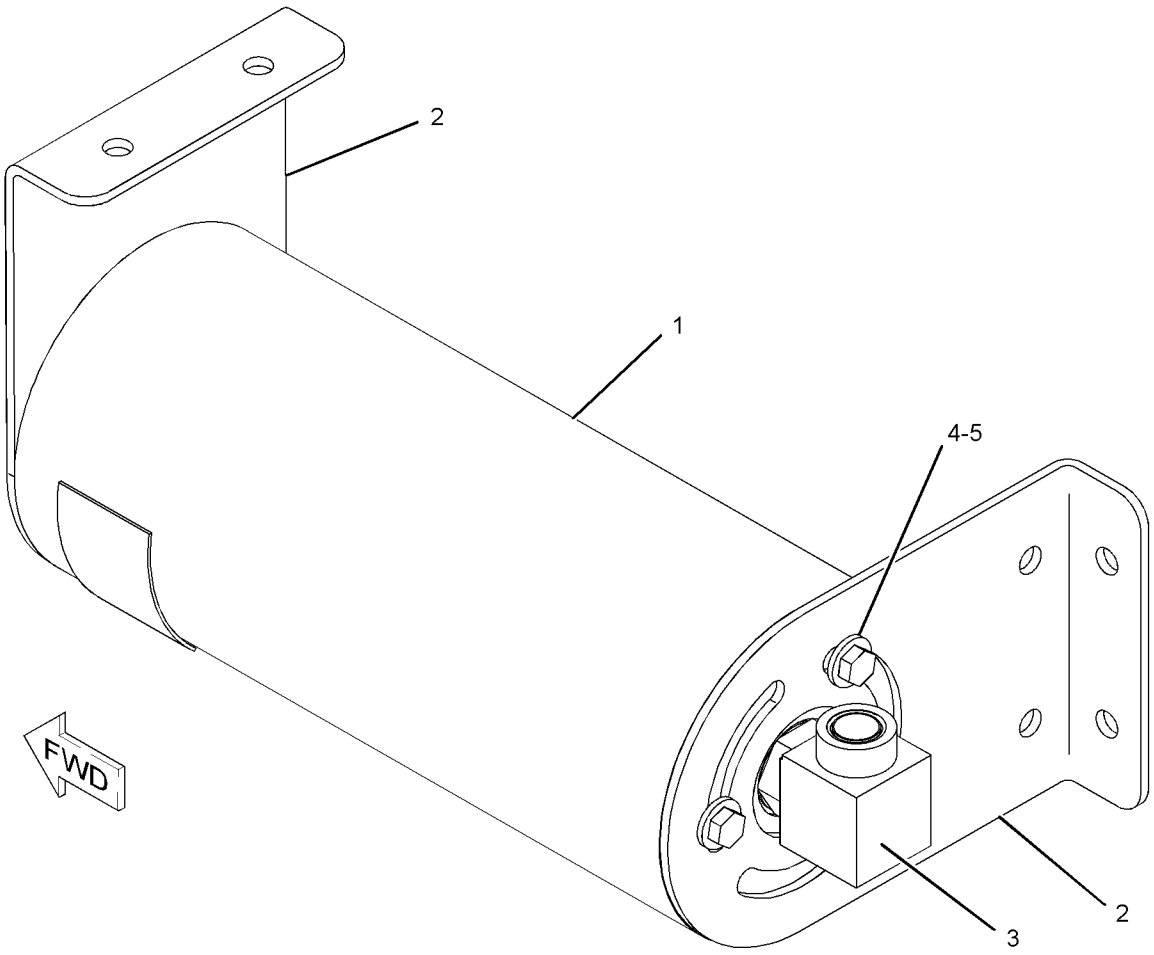

GRAPHIC #1 **<END>** g01135991

243-7241 CONTROL & LINES GP-FAN—AUTOMATIC REVERSING

S/N: M3G1-UP
PART OF 244-3255 CONTROL AR-FAN
AN ATTACHMENT

SMCS-1386, 138R, 5057 **i02445207**

NOTE	REF NO	GRAPHIC REF	PART NUMBER	QTY	PART NAME 1 2 3 4 5 6 (PRODUCT LEVEL)	SEE PAGE
	1	1	**4D-7786**	2	WASHER (1.281X3.25X0.19-IN THK)	
YR	2	1	**228-8527**	1	MOTOR GP-PISTON (AUTOMATIC REVERSING FAN)	528
I	3	1	**244-5608**	1	HOSE AS	
	4	1	**276-8835**	1	TUBE AS	
I	5	1	**276-8838**	2	HOSE AS.	
I	6	1	**276-8839**	1	HOSE AS.	
	7	1	**276-8843**	1	BRACKET AS	
	8	1	*148-8322*	2	CONNECTOR GP	
					(EACH INCLUDES)	
		1	**2M-9780**	1	SEAL-O-RING	
		1	**6V-8640**	1	CONNECTOR	
		1	**6V-9746**	1	SEAL-O-RING	
	9	1	*148-8347*	1	ELBOW AS	
		1	**3D-2824**	1	SEAL-O-RING	
		1	**6V-9007**	1	ELBOW	
		1	**6V-9746**	1	SEAL-O-RING	
	10	1	*148-8376*	1	ELBOW AS	
		1	**6V-8983**	1	ELBOW	
		1	**6V-9746**	2	SEAL-O-RING	
	11	1	*148-8388*	1	ELBOW AS	
		1	**2M-9780**	1	SEAL-O-RING	
		1	**6V-8629**	1	ELBOW	
		1	**6V-9746**	1	SEAL-O-RING	
	12	1	*148-8392*	1	ELBOW AS	
		1	**6V-9746**	1	SEAL-O-RING	
		1	**6V-9853**	1	ELBOW	
	13	1	*150-4048*	1	ELBOW AS	
		1	**3K-0360**	1	SEAL-O-RING	
		1	**6V-8722**	1	ELBOW	
		1	**7J-9108**	1	SEAL-O-RING	
	14	1	*153-6237*	2	ELBOW AS	
					(EACH INCLUDES)	
		1	**3D-2824**	1	SEAL-O-RING	
		1	**6V-9004**	1	ELBOW	
		1	**6V-9746**	1	SEAL-O-RING	
Y	15	1	**263-5832**	1	MANIFOLD GP-CONTROL (AUTOMATIC REVERSING FAN)	
	16	1	**2P-1293**	1	LOCKNUT (1-3/16-12-THD)	
	17	1	**5D-0718**	2	CLIP	
	18	1	**8T-4121**	4	WASHER-HARD (11X21X2.5-MM THK)	
M	19	1	**8T-4137**	2	BOLT (M10X1.5X20-MM)	
M	20	1	**8T-4195**	2	BOLT (M10X1.5X30-MM)	

I-REFER TO HYDRAULIC INFORMATION SYSTEM
M-METRIC PART
R-REMFG PART MAY BE AVAILABLE
Y-SEPARATE ILLUSTRATION

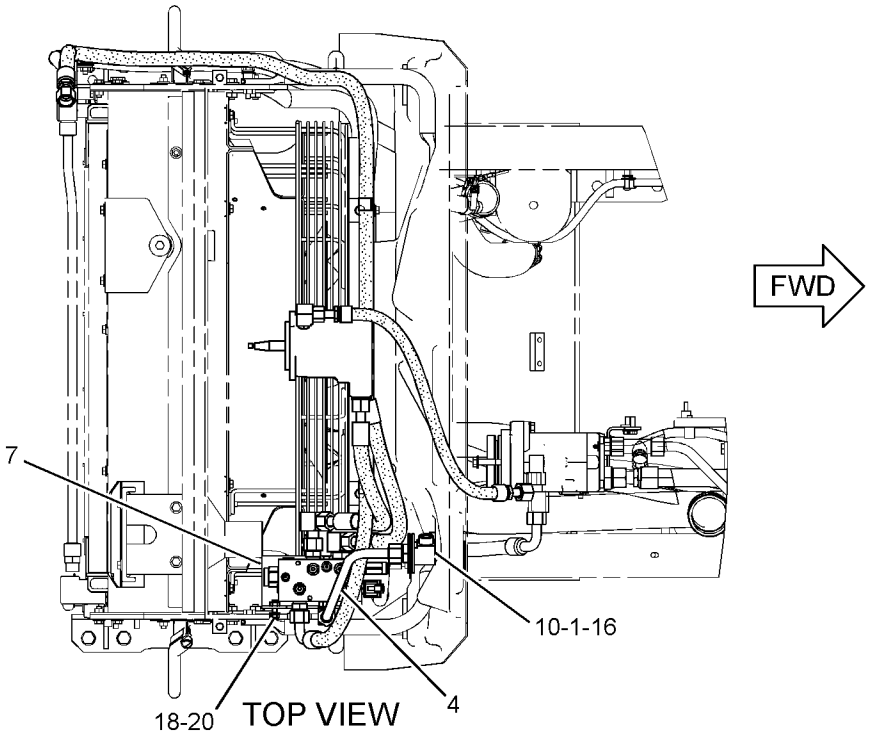

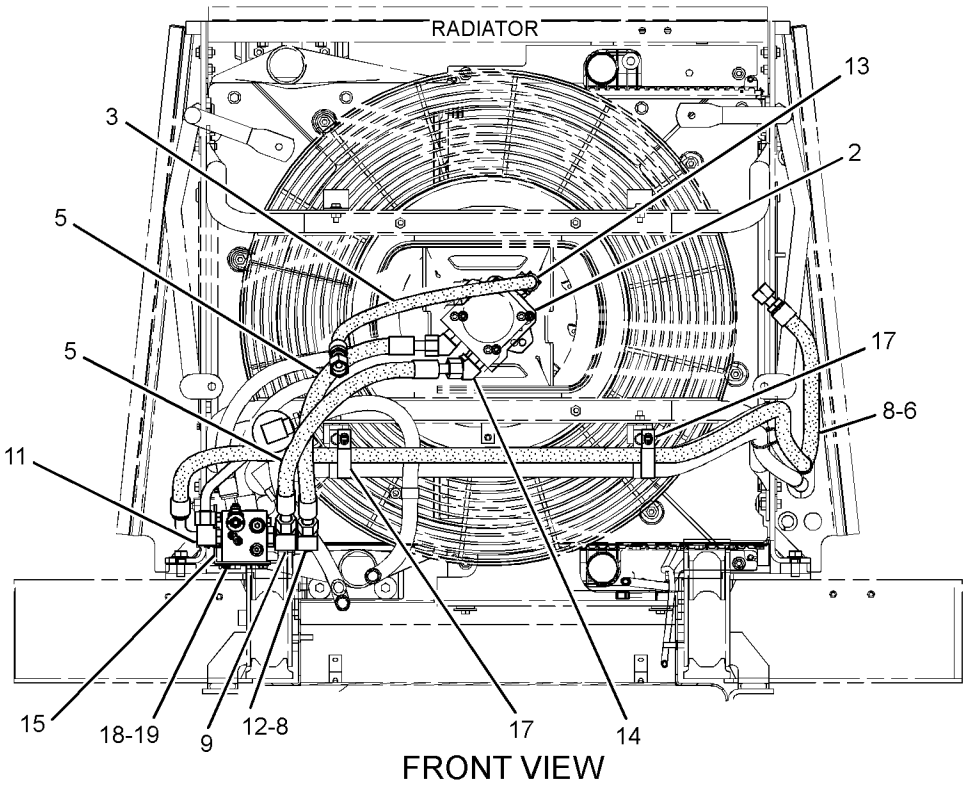

GRAPHIC #1 **<END>** g01224381

239-4849 CONTROL & LINES GP-RIDE

S/N: M3G1-UP
PART OF 244-3442, 244-3443 CONTROL AR-RIDE
AN ATTACHMENT

SMCS-5004 **i02305799**

NOTE	REF NO	GRAPHIC REF	PART NUMBER	QTY	PART NAME 1 2 3 4 5 6 (PRODUCT LEVEL)	SEE PAGE
	1	1	**7J-5311**	1	PLATE-WARNING (HIGH PRESSURE CYLINDER)	
Y	2	1	*246-2052*	1	ACCUMULATOR GP-RIDE CONTROL (CHARGED)	466
I	3	1	**246-5105**	1	HOSE AS	
	4	1	**8T-4121**	4	WASHER-HARD (11X21X2.5-MM THK)	
M	5	1	**8T-4195**	4	BOLT (M10X1.5X30-MM)	

I-REFER TO HYDRAULIC INFORMATION SYSTEM
M-METRIC PART
Y-SEPARATE ILLUSTRATION

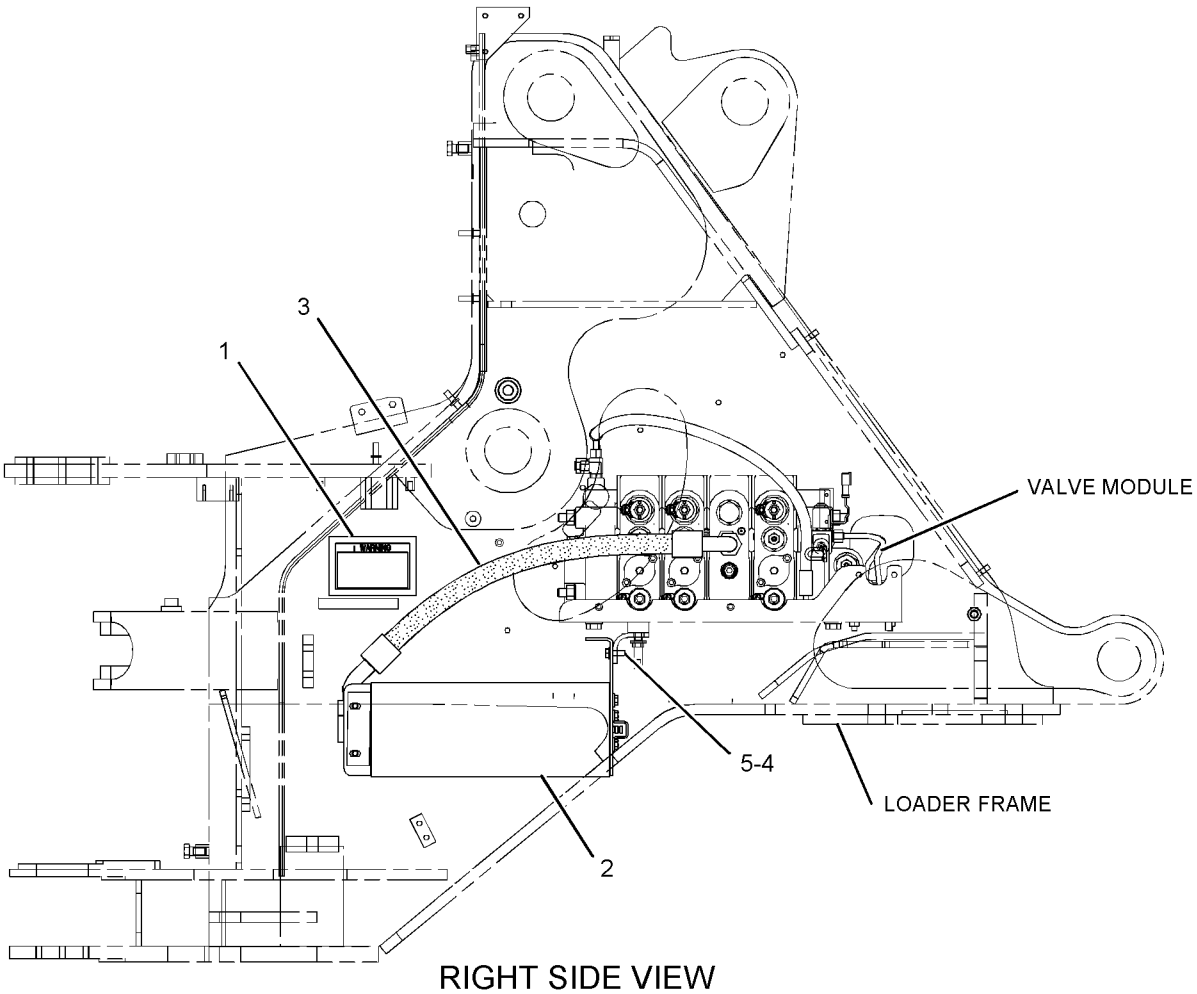

RIGHT SIDE VIEW

GRAPHIC #1 **<END>** g01130191

244-3255 CONTROL AR-FAN—AUTOMATIC REVERSING

S/N: M3G1-UP
AN ATTACHMENT

SMCS-1386, 138R **i02445215**

NOTE	PART NUMBER	QTY	PART NAME 1 2 3 4 5 6 (PRODUCT LEVEL)	SEE PAGE
Y	*243-7241*	1	CONTROL & LINES GP-FAN (AUTOMATIC REVERSING)	467
Y	*262-9949*	1	SWITCH GP-REVERSING FAN	204

Y-SEPARATE ILLUSTRATION

<END>

244-3442 CONTROL AR-RIDE—2-VALVE

S/N: M3G1-UP
AN ATTACHMENT

SMCS-5004 **i02305594**

NOTE	PART NUMBER	QTY	PART NAME 1 2 3 4 5 6 (PRODUCT LEVEL)	SEE PAGE
Y	*239-4849*	1	CONTROL & LINES GP-RIDE	469
Y	*252-5917*	1	SWITCH GP-RIDE CONTROL	205
Y	*243-0083*	1	VALVE & MTG GP-MAIN CONTROL (2-FUNCTION, WITH RIDE CONTROL)	549

Y-SEPARATE ILLUSTRATION

<END>

244-3443 CONTROL AR-RIDE—3-VALVE

S/N: M3G1-UP
AN ATTACHMENT

SMCS-5004 **i02305589**

NOTE	PART NUMBER	QTY	PART NAME 1 2 3 4 5 6 (PRODUCT LEVEL)	SEE PAGE
Y	*239-4849*	1	CONTROL & LINES GP-RIDE	469
Y	*252-5917*	1	SWITCH GP-RIDE CONTROL	205
Y	*243-0086*	1	VALVE & MTG GP-MAIN CONTROL (3-FUNCTION, WITH RIDE CONTROL)	552

Y-SEPARATE ILLUSTRATION

<END>

HYDRAULIC SYSTEM

243-1089 CONTROL GP-ELECTROHYDRAULIC–2-FUNCTION

S/N: M3G1-UP

PART OF 243-1080 CAB AR-ENCLOSED ROPS, 258-1552 CANOPY AR-OPEN ROPS

ALSO AN ATTACHMENT

SMCS-5702 **i02450898**

NOTE	REF NO	GRAPHIC REF	PART NUMBER	QTY	PART NAME 1 2 3 4 5 6 (PRODUCT LEVEL)	SEE PAGE
	1	1	**4E-8722**	4	NUT	
	2	1	**140-5945**	1	FILM-IDENTIFICATION (HORN)	
	3	1	**189-2077**	1	FILM-CONTROL (LIFT, FLOAT, LOWER)	
	4	1	**189-2078**	1	FILM-CONTROL (DUMP, TILT BACK)	
	5	1	**189-2079**	1	FILM-INSTRUCTION (MAINTENANCE)	
Y	6	1	**243-3166**	1	CONTROL GP-HANDLE (TILT)	479
Y	6A	1	**243-3166**	1	CONTROL GP-HANDLE (LIFT)	479
	7	1	**245-6447**	1	CUSHION AS	
	8	1	**247-4184**	1	FILM-TRANSMISSION (DOWNSHIFT SWITCH)	
	9	1	**247-4969**	1	PLATE	
	10	1	**262-5236**	1	COVER	
	11	1	**262-5239**	1	HOUSING AS	
	12	1	**262-5240**	1	PLATE AS	
M	13	1	**6R-7653**	2	SCREW (M6X1X15-MM)	
	14	1	**8R-3695**	2	GROMMET	
	15	1	**8T-4205**	2	WASHER-HARD (7.2X14.5X2-MM THK)	
M	16	1	**8T-4970**	2	BOLT (M6X1X14-MM)	
	17	1	**9X-2038**	4	WASHER (7X19X2-MM THK)	
M	18	1	**9X-2044**	17	SCREW-TRUSS HEAD (M6X1X16-MM)	
M	19	1	**9X-2045**	4	SCREW-TRUSS HEAD (M6X1X20-MM)	
D	20	1	**6V-3987**		SEAL (0.062-M EA)	

D-ORDER BY THE METER
M-METRIC PART
Y-SEPARATE ILLUSTRATION

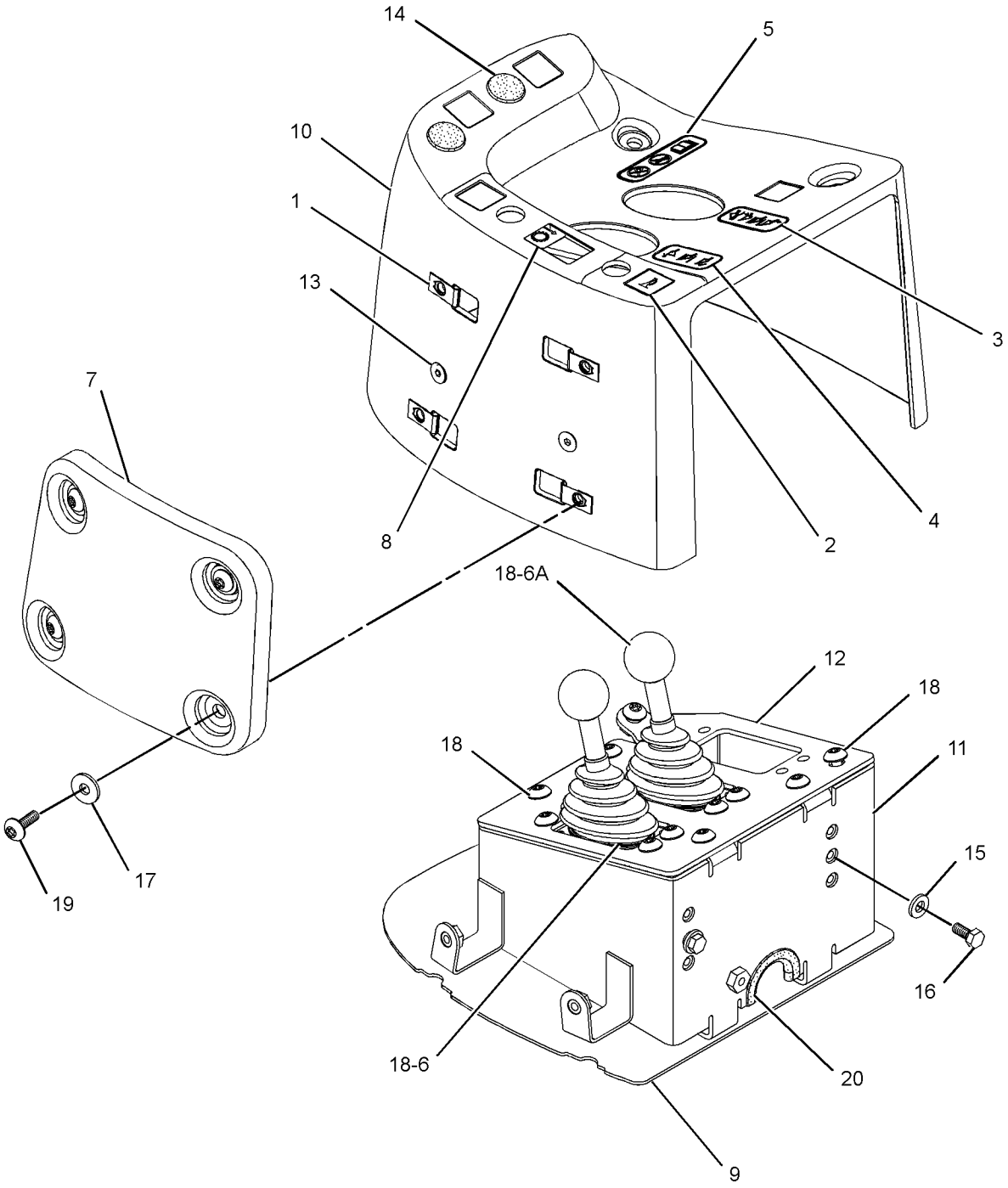

GRAPHIC #1 **<END>** g01202207

HYDRAULIC SYSTEM

243-1940 CONTROL GP-ELECTROHYDRAULIC—3-FUNCTION

S/N: M3G1-UP

PART OF 237-0269, 244-3825 HYDRAULIC AR-3 VALVE AN ATTACHMENT

SMCS-5702 **i02449439**

NOTE	REF NO	GRAPHIC REF	PART NUMBER	QTY	PART NAME 1 2 3 4 5 6 (PRODUCT LEVEL)	SEE PAGE
	1	1	**4E-8722**	4	NUT	
	2	1	**140-5945**	1	FILM-IDENTIFICATION (HORN)	
	3	1	**189-2077**	1	FILM-CONTROL (LIFT, FLOAT, LOWER)	
	4	1	**189-2078**	1	FILM-CONTROL (DUMP, TILT BACK)	
	5	1	**189-2079**	1	FILM-INSTRUCTION (MAINTENANCE)	
	6	1	**201-5563**	1	FILM-IDENTIFICATION (AUXILIARY HYDRAULIC)	
Y	7	1	**243-3166**	1	CONTROL GP-HANDLE (TILT)	479
Y	7A	1	**243-3166**	1	CONTROL GP-HANDLE (LIFT)	479
Y	7B	1	**243-3166**	1	CONTROL GP-HANDLE (AUXILIARY)	479
	8	1	**245-6447**	1	CUSHION AS	
	9	1	**247-4184**	1	FILM-TRANSMISSION (DOWNSHIFT SWITCH)	
	10	1	**247-4969**	1	PLATE	
	11	1	**262-5237**	1	COVER	
	12	1	**262-5239**	1	HOUSING AS	
	13	1	**262-5240**	1	PLATE AS	
M	14	1	**6R-7653**	2	SCREW (M6X1X15-MM)	
	15	1	**8T-4205**	2	WASHER-HARD (7.2X14.5X2-MM THK)	
M	16	1	**8T-4970**	2	BOLT (M6X1X14-MM)	
	17	1	**9X-2038**	4	WASHER (7X19X2-MM THK)	
M	18	1	**9X-2044**	21	SCREW-TRUSS HEAD (M6X1X16-MM)	
D	19	1	**6V-3987**		SEAL (0.062-M EACH)	
M	20	1	**9X-2045**	4	SCREW-TRUSS HEAD (M6X1X20-MM)	
	21	1	**256-7822**	1	SWITCH AS-ROCKER (3RD FUNCTION SELECT)	
	22	1	**8R-3695**	2	GROMMET	

D-ORDER BY THE METER
M-METRIC PART
Y-SEPARATE ILLUSTRATION

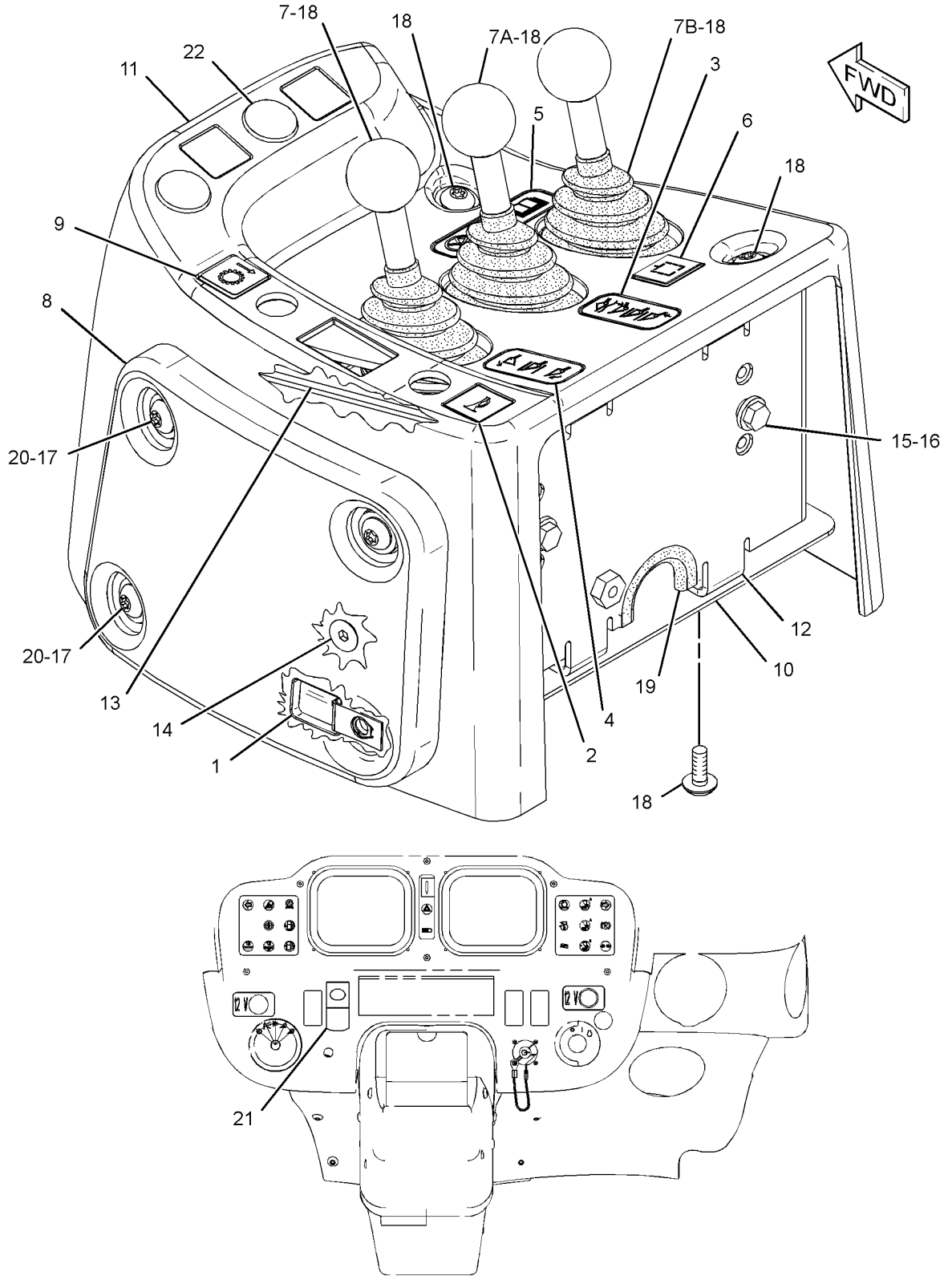

FRONT VIEW
(OPERATORS POSITION)

GRAPHIC #1 **<END>** g01202194

243-1941 CONTROL GP-ELECTROHYDRAULIC–
JOYSTICK, 2-FUNCTION
S/N: M3G1-UP
AN ATTACHMENT

SMCS-5702 **i02445167**

NOTE	REF NO	GRAPHIC REF	PART NUMBER	QTY	PART NAME 1 2 3 4 5 6 (PRODUCT LEVEL)	SEE PAGE
	1	1	**4E-8722**	1	NUT	
	2	1	**7K-1181**	4	STRAP-CABLE	
	3	1	**189-2079**	1	FILM-INSTRUCTION (MAINTENANCE)	
	4	1	**245-6447**	1	CUSHION AS	
Y	5	1	**245-7650**	1	CONTROL GP-JOYSTICK (2-FUNCTION, WITH DOWNSHIFT)	480
	6	1	**245-8335**	1	HARNESS AS-OPERATOR CONTROLS (ELECTROHYDRAULIC, JOYSTICK)	
		1	**155-2255**	2	KIT-CONNECTING PLUG (12-PIN)	
		1	**155-2265**	1	KIT-CONNECTING PLUG (8-PIN)	
		1	**155-2270**	1	KIT-CONNECTING PLUG (2-PIN)	
		1	**155-2274**	1	KIT-CONNECTING PLUG (6-PIN)	
		1	**155-2260**	1	KIT-CONNECTING PLUG (3-PIN)	
					(EACH KIT PLUG INCLUDES PLUG AS AND WEDGE)	
	7	1	**247-4969**	1	PLATE	
	8	1	**254-9149**	1	FILM-CONTROL (JOYSTICK, 2-FCTN, DOWNSHIFT SW)	
	9	1	**262-5238**	1	COVER	
	10	1	**262-5239**	1	HOUSING AS	
	11	1	**263-1995**	1	PLATE AS	
M	12	1	**112-6646**	4	LOCKNUT (M6X1-THD)	
	13	1	**156-6175**	1	CLIP	
	14	1	**198-4775**	1	WASHER-HARD (6.6X15X6-MM THK)	
M	15	1	**6R-7653**	2	SCREW (M6X1X15-MM)	
	16	1	**8R-3695**	3	GROMMET	
M	17	1	**8T-4138**	1	BOLT (M6X1X20-MM)	
	18	1	**8T-4205**	3	WASHER-HARD (7.2X14.5X2-MM THK)	
M	19	1	**8T-4970**	2	BOLT (M6X1X14-MM)	
	20	1	**9X-2038**	4	WASHER (7X19X2-MM THK)	
M	21	1	**9X-2044**	9	SCREW-TRUSS HEAD (M6X1X16-MM)	
M	22	1	**9X-2045**	4	SCREW-TRUSS HEAD (M6X1X20-MM)	
D	23	1	**6V-3987**		SEAL (0.062-M EACH)	

D-ORDER BY THE METER
M-METRIC PART
Y-SEPARATE ILLUSTRATION

243-1941 **CONTROL GP-ELECTROHYDRAULIC** *(contd.)* **i02445167**

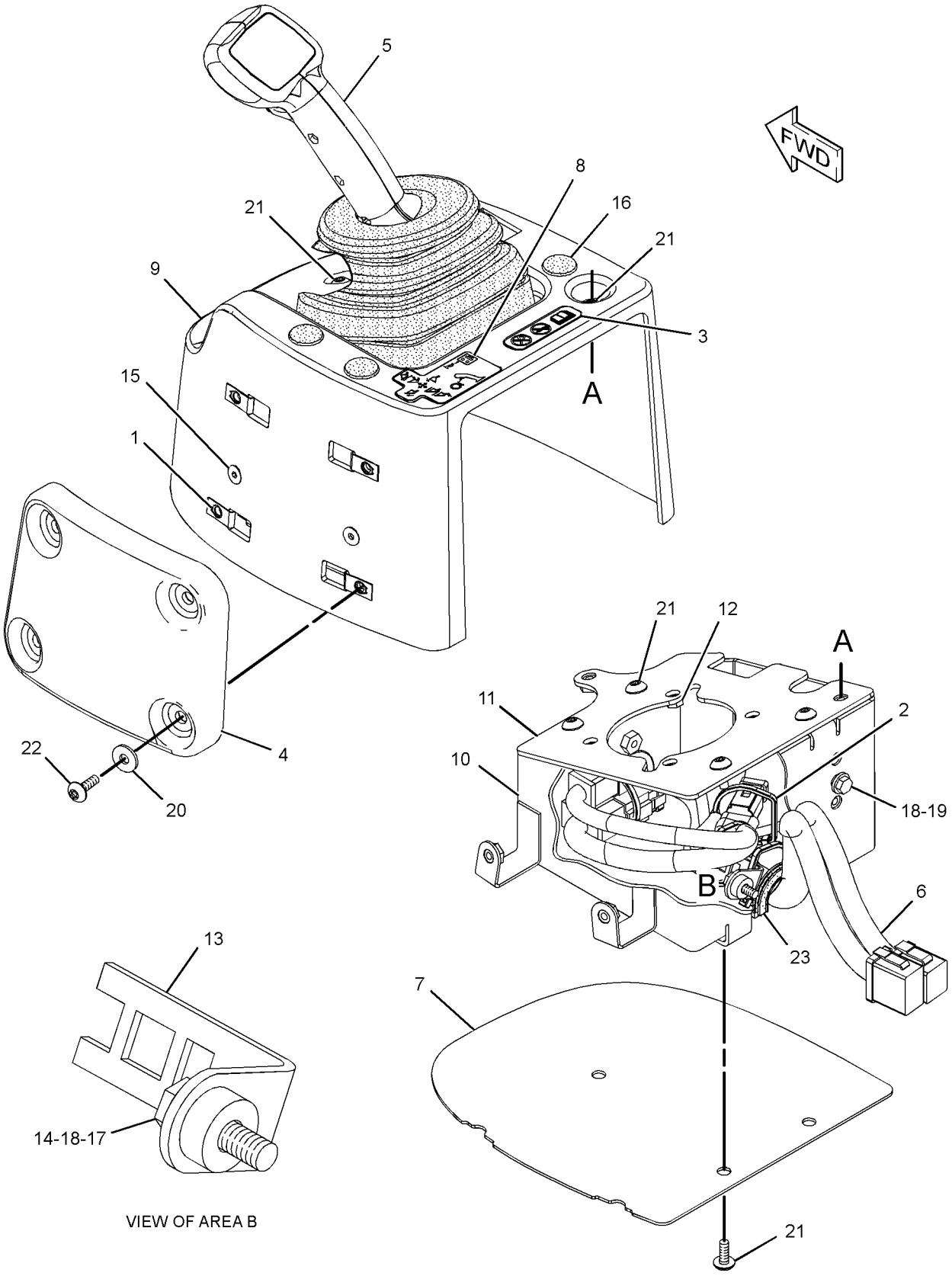

GRAPHIC #1 **<END>** g01210563

HYDRAULIC SYSTEM

243-1946 CONTROL GP-ELECTROHYDRAULIC–
JOYSTICK, 3-FUNCTION
S/N: M3G1-UP
AN ATTACHMENT

SMCS-5702 **i02434174**

NOTE	REF NO	GRAPHIC REF	PART NUMBER	QTY	PART NAME 1 2 3 4 5 6 (PRODUCT LEVEL)	SEE PAGE
	1	1	**4E-8722**	4	NUT	
	2	1	**189-2079**	1	FILM-INSTRUCTION (MAINTENANCE)	
	3	1	**245-6447**	1	CUSHION AS	
Y	4	1	**245-7649**	1	CONTROL GP-JOYSTICK (3-FUNCTION, WITH DOWNSHIFT)	
	5	1	**245-8335**	1	HARNESS AS-OPERATOR CONTROLS (ELECTROHYDRAULIC, JOYSTICK)	
		1	**155-2255**	1	KIT-CONNECTING PLUG (12-PIN)	
		1	**155-2265**	1	KIT-CONNECTING PLUG (8-PIN)	
		1	**155-2260**	1	KIT-CONNECTING PLUG (3-PIN)	
		1	**155-2270**	1	KIT-CONNECTING PLUG (2-PIN)	
		1	**155-2274**	1	KIT-CONNECTING PLUG (6-PIN)	
					(EACH KIT INCLUDES PLUG AS AND WEDGE)	
	6	1	**247-4969**	1	PLATE	
	7	1	**254-9150**	1	FILM-CONTROL (JOYSTICK, 3-FCTN, DOWNSHIFT SW)	
	8	1	**262-5238**	1	COVER	
	9	1	**262-5239**	1	HOUSING AS	
	10	1	**263-1995**	1	PLATE AS	
	11	1	*265-6696*	1	SWITCH GP-ROCKER (3RD FUNCTION SELECT)	
		1	**256-7822**	1	SWITCH AS-ROCKER (3RD FUNCTION SELECT)	
M	12	1	**112-6646**	4	LOCKNUT (M6X1-THD)	
M	13	1	**6R-7653**	2	SCREW (M6X1X15-MM)	
	14	1	**8R-3695**	3	GROMMET	
	15	1	**8T-4205**	3	WASHER-HARD (7.2X14.5X2-MM THK)	
M	16	1	**8T-4970**	2	BOLT (M6X1X14-MM)	
	17	1	**9X-2038**	4	WASHER (7X19X2-MM THK)	
M	18	1	**9X-2044**	9	SCREW-TRUSS HEAD (M6X1X16-MM)	
M	19	1	*9X-2045*	4	SCREW-TRUSS HEAD (M6X1X20-MM)	
D	20	1	**6V-3987**		SEAL (0.062-M EACH)	
	21	1	**7K-1181**	4	STRAP-CABLE	
M	22	1	**8T-4138**	1	BOLT (M6X1X20-MM)	
	23	1	**156-6175**	1	CLIP	
	24	1	**198-4775**	1	WASHER-HARD (6.6X15X6-MM THK)	

D-ORDER BY THE METER
M-METRIC PART
Y-SEPARATE ILLUSTRATION

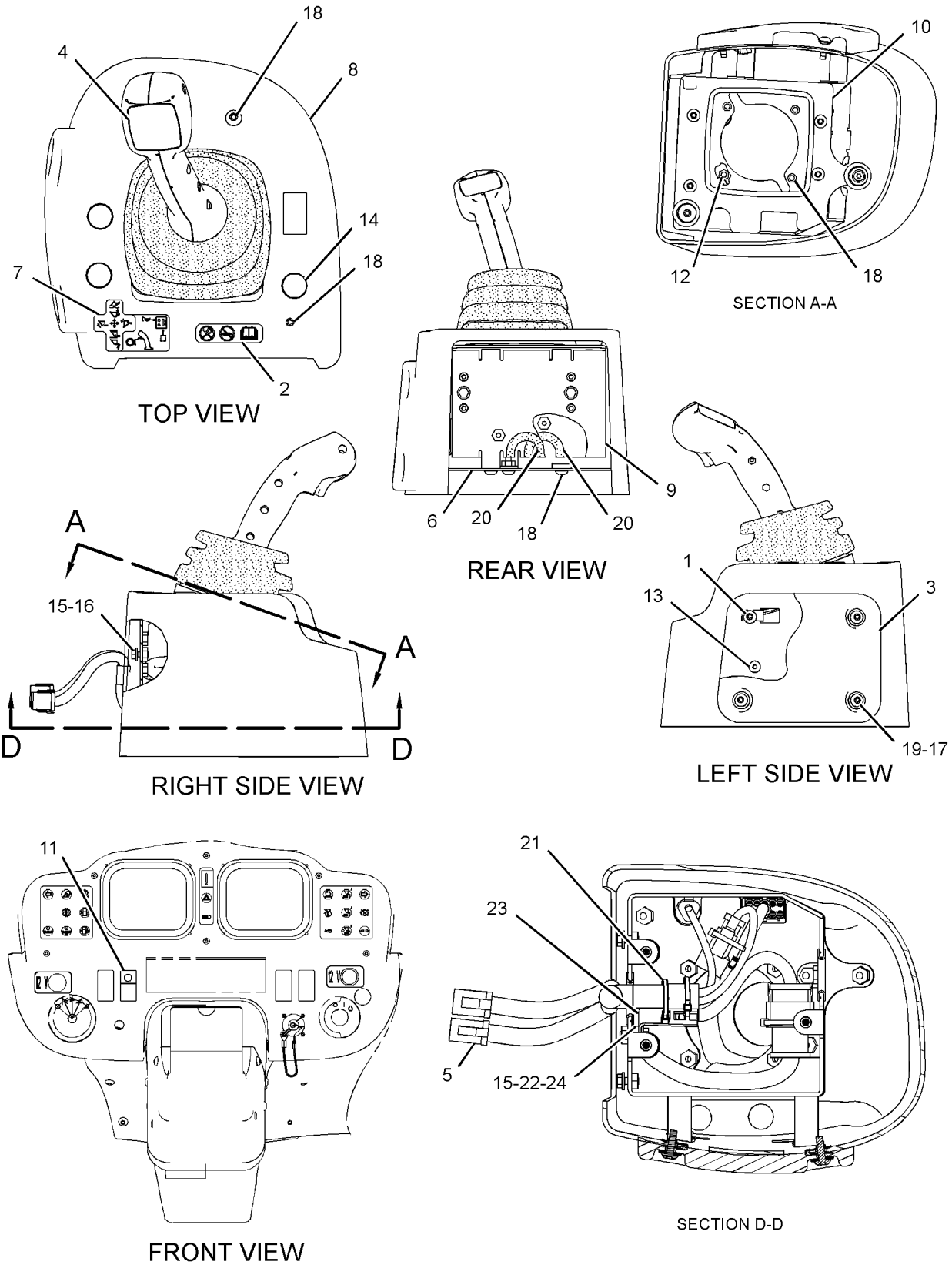

GRAPHIC #1 **<END>** g01224771

243-3166 CONTROL GP-HANDLE

S/N: M3G1-UP

PART OF 243-1089, 243-1940 CONTROL GP-ELECTROHYDRAULIC

ALSO AN ATTACHMENT

SMCS-5063, 5705 **i02442762**

NOTE	REF NO	GRAPHIC REF	PART NUMBER	QTY	PART NAME 1 2 3 4 5 6 (PRODUCT LEVEL)	SEE PAGE
	1	1	**102-8804**	1	KIT-RECEPTACLE (4-PIN)	
					(INCLUDES RECEPTACLE AS AND WEDGE)	
	2	1	**278-8974**	1	KNOB	
	3	1	**278-8965**	1	BOOT	
	4	1	**278-8967**	1	RETAINER-BOOT	
	5	1	**278-8970**	4	SCREW	

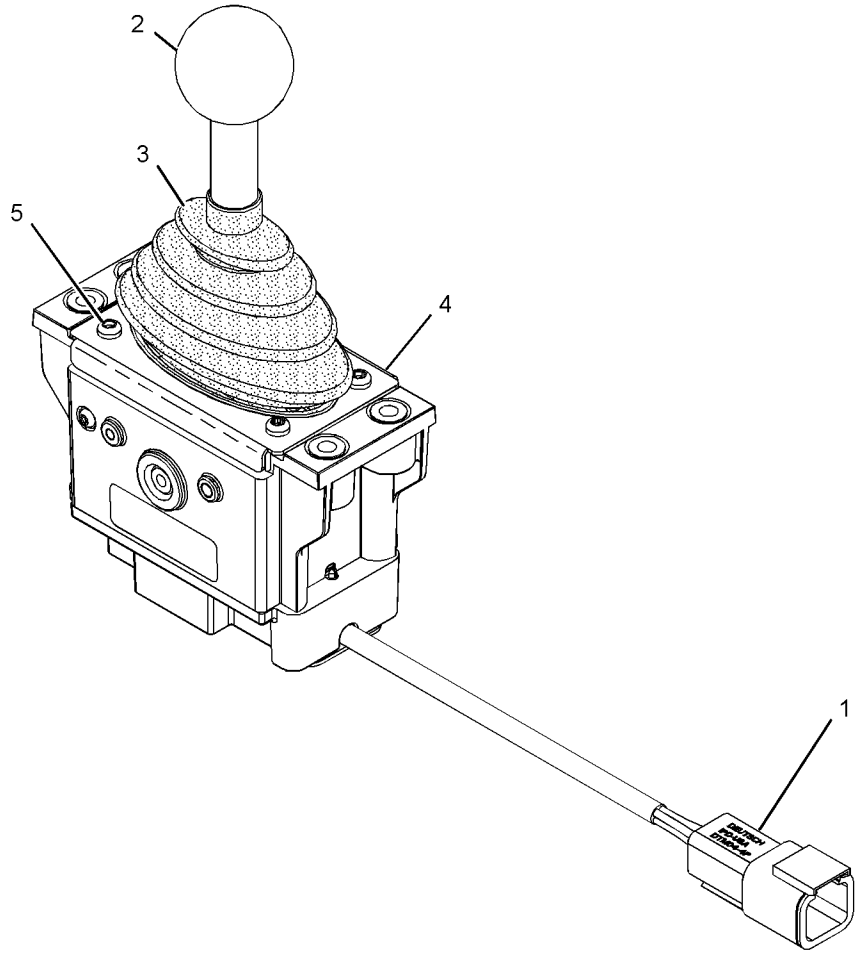

GRAPHIC #1 **<END>** g01195083

HYDRAULIC SYSTEM

245-7650 CONTROL GP-JOYSTICK

S/N: M3G1-UP

PART OF 243-1941 CONTROL GP-ELECTROHYDRAULIC

AN ATTACHMENT

SMCS-5063, 5705 **i02445199**

NOTE	REF NO	GRAPHIC REF	PART NUMBER	QTY	PART NAME 1 2 3 4 5 6 (PRODUCT LEVEL)	SEE PAGE
	1	1	**254-9139**	1	CONTROL GP-HANDLE (LIFT, TILT, DOWNSHIFT SWITCH)	
		1	**8T-8737**	6	PLUG-SEAL	
		1	**144-0331**	1	CAP-PUSH BUTTON	
		1	**174-3091**	1	KIT-RECEPTACLE (12-PIN)	
					(INCLUDES RECEPTACLE AS AND WEDGE)	
		1	**186-3735**	6	PIN-CONNECTOR (16-GA TO 18-GA)	
	2	1	**277-7570**	1	SENSOR AS-POSITION	
		1	**102-8805**	1	KIT-RECEPTACLE (6-PIN)	
					(INCLUDES RECEPTACLE AS AND WEDGE)	
		1	**186-3735**	6	PIN-CONNECTOR (16-GA TO 18-GA)	
		1	**280-0440**	4	STUD-MOUNTING	
	3	1	**279-6641**	1	BOOT	
	4	1	**213-7489**	3	SCREW (M4X25-MM)	
M	5	1	**178-9983**	3	LOCKNUT (M4X0.7-THD)	
	6	1	**174-3091**	1	KIT-RECEPTACLE (12-PIN)	
	7	1	**102-8805**	1	KIT-RECEPTACLE (6-PIN)	
					(EACH KIT INCLUDES RECEPTACLE AS AND WEDGE)	
	8	1	**186-3735**	6	PIN-CONNECTOR (16-GA TO 18-GA)	
	9	1	**8T-8737**	6	PLUG-SEAL	

M-METRIC PART

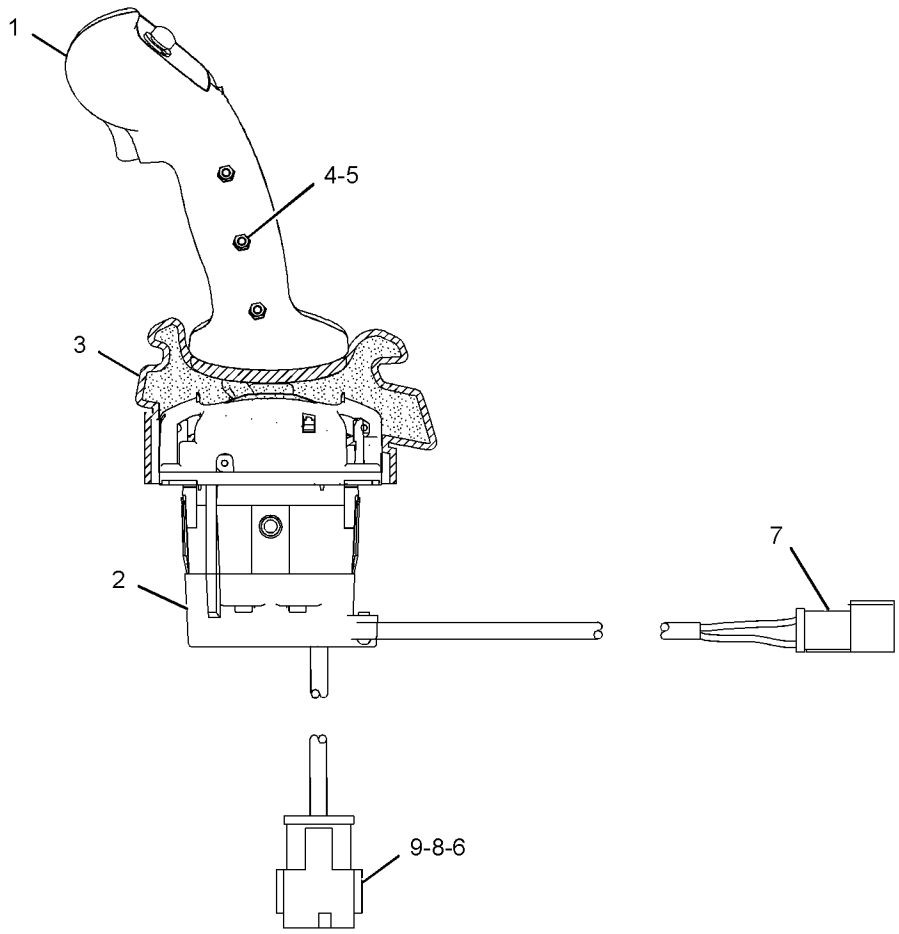

GRAPHIC #1 **<END>** g01221864

HYDRAULIC SYSTEM

237-0948 CYLINDER & SEAL GP-LIFT–LH

S/N: M3G1-UP

PART OF 237-0238 HYDRAULIC AR-2 VALVE

SMCS-5102 **i02207740**

NOTE	REF NO	GRAPHIC REF	PART NUMBER	QTY	PART NAME 1 2 3 4 5 6 (PRODUCT LEVEL)	SEE PAGE
Y	1	1	**242-4272**	1	CYLINDER GP-LIFT (LH)	489
	2	1	**7K-9211**	2	SEAL-LIP TYPE	

Y-SEPARATE ILLUSTRATION

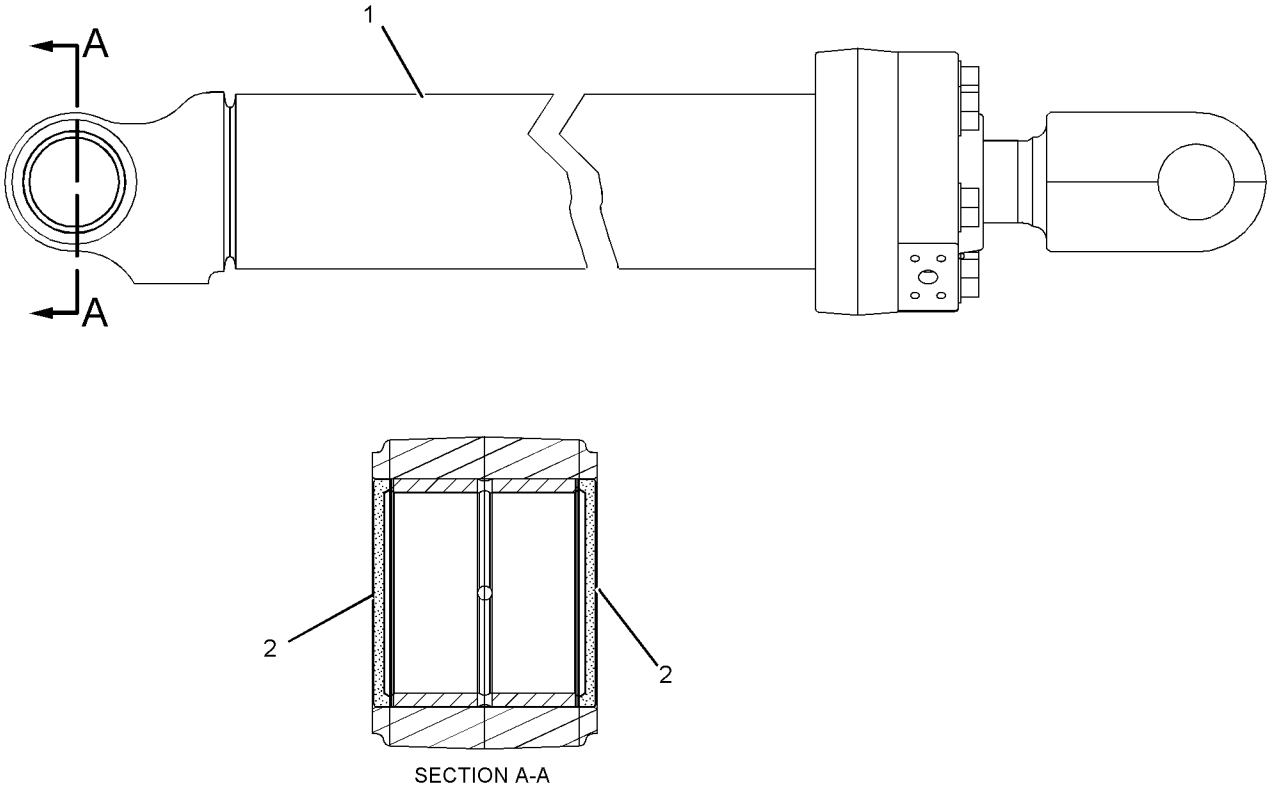

GRAPHIC #1 **<END>** g01119338

237-0949 CYLINDER & SEAL GP-LIFT–RH

S/N: M3G1-UP

PART OF 237-0238 HYDRAULIC AR-2 VALVE

SMCS-5102 **i02207738**

NOTE	REF NO	GRAPHIC REF	PART NUMBER	QTY	PART NAME 1 2 3 4 5 6 (PRODUCT LEVEL)	SEE PAGE
Y	1	1	**242-4271**	1	CYLINDER GP-LIFT (RH)	488
	2	1	**7K-9211**	2	SEAL-LIP TYPE	

Y-SEPARATE ILLUSTRATION

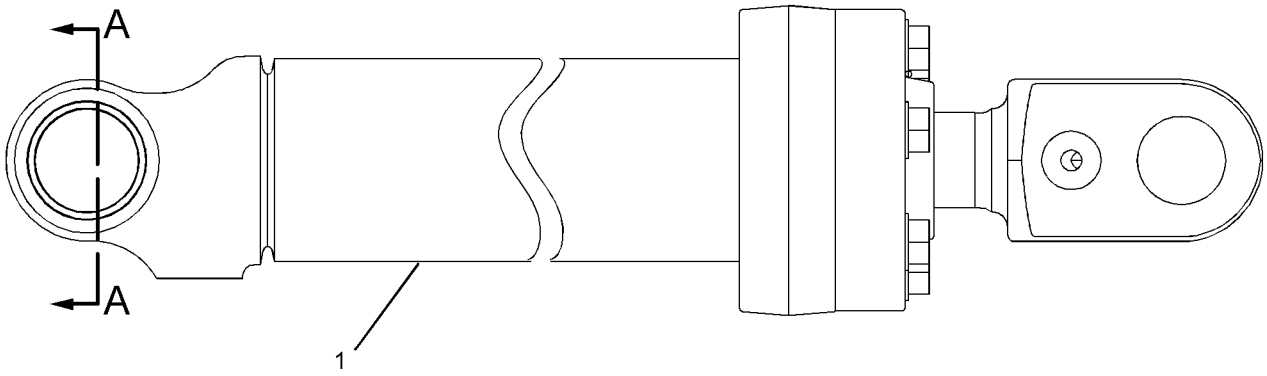

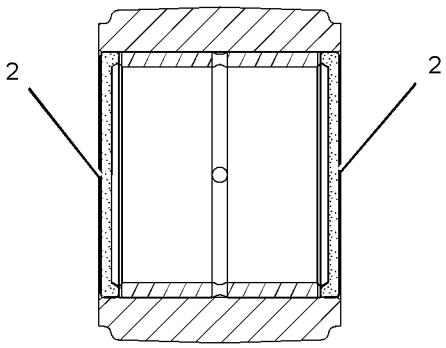

SECTION A-A

GRAPHIC #1 **<END>** g01119398

HYDRAULIC SYSTEM

237-0950 CYLINDER & SEAL GP-TILT

S/N: M3G1-UP

PART OF 237-0238 HYDRAULIC AR-2 VALVE

SMCS-5104 **i02304881**

NOTE	REF NO	GRAPHIC REF	PART NUMBER	QTY	PART NAME 1 2 3 4 5 6 (PRODUCT LEVEL)	SEE PAGE
Y	1	1	**242-4270**	1	CYLINDER GP-TILT	490
	2	1	**7K-9210**	2	SEAL-LIP TYPE	
	3	1	**7K-9211**	2	SEAL-LIP TYPE	

Y-SEPARATE ILLUSTRATION

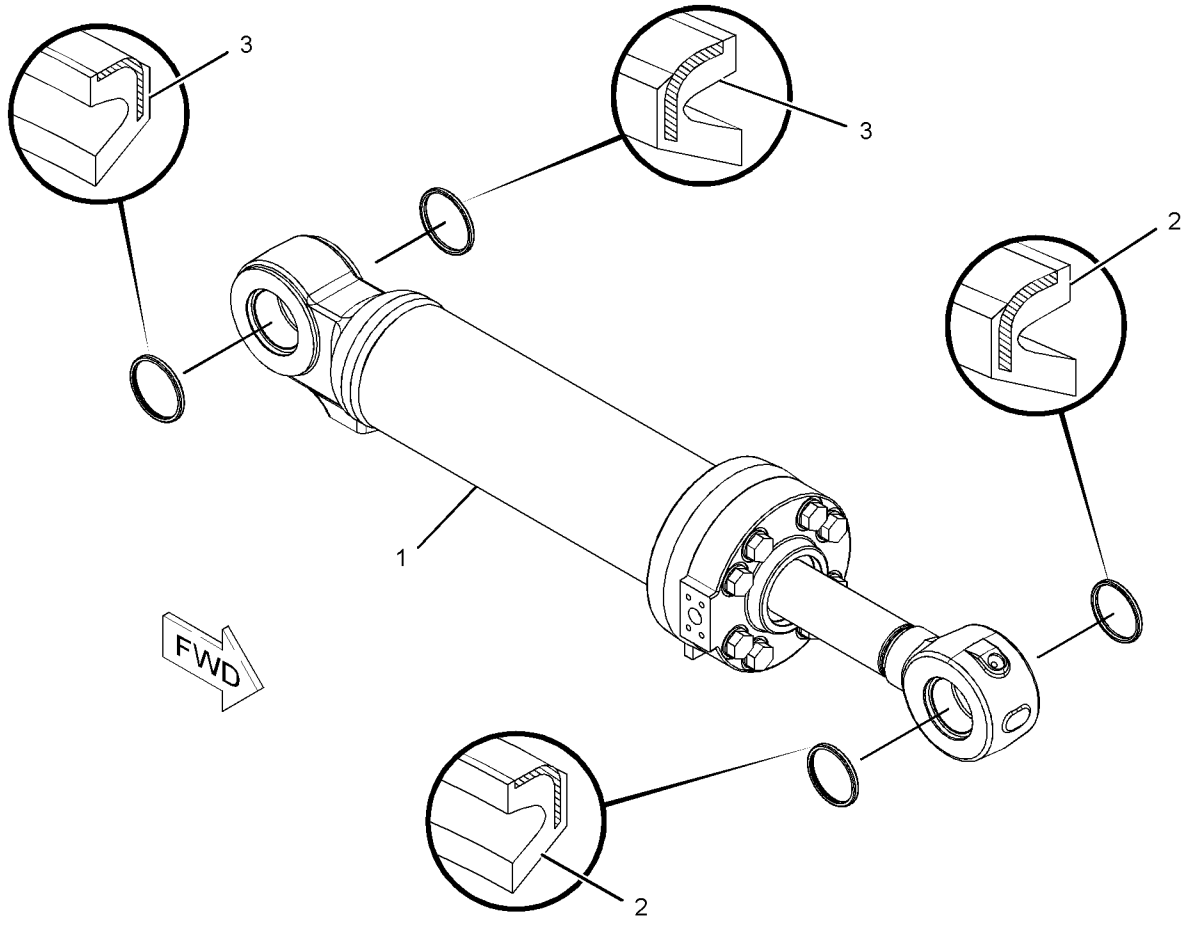

GRAPHIC #1 **<END>** g01133071

244-5548 CYLINDER & SEAL GP-TILT–HIGH LIFT MACHINES

S/N: M3G1-UP
PART OF 244-3411, 244-3412 LIFT AR
AN ATTACHMENT

SMCS-5104 **i02306066**

NOTE	REF NO	GRAPHIC REF	PART NUMBER	QTY	PART NAME 1 2 3 4 5 6 (PRODUCT LEVEL)	SEE PAGE
Y	1	1	**245-7491**	1	CYLINDER GP-TILT (HIGH LIFT MACHINES)	492
	2	1	**7K-9210**	2	SEAL-LIP TYPE	
	3	1	**7K-9211**	2	SEAL-LIP TYPE	

Y-SEPARATE ILLUSTRATION

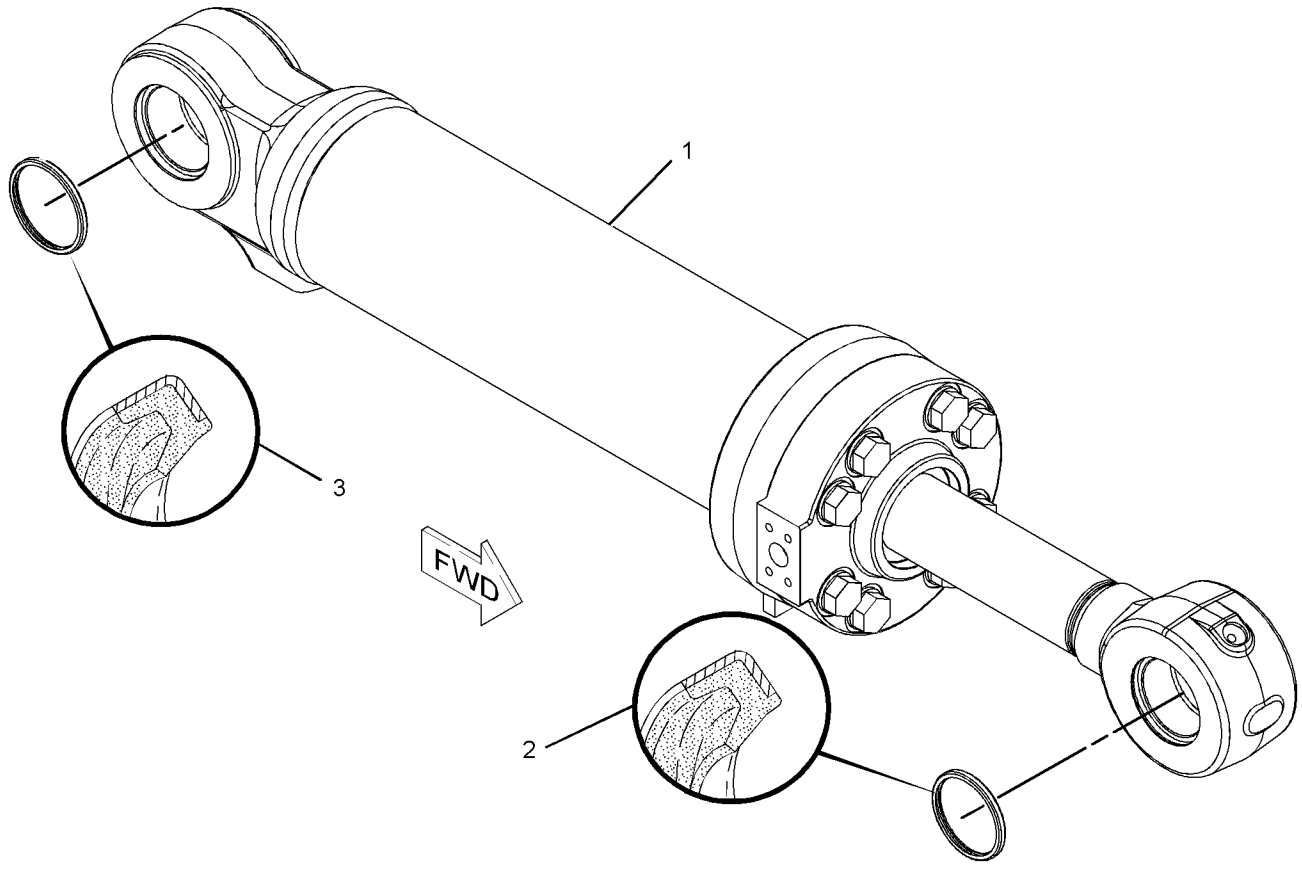

GRAPHIC #1 **<END>** g01155587

HYDRAULIC SYSTEM

244-5584 CYLINDER & SEAL GP-TILT

S/N: M3G1-UP
PART OF 244-3472 CONTROL GP-BUCKET
AN ATTACHMENT

SMCS-5104 **i02306344**

NOTE	REF NO	GRAPHIC REF	PART NUMBER	QTY	PART NAME 1 2 3 4 5 6 (PRODUCT LEVEL)	SEE PAGE
Y	1	1	**247-0497**	1	CYLINDER GP-TILT	494
	2	1	**7K-9210**	2	SEAL-LIP TYPE	
	3	1	**7K-9211**	2	SEAL-LIP TYPE	

Y-SEPARATE ILLUSTRATION

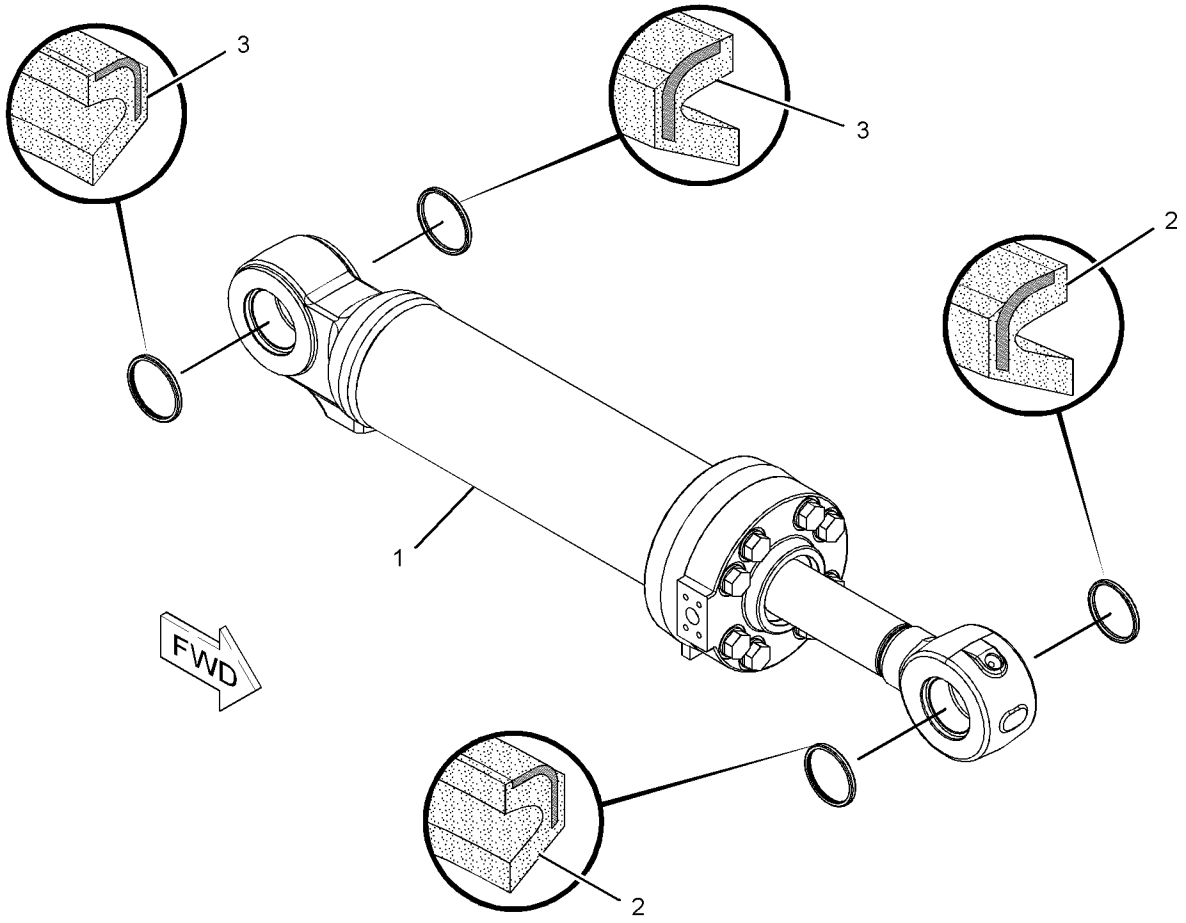

GRAPHIC #1 **<END>** g01155245

HYDRAULIC SYSTEM

237-0946 CYLINDER GP-COUPLER

S/N: M3G1-UP
50.8-MM (2-IN) BORE X 69.85-MM (2.75-IN) STROKE
PART OF 222-4994 FRAME GP-QUICK COUPLER
AN ATTACHMENT

SMCS-5133 **i02145566**

NOTE	REF NO	GRAPHIC REF	PART NUMBER	QTY	PART NAME 1 2 3 4 5 6 (PRODUCT LEVEL)	SEE PAGE
	1	1	**1H-9696**	1	SEAL-O-RING	
	2	1	**7F-8607**	1	SEAL-O-RING	
	3	1	**1S-0670**	1	RING-BACKUP	
	4	1	**3E-4250**	1	SEAL-PISTON RING	
	5	1	**6J-1889**	1	SEAL-U-CUP	
	6	1	**6J-1890**	1	WIPER-ROD	
	7	1	**9S-8002**	2	PLUG	
	8	1	**237-0947**	1	VALVE GP-CHECK	
		1	**213-8433**	1	KIT-SEAL	

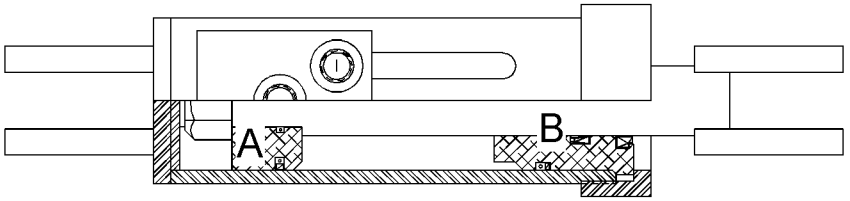

VIEW C-C

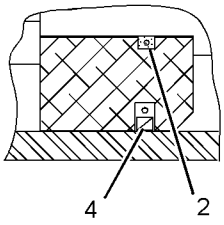

VIEW OF AREA A

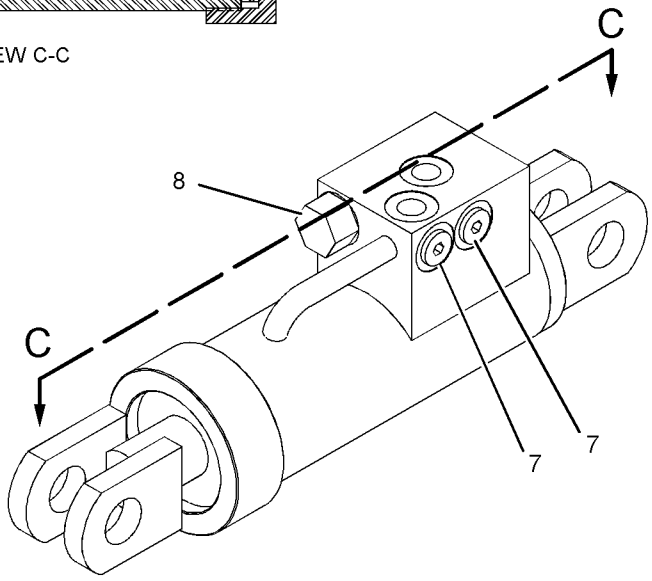

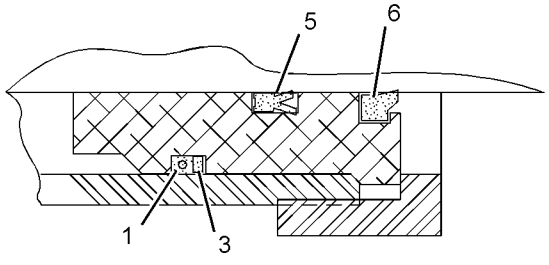

VIEW OF AREA B

GRAPHIC #1 **<END>** g01110646

242-4271 CYLINDER GP-LIFT–RH

S/N: M3G1-UP
146.05-MM BORE X 800-MM STROKE
PART OF 237-0949 CYLINDER & SEAL GP-LIFT

SMCS-5102 **i02219168**

NOTE	REF NO	GRAPHIC REF	PART NUMBER	QTY	PART NAME 1 2 3 4 5 6 (PRODUCT LEVEL)	SEE PAGE
	1	1	**245-7493**	1	PISTON	
	2	1	**245-7494**	1	HEAD	
	3	1	**245-7495**	1	ROD AS	
	4	1	**245-7500**	1	CYLINDER AS	
		1	**3G-7624**	1	BEARING-SLEEVE	
	5	1	**141-1774**	1	SEAL-O-RING	
	6	1	**167-2209**	1	SEAL AS-BUFFER	
	7	1	**167-2320**	1	SEAL-U-CUP	
	8	1	**225-3285**	1	SEAL-WIPER	
	9	1	**246-2896**	1	SEAL AS	
	10	1	**246-2899**	1	RING-BACKUP	
	11	1	**5J-3488**	1	LOCKNUT (2-1/4-12-2B-THD)	
	12	1	**5P-8250**	6	WASHER (28X49X5-MM THK)	
	13	1	**8T-6745**	1	RING-WEAR	
	14	1	**9J-4164**	1	RING-WEAR	
	15	1	**9X-8896**	6	BOLT (1-8X4-IN)	

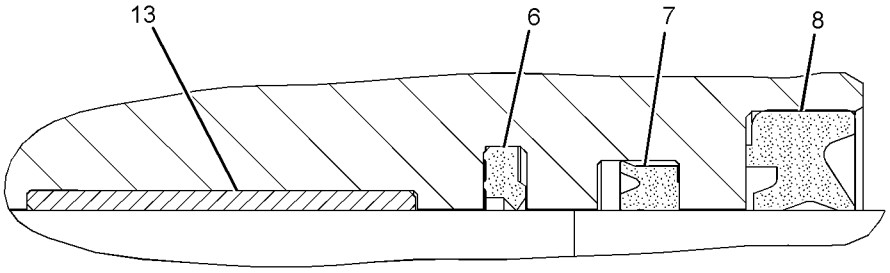

VIEW OF AREA A

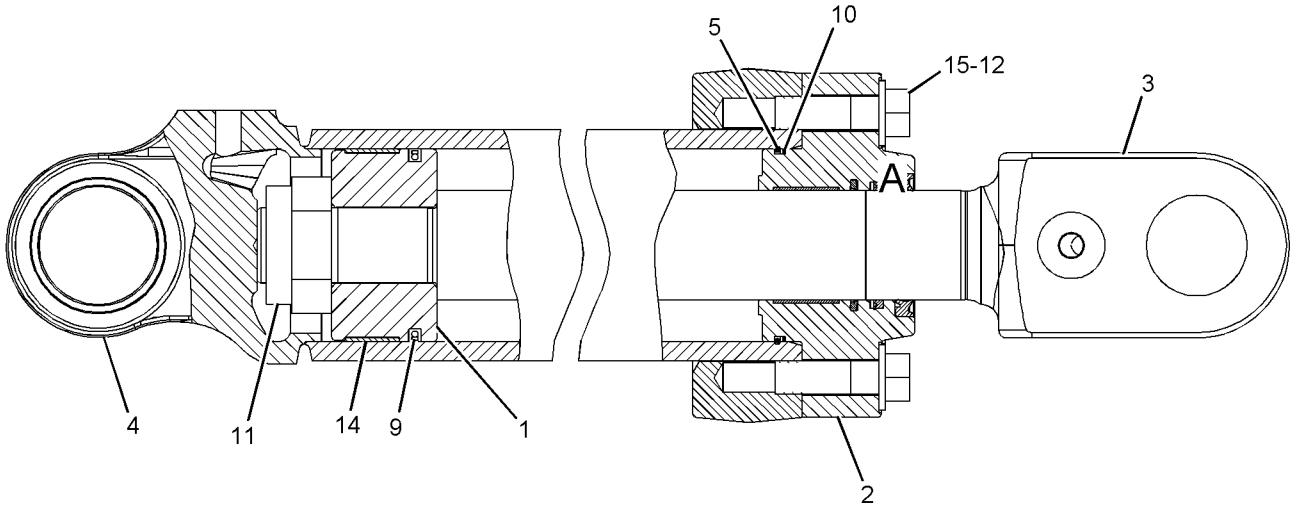

GRAPHIC #1 **<END>** g01120923

242-4272 CYLINDER GP-LIFT–LH

S/N: M3G1-UP
146.05-MM BORE X 800-MM STROKE
PART OF 237-0948 CYLINDER & SEAL GP-LIFT

SMCS-5102 **i02219138**

NOTE	REF NO	GRAPHIC REF	PART NUMBER	QTY	PART NAME 1 2 3 4 5 6 (PRODUCT LEVEL)	SEE PAGE
	1	1	**245-7493**	1	PISTON	
	2	1	**245-7494**	1	HEAD	
	3	1	**245-7495**	1	ROD AS	
	4	1	**245-7500**	1	CYLINDER AS	
		1	**3G-7624**	1	BEARING-SLEEVE	
	5	1	**141-1774**	1	SEAL-O-RING	
	6	1	**167-2209**	1	SEAL AS-BUFFER	
	7	1	**167-2320**	1	SEAL-U-CUP	
	8	1	**225-3285**	1	SEAL-WIPER	
	9	1	**246-2896**	1	SEAL AS	
	10	1	**246-2899**	1	RING-BACKUP	
	11	1	**5J-3488**	1	LOCKNUT (2-1/4-12-2B-THD)	
	12	1	**5P-8250**	6	WASHER (28X49X5-MM THK)	
	13	1	**8T-6745**	1	RING-WEAR	
	14	1	**9J-4164**	1	RING-WEAR	
	15	1	**9X-8896**	6	BOLT (1-8X4-IN)	

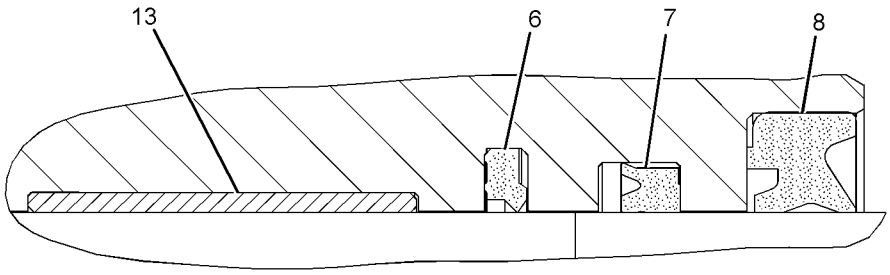

VIEW OF AREA A

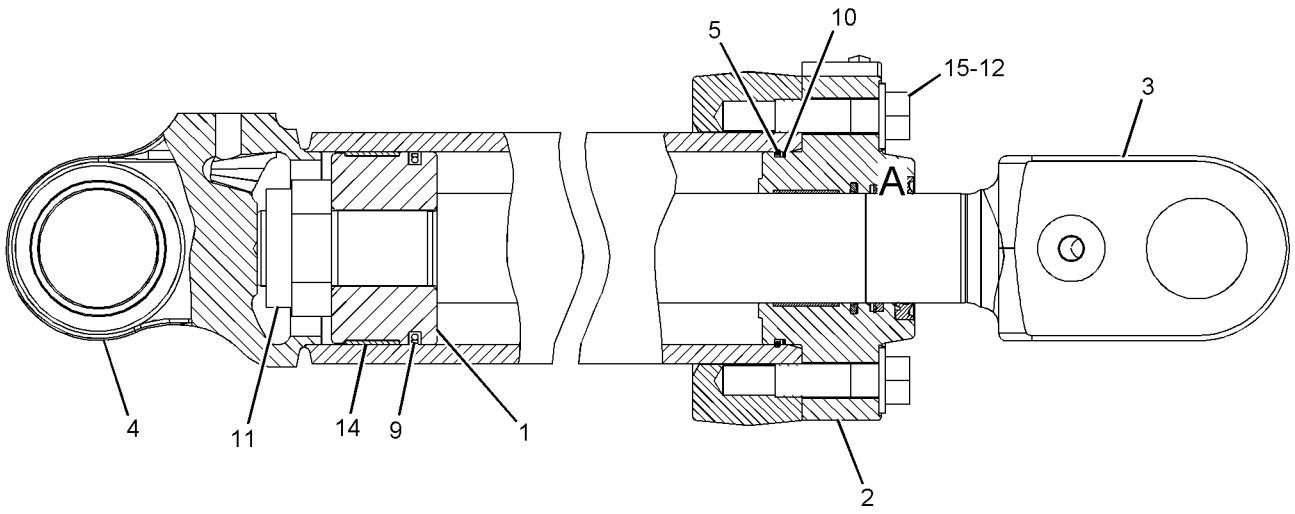

GRAPHIC #1 **<END>** g01120922

HYDRAULIC SYSTEM

242-4270 CYLINDER GP-TILT

S/N: M3G1-UP

158.8-MM BORE X 542-MM STROKE

PART OF 237-0950 CYLINDER & SEAL GP-TILT

SMCS-5104 **i02304884**

NOTE	REF NO	GRAPHIC REF	PART NUMBER	QTY	PART NAME 1 2 3 4 5 6 (PRODUCT LEVEL)	SEE PAGE
	1	1	**162-7209**	1	RING-BACKUP	
	2	1	**245-9790**	1	CYLINDER AS	
		1	**7Y-2522**	1	PLATE	
		1	**9J-7099**	1	BEARING-SLEEVE	
	3	1	**245-9791**	1	HEAD	
	4	1	**248-3317**	1	PISTON	
	5	1	**248-3318**	1	ROD AS	
		1	**3G-8779**	1	BEARING-SLEEVE	
	6	1	**167-2209**	1	SEAL AS-BUFFER	
	7	1	**167-2320**	1	SEAL-U-CUP	
	8	1	**225-3285**	1	SEAL-WIPER	
	9	1	**2J-7686**	1	LOCKNUT	
	10	1	**6V-5657**	1	SEAL-O-RING	
	11	1	**6V-8237**	8	WASHER (26X44X4-MM THK)	
M	12	1	**8T-0667**	8	BOLT (M24X3X100-MM)	
	13	1	**8T-1788**	1	SEAL AS	
	14	1	**8T-6745**	1	RING-WEAR	
	15	1	**9J-5550**	1	RING-WEAR	

M-METRIC PART

242-4270 **CYLINDER GP-TILT** *(contd.)* **i02304884**

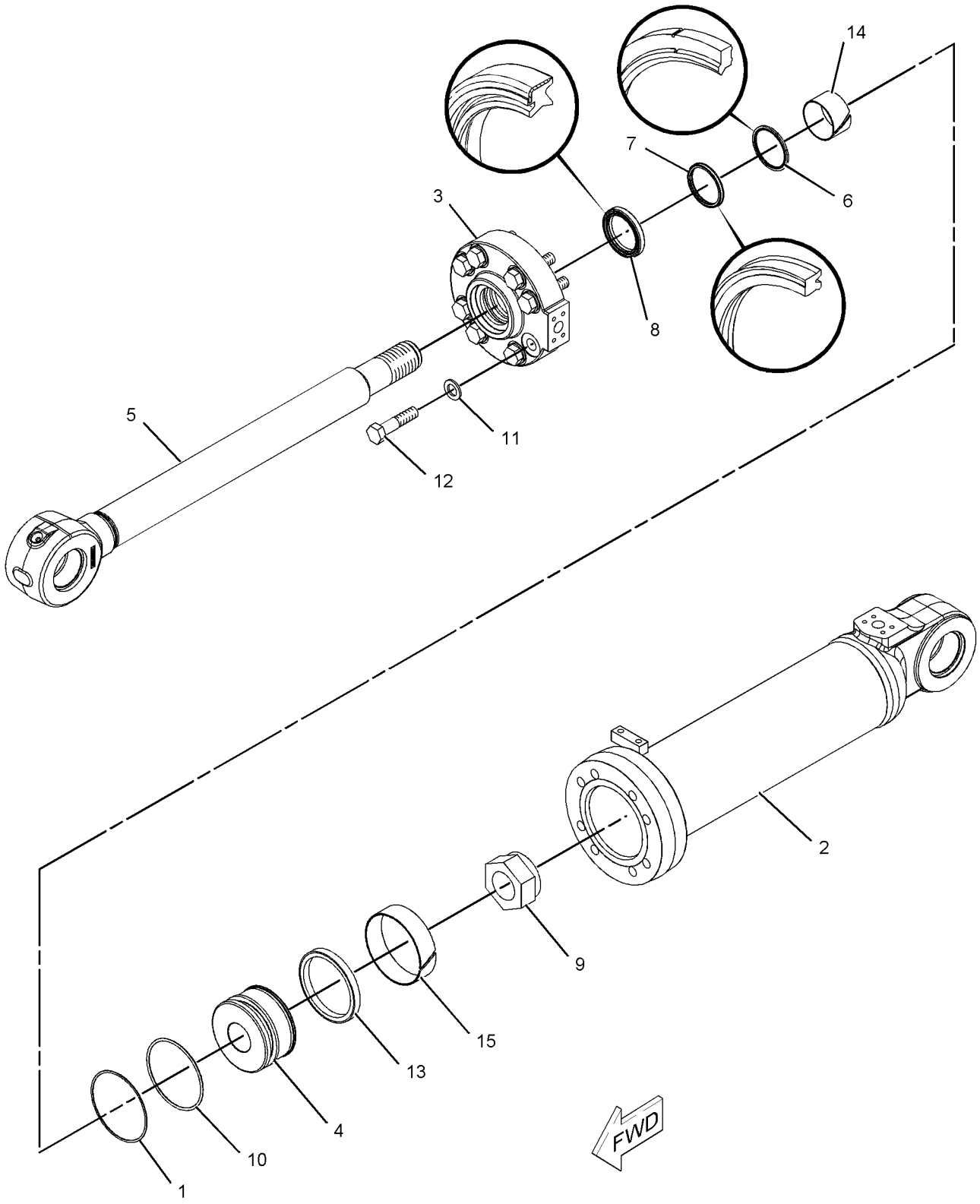

GRAPHIC #1 **<END>** g01131994

245-7491 CYLINDER GP-TILT—HIGH LIFT MACHINES

S/N: M3G1-UP
158.8-MM (6.25-IN) BORE X 536-MM (21.10-IN) STROKE
PART OF 244-5548 CYLINDER & SEAL GP-TILT
AN ATTACHMENT

SMCS-5104 **i02449342**

NOTE	REF NO	GRAPHIC REF	PART NUMBER	QTY	PART NAME 1 2 3 4 5 6 (PRODUCT LEVEL)	SEE PAGE
	1	1	**162-7209**	1	RING-BACKUP	
	2	1	**245-9790**	1	CYLINDER AS	
		1	**9J-7099**	1	BEARING-SLEEVE	
	3	1	**245-9791**	1	HEAD	
	4	1	**224-5700**	1	ROD AS	
		1	**9J-7099**	1	BEARING-SLEEVE	
		1	**224-5699**	1	ROD AS	
	5	1	**248-3317**	1	PISTON	
	6	1	**167-2209**	1	SEAL AS-BUFFER	
	7	1	**167-2320**	1	SEAL-U-CUP	
	8	1	**225-3285**	1	SEAL-WIPER	
	9	1	**2J-7686**	1	LOCKNUT	
	10	1	**6V-5657**	1	SEAL-O-RING	
	11	1	**6V-8237**	8	WASHER (26X44X4-MM THK)	
M	12	1	**8T-0667**	8	BOLT (M24X3X100-MM)	
	13	1	**8T-1788**	1	SEAL AS	
	14	1	**8T-6745**	1	RING-WEAR	
	15	1	**9J-5550**	1	RING-WEAR	

M-METRIC PART

245-7491 CYLINDER GP-TILT *(contd.)* **i02449342**

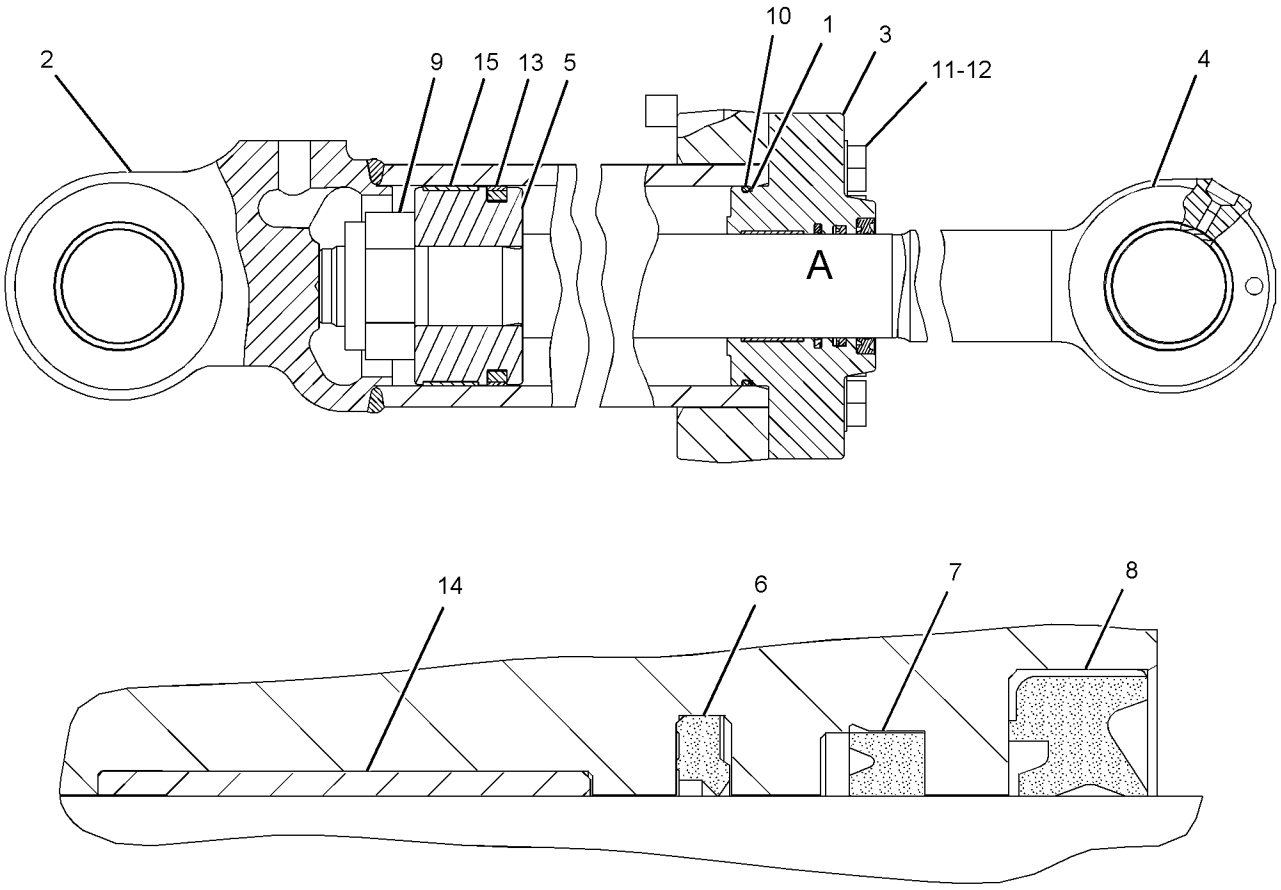

VIEW OF AREA A

GRAPHIC #1 **<END>** g01222159

HYDRAULIC SYSTEM

247-0497 CYLINDER GP-TILT

S/N: M3G1-UP
158.8-MM (6.25-IN) BORE X 542-MM (21.34-IN) STROKE
PART OF 244-5584 CYLINDER & SEAL GP-TILT
AN ATTACHMENT

SMCS-5104 **i02305962**

NOTE	REF NO	GRAPHIC REF	PART NUMBER	QTY	PART NAME 1 2 3 4 5 6 (PRODUCT LEVEL)	SEE PAGE
	1	1	**162-7209**	1	RING-BACKUP	
	2	1	**245-9790**	1	CYLINDER AS	
		1	**7Y-2522**	1	PLATE	
		1	**9J-7099**	1	BEARING-SLEEVE	
	3	1	**245-9791**	1	HEAD	
	4	1	**248-3317**	1	PISTON	
	5	1	**249-0954**	1	ROD AS	
		1	**3G-8779**	1	BEARING-SLEEVE	
	6	1	**167-2209**	1	SEAL AS-BUFFER	
	7	1	**167-2320**	1	SEAL-U-CUP	
	8	1	**225-3285**	1	SEAL-WIPER	
	9	1	**2J-7686**	1	LOCKNUT	
	10	1	**6V-5657**	1	SEAL-O-RING	
	11	1	**6V-8237**	8	WASHER (26X44X4-MM THK)	
M	12	1	**8T-0667**	8	BOLT (M24X3X100-MM)	
	13	1	**8T-1788**	1	SEAL AS	
	14	1	**8T-6745**	1	RING-WEAR	
	15	1	**9J-5550**	1	RING-WEAR	

M-METRIC PART

247-0497 **CYLINDER GP-TILT** *(contd.)* **i02305962**

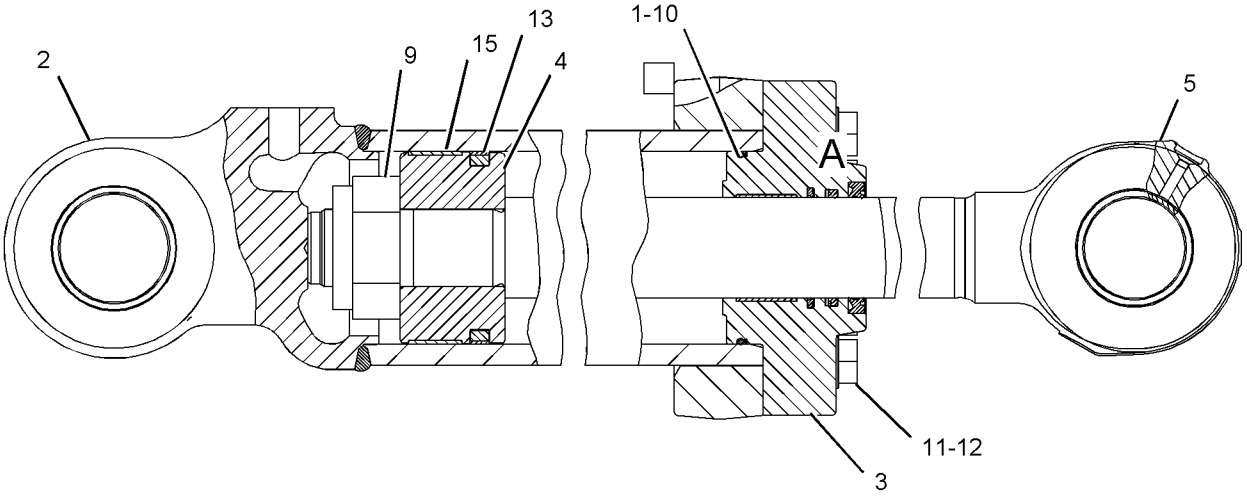

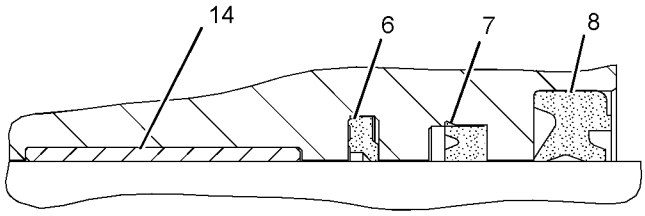

VIEW OF AREA A

GRAPHIC #1 **<END>** g01128353

244-1031 FILTER GP-OIL–HYDRAULIC

S/N: M3G1-UP

PART OF 237-0435 LINES GP-HYDRAULIC OIL COOLER

SMCS-5068, 5091, 5092 **i02444342**

NOTE	REF NO	GRAPHIC REF	PART NUMBER	QTY	PART NAME 1 2 3 4 5 6 (PRODUCT LEVEL)	SEE PAGE
	1	1	**8C-3451**	1	CAP-DUST	
	2	1	**8C-6712**	1	ELBOW	
	3	1	**253-2673**	1	SWITCH AS-PRESSURE (DIFFERENTIAL)	
		1	**102-8802**	1	KIT-RECEPTACLE (2-PIN)	
					(INCLUDES RECEPTACLE AS AND WEDGE)	
		1	**186-3735**	1	PIN-CONNECTOR (16-GA TO 18-GA)	
E		1	**9X-1813**		SLEEVE (14-CM)	
	4	1	**225-4118**	1	FILTER ELEMENT AS-OIL (HYDRAULIC)	
	5	1	**3J-1907**	2	SEAL-O-RING	
	6	1	**3J-7354**	1	SEAL-O-RING	
	7	1	**5F-9144**	1	SEAL-O-RING	
	8	1	**8C-3446**	1	VALVE-FLUID SAMPLING	

E-ORDER BY THE CENTIMETER

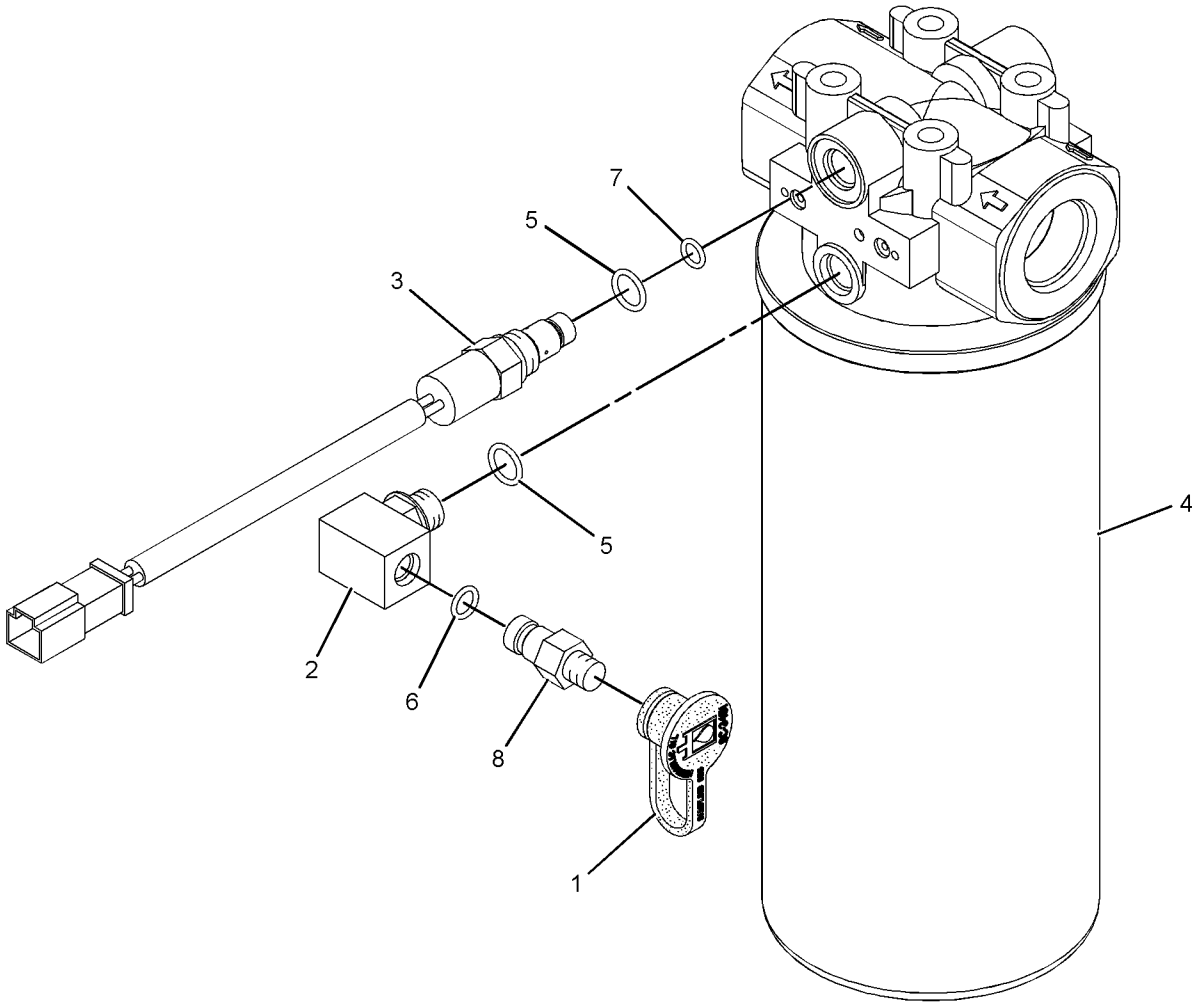

GRAPHIC #1 **<END>** g01114256

249-2334 FILTER GP-OIL–HYDRAULIC CASE DRAIN

S/N: M3G1-UP

PART OF 237-0268 LINES GP-HYDRAULIC

SMCS-5068, 5091, 5092 **i02325333**

NOTE	REF NO	GRAPHIC REF	PART NUMBER	QTY	PART NAME 1 2 3 4 5 6 (PRODUCT LEVEL)	SEE PAGE
	1	1	**144-0832**	1	FILTER AS-OIL (HYDRAULIC CASE DRAIN)	

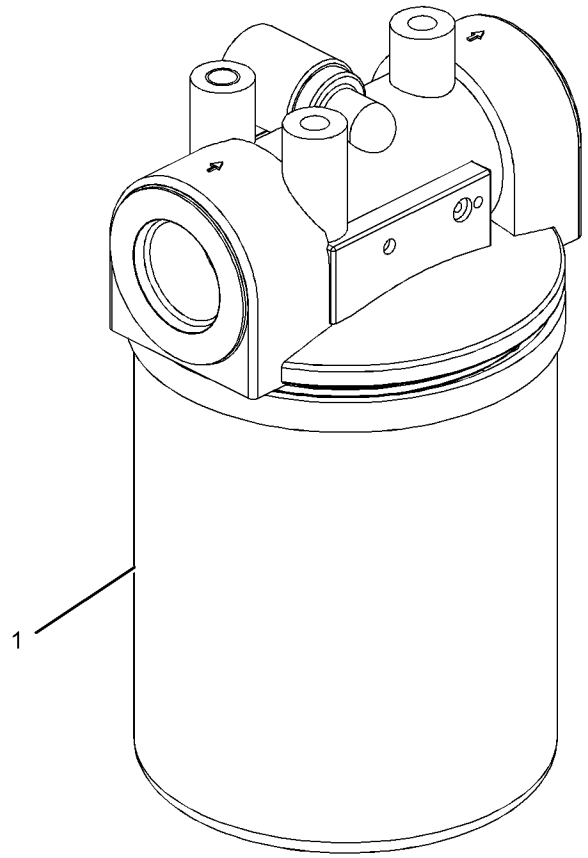

GRAPHIC #1 **<END>** g01156351

274-0055 GUARD GP-LIFT CYLINDER

S/N: M3G1-UP

AN ATTACHMENT

SMCS-5102, 7164 **i02449572**

NOTE	REF NO	GRAPHIC REF	PART NUMBER	QTY	PART NAME 1 2 3 4 5 6 (PRODUCT LEVEL)	SEE PAGE
Y	1	1	**274-0056**	1	GUARD GP-LIFT CYLINDER (LH)	499
Y	2	1	**274-0057**	1	GUARD GP-LIFT CYLINDER (RH)	500

Y-SEPARATE ILLUSTRATION

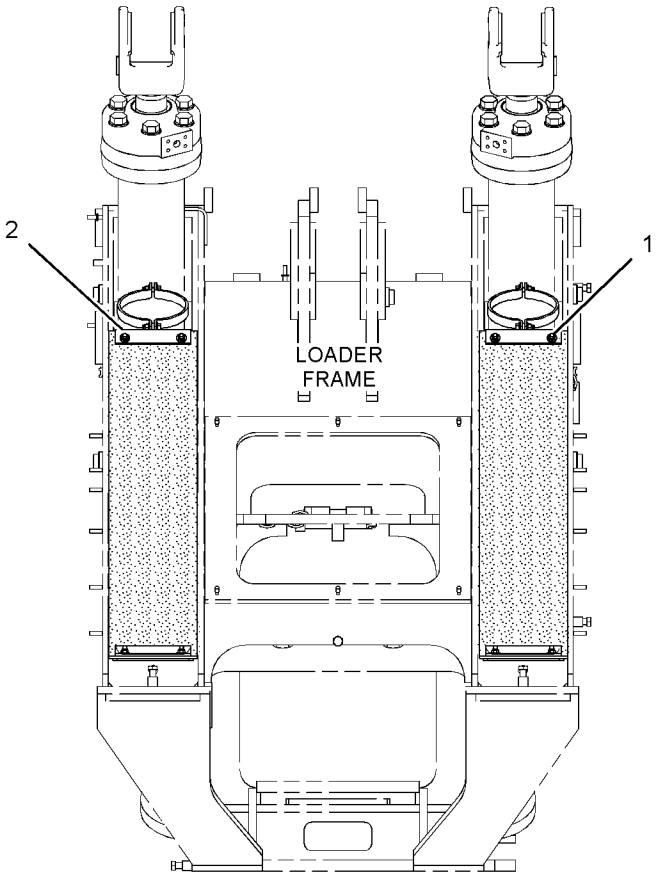

FRONT VIEW

GRAPHIC #1 **<END>** g01221850

274-0056 GUARD GP-LIFT CYLINDER–LH

S/N: M3G1-UP
PART OF 274-0055 GUARD GP-LIFT CYLINDER
AN ATTACHMENT

SMCS-5102, 7164 **i02449576**

NOTE	REF NO	GRAPHIC REF	PART NUMBER	QTY	PART NAME 1 2 3 4 5 6 (PRODUCT LEVEL)	SEE PAGE
	1	1	**127-8889**	1	PLATE	
	2	1	**211-5004**	1	PLATE AS	
	3	1	**211-5006**	1	PLATE	
	4	1	**216-7752**	1	PLATE AS	
	5	1	**274-0058**	1	CLIP	
	6	1	**274-0059**	1	CLIP	
	7	1	**274-0060**	1	SHEET-RUBBER	
M	8	1	**6V-7687**	2	LOCKNUT (M12X1.75-THD)	
M	9	1	**6V-7744**	4	LOCKNUT (M10X1.15-THD)	
	10	1,1	**7X-7729**	4	WASHER (11X25X3-MM THK)	
M	11	1	**8T-4183**	2	BOLT (M12X1.75X40-MM)	
M	12	1	**8T-4196**	2	BOLT (M10X1.5X35-MM)	
	13	1	**8T-4223**	4	WASHER-HARD (13.5X25.5X3-MM THK)	

M-METRIC PART

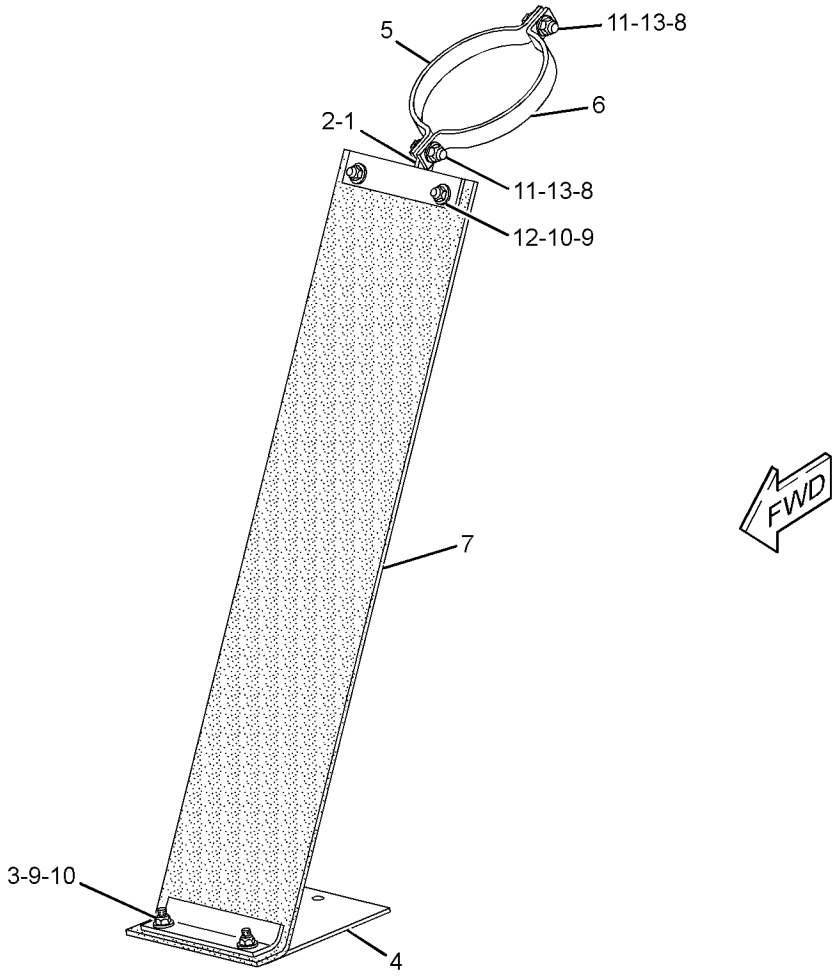

GRAPHIC #1 **<END>** g01224591

HYDRAULIC SYSTEM

274-0057 GUARD GP-LIFT CYLINDER–RH

S/N: M3G1-UP
PART OF 274-0055 GUARD GP-LIFT CYLINDER
AN ATTACHMENT

SMCS-5102, 7164 **i02449577**

NOTE	REF NO	GRAPHIC REF	PART NUMBER	QTY	PART NAME 1 2 3 4 5 6 (PRODUCT LEVEL)	SEE PAGE
	1	1	**127-8889**	1	PLATE	
	2	1	**211-5004**	1	PLATE AS	
	3	1	**211-5006**	1	PLATE	
	4	1	**216-7752**	1	PLATE AS	
	5	1	**274-0058**	1	CLIP	
	6	1	**274-0059**	1	CLIP	
	7	1	**274-0060**	1	SHEET-RUBBER	
M	8	1	**6V-7687**	2	LOCKNUT (M12X1.75-THD)	
M	9	1	**6V-7744**	4	LOCKNUT (M10X1.15-THD)	
	10	1	**7X-7729**	4	WASHER (11X25X3-MM THK)	
M	11	1	**8T-4183**	2	BOLT (M12X1.75X40-MM)	
M	12	1	**8T-4196**	2	BOLT (M10X1.5X35-MM)	
	13	1	**8T-4223**	4	WASHER-HARD (13.5X25.5X3-MM THK)	

M-METRIC PART

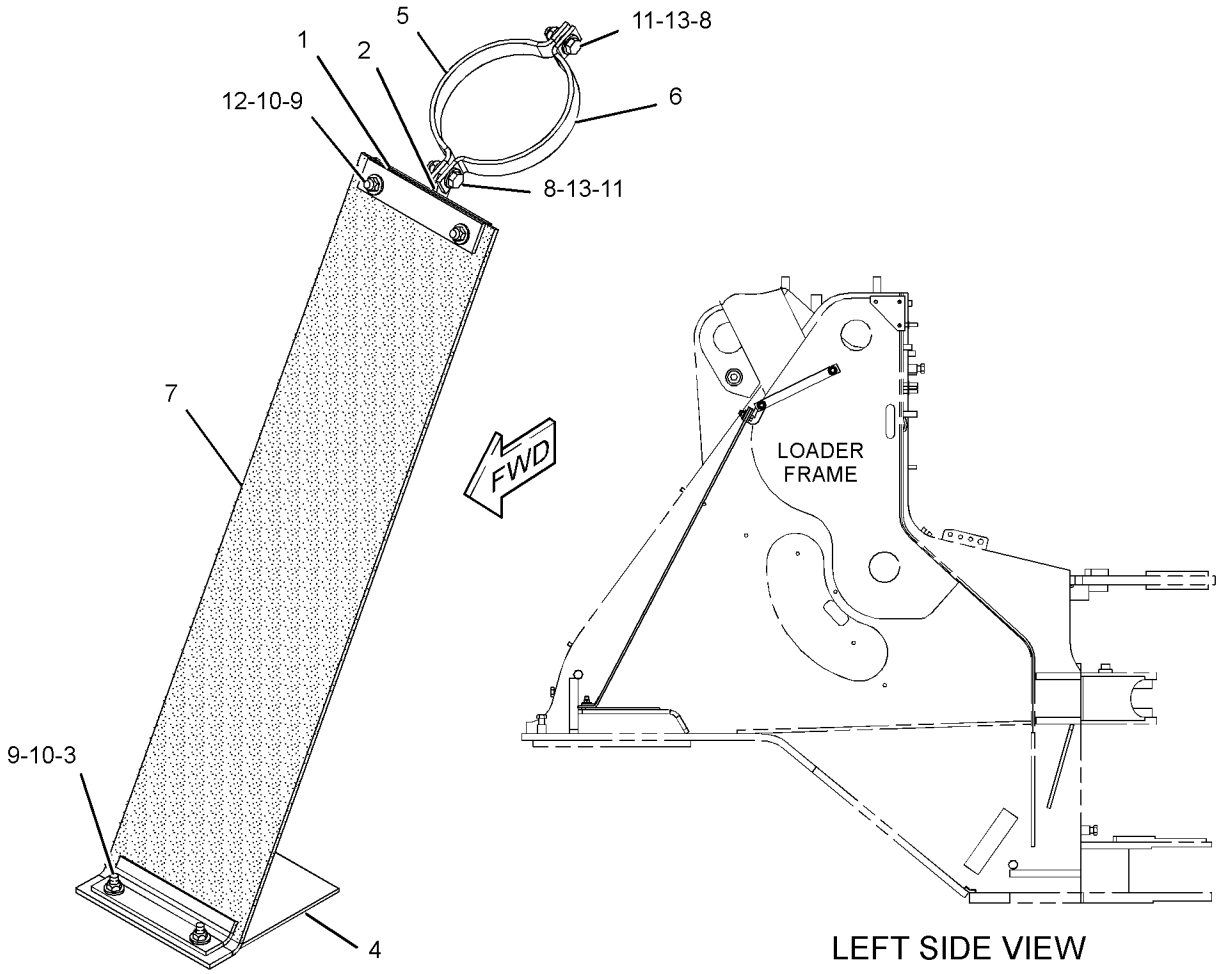

LEFT SIDE VIEW

GRAPHIC #1 **<END>** g01221848

HYDRAULIC SYSTEM

237-0238 HYDRAULIC AR-2 VALVE

S/N: M3G1-UP

PART OF 237-4935 GENERAL AR

SMCS-5051 **i02304639**

NOTE	PART NUMBER	QTY	PART NAME 1 2 3 4 5 6 (PRODUCT LEVEL)	SEE PAGE
Y	*237-0948*	1	CYLINDER & SEAL GP-LIFT (LH)	482
Y	*237-0949*	1	CYLINDER & SEAL GP-LIFT (RH)	483
Y	*237-0950*	1	CYLINDER & SEAL GP-TILT	484
Y	*244-5526*	1	LINES GP-DIAGNOSTIC (REMOTE PRESSURE TAPS)	777
Y	*237-0268*	1	LINES GP-HYDRAULIC	510
Y	*237-0951*	1	LINES GP-LIFT CYLINDER	518
Y	*237-0952*	1	LINES GP-TILT CYLINDER	520
Y	*237-0960*	1	MOUNTING GP-HYDRAULIC TANK	530
Y	*237-0954*	1	PUMP & MTG GP-BRAKE & HYD FAN	531
Y	*246-2054*	1	PUMP & MTG GP-HYDRAULIC	533
Y	*237-2742*	1	TANK GP-HYDRAULIC	541
Y	*237-0961*	1	VALVE & MTG GP-MAIN CONTROL (2-FUNCTION)	543
Y	*245-3866*	1	VALVE GP-LOWERING CONTROL	570

Y-SEPARATE ILLUSTRATION

<END>

237-0269 HYDRAULIC AR-3 VALVE

S/N: M3G1-UP

CANNOT BE USED WITH MACHINES EQUIPPED WITH CONTROL GP BUCKET (MID LIFT) AN ATTACHMENT

SMCS-5051 **i02449431**

NOTE	PART NUMBER	QTY	PART NAME 1 2 3 4 5 6 (PRODUCT LEVEL)	SEE PAGE
Y	**279-3440**	1	ARM AS-LIFT	596
Y	*243-1940*	1	CONTROL GP-ELECTROHYDRAULIC (3-FUNCTION)	473
Y	*238-4436*	1	LINES GP-FRONT	507
Y	*237-4932*	1	VALVE & MTG GP-MAIN CONTROL (3-FUNCTION)	546

Y-SEPARATE ILLUSTRATION

<END>

244-3825 HYDRAULIC AR-3 VALVE—MID LIFT MACHINES

S/N: M3G1-UP

AN ATTACHMENT

SMCS-5051 **i02449357**

NOTE	PART NUMBER	QTY	PART NAME 1 2 3 4 5 6 (PRODUCT LEVEL)	SEE PAGE
Y	*279-3541*	1	ARM AS-LIFT	
Y	*243-1940*	1	CONTROL GP-ELECTROHYDRAULIC (3-FUNCTION)	473
Y	*238-4436*	1	LINES GP-FRONT	507
Y	*237-4932*	1	VALVE & MTG GP-MAIN CONTROL (3-FUNCTION)	546

Y-SEPARATE ILLUSTRATION

<END>

HYDRAULIC SYSTEM

275-6101 LINES GP-COUPLER–REAR

S/N: M3G1-UP
PART OF 244-2662 CONTROL AR-QUICK COUPLER
AN ATTACHMENT

SMCS-5057, 5133 **i02449433**

NOTE	REF NO	GRAPHIC REF	PART NUMBER	QTY	PART NAME 1 2 3 4 5 6 (PRODUCT LEVEL)	SEE PAGE
	1	1	**4H-1225**	1	WASHER (11X22X6-MM THK)	
	2	1	**090-8247**	1	BLOCK	
Y	3	1	**180-8585**	1	VALVE GP-DIVERTER (QUICK COUPLER)	567
	4	1	**244-6625**	1	ADAPTER-SPECIAL	
I	5	1	**247-5577**	1	HOSE AS	
I	6	1	**247-5578**	1	HOSE AS	
I	7	1	**247-5579**	1	HOSE AS	
	8	1	**247-5585**	1	TUBE AS	
	9	1	**247-5586**	1	TUBE AS	
	10	1	**247-9915**	1	BRACKET AS	
	11	1	**260-0149**	1	BRACKET AS	
I	12	1	**276-2602**	2	HOSE AS	
	13	1	**096-6166**	4	WASHER-HARD (4.5X9X1-MM THK)	
Y	14	1	**112-1817**	1	VALVE GP-MANUAL	579
	15	1	**148-8336**	6	CONNECTOR AS	
					(EACH INCLUDES)	
		1	**3J-1907**	1	SEAL-O-RING	
		1	**6V-8397**	1	SEAL-O-RING	
		1	**6V-8636**	1	CONNECTOR	
	16	1	*148-8367*	4	ELBOW AS	
					(EACH INCLUDES)	
		1	**6V-8397**	1	SEAL-O-RING	
		1	**6V-9850**	1	ELBOW	
	17	1	*148-8378*	1	ELBOW AS	
		1	**3J-1907**	1	SEAL-O-RING	
		1	**6V-8397**	1	SEAL-O-RING	
		1	**6V-8724**	1	ELBOW	
	18	1	*148-8415*	1	REDUCER AS	
		1	**6V-8397**	1	SEAL-O-RING	
		1	**6V-8936**	1	REDUCER	
	19	1	*148-8435*	1	TEE AS	
		1	**3J-1907**	1	SEAL-O-RING	
		1	**6V-8397**	2	SEAL-O-RING	
		1	**6V-8781**	1	TEE-FACE SEAL	
	20	1	*164-9869*	1	CONNECTOR AS	
		1	**3J-1907**	1	SEAL-O-RING	
		1	**6V-8397**	1	SEAL-O-RING	
		1	**9X-2297**	1	CONNECTOR	
	21	1	**222-9151**	2	WASHER-HARD (11X32X5-MM THK)	
	22	1	**3J-1907**	1	SEAL-O-RING	
	23	1	**4D-7794**	6	CLIP	
	24	1	**5K-5338**	1	CLIP	
	25	1	**6D-4246**	4	CLIP	
	26	1	**6V-8397**	2	SEAL-O-RING	
	27	1	**6V-8398**	1	SEAL-O-RING	
M	28	1	**8T-0285**	4	SCREW-MACHINE (M4X0.7X12-MM)	
	29	1	**8T-4121**	8	WASHER-HARD (11X21X2.5-MM THK)	
M	30	1	**8T-4133**	1	NUT (M10X1.5 THD)	
M	31	1	**8T-4136**	2	BOLT (M10X1.5X25-MM)	
M	32	1	**8T-4137**	3	BOLT (M10X1.5X20-MM)	
M	33	1	**8T-4139**	2	BOLT (M12X1.75X30-MM)	
M	34	1	**8T-4172**	2	BOLT (M10X1.5X80-MM)	
	35	1	**8T-4223**	2	WASHER-HARD (13.5X25.5X3-MM THK)	

I-REFER TO HYDRAULIC INFORMATION SYSTEM
M-METRIC PART
Y-SEPARATE ILLUSTRATION

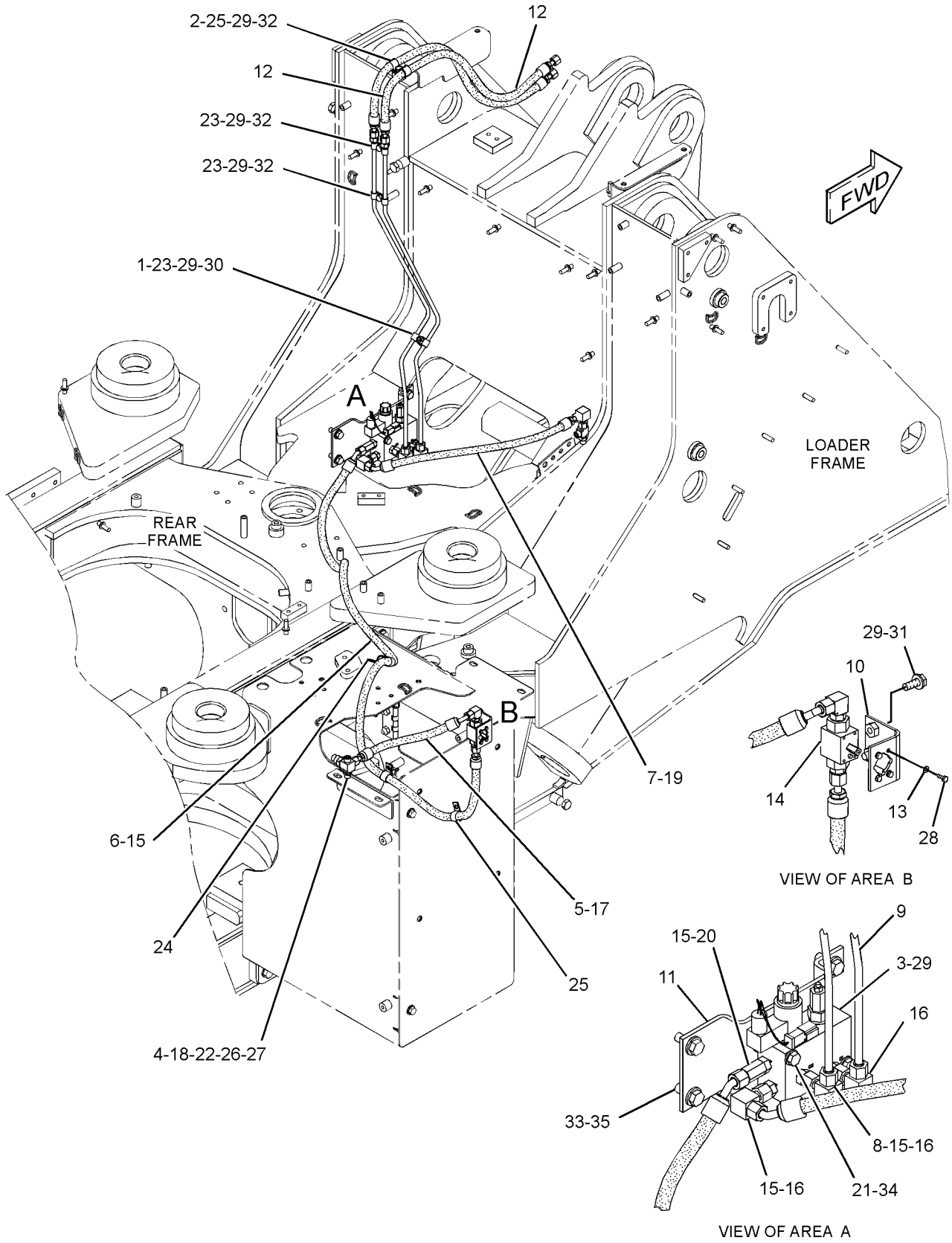

GRAPHIC #1 **<END>** g01198811

HYDRAULIC SYSTEM

276-2563 LINES GP-COUPLER–FRONT

S/N: M3G1-UP
PART OF 244-2662 CONTROL AR-QUICK COUPLER
AN ATTACHMENT

SMCS-5057, 5133 **i02449435**

NOTE	REF NO	GRAPHIC REF	PART NUMBER	QTY	PART NAME 1 2 3 4 5 6 (PRODUCT LEVEL)	SEE PAGE
Y	1	1	**112-1817**	2	VALVE GP-MANUAL (LOWERING CONTROL)	579
	2	1	**230-7058**	1	BRACKET	
	3	1	**238-2658**	1	TUBE AS	
	4	1	**238-2659**	1	TUBE AS	
	5	1	**276-2567**	2	TUBE AS	
	6	1	**096-6166**	8	WASHER-HARD (4.5X9X1-MM THK)	
	7	1	*148-8353*	4	ELBOW AS	
					(EACH INCLUDES)	
		1	**3J-1907**	1	SEAL-O-RING	
		1	**6V-8397**	1	SEAL-O-RING	
		1	**6V-9001**	1	ELBOW	
	8	1	*148-8413*	2	REDUCER AS	
					(EACH INCLUDES)	
		1	**4J-5477**	1	SEAL-O-RING	
		1	**6V-8934**	1	REDUCER AS	
	9	1	**5P-9297**	11	CLIP	
	10	1	**6V-8397**	4	SEAL-O-RING	
	11	1	**6V-9828**	2	CAP AS	
M	12	1	**8T-0285**	8	SCREW-MACHINE (M4X0.7X12-MM)	
M	13	1	**8T-3490**	1	NUT-WELD (M10X1.5-THD)	
M	14	1	**8T-3851**	1	BOSS-WELD (M10X1.5X17.5-MM)	
	15	1	**8T-4121**	9	WASHER-HARD (11X21X2.5-MM THK)	
M	16	1	**8T-4137**	9	BOLT (M10X1.5X20-MM)	

M-METRIC PART
Y-SEPARATE ILLUSTRATION

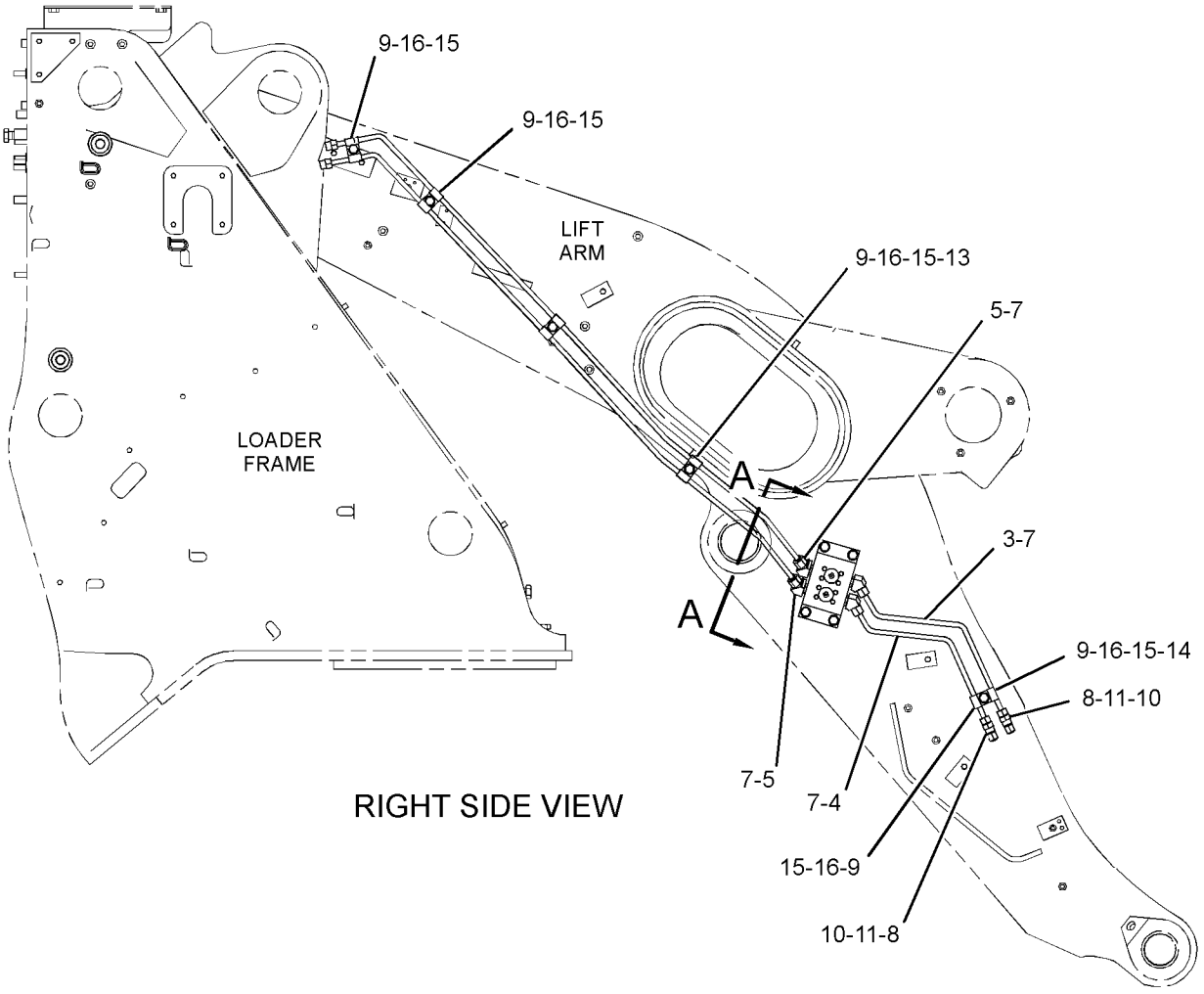

RIGHT SIDE VIEW

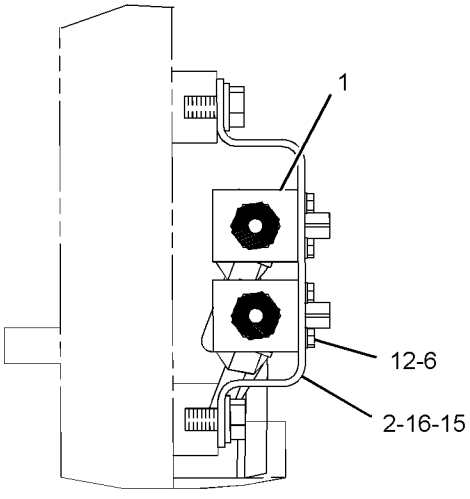

SECTION A-A

GRAPHIC #1 **<END>** g01220731

HYDRAULIC SYSTEM

238-4436 LINES GP-FRONT

S/N: M3G1-UP
PART OF 237-0269, 244-3825 HYDRAULIC AR-3 VALVE
AN ATTACHMENT

SMCS-5057 **i02306018**

NOTE	REF NO	GRAPHIC REF	PART NUMBER	QTY	PART NAME 1 2 3 4 5 6 (PRODUCT LEVEL)	SEE PAGE
	1	1	**5H-4020**	2	COVER	
	2	1	**6V-0852**	2	CAP-DUST	
	3	1	**197-3295**	12	FLANGE-HALF	
	4	1	**240-8253**	2	TUBE AS	
					(EACH INCLUDES)	
		1	**6V-0422**	2	PLUG	
	5	1	**240-8254**	1	TUBE AS	
	6	1	**240-8255**	1	TUBE AS	
I	7	1	**258-6598**	2	HOSE AS	
	8	1	*164-5567*	2	FITTING AS	
					(EACH INCLUDES)	
		1	**3J-1907**	1	SEAL-O-RING	
		1	**6V-3965**	1	FITTING AS (QUICK DISCONNECT)	
	9	1	**1P-3705**	2	SEAL-RECTANGULAR	
	10	1	**4J-0522**	6	SEAL-O-RING	
	11	1,2	**8S-0023**	8	CLIP (SLOT)	
	12	1,2	**8S-0024**	8	CLIP (TAB)	
M	13	1	**8T-4139**	6	BOLT (M12X1.75X30-MM)	
M	14	1	**8T-4183**	24	BOLT (M12X1.75X40-MM)	
M	15	2	**8T-4192**	2	BOLT (M12X1.75X25-MM)	
	16	1,2	**8T-4223**	40	WASHER-HARD (13.5X25.5X3-MM THK)	
M	17	2	**8T-4910**	8	BOLT (M12X1.75X60-MM)	

I-REFER TO HYDRAULIC INFORMATION SYSTEM
M-METRIC PART

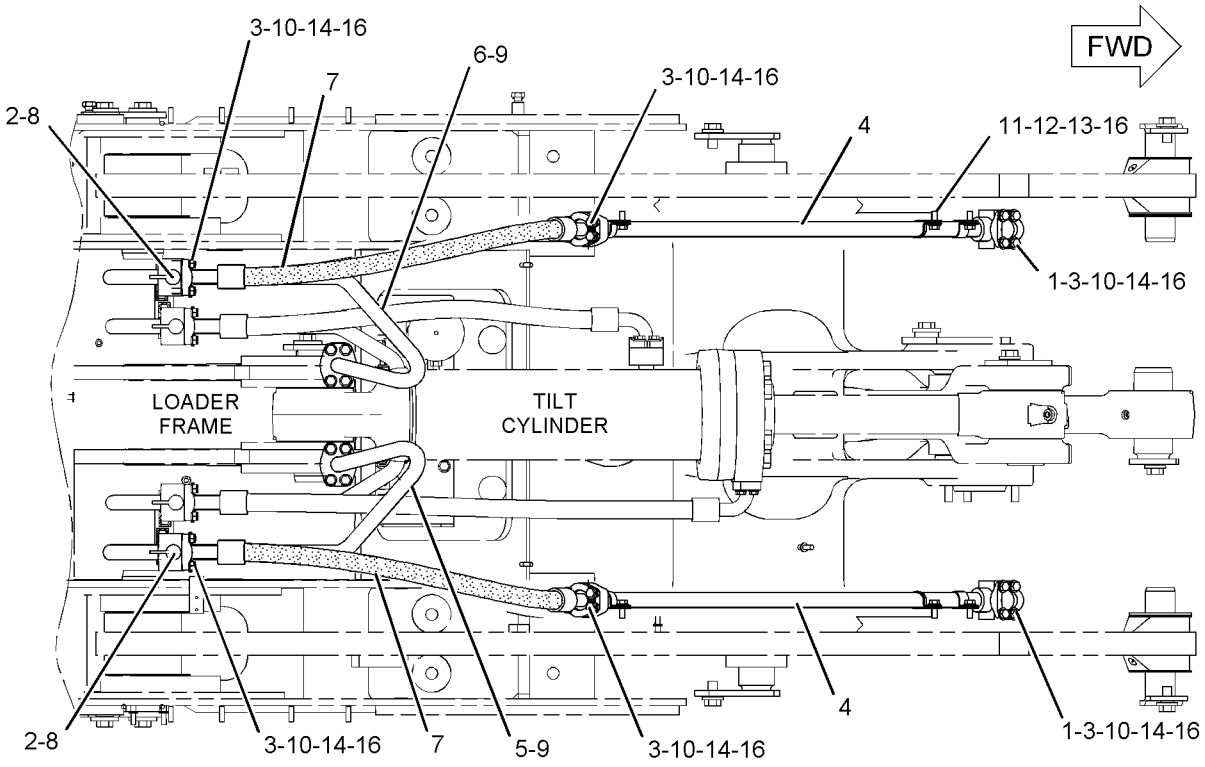

TOP VIEW

GRAPHIC #1 g01130272

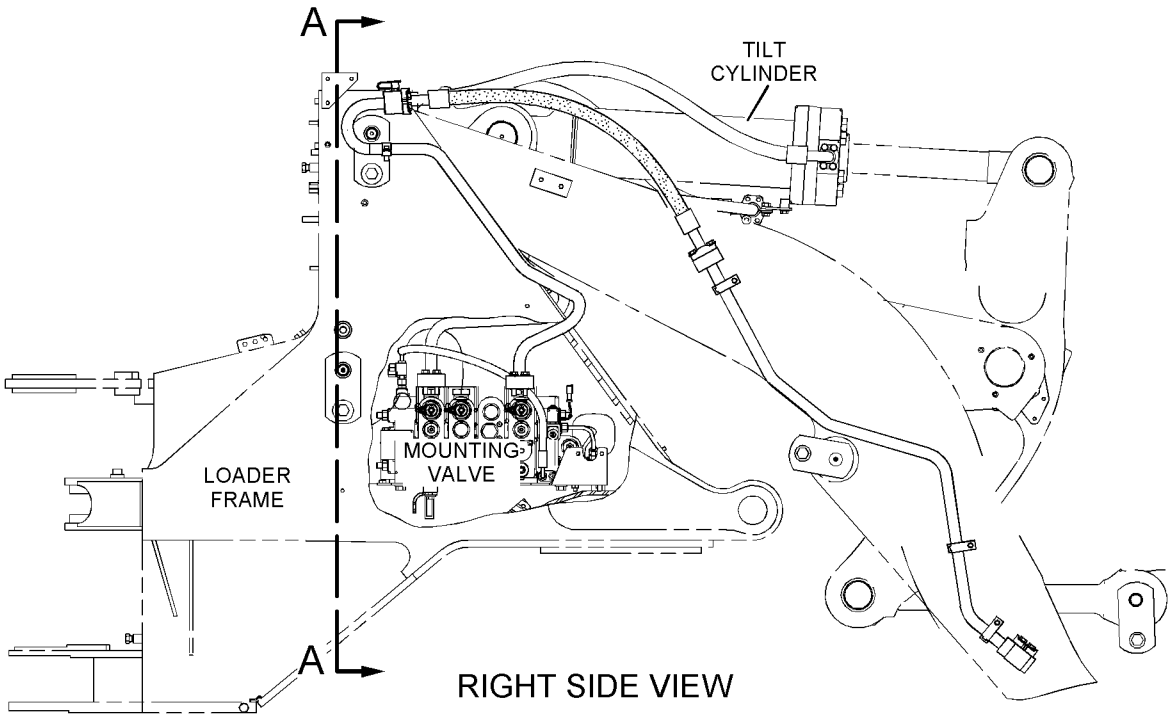

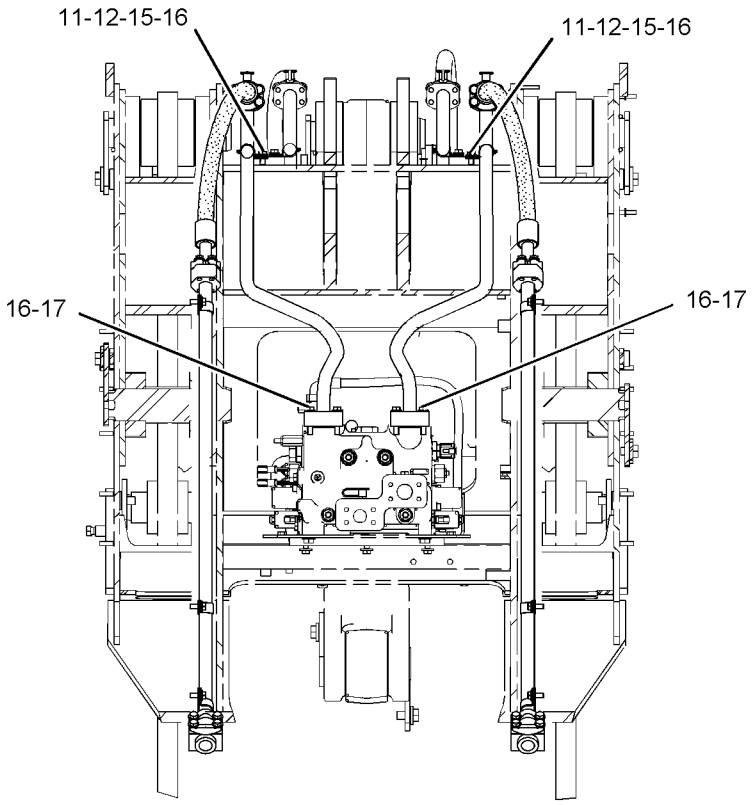

SECTION A-A

GRAPHIC #2 **<END>** g01130278

HYDRAULIC SYSTEM

237-0268 LINES GP-HYDRAULIC

S/N: M3G1-UP

PART OF 237-0238 HYDRAULIC AR-2 VALVE

SMCS-5057 **i02443786**

NOTE	REF NO	GRAPHIC REF	PART NUMBER	QTY	PART NAME 1 2 3 4 5 6 (PRODUCT LEVEL)	SEE PAGE
E	1	1	**7X-7893**		HOSE (13-CM)	
	2	1	**8T-6907**	1	VALVE GP-SHUTOFF	
	3	2	**9P-4898**	1	SPACER (12.7X19.05X19-MM THK)	
	4	2	*148-8424*	1	TEE AS	
		2	**6V-8397**	1	SEAL-O-RING	
		2	**8T-8902**	1	TEE	
I	5	1	**169-2932**	1	HOSE AS	
	6	1	*180-9286*	1	CONNECTOR GP	
		1	**3D-2824**	1	SEAL-O-RING	
		1	**3E-2345**	1	TEE-O-RING	
		1	**6V-9746**	1	SEAL-O-RING	
	7	1	*188-2008*	2	ELBOW AS	
					(EACH INCLUDES)	
		1	**3D-2824**	1	SEAL-O-RING	
		1	**5K-9090**	1	SEAL-O-RING	
		1	**8T-7970**	1	ELBOW	
I	8	1	**200-4257**	1	HOSE AS	
	9	1	**220-0814**	1	VALVE-BREAKER RELIEF (HYDRAULIC TANK)	
	10	1	*241-6209*	1	CROSS AS	
		1	**5K-9090**	3	SEAL-O-RING	
		1	**117-5208**	1	CROSS	
I	11	1	**243-2532**	1	HOSE AS	
	12	2	**243-3720**	2	CLAMP	
	13	1	**243-4786**	1	TUBE AS	
I	14	1	**243-4787**	1	HOSE AS	
I	15	1	**243-4788**	1	HOSE AS	
I	16	1	**243-6531**	1	HOSE AS	
I	17	1	**243-6533**	1	HOSE AS	
I	18	1	**243-6535**	1	HOSE AS	
	19	1	**243-6537**	1	TUBE AS	
Y	20	1	**245-5943**	1	VALVE GP-DRAIN (ECOLOGY, HYDRAULIC)	569
	21	1	**246-8888**	1	ELBOW	
	22	2	**246-8889**	1	ELBOW	
I	23	1	**247-9897**	1	HOSE AS	
Y	24	2	**249-2334**	1	FILTER GP-OIL (HYDRAULIC CASE DRAIN)	497
I	25	1	**255-3613**	1	HOSE AS	
	26	1	**273-1751**	1	GUARD-HOSE	
	27	2	**273-3241**	1	BRACKET AS	
I	28	1	**273-3958**	1	HOSE AS	
	29	1	**273-9693**	1	BRACKET AS	
	30	1	**274-5872**	1	TUBE AS	
	31	1	**275-8880**	1	FLANGE	
	32	1	*148-8327*	1	CONNECTOR AS	
		1	**3D-2824**	1	SEAL-O-RING	
		1	**6V-8637**	1	CONNECTOR	
		1	**6V-9746**	1	SEAL-O-RING	
	33	1	*148-8336*	1	CONNECTOR AS	
		1	**3J-1907**	1	SEAL-O-RING	
		1	**6V-8397**	1	SEAL-O-RING	
		1	**6V-8636**	1	CONNECTOR	
	34	1	*148-8352*	3	ELBOW AS	
					(EACH INCLUDES)	
		1	**5K-9090**	1	SEAL-O-RING	
		1	**6V-9854**	1	ELBOW (SWIVEL)	
	35	2	*148-8357*	2	ELBOW AS	
					(EACH INCLUDES)	

237-0268 **LINES GP-HYDRAULIC** *(contd.)* **i02443786**

NOTE	REF NO	GRAPHIC REF	PART NUMBER	QTY	PART NAME 1 2 3 4 5 6 (PRODUCT LEVEL)	SEE PAGE
M		2	**8T-3612**	3	NUT-WELD (M8X1.25-THD)	
	36	2	*148-8366*	1	ELBOW GP	
		2	**6V-8397**	2	SEAL-O-RING	
		2	**6V-8987**	1	ELBOW	
	37	1	*148-8378*	1	ELBOW AS	
		1	**3J-1907**	1	SEAL-O-RING	
		1	**6V-8397**	1	SEAL-O-RING	
		1	**6V-8724**	1	ELBOW	
	38	2	*148-8380*	1	ELBOW AS	
		2	**6V-8398**	2	SEAL-O-RING	
		2	**6V-8988**	1	ELBOW	
	39	1	*148-8392*	1	ELBOW AS	
					(EACH INCLUDES)	
		1	**6V-9746**	1	SEAL-O-RING	
		1	**6V-9853**	1	ELBOW	
	40	2	*148-8455*	1	UNION AS	
		2	**6V-8997**	1	UNION	
		2	**6V-9746**	2	SEAL-O-RING	
	41	1	*150-4043*	1	CONNECTOR AS	
		1	**3J-1907**	1	SEAL-O-RING	
		1	**6V-8398**	1	SEAL-O-RING	
		1	**6V-9873**	1	CONNECTOR	
	42	1	*153-6248*	1	ADAPTER AS	
		1	**6V-8397**	1	SEAL-O-RING	
		1	**8T-6663**	1	ADAPTER-PORT	
	43	2	*164-5567*	1	FITTING AS	
		2	**3J-1907**	1	SEAL-O-RING	
		2	**6V-3965**	1	FITTING AS (QUICK DISCONNECT)	
	44	1	*164-5574*	1	TEE GP	
		1	**3D-2824**	1	SEAL-O-RING	
		1	**6V-8784**	1	TEE-FACE SEAL	
		1	**6V-9746**	2	SEAL-O-RING	
	45	1	*169-7394*	1	CONNECTOR AS	
		1	**3K-0360**	1	SEAL-O-RING	
		1	**5K-9090**	1	SEAL-O-RING	
		1	**8C-3370**	1	CONNECTOR	
	46	1	*171-6728*	1	ELBOW GP	
		1	**3K-0360**	1	SEAL-O-RING	
		1	**8T-0249**	1	ELBOW (SWIVEL)	
I	47	1	**187-5495**	1	HOSE AS	
I	48	1	**243-4626**	1	HOSE AS	
	49	1,2	**1P-3704**	2	SEAL-RECTANGULAR	
	50	2	**1P-3705**	1	SEAL-RECTANGULAR	
	51	1	**1P-4579**	8	FLANGE-HALF	
	52	1,2	**1P-5767**	4	FLANGE-HALF	
	53	2	**1S-0994**	2	CLIP	
	54	1	**2H-3931**	1	SEAL-O-RING	
	55	1	**2H-6338**	1	SEAL-O-RING	
	56	2	**2P-1293**	1	LOCKNUT (1-3/16-12-THD)	
	57	1	**3D-2824**	1	SEAL-O-RING	
	58	1	**4D-7388**	1	CLIP	
	59	1	**4J-0524**	4	SEAL-O-RING	
	60	1	**5D-0718**	1	CLIP	
	61	2	**5P-1076**	2	WASHER-HARD (13.5X30X4-MM THK)	
	62	2	**6D-4246**	1	CLIP	
	63	2	**6V-0852**	1	CAP-DUST	
	64	2	**6V-1875**	1	GROMMET	
	65	2	**6V-1889**	1	CLIP	
	66	2	**6V-9168**	1	NUT (11/16-16-THD)	

237-0268 **LINES GP-HYDRAULIC** *(contd.)* **i02443786**

NOTE	REF NO	GRAPHIC REF	PART NUMBER	QTY	PART NAME 1 2 3 4 5 6 (PRODUCT LEVEL)	SEE PAGE
	67	2	**6V-9169**	1	NUT-BULKHEAD (13/16-16-THD)	
	68	2	**7D-7233**	1	CLIP	
	69	1	**7K-1401**	1	CLIP	
	70	1	**7K-1402**	1	BRACKET	
	71	2	**7X-0599**	4	WASHER-HARD (13X20X2-MM THK)	
M	72	1	**7X-2543**	4	BOLT (M10X1.5X120-MM)	
	73	1,2	**8T-4121**	11	WASHER-HARD (11X21X2.5-MM THK)	
M	74	2	**8T-4133**	1	NUT (M10X1.5 THD)	
M	75	1,2	**8T-4137**	7	BOLT (M10X1.5X20-MM)	
M	76	1,2	**8T-4183**	14	BOLT (M12X1.75X40-MM)	
M	77	1	**8T-4192**	3	BOLT (M12X1.75X25-MM)	
M	78	1,2	**8T-4193**	10	BOLT (M16X2X50-MM)	
M	79	1,2	**8T-4194**	12	BOLT (M12X1.75X50-MM)	
	80	1,2	**8T-4223**	28	WASHER-HARD (13.5X25.5X3-MM THK)	
M	81	2	**8T-4910**	2	BOLT (M12X1.75X60-MM)	
M	82	2	**8T-4956**	2	BOLT (M12X1.75X35-MM)	
	83	1	**8T-4985**	2	CLAMP-HOSE	
	84	1,2	**9X-8257**	10	WASHER (17.5X30X3.5-MM THK)	

E-ORDER BY THE CENTIMETER
I-REFER TO HYDRAULIC INFORMATION SYSTEM
M-METRIC PART
Y-SEPARATE ILLUSTRATION

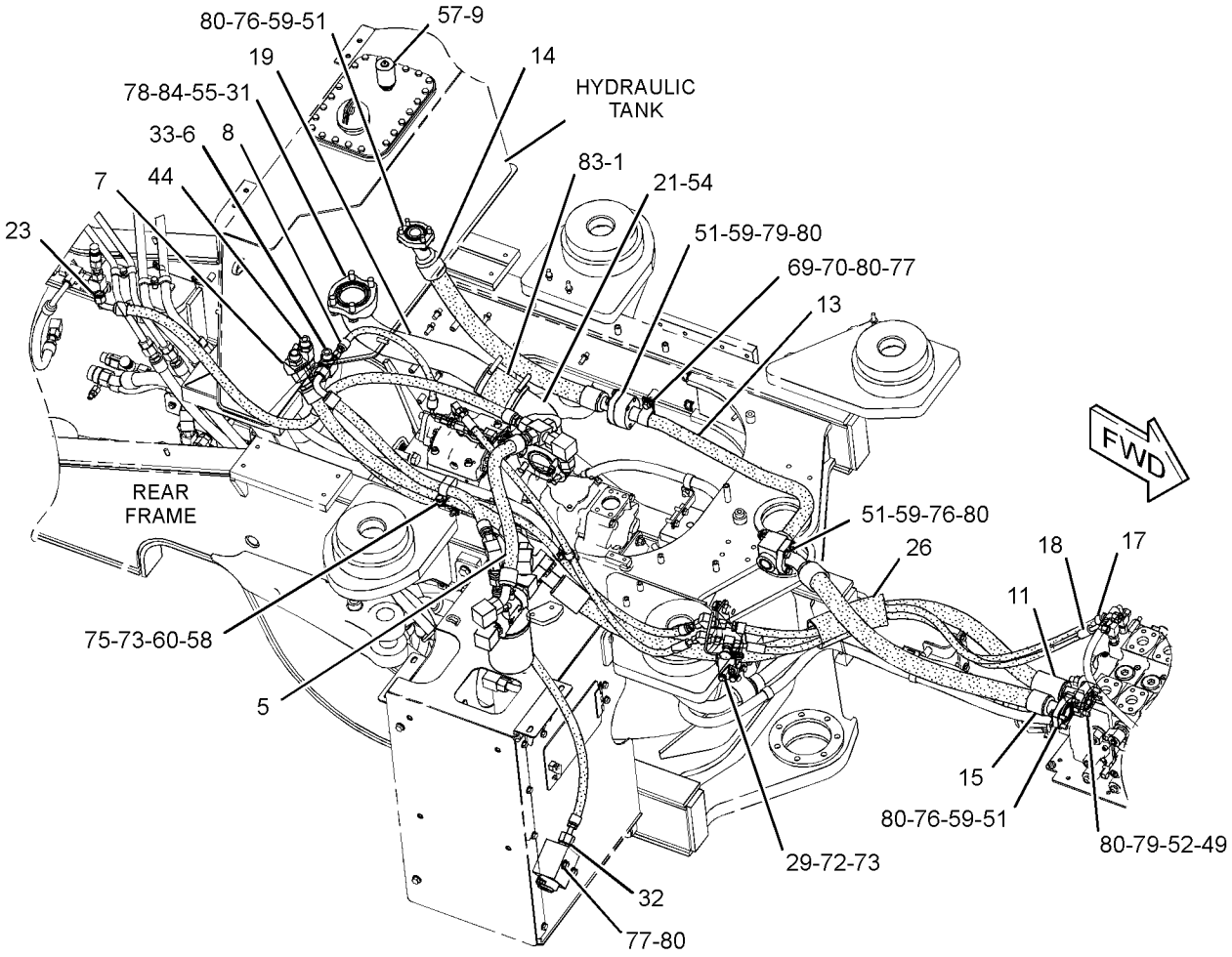

GRAPHIC #1 g01221435

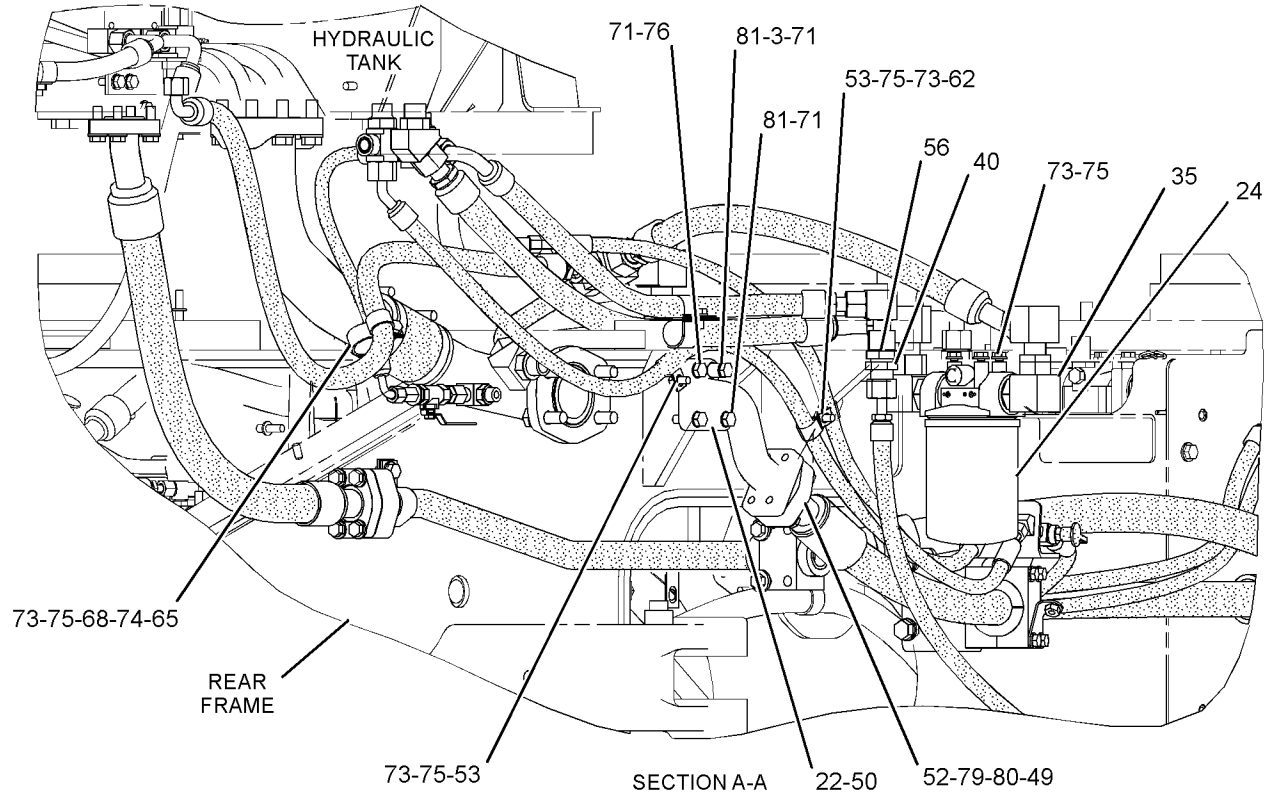

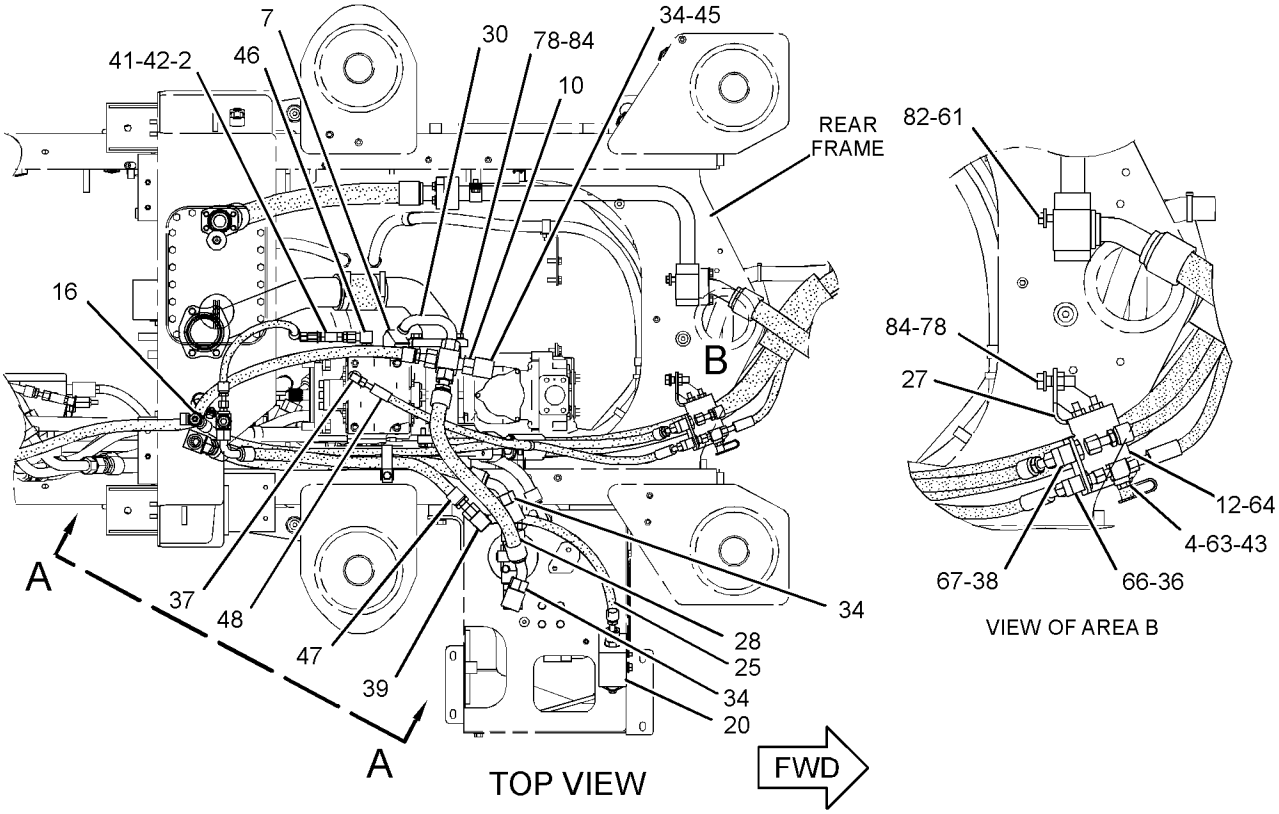

GRAPHIC #2 **<END>** g01221436

HYDRAULIC SYSTEM

237-0435 LINES GP-HYDRAULIC OIL COOLER

S/N: M3G1-UP

PART OF 237-4933 CHASSIS AR

SMCS-1374, 5057 **i02444645**

NOTE	REF NO	GRAPHIC REF	PART NUMBER	QTY	PART NAME 1 2 3 4 5 6 (PRODUCT LEVEL)	SEE PAGE
	1	1	**5D-2651**	1	CLIP	
	2	1	**6V-0852**	2	CAP-DUST	
	3	1	**7K-1181**	1	STRAP-CABLE	
	4	1	**8R-1496**	1	SPACER (10X20X29-MM THK)	
	5	1	**127-0366**	1	SPACER (11X32X24-MM THK)	
	6	1	*148-8430*	1	TEE AS	
		1	**6V-9746**	1	SEAL-O-RING	
		1	**7X-0873**	1	TEE	
	7	1	*148-8443*	1	TEE GP	
		1	**3J-1907**	1	SEAL-O-RING	
		1	**6V-8397**	1	SEAL-O-RING	
		1	**7X-2459**	1	TEE-O-RING	
	8	1	*150-3032*	1	ELBOW AS	
		1	**6V-9746**	1	SEAL-O-RING	
		1	**8C-8762**	1	ELBOW	
	9	1	**153-2995**	1	FITTING (QUICK DISCONNECT, MALE)	
	10	1	*161-1702*	1	TEE AS	
		1	**3J-1907**	1	SEAL-O-RING	
		1	**6V-8397**	1	SEAL-O-RING	
		1	**8T-2556**	1	TEE-FACE SEAL	
	11	1	**198-7651**	1	BRACKET AS	
	12	1	*241-2443*	1	ELBOW AS	
		1	**3J-1907**	1	SEAL-O-RING	
		1	**7J-9108**	1	SEAL-O-RING	
		1	**241-2451**	1	ELBOW	
Y	13	1	**242-1307**	1	MANIFOLD GP-CONTROL (BRAKE CHARGE, HYD FAN CONTROL)	522
I	14	1	**243-4673**	1	HOSE AS	
I	15	1	**243-6467**	1	HOSE AS	
	16	1	**243-6468**	1	TUBE AS	
I	17	1	**243-6512**	1	HOSE AS	
	18	1	**243-6711**	1	PLATE AS	
	19	1	**243-7258**	1	TUBE AS	
Y	20	1	**244-1031**	1	FILTER GP-OIL (HYDRAULIC)	496
	21	1	**244-1426**	1	VALVE GP-CHECK (HYDRAULIC OIL COOLER BYPASS)	
		1	**3D-2824**	1	SEAL-O-RING	
		1	**6V-9746**	1	SEAL-O-RING	
I	22	1	**247-5513**	1	HOSE AS	
I	23	1	**247-5572**	1	HOSE AS	
I	24	1	**247-9865**	1	HOSE AS	
I	25	1	**247-9906**	1	HOSE AS	
	26	1	**276-5695**	1	BRACKET	
	27	1	**276-5698**	1	TUBE AS	
I	28	1	**279-8860**	1	HOSE AS	
	29	1	*148-8322*	1	CONNECTOR GP	
		1	**2M-9780**	1	SEAL-O-RING	
		1	**6V-8640**	1	CONNECTOR	
		1	**6V-9746**	1	SEAL-O-RING	
	30	1	*148-8323*	1	CONNECTOR GP	
		1	**2S-4078**	1	SEAL-O-RING	
		1	**5K-9090**	1	SEAL-O-RING	
		1	**6V-9875**	1	CONNECTOR	
	31	1	*148-8326*	1	CONNECTOR AS	
		1	**3J-7354**	1	SEAL-O-RING	
		1	**6V-8397**	1	SEAL-O-RING	
		1	**6V-9872**	1	CONNECTOR	

237-0435 LINES GP-HYDRAULIC OIL COOLER *(contd.)* i02444645

NOTE	REF NO	GRAPHIC REF	PART NUMBER	QTY	PART NAME 1 2 3 4 5 6 (PRODUCT LEVEL)	SEE PAGE
	32	1	*148-8327*	4	CONNECTOR AS	
					(EACH INCLUDES)	
		1	**3D-2824**	1	SEAL-O-RING	
		1	**6V-8637**	1	CONNECTOR	
		1	**6V-9746**	1	SEAL-O-RING	
	33	1	*148-8347*	1	ELBOW AS	
		1	**3D-2824**	1	SEAL-O-RING	
		1	**6V-9007**	1	ELBOW	
		1	**6V-9746**	1	SEAL-O-RING	
	34	1	*148-8360*	2	ELBOW AS	
					(EACH INCLUDES)	
		1	**6V-9182**	1	ELBOW	
		1	**6V-9746**	1	SEAL-O-RING	
		1	**7M-8485**	1	SEAL-O-RING	
	35	1	*148-8367*	1	ELBOW AS	
		1	**6V-8397**	1	SEAL-O-RING	
		1	**6V-9850**	1	ELBOW	
	36	1	*148-8376*	1	ELBOW AS	
		1	**6V-8983**	1	ELBOW	
		1	**6V-9746**	2	SEAL-O-RING	
	37	1	*148-8378*	1	ELBOW AS	
		1	**3J-1907**	1	SEAL-O-RING	
		1	**6V-8397**	1	SEAL-O-RING	
		1	**6V-8724**	1	ELBOW	
	38	1	*148-8392*	3	ELBOW AS	
					(EACH INCLUDES)	
		1	**6V-9746**	1	SEAL-O-RING	
		1	**6V-9853**	1	ELBOW	
	39	1	*148-8393*	1	ELBOW GP	
		1	**6V-9852**	1	ELBOW (SWIVEL)	
		1	**7J-9108**	1	SEAL-O-RING	
	40	1	*148-8413*	1	REDUCER AS	
		1	**4J-5477**	1	SEAL-O-RING	
		1	**6V-8934**	1	REDUCER AS	
	41	1	*148-8446*	1	TEE GP-SWIVEL	
		1	**6V-9838**	1	TEE-SWIVEL	
		1	**7J-9108**	2	SEAL-O-RING	
	42	1	*148-8455*	1	UNION AS	
		1	**6V-8997**	1	UNION	
		1	**6V-9746**	2	SEAL-O-RING	
	43	1	*150-4033*	1	TEE AS	
		1	**6V-9746**	2	SEAL-O-RING	
		1	**6V-9846**	1	TEE-SWIVEL	
	44	1	*150-4048*	1	ELBOW AS	
		1	**3K-0360**	1	SEAL-O-RING	
		1	**6V-8722**	1	ELBOW	
		1	**7J-9108**	1	SEAL-O-RING	
	45	1	*153-6237*	1	ELBOW AS	
		1	**3D-2824**	1	SEAL-O-RING	
		1	**6V-9004**	1	ELBOW	
		1	**6V-9746**	1	SEAL-O-RING	
	46	1	*153-6245*	1	ELBOW GP	
		1	**2M-9780**	1	SEAL-O-RING	
		1	**6V-8398**	1	SEAL-O-RING	
		1	**136-6811**	1	ELBOW	
	47	1	*153-6248*	1	ADAPTER AS	
		1	**6V-8397**	1	SEAL-O-RING	
		1	**8T-6663**	1	ADAPTER-PORT	

237-0435 LINES GP-HYDRAULIC OIL COOLER *(contd.)* i02444645

NOTE	REF NO	GRAPHIC REF	PART NUMBER	QTY	PART NAME 1 2 3 4 5 6 (PRODUCT LEVEL)	SEE PAGE
	48	1	*164-5567*	2	FITTING AS	
					(EACH INCLUDES)	
		1	**3J-1907**	1	SEAL-O-RING	
		1	**6V-3965**	1	FITTING AS (QUICK DISCONNECT)	
	49	1	*164-6860*	1	TEE AS	
		1	**6V-9350**	1	TEE-BULKHEAD	
		1	**7J-9108**	3	SEAL-O-RING	
	50	1	*171-6723*	1	ELBOW AS	
		1	**6V-9746**	1	SEAL-O-RING	
		1	**8T-8899**	1	ELBOW	
	51	1	**198-4777**	1	WASHER-HARD (11X25X10-MM THK)	
I	52	1	**246-1708**	1	HOSE AS	
I	53	1	**254-7032**	1	HOSE AS	
	54	1	**1P-4578**	2	FLANGE-HALF	
	55	1	**2M-9780**	1	SEAL-O-RING	
	56	1	**2P-1293**	2	LOCKNUT (1-3/16-12-THD)	
	57	1	**3P-2404**	5	CLIP	
	58	1	**3R-2360**	1	CLIP	
	59	1	**4D-7786**	2	WASHER (1.281X3.25X0.19-IN THK)	
	60	1	**4J-0522**	1	SEAL-O-RING	
	61	1	**5D-0718**	2	CLIP	
	62	1	**5P-4116**	1	WASHER-HARD (8.8X20.5X2-MM THK)	
	63	1	**6D-4244**	1	CLIP	
	64	1	**6D-4246**	1	CLIP	
	65	1	**6V-1889**	6	CLIP	
	66	1	**6V-9170**	1	NUT-BULKHEAD (1-14-THD)	
M	67	1	**7X-2543**	2	BOLT (M10X1.5X120-MM)	
	68	1	**7X-3165**	1	ADAPTER AS-SWIVEL	
	69	1	**7X-7729**	5	WASHER (11X25X3-MM THK)	
	70	1	**8T-4121**	21	WASHER-HARD (11X21X2.5-MM THK)	
M	71	1	**8T-4122**	2	WASHER-HARD (17X32X3.5-MM THK)	
M	72	1	**8T-4132**	1	NUT (M16X2-THD)	
M	73	1	**8T-4133**	2	NUT (M10X1.5 THD)	
M	74	1	**8T-4136**	8	BOLT (M10X1.5X25-MM)	
M	75	1	**8T-4137**	6	BOLT (M10X1.5X20-MM)	
M	76	1	**8T-4186**	1	BOLT (M10X1.5X40-MM)	
M	77	1	**8T-4195**	3	BOLT (M10X1.5X30-MM)	
M	78	1	**8T-4196**	4	BOLT (M10X1.5X35-MM)	
	79	1	**8T-4226**	1	WASHER-PLATED (10.5X45X3-MM THK)	
M	80	1	**8T-4779**	1	BOLT (M16X2X35-MM)	
M	81	1	**8T-6466**	1	BOLT (M10X1.5X60-MM)	
M	82	1	**8T-6869**	1	BOLT (M8X1.25X60-MM)	

I-REFER TO HYDRAULIC INFORMATION SYSTEM
M-METRIC PART
Y-SEPARATE ILLUSTRATION

237-0435 **LINES GP-HYDRAULIC OIL COOLER** *(contd.)* **i02444645**

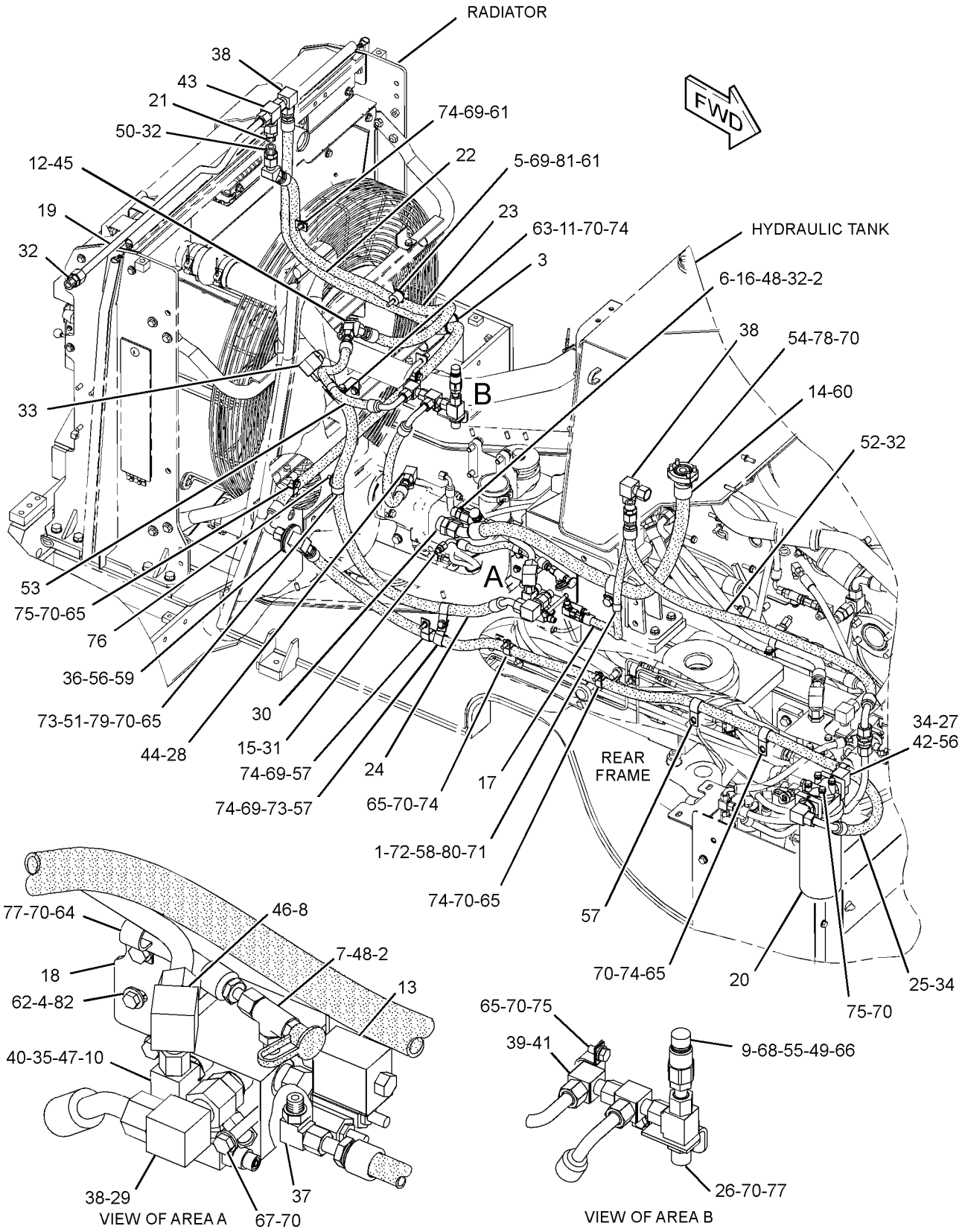

GRAPHIC #1 **<END>** g01221408

HYDRAULIC SYSTEM

237-0951 LINES GP-LIFT CYLINDER

S/N: M3G1-UP

PART OF 237-0238 HYDRAULIC AR-2 VALVE

SMCS-5057, 5102 **i02449541**

NOTE	REF NO	GRAPHIC REF	PART NUMBER	QTY	PART NAME 1 2 3 4 5 6 (PRODUCT LEVEL)	SEE PAGE
	1	1	**241-1485**	1	TUBE AS	
	2	1	**241-1495**	1	TUBE AS	
	3	1	**241-1504**	1	TUBE AS	
	4	1	**241-1512**	1	TUBE AS	
	5	1	**241-1541**	2	BRACKET	
	6	1	**272-0145**	1	TUBE AS	
	7	1	**272-0146**	1	TUBE AS	
	8	1	**272-0147**	1	TUBE AS	
	9	1	**272-0148**	1	TUBE AS	
	10	1	**272-0149**	1	BRACKET AS	
		1	**090-8247**	2	BLOCK	
	11	1	**272-0151**	1	BRACKET AS	
		1	**090-8247**	2	BLOCK	
I	12	1	**272-0153**	1	HOSE AS	
I	13	1	**272-0154**	1	HOSE AS	
I	14	1	**272-0155**	1	HOSE AS	
I	15	1	**272-0156**	1	HOSE AS	
	16	1	**1P-3703**	4	SEAL-RECTANGULAR	
	17	1	**1P-3705**	4	SEAL-RECTANGULAR	
	18	1	**4J-5267**	8	SEAL-O-RING	
	19	1	**8C-3205**	16	FLANGE-HALF	
	20	1	**8T-1889**	4	CLIP (SLOT)	
	21	1	**8T-1890**	4	CLIP (TAB)	
	22	1	**8T-4121**	60	WASHER-HARD (11X21X2.5-MM THK)	
M	23	1	**8T-4136**	12	BOLT (M10X1.5X25-MM)	
M	24	1	**8T-4185**	4	BOLT (M10X1.5X50-MM)	
M	25	1	**8T-4196**	32	BOLT (M10X1.5X35-MM)	
	26	1	**8T-4223**	16	WASHER-HARD (13.5X25.5X3-MM THK)	
M	27	1	**8T-4910**	16	BOLT (M12X1.75X60-MM)	
M	28	1	**8T-6466**	12	BOLT (M10X1.5X60-MM)	

I-REFER TO HYDRAULIC INFORMATION SYSTEM
M-METRIC PART

237-0951 **LINES GP-LIFT CYLINDER** *(contd.)* **i02449541**

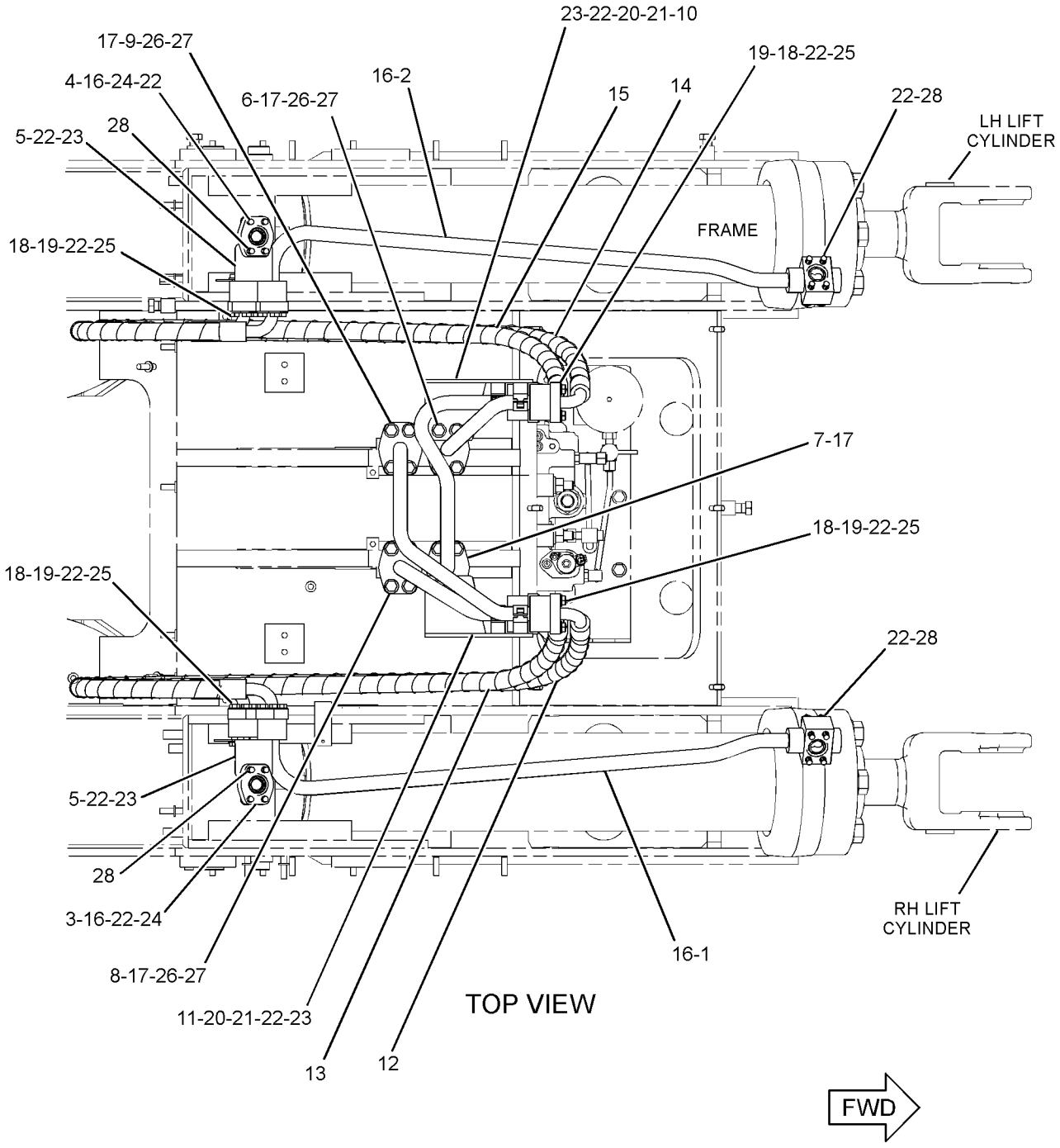

GRAPHIC #1 **<END>** g01224469

HYDRAULIC SYSTEM

237-0952 LINES GP-TILT CYLINDER

S/N: M3G1-UP

PART OF 237-0238 HYDRAULIC AR-2 VALVE

SMCS-5057, 5104 **i02449347**

NOTE	REF NO	GRAPHIC REF	PART NUMBER	QTY	PART NAME 1 2 3 4 5 6 (PRODUCT LEVEL)	SEE PAGE
	1	1	**6V-0852**	2	CAP-DUST	
	2	1	**197-3295**	6	FLANGE-HALF	
I	3	1	**240-8245**	1	HOSE AS	
I	4	1	**240-8246**	1	HOSE AS	
	5	1	**240-8248**	1	TUBE AS	
	6	1	**240-8249**	1	TUBE AS	
	7	1	**240-8250**	1	TUBE AS	
	8	1	**254-3571**	1	BRACKET AS	
	9	1	*164-5567*	2	FITTING AS	
					(EACH INCLUDES)	
		1	**3J-1907**	1	SEAL-O-RING	
		1	**6V-3965**	1	FITTING AS (QUICK DISCONNECT)	
	10	1	**1P-3704**	1	SEAL-RECTANGULAR	
	11	1	**1P-3705**	2	SEAL-RECTANGULAR	
	12	1	**8C-3206**	2	FLANGE-HALF	
	13	1	**4J-0520**	1	SEAL-O-RING	
	14	1	**4J-0522**	3	SEAL-O-RING	
	15	1	**8K-4691**	2	CLAMP-HALF	
	16	1	**8S-0023**	2	CLIP (SLOT)	
	17	1	**8S-0024**	2	CLIP (TAB)	
	18	1	**8T-4121**	8	WASHER-HARD (11X21X2.5-MM THK)	
M	19	1	**8T-4139**	4	BOLT (M12X1.75X30-MM)	
M	20	1	**8T-5005**	4	BOLT (M10X1.5X70-MM)	
M	21	1	**8T-4183**	8	BOLT (M12X1.75X40-MM)	
M	22	1	**8T-4186**	4	BOLT (M10X1.5X40-MM)	
M	23	1	**8T-4192**	2	BOLT (M12X1.75X25-MM)	
	24	1	**8T-4223**	18	WASHER-HARD (13.5X25.5X3-MM THK)	
M	25	1	**8T-4910**	8	BOLT (M12X1.75X60-MM)	
M	26	1	**8T-4956**	4	BOLT (M12X1.75X35-MM)	
	27	1	**7X-3392**	8	WASHER-HARD (13.5X22.5X3-MM THK)	

I-REFER TO HYDRAULIC INFORMATION SYSTEM
M-METRIC PART

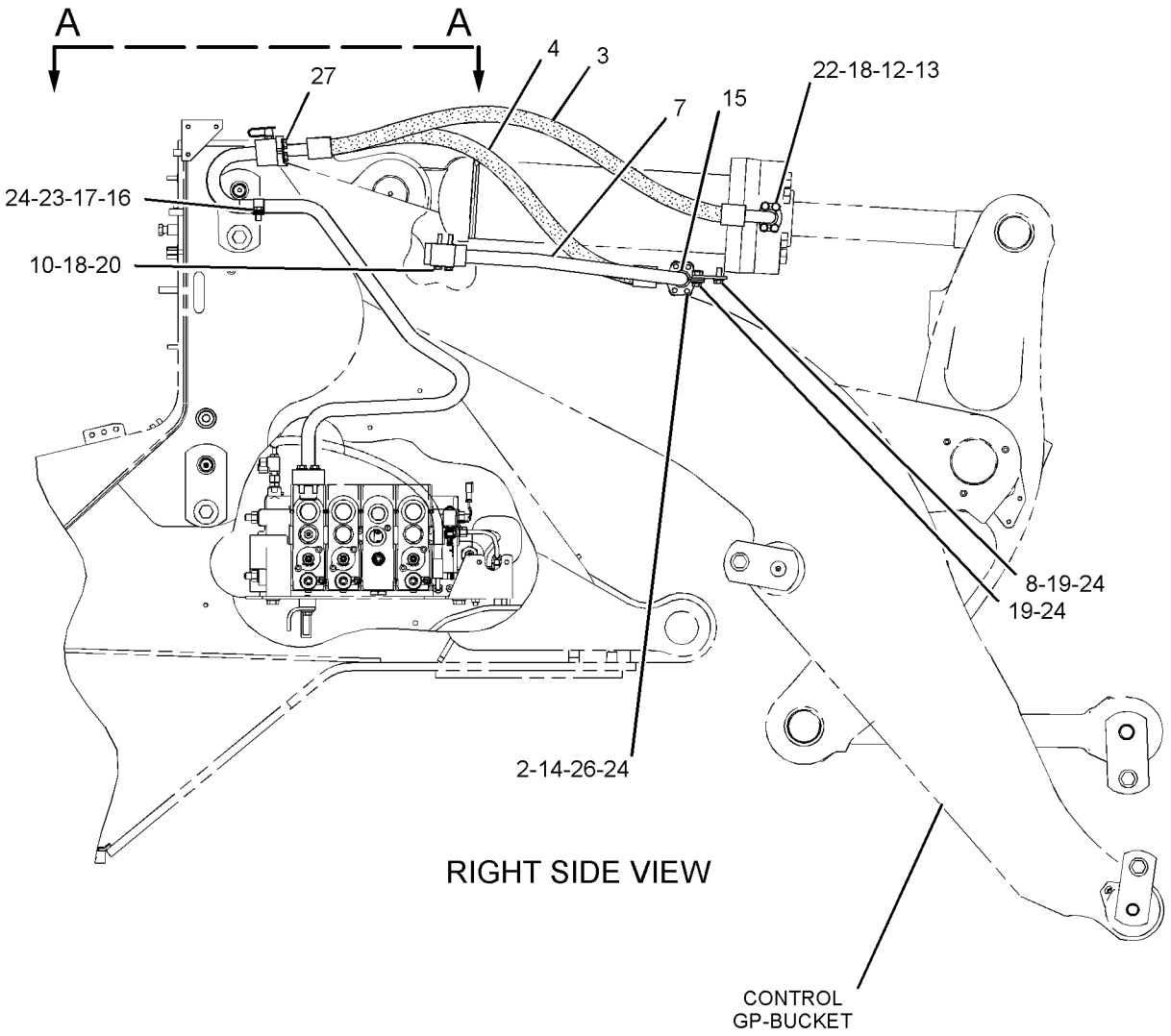

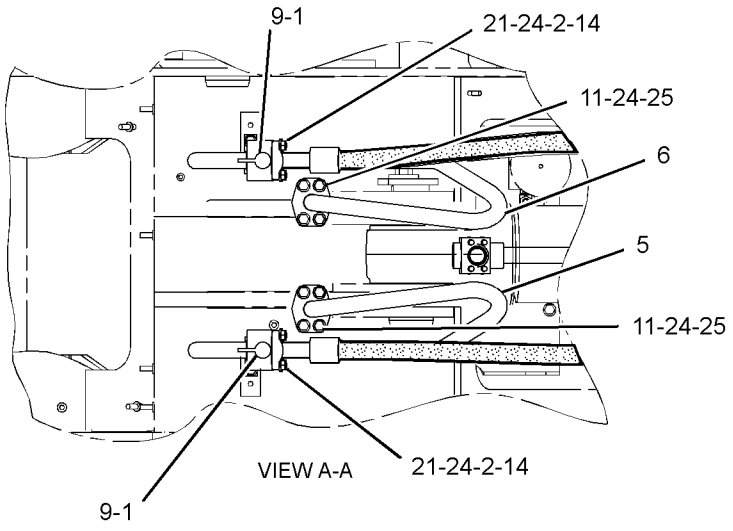

GRAPHIC #1 **<END>** g01199393

HYDRAULIC SYSTEM

242-1307 MANIFOLD GP-CONTROL–
BRAKE CHARGE, HYD FAN CONTROL
S/N: M3G1-UP

PART OF 237-0435 LINES GP-HYDRAULIC OIL COOLER

SMCS-4264, 5072, 5264, 5467, 5479 **i02305330**

NOTE	REF NO	GRAPHIC REF	PART NUMBER	QTY	PART NAME 1 2 3 4 5 6 (PRODUCT LEVEL)	SEE PAGE
Y	1	1	**252-9256**	1	VALVE GP-DIVERTER (HYDRAULIC FAN)	568
Y	2	1	**158-9956**	1	VALVE GP-CHECK (BRAKE OIL)	555
J	3	1	**239-0621**	1	VALVE GP-DIVERTER (HYDRAULIC TANK)	
	4	1	**256-9997**	1	VALVE GP-RELIEF (HYDRAULIC TANK)	
		1	**3K-0360**	1	SEAL-O-RING	
		1	**161-6154**	1	SEAL-O-RING	
		1	**6E-0381**	1	RING-BACKUP	
H	5	1	**245-8355**	1	VALVE GP-RELIEF (BRAKE)	
H		1	**2M-9780**	1	SEAL-O-RING	
H		1	**161-6149**	1	SEAL-O-RING	
H		1	**161-6161**	2	RING-BACKUP	
Y	6	1	**249-5227**	1	VALVE GP-SHUTTLE (BRAKE ACCUMULATOR)	589
L	7	1	**239-0618**	1	VALVE GP-SHUTTLE (BRAKE, HYDRAULIC FAN)	
L		1	**3H-0442**	1	SEAL-O-RING	
Y	8	1	**183-7595**	1	VALVE GP-SOLENOID (24-VOLT) (BRAKE, HYDRAULIC FAN)	592
	9	1	**6E-5066**	1	SCREEN (CONTROL VALVE MANIFOLD)	
	10	1	**246-0535**	1	PLUG-ORIFICE	
	11	1	**9S-8001**	2	PLUG	
	12	1	**9S-8004**	1	PLUG	
	13	1	**4J-7533**	2	SEAL-O-RING	
	14	1	**3J-1907**	2	SEAL-O-RING	
					AVAILABLE REPAIR KIT(S):	
J			**200-6282**	1	KIT-SEAL (DIVERTER VALVE)	
					(INCLUDES SEALS & RINGS)	
H			**133-5545**	1	KIT-SEAL (RELIEF VALVE)	
					(INCLUDES SEALS & RINGS)	
L			**239-5195**	1	KIT-SEAL (SHUTTLE VALVE)	
					(INCLUDES SEALS & RINGS)	

H-KIT MARKED H SERVICES PARTS MARKED H
J-KIT MARKED J SERVICES PARTS MARKED J
L-KIT MARKED L SERVICES PARTS MARKED L
Y-SEPARATE ILLUSTRATION

242-1307 MANIFOLD GP-CONTROL *(contd.)* **i02305330**

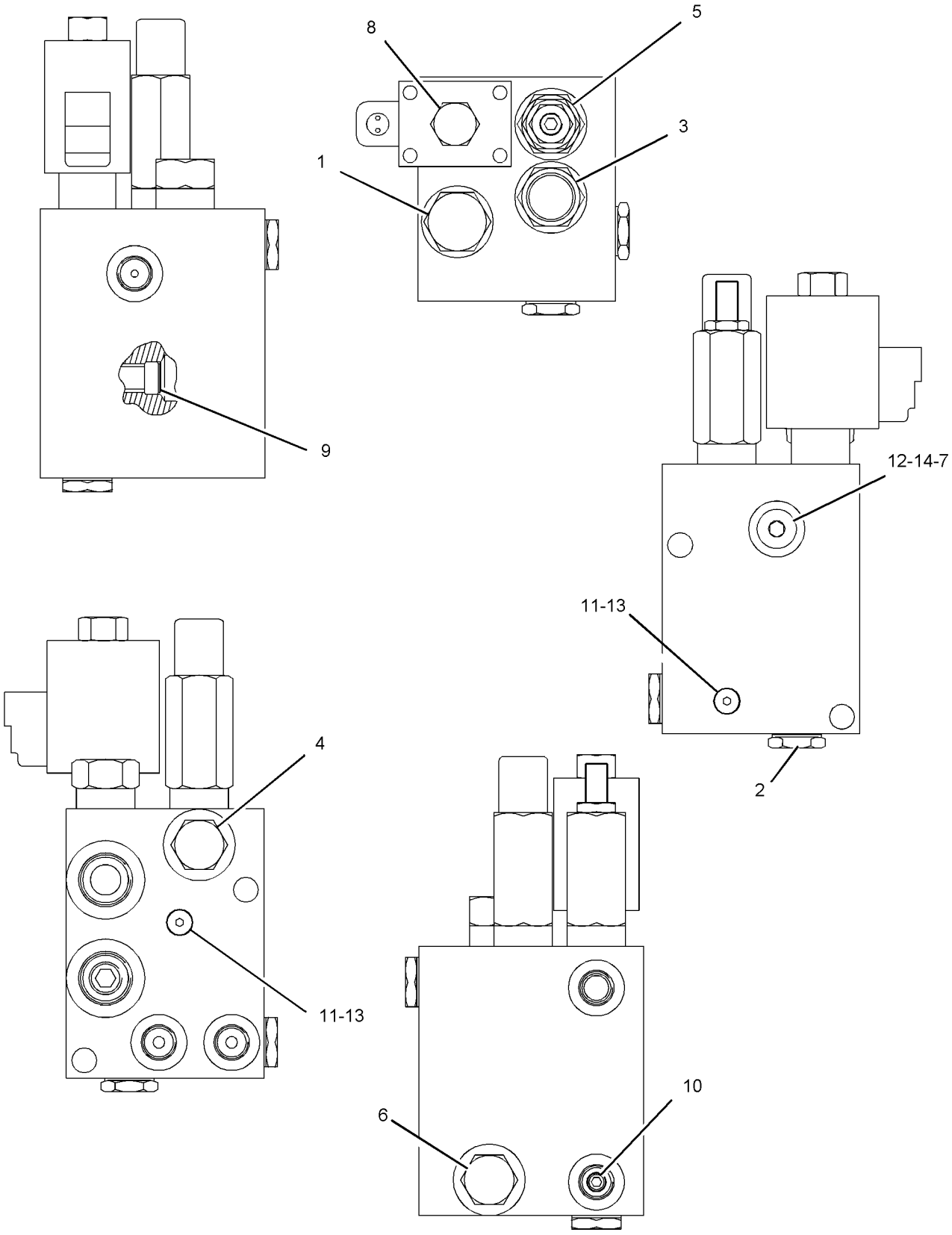

GRAPHIC #1 **<END>** g01133789

269-9398 MANIFOLD GP-VALVE—END COVER

S/N: M3G1-UP

PART OF 261-3682, 261-3683, 261-4171, 261-4172 VALVE GP-MAIN CONTROL

ALSO AN ATTACHMENT

SMCS-5264 **i02441657**

NOTE	REF NO	GRAPHIC REF	PART NUMBER	QTY	PART NAME 1 2 3 4 5 6 (PRODUCT LEVEL)	SEE PAGE
	1	1	**4J-9535**	2	SEAL-O-RING	
	2	1	**6E-5066**	1	SCREEN	
L	3	1	**225-0300**	1	VALVE GP-SOLENOID (HYDRAULIC LOCKOUT)	
H	4	1	**235-6163**	1	VALVE GP-PRESSURE REDUCING	
	5	1	**6J-3134**	4	SEAL-O-RING	
J	6	1	**254-5789**	1	VALVE GP-RELIEF (PUMP MARGIN PRESSURE)	
M	7	1	**8T-1158**	1	BOLT-SOCKET HEAD (M8X1.25X20-MM)	
	8	1	*148-8395*	1	PLUG AS	
		1	**3K-0360**	1	SEAL-O-RING	
		1	**9S-8005**	1	PLUG-O RING	
Y	9	1	**158-9956**	1	VALVE GP-CHECK (PILOT OIL)	555
	10	1	*162-0177*	5	PLUG AS	
					(EACH INCLUDES)	
		1	**3J-1907**	1	SEAL-O-RING	
		1	**9S-8004**	1	PLUG	
	11	1	*173-3993*	16	PLUG AS	
					(EACH INCLUDES)	
		1	**4J-7533**	1	SEAL-O-RING	
		1	**9S-8001**	1	PLUG	
	12	1	*183-7263*	2	PLUG AS	
					(EACH INCLUDES)	
		1	**3J-7354**	1	SEAL-O-RING	
		1	**9S-8002**	1	PLUG	
	13	1	**1P-3705**	1	SEAL-RECTANGULAR	
	14	1	**4J-0524**	2	SEAL-O-RING	
Z	15	1		1	COVER-MANIFOLD	
					AVAILABLE REPAIR KIT(S):	
H			**224-7135**	1	KIT-SEAL	
					(INCLUDES RINGS AND SEALS)	
J			**239-6336**	1	KIT-SEAL	
					(INCLUDES RINGS AND SEALS)	
L			**200-2371**	1	KIT-SEAL	
					(INCLUDES RINGS AND SEALS)	

H-KIT MARKED H SERVICES PART MARKED H
J-KIT MARKED J SERVICES PART MARKED J
L-KIT MARKED L SEVICES PART MARKED L
M-METRIC PART
Y-SEPARATE ILLUSTRATION
Z-NOT SERVICED SEPARATELY

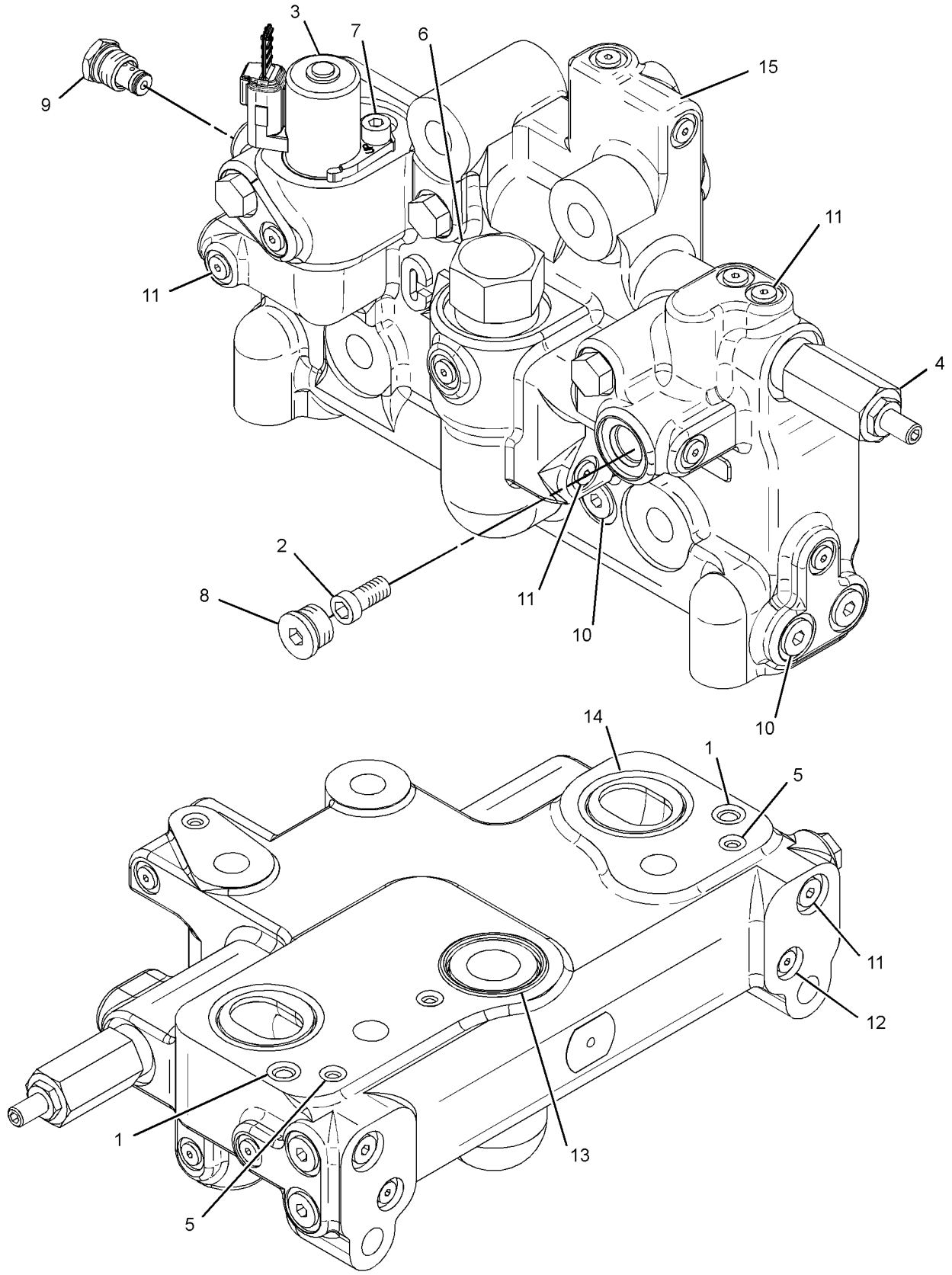

GRAPHIC #1 **<END>** g01223257

HYDRAULIC SYSTEM

271-9248 MANIFOLD GP-VALVE—INLET

S/N: M3G1-UP

PART OF 261-3682, 261-3683, 261-4171, 261-4172 VALVE GP-MAIN CONTROL

ALSO AN ATTACHMENT

SMCS-5264 **i02441653**

NOTE	REF NO	GRAPHIC REF	PART NUMBER	QTY	PART NAME 1 2 3 4 5 6 (PRODUCT LEVEL)	SEE PAGE
	1	1	**1T-0936**	1	PLUG-PIPE	
	3	1	**6E-5066**	1	SCREEN	
Y	4	1	**193-1665**	1	VALVE GP-PRESSURE REDUCING	580
	5	1	**247-8632**	1	VALVE GP-RELIEF (MAIN, LOAD SENSING)	
		1	**225-9611**		KIT-SEAL (RELIEF VALVE)	
					(INCLUDES SEAL-O-RINGS AND RING-BACKUPS)	
	8	1	*148-8395*	1	PLUG AS	
	8A	1	**3K-0360**	1	SEAL-O-RING	
	8B	1	**9S-8005**	1	PLUG-O RING	
	9	1	*162-0177*	1	PLUG AS	
	9A	1	**3J-1907**	1	SEAL-O-RING	
	9B	1	**9S-8004**	1	PLUG	
	10	1	*173-3993*	6	PLUG AS	
					(EACH INCLUDES)	
	10A	1	**4J-7533**	1	SEAL-O-RING	
	10B	1	**9S-8001**	1	PLUG	

Y-SEPARATE ILLUSTRATION

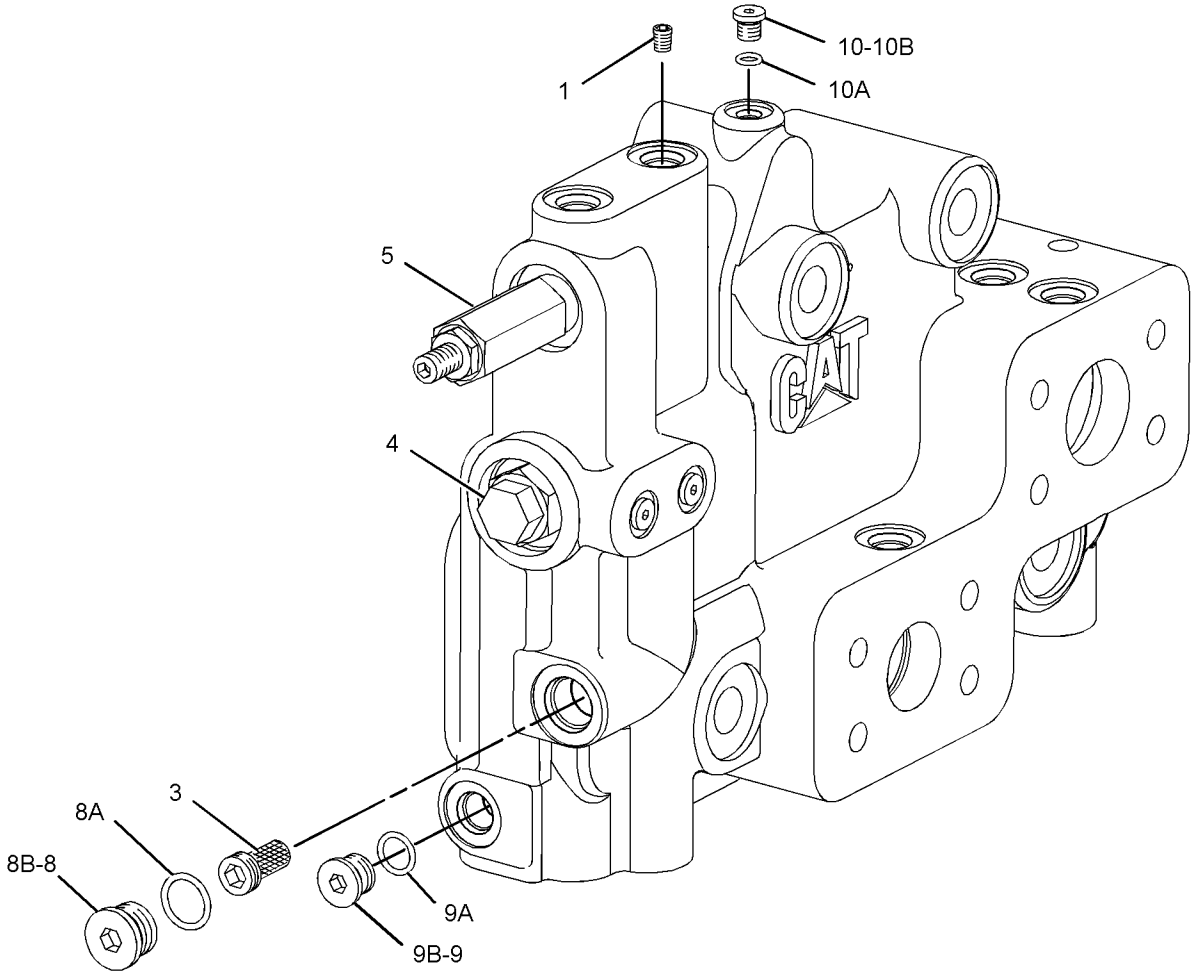

GRAPHIC #1 **<END>** g01224078

246-6152 MOTOR GP-GEAR–HYDRAULIC FAN

S/N: M3G1-UP

PART OF 237-0443 RADIATOR & FAN GP

SMCS-1386, 5061 **i02232153**

NOTE	REF NO	GRAPHIC REF	PART NUMBER	QTY	PART NAME 1 2 3 4 5 6 (PRODUCT LEVEL)	SEE PAGE
M	1	1	**136-9029**	4	BOLT	
	2	1	**136-9030**	4	WASHER (12.5X18X1.5-MM THK)	
J	3	1	**150-3378**	1	SEAL-SHAFT	
J	4	1	**096-0194**	1	RING-RETAINING	
	5	1	**9S-4191**	1	PLUG-O RING	
	6	1	**3J-1907**	1	SEAL-O-RING	
					AVAILABLE REPAIR KIT(S):	
J			**194-9632**	1	KIT-SEAL	
					(INCLUDES SEALS AND RINGS)	

J-KIT MARKED J SERVICES PARTS MARKED J
M-METRIC PART

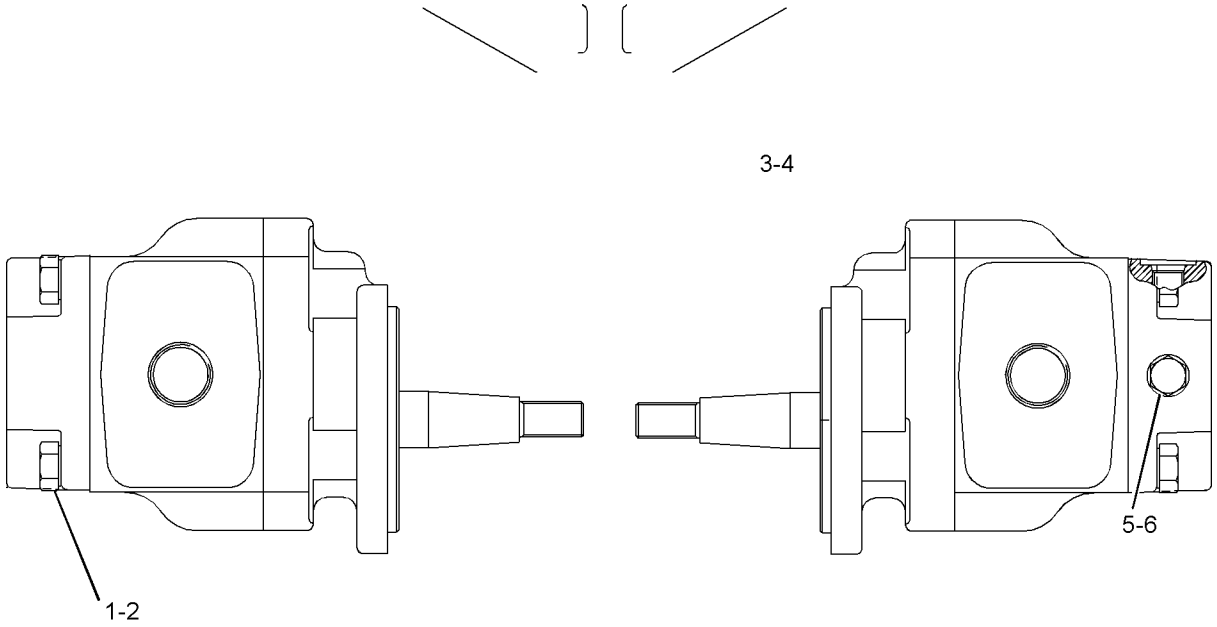

GRAPHIC #1 **<END>** g01126170

HYDRAULIC SYSTEM

228-8527 MOTOR GP-PISTON—AUTOMATIC REVERSING FAN*R

S/N: M3G1-UP

PART OF 243-7241 CONTROL & LINES GP-FAN

AN ATTACHMENT

SMCS-1386, 5058 **i02444921**

NOTE	REF NO	GRAPHIC REF	PART NUMBER	QTY	PART NAME 1 2 3 4 5 6 (PRODUCT LEVEL)	SEE PAGE
	1	1	**8T-9597**	1	RING-RETAINING	
	2	1	**185-0303**	1	SEAL-OIL	
	3	1	**155-9122**	1	SWASHPLATE	
Y	4	1	**233-2530**	1	ROTATING GP-MOTOR	539
	5	1	**231-4707**	1	SEAL-O-RING	
M	6	1	**8T-0341**	4	BOLT-SOCKET HEAD (M10X1.5X60-MM)	
	7	1	**204-2799**	1	DOWEL	
	8	1	**191-7583**	1	BEARING AS-ROLLER	
B	9	1	**191-7582**	1	SHIM (2.5-MM THK)	
	10	1	**101-2862**	2	DOWEL	
	11	1	**9S-8005**	1	PLUG-O RING	
	12	1	**155-9125**	1	BEARING AS-ROLLER	
	13	1	**269-7515**	1	SHAFT-DRIVE	
	14	1	**194-9473**	1	RING	
	15	1	**3K-0360**	1	SEAL-O-RING	

B-USE AS REQUIRED
M-METRIC PART
Y-SEPARATE ILLUSTRATION

228-8527 MOTOR GP-PISTON *(contd.)* **i02444921**

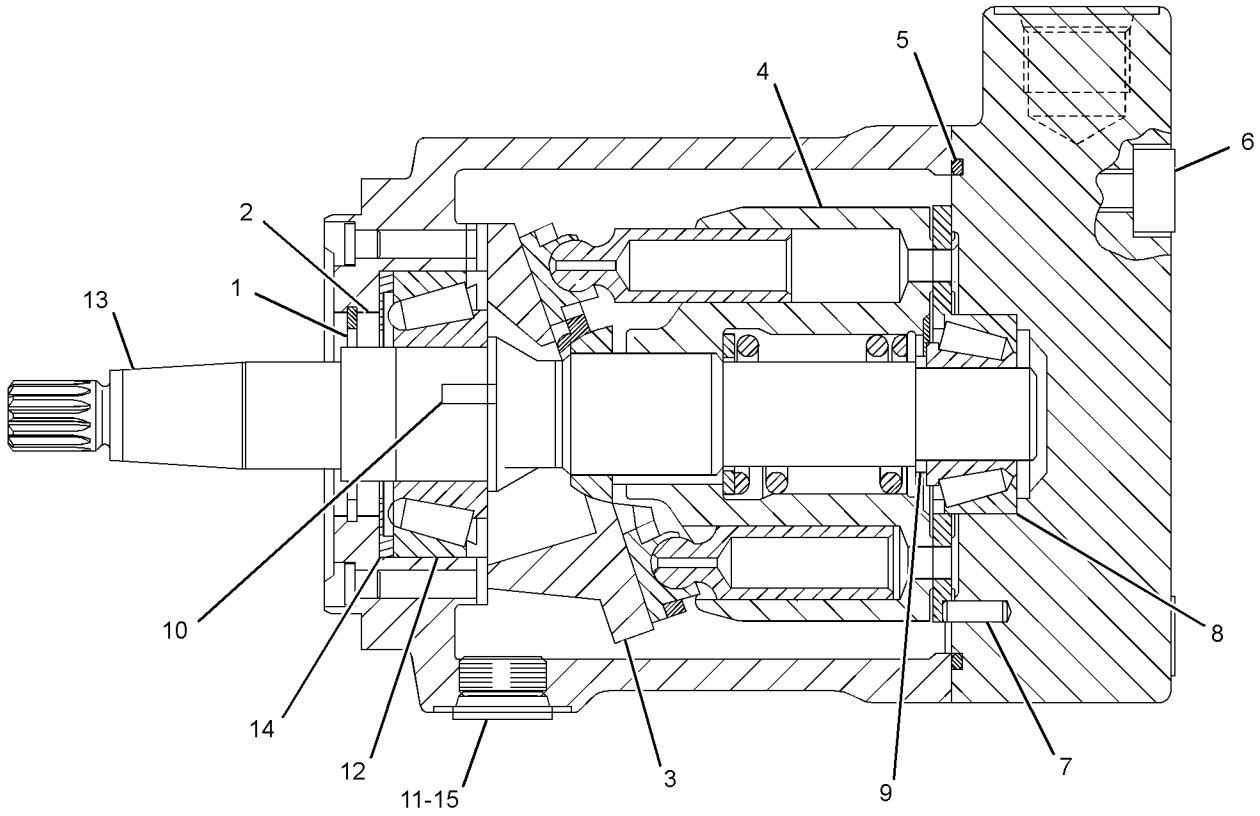

SECTION A-A

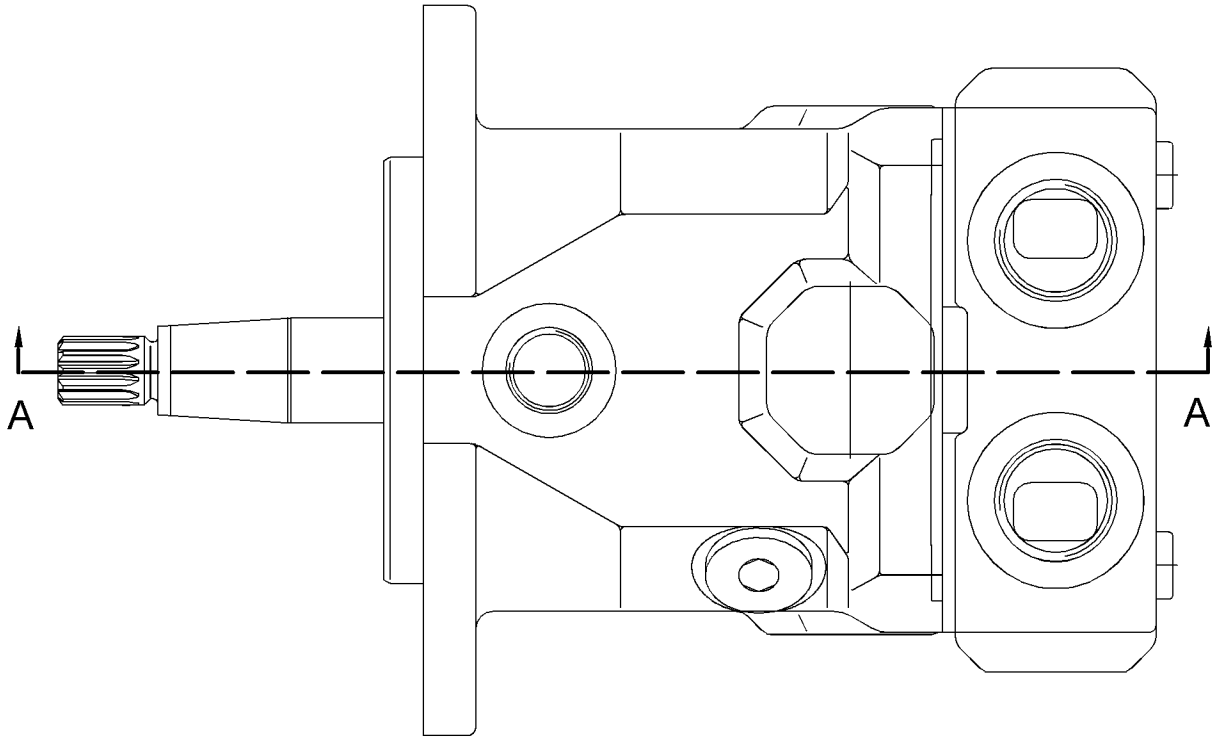

GRAPHIC #1 **<END>** g01184569

HYDRAULIC SYSTEM

237-0960 MOUNTING GP-HYDRAULIC TANK

S/N: M3G1-UP

PART OF 237-0238 HYDRAULIC AR-2 VALVE

SMCS-5056 **i02454388**

NOTE	REF NO	GRAPHIC REF	PART NUMBER	QTY	PART NAME 1 2 3 4 5 6 (PRODUCT LEVEL)	SEE PAGE
	1	1	**6T-6080**	8	MOUNT-RUBBER	
	2	1	**257-0499**	1	BRACKET AS (RH)	
	3	1	**257-0500**	1	BRACKET AS (LH)	
	4	1	**8T-4123**	4	WASHER-PLATED (22X35X3.5-MM THK)	
M	5	1	**8T-4183**	8	BOLT (M12X1.75X40-MM)	
M	6	1	**8T-6381**	4	BOLT (M20X2.5X120-MM)	
	7	1	**8T-7971**	8	WASHER-HARD (13.5X25.5X5-MM THK)	
	8	1	**8X-0674**	4	WASHER (22X100X10-MM THK)	

M-METRIC PART

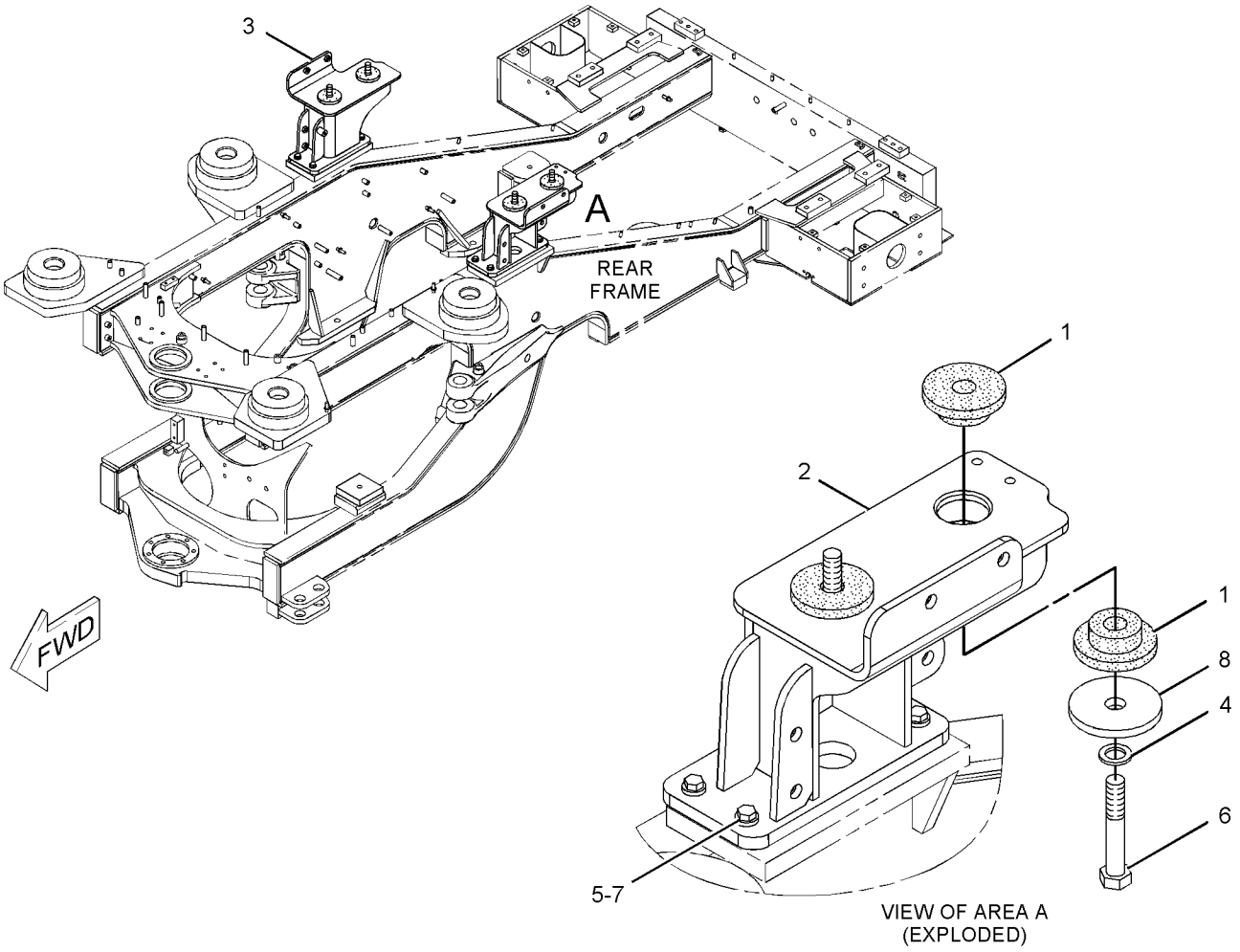

GRAPHIC #1 **<END>** g01122622

HYDRAULIC SYSTEM

237-0954 PUMP & MTG GP-BRAKE & HYD FAN

S/N: M3G1-UP

PART OF 237-0238 HYDRAULIC AR-2 VALVE

SMCS-1387, 4268 **i02443517**

NOTE	REF NO	GRAPHIC REF	PART NUMBER	QTY	PART NAME 1 2 3 4 5 6 (PRODUCT LEVEL)	SEE PAGE
	1	1	**8R-8088**	2	SPACER (11.66X15.88X18-MM THK)	
	2	1	**191-3678**	1	GEAR (50-TEETH)	
	3	1	**243-3696**	1	PLATE	
	4	1	**245-7456**	1	ADAPTER	
Y	5	1	**254-5146**	1	PUMP GP-PISTON (BRAKE, HYDRAULIC FAN)	537
	6	1	**2K-4821**	1	LOCKNUT (5/8-18-THD)	
	7	1	**3D-0053**	1	BALL BEARING	
	8	1	**6V-8467**	1	SEAL-O-RING	
	9	1	**8T-2561**	1	WASHER-HARD (10.5X28.5X5-MM THK)	
	10	1	**8T-4121**	4	WASHER-HARD (11X21X2.5-MM THK)	
M	11	1	**8T-4122**	1	WASHER-HARD (17X32X3.5-MM THK)	
M	12	1	**8T-4139**	2	BOLT (M12X1.75X30-MM)	
M	13	1	**8T-4195**	1	BOLT (M10X1.5X30-MM)	
	14	1	**8T-4223**	4	WASHER-HARD (13.5X25.5X3-MM THK)	
M	15	1	**8T-4648**	2	BOLT (M12X1.75X70-MM)	
M	16	1	**8T-6466**	2	BOLT (M10X1.5X60-MM)	
M	17	1	**8T-4137**	1	BOLT (M10X1.5X20-MM)	

M-METRIC PART
Y-SEPARATE ILLUSTRATION

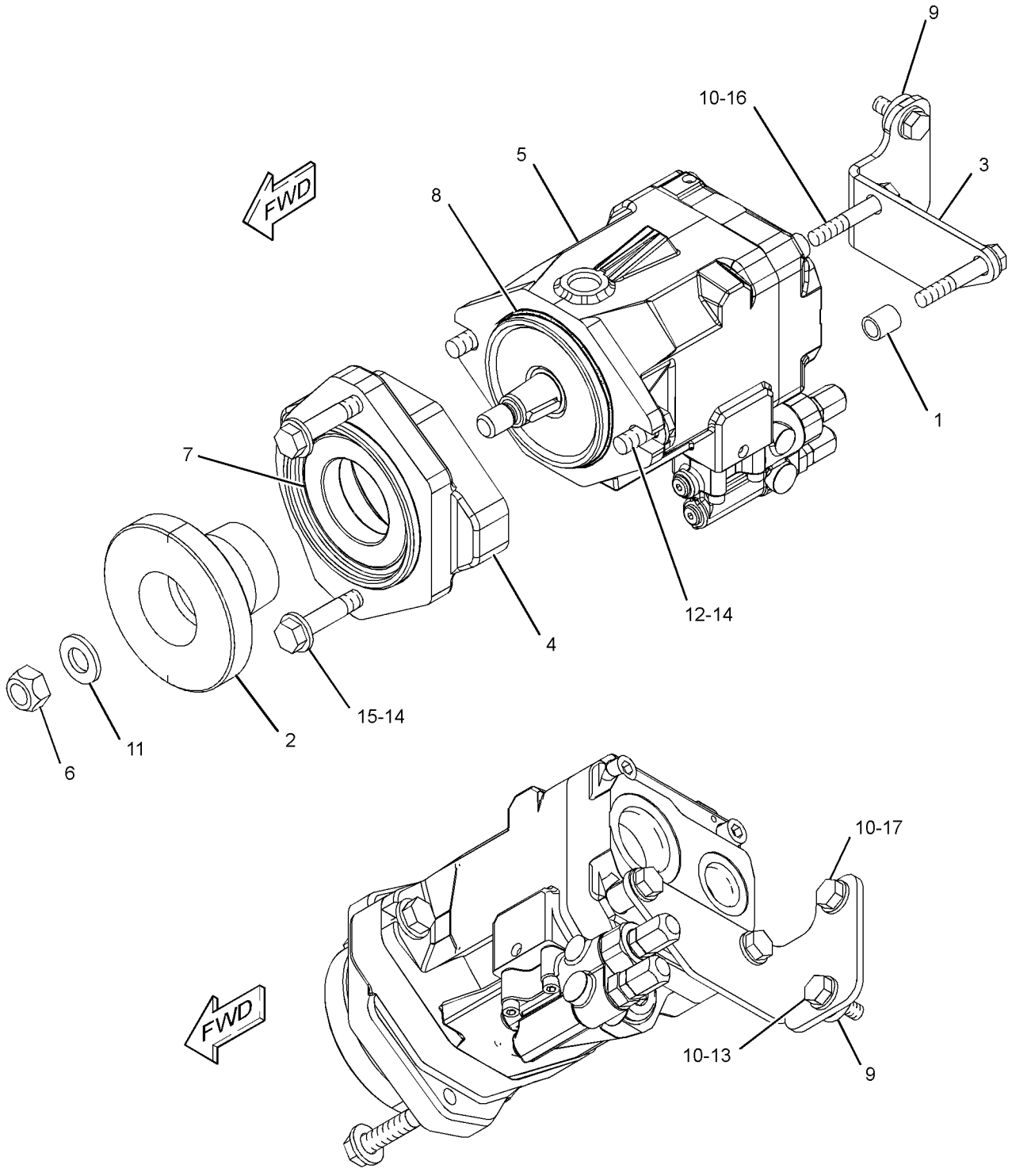

GRAPHIC #1 **<END>** g01220350

HYDRAULIC SYSTEM

246-2054 PUMP & MTG GP-HYDRAULIC

S/N: M3G1-UP

PART OF 237-0238 HYDRAULIC AR-2 VALVE

SMCS-5055, 5070, 5073, 5084 **i02449887**

NOTE	REF NO	GRAPHIC REF	PART NUMBER	QTY	PART NAME 1 2 3 4 5 6 (PRODUCT LEVEL)	SEE PAGE
Y	1	1	**241-9299**	1	PUMP GP-PISTON (STEERING)	451
	2	1	**246-2099**	1	BRACKET AS	
Y	3	1	**254-4108**	1	PUMP GP-PISTON (IMPLEMENT, PILOT)	534
	4	1	**117-8801**	1	SEAL-O-RING	
	5	1	**5P-1076**	4	WASHER-HARD (13.5X30X4-MM THK)	
	6	1	**7D-9014**	1	SEAL-O-RING	
	7	1	**7X-7729**	2	WASHER (11X25X3-MM THK)	
	8	1	**226-4192**	4	WASHER-HARD (21.5X35X8-MM THK)	
M	9	1	**8T-4136**	2	BOLT (M10X1.5X25-MM)	
M	10	1	**8T-4183**	4	BOLT (M12X1.75X40-MM)	
M	11	1	**7X-2563**	4	BOLT (M20X2.5X60-MM)	
	12	1	**8T-4223**	4	WASHER-HARD (13.5X25.5X3-MM THK)	
M	13	1	**8T-4244**	2	NUT (M12X1.75-THD)	
	14	1	*246-2887*	1	COUPLING AS	
		1	**8C-3312**	1	RING-RETAINING	

M-METRIC PART
Y-SEPARATE ILLUSTRATION

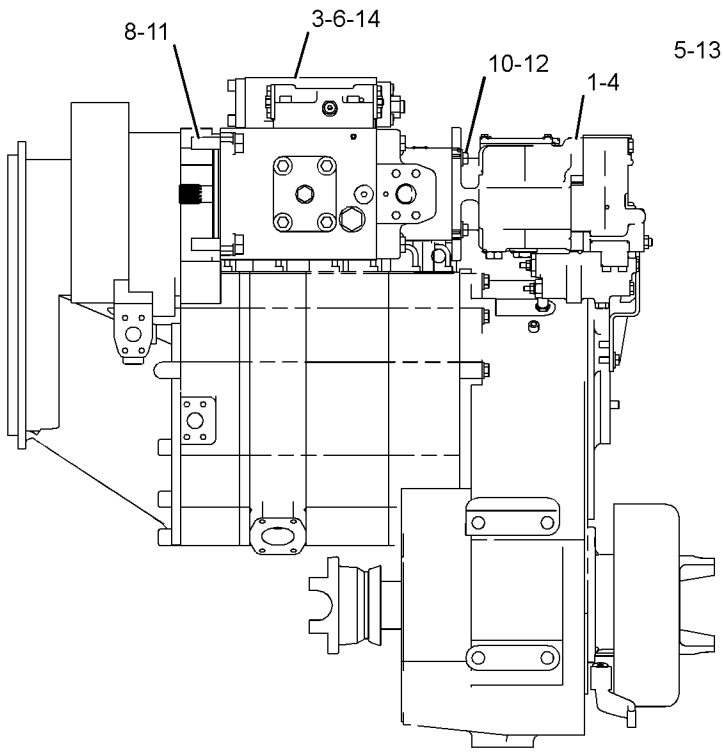

RIGHT SIDE VIEW

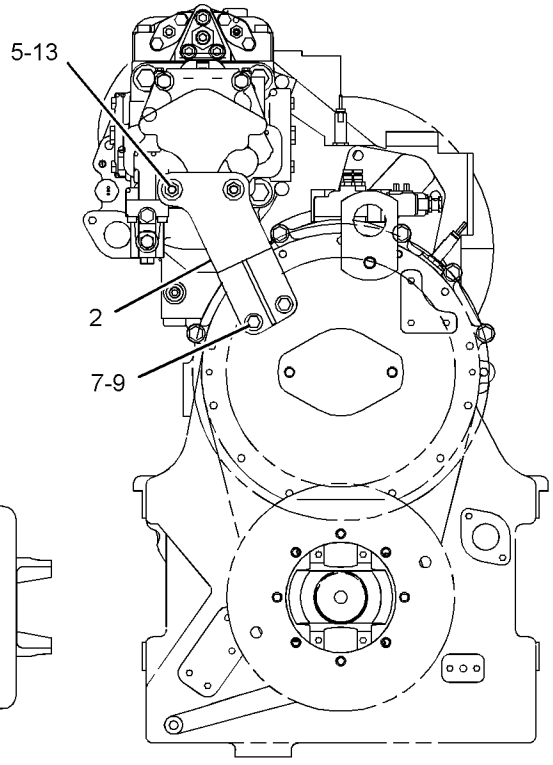

FRONT VIEW

GRAPHIC #1 **<END>** g01199850

254-4108 PUMP GP-PISTON–IMPLEMENT, PILOT

S/N: M3G1-UP

PART OF 246-2054 PUMP & MTG GP-HYDRAULIC

SMCS-5070 **i02306024**

NOTE	REF NO	GRAPHIC REF	PART NUMBER	QTY	PART NAME 1 2 3 4 5 6 (PRODUCT LEVEL)	SEE PAGE
	1	2	**7Y-4215**	1	SPACER	
	2	2	**7Y-4944**	1	RING-RETAINING	
	3	2	**096-4389**	9	SPRING	
	4	2	**188-4210**	1	PISTON AS	
	5	2	**129-7853**	1	PLATE-CREEP	
	6	2	**129-7921**	1	RING-RETAINING	
	7	2	**129-7925**	2	SEAL-LIP TYPE	
	8	2	**129-7927**	1	BEARING	
	9	2	**129-7979**	2	DOWEL	
	10	1	**150-5782**	2	COVER	
	11	2	**173-3427**	1	GUIDE-BALL	
	12	1	**192-0573**	2	PIN-DOWEL	
	13	2	**194-8325**	1	SET-BEARING	
	14	2	**242-6801**	1	SWASHPLATE AS	
		2	**094-1875**	1	DOWEL	
		2	**173-3428**	1	BEARING-SLEEVE	
		2	**242-6803**	2	PIN-DOWEL	
	15	1	**242-6804**	2	BEARING	
	16	2	**245-3315**	1	SHAFT-DRIVE	
	17	2	**245-3862**	1	CASE-SEAL	
	18	2	*246-2887*	1	COUPLING AS	
		2	**8C-3312**	1	RING-RETAINING	
		2	**246-2886**	1	COUPLING	
	19	2	**254-6549**	1	BODY AS	
		2	**124-1555**	2	PLUG	
	20	2	**254-6555**	1	BLOCK	
		2	**124-1555**	3	PLUG	
Y	21	2	**254-6561**	1	VALVE GP-PUMP CONTROL (PRESSURE, FLOW COMPENSATOR)	583
	22	2	**256-0083**	1	BARREL AS-PUMP	
	23	2	**256-7484**	9	PISTON AS	
	25	1,2	**094-1875**	3	DOWEL	
	26	1	**094-1883**	1	PLUG	
M	27	1	**095-0673**	4	BOLT-SOCKET HEAD (M12X1.75X60-MM)	
	28	1	**095-0946**	1	RING-RETAINING	
	29	2	**095-1673**	1	SEAL-O-RING	
	30	2	**095-1674**	1	SEAL-O-RING	
	32	1	**189-9763**	1	SEAL-O-RING	
	33	1	**193-1736**	2	SEAL-O-RING	
	34	1	**3D-2824**	2	SEAL-O-RING	
	35	1,2	**3K-0360**	3	SEAL-O-RING	
	36	1	**4H-6520**	1	SEAL-O-RING	
M	37	1	**8T-4136**	8	BOLT (M10X1.5X25-MM)	
M	38	1	**8T-4140**	4	BOLT (M16X2X60-MM)	
	39	1	**9S-4183**	2	PLUG	
	40	1	**9S-4185**	2	PLUG	
	41	2	**3J-1907**	1	SEAL-O-RING	
	42	2	**9S-8004**	1	PLUG	
	43	2	**9S-8005**	1	PLUG-O RING	
	44	2	**4I-1022**	1	ORIFICE	

M-METRIC PART
Y-SEPARATE ILLUSTRATION

254-4108 PUMP GP-PISTON *(contd.)* **i02306024**

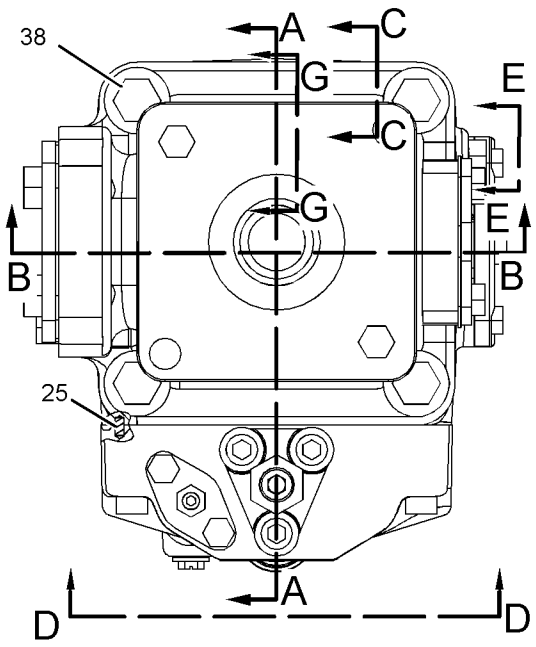

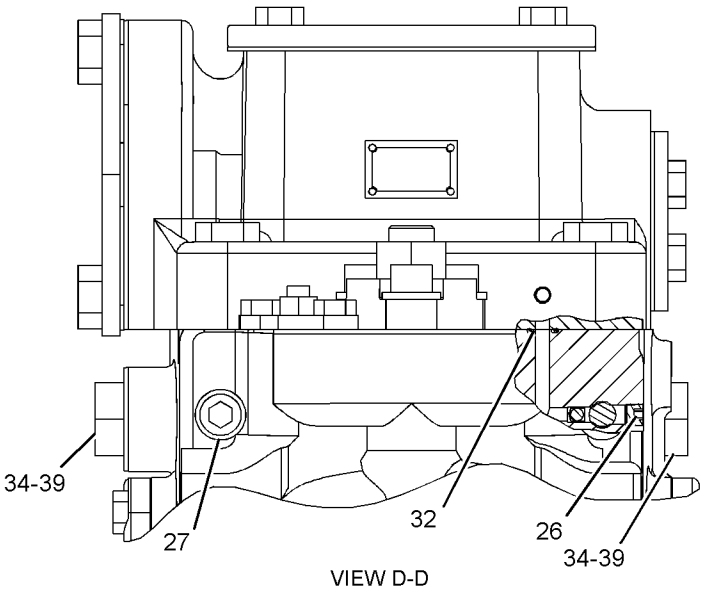

VIEW D-D

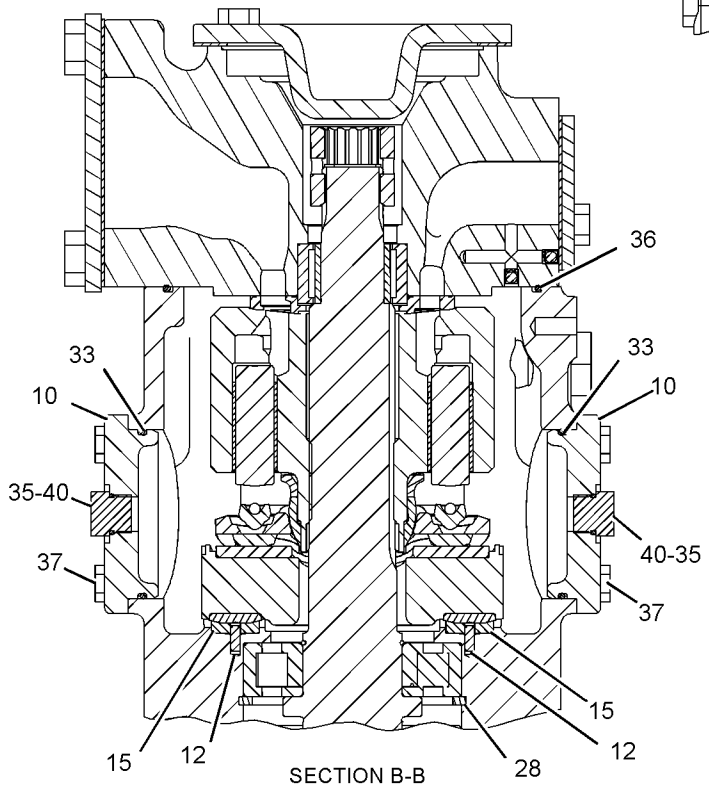

SECTION B-B

REFER TO ALL ILLUSTRATIONS
OF THIS GROUP FOR AUXILIARY VIEWS

GRAPHIC #1

g01155746

254-4108 PUMP GP-PISTON *(contd.)* i02306024

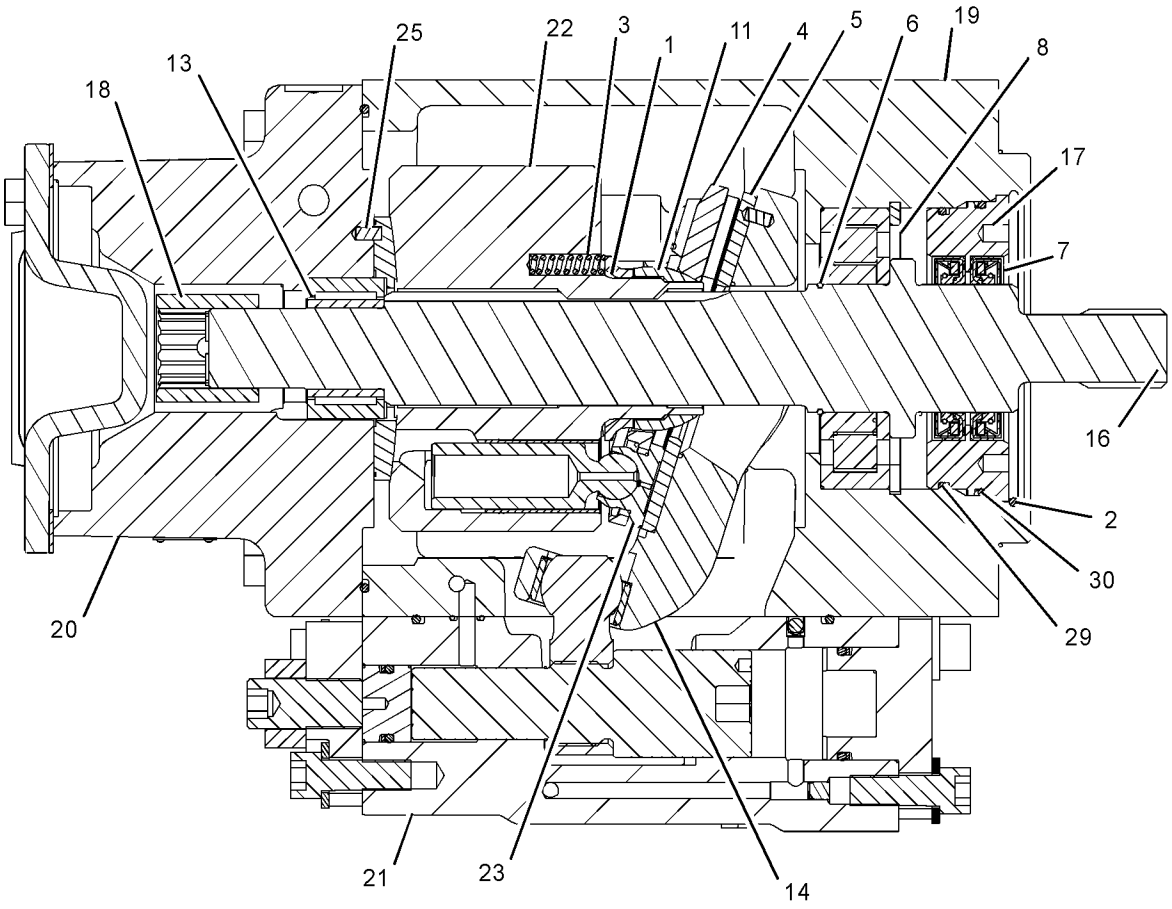

SECTION A-A

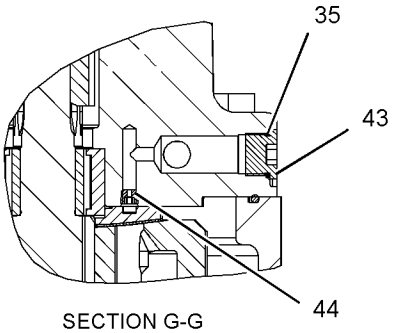

SECTION G-G

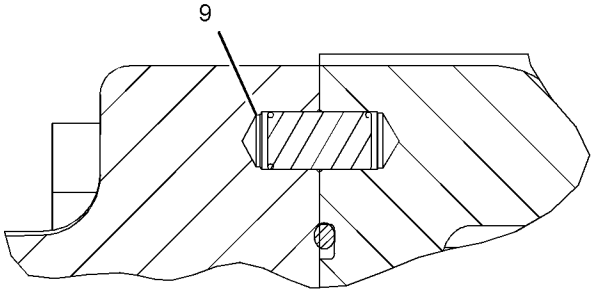

SECTION C-C

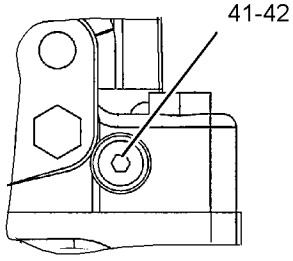

VIEW E-E

GRAPHIC #2 **<END>** g01159210

254-5146 PUMP GP-PISTON–BRAKE, HYDRAULIC FAN

S/N: M3G1-UP

PART OF 237-0954 PUMP & MTG GP-BRAKE & HYD FAN

SMCS-5070 **i02321461**

NOTE	REF NO	GRAPHIC REF	PART NUMBER	QTY	PART NAME 1 2 3 4 5 6 (PRODUCT LEVEL)	SEE PAGE
Y	1	1	**259-5504**	1	ROTATING GP-PUMP (BRAKE, HYDRAULIC FAN)	540
	2	1	**168-7861**	1	PISTON-ACTUATOR	
	3	1	**259-5507**	1	ROD-PISTON	
	4	1	**259-5509**	1	SWASHPLATE	
	5	1	**233-6306**	1	SHAFT-DRIVE	
	6	1	**198-5351**	1	PLUG	
	7	1	**194-9472**	1	SPRING	
B	8	1	**191-7582**	1	SHIM (2.5-MM THK)	
	9	1	**194-9473**	1	RING	
	10	1	**155-9125**	1	BEARING AS-ROLLER	
	11	1	**191-7583**	1	BEARING AS-ROLLER	
	12	1	**194-9474**	2	BEARING-CRADLE	
	13	1	**155-9127**	1	SEAL	
	14	1	**133-6578**	1	SEAL-O-RING	
	15	1	**8T-7525**	1	SEAL-O-RING	
	16	1	**168-3504**	1	SEAL	
	17	1	**8T-9597**	1	RING-RETAINING	
M	18	1	**8T-9515**	4	BOLT-SOCKET HEAD (M10X1.5X40-MM)	
	19	1	**9S-8005**	1	PLUG-O RING	
	20	1	**120-4394**	1	PLUG-BREAK OFF	
	21	1	**099-3047**	1	DOWEL	
	22	1	**3K-0360**	1	SEAL-O-RING	
Y	23	1	**207-0697**	1	VALVE GP-PUMP CONTROL (PRESSURE, FLOW COMPENSATOR)	581
	24	1	**155-9133**	1	KEY	
	25	1	**9S-8002**	1	PLUG	
	26	1	**3J-7354**	1	SEAL-O-RING	

B-USE AS REQUIRED
M-METRIC PART
Y-SEPARATE ILLUSTRATION

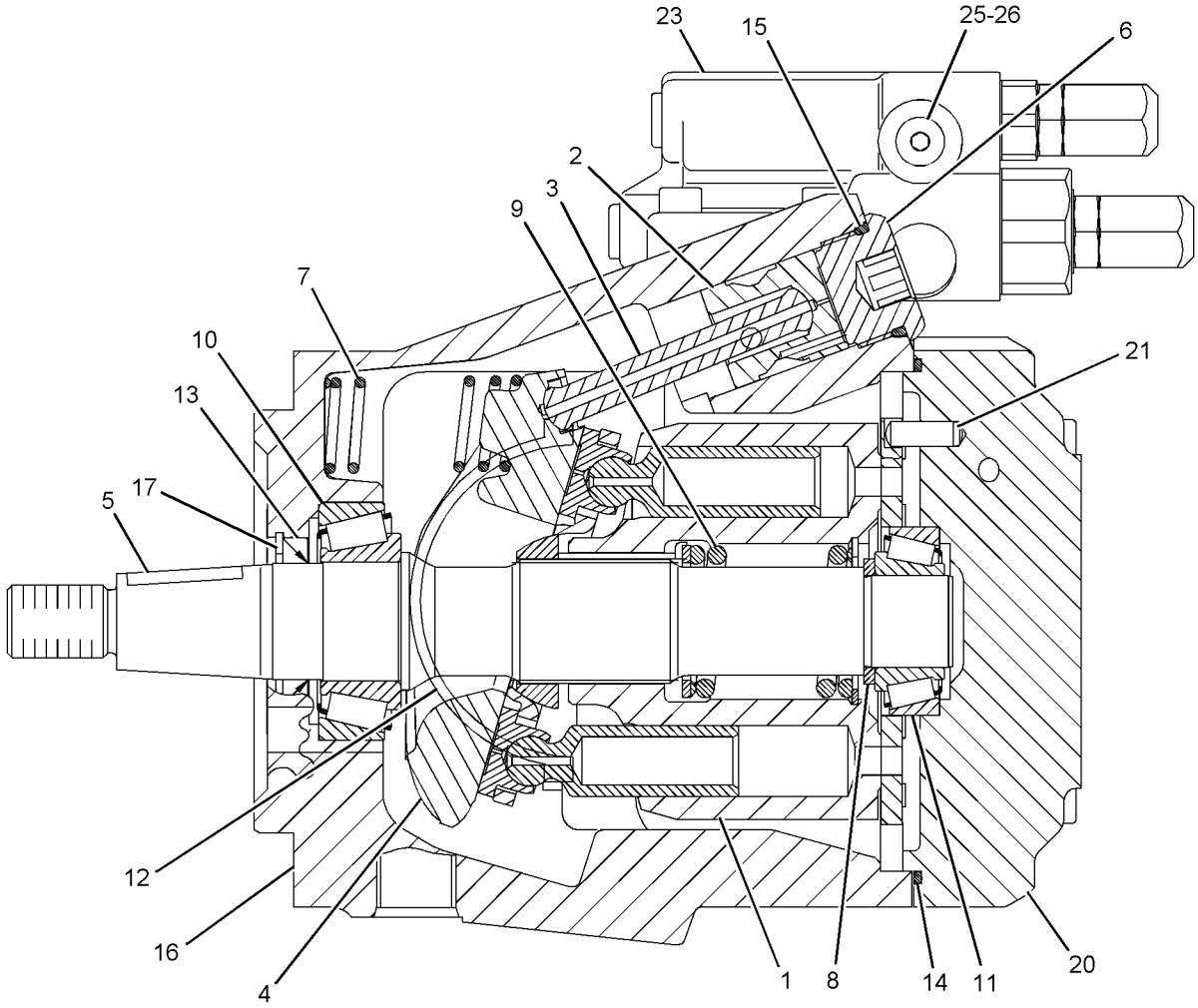

SECTION A-A

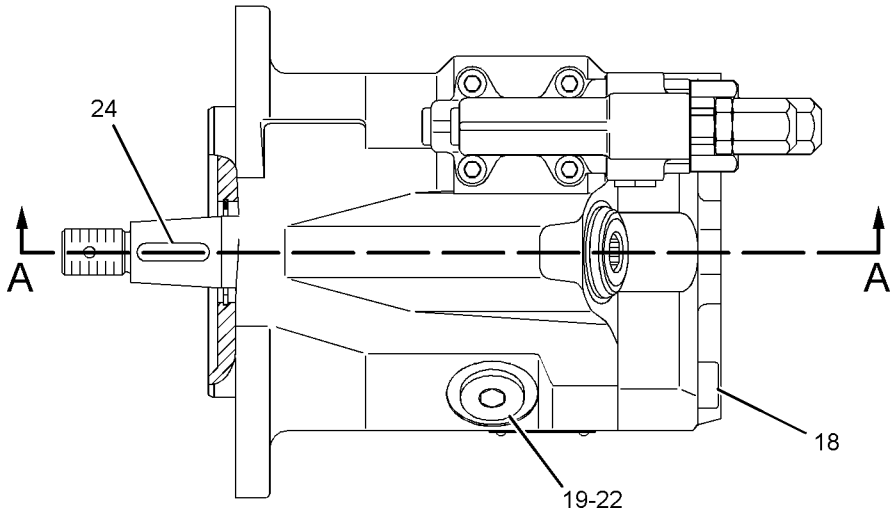

GRAPHIC #1 **<END>** g01127483

233-2530 ROTATING GP-MOTOR—AUTOMATIC REVERSING FAN

S/N: M3G1-UP
PART OF 228-8527 MOTOR GP-PISTON
AN ATTACHMENT

SMCS-1386, 5058 **i02158105**

NOTE	REF NO	GRAPHIC REF	PART NUMBER	QTY	PART NAME 1 2 3 4 5 6 (PRODUCT LEVEL)	SEE PAGE
	1	1	**189-9380**	9	PISTON AS	
	2	1	**233-4885**	1	BARREL	
	3	1	**233-2535**	1	PLATE (VALVE)	
	4	1	**189-9382**	1	PLATE	
	5	1	**138-8175**	1	BEARING-SPHERICAL	
	6	1	**168-7941**	1	SPRING	
	7	1	**168-7940**	3	PIN	
	8	1	**096-0015**	1	RING-RETAINING	
	9	1	**168-7942**	1	WASHER	

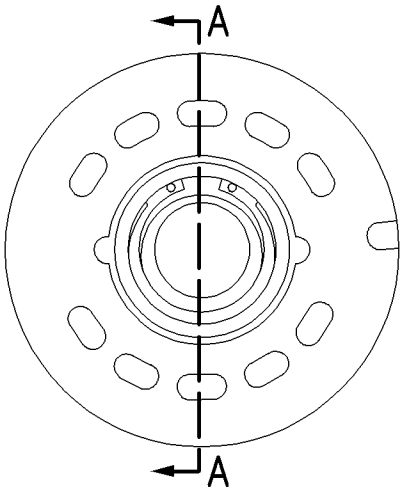

LEFT SIDE VIEW

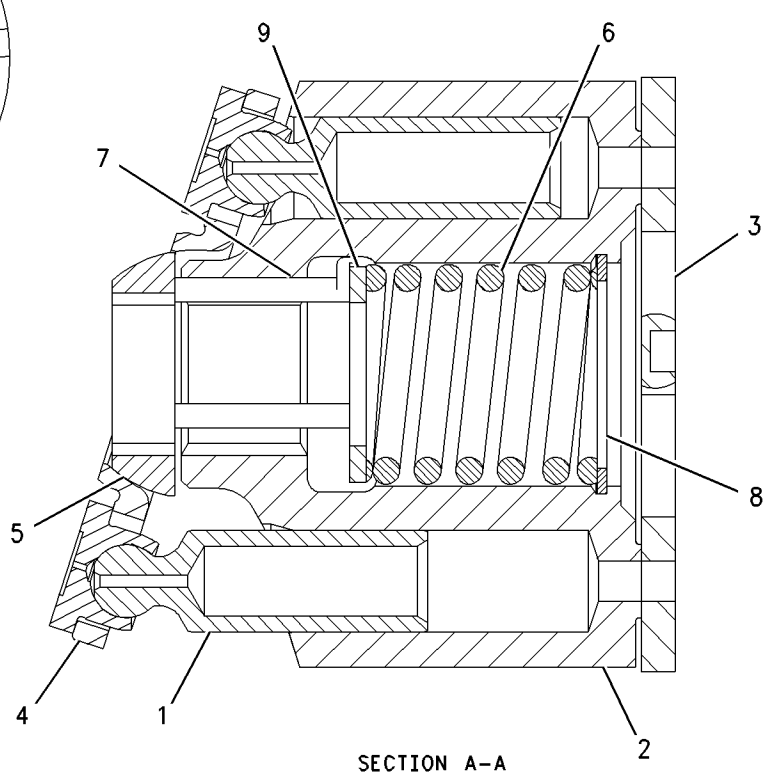

SECTION A–A

GRAPHIC #1 **<END>** g01001863

259-5504 ROTATING GP-PUMP–BRAKE, HYDRAULIC FAN

S/N: M3G1-UP

PART OF 254-5146 PUMP GP-PISTON

SMCS-1387, 5070, 5084 **i02305775**

NOTE	REF NO	GRAPHIC REF	PART NUMBER	QTY	PART NAME 1 2 3 4 5 6 (PRODUCT LEVEL)	SEE PAGE
	1	1	**259-5501**	9	PISTON AS	
	2	1	**259-5502**	1	BARREL	
	3	1	**259-5503**	1	PLATE	
	4	1	**155-9116**	1	GUIDE-BALL	
	5	1	**155-9117**	1	SPRING	
	6	1	**194-9479**	3	PIN	
	7	1	**194-9480**	1	RING-RETAINING	
	8	1	**194-9481**	1	DISC-THRUST	
	9	1	**194-9478**	1	PLATE-PORT	

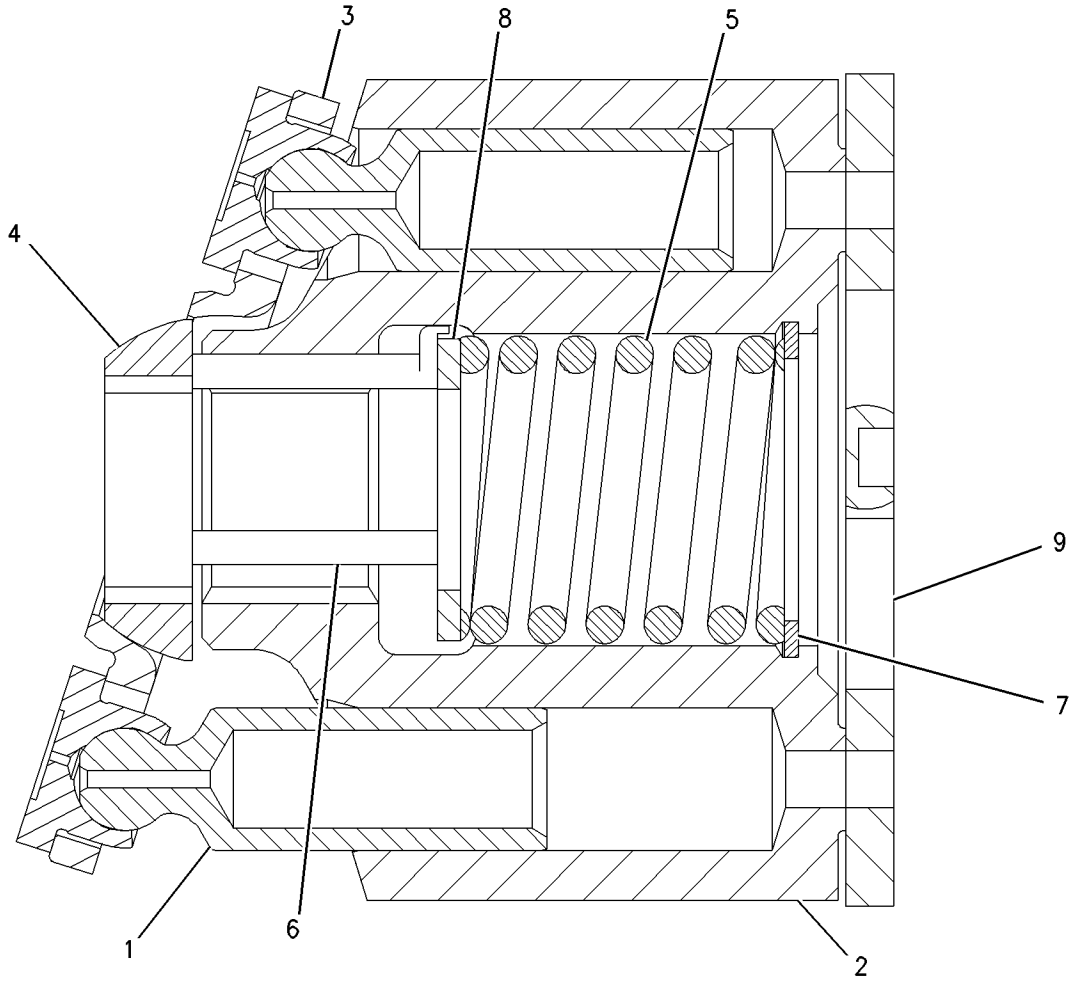

GRAPHIC #1 **<END>** g00768329

HYDRAULIC SYSTEM

237-2742 TANK GP-HYDRAULIC

S/N: M3G1-UP

PART OF 237-0238 HYDRAULIC AR-2 VALVE

SMCS-5056 **i02449830**

NOTE	REF NO	GRAPHIC REF	PART NUMBER	QTY	PART NAME 1 2 3 4 5 6 (PRODUCT LEVEL)	SEE PAGE
	1	1	**1P-4578**	2	FLANGE-HALF	
	2	1	**1P-4579**	2	FLANGE-HALF	
	3	1	**1P-4584**	2	FLANGE-HALF	
	4	1	**1P-4585**	2	FLANGE-HALF	
	5	1	**7X-0591**	4	WASHER-HARD (17X29X3-MM THK)	
	6	1	**8C-3206**	2	FLANGE-HALF	
	7	1	**8T-4121**	8	WASHER-HARD (11X21X2.5-MM THK)	
M	8	1	**8T-4184**	4	BOLT (M12X1.75X45-MM)	
M	9	1	**8T-4193**	4	BOLT (M16X2X50-MM)	
M	10	1	**8T-4196**	8	BOLT (M10X1.5X35-MM)	
	11	1	**8T-4223**	8	WASHER-HARD (13.5X25.5X3-MM THK)	
M	12	1	**8T-4956**	4	BOLT (M12X1.75X35-MM)	
	13	1	**5D-1911**	1	COVER-HYDRAULIC CAP	
	14	1	**5D-7927**	1	STRAINER AS (HYDRAULIC TANK FILL)	
	15	1	**7H-1447**	1	CAP-FILLER (HYDRAULIC TANK)	
	16	1	**9M-7394**	1	LEVER (COVER)	
	17	1	**9T-9226**	2	PLATE	
	18	1	**9T-9227**	2	SCREEN AS (HYDRAULIC TANK)	
	19	1	**237-2743**	1	TANK AS-HYDRAULIC	
	20	1	**244-0405**	1	COVER AS	
	21	1	**244-0420**	1	GASKET	
	22	1	**260-8636**	1	GAUGE-LIQUID LEVEL (SIGHT GLASS)	
	23	1	**1L-5072**	1	DOWEL	
	24	1	**2D-4202**	1	PLATE	
	25	1	**2J-7761**	1	RING-RETAINING	
	26	1	**6H-9361**	1	RING-RETAINING	
M	27	1	**6V-7744**	2	LOCKNUT (M10X1.15-THD)	
	28	1	**8T-2275**	1	BALL	
M	29	1	**8T-4201**	24	BOLT-LOCKING (M10X1.5X20-MM)	
	30	1	**9H-6454**	1	GASKET	

M-METRIC PART

237-2742 TANK GP-HYDRAULIC *(contd.)* **i02449830**

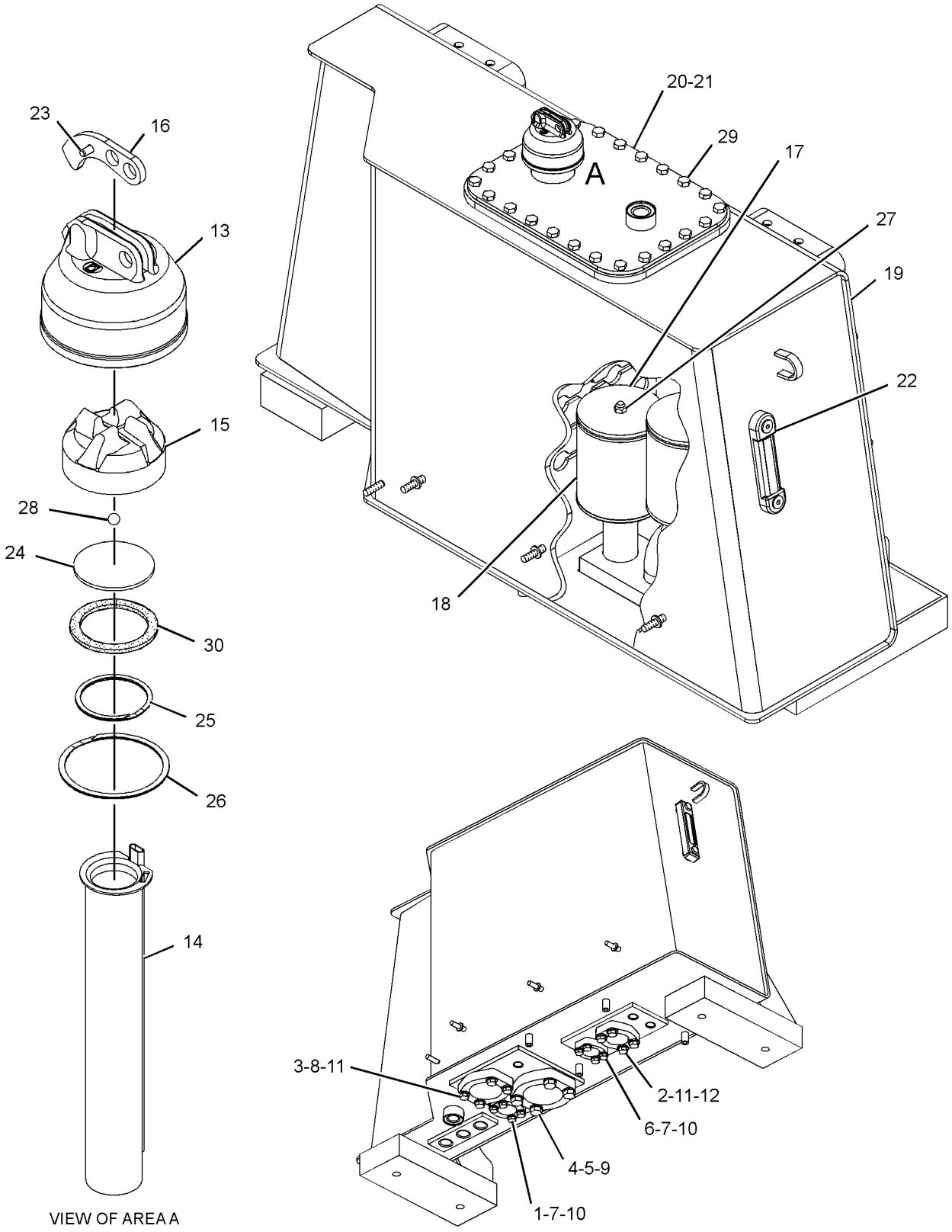

GRAPHIC #1 **<END>** g01190173

HYDRAULIC SYSTEM

237-0961 VALVE & MTG GP-MAIN CONTROL–2-FUNCTION

S/N: M3G1-UP

PART OF 237-0238 HYDRAULIC AR-2 VALVE

SMCS-5051 **i02449482**

NOTE	REF NO	GRAPHIC REF	PART NUMBER	QTY	PART NAME 1 2 3 4 5 6 (PRODUCT LEVEL)	SEE PAGE
	1	1	*148-8424*	1	TEE AS	
		1	**6V-8397**	1	SEAL-O-RING	
		1	**8T-8902**	1	TEE	
Y	2	1	**276-9072**	1	VALVE GP-SHUTTLE	591
	3	1	**241-2628**	1	BRACKET AS	
	4	1	*150-3033*	1	ELBOW AS	
		1	**3J-1907**	1	SEAL-O-RING	
		1	**4J-5477**	1	SEAL-O-RING	
		1	**8T-0164**	1	ELBOW	
Y	5	1	*245-2975*	1	ACCUMULATOR GP-PILOT OIL (CHARGED) (DEAD ENGINE LOWER)	463
I	6	1	**249-0787**	1	HOSE AS	
	7	1	**259-1502**	1	BLOCK	
	8	1	**259-1971**	1	TUBE AS	
	9	1	**259-2092**	1	TUBE AS	
Y	10	1	*261-4171*	1	VALVE GP-MAIN CONTROL (2-FUNCTION)	576
	11	1	*148-8336*	2	CONNECTOR AS	
					(EACH INCLUDES)	
		1	**3J-1907**	1	SEAL-O-RING	
		1	**6V-8397**	1	SEAL-O-RING	
		1	**6V-8636**	1	CONNECTOR	
	12	1	*148-8367*	2	ELBOW AS	
					(EACH INCLUDES)	
		1	**6V-8397**	1	SEAL-O-RING	
		1	**6V-9850**	1	ELBOW	
	13	1	*148-8378*	2	ELBOW AS	
					(EACH INCLUDES)	
		1	**3J-1907**	1	SEAL-O-RING	
		1	**6V-8397**	1	SEAL-O-RING	
		1	**6V-8724**	1	ELBOW	
	14	1	**5P-4295**	1	CLIP	
	15	1	*148-8435*	1	TEE AS	
		1	**3J-1907**	1	SEAL-O-RING	
		1	**6V-8397**	2	SEAL-O-RING	
		1	**6V-8781**	1	TEE-FACE SEAL	
	16	1	*150-4044*	2	CONNECTOR AS	
					(EACH INCLUDES)	
		1	**3J-1907**	1	SEAL-O-RING	
		1	**6V-8397**	1	SEAL-O-RING	
		1	**8T-1779**	1	CONNECTOR	
	17	1	**152-3411**	1	ELBOW	
	18	1	*164-5567*	1	FITTING AS	
		1	**3J-1907**	1	SEAL-O-RING	
		1	**6V-3965**	1	FITTING AS (QUICK DISCONNECT)	
	19	1	**3D-2824**	1	SEAL-O-RING	
	20	1	**3J-1907**	1	SEAL-O-RING	
	21	1	**5P-1076**	3	WASHER-HARD (13.5X30X4-MM THK)	
	22	1	**6V-0852**	1	CAP-DUST	
	23	1	**6V-8397**	3	SEAL-O-RING	
	24	1	**6V-8398**	1	SEAL-O-RING	
	27	1	*165-6365*	1	FITTING AS	
		1	**3J-1907**	1	SEAL-O-RING	
		1	**7W-7381**	1	FITTING-OUTLET	
M	28	1	**7X-2552**	4	BOLT (M16X2X30-MM)	
	29	1	**8T-4121**	2	WASHER-HARD (11X21X2.5-MM THK)	
M	30	1	**8T-4122**	4	WASHER-HARD (17X32X3.5-MM THK)	

237-0961 VALVE & MTG GP-MAIN CONTROL *(contd.)* i02449482

NOTE	REF NO	GRAPHIC REF	PART NUMBER	QTY	PART NAME 1 2 3 4 5 6 (PRODUCT LEVEL)	SEE PAGE
M	31	1	**8T-4172**	2	BOLT (M10X1.5X80-MM)	
M	32	1	**8T-4183**	3	BOLT (M12X1.75X40-MM)	
M	33	1	**8T-4192**	2	BOLT (M12X1.75X25-MM)	
	34	1	**8T-4223**	2	WASHER-HARD (13.5X25.5X3-MM THK)	
	35	1	**244-6625**	1	ADAPTER-SPECIAL	
	36	1	**6V-9829**	2	CAP AS	

I-REFER TO HYDRAULIC INFORMATION SYSTEM
M-METRIC PART
Y-SEPARATE ILLUSTRATION

237-0961 **VALVE & MTG GP-MAIN CONTROL** *(contd.)* **i02449482**

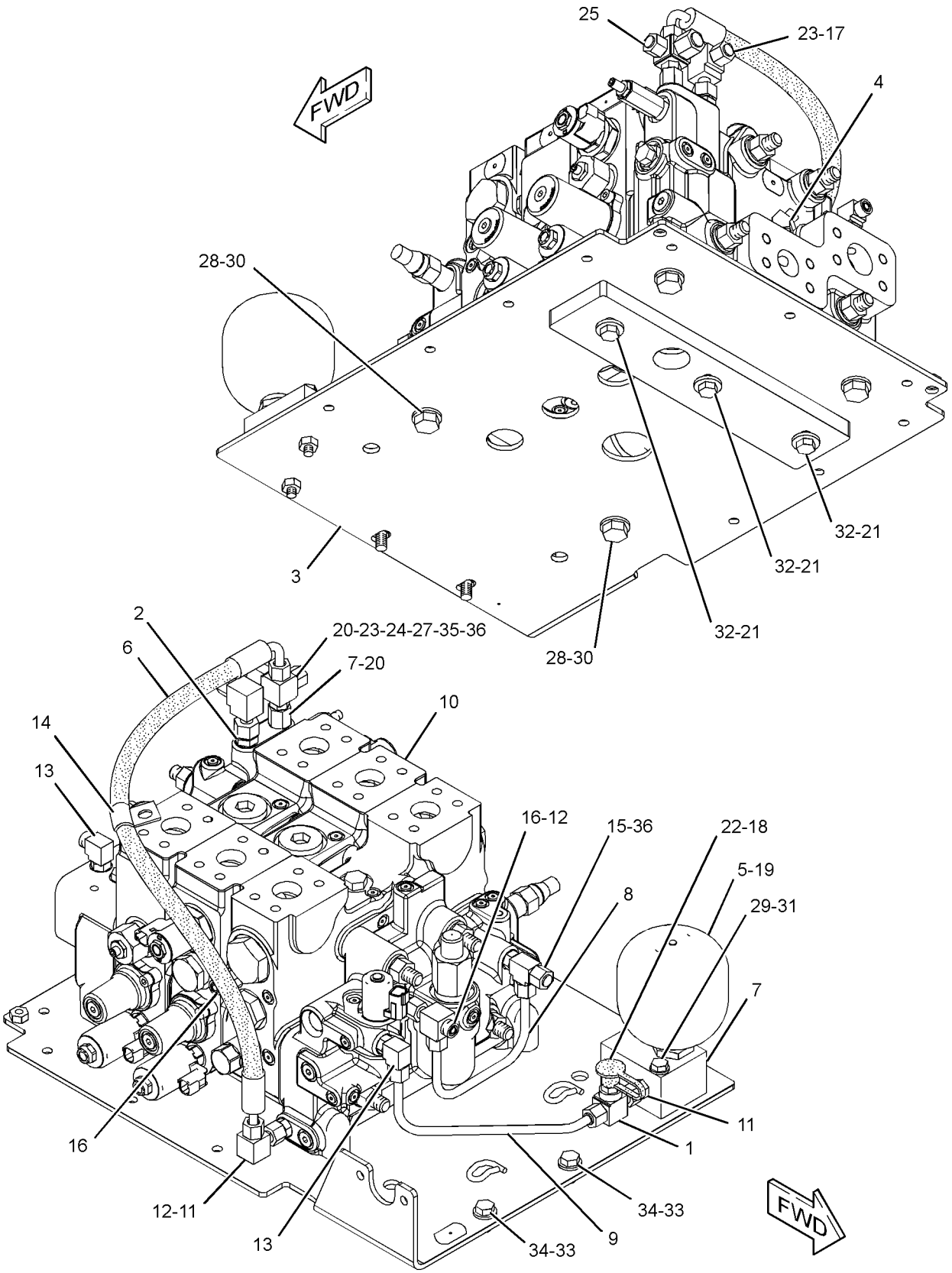

GRAPHIC #1 **<END>** g01224915

HYDRAULIC SYSTEM

237-4932 VALVE & MTG GP-MAIN CONTROL—3-FUNCTION

S/N: M3G1-UP

PART OF 237-0269, 244-3825 HYDRAULIC AR-3 VALVE AN ATTACHMENT

SMCS-5051 **i02449478**

NOTE	REF NO	GRAPHIC REF	PART NUMBER	QTY	PART NAME 1 2 3 4 5 6 (PRODUCT LEVEL)	SEE PAGE
	1	1	*148-8424*	1	TEE AS	
		1	**6V-8397**	1	SEAL-O-RING	
		1	**8T-8902**	1	TEE	
	2	1	**165-6365**	1	FITTING AS	
	3	1	**241-2628**	1	BRACKET AS	
M		1	**8T-3490**	8	NUT-WELD (M10X1.5-THD)	
	4	1	**244-6625**	1	ADAPTER-SPECIAL	
Y	5	1	*245-2975*	1	ACCUMULATOR GP-PILOT OIL (CHARGED) (DEAD ENGINE LOWER)	463
I	6	1	**249-0368**	1	HOSE AS	
	7	1	**259-1502**	1	BLOCK	
	8	1	**259-1970**	1	TUBE AS	
	9	1	**259-1971**	1	TUBE AS	
	10	1	*148-8336*	2	CONNECTOR AS	
					(EACH INCLUDES)	
		1	**3J-1907**	1	SEAL-O-RING	
		1	**6V-8397**	1	SEAL-O-RING	
		1	**6V-8636**	1	CONNECTOR	
	11	1	*148-8367*	2	ELBOW AS	
					(EACH INCLUDES)	
		1	**6V-8397**	1	SEAL-O-RING	
		1	**6V-9850**	1	ELBOW	
	12	1	*148-8378*	2	ELBOW AS	
					(EACH INCLUDES)	
		1	**3J-1907**	1	SEAL-O-RING	
		1	**6V-8397**	1	SEAL-O-RING	
		1	**6V-8724**	1	ELBOW	
	14	1	*148-8435*	1	TEE AS	
		1	**3J-1907**	1	SEAL-O-RING	
		1	**6V-8397**	2	SEAL-O-RING	
		1	**6V-8781**	1	TEE-FACE SEAL	
	15	1	*150-3033*	1	ELBOW AS	
		1	**3J-1907**	1	SEAL-O-RING	
		1	**4J-5477**	1	SEAL-O-RING	
		1	**8T-0164**	1	ELBOW	
	16	1	*150-4044*	2	CONNECTOR AS	
					(EACH INCLUDES)	
		1	**3J-1907**	1	SEAL-O-RING	
		1	**6V-8397**	1	SEAL-O-RING	
		1	**8T-1779**	1	CONNECTOR	
	17	1	**152-3411**	1	ELBOW	
	18	1	*164-5567*	1	FITTING AS	
		1	**3J-1907**	1	SEAL-O-RING	
		1	**6V-3965**	1	FITTING AS (QUICK DISCONNECT)	
Y	19	1	*261-4172*	1	VALVE GP-MAIN CONTROL (3-FUNCTION)	577
Y	20	1	**276-9072**	1	VALVE GP-SHUTTLE	591
	21	1	**3D-2824**	1	SEAL-O-RING	
	22	1	**3J-1907**	1	SEAL-O-RING	
	23	1	**5P-1076**	3	WASHER-HARD (13.5X30X4-MM THK)	
	24	1	**6V-0852**	1	CAP-DUST	
	25	1	**6V-8397**	3	SEAL-O-RING	
	26	1	**6V-8398**	1	SEAL-O-RING	
	27	1	**6V-9829**	2	CAP AS	
	28	1	**5P-4295**	1	CLIP	
M	29	1	**7X-2553**	4	BOLT (M16X2X40-MM)	

237-4932 VALVE & MTG GP-MAIN CONTROL *(contd.)* i02449478

NOTE	REF NO	GRAPHIC REF	PART NUMBER	QTY	PART NAME 1 2 3 4 5 6 (PRODUCT LEVEL)	SEE PAGE
	30	1	**8T-4121**	2	WASHER-HARD (11X21X2.5-MM THK)	
M	31	1	**8T-4122**	4	WASHER-HARD (17X32X3.5-MM THK)	
M	32	1	**8T-4172**	2	BOLT (M10X1.5X80-MM)	
M	33	1	**8T-4183**	3	BOLT (M12X1.75X40-MM)	
M	34	1	**8T-4192**	2	BOLT (M12X1.75X25-MM)	
	35	1	**8T-4223**	2	WASHER-HARD (13.5X25.5X3-MM THK)	

I-REFER TO HYDRAULIC INFORMATION SYSTEM
M-METRIC PART
Y-SEPARATE ILLUSTRATION

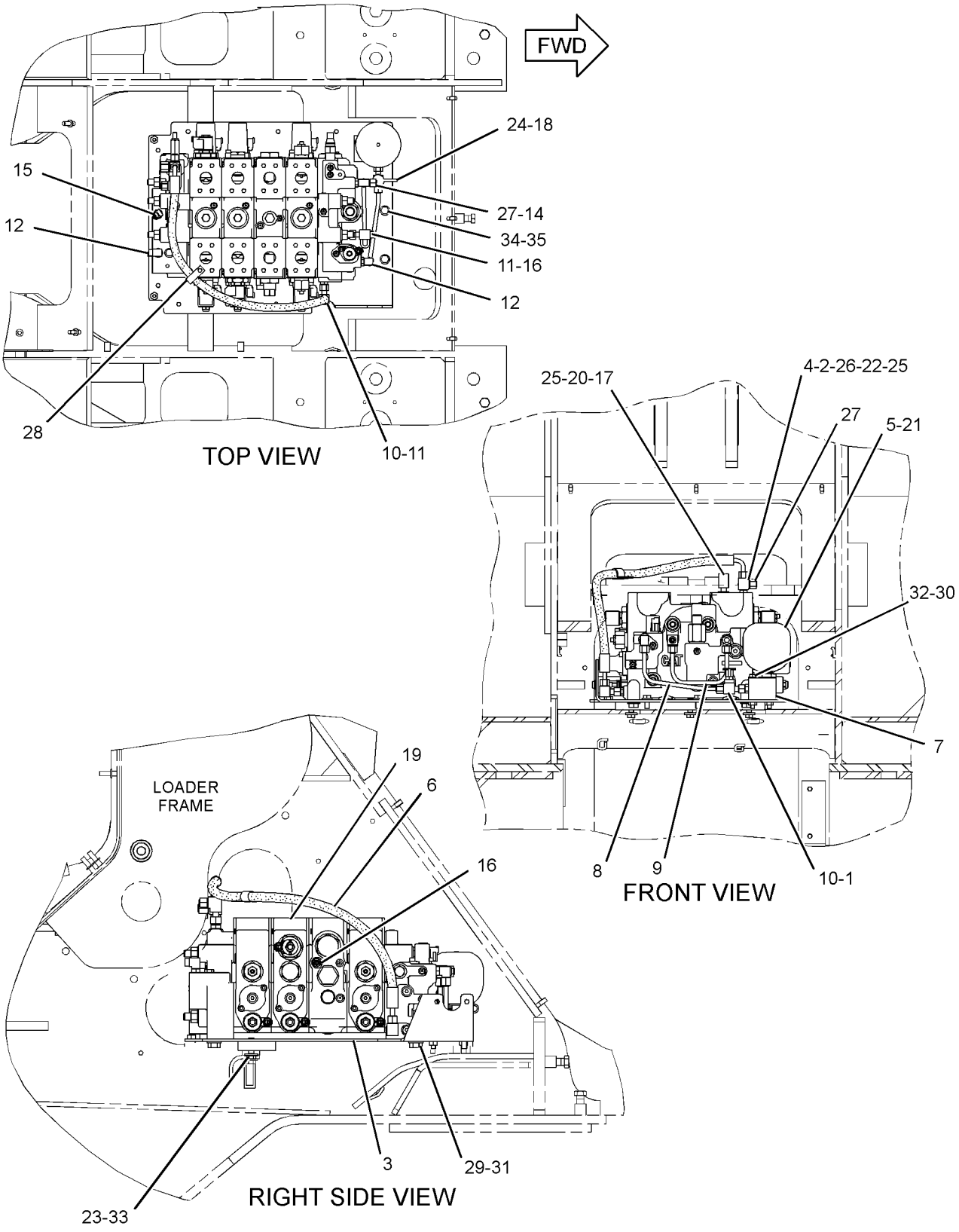

GRAPHIC #1 **<END>** g01223505

HYDRAULIC SYSTEM

243-0083 VALVE & MTG GP-MAIN CONTROL–
2-FUNCTION, WITH RIDE CONTROL
S/N: M3G1-UP
PART OF 244-3442 CONTROL AR-RIDE
AN ATTACHMENT

SMCS-5051 **i02305902**

NOTE	REF NO	GRAPHIC REF	PART NUMBER	QTY	PART NAME 1 2 3 4 5 6 (PRODUCT LEVEL)	SEE PAGE
	1	1	*148-8424*	1	TEE AS	
		1	**6V-8397**	1	SEAL-O-RING	
		1	**8T-8902**	1	TEE	
Y	2	1	*152-2646*	1	VALVE GP-SHUTTLE	588
	3	1	**241-2628**	1	BRACKET AS	
M		1	**8T-3490**	8	NUT-WELD (M10X1.5-THD)	
	4	1	**244-6625**	1	ADAPTER-SPECIAL	
Y	5	1	*245-2975*	1	ACCUMULATOR GP-PILOT OIL (CHARGED) (DEAD ENGINE LOWER)	463
I	6	1	**249-0787**	1	HOSE AS	
	7	1	**259-1502**	1	BLOCK	
	8	1	**259-1971**	1	TUBE AS	
	9	1	**259-2092**	1	TUBE AS	
Y	10	1	*261-3682*	1	VALVE GP-MAIN CONTROL (2-FUNCTION, WITH RIDE CONTROL)	572
	11	1	*148-8335*	1	CONNECTOR AS	
		1	**5K-9090**	1	SEAL-O-RING	
		1	**6V-8635**	1	CONNECTOR	
		1	**7M-8485**	1	SEAL-O-RING	
	12	1	*148-8336*	3	CONNECTOR AS	
					(EACH INCLUDES)	
		1	**3J-1907**	1	SEAL-O-RING	
		1	**6V-8397**	1	SEAL-O-RING	
		1	**6V-8636**	1	CONNECTOR	
	13	1	*148-8367*	1	ELBOW AS	
		1	**6V-8397**	1	SEAL-O-RING	
		1	**6V-9850**	1	ELBOW	
	14	1	*148-8378*	1	ELBOW AS	
		1	**3J-1907**	1	SEAL-O-RING	
		1	**6V-8397**	1	SEAL-O-RING	
	15	1	*148-8433*	1	TEE AS	
		1	**6V-8397**	2	SEAL-O-RING	
		1	**6V-9836**	1	TEE-SWIVEL	
	16	1	*148-8435*	1	TEE AS	
		1	**3J-1907**	1	SEAL-O-RING	
		1	**6V-8397**	2	SEAL-O-RING	
		1	**6V-8781**	1	TEE-FACE SEAL	
	17	1	*150-4044*	1	CONNECTOR AS	
		1	**3J-1907**	1	SEAL-O-RING	
		1	**6V-8397**	1	SEAL-O-RING	
		1	**8T-1779**	1	CONNECTOR	
	18	1	**152-3411**	1	ELBOW	
	19	1	*164-5567*	1	FITTING AS	
		1	**3J-1907**	1	SEAL-O-RING	
		1	**6V-3965**	1	FITTING AS (QUICK DISCONNECT)	
	20	1	**3D-2824**	1	SEAL-O-RING	
	21	1	**3J-1907**	4	SEAL-O-RING	
	22	1	**5P-1076**	3	WASHER-HARD (13.5X30X4-MM THK)	
	23	1	**6V-0852**	1	CAP-DUST	
	24	1	**6V-8397**	3	SEAL-O-RING	
	25	1	**6V-8398**	1	SEAL-O-RING	
	26	1	**6V-9829**	3	CAP AS	
	27	1	**6V-9830**	1	CAP AS	
	28	1	**7W-7381**	1	FITTING-OUTLET	

243-0083 VALVE & MTG GP-MAIN CONTROL *(contd.)* i02305902

NOTE	REF NO	GRAPHIC REF	PART NUMBER	QTY	PART NAME 1 2 3 4 5 6 (PRODUCT LEVEL)	SEE PAGE
M	29	1	**7X-2552**	4	BOLT (M16X2X30-MM)	
	30	1	**8T-4121**	2	WASHER-HARD (11X21X2.5-MM THK)	
M	31	1	**8T-4122**	4	WASHER-HARD (17X32X3.5-MM THK)	
M	32	1	**8T-4172**	2	BOLT (M10X1.5X80-MM)	
M	33	1	**8T-4183**	3	BOLT (M12X1.75X40-MM)	
M	34	1	**8T-4192**	2	BOLT (M12X1.75X25-MM)	
	35	1	**8T-4223**	2	WASHER-HARD (13.5X25.5X3-MM THK)	

I-REFER TO HYDRAULIC INFORMATION SYSTEM
M-METRIC PART
Y-SEPARATE ILLUSTRATION

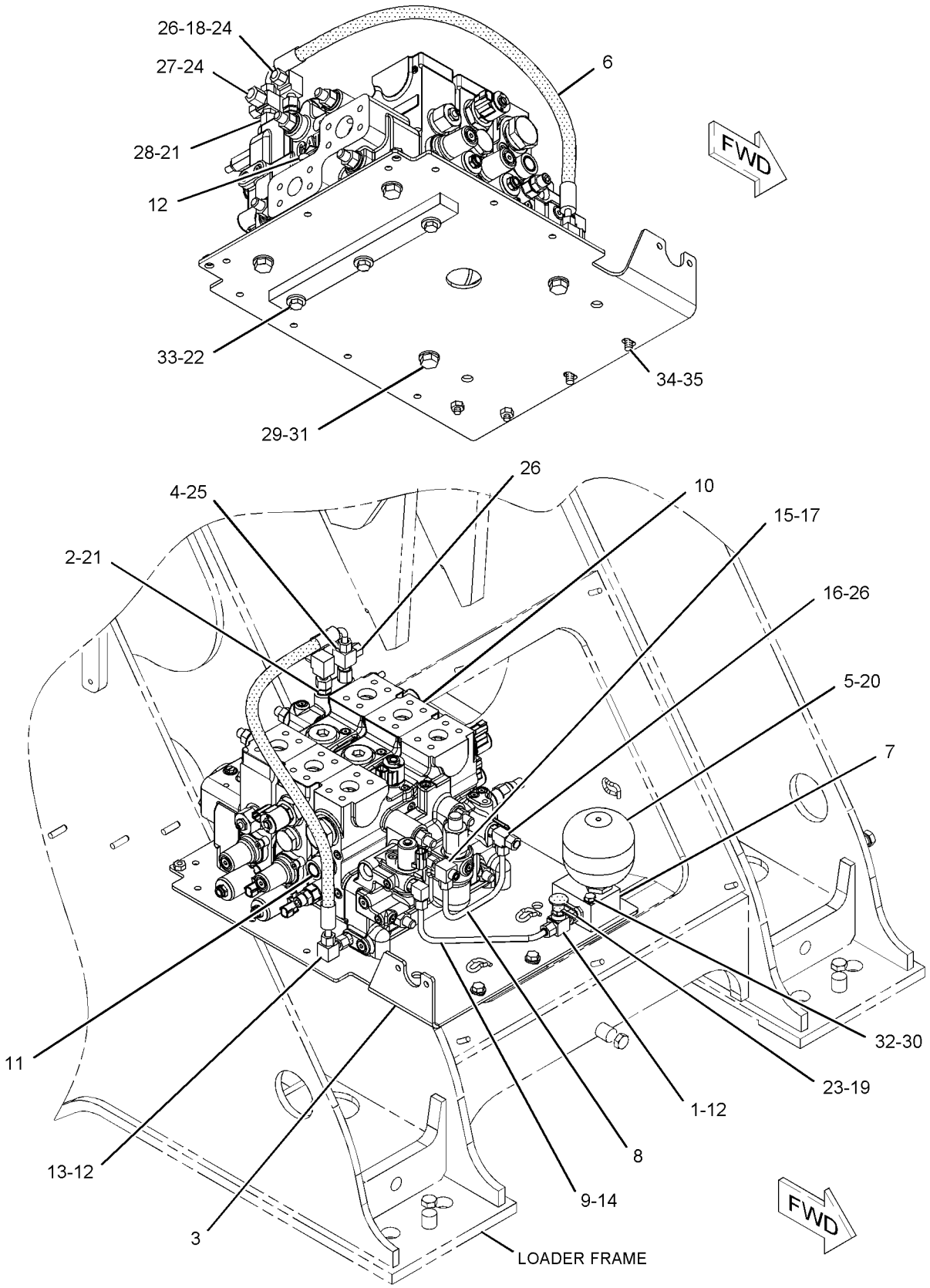

GRAPHIC #1 **<END>** g01131221

HYDRAULIC SYSTEM

243-0086 VALVE & MTG GP-MAIN CONTROL–
3-FUNCTION, WITH RIDE CONTROL
S/N: M3G1-UP
PART OF 244-3443 CONTROL AR-RIDE
AN ATTACHMENT

SMCS-5051 **i02449486**

NOTE	REF NO	GRAPHIC REF	PART NUMBER	QTY	PART NAME 1 2 3 4 5 6 (PRODUCT LEVEL)	SEE PAGE
	1	1	*148-8424*	1	TEE AS	
		1	**6V-8397**	1	SEAL-O-RING	
		1	**8T-8902**	1	TEE	
Y	2	1	**276-9072**	1	VALVE GP-SHUTTLE	591
	3	1	**241-2628**	1	BRACKET AS	
	4	1	**244-6625**	1	ADAPTER-SPECIAL	
Y	5	1	*245-2975*	1	ACCUMULATOR GP-PILOT OIL (CHARGED) (DEAD ENGINE LOWER)	463
I	6	1	**249-0368**	1	HOSE AS	
	7	1	**259-1502**	1	BLOCK	
	8	1	**259-1970**	1	TUBE AS	
	9	1	**259-1971**	1	TUBE AS	
Y	10	1	*261-3683*	1	VALVE GP-MAIN CONTROL (3-FUNCTION, WITH RIDE CONTROL)	574
	11	1	**5P-4295**	1	CLIP	
	12	1	*148-8336*	2	CONNECTOR AS	
					(EACH INCLUDES)	
		1	**3J-1907**	1	SEAL-O-RING	
		1	**6V-8397**	1	SEAL-O-RING	
		1	**6V-8636**	1	CONNECTOR	
	13	1	*148-8367*	2	ELBOW AS	
					(EACH INCLUDES)	
		1	**6V-8397**	1	SEAL-O-RING	
		1	**6V-9850**	1	ELBOW	
	14	1	*148-8378*	2	ELBOW AS	
					(EACH INCLUDES)	
		1	**3J-1907**	1	SEAL-O-RING	
		1	**6V-8397**	1	SEAL-O-RING	
		1	**6V-8724**	1	ELBOW	
	15	1	*150-3033*	1	ELBOW AS	
		1	**3J-1907**	1	SEAL-O-RING	
		1	**4J-5477**	1	SEAL-O-RING	
		1	**8T-0164**	1	ELBOW	
	16	1	*148-8435*	1	TEE AS	
		1	**3J-1907**	1	SEAL-O-RING	
		1	**6V-8397**	2	SEAL-O-RING	
		1	**6V-8781**	1	TEE-FACE SEAL	
	17	1	*150-4044*	2	CONNECTOR AS	
					(EACH INCLUDES)	
		1	**3J-1907**	1	SEAL-O-RING	
		1	**6V-8397**	1	SEAL-O-RING	
		1	**8T-1779**	1	CONNECTOR	
	18	1	**152-3411**	1	ELBOW	
	19	1	*164-5567*	1	FITTING AS	
		1	**3J-1907**	1	SEAL-O-RING	
		1	**6V-3965**	1	FITTING AS (QUICK DISCONNECT)	
	20	1	**3D-2824**	1	SEAL-O-RING	
	21	1	**3J-1907**	1	SEAL-O-RING	
	22	1	**5P-1076**	3	WASHER-HARD (13.5X30X4-MM THK)	
	23	1	**6V-0852**	1	CAP-DUST	
	24	1	**6V-8397**	3	SEAL-O-RING	
	25	1	**6V-8398**	1	SEAL-O-RING	
	26	1	**6V-9829**	2	CAP AS	
	28	1	*165-6365*	1	FITTING AS	

243-0086 VALVE & MTG GP-MAIN CONTROL *(contd.)* i02449486

NOTE	REF NO	GRAPHIC REF	PART NUMBER	QTY	PART NAME 1 2 3 4 5 6 (PRODUCT LEVEL)	SEE PAGE
		1	**3J-1907**	1	SEAL-O-RING	
		1	**7W-7381**	1	FITTING-OUTLET	
M	29	1	**7X-2552**	4	BOLT (M16X2X30-MM)	
	30	1	**8T-4121**	2	WASHER-HARD (11X21X2.5-MM THK)	
M	31	1	**8T-4122**	4	WASHER-HARD (17X32X3.5-MM THK)	
M	32	1	**8T-4172**	2	BOLT (M10X1.5X80-MM)	
M	33	1	**8T-4183**	3	BOLT (M12X1.75X40-MM)	
M	34	1	**8T-4192**	2	BOLT (M12X1.75X25-MM)	
	35	1	**8T-4223**	2	WASHER-HARD (13.5X25.5X3-MM THK)	

I-REFER TO HYDRAULIC INFORMATION SYSTEM
M-METRIC PART
Y-SEPARATE ILLUSTRATION

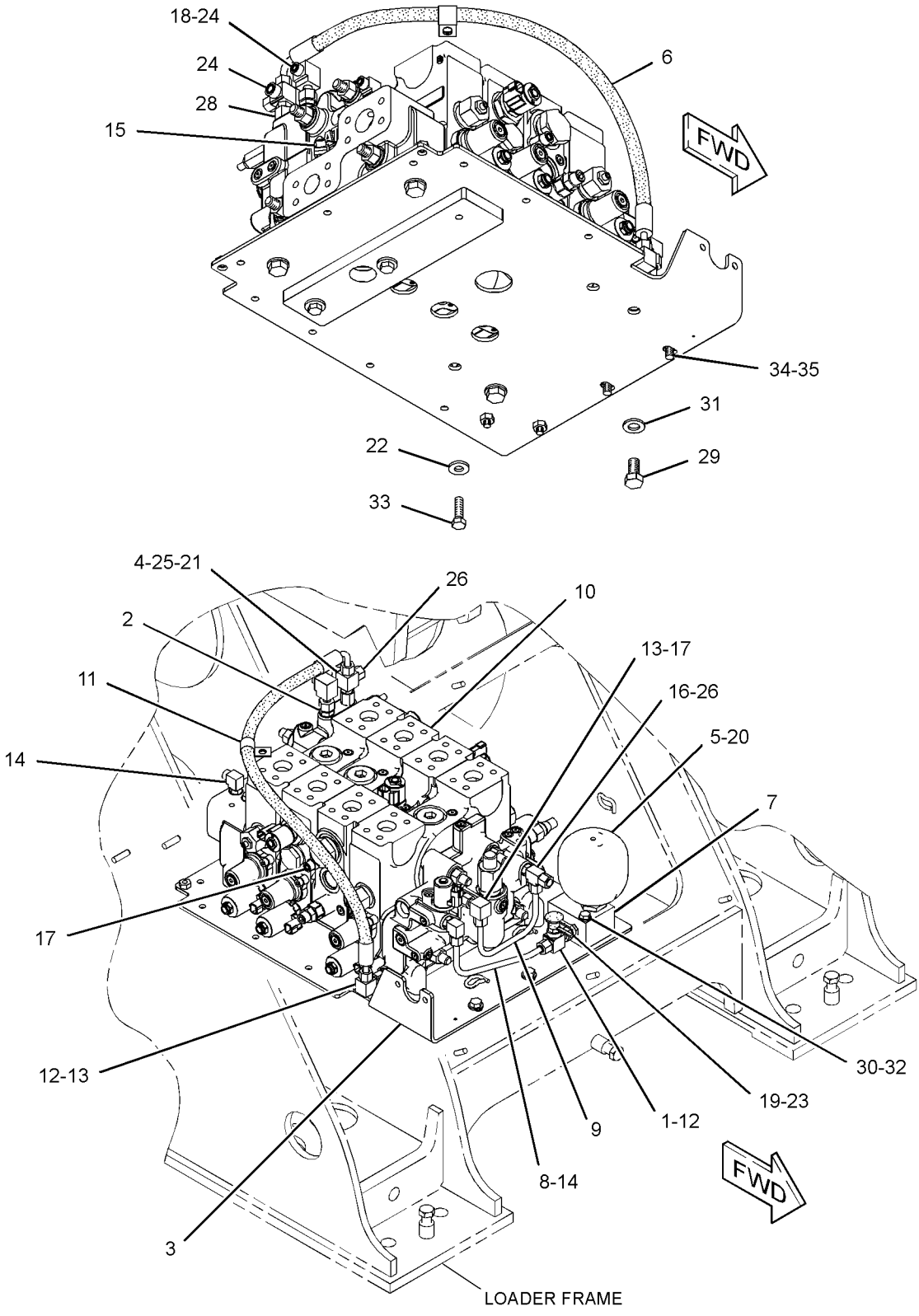

GRAPHIC #1 **<END>** g01224471

158-9956 VALVE GP-CHECK

S/N: M3G1-UP

PART OF 242-1307 MANIFOLD GP-CONTROL, 269-9398 MANIFOLD GP-VALVE

ALSO AN ATTACHMENT

SMCS-5067 **i02106248**

NOTE	REF NO	GRAPHIC REF	PART NUMBER	QTY	PART NAME 1 2 3 4 5 6 (PRODUCT LEVEL)	SEE PAGE
	1	1	**3K-0360**	1	SEAL-O-RING	
	2	1	**161-6154**	1	SEAL-O-RING	
	3	1	**6E-0381**	1	RING-BACKUP	

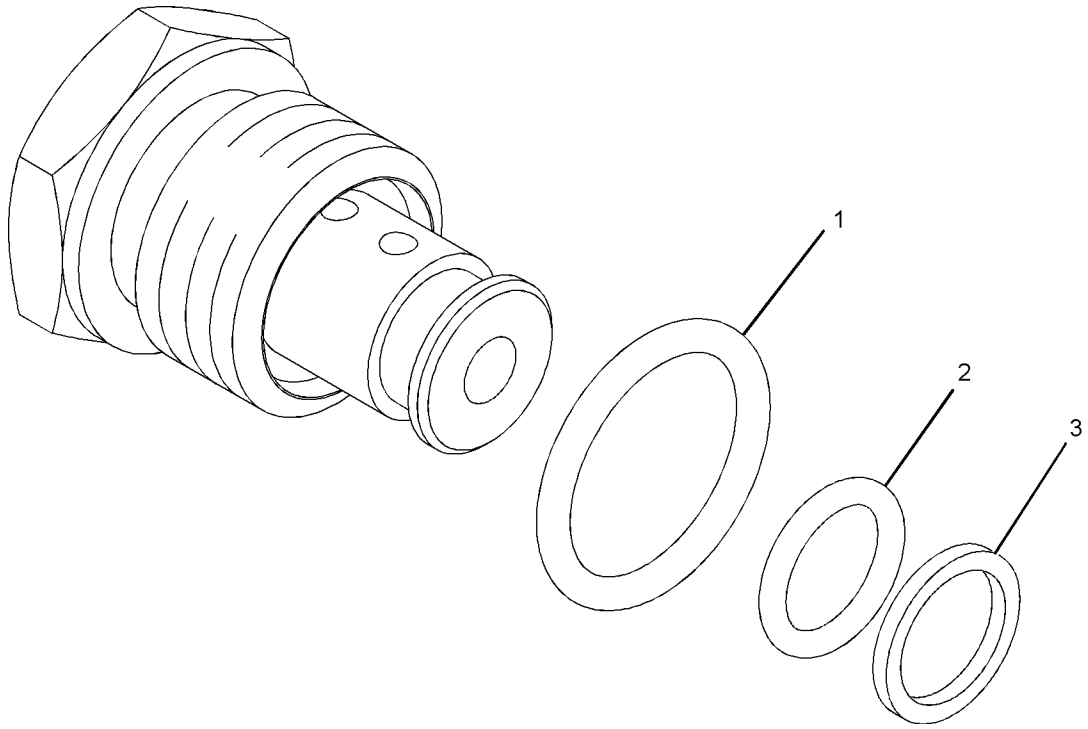

GRAPHIC #1 **<END>** g01016882

HYDRAULIC SYSTEM

194-1723 VALVE GP-CHECK

S/N: M3G1-UP

PART OF 247-7601 VALVE GP-CONTROL, 253-4026 VALVE GP-RIDE CONTROL

ALSO AN ATTACHMENT

SMCS-5067 **i02248420**

NOTE	REF NO	GRAPHIC REF	PART NUMBER	QTY	PART NAME 1 2 3 4 5 6 (PRODUCT LEVEL)	SEE PAGE
	1	1	**2M-9780**	1	SEAL-O-RING	
	2	1	**161-6149**	1	SEAL-O-RING	
	3	1	**7X-4776**	1	RING-BACKUP	

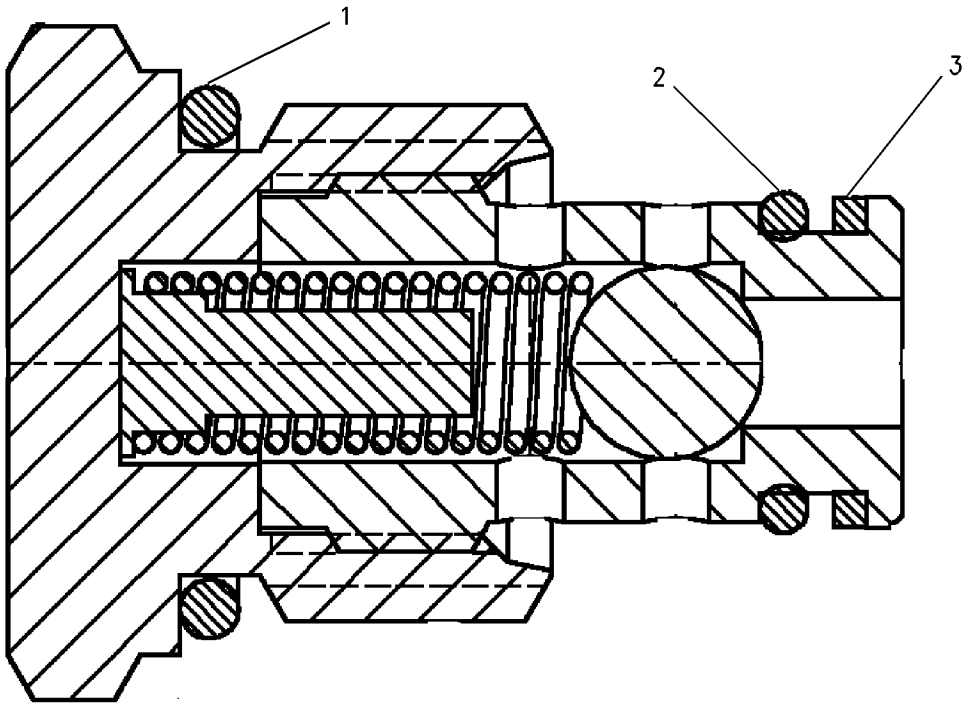

GRAPHIC #1 **<END>** g00748809

268-8019 VALVE GP-CHECK & RELIEF–LINE

S/N: M3G1-UP

PART OF 261-0018 VALVE GP-CONTROL

ALSO AN ATTACHMENT

SMCS-5453 **i02304888**

NOTE	REF NO	GRAPHIC REF	PART NUMBER	QTY	PART NAME 1 2 3 4 5 6 (PRODUCT LEVEL)	SEE PAGE
	1	1	**8U-7381**	1	SEAL-O-RING	
	2	1	**9T-4512**	1	CAP	
	3	1	**9T-4513**	1	ADJUSTER	
	4	1	**9T-4514**	1	RETAINER	
	5	1	**9T-4517**	1	VALVE	
	6	1	**111-7740**	1	SPACER	
	7	1	**124-7359**	1	SPRING	
	8	1	**124-7360**	1	SPRING	
	9	1	**125-6990**	1	VALVE	
	10	1	**262-4422**	1	HOUSING	
	11	1	**262-5316**	1	RING-BACKUP	
	12	1	**111-7739**	1	SPRING	
	13	1	**124-7326**	2	WASHER (1.6-MM THK)	
	14	1	**3D-2824**	1	SEAL-O-RING	
	15	1	**4F-2294**	1	NUT-JAM (5/16-24-THD)	
	16	1	**7M-8485**	1	SEAL-O-RING	

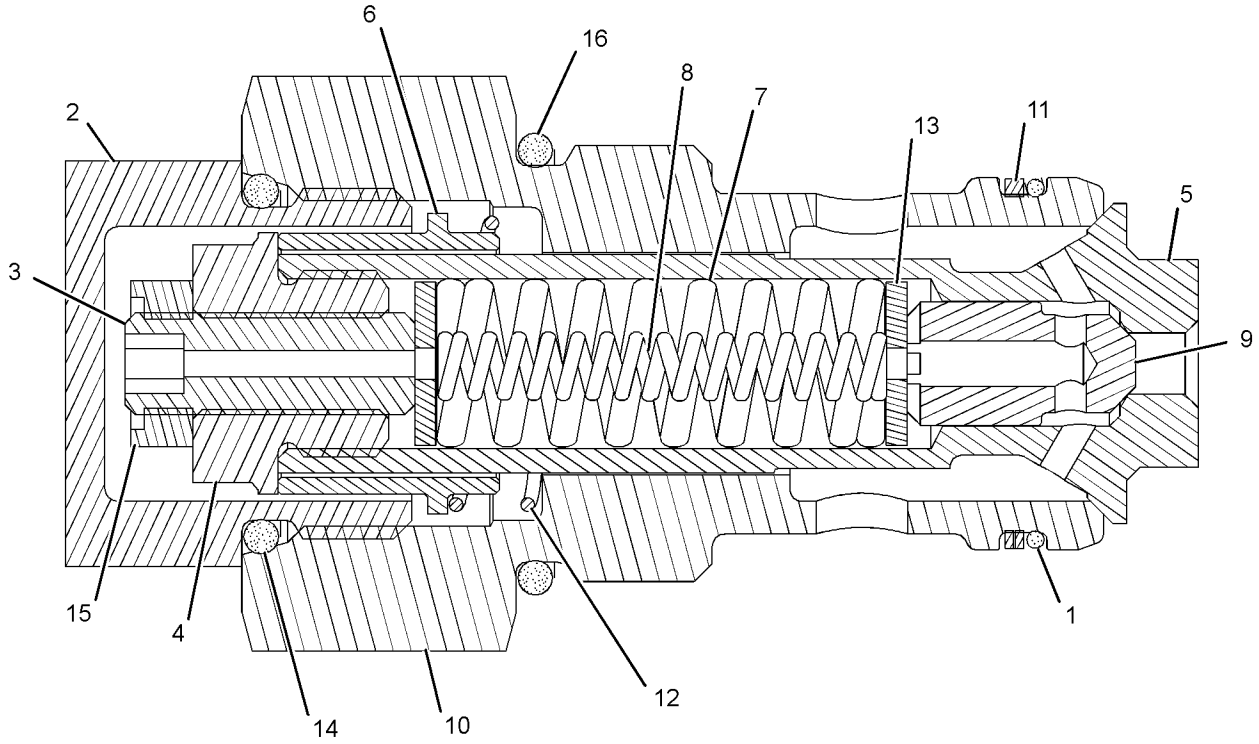

GRAPHIC #1 **<END>** g01157326

HYDRAULIC SYSTEM

247-7601 VALVE GP-CONTROL—HYDRAULIC BLOCK

S/N: M3G1-UP

PART OF 261-4171, 261-4172 VALVE GP-MAIN CONTROL

ALSO AN ATTACHMENT

SMCS-5051 **i02248731**

NOTE	REF NO	GRAPHIC REF	PART NUMBER	QTY	PART NAME 1 2 3 4 5 6 (PRODUCT LEVEL)	SEE PAGE
	1	1	**7X-1550**	2	SEAL-O-RING	
	2	1	**9T-7692**	2	RING	
	3	1	**105-9410**	1	SEAL-O-RING	
	4	1	**148-9359**	5	PLUG	
Y	5	1	**194-1723**	1	VALVE GP-CHECK (PILOT OIL)	556
	6	1	**223-1341**	1	PLUG AS	
		1	**3K-0360**	1	SEAL-O-RING	
		1	**7J-9933**	1	SEAL-O-RING	
	7	1	**240-4695**	2	RING-BACKUP	
	8	1	**247-4481**	1	PLUG	
	9	1	**7J-9108**	1	SEAL-O-RING	
	10	1	**253-4025**	1	BODY-VALVE	
	11	1	**256-4362**	2	RING-BACKUP	
	12	1	**256-4363**	2	RING-BACKUP	
	13	1	**256-4552**	2	PLUG	
	14	1	**256-7280**	2	RING-BACKUP	
Y	15	1	**260-8590**	1	VALVE GP-SHUTTLE	590
	16	1	**095-1751**	1	SEAL-O-RING	
	17	1	*148-8395*	1	PLUG AS	
		1	**3K-0360**	1	SEAL-O-RING	
		1	**9S-8005**	1	PLUG-O RING	
	18	1	*148-8406*	1	PLUG AS	
		1	**7M-8485**	1	SEAL-O-RING	
		1	**9S-9334**	1	PLUG	
	19	1	*148-8411*	2	PLUG AS	
					(EACH INCLUDES)	
		1	**3K-0360**	1	SEAL-O-RING	
	20	1	*162-0177*	1	PLUG AS	
		1	**3J-1907**	1	SEAL-O-RING	
		1	**9S-8004**	1	PLUG	
	21	1	*164-4180*	1	PLUG AS	
		1	**9S-4191**	1	PLUG-O RING	
		1	**7M-8485**	1	SEAL-O-RING	
	22	1	**173-3993**	14	PLUG AS	
					(EACH INCLUDES)	
		1	**4J-7533**	1	SEAL-O-RING	
		1	**9S-8001**	1	PLUG	
	23	1	*207-8218*	3	PLUG AS	
					(EACH INCLUDES)	
		1	**7J-0204**	1	SEAL-O-RING	
		1	**9S-8007**	1	PLUG	
	24	1	**1P-3704**	2	SEAL-RECTANGULAR	
	25	1	**1P-3705**	1	SEAL-RECTANGULAR	
	26	1	**2M-9780**	1	SEAL-O-RING	
	27	1	**2S-4078**	2	SEAL-O-RING	
	28	1	**4J-0524**	2	SEAL-O-RING	
	29	1	**4J-9535**	2	SEAL-O-RING	
	30	1	**6J-3134**	5	SEAL-O-RING	
	31	1	**6V-0357**	2	SEAL-O-RING	

Y-SEPARATE ILLUSTRATION

247-7601 VALVE GP-CONTROL *(contd.)* **i02248731**

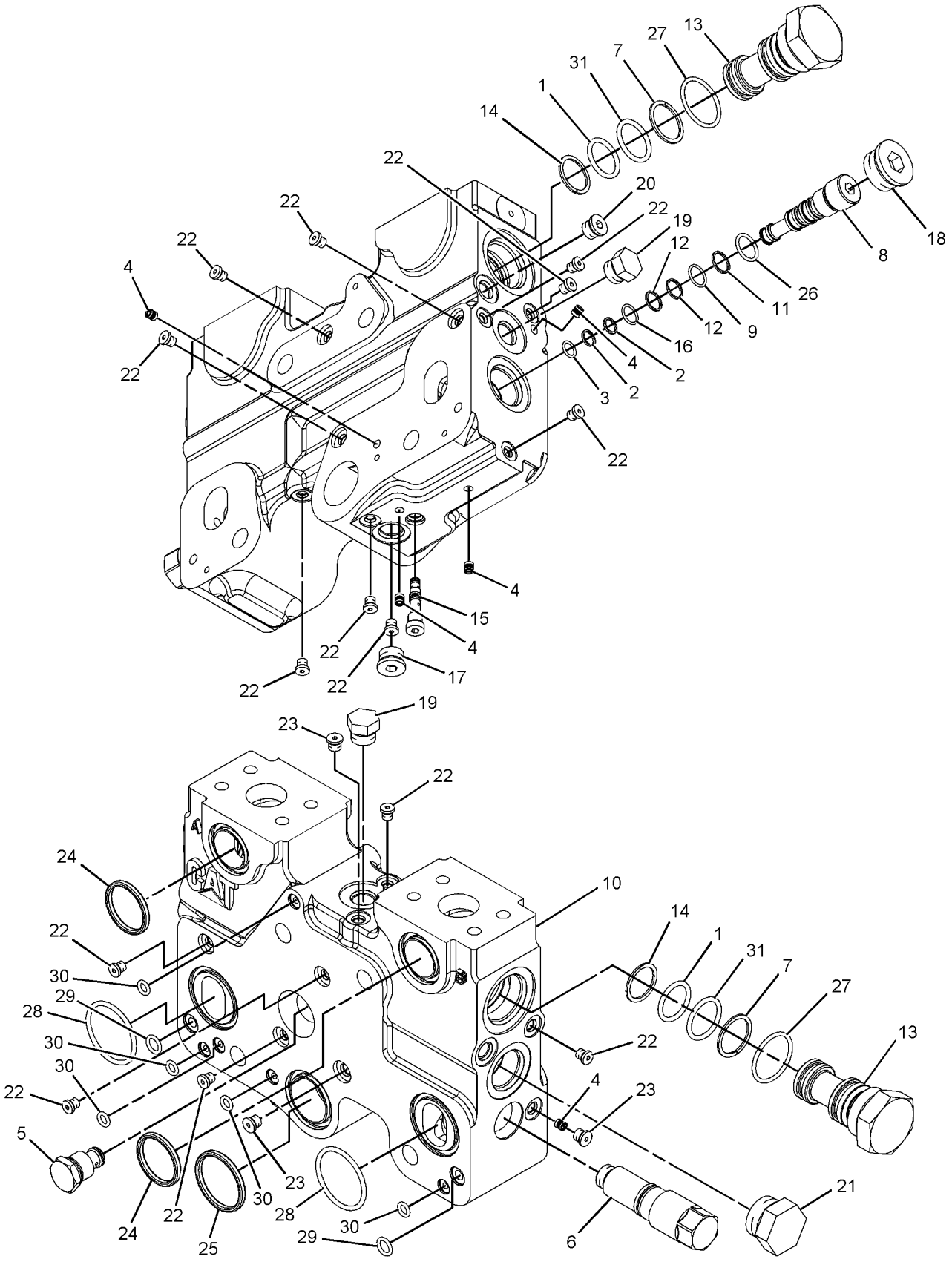

GRAPHIC #1 **<END>** g01114584

HYDRAULIC SYSTEM

261-0017 VALVE GP-CONTROL–AUXILIARY

S/N: M3G1-UP

PART OF 261-3683, 261-4172 VALVE GP-MAIN CONTROL

AN ATTACHMENT

SMCS-5051 **i02444346**

NOTE	REF NO	GRAPHIC REF	PART NUMBER	QTY	PART NAME 1 2 3 4 5 6 (PRODUCT LEVEL)	SEE PAGE
	1	1	**1T-0936**	1	PLUG-PIPE	
	2	1	*164-5619*	2	PLUG AS	
					(EACH INCLUDES)	
		1	**9S-8006**	1	PLUG	
		1	**2M-9780**	1	SEAL-O-RING	
	3	1	**9W-7783**	2	PLUG	
	4	1	**148-9359**	4	PLUG	
	5	1	**234-4845**	1	SPOOL	
	6	1	**234-4846**	1	SPOOL	
	7	1	**234-4851**	1	SPRING (INNER)	
	8	1	**284-1010**	1	SPRING (OUTER)	
	9	1	**284-1011**	1	SPRING (INNER)	
	10	1	**236-9832**	1	SPRING (OUTER)	
J	11	1	**272-2334**	2	VALVE GP-RELIEF (LINE, AUXILIARY)	
	12	1	**250-7531**	1	PLUG-RETAINER	
Z	14	1		1	BODY-VALVE	
Y	15	1	**257-0267**	2	VALVE GP-SOLENOID (PILOT PROPORTIONING)	593
	16	1	**260-3053**	1	HOUSING-SPRING	
	17	1	**260-3055**	1	HOUSING-SPRING	
	18	1	**284-1017**	1	RETAINER	
	19	1	**284-1018**	1	RETAINER	
	20	1	**260-3058**	1	BOLT	
Z	21	1		1	STEM-VALVE (AUXILIARY)	
Y	22	1	**260-8590**	1	VALVE GP-SHUTTLE (BALL RESOLVER)	590
	24	1	*162-0177*	2	PLUG AS	
					(EACH INCLUDES)	
		1	**3J-1907**	1	SEAL-O-RING	
		1	**9S-8004**	1	PLUG	
	25	1	**1P-3705**	1	SEAL-RECTANGULAR	
	26	1	*183-7263*	1	PLUG AS	
		1	**3J-7354**	1	SEAL-O-RING	
		1	**9S-8002**	1	PLUG	
	27	1	**2S-4078**	1	SEAL-O-RING	
	28	1	**3E-6771**	2	SEAL-O-RING	
	29	1	**3J-1907**	1	SEAL-O-RING	
	30	1	**4J-0524**	2	SEAL-O-RING	
	31	1	**4J-9535**	2	SEAL-O-RING	
M	32	1	**5A-3604**	4	BOLT-SOCKET HEAD (M8X1.25X25-MM)	
	33	1	**6J-3134**	4	SEAL-O-RING	
					AVAILABLE REPAIR KIT(S):	
J			**238-9842**	1	KIT-SEAL	

J-KIT MARKED J SERVICES PARTS MARKED J
M-METRIC PART
Y-SEPARATE ILLUSTRATION
Z-NOT SERVICED SEPARATELY

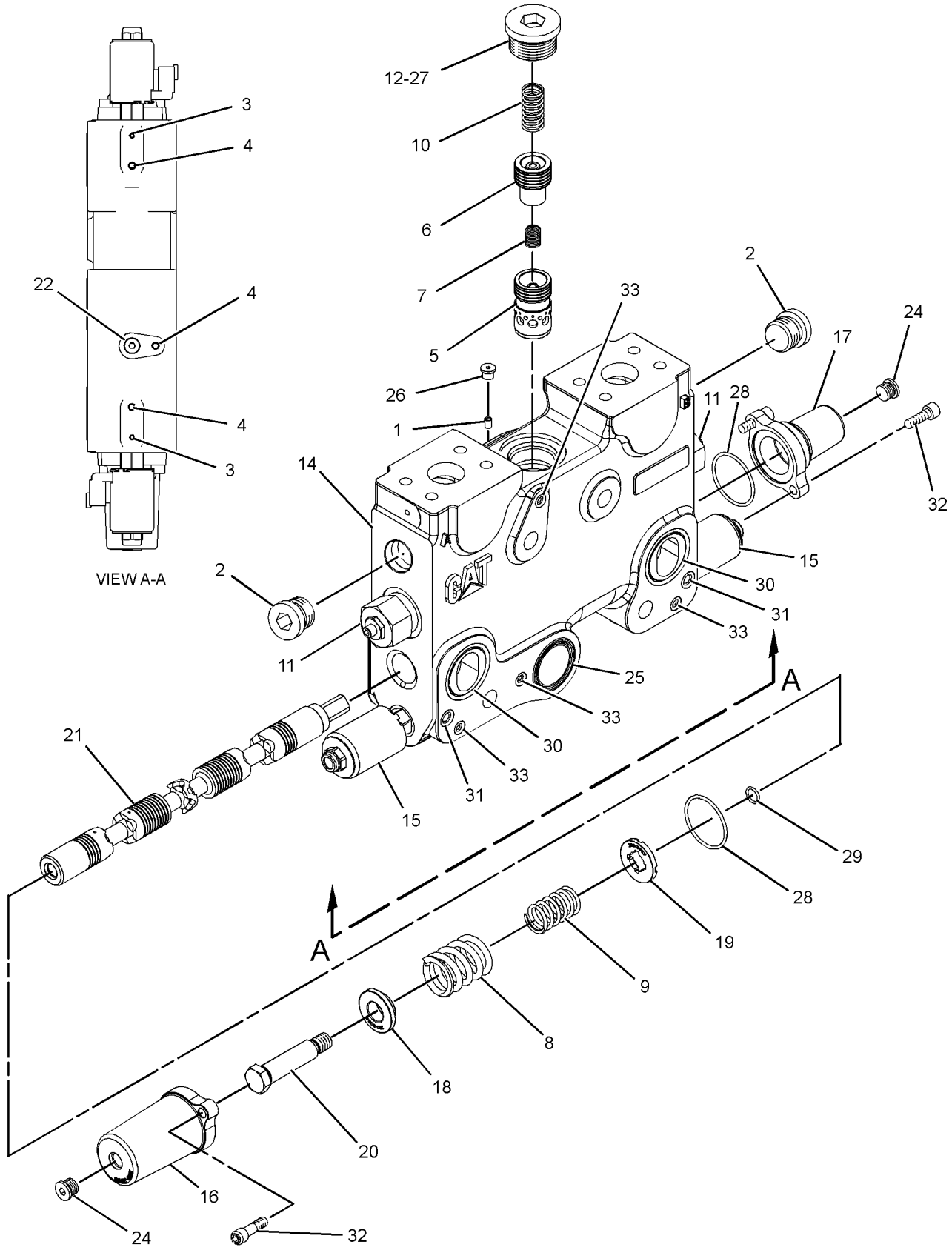

GRAPHIC #1 **<END>** g01197592

HYDRAULIC SYSTEM

261-0018 VALVE GP-CONTROL–TILT

S/N: M3G1-UP

PART OF 261-3682, 261-3683, 261-4171, 261-4172 VALVE GP-MAIN CONTROL

ALSO AN ATTACHMENT

SMCS-5051 **i02304889**

NOTE	REF NO	GRAPHIC REF	PART NUMBER	QTY	PART NAME 1 2 3 4 5 6 (PRODUCT LEVEL)	SEE PAGE
	1	1	**1T-0936**	1	PLUG-PIPE	
	3	2	**9W-7783**	2	PLUG	
	4	2	**148-9359**	4	PLUG	
	5	1,2	**162-0177**	2	PLUG AS	
					(EACH INCLUDES)	
		1,2	**3J-1907**	1	SEAL-O-RING	
		1,2	**9S-8004**	1	PLUG	
	6	1	**234-0349**	1	BODY-VALVE	
	7	1	**234-4845**	1	SPOOL	
	8	1	**234-4846**	1	SPOOL	
	9	1	**234-4851**	1	SPRING	
	10	2	**234-5001**	1	SPRING	
	11	2	**235-1498**	1	SPRING	
	12	1	**236-9832**	1	SPRING	
Y	13	2	**262-5265**	1	VALVE GP-SOLENOID (DRIFT REDUCTION)	594
Y	14	1	**268-8019**	1	VALVE GP-CHECK & RELIEF (LINE, TILT CYL HEAD END PORT)	557
Y	14A	2	**268-8019**	1	VALVE GP-CHECK & RELIEF (LINE, TILT CYL ROD END PORT)	557
	15	1	**250-7531**	1	PLUG-RETAINER	
Y	16	1,2	**257-0267**	2	VALVE GP-SOLENOID (PILOT PROPORTIONING)	593
	17	2	**260-3053**	1	HOUSING-SPRING	
	18	1	**260-3055**	1	HOUSING-SPRING	
	19	2	**260-3056**	1	RETAINER	
	20	2	**260-3057**	1	RETAINER	
	21	2	**260-3058**	1	BOLT	
	22	1	**260-6737**	1	STEM-VALVE (TILT)	
Y	23	2	**260-8590**	1	VALVE GP-SHUTTLE (BALL RESOLVER)	590
	25	1	**1P-3705**	1	SEAL-RECTANGULAR	
	26	1	*183-7263*	1	PLUG AS	
		1	**3J-7354**	1	SEAL-O-RING	
		1	**9S-8002**	1	PLUG	
	27	1	**2S-4078**	1	SEAL-O-RING	
	28	1,2	**3E-6771**	2	SEAL-O-RING	
	29	2	**3J-1907**	1	SEAL-O-RING	
	30	1	**4J-0524**	2	SEAL-O-RING	
	31	1	**4J-9535**	2	SEAL-O-RING	
M	32	1,2	**5A-3604**	4	BOLT-SOCKET HEAD (M8X1.25X25-MM)	
	33	1	**6J-3134**	4	SEAL-O-RING	
	34	1	**164-5619**	1	PLUG AS	
		1	**2M-9780**	1	SEAL-O-RING	
		1	**9S-8006**	1	PLUG	

M-METRIC PART
Y-SEPARATE ILLUSTRATION

261-0018 VALVE GP-CONTROL *(contd.)* **i02304889**

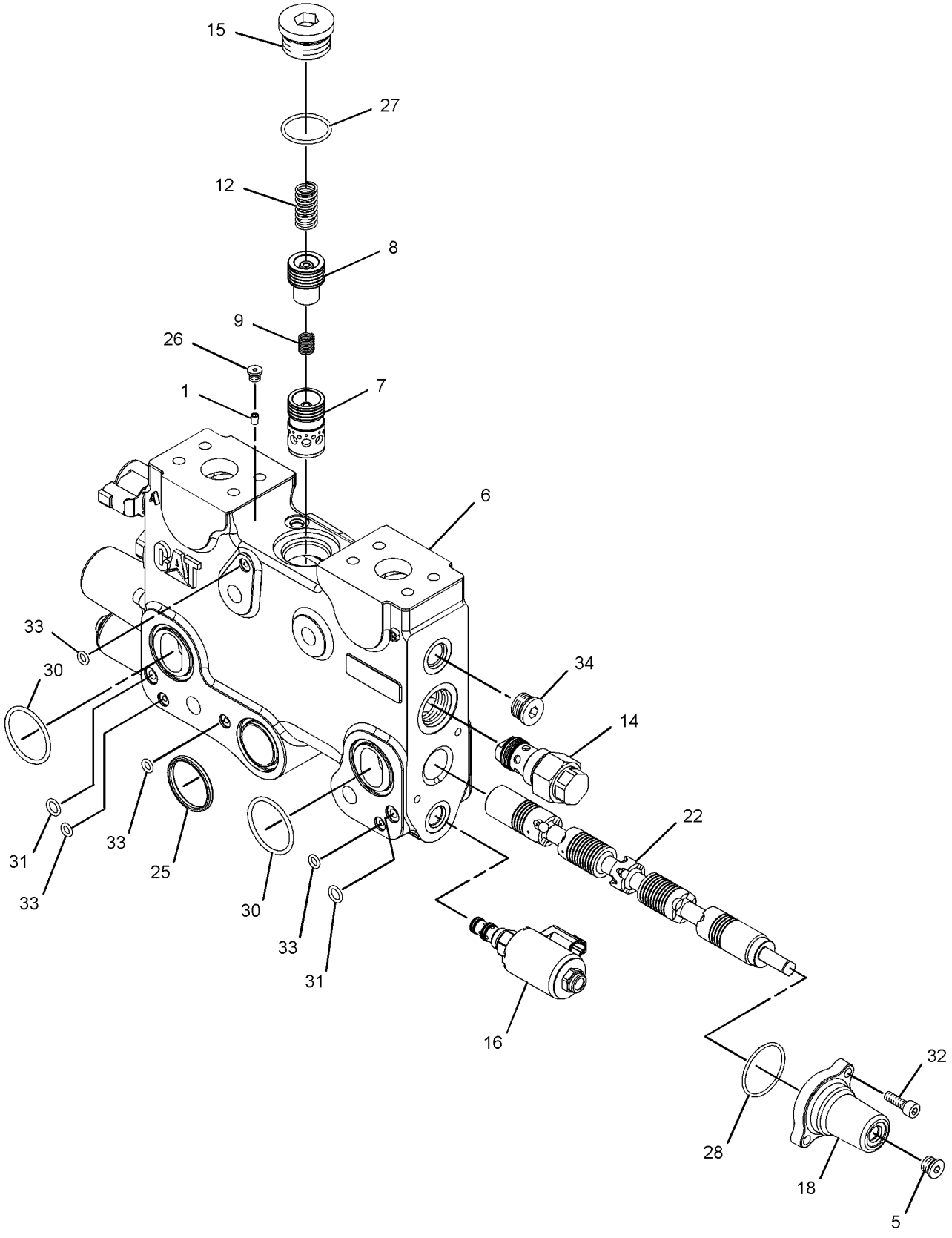

GRAPHIC #1 g01154708

261-0018 VALVE GP-CONTROL *(contd.)* i02304889

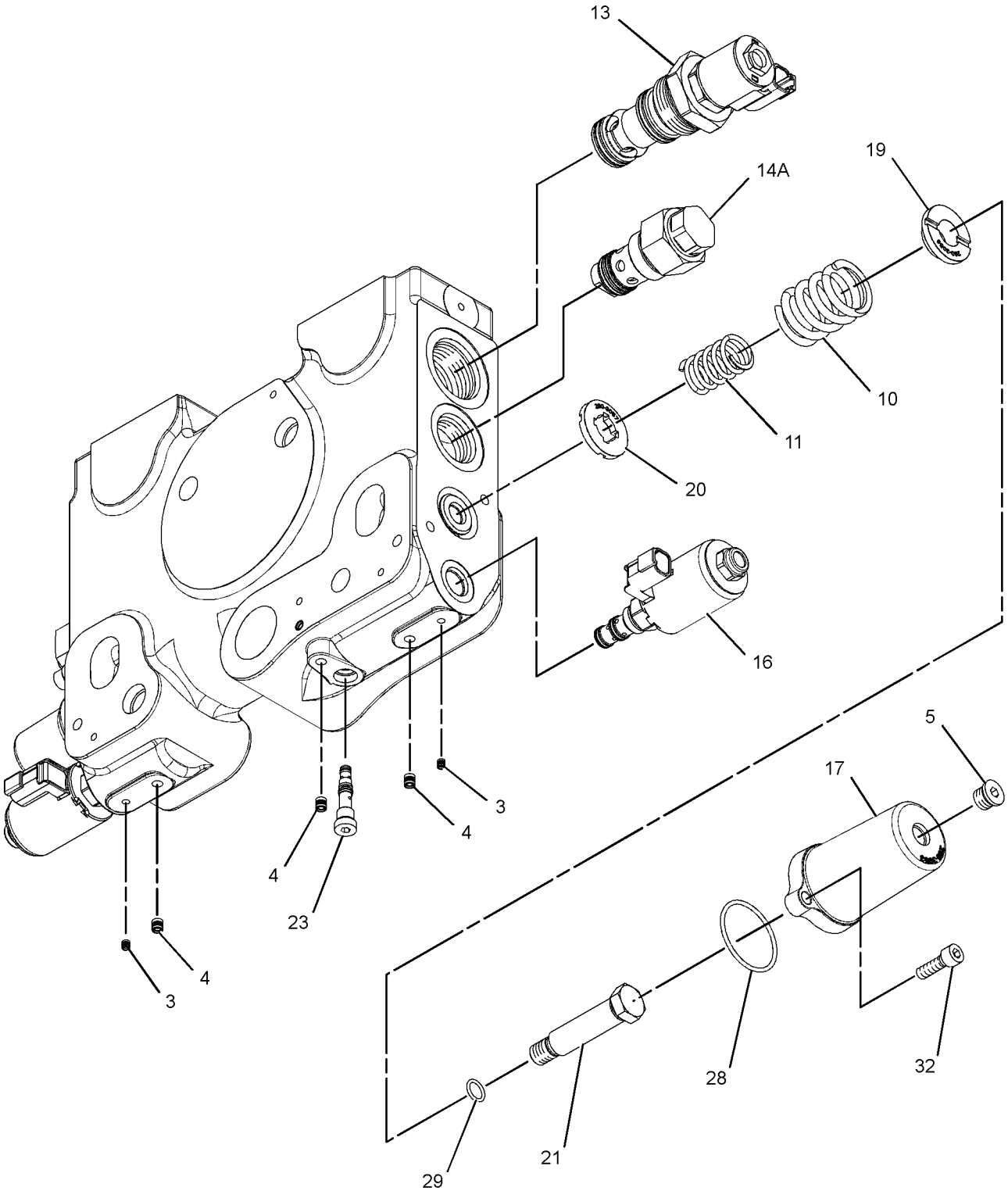

GRAPHIC #2 **<END>** g01154709

261-0019 VALVE GP-CONTROL—LIFT

S/N: M3G1-UP

PART OF 261-3682, 261-3683, 261-4171, 261-4172 VALVE GP-MAIN CONTROL

ALSO AN ATTACHMENT

SMCS-5051 **i02305228**

NOTE	REF NO	GRAPHIC REF	PART NUMBER	QTY	PART NAME 1 2 3 4 5 6 (PRODUCT LEVEL)	SEE PAGE
	1	1	**1T-0936**	1	PLUG-PIPE	
	3	1	**9W-7783**	2	PLUG	
	4	1	**148-9359**	4	PLUG	
	5	1	**162-0177**	2	PLUG AS	
					(EACH INCLUDES)	
		1	**3J-1907**	1	SEAL-O-RING	
		1	**9S-8004**	1	PLUG	
	6	1	**234-4845**	1	SPOOL	
	7	1	**234-4846**	1	SPOOL	
	8	1	**234-4851**	1	SPRING	
	9	1	**234-4860**	1	BODY-VALVE	
J	10	1	**234-4869**	1	VALVE GP-MAKEUP	
	11	1	**234-4870**	1	PLUG	
	12	1	**234-5001**	1	SPRING	
	13	1	**235-1498**	1	SPRING	
	14	1	**236-9832**	1	SPRING	
Y	15	1	**262-5265**	1	VALVE GP-SOLENOID (DRIFT REDUCTION)	594
	16	1	**240-4696**	1	RING-BACKUP	
	17	1	**250-7531**	1	PLUG-RETAINER	
Y	18	1	**257-0267**	2	VALVE GP-SOLENOID (PILOT PROPORTIONING)	593
	19	1	**260-3053**	1	HOUSING-SPRING	
	20	1	**260-3055**	1	HOUSING-SPRING	
	21	1	**260-3056**	1	RETAINER	
	22	1	**260-3057**	1	RETAINER	
	23	1	**260-3058**	1	BOLT	
	24	1	**260-6738**	1	STEM-VALVE (LIFT)	
Y	25	1	**260-8590**	1	VALVE GP-SHUTTLE (BALL RESOLVER)	590
	27	1	**1P-3705**	1	SEAL-RECTANGULAR	
	28	1	*183-7263*	1	PLUG AS	
		1	**3J-7354**	1	SEAL-O-RING	
		1	**9S-8002**	1	PLUG	
	29	1	**2S-4078**	1	SEAL-O-RING	
	30	1	**3E-6771**	2	SEAL-O-RING	
	31	1	**3J-1907**	1	SEAL-O-RING	
	32	1	**4J-0524**	2	SEAL-O-RING	
	33	1	**4J-8996**	1	SEAL-O-RING	
	34	1	**4J-9535**	2	SEAL-O-RING	
M	35	1	**5A-3604**	4	BOLT-SOCKET HEAD (M8X1.25X25-MM)	
	36	1	**6J-3134**	4	SEAL-O-RING	
	37	1	**7M-8485**	1	SEAL-O-RING	
	38	1	**164-5619**	1	PLUG AS	
		1	**2M-9780**	1	SEAL-O-RING	
		1	**9S-8006**	1	PLUG	
					AVAILABLE REPAIR KIT(S):	
J			**238-9842**	1	KIT-SEAL	

J-KIT MARKED J SERVICES PART MARKED J
M-METRIC PART
Y-SEPARATE ILLUSTRATION

261-0019 VALVE GP-CONTROL *(contd.)* i02305228

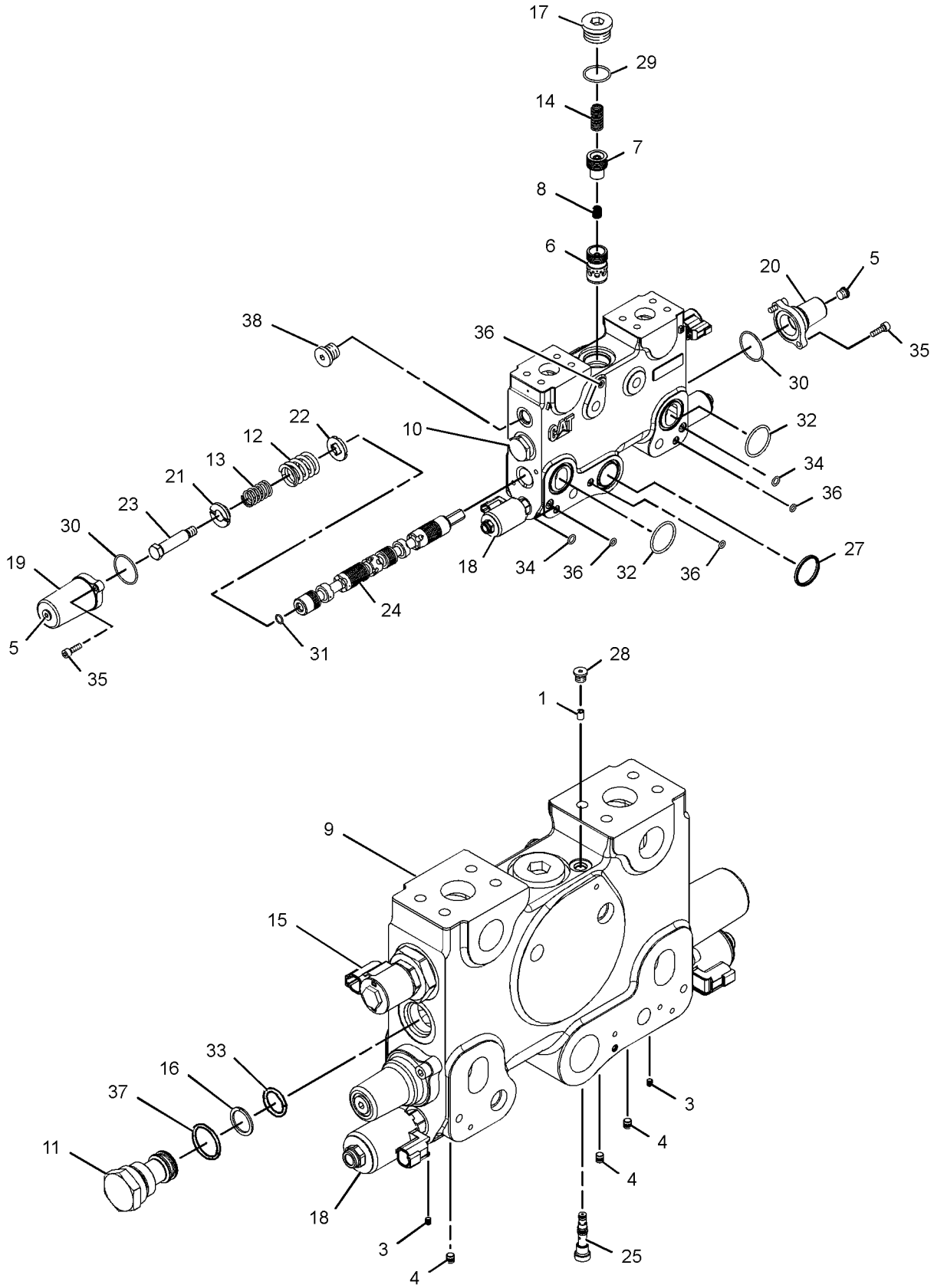

GRAPHIC #1 **<END>** g01156401

180-8585 VALVE GP-DIVERTER–QUICK COUPLER

S/N: M3G1-UP

PART OF 275-6101 LINES GP-COUPLER

AN ATTACHMENT

SMCS-5066 **i02139165**

NOTE	REF NO	GRAPHIC REF	PART NUMBER	QTY	PART NAME 1 2 3 4 5 6 (PRODUCT LEVEL)	SEE PAGE
	1	1	**180-9068**	1	VALVE GP-SOLENOID (QUICK COUPLER)	
	2	1	**180-9069**	1	VALVE GP-DIVERTER (QUICK COUPLER)	
	3	1	**102-8802**	1	KIT-RECEPTACLE (2-PIN)	
					(INCLUDES RECEPTACLE AS AND WEDGE)	
	4	1	**186-3735**	2	PIN-CONNECTOR (16-GA TO 18-GA)	

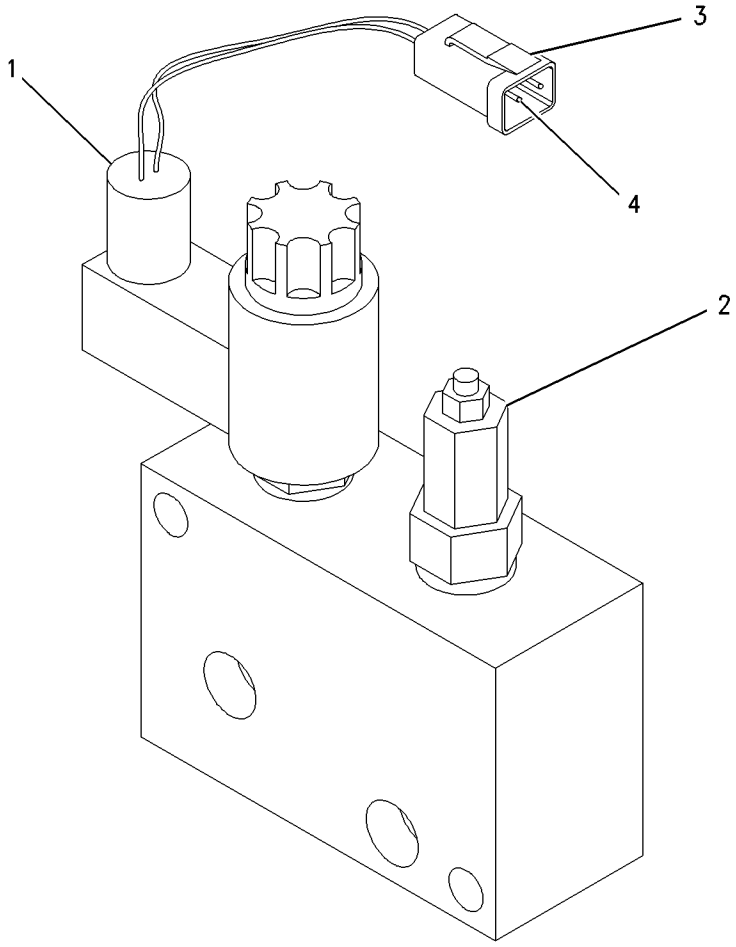

GRAPHIC #1 **<END>** g00748594

252-9256 VALVE GP-DIVERTER–HYDRAULIC FAN

S/N: M3G1-UP

PART OF 242-1307 MANIFOLD GP-CONTROL

SMCS-5066 **i02250581**

NOTE	REF NO	GRAPHIC REF	PART NUMBER	QTY	PART NAME 1 2 3 4 5 6 (PRODUCT LEVEL)	SEE PAGE
J	1	1	**2M-9780**	1	SEAL-O-RING	
J	2	1	**6V-5142**	1	SEAL-O-RING	
J	3	1	**169-1617**	2	RING-BACKUP	
J	4	1	**095-1751**	1	SEAL-O-RING	
J	5	1	**169-1616**	2	RING-BACKUP	
					AVAILABLE REPAIR KIT(S):	
J			**200-6282**	1	KIT-SEAL (DIVERTER VALVE) (HYDRAULIC FAN FLUID FLOW)	
					(INCLUDES SEALS & RINGS)	

J-KIT MARKED J SERVICES PARTS MARKED J

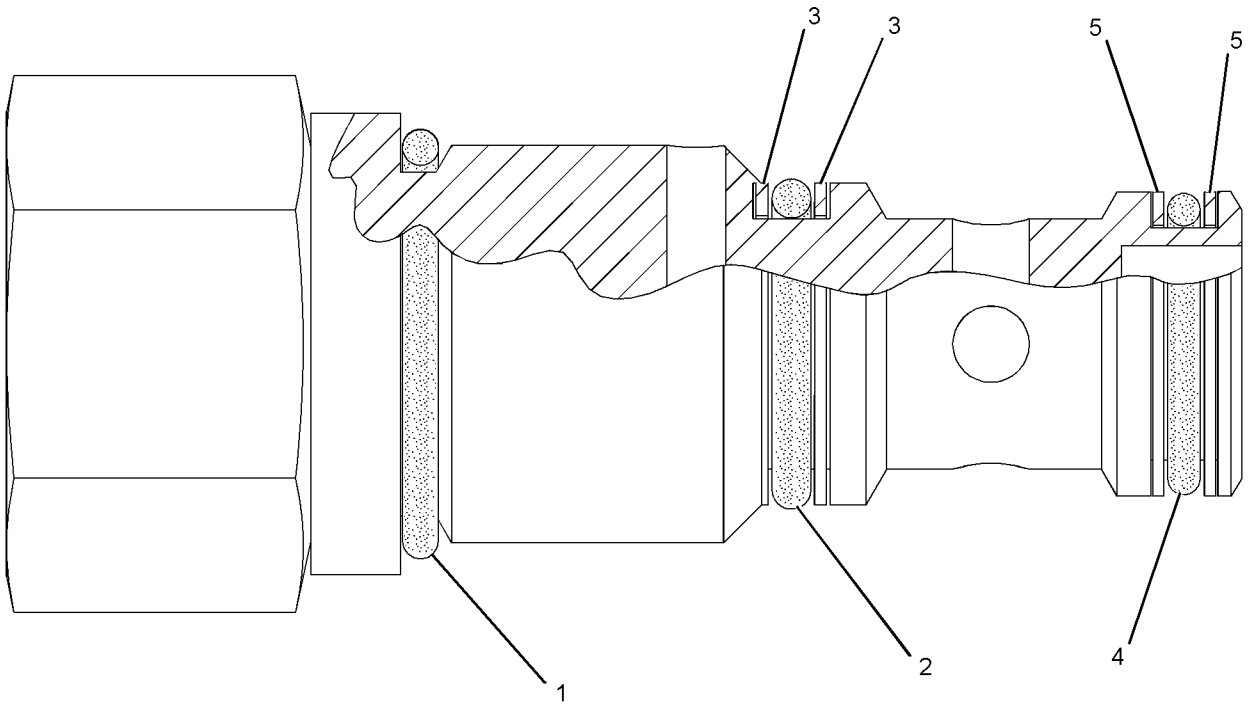

GRAPHIC #1 **<END>** g01109584

245-5943 VALVE GP-DRAIN–ECOLOGY, HYDRAULIC

S/N: M3G1-UP

PART OF 237-0268 LINES GP-HYDRAULIC

SMCS-5076 **i02443036**

NOTE	REF NO	GRAPHIC REF	PART NUMBER	QTY	PART NAME 1 2 3 4 5 6 (PRODUCT LEVEL)	SEE PAGE
	1	1	**1U-2827**	1	GUIDE-VALVE	
	2	1	**8J-8782**	1	BODY-DRAIN VALVE	
	3	1	**8J-8783**	1	VALVE	
	4	1	**9J-7031**	1	PLUG-DRAIN	
	5	1	**245-5942**	1	BLOCK	
	6	1	**5M-2057**	1	SEAL-O-RING	
	7	1	**7B-3039**	1	SPRING	
M	8	1	**8T-0722**	2	BOLT-LOCKING (M10X1.5X30-MM)	
	9	1	**8T-3298**	1	SEAL-RECTANGULAR	
	10	1	**8T-4896**	2	WASHER-HARD (10.2X18.5X2.5-MM THK)	

M-METRIC PART

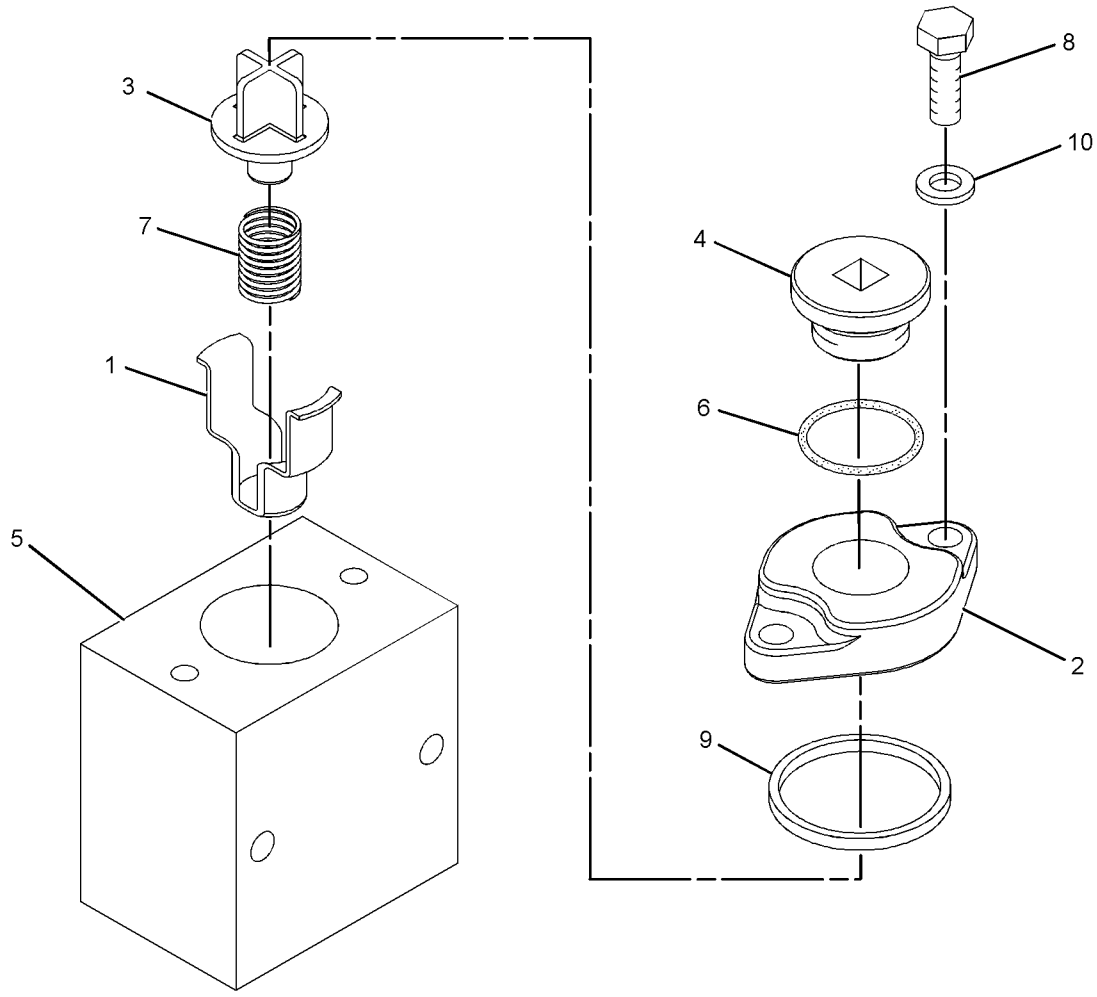

GRAPHIC #1 **<END>** g01116077

HYDRAULIC SYSTEM

245-3866 VALVE GP-LOWERING CONTROL

S/N: M3G1-UP

PART OF 237-0238 HYDRAULIC AR-2 VALVE

SMCS-5147 **i02449752**

NOTE	REF NO	GRAPHIC REF	PART NUMBER	QTY	PART NAME 1 2 3 4 5 6 (PRODUCT LEVEL)	SEE PAGE
I	1	1	**245-3867**	1	HOSE AS	
I	2	1	**245-3868**	1	HOSE AS	
	3	1	**261-0424**	1	PLATE	
	4	1	**096-6166**	4	WASHER-HARD (4.5X9X1-MM THK)	
Y	5	1	**112-1817**	1	VALVE GP-MANUAL (LOWERING CONTROL)	579
	6	1	*148-8378*	1	ELBOW AS	
		1	**3J-1907**	1	SEAL-O-RING	
		1	**6V-8397**	1	SEAL-O-RING	
		1	**6V-8724**	1	ELBOW	
	7	1	*148-8435*	1	TEE AS	
		1	**3J-1907**	1	SEAL-O-RING	
		1	**6V-8397**	2	SEAL-O-RING	
		1	**6V-8781**	1	TEE-FACE SEAL	
	8	1	**6D-4246**	1	CLIP	
	9	1	**6V-9829**	1	CAP AS	
M	10	1	**8T-0285**	4	SCREW-MACHINE (M4X0.7X12-MM)	
	11	1	**8T-4121**	3	WASHER-HARD (11X21X2.5-MM THK)	
M	12	1	**8T-4137**	3	BOLT (M10X1.5X20-MM)	

I-REFER TO HYDRAULIC INFORMATION SYSTEM
M-METRIC PART
Y-SEPARATE ILLUSTRATION

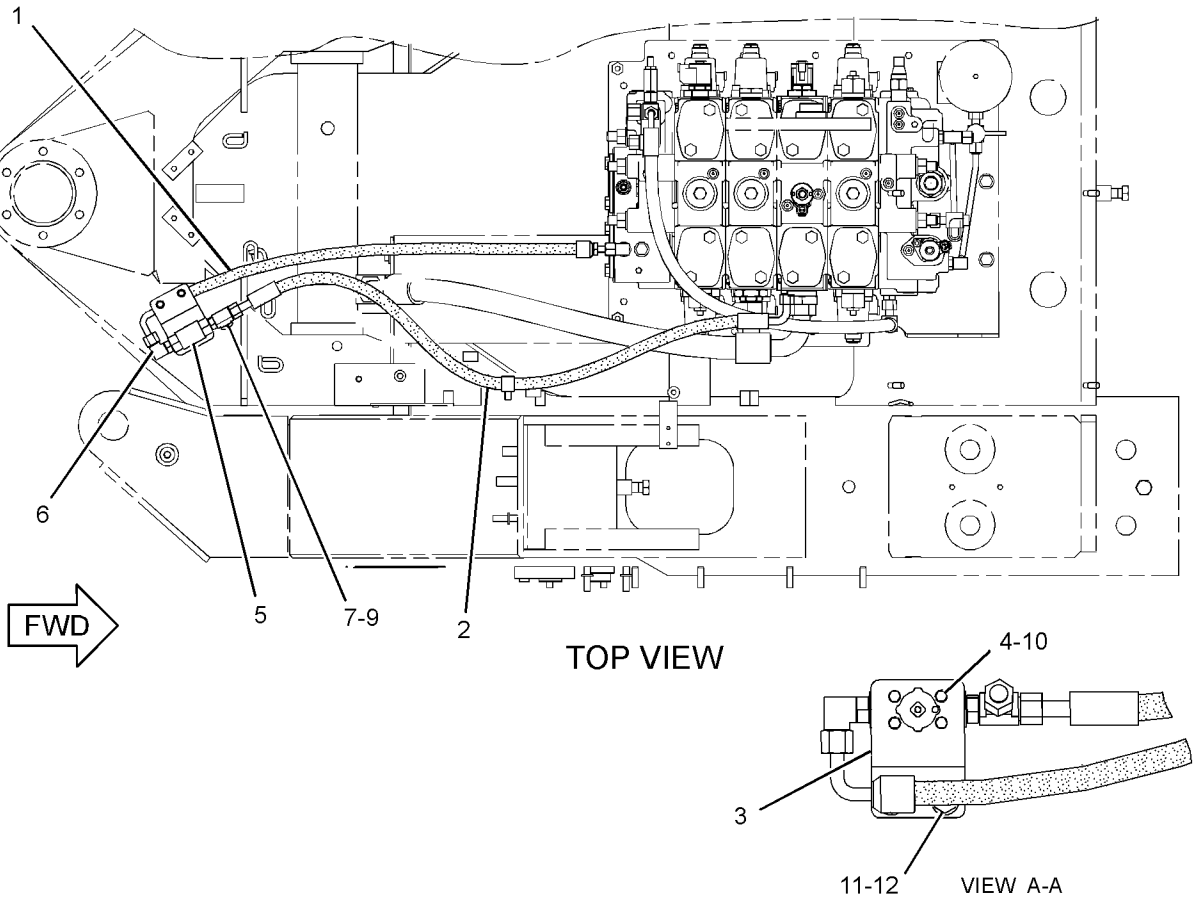

GRAPHIC #1 **<END>** g01200135

261-3682 VALVE GP-MAIN CONTROL–
2-FUNCTION, WITH RIDE CONTROL
S/N: M3G1-UP
PART OF 243-0083 VALVE & MTG GP-MAIN CONTROL
AN ATTACHMENT

SMCS-5051 **i02449503**

NOTE	REF NO	GRAPHIC REF	PART NUMBER	QTY	PART NAME 1 2 3 4 5 6 (PRODUCT LEVEL)	SEE PAGE
M	2	1	**8T-4132**	8	NUT (M16X2-THD)	
	3	1	**238-1795**	4	ROD	
Y	4	1	**253-4026**	1	VALVE GP-RIDE CONTROL	586
Y	5	1	**261-0018**	1	VALVE GP-CONTROL (TILT)	562
Y	6	1	**261-0019**	1	VALVE GP-CONTROL (LIFT)	565
Y	8	1	**269-9398**	1	MANIFOLD GP-VALVE (END COVER)	524
Y	9	1	**271-9248**	1	MANIFOLD GP-VALVE (INLET)	526
	10	1	*183-7263*	1	PLUG AS	
		1	**3J-7354**	1	SEAL-O-RING	
		1	**9S-8002**	1	PLUG	
	11	1	**9X-8257**	8	WASHER (17.5X30X3.5-MM THK)	

M-METRIC PART
Y-SEPARATE ILLUSTRATION

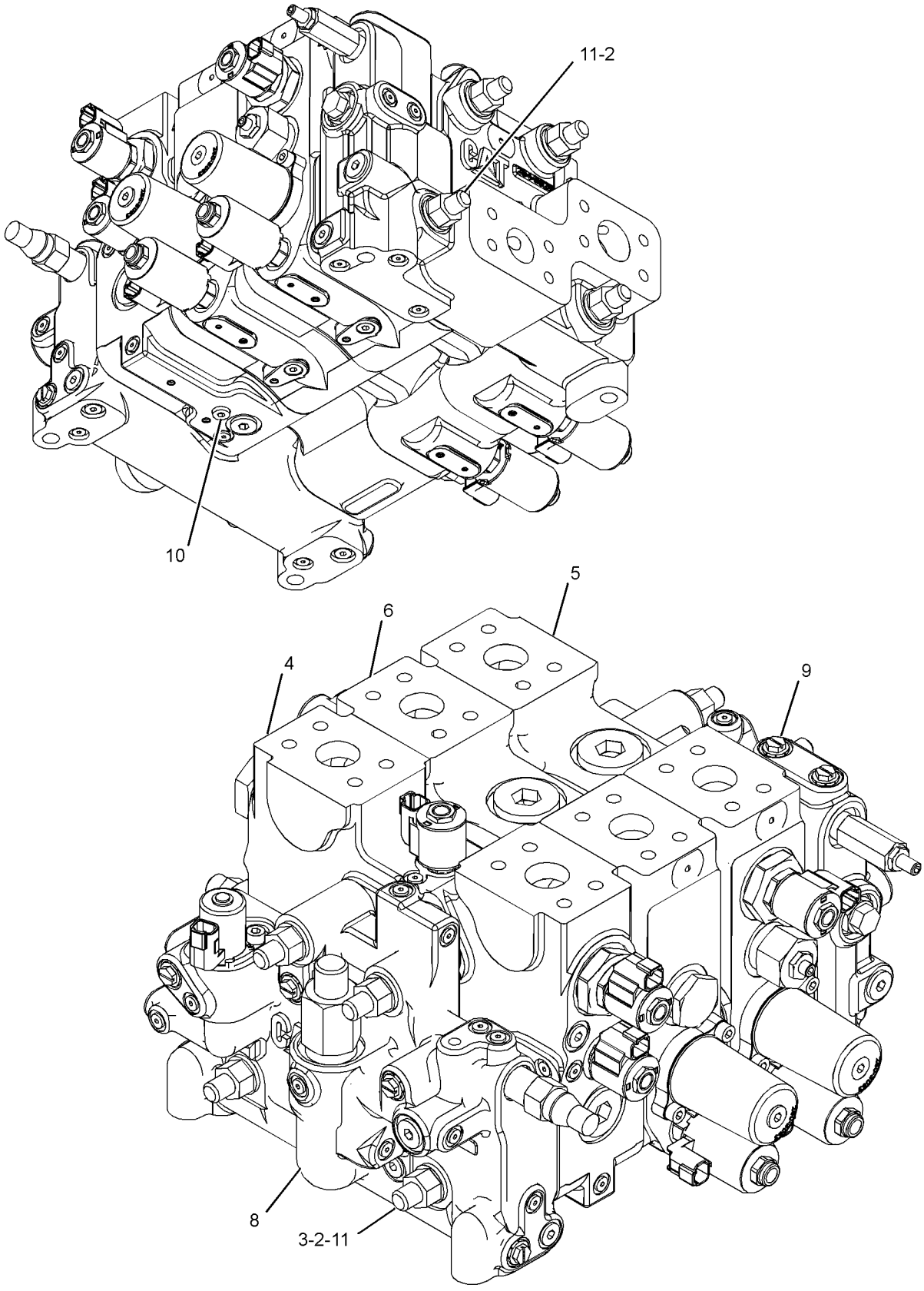

GRAPHIC #1

<END>

g01224708

261-3683 VALVE GP-MAIN CONTROL–
3-FUNCTION, WITH RIDE CONTROL
S/N: M3G1-UP
PART OF 243-0086 VALVE & MTG GP-MAIN CONTROL
AN ATTACHMENT

SMCS-5051 **i02449498**

NOTE	REF NO	GRAPHIC REF	PART NUMBER	QTY	PART NAME 1 2 3 4 5 6 (PRODUCT LEVEL)	SEE PAGE
M	2	1	**8T-4132**	8	NUT (M16X2-THD)	
	3	1	**238-1796**	4	ROD	
Y	4	1	**253-4026**	1	VALVE GP-RIDE CONTROL	586
Y	5	1	*261-0017*	1	VALVE GP-CONTROL (AUXILIARY)	560
Y	6	1	**261-0018**	1	VALVE GP-CONTROL (TILT)	562
Y	7	1	**261-0019**	1	VALVE GP-CONTROL (LIFT)	565
Y	9	1	**269-9398**	1	MANIFOLD GP-VALVE (END COVER)	524
Y	10	1	**271-9248**	1	MANIFOLD GP-VALVE (INLET)	526
	11	1	*183-7263*	1	PLUG AS	
		1	**3J-7354**	1	SEAL-O-RING	
		1	**9S-8002**	1	PLUG	
	12	1	**9X-8257**	8	WASHER (17.5X30X3.5-MM THK)	

M-METRIC PART
Y-SEPARATE ILLUSTRATION

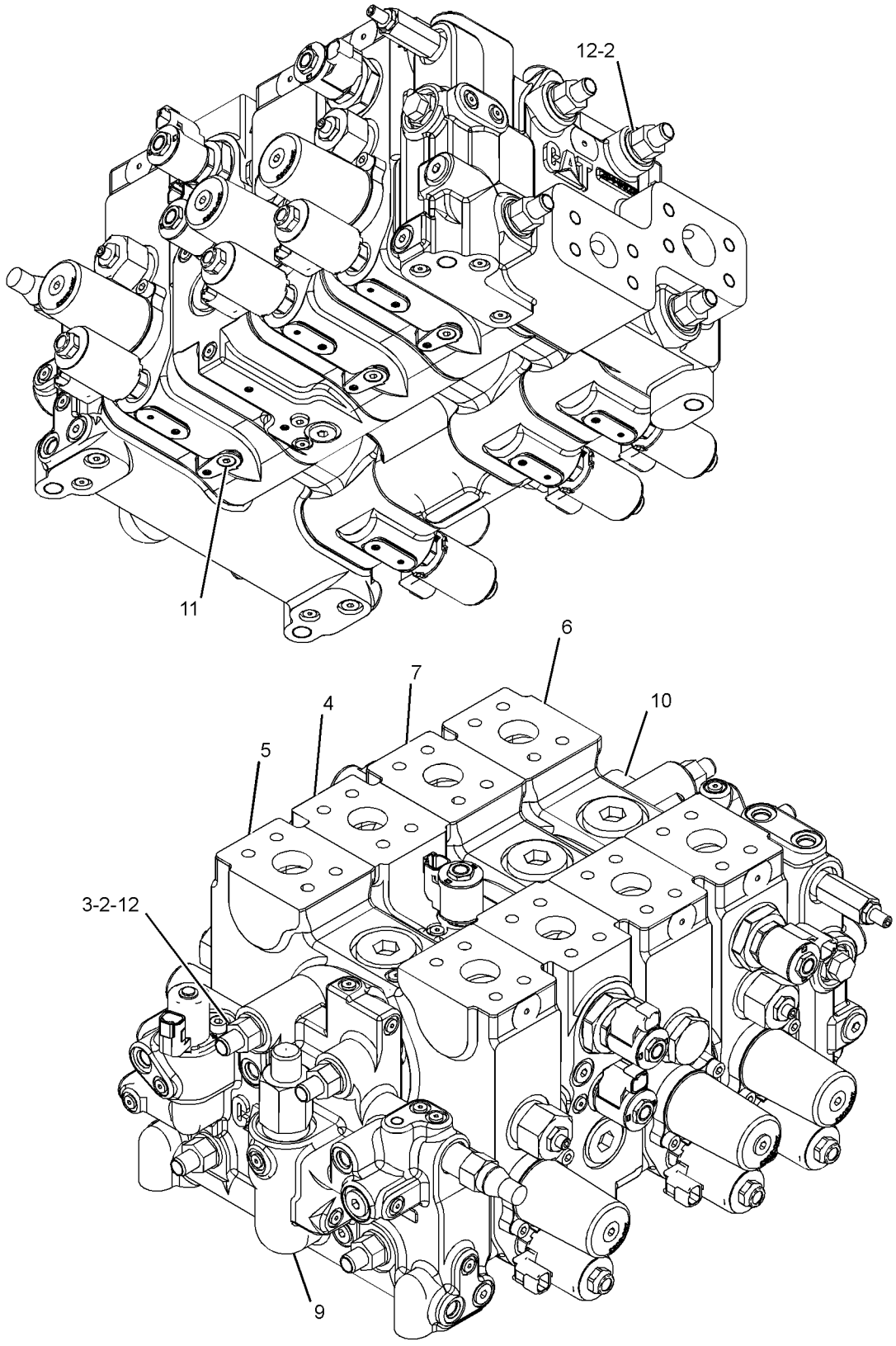

GRAPHIC #1 **<END>** g01224639

HYDRAULIC SYSTEM

261-4171 VALVE GP-MAIN CONTROL–2-FUNCTION

S/N: M3G1-UP

PART OF 237-0961 VALVE & MTG GP-MAIN CONTROL

SMCS-5051 **i02449493**

NOTE	REF NO	GRAPHIC REF	PART NUMBER	QTY	PART NAME 1 2 3 4 5 6 (PRODUCT LEVEL)	SEE PAGE
	2	1	**238-1795**	4	ROD	
Y	3	1	**247-7601**	1	VALVE GP-CONTROL (HYDRAULIC BLOCK)	558
Y	4	1	**261-0018**	1	VALVE GP-CONTROL (TILT)	562
Y	5	1	**261-0019**	1	VALVE GP-CONTROL (LIFT)	565
Y	7	1	**269-9398**	1	MANIFOLD GP-VALVE (END COVER)	524
Y	8	1	**271-9248**	1	MANIFOLD GP-VALVE (INLET)	526
	9	1	*183-7263*	1	PLUG AS	
		1	**3J-7354**	1	SEAL-O-RING	
		1	**9S-8002**	1	PLUG	
M	10	1	**8T-4132**	8	NUT (M16X2-THD)	
	11	1	**9X-8257**	8	WASHER (17.5X30X3.5-MM THK)	

M-METRIC PART
Y-SEPARATE ILLUSTRATION

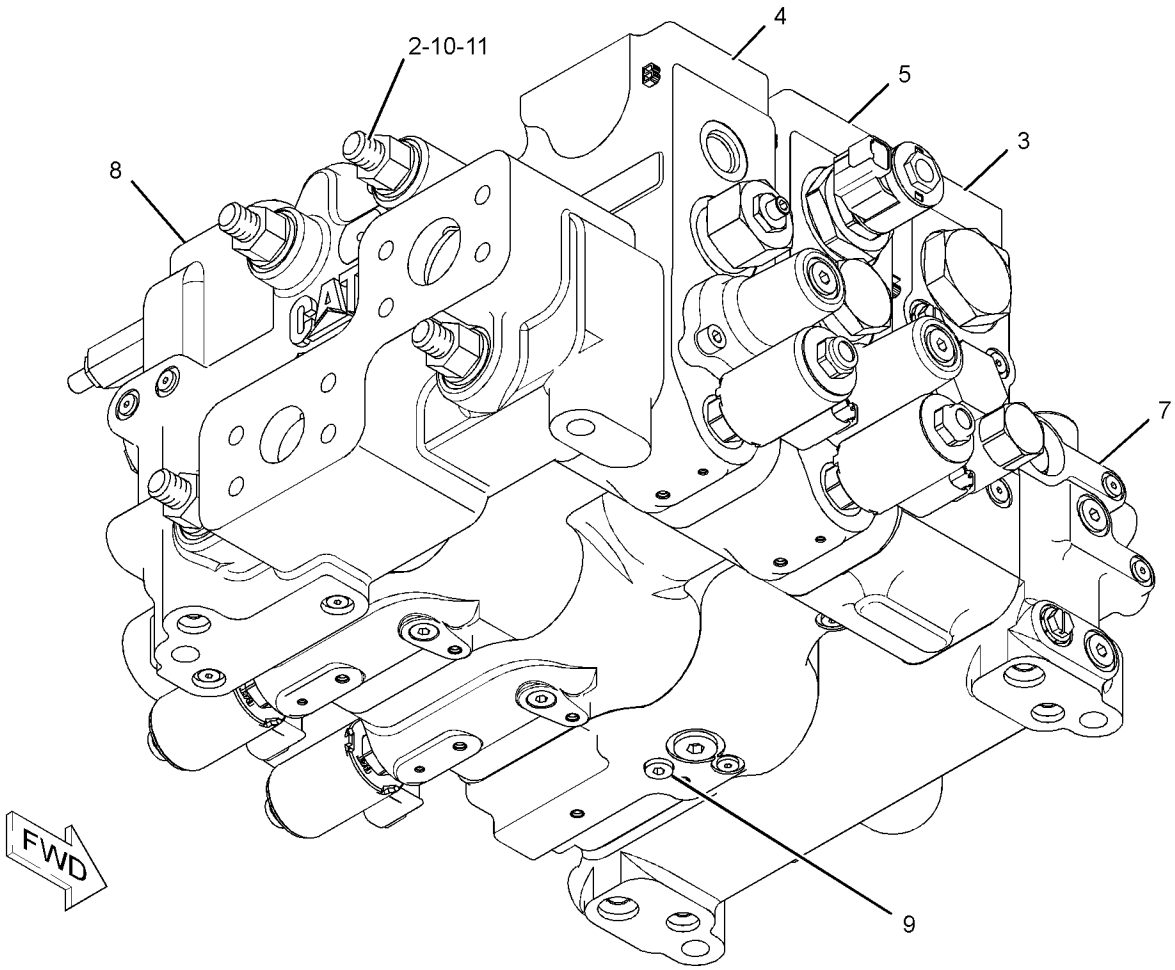

GRAPHIC #1 **<END>** g01223789

261-4172 VALVE GP-MAIN CONTROL—3-FUNCTION

S/N: M3G1-UP

PART OF 237-4932 VALVE & MTG GP-MAIN CONTROL

AN ATTACHMENT

SMCS-5051 **i02449487**

NOTE	REF NO	GRAPHIC REF	PART NUMBER	QTY	PART NAME 1 2 3 4 5 6 (PRODUCT LEVEL)	SEE PAGE
	2	1	**238-1796**	4	ROD	
Y	3	1	**247-7601**	1	VALVE GP-CONTROL (HYDRAULIC BLOCK)	558
Y	4	1	*261-0017*	1	VALVE GP-CONTROL (AUXILIARY)	560
Y	5	1	**261-0018**	1	VALVE GP-CONTROL (TILT)	562
Y	6	1	**261-0019**	1	VALVE GP-CONTROL (LIFT)	565
Y	8	1	**269-9398**	1	MANIFOLD GP-VALVE (END COVER)	524
Y	9	1	**271-9248**	1	MANIFOLD GP-VALVE (INLET)	526
	10	1	*183-7263*	1	PLUG AS	
		1	**3J-7354**	1	SEAL-O-RING	
		1	**9S-8002**	1	PLUG	
M	11	1	**8T-4132**	8	NUT (M16X2-THD)	
	12	1	**9X-8257**	8	WASHER (17.5X30X3.5-MM THK)	

M-METRIC PART
Y-SEPARATE ILLUSTRATION

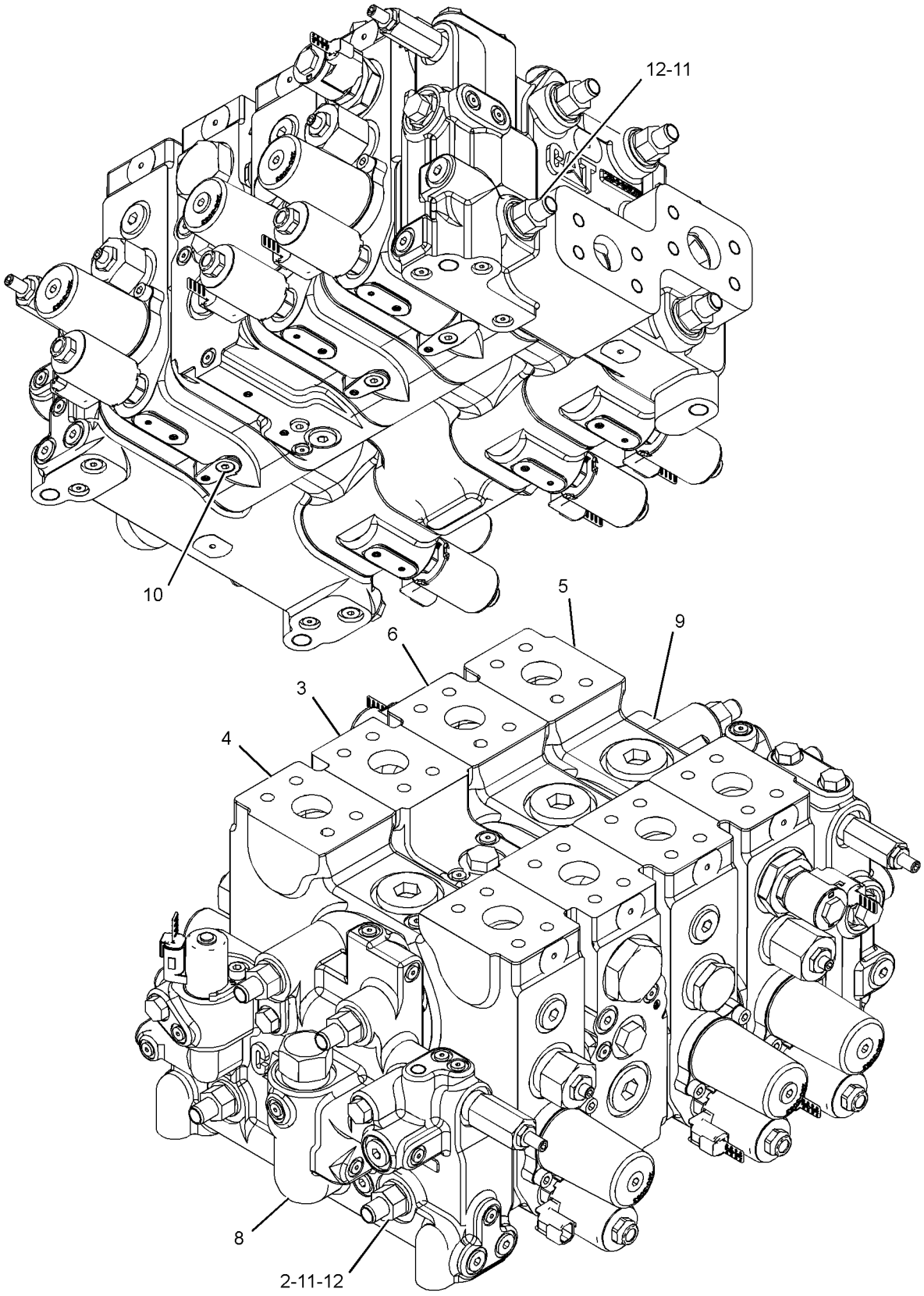

GRAPHIC #1 **<END>** g01224820

112-1817 VALVE GP-MANUAL–LOWERING CONTROL

S/N: M3G1-UP

PART OF 275-6101, 276-2563 LINES GP-COUPLER, 245-3866 VALVE GP-LOWERING CONTROL

ALSO AN ATTACHMENT

SMCS-5001, 5130, 5147 **i01859603**

NOTE	PART NUMBER	QTY	PART NAME 1 2 3 4 5 6 (PRODUCT LEVEL)	SEE PAGE
J	*202-0671*	1	VALVE GP-MANUAL	
			–OR–	
J	*202-0673*	1	VALVE GP-MANUAL	
			–OR–	
J	*202-0674*	1	VALVE GP-MANUAL	
			AVAILABLE REPAIR KIT(S):	
J	**112-9861**	1	KIT-SEAL	
			(INCLUDES SEALS, CONNECTORS & THRUST RING)	

J-KIT MARKED J SERVICES PARTS MARKED J

<END>

193-1665 VALVE GP-PRESSURE REDUCING–
SIGNAL DUPLICATION
S/N: M3G1-UP
PART OF 271-9248 MANIFOLD GP-VALVE
ALSO AN ATTACHMENT

SMCS-5117 **i02248725**

NOTE	REF NO	GRAPHIC REF	PART NUMBER	QTY	PART NAME 1 2 3 4 5 6 (PRODUCT LEVEL)	SEE PAGE
	1	1	**193-1664**	1	VALVE GP-CONTROL	
	2	1	**3J-1907**	2	SEAL-O-RING	
	3	1	**4J-5268**	1	SEAL-O-RING	
	4	1	**4J-5351**	1	SEAL-O-RING	
	5	1	**4T-5072**	1	RING-BACKUP	
	6	1	**5J-2974**	1	SEAL-O-RING	
	7	1	**5P-6719**	1	PLUG	
	8	1	**9T-8761**	1	RING-BACKUP	
	9	1	**9T-9963**	1	RING-BACKUP	

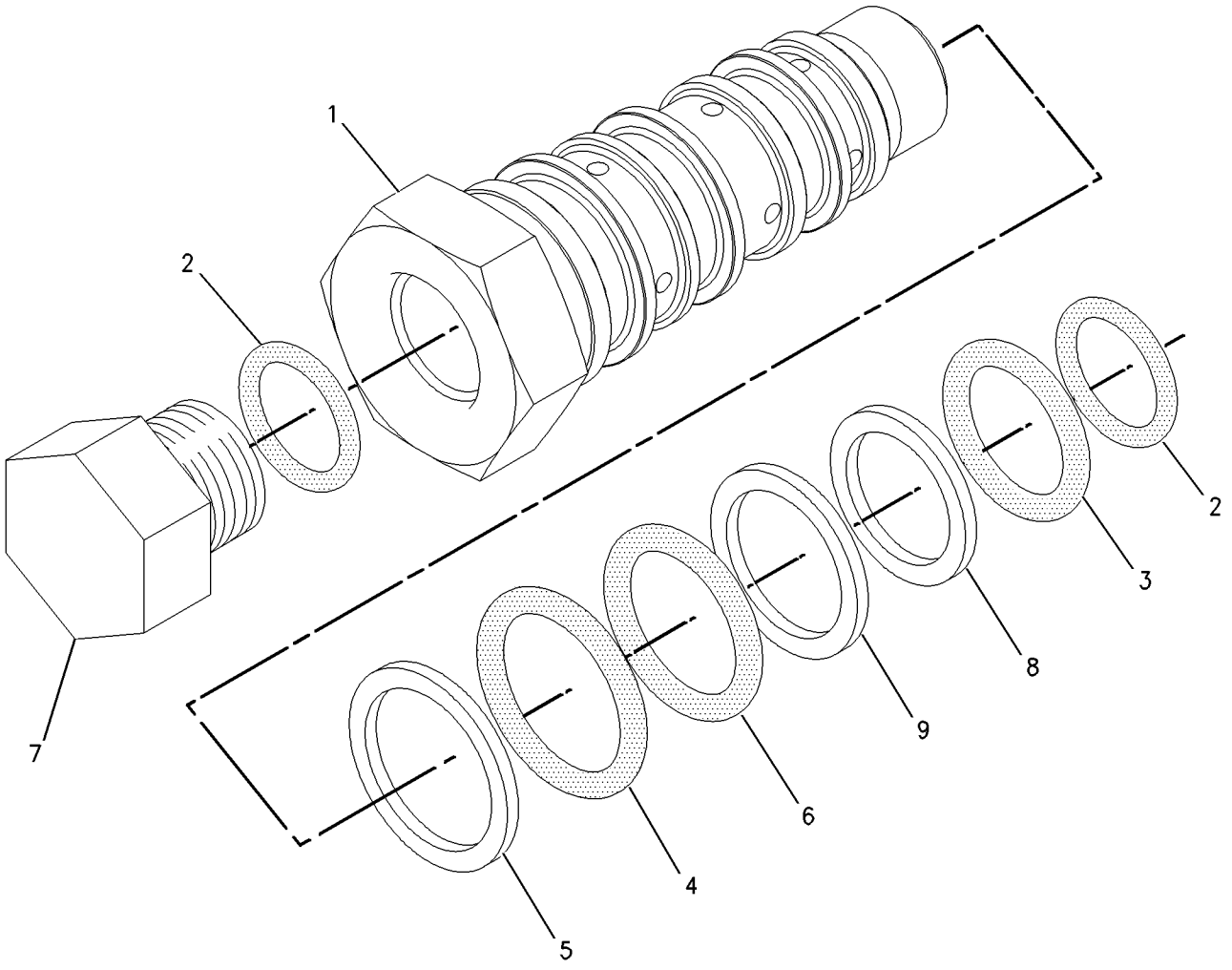

GRAPHIC #1 **<END>** g00763618

207-0697 VALVE GP-PUMP CONTROL–PRESSURE, FLOW COMPENSATOR–BRAKE, HYDRAULIC FAN

S/N: M3G1-UP

PART OF 254-5146 PUMP GP-PISTON

SMCS-5455 **i01787268**

NOTE	REF NO	GRAPHIC REF	PART NUMBER	QTY	PART NAME 1 2 3 4 5 6 (PRODUCT LEVEL)	SEE PAGE
	1	1	**6E-6528**	6	SEAL	
	2	1	**6E-6527**	2	PLUG	
	3	1	**6E-3268**	1	RETAINER-SPRING	
	4	1	**6E-3275**	1	SPRING	
	5	1	**6E-3274**	1	SPRING	
	6	1	**033-6043**	1	SEAL-O-RING	
	7	1	**6E-3272**	1	SEAT	
	8	1	**6E-6540**	1	PLUG	
M	9	1	**6E-6538**	2	NUT-ADJUSTMENT (M8X1-THD)	
M	10	1	**6E-6537**	2	SCREW-ADJUSTMENT (M8X1X28-MM)	
M	11	1	**6E-6539**	2	NUT-CAP (M8X1-THD)	
	12	1	**6E-3273**	1	SEAT	
	13	1	**6E-6536**	1	PLUG	
	14	1	**6V-8352**	1	SEAL-O-RING	
	15	1	**193-1036**	1	SPRING	
	16	1	**6E-3276**	1	SPRING	
	17	1	**6E-3269**	1	RETAINER-SPRING	
	18	1	**105-2145**	1	VALVE-ORIFICE	
	19	1	**5P-9262**	1	SEAL-O-RING	
	20	1	**3J-7354**	1	SEAL-O-RING	
	21	1	**9S-8002**	1	PLUG	
M	22	1	**8T-8442**	4	BOLT-SOCKET HEAD (M6X1X30-MM)	
	23	1	**9X-7680**	3	SEAL-O-RING	
	24	1	**119-0959**	1	PLUG-ORIFICE	

M-METRIC PART

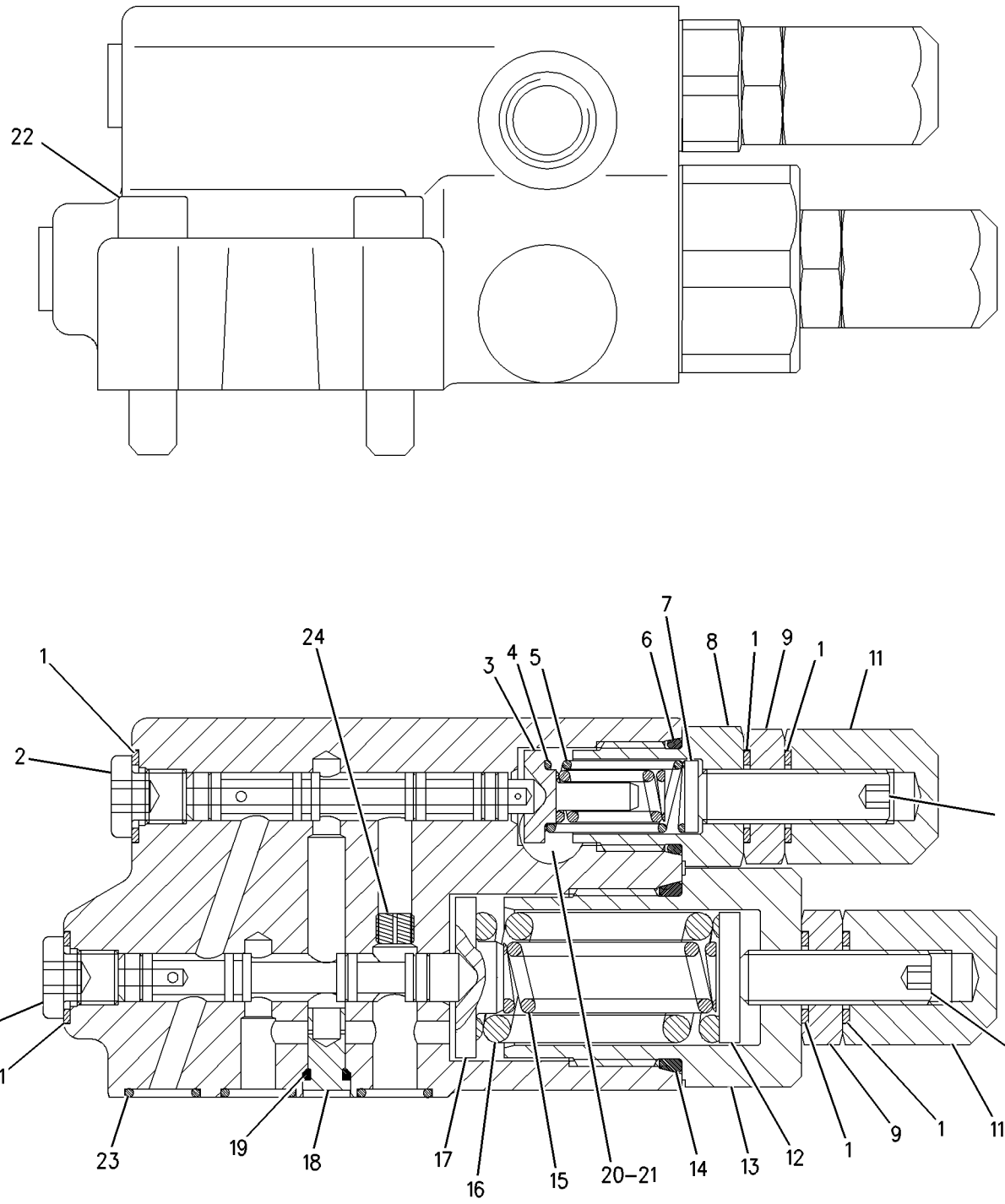

GRAPHIC #1 **<END>** g00826611

254-6561 VALVE GP-PUMP CONTROL–
PRESSURE, FLOW COMPENSATOR–IMPLEMENT, PILOT

S/N: M3G1-UP

PART OF 254-4108 PUMP GP-PISTON

SMCS-5455 **i02248421**

NOTE	REF NO	GRAPHIC REF	PART NUMBER	QTY	PART NAME 1 2 3 4 5 6 (PRODUCT LEVEL)	SEE PAGE
	1	1	**171-3258**	1	ORIFICE	
	2	1	**225-4607**	1	SETSCREW (M20X2.5X45-MM)	
	3	1	**234-4452**	1	COVER	
	4	1	**245-7438**	1	PIN	
	5	1	**248-9953**	1	RETAINER	
	6	1	**248-9954**	1	RETAINER	
	7	1	**248-9955**	1	GUIDE	
	8	1	**248-9956**	2	PISTON	
	9	1	*254-6562*	1	BODY AS	
		1	**124-1555**	1	PLUG	
		1	**245-8472**	1	PLUG-EXPANSION	
	10	1	**259-7889**	1	SPOOL AS	
	11	1	**263-1202**	1	SPRING	
	12	1	**263-1203**	1	COVER	
	13	1	**263-1204**	1	PISTON	
	14	1	**095-1586**	2	SEAL-O-RING	
	15	1	**095-1590**	2	SEAL-O-RING	
	16	1	**095-1787**	2	RING-BACKUP	
	17	1	**095-1788**	1	RING-BACKUP	
M	18	1	**096-2966**	1	SETSCREW-SOCKET	
M	19	1	**8T-4131**	1	NUT (M20X2.5-THD)	
	20	1	**114-3361**	1	SEAL-O-RING	
	21	1	**153-8623**	1	RING-BACKUP	
	22	1	**189-9763**	3	SEAL-O-RING	
	23	1	**190-7673**	1	SEAL-O-RING	
	24	1	**190-7674**	1	SEAL-O-RING	
	25	1	**215-9962**	1	STOPPER	
	26	1	**225-4456**	2	COVER	
	27	1	**225-4460**	1	SETSCREW	
	28	1	**248-9963**	1	SPRING	
	29	1	**2K-4472**	1	SEAL-O-RING	
	30	1	**3J-1907**	1	SEAL-O-RING	
	31	1	**3K-6113**	4	WASHER-HARD (12X18.5X3-MM THK)	
M	32	1	**6V-8200**	6	BOLT-SOCKET HEAD (M12X1.75X35-MM)	
	33	1	**7J-0204**	1	SEAL-O-RING	
	34	1	**7Y-4217**	2	RING-BACKUP	
M	35	1	**8T-4133**	2	NUT (M10X1.5 THD)	
M	36	1	**8T-4136**	4	BOLT (M10X1.5X25-MM)	
	37	1	**8T-4223**	6	WASHER-HARD (13.5X25.5X3-MM THK)	
	38	1	**9S-8004**	1	PLUG	
	39	1	**9S-8007**	1	PLUG	

M-METRIC PART

254-6561 **VALVE GP-PUMP CONTROL** *(contd.)* **i02248421**

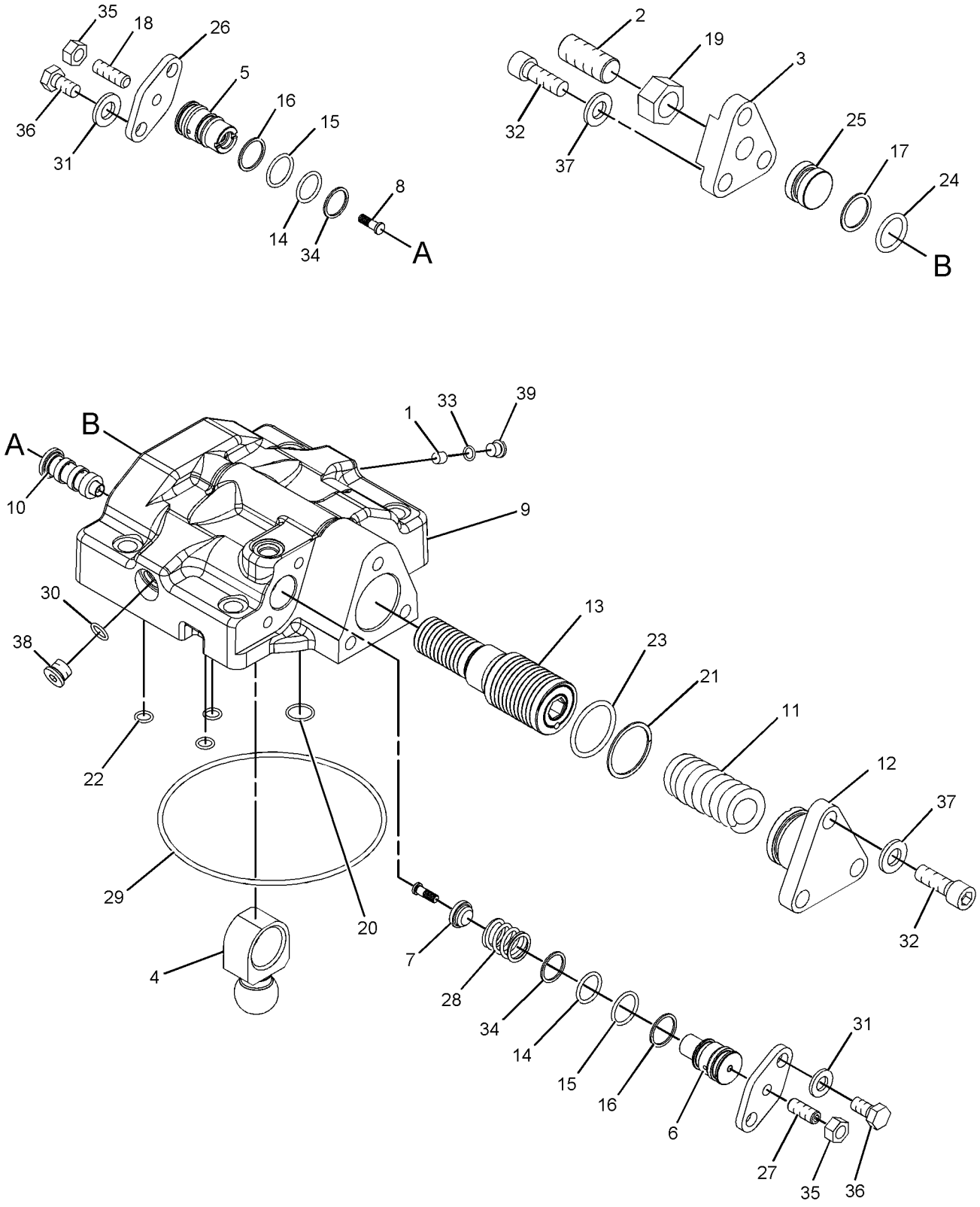

GRAPHIC #1 **<END>** g01133559

4T-7581 VALVE GP-RELIEF–RIDE CONTROL

S/N: M3G1-UP

PART OF 253-4026 VALVE GP-RIDE CONTROL

AN ATTACHMENT

SMCS-5069, 5117 **i02252757**

NOTE	REF NO	GRAPHIC REF	PART NUMBER	QTY	PART NAME 1 2 3 4 5 6 (PRODUCT LEVEL)	SEE PAGE
	1	1	**6E-1835**	1	RETAINER AS	
	2	1	**9X-6395**	1	NUT (3/4-16-THD)	
	3	1	**7J-9933**	1	SEAL-O-RING	
	4	1	**4T-7571**	1	PLATE	
	5	1	**6J-6439**	1	VALVE-POPPET	
	6	1	**3K-0360**	2	SEAL-O-RING	
	7	1	**4T-4942**	1	SPRING	
	8	1	**9M-1974**	2	WASHER-HARD (8.8X16X2-MM THK)	

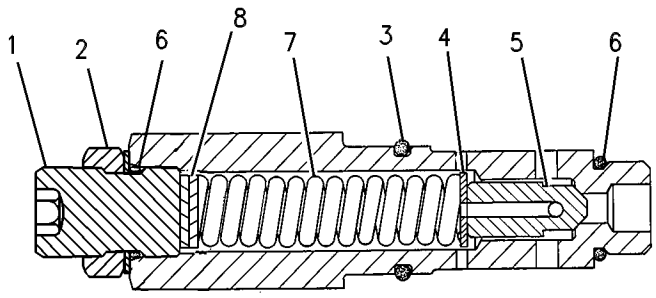

GRAPHIC #1 **<END>** g00121410

253-4026 VALVE GP-RIDE CONTROL

S/N: M3G1-UP

PART OF 261-3682, 261-3683 VALVE GP-MAIN CONTROL

AN ATTACHMENT

SMCS-5054, 5066 **i02252603**

NOTE	REF NO	GRAPHIC REF	PART NUMBER	QTY	PART NAME 1 2 3 4 5 6 (PRODUCT LEVEL)	SEE PAGE
	1	1	**148-9359**	5	PLUG	
Y	2	1	**194-1723**	1	VALVE GP-CHECK (PILOT OIL)	556
J	3	1	**235-6157**	1	VALVE GP-SHUTTLE	
	4	1	**237-2234**	1	VALVE GP-SOLENOID (RIDE CONTROL, ACCUMULATOR)	
		1	**2S-4078**	1	SEAL-O-RING	
		1	**096-3044**	1	SEAL-O-RING	
		1	**099-8232**	1	SEAL-O-RING	
	5	1	**252-0737**	1	VALVE GP-SOLENOID (RIDE CONTROL, LIFT CYLINDER)	
	5A	1	**252-0737**	1	VALVE GP-SOLENOID (RIDE CONTROL ON, OFF)	
L	6	1	**253-1285**	1	VALVE GP-CHECK (RIDE CONTROL)	
	7	1	**253-4025**	1	BODY-VALVE	
Y	9	1	**260-8590**	1	VALVE GP-SHUTTLE	590
	10	1	*148-8395*	1	PLUG AS	
		1	**3K-0360**	1	SEAL-O-RING	
		1	**9S-8005**	1	PLUG-O RING	
	11	1	*148-8406*	1	PLUG AS	
		1	**7M-8485**	1	SEAL-O-RING	
		1	**9S-9334**	1	PLUG	
	12	1	**162-0177**	1	PLUG AS	
		1	**3J-1907**	1	SEAL-O-RING	
		1	**9S-8004**	1	PLUG	
	13	1	**173-3993**	14	PLUG AS	
					(EACH INCLUDES)	
		1	**4J-7533**	1	SEAL-O-RING	
		1	**9S-8001**	1	PLUG	
	14	1	*207-8218*	3	PLUG AS	
					(EACH INCLUDES)	
		1	**7J-0204**	1	SEAL-O-RING	
		1	**9S-8007**	1	PLUG	
	15	1	**1P-3704**	2	SEAL-RECTANGULAR	
	16	1	**1P-3705**	1	SEAL-RECTANGULAR	
	18	1	**4J-0524**	2	SEAL-O-RING	
	19	1	**4J-9535**	2	SEAL-O-RING	
Y	20	1	**4T-7581**	1	VALVE GP-RELIEF (RIDE CONTROL)	585
	21	1	**6J-3134**	5	SEAL-O-RING	
					AVAILABLE REPAIR KIT(S):	
J			**238-9844**	1	KIT-SEAL (SHUTTLE VALVE)	
L			**238-9843**	1	KIT-SEAL (CHECK VALVE)	
					(EACH KIT INCLUDES SEAL-O-RINGS AND RING-BACKUPS)	

J-KIT MARKED J SERVICES PARTS MARKED J
L-KIT MARKED L SERVICES PARTS MARKED L
Y-SEPARATE ILLUSTRATION

253-4026 **VALVE GP-RIDE CONTROL** *(contd.)* **i02252603**

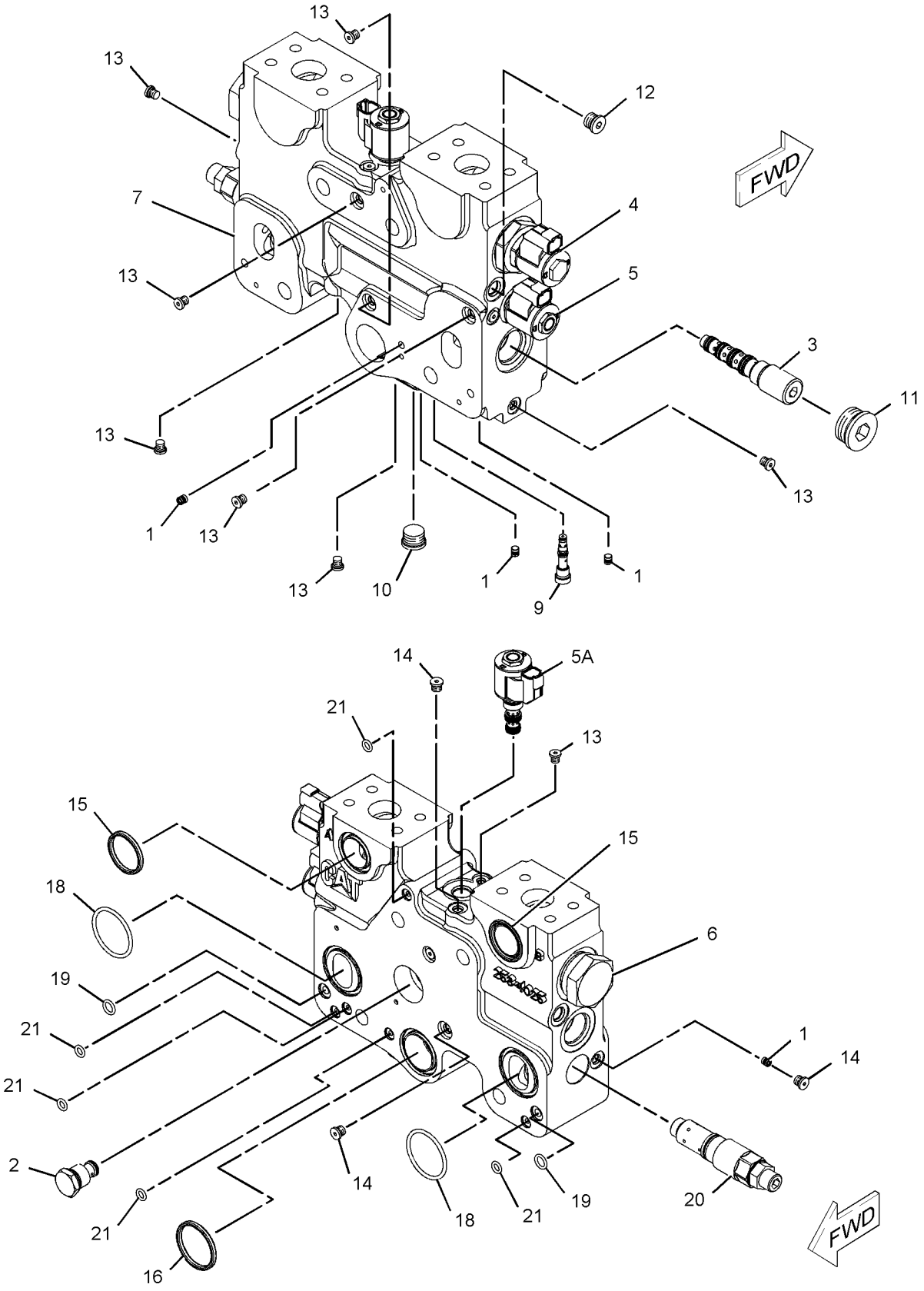

GRAPHIC #1 **<END>** g01116534

152-2646 VALVE GP-SHUTTLE

S/N: M3G1-UP
PART OF 243-0083 VALVE & MTG GP-MAIN CONTROL
AN ATTACHMENT

SMCS-5079 **i02219995**

NOTE	REF NO	GRAPHIC REF	PART NUMBER	QTY	PART NAME 1 2 3 4 5 6 (PRODUCT LEVEL)	SEE PAGE
	1	1	**6V-8398**	1	SEAL-O-RING	
	2	1	**123-5799**	1	SEAT	
	3	1	**131-0752**	1	VALVE	
	4	1	**123-5798**	1	SEAT	
	5	1	**131-0749**	1	CONNECTOR	
	6	1	**3J-1907**	1	SEAL-O-RING	

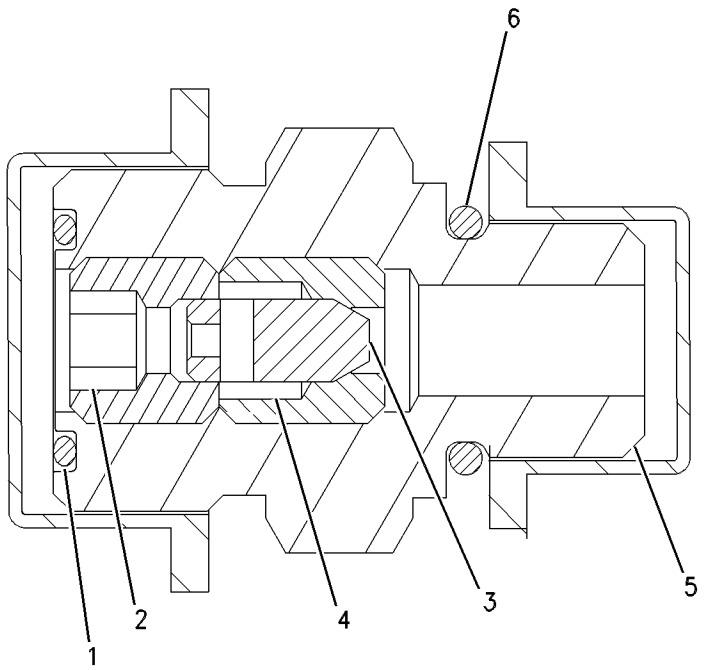

GRAPHIC #1 **<END>** g00502136

249-5227 VALVE GP-SHUTTLE–BRAKE ACCUMULATOR

S/N: M3G1-UP

PART OF 242-1307 MANIFOLD GP-CONTROL

SMCS-5079 **i02250604**

NOTE	REF NO	GRAPHIC REF	PART NUMBER	QTY	PART NAME 1 2 3 4 5 6 (PRODUCT LEVEL)	SEE PAGE
	1	1	**3K-0360**	1	SEAL-O-RING	
	2	1	**161-6149**	1	SEAL-O-RING	
	3	1	**095-1750**	1	SEAL-O-RING	
	4	1	**161-6161**	1	RING-BACKUP	
	5	1	**187-0541**	1	RING-BACKUP	

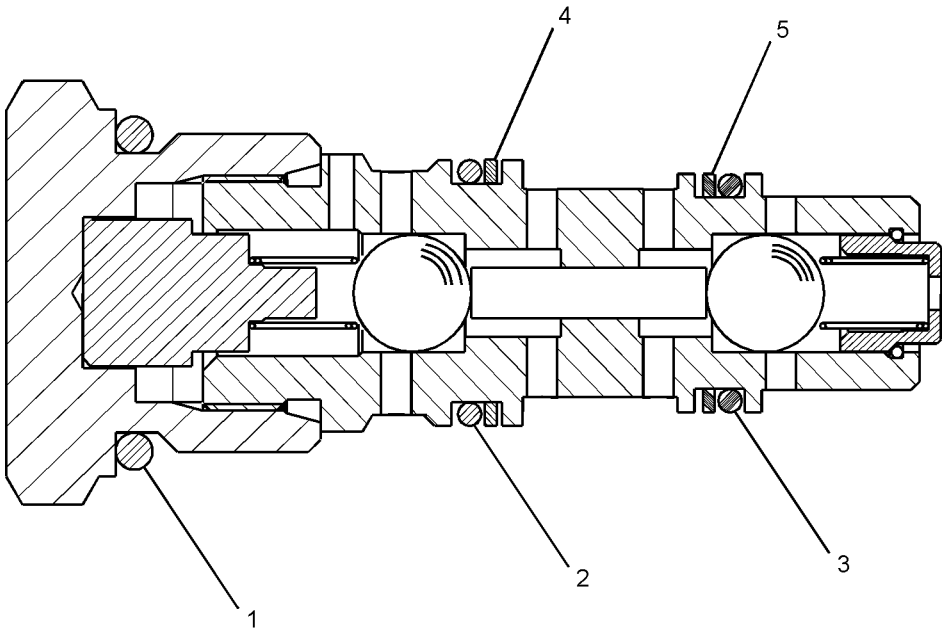

GRAPHIC #1 **<END>** g01064226

HYDRAULIC SYSTEM

260-8590 VALVE GP-SHUTTLE–BALL RESOLVER

S/N: M3G1-UP

PART OF 247-7601, 261-0017, 261-0018, 261-0019 VALVE GP-CONTROL, 253-4026 VALVE GP-RIDE CONTROL

ALSO AN ATTACHMENT

SMCS-5079 **i02233009**

NOTE	REF NO	GRAPHIC REF	PART NUMBER	QTY	PART NAME 1 2 3 4 5 6 (PRODUCT LEVEL)	SEE PAGE
J	1	1	**3J-7354**	1	SEAL-O-RING	
J	2	1	**9N-1756**	1	SEAL-O-RING	
J	3	1	**3H-0442**	1	SEAL-O-RING	
					AVAILABLE REPAIR KIT(S):	
J			**240-7356**	1	KIT-SEAL (SHUTTLE VALVE) (IMPLEMENT CONTROL)	

J-(KIT MARKED J INCLUDES PARTS MARKED J)

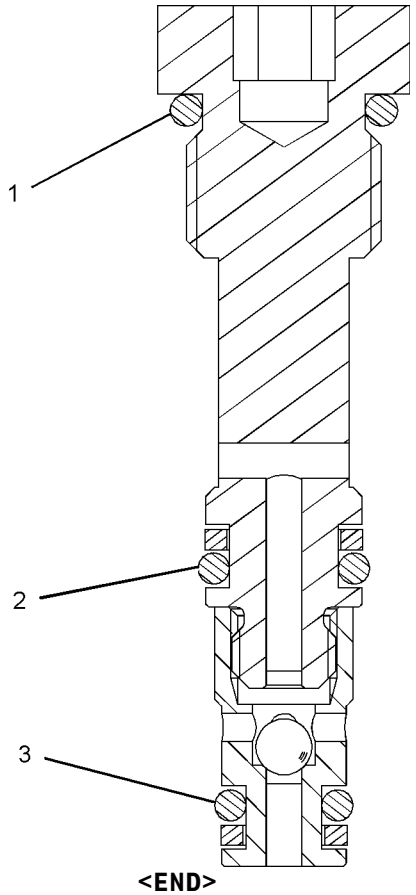

GRAPHIC #1 **<END>** g01018080

276-9072 VALVE GP-SHUTTLE

S/N: M3G1-UP

PART OF 237-0961, 237-4932, 243-0086 VALVE & MTG GP-MAIN CONTROL

ALSO AN ATTACHMENT

SMCS-5079 **i02442924**

NOTE	REF NO	GRAPHIC REF	PART NUMBER	QTY	PART NAME 1 2 3 4 5 6 (PRODUCT LEVEL)	SEE PAGE
	1	1	**123-5798**	1	SEAT	
	2	1	**123-5799**	1	SEAT	
	3	1	**131-0749**	1	CONNECTOR	
	4	1	**228-9697**	1	PIN	
	5	1	**3J-1907**	1	SEAL-O-RING	
	6	1	**6V-8398**	1	SEAL-O-RING	

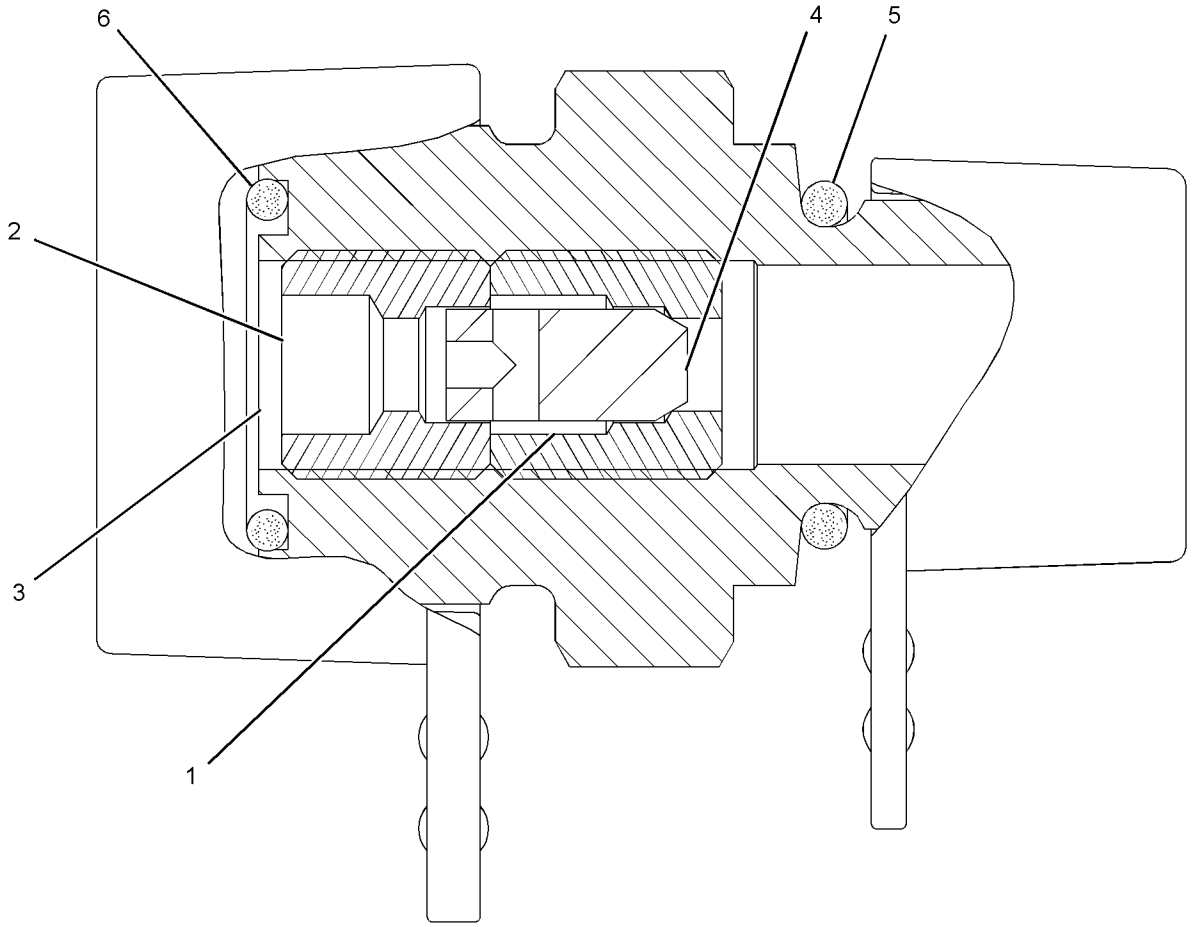

GRAPHIC #1 **<END>** g01220011

HYDRAULIC SYSTEM

183-7595 VALVE GP-SOLENOID—BRAKE, HYDRAULIC FAN

S/N: M3G1-UP

PART OF 242-1307 MANIFOLD GP-CONTROL

SMCS-5132, 5479 **i02357432**

NOTE	REF NO	GRAPHIC REF	PART NUMBER	QTY	PART NAME 1 2 3 4 5 6 (PRODUCT LEVEL)	SEE PAGE
	1	1	**146-3728**	1	WASHER-SPRING	
	2	1	**187-8191**	1	COIL AS	
Z	3	1		1	CARTRIDGE AS	
Z	4	1		1	ADAPTER AS	

Z-NOT SERVICED SEPARATELY

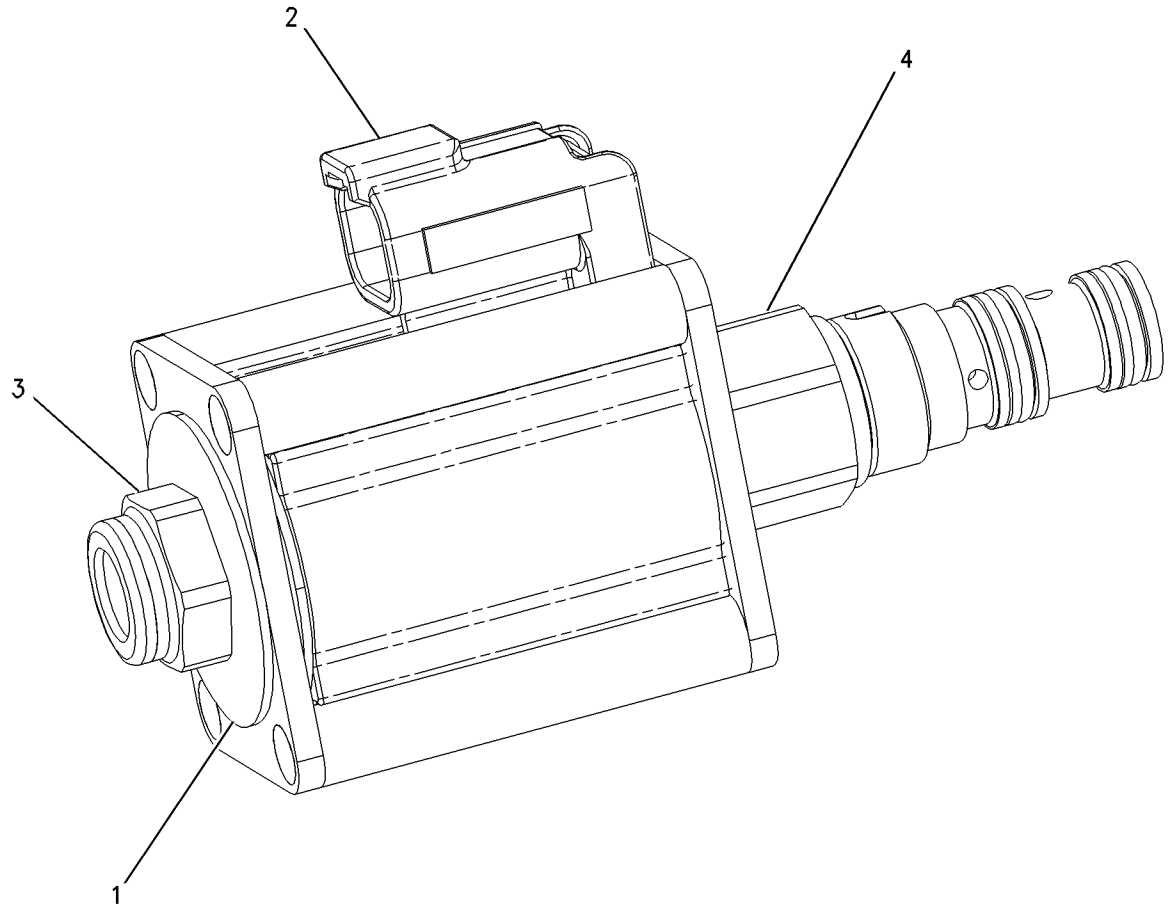

GRAPHIC #1 **<END>** g00891511

257-0267 VALVE GP-SOLENOID–PILOT PROPORTIONING

S/N: M3G1-UP

PART OF 261-0017, 261-0018, 261-0019 VALVE GP-CONTROL

ALSO AN ATTACHMENT

SMCS-5132, 5479 **i02233007**

NOTE	REF NO	GRAPHIC REF	PART NUMBER	QTY	PART NAME 1 2 3 4 5 6 (PRODUCT LEVEL)	SEE PAGE
Z	1	1		1	CARTRIDGE AS	
Z	2	1		1	COIL AS	
Z	3	1		1	CARTRIDGE AS-VALVE	
Z	4	1		1	WASHER-SPRING	
	5	1	**6M-5062**	1	SEAL-O-RING	
	6	1	**3K-0360**	1	SEAL-O-RING	
	7	1	**4K-2039**	1	SEAL-O-RING	

Z-NOT SERVICED SEPARATELY

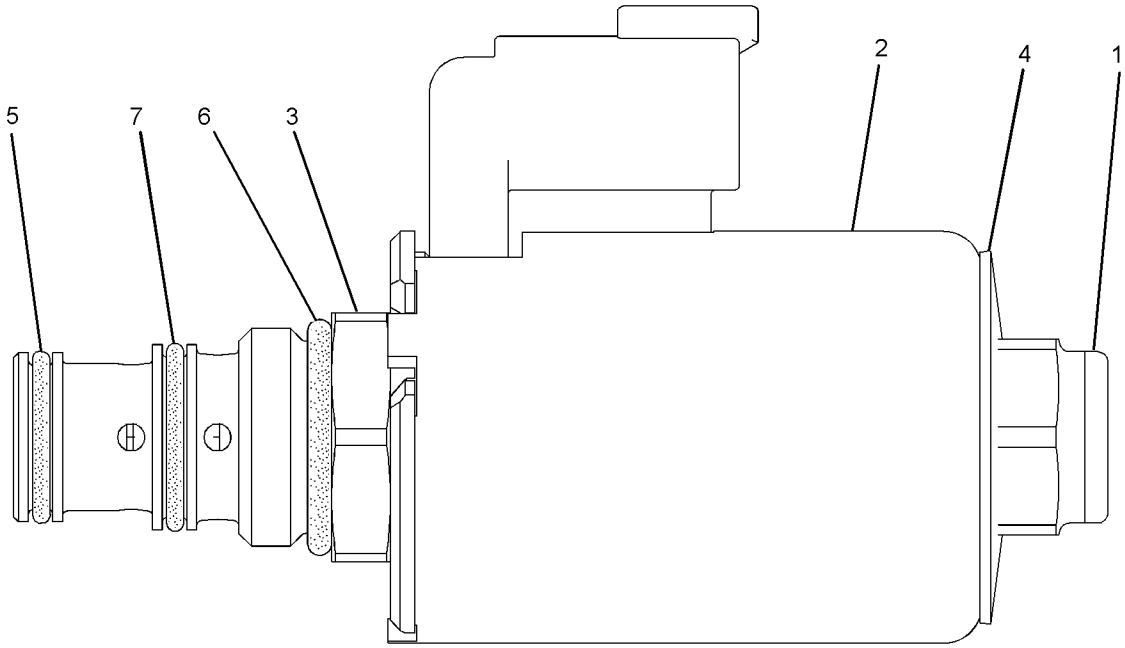

GRAPHIC #1 **<END>** g01022105

HYDRAULIC SYSTEM

262-5265 VALVE GP-SOLENOID–DRIFT REDUCTION

S/N: M3G1-UP

PART OF 261-0018, 261-0019 VALVE GP-CONTROL

ALSO AN ATTACHMENT

SMCS-5132, 5479 **i02304895**

NOTE	REF NO	GRAPHIC REF	PART NUMBER	QTY	PART NAME 1 2 3 4 5 6 (PRODUCT LEVEL)	SEE PAGE
	1	1	**2S-4078**	1	SEAL-O-RING	
	2	1	**096-3044**	1	SEAL-O-RING	
	3	1	**099-8232**	1	SEAL-O-RING	

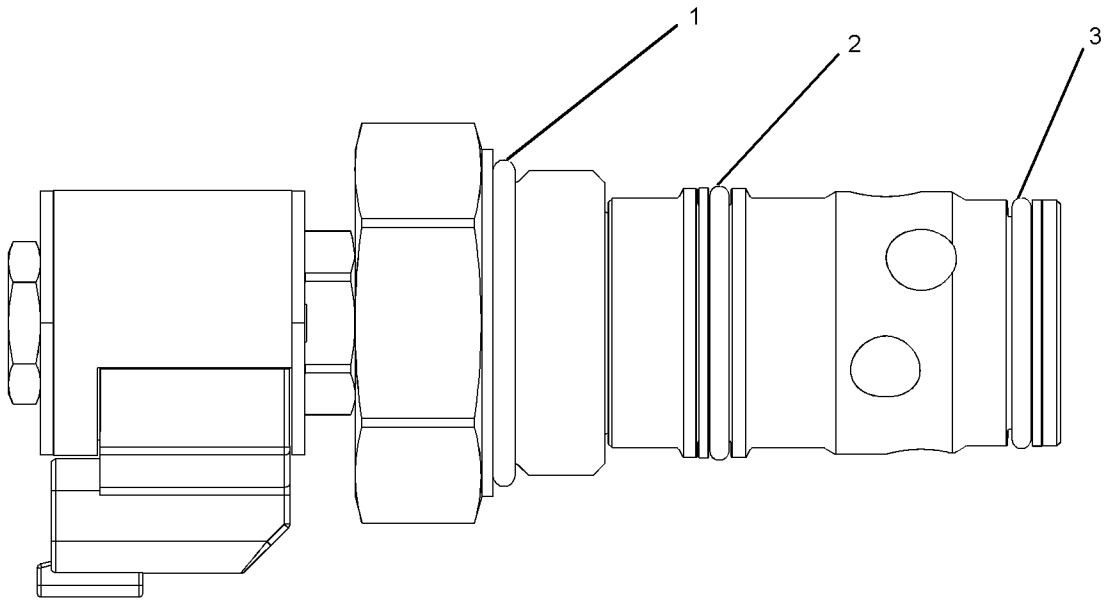

GRAPHIC #1 **<END>** g01154884

232-7637 ARM AS-LIFT—HIGH LIFT MACHINES

S/N: M3G1-UP
PART OF 232-7635 CONTROL GP-BUCKET
AN ATTACHMENT

SMCS-6119 **i02139830**

NOTE	REF NO	GRAPHIC REF	PART NUMBER	QTY	PART NAME 1 2 3 4 5 6 (PRODUCT LEVEL)	SEE PAGE
	1	1	**3V-2333**	2	BEARING-SLEEVE	
	2	1	**4V-8674**	2	BEARING-SLEEVE	
	3	1	**5V-1874**	2	BEARING-SLEEVE	

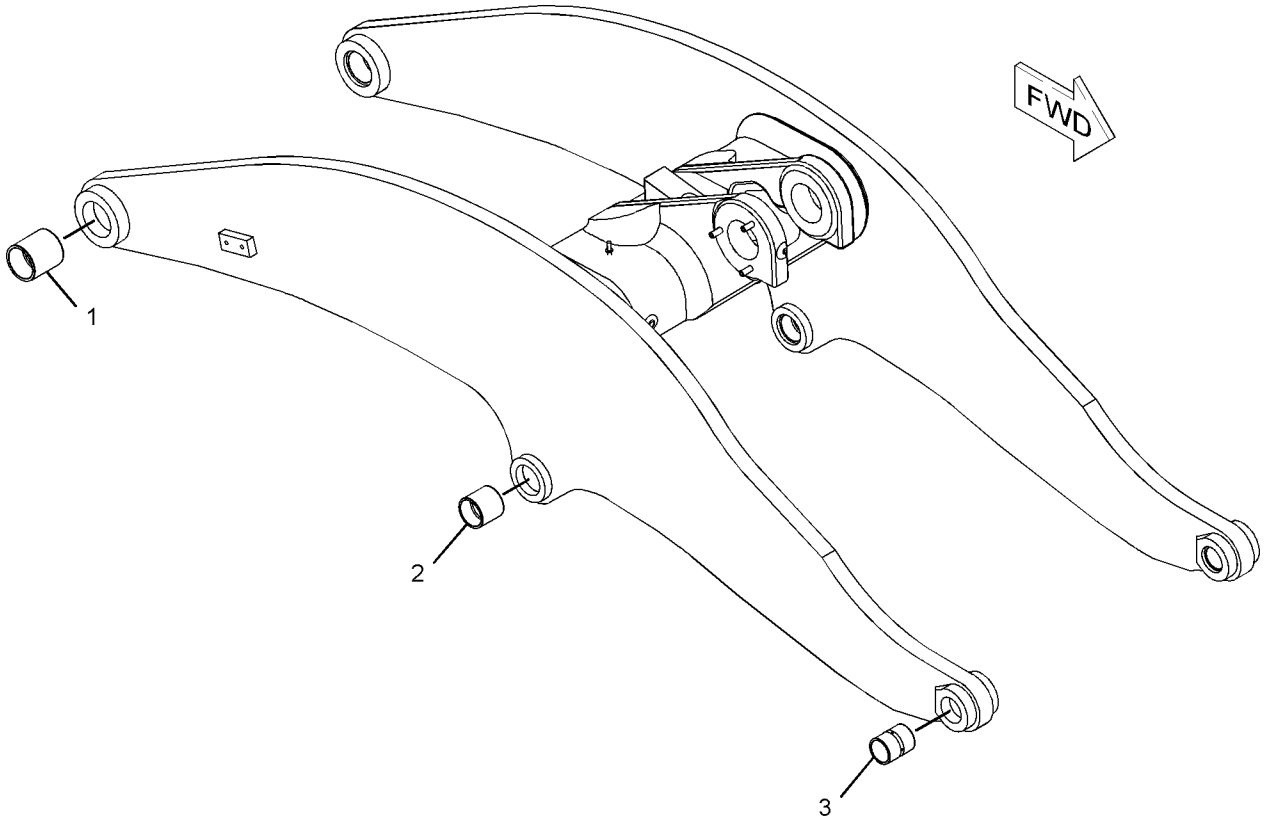

GRAPHIC #1 **<END>** g01086571

279-3440 ARM AS-LIFT

S/N: M3G1-UP

PART OF 244-2662 CONTROL AR-QUICK COUPLER, 237-0269 HYDRAULIC AR-3 VALVE AN ATTACHMENT

SMCS-6119 **i02449430**

NOTE	REF NO	GRAPHIC REF	PART NUMBER	QTY	PART NAME 1 2 3 4 5 6 (PRODUCT LEVEL)	SEE PAGE
	1	1	**153-2836**	1	BRACKET (RH)	
	2	1	**153-2837**	1	BRACKET (LH)	
	3	1	**191-0629**	1	ARM AS-LIFT	
		1	**3V-2333**	2	BEARING-SLEEVE	
		1	**4V-8674**	2	BEARING-SLEEVE	
		1	**5V-1874**	2	BEARING-SLEEVE	
	4	1	**213-3781**	6	BLOCK	
	5	1	**7V-2882**	1	PLATE AS	
M	6	1	**8T-3851**	4	BOSS-WELD (M10X1.5X17.5-MM)	
	7	1	**9C-4935**	2	PLATE	

M-METRIC PART

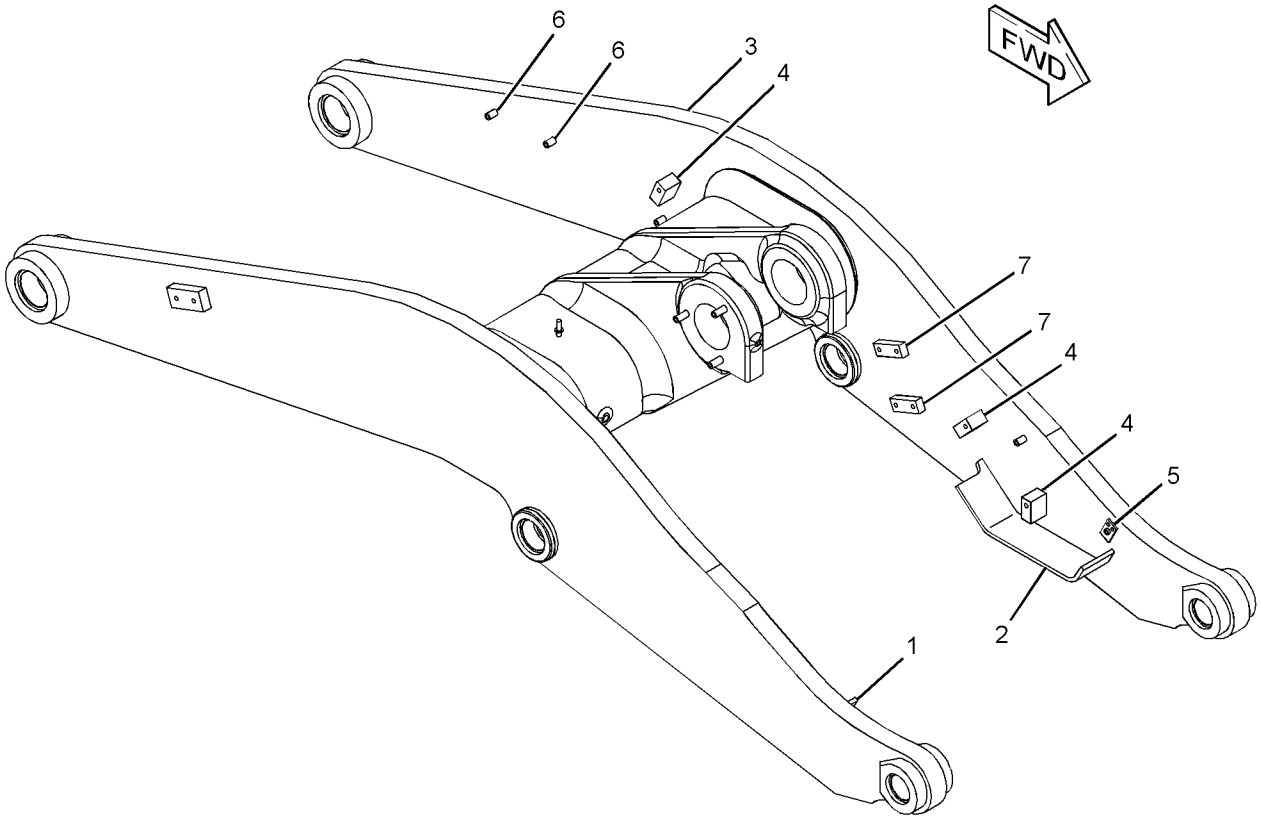

GRAPHIC #1 **<END>** g01223249

190-6728 CONTROL GP-BUCKET

S/N: M3G1-UP

PART OF 237-4933 CHASSIS AR

SMCS-6107 **i01804138**

NOTE	REF NO	GRAPHIC REF	PART NUMBER	QTY	PART NAME 1 2 3 4 5 6 (PRODUCT LEVEL)	SEE PAGE
	1	1	**2D-4867**	2	FITTING-GREASE	
	2	1	**3B-8489**	6	FITTING-GREASE	
	3	1	**3B-8491**	2	FITTING-GREASE	
	4	1	**4E-3196**	2	PIN AS	
	5	1	**5V-0353**	4	WASHER (1.6-MM THK)	
	6	1	**5V-0354**	6	WASHER (66X133X3-MM THK)	
	7	1	**5V-1508**	2	PIN AS	
	8	1	**5V-1511**	2	PIN AS	
	9	1	**5V-1882**	1	PIN AS	
	10	1	**7K-9205**	4	SEAL-LIP TYPE	
	11	1	**7K-9209**	4	SEAL-LIP TYPE	
	12	1	**7K-9210**	4	SEAL-LIP TYPE	
	13	1	**7K-9212**	4	SEAL-LIP TYPE	
	14	1	**7K-9218**	2	SEAL-LIP TYPE	
	15	1	**8T-5439**	7	WASHER (21.5X45X6-MM THK)	
	16	1	**9C-0093**	1	PIN AS	
	17	1	**9C-7907**	7	SPACER (14-MM THK)	
	18	1	**096-6467**	6	WASHER (22X60X8-MM THK)	
	19	1	**127-6371**	1	LINK AS	
		1	**3G-8779**	2	BEARING-SLEEVE	
	20	1	**136-9371**	4	PIN AS	
	21	1	**136-9380**	1	PIN AS	
B	22	1	**159-0268**	4	SHIM (0.35-MM THK)	
B	23	1	**159-0269**	4	SHIM (0.35-MM THK)	
	24	1	**191-0629**	1	ARM AS-LIFT	
		1	**3V-2333**	2	BEARING-SLEEVE	
		1	**4V-8674**	2	BEARING-SLEEVE	
		1	**5V-1874**	2	BEARING-SLEEVE	
	25	1	**191-0631**	1	LEVER AS	
		1	**5V-1386**	1	BEARING-SLEEVE	
M	26	1	**8T-4780**	6	BOLT (M20X2.5X30-MM)	
M	27	1	**8T-5460**	7	BOLT (M20X2.5X40-MM)	

B-USE AS REQUIRED
M-METRIC PART

190-6728 **CONTROL GP-BUCKET** *(contd.)* **i01804138**

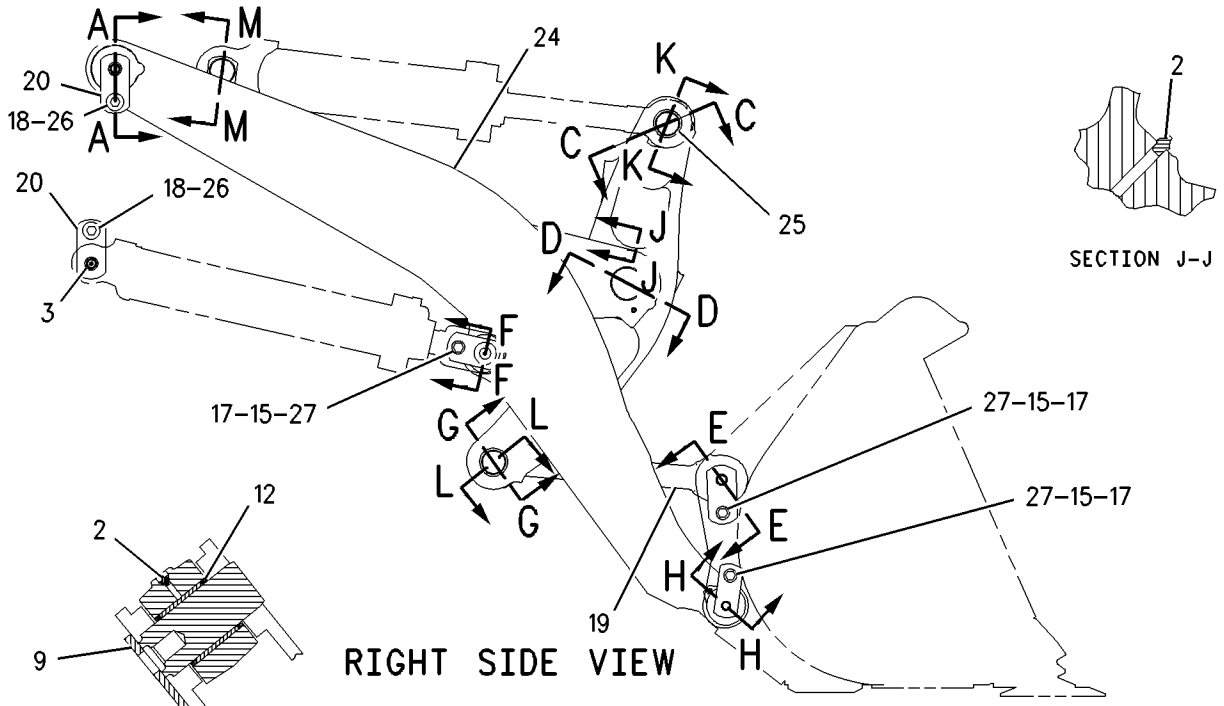

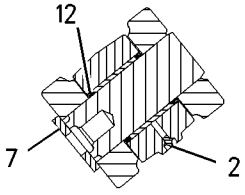

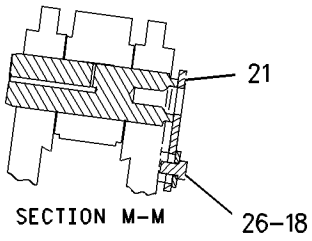

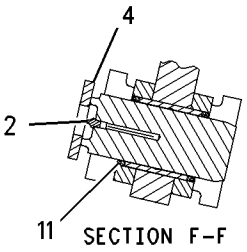

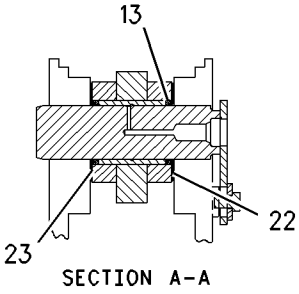

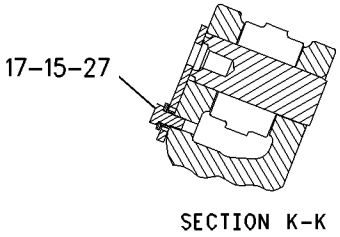

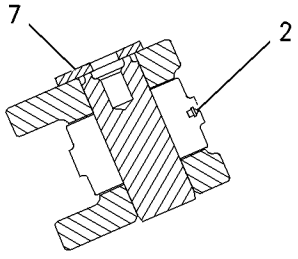

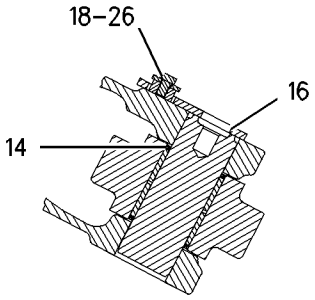

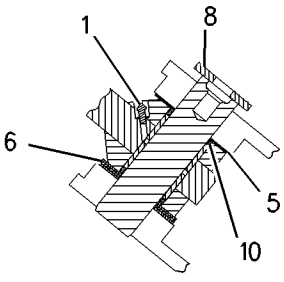

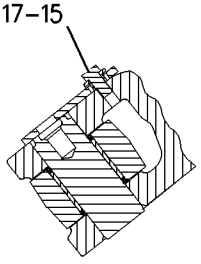

GRAPHIC #1 **<END>** g00813790

191-0633 CONTROL GP-BUCKET

S/N: M3G1-UP
PART OF 244-3472 CONTROL GP-BUCKET
AN ATTACHMENT

SMCS-6107 **i01480472**

NOTE	REF NO	GRAPHIC REF	PART NUMBER	QTY	PART NAME 1 2 3 4 5 6 (PRODUCT LEVEL)	SEE PAGE
	1	1	**2D-4867**	2	FITTING-GREASE	
	2	1	**3B-8489**	6	FITTING-GREASE	
	3	1	**3B-8491**	2	FITTING-GREASE	
	4	1	**4E-3196**	2	PIN AS	
	5	1	**5V-0353**	4	WASHER (1.6-MM THK)	
	6	1	**5V-0354**	6	WASHER (66X133X3-MM THK)	
	7	1	**5V-1508**	2	PIN AS	
	8	1	**5V-1511**	2	PIN AS	
	9	1	**5V-1882**	1	PIN AS	
	10	1	**7K-9205**	4	SEAL-LIP TYPE	
	11	1	**7K-9209**	4	SEAL-LIP TYPE	
	12	1	**7K-9210**	4	SEAL-LIP TYPE	
	13	1	**7K-9212**	4	SEAL-LIP TYPE	
	14	1	**7K-9218**	2	SEAL-LIP TYPE	
	15	1	**8T-5439**	7	WASHER (21.5X45X6-MM THK)	
	16	1	**9C-0093**	1	PIN AS	
	17	1	**9C-7907**	7	SPACER (14-MM THK)	
	18	1	**096-6467**	6	WASHER (22X60X8-MM THK)	
	19	1	**127-6371**	1	LINK AS	
		1	**3G-8779**	2	BEARING-SLEEVE	
	20	1	**136-9371**	4	PIN AS	
	21	1	**136-9380**	1	PIN AS	
B	22	1	**159-0268**	4	SHIM (0.35-MM THK)	
B	23	1	**159-0269**	4	SHIM (0.35-MM THK)	
	24	1	**191-0631**	1	LEVER AS	
		1	**5V-1386**	1	BEARING-SLEEVE	
	25	1	**191-0634**	1	ARM AS-LIFT	
		1	**3V-2333**	2	BEARING-SLEEVE	
		1	**4V-8674**	2	BEARING-SLEEVE	
		1	**5V-1874**	2	BEARING-SLEEVE	
M	26	1	**8T-4780**	6	BOLT (M20X2.5X30-MM)	
M	27	1	**8T-5460**	7	BOLT (M20X2.5X40-MM)	

B-USE AS REQUIRED
M-METRIC PART

191-0633 **CONTROL GP-BUCKET** *(contd.)* **i01480472**

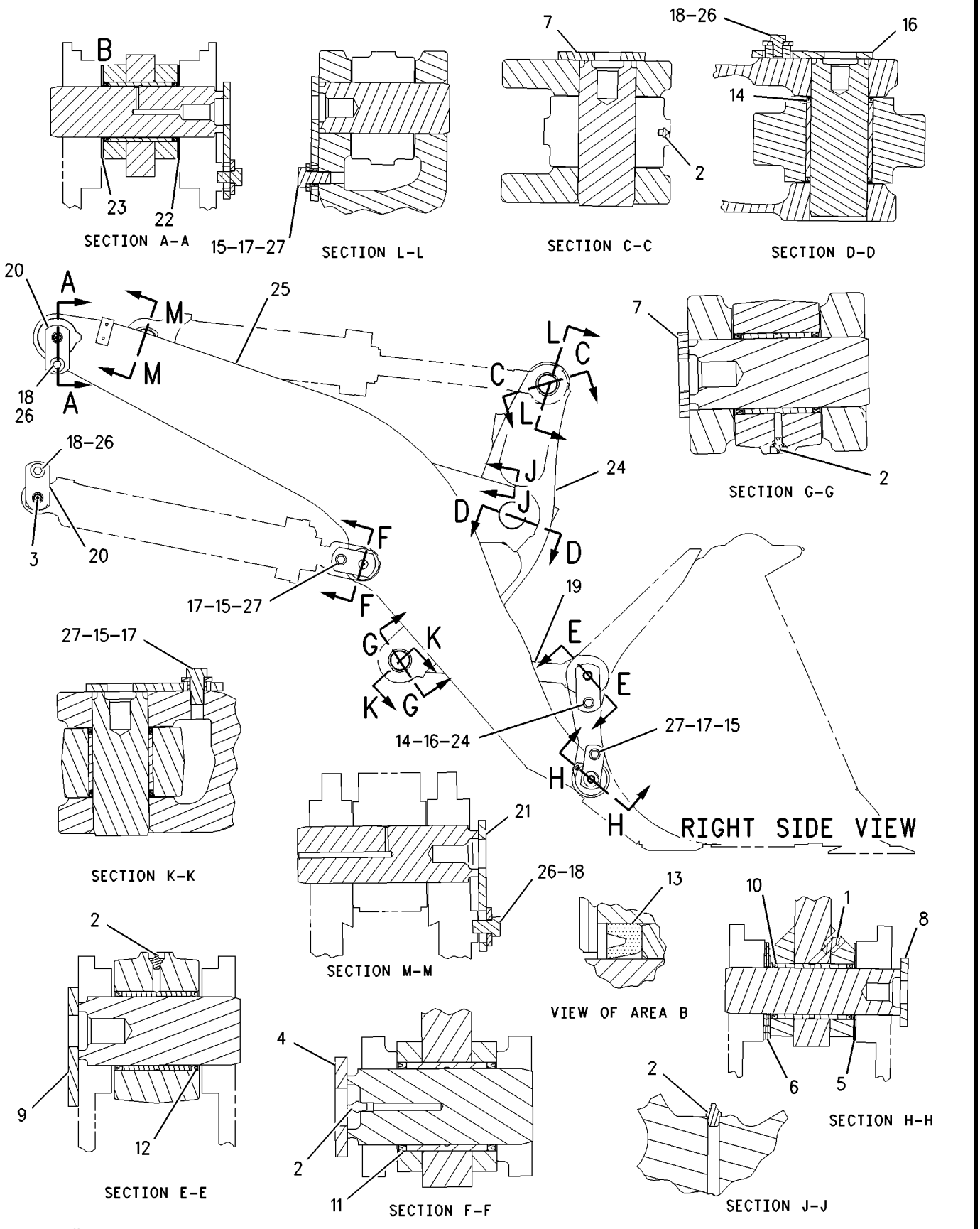

GRAPHIC #1

<END>

g00772287

232-7635 CONTROL GP-BUCKET—HIGH LIFT MACHINES

S/N: M3G1-UP
PART OF 244-3411, 244-3412 LIFT AR
AN ATTACHMENT

SMCS-6107 **i02307699**

NOTE	REF NO	GRAPHIC REF	PART NUMBER	QTY	PART NAME 1 2 3 4 5 6 (PRODUCT LEVEL)	SEE PAGE
	1	1	**2D-4867**	2	FITTING-GREASE	
	2	1	**3B-8489**	6	FITTING-GREASE	
	3	1	**4E-3196**	2	PIN AS	
	4	1	**4V-7099**	1	PIN AS	
	5	1	**5V-0353**	4	WASHER (1.6-MM THK)	
	6	1	**5V-0354**	6	WASHER (66X133X3-MM THK)	
	7	1	**5V-1511**	2	PIN AS	
	8	1	**5V-1882**	1	PIN AS	
	9	1	**9C-0093**	1	PIN AS	
	10	1	**9C-7907**	5	SPACER (14-MM THK)	
	11	1	**9K-9731**	2	SPACER (20.4X28.5X14.2-MM THK)	
	12	1	**136-9371**	4	PIN AS	
	13	1	**136-9380**	1	PIN AS	
B	14	1	**159-0268**	4	SHIM (0.35-MM THK)	
B	15	1	**159-0269**	4	SHIM (0.35-MM THK)	
	16	1	**227-4339**	1	LEVER AS	
		1	**227-4340**	1	BEARING-SLEEVE	
	17	1	**227-8305**	1	LINK AS	
	17A	1	**4V-8520**	1	BEARING-SLEEVE	
	17B	1	**227-4342**	1	BEARING-SLEEVE	
B	18	1	**227-4343**	4	SHIM	
Y	19	1	**232-7637**	1	ARM AS-LIFT (HIGH LIFT MACHINES)	595
	20	1	**234-3075**	1	PIN AS	
	21	1	**096-6467**	6	WASHER (22X60X8-MM THK)	
	22	1	**3B-8491**	2	FITTING-GREASE	
	23	1	**7K-9205**	4	SEAL-LIP TYPE	
	24	1	**7K-9209**	4	SEAL-LIP TYPE	
	25	1	**7K-9210**	2	SEAL-LIP TYPE	
	26	1	**7K-9212**	6	SEAL-LIP TYPE	
	27	1	**7K-9218**	2	SEAL-LIP TYPE	
M	28	1	**8T-4780**	6	BOLT (M20X2.5X30-MM)	
	29	1	**8T-5439**	7	WASHER (21.5X45X6-MM THK)	
M	30	1	**8T-5460**	5	BOLT (M20X2.5X40-MM)	
M	31	1	**8T-6430**	2	BOLT (M20X2.5X50-MM)	

B-USE AS REQUIRED
M-METRIC PART
Y-SEPARATE ILLUSTRATION

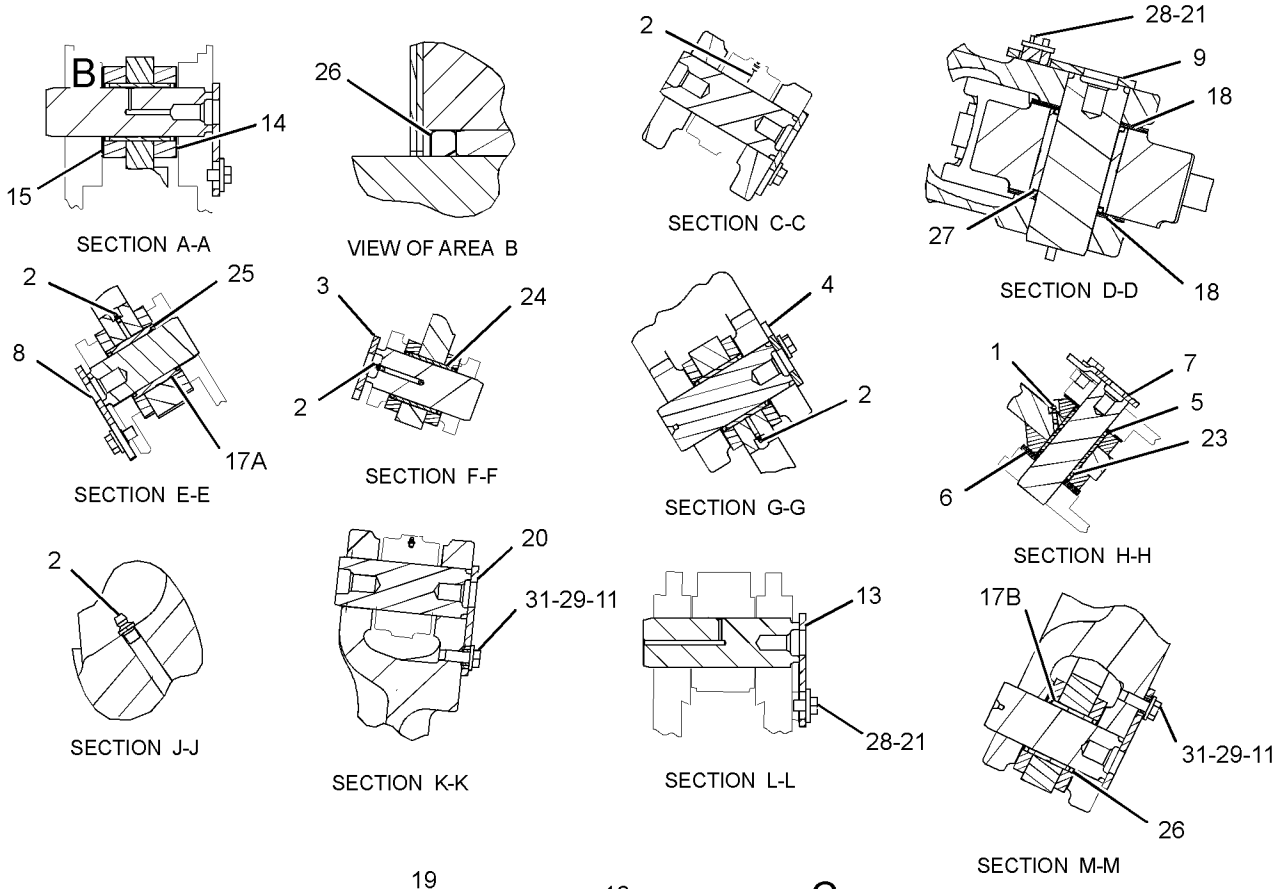

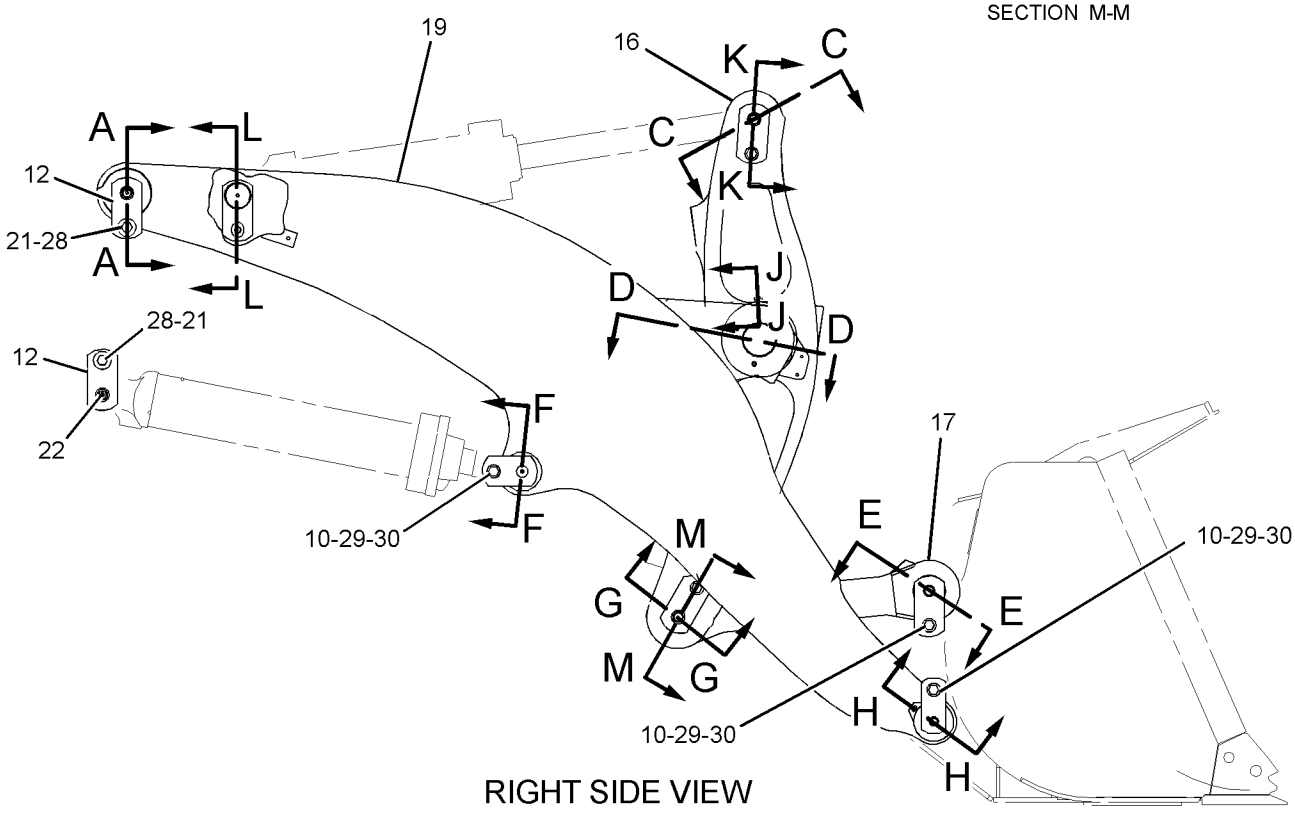

GRAPHIC #1 **<END>** g01159859

244-3472 CONTROL GP-BUCKET

S/N: M3G1-UP

AN ATTACHMENT

SMCS-6107 **i02449352**

NOTE	PART NUMBER	QTY	PART NAME 1 2 3 4 5 6 (PRODUCT LEVEL)	SEE PAGE
Y	*191-0633*	1	CONTROL GP-BUCKET	599
Y	*244-5584*	1	CYLINDER & SEAL GP-TILT	486
Y	*283-2513*	1	WIRING GP-SENSOR (TILT POSITION)	
Y-SEPARATE ILLUSTRATION				

<END>

244-2661 LIFT AR—WITH QUICK COUPLER

S/N: M3G1-UP

CANNOT BE USED WITH 244-2662—PAGE 624, 244-3472—PAGE 603

AN ATTACHMENT

SMCS-6000 **i02415738**

NOTE	PART NUMBER	QTY	PART NAME 1 2 3 4 5 6 (PRODUCT LEVEL)	SEE PAGE
Y	*244-2662*	1	CONTROL AR-QUICK COUPLER (STANDARD, MID LIFT MACHINES)	624
Y	*222-5004*	1	COUPLER GP-QUICK	625
Y-SEPARATE ILLUSTRATION				

<END>

244-3411 LIFT AR—HIGH LIFT MACHINES

S/N: M3G1-UP

AN ATTACHMENT

SMCS-6000 **i02449366**

NOTE	PART NUMBER	QTY	PART NAME 1 2 3 4 5 6 (PRODUCT LEVEL)	SEE PAGE
Y	**279-3561**	1	ARM AS-LIFT	
Y	*232-7635*	1	CONTROL GP-BUCKET (HIGH LIFT MACHINES)	601
Y	*244-5548*	1	CYLINDER & SEAL GP-TILT (HIGH LIFT MACHINES)	485
Y	*275-0023*	1	WIRING GP-SENSOR (TILT POSITION)	
	208-3906	1	ARM AS-TILT (BAIL)	
	244-5575	2	TUBE AS	
Y-SEPARATE ILLUSTRATION				

<END>

244-3412 LIFT AR—HIGH LIFT MACHINES

S/N: M3G1-UP

AN ATTACHMENT

SMCS-6000 **i02449374**

NOTE	PART NUMBER	QTY	PART NAME 1 2 3 4 5 6 (PRODUCT LEVEL)	SEE PAGE
Y	*232-7635*	1	CONTROL GP-BUCKET (HIGH LIFT MACHINES)	601
Y	*244-5548*	1	CYLINDER & SEAL GP-TILT (HIGH LIFT MACHINES)	485
Y	*275-0023*	1	WIRING GP-SENSOR (TILT POSITION)	
	208-3906	1	ARM AS-TILT (BAIL)	

Y-SEPARATE ILLUSTRATION

<END>

WORK TOOLS

107-3411 ADAPTER GP-TIP

S/N: M3G1-UP
FOR USE WITH 109-3640 BUCKET AS AN ATTACHMENT

SMCS-6803 **i00350156**

NOTE	PART NUMBER	QTY	PART NAME 1 2 3 4 5 6 (PRODUCT LEVEL)	SEE PAGE
	4T-4307	6	ADAPTER-STRAP	
	8E-5308	1	ADAPTER-STRAP (LH)	
	8E-5309	1	ADAPTER-STRAP (RH)	
	5P-8136	12	BOLT-PLOW (1X8X4-IN)	
	5P-8823	2	BOLT-PLOW (1-1/4-7X4.13-IN)	
	8T-9079	2	BOLT-PLOW (1-1/2X7X3.35-IN)	
	8J-2933	12	NUT (1-8-THD)	
	3K-9770	4	NUT-FULL (1-1/4-7-THD)	

<END>

136-0499 ARM GP-MATERIAL HANDLING

S/N: M3G1-UP

AN ATTACHMENT

SMCS-6542 **i02163228**

NOTE	REF NO	GRAPHIC REF	PART NUMBER	QTY	PART NAME 1 2 3 4 5 6 (PRODUCT LEVEL)	SEE PAGE
	1	1	**3W-6116**	1	PIN	
	2	1	**103-5796**	1	PIN-KEEPER	
	3	1	**159-8036**	1	FILM-WARNING (READ OPERATION MANUAL)	
	4	1	**203-7643**	1	SHACKLE	
	5	1	**203-7644**	1	HOOK	
	6	1	**203-7730**	1	LATCH AS	
	7	1	**222-2307**	1	TUBE AS	

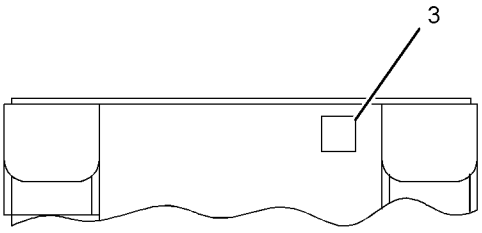

VIEW A-A

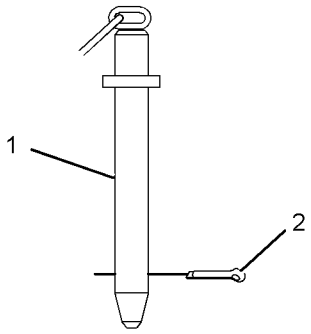

VIEW B-B

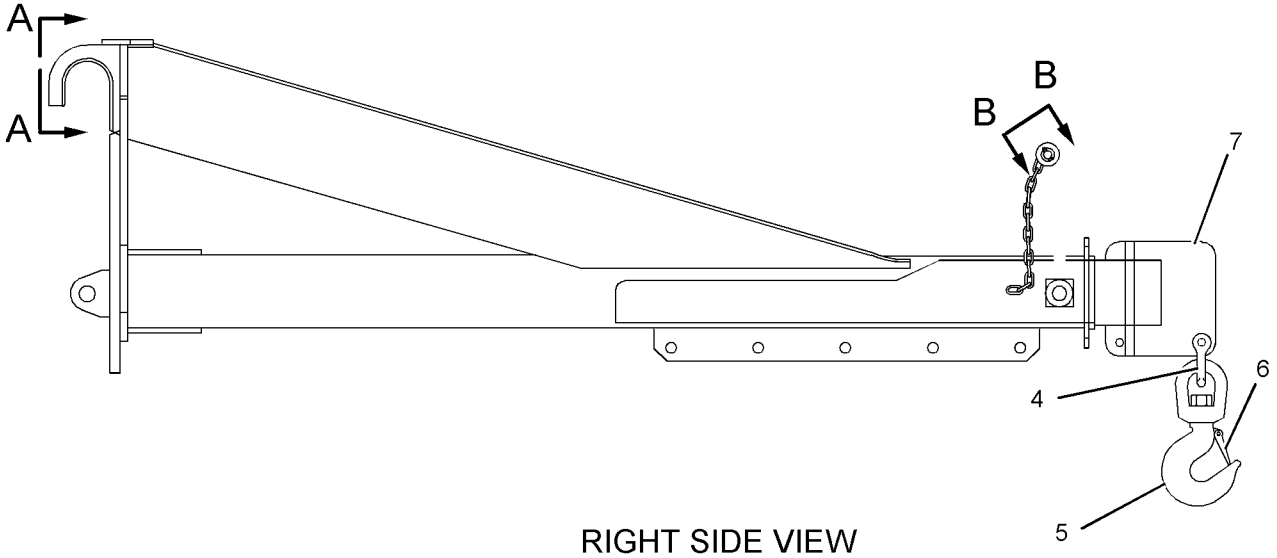

RIGHT SIDE VIEW

GRAPHIC #1

<END>

g01096974

141-9393 BUCKET AS-GENERAL PURPOSE

S/N: M3G1-UP
2.7 CU M (3.5 CU YD)
PART OF 130-8285 BUCKET GP-GENERAL PURPOSE
AN ATTACHMENT

SMCS-6101 **i02138816**

NOTE	REF NO	GRAPHIC REF	PART NUMBER	QTY	PART NAME 1 2 3 4 5 6 (PRODUCT LEVEL)	SEE PAGE
	1	1	**141-4847**	1	EDGE	
	2	1	**141-9051**	1	HINGE AS (TILT-LH)	
	3	1	**141-9050**	1	HINGE AS (TILT-RH)	
	4	1	**130-5543**	4	PLATE	
	5	1	**141-9040**	1	HINGE AS (LIFT-LH-OUTER)	
	6	1	**141-9041**	1	HINGE AS (LIFT-LH-INNER)	
	7	1	**141-9039**	1	HINGE AS (LIFT-RH-INNER)	
	8	1	**141-9038**	1	HINGE AS (LIFT-RH-OUTER)	
	9	1	**130-5553**	2	BAR	
	10	1	**8E-5300**	1	CORNER-RH	
	11	1	**8E-5301**	1	CORNER-LH	

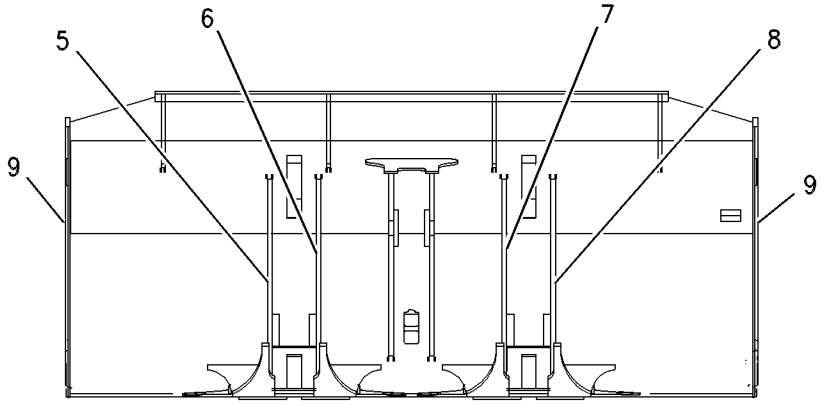

REAR VIEW

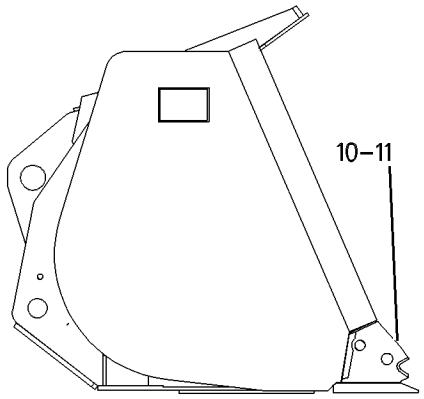

RIGHT SIDE VIEW

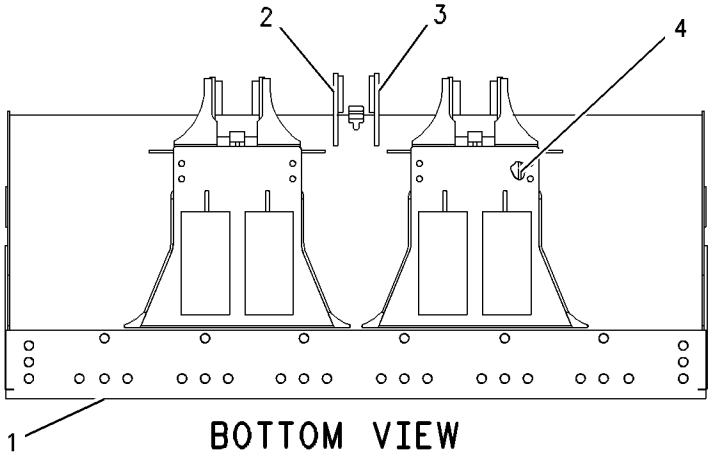

BOTTOM VIEW

GRAPHIC #1 **<END>** g00610616

148-7243 BUCKET AS-GENERAL PURPOSE

S/N: M3G1-UP
3.3 CU M (4.25 CU YD)
PART OF 148-7242 BUCKET GP-GENERAL PURPOSE
AN ATTACHMENT

SMCS-6101 **i01181723**

NOTE	REF NO	GRAPHIC REF	PART NUMBER	QTY	PART NAME 1 2 3 4 5 6 (PRODUCT LEVEL)	SEE PAGE
	2	1	**141-9038**	1	HINGE AS (LIFT-RH-OUTER)	
	3	1	**141-9039**	1	HINGE AS (LIFT-RH-INNER)	
	4	1	**141-9041**	1	HINGE AS (LIFT-LH-INNER)	
	5	1	**141-9040**	1	HINGE AS (LIFT-LH-OUTER)	
	6	1	**141-9051**	1	HINGE AS (TILT-LH)	
	7	1	**141-9050**	1	HINGE AS (TILT-RH)	
	8	1	**130-5543**	4	PLATE	
	9	1	**141-4847**	1	EDGE	
	10	1	**8E-5300**	1	CORNER-RH	
	11	1	**8E-5301**	1	CORNER-LH	
	12	1	**128-9599**	2	BAR	

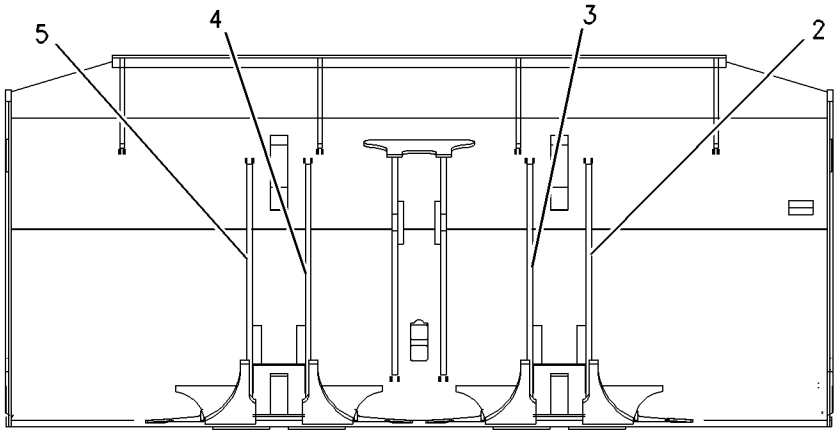

REAR VIEW

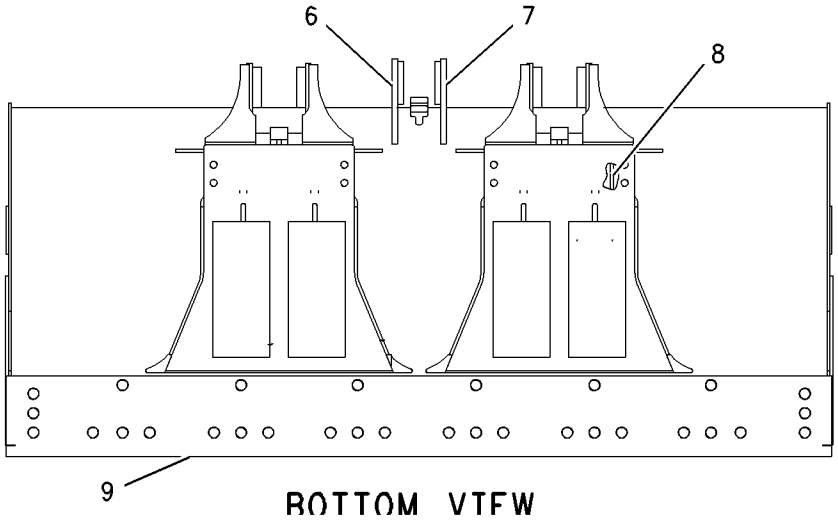

BOTTOM VIEW

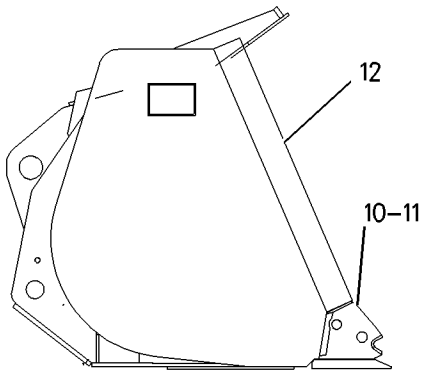

RIGHT SIDE VIEW

GRAPHIC #1 **<END>** g00632765

WORK TOOLS

209-6667 BUCKET AS-GENERAL PURPOSE

S/N: M3G1-UP
2.87 CU M (3.75 CU YD)
AN ATTACHMENT

SMCS-6101 **i02137920**

NOTE	REF NO	GRAPHIC REF	PART NUMBER	QTY	PART NAME 1 2 3 4 5 6 (PRODUCT LEVEL)	SEE PAGE
	1	1	**2C-9259**	2	PLATE-IDENTIFICATION	
	2	1	**8E-5300**	1	CORNER-RH	
	3	1	**8E-5301**	1	CORNER-LH	
	4	1	**141-4847**	1	EDGE	
	5	1	**209-6660**	2	PLATE-WEAR	
	6	1	**209-6661**	2	PAD-WEAR	

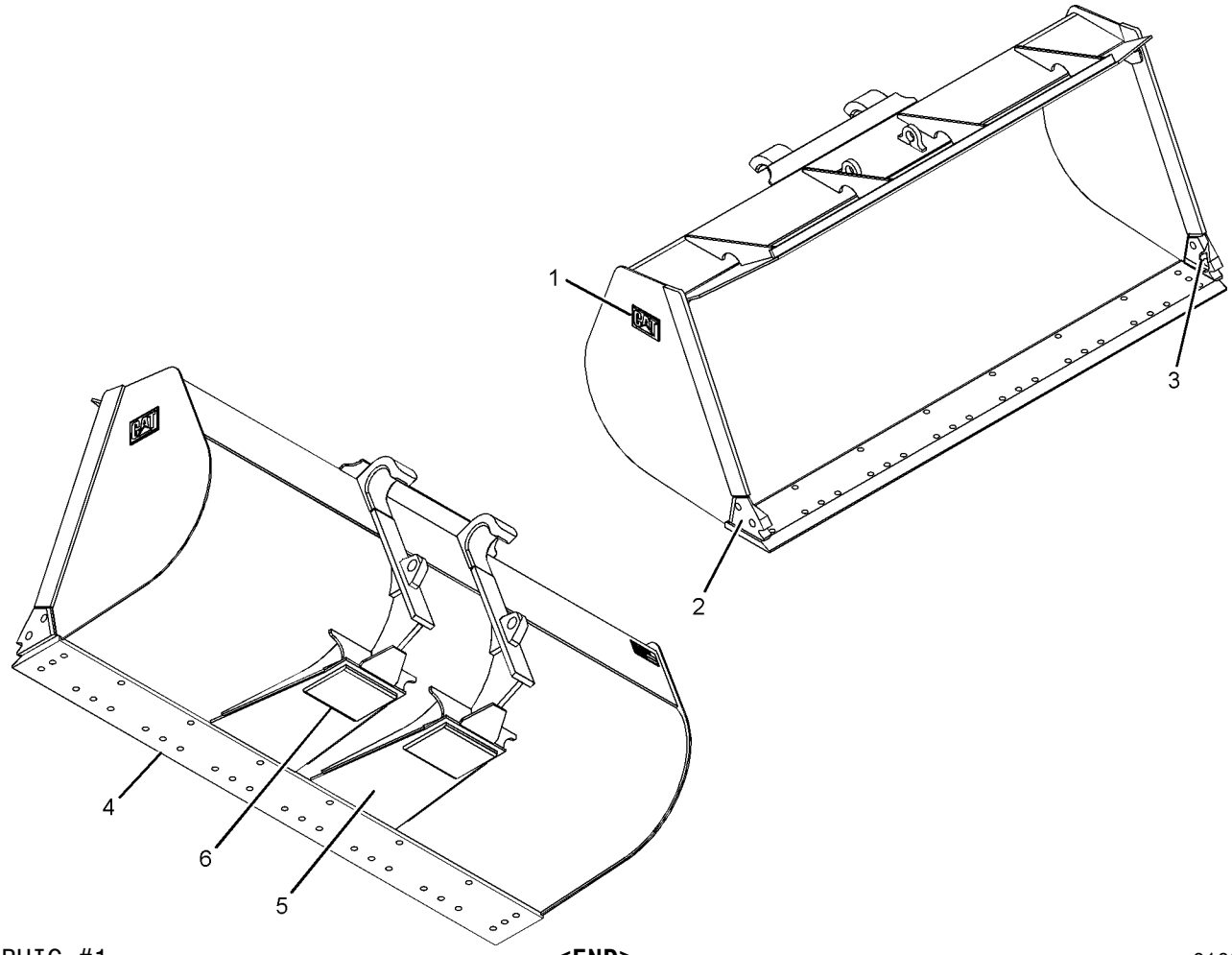

GRAPHIC #1 **<END>** g01086113

WORK TOOLS

141-9397 BUCKET AS-MATERIAL HANDLING

S/N: M3G1-UP
3.1-CU M (4.03-CU YD)
PART OF 130-3070 BUCKET GP-MATERIAL HANDLING
AN ATTACHMENT

SMCS-6101 **i02147874**

NOTE	REF NO	GRAPHIC REF	PART NUMBER	QTY	PART NAME 1 2 3 4 5 6 (PRODUCT LEVEL)	SEE PAGE
	1	1	**141-9044**	1	HINGE AS (LIFT-LH-OUTER)	
	2	1	**141-9045**	1	HINGE AS (LIFT-LH-INNER)	
	3	1	**141-9053**	1	HINGE AS (TILT-LH)	
	4	1	**141-9052**	1	HINGE AS (TILT-RH)	
	5	1	**141-9043**	1	HINGE AS (LIFT-RH-INNER)	
	6	1	**141-9042**	1	HINGE AS (LIFT-RH-OUTER)	
	7	1	**141-4847**	1	EDGE	
	8	1	**141-8765**	2	PLATE	
	9	1	**128-9600**	2	BAR	
	10	1	**8E-5300**	1	CORNER-RH	
	11	1	**8E-5301**	1	CORNER-LH	

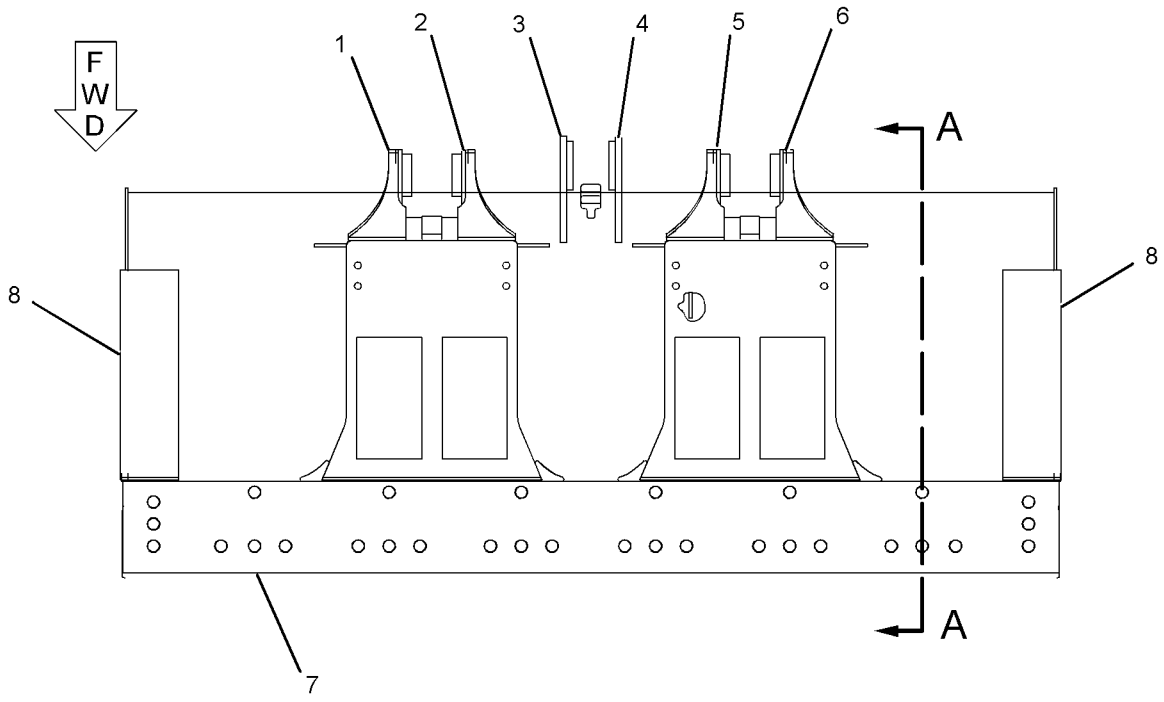

BOTTOM VIEW

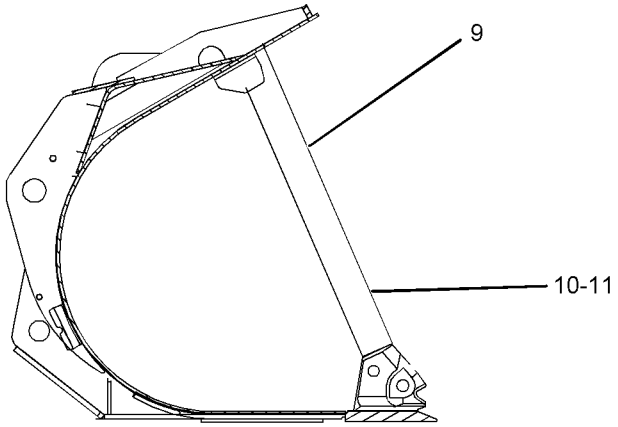

SECTION A-A

GRAPHIC #1

<END>

g01089564

WORK TOOLS

141-9398 BUCKET AS-MATERIAL HANDLING

S/N: M3G1-UP
3.5 CU M (4.55 CU YD)
PART OF 130-3071 BUCKET GP-MATERIAL HANDLING
AN ATTACHMENT

SMCS-6101 **i01181481**

NOTE	REF NO	GRAPHIC REF	PART NUMBER	QTY	PART NAME 1 2 3 4 5 6 (PRODUCT LEVEL)	SEE PAGE
	1	1	**141-9044**	1	HINGE AS (LIFT-LH-OUTER)	
	2	1	**141-9045**	1	HINGE AS (LIFT-LH-INNER)	
	3	1	**141-9053**	1	HINGE AS (TILT-LH)	
	4	1	**141-9052**	1	HINGE AS (TILT-RH)	
	5	1	**141-9043**	1	HINGE AS (LIFT-RH-INNER)	
	6	1	**141-9042**	1	HINGE AS (LIFT-RH-OUTER)	
	7	1	**141-4847**	1	EDGE	
	8	1	**128-9601**	2	BAR	
	9	1	**8E-5300**	1	CORNER-RH	
	10	1	**8E-5301**	1	CORNER-LH	

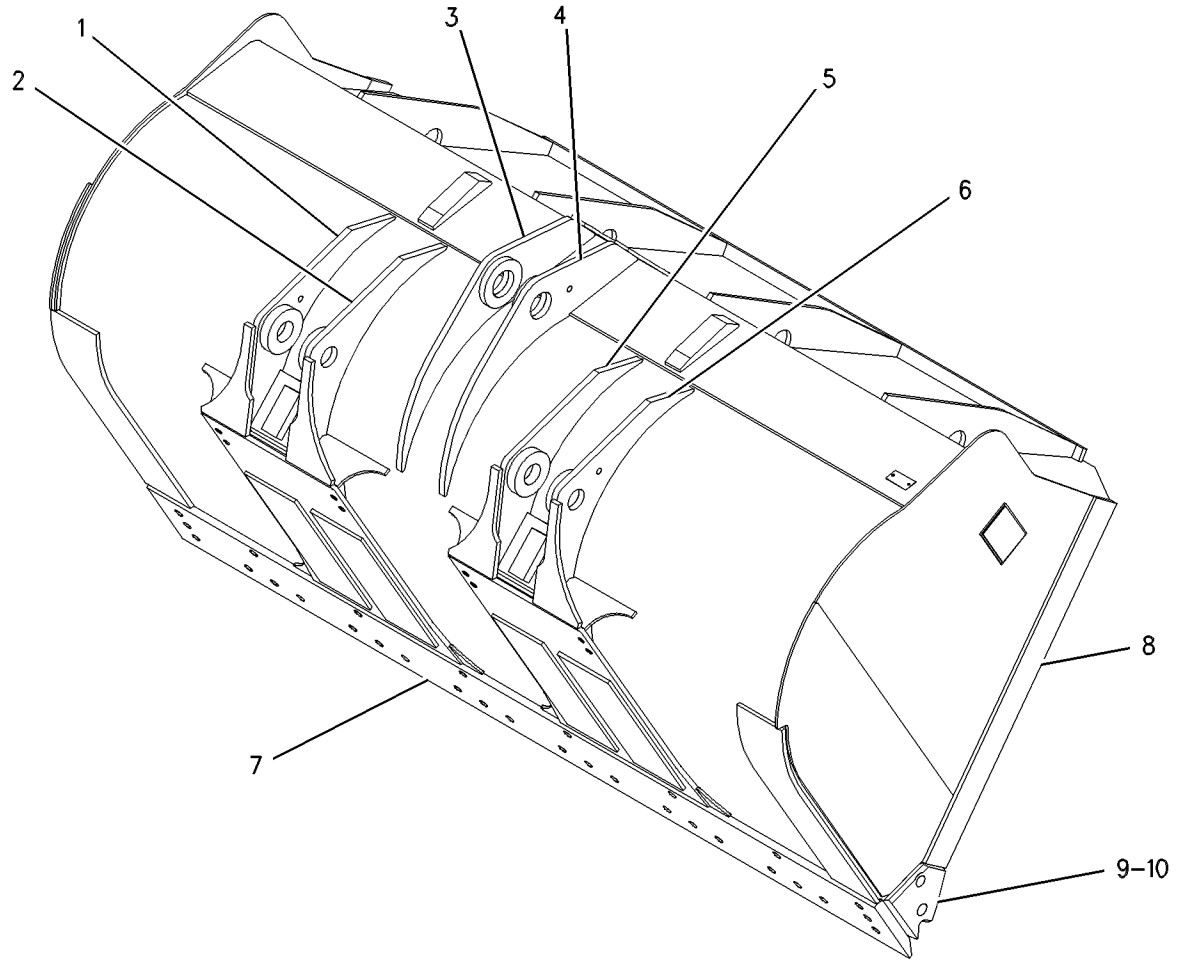

GRAPHIC #1 **<END>** g00387738

141-9399 BUCKET AS-MATERIAL HANDLING

S/N: M3G1-UP
3.8 CU M (4.94 CU YD)
PART OF 130-3075 BUCKET GP-MATERIAL HANDLING
AN ATTACHMENT

SMCS-6101 **i01181528**

NOTE	REF NO	GRAPHIC REF	PART NUMBER	QTY	PART NAME 1 2 3 4 5 6 (PRODUCT LEVEL)	SEE PAGE
	1	1	**141-9044**	1	HINGE AS (LIFT-LH-OUTER)	
	2	1	**141-9045**	1	HINGE AS (LIFT-LH-INNER)	
	3	1	**141-9053**	1	HINGE AS (TILT-LH)	
	4	1	**141-9052**	1	HINGE AS (TILT-RH)	
	5	1	**141-9043**	1	HINGE AS (LIFT-RH-INNER)	
	6	1	**141-9042**	1	HINGE AS (LIFT-RH-OUTER)	
	7	1	**141-4847**	1	EDGE	
	8	1	**128-9602**	2	BAR	
	9	1	**8E-5301**	1	CORNER-LH	
	10	1	**8E-5300**	1	CORNER-RH	
	11	1	**141-8763**	1	PLATE	

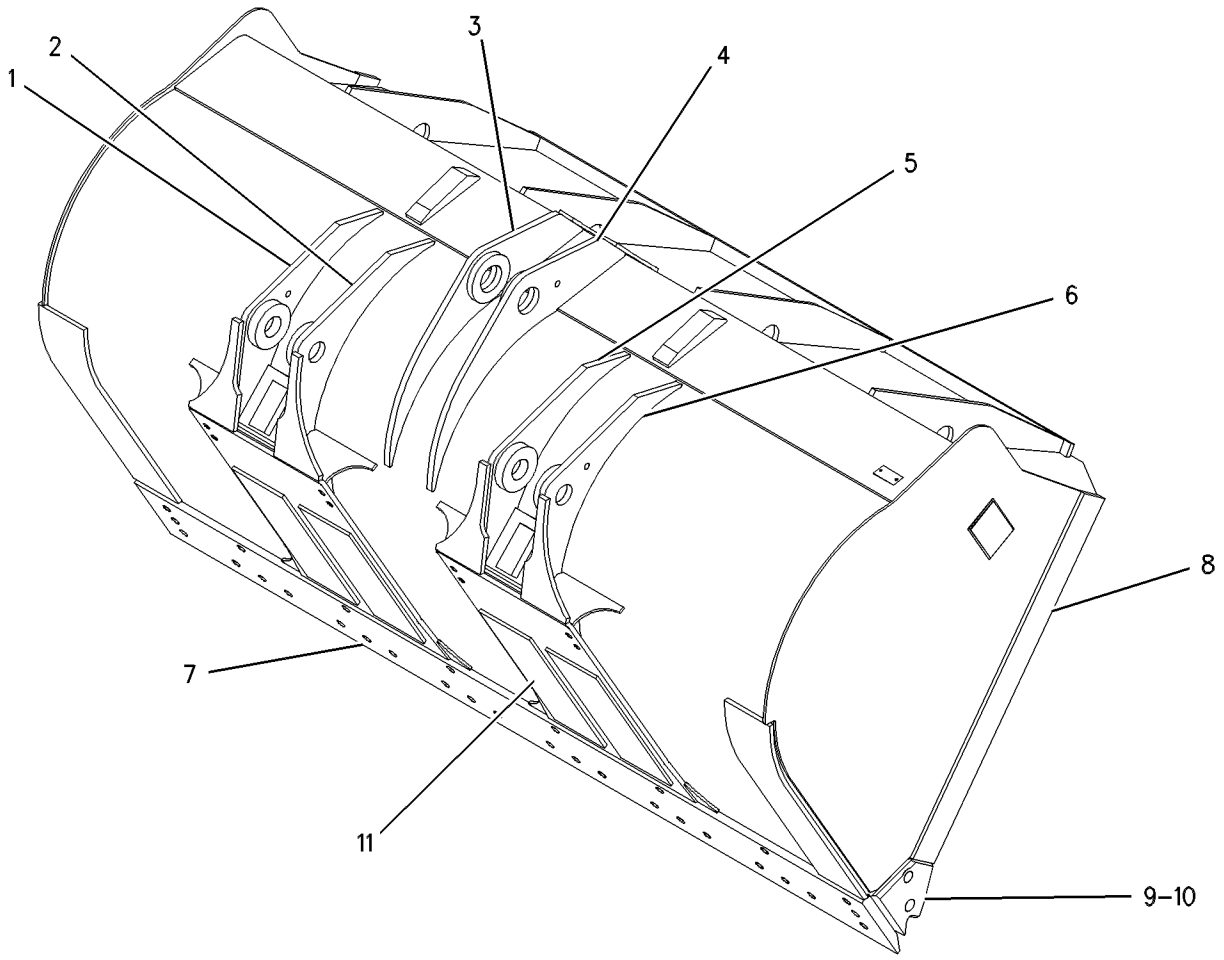

GRAPHIC #1 **<END>** g00412730

WORK TOOLS

148-7245 BUCKET AS-ROCK

S/N: M3G1-UP
3.1 CU M(4.00 CU YD)
PART OF 148-7244 BUCKET GP-ROCK
AN ATTACHMENT

SMCS-6102 **i02163466**

NOTE	REF NO	GRAPHIC REF	PART NUMBER	QTY	PART NAME 1 2 3 4 5 6 (PRODUCT LEVEL)	SEE PAGE
	1	1	**141-8823**	1	EDGE-CUTTING	
	2	1	**141-9048**	1	HINGE AS (LIFT, OUTER, LH) (LIFT-LH-OUTER)	
	3	1	**141-9049**	1	HINGE AS (LIFT, INNER, LH) (LIFT-LH-INNER)	
	4	1	**141-9051**	1	HINGE AS (TILT-LH)	
	5	1	**141-9050**	1	HINGE AS (TILT-RH)	
	6	1	**141-9046**	1	HINGE AS (LIFT, INNER, RH) (LIFT-RH-OUTER)	
	7	1	**141-9047**	1	HINGE AS (LIFT, OUTER, RH) (LIFT-RH-INNER)	
	9	1	**9V-2899**	4	PLATE	
	10	1	**6W-3468**	2	CORNER	
	11	1	**148-8941**	2	PLATE	
	12	1	**148-8942**	2	BAR	

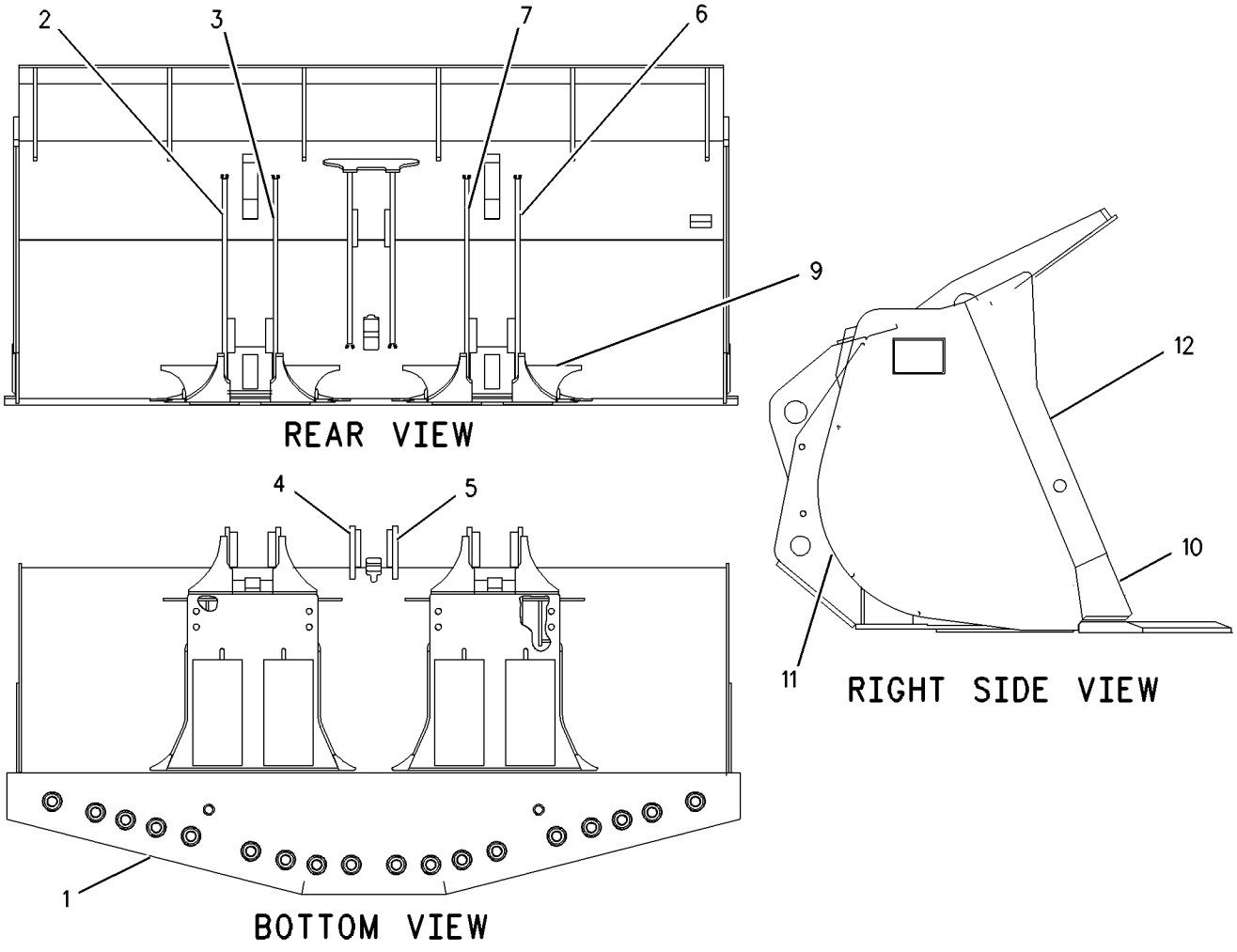

GRAPHIC #1 **<END>** g00632646

WORK TOOLS

148-7247 BUCKET AS-ROCK

S/N: M3G1-UP
3.1 CU M(4.00 CU YD)
PART OF 148-7246 BUCKET GP-ROCK
AN ATTACHMENT

SMCS-6102 **i01188873**

NOTE	REF NO	GRAPHIC REF	PART NUMBER	QTY	PART NAME 1 2 3 4 5 6 (PRODUCT LEVEL)	SEE PAGE
	2	1	**141-9046**	1	HINGE AS (LIFT, INNER, RH) (LIFT-RH-OUTER)	
	3	1	**141-9047**	1	HINGE AS (LIFT, OUTER, RH) (LIFT-RH-INNER)	
	4	1	**141-9049**	1	HINGE AS (LIFT, INNER, LH) (LIFT-LH-INNER)	
	5	1	**141-9048**	1	HINGE AS (LIFT, OUTER, LH) (LIFT-LH-OUTER)	
	7	1	**141-9050**	1	HINGE AS (TILT-RH)	
	8	1	**141-9051**	1	HINGE AS (TILT-LH)	
	9	1	**9V-2899**	4	PLATE	
	10	1	**141-8824**	1	EDGE GP-CUTTING	
		1	**1U-1350**	2	ADAPTER-TIP (CENTER)	
		1	**1U-1351**	2	ADAPTER-TIP (RH)	
		1	**1U-1352**	2	ADAPTER-TIP (LH)	
	11	1	**141-8830**	1	BAR	
	12	1	**148-8941**	2	PLATE	
	13	1	**6W-3468**	2	CORNER	
	14	1	**148-8942**	2	BAR	

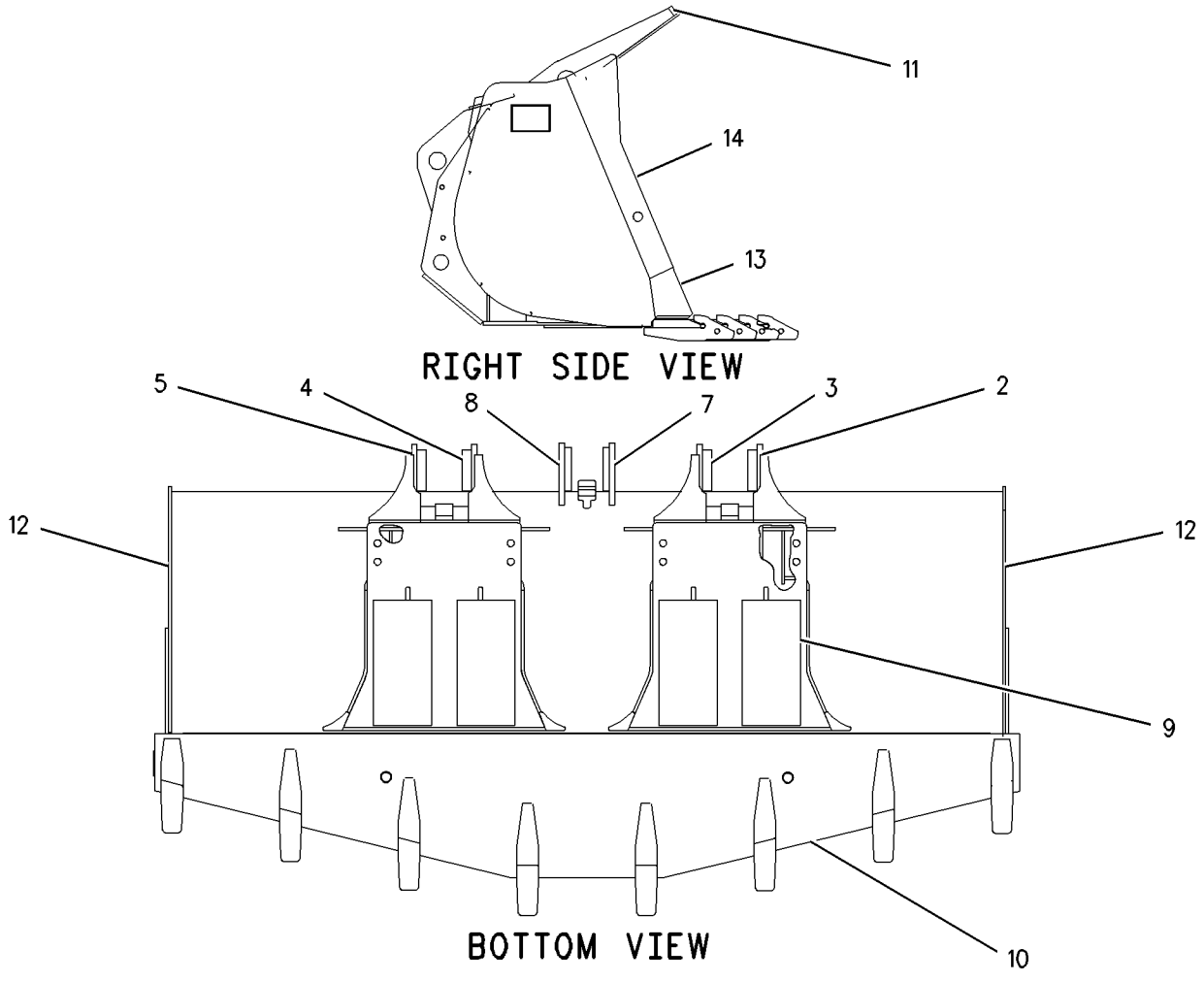

GRAPHIC #1 **<END>** g00636495

WORK TOOLS

130-8285 BUCKET GP-GENERAL PURPOSE

S/N: M3G1-UP
2.7 CU M (3.5 CU YD)
AN ATTACHMENT

SMCS-6101 **i02454421**

NOTE	PART NUMBER	QTY	PART NAME 1 2 3 4 5 6 (PRODUCT LEVEL)	SEE PAGE
Y	**141-9393**	1	BUCKET AS-GENERAL PURPOSE	607
M	**4F-7827**	8	BOLT-PLOW (3/4-10X2.5-IN)	
	2J-3506	8	NUT-FULL (3/4-10-THD)	
	9W-6747	2	PLATE-WEAR	
	5P-8248	8	WASHER-HARD (20X36.5X3.5-MM THK)	

M-METRIC PART
Y-SEPARATE ILLUSTRATION

<END>

WORK TOOLS

147-3677 BUCKET GP-GENERAL PURPOSE

S/N: M3G1-UP

AN ATTACHMENT

SMCS-6101 **i02096125**

NOTE	REF NO	GRAPHIC REF	PART NUMBER	QTY	PART NAME 1 2 3 4 5 6 (PRODUCT LEVEL)	SEE PAGE
	1	1	**147-2864**	2	PAD-WEAR	
	2	1	**147-7633**	3	BOSS-TAPPED	
	3	1	**8E-5300**	1	CORNER-RH	
	4	1	**8E-5301**	1	CORNER-LH	
	5	1	**186-2270**	4	PLATE-HINGE	
	6	1	**141-4847**	1	EDGE	
	7	1	**2C-9259**	2	PLATE-IDENTIFICATION	

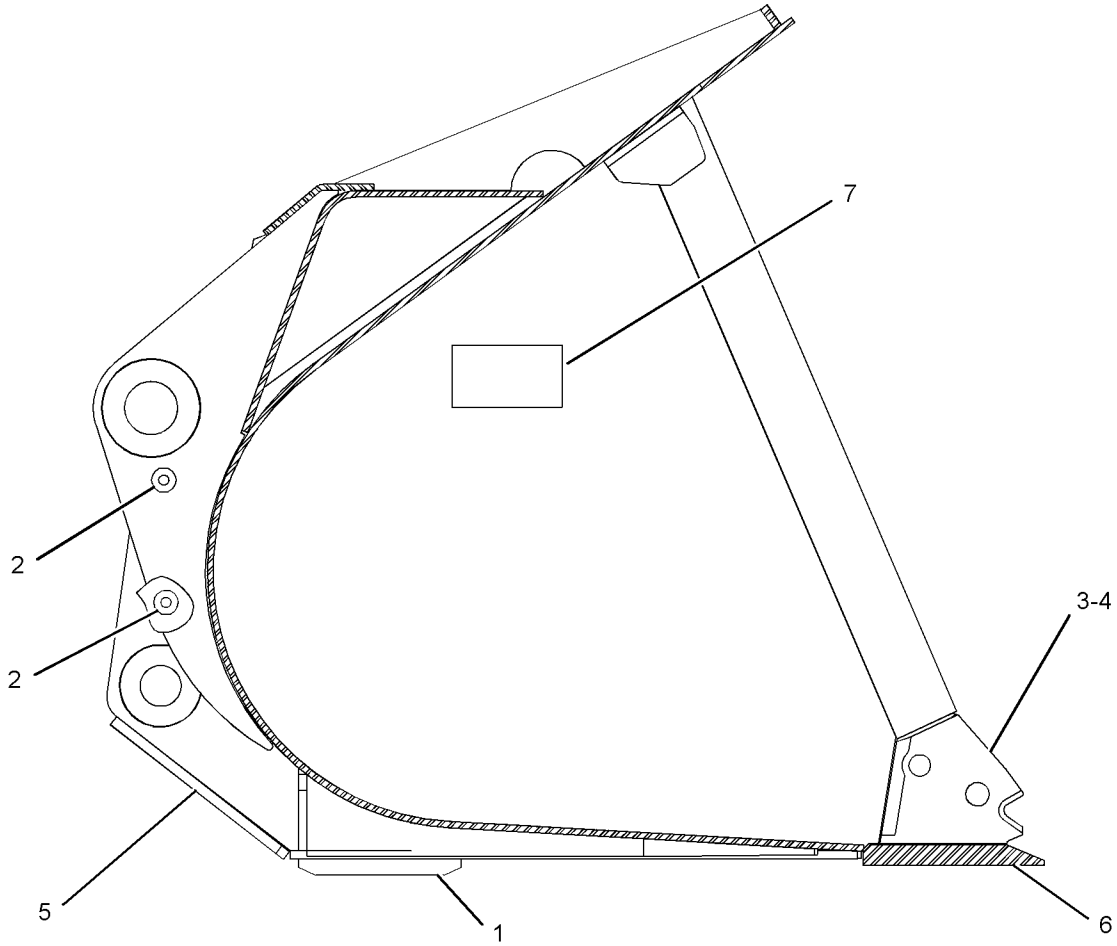

GRAPHIC #1 **<END>** g01083796

WORK TOOLS

148-7242 BUCKET GP-GENERAL PURPOSE

S/N: M3G1-UP
3.5 CU M (4.55 CU YD)
AN ATTACHMENT

SMCS-6101 **i01929604**

NOTE	PART NUMBER	QTY	PART NAME 1 2 3 4 5 6 (PRODUCT LEVEL)	SEE PAGE
	4F-7827	8	BOLT-PLOW (3/4-10X57.15MM)	
Y	**148-7243**	1	BUCKET AS-GENERAL PURPOSE	608
	2J-3506	8	NUT-FULL (3/4-10 THD)	
	9W-6747	2	PLATE-WEAR	
	5P-8248	8	WASHER-HARD (20X36.5X3.5MM THK)	

Y-SEPARATE ILLUSTRATION

<END>

WORK TOOLS

130-3070 BUCKET GP-MATERIAL HANDLING

S/N: M3G1-UP
3.3 CU YD (4.25 CU YD)
AN ATTACHMENT

SMCS-6101 **i02454643**

NOTE	REF NO	GRAPHIC REF	PART NUMBER	QTY	PART NAME 1 2 3 4 5 6 (PRODUCT LEVEL)	SEE PAGE
	1	1	**9W-6747**	2	PLATE-WEAR	
Y	2	1	**141-9397**	1	BUCKET AS-MATERIAL HANDLING	610
	4	1	**2J-3506**	8	NUT-FULL (3/4-10-THD)	
M	5	1	**4F-7827**	8	BOLT-PLOW (3/4-10X2.5-IN)	
	6	1	**5P-8248**	8	WASHER-HARD (20X36.5X3.5-MM THK)	

M-METRIC PART
Y-SEPARATE ILLUSTRATION

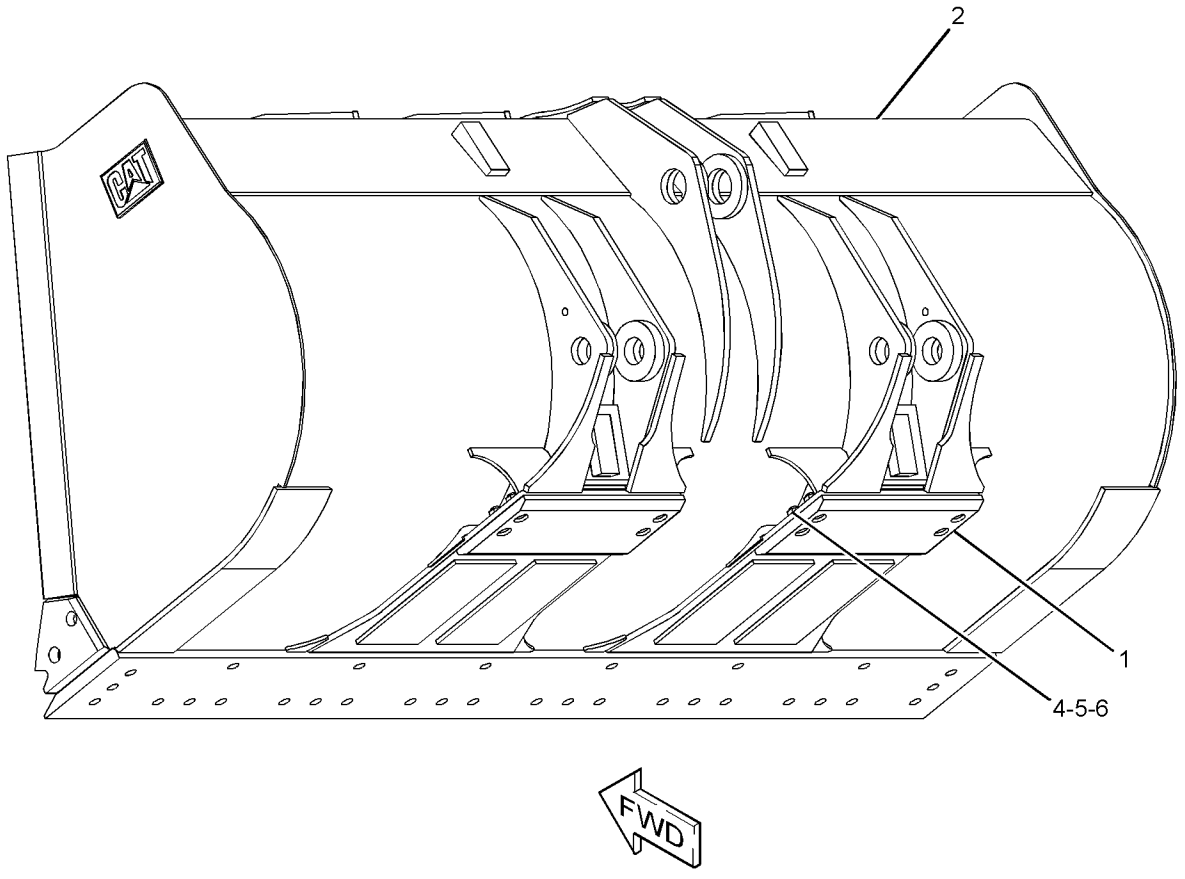

GRAPHIC #1 **<END>** g01225124

130-3071 BUCKET GP-MATERIAL HANDLING

S/N: M3G1-UP
3.5 CU M (4.5 CU YD)
AN ATTACHMENT

SMCS-6101 **i00851501**

NOTE	PART NUMBER	QTY	PART NAME 1 2 3 4 5 6 (PRODUCT LEVEL)	SEE PAGE
	4F-7827	8	BOLT-PLOW (3/4-10X57.15MM)	
Y	**141-9398**	1	BUCKET AS-MATERIAL HANDLING	612
	2J-3506	8	NUT-FULL (3/4-10 THD)	
	9W-6747	2	PLATE-WEAR	
	5P-8248	8	WASHER-HARD (3.5MM THK)	

Y-SEPARATE ILLUSTRATION

<END>

130-3075 BUCKET GP-MATERIAL HANDLING

S/N: M3G1-UP
3.8 CU M (4.94 CU YD)
AN ATTACHMENT

SMCS-6101 **i01070521**

NOTE	PART NUMBER	QTY	PART NAME 1 2 3 4 5 6 (PRODUCT LEVEL)	SEE PAGE
	4F-7827	8	BOLT-PLOW (3/4-10X57.15MM)	
Y	**141-9399**	1	BUCKET AS-MATERIAL HANDLING	613
	2J-3506	8	NUT-FULL (3/4-10 THD)	
	9W-6747	2	PLATE-WEAR	
	5P-8248	8	WASHER-HARD (3.5MM THK)	

Y-SEPARATE ILLUSTRATION

<END>

148-7244 BUCKET GP-ROCK

S/N: M3G1-UP
3.1 CU M (4.00 CU YD)
AN ATTACHMENT

SMCS-6102 **i00856235**

NOTE	PART NUMBER	QTY	PART NAME 1 2 3 4 5 6 (PRODUCT LEVEL)	SEE PAGE
	4F-7827	8	BOLT-PLOW (3/4-10X57.15MM)	
Y	**148-7245**	1	BUCKET AS-ROCK	614
Y	*109-9015*	1	EDGE GP-CUTTING	626
	2J-3506	8	NUT-FULL (3/4-10 THD)	
	9W-6747	2	PLATE-WEAR	
	5P-8248	8	WASHER-HARD (3.5MM THK)	

Y-SEPARATE ILLUSTRATION

<END>

WORK TOOLS

148-7246 BUCKET GP-ROCK

S/N: M3G1-UP
3.1 CU M(4.00 CU YD)
AN ATTACHMENT

SMCS-6102 **i00856237**

NOTE	PART NUMBER	QTY	PART NAME 1 2 3 4 5 6 (PRODUCT LEVEL)	SEE PAGE
	4F-7827	8	BOLT-PLOW (3/4-10X57.15MM)	
Y	**148-7247**	1	BUCKET AS-ROCK	615
	2J-3506	8	NUT-FULL (3/4-10 THD)	
	9W-6747	2	PLATE-WEAR	
	5P-8248	8	WASHER-HARD (3.5MM THK)	

Y-SEPARATE ILLUSTRATION

<END>

WORK TOOLS

136-0495 CARRIAGE GP-FORK

S/N: M3G1-UP

AN ATTACHMENT

SMCS-6402 **i01958451**

NOTE	REF NO	GRAPHIC REF	PART NUMBER	QTY	PART NAME 1 2 3 4 5 6 (PRODUCT LEVEL)	SEE PAGE
	2	1	**149-8447**	1	CARRIAGE AS	
	3	1	**165-5759**	2	TINE AS (60-IN)	
	4	1	**165-5761**	4	CLAMP AS	
	5	1	**165-5763**	2	PLATE	
	6	1	**165-5760**	1	SHAFT	
	7	1	**8T-4123**	4	WASHER-PLATED (22X35X3.5-MM THK)	
M	8	1	**8T-6430**	4	BOLT (M20X2.5X50-MM)	

M-METRIC PART

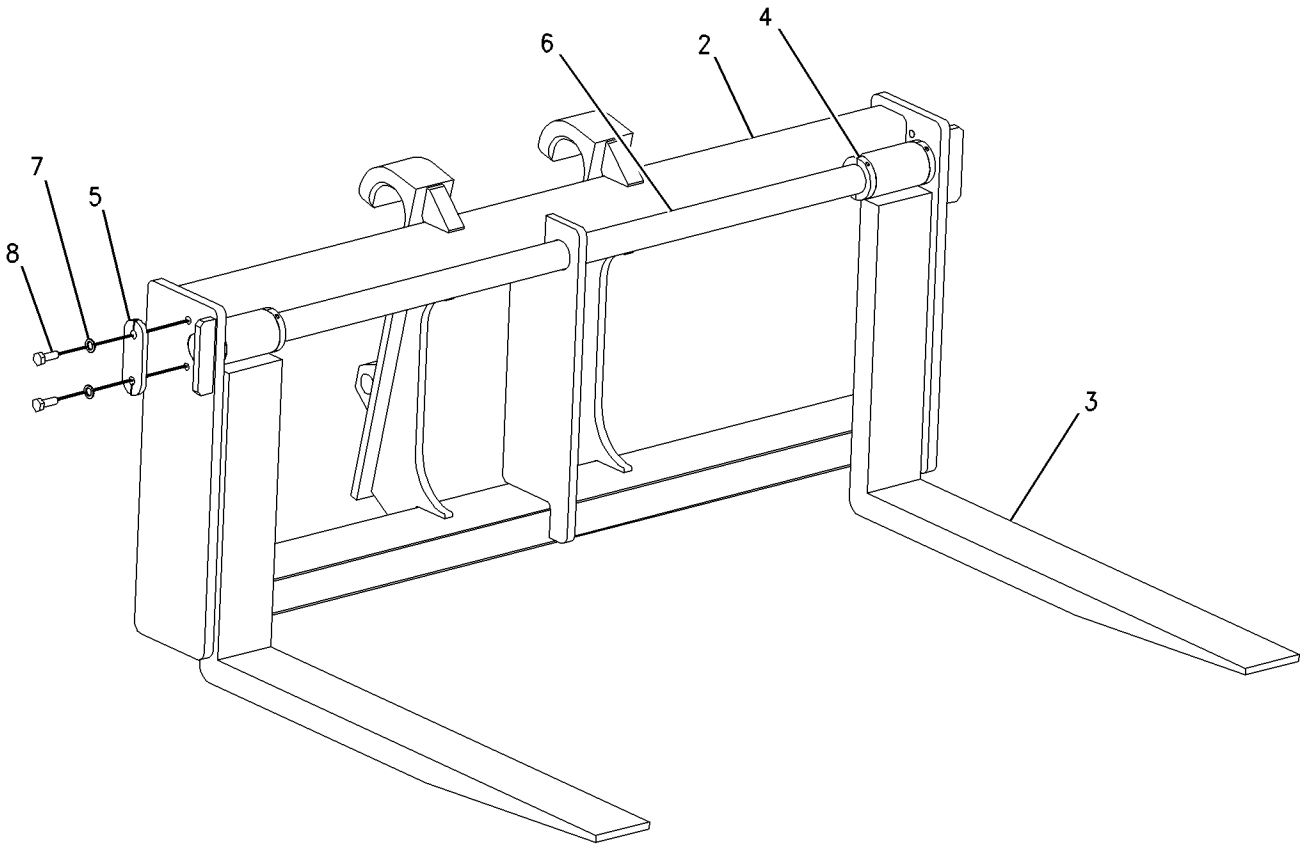

GRAPHIC #1 **<END>** g00915900

WORK TOOLS

136-0496 CARRIAGE GP-FORK

S/N: M3G1-UP

AN ATTACHMENT

SMCS-6402 **i01958457**

NOTE	REF NO	GRAPHIC REF	PART NUMBER	QTY	PART NAME 1 2 3 4 5 6 (PRODUCT LEVEL)	SEE PAGE
	2	1	**149-8447**	1	CARRIAGE AS	
	3	1	**165-5761**	4	CLAMP AS	
	4	1	**165-5763**	2	PLATE	
	5	1	**184-6343**	2	TINE (72-IN)	
	6	1	**165-5760**	1	SHAFT	
	7	1	**8T-4123**	4	WASHER-PLATED (22X35X3.5-MM THK)	
M	8	1	**8T-6430**	4	BOLT (M20X2.5X50-MM)	

M-METRIC PART

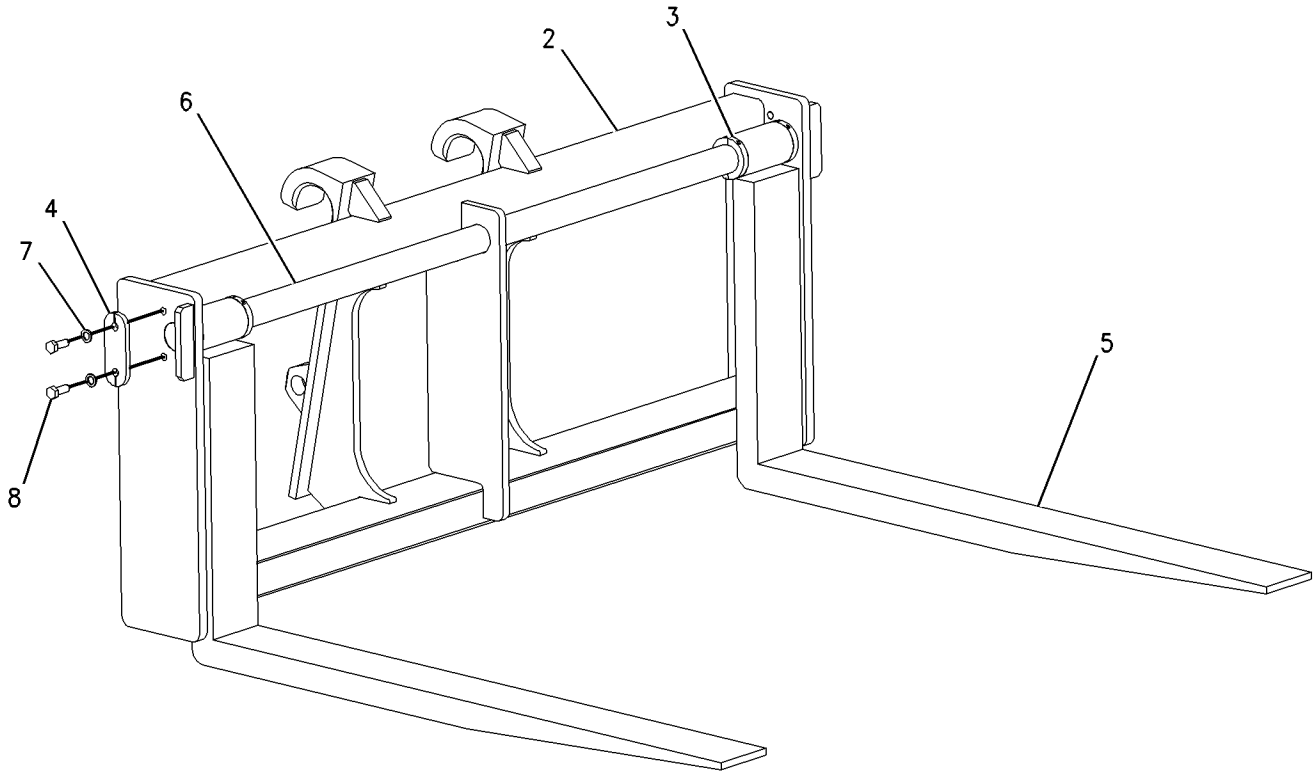

GRAPHIC #1 **<END>** g00915895

244-2662 CONTROL AR-QUICK COUPLER—MID LIFT MACHINES—QUICK COUPLER READY

S/N: M3G1-UP

PART OF 244-2661 LIFT AR

CANNOT BE USED WITH 244-3472—PAGE 603

AN ATTACHMENT

SMCS-6129 **i02449432**

NOTE	PART NUMBER	QTY	PART NAME 1 2 3 4 5 6 (PRODUCT LEVEL)	SEE PAGE
Y	**279-3440**	1	ARM AS-LIFT	596
Y	*275-6101*	1	LINES GP-COUPLER (REAR)	502
Y	*276-2563*	1	LINES GP-COUPLER (FRONT)	505
Y	*271-4026*	1	WIRING GP-COUPLER	234
	252-5925	1	SWITCH GP-QUICK COUPLER	
	228-6089	1	PLUG	
	248-5081	1	SWITCH AS-ROCKER (QUICK COUPLER)	
	249-5602	1	GUARD-SWITCH	

Y-SEPARATE ILLUSTRATION

<END>

WORK TOOLS

222-5004 COUPLER GP-QUICK

S/N: M3G1-UP
PART OF 244-2661 LIFT AR
AN ATTACHMENT

SMCS-6129 **i01910320**

NOTE	REF NO	GRAPHIC REF	PART NUMBER	QTY	PART NAME 1 2 3 4 5 6 (PRODUCT LEVEL)	SEE PAGE
	1	1	**3V-0046**	2	PLATE	
	2	1	**086-9286**	4	CLAMP	
I	3	1	**199-0629**	2	HOSE AS	
Y	5	1	*222-4994*	1	FRAME GP-QUICK COUPLER	627
	6	1	**1B-2790**	2	BOLT (5/16-18X1.375-IN)	
	7	1	**3J-7354**	2	SEAL-O-RING	
	8	1	**4J-5477**	2	SEAL-O-RING	
	9	1	**6V-8189**	1	NUT (5/16-18-THD)	
	10	1	**6V-8647**	2	CONNECTOR	

I-REFER TO HYDRAULIC INFORMATION SYSTEM
Y-SEPARATE ILLUSTRATION

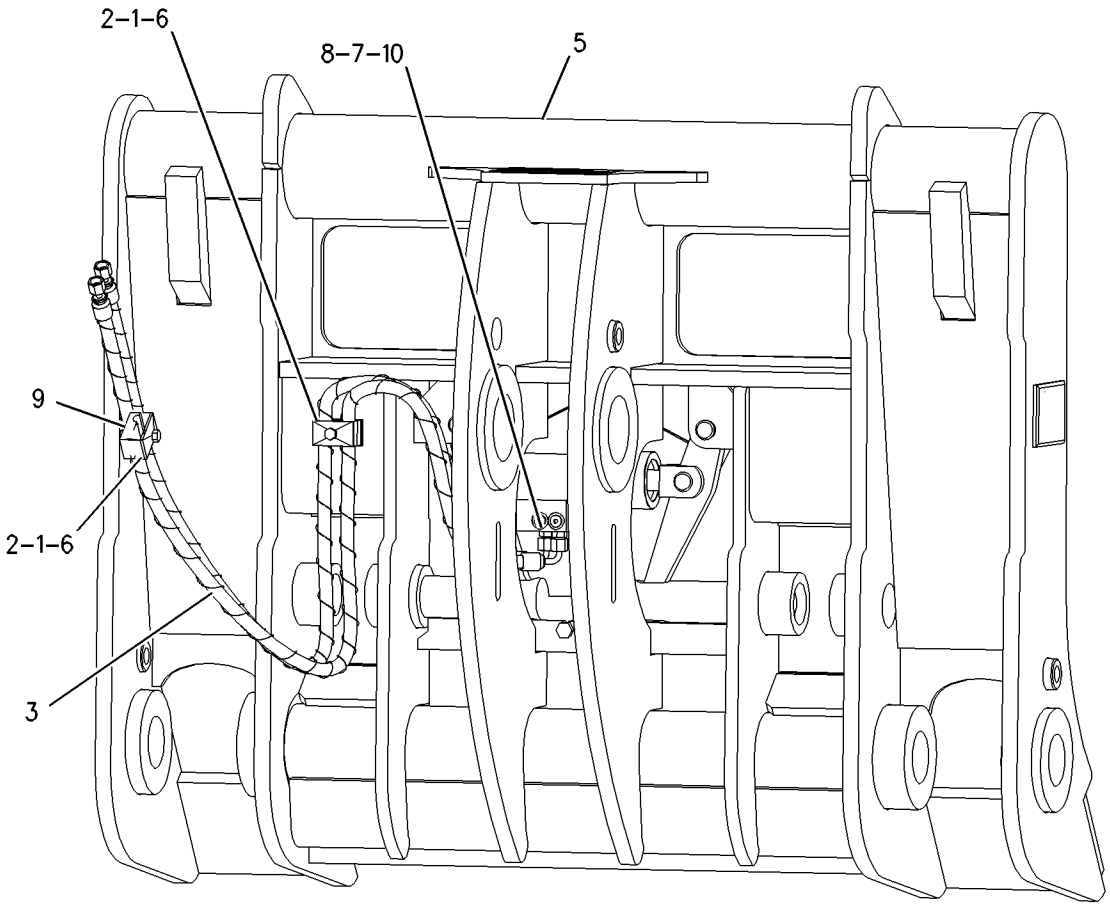

GRAPHIC #1 **<END>** g00919126

WORK TOOLS

109-9015 EDGE GP-CUTTING

S/N: M3G1-UP
PART OF 148-7244 BUCKET GP-ROCK
AN ATTACHMENT

SMCS-6801 **i00911860**

NOTE	PART NUMBER	QTY	PART NAME 1 2 3 4 5 6 (PRODUCT LEVEL)	SEE PAGE
	8T-9079	18	BOLT-PLOW	
	132-1089	1	EDGE-CUTTING	
	7T-5961	1	EDGE-CUTTING-LH	
	109-9016	1	EDGE-CUTTING-LH	
	7T-5963	1	EDGE-CUTTING-RH	
	109-9017	1	EDGE-CUTTING-RH	
	3K-9770	18	NUT-FULL (1-1/4-7 THD)	
	4K-0684	18	WASHER-HARD (6MM THK)	

<END>

139-9229 EDGE GP-CUTTING

S/N: M3G1-UP
AN ATTACHMENT

SMCS-6801 **i00801934**

NOTE	PART NUMBER	QTY	PART NAME 1 2 3 4 5 6 (PRODUCT LEVEL)	SEE PAGE
	4F-4042	12	BOLT-PLOW	
	139-9230	2	EDGE-CUTTING	
	4T-8101	2	EDGE-END	
	2J-3507	12	NUT-FULL (1-8 THD)	

<END>

107-3394 EDGE GP-SEGMENT

S/N: M3G1-UP
AN ATTACHMENT

SMCS-6818 **i02308351**

NOTE	PART NUMBER	QTY	PART NAME 1 2 3 4 5 6 (PRODUCT LEVEL)	SEE PAGE
	4F-4042	14	BOLT-PLOW (M1-8X3-IN)	
	132-4715	5	EDGE-SEGMENT	
	257-1762	2	EDGE-SEGMENT	
	2J-3507	14	NUT-FULL (1-8-THD)	

<END>

222-4994 FRAME GP-QUICK COUPLER

S/N: M3G1-UP
PART OF 222-5004 COUPLER GP-QUICK
AN ATTACHMENT

SMCS-6129 **i02145916**

NOTE	REF NO	GRAPHIC REF	PART NUMBER	QTY	PART NAME 1 2 3 4 5 6 (PRODUCT LEVEL)	SEE PAGE
	2	1	**163-0086**	2	PIN	
	3	1	**185-1948**	1	PLATE-STOP	
	4	1	**200-1734**	2	PLATE	
Y	5	1	**237-0946**	1	CYLINDER GP-COUPLER	487
	6	1	**222-4983**	1	FRAME AS	
	7	1	**3B-4629**	4	PIN-COTTER	
	8	1	**5P-8245**	2	WASHER-HARD (13.5X25.5X3-MM THK)	
	9	1	**5S-7598**	4	PIN	
M	10	1	**6V-7687**	2	LOCKNUT (M12X1.75-THD)	
M	11	1	**6V-8197**	2	BOLT (M12X1.75X40-MM)	

M-METRIC PART
Y-SEPARATE ILLUSTRATION

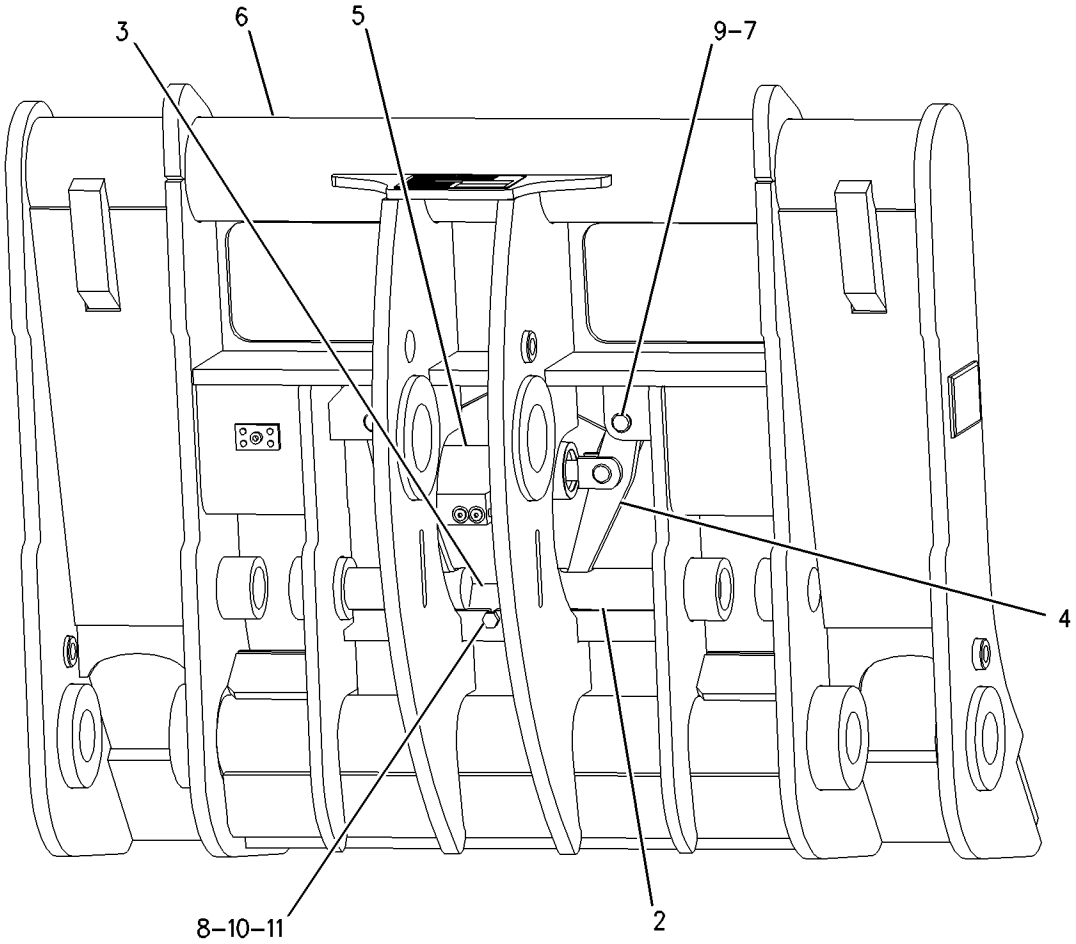

GRAPHIC #1 **<END>** g00919198

WORK TOOLS

217-4891 TIP GP-EXTRA DUTY

S/N: M3G1-UP
K-90
AN ATTACHMENT

SMCS-6805 **i02449348**

NOTE	REF NO	GRAPHIC REF	PART NUMBER	QTY	PART NAME 1 2 3 4 5 6 (PRODUCT LEVEL)	SEE PAGE
	1	1	**220-9090**	1	RETAINER-G.E.T. (K-80, K-90, K-100)	
	2	1	**220-9091**	1	TIP-EXTRA DUTY (K-90)	

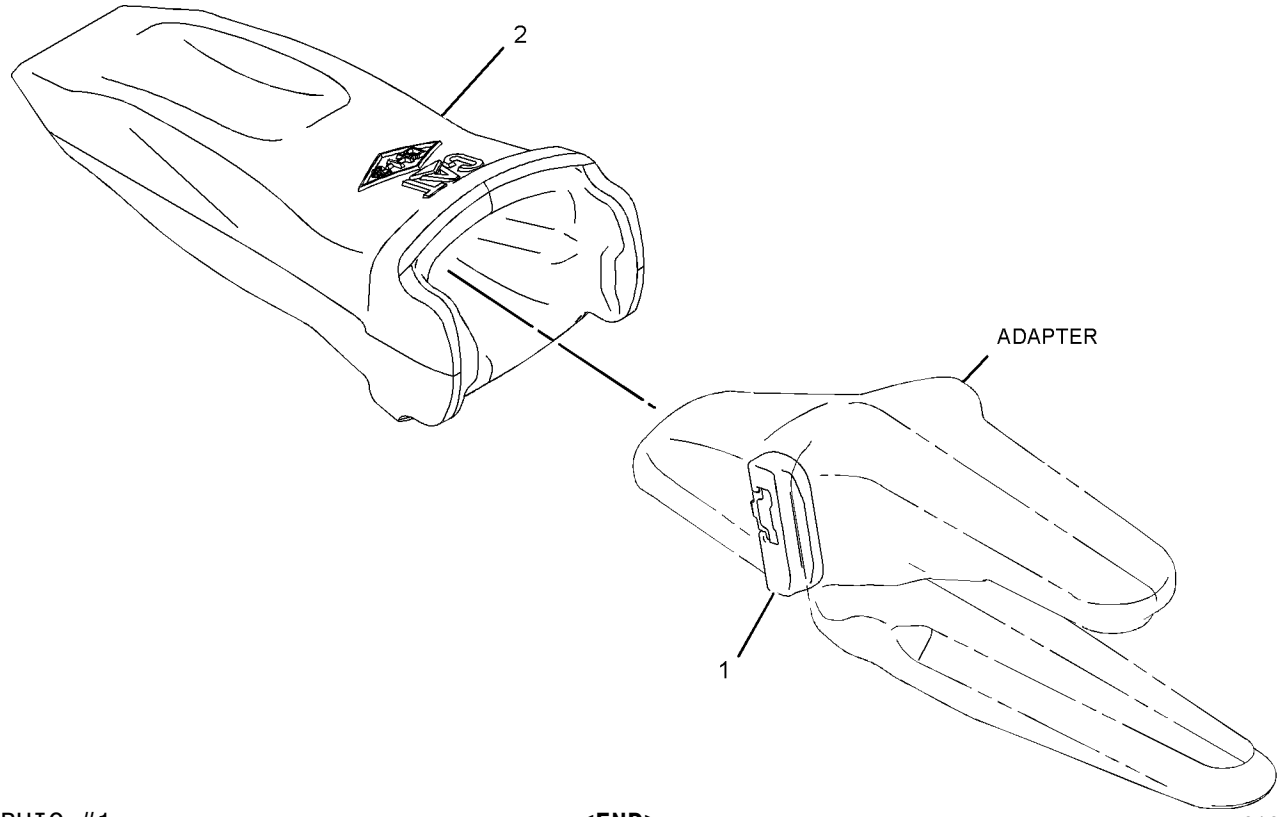

GRAPHIC #1 **<END>** g01074500

WORK TOOLS

254-5068 TIP GP-GENERAL PURPOSE

S/N: M3G1-UP
K-80
FOR USE WITH 130-8285—PAGE 616, 130-3070—PAGE 619, 130-3071—PAGE 620, 130-3075—PAGE 620
AN ATTACHMENT

SMCS-6805 **i02449723**

NOTE	REF NO	GRAPHIC REF	PART NUMBER	QTY	PART NAME 1 2 3 4 5 6 (PRODUCT LEVEL)	SEE PAGE
	1	1	**220-9089**	8	TIP-GENERAL PURPOSE (K-80)	
	2	1	**220-9090**	8	RETAINER-G.E.T. (K-80, K-90, K-100)	

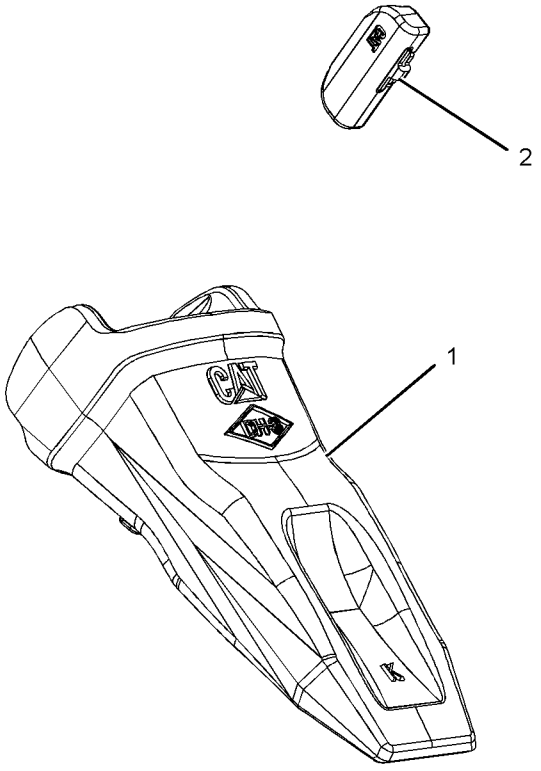

GRAPHIC #1 **<END>** g01136148

WORK TOOLS

254-5072 TIP GP-GENERAL PURPOSE

S/N: M3G1-UP
K-90
AN ATTACHMENT

SMCS-6805 **i02449775**

NOTE	REF NO	GRAPHIC REF	PART NUMBER	QTY	PART NAME 1 2 3 4 5 6 (PRODUCT LEVEL)	SEE PAGE
	1	1	**220-9090**	8	RETAINER-G.E.T. (K-80, K-90, K-100)	
	2	1	**220-9099**	8	TIP-GENERAL PURPOSE (K-90)	

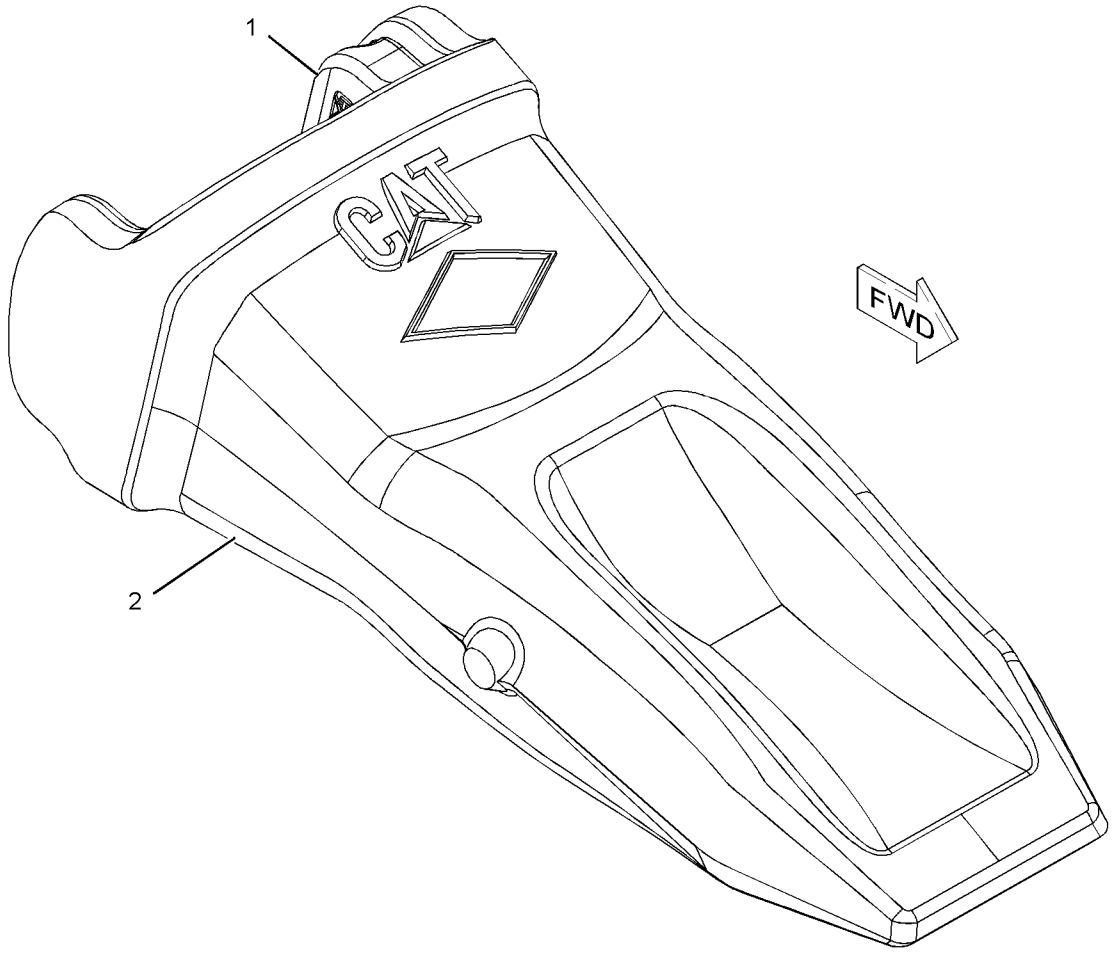

GRAPHIC #1 **<END>** g01130267

WORK TOOLS

8E-3751 TIP GP-LONG

S/N: M3G1-UP
J-300. HEAVY DUTY
AN ATTACHMENT

SMCS-6805 **i02321688**

NOTE	REF NO	GRAPHIC REF	PART NUMBER	QTY	PART NAME 1 2 3 4 5 6 (PRODUCT LEVEL)	SEE PAGE
	1	1	**107-3308**	1	PIN	
	2	1	**8E-6259**	1	RETAINER AS	
	3	1	**9N-4302**	1	TIP-LONG (J-300)	

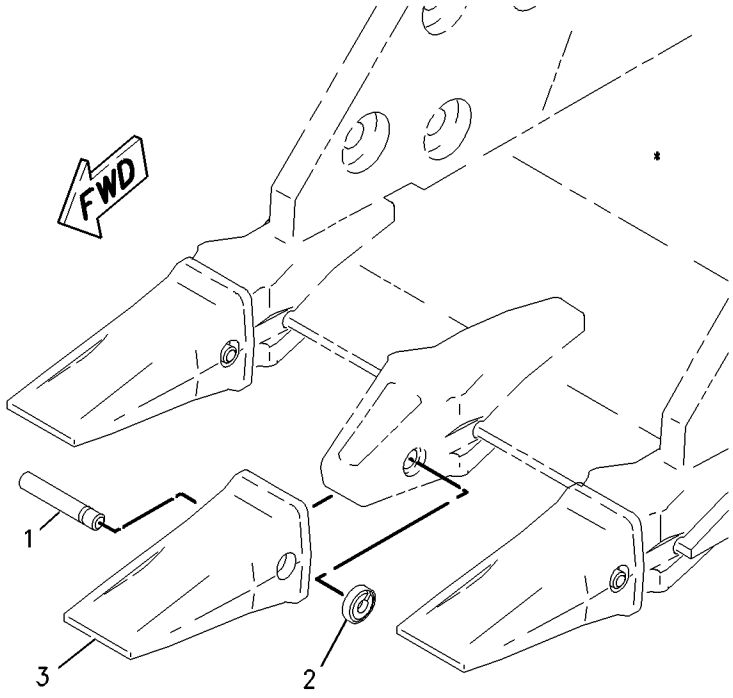

GRAPHIC #1 **<END>** g00925728

3G-3237 TIP GP-PENETRATION

S/N: M3G1-UP
J-300
FOR USE WITH HOE BUCKET
AN ATTACHMENT

SMCS-6805 **i02322347**

NOTE	REF NO	GRAPHIC REF	PART NUMBER	QTY	PART NAME 1 2 3 4 5 6 (PRODUCT LEVEL)	SEE PAGE
	1	1	**107-3308**	1	PIN	
	2	1	**9J-4309**	1	TIP-PENETRATION (J-300)	
	3	1	**8E-6259**	1	RETAINER AS	

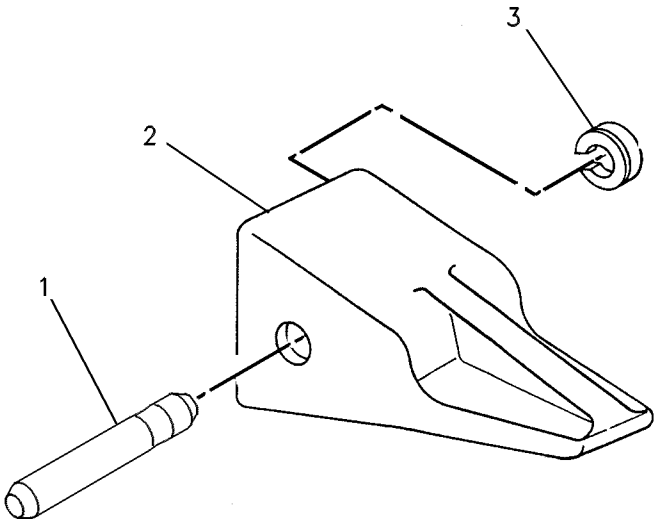

GRAPHIC #1 **<END>** g00246912

WORK TOOLS

217-4892 TIP GP-PENETRATION

S/N: M3G1-UP
K-90
AN ATTACHMENT

SMCS-6805 **i02100100**

NOTE	REF NO	GRAPHIC REF	PART NUMBER	QTY	PART NAME 1 2 3 4 5 6 (PRODUCT LEVEL)	SEE PAGE
	1	1	**220-9090**	1	RETAINER-G.E.T. (K-80, K-90, K-100)	
	2	1	**220-9092**	1	TIP-BUCKET (PENETRATION) (K-90)	

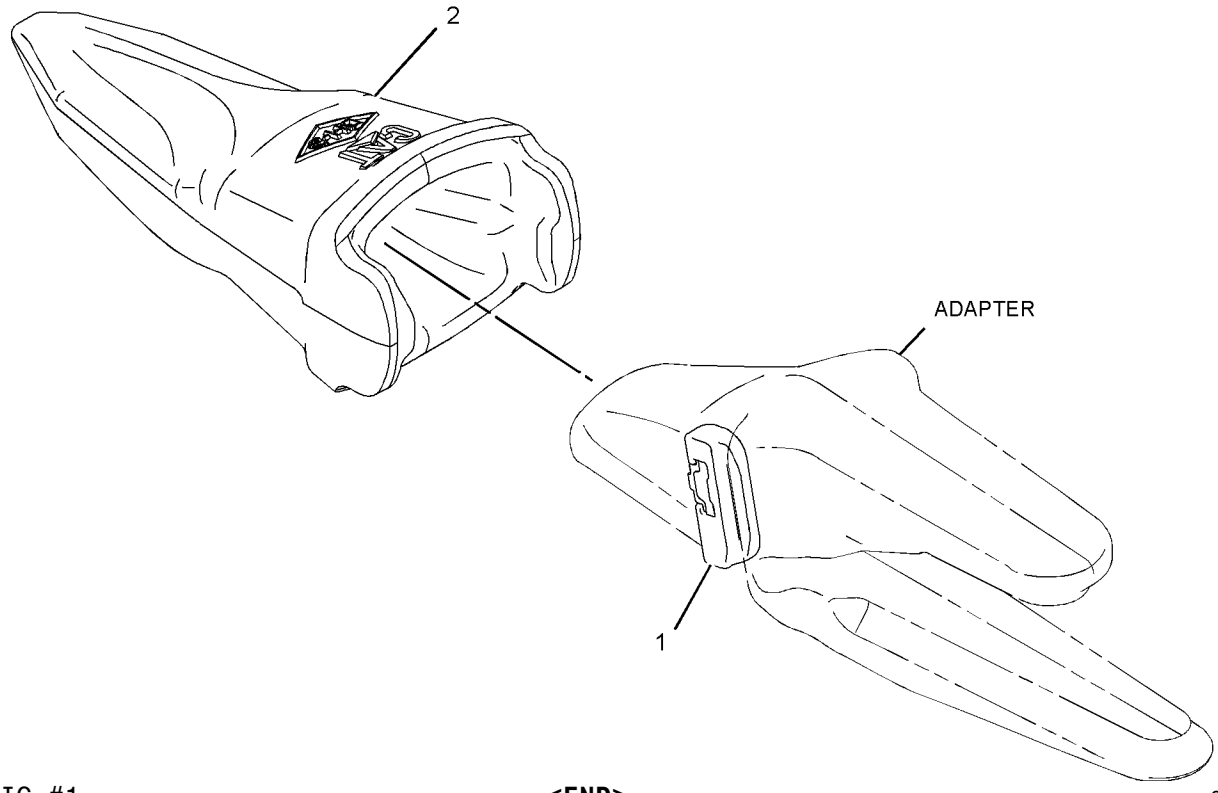

GRAPHIC #1 **<END>** g01074482

WORK TOOLS

4T-5225 TIP GP-SHORT

S/N: M3G1-UP
J-350
AN ATTACHMENT

SMCS-6805 **i02322348**

NOTE	PART NUMBER	QTY	PART NAME 1 2 3 4 5 6 (PRODUCT LEVEL)	SEE PAGE
Y	*8J-4954*	8	TIP GP-SHORT (J-350)	635

Y-SEPARATE ILLUSTRATION

<END>

WORK TOOLS

8J-4954 TIP GP-SHORT

S/N: M3G1-UP
J-350
PART OF 4T-5225 TIP GP-SHORT
AN ATTACHMENT

SMCS-6805 **i02322349**

NOTE	REF NO	GRAPHIC REF	PART NUMBER	QTY	PART NAME 1 2 3 4 5 6 (PRODUCT LEVEL)	SEE PAGE
	1	1	**114-0358**	1	PIN	
C	2	1	**114-0359**	1	RETAINER AS (G.E.T.)	
C	3	1	**1U-3351**	1	TIP-SHORT (J-350)	

C-CHANGE FROM PREVIOUS TYPE

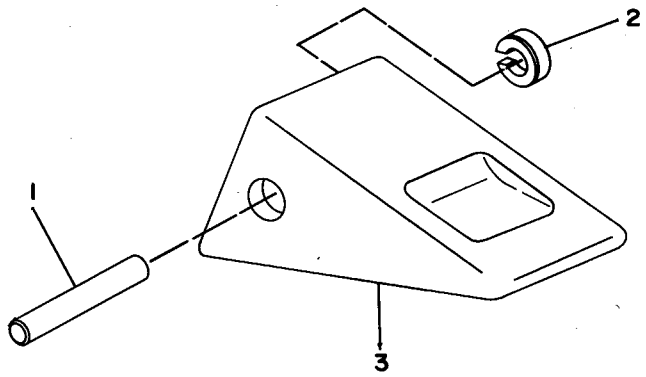

GRAPHIC #1 **<END>** g00118345

173-1028 ADJUSTER GP-SEAT

S/N: M3G1-UP
PART OF 178-0603, 180-7304 SEAT GP
ALSO AN ATTACHMENT

SMCS-7321 **i01582195**

NOTE	REF NO	GRAPHIC REF	PART NUMBER	QTY	PART NAME 1 2 3 4 5 6 (PRODUCT LEVEL)	SEE PAGE
	1	1	**4V-8256**	4	SPRING	
	2	1	**117-4492**	1	ROD	
	3	1	**136-1544**	1	LATCH AS-LH	
	4	1	**156-5545**	1	LATCH AS-RH	
	5	1	**164-4531**	1	ROD	
	6	1	**170-1112**	1	PLATE AS	
	7	1	**170-1114**	1	HANDLE (SLIDE ADJUSTMENT)	
	8	1	**170-1115**	1	HANDLE (TILT ADJUSTMENT)	
	9	1	**132-0338**	2	WASHER-PLASTIC (13X31.7X.8-MM THK)	
	10	1	**2K-4973**	2	LOCKNUT (3/8-16-THD)	
	11	1	**7X-0608**	2	WASHER-HARD (10.2X16X2-MM THK)	

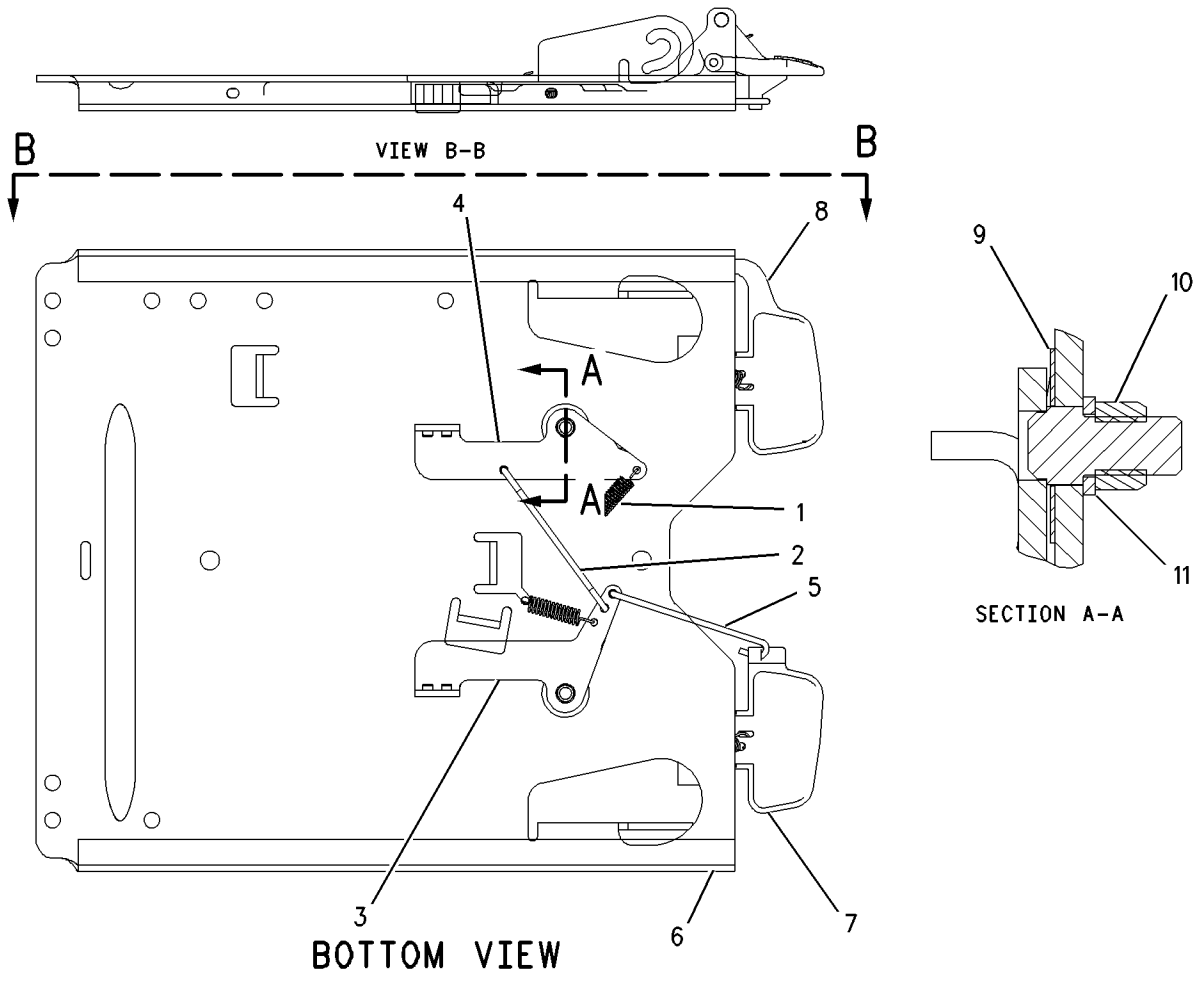

GRAPHIC #1 **<END>** g00816460

OPERATOR STATION

243-6623 AIR CONDITIONER AR

S/N: M3G1-UP
R134
AN ATTACHMENT

SMCS-7320 **i02445204**

NOTE	PART NUMBER	QTY	PART NAME 1 2 3 4 5 6 (PRODUCT LEVEL)	SEE PAGE
Y	*243-1088*	1	AIR CONDITIONER GP	638
Y	*237-4857*	1	COMPRESSOR GP-REFRIGERANT	649
Y	*244-4978*	1	CONDENSER & MTG GP-REFRIGERANT	650
Y	*244-5419*	1	LINES GP-AIR CONDITIONER	687
Y	*271-4024*	1	WIRING GP-AIR CONDITIONER	216
	110-6393	1	PLATE-INSTRUCTION (AIR CONDITIONER)	

Y-SEPARATE ILLUSTRATION

<END>

OPERATOR STATION

243-1088 AIR CONDITIONER GP

S/N: M3G1-UP
PART OF 243-6623 AIR CONDITIONER AR
AN ATTACHMENT

SMCS-7320 **i02445162**

NOTE	REF NO	GRAPHIC REF	PART NUMBER	QTY	PART NAME 1 2 3 4 5 6 (PRODUCT LEVEL)	SEE PAGE
	1	1	**9X-8116**	2	TUBE AS	
Y	2	1	**276-3965**	1	AIR CONDITIONER GP	639
Y	3	1	*242-9416*	1	LINES GP-AIR CONDITIONER	685

Y-SEPARATE ILLUSTRATION

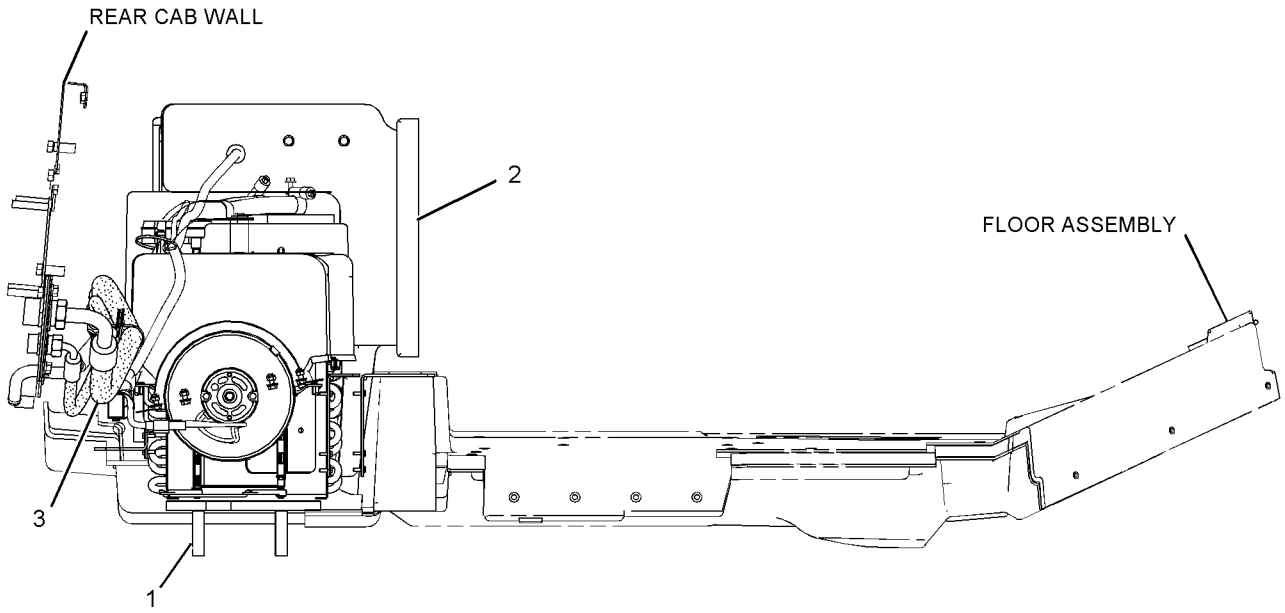

RIGHT SIDE VIEW

GRAPHIC #1 **<END>** g01116353

OPERATOR STATION

276-3965 AIR CONDITIONER GP

S/N: M3G1-UP

PART OF 243-1088 AIR CONDITIONER GP

AN ATTACHMENT

SMCS-7320 **i02444711**

NOTE	REF NO	GRAPHIC REF	PART NUMBER	QTY	PART NAME 1 2 3 4 5 6 (PRODUCT LEVEL)	SEE PAGE
	1	1	**3B-4501**	2	LOCKWASHER	
	2	1	**3E-5464**	1	SWITCH AS-TEMPERATURE (AIR CONDITIONER)	
	3	1	**3S-2093**	1	STRAP-CABLE	
	4	1	**6T-6708**	2	WASHER (7X28.6X4.1-MM THK)	
M	5	1	**8C-7581**	1	SCREW-MACHINE (M4X0.7X8-MM)	
	6	2	**9G-1950**	1	RESISTOR	
	7	2	**133-9012**	1	FUSE (15-AMPERE)	
	8	1	**177-6696**	1	GROMMET	
	9	2	**177-6704**	2	GASKET	
	10	2	**177-6716**	1	DOOR	
	11	1	**177-6727**	1	ACTUATOR	
	12	1	**177-6732**	1	DOOR AS	
		1	**4K-9429**	4	RIVET-POP	
	13	2	**179-4682**	2	LEVER	
	14	2	**179-4683**	1	ROD	
	15	2	**185-4778**	1	HOUSING AS	
	16	2	**185-4780**	1	HOUSING	
	17	2	**185-4782**	1	HOUSING	
	18	2	**185-4783**	1	COVER	
	19	2	**185-4785**	1	DUCT AS	
M	20	1,2	**187-7719**	24	BOLT (M5X2.24X14-MM)	
	21	2	**188-7690**	1	SUPPORT	
	22	1	**189-4680**	1	COIL AS-EVAPORATOR	
	23	1	**189-4682**	1	COIL AS-HEATER	
	24	1	**192-2820**	1	PLATE	
	25	2	**192-2822**	1	GASKET	
	26	1	**192-2823**	1	HARNESS AS-HEATER & AIR COND	
		1	**102-8801**	1	KIT-RECEPTACLE (12-PIN)	
					(INCLUDES RECEPTACLE AS AND WEDGE)	
		1	**155-2270**	1	KIT-CONNECTING PLUG (2-PIN)	
					(INCLUDES PLUG AS AND WEDGE)	
	27	1	**193-0702**	1	GASKET	
	28	2	**197-1397**	1	BRACKET	
	29	2	**197-1398**	1	BRACKET	
	30	1	**197-1399**	1	BRACKET	
	31	2	**197-1400**	1	BRACKET AS	
M		2	**6V-9632**	3	NUT-WELD (M6X1-THD)	
	32	2	**199-7499**	1	GASKET	
	33	1	**202-1327**	1	GASKET	
	34	1	**212-7042**	1	BRACKET	
	35	1	**268-8792**	1	MOTOR AS-BLOWER (24-VOLT, A/C, HEATER)	
		1	**102-8802**	1	KIT-RECEPTACLE (2-PIN)	
					(INCLUDES RECEPTACLE AS AND WEDGE)	
		1	**9W-0852**	2	PIN-CONNECTOR (14-GA)	
M	36	1	**129-3178**	7	LOCKNUT (M6X1-THD)	
	37	1	**130-5300**	1	CLIP	
M	38	2	**141-9784**	1	BOLT (M6X1X190-MM)	
	39	2	**4B-4274**	2	WASHER (5.5X13X1.2-MM THK)	
M	40	1	**5C-9553**	8	BOLT (M6X1X16-MM)	
	41	1	**5P-4115**	3	WASHER-HARD (7.2X19X2-MM THK)	
	42	1	**6V-1668**	2	WASHER (6.5X29.1X3-MM THK)	
	43	1	**6V-4369**	1	CLIP	
M	44	1	**6V-7357**	3	BOLT (M6X1X25-MM)	
	45	1,2	**8T-4205**	11	WASHER-HARD (7.2X14.5X2-MM THK)	
	46	1	**8T-6631**	2	SCREW-MACHINE (8-32X0.5-IN)	

276-3965 **AIR CONDITIONER GP** *(contd.)* **i02444711**

NOTE	REF NO	GRAPHIC REF	PART NUMBER	QTY	PART NAME 1 2 3 4 5 6 (PRODUCT LEVEL)	SEE PAGE
	47	1	**9X-7373**	1	GROMMET	
M-METRIC PART						

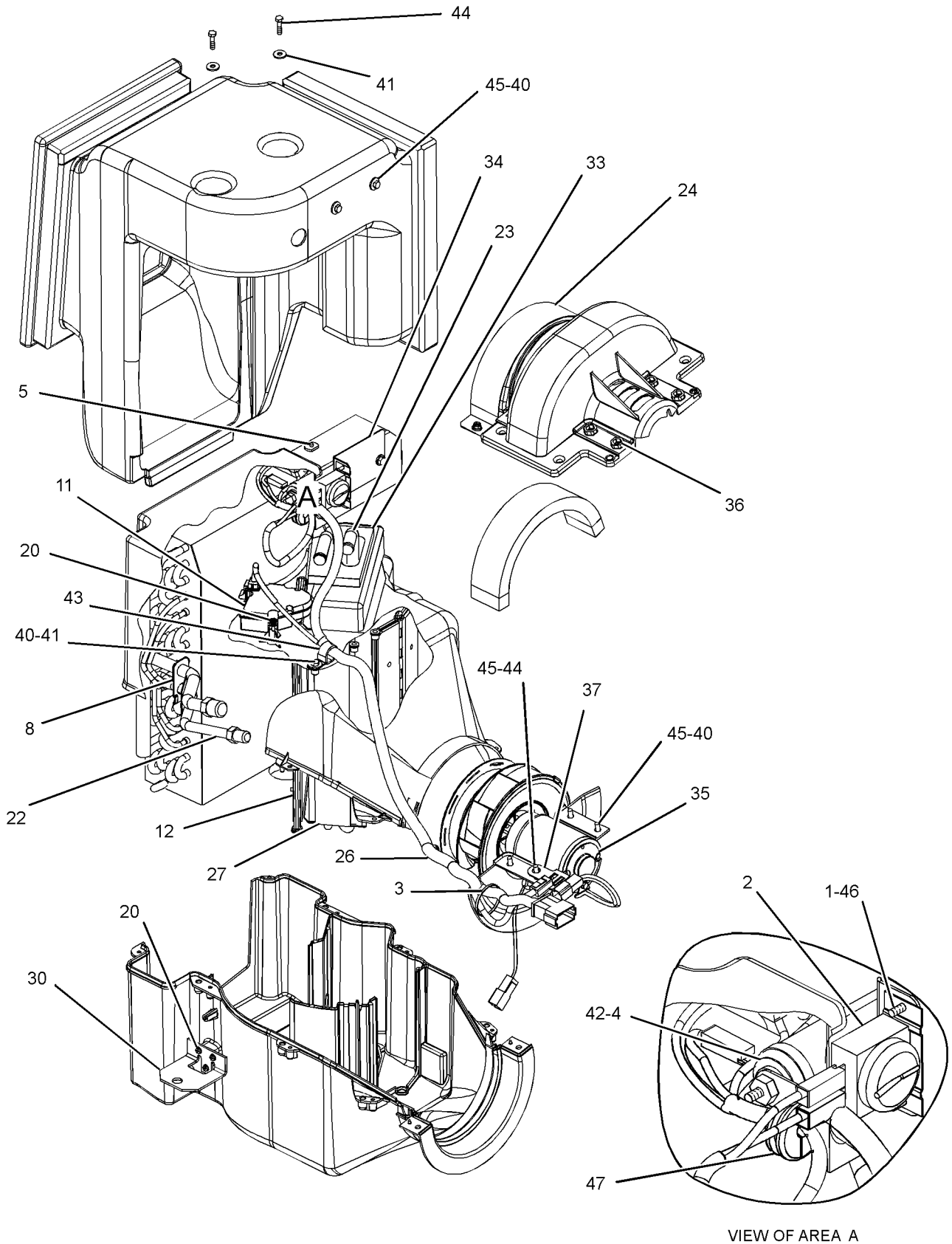

GRAPHIC #1

g01196008

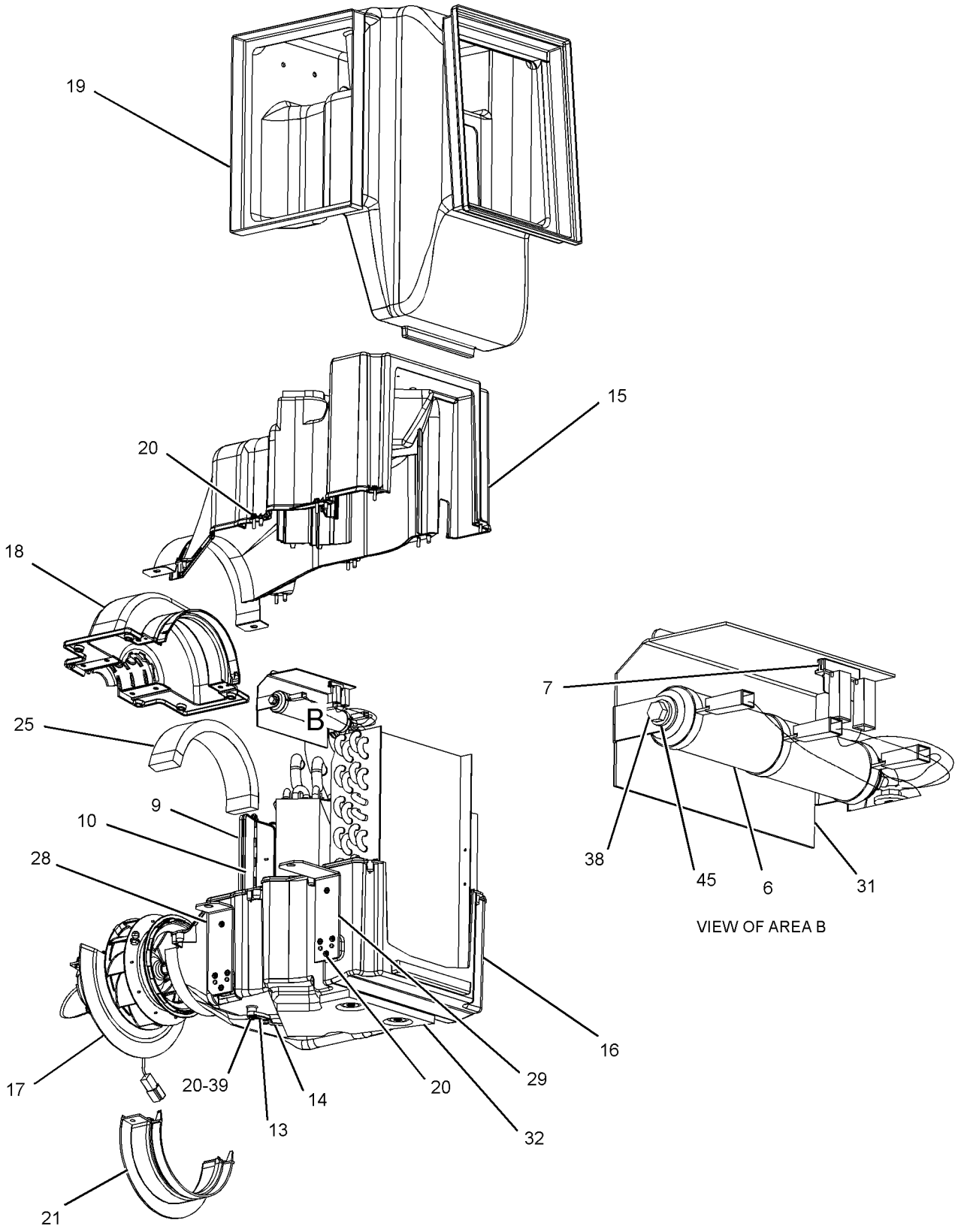

GRAPHIC #2 **<END>** g01196009

OPERATOR STATION

214-7634 ARM GP-WINDOW WIPER–REAR

S/N: M3G1-UP

PART OF 257-2016 WIPER GP-WINDOW

SMCS-7305 **i01933231**

NOTE	REF NO	GRAPHIC REF	PART NUMBER	QTY	PART NAME 1 2 3 4 5 6 (PRODUCT LEVEL)	SEE PAGE
M	1	1	**191-8921**	2	BOLT-SOCKET HEAD (M6X1X25-MM)	
	2	1	**227-7392**	2	WASHER (6.3X10.3X0.4-MM THK)	
M	3	1	**6V-8225**	2	NUT (M6X1-THD)	
	4	1	**136-3195**	1	NOZZLE AS-WASHER	
	5	1	**136-3188**	3	CLIP	

M-METRIC PART

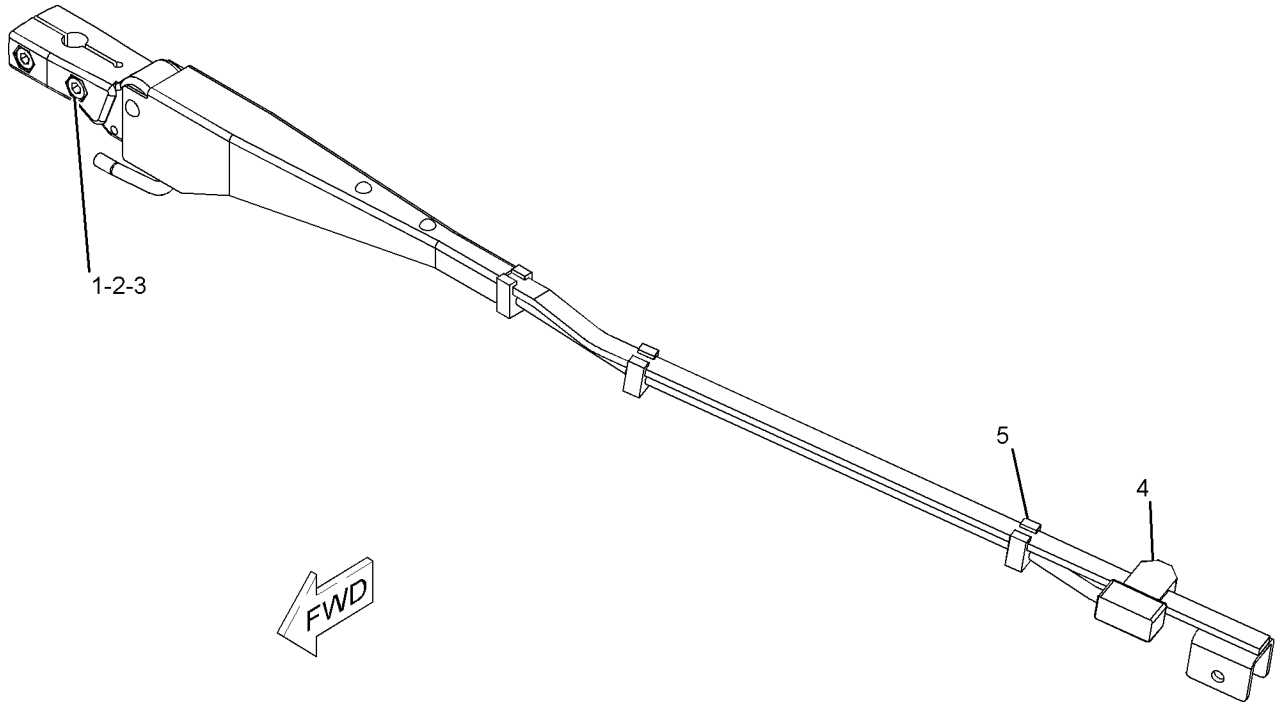

GRAPHIC #1 **<END>** g01024688

OPERATOR STATION

214-7635 ARM GP-WINDOW WIPER—FRONT

S/N: M3G1-UP

PART OF 257-2016 WIPER GP-WINDOW

SMCS-7305 **i01902746**

NOTE	REF NO	GRAPHIC REF	PART NUMBER	QTY	PART NAME 1 2 3 4 5 6 (PRODUCT LEVEL)	SEE PAGE
M	1	1	**191-8921**	4	BOLT-SOCKET HEAD (M6X1X25-MM)	
	2	1	**227-7392**	4	WASHER (6.3X10.3X0.4-MM THK)	
M	3	1	**6V-8225**	4	NUT (M6X1-THD)	
	4	1	**136-3190**	1	NOZZLE AS-WASHER	
	5	1	**136-3188**	3	CLIP	

M-METRIC PART

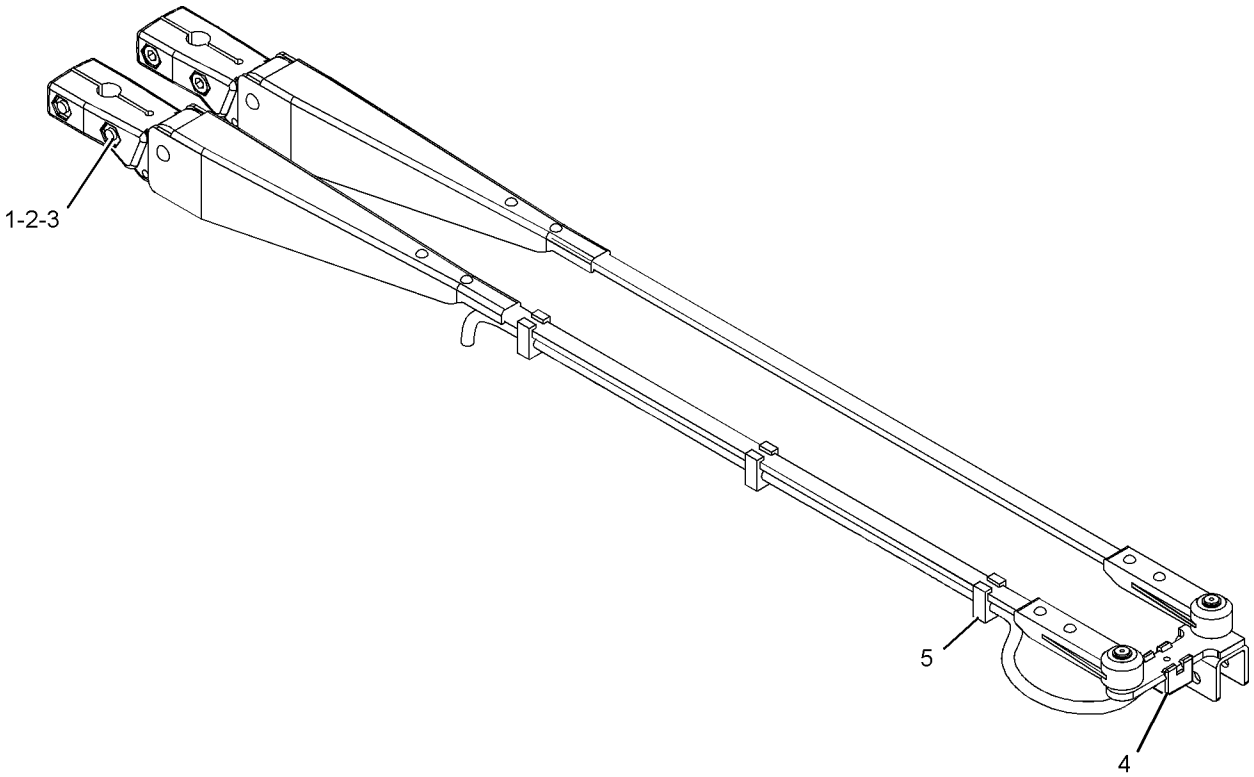

GRAPHIC #1 **<END>** g01021918

OPERATOR STATION

188-9820 ARMREST GP

S/N: M3G1-UP
PART OF 178-7913, 207-2804 SEAT GP
ALSO AN ATTACHMENT

SMCS-7307, 7312 **i02250550**

NOTE	REF NO	GRAPHIC REF	PART NUMBER	QTY	PART NAME 1 2 3 4 5 6 (PRODUCT LEVEL)	SEE PAGE
	1	1	**173-2219**	1	CUSHION AS	
	2	1	**143-1288**	1	LOCKNUT-FLANGE (3/8-16 THD)	
	3	1	**163-1149**	1	BRACKET AS	
	4	1	**1K-6872**	1	LOCKNUT (1/2-13-THD)	
	5	1	**2M-0849**	1	WASHER-HARD (13.5X25.5X5-MM THK)	
	6	1	**3E-4312**	1	NUT-SQUARE (3/8-16 THD)	
	7	1	**4L-6454**	1	BOLT (3/8-16X1-IN)	
	8	1	**6V-2687**	4	SCREW-PAN HEAD (10-24X1-IN)	
	9	1	**8S-7803**	1	RING-RETAINING	
	10	1	**8T-8641**	1	WASHER (M9.8X16X0.8-MM THK)	
	11	1	**8Y-5910**	1	KNOB AS	
	12	1	**8Y-5913**	1	BASE-ARMREST	
	13	1	**8Y-5914**	1	SPRING	
	14	1	**9X-8873**	1	BOLT (1/2-13X2.25-IN)	

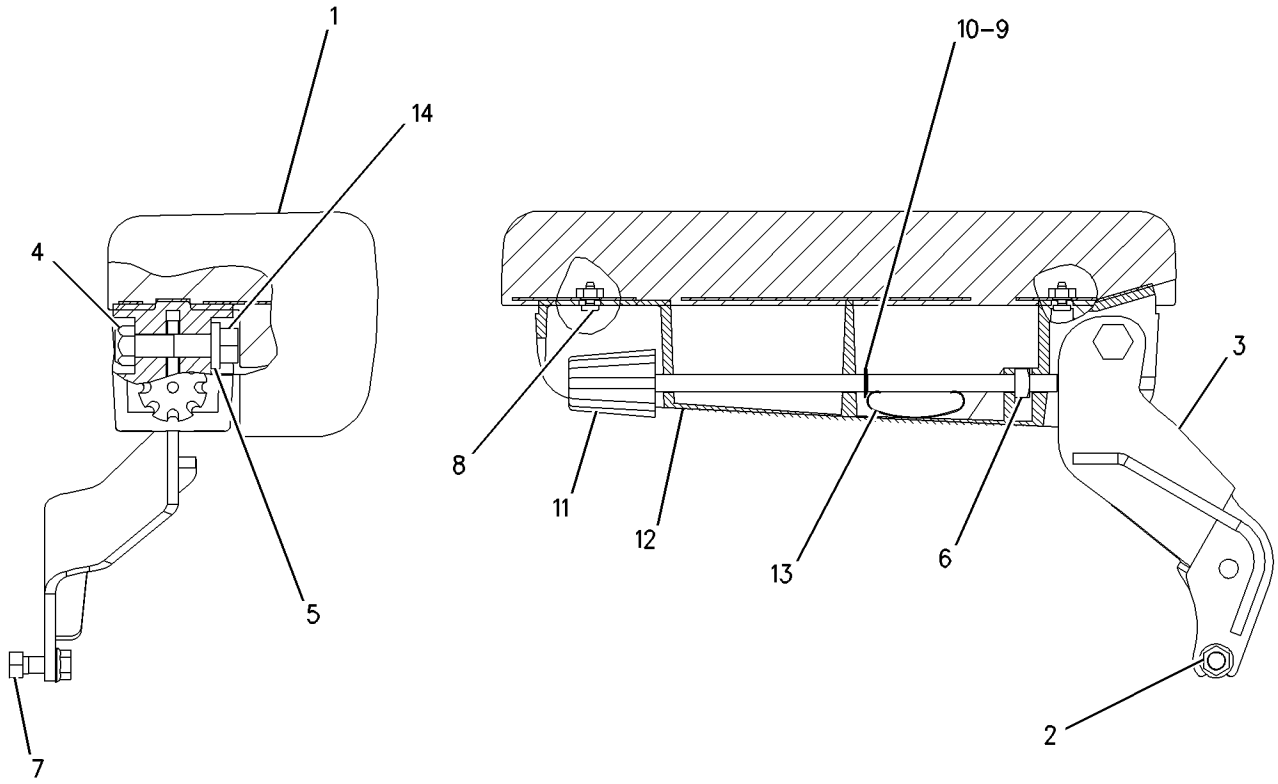

GRAPHIC #1 **<END>** g00812871

OPERATOR STATION

243-1080 CAB AR-ENCLOSED ROPS

S/N: M3G1-UP

PART OF 243-1076 OPERATOR AR-ENCLOSED ROPS

SMCS-7301 **i02449443**

NOTE	PART NUMBER	QTY	PART NAME 1 2 3 4 5 6 (PRODUCT LEVEL)	SEE PAGE
Y	*243-1089*	1	CONTROL GP-ELECTROHYDRAULIC (2-FUNCTION)	471
Y	*265-6695*	1	CONTROL GP-FOOT BRAKE	428
Y	*244-2747*	1	CONTROL GP-PARKING BRAKE	430
Y	*141-8802*	1	CONTROL GP-STEERING (HMU STEERING)	437
Y	*121-9300*	1	CONTROL GP-TRANSMISSION	271
Y	*171-8888*	1	DUCT & FILTER GP-AIR	657
Y	**232-1397**	1	FLOOR GP-SOUND SUPPRESSION	662
Y	*243-1092*	1	HEATER GP-CAB	670
Y	*257-2008*	1	INSTALLATION GP-RADIO	678
Y	*235-8559*	1	LIGHTING GP-FLOOD (4-LAMP, CAB FRONT, REAR)	154
Y	*232-1394*	1	LINER GP-CAB	679
Y	**192-7049**	1	MODULE GP-SPEEDOMETER & TACH	707
Y	*191-5282*	1	PANEL GP-INSTRUMENT (UPPER)	719
Y	*245-6458*	1	PANEL GP-INSTRUMENT (LOWER)	723
Y	*207-1759*	1	PEDAL GP-GOVERNOR	727
Y	*243-1083*	1	ROPS GP-ENCLOSED	731
Y	*174-3624*	1	SEAT GP-SUSPENSION	748
Y	*243-1090*	1	SUPPORT GP-HYDRAULIC CONTROL (REAR)	753
Y	*232-1396*	1	SUPPRESSION GP-CAB SOUND (FRONT)	757
Y	*234-9553*	1	SUPPRESSION GP-CAB SOUND (REAR)	760
Y	*257-2016*	1	WIPER GP-WINDOW	769
Y	*237-4910*	1	WIRING GP-CAB	220
	117-1410	1	SEALING GP-GLASS	
	119-0781	1	ADHESIVE	

Y-SEPARATE ILLUSTRATION

<END>

OPERATOR STATION

258-1552 CANOPY AR-OPEN ROPS

S/N: M3G1-UP

PART OF 258-1548 OPERATOR AR-OPEN ROPS

AN ATTACHMENT

SMCS-7302, 7323 **i02449540**

NOTE	PART NUMBER	QTY	PART NAME 1 2 3 4 5 6 (PRODUCT LEVEL)	SEE PAGE
Y	*243-1089*	1	CONTROL GP-ELECTROHYDRAULIC (2-FUNCTION)	471
Y	*265-6695*	1	CONTROL GP-FOOT BRAKE	428
Y	*244-2747*	1	CONTROL GP-PARKING BRAKE	430
Y	*141-8802*	1	CONTROL GP-STEERING (HMU STEERING)	437
Y	*121-9300*	1	CONTROL GP-TRANSMISSION	271
Y	*204-3664*	1	DUCT GP-AIR	659
Y	*204-4125*	1	GUARD GP-VANDALISM (INSTRUMENT PANEL)	665
Y	*235-8559*	1	LIGHTING GP-FLOOD (4-LAMP, CAB FRONT, REAR)	154
Y	*263-0044*	1	LINER GP-CAB	682
Y	**192-7049**	1	MODULE GP-SPEEDOMETER & TACH	707
Y	*206-6499*	1	PANEL GP-INSTRUMENT (UPPER, OPEN ROPS)	721
Y	*245-6458*	1	PANEL GP-INSTRUMENT (LOWER)	723
Y	*207-1759*	1	PEDAL GP-GOVERNOR	727
Y	**261-2951**	1	ROPS GP-OPEN	738
Y	*204-4492*	1	SEAT GP-SUSPENSION	749
Y	*243-1090*	1	SUPPORT GP-HYDRAULIC CONTROL (REAR)	753
Y	*262-9187*	1	WIRING GP-OPEN ROPS	248

Y-SEPARATE ILLUSTRATION

<END>

OPERATOR STATION

163-0872 COMPRESSOR GP-REFRIGERANT

S/N: M3G1-UP

PART OF 237-4857 COMPRESSOR GP-REFRIGERANT

AN ATTACHMENT

SMCS-1802 **i02421639**

NOTE	REF NO	GRAPHIC REF	PART NUMBER	QTY	PART NAME 1 2 3 4 5 6 (PRODUCT LEVEL)	SEE PAGE
	1	1	**102-8802**	1	KIT-RECEPTACLE (2-PIN)	
					(INCLUDES RECEPTACLE AS AND WEDGE)	
	2	1	**114-3469**	1	VALVE GP-RELIEF (REFRIGERANT COMPRESSOR)	
		1	**9X-7378**	1	SEAL-O-RING	
	3	1	**7T-4532**	1	PLUG AS	
	4	1	**9X-7385**	2	SEAL-O-RING	
B	5	1	**4C-2959**		OIL-AIR CONDITIONER	

B-USE AS REQUIRED

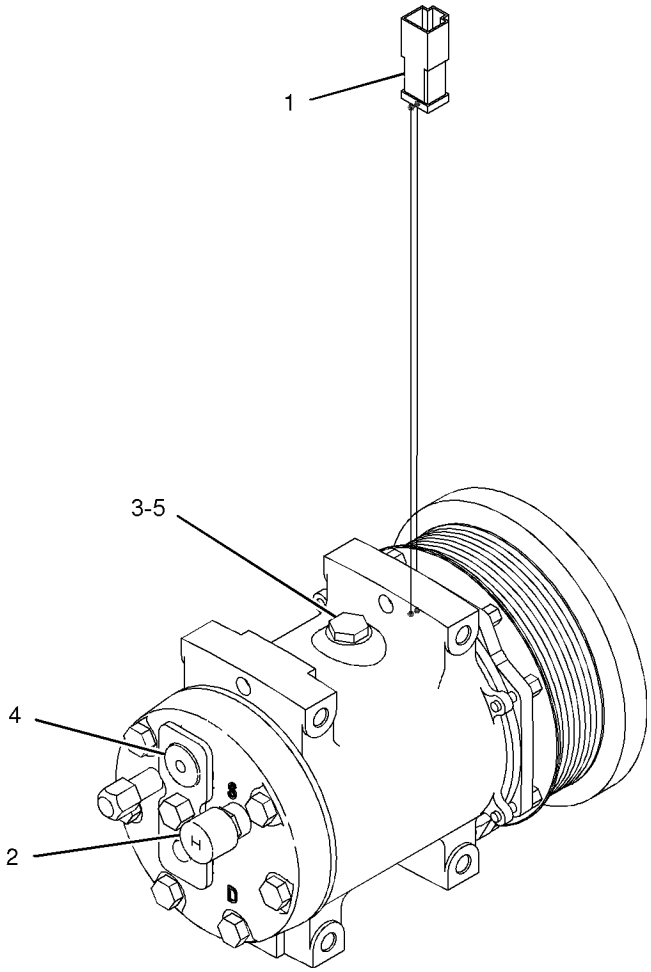

GRAPHIC #1

<END>

g01054441

OPERATOR STATION

237-4857 COMPRESSOR GP-REFRIGERANT

S/N: M3G1-UP
PART OF 243-6623 AIR CONDITIONER AR
AN ATTACHMENT

SMCS-1802 **i02321508**

NOTE	REF NO	GRAPHIC REF	PART NUMBER	QTY	PART NAME 1 2 3 4 5 6 (PRODUCT LEVEL)	SEE PAGE
Y	1	1	**163-0872**	1	COMPRESSOR GP-REFRIGERANT	648
Y	2	1	**192-1563**	2	IDLER GP-BELT (ALTERNATOR, REFRIGERANT COMPR)	36
	3	1	**253-4531**	1	BELT-SERPENTINE	
M	4	1	**7X-2538**	4	BOLT (M8X1.25X100-MM)	
	5	1	**8T-4224**	4	WASHER-HARD (8.8X16X2-MM THK)	

M-METRIC PART
Y-SEPARATE ILLUSTRATION

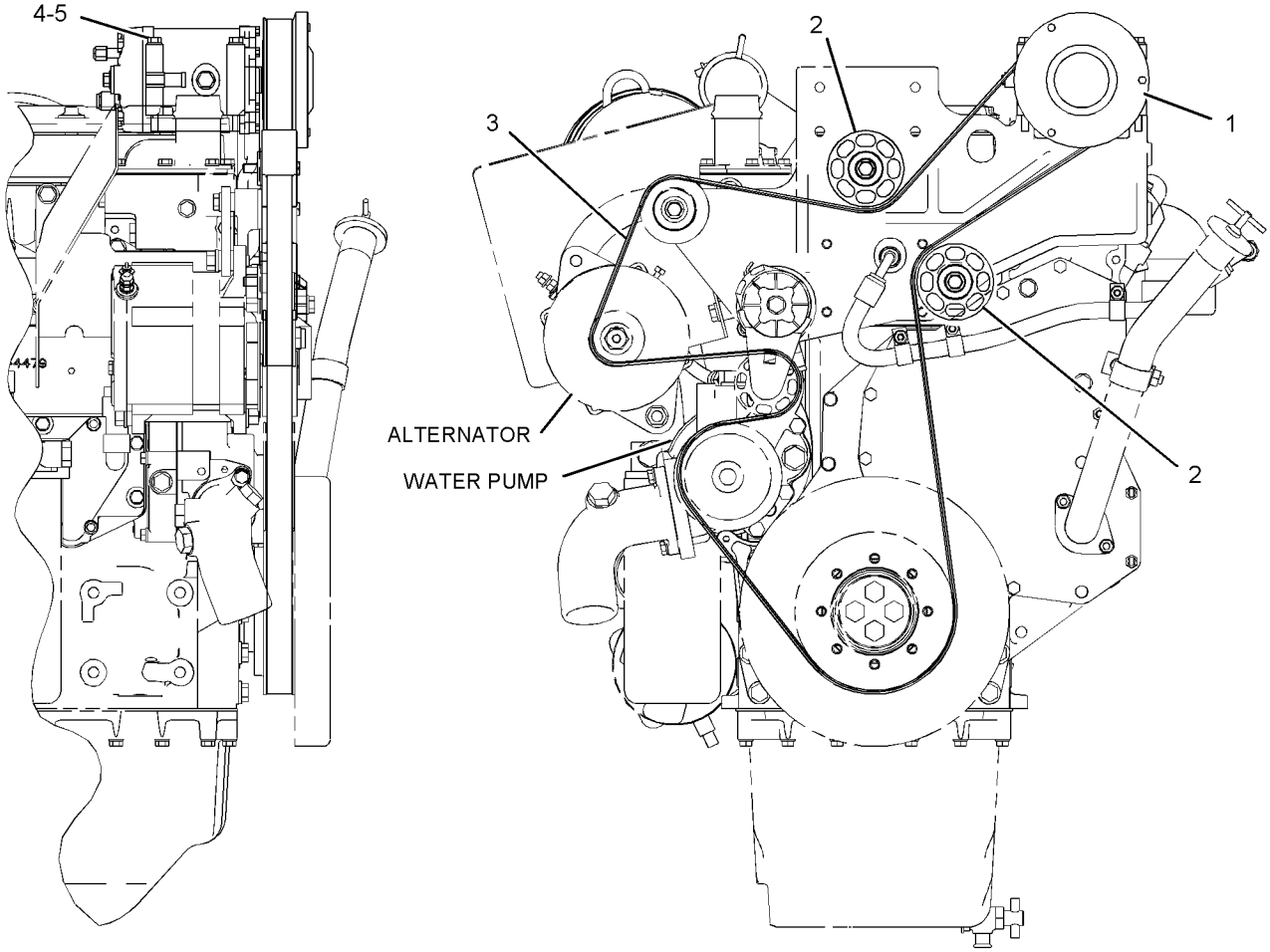

RIGHT SIDE VIEW FRONT VIEW

GRAPHIC #1 **<END>** g01126845

OPERATOR STATION

244-4978 CONDENSER & MTG GP-REFRIGERANT

S/N: M3G1-UP
PART OF 243-6623 AIR CONDITIONER AR
AN ATTACHMENT

SMCS-1805 **i02223835**

NOTE	REF NO	GRAPHIC REF	PART NUMBER	QTY	PART NAME 1 2 3 4 5 6 (PRODUCT LEVEL)	SEE PAGE
	1	1	**4E-1384**	1	BUMPER-CONICAL	
	2	1	**245-0766**	1	BRACKET	
	3	1	**244-8839**	1	CORE AS-CONDENSER (REFRIGERANT)	
M	4	1	**5C-7261**	1	NUT (M8X1.25-THD)	
	5	1	**7X-7729**	4	WASHER (11X25X3-MM THK)	
M	6	1	**8T-4137**	3	BOLT (M10X1.5X20-MM)	
M	7	1	**8T-4195**	1	BOLT (M10X1.5X30-MM)	

M-METRIC PART

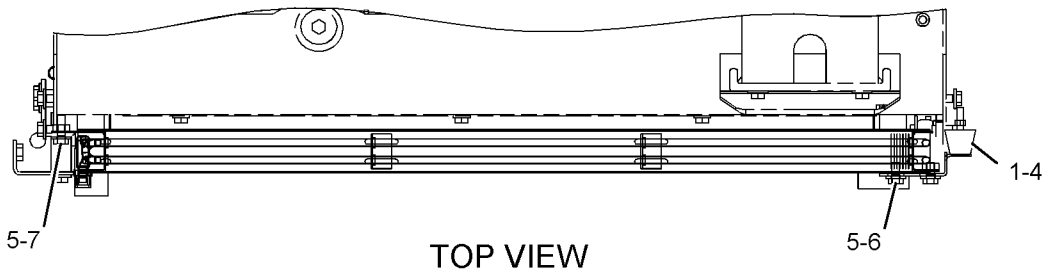

TOP VIEW

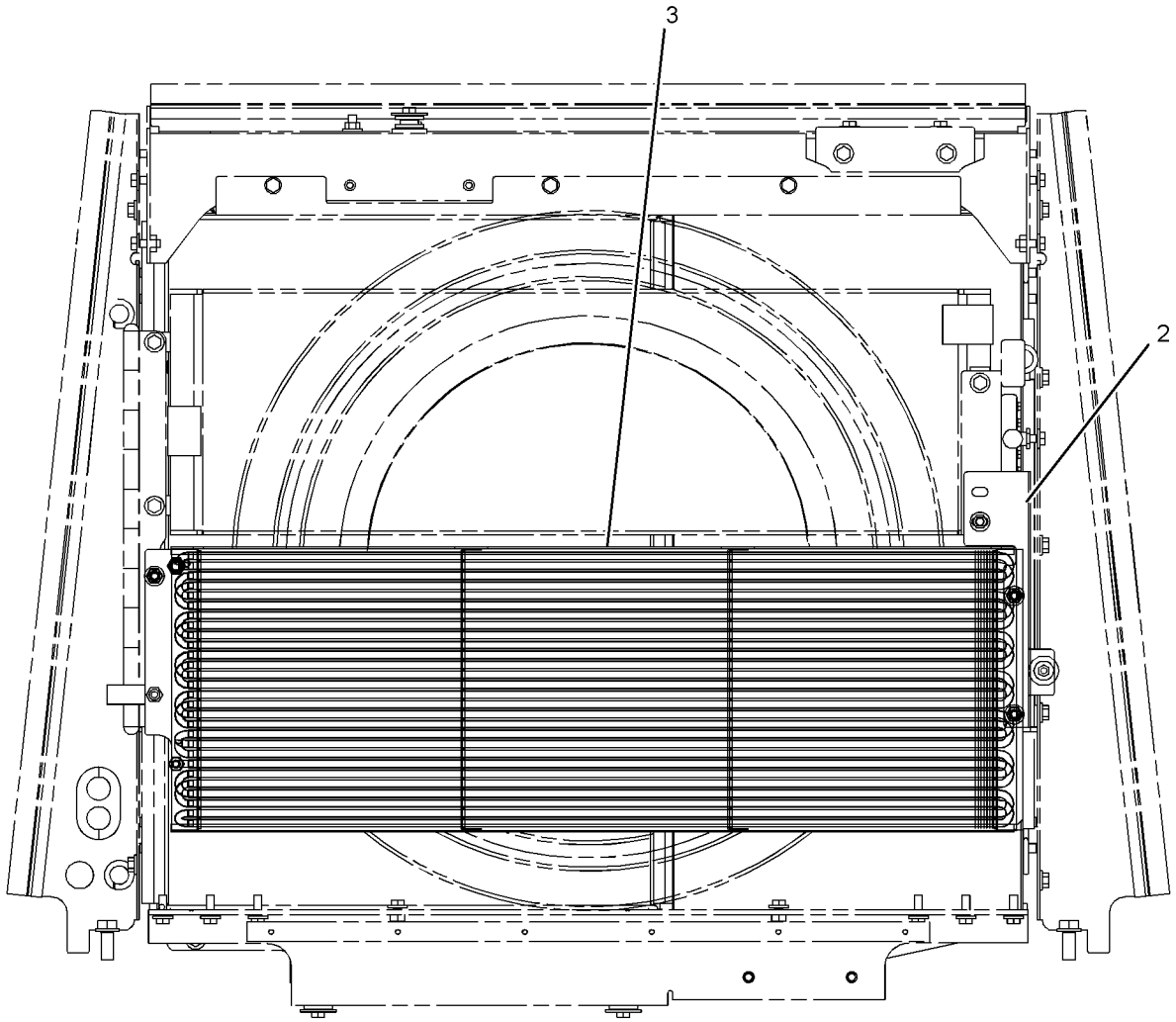

FRONT VIEW

GRAPHIC #1 **<END>** g01122208

OPERATOR STATION

103-5526 CONTROL GP-MONITOR—DIMMER

S/N: M3G1-UP

PART OF 237-4910 WIRING GP-CAB, 262-9187 WIRING GP-OPEN ROPS

ALSO AN ATTACHMENT

SMCS-7490, 7494, 7601 **i00718151**

NOTE	REF NO	GRAPHIC REF	PART NUMBER	QTY	PART NAME 1 2 3 4 5 6 (PRODUCT LEVEL)	SEE PAGE
	1	1	**5P-9132**	2	SCREW-HEX FLANGE (6-32X0.187-IN)	
	2	1	**3E-3383**	1	WEDGE-RECEPTACLE LOCK (6-PIN)	
	3	1	**8T-8729**	6	PIN-CONNECTOR	

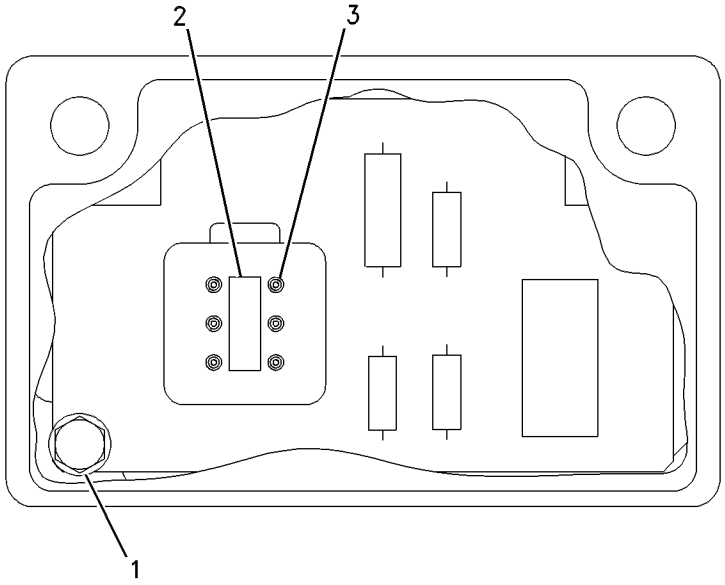

GRAPHIC #1 **<END>** g00316579

OPERATOR STATION

246-9199 CONTROL GP-MONITOR–PAYLOAD

S/N: M3G1-UP
PART OF 241-6254 MONITOR GP-PAYLOAD
AN ATTACHMENT

SMCS-7490, 7494, 7601 **i02098665**

NOTE	REF NO	GRAPHIC REF	PART NUMBER	QTY	PART NAME 1 2 3 4 5 6 (PRODUCT LEVEL)	SEE PAGE
Z	1	1		1	CONTROL AS-ELECTRONIC	
	2	1	**246-9198**	1	SOFTWARE GP-MONITOR (PAYLOAD CONTROL)	
	3	1	**8C-3078**	1	SEAL-O-RING	
	4	1	**129-9690**	1	COVER	
	5	1	**101-1785**	1	BATTERY (LITHIUM)	

Z-NOT SERVICED SEPARATELY

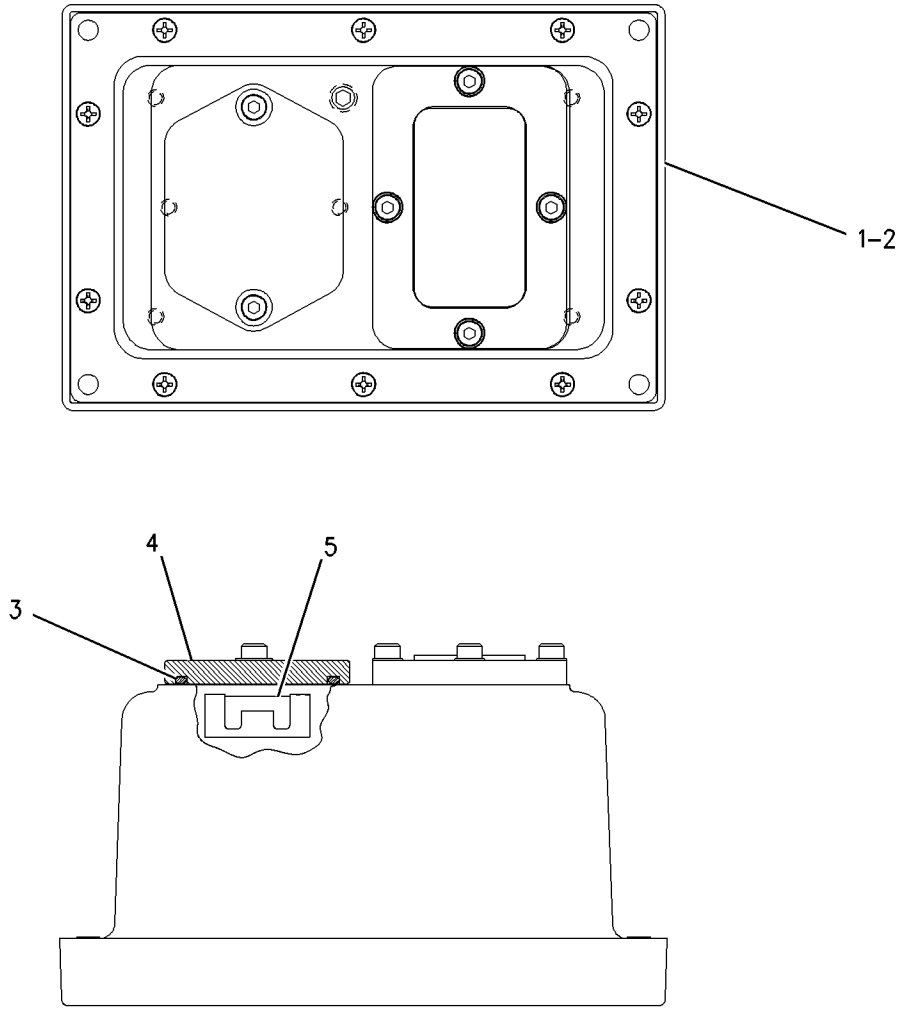

GRAPHIC #1 **<END>** g00845134

OPERATOR STATION

154-7443 CONTROL GP-UNPRGMED MONITOR–

CATERPILLAR MONITORING SYSTEM

S/N: M3G1-UP

PART OF 237-4910 WIRING GP-CAB, 262-9187 WIRING GP-OPEN ROPS

ALSO AN ATTACHMENT

SMCS-7610 **i01829251**

NOTE	PART NUMBER	QTY	PART NAME 1 2 3 4 5 6 (PRODUCT LEVEL)	SEE PAGE
			(NO SERVICED PARTS)	

<END>

OPERATOR STATION

185-7534 DOOR GP-CAB—SLIDING WINDOW, RH

S/N: M3G1-UP

PART OF 270-3388 DOOR GP-CAB

SMCS-7308 **i02391977**

NOTE	REF NO	GRAPHIC REF	PART NUMBER	QTY	PART NAME 1 2 3 4 5 6 (PRODUCT LEVEL)	SEE PAGE
B	1	1	**5P-7803**	2	PLUG-BUTTON	
	2	1	**103-1122**	1	MOUNT-LATCH	
Y	3	1	*185-7522*	1	WINDOW GP-DOOR (RH)	767
	4	1	**185-7533**	1	GLASS (CAB DOOR, RH)	
	5	1	**185-7538**	1	DOOR AS (RH)	
		1	**107-1161**	2	HINGE	
M	6	1	**9X-2041**	1	SCREW-TRUSS HEAD (M10X1.5X20-MM)	
E	7	1	**3E-3805**		SEAL (470-CM)	

B-USE AS REQUIRED
E-ORDER BY THE CENTIMETER
M-METRIC PART
Y-SEPARATE ILLUSTRATION

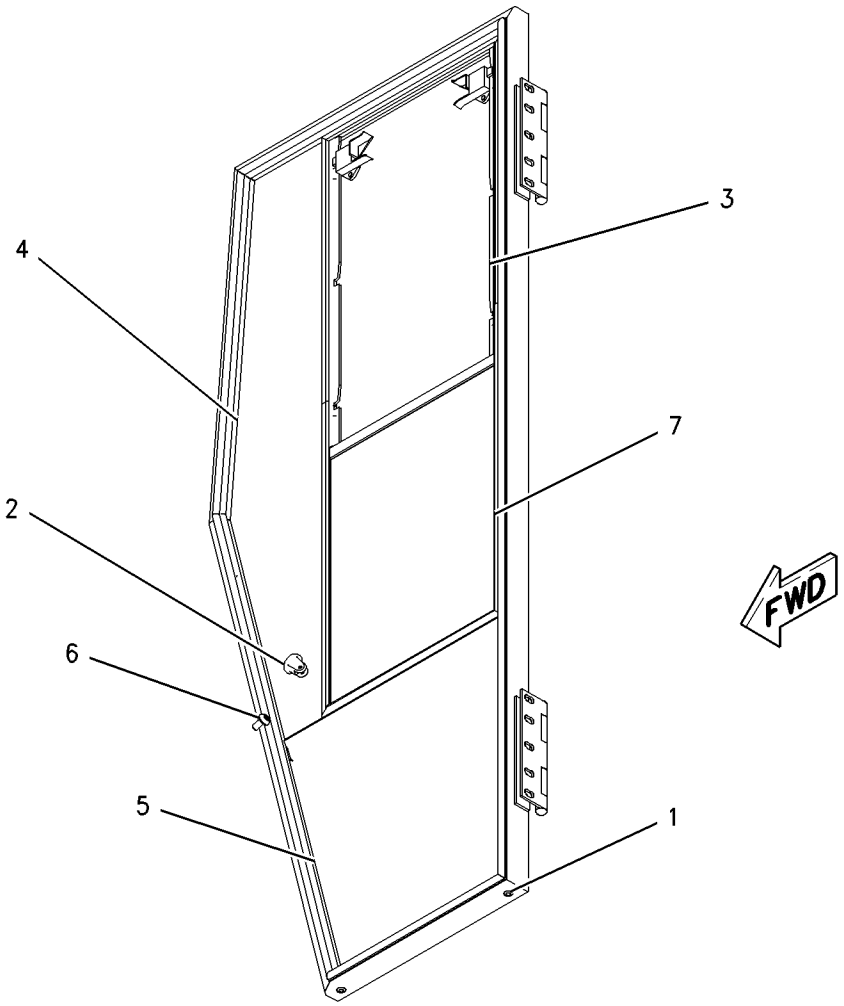

GRAPHIC #1 **<END>** g00819629

OPERATOR STATION

270-3388 DOOR GP-CAB

S/N: M3G1-UP

PART OF 243-1083 ROPS GP-ENCLOSED

SMCS-7308 **i02442671**

NOTE	PART NUMBER	QTY	PART NAME 1 2 3 4 5 6 (PRODUCT LEVEL)	SEE PAGE
Y	*247-1852*	1	DOOR GP-CAB (SLIDING WINDOW, LH)	
Y	*185-7534*	1	DOOR GP-CAB (SLIDING WINDOW, RH)	655

Y-SEPARATE ILLUSTRATION

<END>

OPERATOR STATION

171-8888 DUCT & FILTER GP-AIR

S/N: M3G1-UP

PART OF 243-1080 CAB AR-ENCLOSED ROPS

SMCS-7337, 7342 **i02454450**

NOTE	REF NO	GRAPHIC REF	PART NUMBER	QTY	PART NAME 1 2 3 4 5 6 (PRODUCT LEVEL)	SEE PAGE
	1	1	**3V-7476**	1	KEY-HANDLE	
	2	1	**7X-6041**	2	FILTER-CAB AIR	
	3	1	**8Y-6388**	4	LOUVER AS	
	4	1	**135-8280**	2	SEAL	
	5	1	**146-6371**	6	LOUVER AS	
	6	1	**151-5715**	3	LOUVER AS	
E	7	1	**8T-9005**	2	SEAL	
	8	1	**196-0052**	1	DUCT AS (LH)	
		1	**8M-7758**	4	RIVET-POP	
		1	**096-5962**	4	WASHER-HARD (3.4X7X0.8-MM THK)	
	9	1	**177-4495**	4	BRACKET AS	
	10	1	**198-8772**	1	DUCT AS	
	11	1	**104-2091**	4	SCREW-FLAT HEAD (6-20X0.5-IN)	
	12	1	**148-3626**	6	SCREW-FLAT HEAD (NO 6X3/4-IN)	
	13	1	**5P-4116**	4	WASHER-HARD (8.8X20.5X2-MM THK)	
M	14	1	**7X-2537**	4	BOLT (M8X1.25X35-MM)	
		1	**7X-0579**	4	WASHER-HARD (8.8X25.5X2-MM THK)	
M	15	1	**9X-2044**	8	SCREW-TRUSS HEAD (M6X1X16-MM)	
M	16	1	**9X-2043**	6	SCREW-TRUSS HEAD (M6X1X14-MM)	
E	17	1	**117-4473**		SEAL (5-CM EACH)	
M	18	1	**9X-2045**	2	SCREW-TRUSS HEAD (M6X1X20-MM)	
	19	1	**117-8929**	2	WASHER (6.6X22X2-MM THK)	
	20	1	**209-0746**	2	STRAP	
E	21	1	**3E-8082**		SEAL (46-CM)	

E-ORDER BY THE CENTIMETER
M-METRIC PART

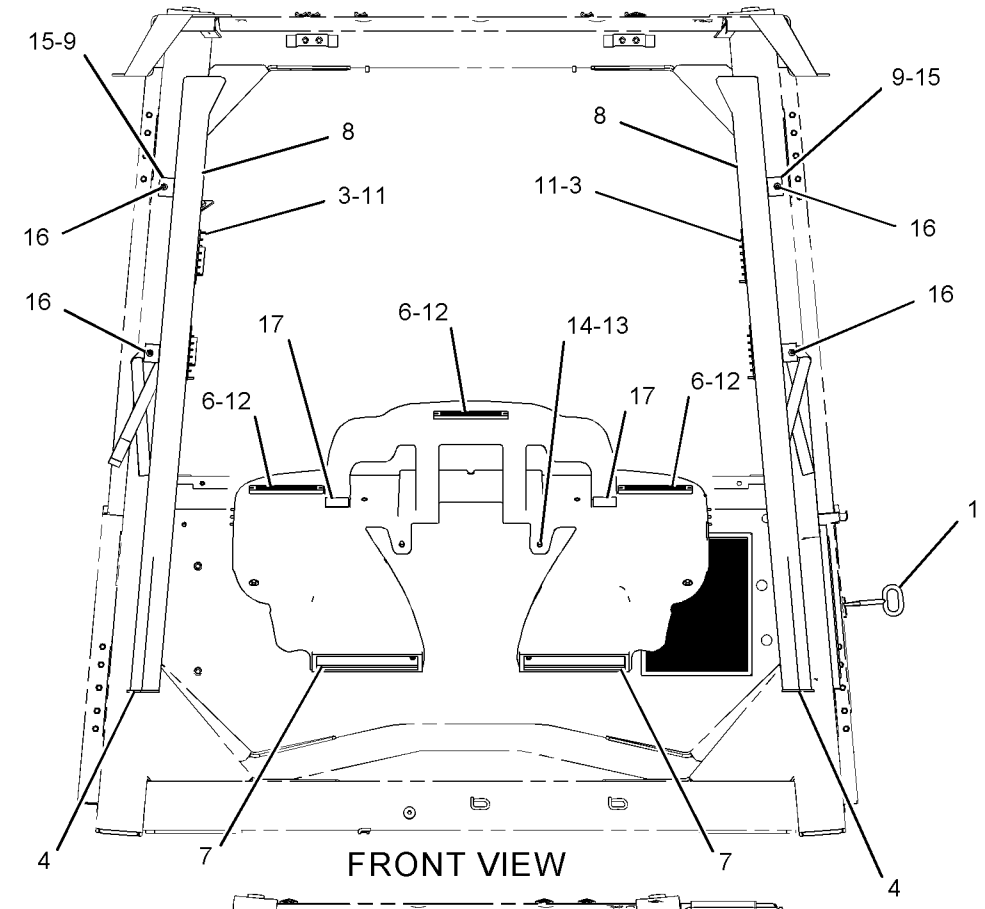

FRONT VIEW

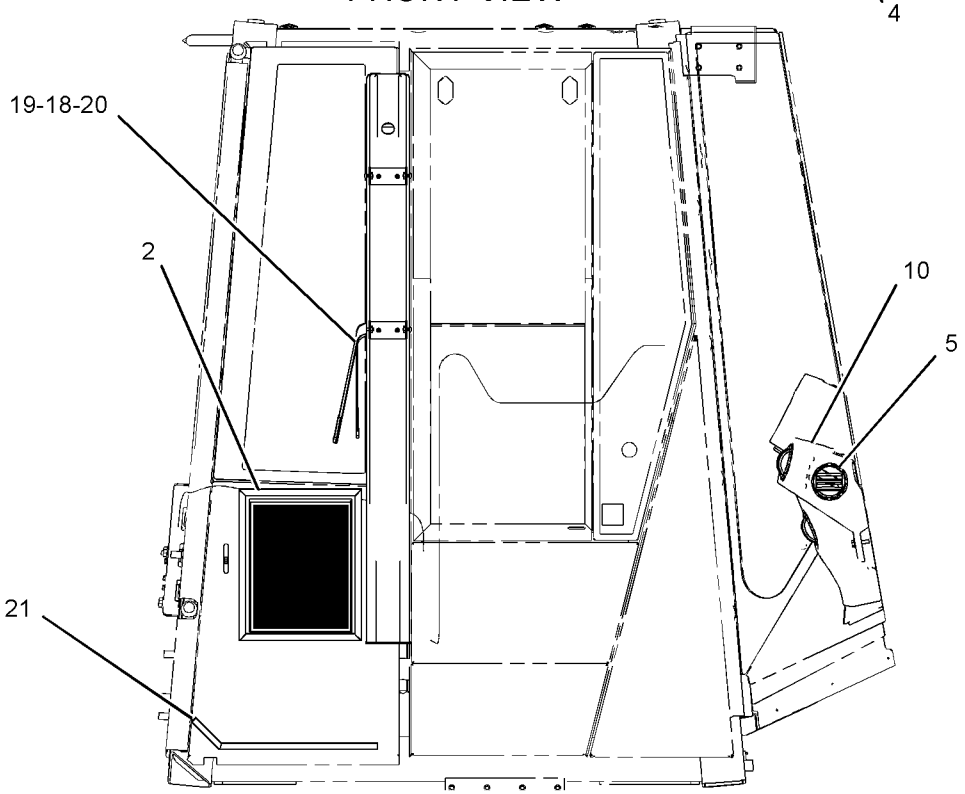

RIGHT SIDE VIEW

GRAPHIC #1

<END>

g01118365

OPERATOR STATION

204-3664 DUCT GP-AIR

S/N: M3G1-UP
PART OF 258-1552 CANOPY AR-OPEN ROPS
AN ATTACHMENT

SMCS-734D **i02307866**

NOTE	REF NO	GRAPHIC REF	PART NUMBER	QTY	PART NAME 1 2 3 4 5 6 (PRODUCT LEVEL)	SEE PAGE
	1	1	**135-8280**	2	SEAL	
	2	1,2	**177-4495**	4	BRACKET AS	
	3	1	**205-8650**	1	DUCT AS	
	4	1	**205-8651**	2	DUCT AS	
	5	1	**206-7562**	1	COVER	
	6	1	**209-0746**	1	STRAP	
	7	1	**117-8929**	1	WASHER (6.6X22X2-MM THK)	
	8	1	**5P-4116**	4	WASHER-HARD (8.8X20.5X2-MM THK)	
M	9	1	**7X-2537**	4	BOLT (M8X1.25X35-MM)	
M	11	1,2	**9X-2044**	13	SCREW-TRUSS HEAD (M6X1X16-MM)	
	12	1	**9X-2038**	5	WASHER (7X19X2-MM THK)	
M	13	1,2	**9X-2043**	7	SCREW-TRUSS HEAD (M6X1X14-MM)	
M	14	1	**9X-2045**	1	SCREW-TRUSS HEAD (M6X1X20-MM)	
D	15	1	**8T-5372**		SEAL (0.8-M)	
E	16	1	**8T-9005**		SEAL (120-CM)	
	17	2	**117-9966**	6	PLUG	

D-ORDER BY THE METER
E-ORDER BY THE CENTIMETER
M-METRIC PART

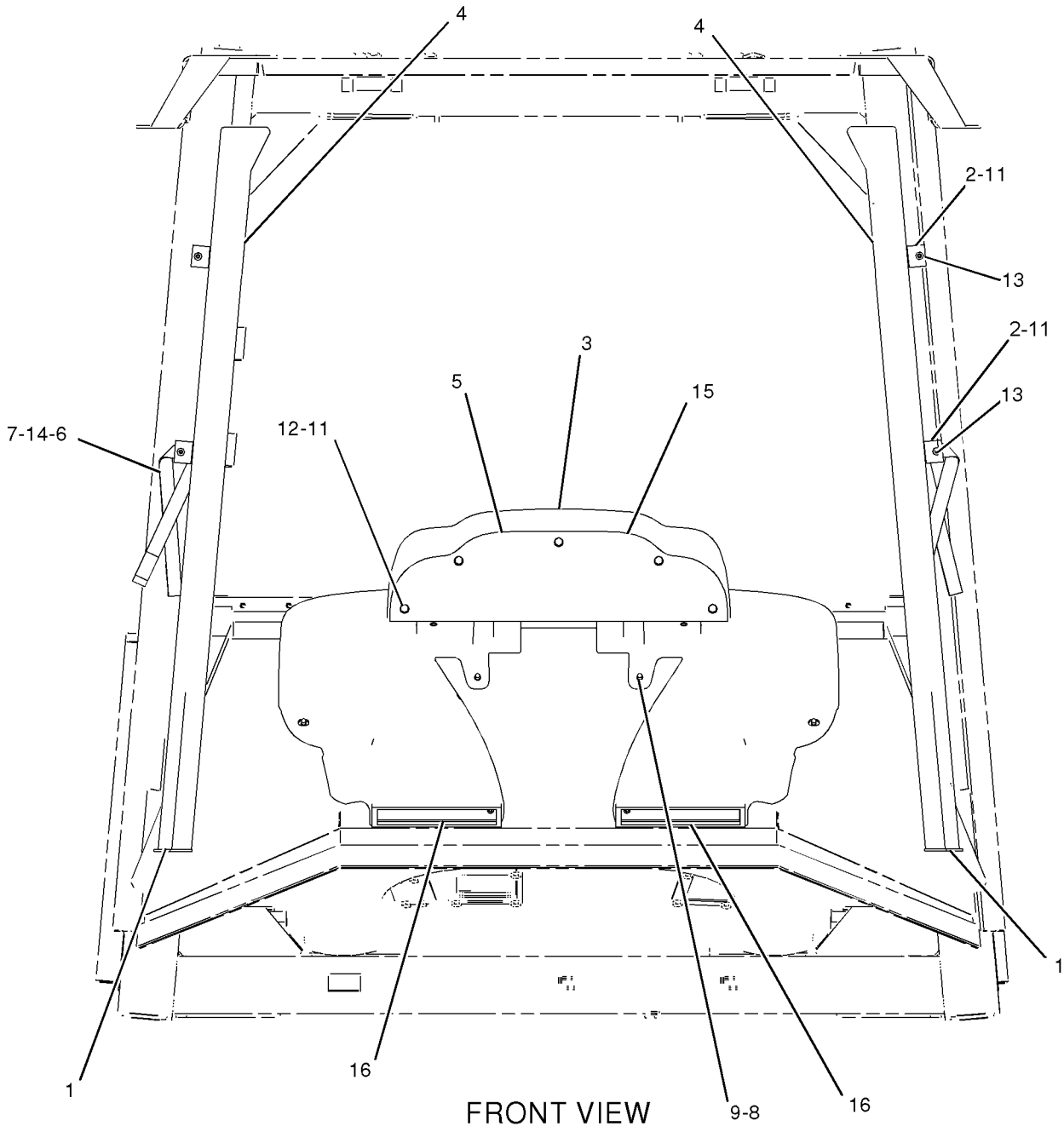

GRAPHIC #1 g01158156

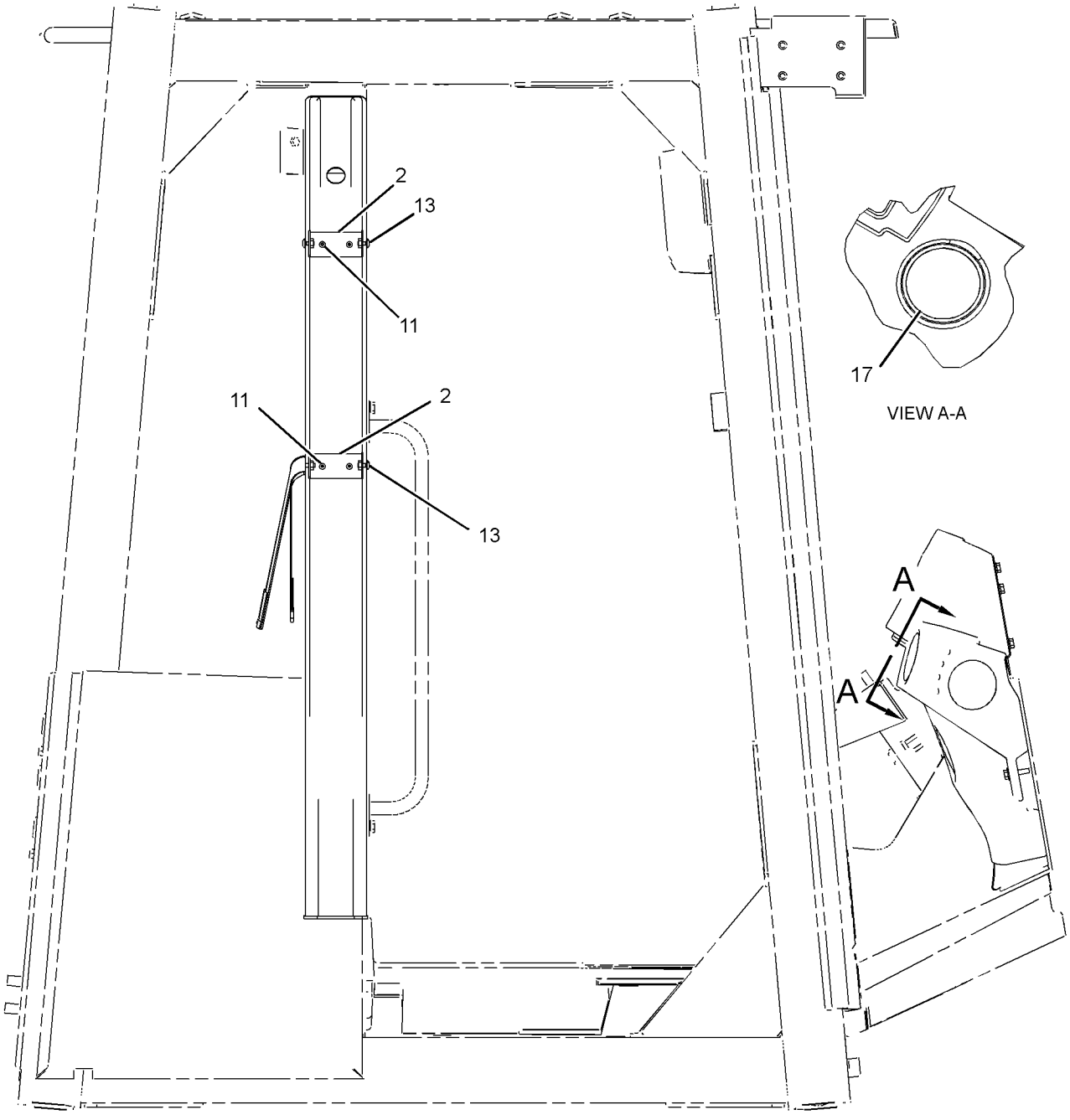

RIGHT SIDE VIEW

GRAPHIC #2 **<END>** g01158158

OPERATOR STATION

232-1397 FLOOR GP-SOUND SUPPRESSION

S/N: M3G1-UP

PART OF 243-1080 CAB AR-ENCLOSED ROPS

SMCS-7265, 7301 **i02306146**

NOTE	REF NO	GRAPHIC REF	PART NUMBER	QTY	PART NAME 1 2 3 4 5 6 (PRODUCT LEVEL)	SEE PAGE
	1	1	**224-9392**	8	FASTENER-SINGLE HEAD	
	2	1	**225-9578**	1	INSULATION	
	3	1	**225-9579**	1	PANEL	
	5	1	**236-8896**	1	INSULATION	
	6	1	**2D-6416**	2	WASHER (7/16-1.25X0.12-IN THK)	
M	7	1	**8T-4137**	2	BOLT (M10X1.5X20-MM)	

M-METRIC PART

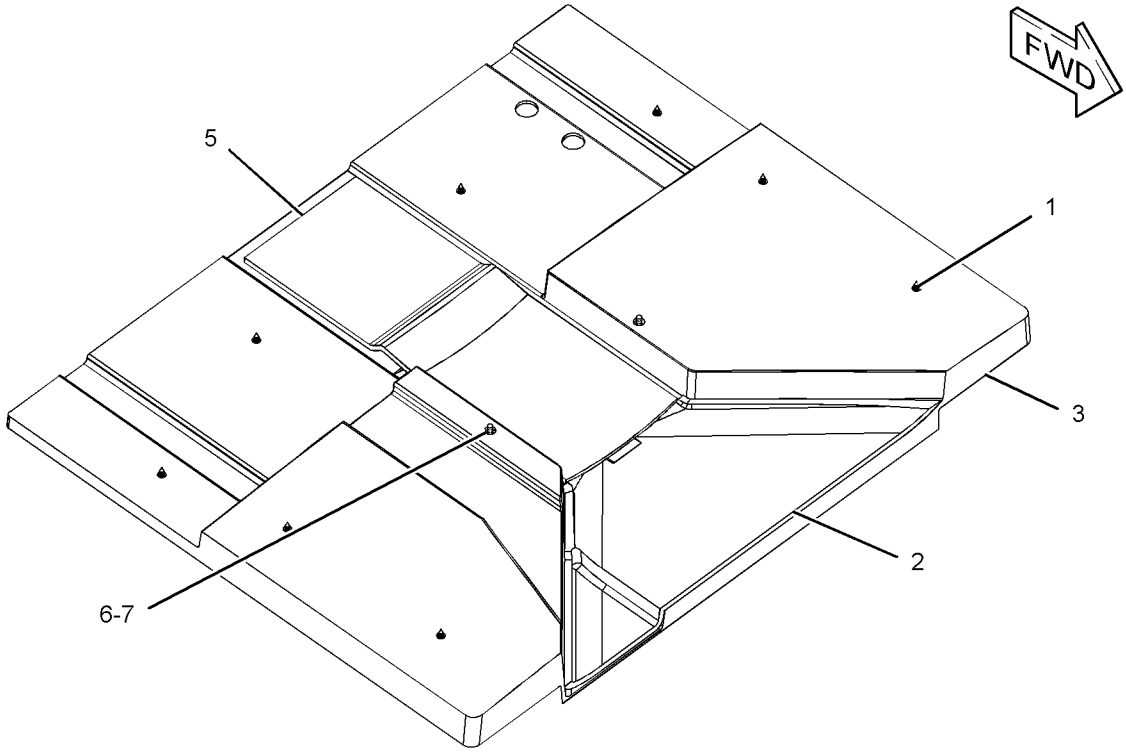

GRAPHIC #1 **<END>** g01155556

OPERATOR STATION

266-6594 FLOOR GP-SOUND SUPPRESSION

S/N: M3G1-UP

PART OF 262-1085 SUPPRESSION AR-SOUND

AN ATTACHMENT

SMCS-7265, 7301 **i02444744**

NOTE	REF NO	GRAPHIC REF	PART NUMBER	QTY	PART NAME 1 2 3 4 5 6 (PRODUCT LEVEL)	SEE PAGE
	1	1	**224-9392**	32	FASTENER-SINGLE HEAD	
	2	1	**266-6590**	1	INSULATION	
	3	1	**266-6591**	1	INSULATION	
	4	1	**266-6592**	1	INSULATION	
	5	1	**266-6593**	1	INSULATION	
	6	1	**266-6631**	1	INSULATION	
	7	1	**266-6632**	1	INSULATION	
	8	1	**266-6633**	1	INSULATION	
	9	1	**266-8944**	2	GROMMET	
	10	1	**275-8294**	1	BRACKET AS	
	11	1	**275-8297**	1	BRACKET AS	
	12	1	**275-8299**	1	BRACKET AS	
	13	1	**275-8301**	1	BRACKET	
	14	1	**275-8302**	1	BRACKET	
	15	1	**275-8303**	7	TUBE	
	16	1	**275-8304**	1	TUBE	
	17	1	**275-8305**	8	TUBE	
	18	1	**280-7000**	2	BRACKET	
	19	1	**8T-4121**	2	WASHER-HARD (11X21X2.5-MM THK)	

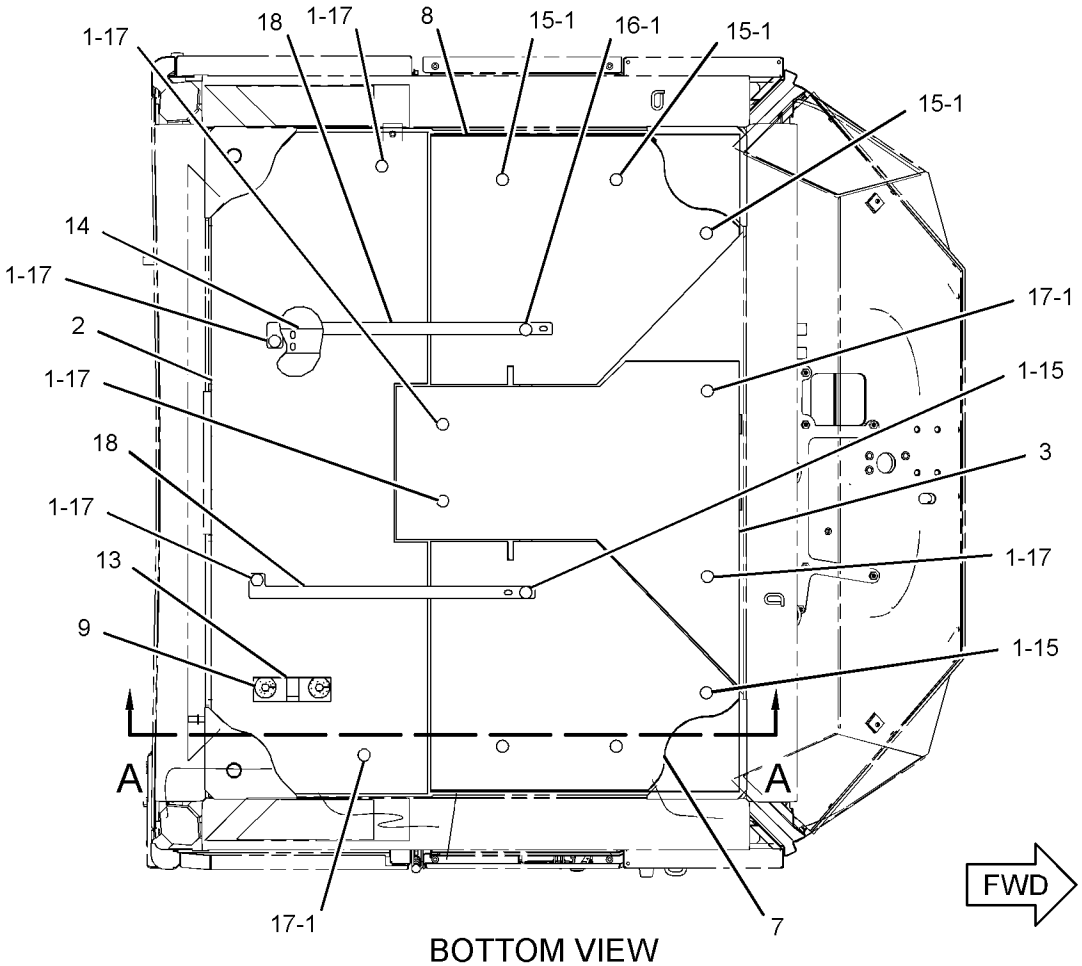

BOTTOM VIEW

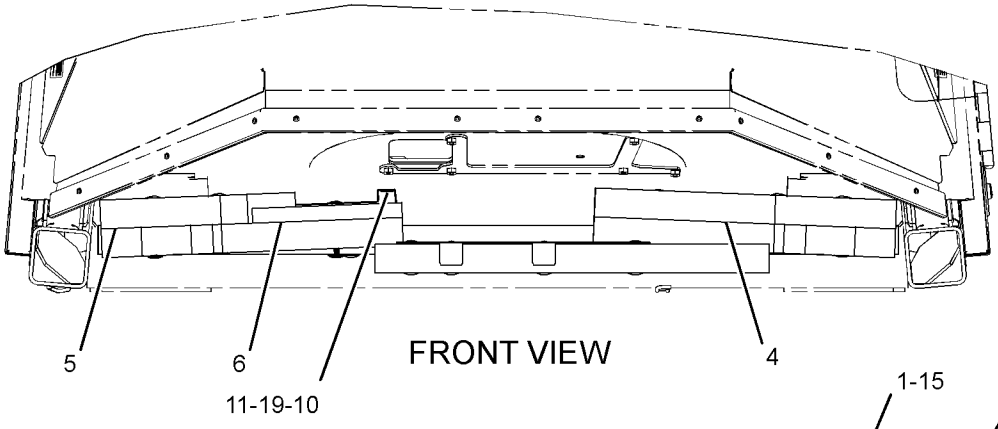

FRONT VIEW

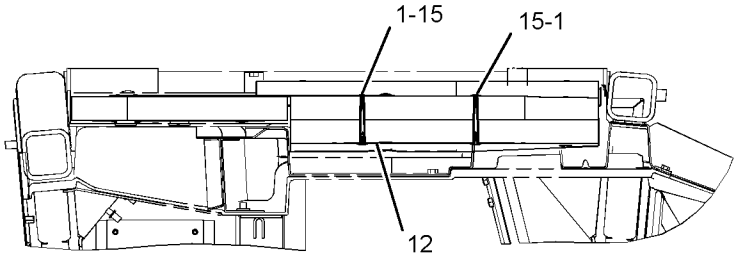

SECTION A-A

GRAPHIC #1 **<END>** g01209351

OPERATOR STATION

204-4125 GUARD GP-VANDALISM—INSTRUMENT PANEL

S/N: M3G1-UP

PART OF 258-1552 CANOPY AR-OPEN ROPS

AN ATTACHMENT

SMCS-7315 **i01851050**

NOTE	REF NO	GRAPHIC REF	PART NUMBER	QTY	PART NAME 1 2 3 4 5 6 (PRODUCT LEVEL)	SEE PAGE
	1	1	**5P-8502**	2	PADLOCK GP	
					(EACH INCLUDES)	
		1	**5P-8500**	1	KEY	
		1	**8Y-6364**	1	SLEEVE	
	2	1	**8M-7758**	4	RIVET-POP	
	3	1	**206-5175**	1	BRACKET	
	4	1	**206-5176**	1	COVER AS	
	5	1	**207-8619**	1	BRACKET	
	6	1	**207-8620**	1	PLATE	
	7	1	**207-8621**	1	COVER	
M	8	1	**7Y-7256**	2	SCREW-TRUSS HEAD (M4X0.7-MM)	

M-METRIC PART

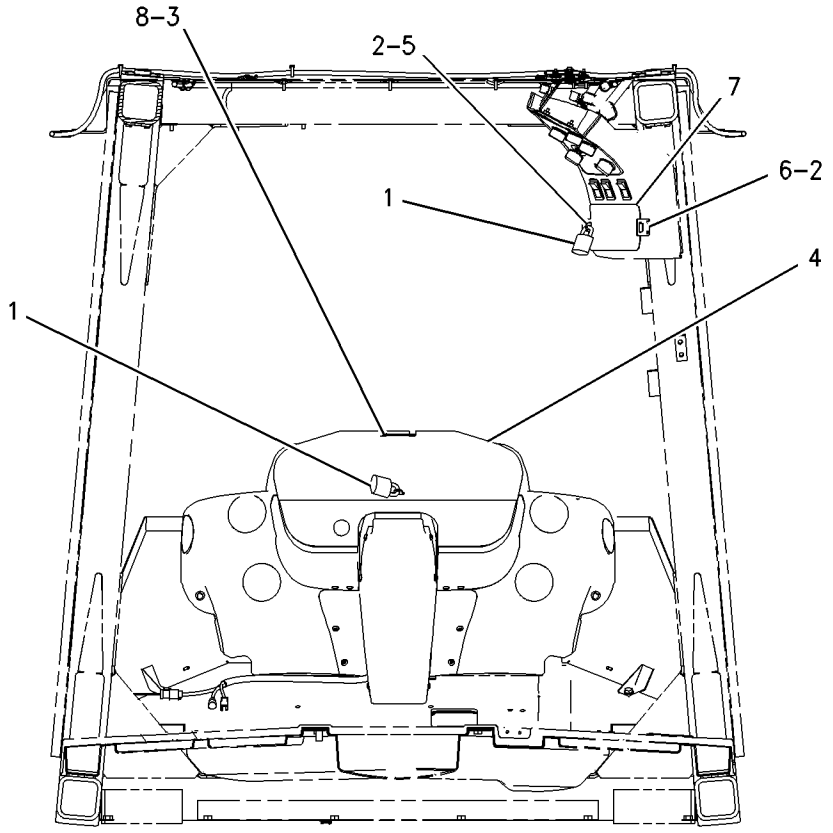

REAR VIEW

GRAPHIC #1 **<END>** g00892419

OPERATOR STATION

240-4542 GUARD GP-WINDOW

S/N: M3G1-UP

AN ATTACHMENT

SMCS-7165, 7182, 7310 **i02443753**

NOTE	REF NO	GRAPHIC REF	PART NUMBER	QTY	PART NAME 1 2 3 4 5 6 (PRODUCT LEVEL)	SEE PAGE
	1	1	**2G-9524**	2	LATCH	
	2	1	**4E-1384**	2	BUMPER-CONICAL	
	3	1	**6C-3678**	4	RIVET	
	4	1	**6C-3679**	4	RIVET-POP	
	5	1	**6S-6646**	6	PIN-COTTER	
	6	1	**7K-6536**	2	RIVET-POP	
	7	1	**8G-6035**	2	CLIP	
	8	1	**240-4548**	1	GRILL AS-FRONT	
	9	1	**240-4551**	1	GRILL AS-RH	
	10	1	**240-4552**	1	GRILL AS-LH	
	11	1	**240-4557**	1	TUBE	
	12	1	**240-4630**	2	PLATE	
	13	1	**241-6978**	1	TUBE	
	14	1	**241-8651**	1	TUBE AS	
	15	1	**241-8652**	1	TUBE AS	
	16	1	**244-2539**	2	ROD AS	
					(EACH INCLUDES)	
		1	**6V-5839**	2	WASHER (11X21X2.5-MM THK)	
	17	1	**0S-0175**	4	PIN-CLEVIS	
	18	1	**4M-7470**	4	GROMMET	
M	19	1	**5C-7261**	2	NUT (M8X1.25-THD)	
	20	1	**5P-1076**	12	WASHER-HARD (13.5X30X4-MM THK)	
M	21	1	**7X-2555**	6	BOLT (M16X2X80-MM)	
	22	1	**8T-4121**	2	WASHER-HARD (11X21X2.5-MM THK)	
M	23	1	**8T-4139**	12	BOLT (M12X1.75X30-MM)	
	24	1	**9X-8257**	6	WASHER (17.5X30X3.5-MM THK)	

M-METRIC PART

240-4542 **GUARD GP-WINDOW** *(contd.)* **i02443753**

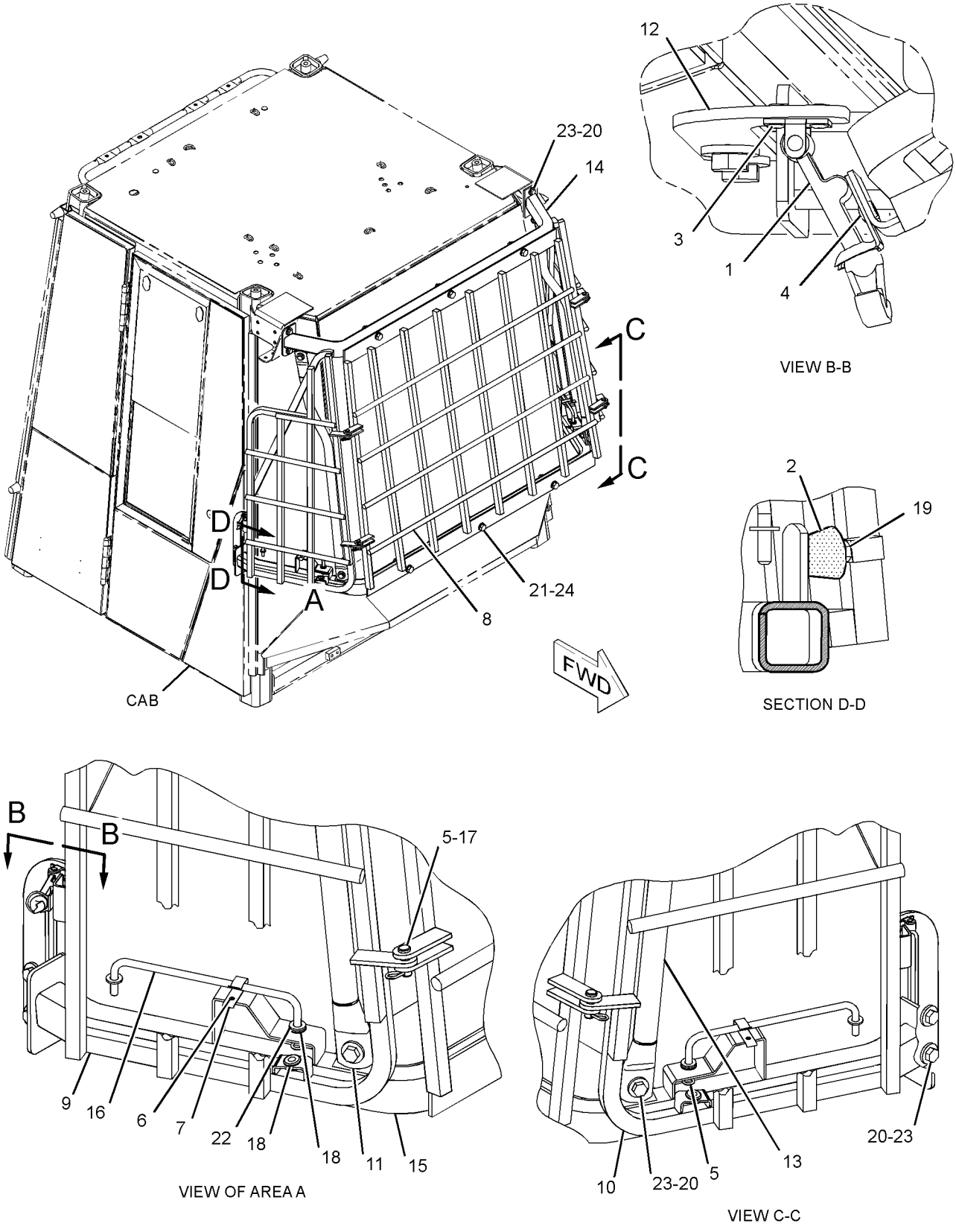

GRAPHIC #1 **<END>** g01197003

OPERATOR STATION

241-8650 GUARD GP-WINDOW

S/N: M3G1-UP

AN ATTACHMENT

SMCS-7165, 7182, 7310 **i02443747**

NOTE	REF NO	GRAPHIC REF	PART NUMBER	QTY	PART NAME 1 2 3 4 5 6 (PRODUCT LEVEL)	SEE PAGE
	1	1	**2G-9524**	2	LATCH	
	2	1	**6C-3678**	4	RIVET	
	3	1	**6C-3679**	4	RIVET-POP	
	4	1	**6S-6646**	6	PIN-COTTER	
	5	1	**7K-6536**	2	RIVET-POP	
	6	1	**8G-6035**	2	CLIP	
	7	1	**240-4557**	1	TUBE	
	8	1	**240-4630**	2	PLATE	
	9	1	**241-6978**	1	TUBE	
	10	1	**241-8651**	1	TUBE AS	
	11	1	**241-8652**	1	TUBE AS	
	12	1	**242-0718**	1	GRILL AS (FRONT)	
	13	1	**242-0719**	1	GRILL AS (RH)	
	14	1	**242-0720**	1	GRILL AS (LH)	
	15	1	**244-2539**	2	ROD AS	
					(EACH INCLUDES)	
		1	**6V-5839**	2	WASHER (11X21X2.5-MM THK)	
	16	1	**0S-0175**	4	PIN-CLEVIS	
	17	1	**4M-7470**	4	GROMMET	
	18	1	**5P-1076**	12	WASHER-HARD (13.5X30X4-MM THK)	
M	19	1	**7X-2555**	6	BOLT (M16X2X80-MM)	
	20	1	**8T-4121**	2	WASHER-HARD (11X21X2.5-MM THK)	
M	21	1	**8T-4139**	12	BOLT (M12X1.75X30-MM)	
	22	1	**9X-8257**	6	WASHER (17.5X30X3.5-MM THK)	
	23	1	**4E-1384**	2	BUMPER-CONICAL	
M	24	1	**5C-7261**	2	NUT (M8X1.25-THD)	

M-METRIC PART

241-8650 **GUARD GP-WINDOW** *(contd.)* **i02443747**

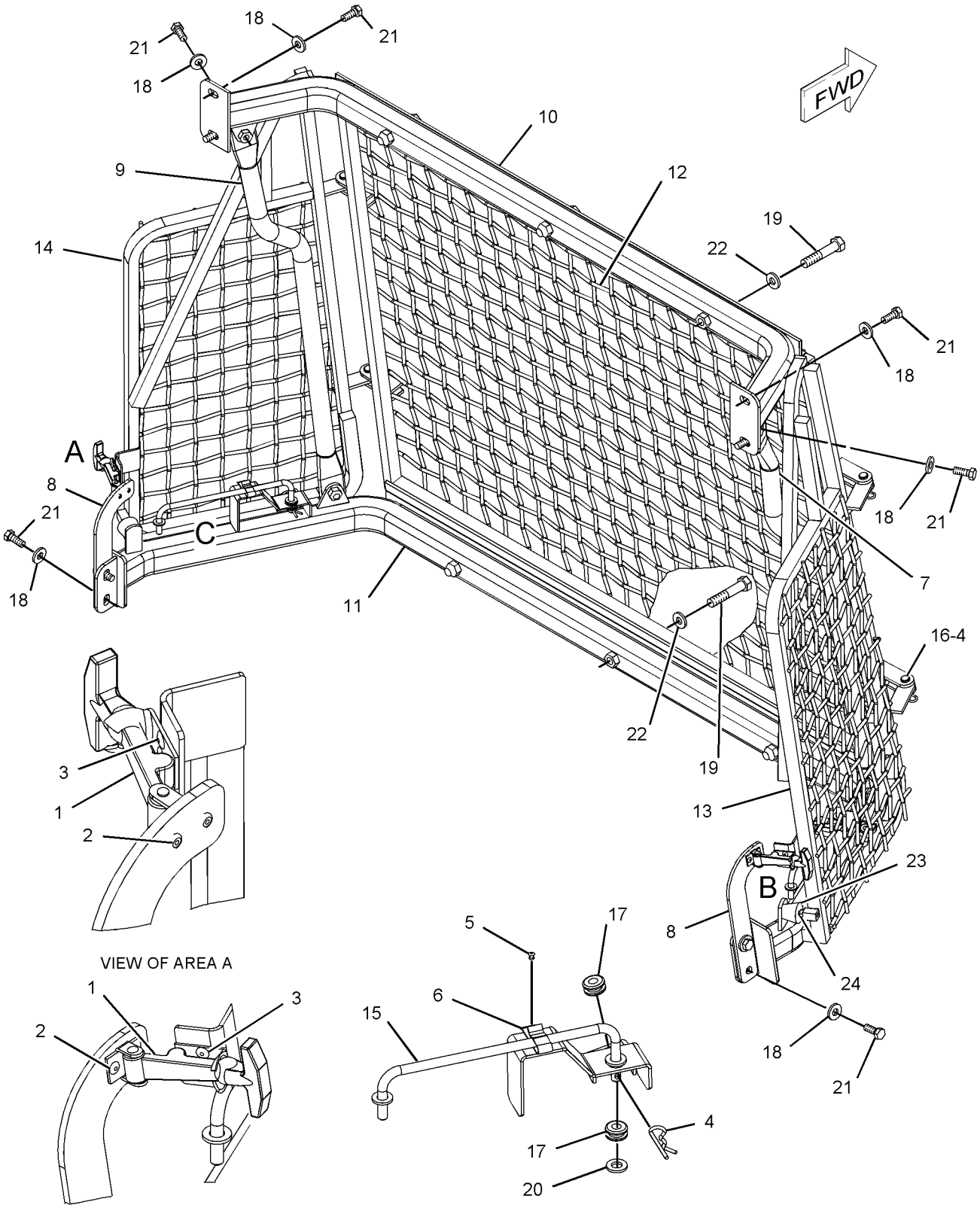

VIEW OF AREA A

VIEW OF AREA B

VIEW OF AREA C
(EXPLODED)

GRAPHIC #1 **<END>** g01144342

OPERATOR STATION

243-1092 HEATER GP-CAB

S/N: M3G1-UP

PART OF 243-1080 CAB AR-ENCLOSED ROPS

SMCS-7304 **i02449509**

NOTE	REF NO	GRAPHIC REF	PART NUMBER	QTY	PART NAME 1 2 3 4 5 6 (PRODUCT LEVEL)	SEE PAGE
M	1	1	**8T-4971**	4	BOLT (M6X1X30-MM)	
Y	2	1	**276-3964**	1	HEATER GP-CAB	672
	3	1	**192-2822**	1	GASKET	
	4	1	**229-2704**	8	WASHER-RUBBER	
Y	5	1	*243-1093*	1	LINES GP-CAB HEATER	693
M	6	1	**5C-9553**	2	BOLT (M6X1X16-MM)	
M	8	1	**9X-2040**	3	SCREW-TRUSS HEAD (M10X1.5X25-MM)	
	9	1	**8T-4205**	6	WASHER-HARD (7.2X14.5X2-MM THK)	
E	11	1	**123-3827**		SEAL (28-CM EACH)	
E	11A	1	**123-3827**		SEAL (33-CM EACH)	

E-ORDER BY THE CENTIMETER
M-METRIC PART
Y-SEPARATE ILLUSTRATION

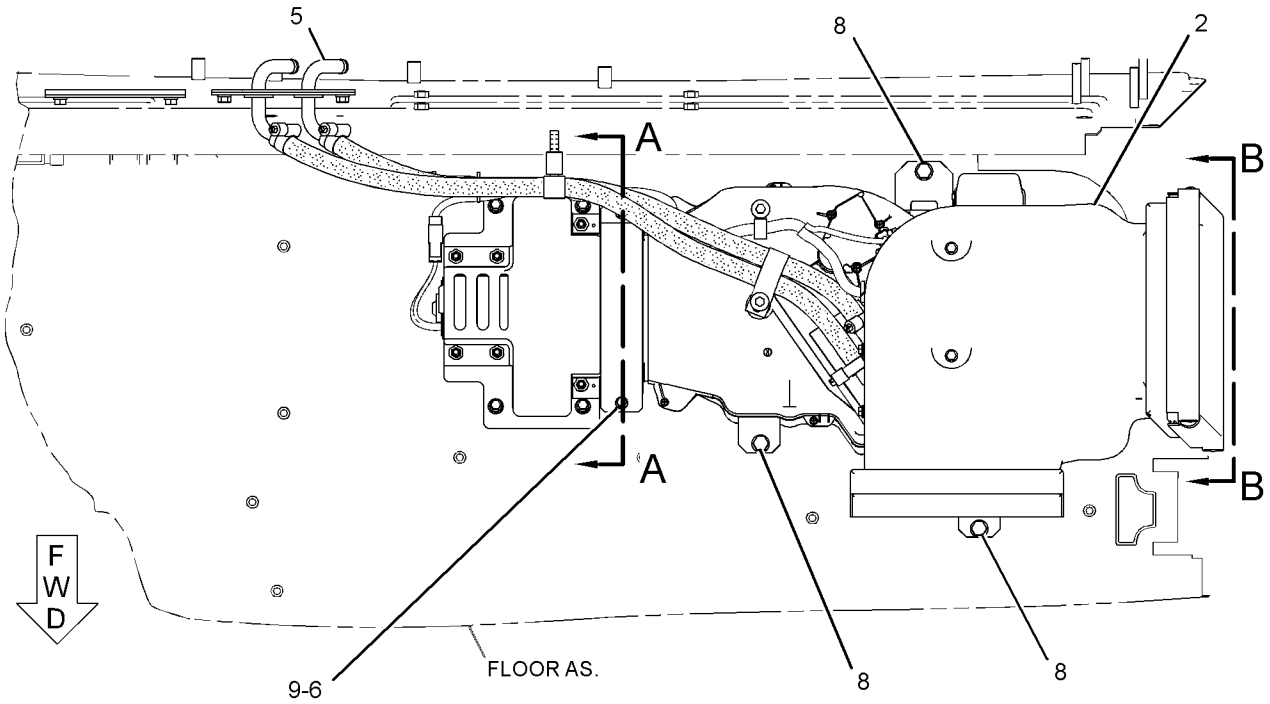

TOP VIEW

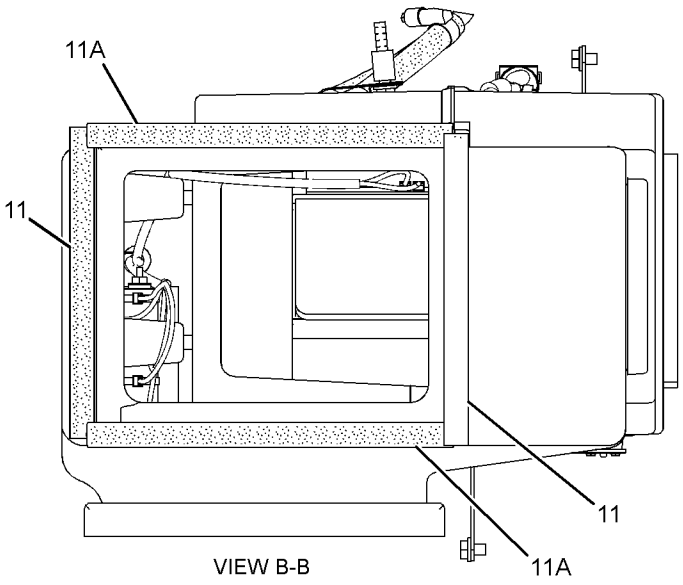

VIEW B-B

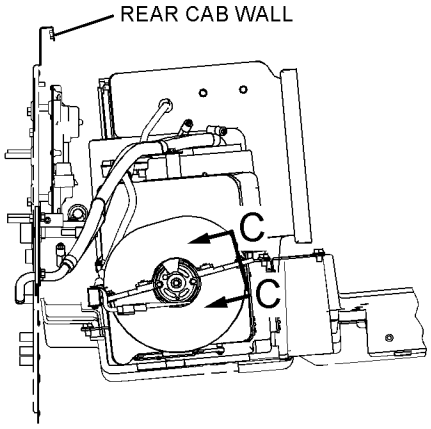

RIGHT SIDE VIEW

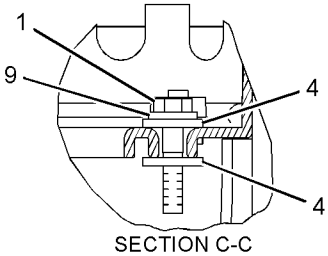

SECTION C-C

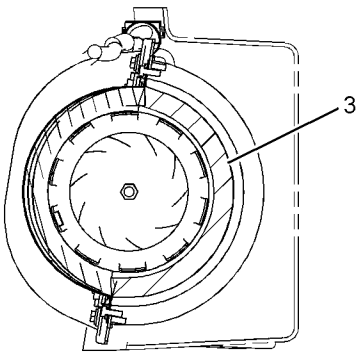

SECTION A-A

GRAPHIC #1 **<END>** g01189860

OPERATOR STATION

276-3964 HEATER GP-CAB

S/N: M3G1-UP

PART OF 243-1092 HEATER GP-CAB

SMCS-7304 **i02442944**

NOTE	REF NO	GRAPHIC REF	PART NUMBER	QTY	PART NAME 1 2 3 4 5 6 (PRODUCT LEVEL)	SEE PAGE
	1	1	**3S-2093**	1	STRAP-CABLE	
	2	1	**6T-6708**	2	WASHER (7X28.6X4.1-MM THK)	
M	3	1	**8C-7581**	1	SCREW-MACHINE (M4X0.7X8-MM)	
	4	1	**9G-1950**	1	RESISTOR	
	5	1	**133-9012**	1	FUSE (15-AMPERE)	
	6	1	**177-6704**	2	GASKET	
	7	1	**177-6716**	1	DOOR	
	8	1	**177-6727**	1	ACTUATOR	
	9	1	**177-6732**	1	DOOR AS	
		1	**4K-9429**	4	RIVET-POP	
	10	1	**179-4682**	2	LEVER	
	11	1	**179-4683**	1	ROD	
	12	1	**185-4778**	1	HOUSING AS	
	13	1	**185-4780**	1	HOUSING	
	14	1	**185-4782**	1	HOUSING	
	15	1	**185-4783**	1	COVER	
	16	1	**185-4785**	1	DUCT AS	
M	17	1	**187-7719**	24	BOLT (M5X2.24X14-MM)	
	18	1	**188-7690**	1	SUPPORT	
	19	1	**189-4682**	1	COIL AS-HEATER	
	20	1	**192-2820**	1	PLATE	
	21	1	**192-2822**	1	GASKET	
	22	1	**192-2823**	1	HARNESS AS-HEATER & AIR COND	
		1	**102-8801**	2	KIT-RECEPTACLE (12-PIN)	
					(EACH KIT INCLUDES RECEPTACE AS AND WEDGE)	
		1	**155-2270**	2	KIT-CONNECTING PLUG (2-PIN)	
					(EACH KIT INCLUDES PLUG AS AND WEDGE)	
	23	1	**193-0702**	1	GASKET	
	24	1	**193-7307**	1	GROMMET	
	25	1	**197-1397**	1	BRACKET	
	26	1	**197-1398**	1	BRACKET	
	27	1	**197-1399**	1	BRACKET	
	28	1	**197-1400**	1	BRACKET AS	
M		1	**6V-9632**	3	NUT-WELD (M6X1-THD)	
	29	1	**199-7499**	1	GASKET	
	30	1	**202-1327**	1	GASKET	
	31	1	**268-8792**	1	MOTOR AS-BLOWER (24-VOLT, A/C, HEATER)	
		1	**102-8802**	2	KIT-RECEPTACLE (2-PIN)	
					(EACH KIT INCLUDES RECEPTACLE AS AND WEDGE)	
		1	**9W-0852**	2	PIN-CONNECTOR (14-GA)	
M	32	1	**129-3178**	7	LOCKNUT (M6X1-THD)	
	33	1	**130-5300**	1	CLIP	
M	34	1	**141-9784**	1	BOLT (M6X1X190-MM)	
	35	1	**4B-4274**	2	WASHER (5.5X13X1.2-MM THK)	
M	36	1	**5C-9553**	8	BOLT (M6X1X16-MM)	
	37	1	**5P-4115**	3	WASHER-HARD (7.2X19X2-MM THK)	
	38	1	**6V-1668**	2	WASHER (6.5X29.1X3-MM THK)	
	39	1	**6V-4369**	1	CLIP	
M	40	1	**6V-7357**	3	BOLT (M6X1X25-MM)	
	41	1	**8T-4205**	11	WASHER-HARD (7.2X14.5X2-MM THK)	
	42	1	**9X-7373**	1	GROMMET	

M-METRIC PART

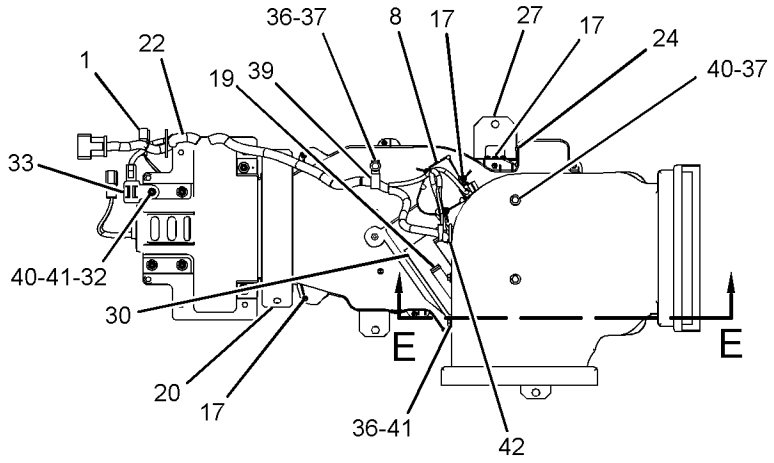

VIEW A-A

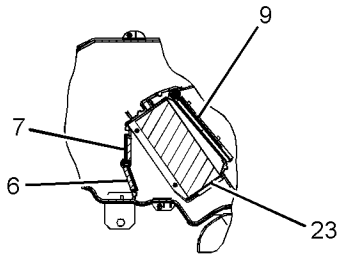

SECTION D-D

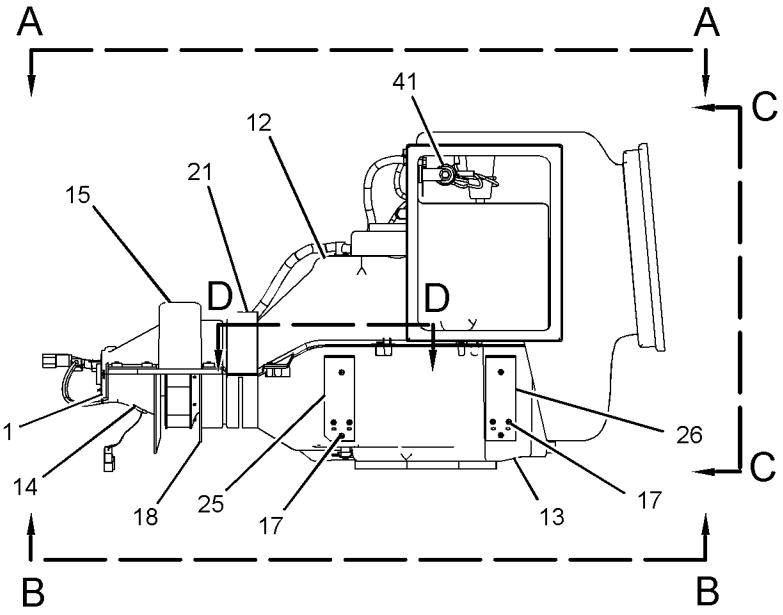

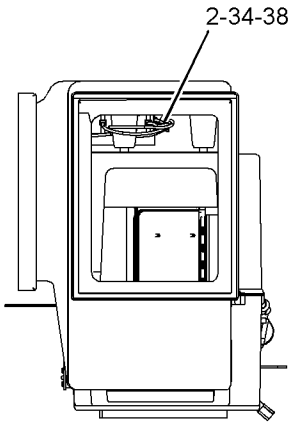

VIEW C-C

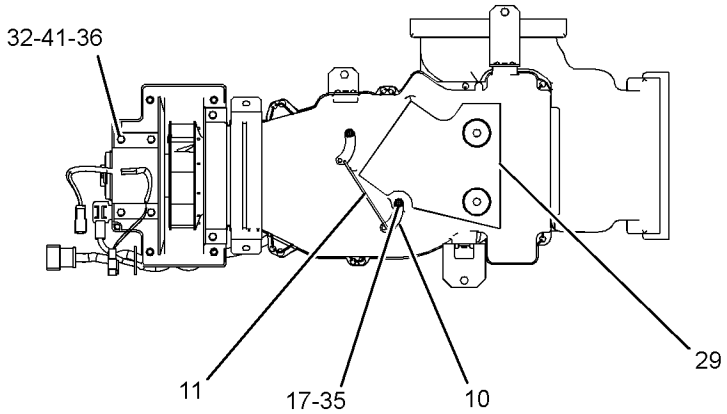

VIEW B-B

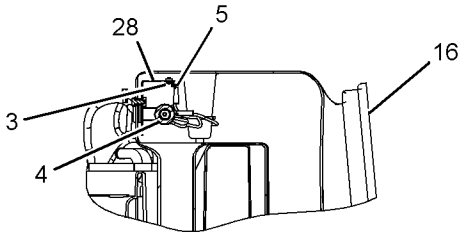

SECTION E-E

GRAPHIC #1 **<END>** g01197019

OPERATOR STATION

248-0420 HORN GP-ELECTRIC

S/N: M3G1-UP

PART OF 237-4931 ELECTRICAL AR

SMCS-7402 **i02305331**

NOTE	REF NO	GRAPHIC REF	PART NUMBER	QTY	PART NAME 1 2 3 4 5 6 (PRODUCT LEVEL)	SEE PAGE
	1	1	**174-7875**	1	HORN AS (24-VOLT, HIGH TONE)	
	2	1	**8T-4121**	1	WASHER-HARD (11X21X2.5-MM THK)	
M	3	1	**8T-4137**	1	BOLT (M10X1.5X20-MM)	

M-METRIC PART

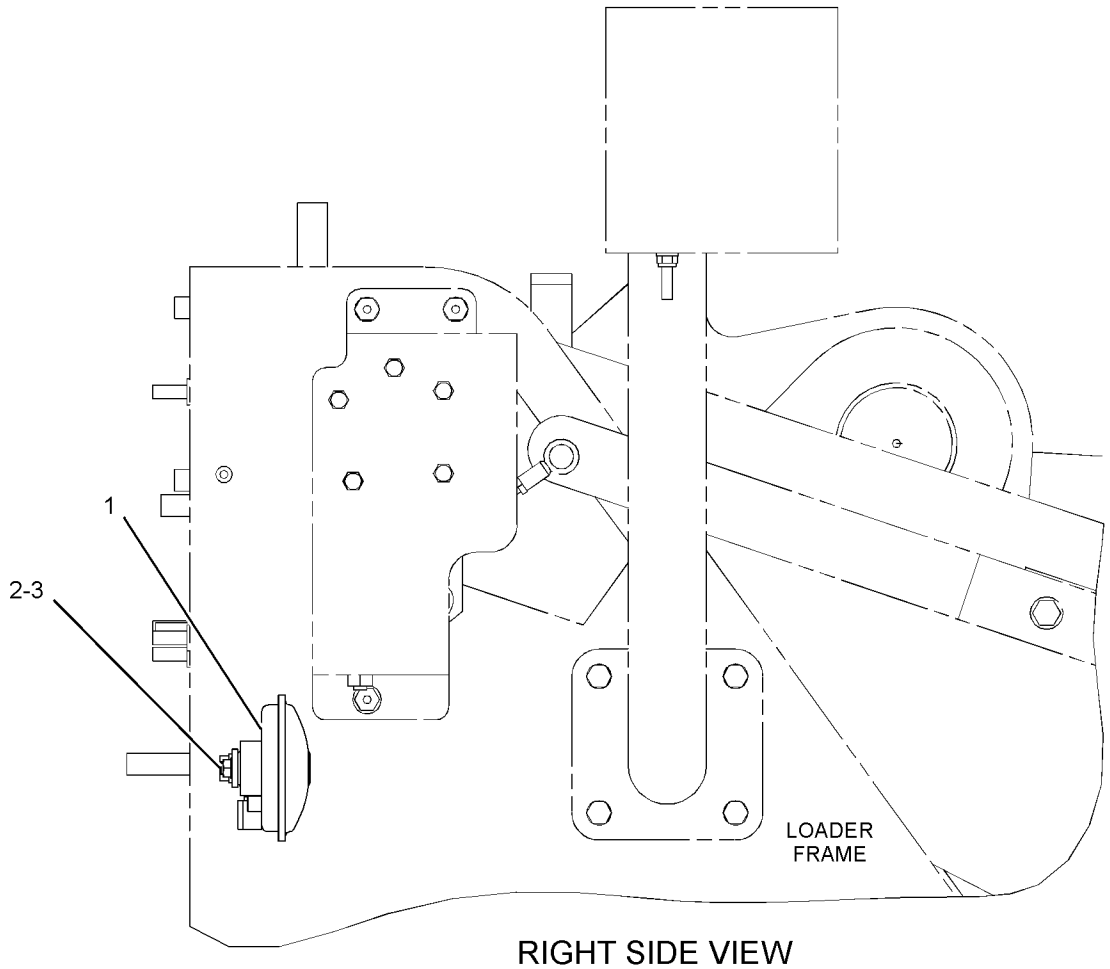

RIGHT SIDE VIEW

GRAPHIC #1 **<END>** g01154861

OPERATOR STATION

244-2786 INSTALLATION GP-CONTROLS–
PARKING BRAKE CABLE
S/N: M3G1-UP

PART OF 243-1076 OPERATOR AR-ENCLOSED ROPS, 258-1548 OPERATOR AR-OPEN ROPS ALSO AN ATTACHMENT

SMCS-1265, 4284 **i02207714**

NOTE	REF NO	GRAPHIC REF	PART NUMBER	QTY	PART NAME 1 2 3 4 5 6 (PRODUCT LEVEL)	SEE PAGE
	1	1	**9U-0830**	1	END-YOKE ROD	
	2	1	**152-1684**	1	ANGLE	
	3	1	**096-0067**	1	PIN-CLEVIS	
	4	1	**5B-9192**	1	PIN-COTTER	
M	5	1	**5C-2874**	1	NUT (M5X0.8 THD)	
	6	1	**8T-4121**	2	WASHER-HARD (11X21X2.5-MM THK)	
M	7	1	**8T-4137**	2	BOLT (M10X1.5X20-MM)	

M-METRIC PART

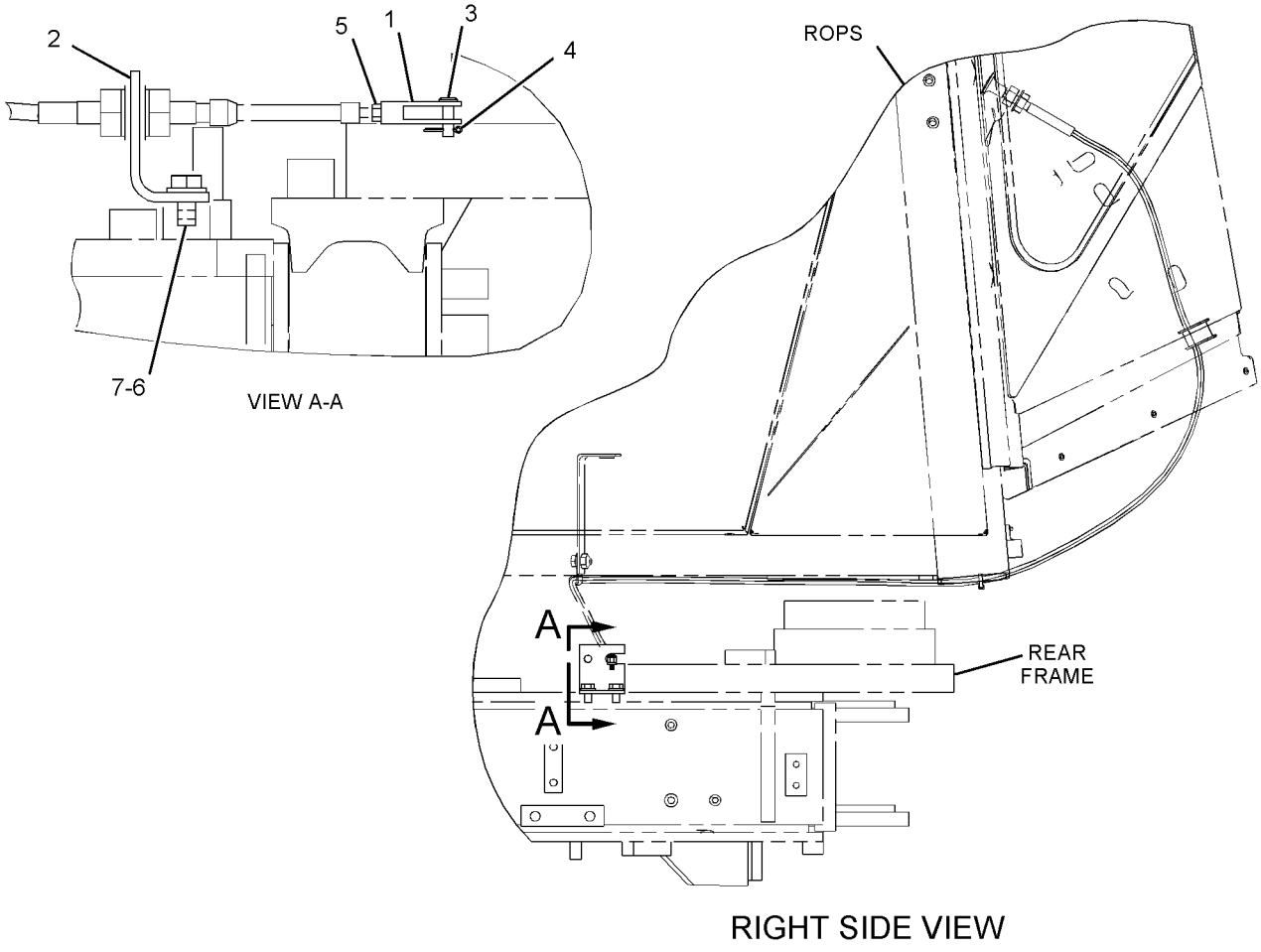

GRAPHIC #1 **<END>** g01122304

OPERATOR STATION

237-1013 INSTALLATION GP-RADIO

S/N: M3G1-UP

AN ATTACHMENT

SMCS-7338 **i02443762**

NOTE	REF NO	GRAPHIC REF	PART NUMBER	QTY	PART NAME 1 2 3 4 5 6 (PRODUCT LEVEL)	SEE PAGE
	1	1	**3S-2093**	4	STRAP-CABLE	
	2	1	**7K-1181**	1	STRAP-CABLE	
	3	1	**9U-2332**	2	ANTENNA AS (CB)	
	4	1	**9U-4431**	2	MOUNT-ANTENNA	
	5	1	**163-6795**	2	STRAP-CABLE	
	6	1	**191-5114**	2	CABLE AS	
	7	1	**208-3777**	1	BRACKET	
	8	1	**208-3778**	1	BRACKET	
	9	1	**208-3779**	1	BRACKET AS	
	10	1	**209-0381**	1	CONVERTER-POWER (24-VOLT TO 12-VOLT)	
	11	1	**236-6253**	2	GROMMET	
	12	1	**236-7772**	1	HARNESS AS-RADIO	
		1	**102-8804**	3	KIT-RECEPTACLE (4-PIN)	
					(EACH KIT RECEPTACLE INCLUDES RECEPTACLE AS AND WEDGE)	
		1	**155-2271**	2	KIT-CONNECTING PLUG (4-PIN)	
		1	**155-2274**	1	KIT-CONNECTING PLUG (6-PIN)	
					(EACH KIT PLUG INCLUDES PLUG AS AND WEDGE)	
M	13	1	**5C-9553**	2	BOLT (M6X1X16-MM)	
M	14	1	**6V-7357**	4	BOLT (M6X1X25-MM)	
M	15	1	**6V-9673**	4	SCREW-MACHINE (M5X0.8X12-MM)	
	16	1	**9X-8256**	6	WASHER (6.6X12X2-MM THK)	

M-METRIC PART

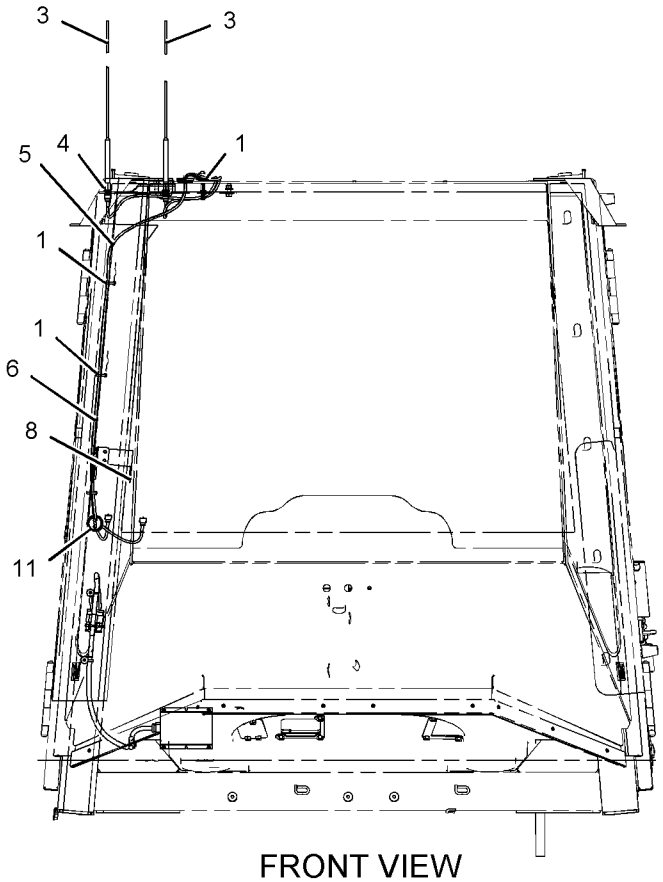

FRONT VIEW

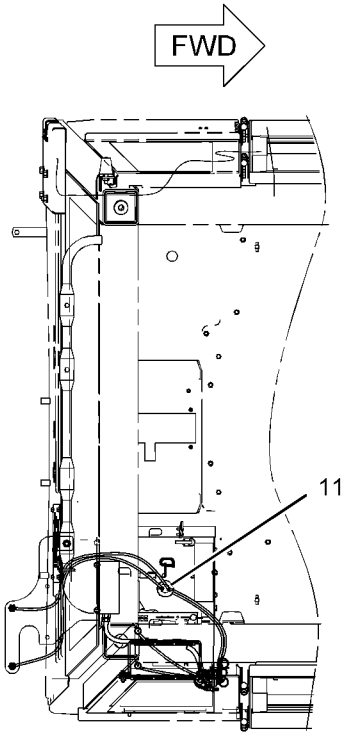

TOP VIEW

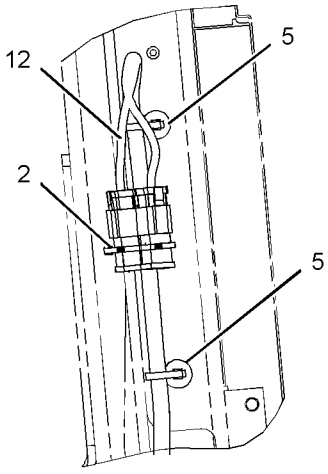

VIEW B-B

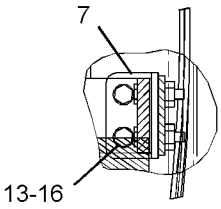

SECTION A-A

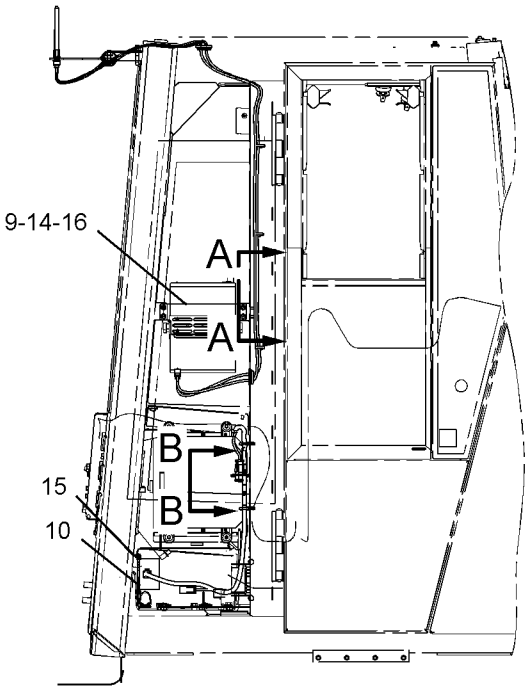

RIGHT SIDE VIEW

GRAPHIC #1 **<END>** g01132946

OPERATOR STATION

257-2008 INSTALLATION GP-RADIO

S/N: M3G1-UP

PART OF 243-1080 CAB AR-ENCLOSED ROPS

SMCS-7338 **i02305967**

NOTE	REF NO	GRAPHIC REF	PART NUMBER	QTY	PART NAME 1 2 3 4 5 6 (PRODUCT LEVEL)	SEE PAGE
	1	1	**3S-2093**	10	STRAP-CABLE	
	2	1	**9U-2331**	1	ANTENNA AS (AM/FM)	
	3	1	**9U-4431**	1	MOUNT-ANTENNA	
	4	1	**9U-8263**	1	COVER	
	5	1	**168-8772**	2	SPEAKER AS-RADIO	
	6	1	**173-2200**	1	CABLE AS	
	7	1	**011-7960**	1	GROMMET	
	8	1	**8T-0328**	8	WASHER-HARD (5.5X10X1-MM THK)	
M	9	1	**8T-0337**	8	SCREW-MACHINE (M4X0.7X12-MM)	
D	10	1	**8T-2562**		TRIM (0.06-M EACH)	

D-ORDER BY THE METER
M-METRIC PART

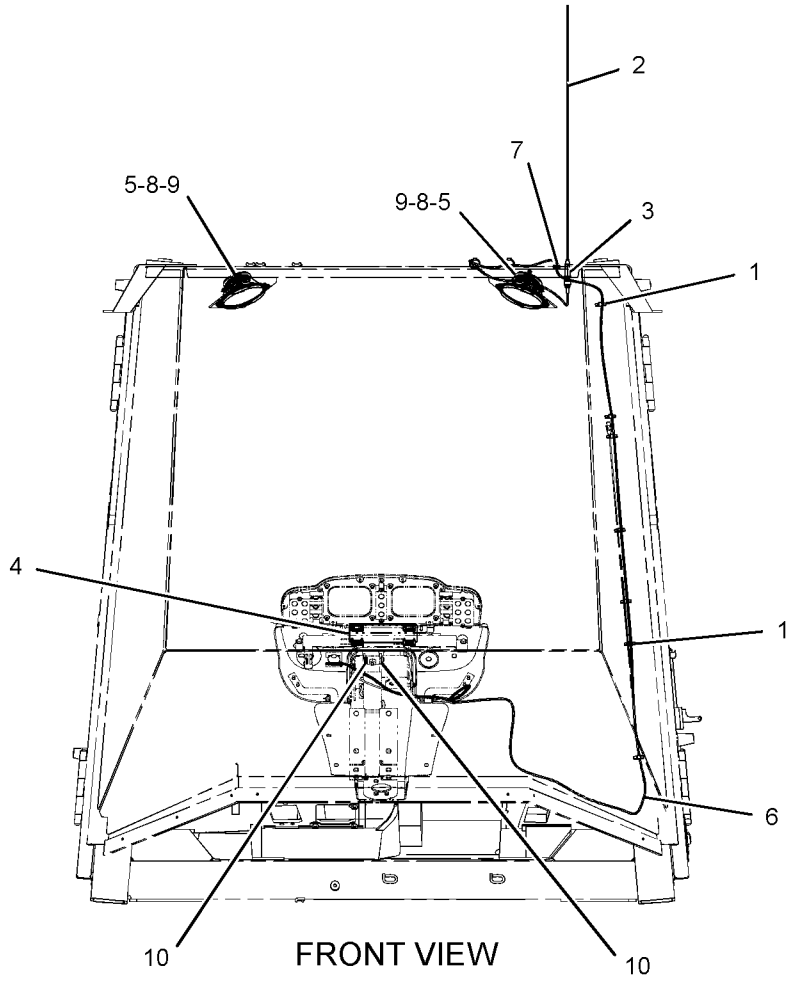

FRONT VIEW

GRAPHIC #1 **<END>** g01141875

OPERATOR STATION

232-1394 LINER GP-CAB

S/N: M3G1-UP

PART OF 243-1080 CAB AR-ENCLOSED ROPS

SMCS-7329 **i02449528**

NOTE	REF NO	GRAPHIC REF	PART NUMBER	QTY	PART NAME 1 2 3 4 5 6 (PRODUCT LEVEL)	SEE PAGE
	1	2	**222-3686**	1	BRACKET (LH)	
	2	2	**222-3687**	1	BRACKET (RH)	
	3	1	**3T-4509**	2	PLATE	
	4	2	**5P-7958**	1	SLEEVE-CABLE SPLICE	
	5	1	**6V-8928**	2	HOOK-COAT	
	6	2	**8T-6842**	1	FILM-INSTRUCTION (ALTERNATE EXIT)	
	7	2	**160-9925**	1	LANYARD	
	8	1	**161-3415**	1	STRAP	
	9	1	**243-4860**	1	FLOOR MAT	
	10	1	**173-2185**	1	LINER-CAB	
	11	2	**173-2187**	1	COVER AS	
	12	1	**178-4323**	9	CAP	
	13	2	**190-5497**	1	COVER AS	
	14	1	**197-2027**	1	BRACKET AS	
	15	2	**197-2072**	1	COVER	
	16	2	**210-5551**	1	TRAY	
	17	2	**211-0667**	1	COVER AS	
	18	1	**233-5036**	2	ANGLE AS	
	19	1	**234-1360**	1	INSULATION	
	20	1	**243-3763**	1	INSULATION	
	21	1	**247-1863**	1	COVER-LATCH	
	22	2	**253-9521**	4	SCREW-TRUSS HEAD (M12X1.75X20-MM)	
	23	1	**259-6893**	1	FILM-FUSE PANEL	
	24	2	**272-6674**	1	COVER	
M	25	2	**5C-7261**	4	NUT (M8X1.25-THD)	
	26	1	**8D-6542**	3	GROMMET	
	27	1,2	**8R-3695**	2	GROMMET	
	28	1,2	**8T-4121**	6	WASHER-HARD (11X21X2.5-MM THK)	
M	29	2	**8T-4137**	2	BOLT (M10X1.5X20-MM)	
M	30	1	**8T-4195**	4	BOLT (M10X1.5X30-MM)	
	31	2	**5P-4116**	4	WASHER-HARD (8.8X20.5X2-MM THK)	
M	32	2	**9X-2040**	6	SCREW-TRUSS HEAD (M10X1.5X25-MM)	
M	33	1,2	**9X-2041**	7	SCREW-TRUSS HEAD (M10X1.5X20-MM)	
M	34	1,2	**9X-2042**	10	SCREW-TRUSS HEAD (M6X1X12-MM)	
M	35	1,2	**9X-2045**	8	SCREW-TRUSS HEAD (M6X1X20-MM)	
M	36	2	**9X-2046**	4	SCREW-TRUSS HEAD (M6X1X35-MM)	
	37	2	**9X-6165**	1	WASHER (6.5X22X2.5-MM THK)	
D	38	2	**5P-5927**		SEAL (0.8-M)	
D	39	2	**128-2596**		SEAL (0.9-M)	
E	40	2	**8T-9005**		SEAL (46-CM)	

D-ORDER BY THE METER
E-ORDER BY THE CENTIMETER
M-METRIC PART

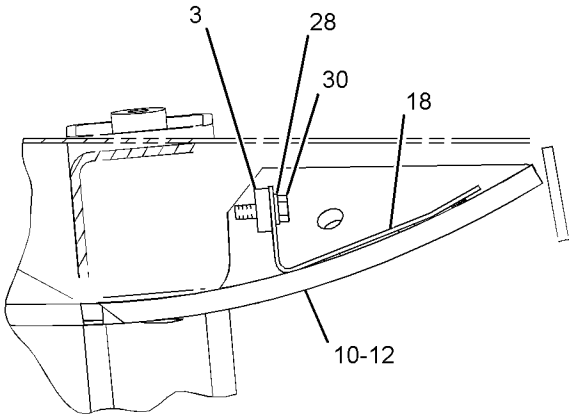

VIEW OF AREA C

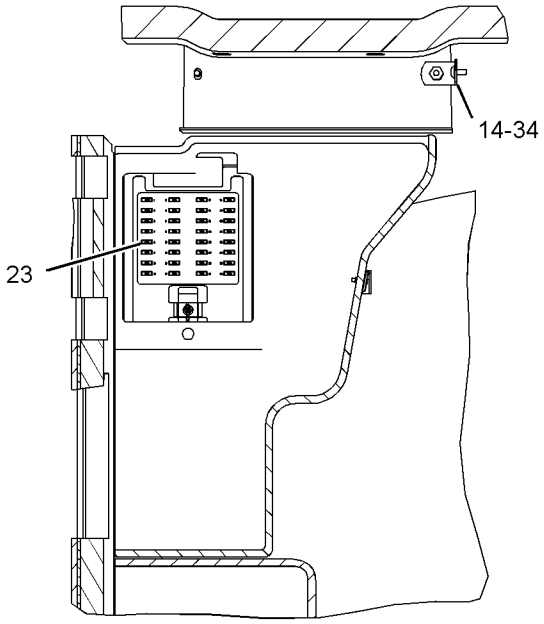

SECTION D-D

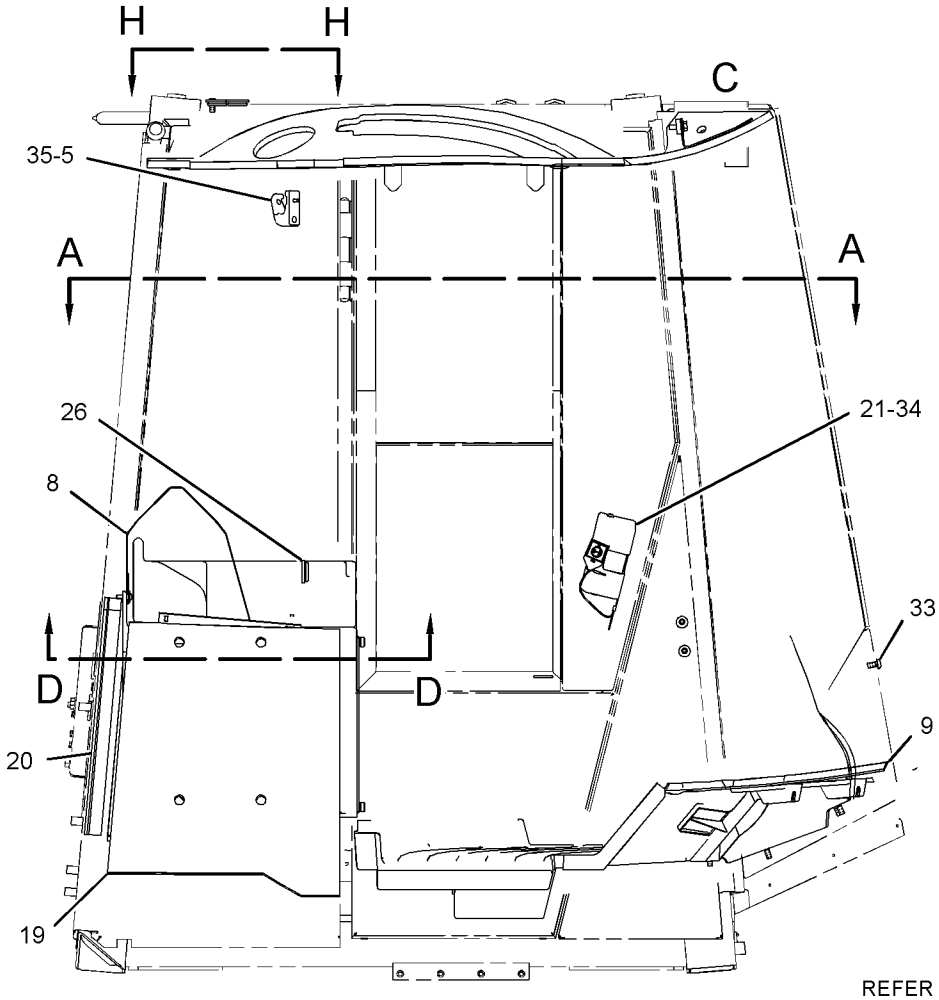

RIGHT SIDE VIEW

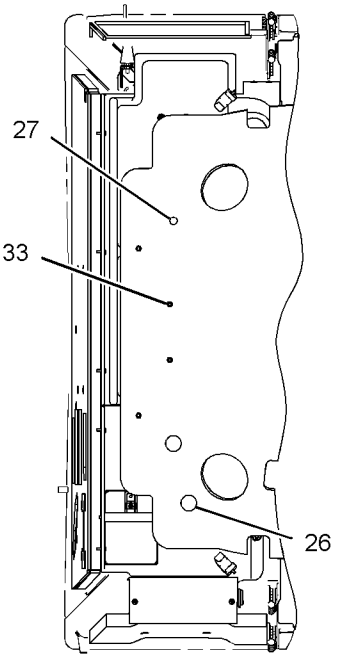

VIEW H-H

REFER TO ALL ILLUSTRATIONS OF THIS GROUP FOR AUXILIARY VIEWS

GRAPHIC #1

g01190545

232-1394 **LINER GP-CAB** *(contd.)* **i02449528**

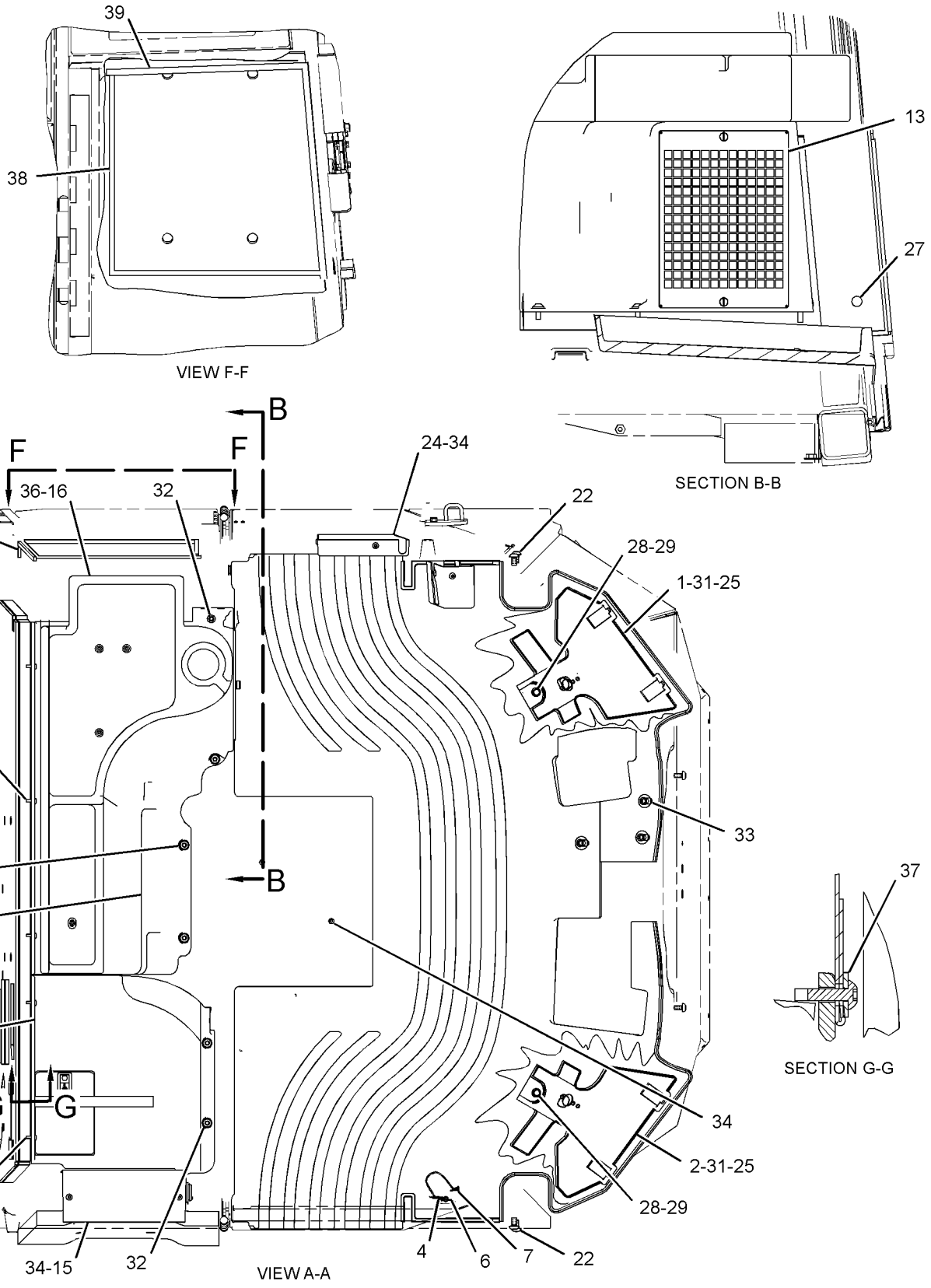

GRAPHIC #2 **<END>** g01190546

OPERATOR STATION

263-0044 LINER GP-CAB

S/N: M3G1-UP
PART OF 258-1552 CANOPY AR-OPEN ROPS
AN ATTACHMENT

SMCS-7329 **i02454480**

NOTE	REF NO	GRAPHIC REF	PART NUMBER	QTY	PART NAME 1 2 3 4 5 6 (PRODUCT LEVEL)	SEE PAGE
	1	1	**222-3686**	1	BRACKET (LH)	
	2	1	**222-3687**	1	BRACKET (RH)	
	3	2	**3T-4509**	2	PLATE	
	4	1	**6V-8928**	1	HOOK-COAT	
	5	1	**161-3415**	1	STRAP	
	6	1	**173-2185**	1	LINER-CAB	
	7	1	**173-2187**	1	COVER AS	
		1	**200-7939**	1	COVER AS	
	8	1	**178-4323**	11	CAP	
	9	1	**197-2027**	1	BRACKET AS	
	10	1	**206-0033**	1	COVER AS	
	11	1	**209-8310**	1	COVER	
	12	1	**209-8312**	1	PLATE	
	13	2	**233-1643**	1	DOOR AS-ACCESS	
		2	**233-1645**	1	HINGE AS	
	14	2	**233-4463**	1	CAM	
	15	2	**233-4466**	1	LATCH AS	
	16	2	**233-5036**	2	ANGLE AS	
	17	1	**243-4860**	1	FLOOR MAT	
	18	2	**259-6893**	1	FILM-FUSE PANEL	
M	19	1	**5C-7261**	4	NUT (M8X1.25-THD)	
	20	1,2	**8T-4121**	6	WASHER-HARD (11X21X2.5-MM THK)	
M	21	1	**8T-4191**	2	BOLT (M10X1.5X16-MM)	
M	22	2	**8T-4195**	4	BOLT (M10X1.5X30-MM)	
	23	1	**8T-4224**	4	WASHER-HARD (8.8X16X2-MM THK)	
M	24	1	**9X-2040**	6	SCREW-TRUSS HEAD (M10X1.5X25-MM)	
M	25	1	**9X-2042**	1	SCREW-TRUSS HEAD (M6X1X12-MM)	
M	26	1	**9X-2044**	2	SCREW-TRUSS HEAD (M6X1X16-MM)	
M	27	1,2	**9X-2045**	13	SCREW-TRUSS HEAD (M6X1X20-MM)	
	28	2	**9X-6165**	1	WASHER (6.5X22X2.5-MM THK)	
	29	2	**9X-8256**	6	WASHER (6.6X12X2-MM THK)	
D	30	2	**5P-5643**		SEAL (1.1-M)	
E	31	1	**103-2543**		SEAL (16-CM EA)	
E	32	2	**209-8315**		SEAL (70-CM)	
E	33	1	**7X-7877**		STRIP-EDGING (199-CM)	
E	34	1	**7X-7898**		TRIM (19.3-CM EA)	
E	34A	2	**7X-7898**		TRIM (28.8-CM)	
E	34B	1	**7X-7898**		TRIM (52.7-CM)	

D-ORDER BY THE METER
E-ORDER BY THE CENTIMETER
M-METRIC PART

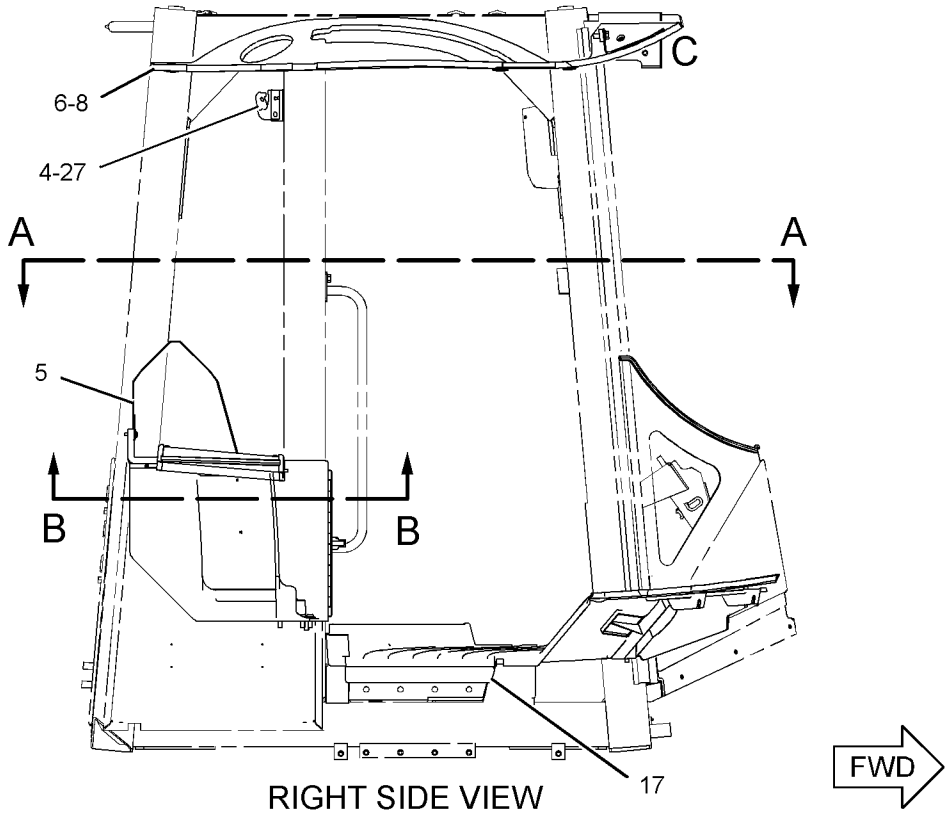

RIGHT SIDE VIEW

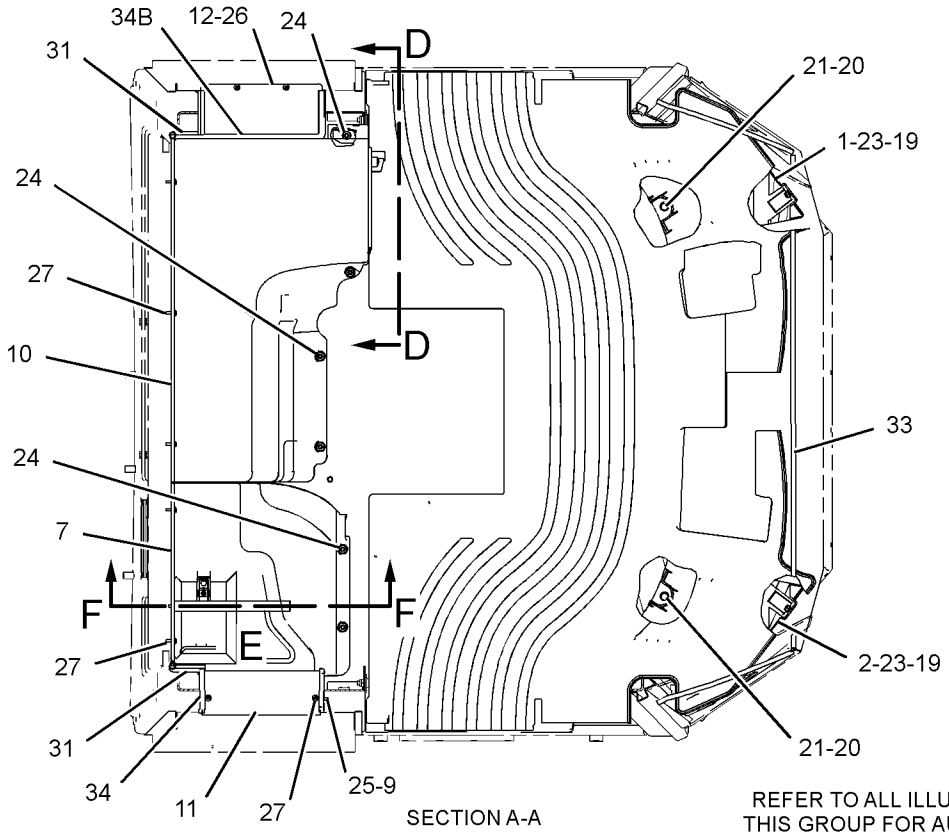

SECTION A-A

REFER TO ALL ILLUSTRATIONS OF THIS GROUP FOR AUXILIARY VIEWS

GRAPHIC #1

g01158129

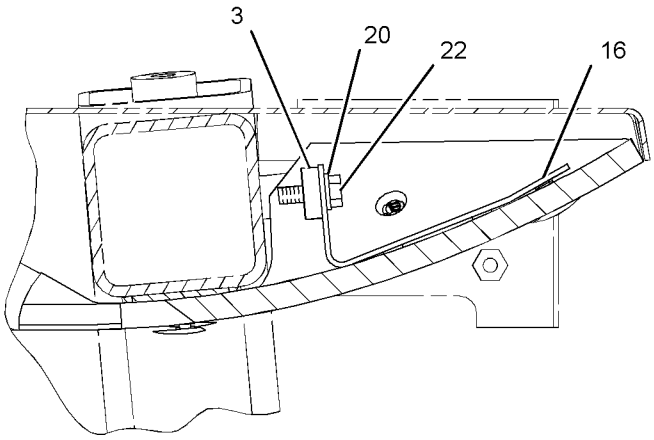

VIEW OF AREA C

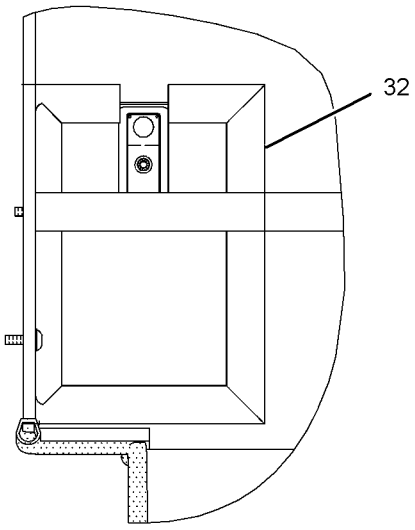

VIEW OF AREA E

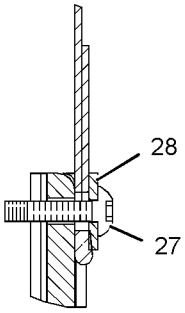

SECTION F-F

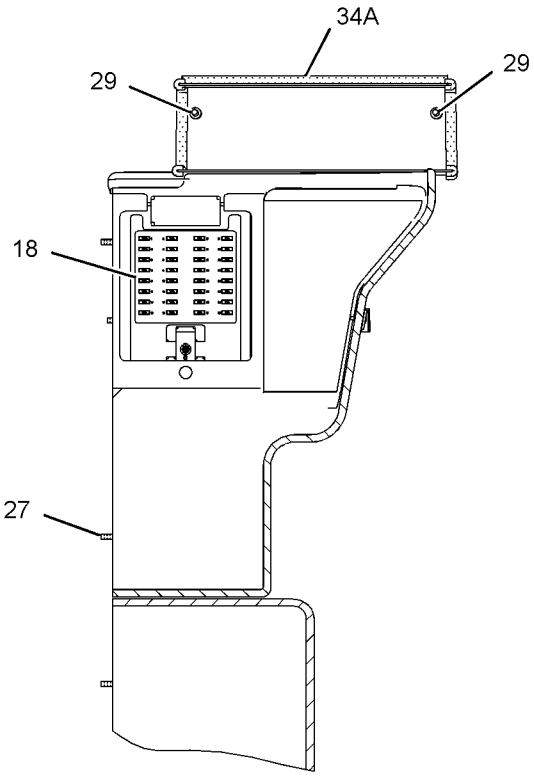

SECTION B-B

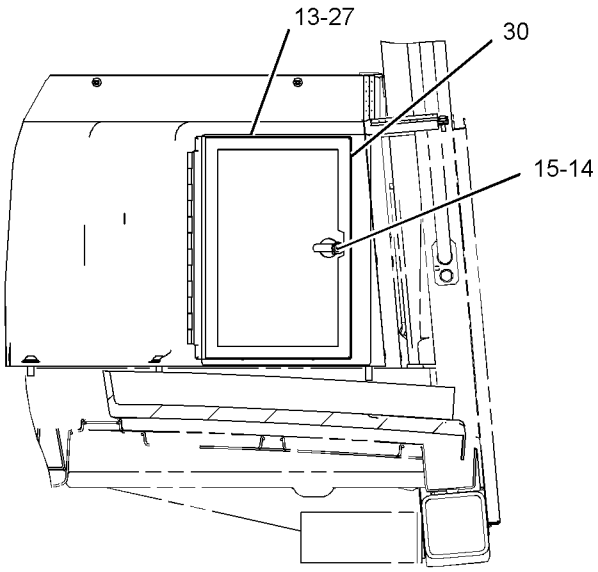

SECTION D-D

GRAPHIC #2 **<END>** g01133275

OPERATOR STATION

242-9416 LINES GP-AIR CONDITIONER

S/N: M3G1-UP

PART OF 243-1088 AIR CONDITIONER GP

AN ATTACHMENT

SMCS-1808 **i02224421**

NOTE	REF NO	GRAPHIC REF	PART NUMBER	QTY	PART NAME 1 2 3 4 5 6 (PRODUCT LEVEL)	SEE PAGE
	1	1	**5P-3928**	1	COUPLING AS-REFRIGERANT	
		1	**107-4395**	1	VALVE AS	
		1	**107-4396**	1	GASKET	
	2	1	**5P-4106**	1	NUT (1-7/16-THD)	
	3	1	**7K-3176**	1	COUPLING AS-REFRIGERANT	
		1	**107-4393**	1	VALVE AS	
		1	**107-4394**	1	GASKET	
	4	1	**7K-3304**	1	NUT-JAM (1-20-THD)	
	5	1	**170-3447**	1	PLATE	
	6	1	**170-3448**	1	PLATE	
	7	1	**242-8559**	1	PLATE	
I	8	1	**242-9371**	1	HOSE AS	
I	9	1	**242-9372**	1	HOSE AS	
	10	1	**244-2125**	1	GASKET	
	11	1	**9M-4972**	1	CLIP	
	12	1	**9M-8406**	1	CLIP	
	13	1	**9X-7381**	1	SEAL-O-RING	
	14	1	**9X-7382**	1	SEAL-O-RING	
	15	1	**9X-7383**	1	SEAL-O-RING	
	16	1	**9X-7384**	1	SEAL-O-RING	

I-REFER TO HYDRAULIC INFORMATION SYSTEM

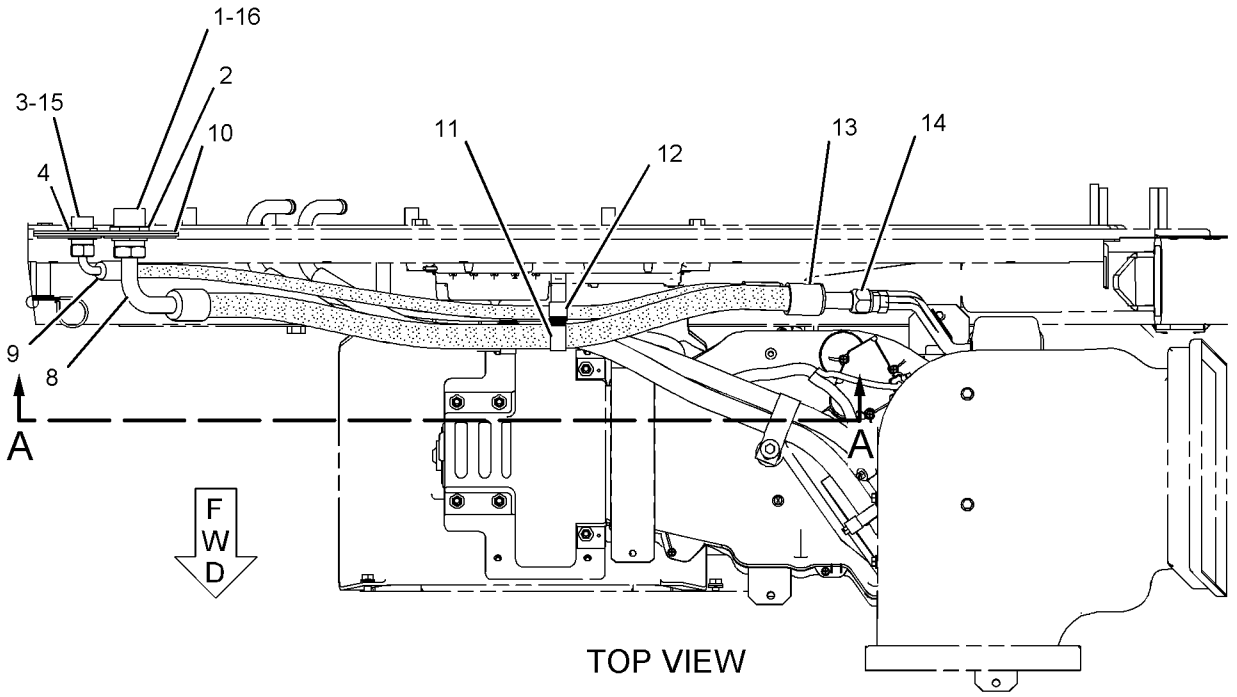

TOP VIEW

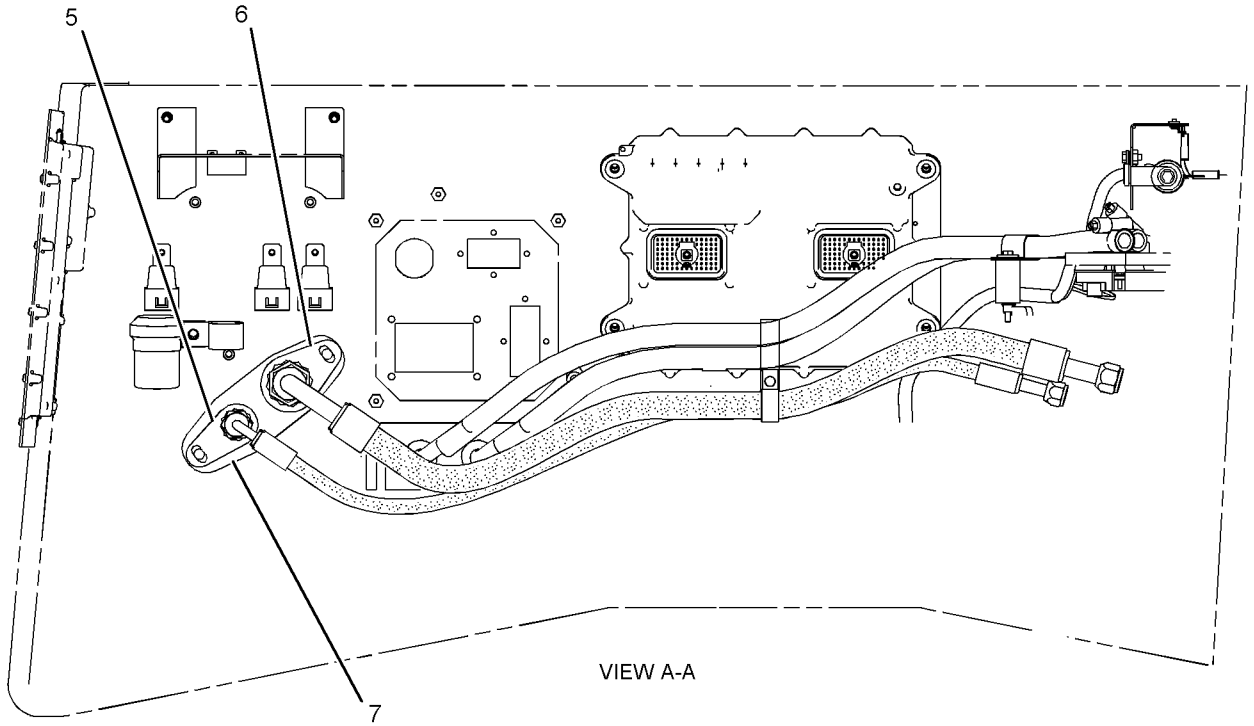

VIEW A-A

GRAPHIC #1 **<END>** g01117021

OPERATOR STATION

244-5419 LINES GP-AIR CONDITIONER

S/N: M3G1-UP
PART OF 243-6623 AIR CONDITIONER AR
AN ATTACHMENT

SMCS-1808 **i02260635**

NOTE	REF NO	GRAPHIC REF	PART NUMBER	QTY	PART NAME 1 2 3 4 5 6 (PRODUCT LEVEL)	SEE PAGE
D	1	2	**5P-5923**		SEAL (0.10-M)	
	2	2	**175-7162**	1	RECEIVER-DRYER GP (AIR CONDITIONER)	
		2	**7X-2049**	1	TUBE AS-REFRIGERANT ORIFICE	
	3	1,2	**7K-1181**	2	STRAP-CABLE	
	4	2	**7V-5515**	1	SPACER (11X26.7X12-MM THK)	
	5	2	**103-6100**	2	FITTING AS-AIR CONDITIONER (QUICK DISCONNECT)	
					(EACH INCLUDES)	
		2	**9X-7382**	2	SEAL-O-RING	
	6	2	**124-3019**	1	BRACKET AS	
M		2	**8T-3490**	1	NUT-WELD (M10X1.5-THD)	
	7	2	**136-0207**	1	STRAP-CABLE	
	8	2	**144-4613**	1	ANGLE AS	
	9	2	**186-6189**	1	ACCUMULATOR GP-REFRIGERANT	
	10	2	**242-2445**	1	CLAMP AS	
I	11	2	**246-7272**	1	HOSE AS	
I	12	2	**246-7273**	1	HOSE AS	
I	13	2	**246-7274**	1	HOSE AS	
I	14	1	**246-7275**	1	HOSE AS	
I	15	2	**246-7276**	1	HOSE AS	
	16	2	**256-7205**	1	TUBE AS	
	17	2	*256-7206*	1	FITTING AS-AIR CONDITIONER	
		2	**3E-4051**	1	CAP-SEAL (AIR CONDITIONER)	
		2	**3E-4057**	1	VALVE AS	
	18	2	**118-9517**	1	FITTING AS-AIR CONDITIONER	
		2	**3E-4052**	1	CAP-SEAL (AIR CONDITIONER)	
		2	**3E-4058**	1	VALVE AS	
	19	2	**1P-6356**	1	PLATE	
	20	2	**4K-8302**	1	CLIP	
	21	2	**4S-1962**	1	CLIP	
M	22	2	**5C-7261**	1	NUT (M8X1.25-THD)	
	23	1	**5P-3929**	1	COUPLING AS-REFRIGERANT (LOW PRESSURE)	
		1	**8F-9206**	1	SEAL-O-RING	
		1	**107-4397**	1	VALVE AS	
	24	1	**5P-3948**	1	COUPLING AS-REFRIGERANT (HIGH PRESSURE)	
		1	**7F-8607**	1	SEAL-O-RING	
		1	**107-4399**	1	VALVE AS	
	25	2	**6D-4246**	1	CLIP	
	26	2	**6K-8178**	3	CLIP	
	27	2	**6V-1889**	2	CLIP	
	28	2	**6V-4356**	1	CLIP (SLOT)	
	29	2	**6V-4357**	1	CLIP (TAB)	
	30	1,2	**8M-2773**	4	CLIP	
	31	2	**8T-2561**	1	WASHER-HARD (10.5X28.5X5-MM THK)	
	32	2	**8T-4121**	9	WASHER-HARD (11X21X2.5-MM THK)	
M	33	2	**8T-4136**	4	BOLT (M10X1.5X25-MM)	
M	34	2	**8T-4137**	4	BOLT (M10X1.5X20-MM)	
M	35	2	**8T-4139**	1	BOLT (M12X1.75X30-MM)	
M	36	2	**8T-4194**	1	BOLT (M12X1.75X50-MM)	
M	37	2	**8T-4195**	1	BOLT (M10X1.5X30-MM)	
	38	2	**8T-4223**	1	WASHER-HARD (13.5X25.5X3-MM THK)	
	39	2	**8T-4224**	1	WASHER-HARD (8.8X16X2-MM THK)	
M	40	2	**8T-6466**	1	BOLT (M10X1.5X60-MM)	
	41	2	**9M-8406**	3	CLIP	
	42	1,2	**9X-7380**	3	SEAL-O-RING	
	43	2	**9X-7381**	2	SEAL-O-RING	

244-5419 LINES GP-AIR CONDITIONER *(contd.)* i02260635

NOTE	REF NO	GRAPHIC REF	PART NUMBER	QTY	PART NAME 1 2 3 4 5 6 (PRODUCT LEVEL)	SEE PAGE
	44	2	**9X-7382**	1	SEAL-O-RING	
	45	1,2	**9X-7383**	4	SEAL-O-RING	
	46	2	**9X-7384**	1	SEAL-O-RING	

D-ORDER BY THE METER
I-REFER TO HYDRAULIC INFORMATION SYSTEM
M-METRIC PART

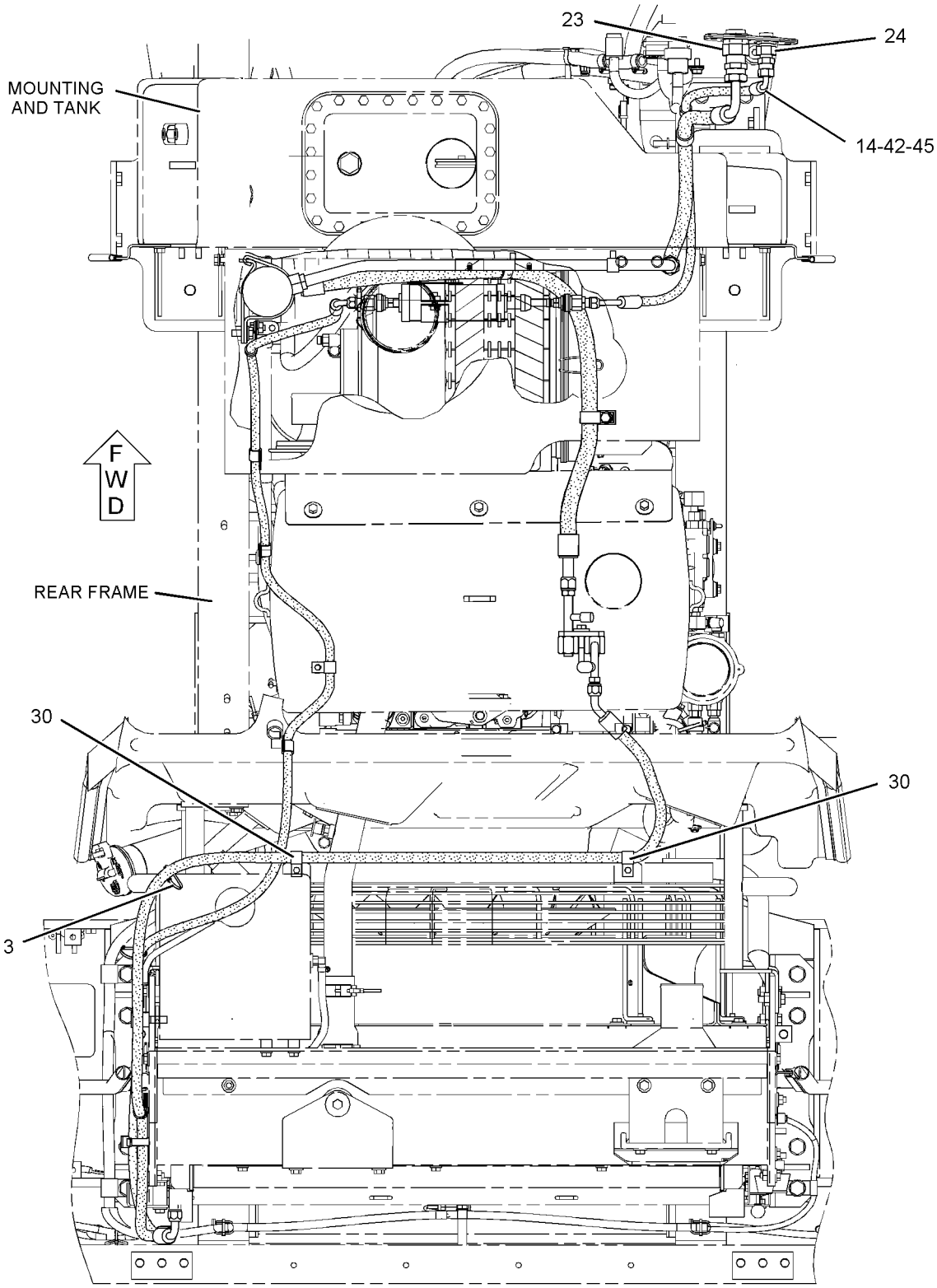

TOP VIEW

GRAPHIC #1 g01127081

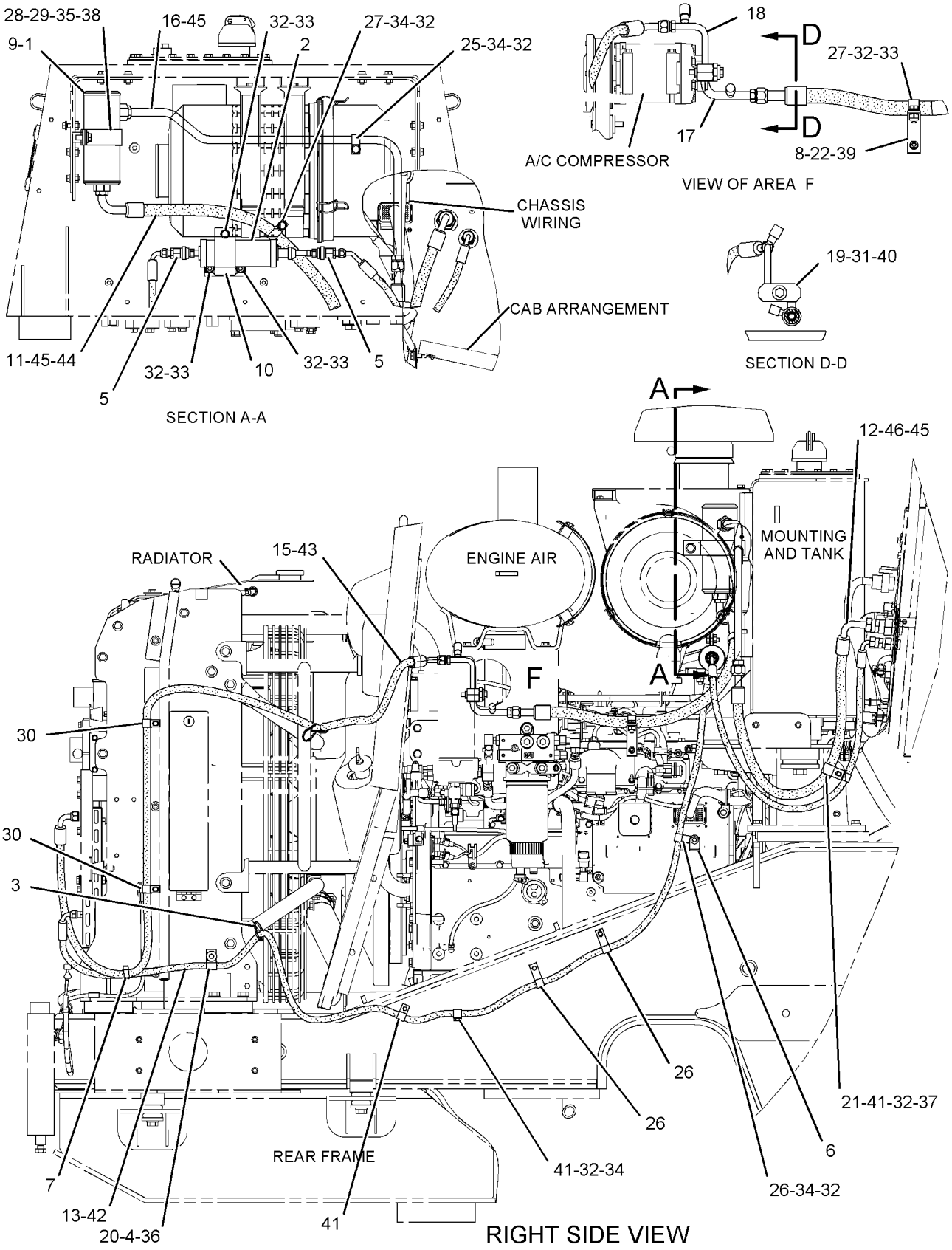

GRAPHIC #2 **<END>** g01127083

OPERATOR STATION

237-0434 LINES GP-CAB HEATER

S/N: M3G1-UP

PART OF 237-4933 CHASSIS AR

SMCS-7304 **i02444689**

NOTE	REF NO	GRAPHIC REF	PART NUMBER	QTY	PART NAME 1 2 3 4 5 6 (PRODUCT LEVEL)	SEE PAGE
	1	1	**5D-1026**	4	CLAMP-HOSE	
	2	1	*161-9916*	1	ADAPTER GP	
		1	**2M-9780**	1	SEAL-O-RING	
		1	**6V-7420**	1	ADAPTER	
	3	1	*165-2273*	2	VALVE GP-SHUTOFF (RETURN MANIFOLD)	
					(EACH INCLUDES)	
		1	**3K-0360**	1	SEAL-O-RING	
		1	**6V-7238**	1	VALVE-SHUTOFF	
	4	1	**192-5017**	1	BRACKET AS	
	5	1	**250-3895**	1	SPACER	
	6	1	**100-7870**	1	ADAPTER-O-RING	
	7	1	**3J-1907**	1	SEAL-O-RING	
	8	1	**5P-4116**	1	WASHER-HARD (8.8X20.5X2-MM THK)	
	9	1	**6D-1641**	3	CLIP	
	10	1	**8T-4121**	3	WASHER-HARD (11X21X2.5-MM THK)	
M	11	1	**8T-4136**	2	BOLT (M10X1.5X25-MM)	
M	12	1	**8T-4195**	1	BOLT (M10X1.5X30-MM)	
M	13	1	**8T-6912**	1	BOLT (M8X1.25X50-MM)	
E	14	1	**5P-0767**		HOSE (176-CM)	
E	14A	1	**5P-0767**		HOSE (182-CM)	

E-ORDER BY THE CENTIMETER
M-METRIC PART

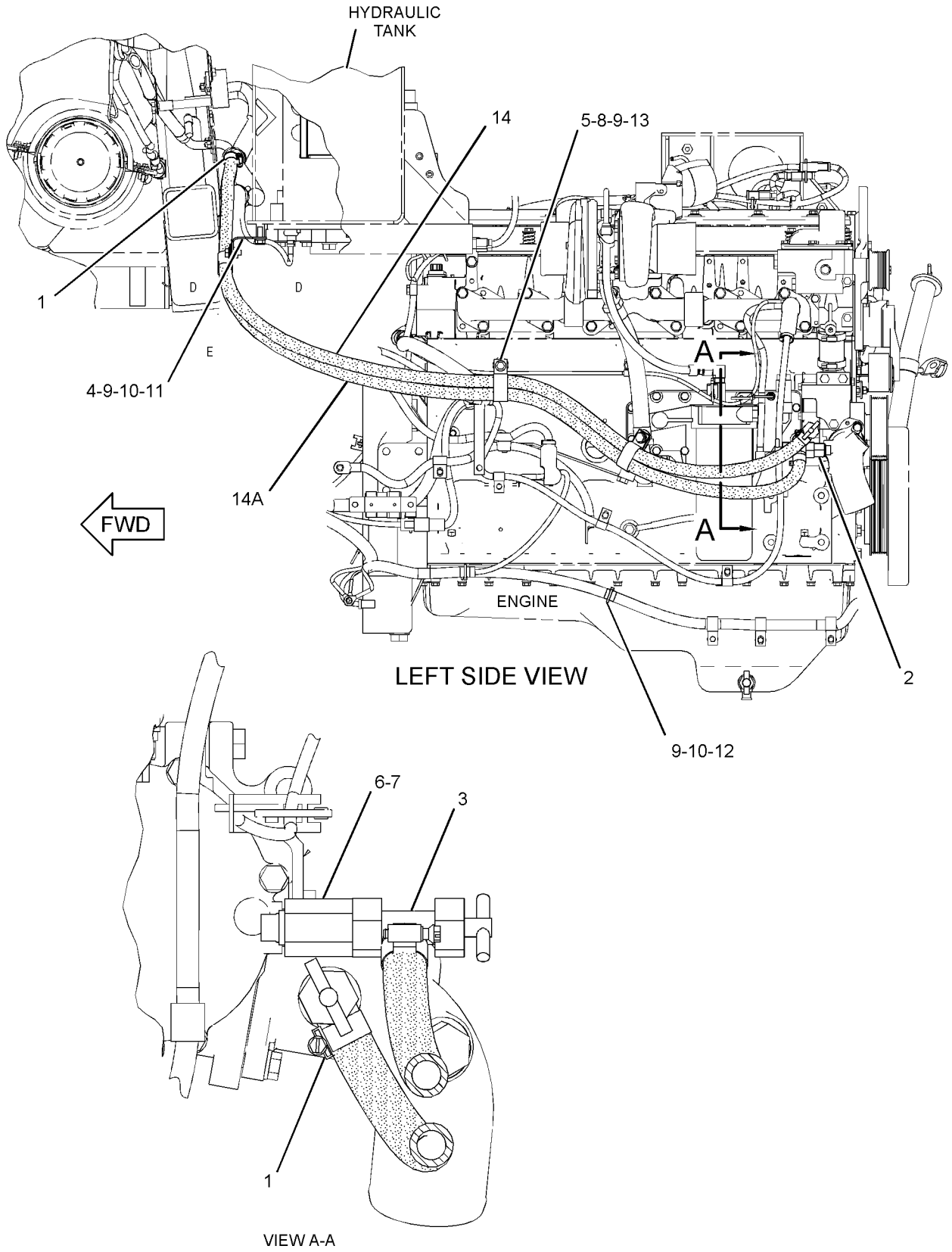

GRAPHIC #1 **<END>** g01202895

OPERATOR STATION

243-1093 LINES GP-CAB HEATER

S/N: M3G1-UP

PART OF 243-1092 HEATER GP-CAB

SMCS-7304 **i02450634**

NOTE	REF NO	GRAPHIC REF	PART NUMBER	QTY	PART NAME 1 2 3 4 5 6 (PRODUCT LEVEL)	SEE PAGE
	1	1	**6D-1641**	2	CLIP	
	2	1	**9X-2488**	4	CLAMP-HOSE	
	3	1	**244-2119**	1	PLATE AS	
	4	1	**244-2360**	1	PLATE AS	
	5	1	**246-3231**	1	GASKET	
	6	1	**132-4354**	1	SPACER (10.5X19X26.5-MM THK)	
	7	1	**4I-7889**	1	SPACER (11X25X45-MM THK)	
M	8	1	**5C-7261**	4	NUT (M8X1.25-THD)	
M	9	1	**8T-3844**	1	BOLT (M6X1X70-MM)	
	10	1	**8T-4121**	1	WASHER-HARD (11X21X2.5-MM THK)	
	11	1	**8T-4224**	4	WASHER-HARD (8.8X16X2-MM THK)	
M	12	1	**8T-6466**	1	BOLT (M10X1.5X60-MM)	
	13	1	**9X-6165**	1	WASHER (6.5X22X2.5-MM THK)	
E	14	1	**5P-0767**		HOSE (85.1-CM)	
E	15	1	**5P-0767**		HOSE (79.1-CM)	

E-ORDER BY THE CENTIMETER
M-METRIC PART

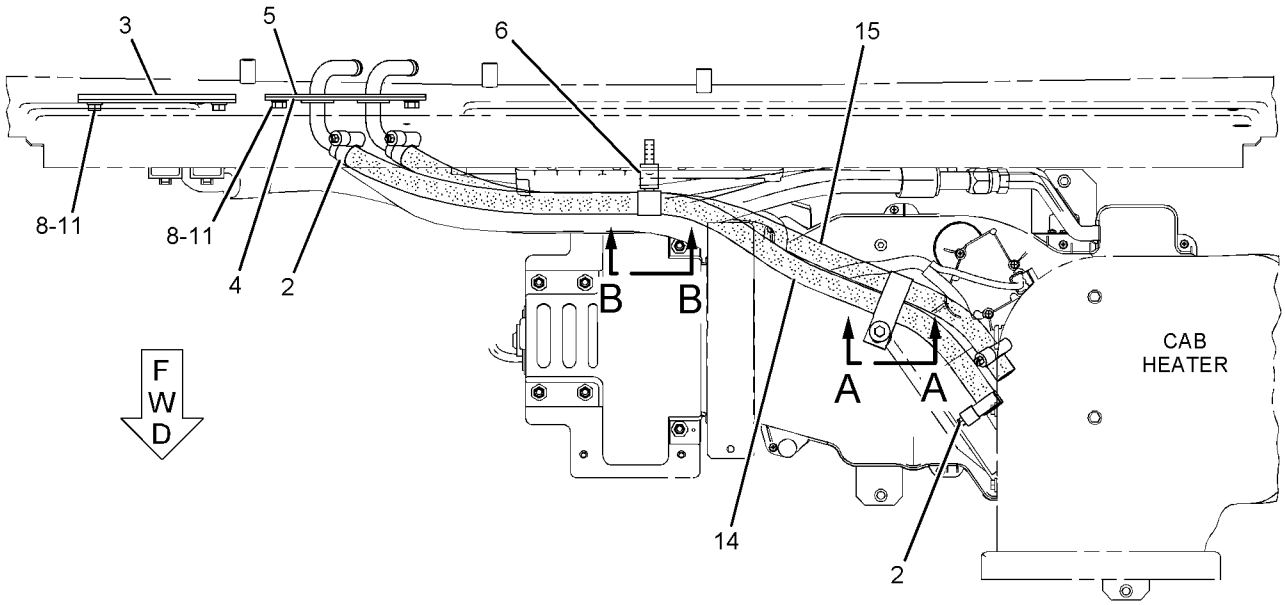

TOP VIEW

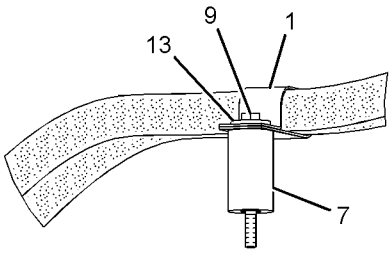

VIEW A-A

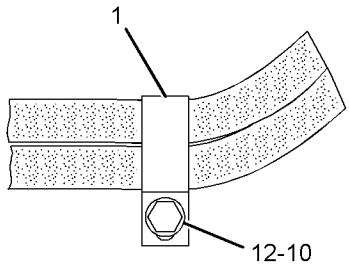

VIEW B-B

GRAPHIC #1 **<END>** g01114136

OPERATOR STATION

197-6474 MIRROR GP-REAR VIEW

S/N: M3G1-UP
PART OF 276-5456 MACHINE AR
AN ATTACHMENT

SMCS-7319 **i01724447**

NOTE	REF NO	GRAPHIC REF	PART NUMBER	QTY	PART NAME 1 2 3 4 5 6 (PRODUCT LEVEL)	SEE PAGE
Y	1	1	*200-8897*	1	MIRROR GP-REAR VIEW (RH)	695
Y	2	1	*200-8898*	1	MIRROR GP-REAR VIEW (LH)	696

Y-SEPARATE ILLUSTRATION

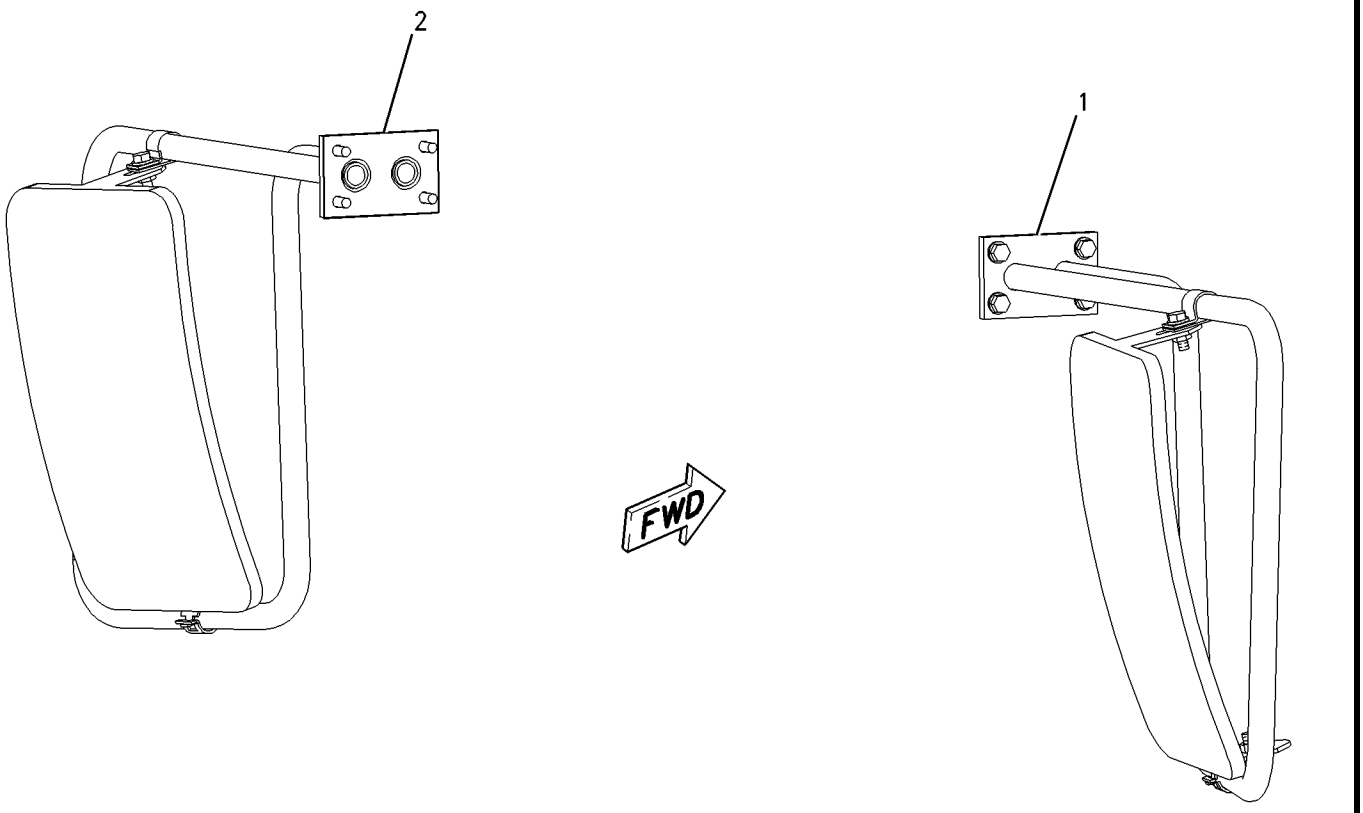

GRAPHIC #1 **<END>** g00887014

OPERATOR STATION

200-8897 MIRROR GP-REAR VIEW–RH

S/N: M3G1-UP
PART OF 197-6474 MIRROR GP-REAR VIEW
AN ATTACHMENT

SMCS-7319 **i02156616**

NOTE	REF NO	GRAPHIC REF	PART NUMBER	QTY	PART NAME 1 2 3 4 5 6 (PRODUCT LEVEL)	SEE PAGE
	1	1	**5P-6879**	1	MIRROR	
	2	1	**8T-1889**	2	CLIP (SLOT)	
	3	1	**8T-1890**	2	CLIP (TAB)	
	4	1	**200-8895**	1	BRACKET AS	
	5	1	**8T-4121**	6	WASHER-HARD (11X21X2.5-MM THK)	
M	6	1	**8T-4133**	2	NUT (M10X1.5 THD)	
M	7	1	**8T-4195**	6	BOLT (M10X1.5X30-MM)	

M-METRIC PART

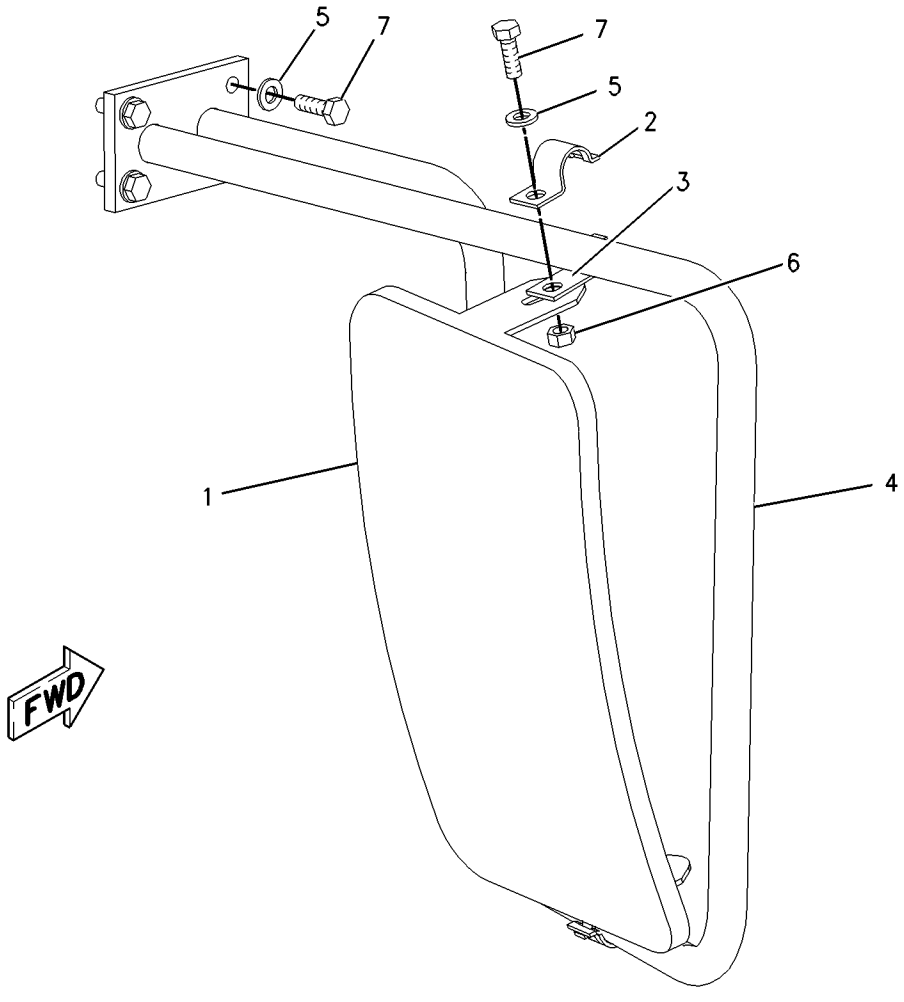

GRAPHIC #1 **<END>** g00886764

200-8898 MIRROR GP-REAR VIEW—LH

S/N: M3G1-UP
PART OF 197-6474 MIRROR GP-REAR VIEW
AN ATTACHMENT

SMCS-7319 **i02156619**

NOTE	REF NO	GRAPHIC REF	PART NUMBER	QTY	PART NAME 1 2 3 4 5 6 (PRODUCT LEVEL)	SEE PAGE
	1	1	**5P-6879**	1	MIRROR	
	2	1	**8T-1889**	2	CLIP (SLOT)	
	3	1	**8T-1890**	2	CLIP (TAB)	
	4	1	**200-8896**	1	BRACKET AS	
	5	1	**8T-4121**	6	WASHER-HARD (11X21X2.5-MM THK)	
M	6	1	**8T-4133**	2	NUT (M10X1.5 THD)	
M	7	1	**8T-4195**	6	BOLT (M10X1.5X30-MM)	

M-METRIC PART

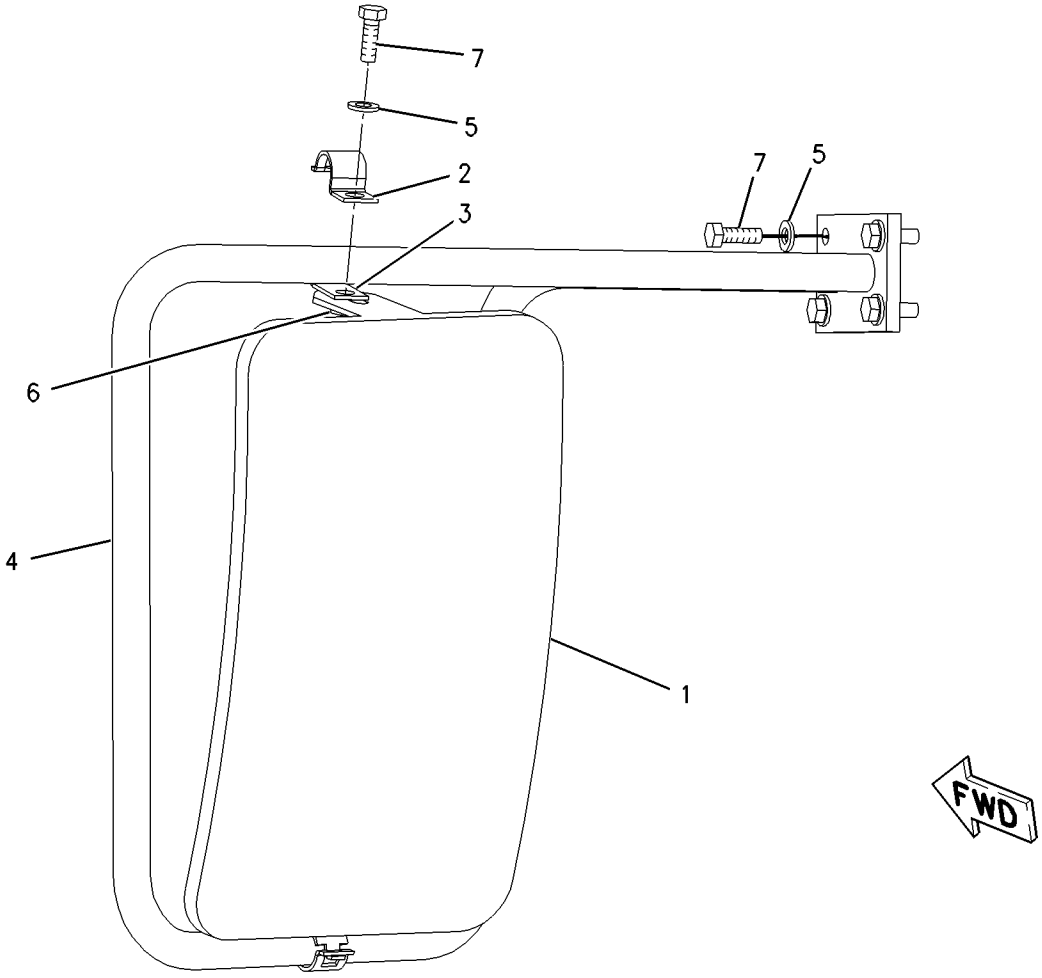

GRAPHIC #1 **<END>** g00887633

OPERATOR STATION

236-4970 MIRROR GP-REAR VIEW—HEATED, LH

S/N: M3G1-UP

PART OF 259-1998 MIRROR GP-REAR VIEW

AN ATTACHMENT

SMCS-7319 **i02444784**

NOTE	REF NO	GRAPHIC REF	PART NUMBER	QTY	PART NAME 1 2 3 4 5 6 (PRODUCT LEVEL)	SEE PAGE
	1	1	**3S-2093**	4	STRAP-CABLE	
	2	1	**200-8896**	1	BRACKET AS	
	3	1	**202-8649**	1	MIRROR AS (HEATED)	
		1	**102-8802**	1	KIT-RECEPTACLE (2-PIN)	
					(INCLUDES RECEPTACLE AS AND WEDGE)	
		1	**186-3735**	2	PIN-CONNECTOR (16-GA TO 18-GA)	
		1	**200-1173**	1	MIRROR AS	
	4	1	**130-5300**	1	CLIP	
	5	1	**8T-1889**	2	CLIP (SLOT)	
	6	1	**8T-1890**	2	CLIP (TAB)	
	7	1	**8T-4121**	8	WASHER-HARD (11X21X2.5-MM THK)	
M	8	1	**8T-4133**	2	NUT (M10X1.5 THD)	
M	9	1	**8T-4195**	6	BOLT (M10X1.5X30-MM)	

M-METRIC PART

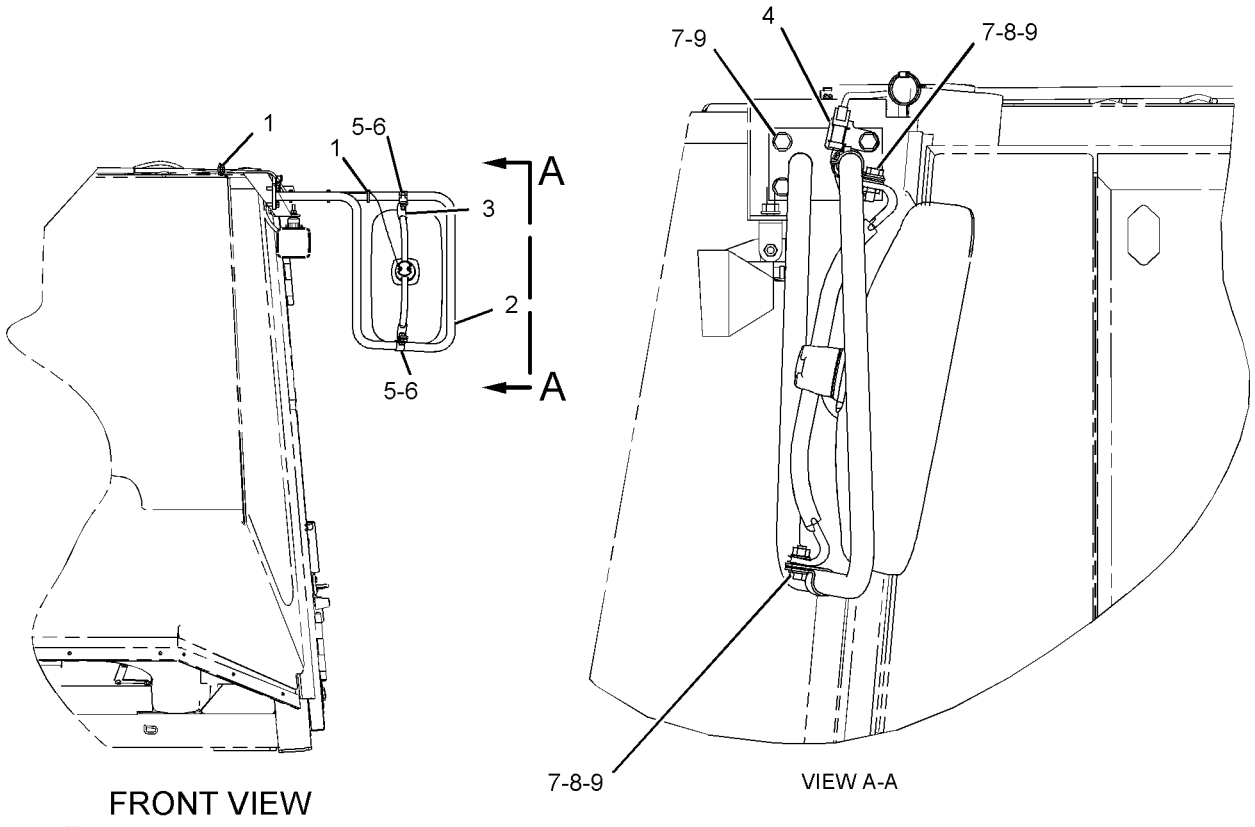

GRAPHIC #1 **<END>** g01066378

OPERATOR STATION

236-4971 MIRROR GP-REAR VIEW—HEATED, RH

S/N: M3G1-UP
PART OF 259-1998 MIRROR GP-REAR VIEW
AN ATTACHMENT

SMCS-7319 **i02444780**

NOTE	REF NO	GRAPHIC REF	PART NUMBER	QTY	PART NAME 1 2 3 4 5 6 (PRODUCT LEVEL)	SEE PAGE
	1	1	**3S-2093**	4	STRAP-CABLE	
	2	1	**200-8895**	1	BRACKET AS	
	3	1	**202-8649**	1	MIRROR AS (HEATED)	
		1	**102-8802**	1	KIT-RECEPTACLE (2-PIN)	
					(INCLUDES RECEPTACLE AS AND WEDGE)	
		1	**186-3735**	2	PIN-CONNECTOR (16-GA TO 18-GA)	
		1	**200-1173**	1	MIRROR AS	
	4	1	**130-5300**	1	CLIP	
	5	1	**8T-1889**	2	CLIP (SLOT)	
	6	1	**8T-1890**	2	CLIP (TAB)	
	7	1	**8T-4121**	8	WASHER-HARD (11X21X2.5-MM THK)	
M	8	1	**8T-4133**	2	NUT (M10X1.5 THD)	
M	9	1	**8T-4195**	6	BOLT (M10X1.5X30-MM)	

M-METRIC PART

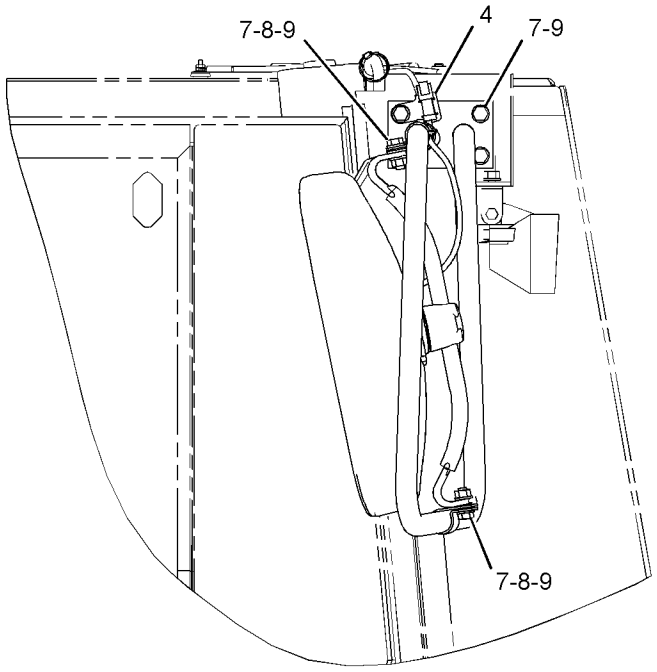

VIEW A-A

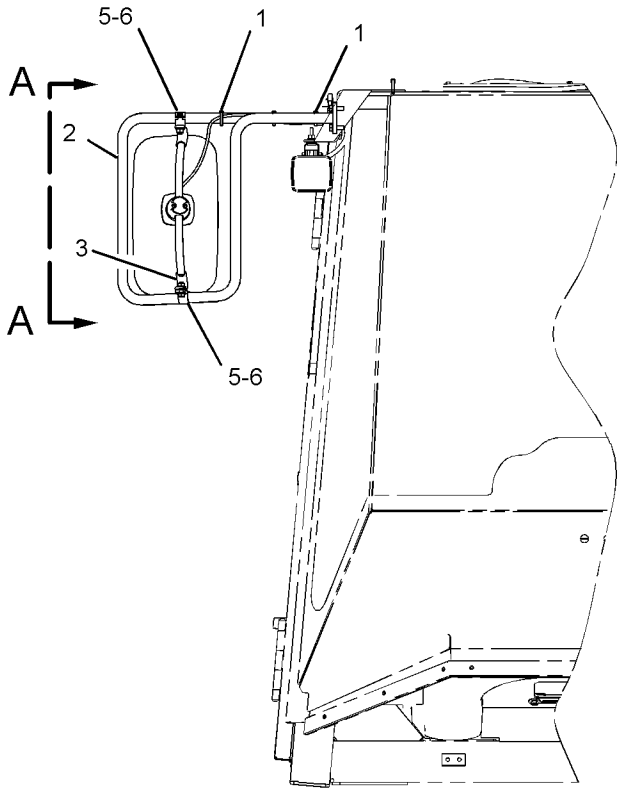

FRONT VIEW

GRAPHIC #1 **<END>** g01066435

OPERATOR STATION

245-8818 MIRROR GP-REAR VIEW—HEATED, RH

S/N: M3G1-UP

PART OF 259-1999 MIRROR GP-REAR VIEW

AN ATTACHMENT

SMCS-7319 **i02444779**

NOTE	REF NO	GRAPHIC REF	PART NUMBER	QTY	PART NAME 1 2 3 4 5 6 (PRODUCT LEVEL)	SEE PAGE
	1	1	**3S-2093**	4	STRAP-CABLE	
	2	1	**202-8649**	1	MIRROR AS (HEATED)	
		1	**102-8802**	1	KIT-RECEPTACLE (2-PIN)	
					(INCLUDES RECEPTACLE AS AND WEDGE)	
		1	**186-3735**	2	PIN-CONNECTOR (16-GA TO 18-GA)	
	3	1	**244-8786**	1	TUBE AS	
	4	1	**130-5300**	1	CLIP	
	5	1	**8T-1889**	2	CLIP (SLOT)	
	6	1	**8T-1890**	2	CLIP (TAB)	
	7	1	**8T-4121**	8	WASHER-HARD (11X21X2.5-MM THK)	
M	8	1	**8T-4133**	2	NUT (M10X1.5 THD)	
M	10	1	**8T-4195**	6	BOLT (M10X1.5X30-MM)	
	11	1	**258-7370**	1	LATCH AS	
		1	**3F-2617**	1	LOCKNUT (5/16-24-THD)	
		1	**8T-4224**	1	WASHER-HARD (8.8X16X2-MM THK)	

M-METRIC PART

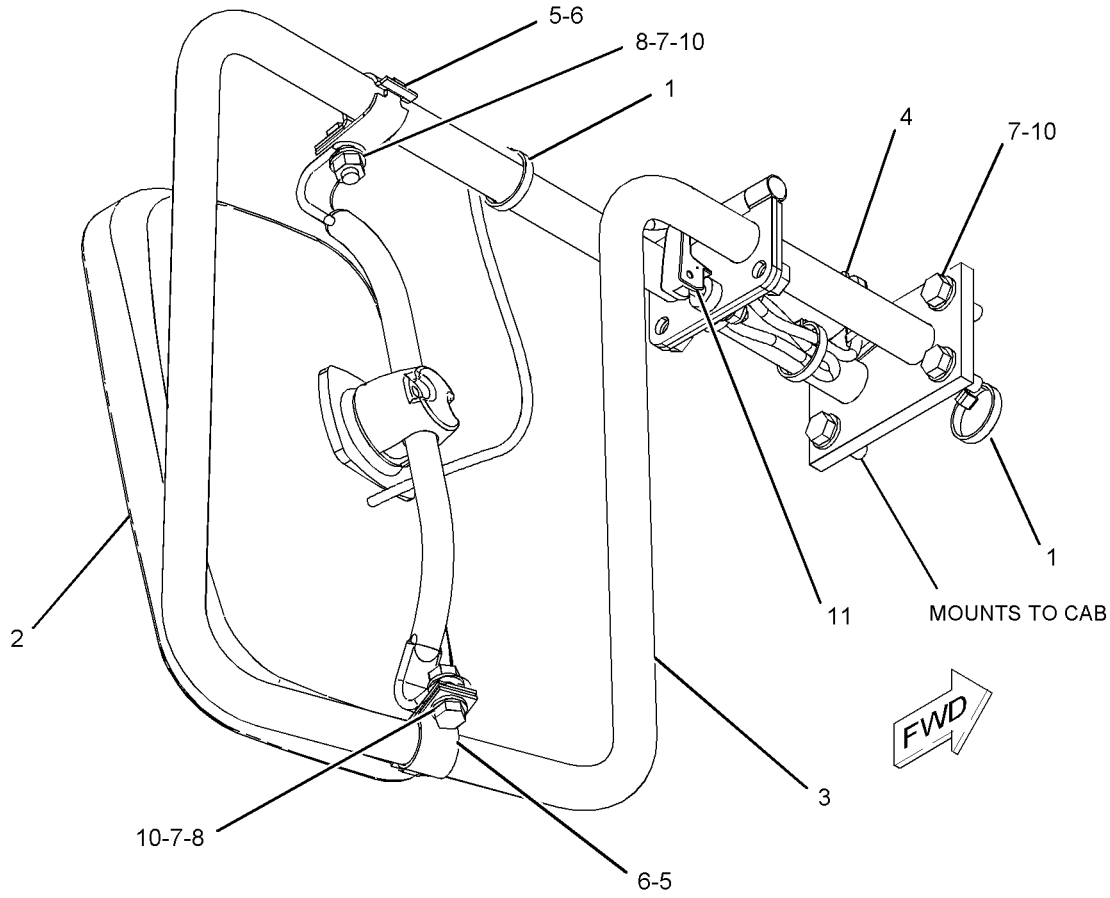

GRAPHIC #1 **<END>** g01115232

OPERATOR STATION

245-8819 MIRROR GP-REAR VIEW—HEATED, LH

S/N: M3G1-UP

PART OF 259-1999 MIRROR GP-REAR VIEW

AN ATTACHMENT

SMCS-7319 **i02444778**

NOTE	REF NO	GRAPHIC REF	PART NUMBER	QTY	PART NAME 1 2 3 4 5 6 (PRODUCT LEVEL)	SEE PAGE
	1	1	**3S-2093**	4	STRAP-CABLE	
	2	1	**202-8649**	1	MIRROR AS (HEATED)	
		1	**102-8802**	1	KIT-RECEPTACLE (2-PIN)	
					(INCLUDES RECEPTACLE AS AND WEDGE)	
		1	**186-3735**	2	PIN-CONNECTOR (16-GA TO 18-GA)	
	3	1	**244-8785**	1	TUBE AS	
	4	1	**130-5300**	1	CLIP	
	5	1	**8T-1889**	2	CLIP (SLOT)	
	6	1	**8T-1890**	2	CLIP (TAB)	
	7	1	**8T-4121**	8	WASHER-HARD (11X21X2.5-MM THK)	
M	8	1	**8T-4133**	2	NUT (M10X1.5 THD)	
M	10	1	**8T-4195**	6	BOLT (M10X1.5X30-MM)	
	11	1	**258-7370**	1	LATCH AS	
		1	**3F-2617**	1	LOCKNUT (5/16-24-THD)	
		1	**8T-4224**	1	WASHER-HARD (8.8X16X2-MM THK)	

M-METRIC PART

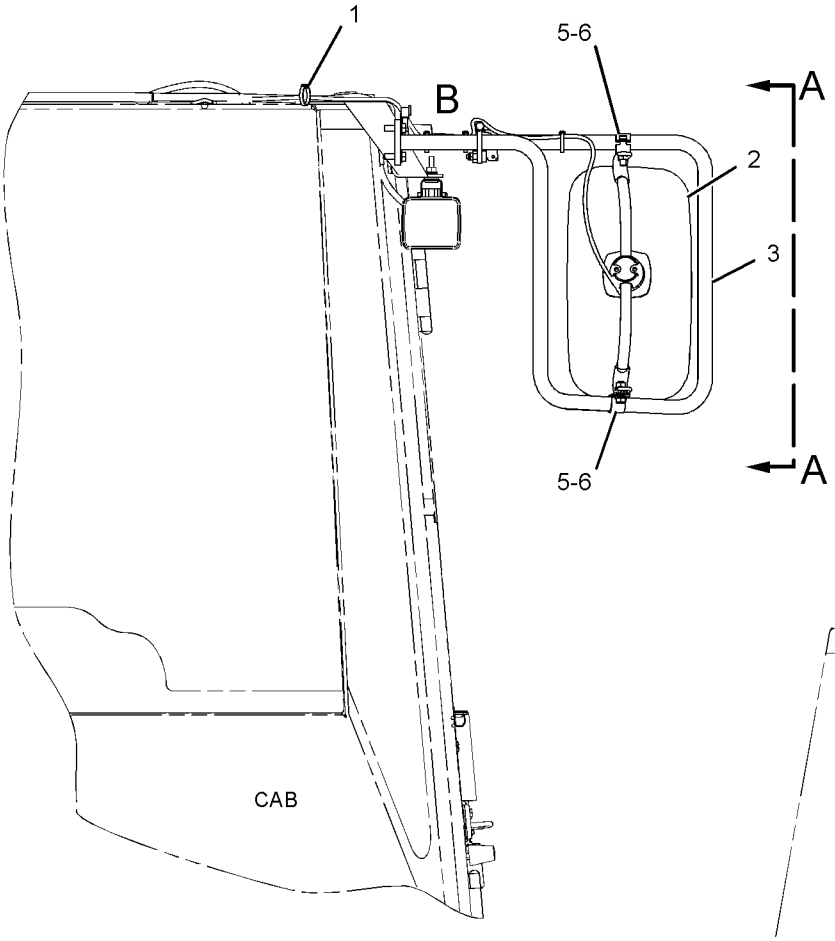

FRONT VIEW

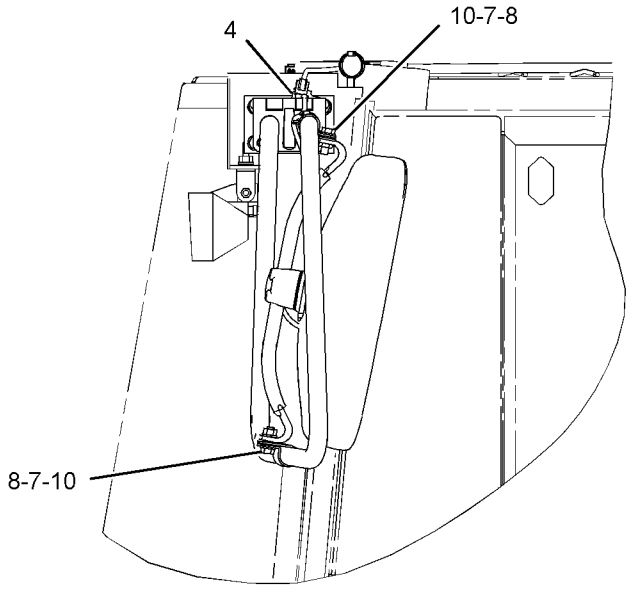

VIEW A-A

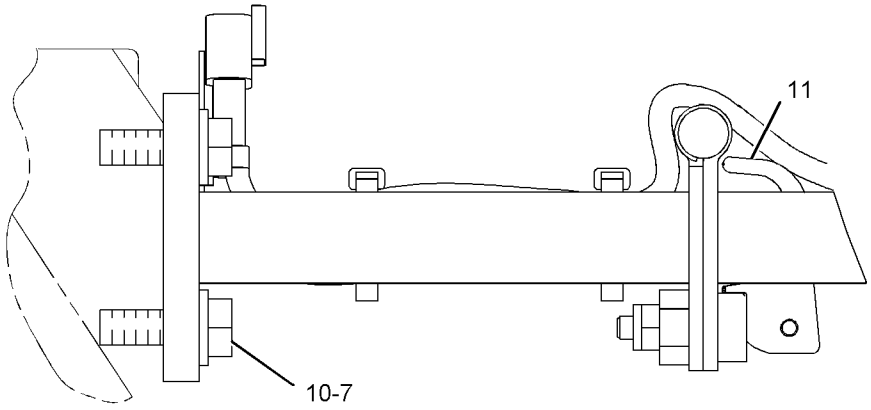

VIEW OF AREA B

GRAPHIC #1 **<END>** g01115258

OPERATOR STATION

259-1998 MIRROR GP-REAR VIEW—HEATED

S/N: M3G1-UP

AN ATTACHMENT

SMCS-7319 **i02444764**

NOTE	REF NO	GRAPHIC REF	PART NUMBER	QTY	PART NAME 1 2 3 4 5 6 (PRODUCT LEVEL)	SEE PAGE
	1	1	**3E-5239**	1	RELAY AS (24-VOLT) (HEATED MIRRORS)	
	2	1	**3S-2093**	1	STRAP-CABLE	
	3	1	**236-4630**	1	SWITCH AS-ROCKER (HEATED MIRRORS)	
Y	4	1	*236-4970*	1	MIRROR GP-REAR VIEW (HEATED, LH)	697
Y	5	1	*236-4971*	1	MIRROR GP-REAR VIEW (HEATED, RH)	698
	6	1	**236-6207**	1	HARNESS AS-CONTROL (HEATED MIRRORS)	
		1	**155-2270**	1	KIT-CONNECTING PLUG (2-PIN)	
					(INCLUDES PLUG AS AND WEDGE)	
M	7	1	**8T-4171**	1	BOLT (M6X1X12-MM)	
	8	1	**9X-8256**	1	WASHER (6.6X12X2-MM THK)	

M-METRIC PART
Y-SEPARATE ILLUSTRATION

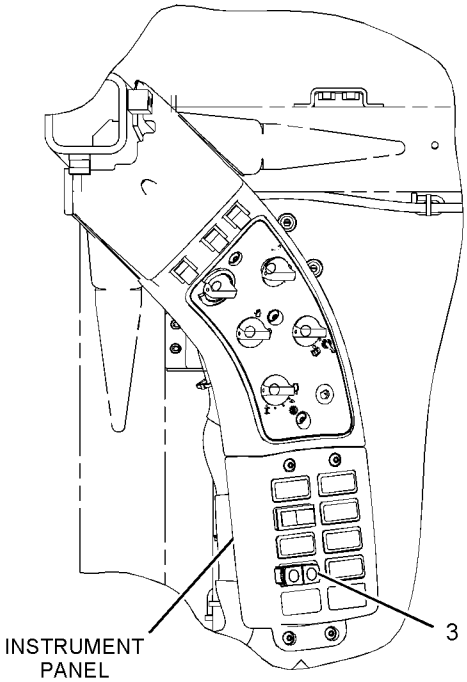

VIEW B-B

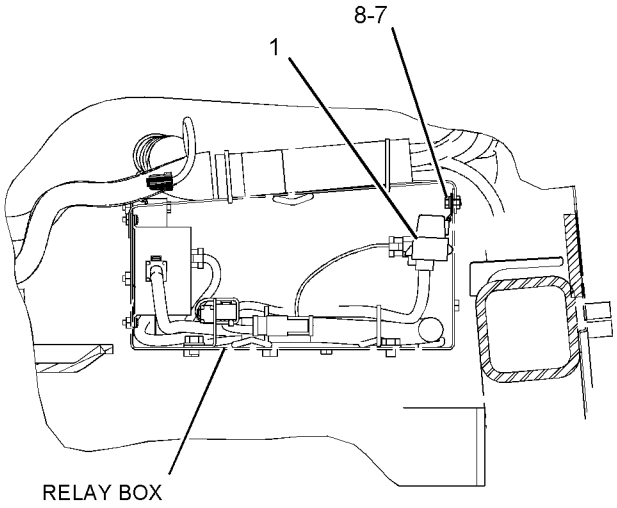

VIEW A-A

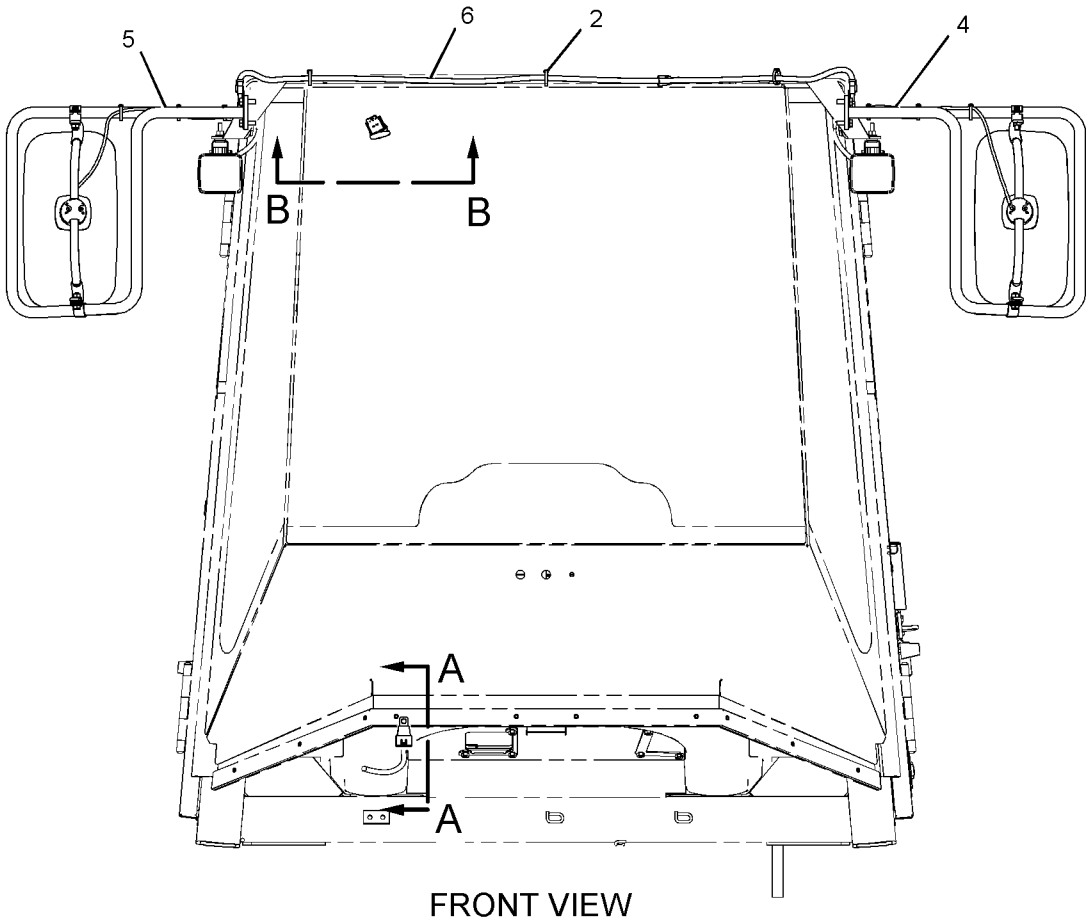

FRONT VIEW

GRAPHIC #1 **<END>** g01115191

OPERATOR STATION

259-1999 MIRROR GP-REAR VIEW—HEATED

S/N: M3G1-UP

AN ATTACHMENT

SMCS-7319 **i02444761**

NOTE	REF NO	GRAPHIC REF	PART NUMBER	QTY	PART NAME 1 2 3 4 5 6 (PRODUCT LEVEL)	SEE PAGE
	1	1	**3E-5239**	1	RELAY AS (24-VOLT) (HEATED MIRRORS)	
	2	1	**3S-2093**	1	STRAP-CABLE	
	3	1	**236-4630**	1	SWITCH AS-ROCKER (HEATED MIRRORS)	
	4	1	**236-6207**	1	HARNESS AS-CONTROL (HEATED MIRRORS)	
		1	**155-2270**	1	KIT-CONNECTING PLUG (2-PIN)	
		1	**155-2270**	1	KIT-CONNECTING PLUG (2-PIN)	
					(KITS INCLUDE PLUG AS AND WEDGE)	
Y	5	1	**245-8818**	1	MIRROR GP-REAR VIEW (HEATED, RH)	699
Y	6	1	**245-8819**	1	MIRROR GP-REAR VIEW (HEATED, LH)	700
M	7	1	**8T-4171**	1	BOLT (M6X1X12-MM)	
	8	1	**9X-8256**	1	WASHER (6.6X12X2-MM THK)	

M-METRIC PART
Y-SEPARATE ILLUSTRATION

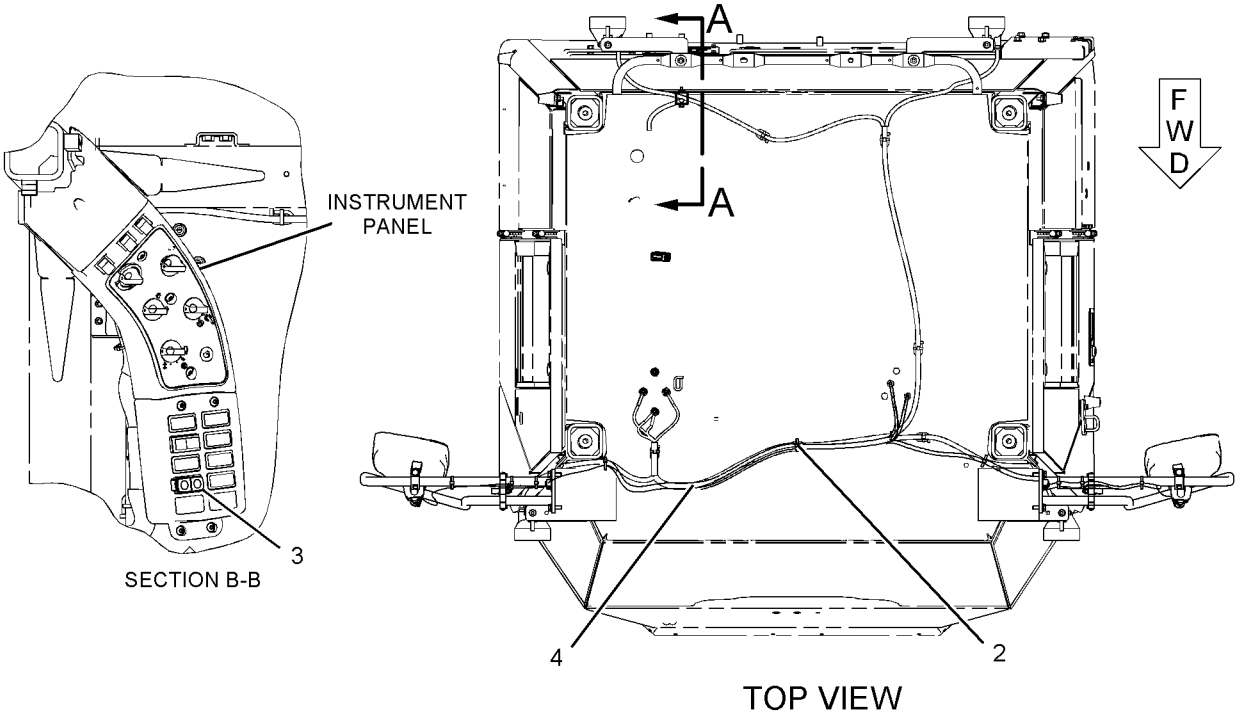

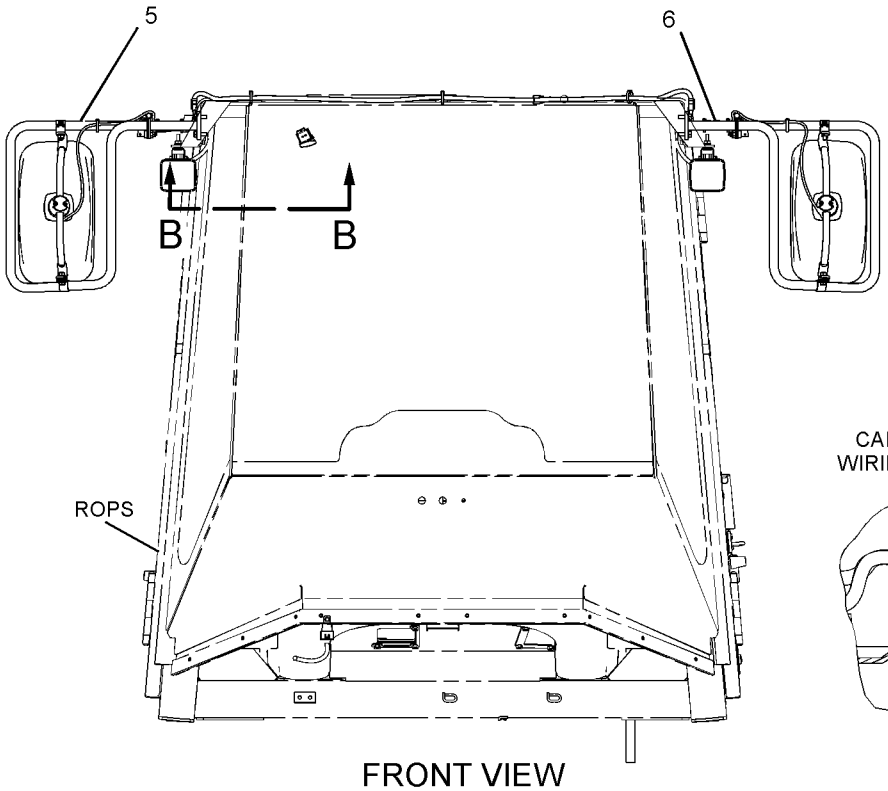

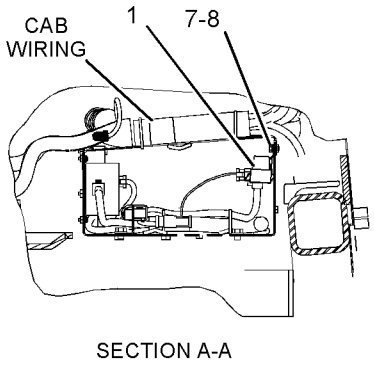

GRAPHIC #1 **<END>** g01114930

OPERATOR STATION

166-6928 MODULE GP-QUAD GAUGE

S/N: M3G1-UP

PART OF 237-4910 WIRING GP-CAB, 262-9187 WIRING GP-OPEN ROPS

ALSO AN ATTACHMENT

SMCS-7450, 7451, 7490, 7601 **i01883788**

NOTE	REF NO	GRAPHIC REF	PART NUMBER	QTY	PART NAME 1 2 3 4 5 6 (PRODUCT LEVEL)	SEE PAGE
	1	1	**102-8805**	1	KIT-RECEPTACLE (6-PIN)	
					(INCLUDES RECEPTACLE AS & WEDGE)	
	2	1	**8T-8729**	6	PIN-CONNECTOR	
	3	1	**3E-3383**	1	WEDGE-RECEPTACLE LOCK (6-PIN)	

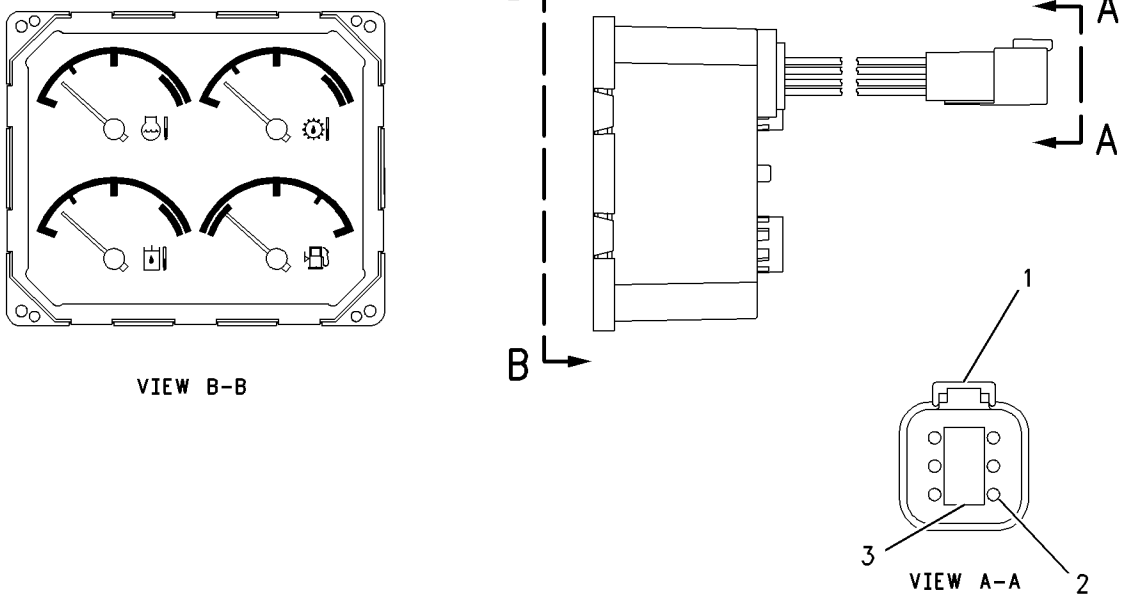

GRAPHIC #1 **<END>** g00690309

OPERATOR STATION

192-7049 MODULE GP-SPEEDOMETER & TACH

S/N: M3G1-UP

PART OF 243-1080 CAB AR-ENCLOSED ROPS, 258-1552 CANOPY AR-OPEN ROPS

ALSO AN ATTACHMENT

SMCS-7451, 7462, 7464, 7490, 7601 **i02143815**

NOTE	REF NO	GRAPHIC REF	PART NUMBER	QTY	PART NAME 1 2 3 4 5 6 (PRODUCT LEVEL)	SEE PAGE
	1	1	**102-8805**	1	KIT-RECEPTACLE (6-PIN)	
					(INCLUDES RECEPTACLE AS AND WEDGE)	
	2	1	**8T-8729**	6	PIN-CONNECTOR	
	3	1	**3E-3383**	1	WEDGE-RECEPTACLE LOCK (6-PIN)	

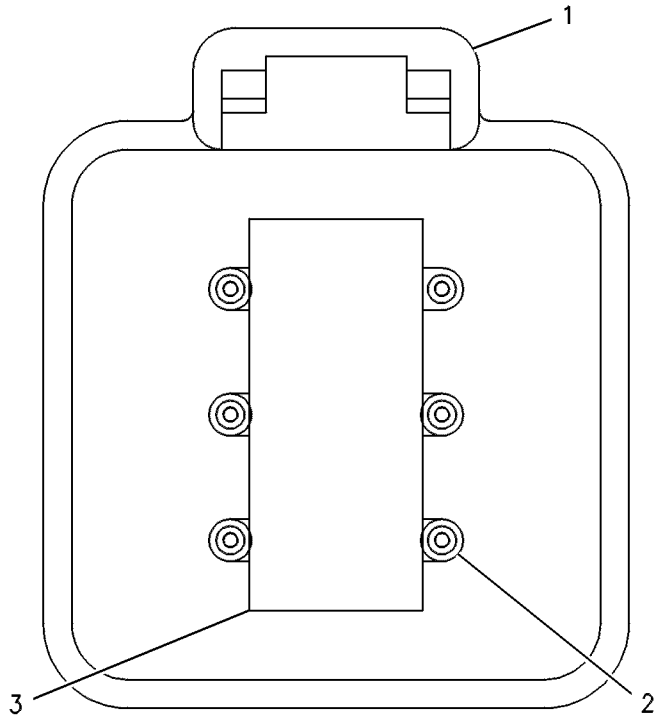

GRAPHIC #1 **<END>** g00120509

OPERATOR STATION

244-4478 MONITOR AR-PAYLOAD

S/N: M3G1-UP

AN ATTACHMENT

SMCS-7494 **i02305556**

NOTE	PART NUMBER	QTY	PART NAME 1 2 3 4 5 6 (PRODUCT LEVEL)	SEE PAGE
Y	*241-6254*	1	MONITOR GP-PAYLOAD	709
Y	*239-4850*	1	SENSOR & MTG GP-PRESSURE (LIFT CYLINDER OIL)	169

Y-SEPARATE ILLUSTRATION

<END>

OPERATOR STATION

241-6254 MONITOR GP-PAYLOAD

S/N: M3G1-UP

PART OF 244-4478 MONITOR AR-PAYLOAD

AN ATTACHMENT

SMCS-7494 **i02454491**

NOTE	REF NO	GRAPHIC REF	PART NUMBER	QTY	PART NAME 1 2 3 4 5 6 (PRODUCT LEVEL)	SEE PAGE
	1	1	**3E-5165**	1	CAP AS-PROTECTION	
	2	1	**3S-2093**	1	STRAP-CABLE	
	3	1	**6K-8180**	2	GROMMET	
	4	1	**7N-5876**	1	LAMP (24-VOLT)	
	5	1	**9X-8917**	7	SCREW-MACHINE (4-40X9.52-MM)	
	6	1	**149-3253**	1	MODULE GP-PAYLOAD KEYPAD	
		1	**102-8803**	2	KIT-RECEPTACLE (3-PIN)	
					(INCLUDES RECEPTACLE AS & WEDGE)	
		1	**3E-3371**	1	WEDGE-RECEPTACLE LOCK (3-PIN)	
		1	**186-3735**	1	PIN-CONNECTOR (16-GA TO 18-GA)	
	7	1	**188-1421**	1	HARNESS AS-MONITOR (PAYLOAD CONTROL)	
		1	**3E-5136**	1	RECEPTACLE AS-CONNECTOR (5-PIN)	
		1	**102-8801**	1	KIT-RECEPTACLE (12-PIN)	
					(INCLUDES RECEPTACLE & WEDGE)	
		1	**3T-3278**	1	BOOT	
		1	**7X-6222**	1	PLUG AS-CONNECTOR (24-PIN)	
		1	**3E-4367**	1	RING-RETAINING	
M		1	**3E-8558**	1	BOLT (M5X0.8X39.37-MM)	
		1	**9X-3265**	2	SEAL-CONNECTOR (24-PIN)	
		1	**8T-8737**	13	PLUG-SEAL	
		1	**155-2260**	1	KIT-CONNECTING PLUG (3-PIN)	
					(INCLUDES PLUG AS & WEDGE)	
	8	1	**195-0973**	1	BRACKET AS	
M		1	**6V-9632**	2	NUT-WELD (M6X1-THD)	
	9	1	**195-0975**	1	BRACKET AS	
M		1	**6V-9632**	5	NUT-WELD (M6X1-THD)	
M		1	**8T-8874**	4	NUT-WELD (M5X0.8-THD)	
	10	1	**195-0976**	1	COVER-FRONT	
	11	1	**198-1941**	2	HINGE AS	
	12	1	**198-6588**	1	COVER-FRONT	
	13	1	**199-3417**	1	PLATE	
	14	1	**205-4933**	1	FILM-EXIT (SECONDARY)	
	15	1	**210-7016**	1	COVER	
	16	1	**210-7018**	2	LATCH AS	
	17	1	**224-9364**	1	BRACKET AS	
	18	1	**224-9367**	1	BRACKET AS	
	19	1	**224-9368**	1	BRACKET AS	
	20	1	**228-7137**	1	COVER AS-REAR	
		1	**198-6589**	1	COVER-REAR	
	21	1	**241-4227**	1	BRACKET	
	22	1	**241-6393**	1	BRACKET AS	
Y	23	1	**246-9199**	1	CONTROL GP-MONITOR (PAYLOAD)	653
M	24	1	**5C-9553**	7	BOLT (M6X1X16-MM)	
M	25	1	**6V-2313**	4	BOLT (M5X0.8X30-MM)	
M	26	1	**7Y-7256**	4	SCREW-TRUSS HEAD (M4X0.7-MM)	
	27	1	**8T-0328**	4	WASHER-HARD (5.5X10X1-MM THK)	
	28	1	**8T-9471**	1	GROMMET	
M	29	1	**9X-2040**	6	SCREW-TRUSS HEAD (M10X1.5X25-MM)	
M	30	1	**9X-2042**	8	SCREW-TRUSS HEAD (M6X1X12-MM)	
M	31	1	**9X-2045**	6	SCREW-TRUSS HEAD (M6X1X20-MM)	
	32	1	**9X-8256**	7	WASHER (6.6X12X2-MM THK)	

M-METRIC PART
Y-SEPARATE ILLUSTRATION

241-6254 **MONITOR GP-PAYLOAD** *(contd.)* **i02454491**

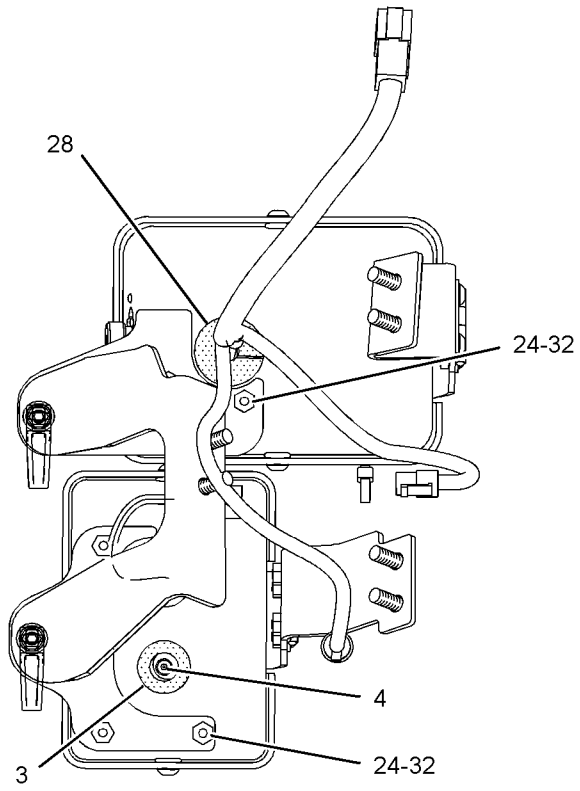

VIEW A-A

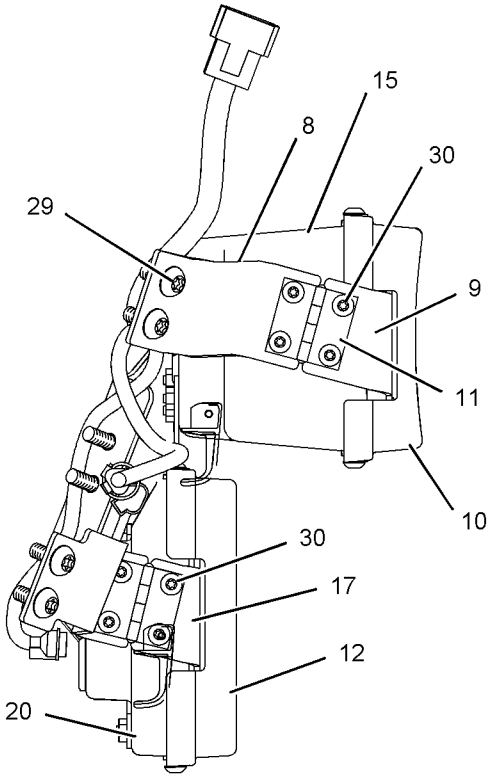

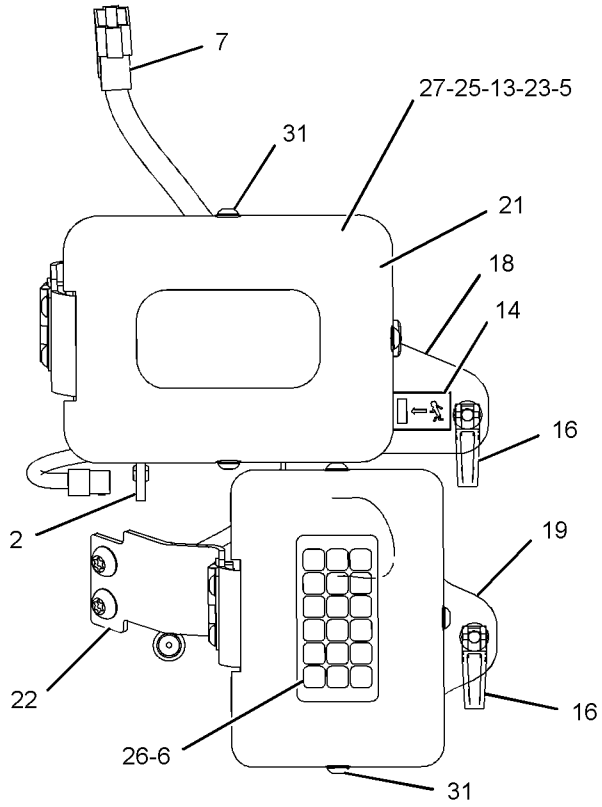

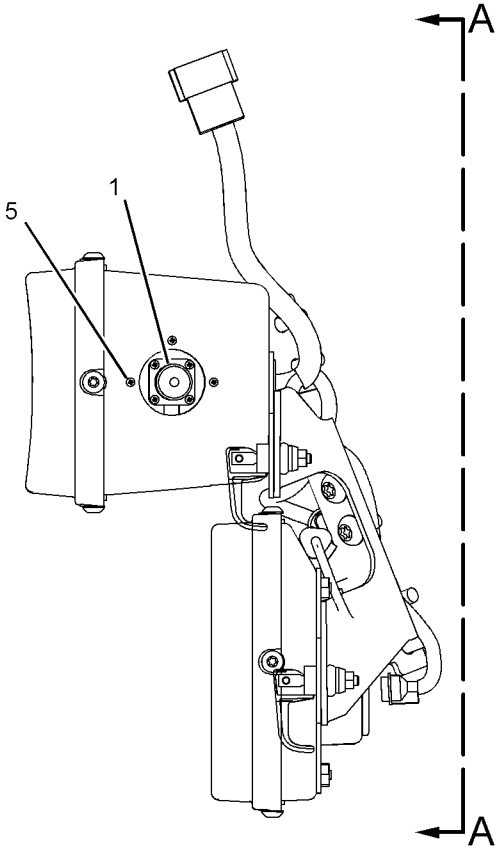

GRAPHIC #1 **<END>** g01081777

OPERATOR STATION

155-5789 MOTOR GP-WINDOW WIPER–REAR

S/N: M3G1-UP

PART OF 257-2016 WIPER GP-WINDOW

SMCS-7305 **i02454492**

NOTE	REF NO	GRAPHIC REF	PART NUMBER	QTY	PART NAME 1 2 3 4 5 6 (PRODUCT LEVEL)	SEE PAGE
	1	1	**102-8805**	1	KIT-RECEPTACLE (6-PIN)	
					(INCLUDES RECEPTACLE AND WEDGE)	
	2	1	**8T-8737**	1	PLUG-SEAL	
	3	1	**8T-8729**	5	PIN-CONNECTOR	

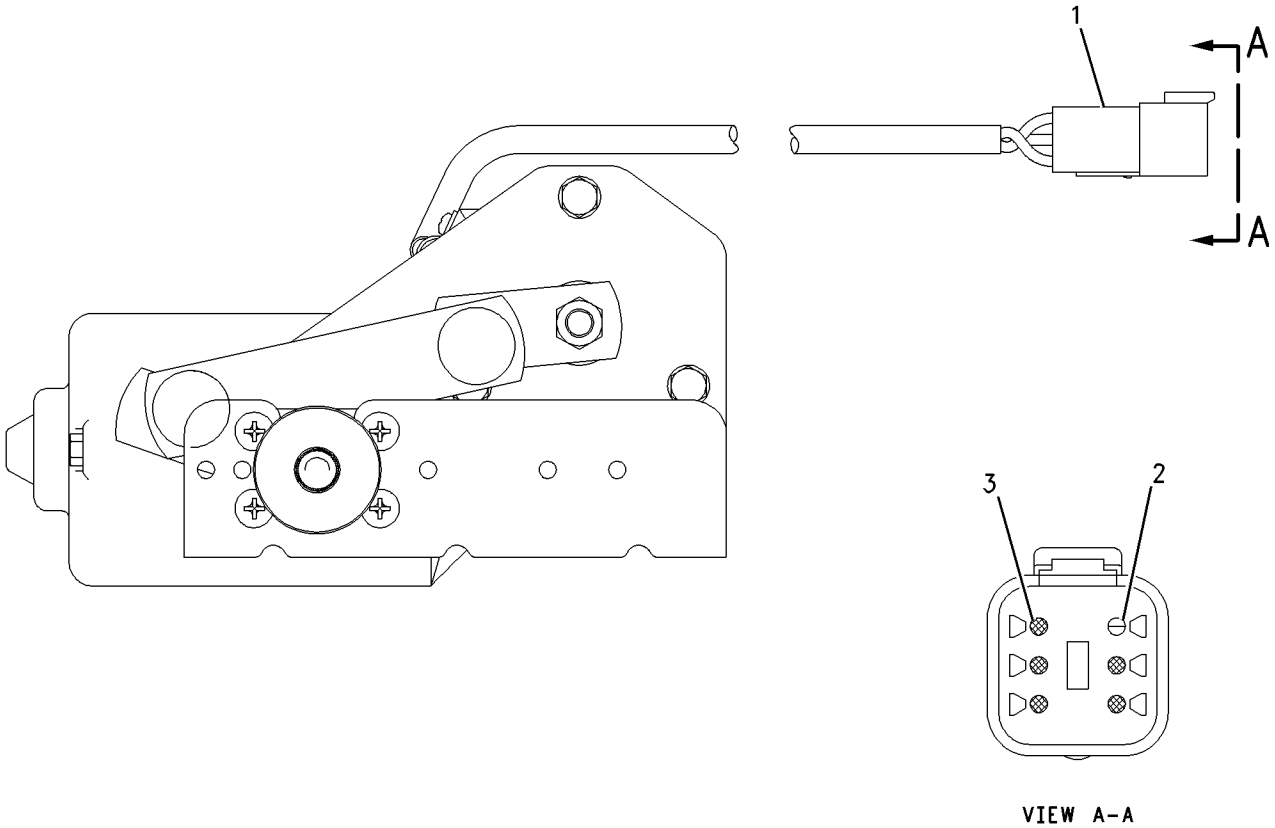

VIEW A-A

GRAPHIC #1 **<END>** g00665801

OPERATOR STATION

189-8622 MOTOR GP-WINDOW WIPER–FRONT

S/N: M3G1-UP

PART OF 257-2016 WIPER GP-WINDOW

SMCS-7305 **i02219162**

NOTE	REF NO	GRAPHIC REF	PART NUMBER	QTY	PART NAME 1 2 3 4 5 6 (PRODUCT LEVEL)	SEE PAGE
	1	1	**102-8805**	1	KIT-RECEPTACLE (6-PIN)	
					(INCLUDES RECEPTACLE AS AND WEDGE)	
	2	1	**8T-8737**	1	PLUG-SEAL	
	3	1	**186-3735**	5	PIN-CONNECTOR (16-GA TO 18-GA)	
	4	1	**206-5823**	2	CAP (WIPER)	

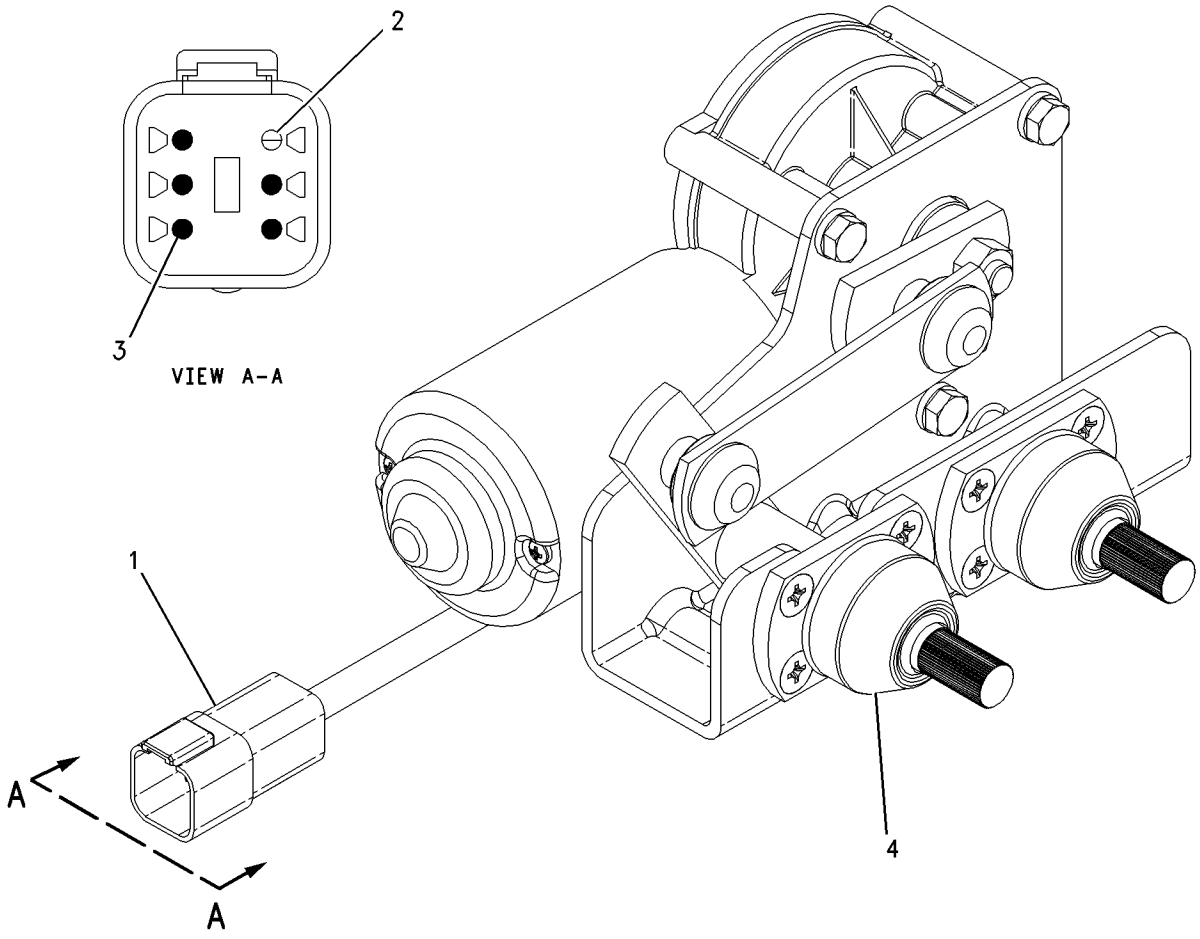

GRAPHIC #1 **<END>** g00847619

OPERATOR STATION

191-8567 MOUNTING GP-CAB

S/N: M3G1-UP

PART OF 243-1076 OPERATOR AR-ENCLOSED ROPS, 258-1548 OPERATOR AR-OPEN ROPS

ALSO AN ATTACHMENT

SMCS-7301 **i02219199**

NOTE	REF NO	GRAPHIC REF	PART NUMBER	QTY	PART NAME 1 2 3 4 5 6 (PRODUCT LEVEL)	SEE PAGE
	1	1	**7X-0593**	4	WASHER-HARD (34X57X6-MM THK)	
	2	1	**9U-0512**	8	WASHER (32X144X12-MM THK)	
M	3	1	**9X-2045**	10	SCREW-TRUSS HEAD (M6X1X20-MM)	
	4	1	**107-3157**	8	WASHER (22X76.2X6-MM THK)	
	5	1	**117-8131**	8	MOUNT AS	
	6	1	**242-6098**	8	SLEEVE	
	7	1	**173-2118**	1	ROOF	
	8	1	**196-0436**	4	SPACER (25X40X12-MM THK)	
	9	1	**197-5470**	4	GROMMET	
	10	1	**216-4531**	1	SHROUD	
M	11	1	**8T-4122**	4	WASHER-HARD (17X32X3.5-MM THK)	
M	12	1	**8T-4193**	4	BOLT (M16X2X50-MM)	
M	13	1	**8T-6624**	4	BOLT (M30X3.5X180-MM)	

M-METRIC PART

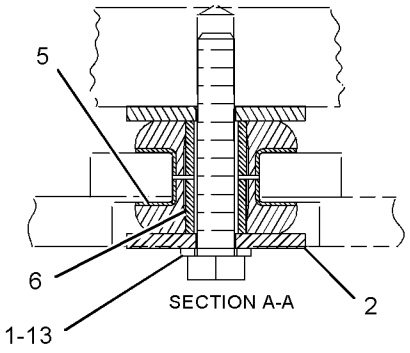

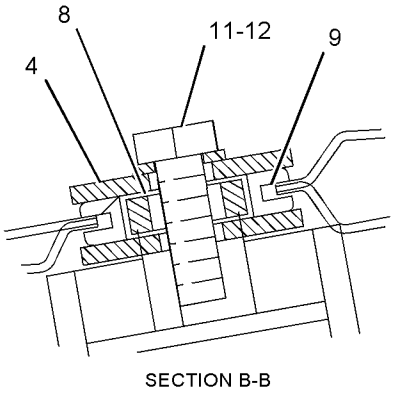

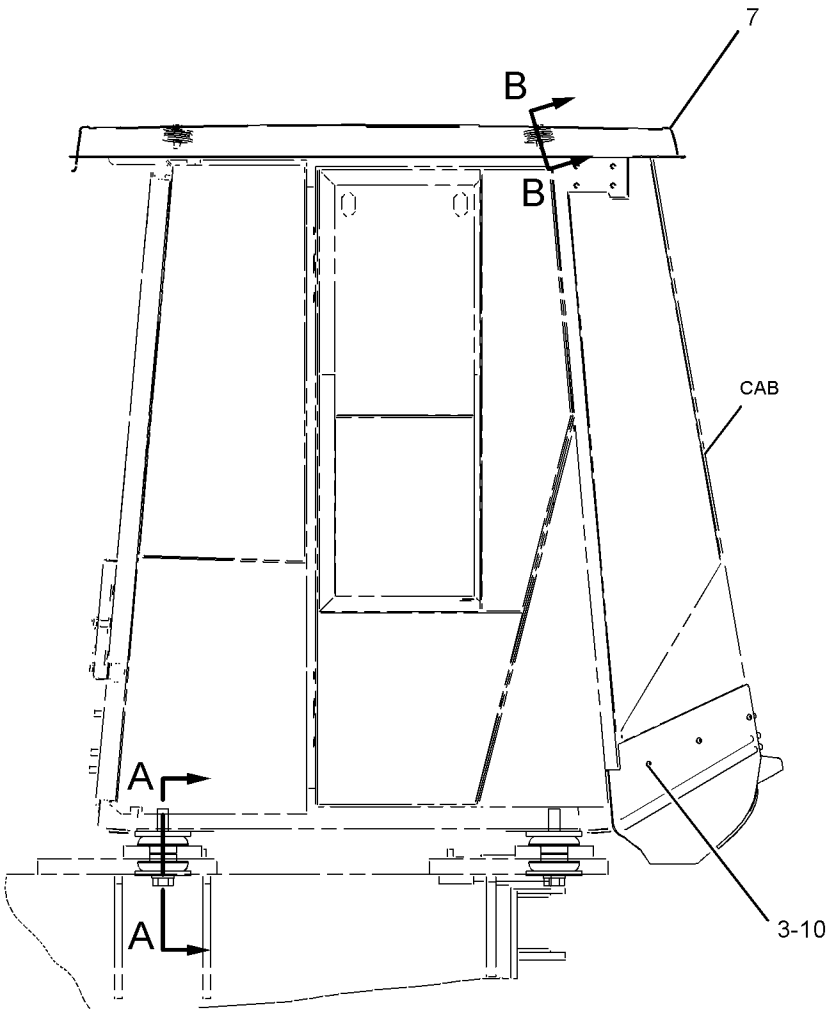

RIGHT SIDE VIEW

GRAPHIC #1 **<END>** g01090447

243-1076 OPERATOR AR-ENCLOSED ROPS—HMU STEERING

S/N: M3G1-UP

PART OF 237-4935 GENERAL AR

SMCS-7301 **i02207797**

NOTE	PART NUMBER	QTY	PART NAME 1 2 3 4 5 6 (PRODUCT LEVEL)	SEE PAGE
Y	*243-1080*	1	CAB AR-ENCLOSED ROPS	646
Y	*244-2786*	1	INSTALLATION GP-CONTROLS (PARKING BRAKE CABLE)	675
Y	*191-8567*	1	MOUNTING GP-CAB	713

Y-SEPARATE ILLUSTRATION

<END>

258-1548 OPERATOR AR-OPEN ROPS—HMU STEERING

S/N: M3G1-UP

AN ATTACHMENT

SMCS-7323 **i02307747**

NOTE	PART NUMBER	QTY	PART NAME 1 2 3 4 5 6 (PRODUCT LEVEL)	SEE PAGE
Y	*258-1552*	1	CANOPY AR-OPEN ROPS	647
Y	*244-2786*	1	INSTALLATION GP-CONTROLS (PARKING BRAKE CABLE)	675
Y	*191-8567*	1	MOUNTING GP-CAB	713

Y-SEPARATE ILLUSTRATION

<END>

OPERATOR STATION

178-0604 PAN GP-BACKREST–CLOTH

S/N: M3G1-UP

PART OF 178-0603 SEAT GP

SMCS-7312 **i02122340**

NOTE	REF NO	GRAPHIC REF	PART NUMBER	QTY	PART NAME 1 2 3 4 5 6 (PRODUCT LEVEL)	SEE PAGE
	1	1	**164-4883**	1	KNOB-LUMBAR	
Y	2	1	*178-0605*	1	PAN GP-BACKREST	717
	3	1	**233-6745**	1	CUSHION AS (CLOTH)	
	4	1	**250-4628**	3	PLUG	
	5	1	**8T-7566**	1	PIN-SPRING	

Y-SEPARATE ILLUSTRATION

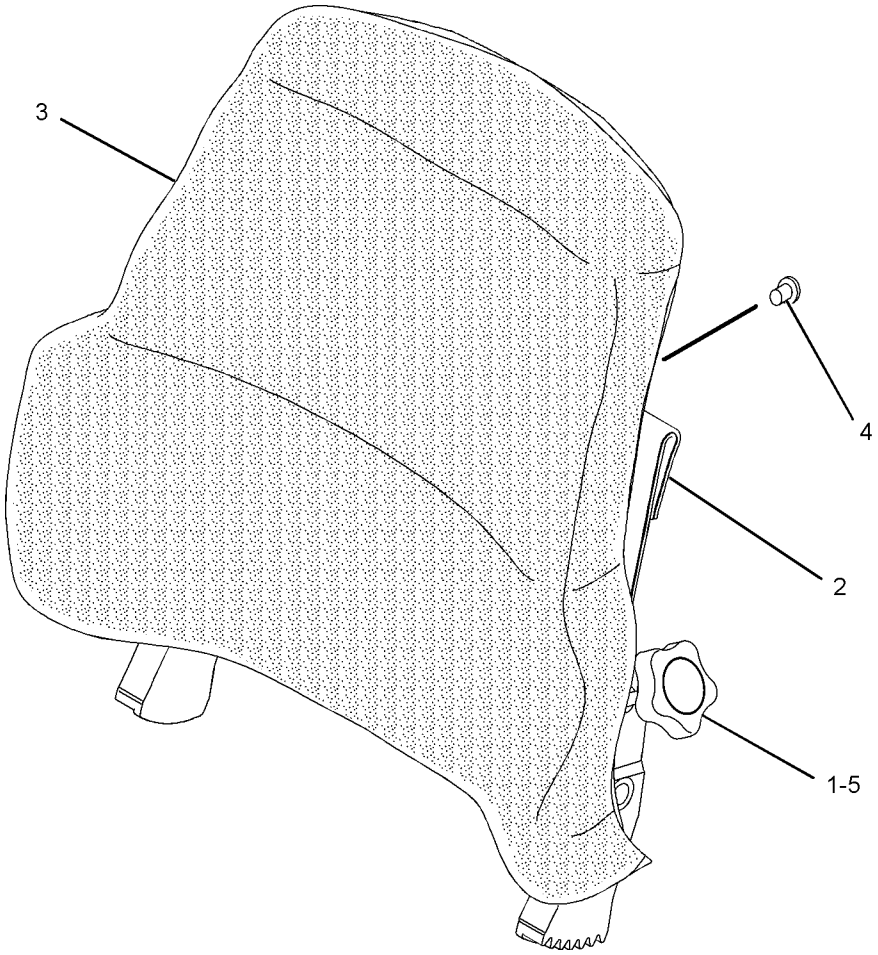

GRAPHIC #1 **<END>** g01092296

OPERATOR STATION

178-0605 PAN GP-BACKREST

S/N: M3G1-UP

PART OF 178-0604, 180-7305 PAN GP-BACKREST

ALSO AN ATTACHMENT

SMCS-7312 **i01437598**

NOTE	REF NO	GRAPHIC REF	PART NUMBER	QTY	PART NAME 1 2 3 4 5 6 (PRODUCT LEVEL)	SEE PAGE
	1	1	**4K-9429**	8	RIVET-POP	
	2	1	**5P-7957**	1	LANYARD	
	3	1	**136-1543**	1	PLATE AS-LUMBAR	
	4	1	**173-2052**	1	RETAINER	
	5	1	**178-7907**	1	HOLDER	
	6	1	**177-4930**	1	PAN AS-BACK	

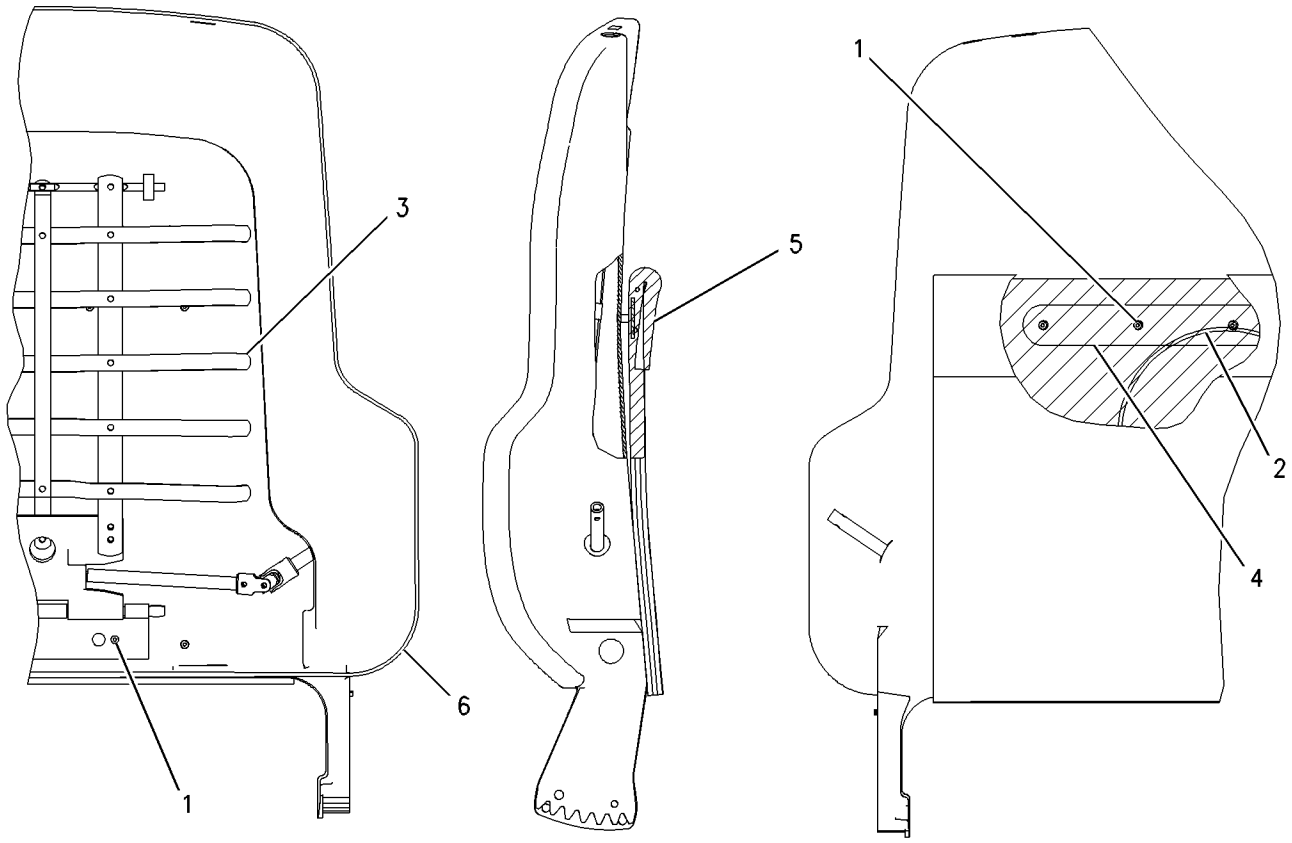

GRAPHIC #1 **<END>** g00716497

OPERATOR STATION

180-7305 PAN GP-BACKREST—VINYL SEAT

S/N: M3G1-UP
PART OF 180-7304 SEAT GP
AN ATTACHMENT

SMCS-7312 **i02122315**

NOTE	REF NO	GRAPHIC REF	PART NUMBER	QTY	PART NAME 1 2 3 4 5 6 (PRODUCT LEVEL)	SEE PAGE
	1	1	**164-4883**	1	KNOB-LUMBAR	
	2	1	**169-0697**	1	CUSHION AS	
Y	3	1	*178-0605*	1	PAN GP-BACKREST	717
	4	1	**250-4628**	3	PLUG	
	5	1	**8T-7566**	1	PIN-SPRING	

Y-SEPARATE ILLUSTRATION

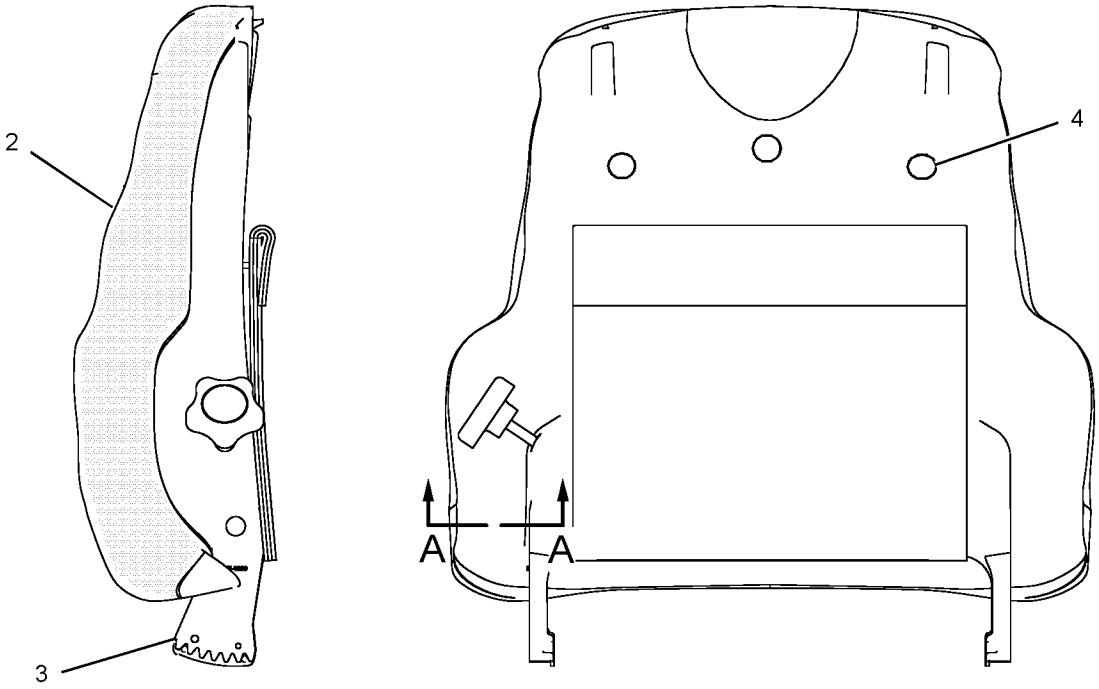

LEFT SIDE VIEW

REAR VIEW

SECTION A-A

<END>

GRAPHIC #1

g01082619

OPERATOR STATION

191-5282 PANEL GP-INSTRUMENT–UPPER

S/N: M3G1-UP

PART OF 243-1080 CAB AR-ENCLOSED ROPS

SMCS-7451 **i02454495**

NOTE	REF NO	GRAPHIC REF	PART NUMBER	QTY	PART NAME 1 2 3 4 5 6 (PRODUCT LEVEL)	SEE PAGE
	1	1	**173-2148**	1	FILM-MONITOR (CATERPILLAR MONITORING SYSTEM)	
	2	1	**216-7888**	1	PANEL-CONTROL	
	3	1	**211-2126**	1	COVER AS	
	4	1	**192-1954**	1	FILM-CONTROL (UPPER PANEL)	
	5	1	**200-5951**	1	BRACKET AS	
	6	1	**200-5952**	1	BRACKET AS	
M		1	**6V-9632**	2	NUT-WELD (M6X1-THD)	
	7	1	**216-8344**	1	BRACKET AS	
	8	1	**211-2109**	1	BRACKET AS	
	9	1	**200-6206**	1	COVER AS	
	10	1	**175-3265**	4	SCREW (8-16X0.63-IN)	
M	11	1	**5C-2890**	8	NUT (M6X1-THD)	
M	12	1	**9X-2044**	2	SCREW-TRUSS HEAD (M6X1X16-MM)	
M	13	1	**9X-2045**	9	SCREW-TRUSS HEAD (M6X1X20-MM)	
	14	1	**9X-8256**	8	WASHER (6.6X12X2-MM THK)	
M	15	1	**9X-2046**	1	SCREW-TRUSS HEAD (M6X1X35-MM)	
E	16	1	**155-0755**		SEAL (34CM)	
E	17	1	**5P-8309**		SEAL (57CM)	
	18	1	**9X-8267**	4	WASHER (6.6X12X2-MM THK)	
	19	1	**222-5774**	1	BRACKET AS	

E-ORDER BY THE CENTIMETER
M-METRIC PART

191-5282 **PANEL GP-INSTRUMENT** *(contd.)* **i02454495**

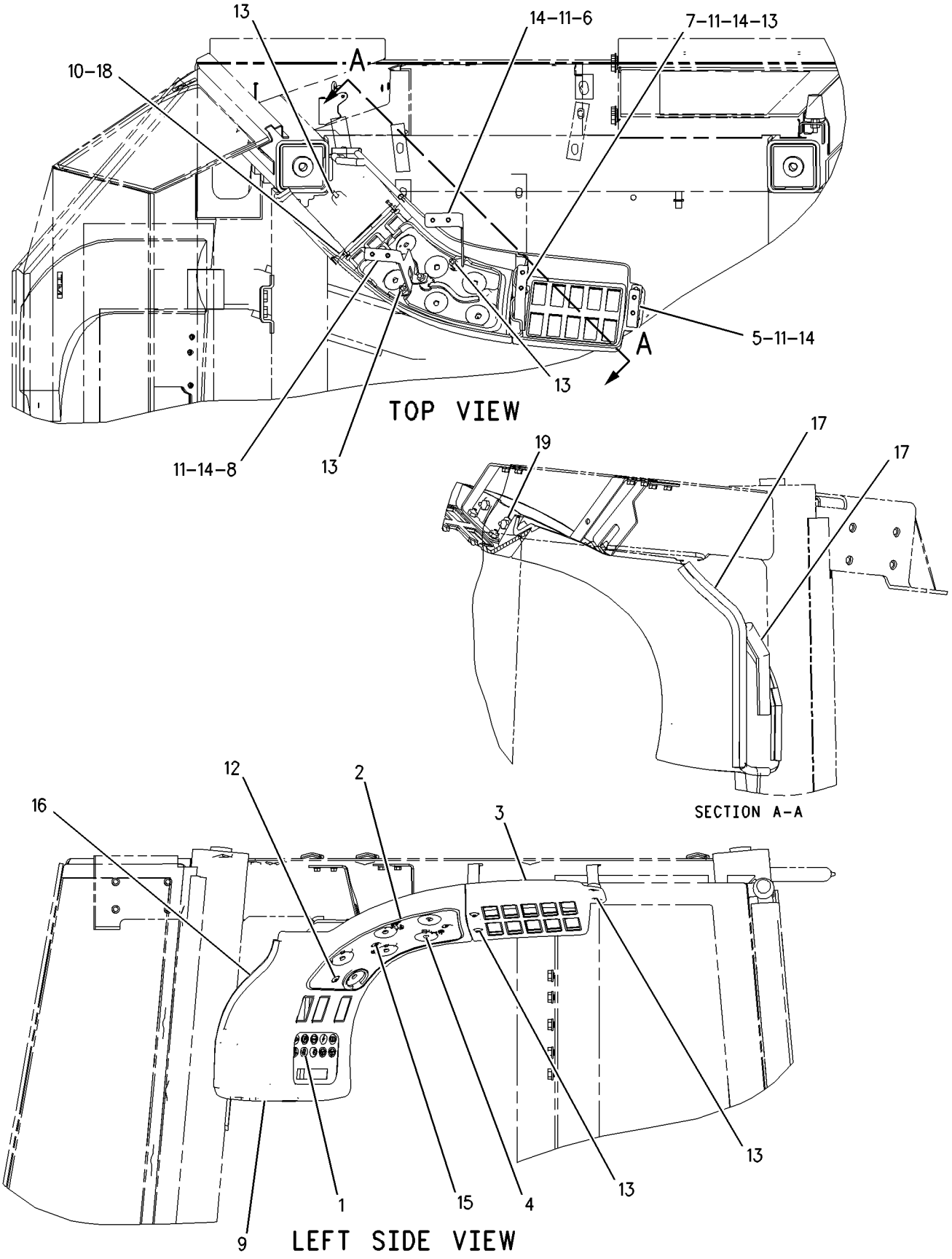

GRAPHIC #1 **<END>** g00920981

OPERATOR STATION

206-6499 PANEL GP-INSTRUMENT–UPPER, OPEN ROPS

S/N: M3G1-UP

PART OF 258-1552 CANOPY AR-OPEN ROPS

AN ATTACHMENT

SMCS-7451 **i02454497**

NOTE	REF NO	GRAPHIC REF	PART NUMBER	QTY	PART NAME 1 2 3 4 5 6 (PRODUCT LEVEL)	SEE PAGE
	1	1	**173-2148**	1	FILM-MONITOR (CATERPILLAR MONITORING SYSTEM)	
	2	1	**216-7888**	1	PANEL-CONTROL	
	3	1	**200-5951**	1	BRACKET AS	
	4	1	**200-5952**	1	BRACKET AS	
	5	1	**216-8344**	1	BRACKET AS	
	6	1	**207-8293**	1	FILM-IDENTIFICATION (HMU)	
	7	1	**209-0112**	1	COVER AS	
	8	1	**211-2109**	1	BRACKET AS	
	9	1	**211-2126**	1	COVER AS	
	10	1	**175-3265**	4	SCREW (8-16X0.63-IN)	
M	11	1	**5C-2890**	8	NUT (M6X1-THD)	
M	12	1	**9X-2044**	2	SCREW-TRUSS HEAD (M6X1X16-MM)	
M	13	1	**9X-2045**	9	SCREW-TRUSS HEAD (M6X1X20-MM)	
M	14	1	**9X-2046**	1	SCREW-TRUSS HEAD (M6X1X35-MM)	
	15	1	**9X-8256**	8	WASHER (6.6X12X2-MM THK)	
E	16	1	**155-0755**		SEAL (34CM)	
E	17	1	**3E-8082**		SEAL (57CM)	
	18	1	**9X-8267**	4	WASHER (6.6X12X2-MM THK)	
	19	1	**222-5774**	1	BRACKET AS	

E-ORDER BY THE CENTIMETER
M-METRIC PART

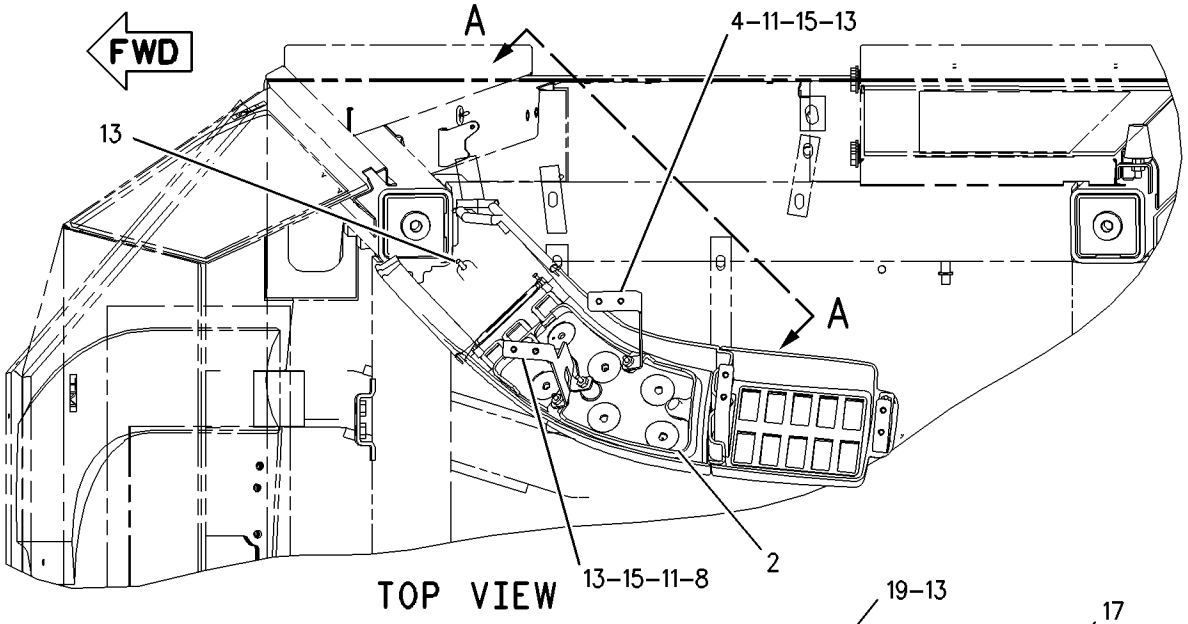

TOP VIEW

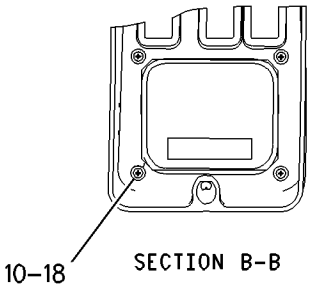

SECTION B-B

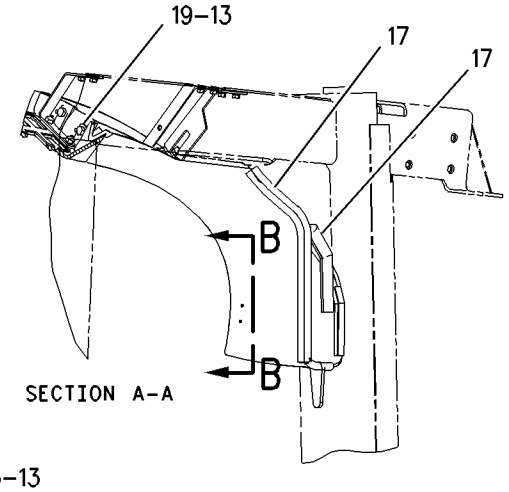

SECTION A-A

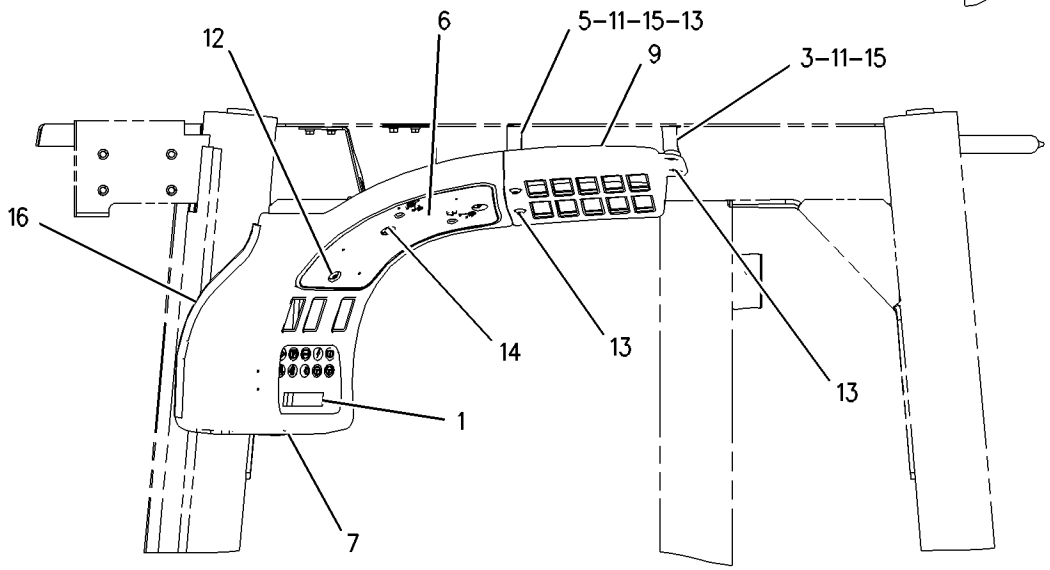

LEFT SIDE VIEW

GRAPHIC #1 **<END>** g00916737

OPERATOR STATION

245-6458 PANEL GP-INSTRUMENT–LOWER

S/N: M3G1-UP

PART OF 243-1080 CAB AR-ENCLOSED ROPS, 258-1552 CANOPY AR-OPEN ROPS

ALSO AN ATTACHMENT

SMCS-7451 **i02308493**

NOTE	REF NO	GRAPHIC REF	PART NUMBER	QTY	PART NAME 1 2 3 4 5 6 (PRODUCT LEVEL)	SEE PAGE
	1	2	**4E-8722**	4	NUT	
	2	1	**4I-3038**	1	WASHER (3.3X8X0.5-MM THK)	
	3	1	**5P-7958**	1	SLEEVE-CABLE SPLICE	
	4	1	**128-8617**	1	PLATE AS	
	5	1	**129-7184**	1	FILM-INSTRUCTION (ENGINE START)	
	6	1	**165-9104**	2	SPACER (6.5X9.5X10-MM THK)	
	7	2	**173-2205**	1	COVER	
	8	2	**173-2206**	1	COVER	
	9	1	**179-9392**	1	LANYARD	
	10	1	**189-2076**	1	FILM-CONTROLS	
	11	1	**189-2512**	1	PLATE	
	12	1	**198-8774**	1	BEZEL	
	13	1	**199-9641**	1	PANEL-CONTROL	
	14	1	**200-0727**	1	BEZEL	
	15	1	**200-0731**	1	BRACKET AS	
	16	1	**200-8152**	1	BRACKET AS (LH)	
	17	1	**200-8153**	1	BRACKET AS (RH)	
	18	1	**200-8154**	2	FILM-IDENTIFICATION (12-VOLT)	
	19	1	**201-2733**	1	FILM-INFORMATION (INPUT/OUTPUT)	
	20	1	**251-4282**	1	FILM-PANEL (CENTER)	
	21	1	**251-4283**	1	FILM-PANEL (LH)	
	22	1	**251-4284**	1	FILM-PANEL (RH)	
	23	1	**107-1964**	8	SCREW-PAN HEAD (6-19X0.5-IN)	
M	24	1	**155-4098**	4	SCREW-BUTTON HEAD (M3X0.5X1-MM)	
	25	1	**2V-3726**	1	BUMPER	
M	26	1	**5C-2890**	2	NUT (M6X1-THD)	
M	27	1	**7Y-7256**	2	SCREW-TRUSS HEAD (M4X0.7-MM)	
	28	1	**8T-4205**	2	WASHER-HARD (7.2X14.5X2-MM THK)	
M	29	1	**9X-1046**	18	SCREW (M4X0.7X18-MM)	
M	30	1,2	**9X-2044**	25	SCREW-TRUSS HEAD (M6X1X16-MM)	

M-METRIC PART

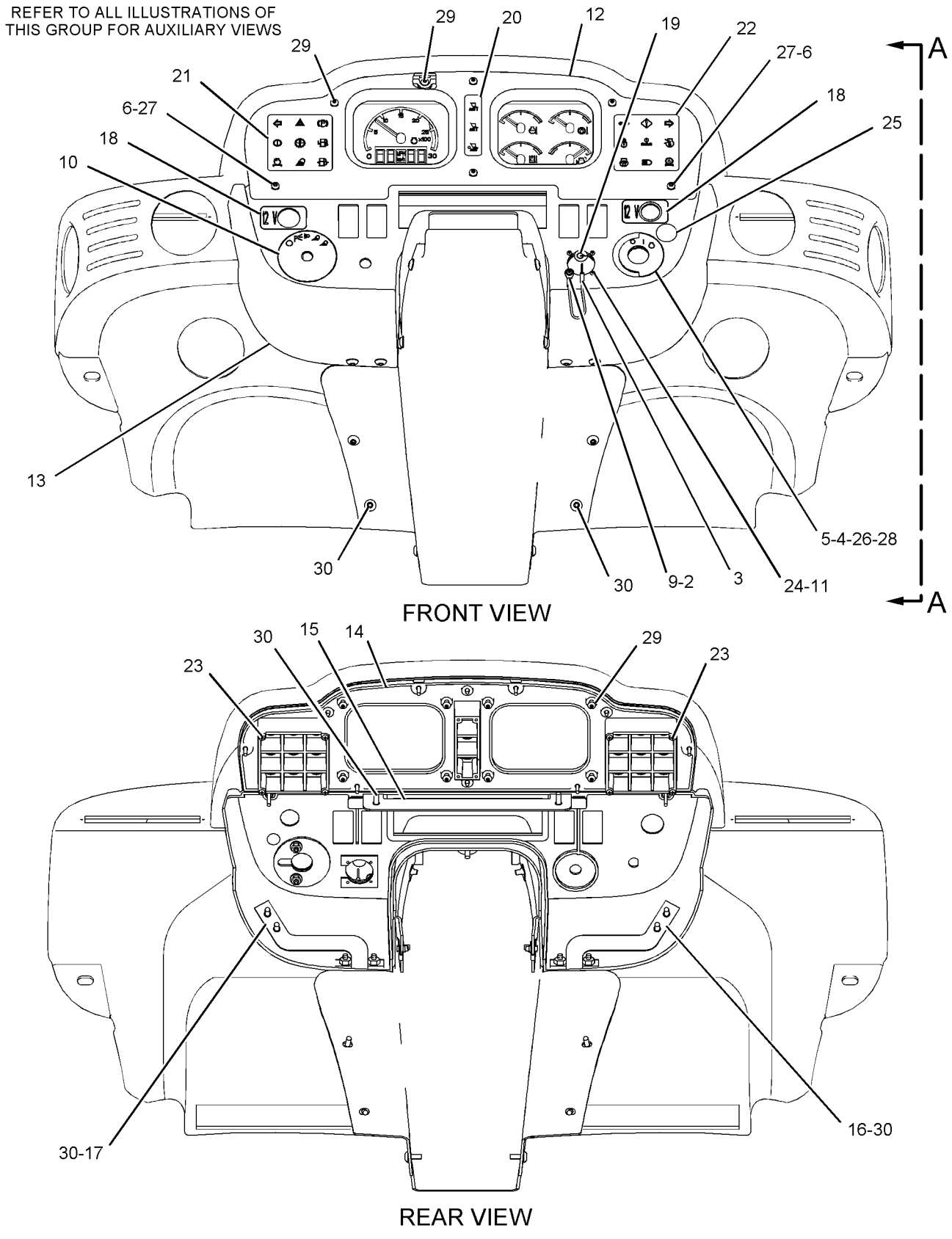

GRAPHIC #1 g01141513

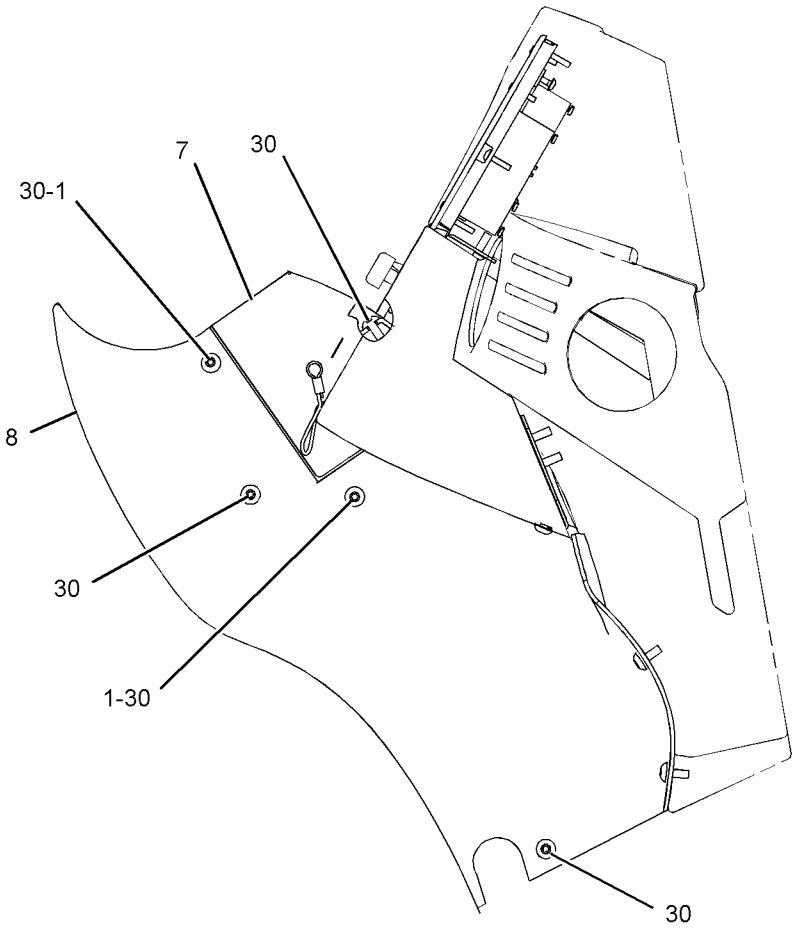

VIEW A-A

GRAPHIC #2 **<END>** g01142232

OPERATOR STATION

201-8616 PEDAL GP-GOVERNOR

S/N: M3G1-UP
PART OF 207-1759 PEDAL GP-GOVERNOR
ALSO AN ATTACHMENT

SMCS-1276 **i02195027**

NOTE	REF NO	GRAPHIC REF	PART NUMBER	QTY	PART NAME 1 2 3 4 5 6 (PRODUCT LEVEL)	SEE PAGE
	1	1	**123-9431**	1	COVER	
Y	2	1	**204-7949**	1	SENSOR GP-POSITION (ROTARY) (THROTTLE)	175
	3	1	**7G-7053**	1	GROMMET	
	4	1	**160-6365**	2	SCREW	
	5	1	**160-6366**	2	CLIP	
	6	1	**140-2961**	1	KIT-ROLLER	
					(INCLUDES ROLLLER AND ROLLER PIN	
	7	1	**140-2962**	1	KIT-TREADLE PIN	
					(INCLUDES 2 SNAP RINGS, 6 BUSHINGS, 2 TREADLE PINS, AND 4 SPRINGS)	
	8	1	**140-2963**	2	SCREW	
	9	1	**208-3703**	1	PLATE AS	

Y-SEPARATE ILLUSTRATION

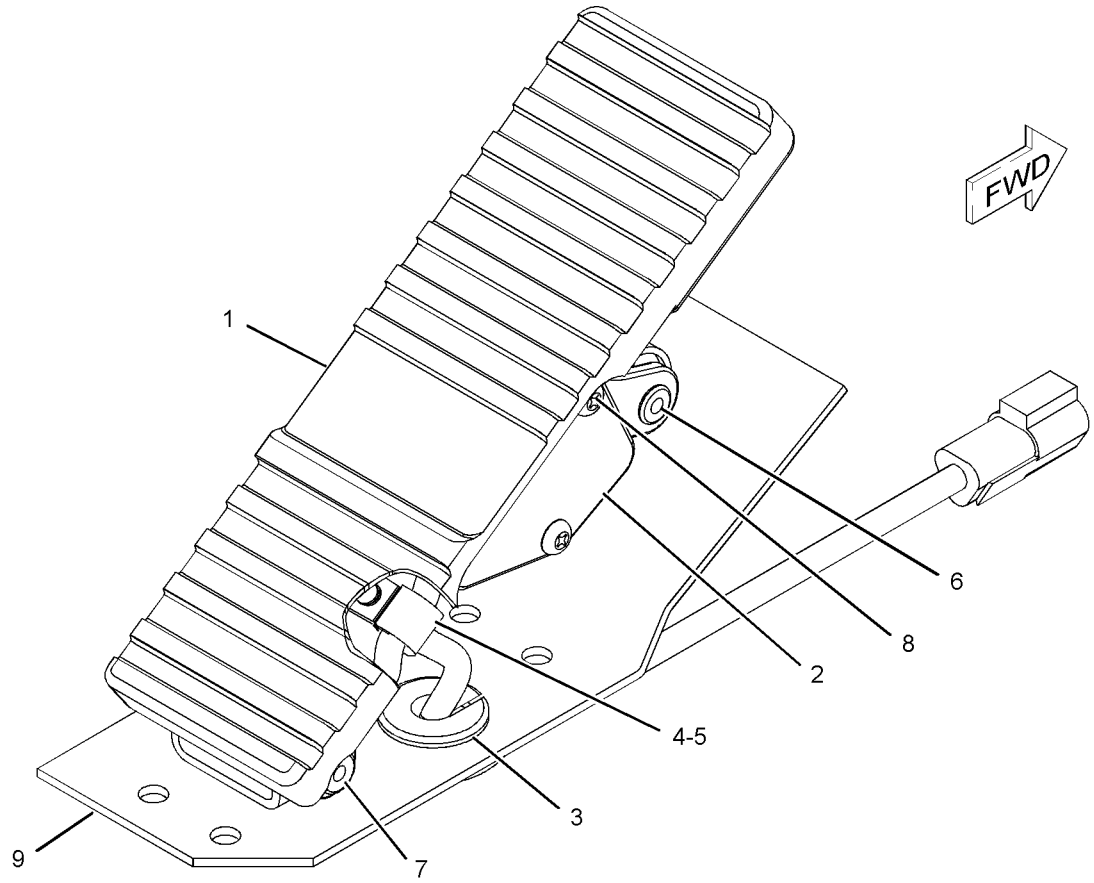

GRAPHIC #1 **<END>** g01020704

OPERATOR STATION

207-1759 PEDAL GP-GOVERNOR

S/N: M3G1-UP

PART OF 243-1080 CAB AR-ENCLOSED ROPS, 258-1552 CANOPY AR-OPEN ROPS

ALSO AN ATTACHMENT

SMCS-1276 **i02203263**

NOTE	REF NO	GRAPHIC REF	PART NUMBER	QTY	PART NAME 1 2 3 4 5 6 (PRODUCT LEVEL)	SEE PAGE
Y	1	1	**201-8616**	1	PEDAL GP-GOVERNOR	726
	2	1	**8T-4224**	4	WASHER-HARD (8.8X16X2-MM THK)	
M	3	1	**8T-4908**	4	BOLT (M8X1.25X25-MM)	

M-METRIC PART
Y-SEPARATE ILLUSTRATION

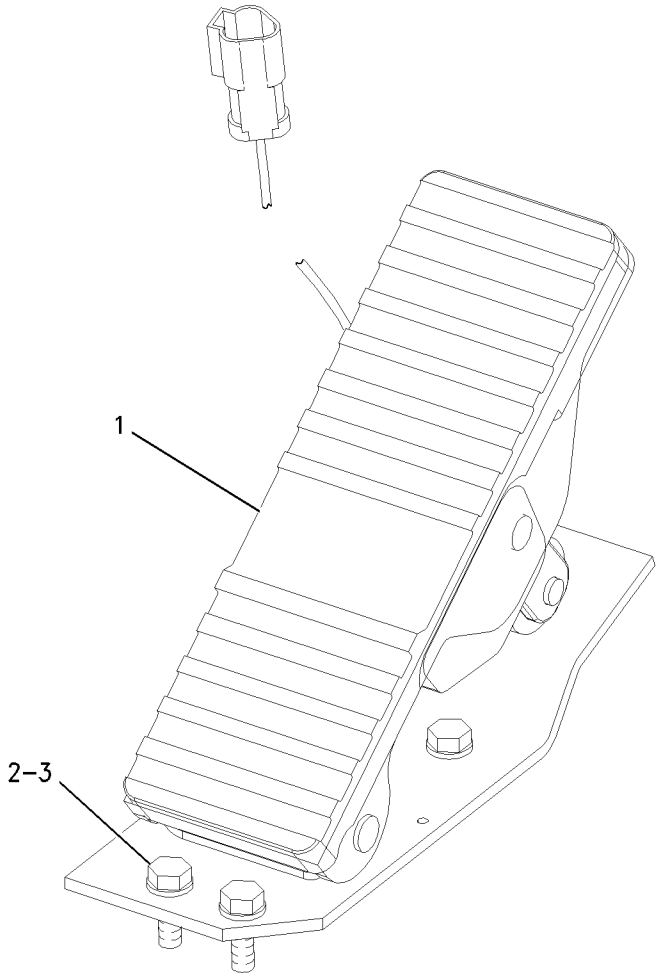

GRAPHIC #1 **<END>** g00890107

OPERATOR STATION

173-6532 RADIO GP–AM/FM CASSETTE

S/N: M3G1-UP
PART OF 227-9981 RADIO GP
AN ATTACHMENT

SMCS-7338 **i01871001**

NOTE	REF NO	GRAPHIC REF	PART NUMBER	QTY	PART NAME 1 2 3 4 5 6 (PRODUCT LEVEL)	SEE PAGE
	1	1	**102-8806**	1	KIT-RECEPTACLE (8-PIN)	
					(INCLUDES RECEPTACLE AS & WEDGE)	
	2	1	**8T-8729**	7	PIN-CONNECTOR	
	3	1	**8T-8737**	1	PLUG-SEAL	
	4	1	**3E-3389**	1	WEDGE-RECEPTACLE LOCK	
	5	1	**192-7054**	1	SLEEVE	
	6	1	**137-8165**	1	BUMPER	
	7	1	**186-2741**	1	HARNESS AS-RADIO (SPEAKER)	
	8	1	**175-3678**	1	KIT-KNOB (RADIO)	
					(INCLUDES KNOBS: FADER, TONE, VOLUME/SW)	

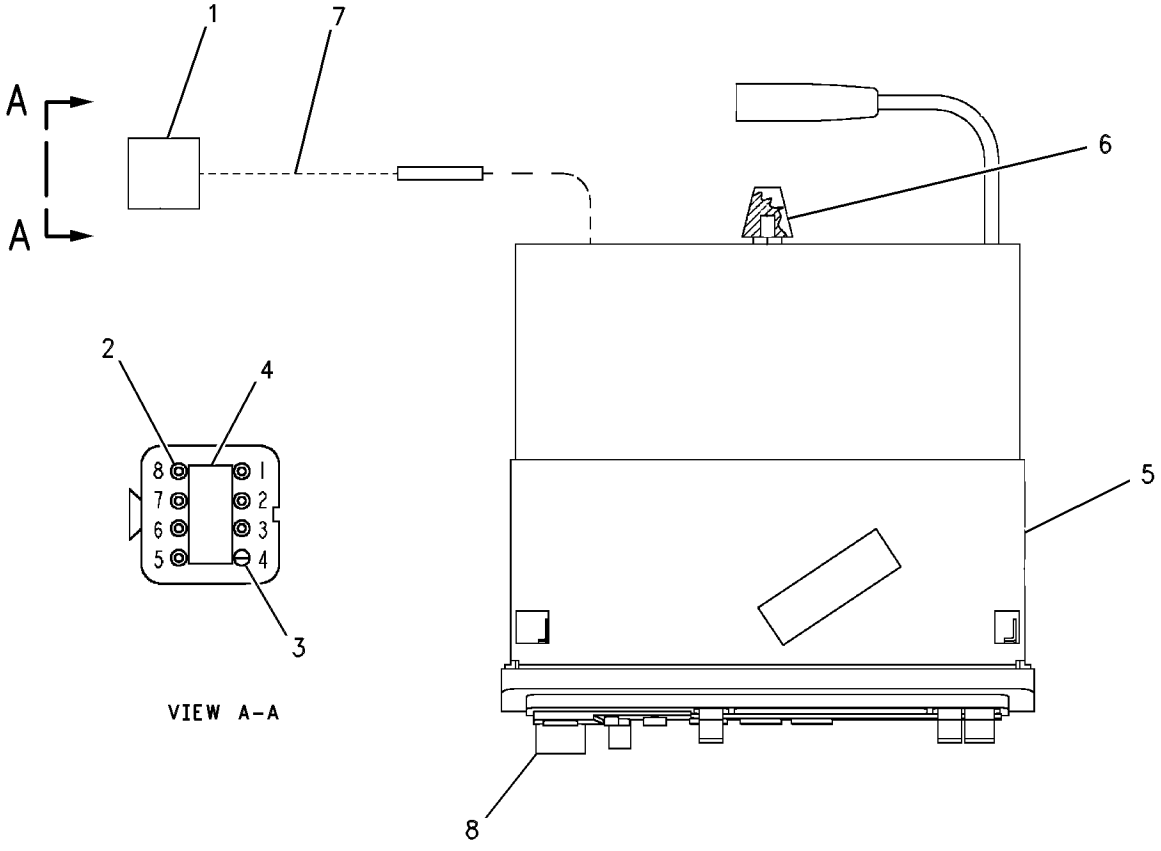

VIEW A-A

GRAPHIC #1 **<END>** g00618667

OPERATOR STATION

227-9981 RADIO GP–AM/FM CASSETTE

S/N: M3G1-UP

PART OF 276-5456 MACHINE AR

AN ATTACHMENT

SMCS-7338 **i01859826**

NOTE	PART NUMBER	QTY	PART NAME 1 2 3 4 5 6 (PRODUCT LEVEL)	SEE PAGE
Y	**173-6532**	1	RADIO GP (AM/FM CASSETTE)	728

Y-SEPARATE ILLUSTRATION

<END>

OPERATOR STATION

177-4935 RECLINER GP-SEAT

S/N: M3G1-UP
PART OF 178-0603, 180-7304 SEAT GP
ALSO AN ATTACHMENT

SMCS-7312 **i01809930**

NOTE	REF NO	GRAPHIC REF	PART NUMBER	QTY	PART NAME 1 2 3 4 5 6 (PRODUCT LEVEL)	SEE PAGE
	1	1	**217-7933**	1	LATCH	
	2	1	**164-4146**	1	SPRING	
	3	1	**177-1860**	1	GEAR (14 TEETH) (LOCK)	
	4	1	**177-1862**	1	BRACKET	
	5	1	**178-0607**	1	SHAFT AS	
	5A	1	**2K-9111**	2	PIN-SPRING	
	5B	1	**9M-6803**	2	DOWEL	
	5C	1	**170-8590**	1	SPRING	
	6	1	**178-0608**	1	BRACKET AS	
	7	1	**178-0609**	1	BRACKET AS	
	8	1	**031-0214**	1	BOLT-LOCKING (1/4-20X0.5 IN)	
	9	1	**101-2867**	1	WASHER-HARD (7.2X25X2MM THK)	
	10	1	**4M-6425**	1	BOLT (5/16-18X1 IN)	
	11	1	**5S-7383**	1	BOLT (3/8-16X1.75 IN)	
	12	1	**8T-4224**	1	WASHER-HARD (8.8X16X2MM THK)	

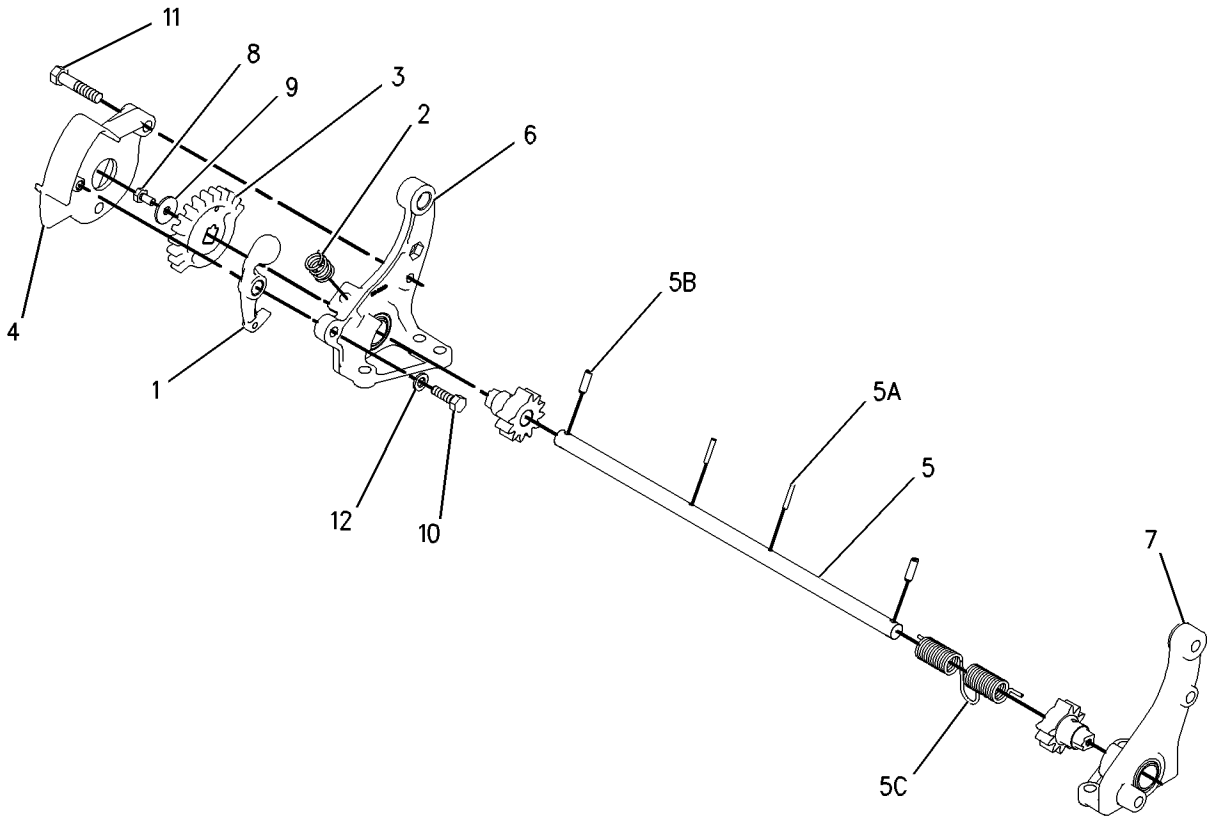

GRAPHIC #1 **<END>** g00673022

OPERATOR STATION

243-1083 ROPS GP-ENCLOSED

S/N: M3G1-UP

PART OF 243-1080 CAB AR-ENCLOSED ROPS

SMCS-7301 **i02454498**

NOTE	REF NO	GRAPHIC REF	PART NUMBER	QTY	PART NAME 1 2 3 4 5 6 (PRODUCT LEVEL)	SEE PAGE
B	1	4	**8T-0318**	3	SHIM (0.8-MM THK)	
M	2	2	**9X-2042**	2	SCREW-TRUSS HEAD (M6X1X12-MM)	
	3	1	**107-4600**	1	GLASS (RIGHT SIDE-REAR)	
	4	2	**107-4602**	1	GLASS (LEFT SIDE-REAR)	
	5	2	**109-5008**	3	BUMPER-CONICAL	
	6	4	**111-0687**	1	STRIKER AS	
	7	4	**114-9252**	1	BRACKET AS	
	8	4	**126-1052**	1	PIN	
	9	4	**128-1026**	1	SHIELD-STRIKER	
	10	2	**136-9351**	1	TRIM (RH)	
	11	2	**154-9508**	1	TRIM (LH)	
	12	1	**173-2142**	1	GLASS (FRONT)	
	13	1	**173-2143**	1	GLASS (RIGHT FRONT CORNER)	
	14	1	**173-2144**	1	GLASS (LEFT FRONT CORNER)	
	15	3	**187-4161**	1	SHEET AS	
M		3	**8T-3490**	2	NUT-WELD (M10X1.5-THD)	
	16	3	**188-5175**	1	CHANNEL AS (LH)	
		3	**7T-1099**	5	LINK	
	17	3	**188-5177**	1	BRACKET AS	
		3	**5G-8871**	2	BOSS (M6X1-6H-THD)	
		3	**7T-1099**	5	LINK	
M		3	**8T-3490**	3	NUT-WELD (M10X1.5-THD)	
M		3	**8T-3635**	1	STUD-WELD (M12X1.75X34.93-MM OAL)	
	18	3	**204-6132**	1	CHANNEL	
	19	4	**209-5018**	1	LATCH AS	
	20	5	**210-1254**	2	INSULATION	
	21	1	**232-2964**	1	FLOOR GP-SOUND SUPPRESSION	
	22	2	**242-8263**	1	SHEET AS	
	23	1	**243-1113**	1	CAB AS	
	24	1	**243-4369**	1	PLATE AS (RH)	
	25	2	**243-4371**	1	PLATE AS (LH)	
	26	3	**243-5553**	1	TRIM (RH)	
	27	3	**243-5554**	1	TRIM (RH)	
	28	3	**243-5555**	1	TRIM (LH)	
	29	3	**243-5556**	1	TRIM (LH)	
	30	5	**245-4333**	1	INSULATION	
	31	2	**247-1860**	1	DOOR AS	
		2	**1V-6755**	1	LATCH AS	
		2	**2N-2258**	6	RIVET-POP	
		2	**111-1316**	1	HINGE	
	32	2	**255-4367**	1	GLASS (REAR)	
	33	3	**258-7623**	1	TRIM (RH)	
	34	3	**258-7624**	1	TRIM (LH)	
Y	35	1	*270-3388*	1	DOOR GP-CAB	656
M	36	2	**5C-7261**	3	NUT (M8X1.25-THD)	
	37	3,5	**8T-4121**	22	WASHER-HARD (11X21X2.5-MM THK)	
M	38	3	**8T-4133**	4	NUT (M10X1.5 THD)	
M	39	3	**8T-4136**	4	BOLT (M10X1.5X25-MM)	
M	40	3,5	**8T-4137**	14	BOLT (M10X1.5X20-MM)	
M	41	4	**9X-2044**	2	SCREW-TRUSS HEAD (M6X1X16-MM)	
D	42	5	**5P-6120**		TRIM-EDGE (0.2-M)	
	43	1	**110-7524**	8	BUTTON	
	44	1	**214-9186**	48	BUTTON	

B-USE AS REQUIRED
D-ORDER BY THE METER
M-METRIC PART
Y-SEPARATE ILLUSTRATION

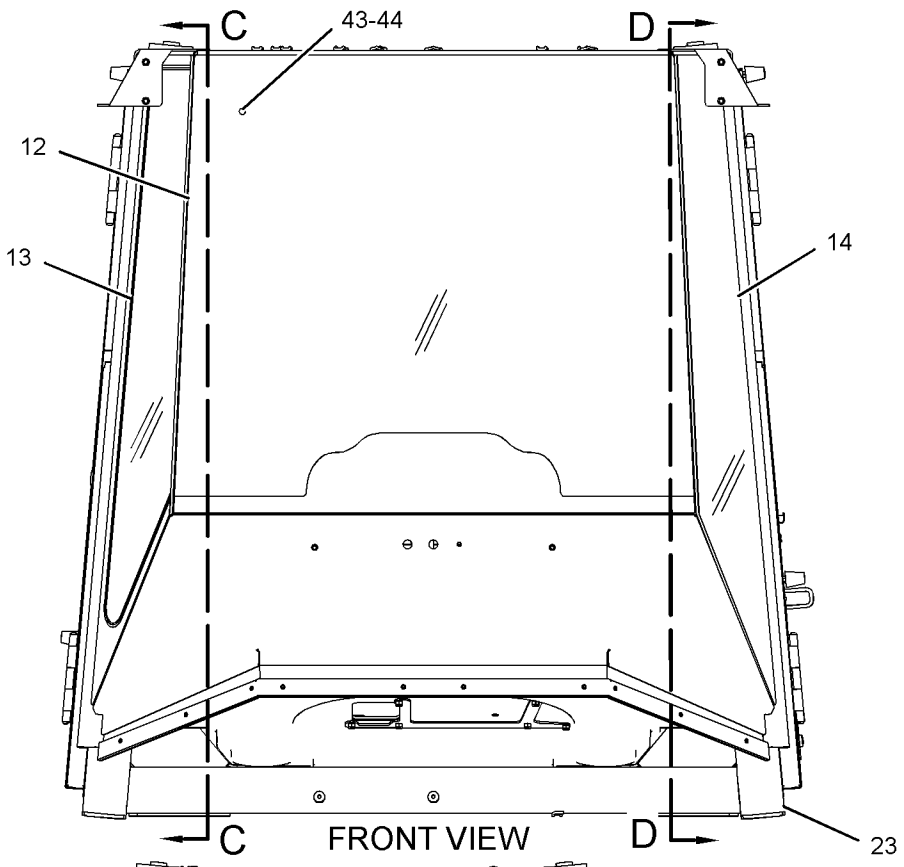

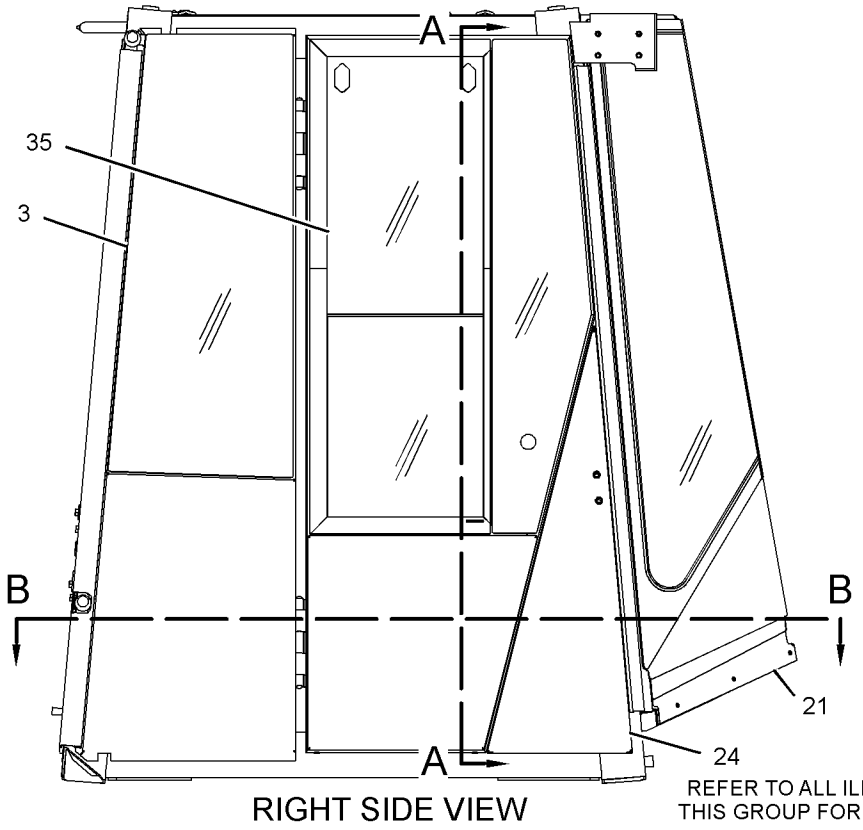

REFER TO ALL ILLUSTRATIONS OF THIS GROUP FOR AUXILIARY VIEWS

GRAPHIC #1

g01223307

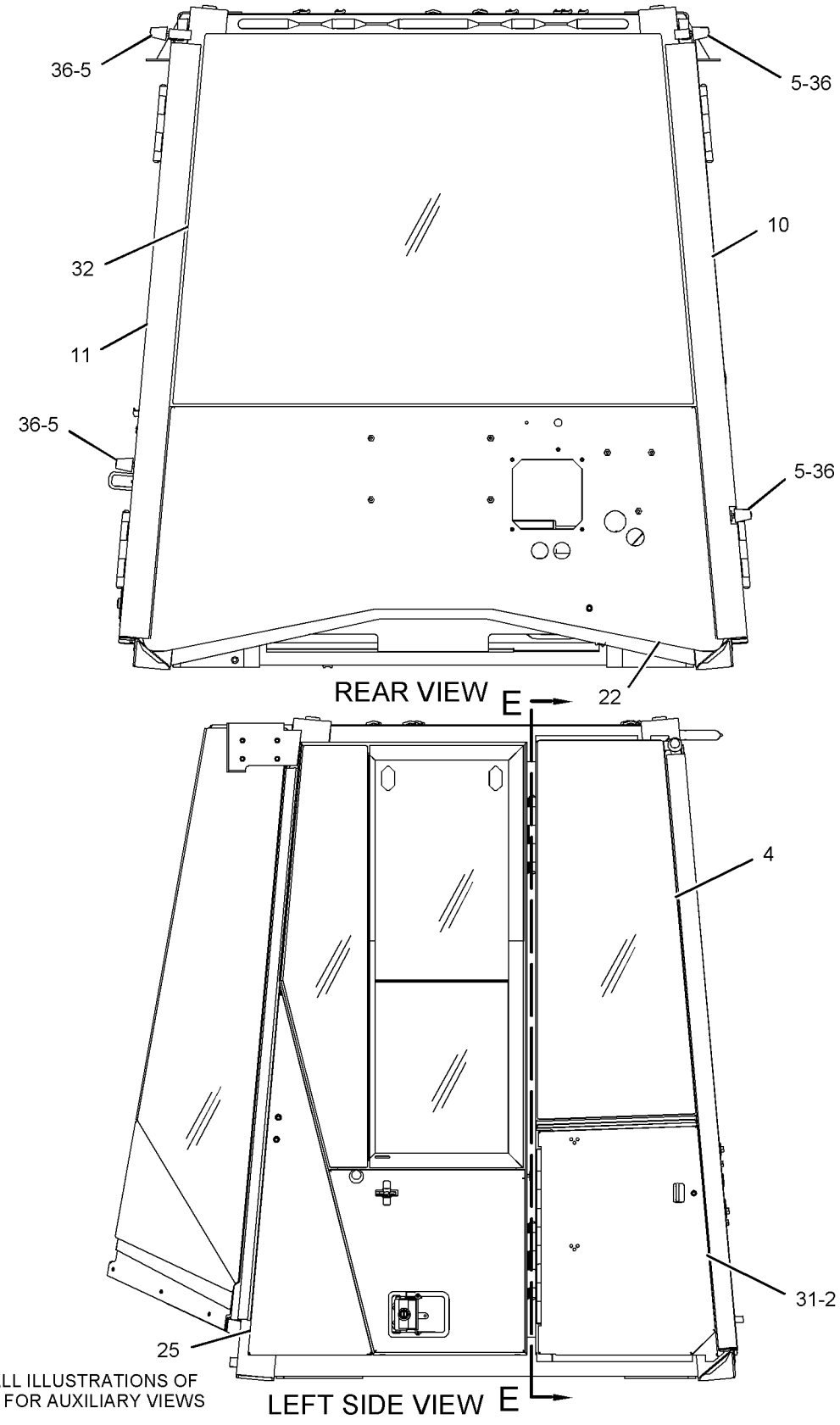

REFER TO ALL ILLUSTRATIONS OF THIS GROUP FOR AUXILIARY VIEWS

GRAPHIC #2

g01223308

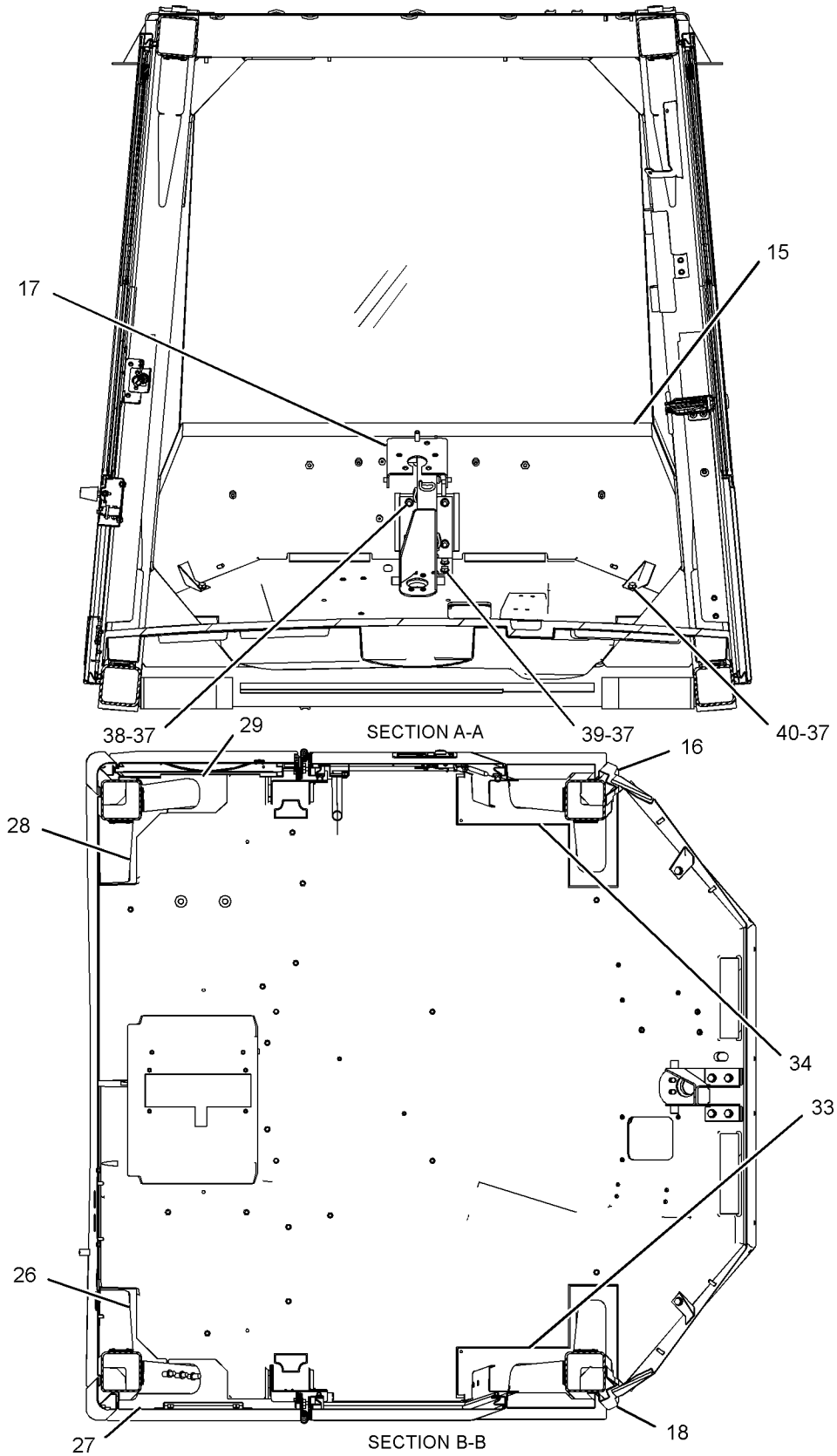

GRAPHIC #3

g01223309

REFER TO ALL ILLUSTRATIONS OF THIS GROUP FOR AUXILIARY VIEWS

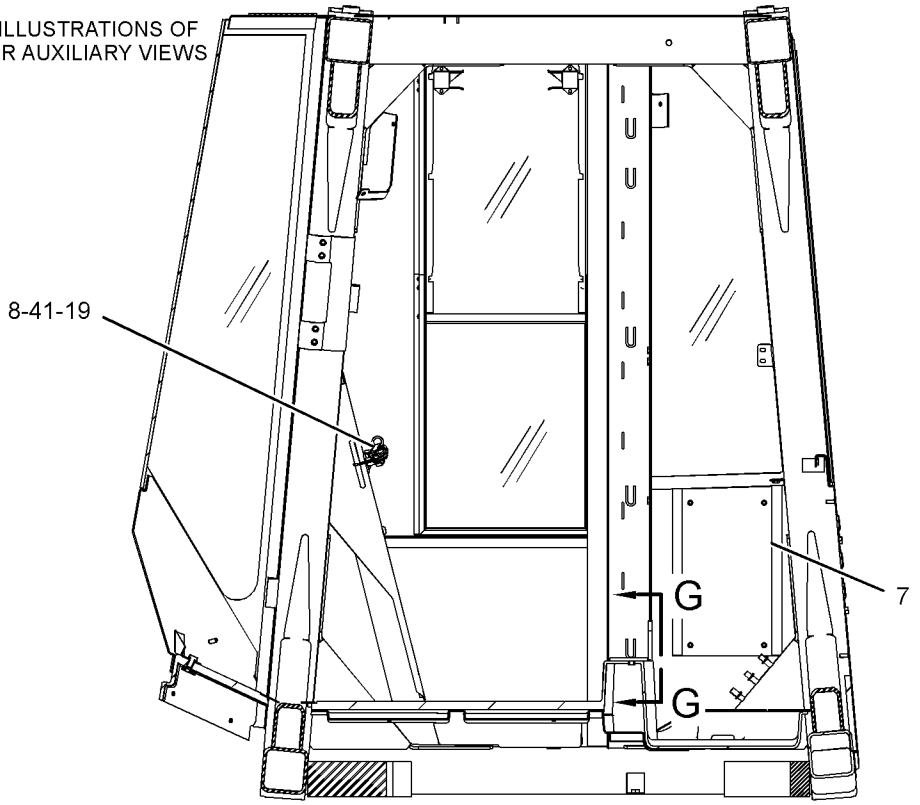

SECTION C-C

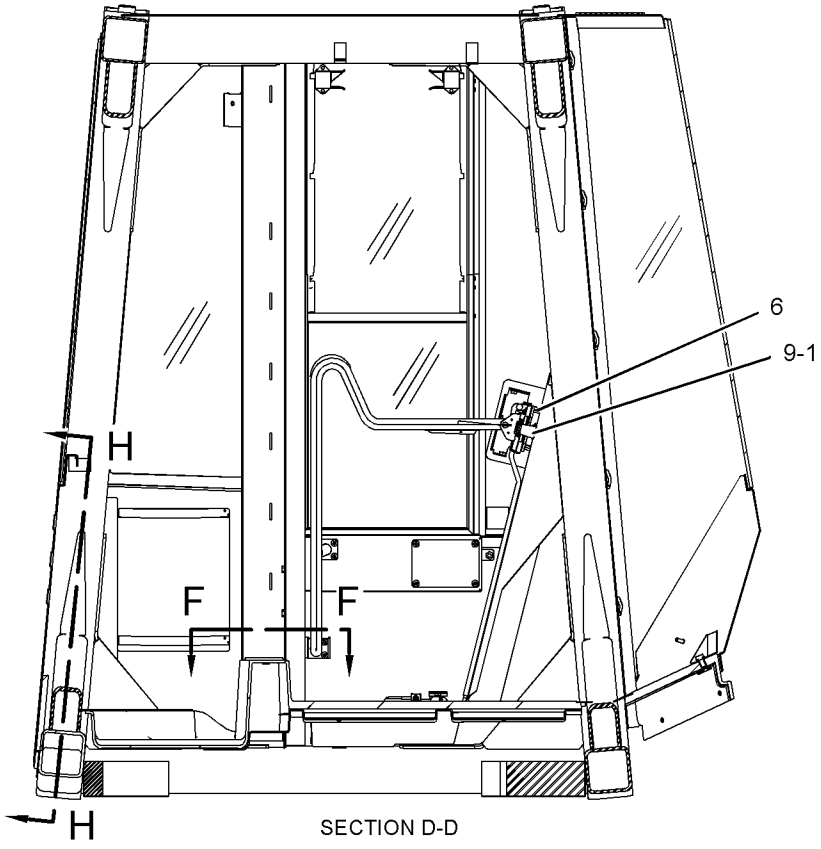

SECTION D-D

GRAPHIC #4

g01223310

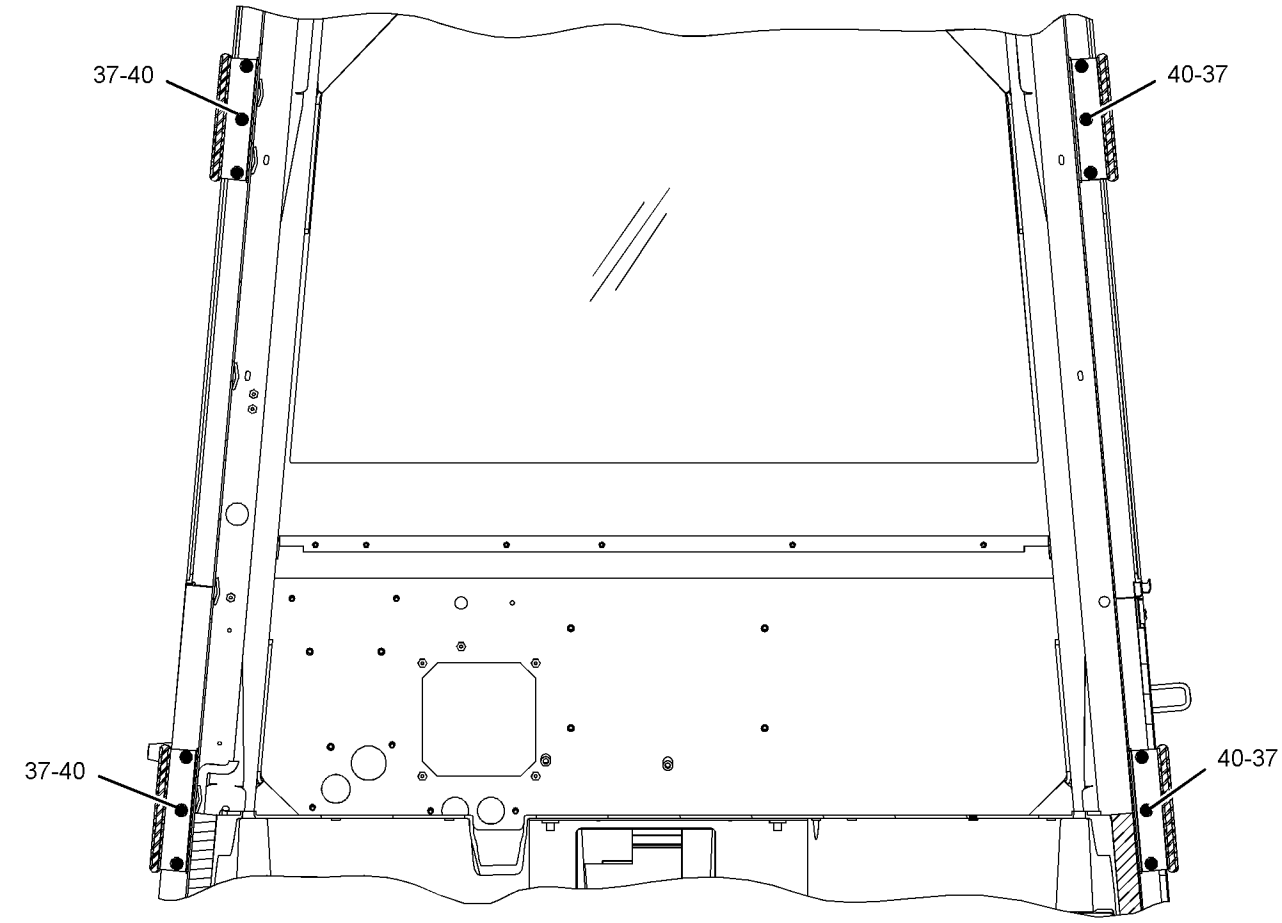

SECTION E-E

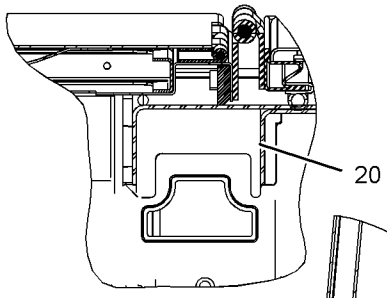

SECTION F-F

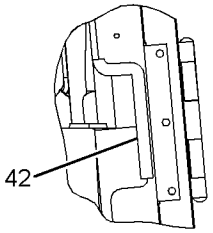

SECTION G-G

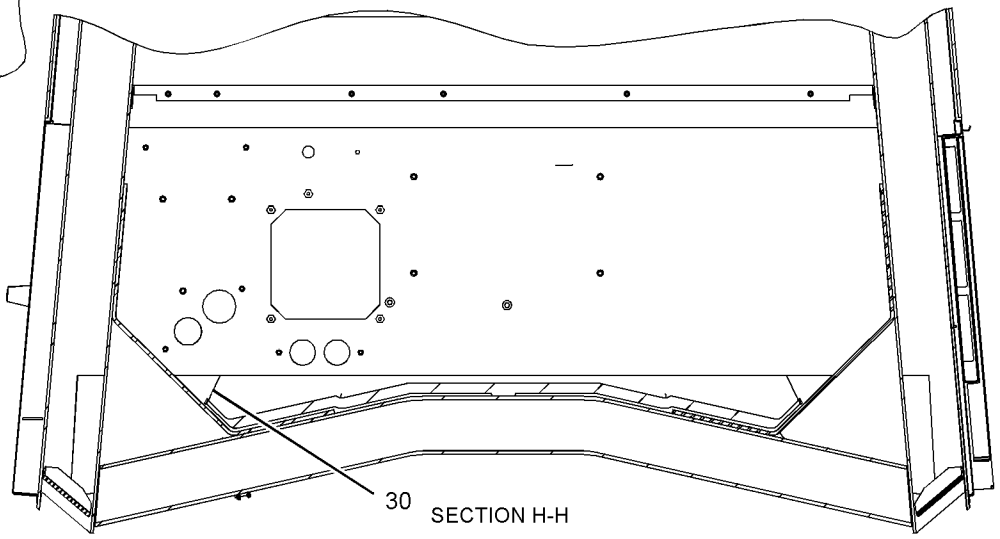

SECTION H-H

GRAPHIC #5 **<END>** g01223311

OPERATOR STATION

261-2951 ROPS GP-OPEN

S/N: M3G1-UP
PART OF 258-1552 CANOPY AR-OPEN ROPS
AN ATTACHMENT

SMCS-7323 **i02308018**

NOTE	REF NO	GRAPHIC REF	PART NUMBER	QTY	PART NAME 1 2 3 4 5 6 (PRODUCT LEVEL)	SEE PAGE
	1	1	**114-9252**	1	BRACKET AS	
	2	1	**125-6510**	1	INSULATION	
	3	1	**133-8769**	1	TRIM (RH)	
	4	1	**133-8770**	1	TRIM (LH)	
	5	2	**161-9934**	2	HANDHOLD AS	
	6	1	**188-5175**	1	CHANNEL AS (LH)	
	7	1	**188-5177**	1	BRACKET AS	
	8	2	**197-5504**	1	TRIM (LH)	
	9	1	**197-5506**	1	TRIM (RH)	
	10	2	**197-5507**	1	TRIM (LH)	
	11	2	**198-7356**	1	TRIM (RH)	
	12	2	**204-0725**	1	SHEET AS	
	13	2	**204-6132**	1	CHANNEL	
	14	1	**204-7572**	1	FLOOR AS	
B	15	1	**214-9186**	28	BUTTON	
	16	1,2	**219-9579**	2	TRIM	
	17	1	**242-1543**	2	PLATE	
	18	2	**261-2952**	1	CAB AS	
	19	1	**261-2958**	1	SHEET AS	
M	20	1,2	**8T-0389**	4	LOCKNUT (M10X1.15-THD)	
	21	1,2	**8T-4121**	14	WASHER-HARD (11X21X2.5-MM THK)	
M	22	1	**8T-4133**	4	NUT (M10X1.5 THD)	
M	23	1,2	**8T-4136**	8	BOLT (M10X1.5X25-MM)	
M	24	1	**8T-4137**	2	BOLT (M10X1.5X20-MM)	
D	25	1	**5P-6120**		TRIM-EDGE (0.2-M)	

B-USE AS REQUIRED
D-ORDER BY THE METER
M-METRIC PART

261-2951 ROPS GP-OPEN *(contd.)* **i02308018**

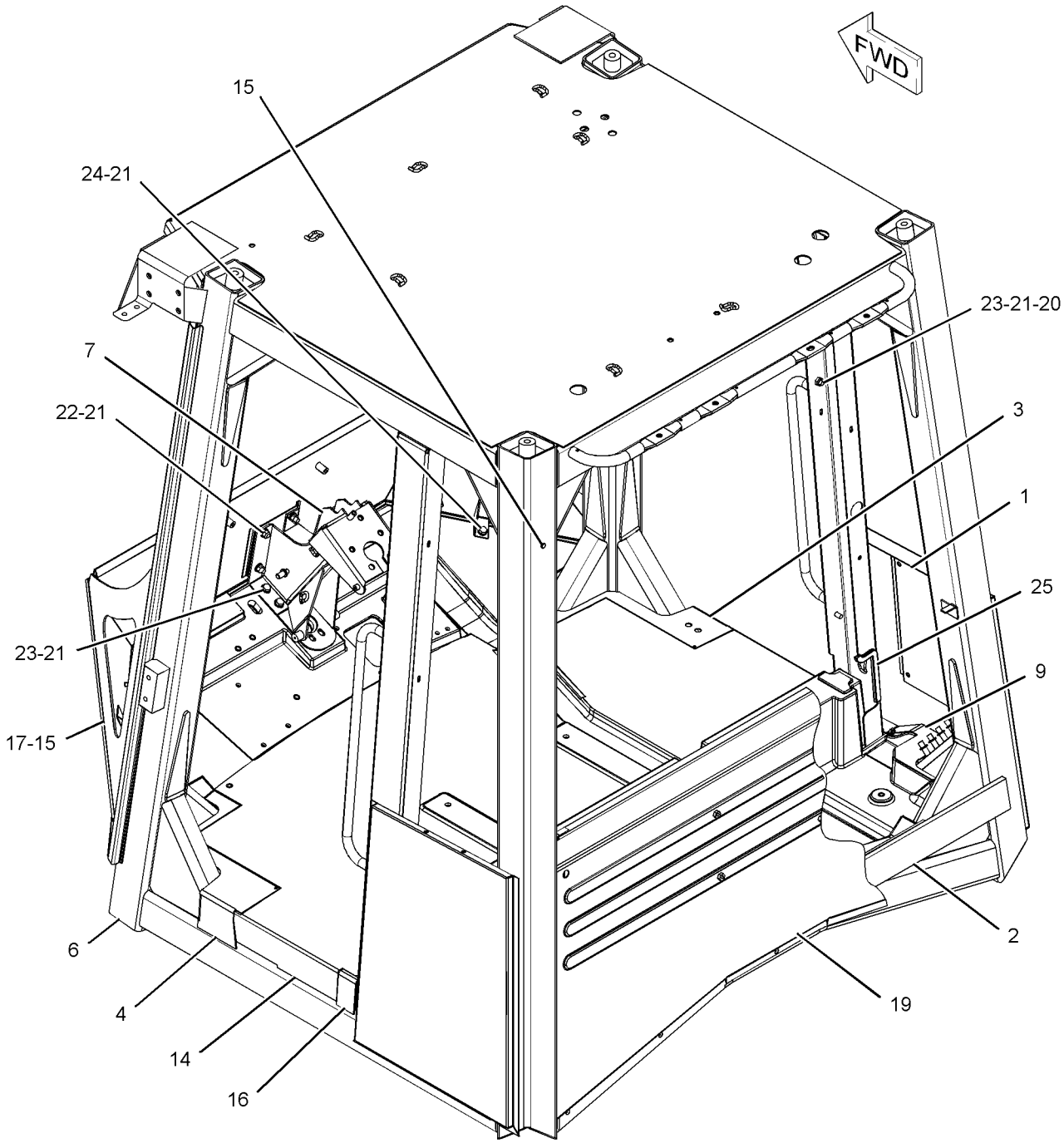

GRAPHIC #1 g01135699

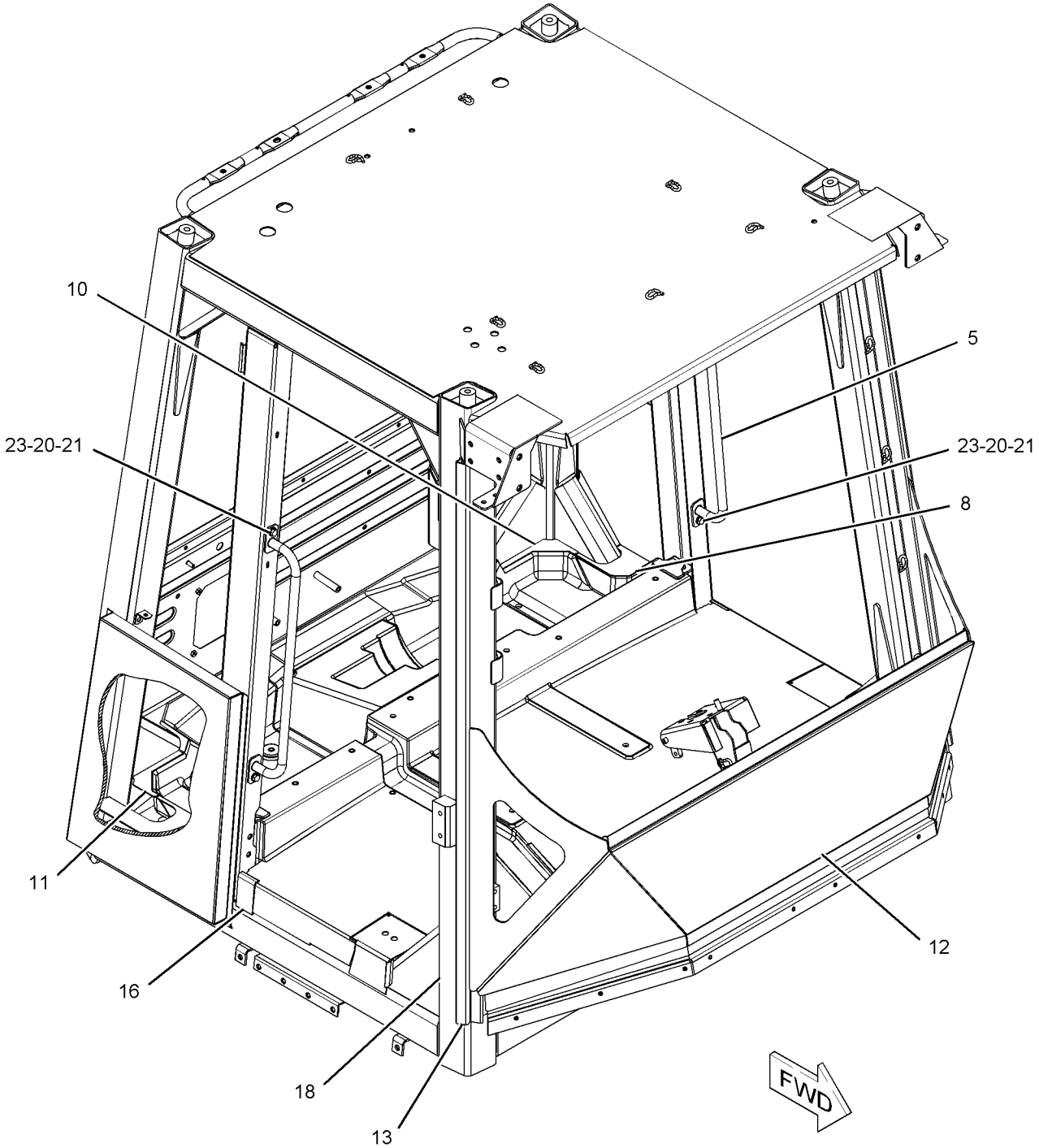

GRAPHIC #2 **<END>** g01135701

OPERATOR STATION

236-7019 SEAT BELT GP

S/N: M3G1-UP
PART OF 174-3624, 204-4492 SEAT GP-SUSPENSION
ALSO AN ATTACHMENT

SMCS-7327 **i02220017**

NOTE	REF NO	GRAPHIC REF	PART NUMBER	QTY	PART NAME 1 2 3 4 5 6 (PRODUCT LEVEL)	SEE PAGE
	1	1	**0T-0244**	1	BOLT (7/16-20X1.25-IN)	
	2	1	**205-6388**	1	BOLT (7/16-20X44.45-MM)	

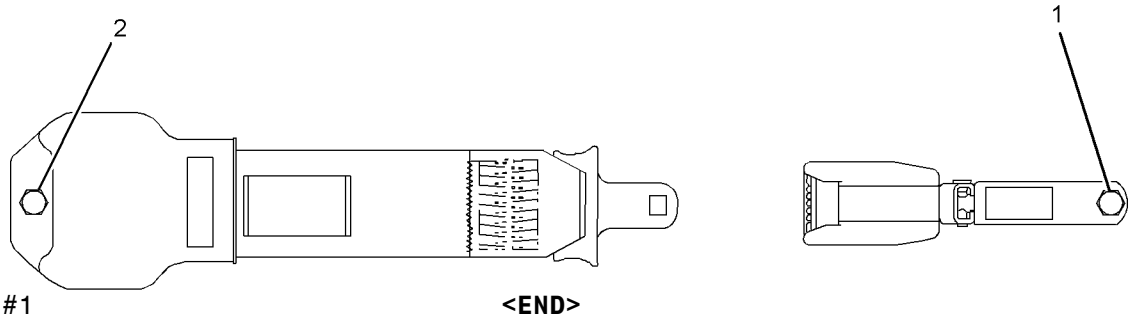

GRAPHIC #1 **<END>** g01072526

OPERATOR STATION

178-0603 SEAT GP—CLOTH

S/N: M3G1-UP

PART OF 178-7913 SEAT GP

SMCS-7312 **i01852208**

NOTE	REF NO	GRAPHIC REF	PART NUMBER	QTY	PART NAME 1 2 3 4 5 6 (PRODUCT LEVEL)	SEE PAGE
	1	1	**135-5499**	1	PAN AS	
		1	**8T-9082**	5	RIVET-POP	
		1	**117-4506**	1	CUSHION AS	
	2	1	**143-1288**	8	LOCKNUT-FLANGE (3/8-16-THD)	
	3	1	**171-1230**	6	SCREW-BUTTON HEAD (3/8-16X1-IN)	
	4	1	**171-6682**	1	BAR	
	5	1	**172-2416**	2	PIN	
Y	6	1	*173-1028*	1	ADJUSTER GP-SEAT	636
	7	1	**177-1863**	2	BOLT-PIVOT (3/8-16X2.89-IN)	
Y	8	1	*177-4935*	1	RECLINER GP-SEAT	730
Y	9	1	*178-0604*	1	PAN GP-BACKREST (CLOTH)	716
	10	1	**184-2298**	1	ROD	
	11	1	**184-2299**	4	WASHER (7X25.4X2.54-MM THK)	
	12	1	**095-0843**	2	PIN-COTTER	
	13	1	**5V-1496**	2	RETAINER	
	14	1	**6V-7646**	2	WASHER-HARD (7.2X25X2-MM THK)	
	15	1	**8T-0328**	1	WASHER-HARD (5.5X10X1-MM THK)	
	16	1	**8T-4205**	1	WASHER-HARD (7.2X14.5X2-MM THK)	
	17	1	**8Y-6277**	2	SPACER (10.5X28.6X10-MM THK)	

Y-SEPARATE ILLUSTRATION

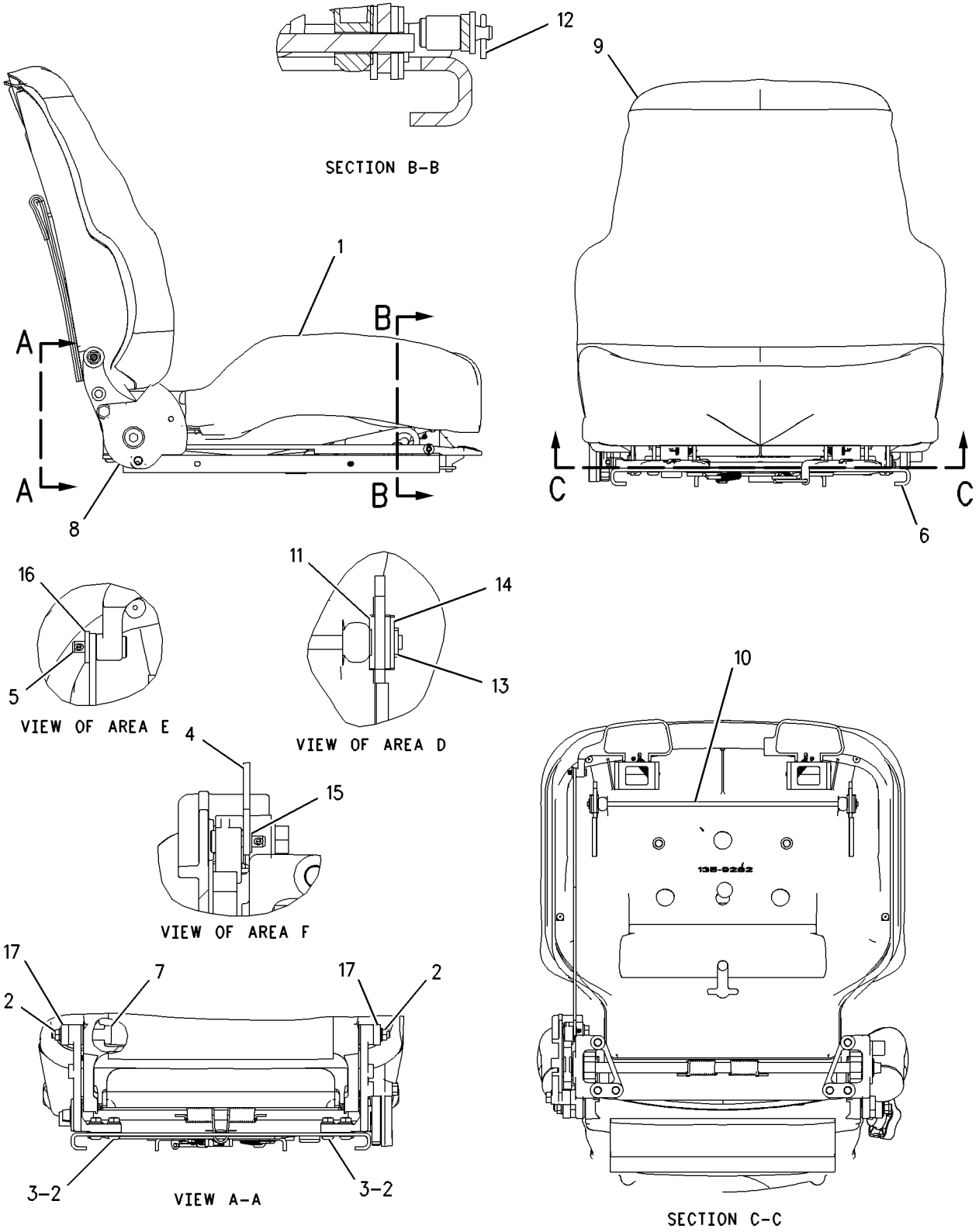

GRAPHIC #1 **<END>** g00729407

OPERATOR STATION

178-7913 SEAT GP

S/N: M3G1-UP

PART OF 219-8094 SEAT GP-SUSPENSION

SMCS-7312 **i02307263**

NOTE	REF NO	GRAPHIC REF	PART NUMBER	QTY	PART NAME 1 2 3 4 5 6 (PRODUCT LEVEL)	SEE PAGE
	1	1	**143-1288**	4	LOCKNUT-FLANGE (3/8-16-THD)	
	2	1	**171-1230**	3	SCREW-BUTTON HEAD (3/8-16X1-IN)	
	3	1	**229-1494**	1	EXTENSION GP-BACKREST (CLOTH)	
Y	5	1	**178-0603**	1	SEAT GP (CLOTH)	742
	8	1	**180-9617**	1	BRACKET AS	
Y	10	1	**188-9820**	1	ARMREST GP (LH)	645
	11	1	**4L-6454**	1	BOLT (3/8-16X1-IN)	

Y-SEPARATE ILLUSTRATION

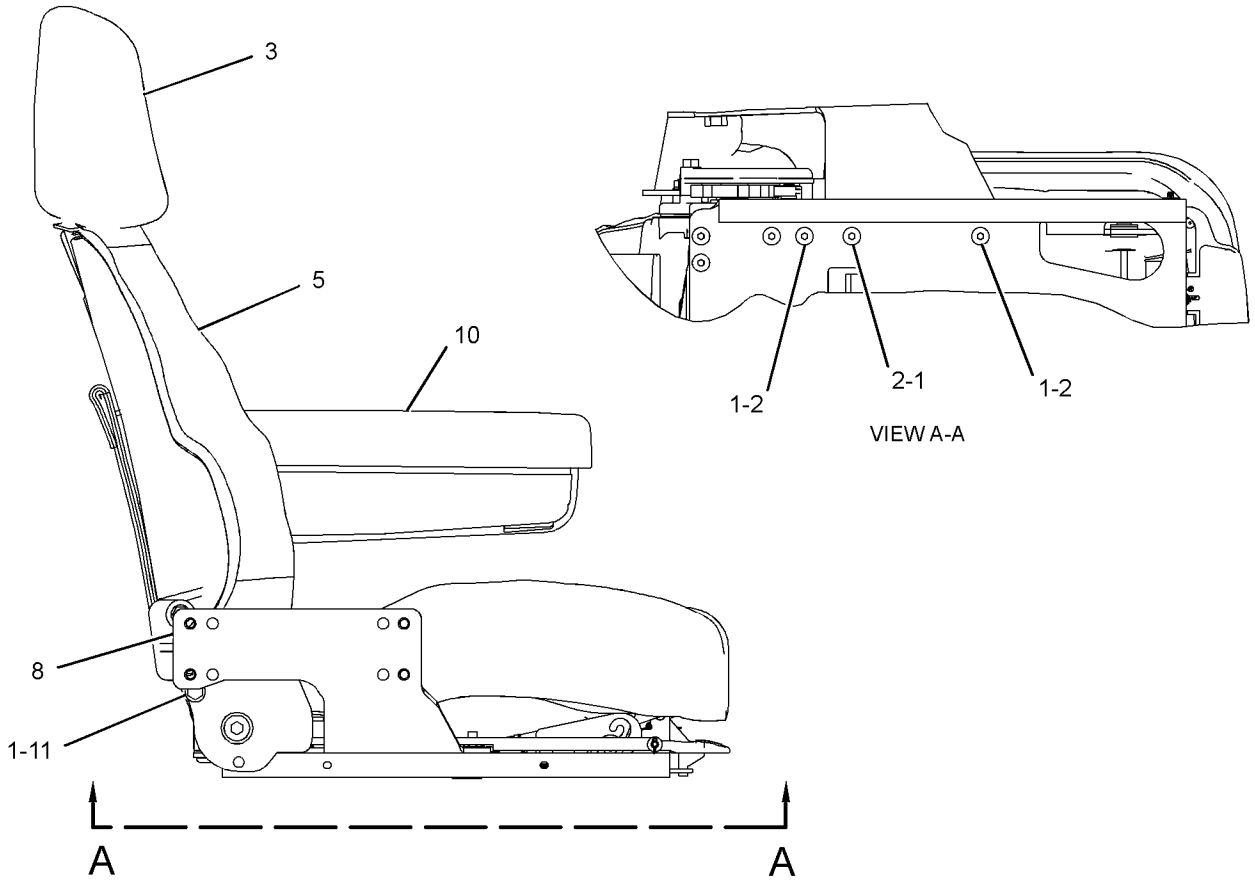

RIGHT SIDE VIEW

GRAPHIC #1 **<END>** g01156062

OPERATOR STATION

180-7304 SEAT GP–VINYL

S/N: M3G1-UP
PART OF 207-2804 SEAT GP
AN ATTACHMENT

SMCS-7312 **i01883816**

NOTE	REF NO	GRAPHIC REF	PART NUMBER	QTY	PART NAME 1 2 3 4 5 6 (PRODUCT LEVEL)	SEE PAGE
	1	1	**6K-3273**	5	RIVET-POP	
		1	**169-1026**	1	CUSHION AS	
	2	1	**143-1288**	8	LOCKNUT-FLANGE (3/8-16-THD)	
	3	1	**171-1230**	6	SCREW-BUTTON HEAD (3/8-16X1-IN)	
	4	1	**171-6682**	1	BAR	
	5	1	**172-2416**	2	PIN	
Y	6	1	*173-1028*	1	ADJUSTER GP-SEAT	636
	7	1	**177-1863**	2	BOLT-PIVOT (3/8-16X2.89-IN)	
Y	8	1	*177-4935*	1	RECLINER GP-SEAT	730
Y	9	1	*180-7305*	1	PAN GP-BACKREST	718
	10	1	**184-2298**	1	ROD	
	11	1	**184-2299**	4	WASHER (7X25.4X2.54-MM THK)	
	12	1	**095-0843**	2	PIN-COTTER	
	13	1	**8Y-6277**	2	SPACER (10.5X28.6X10-MM THK)	
	14	1	**5V-1496**	2	RETAINER	
	15	1	**6V-7646**	2	WASHER-HARD (7.2X25X2-MM THK)	
	16	1	**8T-0328**	1	WASHER-HARD (5.5X10X1-MM THK)	
	17	1	**8T-4205**	1	WASHER-HARD (7.2X14.5X2-MM THK)	

Y-SEPARATE ILLUSTRATION

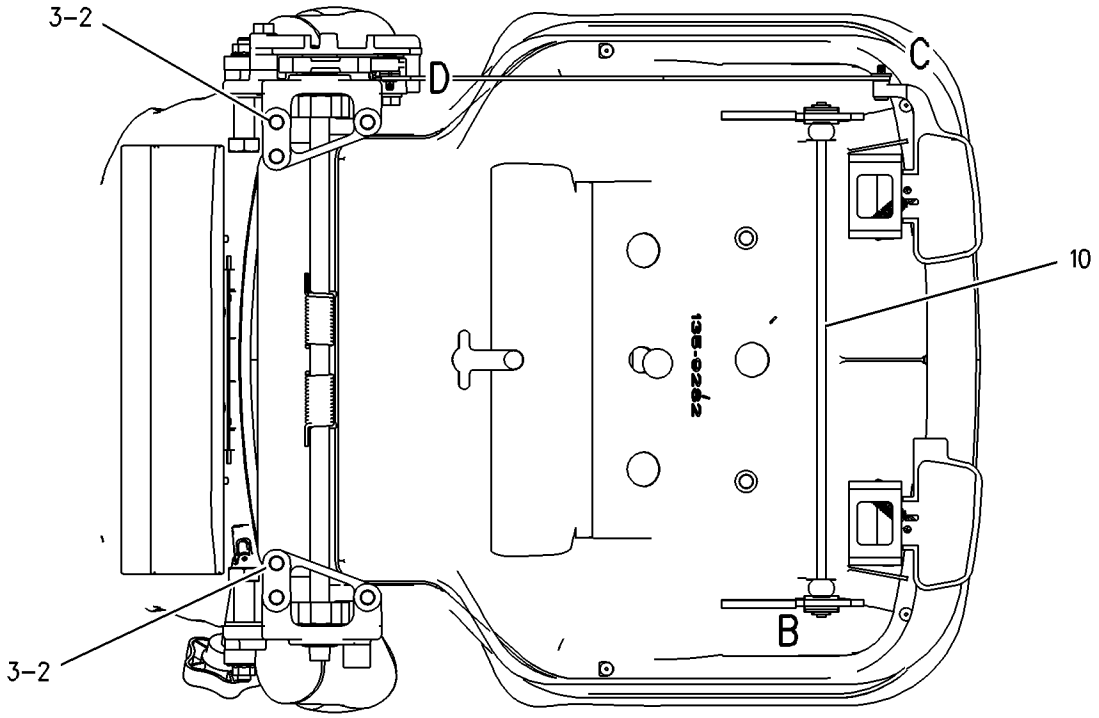

SECTION A-A

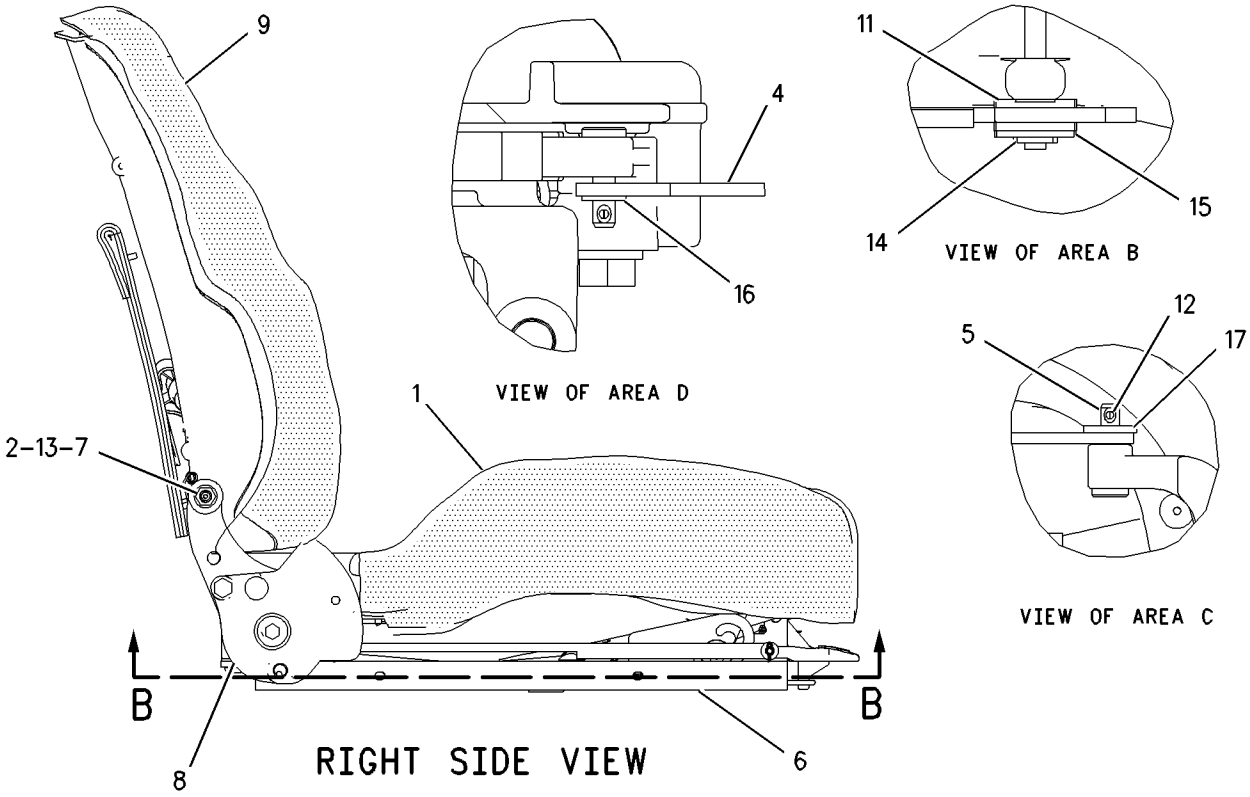

GRAPHIC #1 **<END>** g00726860

OPERATOR STATION

207-2804 SEAT GP–VINYL

S/N: M3G1-UP
PART OF 219-8095 SEAT GP-SUSPENSION
AN ATTACHMENT

SMCS-7312 **i02321642**

NOTE	REF NO	GRAPHIC REF	PART NUMBER	QTY	PART NAME 1 2 3 4 5 6 (PRODUCT LEVEL)	SEE PAGE
	1	1	**143-1288**	4	LOCKNUT-FLANGE (3/8-16-THD)	
	2	1	**171-1230**	3	SCREW-BUTTON HEAD (3/8-16X1-IN)	
	3	1	**173-3083**	1	EXTENSION GP-BACKREST (VINYL)	
		1	**117-4491**	1	ROD	
Y	4	1	**180-7304**	1	SEAT GP (VINYL)	745
	5	1	**180-9617**	1	BRACKET AS	
Y	6	1	**188-9820**	1	ARMREST GP (LH)	645
	7	1	**4L-6454**	1	BOLT (3/8-16X1-IN)	

Y-SEPARATE ILLUSTRATION

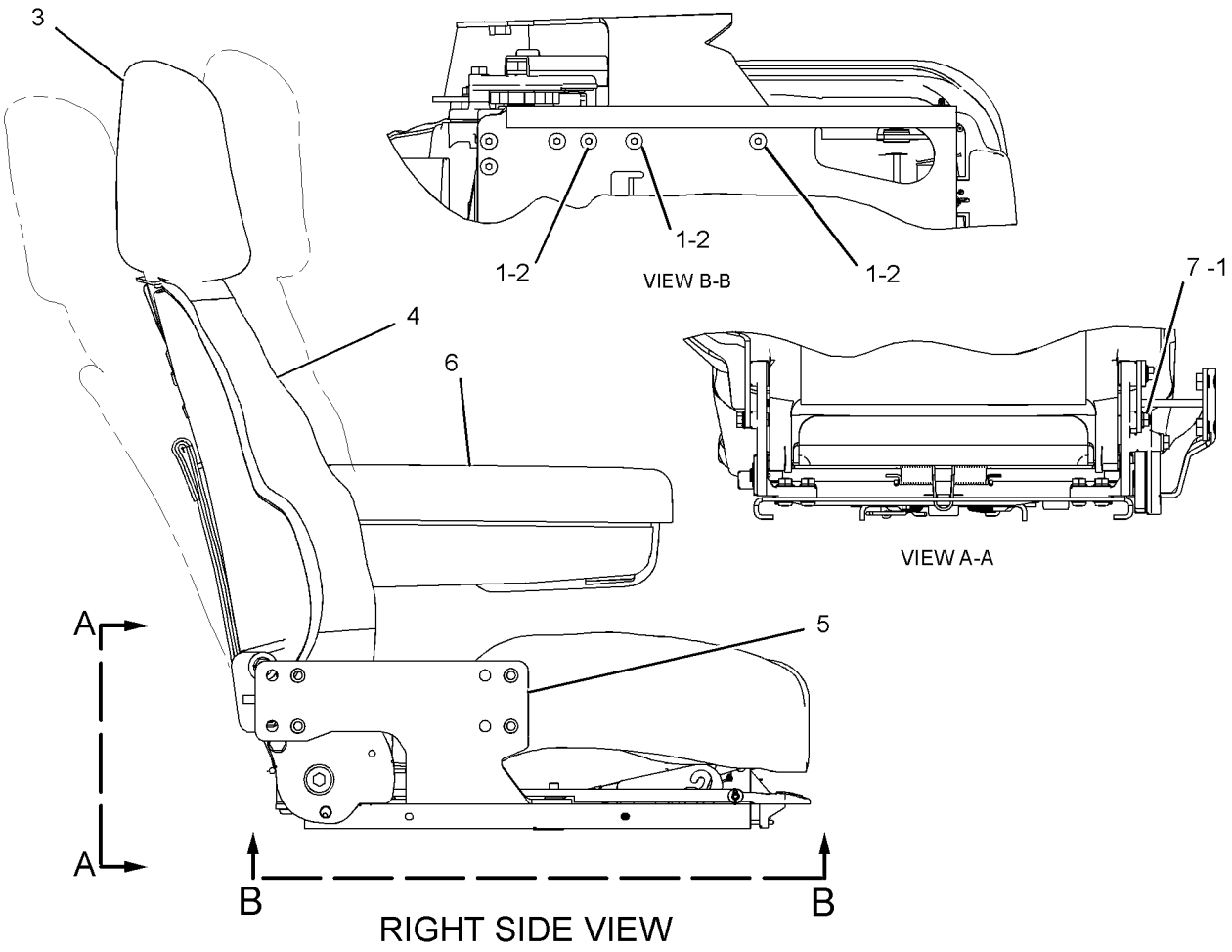

GRAPHIC #1 **<END>** g01156191

OPERATOR STATION

174-3624 SEAT GP-SUSPENSION

S/N: M3G1-UP

PART OF 243-1080 CAB AR-ENCLOSED ROPS

SMCS-7324, 7336 **i02219190**

NOTE	REF NO	GRAPHIC REF	PART NUMBER	QTY	PART NAME 1 2 3 4 5 6 (PRODUCT LEVEL)	SEE PAGE
	1	1	**192-2175**	1	PLATE AS	
	2	1	**209-3750**	2	BOLT (M10X1.5X75-MM)	
Y	3	1	**219-8094**	1	SEAT GP-SUSPENSION	750
M	4	1	**7X-2545**	2	BOLT (M10X1.5X150-MM)	
	5	1	**8T-4896**	4	WASHER-HARD (10.2X18.5X2.5-MM THK)	
Y	6	1	**236-7019**	1	SEAT BELT GP	741
	7	1	**205-6388**	1	BOLT (7/16-20X44.45-MM)	
	8	1	**177-4937**	1	SPACER (11.7X19.8X20.3-MM THK)	
	9	1	**0T-0244**	1	BOLT (7/16-20X1.25-IN)	

M-METRIC PART
Y-SEPARATE ILLUSTRATION

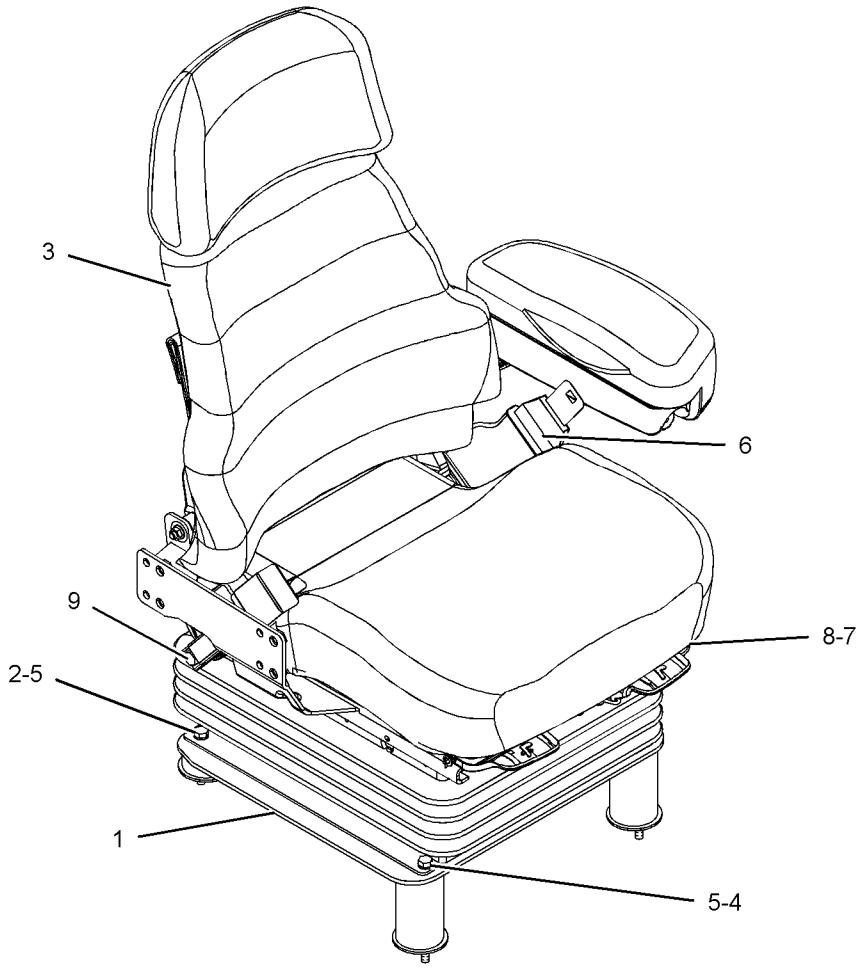

GRAPHIC #1 **<END>** g01104707

OPERATOR STATION

204-4492 SEAT GP-SUSPENSION

S/N: M3G1-UP
PART OF 258-1552 CANOPY AR-OPEN ROPS
AN ATTACHMENT

SMCS-7324, 7336 **i02307929**

NOTE	REF NO	GRAPHIC REF	PART NUMBER	QTY	PART NAME 1 2 3 4 5 6 (PRODUCT LEVEL)	SEE PAGE
	1	1	**192-2175**	1	PLATE AS	
	2	1	**209-3750**	1	BOLT (M10X1.5X75-MM)	
Y	3	1	**219-8095**	2	SEAT GP-SUSPENSION	751
M	4	1	**7X-2545**	2	BOLT (M10X1.5X150-MM)	
	5	1	**8T-4896**	4	WASHER-HARD (10.2X18.5X2.5-MM THK)	
Y	6	1	**236-7019**	1	SEAT BELT GP	741
	7	1	**205-6388**	1	BOLT (7/16-20X44.45-MM)	
	8	1	**177-4937**	1	SPACER (11.7X19.8X20.3-MM THK)	
	9	1	**0T-0244**	1	BOLT (7/16-20X1.25-IN)	

M-METRIC PART
Y-SEPARATE ILLUSTRATION

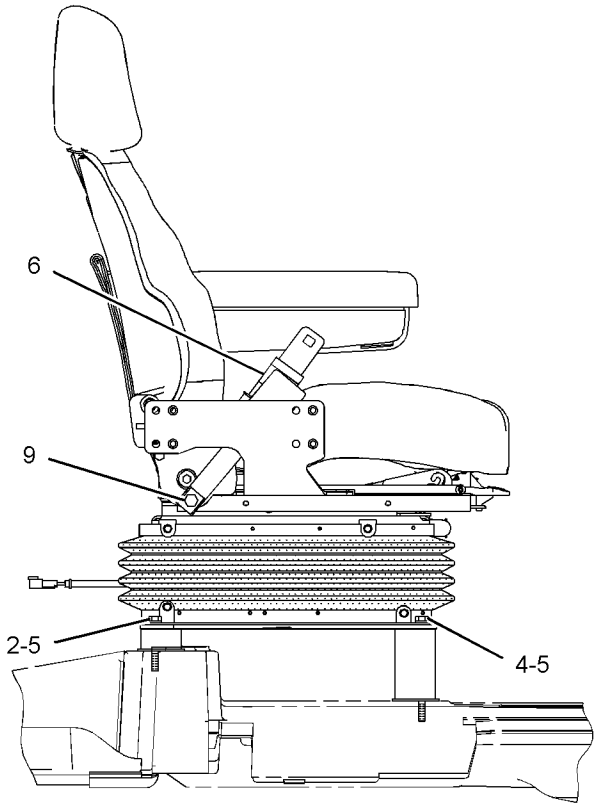

RIGHT SIDE VIEW

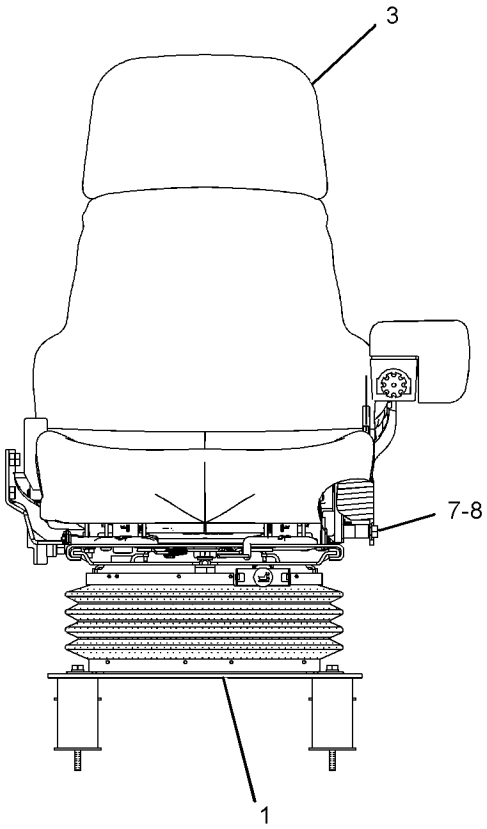

FRONT VIEW

GRAPHIC #1 **<END>** g01109178

OPERATOR STATION

219-8094 SEAT GP-SUSPENSION

S/N: M3G1-UP

PART OF 174-3624 SEAT GP-SUSPENSION

SMCS-7324, 7336 **i02220014**

NOTE	REF NO	GRAPHIC REF	PART NUMBER	QTY	PART NAME 1 2 3 4 5 6 (PRODUCT LEVEL)	SEE PAGE
JZ	1	1		4	BLOCK-SLIDER	
J	2	1	**173-5787**	4	SETSCREW (1/4-20-THD)	
Y	3	1	**178-7913**	1	SEAT GP	744
Y	4	1	**191-2933**	1	SUSPENSION GP-SEAT (AIR)	763
J	5	1	**203-7703**	2	WASHER-HARD (10.2X22.22X2.38-MM THK)	
J	6	1	**4F-4879**	1	BOLT (3/8-16X0.5-IN)	
					AVAILABLE REPAIR KIT(S):	
J			**173-7035**	1	KIT-SLIDER BLOCK	

J-KIT MARKED J SERVICES PARTS MARKED J
Y-SEPARATE ILLUSTRATION
Z-NOT SERVICED SEPARATELY

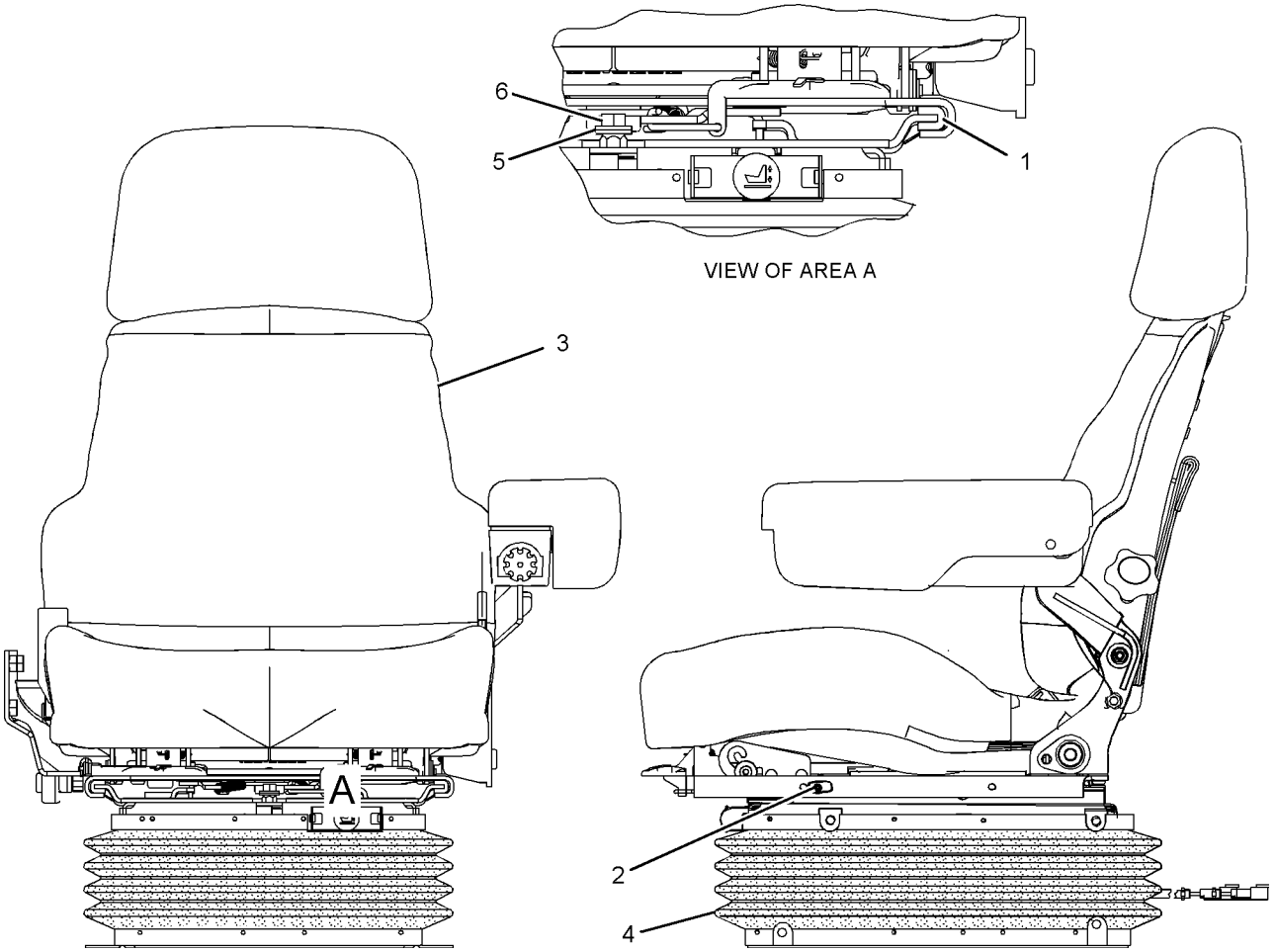

GRAPHIC #1 **<END>** g01100900

OPERATOR STATION

219-8095 SEAT GP-SUSPENSION

S/N: M3G1-UP

PART OF 204-4492 SEAT GP-SUSPENSION

AN ATTACHMENT

SMCS-7324, 7336 **i02307961**

NOTE	REF NO	GRAPHIC REF	PART NUMBER	QTY	PART NAME 1 2 3 4 5 6 (PRODUCT LEVEL)	SEE PAGE
	1	1	**161-9289**	4	BLOCK-SLIDER	
	2	1	**173-5787**	4	SETSCREW (1/4-20-THD)	
Y	3	1	**191-2933**	1	SUSPENSION GP-SEAT (AIR)	763
	4	1	**203-7703**	2	WASHER-HARD (10.2X22.22X2.38-MM THK)	
Y	5	1	**207-2804**	1	SEAT GP (VINYL)	747
	6	1	**4F-4879**	1	BOLT (3/8-16X0.5-IN)	
					AVAILABLE REPAIR KIT(S):	
			173-7035		KIT-SLIDER BLOCK	
					INCLUDES BOLT, WASHERS, SETSCREWS AND BLOCKS	

Y-SEPARATE ILLUSTRATION

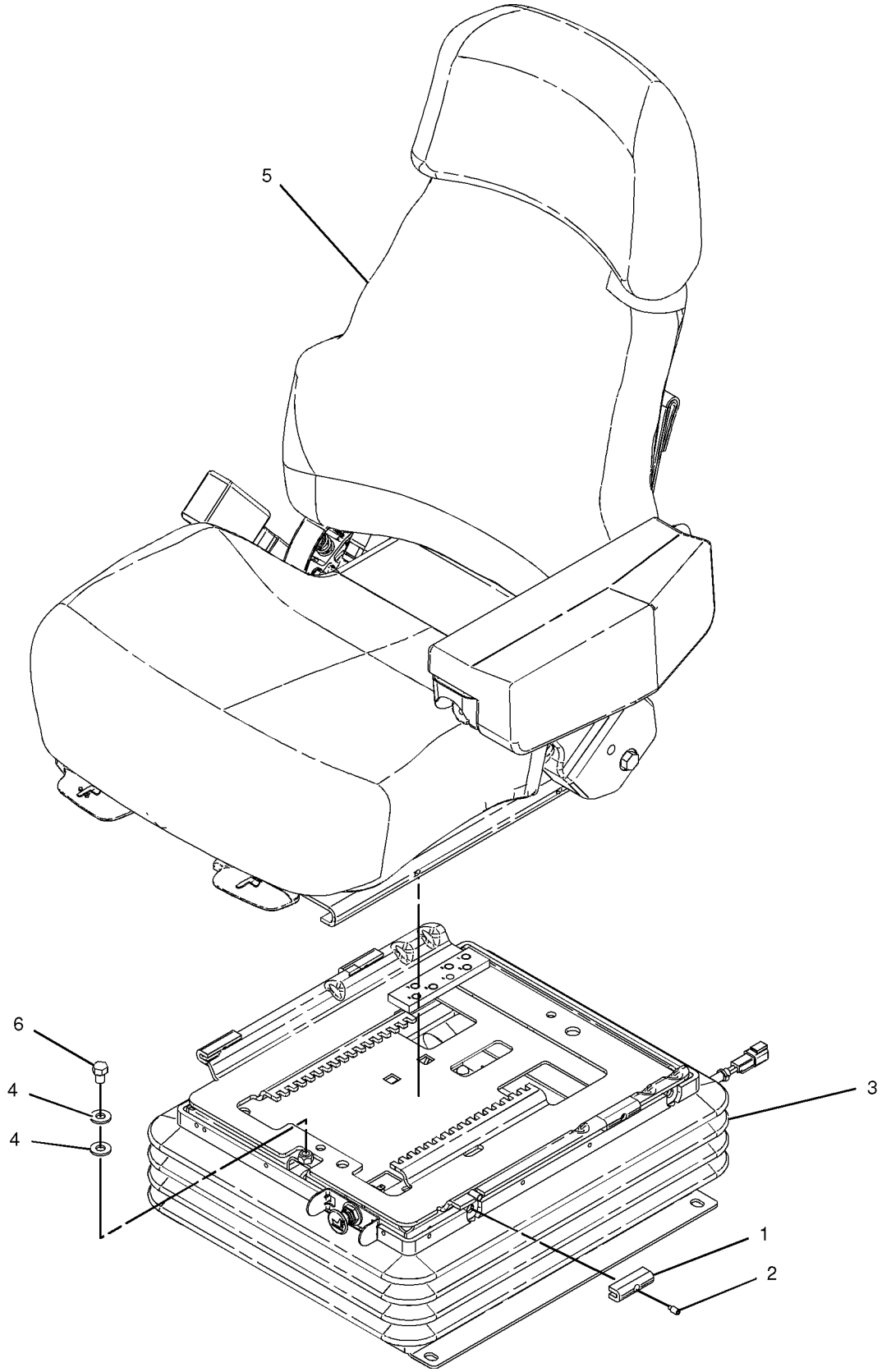

GRAPHIC #1

<END>

g01037768

OPERATOR STATION

243-1090 SUPPORT GP-HYDRAULIC CONTROL

S/N: M3G1-UP

PART OF 243-1080 CAB AR-ENCLOSED ROPS, 258-1552 CANOPY AR-OPEN ROPS

ALSO AN ATTACHMENT

SMCS-5258 **i02207789**

NOTE	REF NO	GRAPHIC REF	PART NUMBER	QTY	PART NAME 1 2 3 4 5 6 (PRODUCT LEVEL)	SEE PAGE
	1	3	**4E-6523**	1	SUPPORT-SLIDE	
	2	2	**4E-8722**	2	NUT	
	3	3	**4E-9173**	2	SHAFT-CONTROL	
	4	3	**4E-9174**	2	BEARING	
	5	3	**7V-0445**	1	SPRING	
	6	3	**7X-3310**	1	KNOB-BALL	
	7	2	**8Y-5746**	1	ASHTRAY	
	8	2	**8Y-6333**	1	GASKET (ASHTRAY)	
	9	3	**9U-0952**	1	PIN	
	10	3	**9U-0953**	1	GUIDE	
	11	3	**9U-0954**	1	STUD	
	12	3	**9U-0955**	1	PIN	
	13	3	**9U-0958**	1	SLIDER	
	14	3	**9U-3925**	4	RING-RETAINING	
	15	3	**9U-3926**	2	STOP	
	16	2	**9U-3927**	1	BEARING	
B	17	2	**137-6841**	2	SHIM (0.2-MM THK)	
	18	3	**174-4301**	1	LEVER AS	
	19	1	**198-8769**	1	CONSOLE AS	
	20	2	**200-0728**	1	BRACKET	
	21	2	**200-0729**	1	BRACKET	
	22	3	**203-0328**	1	SPACER (16X19X9-MM THK)	
	23	1	**203-9991**	3	KNOB AS	
	24	1	**205-8212**	1	CUSHION AS	
	25	1	**210-6783**	1	BRACKET AS	
M		1	**6V-9632**	2	NUT-WELD (M6X1-THD)	
	26	1	**248-2079**	1	COVER	
	27	3	**253-0575**	1	BRACKET AS	
M		3	**6V-9632**	6	NUT-WELD (M6X1-THD)	
		3	**7T-1099**	3	LINK	
M		3	**8T-3490**	1	NUT-WELD (M10X1.5-THD)	
	28	1	**254-9146**	1	CUSHION AS	
M		1	**6V-9632**	2	NUT-WELD (M6X1-THD)	
	29	1	**254-9147**	1	CUSHION AS	
M		1	**6V-9632**	4	NUT-WELD (M6X1-THD)	
M	30	3	**099-3649**	4	BOLT (M8X1.25X40-MM)	
	31	3	**3K-4897**	1	PIN-SPRING	
M	32	3	**5C-7261**	4	NUT (M8X1.25-THD)	
M	33	3	**6V-9327**	4	SETSCREW-SOCKET	
M	34	3	**8T-4136**	4	BOLT (M10X1.5X25-MM)	
M	35	2	**8T-4138**	11	BOLT (M6X1X20-MM)	
	36	1,2	**8T-4205**	11	WASHER-HARD (7.2X14.5X2-MM THK)	
	37	2,3	**8T-4224**	9	WASHER-HARD (8.8X16X2-MM THK)	
	38	3	**9X-2027**	1	WASHER (11X18X2-MM THK)	
	39	1,2,3	**9X-2038**	9	WASHER (7X19X2-MM THK)	
M	40	1,2,3	**9X-2044**	9	SCREW-TRUSS HEAD (M6X1X16-MM)	
M	41	2	**9X-2616**	2	SCREW-SOCKET (M8X1.25X16-MM)	

B-USE AS REQUIRED
M-METRIC PART

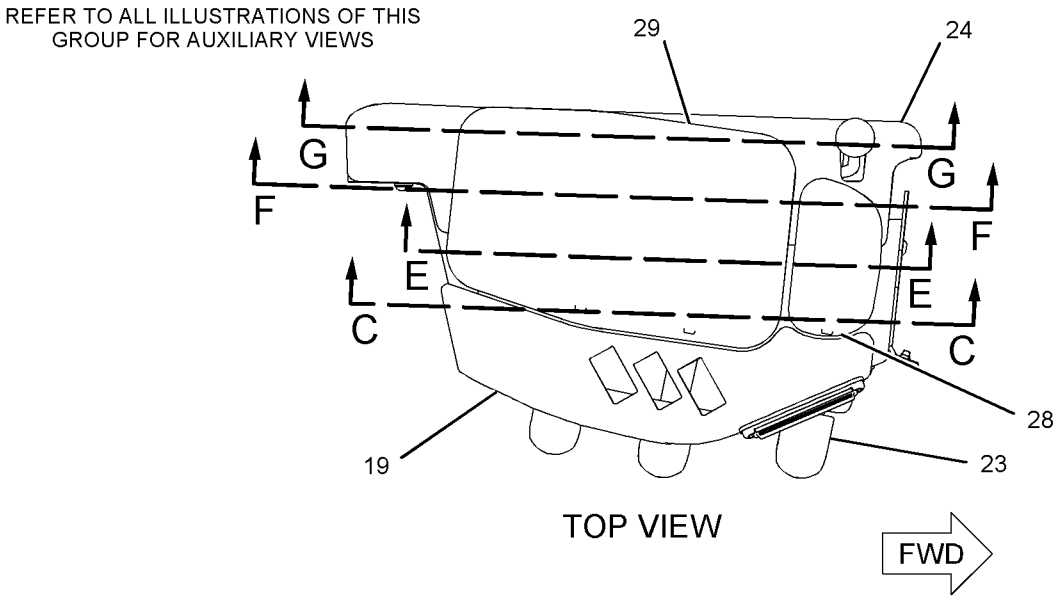

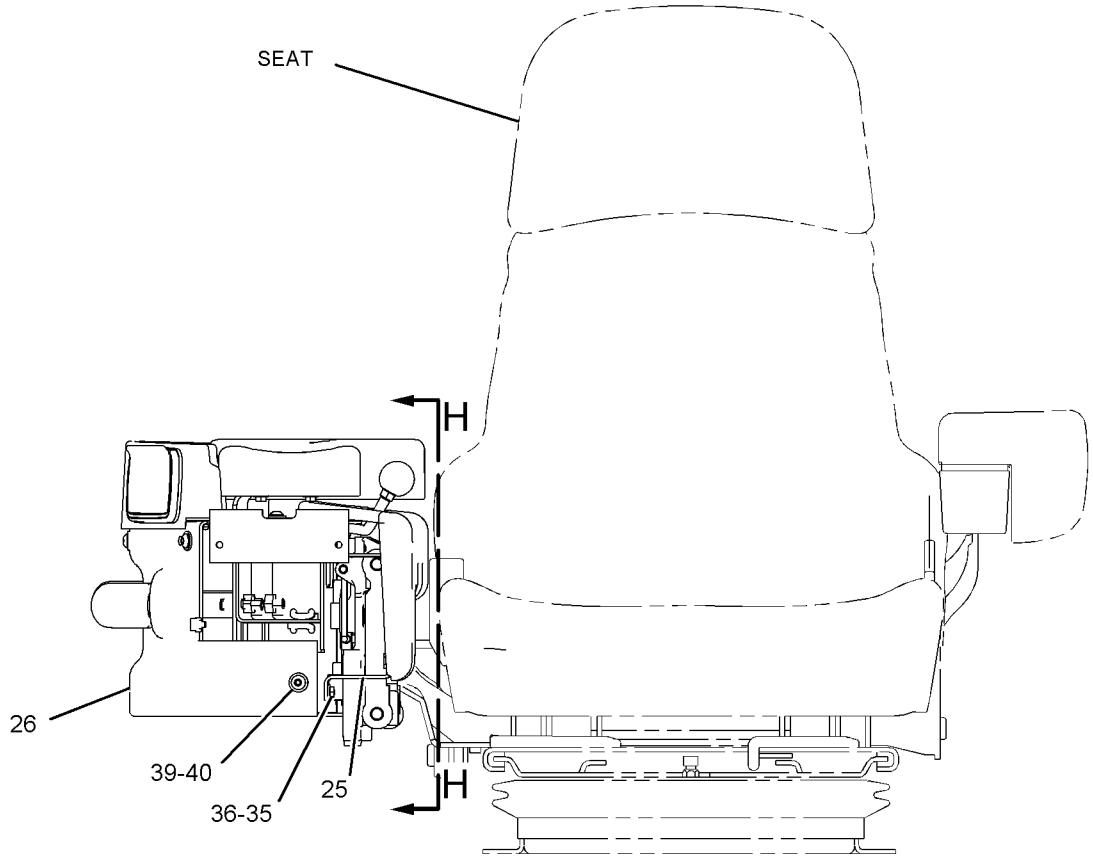

RIGHT SIDE VIEW

GRAPHIC #1

g01122400

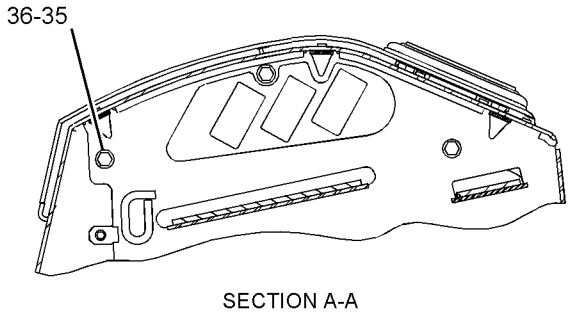

SECTION A-A

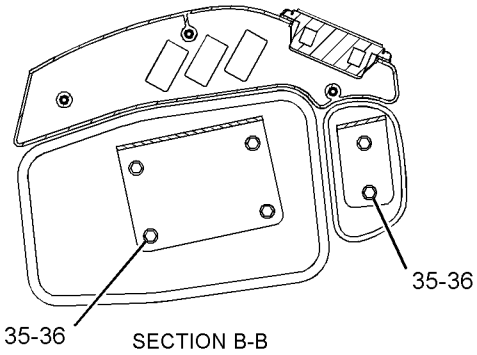

SECTION B-B

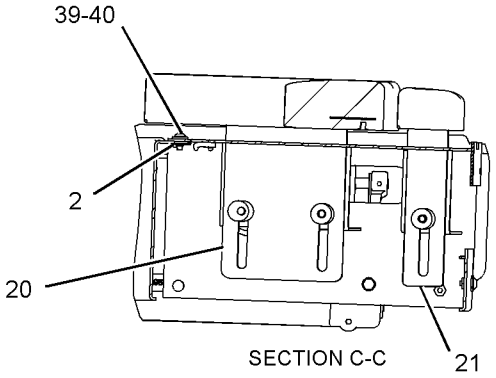

SECTION C-C

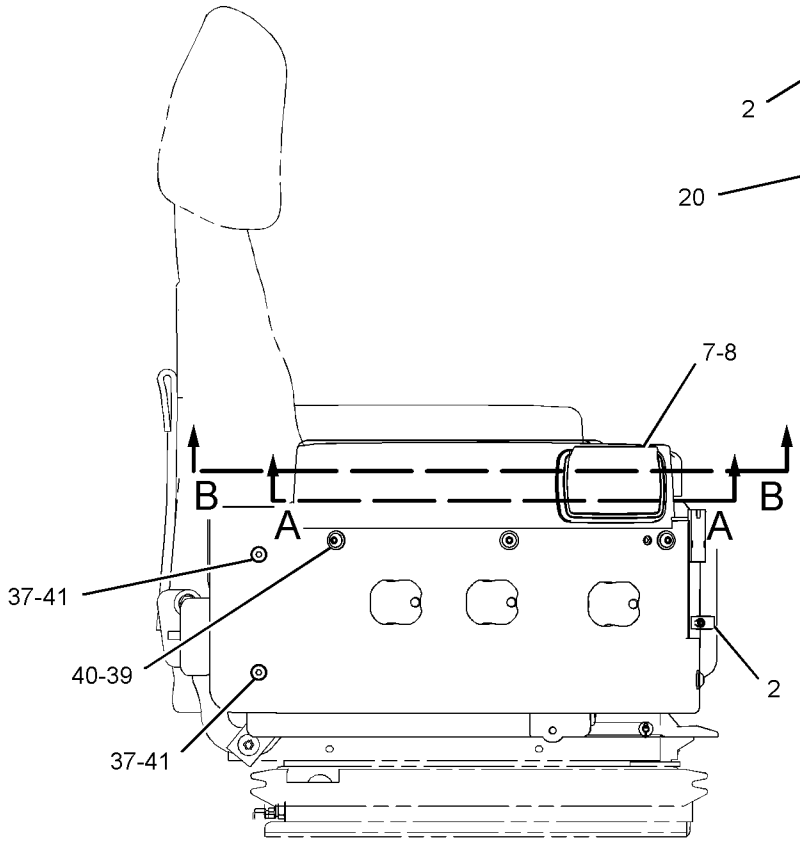

RIGHT SIDE VIEW

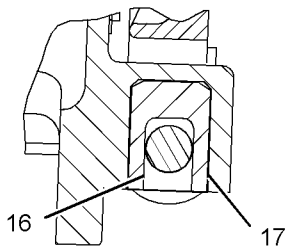

SECTION D-D

GRAPHIC #2 g01116949

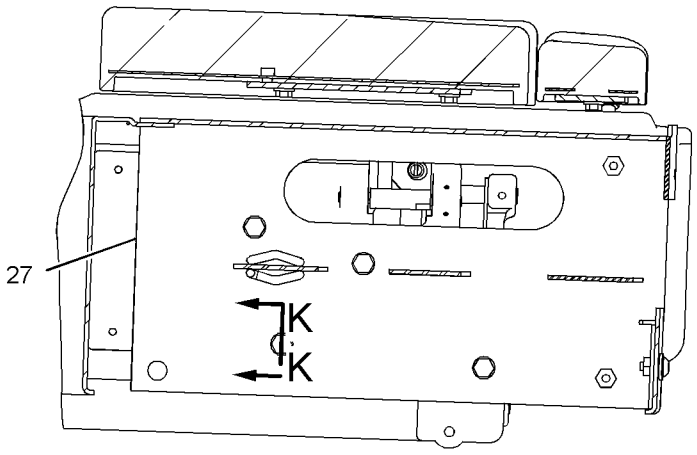

SECTION E-E

REFER TO ALL ILLUSTRATIONS OF THIS GROUP FOR AUXILIARY VIEWS

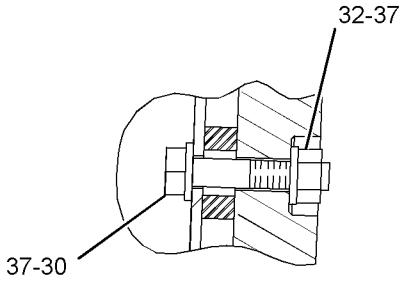

SECTION K-K

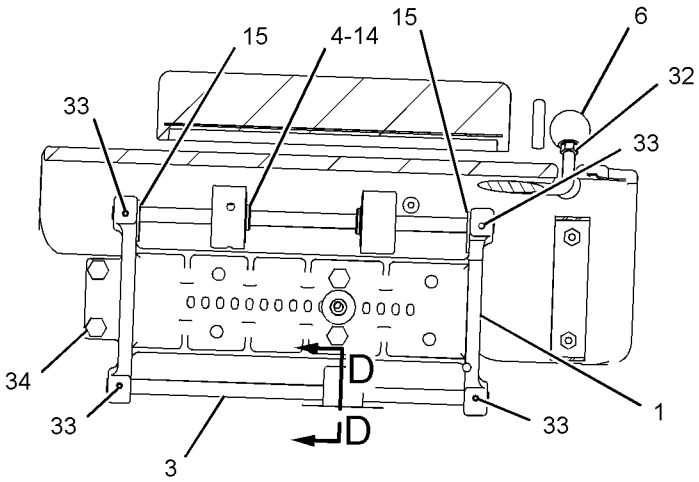

SECTION G-G

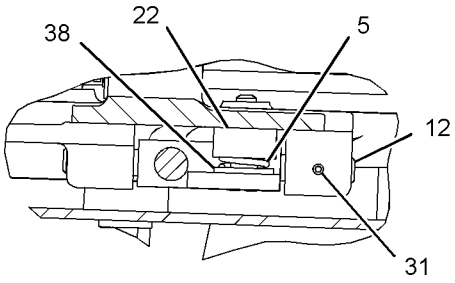

SECTION J-J

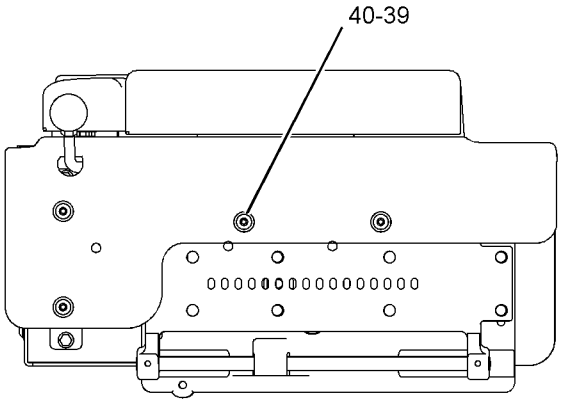

VIEW H-H

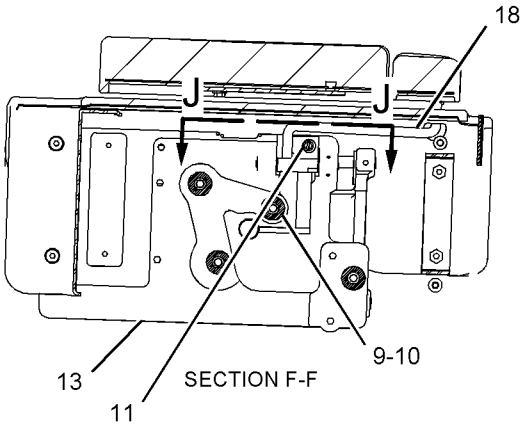

SECTION F-F

GRAPHIC #3 **<END>** g01116950

OPERATOR STATION

232-1396 SUPPRESSION GP-CAB SOUND—FRONT

S/N: M3G1-UP

PART OF 243-1080 CAB AR-ENCLOSED ROPS

SMCS-7329 **i02207784**

NOTE	REF NO	GRAPHIC REF	PART NUMBER	QTY	PART NAME 1 2 3 4 5 6 (PRODUCT LEVEL)	SEE PAGE
	1	1	**232-1684**	1	INSULATION	
	2	1	**232-1685**	1	INSULATION	
	3	1	**232-1686**	1	INSULATION	
	4	1	**232-1687**	1	INSULATION	
	5	1	**232-1711**	1	INSULATION	
	6	1	**232-1712**	1	INSULATION	
	7	1	**233-0915**	1	INSULATION	
	8	1	**233-0916**	1	INSULATION	

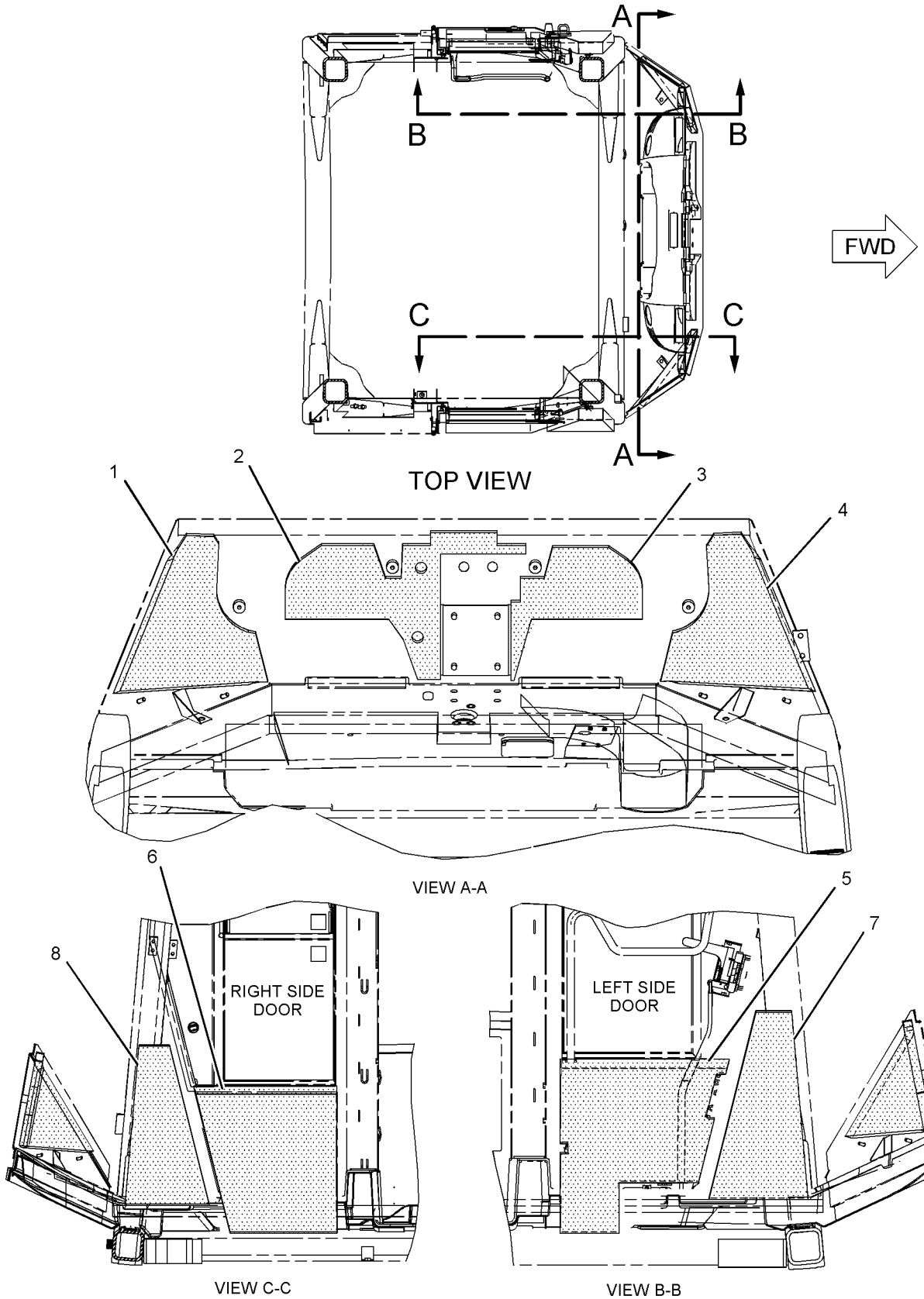

GRAPHIC #1 **<END>** g01066148

233-7676 SUPPRESSION GP-CAB SOUND–
AIR CONDITIONER, HEATER
S/N: M3G1-UP
PART OF 246-5231 SUPPRESSION GP-CAB SOUND
AN ATTACHMENT

SMCS-7329 **i02444787**

NOTE	REF NO	GRAPHIC REF	PART NUMBER	QTY	PART NAME 1 2 3 4 5 6 (PRODUCT LEVEL)	SEE PAGE
	1	1	**232-1335**	1	INSULATION	
	2	1	**232-1336**	1	INSULATION	
	3	1	**232-1337**	1	INSULATION	
	4	1	**232-1338**	1	INSULATION	
	5	1	**232-1688**	1	INSULATION	
D	6	1	**5P-5637**		SEAL (0.52-M)	

D-ORDER BY THE METER

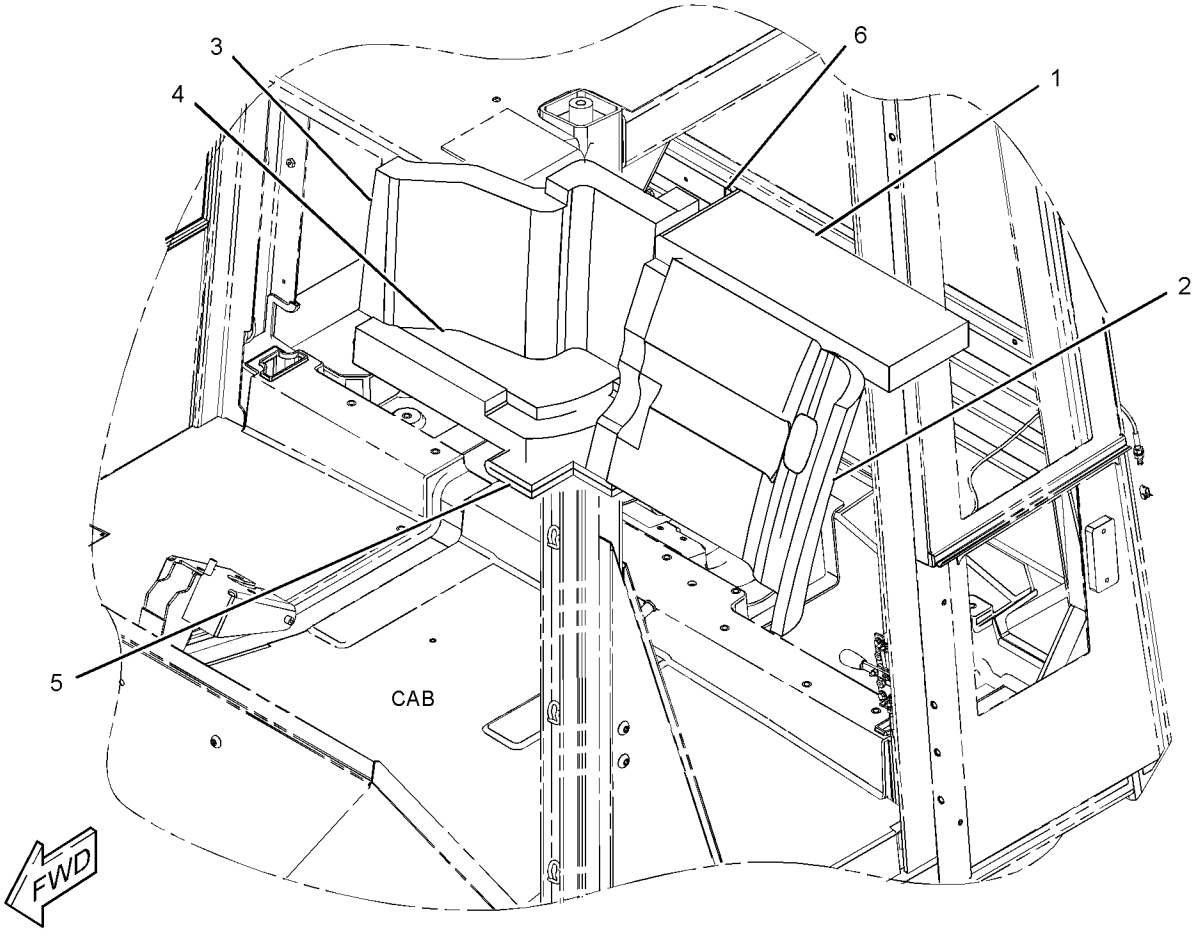

GRAPHIC #1 **<END>** g01187543

OPERATOR STATION

234-9553 SUPPRESSION GP-CAB SOUND–REAR

S/N: M3G1-UP

PART OF 243-1080 CAB AR-ENCLOSED ROPS

SMCS-7329 **i02219193**

NOTE	REF NO	GRAPHIC REF	PART NUMBER	QTY	PART NAME 1 2 3 4 5 6 (PRODUCT LEVEL)	SEE PAGE
	1	1	**228-4428**	1	INSULATION	
	2	1	**234-9571**	1	INSULATION	
	3	1	**234-9572**	2	INSULATION	

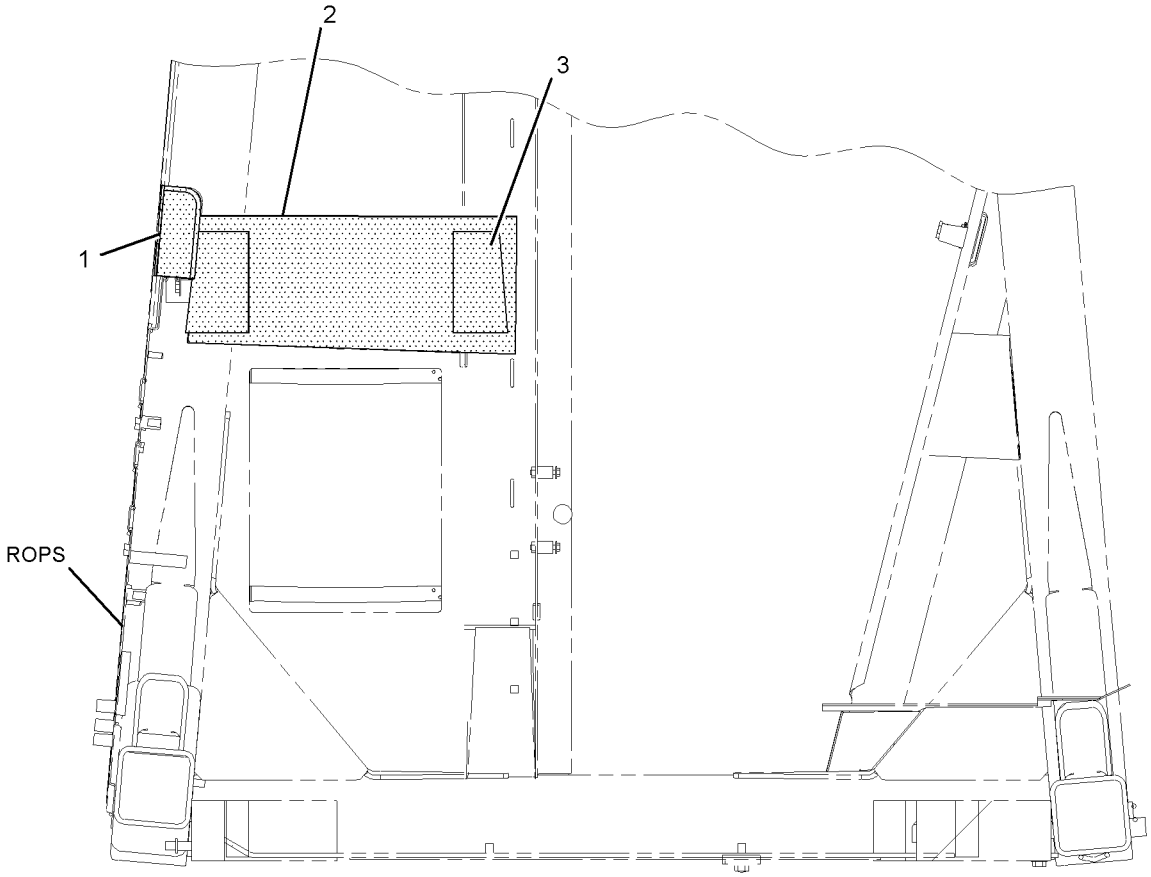

RIGHT SIDE VIEW

GRAPHIC #1

<END>

g01066019

OPERATOR STATION

246-5231 SUPPRESSION GP-CAB SOUND—CAB REAR, CAB ROOF

S/N: M3G1-UP

PART OF 262-1085 SUPPRESSION AR-SOUND

AN ATTACHMENT

SMCS-7329 **i02444502**

NOTE	REF NO	GRAPHIC REF	PART NUMBER	QTY	PART NAME 1 2 3 4 5 6 (PRODUCT LEVEL)	SEE PAGE
	1	1	**174-2407**	1	INSULATION	
Y	2	1	*233-7676*	1	SUPPRESSION GP-CAB SOUND (AIR CONDITIONER, HEATER)	759
	3	1	**236-1068**	1	INSULATION	
	4	1	**236-1069**	1	INSULATION	
	5	1	**236-5898**	1	INSULATION	
	6	1	**248-5249**	1	INSULATION (LH)	
	7	1	**248-5250**	1	INSULATION (LH)	
	8	1	**248-6189**	1	INSULATION (RH)	
	9	1	**248-6190**	1	INSULATION (RH)	

Y-SEPARATE ILLUSTRATION

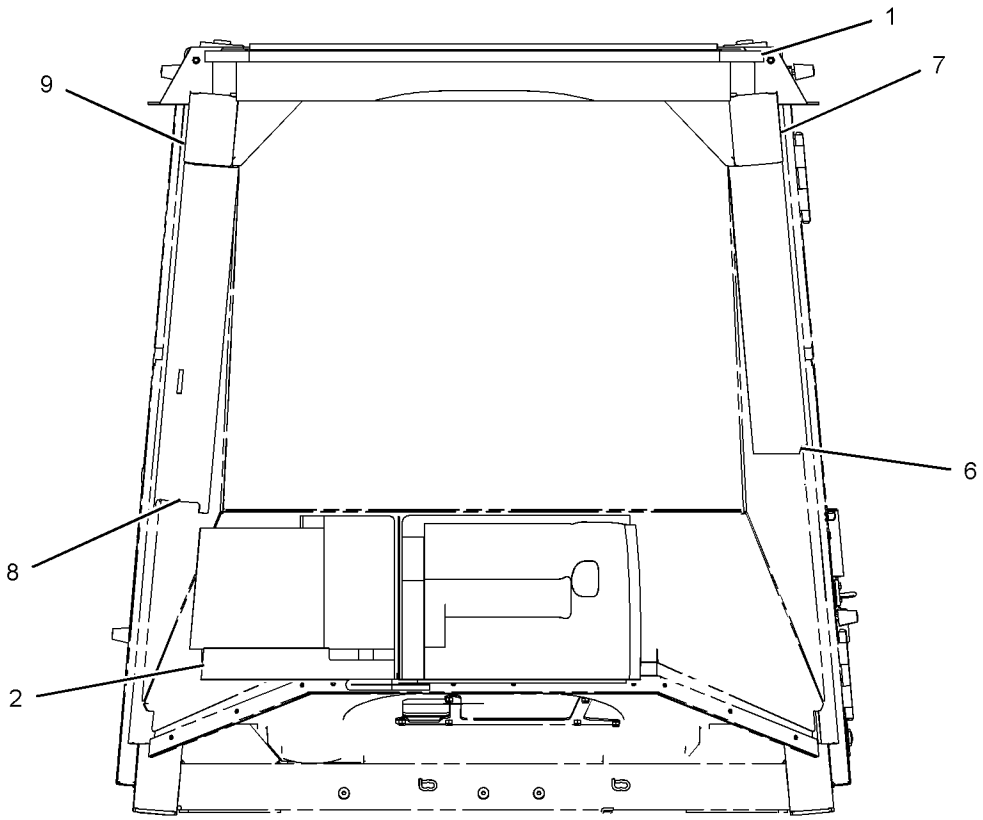

FRONT VIEW

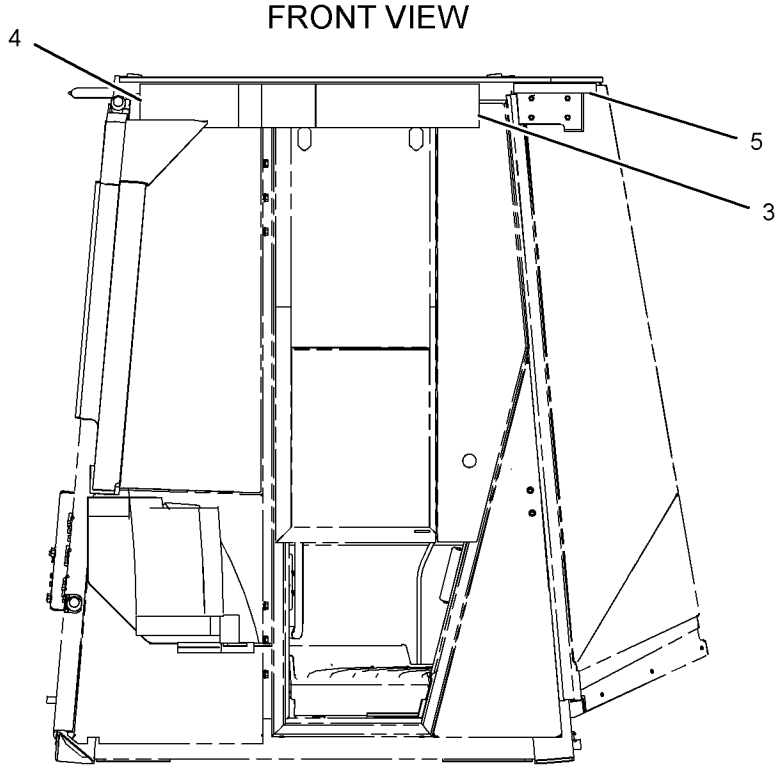

RIGHT SIDE VIEW

GRAPHIC #1

<END>

g01186546

OPERATOR STATION

191-2933 SUSPENSION GP-SEAT—AIR

S/N: M3G1-UP

PART OF 219-8094, 219-8095 SEAT GP-SUSPENSION

ALSO AN ATTACHMENT

SMCS-7324 **i02242455**

NOTE	REF NO	GRAPHIC REF	PART NUMBER	QTY	PART NAME 1 2 3 4 5 6 (PRODUCT LEVEL)	SEE PAGE
	1	1	**3P-9900**	5	WASHER (10.5X30X3-MM THK)	
	2	1	**4B-4278**	2	WASHER (10.2X20.5X1.6-MM THK)	
	3	1	**4V-8577**	12	BEARING	
	4	1	**8L-8413**	1	STRAP-CABLE	
	5	1	**145-0326**	1	FILM-INSTRUCTION (SEAT ADJUSTMENT)	
	6	1	**164-1234**	1	PLATE	
	7	1	**101-0003**	33	FASTENER	
	8	1	**169-7380**	1	BOLT-SOCKET HEAD (3/8-16X0.375-IN)	
	9	1	**186-5107**	2	SCREW (NO 8X1.25-IN)	
	10	1	**192-7752**	4	SHAFT AS	
	11	1	**192-7755**	1	HOUSING AS	
	12	1	**192-7760**	1	SHAFT	
	13	1	**192-7767**	1	SCISSORS AS	
	14	1	**192-7783**	1	TOGGLE AS	
	15	1	**192-7787**	1	TOGGLE AS	
	16	1	**192-7790**	1	HOUSING AS	
	17	1	**192-7795**	1	BOOT	
	18	1	**192-7805**	1	HARNESS AS-VALVE (SEAT AIR COMPRESSOR)	
		1	**102-8802**	1	KIT-RECEPTACLE (2-PIN)	
					(INCLUDES RECEPTACLE AS & WEDGE)	
	19	1	**192-7810**	1	SPRING AS-AIR	
		1	**5P-4423**	1	ELBOW	
		1	**163-1135**	1	SPRING	
	20	1	**192-7812**	1	BOLT-SHOULDER	
	21	1	**192-7820**	3	BUMPER	
	22	1	**192-7822**	1	SHAFT	
	23	1	**237-3943**	1	BRACKET	
	24	1	**237-3970**	1	AIR COMPRESSOR GP-SEAT	
	25	1	**1H-8296**	1	SCREW-MACHINE (3/8-16X0.52-IN)	
	26	1	**2K-4973**	8	LOCKNUT (3/8-16-THD)	
	27	1	**3J-4818**	1	LOCKWASHER	
M	28	1	**5C-2890**	3	NUT (M6X1-THD)	
	29	1	**8T-9371**	1	BOLT (3/8-16X0.5-IN)	
E	30	1	**211-5358**		CONDUIT (100-CM)	
BD	31	1	**5P-6010**		TUBE	
					AVAILABLE REPAIR KIT(S):	
			192-7799	1	KIT-AIR VALVE (SUSPENSION SEAT)	
					(INCLUDES KNOB AS, NUT, VALVE, LOCKWASHER & FITTING)	
			192-7848	1	KIT-SHOCK ABSORBER (SUSPENSION SEAT)	
					(INCLUDES LOCKNUT, LOCKWASHER, SHOCK ABSORBER, BEARING, WASHER, & BOLTS)	
			211-9294	1	KIT-TETHER (SUSPENSION SEAT)	
					(INCLUDES TETHERS)	

B-USE AS REQUIRED
D-ORDER BY THE METER
E-ORDER BY THE CENTIMETER
M-METRIC PART

191-2933 SUSPENSION GP-SEAT *(contd.)* i02242455

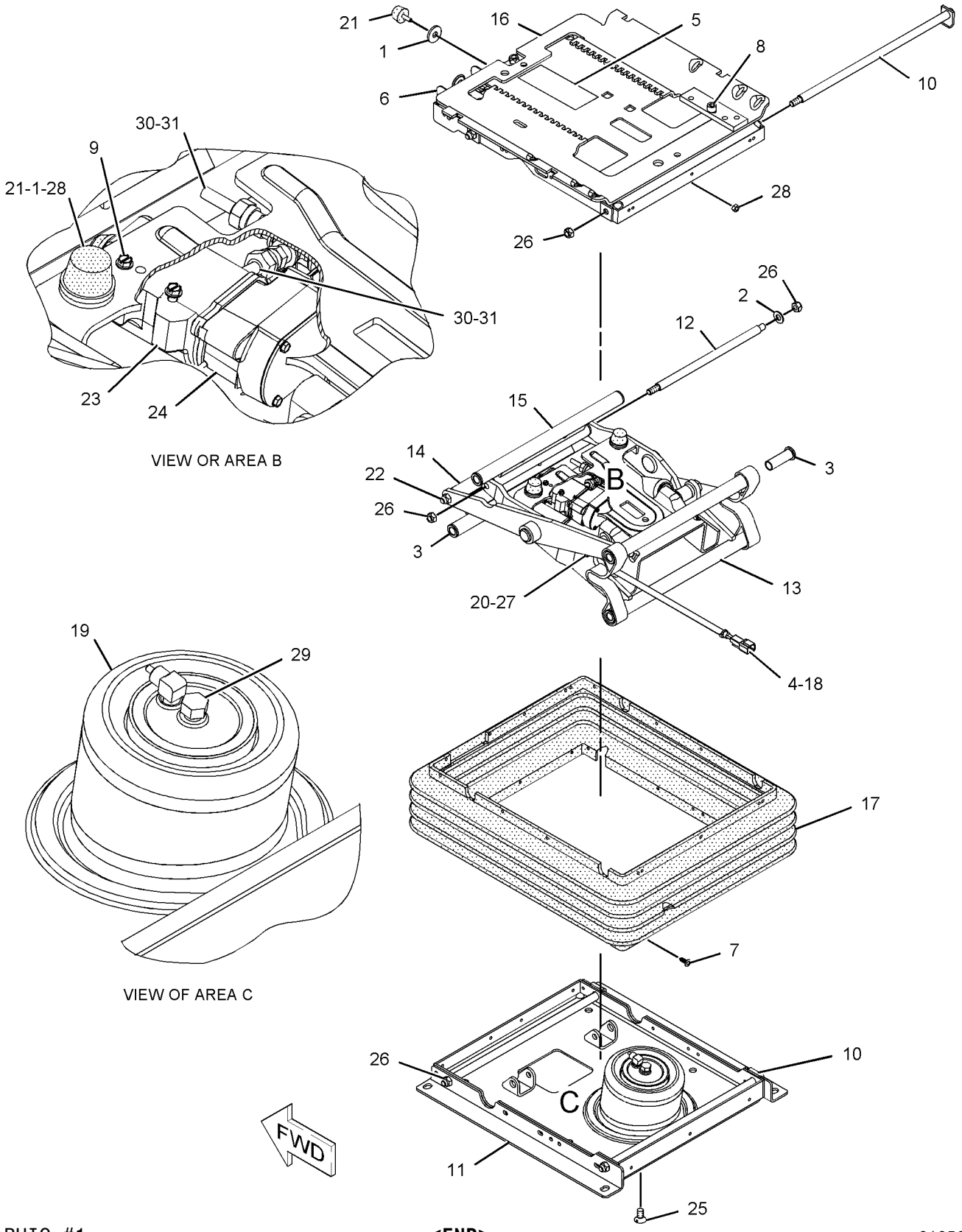

GRAPHIC #1 **<END>** g01056291

OPERATOR STATION

131-2633 VISOR GP-CAB

S/N: M3G1-UP
PART OF 276-5456 MACHINE AR
AN ATTACHMENT

SMCS-7301 **i01105997**

NOTE	REF NO	GRAPHIC REF	PART NUMBER	QTY	PART NAME 1 2 3 4 5 6 (PRODUCT LEVEL)	SEE PAGE
M	1	1	**111-4627**	4	SCREW-MACHINE (M6X1.0X30MM)	
	2	1	**123-4371**	1	VISOR AS	

M-METRIC PART

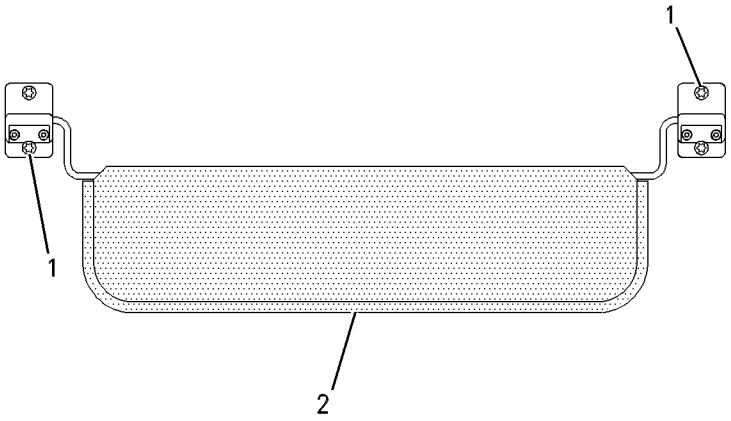

REAR VIEW

GRAPHIC #1 **<END>** g00501655

OPERATOR STATION

236-9039 WASHER GP-WINDOW

S/N: M3G1-UP

PART OF 237-4933 CHASSIS AR

SMCS-7306 **i02219302**

NOTE	REF NO	GRAPHIC REF	PART NUMBER	QTY	PART NAME 1 2 3 4 5 6 (PRODUCT LEVEL)	SEE PAGE
	1	1	**243-3750**	1	TANK GP-WINDOW WASHER	
		1	**223-3383**	2	PUMP AS-WASHER (24-VOLT)	
M	2	1	**5C-9553**	4	BOLT (M6X1X16-MM)	
	3	1	**9X-8256**	4	WASHER (6.6X12X2-MM THK)	

M-METRIC PART

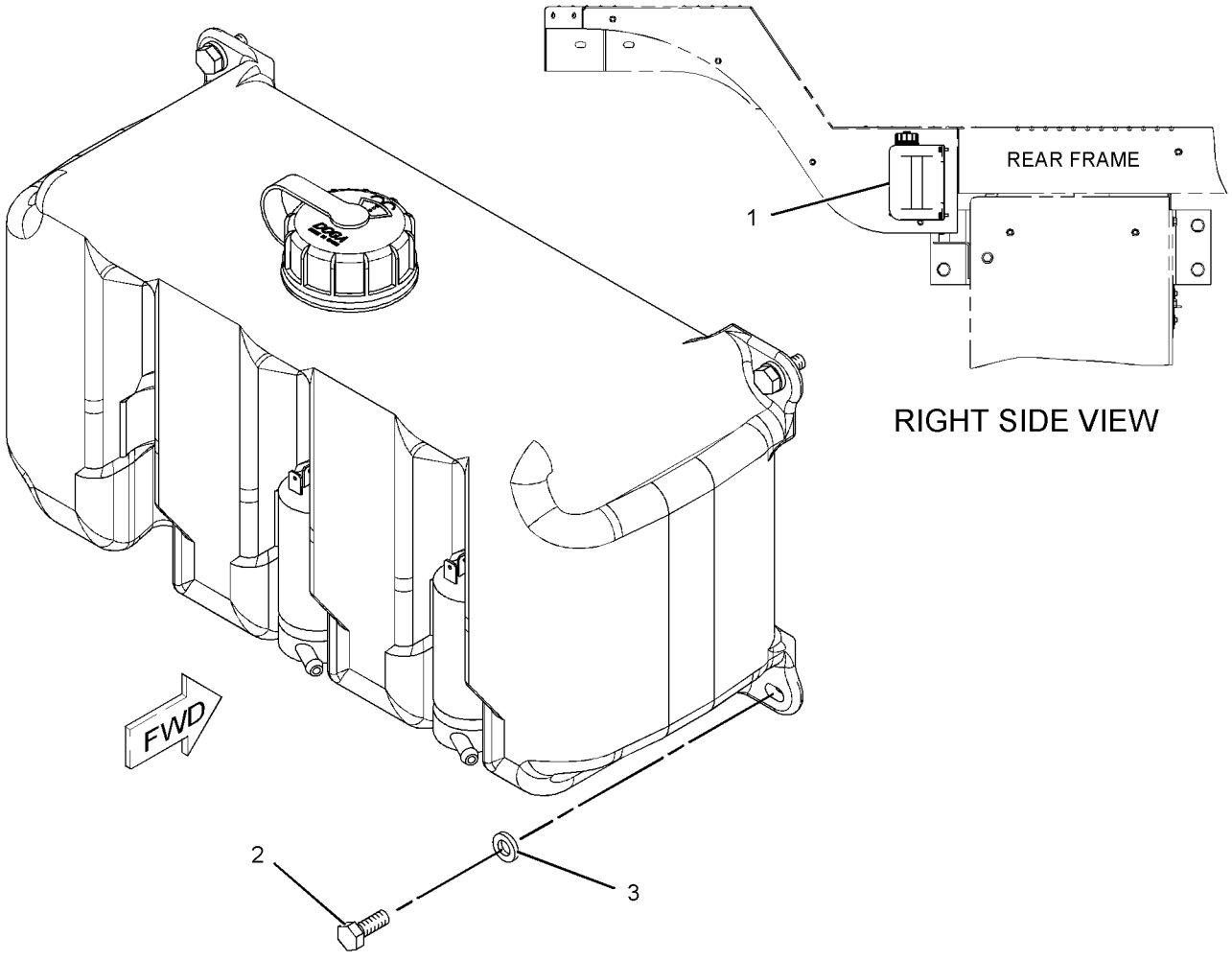

GRAPHIC #1 **<END>** g01116142

OPERATOR STATION

185-7522 WINDOW GP-DOOR–RH

S/N: M3G1-UP

PART OF 185-7534 DOOR GP-CAB

SMCS-7310 **i01628755**

NOTE	REF NO	GRAPHIC REF	PART NUMBER	QTY	PART NAME 1 2 3 4 5 6 (PRODUCT LEVEL)	SEE PAGE
	1	1	**8C-6738**	2	SCREW-PAN HEAD (6-20X1 IN)	
	2	1	**187-5128**	1	CATCH AS (RH)	
	3	1	**187-5127**	1	CATCH AS (LH)	
					(EACH CATCH AS INCLUDES)	
		1	**150-8015**	1	GASKET	
	4	1	**211-9856**	1	STRIP AS	
	5	1	**185-7524**	1	GLASS-SLIDING	
	6	1	**185-7525**	1	GLASS-FIXED	
D	7	1	**9X-2532**		SEAL (.36M)	
E	8	1	**208-5022**		SEAL (135CM)	
	9	1	**185-7529**	1	FRAME AS-WINDOW (UPPER RH)	
E	10	1	**137-2170**		SEAL (257CM)	
D	11	1	**9X-2533**		STOP (.12M)	

D-ORDER BY THE METER
E-ORDER BY THE CENTIMETER

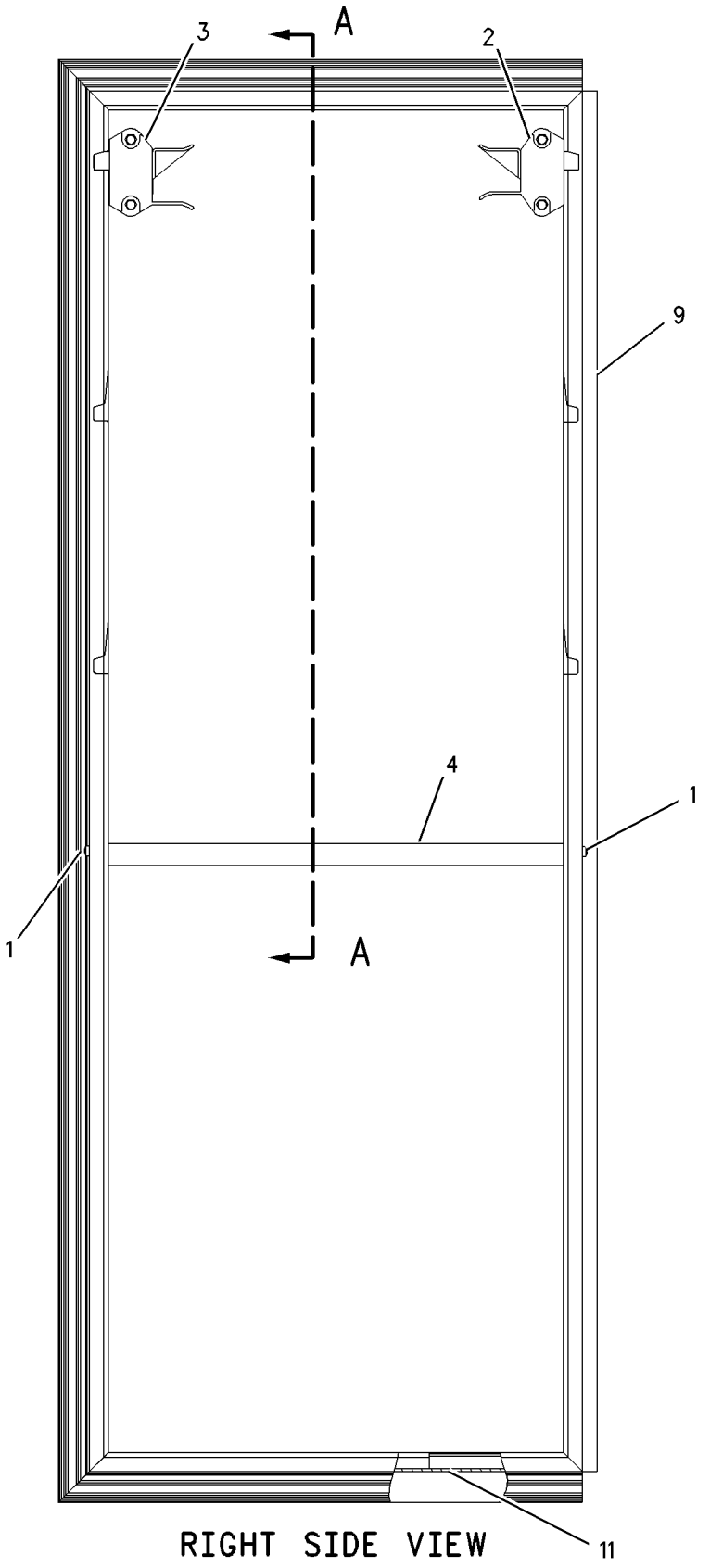

RIGHT SIDE VIEW

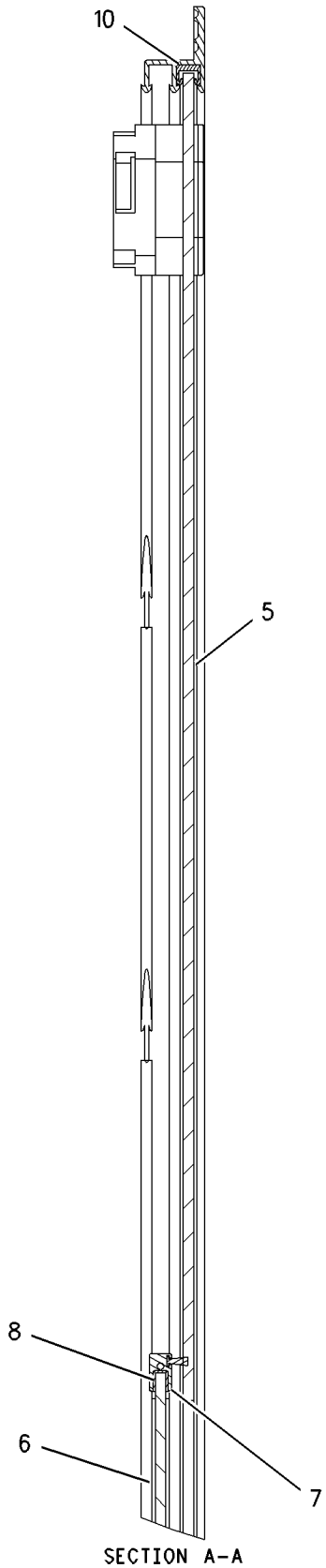

SECTION A-A

GRAPHIC #1 **<END>** g00829150

OPERATOR STATION

257-2016 WIPER GP-WINDOW

S/N: M3G1-UP

PART OF 243-1080 CAB AR-ENCLOSED ROPS

SMCS-7305 **i02442557**

NOTE	REF NO	GRAPHIC REF	PART NUMBER	QTY	PART NAME 1 2 3 4 5 6 (PRODUCT LEVEL)	SEE PAGE
	1	1	**3S-2093**	3	STRAP-CABLE	
	2	2	**3V-3263**	1	CONNECTOR	
	3	2	**6V-6210**	1	GASKET-SHAFT	
	4	1	**6V-7419**	2	BLADE AS-WIPER	
	5	2	**7K-1181**	1	STRAP-CABLE	
	6	2	**8T-5400**	1	CONNECTOR	
	7	1	**9C-9458**	1	BRACKET AS	
M		1	**8T-3490**	1	NUT-WELD (M10X1.5-THD)	
	8	2	**124-3637**	1	PLATE-WIPER	
Y	9	2	**155-5789**	1	MOTOR GP-WINDOW WIPER (REAR)	711
Y	10	1	**189-8622**	1	MOTOR GP-WINDOW WIPER (FRONT)	712
	11	2	**211-1167**	1	GROMMET	
Y	12	1	**214-7634**	1	ARM GP-WINDOW WIPER (REAR)	643
Y	13	1	**214-7635**	1	ARM GP-WINDOW WIPER (FRONT)	644
	14	1	**236-6253**	1	GROMMET	
	15	2	**257-2197**	1	PLUG	
	16	2	**2V-3216**	1	CLIP	
M	17	2	**5C-9553**	1	BOLT (M6X1X16-MM)	
	18	1,2	**6V-3265**	6	CLIP	
	19	1,2	**8T-4121**	4	WASHER-HARD (11X21X2.5-MM THK)	
M	20	1	**8T-4136**	1	BOLT (M10X1.5X25-MM)	
M	21	1,2	**8T-4137**	2	BOLT (M10X1.5X20-MM)	
M	22	2	**8T-4138**	1	BOLT (M6X1X20-MM)	
	23	2	**8T-4205**	2	WASHER-HARD (7.2X14.5X2-MM THK)	
E	24	2	**144-0195**		HOSE (334-CM)	
E	24A	2	**144-0195**		HOSE (215.7-CM)	

E-ORDER BY THE CENTIMETER
M-METRIC PART
Y-SEPARATE ILLUSTRATION

REFER TO ALL ILLUSTRATIONS OF
THIS GROUP FOR AUXILIARY VIEWS

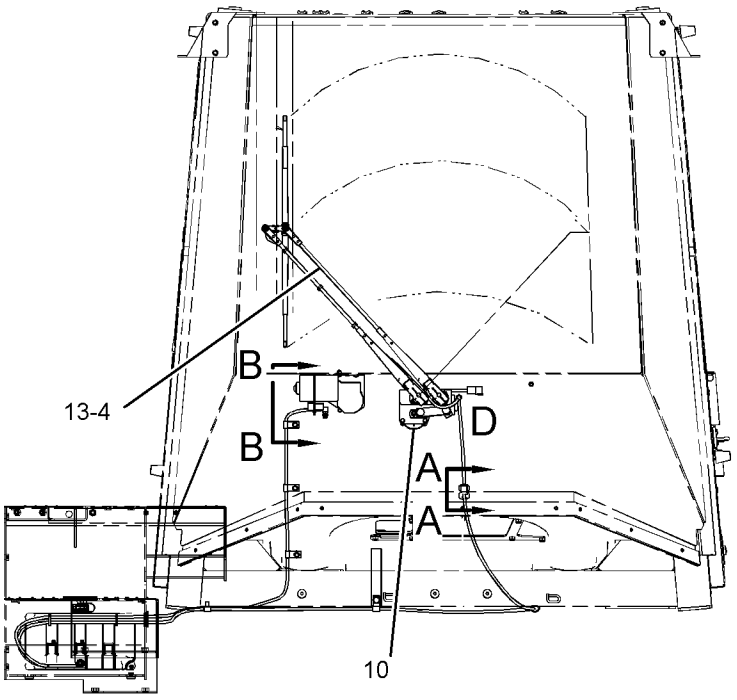

FRONT VIEW

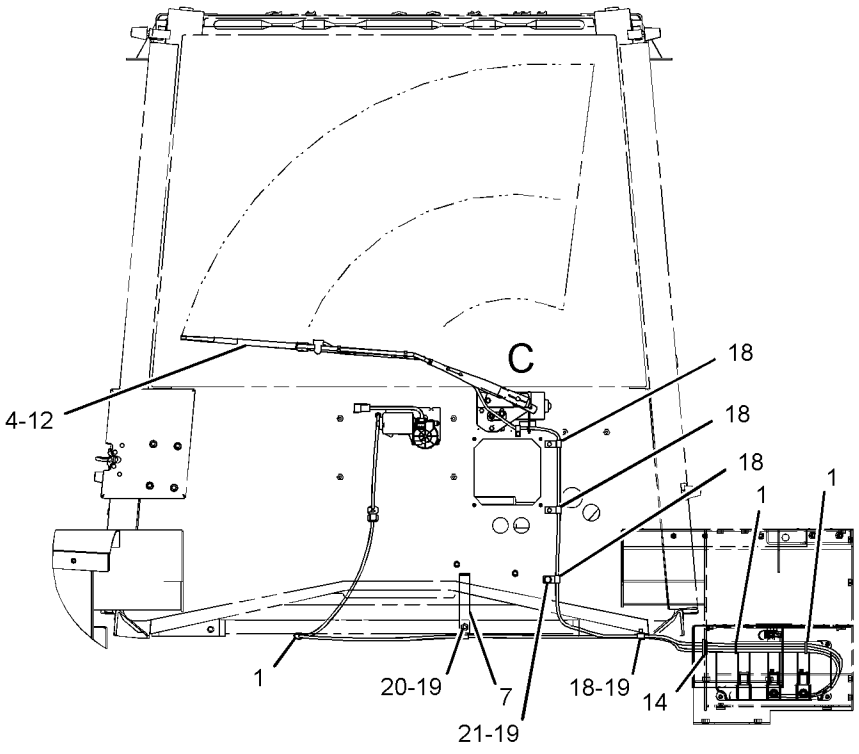

REAR VIEW

GRAPHIC #1

g01203157

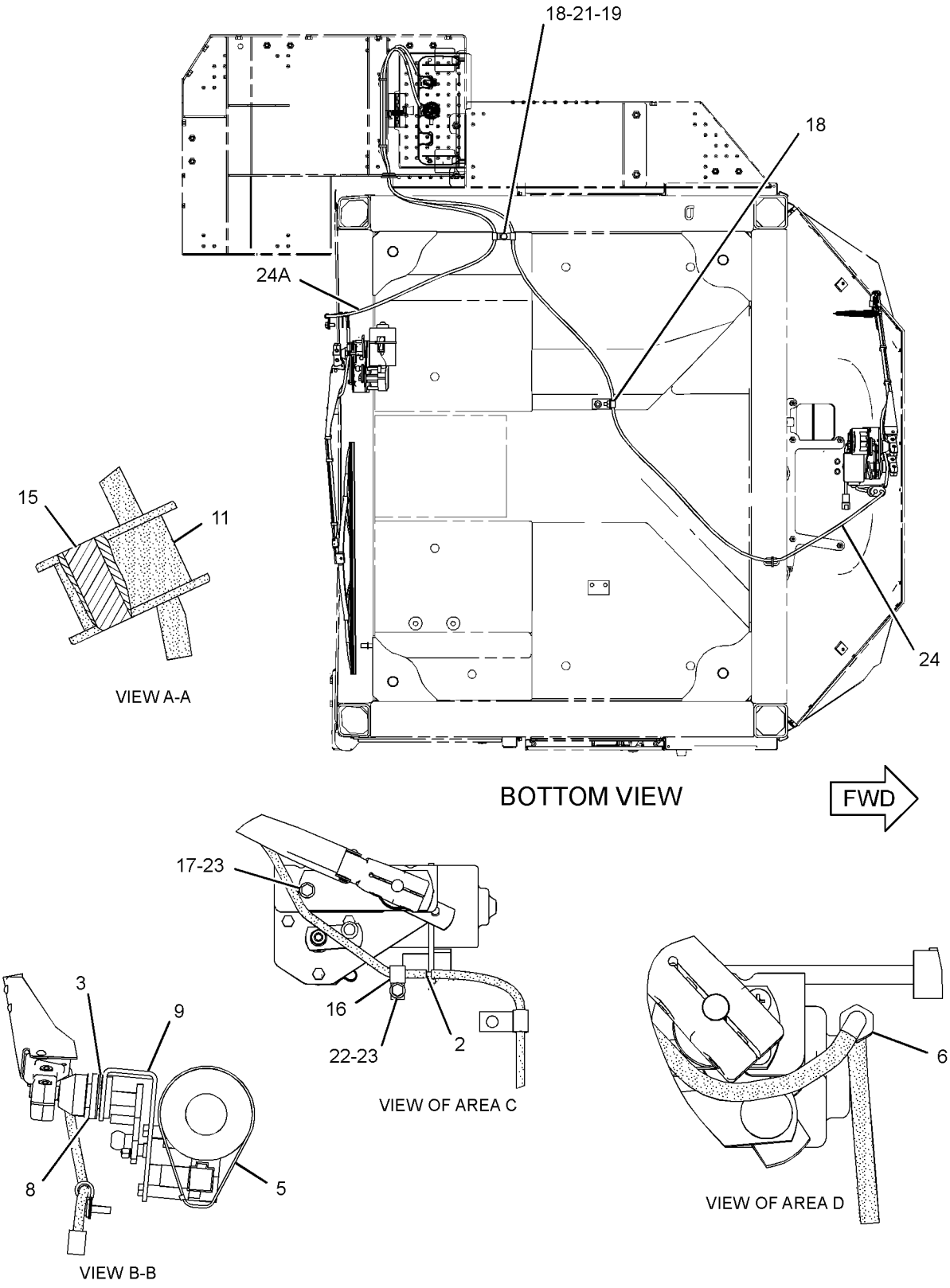

GRAPHIC #2 **<END>** g01206717

SERVICE EQUIPMENT AND SUPPLIES

247-1909 BOX GP-TOOL

S/N: M3G1-UP

AN ATTACHMENT

SMCS-7259 **i02306920**

NOTE	REF NO	GRAPHIC REF	PART NUMBER	QTY	PART NAME 1 2 3 4 5 6 (PRODUCT LEVEL)	SEE PAGE
	1	1	**177-1570**	1	LATCH AS (MINI T)	
		1	**217-0733**	1	LOCK AS	
	2	1	**222-5151**	1	PAWL	
	3	1	**245-3842**	1	SHEET	
	4	1	**248-0824**	1	BOX AS-TOOL	
M		1	**8T-3597**	6	NUT-WELD (M12X1.75-THD)	
		1	**245-3850**	1	HINGE AS	
	5	1	**248-0827**	2	ANGLE	
	8	1	**5P-1076**	10	WASHER-HARD (13.5X30X4-MM THK)	
	9	1	**8T-4121**	6	WASHER-HARD (11X21X2.5-MM THK)	
M	10	1	**8T-4136**	4	BOLT (M10X1.5X25-MM)	
M	11	1	**8T-4139**	6	BOLT (M12X1.75X30-MM)	
M	12	1	**8T-4191**	2	BOLT (M10X1.5X16-MM)	
M	13	1	**8T-4192**	4	BOLT (M12X1.75X25-MM)	
E	14	1	**3E-6602**		SEAL (126-CM)	

E-ORDER BY THE CENTIMETER
M-METRIC PART

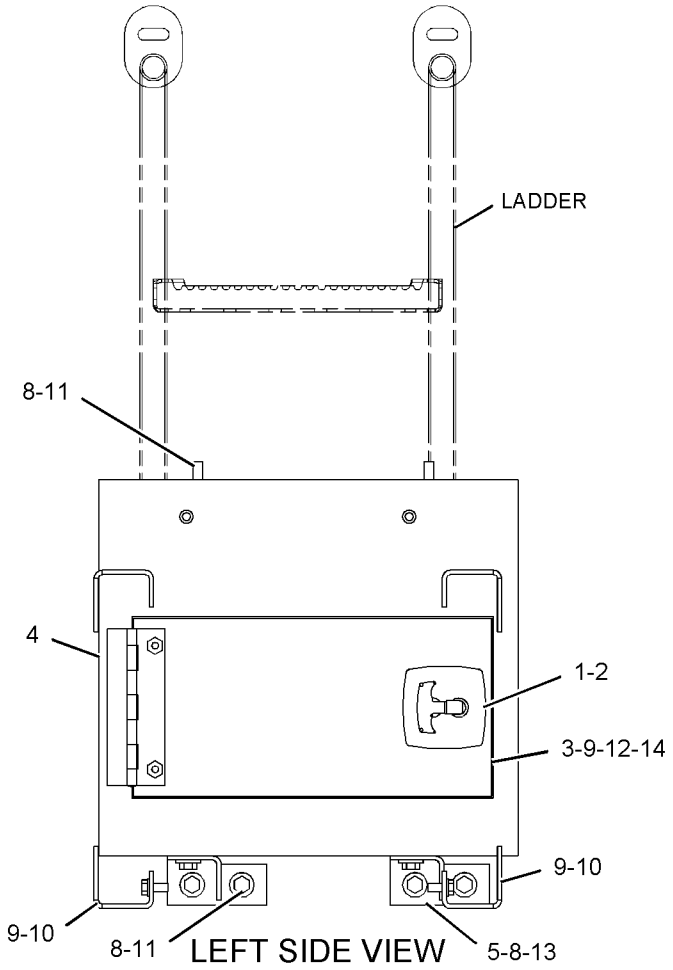

GRAPHIC #1 **<END>** g01130008

SERVICE EQUIPMENT AND SUPPLIES

276-4215 BOX GP-TOOL

S/N: M3G1-UP
PART OF 244-6607 WASTE HANDLING AR
AN ATTACHMENT

SMCS-7259 **i02449375**

NOTE	REF NO	GRAPHIC REF	PART NUMBER	QTY	PART NAME 1 2 3 4 5 6 (PRODUCT LEVEL)	SEE PAGE
	1	1	**177-1570**	1	LATCH AS (MINI T)	
		1	**272-6628**	1	LOCK AS-CYLINDER	
		1	**272-6629**	1	CAM	
	2	1	**222-5151**	1	PAWL	
	3	1	**245-3842**	1	SHEET	
	4	1	**248-0827**	2	ANGLE	
	5	1	**276-4216**	1	BOX AS-TOOL	
M		1	**8T-2321**	1	NUT-WELD	
M		1	**8T-3597**	6	NUT-WELD (M12X1.75-THD)	
		1	**245-3850**	1	HINGE AS	
		1	**276-4219**	2	CHANNEL	
	6	1	**8T-4121**	2	WASHER-HARD (11X21X2.5-MM THK)	
M	7	1	**8T-4139**	6	BOLT (M12X1.75X30-MM)	
M	8	1	**8T-4191**	2	BOLT (M10X1.5X16-MM)	
M	9	1	**8T-4192**	4	BOLT (M12X1.75X25-MM)	
	10	1	**8T-4223**	10	WASHER-HARD (13.5X25.5X3-MM THK)	
E	11	1	**3E-6602**		SEAL (19-CM EACH)	
E	11A	1	**3E-6602**		SEAL (43.8-CM EACH)	

E-ORDER BY THE CENTIMETER
M-METRIC PART

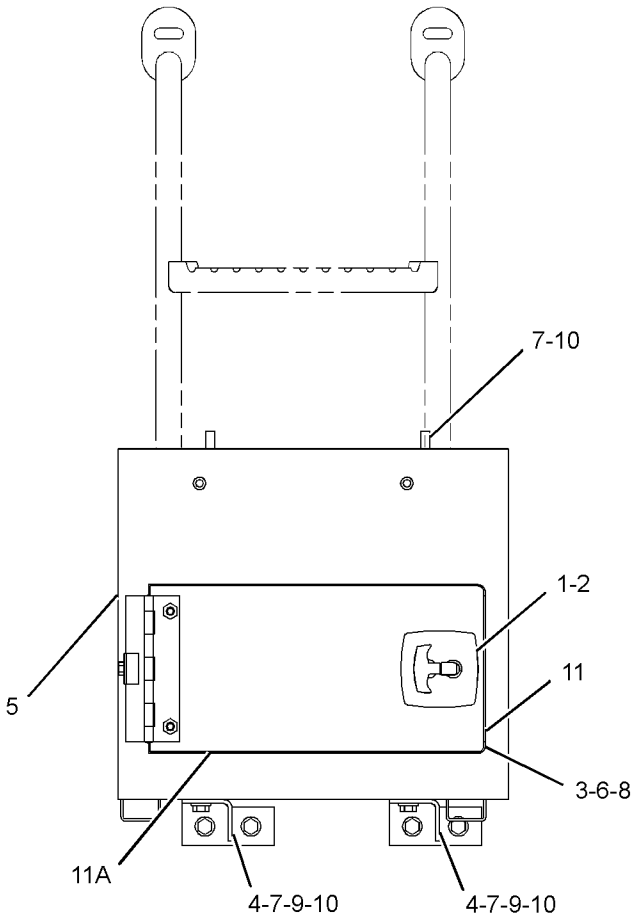

GRAPHIC #1

<END>

g01201624

SERVICE EQUIPMENT AND SUPPLIES

247-9859 FILM GP–962H WASTE HANDLER

S/N: M3G1-UP

PART OF 237-0441 PLATE & FILM GP

SMCS-7405, 7557 **i02306859**

NOTE	REF NO	GRAPHIC REF	PART NUMBER	QTY	PART NAME 1 2 3 4 5 6 (PRODUCT LEVEL)	SEE PAGE
	1	1	**261-5639**	1	FILM-STRIPE (962H, LH)	
	2	1	**261-6684**	1	FILM-STRIPE (REAR, LH)	
	3	1	**261-6683**	1	FILM-STRIPE (REAR, RH)	
	4	1	**261-5638**	1	FILM-STRIPE (962H, RH)	
E	5	1	**206-6305**	2	FILM (RED REFLECTIVE) (13.5-CM EACH)	
	6	1	**209-0516**	1	FILM-CATERPILLAR (WINDSHIELD)	
	7	1	**197-4859**	1	FILM-CATERPILLAR (REAR CAB)	
	8	1	**253-0861**	2	FILM-INFORMATION (CAT POWER, ACERT TECHNOLOGY)	

E-ORDER BY THE CENTIMETER

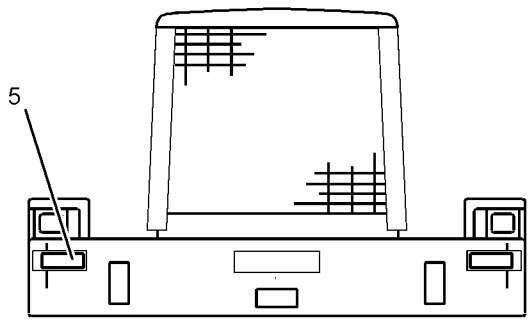

REAR VIEW

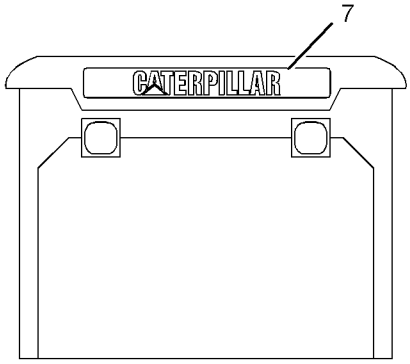

REAR VIEW
(CAB)

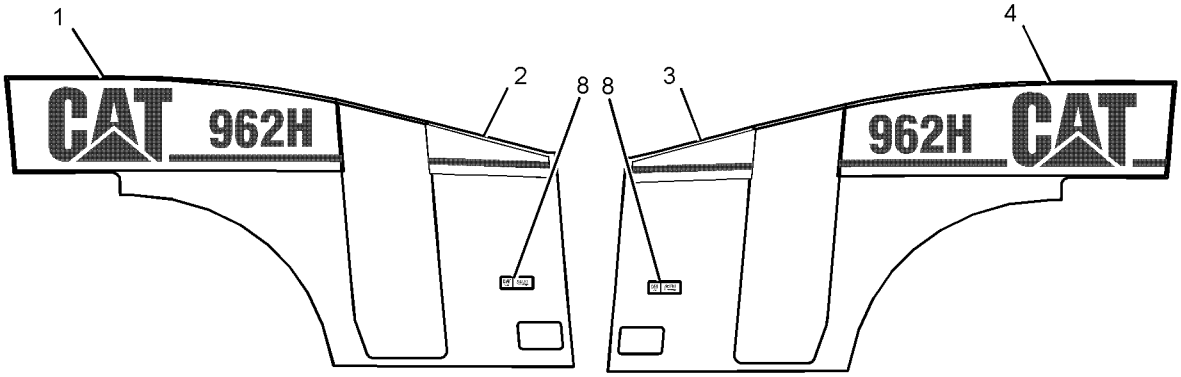

LEFT SIDE VIEW RIGHT SIDE VIEW

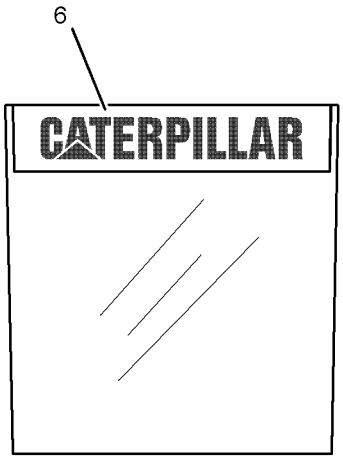

FRONT WINDSHIELD

GRAPHIC #1 **<END>** g01124727

SERVICE EQUIPMENT AND SUPPLIES

244-5526 LINES GP-DIAGNOSTIC—REMOTE PRESSURE TAPS

S/N: M3G1-UP

PART OF 237-0238 HYDRAULIC AR-2 VALVE

SMCS-7554 **i02447599**

NOTE	REF NO	GRAPHIC REF	PART NUMBER	QTY	PART NAME 1 2 3 4 5 6 (PRODUCT LEVEL)	SEE PAGE
	1	2	**6V-0852**	7	CAP-DUST	
	2	1	**111-4836**	1	CLIP	
	3	1	*154-5232*	1	ADAPTER AS	
		1	**3K-0360**	1	SEAL-O-RING	
		1	**4J-5477**	1	SEAL-O-RING	
		1	**112-9783**	1	ADAPTER	
	4	2	**185-6250**	7	FITTING AS	
	5	2	**256-0854**	1	PLATE	
	6	1	**256-7890**	1	HOSE AS (BRAKE ACCUMULATOR PRESSURE)	
	7	1	**256-7891**	1	HOSE AS (TORQUE CONVERTER INLET PRESS)	
	8	1	**256-7892**	1	HOSE AS (TORQUE CONVERTER OUTLET PRESS)	
	9	1	**256-7893**	1	HOSE AS (TMSN LUBRICATION OIL PRESSURE)	
	10	1	**256-7894**	1	HOSE AS (TRANSMISSION PUMP PRESSURE)	
	11	1	**256-7895**	1	HOSE AS (STEERING PUMP PRESSURE)	
	12	1	**260-3840**	1	HOSE AS (MAIN HYD RELIEF VALVE PRESSURE)	
	13	2	*148-8351*	6	ELBOW AS	
					(EACH INCLUDES)	
		2	**4J-5477**	1	SEAL-O-RING	
		2	**6V-9849**	1	ELBOW (SWIVEL)	
	14	1	*148-8368*	3	ELBOW AS	
					(EACH INCLUDES)	
		1	**3J-1907**	1	SEAL-O-RING	
		1	**4J-5477**	1	SEAL-O-RING	
		1	**6V-8627**	1	ELBOW	
	15	2	**170-4735**	7	RING-RETAINING	
	16	2	**4J-5477**	7	SEAL-O-RING	
	17	1,2	**8T-4121**	6	WASHER-HARD (11X21X2.5-MM THK)	
M	18	1	**8T-4133**	1	NUT (M10X1.5 THD)	
M	19	1,2	**8T-4136**	5	BOLT (M10X1.5X25-MM)	
	20	1	**9X-8402**	1	CLIP	
E	21	1	**7I-1024**		GUARD (28-CM)	
E	22	1	**7Y-5074**		GUARD (30-CM)	

E-ORDER BY THE CENTIMETER
M-METRIC PART

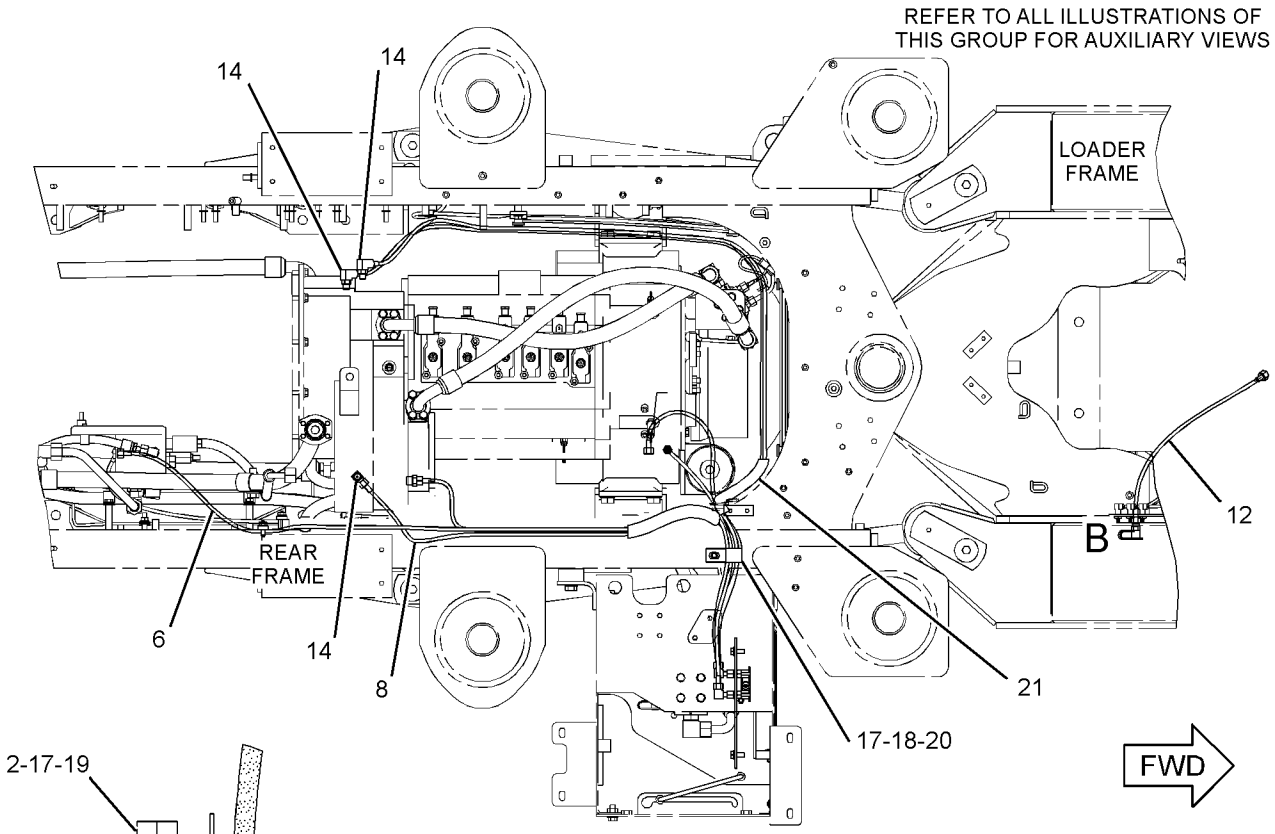

TOP VIEW

SECTION A-A

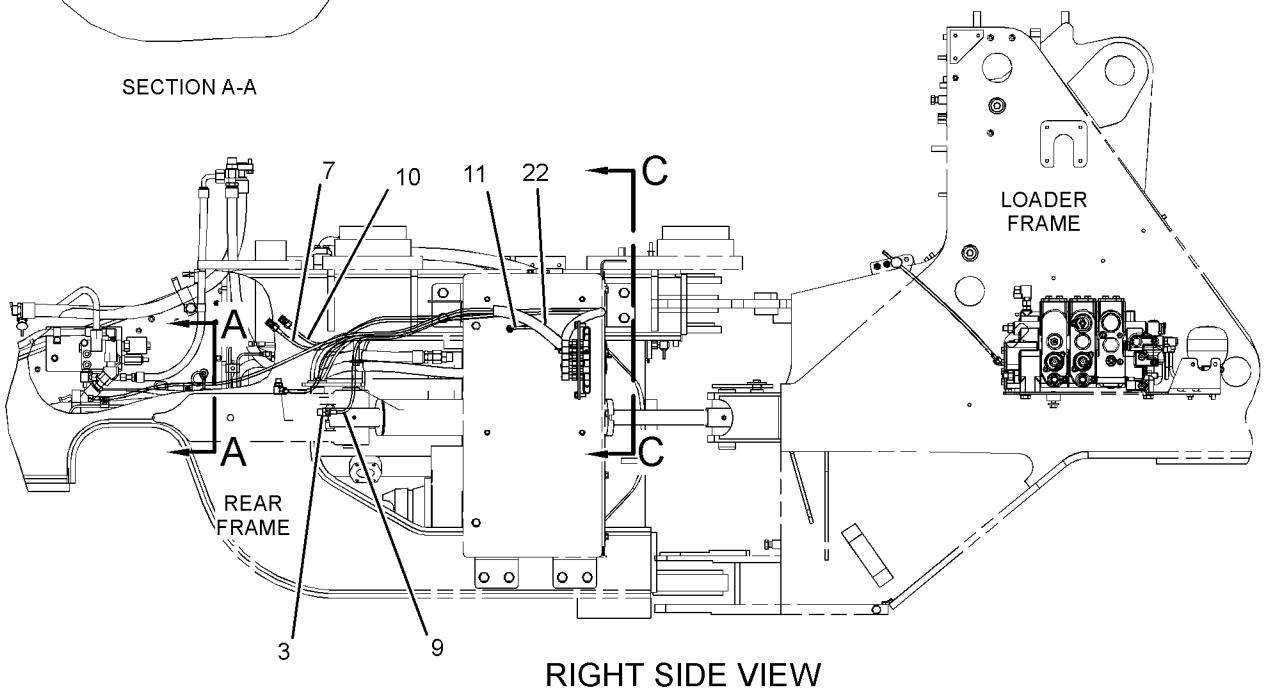

RIGHT SIDE VIEW

GRAPHIC #1

g01202461

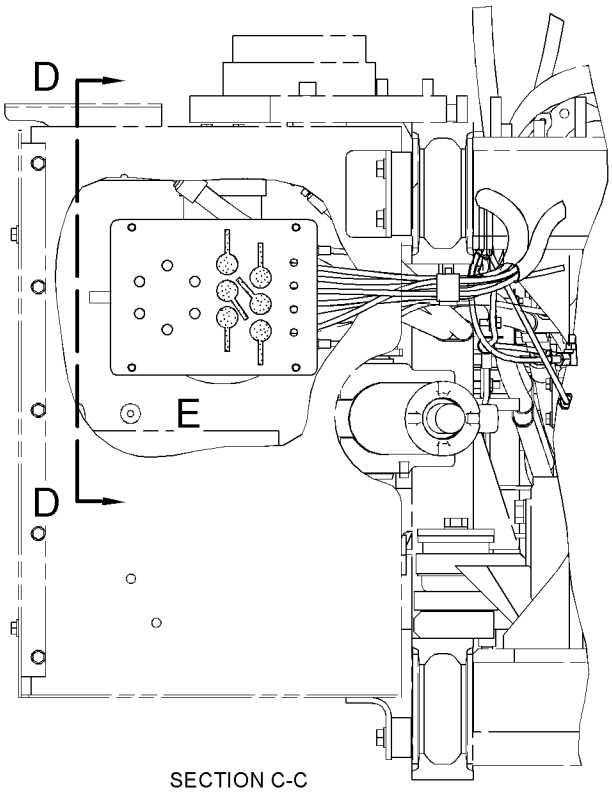

SECTION C-C

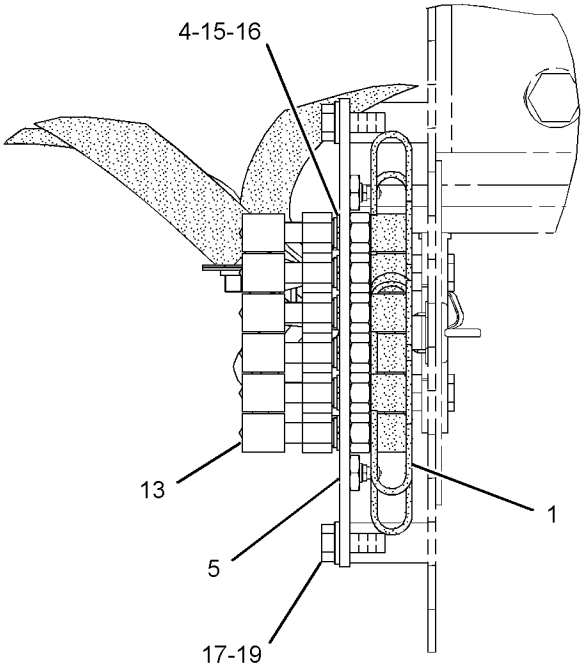

VIEW D-D

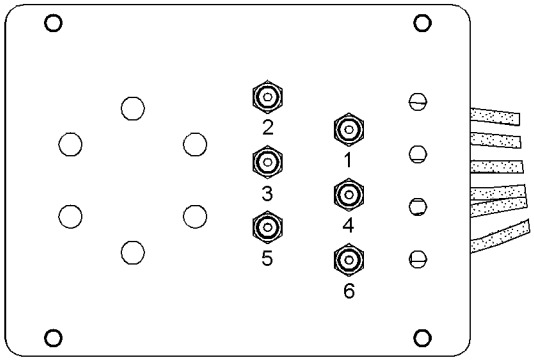

VIEW OF AREA E
(DUST CAPS REMOVED)

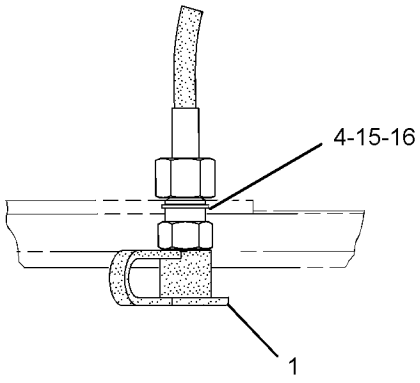

VIEW OF AREA B
(SEE REMOTE PRESSURE
TAPS DESCRIPTION CHART)

REMOTE PRESSURE TAPS DESCRIPTION	
1	BRAKE ACCUMULATOR PRESSURE
2	STEERING PUMP PRESSURE
3	TORQUE CONVERTER INLET PRESSURE
4	TORQUE CONVERTER OUTLET PRESSURE
5	TRANSMISSION PUMP PRESSURE
6	TRANSMISSION LUBRICATION OIL PRESSURE
7	IMPLEMENT MAIN HYD RELIEF VALVE PRESSURE (SEE AREA B)

GRAPHIC #2 **<END>** g01200996

244-5585 LINES GP-DIAGNOSTIC—REMOTE PRESSURE TAPS—TRANSMISSION CLUTCH

S/N: M3G1-UP

AN ATTACHMENT

SMCS-7554 **i02444637**

NOTE	REF NO	GRAPHIC REF	PART NUMBER	QTY	PART NAME 1 2 3 4 5 6 (PRODUCT LEVEL)	SEE PAGE
	1	1	**6V-0852**	6	CAP-DUST	
	2	1	**7K-1181**	2	STRAP-CABLE	
	3	1	**142-1657**	1	BRACKET AS	
M		1	**8T-3490**	1	NUT-WELD (M10X1.5-THD)	
	4	1	**185-6250**	6	FITTING AS	
	5	1	**247-1447**	1	HOSE AS	
	6	1	**247-1448**	1	HOSE AS	
	7	1	**247-1449**	1	HOSE AS	
	8	1	**247-1450**	1	HOSE AS	
	9	1	**247-1451**	1	HOSE AS	
	10	1	**247-1452**	1	HOSE AS	
	11	1	*148-8351*	6	ELBOW AS	
					(EACH INCLUDES)	
		1	**4J-5477**	1	SEAL-O-RING	
		1	**6V-9849**	1	ELBOW (SWIVEL)	
	12	1	*148-8325*	6	CONNECTOR AS	
					(EACH INCLUDES)	
		1	**3J-1907**	1	SEAL-O-RING	
		1	**4J-5477**	1	SEAL-O-RING	
		1	**6V-8641**	1	CONNECTOR	
	13	1	**170-4735**	6	RING-RETAINING	
	14	1	**4J-5477**	6	SEAL-O-RING	
	15	1	**6V-1889**	1	CLIP	
	16	1	**8T-4121**	2	WASHER-HARD (11X21X2.5-MM THK)	
M	17	1	**8T-4136**	2	BOLT (M10X1.5X25-MM)	
	18	1	**7D-1553**	1	CLIP	

M-METRIC PART

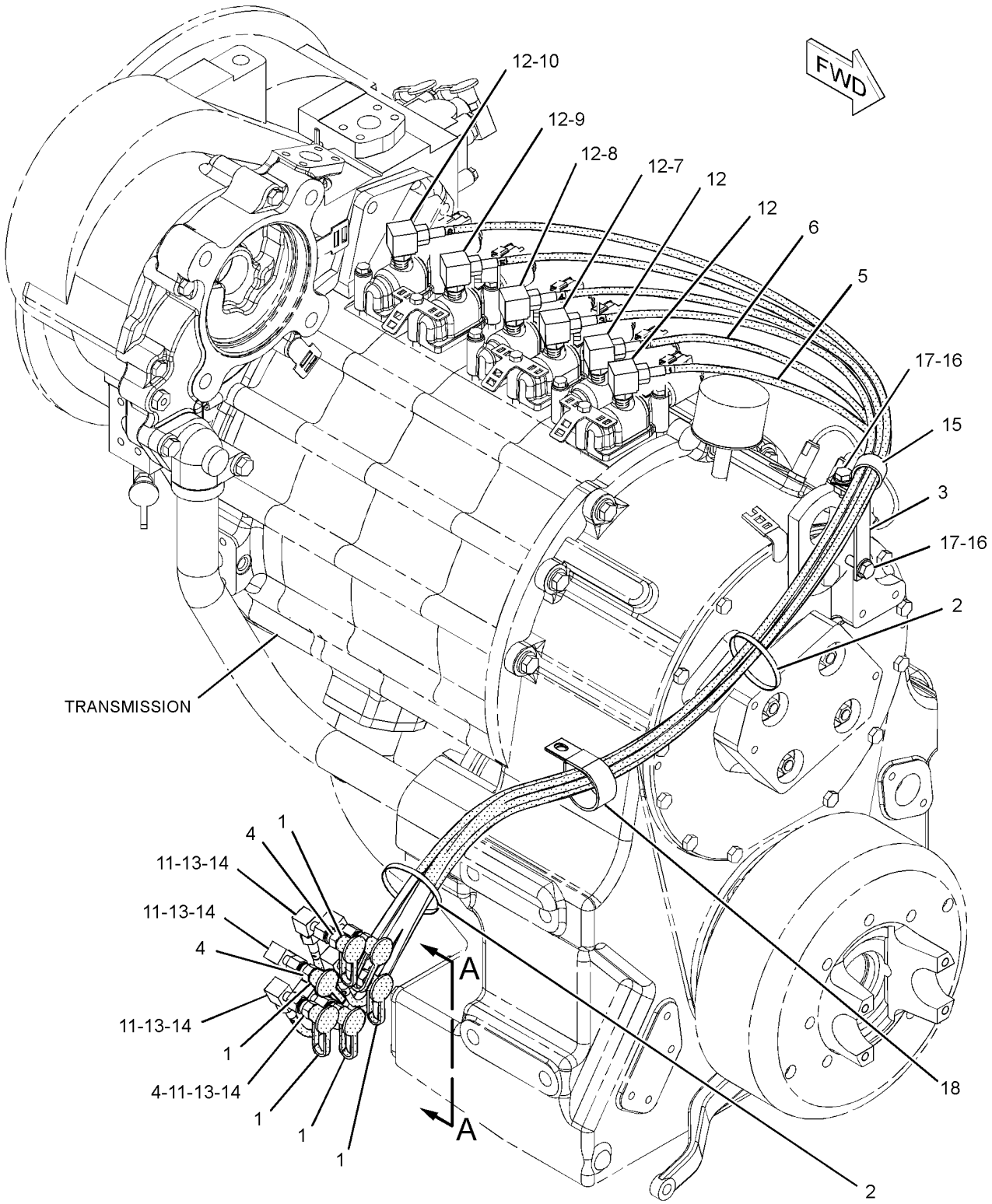

REFER TO ALL ILLUSTRATIONS OF
THIS GROUP FOR AUXILIARY VIEWS

GRAPHIC #1

g01198168

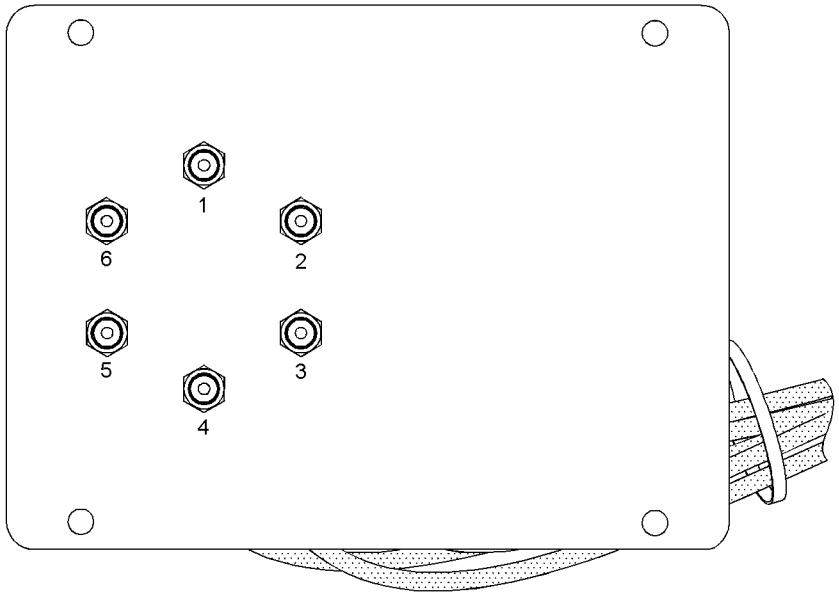

VIEW A-A
(DUST CAPS REMOVED)

REMOTE PRESSURE TAPS DESCRIPTION	
1	NUMBER ONE CLUTCH
2	NUMBER TWO CLUTCH
3	NUMBER THREE CLUTCH
4	NUMBER FOUR CLUTCH
5	NUMBER FIVE CLUTCH
6	NUMBER SIX CLUTCH

GRAPHIC #2 **<END>** g01132016

SERVICE EQUIPMENT AND SUPPLIES

237-0441 PLATE & FILM GP

S/N: M3G1-UP

PART OF 237-4933 CHASSIS AR

SMCS-7405, 7557 **i02450787**

NOTE	PART NUMBER	QTY	PART NAME 1 2 3 4 5 6 (PRODUCT LEVEL)	SEE PAGE
Y	*247-9859*	1	FILM GP (962H WASTE HANDLER)	775
	4P-8681	1	FILM-IDENTIFICATION (ENGINE OIL FILTER)	
			ON ENGINE OIL FILTER IF FILTER IS PAINTED	
	5P-1175	1	FILM-IDENTIFICATION (ENGINE OIL FILL)	
			ATTACH TO CRANKCASE OIL FILLER CAP	
	8C-5346	1	FILM-IDENTIFICATION (HYDRAULIC OIL FILTER)	
			ON HYDRAULIC OIL FILTER IF PAINTED	
	261-0471	1	FILM-IDENTIFICATION (REMOTE PRESSURE TAPS)	
			ON INSIDE OF DIAGNOSTIC CONNECTOR DOOR LOCATED ON THE HYDRAULIC SERVICE CENTER	
	146-6747	1	FILM-INFORMATION (24-VOLT)	
			ON OUTSIDE OF BATTERY COMPARTMENT DOOR	
	148-3587	1	FILM-INFORMATION (TRANSMISSION OIL LEVEL)	
			ON LEFT SIDE OF TRANSMISSION SIGHT GAUGE	
	188-8044	1	FILM-INFORMATION (FUEL FILTER, WATER SEP IDENT)	
			ON WATER SEPARATOR IF SEPARATOR IS PAINTED	
	134-7258	1	FILM-INFORMATION (EXTENDED LIFE COOLANT-READ OMM)	
			NEXT TO RADIATOR FILL CAP	
	252-5874	1	FILM-INFORMATION (ROPS, FOPS, READ OMM)	
			OUTSIDE OF CAB ON RIGHT SIDE ABOVE PLATFORM AND REARWARD OF DOOR	
	7X-3229	4	FILM-INSTRUCTION (LIFT EYE, TIE-DOWN LOCATION)	
			ONE EACH AT REAR LIFT AND TIEDOWN EYES AND ONE EACH AT FRONT LIFT AND TIEDOWN EYES. LOCATE TO THE REAR AND CENTERED ON	
			THE REAR LIFT EYE	
	124-2456	2	FILM-INSTRUCTION (NO STEP)	
			ON TOP OF HOOD BEHIND CAB ON EACH SIDE	
	158-7864	1	FILM-INSTRUCTION (HYDRAULIC OIL)	
			FORWARD OF AND ABOVE THE HYDRAULIC TANK SIGHT GAUGE ON TANK SURFACE	
	187-0661	1	FILM-INSTRUCTION (ALTERNATE EXIT)	
			ON GLASS OF RIGHT HAND DOOR JUST ABOVE THE LATCH	
	241-8489	1	FILM-INSTRUCTION (LUBRICATION CHART)	
			SEE MOUNTING GP FOR LOCATION	
	3E-1552	1	FILM-INSTRUCTION (TRANSMISSION FILTER)	
			TO TRANSMISSION FILTER	
	225-0312	1	FILM-WARNING (JUMP START, READ OMM)	
			ON OUTSIDE OF BATTERY COMPARTMENT DOOR	
	225-4257	2	FILM-WARNING (HOT FLUID UNDER PRESSURE)	
			ONE NEXT TO RADIATOR FILL CAP AND ONE NEXT TO HYDRAULIC TANK FILL CAP	
	226-1240	2	FILM-WARNING (CRUSH HAZARD, STAY BACK)	
			ON SIDE OF LOADER TOWER TO THE REAR OF THE FRONT FENDER	
	226-1274	1	FILM-WARNING (CRUSH HAZARD, READ OMM)	
			BELOW CRUSH WARNING FILM ON THE SIDE OF THE MACHINE WITH THE ARTICULATION LOCK	
	227-7391	1	FILM-WARNING (SEAT BELT)	
			ON RH CAB POST	
	228-2616	1	FILM-WARNING (UNIVERSAL)	
			INSIDE CAB ON SIDE SURFACE OF FRONT LEFT HAND POST APPROXIMATELY 900-MM ABOVE CAB FLOOR	

237-0441 **PLATE & FILM GP** *(contd.)* **i02450787**

NOTE	PART NUMBER	QTY	PART NAME 1 2 3 4 5 6 (PRODUCT LEVEL)	SEE PAGE
	237-6256	2	FILM-WARNING (FAN)	
			ABOVE EACH CLEAN OUT ACCESS ON LEFT RADIATOR SUPPORT PLATE AND RIGHT RADIATOR SUPPORT PLATE	
	219-0305	1	FILM-WARNING (NO WELD, NO DRILL, READ OMM)	
			OUTSIDE OF CAB ON RIGHT SIDE ABOVE PLATFORM AND REARWARD OF DOOR	
	239-6986	1	PLATE-PRODUCT IDENTIFICATION	
			ON LEFT SIDE OF LOADER FRAME EVEN WITH UPPER HITCH PLATE - FRONT EDGE OF PLATE 150-MM FORWARD OF REAR EDGE OF SIDE	
			PLATE. FOR CONCEALED PIN LOCATION SEE CHART	
A	**4W-1413**	1	PLATE-SERIAL NUMBER (ENGINE)	
			ON LOWER RH SIDE OF CYLINDER BLOCK	

A-NOT PART OF THIS GROUP
Y-SEPARATE ILLUSTRATION

<END>

247-9877 PLATE & FILM GP

S/N: M3G1-UP
AN ATTACHMENT

SMCS-7405, 7557 **i02449844**

NOTE	PART NUMBER	QTY	PART NAME 1 2 3 4 5 6 (PRODUCT LEVEL)	SEE PAGE
	225-0313	1	FILM-WARNING (JUMP START, READ OMM)	
	225-4256	2	FILM-WARNING (HOT FLUID UNDER PRESSURE)	
	226-1242	2	FILM-WARNING (CRUSH HAZARD, STAY BACK)	
	226-1275	1	FILM-WARNING (CRUSH HAZARD, READ MANUAL)	
	228-2615	1	FILM-WARNING (UNIVERSAL)	
	237-6257	2	FILM-WARNING (FAN)	

<END>

220-7925 PLATE GP-AXLE IDENTIFICATION

S/N: M3G1-UP
PART OF 214-6161, 214-9397 AXLE AR-FIXED, 112-0723, 126-7845, 126-7846 AXLE AR-OSCILLATING
ALSO AN ATTACHMENT

SMCS-7557 **i01914258**

NOTE	PART NUMBER	QTY	PART NAME 1 2 3 4 5 6 (PRODUCT LEVEL)	SEE PAGE
	220-3773	1	PLATE GP-AXLE IDENTIFICATION	
	109-8895	1	PLATE-IDENTIFICATION	
	220-3681	1	TAPE	
	220-7924	1	PLATE GP-AXLE IDENTIFICATION	
	082-2817	4	TACK	
	109-8895	1	PLATE-IDENTIFICATION	

<END>

PART NUMBER INDEX

Part	Page
0	
0S-0175	666
	668
0T-0244	741
	748
	749
1	
1A-2223	311
1B-2790	625
1B-3925	388
1B-8705	7
	15
1D-5117	122
1F-5151	267
	269
1G-8878	287
1H-0974	318
1H-3244	117
1H-3338	200
1H-3937	451
1H-8296	763
1H-8306	112
1H-8720	293
1H-9696	293
	487
1J-2860	288
	290
1J-4757	288
	290
1J-9671	421
	422
	465
1K-6872	645
1K-6985	439
1K-8850	354
1L-5072	541
1M-3150	312
1M-3151	312
1M-4543	409
1M-6119	121
1M-6120	121
1M-8649	312
1M-9351	340
1N-5999	23
1P-1413	364
1P-3703	304
	444
	518
1P-3704	444
	511
	520
	558
	586
1P-3705	507
	511
	518
	520
	524
	558
	560
	562
	565
	586
1P-4278	66
	100
1P-4577	440
1P-4578	516
	541
1P-4579	511
	541
1P-4582	444
1P-4584	444
	541
1P-4585	541
1P-5767	511
1P-6356	687
1P-6872	451
1R-0762	94
1R-0770	96
1R-1807	54
1S-0670	487
1S-0994	238
	242
	511
1S-2563	56
1S-3743	334
1S-7251	121
	166
	194
	259
1S-7252	194
	259
1S-9593	129
	222
1T-0043	332
1T-0936	526
	560
	562
	565
1T-1621	334
1T-1622	334
1T-1639	332
1U-1350	615
1U-1351	615
1U-1352	615
1U-2827	569
1U-3351	635
1U-8846	9
	34
	35
	47
	83
	84
	298
1U-9053	228
	238
1V-6274	443
1V-6275	443
1V-6276	443
1V-6277	443
1V-6341	293
	332
1V-6755	731
1W-2431	86
1W-2715	22
1W-8407	20
2	
2A-1162	34
2A-2677	223
	250
	259
2A-4429	22
2B-2404	399
2B-9373	318
2C-9259	609
	617
2D-2443	321
2D-2508	321
2D-2509	321
2D-2511	321
2D-4202	541
2D-4867	597
	599
	601
2D-6416	662
2D-6642	37
2D-9454	288
	290
2D-9455	288
	290
2G-1388	414
2G-9524	666
	668
2H-1855	198
2H-3088	290
	292
2H-3920	129
	220
	223
	250
2H-3922	199
2H-3927	293
2H-3931	511
2H-6338	511
2J-3506	616
	618
	619
	620
	621
2J-3507	626
2J-7686	490
	492
	494
2J-7761	541
2K-0715	298
2K-4472	583
2K-4821	117
	531
2K-4973	636
	763
2K-8199	281
2K-9111	730
2M-0849	293
	645
2M-4004	229
2M-4453	73
2M-6471	18
2M-9780	18
	23
	54
	65
	71
	105
	108
	301
	340
	440
	456
	459
	467
	514
	515
	516
	522
	556
	558
	560
	562
	565
	568
	691
2N-2258	731
2N-2658	267
	269
2N-7007	292
2P-1293	467
	511
	516
2P-1373	296
	298
2P-2537	54
2P-2975	166
2P-8986	292
2P-8987	292
2Q-4181	▶344
	345
2Q-4182	344
2S-2053	55
2S-2596	458
	459
2S-4078	300
	301
	514
	558
	560
	562
	565
	586
	594
2S-4663	340
2S-5835	340
2S-6408	332
2T-3360	437
2V-3216	769
2V-3726	723
2W-0027	42
2W-6544	9
2W-6546	8
2W-7213	18
2W-7381	25
2W-7940	122
2W-8147	15
2Y-5829	49

▶ **PRIMARY REFERENCE**

PART NUMBER INDEX

Part	Page
3	
3A-3692	304
3B-0551	296
	298
3B-2062	369
3B-4501	639
3B-4512	427
3B-4607	432
3B-4611	390
	393
	414
3B-4615	369
3B-4617	345
	423
3B-4629	627
3B-4640	432
3B-6552	399
3B-8489	324
	388
	438
	597
	599
	601
3B-8491	597
	599
	601
3D-0053	531
3D-2824	34
	43
	47
	65
	66
	71
	73
	112
	197
	285
	300
	309
	431
	440
	444
	459
	462
	467
	510
	511
	514
	515
	534
	543
	546
	549
	552
	557
3D-8317	340
3E-1552	783
3E-2332	172
3E-2345	510
3E-3365	138
	149
	152
	184
	187
	197
	203
	215
	287
	344
3E-3368	176
	177
3E-3371	129
	140
	174
	175
	213
	221
	228
	248
	259
	709
3E-3377	228
3E-3383	145
	147
	209
	249
	652
	706
	707
3E-3389	220
	248
	728
3E-3805	655
3E-4051	687
3E-4052	687
3E-4057	687
3E-4058	687
3E-4250	487
3E-4302	451
3E-4312	645
3E-4315	337
3E-4352	172
3E-4353	292
3E-4367	273
	709
3E-4883	40
3E-5136	709
3E-5165	709
3E-5169	228
3E-5180	222
	272
3E-5239	220
	235
	248
	259
	702
	704
3E-5464	639
3E-6328	▶115
	220
	248
3E-6389	▶140
	220
	248
3E-6466	▶149
	158
	160
3E-6602	772
	773
3E-6769	229
3E-6771	560
	562
	565
3E-6799	334
3E-6909	229
3E-7417	451
3E-7852	195
3E-7853	195
3E-7855	195
3E-7857	195
3E-7858	195
3E-7860	195
3E-7861	195
3E-8017	92
3E-8032	307
3E-8048	174
3E-8082	657
	721
3E-8320	121
3E-8558	273
	709
3E-9411	378
	379
	380
3E-9412	48
	102
3E-9854	235
3F-0379	195
3F-2617	699
	700
3F-5950	388
3F-9556	117
	201
3G-3237	▶632
3G-7624	488
	489
3G-8779	490
	494
	597
	599
3H-0442	522
	590
3H-2652	293
3H-5552	18
3H-7654	48
3J-0634	292
3J-1907	23
	60
	66
	69
	73
	82
	84
	93
	98
	105
	108
	169
	192
	229
	238
	273
	287
	293
	300
	332
	339
	340
	431
	432
	440
	443
	444
	455
	459
	496
	502
	505
	507
	510
	511
	514
	515
	516
	520
	522
	524
	526
	527
	534
	543
	546
	549
	552
	553
	558
	560
	562
	565
	570
	580
	583
	586
	588
	591
	691
	777
	780
3J-4818	763
3J-7354	34
	47
	54
	60
	66
	69
	98
	172
	287
	421
	422
	431
	432
	444
	459
	496
	514
	524
	537
	560
	562

▶ **PRIMARY REFERENCE**

PART NUMBER INDEX

Part	Page
	565
	572
	574
	576
	577
	581
	590
	625
3J-7479	458
3K-0158	298
3K-0159	298
3K-0360	26
	44
	69
	71
	73
	74
	93
	105
	172
	218
	238
	259
	275
	440
	443
	444
	451
	457
	459
	467
	511
	515
	522
	524
	526
	528
	534
	537
	555
	558
	585
	586
	589
	593
	691
	777
3K-1432	311
3K-2876	388
3K-3257	194
3K-4897	753
3K-6113	583
3K-8460	172
3K-9770	605
	626
3L-6513	238
3P-1156	58
	60
	63
3P-1932	54
3P-2404	516
3P-3441	311
3P-3839	229
3P-7019	311
3P-7898	318
3P-9900	763
3R-2360	516
3S-2093	93
	100
	121
	124
	138
	155
	163
	165
	206
	208
	218
	220
	222
	236
	238
	248
	249
	259
	271
	273
	430
	639
	672
	676
	678
	697
	698
	699
	700
	702
	704
	709
	769
3S-6049	121
3S-6050	121
3S-7023	307
3S-7608	71
3S-8109	311
	312
3S-8664	259
3T-0849	453
3T-2662	229
	263
3T-3278	709
3T-4509	679
	682
3T-7584	312
3T-8724	▶135
3T-9958	332
3T-9960	311
3V-0046	625
3V-0905	279
3V-0906	279
3V-0908	279
3V-2333	595
	596
	597
	599
3V-2431	101
3V-3263	769
3V-7476	657
3W-6116	606
3Y-2888	192

4

Part	Page
4B-2049	223
	250
4B-4274	360
	639
	672
4B-4278	763
4B-9782	282
	284
	459
4B-9880	340
4C-2959	648
4C-9612	8
	41
4D-2886	282
	284
4D-7388	223
	250
	445
	511
4D-7786	467
	516
4D-7794	170
	218
	432
	502
4D-8123	263
4D-9517	122
	242
4E-1384	75
	407
	650
	666
	668
4E-2229	129
4E-2289	431
4E-3196	597
	599
	601
4E-3273	322
4E-3896	288
	290
4E-3897	288
	290
4E-4029	288
	290
4E-4030	288
	290
4E-4031	288
	290
4E-5985	322
4E-6523	753
4E-6986	323
4E-8329	119
4E-8534	296
	298
4E-8722	471
	473
	475
	477
	723
	753
4E-8958	424
4E-9173	753
4E-9174	753
4E-9324	337
4E-9664	424
	425
4F-0186	293
4F-2294	202
	557
4F-4042	626
4F-4097	273
4F-4879	750
	751
4F-5695	21
4F-7827	616
	618
	619
	620
	621
4F-9653	101
4H-1225	242
	399
	502
4H-4737	312
4H-6520	296
	298
	534
4H-7655	301
4I-1022	534
4I-2201	382
4I-3038	723
4I-3398	364
4I-7889	75
	440
	693
4J-0519	458
4J-0520	285
	440
	445
	459
	520
4J-0522	507
	516
	520
4J-0524	511
	524
	558
	560
	562
	565
	586
4J-0525	73
4J-0527	445
4J-5267	445
	518
4J-5268	580
4J-5351	580
4J-5477	98
	431
	440
	444
	505
	515
	543
	546
	552
	625

▶ **PRIMARY REFERENCE**

PART NUMBER INDEX

Part	Page
	777
	780
4J-7533	340
	436
	522
	524
	526
	558
	586
4J-8996	565
4J-9224	439
4J-9535	524
	558
	560
	562
	565
	586
4K-0684	626
4K-1540	423
4K-2039	593
4K-8302	687
4K-8864	122
	229
4K-9429	639
	672
	717
4K-9547	329
4L-6454	645
	744
	747
4M-1831	195
4M-2381	340
4M-6425	730
4M-7470	390
	393
	666
	668
4N-9170	238
4P-5918	9
	84
	236
4P-7428	273
4P-7581	9
	223
	250
	271
4P-7582	238
4P-8134	229
	236
4P-8525	220
	248
4P-8681	783
4R-9999	46
4S-1962	71
	229
	345
	687
4S-5824	311
4S-8537	311
4S-8541	334
4S-8598	292
4S-8603	292
4T-4307	605
4T-4942	585
4T-5072	580
4T-5225	▶634
4T-6907	439
4T-7571	585
4T-7581	▶585
	586
4T-8054	439
4T-8101	626
4V-0301	364
4V-1939	262
4V-4164	220
	248
4V-5099	298
4V-7081	322
4V-7099	601
4V-7785	354
4V-8256	636
4V-8520	601
4V-8577	763
4V-8674	595
	596
	597
	599
4W-1413	784
4W-2026	10
4W-2232	58
4W-3462	4
	▶8
4Y-3046	371
	417
4Y-9652	9
5	
5A-3604	560
	562
	565
5B-0935	399
5B-1866	49
5B-9192	675
5C-2874	675
5C-2890	157
	158
	160
	200
	390
	393
	430
	719
	721
	723
	763
5C-7261	9
	56
	66
	76
	94
	122
	143
	144
	166
	167
	170
	192
	223
	238
	250
	407
	650
	666
	668
	679
	682
	687
	693
	731
	753
5C-8312	223
	250
5C-9553	124
	160
	354
	639
	670
	672
	676
	709
	766
	769
5D-0718	301
	467
	511
	516
5D-1026	59
	71
	275
	691
5D-1242	427
5D-1911	541
5D-2651	514
5D-7927	541
5F-0304	34
5F-1678	332
5F-3144	292
5F-9035	462
5F-9144	496
5F-9657	135
	136
5G-6505	122
5G-7020	445
5G-7021	445
5G-8871	731
5H-3193	459
5H-3701	296
	298
5H-4020	507
5H-8853	105
5I-3333	367
5I-4376	169
5I-8304	121
5J-2974	282
	284
	459
	580
5J-3488	488
	489
5K-0983	388
5K-1568	282
	284
5K-2298	399
5K-2697	301
5K-3294	345
5K-5338	432
	502
5K-9065	334
5K-9090	285
	300
	301
	304
	444
	466
	510
	511
	514
	549
5K-9242	399
5K-9243	399
5K-9979	399
5L-2931	311
5L-2952	53
5L-4507	229
5L-7200	211
5M-2057	569
5M-6668	229
	263
5P-0372	369
5P-0537	152
5P-0746	259
5P-0747	121
	194
	259
5P-0761	121
	259
5P-0767	59
	71
	275
	691
	693
5P-1076	76
	348
	354
	360
	371
	375
	380
	397
	409
	450
	511
	533
	543
	546
	549
	552
	666
	668
	772
5P-1175	783
5P-1230	66
5P-1251	66
5P-1262	66
5P-1291	282
	284
5P-1293	443
5P-1404	105

▶ **PRIMARY REFERENCE**

PART NUMBER INDEX

Part	Page	Part	Page	Part	Page	Part	Page
	108	5P-7483	407		599	6E-3274	581
5P-1442	66	5P-7803	655		601	6E-3275	581
5P-2199	456	5P-7814	172	5V-1386	597	6E-3276	581
5P-2566	119	5P-7957	717		599	6E-4224	451
5P-3119	296	5P-7958	1	5V-1496	742	6E-4228	455
	298		679		745	6E-4230	455
5P-3131	312		723	5V-1508	597	6E-4239	455
5P-3779	422	5P-7970	53		599	6E-4241	455
	464		105	5V-1511	597	6E-4242	455
5P-3928	685	5P-8066	60		599	6E-4246	455
5P-3929	687	5P-8136	605		601	6E-4318	455
5P-3930	312	5P-8196	54	5V-1874	595	6E-4753	457
5P-3948	687	5P-8245	10		596	6E-5066	522
5P-4106	685		28		597		524
5P-4115	360		32		599		526
	639		277	5V-1882	597	6E-5289	459
	672		280		599	6E-5397	459
5P-4116	66		312		601	6E-6140	455
	223		332	5V-6152	242	6E-6141	455
	250		627	5V-6153	242	6E-6142	455
	516	5P-8247	17	5V-6380	401	6E-6527	581
	657		117	5V-8780	75	6E-6528	581
	659		218			6E-6536	581
	679		296			6E-6537	581
	691		298	**6**		6E-6538	581
5P-4295	543	5P-8248	616			6E-6539	581
	546		618	6A-5591	292	6E-6540	581
	552		619	6B-2781	345	6E-6571	451
5P-4423	763		620	6C-2356	307		▶453
5P-4484	296		621	6C-2791	326	6E-6594	451
	298	5P-8250	488	6C-3678	666	6E-6596	451
5P-4924	66		489		668	6E-6597	451
5P-5461	399	5P-8309	76	6C-3679	666	6E-6599	451
5P-5463	399		719		668	6E-6600	451
5P-5624	221	5P-8334	337	6C-7368	327	6E-6601	451
5P-5637	759	5P-8347	69	6C-8352	307	6E-6602	451
5P-5643	682		126	6C-8353	307	6E-6604	453
5P-5677	138	5P-8444	301	6D-1641	223	6E-6605	453
5P-5923	687	5P-8500	1		250	6F-0253	129
5P-5927	679		665		445		221
5P-6008	228	5P-8502	665		691		222
5P-6010	763	5P-8823	605		693		248
5P-6120	731	5P-8874	440	6D-4244	229	6F-5188	282
	738	5P-9085	218		440		284
5P-6313	192		241		445	6F-6673	311
5P-6314	192		242		516	6F-7045	199
5P-6410	390		259	6D-4246	273	6F-7062	43
	393		263		445	6H-5139	282
5P-6414	334		273		502		284
5P-6442	66	5P-9132	652		511	6H-9361	541
5P-6719	580	5P-9262	581		516	6I-1418	220
5P-6724	431	5P-9297	259		570		248
5P-6879	695		505		687	6I-8497	292
	696	5P-9299	66	6D-4636	238	6J-1889	487
5P-6944	93		122	6D-6146	223	6J-1890	487
5P-7084	282	5P-9436	65		250	6J-2680	445
	284	5S-7349	117	6D-8305	432	6J-3134	524
5P-7211	371		195	6E-0381	522		558
	409		198		555		560
	413	5S-7383	730	6E-0410	456		562
	417	5S-7598	627	6E-1835	585		565
5P-7464	242	5V-0353	597	6E-3268	581		586
5P-7465	242		599	6E-3269	581	6J-4568	462
5P-7468	301		601	6E-3272	581	6J-6439	585
5P-7469	301	5V-0354	597	6E-3273	581	6J-6506	459

▶ **PRIMARY REFERENCE**

PART NUMBER INDEX

Part	Page	Part	Page	Part	Page	Part	Page
6J-6516	459		443		65		332
6J-6517	459		507		69	6V-5815	61
6K-2430	298		511		172	6V-5839	24
6K-3273	745		514		340		53
6K-8178	687		520	6V-3960	316		61
6K-8180	709		543	6V-3965	169		94
6L-2609	53		546		287		102
6L-3616	399		549		293		318
6L-8617	79		552		332		332
6M-5062	593		777		339		334
6N-6984	443		780		340		357
6N-7523	236	6V-1355	66		432		360
6N-8744	431	6V-1438	71		444		390
	443	6V-1586	312		507		393
6P-0699	409	6V-1649	311		511		666
6P-2233	312	6V-1668	639		516		668
6P-4467	76		672		520	6V-5842	34
6P-7742	312	6V-1720	293		543		332
6P-7743	312	6V-1722	71		546	6V-5843	33
6P-7772	312	6V-1820	293		549	6V-6210	769
6P-7773	311		332		552	6V-6317	53
6P-7968	311		334	6V-3987	471		292
6P-7983	311	6V-1875	511		473	6V-6604	390
6P-7985	311	6V-1889	76		475		393
6P-8003	312		223		477	6V-6609	189
6P-8005	312		250	6V-4248	292	6V-6715	138
6R-7653	471		301	6V-4249	27	6V-6889	94
	473		432	6V-4356	687	6V-7238	26
	475		440	6V-4357	687		275
	477		511	6V-4369	639		691
6S-6646	420		516		672	6V-7357	360
	666		687	6V-4589	203		639
	668		780	6V-4604	351		672
6T-3631	213	6V-1970	1		352		676
	228	6V-2313	709	6V-5048	23	6V-7419	769
	263	6V-2317	9		93	6V-7420	71
6T-3632	213		29		172		691
	228		54		179	6V-7644	360
	263		191		180	6V-7646	742
6T-3633	213		236	6V-5049	93		745
	228	6V-2686	192		94	6V-7673	334
	263	6V-2687	223		111	6V-7687	499
6T-3644	229		250		172		500
6T-6052	459		645		178		627
6T-6080	530	6V-2803	369	6V-5142	568	6V-7732	296
6T-6708	639	6V-3265	56	6V-5192	191		298
	672		223	6V-5195	459	6V-7744	499
6T-7061	292		238	6V-5217	35		500
6V-0357	558		250	6V-5218	340		541
6V-0422	507		430	6V-5219	12	6V-7981	102
6V-0484	105		769		14		318
	108	6V-3531	298	6V-5223	69	6V-8004	451
	273	6V-3538	8	6V-5645	223	6V-8128	334
	332		20		250	6V-8149	10
	340	6V-3668	373	6V-5657	490		292
	440	6V-3822	94		492	6V-8182	427
6V-0834	311		292		494	6V-8186	201
6V-0835	311	6V-3834	451	6V-5683	437	6V-8187	229
6V-0852	169	6V-3918	35	6V-5686	292	6V-8188	119
	273		41		296		122
	287		74		298		195
	293	6V-3940	7	6V-5696	10		375
	332		8		48	6V-8189	117
	340		42		293		625
	431		58		311	6V-8197	32

PART NUMBER INDEX

Part	Page	Part	Page	Part	Page	Part	Page
	293	6V-8628	98	6V-8987	511		444
	627	6V-8629	467	6V-8988	511		549
6V-8200	583	6V-8635	300	6V-8997	511	6V-9837	444
6V-8214	451		549		515	6V-9838	515
6V-8225	152	6V-8636	60	6V-9001	505	6V-9846	515
	643		93	6V-9004	444	6V-9849	777
	644		98		467		780
6V-8237	310		101		515	6V-9850	105
	439		105	6V-9007	444		108
	490		108		467		432
	492		431		515		502
	494		443	6V-9008	304		515
6V-8336	28		502		466		543
6V-8337	451		510	6V-9023	121		546
6V-8352	581		543		238		549
6V-8362	198		546	6V-9027	36		552
6V-8369	220		549	6V-9161	432	6V-9851	444
	248		552	6V-9168	511	6V-9852	515
6V-8376	229	6V-8637	431	6V-9169	432	6V-9853	440
	263		440		512		467
6V-8378	195		510	6V-9170	516		511
	201		515	6V-9182	515		515
6V-8397	60	6V-8639	444	6V-9189	141	6V-9854	510
	93	6V-8640	467		142	6V-9872	514
	98		514	6V-9200	432	6V-9873	511
	105	6V-8641	440	6V-9327	753	6V-9875	300
	108		780	6V-9350	516		514
	169	6V-8647	625	6V-9489	432	6V-9876	93
	300	6V-8675	312	6V-9493	360		105
	431	6V-8715	105	6V-9632	75	6V-9877	440
	432		108		158	6W-1638	288
	443	6V-8722	440		221		290
	444		467		249	6W-3468	614
	502		515		360		615
	505	6V-8723	93		377	6W-4126	337
	510		105		639	6W-5752	420
	511	6V-8724	60		672	6W-5817	369
	514		93		709	6W-5818	369
	515		98		719	6W-6005	121
	543		300		753	6Y-1085	334
	546		432	6V-9671	174	6Y-1087	334
	549		444	6V-9673	223	6Y-2084	267
	552		502		250		269
	570		511		676	6Y-2109	312
6V-8398	301		515	6V-9746	300	6Y-2538	296
	432		543		301		298
	440		546		309	6Y-2539	288
	443		552		431		290
	444		570		432	6Y-2540	288
	445	6V-8781	432		440		290
	502		502		444	6Y-3149	334
	511		543		467	6Y-3151	334
	515		546		510	6Y-4859	334
	543		549		511	6Y-5352	311
	546		552		514	6Y-5952	312
	549		570		515	6Y-7879	311
	552	6V-8784	511		516	6Y-7880	312
	588	6V-8789	301	6V-9828	505	6Y-7881	311
	591	6V-8928	679	6V-9829	544	6Y-8030	312
6V-8467	531		682		546	6Y-9713	311
6V-8625	440	6V-8934	505		549		
	444		515		552		
6V-8626	440	6V-8936	502		570		
6V-8627	444	6V-8983	467	6V-9830	549		
	777		515	6V-9836	432	7B-3028	292

7

► **PRIMARY REFERENCE**

PART NUMBER INDEX

Part	Page
7B-3039	569
7B-7515	312
7C-1493	54
7C-1770	4
	▶47
7C-2475	4
	▶58
7C-4354	229
7C-5403	58
7C-6976	42
7C-6977	42
7C-7431	92
7C-7980	15
7D-1553	780
7D-1649	411
7D-4092	301
7D-5252	321
7D-7233	53
	229
	285
	301
	440
	512
7D-7469	321
7D-8348	388
7D-8349	388
7D-9014	533
7E-0519	4
	▶32
7E-0759	69
7E-2968	17
7E-3870	88
7E-6794	37
7E-7589	46
7E-7779	22
7F-8607	487
	687
7F-9571	427
7F-9572	427
7F-9578	427
7F-9579	427
7G-0437	311
7G-3710	312
7G-3711	311
7G-5444	311
7G-5569	311
7G-5572	311
7G-5593	311
7G-5594	311
7G-5614	312
7G-5675	311
7G-5730	312
7G-6061	311
7G-6062	311
7G-6945	312
7G-6952	312
7G-7053	726
7G-8121	311
7G-8430	334
7G-8839	388
	438
7H-1447	541
7I-1024	777
7I-4078	431
7J-0204	23
	238
	273
	558
	583
	586
7J-1089	459
7J-4321	459
7J-5311	469
7J-5544	275
7J-9108	440
	467
	514
	515
	516
	558
7J-9885	439
7J-9933	558
	585
7K-1181	71
	98
	124
	206
	208
	216
	218
	220
	228
	234
	235
	238
	242
	248
	259
	263
	271
	300
	475
	477
	514
	676
	687
	769
	780
7K-1401	512
7K-1402	512
7K-3176	685
7K-3304	685
7K-6536	666
	668
7K-9205	597
	599
	601
7K-9209	597
	599
	601
7K-9210	484
	485
	486
	597
	599
	601
7K-9211	482
	483
	484
	485
	486
7K-9212	597
	599
	601
7K-9218	597
	599
	601
7L-2894	195
7L-9061	203
	451
7M-8485	66
	112
	281
	292
	296
	298
	300
	301
	304
	309
	458
	466
	515
	549
	557
	558
	565
	586
7N-0296	192
7N-0718	121
	▶199
7N-2059	192
7N-5274	121
7N-5683	20
7N-5876	220
	248
	709
7N-9801	215
7N-9943	140
7S-0530	432
7S-2962	292
7S-4534	312
7S-6369	84
7S-8158	292
7S-8554	292
7T-0020	140
7T-1099	221
	249
	364
	367
	731
	753
7T-1285	312
7T-3343	312
7T-3451	195
7T-3454	195
7T-3456	312
7T-4532	648
7T-5961	626
7T-5963	626
7T-6799	220
	248
7T-8272	451
7T-8273	451
7V-0445	753
7V-2882	596
7V-3791	288
7V-5515	687
7V-8632	388
7V-8633	388
7W-3871	9
7W-3872	9
7W-5095	32
7W-5340	58
7W-7381	543
	549
	553
7W-8106	397
7W-9737	62
7W-9738	62
7W-9740	62
7W-9930	62
7X-0338	119
7X-0510	40
7X-0515	76
7X-0562	195
7X-0579	80
	657
7X-0589	354
	407
7X-0591	541
7X-0593	713
7X-0599	420
	512
7X-0603	403
	404
	405
	406
	417
7X-0605	88
7X-0607	112
7X-0608	636
7X-0618	373
7X-0622	292
7X-0752	367
	383
	386
7X-0818	167
	170
	223
	250
7X-0873	514
7X-1550	558
7X-1950	195
7X-1952	195
7X-2049	687
7X-2459	431
	514
7X-2533	138
7X-2537	80
	657
	659
7X-2538	649
7X-2543	445
	512
	516
7X-2545	748
	749
7X-2546	76
7X-2550	388

▶ **PRIMARY REFERENCE**

PART NUMBER INDEX

Part	Page
	440
7X-2552	71
	378
	379
	417
	543
	550
	553
7X-2553	76
	414
	546
7X-2554	112
7X-2555	666
	668
7X-2563	40
	533
7X-2564	322
7X-2586	349
7X-2618	432
7X-2622	40
7X-3165	516
7X-3229	783
7X-3310	753
7X-3332	91
7X-3373	195
7X-3392	520
7X-4776	457
	556
7X-6041	657
7X-6222	273
	709
7X-6315	131
	133
7X-7608	311
7X-7662	167
	170
7X-7729	66
	76
	88
	170
	275
	357
	360
	369
	371
	390
	393
	407
	409
	417
	450
	466
	499
	500
	516
	533
	650
7X-7877	682
7X-7893	510
7X-7898	682
7X-7964	386
7Y-1976	66
7Y-2522	490
	494
7Y-3173	211
7Y-4215	534
7Y-4217	583
7Y-4944	534
7Y-5074	777
7Y-5458	209
7Y-5464	209
7Y-7256	665
	709
	723

8

Part	Page
8B-6342	296
	298
8B-6343	296
	298
8B-9294	348
8C-0563	21
8C-0596	238
8C-3056	121
8C-3078	653
8C-3091	8
8C-3095	138
8C-3097	457
8C-3205	445
	518
8C-3206	285
	445
	459
	520
	541
8C-3210	112
	360
8C-3309	431
8C-3312	533
	534
8C-3370	511
8C-3445	54
8C-3446	54
	287
	496
8C-3447	287
8C-3451	496
8C-5172	112
8C-5346	783
8C-5607	124
	138
8C-5608	124
	138
8C-6354	220
	248
8C-6358	122
8C-6712	496
8C-6738	767
8C-6855	40
8C-7581	639
	672
8C-8422	112
8C-8451	124
8C-8762	300
	514
8C-8988	432
8D-2714	312
8D-3791	401
8D-6542	679
8E-1143	340
8E-1666	311
8E-3751	▶631
8E-5247	334
8E-5300	607
	608
	609
	610
	612
	613
	617
8E-5301	607
	608
	609
	610
	612
	613
	617
8E-5308	605
8E-5309	605
8E-6259	631
	632
8E-6539	334
8E-6648	334
8E-7475	332
8E-7476	311
8E-8297	312
8E-8299	312
8E-9571	9
8E-9893	340
8F-0212	292
8F-1434	195
	201
8F-9206	459
	687
8G-6035	666
	668
8H-2046	52
8H-5244	49
8H-5303	199
8H-5306	199
8H-7521	292
8J-0426	301
8J-2933	605
8J-4954	634
	▶635
8J-6815	459
8J-8782	569
8J-8783	569
8K-4691	520
8L-2786	54
	93
	188
8L-8413	121
	763
8M-2769	71
8M-2770	98
	122
	242
	259
8M-2772	230
8M-2773	432
	687
8M-5253	340
8M-5860	21
8M-7160	292
8M-7758	657
	665
8M-8489	318
8N-0869	121
	259
8N-1532	222
	250
8N-1533	228
8N-1535	222
	228
	249
8N-1536	222
8N-1540	342
8N-1541	342
8N-1725	121
8N-2622	211
8P-1722	292
8P-1812	318
8P-3251	292
8P-7857	334
8P-7858	334
8P-8950	311
8P-9723	312
8R-1496	514
8R-1888	267
	269
8R-1893	267
	269
8R-2918	437
8R-3695	471
	473
	475
	477
	679
8R-4568	267
	269
8R-4571	267
	269
8R-5144	300
8R-8088	531
8R-9207	267
	269
8R-9215	288
	290
8R-9440	280
8R-9830	279
8R-9831	279
8R-9832	279
8R-9833	▶279
	280
8S-0023	507
	520
8S-0024	507
	520
8S-0527	311
8S-0768	273
8S-2225	424
8S-2634	166
8S-3020	121
8S-3426	312
8S-6365	332
8S-7583	230
8S-7803	645

▶ **PRIMARY REFERENCE**

PART NUMBER INDEX

Part	Page	Part	Page	Part	Page	Part	Page
8T-0078	444	8T-1788	490		773		304
8T-0100	29		492	8T-3612	192		307
	31		494		221		309
	48	8T-1889	445		249		316
	273		518		511		342
8T-0106	312		695	8T-3635	367		345
8T-0164	543		696		383		348
	546		697		731		354
	552		698	8T-3647	119		357
8T-0226	34		699	8T-3653	40		358
8T-0249	511		700	8T-3666	25		359
8T-0255	163	8T-1890	445	8T-3734	364		360
8T-0271	316		518	8T-3844	693		369
8T-0276	54		695	8T-3851	158		371
8T-0282	373		696		364		373
8T-0285	502		697		367		374
	505		698		383		390
	570		699		386		393
8T-0288	211		700		505		397
8T-0293	43	8T-2275	541		596		399
8T-0299	218	8T-2321	773	8T-4121	38		411
8T-0318	731	8T-2556	514		40		413
8T-0328	195	8T-2561	376		45		414
	211		531		66		420
	678		687		71		423
	709	8T-2562	678		76		430
	742	8T-2893	75		85		432
	745	8T-2899	425		88		437
8T-0336	296	8T-2925	267		90		440
	298		269		91		445
8T-0337	223	8T-2947	124		98		458
	250	8T-3282	24		105		459
	678		298		108		467
8T-0341	528	8T-3298	569		112		469
8T-0358	292	8T-3490	75		119		502
8T-0372	290		76		122		505
	323		98		124		512
	332		121		141		516
	451		167		142		518
8T-0375	292		192		154		520
8T-0380	310		221		155		531
8T-0389	122		235		157		541
	145		249		158		543
	147		259		160		547
	354		273		162		550
	357		276		163		553
	360		354		166		570
	407		360		167		663
	738		386		170		666
8T-0644	73		397		192		668
8T-0649	296		411		194		674
	298		431		218		675
8T-0667	490		437		223		679
	492		505		230		682
	494		546		235		687
8T-0722	569		549		238		691
8T-0741	432		687		242		693
8T-1158	524		731		250		695
8T-1159	101		753		259		696
	437		769		262		697
8T-1685	309		780		271		698
8T-1779	543	8T-3519	122		282		699
	546	8T-3597	75		284		700
	549		450		285		731
	552		772		301		738

► PRIMARY REFERENCE

PART NUMBER INDEX

Part	Page
	769
	772
	773
	777
	780
8T-4122	163
	516
	531
	543
	547
	550
	553
	713
8T-4123	40
	307
	322
	388
	530
	622
	623
8T-4127	360
8T-4131	307
	322
	583
8T-4132	76
	516
	572
	574
	576
	577
8T-4133	71
	76
	90
	91
	119
	122
	124
	154
	155
	163
	167
	218
	223
	230
	238
	242
	250
	262
	285
	301
	342
	345
	358
	359
	369
	371
	376
	390
	393
	397
	399
	407
	409
	413
	414
	417
	423
	432
	445
	502
	512
	516
	583
	695
	696
	697
	698
	699
	700
	731
	738
	777
8T-4136	38
	66
	71
	76
	90
	91
	112
	122
	157
	158
	160
	162
	170
	218
	223
	235
	238
	250
	285
	301
	309
	345
	369
	411
	413
	414
	417
	423
	432
	437
	440
	450
	458
	466
	502
	516
	518
	533
	534
	583
	687
	691
	731
	738
	753
	769
	772
	777
	780
8T-4137	39
	66
	71
	76
	88
	94
	105
	108
	119
	122
	158
	160
	163
	166
	167
	170
	218
	223
	230
	238
	242
	250
	259
	271
	275
	285
	301
	307
	342
	348
	357
	361
	371
	420
	430
	432
	445
	467
	502
	505
	512
	516
	531
	570
	650
	662
	674
	675
	679
	687
	731
	738
	769
8T-4138	124
	158
	160
	223
	250
	377
	390
	393
	420
	475
	477
	753
8T-4139	242
	354
	360
	371
	380
	388
	397
	411
	414
	432
	438
	502
	507
	520
	531
	666
	668
	687
	772
	773
8T-4140	534
8T-4170	307
8T-4171	223
	250
	259
	702
	704
8T-4172	45
	71
	445
	502
	544
	547
	550
	553
8T-4176	388
	411
8T-4177	84
8T-4182	360
8T-4183	345
	358
	359
	388
	397
	407
	409
	499
	500
	507
	512
	520
	530
	533
	544
	547
	550
	553
8T-4184	445
	541
8T-4185	94
	282
	284
	432

► **PRIMARY REFERENCE**

PART NUMBER INDEX

Part	Page
	437
	440
	518
8T-4186	76
	223
	250
	259
	301
	360
	373
	397
	407
	409
	440
	516
	520
8T-4189	122
	141
	142
	170
	192
8T-4191	192
	194
	230
	682
	772
	773
8T-4192	122
	507
	512
	520
	544
	547
	550
	553
	772
	773
8T-4193	420
	512
	541
	713
8T-4194	512
	687
8T-4195	39
	40
	76
	85
	98
	119
	154
	155
	170
	192
	242
	282
	284
	285
	301
	354
	397
	407
	409
	411
	417
	445
	467
	469
	516
	531
	650
	679
	682
	687
	691
	695
	696
	697
	698
	699
	700
8T-4196	76
	88
	119
	122
	259
	285
	304
	316
	374
	390
	393
	413
	432
	440
	445
	459
	499
	500
	516
	518
	541
8T-4198	445
8T-4199	223
	250
8T-4200	56
	211
	238
8T-4201	541
8T-4205	117
	158
	160
	195
	198
	211
	223
	229
	250
	316
	360
	377
	471
	473
	475
	477
	639
	670
	672
	723
	742
	745
	753
	769
8T-4219	364
	367
8T-4222	432
	445
8T-4223	85
	119
	122
	163
	167
	223
	242
	251
	259
	301
	345
	357
	358
	359
	361
	371
	388
	397
	407
	411
	414
	423
	430
	432
	441
	445
	450
	499
	500
	502
	507
	512
	518
	520
	531
	533
	541
	544
	547
	550
	553
	583
	687
	773
8T-4224	9
	56
	60
	94
	117
	119
	122
	143
	144
	166
	167
	170
	192
	223
	235
	238
	251
	428
	432
	649
	682
	687
	693
	699
	700
	727
	730
	753
8T-4226	76
	94
	122
	409
	417
	445
	516
8T-4244	88
	223
	251
	259
	371
	411
	417
	423
	430
	445
	450
	533
8T-4648	531
8T-4750	451
8T-4779	380
	516
8T-4780	597
	599
	601
8T-4896	569
	748
	749
8T-4908	727
8T-4910	88
	348
	507
	512
	518
	520
8T-4935	157
	158
	162
	364
	367
8T-4956	76
	167
	375
	450
	512
	520
	541
8T-4967	367
8T-4970	223
	230
	251

► **PRIMARY REFERENCE**

PART NUMBER INDEX

Part	Page	Part	Page	Part	Page	Part	Page
	471	8T-6850	287		546		298
	473	8T-6869	105		549	9C-6041	296
	475		108		552		298
	477		516	8T-8987	301	9C-6327	296
8T-4971	76	8T-6870	223	8T-9005	657		298
	167		251		659	9C-6809	364
	170	8T-6907	510		679		367
	420	8T-6912	144	8T-9023	444	9C-7725	267
	670		691	8T-9079	605	9C-7727	267
8T-4983	66	8T-6974	242		626		269
8T-4984	443	8T-7044	87	8T-9082	742	9C-7907	597
8T-4985	512	8T-7352	105	8T-9371	763		599
8T-5001	277		108	8T-9471	709		601
	280	8T-7501	364	8T-9515	278	9C-8287	288
8T-5002	296	8T-7525	537		537		290
	298	8T-7546	444	8T-9597	528	9C-8418	267
8T-5005	76	8T-7547	60		537		269
	145		166	8T-9655	105	9C-8419	296
	147	8T-7566	716		108		298
	441		718		126	9C-8421	296
	459	8T-7876	451		127		298
	520	8T-7934	119		220	9C-9159	325
8T-5035	317	8T-7950	24		248	9C-9191	298
8T-5039	451	8T-7970	510	8T-9834	250	9C-9194	296
8T-5372	659	8T-7971	530	8T-9884	195		298
8T-5389	301	8T-8442	48	8U-7381	557	9C-9458	430
8T-5400	769		581	8V-1412	324		769
8T-5414	292	8T-8569	195	8V-7162	351	9C-9537	267
8T-5436	445	8T-8641	645		352		269
8T-5439	322	8T-8729	140	8W-8673	427	9F-5644	199
	597		145	8W-8674	427	9F-8125	220
	599		149	8X-0674	530		248
	601		184	8X-5804	220	9G-1231	311
8T-5460	597		187		248	9G-1234	311
	599		652	8X-5942	383	9G-1491	311
	601		706	8X-6780	386	9G-1950	639
8T-5677	228		707	8Y-5746	753		672
8T-6381	40		711	8Y-5910	645	9G-3695	228
	530		728	8Y-5913	645		272
8T-6430	601	8T-8737	93	8Y-5914	645	9G-5315	296
	622		145	8Y-6277	742	9G-5828	312
	623		147		745	9G-6257	292
8T-6466	76		165	8Y-6333	753	9G-6258	292
	304		209	8Y-6364	665	9G-7411	318
	360		220	8Y-6388	657	9G-7412	318
	445		221	8Y-9603	194	9G-7683	312
	459		234			9H-1024	293
	516		236			9H-5546	312
	518		248			9H-5604	311
	531		249			9H-6454	541
	687		273	9B-0453	430	9J-3866	443
	693		480	9B-7233	198	9J-4164	488
8T-6624	713		709		211		489
8T-6631	639		711		229	9J-4309	632
8T-6663	511		712		263	9J-5550	490
	515		728	9C-0093	597		492
8T-6684	285	8T-8827	121		599		494
	300	8T-8874	221		601	9J-7031	569
	444		249	9C-2230	328	9J-7099	490
8T-6745	488		709	9C-4935	384		492
	489	8T-8899	444		596		494
	490		516	9C-4937	293	9K-0443	329
	492	8T-8902	443	9C-5853	288	9K-9731	601
	494		510	9C-6016	277	9L-4244	86
8T-6842	679		543	9C-6021	296	9L-6074	360

9

► **PRIMARY REFERENCE**

PART NUMBER INDEX

Part	Page	Part	Page	Part	Page	Part	Page
9L-6770	117	9N-4302	631		524	9U-0830	675
9M-0164	282	9N-4460	311		526	9U-0952	753
	284	9P-4898	510		534	9U-0953	753
9M-1328	439	9P-5558	312		558	9U-0954	753
9M-1503	311	9R-1733	364		560	9U-0955	753
9M-1974	8	9R-2060	364		562	9U-0958	753
	9	9R-2640	364		565	9U-1912	288
	12		367		583		290
	14	9R-2821	367		586	9U-1913	288
	35		450	9S-8005	44		290
	41	9S-1812	399		69	9U-2331	678
	48	9S-2396	119		524	9U-2332	676
	53	9S-3263	40		526	9U-3925	753
	54	9S-4167	93		528	9U-3926	753
	56	9S-4181	296		534	9U-3927	753
	58		298		537	9U-4431	676
	65	9S-4182	34		558		678
	69		69		586	9U-8263	678
	74	9S-4183	34	9S-8006	18	9U-8668	340
	84		459		23	9U-8669	340
	94		534		105	9V-1820	351
	105	9S-4185	69		108		352
	126		73		340	9V-2429	290
	127		74		459	9V-2899	614
	191		93		560		615
	236		451		562	9W-0517	311
	273		459		565	9W-0518	311
	340		534	9S-8007	558	9W-0519	312
	459	9S-4190	65		583	9W-0852	220
	585	9S-4191	73		586		221
9M-2110	340		82	9S-8008	43		228
9M-2904	55		93		73		248
9M-4335	267		172	9S-9334	21		249
	269		455		23		344
9M-4972	223		527		112		639
	251		558		296		672
	685	9S-6154	459		298	9W-1441	220
9M-5024	317	9S-7712	399		558		248
9M-5137	427	9S-8001	340		586	9W-1442	220
9M-5138	427		436	9T-1633	451		248
9M-5139	427		522	9T-1636	451	9W-1446	220
9M-5140	427		524	9T-1652	451		248
9M-5870	223		526	9T-1699	451	9W-6671	298
	251		558	9T-1710	451	9W-6747	616
9M-5884	390		586	9T-2186	455		618
	393	9S-8002	23	9T-2197	451		619
9M-6803	730		172	9T-4512	557		620
9M-7394	541		459	9T-4513	557		621
9M-8406	98		487	9T-4514	557	9W-7783	560
	122		524	9T-4517	557		562
	155		537	9T-7220	459		565
	211		560	9T-7692	558	9W-9930	40
	218		562	9T-7754	453	9X-0145	222
	262		565	9T-7755	453		250
	685		572	9T-7756	453	9X-0262	172
	687		574	9T-7757	453	9X-1046	223
9N-0869	31		576	9T-7759	453		251
	52		577	9T-7761	453		723
	105		581	9T-8556	163	9X-1054	222
	108	9S-8004	23	9T-8672	459		250
	126		69	9T-8761	580		259
	127		84	9T-9226	541	9X-1813	174
	223		94	9T-9227	541		176
	251		102	9T-9963	580		177
9N-1756	590		522	9U-0512	713		182

PART NUMBER INDEX

Part	Page	Part	Page	Part	Page	Part	Page
	184		679		687		489
	197		719	9X-7382	685	9X-8916	17
	200		721		687	9X-8917	709
	203	9X-2075	373		688	9X-9865	145
	259	9X-2097	9	9X-7383	685		147
	287	9X-2098	54		688	9Y-9236	66
	425	9X-2099	29	9X-7384	685		
	496		60		688		
9X-2027	296	9X-2297	502	9X-7385	648	**0**	
	298	9X-2305	62	9X-7680	581		
	753	9X-2480	223	9X-7712	21	004-9040	451
9X-2038	211		251		23	006-8663	451
	471		262	9X-7849	152	009-2069	453
	473	9X-2488	693	9X-8116	638	009-3101	360
	475	9X-2532	767	9X-8256	76		424
	477	9X-2533	767		112		425
	659	9X-2616	753		124	011-7960	678
	753	9X-2619	288		157	012-0380	200
9X-2040	357		290		158	027-1287	325
	360	9X-2620	288		160	030-0060	288
	369		290		167		290
	670	9X-3066	149		170	030-0061	288
	679	9X-3265	273		223		290
	682		709		230	030-1712	121
	709	9X-3294	▶136		242		238
9X-2041	655	9X-3401	174		251	031-0214	730
	679	9X-3463	143		262	033-6027	51
9X-2042	211		144		354		455
	679	9X-3465	145		390	033-6036	451
	682		147		393		455
	709	9X-4244	143		420	033-6043	581
	731		144		676	033-8248	121
9X-2043	657		145		682		229
	659		147		702		399
9X-2044	157	9X-4271	195		704	035-3360	311
	158	9X-4492	151		709	036-9823	195
	162	9X-4493	145		719	054-7915	76
	350		147		721	061-9455	53
	390		149		766	064-3843	334
	393		151	9X-8257	71	067-2551	93
	471	9X-4609	273		76	068-9526	54
	473	9X-4821	195		112	070-0079	385
	475	9X-4824	195		238	070-0384	3
	477	9X-4825	195		414	070-0385	3
	657	9X-5699	121		417	077-3241	281
	659	9X-6165	124		420	082-2817	784
	682		138		432	086-9286	625
	719		223		512	090-8247	502
	721		251		572		518
	723		679		574	090-9767	386
	731		682		576	091-0081	300
	753		693		577	091-1735	382
9X-2045	471	9X-6395	585		666	091-1745	431
	473	9X-6493	288		668	094-1875	534
	475		290	9X-8258	349	094-1883	438
	477	9X-6772	124	9X-8267	259		534
	657		222		719	095-0673	296
	659		228		721		298
	679		250	9X-8268	293		534
	682	9X-7373	640		332	095-0843	742
	709		672	9X-8279	375		745
	713	9X-7378	216	9X-8402	777	095-0888	451
	719		648	9X-8487	367	095-0946	534
	721	9X-7380	687	9X-8873	645	095-1586	583
9X-2046	124	9X-7381	685	9X-8896	488	095-1590	583

▶ **PRIMARY REFERENCE**

PART NUMBER INDEX

Part	Page
095-1673	534
095-1674	534
095-1750	589
095-1751	558
	568
095-1787	583
095-1788	583
096-0015	539
096-0067	675
096-0194	527
096-2966	583
096-3044	586
	594
096-3781	369
096-4389	534
096-5962	657
096-6166	267
	269
	502
	505
	570
096-6467	597
	599
	601
097-4896	431
098-8968	220
	248
099-3047	537
099-3649	428
	431
	753
099-8232	586
	594

1

Part	Page
100-3245	145
	147
100-3248	145
	147
100-3250	145
	147
100-3251	145
	147
100-3253	145
	147
100-3254	145
	147
100-3255	145
	147
100-3320	236
100-6551	34
100-7870	691
100-8010	458
100-8011	458
100-8203	451
100-8252	451
101-0003	763
101-1785	653
101-2862	528
101-2867	730
101-3128	126
	127
101-3846	431
101-9161	272
102-8801	124
	222
	228
	236
	249
	250
	259
	272
	639
	672
	709
102-8802	112
	115
	116
	138
	149
	151
	152
	184
	187
	197
	200
	201
	203
	215
	216
	218
	220
	222
	228
	236
	238
	241
	242
	248
	249
	250
	287
	344
	496
	567
	639
	648
	672
	697
	698
	699
	700
	763
102-8803	93
	129
	140
	150
	151
	174
	175
	213
	221
	222
	228
	236
	238
	242
	248
102-8804	220
	221
	222
	228
	248
	249
	479
	676
102-8805	129
	145
	147
	209
	211
	220
	221
	222
	228
	248
	249
	263
	480
	706
	707
	711
	712
102-8806	93
	165
	220
	222
	248
	249
	728
102-9542	323
102-9863	195
103-1122	655
103-2529	100
103-2543	682
103-5526	220
	248
	▶652
103-5796	349
	606
103-6100	687
104-2091	657
104-3351	278
104-3353	278
104-3354	278
104-3355	278
104-3358	278
104-3359	278
105-1797	236
105-2145	581
105-3477	437
105-4177	431
105-4849	▶145
	162
105-4850	▶147
	162
105-6117	425
105-7704	172
105-9410	558
106-0107	129
	▶209
106-0210	209
106-1774	431
	▶436
106-4155	228
	242
106-4175	388
106-7149	195
107-1161	655
107-1964	129
	723
107-2111	259
107-3157	713
107-3308	631
	632
107-3394	▶626
107-3411	▶605
107-4393	685
107-4394	685
107-4395	685
107-4396	685
107-4397	687
107-4399	687
107-4600	731
107-4602	731
107-4749	262
107-7694	7
107-7708	15
108-3320	220
	248
108-4814	455
109-1145	66
109-3207	97
109-4731	298
109-5008	731
109-8895	784
109-9015	620
	▶626
109-9016	626
109-9017	626
110-2023	364
	367
110-6109	129
	220
	248
110-6393	637
110-6844	228
	238
110-6845	228
	238
110-7450	311
110-7452	311
110-7453	293
110-7454	312
110-7455	311
110-7524	731
110-7618	9
110-7886	220
110-7887	220
	248
111-0687	731
111-1316	731
111-2416	236

PART NUMBER INDEX

Part	Page	Part	Page	Part	Page	Part	Page
111-3200	340	114-3361	583	118-8275	388		228
111-4013	157	114-3469	648	118-8276	388	125-2871	275
	158	114-5333	216	118-9517	687	125-3295	425
	160	114-9036	311	118-9573	194	125-3375	292
	162	114-9040	312	119-0281	351	125-3376	292
111-4275	6	114-9224	71		352	125-6510	738
	▶194		300	119-0781	646	125-6990	557
111-4627	765	114-9252	731	119-0959	581	125-7037	390
111-4836	777		738	119-2921	46		393
111-4838	399	115-1326	292	119-3075	69	125-7876	121
111-4839	399	115-1650	322	119-3662	174		166
111-7092	66		▶337	119-4167	300	125-8810	324
111-7739	557	115-2021	332	119-5708	105		▶325
111-7740	557	115-2023	334	119-7463	327		338
111-9110	465	115-2247	424	120-4394	537	126-1052	731
112-0723	▶265		425	120-5281	390	126-1757	11
	315	115-4072	33		393	126-1766	222
112-0724	265	115-4210	4	120-9027	141	126-2743	167
	266		▶46		142	126-5011	236
	▶298	115-4219	33	121-3307	75	126-5466	69
112-0742	290	115-4783	292	121-8038	220	126-7574	131
112-0757	265	115-5669	349		248		133
	266	115-6433	417	121-8039	198	126-7698	315
	▶267	116-0080	121	121-9300	▶271		▶423
112-0759	267	116-2659	90		646	126-7710	▶378
	269		91		647	126-7730	423
112-0762	267	116-4556	4	122-1671	430	126-7757	40
	269		▶28	122-2340	443	126-7845	▶266
112-0764	298	116-8666	6	122-4026	88	126-7846	▶266
112-0765	298		▶40	122-4233	342	126-8472	390
112-0778	265	117-1410	646	122-6660	318		393
	266	117-1559	342	122-8353	282	126-8473	459
	▶288	117-1801	267		284	127-0366	514
112-1817	502		269	122-8705	124	127-1579	401
	505	117-1803	267		154	127-1960	277
	570		269		163	127-4540	221
	▶579	117-2311	220	123-2896	221	127-4729	326
112-5344	75		248		248	127-4731	326
112-6174	220	117-3643	5	123-3827	670	127-4732	326
112-6319	364		▶63	123-4003	296	127-5091	298
112-6646	475	117-4473	657		298	127-5483	238
	477	117-4491	747	123-4371	765	127-5484	228
112-6953	1	117-4492	636	123-4511	84	127-6371	597
	▶388	117-4506	742	123-5798	588		599
112-6956	1	117-5208	510		591	127-6513	388
	▶438	117-5268	449	123-5799	588	127-6514	388
112-6973	1	117-7798	431		591	127-8889	499
	▶401	117-7799	431	123-6713	437		500
112-7847	311	117-8131	713	123-9431	726	127-9133	89
112-8971	323	117-8801	533	123-9694	129	127-9323	259
112-9073	385	117-8929	657	123-9814	300	128-0678	▶310
	387		659	124-0065	437		320
112-9736	76	117-9966	659	124-1479	242	128-0745	266
	390	118-1727	4	124-1555	534		▶280
	393		▶10		583	128-0911	327
	409	118-2073	4	124-2456	360	128-0912	327
112-9783	777		▶26		783	128-0913	328
112-9861	579	118-4264	311	124-3019	75	128-1008	40
113-0580	228	118-6878	238		98	128-1026	731
	242	118-8267	388		687	128-2596	679
113-6069	33	118-8269	388	124-3637	769	128-8423	360
113-7752	424	118-8270	388	124-7326	557	128-8617	723
	425	118-8271	388	124-7359	557	128-9599	608
114-0358	635	118-8272	388	124-7360	557	128-9600	610
114-0359	635	118-8273	388	125-1302	▶200	128-9601	612

▶ **PRIMARY REFERENCE**

PART NUMBER INDEX

Part	Page
128-9602	613
129-2380	334
129-3178	360
	639
	672
129-3180	85
	163
129-5096	119
129-6329	292
129-7163	228
	342
129-7164	228
	342
129-7184	723
129-7632	455
129-7853	534
129-7921	534
129-7925	534
129-7927	534
129-7979	534
129-8090	423
129-8222	▶456
	459
129-9690	653
130-3070	▶619
130-3071	▶620
130-3075	▶620
130-3280	90
	91
130-5202	309
130-5300	157
	158
	160
	162
	163
	167
	170
	192
	218
	229
	235
	238
	242
	259
	263
	273
	639
	672
	697
	698
	699
	700
130-5301	93
	105
	108
	259
130-5543	607
	608
130-5553	607
130-6692	443
130-8285	▶616
130-9811	▶186
	188
	189
	218
	228
131-0030	378
131-0749	588
	591
131-0752	588
131-2633	2
	▶765
131-5879	369
131-8641	417
131-8642	417
132-0338	636
132-1089	626
132-1829	▶116
	206
	208
132-2155	85
132-4354	693
132-4715	626
132-5258	▶457
	459
132-5789	93
	155
	216
	222
	229
	238
	250
132-7370	66
132-7551	122
	443
133-1644	417
133-4995	24
133-5545	522
133-6299	367
133-6379	48
133-6578	537
133-8769	738
133-8770	738
133-9012	639
	672
133-9379	122
134-0165	430
134-1374	271
134-2540	222
	250
134-3079	388
134-3988	93
134-4126	131
	133
134-4483	22
134-5330	409
134-7258	783
134-9569	211
135-0349	462
135-0426	▶150
	157
135-1708	282
	284
135-5038	443
135-5499	742
135-5975	236
135-6259	86
135-6337	328
135-8280	657
	659
135-9819	10
136-0207	687
136-0495	▶622
136-0496	▶623
136-0499	▶606
136-0822	11
136-1543	717
136-1544	636
136-1711	438
136-3188	643
	644
136-3190	644
136-3195	643
136-3845	145
136-3846	147
136-3848	145
	147
136-4183	33
136-6545	277
136-6550	277
136-6551	277
136-6811	515
136-9029	527
136-9030	527
136-9351	731
136-9371	597
	599
	601
136-9380	597
	599
	601
137-1392	265
	▶277
137-2170	767
137-4548	334
137-4549	332
137-6715	22
137-6717	49
137-6718	22
137-6841	753
137-8165	728
138-1509	292
138-1510	292
138-1645	267
	269
138-2373	▶320
	326
	327
	328
	329
	330
	331
138-2637	▶326
138-2738	▶326
138-2758	▶326
138-2795	▶326
	330
138-2796	▶327
138-2917	▶327
	330
138-3252	24
138-3816	322
138-6814	357
	360
138-6819	357
138-7198	49
138-8175	539
138-8402	49
138-8403	49
138-9868	49
139-4081	▶37
	48
139-4084	37
139-6144	▶327
139-6146	▶327
139-6148	▶328
139-6150	▶328
139-6151	▶328
139-9229	▶626
139-9230	626
139-9476	37
140-2961	726
140-2962	726
140-2963	726
140-5945	471
	473
140-6188	22
140-6194	417
140-6197	417
140-8101	417
140-8314	329
140-8885	451
140-9670	22
141-0008	387
141-0312	▶329
141-0752	334
141-1236	334
141-1774	488
	489
141-2597	440
	▶458
141-3889	360
141-3890	360
141-4847	607
	608
	609
	610
	612
	613
	617
141-7687	443
141-8275	93
141-8763	613
141-8765	610
141-8802	▶437
	646
	647
141-8807	443
141-8808	437
141-8811	437
141-8823	614
141-8824	615
141-8830	615
141-9038	607
	608
141-9039	607
	608
141-9040	607
	608

▶ PRIMARY REFERENCE

PART NUMBER INDEX

Part	Page	Part	Page	Part	Page	Part	Page
141-9041	607	143-4642	311	148-2903	97		105
	608	143-4654	52	148-3587	783	148-8364	440
141-9042	610	143-9392	126	148-3626	657		444
	612		127	148-7027	105	148-8366	511
	613	144-0195	769	148-7242	▶618	148-8367	105
141-9043	610	144-0331	480	148-7243	▶608		108
	612	144-0832	497		618		432
	613	144-0896	437	148-7244	▶620		502
141-9044	610	144-1636	209	148-7245	▶614		515
	612	144-4465	265		620		543
	613		266	148-7246	▶621		546
141-9045	610		▶278	148-7247	▶615		549
	612	144-4468	278		621		552
	613	144-4470	278	148-7383	277	148-8368	444
141-9046	614	144-4613	75	148-8240	403		777
	615		192		404	148-8369	98
141-9047	614		431		405	148-8370	444
	615		687		406	148-8371	432
141-9048	614	144-5611	36	148-8307	440	148-8374	93
	615	144-8299	332	148-8313	93	148-8376	467
141-9049	614	145-0050	307	148-8319	105		515
	615	145-0162	15		108	148-8378	93
141-9050	607	145-0164	15	148-8322	467		98
	608	145-0168	15		514		300
	614	145-0170	15	148-8323	300		432
	615	145-0326	763		514		444
141-9051	607	145-1144	339	148-8325	440		502
	608	145-2901	36		780		511
	614	145-6929	▶151	148-8326	514		515
	615		158	148-8327	431		543
141-9052	610		160		440		546
	612		162		510		549
	613	145-7028	▶187		515		552
141-9053	610		238	148-8335	300		570
	612		273		549	148-8380	511
	613	145-7376	49	148-8336	93	148-8388	467
141-9393	▶607	145-7385	49		98	148-8390	440
	616	145-7390	22		105	148-8391	301
141-9397	▶610	146-0098	360		108	148-8392	440
	619	146-0112	443		431		467
141-9398	▶612	146-0240	228		443		511
	620	146-1892	425		502		515
141-9399	▶613	146-3728	592		510	148-8393	515
	620	146-3793	437		543	148-8395	69
141-9784	639	146-6371	657		546		524
	672	146-6581	443		549		526
142-1390	▶329	146-6747	783		552		558
142-1391	▶329	146-7571	443	148-8340	443		586
142-1392	329		▶462	148-8347	444	148-8406	558
142-1657	780	146-9037	443		467		586
142-2624	409	147-0385	235		515	148-8407	73
142-4000	443		242	148-8351	777	148-8408	459
	▶459	147-1445	222		780	148-8409	73
142-5905	▶329		250	148-8352	510	148-8410	65
142-7289	24	147-1446	222	148-8353	505	148-8411	69
142-8545	238		250	148-8357	304		93
143-0001	276	147-2864	617		466		459
	▶373	147-3677	▶617		510		558
143-0003	373	147-5088	74	148-8359	440	148-8413	505
143-0004	373	147-7633	617	148-8360	515		515
143-1288	645	147-8211	22	148-8361	431	148-8415	502
	742	147-8214	22	148-8362	285	148-8424	443
	744	147-8218	21		300		510
	745	147-8220	22		444		543
	747	148-1928	273	148-8363	93		546

▶ **PRIMARY REFERENCE**

PART NUMBER INDEX

Part	Page
	549
	552
148-8430	514
148-8433	432
	444
	549
148-8435	432
	502
	543
	546
	549
	552
	570
148-8442	309
148-8443	431
	514
148-8444	444
148-8446	515
148-8454	301
148-8455	511
	515
148-8941	614
	615
148-8942	614
	615
148-9359	558
	560
	562
	565
	586
149-0668	211
149-2612	228
149-3253	709
149-5240	97
149-8447	622
	623
149-9112	267
	269
149-9114	267
	269
149-9129	122
	238
150-3032	300
	514
150-3033	543
	546
	552
150-3065	105
	108
	440
150-3378	527
150-4033	515
150-4043	511
150-4044	543
	546
	549
	552
150-4046	105
	108
150-4048	440
	467
	515
150-4651	267
	269
150-5782	534
150-8015	767
151-2171	417
151-2898	36
151-2900	36
	45
	119
151-4504	386
151-4505	386
151-4506	300
151-4507	300
151-4809	277
151-5711	309
151-5715	657
151-8754	141
	142
152-1684	675
152-2646	549
	▶588
152-3411	543
	546
	549
	552
153-1036	25
153-1185	325
153-2836	596
153-2837	596
153-2995	514
153-3495	300
153-3715	379
153-5043	187
153-6237	444
	467
	515
153-6244	301
153-6245	515
153-6248	511
	515
153-6273	425
153-8467	49
153-8470	49
153-8623	583
154-0896	38
154-4563	211
154-5232	777
154-7443	221
	248
	▶654
154-8262	211
154-9023	66
154-9508	731
155-0755	719
	721
155-1634	292
155-2255	124
	221
	222
	228
	229
	236
	245
	246
	247
	250
	475
	477
155-2260	176
	177
	181
	182
	221
	222
	228
	229
	234
	236
	238
	242
	249
	250
	259
	262
	475
	477
	709
155-2262	272
155-2265	221
	222
	236
	249
	250
	475
	477
155-2270	93
	155
	163
	202
	218
	221
	222
	229
	234
	236
	238
	241
	242
	245
	246
	249
	250
	259
	263
	273
	425
	475
	477
	639
	672
	702
	704
155-2271	221
	222
	229
	249
	250
	272
	676
155-2274	222
	229
	247
	250
	263
	475
	477
	676
155-2276	181
	182
155-3624	69
155-3677	105
155-4098	723
155-5510	300
155-5600	315
	▶322
155-5602	290
155-5604	322
	▶323
155-5605	323
	▶338
155-5606	323
155-5607	322
	▶324
155-5609	292
155-5789	▶711
	769
155-6647	292
155-6648	292
155-7321	71
155-7329	105
155-9116	540
155-9117	540
155-9122	528
155-9125	528
	537
155-9127	537
155-9133	537
156-1137	276
	▶379
156-1151	288
156-1153	288
156-5545	636
156-5892	218
156-6175	124
	216
	222
	250
	475
	477
157-0340	265
	▶290
157-0670	66
157-1364	263
157-5547	292
158-0851	66
158-6634	228
158-7864	783
158-9956	522
	524
	▶555
159-0268	597
	599
	601
159-0269	597
	599
	601
159-0303	4
	▶43

▶ PRIMARY REFERENCE

PART NUMBER INDEX

Part	Page	Part	Page	Part	Page	Part	Page
159-8036	606	163-4347	360	165-6365	543	170-3447	685
159-8049	166	163-4348	360		546	170-3448	685
159-8050	166	163-4725	▶330		552	170-4735	777
159-8329	440	163-4726	▶330	165-7014	431		780
159-9322	124	163-6795	676	165-9104	723	170-8590	730
	222	164-0210	52	166-0599	167	171-1230	742
	229	164-1234	763	166-1776	11		744
	238	164-2108	339	166-1781	11		745
160-5131	69	164-3018	265	166-2905	41		747
160-6365	726		▶269	166-6358	45	171-1413	334
160-6366	726	164-3071	269		119	171-2206	229
160-7627	443	164-3651	273	166-6928	221	171-2210	229
160-7689	124	164-3652	238		248	171-2211	229
	229	164-4146	730		▶706	171-2212	229
	238	164-4180	558	167-0608	407	171-3258	583
160-8230	32	164-4531	636	167-1801	451	171-3716	342
160-8500	167	164-4883	716	167-1802	451	171-5349	184
	170		718	167-2191	439	171-6682	742
160-9925	679	164-5567	169	167-2209	488		745
161-1702	514		432		489	171-6718	172
161-1703	178		444		490	171-6723	444
161-1704	180		507		492		516
161-1705	179		511		494	171-6728	511
161-3415	679		516	167-2300	439	171-8888	646
	682		520	167-2320	488		▶657
161-6149	522		543		489	172-1482	174
	556		546		490	172-2416	742
	589		549		492		745
161-6154	522		552		494	172-3511	129
	555	164-5574	511	167-8121	25		221
161-6161	522	164-5580	432	167-9524	339		222
	589	164-5598	301	168-2166	342		248
161-9289	751	164-5606	444	168-3504	537	172-4211	119
161-9916	71	164-5619	105	168-5073	381	172-4871	228
	691		108	168-5223	332	172-5754	4
161-9934	738		459		▶334		▶45
162-0177	69		560	168-7861	537	172-6251	354
	93		562	168-7940	539	172-6252	354
	524		565	168-7941	539	172-6298	87
	526	164-6476	267	168-7942	539	172-9200	211
	558		269	168-8772	678	173-0566	281
	560	164-6860	516	168-8976	6	173-1028	▶636
	562	164-6871	169		▶59		742
	565	164-7556	143	169-0417	167		745
	586		144		170	173-1498	45
162-7209	490	164-7577	▶197		▶174		119
	492		228	169-0418	174	173-2052	717
	494	164-7908	444	169-0697	718	173-2118	713
162-8068	4	164-9869	502	169-1026	745	173-2142	731
	▶44	165-2273	275	169-1616	568	173-2143	731
162-8352	300		691	169-1617	568	173-2144	731
162-9728	431	165-4446	5	169-2932	510	173-2148	719
163-0086	627		▶35	169-3104	97		721
163-0324	438	165-4557	4	169-5861	172	173-2185	679
	▶439		▶25	169-7380	763		682
163-0325	439	165-5759	622	169-7394	511	173-2187	679
163-0326	439	165-5760	622	169-8586	97		682
163-0327	439		623	169-8598	97	173-2200	678
163-0329	439	165-5761	622	170-0494	465	173-2205	723
163-0872	▶648		623	170-0965	71	173-2206	723
	649	165-5763	622	170-1112	636	173-2219	645
163-1135	763		623	170-1114	636	173-2234	221
163-1149	645	165-5970	105	170-1115	636		248
163-2478	22		108	170-1821	221	173-3083	747
163-3926	424		▶213		248	173-3427	534

▶ **PRIMARY REFERENCE**

PART NUMBER INDEX

Part	Page	Part	Page	Part	Page	Part	Page
173-3428	534	177-6716	639		▶87	186-2270	617
173-3993	524		672	183-6854	87	186-2517	312
	526	177-6727	639	183-6856	87	186-2522	▶311
	558		672	183-6967	449		336
	586	177-6732	639	183-6970	449	186-2741	728
173-5549	49		672	183-6971	449	186-3221	263
173-5787	750	177-9953	▶117	183-7263	172	186-3402	311
	751		119		459	186-3735	112
173-6532	▶728	178-0603	▶742		524		115
	729		744		560		116
173-7035	750	178-0604	▶716		562		129
	751		742		565		138
173-7225	432	178-0605	716		572		147
173-9779	439		▶717		574		150
174-0503	238		718		576		151
174-2407	761	178-0607	730		577		152
174-3086	369	178-0608	730	183-7595	522		175
174-3091	480	178-0609	730		▶592		197
174-3624	646	178-2357	110	184-2298	742		200
	▶748	178-3620	228		745		201
174-4301	753	178-4323	679	184-2299	742		203
174-4312	228		682		745		213
174-5415	91	178-7907	717	184-6259	361		215
174-5807	75	178-7913	▶744	184-6260	361		220
174-5907	94		750	184-6343	623		221
174-7875	674	178-9167	328	185-0303	528		222
174-8663	369	178-9983	480	185-1948	627		228
174-9169	192	179-4324	342	185-2271	444		248
174-9570	▶96		360	185-2638	117		259
	114	179-4682	639	185-2639	117		263
174-9603	273		672	185-2643	117		272
175-3244	238	179-4683	639	185-2644	117		287
175-3265	719		672	185-2645	117		425
	721	179-7000	167	185-2647	117		480
175-3678	728	179-8128	110	185-2648	117		496
175-4291	143	179-9348	105	185-2650	117		567
	144		108	185-2651	117		697
175-4292	143	179-9392	723	185-2653	117		698
	144	180-0156	132	185-2654	117		699
175-4966	281		▶167	185-2655	117		700
175-7162	687	180-0157	132	185-2658	117		709
175-7898	439		▶170	185-4778	639		712
176-2444	328	180-3730	112		672	186-3736	202
	▶347	180-3994	429	185-4780	639		272
176-9273	312	180-3997	424		672	186-5107	763
177-0581	85	180-7304	▶745	185-4782	639	186-6189	687
177-1052	74		747		672	187-0541	589
177-1058	74	180-7305	▶718	185-4783	639	187-0661	783
177-1570	772		745		672	187-4161	731
	773	180-8585	502	185-4785	639	187-5127	767
177-1860	730		▶567		672	187-5128	767
177-1862	730	180-9068	567	185-6250	777	187-5495	511
177-1863	742	180-9069	567		780	187-6279	4
	745	180-9286	510	185-6335	221		▶60
177-4495	657	180-9340	176		249	187-6294	60
	659		177	185-7522	655	187-7331	112
177-4930	717		181		▶767	187-7719	639
177-4935	▶730	180-9617	744	185-7524	767		672
	742		747	185-7525	767	187-8191	592
	745	183-2931	74	185-7529	767	187-8595	63
177-4937	748	183-3399	101	185-7533	655	188-1421	709
	749	183-3406	93	185-7534	▶655	188-2008	510
177-6696	639		172		656	188-4210	534
177-6704	639	183-4365	49	185-7538	655	188-5046	292
	672	183-6845	4	185-9356	29	188-5149	292

▶ PRIMARY REFERENCE

PART NUMBER INDEX

Part	Page
188-5175	731
	738
188-5177	731
	738
188-7497	▶424
	429
188-7690	639
	672
188-8044	783
188-8844	112
188-9820	▶645
	744
	747
189-2076	723
189-2077	471
	473
189-2078	471
	473
189-2079	471
	473
	475
	477
189-2512	723
189-3158	211
	229
189-3812	276
189-3816	276
189-4680	639
189-4682	639
	672
189-5433	4
	▶54
189-5594	75
189-5604	259
189-8622	▶712
	769
189-8772	87
189-8777	62
189-8779	▶82
	83
189-8780	4
	▶83
189-9380	539
189-9382	539
189-9763	534
	583
190-0643	45
190-1125	409
190-5497	679
190-6728	1
	▶597
190-7673	583
190-7674	583
191-0461	5
	▶101
191-0522	51
191-0523	▶51
	101
191-0629	596
	597
191-0631	597
	599
191-0633	▶599
	603
191-0634	599
191-1782	105
	108
191-1831	292
191-2933	750
	751
	▶763
191-3678	531
191-5114	676
191-5213	53
191-5282	646
	▶719
191-7582	528
	537
191-7583	528
	537
191-7699	53
	235
191-8567	▶713
	715
191-8720	334
191-8921	643
	644
192-0573	534
192-1563	▶36
	316
	649
192-1954	221
	249
	719
192-2175	748
	749
192-2820	639
	672
192-2822	639
	670
	672
192-2823	639
	672
192-2981	5
	▶61
192-4263	300
192-4264	300
192-5017	691
192-7049	646
	647
	▶707
192-7054	728
192-7752	763
192-7755	763
192-7760	763
192-7767	763
192-7783	763
192-7787	763
192-7790	763
192-7795	763
192-7799	763
192-7805	763
192-7810	763
192-7812	763
192-7820	763
192-7822	763
192-7848	763
192-7979	75
192-9121	296
192-9128	298
193-0702	639
	672
193-1034	71
193-1036	581
193-1664	580
193-1665	526
	▶580
193-1736	534
193-2200	292
193-2550	▶184
	292
	332
193-7307	672
194-1723	▶556
	558
	586
194-4411	334
194-5226	182
194-5227	182
194-5278	75
194-6722	▶176
	238
194-6725	93
	▶177
194-8325	534
194-9472	537
194-9473	528
	537
194-9474	537
194-9478	540
194-9479	540
194-9480	540
194-9481	540
194-9632	527
195-0321	42
195-0973	709
195-0975	709
195-0976	709
195-2187	430
195-5826	417
196-0052	657
196-0436	713
196-1093	380
196-1094	380
196-7867	330
196-8490	324
196-9519	15
197-0416	84
197-1397	639
	672
197-1398	639
	672
197-1399	639
	672
197-1400	639
	672
197-2027	679
	682
197-2072	679
197-3295	507
	520
197-4859	775
197-5210	4
	▶34
197-5470	713
197-5504	738
197-5506	738
197-5507	738
197-6474	2
	▶694
197-6475	153
	▶198
197-7565	222
	249
197-7996	323
197-8391	172
	▶188
197-8392	172
	▶189
197-8393	172
	▶178
197-8394	172
	▶179
197-9353	42
197-9371	42
197-9372	42
197-9386	42
197-9580	74
197-9581	74
198-1941	709
198-2713	236
198-2714	4
	▶236
198-4775	222
	250
	475
	477
198-4777	516
198-5351	537
198-5389	138
198-6570	221
	249
198-6571	221
	249
198-6588	709
198-6589	709
198-7248	▶281
198-7356	738
198-7651	514
198-8769	753
198-8772	657
198-8774	723
199-0629	625
199-2090	3
199-3417	709
199-4064	167
199-7499	639
	672
199-7891	117
199-8436	117
199-9641	723
200-0008	1
	▶414
200-0727	723
200-0728	753
200-0729	753

2

▶ **PRIMARY REFERENCE**

PART NUMBER INDEX

Part	Page	Part	Page	Part	Page	Part	Page
200-0731	723	202-0674	579	206-5175	665	209-6660	609
200-1173	697	202-0686	383	206-5176	665	209-6661	609
	698	202-0687	450	206-5203	138	209-6667	▶609
200-1315	292	202-1327	639	206-5823	712	209-7659	108
	▶427		672	206-6305	775	209-8310	682
200-1316	427	202-2005	340	206-6499	647	209-8312	682
200-1734	627	202-2006	340		▶721	209-8315	682
200-2217	425	202-6612	144	206-6876	93	210-1254	731
200-2218	425	202-6614	143		105	210-1747	172
200-2219	425		144		108		▶180
200-2220	425	202-7935	85	206-7562	659	210-3321	9
200-2221	425	202-8649	697	206-8784	195		29
200-2258	65		698	206-9271	321	210-5551	679
200-2371	524		699	206-9278	320	210-5590	5
200-4257	510		700		▶321		▶15
200-4495	33	202-8928	440	207-0697	537	210-5682	170
200-4497	61	202-8933	273		▶581	210-5683	170
	▶62		▶340	207-1517	194	210-6783	753
200-4516	41	203-0328	753		▶195	210-7016	709
200-5951	719	203-2287	285	207-1759	646	210-7018	709
	721	203-3768	87		647	210-7722	87
200-5952	719	203-3940	185		▶727	210-7760	364
	721	203-6093	74	207-2804	▶747	210-8422	▶141
200-6206	719	203-6470	342		751		155
200-6282	522	203-6473	342	207-8218	558	210-8423	▶142
	568	203-7643	606		586		155
200-7138	90	203-7644	606	207-8293	721	211-0667	679
200-7939	682	203-7703	750	207-8619	665	211-1167	769
200-8152	723		751	207-8620	665	211-2101	39
200-8153	723	203-7730	606	207-8621	665	211-2109	719
200-8154	723	203-9991	753	208-0011	360		721
200-8895	695	204-0725	738	208-0039	30	211-2126	719
	698	204-0813	360	208-3703	726		721
200-8896	696	204-2799	528	208-3777	676	211-5004	499
	697	204-3664	647	208-3778	676		500
200-8897	694		▶659	208-3779	676	211-5006	499
	▶695	204-4125	647	208-3906	603		500
200-8898	694		▶665		604	211-5358	763
	▶696	204-4492	647	208-3908	170	211-9120	5
201-0212	271		▶749	208-5022	767		▶11
	▶272	204-6132	731	208-6055	85	211-9294	763
201-1531	129		738	208-7472	321	211-9856	767
201-2733	723	204-6529	75	209-0112	721	212-3652	5
201-5267	399	204-7572	738	209-0381	221		▶42
201-5555	211	204-7949	▶175		249	212-3657	105
201-5563	473		726		676		108
201-6775	358	205-0826	138	209-0499	423		▶114
	359	205-1280	101	209-0516	775	212-3706	101
201-6776	358	205-1320	33	209-0746	657	212-4287	4
	359	205-1321	5		659		▶30
201-6779	▶358		▶33	209-2625	420	212-4288	7
201-6780	358	205-4933	709	209-2626	420	212-4289	5
	359	205-6029	342	209-2629	420		▶7
201-6781	358	205-6388	741	209-3750	748	212-4893	15
	359		748		749	212-6854	342
201-6850	4		749	209-4573	66	212-6934	66
	▶41	205-7299	166	209-4579	85	212-7042	639
201-8143	399		259	209-4600	4	212-7753	373
201-8428	259	205-8212	753		▶73	212-7754	373
201-8616	▶726	205-8257	138	209-5018	731	213-0364	170
	727	205-8650	659	209-5528	75	213-1365	298
201-9774	54	205-8651	659	209-5582	201	213-1370	298
202-0669	417	206-0033	682	209-6477	85	213-3193	42
202-0671	579	206-1345	236	209-6638	141	213-3781	596
202-0673	579	206-5162	138		142	213-7489	480

▶ **PRIMARY REFERENCE**

PART NUMBER INDEX

Part	Page	Part	Page	Part	Page	Part	Page
213-8433	487	217-5213	21		▶20	225-4118	496
213-8773	▶421	217-5287	91	222-1185	49	225-4256	784
	431	217-5288	91	222-1186	49	225-4257	783
214-0113	128	217-5701	12	222-2277	91	225-4456	583
214-3616	167		13	222-2307	606	225-4460	583
	170	217-7933	730	222-2367	465	225-4607	583
214-3617	167	217-8166	211	222-3686	679	225-9578	662
	170	217-8339	114		682	225-9579	662
214-4141	3	218-0404	138	222-3687	679	225-9611	526
	▶375	218-0859	4		682	226-0291	75
214-4142	375		▶27	222-4983	627	226-0321	75
214-4143	375	218-4935	216	222-4994	625	226-1240	783
214-4208	222		234		▶627	226-1242	784
	250	219-0305	784	222-5004	603	226-1274	783
214-6154	296	219-0314	80		▶625	226-1275	784
214-6156	265		86	222-5151	772	226-4192	533
	▶296	219-3309	48		773	226-6039	74
214-6161	▶265	219-5844	▶21	222-5774	719	226-6051	74
	315		22		721	227-1200	21
214-6162	▶307	219-5846	▶22	222-5893	9	227-4002	236
	315		23	222-5900	5	227-4094	3
214-7567	183	219-5847	▶23		▶102		▶374
214-7568	60		24	222-5915	69	227-4301	74
	101	219-5849	5	222-5917	236	227-4339	601
	102		▶24	222-5946	4	227-4340	601
	172	219-6314	138		▶52	227-4342	601
214-7634	▶643	219-6485	▶143	222-5952	4	227-4343	601
	769		157		▶12	227-5464	73
214-7635	▶644		158	222-5958	5		▶74
	769		160		▶104	227-5480	15
214-9186	731	219-6487	▶144	222-9151	502	227-5904	102
	738		154	223-1341	558		110
214-9397	▶265	219-6607	138	223-3383	766	227-5942	69
214-9468	443	219-8094	748	223-3667	437	227-6744	287
215-3013	316		▶750	223-3917	▶422	227-7391	783
215-3014	316	219-8095	749	223-3924	292	227-7392	643
215-3015	316		▶751	223-3925	292		644
215-3687	431	219-9579	738	223-7577	191	227-8305	601
215-6672	152	220-0814	510		▶201	227-9981	2
215-6673	152	220-1428	443	224-3247	7		▶729
215-6674	152	220-3681	784	224-4536	▶182	228-0418	267
215-6981	39	220-3773	784		183		269
215-6982	4	220-3995	443	224-5132	421	228-2615	784
	▶39	220-7924	784		422	228-2616	783
215-9962	583	220-7925	265	224-5152	421	228-3621	27
216-4515	▶89		266		422	228-4428	760
	390		▶784	224-5699	492	228-4709	60
	393	220-8678	96	224-5700	492	228-6089	222
216-4531	713	220-9089	629	224-6638	42		250
216-5586	18	220-9090	628	224-7135	524		624
216-7752	499		629	224-9364	709	228-7137	709
	500		630	224-9367	709	228-8527	467
216-7790	121		633	224-9368	709		▶528
	166	220-9091	628	224-9392	402	228-9697	591
216-7888	719	220-9092	633		662	229-1494	744
	721	220-9099	630		663	229-2704	124
216-8344	719	221-3416	169	225-0300	524		670
	721		▶181	225-0312	783	229-5153	15
216-9528	360	221-3494	60	225-0313	784	229-5154	15
217-0733	772		101	225-1461	56	229-5155	15
217-3027	316	221-4480	▶17	225-3285	488	229-5156	15
217-3031	316		18		489	229-6625	282
217-3681	277	221-4481	▶18		490	229-7534	369
217-4891	▶628		20		492	229-8198	30
217-4892	▶633	221-4482	5		494	229-8844	31

▶ **PRIMARY REFERENCE**

PART NUMBER INDEX

Part	Page	Part	Page	Part	Page	Part	Page
229-8851	191	233-4463	351	235-8200	4		565
229-8870	111		352		▶165	236-9939	369
229-9969	141		682	235-8559	▶154	236-9993	221
	142	233-4466	351		646		249
229-9972	141		352		647	237-0226	86
	142		682	235-8560	2	237-0238	2
229-9974	141	233-4885	539		▶155		▶501
	142	233-5036	679	235-9651	104	237-0268	501
230-1341	137		682	235-9822	75		▶510
230-4014	425	233-6306	537	236-1068	761	237-0269	▶501
230-4015	66	233-6745	716	236-1069	761	237-0271	2
230-4176	443	233-7654	54	236-2216	35		▶315
230-5771	259	233-7655	63	236-4608	222	237-0421	1
230-7058	505	233-7676	▶759		250		▶431
230-7640	425		761	236-4609	222	237-0423	1
231-3539	439	234-0349	562		250		▶348
231-4156	330	234-1360	679	236-4610	222	237-0424	1
231-4157	▶330	234-1530	397	236-4611	222		▶354
231-4159	▶330		411	236-4612	205	237-0425	1
231-4476	121	234-3075	601	236-4615	210		▶367
231-4707	528	234-3545	397	236-4616	211	237-0426	1
232-0343	93	234-4452	583	236-4619	222		▶364
	▶111	234-4845	560		250	237-0428	1
232-0928	374		562	236-4620	129		▶376
232-0929	374		565	236-4621	129	237-0430	1
232-0931	374	234-4846	560	236-4622	222		▶397
232-1335	759		562		250	237-0431	1
232-1336	759		565	236-4623	204		▶85
232-1337	759	234-4851	560	236-4625	206	237-0432	1
232-1338	759		562		208		▶98
232-1374	105		565	236-4630	702	237-0433	1
	108	234-4860	565		704		▶399
232-1376	105	234-4869	565	236-4631	221	237-0434	1
	108	234-4870	565		249		▶691
232-1394	646	234-5001	562	236-4970	▶697	237-0435	1
	▶679		565		702		▶514
232-1396	646	234-5107	397	236-4971	▶698	237-0436	1
	▶757	234-5110	397		702		▶443
232-1397	646	234-5925	221	236-5898	761	237-0438	1
	▶662		249	236-6207	702		▶304
232-1684	757	234-9553	646		704	237-0439	1
232-1685	757		▶760	236-6220	172		▶66
232-1686	757	234-9571	760		▶183	237-0441	1
232-1687	757	234-9572	760	236-6221	172		▶783
232-1688	759	235-1424	2		▶185	237-0443	1
232-1693	126		▶4	236-6253	676		▶75
232-1711	757	235-1425	4		769	237-0445	1
232-1712	757		▶5	236-7019	▶741		▶409
232-1754	48	235-1498	562		748	237-0447	1
232-2964	731		565		749		▶413
232-3717	5	235-3595	93	236-7772	676	237-0946	▶487
	▶48	235-3596	93	236-7773	155		627
232-7635	▶601	235-3937	▶152	236-7775	163	237-0947	487
	603		163	236-8722	221	237-0948	▶482
	604	235-5275	132	236-8896	662		501
232-7637	▶595		▶157	236-8995	132	237-0949	▶483
	601	235-5276	153		▶134		501
233-0891	127		▶158	236-9039	1	237-0950	▶484
233-0915	757	235-5506	221		▶766		501
233-0916	757		249	236-9773	154	237-0951	501
233-1643	682	235-5527	49	236-9774	154		▶518
233-1645	682	235-5528	48	236-9775	155	237-0952	501
233-2530	528		▶49	236-9776	155		▶520
	▶539	235-6157	586	236-9832	560	237-0954	501
233-2535	539	235-6163	524		562		▶531

▶ PRIMARY REFERENCE

PART NUMBER INDEX

Part	Page
237-0960	501
	▶530
237-0961	501
	▶543
237-0963	132
	▶134
237-0966	132
	▶134
237-0969	132
	▶420
237-1012	▶163
237-1013	▶676
237-2234	586
237-2742	501
	▶541
237-2743	541
237-3943	763
237-3970	763
237-3995	2
	▶6
237-4847	6
	▶119
237-4848	6
	▶80
237-4850	6
	▶86
237-4851	6
	▶100
237-4853	6
	▶88
237-4857	637
	▶649
237-4910	▶220
	646
237-4931	2
	▶132
237-4932	501
	▶546
237-4933	▶1
	2
237-4935	▶2
237-4948	1
	▶349
237-5114	▶282
	315
237-5176	69
237-6256	784
237-6257	784
237-7262	163
237-8187	315
	▶336
237-9308	93
237-9736	163
237-9821	4
	▶65
237-9822	4
	▶38
237-9823	4
	▶93
237-9836	4
	▶53
237-9874	▶449
	450
237-9877	449
237-9878	449
238-0371	4
	▶9
238-0373	4
	▶29
238-1074	119
238-1112	93
238-1795	572
	576
238-1796	574
	577
238-2658	505
238-2659	505
238-2706	42
238-2720	42
238-4436	501
	▶507
238-4802	4
	▶69
238-4803	4
	▶105
	▶108
238-4804	6
	▶55
238-4805	55
238-4808	4
	▶172
238-9842	560
	565
238-9843	586
238-9844	586
239-0583	8
239-0618	522
239-0621	522
239-1134	192
	▶215
239-4849	▶469
	470
239-4850	128
	▶169
	708
239-5195	522
239-6135	86
239-6336	524
239-6986	784
239-8410	390
	393
239-9840	75
239-9841	75
239-9843	75
239-9845	75
239-9848	75
239-9851	75
239-9852	75
239-9853	75
239-9854	75
239-9856	75
239-9857	75
239-9862	75
239-9863	75
239-9864	75
239-9867	75
239-9870	75
239-9876	75
239-9877	75
239-9880	75
239-9881	76
239-9883	76
239-9884	66
239-9887	85
239-9954	124
	▶131
240-4542	▶666
240-4548	666
240-4551	666
240-4552	666
240-4557	666
	668
240-4630	666
	668
240-4695	558
240-4696	565
240-5150	1
	▶112
240-5151	112
240-7356	590
240-8245	520
240-8246	520
240-8248	520
240-8249	520
240-8250	520
240-8253	507
240-8254	507
240-8255	507
240-8637	416
	▶417
241-0073	276
241-0077	276
	▶300
241-0078	▶71
	276
241-0080	276
	▶316
241-0086	300
241-0087	300
241-0088	300
241-0089	300
241-0091	300
241-0092	300
241-0638	132
	▶218
241-0639	▶121
	132
241-0640	132
	▶238
241-0641	132
	▶242
241-0642	132
	▶228
241-0643	▶259
	454
241-0645	▶166
241-1485	518
241-1495	518
241-1504	518
241-1512	518
241-1541	518
241-2443	514
241-2451	514
241-2628	543
	546
241-2921	1
	▶275
241-3400	▶97
	104
241-4194	192
241-4227	709
241-4960	30
241-5688	242
241-6185	65
241-6209	510
241-6254	708
	▶709
241-6393	709
241-6978	666
241-7602	4
	▶126
241-7854	376
241-8368	▶202
	229
241-8489	783
241-8650	▶668
241-8651	666
	668
241-8652	666
	668
241-8692	▶317
	336
241-8693	317
	▶318
241-8694	318
241-9022	▶332
	336
241-9023	332
241-9299	▶451
	533
242-0718	668
242-0719	668
242-0720	668
242-1307	514
	▶522
242-1543	738
242-2411	12
	▶13
	14
242-2445	687
242-3210	275
242-3864	54
242-4270	484
	▶490
242-4271	483
	▶488
242-4272	482
	▶489
242-4340	66
	▶79
242-6098	713
242-6099	221
	249
242-6801	534
242-6803	534
242-6804	534
242-8263	731

▶ **PRIMARY REFERENCE**

PART NUMBER INDEX

Part	Page	Part	Page	Part	Page	Part	Page
242-8414	300	243-4369	731	244-3412	▶604		552
242-8415	300	243-4371	731	244-3442	▶470	245-3315	534
242-8416	300	243-4626	511	244-3443	▶470	245-3834	397
242-8417	300	243-4673	514	244-3472	▶603	245-3835	397
242-8418	300	243-4786	510	244-3599	2	245-3842	772
242-8419	300	243-4787	510		▶153		773
242-8421	221	243-4788	510	244-3712	172	245-3850	772
	249	243-4860	679	244-3825	▶501		773
242-8559	685		682	244-4478	▶708	245-3852	397
242-9371	685	243-5063	76	244-4486	14	245-3853	397
242-9372	685	243-5553	731	244-4500	31	245-3862	534
242-9416	638	243-5554	731	244-4978	637	245-3866	501
	▶685	243-5555	731		▶650		▶570
242-9820	300	243-5556	731	244-5419	637	245-3867	570
243-0083	470	243-5745	85		▶687	245-3868	570
	▶549	243-5746	85	244-5424	▶454	245-4083	1
243-0086	470	243-5828	413	244-5427	76		▶407
	▶552	243-5856	354	244-5526	501	245-4094	407
243-0570	431	243-5857	354		▶777	245-4333	731
243-1076	2	243-6467	514	244-5548	▶485	245-4630	185
	▶715	243-6468	514		603	245-4659	112
243-1080	▶646	243-6512	514		604	245-5942	569
	715	243-6531	510	244-5575	603	245-5943	510
243-1083	646	243-6533	510	244-5584	▶486		▶569
	▶731	243-6535	510		603	245-6175	414
243-1088	637	243-6537	510	244-5585	▶780	245-6375	81
	▶638	243-6623	▶637	244-5608	467	245-6376	81
243-1089	▶471	243-6711	514	244-5617	▶440	245-6447	471
	646	243-7241	▶467		454		473
	647		470	244-5623	443		475
243-1090	646	243-7258	514	244-5624	443		477
	647	244-0357	80	244-5625	443	245-6458	646
	▶753		▶81	244-6524	▶235		647
243-1092	646	244-0405	541		276		▶723
	▶670	244-0420	541	244-6601	▶90	245-6566	▶464
243-1093	670	244-1031	▶496	244-6602	65	245-6795	82
	▶693		514	244-6603	▶91	245-6796	14
243-1113	731	244-1426	514	244-6604	93	245-7438	583
243-1712	390	244-2119	693	244-6605	93	245-7456	531
	393	244-2125	685	244-6606	108	245-7491	485
243-1718	390	244-2339	▶285	244-6607	▶3		▶492
	393		315	244-6625	502	245-7493	488
243-1722	390	244-2360	693		544		489
	393	244-2539	666		546	245-7494	488
243-1723	390		668		549		489
	393	244-2661	▶603		552	245-7495	488
243-1938	▶214	244-2662	603	244-7595	98		489
243-1940	▶473		▶624	244-8730	399	245-7500	488
	501	244-2747	▶430	244-8731	399		489
243-1941	▶475		646	244-8732	399	245-7649	477
243-1945	▶137		647	244-8785	700	245-7650	475
243-1946	▶477	244-2786	▶675	244-8786	699		▶480
243-2289	76		715	244-8839	650	245-7727	354
243-2372	66	244-3114	273	244-8840	64	245-8175	443
243-2373	66		▶339	245-0766	650	245-8335	475
243-2374	66	244-3168	126	245-1193	360		477
243-2532	510		127	245-1663	443	245-8355	522
243-3166	471	244-3253	▶128	245-1664	443	245-8472	583
	473	244-3255	▶470	245-1666	443	245-8491	360
	▶479	244-3274	431	245-2973	▶465	245-8492	360
243-3416	76		443		466	245-8818	▶699
243-3696	531	244-3288	431	245-2975	▶463		704
243-3720	510	244-3289	431		543	245-8819	▶700
243-3750	766	244-3290	431		546		704
243-3763	679	244-3411	▶603		549	245-9790	490

▶ PRIMARY REFERENCE

PART NUMBER INDEX

Part	Page	Part	Page	Part	Page	Part	Page
	492	246-4615	81	247-1451	780	247-9761	134
	494	246-4619	417	247-1452	780	247-9859	▶775
245-9791	490	246-4770	431	247-1852	656		783
	492	246-4771	431	247-1860	731	247-9865	514
	494	246-4772	431	247-1863	679	247-9877	▶784
245-9810	331	246-4774	431	247-1909	▶772	247-9897	510
245-9811	▶331	246-4777	431	247-2699	417	247-9906	514
245-9890	76	246-5083	12	247-2700	417	247-9915	502
246-0435	407		14	247-3136	360	247-9989	121
246-0511	76	246-5105	469	247-3137	360	248-0013	134
246-0535	522	246-5124	282	247-3138	360	248-0014	134
246-0578	221	246-5135	440	247-3139	360	248-0072	121
	249	246-5136	440	247-3141	360	248-0220	259
246-0616	76	246-5231	416	247-4184	471	248-0221	259
246-1177	417		▶761		473	248-0334	431
246-1184	417	246-5423	292	247-4255	369	248-0335	431
246-1187	417	246-5459	221	247-4285	143	248-0369	4
246-1479	112		249	247-4389	238		▶56
246-1696	121	246-6152	76	247-4481	558	248-0388	134
246-1697	121		▶527	247-4506	228	248-0389	134
246-1698	121	246-6196	166	247-4593	431	248-0402	443
246-1708	516	246-6291	137	247-4594	431	248-0403	443
246-1715	121		▶138	247-4596	443	248-0414	153
246-1777	80	246-6296	119	247-4668	▶351		▶162
246-1883	86	246-6727	397		390	248-0420	132
246-1884	417	246-7272	687		393		▶674
246-1888	402	246-7273	687	247-4669	351	248-0422	153
246-1889	404	246-7274	687	247-4670	▶352		▶160
	406	246-7275	687		390	248-0423	160
246-1890	403	246-7276	687		393	248-0424	160
	405	246-7934	397	247-4671	352	248-0426	160
246-1891	417	246-7935	397	247-4865	273	248-0639	▶450
246-1892	417	246-7936	397	247-4969	471		454
246-2052	▶466	246-8110	348		473	248-0706	390
	469	246-8627	135		475		393
246-2054	501	246-8628	136		477	248-0824	772
	▶533	246-8630	135	247-5513	514	248-0827	772
246-2099	533	246-8631	136	247-5572	514		773
246-2392	371	246-8848	353	247-5577	502	248-1545	229
	417		▶360	247-5578	502	248-2079	753
246-2393	371	246-8853	360	247-5579	502	248-3317	490
	417	246-8854	360	247-5585	502		492
246-2642	214	246-8855	360	247-5586	502		494
246-2886	534	246-8856	360	247-7569	229	248-3318	490
246-2887	533	246-8888	510	247-7601	▶558	248-5081	206
	534	246-8889	510		576		208
246-2896	488	246-8907	417		577		624
	489	246-9198	653	247-7830	▶273	248-5249	761
246-2899	488	246-9199	▶653		336	248-5250	761
	489		709	247-8238	354	248-6189	761
246-2931	4	246-9345	4	247-8239	354	248-6190	761
	▶84		▶127	247-8474	218	248-7407	466
246-2943	417	246-9353	165	247-8475	218	248-7465	443
246-3231	693	246-9863	417	247-8557	3	248-7466	443
246-3290	157	246-9864	417		▶371	248-7467	443
246-3295	158	246-9866	417	247-8558	3	248-7607	357
	162	247-0261	112		▶380		361
246-4365	414	247-0497	486	247-8559	3	248-7608	357
246-4366	414		▶494		▶346		361
246-4374	414	247-0831	5	247-8560	3	248-7609	357
246-4488	228	247-1086	238		▶359	248-7610	357
246-4489	228	247-1447	780	247-8561	3	248-7611	357
246-4611	80	247-1448	780		▶345		360
246-4612	81	247-1449	780	247-8632	526	248-7612	357
246-4614	81	247-1450	780	247-9760	134		360

▶ **PRIMARY REFERENCE**

PART NUMBER INDEX

Part	Page
248-7613	2
	▶357
248-9953	583
248-9954	583
248-9955	583
248-9956	583
248-9963	583
249-0150	12
249-0368	546
	552
249-0787	543
	549
249-0954	494
249-1750	285
	▶287
249-2334	▶497
	510
249-2763	222
	250
249-2775	129
249-5227	522
	▶589
249-5602	206
	208
	221
	249
	624
249-6463	263
249-8175	▶292
	336
249-9223	4
	▶191
250-0155	98
250-0787	443
250-0841	92
250-1441	309
250-2320	380
250-2321	380
250-2322	345
250-2324	276
250-2326	380
250-2327	▶276
250-3895	691
250-4628	716
	718
250-7531	560
	562
	565
250-8327	64
251-1082	129
251-1197	223
	250
251-1700	1
	▶390
251-1701	390
	393
	▶402
251-1702	402
251-1705	390
	▶403
251-1706	403
251-1708	390
	▶404
251-1709	404
251-1712	390
	393
251-2008	304
251-2009	304
251-2010	304
251-2011	304
251-4282	723
251-4283	723
251-4284	723
251-4339	155
251-4755	390
	393
251-4756	390
	393
251-4760	390
	393
251-6351	300
251-9340	90
251-9739	371
251-9742	371
251-9746	371
251-9750	371
251-9751	371
251-9752	371
251-9754	3
	▶284
251-9755	284
251-9757	284
251-9758	3
	▶381
251-9759	3
	▶385
251-9760	3
	▶411
252-0737	586
252-5874	783
252-5917	▶205
	470
252-5924	▶210
	454
252-5925	624
252-9256	522
	▶568
253-0575	753
253-0861	775
253-1285	586
253-2111	229
253-2538	407
253-2539	407
253-2540	407
253-2541	407
253-2547	407
253-2548	407
253-2550	407
253-2553	407
253-2555	407
253-2556	407
253-2673	496
253-3471	128
	▶129
253-3555	346
253-3945	▶263
	345
253-3951	153
	▶211
253-4025	558
	586
253-4026	572
	574
	▶586
253-4531	649
253-9521	679
254-1425	93
254-3571	520
254-4108	533
	▶534
254-4357	102
	▶110
254-5068	▶629
254-5072	▶630
254-5146	531
	▶537
254-5525	▶153
254-5789	524
254-6549	534
254-6555	534
254-6561	534
	▶583
254-6562	583
254-7032	516
254-9139	480
254-9146	753
254-9147	753
254-9149	475
254-9150	477
255-3613	510
255-3686	292
255-4367	731
255-4369	124
255-4370	163
255-4371	163
255-4954	88
255-5284	127
255-5285	126
255-8545	437
256-0083	534
256-0854	777
256-4362	558
256-4363	558
256-4552	558
256-5068	▶124
	137
256-5310	76
256-6628	64
256-7205	687
256-7206	687
256-7280	558
256-7484	534
256-7822	473
	477
256-7884	399
256-7885	399
256-7886	399
256-7887	399
256-7890	777
256-7891	777
256-7892	777
256-7893	777
256-7894	777
256-7895	777
256-9997	522
257-0267	560
	562
	565
	▶593
257-0499	530
257-0500	530
257-1762	626
257-2008	646
	▶678
257-2016	646
	▶769
257-2197	769
257-5064	413
257-7676	436
257-8471	445
258-0733	192
258-0883	93
	▶203
258-1548	▶715
258-1552	▶647
	715
258-2403	5
	▶92
258-6598	507
258-7370	699
	700
258-7623	731
258-7624	731
258-7628	360
258-8723	4
	▶31
259-1502	543
	546
	549
	552
259-1970	546
	552
259-1971	543
	546
	549
	552
259-1998	▶702
259-1999	▶704
259-2092	543
	549
259-5501	540
259-5502	540
259-5503	540
259-5504	537
	▶540
259-5507	537
259-5509	537
259-6893	679
	682
259-7060	451
259-7889	583
260-0149	502
260-0411	451
	▶455
260-1530	276
	▶386
260-1531	▶383
	454
260-1532	353
	▶384

▶ PRIMARY REFERENCE

PART NUMBER INDEX

Part	Page
260-1533	▶387
	416
260-3053	560
	562
	565
260-3055	560
	562
	565
260-3056	562
	565
260-3057	562
	565
260-3058	560
	562
	565
260-3820	399
260-3821	399
260-3840	777
260-4698	409
260-4861	93
260-5786	▶64
260-6465	309
260-6596	364
260-6737	562
260-6738	565
260-8590	558
	560
	562
	565
	586
	▶590
260-8636	541
260-9584	276
	▶309
260-9602	221
	249
260-9984	162
260-9985	162
261-0017	▶560
	574
	577
261-0018	▶562
	572
	574
	576
	577
261-0019	▶565
	572
	574
	576
	577
261-0424	570
261-0441	88
261-0471	783
261-2332	157
261-2333	157
261-2951	647
	▶738
261-2952	738
261-2958	738
261-3037	▶137
261-3682	549
	▶572
261-3683	552
	▶574
261-3721	4
	▶14
261-3802	190
	▶192
261-4171	543
	▶576
261-4172	546
	▶577
261-4405	158
	160
261-4406	158
	160
261-4884	158
	160
261-5638	775
261-5639	775
261-5689	56
261-5690	56
261-6639	88
261-6683	775
261-6684	775
261-8531	86
261-8716	417
262-0262	409
262-0263	409
262-0264	409
262-0265	409
262-0266	409
262-1085	▶416
262-1379	3
	▶377
262-1380	377
262-1381	377
262-1383	377
262-1408	222
	249
262-2043	▶133
	137
262-4422	557
262-4561	119
262-4914	▶342
	420
262-4917	342
262-4918	342
262-5236	471
262-5237	473
262-5238	475
	477
262-5239	471
	473
	475
	477
262-5240	471
	473
262-5265	562
	565
	▶594
262-5316	557
262-9187	▶248
	647
262-9762	3
262-9949	▶204
	470
263-0044	647
	▶682
263-0051	360
263-0052	360
263-0056	▶353
263-1202	583
263-1203	583
263-1204	583
263-1493	222
	249
263-1774	192
263-1995	475
	477
263-3322	▶137
263-4133	▶206
263-4134	▶208
263-5832	467
263-6353	▶190
263-6667	190
	▶241
263-6668	241
263-6703	440
263-8948	124
263-9088	124
263-9574	121
263-9742	440
264-0551	137
264-1446	383
264-3637	88
264-4872	124
264-7671	124
264-7757	273
265-6681	369
265-6695	▶428
	646
	647
265-6696	477
265-7607	349
265-7929	276
	▶382
265-8171	129
265-9642	133
265-9643	133
266-6590	663
266-6591	663
266-6592	663
266-6593	663
266-6594	416
	▶663
266-6631	663
266-6632	663
266-6633	663
266-7230	263
266-7269	206
	208
266-8944	663
267-2809	151
267-4603	124
267-5222	425
268-1497	66
268-8019	▶557
	562
268-8792	639
	672
269-7515	528
269-9398	▶524
	572
270-3388	▶656
	731
270-5320	96
270-8348	350
271-0263	428
	▶429
271-0264	▶425
	429
271-3952	229
271-4010	132
	▶262
271-4011	262
271-4016	132
	▶245
271-4017	245
271-4024	▶216
	637
271-4026	▶234
	624
271-4027	234
271-4028	153
	▶246
271-4029	246
271-4030	246
271-4034	153
271-4037	153
	▶247
271-4038	247
271-4039	247
271-7219	369
271-7220	▶369
	390
	393
271-9248	▶526
	572
	574
	576
	577
272-0145	518
272-0146	518
272-0147	518
272-0148	518
272-0149	518
272-0151	518
272-0153	518
272-0154	518
272-0155	518
272-0156	518
272-0181	▶64
272-1956	87
272-2334	560
272-6537	121
272-6628	773
272-6629	773
272-6674	679
273-0274	222
	249
273-1131	153
	▶350
273-1751	510
273-3241	510
273-3958	510

▶ **PRIMARY REFERENCE**

PART NUMBER INDEX

Part	Page	Part	Page	Part	Page	Part	Page
273-9693	510	276-4218	411				
274-0055	▶498	276-4219	773				
274-0056	498	276-5386	105				
	▶499	276-5456	▶2				
274-0057	498	276-5695	514				
	▶500	276-5698	514				
274-0058	499	276-8835	467				
	500	276-8838	467				
274-0059	499	276-8839	467				
	500	276-8843	467				
274-0060	499	276-9072	543				
	500		546				
274-5872	510		552				
274-6580	411		▶591				
275-0023	603	277-2935	285				
	604	277-2936	285				
275-0571	354	277-2941	285				
275-0572	354	277-7570	480				
275-4024	229	277-8628	76				
275-5635	348	278-2656	76				
275-5865	▶153	278-8965	479				
275-6101	▶502	278-8967	479				
	624	278-8970	479				
275-8294	663	278-8974	479				
275-8297	663	279-3440	501				
275-8299	663		▶596				
275-8301	663		624				
275-8302	663	279-3541	501				
275-8303	663	279-3561	603				
275-8304	663	279-6141	300				
275-8305	663	279-6143	300				
275-8310	153	279-6641	480				
	▶393	279-8860	514				
275-8311	393	280-0440	480				
	▶405	280-2748	42				
275-8312	405	280-3492	79				
275-8313	393	280-7000	663				
	▶406	280-7076	420				
275-8314	406	280-7078	420				
275-8880	510	282-6661	440				
275-8903	75	283-0660	91				
275-9916	229	283-2513	603				
275-9955	300	284-1010	560				
276-0031	124	284-1011	560				
276-0038	371	284-1017	560				
276-2563	▶505	284-1018	560				
	624						
276-2567	505						
276-2602	502						
276-3964	670						
	▶672						
276-3965	638						
	▶639						
276-4044	285						
276-4045	285						
276-4188	411						
276-4191	411						
276-4194	411						
276-4196	411						
276-4197	411						
276-4199	411						
276-4215	3						
	▶773						
276-4216	773						
276-4217	411						

▶ PRIMARY REFERENCE



© 2005 Caterpillar
All Rights Reserved

Printed in U.S.A.