DealerNation@aol.com

JANEIRO 2001
RUTHZIL TRATOR COMERCIAL DE PEÇAS LTDA 11 97083-6812 ROLANDO

963

Bobcat®

G-Series

Parts Manual

S/N 5622 15001 & Above
S/N 5165 15001 & Above

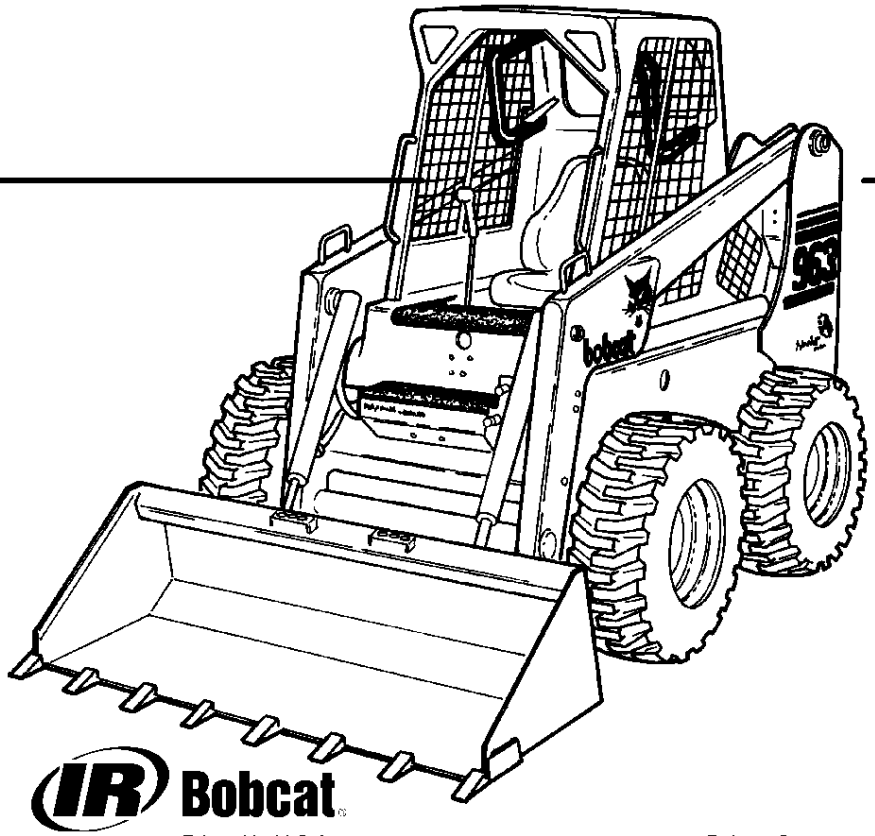

EQUIPPED WITH BOBCAT INTERLOCK CONTROL SYSTEM (BICS™)

6900907 (6-00) Revised (1-01)

Printed in U.S.A.

© Bobcat Company 2001

DealerNation Quality Equipment Manuals - dealernation@aol.com

963 G-SERIES ALPHABETICAL INDEX

ADHESIVE 312
AIR CLEANER 208
ALTERNATOR 136, 138
ANTI-FREEZE 312
AUX CASE DRAIN 213
AXLE 43

BACK-UP ALARM 216
BATTERY 122
BATTERY, DUAL 217
BEACON 218
BEARINGS, ENGINE 166
BELT, ALTERNATOR 154
BELT, DRIVE 148
BICS CONTROL VALVE 71
BLOCK HEATER 219
BLOCK, SHORT 162
BOB-TACH 28, 30
BOB-TACH CONVERSION KIT .. 220
BOOT, RUBBER 32

CAB 14, 16
CAB DOOR 222, 226
CAB ENCLOSURE 228
CABLE, BATTERY 122
CAP, FUEL 34
CHAIN, DRIVE 38
CHAINCASE 38
CHARGE PUMP 102, 110, 111
CONNECTING ROD 168
CONTROLS, HAND 92
COUNTERWEIGHT KIT 236
CRANKSHAFT 166
CYLINDER BLOCK 164
CYLINDER HEAD 170
CYLINDER, LIFT 57

DIPSTICK, ENG. OIL 180
DISC BRAKE 115
DOOR, CAB 222, 226
DOOR, REAR 26
DUAL GEAR PUMP 113
DUMP RESTRICTOR KIT 243

ENGINE 162
EXT RMVL R WIN KIT 233

FILTER, FUEL 200
FILTER, HYDRO. OIL 116
FIRE EXTINGUISHER 256
FLASHER LIGHTS 260
FLYWHEEL 148
FOUR POINT LIFT KIT 289
FUEL FILTER 198- 200, 202, 204, 206
FUEL PUMP 197
FUEL SYSTEM 34

GAS SPRING 14, 224, 226
GEARBOX 38, 42
GREASE 312
GUAGE, ENG. TEMP. 120
GUAGE, FUEL 120

HARNESS, CAB 118, 120, 126
HARNESS, ENGINE 122
HARNESS, LIGHTS 291
HEATER 266, 272, 284
HORN 288
HYD FAN MOTOR 159
HYDROSTATIC MOTOR 98

KIT, ETHER 252
KIT, HEATER PLUMBING 269

LATCH, REAR DOOR 26
LIFT ARMS 28
LIFT CYLINDER 28
LIGHT KIT 291
LIGHTS, FLASHER 260
LOCK, REAR DOOR 298
LUBRICANT 312

MAINFRAME 12
MANIFOLD 190
MANIFOLD VALVE 76

OIL 312
OIL COOLER 80, 184

PAINT 312
PANEL, INSTRUMENT 118, 120
PEDALS, CONTROL 56
POLISH 312
PORT BLOCK 99, 105
PUMP, HYDRO 102, 104

RIM, WHEEL 309
ROD, CONNECTING 168

SEALANT 312
SEAT 20, 22
SEAT BELT 16, 302
SENDER, ENG. TEMP. 122
STARTER 140
STOP, LIFT ARM 28
SWITCH, ENG. OIL PRESS. 122
SWITCH, HYDRO. PRESS. 122
SWITCH, IGNITION 118, 120

TANK, FUEL 34
THROTTLE 158
TILT CYLINDER 28, 58
TIRES 309
TURBO CHARGER 192, 193, 194
TWO POINT LIFT KIT 290

VALVE, BUCKET POS. 74
VALVE, ENGINE 170
VALVE, HYD. CONTROL .. 60, 64, 68

WATER PUMP 186
WINDOW, REAR 232, 242
WINDOW, SIDE 232
WIPER, WINDSHIELD 222

DealerNation Quality Equipment Manuals - dealernation@aol.com

963 G-SERIES CONTENTS

MAIN FRAME 11-36
- MAINFRAME 11
- OPERATOR CAB 13-16
- SEAT & SEAT BAR 17-24
- REAR DOOR 25
- LIFT ARMS & BOB-TACH 27
- BOB-TACH 29
- PANELS 31
- FUEL SYSTEM 33-36

DRIVE SYSTEM 37-43
- DRIVE TRAIN 37
- DISC BRAKE 39
- GEARBOX 41
- AXLE 43

HYDRAULIC SYSTEM 45-74
- HYDRAULIC CIRCUITRY 45-48
- MANUAL LIFT RELEASE SYSTEM 49
- MANUAL LIFT RELEASE VALVE 51
- AUXILIARY HYDRAULIC CIRCUITRY 53
- CONTROL PEDALS 55
- LIFT CYLINDER 57
- TILT CYLINDER 58
- HYDRAULIC CONTROL VALVE 59, 63, 67
- BICS VALVE 71
- BUCKET POSITION VALVE 73

HYDROSTATIC SYSTEM 75-116
- HYDROSTATIC CIRCUITRY 75-90
- HAND CONTROLS 91
- CONTROLLER 93
- * VALVE ASSEMBLY 95
- HYDROSTATIC MOTOR 97-100
- HYDROSTATIC PUMP 101-111
- DUAL GEAR PUMP 113
- DISC BRAKE 115
- HYDROSTATIC OIL FILTER 116

ELECTRICAL SYSTEM 117-140
- CAB ELECTRICAL CIRCUITRY 117-120
- ENGINE ELECTRICAL 121-124
- CONTROLS ELECTRICAL 125-134
- ALTERNATOR 135, 137
- STARTER 139

POWER UNIT 141-208
- COOLING SYSTEM 141-144
- ENGINE & ATTACHING PARTS 145-156
- THROTTLE 157
- HYDRAULIC FAN MOTOR 159
- ENGINE & GASKET KITS 161-207
- AIR CLEANER 208

ACCESSORIES & OPTIONS 211-215
- AIR PRECLEANER FILTER 211
- * ACCESSORIES HARNESS 212
- AUX CASE DRAIN KIT 213
- BACK-UP ALARM KIT 215

DealerNation Quality Equipment Manuals - dealernation@aol.com

ACCESSORIES & OPTIONS (CONT'D) 217-310
BATTERY KIT 217
BEACON LIGHT 218
BLOCK HEATER 219
BOB-TACH CONVERSION KIT 220
CAB DOOR 221-227
CAB ENCLOSURE 228, 229
* CAB LIFT SPRING KIT 230
CAB WINDOWS 231-233
COUNTERWEIGHT KIT 235
DECALS 237-240
DELUXE CAB 241
DUMP RESTRICTOR KIT 243
* ELECTRICAL CONNECTOR KIT 245
ELECTRICAL CONTROLS KIT 246-250
ETHER KIT 251
EUROPEAN ACCESSORIES 253-255
FIRE EXTINGUISHER 256
F.O.P.S. KIT 257
FLASHER LIGHTS KIT 259
HAND CONTROL KIT 261-264
HEATER & A/C 265-286
HORN KIT 288
LIFT (4-POINT) KIT 289
LIFT (2-POINT) KIT 290
LIGHT KIT 291
PURIFIER, MUFFLER 293
REAR AUXILIARY HYDRAULIC KIT 295
REAR AUXILIARY VALVE 297
REAR DOOR LOCK 298
REAR WIPER 299
SEAT BELT 300-302
SECONDARY AUXILIARY HYDRAULIC KIT 303
SOUND KIT 305
STROBE LIGHT 307
TIRES & RIMS 309, 310
BULK ITEMS 311-312
BULK ITEMS 311-312
NUMERICAL INDEX 313-364
NUMERICAL INDEX 313-364

DealerNation Quality Equipment Manuals - dealernation@aol.com

963 G-SERIES CONTENTS

MAIN FRAME 11-36
- MAINFRAME 11
- OPERATOR CAB 13-16
- SEAT & SEAT BAR 17-24
- REAR DOOR 25
- LIFT ARMS & BOB-TACH 27
- BOB-TACH 29
- PANELS 31
- FUEL SYSTEM 33-36

DRIVE SYSTEM 37-43
- DRIVE TRAIN 37
- DISC BRAKE 39
- GEARBOX 41
- AXLE 43

HYDRAULIC SYSTEM 45-74
- HYDRAULIC CIRCUITRY 45-48
- MANUAL LIFT RELEASE SYSTEM 49
- MANUAL LIFT RELEASE VALVE 51
- AUXILIARY HYDRAULIC CIRCUITRY 53
- CONTROL PEDALS 55
- LIFT CYLINDER 57
- TILT CYLINDER 58
- HYDRAULIC CONTROL VALVE 59, 63, 67
- BICS VALVE 71
- BUCKET POSITION VALVE 73

HYDROSTATIC SYSTEM 75-116
- HYDROSTATIC CIRCUITRY 75-90
- HAND CONTROLS 91
- CONTROLLER 93
- * VALVE ASSEMBLY 95
- HYDROSTATIC MOTOR 97-100
- HYDROSTATIC PUMP 101-111
- DUAL GEAR PUMP 113
- DISC BRAKE 115
- HYDROSTATIC OIL FILTER 116

ELECTRICAL SYSTEM 117-140
- CAB ELECTRICAL CIRCUITRY 117-120
- ENGINE ELECTRICAL 121-124
- CONTROLS ELECTRICAL 125-134
- ALTERNATOR 135, 137
- STARTER 139

POWER UNIT 141-208
- COOLING SYSTEM 141-144
- ENGINE & ATTACHING PARTS 145-156
- THROTTLE 157
- HYDRAULIC FAN MOTOR 159
- ENGINE & GASKET KITS 161-207
- AIR CLEANER 208

ACCESSORIES & OPTIONS 211-215
- AIR PRECLEANER FILTER 211
- * ACCESSORIES HARNESS 212
- AUX CASE DRAIN KIT 213
- BACK-UP ALARM KIT 215

DealerNation Quality Equipment Manuals - dealernation@aol.com

ACCESSORIES & OPTIONS (CONT'D) 217-310
BATTERY KIT 217
BEACON LIGHT 218
BLOCK HEATER 219
BOB-TACH CONVERSION KIT 220
CAB DOOR 221-227
CAB ENCLOSURE 228, 229
* CAB LIFT SPRING KIT 230
CAB WINDOWS 231-233
COUNTERWEIGHT KIT 235
DECALS 237-240
DELUXE CAB 241
DUMP RESTRICTOR KIT 243
* ELECTRICAL CONNECTOR KIT 245
ELECTRICAL CONTROLS KIT 246-250
ETHER KIT 251
EUROPEAN ACCESSORIES 253-255
FIRE EXTINGUISHER 256
F.O.P.S. KIT 257
FLASHER LIGHTS KIT 259
HAND CONTROL KIT 261-264
HEATER & A/C 265-286
HORN KIT 288
LIFT (4-POINT) KIT 289
LIFT (2-POINT) KIT 290
LIGHT KIT 291
PURIFIER, MUFFLER 293
REAR AUXILIARY HYDRAULIC KIT 295
REAR AUXILIARY VALVE 297
REAR DOOR LOCK 298
REAR WIPER 299
SEAT BELT 300-302
SECONDARY AUXILIARY HYDRAULIC KIT 303
SOUND KIT 305
STROBE LIGHT 307
TIRES & RIMS 309, 310
BULK ITEMS 311-312
BULK ITEMS 311-312
NUMERICAL INDEX 313-364
NUMERICAL INDEX 313-364

DealerNation Quality Equipment Manuals - dealernation@aol.com

MAINTENANCE ITEMS
MODEL 963 G-Series

	PART NO.	DESCRIPTION		PAGE #
1	6511766	ENGINE OIL FILTER		184
2	6670996	FUEL FILTER		198
3	6671649	FUEL FILTER		202
4	6672862	AIR CLEANER, OUTER	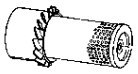	208
5	6671969	AIR CLEANER, INNER	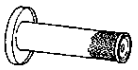	208
6	6668819	HYDROSTATIC FILTER		116
7	6660728	HYDRAULIC FILTER		88
8	6665427	BATTERY		122

9	6563328	BLACK GOLD	Hydraulic/Hydrostatic Fluid - 5 Gallons	312
10	6563329	BLACK GOLD	30 Gallon Drum	312
11	6563330	BLACK GOLD	55 Gallon Drum	312

(HYDRAULIC RESERVOIR CAPACITY) ..... 6 GALS. (23 L.)

(HYDRAULIC/HYDROSTATIC SYSTEM) ..... 15 GALS. (57 L.)

12	6657299	MOTOR OIL	15W40 CE/SG -1 Qt.	312
13	6657301	MOTOR OIL	10W30 CE/SG -1 Qt.	312
14	6657303	MOTOR OIL	30 CE/SG -1 Qt.	312
15	6724557	MOTOR OIL	SAE 10W30 - 1 Gal.	312
16	6724558	MOTOR OIL	SAE 15W40 - 1 Gal.	312
17	6724559	MOTOR OIL	SAE 30 - 1 Gal.	312
18	6674205	MOTOR OIL	10W30 CE/SG - 2.5 Gal.	312
19	6674204	MOTOR OIL	15W40 CE/SG - 2.5 Gal.	312
20	6674206	MOTOR OIL	30 CE/SG -2.5 Gal.	312

DealerNation Quality Equipment Manuals - dealernation@aol.com

GENERAL INFORMATION

When using the machine serial number, use the complete number.

Some Serial Number breaks are not available at time of printing. These are listed as & Below or & Above.

The number shown in the quantity column in this manual is the number of parts needed for the illustration on the page. For some parts an "x" will be shown in the quantity column. This "x" indicates that the quantity to be used is "As Needed".

When references L.H. and R.H. are used in this manual, it is done from the operator's seat in the forward operating position.

To find the size and kind of bolt use the Bobcat Standard Microfiche (P/N 6566077).

Some of the illustrations and information found in this parts manual were supplied to Bobcat by machine component companies.

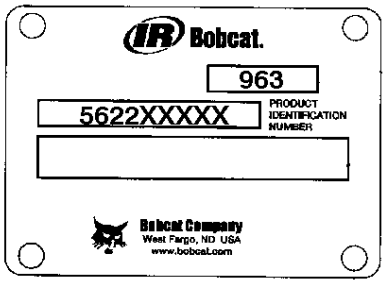

Domestic

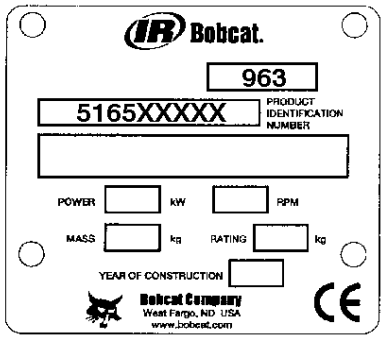

European

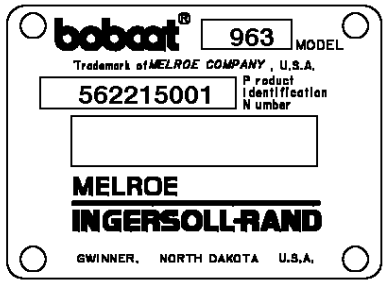

Domestic

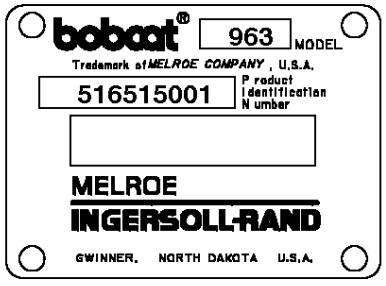

European

ABBREVIATIONS & SYMBOLS

SALES = Order from Gwinner Sales Department

NSS = Not Serviced Seperately

NAP = Not Available as Parts

***** = Changed or Added Sections, Pages or Part Numbers

Disposition Code Definition (In the Remarks Column)

[A] = Use Up

[B] = Use Up on Other Appplication (See PNI)

[C] = File PDR Report With Bobcat Parts Sales

[D] = Part Number Error

Explications en francais	Grid Nb	3
Erklärungen auf deutsch	Grid Nb	4
Spiegazioni in italiano	Grid Nb	5
Explicaciones en espanol	Grid Nb	6
Verklaring in het Nederlands	Grid Nb	7

DealerNation Quality Equipment Manuals - dealernation@aol.com

NOTE D'INFORMATION

Pour toute référence au numéro de série de l'engin, toujours donner le numéro complet.

Le chiffré apparaissant dans la colonne des quantités de ce manuel représentent le nombre de pièces nécessaires pour l'illustration reprise sur la page. Dans certains cas, on lira un "x" dans la colonne des quantités. Cet "x" indique que la quantité nécessaire est "selon besoin".

Pour toute référence vers la GAUCHE ou la DROITE dans ce manuel, considérer que la personne se trouve assise dans le siège de l'opérateur, en position de fonctionnement en marche avant.

Certaines illustrations et informations reprises dans ce manuel de pièces de rechange ont été fournies à Bobcat par des fabricants de composants.

ABREVIATIONS & SYMBOLES

SALES	= Commander au Service Ventes à Bruxelles
NSS	= Pas vendu séparément
NAP	= Non disponible comme pièce de rechange
*	= Chapitre, page ou numéro de pièce modifié ou supplémentaire
BTI	= Bobcat Technical Information Bulletin : voir à la fin de la microfiché du modèle concerné ou la microfiche générale reprenant l' ensemble des "BTI".
was 6535403	= était avant 6535403
adj. (adjustment)	= réglage
Assembly	= ensemble
available W/Ref.	= disponible avec réf.
bulk/sold per foot	= en vrac/vendu par pied
does not include	= ne comprend pas
included with	= compris dans
I.D.	= D.I. (diamètre intérieur)
O.D.	= D.E. (diamètre extérieur)
not in kit	= pas en kit
W/ - WO/	= inclus/ - non inclus/
Qty	= quantité requise
see page/ref.	= voir page/réf.
used with ref/	= utilisé avec réf.
0,05 inch thickness	= 0,05 pouce d'épaisseur (un pouce = 25.4 mm)
weld on	= à souder

DealerNation Quality Equipment Manuals - dealernation@aol.com

ALLGEMEINE INFORMATIONEN

Bei Angabe der Maschinen-Seriennummer stets die komplette Nummer angeben.

Bei der in der Mengenspalte (Anzahl) in diesem Handbuch angegebenen Zahl handelt es sich um die Anzahl von Teilen, die für die Abbildung auf der betreffenden Seite benötigt werden. Bei manchen Teilen in der Mengenspalte ist ein “x” angegeben. Dieses “x” weist darauf hin, dass sich die Anzahl der verwendeten Teile auf den “Bedarf” bezieht.

Bei Verwendung der Seitenangaben links und rechts in diesem Handbuch gelten diese für die Blickrichtung vom Fahrersitz aus, und zwar in Vorwärts-Betriebsrichtung.

Einige der in diesem Ersatzteilhandbuch aufgeführten Abbildungen und Informationen wurden der Bobcat von den Herstellern von Maschinenbauteilen zur Verfügung gestellt.

ABKÜRZUNGEN UND SYMBOLE

SALES	= Bestellung bei der Verkaufsabteilung in Brüssel
NSS	= Nicht einzeln erhältlich
NAP	= Nicht als Ersatzteil erhältlich
*	= Geänderte oder hinzugefügte Abschnitte, Seiten oder Teilenummern
BTI	= Bobcat Technical Information Bulletin : Siehe am Ende der Mikrokarte des jeweiligen Modells oder der allgemeinen Mikrokarte der BTI.
was 6535403	= War 6535403
adj.	= Einstellung
Assembly	= Baugruppe
available W/Ref.	= erhältlich mit der Referenz
bulk/sold per foot	= Mengenabnahme / Verkauf pro Fuss
does not include	= beinhaltet nicht
included with	= enthalten in
I.D.	= Innendurchmesser
O.D.	= Aussendurchmesser
not in kit	= nicht in Bausatz
W/ - WO/	= mit/ - ohne/
Qty	= Anzahl
see page/ref.	= Siehe Seite / Referenz
used with ref.	= verwendet mit Referenz
0.05 inch thickness	= Dicke : 0.05 Zoll (ein Zoll = 25.4 mm)
weld on	= anschweissen

DealerNation Quality Equipment Manuals - dealernation@aol.com

INFORMAZIONI GENERALI

Quando si usa il numero di serie della macchina usare il numero completo.

Il numero mostrato nella colonna della quantità di questo manuale corrisponde al numero di componenti necessari per l'illustrazione della pagina. Per alcuni componenti appare "X" nella colonna delle quantità. Questa "X" indica che la quantità da usare è "come necessario".

See in questo manuale si fa riferimento alla parte destra o sinistra, si intende dal sedile dell'operatore nella posizione in avanti di funzionamento.

Alcune delle illustrazioni e informazioni trovate in questo manuale di componenti sono state fornite alla Bobcat da società di componenti di macchine.

SIMBOLI E ABBREVIAZIONI

SALES	= Ordinare al servizio vendite di Bruxelles
NSS	= Non vendute separatamente
NAP	= Non disponibile come componente
*	= Sezioni, pagine o numeri di componente cambiati o aggiunti
BTI	= (Bobcat Technical information) Ved. al termine del microfiche del modello relativo oppure microfiche generale
was 6535403	= era 6535403
adj. (adjustment)	= regol. (regolazione)
Assembly	= Complessivo
available W/ref.	= disponibile con rif.
bulk/sold per foot	= alla rinfusa/venduto al piede
does not include	= non comprende
Included with	= compreso con
I.D.	= d. i.
O.D.	= d. e.
not in kit	= non fa parte del kit
W/ - WO/	= con - senza
Qty	= Qtà
see page/ref	= ved. pagina/rif.
used with ref.	= usato con il rif.
0,05 inch thickness	= spessore 0,05 pollici (un pollice = 25,4 mm)
weld on	= a saldare

DealerNation Quality Equipment Manuals - dealernation@aol.com

INFORMACION GENERAL

Al utilizar el número de serie de la máquina, debe emplearse el número completo.

El número que figura en la columna de “Unidades” en este manual es el número de piezas que se necesitan para la ilustración que consta en la página. En algunas piezas aparece una “x” en la columna de “Unidades”. Esta “x” indica que las unidades a utilizar son “según sea necesario”.

Cuando se empleen las referencias izq. y dcha., éstas se entienden mirando desde el asiento del conductor, en posición de marcha adelante.

Algunas de las ilustraciones y la información que figuran en este manual de piezas han sido facilitadas a Bobcat por empresas de componentes de máquinas.

ABREVIATURAS Y SIMBOLOS

VENTAS	= Pedido al Departamento de Ventas de Bruselas
NSS	= No se vende por separado
NAP	= No disponible como pieza de repuesto
*	= Secciones, páginas o referencias modificadas o añadidas
BTI	= (Bobcat Tecnical Information) Ver al final de la microficha del modelo afectado o en la microficha general “Boletín de Información Técnica Bobcat”.
was 6535403	= era anteriormente el 6535403
adj. (adjustment)	= ajuste
assembly	= conjunto
available W/Ref.	= disponible con la ref.
bulk/sold per foot	= a granel/vendido por pies
does not include	= no incluye
included with	= incluido en
I.D.	= diámetro interior
O.D.	= diámetro exterior
not in kit	= no en el kit
W/ - WO/	= con/ - sin
Qty	= Unidades
see page /ref.	= ver página/ref.
used with ref.	= empleado con la ref.
0,05 inch thickness	= 0,05 pulgadas de espesor (1 pulgada = 25,4 mm)
weld on	= debe ser soldado

DealerNation Quality Equipment Manuals - dealernation@aol.com

ALGEMENE INFORMATIE

Als u het serienummer van de machine gebruikt, geef dan het gehele serienummer.

Het cijfer dat voorkomt in de kolom “Aantal”, in deze handleiding, is het aantal onderdelen dat nodig is van de illustratie op de pagina. Voor sommige onderdelen staat er een “x” in de kolom “Aantal”. Deze “x” betekent dat er een aantal “zoals nodig” vereist is.

Wanneer er in deze handleiding naar “links” en naar “rechts” gerefereerd wordt, moet dit verstaan worden voor een bestuurder die in de bestuurdersstoel zit in de voorwaartse bedrijfsstand.

Sommige van de illustraties en informatie in deze onderdelen-handleiding werden door firma’s van machine-componenten geleverd aan Bobcat.

AFKORTINGEN EN SYMBOLEN

SALES	= Bestellen bij de Verkoopafdeling te Brussel
NSS	= Niet afzonderlijk te verkrijgen
NAP	= Niet beschikbaar als onderdeel
*	= Gewijzigde of toegevoegde paragrafen, pagina’s of onderdeelnummers
BTI	= Bobcat Technical Information Bulletin : Zie einde van de microfiche van het desbetreffende model of einde van de algemene microfiche die het geheel van alle “BTI” herneemt.
was 6535403	= was vroeger 6535403
adj. (adjustment)	= afstelling
Assembly	= geheel
available W/Ref.	= beschikbaar met ref.
bulk/sold per foot	= bulk/aan de meter verkocht
does not include	= bevat niet
includes with	= is bevat in
I.D.	= ϕ inw. (inwendige diameter)
O.D.	= ϕ uitw. (uitwendige diameter)
not in kit	= niet in de kit
W/ - WO/	= met/ - zonder/
Qty	= vereiste aantal
see page/ref.	= zie pagina/ref.
used with ref/	= gebruikt met ref.
0,05 inch thickness	= 0.05 inch dik (een inch = 25.4 mm)
weld on	= te lassen

DealerNation Quality Equipment Manuals - dealernation@aol.com

High quality Bobcat brand work tools are available to help with your cleanup needs.

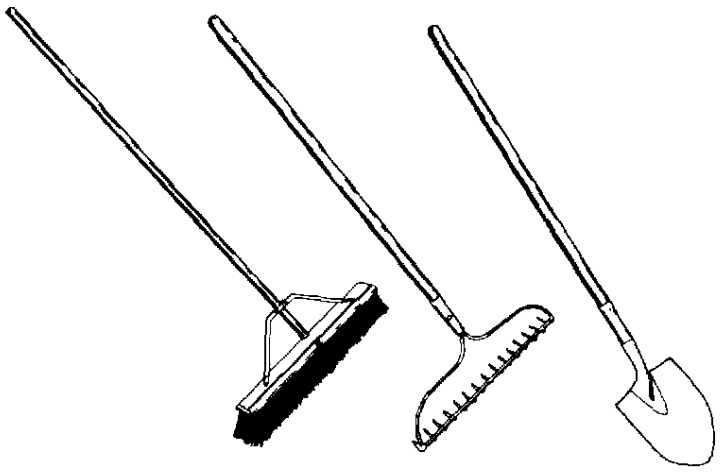

Available from Bobcat Parts.

DealerNation Quality Equipment Manuals - dealernation@aol.com

Both new and rebuilt starters are available from Bobcat.

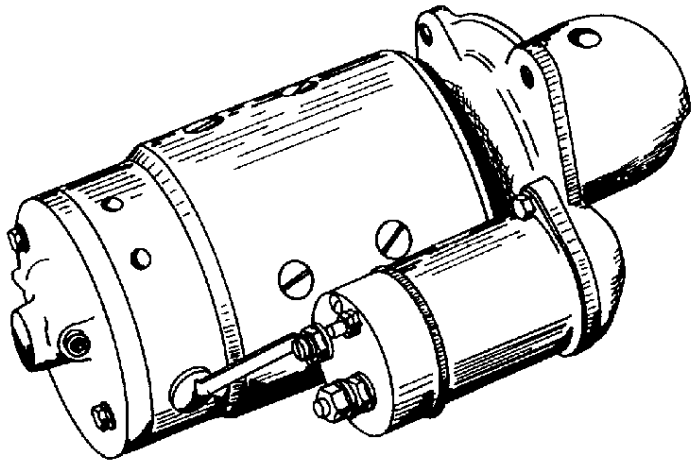

Available from Bobcat Parts.

Bobcat

DealerNation Quality Equipment Manuals - dealernation@aol.com

Bobcat Hydraulic/Hydrostatic Fluid
is blended to our specifications
to meet or exceed requirements of our components.

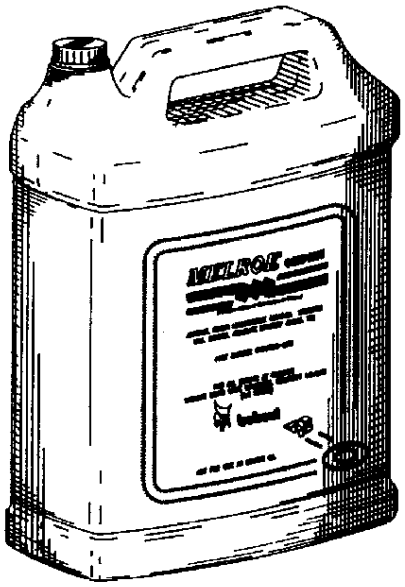

Available from Bobcat Parts.

Bobcat

DealerNation Quality Equipment Manuals - dealernation@aol.com

Need a grease gun?

A high quality Bobcat branded one

is available from Bobcat Parts.

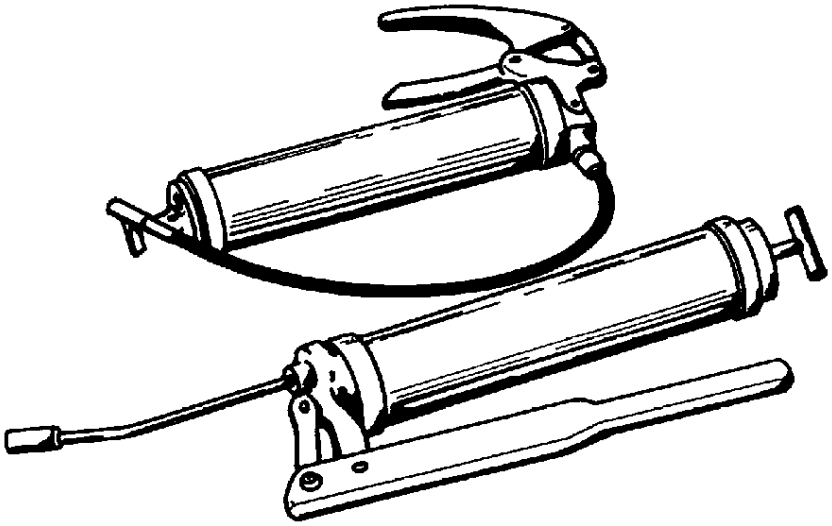

Available from Bobcat Parts.

Bobcat

DealerNation Quality Equipment Manuals - dealernation@aol.com

Both new and rebuilt engines are available from Bobcat.

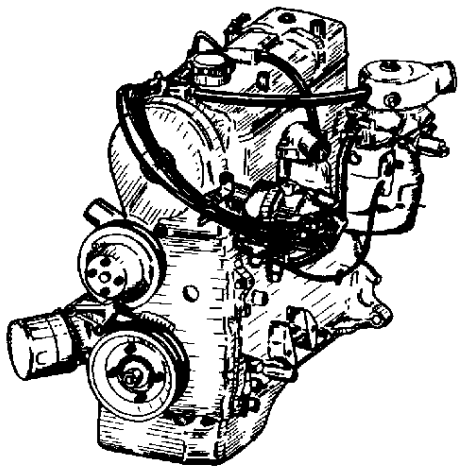

Available from Bobcat Parts.

Bobcat

DealerNation Quality Equipment Manuals - dealernation@aol.com

High quality Bobcat brand work tools are available to help with your cleanup needs.

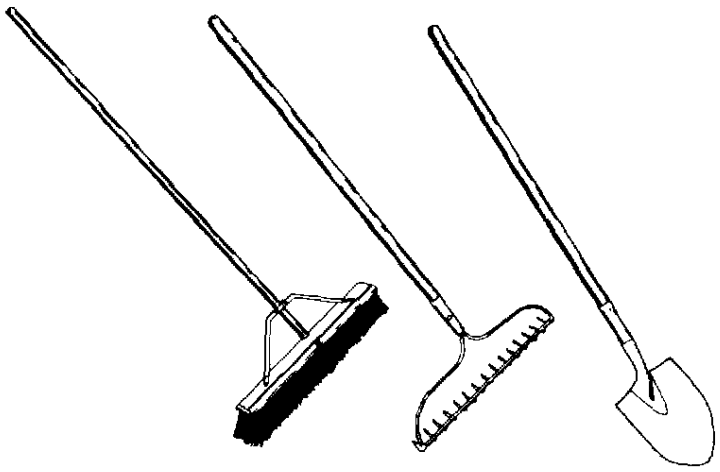

Available from Bobcat Parts.

DealerNation Quality Equipment Manuals - dealernation@aol.com

Bobcat oil filters are designed specifically to meet the demands of your equipment.



Available from Bobcat Parts.

Bobcat

DealerNation Quality Equipment Manuals - dealernation@aol.com

Do you need a Digging Bucket?
Turn your Standard Bucket into one and save $$$ by bolting on the Bobcat Bucket Bite.
Digging teeth are replaceable.

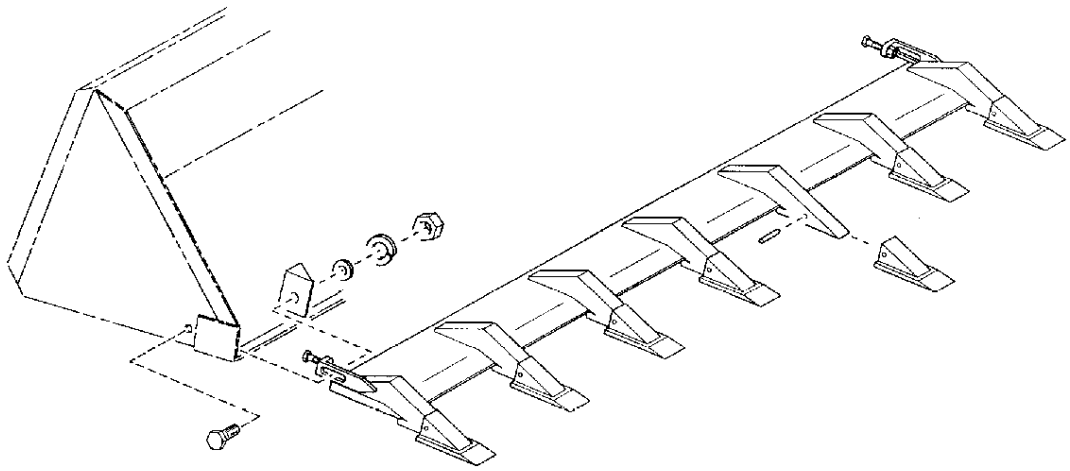

Available from Bobcat Parts.

DealerNation Quality Equipment Manuals - dealernation@aol.com

Bobcat oil filters are designed specifically to meet the demands of your equipment.



Available from Bobcat Parts.

Bobcat

DealerNation Quality Equipment Manuals - dealernation@aol.com

Use Bobcat replacement tires to maintain designed performance specifications.

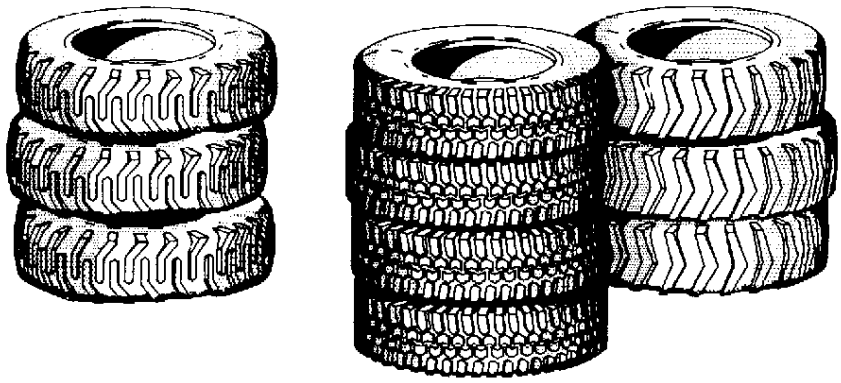

Available from Bobcat Parts.

Bobcat

DealerNation Quality Equipment Manuals - dealernation@aol.com

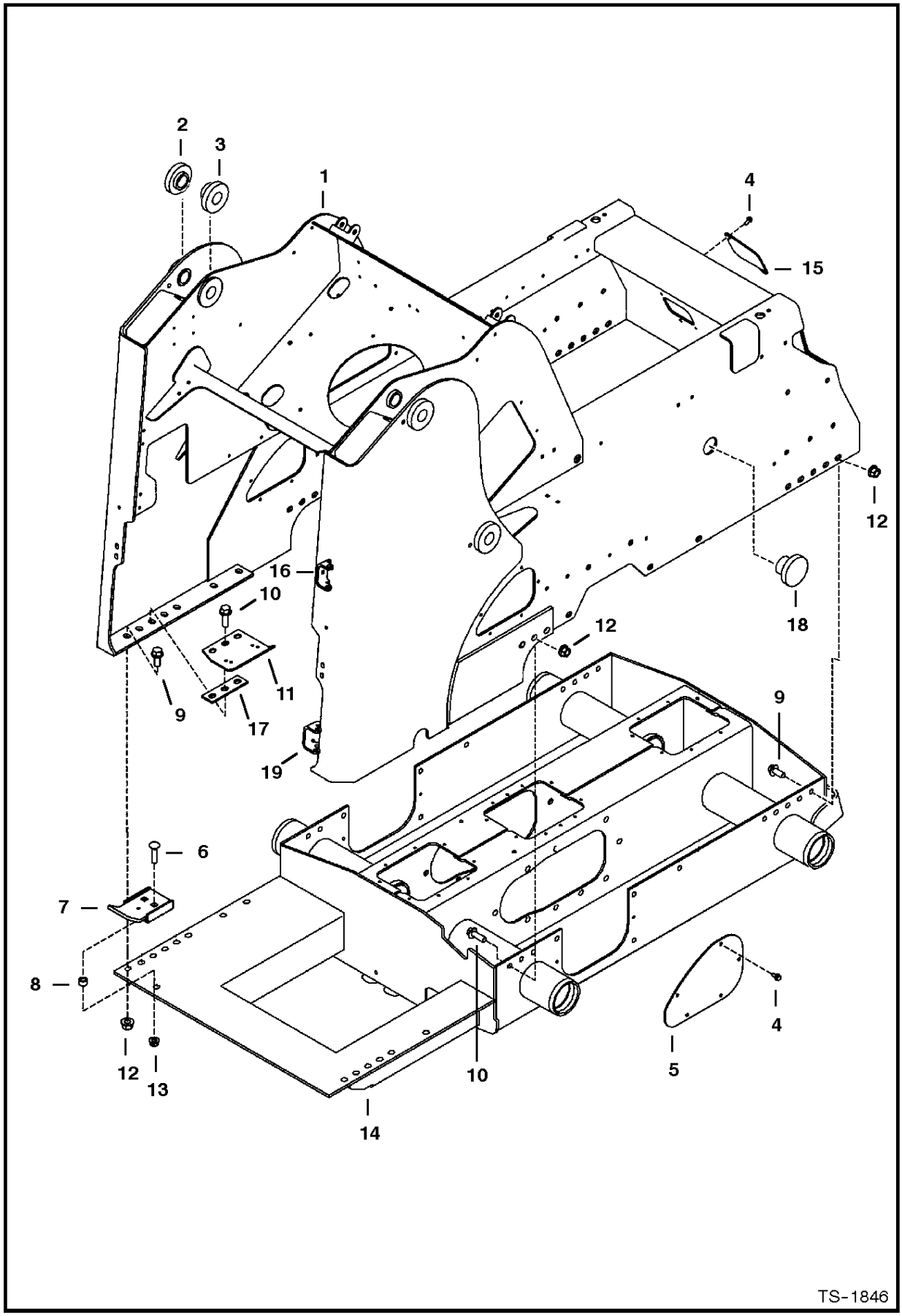

DealerNation Quality Equipment Manuals - dealernation@aol.com

MAIN FRAME & ATTACHING PARTS

Ref.N°	Part N°	Description	Remarks	Serial N°	Qty.
1	6805582	MAIN FRAME			1
2	6597280	BUSHING			4
3	6597281	BUSHING			4
4	84G-3712	BOLT			14
5	6805462	COVER			2
6	37C-1040	BOLT			2
7	6806890	BRACKET			1
8	6807262	SPACER			2
9	31C-1228	BOLT			22
10	31C-1236	BOLT			9
11	6597595	BRACKET			1
12	53D-12	NUT	Was 83D-12 [B]		31
13	53D-10	NUT			2
14		CHAINCASE	See Page DRIVE TRAIN(1)		1
15	6577812	COVER	access		2
16	6708987	BRACKET	weld on		1
17	6806893	PLATE			1
18	6718796	PLUG			2
19	6806563	BRACKET			1

DealerNation Quality Equipment Manuals - dealernation@aol.com

OPERATOR CAB

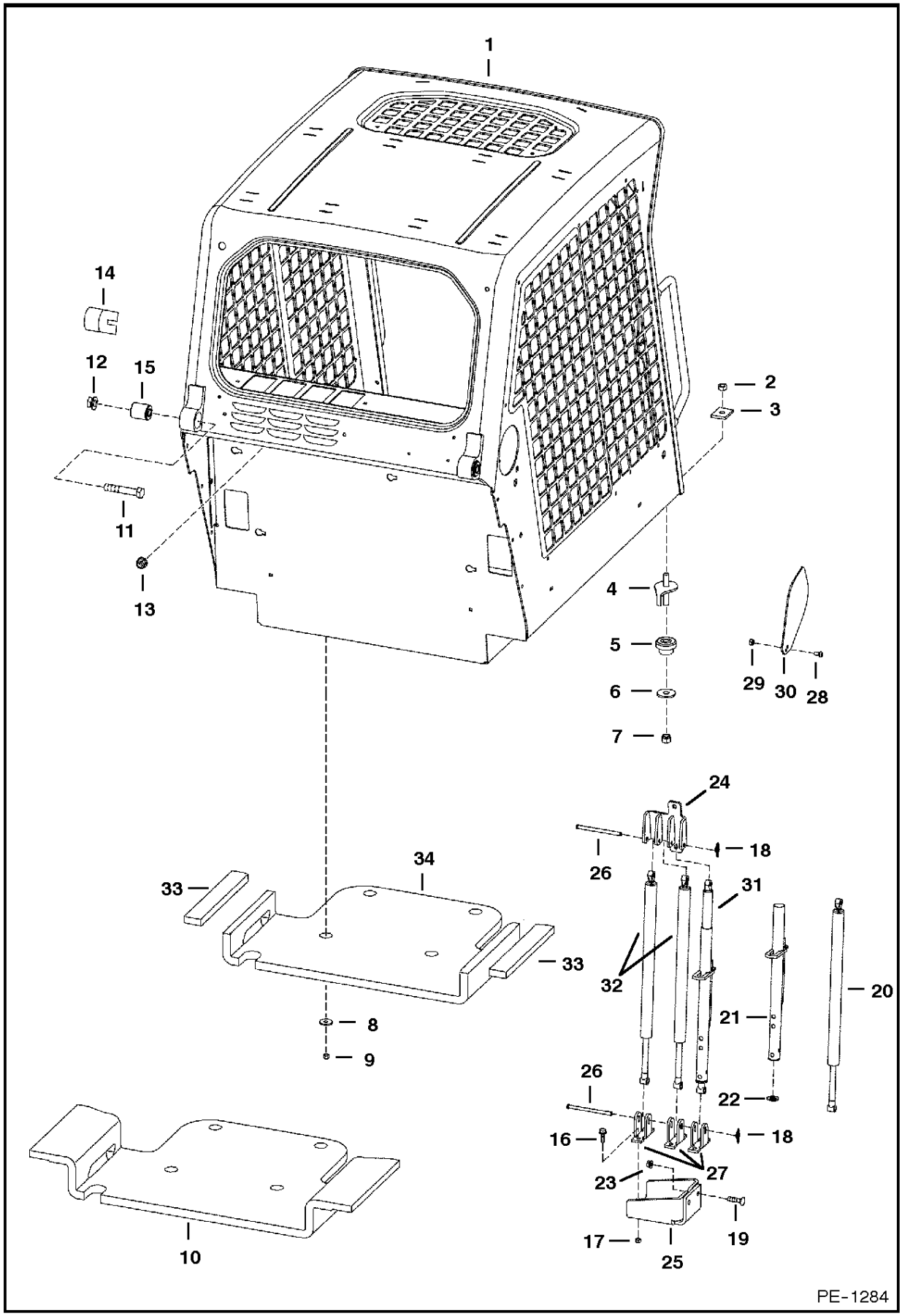

DealerNation Quality Equipment Manuals - dealernation@aol.com

OPERATOR CAB

Ref.N°	Part N°	Description	Remarks	Serial N°	Qty.
1	6719672	OPERATOR CAB	includes cab decals		1
2	59D-8	NUT			2
3	6553709	WASHER	rectangular		2
4	6702971	BOLT			2
5	6560633	MOUNT			2
6	6515817	WASHER			2
7	85D-8	NUT			2
8	619021	WASHER			4
9	59D-5	NUT			4
10	NAP	INSULATION	Order Ref. OPERATOR CAB(33) (2) & Ref. OPERATOR CAB(34) - Was 6719360 [A]		1
11	17C-1056	BOLT			2
12	53D-10	NUT			2
13	53D-6	NUT			4
14	6579613	STOP			2
15	6562602	BUSHING			2
16	35C-516	BOLT			6
17	87D-5	NUT			6
18	6631418	PIN	ring		2
19	37C-624	BOLT			2
20	6664205	GAS SPRING			1
21	6708189	TUBE	stop		1
22	6701174	WASHER			1
23	57D-6	NUT			2
24	6807540	BRACKET	Was 6806207 [A]		1
25	6807997	BRACKET	Was 6805826 [A]		1
26	6586772	PIN	3.32' (84,33mm) long		2
26	6808309	PIN	4.62' (117,35mm) long		2
27	6706349	MOUNT			3
28	25G-510	BOLT			2
29	95D-5	NUT			2
30	6718784	COVER			2
31	NAP	GAS SPRING	w/latch - Order Ref. OPERATOR CAB(20)-OPERATOR CAB(22)		1
32	NSS	GAS SPRING	Order 6714062 gas spring kit		2
32	6714062	KIT			2
33	6729012	INSULATION	seat pan		2
34	6729013	INSULATION	seat pan		1

DealerNation Quality Equipment Manuals - dealernation@aol.com

OPERATOR CAB

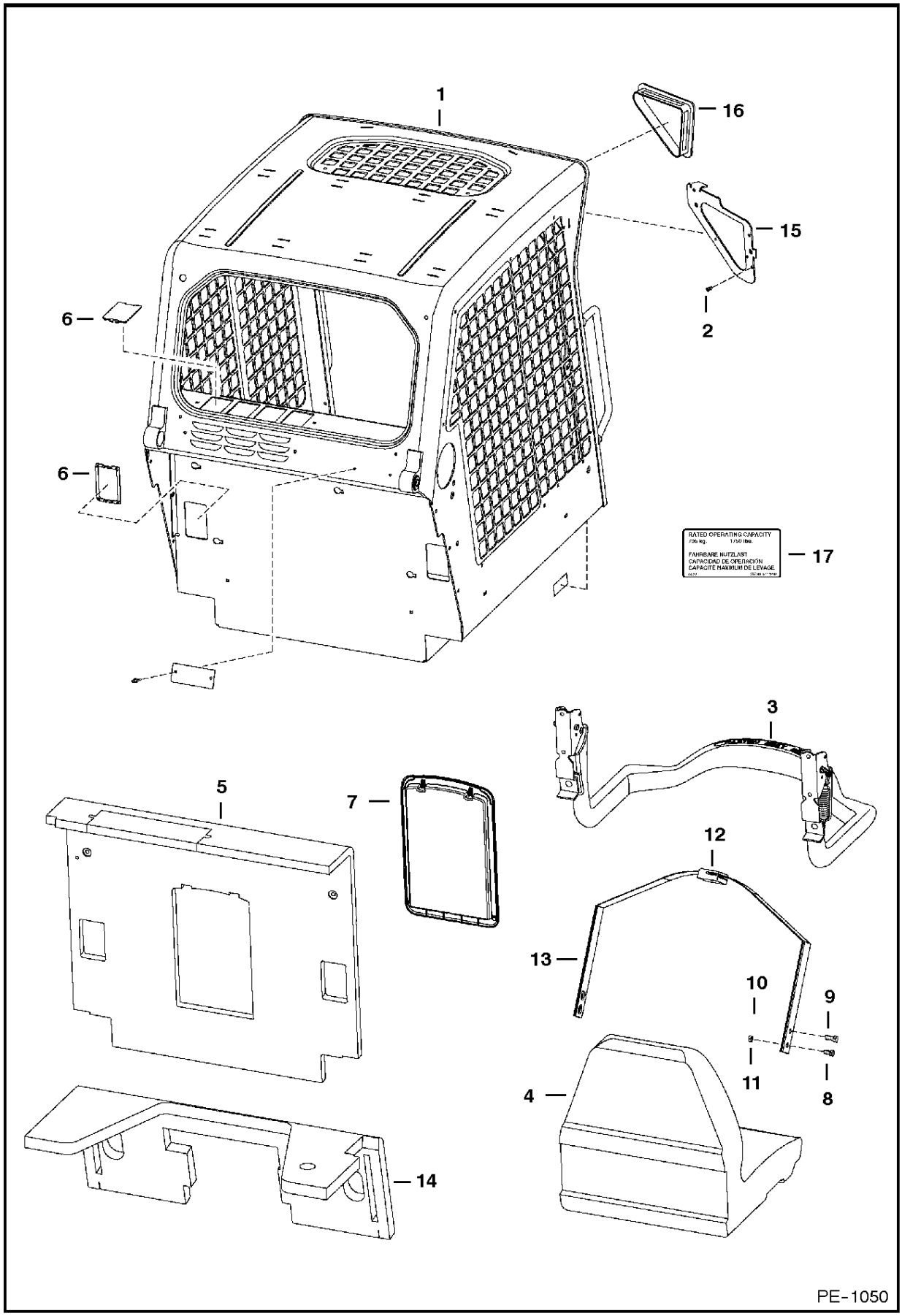

DealerNation Quality Equipment Manuals - dealernation@aol.com

OPERATOR CAB

Ref.N°	Part N°	Description	Remarks	Serial N°	Qty.
1	6719672	OPERATOR CAB	includes cab decals		1
2	6675033	INSERT	See Page CAB ELECTRICAL CIRCUITRY(1)		6
3		SEAT BAR	See Page SEAT & SEAT BAR(1)		1
4		SEAT	See Page SEAT(1)		1
5	6719504	INSULATION	W/Ref. OPERATOR CAB(7)		1
6	6718101	COVER			6
7	6719503	CONTAINER	manuals		1
7	6675524	CLIP			2
7	6725301	COVER			1
7	6725303	FRAME			1
8	17C-612	BOLT			2
9	17C-716	BOLT			2
10	85D-7	NUT			2
11	85D-6	NUT			2
12	NAP	SEAT BELT	Order 6725403 Seat Belt - Was 6667875 [A]		1
12	NAP	SEAT BELT	W/ spring plates - Order 6675074 seat belt & (2) of Ref. OPERATOR CAB(13) (6725373 spring plate) - Was 6725403 [A]		1
12	6675074	SEAT BELT	W/O spring plate		1
13	NAP	GUIDE	Order 6711908 spring plate, 6565355 guide & (2) of 6630207 - Was 6711907 [A]		2
13	6711908	SPRING PLATE	Use W/Ref. OPERATOR CAB(12) (NAP/6667875 seat belt)		2
13	6725373	SPRING PLATE	Use W/Ref. OPERATOR CAB(12) (6675074 seat belt)		2
14	6718489	INSULATION	steering panel		1
15	NSS	PLATE	R.H. - weld on		1
15	NSS	PLATE	L.H. - weld on		1
16	6674403	COVER	no lights		2
17	6718200	DECAL	load		1

DealerNation Quality Equipment Manuals - dealernation@aol.com

SEAT & SEAT BAR

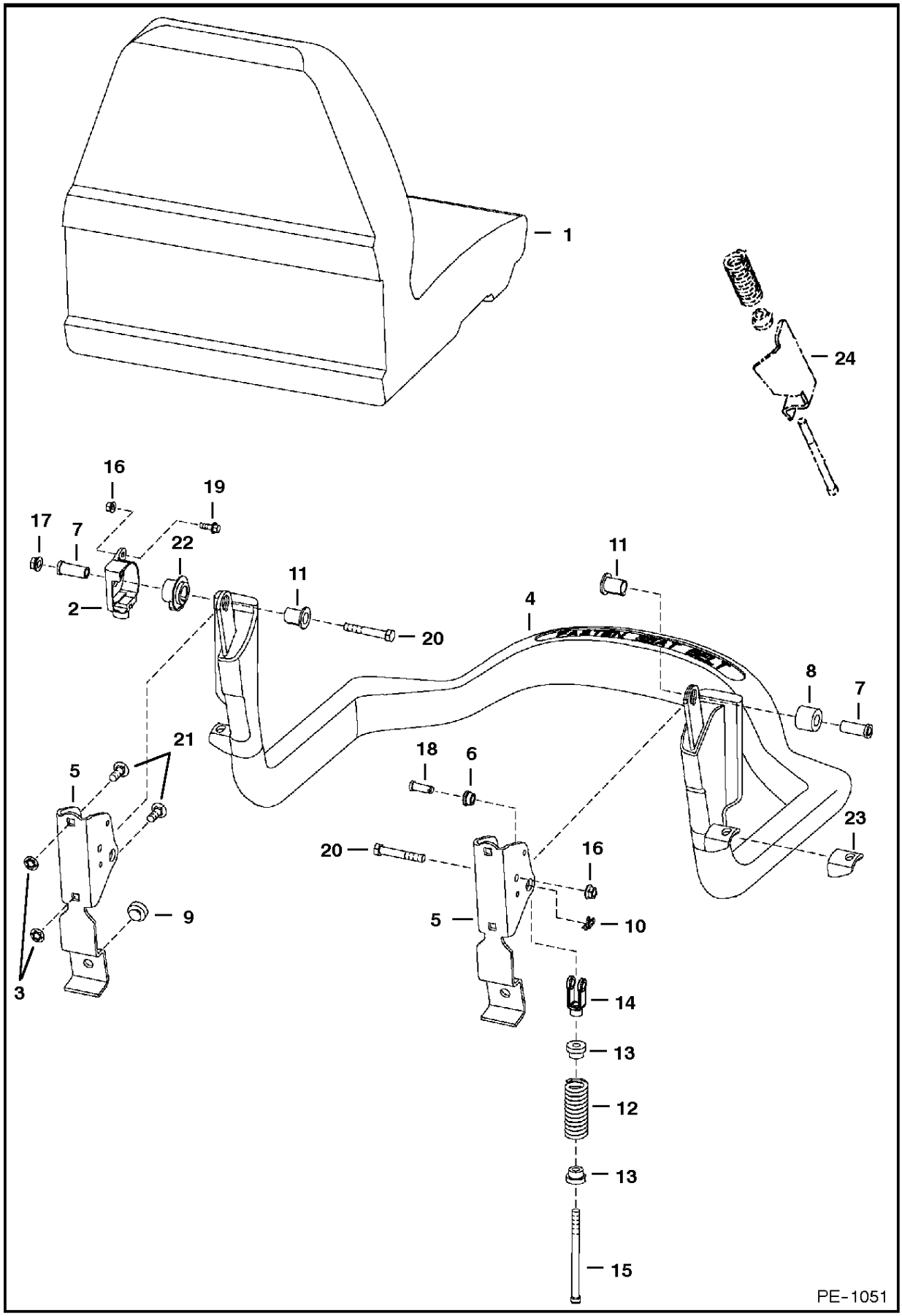

DealerNation Quality Equipment Manuals - dealernation@aol.com

SEAT & SEAT BAR

Ref.N°	Part N°	Description	Remarks	Serial N°	Qty.
1		SEAT	See Page SEAT(1)		1
2	6674406	SENSOR			1
3	6674894	NUT			4
4	6715860	SEAT BAR			1
5	6715863	BRACKET			1
6	6715864	BUSHING			2
7	6715865	BUSHING			2
8	6715866	BUSHING			1
9	6519178	BUMPER			2
10	6631418	PIN	ring		2
11	6664882	BUSHING	keyed		2
12	6701535	SPRING			2
13	6710659	BUSHING			2
14	6713589	CLEVIS			2
15	6713887	BOLT			2
16	83D-4	NUT			1
17	53D-6	NUT			2
18	4F-6106	PIN			2
19	35C-412	BOLT			1
20	17C-640	BOLT			2
21	10C-616	BOLT			4
22	6674405	BUSHING			1
23	NAP	MOUNT	Order Ref. SEAT & SEAT BAR(4)	& Abv	2
24	NAP	MOUNT	Order Ref. SEAT & SEAT BAR(4)	& Bel	2

DealerNation Quality Equipment Manuals - dealernation@aol.com

Need a grease gun?

A high quality Bobcat branded one

is available from Bobcat Parts.

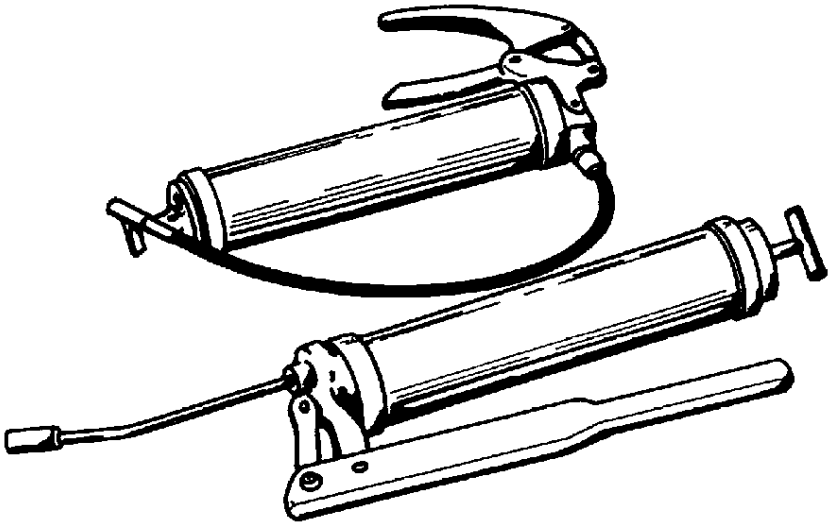

Available from Bobcat Parts.

Bobcat

DealerNation Quality Equipment Manuals - dealernation@aol.com

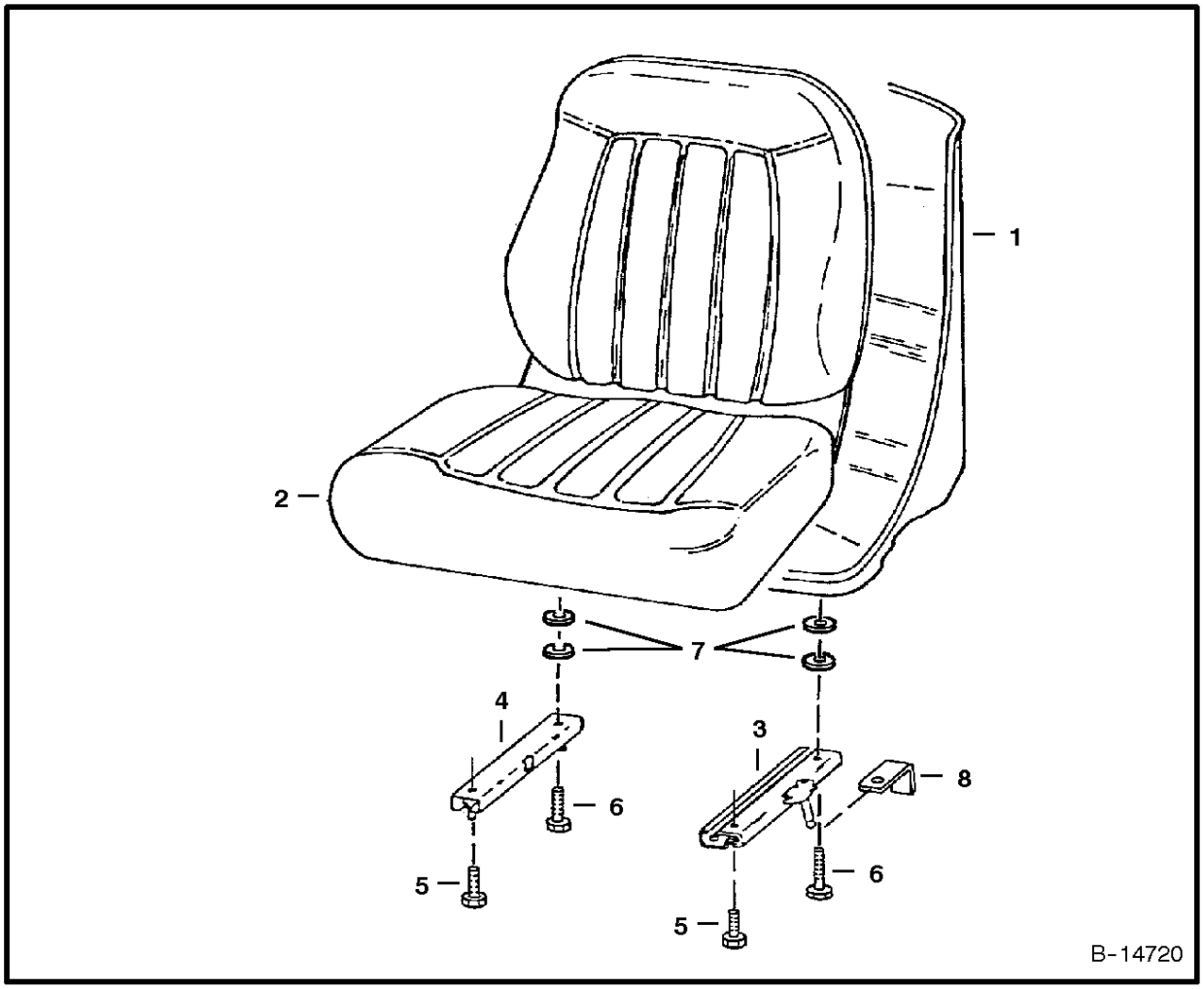

SEAT
(Michigan)
(S/N 5622 15163 & Below, 5165 15031 & Below)

Ref. No.	Part Number	Description	Remarks	Serial Number	Qty.

DealerNation Quality Equipment Manuals - dealernation@aol.com

SEAT

Ref.N°	Part N°	Description	Remarks	Serial N°	Qty.
1	6669135	SEAT	W/Ref. SEAT(2)-SEAT(7)		1
2	6670160	CUSHION	W/edging, clip & (2) grommets		1
2	NSS	EDGING			1
2	NSS	CLIP			1
3	6674013	TRACK	L.H. - W/8'' (203,2mm)		1
4	6669089	TRACK	R.H. - W/O Latch		1
5	25G-512	BOLT	6669135 Seat uses (2) bolts		4
6	25G-520	BOLT			2
7	7000010	SPACER			4
8	6668953	BRACKET	See S/L Dated 16 April 1996		2

DealerNation Quality Equipment Manuals - dealernation@aol.com

SEAT
(Suspension - Sears)
(S/N 5622 15164 & Above, 5165 15032 & Above)

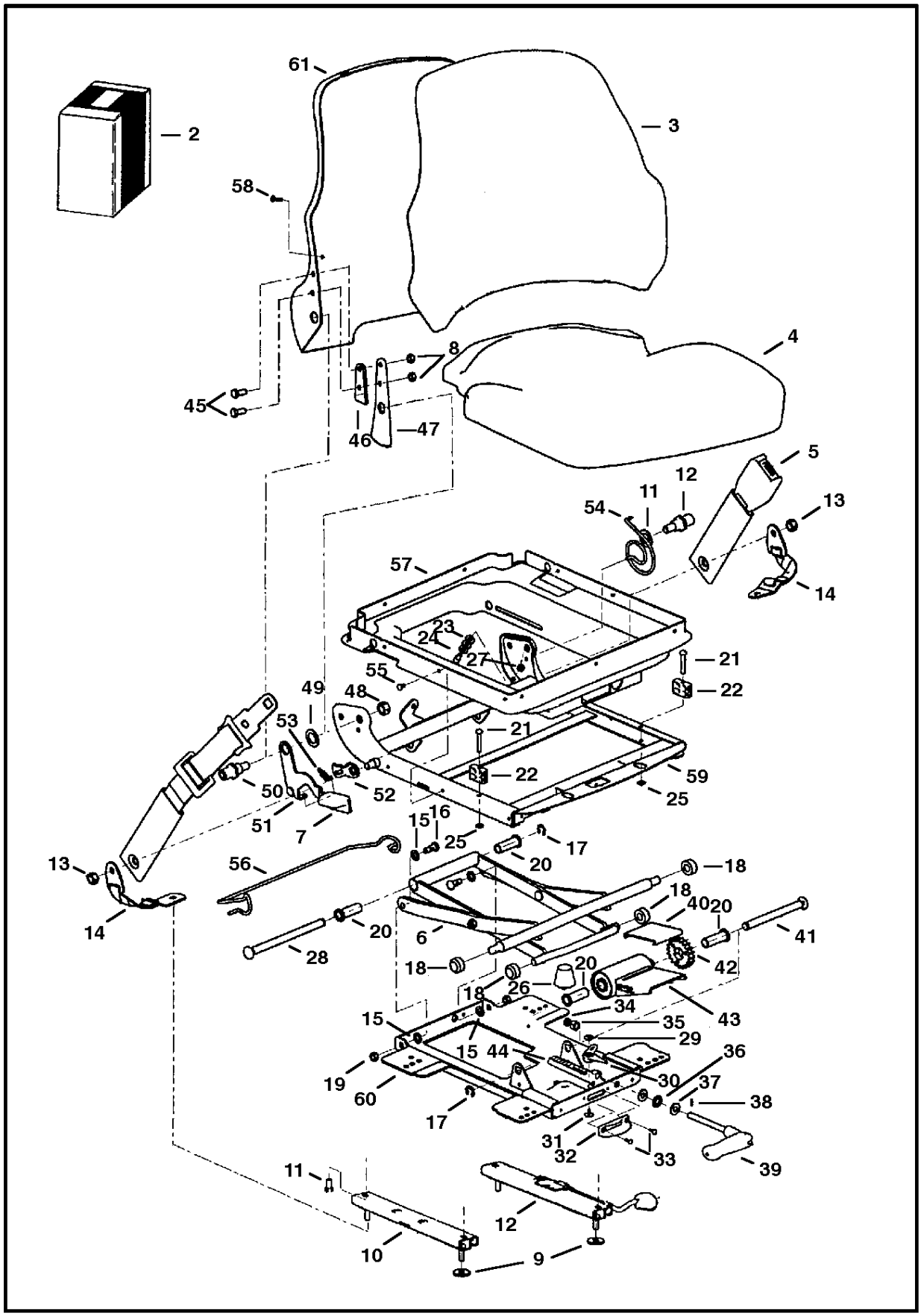

DealerNation Quality Equipment Manuals - dealernation@aol.com

SEAT

Ref.N°	Part N°	Description	Remarks	Serial N°	Qty.
1	NAP	SEAT	,fabric - R.H. recliner lever - Order 6675595 seat - Was 6674404 [A]		1
1	6675595	SEAT	fabric - L.H. recliner lever		1
1	NAP	SEAT	vinyl - R.H. recliner lever - Order 6675596 seat - Was 6674896 [A]		1
1	6675596	SEAT	vinyl - L.H. recliner lever		1
2	6675309	KIT	slides - W/Ref. SEAT(8), SEAT(9), SEAT(10), SEAT(11) & SEAT(12)		1
2	6675310	KIT	tether belt - W/Ref. SEAT(9), SEAT(13) & SEAT(14)		1
2	6675311	KIT	suspension rollers & bearings - W/Ref. SEAT(15), SEAT(16), SEAT(17), SEAT(18), SEAT(19) & SEAT(20)		1
2	6675312	KIT	suspension bumpers & stops - W/Ref. SEAT(21), SEAT(22), SEAT(23), SEAT(24), SEAT(25), SEAT(26) & SEAT(27)		1
2	6675313	KIT	rear tube - W/Ref. SEAT(17), SEAT(20) & SEAT(28)		1
2	6675314	KIT	weight adj. indicator - W/Ref. SEAT(29), SEAT(30), SEAT(31), SEAT(32) & SEAT(33)		1
2	6675315	KIT	weight adj. handle - W/Ref. SEAT(34), SEAT(35), SEAT(36), SEAT(37), SEAT(38), SEAT(39)		1
2	6675316	KIT	weight adj. - W/Ref. SEAT(17), SEAT(20), SEAT(40), SEAT(41), SEAT(42), SEAT(43) & SEAT(44)		1
2	6675318	KIT	R.H. recliner - W/Ref. SEAT(7), SEAT(8), SEAT(45), SEAT(46), SEAT(47), SEAT(48), SEAT(49), SEAT(50), SEAT(51), SEAT(52), SEAT(5		1
2	6676034	KIT	L.H. recliner - W/Ref. SEAT(7), SEAT(8), SEAT(45), SEAT(46), SEAT(47), SEAT(48), SEAT(49), SEAT(50), SEAT(51), SEAT(52), SEAT(5		1
2	6675308	KIT	susp. boot - W/Ref. SEAT(55), SEAT(56), SEAT(57)		1
3	6675319	SEAT	backrest - fabric - W/Ref. SEAT(58)		1
3	6675321	SEAT	backrest - vinyl - W/Ref. SEAT(58)		1
4	6675320	SEAT	seat - fabric		1
4	6675322	SEAT	seat - vinyl		1
5	6674408	SEAT BELT	lap - Was 6675170 [A]		1
6	6675317	SCISSORS			1
7	6675323	KNOB	recliner		1
8	NSS	NUT			6
9	NSS	WASHER			4
10	NSS	SLIDE	slave		1
11	NSS	BOLT			4
12	NSS	SLIDE	locking		1
13	NSS	NUT			2
14	NSS	BELT	tether		2
15	NSS	WASHER	cross pivot		4
16	NSS	BOLT	pivot		2
17	NSS	RING	retaining		2
18	NSS	ROLLER			4
19	NSS	NUT			2
20	NSS	BUSHING	wt adjustment		4
21	NSS	RIVET			2
22	NSS	BLOCK	up stop		2
23	NSS	WASHER			3
24	NSS	STOP	armrest		1
25	NSS	PUSHNUT			2

DealerNation Quality Equipment Manuals - dealernation@aol.com

SEAT

Ref.N°	Part N°	Description	Remarks	Serial N°	Qty.
26	NSS	BUMPER			1
27	NSS	NUT			1
28	NSS	SHAFT	bearing		1
29	NSS	RIVET	female snap		1
30	NSS	INDICATOR	weight		1
31	NSS	RIVET	male snap		1
32	NSS	DIAL	weight indicator		1
33	NSS	POP RIVET			2
34	NSS	SPACER			1
35	NSS	NUT			1
36	NSS	BEARING	thrust		1
37	NSS	RACE	thrust		2
38	NSS	SHEAR PIN			1
39	NSS	HANDLE	weight adjustment		1
40	NSS	PLATE	wear		1
41	NSS	SHAFT	torsion		1
42	NSS	DRIVE GEAR			1
43	NSS	BUSHING	torsion		1
44	NSS	RACK	wt adjustment		1
45	NSS	BOLT			2
46	NSS	SPACER	recliner		1
47	NSS	BRACKET	back tilt		1
48	NSS	NUT			2
49	NSS	WASHER	plastic		2
50	NSS	BOSS	back pan pivot		2
51	NSS	HANDLE	recliner (RH)		1
52	NSS	LATCH	recliner		1
53	NSS	SPRING	extension		1
54	NSS	SPRING	tilt latch		1
55	NSS	CLIP			6
56	NSS	WIRE	boot support		1
57	NSS	SUSPENSION	boot		1
58	NSS	SCREW			2
59	NSS	HOUSING	upper		1
60	NSS	HOUSING	lower		1
61	NSS	BACK PAN			1
62	6676338	GAS SPRING			1

DealerNation Quality Equipment Manuals - dealernation@aol.com

REAR DOOR

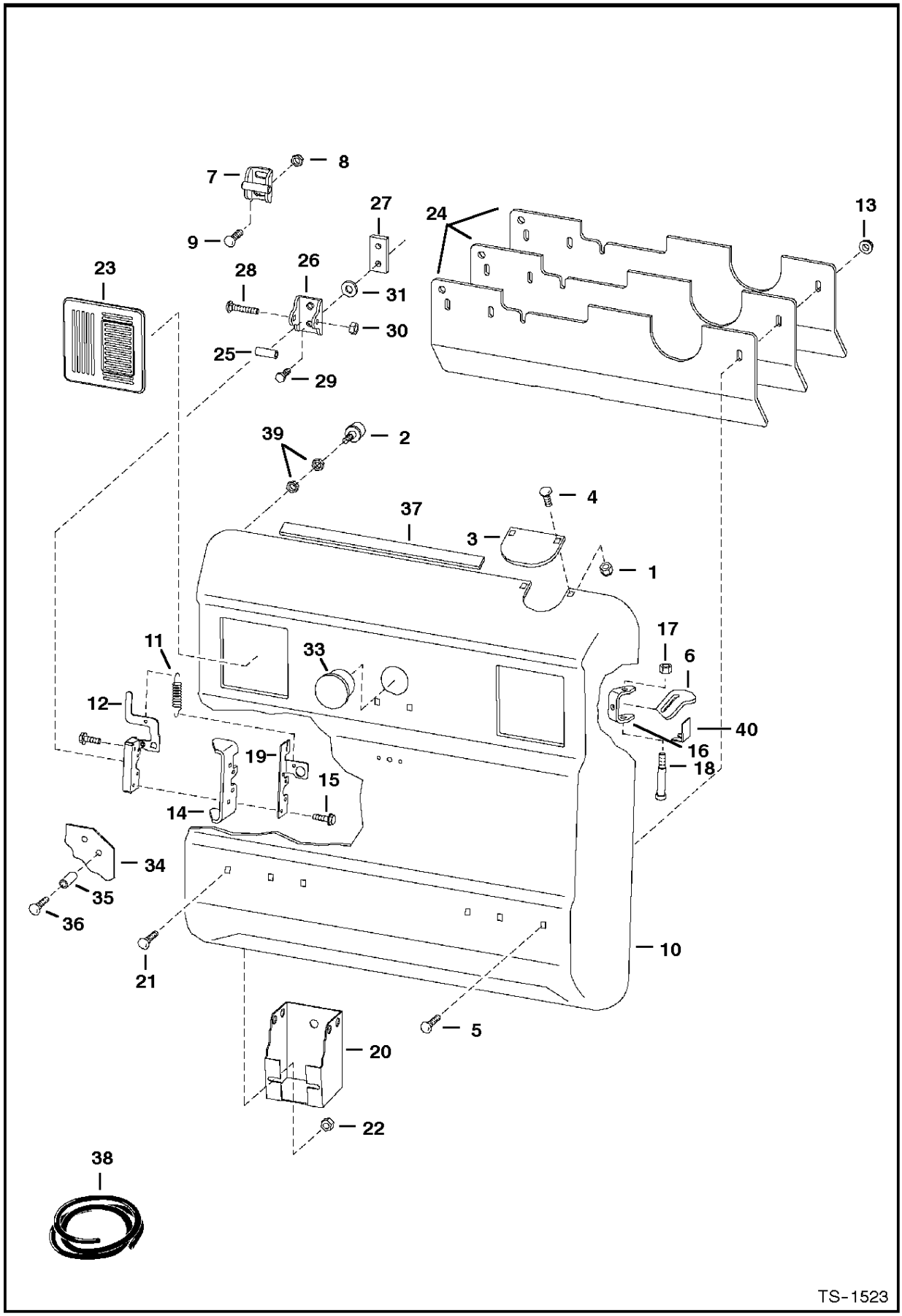

DealerNation Quality Equipment Manuals - dealernation@aol.com

REAR DOOR

Ref.N°	Part N°	Description	Remarks	Serial N°	Qty.
1	57D-5	NUT	Was 61D-5 [B, D]		2
2	6655399	BUMPER	Was 6714454 [B, D]		2
3	6714509	COVER	exhaust		1
4	37C-512	BOLT			2
5	37C-628	BOLT			3
6	6714126	DOOR STOP			1
7	6715157	STRIKER ASSY.			1
8	83D-8	NUT			2
9	37C-820	BOLT			2
10	6711524	REAR DOOR			1
11	6714210	SPRING			1
12	6670867	LATCH			1
13	57D-6	NUT			2
14	6711527	LATCH PLATE	weldAon		1
15	31C-420	BOLT			4
16	6711526	HINGE	weldAon		2
17	59D-6	NUT			3
18	38C-856	BOLT			2
19	6711664	GUIDE	latch		1
20	6807729	TOOL HOLDER	Was 6715318 [B]		1
21	37C-612	BOLT			2
22	55D-6	NUT			2
23	6670287	COVER			2
24	6725256	WEIGHT			3
25	6719550	TUBE	striker		1
26	6719524	STRIKER			1
27	6719525	BAR	threaded striker		1
28	37C-644	BOLT	carriage		1
29	17C-820	BOLT			2
30	61D-6	NUT			2
31	6675273	WASHER	lock - Was 6675263 [B, D]		2
32	1612281	NUT	spring		2
33	6718796	PLUG			1
34	6807316	PLATE			1
35	6807444	SPACER			2
36	35C-516	BOLT			2
37	NAP	SEAL	27.5' (698,5 mm) long - Order Ref. REAR DOOR(38)		1
38	6667586	SEAL	bulk - Sold Per Foot		x
39	61D-5	NUT			4
40	6719766	STOP			1

DealerNation Quality Equipment Manuals - dealernation@aol.com

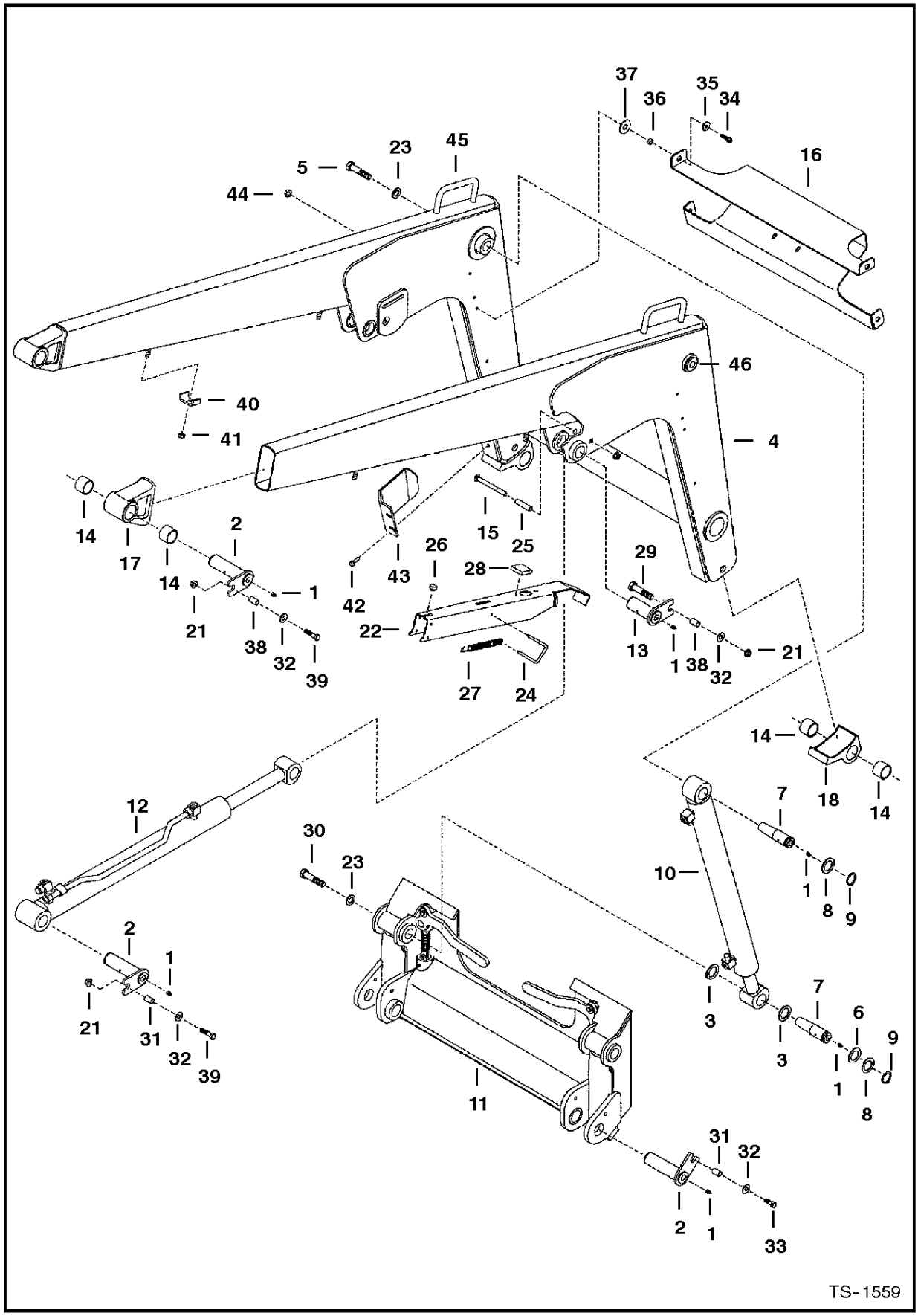

DealerNation Quality Equipment Manuals - dealernation@aol.com

LIFT ARMS & BOB-TACH

Ref.N°	Part N°	Description	Remarks	Serial N°	Qty.
1	10H-25	GREASE ZERK			12
2	6597798	PIN			6
2	6803046	SHIM	.134 (3.40 mm) - when needed		x
2	6803047	SHIM	.075 (1.905 mm) - when needed		x
3	6631067	SEAL			4
4	6597770	LIFT ARMS			1
5	17C-1256	BOLT			4
6	6584873	WASHER	.075 " (1.905mm) - when needed		4
7	6565864	PIN			4
8	6584872	WASHER			4
9	6538285	SNAP RING			4
10		CYLINDER	tilt - See Page TILT CYLINDER(1)		2
11		BOB-TACH	See Page BOB-TACH(10)		1
12		CYLINDER	lift - See Page LIFT CYLINDER(1)		2
13	6597799	PIN			2
14	6670762	BUSHING			8
15	37C-888	BOLT			1
16	6805922	STEP			1
17	6802618	PIVOT ASSY	Weld On - W/Ref. LIFT ARMS & BOB-TACH(14)		2
18	6597492	PIVOT ASSY	Weld On - W/Ref. LIFT ARMS & BOB-TACH(14)		2
19	6597489	BUSHING	Weld On		2
20	6597488	BUSHING	Weld On		2
21	55D-8	NUT			6
22	6804533	STOP	Lift Arm		1
23	6576033	WASHER			4
24	6714810	PIN	Retainer		1
25	6802566	SPACER			1
26	6519178	BUMPER			1
27	6579072	SPRING			1
28	6704436	PAD	Rubber - Self Adhesive		1
29	37C-836	BOLT			1
30	17C-1248	BOLT			2
31	6597768	SPACER	Was 6628799 [A]		2
32	27E-8	WASHER			4
33	31C-832	BOLT			2
34	37C-880	BOLT			4
35	25E-21	WASHER			4
36	6626323	BUSHING			4
37	6568498	WASHER	friction		4
38	6597768	SPACER			6
39	17C-836	BOLT			4
40	6800262	CLAMP			4
41	59D-8	NUT			4
42	84G-3720	BOLT			2
43	6802017	BRACKET	hose		1
44	95D-8	NUT			4
45	6568559	HANDLE	grab		2
46	6810036	BUSHING	weld on		2

DealerNation Quality Equipment Manuals - dealernation@aol.com

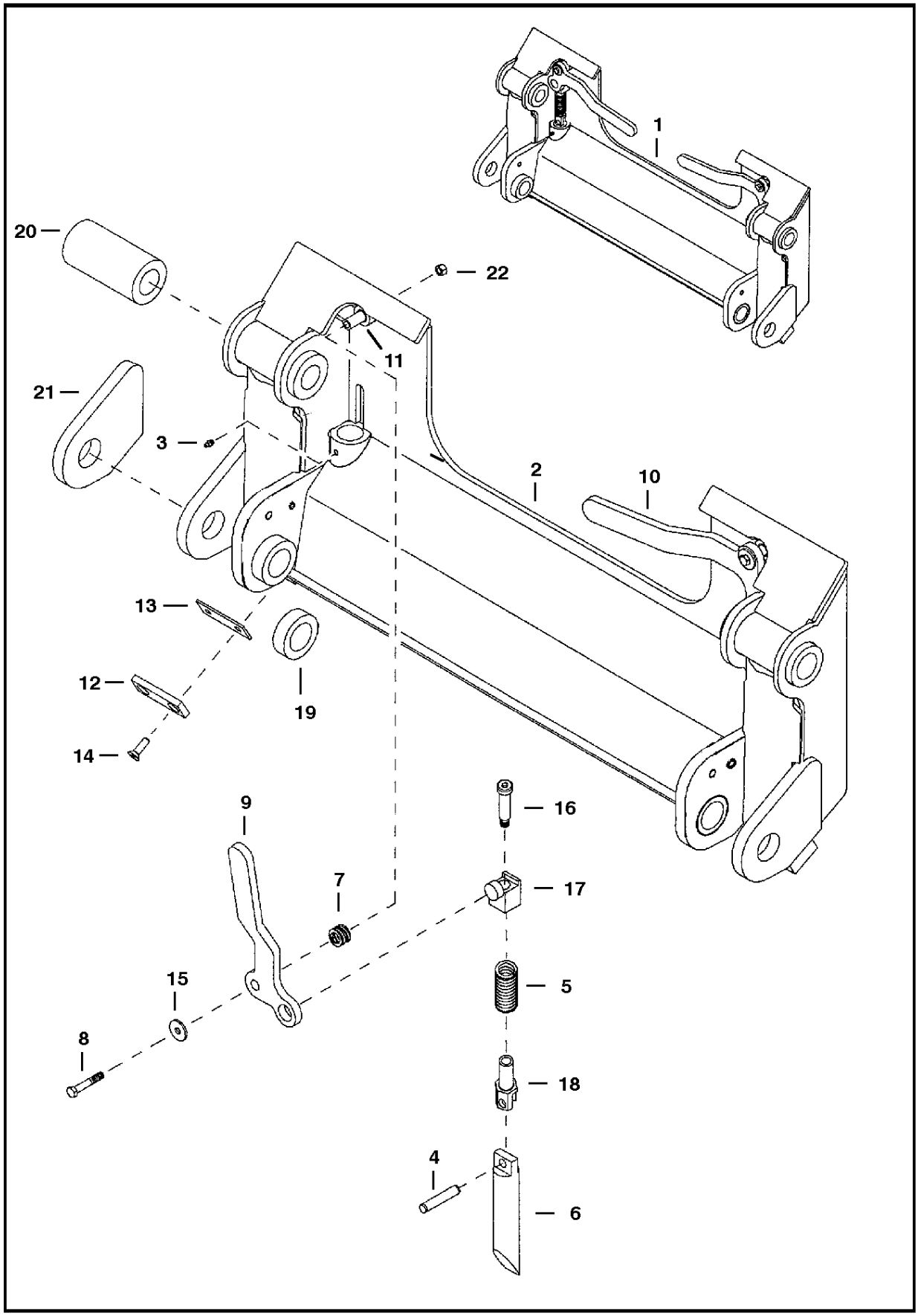

DealerNation Quality Equipment Manuals - dealernation@aol.com

BOB-TACH

Ref.N°	Part N°	Description	Remarks	Serial N°	Qty.
1	6597415	BOB-TACH	Ref. BOB-TACH(2) - BOB-TACH(22)		1
2	NAP	FRAME	Order Ref. BOB-TACH(1)		1
3	10H-35	GREASE ZERK			2
4	14J-5032	PIN	Was 14J-5044 [A]		2
5	6578253	SPRING			2
6	NAP	WEDGE	Order 6807545 Was 6589688 [A]	5622 15063 & Bel	2
6	6807545	WEDGE		5622 15064 & Abv	2
7	6704453	SPRING			2
8	17C-636	BOLT			2
9	6589690	LEVER	L.H.		1
10	6589691	LEVER	R.H.		1
11	6589683	STUD			2
12	6803659	STOP			2
13	6803660	SHIM			2
14	9G-620	BOLT			4
15	619021	WASHER			2
16	6572050	BOLT			2
17	6589692	PIVOT			2
18	6704248	PIVOT			2
19	6595338	BUSHING	Weld On		2
20	6800823	BUSHING	Weld On		2
21	6589686	PIVOT	Weld On		2
22	95D-6	NUT			2

DealerNation Quality Equipment Manuals - dealernation@aol.com

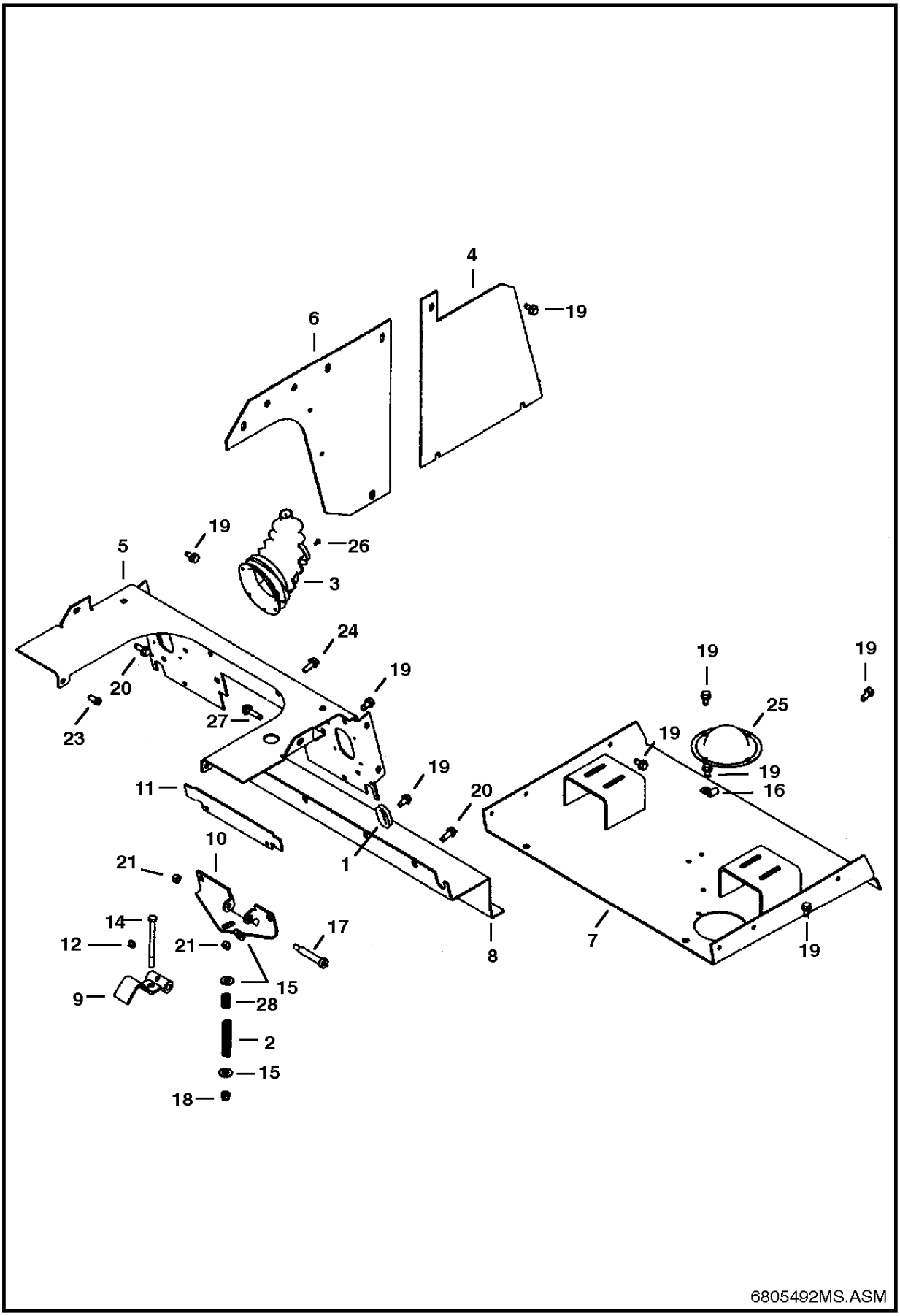

DealerNation Quality Equipment Manuals - dealernation@aol.com

PANELS

Ref.N°	Part N°	Description	Remarks	Serial N°	Qty.
1	6577961	GROMMET			2
2	6505082	SPRING			1
3	6532127	BOOT			1
4	6597501	PANEL	side		1
5	6718305	SHIELD	lever		1
6	6807202	PANEL	side		1
7	6808130	FLOOR	Was 6805868 [A]		1
8	6808111	COVER	lever - Was 6805870 [A]	& Bel	1
8	6809567	COVER	lever	& Abv	1
9	6806304	ARM			1
10	6806308	BRACKET			1
11	6806838	SHIELD			1
12	10H-25	GREASE ZERK			1
13	17C-616	BOLT			2
14	17C-672	BOLT			1
15	25E-18	WASHER			4
15	25E-18	WASHER	ahc		2
15	6571991	WASHER	ahc		2
16	30H-23	CLAMP			1
17	38C-840	BOLT			1
18	59D-6	NUT			1
19	84G-3712	BOLT			10
20	84G-3716	BOLT			2
21	95D-6	NUT			3
22	6807159	INSULATION	strg panel		1
23	17C-612	BOLT			2
24	35C-616	BOLT			2
25	6565825	CAP	dust		1
26	6630207	RIVET			8
27	84G-3724	BOLT			1
28	6572026	SPRING	ahc - used with 6505082	5622 15243 & Abv	1

DealerNation Quality Equipment Manuals - dealernation@aol.com

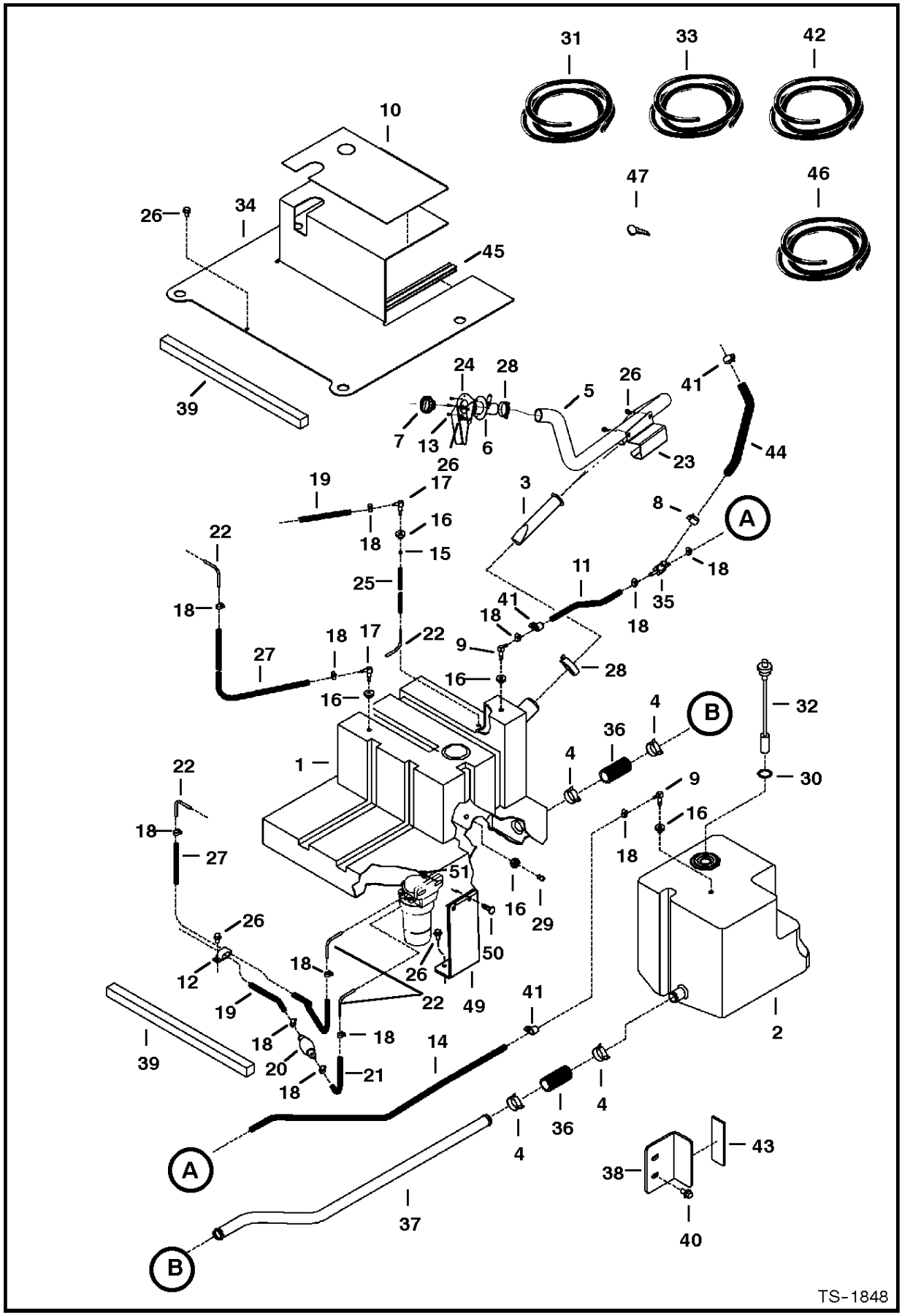

DealerNation Quality Equipment Manuals - dealernation@aol.com

FUEL SYSTEM

Ref.N°	Part N°	Description	Remarks	Serial N°	Qty.
1	6807186	TANK	25 gal. Was 6804575 [A]		1
2	6804576	TANK	aux - 10 gal.		1
3	6569219	SCREEN			1
4	42HC-200	CLAMP	Was 5HM-40 [B]		4
4	42HC-200	CLAMP	used with bulk hose		2
5	6807248	HOSE			1
6	6701449	FILLER TUBE			1
7	6661114	CAP	green fuel fill		1
7	6661696	FUEL CAP	locking code PK510 W/Ref. FUEL SYSTEM(47)		1
8	5HM-23	CLAMP			2
9	6553412	ELBOW			2
10	6805767	INSULATION			1
11	NAP	HOSE	.19.5 (495,3 mm) long - Order Ref. FUEL SYSTEM(42)	/	x
12	31H-46	CLAMP			1
13	6706517	SCREW			3
14	NAP	HOSE	Order Ref. FUEL SYSTEM(42) - 41.5' (1054,1 mm) long		x
15	6661213	CLAMP			2
16	6553411	BUSHING			5
17	6598908	ELBOW			2
18	6515575	CLAMP			12
19	NAP	HOSE	42.13'' (1070 mm) long - Order Ref. FUEL SYSTEM(33)		1
20	6657734	PUMP	hand primer		1
21	NAP	HOSE	.2.76'' (70 mm) long - Order Ref. FUEL SYSTEM(33)		1
22	6597183	ELBOW			5
23	6806202	BRACKET			1
24	6805849	SHIELD			1
25	NAP	HOSE	20.08'' (510 mm) long - Order Ref. FUEL SYSTEM(31)		2
26	84G-3712	BOLT			9
27	NAP	HOSE	61.42'' (1560 mm) long - Order Ref. FUEL SYSTEM(33)		2
28	5HM-58	CLAMP			2
29	6599645	PLUG			1
30	79K-14	O-RING			1
30	6717579	GASKET			1
31	6569752	HOSE	bulk - Sold Per Foot		x
32	6673119	SENDER	fuel - W/Ref. FUEL SYSTEM(30)		1
33	6577821	HOSE	bulk - Sold Per Foot		x
34	6807157	COVER	Was 6806208 [A]		1
35	6804639	TEE			1
36	NAP	HOSE	5' (127 mm) long - Order Ref. FUEL SYSTEM(53)		2
37	NAP	TUBE	Order 44'(1117,6mm) of Ref. FUEL SYSTEM(53) - Was 6802771 [A]		1
37	NAP	HOSE	.44'(1117,6mm)long - Order Ref. FUEL SYSTEM(53)		1
38	6803062	BRACKET			1
39	6597184	FOAM			2
40	35C-816	BOLT			2
41	30H-35	CLIP			1
42	6577822	HOSE	bulk - Sold Per Foot		x

DealerNation Quality Equipment Manuals - dealernation@aol.com

FUEL SYSTEM

Ref.N°	Part N°	Description	Remarks	Serial N°	Qty.
43	6803976	STRIP	rubber		1
44	NAP	HOSE	50.5' (1282,7 mm) long - Order Ref. FUEL SYSTEM(48)		1
45	NAP	SEAL	13.5' (342.9 mm) long - Order Ref. FUEL SYSTEM(46)		2
46	6667586	SEAL	Bulk - Sold Per Foot		x
47	6587458	KEY SET	code PK010		1
48	6578172	HOSE	Bulk - Sold Per Foot		x
49	6800223	BRACKET	fuel fill		1
50	37C-620	BOLT			2
51	57D-6	NUT			2
52	30H-50	CLAMP			2
53	6802748	HOSE	bulk - Sold Per Foot		x

DealerNation Quality Equipment Manuals - dealernation@aol.com

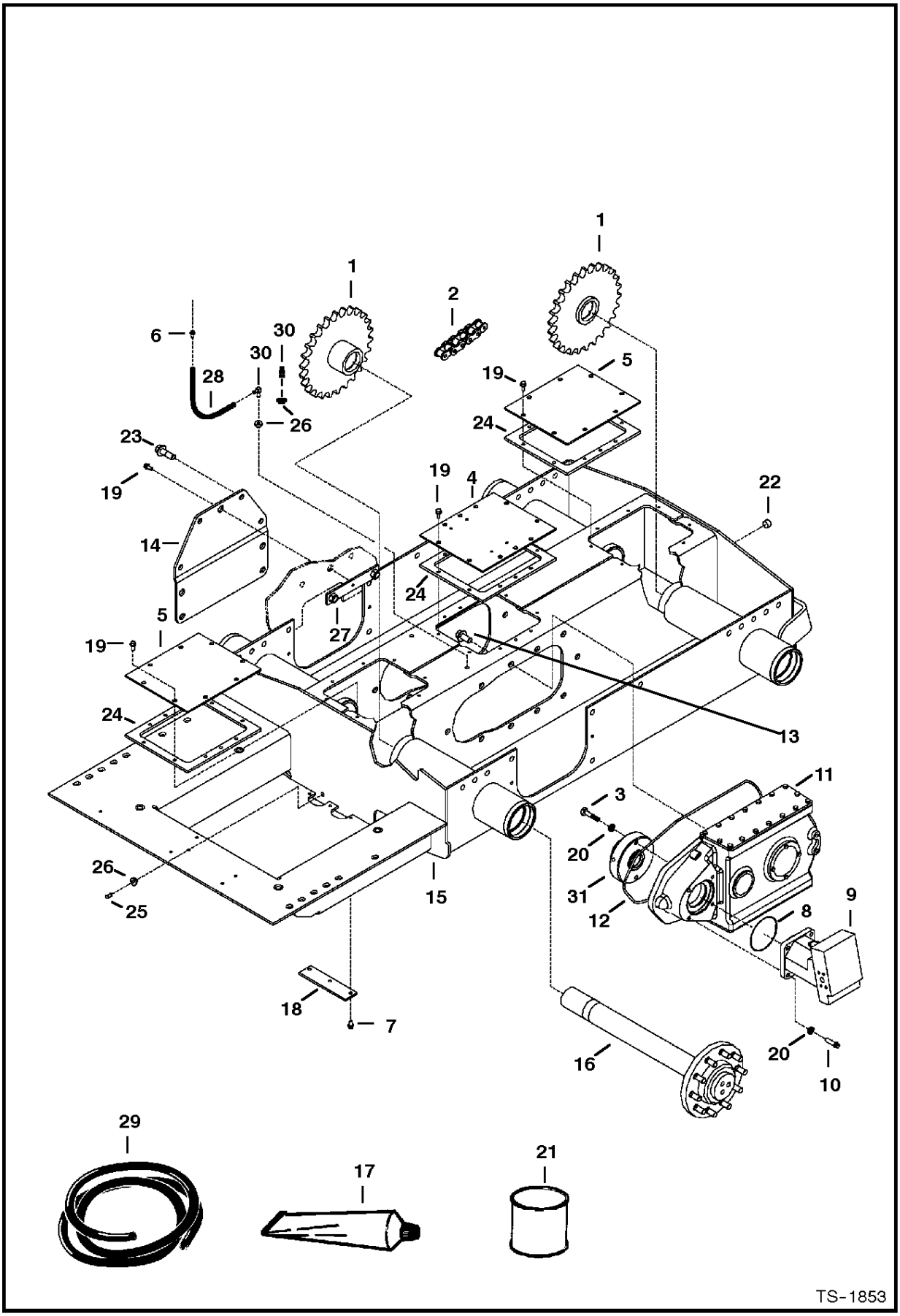

DealerNation Quality Equipment Manuals - dealernation@aol.com

DRIVE TRAIN

Ref.N°	Part N°	Description	Remarks	Serial N°	Qty.
1	6565742	SPROCKET			4
2	6628103	CHAIN	endless		4
3	17C-860	BOLT			4
4	6804340	COVER	center		1
5	6597759	COVER	front		2
6	6670627	BREATHER	breather 1/8' thread		1
7	84G-3712	BOLT			5
8	25K-30500	O-RING	Not used on some Gearboxes		2
9	6670817	MOTOR	See Page HYDROSTATIC MOTOR(3)		2
10	93G-828	BOLT			8
11		GEARBOX	See Page GEARBOX(2)		2
12	6802321	O-RING			2
13	31C-1224	BOLT			20
14	6803061	COVER			2
15	6597210	CHAINCASE			1
16		AXLE	See Page AXLE(9)		4
17	6650388	SEALANT	gearcase covers		x
18	6700182	COVER			2
19	84G-3716	BOLT			32
20	6701097	WASHER			12
21	6632501	SEALANT	Used to fill seam on top of chaincase		x
22	16F-12	PLUG			1
23	31C-1236	BOLT			12
24	6627897	GASKET			3
25	6599645	PLUG			1
26	6553411	BUSHING			2
27	6803448	RETAINER			6
28	NAP	HOSE	16.5' (419 mm) long - Order Ref. DRIVE TRAIN(29)		1
29	6577822	HOSE	Bulk - Sold Per Foot		x
30	6553412	ELBOW			1
30	6630488	BREATHER			1
31		BRAKE	See Page DISC BRAKE(1)		2

DealerNation Quality Equipment Manuals - dealernation@aol.com

DISC BRAKE
(S/N 5622 15999 & Below, 5165 15999 & Below)

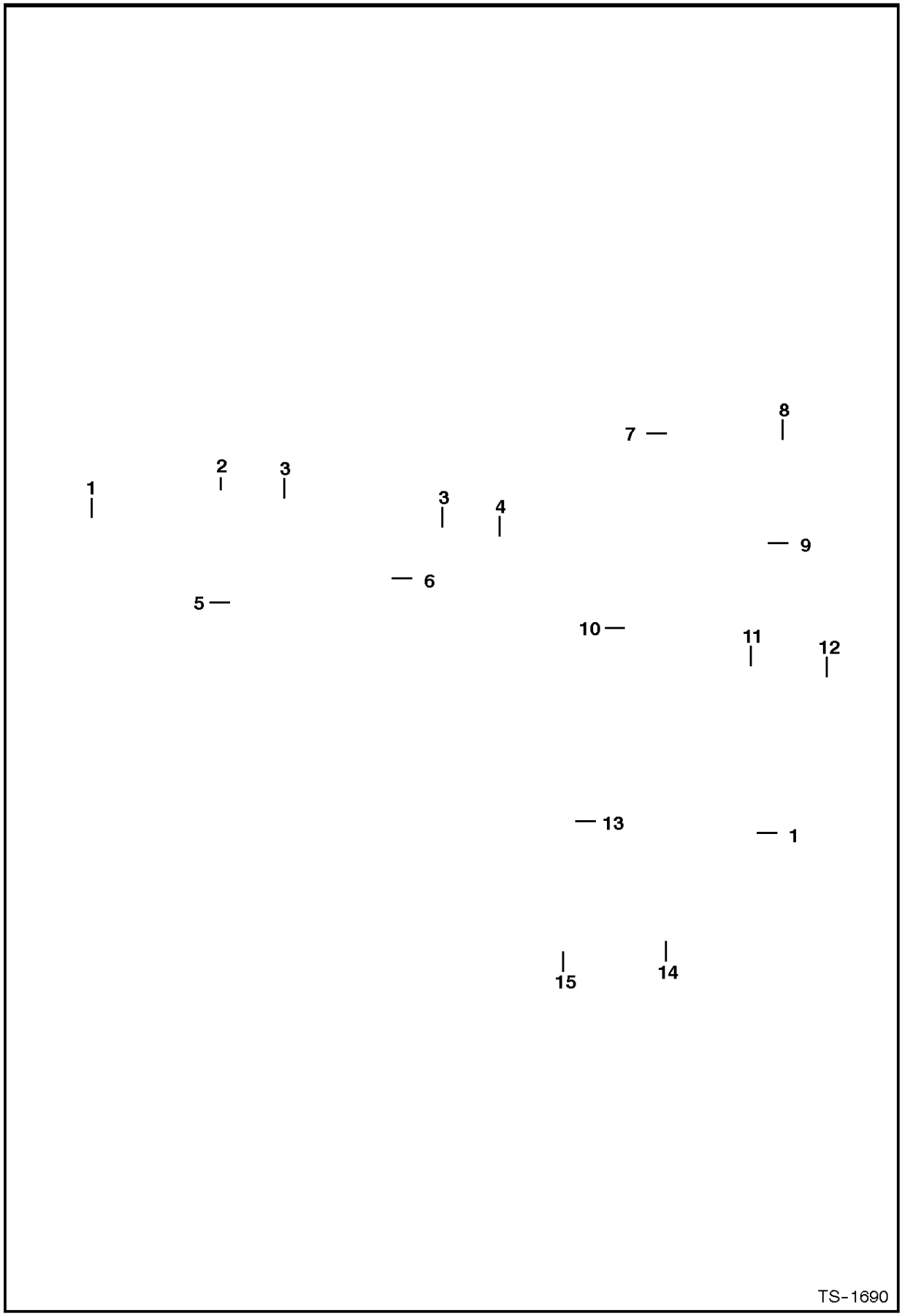

DealerNation Quality Equipment Manuals - dealernation@aol.com

DISC BRAKE

Ref.N°	Part N°	Description	Remarks	Serial N°	Qty.
1	84G-3712	BOLT			3
2	23G-812	SCREW			2
3	25E-8	WASHER			4
4	12D-8	NUT			2
5	17C-610	BOLT			1
6	6707313	PEDAL MOUNT			1
7	6585860	SPRING			1
8	95D-6	NUT			2
9	6707315	ANGLE			1
10	6707314	PEDAL	brake		1
11	6700170	WASHER	plastic		2
12	6559479	NUT			1
13	6707337	SWITCH	w/cover and connector		1
13	6664880	SWITCH			1
14	17C-620	BOLT			1
15	30H-23	CLAMP			1

DealerNation Quality Equipment Manuals - dealernation@aol.com

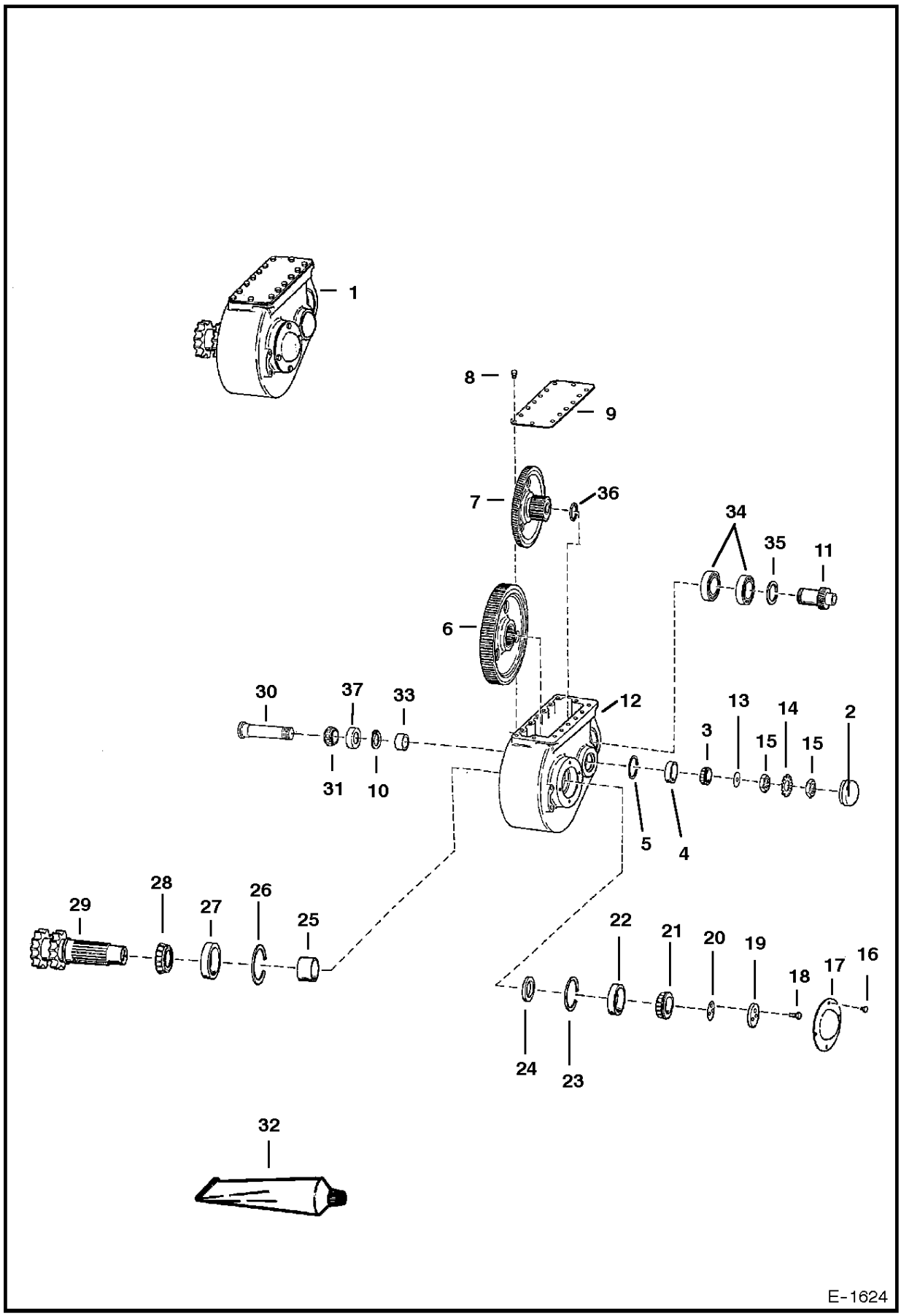

DealerNation Quality Equipment Manuals - dealernation@aol.com

GEARBOX

Ref.N°	Part N°	Description	Remarks	Serial N°	Qty.
1	6596676	GEARBOX ASSY	Ref. GEARBOX(2) - GEARBOX(31) & GEARBOX(33) - GEARBOX(37)		1
2	6565289	CAP			1
3	6648774	BEARING			1
4	6648776	RACE			1
5	6565839	SNAP RING			1
6	6565834	GEAR			1
7	6595506	GEAR	straight		1
8	17C-616	BOLT			32
9	6802322	COVER	Also order Ref. GEARBOX(32)		2
10	6595510	SNAP RING			2
11	6801642	GEAR	straight		1
12	6801459	GEARBOX			1
13	6670839	WASHER			1
14	27H-108	WASHER			1
15	24H-8	NUT			2
16	17C-508	BOLT			4
17	6565825	CAP			1
18	17C-820	BOLT			3
19	6565830	CAP			1
20	6701378	SHIM	.007		1
21	6648784	BEARING			1
22	6648785	RACE			1
23	223879	SNAP RING			1
24	6565829	COLLAR			1
25	6565828	COLLAR			1
26	6565831	SNAP RING			1
27	6648779	RACE			1
28	6648778	BEARING			1
29	6565832	SHAFT			1
30	6595507	SHAFT			1
31	6519925	BEARING	Was 6669050 [A]		1
32	6650388	SEALANT	used on cover Ref. GEARBOX(9)		x
33	6595508	SPACER			1
34	6665731	BEARING			2
35	7JM-90	SNAP RING			1
36	6595509	SPACER			1
37	6634609	RACE			1

DealerNation Quality Equipment Manuals - dealernation@aol.com

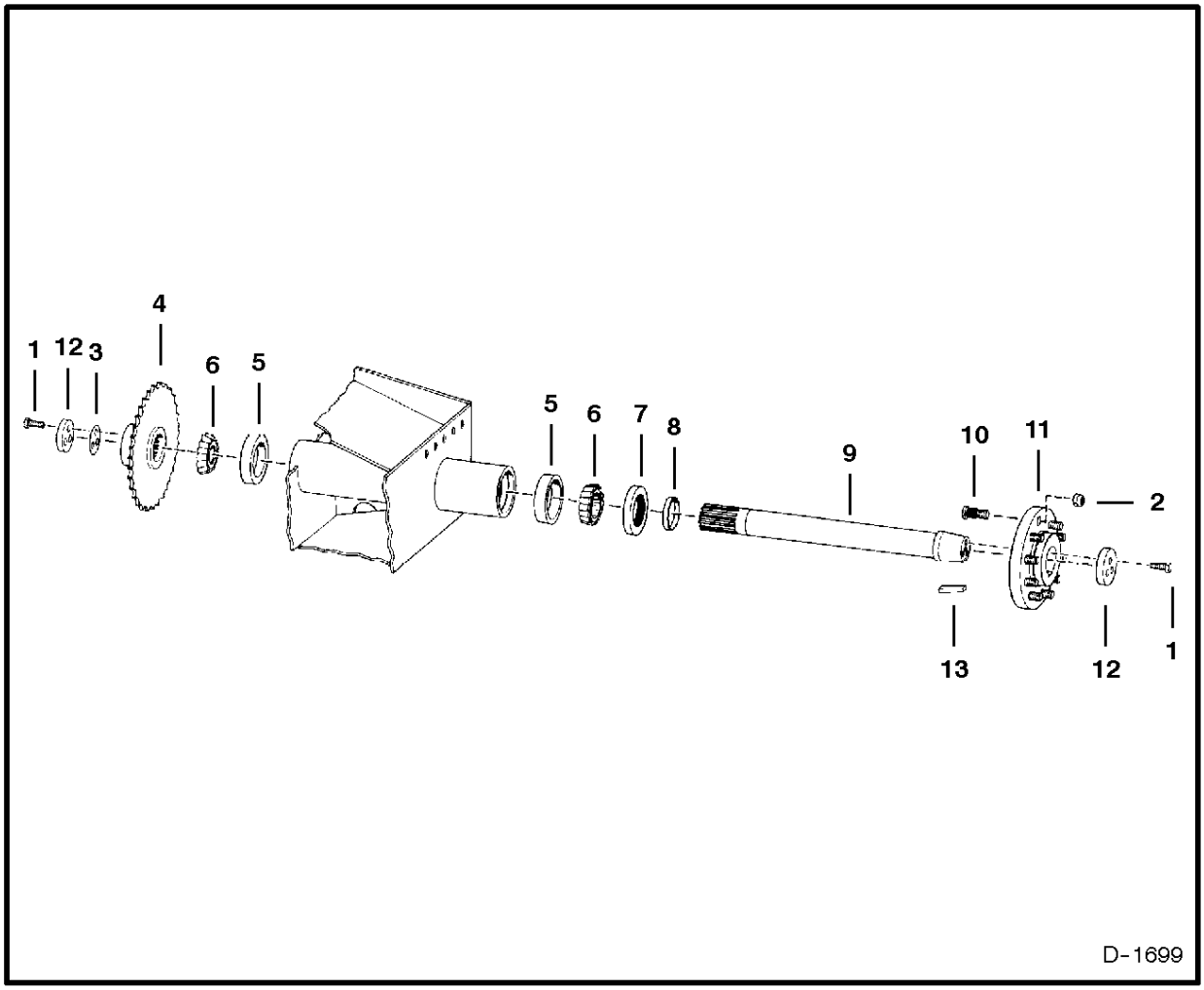

AXLE

Ref. No.	Part Number	Description	Remarks	Serial Number	Qty.

DealerNation Quality Equipment Manuals - dealernation@aol.com

AXLE

Ref.N°	Part N°	Description	Remarks	Serial N°	Qty.
1	17C-1024	BOLT			6
2	103522	NUT	wheel		10
3	6565975	SHIM			1
4	6565742	SPROCKET			1
5	6648782	RACE			2
6	6648780	BEARING			2
7	6809234	SEAL	Was 6630142 [A]		1
8	6630151	SLEEVE	wear		1
9	6565944	AXLE			1
10	6592304	STUD			10
11	6567173	HUB	W/Ref. AXLE(10)		1
12	6565947	CAP			2
13	7J-10208	KEY			1

DealerNation Quality Equipment Manuals - dealernation@aol.com

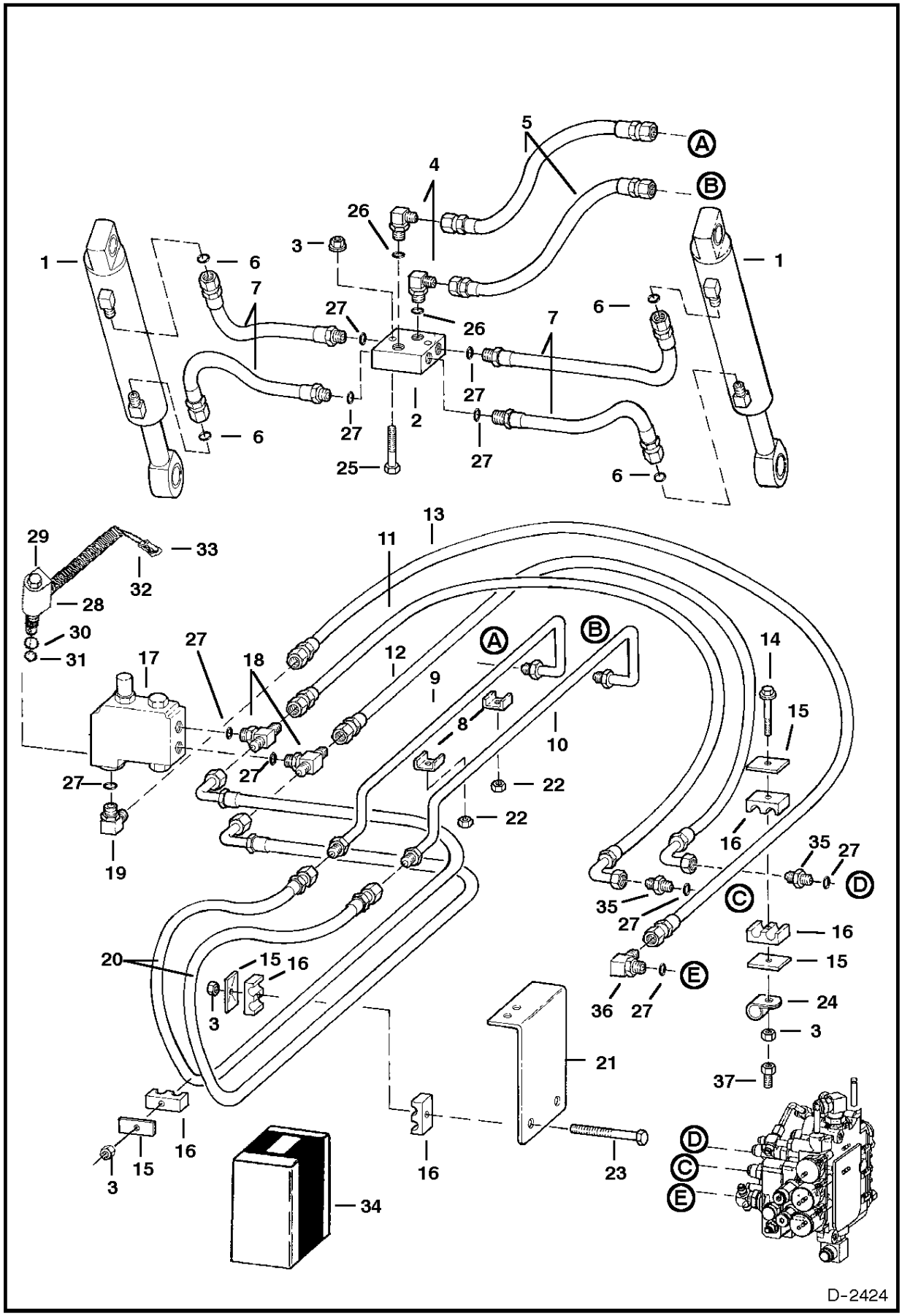

DealerNation Quality Equipment Manuals - dealernation@aol.com

HYDRAULIC CIRCUITRY

Ref.N°	Part N°	Description	Remarks	Serial N°	Qty.
1	6597316	CYLINDER	tilt - See Page TILT CYLINDER(1)		2
2	6800042	BLOCK			1
3	57D-6	NUT	Was 55D-6 [B]		4
4	6801164	ELBOW	W/Ref. HYDRAULIC CIRCUITRY(26)		2
5	6808284	HOSE	w/guard - Was 6670646 [A]		2
6	55K-16	O-RING			4
7	6802376	HOSE	w/guard		4
8	6800262	CLAMP			2
9	6802062	TUBELINE			1
10	6802061	TUBELINE			1
11	6808146	HOSE	Was 6671495 [A]		1
12	6808147	HOSE	Was 6671496 [A]		1
13	6808145	HOSE	Was 6671494 [A]		1
14	17C-656	BOLT			3
15	6595356	COVER			9
16	6595353	CLAMP			6
17	6673958	VALVE	#bucket positioning - See Page BUCKET POSITION VALVE(4)		1
18	6803029	TEE	W/Ref. HYDRAULIC CIRCUITRY(27)		2
19	6803028	ELBOW	W/Ref. HYDRAULIC CIRCUITRY(27)		1
20	6808148	HOSE	Was 6806388 [A]		2
21	6627878	BRACKET			1
22	85D-8	NUT			2
23	37C-656	BOLT			1
24	30H-23	CLAMP			1
25	31C-640	BOLT	Was 35C-636 [B]		2
26	75K-12	O-RING			x
27	75K-10	O-RING			x
28	6672863	SOLENOID	W/Ref. HYDRAULIC CIRCUITRY(29)-HYDRAULIC CIRCUITRY(33)		1
29	6671527	NUT			1
30	NSS	O-RING	large - order Ref. HYDRAULIC CIRCUITRY(34)		1
31	NSS	O-RING	small - order Ref. HYDRAULIC CIRCUITRY(34)		1
32	6641180	LOCK	2-pin		1
33	6641179	CONNECTOR	2-pin		1
34	6670634	SEAL KIT	W/Ref. HYDRAULIC CIRCUITRY(29), HYDRAULIC CIRCUITRY(30) & HYDRAULIC CIRCUITRY(31)		1
35	6800567	CONNECTOR	W/Ref. HYDRAULIC CIRCUITRY(27)		2
36	6803028	ELBOW	W/Ref. HYDRAULIC CIRCUITRY(27)		1
37	6803150	SPACER			5

DealerNation Quality Equipment Manuals - dealernation@aol.com

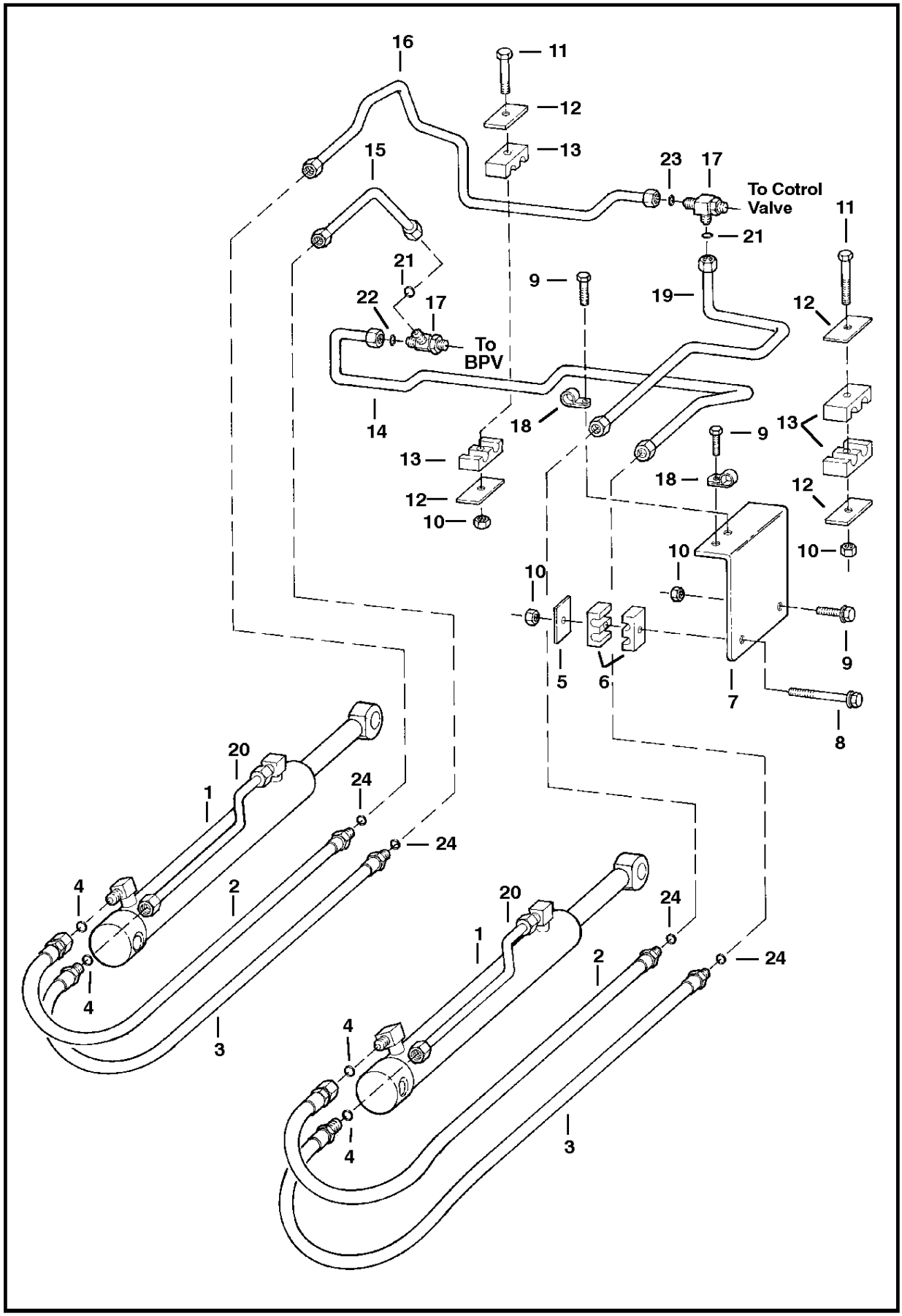

DealerNation Quality Equipment Manuals - dealernation@aol.com

HYDRAULIC CIRCUITRY

Ref.N°	Part N°	Description	Remarks	Serial N°	Qty.
1	6597314	CYLINDER	lift - See Page LIFT CYLINDER(1)		2
2	6806390	HOSE			2
3	6806391	HOSE			2
4	55K-16	O-RING			4
5	6595356	COVER			1
6	6595353	CLAMP			2
7	6627878	BRACKET			1
8	37C-656	BOLT			1
9	37C-616	BOLT			2
10	55D-6	NUT			3
11	35C-632	BOLT			2
12	6652521	COVER			4
13	6701892	CLAMP			4
14	6803083	TUBELINE			1
15	6803082	TUBELINE			1
16	6803081	TUBELINE			1
17	46E-810	ADAPTER	W/Ref. HYDRAULIC CIRCUITRY(21)		2
18	30H-31	CLAMP			2
19	6802384	TUBELINE			1
20	6800627	TUBELINE			2
21	75K-8	O-RING			x
22	55K-14	O-RING			1
23	55K-12	O-RING			1
24	58K-16	O-RING			1
25	30H-38	CLAMP			2

DealerNation Quality Equipment Manuals - dealernation@aol.com

MANUAL LIFT RELEASE SYSTEM

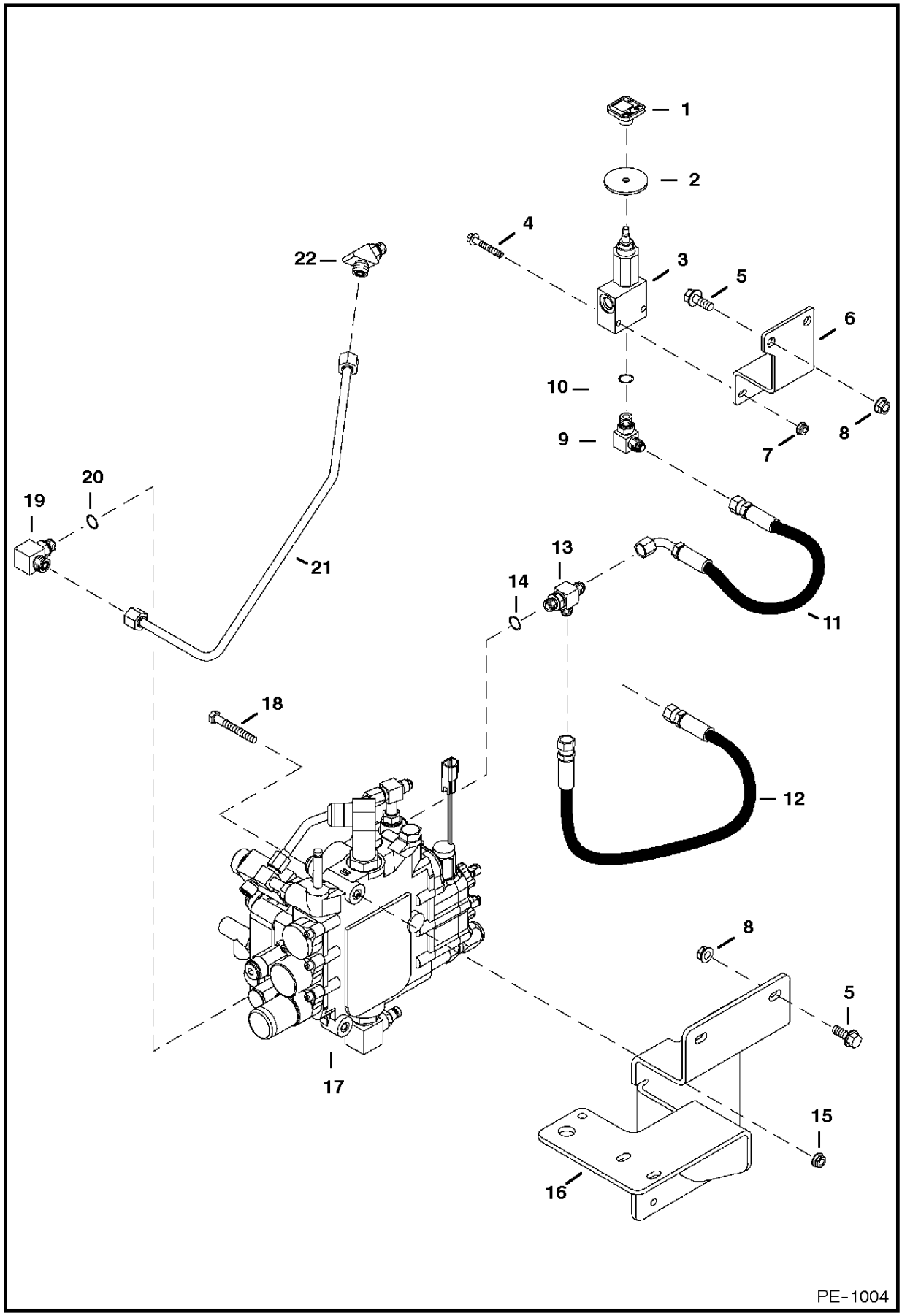

DealerNation Quality Equipment Manuals - dealernation@aol.com

MANUAL LIFT RELEASE SYSTEM

Ref.N°	Part N°	Description	Remarks	Serial N°	Qty.
1	6668913	KNOB			1
2	6707101	WASHER			1
3	6667844	VALVE	See Page MANUAL LIFT RELEASE VALVE(1)		1
4	31C-428	BOLT	Was 35C-428 [B]		2
5	35C-616	BOLT			4
6	6806343	BRACKET			1
7	57D-4	NUT			2
8	57D-6	NUT			4
9	85K-5	ELBOW	W/Ref. MANUAL LIFT RELEASE SYSTEM(10)		1
10	75K-6	O-RING			x
11	6535445	HOSE		5622 15244 & Bel	1
12	6806404	HOSE			1
13	21K-5	TEE	W/Ref. MANUAL LIFT RELEASE SYSTEM(14)	5622 15244 & Bel	1
14	79K-6	O-RING			x
15	57D-5	NUT			2
16	6802983	BRACKET			1
17		CONTROL VALVE	See Page HYDRAULIC CONTROL VALVE(1)		1
18	17C-540	BOLT			1
19	42E-606	FITTING	W/Ref. MANUAL LIFT RELEASE SYSTEM(20)		1
20	75K-6	O-RING			x
21	6806489	TUBELINE			1
22	44E-606	ELBOW	W/Ref. MANUAL LIFT RELEASE SYSTEM(20)		1
23	6803505	HOSE		5622 15245 & Abv	1
24	17K-5	ELBOW	W/Ref. MANUAL LIFT RELEASE SYSTEM(14)	5622 15245 & Abv	1

DealerNation Quality Equipment Manuals - dealernation@aol.com

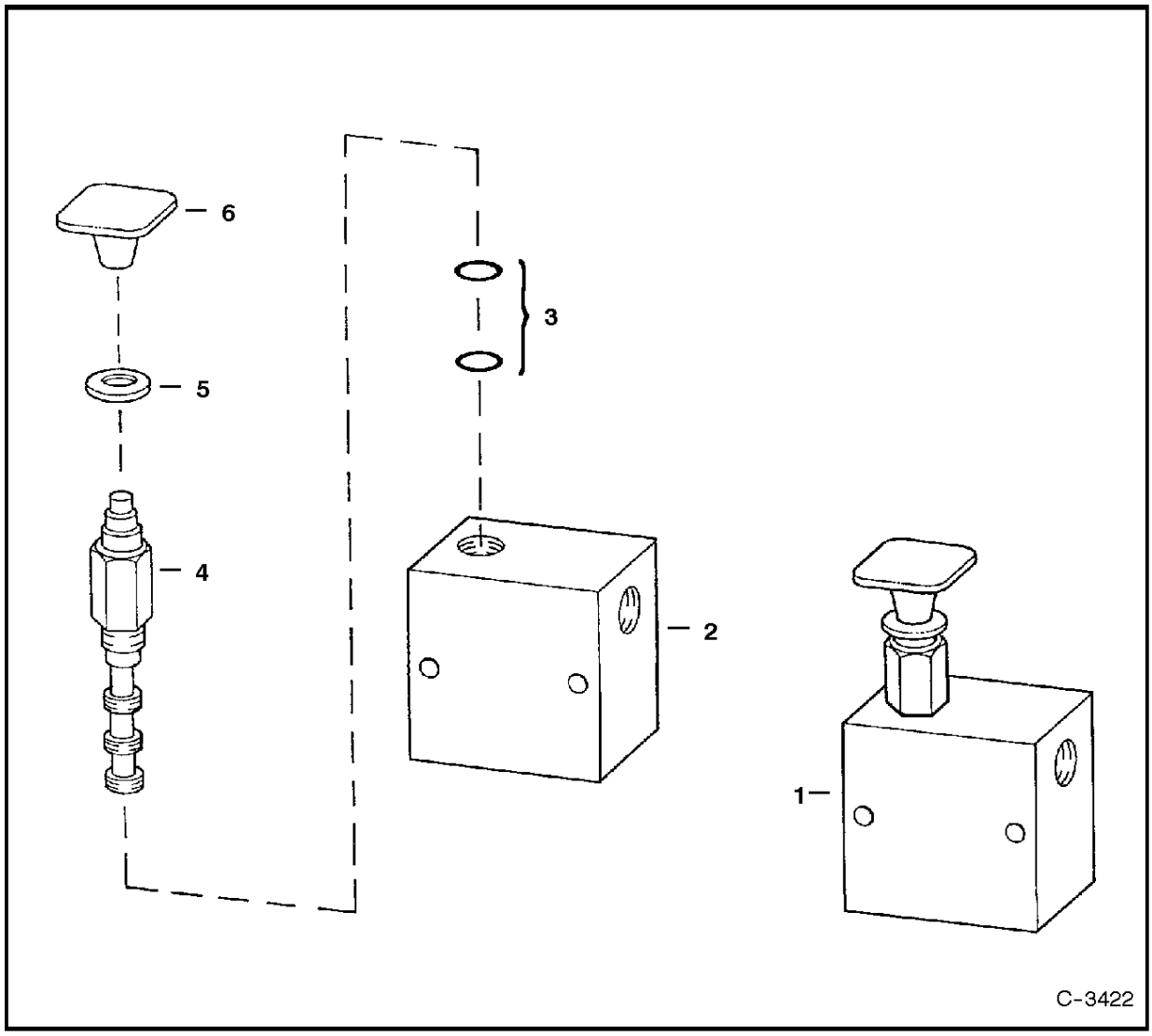

MANUAL LIFT RELEASE VALVE

Ref Part

DealerNation Quality Equipment Manuals - dealernation@aol.com

MANUAL LIFT RELEASE VALVE

Ref.N°	Part N°	Description	Remarks	Serial N°	Qty.
1	6667844	VALVE	Ref. MANUAL LIFT RELEASE VALVE(2) - MANUAL LIFT RELEASE VALVE(4)		1
2	NSS	BLOCK			1
3	6669087	SEAL KIT			1
4	6669085	VALVE			1
5	6707101	WASHER	neoprene		1
6	6668913	KNOB	red		1

DealerNation Quality Equipment Manuals - dealernation@aol.com

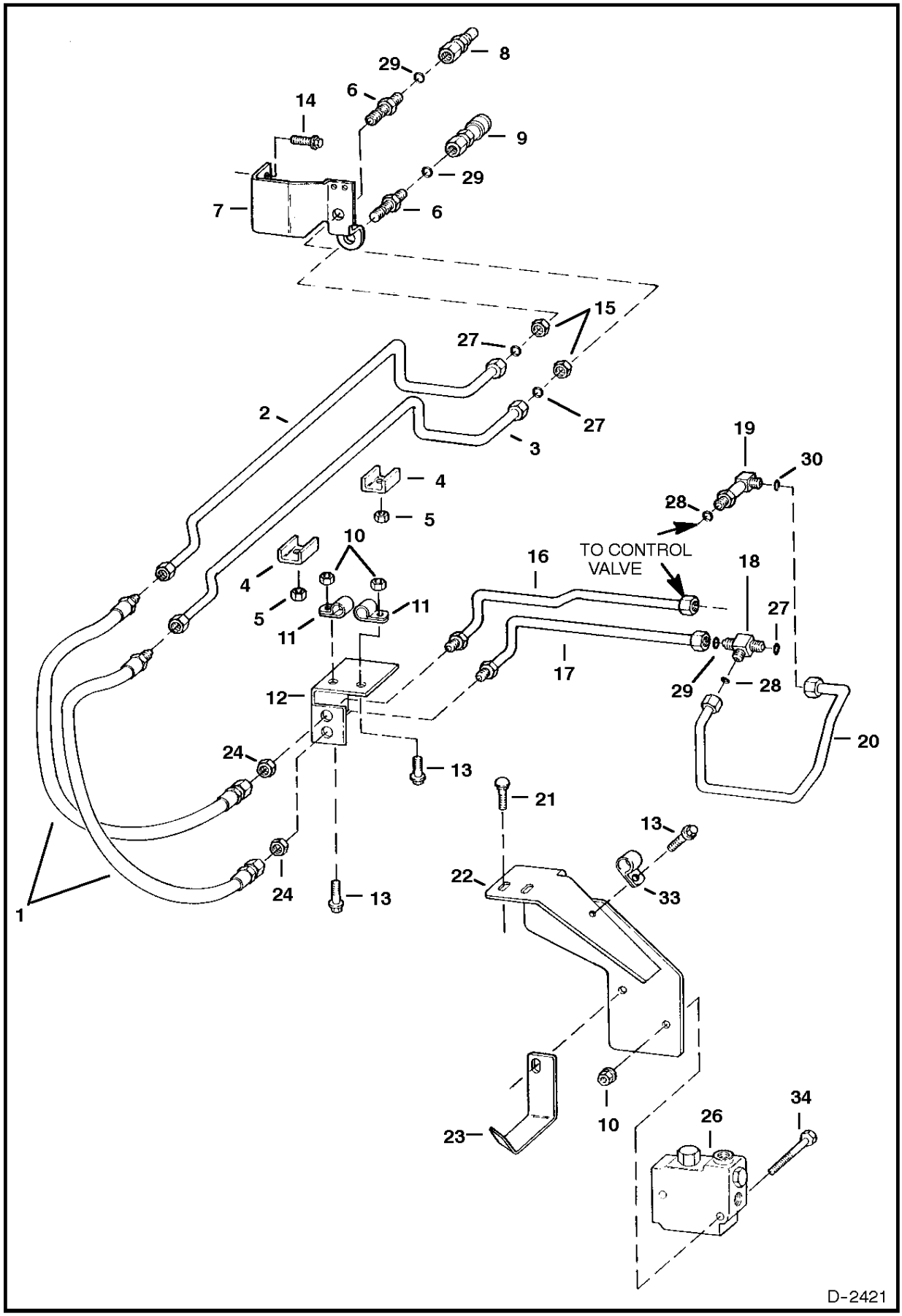

DealerNation Quality Equipment Manuals - dealernation@aol.com

AUXILIARY HYDRAULIC CIRCUITRY

Ref.N°	Part N°	Description	Remarks	Serial N°	Qty.
1	6806389	HOSE			2
2	6805924	TUBELINE			1
3	6805925	TUBELINE			1
4	6800262	CLAMP			2
5	85D-8	NUT			2
6	6802042	ADAPTER			2
7	6807574	BRACKET	coupler - Was 6805921 [B,D]		1
8	6667808	COUPLER	male FF		1
8	6672026	O-RING			1
9	6672960	COUPLER	female FF		1
10	57D-6	NUT	Was 55D-6 [B]		5
11	30H-31	CLAMP			3
12	6803069	BRACKET			1
13	35C-616	BOLT			3
14	84G-3716	BOLT			1
15	61E-12	NUT			2
16	6803085	TUBELINE			1
17	6803084	TUBELINE			1
18	6802536	TEE	W/Ref. AUXILIARY HYDRAULIC CIRCUITRY(28)		1
19	42E-606	FITTING	W/Ref. AUXILIARY HYDRAULIC CIRCUITRY(28), AUXILIARY HYDRAULIC CIRCUITRY(30)		1
20	6802559	TUBELINE			1
21	37C-620	BOLT			1
22	6806123	BRACKET			1
23	6806116	BRACKET			1
24	86F-8	NUT			2
25	35C-540	BOLT			2
26	6673958	VALVE	See Page BUCKET POSITION VALVE(4)		1
27	75K-12	O-RING			3
28	55K-12	O-RING			1
29	55K-18	O-RING			1
30	75K-6	O-RING			1
31	6806454	U-BOLT			1
32	30H-23	CLAMP			1
33	30H-60	CLIP			1
34	17C-540	BOLT			2
35	35C-512	BOLT			1

DealerNation Quality Equipment Manuals - dealernation@aol.com

CONTROL PEDALS

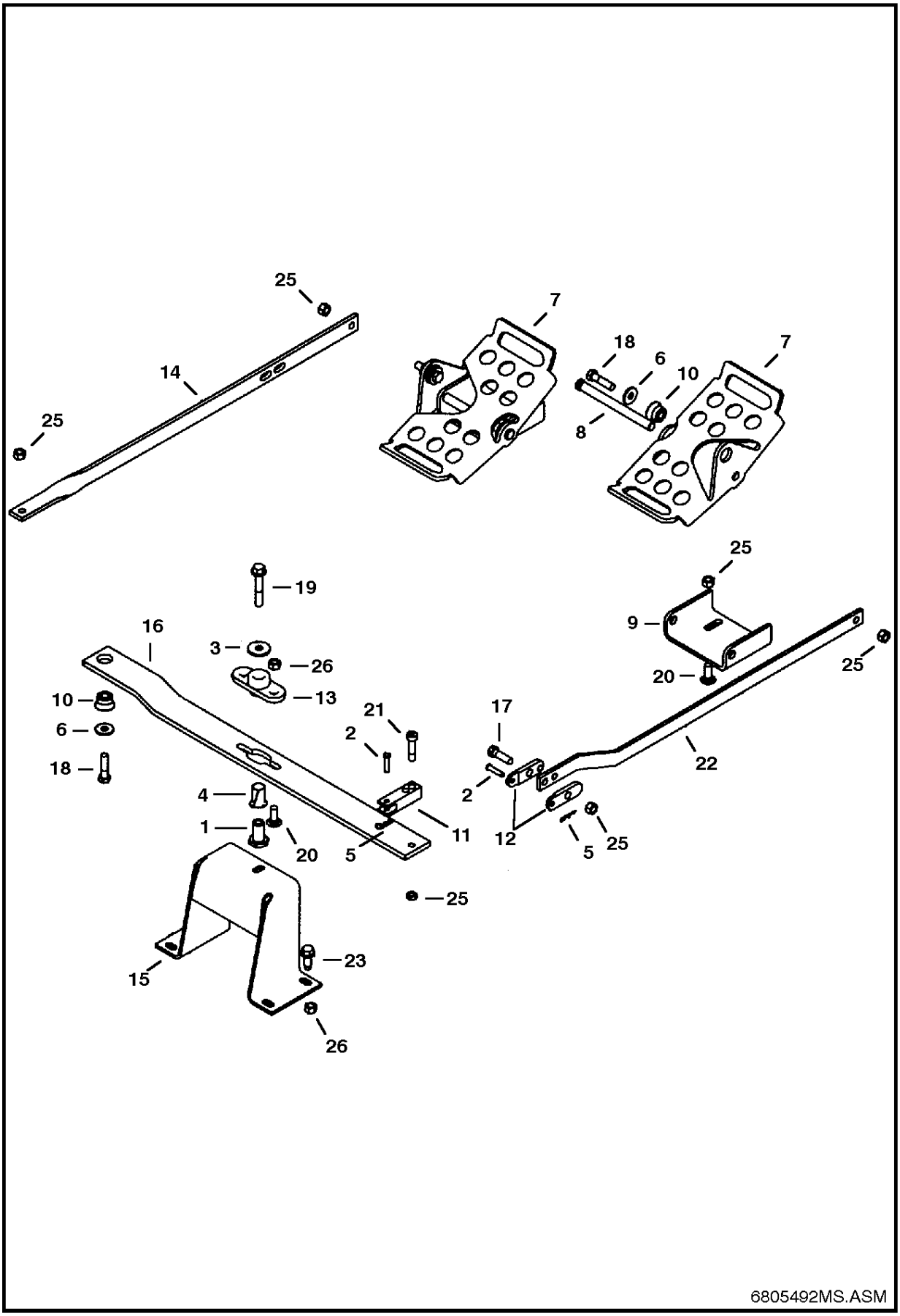

DealerNation Quality Equipment Manuals - dealernation@aol.com

CONTROL PEDALS

Ref.N°	Part N°	Description	Remarks	Serial N°	Qty.
1	6803360	BUSHING	pivot		1
2	6564654	PIN	clevis		2
3	619021	WASHER			1
4	6512026	BUSHING	flanged		1
5	6513495	COTTER PIN			2
6	6563914	WASHER			3
7	6726680	PEDAL	Was 6564656 [A]		2
8	6564657	PIN	pivot		2
9	6726679	BRACKET	Was 6564658 [A]		2
10	6665701	BUSHING			3
11	6706105	YOKE			1
12	6708009	LINK	valve		2
13	6708043	BUSHING	flange		1
14	6710328	LINK	pedal		1
15	6805869	BRACKET	pivot		1
16	6805881	BELLCRANK			1
17	17C-620	BOLT			1
18	17C-624	BOLT			3
19	35C-636	BOLT			1
20	7C-620	BOLT	Was 37C-616 [B]		6
21	38C-616	BOLT			1
22	6805879	LINK	tilt		1
23	84G-3716	BOLT			4
24	85D-5	NUT			1
25	95D-6	NUT			8
26	97D-6	NUT			3

DealerNation Quality Equipment Manuals - dealernation@aol.com

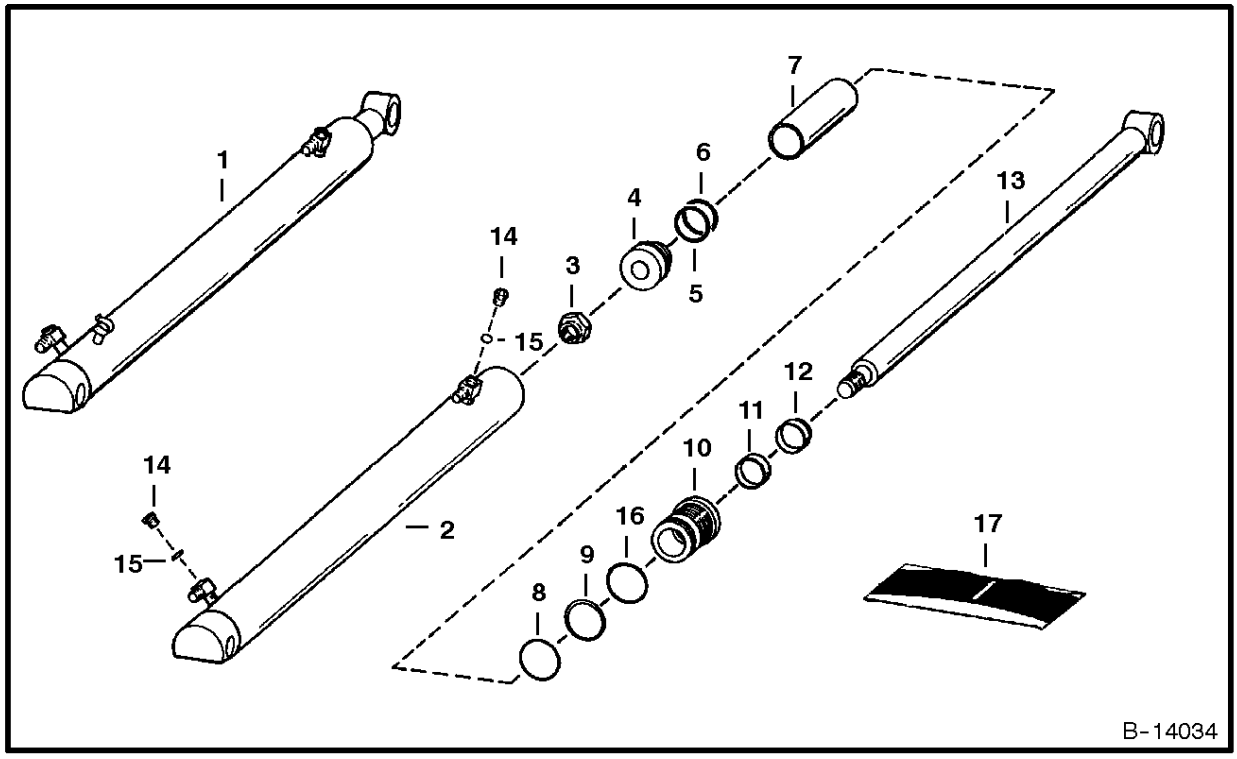

LIFT CYLINDER

Ref. No.	Part Number	Description	Remarks	Serial Number	Qty.
1	6597314	CYLINDER	Ref. 2 - 16		2
2	6627707	CASE			1

DealerNation Quality Equipment Manuals - dealernation@aol.com

LIFT CYLINDER

Ref.N°	Part N°	Description	Remarks	Serial N°	Qty.
1	6597314	CYLINDER	Ref. LIFT CYLINDER(2) - LIFT CYLINDER(16)		2
2	6627707	CASE			1
3	6804592	NUT			1
4	6669993	PISTON	W/Ref. LIFT CYLINDER(5) & LIFT CYLINDER(6)		1
5	947088	SEAL			1
6	25K-30218	O-RING			1
7	6802744	SPACER			1
8	54K-40224	O-RING			1
9	80K-232	BACKUP RING			1
10	6586568	HEAD			1
11	6667327	SEAL			1
12	6666544	SEAL	wiper		1
13	6627706	ROD			1
14	6809198	PLUG	W/Ref. LIFT CYLINDER(15) - tapered boss face - Was 90KV-5 [B]		2
15	95K-6	O-RING	tapered boss face		2
16	54K-40300	O-RING			1
17	6808791	SEAL KIT	Ref. LIFT CYLINDER(3), LIFT CYLINDER(5), LIFT CYLINDER(6), LIFT CYLINDER(8), LIFT CYLINDER(9), LIFT CYLINDER(11), LIFT CYLINDER(		1

DealerNation Quality Equipment Manuals - dealernation@aol.com

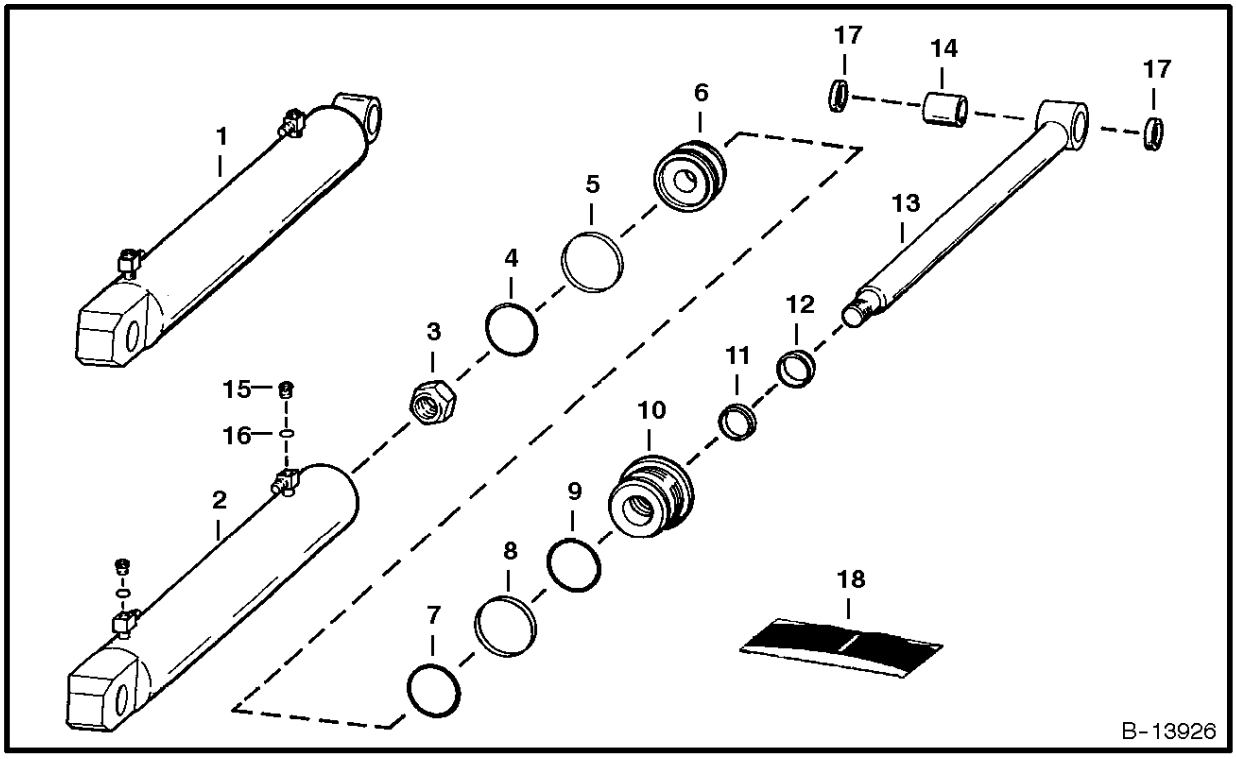

TILT CYLINDER

Ref. No.	Part Number	Description	Remarks	Serial Number	Qty.
1	6597316	CYLINDER	W/Ref. 2 - 17		2
2	6597833	CASE			1

DealerNation Quality Equipment Manuals - dealernation@aol.com

TILT CYLINDER

Ref.N°	Part N°	Description	Remarks	Serial N°	Qty.
1	6597316	CYLINDER	W/Ref. TILT CYLINDER(2) - TILT CYLINDER(17)		2
2	6597833	CASE			1
3	6804592	NUT			1
4	54K-30218	O-RING			1
5	947088	SEAL			1
6	6800572	PISTON			1
7	54K-40224	O-RING			1
8	80K-232	BACKUP RING			1
9	54K-40300	O-RING			1
10	6800872	HEAD			1
11	6667326	SEAL	rod		1
12	6665086	SEAL	wiper		1
13	6597834	ROD			1
14	6539341	BUSHING			1
15	6809198	PLUG	W/Ref. LIFT CYLINDER(15) - tapered boss face - Was 90KV-5 [B]		2
16	95K-6	O-RING	tapered boss face		2
17	6631067	SEAL			4
18	6804604	SEAL KIT	W/Ref. TILT CYLINDER(3) - TILT CYLINDER(5), TILT CYLINDER(7) - TILT CYLINDER(9), TILT CYLINDER(11) & TILT CYLINDER(12)		1

DealerNation Quality Equipment Manuals - dealernation@aol.com

HYDRAULIC CONTROL VALVE
(W/ BICS Control Valve) (Spool Lock)

NOTE: Spools are available for service. The boot end of the lift and tilt spool is stamped W/# 1, 2 , 3 or painted red, green or black respectively. Reference S/L Dated 20 Feb. 1995.

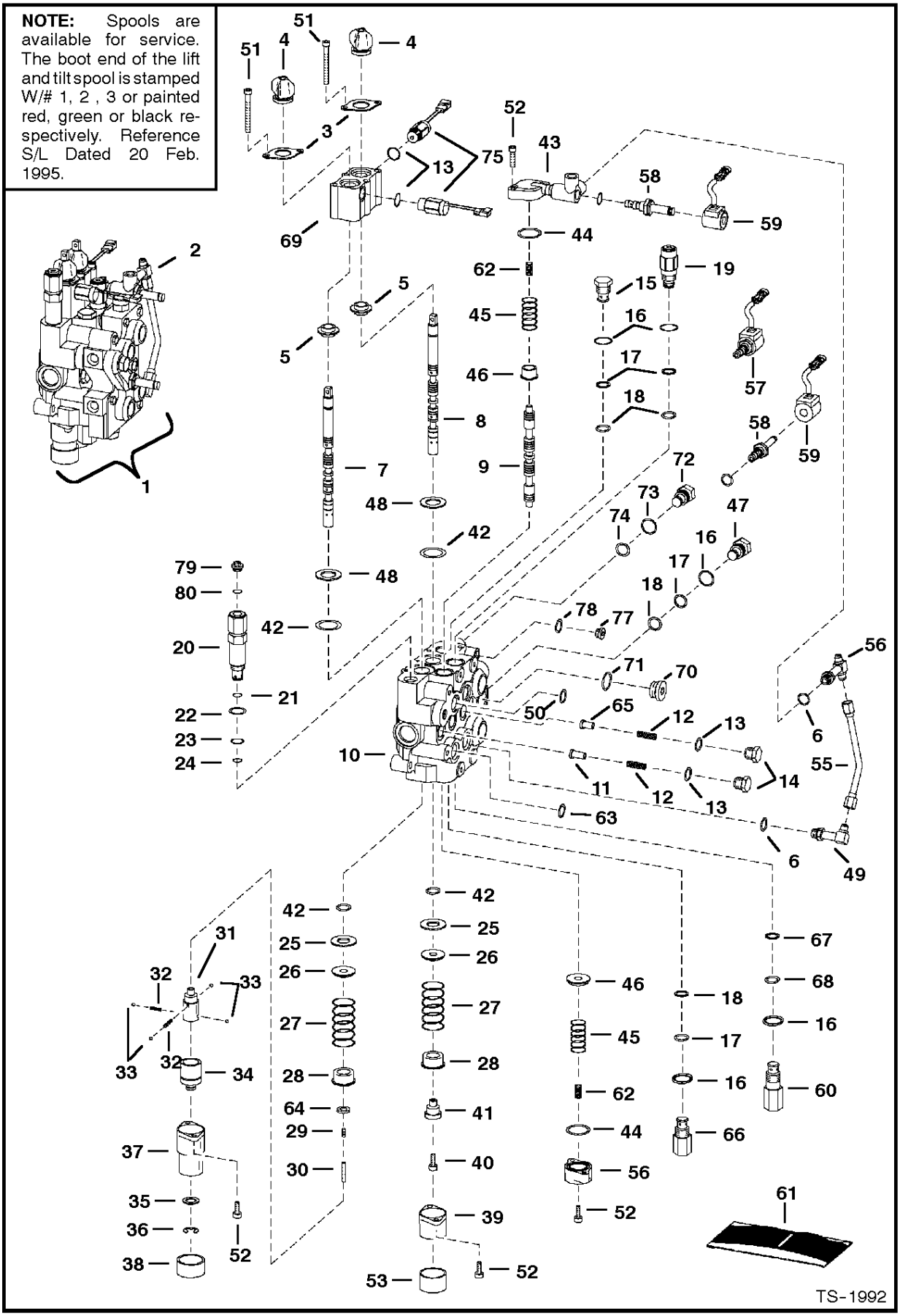

DealerNation Quality Equipment Manuals - dealernation@aol.com

HYDRAULIC CONTROL VALVE

Ref.N°	Part N°	Description	Remarks	Serial N°	Qty.
1	6806730	VALVE	W/Fittings - Ref. HYDRAULIC CONTROL VALVE(2) - HYDRAULIC CONTROL VALVE(56)		1
2	6628571	VALVE	Bics Control - See Page BICS VALVE(1)		1
3	6589564	RETAINER			2
4	6587763	BOOT			2
5	6805102	BUSHING			2
6	79K-6	O-RING	flat boss face		x
6	99K-6	O-RING	tapered boss face		x
7	6675736	SPOOL	lift - # 1 - SEE NOTE		1
7	6675737	SPOOL	lift - # 2 - SEE NOTE		1
8	6675738	SPOOL	tilt - # 1 - SEE NOTE		1
8	6675739	SPOOL	tilt - # 2 - SEE NOTE		1
9	6588074	SPOOL	auxiliary - SEE NOTE		3
10	NSS	BODY			1
11	6592115	SEAT	load check		2
12	6592117	SPRING			3
13	79K-8	O-RING			3
14	6592116	NUT	load check		3
15	6667549	VALVE	anti-cavity check -W/Ref. HYDRAULIC CONTROL VALVE(16)-HYDRAULIC CONTROL VALVE(18)		1
16	79K-10	O-RING			2
17	80K-14	WASHER	back-up		5
18	58K-14	O-RING	back-up washer required		5
18	6677106	O-RING	back-up washer not required		5
19	6673184	VALVE	port relief - W/Ref. HYDRAULIC CONTROL VALVE(16)-HYDRAULIC CONTROL VALVE(18)		1
20	6674146	VALVE	main relief - W/Ref. HYDRAULIC CONTROL VALVE(2 1)-HYDRAULIC CONTROL VALVE(24)		1
21	NSS	O-RING			1
22	NSS	WASHER	back-up		1
23	NSS	O-RING			1
24	NSS	RING	glide		1
25	6595663	BUSHING			2
26	6587523	WASHER			2
27	6587580	SPRING			2
28	6592100	COLLAR			2
29	6596807	PLUG			1
30	6586918	SCREW			1
31	6587575	ADAPTER			1
32	6592107	SPRING			2
33	6592105	BALL			4
34	6531270	SLEEVE			1
35	6592098	WASHER			1
36	799119	RETAINER			1
37	6589226	BONNET	.625' flange		1
38	6660644	CAP			1
39	6587633	BONNET			1
40	30G-416	SCREW			1
41	6592109	ADAPTER			1
42	6665846	SEAL	lip		4
43	6805651	BLOCK	aux		1

DealerNation Quality Equipment Manuals - dealernation@aol.com

HYDRAULIC CONTROL VALVE

Ref.N°	Part N°	Description	Remarks	Serial N°	Qty.
44	58K-124	O-RING			2
45	6596332	SPRING			2
46	6595951	SLEEVE			2
47	6592720	PLUG	W/Ref. HYDRAULIC CONTROL VALVE(16)-HYDRAULIC CONTROL VALVE(18)		1
48	58K-127	O-RING			2
49	6805242	ELBOW	W/Ref. HYDRAULIC CONTROL VALVE(6)		1
50	55K-204	O-RING			1
51	29G-444	BOLT			4
52	29G-416	SCREW	1' long		8
53	6662848	CAP			2
54	6805696	TEE	W/Ref. HYDRAULIC CONTROL VALVE(6) - tapered boss face		2
54	97K-6	O-RING	flare end		3
55	6806496	TUBELINE			1
56	6588781	END CAP			1
57	6665084	VALVE	W/Ref. HYDRAULIC CONTROL VALVE(58) & HYDRAULIC CONTROL VALVE(59)		2
58	6676249	STEM	Was 6666616 [B]		2
58	6586459	SEAL KIT			x
59	6717706	COIL	pwm - 10 volt - w/nut		2
60	6671632	VALVE	+port relief & antiAcav.AW/Ref. HYDRAULIC CONTROL VALVE(16) - 2500 PSI - use in tilt cylinder base end port		1
60	6673904	SEAL KIT	W/Ref. HYDRAULIC CONTROL VALVE(16),, HYDRAULIC CONTROL VALVE(67), HYDRAULIC CONTROL VALVE(68),		1
61	6806941	SEAL KIT	two spool - Ref. HYDRAULIC CONTROL VALVE(4), HYDRAULIC CONTROL VALVE(42) & HYDRAULIC CONTROL VALVE(51)		x
61	6809448	SEAL KIT	complete - Ref. HYDRAULIC CONTROL VALVE(4), HYDRAULIC CONTROL VALVE(13), HYDRAULIC CONTROL VALVE(16)-HYDRAULIC CONTROL VALVE(18)		x
61	6661328	SEAL KIT	main relief - Ref. HYDRAULIC CONTROL VALVE(21)-HYDRAULIC CONTROL VALVE(24)		x
61	6809425	SEAL KIT	#Ref. HYDRAULIC CONTROL VALVE(13) & HYDRAULIC CONTROL VALVE(16)-HYDRAULIC CONTROL VALVE(18) - Was 6586461 [A]		x
62	6595131	SPRING	.72' O.D.		2
63	55K-212	O-RING			4
64	54K-20002	O-RING			1
65	6596569	SEAT			1
66	6671583	RELIEF VALVE			1
67	NSS	O-RING	Order Ref. HYDRAULIC CONTROL VALVE(60) - kit		1
68	NSS	O-RING	Order Ref. HYDRAULIC CONTROL VALVE(60) - kit		1
69	6805657	BLOCK	lock		1
70	90KV-8	PLUG	W/Ref. HYDRAULIC CONTROL VALVE(71)		1
71	95K-12	O-RING			x
72	6806561	PLUG	W/Ref. HYDRAULIC CONTROL VALVE(73) - HYDRAULIC CONTROL VALVE(74)		1
73	79K-7	O-RING			1
74	58K-12	O-RING			1
75	6677383	SOLENOID	W/Ref. HYDRAULIC CONTROL VALVE(13) - 5'(127mm) wire - Was 6674786 [A]		2

DealerNation Quality Equipment Manuals - dealernation@aol.com

HYDRAULIC CONTROL VALVE

Ref.N°	Part N°	Description	Remarks	Serial N°	Qty.
75	NAP	SOLENOID	W/Ref. HYDRAULIC CONTROL VALVE(13) - 3'(76,2mm) wire - Order 6677383 Solenoid		2
76	6588781	END CAP			1
77	90KV-5	PLUG			1
78	95K-6	O-RING			2
79	6658246	PLUG	W/Ref. HYDRAULIC CONTROL VALVE(80)		1
80	79K-6	O-RING			x

DealerNation Quality Equipment Manuals - dealernation@aol.com

HYDRAULIC CONTROL VALVE
(Advanced Hand Control System) (Spool Lock)

NOTE: Spools are available for service. The boot end of the lift and tilt spool is stamped W/# 1, 2 , 3 or painted red, green or black respectively. Reference S/L Dated 20 Feb. 1995.

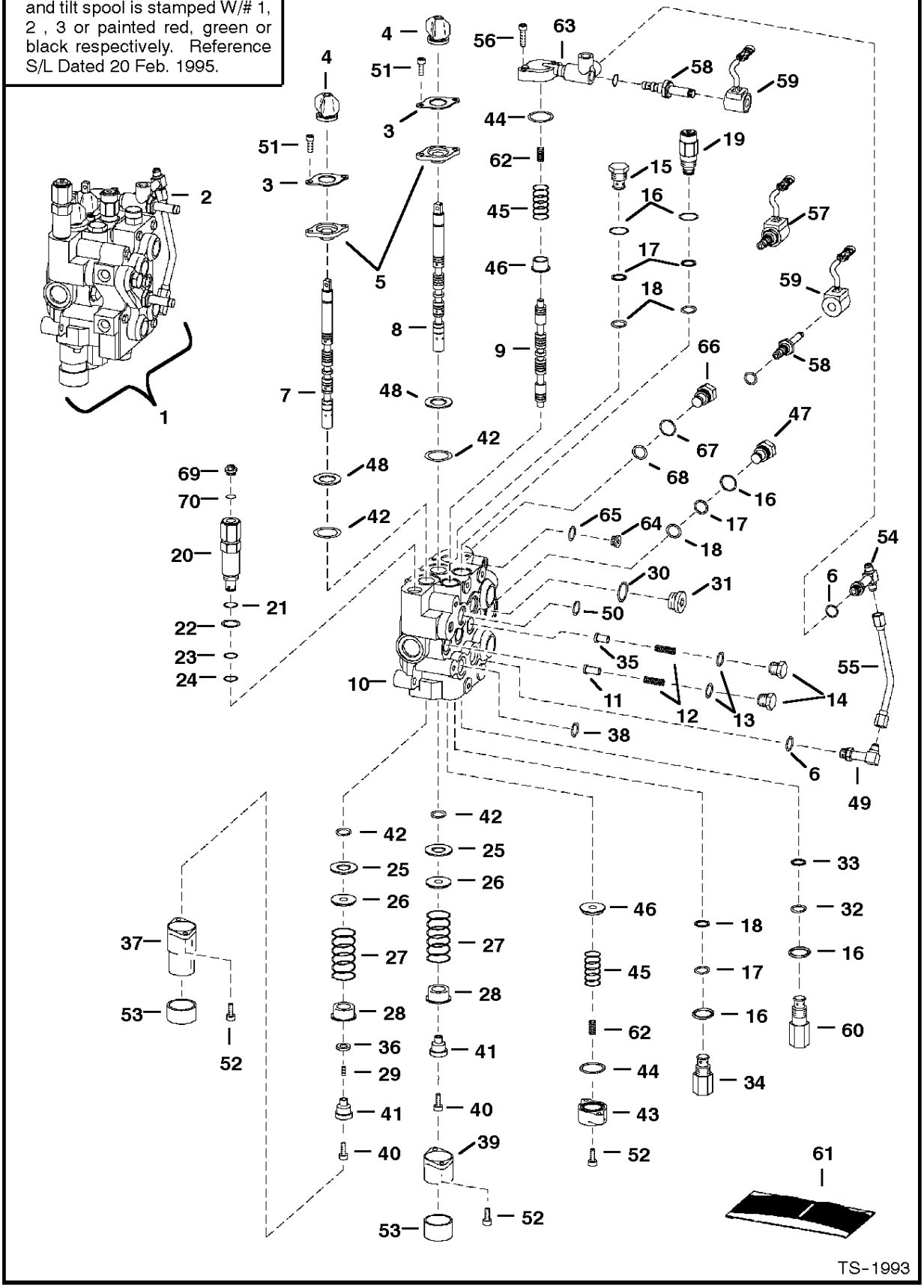

DealerNation Quality Equipment Manuals - dealernation@aol.com

HYDRAULIC CONTROL VALVE

Ref.N°	Part N°	Description	Remarks	Serial N°	Qty.
1	6805984	VALVE	W/Fittings - Ref. HYDRAULIC CONTROL VALVE(2) - HYDRAULIC CONTROL VALVE(56)		1
2	6628571	VALVE	BAHCS - BICS control - See Page BICS VALVE(1)		1
3	6589564	RETAINER			2
4	6587763	BOOT			2
5	6589565	RETAINER			2
6	99K-6	O-RING	tapered boss face		x
7	6674297	SPOOL	lift - # 1 or Red - SEE NOTE		1
7	6674298	SPOOL	lift - # 2 or Green - SEE NOTE		1
7	6674299	SPOOL	lift - # 3 or Black - SEE NOTE		1
8	6674300	SPOOL	tilt - # 1 or Red - SEE NOTE		1
8	6674301	SPOOL	tilt - # 2 or Green - SEE NOTE		1
8	6674302	SPOOL	tilt - # 3 or Black - SEE NOTE		1
9	6588074	SPOOL	auxiliary - SEE NOTE		3
10	NSS	BODY			1
11	6592115	SEAT	load check		2
12	6592117	SPRING			3
13	79K-8	O-RING			3
14	6592116	NUT	load check - W/Ref. HYDRAULIC CONTROL VALVE(13)		3
15	6667549	VALVE	anti-cavity check -W/Ref. HYDRAULIC CONTROL VALVE(16)-HYDRAULIC CONTROL VALVE(18)		1
16	79K-10	O-RING			2
17	80K-14	WASHER	back-up		5
18	58K-14	O-RING	back-up washer required		5
18	6677106	O-RING	back-up washer not required		5
19	6673184	VALVE	port relief - W/Ref. HYDRAULIC CONTROL VALVE(16)-HYDRAULIC CONTROL VALVE(18)		1
20	6674146	VALVE	main relief - W/Ref. HYDRAULIC CONTROL VALVE(21)-HYDRAULIC CONTROL VALVE(24)		1
21	NSS	O-RING			1
22	NSS	WASHER	back-up		1
23	NSS	O-RING			1
24	NSS	RING	glide		1
25	6595663	BUSHING			2
26	6587523	WASHER			2
27	6587580	SPRING			2
28	6592100	COLLAR			2
29	6801167	PLUG	Spool		1
30	95K-12	O-RING			1
31	90KV-8	PLUG	W/Ref. HYDRAULIC CONTROL VALVE(30) - socket head		1
32	NSS	O-RING	Order Ref. HYDRAULIC CONTROL VALVE(60) - kit		1
33	NSS	O-RING	Order Ref. HYDRAULIC CONTROL VALVE(60) - kit		1
34	6671583	RELIEF VALVE			1
35	6596569	SEAT			1
36	54K-20002	O-RING			1
37	6803092	BONNET	.625 flange		1
38	55K-212	O-RING			4
39	6587633	BONNET			1
40	30G-416	SCREW			2
41	6592109	ADAPTER			2

DealerNation Quality Equipment Manuals - dealernation@aol.com

HYDRAULIC CONTROL VALVE

Ref.N°	Part N°	Description	Remarks	Serial N°	Qty.
42	6665846	SEAL	lip		4
43	6588781	END CAP	.87' thick		2
44	58K-124	O-RING			2
45	6596332	SPRING			2
46	6595951	SLEEVE			2
47	6592720	PLUG	W/Ref. HYDRAULIC CONTROL VALVE(16)-HYDRAULIC CONTROL VALVE(18)		1
48	58K-127	O-RING			2
49	6805242	ELBOW	W/Ref. HYDRAULIC CONTROL VALVE(6)		1
50	55K-204	O-RING			1
51	29G-412	SCREW			4
52	29G-416	SCREW	1' long		8
53	6662848	CAP			2
54	6805696	TEE	W/Ref. HYDRAULIC CONTROL VALVE(6)		2
55	6806496	TUBELINE			1
56	29G-436	SCREW			2
57	6665084	VALVE	W/Ref. HYDRAULIC CONTROL VALVE(58) & HYDRAULIC CONTROL VALVE(59)		2
58	6676249	STEM	Was 6666616 [B]		2
58	6586459	SEAL KIT			x
59	6717706	COIL	pwm - 10 volt - w/nut		2
60	6671632	VALVE	+port relief & antiAcav.AW/Ref. HYDRAULIC CONTROL VALVE(16), HYDRAULIC CONTROL VALVE(32), HYDRAULIC CONTROL VALVE(33) - 2500 PSI		1
61	6803605	SEAL KIT	one spool - Ref. HYDRAULIC CONTROL VALVE(4), HYDRAULIC CONTROL VALVE(42) & HYDRAULIC CONTROL VALVE(51)		x
61	6809448	SEAL KIT	complete - Ref. HYDRAULIC CONTROL VALVE(4), HYDRAULIC CONTROL VALVE(13), HYDRAULIC CONTROL VALVE(16)-HYDRAULIC CONTROL VALVE(18)		x
61	6661328	SEAL KIT	main relief - Ref. HYDRAULIC CONTROL VALVE(21)-HYDRAULIC CONTROL VALVE(24)		x
61	6809425	SEAL KIT	#Ref. HYDRAULIC CONTROL VALVE(13) & HYDRAULIC CONTROL VALVE(16)-HYDRAULIC CONTROL VALVE(18) - Was 6586461 [A]		x
61	6586459	SEAL KIT	W/Ref. HYDRAULIC CONTROL VALVE(16),, HYDRAULIC CONTROL VALVE(32), HYDRAULIC CONTROL VALVE(33),		1
62	6595131	SPRING	.72' O.D.		2
63	6805651	BLOCK	aux		1
64	90KV-5	PLUG	W/Ref. HYDRAULIC CONTROL VALVE(65)		1
65	95K-6	O-RING			2
66	6806561	PLUG	W/Ref. HYDRAULIC CONTROL VALVE(67) - HYDRAULIC CONTROL VALVE(68)		1
67	79K-7	O-RING			1
68	58K-12	O-RING			1
69	6658246	PLUG	W/Ref. HYDRAULIC CONTROL VALVE(70)		1
70	79K-6	O-RING			x

DealerNation Quality Equipment Manuals - dealernation@aol.com

* HYDRAULIC CONTROL VALVE
(Advanced Control System) (Spool Lock)

NOTE: Spools are available for service. The boot end of the lift and tilt spool is stamped W/# 1, 2 , 3 or painted red, green or black respectively. Reference S/L Dated 20 Feb. 1995.

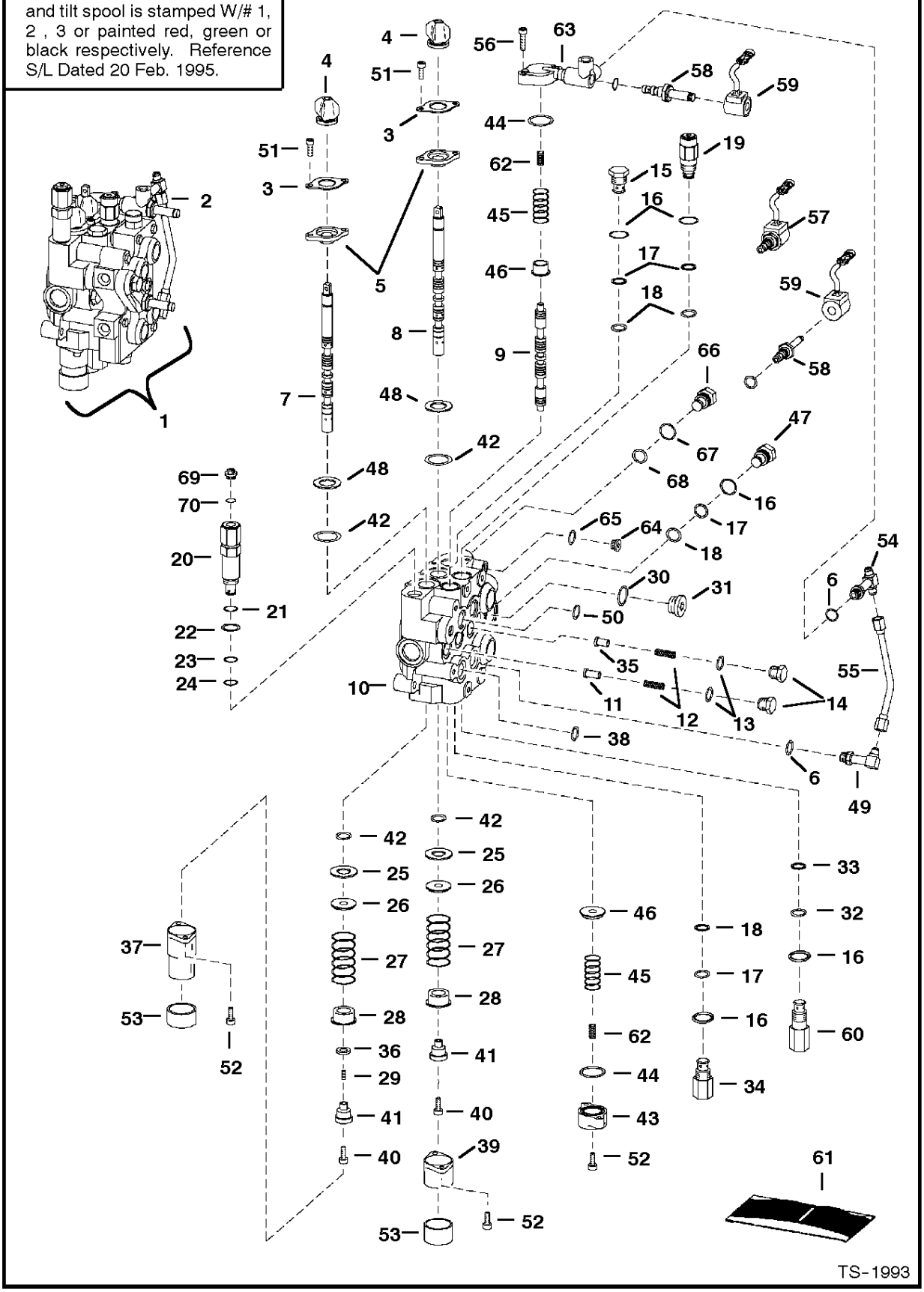

DealerNation Quality Equipment Manuals - dealernation@aol.com

*

Ref.N°	Part N°	Description	Remarks	Serial N°	Qty.
1	6809109	VALVE	W/Fittings - Ref. HYDRAULIC CONTROL VALVE(2) - HYDRAULIC CONTROL VALVE(56)		1
2	6628571	VALVE	BAHCS - BICS control - See Page BICS VALVE(1)		1
3	6589564	RETAINER			2
4	6587763	BOOT			2
5	6589565	RETAINER			2
6	99K-6	O-RING	tapered boss face		x
7	6677660	SPOOL	lift - # 1 or Red - SEE NOTE		1
7	6677661	SPOOL	lift - # 2 or Green - SEE NOTE		1
8	6677662	SPOOL	tilt - # 1 or Red - SEE NOTE		1
8	6677663	SPOOL	tilt - # 2 or Green - SEE NOTE		1
9	6588074	SPOOL	auxiliary - SEE NOTE		3
10	NSS	BODY			1
11	6592115	SEAT	load check		2
12	6592117	SPRING			3
13	79K-8	O-RING			3
14	6592116	NUT	load check - W/Ref. HYDRAULIC CONTROL VALVE(13)		3
15	6667549	VALVE	anti-cavity check -W/Ref. HYDRAULIC CONTROL VALVE(16)-HYDRAULIC CONTROL VALVE(18)		1
16	79K-10	O-RING			2
17	80K-14	WASHER	back-up		5
18	58K-14	O-RING	back-up washer required		5
18	6677106	O-RING	back-up washer not required		5
19	6673184	VALVE	port relief - W/Ref. HYDRAULIC CONTROL VALVE(16)-HYDRAULIC CONTROL VALVE(18)		1
20	6674146	VALVE	main relief - W/Ref. HYDRAULIC CONTROL VALVE(21)-HYDRAULIC CONTROL VALVE(24)		1
21	NSS	O-RING			1
22	NSS	WASHER	back-up		1
23	NSS	O-RING			1
24	NSS	RING	glide		1
25	6595663	BUSHING			2
26	6587523	WASHER			2
27	6587580	SPRING			2
28	6592100	COLLAR			2
29	6801167	PLUG	Spool		1
30	95K-12	O-RING			1
31	90KV-8	PLUG	W/Ref. HYDRAULIC CONTROL VALVE(30) - socket head		1
32	NSS	O-RING	Order Ref. HYDRAULIC CONTROL VALVE(60) - kit		1
33	NSS	O-RING	Order Ref. HYDRAULIC CONTROL VALVE(60) - kit		1
34	6671583	RELIEF VALVE			1
35	6596569	SEAT			1
36	54K-20002	O-RING			1
37	6803092	BONNET	.625 flange		1
38	55K-212	O-RING			4
39	6587633	BONNET			1
40	30G-416	SCREW			2
41	6592109	ADAPTER			2
42	6665846	SEAL	lip		4
43	6588781	END CAP	.87' thick		2

DealerNation Quality Equipment Manuals - dealernation@aol.com

*

Ref.N°	Part N°	Description	Remarks	Serial N°	Qty.
44	58K-124	O-RING			2
45	6596332	SPRING			2
46	6595951	SLEEVE			2
47	6592720	PLUG	W/Ref. HYDRAULIC CONTROL VALVE(16)-HYDRAULIC CONTROL VALVE(18)		1
48	58K-127	O-RING			2
49	6805242	ELBOW	W/Ref. HYDRAULIC CONTROL VALVE(6)		1
50	55K-204	O-RING			1
51	29G-412	SCREW			4
52	29G-416	SCREW	1' long		8
53	6662848	CAP			2
54	6805696	TEE	W/Ref. HYDRAULIC CONTROL VALVE(6)		2
55	6806496	TUBELINE			1
56	29G-436	SCREW			2
57	6665084	VALVE	W/Ref. HYDRAULIC CONTROL VALVE(58) & HYDRAULIC CONTROL VALVE(59)		2
58	6676249	STEM	Was 6666616 [B]		2
58	6586459	SEAL KIT			x
59	6717706	COIL	pwm - 10 volt - w/nut		2
60	6671632	VALVE	+port relief & antiAcav.AW/Ref. HYDRAULIC CONTROL VALVE(16), HYDRAULIC CONTROL VALVE(32), HYDRAULIC CONTROL VALVE(33) - 2500 PSI		1
61	6586459	SEAL KIT	W/Ref. HYDRAULIC CONTROL VALVE(16),, HYDRAULIC CONTROL VALVE(32), HYDRAULIC CONTROL VALVE(33),		1
61	6803605	SEAL KIT	one spool - Ref. HYDRAULIC CONTROL VALVE(4), HYDRAULIC CONTROL VALVE(42) & HYDRAULIC CONTROL VALVE(51)		x
61	6809448	SEAL KIT	complete - Ref. HYDRAULIC CONTROL VALVE(4), HYDRAULIC CONTROL VALVE(13), HYDRAULIC CONTROL VALVE(16)-HYDRAULIC CONTROL VALVE(18)		x
61	6661328	SEAL KIT	main relief - Ref. HYDRAULIC CONTROL VALVE(21)-HYDRAULIC CONTROL VALVE(24)		x
61	6809425	SEAL KIT	#Ref. HYDRAULIC CONTROL VALVE(13) & HYDRAULIC CONTROL VALVE(16)-HYDRAULIC CONTROL VALVE(18) - Was 6586461 [A]		x
62	6595131	SPRING	.72' O.D.		2
63	6805651	BLOCK	aux		1
64	6809198	PLUG	W/Ref. HYDRAULIC CONTROL VALVE(65)		1
65	95K-6	O-RING			2
66	6806561	PLUG	W/Ref. HYDRAULIC CONTROL VALVE(67) - HYDRAULIC CONTROL VALVE(68)		1
67	79K-7	O-RING			1
68	58K-12	O-RING			1
69	6658246	PLUG	W/Ref. HYDRAULIC CONTROL VALVE(70)		1
70	79K-6	O-RING			x

DealerNation Quality Equipment Manuals - dealernation@aol.com

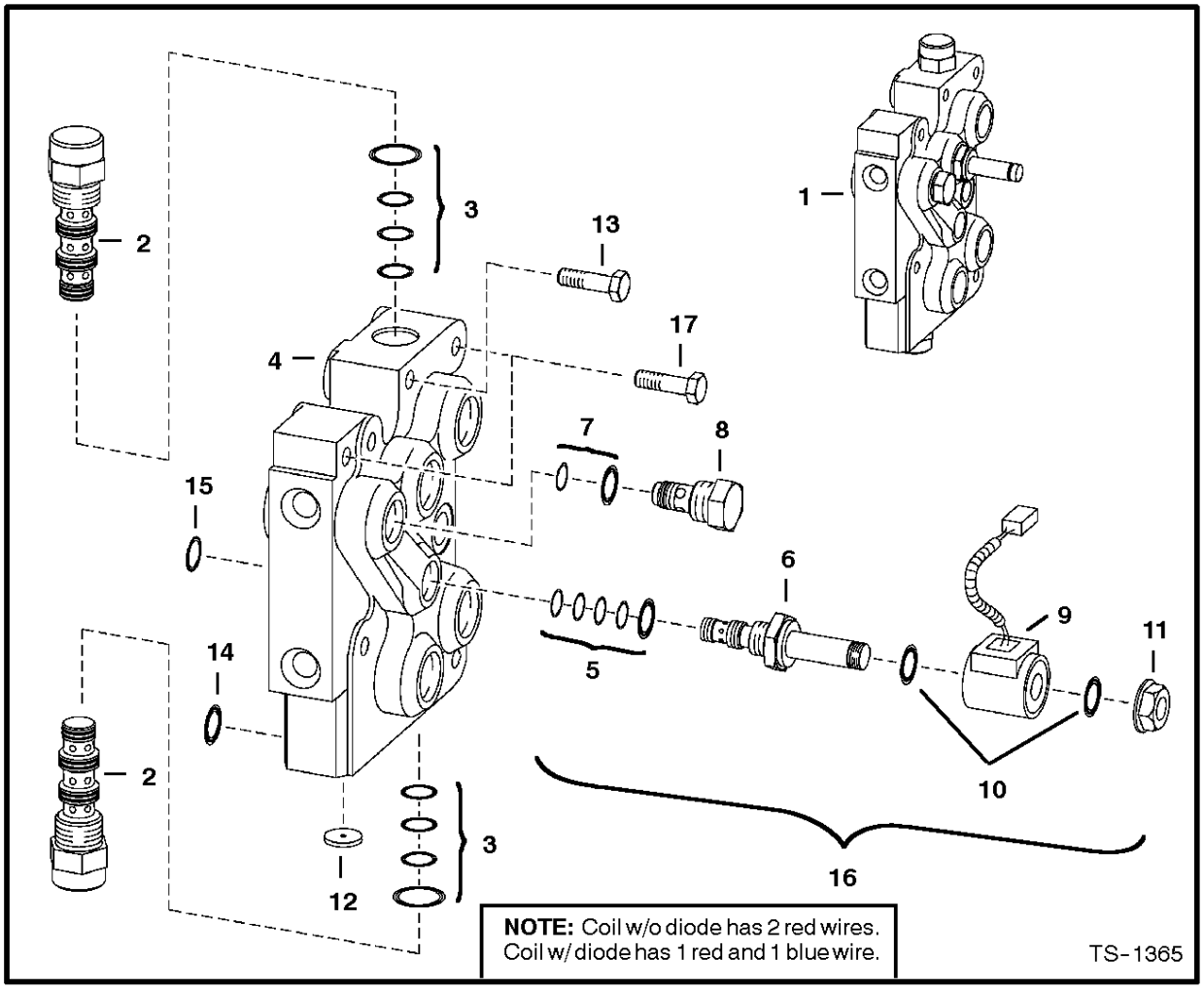

BICS VALVE

Ref. No.	Part Number	Description	Remarks	Serial Number	Qty.

DealerNation Quality Equipment Manuals - dealernation@aol.com

BICS VALVE

Ref.N°	Part N°	Description	Remarks	Serial N°	Qty.
1	6628571	VALVE	Ref. BICS VALVE(2) - BICS VALVE(8)		1
2	6668765	VALVE	pilot operated		2
3	6669734	SEAL KIT			x
4	NSS	BODY			1
5	6669732	SEAL KIT			x
6	6667687	STEM	+solenoid valve		1
7	6669733	SEAL KIT			x
8	6669057	CHECK VALVE	filter		1
9	6671025	COIL	#w/diodeAW/Ref. BICS VALVE(10) & BICS VALVE(11)SEE NOTE		1
10	54K-20028	O-RING	pwm		2
11	6668820	NUT	pwm		1
12	6668791	ORIFICE			1
13	43C-532	BOLT			4
14	55K-212	O-RING			4
15	55K-204	O-RING			1
16	6672471	SOLENOID	solenoidARef. BICS VALVE(6) & BICS VALVE(9)- BICS VALVE(11) - w/diode		1
17	43C-524	BOLT			2

DealerNation Quality Equipment Manuals - dealernation@aol.com

BUCKET POSITION VALVE

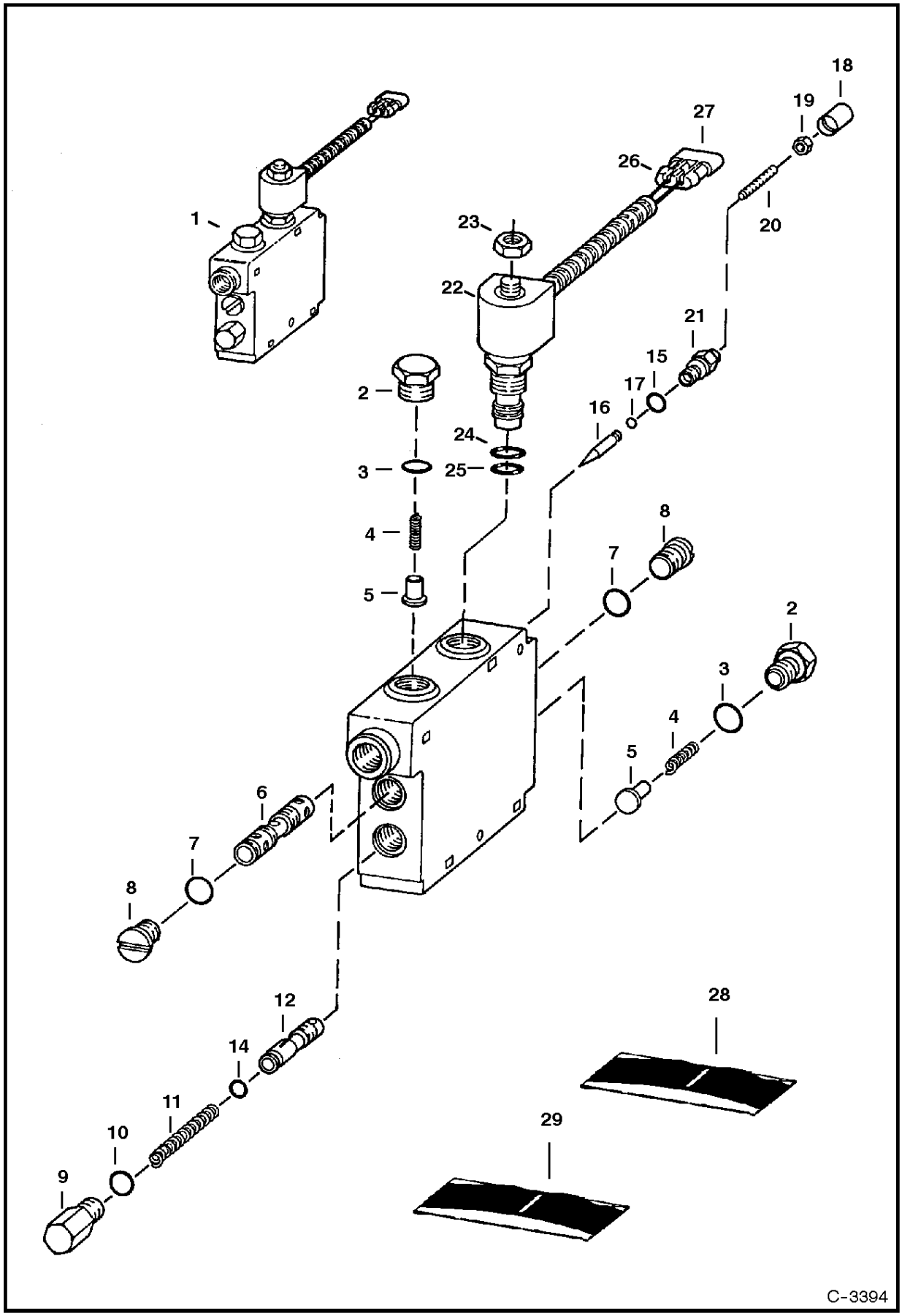

DealerNation Quality Equipment Manuals - dealernation@aol.com

BUCKET POSITION VALVE

Ref.N°	Part N°	Description	Remarks	Serial N°	Qty.
1	6673958	VALVE	W/Ref. BUCKET POSITION VALVE(2) - BUCKET POSITION VALVE(22)		1
2	6647784	PLUG	W/Ref. BUCKET POSITION VALVE(3)		1
3	NSS	O-RING			1
4	6647785	SPRING			1
5	6647783	LOAD CHECK			1
6	NSS	SPOOL			1
7	NSS	O-RING			2
8	6647780	PLUG	W/Ref. BUCKET POSITION VALVE(7)		2
9	6667176	PLUG	W/Ref. BUCKET POSITION VALVE(10)		1
10	NSS	O-RING			1
11	6648294	SPRING			1
12	NSS	SPOOL			1
13	NSS	BODY			1
14	NSS	RETAINING RING			1
15	NSS	OARING			1
16	6647777	PIN			1
17	NSS	OARING			1
18	NSS	COVER			1
19	6631561	NUT			1
20	6648293	SCREW			1
21	6647778	CAP			1
22	6672863	SOLENOID	Ref. BUCKET POSITION VALVE(23)-BUCKET POSITION VALVE(27)		1
23	6671527	NUT			1
24	NSS	O-RING	Large - Order Ref. BUCKET POSITION VALVE(28)		1
25	NSS	O-RING	Small - Order Ref. BUCKET POSITION VALVE(28)		1
26	6641180	LOCK	2-Pin		1
27	6641179	CONNECTOR	2-pin		1
28	6670634	SEAL KIT	Ref. BUCKET POSITION VALVE(23), BUCKET POSITION VALVE(24), BUCKET POSITION VALVE(25)		1
29	6667185	SEAL KIT	Ref. BUCKET POSITION VALVE(3), BUCKET POSITION VALVE(7), BUCKET POSITION VALVE(10), BUCKET POSITION VALVE(15), BUCKET POSITION V		1

DealerNation Quality Equipment Manuals - dealernation@aol.com

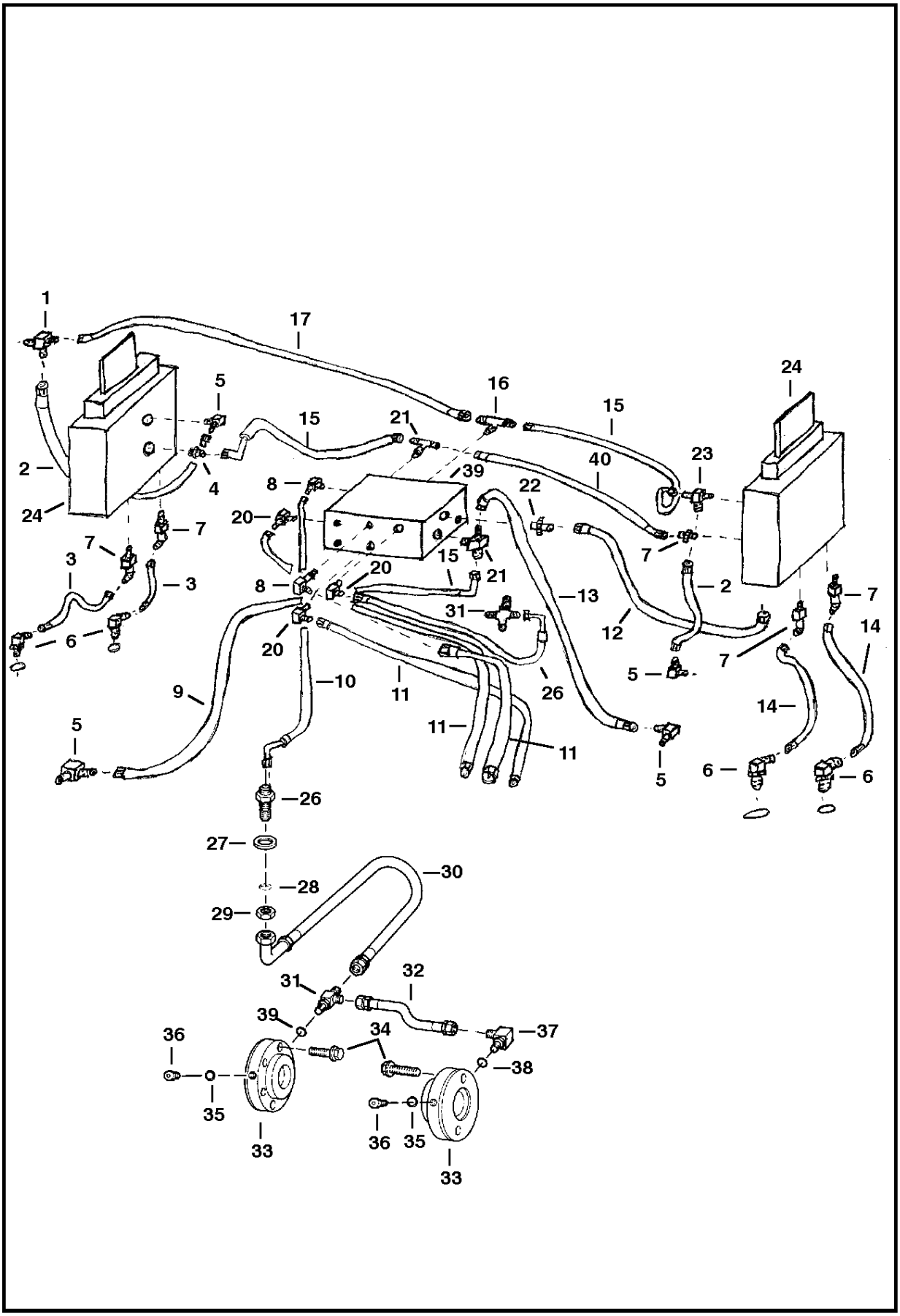

DealerNation Quality Equipment Manuals - dealernation@aol.com

HYDROSTATIC CIRCUITRY

Ref.N°	Part N°	Description	Remarks	Serial N°	Qty.
1	88K-5	TEE		5622 15244 & Bel	1
1	6578209	CROSS	W/Ref. HYDROSTATIC CIRCUITRY(45)	5622 15245 & Abv	1
1	99K-5	O-RING	flared end		x
2	6536789	HOSE			1
3	6806394	HOSE			2
4	15KV-5	ADAPTER	W/Ref. HYDROSTATIC CIRCUITRY(19)		1
4	97K-6	O-RING	flared end		x
5	17KV-5	ELBOW	W/Ref. HYDROSTATIC CIRCUITRY(19)		3
5	97K-6	O-RING	flared end		x
6	17KV-3	ELBOW	W/Ref. HYDROSTATIC CIRCUITRY(18)		4
6	97K-4	O-RING	flared end		x
7	18KV-5	ELBOW	W/Ref. HYDROSTATIC CIRCUITRY(19)		6
8	6558510	ELBOW			2
9	6718848	HOSE	Was 6800553 [B]		1
10	6536785	HOSE			1
11	6587294	HOSE			3
12	6806404	HOSE			1
13	6618193	HOSE			1
14	6577680	HOSE			2
15	6801712	HOSE			3
16	6805696	TEE			1
17	6535451	HOSE			1
18	99K-4	O-RING			x
19	99K-6	O-RING	flared end		x
20	85K-5	ELBOW			4
21	87K-5	FITTING			2
22	83K-5	FITTING			2
23	21KV-5	TEE	W/Ref. HYDROSTATIC CIRCUITRY(19)		1
23	97K-6	O-RING	flared end		x
24	6675147	CONTROLLER			2
25	6671613	COUPLER	diagnostic		4
26	45KV-5	ADAPTER			1
26	97K-6	O-RING	flared end		1
27	6804342	WASHER			1
28	75K-6	O-RING	flat boss face		x
29	86F-5	NUT			1
30	6704212	HOSE			1
31	21KV-3	TEE	W/Ref. HYDROSTATIC CIRCUITRY(18)		1
31	97K-4	O-RING			x
32	6530862	HOSE			1
33		BRAKE	See Page DISC BRAKE(1)		2
34	17C-860	BOLT			4
35	95K-4	O-RING			2
36	90KV-3	PLUG			1
37	17KV-3	ELBOW			1
37	97K-4	O-RING	flared end		x
38	6804407	ELBOW			2
39	6674677	VALVE	manifold - See Pg VALVE ASSEMBLY(2)		1
40	6806408	HOSE			1
41	6807292	BRACKET	decal		1

DealerNation Quality Equipment Manuals - dealernation@aol.com

HYDROSTATIC CIRCUITRY

Ref.N°	Part N°	Description	Remarks	Serial N°	Qty.
41	6803932	DECAL	warning - 2 speed		1
42	30H-35	CLIP			1
43	31H-38	CLAMP			5
44	31H-42	CLAMP			2
45	79K-6	O-RING			x

DealerNation Quality Equipment Manuals - dealernation@aol.com

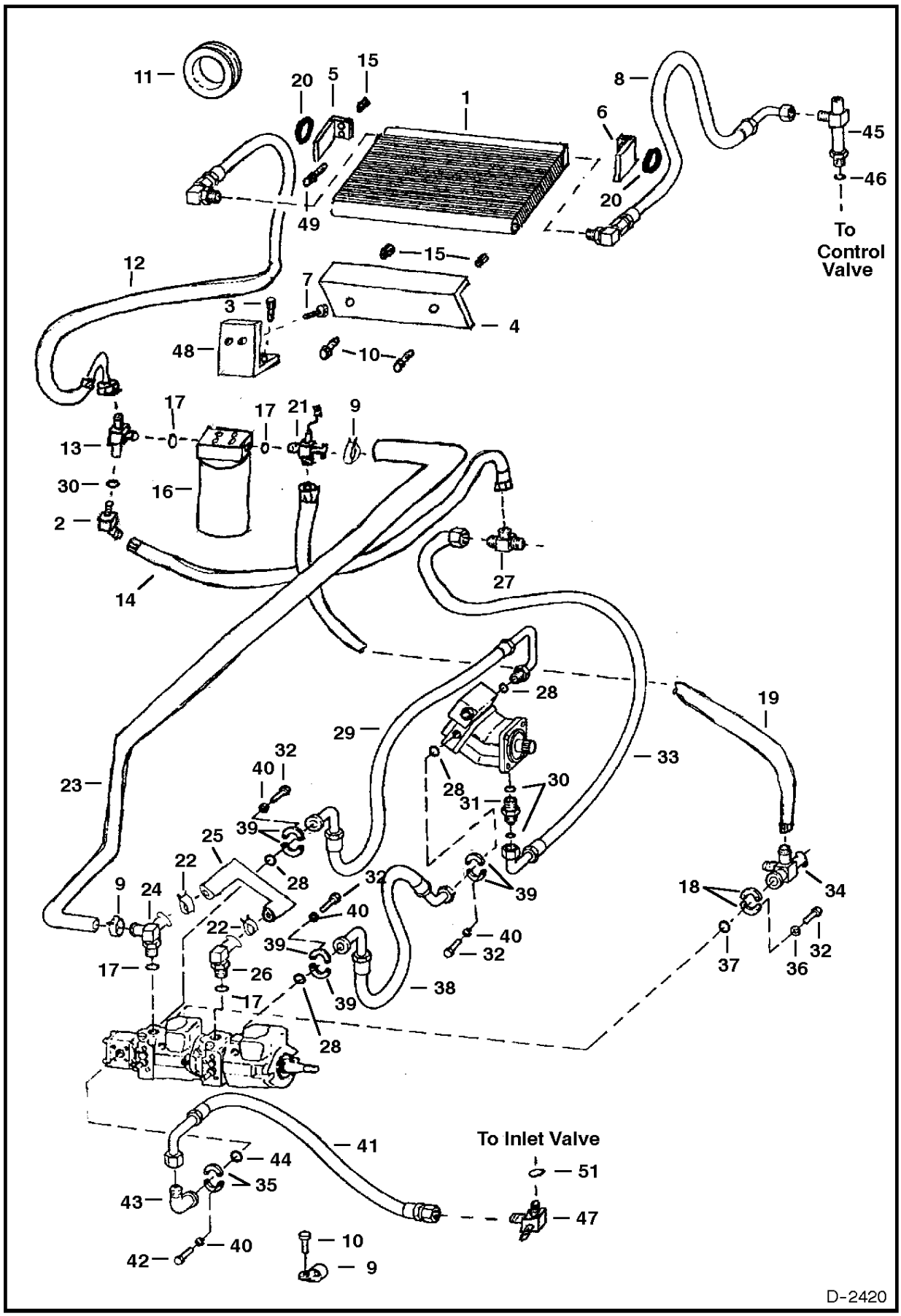

DealerNation Quality Equipment Manuals - dealernation@aol.com

HYDROSTATIC CIRCUITRY

Ref.N°	Part N°	Description	Remarks	Serial N°	Qty.
1	6674669	OIL COOLER			1
2	18KV-7	ELBOW	W/Ref. HYDROSTATIC CIRCUITRY(30)		1
3	35C-612	BOLT			7
4	6805773	BRACKET			1
5	6805775	BRACKET	LH	& Bel	1
5	6806882	BRACKET	LH	& Abv	1
6	6806883	BRACKET	RH	& Abv	1
6	6805776	BRACKET	RH	& Bel	1
7	84G-3716	BOLT			2
8	6806395	HOSE	W/Ref. HYDROSTATIC CIRCUITRY(52)		1
9	5HM-40	CLAMP			3
10	37C-616	BOLT			2
11	6807283	GROMMET			2
12	6806396	HOSE	W/Ref. HYDROSTATIC CIRCUITRY(52)		1
12	6808285	HOSE	W/Ref. HYDROSTATIC CIRCUITRY(52)	& Abv	1
13	6806287	TEE	W/Ref. HYDROSTATIC CIRCUITRY(17)		1
14	6806399	HOSE			1
15	57D-6	NUT			6
16	6672584	FILTER ASSY	See Page HYDROSTATIC OIL FILTER(1)		1
16	6668819	FILTER			1
17	75K-16	O-RING			x
18	19J-20	CLAMP			2
19	6807218	HOSE			1
20	6806443	GROMMET			2
21	6806288	TEE	W/Ref. HYDROSTATIC CIRCUITRY(17)		1
22	5HM-35	CLAMP			2
23	6806383	HOSE			1
24	6806285	ELBOW	W/Ref. HYDROSTATIC CIRCUITRY(17)		1
25	6806735	HOSE			1
26	6806286	ELBOW	W/Ref. HYDROSTATIC CIRCUITRY(17)		1
27	10KN-7	TEE			1
27	97K-10	O-RING	flared end		x
28	55K-214	O-RING			8
29	6671501	HOSE			1
30	99K-10	O-RING			x
31	15KV-7	ADAPTER	W/Ref. HYDROSTATIC CIRCUITRY(30)		2
31	97K-10	O-RING	flared end		x
32	17C-624	BOLT			20
33	6806399	HOSE			1
34	6806284	CROSS			1
35	19J-16	FLANGE			2
36	4E-7	WASHER			4
37	55K-222	O-RING			1
38	6671500	HOSE			1
39	20J-12	CLAMP	split flange		16
40	4E-6	WASHER			32
41	6671493	HOSE			1
42	17C-620	BOLT			4
43	6803149	ADAPTER			1
44	55K-219	O-RING			1

DealerNation Quality Equipment Manuals - dealernation@aol.com

HYDROSTATIC CIRCUITRY

Ref.N°	Part N°	Description	Remarks	Serial N°	Qty.
45	6804339	TEE	W/Ref. HYDROSTATIC CIRCUITRY(46)		1
45	97K-12	O-RING	flared end		x
46	99K-12	O-RING			1
47	6801165	TEE	W/Ref. HYDROSTATIC CIRCUITRY(51)		1
48	6806006	MOUNT	filter		1
49	37C-612	BOLT			4
50	6E-6	WASHER			2
51	79K-10	O-RING			x
52	79K-12	O-RING			x

DealerNation Quality Equipment Manuals - dealernation@aol.com

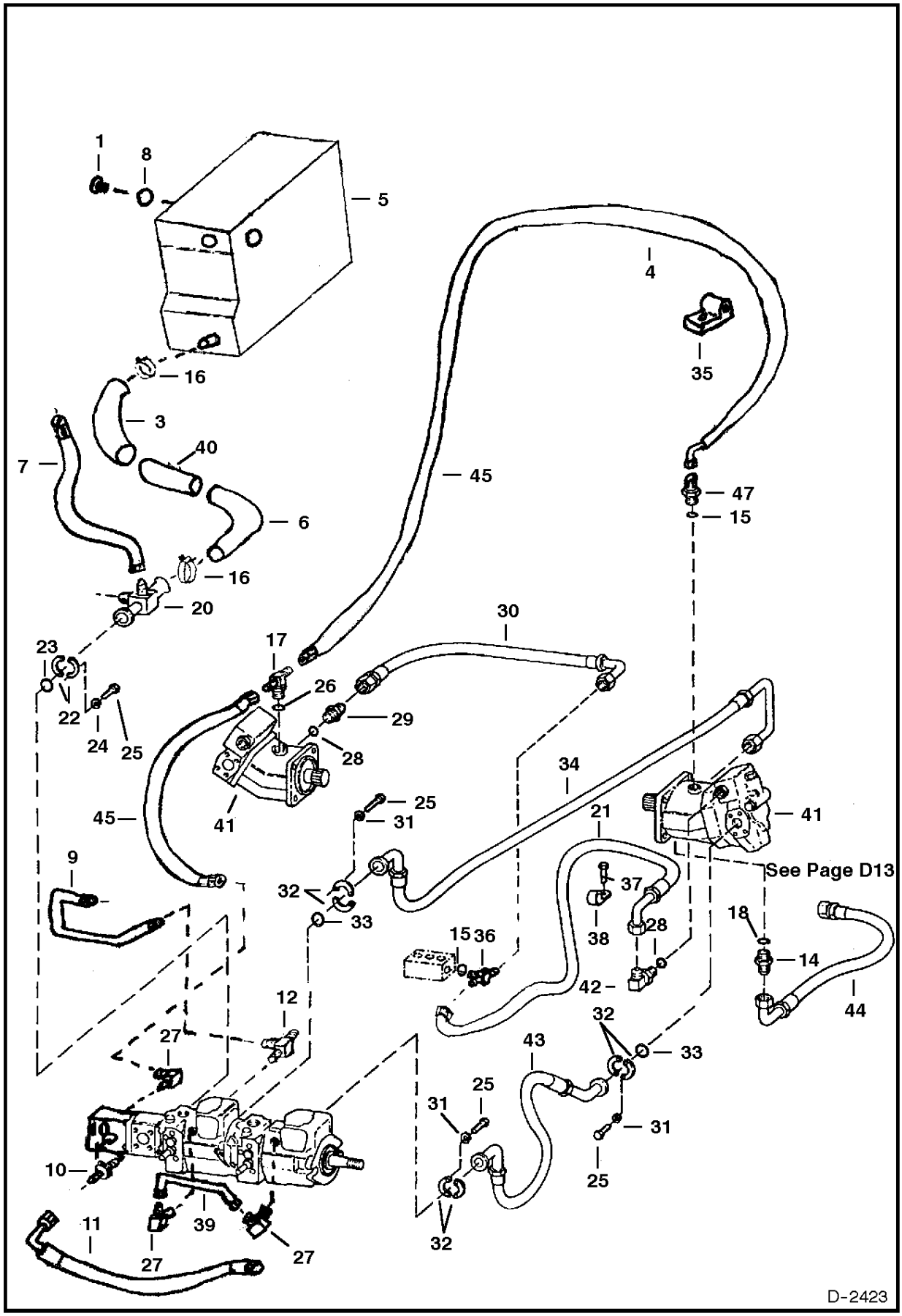

DealerNation Quality Equipment Manuals - dealernation@aol.com

HYDROSTATIC CIRCUITRY

Ref.N°	Part N°	Description	Remarks	Serial N°	Qty.
1	6665915	SIGHT GAUGE	W/Ref. * CAB LIFT SPRING KIT(8)		1
2	6672281	CLAMP			2
3	NAP	HOSE	5' (127 mm) ling - Order Ref. HYDROSTATIC CIRCUI TRY(13)		1
4	6807219	HOSE			1
5	6805779	TANK	hyd	& Bel	1
5	6808899	TANK	hyd	& Abv	1
6	6807236	HOSE			1
7	6807218	HOSE			1
8	79K-12	O-RING			x
9	6802832	TUBELINE			1
10	83K-7	FITTING	W/Ref. HYDROSTATIC CIRCUITRY(46)		1
11	6806392	HOSE			1
12	6806290	TEE	W/Ref. HYDROSTATIC CIRCUITRY(18)		1
12	97K-10	O-RING	flared end		2
13	6802748	HOSE	bulk -Sold Per Foot		x
14	15KV-7	ADAPTER	W/Ref. HYDROSTATIC CIRCUITRY(18)		2
14	97K-10	O-RING	flared end		2
15	99K-12	O-RING			x
16	5HM-40	CLAMP			4
17	6806289	TEE	W/Ref. HYDROSTATIC CIRCUITRY(26)		2
17	97K-12	O-RING	flared end		2
18	99K-10	O-RING			x
19	6807245	CONNECTOR	W/Ref. HYDROSTATIC CIRCUITRY(15)		1
19	97K-10	O-RING	flared end		2
20	6806284	CROSS			1
20	97K-12	O-RING	flared end		2
21	6618193	HOSE			1
22	19J-20	CLAMP			2
23	55K-222	O-RING			1
24	4E-7	WASHER			4
25	17C-624	BOLT			6
26	99K-12	O-RING			x
27	17KV-7	ELBOW	W/Ref. HYDROSTATIC CIRCUITRY(18)		3
27	97K-10	O-RING	flared end		2
28	99K-6	O-RING	boss end		x
29	15KV-5	ADAPTER	W/Ref. HYDROSTATIC CIRCUITRY(28)		1
29	97K-6	O-RING	flared end		1
30	6718848	HOSE	was 6800553 [A]		2
31	4E-6	WASHER			12
32	20J-12	CLAMP	split flange		16
33	55K-214	O-RING			8
34	6671499	HOSE			1
35	30H-50	CLAMP			2
36	21KV-5	TEE	W/Ref. HYDROSTATIC CIRCUITRY(28)		3
36	97K-6	O-RING	flared end		1
37	35C-616	BOLT			5
38	30H-31	CLAMP			4
39	6802834	TUBELINE			1
40	6807238	TUBE			1

DealerNation Quality Equipment Manuals - dealernation@aol.com

HYDROSTATIC CIRCUITRY

Ref.N°	Part N°	Description	Remarks	Serial N°	Qty.
41	6670817	MOTOR	See Page HYDROSTATIC MOTOR(3)		1
42	17KV-5	ELBOW	W/Ref. HYDROSTATIC CIRCUITRY(28)		1
42	97K-6	O-RING	flared end		1
43	6671498	HOSE			1
44	6806399	HOSE			1
45	6806406	HOSE			1
46	75K-10	O-RING			x

DealerNation Quality Equipment Manuals - dealernation@aol.com

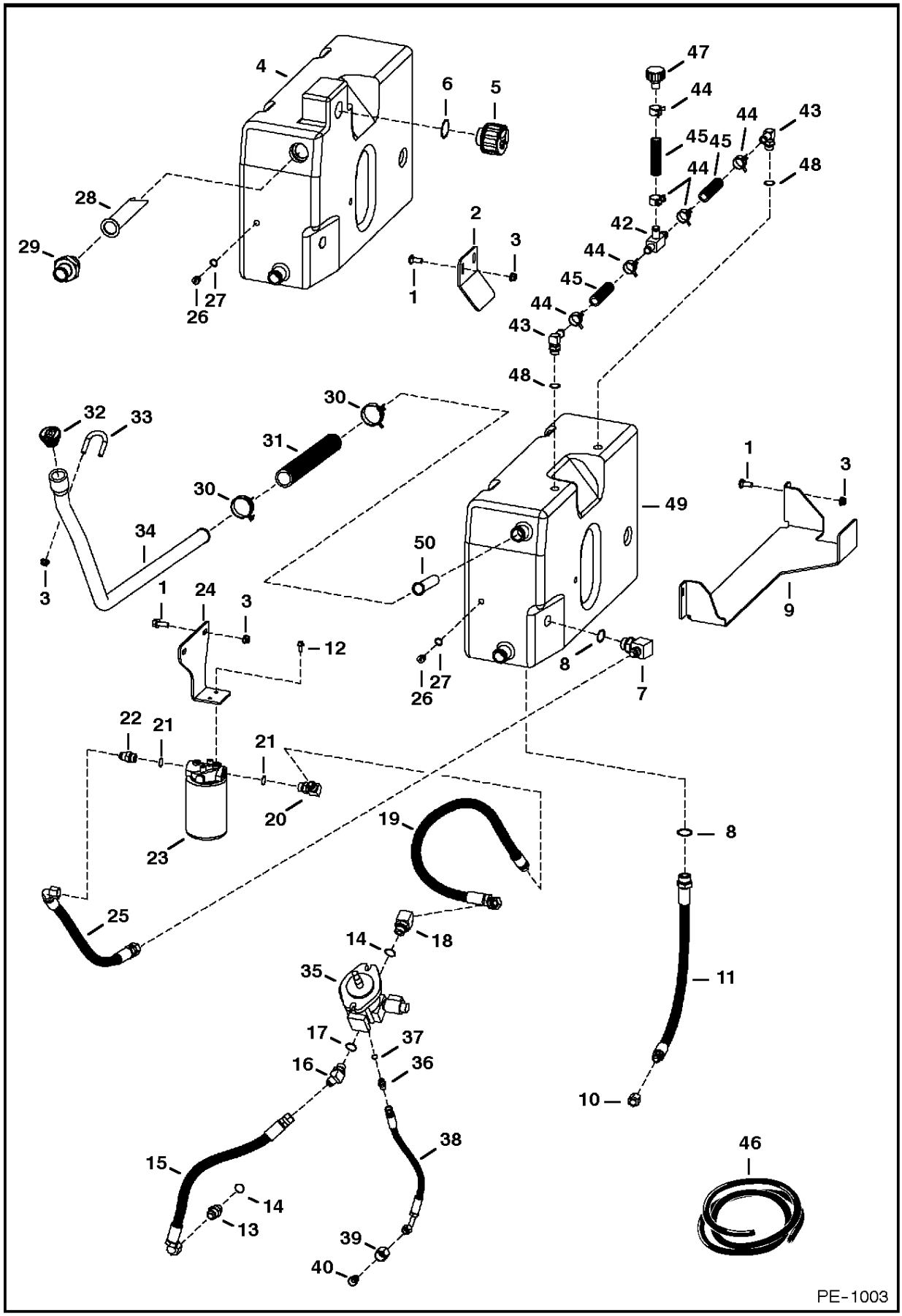

DealerNation Quality Equipment Manuals - dealernation@aol.com

HYDROSTATIC CIRCUITRY

Ref.N°	Part N°	Description	Remarks	Serial N°	Qty.
1	37C-616	BOLT			6
2	6805811	BRACKET			1
3	57D-6	NUT			8
4	6805779	TANK		& Bel	1
5	6674690	CAP	breather - W/Ref. HYDROSTATIC CIRCUITRY(6)	& Bel	1
6	79K-20	O-RING			x
7	1302104	ELBOW	W/Ref. HYDROSTATIC CIRCUITRY(8)		1
8	79K-12	O-RING			x
9	6806969	BRACKET	tank		1
10	36K-6	CAP			1
11	6806407	HOSE	W/Ref. HYDROSTATIC CIRCUITRY(8)		1
12	35C-410	BOLT			2
13	83K-7	FITTING	W/Ref. HYDROSTATIC CIRCUITRY(14)		1
14	75K-10	O-RING			x
15	6806392	HOSE			1
16	86K-6	ELBOW	W/Ref. HYDROSTATIC CIRCUITRY(17)		1
17	75K-8	O-RING			x
18	86K-7	ELBOW	W/Ref. HYDROSTATIC CIRCUITRY(14)		1
19	6807216	HOSE			1
20	17KV-6	ELBOW	W/Ref. HYDROSTATIC CIRCUITRY(21)		1
20	97K-8	O-RING			x
21	99K-8	O-RING			x
22	15KV-6	CONNECTOR	W/Ref. HYDROSTATIC CIRCUITRY(21)		1
22	97K-8	O-RING			x
23	6660727	FILTER ASSY			1
23	6660728	FILTER	25 micron		1
24	6807149	BRACKET			1
25	6807217	HOSE			1
26	47K-5	PLUG	W/Ref. HYDROSTATIC CIRCUITRY(27)		1
27	79K-6	O-RING			x
28	6569219	SCREEN		& Bel	1
29	6717815	ADAPTER	W/Ref. HYDROSTATIC CIRCUITRY(41)	& Bel	1
30	5HM-44	CLAMP			2
31	6806483	HOSE			1
32	6717827	CAP	oil fill		1
33	6806454	U-BOLT			1
34	6805998	TUBE	oil fill		1
35		HYD FAN	See Page HYDRAULIC FAN MOTOR(1)		1
36	83K-3	ADAPTER	W/Ref. HYDROSTATIC CIRCUITRY(37)		1
37	75K-4	O-RING			x
38	6806403	HOSE			1
39	80F-7	NUT			1
40	9KV-5	ADAPTER			1
40	97K-6	O-RING	flared end		x
41	79K-24	O-RING			x
42	6809553	TEE	beaded	& Abv	1
43	6808900	ELBOW	W/Ref. HYDROSTATIC CIRCUITRY(48)	& Abv	2
44	5HM-23	CLAMP		& Abv	6
45	NAP	HOSE	#3.37'(85,6mm)long - Order Ref. HYDROSTATIC CIRCUITRY(46)	& Abv	3

DealerNation Quality Equipment Manuals - dealernation@aol.com

HYDROSTATIC CIRCUITRY

Ref.N°	Part N°	Description	Remarks	Serial N°	Qty.
46	6578172	HOSE	bulk - Sold Per Foot		x
47	6648944	BREATHER CAP		& Abv	1
48	99K-8	O-RING			x
49	6808899	TANK		& Abv	1
50	6726258	SCREEN		& Abv	1

DealerNation Quality Equipment Manuals - dealernation@aol.com

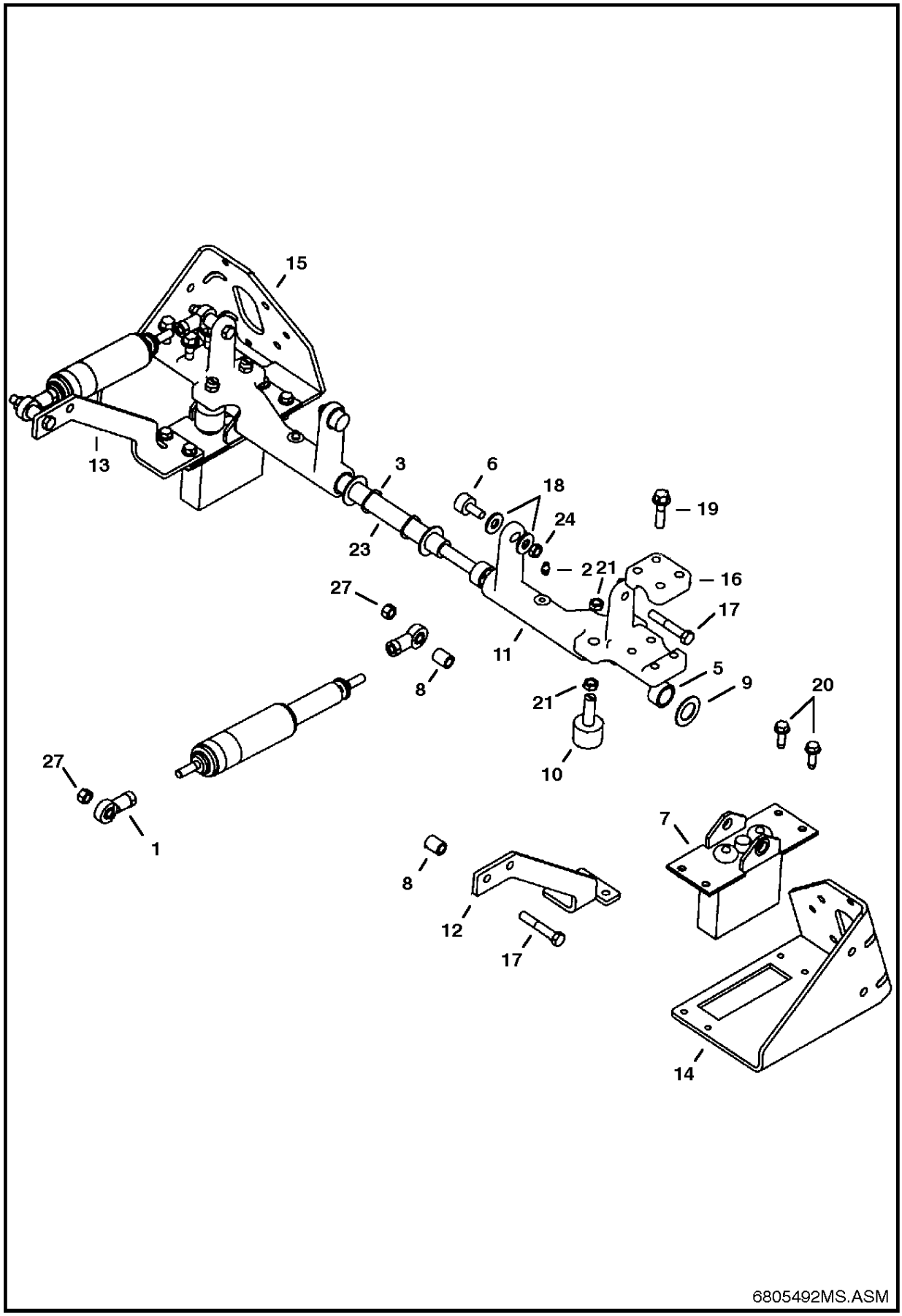

DealerNation Quality Equipment Manuals - dealernation@aol.com

HAND CONTROLS

Ref.N°	Part N°	Description	Remarks	Serial N°	Qty.
1	6512954	ROD END			4
2	6518200	GREASE ZERK			2
3	6599741	WASHER			2
4	6649551	DAMPENER	shock		2
5	6673710	BEARING	needle		4
6	6673789	BEARING	roller		2
7		CONTROLLER	See Page CONTROLLER(1)		2
8	6708314	BUSHING	Was 6705484 [A]		4
9	6716916	WASHER			4
10	6806295	STOP			4
11	6806296	BELLCRANK			2
12	6806301	BRACKET	RH support		1
13	6806302	BRACKET	LH support		1
14	6806305	BRACKET	RH steering		1
15	6806306	BRACKET	LH steering		1
16	6806309	CLAMP			1
17	17C-636	BOLT			4
18	25E-18	WASHER			4
19	35C-624	BOLT			10
20	84G-3116	BOLT			8
21	8D-8	NUT			2
22	95D-6	NUT			4
23	6806307	SHAFT	steering		1
24	8D-6	NUT			2
25	6702543	LEVER			2
26	6702621	GRIP			2

DealerNation Quality Equipment Manuals - dealernation@aol.com

CONTROLLER

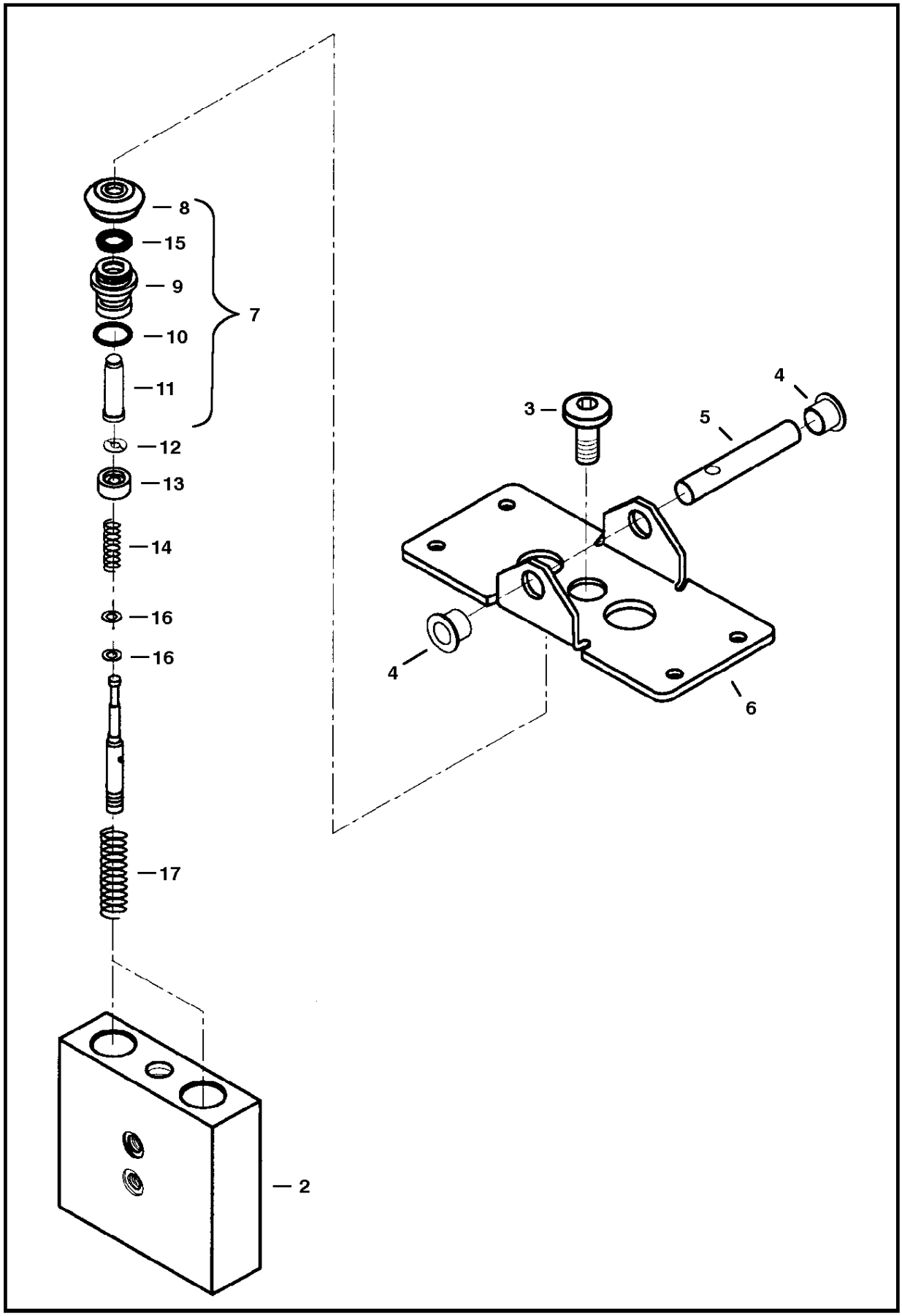

DealerNation Quality Equipment Manuals - dealernation@aol.com

CONTROLLER

Ref.N°	Part N°	Description	Remarks	Serial N°	Qty.
1	6675147	CONTROLLER	hyd		2
2	NSS	BLOCK	Order Ref. CONTROLLER(1)		1
3		SCREW	cap		1
4	6675568	BUSHING			2
5	6675569	PIN			1
6	NSS	PLATE			1
7	6675571	PLUNGER KIT	Ref. CONTROLLER(8) - CONTROLLER(11)		1
8	6675906	BOOT			2
9	NSS	GUIDE			2
10	6675572	O-RING			2
11	NSS	PLUNGER			2
12	6675573	DISC	locking		2
13	6675574	RETAINER			2
14	6675575	SPRING			2
15	6675926	SEAL	wiper		2
16	6675585	WASHER			4
17	6675578	SPRING			2
18	6676598	PLATE KIT	Ref. CONTROLLER(4) & CONTROLLER(6)		1

DealerNation Quality Equipment Manuals - dealernation@aol.com

VALVE ASSEMBLY

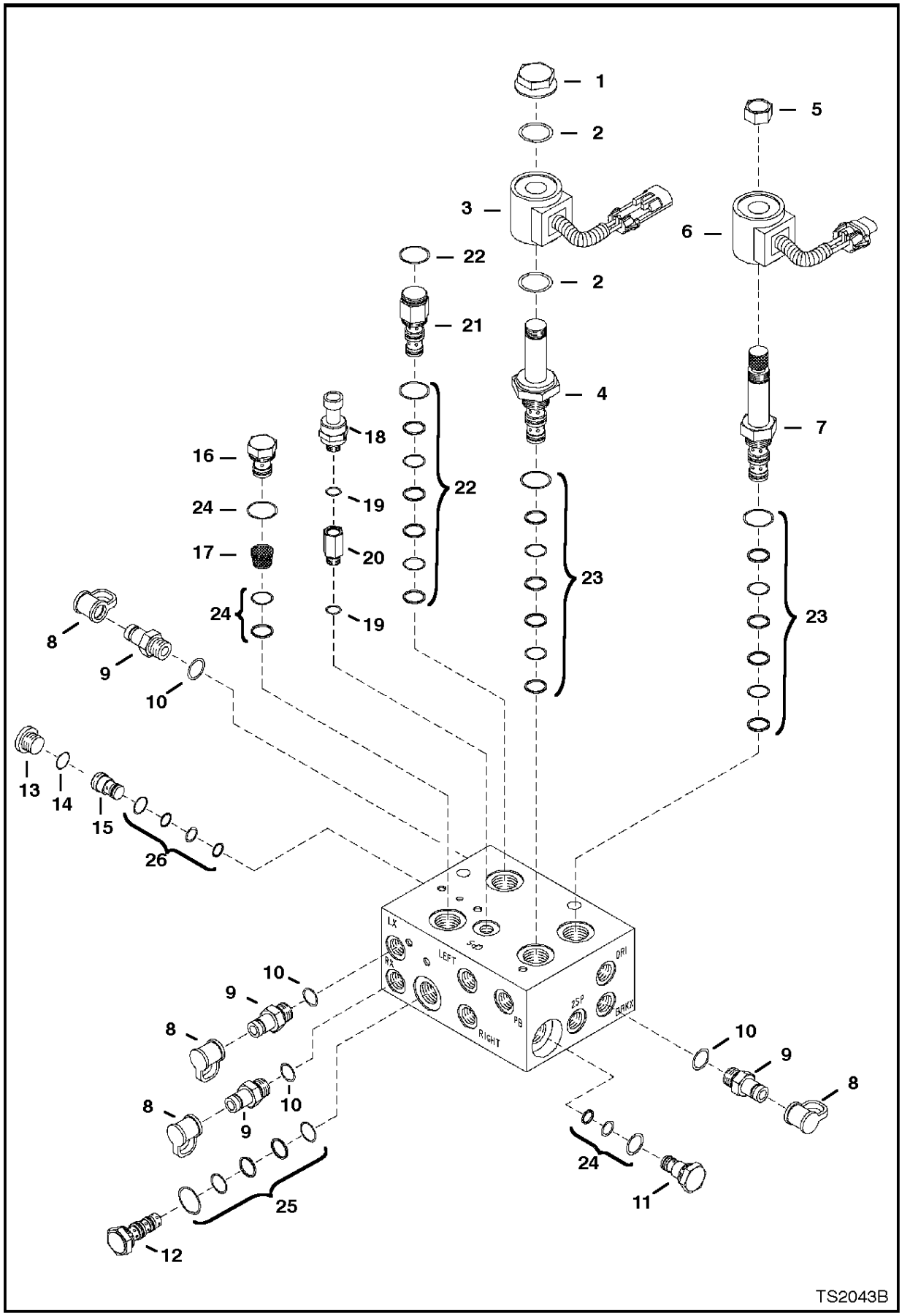

DealerNation Quality Equipment Manuals - dealernation@aol.com

VALVE ASSEMBLY

Ref.N°	Part N°	Description	Remarks	Serial N°	Qty.
1	6674677	VALVE	Ref. 2 - 21		1
2	54K-20028	O-RING			2
3	6671025	COIL			1
4	6673193	VALVE	W/Ref. HYDROSTATIC CIRCUITRY(23)		1
5	6675663	NUT			1
6	6675731	COIL			1
7	6673187	VALVE	W/Ref. HYDROSTATIC CIRCUITRY(23)		1
8	6630367	DUST CAP			4
9	6671613	COUPLER	diagnostic - W/Ref. HYDROSTATIC CIRCUITRY(10)		4
10	75K-6	O-RING			x
11	6675265	VALVE	check - W/Ref. HYDROSTATIC CIRCUITRY(24)		1
12	6675262	VALVE	shuttle - W/Ref. HYDROSTATIC CIRCUITRY(25)		1
13	6672762	PLUG	W/Ref. HYDROSTATIC CIRCUITRY(14)		1
14	75K-4	O-RING			x
15	6675260	VALVE	shuttle - W/Ref. HYDROSTATIC CIRCUITRY(26)		1
16	6675288	VALVE	W/Ref. HYDROSTATIC CIRCUITRY(17) & HYDROSTATIC CIRCUITRY(24)		1
17	6675927	SCREEN			1
18	6674316	SWITCH	hyd pressure - W/Ref. HYDROSTATIC CIRCUITRY(19)		1
19	79K-3	O-RING			x
20	6718948	ADAPTER	W/Ref. HYDROSTATIC CIRCUITRY(19)		1
20	6675278	FILTER			1
21	6675264	VALVE	directional - W/Ref. HYDROSTATIC CIRCUITRY(22)		1
22	6672760	SEAL KIT			1
23	6673188	SEAL KIT			2
24	6669087	SEAL KIT			2
25	6675263	SEAL KIT			1
26	6675261	SEAL KIT			1

DealerNation Quality Equipment Manuals - dealernation@aol.com

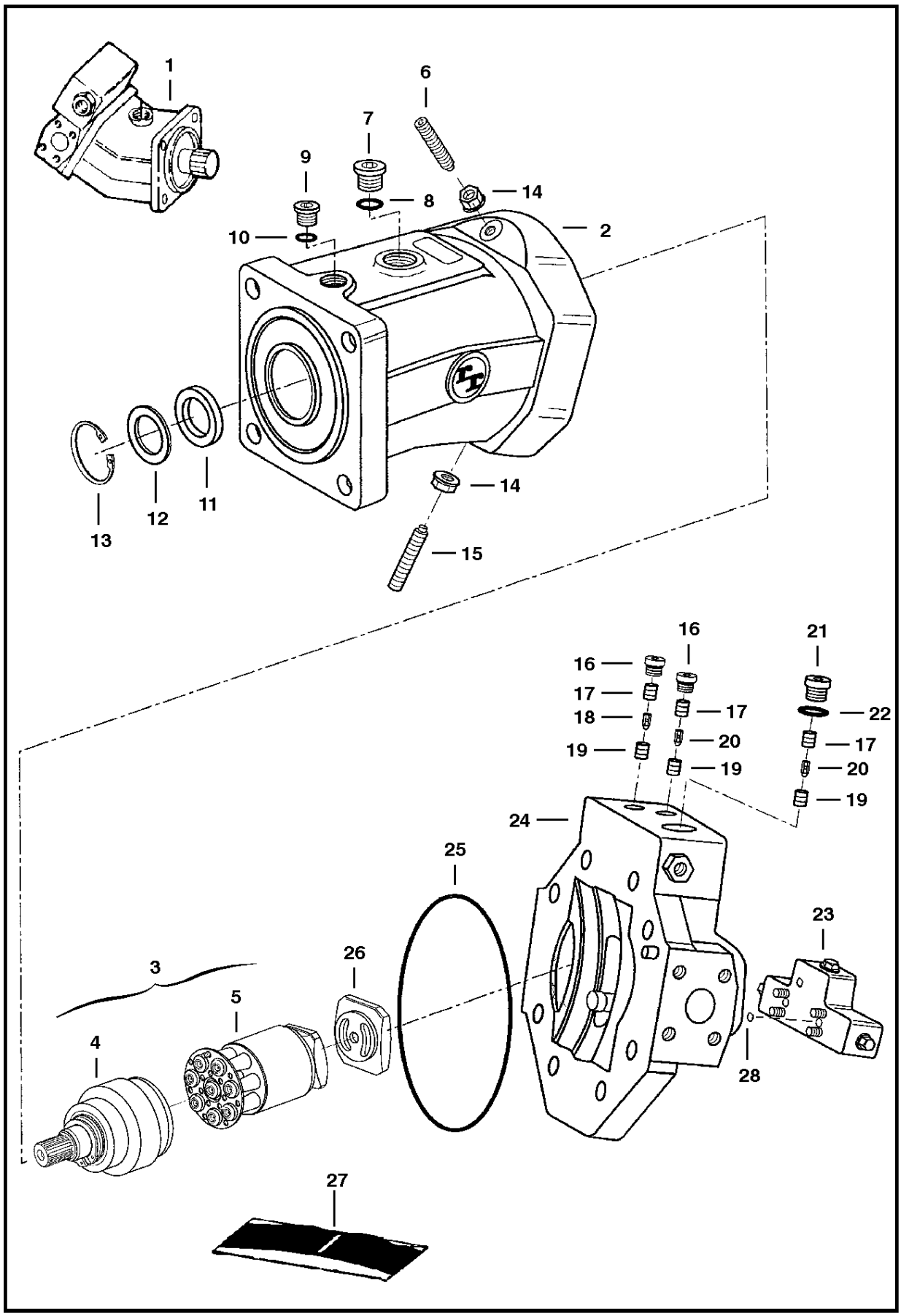

DealerNation Quality Equipment Manuals - dealernation@aol.com

HYDROSTATIC MOTOR

Ref.N°	Part N°	Description	Remarks	Serial N°	Qty.
1	6670817	MOTOR	W/Ref. HYDROSTATIC MOTOR(2) - HYDROSTATIC MOTOR(26)		1
2	6671842	HOUSING			1
3	6671830	BLOCK ASSY	rotary group		1
4	6671853	SHAFT			1
5	6671852	BLOCK	rotary group		1
6	6671838	SCREW			1
7	6671843	PLUG			1
8	6671844	O-RING	W/Ref. HYDROSTATIC MOTOR(7)		1
9	6671836	PLUG			1
10	6671837	O-RING	W/Ref. HYDROSTATIC MOTOR(9)		1
11	6671850	SEAL			1
12	6671851	SHIM			1
13	6671849	SNAP RING			1
14	6671839	NUT			2
15	6671840	SCREW			1
16	6671832	PLUG			2
17	6671833	SCREW	throttle		3
18	6671834	PIN	throttle		3
19	6671835	SCREW	throttle		3
20	6671841	SHUTTLE	check valve		2
21	6671845	PLUG			1
22	6671846	O-RING	W/Ref. HYDROSTATIC MOTOR(21)		1
23	6671848	VALVE	See Page FLUSHING VALVE(1)		1
24	6671882	PORT BLOCK	See Page REAR COVER ASSY(1)		1
25	6671847	O-RING			1
26	6671867	LENS CONTROL	See Page REAR COVER ASSY(16)		1
27	6672018	SEAL KIT	W/Ref. HYDROSTATIC MOTOR(8), HYDROSTATIC MOTOR(10), HYDROSTATIC MOTOR(16), HYDROSTATIC MOTOR(22) & HYDROSTATIC MOTOR(25) - Pag		1
28	6671883	O-RING			3

DealerNation Quality Equipment Manuals - dealernation@aol.com

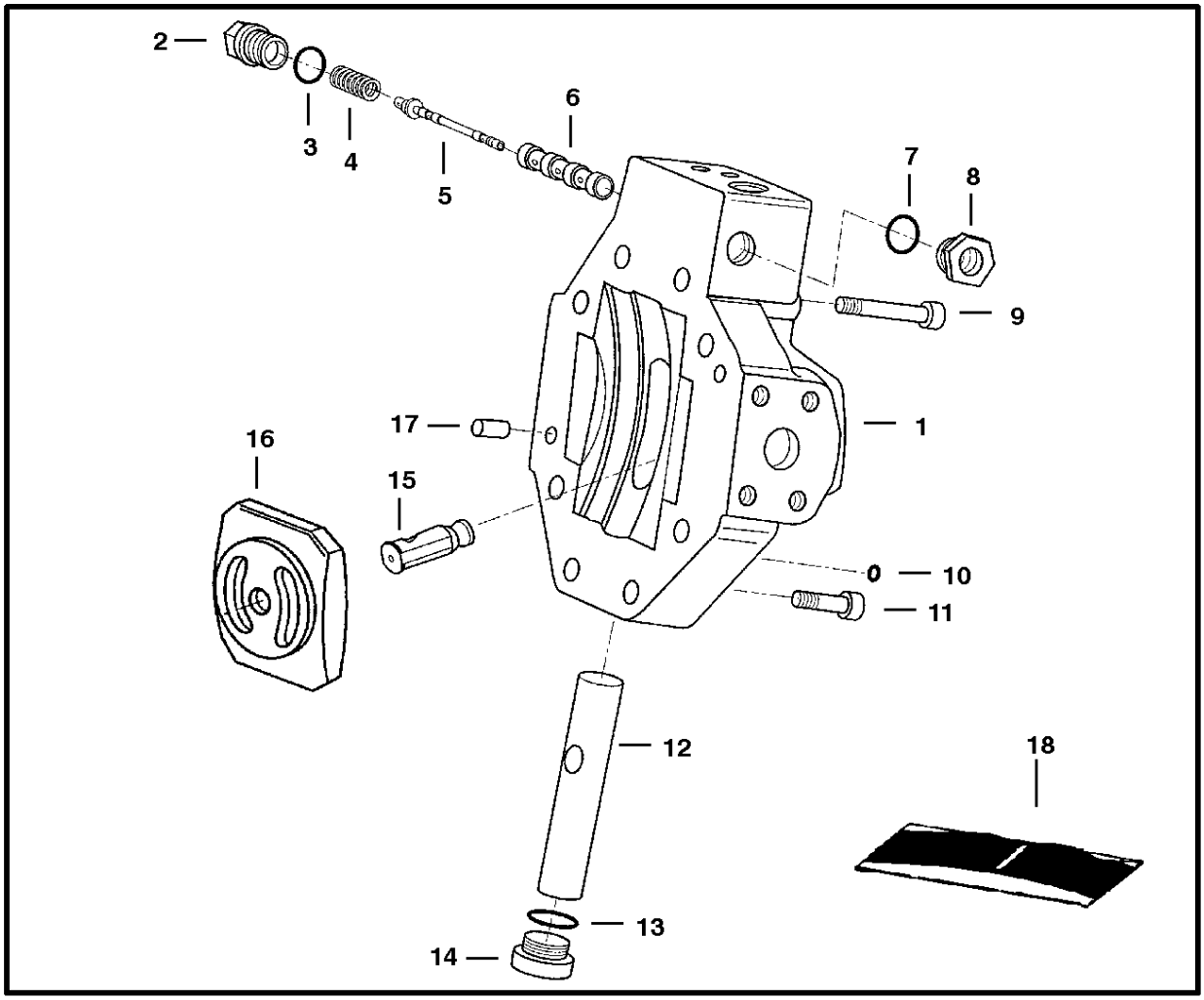

REAR COVER ASSY

Ref. No.	Part Number	Description	Remarks	Serial Number	Qty.

DealerNation Quality Equipment Manuals - dealernation@aol.com

REAR COVER ASSY

Ref.N°	Part N°	Description	Remarks	Serial N°	Qty.
1	6671882	PORT BLOCK	See Page HYDROSTATIC MOTOR(3)		1
2	6671868	PLUG			1
3	6671869	O-RING			1
4	6671870	SPRING			1
5	6671871	SPOOL			1
6	6671872	BUSHING	control		1
7	6671874	O-RING			1
8	6671873	CONNECTOR			1
9	6671875	SCREW			2
10	6671883	O-RING			3
11	6671876	SCREW			6
12	6671880	PISTON			1
13	6671879	O-RING			1
14	6671878	PLUG			1
15	6671877	PIN			1
16	6671867	LENS CONTROL			1
17	6671881	DOWEL PIN			2
18	6672018	SEAL KIT	See Page HYDROSTATIC MOTOR(3) Ref. HYDROSTATIC MOTOR(27)		1

DealerNation Quality Equipment Manuals - dealernation@aol.com

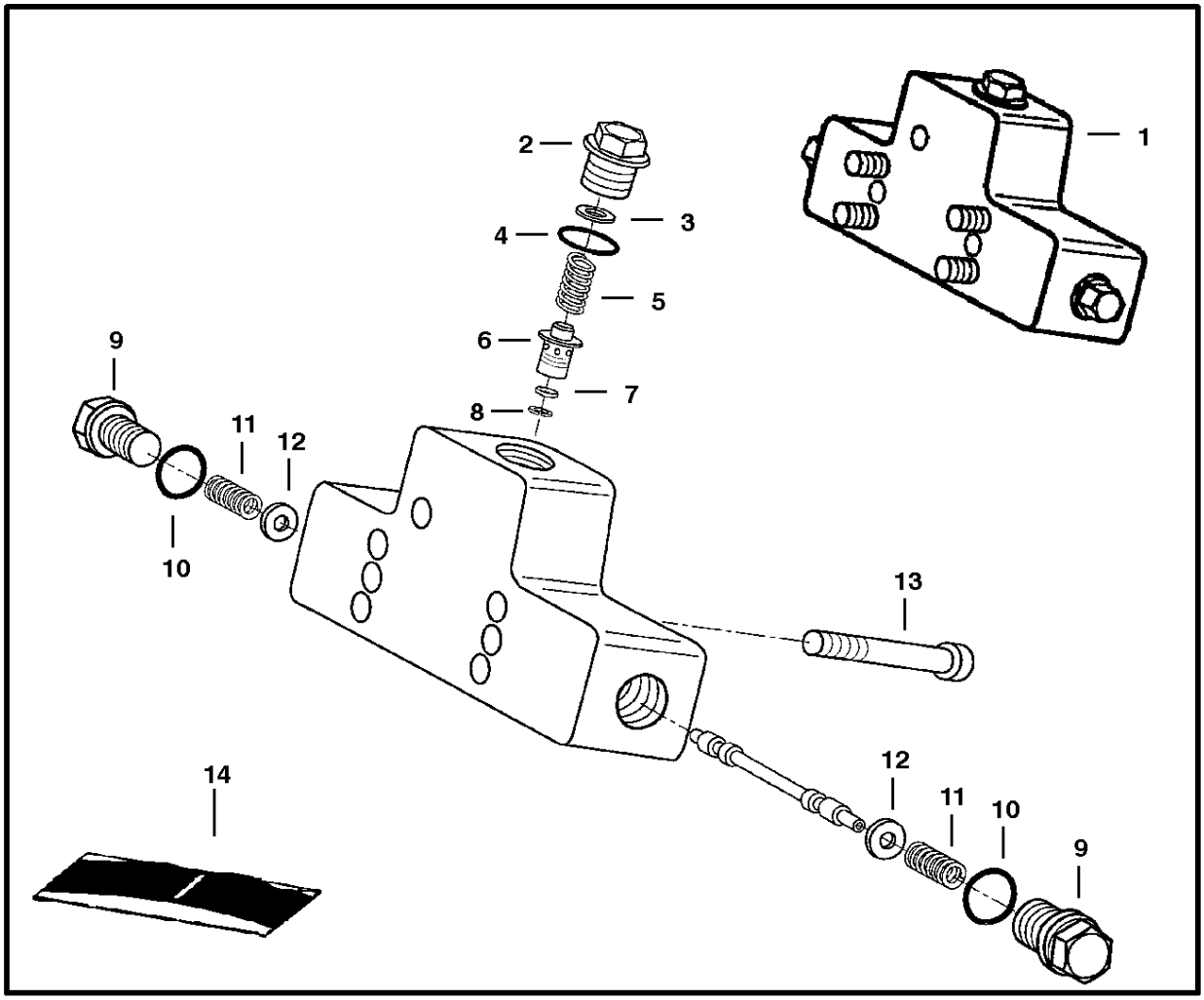

FLUSHING VALVE

Ref. No.	Part Number	Description	Remarks	Serial Number	Qty.

DealerNation Quality Equipment Manuals - dealernation@aol.com

FLUSHING VALVE

Ref.N°	Part N°	Description	Remarks	Serial N°	Qty.
1	6671848	VALVE	See Page HYDROSTATIC MOTOR(3), Ref. HYDROSTATIC MOTOR(23)		1
2	6671884	PLUG			1
3	6671885	SHIM			1
4	6671886	O-RING			1
5	6666366	SPRING			1
6	6671887	POPPET	relief valve		1
7	6671888	ORIFICE			1
8	6666369	SNAP RING			1
9	6671892	PLUG			2
10	6671869	O-RING			2
11	6671891	SPRING			2
12	6671890	WASHER			2
13	6671889	SCREW			4
14	6672018	SEAL KIT	See Page HYDROSTATIC MOTOR(3), Ref. HYDROSTATIC MOTOR(27)		1

DealerNation Quality Equipment Manuals - dealernation@aol.com

HYDROSTATIC PUMP
(Gear Pump End)

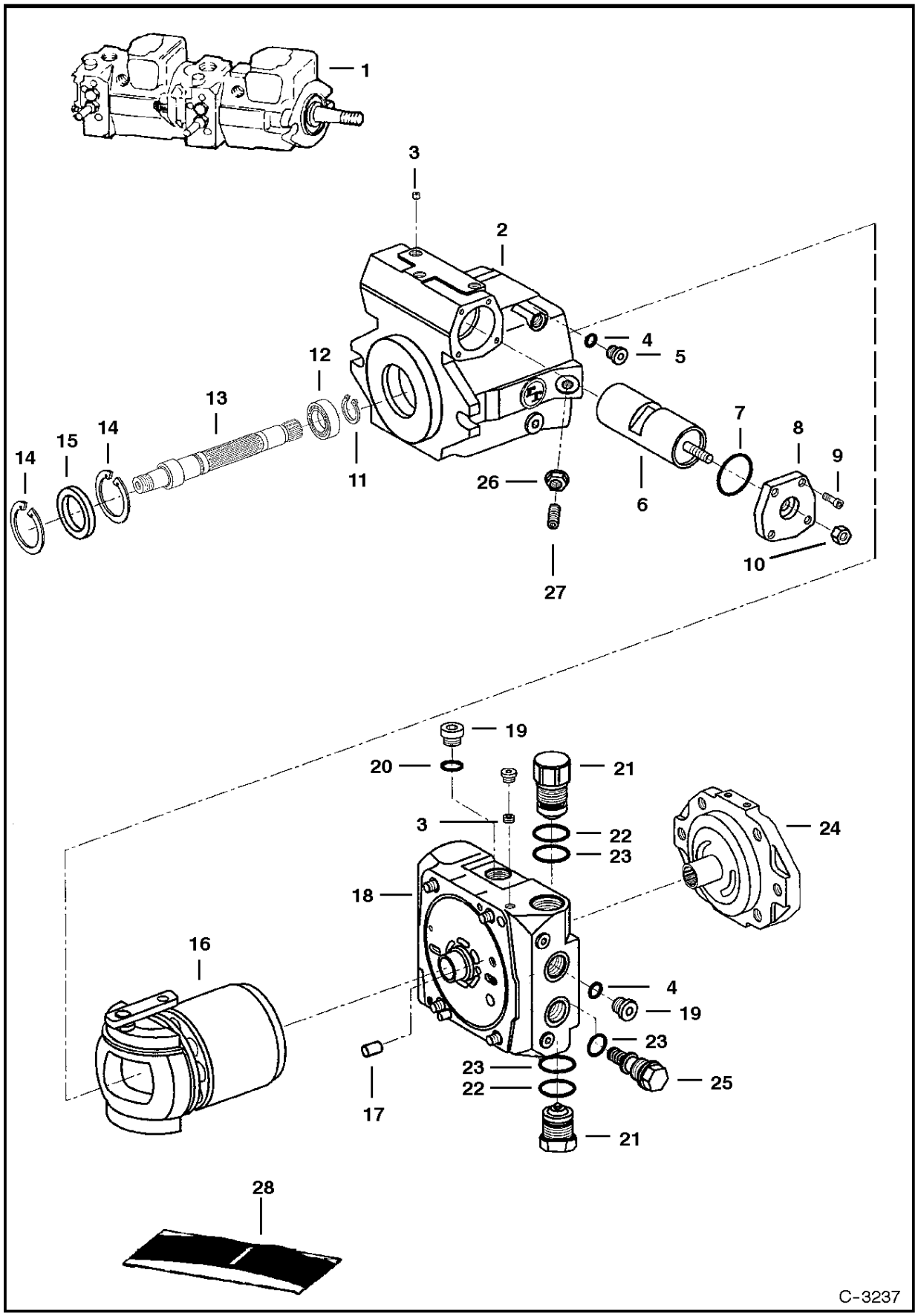

DealerNation Quality Equipment Manuals - dealernation@aol.com

HYDROSTATIC PUMP

Ref.N°	Part N°	Description	Remarks	Serial N°	Qty.
1	6674238	PUMP	assembly		1
2	6671781	HOUSING	See Page HOUSING ASSY(1)		1
3	6671747	ORIFICE			2
4	6671749	O-RING			1
5	6671759	PLUG			1
6	NAP	PISTON	See Page PISTON ASSY(1)		1
7	6671743	O-RING			1
8	6671760	COVER	piston		1
9	6671761	SCREW			4
10	6674907	NUT			1
11	6671780	SNAP RING			1
12	6671779	BEARING			1
13	6671778	SHAFT			1
14	6671741	SNAP RING			2
15	6671742	SEAL	shaft		1
16		BLOCK	rotating group - See Page BLOCK - ROTARY GROUP (1)		1
17	6671750	DOWEL PIN			1
18	6671827	PORT BLOCK	See Page PORT BLOCK(1)		1
19	6666364	PLUG			2
20	6671758	O-RING			2
21	6674912	RELIEF VALVE			2
22	6671752	O-RING			2
23	6671753	O-RING			2
24	6671824	CHARGE PUMP	See Page CHARGE PUMP(1)		1
25	6671754	RELIEF VALVE			1
26	6671746	NUT			1
27	6671744	SCREW			1
28	6672016	SEAL KIT	W/Ref. HYDROSTATIC PUMP(4), HYDROSTATIC PUMP(7), HYDROSTATIC PUMP(15), HYDROSTATIC PUMP(20), HYDROSTATIC PUMP(22), HYDROSTATIC P		1

DealerNation Quality Equipment Manuals - dealernation@aol.com

HYDROSTATIC PUMP
(Pulley Side)

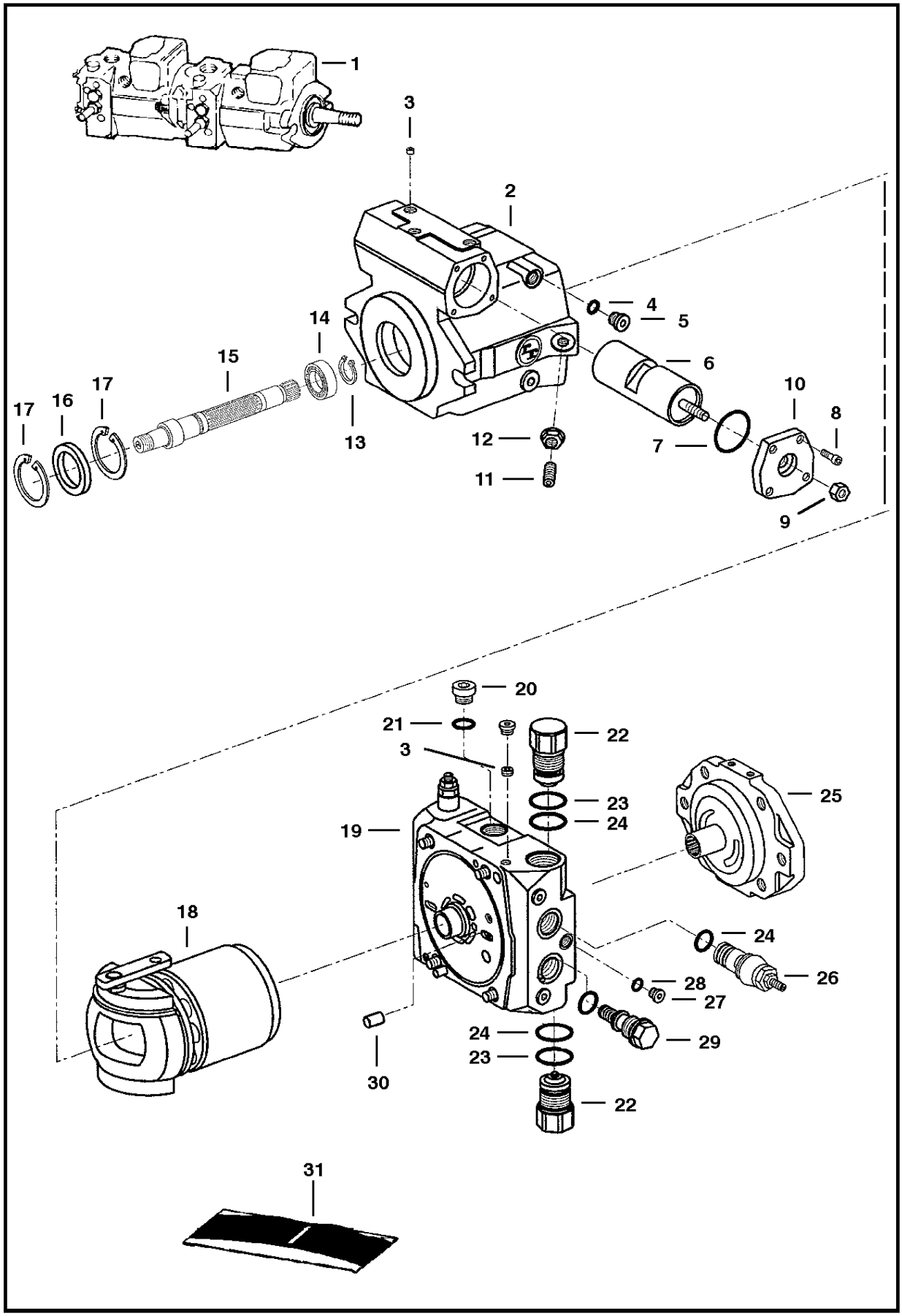

DealerNation Quality Equipment Manuals - dealernation@aol.com

HYDROSTATIC PUMP

Ref.N°	Part N°	Description	Remarks	Serial N°	Qty.
1	6674238	PUMP	assembly		1
2	6671781	HOUSING	See Page HOUSING ASSY(1)		1
3	6671747	ORIFICE			2
4	6671749	O-RING			1
5	6671759	PLUG			1
6	NAP	PISTON	See Page PISTON ASSY(1)		1
7	6671743	O-RING			1
8	6671761	SCREW			4
9	6674907	NUT			1
10	6671760	COVER	piston		1
11	6671744	SCREW			1
12	6671746	NUT			1
13	6671780	SNAP RING			1
14	6671779	BEARING			1
15	6674908	SHAFT			1
16	6671742	SEAL	shaft		1
17	6671741	SNAP RING			2
18		BLOCK	rotating group - See Page BLOCK - ROTARY GROUP (1)		1
19	6671807	PORT BLOCK	See Page PORT BLOCK(1)		1
20	6666364	PLUG			2
21	6674910	O-RING			2
22	6674909	RELIEF VALVE	Was 6674912 [B, D]		2
23	6671752	O-RING			2
24	6671753	O-RING			2
25	6671740	CHARGE PUMP	See Page CHARGE PUMP(1)		1
26	6671757	FILTER			1
27	6671784	O-RING			2
28	6671783	PLUG			1
29	6671754	RELIEF VALVE	charge		1
30	6671750	DOWEL PIN			1
31	6672016	SEAL KIT	See Page HYDROSTATIC PUMP(4) Ref. HYDROSTATIC PUMP(28)		1
32	6675616	CAP	tamper proof		1

DealerNation Quality Equipment Manuals - dealernation@aol.com

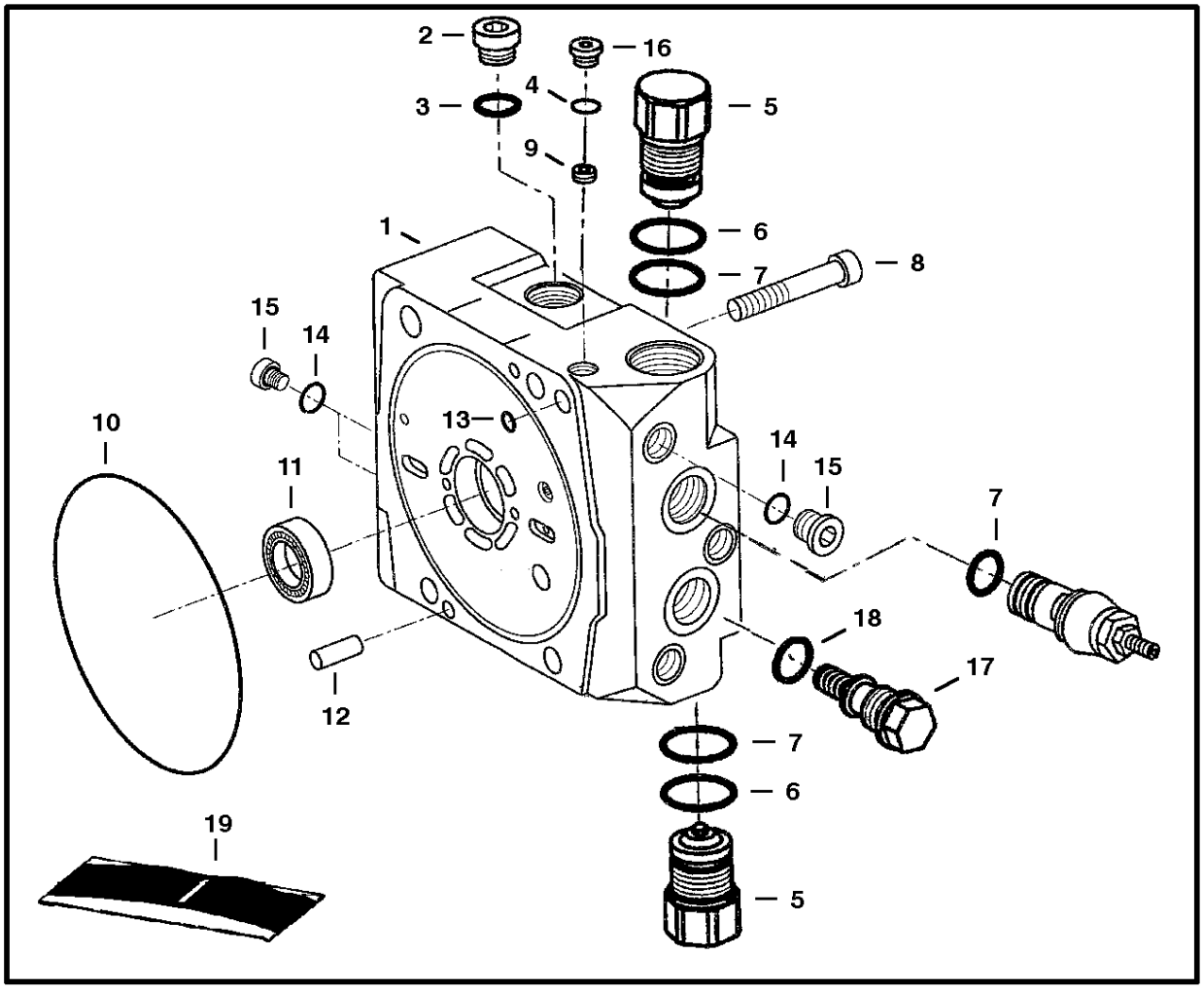

PORT BLOCK

Ref. No.	Part Number	Description	Remarks	Serial Number	Qty.

DealerNation Quality Equipment Manuals - dealernation@aol.com

PORT BLOCK

Ref.N°	Part N°	Description	Remarks	Serial N°	Qty.
1	NAP	PORT BLOCK	W/Ref. PORT BLOCK(2)-PORT BLOCK(15) - See Page HYDROSTATIC PUMP(4), Ref. HYDROSTATIC PUMP(18) & Page HYDROSTATIC PUMP(5), Ref.		1
2	6666364	PLUG	W/Ref. PORT BLOCK(3)		1
3	6671758	O-RING			1
4	6671749	O-RING			1
5	6674912	RELIEF VALVE			2
6	6671752	O-RING	backup		2
7	6671753	O-RING			2
8	6671808	BOLT			1
9	6671747	ORIFICE			1
10	6671809	O-RING			1
11	6671811	BEARING			1
12	6671812	DOWEL PIN			2
13	6671810	O-RING			1
14	6671784	O-RING			3
15	6671783	PLUG			3
16	6671759	PLUG			1
17	6671754	RELIEF VALVE	charge pressure		1
18	6671752	O-RING			1
19	6672016	SEAL KIT	See Page HYDROSTATIC PUMP(4) Ref. HYDROSTATIC PUMP(28)		1

DealerNation Quality Equipment Manuals - dealernation@aol.com

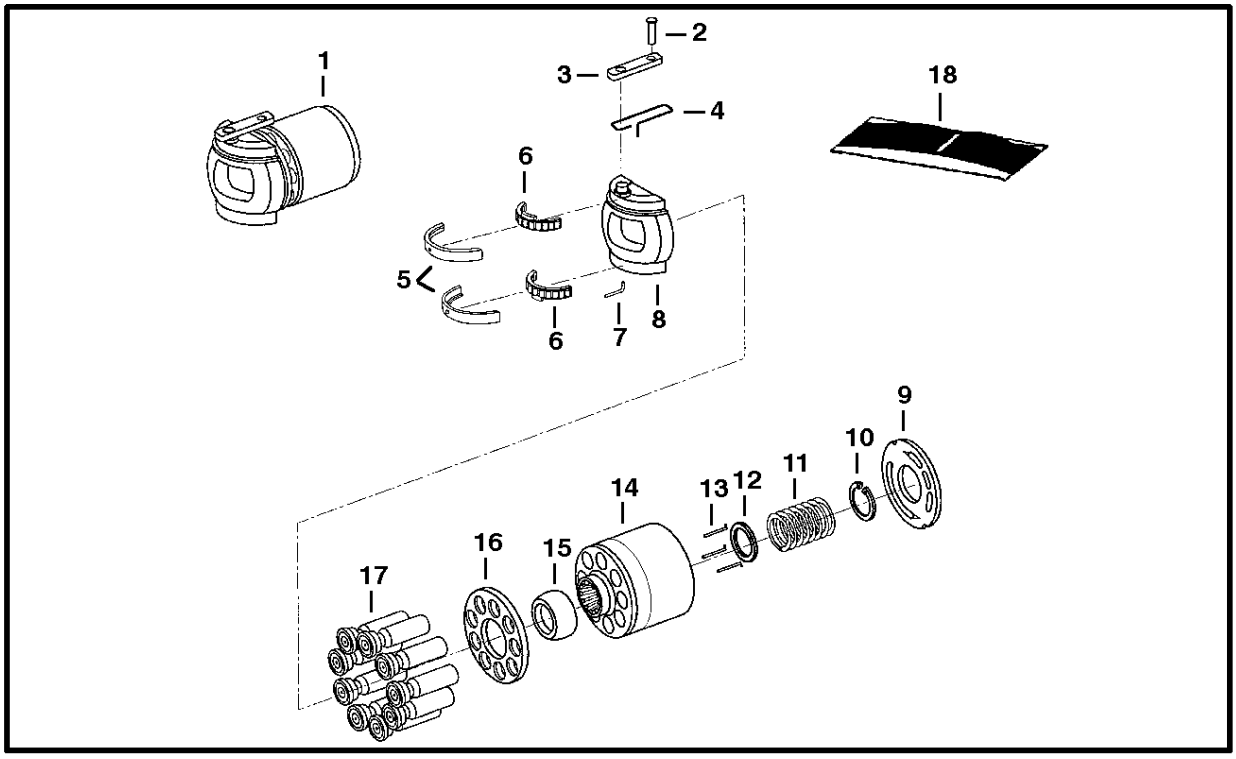

BLOCK - ROTARY GROUP

Ref. No.	Part Number	Description	Remarks	Serial Number	Qty.
1	6674911	BLOCK ASSY	See Page 101, Ref. 16 & Page 103, Ref. 18		1

DealerNation Quality Equipment Manuals - dealernation@aol.com

BLOCK - ROTARY GROUP

Ref.N°	Part N°	Description	Remarks	Serial N°	Qty.
1	6674911	BLOCK ASSY	See Page HYDROSTATIC PUMP(4), Ref. BLOCK - ROTARY GROUP(16) & &Page HYDROSTATIC PUMP(5), Ref. HYDROSTATIC PUMP(18)		1
2	6671774	PIN			1
3	6671773	LEVER			1
4	6671775	WIRE			1
5	6671770	RACE	pair		1
6	6671771	BEARING	set		1
7	6671772	WIRE			1
8	6671766	SWASH PLATE			1
9	6674914	PLATE	ccw		1
10	6674919	SNAP RING			1
11	6674918	SPRING			1
12	6674921	SPACER			1
13	6674920	PIN			3
14	6674913	BARREL			1
15	6674917	BALL	retaining		1
16	6674916	PLATE	retaining		1
17	6674915	PISTON			9
18	NAP	KIT	W/Ref. BLOCK - ROTARY GROUP(7), BLOCK - ROTARY GROUP(9)-BLOCK - ROTARY GROUP(13), BLOCK - ROTARY GROUP(15)-BLOCK - ROTARY GROUP(		1

DealerNation Quality Equipment Manuals - dealernation@aol.com

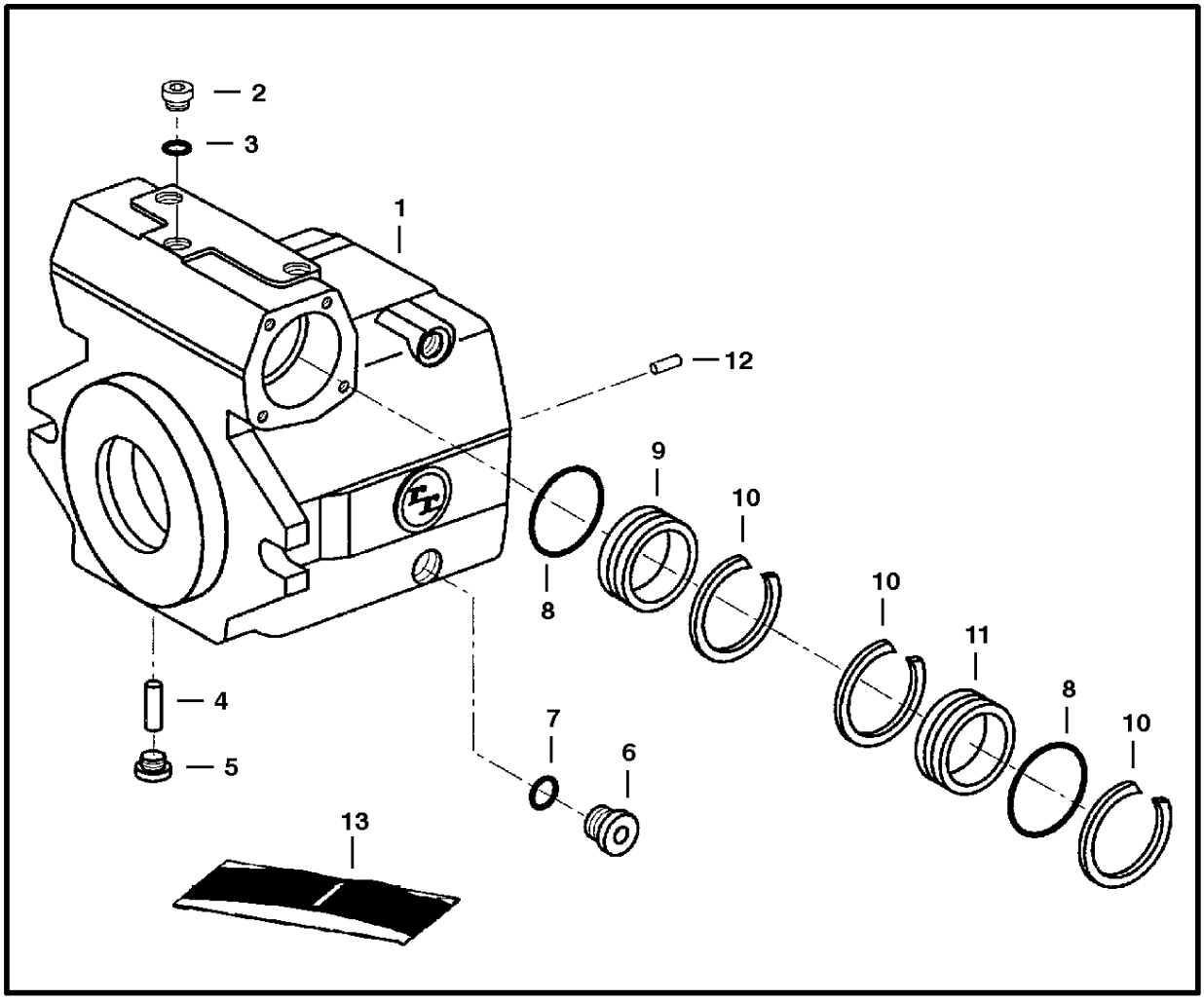

HOUSING ASSY

Ref. No.	Part Number	Description	Remarks	Serial Number	Qty.

DealerNation Quality Equipment Manuals - dealernation@aol.com

HOUSING ASSY

Ref.N°	Part N°	Description	Remarks	Serial N°	Qty.
1	6671781	HOUSING	&W/Ref. HOUSING ASSY(2)-HOUSING ASSY(12), See Page HYDROSTATIC PUMP(5), Ref. HYDROSTATIC PUMP(2)		1
2	6671783	PLUG			1
3	6671784	O-RING	W/Ref. HOUSING ASSY(2)		1
4	6671789	PIN			1
5	6671790	PLUG			1
6	6671748	PLUG			1
7	6671787	O-RING	W/Ref. HOUSING ASSY(6)		1
8	6671743	O-RING			2
9	6671785	BUSHING			1
10	6671786	V-RING			3
11	6671788	BUSHING			1
12	6671782	ROLL PIN			2
13	6672016	SEAL KIT	See Page HYDROSTATIC PUMP(4) Ref. HYDROSTATIC PUMP(28)		1

DealerNation Quality Equipment Manuals - dealernation@aol.com

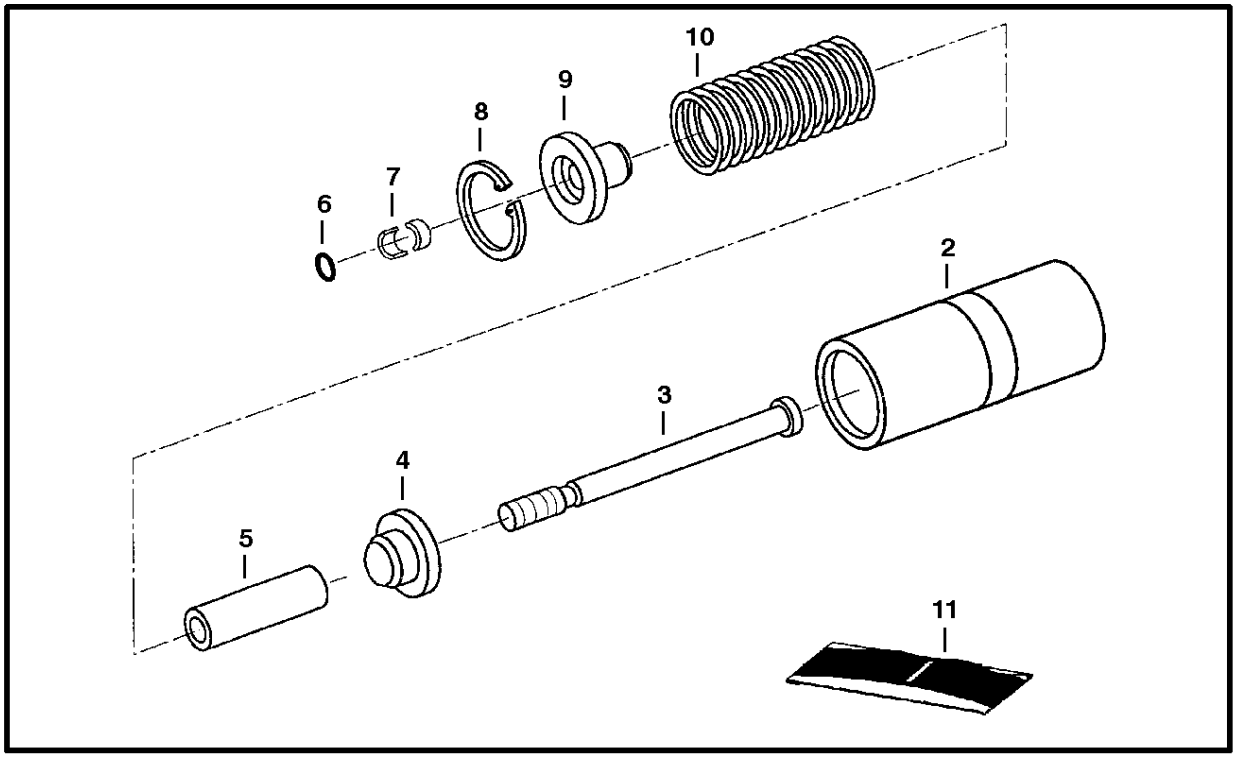

PISTON ASSY

Ref. No.	Part Number	Description	Remarks	Serial Number	Qty.
1	NAP	PISTON ASSY	W/Ref. 2 - 10 - See Page 101, Ref. 6		1

DealerNation Quality Equipment Manuals - dealernation@aol.com

PISTON ASSY

Ref.N°	Part N°	Description	Remarks	Serial N°	Qty.
1	NAP	PISTON ASSY	W/Ref. PISTON ASSY(2) - PISTON ASSY(10) - See Page HYDROSTATIC PUMP(4), Ref. HYDROSTATIC PUMP(6)		1
2	6674922	PISTON	control		1
3	6671791	BOLT			1
4	6674213	COLLAR			1
5	6674923	SPACER	55.1 mm		1
5	6674924	SPACER	55.0 mm		x
5	6674925	SPACER	55.2 mm		x
6	6671805	O-RING			1
7	6671799	RING	6.85 mm		1
7	6671800	RING	6.90 mm		x
7	6671801	RING	6.95 mm		x
7	6671802	RING	7.00 mm		x
7	6671803	RING	7.05 mm		x
7	6671804	RING	7.10 mm		x
8	6671798	SNAP RING			1
9	6674215	COLLAR			1
10	6674214	SPRING			1
11	6672016	SEAL KIT	See Page HYDROSTATIC PUMP(4), Ref. HYDROSTATIC PUMP(28)		1

DealerNation Quality Equipment Manuals - dealernation@aol.com

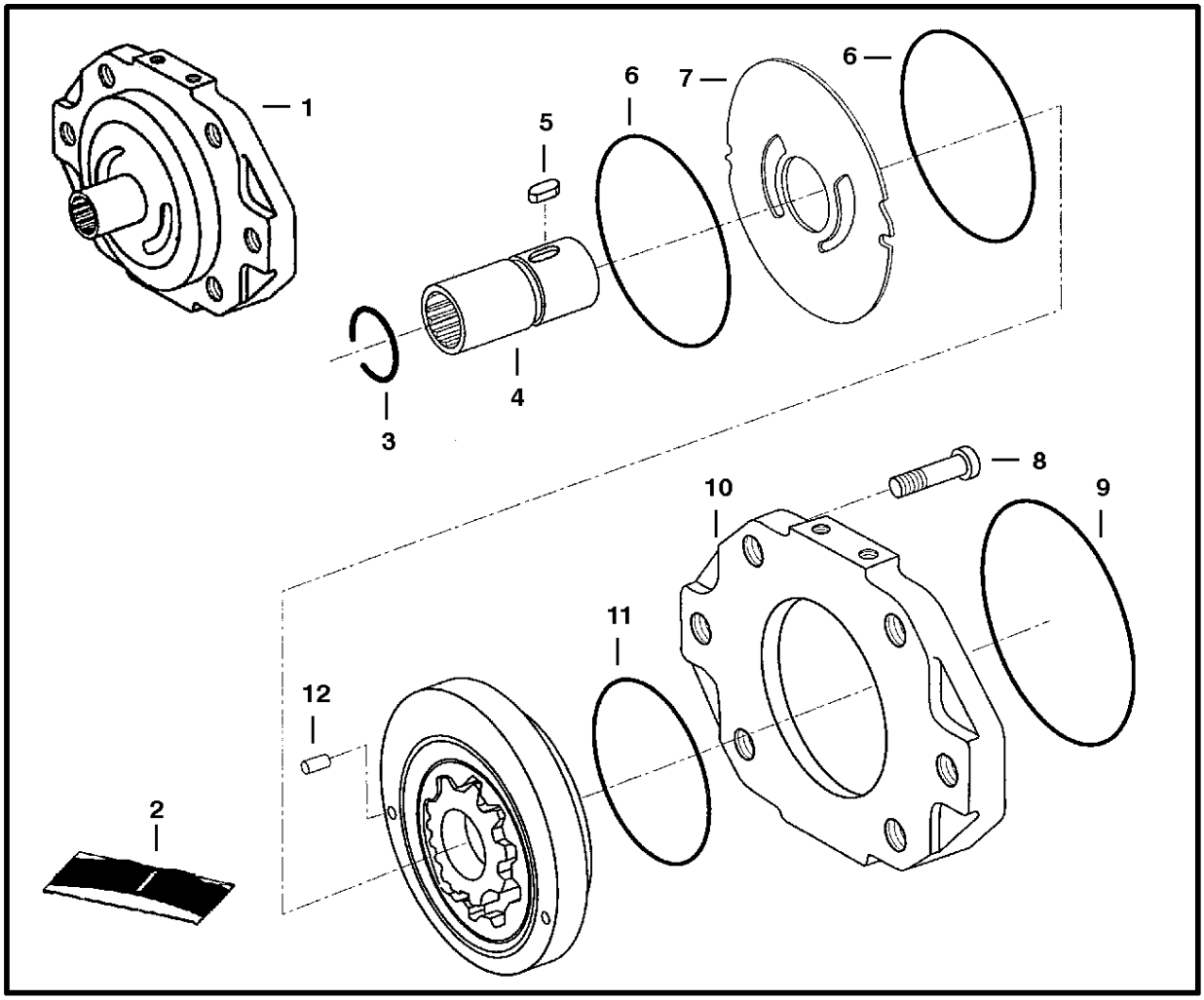

CHARGE PUMP
(Pulley End)

Ref. No.	Part Number	Description	Remarks	Serial Number	Qty.

DealerNation Quality Equipment Manuals - dealernation@aol.com

CHARGE PUMP

Ref.N°	Part N°	Description	Remarks	Serial N°	Qty.
1	6671740	CHARGE PUMP	W/Ref. CHARGE PUMP(2) - CHARGE PUMP(12) - See Page HYDROSTATIC PUMP(5), Ref. HYDROSTATIC PUMP(25)		1
2	6672016	SEAL KIT	See Page HYDROSTATIC PUMP(4) Ref. HYDROSTATIC PUMP(28)		1
3	6671814	SNAP RING			1
4	6671815	SHAFT			1
5	6674927	KEY	Was 6671816 [A]		1
6	6671817	QUAD RING			2
7	6671822	PLATE	wear		1
8	6671820	BOLT			1
9	6671821	O-RING			1
10	6671819	FLANGE			1
11	6671818	O-RING			1
12	6671829	PIN			1

DealerNation Quality Equipment Manuals - dealernation@aol.com

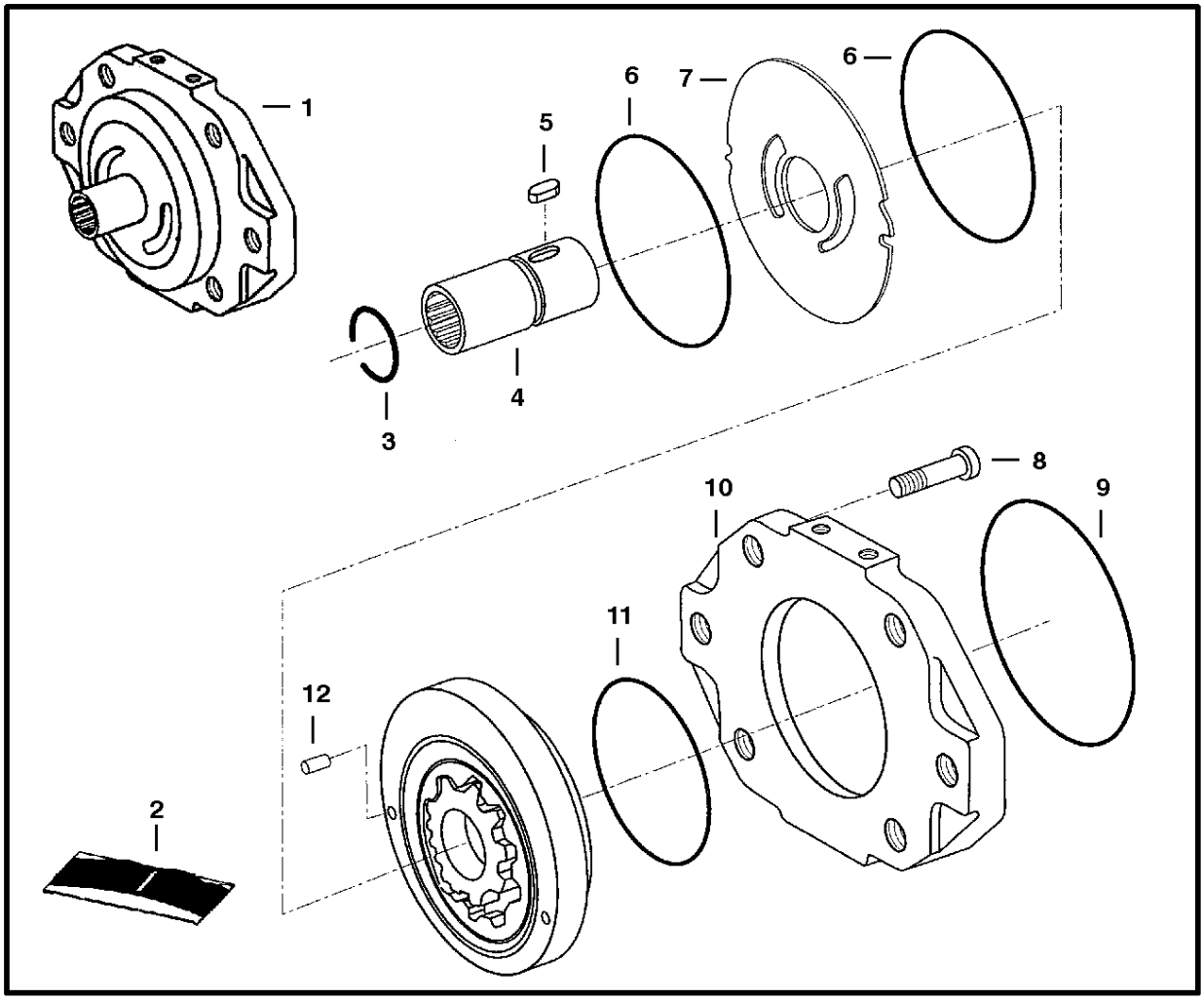

CHARGE PUMP
(Gear Pump End)

Ref. No.	Part Number	Description	Remarks	Serial Number	Qty.

DealerNation Quality Equipment Manuals - dealernation@aol.com

CHARGE PUMP

Ref.N°	Part N°	Description	Remarks	Serial N°	Qty.
1	6671824	CHARGE PUMP	W/Ref. CHARGE PUMP(2) - CHARGE PUMP(12) - See Page HYDROSTATIC PUMP(5), Ref. HYDROSTATIC PUMP(25)		1
2	6672016	SEAL KIT	See Page HYDROSTATIC PUMP(4) Ref. HYDROSTATIC PUMP(28)		1
3	6671814	SNAP RING			1
4	6674926	SHAFT			1
5	6674927	KEY			1
6	6671817	QUAD RING			2
7	6671822	PLATE	wear		1
8	6671820	BOLT			1
9	6671821	O-RING			1
10	6674928	FLANGE			1
11	6671818	O-RING			1
12	6671829	PIN			1

DealerNation Quality Equipment Manuals - dealernation@aol.com

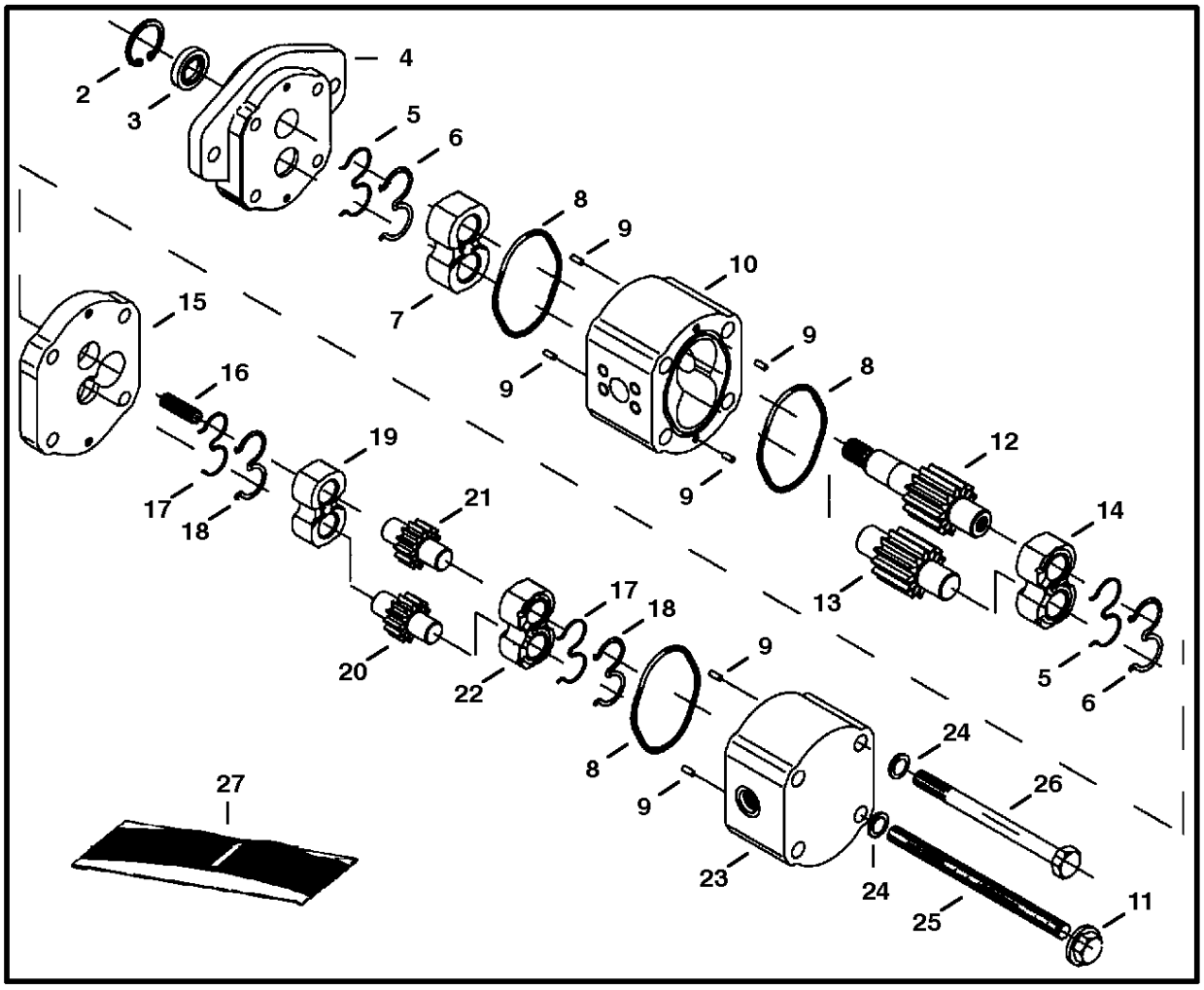

DUAL GEAR PUMP

Ref. No.	Part Number	Description	Remarks	Serial Number	Qty.

DealerNation Quality Equipment Manuals - dealernation@aol.com

DUAL GEAR PUMP

Ref.N°	Part N°	Description	Remarks	Serial N°	Qty.
1	6674739	PUMP	Ref. AUXILLIARY CASE DRAIN KIT(2) DUAL GEAR PUMP(26)		1
2	6672156	SNAP RING			1
3	6675798	SEAL			1
4	NSS	FLANGE			1
5	6672161	OARING			2
6	6675799	SEAL			2
7	NSS	HOLDER			1
8	6675800	OARING			3
9	6662929	DOWEL PIN			6
10	NSS	BODY			1
11	6675381	NUT			1
12	NSS	GEAR			1
13	NSS	GEAR			1
14	NSS	HOLDER			1
15	NSS	END CAP			1
16	6670632	COUPLING			1
17	6675801	OARING			2
18	6675802	SEAL			2
19	NSS	HOLDER			1
20	NSS	GEAR			1
21	NSS	GEAR			1
22	NSS	HOLDER			1
23	NSS	HOUSING			1
24	6675796	WASHER			4
25	NSS	ROD	threaded		1
26	NSS	BOLT			1
27	6675797	SEAL KIT	Ref. AUXILLIARY CASE DRAIN KIT(2), DUAL GEAR PUMP(3), DUAL GEAR PUMP(5), DUAL GEAR PUMP(6), DUAL GEAR PUMP(8), DUAL GEAR PUMP(17		1
28	6671821	O-RING	See Page CHARGE PUMP(1), Ref. CHARGE PUMP(9)		1

DealerNation Quality Equipment Manuals - dealernation@aol.com

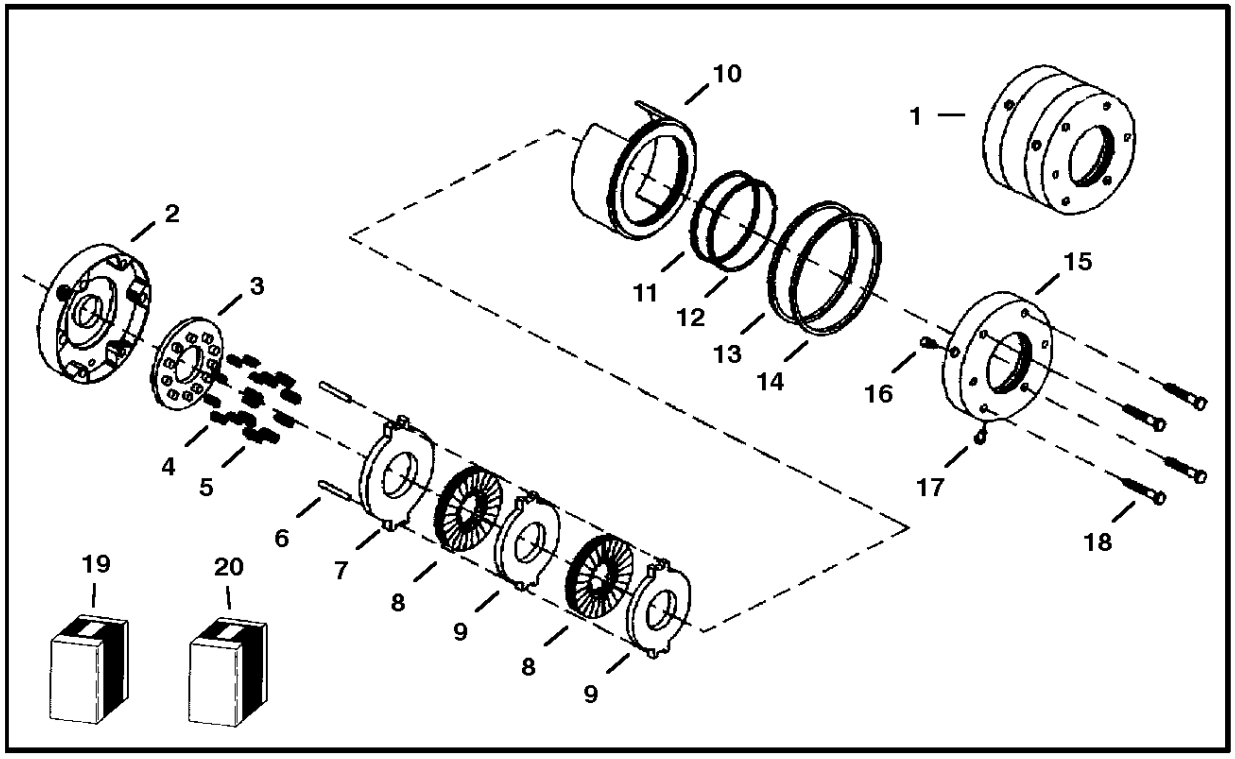

DISC BRAKE
(Ausco)

Ref. No.	Part Number	Description	Remarks	Serial Number	Qty.
1	6670157	BRAKE	disc - Ref. 2 - 18		1
2	6675112	HOUSING			1

DealerNation Quality Equipment Manuals - dealernation@aol.com

DISC BRAKE

Ref.N°	Part N°	Description	Remarks	Serial N°	Qty.
1	6670157	BRAKE	disc - Ref. DISC BRAKE(2) - DISC BRAKE(18)		1
2	6675112	HOUSING			1
3	6675113	RETAINER	spring		1
4	NSS	SPRING	compression		11
5	NSS	SPRING	compression		11
6	NSS	PIN	torque		2
7	NSS	DISC	primary		1
8	NSS	DISC	rotating		2
9	NSS	DISC	stationary		2
10	6675122	PISTON			1
11	NSS	O-RING			1
12	NSS	O-RING	back-up		1
13	NSS	O-RING			1
14	NSS	O-RING	back-up		1
15	6675123	PLATE	power		1
16	6195215	SCREW	bleeder - Was 6675127 [A]		1
16	90KV-3	PLUG	W/Ref. DISC BRAKE(21)		1
17	NAP	PLUG	Was 6675111 [A]		1
18	6675126	BOLT			4
19	6672581	KIT	o-ring repair - Ref. DISC BRAKE(11) - DISC BRAKE(14)		1
20	6672582	KIT	stack - Ref. DISC BRAKE(4) & DISC BRAKE(9)		1
21	95K-4	O-RING			x

DealerNation Quality Equipment Manuals - dealernation@aol.com

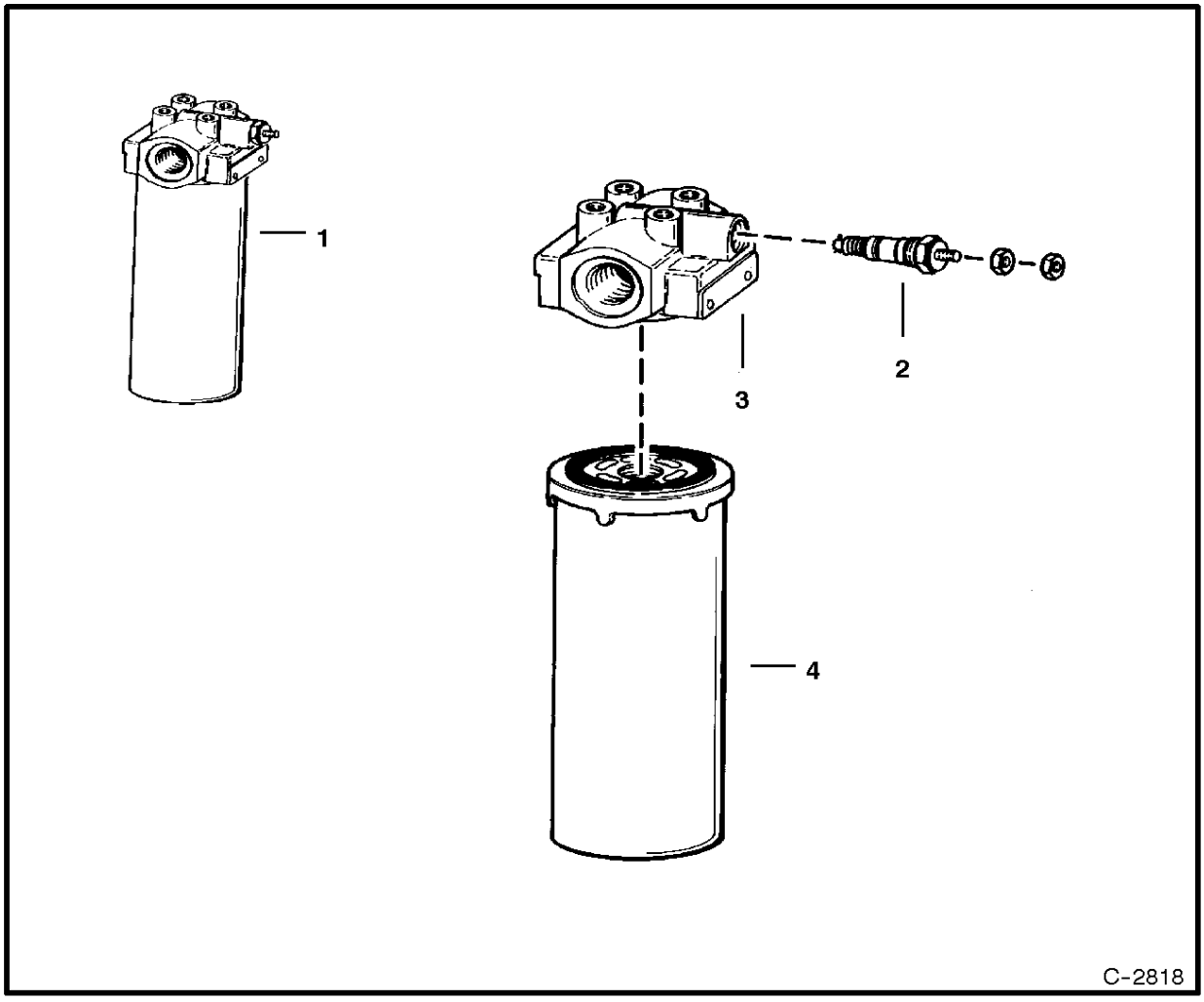

HYDROSTATIC OIL FILTER

Ref. No.	Part Number	Description	Remarks	Serial Number	Qty.

DealerNation Quality Equipment Manuals - dealernation@aol.com

HYDROSTATIC OIL FILTER

Ref.N°	Part N°	Description	Remarks	Serial N°	Qty.
1	6672584	FILTER ASSY	W/Ref. HYDROSTATIC OIL FILTER(2) - 50 PSI byApass & switch		1
2	6632053	SWITCH	pressure - Use with 50 PSI byApass		1
2	6599365	KIT	nut, washer & OArings for 6632060 switch		1
3	NSS	HEAD	Order Ref. HYDROSTATIC OIL FILTER(1)		1
4	6668819	FILTER	9.5' (241,3 mm) long		1

DealerNation Quality Equipment Manuals - dealernation@aol.com

CAB ELECTRICAL CIRCUITRY
(S/N 5622 15999 & Below, 5165 15999 & Below)

NOTE: Front & Rear Lights located on Page 291 .

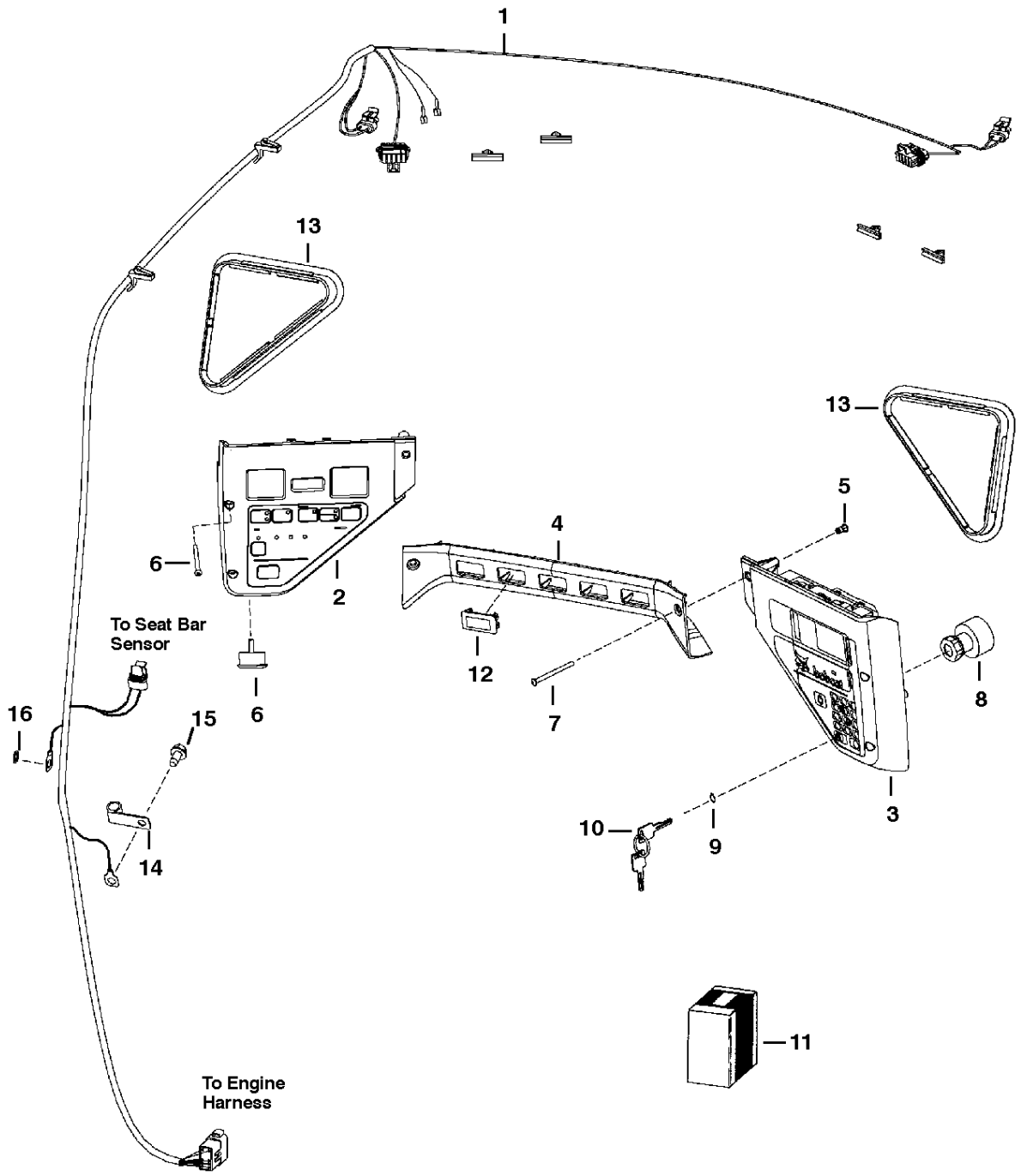

PE-1039

DealerNation Quality Equipment Manuals - dealernation@aol.com

CAB ELECTRICAL CIRCUITRY

Ref.N°	Part N°	Description	Remarks	Serial N°	Qty.
1	6718870	HARNESS			1
2	6672346	PANEL	L.H.		1
2	6675982	PLUG	covers backlighting service hole		1
2	6675337	BULB			2
3	6677175	PANEL	R.H. - keyed - Was 6672347 [A]		1
3	6672348	PANEL	R.H. - deluxe - keyless		1
3	6675982	PLUG	covers backlighting service hole		1
3	NAP	INSTRUCTIONS	for deluxe panel - See Service Manual - Was 6900860 [A]		1
4	6674317	CROSSMEMBER			1
5	6675033	INSERT	threaded		6
6	6675390	ALARM	W/nut		1
7	6719084	BOLT			6
8	6675470	SWITCH	ignition - W/Ref. CAB ELECTRICAL CIRCUITRY(9) & CAB ELECTRICAL CIRCUITRY(10)		1
9	6674202	NUT			2
10	6709527	KEY	ignition		1
11	NAP	KIT	keyless ign. - Order 6672348 Panel and 6900860 Instructions		1
12	6719038	PLUG			5
13	6674403	COVER			2
14	6675171	CLAMP			1
15	84G-3712	BOLT			1
16	6E-5	WASHER			1

DealerNation Quality Equipment Manuals - dealernation@aol.com

* CAB ELECTRICAL CIRCUITRY
(S/N 5622 16001 & Above, 5165 16001 & Above)

NOTE: Front & Rear Lights located on Page 291 .

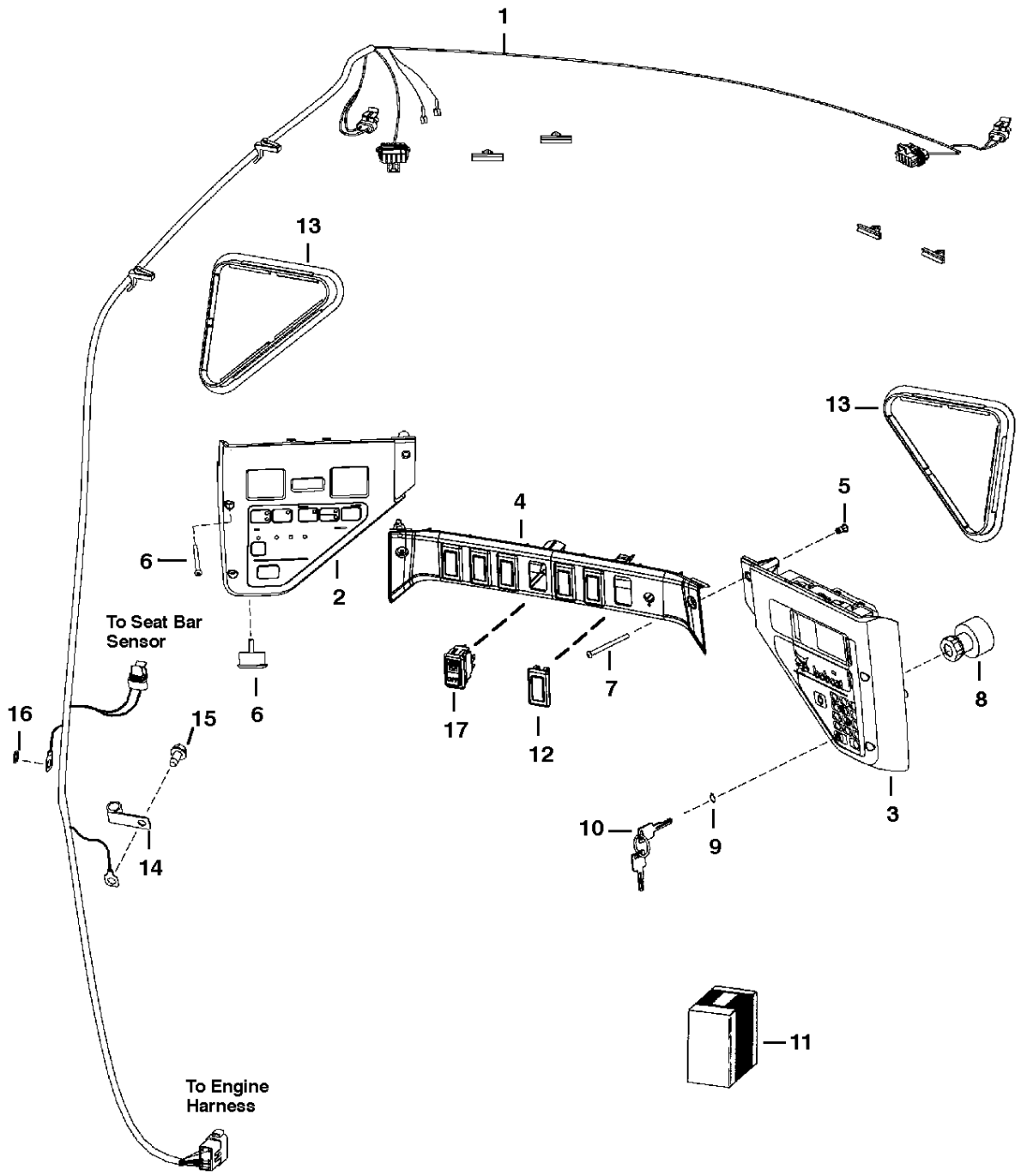

DealerNation Quality Equipment Manuals - dealernation@aol.com

* CAB ELECTRICAL CIRCUITRY

Ref.N°	Part N°	Description	Remarks	Serial N°	Qty.
1	6727178	HARNESS			1
2	6672346	PANEL	L.H.		1
2	6675982	PLUG	backlighting service hole		1
2	6675337	BULB			2
3	6677175	PANEL	R.H. - keyed		1
3	6672348	PANEL	R.H. - deluxe - keyless		1
3	NAP	INSTRUCTIONS	for deluxe panel - See Service Manual - Was 6900860 [A]		1
4	6676723	CROSSMEMBER			1
5	6675033	INSERT	threaded		6
6	6675390	ALARM	W/nut		1
7	6719084	BOLT			6
8	6675470	SWITCH	ignition - W/Ref. CAB ELECTRICAL CIRCUITRY(9)		1
9	6674202	NUT			2
10	6709527	KEY	ignition		1
11	NAP	KIT	keyless ign. - Order 6672348 Panel - See Service Manual		1
12	6807730	PLUG			x
13	6674403	COVER			2
14	6675171	CLAMP			1
15	84G-3712	BOLT			1
16	6E-5	WASHER			1
17	6676536	SWITCH	park brake		1

DealerNation Quality Equipment Manuals - dealernation@aol.com

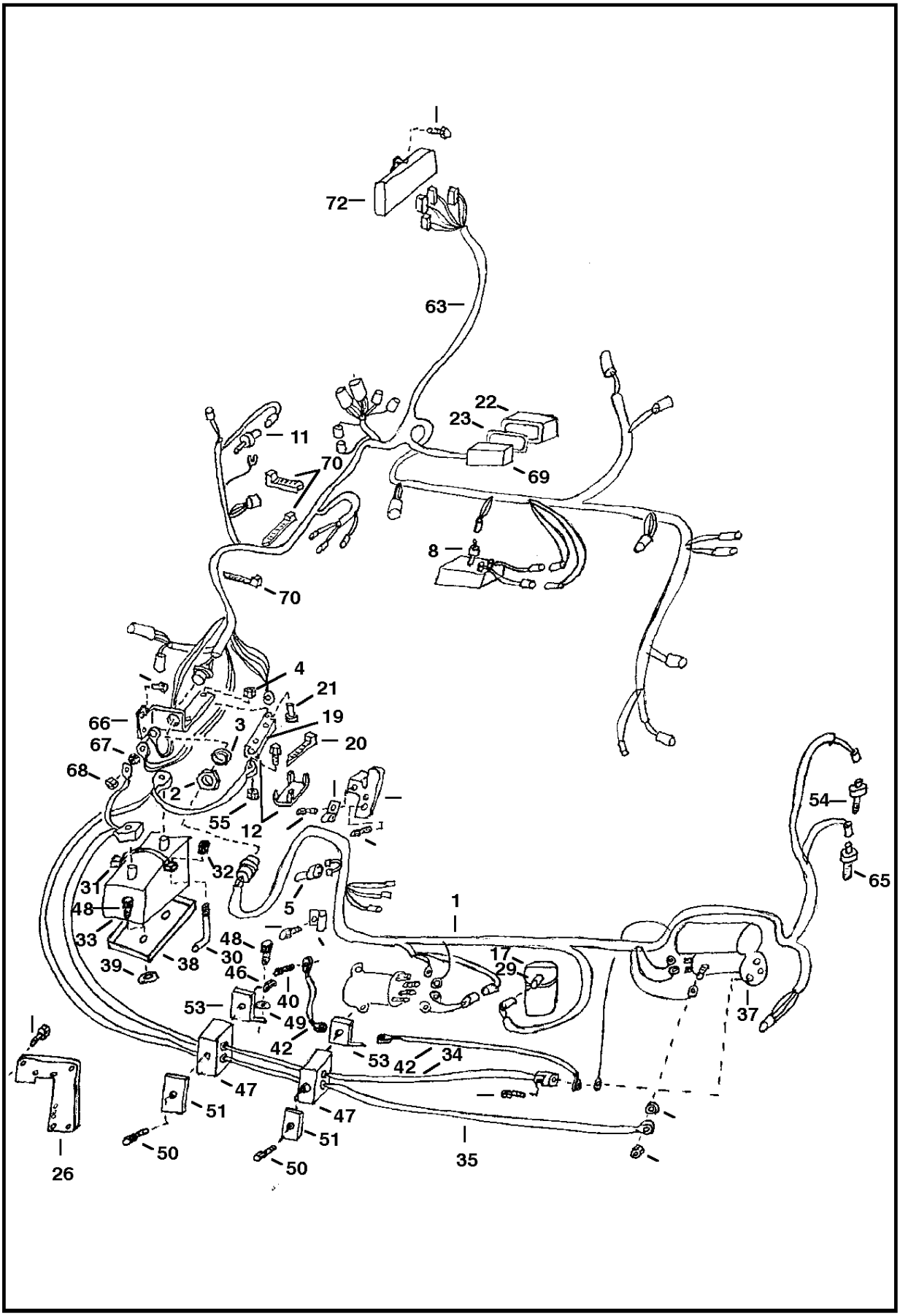

DealerNation Quality Equipment Manuals - dealernation@aol.com

ENGINE ELECTRICAL

Ref.N°	Part N°	Description	Remarks	Serial N°	Qty.
1	6719160	HARNESS	engine	5622 15434 & Bel	1
2	6664972	NUT			1
3	6676172	WASHER			1
4	59D-4	NUT			2
5	6718415	SWITCH	eng. temp.		1
6	19F-4	ADAPTER			1
7	35C-512	BOLT			1
8	6674316	SWITCH	hydro. press.		1
9	6673119	SENDER	fuel - W/Ref. ENGINE ELECTRICAL(71)		1
10	6661611	ALTERNATOR	See Page ALTERNATOR(1)		1
11	6718417	SENDER	hydro. temp. - 230&5		1
12	6675154	HOLDER	fuse		1
13	84G-3712	BOLT			3
14	27E-5	WASHER			1
15	6672321	SOLENOID	switch temp. Sensor/Cold Start		1
16	30H-60	CLIP			2
17	6672584	FILTER ASSY	See Page HYDROSTATIC OIL FILTER(1)		1
17	6668819	FILTER	See Page HYDROSTATIC OIL FILTER(1)		1
18	6674376	SWITCH	starter relay		4
19	6675155	FUSE	100 amp		1
20	10C-412	BOLT			5
21	25G-410	BOLT			2
22	6716621	COVER	fuse box		1
23	6725302	GASKET	fuse cover		1
24	43C-616	BOLT	Was 45C-616 [B, D]		3
25	6665357	LOCK	yellow		2
26	6800809	BRACKET			2
27	37C-616	BOLT			3
28	37C-620	BOLT			5
29	6674315	SWITCH	eng. oil press.		1
30	6808878	BOLT	Was 6576280 [B, D]		2
31	6569203	CLAMP			1
32	59D-5	NUT			2
33	6665427	BATTERY	950 CCA		1
34	6715338	CABLE	negative		1
35	6806355	CABLE	less conduit - positive		1
36	85D-6	NUT			2
37	6667320	STARTER	See Page STARTER(2)		1
38	6712536	MOUNT	battery		1
39	6555455	WASHER			2
40	1CM-1020	BOLT			1
41	61D-4	NUT			5
42	6563025	CABLE	negative - 22" (558,80mm) long		2
43	6665527	NYLON TIE	never modify		2
44	97D-6	NUT			3
45	30H-35	CLIP			2
46	97D-5	NUT			2
47	6715197	CLAMP			2
48	84G-3716	BOLT			4
49	6E-6	WASHER			2

DealerNation Quality Equipment Manuals - dealernation@aol.com

ENGINE ELECTRICAL

Ref.N°	Part N°	Description	Remarks	Serial N°	Qty.
50	17C-540	BOLT			2
51	6715132	RETAINER			2
52	30H-50	CLAMP			4
53	6715307	BRACKET			2
54	6665371	SWITCH	vacuum		1
55	12D-8	NUT			1
56	25E-15	WASHER			2
57	12D-10	NUT			1
58	57D-6	NUT			8
59	14D-10	NUT			1
60	35C-616	BOLT			1
61	6716744	BOLT			1
62	6649481	BULB	base lamp		2
63	6719383	HARNESS	controls	5622 15434 & Bel	1
64	24F-1	ELBOW			1
65	6658260	SENSOR			1
66	6726504	BRACKET			1
67	53D-6	NUT			1
68	59D-6	NUT			1
69	6718659	HOUSING	fuse		1
69	6654806	FUSE	15 amp		x
69	6702444	FUSE	25 amp		x
69	6718034	FUSE	30 amp		x
69	6674376	SWITCH	relay switch		1
70	6624289	STA-STRAP			4
71	79K-14	O-RING			1
71	6717579	GASKET			1
72	6676553	CONTROLLER			1
73	6729058	HARNESS	main frame	5622 15435 & Abv	1

DealerNation Quality Equipment Manuals - dealernation@aol.com

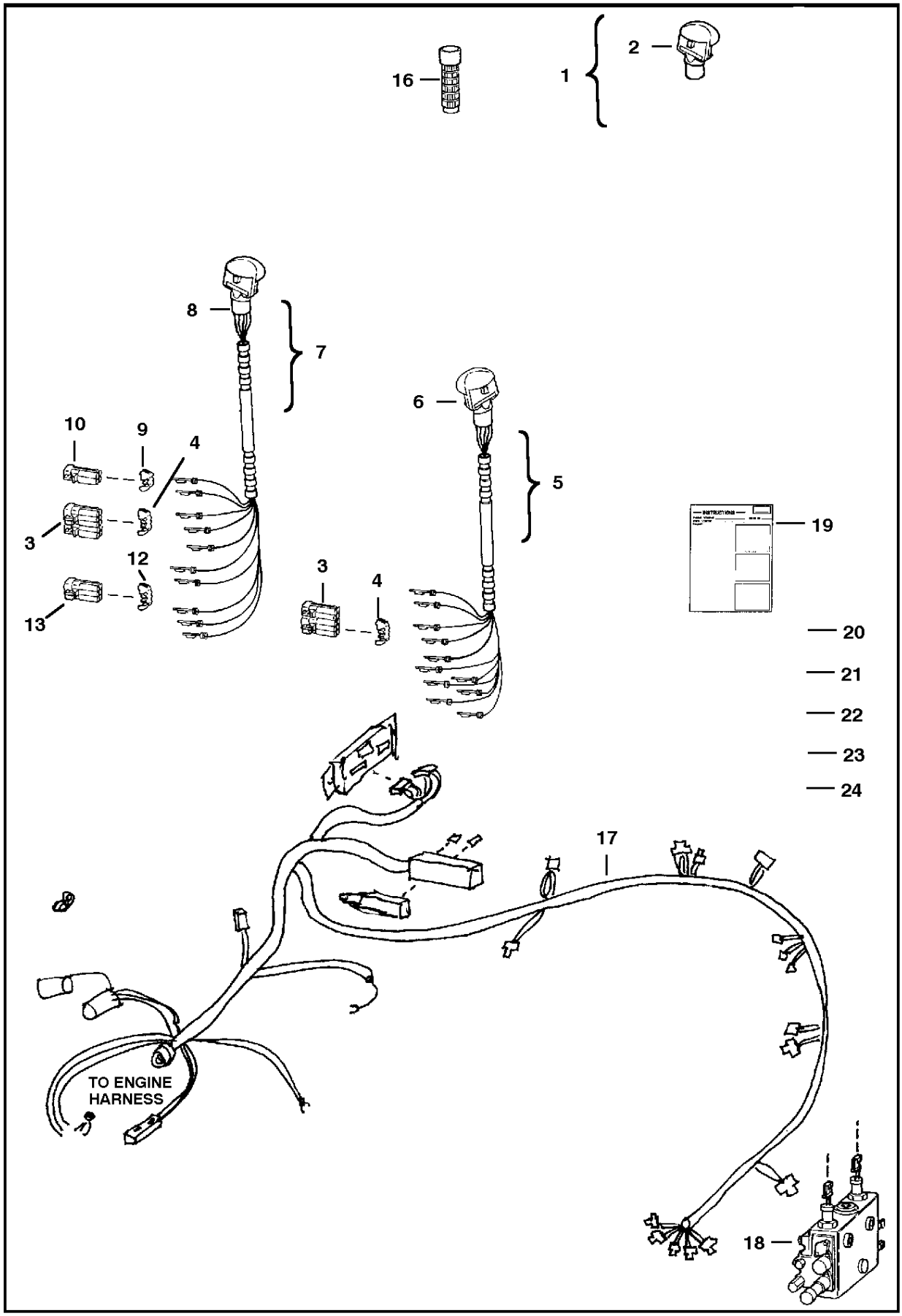

DealerNation Quality Equipment Manuals - dealernation@aol.com

CONTROLS ELECTRICAL

Ref.N°	Part N°	Description	Remarks	Serial N°	Qty.
1	6706565	KIT	blank handle - Ref. CONTROLS ELECTRICAL(2) & CONTROLS ELECTRICAL(19)		2
2	6705920	HANDLE	L.H. - blank		2
3	6640692	CONNECTOR	10-pin		1
4	6640694	LOCK	10-pin		1
5		KIT	R.H. deluxe handle		1
6	6675468	HANDLE ASSY	R.H.-'Also Order Ref. CONTROLS ELECTRICAL(3) & CONTROLS ELECTRICAL(4)		1
6	6640690	PIN			10
6	6641176	SEAL			10
7		KIT	L.H. deluxe handle		1
8	6674450	HANDLE ASSY.	L.H.-Also Order Ref. CONTROLS ELECTRICAL(3), CONTROLS ELECTRICAL(4), CONTROLS ELECTRICAL(9), CONTROLS ELECTRICAL(10), CONTROLS E		1
8	6640690	PIN			10
8	6641176	SEAL			10
8	6677370	DECAL			1
9	6641180	LOCK	2 - pin		1
10	6641179	CONNECTOR	2 - pin		2
11	59D-4	NUT			2
12	6667145	LOCK	5 - way		1
13	6667144	CONNECTOR	5 - way		1
14	25G-410	BOLT			2
15	6675155	FUSE			1
16	6702621	GRIP			2
17	6719383	HARNESS		5622 15434 & Bel	1
17	6729058	HARNESS		5622 15435 & Abv	1
18		VALVE	See Page HYDRAULIC CONTROL VALVE(2)		1
19	6722759	INSTRUCTIONS	for Ref. CONTROLS ELECTRICAL(1), CONTROLS ELECTRICAL(5) & CONTROLS ELECTRICAL(7)		1
20	6674000	CLAMP			2
21	6715365	HARNESS	accessories		1
22	6726504	BRACKET	Was 6719408 [A]		1
23	6675154	HOLDER			1
24	6646582	PLUG			1

DealerNation Quality Equipment Manuals - dealernation@aol.com

CONTROLS ELECTRICAL
(Advanced Hand Controls Option - W/O Push Button Float)

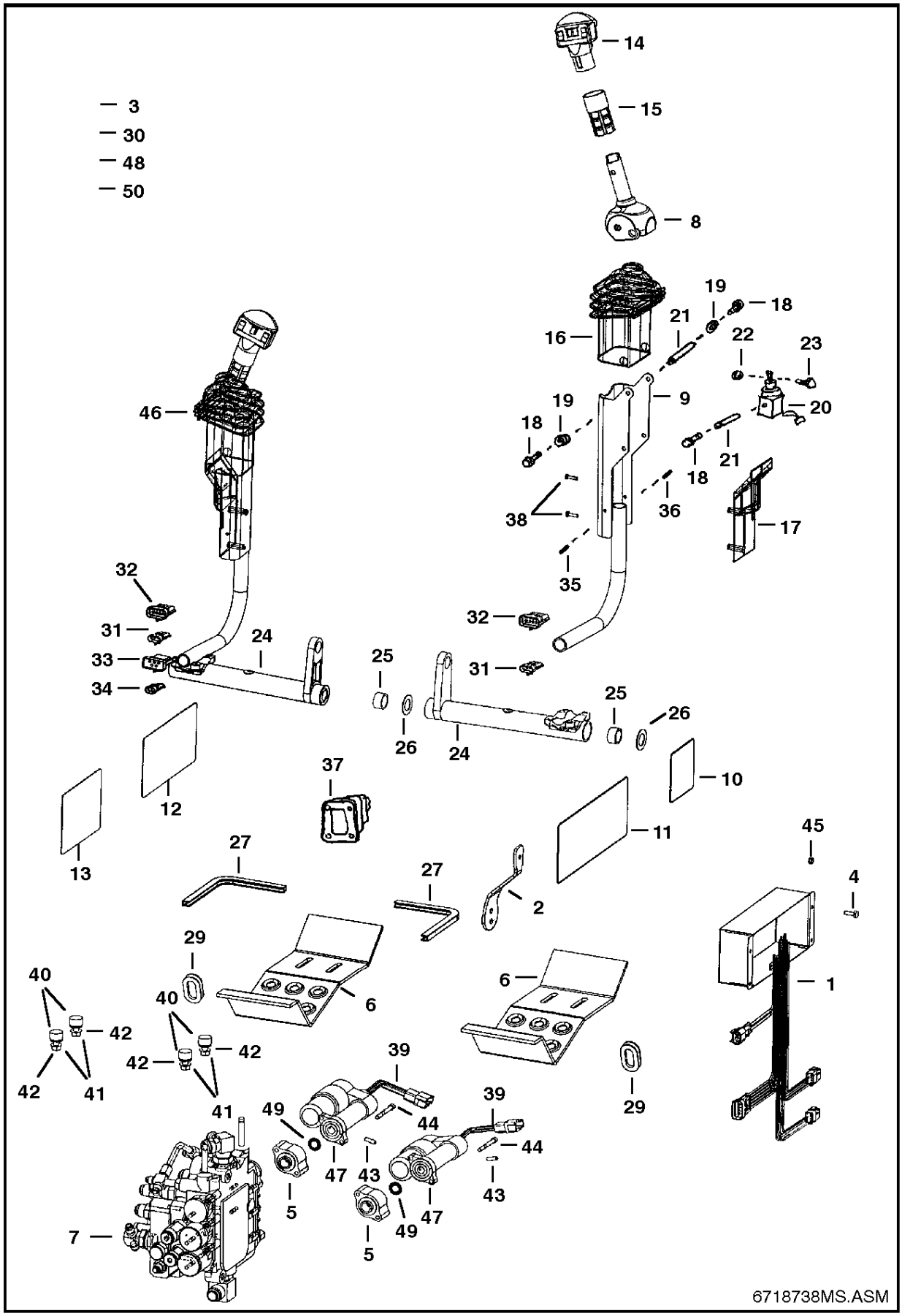

DealerNation Quality Equipment Manuals - dealernation@aol.com

CONTROLS ELECTRICAL

Ref.N°	Part N°	Description	Remarks	Serial N°	Qty.
1	6674804	CONTROLLER			1
2	6717393	LEVER	throttle		1
3	6670707	CONNECTOR	3-way		2
3	6670710	LOCK	3-way		2
4	17C-412	BOLT			4
5	6725128	ADAPTER	actuator - W/Ref. CONTROLS ELECTRICAL(49)		2
6	6712365	STEP			2
7		VALVE	AHC - See Page HYDRAULIC CONTROL VALVE(2)		1
8	6597774	HANDLE	R.H. - tilt		1
8	6717163	HANDLE	L.H. - lift		1
9	NAP	LEVER	R.H. - tilt - Order 6597775 - Was 6717055 [A]	& Bel	1
9	6597775	LEVER	R.H. - lift	& Abv	1
9	NAP	LEVER	L.H. - lift - Order 587776 - Was 6717056 [A]	& Bel	1
9	6597776	LEVER	L.H. - lift	& Abv	1
10	6718706	DECAL	warning		1
11	6718699	DECAL			1
12	6718702	DECAL	operation		1
13	6718704	DECAL	opeation		1
14	6675469	HANDLE ASSY	R.H. - tilt - Was 6675249 [A]		1
14	6640690	PIN			11
14	6670715	SOCKET			3
14	6641176	SEAL			11
14	6675250	HANDLE ASSY	L.H. - lift		1
14	6640690	PIN			13
14	6670715	SOCKET			3
14	6641176	SEAL			13
14	6677370	DECAL			1
15	6713349	GRIP			2
16	6713898	COVER			2
17	6715957	COVER			2
18	25GT-410	BOLT			8
19	6702990	BUSHING			4
20	6712398	CONTROL	R.H. - tilt		4
20	6712397	CONTROL	L.H. - lift		1
21	6713043	SPACER			4
22	12D-10	NUT			2
23	6716826	BOLT			2
24	6716977	BELLCRANK			2
25	6673710	BEARING	needle		4
26	6716916	WASHER	plastic		4
27	NAP	MOULDING	10.5'(266 mm) long - Order Ref. CONTROLS ELECTRICAL(28)		2
28	6654139	MOULDING	bulk - Sold Per Foot		x
29	6714726	PLUG			2
30	6665000	CLIP			2
31	6640699	CONNECTOR			1
31	6640700	LOCK			1
32	6640692	CONNECTOR			2
32	6640694	LOCK			2
33	6667144	CONNECTOR			1

DealerNation Quality Equipment Manuals - dealernation@aol.com

CONTROLS ELECTRICAL

Ref.N°	Part N°	Description	Remarks	Serial N°	Qty.
33	6667145	LOCK			1
34	6641179	CONNECTOR			1
34	6641180	LOCK			1
35	6665322	RIVET	female		2
36	6665321	RIVET	male		2
37	6532127	BOOT			2
38	6669224	BOLT			4
39	6674838	ACTUATOR ASSY			2
39	6674992	ACTUATOR			2
39	6670708	CONNECTOR	8-way		2
40	6673789	BEARING			4
41	25E-17	WASHER			8
42	98D-6	NUT			4
43	6718506	PIN			2
44	69G-436	BOLT			4
45	61D-4	NUT			5
46	NAP	LEVER ASSY	R.H. - tilt - Order 6718201 - Was 6718195 [A]		1
46	6718201	LEVER ASSY	R.H. - lift		1
46	NAP	LEVER ASSY	L.H. - lift - Order 6718202 - Was 6718194 [A]		1
46	6718202	LEVER ASSY	L.H. - lift		1
47	6674879	FLANGE			4
48	6725193	HARNESS	AHC		1
49	58K-120	O-RING			x
50	6809777	BRACKET	AHC - Was 6807058 [A]		1
51	6719408	BRACKET			1
52	6675154	HOLDER			1
53	6675155	FUSE			1
54	25G-410	BOLT			2
55	59D-4	NUT			2
56	6571991	WASHER			2
57	6572026	SPRING			1
58	6728742	HARNESS	jumper - to enhance boom lift		1

DealerNation Quality Equipment Manuals - dealernation@aol.com

* CONTROLS ELECTRICAL
(Advanced Hand Control Option - W/ Push Button Float)

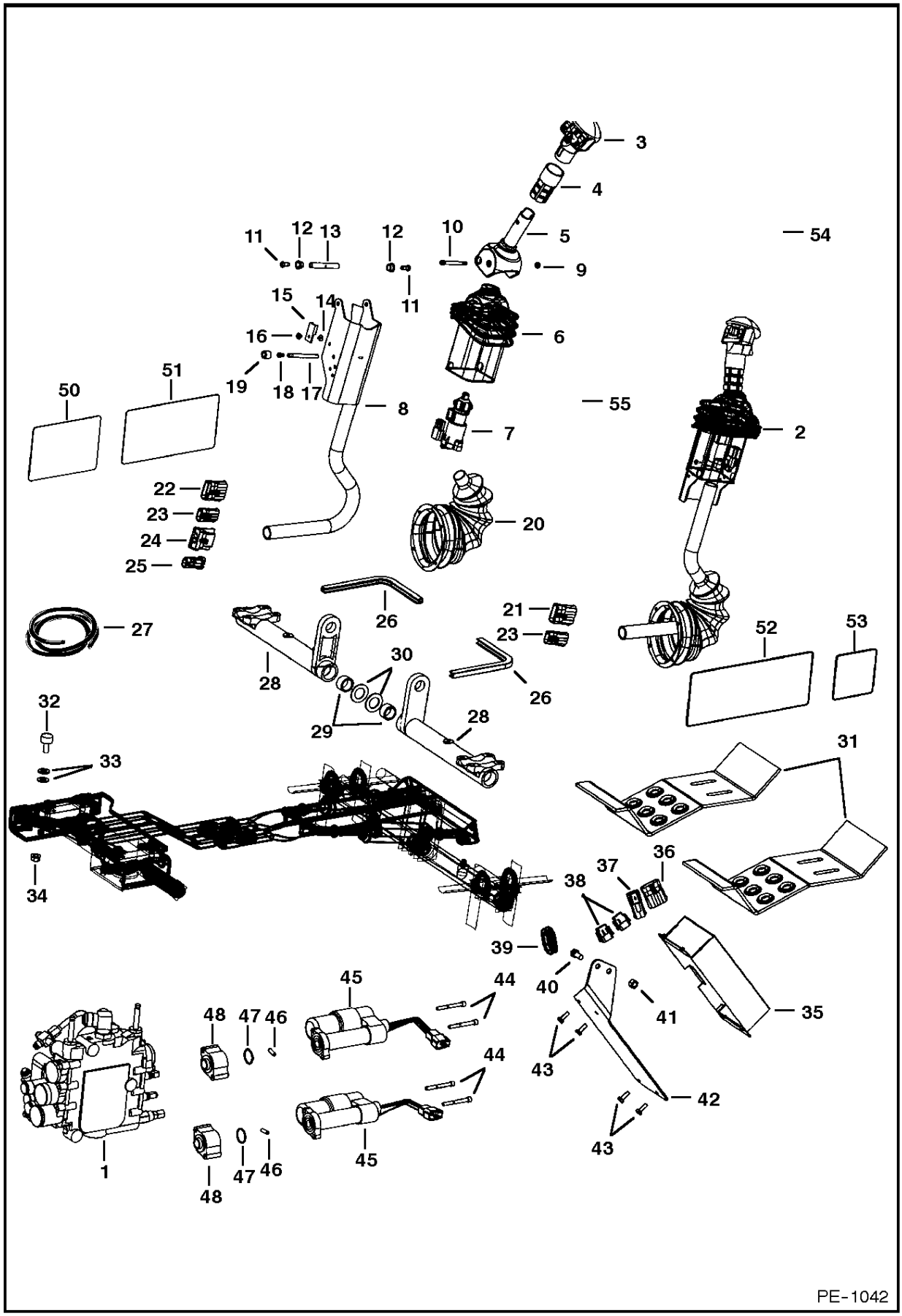

DealerNation Quality Equipment Manuals - dealernation@aol.com

*

Ref.N°	Part N°	Description	Remarks	Serial N°	Qty.
1		VALVE	See Page HYDRAULIC CONTROL VALVE(2)		1
2	6675742	LEVER	tilt - R.H.		1
2	6675750	LEVER	lift - L.H.		1
3	6675469	HANDLE ASSY	lift - R.H.		1
3	6675749	HANDLE	lift - L.H.		1
4	6713349	GRIP			2
5	6597774	HANDLE	R.H.		1
5	6717163	HANDLE	L.H.		1
6	6713898	COVER			2
7	6675741	SENSOR			2
7	6670706	CONNECTOR			1
7	6670715	SOCKET			3
7	6670710	LOCK			1
8	6719711	CHANNEL	L.H.		1
8	6719712	CHANNEL	R.H.		1
9	12D-10	NUT			2
10	6716826	BOLT			2
11	25GT-410	BOLT			8
12	6702990	BUSHING			4
13	6713043	SPACER			4
14	6665321	RIVET	male		2
15	6665000	CLIP			2
16	6665322	RIVET	female		2
17	6719834	SPACER	threaded		2
18	6727065	BOLT			4
19	6719835	SLEEVE			4
20	6532127	BOOT			2
21	6640692	CONNECTOR	10-pin		1
21	6640690	PIN			8
21	6640694	LOCK			1
21	6641176	SEAL			8
21	6646582	PLUG	cavity		1
22	6640692	CONNECTOR	10-pin		1
22	6640690	PIN			6
22	6640694	LOCK			1
22	6641176	SEAL			6
22	6646582	PLUG	cavity		4
23	6640699	CONNECTOR	3-pin		2
23	6640690	PIN			3
23	6641176	SEAL			3
23	6640700	LOCK			3
24	6667144	CONNECTOR	5-pin		2
24	6640690	PIN			3
24	6641176	SEAL			3
24	6646582	PLUG	cavity		1
24	6667145	LOCK			1
25	6641179	CONNECTOR	2-pin		1
25	6640690	PIN			2
25	6641176	SEAL			2
25	6641180	LOCK			1

DealerNation Quality Equipment Manuals - dealernation@aol.com

*

Ref.N°	Part N°	Description	Remarks	Serial N°	Qty.
26	NAP	MOULDING	'10.5'(266,7 mm)long-Order Ref. HAND CONTROL KIT(27)		1
27	6654139	MOULDING	bulk - Sold Per Foot		x
28	6716977	BELLCRANK			2
29	6673710	BEARING			4
30	6716916	WASHER	plastic		4
31	6712365	STEP			2
32	6673789	BEARING			4
33	27E-6	WASHER			8
34	98D-6	NUT			4
35	6676153	CONTROLLER			1
36	6640692	CONNECTOR	10-pin		1
36	6640690	PIN			9
36	6640694	LOCK			1
36	6641176	SEAL			9
36	6646582	PLUG	cavity		1
37	6648307	CONNECTOR	2-pin		1
38	6670709	CONNECTOR	8-pin		2
39	6714726	PLUG			1
40	17C-612	BOLT			2
41	61D-6	NUT			2
42	6725165	MOUNT			1
43	17C-412	BOLT			4
44	69G-436	BOLT			4
45	6674838	ACTUATOR ASSY			2
46	6718506	PIN			2
47	58K-120	O-RING			2
48	6725128	ADAPTER			2
49	com36.}H~10{ M				x
50	6718704	DECAL			1
51	6727155	DECAL		5622 15999 & Bel	1
51	6728328	DECAL		5622 16001 & Abv	1
52	6718699	DECAL			1
53	6718706	DECAL			1
54	6808364	HARNESS		5622 15999 & Bel	1
54	6726925	HARNESS		5622 16001 & Abv	1
55	6670707	CONNECTOR	3-pin		1
55	6670715	SOCKET			3
55	6670711	LOCK			1
56	6571991	WASHER	spring		2
57	6572026	SPRING	compression		1
58	6809777	BRACKET	ACS/AHC		1
59	59D-6	NUT			1
60	17C-612	BOLT			1
61	6728742	HARNESS	jumper - to enhance boom lift		1
62	6729054	HARNESS	w/capacitor	5622 16001 & Abv	1

DealerNation Quality Equipment Manuals - dealernation@aol.com

ALTERNATOR
(Bobcat)

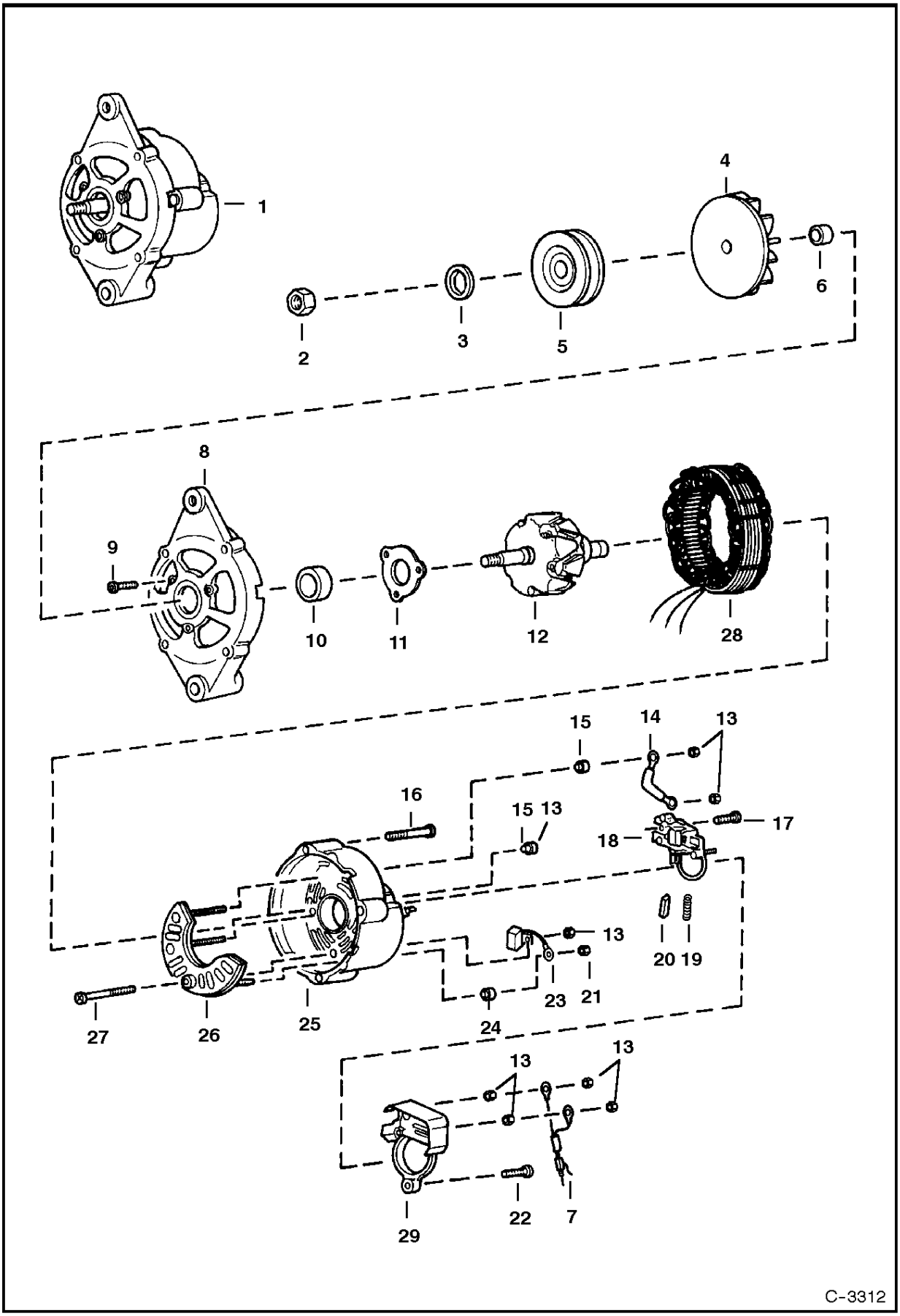

DealerNation Quality Equipment Manuals - dealernation@aol.com

ALTERNATOR

Ref.N°	Part N°	Description	Remarks	Serial N°	Qty.
1	6661611	ALTERNATOR	Ref. ALTERNATOR(7)-ALTERNATOR(29) - Less Fan & Pulley		1
2	6659371	NUT			1
3	6571554	SPACER			1
4	6659375	FAN			1
5	6576440	PULLEY			1
6	6632210	SPACER			1
7	6659400	CONNECTOR	assy.		1
8	6659376	BRACKET	W/Ref. ALTERNATOR(9) - ALTERNATOR(11)		1
9	6659378	BOLT			3
10	6659379	BEARING			1
11	6632228	RETAINER			1
12	6659380	ROTOR			1
13	6659387	NUT			7
14	6659397	TERMINAL			1
15	6659386	HOLDER			2
16	6659392	BOLT			3
17	6659396	SCREW			2
18	6659393	REGULATOR	W/Ref. ALTERNATOR(19) & ALTERNATOR(20)		1
19	6659395	SPRING			2
20	6659394	BRUSH			2
21	6659391	NUT			1
22	6659399	SCREW			1
23	6659388	CONDENSER			1
24	6659390	HOLDER			1
25	6659382	BRACKET	rear - W/Ref. ALTERNATOR(13), ALTERNATOR(15), ALTERNATOR(21) & ALTERNATOR(23) - ALTERNATOR(27)		1
26	6659384	RECTIFIER			1
27	6659385	SCREW			1
28	6659381	STATOR			1
29	6659398	COVER			1

DealerNation Quality Equipment Manuals - dealernation@aol.com

* ALTERNATOR

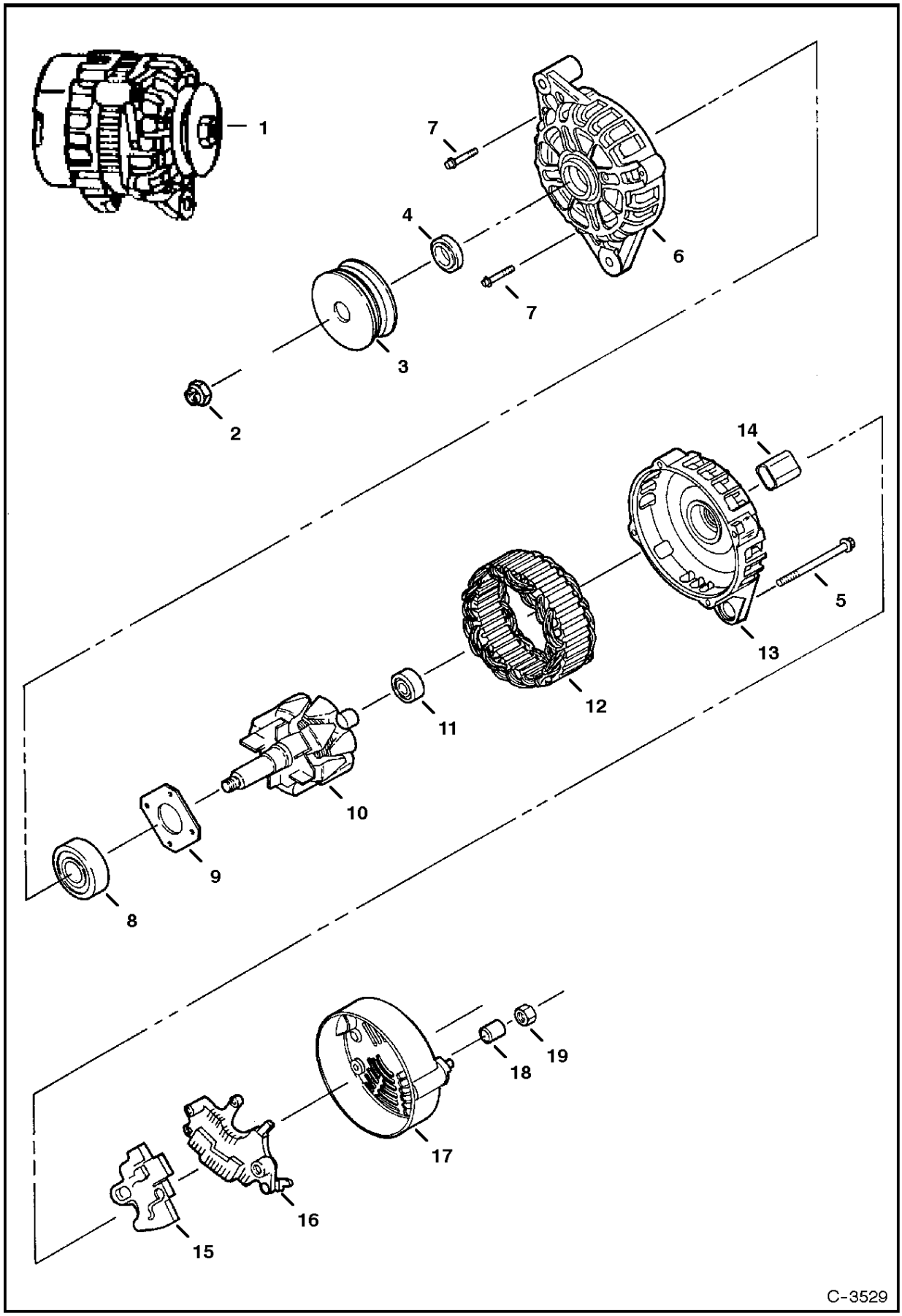

DealerNation Quality Equipment Manuals - dealernation@aol.com

*

Ref.N°	Part N°	Description	Remarks	Serial N°	Qty.
1	6675292	ALTERNATOR	90 amp - Ref. * ALTERNATOR(2)-* ALTERNATOR(19)		1
2	6677497	NUT			1
3	6677496	PULLEY			1
4	6677495	SPACER			1
5	6677494	BOLT			4
6	6677491	BRACKET	front		1
7	6677817	BOLT			4
8	6677818	BEARING			1
9	6677819	RETAINER			1
10	6677492	ROTOR ASSY			1
11	6677820	BEARING			1
12	6677493	STATOR ASSY			1
13	6677490	BRACKET			1
14					x
15	6677489	(REGULATOR ASSY			1
16	6677488	RECTIFIER ASSY			1
17	6677487	COVER			1
18	6677485	SPACER			1
19	6677486	NUT			1

DealerNation Quality Equipment Manuals - dealernation@aol.com

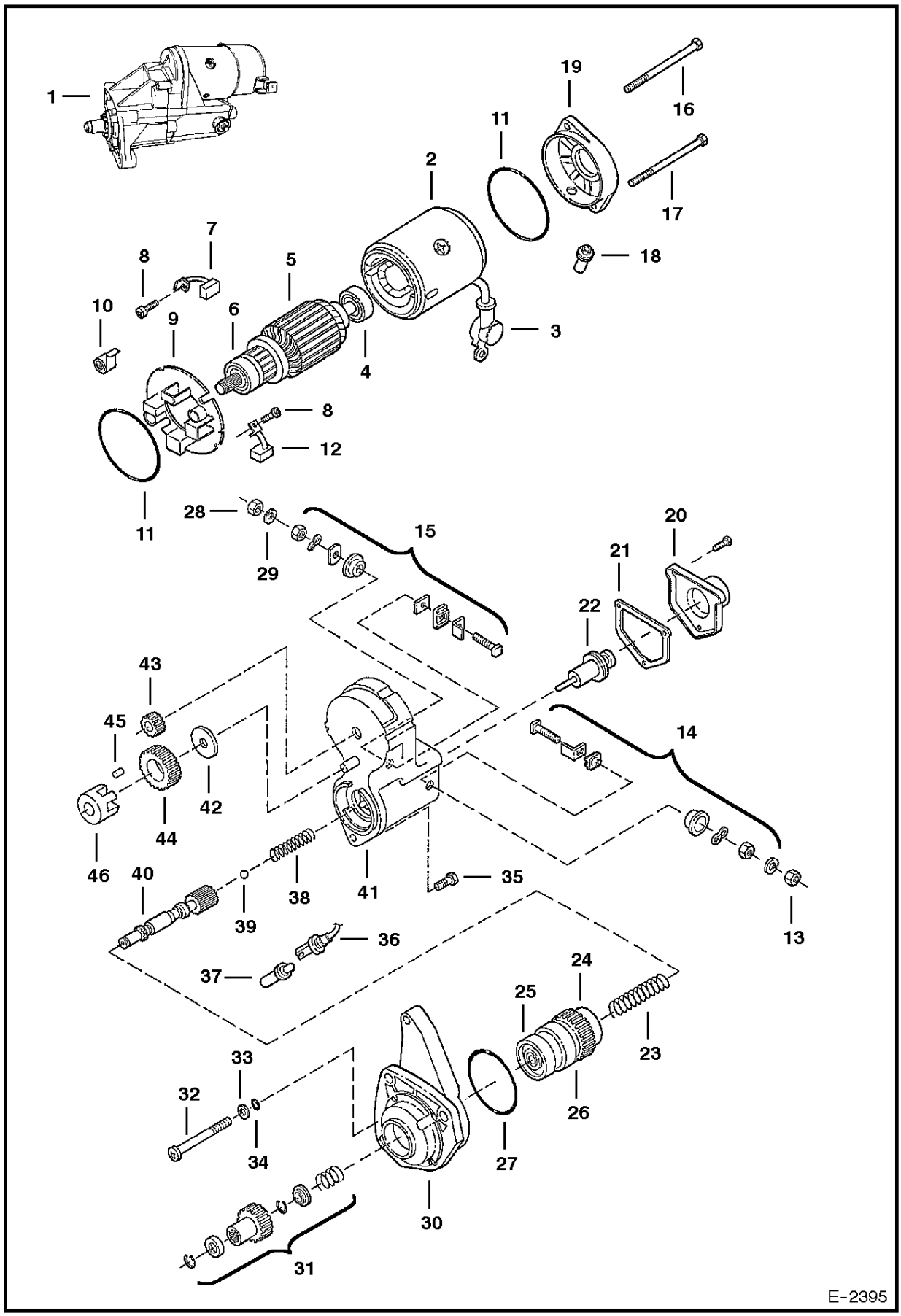

DealerNation Quality Equipment Manuals - dealernation@aol.com

STARTER

Ref.N°	Part N°	Description	Remarks	Serial N°	Qty.
1	6667320	STARTER			1
2	6669345	YOKE			1
3	6669365	BOOT			1
4	6669349	BEARING			1
5	6669346	ARMATURE ASSY.			1
6	6669347	BEARING			1
6	6669348	BEARING			1
7	6669371	BRUSHES			2
8	6666634	BOLT	W/washer		4
9	6669361	HOLDER	brush		1
10	6669362	SPRING	brush		4
11	6669368	O-RING			2
12	6669370	BRUSHES			2
13	6666637	NUT			1
14	6669358	KIT	starter		1
15	6669357	KIT	starter		1
16	6669367	BOLT			1
17	6669366	BOLT			1
18	6669372	COVER			1
19	6669436	FRAME	end		1
20	6632434	COVER	solenoid		1
21	6632433	GASKET	switch		1
22	6632432	PLUNGER			1
23	6632441	SPRING	compression		1
24	6669353	BEARING			1
25	6669352	BEARING			1
26	6666622	DRIVE	Ref. STARTER (23), STARTER (24), STARTER (25), STARTER (31) & STARTER (40)		1
27	6666632	O-RING			1
28	6666628	NUT			1
29	6666630	WASHER			1
30	6669434	HOUSING			1
31	6669350	KIT	starter		1
32	6666633	BOLT			3
33	6666629	WASHER			3
34	6666631	O-RING			3
35	6666635	BOLT	W/washer		1
36	6669359	TERMINAL			1
37	6669360	BUSHING	drain		1
38	6632436	SPRING	compression oil		1
39	6632435	BALL	steel		1
40	6669354	SHAFT			1
41	6669435	SWITCH ASSY.	magnetic		1
42	6666624	SNAP RING			1
43	6669369	PINION			1
44	6669364	PINION			1
45	6632430	ROLLER	clutch		5
46	6632429	RETAINER			1

DealerNation Quality Equipment Manuals - dealernation@aol.com

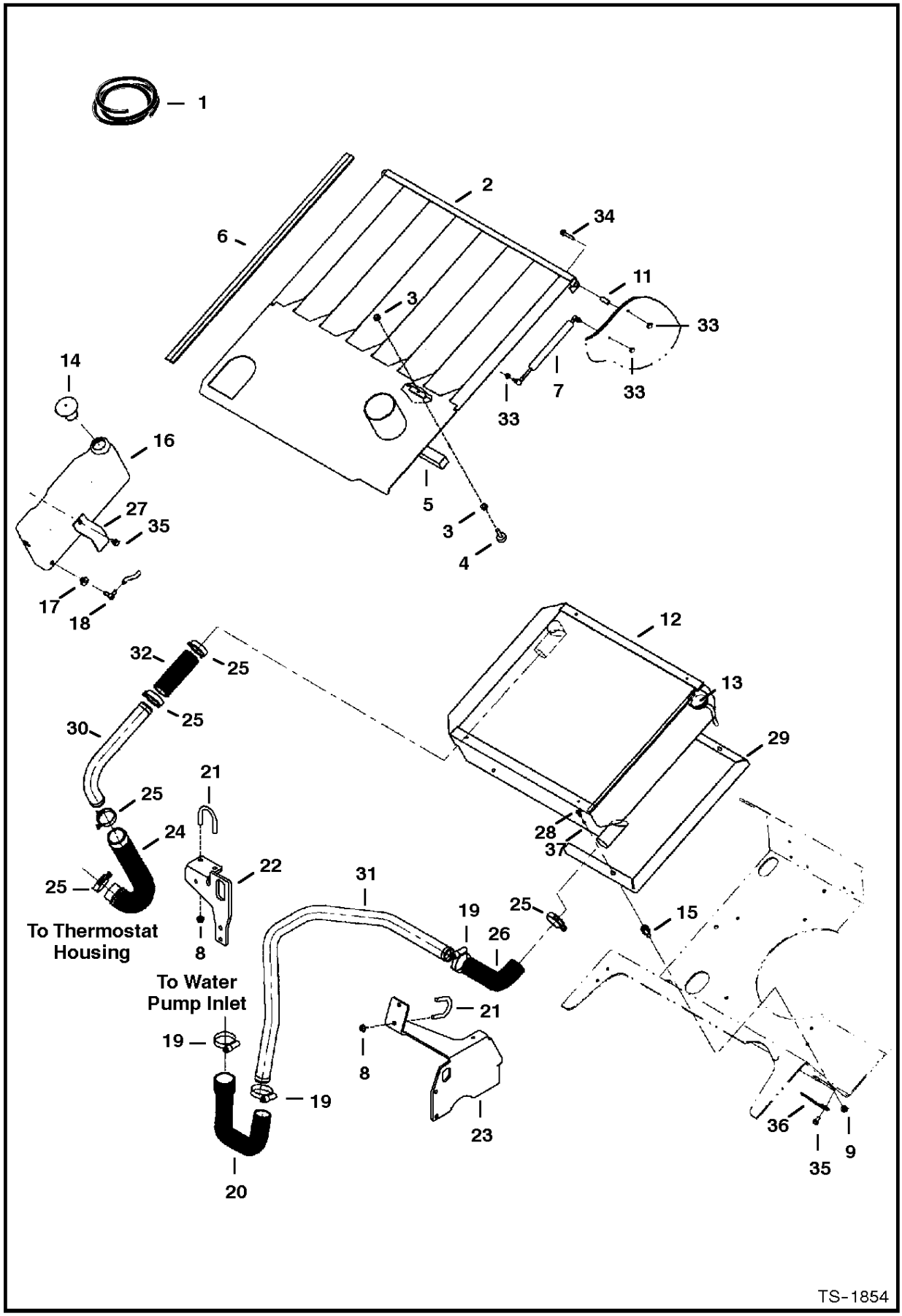

DealerNation Quality Equipment Manuals - dealernation@aol.com

COOLING SYSTEM

Ref.N°	Part N°	Description	Remarks	Serial N°	Qty.
1	6646705	MOULDING	bulk - Sold Per Foot		x
2	6806016	SHIELD			1
3	57D-5	NUT			4
4	6655399	BUMPER			2
5	6801050	INSULATION			1
6	NAP	SEAL	Order Ref. COOLING SYSTEM(1) - 35.51' (902 mm) long		2
7	6630797	GAS SPRING			2
8	57D-6	NUT			15
9	97D-6	NUT		& Bel	4
10	6579613	STOP	cab		2
11	6807369	BUSHING			2
12	6674691	EXCHANGE			1
13	6646678	CAP	water - Was 6673313 [A]		1
14	6702797	CAP			1
15	6803150	SPACER		& Bel	4
16	6805675	TANK			1
17	6553411	BUSHING			1
18	6553412	ELBOW			1
19	6671626	CLAMP			3
20	6801574	HOSE			1
21	6801604	U-BOLT			2
22	6800742	BRACKET	See page ENGINE & ATTACHING PARTS(3)		1
23	6807187	MOUNT	See page ENGINE & ATTACHING PARTS(3)		1
24	NAP	HOSE ASSY	Order 6805812, 6671618 & 6670619 - Was 6806153 [A]		1
24	6805812	HOSE			1
24	6671618	SHIELD			1
24	6660619	CLAMP			2
25	5HM-53	CLAMP			5
26	6805417	HOSE	radiator		1
27	6805682	BRACKET	water bottle		1
28	17C-612	BOLT		& Bel	4
29	6805198	SPACER		& Bel	2
30	6805813	TUBELINE			1
31	6805814	TUBELINE			1
32	6806281	HOSE			1
33	46D-5	NUT			6
34	35C-528	BOLT			2
35	84G-3710	BOLT		& Bel	3
35	84G-3710	BOLT		& Abv	1
36	6805203	COVER		& Bel	1
37	25E-21	WASHER			1
38	6668573	SCREW			2

DealerNation Quality Equipment Manuals - dealernation@aol.com

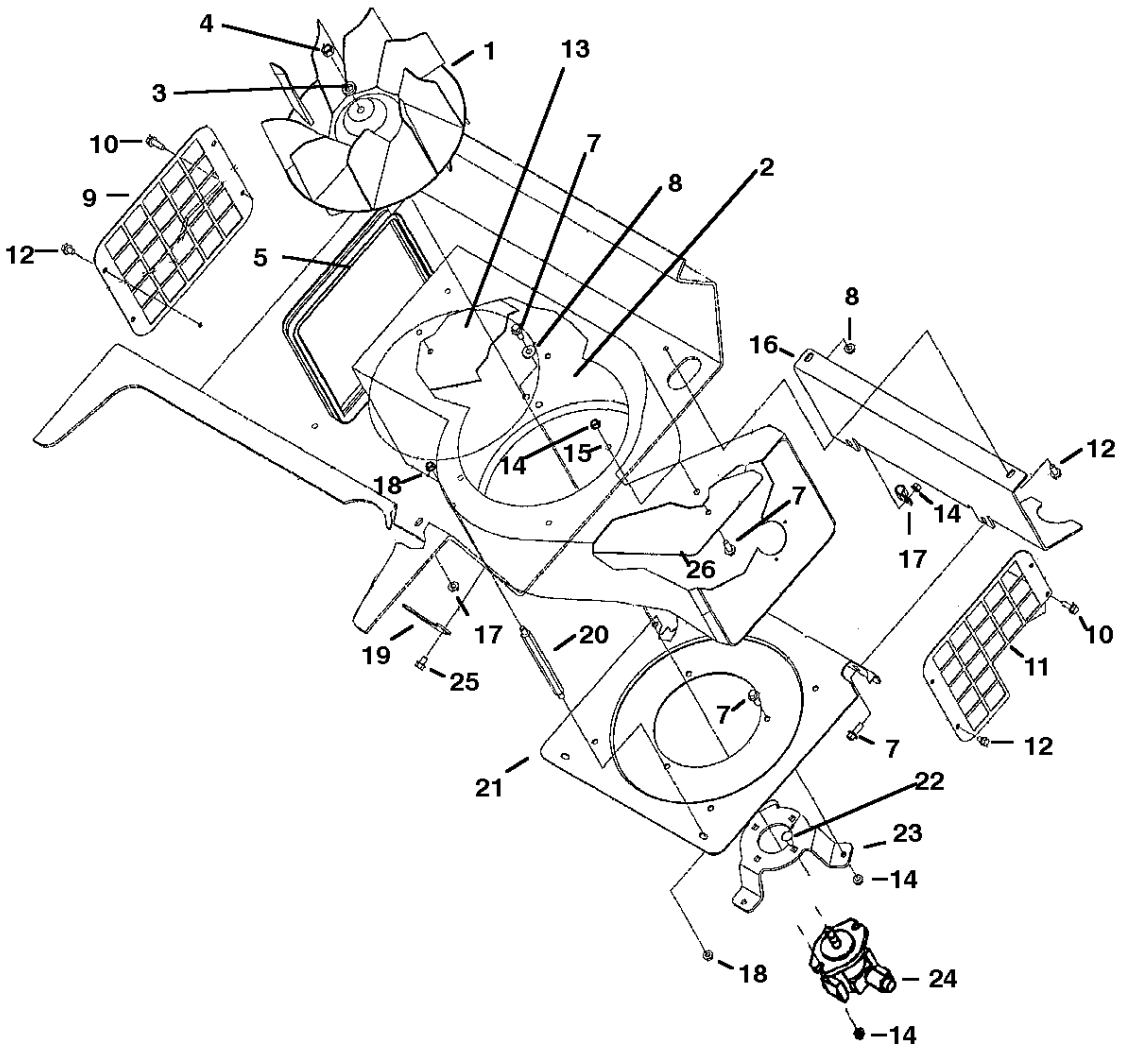

DealerNation Quality Equipment Manuals - dealernation@aol.com

COOLING SYSTEM

Ref.N°	Part N°	Description	Remarks	Serial N°	Qty.
1	6804741	FAN			1
2	6806151	HOUSING	fan		1
3	6701097	WASHER			1
4	96D-8	NUT			1
5	NAP	SEAL	47.44'' (1205 mm) long - Order Ref. COOLING SYSTEM (6)		2
6	6667586	SEAL	Bulk - Sold Per Foot		x
7	35C-616	BOLT		& Abv	13
7	35C-616	BOLT		& Bel	9
8	25E-18	WASHER			2
9	6596936	SCREEN	LH		1
10	84G-3720	BOLT			8
11	6596937	SCREEN	RH		1
12	84G-3716	BOLT			8
13	6806081	PLATE			1
14	57D-6	NUT			28
15	6803698	PLATE			1
16	6805818	BRACKET	hyd. tank - Was 6596938 [B, D]		1
17	30H-35	CLIP			1
18	97D-6	NUT		& Bel	8
18	97D-6	NUT		& Abv	4
19	6805203	COVER		& Bel	1
20	6577605	SPACER			2
21	6806179	MOUNT	Was 6596939 [B]		1
22	37C-620	BOLT			2
23	6596940	BRACKET	fan		1
24	6674740	HYD FAN	See Page HYDRAULIC FAN MOTOR(4)		1
25	84G-3710	BOLT		& Bel	2
26	6806082	PLATE			1

DealerNation Quality Equipment Manuals - dealernation@aol.com

ENGINE & ATTACHING PARTS
(Air Cleaner & Muffler)

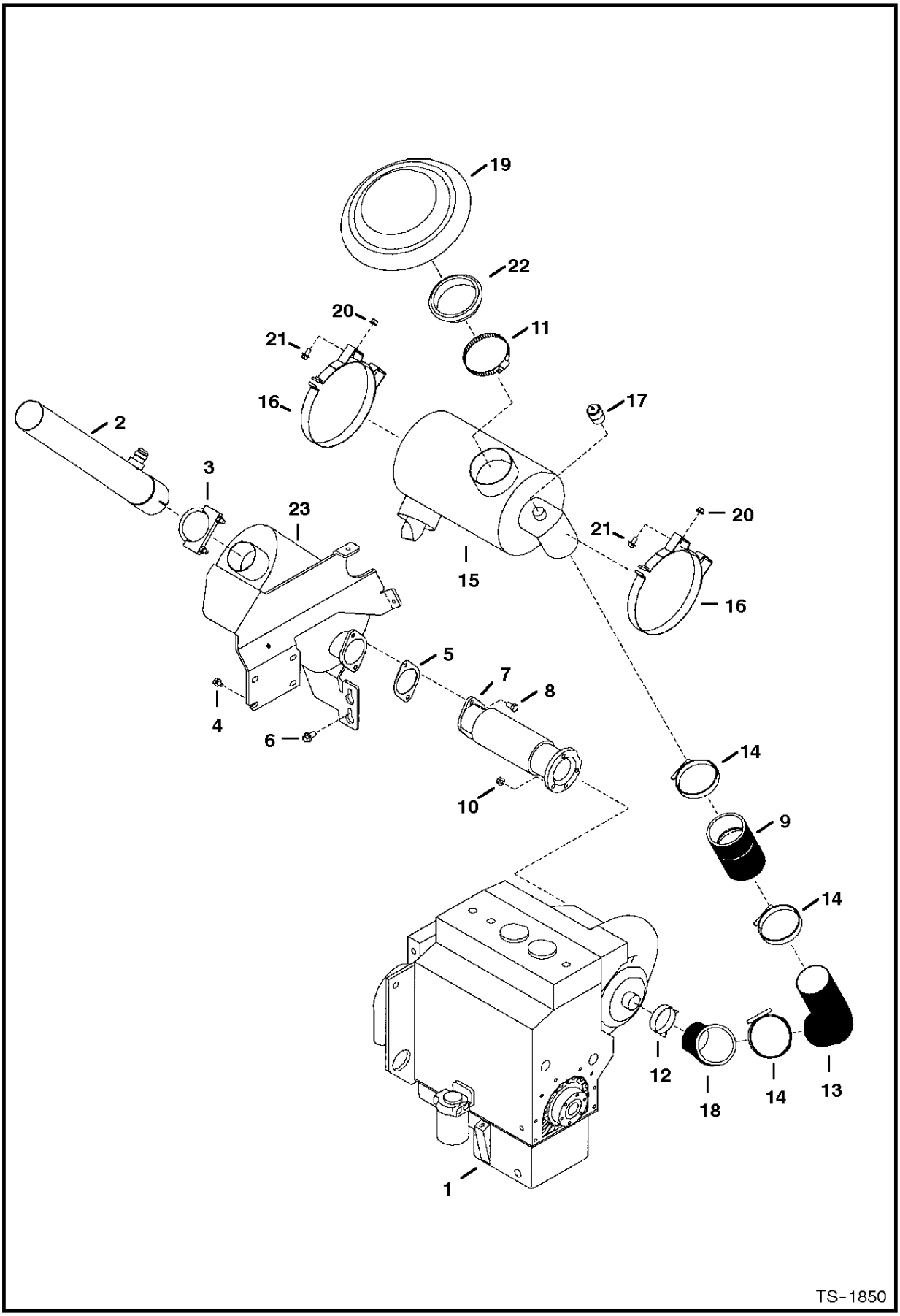

DealerNation Quality Equipment Manuals - dealernation@aol.com

ENGINE & ATTACHING PARTS

Ref.N°	Part N°	Description	Remarks	Serial N°	Qty.
1	6669595	ENGINE	See Page ENGINE & GASKET KIT(5)		1
2	6807156	TUBE	exhaust		1
3	6660863	CLAMP	assy.		1
4	6668287	SCREW			4
5	6802731	GASKET			1
6	29CM-1020	BOLT			4
7	6675379	PIPE	exhaust	5622 15006 & Abv	1
7	6669677	PIPE	exhaust	5622 15005 & Bel	1
8	17C-612	BOLT			2
9	6804067	HOSE	air cleaner		1
10	49DM-8	NUT			3
11	44H-64	CLAMP			1
12	5HM-61	CLAMP			1
13	6804069	HOSE	air filter		1
14	6670598	CLAMP			3
15	6672636	AIR CLEANER	See Page AIR CLEANER(1)		1
16	6670562	BAND			2
17	6668907	GAUGE	restrictor		1
18	6804202	HOSE	reducer		1
19	6670564	COVER	air inlet		1
20	55D-5	NUT			4
21	37C-512	BOLT	Was 35C-510 [B, D]		4
22	6804454	SEAL	#air filter - 12.25' (311.15 mm) long		1
23	6675277	MUFFLER	exhaust		1

DealerNation Quality Equipment Manuals - dealernation@aol.com

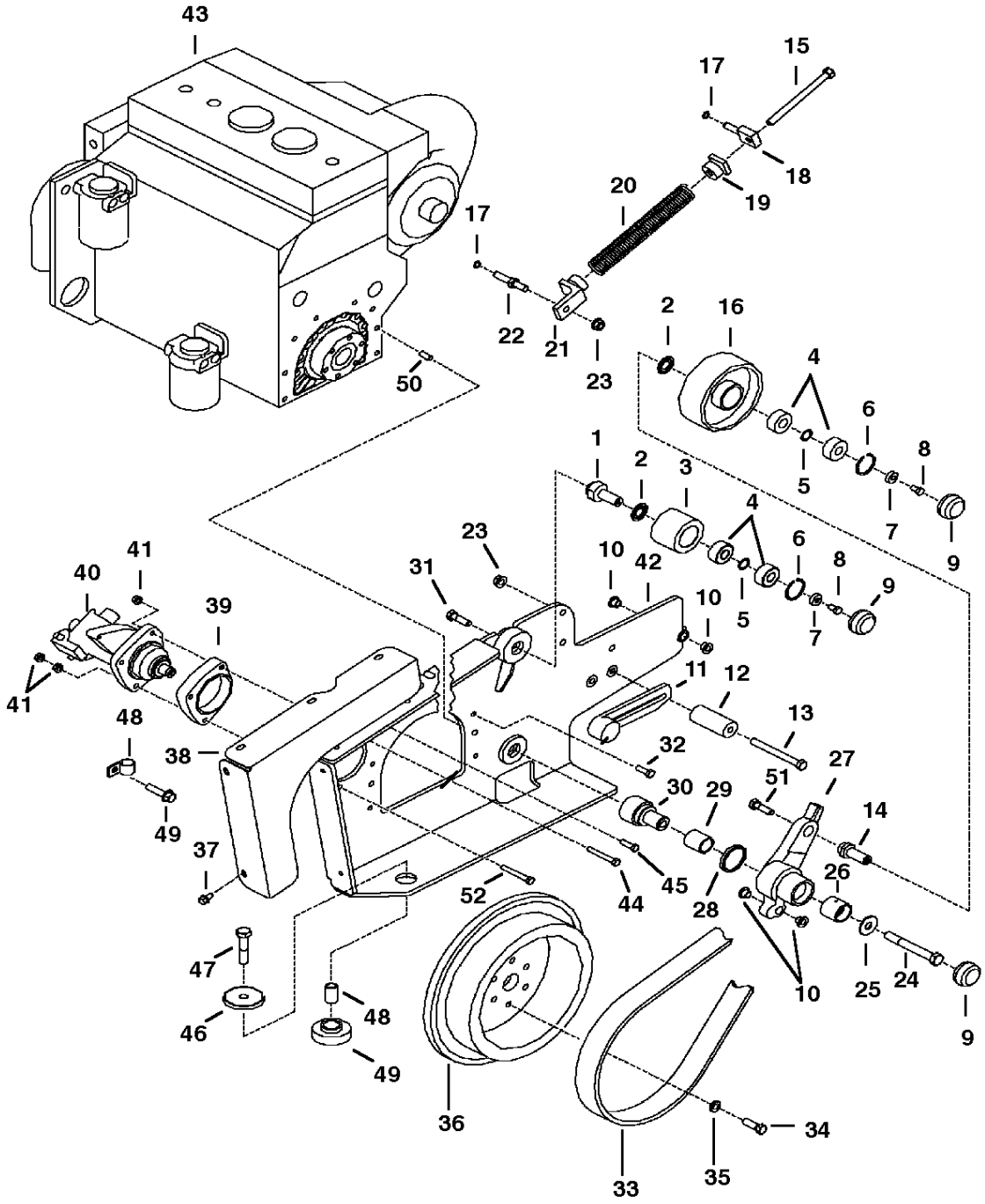

DealerNation Quality Equipment Manuals - dealernation@aol.com

ENGINE & ATTACHING PARTS

Ref.N°	Part N°	Description	Remarks	Serial N°	Qty.
1	6800293	PIN	top idler		1
2	6665307	SEAL			2
3	6800688	PULLEY	top idler		1
4	6661229	BEARING			4
5	6701159	SHIM			2
6	6665308	RETAINER			2
7	6707697	WASHER	counterbored		2
8	17C-612	BOLT			4
9	6660967	CAP	use 6658266 grease		3
10	1313116	BUSHING			4
11	6800238	STOP	idler		1
12	6801005	SPACER		& Bel	2
12	6810144	WASHER		& Abv	2
13	17C-880	BOLT		& Bel	2
13	17C-828	BOLT		& Abv	2
14	6707654	IDLER	spindle		1
15	6800450	BOLT			1
16	6800475	IDLER	drive		1
17	6518955	RETAINER			2
18	6587182	PIN	swivel		1
19	6568425	STOP			1
20	6569498	SPRING ASSY			1
21	6596850	BRACKET	idler		1
22	6596851	PIN	idler		1
23	55D-8	NUT			1
24	17C-1080	BOLT			1
25	6596839	WASHER			1
26	6671035	BUSHING			1
27	6802839	LINK	idler		1
28	6661377	SEAL			1
29	6802852	BEARING			1
30	6802854	PIVOT PIN			1
31	17C-828	BOLT			1
32	1CM-1030	BOLT			6
33	6669565	BELT	drive		1
34	18C-824	SCREW			6
35	6557929	WASHER			8
36	6800808	FLYWHEEL ASSY	engine		1
36	6515771	RING GEAR			1
37	84G-3712	BOLT			3
38	6805563	SHIELD	drive		1
39	6562480	BLOCK	starter		1
40	6667320	STARTER	See Page STARTER(2)		1
41	97D-6	NUT			4
42	6805974	MOUNT ASSY	rear engine - Was 6800320 [A]		1
43	6669595	ENGINE	See Page ENGINE & GASKET KIT(5)		1
44	17C-644	BOLT			2
45	17C-620	BOLT			2
46	6802984	WASHER			4
47	17C-1248	BOLT			4

DealerNation Quality Equipment Manuals - dealernation@aol.com

ENGINE & ATTACHING PARTS

Ref.N°	Part N°	Description	Remarks	Serial N°	Qty.
48	6806112	SPACER	tube		4
49	6661785	MOUNT	engine		4
50	3725347	DOWEL			1
51	17C-816	BOLT			1
52	17C-652	BOLT			1

DealerNation Quality Equipment Manuals - dealernation@aol.com

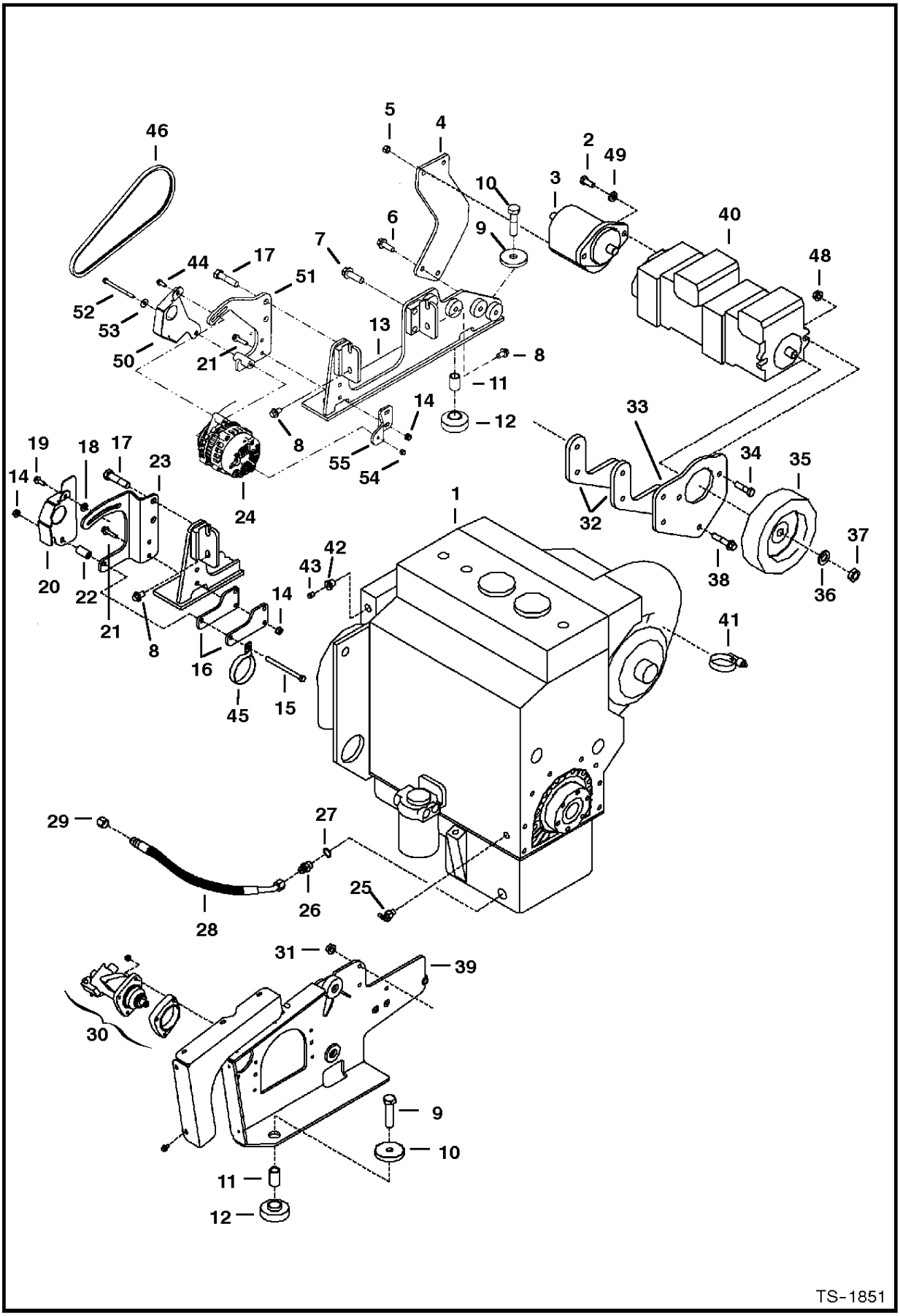

DealerNation Quality Equipment Manuals - dealernation@aol.com

ENGINE & ATTACHING PARTS

Ref.N°	Part N°	Description	Remarks	Serial N°	Qty.
1	6669595	ENGINE	See Page ENGINE & GASKET KIT(5)		1
2	17C-820	BOLT			2
3	6674739	PUMP	See Page 107		1
4	6805740	MOUNT	pump		1
5	53DM-12	NUT	Was 1DM-12 [B, D]		2
6	35C-824	BOLT			2
7	29CM-1650	BOLT			2
8	29CM-1220	BOLT			4
9	17C-1248	BOLT			4
10	6802984	WASHER			4
11	6806112	SPACER	tube - 1.525" long		4
12	6661785	MOUNT			4
13	6805743	MOUNT ASSY	front engine		1
14	57D-6	NUT		5622 15001-15999	7
14	57D-6	NUT		5622 16001 & Abv	6
15	17C-680	BOLT		5622 15001-15999	1
16	6628129	PLATE	alternator	5622 15001-15999	2
17	1CM-1665	BOLT			2
18	25E-16	WASHER		5622 15001-15999	1
19	35C-520	BOLT		5622 15001-15999	1
20	6803142	SHIELD	alternator	5622 15001-15999	1
21	35C-624	BOLT		5622 15001-15999	3
22	6803151	SPACER			1
23	6596840	BRACKET	alternator	5622 15001-15999	1
24		ALTERNATOR	See Page ALTERNATOR(1)		1
25	6513679	DRAINCOCK			1
26	15K-6	CONNECTOR			1
27	6571723	WASHER	retainer		1
28	6805079	HOSE			1
29	36K-6	CAP			1
30	6667320	STARTER	See Page STARTER(2)		1
31	55D-8	NUT			3
32	6596847	MOUNT	pump		2
33	6596846	MOUNT	pump		1
34	17C-832	BOLT			2
35	6805533	PULLEY	pump		1
36	6805550	WASHER			1
37	6805549	NUT			1
38	35C-840	BOLT			3
39	6805974	MOUNT ASSY	rear engine		1
40	6674238	PUMP			1
41	6671626	CLAMP			2
42	19F-4	ADAPTER			1
43	6672330	VALVE	air bleed		1
44	29CM-820	BOLT		5622 16001 & Abv	1
45	30H-60	CLIP		5622 15001-15999	1
46	6617875	BELT	alternator		1
47	84G-3712	BOLT			12
48	55D-8	NUT			6
49	6557929	WASHER			8

DealerNation Quality Equipment Manuals - dealernation@aol.com

ENGINE & ATTACHING PARTS

Ref.N°	Part N°	Description	Remarks	Serial N°	Qty.
50	6809072	SHIELD		5622 16001 & Abv	1
51	6807622	BRACKET		5622 16001 & Abv	1
52	17C-568	BOLT		5622 16001 & Abv	1
53	27E-5	WASHER		5622 16001 & Abv	1
54	59D-5	NUT		5622 16001 & Abv	1
55	6809569	BRACKET		5622 16001 & Abv	1

DealerNation Quality Equipment Manuals - dealernation@aol.com

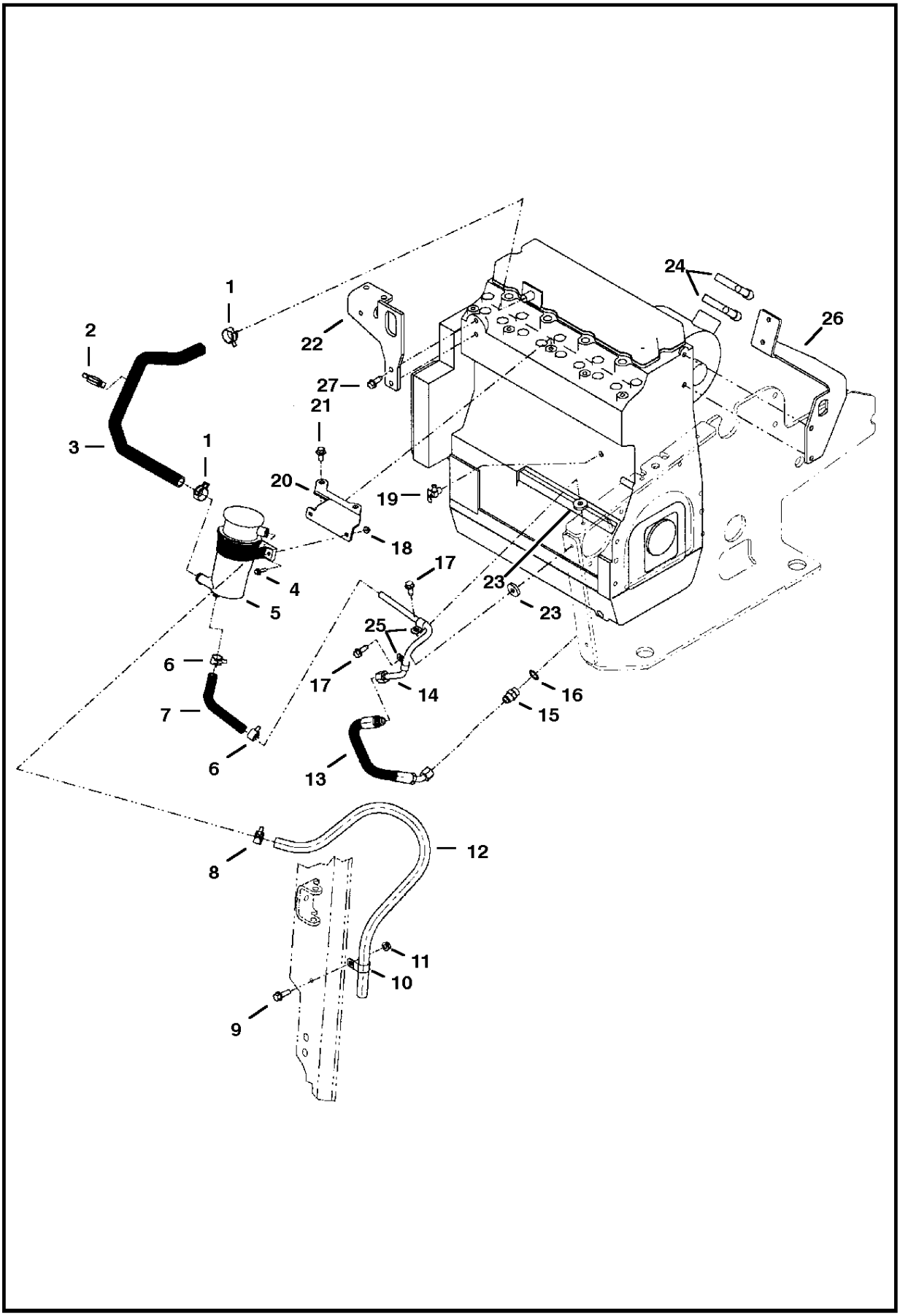

DealerNation Quality Equipment Manuals - dealernation@aol.com

ENGINE & ATTACHING PARTS

Ref.N°	Part N°	Description	Remarks	Serial N°	Qty.
1	5HM-27	CLAMP			2
2	6675704	CLAMP			1
3	6675703	HOSE			1
4	29CM-625	BOLT			2
5	6675702	OIL SEPERATOR			1
6	5HM-20	CLAMP			2
7	6807278	HOSE			1
8	5HM-23	CLAMP			1
9	35C-620	BOLT			1
10	30H-50	CLAMP			1
11	57D-6	NUT			1
12	6672296	HOSE	breather		1
12	6671651	SPRING	inside of hose		1
13	6807277	HOSE			1
14	6807276	TUBELINE			1
15	15K-6	CONNECTOR	W/Ref. ENGINE & ATTACHING PARTS(16)		1
16	6571723	WASHER			1
17	84G-3716	BOLT			2
18	43DM-6	NUT			2
19	6513679	DRAINCOCK			1
20	6807275	BRACKET			1
21	29CM-1020	BOLT			2
22	6800742	BRACKET	See Page COOLING SYSTEM(1)		1
23	6704484	WASHER			2
24	6671626	CLAMP			2
25	30H-31	CLAMP			2
26	6807187	MOUNT	engine - See Page COOLING SYSTEM(1)		1
27	6668573	SCREW			2

DealerNation Quality Equipment Manuals - dealernation@aol.com

THROTTLE

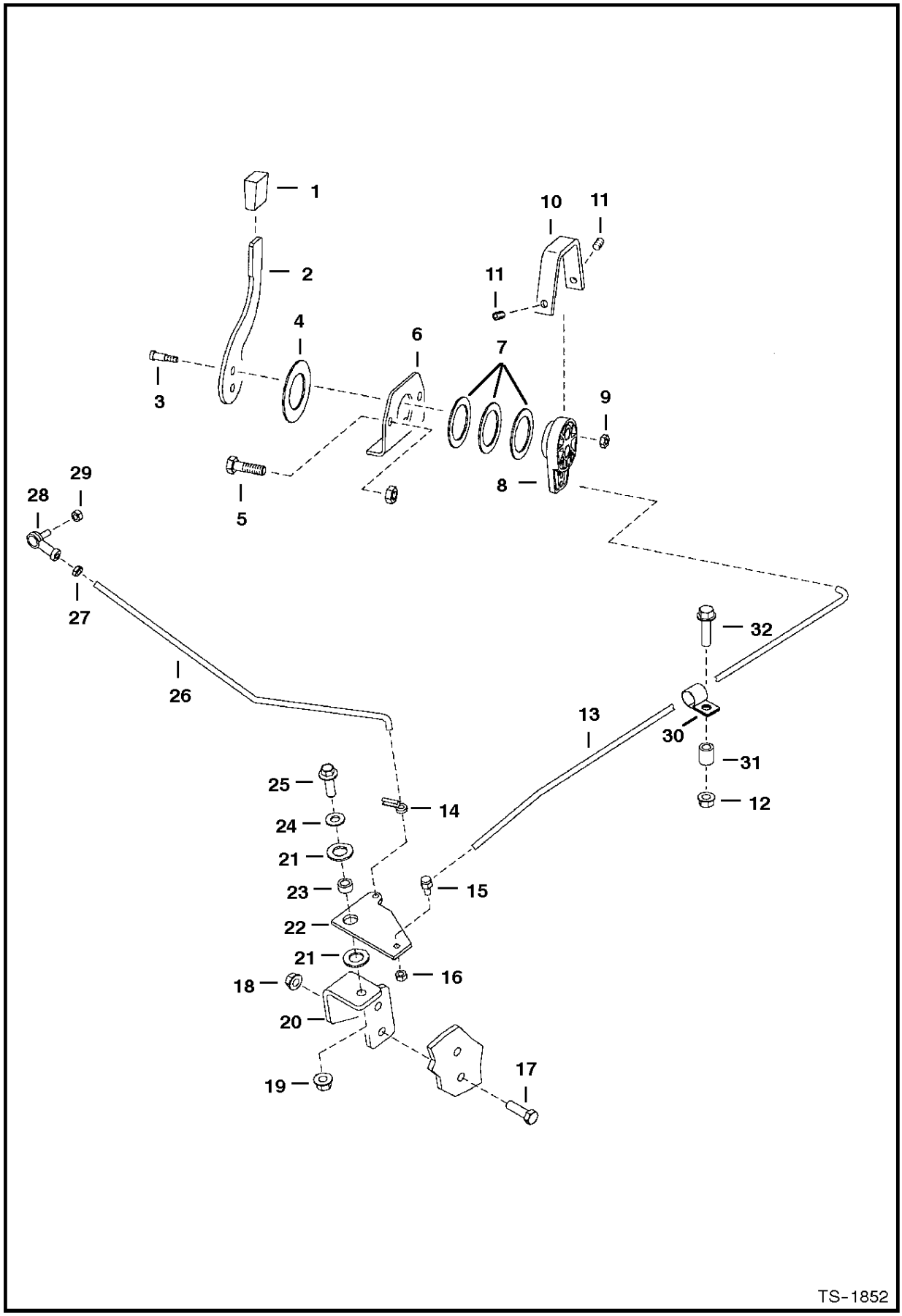

DealerNation Quality Equipment Manuals - dealernation@aol.com

THROTTLE

Ref.N°	Part N°	Description	Remarks	Serial N°	Qty.
1	6564452	GRIP			1
2	6705452	LEVER			1
3	35C-610	BOLT			2
4	6567962	WASHER			1
5	84G-3724	BOLT			3
6	6576262	MOUNT			1
7	6630945	WASHER			3
8	6709022	LEVER			1
9	85D-5	NUT			2
10	6576261	COVER			1
11	6706572	SET SCREW			2
12	57D-6	NUT			1
13	6800109	ROD	throttle		1
14	6512274	CLIP			1
15	6557291	BALL JOINT			1
16	85D-4	NUT			1
17	17C-620	BOLT			2
18	55D-6	NUT			2
19	83D-6	NUT			1
20	6800111	MOUNT			1
21	6700170	WASHER			2
22	6567407	LEVER	throttle		1
23	6564343	BUSHING			1
24	25E-17	WASHER			1
25	35C-620	BOLT			1
26	6800110	ROD	throttle		1
27	8D-4	NUT			1
28	6631036	BALL JOINT			2
29	86D-4	NUT			2
30	30H-23	CLAMP			1
31	6705484	BUSHING			1
32	35C-624	BOLT			1

DealerNation Quality Equipment Manuals - dealernation@aol.com

HYDRAULIC FAN MOTOR

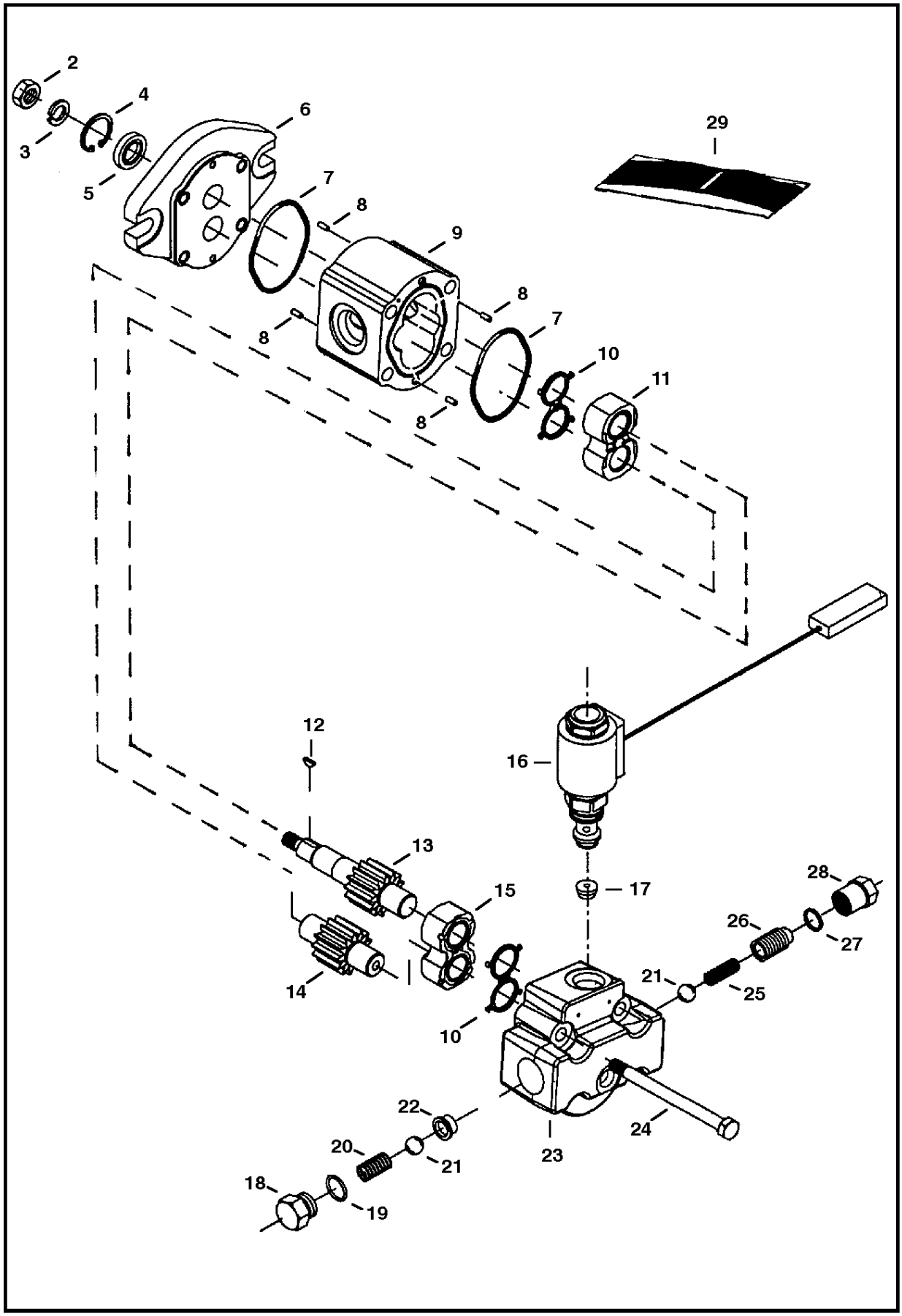

DealerNation Quality Equipment Manuals - dealernation@aol.com

HYDRAULIC FAN MOTOR

Ref.N°	Part N°	Description	Remarks	Serial N°	Qty.
1	6674740	HYD FAN			1
2	6675803	SEAL KIT			1
3	6675804	WASHER			1
4	6675816	SNAP RING			1
5	6675817	SEAL			1
6	6675821	FLANGE			1
7	6675815	SEAL			2
8	6662929	DOWEL PIN			4
9	NSS	BODY			1
10	6675820	SEAL			2
11	NSS	HOLDER			1
12	6675805	KEY			1
13	NSS	GEAR			1
14	NSS	GEAR			1
15	NSS	HOLDER			1
16	6671025	COIL			1
16	6676549	STEM	Was 6667687 [B, D]		1
16	54K-20028	O-RING			2
16	6668820	NUT			1
16	6672515	SEAL KIT	Was 6669732 [B, D]		1
17	6675806	ORIFICE			1
18	NSS	PLUG			1
19	6675818	SEAL			1
20	NSS	SPRING			1
21	NSS	BALL			2
22	NSS	RETAINER			1
23	6675822	END COVER			1
24	6675823	SCREW			4
25	NSS	SPRING			1
26	NSS	SCREW			1
27	6675819	GASKET			1
28	NSS	PLUG			1
29	6675814	SEAL KIT	Ref. HYDRAULIC FAN MOTOR(4), HYDRAULIC FAN MOTOR(5), HYDRAULIC FAN MOTOR(7), HYDRAULIC FAN MOTOR(10), HYDRAULIC FAN MOTOR(19) &		1

DealerNation Quality Equipment Manuals - dealernation@aol.com

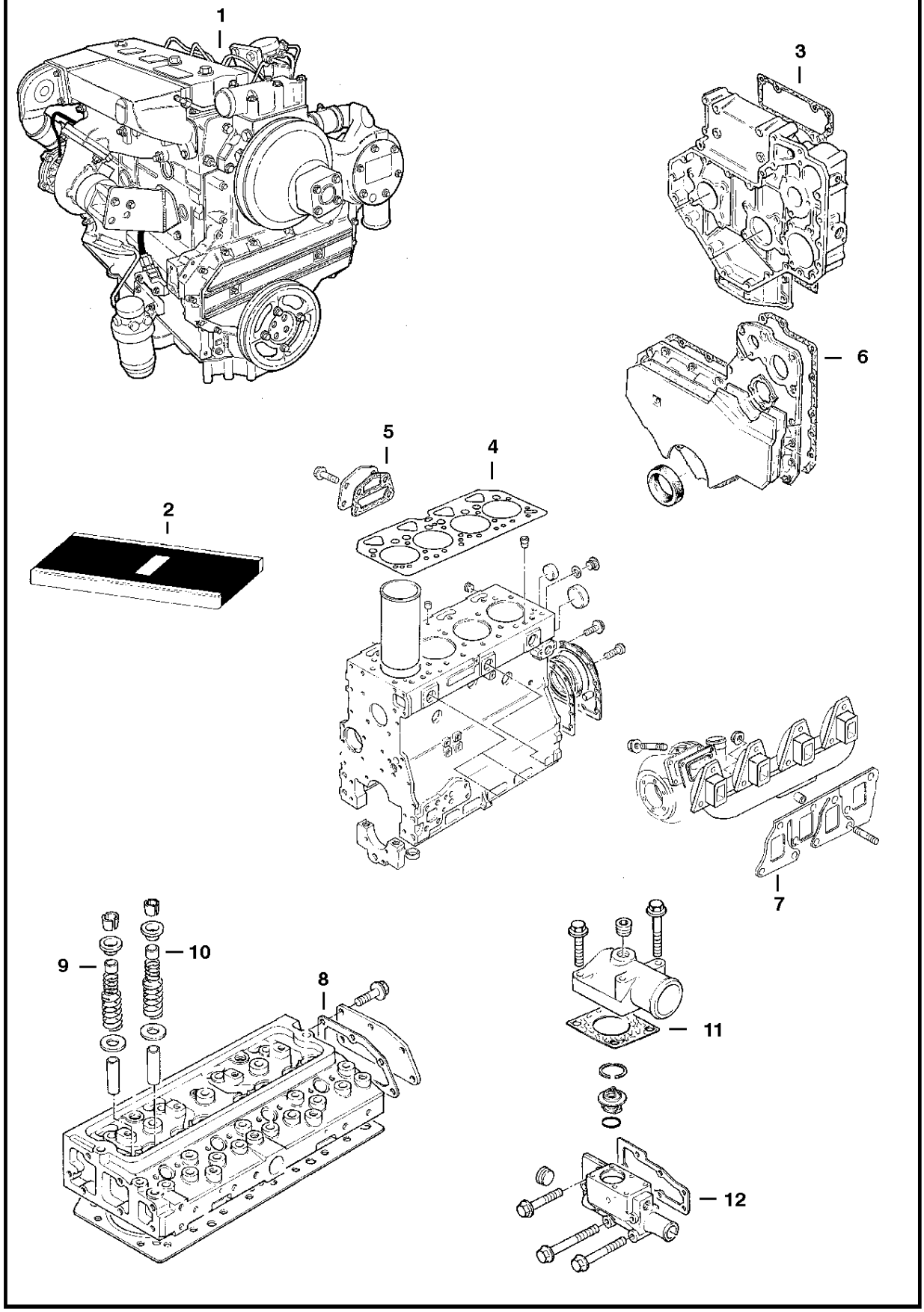

DealerNation Quality Equipment Manuals - dealernation@aol.com

ENGINE & GASKET KIT

Ref.N°	Part N°	Description	Remarks	Serial N°	Qty.
1	6669595	ENGINE			x
1	6672270	SHORT BLOCK	Engine - With the following , Items = with Plugs, 1-Cylinder Block, 4-Liner, 1-Crankshaft, 4 -Con Rod, 10-Main Bearing, 8- Big		1
2	6672167	GASKET KIT	Top		x
2	6672166	GASKET KIT	Bottom		x
3	6668257	GASKET	See Ref. TIMING GEARS(2) on Page TIMING GEARS (26)		1
4	6672182	GASKET	#See Ref. CYLINDER BLOCK(2) on Page CYLINDER BLOCK(13)		1
5	6668510	GASKET	See Ref. CYLINDER BLOCK(26) on Page CYLINDER BLOCK(13)		1
6	6670915	GASKET	See Ref. TIMING GEARS(20) on Page TIMING GEARS(26)		1
7	6670967	GASKET	See Ref. MANIFOLD(9) on Page MANIFOLD(9)		1
8	6674362	GASKET	See Ref. CYLINDER HEAD(16) on Page CYLINDER HEAD(10)		1
9	6671645	SEAL	See Ref. CYLINDER HEAD(9) on Page CYLINDER HEAD(10)		4
10	6670898	SEAL	See Ref. CYLINDER HEAD(14) on Page CYLINDER HEAD(10)		4
11		GASKET	See Ref. WATER PUMP(31) on Page WATER PUMP(33)		1
12	6670945	GASKET	See Ref. WATER PUMP(20) on Page WATER PUMP(33)		1

DealerNation Quality Equipment Manuals - dealernation@aol.com

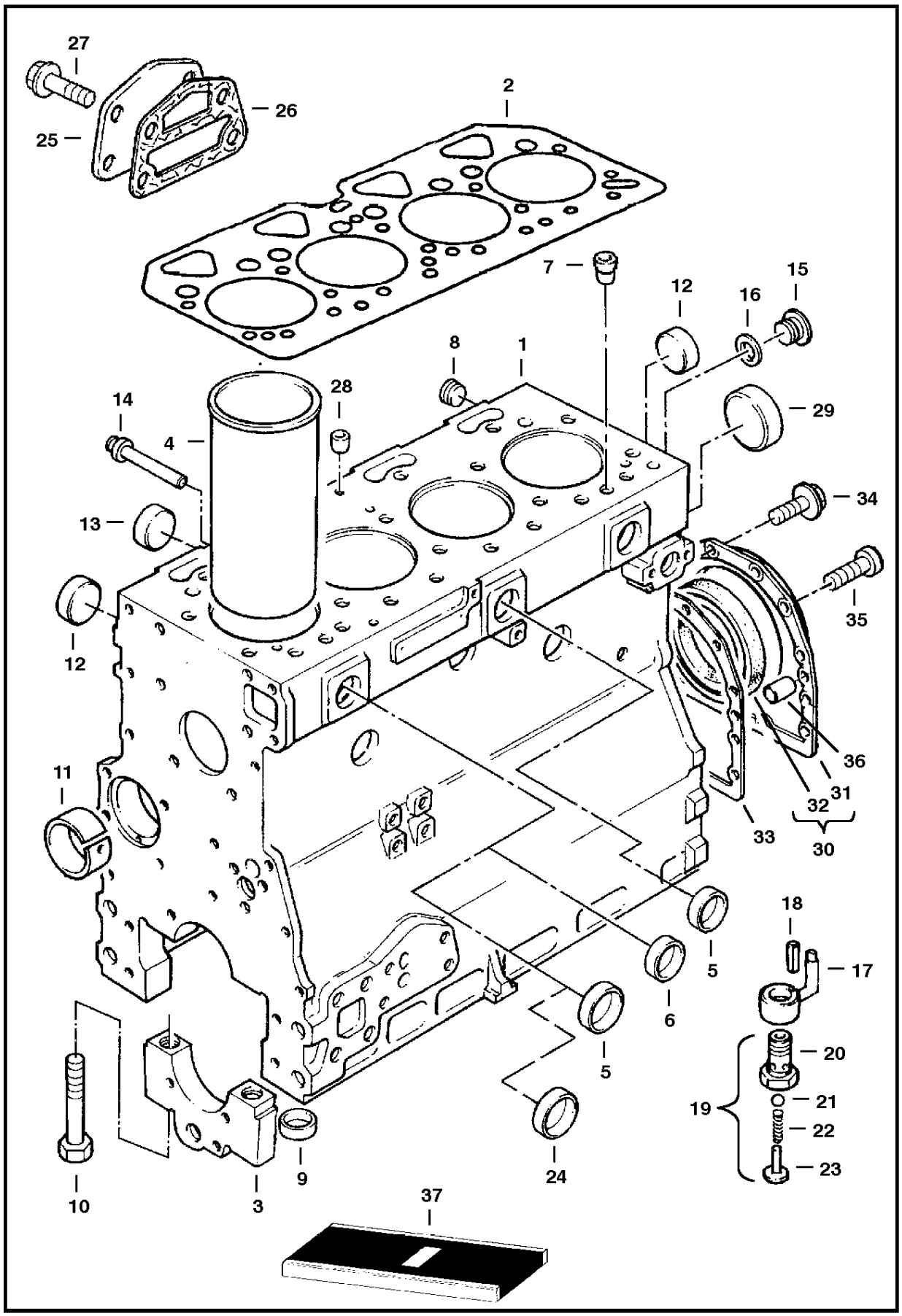

DealerNation Quality Equipment Manuals - dealernation@aol.com

CYLINDER BLOCK

Ref.N°	Part N°	Description	Remarks	Serial N°	Qty.
1	6670878	BLOCK	Cylinder W/Ref. 2, 3		1
2	6672182	GASKET	Cyl. Head		1
3	NSS	CAP	Bearing - Order Ref. 1		5
4	6671650	LINER	Slip Fit		4
5	3490716	PLUG	Block		5
6	6668206	PLUG	Block		1
7	6667271	PIN	Dowel		2
8	6668207	PLUG			1
9	3725302	THIMBLE			10
10	6513096	BOLT			10
11	6670880	BUSHING			1
12	6668209	PLUG			4
13	6670939	PLUG			3
14	909703	PLUG			1
15	6514963	PLUG			1
16	6668211	WASHER			1
17	6672053	JET	Injection		4
18	6672054	PIN	Dowel		1
19	6668218	VALVE	W/Ref. CYLINDER BLOCK(20) - CYLINDER BLOCK(23)		4
20	NSS	BODY	Order Ref. CYLINDER BLOCK(19)		1
21	6668219	BALL			1
22	6668220	SPRING			1
23	6668221	RETAINER			1
24	6668224	PLUG			1
25	6668222	PLATE			1
26	6668510	GASKET			1
27	6668223	SCREW			4
28	3739121	PLUG			1
29	6668210	PLUG			1
30	6671639	HOUSING			1
31	NSS	COVER	Order Ref. CYLINDER BLOCK(30)		1
32	6671638	SEAL			1
33	997692	GASKET			1
34	6668212	SCREW			12
35	6670822	SCREW			2
36	1305481	PIN	Dowel		2
37	6672167	GASKET KIT	upper		x
37	6672166	GASKET KIT	lower		x

DealerNation Quality Equipment Manuals - dealernation@aol.com

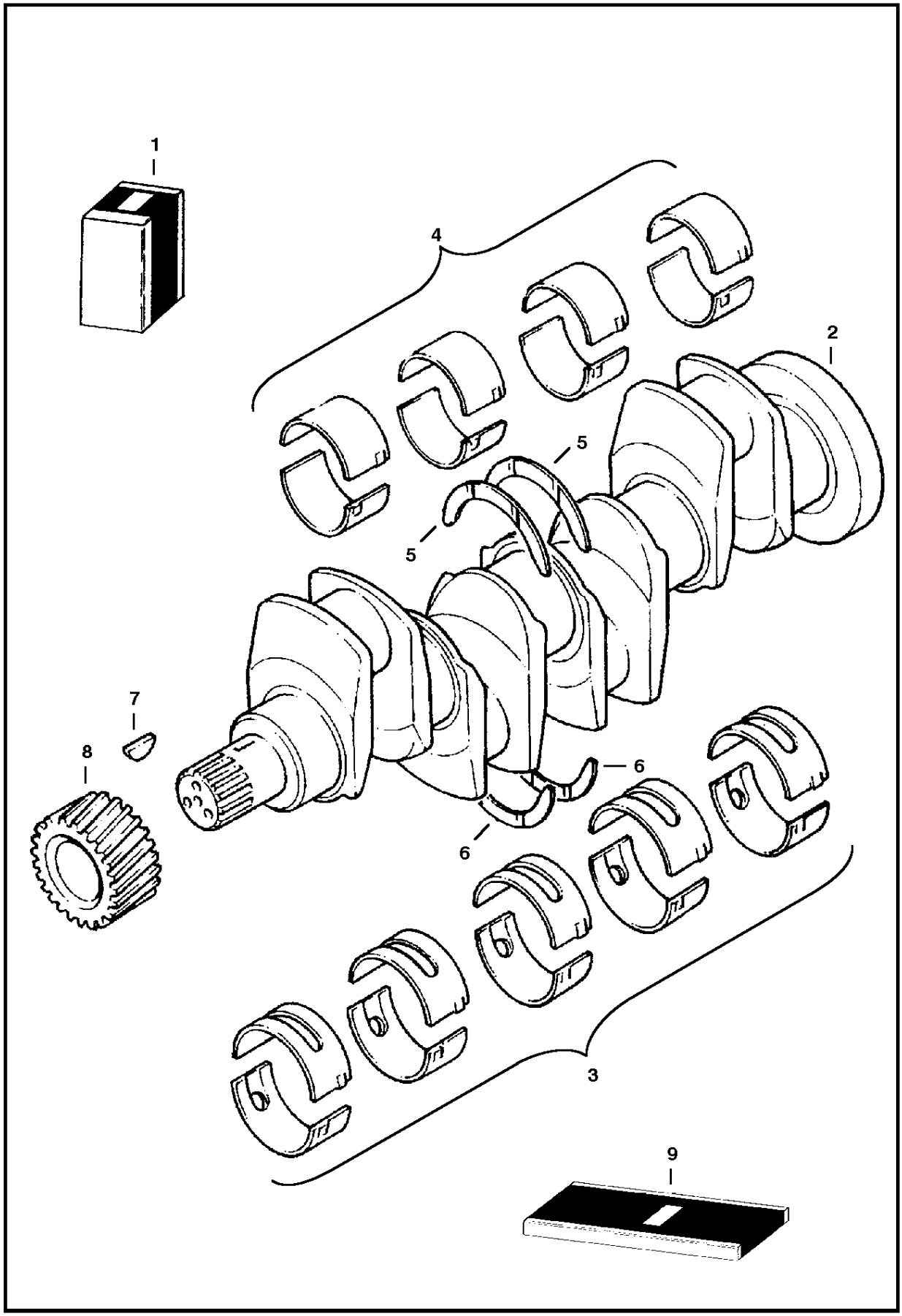

DealerNation Quality Equipment Manuals - dealernation@aol.com

CRANKSHAFT & ASSOCIATED PARTS

Ref.N°	Part N°	Description	Remarks	Serial N°	Qty.
1	6670906	KIT	Crankshaft - W/Ref. 2-6		1
2	NSS	CRANKSHAFT	Order Ref. 1		1
3	3725394	KIT	Main Bearing - Std, Set of 10 Halves		1
3	6515695	KIT	Main Bearing (-) 0.25mm, Set of 10 Halves		1
3	6515696	KIT	Main Bearing (-) 0.50mm, Set of 10 Halves		1
3	6515697	KIT	Main Bearing (-) 0.75mm, Set of 10 Halves		1
4	6668226	KIT	Rod Bearing - Std. - Set of 8 Halves		1
4	6668227	KIT	Rod Bearing - (-) 0.25mm - Set of 8 Halves		1
4	6668228	KIT	Rod Bearing - (-) 0.50mm - Set of 8 Halves		1
4	6668229	KIT	Rod Bearing - (-) 0.75mm - Set of 8 Halves		1
5	6662035	WASHER	Thrust - Std. Top Half		2
5	3725400	WASHER	Thrust - (+) 0.19mm, Top Half		x
6	6668230	WASHER	Thrust - Std.		2
6	3725402	WASHER	Thrust - (+) 0.19mm		x
7	6668235	GEAR	Crankshaft		1
8	6J-807	KEY			1
9	6672167	GASKET KIT	upper		x
9	6672166	GASKET KIT	lower		x

DealerNation Quality Equipment Manuals - dealernation@aol.com

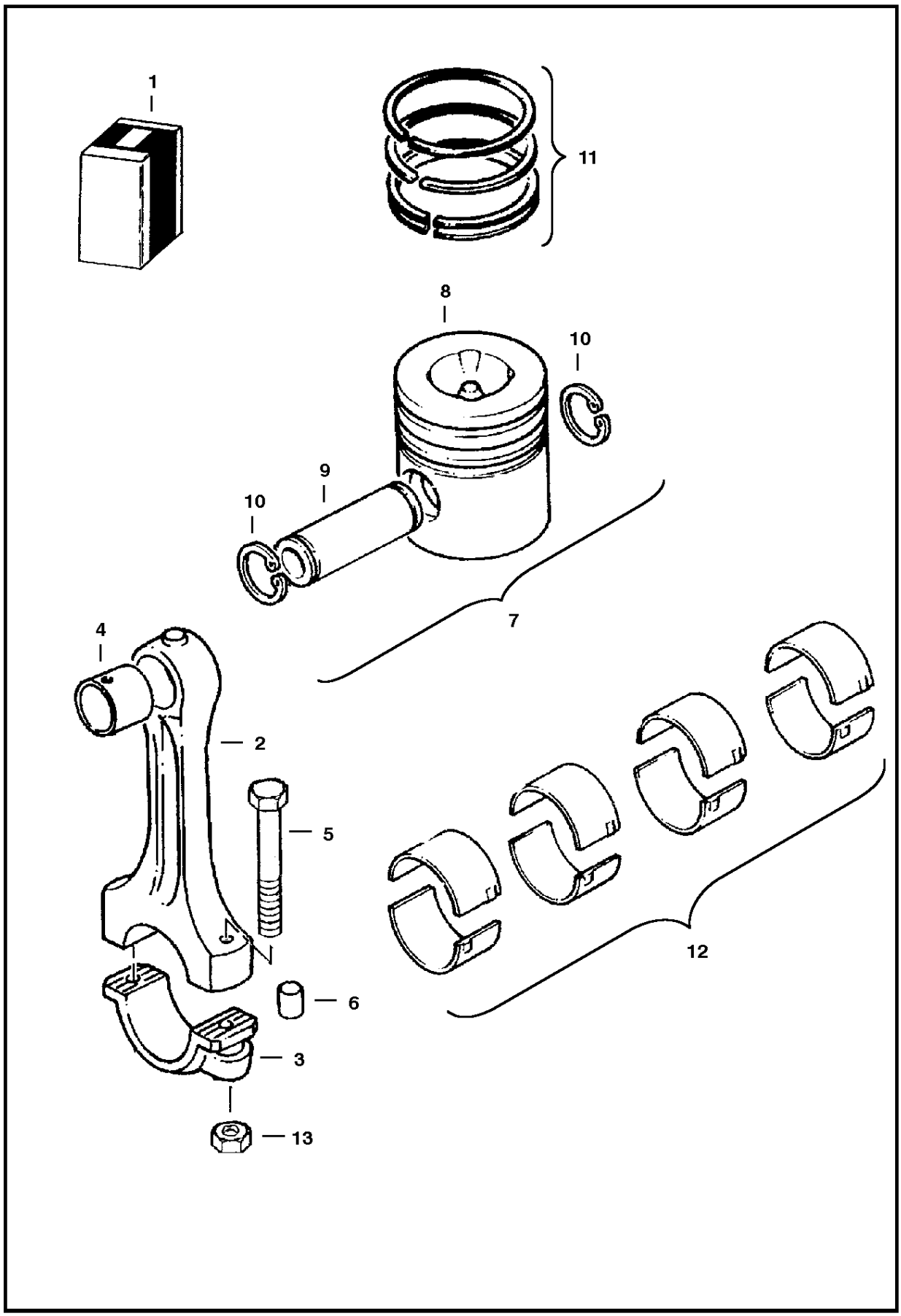

DealerNation Quality Equipment Manuals - dealernation@aol.com

CONNECTING ROD & PISTON

Ref.N°	Part N°	Description	Remarks	Serial N°	Qty.
1	6675910	KIT	Rod, Connecting - W/Ref. CONNECTING ROD & PISTON(2) - CONNECTING ROD & PISTON(6) & CONNECTING ROD & PISTON(13)		4
2	NSS	ROD	Connecting - Order Ref. CONNECTING ROD & PISTON(1)		1
3	NSS	CAP	Connecting - Order Ref. CONNECTING ROD & PISTON(1)		1
4	6672180	BUSHING			4
5	6515679	SCREW			8
6	6675834	THIMBLE			8
7	6670885	PISTON	Low Grade - W/Ref. CONNECTING ROD & PISTON(8) - CONNECTING ROD & PISTON(10)		4
8	NSS	PISTON	Order Ref. CONNECTING ROD & PISTON(7)		1
9	NSS	PIN	Order Ref. CONNECTING ROD & PISTON(7)		1
10	6670886	RETAINER			8
11	6670887	KIT	Rings - Std. - For One Piston		4
12	6668226	KIT	Rod Bearing - Std. - Set of 8 Halves		1
12	6668227	KIT	Rod Bearing - (-) 0.25mm - Set of 8 Halves		1
12	6668228	KIT	Rod Bearing - (-) 0.50mm - Set of 8 Halves		1
12	6668229	KIT	Rod Bearing - (-) 0.75mm - Set of 8 Halves		1
13	6599646	NUT			2

DealerNation Quality Equipment Manuals - dealernation@aol.com

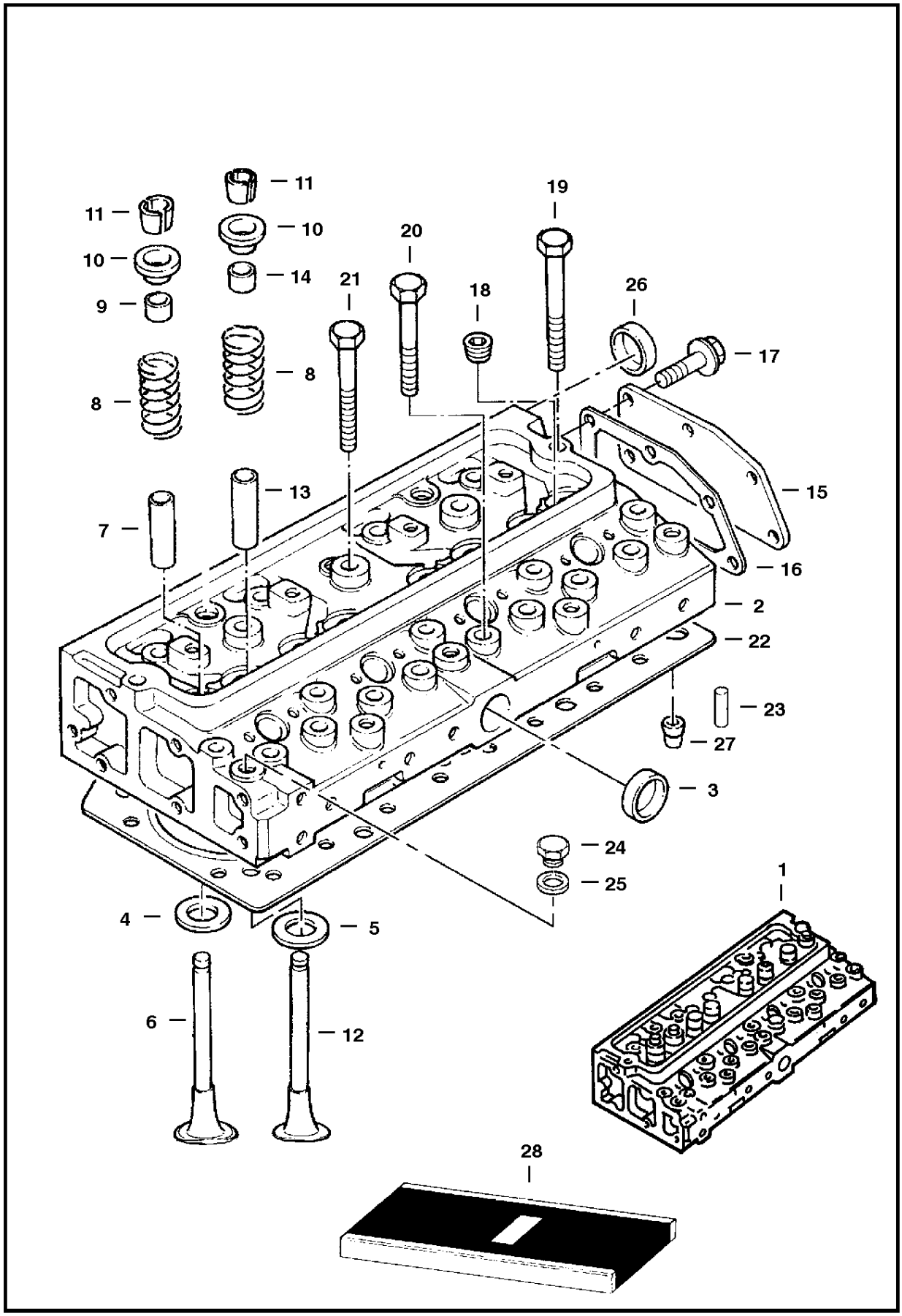

DealerNation Quality Equipment Manuals - dealernation@aol.com

CYLINDER HEAD

Ref.N°	Part N°	Description	Remarks	Serial N°	Qty.
1	6672181	HEAD	Assembly - W/Ref. 2-19		1
2	NSS	HEAD	Order Ref. CYLINDER HEAD(1)		x
3	3490716	PLUG			1
4	6670888	INSERT	Inlet Valve Seat		4
5	6670889	INSERT	Exhaust		4
6	6670890	VALVE	Inlet		4
7	6670891	GUIDE	Valve - Inlet		4
8	6670892	SPRING	Inlet, Exhaust		4
9	6670893	SEAL	Inlet, Exhaust		4
10	6670894	CAP	Inlet, Exhaust		4
11	6670895	COTTER	Inlet, Exhaust		8
12	6670896	VALVE	Exhaust		4
13	6670897	GUIDE	Valve - Exhaust		4
14	6671645	SEAL	Inlet, Exhaust		4
15	6670900	COVER			1
16	6674362	GASKET			1
17	6668487	SCREW			6
18	6514963	PLUG			4
19	6668243	BOLT			2
20	6668244	BOLT			8
21	6668245	BOLT			12
22	6670905	GASKET	Head -used only when dowel pins are not needed		1
22	6672182	GASKET	Head - used only when dowel pins are needed		1
23	6672287	PIN	Dowel		2
24	3490713	PLUG			1
25	3490223	WASHER			1
26	6668209	PLUG			1
27	6672271	PIN	dowel		2
28	6672167	GASKET KIT	upper		x
28	6672166	GASKET KIT	lower		x

DealerNation Quality Equipment Manuals - dealernation@aol.com

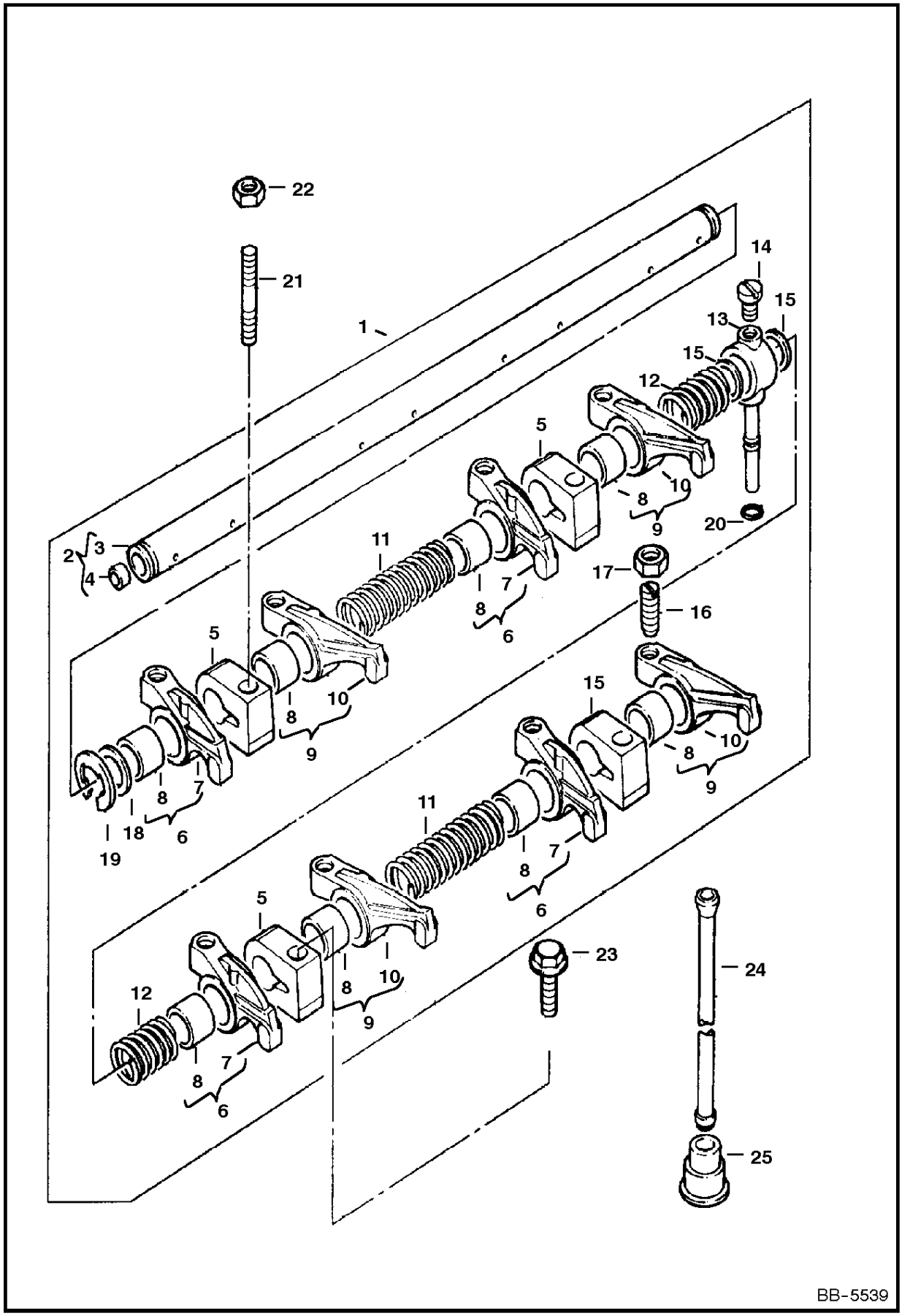

DealerNation Quality Equipment Manuals - dealernation@aol.com

ROCKER SHAFT

Ref.N°	Part N°	Description	Remarks	Serial N°	Qty.
1	6670907	ROCKER	Shaft Assembly - W/Ref. 2-20		1
2	6651232	SHAFT	W/Ref. 3, 4		1
3	NSS	SHAFT	Order Ref. 2		1
4	3490714	PLUG			2
5	3737958	BRACKET			4
6	6670908	ARM	R.H. - W/Ref. 7,8		4
7	NSS	ARM	R.H. Order Ref. 6		1
8	6670909	BUSHING			8
9	6670910	ARM	L.H. - W/Ref. 8,9		4
10	NSS	ARM	L.H. - Order Ref. 9		1
11	3725441	SPRING			2
12	3725442	SPRING			2
13	6664260	CONNECTION			1
14	6664261	SCREW			1
15	6631501	SHIM			2
16	3725449	SCREW	Adjust		8
17	3725450	LOCKNUT			8
18	6670911	WASHER			2
19	3725440	SNAP RING			2
20	3727375	SEAL			1
21	6668252	STUD			3
22	6668253	NUT			3
23	6668254	SCREW			1
24	3725455	PUSH ROD			8
25	6670281	TAPPET			8

DealerNation Quality Equipment Manuals - dealernation@aol.com

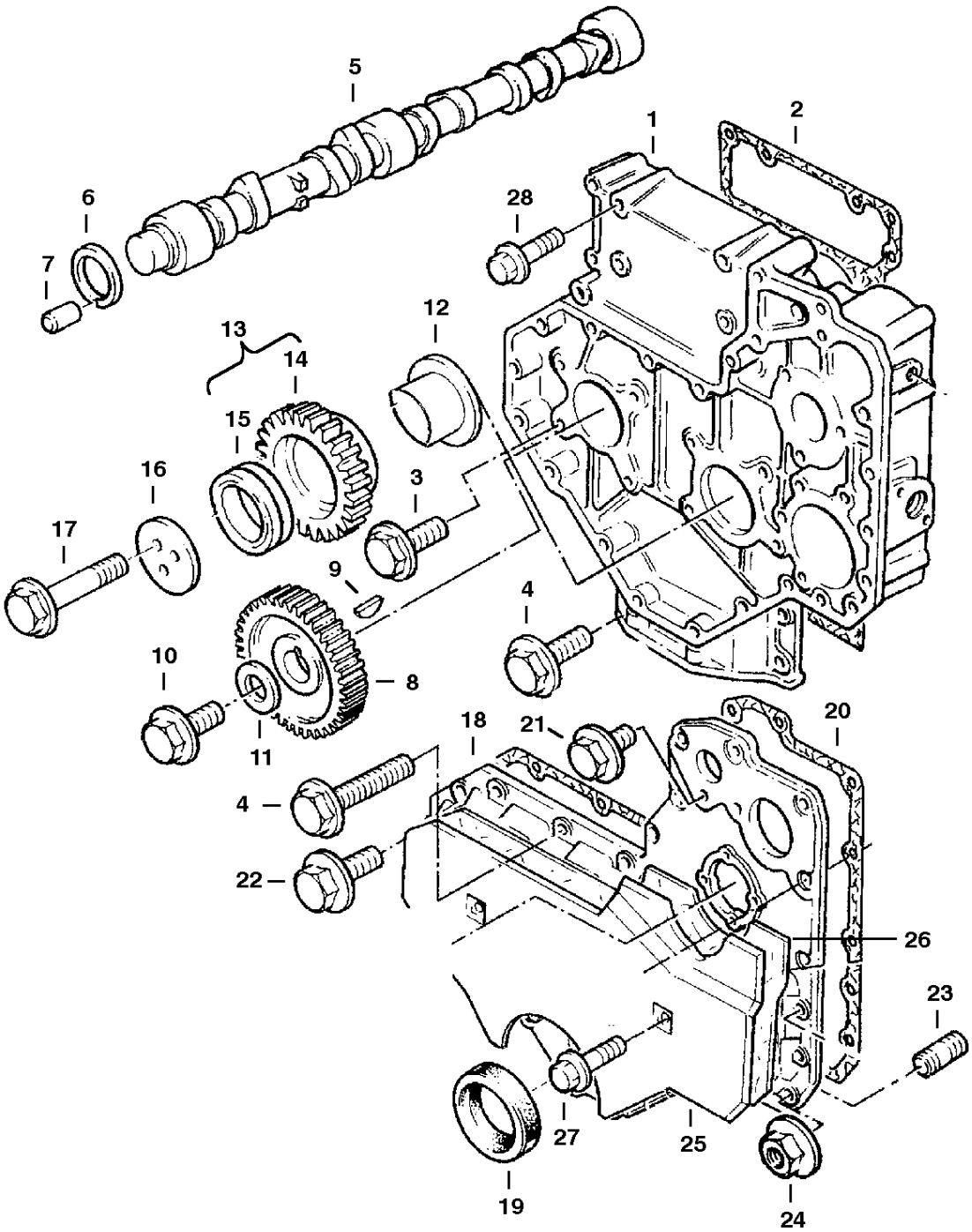

DealerNation Quality Equipment Manuals - dealernation@aol.com

TIMING GEARS

Ref.N°	Part N°	Description	Remarks	Serial N°	Qty.
1	6670912	HOUSING			1
2	6668257	GASKET			1
3	6668212	SCREW			8
4	6668278	SCREW			4
5	6670913	CAMSHAFT			1
6	6668260	WASHER			1
7	873222	DOWEL PIN			1
8	6668261	GEAR	camshaft		1
9	6J-807	KEY			1
10	29CM-1245	BOLT			1
11	6668263	WASHER			1
12	3490179	HUB			1
13	3679424	GEAR	idler		1
14	NSS	GEAR	idler - Order Ref. TIMING GEARS(13)		1
15	3490181	BUSHING			1
16	6668264	PLATE			1
17	6649440	BOLT			3
18	6670914	COVER			1
19	3738154	SEAL			1
20	6670915	GASKET			1
21	6668267	SCREW			6
22	6668268	SCREW			6
23	6668298	STUD			2
24	6668270	NUT			2
25	6670916	SHIELD			1
26	6670917	DAMPER			1
27	6668276	SCREW			2
28	6668287	SCREW	Muffler Bracket - See Page ENGINE & ATTACHING PARTS(2)		4

DealerNation Quality Equipment Manuals - dealernation@aol.com

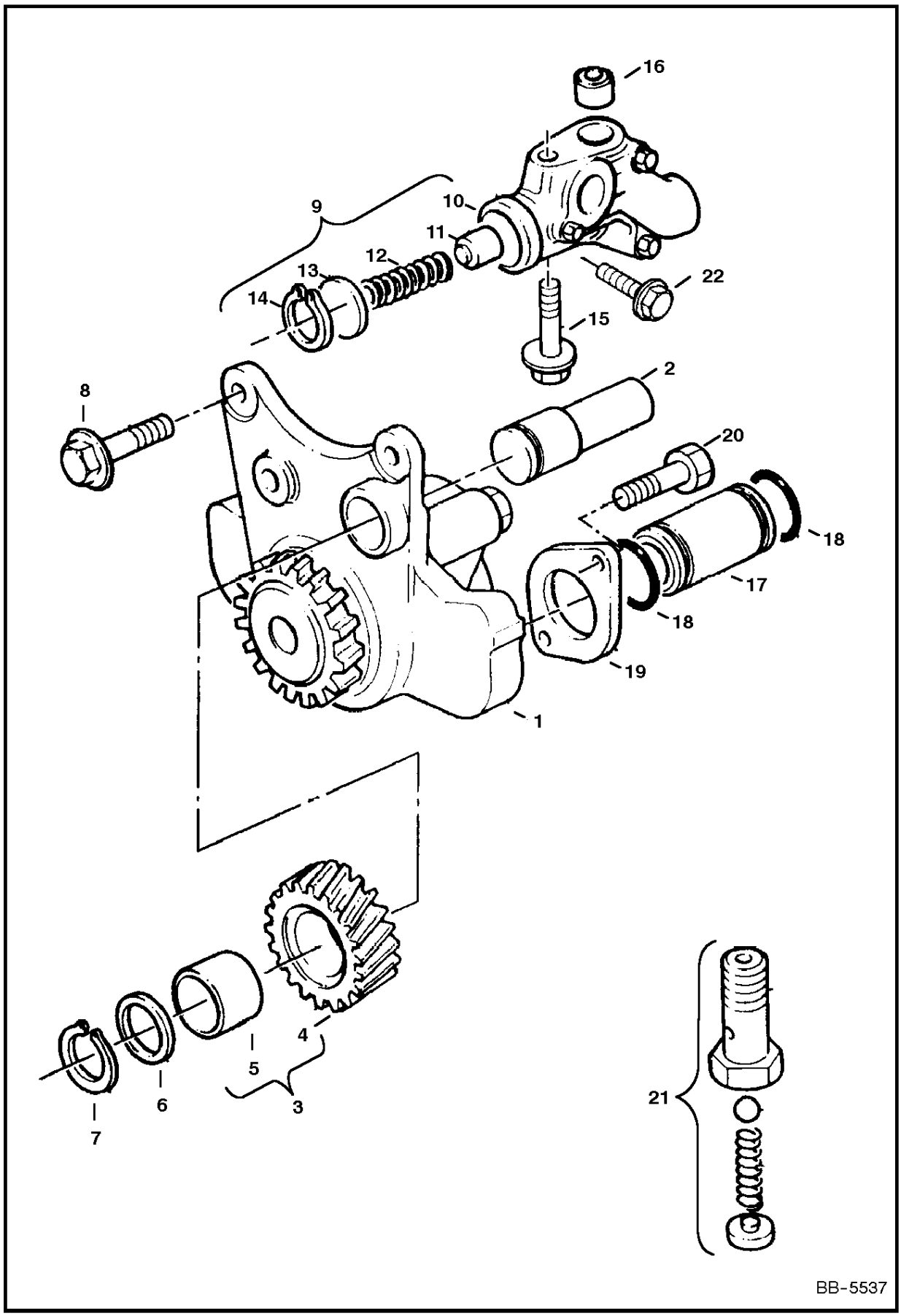

DealerNation Quality Equipment Manuals - dealernation@aol.com

PUMP OIL - VALVE RELIEF

Ref.N°	Part N°	Description	Remarks	Serial N°	Qty.
1	6668279	PUMP	Oil		1
2	6670918	SHAFT			1
3	6668280	GEAR	Idler - W/Ref. 4, 5		1
4	NSS	GEAR	Idler - Order Ref. 3		1
5	6667523	BUSHING			1
6	6668281	WASHER			1
7	6514985	SNAP RING			1
8	6668268	SCREW			3
9	6668282	VALVE	Relief - W/Ref. 10-14 & PUMP OIL - VALVE RELIEF(22)		1
10	NSS	BODY	Order Ref. 9		1
11	6668283	PLUNGER			1
12	6668284	SPRING			1
13	6668285	SEAT			1
14	6668286	SNAP RING			1
15	6668287	SCREW			1
16	907768	THIMBLE			1
17	6668288	PIPE			1
18	6668289	O-RING			2
19	6668290	FLANGE			1
20	6668278	SCREW			1
21	6668218	VALVE	See Page CYLINDER BLOCK(13), Ref. CYLINDER BLOCK(19)		4
22	6668523	SCREW			3

DealerNation Quality Equipment Manuals - dealernation@aol.com

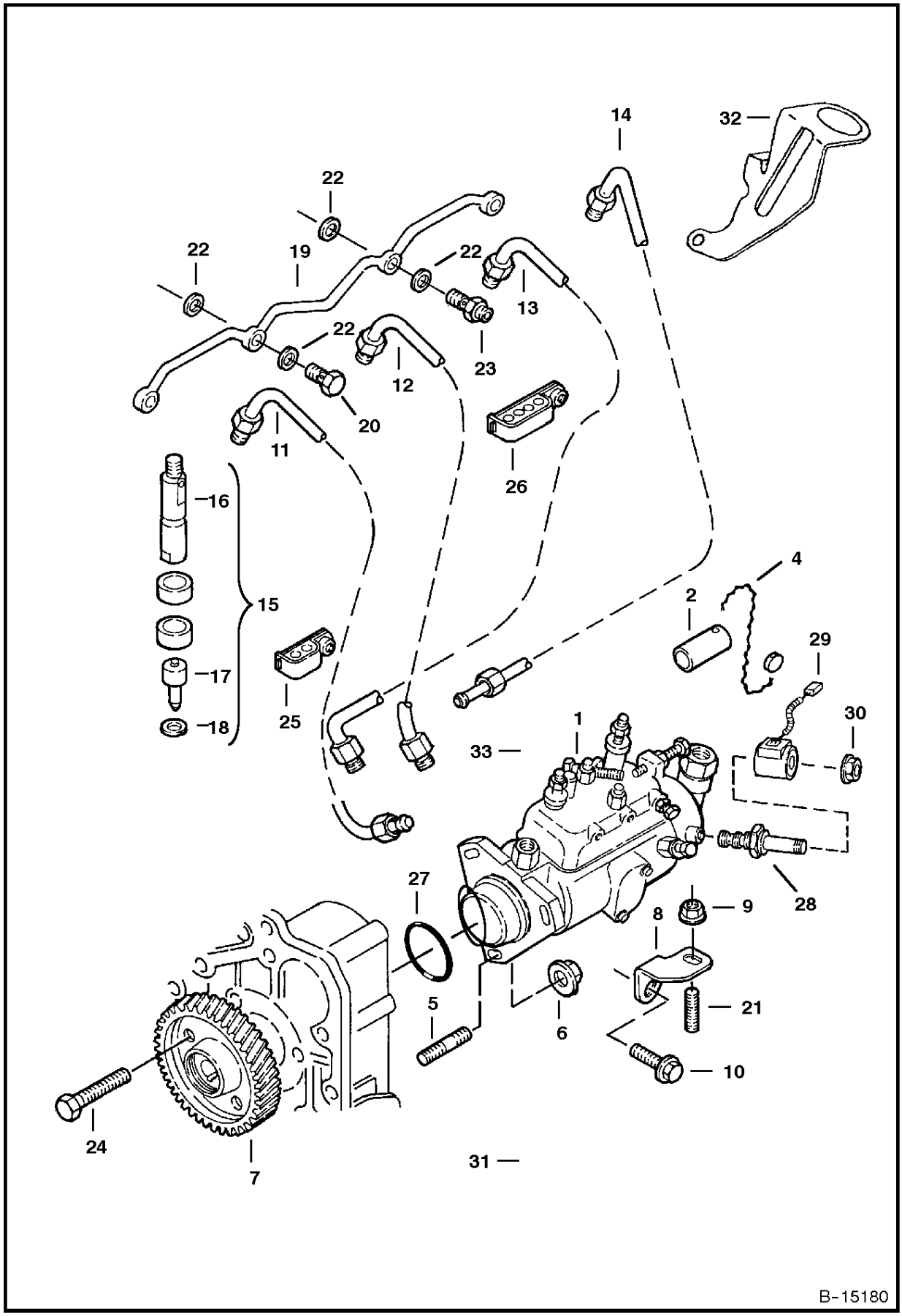

DealerNation Quality Equipment Manuals - dealernation@aol.com

FUEL INJECTOR SYSTEM

Ref.N°	Part N°	Description	Remarks	Serial N°	Qty.
1	6672154	PUMP	Fuel Injection		1
2	6667500	SLEEVE			1
3	3490324	SEAL	Sleeve		1
4	3490325	WIRE	Seal		1
5	6672288	STUD			3
6	6668270	NUT			3
7	6672289	GEAR	Pump		1
8	6668311	BRACKET			1
9	6668313	NUT			1
10	6668314	SCREW			1
11	6672776	PIPE	Injection - No. 1 cylinder		1
12	6672777	PIPE	Injection - No. 2 cylinder		1
13	6672778	PIPE	Injection - No. 3 cylinder		1
14	6672779	PIPE	Injection - No. 4 cylinder		1
15	6670926	INJECTOR			4
16	6670927	HOLDER			1
17	6670928	NOZZLE			1
18	6670929	WASHER			1
19	6670930	PIPE			1
20	6670931	BOLT	Banjo		3
21	6668312	STUD			1
22	6670932	WASHER			8
23	6670933	CONNECTION	mtg. to Ref. FUEL FILTER(16), Page FUEL FILTER(22)		1
24	6668487	SCREW			4
25	6671647	CLIP			2
26	6671648	CLIP			1
27	6673114	O-RING			1
28	6674320	SOLENOID VALVE	Cold Weather Start		1
29	6674391	COIL	Cold Weather Start		1
30	6674392	NUT	Cold Weather Start		1
31	6675588	SPRING			1
32	6676056	BRACKET	solenoid		1
33	NAP	BRACKET	no longer used		1
34	6672321	SOLENOID	cold weather start		1

DealerNation Quality Equipment Manuals - dealernation@aol.com

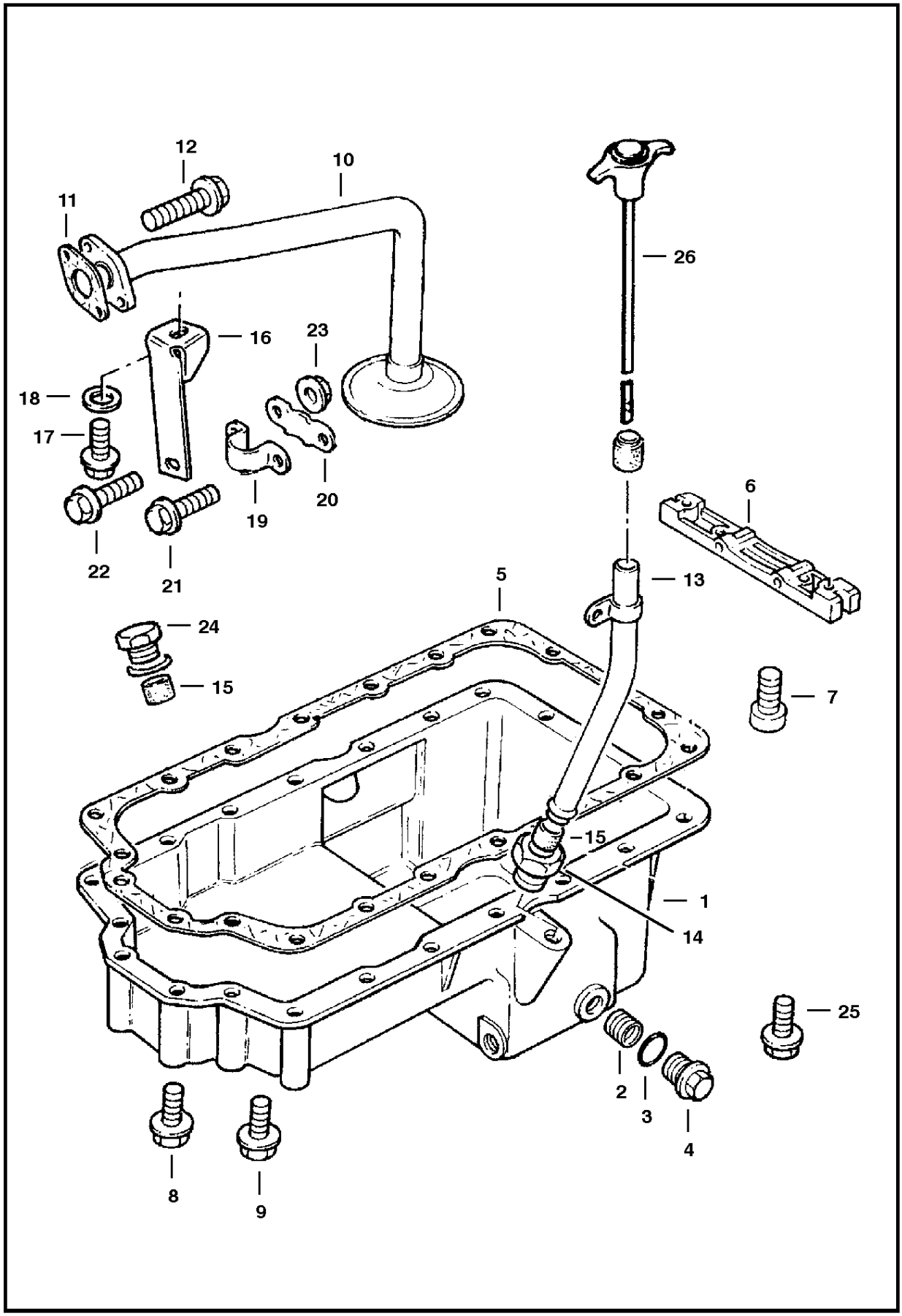

DealerNation Quality Equipment Manuals - dealernation@aol.com

LUBRICATION SYSTEM

Ref.N°	Part N°	Description	Remarks	Serial N°	Qty.
1	6668475	OIL PAN			1
2	905801	INSERT			2
3	6649446	PLUG			2
4	6649447	O-RING			2
5	3727656	GASKET			1
6	6668477	BRIDGE			1
7	6668478	SCREW			2
8	6668479	SCREW			6
9	6668212	SCREW			12
10	6668480	PIPE	Oil		1
11	6668481	GASKET			1
12	6668482	SCREW			2
13	6668483	TUBE ASSY.			1
14	NSS	NUT	Order Ref. LUBRICATION SYSTEM(13)		1
15	6668485	SEAL			2
16	6668486	BRACKET			1
17	6668487	SCREW			1
18	6668488	WASHER			1
19	6668489	CLAMP			1
20	6668490	PLATE			1
21	6668491	SCREW			1
22	6668492	SCREW			1
23	6668493	NUT			2
24	6668494	PLUG			1
25	6668495	SCREW			1
26	6668496	DIPSTICK			1

DealerNation Quality Equipment Manuals - dealernation@aol.com

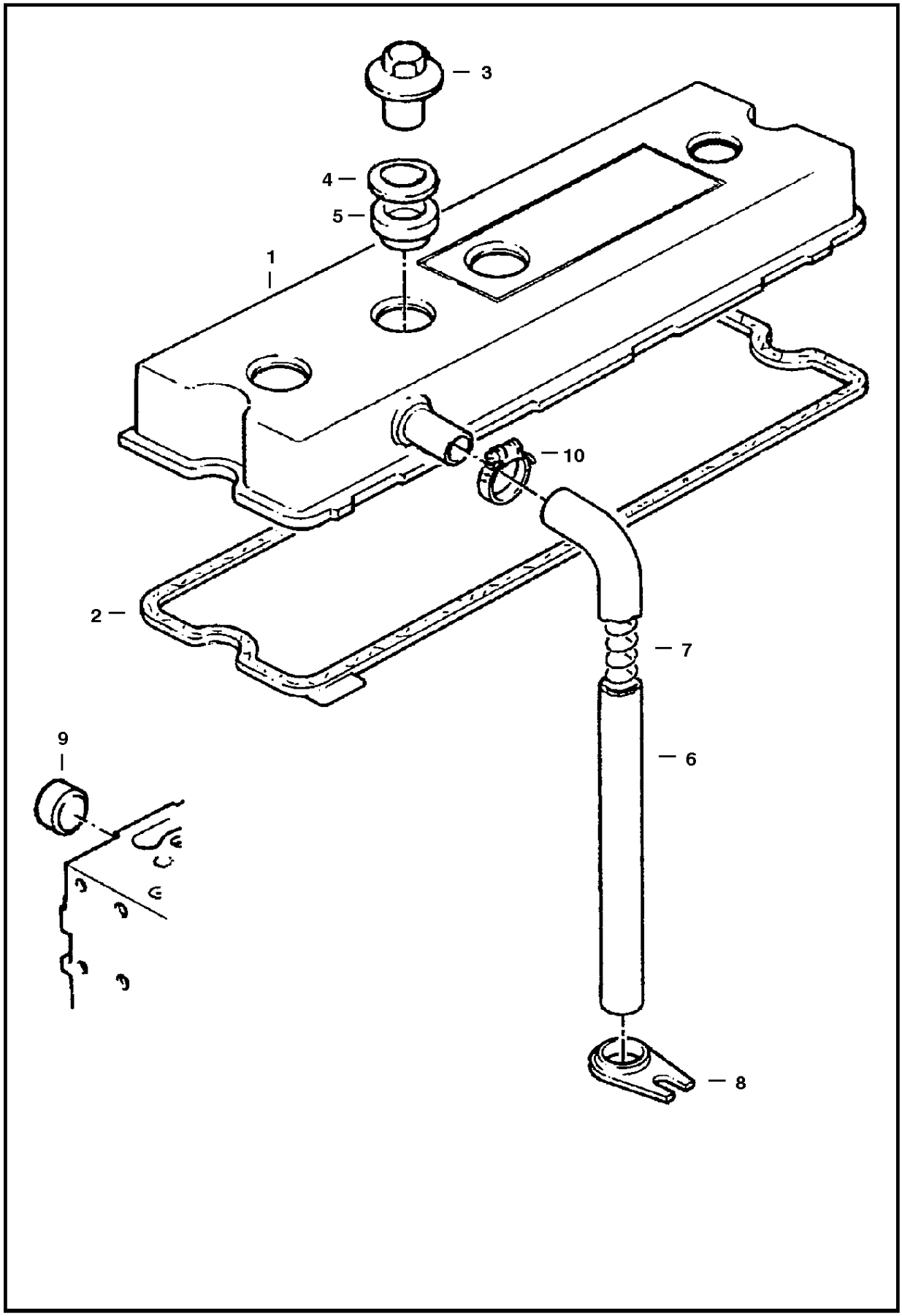

DealerNation Quality Equipment Manuals - dealernation@aol.com

ROCKER ARM COVER

Ref.N°	Part N°	Description	Remarks	Serial N°	Qty.
1	6672780	COVER	Cylinder Head		1
2	6672781	GASKET			1
3	6669136	NUT			3
4	3575075	WASHER			3
5	7000007	SEAL			3
6	6672296	HOSE			1
7	6668499	SPRING			1
8	6668500	BRACKET			1
9	6670939	PLUG			1
10	6674324	CLAMP			1

DealerNation Quality Equipment Manuals - dealernation@aol.com

FILTER OIL - COOLER OIL
(Power Unit)

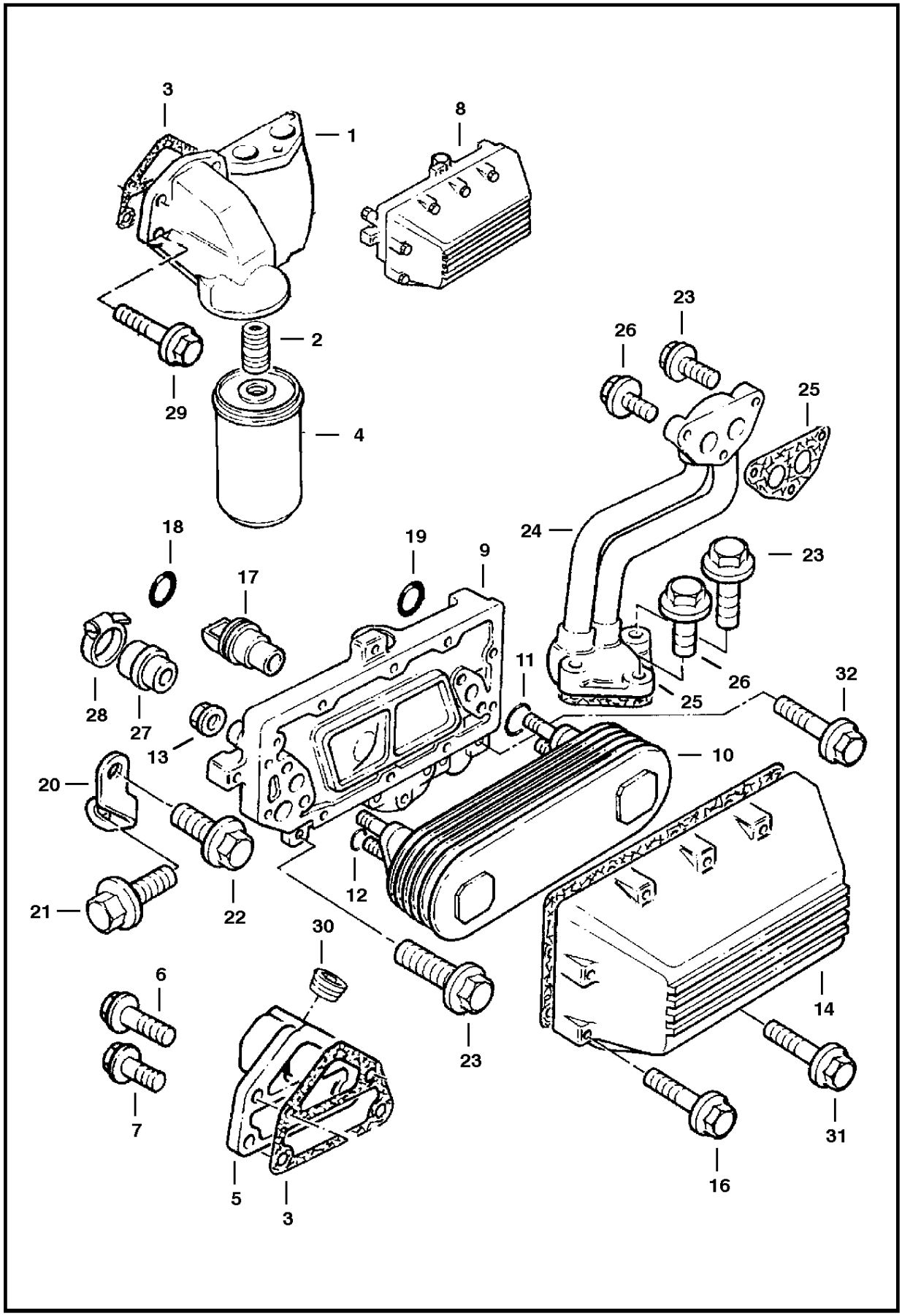

DealerNation Quality Equipment Manuals - dealernation@aol.com

FILTER OIL - COOLER OIL

Ref.N°	Part N°	Description	Remarks	Serial N°	Qty.
1	6668514	FILTER HEAD			1
2	6668515	CONNECTION			1
3	6668510	GASKET			1
4	6511766	OIL FILTER			1
5	6668509	ADAPTOR			1
6	6671644	SCREW			1
7	6668223	SCREW			3
8	6668516	OIL COOLER			1
9	NSS	HOUSING	Order Ref. FILTER OIL - COOLER OIL (8)		1
10	6668517	OIL COOLER			1
11	6668518	O-RING			2
12	6668519	O-RING			4
13	6668520	NUT			4
14	6668521	COVER			1
15	6668522	GASKET			1
16	6668523	SCREW			8
17	6668524	CONNECTION			1
18	6668525	O-RING			1
19	6668526	O-RING			1
20	6668527	BRACKET			1
21	6668487	SCREW			1
22	6668314	SCREW			1
23	6668482	SCREW			4
24	6668528	PIPE	Oil		1
25	6668529	GASKET			2
26	6668268	SCREW			2
27	6668530	CONNECTION			1
28	6668531	CLAMP			1
29	6668532	SCREW			4
30	13F-2	PLUG			1
31	6668533	SCREW			2
32	6668534	SCREW			2

DealerNation Quality Equipment Manuals - dealernation@aol.com

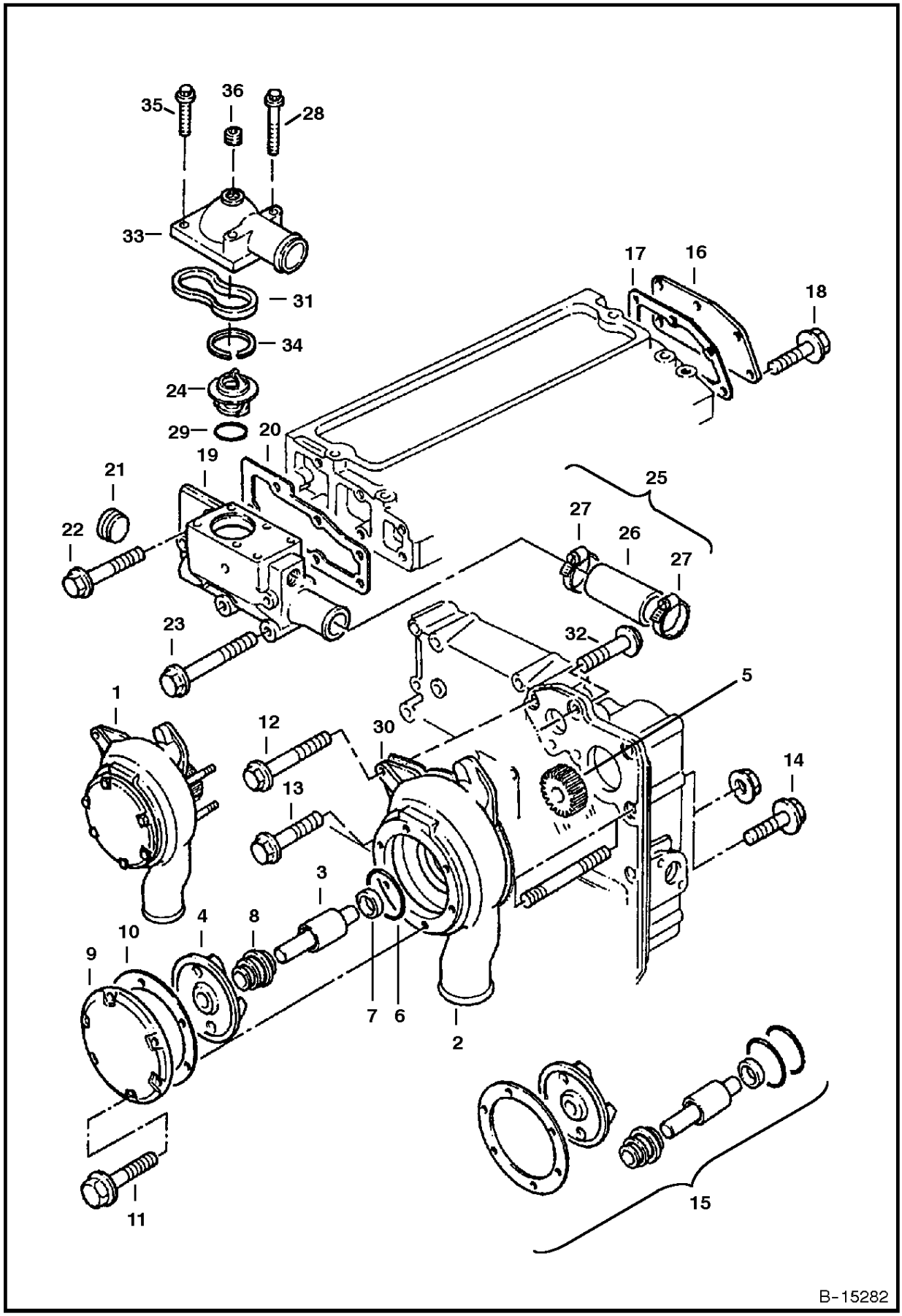

DealerNation Quality Equipment Manuals - dealernation@aol.com

WATER PUMP

Ref.N°	Part N°	Description	Remarks	Serial N°	Qty.
1	6672782	WATER PUMP	W/Ref. WATER PUMP(2) - WATER PUMP(11)		1
2	NSS	BODY	Order Ref. WATER PUMP(1)		1
3	NSS	SHAFT	Order Ref. WATER PUMP(1)		1
4	NSS	IMPELLER	Order Ref. WATER PUMP(1)		1
5	NSS	GEAR	Water Pump - Order Ref. WATER PUMP(1)		1
6	NSS	SEAL	Order Ref. WATER PUMP(1)		1
7	NSS	SEAL	Order Ref. WATER PUMP(1)		1
8	NSS	SEAL	Order Ref. WATER PUMP(1)		1
9	NSS	COVER	Order Ref. WATER PUMP(1)		1
10	NSS	GASKET	Order Ref. WATER PUMP(1)		1
11	NSS	SCREW	Order Ref. WATER PUMP(1)		6
12	6670943	SCREW	used with 6672782 pump		1
12	6670960	SCREW	used with 6670941 pump		1
13	6668495	SCREW			3
14	6672783	SCREW			2
15	6672320	KIT	Repair - Water Pump W/Ref. WATER PUMP(3), 4, WATER PUMP(6) - WATER PUMP(8), WATER PUMP(10) & WATER PUMP(30)		1
16	6670900	COVER	See Page CYLINDER HEAD(10), Ref. CYLINDER HEAD(15)		1
17	6674362	GASKET			1
18	6668487	SCREW			3
19	6677651	HOUSING	Thermostat - Was 6672785 [B, D]		1
20	6677709	GASKET	Was 6670945 [B, D]		1
21	16F-8	PLUG			1
21	6677710	PLUG			3
22	6668558	SCREW			3
23	6668534	SCREW			3
24	6672299	THERMOSTAT			1
25	6670947	KIT	Hose - W/Ref. WATER PUMP(26) & WATER PUMP(27)		1
26	NSS	HOSE	Order Ref. WATER PUMP(25)		1
27	6672300	CLAMP	Hose		2
28	6668278	SCREW			2
29	6670950	O-RING			1
30	6670951	GASKET			1
31	6674292	O-RING			1
32	6668479	SCREW			1
33	6674290	CONNECTION	W/Ref. WATER PUMP(24), WATER PUMP(29),	$	1
34	6674293	RING			1
35	6668558	SCREW		#	2
36	6674291	PLUG			1

DealerNation Quality Equipment Manuals - dealernation@aol.com

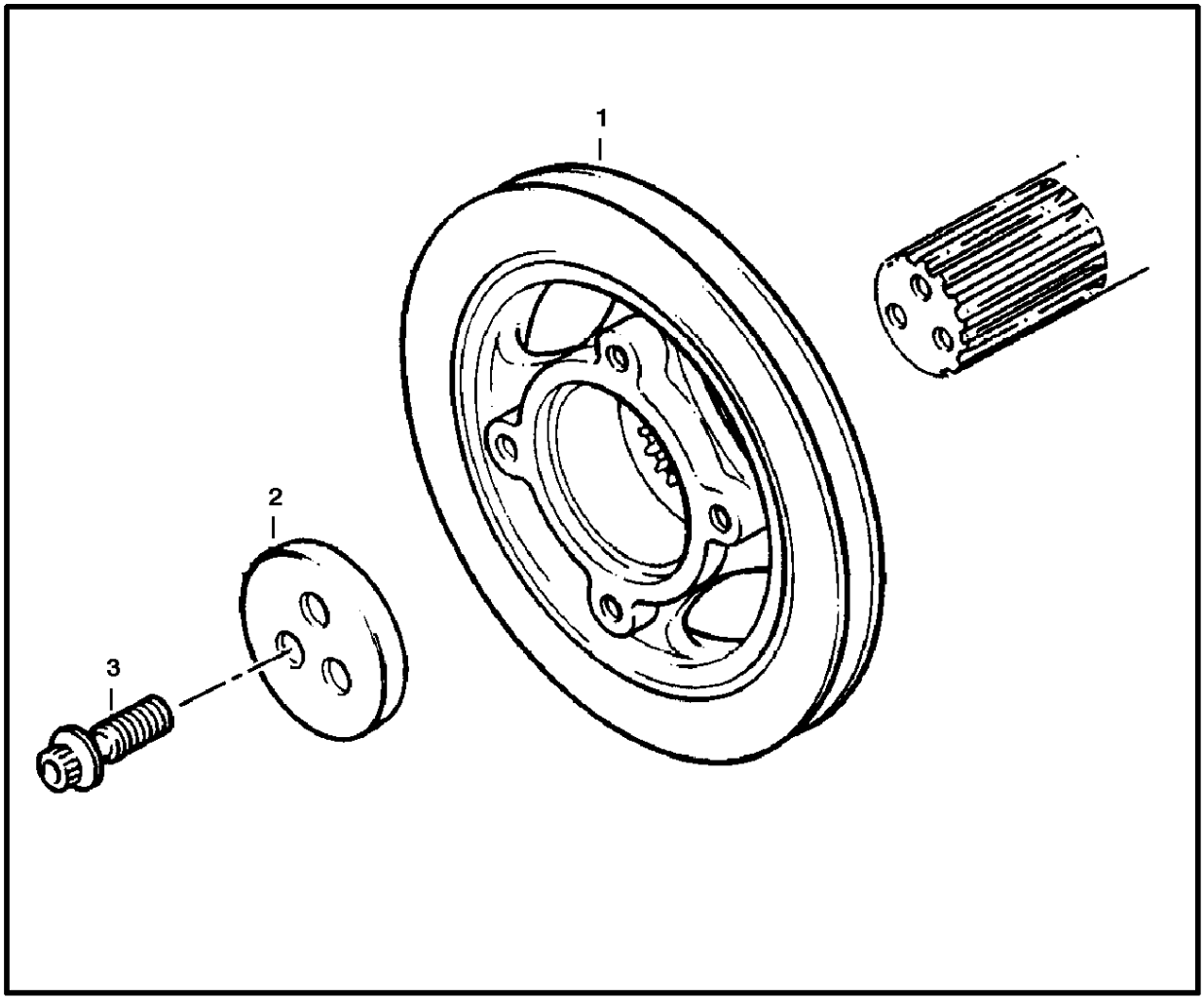

PULLEY CRANKSHAFT
(Power Unit)

Ref. No.	Part Number	Description	Remarks	Serial Number	Qty.

DealerNation Quality Equipment Manuals - dealernation@aol.com

PULLEY CRANKSHAFT

Ref.N°	Part N°	Description	Remarks	Serial N°	Qty.
1	6668535	PULLEY	Crankshaft		1
2		6668536inD1}A	BLOCK		81
3		6668537inD1}C	SCREW		81

DealerNation Quality Equipment Manuals - dealernation@aol.com

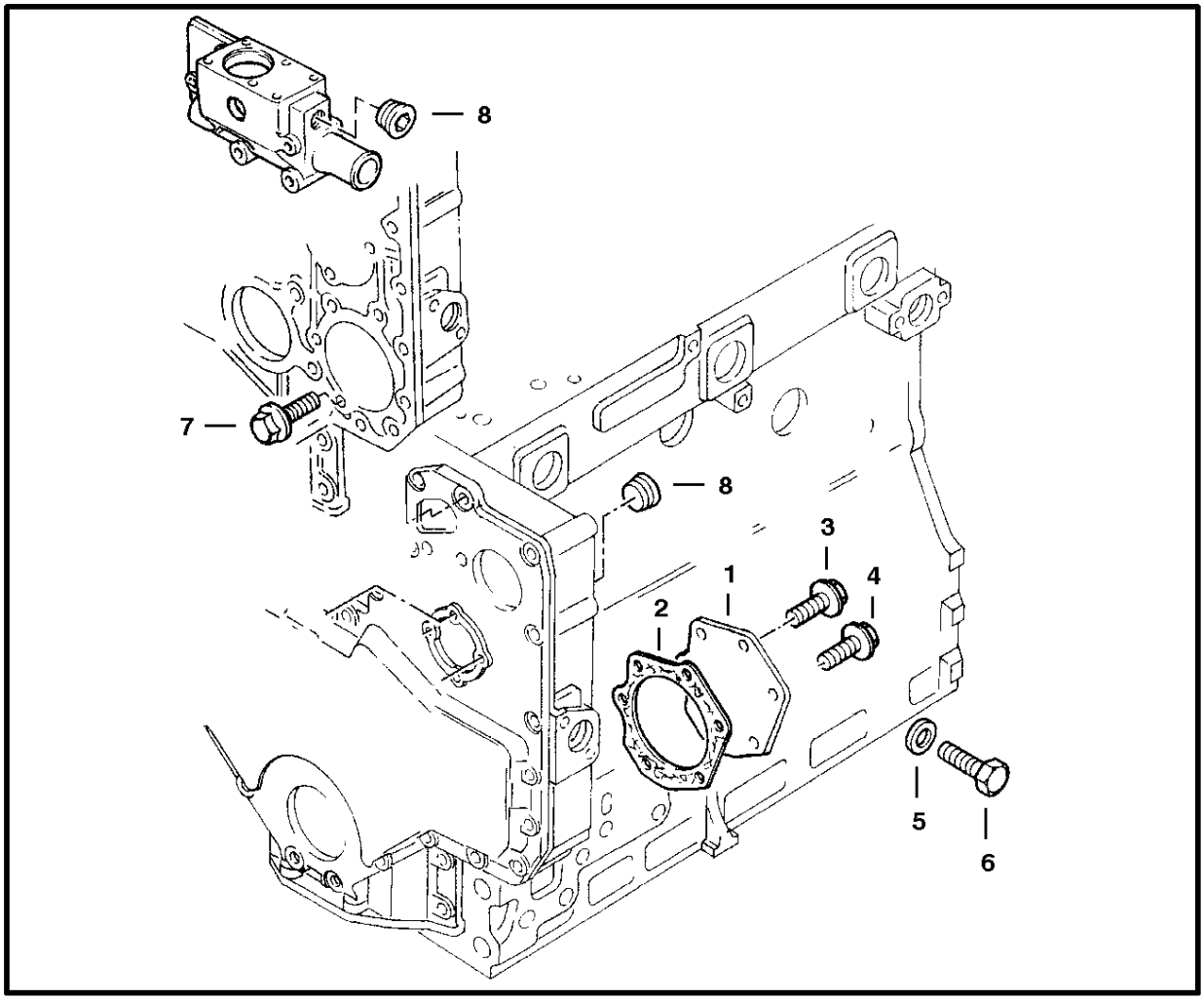

PLATE EXTERNAL

Ref. No.	Part Number	Description	Remarks	Serial Number	Qty.

DealerNation Quality Equipment Manuals - dealernation@aol.com

PLATE EXTERNAL

Ref.N°	Part N°	Description	Remarks	Serial N°	Qty.
1	6671660	PLATE			1
2	6668676	GASKET			1
3	6672302	SCREW			5
4	6668314	SCREW			1
5	3490721	WASHER			1
6	6668565	SCREW			1
7	6668564	SCREW			1
8	16F-8	PLUG			1

DealerNation Quality Equipment Manuals - dealernation@aol.com

Both new and rebuilt starters are available from Bobcat.

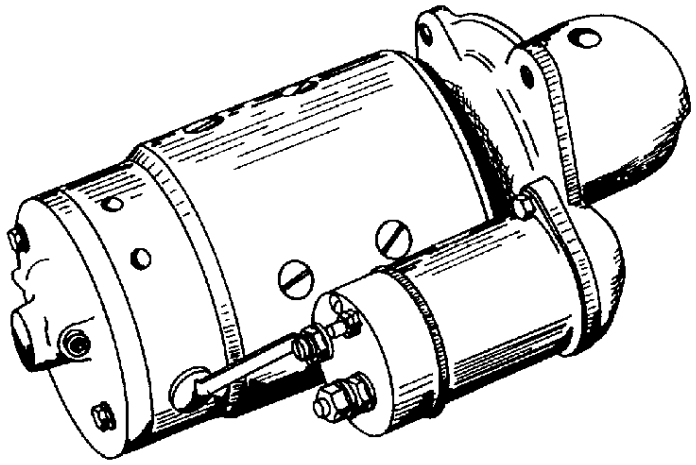

Available from Bobcat Parts.

Bobcat

DealerNation Quality Equipment Manuals - dealernation@aol.com

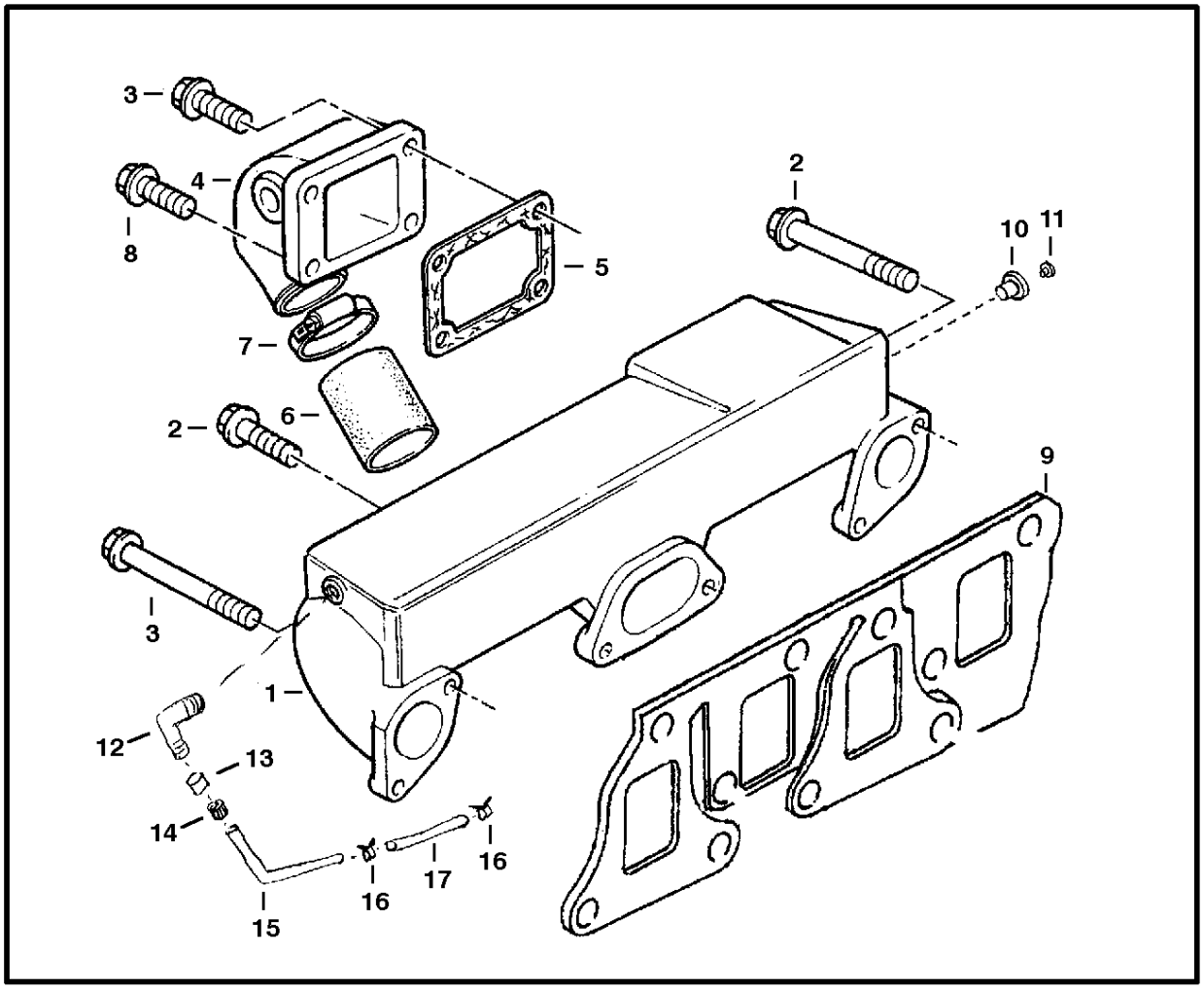

MANIFOLD

Ref. No.	Part Number	Description	Remarks	Serial Number	Qty.

DealerNation Quality Equipment Manuals - dealernation@aol.com

MANIFOLD

Ref.N°	Part N°	Description	Remarks	Serial N°	Qty.
1	6672303	MANIFOLD	Intake		1
2	6672786	SCREW			4
3	6670943	SCREW			4
4	6672787	ELBOW			1
5	6671011	GASKET			1
6	6671012	HOSE			1
7	6668597	CLAMP			2
8	6668278	SCREW			2
9	6670967	GASKET	See Page TURBO CHARGER - MANIFOLD EXHAUS T(18), Ref. TURBO CHARGER - MANIFOLD EXHAUS T(2) - Combined intake/exhaust gasket		1
10	6515707	ADAPTER			1
11	40K-2	PLUG	pipe		1
12	6668292	ELBOW			1
13	57F-2	OLIVE			1
14	58F-2	NUT			1
15	6670922	TUBE			1
16	6668296	CLAMP			2
17	6672290	HOSE			1

DealerNation Quality Equipment Manuals - dealernation@aol.com

TURBO CHARGER - MANIFOLD EXHAUST
(Power Unit)

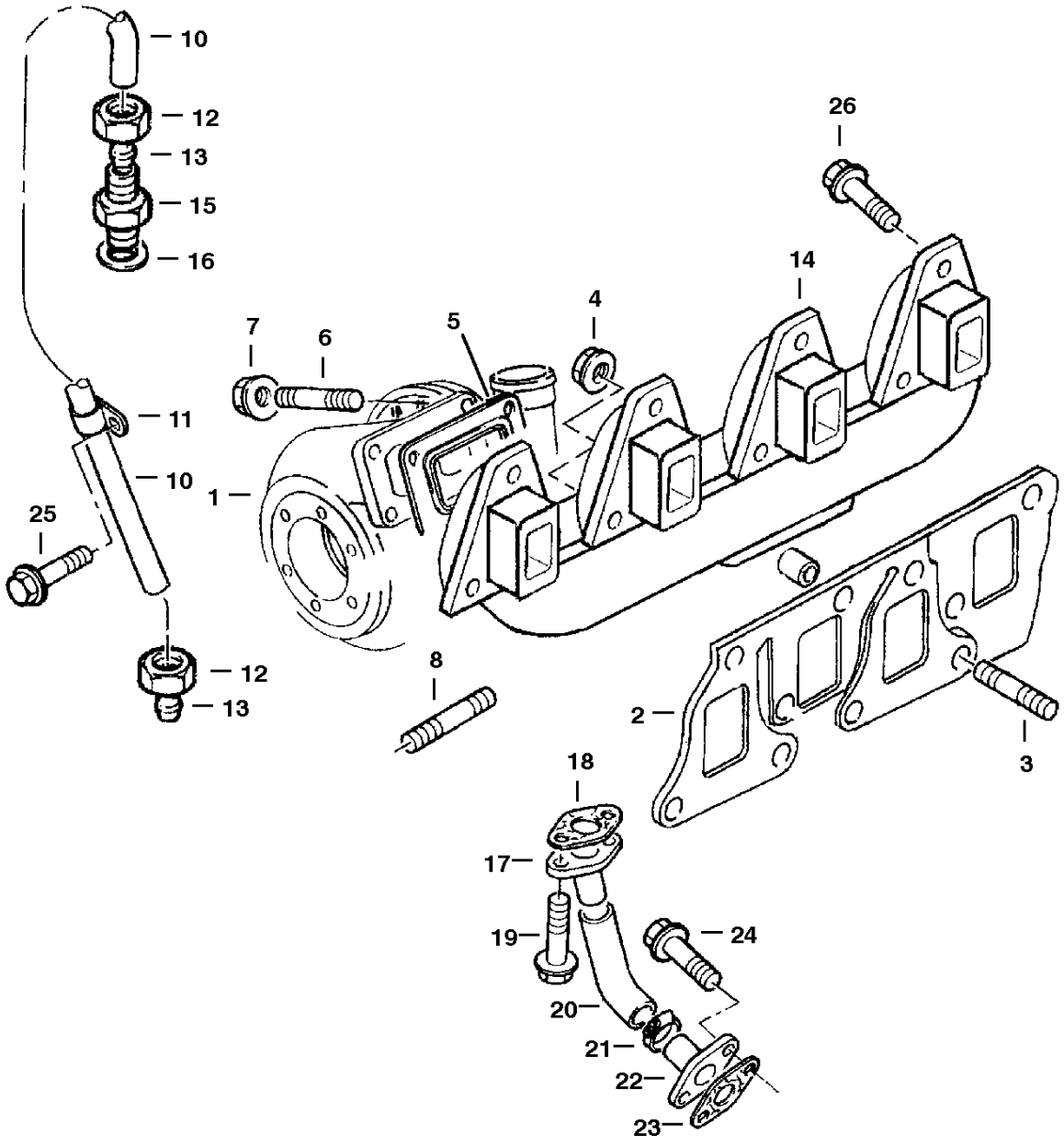

DealerNation Quality Equipment Manuals - dealernation@aol.com

TURBO CHARGER - MANIFOLD EXHAUST

Ref.N°	Part N°	Description	Remarks	Serial N°	Qty.
1	6670961	TURBO CHARGER	See Page TURBO CHARGER(27)		1
2	6670967	GASKET	Combined intake/exhaust gasket		2
3	6672796	STUD			3
4	6670969	NUT			12
5	6671635	GASKET			1
6	6672305	STUD			4
7	6668569	NUT			4
8	6670970	STUD			3
9	6670974	CONNECTION			1
10	6670975	PIPE	Oil		1
11	NSS	CLIP	Supplied W/Ref. TURBO CHARGER - MANIFOLD EXHAUST(10)		1
12	6672307	NUT			1
13	3490088	OLIVE			1
14	6672304	MANIFOLD	Exhaust		1
15	6670977	ADAPTOR			1
16	6670978	WASHER			1
17	6670979	PIPE	Oil		1
18	6670980	GASKET			1
19	6668491	SCREW			2
20	6670981	HOSE			1
21	6670940	CLIP	Hose		2
22	6670982	PIPE	Oil		1
23	6668578	GASKET			1
24	6668495	SCREW			1
25	6668487	SCREW			1
26	6672798	SCREW			9

DealerNation Quality Equipment Manuals - dealernation@aol.com

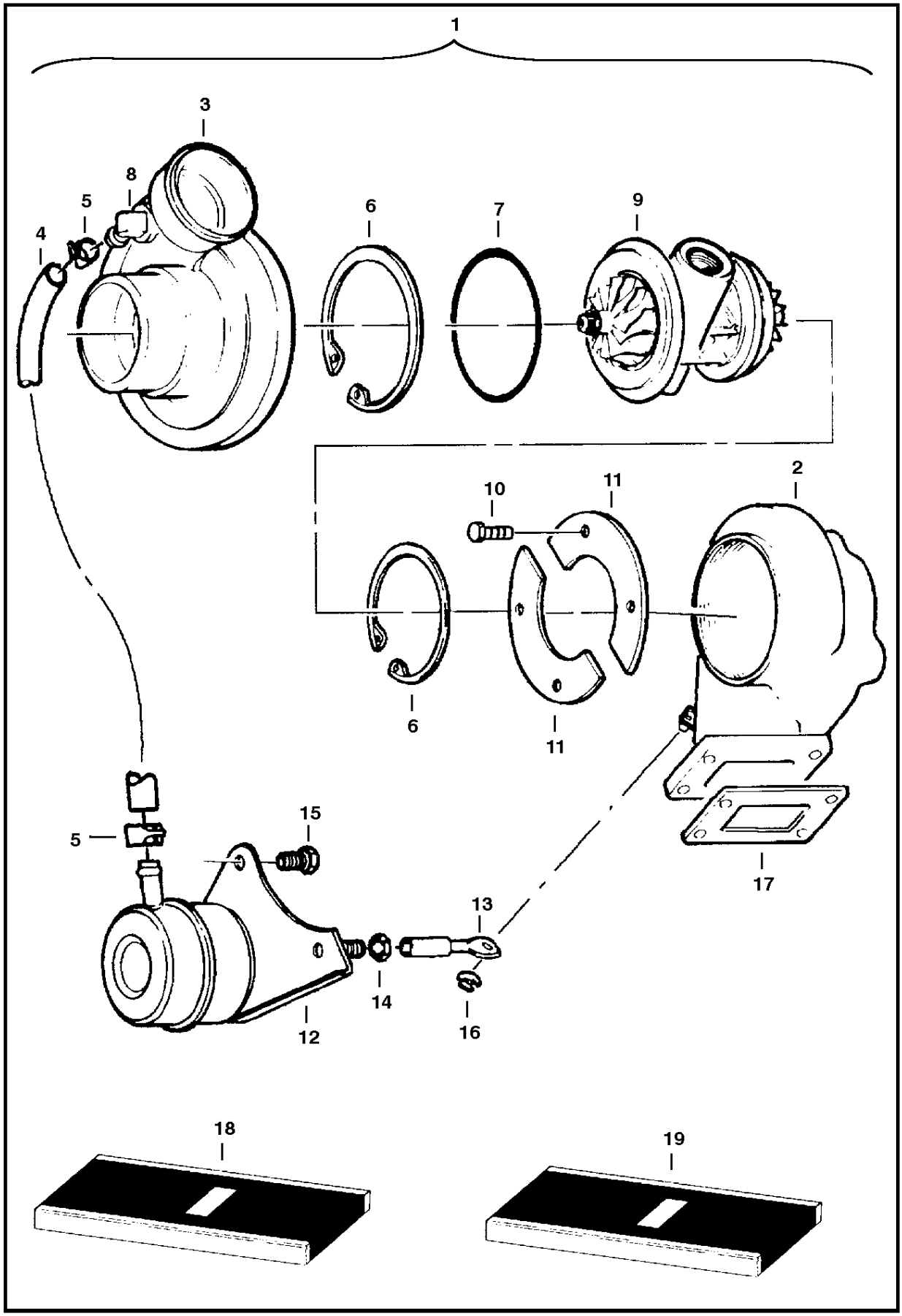

DealerNation Quality Equipment Manuals - dealernation@aol.com

TURBO CHARGER

Ref.N°	Part N°	Description	Remarks	Serial N°	Qty.
1	6670961	TURBO CHARGER			1
2	6672789	HOUSING			1
3	6672790	HOUSING			1
4	6672791	HOSE			1
5	NSS	CLAMP			1
6	NSS	CIRCLIP			1
7	NSS	RING			1
8	NSS	CONNECTION			1
9	6672792	CORE			1
10	NSS	BOLT			4
11	NSS	CLAMP			2
12	6672793	ACTUATOR			1
13	NSS	ROD			1
14	NSS	NUT			1
15	NSS	BOLT			2
16	NSS	RING			1
17	6671635	GASKET			1
18	6672794	KIT	repair - W/Ref. TURBO CHARGER(5), TURBO CHARGER(8), TURBO CHARGER(13), TURBO CHARGER(14) & TURBO CHARGER(16)		1
19	6672795	KIT	repair - W/Ref. TURBO CHARGER(7), TURBO CHARGER(10), TURBO CHARGER(11) & TURBO CHARGER(15)		1

DealerNation Quality Equipment Manuals - dealernation@aol.com

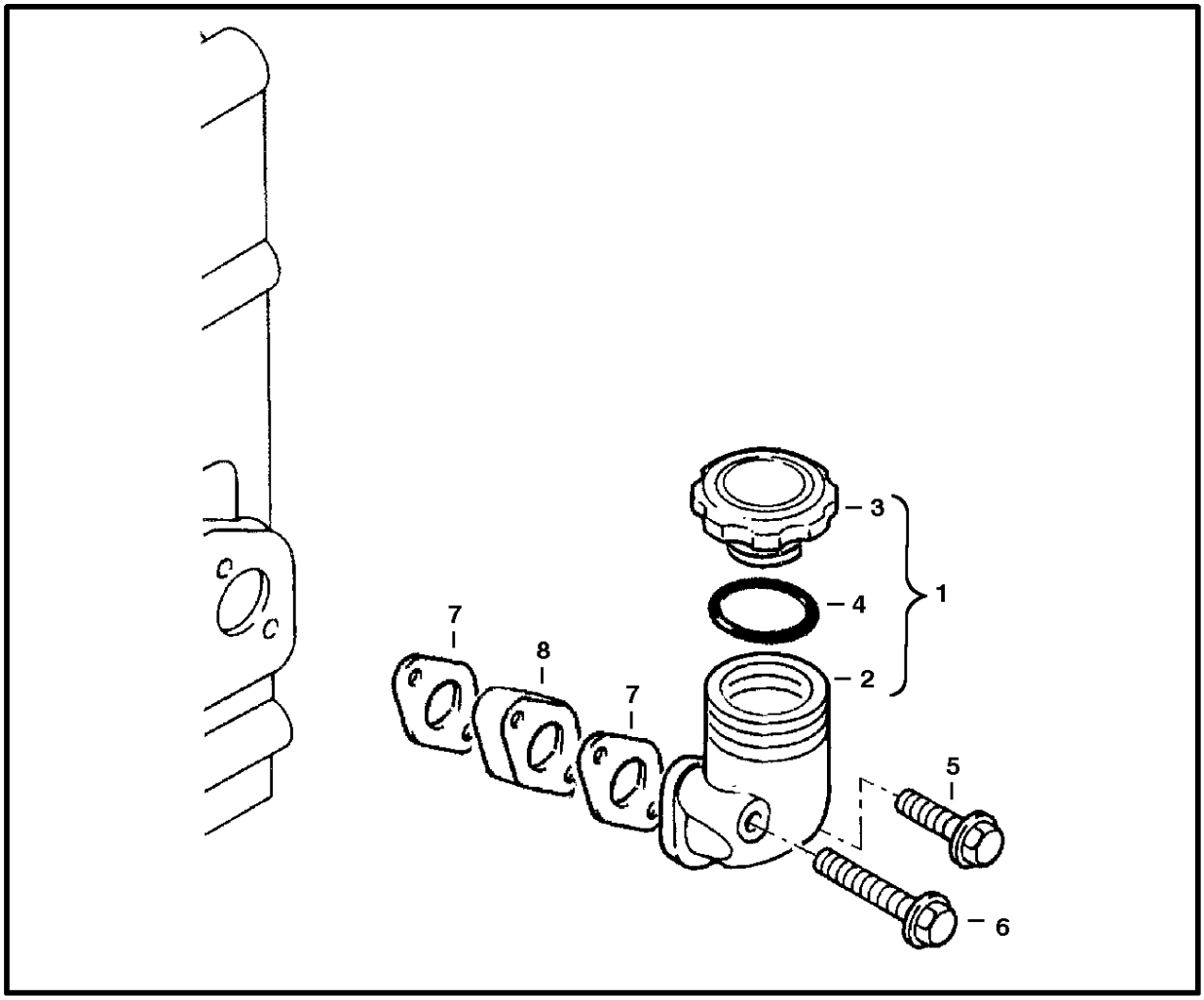

FILLER OIL - CAP OIL

Ref. No.	Part Number	Description	Remarks	Serial Number	Qty.

DealerNation Quality Equipment Manuals - dealernation@aol.com

FILLER OIL - CAP OIL

Ref.N°	Part N°	Description	Remarks	Serial N°	Qty.
1	6668504	FILLER	Oil - W/Ref. 2-4		1
2	NSS	FILLER	Oil - Order Ref. 1		1
3	6668505	CAP			1
4	6668506	O-RING			1
5	6668267	SCREW			1
6	6668546	SCREW			1
7	6668508	GASKET			1
8	6672293	SPACER			1

DealerNation Quality Equipment Manuals - dealernation@aol.com

Bobcat batteries are designed to meet the needs of your machine.

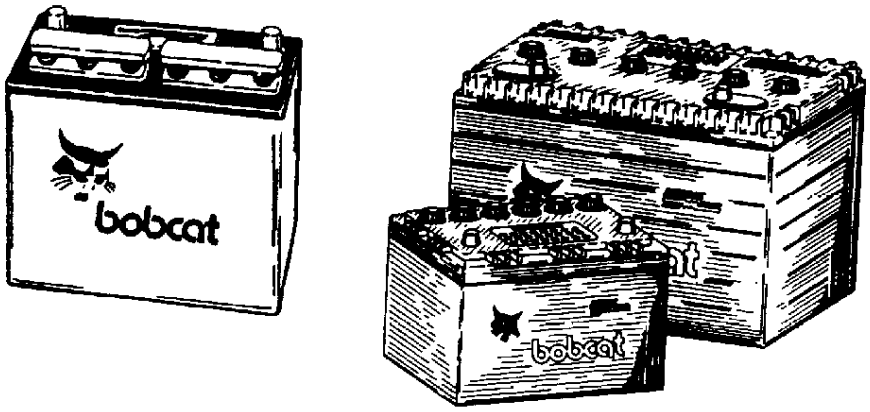

Available from Bobcat Parts.

Bobcat

DealerNation Quality Equipment Manuals - dealernation@aol.com

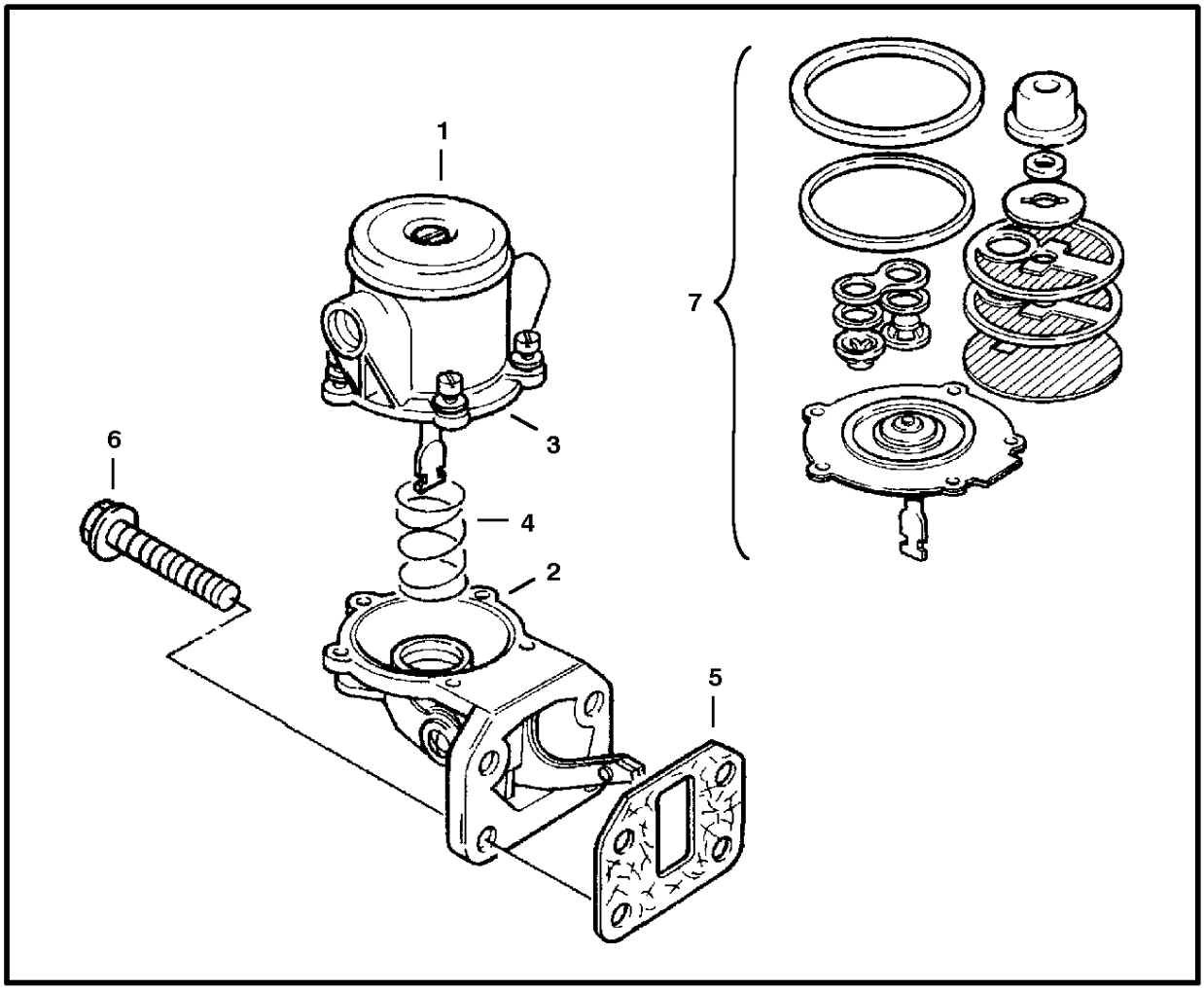

FUEL PUMP

Ref. No.	Part Number	Description	Remarks	Serial Number	Qty.

DealerNation Quality Equipment Manuals - dealernation@aol.com

FUEL PUMP

Ref.N°	Part N°	Description	Remarks	Serial N°	Qty.
1	6668624	PUMP	Ref. FUEL PUMP(2) - FUEL PUMP(4)		1
2	NSS	BODY			1
3	NSS	COVER			1
4	NSS	SPRING			1
5	6666638	GASKET			1
6	6668495	SCREW			4
7	6667518	REPAIR KIT			1

DealerNation Quality Equipment Manuals - dealernation@aol.com

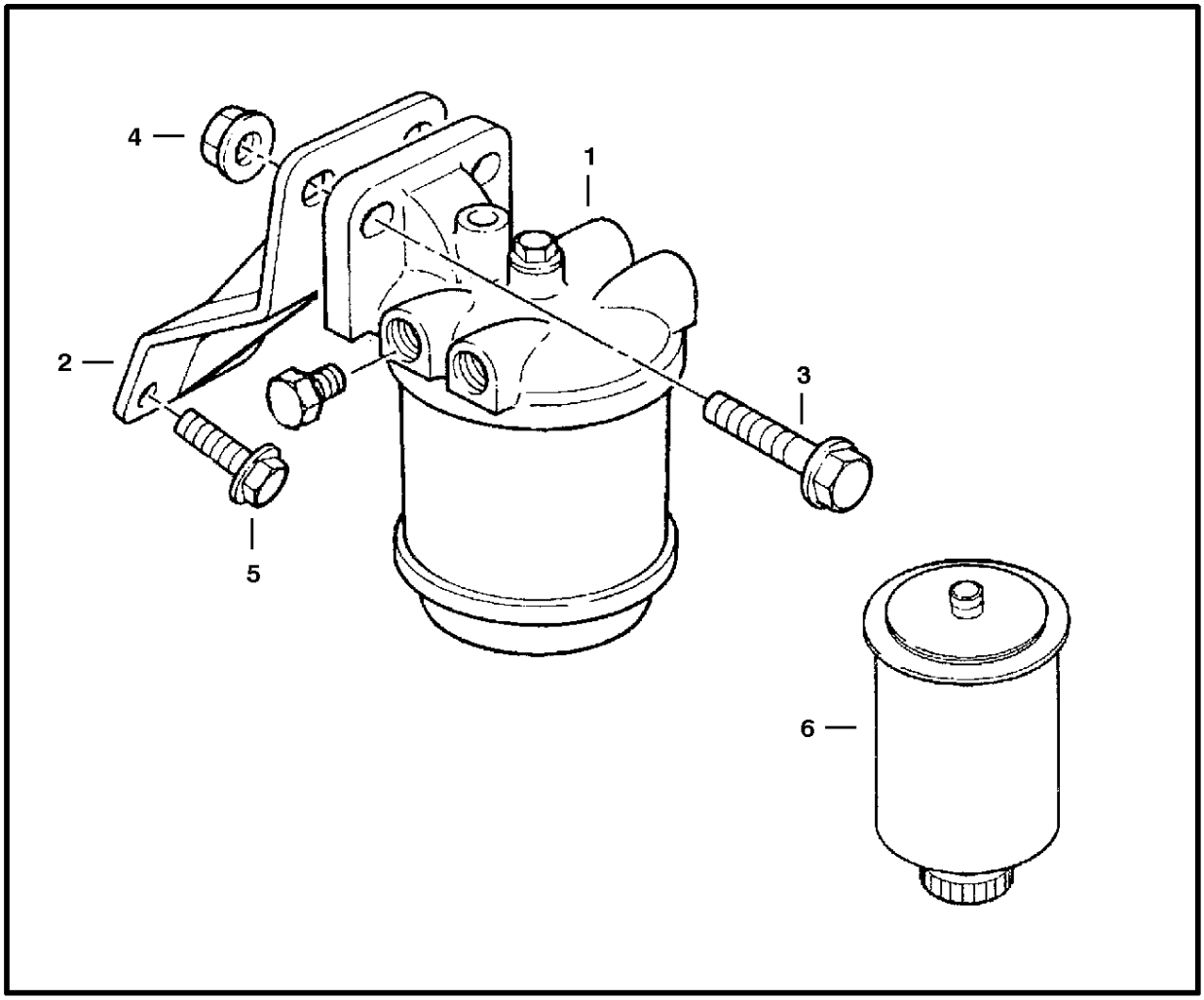

FUEL FILTER

Ref. No.	Part Number	Description	Remarks	Serial Number	Qty.

DealerNation Quality Equipment Manuals - dealernation@aol.com

FUEL FILTER

Ref.N°	Part N°	Description	Remarks	Serial N°	Qty.
1	6670995	FUEL FILTER	Ref. FUEL FILTER(2) - FUEL FILTER(6)		1
2	6670990	BRACKET			1
3	6668573	SCREW			2
4	6668313	NUT			2
5	6668564	SCREW			2
6	6670996	ELEMENT			1

DealerNation Quality Equipment Manuals - dealernation@aol.com

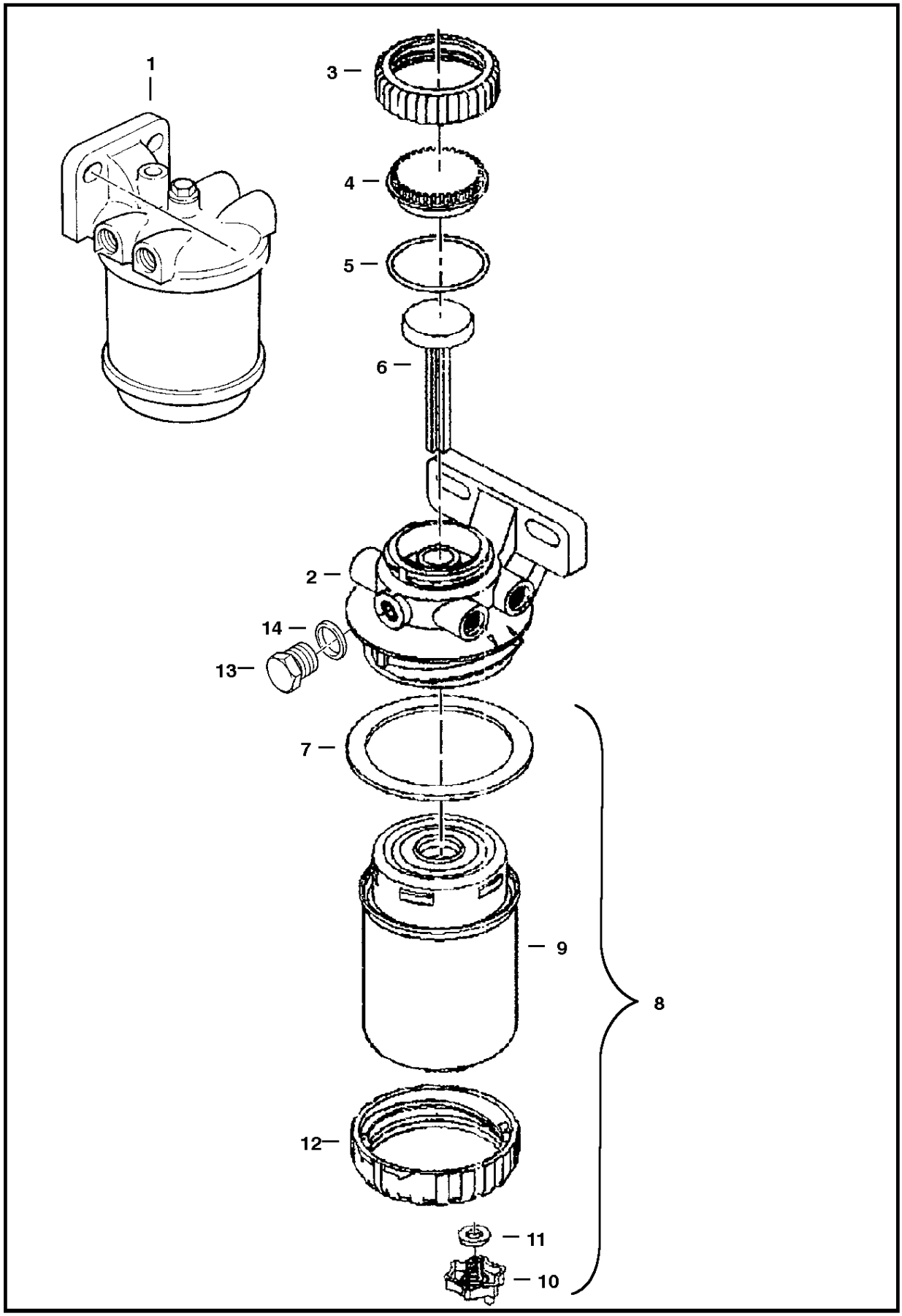

DealerNation Quality Equipment Manuals - dealernation@aol.com

FUEL FILTER - PARTS

Ref.N°	Part N°	Description	Remarks	Serial N°	Qty.
1	6670995	FUEL FILTER	Fuel - W/Ref. 2-12		1
2	NSS	HEAD	Order Ref. 1		1
3	6668640	NUT			1
4	6668641	CAP			1
5	6668642	SEAL			1
6	6668643	PLUG			1
7	6668644	SEAL			1
8	6670996	ELEMENT	W/Ref. 9-11		1
9	NSS	ELEMENT	Order Ref. 8		1
10	NSS	VALVE	Order Ref. 8		1
11	NSS	WASHER	Order Ref. 8		1
12	6668648	RING			1
13	6668661	PLUG			1
14	6672556	SEAL			1

DealerNation Quality Equipment Manuals - dealernation@aol.com

Bobcat Hydraulic/Hydrostatic Fluid
is blended to our specifications
to meet or exceed requirements of our components.

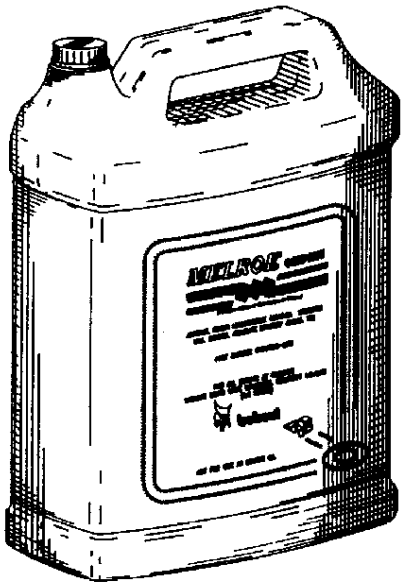

Available from Bobcat Parts.

Bobcat

DealerNation Quality Equipment Manuals - dealernation@aol.com

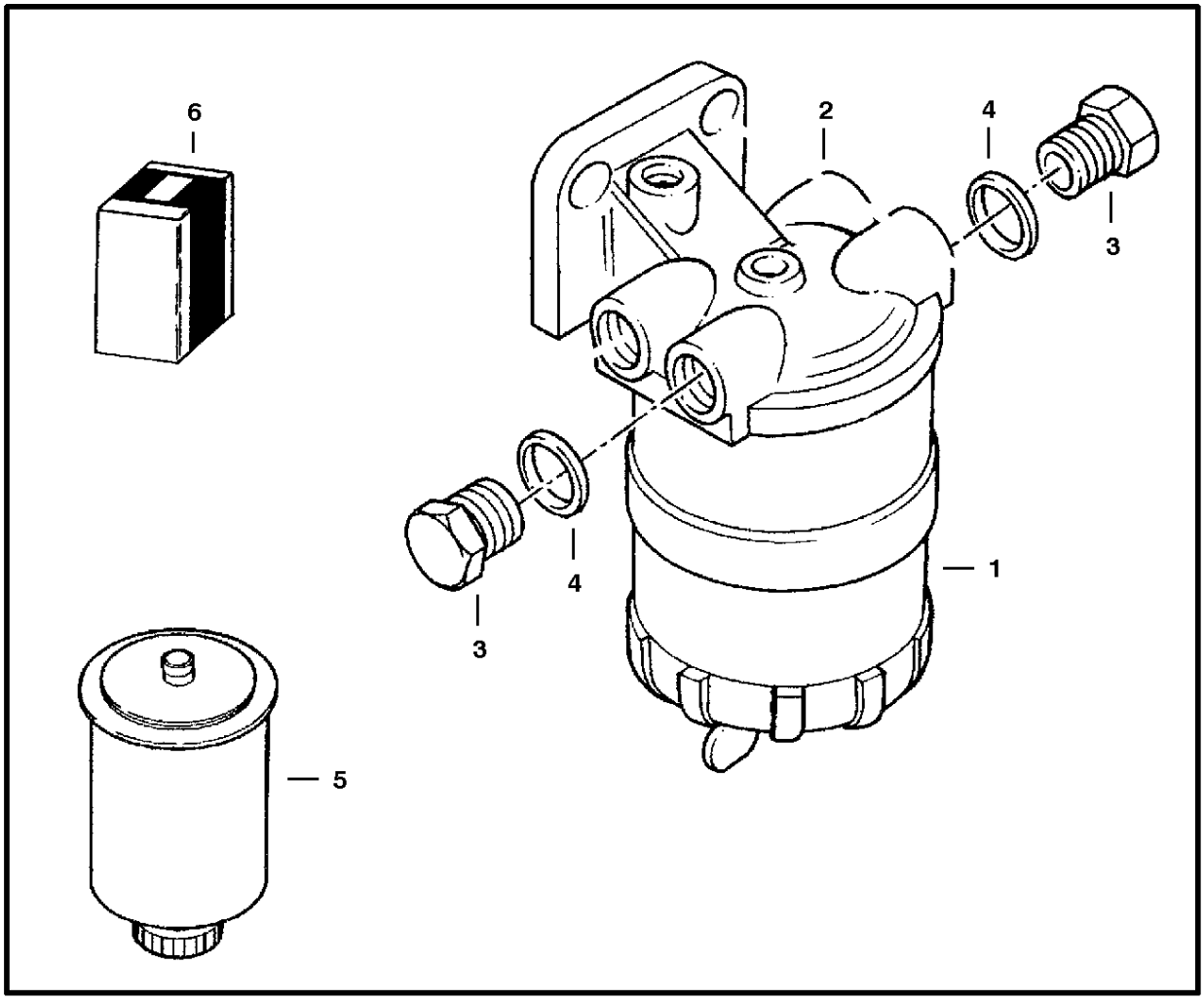

PUMP FUEL PRE-LIFT
(Water Trap)

Ref. No.	Part Number	Description	Remarks	Serial Number	Qty.

DealerNation Quality Equipment Manuals - dealernation@aol.com

PUMP FUEL PRE-LIFT

Ref.N°	Part N°	Description	Remarks	Serial N°	Qty.
1	6671003	FILTER	fuel - Ref. PUMP FUEL PRE-LIFT(2) - PUMP FUEL PRE-LIFT(5)		1
2	NSS	HOUSING	Order Ref. PUMP FUEL PRE-LIFT(1)		1
3	6515682	PLUG			2
4	3727285	WASHER			2
5	6671649	ELEMENT			1
6	6669137	KIT			1

DealerNation Quality Equipment Manuals - dealernation@aol.com

PUMP FUEL PRE-LIFT - PARTS
(Power Unit)

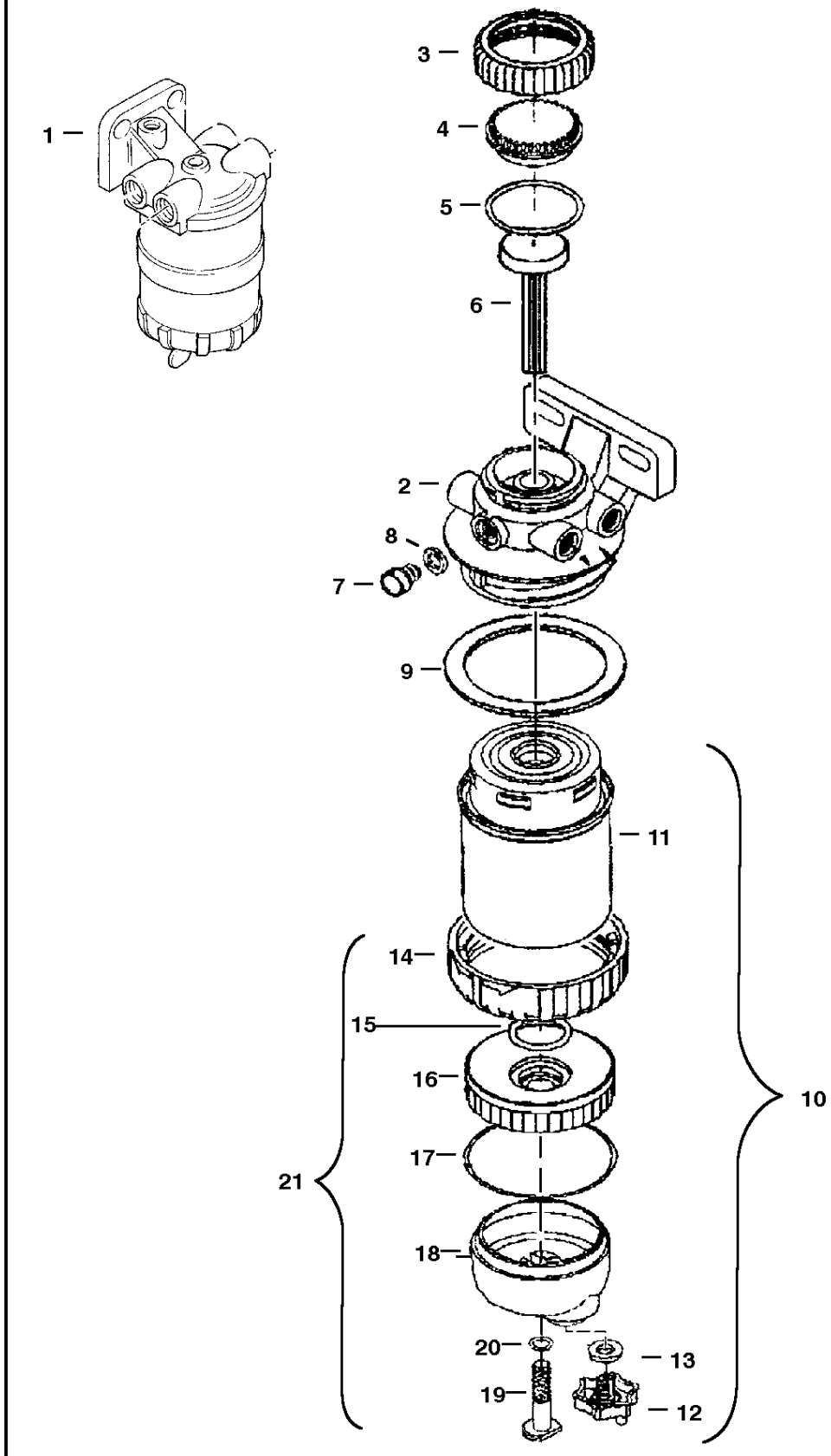

DealerNation Quality Equipment Manuals - dealernation@aol.com

PUMP FUEL PRE-LIFT - PARTS

Ref.N°	Part N°	Description	Remarks	Serial N°	Qty.
1	6671003	FILTER	W/Ref. 2-20 - Also See Page PUMP FUEL PRE-LIFT(1)		1
2	NSS	HEAD	Order Ref. 1		1
3	6668640	NUT			1
4	6668641	CAP			1
5	6668642	SEAL			1
6	6668643	PLUG			1
7	6668661	PLUG			1
8	6672556	SEAL			1
9	6668644	SEAL			1
10	6671649	ELEMENT	W/Ref. 11-PUMP FUEL PRE-LIFT - PARTS(13)		1
11	NSS	ELEMENT	Order Ref. 10		1
12	NSS	VALVE	Order Ref. 10		1
13	NSS	WASHER	Order Ref. 10		1
14	NSS	RING	Order Ref. PUMP FUEL PRE-LIFT - PARTS(21)		1
15	6668664	SEAL			1
16	NSS	HEAD	Order Ref. PUMP FUEL PRE-LIFT - PARTS(21)		1
17	6668669	SEAL			1
18	NSS	BOWL	Order Ref. PUMP FUEL PRE-LIFT - PARTS(21)		1
19	NSS	BOLT	Order Ref. PUMP FUEL PRE-LIFT - PARTS(21)		1
20	6677513	SEAL			1
21	6669137	KIT	Filter - Ref. PUMP FUEL PRE-LIFT - PARTS(14) - PUMP FUEL PRE-LIFT - PARTS(20)		1
21	6677514	KIT	#Bowl Seal Kit - Ref. PUMP FUEL PRE-LIFT - PARTS (13), PUMP FUEL PRE-LIFT - PARTS(15), PUMP FUEL PRE-LIFT - PARTS(17) & PUMP FUEL		1

DealerNation Quality Equipment Manuals - dealernation@aol.com

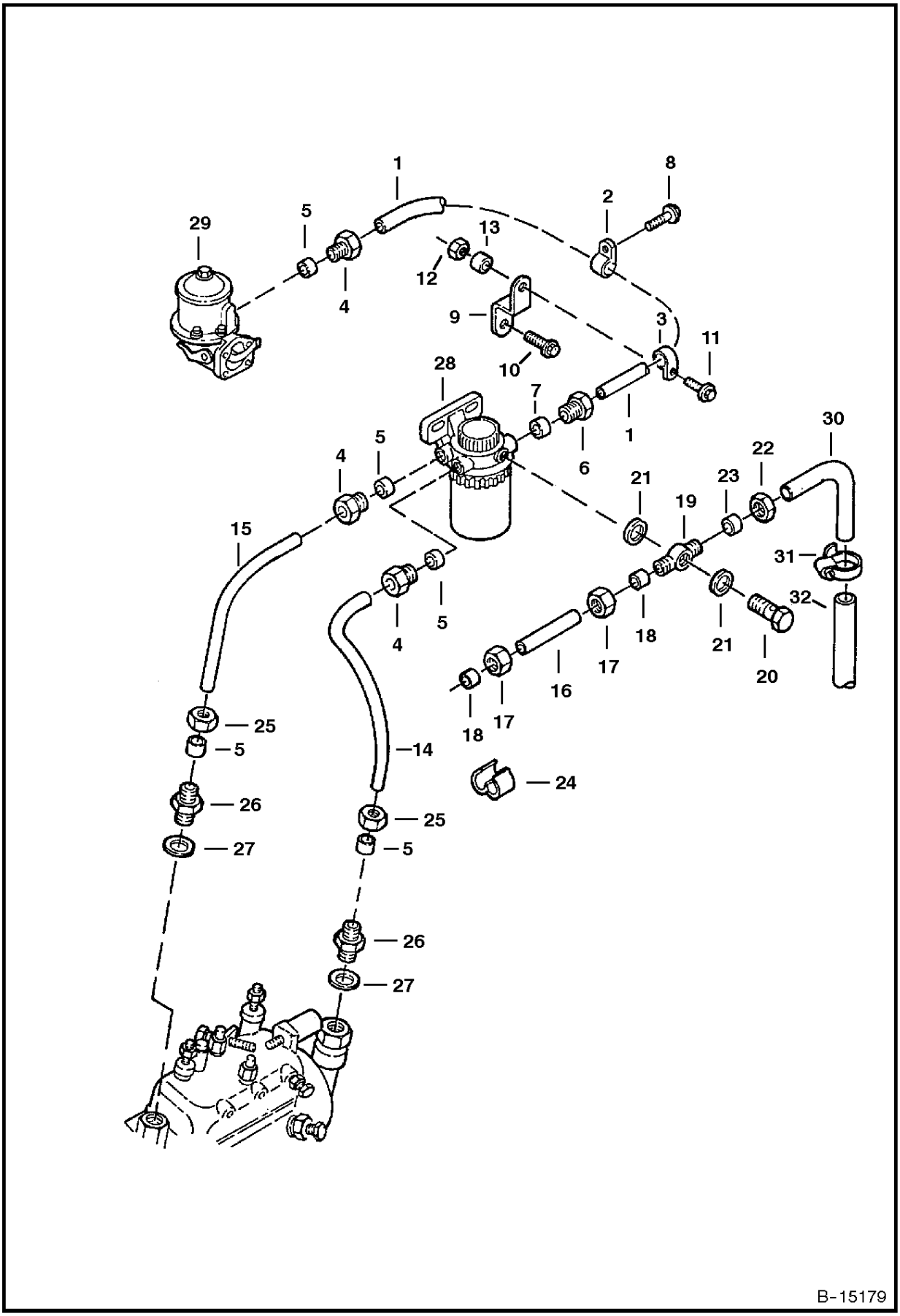

DealerNation Quality Equipment Manuals - dealernation@aol.com

FUEL FILTER

Ref.N°	Part N°	Description	Remarks	Serial N°	Qty.
1	6672309	PIPE	Fuel		1
2	6672310	CLIP			1
3	6672311	CLIP			1
4	92F-4	NUT			2
5	6672312	OLIVE			4
6	3727374	NUT			1
7	3727375	SEAL			1
8	6668212	SCREW			1
9	6671658	BRACKET			1
10	6668492	SCREW			1
11	6668638	SCREW			1
12	6668493	NUT			1
13	6671640	WASHER			1
14	6676335	PIPE	Fuel - Was 6672313 [A]		1
15	6676334	PIPE	Fuel - Was 6672314 [A]		1
16	6670993	PIPE	Fuel- mgt. to Ref. FUEL INJECTOR SYSTEM(23), page FUEL INJECTOR SYSTEM(23)		1
17	3490133	UNION NUT			2
18	3490132	OLIVE			2
19	6668634	CONNECTION			1
20	6668635	BANJO BOLT			1
21	6668636	WASHER			2
22	58F-3	NUT			1
23	57F-3	SEAL			1
24	6670994	CLIP			1
25	6672316	NUT			2
26	6672317	UNION			2
27	6514965	WASHER			2
28	6670995	FUEL FILTER	Ref. FUEL FILTER(1) on Page FUEL FILTER(1)		1
29	6668624	PUMP	Ref. FUEL PUMP(1) on Page FUEL PUMP(1)		1
30	6597183	ELBOW	See Page FUEL SYSTEM(11), Ref. FUEL SYSTEM(22)		1
31	6515575	CLAMP	hose		1
32		HOSE	See Page FUEL SYSTEM(11), Ref. FUEL SYSTEM(27)		1

DealerNation Quality Equipment Manuals - dealernation@aol.com

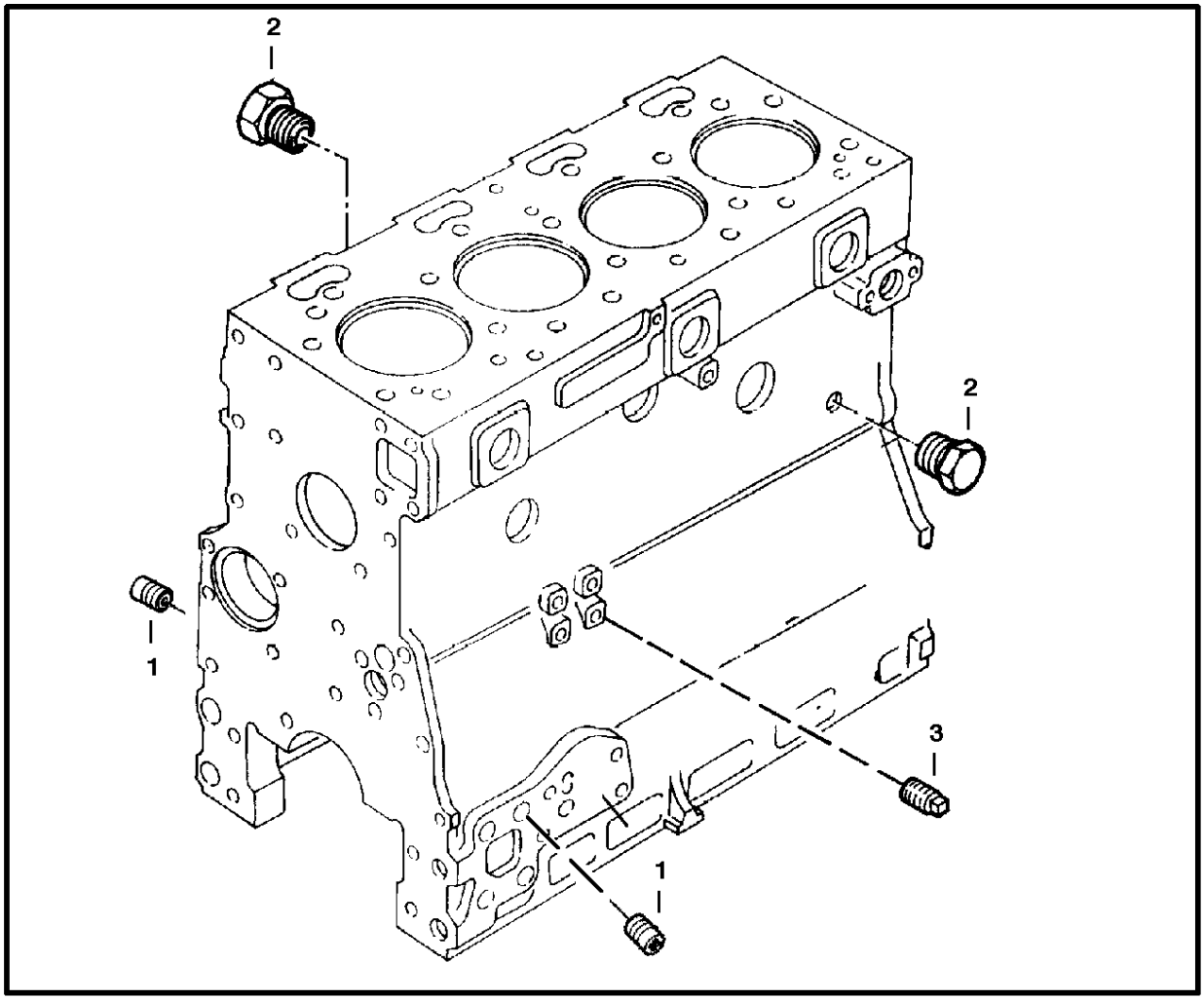

ENGINE PLUGS

Ref. No.	Part Number	Description	Remarks	Serial Number	Qty.

DealerNation Quality Equipment Manuals - dealernation@aol.com

ENGINE PLUGS

Ref.N°	Part N°	Description	Remarks	Serial N°	Qty.
1	6668652	PLUG			2
2	41K-4	PLUG			2
3	13F-2	PLUG			1

DealerNation Quality Equipment Manuals - dealernation@aol.com

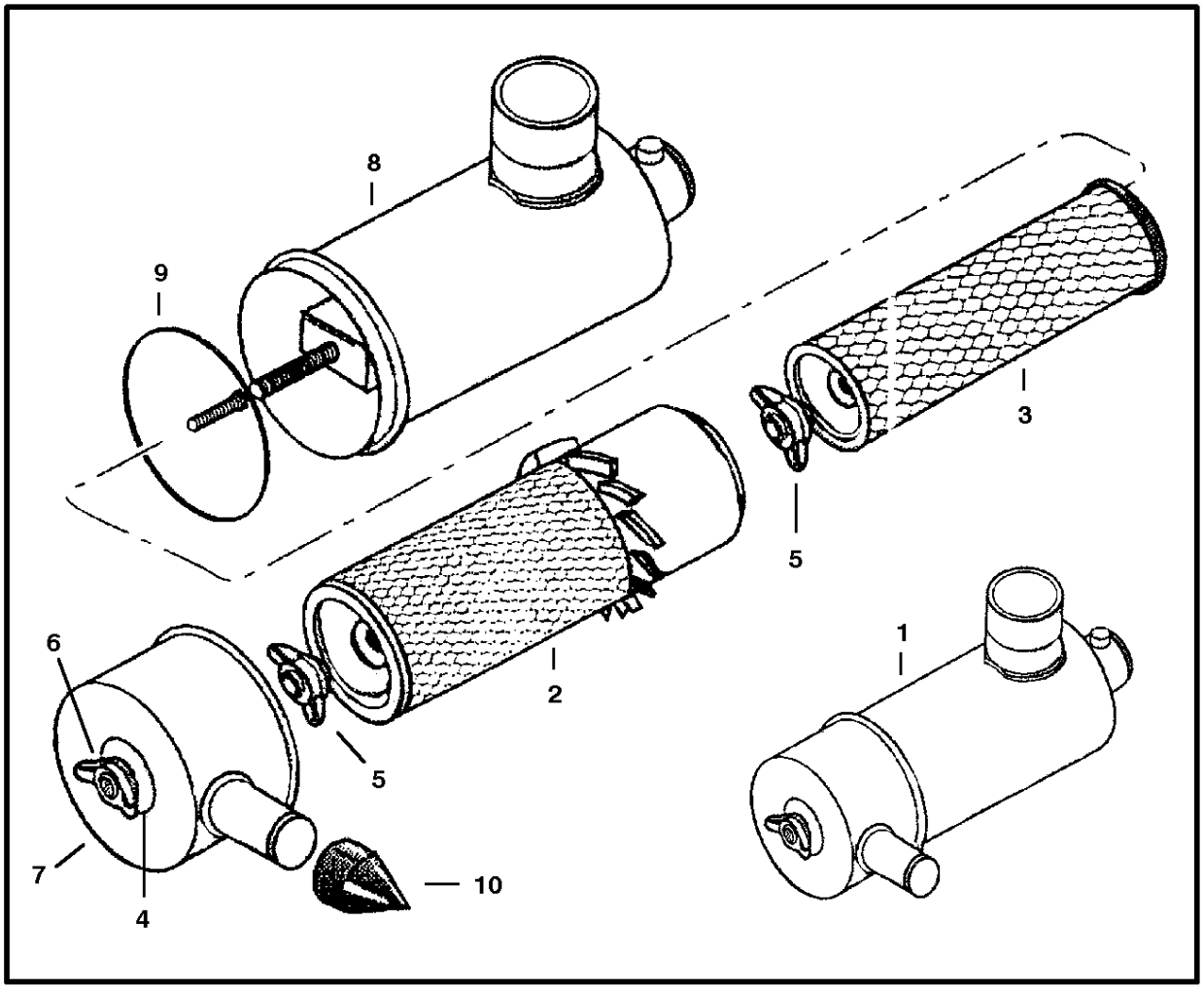

AIR CLEANER

Ref. No.	Part Number	Description	Remarks	Serial Number	Qty.

DealerNation Quality Equipment Manuals - dealernation@aol.com

AIR CLEANER

Ref.N°	Part N°	Description	Remarks	Serial N°	Qty.
1	6672636	AIR CLEANER	W/Ref. AIR CLEANER(2) & AIR CLEANER(3)		1
2	6672862	ELEMENT	Was 6672453 [A]		1
3	6671969	ELEMENT			1
4	6661244	WASHER			1
5	6672558	WING NUT			2
6	6652564	WING NUT			1
7	NSS	COVER			1
8	NSS	TANK			1
9	6672559	O-RING			1
10	6672557	VALVE	dust unloader		1

DealerNation Quality Equipment Manuals - dealernation@aol.com

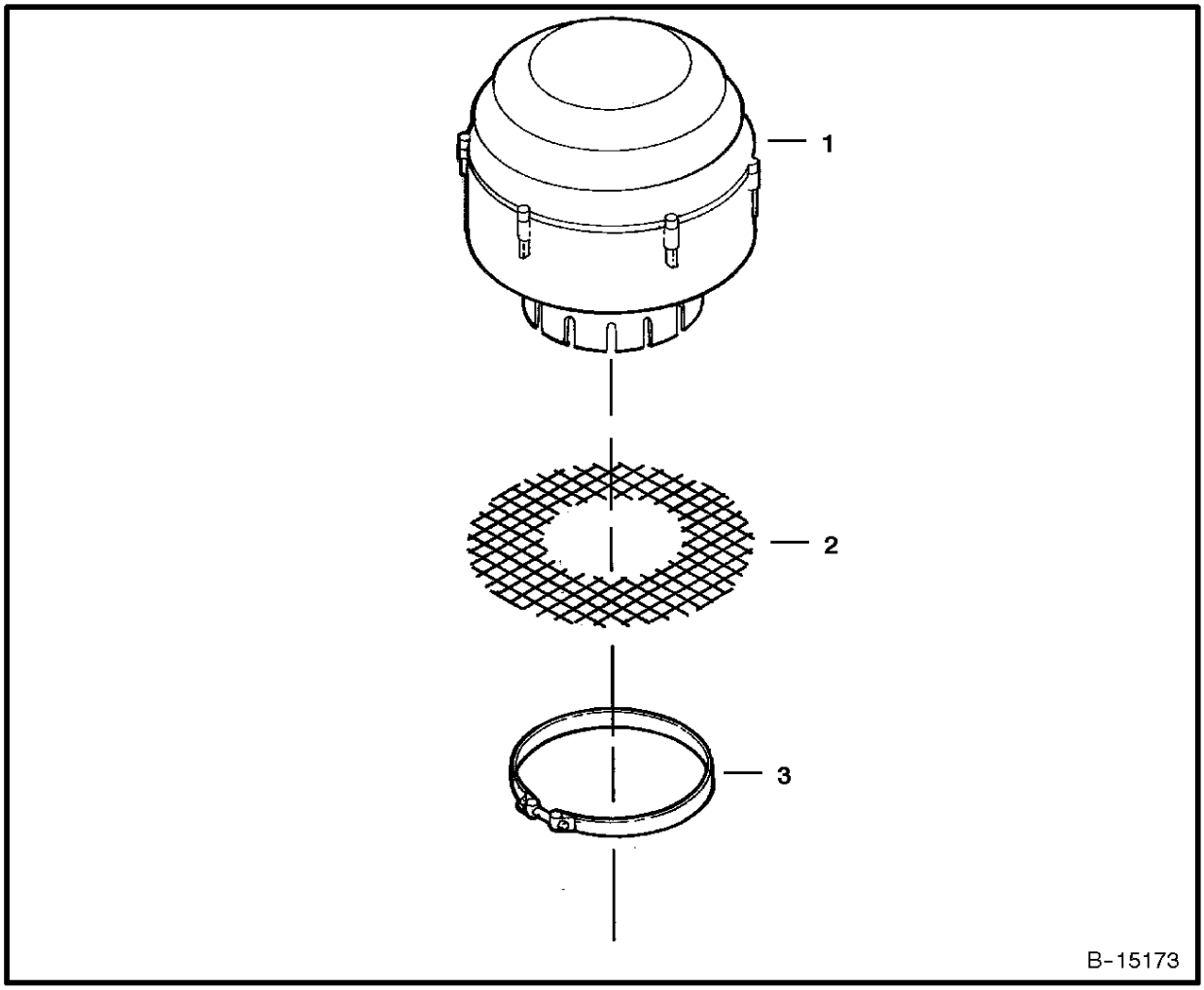

AIR PRECLEANER FILTER

Ref. No.	Part Number	Description	Remarks	Serial Number	Qty.

DealerNation Quality Equipment Manuals - dealernation@aol.com

AIR PRECLEANER FILTER

Ref.N°	Part N°	Description	Remarks	Serial N°	Qty.
1	6672561	FILTER	air precleaner assy. W/Ref. AIR PRECLEANER FILTER(2)		1
2	6673920	GUARD	safety		1
3	44H-64	CLAMP	See Page ENGINE & ATTACHING PARTS(2), Ref. ENGINE & ATTACHING PARTS(15)		1

DealerNation Quality Equipment Manuals - dealernation@aol.com

NOTE: If loader is not equipped with Deluxe Cab Option, this harness must be used to run Flasher Lights, Turn Indicators, Hazard LIghts, Rotating Beacon and/or Strobe Lights.

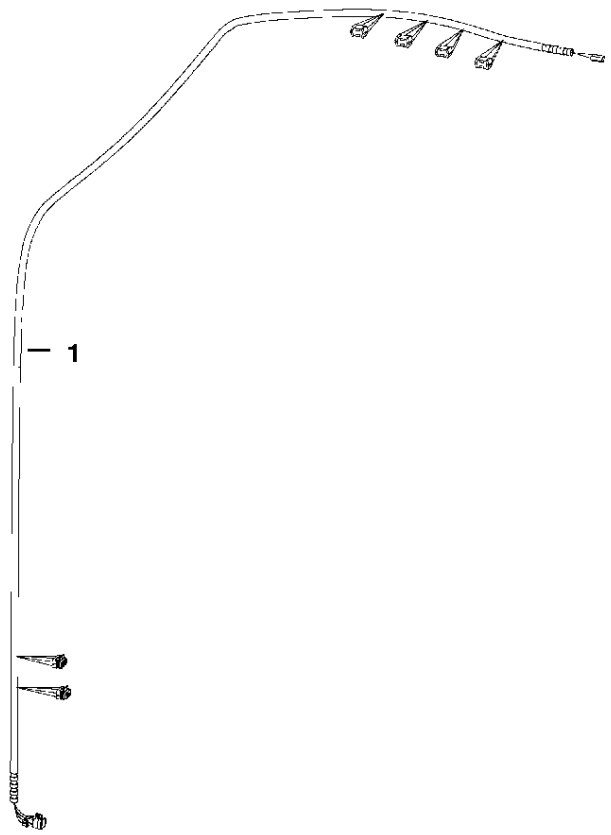

*** ACCESSORIES HARNESS**
(Standard - Non Deluxe Cab)

Ref. No.	Part Number	Description	Remarks	Serial Number	Qty.

DealerNation Quality Equipment Manuals - dealernation@aol.com

* ACCESSORIES HARNESS

Ref.N°	Part N°	Description	Remarks	Serial N°	Qty.
1	6727468	HARNESS	SEE NOTE		1

DealerNation Quality Equipment Manuals - dealernation@aol.com

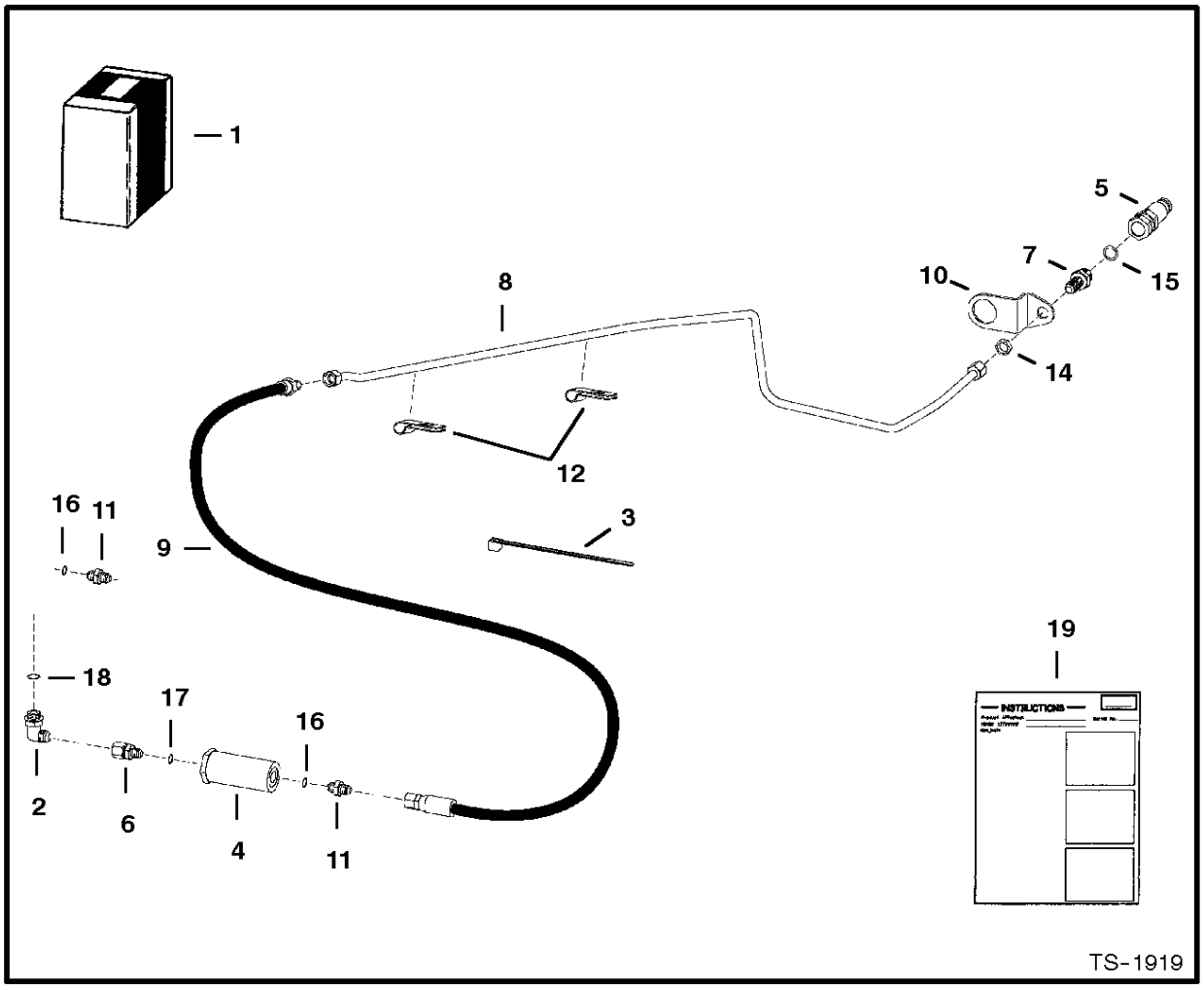

AUXILLIARY CASE DRAIN KIT

Ref. No.	Part Number	Description	Remarks	Serial Number	Qty.

DealerNation Quality Equipment Manuals - dealernation@aol.com

AUXILLIARY CASE DRAIN KIT

Ref.N°	Part N°	Description	Remarks	Serial N°	Qty.
1	6806348	KIT	Ref. AUXILLIARY CASE DRAIN KIT(2) - AUXILLIARY CASE DRAIN KIT(19)		1
2	6596832	ELBOW	C-Series		1
3	6624289	STA-STRAP			2
4	6661022	FILTER			1
5	6667806	QUICK COUPLER			1
6	6673243	CONNECTOR	W/Ref. AUXILLIARY CASE DRAIN KIT(17)		1
7	6711628	ADAPTER	W/Ref. AUXILLIARY CASE DRAIN KIT(15)		1
7	6669659	O-RING			x
8	6806046	TUBELINE			1
9	6803584	HOSE			1
10	6803585	MOUNT			1
11	15KV-5	ADAPTER	W/Ref. AUXILLIARY CASE DRAIN KIT(16)		2
11	97K-6	O-RING			x
12	30H-62	CLIP			2
13	75K-6	O-RING			1
14	86F-5	NUT			1
15	79K-8	O-RING			1
16	99K-6	O-RING			2
17	79K-6	O-RING			1
18	75K-8	O-RING			1
19	6900912	INSTRUCTIONS			1

DealerNation Quality Equipment Manuals - dealernation@aol.com

BACK-UP ALARM

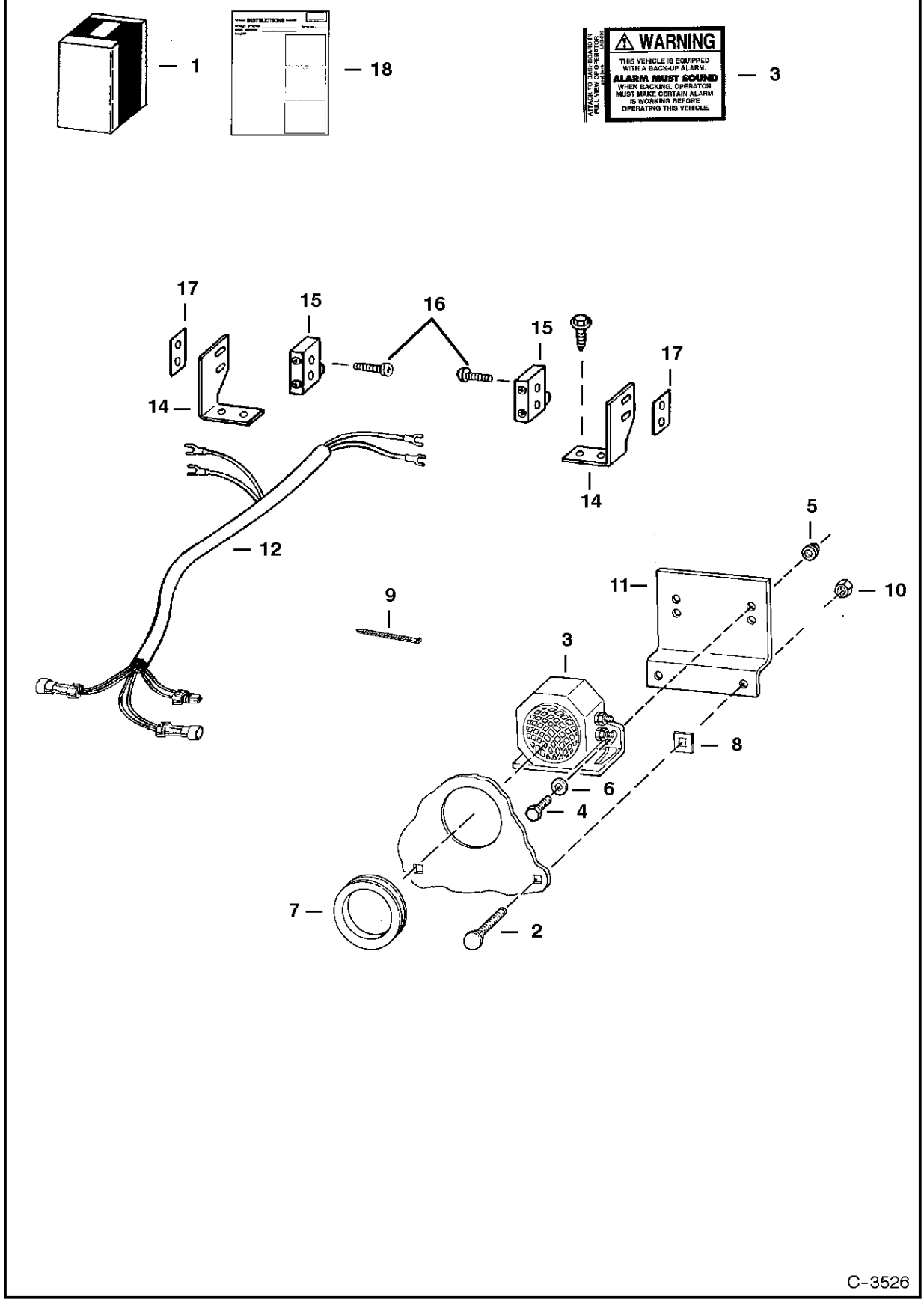

DealerNation Quality Equipment Manuals - dealernation@aol.com

BACK-UP ALARM

Ref.N°	Part N°	Description	Remarks	Serial N°	Qty.
1	6806425	KIT	backup alarm - Ref. BACK-UP ALARM(2) - BACK-UP ALARM(18)		1
2	37C-512	BOLT			2
3	6599931	ALARM	backup		1
3	6668879	DECAL			1
4	17C-410	BOLT			2
5	57D-4	NUT			2
6	25E-13	WASHER			2
7	6577545	GROMMET			1
8	774220	NUT			2
9	6610510	NYLON TIE			4
10	57D-5	NUT			2
11	6707726	MOUNT			1
12	6807152	HARNESS			1
13	6806500	BRACKET	RH		1
14	6806506	BRACKET	LH		1
15	6646781	SWITCH	alarm		2
16	59G-620	BOLT			4
17	6702593	SPACER			2
18	6901006	INSTRUCTIONS			1

DealerNation Quality Equipment Manuals - dealernation@aol.com

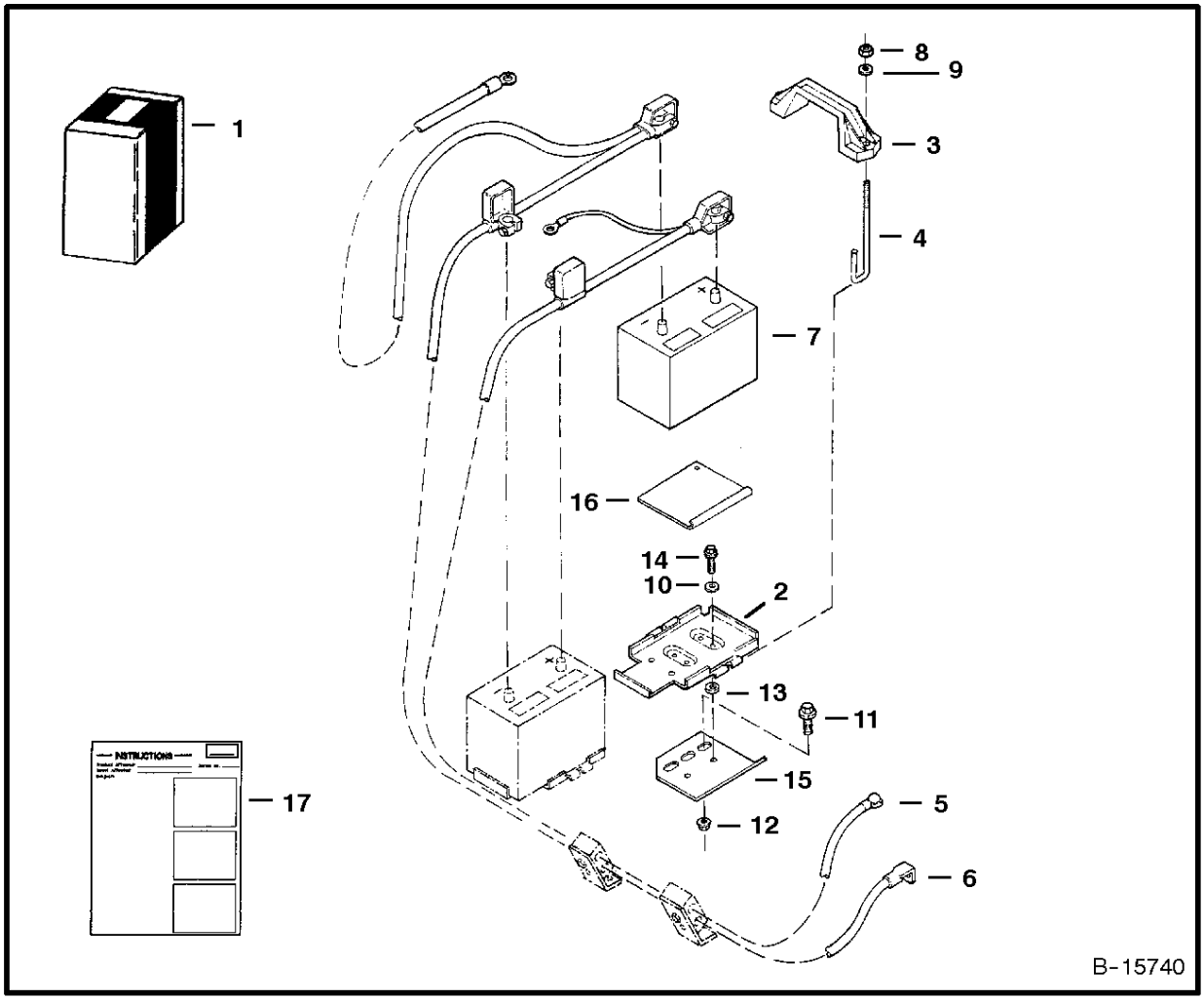

BATTERY KIT
(Dual)

Ref. No.	Part Number	Description	Remarks	Serial Number	Qty.

DealerNation Quality Equipment Manuals - dealernation@aol.com

BATTERY KIT

Ref.N°	Part N°	Description	Remarks	Serial N°	Qty.
1	6808262	KIT	W/Ref. BATTERY KIT(2) - BATTERY KIT(17)		1
2	6712536	MOUNT			1
3	6569203	CLAMP			1
4	6808878	BOLT	bent		2
5	6808226	CABLE	positive		1
6	6808227	CABLE	negative		1
7	6665427	BATTERY			1
8	59D-5	NUT			2
9	25E-15	WASHER			2
10	25E-18	WASHER			2
11	31C-1236	BOLT			1
12	53D-12	NUT	Was 83D-12 [B]		1
13	6555455	WASHER			2
14	84G-3716	BOLT			2
15	6808212	BRACKET			1
16	6808263	BRACKET	spacer		1
17	6901064	INSTRUCTIONS			1

DealerNation Quality Equipment Manuals - dealernation@aol.com

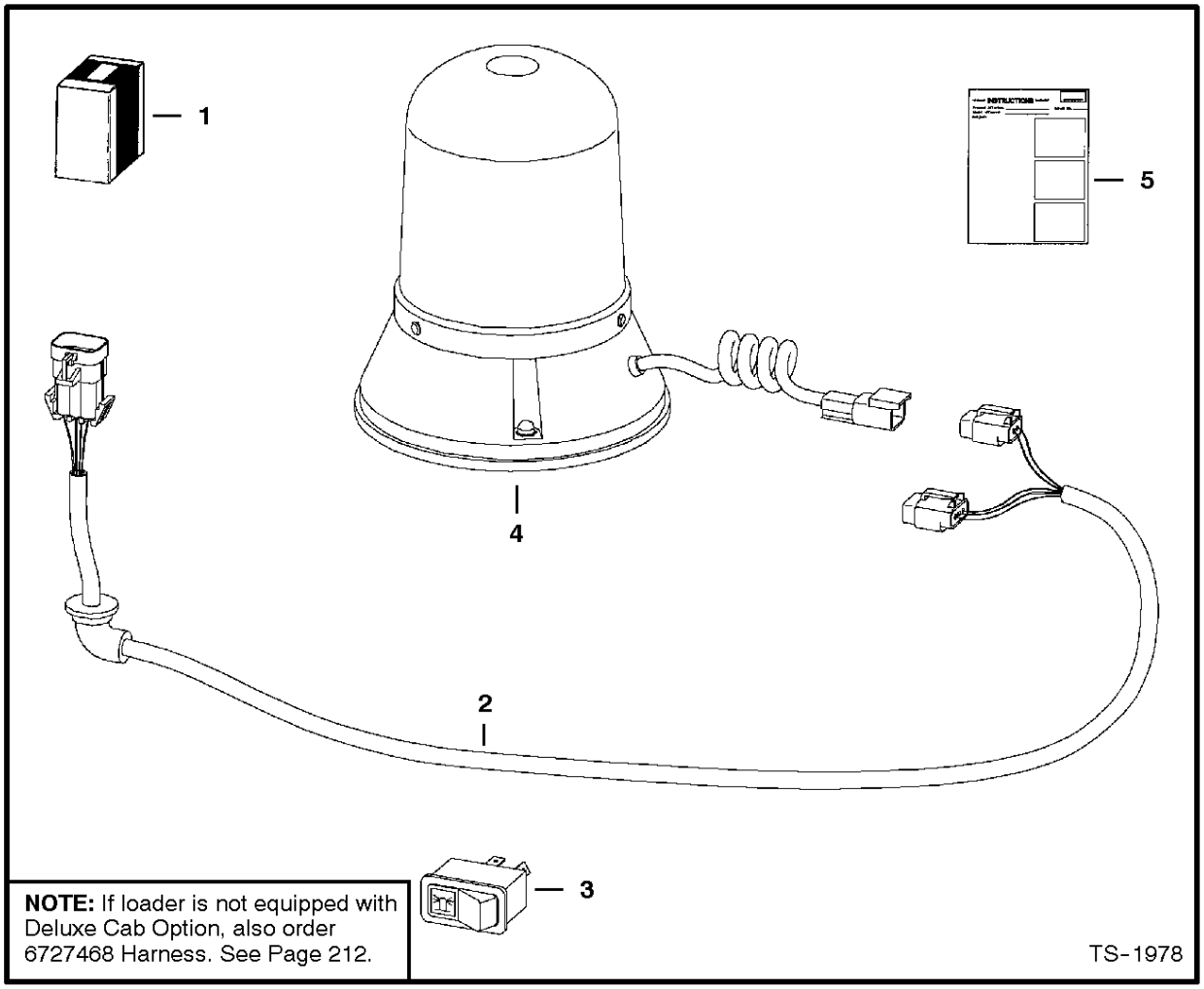

BEACON

Ref. No.	Part Number	Description	Remarks	Serial Number	Qty.

DealerNation Quality Equipment Manuals - dealernation@aol.com

BEACON

Ref.N°	Part N°	Description	Remarks	Serial N°	Qty.
1	6719854	KIT	rotating beacon		1
2	6718872	HARNESS			1
3	6665317	SWITCH	horizontal		1
3	6668816	SWITCH	vertical		1
4	6675523	BEACON			1
5	6900991	INSTRUCTIONS			1

DealerNation Quality Equipment Manuals - dealernation@aol.com

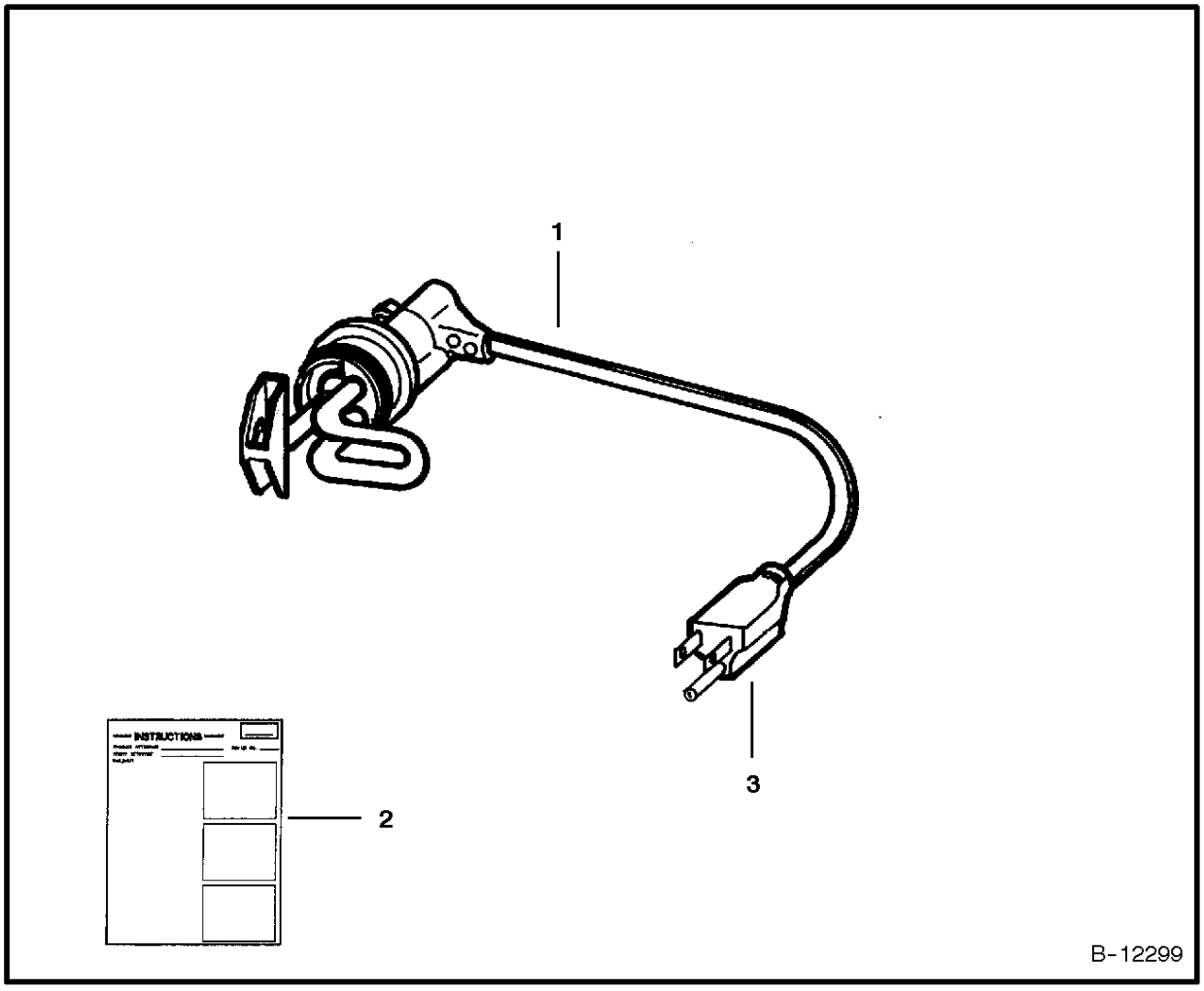

BLOCK HEATER

Ref. No.	Part Number	Description	Remarks	Serial Number	Qty.

DealerNation Quality Equipment Manuals - dealernation@aol.com

BLOCK HEATER

Ref.N°	Part N°	Description	Remarks	Serial N°	Qty.
1	6720745	HEATER	Located on injection pump side (2nd hole)		1
2	6720038	INSTRUCTIONS			1
3	6668881	CORD			1

DealerNation Quality Equipment Manuals - dealernation@aol.com

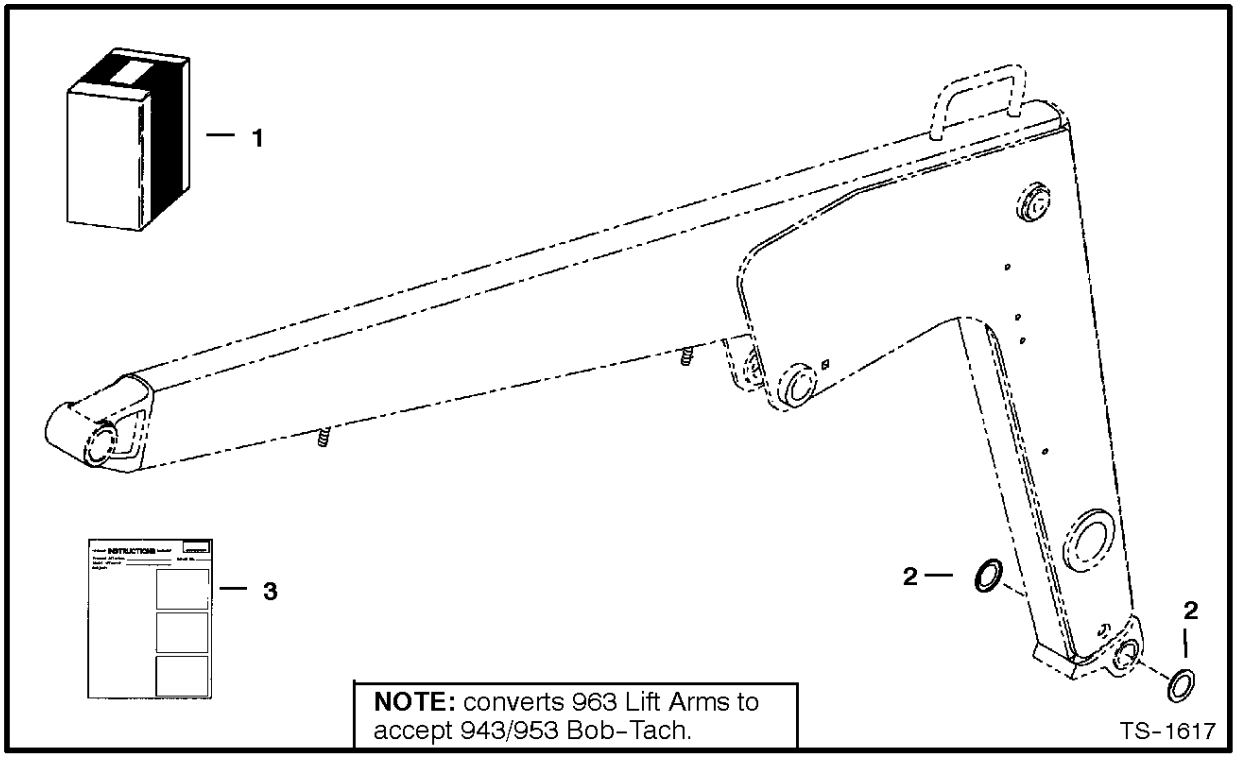

BOB-TACH CONVERSION KIT

Ref. No.	Part Number	Description	Remarks	Serial Number	Qty.
1	6804074	KIT	Ref. 2 & 3 - SEE NOTE		1
2	6804058	BUSHING			4

DealerNation Quality Equipment Manuals - dealernation@aol.com

BOB-TACH CONVERSION KIT

Ref.N°	Part N°	Description	Remarks	Serial N°	Qty.
1	6804074	KIT	Ref. BOB-TACH CONVERSION KIT(2) & BOB-TACH CONVERSION KIT(3) - SEE NOTE		1
2	6804058	BUSHING			4
3	6900529	INSTRUCTIONS			1

DealerNation Quality Equipment Manuals - dealernation@aol.com

CAB DOOR

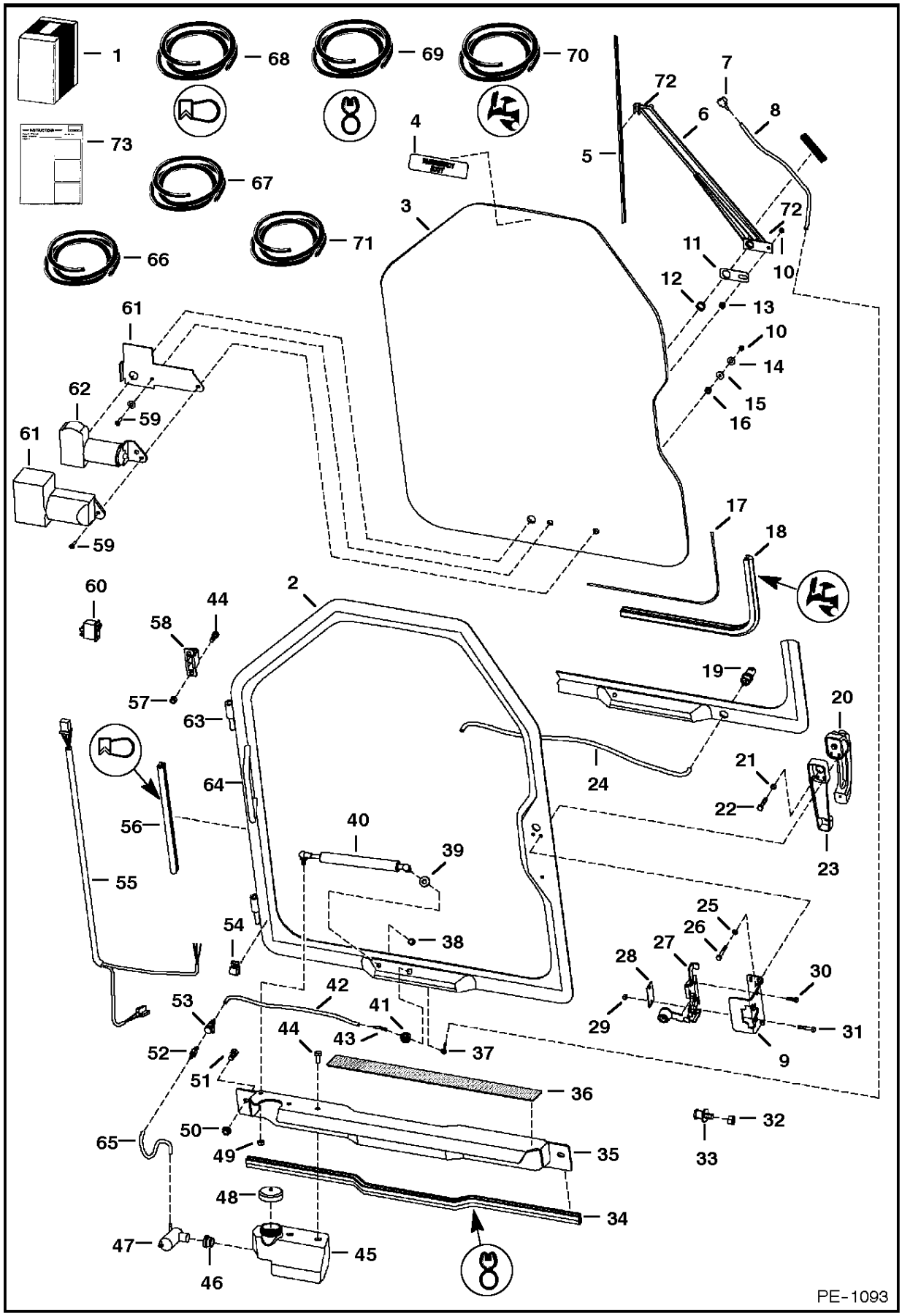

DealerNation Quality Equipment Manuals - dealernation@aol.com

CAB DOOR

Ref.N°	Part N°	Description	Remarks	Serial N°	Qty.
1	6718807	KIT	door - Was SALES [D]		1
2	NAP	DOOR	W/Ref. CAB DOOR(63) & CAB DOOR(64) - .5' longer than 6726435 Door - Was 6717590 [A]		1
2	6726435	DOOR	W/Ref. CAB DOOR(63) & CAB DOOR(64) - .5' shorter than NAP/6717590 Door		1
3	6717360	WINDOW	.25' thick glass		1
4	6707852	DECAL	exit		1
5	6664096	BLADE	wiper		1
6	6664095	ARM	wiper		1
7	6676498	NOZZLE	wiper mounted		1
8	NAP	HOSE	10.25' (260,4 mm) long - Order Ref. CAB DOOR(71)		1
9	6717369	BRACKET	latch		1
10	6664103	NUT	acorn		2
11	6664178	GASKET	panto adaptor		1
12	6667201	SPACER	nylon		1
13	6676501	CLIP			1
14	6664065	WASHER	nylon		1
15	6801059	WASHER	neoprene		1
16	6664085	BUSHING	nylon		2
17	NAP	CORD	window - 113.3' (2877,8 mm) - Order Ref. CAB DOOR(67)		1
18	NAP	SEAL	window - 113.3' (2877,8 mm) - Order Ref. CAB DOOR(70)		1
19	6664555	NOZZLE	door mounted		1
20	6674667	HANDLE			1
20	6709527	KEY	ign/rear door		1
21	61D-4	NUT			1
22	17C-420	BOLT			1
23	6717146	SPACER	handle		1
24	NAP	HOSE	washer - 25.25' (641,4 mm) long - Order Ref. CAB DOOR(66)		1
25	6EM-60	WASHER			3
26	1CM-640	BOLT			3
27	6674666	LATCH			1
28	6718520	COVER	latch		1
29	4DM-6	NUT			2
30	1CM-620	BOLT			2
31	1CM-635	BOLT			2
32	91D-7	NUT			1
33	6654170	STRIKER BOLT			1
34	NAP	SEAL	threshold - 32' (812,8 mm) - Used W/Ref. CAB DOOR(35) (NAP/6718179 Shield) - Order (3) ft. of Ref. CAB DOOR(69)		1
34	NAP	SEAL	threshold - 36' (914,4 mm) - Used W/Ref. CAB DOOR(35) (6725171 Shield) - Order (3) ft. of Ref. CAB DOOR(69)		1
35	NAP	SHIELD	Order 6725171 Shield & 3 ft. of Ref. CAB DOOR(69) - Was 6718179 [A]		1
35	6725171	SHIELD			1
36	6542731	SAFETY TREAD			1
37	6676500	ELBOW			1
38	46D-5	NUT	acorn		1
39	25E-16	WASHER			1

DealerNation Quality Equipment Manuals - dealernation@aol.com

CAB DOOR

Ref.N°	Part N°	Description	Remarks	Serial N°	Qty.
40	6674938	GAS SPRING			1
41	6676499	GROMMET	wiper		1
42	NAP	HOSE	18.25' (463,6 mm) long - Order Ref. CAB DOOR(66)		1
43	6676917	ELBOW			1
44	17C-512	BOLT			6
45	6725201	TANK	washer - Was 6718627 [A]		1
46	6666766	GROMMET			1
47	6664554	PUMP	washer bottle		1
48	6674993	CAP	vented		1
49	61D-5	NUT			1
50	61D-6	NUT	Was 61D-8 [B]		2
51	17C-612	BOLT	Was 17C-812 [B]		2
52	6675299	COUPLER	insert		1
53	6675298	COUPLER	body		1
54	6675378	CLIP	Use W/Ref. CAB DOOR(19)		2
54	6675378	CLIP	Use W/Ref. CAB DOOR(7)		1
55	6718295	HARNESS	wiper		1
56	NAP	SEAL	127.3'(3233,4 mm)-Order Ref. CAB DOOR(68)		1
57	59D-5	NUT			4
58	6717593	HINGE	base		2
59	6664566	SCREW			2
60	6665707	SWITCH	front wiper		1
61	6664097	COVER	wiper		1
62	6668137	MOTOR	wiper		1
62	6631928	SHAFT			1
62	6631927	GEAR			1
62	6670164	LINK			1
62	961528	HARDWARE			1
63	6718376	HINGE	door		2
64	6718521	HANDLE	grab		1
65	NAP	HOSE	4.25' (107,9 mm) long - Order Ref. CAB DOOR(66)		1
66	6676003	HOSE	bulk - Sold Per Foot - .109' I.D. - Was 6708310 [B]		x
67	6554149	CORD	bulk - Sold Per Foot		x
68	6675558	SEAL	bulk - Sold Per Foot - Was 6669390 [A]		x
69	6513152	SEAL	bulk - Sold Per Foot		x
70	6665568	SEAL	bulk - Sold Per Foot		x
71	6676918	HOSE	bulk - Sold Per Foot		x
72	6670288	END	plastic		2
73	6901013	INSTRUCTIONS	Was 6900854 [A]		1

DealerNation Quality Equipment Manuals - dealernation@aol.com

CAB DOOR
(Special Applications)

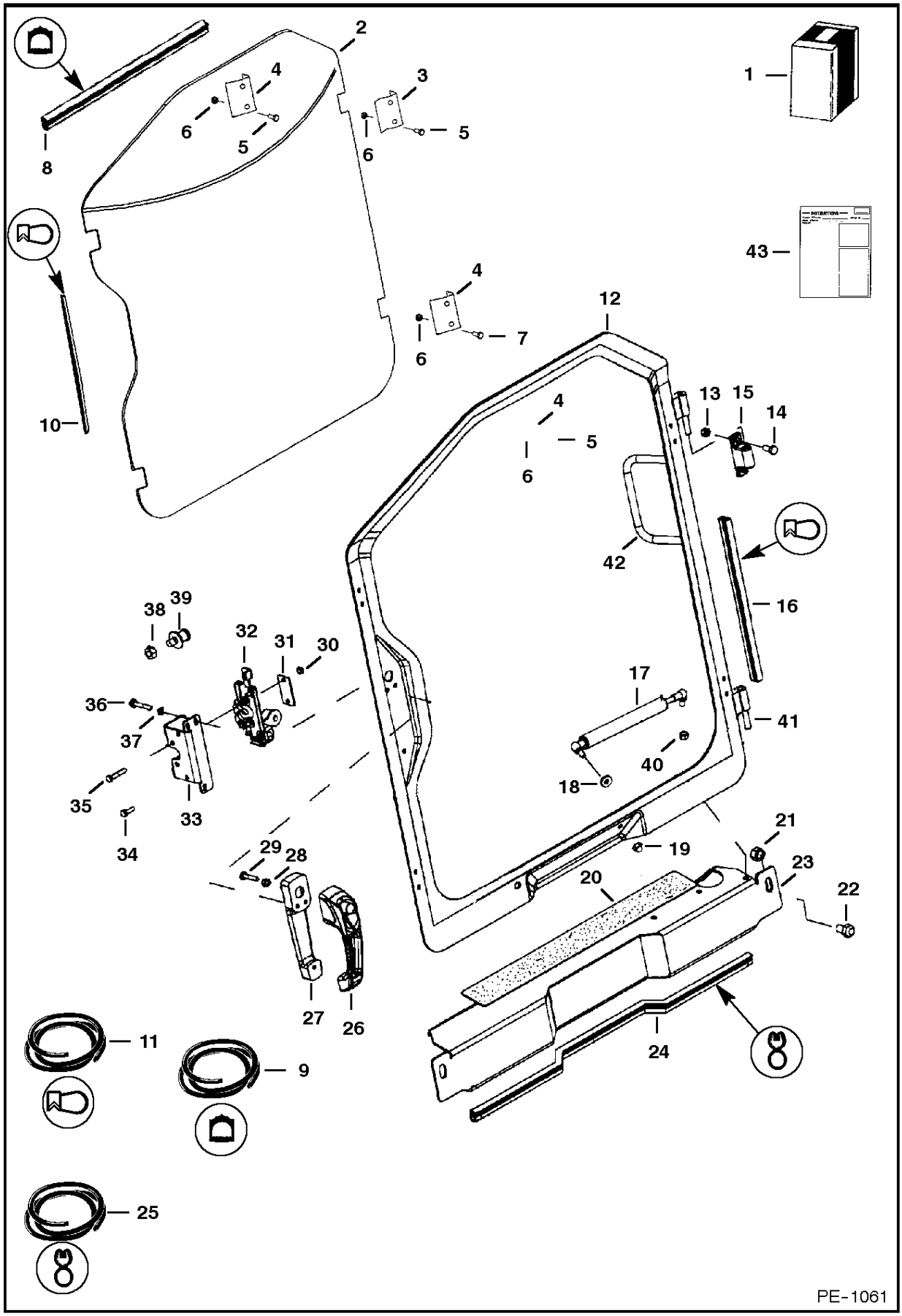

DealerNation Quality Equipment Manuals - dealernation@aol.com

CAB DOOR

Ref.N°	Part N°	Description	Remarks	Serial N°	Qty.
1	6726420	KIT	door		1
2	NAP	WINDOW	.5' thick polycarbonate -W/O top notch - Order 672593 5 Window, Ref. CAB DOOR(4) & (2) each of Ref. CAB DOOR(5) & CAB DOOR(6) -		1
2	6725935	WINDOW	.5' thick polycarbonate -W/ top notch		1
3	6725938	CLAMP			2
4	6725937	CLAMP			3
5	17C-628	BOLT			6
6	95D-6	NUT			10
7	17C-624	BOLT			4
8	NAP	SEAL	*12'(304,8 mm) long - Order Ref. CAB DOOR(9) - Used W/Ref. CAB DOOR(2) (W/O notch)		1
9	6670759	SEAL	bulk - Sold Per Foot		x
10	NAP	SEAL	*115'(2921 mm) long -Order Ref. CAB DOOR(11)		1
11	6675558	SEAL	bulk - Sold Per Foot		x
12	6726932	DOOR	W/Ref. CAB DOOR(41) & CAB DOOR(42)		1
13	59D-5	NUT			4
14	17C-512	BOLT			4
15	6717593	HINGE	base		2
16	NAP	SEAL	127.3'(3233,4 mm) long - Order Ref. CAB DOOR(11)		1
17	6674938	GAS SPRING			1
18	25E-16	WASHER			1
19	46D-5	NUT	acorn		1
20	6542731	SAFETY TREAD			1
21	55D-6	NUT			2
22	17C-612	BOLT			2
23	6725171	SHIELD			1
24	NAP	SEAL	*36'(914,4 mm) long -Order Ref. CAB DOOR(25)		1
25	6513152	SEAL	bulk - Sold Per Foot		x
26	6674667	HANDLE			1
26	6709527	KEY	ign. & rear door		1
27	6717146	SPACER	handle		1
28	61D-4	NUT			1
29	17C-420	BOLT			1
30	4DM-6	NUT			2
31	6718520	COVER	latch		1
32	6674666	LATCH			1
33	6717369	BRACKET	latch		1
34	1CM-620	BOLT			2
35	1CM-635	BOLT			2
36	1CM-640	BOLT			3
37	6EM-60	WASHER			3
38	91D-7	NUT			1
39	6654170	STRIKER BOLT			1
40	61D-5	NUT			1
41	6718376	HINGE	door		2
42	6718521	HANDLE	grab		1
43	6901013	INSTRUCTIONS			1

DealerNation Quality Equipment Manuals - dealernation@aol.com

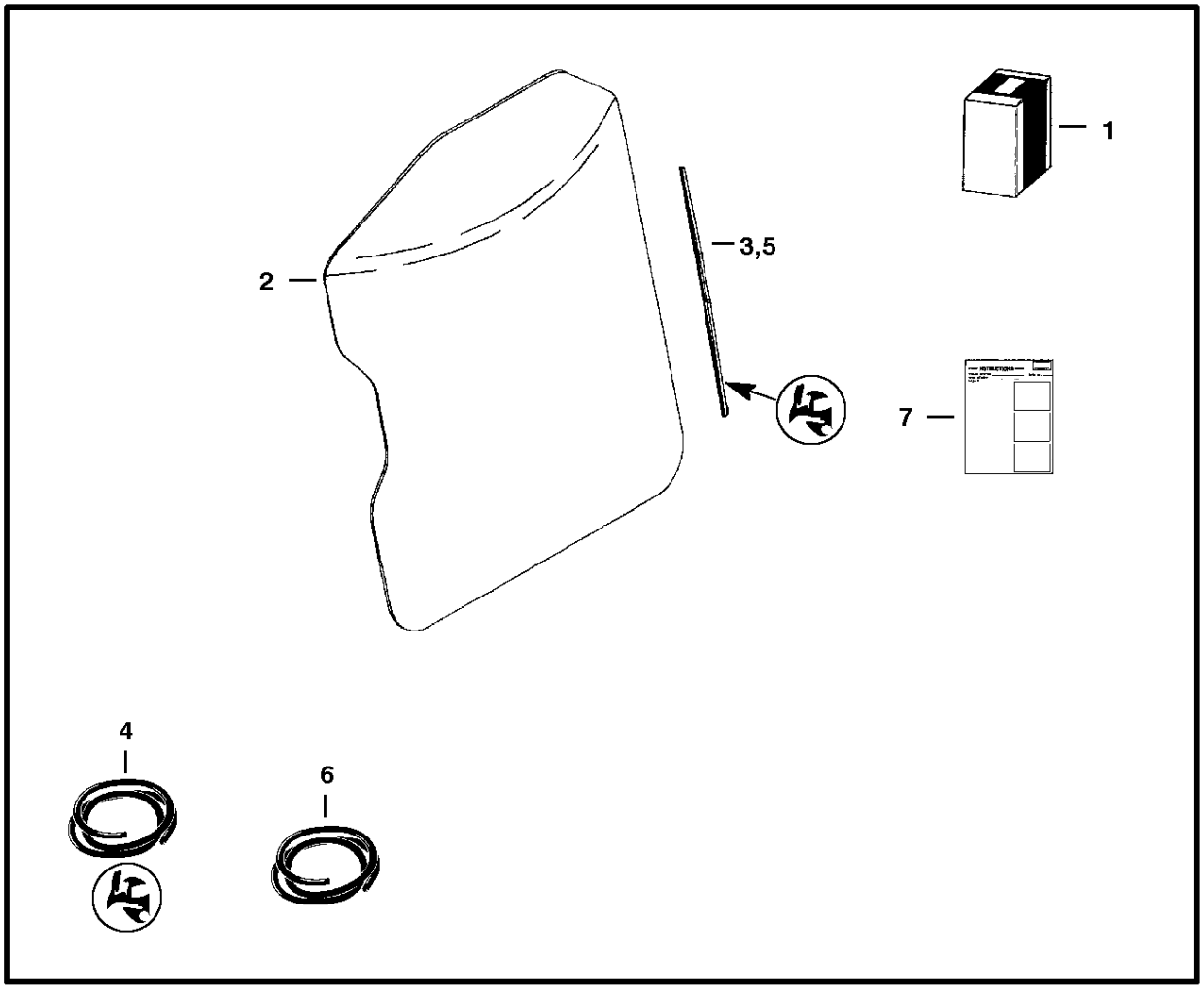

CAB DOOR
(Lexan Window)

Ref. No.	Part Number	Description	Remarks	Serial Number	Qty.

DealerNation Quality Equipment Manuals - dealernation@aol.com

CAB DOOR

Ref.N°	Part N°	Description	Remarks	Serial N°	Qty.
1	6726427	KIT	Ref. CAB DOOR(2) - CAB DOOR(7)		1
2	6675215	WINDOW	lexan - .236' thick		1
3	NAP	SEAL	113.3'(2877,8 mm) long - Order Ref. CAB DOOR(4)		1
4	6665568	SEAL	bulk - Sold Per Foot		x
5	NAP	CORD	113.3'(2877,8 mm) long - Order Ref. CAB DOOR(6)		1
6	6554149	CORD	bulk - Sold Per Foot		x
7	6901036	INSTRUCTIONS			1

DealerNation Quality Equipment Manuals - dealernation@aol.com

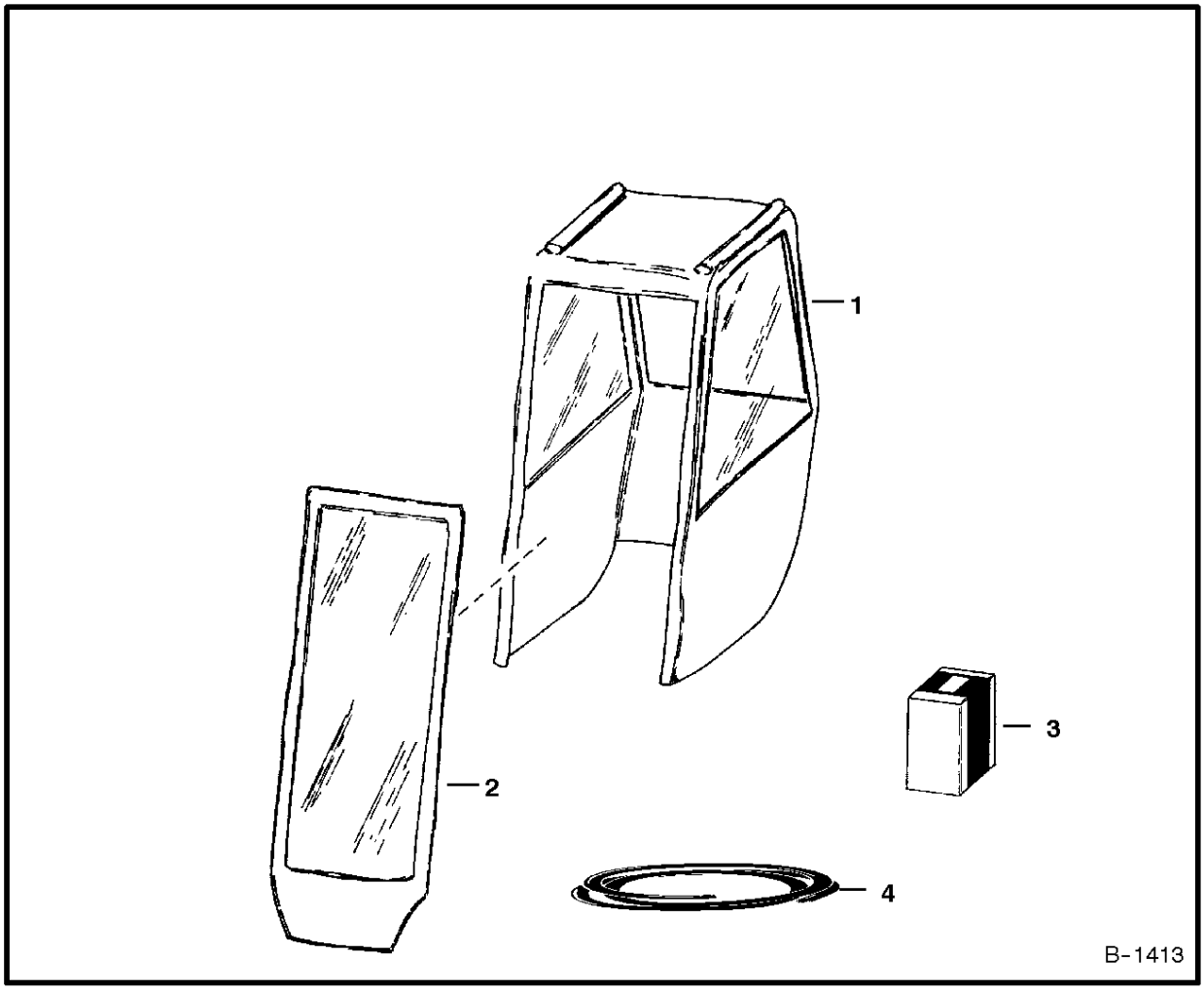

CAB ENCLOSURE
(Envelope)

Ref. No.	Part Number	Description	Remarks	Serial Number	Qty.

DealerNation Quality Equipment Manuals - dealernation@aol.com

CAB ENCLOSURE

Ref.N°	Part N°	Description	Remarks	Serial N°	Qty.
1	6675544	VINYLCAB	fits over cab - W/Ref. CAB ENCLOSURE(2) CAB ENCLOSURE(4)		1
2	6675590	DOOR	vinyl		1
3	6675591	HINGE KIT			1
4	6722597	VELCRO	27 feet (8,2 m)		1

DealerNation Quality Equipment Manuals - dealernation@aol.com

NOTE: Order Cab Enclosure Kit from Gwinner SALES #6719666.
Order Special Applications Kit from Gwinner SALES # 6719326.

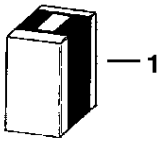

CAB ENCLOSURE

Ref. No.	Part Number	Description	Remarks	Serial Number	Qty.

DealerNation Quality Equipment Manuals - dealernation@aol.com

CAB ENCLOSURE

Ref.N°	Part N°	Description	Remarks	Serial N°	Qty.
1	SALES	KIT	cab enclosure - SEE NOTE - includes items on Pages CAB DOOR(1) & CAB WINDOWS(1)		1
1	SALES	KIT	special cab enclosure - SEE NOTE - includes items on Page CAB DOOR(1) & CAB WINDOWS(1)		1

DealerNation Quality Equipment Manuals - dealernation@aol.com

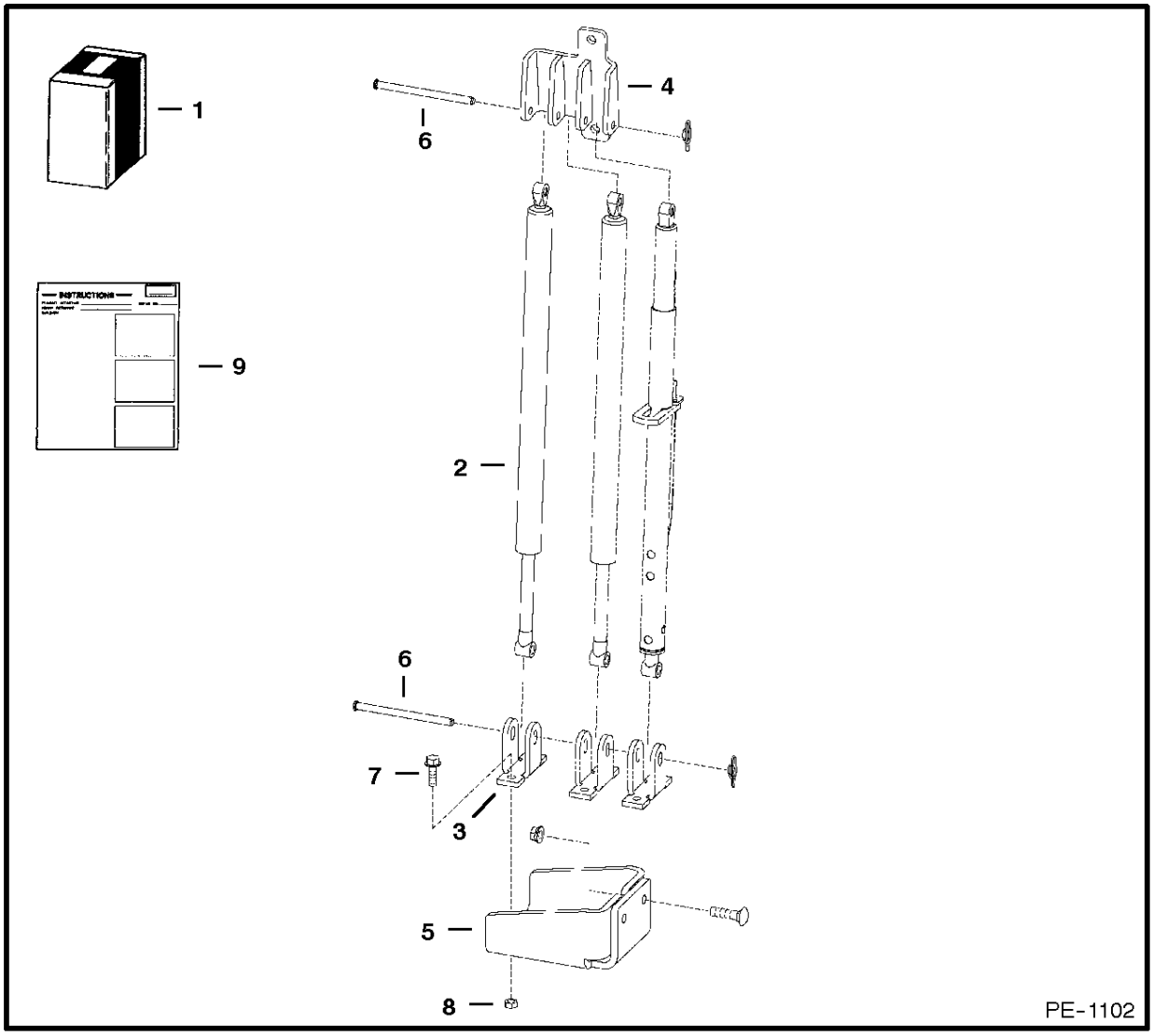

*** CAB LIFT SPRING KIT**

Ref Part

DealerNation Quality Equipment Manuals - dealernation@aol.com

* CAB LIFT SPRING KIT

Ref.N°	Part N°	Description	Remarks	Serial N°	Qty.
1	6714062	KIT			1
2	6706349	MOUNT			1
3	6807540	BRACKET			1
4	6808310	KIT	gas spring - Ref. * CAB LIFT SPRING KIT(1)-* CAB LIFT SPRING KIT(8)		1
4	6807997	BRACKET			1
5	6808309	PIN			2
6	35C-516	BOLT			2
7	87D-5	NUT			2
8	6901077	INSTRUCTIONS			1

DealerNation Quality Equipment Manuals - dealernation@aol.com

NOTE: Order Top & Rear WIndow Kit from Gwinner Sales # 6718805.
Order Side Window Kit from Gwinner Sales # 6718806.

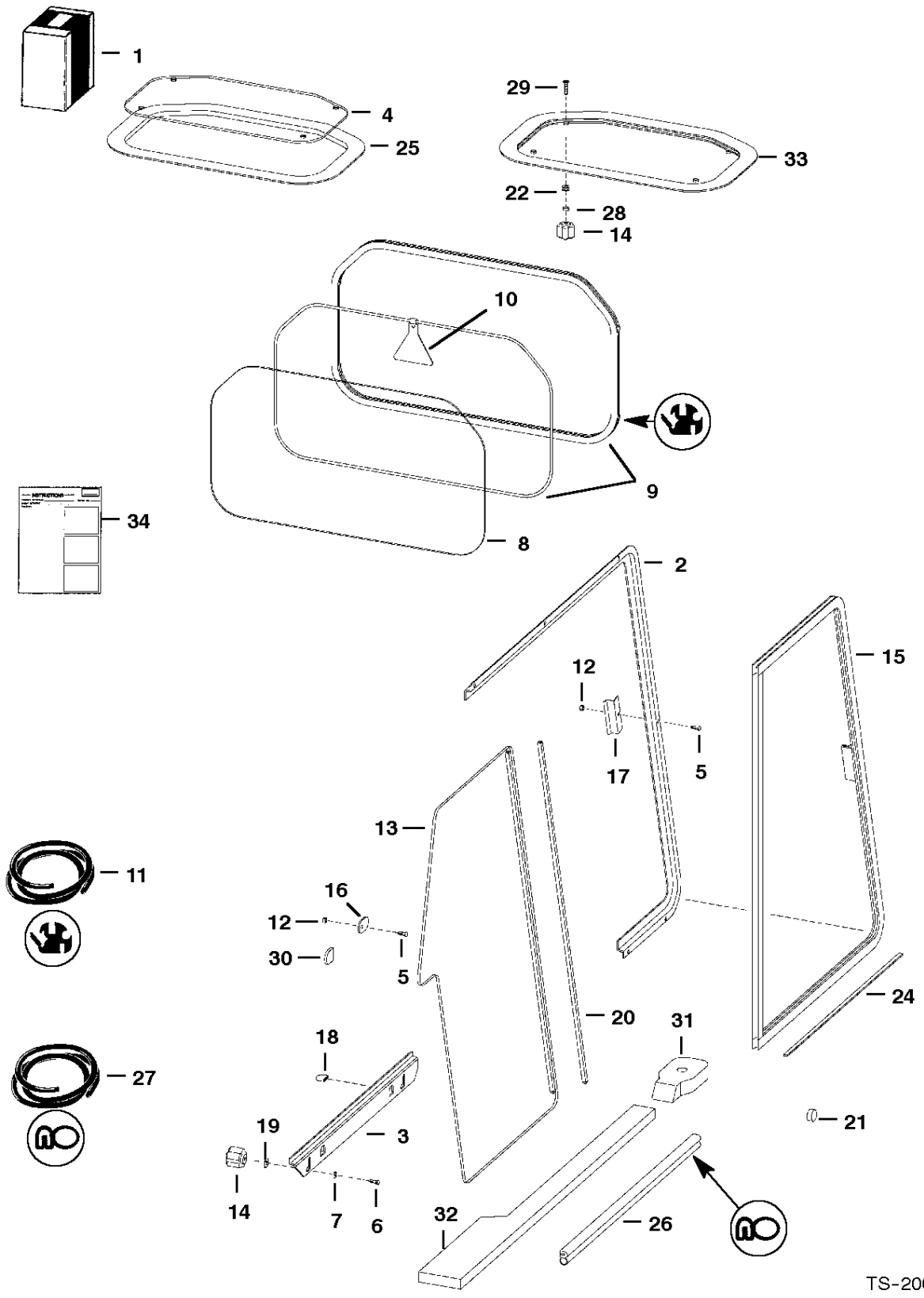

DealerNation Quality Equipment Manuals - dealernation@aol.com

CAB WINDOWS

Ref.N°	Part N°	Description	Remarks	Serial N°	Qty.
1	SALES	KIT	Top & Rear Window - SEE NOTE		1
1	SALES	KIT	Side Window - SEE NOTE		1
2	6717870	TRACK	L.H. side		1
2	6717872	TRACK	R.H. side		1
3	6717871	TRACK	L.H. bottom		1
3	6717873	TRACK	R.H. bottom		1
4	NAP	WINDOW	top - Order Ref. CAB WINDOWS(33)		1
5	10C-410	BOLT	carriage		18
6	10C-416	BOLT	carriage		4
7	25E-14	WASHER			4
8	6717874	WINDOW	rear		1
9	NAP	EXTRUSION	75.75'(1924 mm) long - Order Ref. CAB WINDOWS(11)		x
9	NAP	CORD	75.75'(1924 mm) long - Order Ref. CAB WINDOWS(11)		x
10	6559515	EXIT TAG			1
11	6675387	SEA;	bulk - Sold Per Foot		x
11	6554149	CORD	bulk - Sold Per Foot		x
12	59D-4	NUT			18
13	6674520	WINDOW	L.H. rear		1
13	6674522	WINDOW	R.H. rear		1
14	6674741	KNOB			8
15	6674519	WINDOW	L.H. front - W/Ref. CAB WINDOWS(24)		1
15	6674521	WINDOW	R.H. front - W/Ref. CAB WINDOWS(24)		1
16	6719063	STOP			2
17	6719037	STRIKER			2
18	6719065	COVER	tab		4
19	6675212	RETAINER	bolt		4
20	6675833	SEAL	rear window dual wiper W/tape		2
21	6657719	PLUG	for .75' dia. hole		2
22	6675545	GROMMET			4
23	NAP	SEAL	bulk - Sold Per Foot - Order Ref. CAB WINDOWS(33)		x
24	6676927	FELT STRIP	20.38'(517,7 mm) long		2
25	NAP	SEAL	55.25'(1403,4 mm) long - Order Ref. CAB WINDOWS(33)		1
26	NAP	SEAL	24'(609,6 mm) long - Order Ref. CAB WINDOWS(27)		2
27	6555351	SEAL	bulk - Sold Per Foot		x
28	6664085	BUSHING	nylon		4
29	91G-416	BOLT			4
30	6677198	CAP	tab		2
31	6729011	SEAL	cab mount		1
32	6729010	SEAL	L.H. - cab/main frame - foam		1
32	6729009	SEAL	R.H. - cab/main frame - foam		1
33	6728629	WINDOW	assy. - W/seal & grommets		1
34	6901013	INSTRUCTIONS	Top & Rear Window		1
34	6900853	INSTRUCTIONS	Side Windows		1

DealerNation Quality Equipment Manuals - dealernation@aol.com

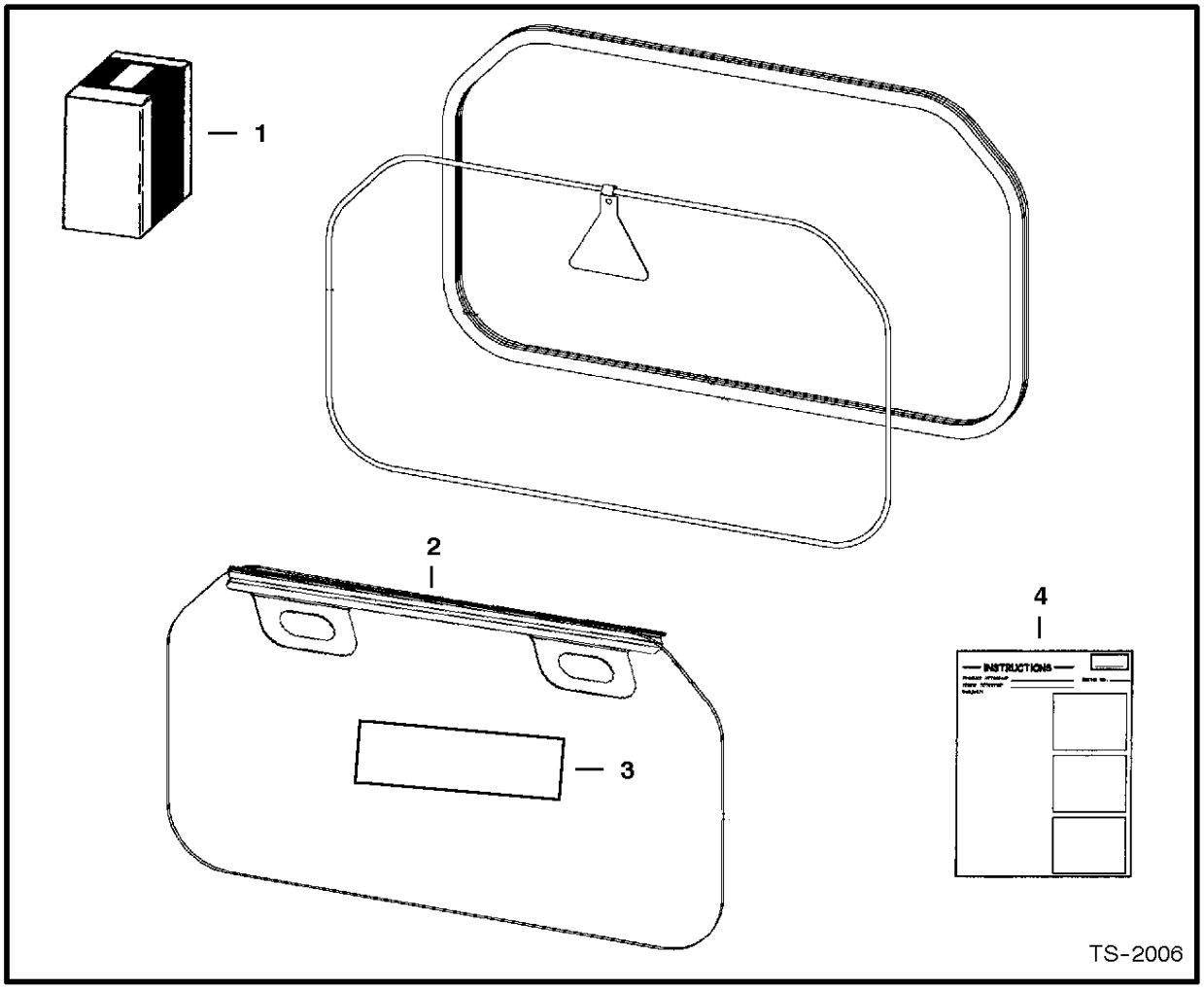

CAB WINDOWS
(Rear External Removal Kit)

Ref. No.	Part Number	Description	Remarks	Serial Number	Qty.

DealerNation Quality Equipment Manuals - dealernation@aol.com

CAB WINDOWS

Ref.N°	Part N°	Description	Remarks	Serial N°	Qty.
1	6725946	KIT	Ref. CAB WINDOWS(2) - CAB WINDOWS(4)		1
2	6725421	HANDLE			1
3	6726303	DECAL			1
4	6901029	INSTRUCTIONS			1

DealerNation Quality Equipment Manuals - dealernation@aol.com

COUNTERWEIGHT KIT
(3650 lb. - Side Mounting)

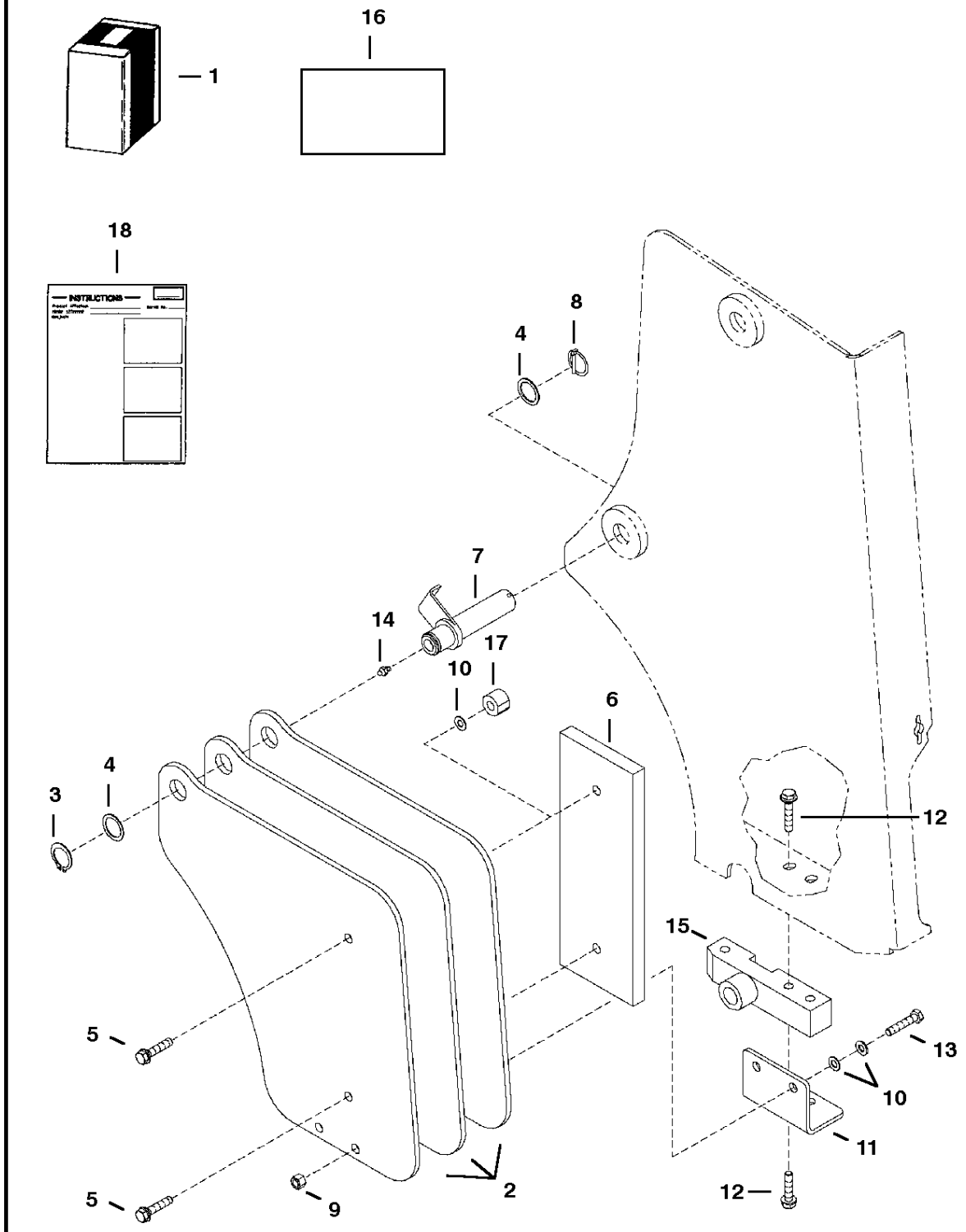

NOTE: Order Counterweight Kit #6805760 from Gwinner Sales.

TS-1906

DealerNation Quality Equipment Manuals - dealernation@aol.com

COUNTERWEIGHT KIT

Ref.N°	Part N°	Description	Remarks	Serial N°	Qty.
1	SALES	KIT	/counterweight - Order Ref. AUXILLIARY CASE DRAIN KIT(2) - COUNTERWEIGHT KIT(18)		1
2	6805763	WEIGHT	78.5 lbs (34,5 kg)		6
3	6668787	RING	retaining		6
4	6803046	SHIM			6
5	31C-1236	BOLT	3650 lb		4
5	31C-1236	BOLT	3500 lb		2
6	6806430	PLATE	62 lbs (27,3 kg)		2
7	6715876	PIN ASSY			2
8	6510020	SNAP PIN			2
9	53D-12	NUT	Was 83D-12 [B]		4
10	27E-12	WASHER			10
11	6805761	MOUNT	L.H.		1
11	6805762	MOUNT	R.H.		1
12	31C-1228	BOLT			4
13	17C-1248	BOLT			4
14	10H-25	GREASE ZERK			2
15	6803245	BUSHING			2
16	6807724	DECAL	3650 lb - Was 6806947 [B]		1
16	6806071	DECAL	3500 lb		1
17	6805764	BUSHING	3500 lb		2
18	6900833	INSTRUCTIONS			1

DealerNation Quality Equipment Manuals - dealernation@aol.com

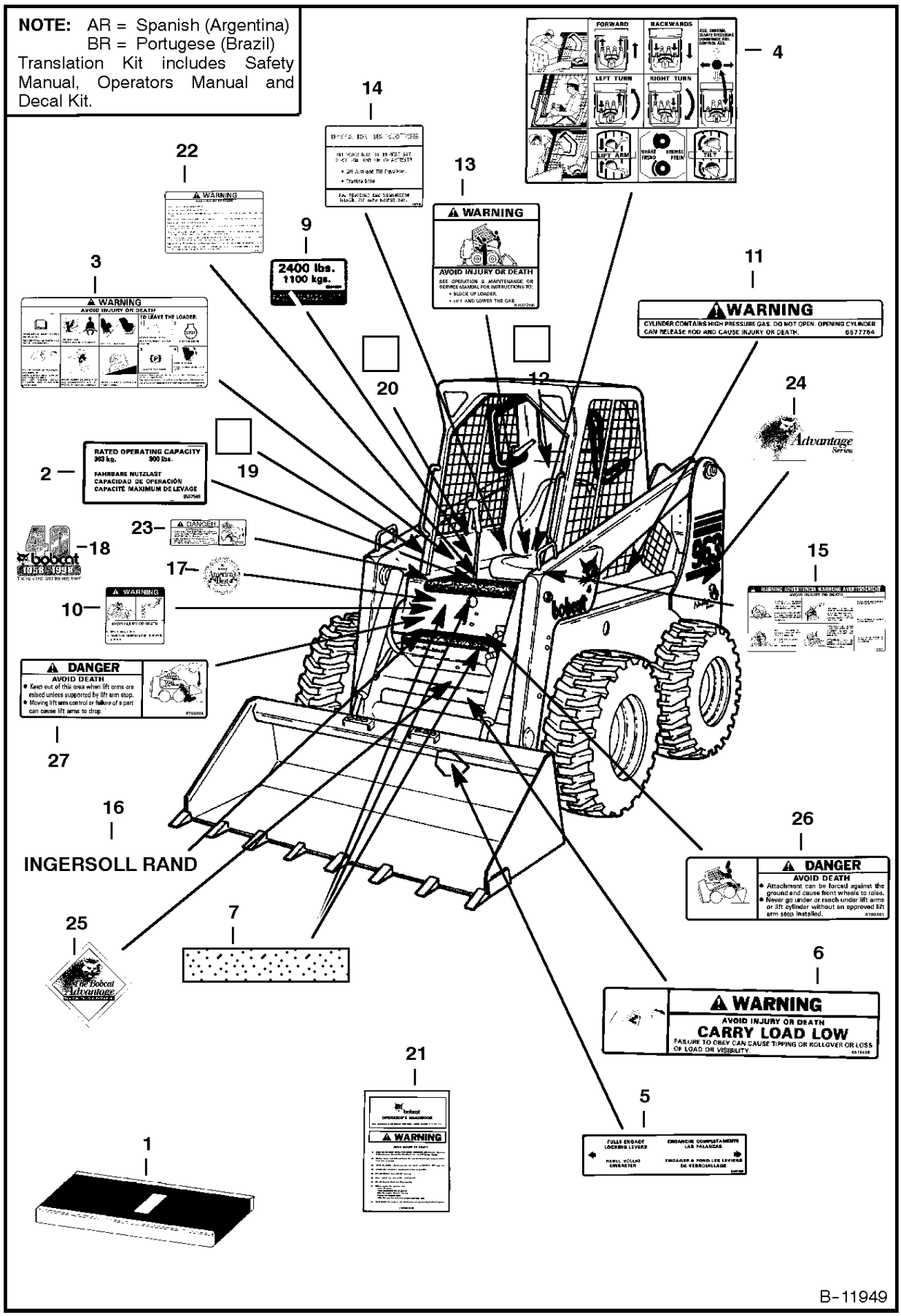

DealerNation Quality Equipment Manuals - dealernation@aol.com

DECALS

Ref.N°	Part N°	Description	Remarks	Serial N°	Qty.
1	6901220	KIT	W/Ref. DECALS(3)-6, 8-DECALS(12), DECALS(14), DECALS(15) & DECALS(20) - On Page DECALS(6) W/Ref. DECALS(8), DECALS(9), DECALS(12		1
1	6807304AR	KIT	decal - SEE NOTE		1
1	6807304BR	KIT	decal - SEE NOTE		1
1	6807304JP	KIT	decal - SEE NOTE		1
1	6807307AR	KIT	translation - SEE NOTE		1
1	6807307BR	KIT	translation - SEE NOTE		1
2	6557565	DECAL	throttle		1
3	6718698	DECAL	warning		1
4	6718701	DECAL	operations - not in kit	5622 15999 & Bel	1
4	6728327	DECAL	operations	5622 16001 & Abv	1
5	6561383	DECAL	bob-tach		1
6	6579528	DECAL	carry load low		1
7	6567651	SAFETY TREAD	3.5' (88,9mm) x 25' (635mm) - Main Frame		2
7	6800009	SAFETY TREAD	10' (254mm) x 25.5' (647,7mm) - Pedal Mount		1
7		SAFETY TREAD	8.85' (244,8mm) x 21.65 (549,9mm) - Lift Arm Stop		1
7	6553976	SAFETY TREAD	5.06' (128,5mm) x 8.06' (204,7mm)		2
8	6708941	DECAL	danger - european		2
9	6807724	DECAL	capacity - Was 6804790 [B]		1
9	6807723	DECAL	capacity - european		1
10	6710358	DECAL	warning - no riders		1
11	6577754	DECAL	warning		4
12	6719833	DECAL	notice		1
13	6706809	DECAL	lift lock		1
14	6718703	DECAL	seat & seat bar operating		1
15	6565200	DECAL	filter		3
16	6727310	DECAL	/Ingersoll Rand - Was 6711329 [A]		1
17		DECAL	best		1
18		DECAL	40th Anniversary		1
19	6711840	DECAL	bypass lift lock valve		1
20	6703727	DECAL	horn/aux.		1
21		HANDBOOK	instruction - AHCS		1
22	6803932	DECAL	warning - brake		1
23	6717343	DECAL	danger		2
24	6718271	DECAL	Advantage Series - L.H. - not in kit		1
25	6718275	DECAL	Bobcat Advantage		1
26	6702301	DECAL	danger		1
27	6702302	DECAL	danger		1
28	6579509	DECAL	danger		1
29	6579639	DECAL	danger		1
30	6713507	DECAL	stay clear - european		2

DealerNation Quality Equipment Manuals - dealernation@aol.com

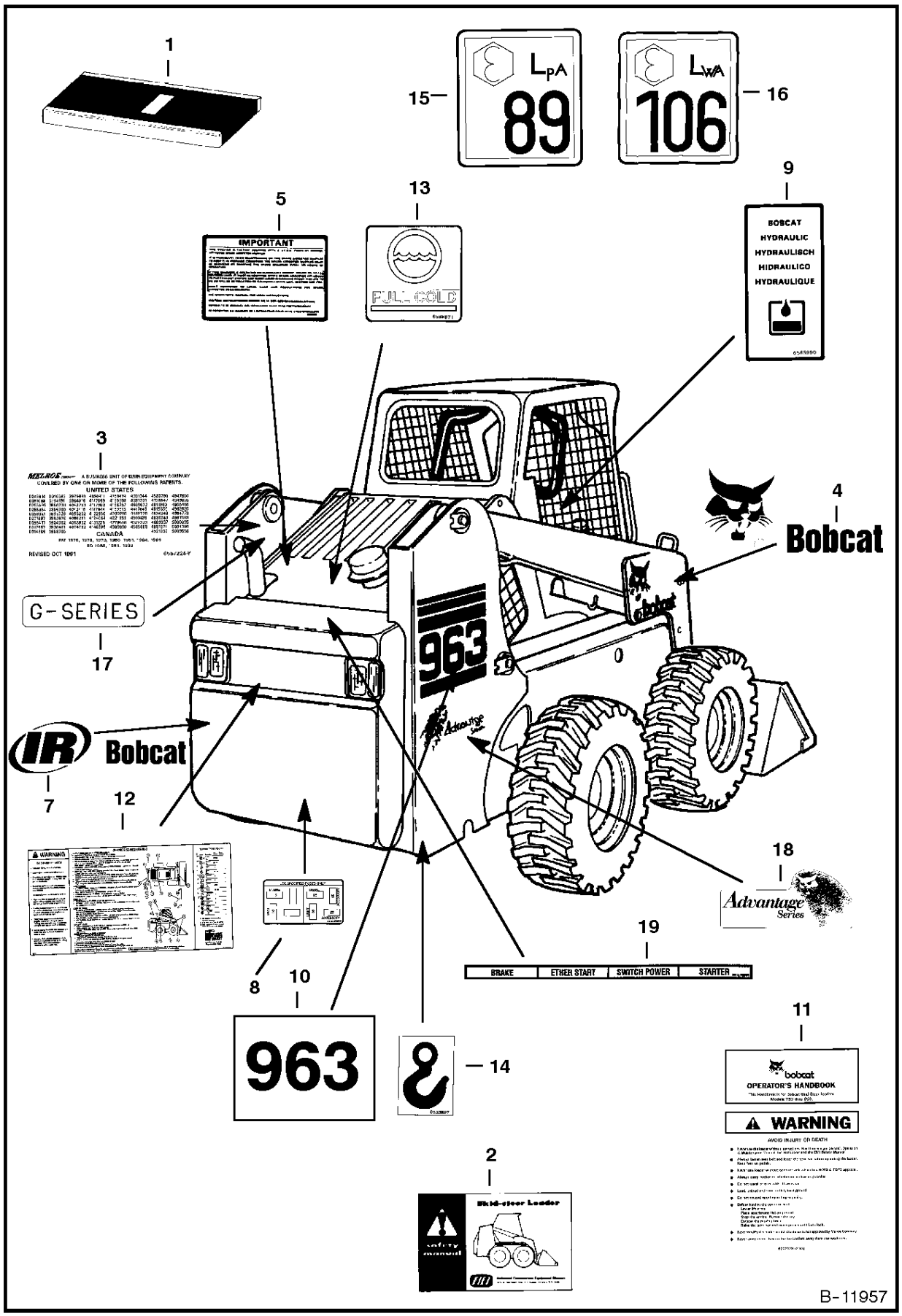

DealerNation Quality Equipment Manuals - dealernation@aol.com

DECALS

Ref.N°	Part N°	Description	Remarks	Serial N°	Qty.
1	6901220	KIT	Ref. DECALS(8), DECALS(9), DECALS(12), DECALS(13), DECALS(15), DECALS(16) & DECALS(19) & On Page DECALS(5) Ref. DECALS(3)-6, 8-D		1
2	6556500	SAFETY MANUAL	safety - Not included in kit		1
3	6557224	DECAL	patent		1
4	6727309	DECAL	bobcat - R.H. - Was 6559070 [A]		1
4	6727308	DECAL	bobcat - L.H. - Was 6559071 [A]		1
5	6560573	DECAL	spark arrestor		1
6	6700388	DECAL	diesel		1
7	6727311	DECAL	bobcat - Was 6714139 [A]		1
8	NAP	DECAL	Fuse - NON-AHCS - 2.1'x9.4'(53,3mmx238,8mm) - Order 6718774 decal		1
8	6718774	DECAL	Fuse - NON-AHCS - 2'x7'(50,8mmx177,8mm)		1
8		DECAL	Fuse - AHCS		1
9	6565990	DECAL	hydraulic oil		1
10	6627802	DECAL	model 963		2
11		KIT	handbook		1
11	6558309	WIRE ROPE	33' (838,2mm) long - Bulk - Sold Per Foot - Also order (2) 6558310 Sleeve		x
11	6558310	SLEEVE	wire rope		2
12	6807348	DECAL	*service & filters - Was 6804345 [B, D]		1
13	6708929	DECAL	propylene glycol		1
14	6595014	DECAL	hook		2
15	6578368	DECAL	push		1
16	6706558	DECAL	lift arm support		1
17	6717907	DECAL	G-Series		1
18	6718272	DECAL	Advantage Series R.H. - not in kit		1
19	6714526	DECAL	turbo - tailgate		1
19	6727912	DECAL	turbo - main frame		2

DealerNation Quality Equipment Manuals - dealernation@aol.com

DELUXE CAB

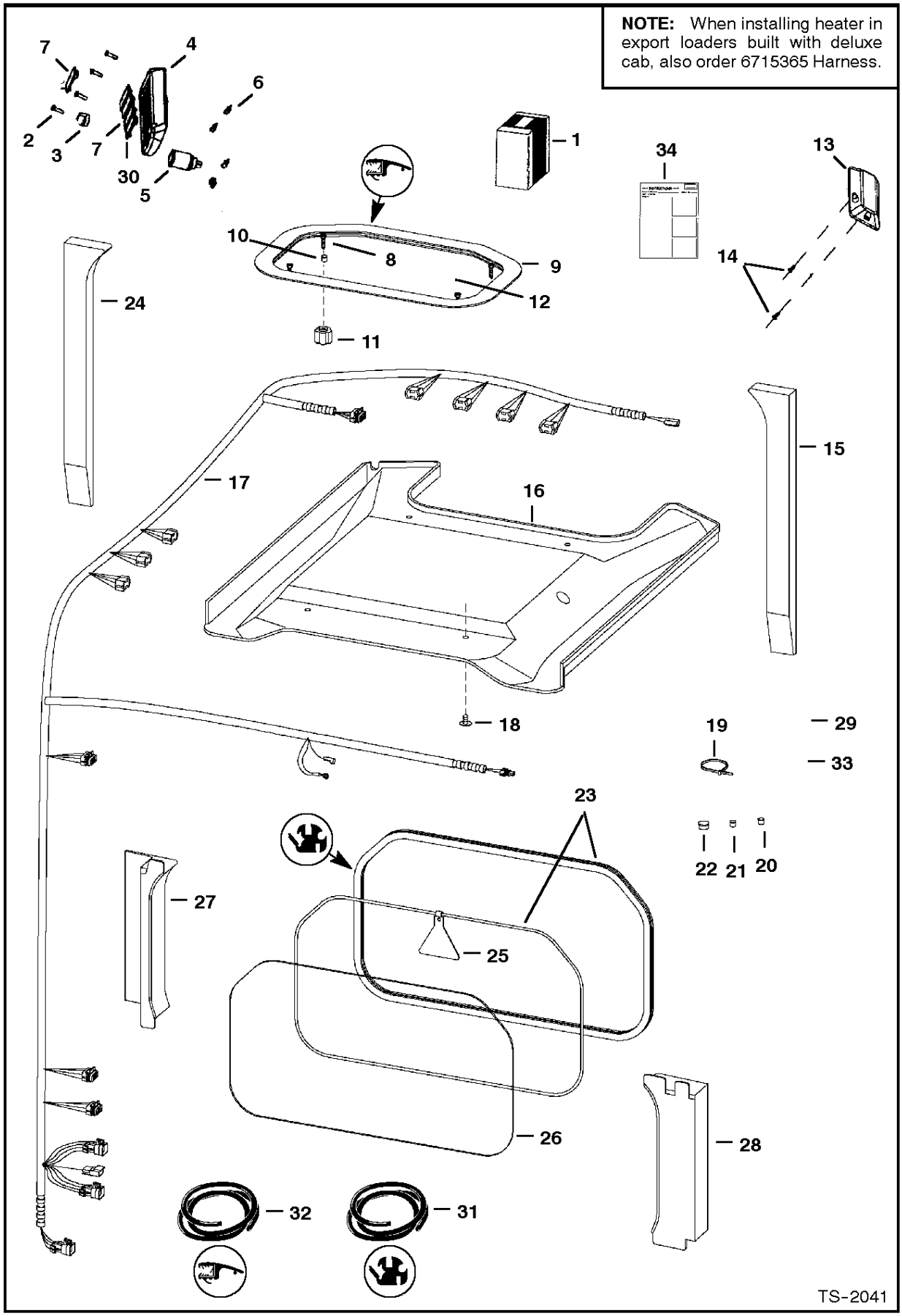

DealerNation Quality Equipment Manuals - dealernation@aol.com

DELUXE CAB

Ref.N°	Part N°	Description	Remarks	Serial N°	Qty.
1	6718804	KIT	deluxe cab - SEE NOTE	5622 15999 & Bel	1
1				5165 15999 & Bel	1
1	6729233	KIT	deluxe cab - SEE NOTE	5622 16001 & Abv	1
1				5165 16001 & Abv	1
2	6669224	BOLT			4
3	6664224	CAP			1
4	6718580	PANEL			1
5	6664223	OUTLET			1
6	6669091	CLIP			4
7	6719038	PLUG			5
8	91G-416	BOLT	Was 88G-1216 [B]		4
9	NAP	SEAL	55.25'(1403,4 mm) long - Order Ref. DELUXE CAB(32)		1
10	6675545	GROMMET			4
11	6674741	KNOB			4
12	6725360	WINDOW	top - Was 6675214 [A]		1
13	6664368	DOME LIGHT	dome		1
13	6665367	BULB			1
14	6664221	RETAINER	snap in		2
15	6717520	INSULATION			1
16	6717515	INSULATION	headliner		1
17	6725273	HARNESS		5622 15999 & Bel	1
17				5165 15999 & Bel	1
17	6727190	HARNESS		5622 16001 & Abv	1
17				5165 16001 & Abv	1
17	6715365	HARNESS	*accessories - Export - SEE NOTE - Not in Kits		1
18	6674895	RETAINER	snap in		4
19	6610510	NYLON TIE			6
20	5289686	PLUG	black		1
21	6649949	PLUG			2
22	6657719	PLUG			1
23	NAP	EXTRUSION	75.75'(1924 mm) long - Order Ref. DELUXE CAB(31)		x
23	NAP	CORD	75.75'(1924 mm) long - Order Ref. DELUXE CAB(31)		x
24	6717519	INSULATION			1
25	6559515	EXIT TAG			1
26	6717874	WINDOW	rear		1
27	6717517	INSULATION			1
28	6717518	INSULATION			1
29	6672348	PANEL	R.H. - deluxe - keyless		1
29	NAP	INSTRUCTIONS	See Loader Service Manual - Was 6900860 [A]		1
30	6668742	SWITCH	travel control - Export		1
31	6675387	SEA;	bulk - Sold Per Foot - Was 6674524 [A]		x
31	6554149	CORD	bulk - Sold Per Foot		x
32	6675546	SEAL	bulk - Sold Per Foot		x
33	6727299	INSULATION	cab back		1
34	6900851	INSTRUCTIONS			1

DealerNation Quality Equipment Manuals - dealernation@aol.com

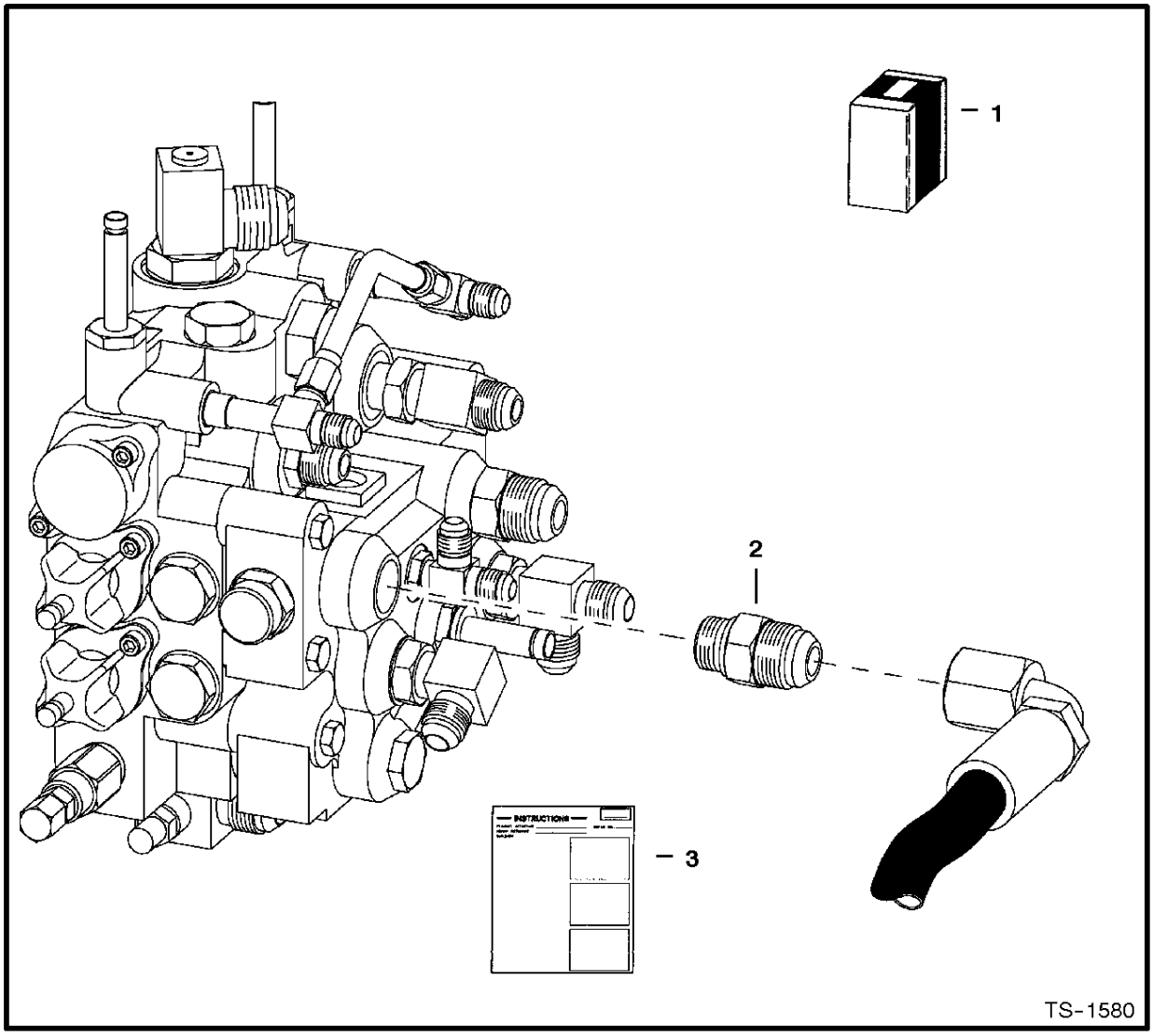

DUMP RESTRICTOR KIT

Ref Part

DealerNation Quality Equipment Manuals - dealernation@aol.com

DUMP RESTRICTOR KIT

Ref.N°	Part N°	Description	Remarks	Serial N°	Qty.
1	NAP	KIT			1
2	6672340	FITTING	restrictor		1
3	6900519	INSTRUCTIONS			1

DealerNation Quality Equipment Manuals - dealernation@aol.com

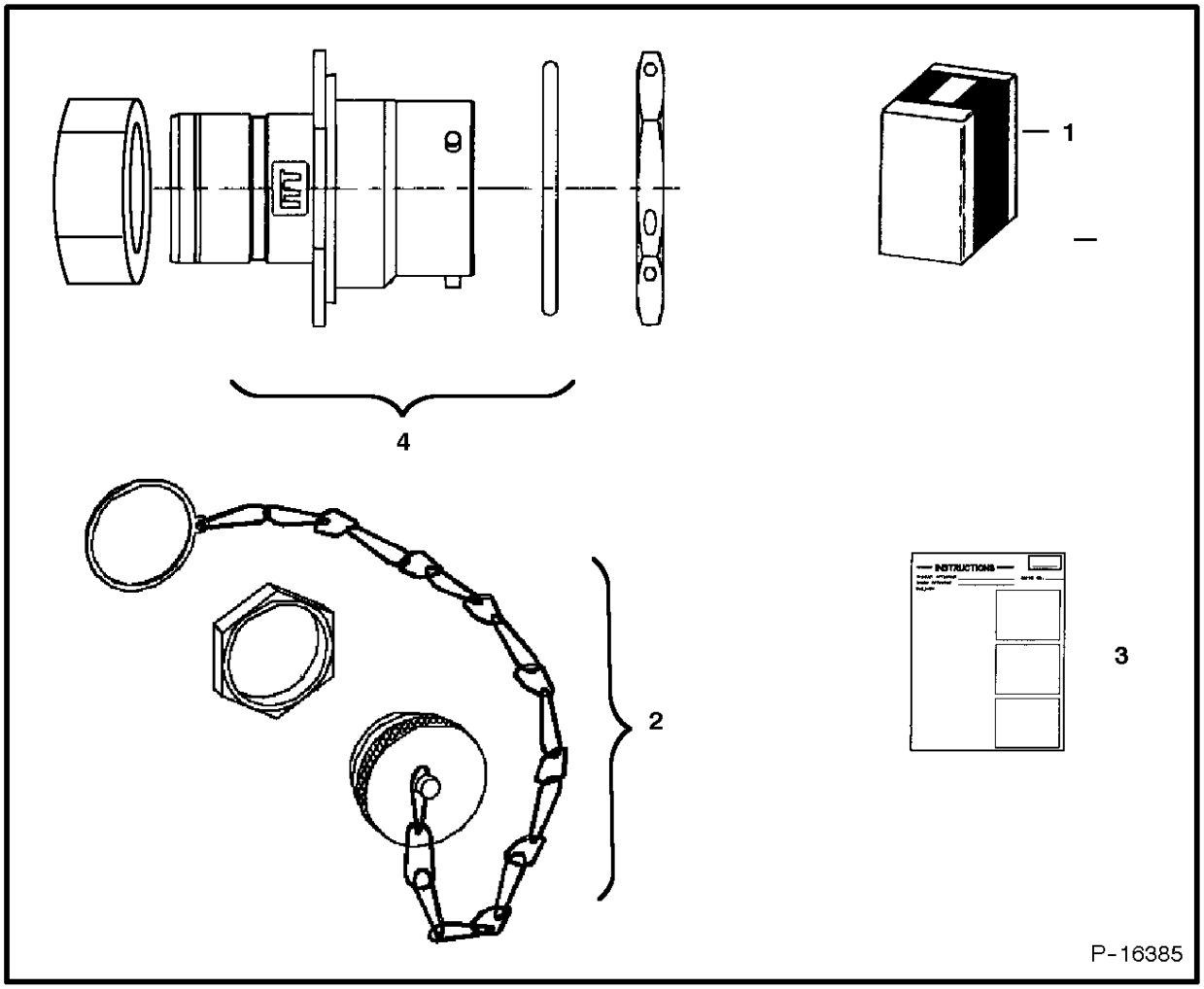

*** ELECTRICAL CONNECTOR KIT**
(7-Pin)

Ref. No.	Part Number	Description	Remarks	Serial Number	Qty.

DealerNation Quality Equipment Manuals - dealernation@aol.com

* ELECTRICAL CONNECTOR KIT

Ref.N°	Part N°	Description	Remarks	Serial N°	Qty.
1	6727176	KIT			1
2	6674802	CONNECTOR	7-pin		1
2	6669549	SOCKET	small		4
2	6677136	SOCKET	12 ga		3
3	6675026	CAP			1
4	6901076	INSTRUCTIONS			1

DealerNation Quality Equipment Manuals - dealernation@aol.com

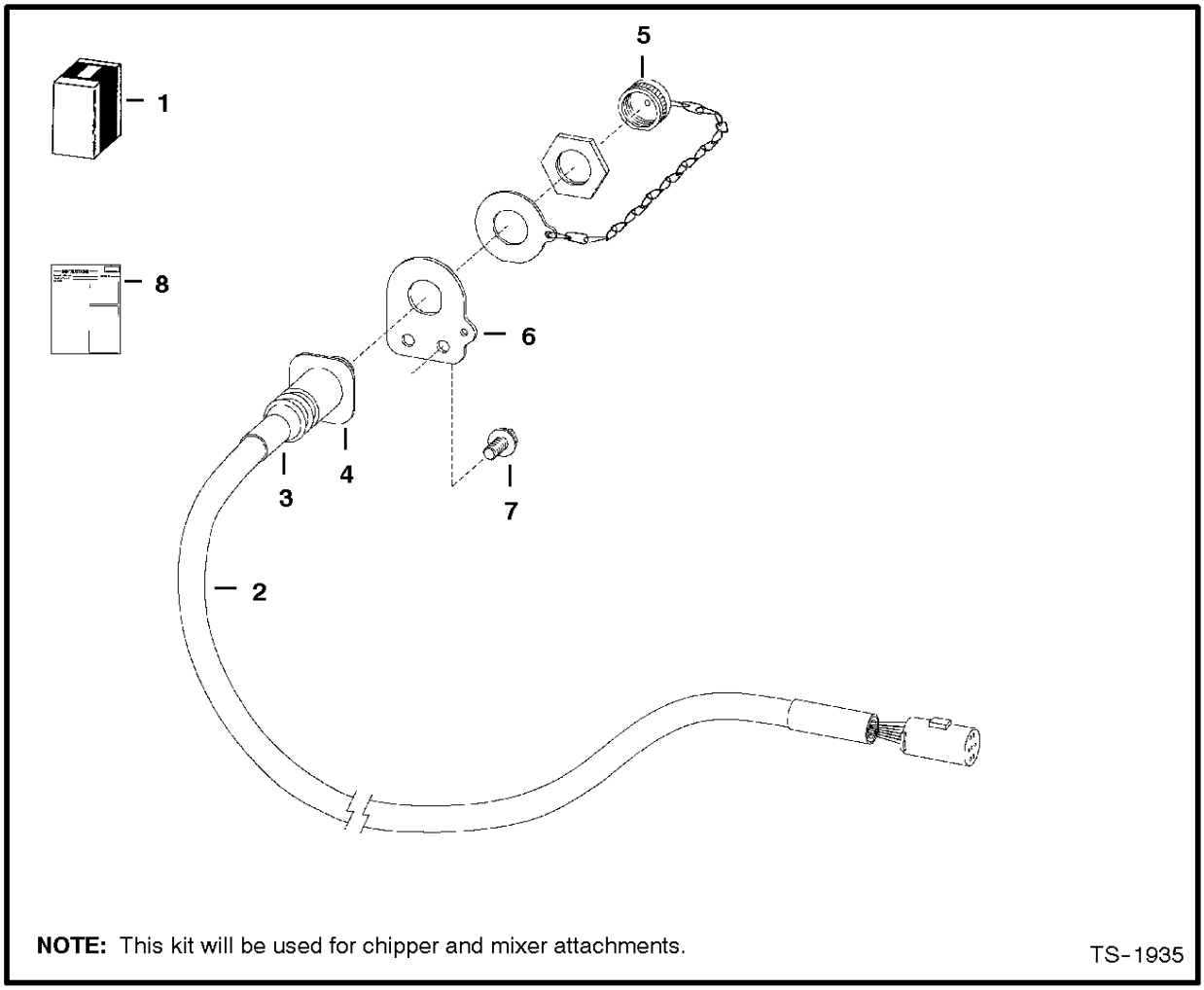

NOTE: This kit will be used for chipper and mixer attachments.

TS-1935

ELECTRICAL CONTROLS KIT
(Electronic Attachments)

Ref. No.	Part Number	Description	Remarks	Serial Number	Qty.

DealerNation Quality Equipment Manuals - dealernation@aol.com

ELECTRICAL CONTROLS KIT

Ref.N°	Part N°	Description	Remarks	Serial N°	Qty.
1	6718812	KIT	Ref. ELECTRICAL CONTROLS KIT(2) - ELECTRICAL CONTROLS KIT(8)		1
2	6718426	HARNESS			1
3	6674799	ADAPTER	heat shrink		1
4	6674802	CONNECTOR	7-pin - See Page * ELECTRICAL CONNECTOR KIT(1)		1
4	6669549	SOCKET	small		4
4	6677136	SOCKET	12 ga		3
5	6675026	CAP			1
6	6718750	MOUNT			1
7	84G-3112	BOLT			2
8	6900855	INSTRUCTIONS			1

DealerNation Quality Equipment Manuals - dealernation@aol.com

ELECTRICAL CONTROLS KIT
(To Run "G" Series Attachments & Old Attachments) (W/Toggle Switch)

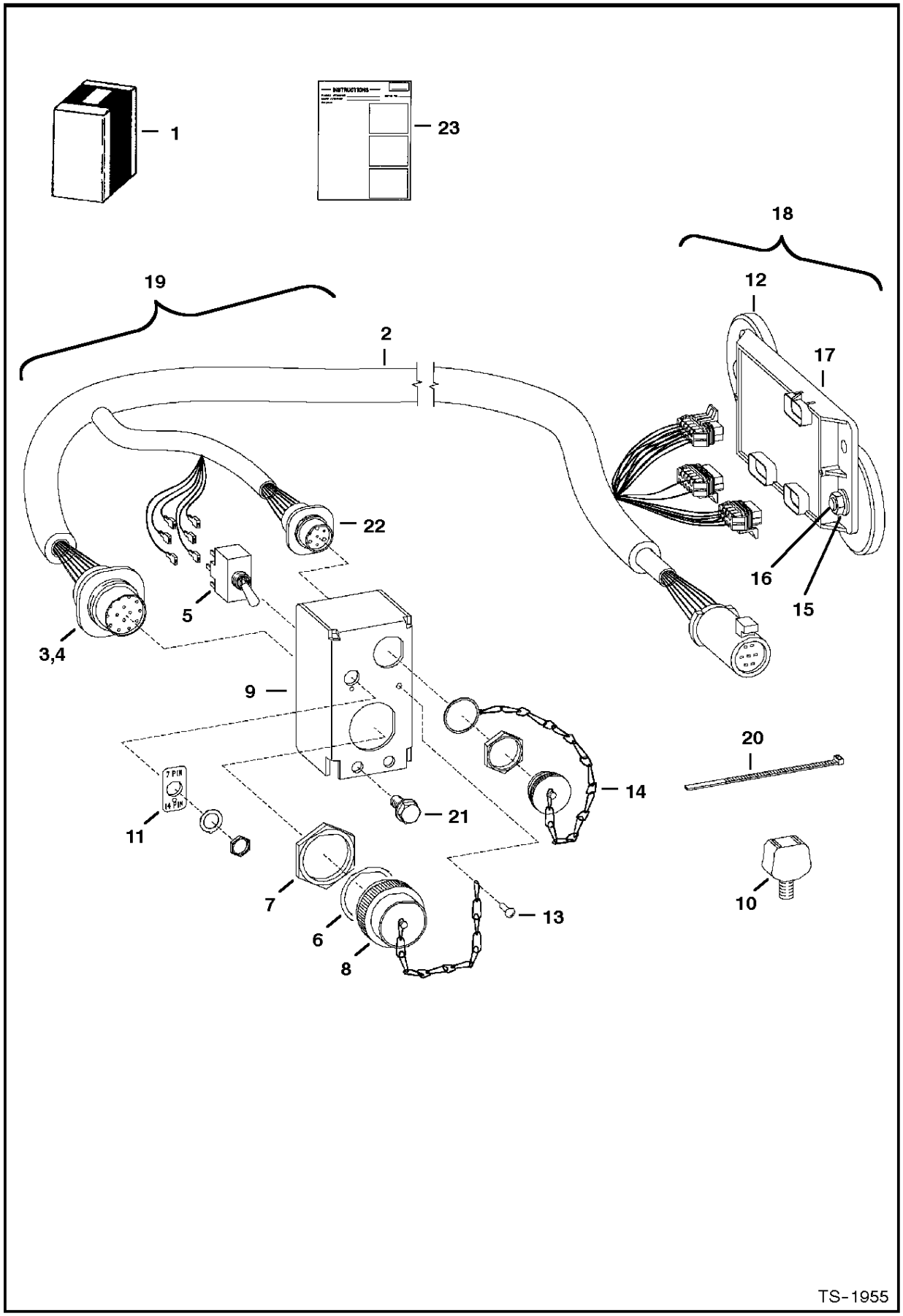

DealerNation Quality Equipment Manuals - dealernation@aol.com

ELECTRICAL CONTROLS KIT

Ref.N°	Part N°	Description	Remarks	Serial N°	Qty.
1	NAP	KIT	Order 6727739 Kit - See Page * ELECTRICAL CONTROLS KIT(1) - Was 6719431 [A]		1
2	6719434	HARNESS	W/Ref. ELECTRICAL CONTROLS KIT(3), ELECTRIC AL CONTROLS KIT(4), ELECTRICAL CONTROLS KIT(6) - ELECTRICAL CONTROLS KIT(8) & ELECTRI		1
3	6667569	CONNECTOR	Also Order (14) of Ref. ELECTRICAL CONTROLS KIT(4)		1
4	6664040	PIN	male		x
5	6675389	SWITCH			1
6	6664037	WASHER			2
7	6664036	NUT			2
8	6664035	CAP			1
9	6719442	MOUNT			1
10	6675281	MOUNT	773G only		1
11	6719441	DECAL			1
12	6719448	MAGNET	100 lb. force		4
13	6704892	RIVET	Was 84G-1908 [B]		1
14	6675026	CAP			2
15	83D-6	NUT			2
16	25G-612	BOLT			2
17	6674943	CONTROLLER			1
18	6675495	CONTROLLER	assy - Ref. ELECTRICAL CONTROLS KIT(12) & ELECTRICAL CONTROLS KIT(15) - ELECTRICAL CONTROLS KIT(17)		1
19	NAP	CONTROL	assy - Order Ref. ELECTRICAL CONTROLS KIT(2), ELECTRICAL CONTROLS KIT(5), ELECTRICAL CONTROLS KIT(9), ELECTRICAL CONTROLS KIT(11		1
20	6624289	STA-STRAP	Was 6610510 [B]		8
21	84G-3112	BOLT			2
22	6674802	CONNECTOR	7-pin - See Page * ELECTRICAL CONNECTOR KIT(1)		1
22	6669549	SOCKET	small		4
22	6677136	SOCKET	12 ga		3
23	6900921	INSTRUCTIONS			1

DealerNation Quality Equipment Manuals - dealernation@aol.com

* ELECTRICAL CONTROLS KIT
(To Run "G" Series Attachments & Old Attachments) (W/O Toggle Switch)

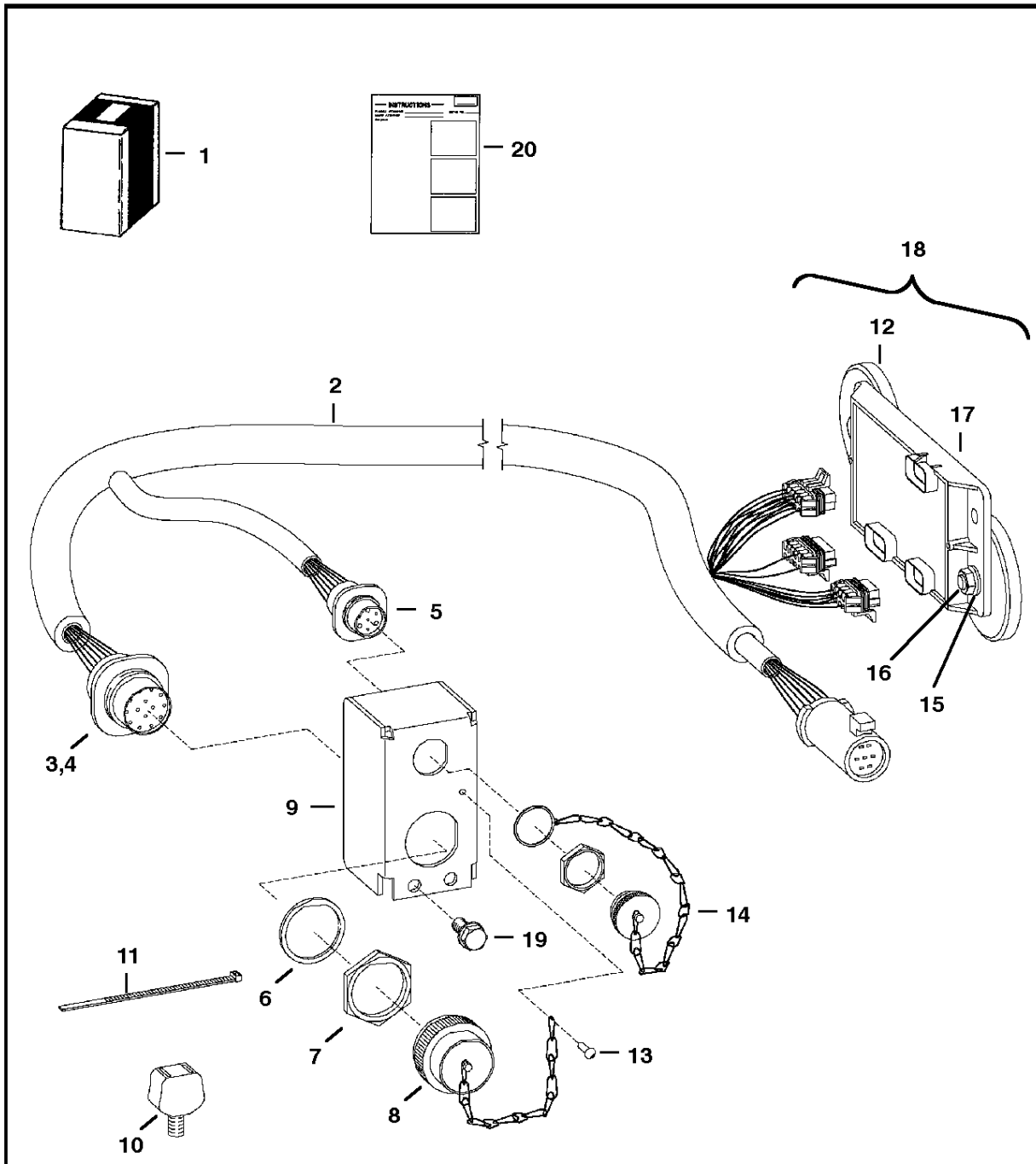

DealerNation Quality Equipment Manuals - dealernation@aol.com

* ELECTRICAL CONTROLS KIT

Ref.N°	Part N°	Description	Remarks	Serial N°	Qty.
1	6727739	KIT			1
2	6729380	HARNESS	W/Ref. * ELECTRICAL CONTROLS KIT(3) - ELECTRICAL CONTROLS KIT(8) & * ELECTRICAL CONTROLS KIT(14)		1
3	6667569	CONNECTOR	Also Order (14) of Ref. * ELECTRICAL CONTROLS KIT(4)		1
4	6664040	PIN	male		x
5	6674802	CONNECTOR	7-pin - See Page * ELECTRICAL CONNECTOR KIT(1)		1
5	6669549	SOCKET	small		4
5	6677136	SOCKET	large - 12 ga.		3
6	6664037	WASHER			2
7	6664036	NUT			2
8	6664035	CAP			1
9	6726945	MOUNT			1
10	6675281	MOUNT	773G only		1
11	6624289	STA-STRAP			8
12	6719448	MAGNET	100 lb. force		4
13	6704892	RIVET			1
14	6675026	CAP			2
15	83D-6	NUT			2
16	25G-612	BOLT			2
17	6676514	CONTROLLER			1
18	6676515	CONTROLLER	assy - Ref. ELECTRICAL CONTROLS KIT(12) & * ELECTRICAL CONTROLS KIT(15) - * ELECTRICAL CONTROLS KIT(17)		1
19	84G-3112	BOLT			2
20	6901116	INSTRUCTIONS			1

DealerNation Quality Equipment Manuals - dealernation@aol.com

ETHER KIT

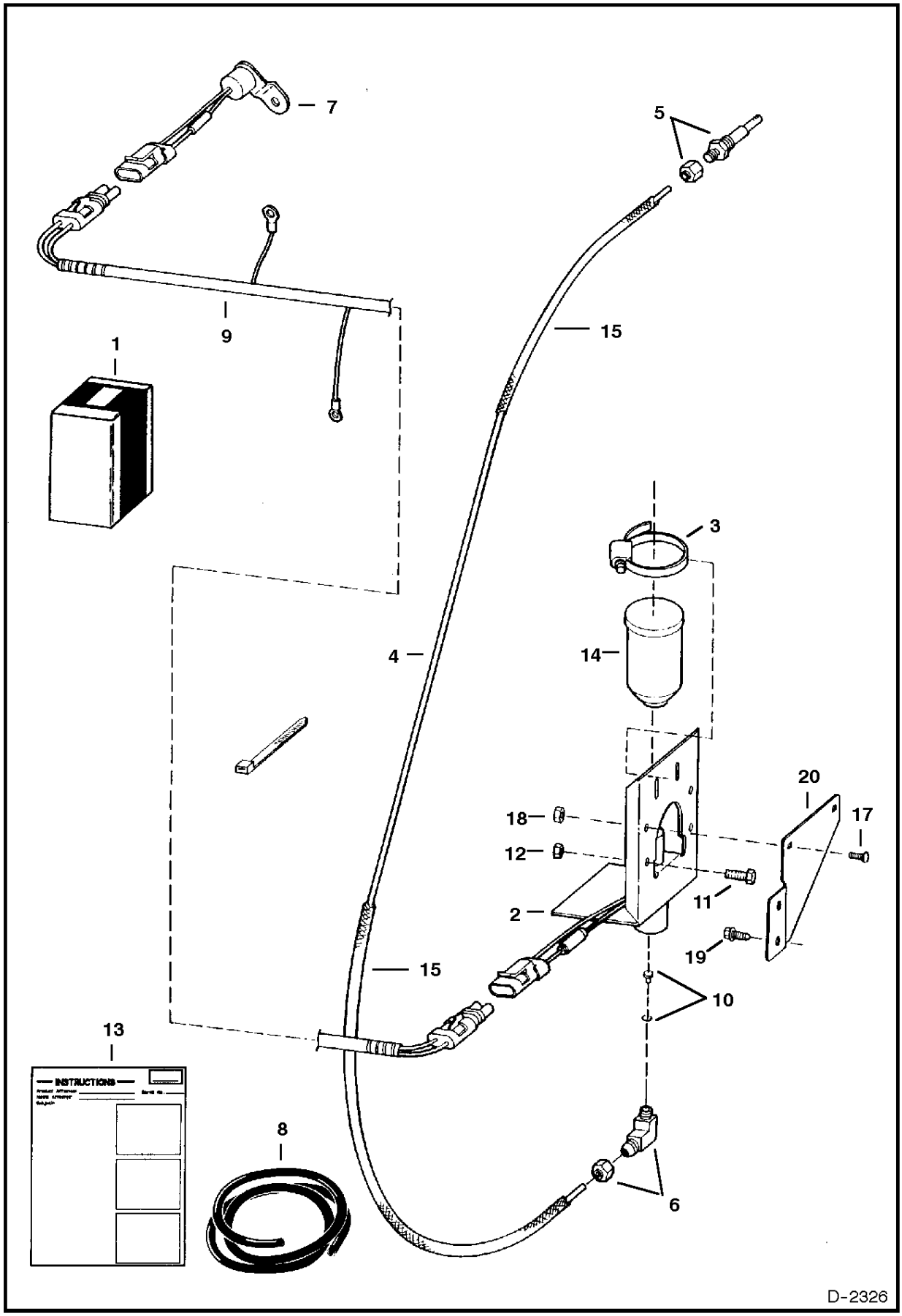

DealerNation Quality Equipment Manuals - dealernation@aol.com

ETHER KIT

Ref.N°	Part N°	Description	Remarks	Serial N°	Qty.
1	6597284	KIT	Ref. ETHER KIT(2) - ETHER KIT(13) & ETHER KIT(17) - ETHER KIT(20)		1
2	6667732	VALVE			1
3	6667733	CLAMP			1
4	6674161	TUBING			1
5	6667735	NOZZLE			1
6	6667736	ELBOW	W/Ref. ETHER KIT(10)		1
7	6667737	SWITCH	temperature		1
8	6667738	HOSE COVER			1
9	6667743	HARNESS			1
10	6675724	FILTER ASSY	Was 6667744 [A]		1
11	17C-516	BOLT			2
12	87D-5	NUT			2
13	6724396	INSTRUCTIONS			1
14	6667871	CAN	5ether - 8 oz. - 12 pk. - not in kit		1
15	6674162	COVER	tubing		1
16	6674163	NUT	W/sleeve		2
17	37C-512	BOLT	G-Series		2
18	59D-5	NUT	G-Series		2
19	84G-3712	BOLT	G-Series		2
20	6807301	BRACKET	G-Series		1

DealerNation Quality Equipment Manuals - dealernation@aol.com

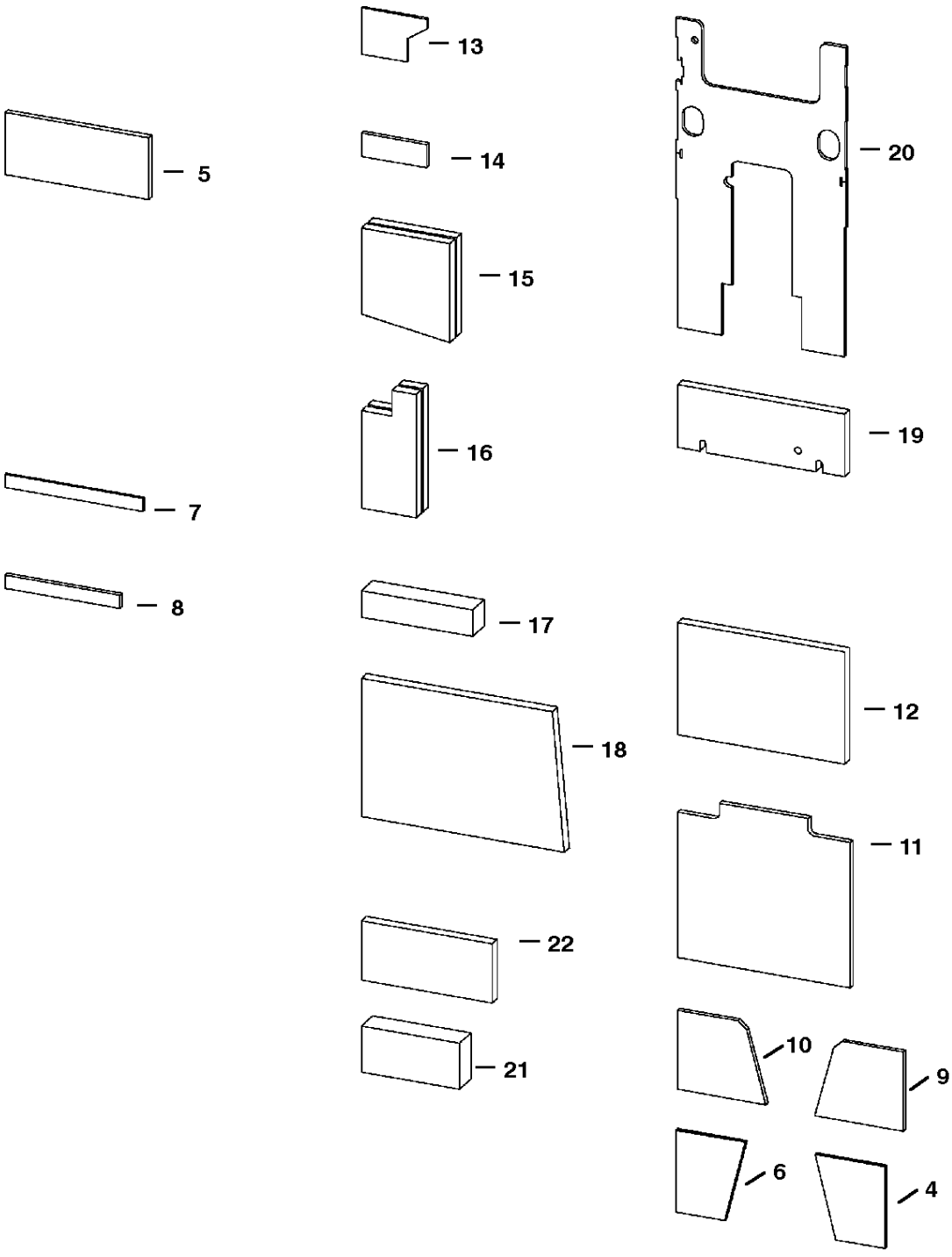

DealerNation Quality Equipment Manuals - dealernation@aol.com

EUROPEAN ACCESSORIES

Ref.N°	Part N°	Description	Remarks	Serial N°	Qty.
1	6715428	DECAL	dynamic level		1
2	6579385	DECAL	noise		1
3	6579406	DECAL	noise		1
4	6715435	INSULATION	panel shield		1
5	6715106	INSULATION	tailgate		1
6	6715393	INSULATION	panel shield		1
7	6804493	INSULATION	R.H. cab		1
8	6804496	INSULATION	L.H. cab		1
9	6804183	INSULATION	panel shield		1
10	6804182	INSULATION	panel shield		1
11	6807520	INSULATION	crossmember		1
12	6804178	INSULATION	floor		1
13	6804494	INSULATION	housing		1
14	6804495	INSULATION	housing		1
15	6804186	INSULATION	trans		3
16	6804187	INSULATION	fender		4
17	6804181	INSULATION	fender		2
18	6804498	INSULATION	upright		1
19	6804180	INSULATION	cover		1
20	6806559	INSULATION	panel		1
21	6804490	INSULATION	screen		1
22	6804497	INSULATION	upright		1

DealerNation Quality Equipment Manuals - dealernation@aol.com

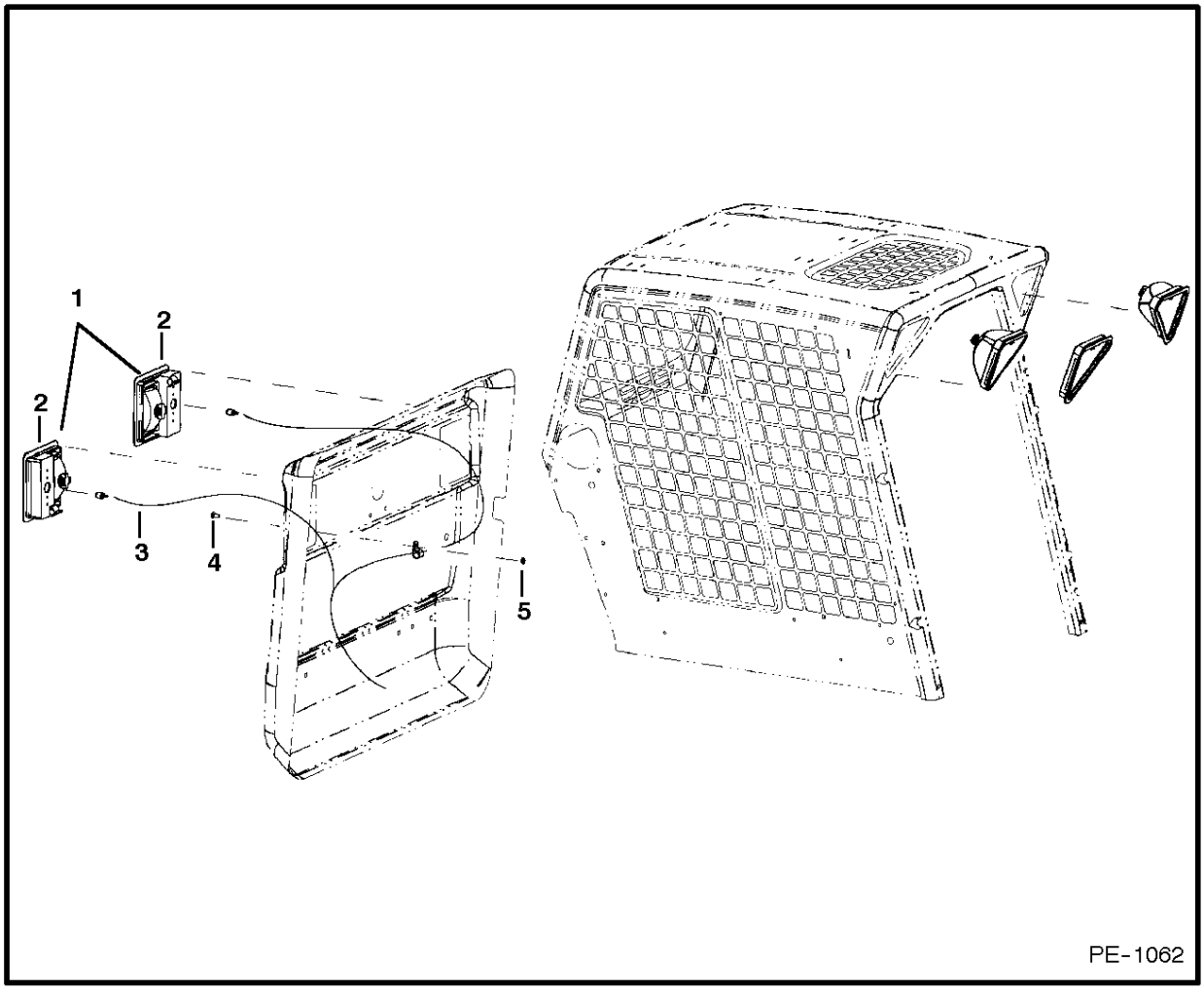

EUROPEAN ACCESSORIES
(Rear Door Lights)

Ref. No.	Part Number	Description	Remarks	Serial Number	Qty.

DealerNation Quality Equipment Manuals - dealernation@aol.com

EUROPEAN ACCESSORIES

Ref.N°	Part N°	Description	Remarks	Serial N°	Qty.
1	6707789	LIGHT ASSY	rear		2
1	6666568	BULB	21W		2
1	6667887	BULB	21/5W		2
1	6668007	SCREW			2
1	6668010	LENS			2
2	6671027	LIGHT			2
3	NAP	HARNESS	Order 6718198 Harness - Was 6714546 [A]		1
3	6718198	HARNESS	deluxe		1
4	25E-11	WASHER			4
5	4DM-5	NUT			4

DealerNation Quality Equipment Manuals - dealernation@aol.com

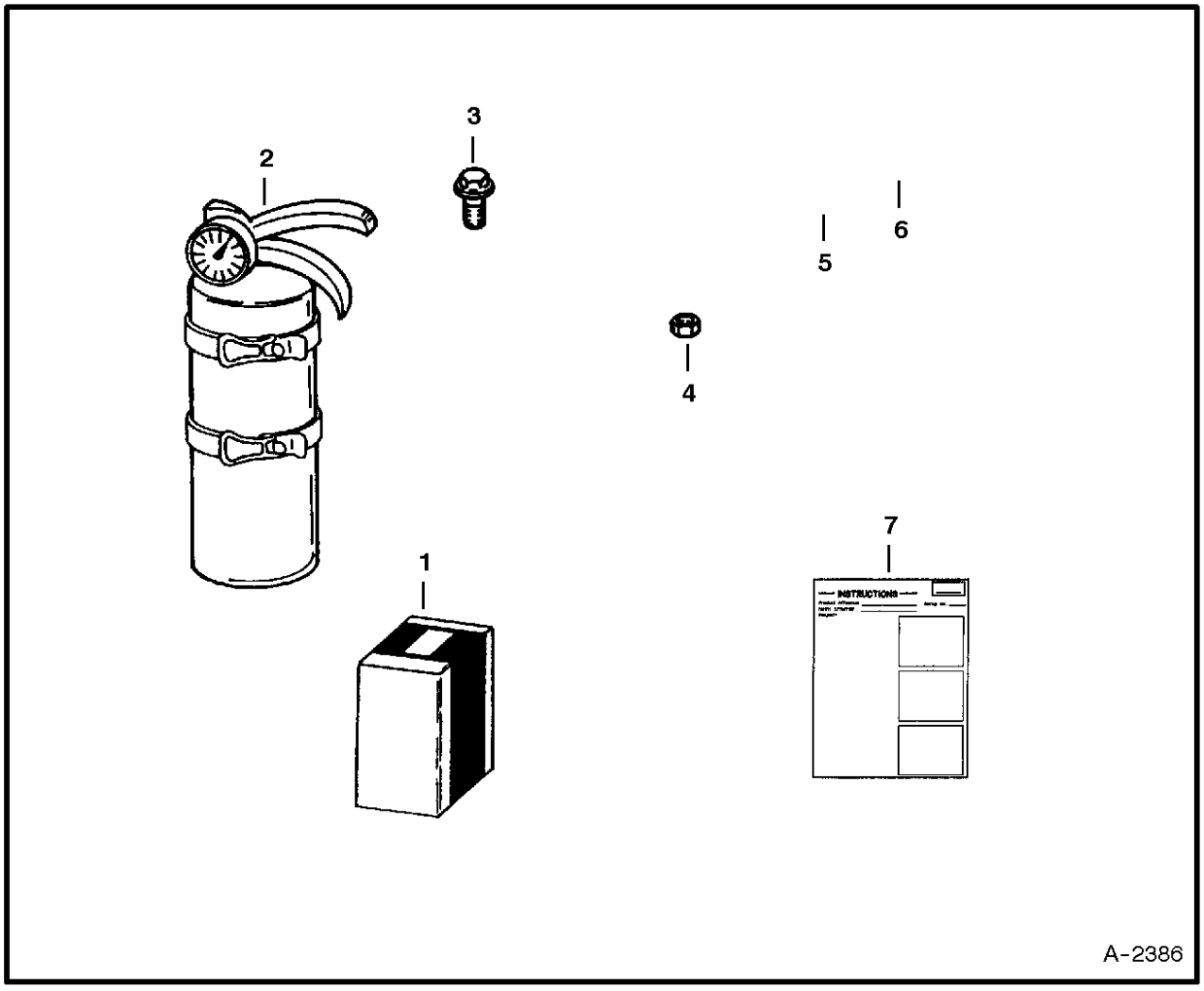

FIRE EXTINGUISHER

Ref. No.	Part Number	Description	Remarks	Serial Number	Qty.

DealerNation Quality Equipment Manuals - dealernation@aol.com

FIRE EXTINGUISHER

Ref.N°	Part N°	Description	Remarks	Serial N°	Qty.
1	6725898	KIT	fire extinguisher - Ref. FIRE EXTINGUISHER(2) - FIRE EXTINGUISHER(7)		1
2	6675581	EXTINGUISHER			1
3	45G-1006	BOLT			4
4	12D-10	NUT			4
5	6725906	BRACKET			1
6	31C-410	BOLT			2
7	6901025	INSTRUCTIONS			1

DealerNation Quality Equipment Manuals - dealernation@aol.com

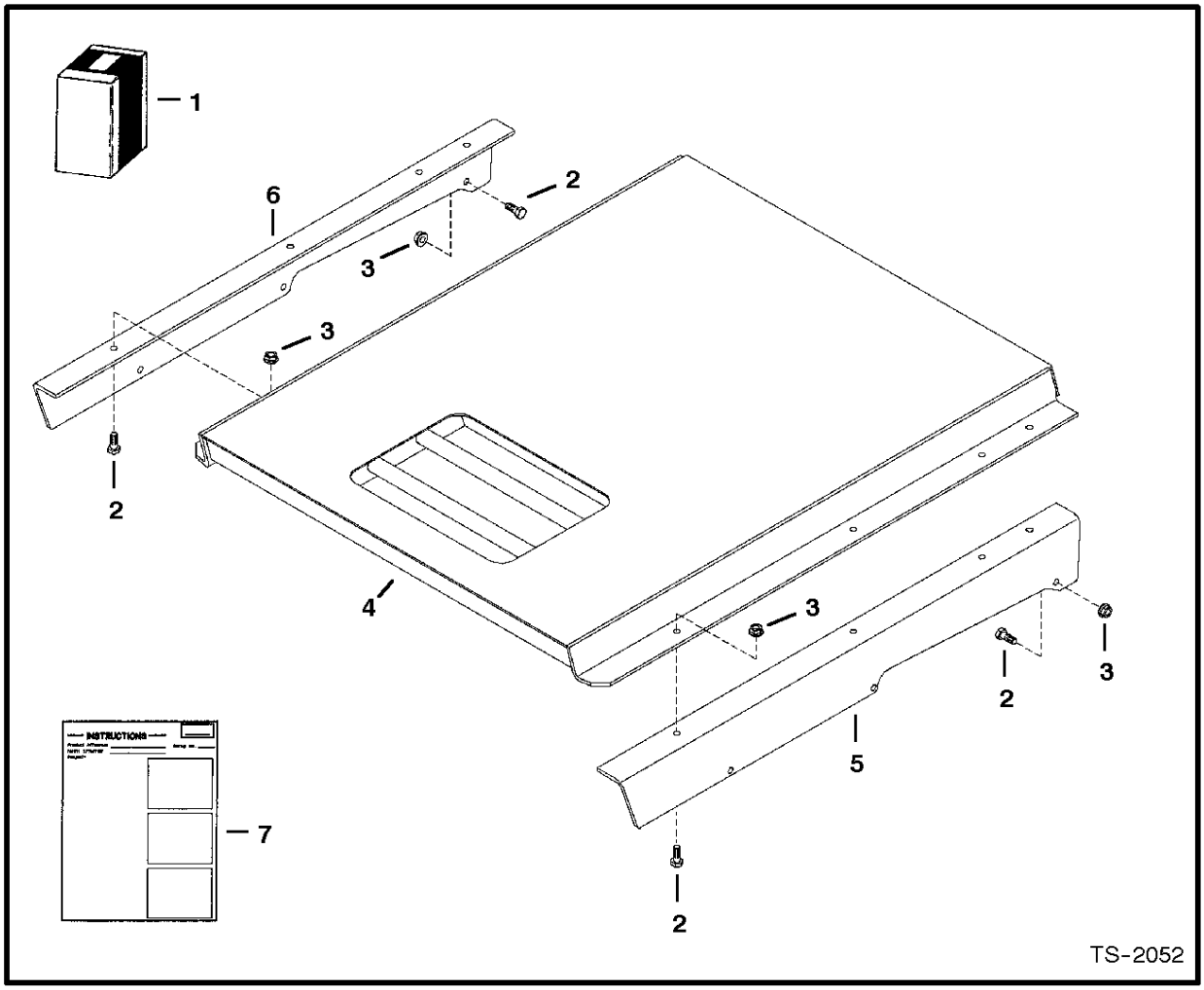

F.O.P.S. KIT

Ref. No.	Part Number	Description	Remarks	Serial Number	Qty.

DealerNation Quality Equipment Manuals - dealernation@aol.com

F.O.P.S. KIT

Ref.N°	Part N°	Description	Remarks	Serial N°	Qty.
1	6718924	KIT	Ref. F.O.P.S. KIT(2) - F.O.P.S. KIT(7)		1
2	17C-616	BOLT	Was 17C-612 [B]		14
3	83D-6	NUT			14
4	6702402	SHIELD			1
5	6718833	BRACKET	L.H.		1
6	6718834	BRACKET	R.H.		1
7	6720592	INSTRUCTIONS			1

DealerNation Quality Equipment Manuals - dealernation@aol.com

FLASHER LIGHTS
(4-Way) (Turn Indicators)

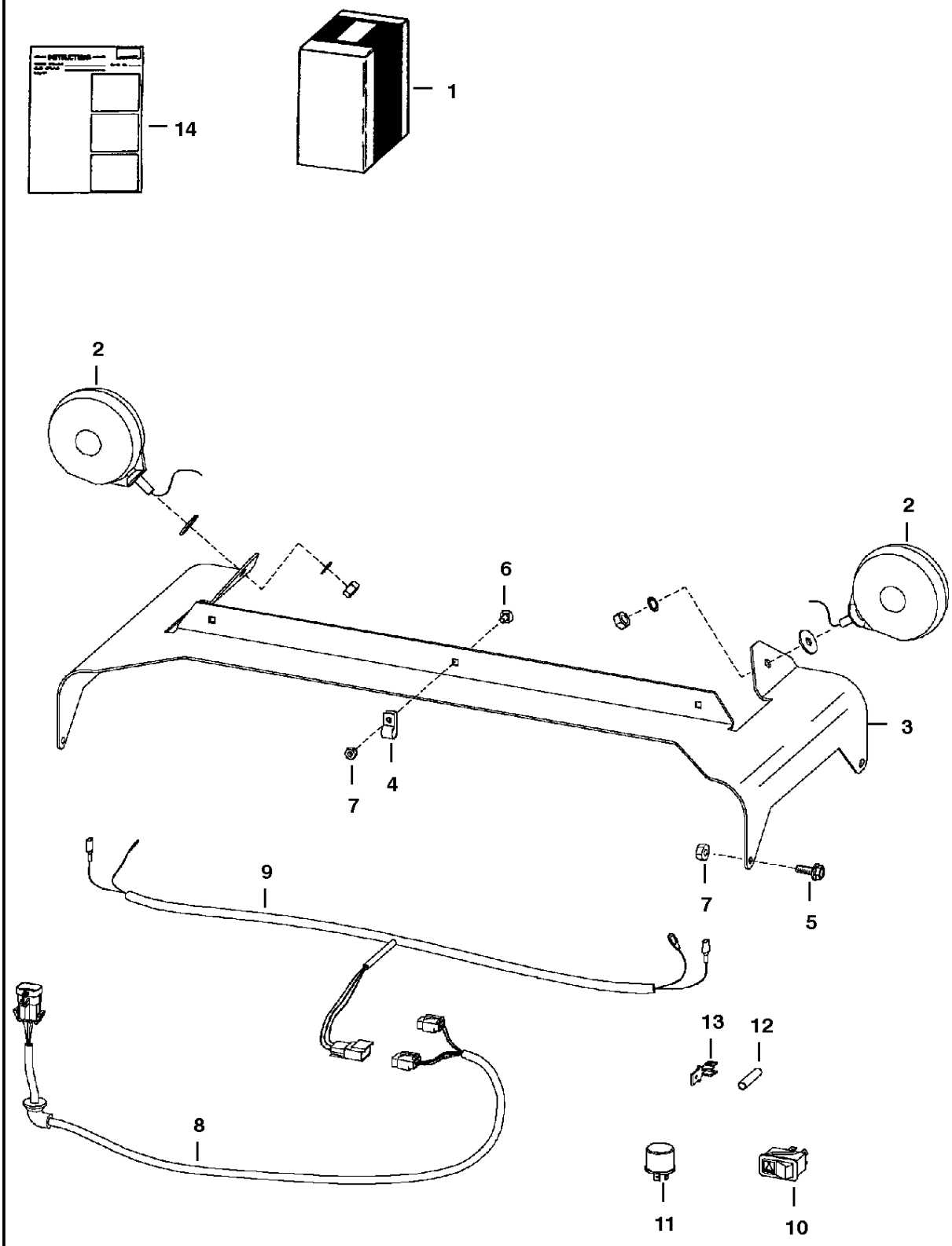

NOTE: If loader is not equipped with Deluxe Cab Option, also order 6727468 Harness. See Page 212.

TS-1983
6718412MS.ASM

DealerNation Quality Equipment Manuals - dealernation@aol.com

FLASHER LIGHTS

Ref.N°	Part N°	Description	Remarks	Serial N°	Qty.
1	6718411	KIT	Ref. FLASHER LIGHTS (2) - FLASHER LIGHTS (14)		1
2	6517516	LIGHT			2
3	6718326	MOUNT			1
4	30H-21	CLAMP			3
5	35C-412	BOLT			4
6	37C-412	BOLT			3
7	59D-4	NUT			7
8	6718872	HARNESS	ext. cab		1
9	6718873	HARNESS	4-way flasher		1
10	6665316	SWITCH			1
11	6557904	FLASHER			1
12	614142	SLEEVE			1
13	6515131	TERMINAL			1
14	6900848	INSTRUCTIONS			1

DealerNation Quality Equipment Manuals - dealernation@aol.com

HAND CONTROL KIT
(W/Push Button Float)

NOTE: Also order 6900878 O/M with revised date of 9/00 or newer.

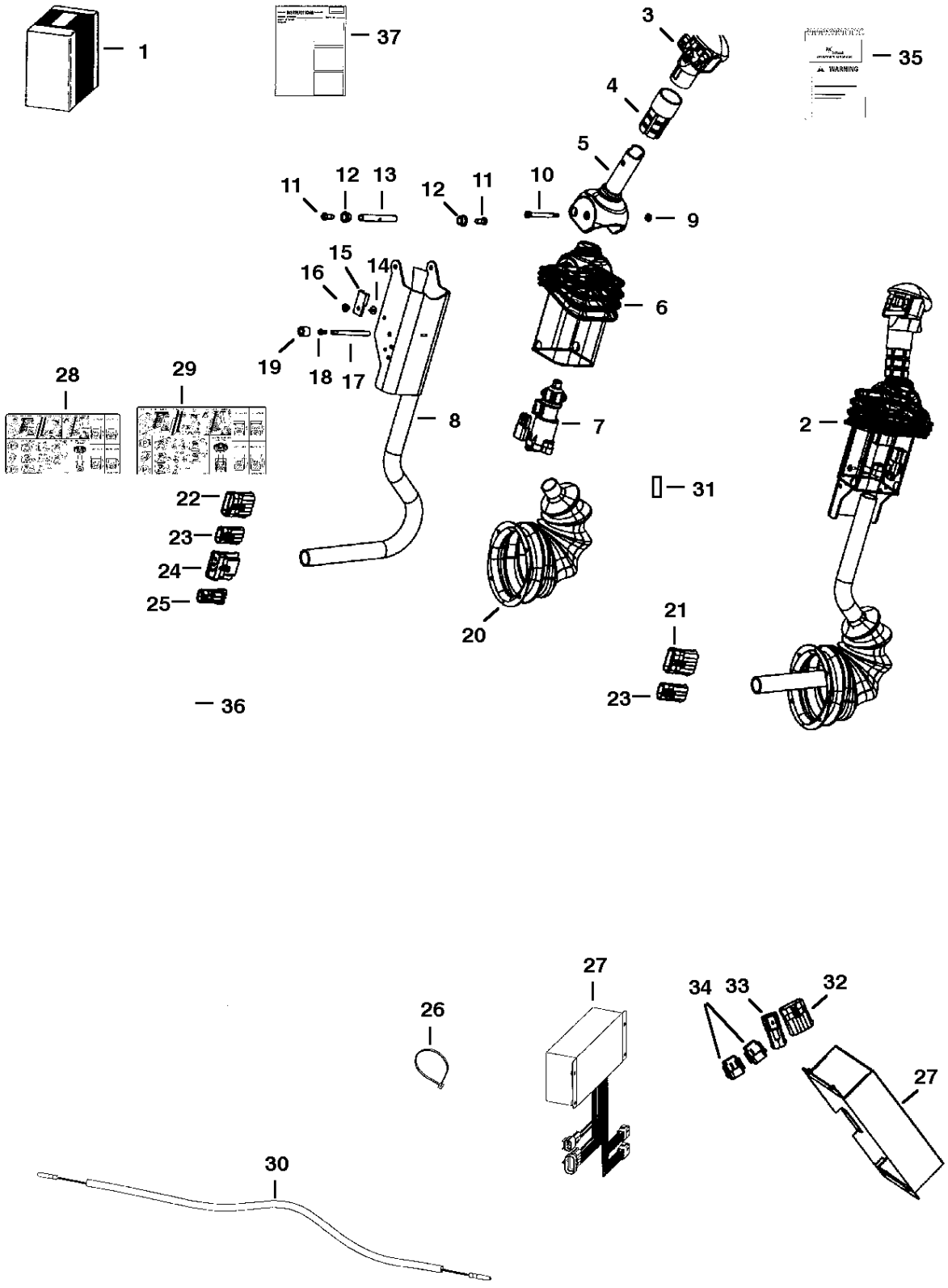

PE-1046

DealerNation Quality Equipment Manuals - dealernation@aol.com

HAND CONTROL KIT

Ref.N°	Part N°	Description	Remarks	Serial N°	Qty.
1	6727298	KIT	SEE NOTE		1
2	6675742	LEVER	tilt - R.H.		1
2	6675750	LEVER	lift - L.H.		1
3	6675469	HANDLE ASSY	lift - R.H.		1
3	6675749	HANDLE	lift - L.H.		1
4	6713349	GRIP			2
5	6597774	HANDLE	R.H.		1
5	6717163	HANDLE	L.H.		1
6	6713898	COVER			2
7	6675741	SENSOR			2
7	6670706	CONNECTOR	3pin		1
7	6670714	PIN			3
7	6670710	LOCK			1
8	6719712	CHANNEL	R.H.		1
8	6719711	CHANNEL	L.H.		1
9	12D-10	NUT			2
10	6716826	BOLT			2
11	25GT-410	BOLT			8
12	6702990	BUSHING			4
13	6713043	SPACER			4
14	6665321	RIVET	male		2
15	6665000	CLIP			2
16	6665322	RIVET	female		2
17	6719834	SPACER	threaded		2
18	6727065	BOLT			4
19	6719835	SLEEVE			4
20	6532127	BOOT			2
21	6640692	CONNECTOR	10pin		1
21	6640690	PIN			8
21	6640694	LOCK			1
21	6641176	SEAL			8
21	6646582	PLUG	cavity		2
22	6640692	CONNECTOR	10pin		1
22	6640690	PIN			6
22	6640694	LOCK			1
22	6641176	SEAL			6
22	6646582	PLUG	cavity		4
23	6640699	CONNECTOR	3pin		2
23	6640690	PIN			3
23	6641176	SEAL			3
23	6640700	LOCK			3
24	6667144	CONNECTOR	5pin		1
24	6640690	PIN			3
24	6641176	SEAL			3
24	6646582	PLUG	cavity		1
24	6667145	LOCK			1
25	6641179	CONNECTOR	2pin		1
25	6640690	PIN			2
25	6641176	SEAL			2
25	6641180	LOCK			1

DealerNation Quality Equipment Manuals - dealernation@aol.com

HAND CONTROL KIT

Ref.N°	Part N°	Description	Remarks	Serial N°	Qty.
26	6610510	NYLON TIE			11
27	6676153	CONTROLLER			1
28	6727155	DECAL			1
29	6727243	DECAL			1
30	6727328	HARNESS			1
31	6670707	CONNECTOR	3pin		1
31	6670715	SOCKET			3
31	6670711	LOCK			1
32	6640692	CONNECTOR	10pin		1
32	6640690	PIN			9
32	6640694	LOCK			1
32	6641176	SEAL			9
32	6646582	PLUG	cavity		1
33	6648307	CONNECTOR	2pin		1
34	6670709	CONNECTOR	8pin		2
35	6719563	KIT	handbook		1
36	6728742	HARNESS	W/capacitor		1
37	6901100	INSTRUCTIONS			1

DealerNation Quality Equipment Manuals - dealernation@aol.com

HEATER & A/C
(Heater Kit)

NOTE: If loader does not have deluxe cab headliner, also order Deluxe Cab Kit 6718804 on Page 241.

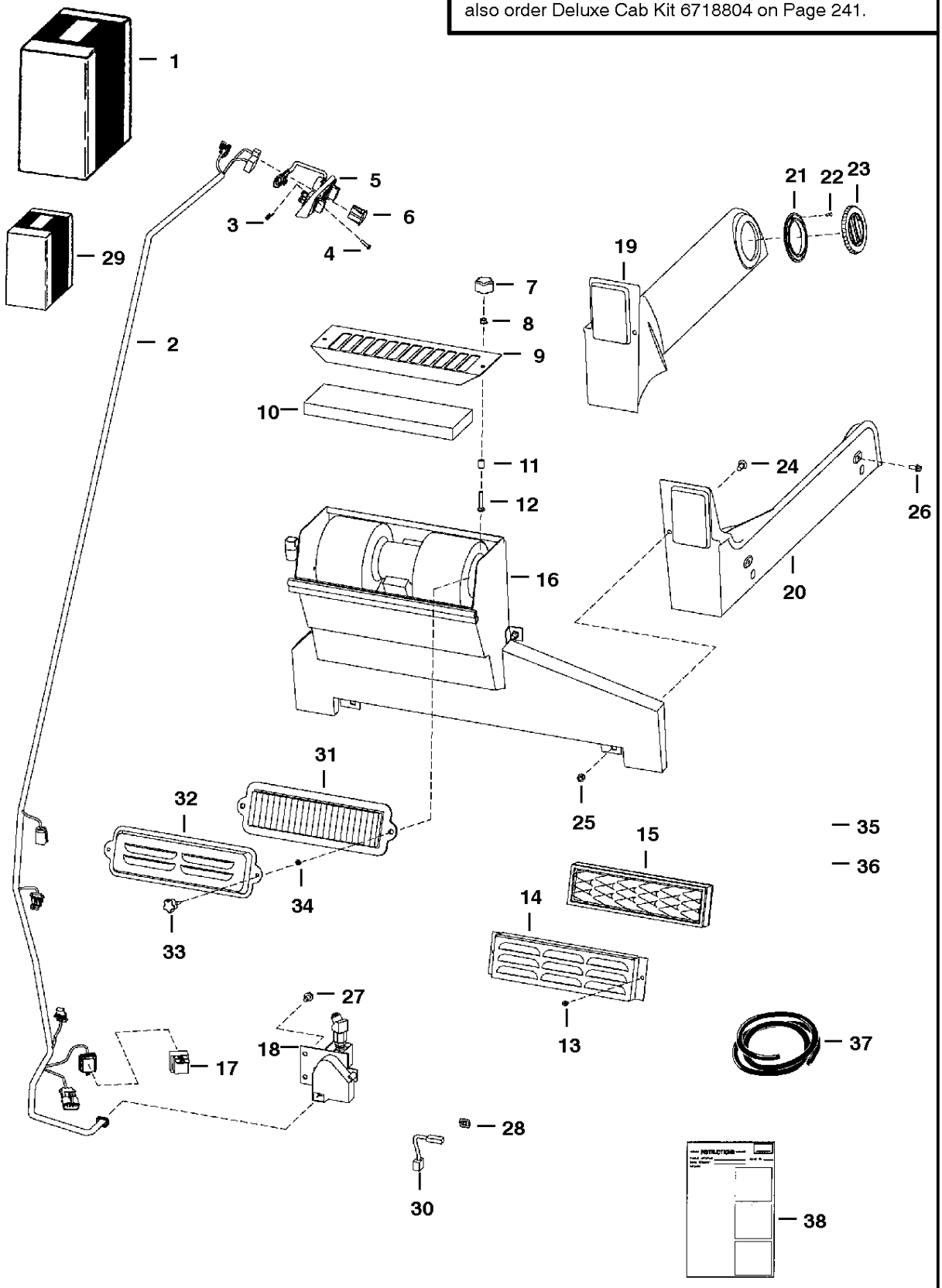

PE-1034

DealerNation Quality Equipment Manuals - dealernation@aol.com

HEATER & A/C

Ref.N°	Part N°	Description	Remarks	Serial N°	Qty.
1	6718803	HEATER KIT	Ref. HEATER & A/C(2)-HEATER & A/C(28) & HEATE R & A/C(38) - SEE NOTE		1
2	NAP	HARNESS	hvac - Order 6725933 Harness - Was 6725275 [A]	& Bel	1
2	6725933	HARNESS	hvac-W/Ref. HEATER & A/C(17)-Was 6717877 [A]	& Abv	1
2	6725273	HARNESS	AHC		1
3	6669091	CLIP	retainer		3
4	6669224	BOLT			3
5	6674228	PANEL	control		1
5	6640699	CONNECTOR			1
5	6718579	DECAL			1
5	6718887	PANEL	A/C		1
5	6675176	SWITCH	blower		1
5	6675177	KNOB			1
5	6675846	POTENTIOMETER	Was 6675178 [A]		1
6	6675181	PLUG	switch hole		1
7	6674741	KNOB			2
8	83D-4	NUT			2
9	6718175	SCREEN	filter		1
10	6674229	FILTER	recirculation		1
11	6718837	SPACER			2
12	37C-424	BOLT			2
13	87G-1008	SCREW			2
14	NAP	COVER	filter - Order Ref. HEATER & A/C(31), HEATER & A/C(32) & (2) ea. of Ref. HEATER & A/C(33) & HEATE R & A/C(34) -Was 6674236 [A]		1
15	NAP	FILTER	Order Ref. HEATER & A/C(31), HEATER & A/C(32) & (2) ea. of Ref. HEATER & A/C(33) & HEATER & A/C(3 4) - Was 6674230 [A]		1
16		HEATER	See Page HEATER & A/C(1)		1
17	6670312	SOLENOID	relay		1
18	NAP	VALVE	(Order 6675684 - Was 6674227 [A]		1
18	6675684	VALVE			1
18	6640699	CONNECTOR			1
18	6675175	BRACKET			1
18	6675172	BRACKET			1
18	6675173	ACTUATOR			1
18	6675174	BODY			1
19	6717644	DUCT	L.H.		1
20	6717643	DUCT	R.H.		1
21	6675179	FLANGE			4
22	57G-608	SCREW			16
23	6674231	VENT	round - W/Ref. HEATER & A/C(21) & HEATER & A/C(22)		4
23	6675180	VENT			4
24	37C-512	BOLT			4
25	59D-5	NUT			4
26	35C-410	BOLT			4
27	84G-3110	BOLT			2
28	774220	NUT	spring		2
29	6725513	DECAL PACKAGE	decal		1
30	6725390	HARNESS	jumper - SEE NOTE		1
31	6727140	FILTER			1

DealerNation Quality Equipment Manuals - dealernation@aol.com

HEATER & A/C

Ref.N°	Part N°	Description	Remarks	Serial N°	Qty.
32	6726608	COVER			1
33	6726386	KNOB			2
34	6676516	NUT	push		2
35	6725934	HARNESS	jumper - 4'(101,6 mm) long - connects)Ref. HEATER & A/C(2) (6725933 Harness) to Ref. HEATER & A/C(18) (NAP/6674227)Valve)		1
35	6725936	HARNESS	jumper - 8'(203,2 mm) long - connects)Ref. HEATER & A/C(2) (NAP/6725275 Harness or NAP/6717877 Harness) to Ref. HEATER & A/C(1		x
36	NAP	SEAL	16.25'(412,8 mm) long - Order Ref. HEATER & A/C(37)		1
37	6513152	SEAL	bulk - Sold Per Foot		x
38	6900850	INSTRUCTIONS			1

DealerNation Quality Equipment Manuals - dealernation@aol.com

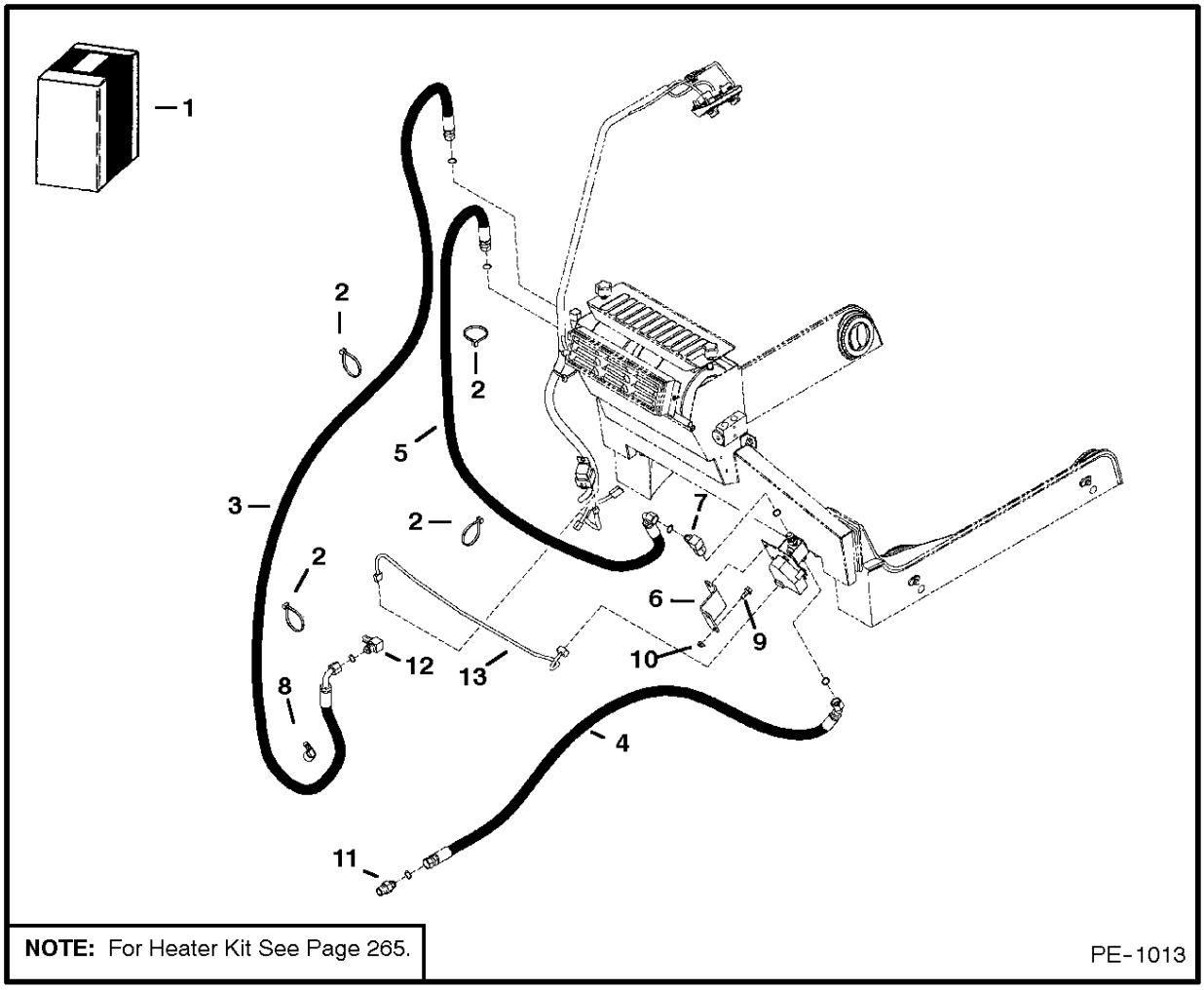

NOTE: For Heater Kit See Page 265.

PE-1013

HEATER & A/C
(Heater Plumbing Kit)

Ref. No.	Part Number	Description	Remarks	Serial Number	Qty.

DealerNation Quality Equipment Manuals - dealernation@aol.com

U

Ref.N°	Part N°	Description	Remarks	Serial N°	Qty.
1	6807305	KIT	W/Ref. U(2) - U(13)		1
2	6624289	STA-STRAP			4
3	6807017	HOSE			1
4	6807018	HOSE			1
5	6807019	HOSE			1
6	6807081	BRACKET			1
7	11KN-6	ADAPTER			1
7	96K-8	O-RING			x
8	30H-64	CLAMP			1
9	35C-512	BOLT			2
10	57D-5	NUT			2
11	656598	ADAPTER			1
12	662487	ELBOW			1
13	6807266	HARNESS	hvac		1

DealerNation Quality Equipment Manuals - dealernation@aol.com

Do you operate in a cold climate? Block heaters are available.

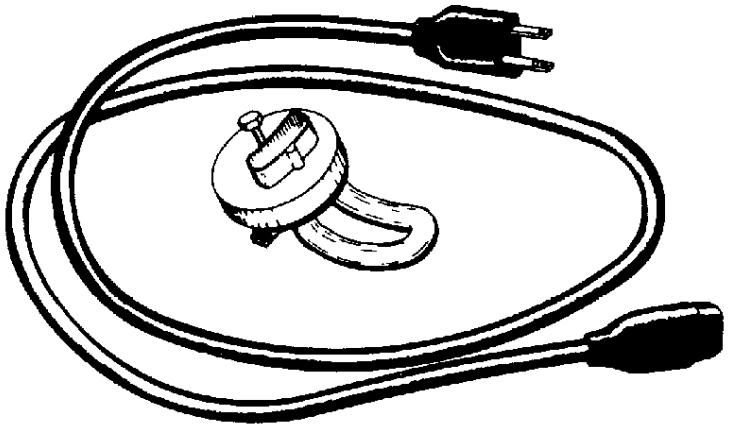

Available from Bobcat Parts.

Bobcat

DealerNation Quality Equipment Manuals - dealernation@aol.com

HEATER & A/C
(Heater Assembly) (S/N & Below)

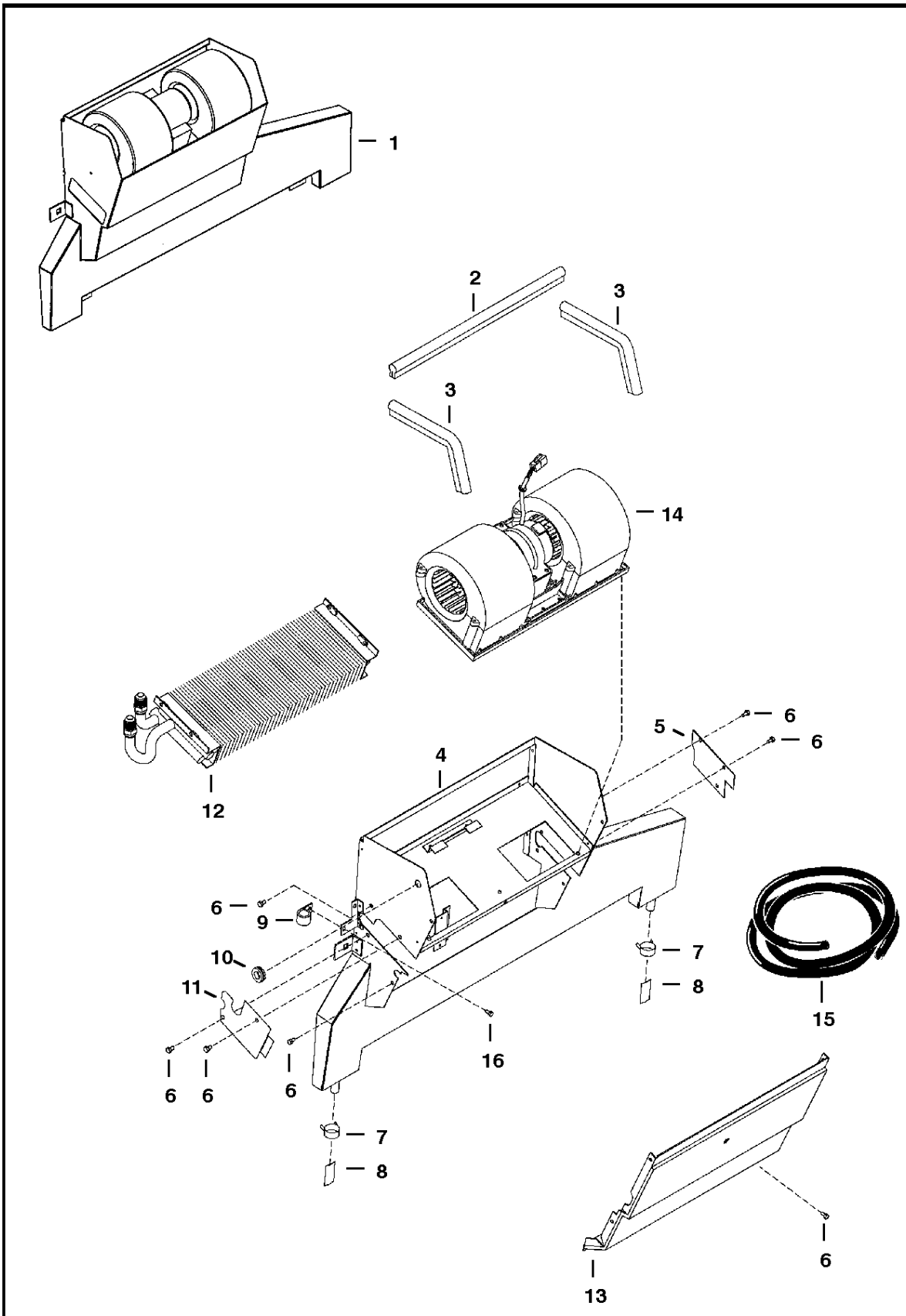

NOTE: See Page 277 for insulation

PE-1141

DealerNation Quality Equipment Manuals - dealernation@aol.com

HEATER & A/C

Ref.N°	Part N°	Description	Remarks	Serial N°	Qty.
1	NAP	HEATER	Ref. HEATER & A/C(2)-HEATER & A/C(16) - Order 6676562 - See Page * HEATER & A/C(2) - Was 6674933 [A]		1
2	NAP	SEAL	14.75'(375 mm) long - Order Ref. HEATER & A/C(15))		1
3	NAP	SEAL	8.5'(215 mm) long - Order Ref. HEATER & A/C(15)		2
4	6675499	HOUSING	SEE NOTE		1
5	6675502	PLATE	cover		1
6	6677580	SCREW			13
7	6675510	CLAMP			2
8	6675511	DRAIN VALVE			2
9	6675512	CLAMP			2
10	6675513	GROMMET			2
11	6675501	PLATE	cover		1
12	NAP	COIL	(Order 6728990 - Was 6675498 [A]		1
13	6675500	COVER	SEE NOTE		1
14	6675497	BLOWER	See Page HEATER & A/C(3)		1
15	6675514	SEAL	bulk - Sold Per Foot - See Page * HEATER & A/C(4)		x
16	6677118	SCREW			2

DealerNation Quality Equipment Manuals - dealernation@aol.com

* HEATER & A/C
(Heater Assembly) (S/N & Above)

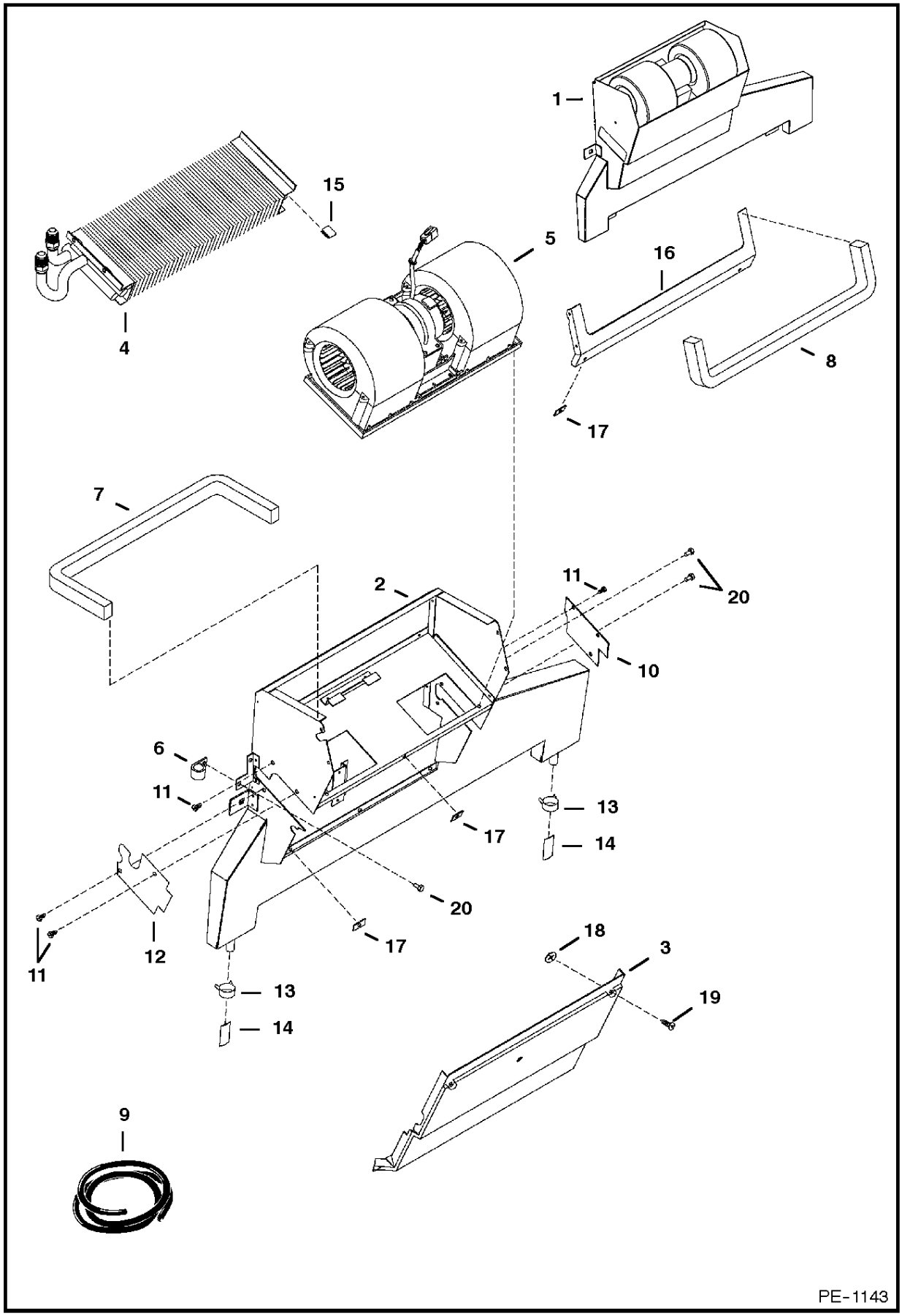

DealerNation Quality Equipment Manuals - dealernation@aol.com

* HEATER & A/C

Ref.N°	Part N°	Description	Remarks	Serial N°	Qty.
1	6676562	HEATER	assy - Ref. * HEATER & A/C(2)-* HEATER & A/C(20)		1
2	6677108	HOUSING			1
3	6677109	COVER			1
4	NAP	COIL	heater - Order 6728990 - Was 6676603 [A]		1
5	6675497	BLOWER	assy - See Page HEATER & A/C(3)		1
6	6675512	CLAMP	hose		2
7	NAP	SEAL	25'(635mm) long - Order Ref. * HEATER & A/C(9)		1
8	NAP	SEAL	(22.6'(575mm) long - Order Ref. * HEATER & A/C(9)		1
9	6677111	SEAL	bulk - Sold Per Foot		x
10	6677120	COVER			1
11	6726621	SCREW	sheetmetal		7
12	6676604	COVER			1
13	6675510	CLAMP	drain hose		2
14	6675511	DRAIN VALVE			2
15	6676539	CLIP			1
16	6677114	SEAL			1
17	6677115	RECEPTACLE			6
18	6677116	RETAINER			6
19	6677117	SCREW	captive		6
20	6677118	SCREW	w/washer		4

DealerNation Quality Equipment Manuals - dealernation@aol.com

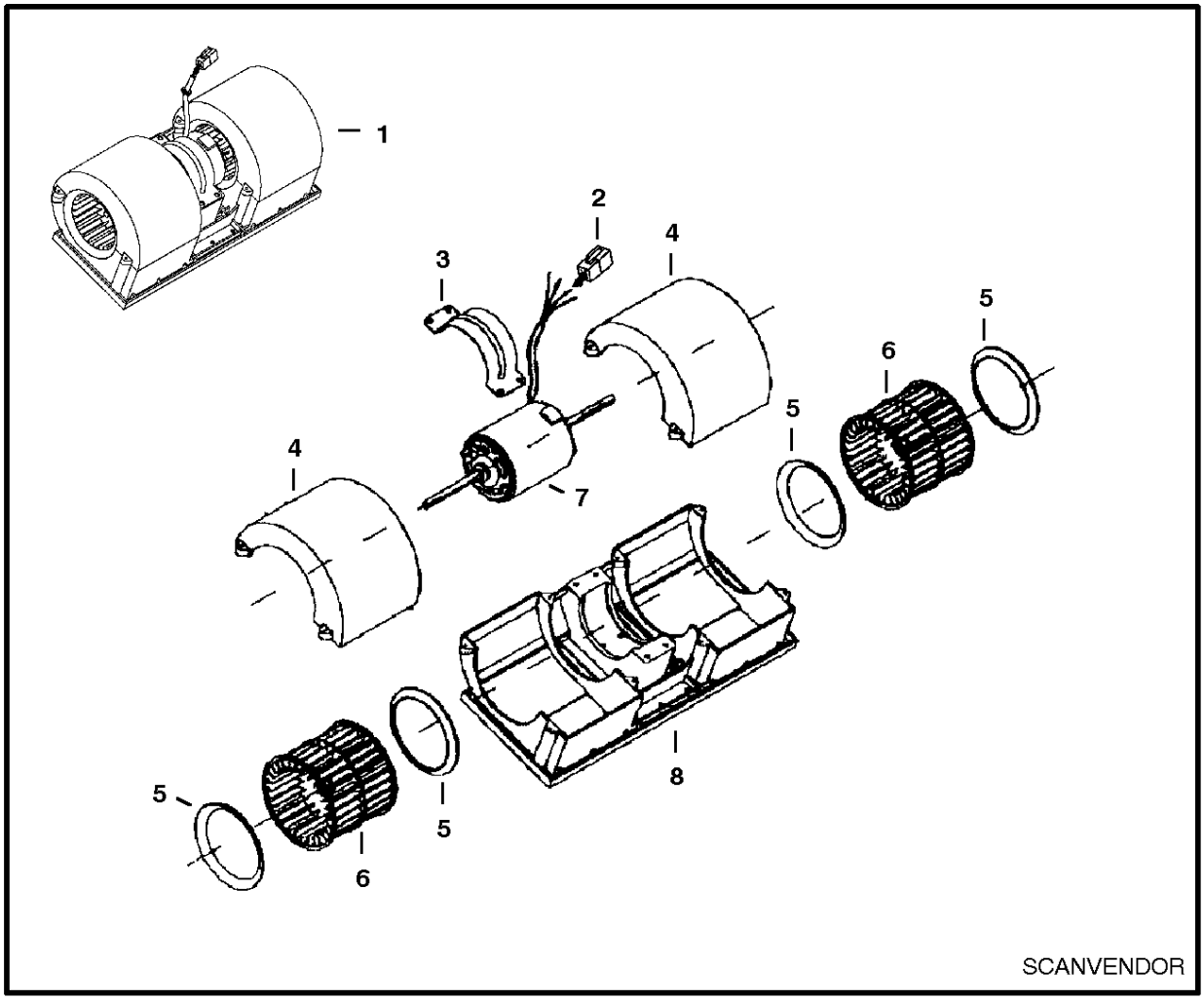

HEATER & A/C
(Blower Assembly)

Ref. No.	Part Number	Description	Remarks	Serial Number	Qty.

DealerNation Quality Equipment Manuals - dealernation@aol.com

HEATER & A/C

Ref.N°	Part N°	Description	Remarks	Serial N°	Qty.
1	6675497	BLOWER	Ref. HEATER & A/C(2)-HEATER & A/C(8)		1
2	6728567	KIT	6 pin		1
2	6662252	LOCK	6 pin		1
2	6662257	PIN			4
2	6665370	PLUG			2
3	6675506	MOUNT			1
4	6675507	COVER			2
5	6675504	RING			4
6	6675505	BLOWER WHEEL			2
7	6675509	MOTOR	W/Ref. HEATER & A/C(2)		1
8	6675503	HOUSING			1

DealerNation Quality Equipment Manuals - dealernation@aol.com

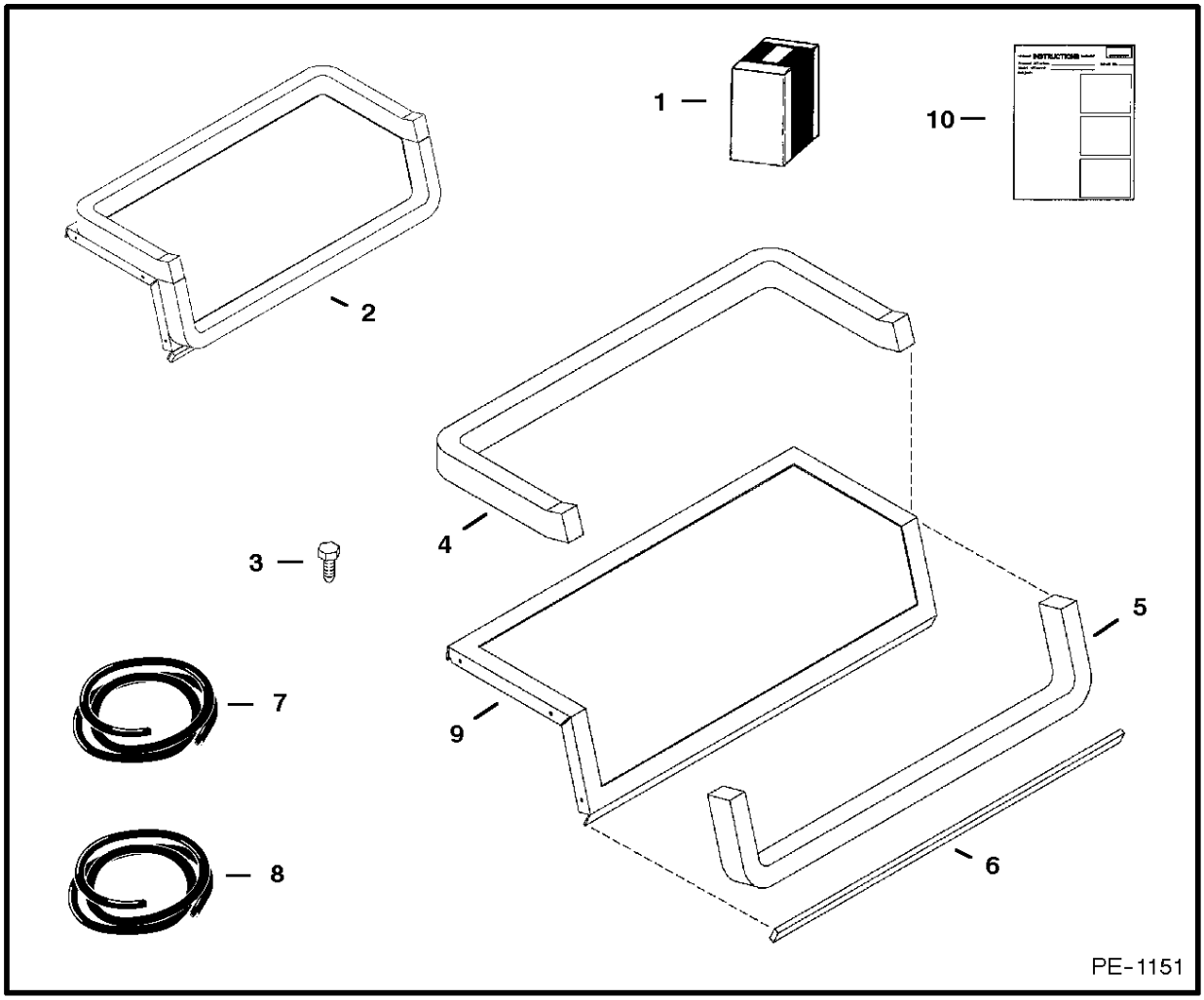

*** HEATER & A/C**
(Blower Seal Kit)

Ref. No.	Part Number	Description	Remarks	Serial Number	Qty.

DealerNation Quality Equipment Manuals - dealernation@aol.com

* HEATER & A/C

Ref.N°	Part N°	Description	Remarks	Serial N°	Qty.
1	6728567	KIT	blower seal - W/Ref. PURIFIER, MUFFLER(2), PURIFIER, MUFFLER(3) & * HEATER & A/C(10)		1
2	NSS	FLANGE SEAL	assy - Ref. * HEATER & A/C(4), * HEATER & A/C(5), * HEATER & A/C(6) & * HEATER & A/C(9) - Order Ref. * HEATER & A/C(1)		1
3	6726621	SCREW			7
4	NAP	SEAL	27'(686mm) long - Order Ref. * HEATER & A/C(8)		1
5	NAP	SEAL	21'(534mm) long - Order Ref. * HEATER & A/C(8)		1
6	NAP	SEAL	15'(384mm) long - Order Ref. * HEATER & A/C(7)		1
7	6675611	SEAL	bulk - Sold Per Foot		x
8	6677111	SEAL	bulk - Sold Per Foot		x
9	NSS	FLANGE	Order Ref. * HEATER & A/C(1)		1
10	6901213	INSTRUCTIONS			1

DealerNation Quality Equipment Manuals - dealernation@aol.com

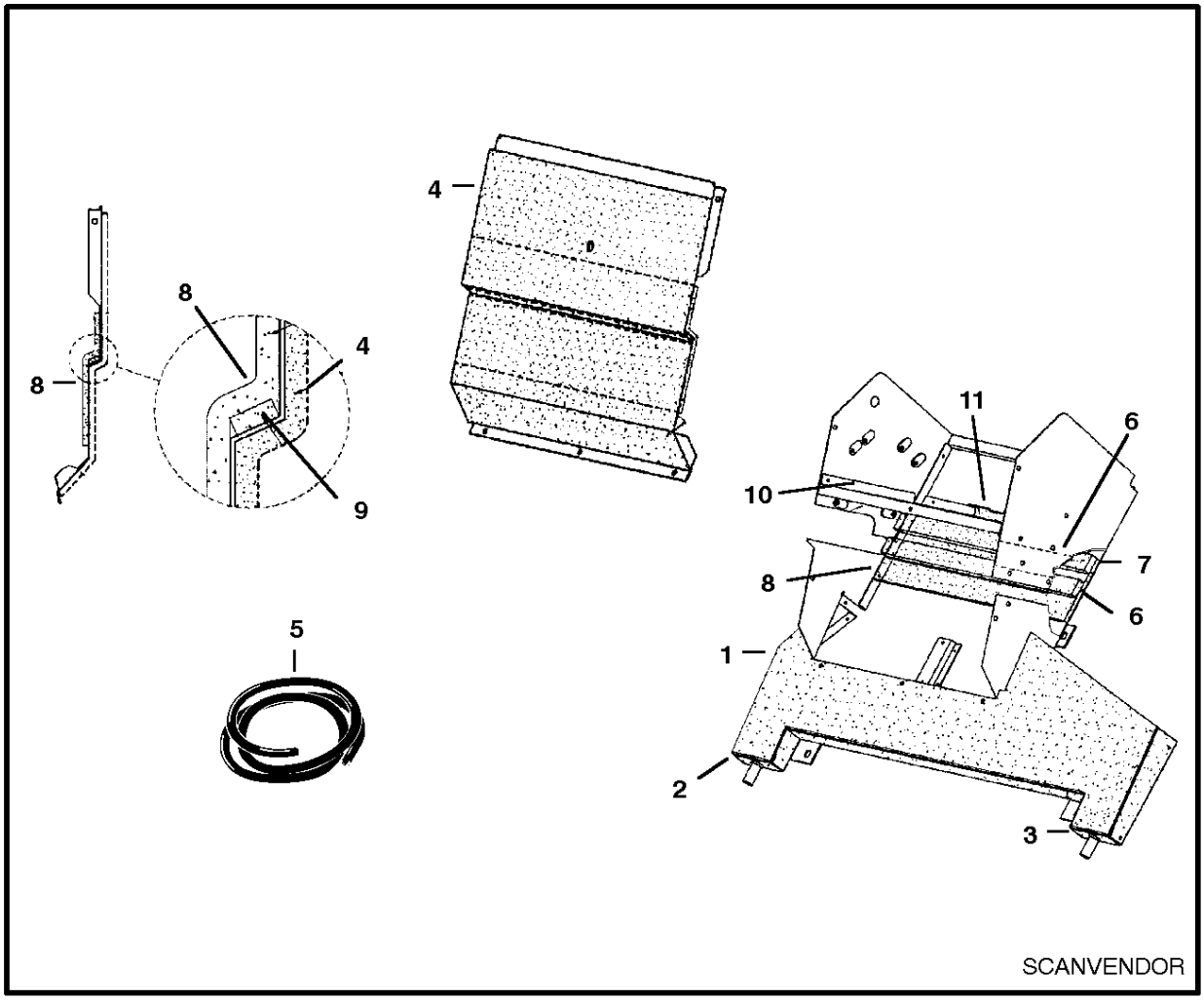

HEATER & A/C
(Insulation)

Ref. No.	Part Number	Description	Remarks	Serial Number	Qty.

DealerNation Quality Equipment Manuals - dealernation@aol.com

HEATER & A/C

Ref.N°	Part N°	Description	Remarks	Serial N°	Qty.
1	6675607	INSULATION			1
2	6675608	INSULATION			1
3	6675609	INSULATION			1
4	6675610	INSULATION			1
5	6675611	SEAL	bulk - Sold Per Foot		x
6	6675612	INSULATION			2
7	6675613	INSULATION			1
8	6675614	INSULATION			2
9	NAP	SEAL	15' (381mm) long - Order Ref. HEATER & A/C(5)		1
10	NAP	SEAL	5.5' (140mm) long - Order Ref. HEATER & A/C(5)		1
11	NAP	SEAL	4' (101,6mm) long - Order Ref. HEATER & A/C(5)		1

DealerNation Quality Equipment Manuals - dealernation@aol.com

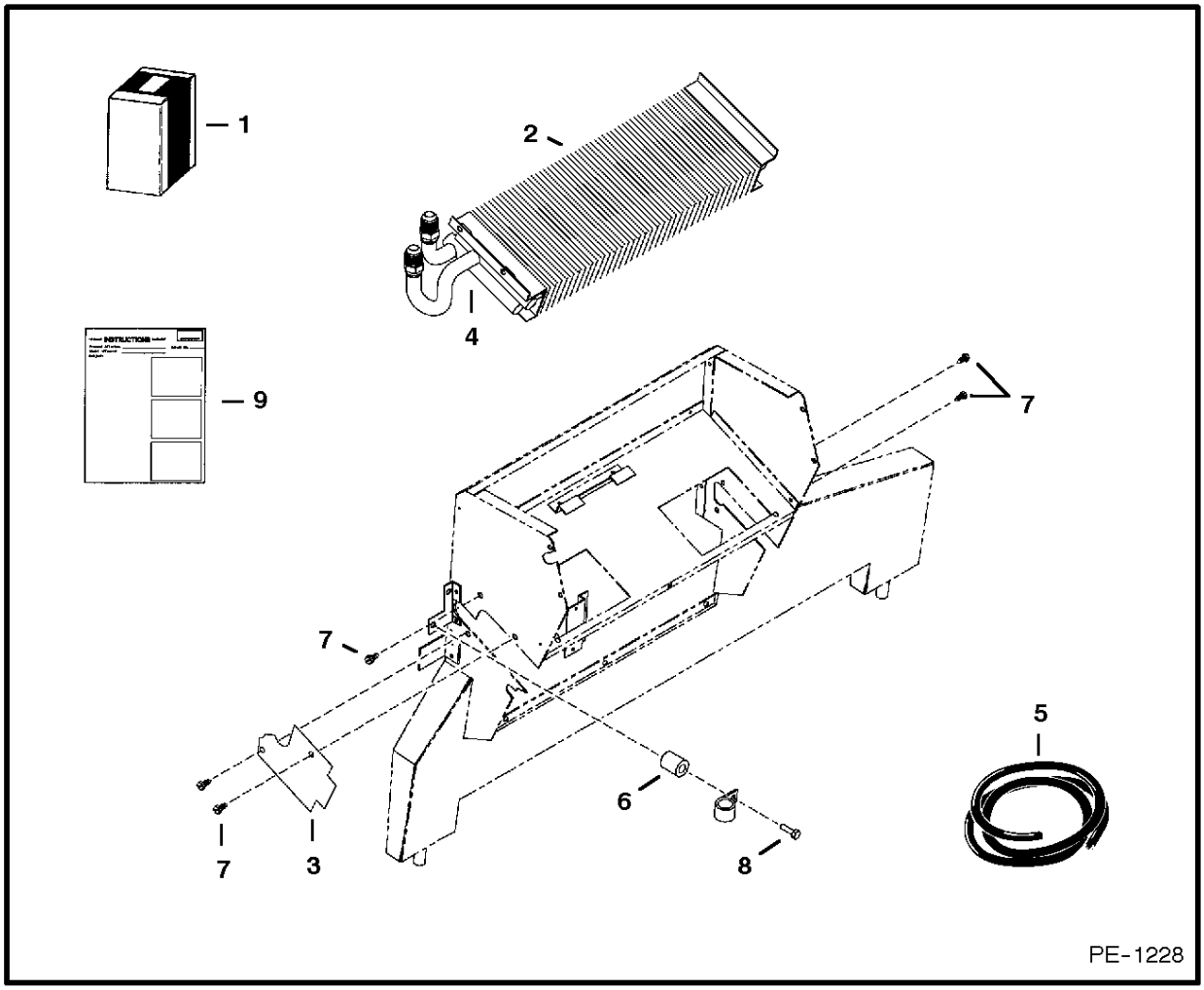

*** HEATER & A/C**
(Heater Coil Kit)

Ref. No.	Part Number	Description	Remarks	Serial Number	Qty.

DealerNation Quality Equipment Manuals - dealernation@aol.com

* HEATER & A/C

Ref.N°	Part N°	Description	Remarks	Serial N°	Qty.
1	6728990	KIT	heater coil - W/Ref. * HEATER & A/C(2)-* HEATER & A/C(9)		1
2	NSS	HEATER COIL	Order 6728990		1
3	6677504	COVER	.279'(7,1mm) thickness		1
4	NAP	INSULATION	6(152.4mm) long - Order Ref. * HEATER & A/C(5)		1
5	6676538	INSULATION	bulk - Sold Per Foot		x
6	6676606	SPACER			1
7	6726621	SCREW			2
8	6676653	SCREW			1
9	6901120	INSTRUCTIONS			1

DealerNation Quality Equipment Manuals - dealernation@aol.com

HEATER & A/C
(A/C Kit)

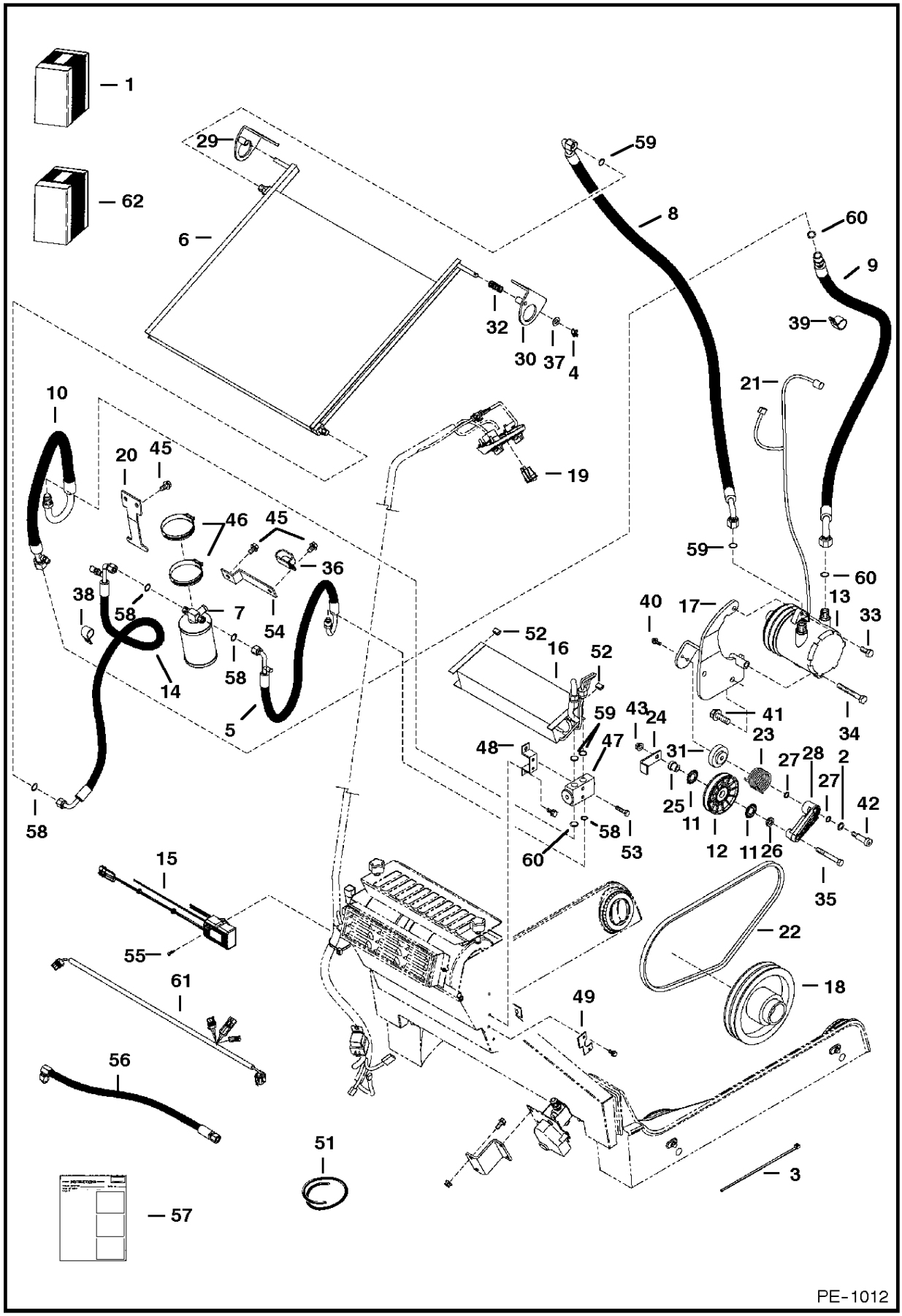

DealerNation Quality Equipment Manuals - dealernation@aol.com

HEATER & A/C

Ref.N°	Part N°	Description	Remarks	Serial N°	Qty.
1	6808381	KIT	Ref. HEATER & A/C(2) - HEATER & A/C(57)		1
2	6655781	BEARING	thrust		1
3	6624289	STA-STRAP			4
4	6631418	PIN			1
5	6675366	HOSE	ac		1
5	6677122	CAP			1
6	6675371	CONDENSER			1
7	6674235	RECEIVER DRIER	reciever		1
7	6676062	RELIEF VALVE			1
8	6675368	HOSE	ac		1
9	6675369	HOSE	ac		1
10	6675370	HOSE	ac		1
10	6677121	CAP			1
11	6660995	RING			1
12	6662997	PULLEY	idler		1
13	6675667	COMPRESSOR			1
13	6675828	CLUTCH			1
14	6675686	HOSE	ac		1
14	6675779	SWITCH	pressure		1
14	6676399	VALVE CORE			1
15	6675790	THERMOSTAT			1
16	6675533	COIL	evaporator		1
17	6806870	MOUNT	compressor		1
18	6675365	PULLEY	engine		1
19	6719176	SWITCH	rocker		1
20	6806273	MOUNT	reciever drier		1
21	6719630	HARNESS	ac		1
22	6807036	BELT	compressor		1
23	6700722	SPRING	torsion		1
24	6702474	RETAINER	belt		1
25	6704443	BUSHING			1
26	6704444	WASHER			1
27	6704820	O-RING			2
28	6725212	IDLER ARM	pulley		1
29	6806882	BRACKET	left		1
30	6806883	BRACKET	right		1
31	6807422	BOSS			1
32	6807576	SPRING	compression		1
33	5CM-1025	BOLT			1
34	5CM-1080	BOLT			1
35	17C-648	BOLT			1
36	31H-46	CLAMP	Was 31H-42 [B]		1
37	25E-17	WASHER			1
38	30H-50	CLAMP			1
39	30H-65	CLIP			1
40	35C-410	BOLT			4
41	35C-824	BOLT			2
42	38C-820	BOLT			1
43	55D-6	NUT			1
44	57D-5	NUT			2

DealerNation Quality Equipment Manuals - dealernation@aol.com

HEATER & A/C

Ref.N°	Part N°	Description	Remarks	Serial N°	Qty.
45	84G-3712	BOLT			4
46	6515576	CLAMP			2
47	6675534	BLOCK VALVE			1
48	6675536	BRACKET			1
49	6675537	COVER			1
50	NAP	INSULATION	foam tape - 6' (152,4 mm) long - Order Ref. HEATER & A/C(51)		1
51	6676538	INSULATION	bulk - Sold Per Foot		x
52	6676539	CLIP			2
53	1CM-635	BOLT			2
54	6727326	MOUNT	clamp		1
55	6726621	SCREW			2
56	6808285	HOSE			1
57	6901075	INSTRUCTIONS			1
58	6675824	O-RING	#6		x
59	6675538	O-RING	#8		x
60	6675825	O-RING	#10		x
61	6726357	HARNESS	hvac jumper - connects the old hvac harness' (6725275 or 6717877) to the ac harness (6719630) and the thermostat		1
62	6676063	KIT	fitting caps		1

DealerNation Quality Equipment Manuals - dealernation@aol.com

HEATER & A/C
(HVAC Assembly) (S/N & Below)

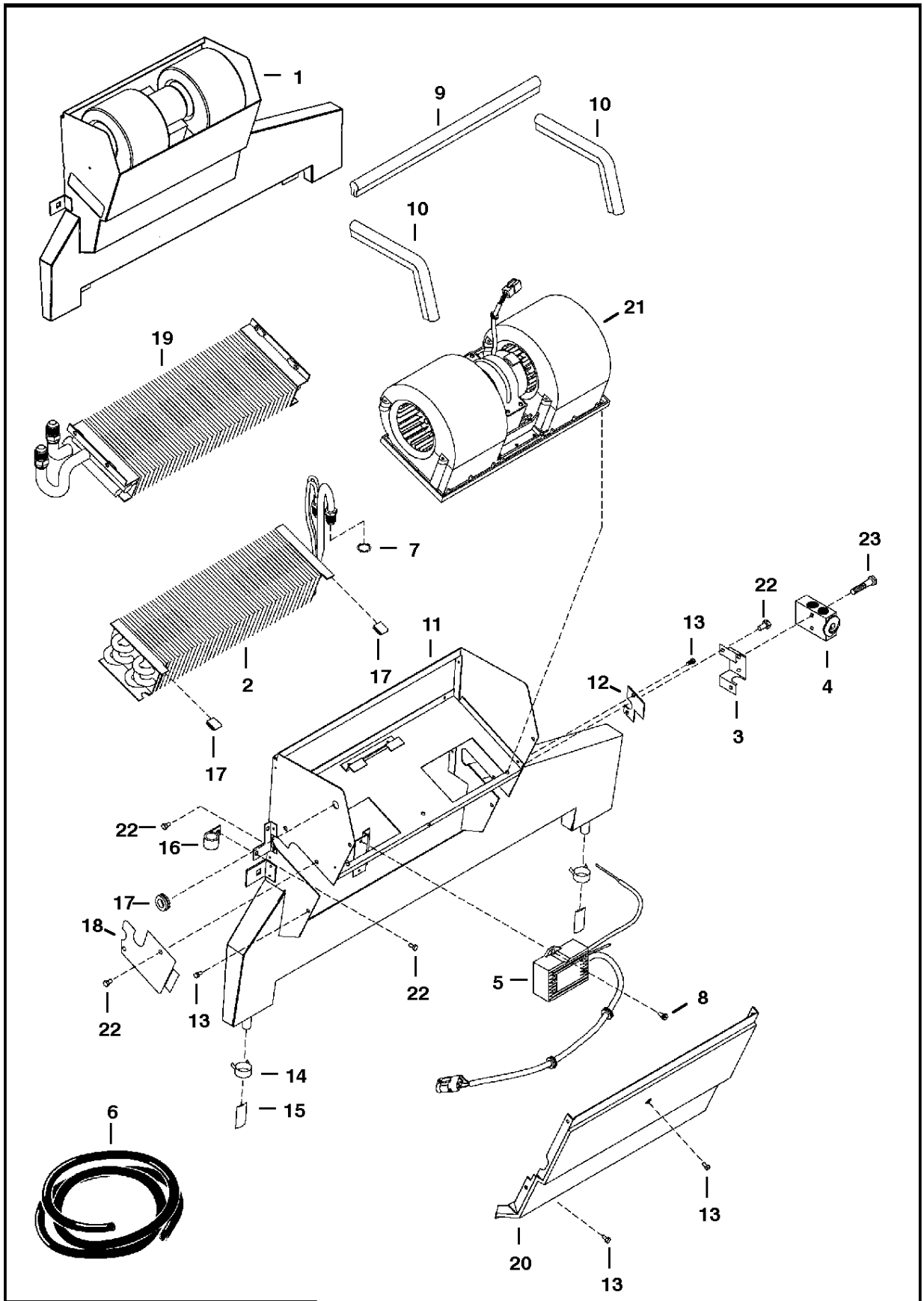

NOTE: See Page 277 for insulation

PE-1140

DealerNation Quality Equipment Manuals - dealernation@aol.com

HEATER & A/C

Ref.N°	Part N°	Description	Remarks	Serial N°	Qty.
1	NAP	HEATER/AC	Ref. HEATER & A/C(2) - HEATER & A/C(23) - Order 6676561 - See Page * (6) - Was 6674226 [A]		1
2	6675533	COIL	evaporator		1
3	6675536	BRACKET	valve support		1
4	6675534	BLOCK VALVE			1
5	6675790	THERMOSTAT	Was 6675535 [A]		1
6	6675514	SEAL	bulk - Sold Per Foot - See Page * HEATER & A/C(4)		x
7	6675538	O-RING			2
8	6726621	SCREW	for mounting thermostat		2
9	NAP	SEAL	14.75'(375 mm) long - Order Ref. HEATER & A/C(6))		1
10	NAP	SEAL	8.5'(215 mm) long - Order Ref. HEATER & A/C(6)		2
11	6675499	HOUSING	SEE NOTE		1
12	6675537	COVER	cover		1
13	6677580	SCREW			10
14	6675510	CLAMP			2
15	6675511	DRAIN VALVE			2
16	6675512	CLAMP			2
17	6675513	GROMMET			2
18	6675501	PLATE	cover		1
19	NAP	COIL	(Order 6728990 - Was 6675498 [A]		1
20	6675500	COVER	SEE NOTE		1
21	6675497	BLOWER	See Page HEATER & A/C(3)		1
22	6677118	SCREW			7
23	1CM-635	BOLT			2

DealerNation Quality Equipment Manuals - dealernation@aol.com

* HEATER & A/C
(HVAC Assembly) (S/N & Above)

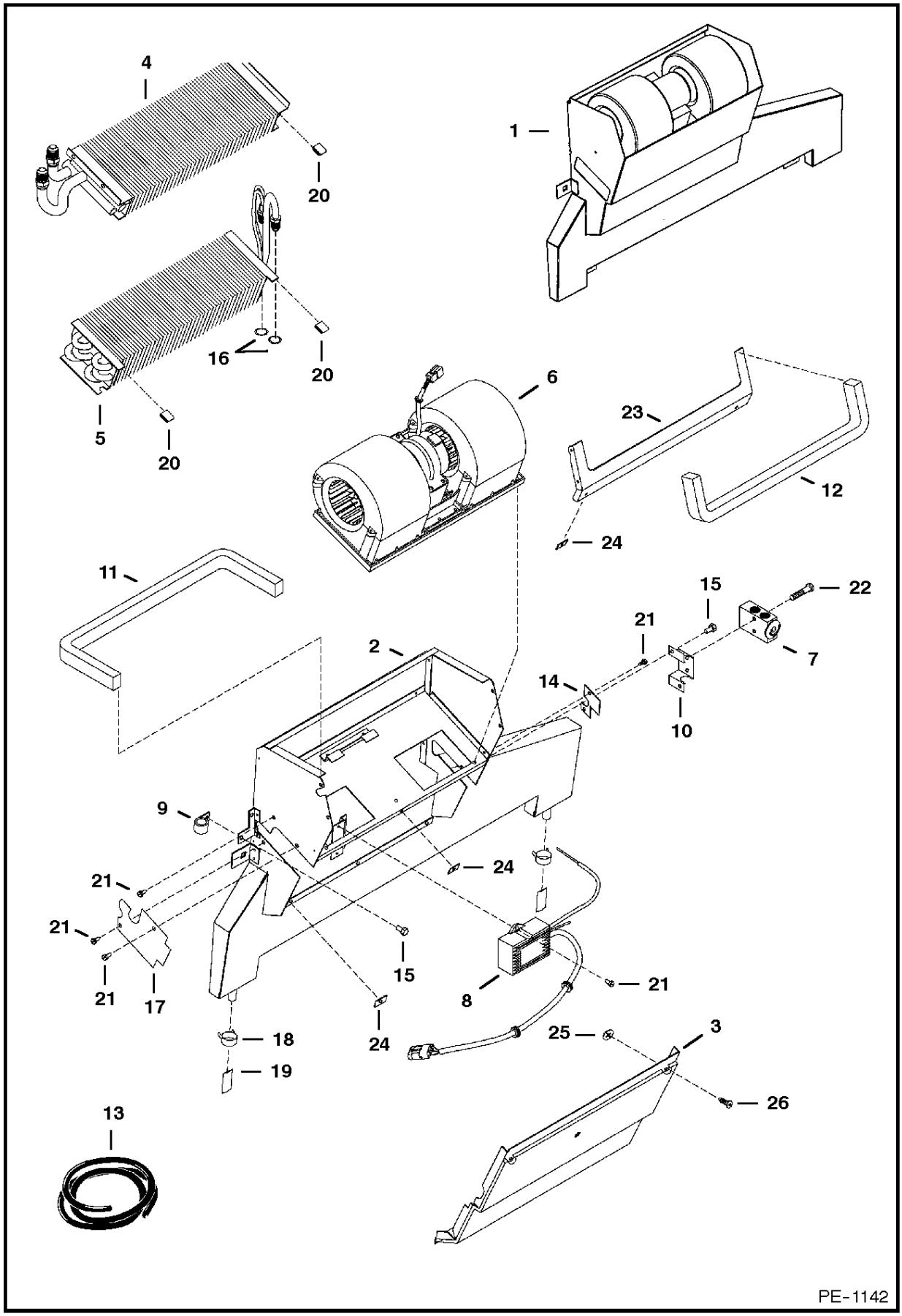

DealerNation Quality Equipment Manuals - dealernation@aol.com

*

Ref.N°	Part N°	Description	Remarks	Serial N°	Qty.
1	6676561	HVAC ASSY	assy - Ref. * HEATER & A/C(2)-* HEATER & A/C(26)		1
2	6677108	HOUSING			1
3	6677109	COVER			1
4	NAP	COIL	heater - Order 6728990 - Was 6676603 [A]		1
5	6675533	COIL	evaporator		1
6	6675497	BLOWER	assy - See Page HEATER & A/C(3)		1
7	6675534	BLOCK VALVE			1
8	6675790	THERMOSTAT			1
9	6675512	CLAMP	hose		2
10	6676984	BRACKET	valve		1
11	NAP	SEAL	25'(635mm) long - Order Ref. * HEATER & A/C(13)		1
12	NAP	SEAL	)22.6'(575mm) long - Order Ref. * HEATER & A/C(13)		1
13	6677111	SEAL	bulk - Sold Per Foot		x
14	6677105	COVER			1
15	6677118	SCREW	w/washer		4
16	6675538	O-RING			2
17	6676604	COVER			1
18	6675510	CLAMP	drain hose		2
19	6675511	DRAIN VALVE			2
20	6676539	CLIP			3
21	6726621	SCREW	sheet metal		7
22	1CM-635	BOLT			2
23	6677114	SEAL			1
24	6677115	RECEPTACLE			6
25	6677116	RETAINER			6
26	6677117	SCREW	captive		6

DealerNation Quality Equipment Manuals - dealernation@aol.com

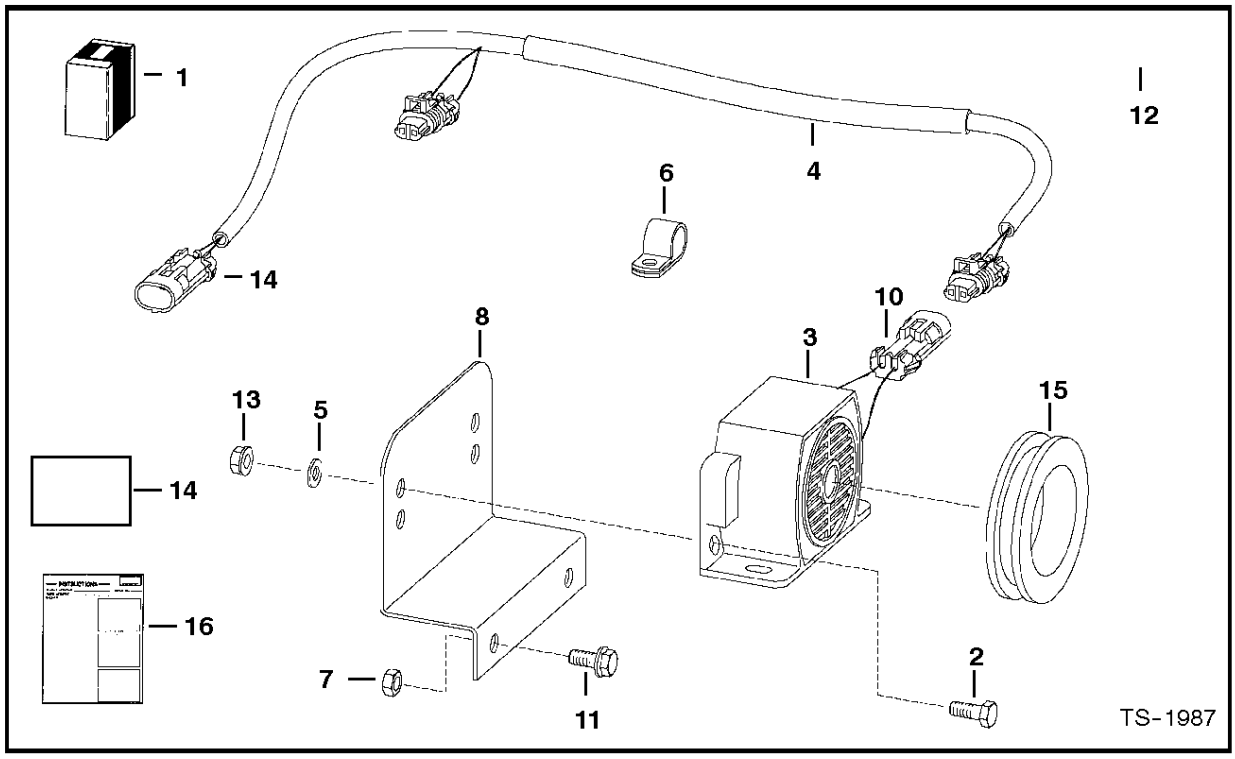

HORN KIT

Ref. No.	Part Number	Description	Remarks	Serial Number	Qty.
1*	NAP	HORN KIT	Ref. 2 - 16 - Was 6719043 [B]		1
*	6727995	HORN KIT	Ref. 2 - 16		2

DealerNation Quality Equipment Manuals - dealernation@aol.com

HORN KIT

Ref.N°	Part N°	Description	Remarks	Serial N°	Qty.
1	NAP	HORN KIT	Ref. HORN KIT(2) - HORN KIT(16) - Was 6719043 [B]		1
1	6727995	HORN KIT	Ref. HORN KIT(2) - HORN KIT(16)		2
2	17C-410	BOLT			2
3	6675099	HORN			1
4	6719151	HARNESS	56.5'(1435mm) long - w/metal tube - For 6719043 Kit		1
4	6727498	HARNESS	56.5'(1435mm) long - For 6727995 Kit		1
5	25E-13	WASHER			1
6	30H-23	CLAMP			1
7	83D-5	NUT	Was 61D-5 [B]		2
8	6707726	MOUNT			1
9	6641180	LOCK	2 - pin		2
9	6640700	LOCK	3 - pin		2
10	6641179	CONNECTOR	2 - pin		2
10	6640699	CONNECTOR	3 - pin		2
11	35C-512	BOLT			2
12	6705921	HANDLE ASSY.			1
12	6640690	PIN			5
12	6641176	SEAL			5
13	83D-4	NUT			2
14	6703727	DECAL			1
15	6577545	GROMMET			1
16	6901146	INSTRUCTIONS	Was 6900913 [B]		1

DealerNation Quality Equipment Manuals - dealernation@aol.com

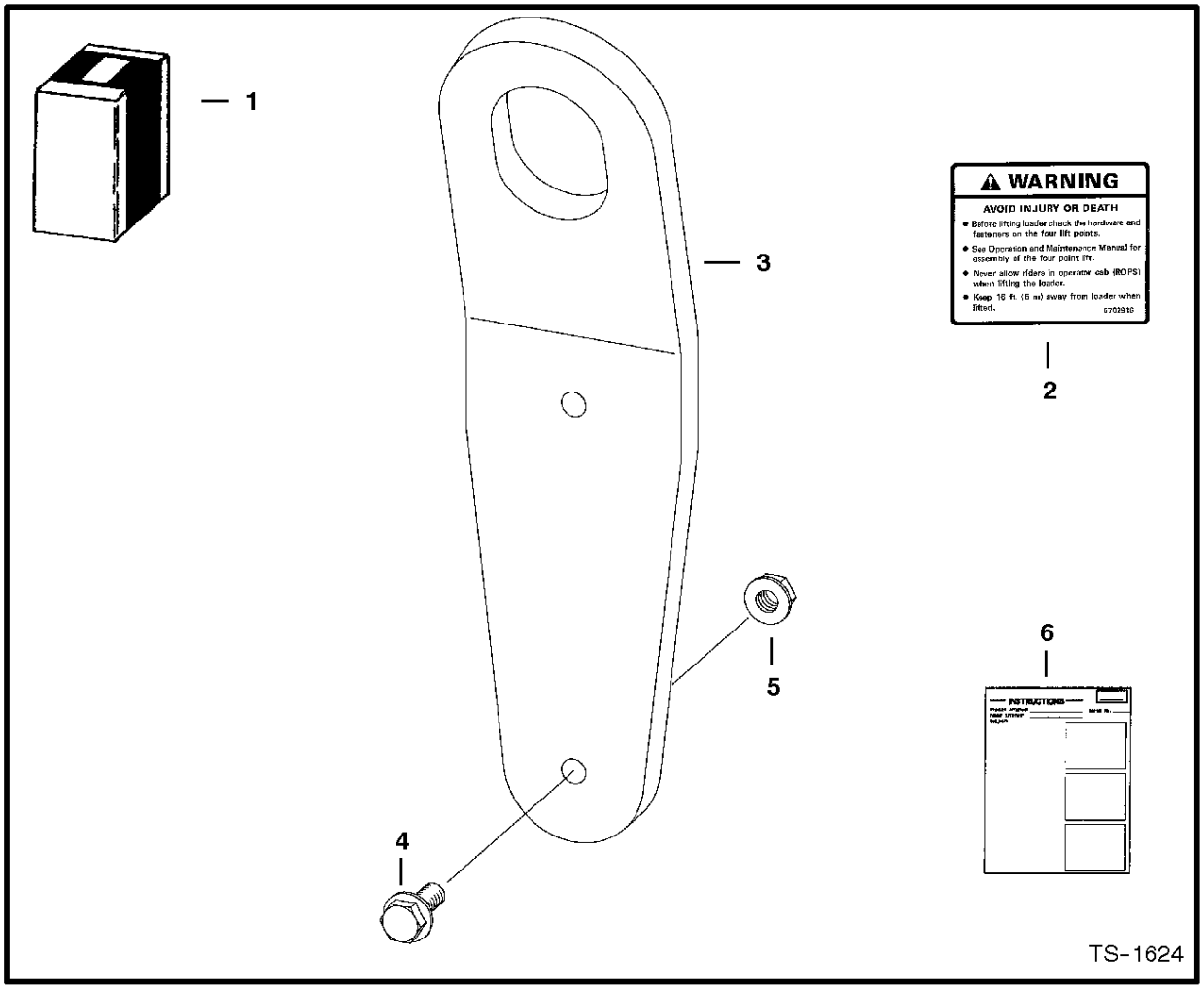

LIFT KIT
(4 - Point)

Ref. No.	Part Number	Description	Remarks	Serial Number	Qty.

DealerNation Quality Equipment Manuals - dealernation@aol.com

LIFT KIT

Ref.N°	Part N°	Description	Remarks	Serial N°	Qty.
1	6804247	KIT	Ref. LIFT KIT(2) - LIFT KIT(6)		1
2	6726423	DECAL	Was 6702916 [A]		4
3	6804236	BRACKET	lift eye		4
4	35C-1032	BOLT			8
5	97D-10	NUT			8
6	6900533	INSTRUCTIONS			1

DealerNation Quality Equipment Manuals - dealernation@aol.com

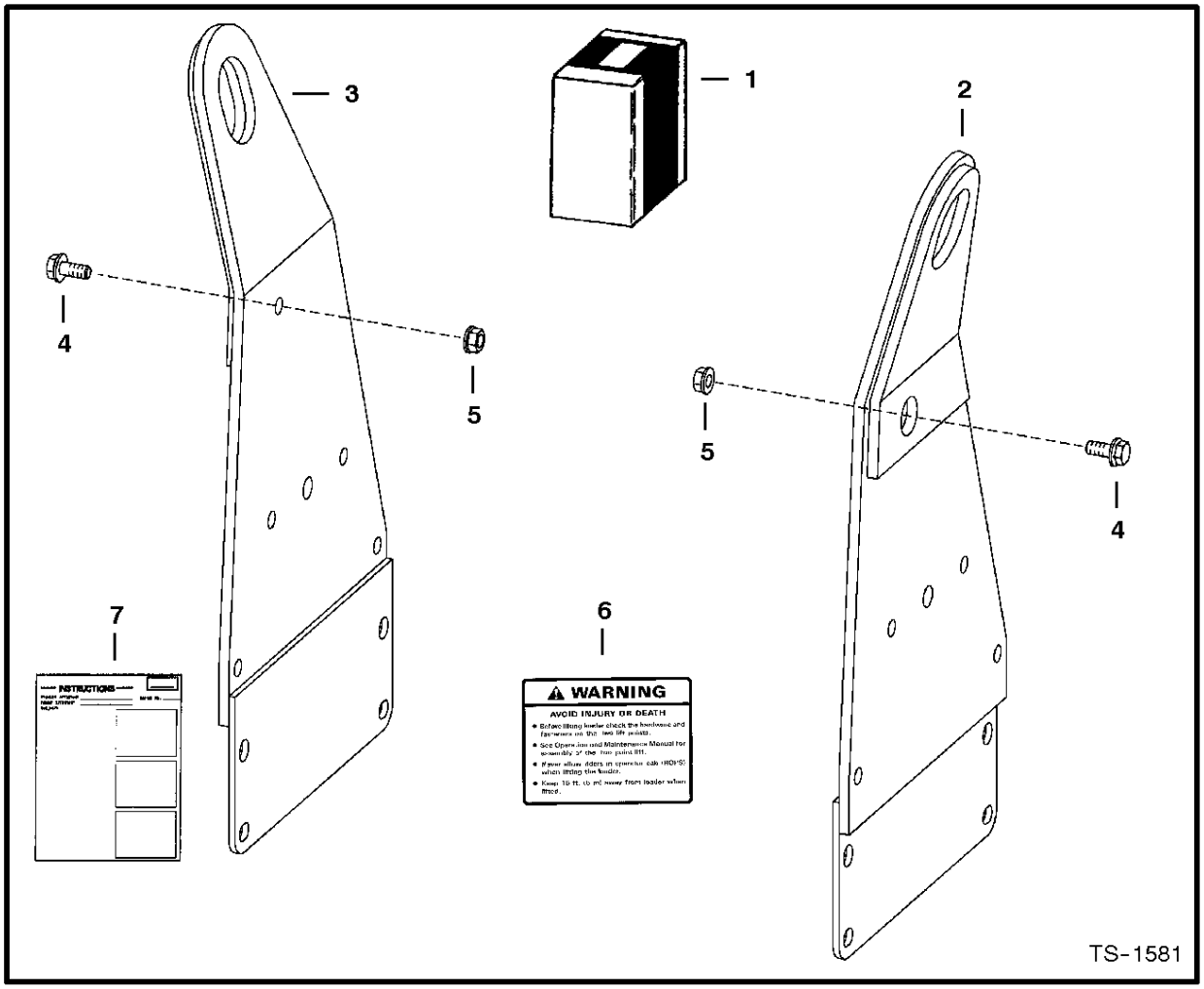

LIFT KIT
(2 - Point)

Ref. No.	Part Number	Description	Remarks	Serial Number	Qty.

DealerNation Quality Equipment Manuals - dealernation@aol.com

LIFT KIT

Ref.N°	Part N°	Description	Remarks	Serial N°	Qty.
1	6804073	KIT	Ref. LIFT KIT(2) - LIFT KIT(7)		1
2	6804050	BRACKET	L.H.		1
3	6804051	BRACKET	R.H.		1
4	31C-1228	BOLT			2
5	53D-12	NUT	Was 83D-12 [B]		2
6	6804300	DECAL			1
7	6900520	INSTRUCTIONS			1

DealerNation Quality Equipment Manuals - dealernation@aol.com

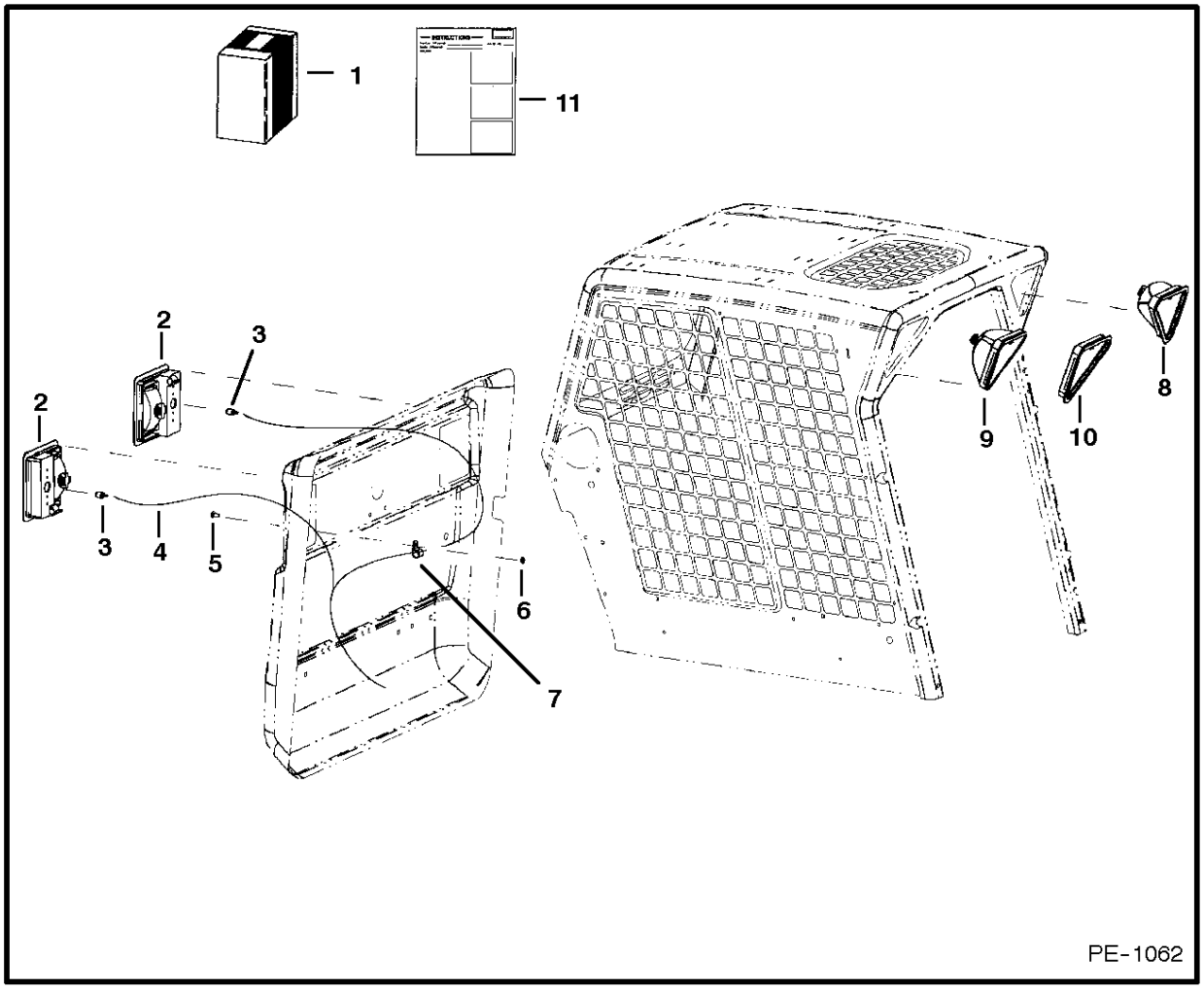

LIGHT KIT

Ref. No.	Part Number	Description	Remarks	Serial Number	Qty.

DealerNation Quality Equipment Manuals - dealernation@aol.com

LIGHT KIT

Ref.N°	Part N°	Description	Remarks	Serial N°	Qty.
1	NAP	KIT	Order components		1
2	6670284	LIGHT	rear		2
2	6672273	SCREW			2
2	6672276	LENS	red		2
2	6672275	GASKET			2
2	6672277	BRACKET			2
2	6672279	MOUNT	rubber		2
2	6672272	WASHER			4
2	6672274	SCREW			4
2	6661353	LIGHT ASSY	W/bulb - white		2
2	898731	LIGHT BULB			2
3	6649481	BULB			2
4	6716419	HARNESS			1
5	37C-512	BOLT			1
6	85D-5	NUT			1
7	30H-42	CLAMP			1
8	NAP	LIGHT ASSY	R.H. - Ref. LIGHT KIT(9) & LIGHT KIT(10)		1
8	NAP	LIGHT ASSY	L.H. - Ref. LIGHT KIT(9) & LIGHT KIT(10)		1
9	6674401	HOUSING	R.H.		1
9	6675336	BULB	55 watt		1
9	6674400	HOUSING	L.H.		1
9	6675336	BULB	55 watt		1
10	6674402	MOUNT			1
11	NAP	INSTRUCTIONS			1

DealerNation Quality Equipment Manuals - dealernation@aol.com

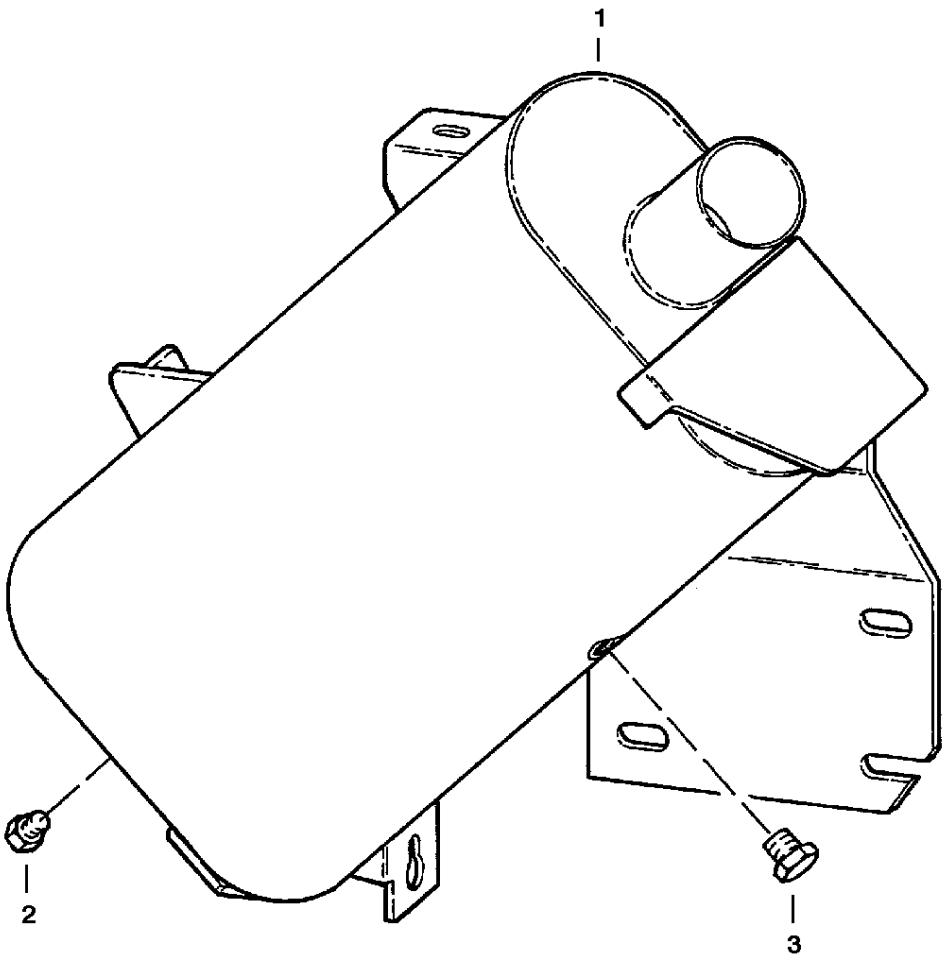

NOTE: Mounting use existing hardware and gasket

C-3511

PURIFIER, MUFFLER

DealerNation Quality Equipment Manuals - dealernation@aol.com

PURIFIER, MUFFLER

Ref.N°	Part N°	Description	Remarks	Serial N°	Qty.
1	6672555	MUFFLER	purifier - W/Ref. PURIFIER, MUFFLER(2) & PURIFIER , MUFFLER(3)		1
2	6659543	PLUG	brass - 1/8'		1
3	6661062	PLUG	brass - 3/8'		1

DealerNation Quality Equipment Manuals - dealernation@aol.com

REAR AUXILIARY HYDRAULIC KIT

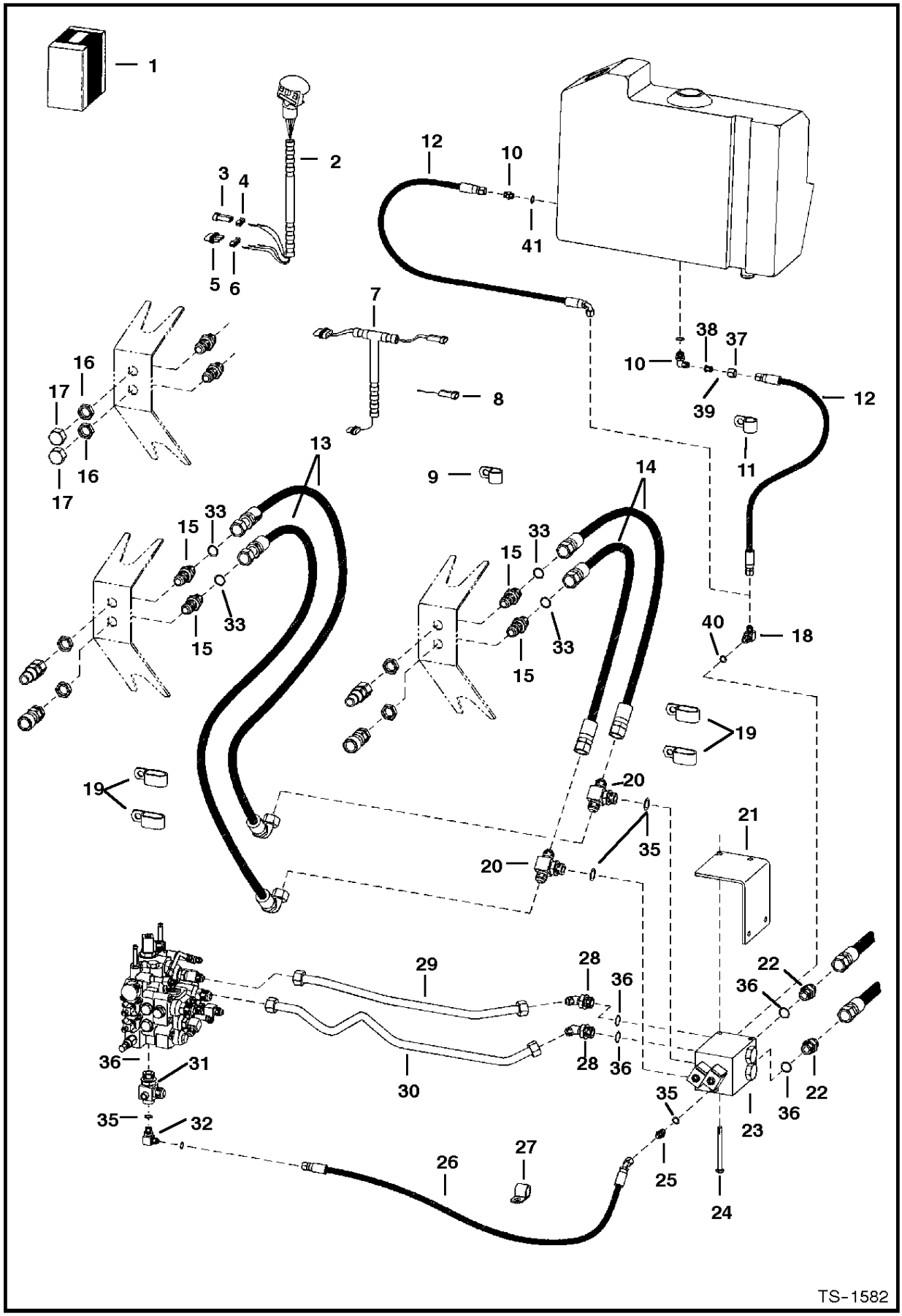

DealerNation Quality Equipment Manuals - dealernation@aol.com

REAR AUXILIARY HYDRAULIC KIT

Ref.N°	Part N°	Description	Remarks	Serial N°	Qty.
1	SALES	KIT	Ref. REAR AUXILIARY HYDRAULIC KIT(2) -REAR AUXILIARY HYDRAULIC KIT(14), REAR AUXILIARY HYDRAULIC KIT(19)-REAR AUXILIARY HYDRAUL		1
2	6705921	HANDLE ASSY.	switch		1
3	6640699	CONNECTOR			1
4	6640700	LOCK			1
5	6641179	CONNECTOR			1
6	6641180	LOCK			1
7	6710435	HARNESS			1
8	NAP	HARNESS	ground wire - not required		1
9	30H-38	CLAMP			1
10	17KV-6	ELBOW	C-Series		1
10	15K-5	ADAPTER	G-Series - W/Ref. REAR AUXILIARY HYDRAULIC KIT(41)		1
11	30H-35	CLIP			1
12	6802064	HOSE	C-Series		1
12	6708597	HOSE	G-Series		1
13	6802377	HOSE			2
14	6802378	HOSE			2
15	6802043	FITTING	W/face seal o-ring		4
15	58K-12	O-RING	face seal		4
16	86F-5	NUT	jam		4
17	36K-5	CAP			4
18	17KV-3	ELBOW			1
18	97K-4	O-RING	flare end		x
19	31H-42	CLAMP			4
20	43E-606	TEE	W/Ref. REAR AUXILIARY HYDRAULIC KIT(35)		2
20	55K-12	O-RING	face seal		1
21	6627877	MOUNT			1
22	83K-8	FITTING			2
23	6665572	VALVE	diverter - See Page REAR AUXILIARY VALVE(1)		1
24	17C-680	BOLT			2
25	41E-606	FITTING			1
25	55K-12	O-RING	face seal		1
26	6802379	HOSE			1
27	30H-23	CLAMP			1
28	44E-1212	FITTING	W/Ref. REAR AUXILIARY HYDRAULIC KIT(36)		2
28	55K-18	O-RING			2
29	6803086	TUBELINE			1
30	6803087	TUBELINE			1
31	6803088	CROSS HYDR			1
32	42E-606	FITTING			1
32	55K-12	O-RING	face seal		1
33	75K-8	O-RING			4
34	75K-10	O-RING			1
35	75K-6	O-RING			4
36	75K-12	O-RING			4
37	80F-6	NUT			1
38	9KV-2	ADAPTER	W/Ref. REAR AUXILIARY HYDRAULIC KIT(39)		1
39	97K-4	O-RING	flare end		x
40	99K-4	O-RING	boss end		x

DealerNation Quality Equipment Manuals - dealernation@aol.com

REAR AUXILIARY HYDRAULIC KIT

Ref.N°	Part N°	Description	Remarks	Serial N°	Qty.
41	79K-6	O-RING	boss end		x
42	6900421	INSTRUCTIONS			1

DealerNation Quality Equipment Manuals - dealernation@aol.com

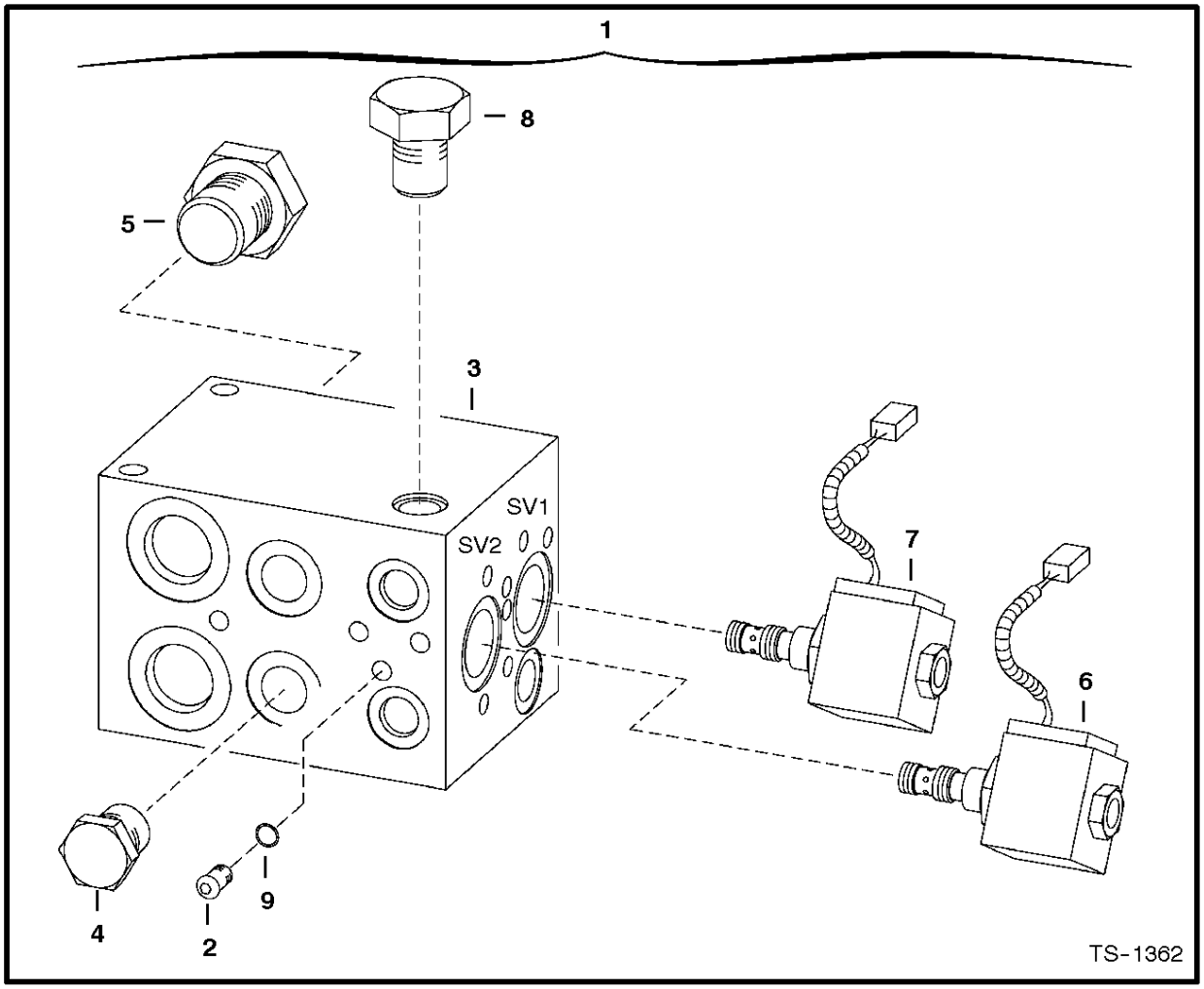

REAR AUXILIARY VALVE
(For Use W/FF Couplers)

Ref. No.	Part Number	Description	Remarks	Serial Number	Qty.

DealerNation Quality Equipment Manuals - dealernation@aol.com

REAR AUXILIARY VALVE

Ref.N°	Part N°	Description	Remarks	Serial N°	Qty.
1	6665572	VALVE	diverter		1
2	6676152	PLUG	W/Ref. REAR AUXILIARY VALVE(9) - Was 6653490 [A]		18
3	NSS	BODY	Order Ref. REAR AUXILIARY VALVE(1)		1
4	6664212	CHECK VALVE			2
4	6653487	SEAL KIT			2
5	6653484	VALVE			2
5	6653485	SEAL KIT			2
6	6669218	VALVE	,solenoid -W/connector -SV2 port		1
6	6669190	COIL			1
6	6669188	STEM			1
6	6669217	SEAL KIT			1
7	6669219	VALVE	,solenoid -W/connector -SV1 Port		1
7	6669190	COIL			1
7	6669189	STEM			1
7	6669216	SEAL KIT			1
8	6669187	VALVE			1
8	6653487	SEAL KIT			1
9	79K-2	O-RING			x

DealerNation Quality Equipment Manuals - dealernation@aol.com

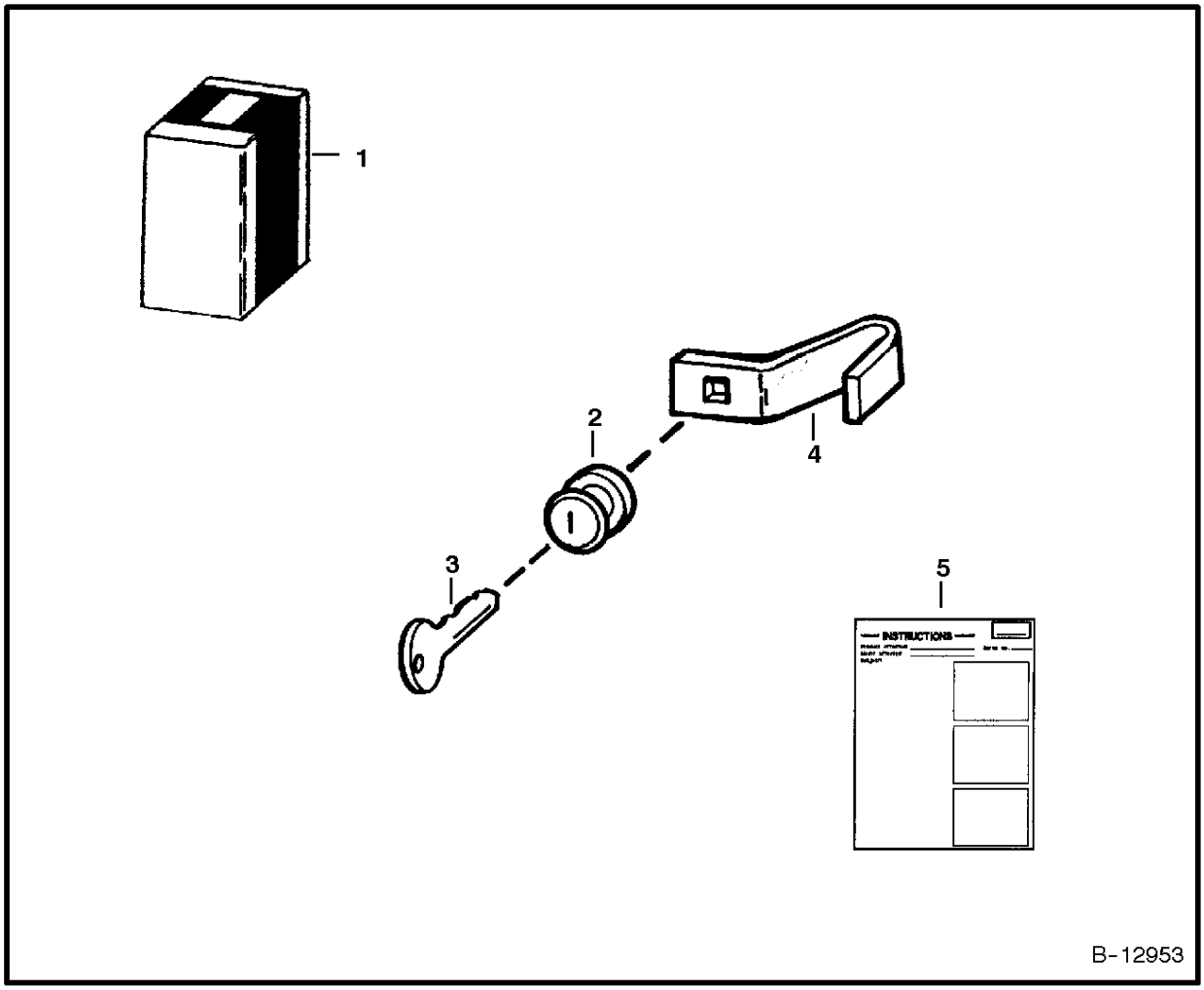

REAR DOOR LOCK

Ref. No.	Part Number	Description	Remarks	Serial Number	Qty.

DealerNation Quality Equipment Manuals - dealernation@aol.com

REAR DOOR LOCK

Ref.N°	Part N°	Description	Remarks	Serial N°	Qty.
1	6714973	KIT	lock - Ref. REAR DOOR LOCK(2)-REAR DOOR LOCK(5)		1
2	6670726	LOCK			1
3	6709527	KEY	ignition		1
4	6714037-	LATCH			1
5	6570762	INSTRUCTIONS			1

DealerNation Quality Equipment Manuals - dealernation@aol.com

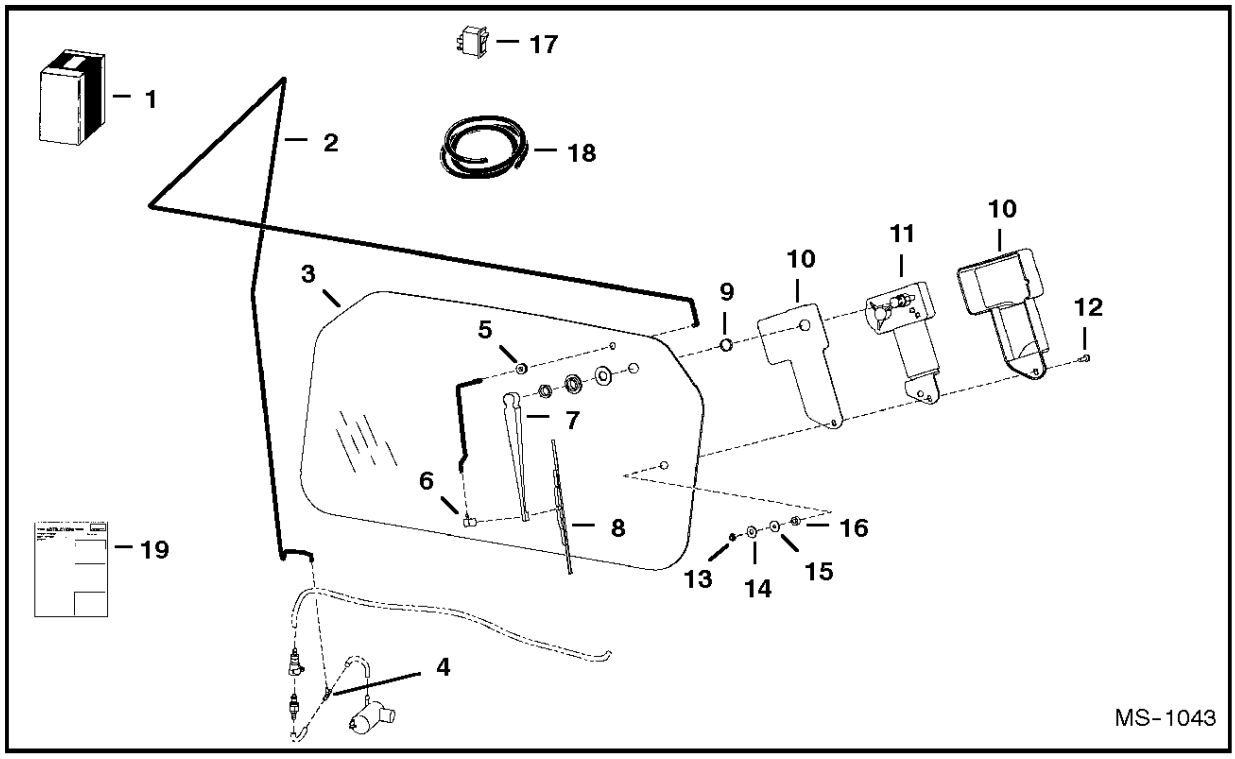

REAR WIPER

Ref. No.	Part Number	Description	Remarks	Serial Number	Qty.
1	6726655	KIT	rear wiper		1
2	NAP	HOSE	96”(2438,4 mm) long -		

DealerNation Quality Equipment Manuals - dealernation@aol.com

REAR WIPER

Ref.N°	Part N°	Description	Remarks	Serial N°	Qty.
1	6726655	KIT	rear wiper		1
2	NAP	HOSE	96'(2438,4 mm) long - Order Ref. REAR WIPER(18)		1
3	6719317	WINDOW			1
4	6676000	TEE			1
5	6557493	GROMMET			1
6	6676028	NOZZLE			1
7	6676001	ARM			1
8	6676002	BLADE			1
9	6667201	SPACER	nylon		1
10	6664097	COVER	wiper		1
11	6665602	MOTOR			1
12	6664566	SCREW			1
13	6664103	NUT			1
14	6664065	WASHER	nylon		1
15	6801059	WASHER	neoprene		1
16	6664085	BUSHING	nylon		1
17	6675999	SWITCH			1
18	6676003	HOSE	bulk - Sold Per Foot		x
19	6901061	INSTRUCTIONS			1

DealerNation Quality Equipment Manuals - dealernation@aol.com

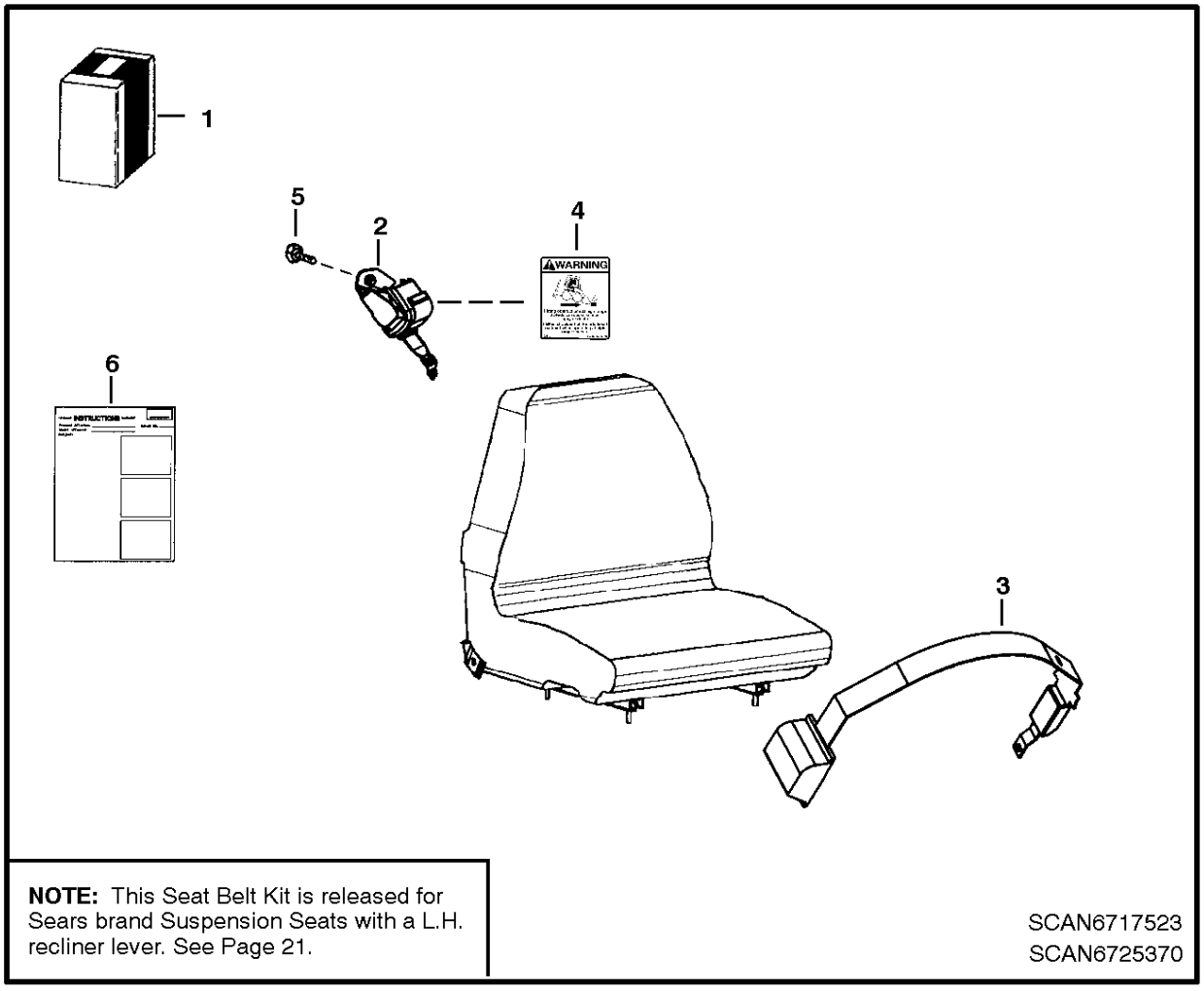

NOTE: This Seat Belt Kit is released for Sears brand Suspension Seats with a L.H. recliner lever. See Page 21.

SCAN6717523
SCAN6725370

SEAT BELT
(Three Point Retractable)

Ref. No.	Part Number	Description	Remarks	Serial Number	Qty.

DealerNation Quality Equipment Manuals - dealernation@aol.com

SEAT BELT

Ref.N°	Part N°	Description	Remarks	Serial N°	Qty.
1	6725168	KIT	three point retractable seat belt		1
2	6674407	SHOULDER BELT			1
3	6674408	SEAT BELT			1
4	6725370	DECAL			1
5	35C-612	BOLT			1
6	6901010	INSTRUCTIONS			1

DealerNation Quality Equipment Manuals - dealernation@aol.com

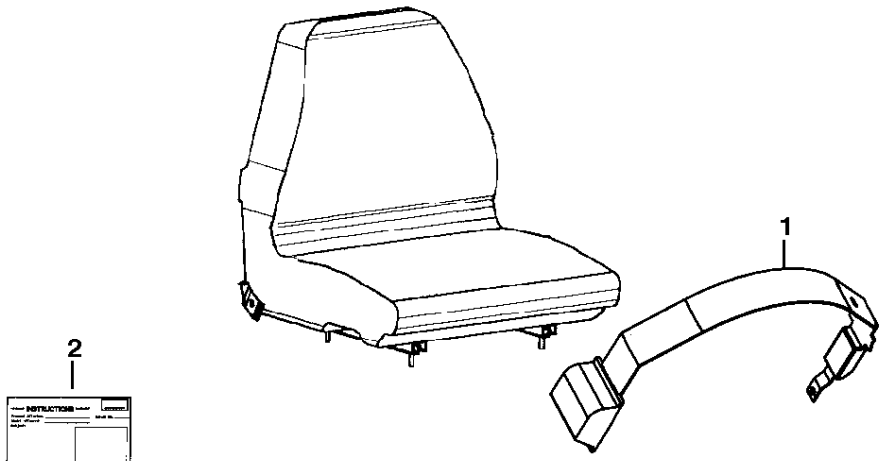

NOTE: This Seat Belt is released for Sears brand Suspension Seats with a L.H. recliner lever. See Page 21.

SCAN6717523

SEAT BELT
(3" Wide Retractable)

Ref. No.	Part Number	Description	Remarks	Serial Number	Qty.

DealerNation Quality Equipment Manuals - dealernation@aol.com

SEAT BELT

Ref.N°	Part N°	Description	Remarks	Serial N°	Qty.
1	6675562	SEAT BELT	3' wide retractable		1
2	6901011	INSTRUCTIONS			1

DealerNation Quality Equipment Manuals - dealernation@aol.com

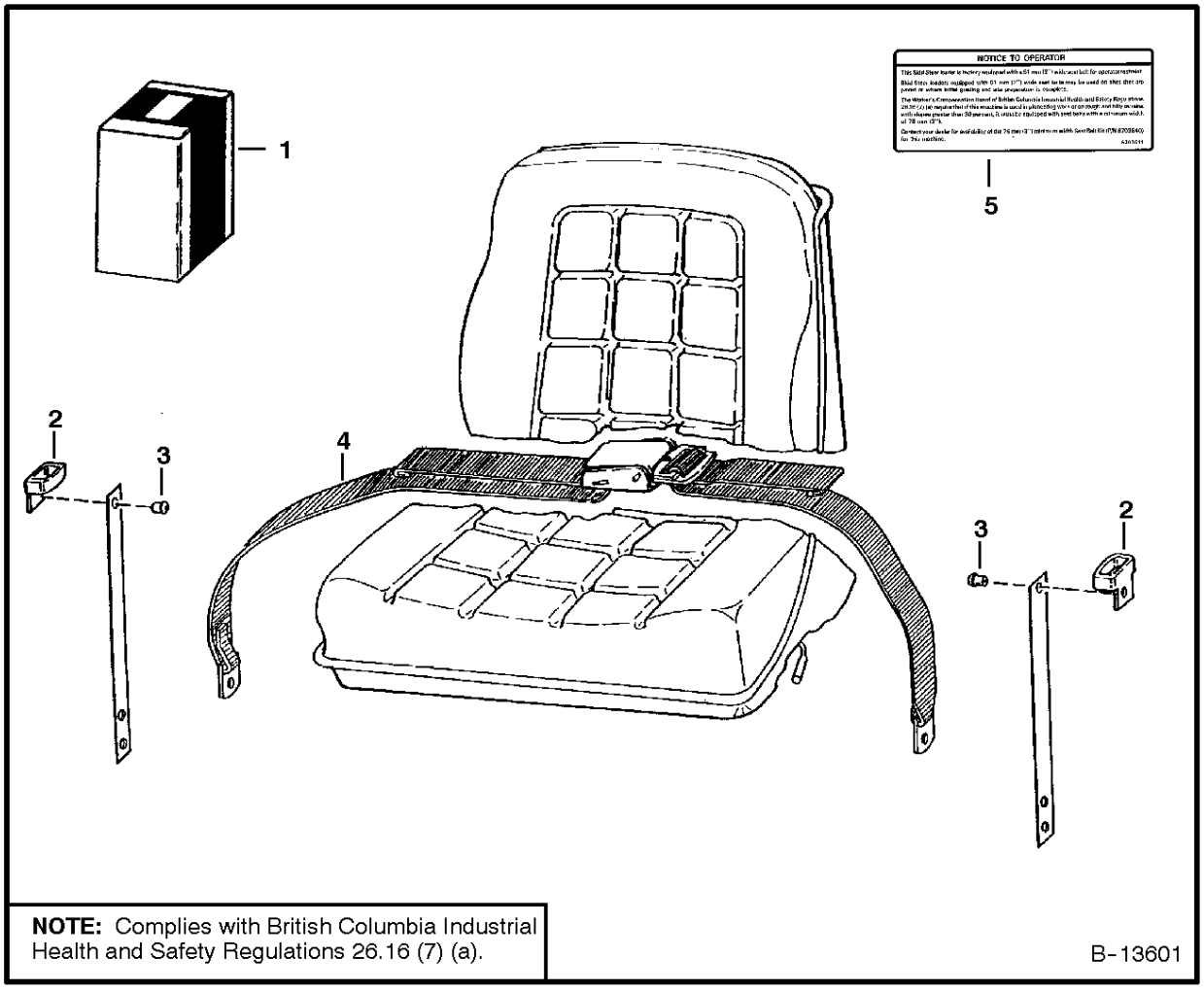

NOTE: Complies with British Columbia Industrial Health and Safety Regulations 26.16 (7) (a).

B-13601

SEAT BELT
(3" Wide)

Ref. No.	Part Number	Description	Remarks	Serial Number	Qty.

DealerNation Quality Equipment Manuals - dealernation@aol.com

SEAT BELT

Ref.N°	Part N°	Description	Remarks	Serial N°	Qty.
1	6703640	KIT	W/Ref. SEAT BELT(2) - SEAT BELT(5)		1
2	6703703	GUIDE			2
3	6630207	RIVET			4
4	6659999	BELT			1
5	6703641	DECAL			1

DealerNation Quality Equipment Manuals - dealernation@aol.com

SECONDARY AUXILIARY HYDRAULIC KIT
(Right Side)

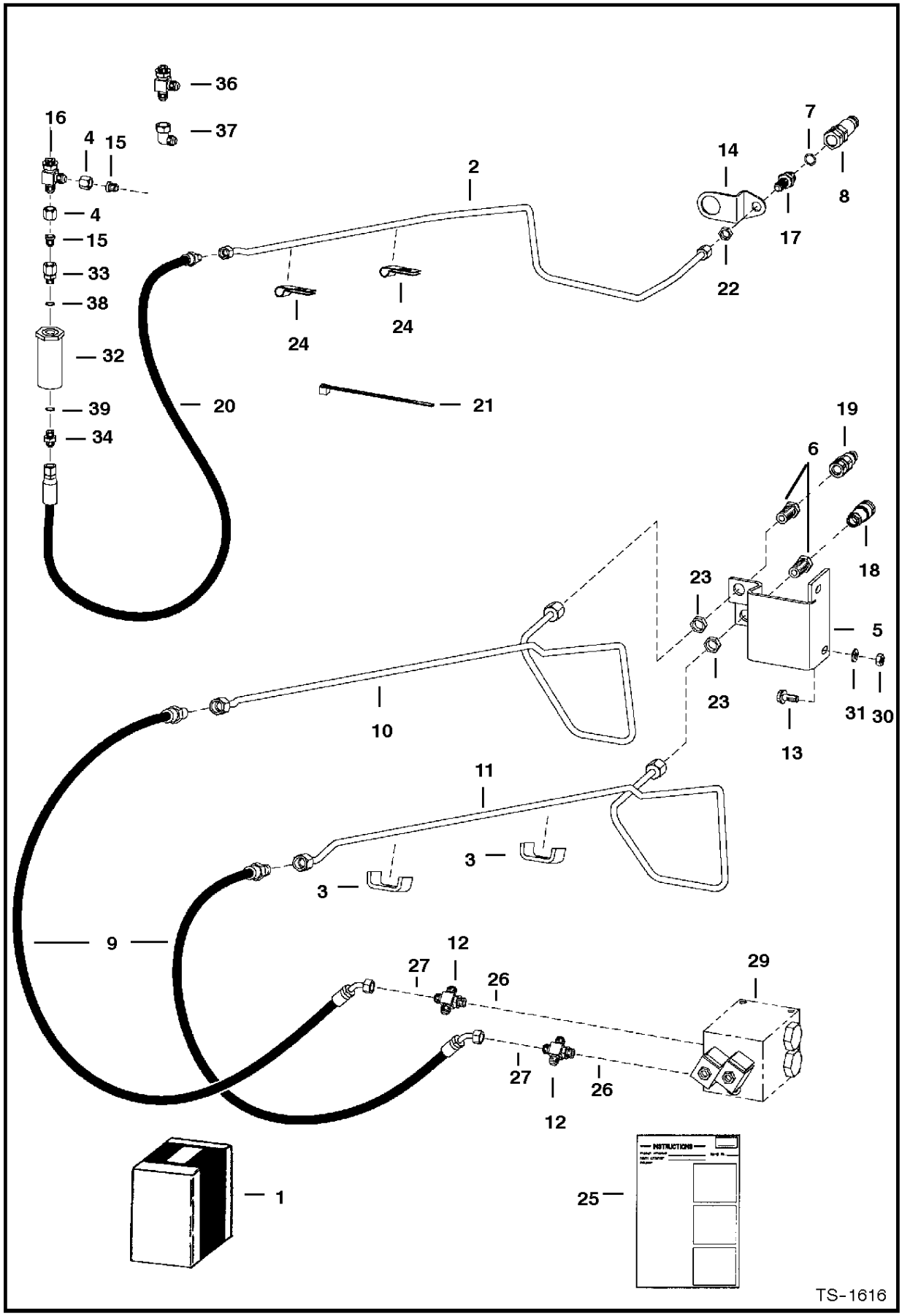

DealerNation Quality Equipment Manuals - dealernation@aol.com

SECONDARY AUXILIARY HYDRAULIC KIT

Ref.N°	Part N°	Description	Remarks	Serial N°	Qty.
1	6803596	KIT	W/Ref. SECONDARY AUXILIARY HYDRAULIC KI(2) - SECONDARY AUXILIARY HYDRAULIC KI(37)		1
2	6806046	TUBELINE	Was 6803583 [B, D]		1
3	6803571	CLAMP			2
4	80F-6	NUT			2
5	6805463	BRACKET	Was 6803528 [B, D]		1
6	6804256	FITTING	W/Ref. SECONDARY AUXILIARY HYDRAULIC KI(7)		2
7	6669659	O-RING			2
8	6667806	QUICK COUPLER	male - FF		1
9	6803534	HOSE			2
10	6803531	TUBELINE			1
11	6803532	TUBELINE			1
12	6803607	FITTING	W/Ref. SECONDARY AUXILIARY HYDRAULIC KI(26) , SECONDARY AUXILIARY HYDRAULIC KI(27)		2
13	37C-872	BOLT	Was 84G-3712 [B]		2
14	6803585	MOUNT			1
15	9KV-3	ADAPTER			2
15	97K-6	O-RING	flare end		1
16	21KV-6	TEE	W/Ref. BUCKET POSITION VALVE(22)		1
16	97K-8	O-RING	flare end		2
17	6711628	ADAPTER	W/Ref. SECONDARY AUXILIARY HYDRAULIC KI(35)		1
18	6667803	QUICK COUPLER	female - FF		1
19	6667804	QUICK COUPLER	male - FF		1
19	6669657	O-RING			1
20	6803584	HOSE			1
21	6624289	STA-STRAP			4
22	86F-5	NUT			1
23	61E-6	NUT			2
24	30H-62	CLIP			2
25	6900515	INSTRUCTIONS			1
26	55K-12	O-RING			x
27	75K-6	O-RING			x
28	99K-8	O-RING			x
29		VALVE	diverter - See Page REAR AUXILIARY VALVE(1)		1
30	95D-8	NUT			2
31	25E-21	WASHER			2
32	6661022	FILTER			1
33	6673243	CONNECTOR	W/Ref. SECONDARY AUXILIARY HYDRAULIC KI(38)		1
34	15KV-5	ADAPTER	W/Ref. SECONDARY AUXILIARY HYDRAULIC KI(39)		1
34	97K-6	O-RING	flare end		1
35	79K-8	O-RING			1
36	21K-5	TEE	G-Series - W/Ref. SECONDARY AUXILIARY HYDRAULIC KI(38)		1
37	11KN-5	ELBOW	G-Series		1
37	97K-6	O-RING	flare end		1
38	79K-6	O-RING			x
39	99K-6	O-RING			x

DealerNation Quality Equipment Manuals - dealernation@aol.com

SOUND KIT

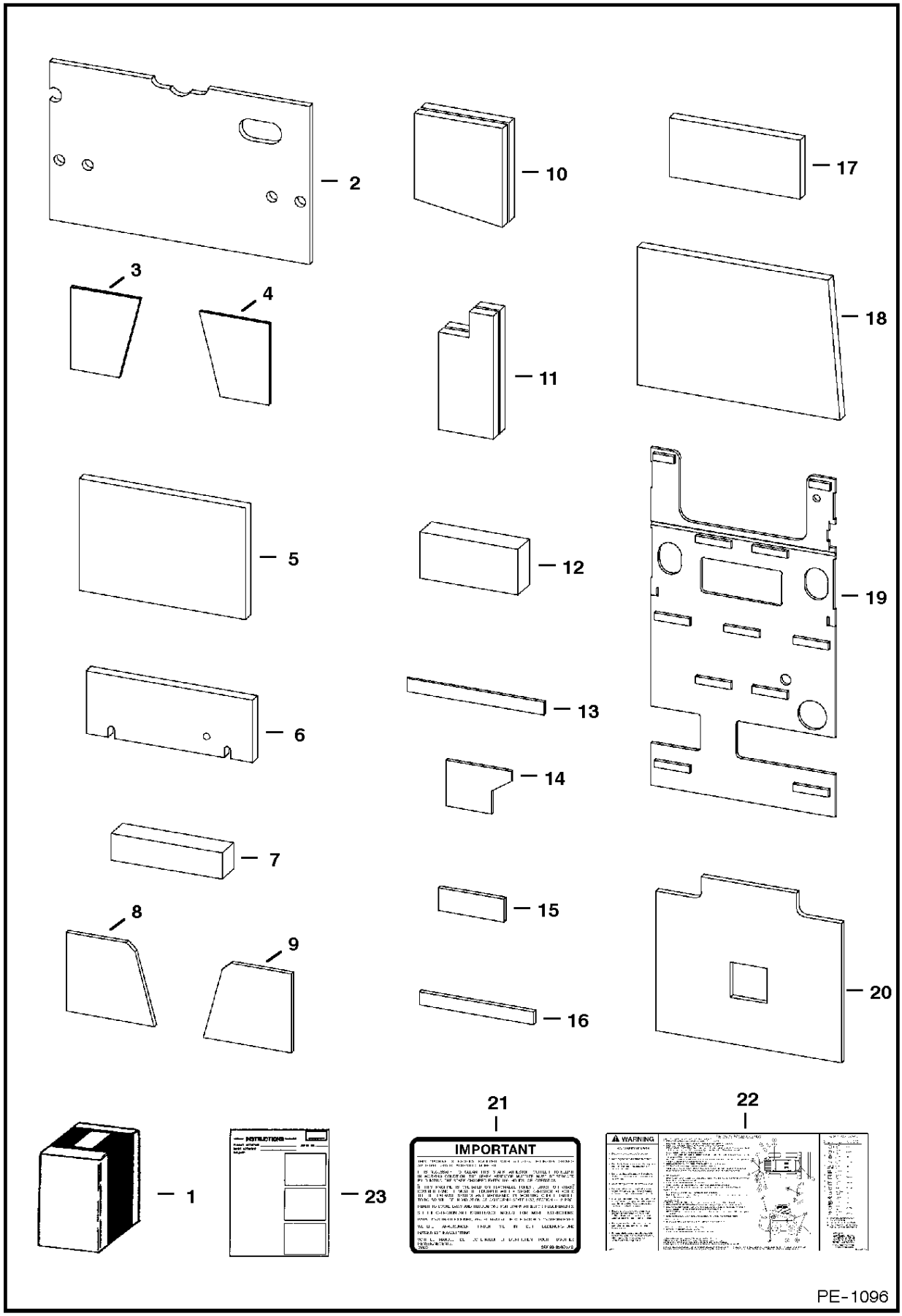

DealerNation Quality Equipment Manuals - dealernation@aol.com

SOUND KIT

Ref.N°	Part N°	Description	Remarks	Serial N°	Qty.
1	6808104	KIT	Ref. SOUND KIT(2) - SOUND KIT(23)		1
2	6715106	INSULATION	tailgate		1
3	6715393	INSULATION	pnl shield		1
4	6715435	INSULATION	pnl shield		1
5	6804178	INSULATION	floor		1
6	6804180	INSULATION	cover		1
7	6804181	INSULATION	fender		1
8	6804182	INSULATION	shield		1
9	6804183	INSULATION	shield		1
10	6804186	INSULATION	trans		1
11	6804187	INSULATION	fender		1
12	6804490	INSULATION	screen		1
13	6804493	INSULATION	rh cab		1
14	6804494	INSULATION	housing		1
15	6804495	INSULATION	housing		2
16	6804496	INSULATION	lh cab		1
17	6804497	INSULATION	upright		1
18	6804498	INSULATION	upright		1
19	6806559	INSULATION	strg panel		1
20	6807520	INSULATION	crossmember		1
21	6560573	DECAL	spark arsr		1
22	6807348	DECAL	service		1
23	6901057	INSTRUCTIONS			1

DealerNation Quality Equipment Manuals - dealernation@aol.com

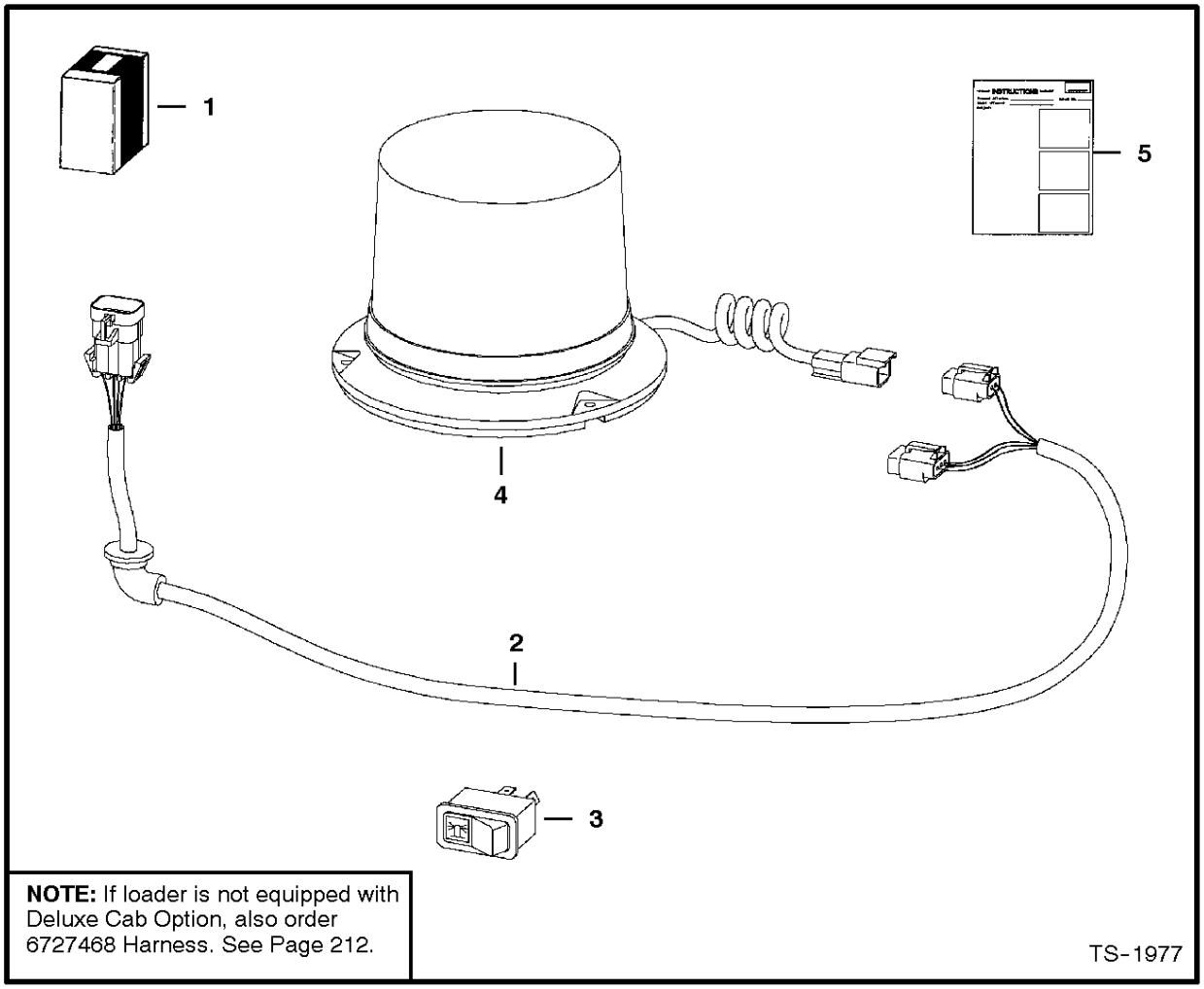

STROBE LIGHT

Ref. No.	Part Number	Description	Remarks	Serial Number	Qty.

DealerNation Quality Equipment Manuals - dealernation@aol.com

STROBE LIGHT

Ref.N°	Part N°	Description	Remarks	Serial N°	Qty.
1	6719857	KIT	strobe light		1
2	6718872	HARNESS			1
3	6665317	SWITCH	horizontal		1
3	6668816	SWITCH	vertical		1
4	6675522	STROBE			1
4	6675858	FLASH TUBE			1
5	6900992	INSTRUCTIONS			1

DealerNation Quality Equipment Manuals - dealernation@aol.com

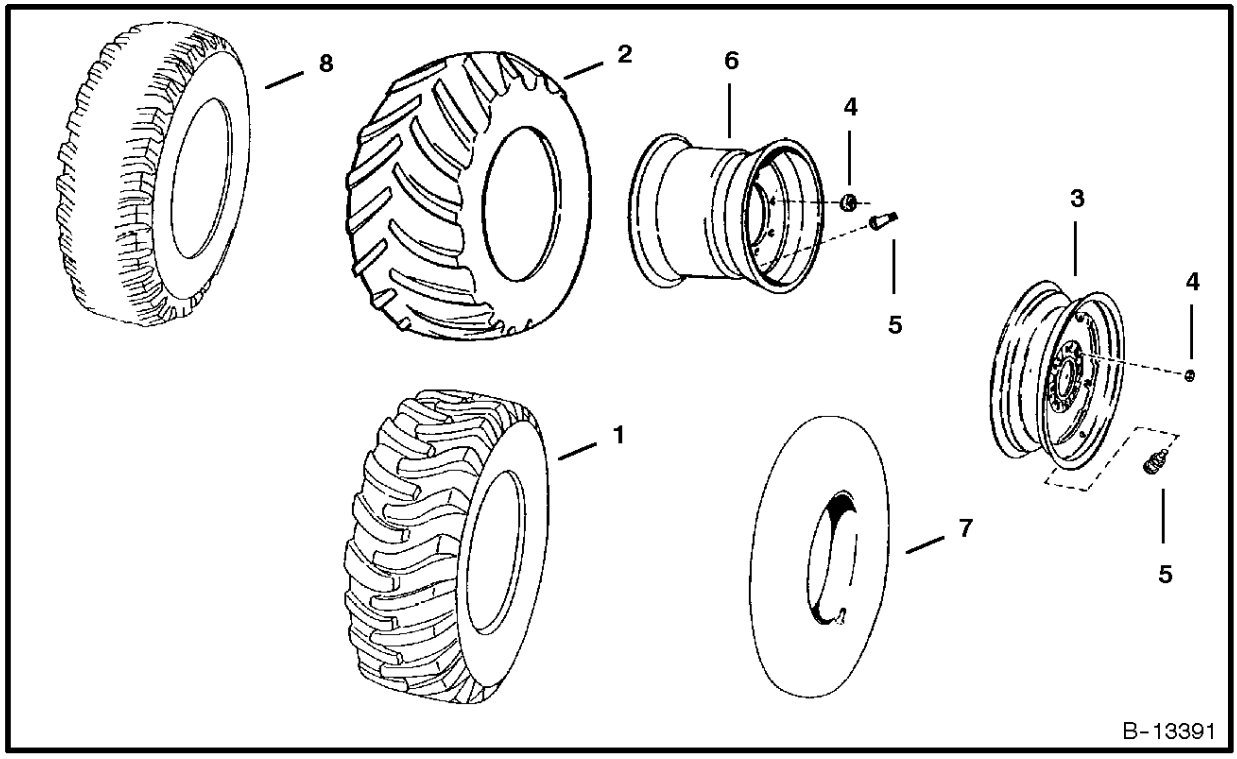

TIRES & RIMS

Ref. No.	Part Number	Description	Remarks	Serial Number	Qty.
1	6647879	TIRE	14 x 17.5 (355,6 x 444,5), 10 Ply Rating - Firestone		4

DealerNation Quality Equipment Manuals - dealernation@aol.com

TIRES & RIMS

Ref.N°	Part N°	Description	Remarks	Serial N°	Qty.
1	6647879	TIRE	14 x 17.5 (355,6 x 444,5), 10 Ply Rating - Firestone		4
1	6651476	TIRE	14 x 17.5 (355,6 x 444,5), 10 Ply Rating - Goodyear		4
1	6667794	TIRE	14 x 17.5 (355,6 x 444,5), 10 Ply Rating - Dico		4
1	6675037	TIRE	14 x 17.5 (355,6 x 444,5), 12 Ply Rating - Maxxis		4
1	6675541	TIRE	14 x 17.5 (355,6 x 444,5), 14 Ply Rating - Maxxis		4
2	6569160	TIRE	38 x 20-16.1 (965,2 x 508-409))8 Ply Rating Terra Grip AGoodyear		4
3	6565738	RIM	Used W/Ref. TIRES & RIMS(1)		4
4	103522	NUT	wheel		40
5	1614765	VALVE	valve		4
6	6569128	RIM	Used W/Ref. TIRES & RIMS(7)		4
7	6569632	TUBE	Can be used with Ref. TIRES & RIMS(1)		x
8	SALES	TIRE	Solid - W/Rim		4

DealerNation Quality Equipment Manuals - dealernation@aol.com

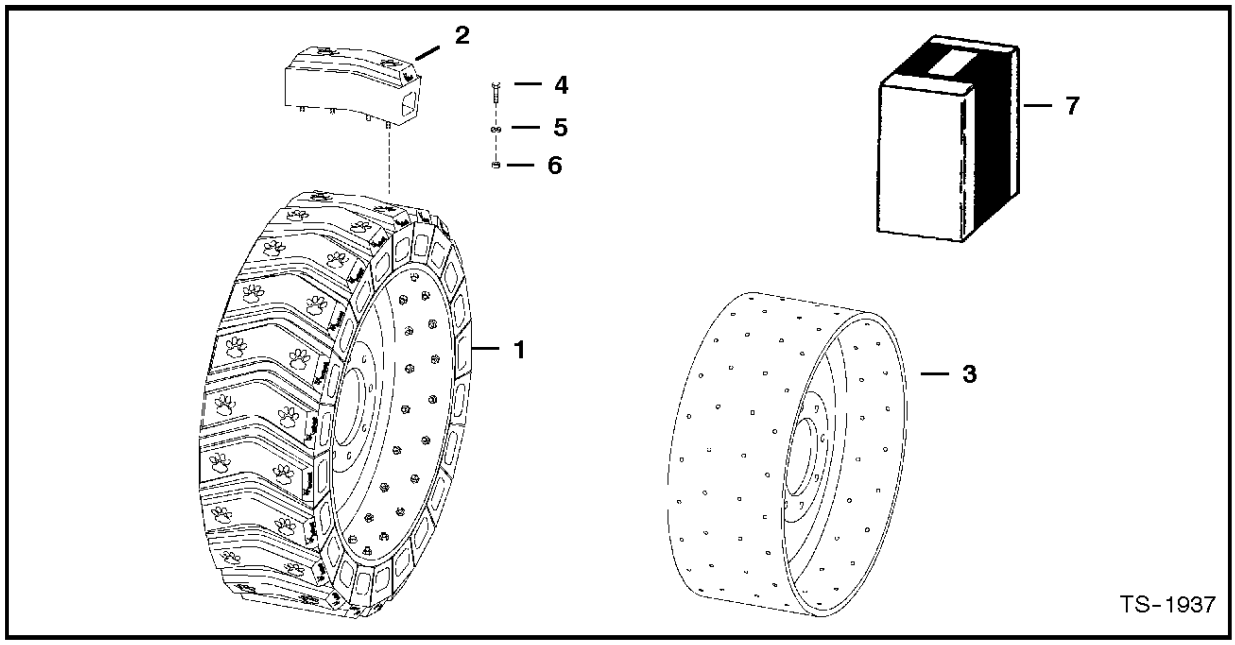

TIRES & RIMS
(Solid Tire - Iatco)

DealerNation Quality Equipment Manuals - dealernation@aol.com

TIRES & RIMS

Ref.N°	Part N°	Description	Remarks	Serial N°	Qty.
1	6672047	TIRE & RIM	Assy. - R.H. - 14 x 17.5		2
1	6672046	TIRE & RIM	Assy. - L.H. - 14 x 17.5		2
2	6672048	KIT	Box of (5) segments - 14 x 17.5 W/Ref. TIRES & RIMS(4) - TIRES & RIMS(6) - (20) segments/tire		x
3	NAP	RIM	R.H. - Order Ref. TIRES & RIMS(1)		2
3	NAP	RIM	L.H. - Order Ref. TIRES & RIMS(1)		2
4	1CM-830	BOLT			x
5	25E-15	WASHER			x
6	40DM-8	NUT			x
7	6672049	KIT	wheel - Set of (4) Tire & Rim Assys. - (2) R.H. & (2) L.H.		1

DealerNation Quality Equipment Manuals - dealernation@aol.com

BULK ITEMS
(See Note)

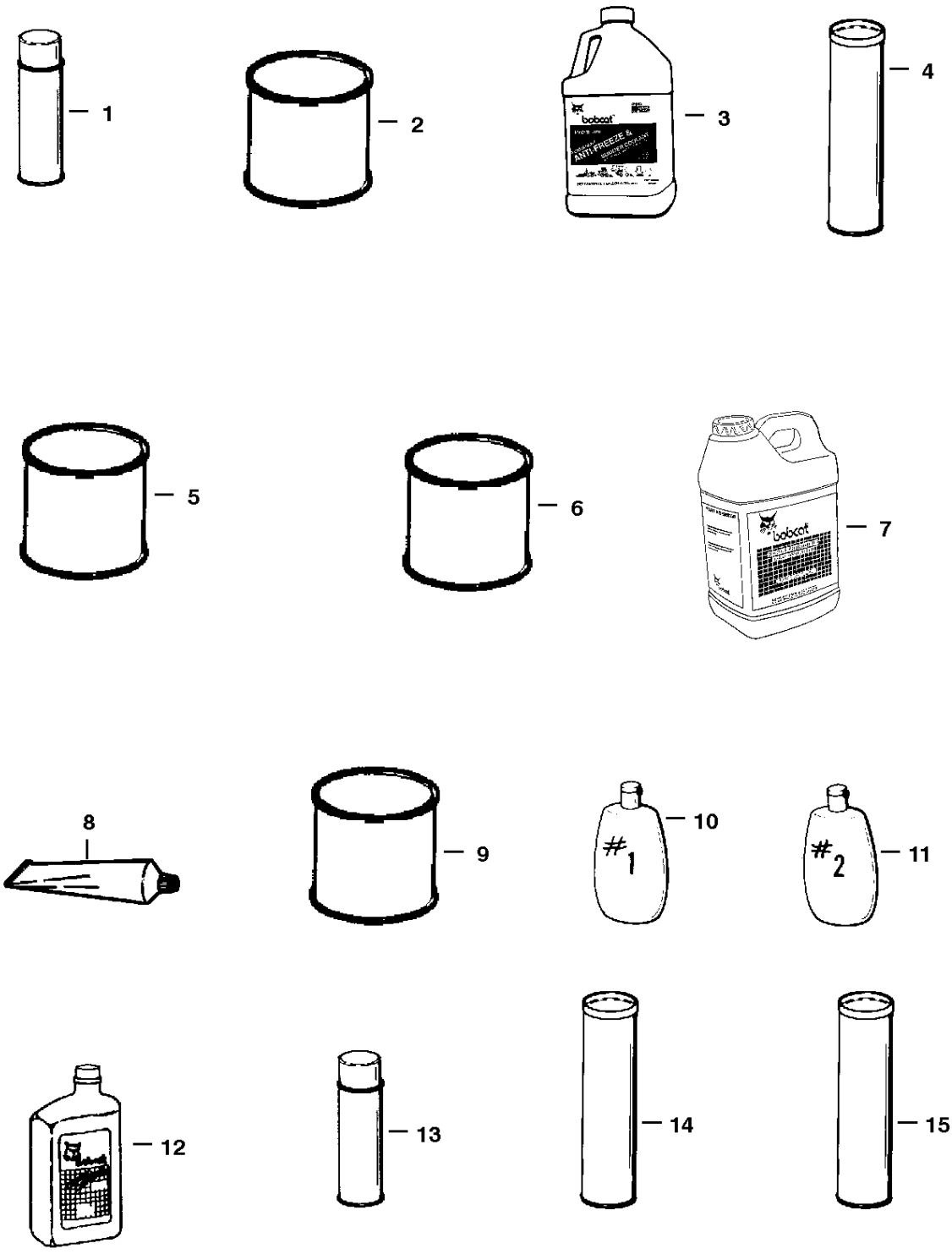

NOTE: Some of these Bulk Items may not be used on this Bobcat.

NOTE: See Merchandising catalog for more products & information.

NOTE: Paint spray cans are packaged 6 per box. Motor oil quarts are packaged 12 per box. Motor oil 1 gal. jugs are packaged 4 per box.

DealerNation Quality Equipment Manuals - dealernation@aol.com

BULK ITEMS

Ref.N°	Part N°	Description	Remarks	Serial N°	Qty.
1	6722783	PAINT	orange - Spray Can - See Note		x
1	6722786	PAINT	charcoal - Spray Can - See Note		x
1	6722789	PAINT	white - Spray Can - See Note		x
2	6722781	PAINT	orange - Gallon - Also Order Ref. BULK ITEMS(5)		x
2	6722782	PAINT	orange - Qt. - Also Order Ref. BULK ITEMS(5)		x
2	6722784	PAINT	charcoal - Gallon - Also Order Ref. BULK ITEMS(5)		x
2	6722785	PAINT	charcoal - Qt. - Also Order Ref. BULK ITEMS(5)		x
2	6722787	PAINT	white - Gallon - Also Order Ref. BULK ITEMS(5)		x
2	6722788	PAINT	white - Qt. Also Order Ref. BULK ITEMS(5)		x
3	6724354	ANTI-FREEZE	PG concentrate - 1 gallon		x
3	6724094	ANTI-FREEEZE	preAmixed PG - 1 gallon		x
4	6633583	SEALANT	chaincase covers		x
5	6653517	REDUCER	gallon		x
6	6653518	PRIMER	gallon		x
7	6563328	BLACK GOLD	Hydraulic/Hydrostatic Transmission Fluid - 5 Gallons - 2-2 1/2 Gallon Containers		x
7	6722344	BLACK GOLD	Hydraulic/Hydrostatic Transmission Fluid - 5 Gallons Container		x
7	6563330	BLACK GOLD	55 Gallon Drum		x
8	6599360	SEALANT	electrical - 3 oz. tube		x
9	6634393	LUBRICANT	90 wt. gear - pint - For use in cooling fan drive assy.		x
10	6630188	POLISH	window-#1 (8 oz.)		x
10	NAP	POLISH	window-#1 (64 oz.) - Order 6630188		x
11	6630189	POLISH	window-#2 (8 oz.) - scratch remover		x
11	NAP	POLISH	window-#2 (64 oz.) - scratch remover - Order 6630189		x
12	6657301	MOTOR OIL	10W30 CE/SG - 1 Qt. - See Note		x
12	6724557	MOTOR OIL	SAE 10W30 - 1 Gal. - See Note		x
12	6674205	MOTOR OIL	10W30 CE/SG - 2.5 Gal.		x
12	6657303	MOTOR OIL	30 CE/SG - 1 Qt. - See Note		x
12	6724559	MOTOR OIL	SAE 30 - 1 Gal. - See Note		x
12	6674206	MOTOR OIL	30 CE/SG -2.5 Gal.		x
12	6657299	MOTOR OIL	15W40 CE/SG - 1 Qt. - See Note		x
12	6724558	MOTOR OIL	SAE 15W40 - 1 Gal. - See Note		x
12	6674204	MOTOR OIL	15W40 CE/SG - 2.5 Gal.		x
13	6652818	ADHESIVE	insulation - spray can		x
14	6658266	GREASE	general purpose		x
15	6599719	GREASE	14.5 oz. cartridge - For UAJoint		x
16	6650407	ADHESIVE	1 oz. tube		x
17	6650388	SEALANT	flange		x

DealerNation Quality Equipment Manuals - dealernation@aol.com

	Part No.	Description	Was	Code	Page
	103522	NUT			43, 309
	223879	SNAP RING			42
	614142	SLEEVE			260
	619021	WASHER			14, 30, 56
	774220	NUT			216, 266
	799119	SNAP RING			60
	873222	DOWEL PIN			174
	898731	BULB			291
	905801	INSERT			180
	907768	THIMBLE			176
	909703	PLUG			164
	947088	RING			57, 58
*	961528	HARDWARE			224
	997692	GASKET			164
	1302104	ELBOW			88
	1305481	PIN			164
	1313116	BUSHING			148
	1612281	NUT			26
	1614765	STEM			309
	3490088	OLIVE			192
	3490132	OLIVE			206
	3490133	UNION NUT			206
	3490179	HUB			174
	3490181	BUSHING			174
	3490223	WASHER			170
	3490324	SEAL			178
	3490325	WIRE			178
	3490713	PLUG			170
	3490714	PLUG			172
	3490716	PLUG			164, 170
	3490721	WASHER			188
	3575075	WASHER			182
	3679424	GEAR IDLER			174
	3725302	THIMBLE			164
	3725347	DOWEL			150
	3725394	KIT			166
	3725400	WASHER			166
	3725402	WASHER			166
	3725440	SNAP RING			172
	3725441	SPRING			172
	3725442	SPRING			172
	3725449	SCREW			172
	3725450	LOCKNUT			172
	3725455	PUSH ROD			172
	3727285	WASHER			202
	3727374	NUT			206
	3727375	SEAL			172, 206
	3727656	GASKET			180
	3737958	BRACKET			172
	3738154	SEAL			174
	3739121	PLUG			164

Code for disposition of old part number

A — Use up

B — Use on other application (See PNI)

C — File PDR Report with Melroe Parts Sales

D — Part Number Error

DealerNation Quality Equipment Manuals - dealernation@aol.com

	Part No.	Description	Was	Code	Page
	3739149	COTTER			170
	5289686	PLUG			242
*	6195215	SCREW	6675127	A	115
	6505082	SPRING			32
	6510020	SNAP PIN			236
	6511766	OIL FILTER			1, 184
	6512026	BUSHING			56
	6512274	CLIP			158
	6512954	CONNECTOR			92
	6513096	BOLT			164
	6513152	SEAL			224, 226, 268
	6513495	HAIRPIN			56
	6513679	DRAINCOCK			152, 156
	6514963	PLUG			164, 170
	6514985	SNAP RING			176
	6515131	TERMINAL			260
	6515575	CLAMP			34, 206
	6515576	CLAMP			282
	6515679	SCREW			168
	6515682	PLUG			202
	6515695	KIT			166
	6515696	KIT			166
	6515697	KIT			166
	6515707	ADAPTER			190
	6515771	RING GEAR			148
	6515817	WASHER			14
	6517516	LIGHT			260
	6518200	GREASE ZERK			92
	6518955	RETAINER			148
	6519178	BUMPER			18, 28
*	6519925	BEARING	6669050	A	42
	6514965	WASHER			206
	6530862	HOSE			76
	6531270	SLEEVE			60
*	6532127	BOOT			132
	6532127	BOOT			32, 130, 262
	6535445	HOSE			50
	6535451	HOSE			76
	6536785	HOSE			76
	6536789	HOSE			76
	6538285	SNAP RING			28
	6539341	BUSHING			58
	6542731	SAFETY TREAD			222, 226
	6553411	BUSHING			34, 38, 142
	6553412	ELBOW			34, 38, 142
	6553709	WASHER			14
	6553976	SAFETY TREAD			238
	6554149	CORD			224, 227, 232, 242
	6555351	SEAL			232
	6555455	WASHER			122, 217
	6556500	MANUAL			240

Code for disposition of old part number

A — Use up

B — Use on other application (See PNI)

C — File PDR Report with Melroe Parts Sales

D — Part Number Error

DealerNation Quality Equipment Manuals - dealernation@aol.com

	Part No.	Description	Was	Code	Page
	6557224	DECAL			240
	6557291	BALL JOINT			158
	6557493	GROMMET			299
	6557565	DECAL			238
	6557904	FLASHER			260
	6557929	WASHER			148, 154
	6558309	WIRE ROPE			240
	6558310	SLEEVE			240
	6558510	ELBOW			76
	6559479	NUT			40
	6559515	EXIT TAG			232, 242
*	6560573	DECAL			306
	6560573	DECAL			240
	6560633	DAMPENER			14
	6561383	DECAL			238
	6562480	BLOCK			148
*	6562602	BUSHING			14
	6563025	CABLE			122
	6563328	BLACK GOLD			1, 312
	6563329	BLACK GOLD			1, 312
	6563330	BLACK GOLD			1, 312
	6563914	WASHER			56
	6564343	SPACER			158
	6564452	GRIP			158
	6564654	PIN			56
	6564657	PIN			56
	6565200	DECAL			238
	6565289	CAP			42
	6565738	RIM			309
	6565742	SPROCKET			38, 43
	6565825	CAP			32, 42
	6565828	COLLAR			42
	6565829	COLLAR			42
	6565830	CAP			42
	6565831	SNAP RING			42
	6565832	SHAFT			42
	6565834	GEAR			42
	6565839	SNAP RING			42
	6565864	PIN			28
	6565944	AXLE			43
	6565947	CAP			43
	6565975	SHIM			43
	656598	ADAPTER			269
	6565990	DECAL			240
	6567173	HUB			43
	6567407	LEVER			158
	6567651	SAFETY TREAD			238
	6567962	SPACER			158
	6568425	STOP			148
	6568498	WASHER			28
	6568559	HANDLE			28

Code for disposition of old part number

A — Use up

B — Use on other application (See PNI)

C — File PDR Report with Melroe Parts Sales

D — Part Number Error

DealerNation Quality Equipment Manuals - dealernation@aol.com

	Part No.	Description	Was	Code	Page
	6569128	RIM			309
	6569160	TIRE			309
	6569203	CLAMP			122, 217
	6569219	SCREEN			34, 88
	6569498	SPRING ASSY			148
	6569632	TUBE			309
	6569752	HOSE			34
	6570762	INSTRUCTIONS			298
	6571554	WASHER			136
	6571723	WASHER			152, 156
	6571991	GUIDE			32, 130, 134
*	6572026	SPRING			134
	6572026	SPRING			32, 130
	6572050	BOLT			30
	6576033	WASHER			28
	6576261	COVER			158
	6576262	MOUNT			158
	6576440	PULLEY			136
	6577545	GROMMET			216, 288
	6577605	SPACER			144
	6577680	HOSE			76
	6577754	DECAL			238
	6577812	COVER			12
	6577821	HOSE			34
	6577822	HOSE			36, 38
	6577961	GROMMET			32
	6578172	HOSE			36, 88
*	6578209	CROSS			76
	6578253	SPRING			30
	6578368	DECAL			240
	6579072	SPRING			28
	6579385	DECAL			254
	6579406	DECAL			254
	6579509	DECAL			238
	6579528	DECAL			238
*	6579613	CAB STOP			14
	6579613	STOP			142
	6579639	DECAL			238
	6584872	WASHER			28
	6584873	WASHER			28
	6585860	SPRING			40
	6585961	LEVER			30
	6586459	SEAL KIT			62, 66, 70
	6586568	HEAD			57
	6586772	PIN			14
	6586918	SCREW			60
	6587182	PIN			148
	6587294	HOSE			76
	6587458	KEY			36
	6587523	WASHER			60, 64, 68
	6587575	ADAPTER			60

Code for disposition of old part number

A — Use up

B — Use on other application (See PNI)

C — File PDR Report with Melroe Parts Sales

D — Part Number Error

DealerNation Quality Equipment Manuals - dealernation@aol.com

Part No.	Description	Was	Code	Page
6587580	SPRING			60, 64, 68
6587633	BONNET			60, 64, 68
6587763	BOOT			60, 64, 68
6588074	SPOOL			60, 64, 68
6588781	END CAP			62, 64, 68
6589226	BONNET			60
6589564	WASHER			60, 64, 68
6589565	BUSHING			64, 68
6589683	STUD			30
6589686	PIVOT			30
6589690	LEVER			30
6589692	PIVOT			30
6592098	WASHER			60
6592100	COLLAR			60, 64, 68
6592105	BALL			60
6592107	SPRING			60
6592109	ADAPTER			60, 64, 68
6592115	SEAT			60, 64, 68
6592116	NUT			60, 64, 68
6592117	SPRING			60, 64, 68
6592304	STUD			43
6592720	PLUG			60, 66, 68
6595014	DECAL			240
6595048	COVER			38
6595131	SPRING			62, 66, 70
6595338	BUSHING			30
6595353	CLAMP			46, 48
6595356	COVER			46, 48
6595506	GEAR			42
6595507	SHAFT			42
6595508	SPACER			42
6595509	SPACER			42
6595510	SNAP RING			42
6595663	BUSHING			60, 64, 68
6595951	SLEEVE			60, 66, 68
6596332	SPRING			60, 64, 68
6596569	SEAT			62, 64, 68
6596676	GEARBOX			42
6596807	PLUG			60
6596832	ELBOW			213
6596839	WASHER			148
6596840	BRACKET			152
6596846	MOUNT			152
6596847	MOUNT			152
6596850	BRACKET			148
6596851	PIN			148
6596936	SCREEN			144
6596937	SCREEN			144
6596940	BRACKET			144
6597183	ELBOW			34, 206
6597184	FOAM			34

Code for disposition of old part number

A — Use up

B — Use on other application (See PNI)

C — File PDR Report with Melroe Parts Sales

D — Part Number Error

DealerNation Quality Equipment Manuals - dealernation@aol.com

	Part No.	Description	Was	Code	Page
	6597210	CHAINCASE			38
	6597280	BUSHING			12
	6597281	BUSHING			12
	6597284	KIT			252
	6597314	CYLINDER			48, 57
	6597316	CYLINDER			46, 58
*	6597415	BOB-TACH			30
	6597488	BUSHING			28
	6597489	BUSHING			28
	6597492	PIVOT ASSY			28
	6597501	PANEL			32
*	6597595	BRACKET			12
	6597768	SPACER			28
	6597768	SPACER	6628799	A	28
	6597770	LIFT ARMS			28
*	6597774	HANDLE			132
	6597774	HANDLE			128, 262
	6597798	PIN			28
	6597799	PIN			28
	6597833	CASE			58
	6597834	ROD			58
	6598908	ELBOW			34
	6599360	SEALANT			312
	6599365	KIT			116
	6599645	PLUG			34, 38
	6599646	NUT			168
	6599719	GREASE			312
	6599741	WASHER			92
	6599931	ALARM			216
	6610510	TIE			216, 242, 262
	6617875	BELT			154
	6618193	HOSE			76, 84
*	6624289	TIE			250
	6624289	TIE			124, 213, 269, 280, 304
	6624289	TIE	6610510	B	248
	662487	ELBOW			269
	6626323	BUSHING			28
	6627706	ROD			57
	6627707	CASE			57
	6627802	DECAL			240
	6627877	MOUNT			296
	6627878	BRACKET			46, 48
	6627897	GASKET			38
	6628103	CHAIN			38
	6628129	PLATE			152
	6628571	VALVE ASSY			60, 64, 68, 71
	6630151	SLEEVE			43
	6630188	POLISH			312
	6630189	POLISH			312
	6630207	RIVET			32, 302
	6630367	CAP			96

Code for disposition of old part number

A — Use up

B — Use on other application (See PNI)

C — File PDR Report with Melroe Parts Sales

D — Part Number Error

DealerNation Quality Equipment Manuals - dealernation@aol.com

	Part No.	Description	Was	Code	Page
	6630488	BREATHER			38
	6630797	GAS SPRING			142
	6630945	WASHER			158
	6631036	BALL JOINT			158
	6631067	SEAL			28, 58
	6631418	PIN			14, 18, 280
	6631501	SHIM			172
	6631561	NUT			74
*	6631927	GEAR			224
*	6631928	SHAFT			224
	6632053	SWITCH			116
	6632210	SPACER			136
	6632228	RETAINER			136
	6632429	RETAINER			140
	6632430	ROLLER			140
	6632432	PLUNGER			140
	6632433	GASKET			140
	6632434	COVER			140
	6632435	BALL			140
	6632436	SPRING			140
	6632441	SPRING			140
	6632501	SEALANT			38
	6633583	SEALANT			312
	6634393	LUBRICANT			312
	6634609	RACE			42
*	6640690	PIN			132, 134
	6640690	PIN			126, 128, 262, 264, 288
*	6640692	CONNECTOR			132, 134
	6640692	CONNECTOR			126, 128, 262, 264
*	6640694	CAP			132, 134
	6640694	LOCK			126, 128, 262, 264
*	6640699	CONNECTOR			132
	6640699	CONNECTOR			128
*	6640700	LOCK			132
	6640700	LOCK			128, 262, 288, 296
*	6641176	SEAL			132, 134
	6641176	SEAL			126, 128, 262, 264, 288
*	6641179	CONNECTOR			132
	6641179	CONNECTOR			46, 74, 126, 130, 262, 288, 296
*	6641180	LOCK			132
	6641180	LOCK			46, 74, 126, 130, 262, 288, 296
*	6646582	PLUG			132, 134
	6646582	PLUG			126, 262, 264
*	6646678	CAP	6673313	A	142
	6646781	SWITCH			216
	6646784	BEARING			42
	6647405	SEAL			142
	6647777	PIN			74
	6647778	CAP			74
	6647780	PLUG			74
	6647783	LOAD CHECK			74

Code for disposition of old part number

A — Use up

B — Use on other application (See PNI)

C — File PDR Report with Melroe Parts Sales

D — Part Number Error

DealerNation Quality Equipment Manuals - dealernation@aol.com

	Part No.	Description	Was	Code	Page
	6647784	PLUG			74
	6647785	SPRING			74
	6647879	TIRE			309
	6648293	SCREW			74
	6648294	SPRING			74
*	6648307	CONNECTOR			134
	6648307	CONNECTOR			264
	6648774	BEARING			42
	6648776	RACE			42
	6648778	BEARING			42
	6648779	RACE			42
	6648780	BEARING			43
	6648782	RACE			43
	6648785	RACE			42
*	6648944	BREATHER CAP			88
	6649440	BOLT			174
	6649446	PLUG			180
	6649447	O-RING			180
	6649481	BULB			124, 291
	6649551	DAMPENER			92
	6649949	PLUG			242
	6650388	SEALANT			38, 42, 312
	6650407	ADHESIVE			312
	6651232	SHAFT			172
	6651476	TIRE			309
	6652521	COVER			48
	6652564	WING NUT			208
	6652818	ADHESIVE			312
	6653484	VALVE			297
	6653485	SEAL KIT			297
	6653487	SEAL KIT			297
	6653517	REDUCER			312
	6653518	PRIMER			312
*	6654139	MOULDING			134
	6654139	MOULDING			128, 264
	6654170	STRIKER BOLT			222, 226
	6654806	FUSE			124
	6655399	BUMPER			142
	6655399	BUMPER	6714454	B D	26
	6655781	BEARING			280
	6657299	MOTOR OIL			1, 312
	6657301	MOTOR OIL			1, 312
	6657303	MOTOR OIL			1, 312
	6657719	PLUG			232, 242
	6657734	PUMP			34
*	6658246	PLUG			62, 66, 70
	6658260	SENSOR			124
	6658266	GREASE			312
	6659371	NUT			136
	6659375	FAN			136
	6659376	BRACKET			136

Code for disposition of old part number

A — Use up

B — Use on other application (See PNI)

C — File PDR Report with Melroe Parts Sales

D — Part Number Error

DealerNation Quality Equipment Manuals - dealernation@aol.com

	Part No.	Description	Was	Code	Page
	6659378	BOLT			136
	6659379	BEARING			136
	6659380	ROTOR			136
	6659381	STATOR			136
	6659382	BRACKET			136
	6659384	RECTIFIER			136
	6659385	SCREW			136
	6659386	HOLDER			136
	6659387	NUT			136
	6659388	CONDENSER			136
	6659390	HOLDER			136
	6659391	NUT			136
	6659392	BOLT			136
	6659393	REGULATOR			136
	6659394	BRUSH			136
	6659395	SPRING			136
	6659396	SCREW			136
	6659397	TERMINAL			136
	6659398	COVER			136
	6659399	SCREW			136
	6659400	CONNECTOR			136
	6659543	PLUG			293
	6659999	BELT			302
	6660619	CLAMP			142
	6660644	CAP			60
	6660727	FILTER ASSY			88
*	6660728	FILTER			1
	6660728	FILTER			88
	6660863	CLAMP			146
	6660967	CAP			148
	6660995	RING			280
	6661022	IN-LINE FILTER			213, 304
	6661062	PLUG			293
	6661114	CAP			34
	6661213	CLAMP			34
	6661229	BEARING			148
	6661244	WASHER			208
	6661328	SEAL KIT			62, 66, 70
	6661353	LIGHT ASSY			291
	6661377	SEAL			148
	6661611	ALTERNATOR			122, 136
	6661696	CAP			34
	6661785	MOUNT			150, 152
	6662035	WASHER			166
	6662252	LOCK			275
	6662257	PIN			275
	6662299	THERMOSTAT			186
	6662848	CAP			62, 66, 70
	6662929	DOWEL PIN			113, 160
	6662997	PULLEY			280
*	6664035	CAP			250

Code for disposition of old part number

A — Use up

B — Use on other application (See PNI)

C — File PDR Report with Melroe Parts Sales

D — Part Number Error

DealerNation Quality Equipment Manuals - dealernation@aol.com

	Part No.	Description	Was	Code	Page
	6664035	CAP			248
*	6664036	NUT			250
	6664036	NUT			248
*	6664037	WASHER			250
	6664037	WASHER			248
*	6664040	PIN			250
	6664040	PIN			248
	6664065	WASHER			222, 299
	6664085	BUSHING			222, 232, 299
	6664095	ARM			222
	6664096	BLADE			222
	6664097	COVER			224, 299
	6664103	NUT			222, 299
	6664178	GASKET			222
*	6664205	GAS SPRING			14
	6664212	CHECK VALVE			297
	6664221	RETAINER			242
	6664223	OUTLET			242
	6664224	CAP			242
	6664260	CONNECTION			172
	6664261	SCREW			172
	6664368	LIGHT			242
	6664554	PUMP			224
	6664555	NOZZLE			222
	6664566	SCREW			224, 299
	6664882	BUSHING			18
	6664972	NUT			122
*	6665000	CLIP			132
	6665000	CLIP			128, 262
	6665084	SOLENOID			62, 66, 70
	6665086	SEAL			58
	6665307	SEAL			148
	6665308	RETAINER			148
	6665316	SWITCH			260
	6665317	SWITCH			218, 307
*	6665321	RIVET			132
	6665321	RIVET			130, 262
*	6665322	RIVET			132
	6665322	RIVET			130, 262
	6665357	LOCK			122
	6665367	BULB			242
	6665370	PLUG			275
	6665371	SWITCH			124
	6665427	BATTERY			1, 122, 217
	6665527	STA-STRAP			122
	6665568	SEAL			224, 227
	6665572	VALVE			296, 297
	6665602	MOTOR			299
	6665701	BUSHING			56
	6665707	SWITCH			224
	6665731	BEARING			42

Code for disposition of old part number

A — Use up

B — Use on other application (See PNI)

C — File PDR Report with Melroe Parts Sales

D — Part Number Error

DealerNation Quality Equipment Manuals - dealernation@aol.com

	Part No.	Description	Was	Code	Page
	6665846	SEAL			60, 64, 68
	6665915	SIGHT GAUGE			84
	6666364	PLUG			102, 104, 105
	6666366	SPRING			100
	6666369	SNAP RING			100
	6666544	SEAL			57
	6666568	BULB			255
	6666622	CLUTCH			140
	6666624	SNAP RING			140
	6666628	NUT			140
	6666629	WASHER			140
	6666630	WASHER			140
	6666631	O-RING			140
	6666632	O-RING			140
	6666633	BOLT			140
	6666634	SCREW			140
	6666635	SCREW			140
	6666637	NUT			140
	6666638	GASKET			197
	6666766	GROMMET			224
*	6667144	CONNECTOR			132
	6667144	CONNECTOR			126, 130, 262
*	6667145	LOCK			132
	6667145	LOCK			126, 130, 262
	6667176	PLUG			74
	6667185	SEAL KIT			74
	6667201	SPACER			222, 299
	6667320	STARTER			122, 140, 148, 152
	6667326	SEAL			58
	6667327	SEAL			57
	6667500	SLEEVE			178
	6667518	REPAIR KIT			197
	6667523	BUSHING			176
	6667549	VALVE			60, 64, 68
*	6667569	CONNECTOR			250
	6667569	CONNECTOR			248
	6667586	SEAL			26, 36, 144
	6667687	VALVE			71
	6667732	VALVE			252
	6667733	CLAMP			252
	6667735	NOZZLE			252
	6667736	ELBOW			252
	6667737	SWITCH			252
	6667738	HOSE COVER			252
	6667743	HARNESS			252
	6667794	TIRE			309
	6667803	QUICK COUPLER			304
	6667804	QUICK COUPLER			304
	6667806	QUICK COUPLER			213, 304
	6667808	COUPLER			54
	6667844	VALVE ASSY			50, 51

Code for disposition of old part number

A — Use up

B — Use on other application (See PNI)

C — File PDR Report with Melroe Parts Sales

D — Part Number Error

DealerNation Quality Equipment Manuals - dealernation@aol.com

Part No.	Description	Was	Code	Page
6667871	CAN			252
6667887	BULB			255
6668007	SCREW			255
6668010	LENS			255
6668027	PLUG			164
6668137	MOTOR			224
6668206	PLUG			164
6668209	PLUG			164, 170
6668210	PLUG			164
6668211	WASHER			164
6668212	SCREW			164, 174, 180, 206
6668218	VALVE			164, 176
6668219	BALL			164
6668220	SPRING			164
6668221	RETAINER			164
6668222	PLATE			164
6668223	SCREW			164, 184
6668224	PLUG			164
6668226	KIT			166, 168
6668227	KIT			166, 168
6668228	KIT			166, 168
6668229	KIT			166, 168
6668230	WASHER			166
6668235	GEAR			166
6668243	BOLT			170
6668244	BOLT			170
6668245	BOLT			170
6668252	STUD			172
6668253	NUT			172
6668254	SCREW			172
6668257	GASKET			162, 174
6668260	WASHER			174
6668261	GEAR CAMSHAFT			174
6668263	WASHER			174
6668264	PLATE			174
6668267	SCREW			174, 195
6668268	SCREW			174, 176, 184
6668270	NUT			174, 178
6668276	SCREW			174
6668278	SCREW			174, 176, 186, 190
6668279	PUMP			176
6668280	GEAR			176
6668281	WASHER			176
6668282	VALVE			176
6668283	PLUNGER			176
6668284	SPRING			176
6668285	SEAT			176
6668286	SNAP RING			176
6668287	SCREW			146, 174, 176
6668288	PIPE			176
6668289	O-RING			176

Code for disposition of old part number

A — Use up

B — Use on other application (See PNI)

C — File PDR Report with Melroe Parts Sales

D — Part Number Error

DealerNation Quality Equipment Manuals - dealernation@aol.com

Part No.	Description	Was	Code	Page
6668290	FLANGE			176
6668292	ELBOW			190
6668296	CLAMP			190
6668298	STUD			174
6668311	BRACKET			178
6668312	STUD			178
6668313	NUT			178, 198
6668314	SCREW			178, 184, 188
6668475	OIL PAN			180
6668477	BRIDGE			180
6668478	SCREW			180
6668479	SCREW			180, 186
6668480	PIPE OIL			180
6668481	GASKET			180
6668482	SCREW			180, 184
6668483	TUBE ASSY			180
6668485	SEAL			180
6668486	BRACKET			180
6668487	SCREW			170, 178, 180, 184, 186, 192
6668488	WASHER			180
6668489	CLAMP			180
6668490	PLATE			180
6668491	SCREW			180, 192
6668492	SCREW			180, 206
6668493	NUT			180, 206
6668494	PLUG			180
6668495	SCREW			180, 186, 192, 197
6668496	DIPSTICK			180
6668499	SPRING			182
6668500	BRACKET			182
6668504	FILLER			195
6668505	CAP			195
6668506	O-RING			195
6668508	GASKET			195
6668509	ADAPTOR			184
6668510	GASKET			162, 164, 184
6668514	FILTER HEAD			184
6668515	CONNECTION			184
6668516	OIL COOLER			184
6668517	OIL COOLER			184
6668518	O-RING			184
6668519	O-RING			184
6668520	NUT			184
6668521	COVER			184
6668522	GASKET			184
6668523	SCREW			176, 184
6668524	CONNECTION			184
6668525	O-RING			184
6668526	O-RING			184
6668527	BRACKET			184
6668528	PIPE			184

Code for disposition of old part number

A — Use up

B — Use on other application (See PNI)

C — File PDR Report with Melroe Parts Sales

D — Part Number Error

DealerNation Quality Equipment Manuals - dealernation@aol.com

	Part No.	Description	Was	Code	Page
	6668529	GASKET			184
	6668530	CONNECTION			184
	6668531	CLAMP			184
	6668532	SCREW			184
	6668533	SCREW			184
	6668534	SCREW			184, 186
	6668535	PULLEY			187
	6668536	BLOCK			187
	6668537	SCREW			187
	6668546	SCREW			195
	6668558	SCREW			186
	6668564	SCREW			188, 198
	6668565	SCREW			188
	6668569	NUT			192
*	6668573	SCREW			142, 156
	6668573	SCREW			198
	6668578	PIPE			192
	6668597	CLAMP			190
	6668624	PUMP			197, 206
	6668634	CONNECTION			206
	6668635	BANJO BOLT			206
	6668636	WASHER			206
	6668638	SCREW			206
	6668639	FILTER			200
	6668640	NUT			200, 204
	6668641	CAP			200, 204
	6668642	SEAL			200, 204
	6668643	PLUG			200, 204
	6668644	SEAL			200, 204
	6668648	RING			200
	6668652	PLUG			207
	6668661	PLUG			200, 204
*	6668664	SEAL			204
*	6668669	SEAL			204
	6668676	GASKET			188
*	6668742	SWITCH			242
	6668765	VALVE			71
	6668787	RING			236
	6668791	ORIFICE			71
*	6668816	SWITCH			218, 307
	6668819	FILTER			1, 80, 116, 122
	6668820	NUT			71, 160
	6668879	DECAL			216
	6668881	CORD			219
	6668907	GAUGE			146
	6668913	KNOB			50, 51
	6668953	BRACKET			20
	6669057	CHECK VALVE			71
	6669085	VALVE			51
	6669087	SEAL KIT			51, 96
	6669089	TRACK			20

Code for disposition of old part number

A — Use up

B — Use on other application (See PNI)

C — File PDR Report with Melroe Parts Sales

D — Part Number Error

DealerNation Quality Equipment Manuals - dealernation@aol.com

	Part No.	Description	Was	Code	Page
	6669091	CLIP			242, 266
	6669135	SEAT			20
	6669136	NUT			182
	6669137	KIT			202
	6669187	VALVE			297
	6669188	STEM			297
	6669189	STEM			297
	6669190	COIL			297
	6669216	SEAL KIT			297
	6669217	SEAL KIT			297
	6669218	VALVE			297
	6669219	VALVE			297
	6669224	BOLT			130, 242, 266
	6669317	KIT FILTER			204
	6669345	YOKE			140
	6669346	ARMATURE			140
	6669347	BEARING			140
	6669348	BEARING			140
	6669349	BEARING			140
	6669350	KIT			140
	6669352	BEARING			140
	6669353	BEARING			140
	6669354	SHAFT			140
	6669357	KIT			140
	6669358	KIT			140
	6669359	BOLT			140
	6669360	BUSHING			140
	6669361	HOLDER			140
	6669362	SPRING			140
	6669364	PINION			140
	6669365	BOOT			140
	6669366	BOLT			140
	6669367	BOLT			140
	6669368	O-RING			140
	6669369	PINION			140
	6669370	BRUSHES			140
	6669371	BRUSHES			140
	6669372	COVER			140
	6669434	HOUSING			140
	6669435	SWITCH ASSY			140
	6669436	FRAME			140
*	6669549	SOCKET			245, 246, 248, 250
	6669565	BELT			148
	6669595	ENGINE			146, 148, 152, 162
	6669657	O-RING			304
	6669659	O-RING			213, 304
	6669677	PIPE			146
	6669732	SEAL KIT			71
	6669733	SEAL KIT			71
	6669734	SEAL KIT			71
	6669993	PISTON			57

Code for disposition of old part number

A — Use up

B — Use on other application (See PNI)

C — File PDR Report with Melroe Parts Sales

D — Part Number Error

DealerNation Quality Equipment Manuals - dealernation@aol.com

	Part No.	Description	Was	Code	Page
	6670157	BRAKE			115
	6670160	CUSHION			20
*	6670164	LINK			224
	6670281	TAPPET			172
	6670284	LIGHT ASSY			291
	6670287	COVER			26
*	6670288	END			224
	6670312	SOLENOID			266
	6670389	WASHER			42
	6670562	BAND			146
	6670564	COVER			146
	6670598	CLAMP			146
	6670627	CAP			38
	6670632	COUPLING			113
	6670634	SEAL KIT			46, 74
	6640699	CONNECTOR			262, 266, 288, 296
*	6670706	CONNECTOR			132
	6670706	CONNECTOR			262
*	6670707	CONNECTOR			134
	6670707	CONNECTOR			128, 264
	6670708	CONNECTOR			130
*	6670709	CONNECTOR			134
	6670709	CONNECTOR			264
*	6670710	LOCK			132
	6670710	LOCK			128, 262
*	6670711	LOCK			134
	6670711	LOCK			264
	6670714	PIN			262
*	6670715	PIN			132, 134
	6670715	PIN			128, 264
	6670726	LOCK			298
	6670759	SEAL			226
	6670762	BUSHING			28
	6670817	MOTOR			38, 84, 98
	6670822	SCREW			164
	6670867	LATCH			26
	6670878	BLOCK			164
	6670880	BUSHING			164
	6670885	PISTON			168
	6670886	RETAINER			168
	6670887	KIT			168
	6670888	INSERT			170
	6670889	INSERT			170
	6670890	VALVE			170
	6670891	GUIDE			170
	6670892	SPRING			170
	6670893	SEAL			170
	6670894	CAP			170
	6670896	VALVE			170
	6670897	GUIDE			170
	6670898	SEAL			162

Code for disposition of old part number

A — Use up

B — Use on other application (See PNI)

C — File PDR Report with Melroe Parts Sales

D — Part Number Error

DealerNation Quality Equipment Manuals - dealernation@aol.com

Part No.	Description	Was	Code	Page
6670900	COVER			170, 186
6670905	GASKET			170
6670906	KIT			166
6670907	ROCKER			172
6670908	ARM			172
6670909	BUSHING			172
6670910	ARM			172
6670911	WASHER			172
6670912	HOUSING			174
6670913	CAMSHAFT			174
6670914	COVER			174
6670915	GASKET			162, 174
6670916	SHIELD			174
6670917	DAMPER			174
6670918	SHAFT			176
6670922	TUBE			190
6670926	INJECTOR			178
6670927	HOLDER			178
6670928	NOZZLE			178
6670929	WASHER			178
6670930	PIPE			178
6670931	BOLT			178
6670932	WASHER			178
6670933	CONNECTION			178
6670939	PLUG			164, 182
6670940	CLIP			192
6670943	SCREW			186, 190
6670945	GASKET			162
6670947	KIT HOSE			186
6670950	O-RING			186
6670951	GASKET			186
6670960	SCREW			186
6670961	TURBO CHARGER			192, 194
6670967	GASKET			162, 190, 192
6670969	NUT			192
6670970	STUD			192
6670974	CONNECTION			192
6670975	PIPE OIL			192
6670977	ADAPTOR			192
6670978	WASHER			192
6670979	WASHER			192
6670980	GASKET			192
6670981	HOSE			192
6670982	PIPE			192
6670990	BRACKET			198
6670993	PIPE			206
6670994	CLIP			206
6670995	FUEL FILTER			198, 206
6670996	ELEMENT			1, 198, 200
6671003	FILTER			202, 204
6671011	GASKET			190

Code for disposition of old part number

A — Use up

B — Use on other application (See PNI)

C — File PDR Report with Melroe Parts Sales

D — Part Number Error

DealerNation Quality Equipment Manuals - dealernation@aol.com

Part No.	Description	Was	Code	Page
6671012	HOSE			190
6671025	COIL			71, 96, 160
6671027	LIGHT			255
6671035	BUSHING			148
6671493	HOSE			80
6671498	HOSE ASSY			86
6671499	HOSE ASSY			84
6671500	HOSE			80
6671501	HOSE			80
6671527	NUT			46, 74
6671583	RELIEF VALVE			62, 64, 68
6671613	DIAGNOSTIC COUPLER			76, 96
6671618	SHIELD			142
6671626	CLAMP			142, 152, 156
6671632	VALVE			62, 66, 70
6671635	GASKET			192, 194
6671638	SEAL			164
6671639	HOUSING			164
6671640	WASHER			206
6671644	SCREW			184
6671645	SEAL			162, 170
6671647	CLIP			178
6671648	CLIP			178
6671649	ELEMENT			1, 202, 204
6671650	LINER			164
6671651	SPRING			156
6671658	BRACKET			206
6671660	PLATE			188
6671740	CHARGE PUMP			104, 110
6671741	SNAP RING			102, 104
6671742	SEAL			102, 104
6671743	O-RING			102, 104, 108
6671744	SCREW			102, 104
6671746	NUT			102, 104
6671747	ORIFICE			102, 104, 105
6671748	PLUG			108
6671749	O-RING			102, 104, 105
6671750	DOWEL PIN			102, 104
6671752	O-RING			102, 104, 105, 106
6671753	O-RING			102, 104, 105
6671754	RELIEF VALVE			102, 104, 106
6671757	FILTER			104
6671758	O-RING			102, 105
6671759	PLUG			102, 104, 105
6671760	COVER			102, 104
6671761	SCREW			102, 104
6671766	SWASH PLATE			107
6671770	RACE			107
6671771	BEARING			107
6671772	WIRE			107
6671773	LEVER			107

Code for disposition of old part number

A — Use up

B — Use on other application (See PNI)

C — File PDR Report with Melroe Parts Sales

D — Part Number Error

DealerNation Quality Equipment Manuals - dealernation@aol.com

Part No.	Description	Was	Code	Page
6671774	PIN			107
6671775	WIRE			107
6671778	SHAFT			102
6671779	BEARING			102, 104
6671780	SNAP RING			102, 104
6671781	HOUSING			102, 104, 108
6671782	ROLL PIN			108
6671783	PLUG			104, 105, 108
6671784	O-RING			104, 105, 108
6671785	BUSHING			108
6671786	V-RING			108
6671787	O-RING			108
6671788	BUSHING			108
6671789	PIN			108
6671790	PLUG			108
6671791	BOLT			109
6671798	SNAP RING			109
6671799	RING			109
6671800	RING			109
6671801	RING			109
6671802	RING			109
6671803	RING			109
6671804	RING			109
6671805	O-RING			109
6671807	PORT BLOCK			104
6671808	BOLT			105
6671809	O-RING			105
6671810	O-RING			105
6671811	BEARING			105
6671812	DOWEL PIN			105
6671814	SNAP RING			110, 111
6671815	SHAFT			110
6671817	QUAD RING			110, 111
6671818	O-RING			110, 111
6671819	FLANGE			110
6671820	BOLT			110, 111
6671821	O-RING			110, 111, 114
6671822	PLATE			110, 111
6671824	CHARGE PUMP			102, 111
6671827	PORT BLOCK			102
6671829	PIN			110, 111
6671830	BLOCK ASSY			98
6671832	PLUG			98
6671833	SCREW			98
6671834	PIN			98
6671835	SCREW			98
6671836	PLUG			98
6671837	O-RING			98
6671838	SCREW			98
6671839	NUT			98
6671840	SCREW			98

Code for disposition of old part number

A — Use up

B — Use on other application (See PNI)

C — File PDR Report with Melroe Parts Sales

D — Part Number Error

DealerNation Quality Equipment Manuals - dealernation@aol.com

Part No.	Description	Was	Code	Page
6671841	SHUTTLE			98
6671842	HOUSING			98
6671843	PLUG			98
6671844	O-RING			98
6671845	PLUG			98
6671846	O-RING			98
6671847	O-RING			98
6671848	VALVE			98, 100
6671849	SNAP RING			98
6671850	SEAL			98
6671851	SHIM			98
6671852	BLOCK			98
6671853	SHAFT			98
6671867	LENS CONTROL			98, 99
6671868	PLUG			99
6671869	O-RING			99, 100
6671870	SPRING			99
6671871	SPOOL			99
6671872	BUSHING			99
6671873	CONNECTOR			99
6671874	O-RING			99
6671875	SCREW			99
6671876	SCREW			99
6671877	PIN			99
6671878	PLUG			99
6671879	O-RING			99
6671880	PISTON			99
6671881	DOWEL PIN			99
6671882	PORT BLOCK			98, 99
6671883	O-RING			98, 99
6671884	PLUG			100
6671885	SHIM			100
6671886	O-RING			100
6671887	POPPET			100
6671888	ORIFICE			100
6671889	SCREW			100
6671890	WASHER			100
6671891	SPRING			100
6671892	PLUG			100
6671911	BLOCK ASSY			107
6671969	ELEMENT			1, 208
6672016	SEAL KIT			102, 104, 106, 108, 109, 110, 111
6672018	SEAL KIT			98, 99, 100
6672026	O-RING			54
6672046	TIRE & RIM			310
6672047	TIRE & RIM			310
6672048	KIT			310
6672049	KIT			310
6672053	JET			164
6672054	DOWEL PIN			164
6672154	PUMP			178

Code for disposition of old part number

A — Use up

B — Use on other application (See PNI)

C — File PDR Report with Melroe Parts Sales

D — Part Number Error

DealerNation Quality Equipment Manuals - dealernation@aol.com

	Part No.	Description	Was	Code	Page
	6672156	SNAP RING			113
	6672161	O-RING			113
	6672166	GASKET KIT			162, 164, 166, 170
	6672167	GASKET KIT			162, 164, 166, 170
	6672180	BUSHING			168
	6672181	HEAD CYLINDER			170
	6672182	GASKET			162, 164, 170
	6672270	SHORT BLOCK			162
	6672271	DOWEL PIN			164, 170
	6672272	WASHER			291
	6672273	SCREW			291
	6672274	SCREW			291
	6672275	GASKET			291
	6672276	LENS			291
	6672277	BRACKET			291
	6672279	MOUNT			291
	6672281	CLAMP			84
	6672287	PIN			170
	6672288	STUD			178
	6672289	GEAR			178
	6672290	HOSE			190
	6672293	SPACER			195
	6672296	HOSE			156, 182
	6672300	CLAMP			186
	6672302	SCREW			188
	6672303	MANIFOLD			190
	6672304	MANIFOLD			192
	6672305	STUD			192
	6672307	NUT			192
	6672309	PIPE			206
	6672310	CLIP			206
	6672311	CLIP			206
	6672312	OLIVE			206
	6672316	NUT			206
	6672317	UNION			206
	6672320	KIT REPAIR			186
*	6672321	SWITCH			178
	6672321	SOLENOID			122
	6672330	VALVE			154
	6672340	FITTING			243
	6672346	PANEL			118, 120
	6672348	PANEL			118, 120, 242
	6672471	VALVE			71
	6672515	SEAL KIT	6669732	B D	160
	6672555	MUFFLER			293
	6672556	SEAL			200, 204
	6672557	VALVE			208
	6672558	WING NUT			208
	6672559	O-RING			208
	6672561	FILTER			211
	6672581	KIT O-RING REPAIR			115

Code for disposition of old part number

A — Use up

B — Use on other application (See PNI)

C — File PDR Report with Melroe Parts Sales

D — Part Number Error

DealerNation Quality Equipment Manuals - dealernation@aol.com

	Part No.	Description	Was	Code	Page
	6672582	KIT SPRING			115
	6672584	FILTER ASSY			80 , 116, 122
	6672636	AIR CLEANER			146, 208
	6672760	SEAL KIT			96
	6672762	PLUG			96
	6672776	PIPE INJECTION			178
	6672777	PIPE INJECTION			178
	6672778	PIPE INJECTION			178
	6672779	PIPE INJECTION			178
	6672780	COVER			182
	6672781	GASKET			182
	6672782	WATER PUMP			186
	6672783	SCREW			186
	6672786	SCREW			190
	6672787	ELBOW			190
	6672789	HOUSING			194
	6672790	HOUSING			194
	6672791	HOSE			194
	6672792	CORE			194
	6672793	ACTUATOR			194
	6672794	KIT REPAIR			194
	6672795	KIT REPAIR			194
	6672796	STUD			192
	6672798	SCREW			192
*	6672862	ELEMENT	6672453	A	208
	6672862	ELEMENT			1
	6672863	SOLENOID			46, 74
	6672960	COUPLER			54
	6673114	O-RING			178
	6673119	SENDER			34, 122
	6673184	VALVE			60, 64, 68
	6673187	VALVE			96
	6673188	SEAL KIT			96
	6673193	VALVE			96
	6673243	CONNECTOR			213, 304
*	6673710	BEARING			134
	6673710	BEARING			92, 128
*	6673789	BEARING			134
	6673789	BEARING			92, 130
	6673904	SEAL KIT			62
	6673920	GUARD			211
	6673958	VALVE			46, 54, 74
	6674000	CLAMP			126
	6674013	TRACK			20
	6674146	VALVE			60, 64, 68
	6674161	TUBING			252
	6674162	COVER			252
	6674163	NUT			252
	6674202	NUT			118, 120
	6674204	MOTOR OIL			1, 312
	6674205	MOTOR OIL			1, 312

Code for disposition of old part number

A — Use up

B — Use on other application (See PNI)

C — File PDR Report with Melroe Parts Sales

D — Part Number Error

DealerNation Quality Equipment Manuals - dealernation@aol.com

Part No.	Description	Was	Code	Page
6674206	MOTOR OIL			1, 312
6674213	COLLAR			109
6674214	SPRING			109
6674215	COLLAR			109
6674228	PANEL			266
6674229	FILTER			266
6674231	VENT			266
6674235	DRIER			280
6674238	PUMP			102, 104, 152
6674290	CONNECTION			186
6674291	PLUG			186
6674292	O-RING			186
6674293	RING			186
6674297	SPOOL			64
6674298	SPOOL			64
6674299	SPOOL			64
6674300	SPOOL			64
6674301	SPOOL			64
6674302	SPOOL			64
6674315	SWITCH			122
6674316	SWITCH			96, 122
6674317	CROSSMEMBER			118
6674320	SOENOID VALVE			178
6674324	CLAMP			182
6674362	GASKET			162, 170, 186
6674376	SOLENOID			122, 124
6674391	COIL			178
6674392	NUT			178
6674400	HOUSING			292
6674401	HOUSING			292
6674402	MOUNT			292
6674403	COVER			16, 118, 120
6674405	BUSHING			18
6674406	SENSOR			18
6674407	SHOULDER BELT			300
6674408	SEAT BELT			300
6674408	SEAT BELT	6675170	A	22
6674450	HANDLE ASSY			126
6674519	WINDOW			232
6674520	WINDOW			232
6674521	WINDOW			232
6674522	WINDOW			232
6674666	LATCH			222, 226
6674667	HANDLE			222, 226
6674669	OIL COOLER			80
6674677	VALVE			76, 96
6674690	CAP			88
6674691	EXCHANGE			142
6674739	GEAR PUMP			113, 152
6674740	HYD FAN			144, 160
6674741	KNOB			232, 242, 266

Code for disposition of old part number

A — Use up

B — Use on other application (See PNI)

C — File PDR Report with Melroe Parts Sales

D — Part Number Error

DealerNation Quality Equipment Manuals - dealernation@aol.com

	Part No.	Description	Was	Code	Page
	6674786	SOLENOID			62
	6674799	ADAPTER			246
*	6674802	CONNECTOR			245, 248, 250
	6674802	CONNECTOR			246
	6674804	CONTROLLER			128
*	6674838	ACTUATOR			134
	6674838	ACTUATOR ASSY			130
	6674879	FLANGE			130
	6674894	NUT			18
	6674895	REATAINER			242
	6674907	NUT			102, 104
	6674908	SHAFT			104
	6674909	RELIEF VALVE	6674912	B D	104
	6674910	O-RING			104
	6674912	RELIEF VALVE			102, 105
	6674913	BARREL			107
	6674914	PLATE			107
	6674915	PISTON			107
	6674916	PLATE			107
	6674917	BALL			107
	6674918	SPRING			107
	6674919	SNAP RING			107
	6674920	PIN			107
	6674921	SPACER			107
	6674922	PISTON			109
	6674923	SPACER			109
	6674924	SPACER			109
	6674925	SPACER			109
	6674926	SHAFT			111
*	6674927	KEY	6671816	A	110
	6674927	KEY			111
	6674928	FLANGE			111
	6674938	GAS SPRING			224, 226
	6674943	CONTROLLER			248
	6674992	ACTUATOR			130
	6674993	CAP			224
*	6675026	CAP			245, 250
	6675026	CAP			246, 248
	6675033	INSERT			16, 118, 120
	6675037	TIRE			309
*	6675074	SEAT BELT			16
	6675099	HORN			288
	6675112	HOUSING			115
	6675113	RETAINER			115
	6675122	PISTON			115
	6675123	PLATE			115
	6675126	BOLT			115
	6675147	CONTROLLER			76, 94
	6675154	HOLDER			122, 126, 130
	6675155	FUSE			122, 126, 130
	6675171	CLAMP			118, 120

Code for disposition of old part number

A — Use up

B — Use on other application (See PNI)

C — File PDR Report with Melroe Parts Sales

D — Part Number Error

DealerNation Quality Equipment Manuals - dealernation@aol.com

	Part No.	Description	Was	Code	Page
	6675172	BRACKET			266
	6675173	ACTUATOR			266
	6675174	BODY			266
	6675175	BRACKET			266
	6675176	SWITCH			266
	6675177	KNOB			266
	6675179	FLANGE			266
	6675180	VENT			266
	6675181	PLUG			266
	6675212	RETAINER			232
	6675215	WINDOW			227
	6675250	HANDLE ASSY			128
	6675260	SHUTTLE VALVE			96
	6675261	SEAL KIT			96
	6675262	SHUTTLE VALVE			96
	6675263	SEAL KIT			96
	6675264	DIRECTIONAL VALVE			96
	6675265	CHECK VALVE			96
	6675273	WASHER	6675263	B D	26
	6675277	MUFFLER			146
	6675278	FILTER			96
*	6675281	MOUNT			250
	6675281	MOUNT			248
	6675288	VALVE			96
*	6675292	ALTERNATOR			138
	6675298	COUPLER			224
	6675299	COUPLER			224
	6675308	KIT			22
	6675309	KIT			22
	6675310	KIT			22
	6675311	KIT			22
	6675312	KIT			22
	6675313	KIT			22
	6675314	KIT			22
	6675315	KIT			22
	6675316	KIT			22
	6675317	SCISSORS			22
	6675318	KIT			22
	6675319	SEAT			22
	6675320	SEAT			22
	6675321	SEAT			22
	6675322	SEAT			22
	6675323	KNOB			22
	6675336	BULB			292
	6675337	BULB			118, 120
	6675365	PULLEY			280
	6675366	HOSE			280
	6675368	HOSE			280
	6675369	HOSE			280
	6675370	HOSE			280
	6675371	CONDENSER			280

Code for disposition of old part number

A — Use up

B — Use on other application (See PNI)

C — File PDR Report with Melroe Parts Sales

D — Part Number Error

DealerNation Quality Equipment Manuals - dealernation@aol.com

	Part No.	Description	Was	Code	Page
	6675378	CLIP			224
	6675379	PIPE			146
	6675381	NUT			113
	6675387	EXTRUSION			232
	6675387	EXTRUSION	6674524	A	242
	6675389	SWITCH			248
	6675390	ALARM			118, 120
	6675468	HANDLE ASSY			126
*	6675469	HANDLE			132
	6675469	HANDLE ASSY			262
	6675469	HANDLE ASSY	6675249	A	128
	6675470	SWITCH			118, 120
	6675495	CONTROLLER			248
	6675497	BLOWER			272, 274, 275, 284, 286
	6675499	HOUSING			272, 284
	6675500	COVER			272, 284
	6675501	PLATE			272, 284
	6675502	PLATE			272
	6675503	HOUSING			275
	6675504	RING			275
	6675505	BLOWER WHEEL			275
	6675506	MOUNT			275
	6675507	COVER			275
	6675509	MOTOR			275
	6675510	CLAMP			272, 274, 284, 286
	6675511	DRAIN VALVE			272, 274, 284, 286
	6675512	CLAMP			272, 274, 284, 286
	6675513	GROMMET			272, 284
	6675514	SEAL			272, 284
	6675522	STROBE			307
	6675523	BEACON			218
	6675524	CLIP			16
	6675533	COIL			280, 284, 286
	6675534	BLOCK VALVE			282, 284, 286
	6675536	BRACKET			282, 284
	6675537	COVER			282, 284
	6675538	O-RING			282, 284, 286
*	6675541	TIRE			309
	6675544	VINYL CAB			228
	6675545	GROMMET			232, 242
	6675546	SEAL			242
	6675558	SEAL			226
	6675558	SEAL	6669390	A	224
	6675562	SEAT BELT			301
	6675568	BUSHING			94
	6675569	PIN			94
	6675571	PLUNGER KIT			94
	6675572	O-RING			94
	6675573	DISC			94
	6675574	RETAINER			94
	6675575	SPRING			94

Code for disposition of old part number

A — Use up

B — Use on other application (See PNI)

C — File PDR Report with Melroe Parts Sales

D — Part Number Error

DealerNation Quality Equipment Manuals - dealernation@aol.com

	Part No.	Description	Was	Code	Page
	6675578	SPRING			94
	6675581	EXTINGUISHER			256
	6675585	WASHER			94
	6675588	SPRING			178
	6675590	DOOR			228
	6675591	HINGE KIT			228
	6675595	SEAT			22
	6675596	SEAT			22
	6675607	INSULATION			277
	6675608	INSULATION			277
	6675609	INSULATION			277
	6675610	INSULATION			277
	6675611	SEAL			276, 277
	6675612	INSULATION			277
	6675613	INSULATION			277
	6675614	INSULATION			277
	6675616	CAP			104
	6675663	NUT			96
	6675667	COMPRESSOR			280
	6675684	VALVE			266
	6675686	HOSE			280
	6675702	OIL SEPERATOR			156
	6675703	HOSE			156
	6675704	CLAMP			156
	6675724	FILTER ASSY	6667744	A	252
	6675731	COIL			96
	6675736	SPOOL			60
	6675737	SPOOL			60
	6675738	SPOOL			60
	6675739	SPOOL			60
*	6675741	SENSOR			132
	6675741	SENSOR			262
*	6675742	LEVER			132
	6675742	LEVER			262
*	6675749	HANDLE			132
	6675749	HANDLE			262
*	6675750	LEVER			132
	6675750	LEVER			262
	6675779	SWITCH			280
*	6675790	THERMOSTAT	6675535	A	284
	6675790	THERMOSTAT			280, 286
	6675796	WASHER			114
	6675797	SEAL KIT			114
	6675798	SEAL			113
	6675799	SEAL			113
	6675800	O-RING			113
	6675801	O-RING			113
	6675802	SEAL			113
	6675803	NUT			160
	6675804	WASHER			160
	6675805	KEY			160

Code for disposition of old part number

A — Use up

B — Use on other application (See PNI)

C — File PDR Report with Melroe Parts Sales

D — Part Number Error

DealerNation Quality Equipment Manuals - dealernation@aol.com

	Part No.	Description	Was	Code	Page
	6675806	ORIFICE			160
	6675814	SEAL KIT			160
	6675815	SEAL			160
	6675816	SNAP RING			160
	6675817	SEAL			160
	6675818	SEAL			160
	6675819	GASKET			160
	6675820	SEAL			160
	6675821	FLANGE			160
	6675822	END COVER			160
	6675823	SCREW			160
	6675824	O-RING			282
	6675825	O-RING			282
	6675828	CLUTCH			280
	6675833	SEAL			232
	6675834	THIMBLE			168
	6675846	POTENTIOMETER	6675178	A	266
	6675858	FLASH TUBE			307
	6675906	BOOT			94
	6675910	KIT			168
	6675926	SEAL			94
	6675927	SCREEN			96
*	6675982	PLUG			120
	6675982	PLUG			118
	6675999	SWITCH			299
	6676000	TEE			299
	6676001	ARM			299
	6676002	BLADE			299
*	6676003	HOSE	6708310	B	224
	6676003	HOSE			299
	6676028	NOZZLE			299
	6676034	KIT			22
	6676056	BRACKET			178
	6676062	RELIEF VALVE			280
	6676063	KIT			282
*	6676152	PLUG	6653490	A	297
*	6676153	CONTROLLER			134
	6676172	WASHER			122
*	6676249	STEM	6666616	B	62, 66, 70
	6676334	PIPE	6672314	A	206
	6676335	PIPE	6672313	A	206
	6676338	GAS SPRING			24
	6676399	VALVE CORE			280
*	6676498	NOZZLE			222
*	6676499	GROMMET			224
*	6676500	ELBOW			224
*	6676501	CLIP			222
*	6676514	CONTROLLER			250
*	6676515	CONTROLLER			250
	6676516	NUT			268
*	6676536	SWITCH			120

Code for disposition of old part number

A — Use up

B — Use on other application (See PNI)

C — File PDR Report with Melroe Parts Sales

D — Part Number Error

DealerNation Quality Equipment Manuals - dealernation@aol.com

	Part No.	Description	Was	Code	Page
*	6676538	INSULATION			278
	6676538	INSULATION			282
	6676539	CLIP			274, 282, 286
	6676549	STEM	6667687	B D	160
*	6676553	CONTROLLER			124
*	6676561	HVAC ASSEMBLY			286
*	6676562	HEATER ASSEMBLY			274
	6676598	KIT			94
	6676604	COVER			274, 286
*	6676606	SPACER			278
*	6676653	SCREW			278
*	6676723	CROSSMEMBER			120
*	6676917	ELBOW			224
*	6676918	HOSE			224
*	6676984	BRACKET			286
*	6677105	COVER			286
*	6677106	O-RING			60, 64, 68
*	6677108	HOUSING			274, 286
*	6677109	COVER			274, 286
*	6677111	SEAL			274, 286
	6677111	SEAL			276
*	6677114	FLANGE			274, 286
*	6677115	RECEPTACLE			274, 286
*	6677116	RETAINER			274, 286
*	6677117	SCREW			274, 286
*	6677118	SCREW			274, 286
	6677118	SCREW			272, 284
*	6677120	COVER			274
*	6677121	CAP			280
*	6677122	CAP			280
*	6677136	SOCKET			245, 246, 248, 250
*	6677175	PANEL			120
*	6677175	PANEL	6672347	A	118
	6677198	CAP			232
*	6677370	DECAL			126, 128
*	6677383	SEAL KIT	6661328	A	62
*	6677485	SPACER			138
*	6677486	NUT			138
*	6677487	COVER			138
*	6677488	RECTIFER			138
*	6677489	REGULATOR			138
*	6677490	BRACKET			138
*	6677491	BRACKET			138
*	6677492	ROTOR			138
*	6677493	STATOR			138
*	6677494	BOLT			138
*	6677495	SPACER			138
*	6677496	PULLEY			138
*	6677497	NUT			138
*	6677504	COVER			278
*	6677513	SEAL			204

Code for disposition of old part number

A — Use up

B — Use on other application (See PNI)

C — File PDR Report with Melroe Parts Sales

D — Part Number Error

DealerNation Quality Equipment Manuals - dealernation@aol.com

	Part No.	Description	Was	Code	Page
*	6677514	KIT			204
*	6677580	SCREW			272, 284
	6677651	HOUSING	6672785	B D	186
*	6677660	SPOOL			68
*	6677661	SPOOL			68
*	6677662	SPOOL			68
*	6677663	SPOOL			68
*	6677709	GASKET	6670945	B D	186
*	6677710	PLUG			186
*	6677817	BOLT			138
*	6677818	BEARING			138
*	6677819	RETAINER			138
*	6677820	BEARING			138
	6700170	WASHER			40, 158
	6700182	COVER			38
*	6700388	DECAL			240
	6700722	SPRING			280
	6701097	WASHER			38, 144
	6701159	SHIM			148
	6701174	WASHER			14
	6701378	SHIM			42
	6701449	FILLER TUBE			34
	6701535	SPRING			18
	6701892	CLAMP			48
	6702301	DECAL			238
	6702302	DECAL			238
	6702402	SHIELD			257
	6702444	FUSE			124
	6702474	RETAINER			280
*	6702543	LEVER			92
	6702593	SPACER			216
*	6702621	GRIP			92
	6702621	GRIP			126
	6702797	CAP			142
	6702971	BOLT			14
*	6702990	BUSHING			132
	6702990	BUSHING			128, 262
	6703640	KIT			302
	6703641	DECAL			302
	6703703	GUIDE			302
*	6703727	DECAL			238
	6703727	DECAL			288
	6704212	HOSE			76
	6704248	PIVOT			30
	6704436	PAD			28
	6704443	BUSHING			280
	6704444	WASHER			280
	6704453	SPRING			30
	6704484	WASHER			156
	6704820	O-RING			280
*	6704892	RIVET			250

Code for disposition of old part number

A — Use up

B — Use on other application (See PNI)

C — File PDR Report with Melroe Parts Sales

D — Part Number Error

DealerNation Quality Equipment Manuals - dealernation@aol.com

	Part No.	Description	Was	Code	Page
	6704892	RIVET	84G-1908	B	248
	6705452	LEVER			158
	6705484	BUSHING			158
	6705920	HANDLE			126
	6705921	HANDLE			288, 296
	6706105	YOKE			56
	6706349	MOUNT			14, 230
	6706517	SCREW			34
	6706558	DECAL			240
	6706565	KIT			126
	6706572	SET SCREW			158
	6706809	DECAL			238
	6707101	SEAL			50, 51
	6707313	PEDAL MOUNT			40
	6707314	PEDAL			40
	6707315	ANGLE			40
	6707337	SWITCH			40
	6707654	IDLER			148
	6707697	WASHER			148
	6707726	MOUNT			216, 288
	6707789	LIGHT			255
	6707852	DECAL			222
	6708009	LINK			56
	6708043	BUSHING			56
	6708189	TUBE			14
	6708314	BUSHING	6705484	A	92
	6708597	HOSE			296
	6708929	DECAL			240
	6708941	DECAL			238
	6708987	BRACKET			12
	6709022	LEVER			158
	6709527	KEY			118, 120, 222, 226, 298
	6710328	LINK			56
	6710358	DECAL			238
	6710435	HARNESS			296
	6710659	BUSHING			18
	6711524	REAR DOOR			26
	6711526	HINGE			26
	6711527	LATCH PLATE			26
	6711628	CONNECTOR			213, 304
	6711664	GUIDE			26
	6711840	DECAL			238
	6711908	SPRING PLATE			16
*	6712365	STEP			134
	6712365	STEP			128
	6712397	CONTROL			128
	6712398	CONTROL			128
	6712536	MOUNT			122, 217
*	6713043	SPACER			132
	6713043	SPACER			128, 262
*	6713349	GRIP			132

Code for disposition of old part number

A — Use up

B — Use on other application (See PNI)

C — File PDR Report with Melroe Parts Sales

D — Part Number Error

DealerNation Quality Equipment Manuals - dealernation@aol.com

	Part No.	Description	Was	Code	Page
	6713349	GRIP			128, 262
	6713507	DECAL			238
	6713589	CLEVIS			18
	6713887	BOLT			18
*	6713898	COVER			132
	6713898	COVER			128, 262
	6714037	LATCH			298
*	6714062	GAS SPRING KIT			14, 230
	6714126	DOOR STOP			26
	6714210	SPRING			26
	6714509	COVER			26
	6714526	DECAL			240
*	6714726	PLUG			134
	6714726	PLUG			128
	6714810	PIN			28
	6714973	KIT			298
	6715106	INSULATION			254, 306
	6715132	RETAINER			124
	6715157	STRIKER ASSY			26
	6715197	CLAMP			122
	6715307	BRACKET			124
	6715365	HARNESS			126, 241, 242
	6715393	INSULATION			254, 306
	6715428	DECAL			254
	6715435	INSULATION			254, 306
	6715860	SEAT BAR			18
	6715863	BRACKET			18
	6715864	BUSHING			18
	6715865	BUSHING			18
	6715866	BUSHING			18
	6715876	PIN ASSY			236
	6715957	COVER			128
	6716419	HARNESS			291
	6716621	COVER			122
	6716744	BOLT			124
*	6716826	BOLT			132
	6716826	BOLT			128, 262
*	6716916	WASHER			134
	6716916	WASHER			92, 128
*	6716977	BELLCRANK			134
	6716977	BELLCRANK			128
	6717056	LEVER			128
	6717146	SPACER			222, 226
*	6717163	HANDLE			132
	6717163	HANDLE			128, 262
	6717343	DECAL			238
	6717360	WINDOW			222
	6717369	BRACKET			222, 226
	6717393	LEVER			128
	6717515	INSULATION			242
	6717517	INSULATION			242

Code for disposition of old part number

A — Use up

B — Use on other application (See PNI)

C — File PDR Report with Melroe Parts Sales

D — Part Number Error

DealerNation Quality Equipment Manuals - dealernation@aol.com

	Part No.	Description	Was	Code	Page
	6717518	INSULATION			242
	6717519	INSULATION			242
	6717520	INSULATION			242
*	6717579	GASKET			34, 124
	6717593	HINGE			224, 226
	6717643	DUCT			266
	6717644	DUCT			266
	6717706	COIL			62, 66, 70
	6717815	ADAPTER			88
	6717827	CAP			88
	6717870	TRACK			232
	6717871	TRACK			232
	6717872	TRACK			232
	6717873	TRACK			232
	6717874	WINDOW			232, 242
	6717907	DECAL			240
	6718034	FUSE			124
	6718101	COVER			16
	6718175	SCREEN			266
	6718198	HARNESS			255
	6718200	DECAL			16
*	6718201	LEVER ASSY			130
*	6718202	LEVER ASSY			130
	6718272	DECAL			240
	6718274	DECAL			238
	6718275	DECAL			238
	6718295	HARNESS			224
	6718305	SHIELD			32
	6718326	MOUNT			260
	6718376	HINGE			224, 226
	6718411	KIT			260
	6718415	SENDER			122
	6718417	SWITCH			122
	6718426	HARNESS			246
	6718489	INSULATION			16
*	6718506	PIN			134
	6718506	PIN			130
	6718520	COVER			222, 226
	6718521	HANDLE			224, 226
	6718579	DECAL			266
	6718580	PANEL			242
	6718659	HOUSING			124
	6718698	DECAL			238
*	6718699	DECAL			134
	6718699	DECAL			128
*	6718701	DECAL			238
	6718702	DECAL			128
*	6718703	DECAL			238
*	6718704	DECAL			134
	6718704	DECAL			128
*	6718706	DECAL			134

Code for disposition of old part number

A — Use up

B — Use on other application (See PNI)

C — File PDR Report with Melroe Parts Sales

D — Part Number Error

DealerNation Quality Equipment Manuals - dealernation@aol.com

	Part No.	Description	Was	Code	Page
	6718706	DECAL			128
	6718750	MOUNT			246
	6718774	DECAL			240
	6718784	COVER			14
	6718796	PLUG			12, 26
	6718803	KIT			266
	6718804	KIT			242, 265, 267
	6718807	KIT	SALES	D	222
	6718812	KIT			246
	6718833	BRACKET			257
	6718834	BRACKET			257
	6718837	SPACER			266
	6718848	HOSE	6800553	B	76, 84
	6718870	HARNESS			118
	6718872	HARNESS			218, 260, 307
	6718873	HARNESS			260
	6718887	PANEL			266
	6718924	KIT			257
	6718948	SNUBBER			96
	6719037	STRIKER			232
	6719038	PLUG			118, 242
	6719063	STOP			232
	6719065	COVER			232
	6719084	BOLT			118, 120
	6719151	HARNESS			288
	6719160	HARNESS			122
	6719176	SWITCH			280
	6719317	WINDOW			299
*	6719383	HARNESS			124
	6719383	HARNESS			126
	6719408	BRACKET			130
	6719434	HARNESS			248
	6719441	DECAL			248
	6719442	MOUNT			248
*	6719448	MAGNET			250
	6719448	MAGNET			248
	6719503	CONTAINER			16
	6719504	INSULATION			16
	6719524	STRIKER			26
	6719525	BAR			26
	6719550	TUBE			26
	6719563	KIT			264
	6719630	HARNESS			280
	6719672	OPERATOR CAB			14, 16
*	6719711	CHANNEL			132
	6719711	CHANNEL			262
*	6719712	CHANNEL			132
	6719712	CHANNEL			262
	6719766	STOP			26
*	6719834	SPACER			132
	6719834	SPACER			262

Code for disposition of old part number

A — Use up

B — Use on other application (See PNI)

C — File PDR Report with Melroe Parts Sales

D — Part Number Error

DealerNation Quality Equipment Manuals - dealernation@aol.com

	Part No.	Description	Was	Code	Page
*	6719835	SLEEVE			132
	6719835	SLEEVE			262
	6719854	KIT			218
	6719857	KIT			307
	6720038	INSTRUCTIONS			219
	6720592	INSTRUCTIONS			257
	6720745	HEATER			219
	6722344	BLACK GOLD			312
	6722597	VELCRO			228
	6722759	INSTRUCTIONS			126
	6722781	PAINT			312
	6722782	PAINT			312
	6722783	PAINT			312
	6722784	PAINT			312
	6722785	PAINT			312
	6722786	PAINT			312
	6722787	PAINT			312
	6722788	PAINT			312
	6722789	PAINT			312
	6724094	ANTI-FREEZE			312
	6724354	ANTI-FREEZE			312
	6724396	INSTRUCTIONS			252
	6724557	MOTOR OIL			1, 312
	6724558	MOTOR OIL			1, 312
	6724559	MOTOR OIL			1, 312
*	6725128	ADAPTER			134
	6725128	ADAPTER			128
*	6725165	MOUNT			134
	6725168	KIT			300
	6725171	SHIELD			222, 226
	6725193	HARNESS			130
	6725201	TANK	6718627	A	224
	6725212	ARM ASSY			280
	6725256	COUNTERWEIGHT			26
	6725273	HARNESS			242, 266
	6725301	COVER			16
	6725302	GASKET			122
	6725303	FRAME			16
	6715338	CABLE			122
	6725360	WINDOW	6675214	A	242
	6725370	DECAL			300
*	6725373	SPRING PLATE			16
	6725390	HARNESS			266
	6725421	HANDLE			233
	6725513	PACKAGE			266
	6725898	KIT			256
	6725906	BRACKET			256
	6725933	HARNESS			266
	6725933	HARNESS	6717877	A	266
	6725934	HARNESS			268
*	6725935	WINDOW			226

Code for disposition of old part number

A — Use up

B — Use on other application (See PNI)

C — File PDR Report with Melroe Parts Sales

D — Part Number Error

DealerNation Quality Equipment Manuals - dealernation@aol.com

	Part No.	Description	Was	Code	Page
	6725936	HARNESS			268
	6725937	CLAMP			226
	6725938	CLAMP			226
	6725946	KIT			233
*	6726258	SCREEN			90
	6726303	DECAL			233
	6726357	HARNESS			282
	6726386	KNOB			266
	6726420	KIT			226
*	6726423	DECAL	6702916	A	289
	6726427	KIT			227
	6726435	DOOR			222
	6726504	BRACKET			124
	6726504	BRACKET	6719408	A	126
	6726608	COVER			266
*	6726621	SCREW			274, 278, 284, 286
	6726621	SCREW			276, 282
	6726655	KIT			299
*	6726679	BRACKET	6564658	A	56
*	6726680	PEDAL	6564656	A	56
*	6726925	HARNESS			134
	6726932	DOOR			226
*	6726945	MOUNT			250
*	6727065	BOLT			132
	6727065	BOLT			262
	6727140	FILTER			266
*	6727155	DECAL			134
	6727155	DECAL			264
*	6727176	KIT			245
*	6727178	HARNESS			120
*	6727190	HARNESS			242
	6727243	DECAL			264
	6727298	KIT			262
*	6727299	INSULATION			242
*	6727308	DECAL	6559071	A	240
*	6727309	DECAL	6559070	A	240
*	6727310	DECAL	6711329	A	238
*	6727311	DECAL	6714139	A	240
	6727326	MOUNT			282
	6727328	HARNESS			264
*	6727468	HARNESS			212
*	6727498	HARNESS			288
*	6727739	KIT			250
	6727739	KIT			248
*	6727912	DECAL			240
*	6728327	DECAL			238
*	6728328	DECAL			134
*	6728567	KIT			276
	6728567	CONNECTOR			275
	6728629	WINDOW			232
*	6728742	HARNESS			130, 134, 264

Code for disposition of old part number

A — Use up

B — Use on other application (See PNI)

C — File PDR Report with Melroe Parts Sales

D — Part Number Error

DealerNation Quality Equipment Manuals - dealernation@aol.com

	Part No.	Description	Was	Code	Page
*	6728990	KIT			278
	6729009	SEAL			232
	6729010	SEAL			232
	6729011	SEAL			232
*	6729012	INSULATION			14
*	6729013	INSULATION			14
*	6729054	HARNESS			134
*	6729058	HARNESS			124, 126
*	6729233	KIT			242
*	6729380	HARNESS			250
	6800009	SAFETY TREAD			238
	6800042	BLOCK			46
	6800109	ROD			158
	6800110	ROD			158
	6800111	MOUNT			158
	6800223	BRACKET			36
	6800238	STOP			148
	6800262	CLAMP			28, 46, 54
	6800293	PIN			148
	6800450	BOLT			148
	6800475	IDLER			148
	6900529	INSTRUCTIONS			220
	6800567	CONNECTOR			46
	6800572	PISTON			58
	6800627	TUBELINE			48
	6800688	PULLEY			148
	6800742	BRACKET			142, 156
	6800808	FLYWHEEL ASSY			148
	6800809	BRACKET			122
	6800823	BUSHING			30
	6800872	HEAD			58
	6801005	SPACER			148
	6801050	INSULATION			142
	6801059	WASHER			222, 299
	6801164	ELBOW			46
	6801165	TEE			82
	6801167	PLUG			64, 68
	6801459	GEARBOX			42
	6801574	HOSE			142
	6801604	U-BOLT			142
	6801642	GEAR			42
	6801712	HOSE			76
	6802017	BRACKET			28
	6802042	ADAPTER			54
	6802043	FITTING			296
	6802061	TUBELINE			46
	6802062	TUBELINE			46
	6802064	HOSE			296
	6802321	O-RING			38
	6802322	COVER			42
	6802376	HOSE			46

Code for disposition of old part number

A — Use up

B — Use on other application (See PNI)

C — File PDR Report with Melroe Parts Sales

D — Part Number Error

DealerNation Quality Equipment Manuals - dealernation@aol.com

	Part No.	Description	Was	Code	Page
	6802377	HOSE			296
	6802378	HOSE			296
	6802379	HOSE			296
	6802384	TUBLINE			48
	6802536	TEE			54
	6802559	TUBELINE			54
	6802566	SPACER			28
	6802618	PIVOT ASSY			28
	6802731	GASKET			146
	6802744	SPACER			57
	6802748	HOSE			36, 84
	6802771	TUBE			34
	6802832	TUBELINE			84
	6802834	TUBELINE			84
	6802839	LINK			148
	6802852	BEARING			148
	6802854	PIVOT PIN			148
	6802983	BRACKET			50
	6802984	WASHER			148, 152
	6803028	ELBOW			46
	6803029	TEE			46
	6803046	SHIM			28
	6803046	WASHER			236
	6803047	SHIM			28
	6803061	COVER			38
	6803062	BRACKET			34
	6803069	BRACKET			54
	6803081	TUBELINE			48
	6803082	TUBELINE			48
	6803083	TUBELINE			48
	6803084	TUBELINE			54
	6803085	TUBELINE			54
	6803086	TUBELINE			296
	6803087	TUBELINE			296
	6803088	CROSS HYDR			296
	6803092	BONNET			64, 68
	6803142	SHIELD			152
	6803149	ADAPTER			80
*	6803150	SPACER			46
	6803150	SPACER			142
	6803151	SPACER			152
	6803245	BUSHING			236
	6803360	BUSHING			56
	6803448	RETAINER			38
*	6803505	HOSE			50
	6803531	TUBELINE			304
	6803532	TUBELINE			304
	6803534	HOSE			304
	6803571	CLAMP			304
	6803584	HOSE			213, 304
	6803585	MOUNT			213, 304

Code for disposition of old part number

A — Use up

B — Use on other application (See PNI)

C — File PDR Report with Melroe Parts Sales

D — Part Number Error

DealerNation Quality Equipment Manuals - dealernation@aol.com

	Part No.	Description	Was	Code	Page
	6803596	KIT			304
	6803605	SEAL KIT			66, 70
	6803607	FITTING			304
	6803659	STOP			30
	6803660	SHIM			30
	6803698	PLATE			144
*	6803932	DECAL			238
	6803932	DECAL			78
	6803976	STRIP			36
	6804050	BRACKET			290
	6804051	BRACKET			290
	6804058	BUSHING			220
	6804067	HOSE			146
	6804069	HOSE			146
	6804073	KIT LIFT			290
	6804074	KIT			220
	6804178	INSULATION			254, 306
	6804180	INSULATION			254, 306
	6804181	INSULATION			254, 306
	6804182	INSULATION			254, 306
	6804183	INSULATION			254, 306
	6804186	INSULATION			254, 306
	6804187	INSULATION			254, 306
	6804202	HOSE			146
	6804236	BRACKET			289
	6804247	KIT			289
	6804256	FITTING			304
	6804300	DECAL			290
	6804339	TEE			82
	6804340	COVER			38
	6804342	WASHER			76
	6804407	ELBOW			76
	6804454	SEAL			146
	6804490	INSULATION			254, 306
	6804493	INSULATION			254, 306
	6804494	INSULATION			254, 306
	6804495	INSULATION			254, 306
	6804496	INSULATION			254, 306
	6804497	INSULATION			254, 306
	6804498	INSULATION			254, 306
	6804533	STOP			28
	6804576	TANK			34
	6804592	NUT			57, 58
	6804604	SEAL KIT			58
	6804639	TEE			34
	6804741	FAN			144
	6805079	HOSE			152
	6805102	BUSHING			60
	6805198	SPACER			142
	6805203	COVER			142, 144
	6805242	ELBOW			62, 66, 70

Code for disposition of old part number

A — Use up

B — Use on other application (See PNI)

C — File PDR Report with Melroe Parts Sales

D — Part Number Error

DealerNation Quality Equipment Manuals - dealernation@aol.com

	Part No.	Description	Was	Code	Page
	6805417	HOSE			142
	6805462	COVER			12
	6805463	BRACKET	6803528	B	D, 304
	6805533	PULLEY			152
	6805549	NUT			152
	6805550	WASHER			152
	6805563	SHIELD			148
	6805582	MAIN FRAME			12
	6805651	BLOCK			60, 66, 70
	6805657	BLOCK			62
	6805675	TANK			142
	6805682	BRACKET			142
	6805696	TEE			62, 66, 70, 76
	6805740	MOUNT			152
	6805743	MOUNT ASSY			152
	6805761	MOUNT			236
	6805762	MOUNT			236
	6805763	WEIGHT			236
*	6805764	BUSHING			236
	6805767	INSULATION			34
	6805773	BRACKET			80
	6805775	BRACKET			80
	6805776	BRACKET			80
	6805779	TANK			84, 88
	6805811	BRACKET			88
	6805812	HOSE			142
	6805813	TUBELINE			142
	6805814	TUBELINE			142
	6805818	BRACKET	6596938	B D	144
	6805849	SHIELD			34
	6805869	BRACKET			56
	6805879	LINK			56
	6805881	BELLCRANK			56
	6805922	STEP			28
	6805924	TUBELINE			54
	6805925	TUBELINE			54
*	6805974	MOUNT ASSY	6800320	A	148
	6805974	MOUNT ASSY			152
	6805984	VALVE			64
	6805998	TUBE			88
	6806006	MOUNT			82
	6806016	SHIELD			142
	6806046	TUBELINE			213
	6806046	TUBELINE	6803583	B D	304
*	6806071	DECAL			236
	6806081	PLATE			144
	6806082	PLATE			144
	6806112	SPACER			148, 152
	6806116	BRACKET			54
	6806123	BRACKET			54
	6806151	HOUSING			144

Code for disposition of old part number

A — Use up

B — Use on other application (See PNI)

C — File PDR Report with Melroe Parts Sales

D — Part Number Error

DealerNation Quality Equipment Manuals - dealernation@aol.com

Part No.	Description	Was	Code	Page
6806179	MOUNT	6596939	B	144
6806202	BRACKET			34
6806273	MOUNT			280
6806281	HOSE			142
6806284	CROSS			80, 84
6806285	ELBOW			80
6806286	ELBOW			80
6806287	TEE			80
6806288	TEE			80
6806289	TEE			84
6806290	TEE			84
6806295	STOP			92
6806296	BELLCRANK			92
6806301	BRACKET			92
6806302	BRACKET			92
6806304	ARM			32
6806305	BRACKET			92
6806306	BRACKET			92
6806307	SHAFT			92
6806308	BRACKET			32
6806309	CLAMP			92
6806343	BRACKET			50
6806348	KIT			213
6806355	CABLE			122
6806383	HOSE			80
6806389	HOSE			54
6806390	HOSE			48
6806391	HOSE			48
6806392	HOSE			84, 88
6806394	HOSE			76
6806395	HOSE			80
6806396	HOSE			80
6806399	HOSE			80, 86
6806403	HOSE			88
6806404	HOSE			50, 76
6806406	HOSE			86
6806407	HOSE			88
6806408	HOSE			76
6806425	KIT			216
6806430	PLATE			236
6806443	GROMMET			80
6806454	U-BOLT			54, 88
6806483	HOSE			88
6806489	TUBELINE			50
6806496	TUBELINE			62, 66, 70
6806500	BRACKET			216
6806506	BRACKET			216
6806559	INSULATION			254, 306
6806561	PLUG			62, 66, 70
* 6806563	BRACKET			12
6806730	VALVE			60

Code for disposition of old part number

A — Use up

B — Use on other application (See PNI)

C — File PDR Report with Melroe Parts Sales

D — Part Number Error

DealerNation Quality Equipment Manuals - dealernation@aol.com

Part No.	Description	Was	Code	Page
6806735	HOSE			80
6806838	SHIELD			32
6806870	MOUNT			280
6806882	BRACKET			80, 280
6806883	BRACKET			80, 280
6806890	BRACKET			12
6806893	PLATE			12
6806941	SEAL KIT			62
6806969	BRACKET			88
6807017	HOSE			269
6807018	HOSE			269
6807019	HOSE			269
6807036	BELT			280
6807081	BRACKET			269
6807149	BRACKET			88
6807152	HARNESS			216
6807156	TUBE			146
6807157	COVER	6806208	A	34
6807159	INSULATION			32
6807186	TANK	6804575	A	34
6807187	MOUNT			142, 156
6807202	PANEL			32
6807216	HOSE			88
6807217	HOSE			88
6807218	HOSE			80, 84
6807219	HOSE			84
6807236	HOSE			84
6807238	TUBE			84
6807245	CONNECTOR			84
6807248	HOSE			34
6807262	SPACER			12
6807266	HARNESS			269
6807275	BRACKET			156
6807276	TUBELINE			156
6807277	HOSE			156
6807278	HOSE			156
6807283	GROMMET			80
6807292	BRACKET			78
6807301	BRACKET			252
6807304AR	KIT			238
6807304BR	KIT			238
6807304JP	KIT			238
6807305	KIT			269
6807307AR	KIT			238
6807307BR	KIT			238
6807316	PLATE			26
* 6807348	DECAL			306
6807348	DECAL	6804345	B D	240
6807369	BUSHING			142
6807422	BOSS			280
6807444	SPACER			26

Code for disposition of old part number

A — Use up

B — Use on other application (See PNI)

C — File PDR Report with Melroe Parts Sales

D — Part Number Error

DealerNation Quality Equipment Manuals - dealernation@aol.com

	Part No.	Description	Was	Code	Page
	6807520	INSULATION			254, 306
*	6807540	MOUNT			230
*	6807540	MOUNT	6806207	A	14
	6807545	WEDGE			30
	6807574	BRACKET	6805921	B D	54
	6807576	SPRING			280
	6807723	DECAL	6804790	B	238
	6807724	DECAL			238
	6807724	DECAL	6806947	B	236
	6807729	TOOL HOLDER	6715318	B	26
*	6807730	PLUG			120
*	6807997	BRACKET			230
	6807997	BRACKET	6805826	A	14
	6808104	KIT			306
	6808111	COVER	6805870	A	32
	6808130	FLOOR	6805868	A	32
	6808145	HOSE	6671494	A	46
	6808146	HOSE	6671495	A	46
	6808147	HOSE	6671496	A	46
	6808148	HOSE	6806388	A	46
	6808212	BRACKET			217
	6808226	CABLE			217
	6808227	CABLE			217
	6808262	KIT			217
	6808263	BRACKET			217
	6808284	HOSE	6670646	A	46
	6808285	HOSE			80, 282
*	6808309	PIN			14, 230
*	6808310	KIT			230
*	6808364	HARNESS			134
	6808381	KIT			280
	6808791	SEAL KIT	6803313	B	57
*	6808878	BOLT	6576280	B D	122
	6808878	BOLT			217
*	6808899	TANK			84, 90
*	6808900	ELBOW			88
*	6809109	VALVE			68
*	6809198	PLUG	90KV-5	B	57, 58
	6809198	PLUG			70
	6809234	SEAL	6630142	A	43
*	6809425	SEAL KIT	6586461	A	62, 66, 70
*	6809448	SEAL KIT	6628835	A	62, 66, 70
*	6809553	TEE			88
*	6809567	COVER			32
*	6809777	BRACKET			134
*	6809777	BRACKET	6807058	A	130
*	6810036	BUSHING			28
*	6810144	WASHER			148
	6900421	INSTRUCTIONS			296
	6900515	INSTRUCTIONS			304
	6900519	INSTRUCTIONS			243

Code for disposition of old part number

A — Use up

B — Use on other application (See PNI)

C — File PDR Report with Melroe Parts Sales

D — Part Number Error

DealerNation Quality Equipment Manuals - dealernation@aol.com

	Part No.	Description	Was	Code	Page
	6900520	INSTRUCTIONS			290
	6900533	INSTRUCTIONS			289
	6900833	INSTRUCTIONS			236
	6900848	INSTRUCTIONS			260
	6900850	INSTRUCTIONS			268
	6900851	INSTRUCTIONS			242
	6900853	INSTRUCTIONS			232
	6900855	INSTRUCTIONS			246
	6900860	INSTRUCTIONS			118
	6900912	INSTRUCTIONS			214
	6900921	INSTRUCTIONS			248
	6900991	INSTRUCTIONS			218
	6900992	INSTRUCTIONS			307
	6901006	INSTRUCTIONS			216
	6901010	INSTRUCTIONS			300
	6901011	INSTRUCTIONS			301
	6901013	INSTRUCTIONS			226, 232
	6901013	INSTRUCTIONS	6900854	A	224
	6901025	INSTRUCTIONS			256
	6901029	INSTRUCTIONS			233
	6901036	INSTRUCTIONS			227
	6901057	INSTRUCTIONS			306
	6901061	INSTRUCTIONS			299
	6901064	INSTRUCTIONS			217
	6901075	INSTRUCTIONS			282
*	6901076	INSTRUCTIONS			245
*	6901077	INSTRUCTIONS			230
	6901100	INSTRUCTIONS			264
*	6901116	INSTRUCTIONS			250
*	6901120	INSTRUCTIONS			278
*	6901146	INSTRUCTIONS	6900913	B	288
*	6901213	INSTRUCTIONS			276
*	6901220	KIT			238, 240
	7000007	SEAL			182
	7000010	SPACER			20
	1CM-620	BOLT			222, 226
	1CM-635	BOLT			222, 226, 282, 284, 286
	1CM-640	BOLT			222, 226
	1CM-830	BOLT			310
	1CM-1020	BOLT			122
	1CM-1030	BOLT			148
	1CM-1665	BOLT			152
	4DM-5	NUT			255
	4DM-6	NUT			222, 226
	4E-6	WASHER			80, 84
	4E-7	WASHER			80, 84
	4F-6106	PIN			18
	5CM-1025	SCREW			280
	5CM-1080	SCREW			280
	5HM-20	CLAMP			156

Code for disposition of old part number

A — Use up

B — Use on other application (See PNI)

C — File PDR Report with Melroe Parts Sales

D — Part Number Error

DealerNation Quality Equipment Manuals - dealernation@aol.com

Part No.	Description	Was	Code	Page
5HM-23	CLAMP			34, 88, 156
5HM-27	CLAMP			156
5HM-35	CLAMP			80
5HM-40	CLAMP			80, 84
5HM-44	CLAMP			88
5HM-53	CLAMP			142
5HM-58	CLAMP			34
5HM-61	CLAMP			146
6E-5	WASHER			118, 120
6E-6	WASHER			82, 122
6EM-60	WASHER			222, 226
6J-807	KEY			166, 174
7C-620	BOLT	37C-616	A	56
7J-10208	KEY			43
7JM-90	SNAP RING			42
8D-4	NUT			158
8D-6	NUT			92
8D-8	NUT			92
9G-620	SCREW			30
9KV-2	ADAPTER			296
9KV-3	ADAPTER			304
9KV-5	ADAPTER			88
10C-410	BOLT			232
10C-412	BOLT			122
10C-416	BOLT			232
10C-616	BOLT			18
10H-25	GREASE ZERK			28, 32, 236
10H-35	GREASE ZERK			30
10KN-7	TEE			80
11KN-5	ELBOW			304
11KN-6	ADAPTER			269
12D-8	NUT			40, 124
12D-10	NUT			124, 128, 132, 256, 262
13F-2	PLUG			184, 207
14D-10	NUT			124
14J-5032	PIN	14J-5044	A	30
15K-5	ELBOW			296
15K-6	CONNECTOR			152, 156
15KV-5	ADAPTER			76, 84, 213, 304
15KV-6	CONNECTOR			88
15KV-7	CONNECTOR			80, 84
16F-8	PLUG			186, 188
16F-12	PLUG			38
17C-410	BOLT			216, 288
17C-412	BOLT			128, 134
17C-420	BOLT			222, 226
17C-508	BOLT			42
17C-512	BOLT			224, 226
17C-516	BOLT			252
17C-540	BOLT			50, 54, 124
17C-610	BOLT			40

Code for disposition of old part number

A — Use up

B — Use on other application (See PNI)

C — File PDR Report with Melroe Parts Sales

D — Part Number Error

DealerNation Quality Equipment Manuals - dealernation@aol.com

Part No.	Description	Was	Code	Page
17C-612	BOLT			16, 32, 134, 142, 146, 148, 226
17C-612	BOLT	17C-812	B	224
17C-616	BOLT			32, 42
17C-616	BOLT	17C-612	B	257
17C-620	BOLT			40, 56, 80, 148, 158
17C-624	BOLT			56, 80, 84, 226
17C-628	BOLT			226
17C-636	BOLT			30, 92
17C-640	BOLT			18
17C-644	BOLT			148
17C-648	SCREW			280
17C-652	BOLT			150
17C-656	BOLT			46
17C-672	BOLT			32
17C-680	BOLT			152, 296
17C-716	BOLT			16
17C-816	SCREW			150
17C-820	BOLT			26, 42, 152
17C-828	BOLT			148
17C-832	SCREW			152
17C-836	BOLT			28
17C-860	BOLT			38, 76
17C-880	BOLT			148
17C-1024	BOLT			43
17C-1056	BOLT			14
17C-1248	BOLT			28, 148, 152, 236
17C-1256	BOLT			28
17K-5	ELBOW			50
17KV-3	ELBOW			76, 296
17KV-5	ELBOW			76, 86
17KV-6	ELBOW			88, 296
17KV-7	ELBOW			84
18C-824	SCREW			148
18KV-5	ELBOW			76
18KV-7	ELBOW			80
19F-4	ADAPTER			122, 154
19J-16	FLANGE			80
19J-20	CLAMP			80, 84
20J-12	CLAMP			80, 84
21K-5	TEE			50, 304
21KV-3	TEE			76
21KV-5	TEE			76, 84
21KV-6	TEE			304
23G-812	SCREW			40
24F-1	ELBOW			124
24H-8	NUT			42
25E-8	WASHER			40
25E-11	WASHER			255
25E-13	WASHER			216, 288
25E-14	WASHER			232
25E-15	WASHER			124, 217, 310

Code for disposition of old part number

A — Use up

B — Use on other application (See PNI)

C — File PDR Report with Melroe Parts Sales

D — Part Number Error

DealerNation Quality Equipment Manuals - dealernation@aol.com

Part No.	Description	Was	Code	Page
25E-16	WASHER			152, 224, 226
25E-17	WASHER			130, 158, 280
25E-18	WASHER			32, 92, 144, 217
25E-21	WASHER			28, 142, 304
25G-410	BOLT			122, 126, 130
25G-510	BOLT			14
25G-512	BOLT			20
25G-520	BOLT			20
25G-612	BOLT			248, 250
25GT-410	BOLT			128, 132, 262
25K-30218	O-RING			57
25K-30500	O-RING			38
27E-5	WASHER			122
27E-6	WASHER			134
27E-8	WASHER			28
27E-12	WASHER			236
27H-108	WASHER			42
29CM-625	BOLT			156
29CM-1020	BOLT			146, 156
29CM-1220	BOLT			152
29CM-1245	BOLT			174
29CM-1650	BOLT			152
29G-412	SCREW			66, 70
29G-416	SCREW			62, 66, 70
29G-436	SCREW			66, 70
29G-444	SCREW			62
30G-416	BOLT			60, 64, 68
30H-21	CLAMP			260
30H-23	CLAMP			32, 40, 46, 54, 158, 288, 296
30H-31	CLAMP			48, 54, 84, 156
30H-35	CLIP			34, 78, 122, 144, 296
30H-38	CLAMP			48, 296
30H-42	CLAMP			291
30H-50	CLAMP			36, 84, 124, 156, 280
30H-60	CLAMP			54, 122, 154
30H-62	CLIP			213, 304
30H-64	CLIP			269
30H-65	CLIP			280
31C-410	BOLT			256
31C-420	BOLT			26
31C-428	BOLT	35C-428	B	50
31C-640	BOLT	35C-636	B	46
31C-832	BOLT			28
31C-1224	BOLT			38
31C-1228	BOLT			12, 236, 290
31C-1236	BOLT			12, 38, 217, 236
31H-38	CLAMP			78
31H-42	CLAMP			78, 296
31H-46	CLAMP			34
31H-46	CLAMP	31H-42	B	280
35C-410	BOLT			88, 266, 280

Code for disposition of old part number

A — Use up

B — Use on other application (See PNI)

C — File PDR Report with Melroe Parts Sales

D — Part Number Error

DealerNation Quality Equipment Manuals - dealernation@aol.com

Part No.	Description	Was	Code	Page
35C-412	BOLT			18, 260
35C-512	BOLT			54, 122, 269, 288
35C-516	BOLT			14, 26, 230
35C-520	BOLT			152
35C-528	BOLT			142
35C-540	BOLT			54
35C-610	BOLT			158
35C-612	BOLT			80, 300
35C-616	BOLT			32, 50, 54, 84, 124, 144
35C-620	BOLT			156, 158
35C-624	BOLT			92, 152, 158
35C-632	BOLT			48
35C-636	BOLT			56
35C-816	BOLT			34
35C-824	BOLT			152, 280
35C-840	BOLT			152
35C-1032	BOLT			289
36K-5	CAP			296
36K-6	CAP			88, 152
37C-412	BOLT			260
37C-424	BOLT			266
37C-512	BOLT			26, 216, 252, 266, 291
37C-512	BOLT	35C-510	B D	146
37C-612	BOLT			26, 82
37C-616	BOLT			48, 80, 88, 122
37C-620	BOLT			36, 54, 122, 144
37C-624	BOLT			14
37C-628	BOLT			26
37C-644	BOLT			26
37C-656	BOLT			46, 48
37C-820	BOLT			26
37C-836	BOLT			28
37C-872	BOLT	84G-3712	B	304
37C-880	BOLT			28
37C-888	BOLT			28
37C-1040	BOLT			12
38C-616	BOLT			56
38C-820	SCREW			280
38C-840	BOLT			32
38C-856	BOLT			26
40DM-8	NUT			310
40K-2	PLUG			190
41E-606	FITTING			296
41K-4	PLUG			207
42E-606	FITTING			50, 54, 296
42E-1212	FITTING			296
42HC-200	CLAMP			34
42HC-200	CLAMP	5HM-40	B	34
43C-524	BOLT			71
43C-532	BOLT			71
43C-616	BOLT	45C-616	B D	122

Code for disposition of old part number

A — Use up

B — Use on other application (See PNI)

C — File PDR Report with Melroe Parts Sales

D — Part Number Error

DealerNation Quality Equipment Manuals - dealernation@aol.com

Part No.	Description	Was	Code	Page
43DM-6	NUT			156
43E-606	TEE			296
44E-606	ELBOW			50
44H-64	CLAMP			146, 211
45G-1006	BOLT			256
45KV-5	ADAPTER			76
46D-5	NUT			142, 224, 226
46E-810	ADAPTER			48
47K-5	PLUG			88
49DM-8	NUT			146
53D-6	NUT			14, 18, 124
53D-10	NUT			12, 14
53D-12	NUT	83D-12	B	12, 217, 236, 290
53DM-12	NUT	1DM-12	B D	152
54K-20002	O-RING			62, 64, 68
54K-20028	O-RING			71, 96, 160
54K-30218	O-RING			58
54K-40224	O-RING			57, 58
54K-40300	O-RING			57, 58
55D-5	NUT			146
55D-6	NUT			26, 48, 158, 226, 280
55D-8	NUT			28, 148, 152, 154
55K-12	O-RING			48, 54, 296, 304
55K-14	O-RING			48
55K-16	O-RING			46, 48
55K-18	O-RING			54, 296
55K-204	O-RING			62, 66, 70, 71
55K-212	O-RING			62, 64, 68, 71
55K-214	O-RING			80, 84
55K-219	O-RING			80
55K-222	O-RING			80, 84
57D-4	NUT			50, 216
57D-5	NUT			50, 142, 216, 269, 280
57D-5	NUT	61D-5	B D	26
57D-6	NUT			14, 26, 36, 50, 80, 88, 124, 142, 144 152, 156, 158
57D-6	NUT	55D-6	B	46, 54
57F-2	OLIVE			190
57F-3	SEAL			206
57G-608	SCREW			266
58F-2	NUT			190
58F-3	NUT			206
58K-12	O-RING			62, 66, 70, 296
58K-14	O-RING			60, 64, 68
58K-16	O-RING			48
58K-120	O-RING			130, 134
58K-124	O-RING			60, 64, 68
58K-127	O-RING			62, 66, 70
59D-4	NUT			122, 126, 130, 232, 260
59D-5	NUT			14, 122, 217, 224, 226, 252, 266
59D-6	NUT			26, 32, 124, 134

Code for disposition of old part number

A — Use up

B — Use on other application (See PNI)

C — File PDR Report with Melroe Parts Sales

D — Part Number Error

DealerNation Quality Equipment Manuals - dealernation@aol.com

Part No.	Description	Was	Code	Page
59D-8	NUT			14, 28
59G-620	BOLT			216
61D-4	NUT			122, 130, 222, 226
61D-5	NUT			26, 224, 226
61D-6	NUT			26, 134
61D-6	NUT	61D-8	B	224
61E-6	NUT			304
61E-12	NUT			54
69G-436	BOLT			130, 134
75K-4	O-RING			88, 96
75K-6	O-RING			50, 54, 76, 96, 213, 296, 304
75K-8	O-RING			48, 88, 214, 296
75K-10	O-RING			46, 86, 88, 296
75K-12	O-RING			46, 54, 296
75K-16	O-RING			80
79K-2	O-RING			297
79K-3	O-RING			96
79K-6	O-RING			50, 60, 62, 66, 70, 78, 88, 214
				296, 304
79K-7	O-RING			62, 66, 70
79K-8	O-RING			60, 64, 68, 213, 304
79K-10	O-RING			60, 64, 68, 82
79K-12	O-RING			82, 84, 88
79K-14	O-RING			34, 124
79K-20	O-RING			88
79K-24	O-RING			88
80F-6	NUT			296, 304
80F-7	NUT			88
80K-14	RING			60, 64, 68
80K-232	BACKUP RING			57, 58
83D-4	NUT			18, 266, 288
83D-5	NUT	61D-5	B	288
83D-6	NUT			158, 248, 250, 257
83D-8	NUT			26
83K-3	ADAPTER			88
83K-5	ELBOW			76
83K-7	FITTING			84, 88
83K-8	FITTING			296
84G-3112	BOLT			246, 248, 250
84G-3116	BOLT			92
84G-3710	BOLT			142, 144
84G-3712	BOLT			12, 32, 34, 38, 40, 118, 120, 122
				148, 154, 252, 280
84G-3716	BOLT			32, 38, 54, 56, 80, 122, 144, 156, 217
84G-3720	BOLT			28, 144
84G-3724	BOLT			32, 158
85D-4	NUT			158
85D-5	NUT			56, 158, 291
85D-6	NUT			16, 122
85D-7	NUT			16
85D-8	NUT			14, 46, 54

Code for disposition of old part number

A — Use up

B — Use on other application (See PNI)

C — File PDR Report with Melroe Parts Sales

D — Part Number Error

DealerNation Quality Equipment Manuals - dealernation@aol.com

	Part No.	Description	Was	Code	Page
	85K-5	ELBOW			50, 76
	86D-4	NUT			158
	86F-5	NUT			76, 213, 296, 304
	86F-8	NUT			54
	86K-6	ELBOW			88
	86K-7	ELBOW			88
	87D-5	NUT			14, 230, 252
	87G-1008	SCREW			266
	87K-5	ELBOW			76
	88K-5	TEE			76
	90KV-3	PLUG			76, 115
	90KV-5	PLUG			62, 66
	90KV-8	PLUG			62, 64, 68
	91D-7	NUT			222, 226
	91G-416	BOLT			232
	91G-416	BOLT	88G-1216	B	242
	92F-4	NUT			206
	93G-828	SCREW			38
	95D-5	NUT			14
	95D-6	NUT			30, 32, 40, 56, 92, 226
	95D-8	NUT			28, 304
	95K-4	O-RING			76, 115
	95K-6	O-RING			57, 58, 62, 66, 70
	95K-12	O-RING			62, 64, 68
	96D-8	NUT			144
	96K-8	O-RING			269
	97D-5	NUT			122
	97D-6	NUT			56, 122, 142, 144, 148
	97D-10	NUT			289
	97K-4	O-RING			76, 296
	97K-6	O-RING			62, 76, 84, 86, 88, 213, 304
	97K-8	O-RING			88, 304
	97K-10	O-RING			80, 84
	97K-12	O-RING			82, 84
	98D-6	NUT			130, 134
	99K-4	O-RING			296
	99K-4	O-RING			76
	99K-5	O-RING			76
	99K-6	O-RING			60, 64, 68, 76, 84, 213, 304
	99K-8	O-RING			88, 90
	99K-8	O-RING	75K-8	A	304
	99K-10	O-RING			80, 84
	99K-12	O-RING			82, 84
*	NAP	COIL	6675498	A	272, 284
*	NAP	HARNESS	6714546	A	255
*	NAP	HEATER	6674933	A	272
*	NAP	HEATER COIL	6676603	A	274, 286
*	NAP	HEATER/AC	6674226	A	284
*	NAP	HORN KIT	6719043	A	288
*	NAP	INSTRUCTIONS	6900860	A	120

Code for disposition of old part number

A — Use up

B — Use on other application (See PNI)

C — File PDR Report with Melroe Parts Sales

D — Part Number Error

DealerNation Quality Equipment Manuals - dealernation@aol.com

	Part No.	Description	Was	Code	Page
*	NAP	INSULATION	6719360	A	14
*	NAP	KIT	6673875	A	107
*	NAP	KIT	6719431	A	248
*	NAP	LEVER	6717055	A	128
*	NAP	LEVER	6717056	A	128
*	NAP	LEVER ASSY	6718194	A	130
*	NAP	LEVER ASSY	6718195	A	130
*	NAP	SEAT BELT	6725403	A	16
*	NAP	WINDOW	6725935	A	226
	NAP	CONTROL	6725269	A	248
	NAP	COVER	6674236	A	266
	NAP	DOOR	6717590	A	222
	NAP	FILTER	6674230	A	266
	NAP	GUIDE	6711907	A	16
	NAP	HARNESS	6715729	A	296
	NAP	HARNESS	6725275	A	266
	NAP	HOSE ASSY	6806153	A	142
	NAP	INSTRUCTIONS	6900860	A	118, 242
	NAP	PLUG	6675111	A	115
	NAP	POLISH	6630190	A	312
	NAP	POLISH	6630191	A	312
	NAP	SEAT	6674404	A	22
	NAP	SEAT	6674896	A	22
	NAP	SEAT BELT	6667875	A	16
	NAP	SHIELD	6718179	A	222
	NAP	WEDGE	6589688	A	30

Code for disposition of old part number

A — Use up

B — Use on other application (See PNI)

C — File PDR Report with Melroe Parts Sales

D — Part Number Error

DealerNation Quality Equipment Manuals - dealernation@aol.com