SEBP2393-45 (en-us)
July 2018

RUTHZIL TRATOR COMERCIAL DE PEÇAS LTDA 11 97083-6812 ROLANDO

Parts Manual

963B Track-Type Loader

9BL1-UP (Machine)
4TF17400-UP (Engine)
8EX1-UP (Transmission)
9JH1-UP (Ripper)

Powered By 3116 Engine

Product and Dealer Information

Note: For product identification plate locations, see the section “Product Identification Information” in the Operation and Maintenance Manual.

Delivery Date: _____

Product Information

Model: _____

Product Identification Number: _____

Engine Serial Number: _____

Transmission Serial Number: _____

Generator Serial Number: _____

Attachment Serial Numbers: _____

Attachment Information: _____

Customer Equipment Number: _____

Dealer Equipment Number: _____

Dealer Information

Name: _____ Branch: _____

Address: _____

_____

_____

	Dealer Contact	Phone Number	Hours
Sales:	_____	_____	_____
Parts:	_____	_____	_____
Service:	_____	_____	_____

MEMORANDA

TABLE OF CONTENTS

NAME PAGE

GENERAL INFORMATION. A5

REPAIR ALTERNATIVES. A8

SUPPLEMENTAL COOLANT ADDITIVES. A9

MAINTENANCE PARTS A10

INDEX A14

MACHINE ARRANGEMENT 1
- CHASSIS AR. 1
- GENERAL AR 2
- INSTALLATION AR 3
- MACHINE AR 3
- MODIFICATION AR 4
- WASTE HANDLING AR 5

ENGINE ARRANGEMENT 6
- ENGINE AR 6
- INSTALLATION AR-ENGINE 14

BASIC ENGINE 15
- CAMSHAFT GP 15
- CARRIER GP-SEAL. 17
- COVER GP-CYLINDER BLOCK. 18
- COVER GP-FRONT HOUSING 20
- COVER GP-SOUND SUPPRESSION 21
- COVER GP-VALVE MECHANISM 23
- CRANKSHAFT GP. 25
- CYLINDER BLOCK GP 29
- CYLINDER HEAD AS 40
- CYLINDER HEAD GP. 48
- DAMPER & PULLEY GP 56
- DRAIN GP-ENGINE OIL. 59
- DRIVE GP-FAN. 60
- DRIVE GP-WATER PUMP. 61
- FLYWHEEL GP. 62
- GEAR GP-FRONT 63
- HOUSING GP-FLYWHEEL. 66
- HOUSING GP-FRONT 67
- LIFTING GP-ENGINE 69
- MOUNTING GP-ENGINE & XMSN 70
- PAN GP-OIL 71
- PISTON & ROD GP 72
- PLATE GP-SOUND SUPPRESSION. 76
- PULLEY GP-CRANKSHAFT 77
- PULLEY GP-FAN 78
- ROCKER ARM GP 81
- SEAL GP-CRANKSHAFT 83
- SUPPORT GP-ENGINE 86
- SUPPRESSION AR-SOUND 87
- VALVE MECHANISM GP. 88

LUBRICATION SYSTEM 89
- BREATHER GP 89
- FILLER GP-ENGINE OIL 90
- FILTER GP-ENGINE OIL 92
- FUMES DISPOSAL GP 93
- GAUGE GP-OIL LEVEL (DIPSTICK) 94
- LINES GP-ENGINE OIL 95
- LINES GP-TURBOCHARGER OIL. 97
- PUMP GP-ENGINE OIL 98

COOLING SYSTEM. 102
- COOLER AR-HIGH AMBIENT TEMP 102
- COOLER GP-ENGINE OIL 103
- COVER GP-RADIATOR CAP 105
- FAN GP-BLOWER 106
- HOUSING & REGULATOR GP 108
- LINES GP-WATER. 110
- PUMP GP-WATER. 114
- RADIATOR & HYD OIL COOLER GP 120
- RADIATOR GP 121

AIR INLET AND EXHAUST SYSTEM 129
- AFTERCOOLER GP-WATER 129
- AIR CLEANER GP. 130
- CARTRIDGE GP-TURBOCHARGER 140
- KIT-TURBOCHARGER GASKET 143
- LINES GP-AIR. 144
- MANIFOLD GP-EXHAUST 152
- MANIFOLD GP-INLET. 153
- MOUNTING GP-MUFFLER 154
- MUFFLER GP 157
- PRECLEANER GP 159
- PRESCREENER GP 161
- TURBOCHARGER GP 162

FUEL SYSTEM. 168
- CAP GP-FUEL FILLER. 168
- CONTROL GP-FUEL INJECTION 169
- CONTROL GP-GOVERNOR 171
- DRIVE GP-GOV & TRANSFER PUMP 176
- FASTENER GP-FUEL INJ PUMP 178
- FILTER GP-FUEL. 179
- FILTER GP-SECONDARY FUEL 180
- GOVERNOR GP. 181
- GOVERNOR GP-UNIT INJECTOR 182
- KIT-INJECTOR 205
- LINES GP-FUEL. 206
- LINES GP-FUEL FILTER. 209
- LINES GP-FUEL RATIO CONTROL. 216
- LINES GP-GOVERNOR OIL 218
- PUMP GP-FUEL INJECTION 219
- PUMP GP-FUEL PRIMING 222
- PUMP GP-FUEL PRM & PRIM FILTER 227
- SEPARATOR GP-WATER 228

TABLE OF CONTENTS

NAME PAGE

TANK GP-FUEL 230
VALVE GP-FUEL RELIEF 233

ELECTRICAL AND STARTING SYSTEM 234
ALARM GP 234
ALTERNATOR GP-CHARGING 235
BATTERY & WIRING GP 250
BATTERY GP 267
CONTROL GP-BUCKET POSITIONER 269
CONTROL GP-LIFT KICKOUT 270
CONVERTER GP-ELECTRICAL 271
HEATER AR-AIR INLET 272
HEATER GP-JACKET WATER 275
KIT-DIAL SENSOR 280
LAMP GP-DOME 281
LAMP GP-FLOOD 283
LIGHTING GP 286
LIGHTING GP-FLOOD 287
SOLENOID GP-SHUTOFF 295
STARTING AID GP 297
STARTING AID GP-ETHER 298
STARTING MOTOR GP-ELECTRIC 300
SUPPRESSOR GP-ELECTRONIC 312
SWITCH GP-DISCONNECT 313
SWITCH GP-MAGNETIC 314
SWITCH GP-START 318
WARNING GP-BACKUP 319
WIRING GP-CONSOLE 320
WIRING GP-PLATFORM 327

POWER TRAIN 336
CASE GP-HYDROSTATIC POWER 336
CONTROL AR-HYDROSTATIC POWER 343
CONTROL GP-SPD OVERRIDE & BRK 344
COOLER GP-TRANSMISSION OIL 347
COVER GP-SHIPPING 348
COVER GP-XMSN OIL FILLER CAP 350
CYLINDER GP-SERVO 351
DRIVE GP-FINAL 353
DRIVE GP-FLEXIBLE COUPLING 358
FASTENER GP-XMSN & DRIVE MOTOR 359
FILLER GP-POWER TRAIN OIL 360
FILTER GP-OIL 362
FINAL DRIVE & BRAKE GP 363
LIFTING GP-TRANSMISSION 369
LINES GP-DRAIN 370
LINES GP-HYDROSTATIC 371
LINES GP-POWER TRAIN COOLER 375
LINES GP-TRANSMISSION OIL 377
LINKAGE GP-HYDRO POWER CASE 381

NAME PAGE

LINKAGE GP-SERVO 384
MOTOR GP-PISTON 387
POWER TRAIN AR 390
PUMP GP-GEAR 391
ROTATING GP-PUMP 395
SEGMENT GP-SPROCKET 399
VALVE GP-ACTUATOR 400
VALVE GP-BLOCKER 402
VALVE GP-BYPASS 403
VALVE GP-CONTROL 404
VALVE GP-PUMP CONTROL 406
VALVE GP-RELIEF 408
VALVE GP-REPLENISHING 416
VALVE GP-SHUTTLE 422

FRAME AND BODY 423
BOX GP-BATTERY 423
BRACE GP 424
BUMPER GP 425
CONVERSION AR-NON-ROPS 429
DOOR AS 430
ENCLOSURE GP-ENGINE 432
ENCLOSURE GP-ENGINE & XMSN 439
FRAME GP-LOADER 442
GUARD AR-RADIATOR 446
GUARD GP-BOTTOM 447
GUARD GP-FENDER 451
GUARD GP-FRONT 453
GUARD GP-IDLER 457
GUARD GP-LINES 458
GUARD GP-RADIATOR 460
HITCH GP 465
KIT-SEAL 466
LIFTING GP-MACHINE 467
SCREEN GP 470
SEAL GP-ENCLOSURE 471
SUPPORT GP-TILT PLATFORM 472
SUPPRESSION AR-SOUND 473
SUPPRESSION GP-SOUND 474
TILT GP-PLATFORM 478

UNDERCARRIAGE 479
BAR GP-EQUALIZER 479
CAP GP-TRACK ROLLER 481
FRAME GP-TRACK ROLLER 484
GUARD AR-SEAL 486
GUARD GP-TRACK GUIDE 487
GUARD GP-TRACK ROLLER 489
IDLER GP-FRONT 491
LINK AS-TRACK 498
LINK AS-TRACK BOX 503
PIVOT BAR GP 511
ROLLER GP-TRACK CARRIER 513
ROLLER GP-TRACK-DOUBLE FLANGE 515

TABLE OF CONTENTS

NAME	PAGE
ROLLER GP-TRACK-SINGLE FLANGE	523
TRACK GP	530
UNDERCARRIAGE AR	534
STEERING AND BRAKING SYSTEM	535
BRAKE GP-PARKING	535
CONTROL GP-PARKING BRAKE	537
HYDRAULIC SYSTEM	539
CONTROL GP-DIVERTER & VALVE	539
COOLER & MTG GP-HYDRAULIC OIL	541
CYLINDER & MTG GP-RIPPER	543
CYLINDER & SEAL GP-BUCKET	545
CYLINDER GP-BUCKET	546
CYLINDER GP-LIFT	548
CYLINDER GP-RIPPER	550
CYLINDER GP-TILT	552
HYDRAULIC AR	554
HYDRAULIC AR-3 VALVE	554
KICKOUT & POSITIONER GP	562
LINES GP-BUCKET	566
LINES GP-DIVERTER VALVE	568
LINES GP-FRONT	570
LINES GP-HYDRAULIC OIL COOLER	573
LINES GP-LIFT CYLINDER	574
LINES GP-PILOT	578
LINES GP-PUMP	585
LINES GP-REAR ATTACHMENT	589
LINES GP-RIPPER	591
LINES GP-TILT CYLINDER	592
MOUNTING GP-ATTACHMENT	594
MOUNTING GP-CYLINDER	595
MOUNTING GP-HYDRAULIC TANK	596
PUMP & MOUNTING GP	597
PUMP GP-GEAR	600
TANK & FILTER GP-HYDRAULIC	602
VALVE GP-CHECK	610
VALVE GP-CONTROL	611
VALVE GP-COOLER BYPASS	625
VALVE GP-DIVERTER	626
VALVE GP-PILOT	627
VALVE GP-RELIEF	660
VALVE GP-SELECTOR & PRESS CONT	665
VALVE GP-SHUTTLE	666
IMPLEMENTS	667
CONTROL GP-BUCKET	667
CONVERSION AR-IMPLEMENT CNTLS	669
OPERATOR STATION	670
AIR CONDITIONER GP	670
CAB AR	688
COMPRESSOR GP-REFRIGERANT	689
CONDENSER GP-REFRIGERANT	695
CONTROL GP-DIRECTION & SPEED	700
CONTROL GP-HYDRAULIC	704
CONTROL GP-PILOT OPERATED HYD	705
CONTROL GP-STEERING	716
CONTROL GP-TRANSMISSION	719
DOOR GP-CAB	723
EXTENSION GP-BACKREST	727
GUARD GP-VANDALISM	729
HEATER GP-CAB	733
HOUSING GP-SEAT SUSPENSION	738
INSTALLATION GP-RADIO	741
MOTOR GP-WINDOW WIPER	744
MOUNTING GP-ROPS	746
PAN GP-BACKREST	747
PAN GP-SEAT	748
PLATFORM GP-TILT	750
PRESSURIZER GP-CAB	754
RADIO GP	766
ROPS AR-OPEN	770
ROPS GP-ENCLOSED	771
ROPS GP-OPEN	778
SEAT BELT GP	780
SEAT GP	783
SEAT GP-SUSPENSION	788
SUSPENSION GP-SEAT	795
TANK GP-WINDOW WASHER	797
VANDALISM AR-OPEN ROPS	798
WIPER GP-WINDOW	799
WIPER PIVOT GP	802
WORK TOOLS	803
BUCKET AR-MULTIPURPOSE	803
BUCKET GP-GENERAL PURPOSE	804
BUCKET GP-MULTIPURPOSE	807
CONVERSION AR-BUCKET	809
EDGE GP-BIT & CUTTING	810
EDGE GP-CUTTING	811
EDGE GP-SEGMENT	812
GUARD-BUCKET CORNER	814
MOUNTING GP-RIPPER	818
RIPPER AR	819
RIPPER GP	820
TIP GP-LONG	821
TIP GP-SHORT	824
TOOTH GP-LONG	827
TOOTH GP-RIPPER	830
TOOTH GP-SHORT	831
TOOTH GP-UNI	833
SERVICE EQUIPMENT AND SUPPLIES	834
FILM GP	834

TABLE OF CONTENTS

NAME	PAGE	NAME	PAGE
GREASE GUN GP	835		
KIT-GASKET	836		
PLATE & FILM GP	842		
TOOL GP-HAND	844		
PART NUMBER INDEX	B1		

1. MACHINE IDENTIFICATION

Cat machines are identified by Product Identification Numbers (PIN). Some components included in a machine may be identified by Serial Numbers (S/N). Typical components that will be serialized include engines, transmissions, bulldozers, and rippers. The machine and engine are further identified by arrangement numbers and in some cases modification numbers. These numbers are shown on the product identification plate(s) and on the master plate in the operator's compartment.

Cat dealers need all of these numbers to determine accurate parts identification.

Effective First Quarter 2001 the Cat Product Identification Number (PIN) changed from 8 to 17 characters. In an effort to provide uniform equipment identification, Caterpillar and other construction equipment manufacturers are moving to comply with the latest version of the product identification numbering standard. Non-road machine PINs are defined by ISO 10261. The new PIN format will apply to all Cat machines and generator sets. The PIN plates and frame marking will display the 17 character PIN. The new format will look like the following:

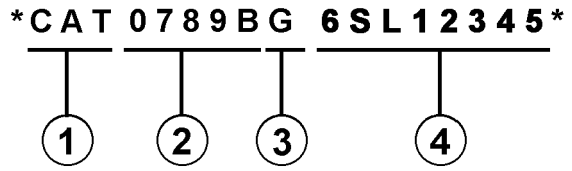

Where:

1. Caterpillar's World Manufacturing Code (characters 1-3)

2. Machine Descriptor (characters 4-8)

3. Check Character (character 9)

4. Machine Indicator Section (MIS) or Product Sequence Number (characters 10-17). These were previously referred to as the Serial Number.

Machines and generator sets produced before First Quarter 2001 will maintain their 8 character PIN format.

Components such as engines, transmissions, axles, etc. and work tools will continue to use an 8 character Serial Number (S/N).

2. ORDERING PARTS

⚠ WARNING

When replacement parts are required for this product Caterpillar recommends using Caterpillar replacement parts or parts with equivalent specifications including, but not limited to, physical dimensions, type, strength and material.

Failure to heed this warning can lead to premature failures, product damage, personal injury or death.

Quality Cat replacement parts are available from Cat dealers throughout the world. Their parts inventories are up to date and include all parts normally required to protect your investment in Cat machines. Dealers may offer repair kits or remanufactured parts to allow selection of the most effective repair alternative for a particular situation. When ordering parts, your order should specify the quantity, part number, part name, and the serial number/product identification number of the machine for which the parts are needed.

3. PARTS MANUAL ORGANIZATION

Product information in this manual is presented as "information elements" that represent all of the components for the specific model. Engine Arrangement and Seat Group are examples of information elements. The information elements are organized alphabetically by part name and secondarily by part number within each major section of the manual.

4. TABLE OF CONTENTS

A table of contents (TOC) is found at the beginning of the manual. The TOC lists each section of the manual with a complete list of all information elements organized as they appear in the manual. Page numbers are provided for quick reference to detailed parts identification illustrations and serviceable consist lists.

5. MAINTENANCE PARTS INDEX

The Maintenance Parts Index, located near the beginning of the manual, references most frequently used maintenance part numbers, providing description, quantity, usage and page number. This information is organized alphabetically by part description.

6. INDEX

The index located near the front of the manual is an alphabetical listing of all information elements included in the manual. Page numbers are provided for quick reference to detailed parts identification illustrations and serviceable consist lists.

7. PART NUMBER INDEX

A numerical index listing all part numbers and the corresponding page number(s) appears at the back of the manual.

8. CAPTIONS

Captions located at the beginning of each information element identify the part number and part name along with additional descriptive information. PIN and S/N information found in each caption should be used to select correct information for a specific machine. Field replacement options, identification of optional attachment components, and where used ("part of") information is also provided.

The first line of a caption is shown in larger type font to indicate the beginning of an information element. Captions for additional pages that may be required to illustrate an information element will be shown in standard type font and will include the term (contd.).

9. NON-SERVICED PARTS

In some instances it is necessary to display non-serviced parts that are a link to a lower level serviceable consist lists. These non-serviced part numbers are shown in italic type indicating that they are not available.

10. PARTS LIST REFERENCE NUMBERS

Numbers shown in the Ref No column correspond to numbers used in the associated graphic(s). An alphabetic suffix may be added to a reference number to identify lower level consist items. Numbers shown in the Graphic Ref column refer to the graphic number identifier displayed in the lower left corner of each illustration. The Graphic Ref number may be used in combination with the item Ref No to determine the correct part number. There may be intentional omission of a Ref No in a consist list as information is updated to reflect the latest serviceable part numbers.

11. INDENTED PART NAMES

When a part name is indented in a parts list, it is part of (included in) the group or assembly under which it is indented.

12. ILLUSTRATION REFERENCE LETTERS

When necessary, illustrations contain reference letters (A, B, C etc.) that are intended to track lines and harnesses from one point to another. They are also used to show where to reconnect illustrations that have been separated.

13. ABBREVIATIONS AND SYMBOLS

O.D. – Outside Diameter
I.D. – Inside Diameter
A – Not Part Of This Group
B – Use As Required
C – Change From Previous Type
D – Order By The Meter
E – Order By The Centimeter
F – Not Shown
G – Order By The Inch
I – Refer To Hydraulic Information System
M – Metric Part
R – Remfg Part May Be Available
Y – Separate Illustration
Z – Not Serviced Separately

14. DESCRIPTION OF TYPE CHANGES

Type - A type is defined as any configuration change that requires an additional Information Element for an Arrangement, Group, or Assembly. If serial number breaks for types are not available, a type # (Type 1, Type 2, etc.) will be displayed in the caption. These "type" changes are identified with a "C" note (change from previous type) in the Parts List. Only the "types" that apply to this Parts Manual will be included. Additional types may exist causing "C" notes to appear on an Information Element when no other types are shown.

15.<END>

This symbol indicates the end of an information element.

NOTE:

Continuing improvement and advancement of product design may cause changes to your machine which may not be included in this publication. Whenever a question arises regarding your Cat product or this publication, please consult your Cat dealer for the latest available information.

FRAME AND BODY

8E-3299 PLATFORM GP-CAB

PIN 38K1-99999

SMCS-7283 100090751

NOTE	REF NO	GRAPHIC REF	PART NUMBER	QTY	PART NAME (1 2 3 4 5 6 PRODUCT LEVEL)	SEE PAGE
	1	1	3T-3963	1	PLATE AS	
	2	1	5H-2062	25	BOLT (3/8-16X.750IN)	
	3	1	6P-1078	41	WASHER-HARD (9MM THK)	
	4	1	9W-1444	2	SUPPORT AS-FOOT	
	5	1	5P-2229	19	BOLT (1/2-13X1IN)	
		1	9z-	19	WASHER-HARD (14MM THK)	
	6	1	9E-8134		COVER AS-LH	
		1	9F-2979	6	NUT-WELD (3/8-16 THD)	
		1	1F-9189	1	CLIP	
	7	1	7S-2411	4	COVER	
	8		5J-0468	19	SCREW-HEAD (3/8-16X.87SIN)	
	9	1	9E-8074	1	COVER	
		1	9E-8975	1	GASKET	
	10	1	9E-3248	1	[illegible]	
		1	9E-3250	1	GASKET	
	11	1	3T-3930	1	HANDHOLD	
	12	1	9E-8978	1	COVER AS	
		1	9F-2979	6	NUT-WELD (3/8-16 THD)	
		1	9E-8979	1	GASKET	
	13	1	7T-0131	1	FLOORPLATE AS	
		1	1F-0748	4	NUT-WELD (1/2-13 THD)	
	14	1	7V-8067	1	PLUG-BUTTON	
	15	1	7T-0136	1	PLATE AS	
		1	9F-2979	5	NUT-WELD (3/8-16 THD)	
	16	1	7T-8066	1	COVER	
		1	7T-0779	1	GASKET	
	17	1	3T-3951	1	PLATE AS	
	18	1	9T-9364	4	BOLT (1/4-20X.62SIN)	
M		1	9T-4286	4	WASHER-HARD (2MM THK)	
	19	1	6I-8464	1	FLOOR MAT	
	20	1	9E-8946	1	MODULE AS-OPERATOR	
	21	1	3T-3934	1	HANDHOLD	
	22	1	9P-8571	2	PLUG	
	23	2	9T-9364	4	BOLT (1/4-20X.62SIN)	
M		2	9T-4286	4	WASHER-HARD (2MM THK)	
	24	2	5H-2062	17	BOLT (3/8-16X.750IN)	
	25	2	6P-1078	21	WASHER-HARD (9MM THK)	
	26	2	7T-0136	1	SEAL	
	27	2	7X-0378	2	BOLT (3/4-10X5IN)	
		2	7X-0682	2	WASHER-HARD (6MM THK)	
	28	2	3T-3482	2	PLATE	
	29	2	3T-8290	1	PLATE AS	
		2	7S-4828	6	SPACER	
	30	2	3T-8281	1	SEAL	
	31	2	7S-8017	1	GASKET	
	32	2	7S-8016	1	COVER AS	
		2	2R-2376	2	WASHER	
		2	6P-8626	2	SCREW-KNURLED	
	33	2	9W-3429	1	COVER	
	34	2	8E-9697	1	COVER	
	35	2	9D-3091	8	SCREW-SOCKET HEAD	
	36	2	9W-3142	8	MOUNTING	
	37	2	9W-9527	2	PLATE	
	38	2	7X-0390	2	BOLT (7/8-9X6IN)	
		2	7X-0672	2	WASHER-HARD	
	39	2	4L-8454	4	BOLT (3/8-16X1.0IN)	
	40	2	3T-4788	1	COVER	

12 FRAME AND BODY 1 of 4 SELP4570-01

FRAME AND BODY

8E-3299 PLATFORM GP-CAB (contd.)

100090751

NOTE	REF NO	GRAPHIC REF	PART NUMBER	QTY	PART NAME (1 2 3 4 5 6 PRODUCT LEVEL)	SEE PAGE
	41	2	8E-2515	1	COVER	
	42	2	7T-0134	1	PLATE	
	43	2	7T-0126	1	GASKET	
	44	2	7S-8724	1	GASKET	
	45	2	7S-8723	1	COVER	
	46	2	6V-1960	2	PLUG-BUTTON	

M-METRIC PART

SELP4570-01 2 of 4 FRAME AND BODY 13

FRAME AND BODY

8E-3299 PLATFORM GP-CAB (contd.)

100090751

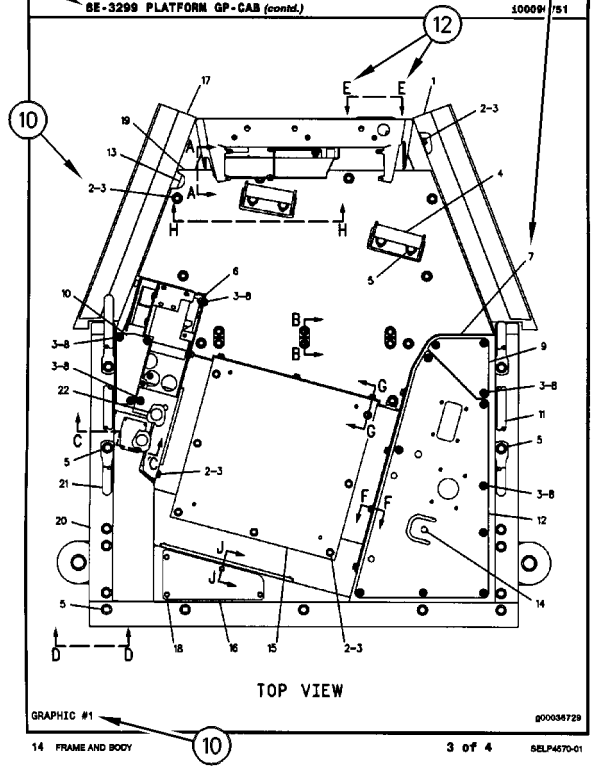

14 FRAME AND BODY 3 of 4 SELP4570-01

FRAME AND BODY

8E-3299 PLATFORM GP-CAB (contd.)

100090751

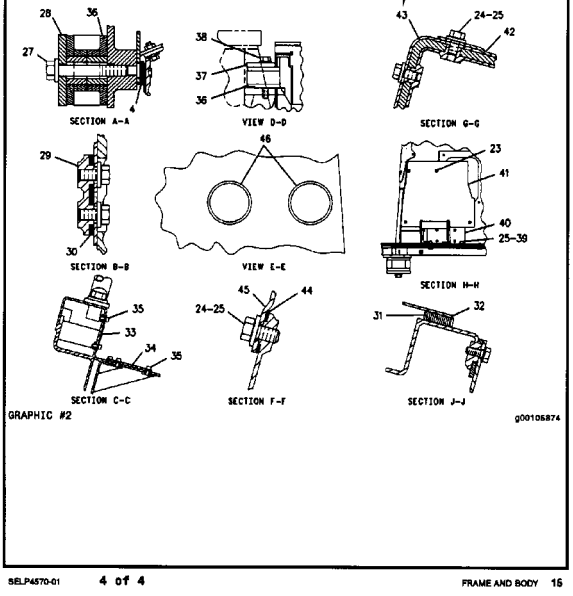

SELP4570-01 4 of 4 FRAME AND BODY 15

REMANUFACTURED COMPONENTS

As an option when making repairs consider Cat Remanufactured Components. Components that are available through the Cat Remanufactured Program are identified three ways in the parts book:

- with the letter R in the note field of the parts list
- with an R* at the beginning of the first line of the caption
- with an *R at the end of the first line of the caption

Typical components included in the Remanufacturing Program include:

ALTERNATORS
CONNECTING RODS
CRANKSHAFTS - UNDERSIZE
CRANKSHAFTS - UPGRADE TO NEW
CYLINDER HEADS
ELECTRONIC CONTROL MODULES (ECM)
ELECTRONIC SENSORS
FUEL INJECTORS
FUEL NOZZLES
FUEL PUMPS
GOVERNORS
OIL PUMPS
PISTONS
SHORT BLOCKS
STARTERS
TURBOCHARGERS - COMPLETE
TURBOCHARGER CARTRIDGES
WATER PUMPS

Cat Remanufactured engines for many engine arrangements are also available.

SUPPLEMENTAL COOLANT ADDITIVES

CUSTOMER BENEFITS:

Protects against cavitation, foam, erosion, corrosion, and scale buildup in cooling systems.

- Provides measured coolant conditioner.

DESCRIPTION:

Additives deplete from the coolant with normal operation. For this reason, Supplemental Coolant Additives (SCA) must be added to all heavy duty coolants at regular intervals. In addition, when not using a fully formulated, pre-charged antifreeze, like Cat DEAC, an initial charge of SCA must be added to the cooling system. The amount of SCA added to the system is dependent on the capacity of the system.

The SCA for initial fill is provided as a liquid. SCA's for maintenance intervals are available in liquid form and as a spin-on element. (No Spin-on available for 3600 Family of Engines)

NOTE:

The amount of SCA added at initial fill is not the same as the amount added at maintenance intervals.

The coolant additive elements can be used with any ethylene or propylene glycol type antifreeze which meets ASTM D4985 or ASTM D5345 Specifications.

NOTE:

For use with standard heavy duty coolant only, not for use with Extended Life Coolant.

PARTS NEEDED:

Cooling System Capacity		Liquid SCA at Initial Fill	Liquid SCA at Maintenance*	Spin-on SCA Maintenance Element*
Liters	Gallons			
22-30	(6-8)	3P-2044 (1)	6V-3542 (1)	111-2370 (1)
30-38	(8-10)	3P-2044 (1) 6V-3542 (1)	111-2372 (1)	111-2369 (1)
38-49	(10-13)	3P-2044 (1) 8T-1589 (1)	111-2372 (1)	111-2369 (1)
49-64	(13-17)	3P-2044 (2)	8T-1589 (1)	9N-3368 (1)
64-83	(17-22)	3P-2044 (2) 8T-1589 (1)	111-2372 (1) 6V-3542 (1)	111-2371 (1)
83-114	(22-30)	3P-2044 (3) 8T-1589 (1)	3P-2044 (1)	9N-3718 (1)
114-163	(30-43)	3P-2044 (5)	3P-2044 (1) 6V-3542 (1)	111-2371 (2)
163-242	(43-64)	3P-2044 (8)	3P-2044 (2)	9N-3718 (2)

* Normal maintenance period is 250 hrs. See your Operation and Maintenance Manual for complete coolant maintenance instructions.

( ) Indicates quantity required.

MAINTENANCE PARTS

DESCRIPTION	PART NUMBER	QTY	WHERE USED	PAGE
AIR INLET AND EXHAUST SYSTEM				
FILTER ELEMENT AS-AIR (PRIMARY)	6I-0273	1	AIR CLEANER GP	132
		1	AIR CLEANER GP	133
FILTER ELEMENT AS-AIR (SECONDARY)	6I-0274	1	AIR CLEANER GP	132
		1	AIR CLEANER GP	133
BASIC ENGINE				
GASKET (VALVE COVER)	119-2940	1	COVER GP-VALVE MECHANISM	23
PLUG-MAGNETIC (ENGINE)	118-3619	1	PAN GP-OIL	71
V-BELT (PUMP DRIVE) (WATER PUMP)	036-6775	1	DRIVE GP-WATER PUMP	61
V-BELT SET (INCLUDES 2 BELTS)	4P-4997	1	PULLEY GP-FAN	79
	7E-6192	1	PULLEY GP-FAN	80
V-BELT SET (INCLUDES 2-BELTS) (INCLUDES 2 BELTS)	7E-1364	1	PULLEY GP-FAN	78
COOLING SYSTEM				
CAP-RADIATOR	7N-5565	1	COVER GP-RADIATOR CAP	105
GASKET-WATER REGULATOR	195-7339	1	LINES GP-WATER	112
	2W-7212	1	HOUSING & REGULATOR GP	108
		1	LINES GP-WATER	110
		1	LINES GP-WATER	112
	4W-0549	1	LINES GP-WATER	110
GASKET-WATER REGULATOR (WATER TEMPERATURE REGULATOR)	195-7339	1	HOUSING & REGULATOR GP	108
REGULATOR-WATER TEMPERATURE	108-7045	1	LINES GP-WATER	110
REGULATOR-WATER TEMPERATURE (94-DEG C)	126-5869	1	HOUSING & REGULATOR GP	108
		1	LINES GP-WATER	112
SEAL-INTEGRAL	153-9648	1	RADIATOR GP	126
ELECTRICAL AND STARTING SYSTEM				
BATTERY (12-VOLT, 1000-CCA) (12 VOLT)	9X-9721	2	BATTERY GP	267
BATTERY (12-VOLT, MAINTENANCE FREE, WET)	9X-3404	2	BATTERY GP	268
BATTERY GP (12-VOLT, 750-CCA)	3T-5760	2	BATTERY & WIRING GP	252
		2	BATTERY & WIRING GP	257
		2	BATTERY & WIRING GP	262
CAP-PLASTIC	8Y-9497	1	LAMP GP-DOME	282
CIRCUIT BREAKER AS (40-AMPERE) (AIR CONDITIONER)	5M-2555	1	WIRING GP-CONSOLE	324
CIRCUIT BREAKER AS (40-AMPERE) (BLOWER & A/C)	5M-2555	1	WIRING GP-CONSOLE	320
CIRCUIT BREAKER AS (60-AMPERE) (ALTERNATOR)	9S-0174	1	WIRING GP-CONSOLE	324
CIRCUIT BREAKER AS (60-AMPERE) (STARTER)	9S-0174	1	WIRING GP-CONSOLE	320
ELEMENT AS-JACKET WATER HEATER (240-VOLT, 1000-WATT)	124-0687	1	HEATER GP-JACKET WATER	276

MAINTENANCE PARTS

DESCRIPTION	PART NUMBER	QTY	WHERE USED	PAGE
FUSE (10-AMPERE)	3K-8782	6	WIRING GP-CONSOLE	320
		6	WIRING GP-CONSOLE	324
FUSE (20-AMPERE)	8M-0456	2	WIRING GP-CONSOLE	320
		2	WIRING GP-CONSOLE	324
FUSE (7.5-AMPERE)	3K-8781	1	LIGHTING GP-FLOOD	293
KEY (BATTERY DISCONNECT)	8H-5306	1	BATTERY & WIRING GP	257
		1	SWITCH GP-DISCONNECT	313
LAMP (24-VOLT, 0.2-AMPERE)	7N-5876	1	HEATER AR-AIR INLET	272
		1	WIRING GP-CONSOLE	320
		1	WIRING GP-PLATFORM	327
		1	WIRING GP-PLATFORM	332
LAMP (24-VOLT)	3E-8825	1	WIRING GP-CONSOLE	320
		2	WIRING GP-CONSOLE	320
		1	WIRING GP-CONSOLE	324
		2	WIRING GP-CONSOLE	324
	7N-9943	1	LAMP GP-DOME	281
		1	LIGHTING GP-FLOOD	293
	7X-2058	3	WIRING GP-PLATFORM	327
		3	WIRING GP-PLATFORM	332
LAMP-HALOGEN (24-VOLT, 70-WATT)	9X-3463	1	LAMP GP-DOME	282
		1	LAMP GP-FLOOD	283
		1	LAMP GP-FLOOD	284
LAMP-HALOGEN (24-VOLT, 70-WATT) (FLOODLIGHT)	9X-3463	1	LAMP GP-FLOOD	285
SCREEN AS	5Q-6782	2	LIGHTING GP-FLOOD	289
SCREEN AS (LH)	5Q-6141	1	LIGHTING GP-FLOOD	289
SCREEN AS (RH)	5Q-6142	1	LIGHTING GP-FLOOD	289
FRAME AND BODY				
SCREEN AS	5Q-6782	2	BUMPER GP	426
	5Q-7111	1	SCREEN GP	470
FUEL SYSTEM				
BREATHER	9G-5127	1	TANK GP-FUEL	231
CAP-FILLER (FUEL TANK)	1V-8523	1	CAP GP-FUEL FILLER	168
ELEMENT-WATER SEPARATOR	117-4089	1	SEPARATOR GP-WATER	229
FILTER ELEMENT-WTR SEP & FUEL (STANDARD EFFICIENCY) (PRIMARY)	9M-2341	1	PUMP GP-FUEL PRM & PRIM FILTER	227
FILTER-FUEL (ADVANCED EFFICIENCY)	1R-0751	1	FILTER GP-FUEL	179
	1R-0753	1	FILTER GP-SECONDARY FUEL	180
		1	LINES GP-FUEL FILTER	212
GASKET	6C-3060	1	TANK GP-FUEL	230
GASKET (FUEL PRIMING PUMP)	1P-0436	1	LINES GP-FUEL	206
		1	LINES GP-FUEL FILTER	212
		1	PUMP GP-FUEL PRIMING	222
		1	PUMP GP-FUEL PRIMING	226
PLUG-DRAIN	9J-7031	1	TANK GP-FUEL	230
SCREEN AS (OIL INLET)	7C-4483	1	GOVERNOR GP-UNIT INJECTOR	182

DESCRIPTION	PART NUMBER	QTY	WHERE USED	PAGE
		1	GOVERNOR GP-UNIT INJECTOR	187
		1	GOVERNOR GP-UNIT INJECTOR	198
		1	GOVERNOR GP-UNIT INJECTOR	200
STRAINER-FUEL (FUEL TANK)	9P-7121	1	TANK GP-FUEL	231
HYDRAULIC SYSTEM				
CAP-FILLER (HYDRAULIC OIL)	5K-1568	1	TANK & FILTER GP-HYDRAULIC	603
		1	TANK & FILTER GP-HYDRAULIC	607
FILTER ELEMENT AS-OIL (STANDARD EFFICIENCY)	1R-0722	2	TANK & FILTER GP-HYDRAULIC	602
		2	TANK & FILTER GP-HYDRAULIC	606
PLUG-DRAIN	4B-7739	1	TANK & FILTER GP-HYDRAULIC	602
		1	TANK & FILTER GP-HYDRAULIC	606
SCREEN AS	1U-2175	1	VALVE GP-PILOT	650
		1	VALVE GP-PILOT	653
STRAINER	9J-3047	1	TANK & FILTER GP-HYDRAULIC	603
		1	TANK & FILTER GP-HYDRAULIC	607
LUBRICATION SYSTEM				
BREATHER AS	2W-9162	1	BREATHER GP	89
CAP AS-FILLER	5L-2952	1	FILLER GP-ENGINE OIL	90
FILTER AS-ENGINE OIL (ADVANCED EFFICIENCY)	1R-1807	1	FILTER GP-ENGINE OIL	92
OPERATOR STATION				
BLADE AS-WIPER (400-MM)	8Y-4615	1	ROPS GP-ENCLOSED	772
BLADE AS-WIPER (600-MM)	5C-8813	1	ROPS GP-ENCLOSED	773
CAP-OIL FILLER	9L-8439	1	TANK GP-WINDOW WASHER	797
CAP-PLASTIC	111-5681	1	AIR CONDITIONER GP	670
CIRCUIT BREAKER AS (15-AMPERE)	6N-8589	1	AIR CONDITIONER GP	672
		1	AIR CONDITIONER GP	678
		1	AIR CONDITIONER GP	685
		1	PRESSURIZER GP-CAB	755
		1	PRESSURIZER GP-CAB	758
		1	PRESSURIZER GP-CAB	763
	6T-3643	1	AIR CONDITIONER GP	672
		1	AIR CONDITIONER GP	678
DRYER AS-REFRIGERANT (IN-LINE)	3E-3535	1	AIR CONDITIONER GP	672
		1	AIR CONDITIONER GP	678
		1	AIR CONDITIONER GP	685
FILTER ELEMENT-CAB AIR	8G-8287	1	PRESSURIZER GP-CAB	759
	9G-1518	2	PRESSURIZER GP-CAB	758
FUSE (7.5-AMPERE)	3K-8781	3	ROPS GP-ENCLOSED	773
SEAT BELT GP (RETRACTABLE, 3-IN)	156-1148	1	SEAT GP-SUSPENSION	790
		1	SEAT GP-SUSPENSION	793
SEAT BELT GP (RETRACTABLE)	122-4617	1	SEAT GP-SUSPENSION	789
		1	SEAT GP-SUSPENSION	792
	8Y-3792	1	SEAT GP-SUSPENSION	788
		1	SEAT GP-SUSPENSION	791

DESCRIPTION	PART NUMBER	QTY	WHERE USED	PAGE
V-BELT	1W-8908	1	COMPRESSOR GP-REFRIGERANT	689
	7E-3898	1	COMPRESSOR GP-REFRIGERANT	691
		1	COMPRESSOR GP-REFRIGERANT	692
POWER TRAIN				
BREATHER	130-4634	1	LINES GP-HYDROSTATIC	372
BREATHER (PRESSURE RELIEF)	9G-5127	1	FILLER GP-POWER TRAIN OIL	360
CAP-FILLER	5K-1568	2	FILLER GP-POWER TRAIN OIL	360
FILTER ELEMENT AS-OIL (ULTRA HIGH EFFICIENCY) (HYDROSTATIC TRANSMISSION)	132-8876	1	FILTER GP-OIL	362
PLUG-DRAIN	4T-2069	1	CASE GP-HYDROSTATIC POWER	338
	9J-7031	1	CASE GP-HYDROSTATIC POWER	338
PLUG-MAGNETIC	3S-9182	2	DRIVE GP-FINAL	353
		2	DRIVE GP-FINAL	355
		1	FINAL DRIVE & BRAKE GP	363
		1	FINAL DRIVE & BRAKE GP	366
	6V-0439	2	DRIVE GP-FINAL	353
		2	DRIVE GP-FINAL	356
		1	FINAL DRIVE & BRAKE GP	363
		1	FINAL DRIVE & BRAKE GP	366
SERVICE EQUIPMENT AND SUPPLIES				
GASKET (VALVE COVER)	119-2940	1	KIT-GASKET	839
		1	KIT-GASKET	841
GASKET-WATER REGULATOR	195-7339	1	KIT-GASKET	839
		1	KIT-GASKET	841
	2W-7212	1	KIT-GASKET	839
		1	KIT-GASKET	841
	4W-0549	1	KIT-GASKET	841

INDEX

NAME PAGE

A

ACCUMULATOR-REFRIGERANT 672
678
684
AFTERCOOLER GP-WATER 129
AIR CLEANER GP 130
132
133
134
136
138
AIR CONDITIONER GP 670
671
677
683
ALARM GP 234
ALARM GP (BACKUP) 319
ALTERNATOR GP-CHARGING 235
237
239
240
242
244
246
248
ARM AS-WIPER 773

B

BAR GP-EQUALIZER 479
BATTERY (12-VOLT, 1000-CCA) (12 VOLT) 267
BATTERY (12-VOLT, MAINTENANCE FREE, WET) 268
BATTERY & WIRING GP 250
256
262
BATTERY GP 267
BATTERY GP (12-VOLT, 750-CCA) 252
257
262
BATTERY GP–MAINTENANCE FREE 268
BLADE AS-WIPER (400-MM) 772
BLADE AS-WIPER (600-MM) 773
BOX GP-BATTERY 423
BRACE GP 424
BRAKE GP-PARKING 535
BREATHER 231
372
BREATHER (PRESSURE RELIEF) 360
BREATHER AS 89
BREATHER GP 89
BUCKET AR-MULTIPURPOSE 803
BUCKET GP-GENERAL PURPOSE 804
806
BUCKET GP-MULTIPURPOSE 807
BUMPER GP 425
427
428

NAME PAGE

C

CAB AR 688
CAMSHAFT GP 15
16
CAP AS-FILLER 90
CAP GP-FUEL FILLER 168
CAP GP-TRACK ROLLER 481
482
483
CAP-FILLER 360
CAP-FILLER (FUEL TANK) 168
CAP-FILLER (HYDRAULIC OIL) 603
607
CAP-OIL FILLER 797
CAP-PLASTIC 282
670
CAP-RADIATOR 105
CARRIER GP-SEAL 17
CARTRIDGE GP-TURBOCHARGER 140
141
142
CASE GP-HYDROSTATIC POWER 336
CHASSIS AR 1
2
CIRCUIT BREAKER AS (15-AMPERE) 672
678
685
755
758
763
CIRCUIT BREAKER AS (40-AMPERE) (AIR CONDITIONER) 324
CIRCUIT BREAKER AS (40-AMPERE) (BLOWER & A/C) 320
CIRCUIT BREAKER AS (60-AMPERE) (ALTERNATOR) 324
CIRCUIT BREAKER AS (60-AMPERE) (STARTER) 320
COMPRESSOR GP-REFRIGERANT 689
690
691
692
694
CONDENSER GP-REFRIGERANT 695
698
CONTROL AR-HYDROSTATIC POWER 343
CONTROL GP-BUCKET 667
CONTROL GP-BUCKET POSITIONER 269
CONTROL GP-DIRECTION & SPEED 700
CONTROL GP-DIVERTER & VALVE 539
CONTROL GP-ELECTRONIC (BUCKET POSITIONER) 562
CONTROL GP-FUEL INJECTION 169
170
CONTROL GP-GOVERNOR 171
172
CONTROL GP-HYDRAULIC 704
CONTROL GP-LIFT KICKOUT 270
562

INDEX

NAME PAGE

CONTROL GP-MONITOR (ELECTRONIC MONITORING SYSTEM) 320 324
CONTROL GP-PARKING BRAKE 537
CONTROL GP-PILOT OPERATED HYD 705 706 707 710 712 714
CONTROL GP-SPD OVERRIDE & BRK 344 346
CONTROL GP-STEERING 716
CONTROL GP-TRANSMISSION 719
CONVERSION AR-BUCKET 809
CONVERSION AR-IMPLEMENT CNTLS 669
CONVERSION AR-NON-ROPS 429
CONVERTER GP-ELECTRICAL 271
COOLER & MTG GP-HYDRAULIC OIL 541 542
COOLER AR-HIGH AMBIENT TEMP 102
COOLER GP-ENGINE OIL 103 104
COOLER GP-TRANSMISSION OIL 347
CORE AS-AFTERCOOLER 129
CORE AS-ENGINE OIL COOLER 103
CORE AS-HYDRAULIC OIL COOLER 541 542
CORE AS-OIL COOLER 102 104 347
CORE AS-RADIATOR 124
COVER GP-CYLINDER BLOCK 18
COVER GP-FRONT HOUSING 20
COVER GP-RADIATOR CAP 105
COVER GP-SHIPPING 348 349
COVER GP-SOUND SUPPRESSION 21 22
COVER GP-VALVE MECHANISM 23 24
COVER GP-XMSN OIL FILLER CAP 350
CRANKSHAFT GP 25 27
CYLINDER & MTG GP-RIPPER 543
CYLINDER & SEAL GP-BUCKET 545
CYLINDER BLOCK GP 29 30 31 33 34 36 37 38 39
CYLINDER GP-BUCKET 546
CYLINDER GP-LIFT 548
CYLINDER GP-RIPPER–LH 550
CYLINDER GP-RIPPER–RH 551
CYLINDER GP-SERVO (LH) 343
CYLINDER GP-SERVO (RH) 343
CYLINDER GP-SERVO–LH 351
CYLINDER GP-SERVO–RH 352
CYLINDER GP-TILT 552
CYLINDER HEAD AS 40 41 42 43 44 45 46 47
CYLINDER HEAD GP 48 49 50 51 52 53 54 55

D

DAMPER & PULLEY GP 56 57 58
DOOR AS–LH 430
DOOR AS–RH 431
DOOR GP-CAB 723 725
DRAIN GP-ENGINE OIL–SHUTOFF VALVE 59
DRIVE GP-FAN 60
DRIVE GP-FINAL 353 355
DRIVE GP-FLEXIBLE COUPLING 358
DRIVE GP-GOV & TRANSFER PUMP 176
DRIVE GP-WATER PUMP 61
DRYER AS-REFRIGERANT (IN-LINE) 672 678 685

E

EDGE GP-BIT & CUTTING 810
EDGE GP-CUTTING 811
EDGE GP-SEGMENT 812 813
ELEMENT AS-JACKET WATER HEATER (240-VOLT, 1000-WATT) 276
ELEMENT-WATER SEPARATOR 229
ENCLOSURE GP-ENGINE 432 436
ENCLOSURE GP-ENGINE & XMSN 439
ENGINE AR 6 8 10 12
EXCLUDER-CRANKSHAFT SEAL 83 838

NAME PAGE

EXTENSION GP-BACKREST 727
EXTENSION GP-BACKREST–VINYL 728

F

FAN GP-BLOWER 106
107
FASTENER GP-FUEL INJ PUMP 178
FASTENER GP-XMSN & DRIVE MOTOR 359
FILLER GP-ENGINE OIL–INCLUDES TURBO OIL SUPPLY LINES 90
FILLER GP-POWER TRAIN OIL 360
FILM. 672
678
685
FILM (EXTERIOR SOUND) 87
FILM GP. 834
FILM-FACE. 320
FILM-FACE (OPERATOR MONITOR PANEL) . . . 324
FILM-HEATER. 755
759
763
FILM-IDENTIFICATION 293
321
773
FILM-IDENTIFICATION (AIR CONDITIONER) . . . 695
698
FILM-IDENTIFICATION (FUSE PANEL) 325
FILM-IDENTIFICATION (LIFT EYE LOCATION) 843
FILM-IDENTIFICATION (SOLENOID, BUCKET POSITIONER) 269
270
FILM-IDENTIFICATION (START SWITCH) 325
FILM-IDENTIFICATION (TIE-DOWN). 843
FILM-INFORMATION (AIR CLEANER) 132
133
FILM-INFORMATION (EXTENDED LIFE COOLANT) 842
FILM-INSTRUCTION (AIR CONDITIONER). 672
678
683
FILM-INSTRUCTION (ENGINE OIL) 842
FILM-INSTRUCTION (MULTIPURPOSE BUCKET) 555
556
557
558
559
560
561
FILM-INSTRUCTION (RIPPER) 555
556
557
558
559
560
561
FILM-INSTRUCTION (SEAT ADJUSTMENT) 795

NAME PAGE

FILM-INSTRUCTION (SGL LEVER IMPLEMENT CONTROL) (BUCKET LEVER). 557
558
704
FILM-INSTRUCTION (SINGLE LEVER CONTROL). 669
842
FILM-INSTRUCTION (SOLENOID, ELECTRICAL POWER) 562
FILM-INSTRUCTION (WIPER) 842
FILM-NOTICE 321
FILM-NOTICE (BUCKET CORNER GUARD SYSTEM) 804
807
843
FILM-NOTICE (NEUTRAL START SYSTEM) 324
FILM-NOTICE (RADIO) (RADIO) 742
743
FILM-OPERATOR SOUND 87
FILM-WARNING 4
FILM-WARNING (JUMP START, READ OMM). 843
FILTER AS-ENGINE OIL (ADVANCED EFFICIENCY). 92
FILTER ELEMENT AS-AIR (PRIMARY). 132
133
FILTER ELEMENT AS-AIR (SECONDARY) 132
133
FILTER ELEMENT AS-OIL (STANDARD EFFICIENCY). 602
606
FILTER ELEMENT AS-OIL (ULTRA HIGH EFFICIENCY) (HYDROSTATIC TRANSMISSION) 362
FILTER ELEMENT-CAB AIR. 758
759
FILTER ELEMENT-WTR SEP & FUEL (STANDARD EFFICIENCY) (PRIMARY) 227
FILTER GP-ENGINE OIL. 92
FILTER GP-FUEL. 179
FILTER GP-OIL 362
FILTER GP-SECONDARY FUEL 180
FILTER-FUEL (ADVANCED EFFICIENCY) 179
180
212
FINAL DRIVE & BRAKE GP (LH) 4
486
FINAL DRIVE & BRAKE GP (RH) 4
486
FINAL DRIVE & BRAKE GP–LH. 366
FINAL DRIVE & BRAKE GP–RH 363
FLOOR MAT 750
752
FLYWHEEL GP 62
FRAME GP-LOADER 442
444
FRAME GP-TRACK ROLLER. 484
FUMES DISPOSAL GP 93
FUSE (10-AMPERE) 320
324

INDEX

NAME PAGE

FUSE (20-AMPERE) 320
324
FUSE (7.5-AMPERE). 293
773

G

GASKET 230
GASKET (FUEL PRIMING PUMP) 206
212
222
226
GASKET (VALVE COVER) 23
839
841
GASKET-CYLINDER HEAD (1.85MM THK) 54
55
GASKET-WATER REGULATOR. 108
110
112
839
841
GASKET-WATER REGULATOR (WATER TEMPERATURE REGULATOR) 108
GAUGE GP-FUEL LEVEL 327
332
GAUGE GP-OIL LEVEL (DIPSTICK) 94
GAUGE-OIL LEVEL (DIPSTICK) 360
GAUGE-SIGHT 360
GEAR GP-FRONT 63
64
65
GENERAL AR. 2
3
GLASS-SIGHT (HYDRAULIC OIL LEVEL) 603
607
GOVERNOR GP. 181
GOVERNOR GP-UNIT INJECTOR 182
187
192
193
194
195
196
197
200
205
GREASE GUN GP 835
GUARD AR-RADIATOR 446
GUARD AR-SEAL 486
GUARD GP-BOTTOM. 447
449
GUARD GP-FENDER 451
GUARD GP-FRONT 453
455
GUARD GP-IDLER–ENHANCED EXTENDED WEAR LIFE 457
GUARD GP-LINES. 458
459

NAME PAGE

GUARD GP-RADIATOR 460
462
463
GUARD GP-TRACK GUIDE 487
GUARD GP-TRACK ROLLER. 489
GUARD GP-VANDALISM. 729
731
732
GUARD-BUCKET CORNER–LH 815
817
GUARD-BUCKET CORNER–RH. 814
816

H

HEATER AR-AIR INLET. 272
HEATER GP-CAB 733
735
HEATER GP-JACKET WATER. 275
276
277
278
279
HITCH GP 465
HOUSING & REGULATOR GP 108
HOUSING GP-FLYWHEEL 66
HOUSING GP-FRONT 67
68
HOUSING GP-SEAT SUSPENSION 738
HYDRAULIC AR. 554
HYDRAULIC AR-3 VALVE. 554
555
556
557
558
559
560
561

I

IDLER GP-FRONT. 491
495
INDICATOR (ACTION WARNING LIGHT). 332
INDICATOR (COOLANT TEMP). 327
INDICATOR (LIGHT) 327
INDICATOR (TRANSMISSION OIL TEMPERATURE) 327
332
INDICATOR-AIR FILTER CHANGE. 130
134
136
138
INJECTOR GP-FUEL 219
220
221
INSTALLATION AR 3
INSTALLATION AR-ENGINE. 14

INDEX

NAME PAGE

INSTALLATION GP-RADIO 741
742
743

K

KEY 723
725
KEY (BATTERY DISCONNECT) 257
313
KICKOUT & POSITIONER GP. 562
564
KIT-DIAL SENSOR–FUEL LEVEL 280
KIT-GASKET 837
KIT-GASKET–CENTRAL, LOWER STRUCTURE. 836
KIT-GASKET–FRONT STRUCTURE 838
KIT-GASKET–OIL COOLER, LINES 836
840
KIT-GASKET–REAR STRUCTURE 838
KIT-GASKET–SINGLE CYLINDER HEAD 839
841
KIT-INJECTOR 205
KIT-SEAL 466
KIT-SOLENOID (24-VOLT, STARTING MOTOR) 308
KIT-TURBOCHARGER GASKET 143

L

LAMP (24-VOLT, 0.2-AMPERE). 272
320
327
332
LAMP (24-VOLT) 281
293
320
324
327
332
LAMP GP-DOME 281
282
LAMP GP-FLOOD 283
284
285
LAMP-HALOGEN (24-VOLT, 70-WATT). 282
283
284
LAMP-HALOGEN (24-VOLT, 70-WATT) (FLOODLIGHT) 285
LIFTER GP-VALVE 88
LIFTING GP-ENGINE 69
LIFTING GP-MACHINE. 467
468
469
LIFTING GP-TRANSMISSION. 369
LIGHTING GP. 286

NAME PAGE

LIGHTING GP-FLOOD 287
289
291
293
LINES GP-AIR 144
146
148
150
151
LINES GP-BUCKET–MULTIPURPOSE. 566
LINES GP-DIVERTER VALVE 568
LINES GP-DRAIN. 370
LINES GP-ENGINE OIL. 95
96
LINES GP-FRONT. 571
572
LINES GP-FRONT–LIFT ARM 570
LINES GP-FUEL. 206
LINES GP-FUEL FILTER. 209
210
212
214
LINES GP-FUEL RATIO CONTROL. 216
217
LINES GP-GOVERNOR OIL. 218
LINES GP-HYDRAULIC OIL COOLER. 573
LINES GP-HYDROSTATIC 371
374
LINES GP-LIFT CYLINDER. 574
576
LINES GP-PILOT 578
582
583
LINES GP-POWER TRAIN COOLER. 375
LINES GP-PUMP 585
587
LINES GP-REAR ATTACHMENT. 589
LINES GP-RIPPER 591
LINES GP-TILT CYLINDER. 592
LINES GP-TRANSMISSION OIL 377
379
LINES GP-TURBOCHARGER OIL. 97
LINES GP-WATER. 110
112
LINK AS-TRACK. 498
499
501
LINK AS-TRACK BOX 505
509
LINK AS-TRACK BOX–OFFSET 506
510
LINK AS-TRACK BOX–SYSTEMONE. 503
507
LINK AS-TRACK BOX–SYSTEMONE, OFFSET 504
508
LINK AS-TRACK–SYSTEMONE 500
LINKAGE GP-HYDRO POWER CASE. 381
LINKAGE GP-SERVO 384

INDEX

NAME PAGE

M

MACHINE AR 3
MANIFOLD GP-EXHAUST 152
MANIFOLD GP-INLET 153
MODIFICATION AR 4
MOTOR GP-ELECTRIC 695
MOTOR GP-PISTON 387
MOTOR GP-WINDOW WIPER 745
MOTOR GP-WINDOW WIPER (24-VOLT) 744
799
MOTOR GP-WINDOW WIPER–24-VOLT 744
MOUNTING GP-ATTACHMENT 594
MOUNTING GP-CYLINDER 595
MOUNTING GP-ENGINE & XMSN 70
MOUNTING GP-HYDRAULIC TANK 596
MOUNTING GP-MUFFLER 154
155
156
MOUNTING GP-RIPPER 818
MOUNTING GP-ROPS 746
MUFFLER GP 157
158

P

PADLOCK GP 168
350
425
427
453
462
607
729
731
732
798
PADLOCK GP (RADIATOR) 105
PAN GP-BACKREST 747
PAN GP-OIL–ENGINE 71
PAN GP-SEAT 748
PIPE GP-EXHAUST 144
146
PISTON & ROD GP 72
73
75
PIVOT BAR GP 511
512
PLATE & FILM GP 842
PLATE GP-SOUND SUPPRESSION 76
PLATE-PRESSURE 391
393
PLATFORM GP-TILT 750
752
PLUG-DRAIN 230
338
602
606

NAME PAGE

PLUG-MAGNETIC 353
355
356
363
366
PLUG-MAGNETIC (ENGINE) 71
POWER TRAIN AR 390
PRECLEANER GP 159
160
PRESCREENER GP 161
PRESSURIZER GP-CAB 754
758
762
PULLEY GP-CRANKSHAFT 77
PULLEY GP-FAN 78
79
80
PUMP & MOUNTING GP 597
598
599
PUMP GP-ENGINE OIL 98
99
100
101
PUMP GP-FUEL INJECTION 219
220
221
PUMP GP-FUEL PRIMING 222
224
226
PUMP GP-FUEL PRIMING–MANUAL 225
PUMP GP-FUEL PRM & PRIM FILTER 227
PUMP GP-GEAR 393
PUMP GP-GEAR–HYDRAULIC 391
600
PUMP GP-WATER 114
115
116
117
118
119

R

RADIATOR & HYD OIL COOLER GP 120
RADIATOR GP 121
124
126
RADIO GP 766
767
768
769
REGULATOR AS-VOLTAGE (24-VOLT) 235
237
REGULATOR AS-VOLTAGE (24-VOLT) (ALTERNATOR) 246
248
REGULATOR-WATER TEMPERATURE 110

INDEX

NAME PAGE

REGULATOR-WATER TEMPERATURE (94-DEG C) . . . 108, 112
RELAY AS (24-VOLT) . . . 333, 695, 698
RIPPER AR . . . 819
RIPPER GP . . . 820
ROCKER ARM GP . . . 81
ROLLER GP-TRACK CARRIER . . . 513
ROLLER GP-TRACK-DOUBLE FLANGE . . . 515, 516, 517, 521
ROLLER GP-TRACK-DOUBLE FLANGE–COLD WEATHER . . . 519
ROLLER GP-TRACK-DOUBLE FLANGE–HIGH HEAT . . . 520
ROLLER GP-TRACK-SINGLE FLANGE . . . 523, 524, 525, 528
ROLLER GP-TRACK-SINGLE FLANGE–COLD WEATHER . . . 526
ROLLER GP-TRACK-SINGLE FLANGE–HIGH HEAT . . . 527
ROPS AR-OPEN . . . 770
ROPS GP-ENCLOSED . . . 771, 772
ROPS GP-OPEN . . . 778
ROTATING GP-PUMP (LH) . . . 343
ROTATING GP-PUMP (RH) . . . 343
ROTATING GP-PUMP–LH . . . 397
ROTATING GP-PUMP–RH . . . 395

S

SCREEN AS . . . 289, 426, 470, 650, 653
SCREEN AS (LH) . . . 289
SCREEN AS (OIL INLET) . . . 182, 187, 198, 200
SCREEN AS (RH) . . . 289
SCREEN GP . . . 470
SEAL GP-CRANKSHAFT . . . 83, 84, 85
SEAL GP-CRANKSHAFT (FRONT) . . . 85
SEAL GP-CRANKSHAFT (REAR) . . . 83, 838
SEAL GP-DUO-CONE . . . 517, 525
SEAL GP-ENCLOSURE . . . 471
SEAL-CRANKSHAFT (FRONT) . . . 83, 838
SEAL-CRANKSHAFT (REAR) . . . 84, 85
SEAL-INTEGRAL . . . 126
SEAT BELT GP . . . 780, 781, 782
SEAT BELT GP (RETRACTABLE, 3-IN) . . . 790, 793
SEAT BELT GP (RETRACTABLE) . . . 788, 789, 791, 792
SEAT GP-SUSPENSION . . . 791, 792, 793, 794
SEAT GP-SUSPENSION–CLOTH, LUMBAR . . . 788, 789, 790
SEAT GP–CLOTH, LUMBAR . . . 786
SEAT GP–VINYL, LUMBAR . . . 783
SEGMENT GP-SPROCKET . . . 399
SENDER AS-FUEL LEVEL . . . 230
SENDER-TEMPERATURE . . . 250
SENDER-TEMPERATURE (ENGINE COOLANT GAUGE) . . . 250
SENDER-TEMPERATURE (ENGINE COOLANT) . . . 263
SENDER-TEMPERATURE (TRANSMISSION OIL) . . . 256, 264
SEPARATOR GP-WATER . . . 228, 229
SOLENOID AS . . . 707, 710
SOLENOID AS-STARTER (24-VOLT) . . . 303
SOLENOID GP-SHUTOFF . . . 295, 296
STARTING AID GP . . . 297
STARTING AID GP-ETHER . . . 298
STARTING MOTOR GP-ELECTRIC . . . 300, 301, 302, 303, 306, 307, 308, 310
STRAINER . . . 603, 607
STRAINER-FUEL (FUEL TANK) . . . 231
SUPPORT GP-ENGINE . . . 86
SUPPORT GP-TILT PLATFORM . . . 472
SUPPRESSION AR-SOUND . . . 87, 473
SUPPRESSION GP-SOUND . . . 474, 476
SUPPRESSOR GP-ELECTRONIC . . . 312
SUSPENSION GP-SEAT . . . 795
SWITCH AS (24-VOLT) . . . 320, 324

INDEX

NAME PAGE

SWITCH AS-MAGNETIC 316
SWITCH AS-PRESSURE 250
673
679
683
SWITCH AS-PRESSURE (ENGINE OIL) 250
258
263
SWITCH AS-PRESSURE (FUEL) 256
263
SWITCH AS-ROCKER (24-VOLT) (INSTRUMENT PANEL LIGHTS) 324
SWITCH AS-ROCKER (24-VOLT) (RUNNING LAMPS) 320
SWITCH AS-ROCKER (ETHER STARTING AID) 324
SWITCH AS-ROCKER (START AID) 320
SWITCH AS-ROLLER (BACKUP ALARM) 319
SWITCH AS-ROTARY 758
762
SWITCH AS-ROTARY (O-ROPS HEATER CONTROL) 755
SWITCH AS-ROTARY (WIPER, WASHER) 774
SWITCH AS-TEMPERATURE (AIR INLET HEATER) 251
SWITCH AS-TEMPERATURE (AIR INTAKE HEATER) 258
SWITCH AS-TEMPERATURE (TRANSMISSION OIL) 250
256
263
SWITCH AS-TEMPERATURE (WATER) 272
SWITCH AS-TOGGLE (SINGLE POLE) 282
SWITCH AS-TOGGLE (SINGLE POLE) (FLOODLAMP) 286
SWITCH AS-TOGGLE (SINGLE POLE) (LIGHT) 293
SWITCH GP-DISCONNECT–BATTERY 313
SWITCH GP-MAGNETIC 314
315
316
317
SWITCH GP-MAGNETIC (24-VOLT) (MAIN POWER RELAY) 321
325
SWITCH GP-PUSH BUTTON (HORN) 327
332
SWITCH GP-START (ENGINE, KEY) 320
324
SWITCH GP-START–ENGINE, KEY 318
SWITCH GP-TEMPERATURE (ENGINE COOLANT) 250
257
263
SWITCH-TOGGLE (SINGLE POLE) (AIR INLET HEATER) 321
SWITCH-TOGGLE (SINGLE POLE) (HEATER ON/OFF) 272

NAME PAGE

T

TANK & FILTER GP-HYDRAULIC 602
606
TANK GP-FUEL 230
TANK GP-WINDOW WASHER 797
TILT GP-PLATFORM 478
TIMER AS-INLET HEATER 272
321
TIP GP-LONG 822
TIP GP-LONG (J-300) 827
TIP GP-LONG–J-300 823
TIP GP-LONG–J-350 821
TIP GP-SHORT 825
TIP GP-SHORT–J-300 826
TIP GP-SHORT–J-350 824
TOOL GP-HAND 844
TOOTH GP-LONG 827
828
829
TOOTH GP-RIPPER–CURVED 830
TOOTH GP-SHORT 831
832
TOOTH GP-UNI 833
TRACK GP 533
TRACK GP–2 REQUIRED 533
TRACK GP–2-REQUIRED 530
TRACK GP–2-REQUIRED, SYSTEMONE 531
532
TURBOCHARGER GP 162
163
164
165
166
167

U

UNDERCARRIAGE AR 534

V

V-BELT 689
691
692
V-BELT (PUMP DRIVE) (WATER PUMP) 61
V-BELT SET (INCLUDES 2 BELTS) 79
80
V-BELT SET (INCLUDES 2-BELTS) (INCLUDES 2 BELTS) 78
VALVE AS-PRESSURE RELIEF 121
126
VALVE AS-PRESSURE RELIEF (REFRIGERANT COMPRESSOR) 690
VALVE AS-WATER 733
735

INDEX

NAME PAGE

VALVE GP 400
402
416
419
650
653
656
658
720
VALVE GP-ACTUATOR 400
VALVE GP-BLOCKER 402
VALVE GP-BYPASS 403
VALVE GP-CHECK 579
610
719
720
VALVE GP-CONTROL 404
405
611
614
617
620
623
624
VALVE GP-COOLER BYPASS 625
VALVE GP-DIVERTER 626
VALVE GP-ETHER STARTING (24-VOLT) 298
VALVE GP-FUEL RELIEF 233
VALVE GP-PILOT 627
628
630
632
635
637
639
642
644
646
648
650
653
656
658
VALVE GP-PUMP CONTROL–LH 406
VALVE GP-PUMP CONTROL–RH 407
VALVE GP-RELIEF 408
409
410
411
412
413
414
415
419
660
661
662
663
664
VALVE GP-RELIEF (PILOT OPERATED) 416
VALVE GP-REPLENISHING 416
419
VALVE GP-ROTARY 406
407
VALVE GP-SELECTOR & PRESS CONT 665
VALVE GP-SHUTTLE 422
666
VALVE MECHANISM GP 88
VALVE-CHECK 230
VANDALISM AR-OPEN ROPS 798
VISOR 771

W

WARNING GP-BACKUP 319
WASTE HANDLING AR 5
WIPER GP-WINDOW 799
801
WIPER PIVOT GP 802
WIRING GP-CONSOLE 320
324
WIRING GP-PLATFORM 327
332

MACHINE ARRANGEMENT

117-1761 CHASSIS AR

S/N: 9BL1488-UP

PART OF 117-1760 GENERAL AR

SMCS-7000 **i00629575**

NOTE	PART NUMBER	QTY	PART NAME 1 2 3 4 5 6 (PRODUCT LEVEL)	SEE PAGE
Y	*128-2209*	1	BATTERY & WIRING GP	250
Y	*8Y-9465*	1	BOX GP-BATTERY	423
Y	*8G-1847*	1	BRACE GP	424
Y	*8Y-9336*	1	BUMPER GP	428
Y	*8Y-9371*	1	CAB AR	688
Y	*7P-2515*	1	CONTROL GP-BUCKET	667
Y	*8G-1260*	1	CONTROL GP-DIRECTION & SPEED	700
Y	*8Y-9464*	1	CONTROL GP-GOVERNOR	172
Y	*7P-2563*	1	CONTROL GP-SPD OVERRIDE & BRK	344
Y	*8G-1267*	1	CONTROL GP-STEERING	716
Y	*117-1762*	1	ENCLOSURE GP-ENGINE	432
Y	*7P-2598*	1	ENCLOSURE GP-ENGINE & XMSN	439
Y	*8Y-9348*	1	FRAME GP-LOADER	444
Y	*8Y-9428*	1	GUARD GP-BOTTOM	449
Y	*8G-0191*	1	GUARD GP-FRONT	455
Y	*117-1763*	1	GUARD GP-RADIATOR	460
Y	*8Y-9459*	1	LINES GP-FUEL	206
Y	*117-1764*	1	MOUNTING GP-MUFFLER	154
Y	*104-2690*	1	PLATE & FILM GP	842
Y	*129-1453*	1	PLATFORM GP-TILT	750
Y	*8Y-9141*	1	SEAT GP-SUSPENSION	794
Y	*8Y-9461*	1	SUPPORT GP-TILT PLATFORM	472
Y	*8Y-9458*	1	TANK GP-FUEL	230
Y	*128-2210*	1	WIRING GP-CONSOLE	320
Y	*129-0081*	1	WIRING GP-PLATFORM	327

Y - SEPARATE ILLUSTRATION

<END>

MACHINE ARRANGEMENT

8Y-9370 CHASSIS AR

S/N: 9BL1-1487

PART OF 8Y-9163 GENERAL AR

SMCS-7000 **i00577351**

NOTE	PART NUMBER	QTY	PART NAME 1 2 3 4 5 6 (PRODUCT LEVEL)	SEE PAGE
Y	*8Y-9466*	1	BATTERY & WIRING GP	262
Y	*8Y-9465*	1	BOX GP-BATTERY	423
Y	*8G-1847*	1	BRACE GP	424
Y	*8Y-9336*	1	BUMPER GP	428
Y	*7P-2515*	1	CONTROL GP-BUCKET	667
Y	*8G-1260*	1	CONTROL GP-DIRECTION & SPEED	700
Y	*8Y-9464*	1	CONTROL GP-GOVERNOR	172
Y	*7P-2563*	1	CONTROL GP-SPD OVERRIDE & BRK	344
Y	*8G-1267*	1	CONTROL GP-STEERING	716
Y	*8Y-9456*	1	ENCLOSURE GP-ENGINE	436
Y	*7P-2598*	1	ENCLOSURE GP-ENGINE & XMSN	439
Y	*8Y-9348*	1	FRAME GP-LOADER	444
Y	*8Y-9428*	1	GUARD GP-BOTTOM	449
Y	*8G-0191*	1	GUARD GP-FRONT	455
Y	*8Y-9457*	1	GUARD GP-RADIATOR	463
Y	*8Y-9459*	1	LINES GP-FUEL	206
Y	*8Y-9775*	1	MOUNTING GP-MUFFLER	156
Y	*104-2690*	1	PLATE & FILM GP	842
Y	*8Y-9468*	1	PLATFORM GP-TILT	752
			S/N: 9BL1-1398	
Y	*129-1453*	1	PLATFORM GP-TILT	750
			S/N: 9BL1399-1487	
Y	*8Y-9141*	1	SEAT GP-SUSPENSION	794
Y	*8Y-9461*	1	SUPPORT GP-TILT PLATFORM	472
Y	*8Y-9458*	1	TANK GP-FUEL	230
Y	*8Y-9462*	1	WIRING GP-CONSOLE	324
Y	*8Y-9467*	1	WIRING GP-PLATFORM	332
			S/N: 9BL1-1398	
Y	*129-0081*	1	WIRING GP-PLATFORM	327
			S/N: 9BL1399-1487	

Y - SEPARATE ILLUSTRATION

<END>

117-1760 GENERAL AR

S/N: 9BL1488-UP

SMCS-7000 **i00629574**

NOTE	PART NUMBER	QTY	PART NAME 1 2 3 4 5 6 (PRODUCT LEVEL)	SEE PAGE
Y	*117-1761*	1	CHASSIS AR	1
YR	**117-5187**	1	ENGINE AR	8
Y	*8Y-9369*	1	HYDRAULIC AR (2-VALVE)	554
Y	*117-5189*	1	INSTALLATION AR-ENGINE	14
Y	*8Y-9345*	1	POWER TRAIN AR	390
Y	*3W-8187*	1	UNDERCARRIAGE AR	534

R - REMANUFACTURED PART MAY BE AVAILABLE
Y - SEPARATE ILLUSTRATION

<END>

8Y-9163 GENERAL AR

S/N: 9BL1-1487

SMCS-7000 **i00416961**

NOTE	PART NUMBER	QTY	PART NAME 1 2 3 4 5 6 (PRODUCT LEVEL)	SEE PAGE
Y	*8Y-9370*	1	CHASSIS AR	2
YR	*6I-3528*	1	ENGINE AR	12
Y	*8Y-9369*	1	HYDRAULIC AR (2-VALVE)	554
Y	*6I-3527*	1	INSTALLATION AR	3
Y	*8Y-9345*	1	POWER TRAIN AR	390
Y	*3W-8187*	1	UNDERCARRIAGE AR	534

R - REMANUFACTURED PART MAY BE AVAILABLE
Y - SEPARATE ILLUSTRATION

<END>

6I-3527 INSTALLATION AR

S/N: 9BL1-1487
PART OF 8Y-9163 GENERAL AR

SMCS-7000 **i00397300**

NOTE	PART NUMBER	QTY	PART NAME 1 2 3 4 5 6 (PRODUCT LEVEL)	SEE PAGE
Y	*100-4595*	1	AIR CLEANER GP	130
			S/N: 9BL1-1359	
Y	*127-9917*	1	AIR CLEANER GP	134
			S/N: 9BL1360-1487	
Y	*106-7670*	1	COOLER & MTG GP-HYDRAULIC OIL	541
Y	*106-7666*	1	FAN GP-BLOWER	106
Y	*100-4598*	1	LINES GP-AIR	144
Y	*107-7219*	1	LINES GP-FUEL FILTER	209
Y	*101-7322*	1	MOUNTING GP-ENGINE & XMSN	70
Y	*100-4593*	1	MUFFLER GP	157
Y	*101-3170*	1	RADIATOR GP	121

Y - SEPARATE ILLUSTRATION

<END>

8Y-9729 MACHINE AR

S/N: 9BL1-UP
COSA
AN ATTACHMENT

SMCS-7000 **i01401440**

NOTE	PART NUMBER	QTY	PART NAME 1 2 3 4 5 6 (PRODUCT LEVEL)	SEE PAGE
Y	*8Y-9600*	1	LAMP GP-DOME	282
Y	*114-9841*	1	HEATER AR-AIR INLET	272
			S/N: 9BL1-1487	

Y - SEPARATE ILLUSTRATION

<END>

119-5868 MODIFICATION AR

S/N: 9BL1-UP

AN ATTACHMENT

SMCS-7000 **i01398780**

NOTE	PART NUMBER	QTY	PART NAME 1 2 3 4 5 6 (PRODUCT LEVEL)	SEE PAGE
Y	*3W-4827*	1	GUARD GP-LINES	458
Y	*5G-9258*	1	HITCH GP	465
Y	*119-5869*	1	ROPS GP-ENCLOSED	771
	3A-8687	1	FILM GP	
	114-2739	1	FILM-WARNING	
	106-0826	1	PLATE	

Y - SEPARATE ILLUSTRATION

<END>

5Q-5567 MODIFICATION AR

S/N: 9BL1-UP

PART OF 133-0568 GUARD AR-RADIATOR, 133-0569, 133-3958 WASTE HANDLING AR

AN ATTACHMENT

SMCS-7000 **i01398776**

NOTE	PART NUMBER	QTY	PART NAME 1 2 3 4 5 6 (PRODUCT LEVEL)	SEE PAGE
Y	*5Q-5569*	1	FINAL DRIVE & BRAKE GP (LH)	366
Y	*5Q-5568*	1	FINAL DRIVE & BRAKE GP (RH)	363
Y	*5Q-5566*	1	IDLER GP-FRONT	495
Y	*5Q-5565*	1	PIVOT BAR GP	512

Y - SEPARATE ILLUSTRATION

<END>

5Q-5791 MODIFICATION AR

S/N: 9BL1-UP

PART OF 133-0569 WASTE HANDLING AR

AN ATTACHMENT

SMCS-7000 **i00682467**

NOTE	PART NUMBER	QTY	PART NAME 1 2 3 4 5 6 (PRODUCT LEVEL)	SEE PAGE
	2Q-5275	1	DOOR AS	
	2Q-5276	1	DOOR AS	
	2Q-5277	1	DOOR AS	
	2Q-5278	1	DOOR AS	
	2Q-5279	2	DOOR AS	
	5Q-8075	1	HOOD AS	

<END>

133-0569 WASTE HANDLING AR

S/N: 9BL1-UP
SPECIAL
AN ATTACHMENT

SMCS-7000 **i00683245**

NOTE	PART NUMBER	QTY	PART NAME 1 2 3 4 5 6 (PRODUCT LEVEL)	SEE PAGE
Y	*5Q-6890*	1	COOLER AR-HIGH AMBIENT TEMP	102
			—OR—	
Y	*136-7804*	1	COOLER AR-HIGH AMBIENT TEMP	102
Y	*5Q-5790*	1	FRAME GP-LOADER	442
Y	*5Q-5831*	1	GUARD GP-BOTTOM	447
Y	*5Q-5755*	1	GUARD GP-FENDER	451
Y	*2Q-5344*	1	GUARD GP-FRONT	453
Y	*5Q-6822*	1	GUARD GP-RADIATOR	462
Y	*5Q-6781*	1	LIGHTING GP-FLOOD	289
Y	*5Q-5791*	1	MODIFICATION AR	4
Y	*5Q-5567*	1	MODIFICATION AR	4
			—OR—	
Y	*136-7802*	1	GUARD AR-SEAL	486
Y	*9S-0603*	1	PRESCREENER GP	161
Y	*5Q-5461*	1	SEAL GP-ENCLOSURE	471

Y - SEPARATE ILLUSTRATION

<END>

133-3958 WASTE HANDLING AR

S/N: 9BL1-UP
AN ATTACHMENT

SMCS-7000 **i00992735**

NOTE	PART NUMBER	QTY	PART NAME 1 2 3 4 5 6 (PRODUCT LEVEL)	SEE PAGE
Y	*5Q-6770*	1	BUMPER GP	425
			—OR—	
Y	*5Q-8901*	1	BUMPER GP	427
Y	*5Q-7126*	1	DOOR AS	430
Y	*5Q-7127*	1	DOOR AS	431
Y	*5Q-5790*	1	FRAME GP-LOADER	442
Y	*5Q-5831*	1	GUARD GP-BOTTOM	447
Y	*5Q-5755*	1	GUARD GP-FENDER	451
Y	*2Q-5344*	1	GUARD GP-FRONT	453
Y	*3W-8578*	1	GUARD GP-IDLER	457
Y	*5Q-6781*	1	LIGHTING GP-FLOOD	289
Y	*5Q-5567*	1	MODIFICATION AR	4
			—OR—	
Y	*136-7802*	1	GUARD AR-SEAL	486
Y	*9S-0603*	1	PRESCREENER GP	161
			—OR—	
	2Q-7954	1	PRECLEANER AS	
Y	*5Q-7094*	1	SCREEN GP	470
Y	*5Q-5461*	1	SEAL GP-ENCLOSURE	471

Y - SEPARATE ILLUSTRATION

<END>

114-7159 ENGINE AR*R

S/N: 4TF17400-99999
PART OF 114-9841 HEATER AR-AIR INLET
AN ATTACHMENT

SMCS-1000 **i00675856**

NOTE	PART NUMBER	QTY	PART NAME 1 2 3 4 5 6 (PRODUCT LEVEL)	SEE PAGE
Y	*9Y-6984*	1	AFTERCOOLER GP-WATER	129
Y	*107-2712*	1	ALTERNATOR GP-CHARGING	240
Y	*1N-3477*	1	BREATHER GP	89
Y	*2W-9608*	1	CAMSHAFT GP	16
Y	*4W-3462*	1	CARRIER GP-SEAL	17
Y	*7W-6989*	1	CONTROL GP-FUEL INJECTION	170
			S/N: 4TF17400-18603	
Y	*105-1695*	1	CONTROL GP-FUEL INJECTION	169
			S/N: 4TF18604-99999	
Y	*7E-9429*	1	CONTROL GP-GOVERNOR	171
Y	*4P-8184*	1	COOLER GP-ENGINE OIL	104
			S/N: 4TF17400-18603	
Y	*100-6269*	1	COOLER GP-ENGINE OIL	103
			S/N: 4TF18604-99999	
Y	*7C-0299*	1	COVER GP-CYLINDER BLOCK	18
Y	*7L-0004*	1	COVER GP-FRONT HOUSING	20
Y	*4W-2172*	1	COVER GP-VALVE MECHANISM	23
Y	*4W-2197*	1	CRANKSHAFT GP	25
YR	*2W-9746*	1	CYLINDER BLOCK GP	33
			S/N: 4TF17400-18603	
YR	*7E-2482*	1	CYLINDER BLOCK GP	36
			S/N: 4TF18604-99999	
Y	*9Y-8871*	1	CYLINDER HEAD GP	55
			S/N: 4TF17400-18603	
Y	*4P-8264*	1	CYLINDER HEAD GP	54
			S/N: 4TF18604-99999	
Y	*7C-2428*	1	DAMPER & PULLEY GP	58
Y	*7C-4532*	1	DRAIN GP-ENGINE OIL	59
Y	*7C-0044*	1	DRIVE GP-FAN	60
Y	*4W-5428*	1	DRIVE GP-WATER PUMP	61
Y	*108-2829*	1	FILLER GP-ENGINE OIL	90
Y	*4P-8183*	1	FILTER GP-ENGINE OIL	92
Y	*6I-2693*	1	FILTER GP-FUEL	179
Y	*100-3649*	1	FLYWHEEL GP	62
Y	*4P-1556*	1	FUMES DISPOSAL GP	93
Y	*108-2828*	1	GAUGE GP-OIL LEVEL (DIPSTICK)	94
Y	*2W-8475*	1	GEAR GP-FRONT	65
Y	*107-7723*	1	GOVERNOR GP	181
Y	*106-9086*	1	STARTING AID GP (HEATER)	297
Y	*9Y-0054*	1	HOUSING GP-FLYWHEEL	66
Y	*7L-0002*	1	HOUSING GP-FRONT	68
Y	*4W-2515*	1	LIFTING GP-ENGINE	69
Y	*7C-9446*	1	LINES GP-AIR	150
			S/N: 4TF17400-20039	
Y	*9Y-4968*	1	LINES GP-AIR	151
			S/N: 4TF20040-99999	
Y	*4W-2914*	1	LINES GP-ENGINE OIL	96

114-7159 **ENGINE AR (**contd.**)** **i00675856**

NOTE	PART NUMBER	QTY	PART NAME 1 2 3 4 5 6 (PRODUCT LEVEL)	SEE PAGE
Y	*6I-2420*	1	LINES GP-FUEL FILTER	214
			S/N: 4TF17400-18603	
Y	*119-2899*	1	LINES GP-FUEL FILTER	210
			S/N: 4TF18604-99999	
Y	*9Y-3943*	1	LINES GP-FUEL RATIO CONTROL	217
			S/N: 4TF17400-18603	
Y	*107-7731*	1	LINES GP-FUEL RATIO CONTROL	216
			S/N: 4TF18604-99999	
Y	*4W-6620*	1	HOUSING & REGULATOR GP	108
			S/N: 4TF17400-18603	
Y	*119-2936*	1	LINES GP-WATER	110
			S/N: 4TF18604-99999	
Y	*7W-9248*	1	MANIFOLD GP-EXHAUST	152
Y	*4W-3480*	1	MANIFOLD GP-INLET	153
Y	*4W-0269*	1	PAN GP-OIL	71
Y	*108-5758*	6	PISTON & ROD GP	75
			S/N: 4TF17400-18603	
YR	*107-7639*	6	PISTON & ROD GP	72
			S/N: 4TF18604-99999	
	7C-7301	1	PLATE & FILM GP (ENGINE)	
Y	*100-4601*	1	PULLEY GP-FAN	78
Y	*4W-5429*	1	PULLEY GP-CRANKSHAFT	77
Y	*4W-2195*	1	PUMP GP-ENGINE OIL	100
Y	*8N-6201*	1	PUMP GP-FUEL PRM & PRIM FILTER	227
			S/N: 4TF18604-99999	
Y	*7E-7607*	6	PUMP GP-FUEL INJECTION	221
Y	*4W-7589*	1	PUMP GP-WATER	117
Y	*4W-1016*	1	SEAL GP-CRANKSHAFT	84
Y	*7C-4028*	1	SOLENOID GP-SHUTOFF (FUEL)	296
Y	*108-3858*	1	STARTING MOTOR GP-ELECTRIC	306
Y	*101-7323*	1	SUPPORT GP-ENGINE	86
Y	*107-7747*	1	TURBOCHARGER GP	163
Y	*2W-9607*	1	VALVE MECHANISM GP	88
			AVAILABLE GASKET KIT(S):	
	124-3690	1	KIT-GASKET (CENTRAL, LOWER STRUCTURE) (CENTRAL AND LOWER STRUCTURE)	
	130-1306	1	KIT-GASKET (FRONT STRUCTURE) (FRONT STRUCTURE)	
	129-6652	1	KIT-GASKET (FUEL SYSTEM) (FUEL SYSTEM)	
	124-3686	1	KIT-GASKET (OIL COOLER, LINES) (OIL COOLER AND LINES)	
	130-1309	1	KIT-GASKET (REAR STRUCTURE) (REAR STRUCTURE)	
	130-1457	1	KIT-GASKET (SINGLE CYLINDER HEAD) (SINGLE CYLINDER HEAD)	
	7X-2526	1	KIT-GASKET (TURBOCHARGER) (TURBOCHARGER)	
	7X-2528	1	KIT-GASKET (WATER PUMP) (WATER PUMP)	

R - REMANUFACTURED PART MAY BE AVAILABLE
Y - SEPARATE ILLUSTRATION

<END>

ENGINE ARRANGEMENT

117-5187 ENGINE AR*R

S/N: 4TF17400-UP

PART OF 117-1760 GENERAL AR

SMCS-1000 **i01089351**

NOTE	PART NUMBER	QTY	PART NAME 1 2 3 4 5 6 (PRODUCT LEVEL)	SEE PAGE
Y	*9Y-6984*	1	AFTERCOOLER GP-WATER	129
Y	*107-2712*	1	ALTERNATOR GP-CHARGING	240
Y	*1N-3477*	1	BREATHER GP	89
Y	*108-5759*	1	CAMSHAFT GP	15
Y	*4W-3462*	1	CARRIER GP-SEAL	17
Y	*105-1695*	1	CONTROL GP-FUEL INJECTION	169
Y	*7E-9429*	1	CONTROL GP-GOVERNOR	171
Y	*100-6269*	1	COOLER GP-ENGINE OIL	103
Y	*7C-0299*	1	COVER GP-CYLINDER BLOCK	18
Y	*7L-0004*	1	COVER GP-FRONT HOUSING	20
Y	*4W-2172*	1	COVER GP-VALVE MECHANISM	23
Y	*4W-2197*	1	CRANKSHAFT GP	25
YR	*7E-2482*	1	CYLINDER BLOCK GP	36
Y	*4P-8264*	1	CYLINDER HEAD GP	54
			S/N: 4TF17400-50340	
Y	*159-0305*	1	CYLINDER HEAD GP	50
			S/N: 4TF50341-UP	
Y	*4P-2844*	1	DAMPER & PULLEY GP	57
Y	*7C-4532*	1	DRAIN GP-ENGINE OIL	59
Y	*7C-0044*	1	DRIVE GP-FAN	60
Y	*4W-5428*	1	DRIVE GP-WATER PUMP	61
Y	*108-2829*	1	FILLER GP-ENGINE OIL	90
Y	*4P-8183*	1	FILTER GP-ENGINE OIL	92
Y	*6I-2693*	1	FILTER GP-FUEL	179
			S/N: 4TF17400-32800	
Y	*128-3937*	1	FILTER GP-SECONDARY FUEL	180
			S/N: 4TF32801-UP	
Y	*100-3649*	1	FLYWHEEL GP	62
Y	*4P-1556*	1	FUMES DISPOSAL GP	93
Y	*108-2828*	1	GAUGE GP-OIL LEVEL (DIPSTICK)	94
Y	*101-4540*	1	GEAR GP-FRONT	64
Y	*119-3037*	1	GOVERNOR GP-UNIT INJECTOR	194
			S/N: 4TF17400-32800	
Y	*129-1213*	1	GOVERNOR GP-UNIT INJECTOR	196
			S/N: 4TF32801-UP	
Y	*106-9086*	1	STARTING AID GP (HEATER)	297
Y	*9Y-0054*	1	HOUSING GP-FLYWHEEL	66
Y	*101-4539*	1	HOUSING GP-FRONT	67
Y	*4W-2515*	1	LIFTING GP-ENGINE	69
Y	*9Y-4968*	1	LINES GP-AIR	151
Y	*4W-2914*	1	LINES GP-ENGINE OIL	96
Y	*119-2899*	1	LINES GP-FUEL FILTER	210
			S/N: 4TF17400-34943	
Y	*142-8167*	1	LINES GP-FUEL FILTER	212
			S/N: 4TF34944-UP	
Y	*107-7731*	1	LINES GP-FUEL RATIO CONTROL	216
Y	*119-2936*	1	LINES GP-WATER	110

117-5187 **ENGINE AR (**contd.**)** **i01089351**

NOTE	PART NUMBER	QTY	PART NAME 1 2 3 4 5 6 (PRODUCT LEVEL)	SEE PAGE
			S/N: 4TF17400-32800	
Y	*4W-6620*	1	HOUSING & REGULATOR GP	108
			S/N: 4TF32801-UP	
Y	*7W-9248*	1	MANIFOLD GP-EXHAUST	152
Y	*4W-3480*	1	MANIFOLD GP-INLET	153
Y	*4W-0269*	1	PAN GP-OIL	71
YR	*107-7639*	6	PISTON & ROD GP	72
Y	*125-1383*	1	PULLEY GP-FAN	79
Y	*4W-5429*	1	PULLEY GP-CRANKSHAFT	77
Y	*4W-2195*	1	PUMP GP-ENGINE OIL	100
Y	*8N-6201*	1	PUMP GP-FUEL PRM & PRIM FILTER	227
			S/N: 4TF17400-34943	
Y	*107-7732*	6	PUMP GP-FUEL INJECTION	219
Y	*4W-7589*	1	PUMP GP-WATER	117
Y	*115-4203*	1	SEAL GP-CRANKSHAFT	83
Y	*7C-4028*	1	SOLENOID GP-SHUTOFF (FUEL)	296
			S/N: 4TF17400-49534, 50042-UP	
Y	*160-6411*	1	SOLENOID GP-SHUTOFF	295
			S/N: 4TF49535-50041	
Y	*108-3858*	1	STARTING MOTOR GP-ELECTRIC	306
Y	*101-7323*	1	SUPPORT GP-ENGINE	86
Y	*126-1123*	1	TURBOCHARGER GP	167
			S/N: 4TF17400-32064	
Y	*119-3084*	1	TURBOCHARGER GP	164
			S/N: 4TF32065-UP	
Y	*2W-9607*	1	VALVE MECHANISM GP	88
			(GASKET KITS WILL BE PROVIDED WHEN AVAILABLE)	

R - REMANUFACTURED PART MAY BE AVAILABLE
Y - SEPARATE ILLUSTRATION

<END>

117-5188 ENGINE AR*R

S/N: 4TF29893-99999

PART OF 117-5637 SUPPRESSION AR-SOUND

AN ATTACHMENT

SMCS-1000 **i01070489**

NOTE	PART NUMBER	QTY	PART NAME 1 2 3 4 5 6 (PRODUCT LEVEL)	SEE PAGE
Y	*9Y-6984*	1	AFTERCOOLER GP-WATER	129
Y	*107-2712*	1	ALTERNATOR GP-CHARGING	240
Y	*1N-3477*	1	BREATHER GP	89
Y	*108-5759*	1	CAMSHAFT GP	15
Y	*4W-3462*	1	CARRIER GP-SEAL	17
Y	*105-1695*	1	CONTROL GP-FUEL INJECTION	169
Y	**7E-9429**	1	CONTROL GP-GOVERNOR	171
Y	*100-6269*	1	COOLER GP-ENGINE OIL	103
Y	*7C-0299*	1	COVER GP-CYLINDER BLOCK	18
Y	*7L-0004*	1	COVER GP-FRONT HOUSING	20
Y	**9Y-1224**	1	COVER GP-VALVE MECHANISM (SOUND SUPPRESSION)	24
Y	*4W-2172*	1	COVER GP-VALVE MECHANISM	23
Y	*4W-2197*	1	CRANKSHAFT GP	25
YR	*7E-2482*	1	CYLINDER BLOCK GP	36
Y	*4P-8264*	1	CYLINDER HEAD GP	54
			S/N: 4TF29893-50340	
Y	*159-0305*	1	CYLINDER HEAD GP	50
			S/N: 4TF50341-99999	
Y	*110-9523*	1	DAMPER & PULLEY GP	56
Y	*7C-4532*	1	DRAIN GP-ENGINE OIL	59
Y	*7C-0044*	1	DRIVE GP-FAN	60
Y	*4W-5428*	1	DRIVE GP-WATER PUMP	61
Y	*108-2829*	1	FILLER GP-ENGINE OIL	90
Y	*4P-8183*	1	FILTER GP-ENGINE OIL	92
Y	*6I-2693*	1	FILTER GP-FUEL	179
			S/N: 4TF29893-32800	
Y	*128-3937*	1	FILTER GP-SECONDARY FUEL	180
			S/N: 4TF32801-99999	
Y	*100-3649*	1	FLYWHEEL GP	62
Y	*4P-1556*	1	FUMES DISPOSAL GP	93
Y	*108-2828*	1	GAUGE GP-OIL LEVEL (DIPSTICK)	94
Y	*101-4540*	1	GEAR GP-FRONT	64
Y	*119-3037*	1	GOVERNOR GP-UNIT INJECTOR	194
			S/N: 4TF29893-32800	
Y	*129-1213*	1	GOVERNOR GP-UNIT INJECTOR	196
			S/N: 4TF32801-99999	
Y	*106-9086*	1	STARTING AID GP (HEATER)	297
Y	*9Y-0054*	1	HOUSING GP-FLYWHEEL	66
Y	*101-4539*	1	HOUSING GP-FRONT	67
Y	*4W-2515*	1	LIFTING GP-ENGINE	69
Y	*9Y-4968*	1	LINES GP-AIR	151
Y	*115-4143*	1	LINES GP-ENGINE OIL	95
Y	*119-2899*	1	LINES GP-FUEL FILTER	210
			S/N: 4TF29893-34869	
Y	*142-8167*	1	LINES GP-FUEL FILTER	212
			S/N: 4TF34870-99999	
Y	*107-7731*	1	LINES GP-FUEL RATIO CONTROL	216

117-5188 **ENGINE AR (**contd.**)** **i01070489**

NOTE	PART NUMBER	QTY	PART NAME 1 2 3 4 5 6 (PRODUCT LEVEL)	SEE PAGE
Y	*119-2936*	1	LINES GP-WATER	110
			S/N: 4TF29893-32800	
Y	*4W-6620*	1	HOUSING & REGULATOR GP	108
			S/N: 4TF32801-99999	
Y	*7W-9248*	1	MANIFOLD GP-EXHAUST	152
Y	*4W-3480*	1	MANIFOLD GP-INLET	153
Y	*4W-0269*	1	PAN GP-OIL	71
YR	*107-7639*	6	PISTON & ROD GP	72
Y	*7C-5034*	1	PLATE GP-SOUND SUPPRESSION	76
Y	*125-1383*	1	PULLEY GP-FAN	79
Y	*4W-5429*	1	PULLEY GP-CRANKSHAFT	77
Y	*4W-2195*	1	PUMP GP-ENGINE OIL	100
Y	*8N-6201*	1	PUMP GP-FUEL PRM & PRIM FILTER	227
			S/N: 4TF29893-34869	
Y	*107-7732*	6	PUMP GP-FUEL INJECTION	219
Y	*4W-7589*	1	PUMP GP-WATER	117
Y	*115-4203*	1	SEAL GP-CRANKSHAFT	83
Y	*7C-4028*	1	SOLENOID GP-SHUTOFF (FUEL)	296
Y	*108-3858*	1	STARTING MOTOR GP-ELECTRIC	306
Y	*101-7323*	1	SUPPORT GP-ENGINE	86
Y	*7C-5033*	1	COVER GP-SOUND SUPPRESSION (OIL PAN)	22
Y	*126-1123*	1	TURBOCHARGER GP	167
			S/N: 4TF29893-32064	
Y	*119-3084*	1	TURBOCHARGER GP	164
			S/N: 4TF32065-99999	
Y	*2W-9607*	1	VALVE MECHANISM GP	88
			GASKET KITS WILL BE PROVIDED WHEN AVAILABLE	

R - REMANUFACTURED PART MAY BE AVAILABLE
Y - SEPARATE ILLUSTRATION

<END>

6I-3528 ENGINE AR*R

S/N: 4TF17400-UP

PART OF 8Y-9163 GENERAL AR

SMCS-1000 **i04499613**

NOTE	PART NUMBER	QTY	PART NAME 1 2 3 4 5 6 (PRODUCT LEVEL)	SEE PAGE
Y	*9Y-6984*	1	AFTERCOOLER GP-WATER	129
Y	*107-2712*	1	ALTERNATOR GP-CHARGING	240
Y	*1N-3477*	1	BREATHER GP	89
Y	*2W-9608*	1	CAMSHAFT GP	16
Y	*4W-3462*	1	CARRIER GP-SEAL	17
Y	*105-1695*	1	CONTROL GP-FUEL INJECTION	169
Y	**7E-9429**	1	CONTROL GP-GOVERNOR	171
Y	*100-6269*	1	COOLER GP-ENGINE OIL	103
Y	*7C-0299*	1	COVER GP-CYLINDER BLOCK	18
Y	*7L-0004*	1	COVER GP-FRONT HOUSING	20
Y	*4W-2172*	1	COVER GP-VALVE MECHANISM	23
Y	*4W-2197*	1	CRANKSHAFT GP	25
YR	*7E-2482*	1	CYLINDER BLOCK GP	36
Y	*4P-8264*	1	CYLINDER HEAD GP	54
Y	*7C-2428*	1	DAMPER & PULLEY GP	58
Y	*7C-4532*	1	DRAIN GP-ENGINE OIL	59
Y	*7C-0044*	1	DRIVE GP-FAN	60
Y	*4W-5428*	1	DRIVE GP-WATER PUMP	61
Y	*108-2829*	1	FILLER GP-ENGINE OIL	90
Y	*4P-8183*	1	FILTER GP-ENGINE OIL	92
Y	*6I-2693*	1	FILTER GP-FUEL	179
Y	*100-3649*	1	FLYWHEEL GP	62
Y	*4P-1556*	1	FUMES DISPOSAL GP	93
Y	*108-2828*	1	GAUGE GP-OIL LEVEL (DIPSTICK)	94
Y	*2W-8475*	1	GEAR GP-FRONT	65
Y	*107-7723*	1	GOVERNOR GP	181
Y	*9Y-0054*	1	HOUSING GP-FLYWHEEL	66
Y	*7L-0002*	1	HOUSING GP-FRONT	68
Y	*4W-2515*	1	LIFTING GP-ENGINE	69
Y	*7C-9446*	1	LINES GP-AIR	150
Y	*4W-2914*	1	LINES GP-ENGINE OIL	96
Y	*119-2899*	1	LINES GP-FUEL FILTER	210
Y	*107-7731*	1	LINES GP-FUEL RATIO CONTROL	216
Y	*4P-7703*	1	LINES GP-TURBOCHARGER OIL	97
Y	*4W-6620*	1	HOUSING & REGULATOR GP	108
			S/N: 4TF17400-18365	
Y	*119-2936*	1	LINES GP-WATER	110
			S/N: 4TF18366-UP	
Y	*7W-9248*	1	MANIFOLD GP-EXHAUST	152
Y	*4W-3480*	1	MANIFOLD GP-INLET	153
Y	*4W-0269*	1	PAN GP-OIL	71
YR	*107-7639*	1	PISTON & ROD GP	72
Y	*100-4601*	1	PULLEY GP-FAN	78
Y	*4W-5429*	1	PULLEY GP-CRANKSHAFT	77
Y	*4W-2195*	1	PUMP GP-ENGINE OIL	100
Y	*8N-6201*	1	PUMP GP-FUEL PRM & PRIM FILTER	227
Y	*7E-7607*	6	PUMP GP-FUEL INJECTION	221
Y	*4W-7589*	1	PUMP GP-WATER	117

6I-3528 **ENGINE AR (**contd.**)** **i04499613**

NOTE	PART NUMBER	QTY	PART NAME 1 2 3 4 5 6 (PRODUCT LEVEL)	SEE PAGE
Y	*4W-1016*	1	SEAL GP-CRANKSHAFT	84
Y	*7C-4028*	1	SOLENOID GP-SHUTOFF (FUEL)	296
Y	*108-3858*	1	STARTING MOTOR GP-ELECTRIC	306
Y	*101-7323*	1	SUPPORT GP-ENGINE	86
Y	*107-7747*	1	TURBOCHARGER GP	163
Y	*2W-9607*	1	VALVE MECHANISM GP	88
			AVAILABLE GASKET KIT(S):	
	130-1304	1	KIT-GASKET (CENTRAL, LOWER STRUCTURE)	
	130-1306	1	KIT-GASKET (FRONT STRUCTURE)	
	129-6652	1	KIT-GASKET (FUEL SYSTEM)	
	130-1457	1	KIT-GASKET (SINGLE CYLINDER HEAD)	
	7X-2526	1	KIT-GASKET (TURBOCHARGER)	
	7X-2528	1	KIT-GASKET (WATER PUMP)	
	130-1309	1	KIT-GASKET (REAR STRUCTURE)	
	124-3686	1	KIT-GASKET (OIL COOLER, LINES)	

R - REMANUFACTURED PART MAY BE AVAILABLE
Y - SEPARATE ILLUSTRATION

<END>

117-5189 INSTALLATION AR-ENGINE

S/N: 9BL1488-UP

PART OF 117-1760 GENERAL AR

SMCS-1000 **i00915156**

NOTE	PART NUMBER	QTY	PART NAME 1 2 3 4 5 6 (PRODUCT LEVEL)	SEE PAGE
Y	*127-9917*	1	AIR CLEANER GP	134
			S/N: 9BL1488-1842	
Y	*142-8168*	1	AIR CLEANER GP	138
			S/N: 9BL1843-UP	
Y	*120-6883*	1	COOLER & MTG GP-HYDRAULIC OIL	542
Y	*117-5193*	1	FAN GP-BLOWER	107
Y	*100-4598*	1	LINES GP-AIR	144
			S/N: 9BL1488-1643	
Y	*117-5179*	1	LINES GP-AIR	148
			S/N: 9BL1644-UP	
Y	*101-7322*	1	MOUNTING GP-ENGINE & XMSN	70
Y	*117-5190*	1	MUFFLER GP	158
Y	*107-7219*	1	LINES GP-FUEL FILTER	209
			S/N: 9BL1488-1842	
Y	*142-8169*	1	PUMP GP-FUEL PRIMING	222
			S/N: 9BL1843-UP	
Y	*117-5192*	1	RADIATOR GP	126
Y	*142-8166*	1	SEPARATOR GP-WATER	228
			S/N: 9BL1843-UP	

Y - SEPARATE ILLUSTRATION

<END>

108-5759 CAMSHAFT GP

S/N: 4TF17400-UP
PART OF 117-5187, 117-5188 ENGINE AR
ALSO AN ATTACHMENT

SMCS-1210, 1211, 1212

i00569497

NOTE	REF NO	GRAPHIC REF	PART NUMBER	QTY	PART NAME 1 2 3 4 5 6 (PRODUCT LEVEL)	SEE PAGE
R	1	1	**134-5276**	1	CAMSHAFT AS	
	2	1	**1B-8705**	1	KEY-WOODRUFF	
	3	1	**7W-4070**	1	GEAR (100-TEETH)	
	4	1	**107-7694**	1	PLATE-THRUST	
M	5	1	**6V-3940**	2	BOLT (M8X1.25X25-MM)	

M - METRIC PART
R - REMANUFACTURED PART MAY BE AVAILABLE

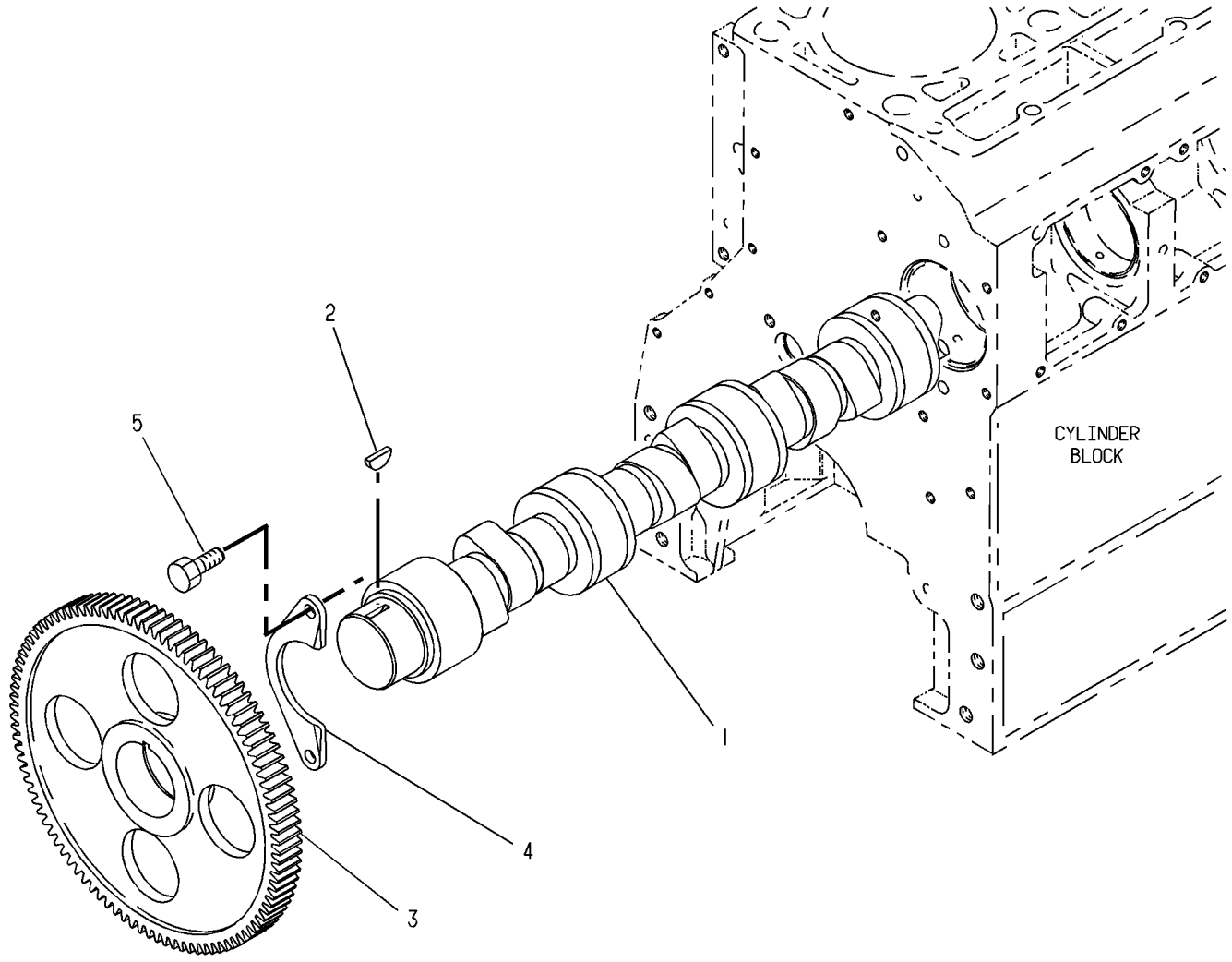

GRAPHIC #1 <END> g00108297

2W-9608 CAMSHAFT GP

S/N: 4TF17400-UP
PART OF 114-7159, 6I-3528 ENGINE AR
ALSO AN ATTACHMENT

SMCS-1210, 1211, 1212

i00569374

NOTE	REF NO	GRAPHIC REF	PART NUMBER	QTY	PART NAME 1 2 3 4 5 6 (PRODUCT LEVEL)	SEE PAGE
R	1	1	**7W-5426**	1	CAMSHAFT AS	
	2	1	**1B-8705**	1	KEY-WOODRUFF	
	3	1	**7W-4070**	1	GEAR (100-TEETH)	
	4	1	**107-7694**	1	PLATE-THRUST	
M	5	1	**6V-3940**	2	BOLT (M8X1.25X25-MM)	

M - METRIC PART
R - REMANUFACTURED PART MAY BE AVAILABLE

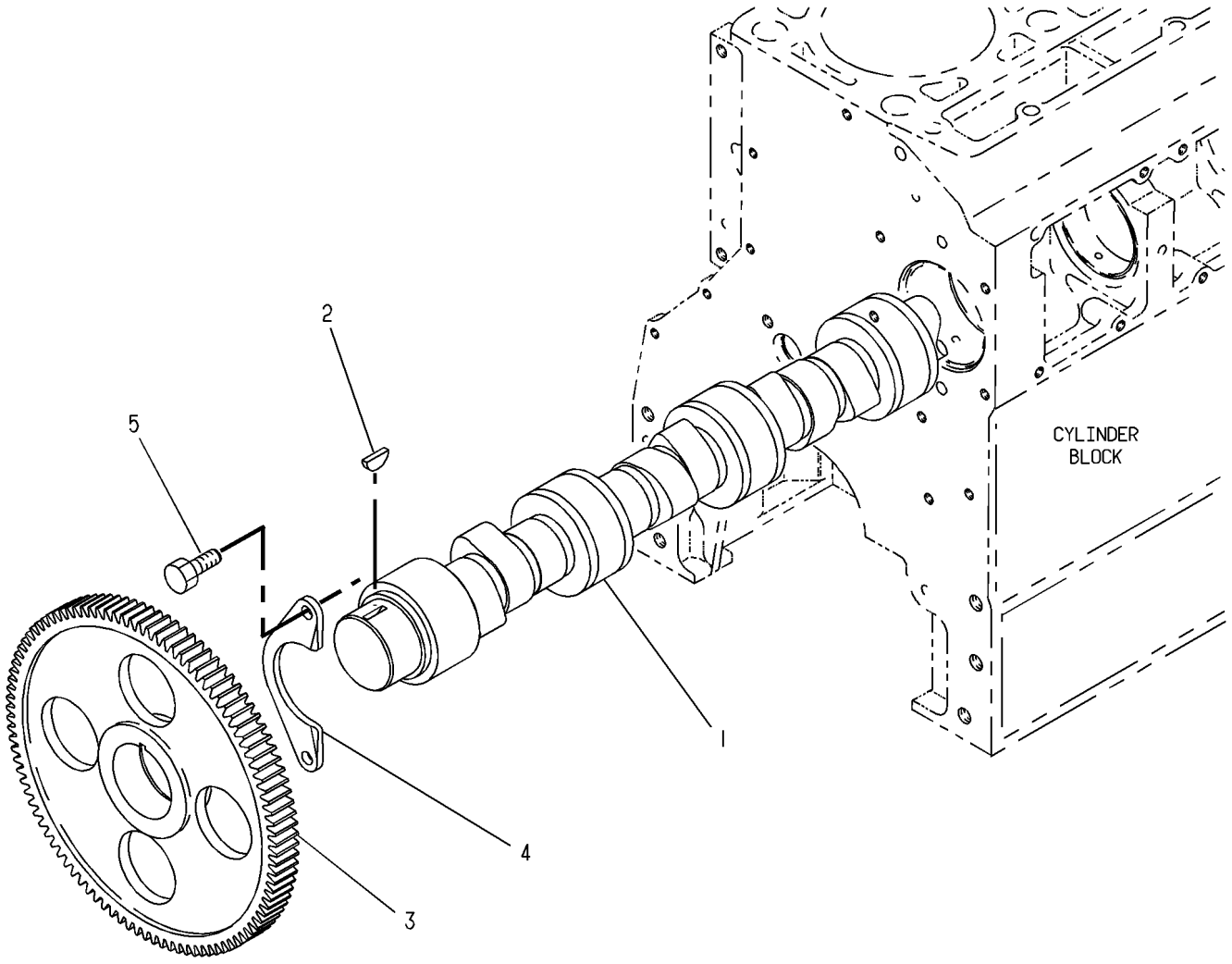

GRAPHIC #1 <END> g00108297

4W-3462 CARRIER GP-SEAL

S/N: 4TF17400-UP
PART OF 114-7159, 117-5187, 117-5188, 6I-3528 ENGINE AR
ALSO AN ATTACHMENT

SMCS-1161 **i04630425**

NOTE	REF NO	GRAPHIC REF	PART NUMBER	QTY	PART NAME 1 2 3 4 5 6 (PRODUCT LEVEL)	SEE PAGE
	1	1	**2W-6546**	1	COVER	
	2	1	**247-1876**	1	SEAL	
	3	1	**239-0583**	1	GASKET	
	4	1	**6V-3538**	2	DOWEL	
M	5	1	**6V-3940**	8	BOLT (M8X1.25X25-MM)	
	6	1	**9M-1974**	8	WASHER-HARD (8.8X16X2-MM THK)	
BF		1	**4C-9612**		SEALANT-SILICONE	

B - USE AS REQUIRED
F - NOT SHOWN
M - METRIC PART

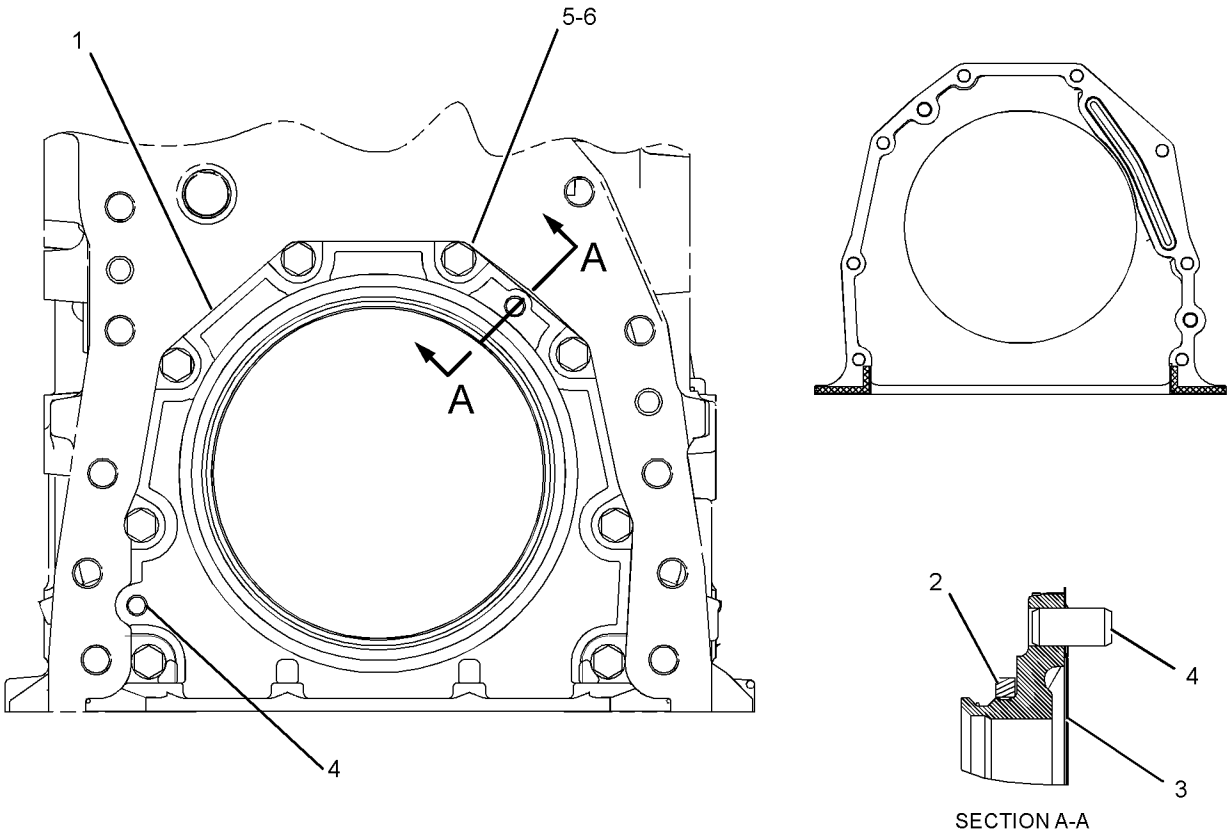

GRAPHIC #1 <END> g02774700

7C-0299 COVER GP-CYLINDER BLOCK

S/N: 4TF17400-UP

PART OF 114-7159, 117-5187, 117-5188, 6I-3528 ENGINE AR

ALSO AN ATTACHMENT

SMCS-1201 **i03634488**

NOTE	REF NO	GRAPHIC REF	PART NUMBER	QTY	PART NAME 1 2 3 4 5 6 (PRODUCT LEVEL)	SEE PAGE
M	1	1	**6V-2317**	18	BOLT (M8X1.25X30-MM)	
	2	1	**9M-1974**	21	WASHER-HARD (8.8X16X2-MM THK)	
	3	1	**7W-3872**	6	SLEEVE (MARKED X)	
	4	1	**342-4977**	2	COVER-SIDE	
	5	1	**4Y-9652**	3	GASKET	
	6	1	**7W-9395**	1	COVER-SIDE	
M	7	1	**6V-5217**	3	BOLT (M8X1.25X20-MM)	
	8	1	**2W-6544**	1	COVER	
C	9	1	**9S-4191**	3	PLUG (9/16-18-THD)	
C	10	1	**3J-1907**	3	SEAL-O-RING	
	11	1	**4F-9653**	1	SEAL-O-RING	
C	12	1	**9Y-0747**	1	MANIFOLD-OIL	
CM	13	1	**6V-5842**	2	BOLT (M10X1.5X40-MM)	
C	14	1	**6V-5839**	2	WASHER (11X21X2.5-MM THK)	
	15	1	**110-7618**	4	BOLT AS	
B	16	1	**1U-8846**		SEALANT-GASKET	
M	17	1	**9X-2099**	2	STUD (M8X1.25X52.75-MM)	
	18	1	**8T-4224**	2	WASHER-HARD (8.8X16X2-MM THK)	
	20	1	**039-2281**	1	SPACER (9X16X25-MM THK)	

B - USE AS REQUIRED
C - CHANGE FROM PREVIOUS TYPE
M - METRIC PART

7C-0299 **COVER GP-CYLINDER BLOCK (**contd.**)** **i03634488**

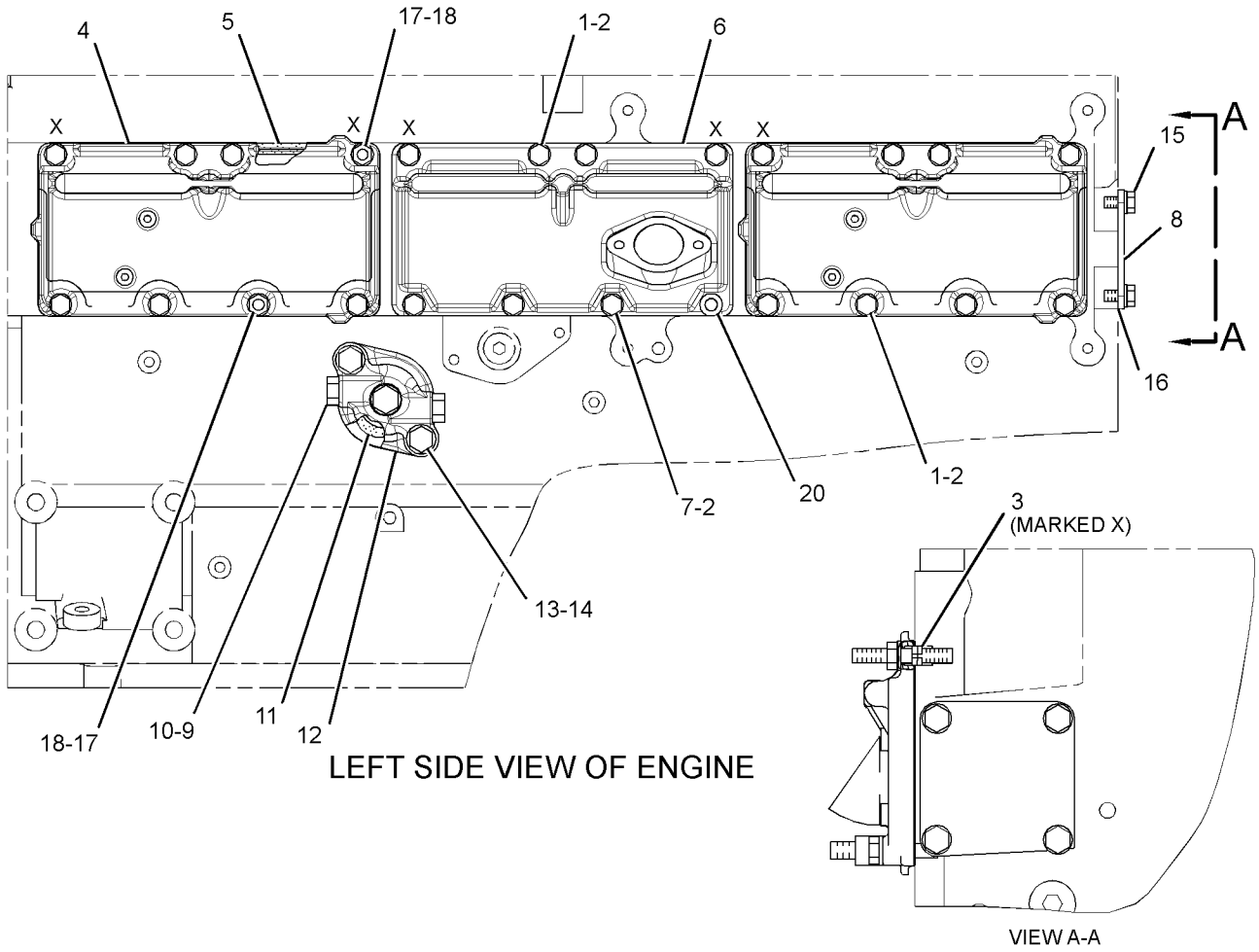

GRAPHIC #1 <END> g01953174

7L-0004 COVER GP-FRONT HOUSING

S/N: 4TF17400-UP
PART OF 114-7159, 117-5187, 117-5188, 6I-3528 ENGINE AR
ALSO AN ATTACHMENT

SMCS-1151, 1162, 1166 **i01741211**

NOTE	REF NO	GRAPHIC REF	PART NUMBER	QTY	PART NAME 1 2 3 4 5 6 (PRODUCT LEVEL)	SEE PAGE
M	1	1	**8T-0100**	2	BOLT (M8X1.25X60-MM)	
	2	1	**106-7920**	1	COVER AS-FRONT	
M	3	1	**6V-2317**	10	BOLT (M8X1.25X30-MM)	
	4	1	**135-9819**	1	SEAL-INTEGRAL	
M	5	1	**6V-8336**	2	BOLT (M12X1.75X70-MM)	
M	6	1	**6V-8149**	2	NUT (M12X1.75-THD)	
	7	1	**5P-8245**	4	WASHER-HARD (13.5X25.5X3-MM THK)	
	8	1	**7W-6552**	1	GASKET	
	9	1	**4W-2026**	1	COVER	
BM	10	1	**6V-2317**	2	BOLT (M8X1.25X30-MM) (LOCATION A)	
B	11	1	**1U-8846**		SEALANT-GASKET	

B - USE AS REQUIRED
M - METRIC PART

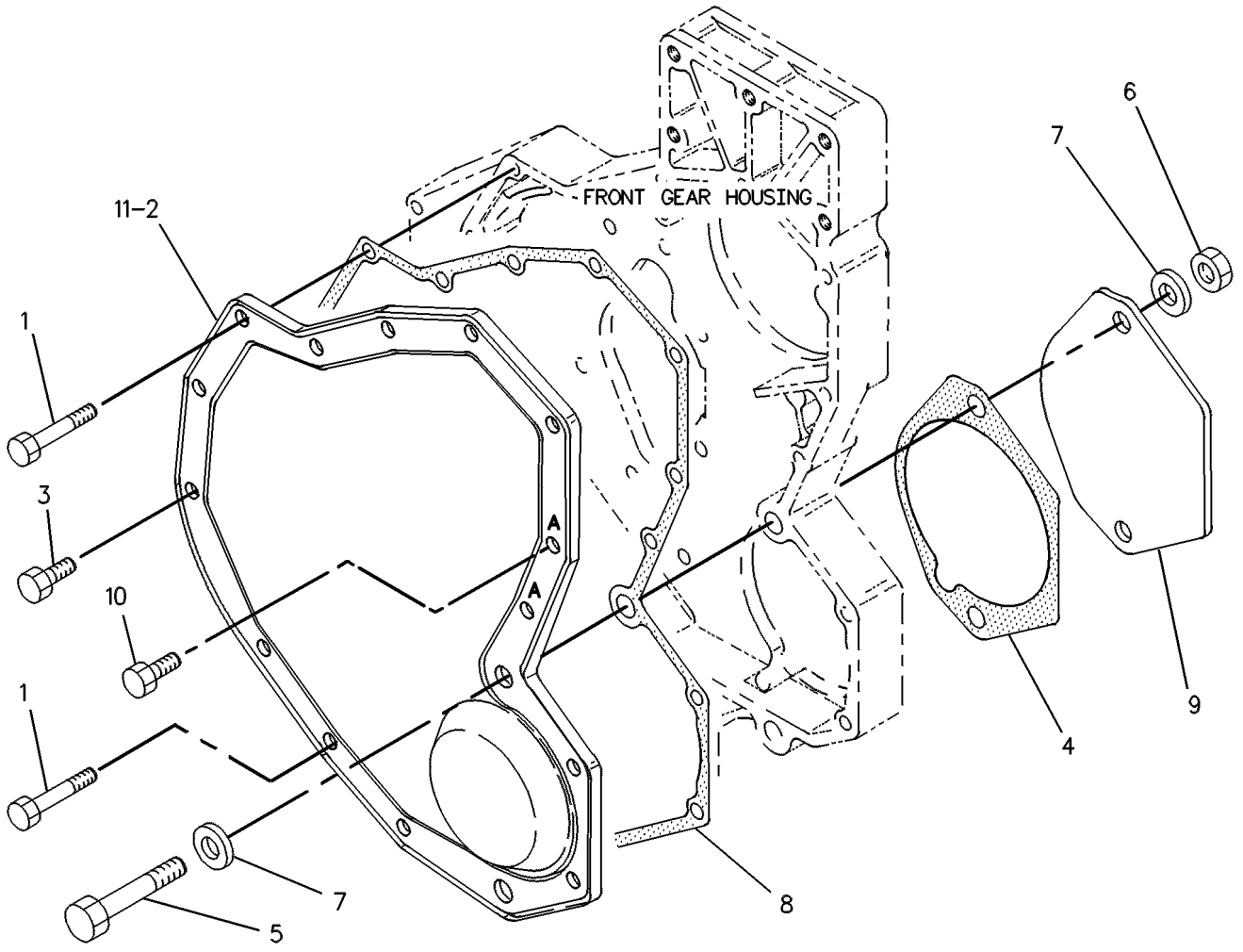

GRAPHIC #1 <END> g00120829

111-4657 COVER GP-SOUND SUPPRESSION

S/N: 9BL1-UP
OIL PAN
PART OF 8Y-9774 SUPPRESSION GP-SOUND
AN ATTACHMENT

SMCS-1801 **i00569507**

NOTE	REF NO	GRAPHIC REF	PART NUMBER	QTY	PART NAME 1 2 3 4 5 6 (PRODUCT LEVEL)	SEE PAGE
	1	1	**111-4656**	1	PANEL AS-BARRIER	
		1	**7C-4868**	6	SPACER (20-MM THK)	
	2	1	**9M-1974**	6	WASHER-HARD (8.8X16X2-MM THK)	
M	3	1	**5P-8347**	6	BOLT (M8X1.25X70-MM)	

M - METRIC PART

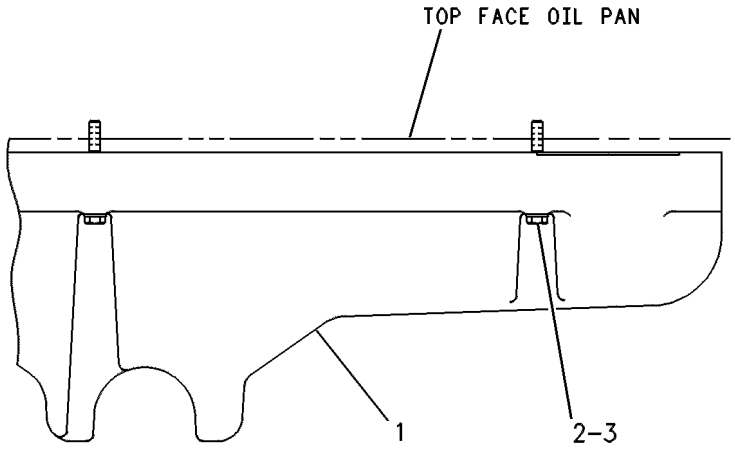

GRAPHIC #1 <END> g00247254

7C-5033 COVER GP-SOUND SUPPRESSION

S/N: 4TF29893-99999
OIL PAN
PART OF 117-5188 ENGINE AR
AN ATTACHMENT

SMCS-1801 **i00906970**

NOTE	REF NO	GRAPHIC REF	PART NUMBER	QTY	PART NAME 1 2 3 4 5 6 (PRODUCT LEVEL)	SEE PAGE
	1	1	**7C-4869**	1	PANEL AS-BARRIER	
		1	**7C-4868**	6	SPACER (20-MM THK)	
	2	1	**9M-1974**	6	WASHER-HARD (8.8X16X2-MM THK)	
M	3	1	**5P-8347**	6	BOLT (M8X1.25X70-MM)	

M - METRIC PART

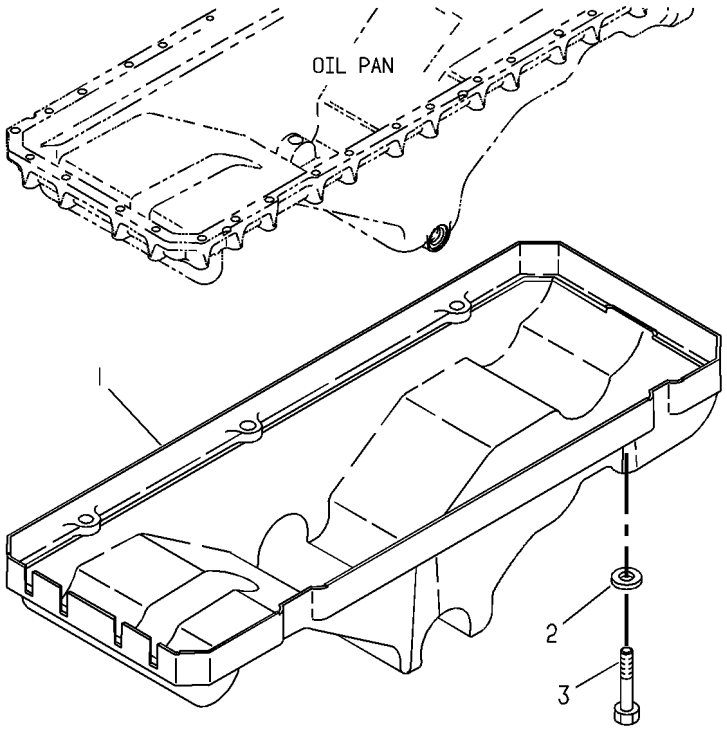

GRAPHIC #1 <END> g00196348

4W-2172 COVER GP-VALVE MECHANISM

S/N: 4TF17400-UP

PART OF 114-7159, 117-5187, 117-5188, 6I-3528 ENGINE AR

ALSO AN ATTACHMENT

SMCS-1107, 1120

i03996880

NOTE	REF NO	GRAPHIC REF	PART NUMBER	QTY	PART NAME 1 2 3 4 5 6 (PRODUCT LEVEL)	SEE PAGE
	1	1	**119-2940**	1	GASKET (VALVE COVER)	
M	2	1	**6V-2315**	14	BOLT (M6X1X35-MM)	
	3	1	**119-2960**	1	COVER	
	4	1	**5P-0537**	14	WASHER-HARD (7.2X14.5X2-MM THK)	

M - METRIC PART

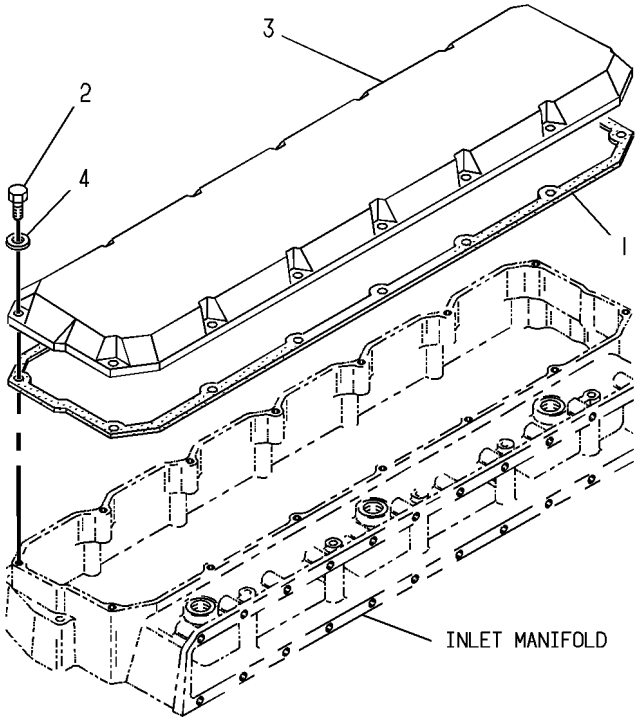

GRAPHIC #1

<END>

g00108317

9Y-1224 COVER GP-VALVE MECHANISM

S/N: 4TF29893-99999; 9BL1-UP
VALVE COVER
PART OF 117-5188 ENGINE AR, 8Y-9774 SUPPRESSION GP-SOUND
AN ATTACHMENT

SMCS-1107, 1120 **i00996722**

NOTE	REF NO	GRAPHIC REF	PART NUMBER	QTY	PART NAME 1 2 3 4 5 6 (PRODUCT LEVEL)	SEE PAGE
					(NO SERVICED PARTS)	

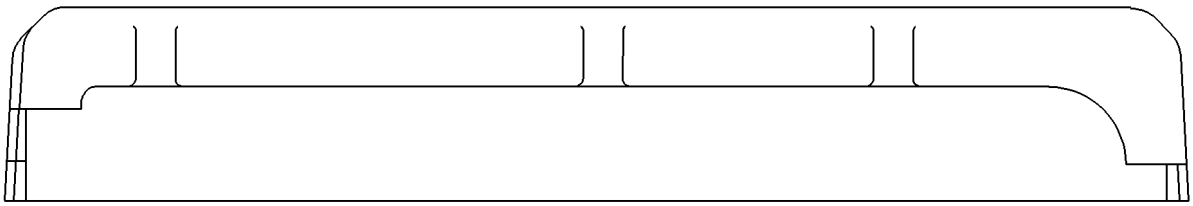

GRAPHIC #1 <END> g00108398

4W-2197 CRANKSHAFT GP

S/N: 4TF17400-UP
PART OF 114-7159, 117-5187, 117-5188, 6I-3528 ENGINE AR
ALSO AN ATTACHMENT

SMCS-1202 **i00888332**

NOTE	REF NO	GRAPHIC REF	PART NUMBER	QTY	PART NAME 1 2 3 4 5 6 (PRODUCT LEVEL)	SEE PAGE
R	1	1	**105-1725**	1	CRANKSHAFT AS	
	2	1	**1B-8705**	1	KEY-WOODRUFF	
	3	1	**2W-8147**	1	GEAR (50-TEETH) (50 TEETH)	
	4	1	**107-7602**	1	BEARING-THRUST	
AB		1	**7C-6969**	1	BEARING-THRUST (0.5-MM OS)	
AB		1	**7C-6970**	1	BEARING-THRUST (0.5-MM OS, 0.5-MM US) (0.5MM US/ 0.5MM OS)	
AB		1	**7C-6966**	1	BEARING-THRUST (0.25-MM US)	
AB		1	**7C-6967**	1	BEARING-THRUST (0.5-MM US)	
AB		1	**7C-6968**	1	BEARING-THRUST (0.75-MM US)	
	5	1	**101-1530**	3	BEARING-MAIN	
AB		1	**7C-6974**	1	BEARING-MAIN (0.5-MM OS)	
AB		1	**7C-6975**	1	BEARING-MAIN (0.5-MM OS, 0.5-MM US)	
AB		1	**7C-6971**	1	BEARING-MAIN (0.25-MM US)	
AB		1	**7C-6972**	1	BEARING-MAIN (0.5-MM US)	
AB		1	**7C-6973**	1	BEARING-MAIN (0.75-MM US)	
	6	1	**107-7708**	3	BEARING-MAIN	
AB		1	**7C-6964**	1	BEARING-MAIN (0.5-MM OS)	
AB		1	**7C-6965**	1	BEARING-MAIN (0.5-MM OS, 0.5-MM US)	
AB		1	**7C-6961**	1	BEARING-MAIN (0.25-MM US)	
AB		1	**7C-6962**	1	BEARING-MAIN (0.5-MM US)	
AB		1	**7C-6963**	1	BEARING-MAIN (0.75-MM US)	
AF		1	**7C-7980**	1	SLEEVE-OIL SEAL	
					(THIS WEAR SLEEVE IS USED ONLY TO SALVAGE (REPAIR) THE REAR SEAL SURFACE OF THE CRANKSHAFT)	

A - NOT PART OF THIS GROUP
B - USE AS REQUIRED
F - NOT SHOWN
R - REMANUFACTURED PART MAY BE AVAILABLE

4W-2197 **CRANKSHAFT GP (**contd.**)** **i00888332**

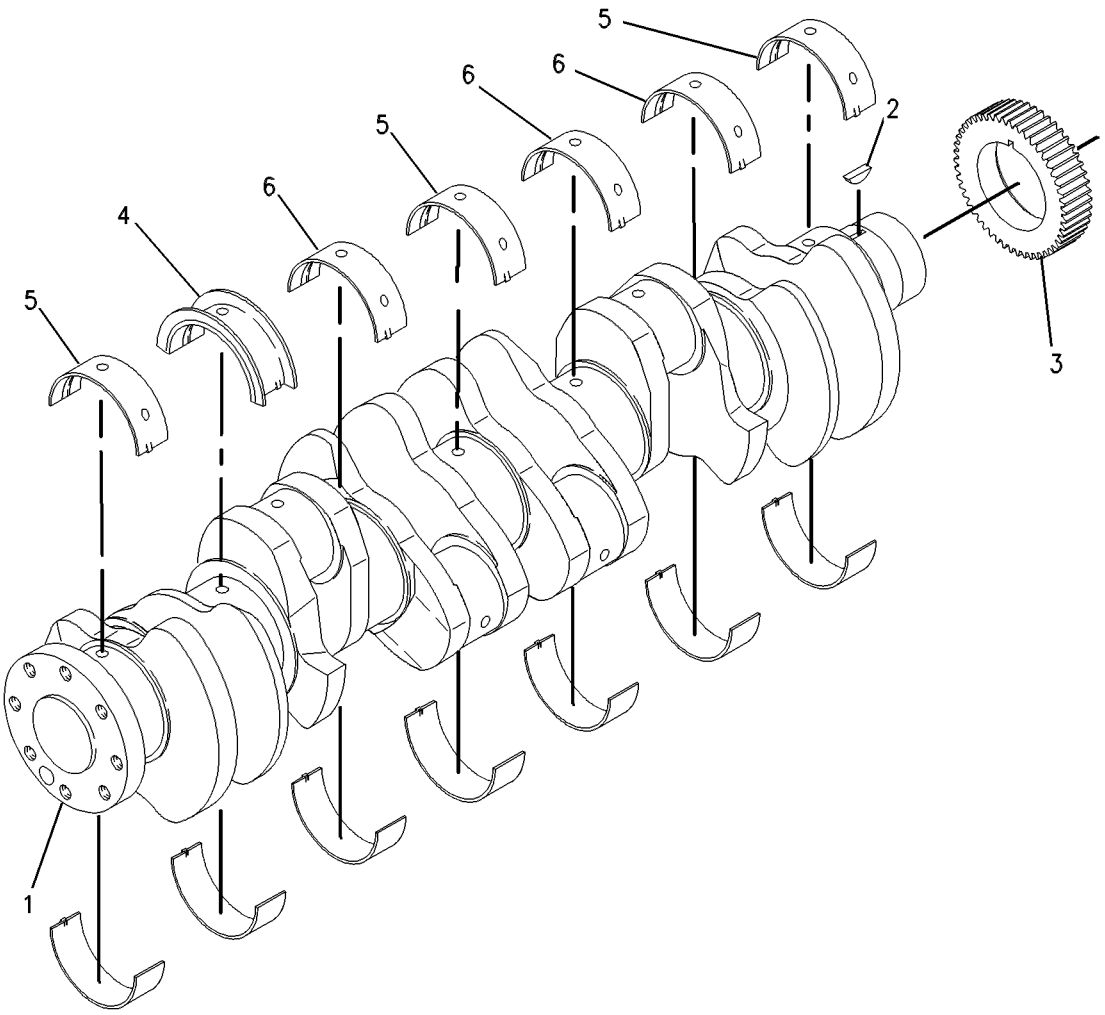

GRAPHIC #1 <END> g00453300

4W-2197 CRANKSHAFT GP

S/N: 4TF44437-UP
PART OF 117-5187, 117-5188 ENGINE AR
ALSO AN ATTACHMENT

SMCS-1202 **i07103395**

NOTE	REF NO	GRAPHIC REF	PART NUMBER	QTY	PART NAME 1 2 3 4 5 6 (PRODUCT LEVEL)	SEE PAGE
R	1	1	**489-2731**	1	CRANKSHAFT AS	
	1A	1	**1B-8705**	1	KEY-WOODRUFF	
	1B	1	**2W-8147**	1	GEAR (50-TEETH)	
	2	1	**212-4893**	1	BEARING-THRUST	
AB		1	**229-5153**		BEARING-THRUST (0.25-MM US)	
AB		1	**229-5154**		BEARING-THRUST (0.5-MM US)	
AB		1	**229-5155**		BEARING-THRUST (0.5-MM OS)	
AB		1	**229-5156**		BEARING-THRUST (0.5-MM OS, 0.5-MM US)	
	3	1	**107-7708**	6	BEARING-MAIN	
AB		1	**145-0162**		BEARING-MAIN (0.25-MM US)	
AB		1	**145-0164**		BEARING-MAIN (0.5-MM US)	
AB		1	**145-0168**		BEARING-MAIN (0.5-MM OS)	
AB		1	**145-0170**		BEARING-MAIN (0.5-MM OS, 0.5-MM US)	

A - NOT PART OF THIS GROUP
B - USE AS REQUIRED
R - REMANUFACTURED PART MAY BE AVAILABLE

4W-2197 **CRANKSHAFT GP (**contd.**)** **i07103395**

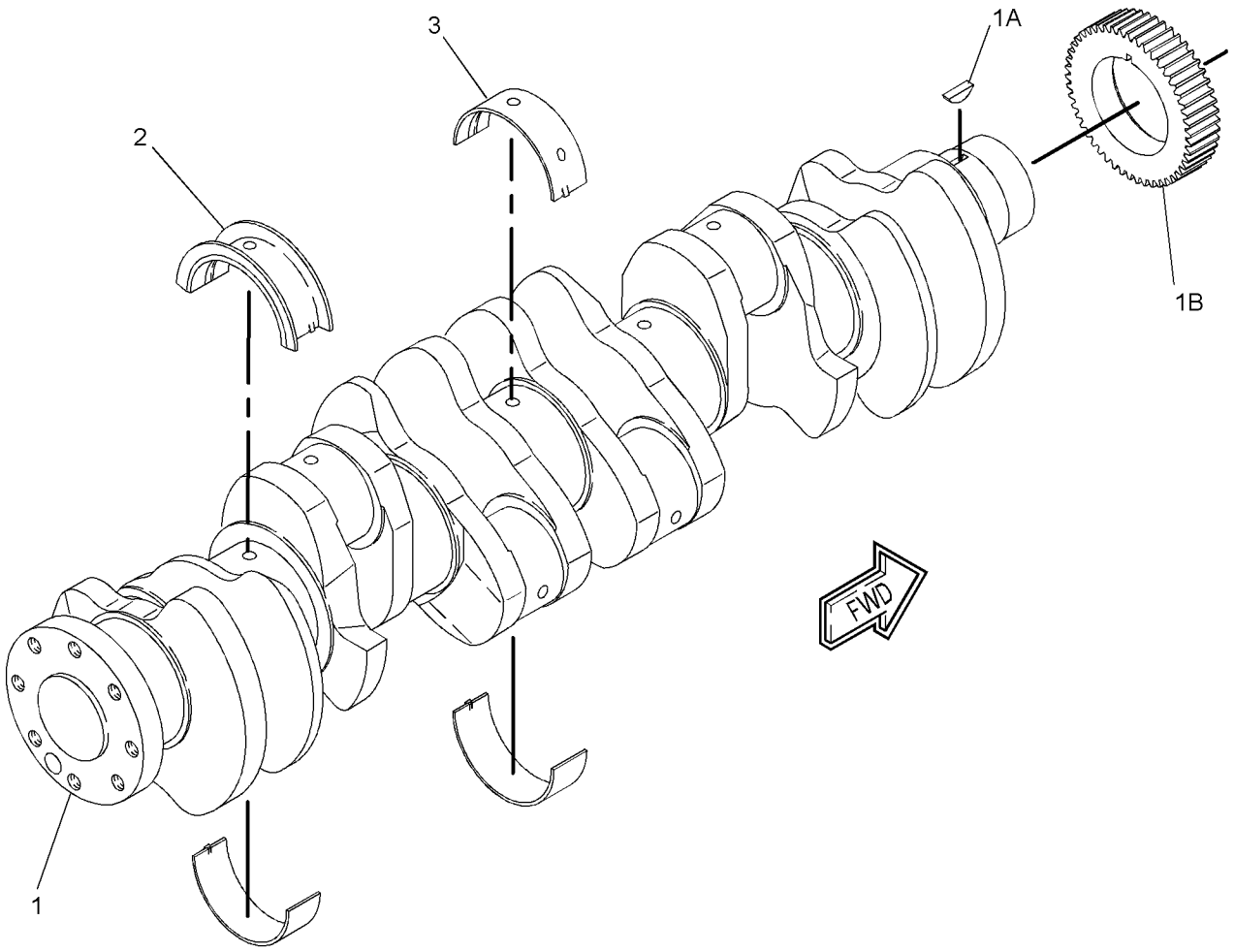

GRAPHIC #1 <END> g02023154

100-4948 CYLINDER BLOCK GP

S/N: 4TF23955-28600
PART OF 7E-2482 CYLINDER BLOCK GP
ALSO AN ATTACHMENT

SMCS-1201 **i01638751**

NOTE	REF NO	GRAPHIC REF	PART NUMBER	QTY	PART NAME 1 2 3 4 5 6 (PRODUCT LEVEL)	SEE PAGE
	1	1	**2M-6471**	2	PLUG-CUP	
	2	1	**7E-2968**	7	CAP-CRANKSHAFT BEARING	
M	3	1	**9X-8916**	14	BOLT (M16X2X140-MM)	
	4	1	**5P-8247**	14	WASHER-HARD (17X32X3.5-MM THK)	
	5	1	**9S-8005**	1	PLUG (3/4-16-THD)	
	6	1	**3K-0360**	1	SEAL-O-RING	
	7	1	**2W-7213**	6	BUSHING (CAMSHAFT)	
B	8	1	**3D-2824**	2	SEAL-O-RING	
B	9	1	**9S-8008**	2	PLUG (1-1/16-12-THD)	
M	10	1	**8T-0293**	2	BOLT (M12X1.75X20-MM)	
	11	1	**6F-7062**	2	WASHER (12.7X19.05X1.83-MM THK)	
	12	1	**3H-5552**	1	PLUG-CUP	
	13	1	**9S-8006**	1	PLUG (7/8-14-THD)	
	14	1	**2M-9780**	1	SEAL-O-RING	
	15	1	**2W-7211**	1	BUSHING (CAMSHAFT)	

B - USE AS REQUIRED
M - METRIC PART

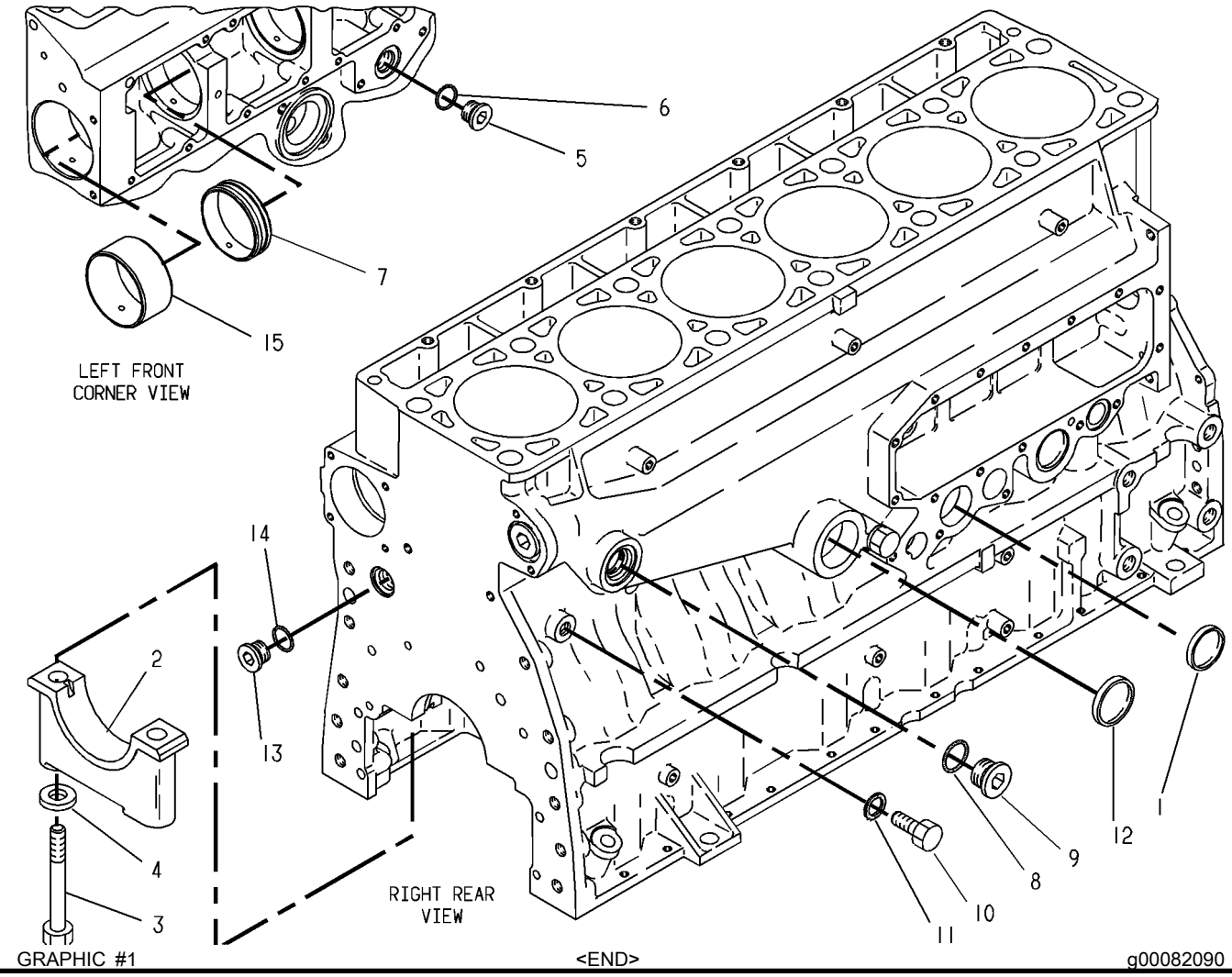

GRAPHIC #1 <END> g00082090

129-1095 CYLINDER BLOCK GP

S/N: 4TF17400-UP
PART OF 7E-2482 CYLINDER BLOCK GP
ALSO AN ATTACHMENT

SMCS-1201 **i01638753**

NOTE	REF NO	GRAPHIC REF	PART NUMBER	QTY	PART NAME 1 2 3 4 5 6 (PRODUCT LEVEL)	SEE PAGE
	1	1	**2M-6471**	2	PLUG-CUP	
	2	1	**7E-2968**	7	CAP-CRANKSHAFT BEARING	
M	3	1	**9X-8916**	14	BOLT (M16X2X140-MM)	
	4	1	**5P-8247**	14	WASHER-HARD (17X32X3.5-MM THK)	
	5	1	**9S-8005**	1	PLUG (3/4-16-THD)	
	6	1	**3K-0360**	1	SEAL-O-RING	
	7	1	**2W-7213**	6	BUSHING (CAMSHAFT)	
B	8	1	**3D-2824**	2	SEAL-O-RING	
B	9	1	**9S-8008**	2	PLUG (1-1/16-12-THD)	
M	10	1	**8T-0293**	2	BOLT (M12X1.75X20-MM)	
	11	1	**6F-7062**	2	WASHER (12.7X19.05X1.83-MM THK)	
	12	1	**3H-5552**	1	PLUG-CUP	
	13	1	**9S-8006**	1	PLUG (7/8-14-THD)	
	14	1	**2M-9780**	1	SEAL-O-RING	
	15	1	**2W-7211**	1	BUSHING (CAMSHAFT)	

B - USE AS REQUIRED
M - METRIC PART

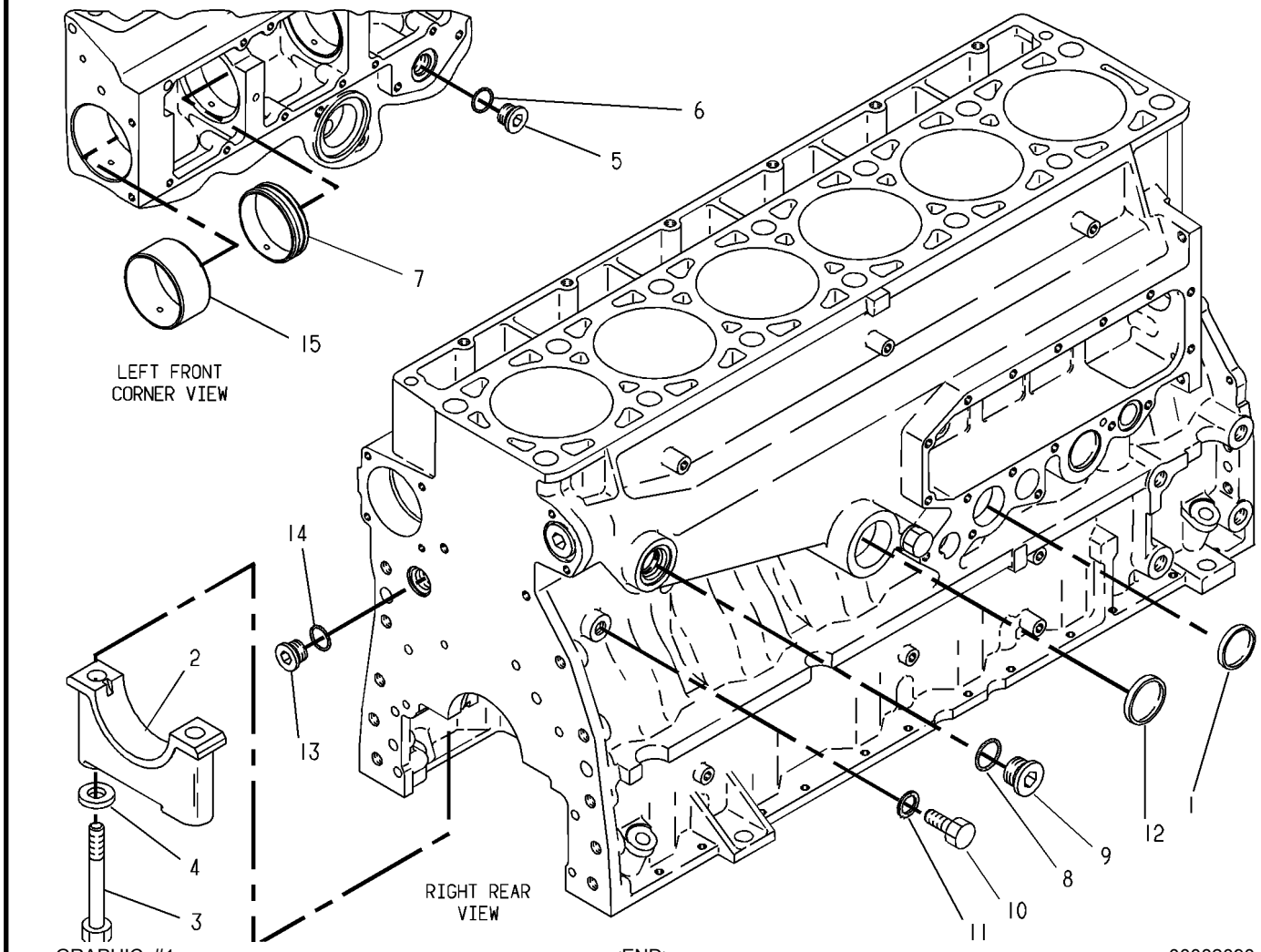

GRAPHIC #1 <END> g00082090

149-5403 CYLINDER BLOCK GP*R

S/N: 4TF28601-UP

PART OF 7E-2482 CYLINDER BLOCK GP

ALSO AN ATTACHMENT

SMCS-1201 **i01718849**

NOTE	REF NO	GRAPHIC REF	PART NUMBER	QTY	PART NAME 1 2 3 4 5 6 (PRODUCT LEVEL)	SEE PAGE
	1	1	*149-5402*	1	CYLINDER BLOCK AS	
	2	1	**7E-2968**	7	CAP-CRANKSHAFT BEARING	
M	3	1	**9X-8916**	14	BOLT (M16X2X140-MM)	
	4	1	**5P-8247**	14	WASHER-HARD (17X32X3.5-MM THK)	
	5	1	**6F-7062**	2	WASHER (12.7X19.05X1.83-MM THK)	
M	6	1	**8T-0293**	2	BOLT (M12X1.75X20-MM)	
	7	1	**2M-6471**	2	PLUG-CUP	
B	8	1	**9S-8008**	1	PLUG (1-1/16-12-THD)	
B	9	1	**3D-2824**	1	SEAL-O-RING	
	10	1	**3H-5552**	1	PLUG-CUP	
	11	1	**9S-8006**	1	PLUG (7/8-14-THD)	
	12	1	**2M-9780**	1	SEAL-O-RING	
	13	1	**216-5586**	1	BUSHING (CAMSHAFT)	
	14	1	**2W-7213**	6	BUSHING (CAMSHAFT)	
	15	1	**3K-0360**	1	SEAL-O-RING	
	16	1	**9S-8005**	1	PLUG (3/4-16-THD)	

B - USE AS REQUIRED
M - METRIC PART

149-5403 **CYLINDER BLOCK GP (**contd.**)** **i01718849**

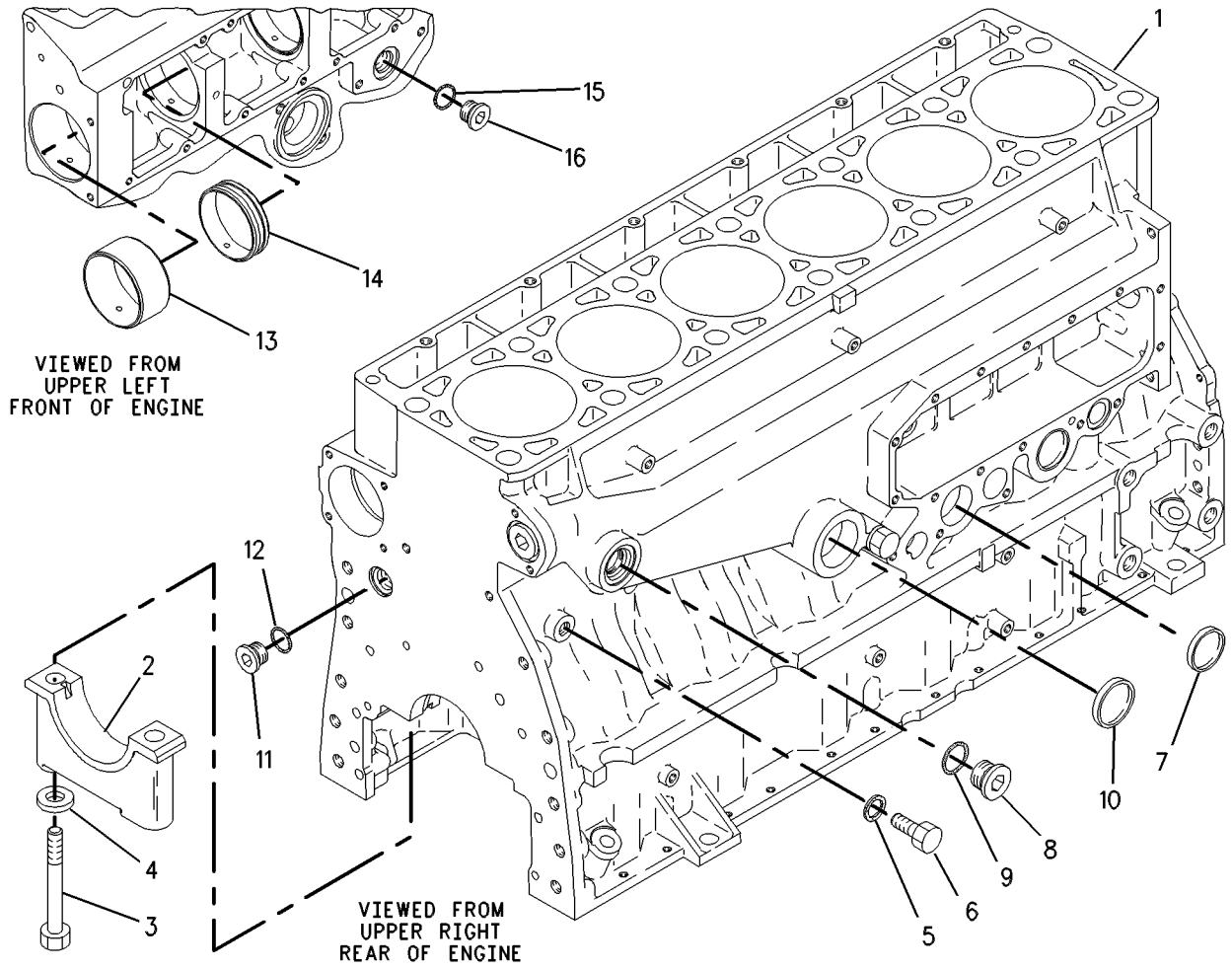

GRAPHIC #1 <END> g00471515

2W-9746 CYLINDER BLOCK GP*R

S/N: 4TF17400-18603
PART OF 114-7159 ENGINE AR
AN ATTACHMENT

SMCS-1201 **i03996905**

NOTE	REF NO	GRAPHIC REF	PART NUMBER	QTY	PART NAME 1 2 3 4 5 6 (PRODUCT LEVEL)	SEE PAGE
CY	1	1	*7C-5826*	1	CYLINDER BLOCK GP	34
	2	1	**6V-3538**	4	DOWEL	
	3	1	**4P-2457**	6	JET AS-PISTON COOLING	
	4	1	**7N-5683**	2	DOWEL	
M	5	1	**6V-3940**	6	BOLT (M8X1.25X25-MM)	
	6	1	**1W-8407**	2	SLEEVE	

C - CHANGE FROM PREVIOUS TYPE
M - METRIC PART
Y - SEPARATE ILLUSTRATION

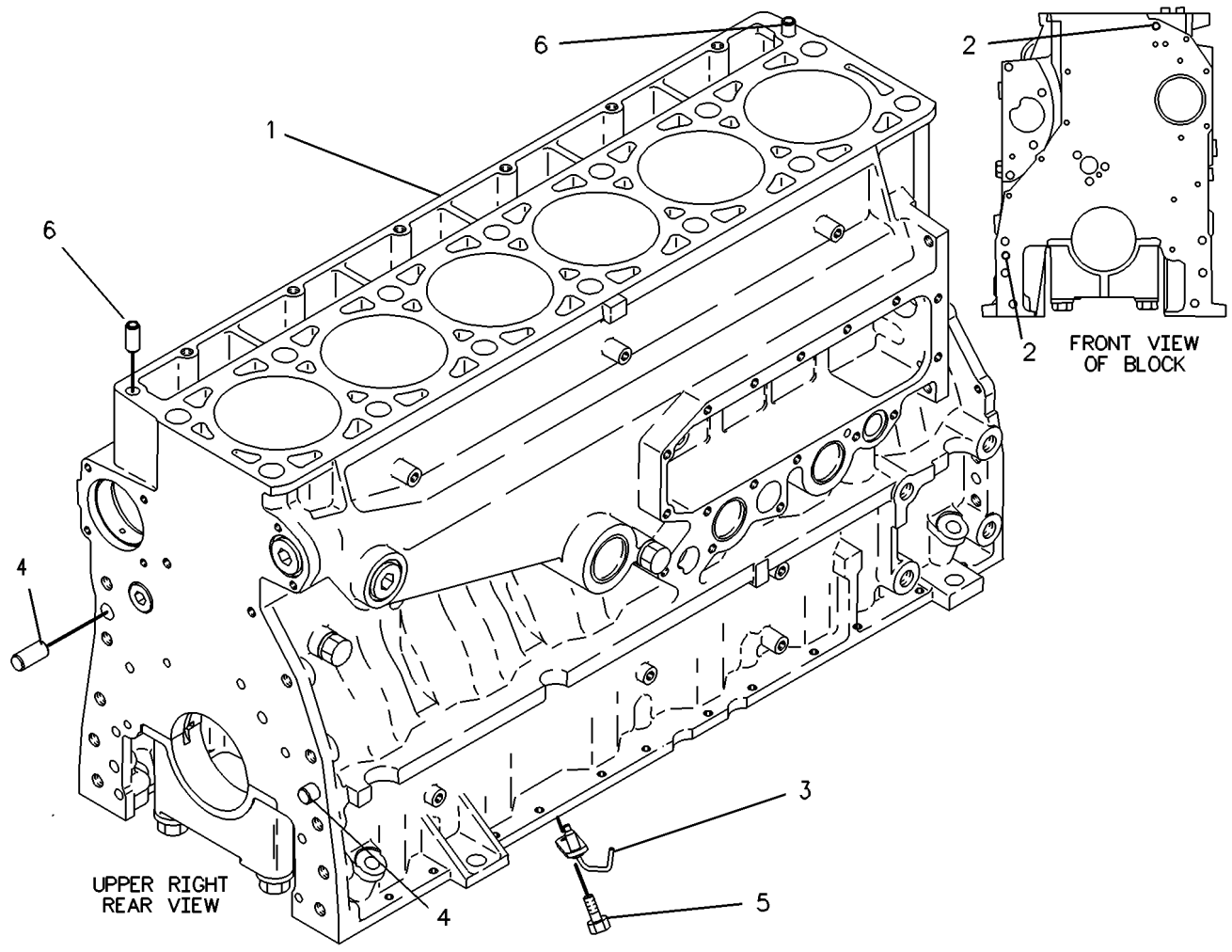

GRAPHIC #1 <END> g00108402

7C-5826 CYLINDER BLOCK GP

S/N: 4TF17400-23954

PART OF 2W-9746, 7E-2482 CYLINDER BLOCK GP

ALSO AN ATTACHMENT

SMCS-1201 **i01741215**

NOTE	REF NO	GRAPHIC REF	PART NUMBER	QTY	PART NAME 1 2 3 4 5 6 (PRODUCT LEVEL)	SEE PAGE
	1	1	**2M-6471**	2	PLUG-CUP	
	2	1	**7E-2968**	7	CAP-CRANKSHAFT BEARING	
M	3	1	**9X-8916**	14	BOLT (M16X2X140-MM)	
	4	1	**5P-8247**	14	WASHER-HARD (17X32X3.5-MM THK)	
	5	1	**9S-8005**	1	PLUG (3/4-16-THD)	
	6	1	**3K-0360**	1	SEAL-O-RING	
	7	1	**2W-7213**	6	BUSHING (CAMSHAFT)	
	8	1	**3D-2824**	2	SEAL-O-RING	
	9	1	**9S-8008**	2	PLUG (1-1/16-12-THD)	
M	10	1	**8T-0293**	2	BOLT (M12X1.75X20-MM)	
	11	1	**6F-7062**	2	WASHER (12.7X19.05X1.83-MM THK)	
	12	1	**3H-5552**	1	PLUG-CUP	
	13	1	**9S-8006**	1	PLUG (7/8-14-THD)	
	14	1	**2M-9780**	1	SEAL-O-RING	
	15	1	**2W-7211**	1	BUSHING (CAMSHAFT)	
AF		1	**7C-6208**	1	SLEEVE-CYLINDER	
					(FOR SALVAGE OF DAMAGED CYL. BORES IN BLOCK. QUANTITY TO BE DETERMINED BY USER)	

A - NOT PART OF THIS GROUP
F - NOT SHOWN
M - METRIC PART

7C-5826 **CYLINDER BLOCK GP** (contd.) **i01741215**

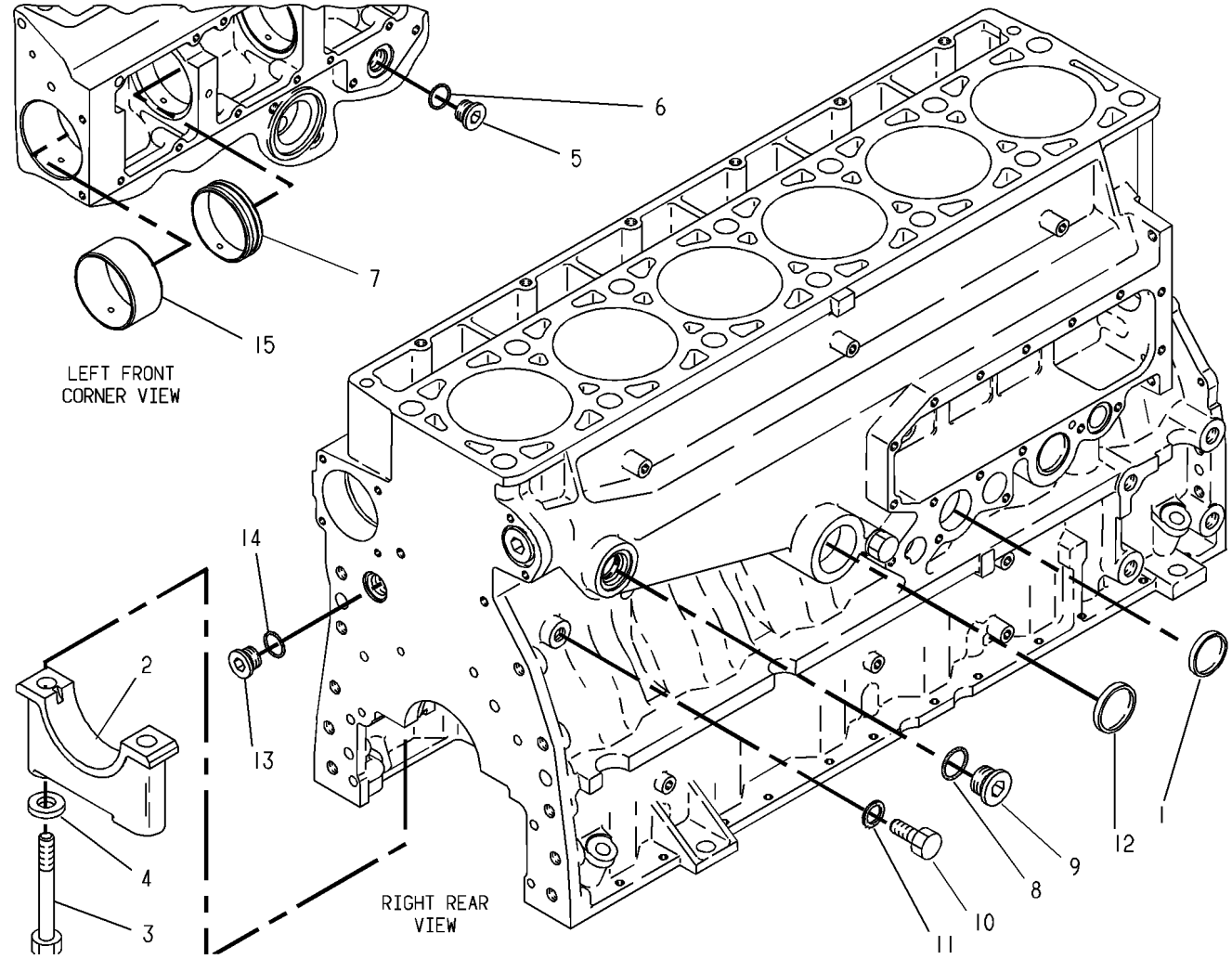

GRAPHIC #1 <END> g00082090

7E-2482 CYLINDER BLOCK GP*R

S/N: 4TF17400-23954
FOR USE WITH TWO-PIECE PISTONS
PART OF 114-7159, 6I-3528 ENGINE AR
ALSO AN ATTACHMENT

SMCS-1201 **i00568514**

NOTE	REF NO	GRAPHIC REF	PART NUMBER	QTY	PART NAME 1 2 3 4 5 6 (PRODUCT LEVEL)	SEE PAGE
Y	1	1	*7C-5826*	1	CYLINDER BLOCK GP	34
	2	1	**6V-3538**	2	DOWEL	
	3	1	**4P-5651**	6	TUBE AS-OIL JET	
	4	1	**7N-5683**	2	DOWEL	
M	5	1	**6V-3940**	6	BOLT (M8X1.25X25-MM)	
	6	1	**1W-8407**	2	SLEEVE	

M - METRIC PART
Y - SEPARATE ILLUSTRATION

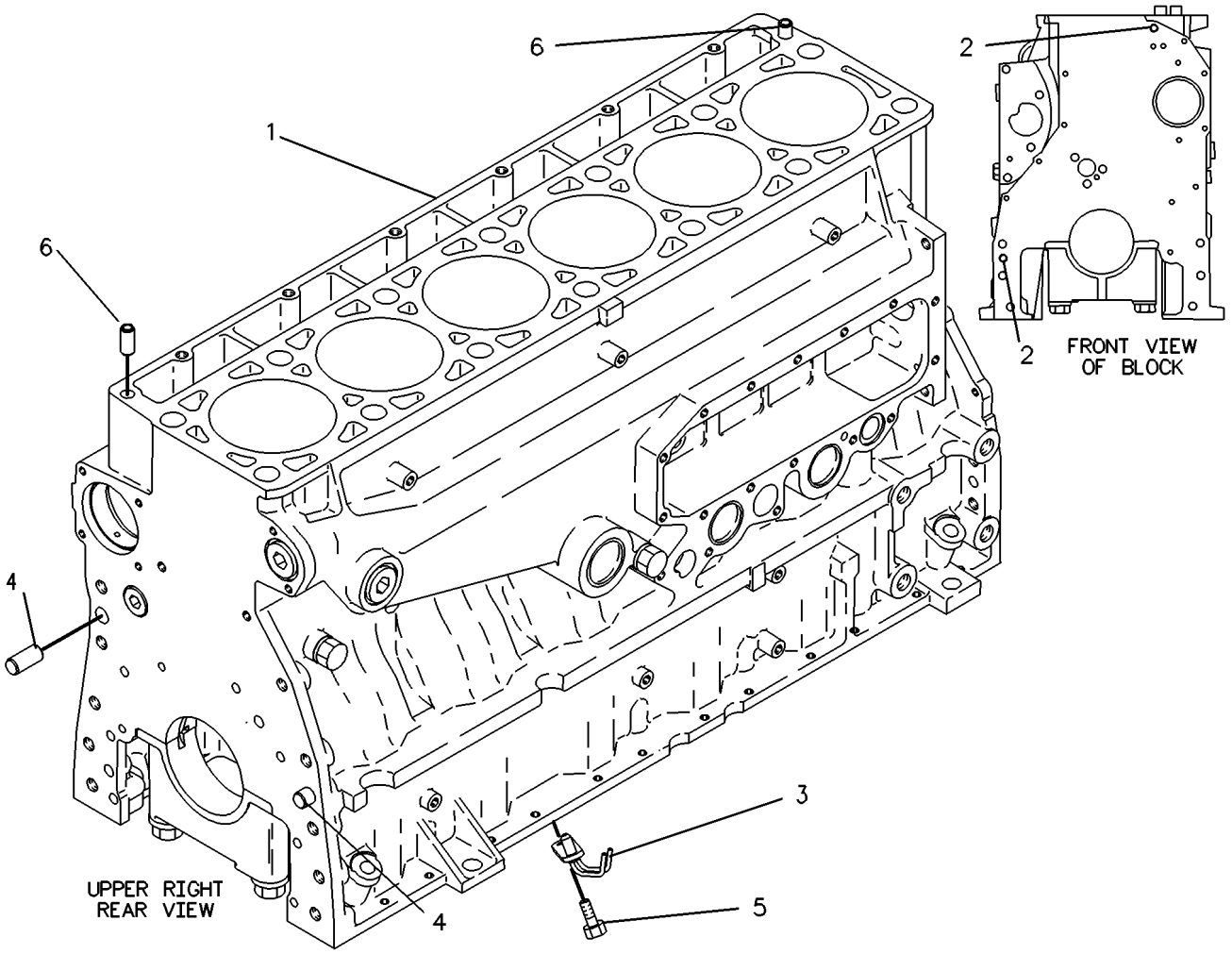

GRAPHIC #1 <END> g00117027

7E-2482 CYLINDER BLOCK GP*R

S/N: 4TF23955-28600
FOR USE WITH TWO-PIECE PISTONS
PART OF 114-7159, 6I-3528 ENGINE AR
ALSO AN ATTACHMENT

SMCS-1201 **i00568507**

NOTE	REF NO	GRAPHIC REF	PART NUMBER	QTY	PART NAME 1 2 3 4 5 6 (PRODUCT LEVEL)	SEE PAGE
CY	1	1	**100-4948**	1	CYLINDER BLOCK GP	29
	2	1	**6V-3538**	2	DOWEL	
	3	1	**4P-5651**	6	TUBE AS-OIL JET	
	4	1	**7N-5683**	2	DOWEL	
M	5	1	**6V-3940**	6	BOLT (M8X1.25X25-MM)	
	6	1	**1W-8407**	2	SLEEVE	

C - CHANGE FROM PREVIOUS TYPE
M - METRIC PART
Y - SEPARATE ILLUSTRATION

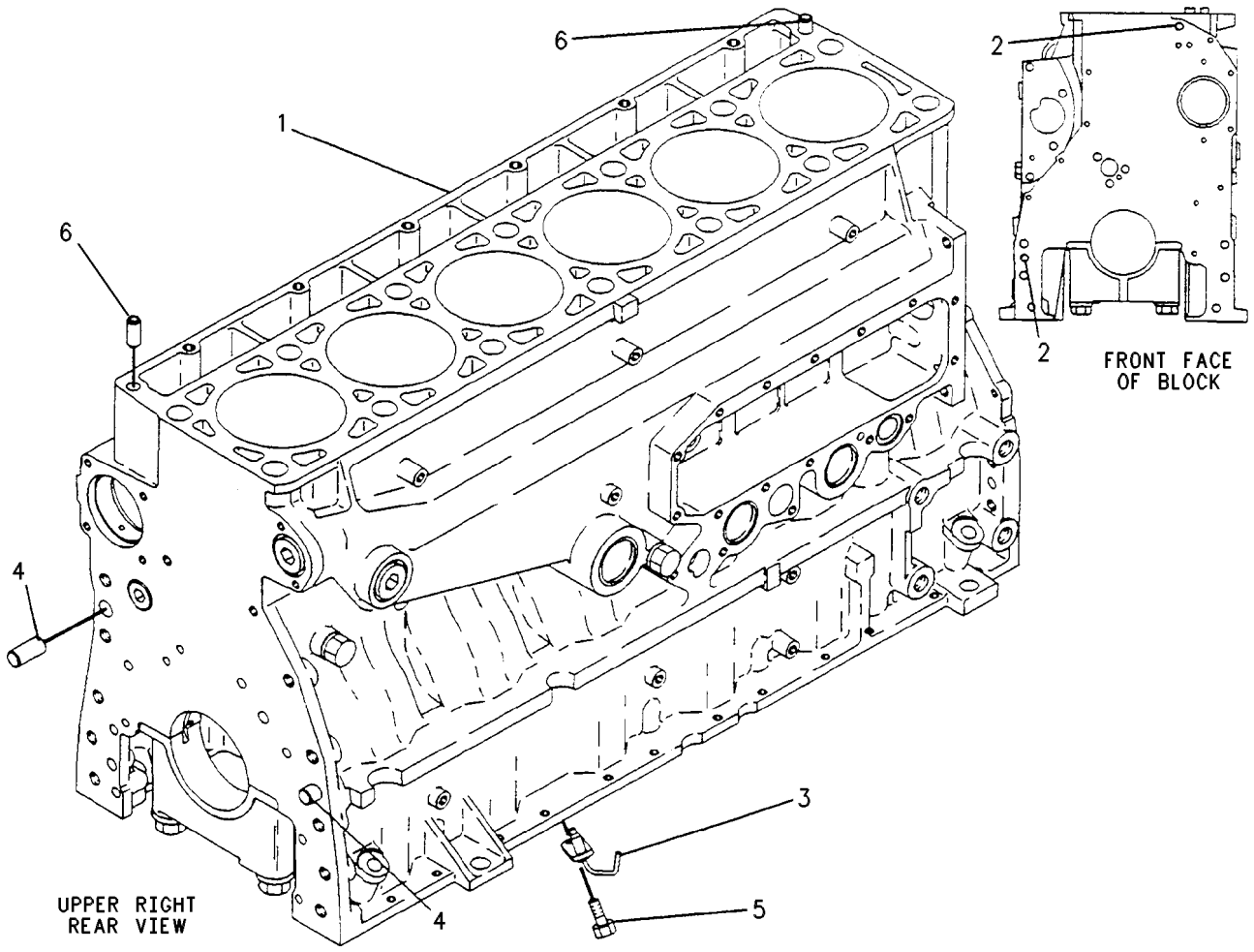

GRAPHIC #1 <END> g00109080

7E-2482 CYLINDER BLOCK GP*R

S/N: 4TF17400-UP
FOR USE WITH TWO-PIECE PISTONS
PART OF 114-7159, 117-5187, 117-5188, 6I-3528 ENGINE AR
ALSO AN ATTACHMENT

SMCS-1201 **i02254587**

NOTE	REF NO	GRAPHIC REF	PART NUMBER	QTY	PART NAME 1 2 3 4 5 6 (PRODUCT LEVEL)	SEE PAGE
YC	1	1	*129-1095*	1	CYLINDER BLOCK GP	30
M	2	1	**6V-3940**	6	BOLT (M8X1.25X25-MM)	
	3	1	**1W-8407**	2	SLEEVE	
	4	1	**6V-3538**	2	DOWEL	
	5	1	**4P-5651**	6	TUBE AS-OIL JET	
	6	1	**7N-5683**	2	DOWEL	

C - CHANGE FROM PREVIOUS TYPE
M - METRIC PART
Y - SEPARATE ILLUSTRATION

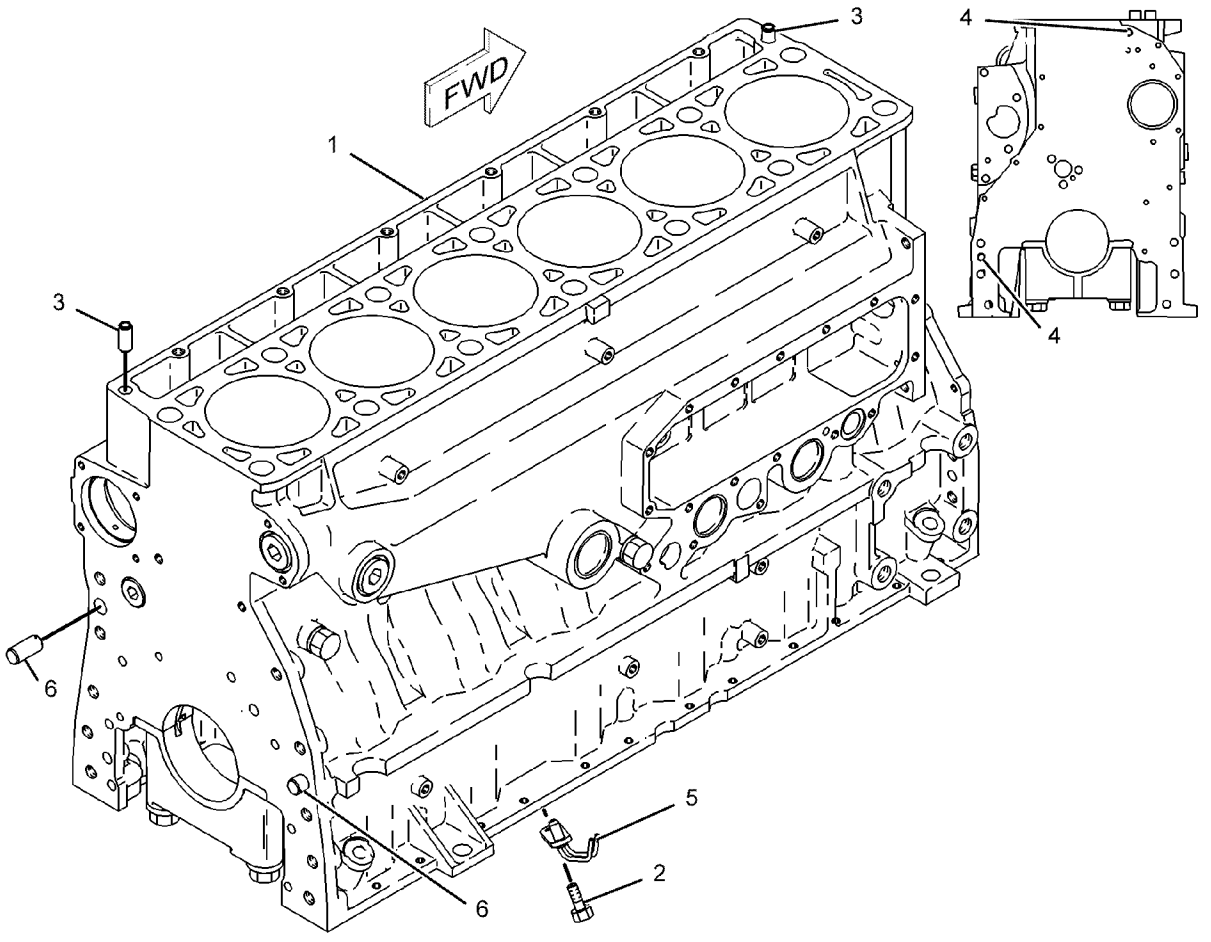

GRAPHIC #1 <END> g01135589

7E-2482 CYLINDER BLOCK GP*R

S/N: 4TF50341-UP
FOR USE WITH TWO-PIECE PISTONS
PART OF 117-5187, 117-5188 ENGINE AR
ALSO AN ATTACHMENT

SMCS-1201 **i01124148**

NOTE	REF NO	GRAPHIC REF	PART NUMBER	QTY	PART NAME 1 2 3 4 5 6 (PRODUCT LEVEL)	SEE PAGE
YCR	1	1	**149-5403**	1	CYLINDER BLOCK GP	31
M	2	1	**6V-3940**	6	BOLT (M8X1.25X25-MM)	
	3	1	**1W-8407**	2	SLEEVE	
	4	1	**6V-3538**	2	DOWEL	
	5	1	**4P-5651**	6	TUBE AS-OIL JET	
	6	1	**7N-5683**	2	DOWEL	

C - CHANGE FROM PREVIOUS TYPE
M - METRIC PART
R - REMANUFACTURED PART MAY BE AVAILABLE
Y - SEPARATE ILLUSTRATION

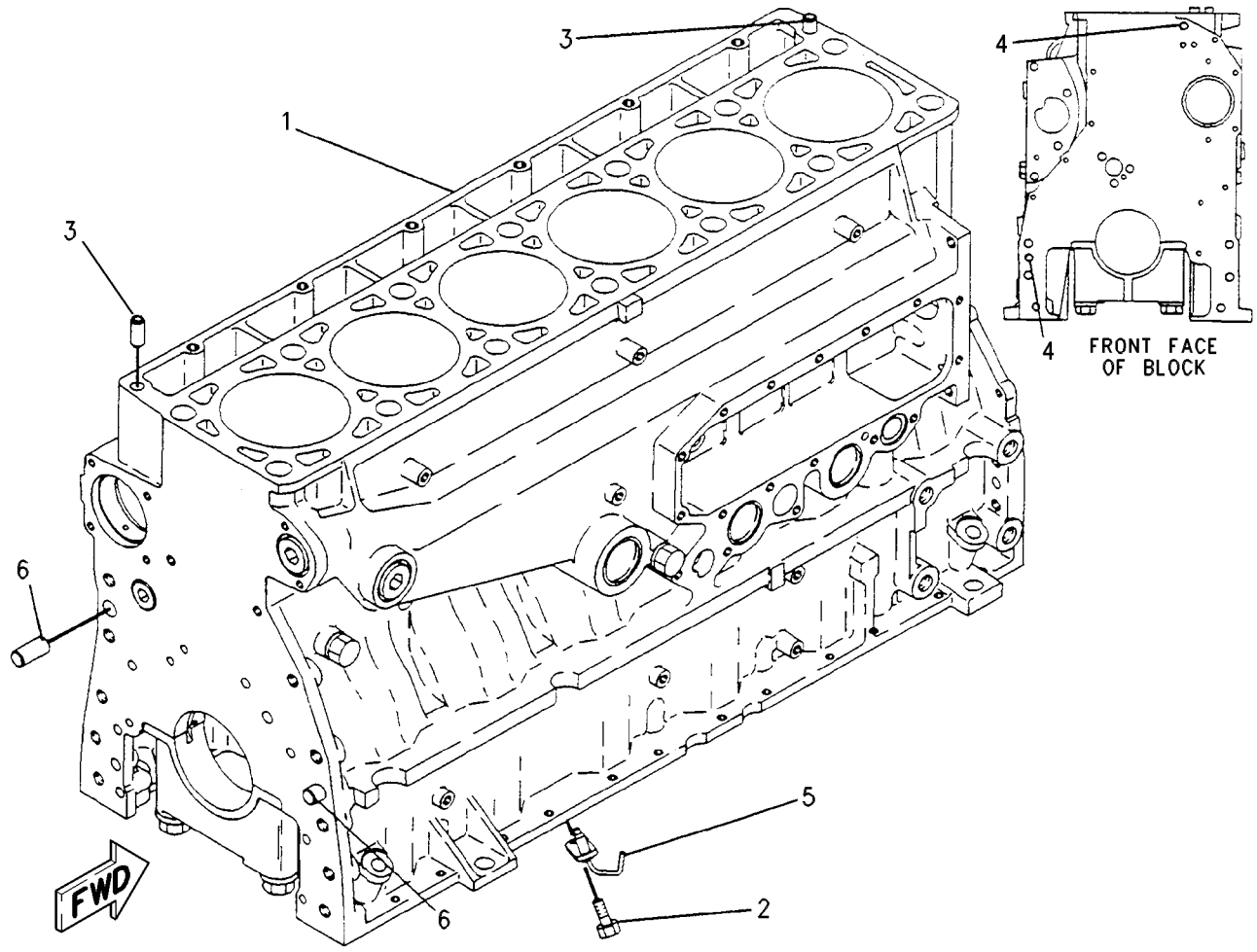

GRAPHIC #1 <END> g00594312

107-7609 CYLINDER HEAD AS

S/N: 4TF17400-24051
FIELD REPLACEMENT ORDER 107-7720—PAGE: 41
PART OF 107-7720 CYLINDER HEAD AS, 4P-8263 CYLINDER HEAD GP
ALSO AN ATTACHMENT

SMCS-1100, 1101, 1103, 1104, 1105, 1106, 1108, 1109, 1115, 1117, 1121, 1124, 1125

i00675615

NOTE	REF NO	GRAPHIC REF	PART NUMBER	QTY	PART NAME 1 2 3 4 5 6 (PRODUCT LEVEL)	SEE PAGE
Z	1	1		1	CYLINDER HEAD	
	2	1	**1W-2713**	6	INSERT-VALVE SEAT (EXHAUST)	
	3	1	**4P-8378**	6	SEAT-VALVE	
	4	1	**119-3061**	6	SLEEVE	
	5	1	**8M-5860**	6	PLUG-CUP	

Z - NOT SERVICED SEPARATELY

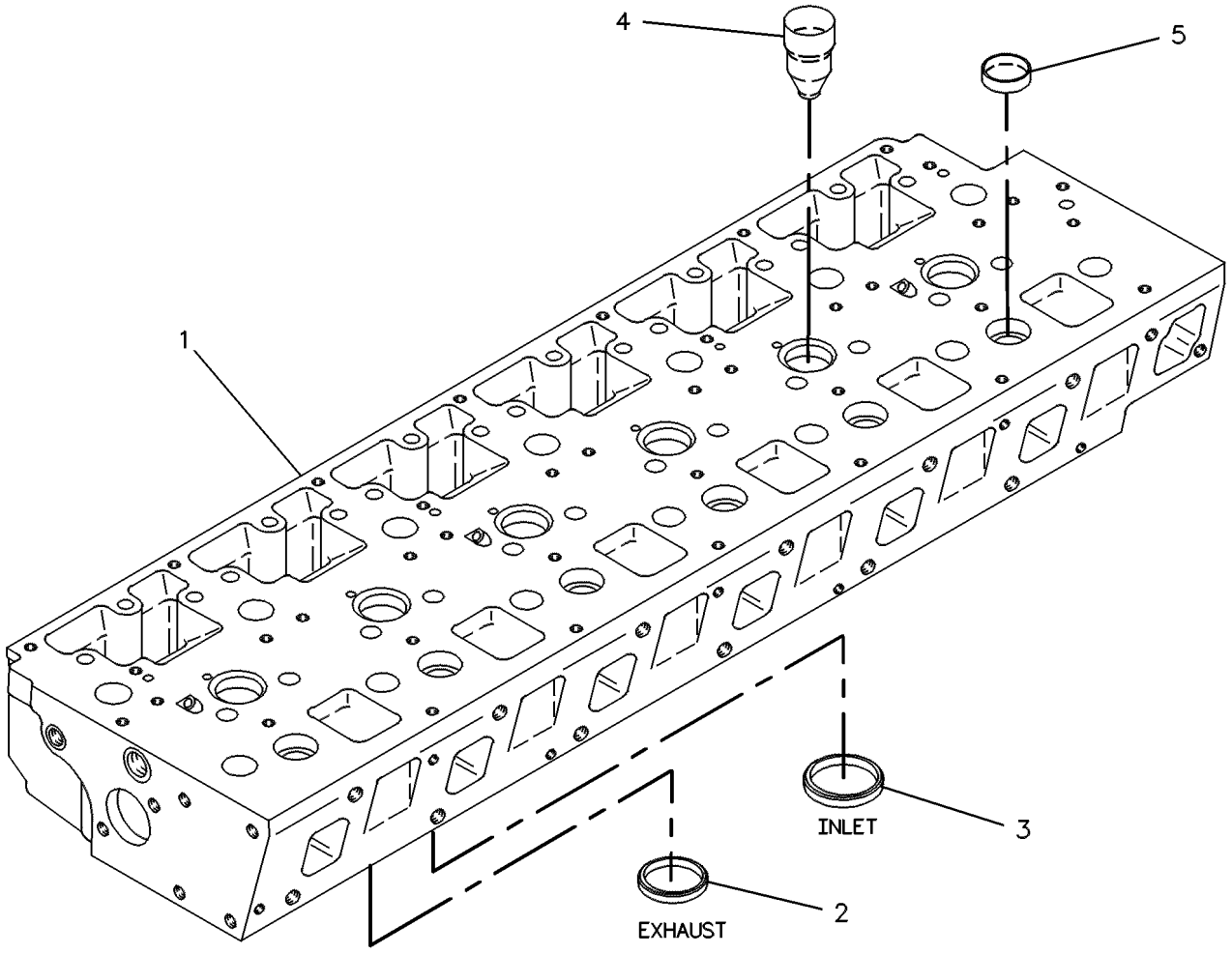

GRAPHIC #1 <END> g00108621

107-7720 CYLINDER HEAD AS*R

S/N: 4TF17400-24051

FIELD REPLACEMENT FOR 107-7609—PAGE: 40

FIELD INSTALLATION

SMCS-1100, 1101, 1103, 1104, 1105, 1106, 1108, 1109, 1115, 1117, 1121, 1124, 1125

i00924517

NOTE	REF NO	GRAPHIC REF	PART NUMBER	QTY	PART NAME 1 2 3 4 5 6 (PRODUCT LEVEL)	SEE PAGE
	1	1	**9Y-8848**	12	GUIDE-VALVE	
	2	1	**9S-8003**	3	PLUG (1/2-20-THD)	
	3	1	**1J-9671**	3	SEAL-O-RING	
	4	1	**2M-6471**	2	PLUG-CUP	
	5	1	**119-3036**	12	SEAL-VALVE STEM	
Y	6	1	*107-7609*	1	CYLINDER HEAD AS	40

Y - SEPARATE ILLUSTRATION

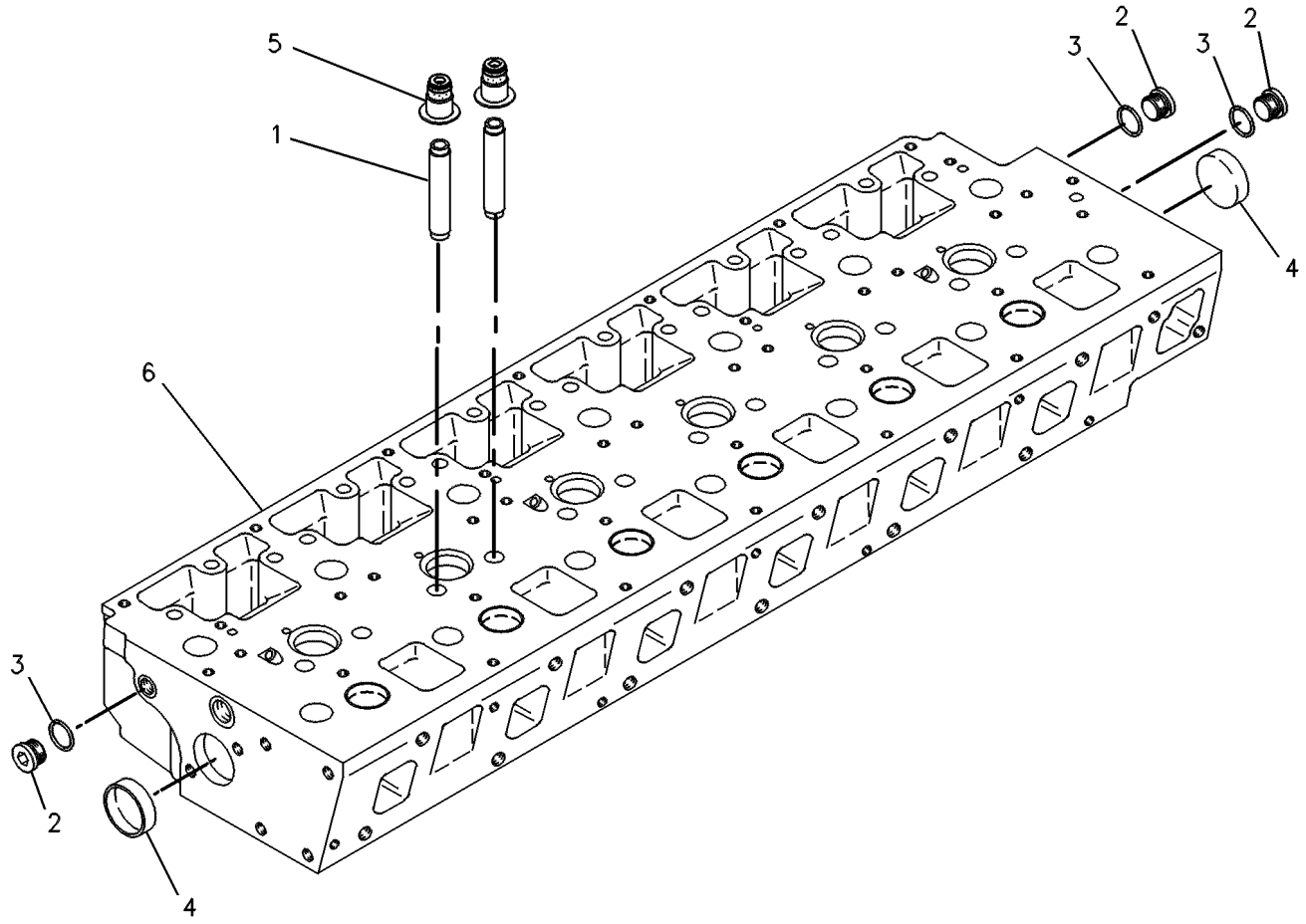

GRAPHIC #1 <END> g00108622

115-4107 CYLINDER HEAD AS

S/N: 4TF17400-18603

FIELD REPLACEMENT ORDER 115-4108—PAGE: 43

PART OF 115-4108 CYLINDER HEAD AS, 115-4165 CYLINDER HEAD GP

AN ATTACHMENT

SMCS-1100, 1101, 1103, 1104, 1105, 1106, 1108, 1109, 1115, 1117, 1121, 1124, 1125

i00569716

NOTE	REF NO	GRAPHIC REF	PART NUMBER	QTY	PART NAME 1 2 3 4 5 6 (PRODUCT LEVEL)	SEE PAGE
	1	1	**107-7610**	1	CYLINDER HEAD	
	2	1	**1W-2713**	6	INSERT-VALVE SEAT (EXHAUST)	
	3	1	**7W-8065**	6	INSERT-VALVE SEAT (INLET)	
	4	1	**119-3061**	6	SLEEVE	
	5	1	**8M-5860**	6	PLUG-CUP	

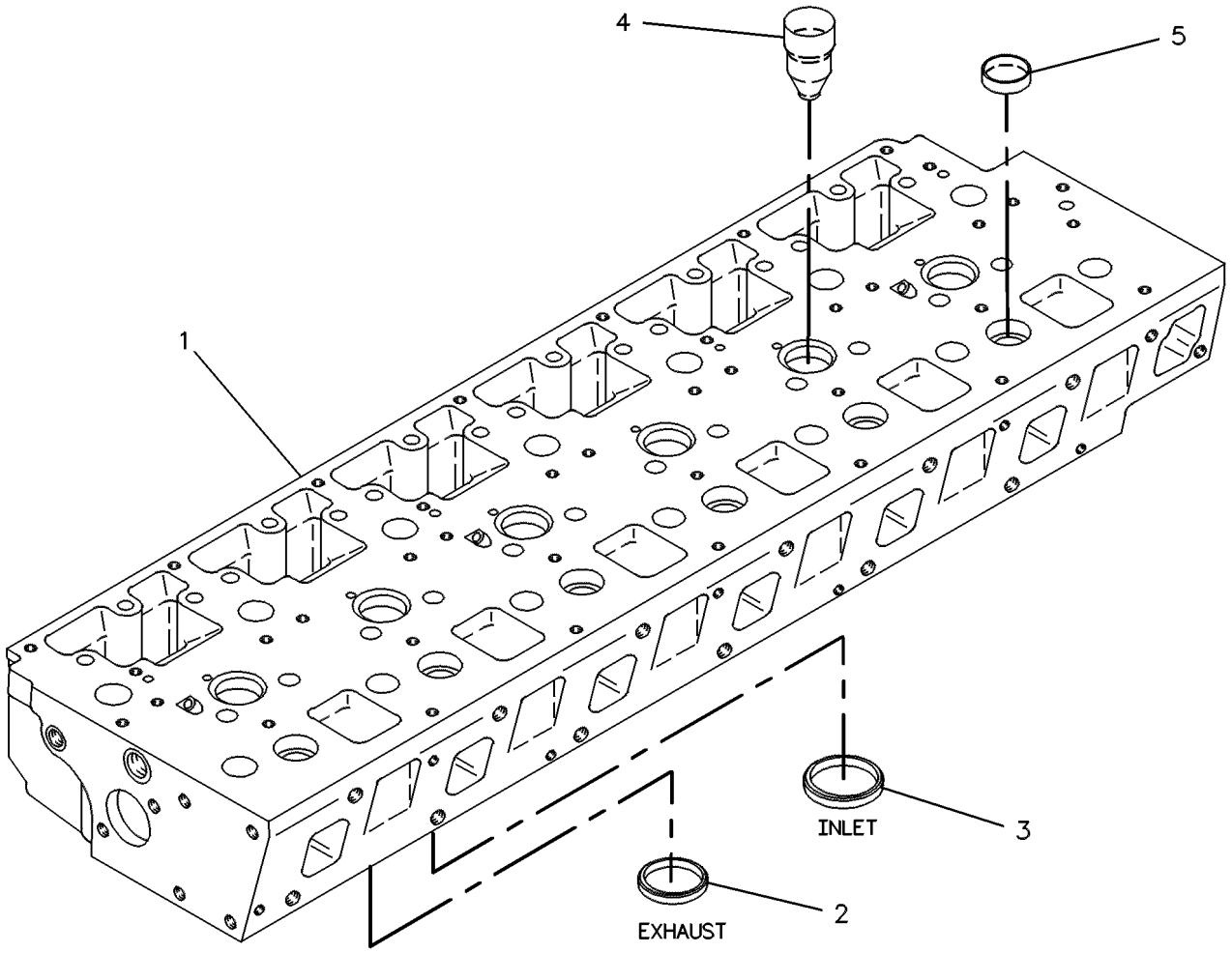

GRAPHIC #1 <END> g00108621

115-4108 CYLINDER HEAD AS*R

S/N: 4TF17400-18603
FIELD REPLACEMENT FOR 115-4107—PAGE: 42
FIELD INSTALLATION

SMCS-1100, 1101, 1103, 1104, 1105, 1106, 1108, 1109, 1115, 1117, 1121, 1124, 1125

i00686279

NOTE	REF NO	GRAPHIC REF	PART NUMBER	QTY	PART NAME 1 2 3 4 5 6 (PRODUCT LEVEL)	SEE PAGE
Y	1	1	*115-4107*	1	CYLINDER HEAD AS	42
	2	1	**9S-8003**	3	PLUG (1/2-20-THD)	
	3	1	**1J-9671**	3	SEAL-O-RING	
	4	1	**2M-6471**	2	PLUG-CUP	
	5	1	**119-3036**	12	SEAL-VALVE STEM	
	6	1	**9Y-8848**	12	GUIDE-VALVE	

Y - SEPARATE ILLUSTRATION

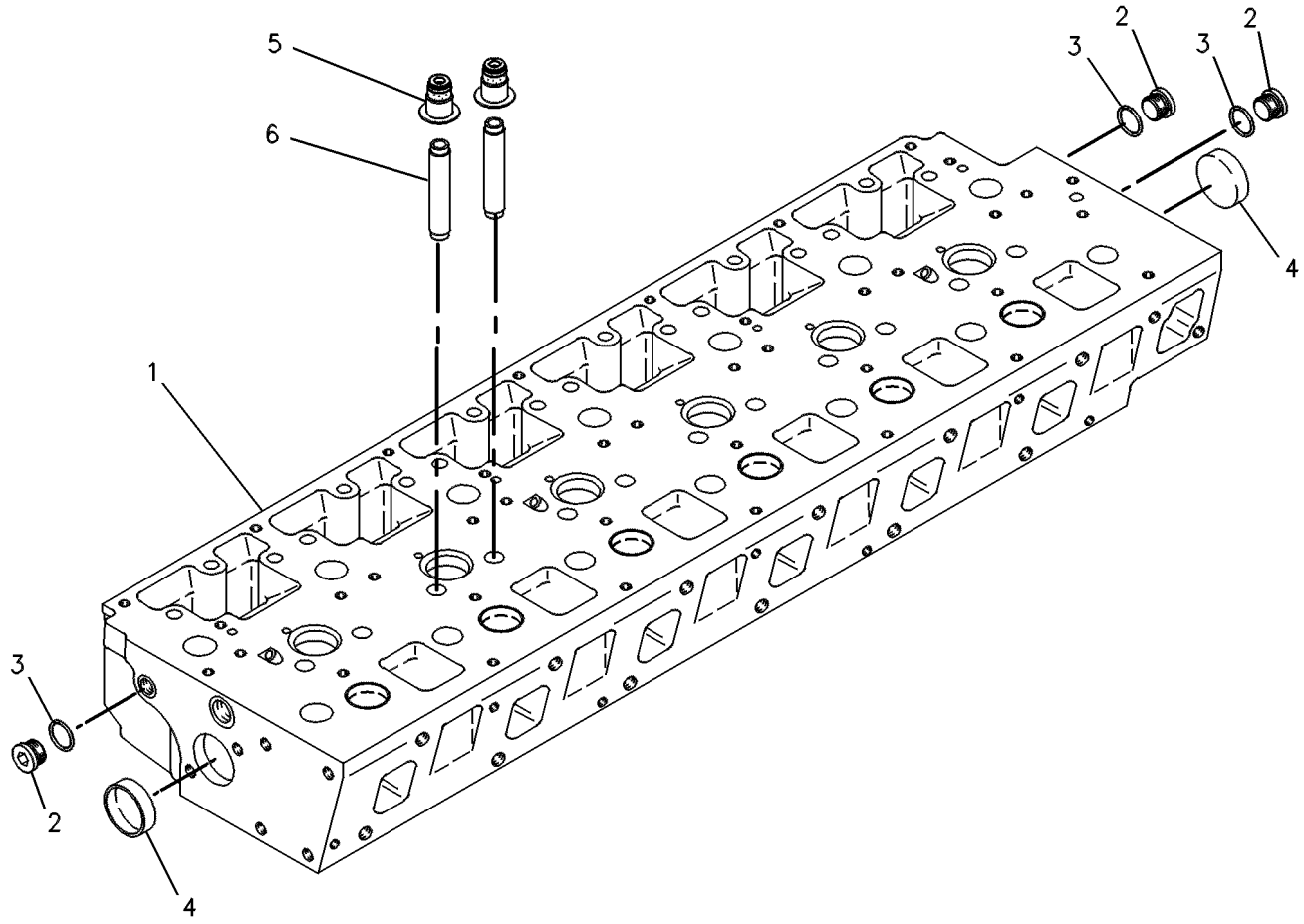

GRAPHIC #1 <END> g00117468

119-3065 CYLINDER HEAD AS

S/N: 4TF17400-UP
FIELD REPLACEMENT ORDER 119-3067—PAGE: 45
PART OF 119-3067 CYLINDER HEAD AS, 4P-8263 CYLINDER HEAD GP
ALSO AN ATTACHMENT

SMCS-1100, 1101, 1103, 1104, 1105, 1106, 1108, 1109, 1115, 1117, 1121, 1124, 1125

i00568277

NOTE	REF NO	GRAPHIC REF	PART NUMBER	QTY	PART NAME 1 2 3 4 5 6 (PRODUCT LEVEL)	SEE PAGE
Z	1	1		1	CYLINDER HEAD	
	2	1	**1W-2713**	6	INSERT-VALVE SEAT (EXHAUST)	
	3	1	**126-0453**	6	INSERT-VALVE SEAT (INLET)	
	4	1	**119-3061**	6	SLEEVE	
	5	1	**8M-5860**	6	PLUG-CUP	

Z - NOT SERVICED SEPARATELY

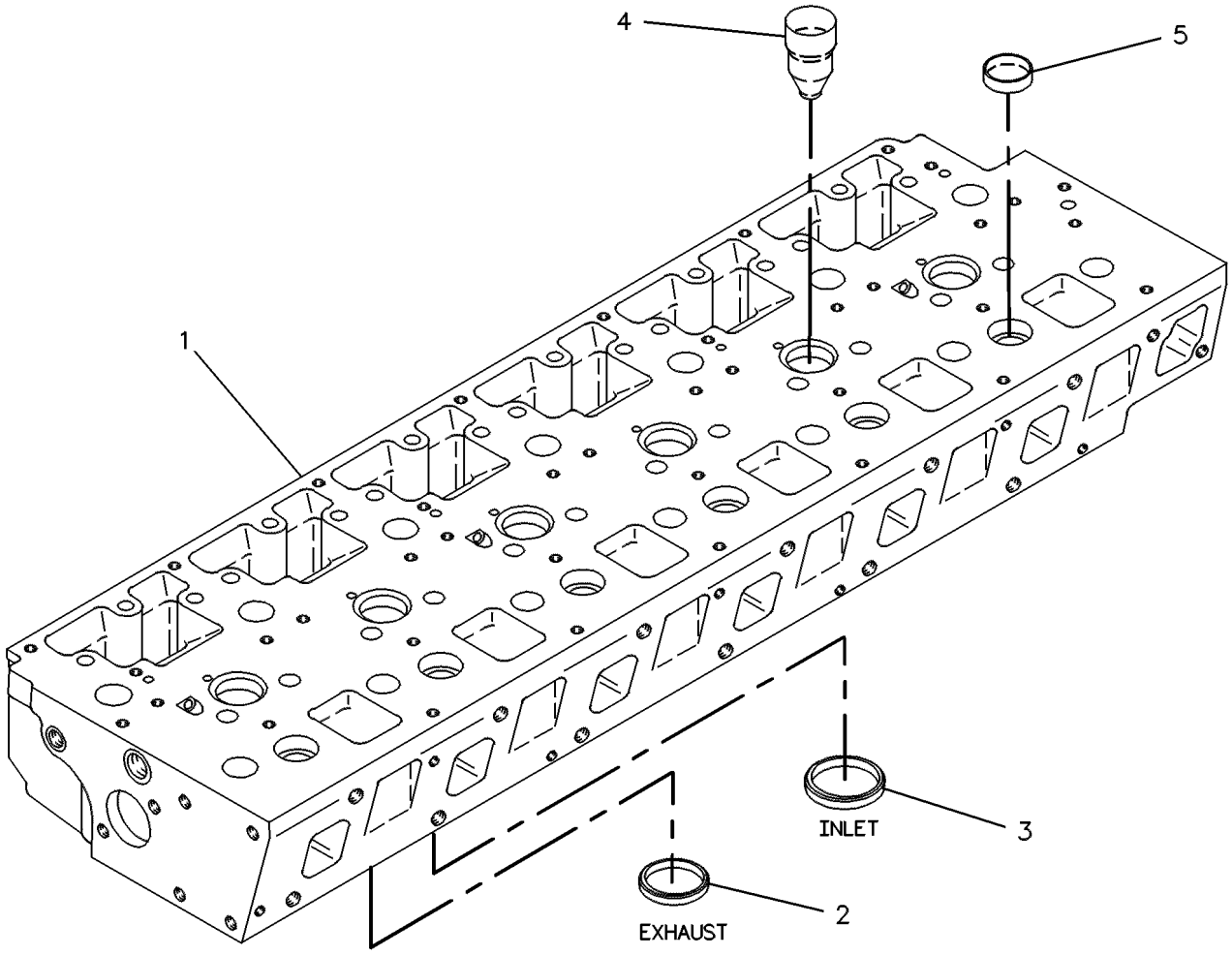

GRAPHIC #1 <END> g00108621

119-3067 CYLINDER HEAD AS

S/N: 4TF24052-UP

FIELD REPLACEMENT FOR 119-3065—PAGE: 44

FIELD INSTALLATION

SMCS-1100, 1101, 1103, 1104, 1105, 1106, 1108, 1109, 1115, 1117, 1121, 1124, 1125

i01638761

NOTE	REF NO	GRAPHIC REF	PART NUMBER	QTY	PART NAME 1 2 3 4 5 6 (PRODUCT LEVEL)	SEE PAGE
	1	1	**9Y-8848**	12	GUIDE-VALVE	
	2	1	**9S-8003**	3	PLUG (1/2-20-THD)	
	3	1	**1J-9671**	3	SEAL-O-RING	
	4	1	**2M-6471**	2	PLUG-CUP	
	5	1	**119-3036**	12	SEAL-VALVE STEM	
Y	6	1	**119-3065**	1	CYLINDER HEAD AS	44

Y - SEPARATE ILLUSTRATION

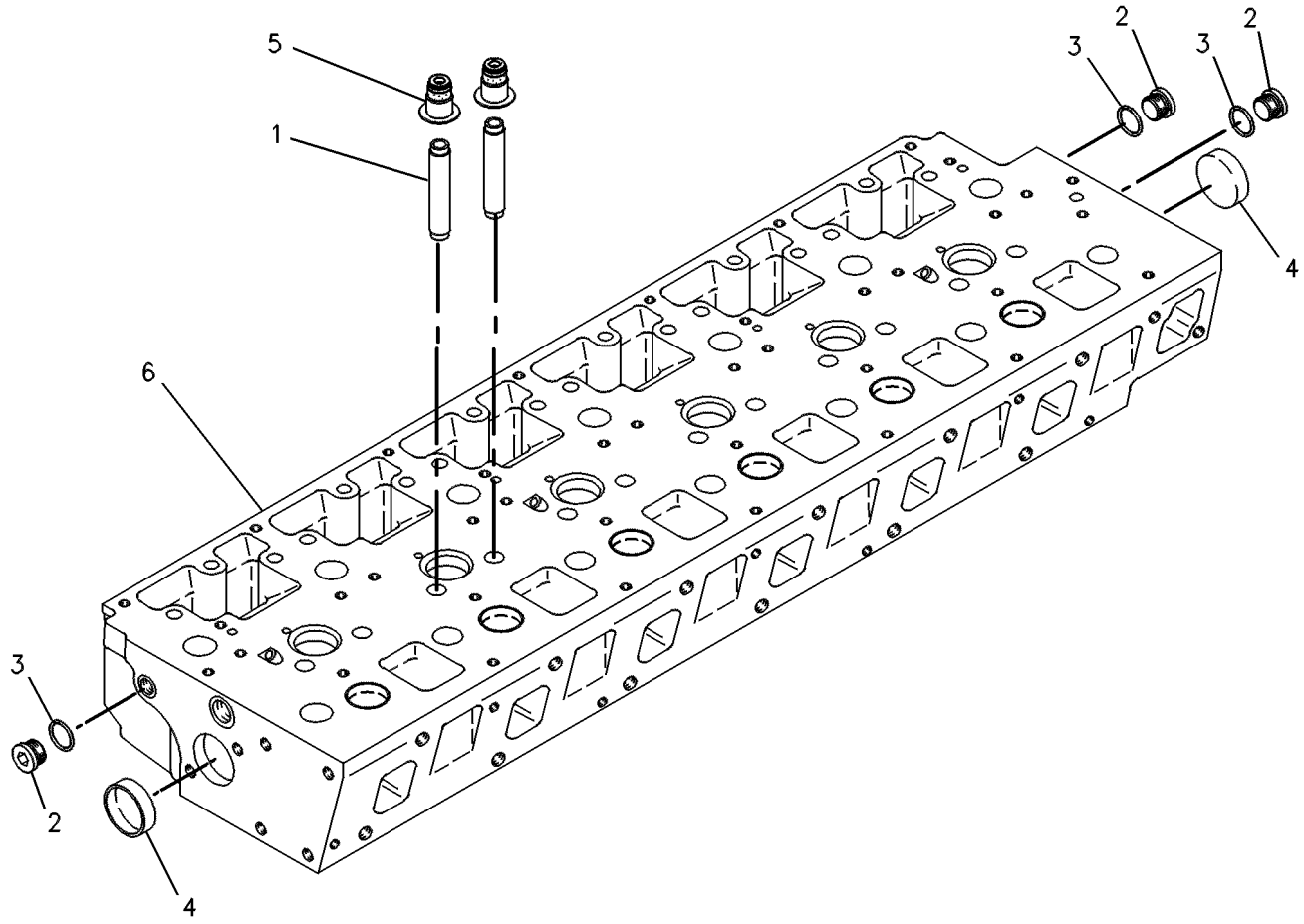

GRAPHIC #1 <END> g00108622

140-7373 CYLINDER HEAD AS*R

S/N: 4TF17400-UP

FIELD REPLACEMENT FOR 190-9066—PAGE: 47

SMCS-1100, 1101, 1103, 1104, 1105, 1106, 1108, 1109, 1115, 1117, 1121, 1124, 1125

i01516041

NOTE	REF NO	GRAPHIC REF	PART NUMBER	QTY	PART NAME 1 2 3 4 5 6 (PRODUCT LEVEL)	SEE PAGE
	1	1	**9Y-8848**	12	GUIDE-VALVE	
	2	1	**9S-8003**	3	PLUG (1/2-20-THD)	
	3	1	**1J-9671**	3	SEAL-O-RING	
	4	1	**2M-6471**	2	PLUG-CUP	
	5	1	**119-3036**	12	SEAL-VALVE STEM	
Y	6	1	*190-9066*	1	CYLINDER HEAD AS	47
	7	1	**3J-7354**	1	SEAL-O-RING	
	8	1	**9S-8002**	1	PLUG (7/16-20-THD)	

Y - SEPARATE ILLUSTRATION

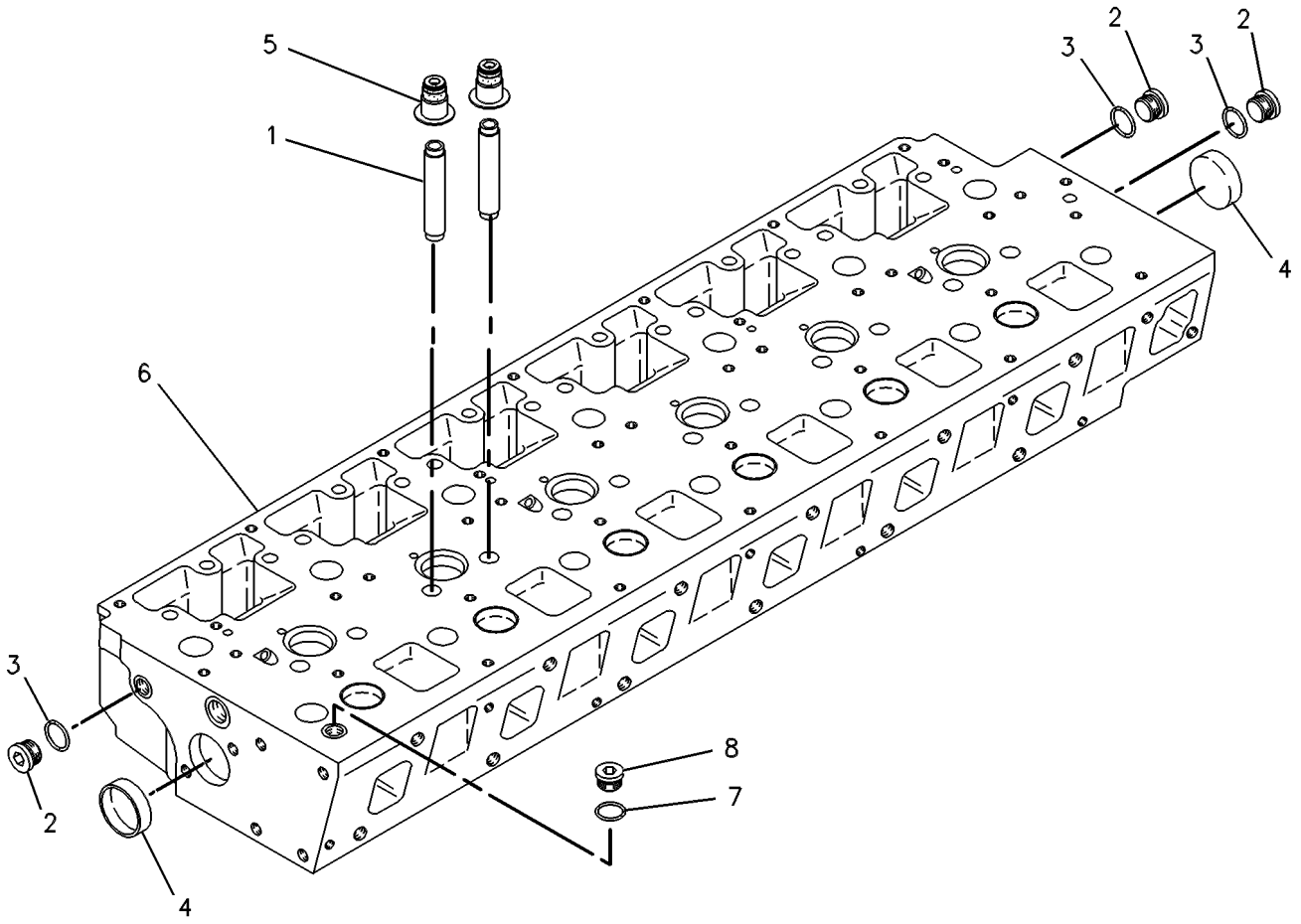

GRAPHIC #1 <END> g00254592

190-9066 CYLINDER HEAD AS

S/N: 4TF17400-UP
FIELD REPLACEMENT ORDER 140-7373—PAGE: 46
PART OF 140-7373 CYLINDER HEAD AS, 140-7371 CYLINDER HEAD GP
ALSO AN ATTACHMENT

SMCS-1100, 1101, 1103, 1104, 1105, 1106, 1108, 1109, 1115, 1117, 1121, 1124, 1125

i01516284

NOTE	REF NO	GRAPHIC REF	PART NUMBER	QTY	PART NAME 1 2 3 4 5 6 (PRODUCT LEVEL)	SEE PAGE
	1	1	**1W-2713**	6	INSERT-VALVE SEAT (EXHAUST)	
	2	1	**163-9063**	6	INSERT-VALVE SEAT (INLET)	
	3	1	**119-3061**	6	SLEEVE	
	4	1	**8M-5860**	6	PLUG-CUP	

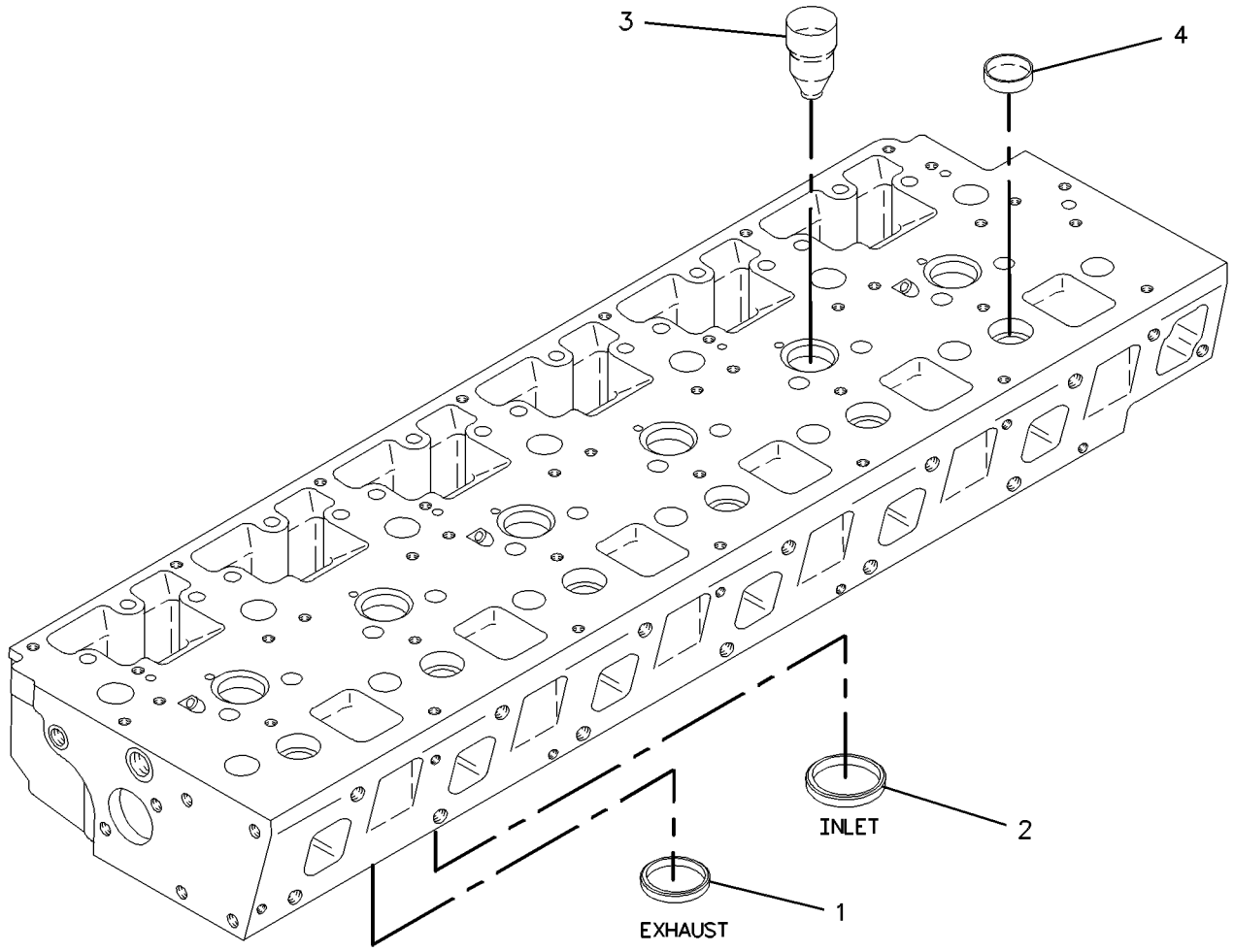

GRAPHIC #1 <END> g00564059

115-4165 CYLINDER HEAD GP*R

S/N: 4TF17400-18603
PART OF 9Y-8871 CYLINDER HEAD GP
AN ATTACHMENT

SMCS-1100, 1101

i00569725

NOTE	REF NO	GRAPHIC REF	PART NUMBER	QTY	PART NAME 1 2 3 4 5 6 (PRODUCT LEVEL)	SEE PAGE
Y	1	1	*115-4107*	1	CYLINDER HEAD AS	42
	2	1	**7E-7779**	12	RETAINER-SPRING	
	3	1	**7C-4273**	12	SPRING-VALVE	
	4	1	**4P-7750**	12	SEAL-VALVE STEM	
	5	1	**9Y-8848**	12	GUIDE-VALVE	
	6	1	**7W-8064**	6	VALVE-INLET	
	7	1	**105-1779**	6	VALVE-EXHAUST	
	8	1	**1W-2715**	24	LOCK-RETAINER	

Y - SEPARATE ILLUSTRATION

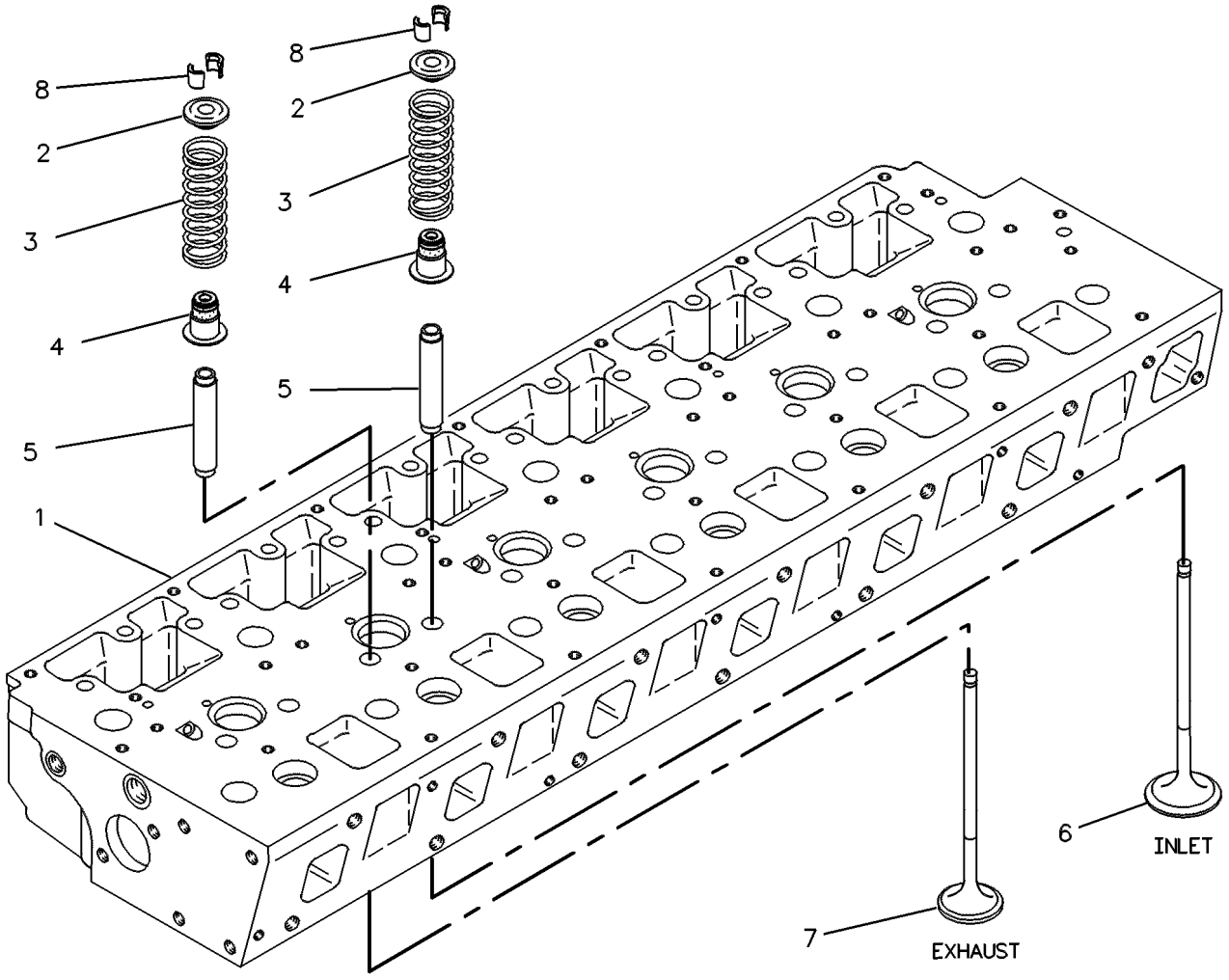

GRAPHIC #1 <END> g00117483

140-7371 CYLINDER HEAD GP

S/N: 4TF50341-UP
FIELD REPLACEMENT ORDER 160-5130—PAGE: 51
PART OF 159-0305, 160-5130 CYLINDER HEAD GP
ALSO AN ATTACHMENT

SMCS-1100, 1101 **i01515955**

NOTE	REF NO	GRAPHIC REF	PART NUMBER	QTY	PART NAME 1 2 3 4 5 6 (PRODUCT LEVEL)	SEE PAGE
Y	1	1	*190-9066*	1	CYLINDER HEAD AS	47
	2	1	**161-4280**	6	VALVE-INLET	
	3	1	**136-0819**	6	VALVE-EXHAUST	
	4	1	**1W-2715**	24	LOCK-RETAINER	
	5	1	**7E-7779**	12	RETAINER-SPRING	
	6	1	**7C-4273**	12	SPRING-VALVE	
	7	1	**9Y-8848**	12	GUIDE-VALVE	
	8	1	**119-3036**	12	SEAL-VALVE STEM	

Y - SEPARATE ILLUSTRATION

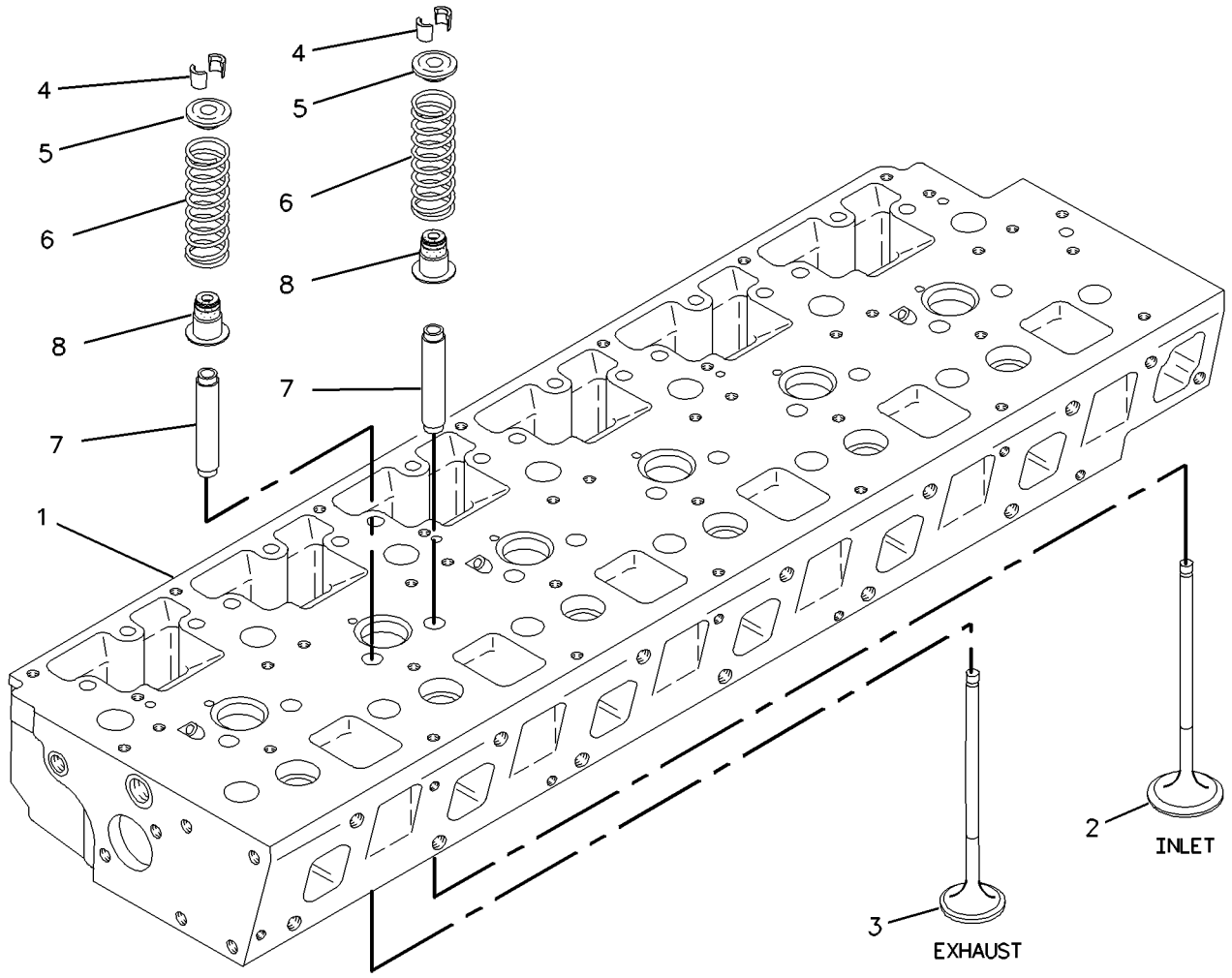

GRAPHIC #1 <END> g00655837

159-0305 CYLINDER HEAD GP

S/N: 4TF50341-UP
PART OF 117-5187, 117-5188 ENGINE AR
ALSO AN ATTACHMENT

SMCS-1100, 1101

i01654319

NOTE	REF NO	GRAPHIC REF	PART NUMBER	QTY	PART NAME 1 2 3 4 5 6 (PRODUCT LEVEL)	SEE PAGE
	1	1	**1J-9671**	3	SEAL-O-RING	
Y	2	1	*140-7371*	1	CYLINDER HEAD GP	49
	3	1	**3J-7354**	1	SEAL-O-RING	
	4	1	**9S-8002**	1	PLUG (7/16-20-THD)	
	5	1	**2M-6471**	2	PLUG-CUP	
	6	1	**107-7832**	1	GASKET	
M	7	1	**8T-5030**	6	BOLT (M10X1.5X120-MM)	
	8	1	**9S-8003**	3	PLUG (1/2-20-THD)	
M	9	1	**127-4836**	14	BOLT (M20X2.5X160-MM)	
		1	**8T-3282**	14	WASHER-HARD (22X35X3.5-MM THK)	

M - METRIC PART
Y - SEPARATE ILLUSTRATION

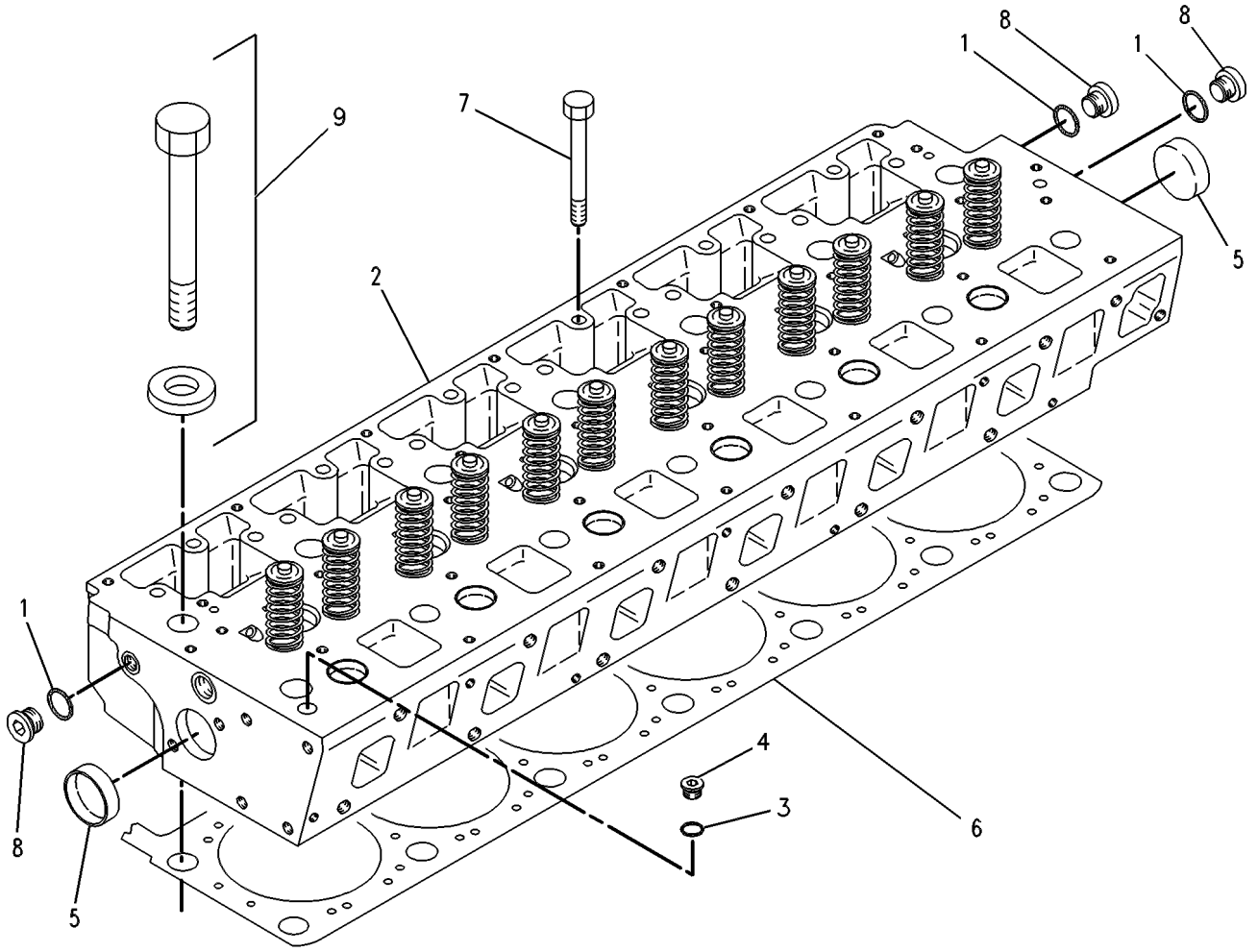

GRAPHIC #1 <END> g00254573

160-5130 CYLINDER HEAD GP*R

S/N: 4TF17400-UP

FIELD REPLACEMENT FOR 140-7371—PAGE: 49

SMCS-1100, 1101

i01638765

NOTE	REF NO	GRAPHIC REF	PART NUMBER	QTY	PART NAME 1 2 3 4 5 6 (PRODUCT LEVEL)	SEE PAGE
	1	1	**1J-9671**	3	SEAL-O-RING	
Y	2	1	*140-7371*	1	CYLINDER HEAD GP	49
	3	1	**2M-6471**	2	PLUG-CUP	
	4	1	**9S-8003**	3	PLUG (1/2-20-THD)	
	5	1	**9S-8002**	1	PLUG (7/16-20-THD)	
	6	1	**3J-7354**	1	SEAL-O-RING	

Y - SEPARATE ILLUSTRATION

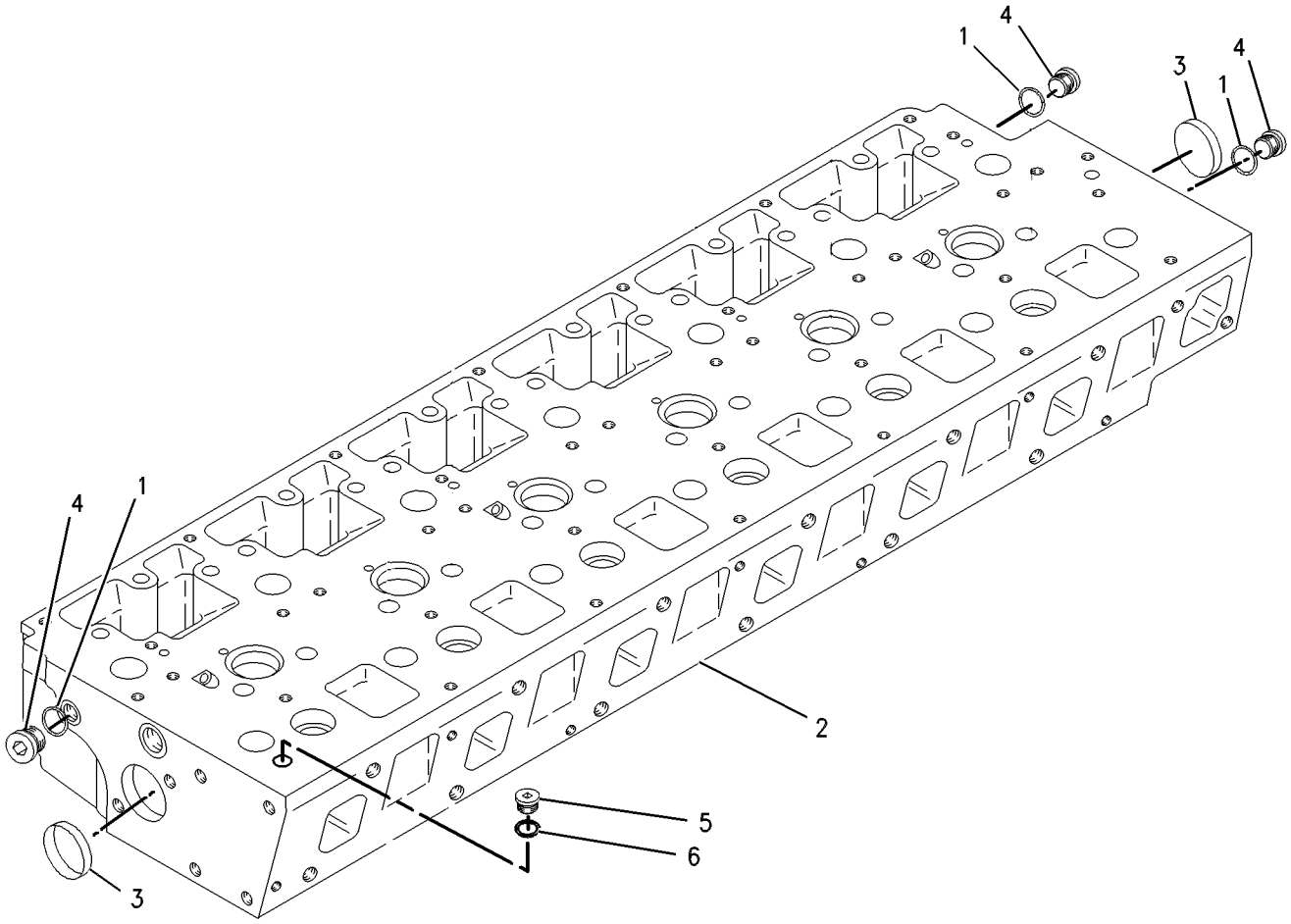

GRAPHIC #1 <END> g00558789

4P-8263 CYLINDER HEAD GP*R

S/N: 4TF17400-24051
PART OF 4P-8264 CYLINDER HEAD GP
ALSO AN ATTACHMENT

SMCS-1100, 1101 **i00569570**

NOTE	REF NO	GRAPHIC REF	PART NUMBER	QTY	PART NAME 1 2 3 4 5 6 (PRODUCT LEVEL)	SEE PAGE
Y	1	1	*107-7609*	1	CYLINDER HEAD AS	40
	2	1	**113-6180**	6	VALVE-INLET	
	3	1	**105-1779**	6	VALVE-EXHAUST	
	4	1	**1W-2715**	24	LOCK-RETAINER	
	5	1	**7E-7779**	12	RETAINER-SPRING	
	6	1	**7C-4273**	12	SPRING-VALVE	
	7	1	**9Y-8848**	12	GUIDE-VALVE	
	8	1	**119-3036**	12	SEAL-VALVE STEM	

Y - SEPARATE ILLUSTRATION

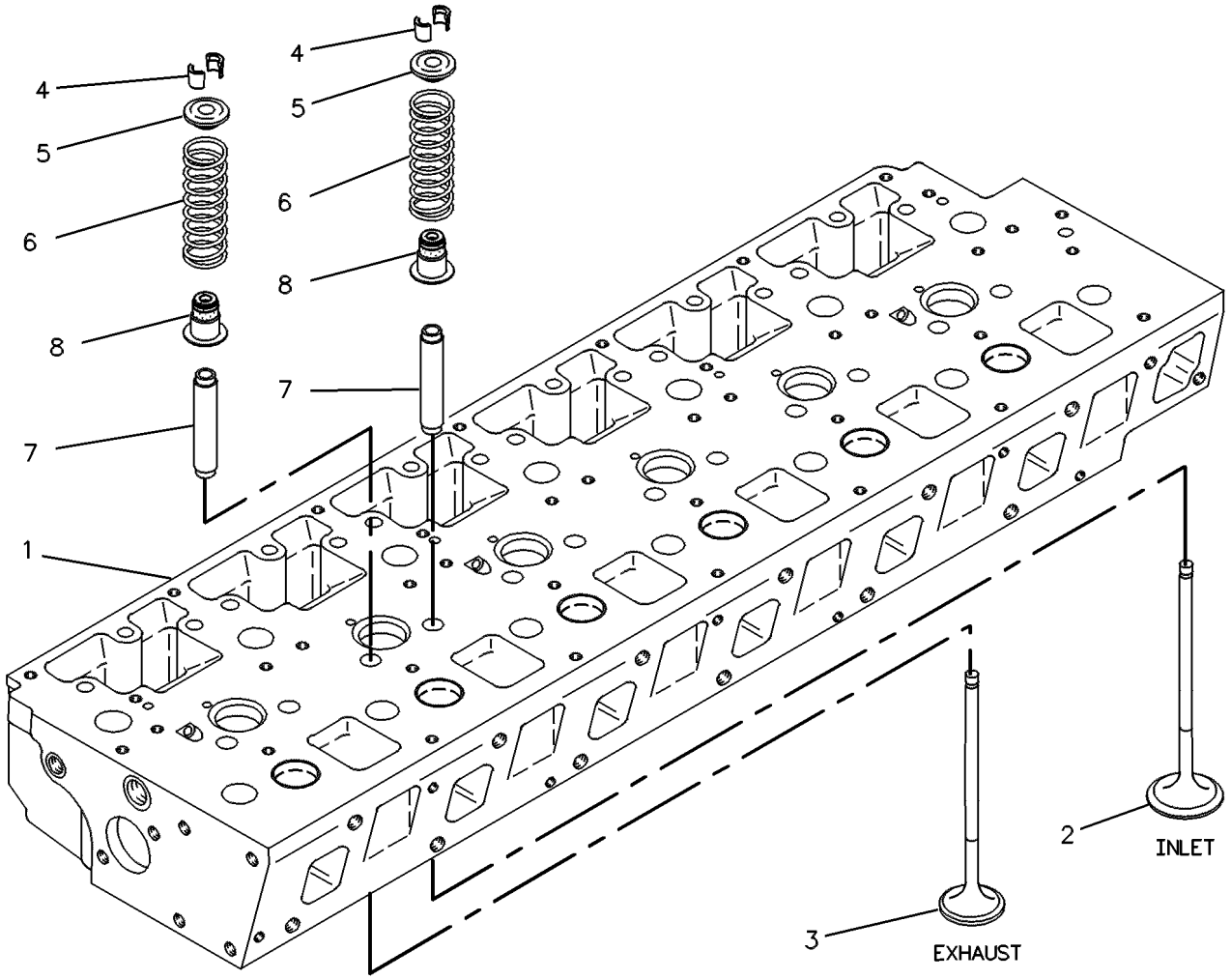

GRAPHIC #1 <END> g00108608

4P-8263 CYLINDER HEAD GP*R

S/N: 4TF17400-50340
PART OF 4P-8264 CYLINDER HEAD GP
ALSO AN ATTACHMENT

SMCS-1100, 1101

i01087582

NOTE	REF NO	GRAPHIC REF	PART NUMBER	QTY	PART NAME 1 2 3 4 5 6 (PRODUCT LEVEL)	SEE PAGE
CY	1	1	**119-3065**	1	CYLINDER HEAD AS	44
	2	1	**113-6180**	6	VALVE-INLET	
	3	1	**136-0819**	6	VALVE-EXHAUST	
	4	1	**1W-2715**	24	LOCK-RETAINER	
	5	1	**7E-7779**	12	RETAINER-SPRING	
	6	1	**7C-4273**	12	SPRING-VALVE	
	7	1	**9Y-8848**	12	GUIDE-VALVE	
	8	1	**119-3036**	12	SEAL-VALVE STEM	

C - CHANGE FROM PREVIOUS TYPE
Y - SEPARATE ILLUSTRATION

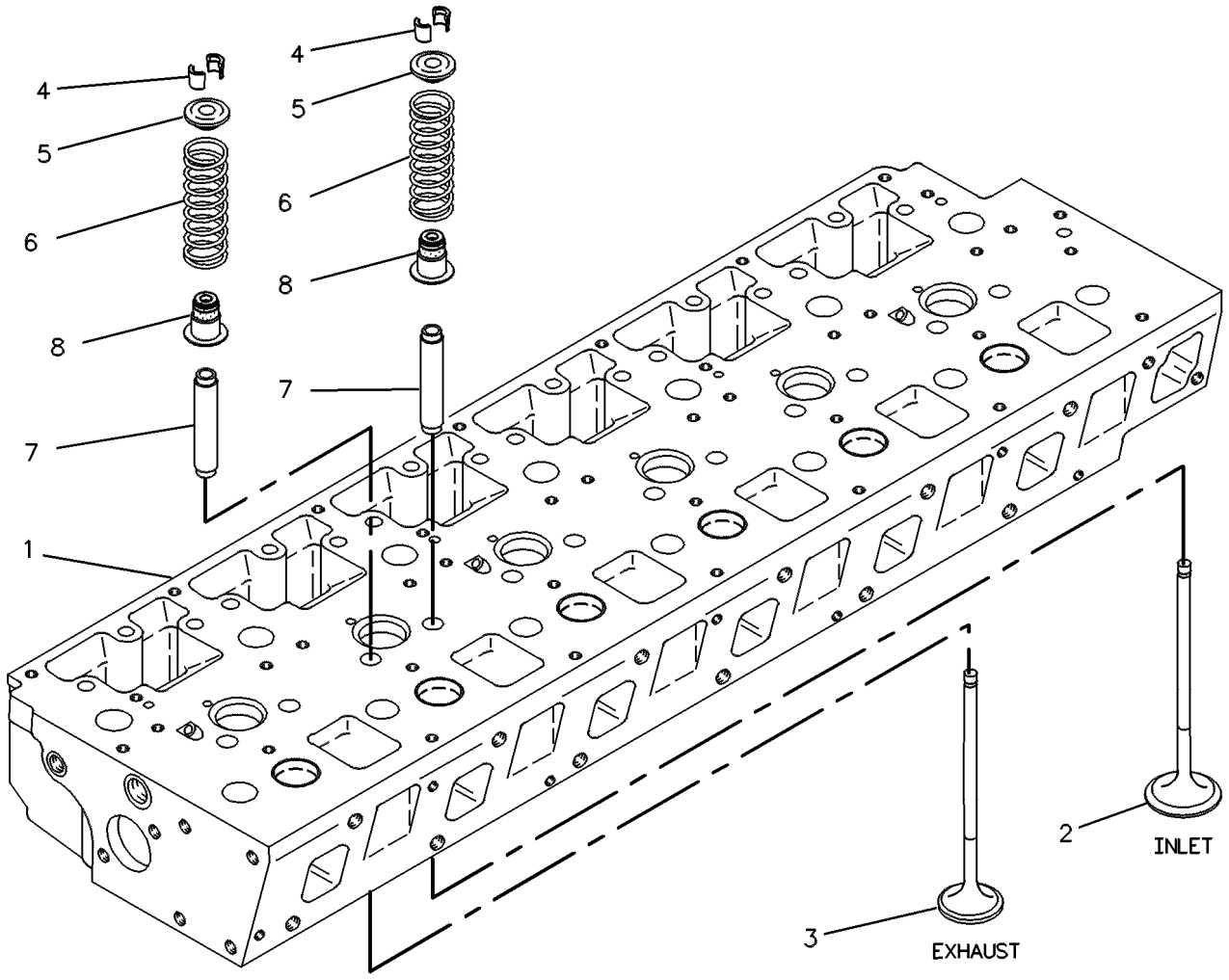

GRAPHIC #1 <END> g00108608

4P-8264 CYLINDER HEAD GP

S/N: 4TF17400-50340
PART OF 114-7159, 117-5187, 117-5188, 6I-3528 ENGINE AR
ALSO AN ATTACHMENT

SMCS-1100, 1101

i01638763

NOTE	REF NO	GRAPHIC REF	PART NUMBER	QTY	PART NAME 1 2 3 4 5 6 (PRODUCT LEVEL)	SEE PAGE
	1	1	**1J-9671**	3	SEAL-O-RING	
YR	2	1	*4P-8263*	1	CYLINDER HEAD GP	52
	3	1	**8T-3282**	14	WASHER-HARD (22X35X3.5-MM THK)	
M		1	**127-4836**	14	BOLT (M20X2.5X160-MM)	
	4	1	**9S-8003**	3	PLUG (1/2-20-THD)	
	5	1	**2M-6471**	2	PLUG-CUP	
	6	1	**107-7832**	1	GASKET (1.60MM THK)	
AB		1	**4P-2590**	1	GASKET-CYLINDER HEAD (1.85MM THK)	
M	7	1	**8T-5030**	6	BOLT (M10X1.5X120-MM)	
	8	1	**9S-8002**	1	PLUG (7/16-20-THD)	
	9	1	**3J-7354**	1	SEAL-O-RING	

A - NOT PART OF THIS GROUP
B - USE AS REQUIRED
M - METRIC PART
R - REMANUFACTURED PART MAY BE AVAILABLE
Y - SEPARATE ILLUSTRATION

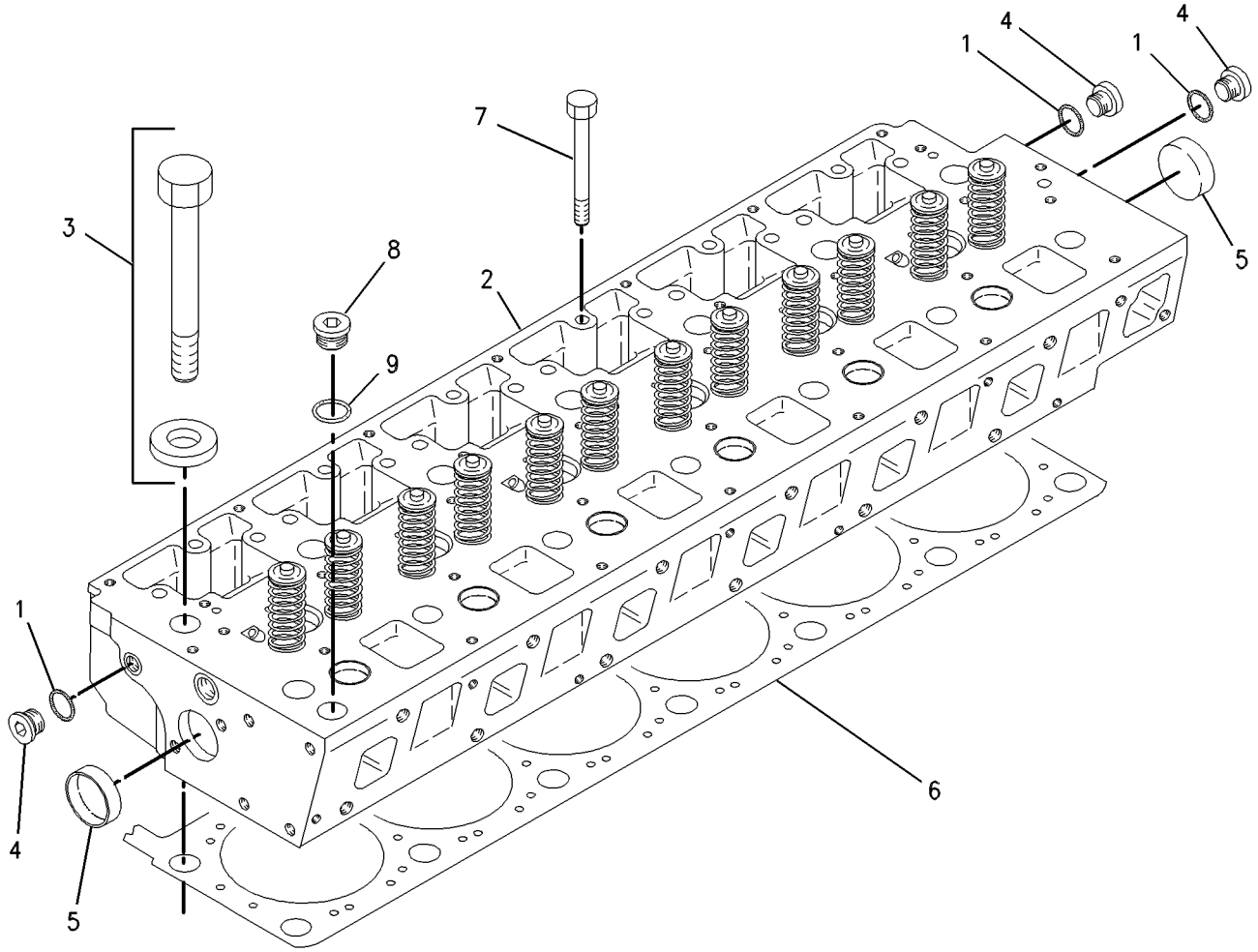

GRAPHIC #1 <END> g00582817

9Y-8871 CYLINDER HEAD GP

S/N: 4TF17400-18603
NON-SWIRL
PART OF 114-7159 ENGINE AR
AN ATTACHMENT

SMCS-1100, 1101 **i00699345**

NOTE	REF NO	GRAPHIC REF	PART NUMBER	QTY	PART NAME 1 2 3 4 5 6 (PRODUCT LEVEL)	SEE PAGE
	1	1	**1J-9671**	3	SEAL-O-RING	
YR	2	1	*115-4165*	1	CYLINDER HEAD GP	48
	3	1	**8T-3282**	14	WASHER-HARD (22X35X3.5-MM THK)	
M		1	**127-4836**	14	BOLT (M20X2.5X160-MM)	
	4	1	**9S-8003**	3	PLUG (1/2-20-THD)	
	5	1	**2M-6471**	2	PLUG-CUP	
	6	1	**107-7832**	1	GASKET (1.61MM THK)	
AB		1	**4P-2590**	1	GASKET-CYLINDER HEAD (1.85MM THK)	
M	7	1	**8T-5030**	6	BOLT (M10X1.5X120-MM)	

A - NOT PART OF THIS GROUP
B - USE AS REQUIRED
M - METRIC PART
R - REMANUFACTURED PART MAY BE AVAILABLE
Y - SEPARATE ILLUSTRATION

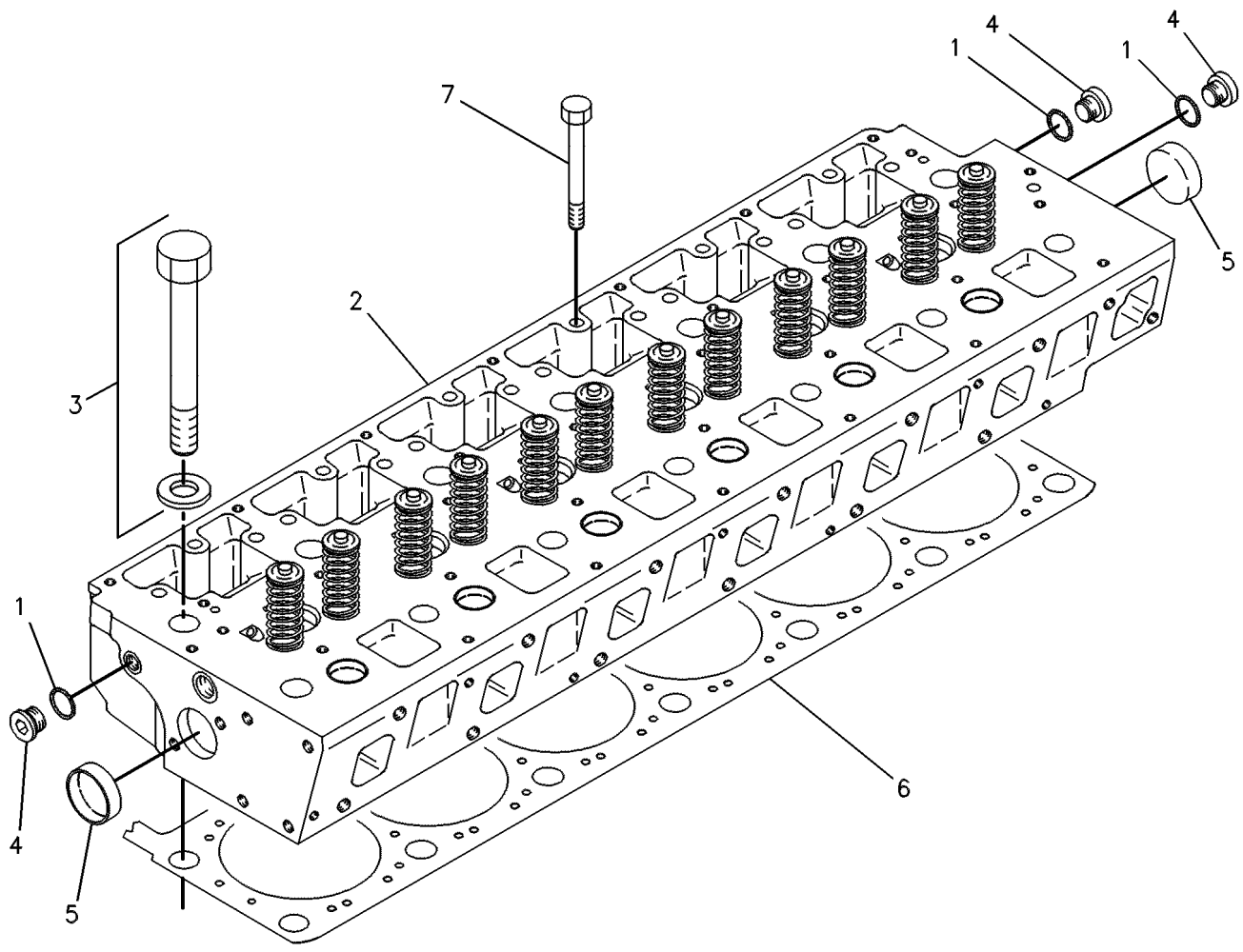

GRAPHIC #1 <END> g00108764

110-9523 DAMPER & PULLEY GP

S/N: 4TF29893-99999
PART OF 117-5188 ENGINE AR
AN ATTACHMENT

SMCS-1205 **i01220217**

NOTE	REF NO	GRAPHIC REF	PART NUMBER	QTY	PART NAME 1 2 3 4 5 6 (PRODUCT LEVEL)	SEE PAGE
	1	1	**167-8121**	1	DAMPER AS	
	2	1	**4P-2843**	1	PULLEY	
M	3	1	**6V-5230**	8	BOLT (M10X1.5X60-MM)	
	4	1	**6V-5839**	8	WASHER (11X21X2.5-MM THK)	

M - METRIC PART

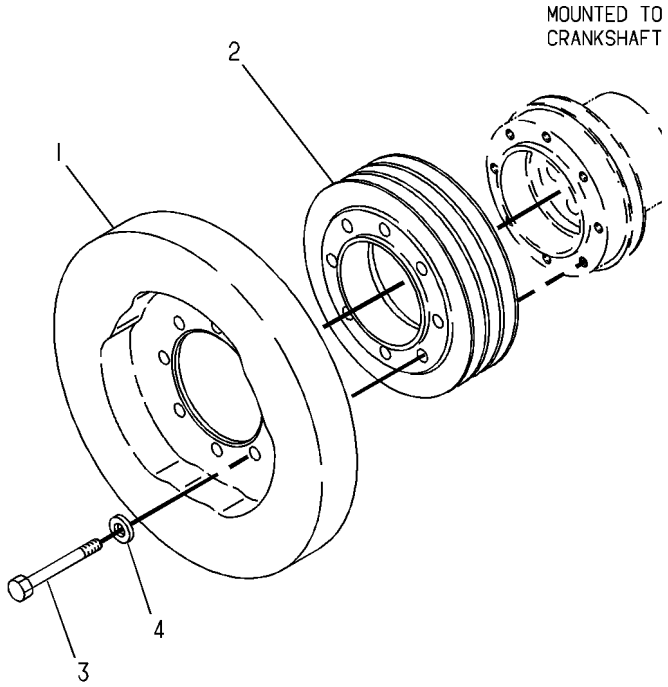

GRAPHIC #1 <END> g00116551

4P-2844 DAMPER & PULLEY GP

S/N: 4TF17400-UP

PART OF 117-5187 ENGINE AR

SMCS-1205 **i01550021**

NOTE	REF NO	GRAPHIC REF	PART NUMBER	QTY	PART NAME 1 2 3 4 5 6 (PRODUCT LEVEL)	SEE PAGE
R	1	1	**203-6088**	1	DAMPER AS	
	2	1	**4P-2843**	1	PULLEY	
M	3	1	**6V-5230**	8	BOLT (M10X1.5X60-MM)	

M - METRIC PART
R - REMANUFACTURED PART MAY BE AVAILABLE

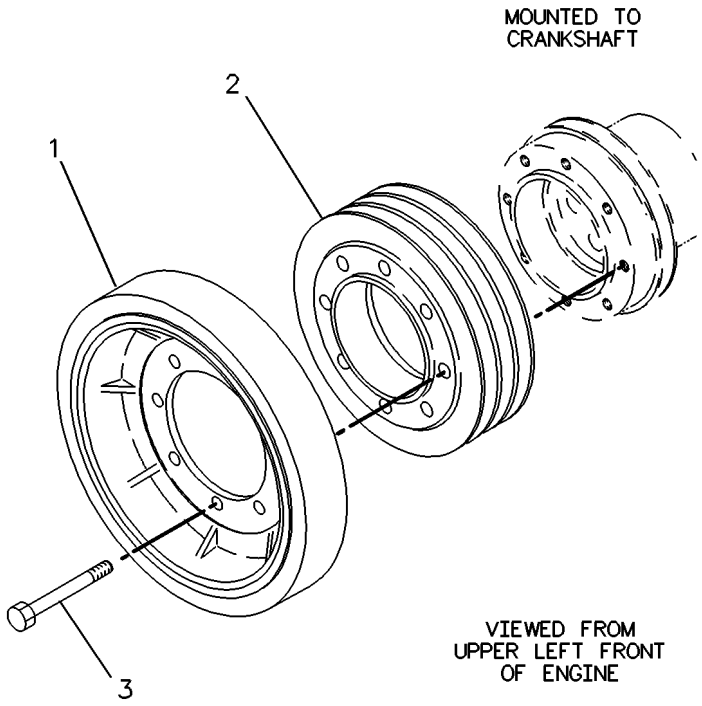

GRAPHIC #1 <END> g00127321

7C-2428 DAMPER & PULLEY GP

S/N: 4TF17400-UP
PART OF 114-7159, 6I-3528 ENGINE AR
ALSO AN ATTACHMENT

SMCS-1205 **i01708712**

NOTE	REF NO	GRAPHIC REF	PART NUMBER	QTY	PART NAME 1 2 3 4 5 6 (PRODUCT LEVEL)	SEE PAGE
R	1	1	**203-6088**	1	DAMPER AS	
	2	1	**107-7750**	1	PULLEY	
M	3	1	**6V-5230**	8	BOLT (M10X1.5X60-MM)	

M - METRIC PART
R - REMANUFACTURED PART MAY BE AVAILABLE

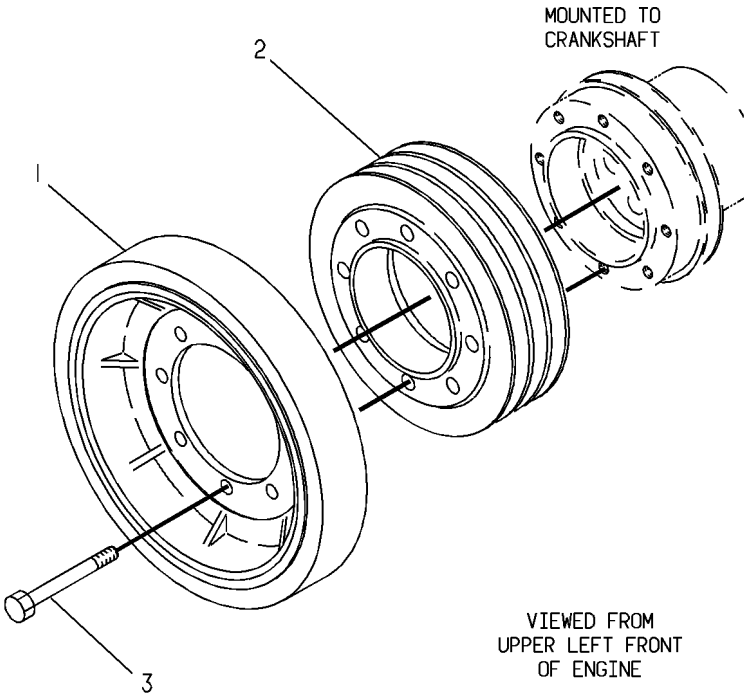

GRAPHIC #1 <END> g00118588

7C-4532 DRAIN GP-ENGINE OIL—SHUTOFF VALVE

S/N: 4TF17400-UP
PROVIDES DRAIN VALVE FOR OIL PAN DRAIN
FOR USE WITH OIL PAN & DRAIN LINE.
PART OF 114-7159, 117-5187, 117-5188, 6I-3528 ENGINE AR
ALSO AN ATTACHMENT

SMCS-1302 **i02128038**

NOTE	REF NO	GRAPHIC REF	PART NUMBER	QTY	PART NAME 1 2 3 4 5 6 (PRODUCT LEVEL)	SEE PAGE
	1	1	**3K-0360**	1	SEAL-O-RING (SUMP DRAIN)	
	2	1	**6V-7238**	1	VALVE-SHUTOFF (ENGINE OIL PAN)	

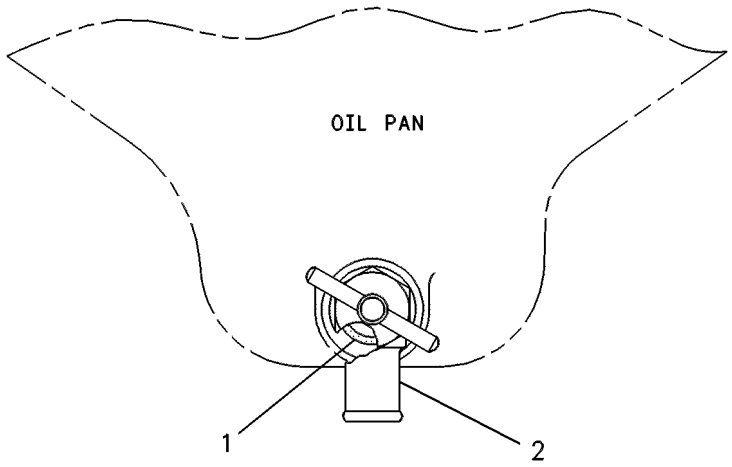

GRAPHIC #1 <END> g00117513

7C-0044 DRIVE GP-FAN

S/N: 4TF17400-UP
DOES NOT INCLUDE DRIVE BELTS, DRIVE PULLEY OR FAN ADAPTER
PART OF 114-7159, 117-5187, 117-5188, 6I-3528 ENGINE AR
ALSO AN ATTACHMENT

SMCS-1359 **i02019239**

NOTE	REF NO	GRAPHIC REF	PART NUMBER	QTY	PART NAME 1 2 3 4 5 6 (PRODUCT LEVEL)	SEE PAGE
	1	1	**7C-8365**	1	DRIVE GP-FAN	
	2	1	**5S-9062**	1	SPACER (35.032X50.8X15.88-MM THK)	
	3	1	**4W-1203**	2	CUP-BEARING	
	4	1	**4W-1204**	2	CONE-BEARING	
	5	1	**4W-2042**	1	SPACER (35.3X45.5X38.331-MM THK)	
M	6	1	**6V-8004**	1	BOLT (M12X1.75X120-MM)	
	7	1	**6V-9748**	1	SEAL-LIP TYPE	
	8	1	**7C-8366**	1	BRACKET AS	
	9	1	**7C-8369**	1	HUB	
	10	1	**7C-8370**	1	CAP-DUST	
	11	1	**7C-8634**	1	PLATE	
M	12	1	**6V-4249**	4	BOLT (M10X1.5X50-MM)	

M - METRIC PART

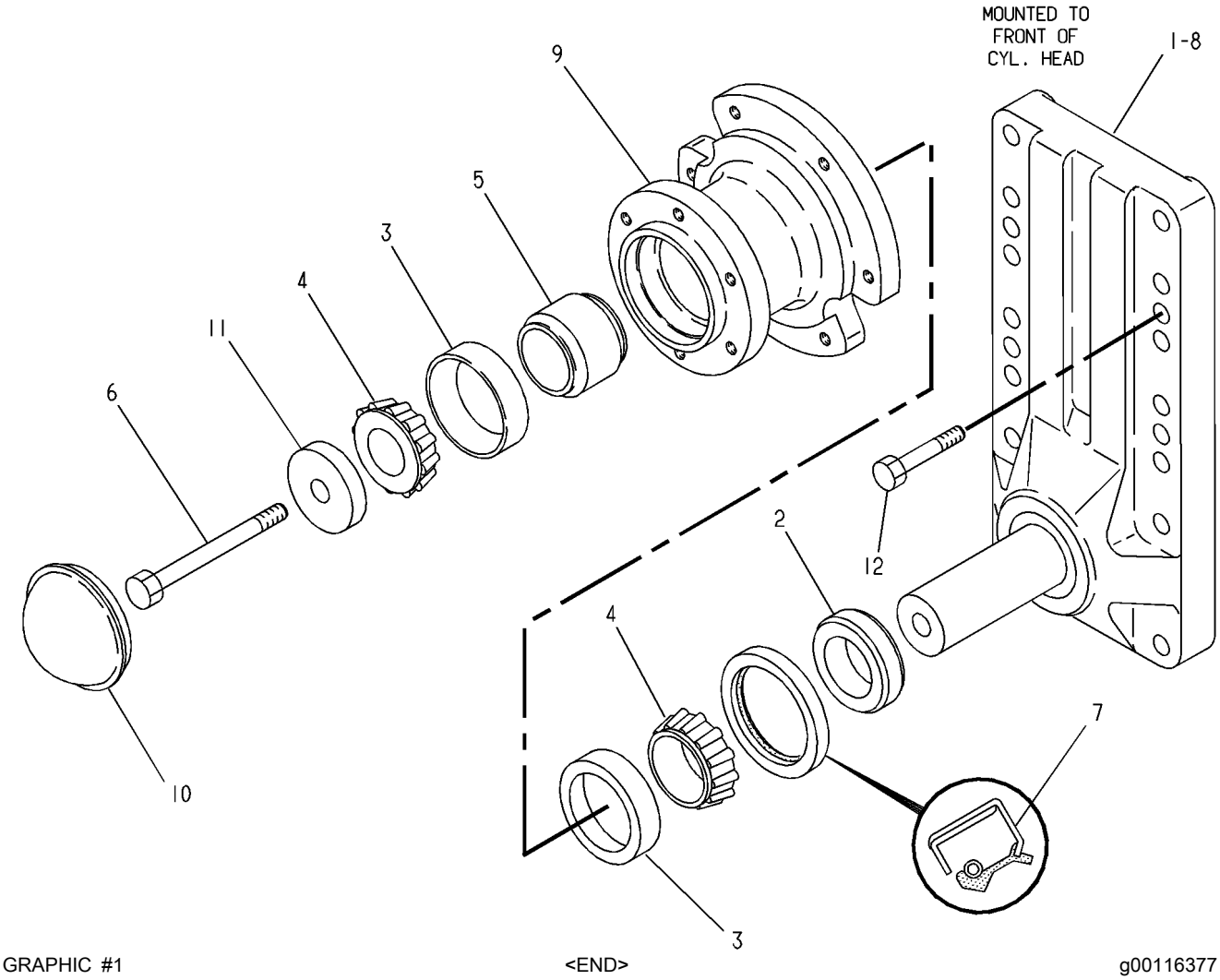

GRAPHIC #1 <END> g00116377

4W-5428 DRIVE GP-WATER PUMP

S/N: 4TF17400-UP

PART OF 114-7159, 117-5187, 117-5188, 6I-3528 ENGINE AR

ALSO AN ATTACHMENT

SMCS-1361, 1385

i01723594

NOTE	REF NO	GRAPHIC REF	PART NUMBER	QTY	PART NAME 1 2 3 4 5 6 (PRODUCT LEVEL)	SEE PAGE
	1	1	**036-6775**	1	V-BELT (PUMP DRIVE) (WATER PUMP)	
M	2	1	**6V-2317**	2	BOLT (M8X1.25X30-MM)	
	3	1	**3E-4352**	1	WASHER-HARD (8.8X20.5X2.5-MM THK)	
	4	1	**115-4204**	1	PULLEY AS-IDLER	
		1	**115-4237**	1	PULLEY-IDLER	
	4A	1	**2L-8509**	1	RING-LOCK	
	4B	1	**156-1871**	2	BALL BEARING	
	4C	1	**100-6267**	1	PLATE AS-IDLER	
	5	1	**9M-1974**	1	WASHER-HARD (8.8X16X2-MM THK)	
M	6	1	**6V-5215**	1	BOLT (M8X1.25X16-MM)	
	7	1	**4F-3714**	1	WASHER (0.375X1.5X0.135-IN THK)	

M - METRIC PART

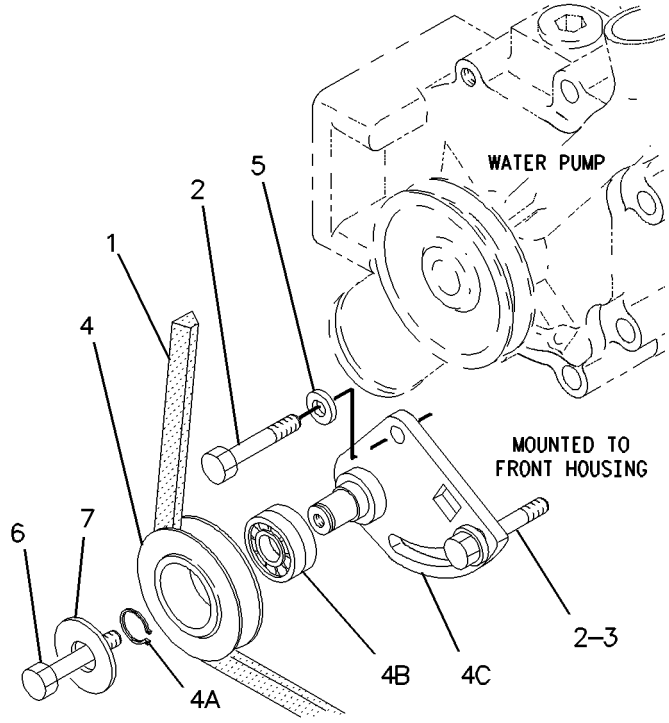

GRAPHIC #1

<END>

g00692126

100-3649 FLYWHEEL GP

S/N: 4TF17400-UP

PART OF 114-7159, 117-5187, 117-5188, 6I-3528 ENGINE AR

ALSO AN ATTACHMENT

SMCS-1156 **i01397986**

NOTE	REF NO	GRAPHIC REF	PART NUMBER	QTY	PART NAME 1 2 3 4 5 6 (PRODUCT LEVEL)	SEE PAGE
	1	1	**187-8995**	1	FLYWHEEL AS	
	2	1	**7W-5095**	1	GEAR-FLYWHEEL (134-TEETH)	
M	3	1	**9Y-7633**	8	BOLT-LOCKING (M12X1.75X50-MM)	
	4	1	**5P-8245**	8	WASHER-HARD (13.5X25.5X3-MM THK)	

M - METRIC PART

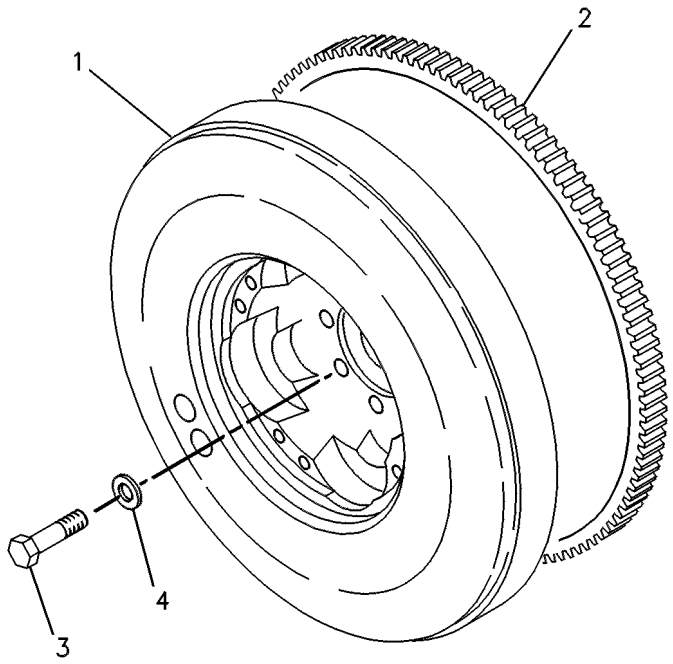

GRAPHIC #1 <END> g00246989

101-4540 GEAR GP-FRONT

S/N: 4TF17400-UP
PART OF 117-5187, 117-5188 ENGINE AR
ALSO AN ATTACHMENT
TYPE 2

SMCS-1206 **i01981306**

NOTE	REF NO	GRAPHIC REF	PART NUMBER	QTY	PART NAME 1 2 3 4 5 6 (PRODUCT LEVEL)	SEE PAGE
	1	1	**2W-8476**	1	GEAR AS-IDLER (50-TEETH)	
	1A	1	**2W-7566**	1	BUSHING	
M	2	1	**6V-3822**	1	BOLT (M10X1.5X35-MM)	
	3	1	**101-3207**	1	SHAFT-CAM IDLER	
M	4	1	**6V-5843**	2	BOLT (M10X1.5X45-MM)	
	5	1	**101-3208**	1	PLATE-RETAINING	

M - METRIC PART

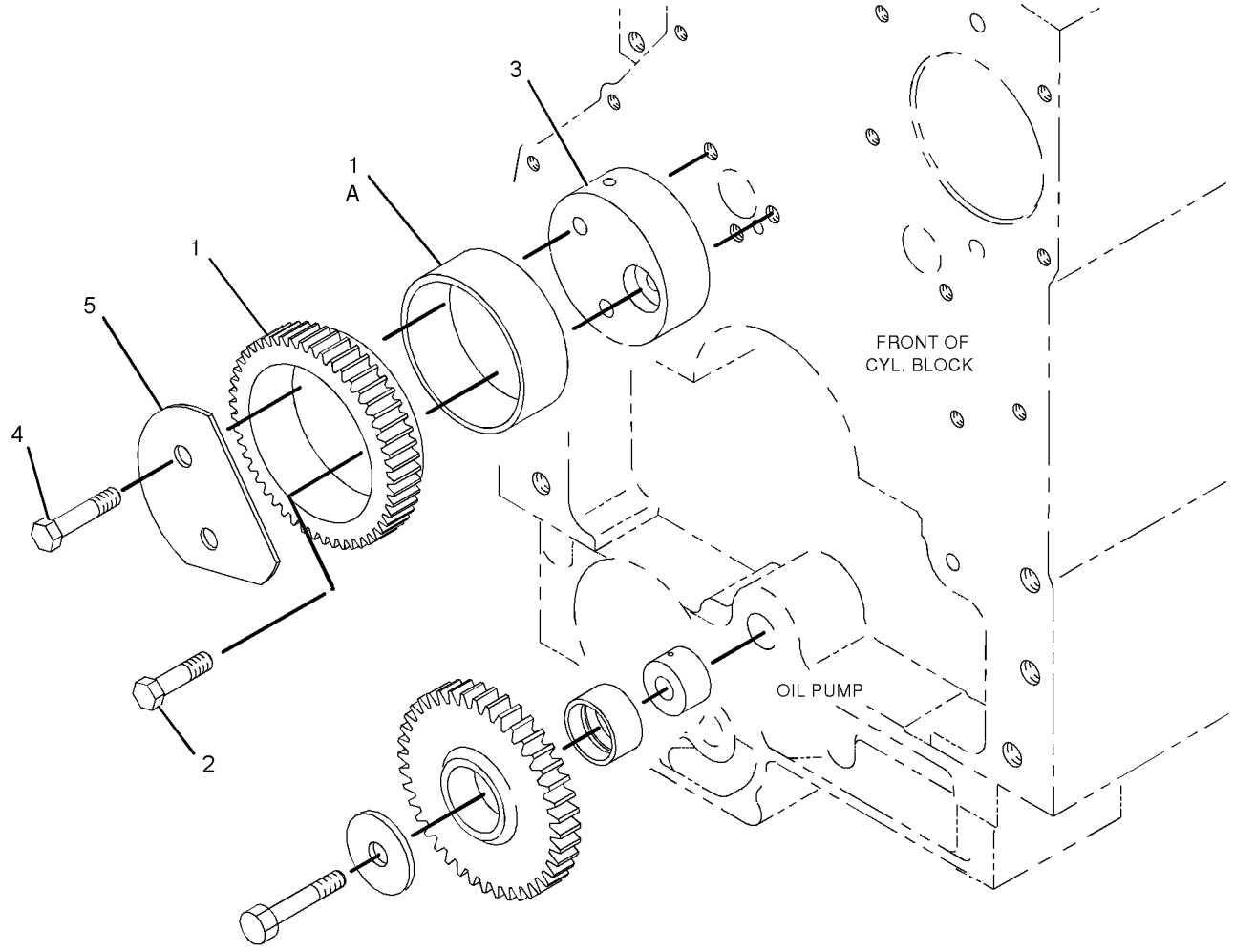

GRAPHIC #1 <END> g01026922

101-4540 GEAR GP-FRONT

S/N: 4TF17400-UP
PART OF 117-5187, 117-5188 ENGINE AR
ALSO AN ATTACHMENT
TYPE 1

SMCS-1206 **i01869654**

NOTE	REF NO	GRAPHIC REF	PART NUMBER	QTY	PART NAME 1 2 3 4 5 6 (PRODUCT LEVEL)	SEE PAGE
	1	1	**2W-8476**	1	GEAR AS-IDLER (50-TEETH)	
	1A	1	**2W-7566**	1	BUSHING	
	2	1	**101-3208**	1	PLATE-RETAINING	
	3	1	**7W-9740**	1	GEAR AS-IDLER (43-TEETH)	
	3A	1	**7W-9930**	1	BUSHING	
M	4	1	**6V-3822**	1	BOLT (M10X1.5X35-MM)	
	5	1	**7W-9738**	1	WASHER (10.5X38X1.6-MM THK)	
	6	1	**7W-9737**	1	SHAFT	
	7	1	**101-3207**	1	SHAFT-CAM IDLER	
M	8	1	**6V-5843**	2	BOLT (M10X1.5X45-MM)	
M	9	1	**9X-2305**	1	BOLT-LOCKING (M10X1.5X50-MM)	

M - METRIC PART

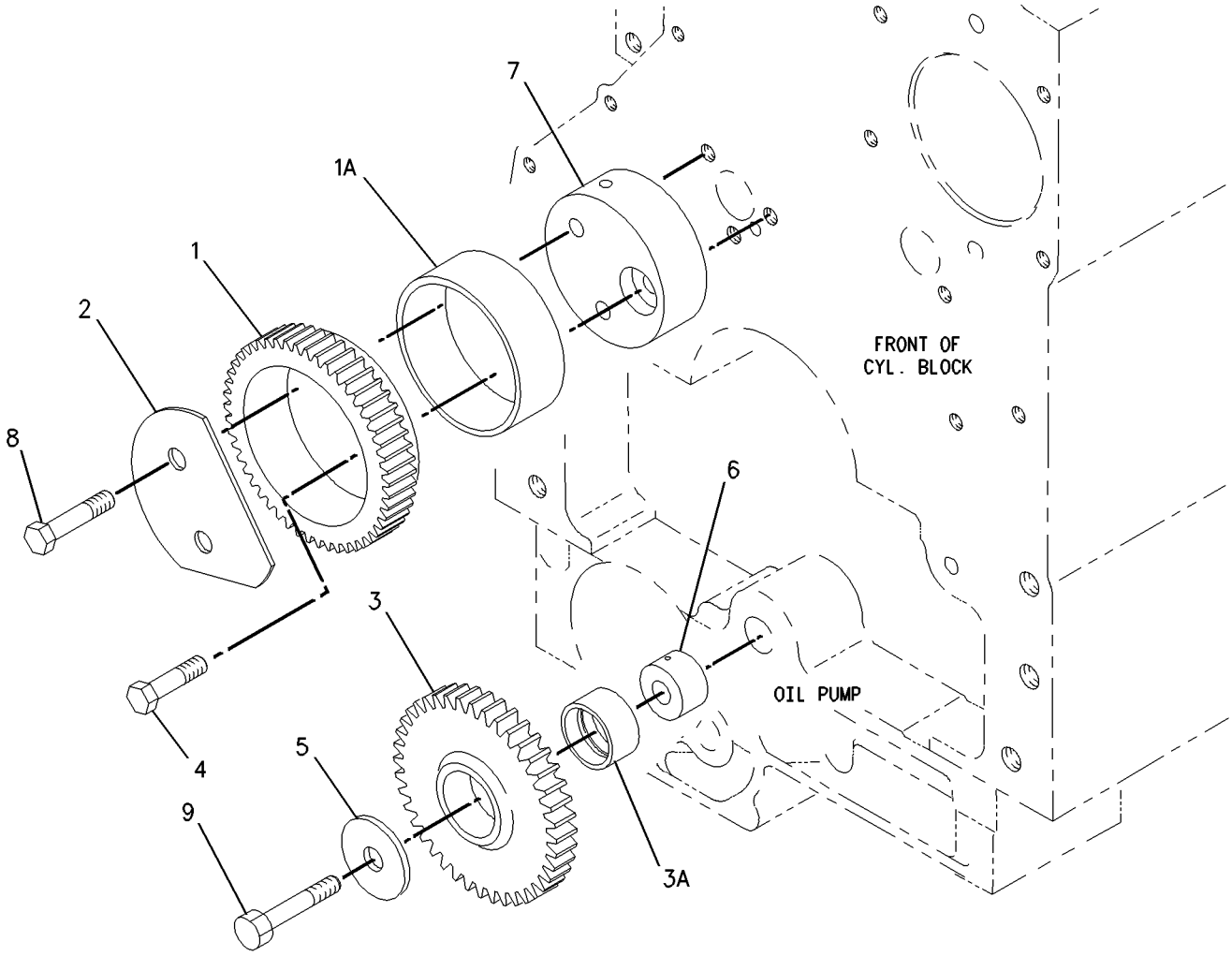

GRAPHIC #1 <END> g00692130

2W-8475 GEAR GP-FRONT

S/N: 4TF17400-UP
PART OF 114-7159, 6I-3528 ENGINE AR
ALSO AN ATTACHMENT

SMCS-1206 **i01869599**

NOTE	REF NO	GRAPHIC REF	PART NUMBER	QTY	PART NAME 1 2 3 4 5 6 (PRODUCT LEVEL)	SEE PAGE
	1	1	**2W-8476**	1	GEAR AS-IDLER (50-TEETH)	
	2	1	**2W-7566**	1	BUSHING	
	3	1	**7W-9740**	1	GEAR AS-IDLER (43-TEETH)	
	4	1	**7W-9930**	1	BUSHING	
	5	1	**7W-9738**	1	WASHER (10.5X38X1.6-MM THK)	
	6	1	**7W-9737**	1	SHAFT	
	7	1	**2W-7565**	1	SHAFT-IDLER	
M	8	1	**6V-3822**	3	BOLT (M10X1.5X35-MM)	
M	9	1	**9X-2305**	1	BOLT-LOCKING (M10X1.5X50-MM)	

M - METRIC PART

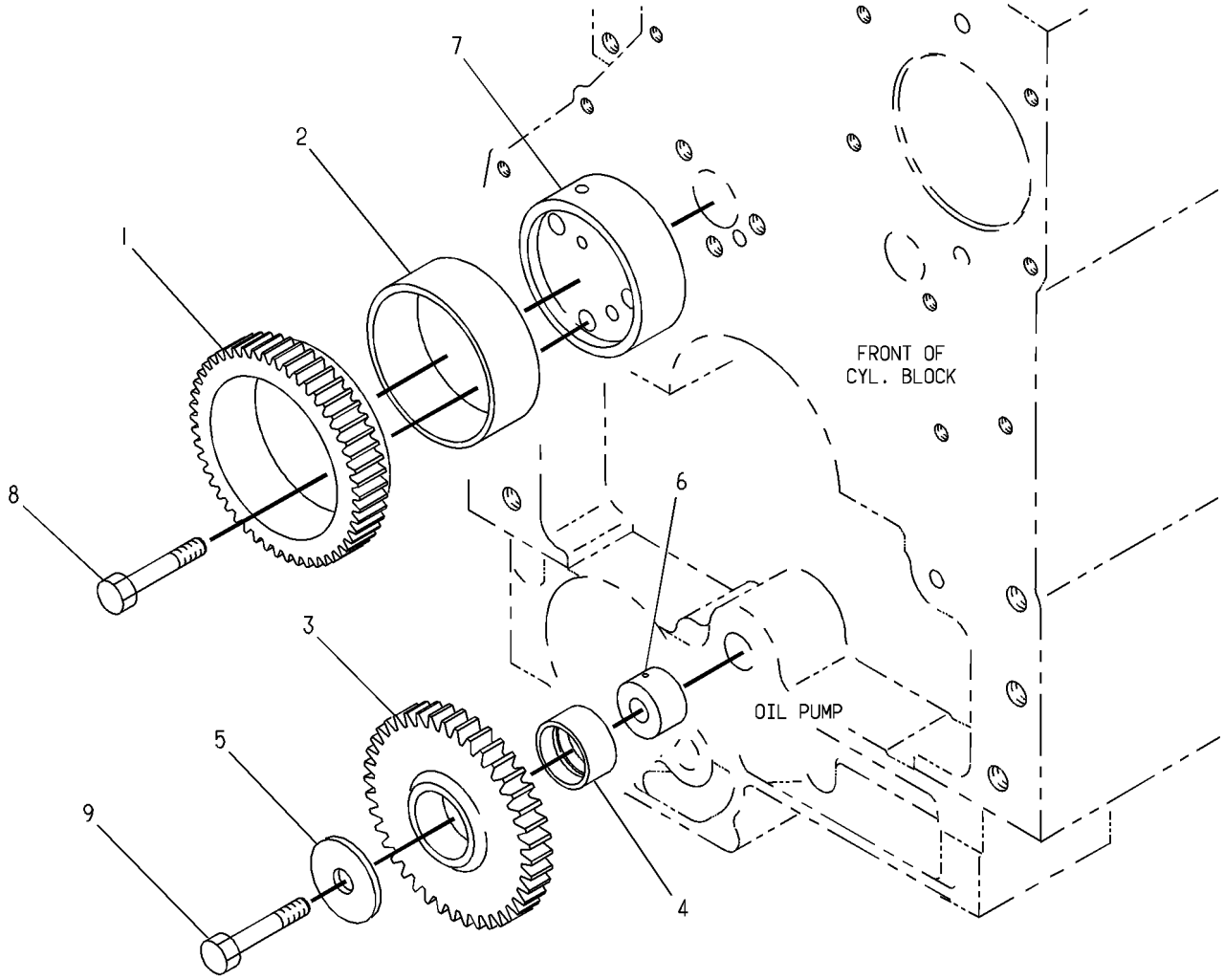

GRAPHIC #1 <END> g00108296

9Y-0054 HOUSING GP-FLYWHEEL

S/N: 4TF17400-UP

PART OF 114-7159, 117-5187, 117-5188, 6I-3528 ENGINE AR

ALSO AN ATTACHMENT

SMCS-1157 **i00568227**

NOTE	REF NO	GRAPHIC REF	PART NUMBER	QTY	PART NAME 1 2 3 4 5 6 (PRODUCT LEVEL)	SEE PAGE
	1	1	**100-6550**	1	HOUSING-FLYWHEEL	
M	2	1	**8T-0226**	10	BOLT (M14X2X45-MM)	
	3	1	**2P-1294**	1	PLUG-SEAL	
M	4	1	**6V-5842**	2	BOLT (M10X1.5X40-MM)	
	5	1	**9S-4183**	1	PLUG (1-1/16-12-THD)	
	6	1	**9S-4182**	1	PLUG (7/16-20-THD)	

M - METRIC PART

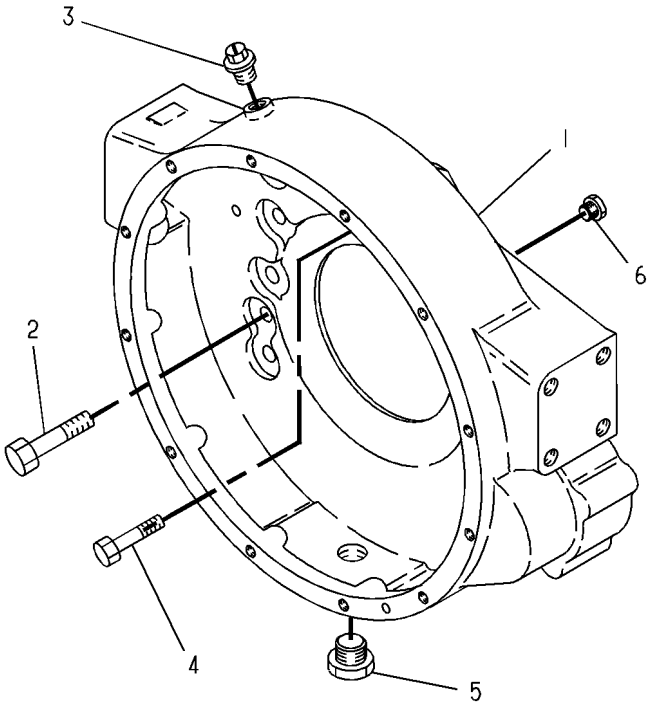

GRAPHIC #1 <END> g00108332

101-4539 HOUSING GP-FRONT

S/N: 4TF17400-UP
PART OF 117-5187, 117-5188 ENGINE AR
ALSO AN ATTACHMENT

SMCS-1151, 1162

i01398811

NOTE	REF NO	GRAPHIC REF	PART NUMBER	QTY	PART NAME 1 2 3 4 5 6 (PRODUCT LEVEL)	SEE PAGE
	1	1	**132-5242**	1	HOUSING-FRONT	
B		1	**1U-8846**		SEALANT-GASKET	
M	2	1	**6V-5217**	8	BOLT (M8X1.25X20-MM)	
	3	1	**9M-1974**	12	WASHER-HARD (8.8X16X2-MM THK)	
M	4	1	**6V-3918**	4	BOLT (M8X1.25X50-MM)	
M	5	1	**6V-8336**	6	BOLT (M12X1.75X70-MM)	
	6	1	**5P-8245**	6	WASHER-HARD (13.5X25.5X3-MM THK)	
	7	1	**107-7611**	2	PLUG	

B - USE AS REQUIRED
M - METRIC PART

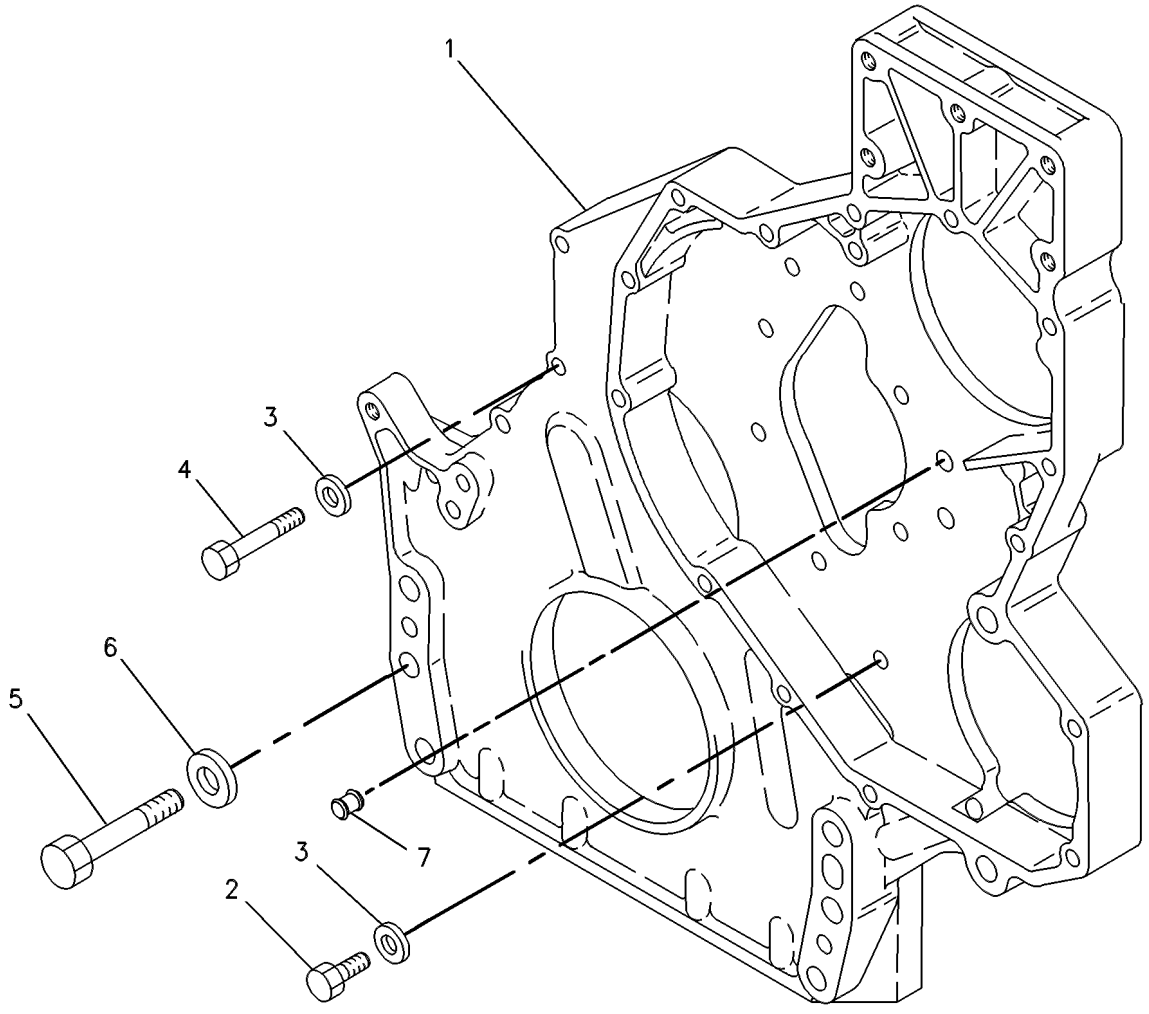

GRAPHIC #1 <END> g00108885

7L-0002 HOUSING GP-FRONT

S/N: 4TF17400-UP
PART OF 114-7159, 6I-3528 ENGINE AR
ALSO AN ATTACHMENT

SMCS-1151, 1162 **i01398807**

NOTE	REF NO	GRAPHIC REF	PART NUMBER	QTY	PART NAME 1 2 3 4 5 6 (PRODUCT LEVEL)	SEE PAGE
	1	1	**7E-6366**	1	HOUSING-FRONT GEAR	
B		1	**1U-8846**		SEALANT-GASKET	
M	2	1	**6V-5217**	8	BOLT (M8X1.25X20-MM)	
	3	1	**9M-1974**	11	WASHER-HARD (8.8X16X2-MM THK)	
M	4	1	**6V-3918**	3	BOLT (M8X1.25X50-MM)	
BM	5	1	**6V-8336**	6	BOLT (M12X1.75X70-MM)	
B	6	1	**5P-8245**	6	WASHER-HARD (13.5X25.5X3-MM THK)	
BM	7	1	**6V-3918**	1	BOLT (M8X1.25X50-MM)	
B	8	1	**9M-1974**	1	WASHER-HARD (8.8X16X2-MM THK)	

B - USE AS REQUIRED
M - METRIC PART

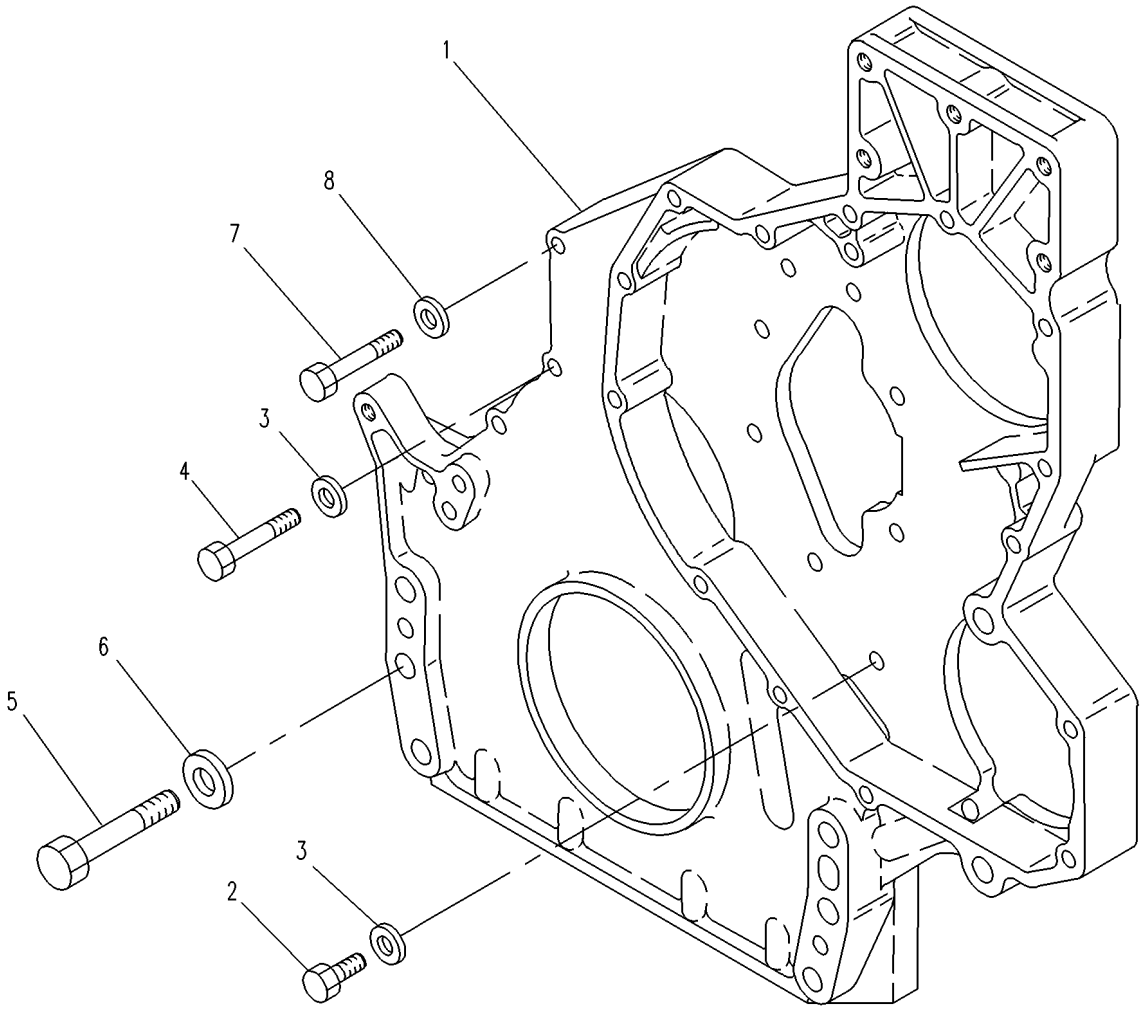

GRAPHIC #1 <END> g00108440

4W-2515 LIFTING GP-ENGINE

S/N: 4TF17400-UP
PART OF 114-7159, 117-5187, 117-5188, 6I-3528 ENGINE AR
ALSO AN ATTACHMENT

SMCS-1122 **i03997471**

NOTE	REF NO	GRAPHIC REF	PART NUMBER	QTY	PART NAME 1 2 3 4 5 6 (PRODUCT LEVEL)	SEE PAGE
	1	1	**4W-1682**	1	PLATE-LIFTING (REAR)	
	2	1	**4W-1683**	1	PLATE-LIFTING (FRONT) (FRONT)	
M	3	1	**6V-4248**	1	BOLT (M10X1.5X25-MM)	
	4	1	**6V-5839**	1	WASHER (11X21X2.5-MM THK)	
BM	5	1	**6V-4248**	4	BOLT (M10X1.5X25-MM)	
B	6	1	**6V-5839**	4	WASHER (11X21X2.5-MM THK)	
BM	7	1	**6V-4248**	3	BOLT (M10X1.5X25-MM)	
B	8	1	**6V-5839**	3	WASHER (11X21X2.5-MM THK)	

B - USE AS REQUIRED
M - METRIC PART

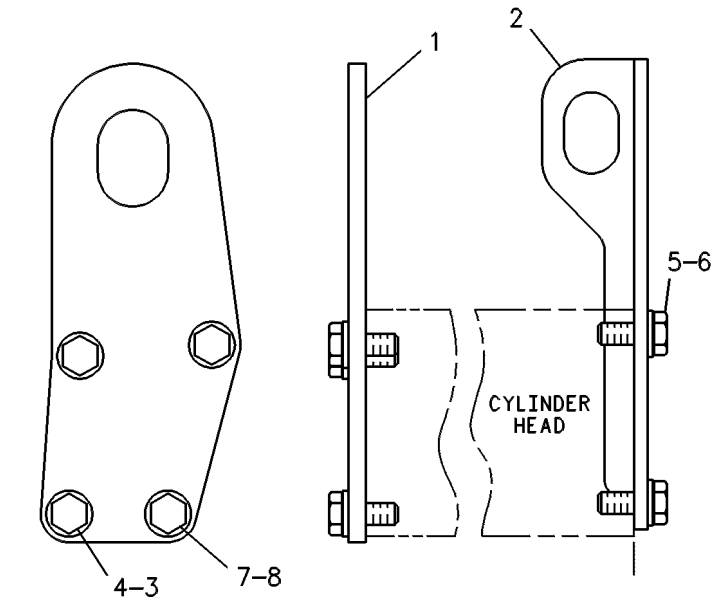

GRAPHIC #1 <END> g00108754

101-7322 MOUNTING GP-ENGINE & XMSN

S/N: 9BL1-UP

PART OF 6I-3527 INSTALLATION AR, 117-5189 INSTALLATION AR-ENGINE

SMCS-1152, 1153, 1154

i01398829

NOTE	REF NO	GRAPHIC REF	PART NUMBER	QTY	PART NAME 1 2 3 4 5 6 (PRODUCT LEVEL)	SEE PAGE
	1	1	**103-0169**	1	SUPPORT AS	
	2	1	**104-7566**	1	SUPPORT AS	
		1	**1F-0750**	2	NUT-WELD (3/8-16-THD)	
	3	1	**7X-0413**	2	BOLT (1-8X7-IN)	
	4	1	**8T-5361**	2	WASHER-HARD (28X49X5-MM THK)	
	5	1	**9W-7388**	2	WASHER (26X144X12-MM THK)	
	6	1	**6Y-9960**	2	MOUNT AS	
	7	1	**9W-7385**	2	SLEEVE	
	8	1	**105-1857**	2	SPACER	
	9	1	**7X-0346**	8	BOLT (5/8-11X2-IN)	
	10	1	**8T-4122**	8	WASHER-HARD (17X32X3.5-MM THK)	
	11	1	**9W-9930**	2	MOUNT AS	
	12	1	**9W-6584**	2	WASHER (20.5X114X10-MM THK)	
	13	1	**9W-6582**	2	SLEEVE	
	14	1	**8T-4994**	2	WASHER-HARD (20X36.5X3.5-MM THK)	
	15	1	**8T-8925**	2	BOLT (3/4-10X4.75-IN)	

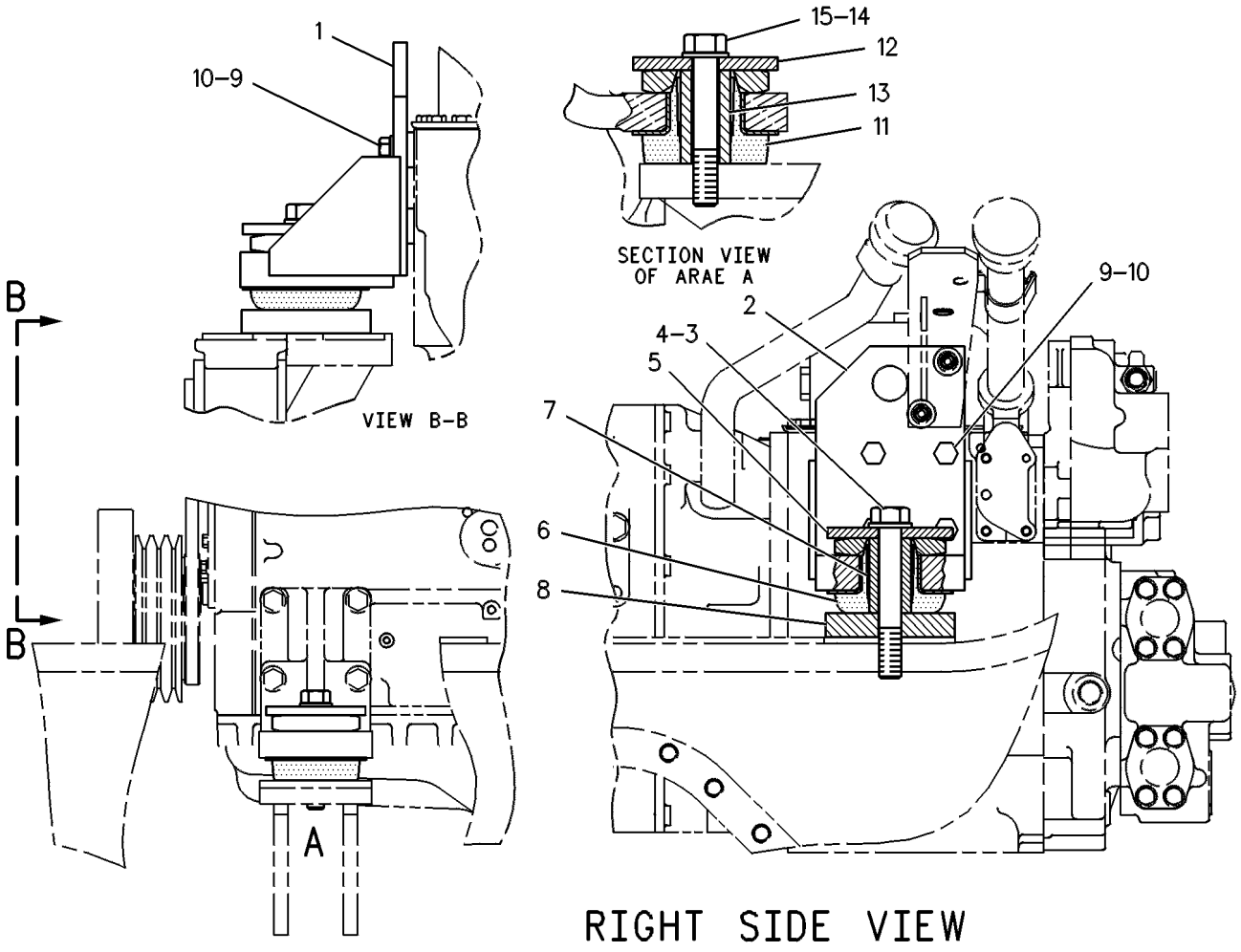

GRAPHIC #1

<END>

g00247212

4W-0269 PAN GP-OIL—ENGINE

S/N: 4TF17400-UP
PART OF 114-7159, 117-5187, 117-5188, 6I-3528 ENGINE AR
ALSO AN ATTACHMENT

SMCS-1302 **i02370048**

NOTE	REF NO	GRAPHIC REF	PART NUMBER	QTY	PART NAME 1 2 3 4 5 6 (PRODUCT LEVEL)	SEE PAGE
	1	1	**116-7077**	1	PAN-OIL	
JM	2	1	**6V-3918**	6	BOLT (M8X1.25X50-MM)	
J	3	1	**9M-1974**	6	WASHER-HARD (8.8X16X2-MM THK)	
M	4	1	**6V-3918**	30	BOLT (M8X1.25X50-MM)	
	5	1	**9M-1974**	30	WASHER-HARD (8.8X16X2-MM THK)	
	6	1	**261-3816**	1	GASKET-OIL PAN (ENGINE)	
B	7	1	**4C-9612**		SEALANT-SILICONE	
	8	1	**9S-4188**	1	PLUG	
	9	1	**4K-1388**	1	SEAL-O-RING	
	10	1	**118-3619**	1	PLUG-MAGNETIC (ENGINE)	
	11	1	**3K-0360**	1	SEAL-O-RING	

B - USE AS REQUIRED
J - USE WITHOUT SOUND SUPPRESSION OIL PAN COVER
M - METRIC PART

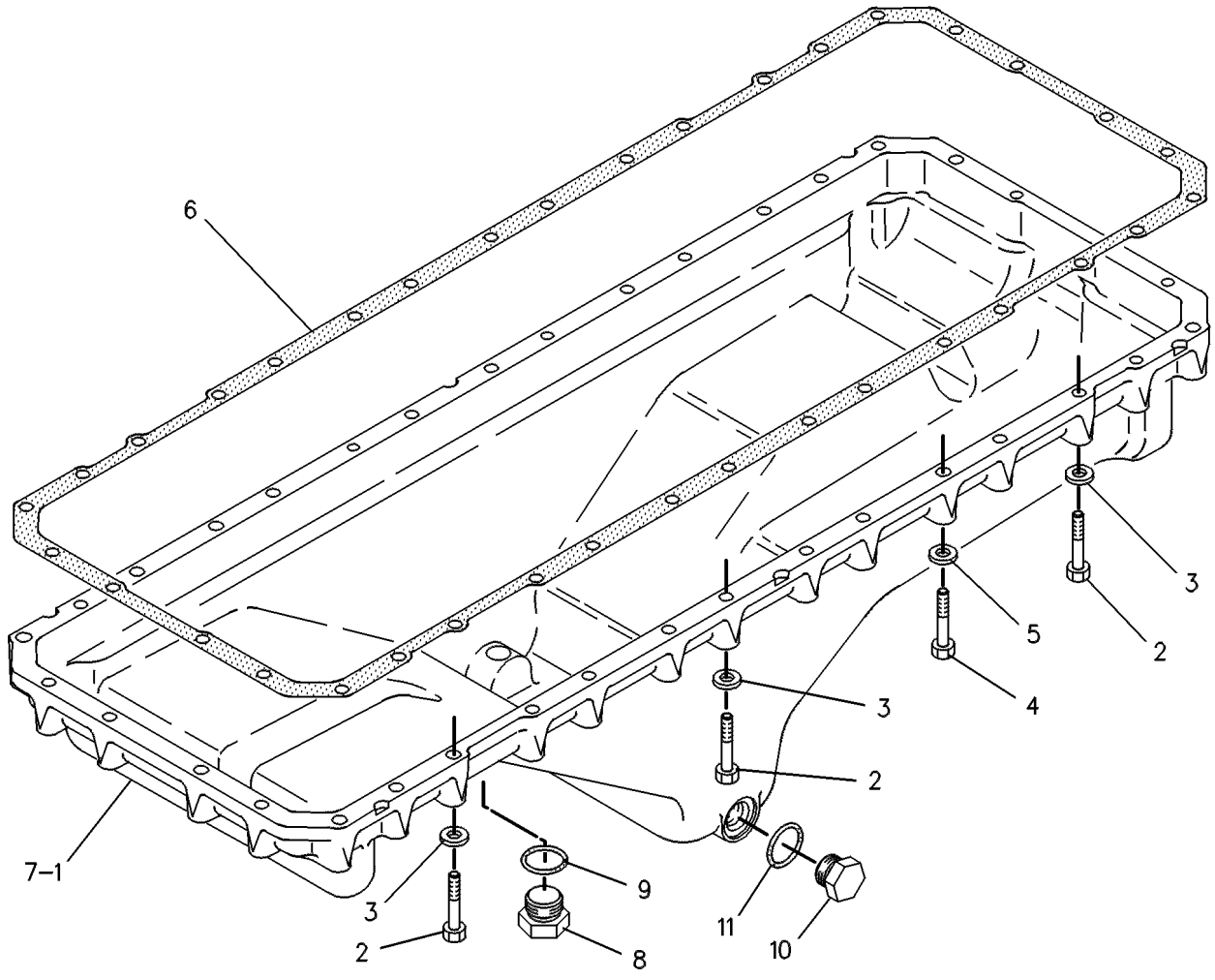

GRAPHIC #1 <END> g00117498

107-7639 PISTON & ROD GP*R

S/N: 4TF17400-UP
16.7:1 RATIO
PART OF 114-7159, 117-5187, 117-5188, 6I-3528 ENGINE AR
ALSO AN ATTACHMENT

SMCS-1214, 1218, 1225 **i01032393**

NOTE	REF NO	GRAPHIC REF	PART NUMBER	QTY	PART NAME 1 2 3 4 5 6 (PRODUCT LEVEL)	SEE PAGE
R	1	1	**107-7545**	1	CROWN AS-PISTON	
	2	1	**107-7787**	1	RING-PISTON (TOP) (TOP)	
	3	1	**7E-5786**	1	RING-PISTON (INTERMEDIATE) (INTERMEDIATE)	
	4	1	**7C-5232**	1	RING-PISTON (OIL) (OIL)	
	5	1	**7C-0111**	2	RETAINER-PIN	
	6	1	**7C-3901**	1	PIN-PISTON	
R	7	1	**2W-9128**	1	ROD AS-CONNECTING	
	8	1	**9N-3832**	2	BOLT-CONNECTING ROD	
	9	1	**9L-7669**	2	NUT-CONNECTING ROD (7/16-20-THD)	
	10	1	**2W-0027**	1	BEARING (EYE END)	
	11	1	**7W-9415**	1	BEARING-CONNECTING ROD (STANDARD)	
	12	1	**107-7791**	1	SKIRT-PISTON	

R - REMANUFACTURED PART MAY BE AVAILABLE

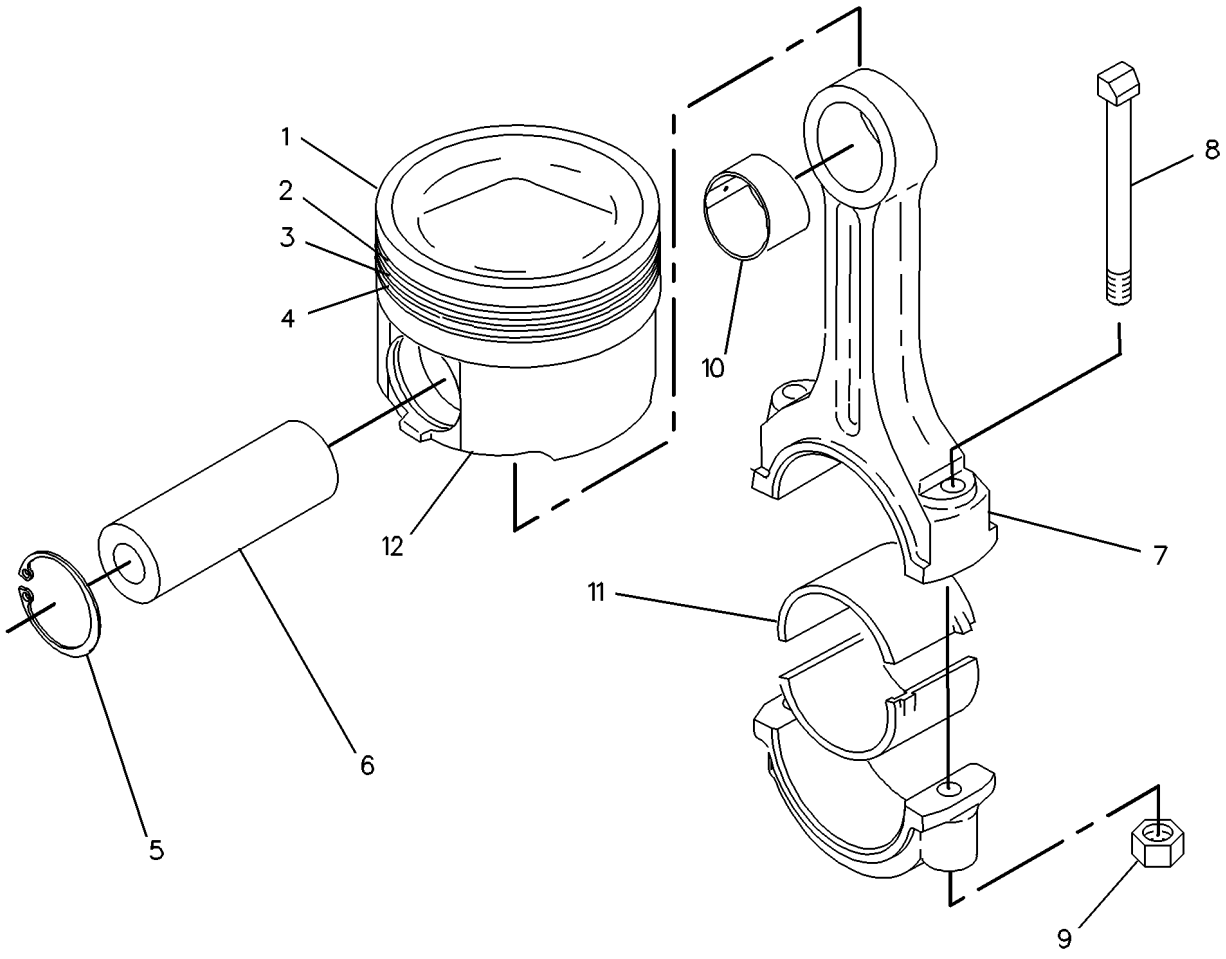

GRAPHIC #1 <END> g00117381

107-7639 PISTON & ROD GP*R

S/N: 4TF17400-UP
16.7:1 RATIO
PART OF 117-5187 ENGINE AR

SMCS-1214, 1218, 1225

i07231888

NOTE	REF NO	GRAPHIC REF	PART NUMBER	QTY	PART NAME 1 2 3 4 5 6 (PRODUCT LEVEL)	SEE PAGE
R	1	1	**107-7545**	1	CROWN AS-PISTON	
	2	1	**107-7787**	1	RING-PISTON (TOP)	
	3	1	**7E-5786**	1	RING-PISTON (INTERMEDIATE)	
	4	1	**7C-5232**	1	RING-PISTON (OIL)	
	5	1	**7C-0111**	2	RETAINER-PIN	
	6	1	**524-7982**	1	PIN-PISTON	
R	7	1	**213-3193**	1	ROD AS-CONNECTING (NON-DRILLED)	
	7A	1	**2W-0027**	2	BEARING (EYE END)	
	7B	1	**229-6266**	2	BOLT	
	8	1	**224-6638**	1	BEARING-CONNECTING ROD (STANDARD)	
AB		1	**419-6371**		BEARING-CONNECTING ROD (STANDARD)	
AB		1	**7C-6976**		BEARING-CONNECTING ROD (0.25-MM US)	
AB		1	**7C-6977**		BEARING-CONNECTING ROD (0.5-MM US)	
	9	1	**238-2716**	1	SKIRT-PISTON	
ABF			**379-8870**		ROD AS-CONNECTING (NON-DRILLED)	

A - NOT PART OF THIS GROUP
B - USE AS REQUIRED
F - NOT SHOWN
R - REMANUFACTURED PART MAY BE AVAILABLE

107-7639 **PISTON & ROD GP (**contd.**)** **i07231888**

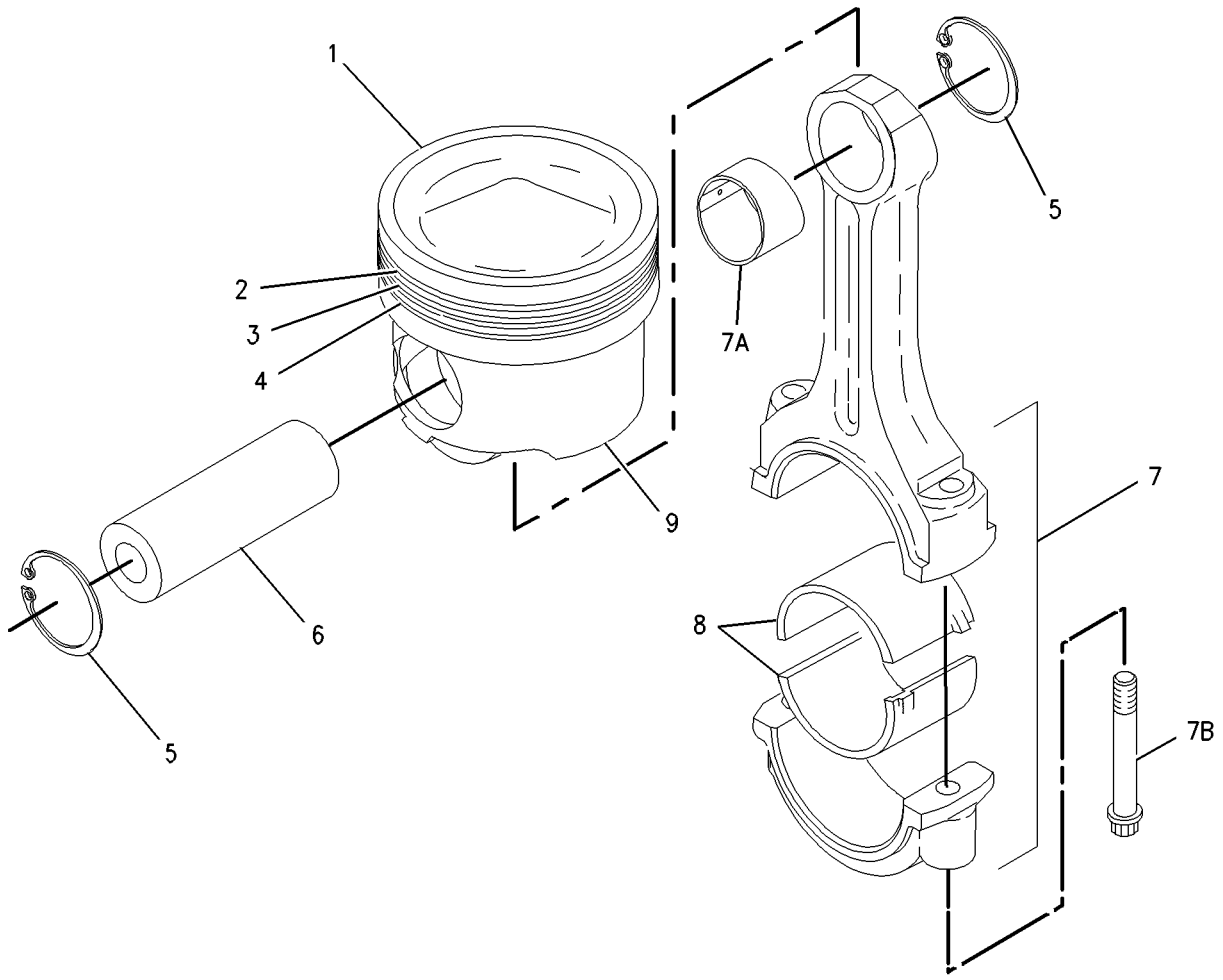

GRAPHIC #1 <END> g00902458

108-5758 PISTON & ROD GP

S/N: 4TF17400-18603
PART OF 114-7159 ENGINE AR
AN ATTACHMENT

SMCS-1214, 1218, 1225

i00569489

NOTE	REF NO	GRAPHIC REF	PART NUMBER	QTY	PART NAME 1 2 3 4 5 6 (PRODUCT LEVEL)	SEE PAGE
R	1	1	**107-7563**	1	BODY AS-PISTON	
	2	1	**105-1568**	1	RING-PISTON (TOP)	
	3	1	**7E-5786**	1	RING-PISTON (INTERMEDIATE) (INTERMEDIATE)	
	4	1	**4P-1806**	1	RING-PISTON (OIL CONTROL)	
	5	1	**7C-0111**	2	RETAINER-PIN	
	6	1	**7C-0115**	1	PIN-PISTON	
	7	1	**7W-9415**	1	BEARING-CONNECTING ROD (STANDARD)	
A		1	**7C-6976**	1	BEARING-CONNECTING ROD (0.25-MM US)	
A		1	**7C-6977**	1	BEARING-CONNECTING ROD (0.5-MM US)	
R	8	1	**2W-9128**	1	ROD AS-CONNECTING	
	9	1	**7C-7412**	1	BEARING-CONNECTING ROD	
	10	1	**9N-3832**	2	BOLT-CONNECTING ROD	
	11	1	**9L-7669**	2	NUT-CONNECTING ROD (7/16-20-THD)	

A - NOT PART OF THIS GROUP
R - REMANUFACTURED PART MAY BE AVAILABLE

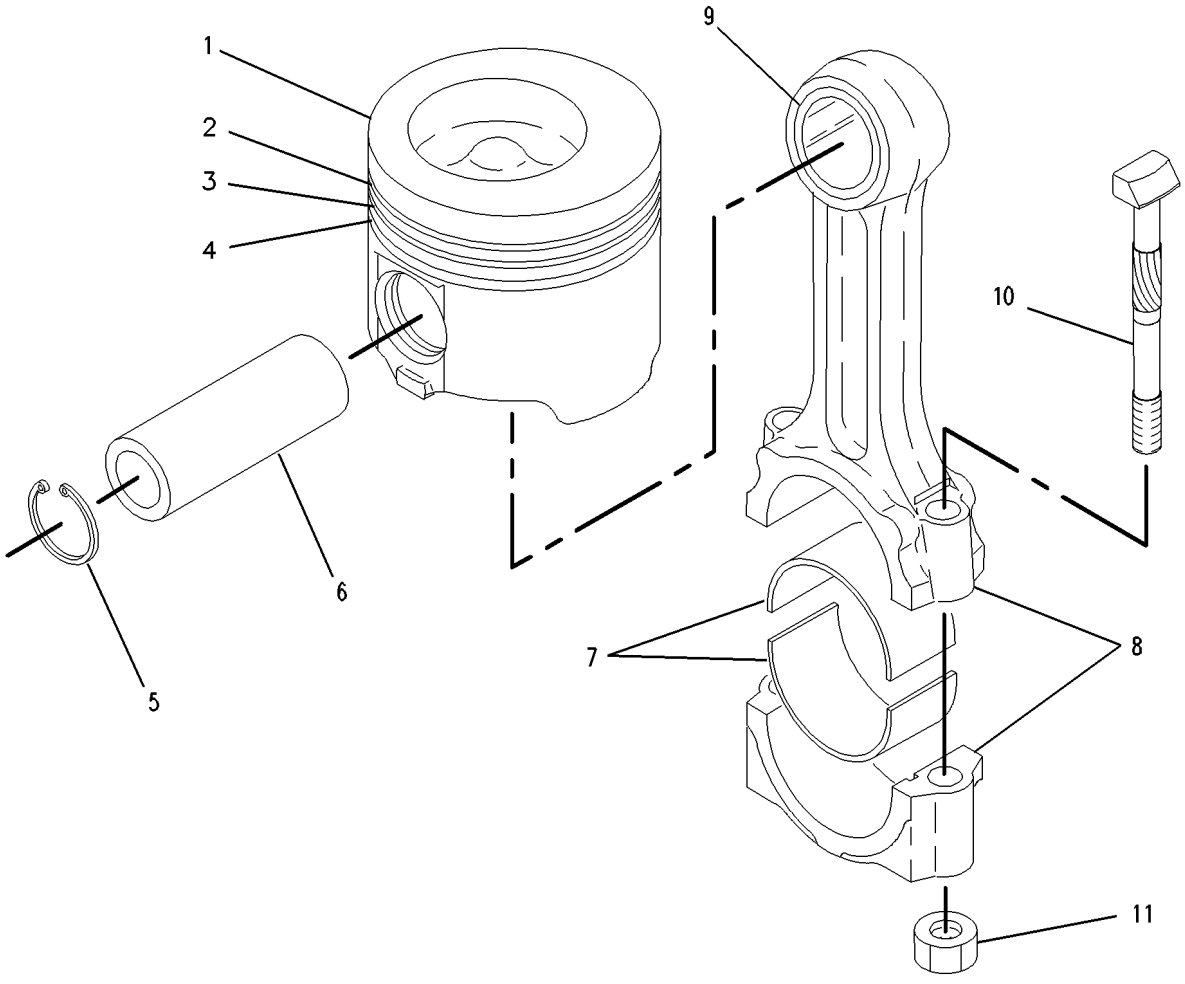

GRAPHIC #1 <END> g00108369

7C-5034 PLATE GP-SOUND SUPPRESSION

S/N: 4TF29893-99999
PART OF 117-5188 ENGINE AR
AN ATTACHMENT

SMCS-1801, 7261

i01398836

NOTE	REF NO	GRAPHIC REF	PART NUMBER	QTY	PART NAME 1 2 3 4 5 6 (PRODUCT LEVEL)	SEE PAGE
	1	1	**117-4648**	1	PLATE-SOUND SUPPRESSION	
M	2	1	**6V-3940**	2	BOLT (M8X1.25X25-MM)	
	3	1	**9M-1974**	2	WASHER-HARD (8.8X16X2-MM THK)	
M	4	1	**6V-3822**	10	BOLT (M10X1.5X35-MM)	
	5	1	**6V-5839**	10	WASHER (11X21X2.5-MM THK)	

M - METRIC PART

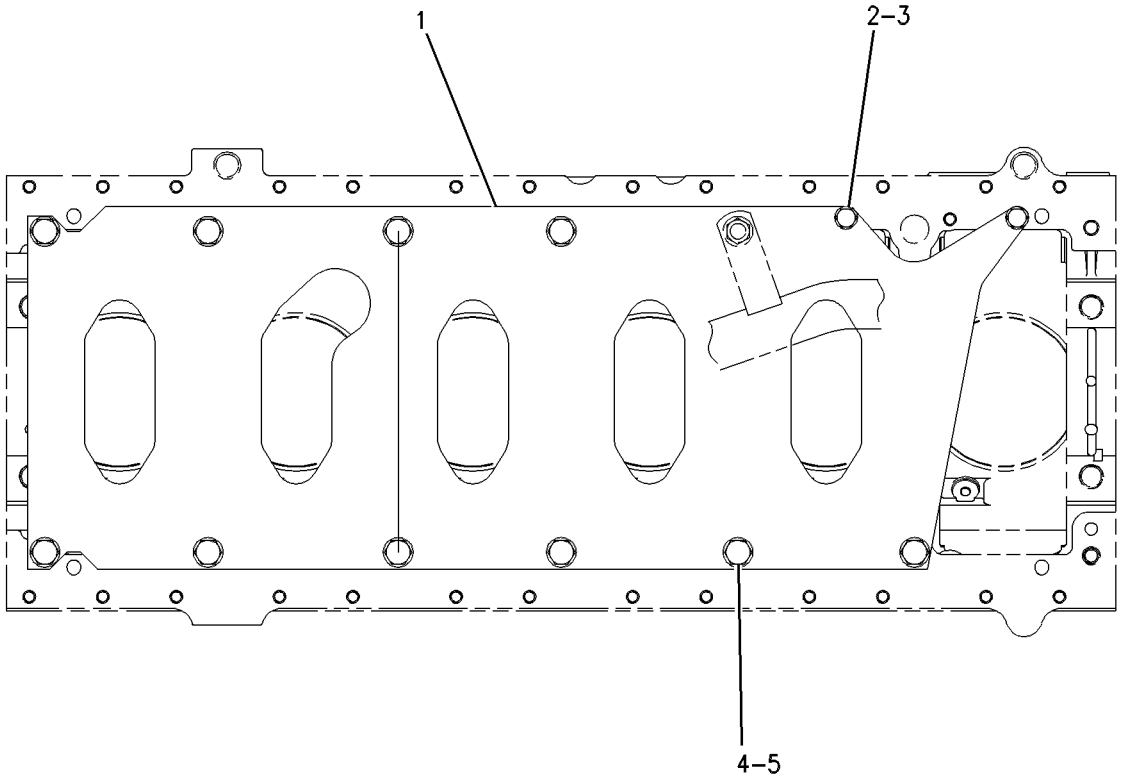

BOTTOM VIEW OF CYLINDER BLOCK

GRAPHIC #1 <END> g00514140

4W-5429 PULLEY GP-CRANKSHAFT

S/N: 4TF17400-UP

PART OF 114-7159, 117-5187, 117-5188, 6I-3528 ENGINE AR

ALSO AN ATTACHMENT

SMCS-1205 **i01398838**

NOTE	REF NO	GRAPHIC REF	PART NUMBER	QTY	PART NAME 1 2 3 4 5 6 (PRODUCT LEVEL)	SEE PAGE
	1	1	**7W-3773**	1	PULLEY-CRANKSHAFT	
M	2	1	**8T-3666**	4	BOLT (M14X2X60-MM)	
	3	1	**2W-7381**	1	PLATE-CLAMP	

M - METRIC PART

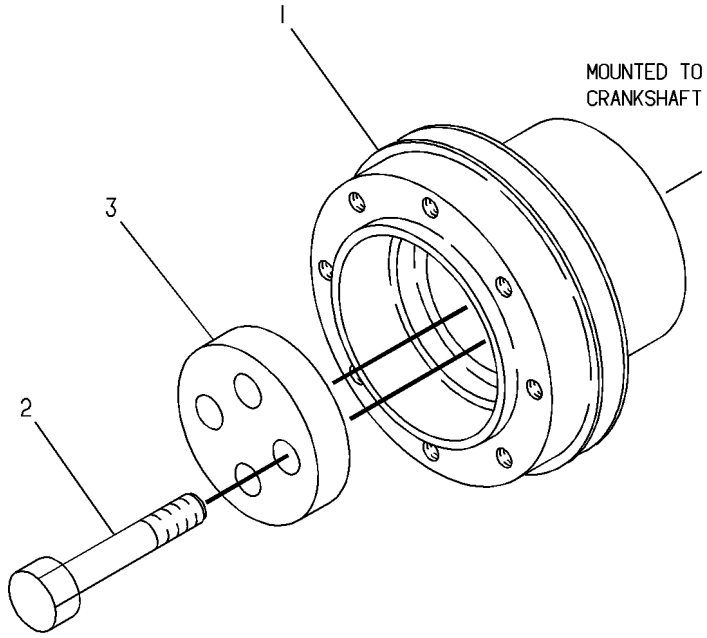

GRAPHIC #1 <END> g00108307

100-4601 PULLEY GP-FAN

S/N: 4TF17400-UP
PART OF 114-7159, 6I-3528 ENGINE AR
ALSO AN ATTACHMENT

SMCS-1356, 1359

i01398844

NOTE	REF NO	GRAPHIC REF	PART NUMBER	QTY	PART NAME 1 2 3 4 5 6 (PRODUCT LEVEL)	SEE PAGE
	1	1	**7C-3938**	1	PULLEY-ALTERNATOR	
	2	1	**109-1211**	1	ADAPTER-FAN	
	3	1	**100-4602**	1	PULLEY-FAN	
	4	1	**7E-1364**	1	V-BELT SET (INCLUDES 2-BELTS) (INCLUDES 2 BELTS)	
M	5	1	**8T-4908**	6	BOLT (M8X1.25X25-MM)	
M	6	1	**7X-0818**	6	BOLT (M8X1.25X45-MM)	

M - METRIC PART

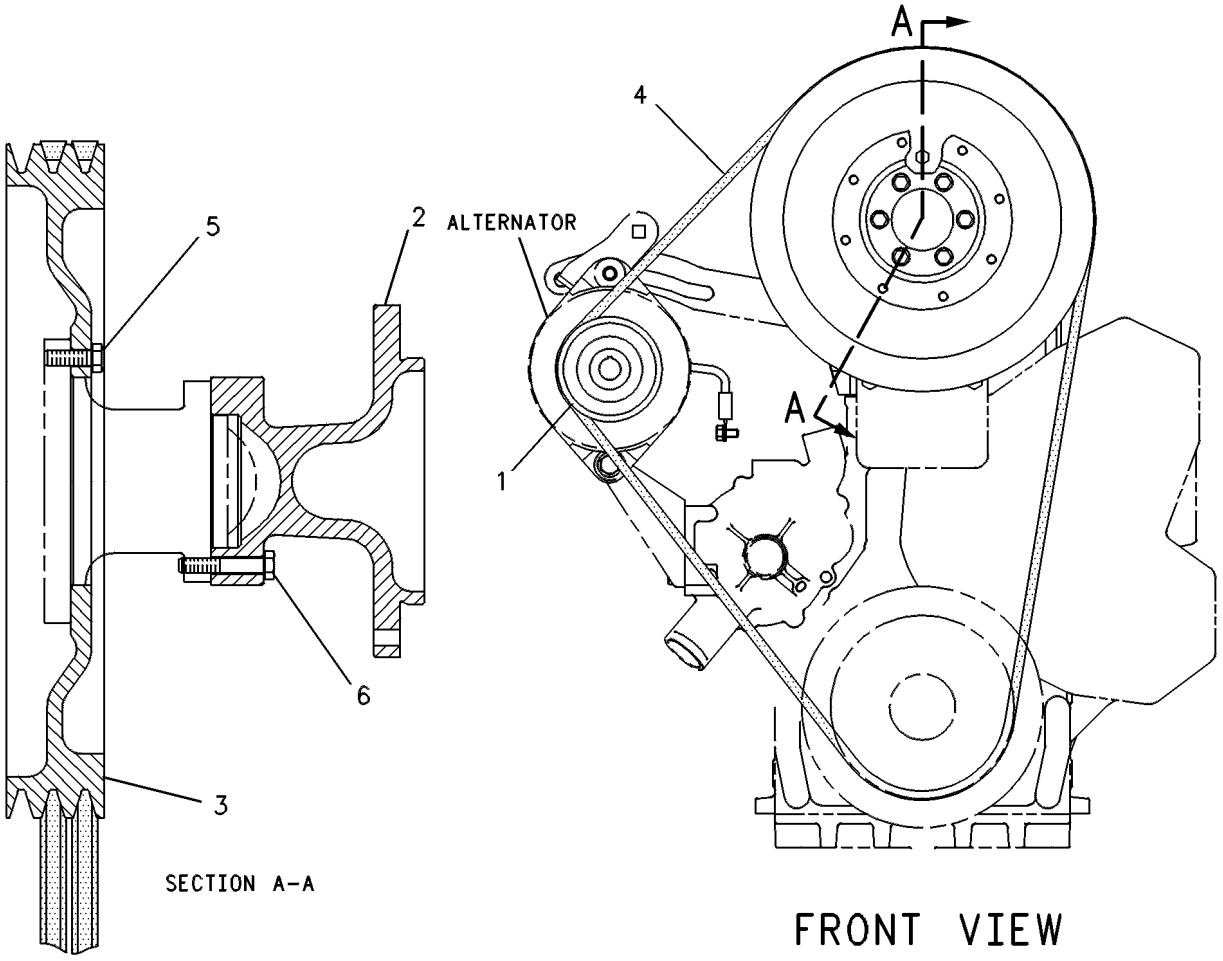

GRAPHIC #1

<END>

g00246991

125-1383 PULLEY GP-FAN

S/N: 4TF17400-30934
PART OF 117-5187, 117-5188 ENGINE AR
ALSO AN ATTACHMENT

SMCS-1356, 1359

i01398849

NOTE	REF NO	GRAPHIC REF	PART NUMBER	QTY	PART NAME 1 2 3 4 5 6 (PRODUCT LEVEL)	SEE PAGE
	1	1	**7C-3938**	1	PULLEY-ALTERNATOR	
	2	1	**7C-1891**	1	ADAPTER-FAN	
	3	1	**100-4602**	1	PULLEY-FAN	
	4	1	**4P-4997**	1	V-BELT SET (INCLUDES 2 BELTS)	
M	5	1	**8T-4908**	6	BOLT (M8X1.25X25-MM)	
M	6	1	**7X-0818**	6	BOLT (M8X1.25X45-MM)	

M - METRIC PART

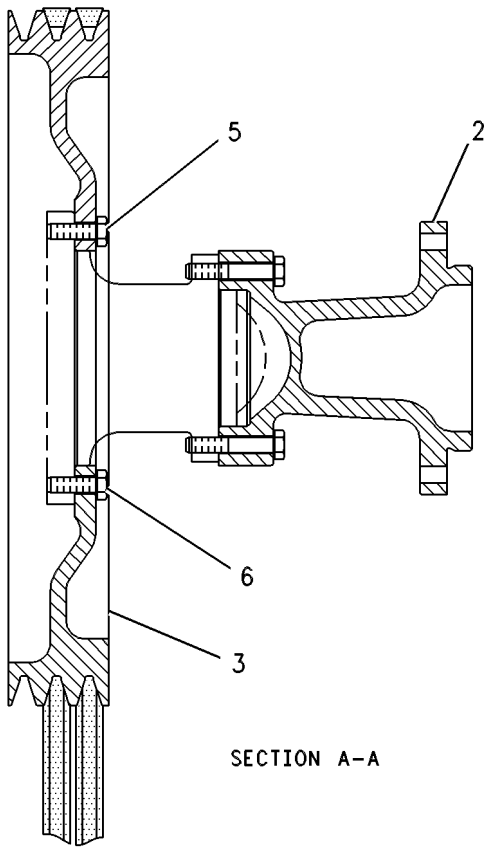

SECTION A-A

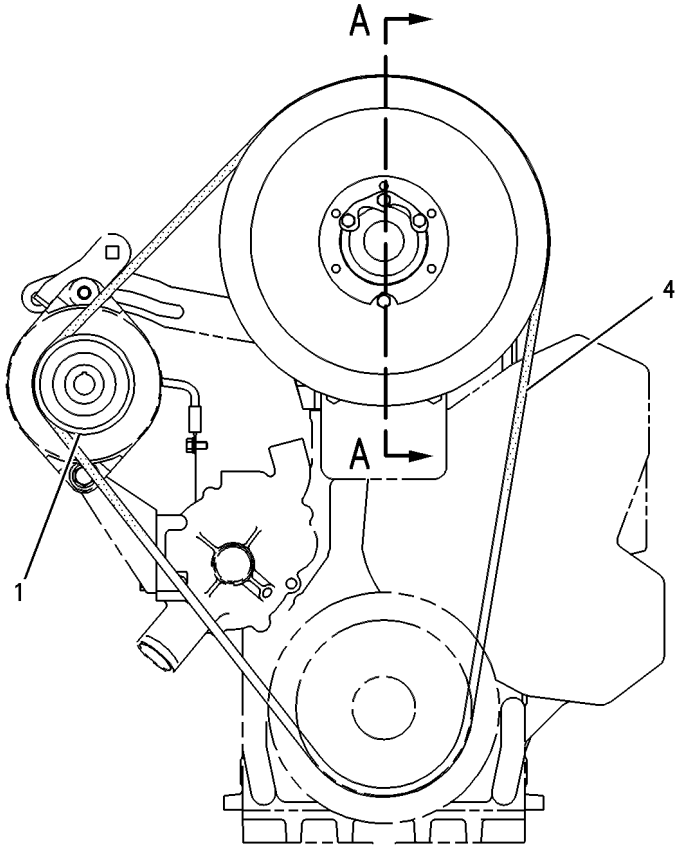

FRONT VIEW

GRAPHIC #1

<END>

g00266698

125-1383 PULLEY GP-FAN

S/N: 4TF30935-UP
PART OF 117-5187, 117-5188 ENGINE AR
ALSO AN ATTACHMENT

SMCS-1356, 1359 **i01398846**

NOTE	REF NO	GRAPHIC REF	PART NUMBER	QTY	PART NAME 1 2 3 4 5 6 (PRODUCT LEVEL)	SEE PAGE
	1	1	**7C-3938**	1	PULLEY-ALTERNATOR	
	2	1	**7C-1891**	1	ADAPTER-FAN	
C	3	1	**138-8865**	1	PULLEY-FAN	
C	4	1	**7E-6192**	1	V-BELT SET (INCLUDES 2 BELTS)	
M	5	1	**8T-4908**	6	BOLT (M8X1.25X25-MM)	
M	6	1	**7X-0818**	6	BOLT (M8X1.25X45-MM)	

C - CHANGE FROM PREVIOUS TYPE
M - METRIC PART

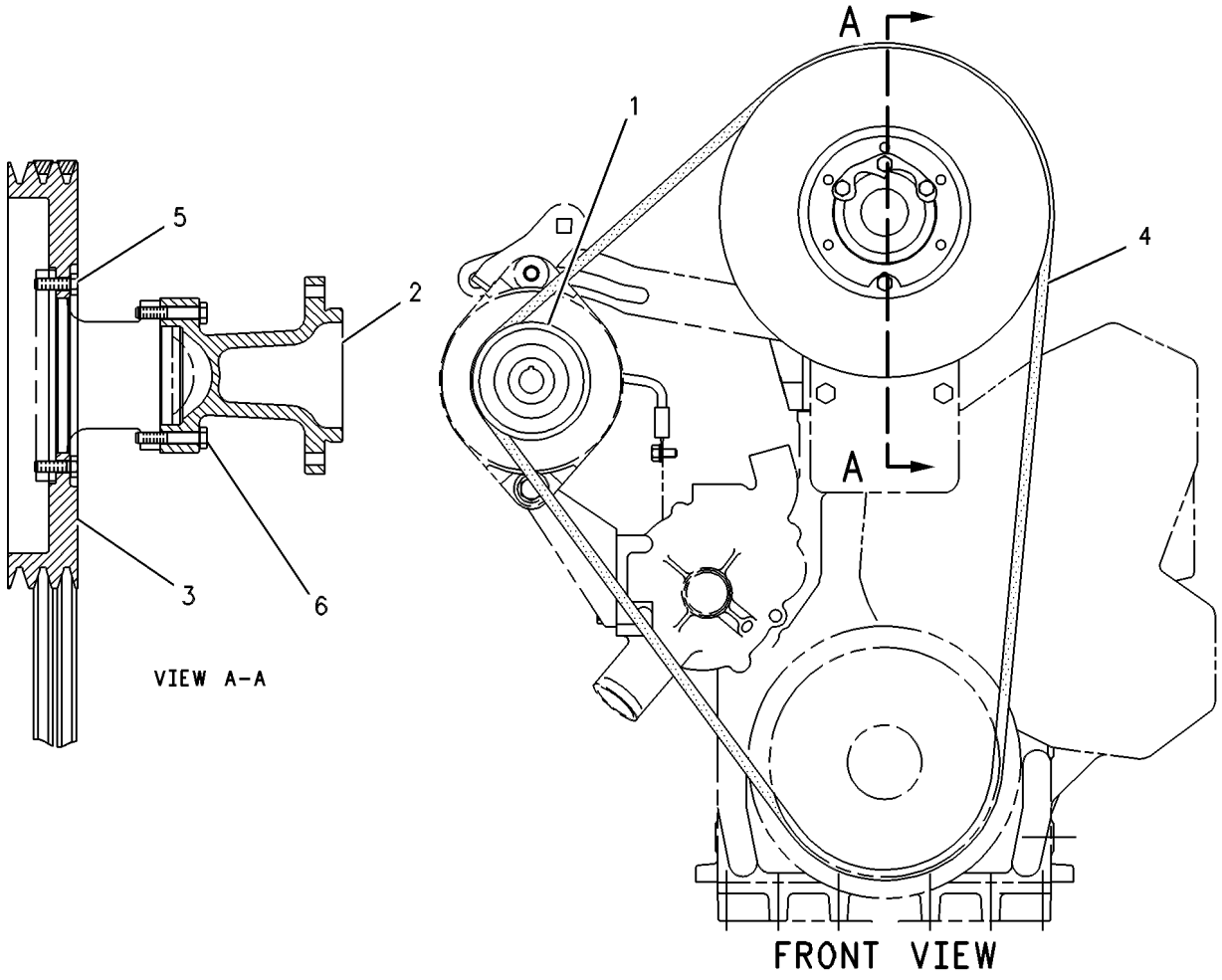

GRAPHIC #1 <END> g00271458

107-7722 ROCKER ARM GP

S/N: 4TF17400-UP
PART OF 2W-9607 VALVE MECHANISM GP
ALSO AN ATTACHMENT

SMCS-1102, 1123

i02989743

NOTE	REF NO	GRAPHIC REF	PART NUMBER	QTY	PART NAME 1 2 3 4 5 6 (PRODUCT LEVEL)	SEE PAGE
M	1	1	**260-7524**	2	SCREW-VALVE ADJUSTMENT (M10X1.5-THD)	
M	2	1	**2Y-5829**	2	NUT (M10X1.5-THD)	
	3	1	**4P-7790**	1	SHAFT AS-ARM	
	3A	1	**2D-6642**	1	BALL	
	3B	1	**7M-5130**	1	PIN-SPRING	
	3C	1	**7W-4137**	1	SHAFT AS	
	3D	1	**0L-1026**	1	PLUG-CUP	
	4	1	**9Y-8534**	1	SUPPORT-SHAFT	
R	5	1	**105-1776**	1	ROCKER ARM AS (UNIT INJECTOR)	
		1	**7W-3980**	1	BUSHING	
		1	**7W-3981**	1	SOCKET-ARM	
M	6	1	**7W-4117**	1	NUT (M12X1.25-THD)	
	7	1	**9Y-4973**	1	SCREW-INJECTION ADJUSTMENT	
	8	1	**7W-3983**	1	RING-RETAINING	
	9	1	**9Y-1582**	1	BUTTON-ARM	
R	10	1	**6I-0924**	2	ROCKER ARM AS	
					(EACH INCLUDES)	
	10A	1		1	SEAT-WEAR	

M - METRIC PART
R - REMANUFACTURED PART MAY BE AVAILABLE

107-7722 **ROCKER ARM GP** (contd.) **i02989743**

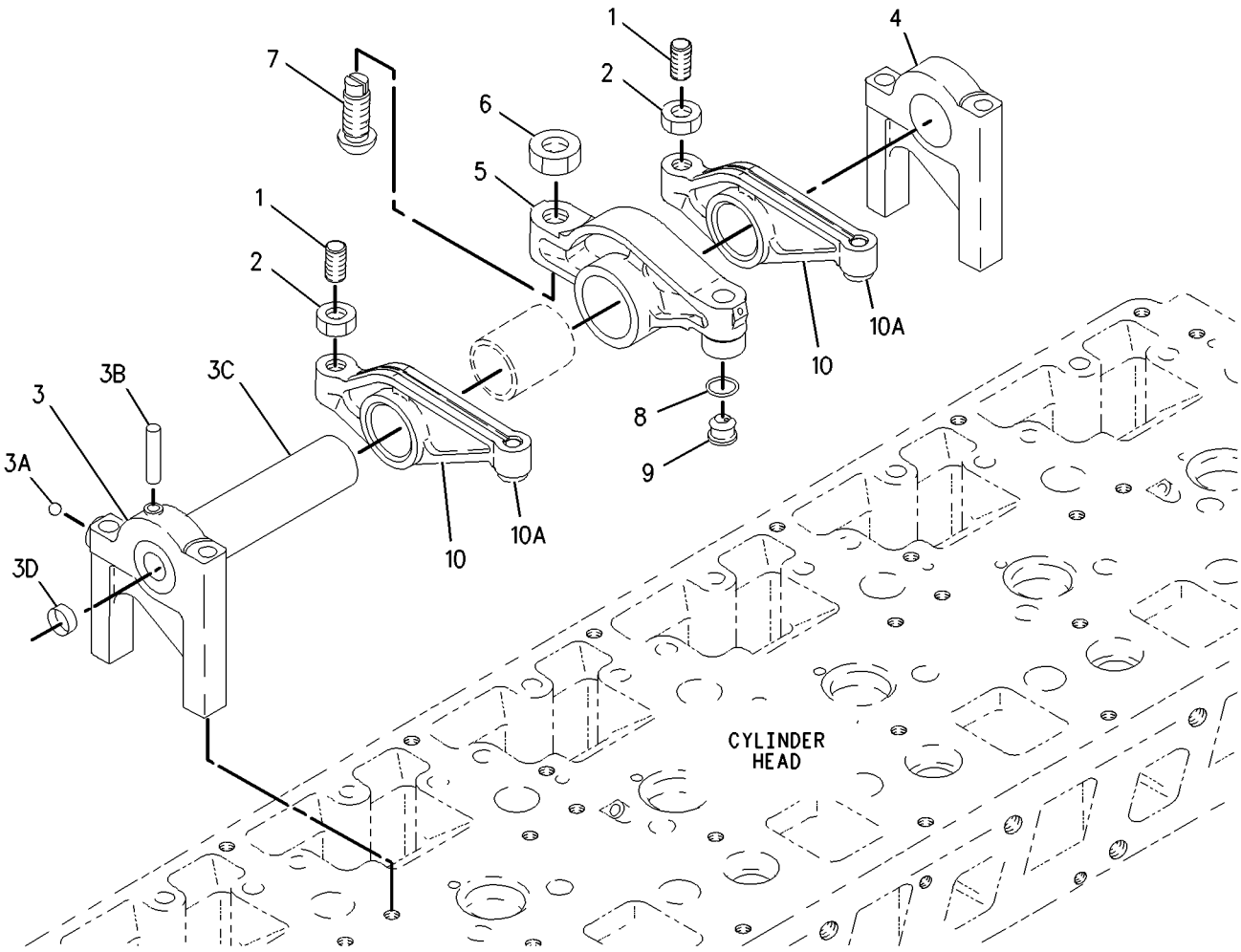

GRAPHIC #1 <END> g01001791

115-4203 SEAL GP-CRANKSHAFT

S/N: 4TF17400-UP
PART OF 117-5187, 117-5188 ENGINE AR
ALSO AN ATTACHMENT

SMCS-1160, 1161

i02891247

NOTE	REF NO	GRAPHIC REF	PART NUMBER	QTY	PART NAME 1 2 3 4 5 6 (PRODUCT LEVEL)	SEE PAGE
	1	1	**222-3909**	1	SEAL GP-CRANKSHAFT (REAR)	
	2	1	**245-7339**	1	SEAL-CRANKSHAFT (FRONT)	
	3	1	**4R-9999**	1	EXCLUDER-CRANKSHAFT SEAL	

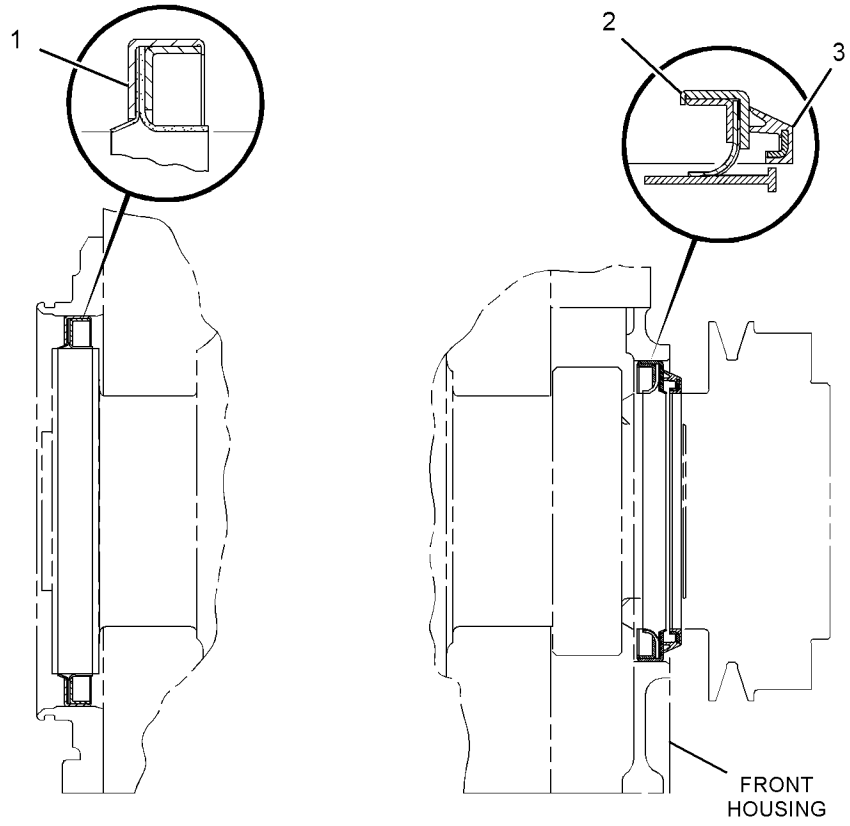

GRAPHIC #1

<END>

g01438538

4W-1016 SEAL GP-CRANKSHAFT

S/N: 4TF17400-26795
PART OF 114-7159, 6I-3528 ENGINE AR
ALSO AN ATTACHMENT

SMCS-1160, 1161

i00907379

NOTE	REF NO	GRAPHIC REF	PART NUMBER	QTY	PART NAME 1 2 3 4 5 6 (PRODUCT LEVEL)	SEE PAGE
	1	1	*7C-3571*	1	SEAL-CRANKSHAFT (REAR)	
		1	**115-4109**	1	SEAL GP-CRANKSHAFT	
	2	1	**7C-4163**	1	SEAL GP-CRANKSHAFT (FRONT)	

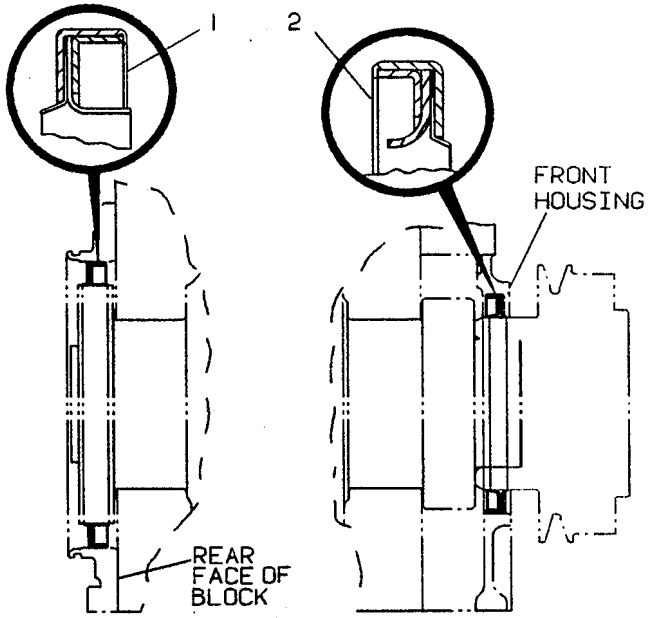

SIDE VIEW

GRAPHIC #1

<END>

g00125389

4W-1016 SEAL GP-CRANKSHAFT

S/N: 4TF26796-UP
PART OF 114-7159, 6I-3528 ENGINE AR
ALSO AN ATTACHMENT

SMCS-1160, 1161

i00907377

NOTE	REF NO	GRAPHIC REF	PART NUMBER	QTY	PART NAME 1 2 3 4 5 6 (PRODUCT LEVEL)	SEE PAGE
	1	1	*7C-3571*	1	SEAL-CRANKSHAFT (REAR)	
C	2	1	**119-2921**	1	SEAL GP-CRANKSHAFT (FRONT)	

C - CHANGE FROM PREVIOUS TYPE

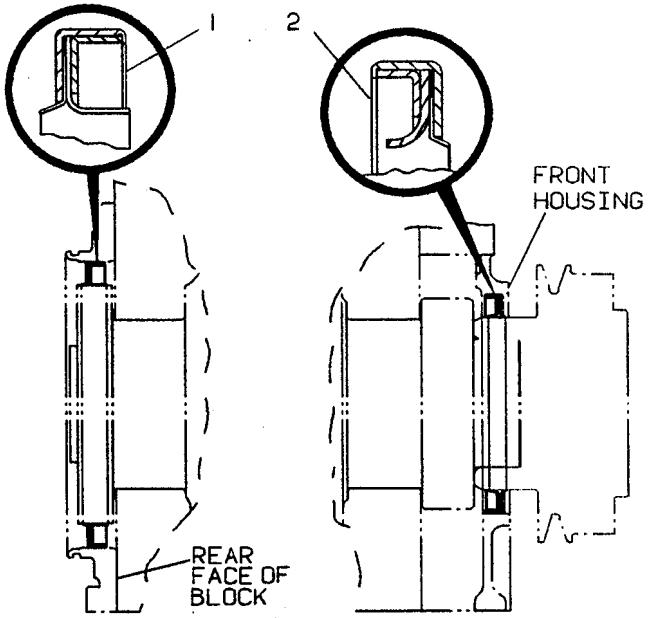

SIDE VIEW

GRAPHIC #1

<END>

g00125389

101-7323 SUPPORT GP-ENGINE

S/N: 4TF17400-UP
PART OF 114-7159, 117-5187, 117-5188, 6I-3528 ENGINE AR
ALSO AN ATTACHMENT

SMCS-1152, 1153, 1154

i01398853

NOTE	REF NO	GRAPHIC REF	PART NUMBER	QTY	PART NAME 1 2 3 4 5 6 (PRODUCT LEVEL)	SEE PAGE
	1	1	**108-8533**	2	SUPPORT	
M	2	1	**8C-6855**	4	BOLT (M14X2X45-MM)	
	3	1	**5P-8246**	8	WASHER-HARD (15.5X29X3-MM THK)	
M	4	1	**8T-3653**	4	BOLT (M14X2X80-MM)	

M - METRIC PART

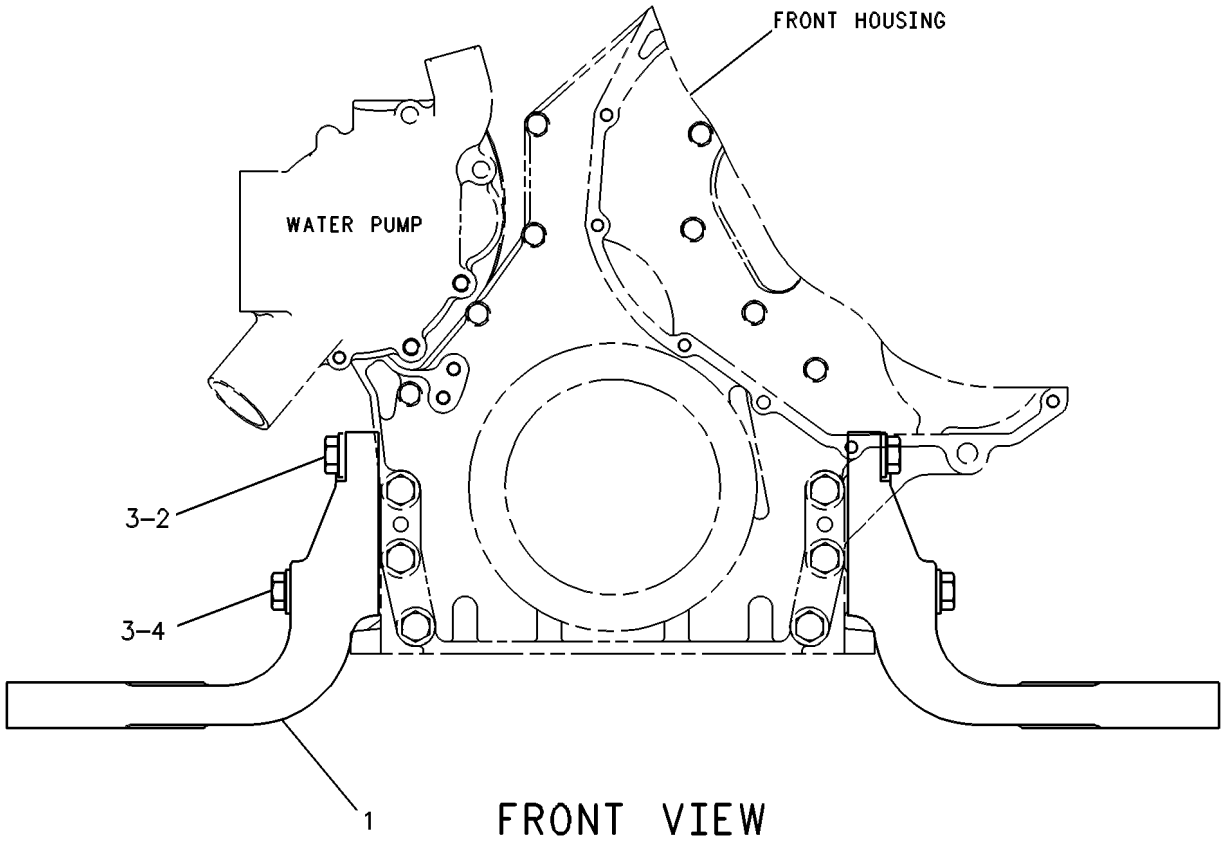

FRONT VIEW

GRAPHIC #1 <END> g00279144

117-5637 SUPPRESSION AR-SOUND

S/N: 9BL1488-UP
EEC
AN ATTACHMENT

SMCS-1801 **i01398857**

NOTE	PART NUMBER	QTY	PART NAME 1 2 3 4 5 6 (PRODUCT LEVEL)	SEE PAGE
YR	**117-5188**	1	ENGINE AR	10
Y	*117-5662*	1	SUPPRESSION GP-SOUND	474
	130-5155	1	FILM (EXTERIOR SOUND)	
	130-5101	1	FILM-OPERATOR SOUND	

R - REMANUFACTURED PART MAY BE AVAILABLE
Y - SEPARATE ILLUSTRATION

<END>

2W-9607 VALVE MECHANISM GP

S/N: 4TF17400-UP

PART OF 114-7159, 117-5187, 117-5188, 6I-3528 ENGINE AR

ALSO AN ATTACHMENT

SMCS-1102, 1121, 1123

i00677281

NOTE	REF NO	GRAPHIC REF	PART NUMBER	QTY	PART NAME 1 2 3 4 5 6 (PRODUCT LEVEL)	SEE PAGE
Y	1	1	*107-7722*	6	ROCKER ARM GP	81
	2	1	**3E-9412**	6	DOWEL	
M	3	1	**8T-8442**	12	BOLT-SOCKET HEAD (M6X1X30-MM)	
	4	1	**7C-6078**	3	LIFTER GP-VALVE	
					(EACH INCLUDES)	
		1	**4P-7738**	1	SHAFT AS-LIFTER	
		1	**2D-6642**	2	BALL	
	5	1	**7E-6794**	2	ARM AS-LIFTER	
	6	1	**146-8147**	4	ARM AS-LIFTER	
	7	1	**7E-4199**	12	PUSHROD-VALVE	
	8	1	**4P-8577**	6	ROD AS-INJECTOR	
M	9	1	**6V-5223**	23	BOLT (M8X1.25X100-MM)	
M	10	1	**9X-6005**	1	BOLT-LOCKING (M8X1.25X100-MM)	
	11	1	**7E-5984**	1	COVER	

M - METRIC PART
Y - SEPARATE ILLUSTRATION

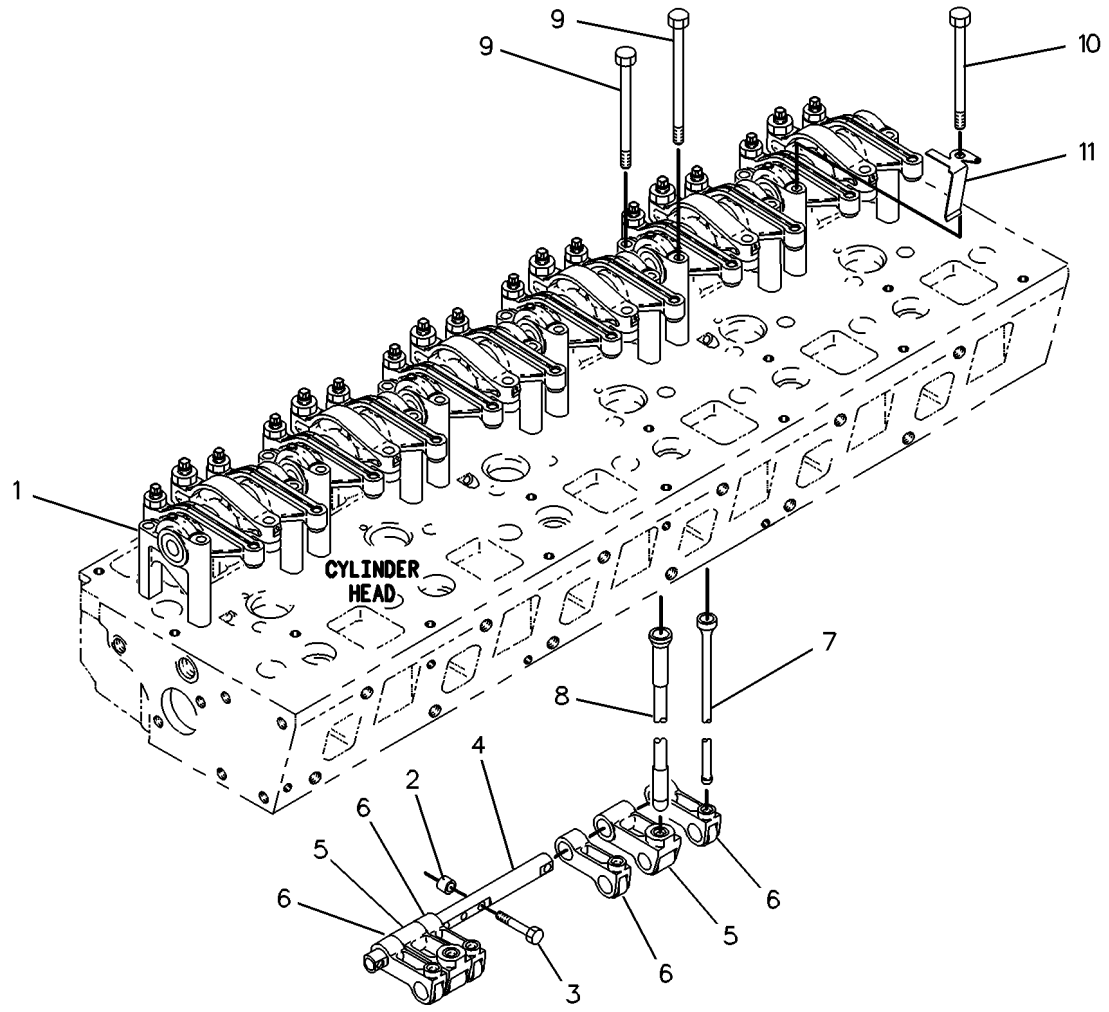

GRAPHIC #1 <END> g00108471

1N-3477 BREATHER GP

S/N: 4TF17400-UP
PART OF 114-7159, 117-5187, 117-5188, 6I-3528 ENGINE AR
ALSO AN ATTACHMENT

SMCS-1317 **i01979041**

NOTE	REF NO	GRAPHIC REF	PART NUMBER	QTY	PART NAME 1 2 3 4 5 6 (PRODUCT LEVEL)	SEE PAGE
	1	1	**2W-9162**	1	BREATHER AS	
	2	1	**8H-2046**	1	SEAL-O-RING	
M	3	1	**6V-3821**	1	BOLT (M8X1.25X110-MM)	
	4	1	**9N-0869**	1	WASHER-HARD (8.8X25.5X2-MM THK)	

M - METRIC PART

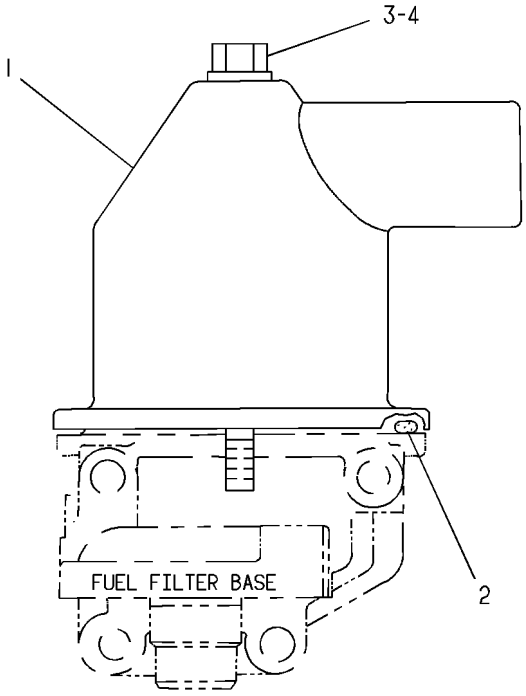

GRAPHIC #1 <END> g00108310

108-2829 FILLER GP-ENGINE OIL—INCLUDES TURBO OIL SUPPLY LINES

S/N: 4TF17400-UP

PART OF 114-7159, 117-5187, 117-5188, 6I-3528 ENGINE AR

ALSO AN ATTACHMENT

SMCS-1316 **i00768155**

NOTE	REF NO	GRAPHIC REF	PART NUMBER	QTY	PART NAME 1 2 3 4 5 6 (PRODUCT LEVEL)	SEE PAGE
	1	1	**9Y-9179**	1	ADAPTER	
	2	1	**4F-7391**	1	SEAL-O-RING	
	3	1	**7C-0358**	2	GASKET	
	4	1	**108-2825**	1	TUBE AS	
M	5	1	**8T-4177**	2	BOLT (M8X1.25X90-MM)	
	6	1	**8T-4224**	8	WASHER-HARD (8.8X16X2-MM THK)	
	7	1	**5L-2952**	1	CAP AS-FILLER	
	8	1	**7C-0748**	1	TUBE AS	
	9	1	**7W-2398**	1	GASKET (OIL DRAIN)	
M	10	1	**8T-4908**	4	BOLT (M8X1.25X25-MM)	
	11	1	**7C-2177**	1	COVER	
	12	1	**119-2919**	1	TUBE AS	
	13	1	**1S-7057**	1	GASKET	
	14	1	**6V-8724**	1	ELBOW	
	15	1	**6V-8397**	1	SEAL-O-RING	
	16	1	**3J-1907**	1	SEAL-O-RING	
	17	1	**9M-4849**	1	SEAL-O-RING	
M	18	1	**6V-2317**	2	BOLT (M8X1.25X30-MM)	

M - METRIC PART

108-2829 **FILLER GP-ENGINE OIL (**contd.**)** **i00768155**

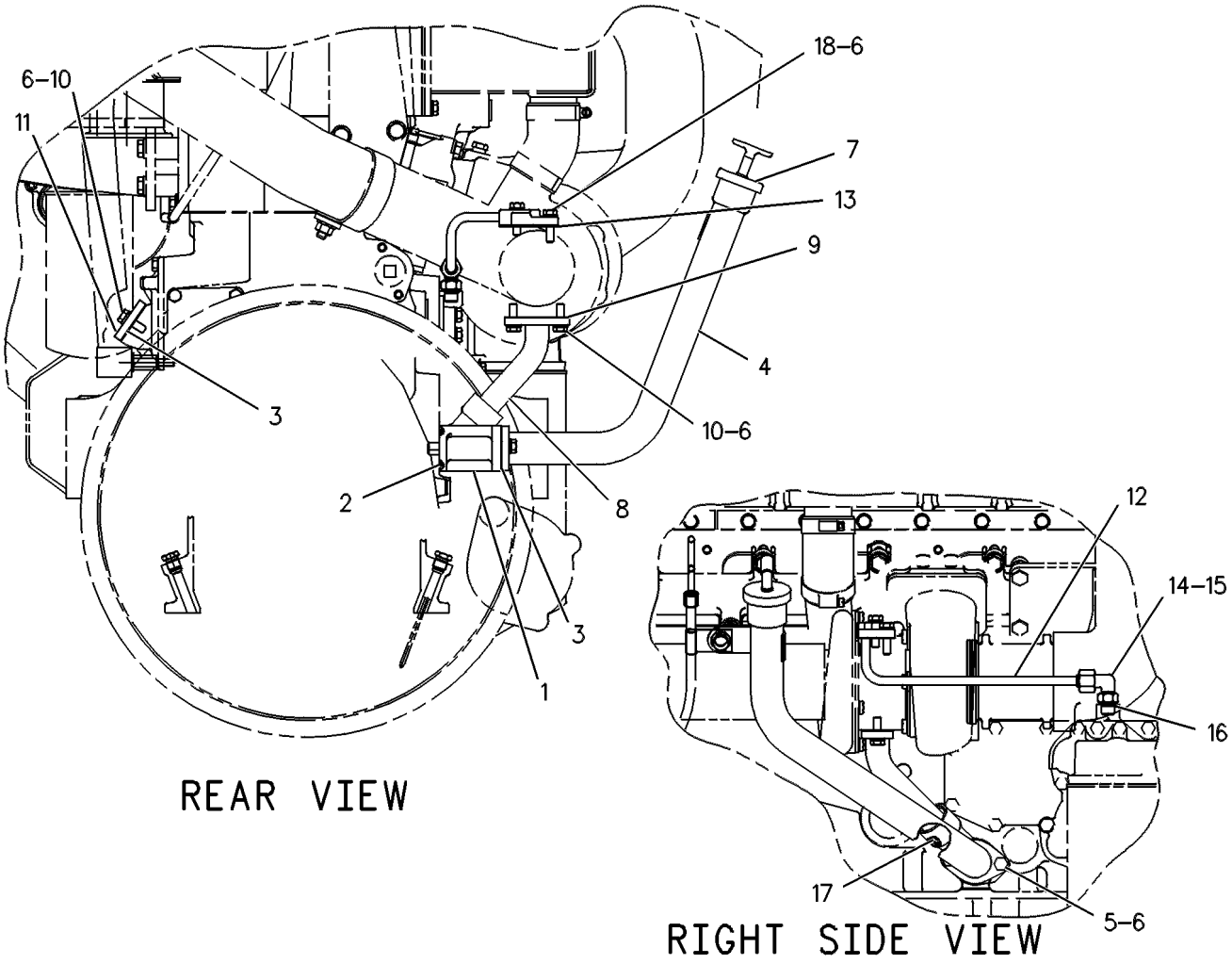

GRAPHIC #1 <END> g00247570

4P-8183 FILTER GP-ENGINE OIL

S/N: 4TF17400-UP
PART OF 114-7159, 117-5187, 117-5188, 6I-3528 ENGINE AR
ALSO AN ATTACHMENT

SMCS-1308 **i07432096**

NOTE	REF NO	GRAPHIC REF	PART NUMBER	QTY	PART NAME 1 2 3 4 5 6 (PRODUCT LEVEL)	SEE PAGE
	1	1	**1R-1807**	1	FILTER AS-ENGINE OIL (ADVANCED EFFICIENCY)	
M	2	1	**8T-0276**	4	BOLT (M8X1.25X45-MM) (MARKED X)	
	3	1	**9M-1974**	14	WASHER-HARD (8.8X16X2-MM THK)	
M	4	1	**6V-2317**	10	BOLT (M8X1.25X30-MM)	
	5	1	**7C-1493**	2	VALVE AS-BYPASS (ENGINE OIL FILTER)	
	6	1	**242-3864**	2	SPRING	
	7	1	*377-9593*	2	PLUG AS	
					(EACH INCLUDES)	
		1	**9N-6152**	1	PLUG	
		1	**238-5081**	1	SEAL-O-RING	
B	8	1	**9M-1974**	1	WASHER-HARD (8.8X16X2-MM THK)	
	9	1	**392-5358**	1	BASE AS-OIL FILTER	
		1	**2P-2537**	1	STUD-HOLLOW	
	10	1	**300-7933**	1	GASKET	
BM	11	1	**8T-0276**	1	BOLT (M8X1.25X45-MM)	

B - USE AS REQUIRED
M - METRIC PART

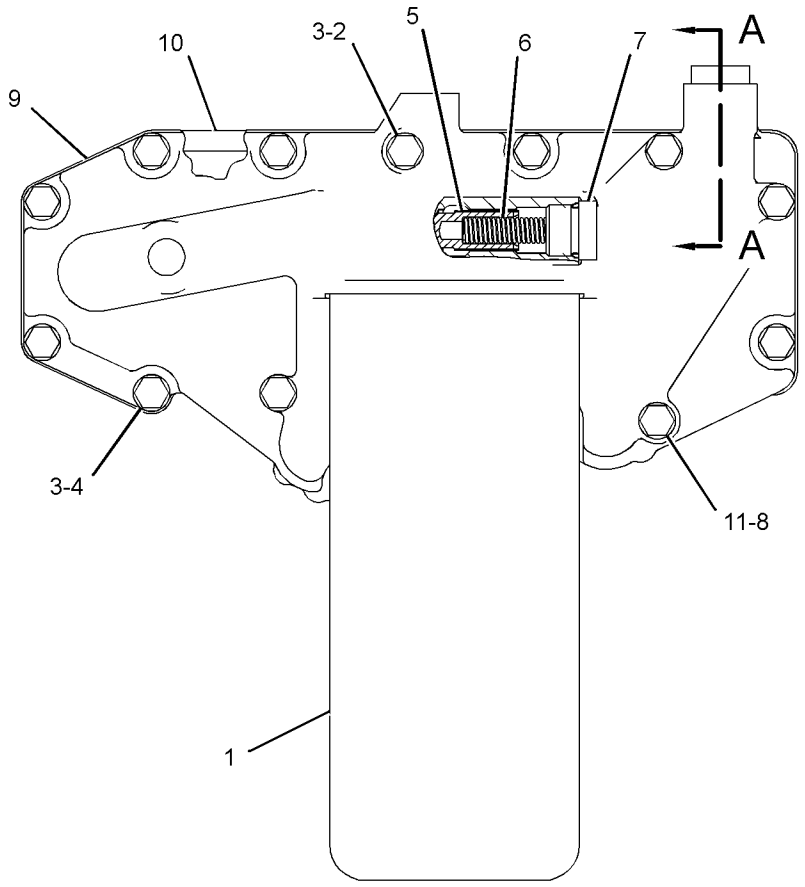

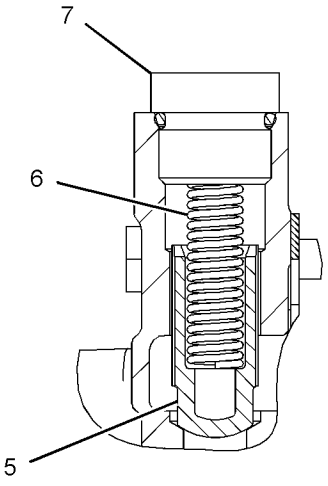

SECTION A-A

GRAPHIC #1 <END> g03328212

4P-1556 FUMES DISPOSAL GP

S/N: 4TF17400-UP
PART OF 114-7159, 117-5187, 117-5188, 6I-3528 ENGINE AR
ALSO AN ATTACHMENT

SMCS-1317 **i00569537**

NOTE	REF NO	GRAPHIC REF	PART NUMBER	QTY	PART NAME 1 2 3 4 5 6 (PRODUCT LEVEL)	SEE PAGE
	1	1	**9M-2904**	1	CLAMP-HOSE	
	2	1	**4P-1555**	1	HOSE-DISPOSAL	
	3	1	**4D-7388**	1	CLIP	
M	4	1	**6V-3918**	1	BOLT (M8X1.25X50-MM)	
		1	**9M-1974**	1	WASHER-HARD (8.8X16X2-MM THK)	
		1	**039-2281**	1	SPACER (9X16X25-MM THK)	

M - METRIC PART

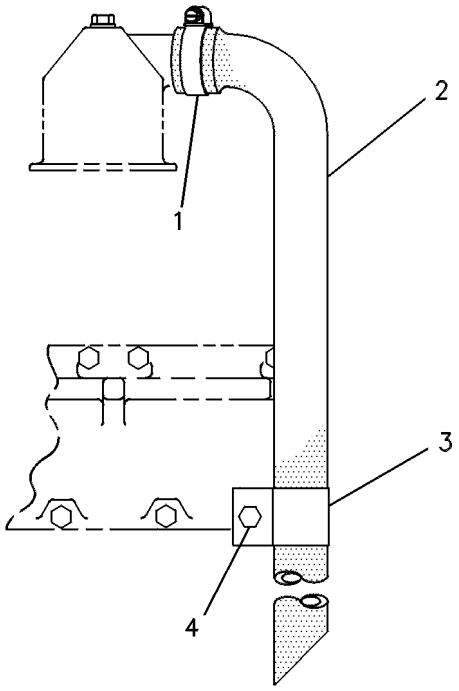

LEFT SIDE VIEW

GRAPHIC #1 <END> g00120283

108-2828 GAUGE GP-OIL LEVEL (DIPSTICK)

S/N: 4TF17400-UP

PART OF 114-7159, 117-5187, 117-5188, 6I-3528 ENGINE AR

ALSO AN ATTACHMENT

SMCS-1326 **i00569463**

NOTE	REF NO	GRAPHIC REF	PART NUMBER	QTY	PART NAME 1 2 3 4 5 6 (PRODUCT LEVEL)	SEE PAGE
	1	1	**108-2826**	1	TUBE AS-OIL GAUGE	
	2	1	**1S-2563**	3	PLUG	
	3	1	**7B-1597**	1	CLIP	
M	4	1	**8T-4137**	1	BOLT (M10X1.5X20-MM)	
	5	1	**8T-4121**	2	WASHER-HARD (11X21X2.5-MM THK)	
M	6	1	**8T-4133**	1	NUT (M10X1.5-THD)	
	7	1	**108-2827**	1	GAUGE-OIL LEVEL (DIPSTICK)	

M - METRIC PART

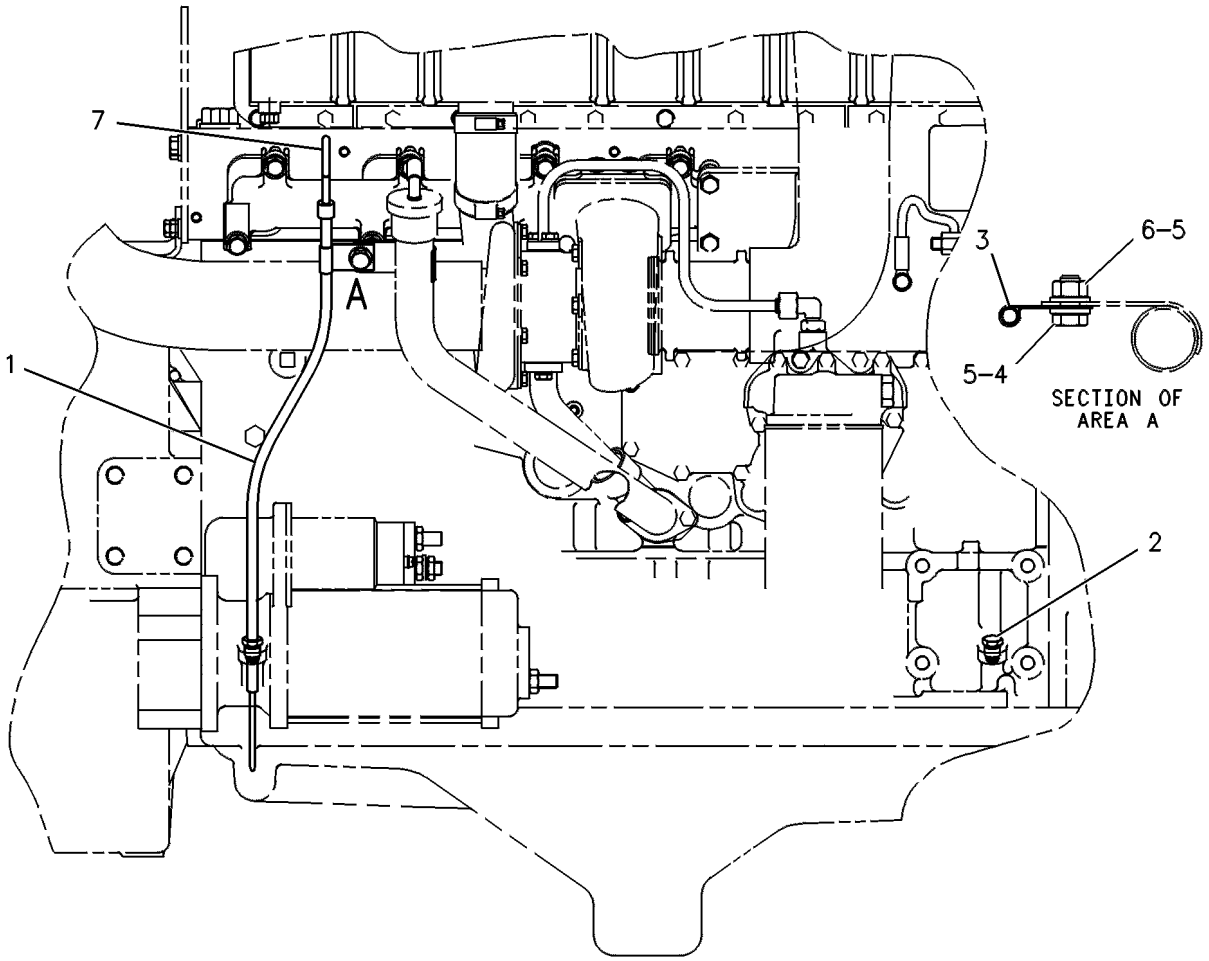

RIGHT SIDE VIEW

GRAPHIC #1 <END> g00247086

115-4143 LINES GP-ENGINE OIL

S/N: 4TF29893-99999
PART OF 117-5188 ENGINE AR
AN ATTACHMENT

SMCS-1307 **i05530004**

NOTE	REF NO	GRAPHIC REF	PART NUMBER	QTY	PART NAME 1 2 3 4 5 6 (PRODUCT LEVEL)	SEE PAGE
	1	1	**115-4073**	1	TUBE AS	
M	2	1	**6V-3822**	1	BOLT (M10X1.5X35-MM)	
	3	1	**7W-5340**	1	GASKET	
M	4	1	**6V-3940**	4	BOLT (M8X1.25X25-MM)	
	5	1	**9M-1974**	4	WASHER-HARD (8.8X16X2-MM THK)	
	6	1	**438-8638**	1	ELBOW-OUTLET	
	7	1	**3P-1156**	2	SEAL-O-RING	
	8	1	**6V-5839**	1	WASHER (11X21X2.5-MM THK)	

M - METRIC PART

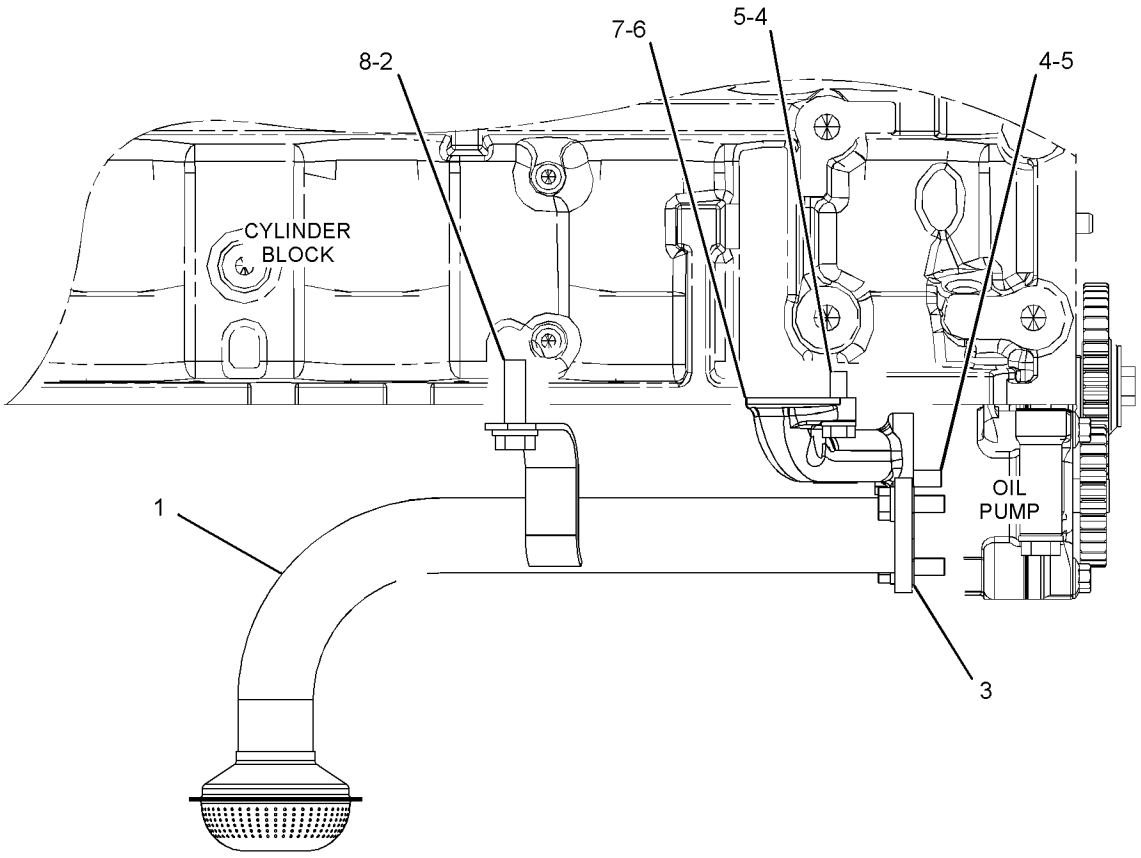

GRAPHIC #1 <END> g03505553

4W-2914 LINES GP-ENGINE OIL

S/N: 4TF17400-UP
PART OF 114-7159, 117-5187, 6I-3528 ENGINE AR
ALSO AN ATTACHMENT

SMCS-1307 **i05976074**

NOTE	REF NO	GRAPHIC REF	PART NUMBER	QTY	PART NAME 1 2 3 4 5 6 (PRODUCT LEVEL)	SEE PAGE
	1	1	**7W-5341**	1	TUBE AS	
M	2	1	**6V-4248**	1	BOLT (M10X1.5X25-MM)	
	3	1	**7W-5340**	1	GASKET	
M	4	1	**6V-3940**	4	BOLT (M8X1.25X25-MM)	
	5	1	**9M-1974**	4	WASHER-HARD (8.8X16X2-MM THK)	
	6	1	**438-8638**	1	ELBOW-OUTLET	
	7	1	**3P-1156**	2	SEAL-O-RING	
	8	1	**6V-5839**	1	WASHER (11X21X2.5-MM THK)	

M - METRIC PART

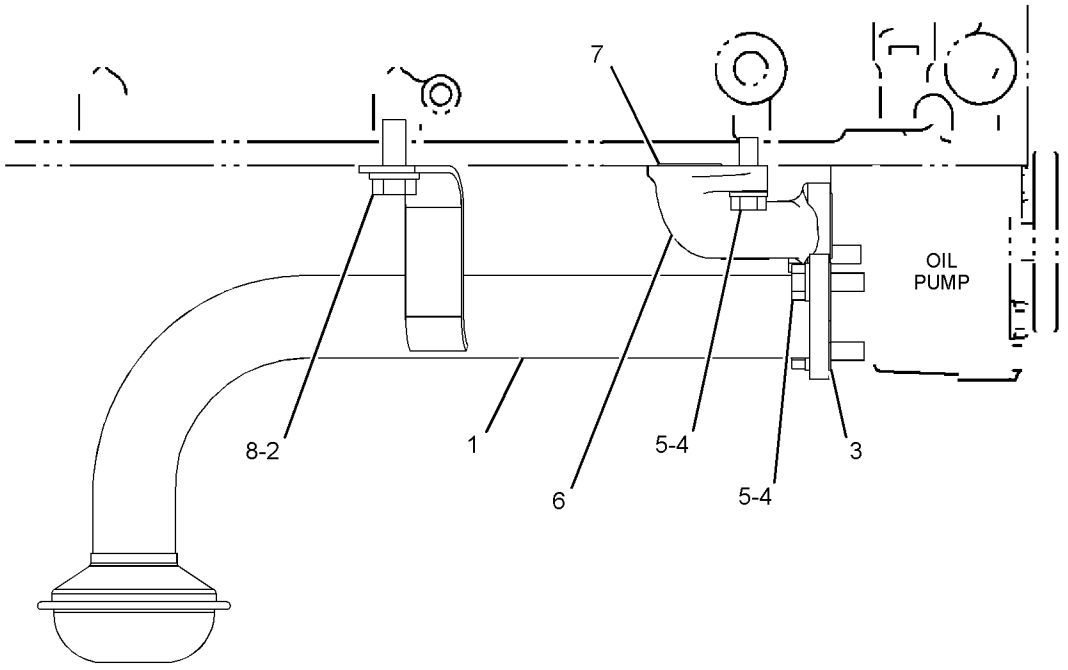

RIGHT SIDE VIEW

GRAPHIC #1 <END> g03481939

4P-7703 LINES GP-TURBOCHARGER OIL

S/N: 4TF17400-UP

PART OF 6I-3528 ENGINE AR

SMCS-1052, 1307 **i01981234**

NOTE	REF NO	GRAPHIC REF	PART NUMBER	QTY	PART NAME 1 2 3 4 5 6 (PRODUCT LEVEL)	SEE PAGE
	1	1	**7W-2398**	1	GASKET (OIL DRAIN)	
	2	1	*148-8378*	1	ELBOW AS	
		1	**6V-8724**	1	ELBOW	
		1	**6V-8397**	1	SEAL-O-RING	
		1	**3J-1907**	1	SEAL-O-RING	
M	3	1	**6V-3940**	2	BOLT (M8X1.25X25-MM)	
	4	1	**9M-1974**	4	WASHER-HARD (8.8X16X2-MM THK)	
	5	1	**119-2919**	1	TUBE AS	
	8	1	**1S-7057**	1	GASKET	
	9	1	**7C-0748**	1	TUBE AS	
	10	1	**7C-1958**	1	ADAPTER	
	11	1	**9M-4849**	1	SEAL-O-RING	
M	12	1	**8T-0276**	2	BOLT (M8X1.25X45-MM)	
	13	1	**4F-7391**	1	SEAL-O-RING	
M	14	1	**6V-2317**	2	BOLT (M8X1.25X30-MM)	

M - METRIC PART

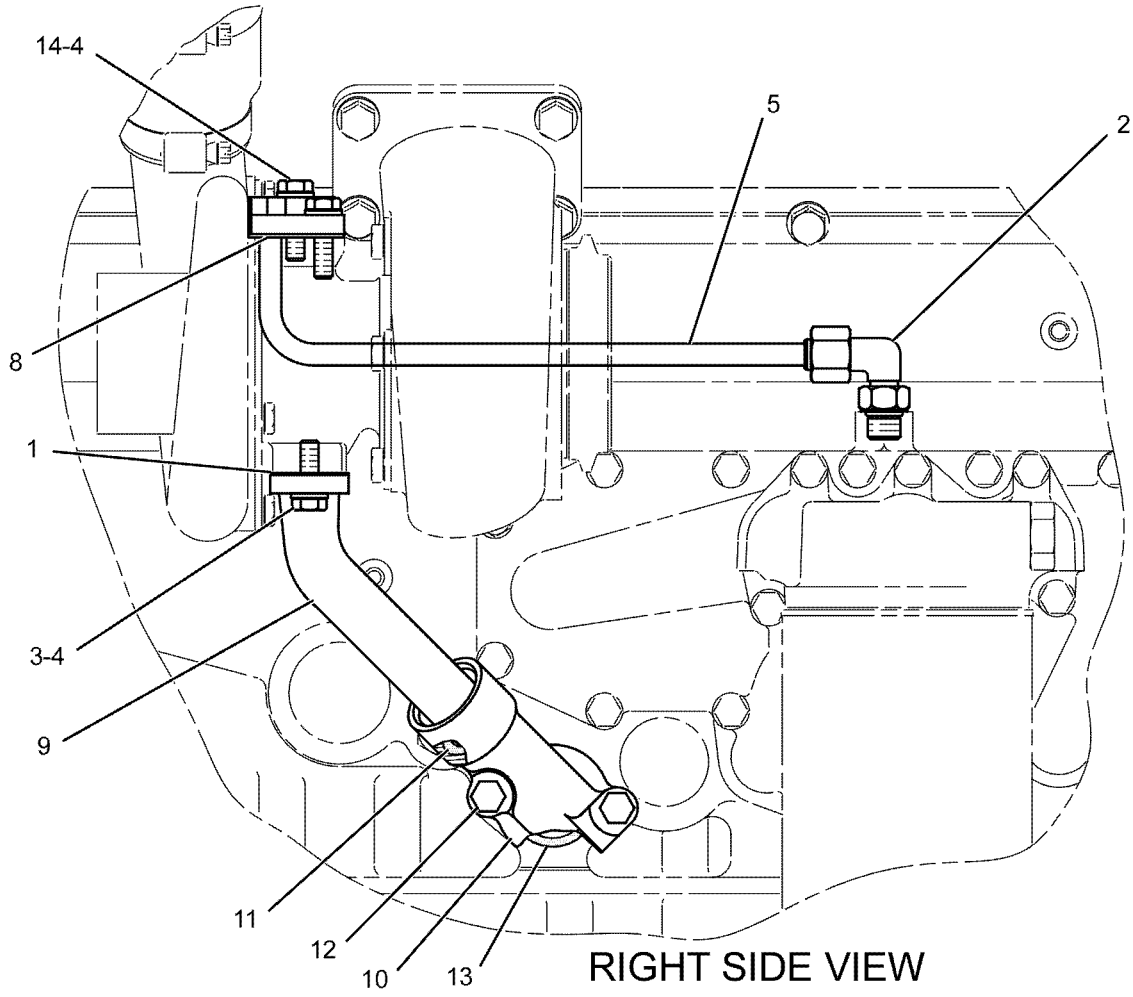

GRAPHIC #1 <END> g01026941

119-2924 PUMP GP-ENGINE OIL*R

S/N: 4TF17400-UP
PART OF 4W-2195 PUMP GP-ENGINE OIL
ALSO AN ATTACHMENT

SMCS-1304 **i01639015**

NOTE	REF NO	GRAPHIC REF	PART NUMBER	QTY	PART NAME 1 2 3 4 5 6 (PRODUCT LEVEL)	SEE PAGE
	1	1	**2W-8077**	1	BODY AS-OIL PUMP	
	2	1	**2W-8091**	1	BODY-OIL PUMP	
M	3	1	**6V-5219**	4	BOLT (M8X1.25X40-MM)	
	4	1	**9M-1974**	4	WASHER-HARD (8.8X16X2-MM THK)	
	5	1	**2W-8087**	1	SHAFT AS	
	6	1	**2W-8090**	1	SHAFT AS-IDLER	
	7	1	**2W-8078**	1	PLUNGER	
	8	1	**105-1805**	1	SPRING	
M	9	1	**6V-5215**	1	BOLT (M8X1.25X16-MM)	
	10	1	**2W-8079**	1	WASHER (8.5X9.5X1.6-MM THK)	
	11	1	**2W-8085**	1	GEAR-PUMP DRIVE (33-TEETH)	

M - METRIC PART

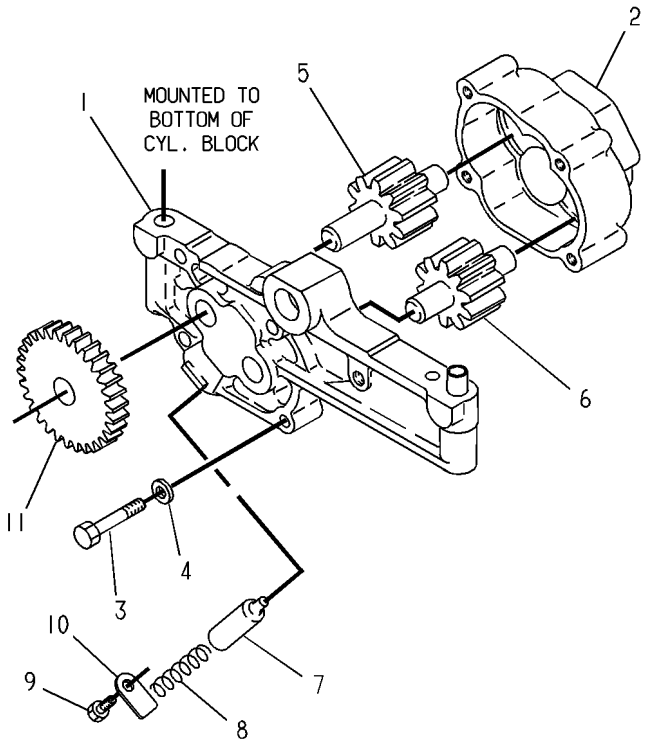

GRAPHIC #1 <END> g00108299

200-4497 PUMP GP-ENGINE OIL

S/N: 4TF78326-UP

PART OF 4W-2195 PUMP GP-ENGINE OIL

SMCS-1304 **i01919892**

NOTE	REF NO	GRAPHIC REF	PART NUMBER	QTY	PART NAME 1 2 3 4 5 6 (PRODUCT LEVEL)	SEE PAGE
	1	1	**7W-9737**	1	SHAFT	
	2	1	**7W-9738**	1	WASHER (10.5X38X1.6-MM THK)	
	3	1	**7W-9740**	1	GEAR AS-IDLER (43-TEETH)	
	3A	1	**7W-9930**	1	BUSHING	
M	4	1	**9X-2305**	1	BOLT-LOCKING (M10X1.5X50-MM)	
R	5	1	**189-8777**	1	PUMP GP-ENGINE OIL	

M - METRIC PART
R - REMANUFACTURED PART MAY BE AVAILABLE

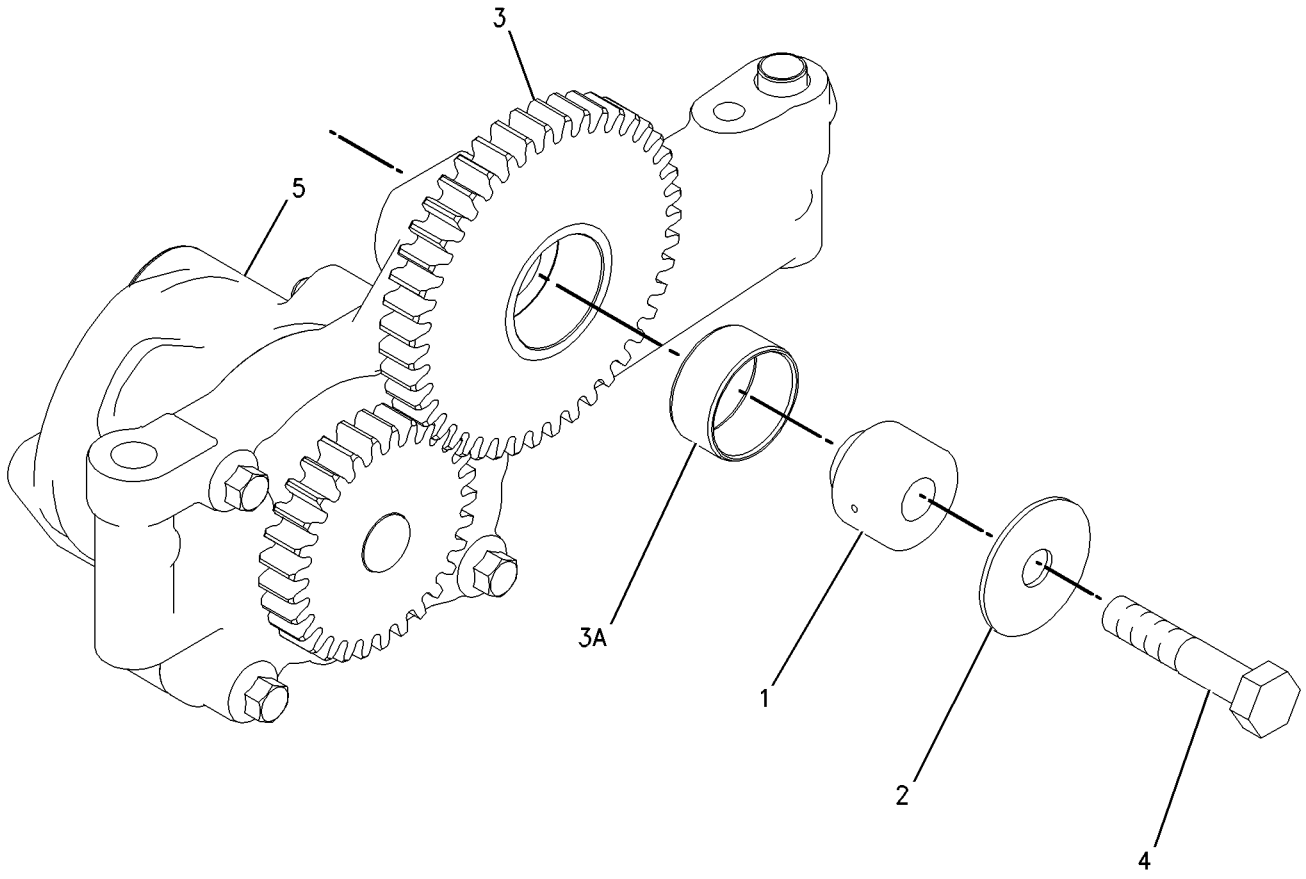

GRAPHIC #1 <END> g00775788

4W-2195 PUMP GP-ENGINE OIL

S/N: 4TF17400-UP
ONE SECTION GEAR
PART OF 114-7159, 117-5187, 117-5188, 6I-3528 ENGINE AR
ALSO AN ATTACHMENT

SMCS-1304 **i01639005**

NOTE	REF NO	GRAPHIC REF	PART NUMBER	QTY	PART NAME 1 2 3 4 5 6 (PRODUCT LEVEL)	SEE PAGE
YR	1	1	**119-2924**	1	PUMP GP-ENGINE OIL	98
M	2	1	**6V-5815**	2	BOLT (M10X1.5X75-MM)	
		1	**6V-5839**	2	WASHER (11X21X2.5-MM THK)	

M - METRIC PART
R - REMANUFACTURED PART MAY BE AVAILABLE
Y - SEPARATE ILLUSTRATION

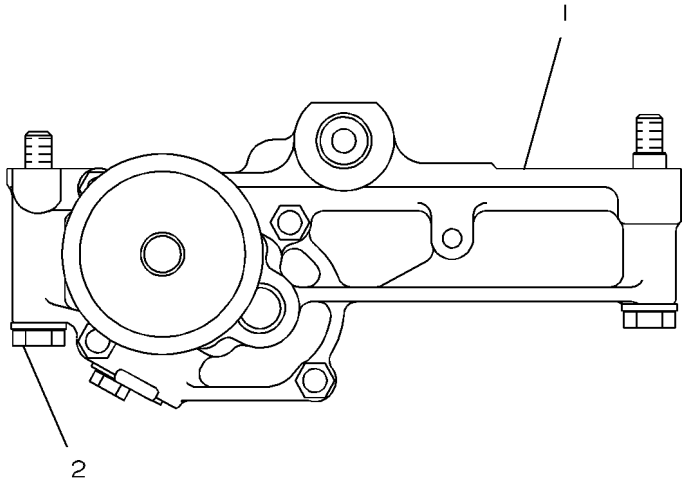

GRAPHIC #1 <END> g00108298

4W-2195 PUMP GP-ENGINE OIL

S/N: 4TF78326-UP
ONE SECTION GEAR
PART OF 117-5187 ENGINE AR

SMCS-1304 **i01709789**

NOTE	REF NO	GRAPHIC REF	PART NUMBER	QTY	PART NAME 1 2 3 4 5 6 (PRODUCT LEVEL)	SEE PAGE
Y	1	1	*200-4497*	1	PUMP GP-ENGINE OIL	99
M	2	1	**6V-5815**	2	BOLT (M10X1.5X75-MM)	
	3	1	**6V-5839**	2	WASHER (11X21X2.5-MM THK)	

M - METRIC PART
Y - SEPARATE ILLUSTRATION

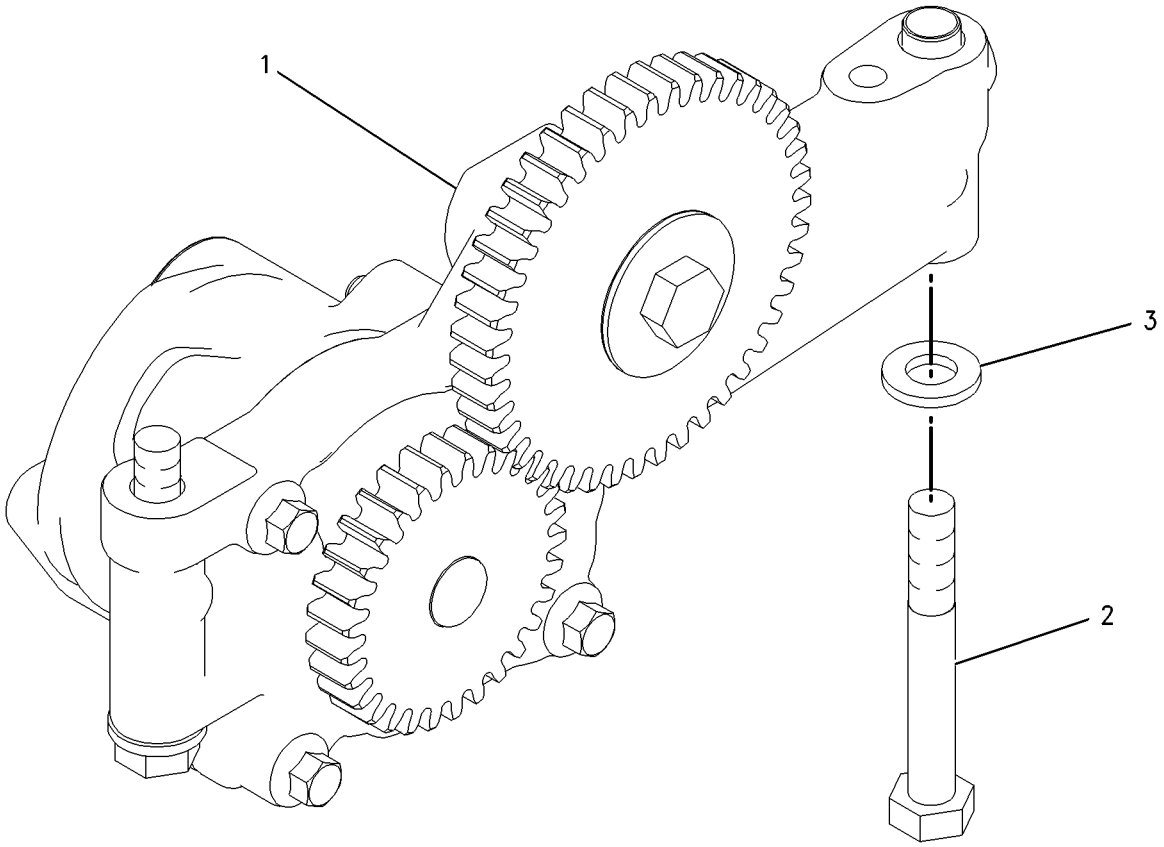

GRAPHIC #1 <END> g00855764

136-7804 COOLER AR-HIGH AMBIENT TEMP

S/N: 9BL1-UP
PART OF 133-0569 WASTE HANDLING AR
AN ATTACHMENT

SMCS-1374 **i00781936**

NOTE	PART NUMBER	QTY	PART NAME 1 2 3 4 5 6 (PRODUCT LEVEL)	SEE PAGE
	4Q-5044	1	CORE AS-OIL COOLER	

<END>

5Q-6890 COOLER AR-HIGH AMBIENT TEMP

S/N: 9BL1-UP
PART OF 133-0569 WASTE HANDLING AR
AN ATTACHMENT

SMCS-1374 **i00781930**

NOTE	PART NUMBER	QTY	PART NAME 1 2 3 4 5 6 (PRODUCT LEVEL)	SEE PAGE
	4Q-5044	1	CORE AS-OIL COOLER	

<END>

100-6269 COOLER GP-ENGINE OIL

S/N: 4TF17400-UP
PART OF 114-7159, 117-5187, 117-5188, 6I-3528 ENGINE AR
ALSO AN ATTACHMENT

SMCS-1378 **i07432860**

NOTE	REF NO	GRAPHIC REF	PART NUMBER	QTY	PART NAME 1 2 3 4 5 6 (PRODUCT LEVEL)	SEE PAGE
	1	1	**240-2767**	1	GASKET	
R	2	1	**267-4743**	1	CORE AS-ENGINE OIL COOLER	
	3	1	**3P-1156**	2	SEAL-O-RING	

R - REMANUFACTURED PART MAY BE AVAILABLE

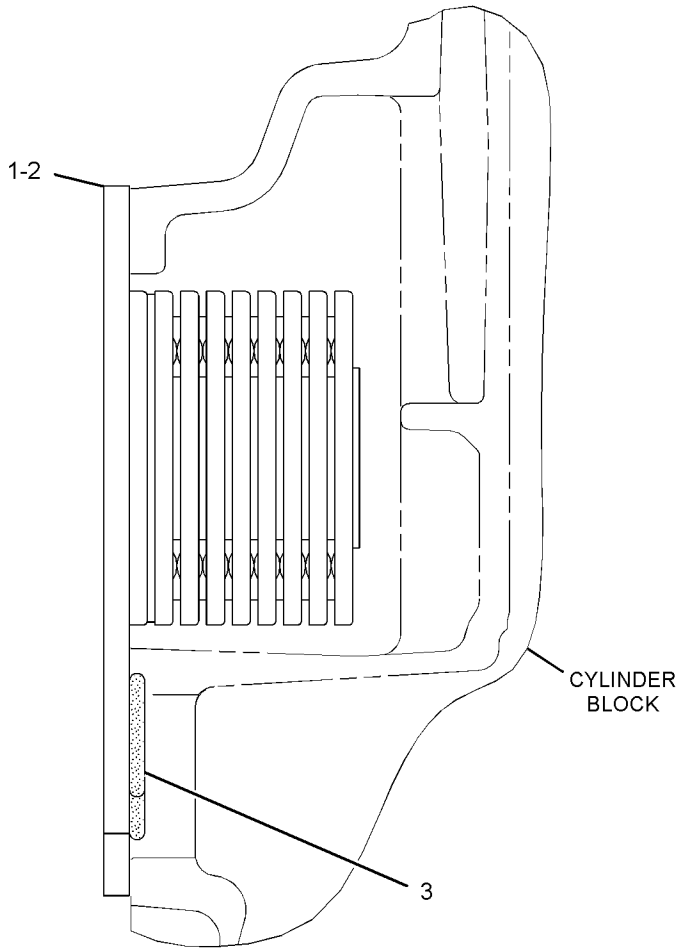

LEFT SIDE VIEW OF ENGINE

GRAPHIC #1 <END> g01439310

4P-8184 COOLER GP-ENGINE OIL

S/N: 4TF17400-18603
PART OF 114-7159 ENGINE AR
AN ATTACHMENT

SMCS-1378 **i01398872**

NOTE	REF NO	GRAPHIC REF	PART NUMBER	QTY	PART NAME 1 2 3 4 5 6 (PRODUCT LEVEL)	SEE PAGE
R	1	1	**7W-5903**	1	CORE AS-OIL COOLER	
	2	1	**7C-1160**	1	GASKET	
M	3	1	**8M-4445**	2	SEAL-O-RING	

M - METRIC PART
R - REMANUFACTURED PART MAY BE AVAILABLE

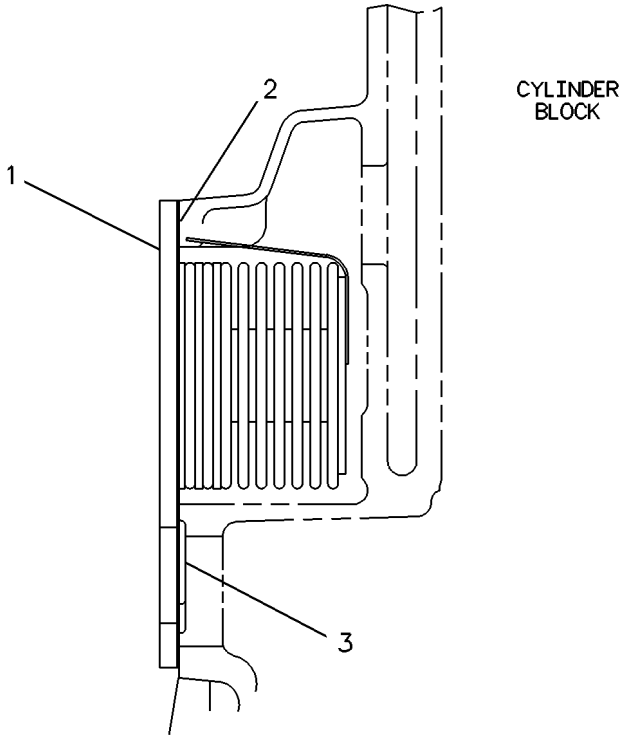

GRAPHIC #1 <END> g00117257

1N-3599 COVER GP-RADIATOR CAP

S/N: 9BL1-UP

PART OF 101-3170, 117-5192 RADIATOR GP

SMCS-1382, 7315

i02156360

NOTE	REF NO	GRAPHIC REF	PART NUMBER	QTY	PART NAME 1 2 3 4 5 6 (PRODUCT LEVEL)	SEE PAGE
	1	1	**2S-2846**	1	RETAINER-GASKET	
	2	1	**9S-9979**	1	RING-RETAINING	
	3	1	**2P-3230**	1	GASKET	
	4	1	**1M-8649**	1	RING-RETAINING	
	5	1	**5P-8502**	1	PADLOCK GP (RADIATOR)	
A		1	**5P-8500**	1	KEY	
A		1	**8Y-6364**	1	SLEEVE	
	6	1	**7N-2957**	1	COVER-RADIATOR CAP	
	7	1	**7N-5565**	1	CAP-RADIATOR	
	8	1	**2S-6097**	1	TANG	

A - NOT PART OF THIS GROUP

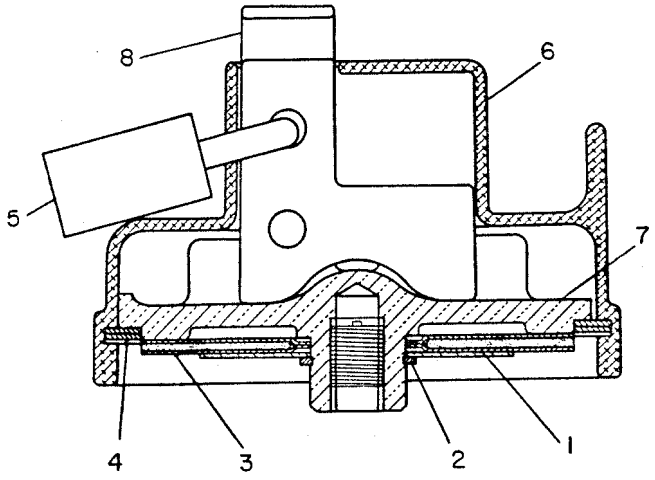

GRAPHIC #1

<END>

g00081606

106-7666 FAN GP-BLOWER

S/N: 9BL1-1487

PART OF 6I-3527 INSTALLATION AR

SMCS-1356, 1360 **i00569288**

NOTE	REF NO	GRAPHIC REF	PART NUMBER	QTY	PART NAME 1 2 3 4 5 6 (PRODUCT LEVEL)	SEE PAGE
	1	1	**7N-0476**	1	SPIDER AS-FAN	
	2	1	**106-7667**	1	GUARD AS	
	3	1	**5P-1075**	28	WASHER-HARD (10.2X22.5X3-MM THK)	
	4	1	**2K-4973**	16	LOCKNUT (3/8-16-THD)	
	5	1	**9B-7237**	12	BOLT (3/8-16X1.25-IN)	

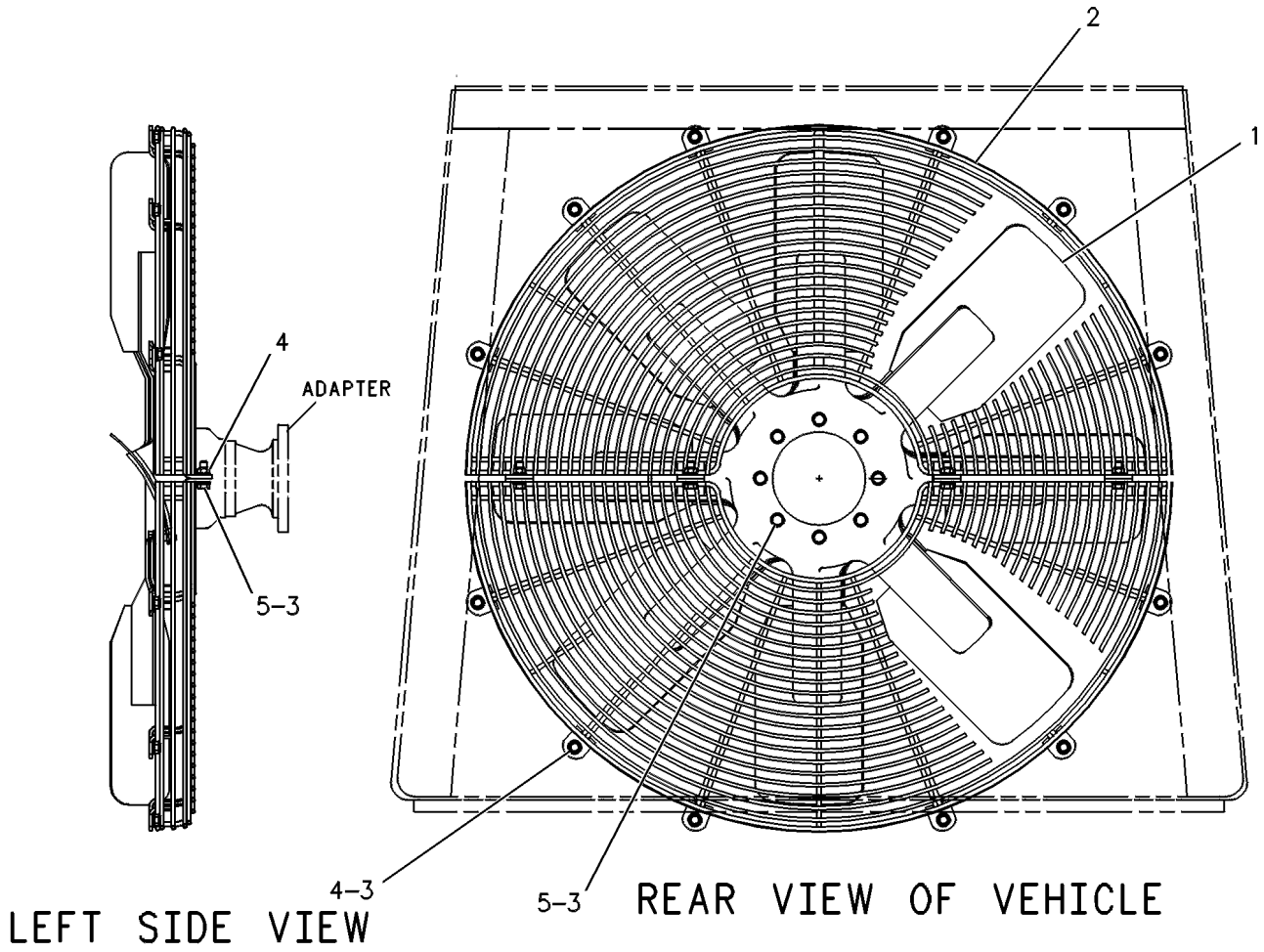

GRAPHIC #1 <END> g00247213

117-5193 FAN GP-BLOWER

S/N: 9BL1488-UP

PART OF 117-5189 INSTALLATION AR-ENGINE

SMCS-1356, 1360 **i00675721**

NOTE	REF NO	GRAPHIC REF	PART NUMBER	QTY	PART NAME 1 2 3 4 5 6 (PRODUCT LEVEL)	SEE PAGE
	1	1	**117-5200**	1	SPIDER AS-FAN (8-BLADE)	
	2	1	**2W-4681**	2	GUARD AS-FAN	
	3	1	**5P-1075**	12	WASHER-HARD (10.2X22.5X3-MM THK)	
	4	1	**2K-4973**	8	LOCKNUT (3/8-16-THD)	
	5	1	**4L-6454**	4	BOLT (3/8-16X1-IN)	
	6	1	**8T-4121**	6	WASHER-HARD (11X21X2.5-MM THK)	
M	7	1	**8T-4195**	6	BOLT (M10X1.5X30-MM)	

M - METRIC PART

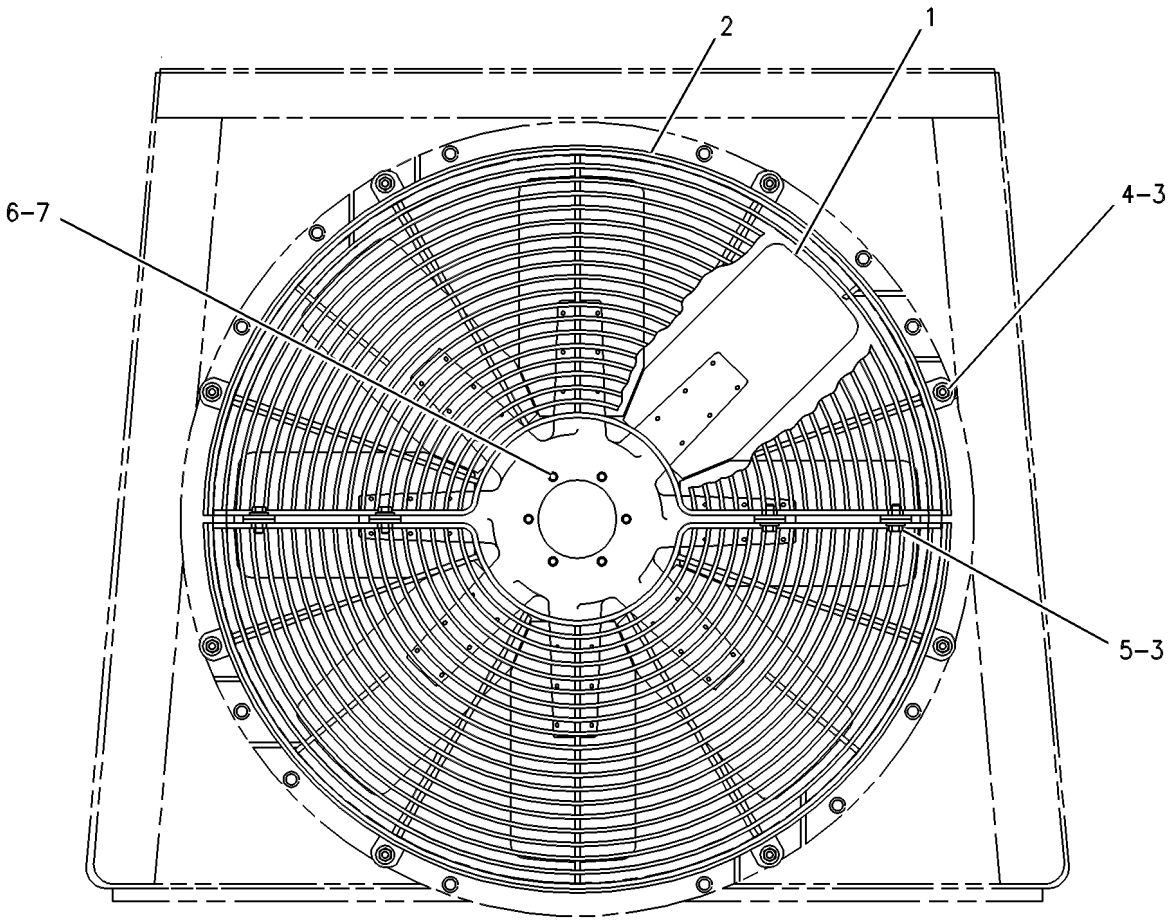

FRONT VIEW

GRAPHIC #1 <END> g00282943

4W-6620 HOUSING & REGULATOR GP

S/N: 4TF17400-18365, 32801-UP
FOR USE WITH ENGINES REQUIRING VERTICAL WATER OUTLET PIPE
PART OF 114-7159, 117-5187, 117-5188, 6I-3528 ENGINE AR
ALSO AN ATTACHMENT

SMCS-1355, 1393

i01853793

NOTE	REF NO	GRAPHIC REF	PART NUMBER	QTY	PART NAME 1 2 3 4 5 6 (PRODUCT LEVEL)	SEE PAGE
C	1	1	**126-0447**	1	HOUSING-WATER REGULATING	
	2	1	**2W-7212**	1	GASKET-WATER REGULATOR	
	3	1	**126-5869**	1	REGULATOR-WATER TEMPERATURE (94-DEG C)	
	4	1	**195-7339**	1	GASKET-WATER REGULATOR (WATER TEMPERATURE REGULATOR)	
	5	1	**4P-2685**	1	PIPE	
M	6	1	**6V-5230**	2	BOLT (M10X1.5X60-MM)	
	7	1	**9S-8005**	2	PLUG (3/4-16-THD)	
	8	1	**3K-0360**	2	SEAL-O-RING	
C	9	1	**9S-8004**	2	PLUG (9/16-18-THD)	
C	10	1	**3J-1907**	2	SEAL-O-RING	
M	11	1	**6V-3940**	2	BOLT (M8X1.25X25-MM)	
	12	1	**9M-1974**	2	WASHER-HARD (8.8X16X2-MM THK)	
B	13	1	**6L-3929**	1	HOSE	
	14	1	**8T-4983**	2	CLAMP-HOSE	
B	15	1	**3D-2824**	1	SEAL-O-RING	
B	16	1	**9S-8008**	1	PLUG (1-1/16-12-THD)	

B - USE AS REQUIRED
C - CHANGE FROM PREVIOUS TYPE
M - METRIC PART

4W-6620 **HOUSING & REGULATOR GP (**contd.**)** **i01853793**

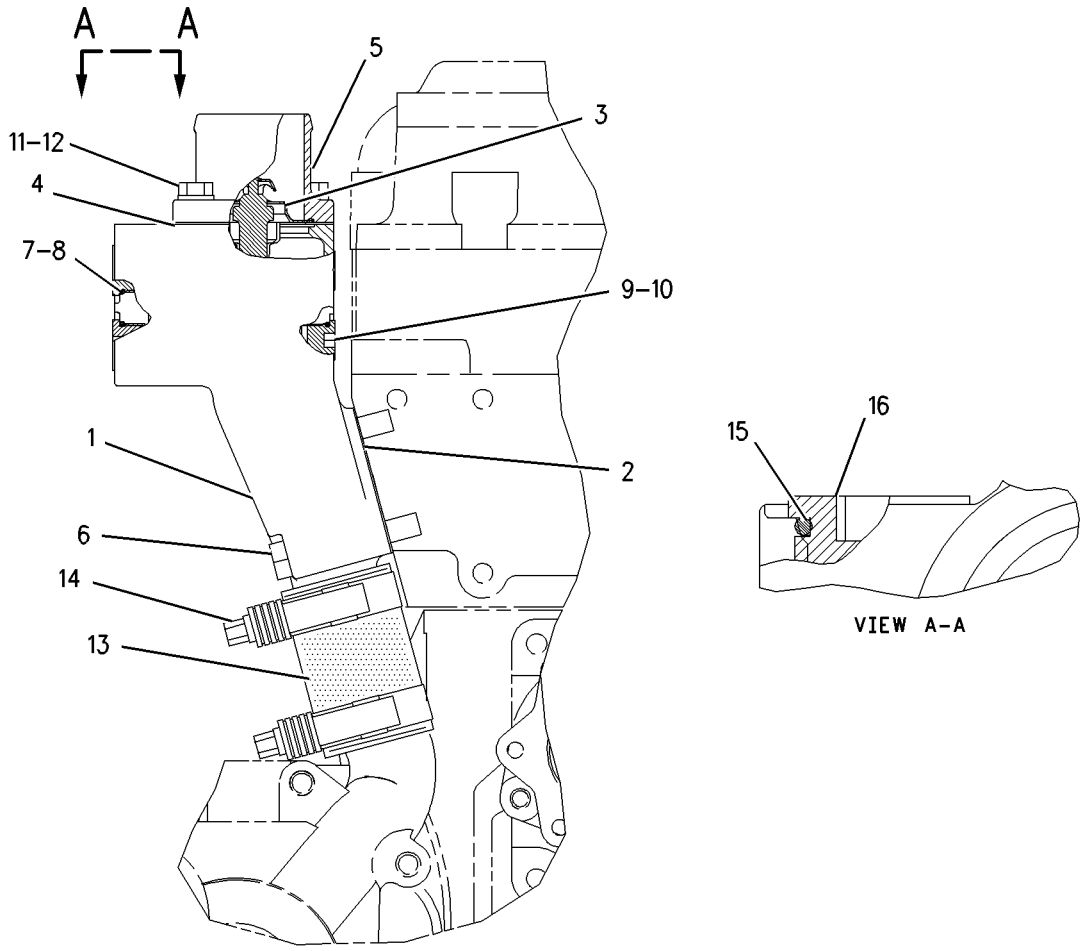

GRAPHIC #1 <END> g00985264

119-2936 LINES GP-WATER

S/N: 4TF18366-24271
PART OF 114-7159, 6I-3528 ENGINE AR
ALSO AN ATTACHMENT

SMCS-1355, 1380, 1393 **i00568241**

NOTE	REF NO	GRAPHIC REF	PART NUMBER	QTY	PART NAME 1 2 3 4 5 6 (PRODUCT LEVEL)	SEE PAGE
	1	1	**9Y-5277**	1	HOUSING	
	2	1	**2W-7212**	1	GASKET-WATER REGULATOR	
	3	1	**108-7045**	1	REGULATOR-WATER TEMPERATURE	
	4	1	**4W-0549**	1	GASKET-WATER REGULATOR	
BE	5	1	**100-4199**	1	PIPE	
M	6	1	**6V-5230**	2	BOLT (M10X1.5X60-MM)	
	7	1	**9S-8005**	2	PLUG (3/4-16-THD)	
	8	1	**3K-0360**	2	SEAL-O-RING	
	9	1	**9S-8004**	2	PLUG (9/16-18-THD)	
	10	1	**3J-1907**	2	SEAL-O-RING	
M	11	1	**6V-3940**	2	BOLT (M8X1.25X25-MM)	
	12	1	**9M-1974**	2	WASHER-HARD (8.8X16X2-MM THK)	
BE	13	1	**5P-0763**		HOSE (8CM)	
	14	1	**5P-0597**	2	CLAMP-HOSE	
	15	1	**3D-2824**	1	SEAL-O-RING	
	16	1	**9S-8008**	1	PLUG (1-1/16-12-THD)	

B - USE AS REQUIRED
E - ORDER BY THE CENTIMETER
M - METRIC PART

119-2936 **LINES GP-WATER (**contd.**)** **i00568241**

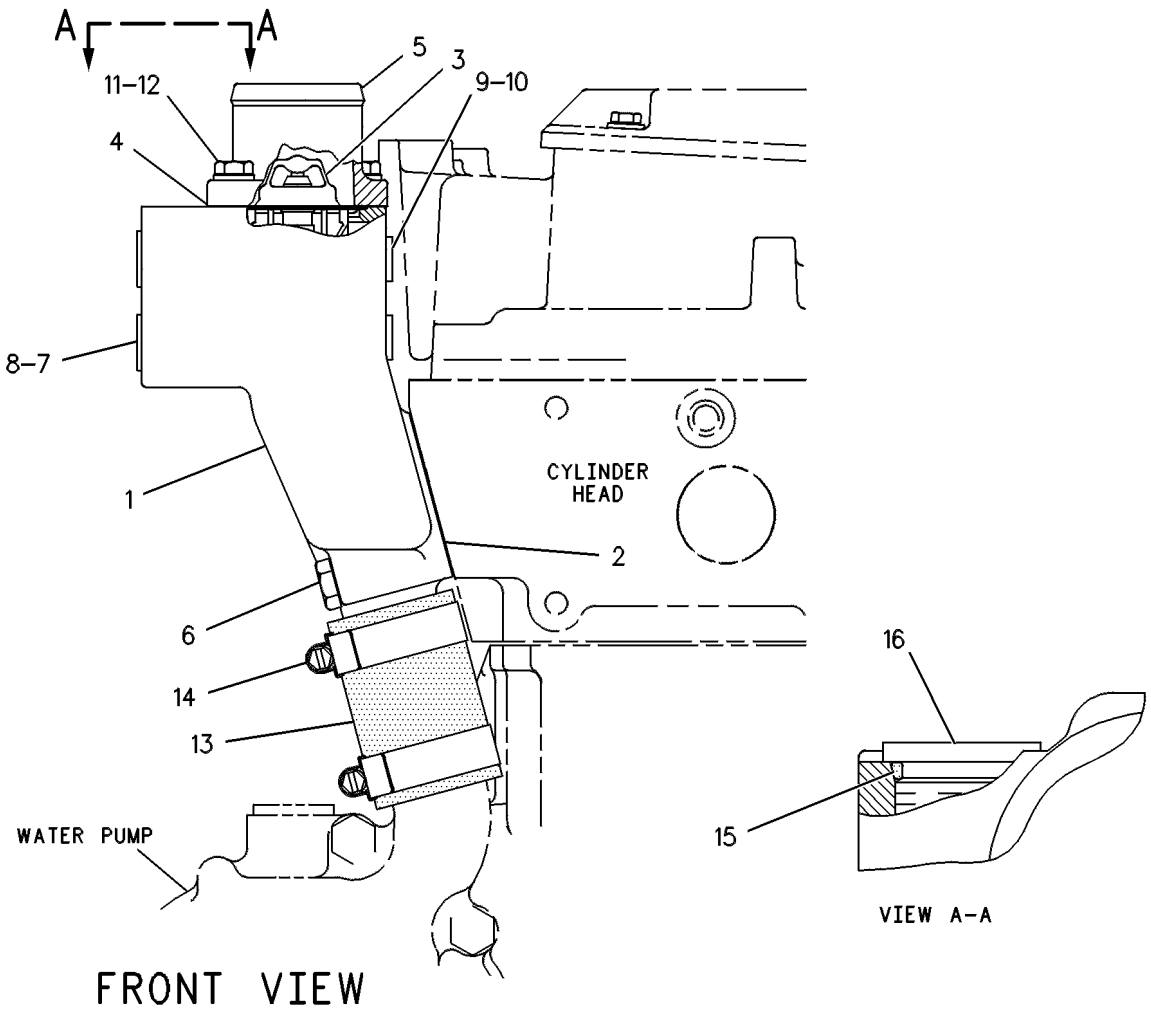

GRAPHIC #1 <END> g00247306

119-2936 LINES GP-WATER

S/N: 4TF17400-UP
PART OF 114-7159, 117-5187, 117-5188, 6I-3528 ENGINE AR
ALSO AN ATTACHMENT

SMCS-1355, 1380, 1393

i01623189

NOTE	REF NO	GRAPHIC REF	PART NUMBER	QTY	PART NAME 1 2 3 4 5 6 (PRODUCT LEVEL)	SEE PAGE
C	1	1	**126-0449**	1	HOUSING	
	2	1	**2W-7212**	1	GASKET-WATER REGULATOR	
C	3	1	**126-5869**	1	REGULATOR-WATER TEMPERATURE (94-DEG C)	
	4	1	**195-7339**	1	GASKET-WATER REGULATOR	
C	5	1	**4P-2685**	1	PIPE	
M	6	1	**6V-5230**	2	BOLT (M10X1.5X60-MM)	
	7	1	**9S-8005**	2	PLUG (3/4-16-THD)	
	8	1	**3K-0360**	2	SEAL-O-RING	
	9	1	**9S-8004**	2	PLUG (9/16-18-THD)	
	10	1	**3J-1907**	2	SEAL-O-RING	
M	11	1	**6V-3940**	2	BOLT (M8X1.25X25-MM)	
	12	1	**9M-1974**	2	WASHER-HARD (8.8X16X2-MM THK)	
E	13	1	**5P-0763**		HOSE (8CM)	
C	14	1	**127-4471**	2	CLAMP-HOSE	
	15	1	**3D-2824**	1	SEAL-O-RING	
	16	1	**9S-8008**	1	PLUG (1-1/16-12-THD)	

C - CHANGE FROM PREVIOUS TYPE
E - ORDER BY THE CENTIMETER
M - METRIC PART

119-2936 **LINES GP-WATER (**contd.**)** **i01623189**

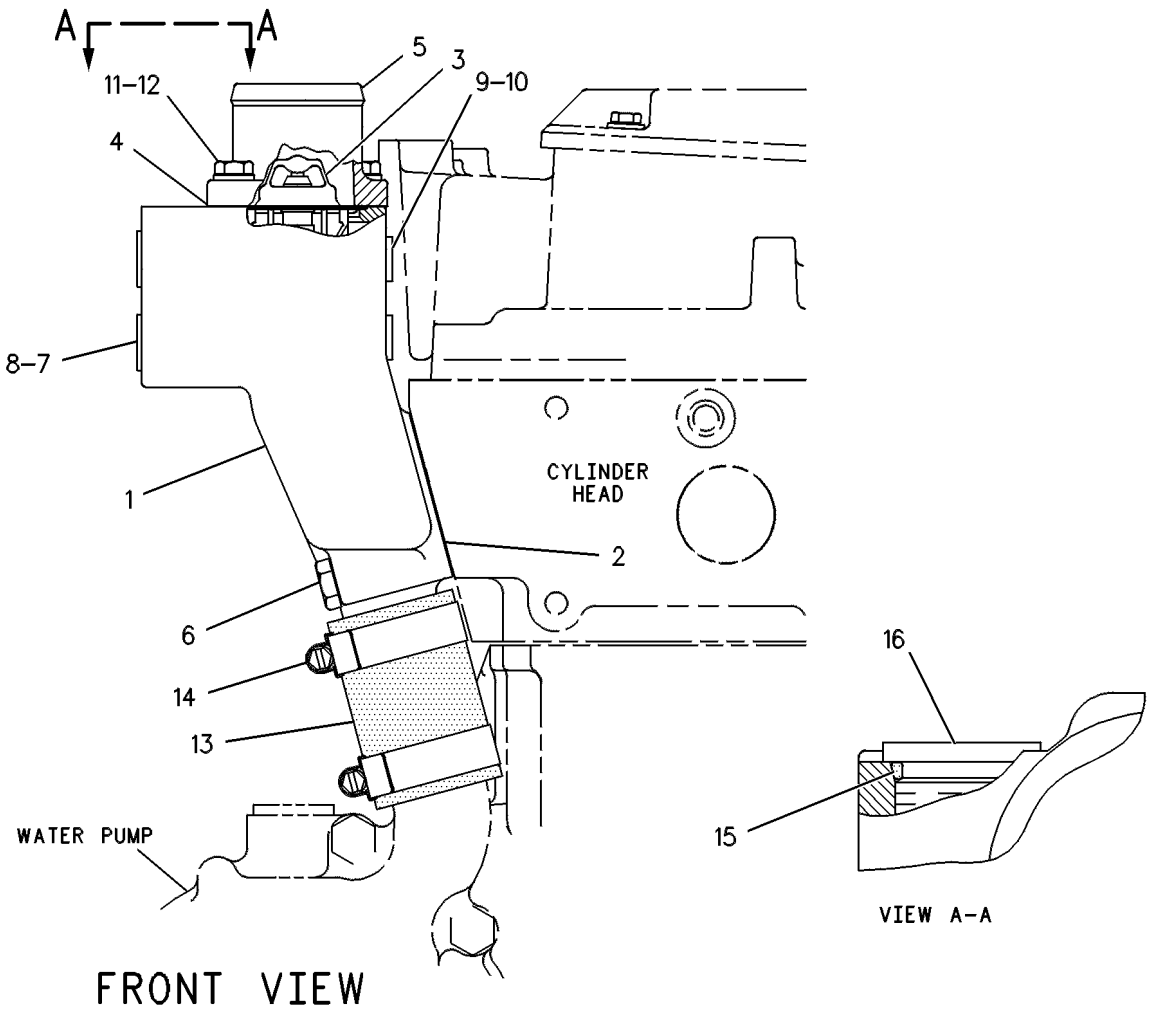

GRAPHIC #1 <END> g00247306

159-3137 PUMP GP-WATER

S/N: 4TF17400-UP
PART OF 7C-4508 PUMP GP-WATER
ALSO AN ATTACHMENT

SMCS-1361 **i03269690**

NOTE	REF NO	GRAPHIC REF	PART NUMBER	QTY	PART NAME 1 2 3 4 5 6 (PRODUCT LEVEL)	SEE PAGE
	1	1	**277-7089**	1	SHAFT AS	
	2	1	**7W-3780**	1	PULLEY	
	3	1	**147-5088**	1	SEAL AS-WATER PUMP	
	4	1	**152-3952**	1	IMPELLER-PUMP	
	5	1	**195-0303**	1	HOUSING AS-PUMP	
	5A	1	**177-1058**	1	PLUG	

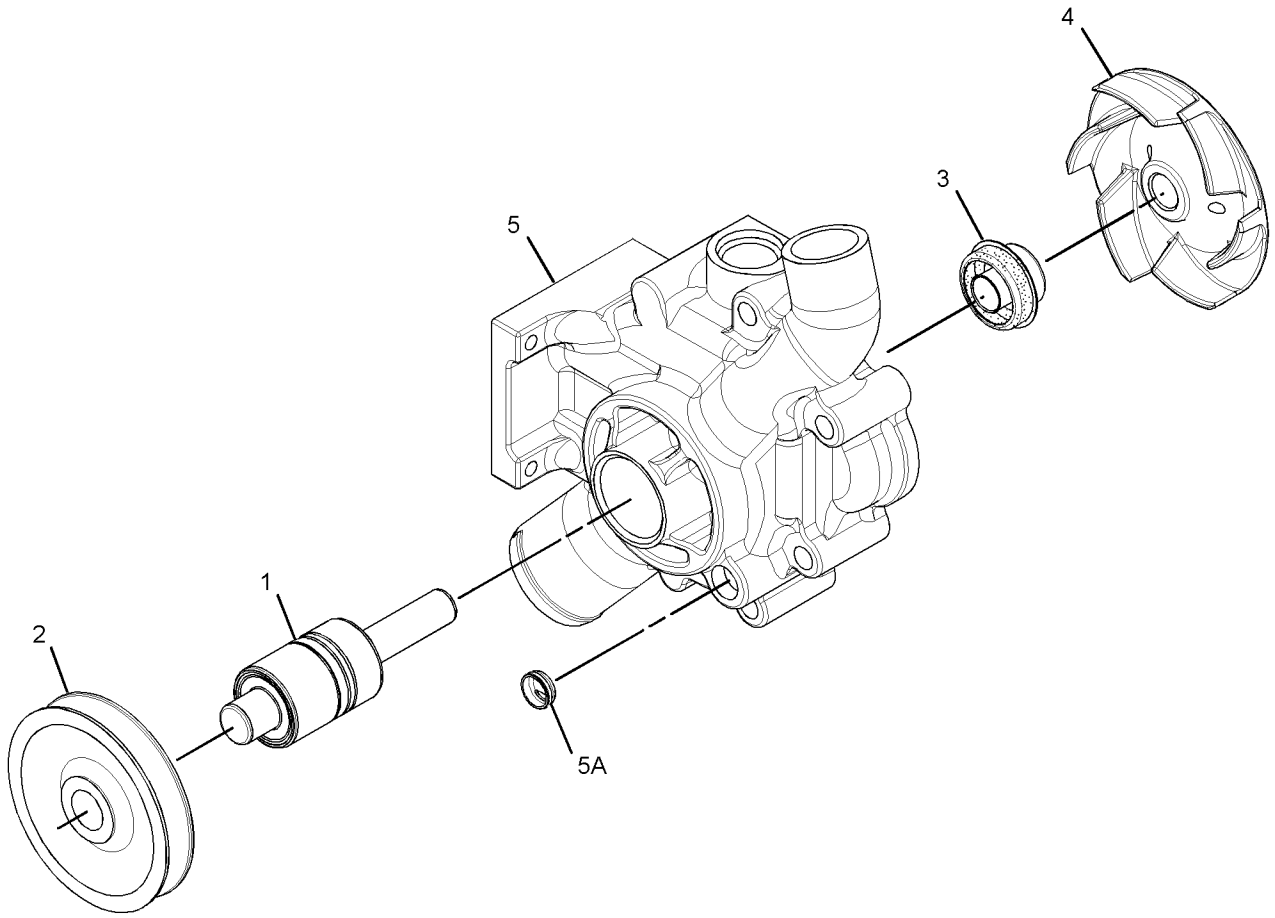

GRAPHIC #1 <END> g01677160

352-2150 PUMP GP-WATER*R

S/N: 4TF17400-UP

PART OF 352-2151 PUMP GP-WATER

SMCS-1361 **i04440923**

NOTE	REF NO	GRAPHIC REF	PART NUMBER	QTY	PART NAME 1 2 3 4 5 6 (PRODUCT LEVEL)	SEE PAGE
	1	1	**277-7089**	1	SHAFT AS	
	2	1	**7W-3780**	1	PULLEY	
	3	1	**350-5417**	1	SEAL-WATER PUMP	
	4	1	**152-3952**	1	IMPELLER-PUMP	
	5	1	**195-0303**	1	HOUSING AS-PUMP	
	5A	1	**177-1058**	1	PLUG	

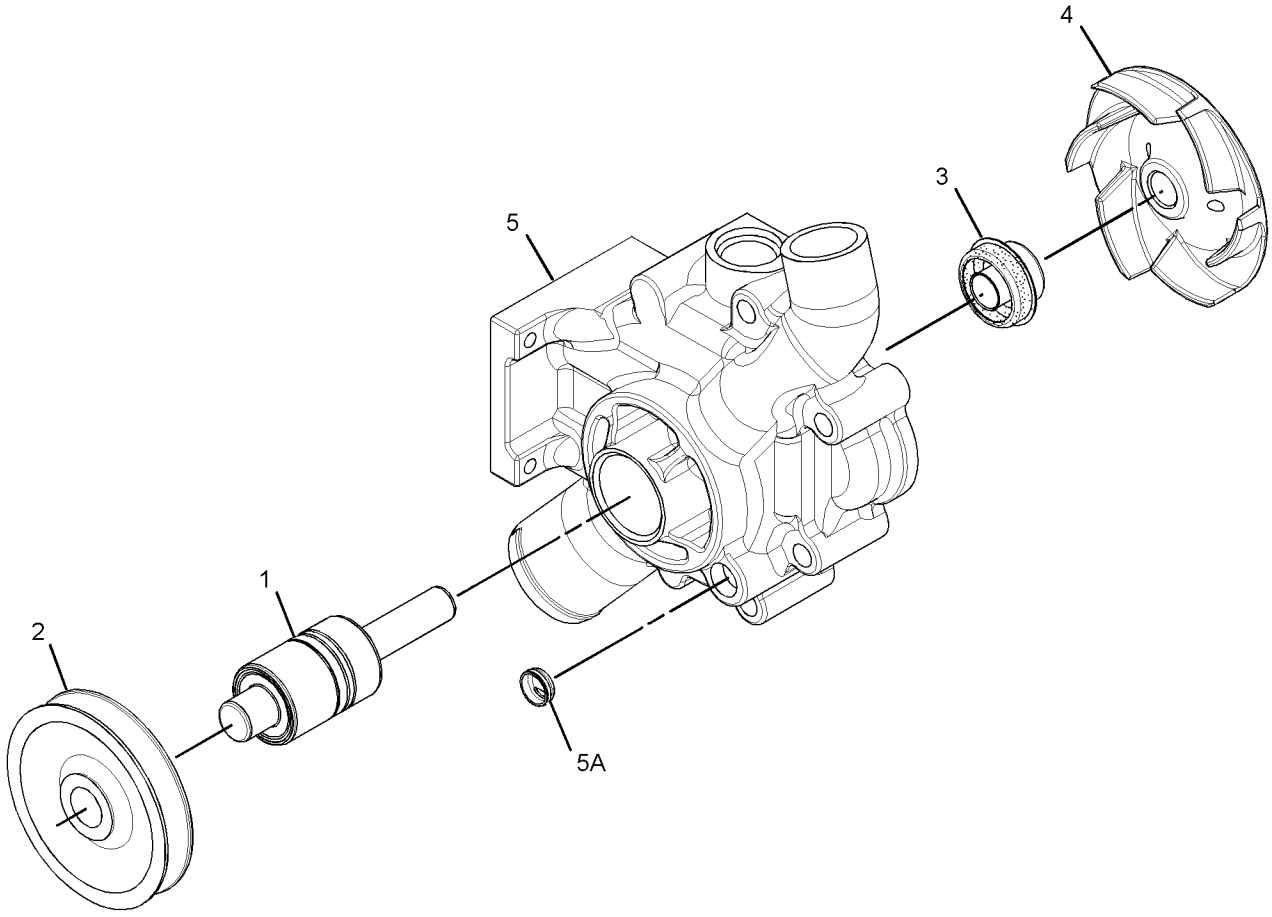

GRAPHIC #1 <END> g01677160

352-2151 PUMP GP-WATER*R

S/N: 4TF17400-UP

PART OF 4W-7589 PUMP GP-WATER

SMCS-1361 **i06204439**

NOTE	REF NO	GRAPHIC REF	PART NUMBER	QTY	PART NAME 1 2 3 4 5 6 (PRODUCT LEVEL)	SEE PAGE
	1	1	*148-8409*	1	PLUG AS	
	1A	1	**3D-2824**	1	SEAL-O-RING	
		1	**9S-8008**	1	PLUG (1-1/16-12-THD)	
	2	1	**4W-7592**	1	GASKET	
	3	1	**4W-0253**	1	COVER	
M	4	1	**6V-3918**	4	BOLT (M8X1.25X50-MM)	
	5	1	*148-8395*	3	PLUG AS	
					(EACH INCLUDES)	
	5A	1	**3K-0360**	1	SEAL-O-RING	
		1	**9S-8005**	1	PLUG (3/4-16-THD)	
	6	1	*3J-3679*	1	PLUG AS	
	6A	1	**1J-9671**	1	SEAL-O-RING	
		1	**9S-8003**	1	PLUG (1/2-20-THD)	
YR	7	1	**352-2150**	1	PUMP GP-WATER	115
	8	1	**9M-1974**	4	WASHER-HARD (8.8X16X2-MM THK)	

M - METRIC PART
R - REMANUFACTURED PART MAY BE AVAILABLE
Y - SEPARATE ILLUSTRATION

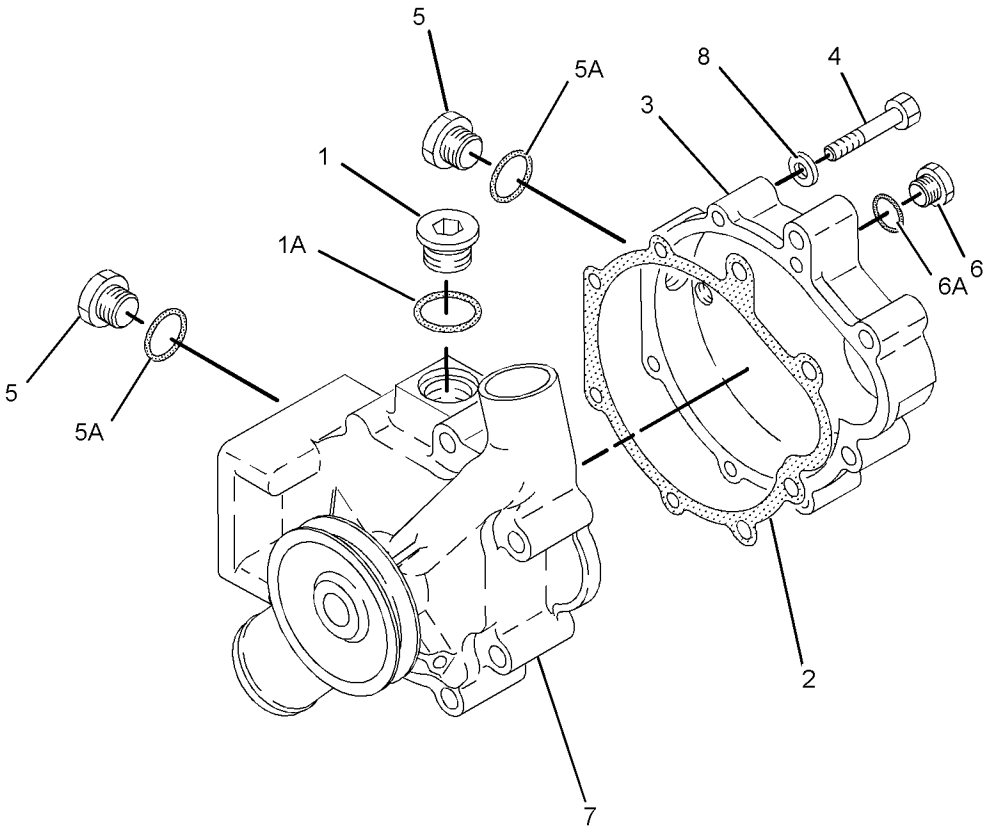

GRAPHIC #1 <END> g03859420

4W-7589 PUMP GP-WATER

S/N: 4TF17400-UP
PART OF 114-7159, 117-5187, 117-5188, 6I-3528 ENGINE AR
ALSO AN ATTACHMENT

SMCS-1361 **i01981235**

NOTE	REF NO	GRAPHIC REF	PART NUMBER	QTY	PART NAME 1 2 3 4 5 6 (PRODUCT LEVEL)	SEE PAGE
YR	1	1	**7C-4508**	1	PUMP GP-WATER	119
M	2	1	**8T-0644**	4	BOLT (M10X1.5X90-MM)	
	3	1	**2M-4453**	1	SEAL-O-RING	
	4	1	**4J-0524**	1	SEAL-O-RING	

M - METRIC PART
R - REMANUFACTURED PART MAY BE AVAILABLE
Y - SEPARATE ILLUSTRATION

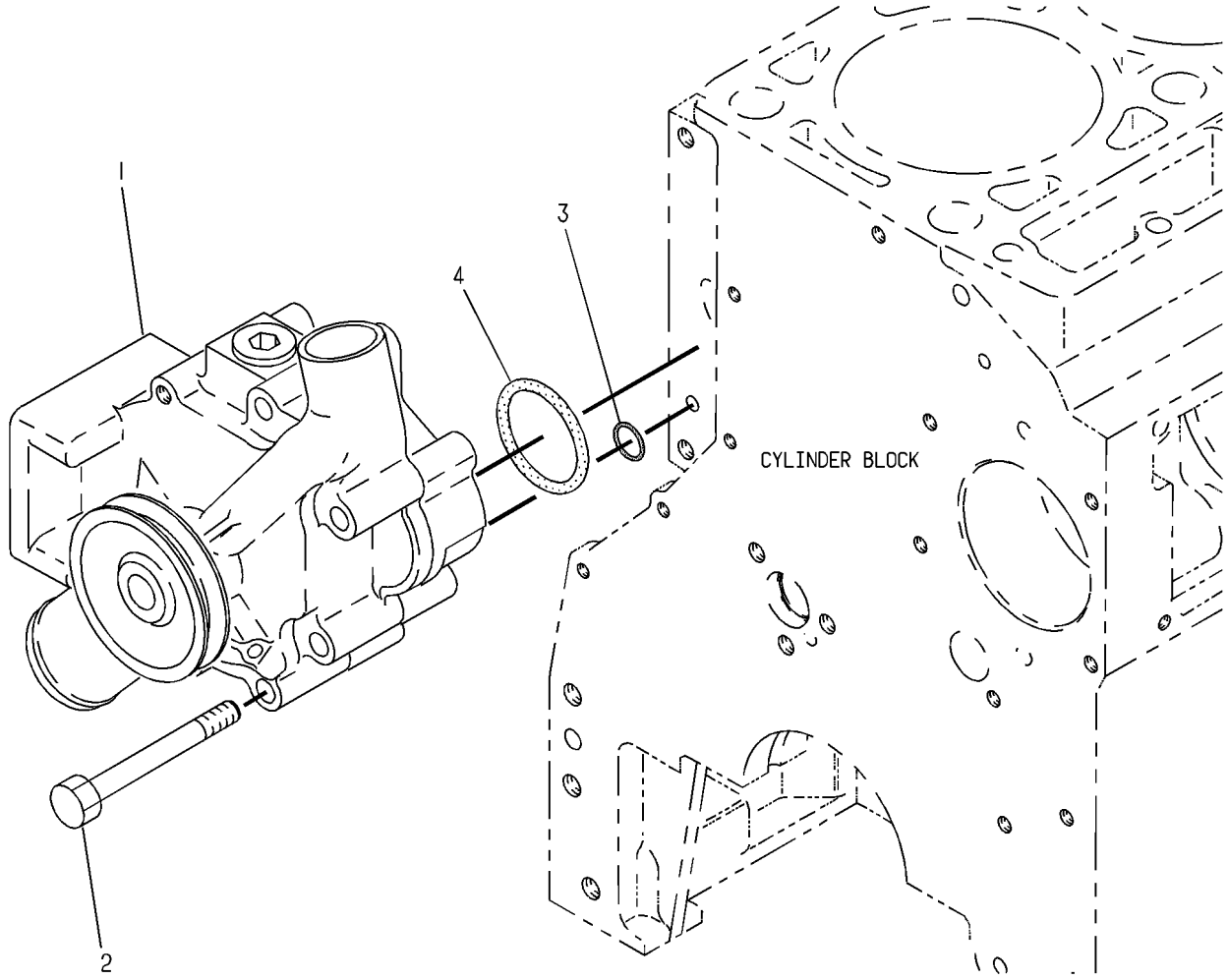

GRAPHIC #1 <END> g00118530

4W-7589 PUMP GP-WATER

S/N: 4TF17400-UP

PART OF 117-5187 ENGINE AR

SMCS-1361 **i04439771**

NOTE	REF NO	GRAPHIC REF	PART NUMBER	QTY	PART NAME 1 2 3 4 5 6 (PRODUCT LEVEL)	SEE PAGE
CYR	1	1	**352-2151**	1	PUMP GP-WATER	116
M	2	1	**8T-0644**	4	BOLT (M10X1.5X90-MM)	
	3	1	**2M-4453**	1	SEAL-O-RING	
	4	1	**4J-0524**	1	SEAL-O-RING	

C - CHANGE FROM PREVIOUS TYPE
M - METRIC PART
R - REMANUFACTURED PART MAY BE AVAILABLE
Y - SEPARATE ILLUSTRATION

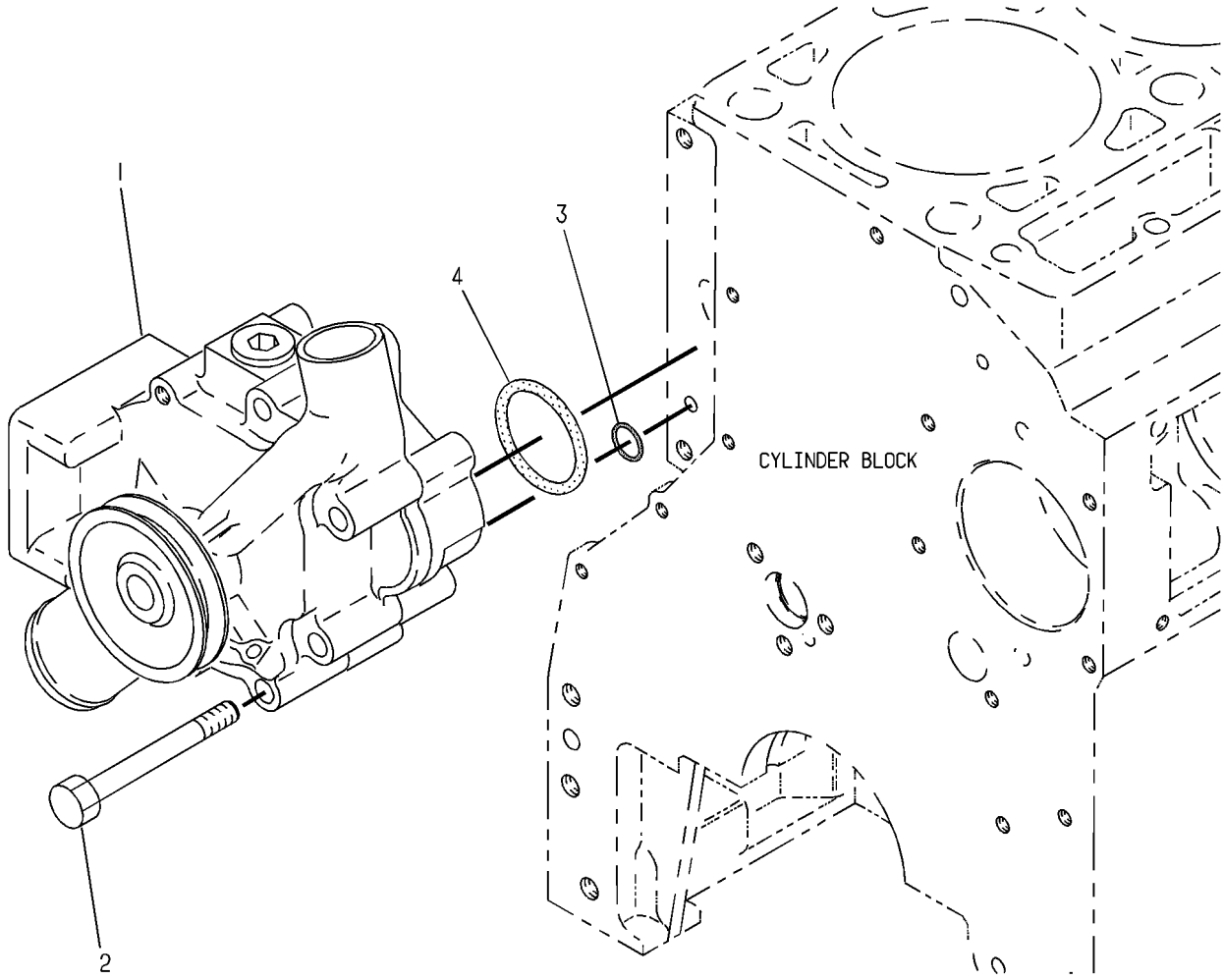

GRAPHIC #1 <END> g00118530

7C-4508 PUMP GP-WATER*R

S/N: 4TF17400-UP
PART OF 4W-7589 PUMP GP-WATER
ALSO AN ATTACHMENT

SMCS-1361 **i01514680**

NOTE	REF NO	GRAPHIC REF	PART NUMBER	QTY	PART NAME 1 2 3 4 5 6 (PRODUCT LEVEL)	SEE PAGE
	1	1	**9S-8008**	1	PLUG (1-1/16-12-THD)	
	2	1	**4W-7592**	1	GASKET	
	3	1	**4W-0253**	1	COVER	
M	4	1	**6V-3918**	4	BOLT (M8X1.25X50-MM)	
	5	1	**9M-1974**	4	WASHER-HARD (8.8X16X2-MM THK)	
	6	1	**9S-8003**	1	PLUG (1/2-20-THD)	
	7	1	**1J-9671**	1	SEAL-O-RING	
	8	1	**9S-8005**	3	PLUG (3/4-16-THD)	
	9	1	**3K-0360**	3	SEAL-O-RING	
	10	1	**3D-2824**	1	SEAL-O-RING	
Y	11	1	**159-3137**	1	PUMP GP-WATER	114

M - METRIC PART
Y - SEPARATE ILLUSTRATION

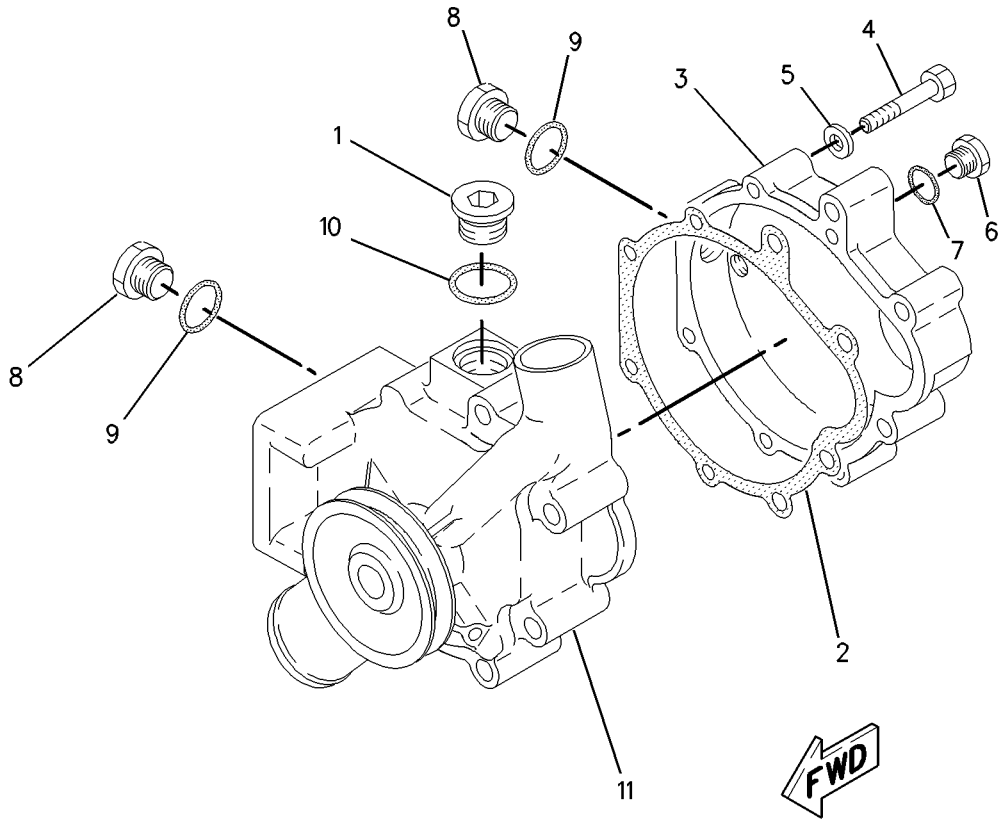

GRAPHIC #1 <END> g00785294

114-6645 RADIATOR & HYD OIL COOLER GP

S/N: 9BL1-UP

PART OF 101-3170, 117-5192 RADIATOR GP

SMCS-1353, 1374

i01133548

NOTE	PART NUMBER	QTY	PART NAME 1 2 3 4 5 6 (PRODUCT LEVEL)	SEE PAGE
Y	*1N-4422*	1	COOLER GP-TRANSMISSION OIL	347
Y	*114-6644*	1	RADIATOR GP	124

Y - SEPARATE ILLUSTRATION

<END>

101-3170 RADIATOR GP

S/N: 9BL1-1487

PART OF 6I-3527 INSTALLATION AR

SMCS-1353 **i01398878**

NOTE	REF NO	GRAPHIC REF	PART NUMBER	QTY	PART NAME 1 2 3 4 5 6 (PRODUCT LEVEL)	SEE PAGE
Y	1	1	*114-6645*	1	RADIATOR & HYD OIL COOLER GP	120
	2	1	**6N-7068**	4	STRIP-FAN BAFFLE	
	3	1	**6N-7061**	4	BAFFLE AS-FAN	
		1	**5B-9627**	6	WASHER (10.3X19X5-MM THK)	
	4	1	**106-9699**	1	BAFFLE	
	5	1	**1N-4135**	1	STRIP-TAPPING	
	6	1	**1N-4137**	1	STRIP-TAPPING	
	7	1	**106-9700**	1	BAFFLE	
	8	1	**8T-9101**	2	BOLT (3/8-16X2.75-IN)	
	9	1	**8T-4896**	29	WASHER-HARD (10.2X18.5X2.5-MM THK)	
	10	1	**5S-7379**	17	BOLT (3/8-16X0.875-IN)	
	11	1	**112-5516**	1	SUPPORT AS	
	12	1	**2S-1212**	2	MOUNT AS	
	13	1	**1N-4146**	2	BRACKET AS-SUPPORT	
	14	1	**8T-2502**	2	BOLT (3/8-16X1.125-IN)	
	15	1	**1N-4142**	1	BAR	
	16	1	**112-4401**	1	SUPPORT AS	
	17	1	**9X-2212**	2	BOLT (9/16-12X4.5-IN)	
	18	1	**7X-0510**	2	WASHER-HARD (15.5X29X3-MM THK)	
	19	1	**8S-5150**	2	NUT-FULL (9/16-12-THD)	
	20	1	**112-5519**	1	STRIP	
	21	1	**8T-7008**	8	BOLT (3/8-16X3-IN)	
	22	1	**7N-6100**	2	BAFFLE	
	23	1	**9L-9813**	12	RETAINER	
	24	1	**6V-8189**	12	NUT (5/16-18-THD)	
	25	1	**5P-4116**	12	WASHER-HARD (8.8X20.5X2-MM THK)	
	26	1	**8N-9889**	1	GASKET	
BE	27	1	**5P-1259**		HOSE	
	28	1	**3K-0360**	1	SEAL-O-RING	
Y	29	1	*1N-3599*	1	COVER GP-RADIATOR CAP	105
	30	1	**5S-1218**	1	VALVE AS-PRESSURE RELIEF	
	31	1	**5S-4629**	2	GASKET-VALVE	
	32	1	**5S-1213**	1	PLATE-PRESSURE VALVE	
	33	1	**5S-1211**	1	COVER-RELIEF VALVE	
	34	1	**8T-4224**	5	WASHER-HARD (8.8X16X2-MM THK)	
	35	1	**8C-3121**	5	BOLT (5/16-18X1.5-IN)	
	36	1	**8T-4835**	4	BOLT (1/2-13X2-IN)	
	37	1	**8T-4223**	4	WASHER-HARD (13.5X25.5X3-MM THK)	
	38	1	**5M-6214**	1	PLUG (1/8-27 PTF)	
	39	1	**100-4591**	1	TUBE	
	40	1	**5P-0597**	2	CLAMP-HOSE	
BE	41	1	**5P-1262**		HOSE	
BE	42	1	**114-5502**	1	HOSE-RADIATOR	
	43	1	**114-6659**	1	TUBE AS	
	44	1	**4L-9337**	6	BOLT (3/8-16X1.5-IN)	
	45	1	**7E-4761**	1	VALVE-DRAIN	
BE	46	1	**5P-0767**		HOSE (20CM)	

101-3170 **RADIATOR GP (**contd.**)** **i01398878**

NOTE	REF NO	GRAPHIC REF	PART NUMBER	QTY	PART NAME 1 2 3 4 5 6 (PRODUCT LEVEL)	SEE PAGE
	47	1	**8T-0154**	1	CLAMP-HOSE	
	48	1	**112-5518**	1	STRIP	
	49	1	**5P-1075**	6	WASHER-HARD (10.2X22.5X3-MM THK)	
	50	1	**112-5517**	2	PLATE	
BE	51	1	**118-0021**		SEAL	
	52	1	**5P-4868**	4	CLAMP-HOSE	

B - USE AS REQUIRED
E - ORDER BY THE CENTIMETER
Y - SEPARATE ILLUSTRATION

101-3170 **RADIATOR GP (**contd.**)** **i01398878**

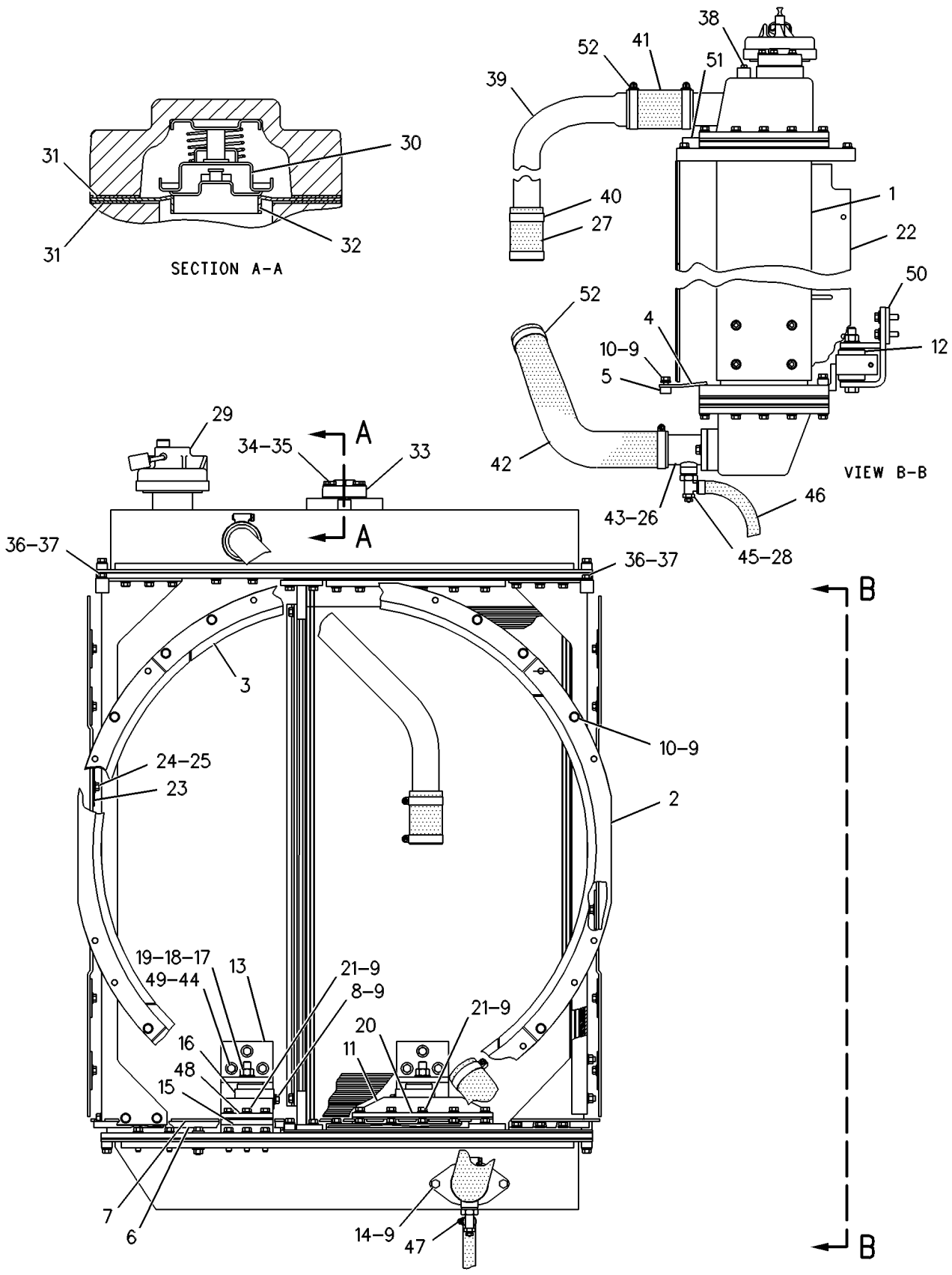

GRAPHIC #1 <END> g00264487

114-6644 RADIATOR GP

S/N: 9BL1-UP

PART OF 114-6645 RADIATOR & HYD OIL COOLER GP

SMCS-1353 **i01905039**

NOTE	REF NO	GRAPHIC REF	PART NUMBER	QTY	PART NAME 1 2 3 4 5 6 (PRODUCT LEVEL)	SEE PAGE
	1	1	**1N-4110**	1	TANK AS-RADIATOR TOP	
		1	**1S-0286**	1	STUD-TAPERLOCK	
	2	1	**1N-4149**	2	STRIP-TAPPING	
	3	1	**8T-2501**	22	BOLT (3/8-16X2-IN)	
	4	1	**8T-4896**	89	WASHER-HARD (10.2X18.5X2.5-MM THK)	
	5	1	**1N-4150**	4	STRIP-BACKUP	
	6	1	**7N-9283**	4	STRIP-BACKUP	
	7	1	**1N-4125**	1	GASKET	
	8	1	**1N-4122**	1	PLATE AS-TOP	
		1	**5M-9679**	3	BOSS	
	9	1	**1N-4126**	2	GASKET	
	10	1	**117-9014**	1	CHANNEL AS-RADIATOR	
	11	1	**5S-7379**	4	BOLT (3/8-16X0.875-IN)	
	12	1	**1N-4128**	1	PLATE AS	
		1	**5M-9679**	3	BOSS	
	13	1	**114-6643**	1	TANK AS-BOTTOM	
	14	1	**1N-4130**	1	GASKET	
	15	1	**9B-7237**	9	BOLT (3/8-16X1.25-IN)	
	16	1	**119-5902**	1	CORE AS-RADIATOR	
	17	1	**5P-1075**	12	WASHER-HARD (10.2X22.5X3-MM THK)	
	18	1	**119-3372**	2	CHANNEL-WRAP	
	19	1	**8N-9928**	1	CHANNEL AS-LOWER	
	20	1	**6V-8801**	9	NUT (3/8-16-THD)	
	21	1	**5S-7383**	33	BOLT (3/8-16X1.75-IN)	
	22	1	**1N-4148**	2	STRIP-TAPPING	
	23	1	**4L-9337**	18	BOLT (3/8-16X1.5-IN)	
	24	1	**1W-4289**	1	PLATE AS	
BD		1	**5P-5931**		SEAL	
	25	1	**2W-3055**	4	SUPPORT AS	
	26	1	**7X-0288**	4	BOLT (3/8-16X1.625-IN)	
	27	1	**4L-6454**	2	BOLT (3/8-16X1-IN)	
	28	1	**117-9013**	1	CHANNEL AS-RADIATOR	
	29	1	**8N-9937**	2	STRIP	
BD	30	1	**5P-5931**		SEAL	

B - USE AS REQUIRED
D - ORDER BY THE METER

114-6644 **RADIATOR GP (**contd.**)** **i01905039**

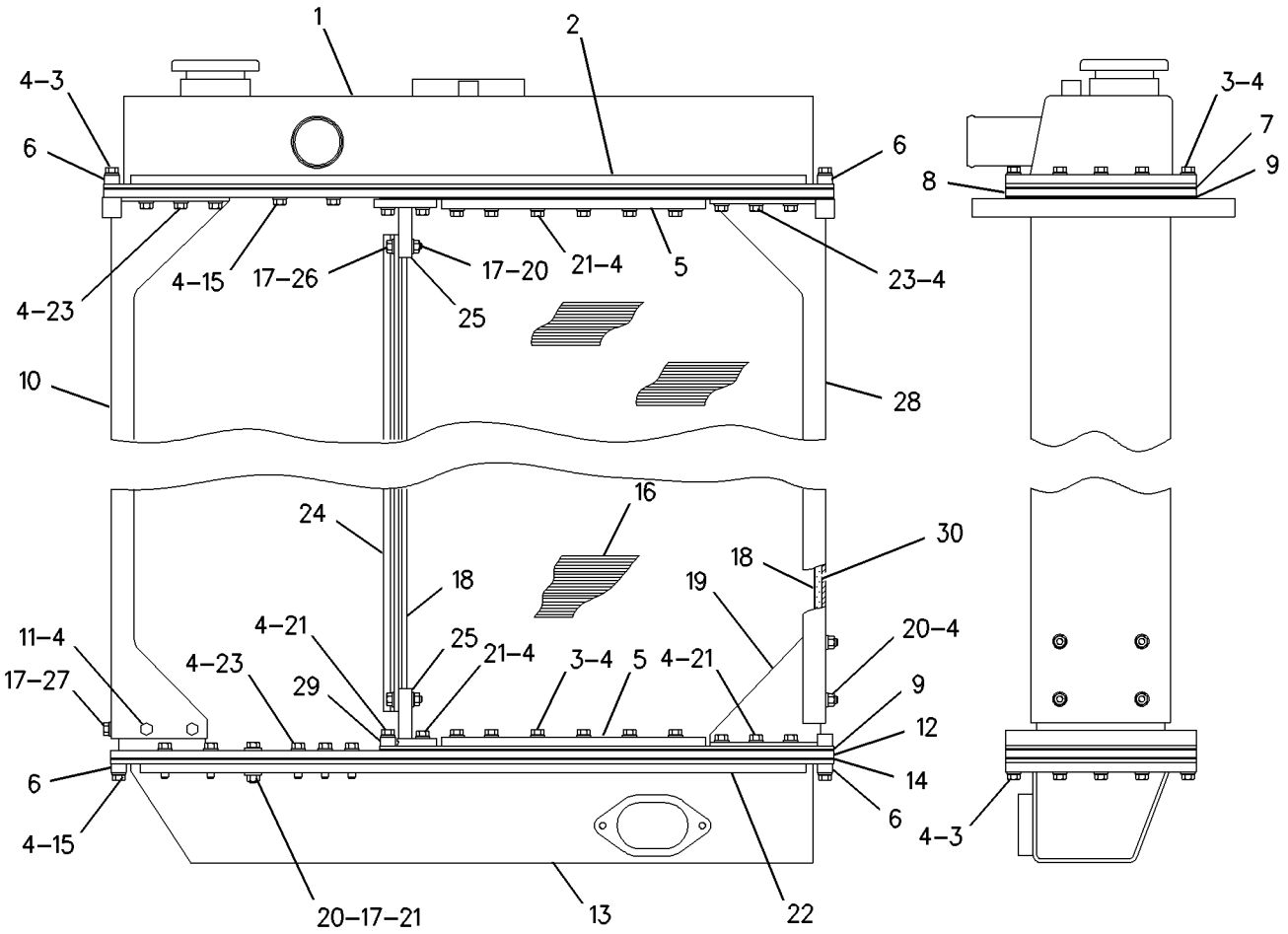

GRAPHIC #1 <END> g00992429

117-5192 RADIATOR GP

S/N: 9BL1488-UP

PART OF 117-5189 INSTALLATION AR-ENGINE

SMCS-1353 **i01398879**

NOTE	REF NO	GRAPHIC REF	PART NUMBER	QTY	PART NAME 1 2 3 4 5 6 (PRODUCT LEVEL)	SEE PAGE
Y	1	1	*114-6645*	1	RADIATOR & HYD OIL COOLER GP	120
	2	1	**119-9480**	4	STRIP-FAN BAFFLE	
	3	1	**119-9479**	4	BAFFLE AS-FAN	
					(EACH INCLUDES)	
		1	**7G-5186**	5	SPACER (13X19X4.5-MM THK)	
	4	1	**106-9699**	1	BAFFLE	
	5	1	**1N-4135**	1	STRIP-TAPPING	
	6	1	**1N-4137**	1	STRIP-TAPPING	
	7	1	**106-9700**	1	BAFFLE	
	8	1	**8T-9101**	2	BOLT (3/8-16X2.75-IN)	
	9	1	**8T-4896**	29	WASHER-HARD (10.2X18.5X2.5-MM THK)	
	10	1	**5S-7379**	5	BOLT (3/8-16X0.875-IN)	
	11	1	**112-5516**	1	SUPPORT AS	
	12	1	**2S-1212**	2	MOUNT AS	
	13	1	**1N-4146**	2	BRACKET AS-SUPPORT	
	14	1	**8T-2502**	2	BOLT (3/8-16X1.125-IN)	
	15	1	**1N-4142**	1	BAR	
	16	1	**112-4401**	1	SUPPORT AS	
	17	1	**9X-2212**	2	BOLT (9/16-12X4.5-IN)	
	18	1	**7X-0510**	2	WASHER-HARD (15.5X29X3-MM THK)	
	19	1	**8S-5150**	2	NUT-FULL (9/16-12-THD)	
	20	1	**112-5519**	1	STRIP	
	21	1	**8T-7008**	8	BOLT (3/8-16X3-IN)	
	22	1	**7N-6100**	2	BAFFLE	
	23	1	**9L-9813**	12	RETAINER	
	24	1	**6V-8189**	12	NUT (5/16-18-THD)	
	25	1	**5P-4116**	12	WASHER-HARD (8.8X20.5X2-MM THK)	
	26	1	**153-9648**	1	SEAL-INTEGRAL	
	27	1	**6L-4381**	1	HOSE	
	28	1	**3K-0360**	1	SEAL-O-RING	
Y	29	1	**1N-3599**	1	COVER GP-RADIATOR CAP	105
	30	1	**5S-1218**	1	VALVE AS-PRESSURE RELIEF	
	31	1	**5S-4629**	2	GASKET-VALVE	
	32	1	**5S-1213**	1	PLATE-PRESSURE VALVE	
	33	1	**5S-1211**	1	COVER-RELIEF VALVE	
	34	1	**8T-4224**	5	WASHER-HARD (8.8X16X2-MM THK)	
	35	1	**8C-3121**	5	BOLT (5/16-18X1.5-IN)	
	36	1	**8T-4835**	4	BOLT (1/2-13X2-IN)	
	37	1	**8T-4223**	4	WASHER-HARD (13.5X25.5X3-MM THK)	
	38	1	**8T-6764**	1	PLUG-PIPE (1/8-27-THD)	
	39	1	**100-4591**	1	TUBE	
	40	1	**5P-0597**	2	CLAMP-HOSE	
	41	1	**6L-4570**	1	HOSE (2.5-IN ID)	
	42	1	**114-5502**	1	HOSE-RADIATOR	
	43	1	**114-6659**	1	TUBE AS	
	44	1	**4L-9337**	6	BOLT (3/8-16X1.5-IN)	
	45	1	**7E-4761**	1	VALVE-DRAIN	
E	46	1	**5P-0767**		HOSE (20CM)	

117-5192 **RADIATOR GP (**contd.**)** **i01398879**

NOTE	REF NO	GRAPHIC REF	PART NUMBER	QTY	PART NAME 1 2 3 4 5 6 (PRODUCT LEVEL)	SEE PAGE
	47	1	**8T-0154**	1	CLAMP-HOSE	
	48	1	**112-5518**	1	STRIP	
	49	1	**5P-1075**	6	WASHER-HARD (10.2X22.5X3-MM THK)	
	50	1	**112-5517**	2	PLATE	
D	51	1	**5P-5939**		SEAL (.9M)	
	52	1	**5P-4868**	4	CLAMP-HOSE	
	53	1	**4L-6454**	12	BOLT (3/8-16X1-IN)	

D - ORDER BY THE METER
E - ORDER BY THE CENTIMETER
Y - SEPARATE ILLUSTRATION

117-5192 **RADIATOR GP** (contd.) **i01398879**

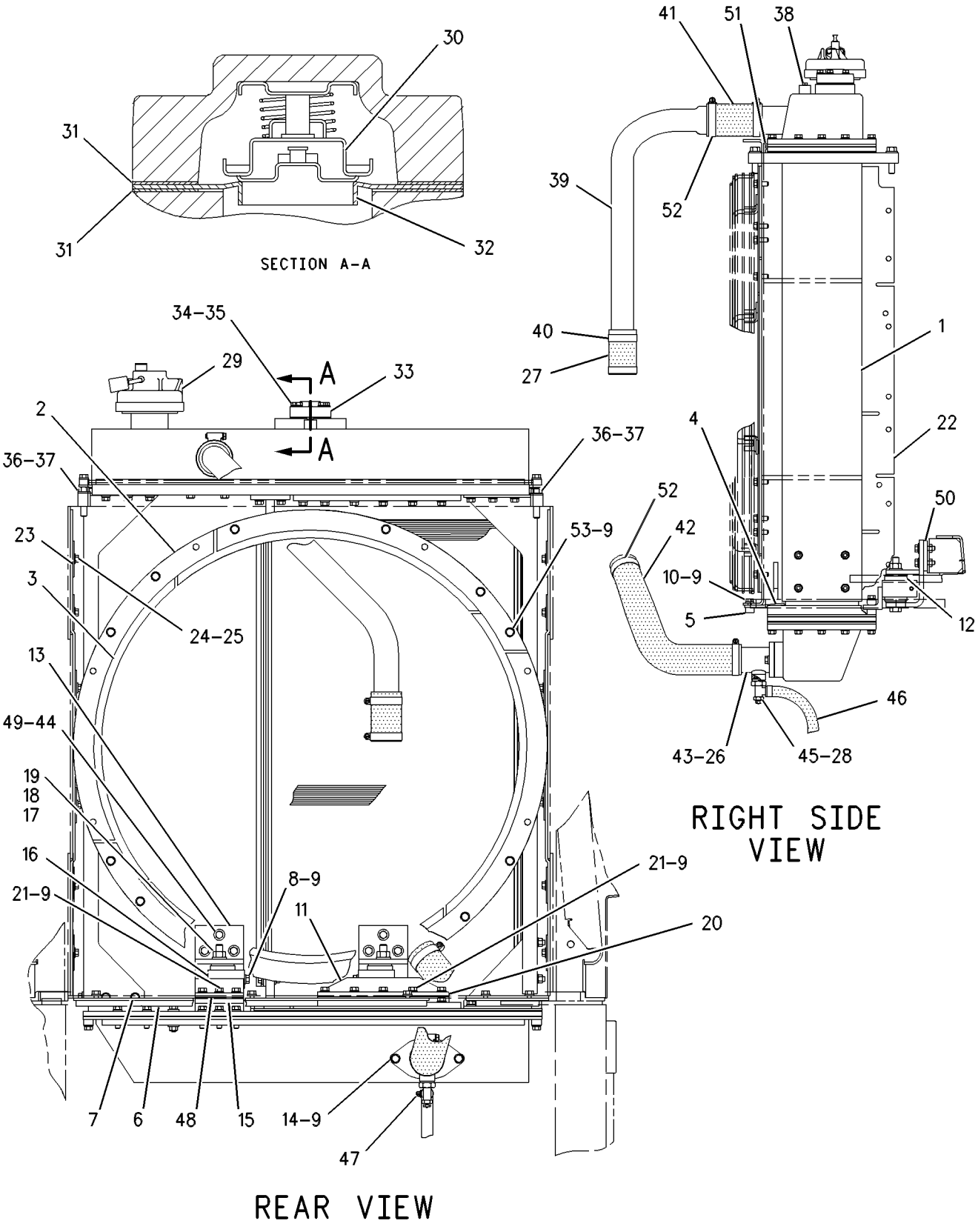

GRAPHIC #1 <END> g00288904

9Y-6984 AFTERCOOLER GP-WATER

S/N: 4TF17400-UP

FOR USE WITH FRONT EXHAUST APPLICATIONS, 7C-9446 LINES GP-AIR, 1W-6030 LINES GP-TURBOCHARGER OIL, 7W-9248 MANIFOLD GP-EXHAUST

PART OF 114-7159, 117-5187, 117-5188, 6I-3528 ENGINE AR

ALSO AN ATTACHMENT

SMCS-1063 **i00568275**

NOTE	REF NO	GRAPHIC REF	PART NUMBER	QTY	PART NAME 1 2 3 4 5 6 (PRODUCT LEVEL)	SEE PAGE
	1	1	**7C-6219**	1	CORE AS-AFTERCOOLER	
M	2	1	**6V-5219**	22	BOLT (M8X1.25X40-MM)	
	3	1	**9M-1974**	22	WASHER-HARD (8.8X16X2-MM THK)	
	4	1	**7C-1152**	1	GASKET	
	5	1	**8T-9402**	4	CLAMP-HOSE	
	6	1	**033-6783**	2	FITTING	
	7	1	**3D-2824**	2	SEAL-O-RING	
BE	8	1	**8T-9543**		HOSE (6.0CM)	
	9	1	**7C-3615**	1	HOSE	
	10	1	**9S-4182**	1	PLUG (7/16-20-THD)	
	11	1	**3J-7354**	1	SEAL-O-RING	

B - USE AS REQUIRED
E - ORDER BY THE CENTIMETER
M - METRIC PART

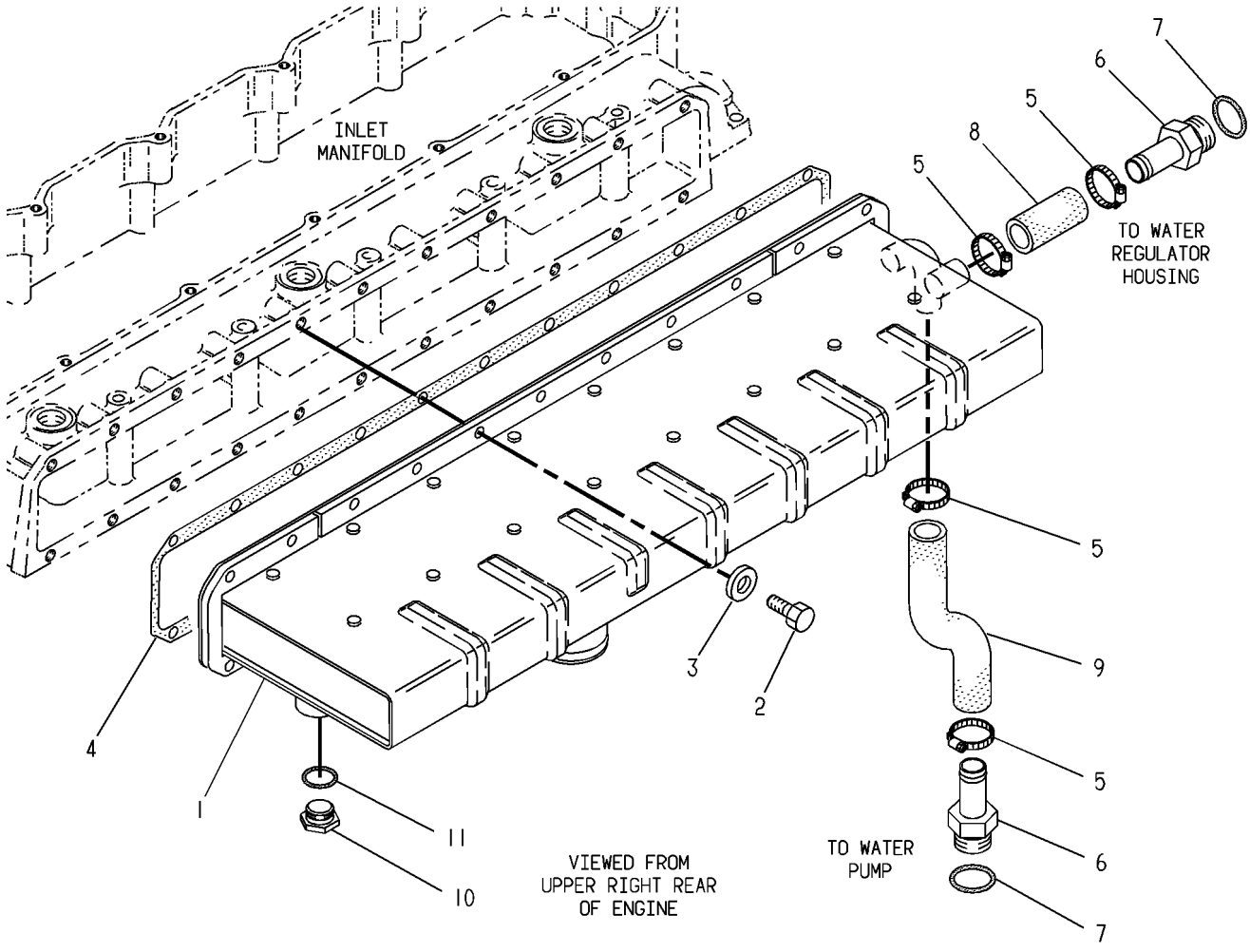

GRAPHIC #1 <END> g00118608

100-4595 AIR CLEANER GP

S/N: 9BL1-1359

PART OF 6I-3527 INSTALLATION AR

SMCS-1051, 1054 **i01398918**

NOTE	REF NO	GRAPHIC REF	PART NUMBER	QTY	PART NAME 1 2 3 4 5 6 (PRODUCT LEVEL)	SEE PAGE
Y	1	1	*100-4596*	1	AIR CLEANER GP	132
	2	1	**3B-6487**	1	COUPLING (PIPE)	
	3	1	**8C-7575**	1	ADAPTER	
	4	1	**3B-6552**	1	ELBOW-PIPE	
	5	1	**8N-2694**	1	INDICATOR-AIR FILTER CHANGE	
	6	1	**110-2425**	1	SUPPORT AS	
M		1	**8T-3612**	3	NUT-WELD (M8X1.25-THD)	
M	7	1	**8T-4185**	4	BOLT (M10X1.5X50-MM)	
	8	1	**8T-4121**	5	WASHER-HARD (11X21X2.5-MM THK)	
	9	1	**111-9335**	1	SUPPORT AS	
M	10	1	**8T-4195**	4	BOLT (M10X1.5X30-MM)	
	11	1	**7X-7729**	4	WASHER (11X25X3-MM THK)	
Y	12	1	*4H-5076*	1	PRECLEANER GP	159
M	13	1	**8T-4908**	1	BOLT (M8X1.25X25-MM)	
	14	1	**8T-4224**	1	WASHER-HARD (8.8X16X2-MM THK)	
M	15	1	**8T-4136**	1	BOLT (M10X1.5X25-MM)	

M - METRIC PART
Y - SEPARATE ILLUSTRATION

100-4595 **AIR CLEANER GP** (contd.) **i01398918**

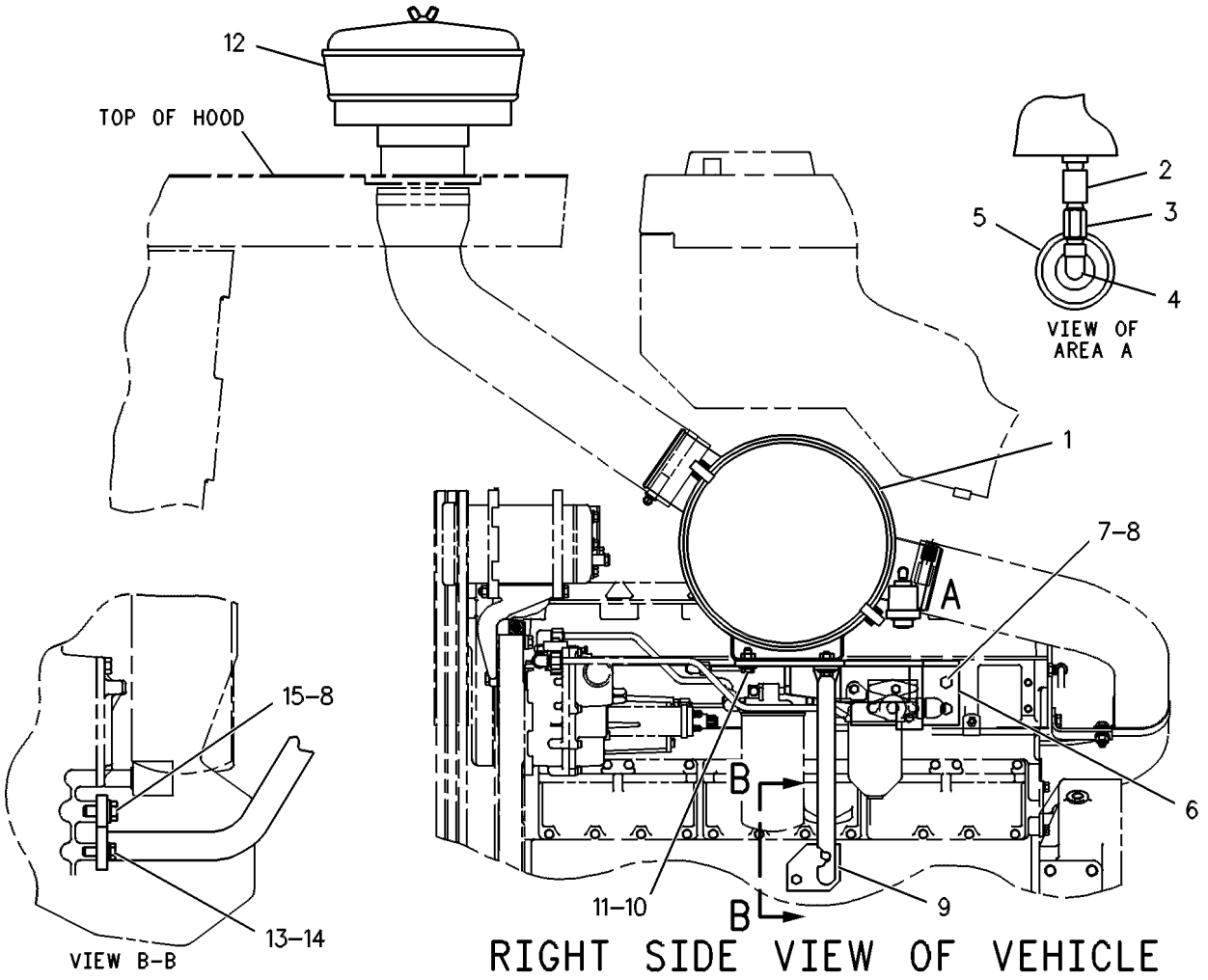

GRAPHIC #1 <END> g00247150

100-4596 AIR CLEANER GP

S/N: 9BL1-1459

PART OF 100-4595 AIR CLEANER GP

SMCS-1051, 1054

i01398927

NOTE	REF NO	GRAPHIC REF	PART NUMBER	QTY	PART NAME 1 2 3 4 5 6 (PRODUCT LEVEL)	SEE PAGE
	1	1	**6I-0273**	1	FILTER ELEMENT AS-AIR (PRIMARY)	
	2	1	**6I-0274**	1	FILTER ELEMENT AS-AIR (SECONDARY)	
	3	1	**6I-0275**	1	COVER AS-AIR CLEANER	
		1	**4P-5524**	1	SEAL-O-RING	
		1	**101-2850**	1	FILM-INFORMATION (AIR CLEANER)	

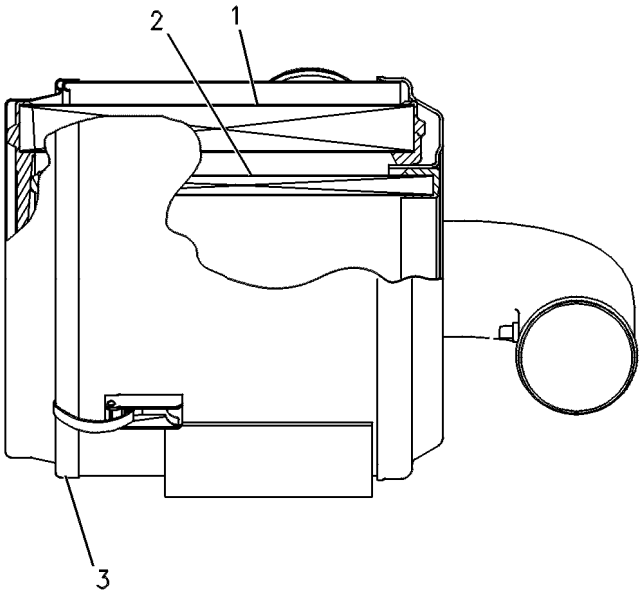

GRAPHIC #1 <END> g00247180

127-9909 AIR CLEANER GP

S/N: 9BL1360-UP

PART OF 127-9917, 142-8168 AIR CLEANER GP

SMCS-1051, 1054

i01398929

NOTE	REF NO	GRAPHIC REF	PART NUMBER	QTY	PART NAME 1 2 3 4 5 6 (PRODUCT LEVEL)	SEE PAGE
	1	1	**6I-0275**	1	COVER AS-AIR CLEANER	
		1	**4P-5524**	1	SEAL-O-RING	
		1	**101-2850**	1	FILM-INFORMATION (AIR CLEANER)	
	2	1	**6I-0273**	1	FILTER ELEMENT AS-AIR (PRIMARY)	
	3	1	**6I-0274**	1	FILTER ELEMENT AS-AIR (SECONDARY)	

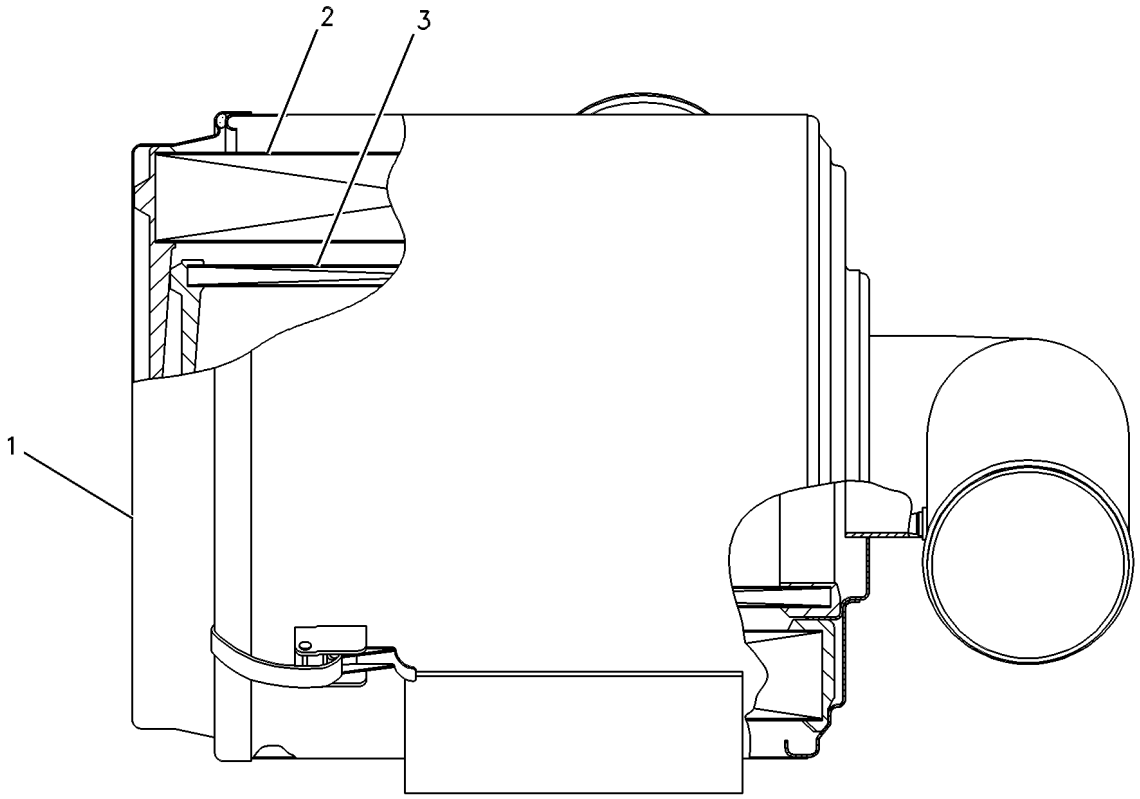

GRAPHIC #1 <END> g00278008

127-9917 AIR CLEANER GP

S/N: 9BL1360-1494

PART OF 6I-3527 INSTALLATION AR, 117-5189 INSTALLATION AR-ENGINE

SMCS-1051, 1054

i01398935

NOTE	REF NO	GRAPHIC REF	PART NUMBER	QTY	PART NAME 1 2 3 4 5 6 (PRODUCT LEVEL)	SEE PAGE
Y	1	1	**127-9909**	1	AIR CLEANER GP	133
	2	1	**3B-6487**	1	COUPLING (PIPE)	
	3	1	**5K-5068**	1	FITTING-PIPE (1/8-27 PTF)	
	4	1	**3B-6552**	1	ELBOW-PIPE	
	5	1	**8N-2694**	1	INDICATOR-AIR FILTER CHANGE	
	6	1	**110-2425**	1	SUPPORT AS	
M	7	1	**8T-4185**	4	BOLT (M10X1.5X50-MM)	
	8	1	**8T-4121**	5	WASHER-HARD (11X21X2.5-MM THK)	
M	9	1	**8T-4195**	4	BOLT (M10X1.5X30-MM)	
	10	1	**7X-7729**	4	WASHER (11X25X3-MM THK)	
Y	11	1	*4H-5076*	1	PRECLEANER GP	159
	12	1	**111-9335**	1	SUPPORT AS	
M	13	1	**8T-4136**	1	BOLT (M10X1.5X25-MM)	
M	14	1	**8T-4908**	1	BOLT (M8X1.25X25-MM)	
	15	1	**8T-4224**	1	WASHER-HARD (8.8X16X2-MM THK)	

M - METRIC PART
Y - SEPARATE ILLUSTRATION

127-9917 **AIR CLEANER GP (**contd.**)** **i01398935**

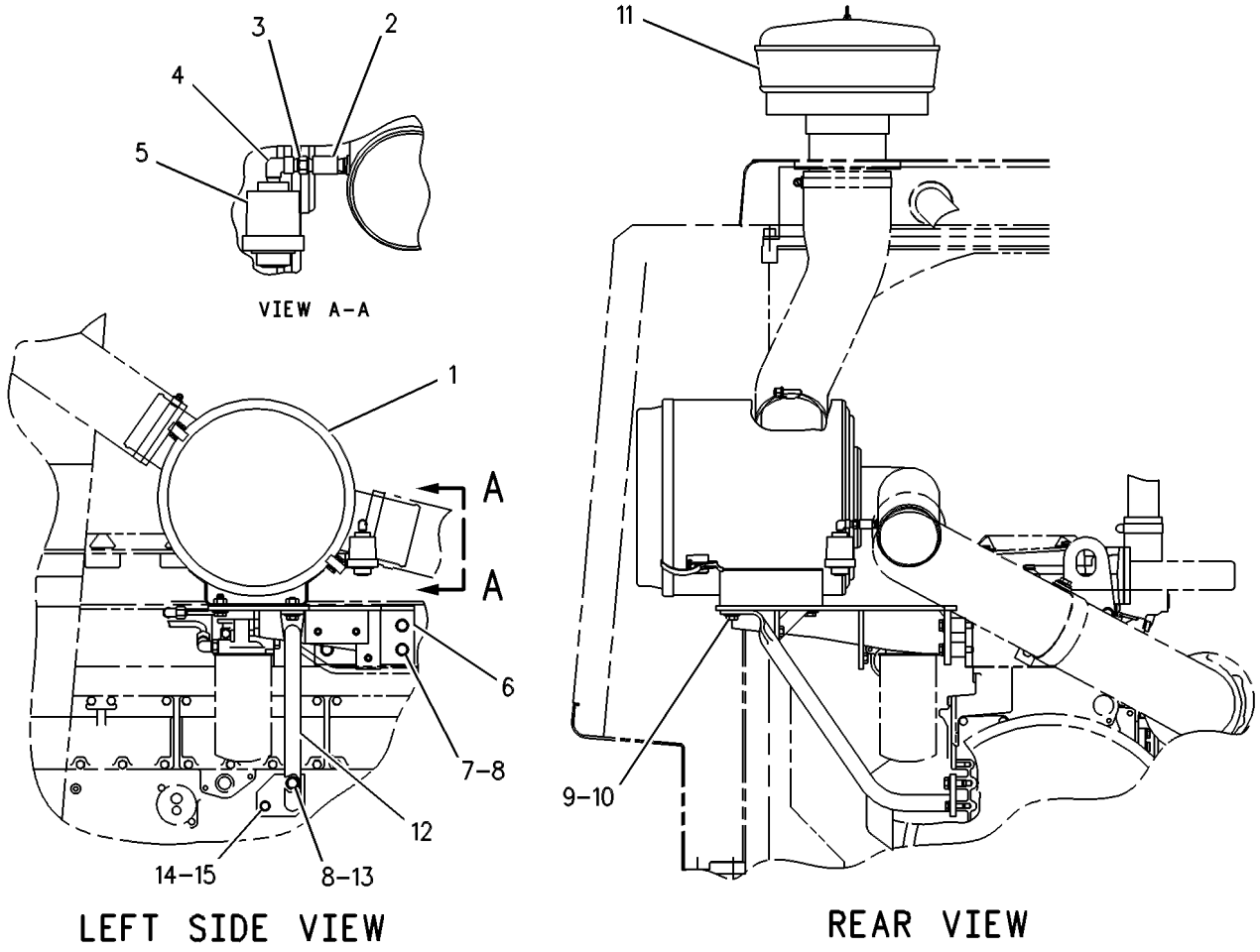

GRAPHIC #1 <END> g00271804

127-9917 AIR CLEANER GP

S/N: 9BL1488-1842

PART OF 117-5189 INSTALLATION AR-ENGINE

SMCS-1051, 1054 **i01398938**

NOTE	REF NO	GRAPHIC REF	PART NUMBER	QTY	PART NAME 1 2 3 4 5 6 (PRODUCT LEVEL)	SEE PAGE
Y	1	1	**127-9909**	1	AIR CLEANER GP	133
	2	1	**3B-6487**	1	COUPLING (PIPE)	
	3	1	**5K-5068**	1	FITTING-PIPE (1/8-27 PTF)	
	4	1	**3B-6552**	1	ELBOW-PIPE	
	5	1	**8N-2694**	1	INDICATOR-AIR FILTER CHANGE	
	6	1	**110-2425**	1	SUPPORT AS	
M	7	1	**8T-4185**	4	BOLT (M10X1.5X50-MM)	
	8	1	**8T-4121**	5	WASHER-HARD (11X21X2.5-MM THK)	
M	9	1	**8T-4195**	4	BOLT (M10X1.5X30-MM)	
	10	1	**7X-7729**	4	WASHER (11X25X3-MM THK)	
C	11	1	**124-3237**	1	PRECLEANER GP (AIR CLEANER)	
	12	1	**111-9335**	1	SUPPORT AS	
M	13	1	**8T-4136**	1	BOLT (M10X1.5X25-MM)	
M	14	1	**8T-4908**	1	BOLT (M8X1.25X25-MM)	
	15	1	**8T-4224**	1	WASHER-HARD (8.8X16X2-MM THK)	

C - CHANGE FROM PREVIOUS TYPE
M - METRIC PART
Y - SEPARATE ILLUSTRATION

127-9917 **AIR CLEANER GP (**contd.**)** **i01398938**

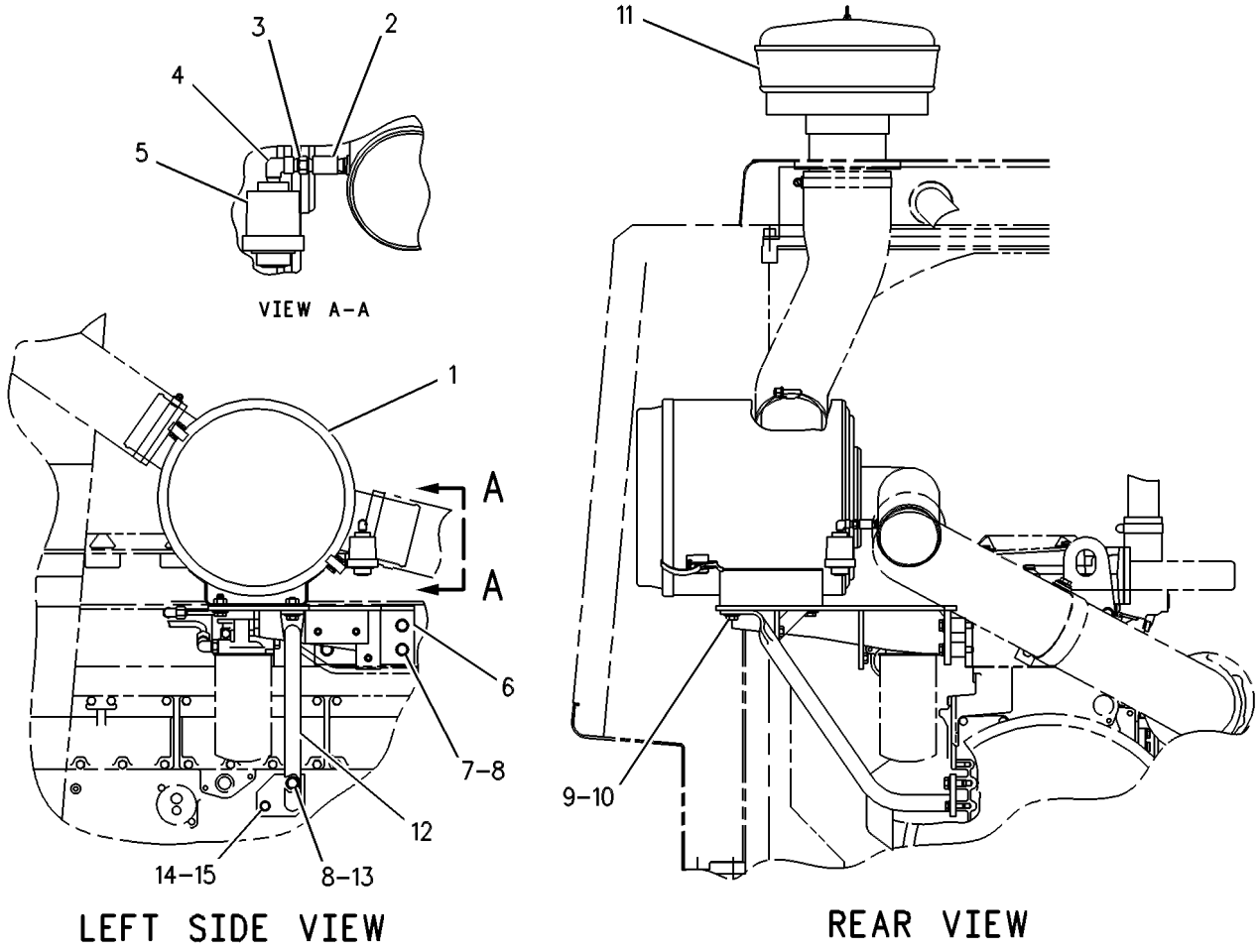

GRAPHIC #1 <END> g00271804

142-8168 AIR CLEANER GP

S/N: 9BL1843-1847, 1849-1861, 1863-1866, 1868-UP
PART OF 117-5189 INSTALLATION AR-ENGINE

SMCS-1051, 1054 **i01398939**

NOTE	REF NO	GRAPHIC REF	PART NUMBER	QTY	PART NAME 1 2 3 4 5 6 (PRODUCT LEVEL)	SEE PAGE
Y	1	1	**127-9909**	1	AIR CLEANER GP	133
	2	1	**3B-6487**	1	COUPLING (PIPE)	
	3	1	**5K-5068**	1	FITTING-PIPE (1/8-27 PTF)	
	4	1	**3B-6552**	1	ELBOW-PIPE	
	5	1	**8N-2694**	1	INDICATOR-AIR FILTER CHANGE	
	6	1	**141-5153**	1	SUPPORT AS	
M		1	**8T-3597**	1	NUT-WELD (M12X1.75-THD)	
M		1	**8T-3612**	4	NUT-WELD (M8X1.25-THD)	
M	7	1	**8T-4185**	4	BOLT (M10X1.5X50-MM)	
	8	1	**8T-4121**	5	WASHER-HARD (11X21X2.5-MM THK)	
M	9	1	**8T-4195**	4	BOLT (M10X1.5X30-MM)	
	10	1	**7X-7729**	4	WASHER (11X25X3-MM THK)	
	11	1	**124-3237**	1	PRECLEANER GP (AIR CLEANER)	
		1	**6H-8021**	1	BODY-PRECLEANER	
		1	**9M-5201**	1	COVER AS	
	12	1	**111-9335**	1	SUPPORT AS	
M	13	1	**8T-4136**	1	BOLT (M10X1.5X25-MM)	
M	14	1	**8T-4908**	1	BOLT (M8X1.25X25-MM)	
	15	1	**8T-4224**	1	WASHER-HARD (8.8X16X2-MM THK)	

M - METRIC PART
Y - SEPARATE ILLUSTRATION

142-8168 **AIR CLEANER GP** (contd.) **i01398939**

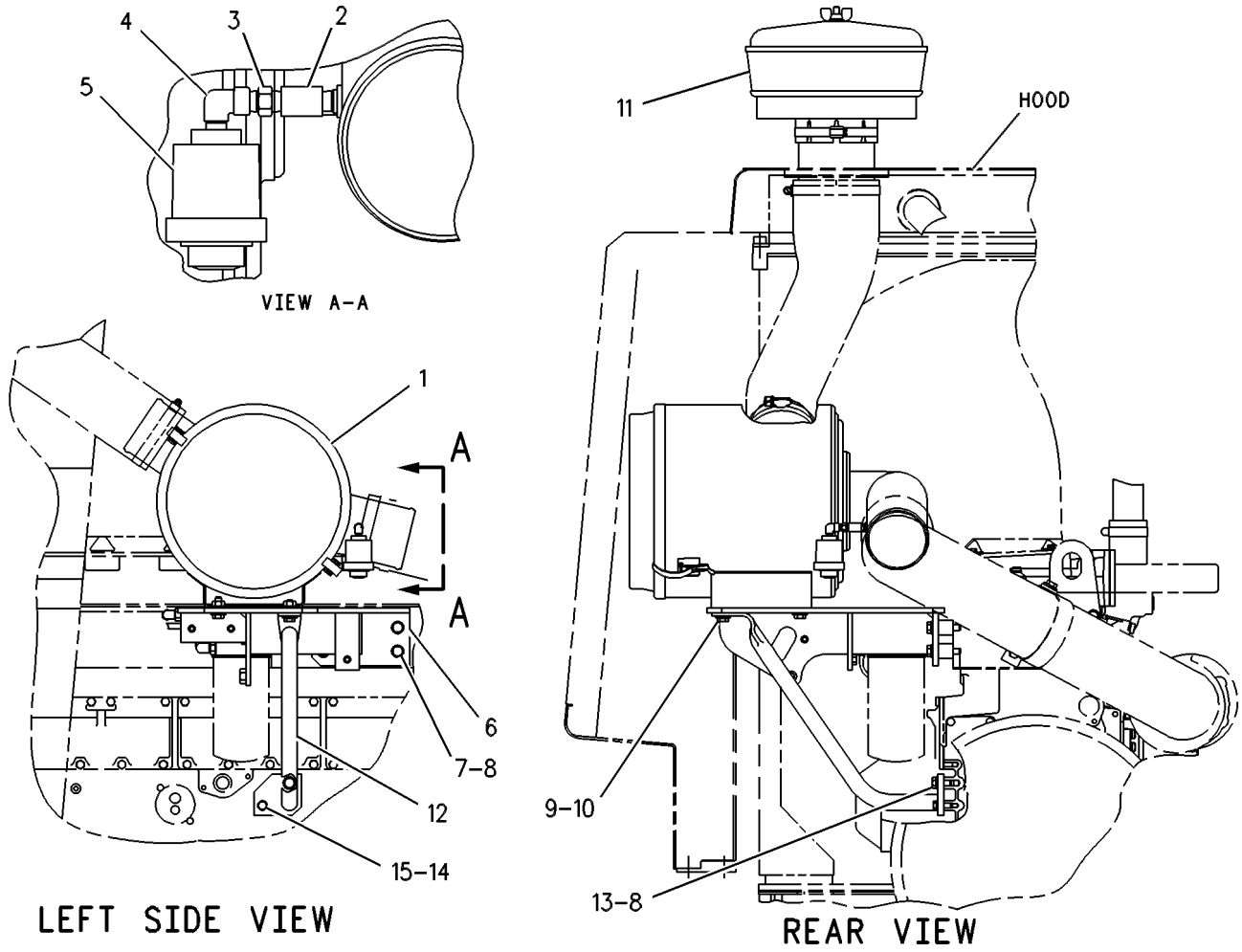

GRAPHIC #1 <END> g00278007

100-6917 CARTRIDGE GP-TURBOCHARGER*R

S/N: 4TF17400-UP
PART OF 105-5057 TURBOCHARGER GP
ALSO AN ATTACHMENT

SMCS-1053 **i06859002**

NOTE	REF NO	GRAPHIC REF	PART NUMBER	QTY	PART NAME 1 2 3 4 5 6 (PRODUCT LEVEL)	SEE PAGE
	1	1	**1N-3806**	1	RING-PISTON	
	2	1	**116-9550**	1	NUT	
	3	1	**7C-6658**	1	RING-RETAINING	
	4	1	**116-9548**	1	INSERT	
	5	1	**6V-8676**	1	SEAL-O-RING	
	6	1	**7C-5859**	1	RING-PISTON	
	7	1	**116-9556**	1	SLEEVE	
	8	1	**6I-0182**	2	RING-THRUST	
	9	1	**6I-0181**	1	BEARING-THRUST	
	10	1	**116-9553**	1	DEFLECTOR-OIL	
	11	1	**6I-0177**	2	BEARING	
	12	1	**7C-6657**	4	RING-RETAINING	
	13	1	**7C-6656**	1	WASHER	

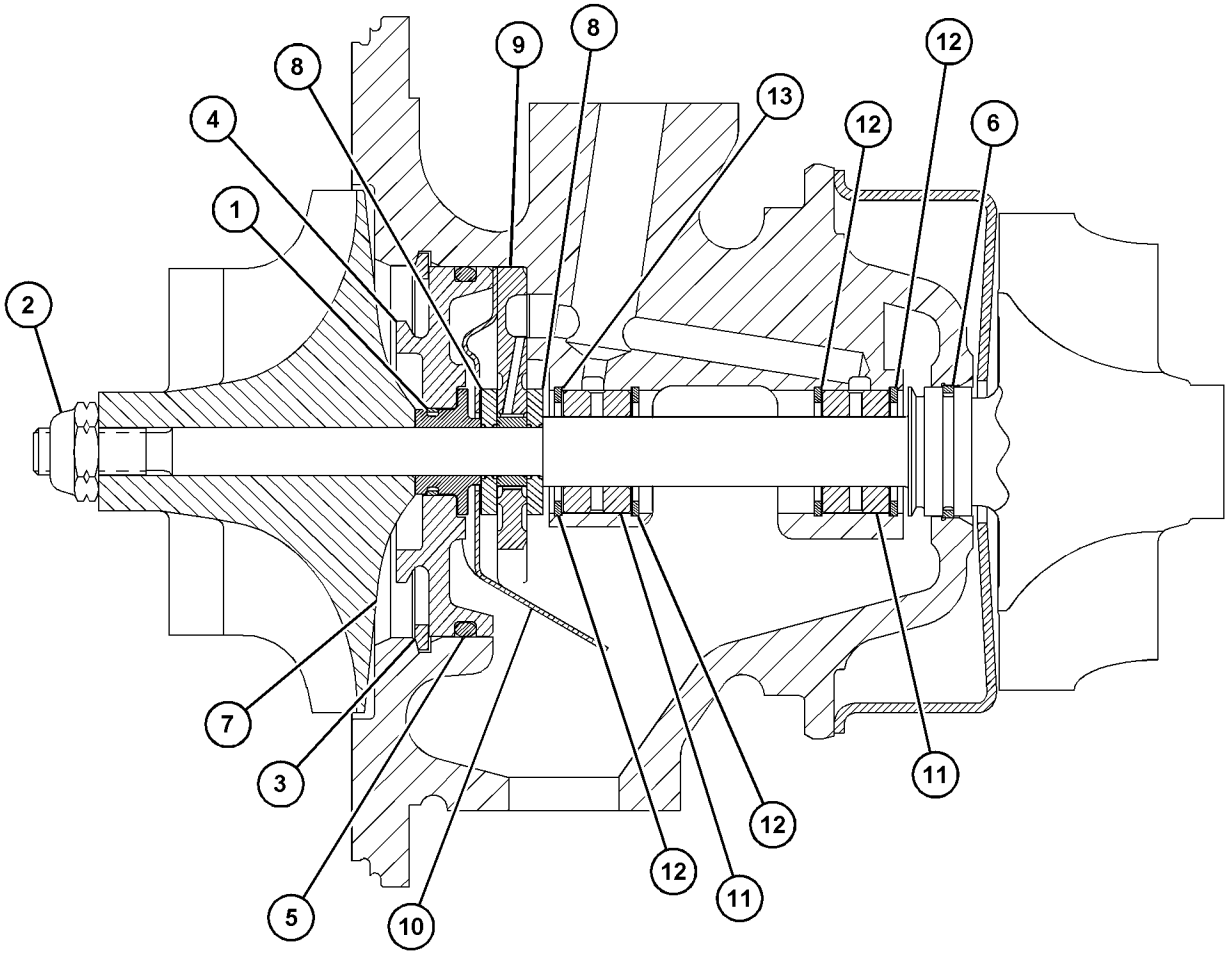

GRAPHIC #1 <END> g06145271

115-5858 CARTRIDGE GP-TURBOCHARGER*R

S/N: 4TF32065-UP
PART OF 124-9340 TURBOCHARGER GP
ALSO AN ATTACHMENT

SMCS-1053 **i06860760**

NOTE	REF NO	GRAPHIC REF	PART NUMBER	QTY	PART NAME 1 2 3 4 5 6 (PRODUCT LEVEL)	SEE PAGE
	1	1	**119-3818**	1	SEAL-PISTON RING	
	2	1	**116-9550**	1	NUT	
	3	1	**7C-6658**	1	RING-RETAINING	
	4	1	**119-3812**	1	INSERT	
	5	1	**6V-8676**	1	SEAL-O-RING	
	6	1	**119-3813**	1	SEAL-PISTON RING	
	7	1	**119-3824**	1	SLEEVE	
	8	1	**119-3815**	1	SLEEVE	
	9	1	**119-3814**	1	BEARING-THRUST	
	10	1	**119-3820**	1	DEFLECTOR-OIL	
	11	1	**119-3816**	2	BEARING-JOURNAL	
	12	1	**7C-6657**	4	RING-RETAINING	

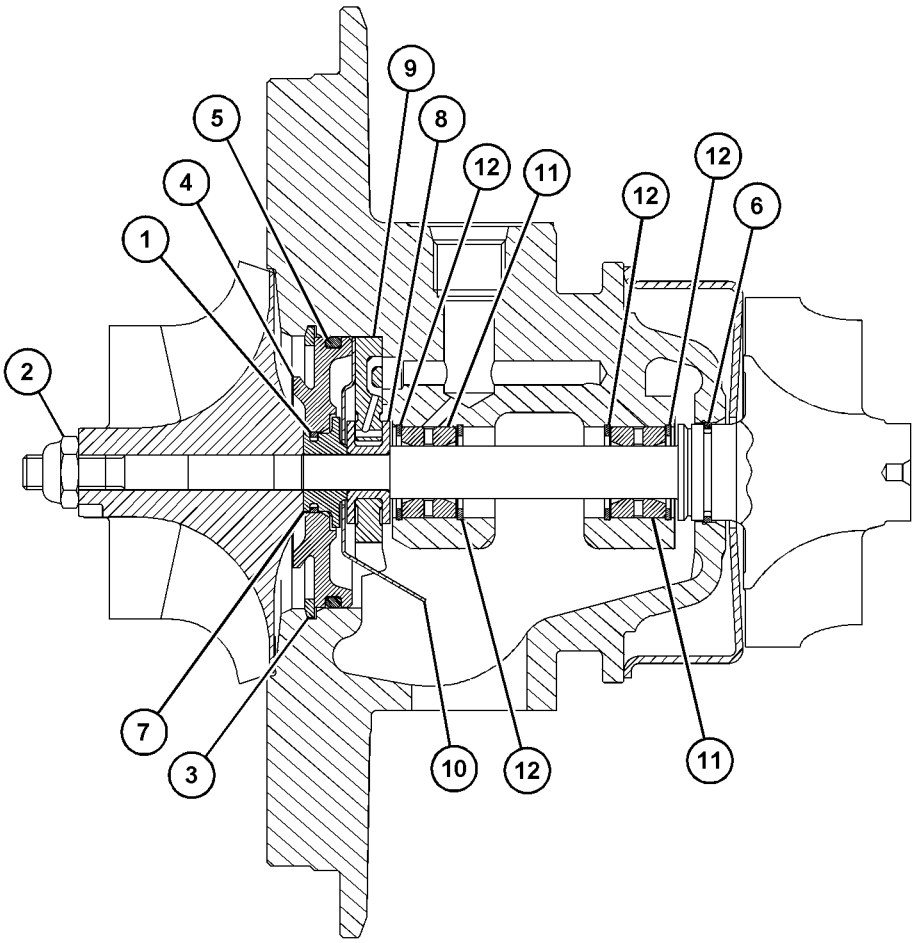

GRAPHIC #1 <END> g06161819

125-1130 CARTRIDGE GP-TURBOCHARGER*R

S/N: 4TF17400-32064
PART OF 125-1125 TURBOCHARGER GP
ALSO AN ATTACHMENT

SMCS-1053 **i06867938**

NOTE	REF NO	GRAPHIC REF	PART NUMBER	QTY	PART NAME 1 2 3 4 5 6 (PRODUCT LEVEL)	SEE PAGE
	1	1	**1N-3806**	1	RING-PISTON	
	2	1	**116-9550**	1	NUT (M7X1-THD)	
	3	1	**7C-6658**	1	RING-RETAINING	
	4	1	**116-9548**	1	INSERT	
	5	1	**6V-8676**	1	SEAL-O-RING	
	6	1	**7C-5859**	1	RING-PISTON	
	7	1	**116-9556**	1	SLEEVE	
	8	1	**6I-0182**	2	RING-THRUST	
	9	1	**6I-0181**	1	BEARING-THRUST	
	10	1	**116-9553**	1	DEFLECTOR-OIL	
	11	1	**6I-0177**	2	BEARING	
	12	1	**7C-6657**	4	RING-RETAINING	
	13	1	**7C-6656**	1	WASHER	

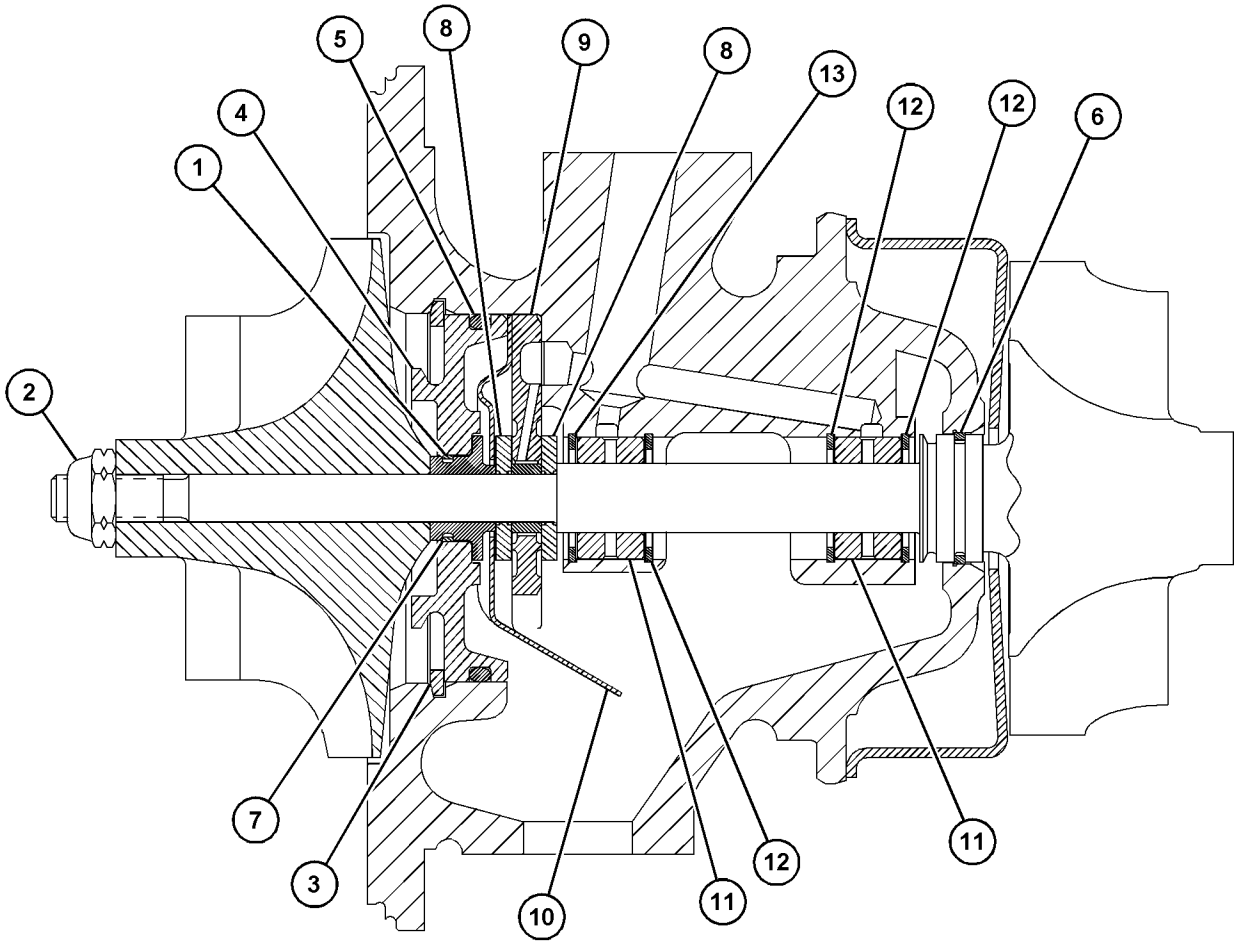

GRAPHIC #1 <END> g06149295

437-3733 KIT-TURBOCHARGER GASKET

S/N: 9BL1-UP

CONTAINS THE GASKETS & SEALS TO REINSTALL THE TURBO(S) & ATTACHING LINES. THE FOLLOWING TURBO MOUNTING HARDWARE WILL BE INCLUDED: BOLTS, NUTS, STUDS, WASHERS, SPACERS. APPLIES TO TURBO KIT PART NUMBER 317-8751-UP

FOR USE WITH 6I-3528—PAGE: 12

FIELD INSTALLATION

SMCS-7555 **i05523250**

NOTE	PART NUMBER	QTY	PART NAME 1 2 3 4 5 6 (PRODUCT LEVEL)	SEE PAGE
	1S-7057	2	GASKET	
	7C-7431	1	GASKET (TURBOCHARGER)	
	7W-2398	2	GASKET (OIL DRAIN)	
M	**3E-8017**	4	LOCKNUT (M10X1.5-THD)	
	3J-1907	2	SEAL-O-RING	
	4F-7391	1	SEAL-O-RING	
	6V-8397	2	SEAL-O-RING	
	9M-4849	2	SEAL-O-RING	
M	**418-6781**	4	STUD-TAPERLOCK (M10X1.5X40-MM)	
			FOR A LIST OF RELATED PARTS THAT REQUIRED FOR THE ENGINE REBUILD TO THE KIT CONSISST, PLEASE VISIT	
			HTTPS://DEALER.CAT.COM/RELATED	

M - METRIC PART

<END>

456-4322 KIT-TURBOCHARGER GASKET

S/N: 9BL1-UP

CONTAINS THE GASKETS & SEALS TO REINSTALL THE TURBO(S) & ATTACHING LINES. THE FOLLOWING TURBO MOUNTING HARDWARE WILL BE INCLUDED: BOLTS, NUTS, STUDS, WASHERS, SPACERS. APPLIES TO TURBO KIT PART NUMBERS 317-8751-UP

FOR USE WITH 117-5188—PAGE: 10

FIELD INSTALLATION

SMCS-7555 **i07139945**

NOTE	PART NUMBER	QTY	PART NAME 1 2 3 4 5 6 (PRODUCT LEVEL)	SEE PAGE
	1S-7057	1	GASKET	
	7C-7431	1	GASKET	
	7W-2398	1	GASKET (OIL DRAIN)	
M	**375-2467**	4	LOCKNUT-FLANGE (M10X1.5-THD)	
	3J-1907	1	SEAL-O-RING	
	4F-7391	1	SEAL-O-RING	
	6V-8397	1	SEAL-O-RING	
	9M-4849	1	SEAL-O-RING	
M	**418-6781**	4	STUD-TAPERLOCK (M10X1.5X40-MM)	

M - METRIC PART

<END>

100-4598 LINES GP-AIR

S/N: 9BL1-1359

PART OF 6I-3527 INSTALLATION AR

SMCS-1071 **i02326357**

NOTE	REF NO	GRAPHIC REF	PART NUMBER	QTY	PART NAME 1 2 3 4 5 6 (PRODUCT LEVEL)	SEE PAGE
	1	1	**100-4871**	1	HOSE-AIR INLET	
	2	1	**5P-1717**	1	CLAMP-HOSE	
	3	1	**120-5276**	1	HOSE-AIR OUTLET	
	4	1	**9X-2201**	2	CLAMP-HOSE	
	5	1	**8T-6675**	1	CLAMP-HOSE	
	6	1	**6I-4065**	1	ANGLE	
	7	1	**120-5867**	2	CLIP	
M	8	1	**8T-4195**	2	BOLT (M10X1.5X30-MM)	
	9	1	**8T-4121**	3	WASHER-HARD (11X21X2.5-MM THK)	
M	10	1	**8T-4133**	1	NUT (M10X1.5-THD)	
	11	1	**105-7170**	1	ELBOW-EXHAUST	
	12	1	**108-8625**	1	COUPLING-EXHAUST	
	13	1	**6N-0009**	2	RING-METAL SEAL	
	14	1	**3E-7428**	1	PLUG-PIPE	
	15	1	*108-2303*	1	PIPE GP-EXHAUST	
E	15A	1	**5P-2136**		HOSE-FLEXIBLE METAL (31CM)	
	15B	1	**7C-1377**	2	CLAMP	
	15C	1	**111-3425**	1	PIPE AS-EXHAUST	
	15D	1	**111-3426**	1	PIPE AS-EXHAUST	
	16	1	**7X-0575**	1	WASHER-HARD (10.2X22.5X5-MM THK)	
	17	1	**8N-4045**	1	COUPLING	
	18	1	**7E-3870**	1	CLAMP-MUFFLER	
	19	1	**5P-0599**	1	CLAMP-BAND	
M	20	1	**8T-4196**	1	BOLT (M10X1.5X35-MM)	

E - ORDER BY THE CENTIMETER
M - METRIC PART

100-4598 **LINES GP-AIR (**contd.**)** **i02326357**

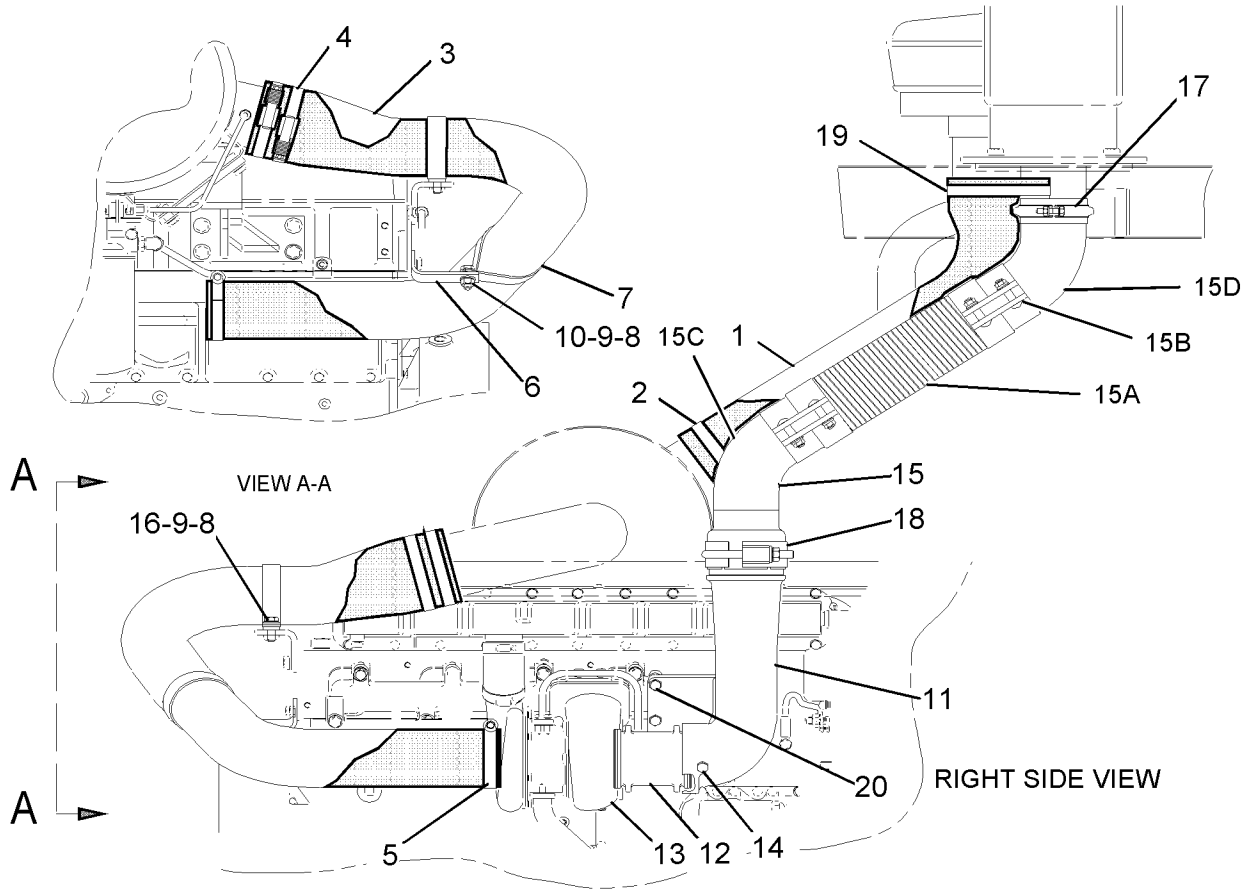

GRAPHIC #1 <END> g01162199

100-4598 LINES GP-AIR

S/N: 9BL1360-1643

PART OF 6I-3527 INSTALLATION AR, 117-5189 INSTALLATION AR-ENGINE

SMCS-1071 **i02326836**

NOTE	REF NO	GRAPHIC REF	PART NUMBER	QTY	PART NAME 1 2 3 4 5 6 (PRODUCT LEVEL)	SEE PAGE
	1	1	**126-7947**	1	HOSE-AIR INLET	
	2	1	**5P-1717**	1	CLAMP-HOSE	
	3	1	**128-2612**	1	HOSE-AIR OUTLET	
	4	1	**8T-4986**	2	CLAMP-HOSE	
	5	1	**8T-4985**	1	CLAMP-HOSE	
	6	1	**128-0533**	1	ANGLE AS	
	7	1	**127-4837**	2	CLIP	
M	8	1	**8T-4136**	2	BOLT (M10X1.5X25-MM)	
M	9	1	**8T-4186**	1	BOLT (M10X1.5X40-MM)	
	10	1	**9G-8140**	1	SPACER (10.5X25X15-MM THK)	
	11	1	**105-7170**	1	ELBOW-EXHAUST	
	12	1	**108-8625**	1	COUPLING-EXHAUST	
	13	1	**6N-0009**	2	RING-METAL SEAL	
	14	1	**5B-7890**	1	PLUG-PIPE	
	15	1	*108-2303*	1	PIPE GP-EXHAUST	
E	15A	1	**5P-2136**		HOSE-FLEXIBLE METAL (31CM)	
	15B	1	**7C-1377**	2	CLAMP	
	15C	1	**111-3425**	1	PIPE AS-EXHAUST	
	15D	1	**111-3426**	1	PIPE AS-EXHAUST	
	16	1	**7X-7729**	3	WASHER (11X25X3-MM THK)	
	17	1	**8N-4045**	1	COUPLING	
	18	1	**7E-3870**	1	CLAMP-MUFFLER	
	19	1	**5P-0599**	1	CLAMP-BAND	
M	20	1	**8T-4196**	3	BOLT (M10X1.5X35-MM)	

E - ORDER BY THE CENTIMETER
M - METRIC PART

100-4598 **LINES GP-AIR (**contd.**)** **i02326836**

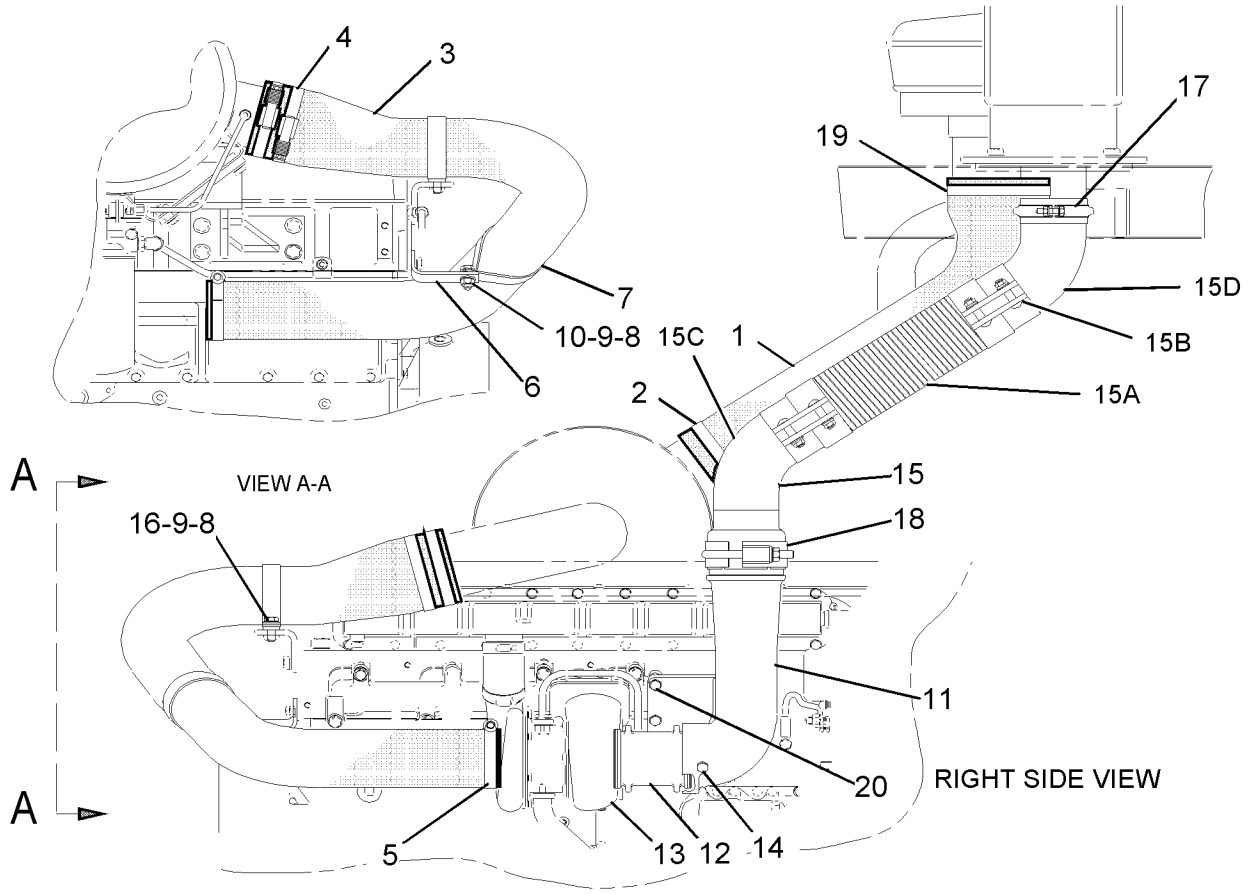

GRAPHIC #1 <END> g01162378

117-5179 LINES GP-AIR

S/N: 9BL1488-UP

PART OF 117-5189 INSTALLATION AR-ENGINE

SMCS-1071 **i01435757**

NOTE	REF NO	GRAPHIC REF	PART NUMBER	QTY	PART NAME 1 2 3 4 5 6 (PRODUCT LEVEL)	SEE PAGE
	1	1	**126-7947**	1	HOSE-AIR INLET	
	2	1	**5P-1717**	1	CLAMP-HOSE	
	3	1	**127-5532**	1	HOSE-AIR OUTLET	
	4	1	**8T-4986**	4	CLAMP-HOSE	
M	5	1	**8T-4196**	3	BOLT (M10X1.5X35-MM)	
	6	1	**130-8212**	1	ANGLE AS	
	7	1	**127-4833**	2	CLIP	
	8	1	**5P-0599**	1	CLAMP-BAND	
	9	1	**7X-7729**	3	WASHER (11X25X3-MM THK)	
M	10	1	**8T-4137**	1	BOLT (M10X1.5X20-MM)	
	11	1	**105-7170**	1	ELBOW-EXHAUST	
	12	1	**108-8625**	1	COUPLING-EXHAUST	
	13	1	**6N-0009**	2	RING-METAL SEAL	
	14	1	**5B-7890**	1	PLUG-PIPE	
	15	1	**7E-3870**	1	CLAMP-MUFFLER	
E	16	1	**5P-2136**		HOSE-FLEXIBLE METAL (31CM)	
	17	1	**7C-1377**	2	CLAMP	
	18	1	**111-3425**	1	PIPE AS-EXHAUST	
	19	1	**111-3426**	1	PIPE AS-EXHAUST	
M	20	1	**8T-4136**	2	BOLT (M10X1.5X25-MM)	
	21	1	**8N-4045**	1	COUPLING	

E - ORDER BY THE CENTIMETER
M - METRIC PART

117-5179 **LINES GP-AIR (**contd.**)** **i01435757**

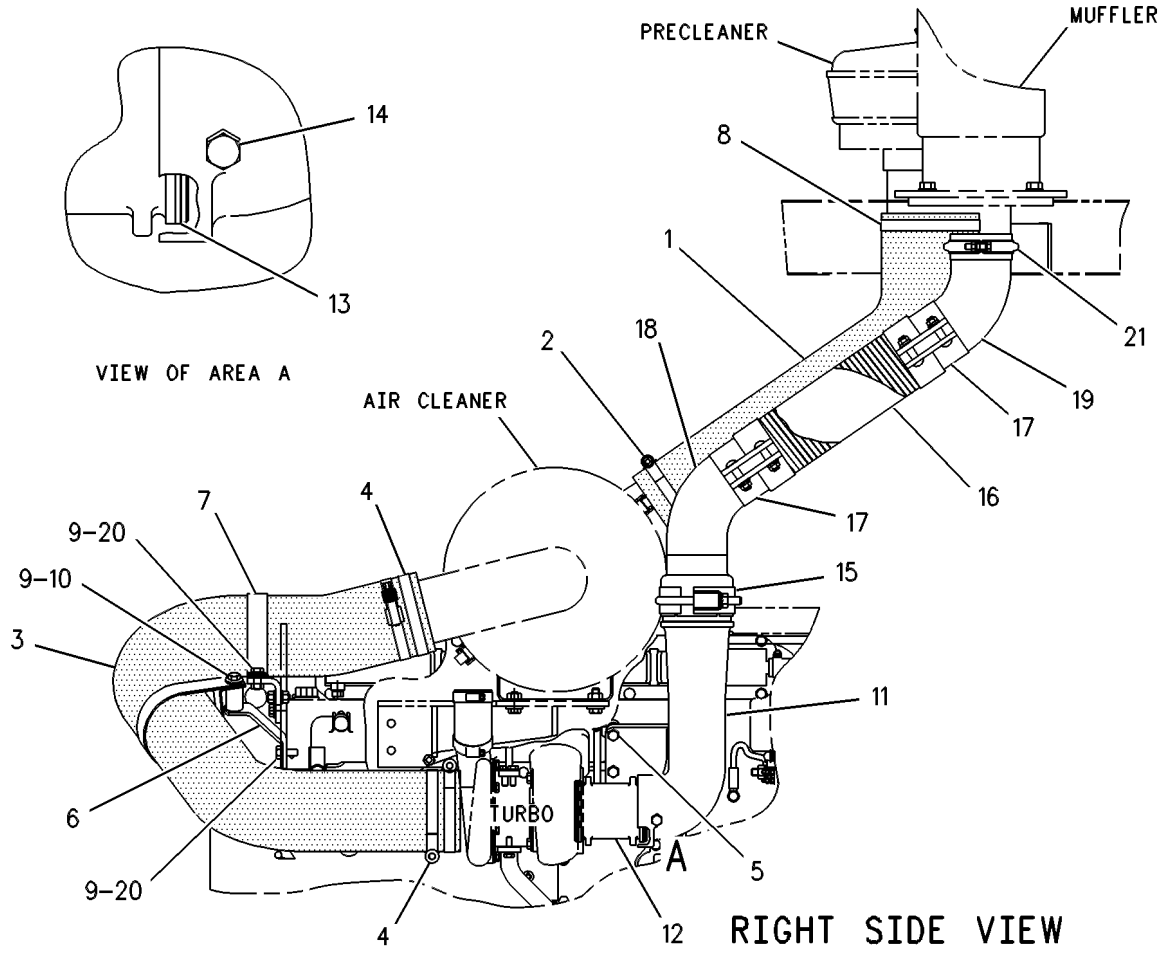

GRAPHIC #1 <END> g00350341

7C-9446 LINES GP-AIR

S/N: 4TF17400-UP
PART OF 114-7159, 6I-3528 ENGINE AR
ALSO AN ATTACHMENT

SMCS-1071 **i00568503**

NOTE	REF NO	GRAPHIC REF	PART NUMBER	QTY	PART NAME 1 2 3 4 5 6 (PRODUCT LEVEL)	SEE PAGE
	1	1	**7C-7705**	1	HOSE	
	2	1	**8T-6703**	2	CLAMP-HOSE	

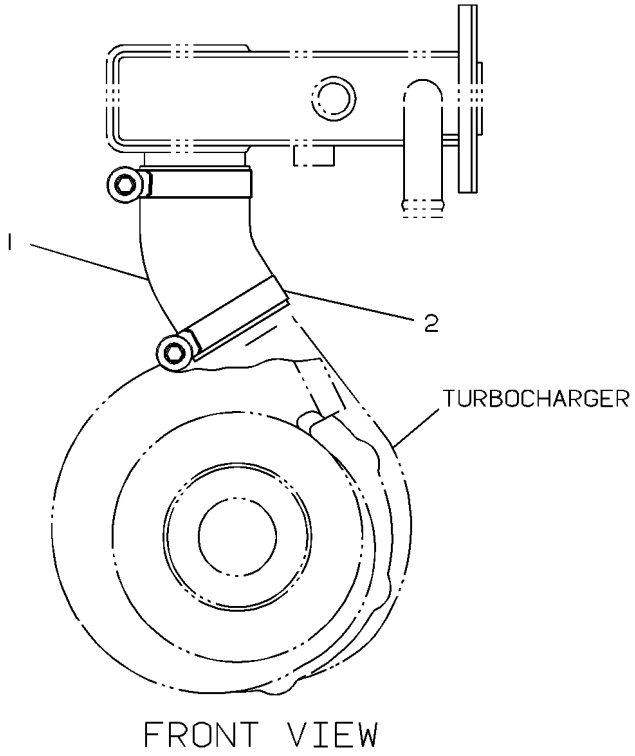

FRONT VIEW

GRAPHIC #1 <END> g00120533

9Y-4968 LINES GP-AIR

S/N: 4TF17400-UP

PART OF 114-7159, 117-5187, 117-5188 ENGINE AR

ALSO AN ATTACHMENT

SMCS-1071 **i00568270**

NOTE	REF NO	GRAPHIC REF	PART NUMBER	QTY	PART NAME 1 2 3 4 5 6 (PRODUCT LEVEL)	SEE PAGE
	1	1	**8T-6703**	1	CLAMP-HOSE	
BE	2	1	**7C-8555**	1	HOSE	

B - USE AS REQUIRED
E - ORDER BY THE CENTIMETER

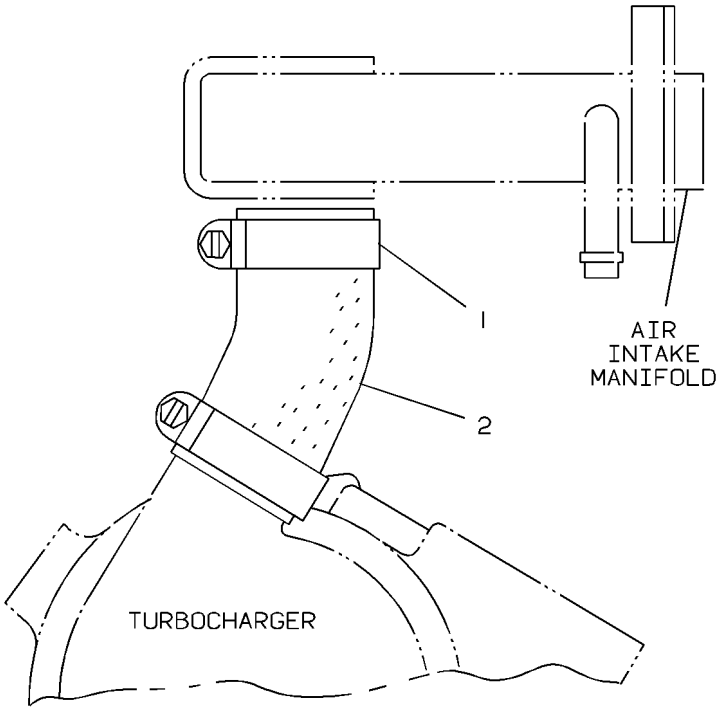

GRAPHIC #1 <END> g00116835

7W-9248 MANIFOLD GP-EXHAUST

S/N: 4TF17400-UP

PART OF 114-7159, 117-5187, 117-5188, 6I-3528 ENGINE AR

ALSO AN ATTACHMENT

SMCS-1059 **i00569262**

NOTE	REF NO	GRAPHIC REF	PART NUMBER	QTY	PART NAME 1 2 3 4 5 6 (PRODUCT LEVEL)	SEE PAGE
	1	1	**113-6200**	3	GASKET	
	2	1	**105-1738**	1	MANIFOLD-EXHAUST	
M	3	1	**8T-7044**	4	STUD-TAPERLOCK (M10X1.5X40-MM)	
M	4	1	**141-6348**	12	BOLT (M10X1.5X65-MM)	
	5	1	**6I-3035**	6	LOCK	

M - METRIC PART

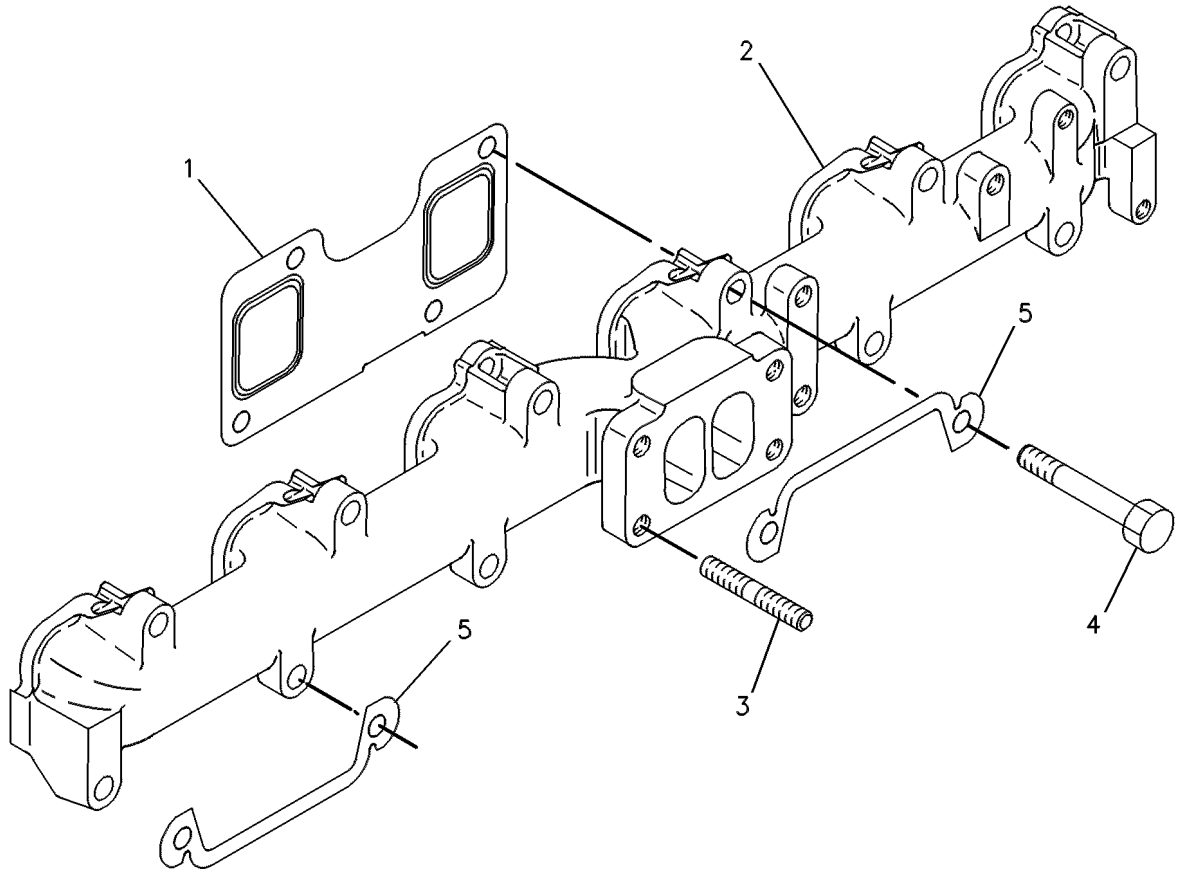

GRAPHIC #1 <END> g00120739

4W-3480 MANIFOLD GP-INLET

S/N: 4TF17400-UP
PART OF 114-7159, 117-5187, 117-5188, 6I-3528 ENGINE AR
ALSO AN ATTACHMENT

SMCS-1058 **i01640356**

NOTE	REF NO	GRAPHIC REF	PART NUMBER	QTY	PART NAME 1 2 3 4 5 6 (PRODUCT LEVEL)	SEE PAGE
M	1	1	**5P-8347**	13	BOLT (M8X1.25X70-MM)	
	2	1	**9M-1974**	18	WASHER-HARD (8.8X16X2-MM THK)	
M	3	1	**6V-5218**	1	BOLT (M8X1.25X35-MM)	
	4	1	**4W-8661**	1	MANIFOLD-INLET	
	5	1	**113-6250**	1	GASKET	
M	6	1	**6V-5223**	4	BOLT (M8X1.25X100-MM)	
	7	1	**9S-8005**	2	PLUG (3/4-16-THD)	
	8	1	**3K-0360**	2	SEAL-O-RING	
BM	9	1	**5P-8347**	2	BOLT (M8X1.25X70-MM)	
B	10	1	**9M-1974**	2	WASHER-HARD (8.8X16X2-MM THK)	
BM	11	1	**6V-5223**	1	BOLT (M8X1.25X100-MM)	
B	12	1	**9M-1974**	1	WASHER-HARD (8.8X16X2-MM THK)	
B	13	1	**3K-0360**	1	SEAL-O-RING	
B	14	1	**9S-8005**	1	PLUG (3/4-16-THD)	

B - USE AS REQUIRED
M - METRIC PART

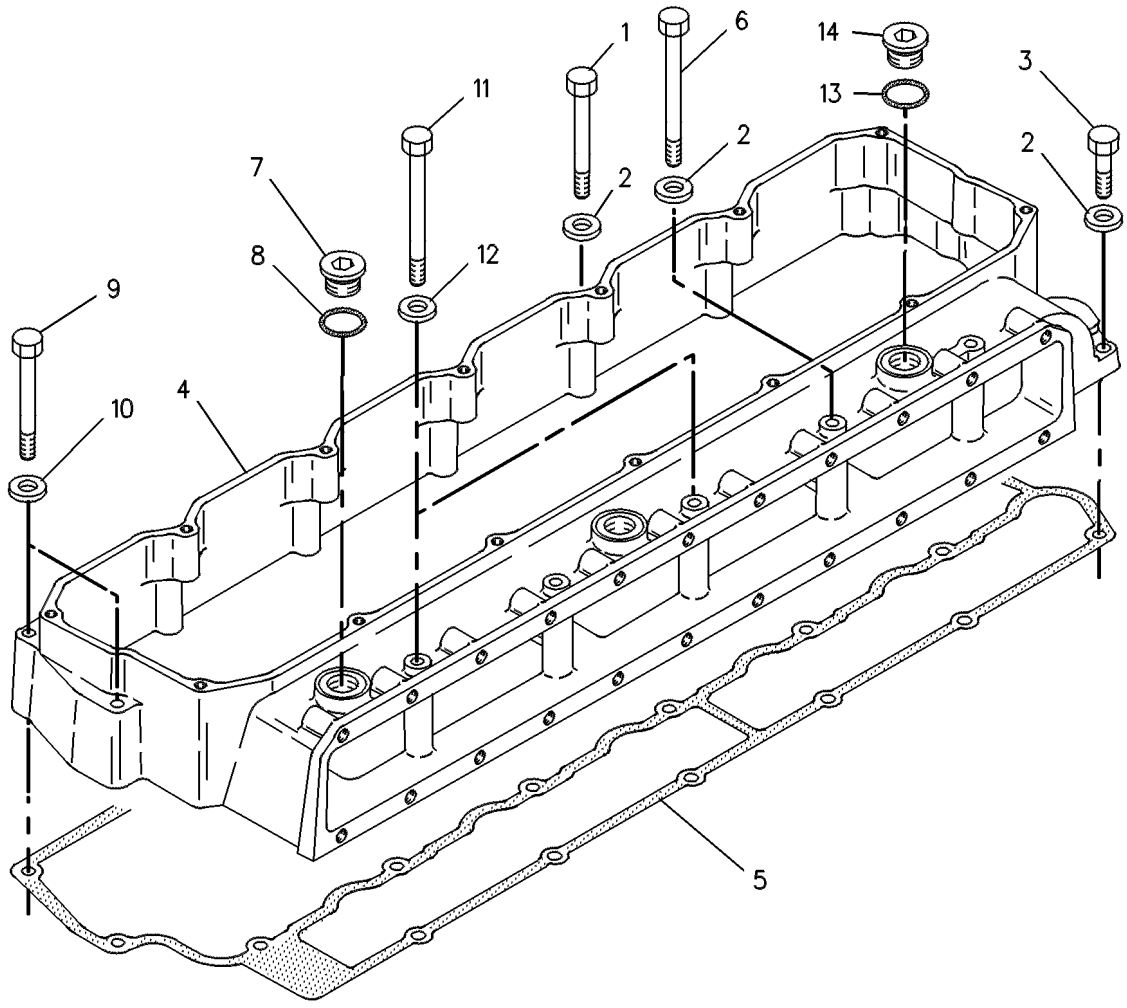

GRAPHIC #1 <END> g00108501

117-1764 MOUNTING GP-MUFFLER

S/N: 9BL1488-1694, 1697-1702

PART OF 117-1761 CHASSIS AR

SMCS-1062 **i00675683**

NOTE	REF NO	GRAPHIC REF	PART NUMBER	QTY	PART NAME 1 2 3 4 5 6 (PRODUCT LEVEL)	SEE PAGE
	1	1	**118-1899**	1	SUPPORT AS	
	2	1	**8T-4835**	4	BOLT (1/2-13X2-IN)	
	3	1	**8T-4223**	4	WASHER-HARD (13.5X25.5X3-MM THK)	

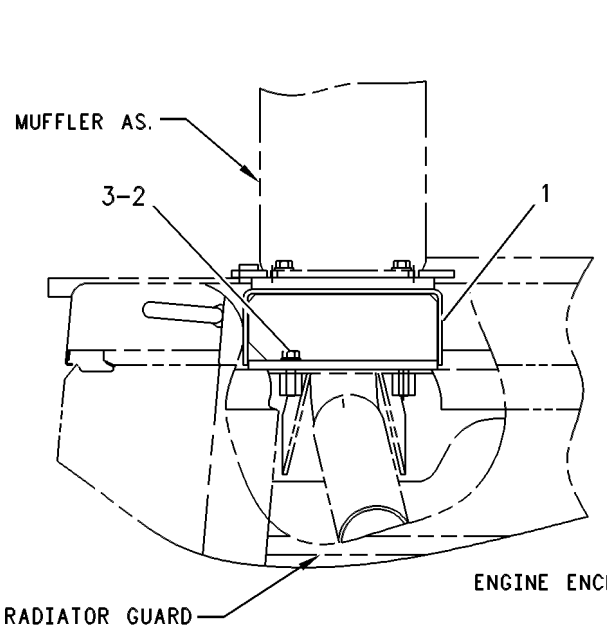

REAR VIEW

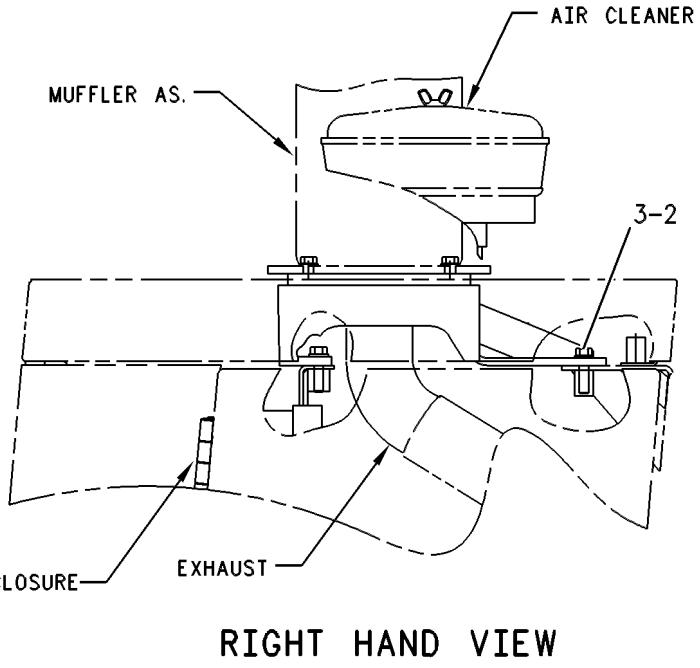

RIGHT HAND VIEW

GRAPHIC #1 <END> g00289986

117-1764 MOUNTING GP-MUFFLER

S/N: 9BL1695-1696, 1703-UP

PART OF 117-1761 CHASSIS AR

SMCS-1062 **i01398949**

NOTE	REF NO	GRAPHIC REF	PART NUMBER	QTY	PART NAME 1 2 3 4 5 6 (PRODUCT LEVEL)	SEE PAGE
C	1	1	**142-2986**	1	SUPPORT AS	
	2	1	**8T-4223**	4	WASHER-HARD (13.5X25.5X3-MM THK)	
C	3	1	**5P-1076**	4	WASHER-HARD (13.5X30X4-MM THK)	

C - CHANGE FROM PREVIOUS TYPE

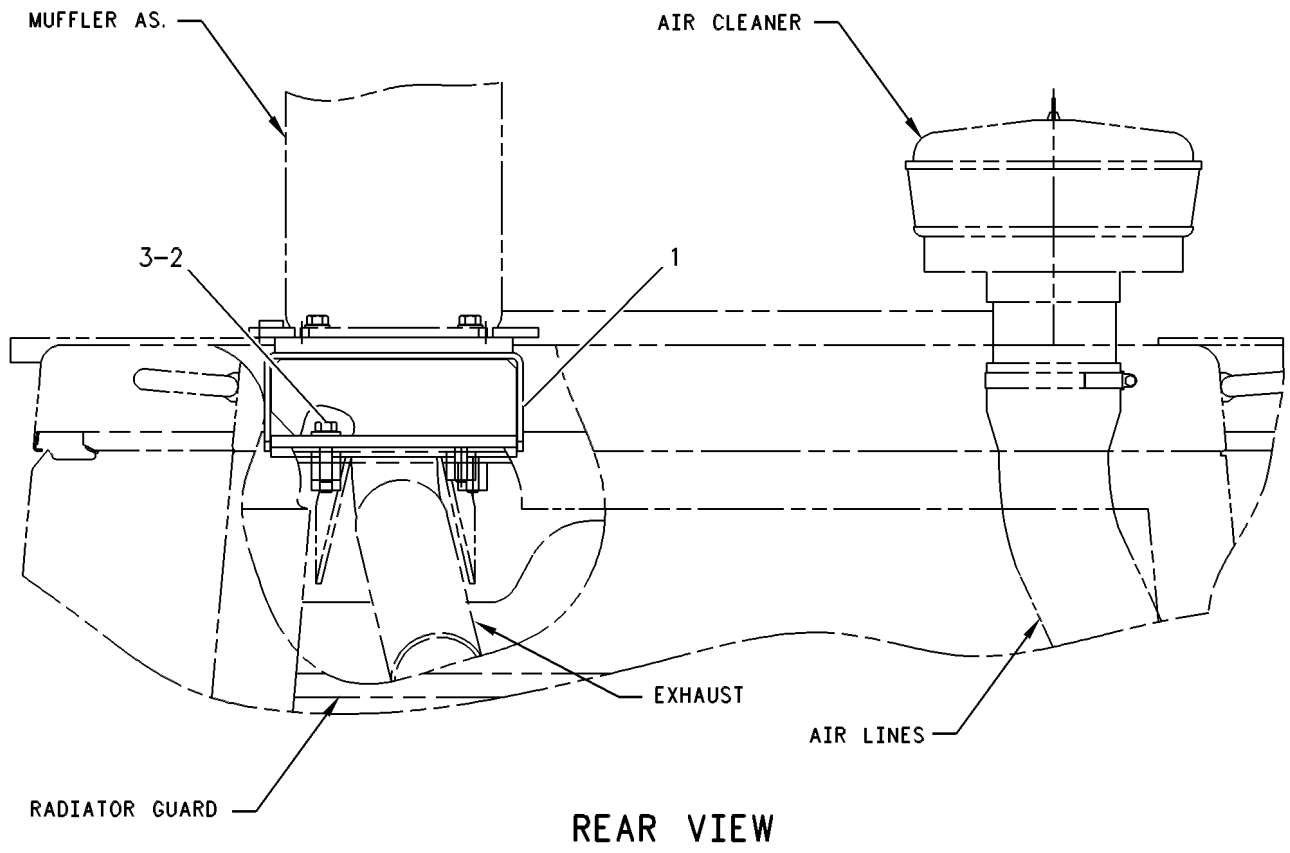

REAR VIEW

GRAPHIC #1 <END> g00292166

8Y-9775 MOUNTING GP-MUFFLER

S/N: 9BL1-1487

PART OF 8Y-9370 CHASSIS AR

SMCS-1062 **i00568622**

NOTE	REF NO	GRAPHIC REF	PART NUMBER	QTY	PART NAME 1 2 3 4 5 6 (PRODUCT LEVEL)	SEE PAGE
	1	1	**8Y-9776**	1	SUPPORT AS	
	2	1	**8T-4835**	4	BOLT (1/2-13X2-IN)	
	3	1	**8T-4223**	4	WASHER-HARD (13.5X25.5X3-MM THK)	

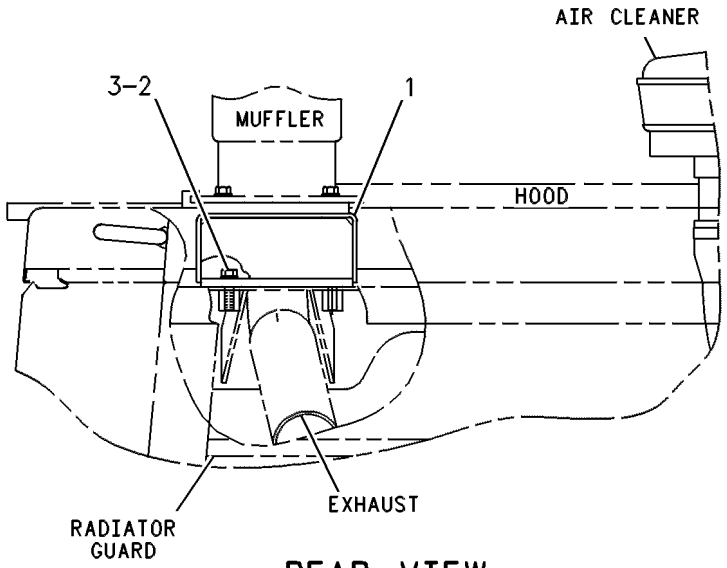

REAR VIEW

GRAPHIC #1 <END> g00247194

100-4593 MUFFLER GP

S/N: 9BL1-UP

PART OF 6I-3527 INSTALLATION AR

SMCS-1062 **i00568223**

NOTE	REF NO	GRAPHIC REF	PART NUMBER	QTY	PART NAME 1 2 3 4 5 6 (PRODUCT LEVEL)	SEE PAGE
	1	1	**100-4594**	1	MUFFLER AS	
	2	1	**9S-1366**	4	BOLT (1/2-13X2.5-IN)	
	3	1	**5P-8245**	4	WASHER-HARD (13.5X25.5X3-MM THK)	

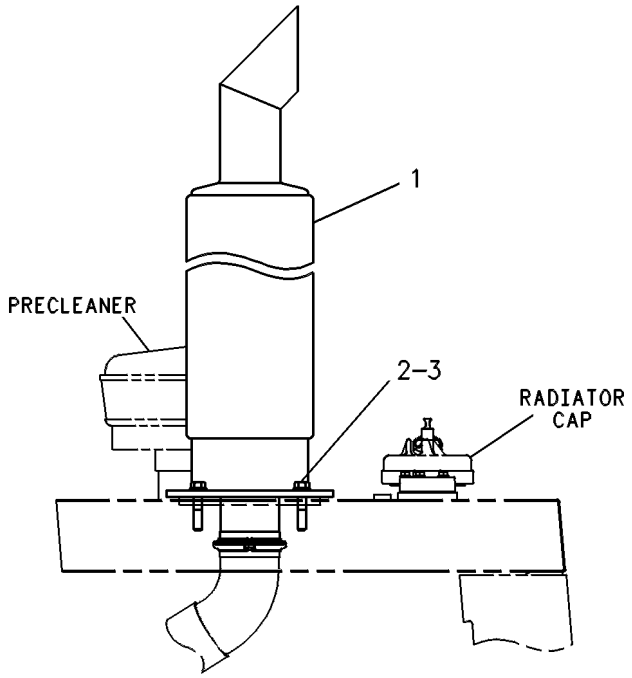

GRAPHIC #1 <END> g00247144

117-5190 MUFFLER GP

S/N: 9BL1488-UP

PART OF 117-5189 INSTALLATION AR-ENGINE

SMCS-1062 **i00675710**

NOTE	REF NO	GRAPHIC REF	PART NUMBER	QTY	PART NAME 1 2 3 4 5 6 (PRODUCT LEVEL)	SEE PAGE
	1	1	**116-4178**	1	MUFFLER AS	
	2	1	**9S-1366**	4	BOLT (1/2-13X2.5-IN)	
	3	1	**5P-8245**	4	WASHER-HARD (13.5X25.5X3-MM THK)	

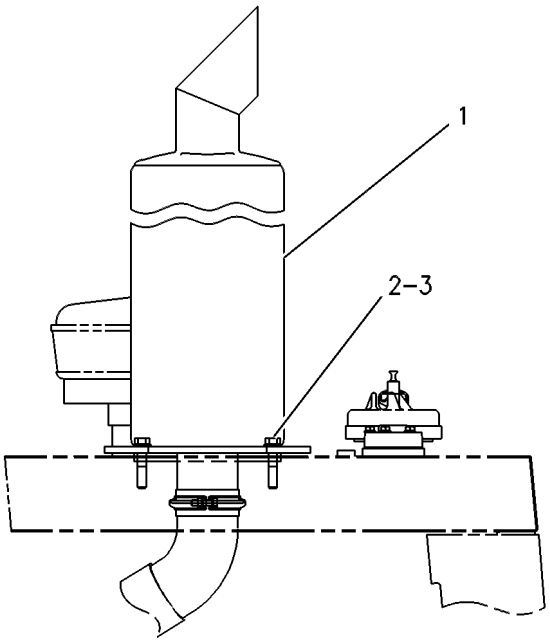

LEFT SIDE VIEW

GRAPHIC #1 <END> g00288042

4H-5076 PRECLEANER GP

S/N: 9BL1-1494
FIELD REPLACEMENT ORDER 5L-7942—PAGE: 160
FOR USE WITH EXTREMELY DUSTY AREAS
PART OF 100-4595, 127-9917 AIR CLEANER GP

SMCS-1055 **i00569528**

NOTE	REF NO	GRAPHIC REF	PART NUMBER	QTY	PART NAME 1 2 3 4 5 6 (PRODUCT LEVEL)	SEE PAGE
	1	1	**9M-5201**	1	COVER AS	
	2	1	**6H-8021**	1	BODY-PRECLEANER	
	3	1	**6H-8381**	1	SLEEVE AS	

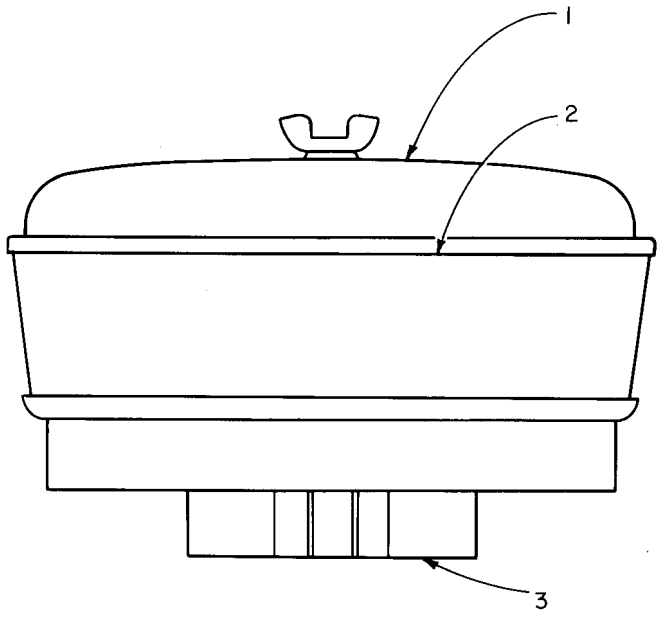

GRAPHIC #1 <END> g00116818

5L-7942 PRECLEANER GP

S/N: 9BL1-1494

FIELD REPLACEMENT FOR 4H-5076—PAGE: 159

FIELD INSTALLATION

SMCS-1055 **i00568096**

NOTE	REF NO	GRAPHIC REF	PART NUMBER	QTY	PART NAME 1 2 3 4 5 6 (PRODUCT LEVEL)	SEE PAGE
	1	1	**9M-5201**	1	COVER AS	
	2	1	**6H-8021**	1	BODY-PRECLEANER	

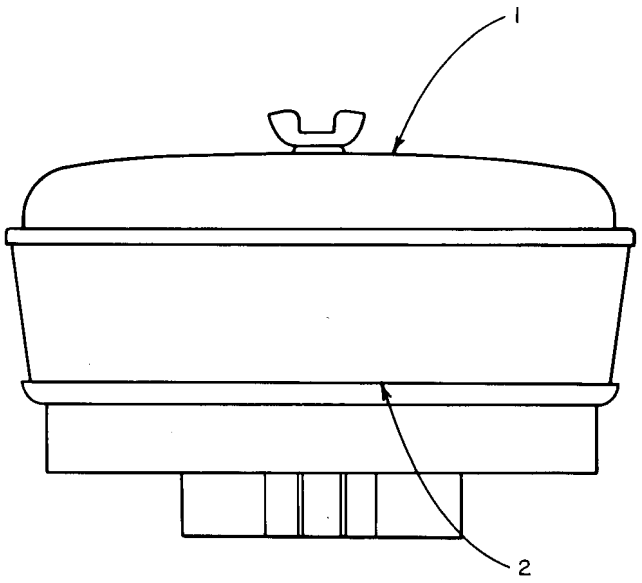

GRAPHIC #1 <END> g00116817

9S-0603 PRESCREENER GP

S/N: 9BL1-UP

PART OF 133-0568 GUARD AR-RADIATOR, 133-0569, 133-3958 WASTE HANDLING AR AN ATTACHMENT

SMCS-1055 **i00682320**

NOTE	PART NUMBER	QTY	PART NAME 1 2 3 4 5 6 (PRODUCT LEVEL)	SEE PAGE
	7X-0290	1	BOLT (3/8-16X3.5-IN)	
	7N-5685	1	CLAMP	
	6V-8801	1	NUT (3/8-16-THD)	
	4P-6549	1	PIPE-EXTENSION	
	9S-0601	1	PRESCREENER AS	
	8T-4896	2	WASHER-HARD (10.2X18.5X2.5-MM THK)	

<END>

105-5057 TURBOCHARGER GP*R

S/N: 4TF17400-UP
PART OF 107-7747 TURBOCHARGER GP
ALSO AN ATTACHMENT

SMCS-1052, 1053

i06859005

NOTE	REF NO	GRAPHIC REF	PART NUMBER	QTY	PART NAME 1 2 3 4 5 6 (PRODUCT LEVEL)	SEE PAGE
YR	1	1	**100-6917**	1	CARTRIDGE GP-TURBOCHARGER	140
	2	1	**7C-5626**	1	HOUSING-COMPRESSOR	
	3	1	**100-5869**	1	HOUSING	
	4	1	**7C-5802**	3	PLATE-CLAMP (COMPRESSOR)	
	5	1	**7C-6672**	2	PLATE-CLAMP (TURBINE)	
	6	1	**1W-4795**	1	PLATE-IDENTIFICATION (TURBOCHARGER CARTRIDGE)	
	7	1	**8H-3710**	1	SCREW-TAPPING (6-32XO.375-IN)	
M	8	1	**7C-6671**	6	BOLT AS	
M	9	1	**7C-6670**	4	BOLT (M8X1.25X12.5-MM)	

M - METRIC PART
R - REMANUFACTURED PART MAY BE AVAILABLE
Y - SEPARATE ILLUSTRATION

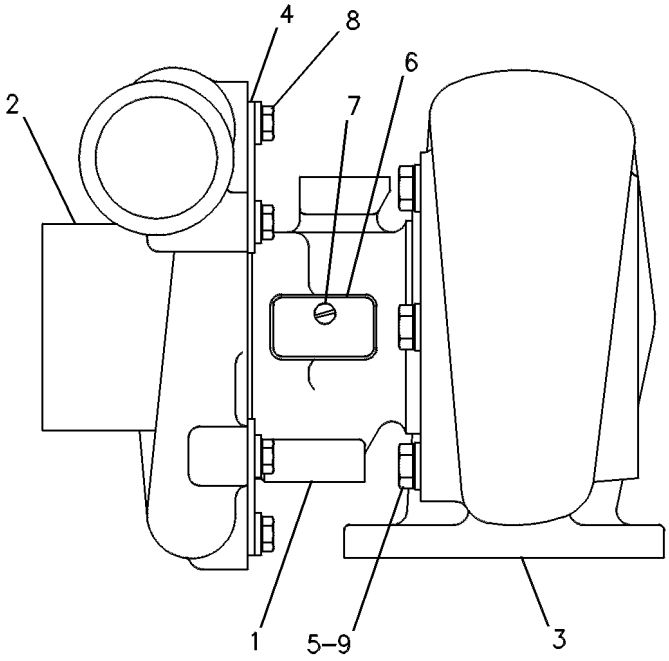

GRAPHIC #1 <END> g00247068

107-7747 TURBOCHARGER GP

S/N: 4TF17400-UP
PART OF 114-7159, 6I-3528 ENGINE AR
ALSO AN ATTACHMENT

SMCS-1052, 1053

i00569440

NOTE	REF NO	GRAPHIC REF	PART NUMBER	QTY	PART NAME 1 2 3 4 5 6 (PRODUCT LEVEL)	SEE PAGE
YR	1	1	**105-5057**	1	TURBOCHARGER GP	162
M	2	1	**3E-8017**	4	LOCKNUT (M10X1.5-THD)	
	3	1	**7C-7431**	1	GASKET	

M - METRIC PART
R - REMANUFACTURED PART MAY BE AVAILABLE
Y - SEPARATE ILLUSTRATION

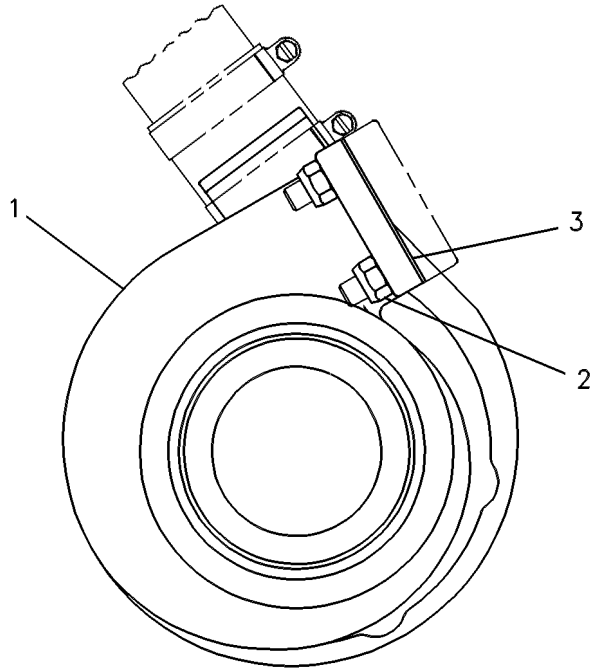

GRAPHIC #1

<END>

g00247065

119-3084 TURBOCHARGER GP

S/N: 4TF32065-UP
PART OF 117-5187, 117-5188 ENGINE AR
ALSO AN ATTACHMENT

SMCS-1052, 1053

i00596752

NOTE	REF NO	GRAPHIC REF	PART NUMBER	QTY	PART NAME 1 2 3 4 5 6 (PRODUCT LEVEL)	SEE PAGE
YR	1	1	**124-9340**	1	TURBOCHARGER GP	165
	2	1	**7C-7431**	1	GASKET	
M	3	1	**3E-8017**	4	LOCKNUT (M10X1.5-THD)	

M - METRIC PART
R - REMANUFACTURED PART MAY BE AVAILABLE
Y - SEPARATE ILLUSTRATION

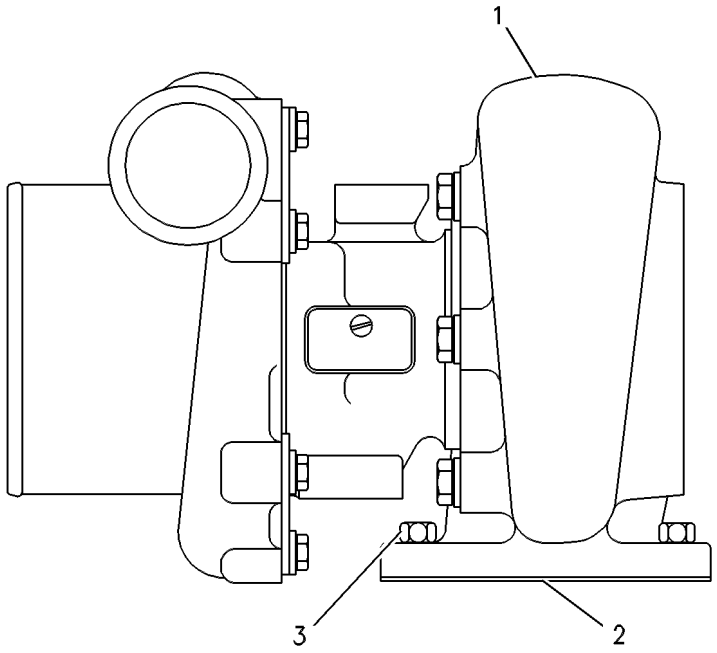

GRAPHIC #1 <END> g00279390

124-9340 TURBOCHARGER GP*R

S/N: 4TF32065-UP
PART OF 119-3084 TURBOCHARGER GP
ALSO AN ATTACHMENT

SMCS-1052, 1053

i06860731

NOTE	REF NO	GRAPHIC REF	PART NUMBER	QTY	PART NAME 1 2 3 4 5 6 (PRODUCT LEVEL)	SEE PAGE
YR	1	1	**115-5858**	1	CARTRIDGE GP-TURBOCHARGER	141
	2	1	**105-1977**	1	HOUSING	
	3	1	**125-1300**	1	COVER-TURBOCHARGER COMPRESSOR	
	4	1	**121-7554**	1	SEAL-O-RING	
	5	1	**125-5466**	6	BOLT AS	
M	6	1	**7C-6670**	4	BOLT (M8X1.25X12.5-MM)	
	7	1	**7C-6672**	2	PLATE-CLAMP (TURBINE)	
	8	1	**121-9799**	3	PLATE-CLAMP (COMPRESSOR)	

M - METRIC PART
R - REMANUFACTURED PART MAY BE AVAILABLE
Y - SEPARATE ILLUSTRATION

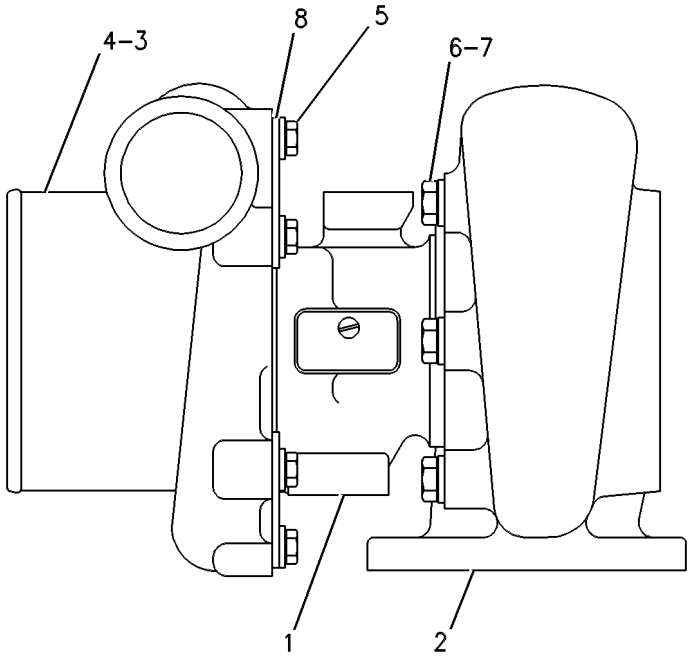

GRAPHIC #1

<END>

g00279388

125-1125 TURBOCHARGER GP*R

S/N: 4TF17400-32064
PART OF 126-1123 TURBOCHARGER GP
ALSO AN ATTACHMENT

SMCS-1052, 1053

i06867854

NOTE	REF NO	GRAPHIC REF	PART NUMBER	QTY	PART NAME 1 2 3 4 5 6 (PRODUCT LEVEL)	SEE PAGE
YR	1	1	**125-1130**	1	CARTRIDGE GP-TURBOCHARGER	142
	2	1	**1W-4795**	1	PLATE-IDENTIFICATION (TURBOCHARGER CARTRIDGE)	
	3	1	**125-1137**	1	COVER-COMPRESSOR	
		1	**7C-6155**	1	SEAL-O-RING	
	4	1	**100-5869**	1	HOUSING	
	5	1	**7C-5802**	3	PLATE-CLAMP (COMPRESSOR)	
	6	1	**7C-6672**	2	PLATE-CLAMP (TURBINE)	
	7	1	**8H-3710**	1	SCREW-TAPPING (6-32X0.375-IN)	
M	8	1	**7C-6671**	6	BOLT AS	
M	9	1	**7C-6670**	4	BOLT (M8X1.25X12.5-MM)	

M - METRIC PART
R - REMANUFACTURED PART MAY BE AVAILABLE
Y - SEPARATE ILLUSTRATION

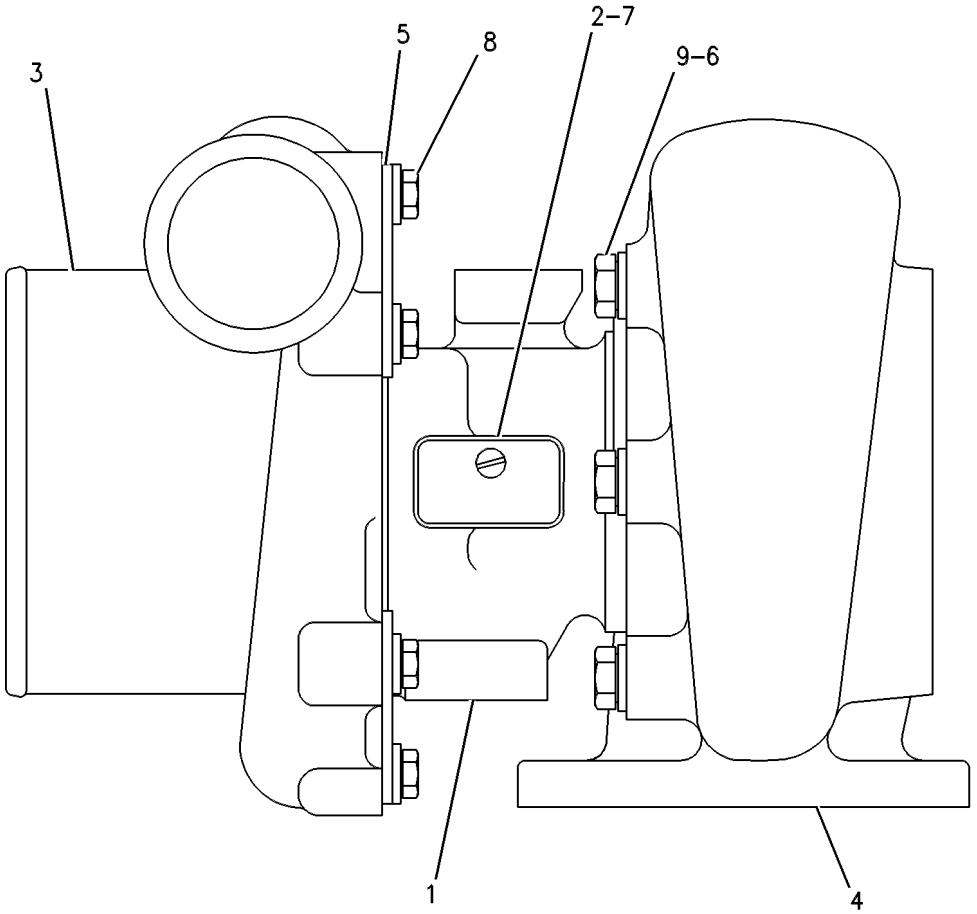

GRAPHIC #1 <END> g00267294

126-1123 TURBOCHARGER GP

S/N: 4TF17400-32064
PART OF 117-5187, 117-5188 ENGINE AR
ALSO AN ATTACHMENT

SMCS-1052, 1053

i00568625

NOTE	REF NO	GRAPHIC REF	PART NUMBER	QTY	PART NAME 1 2 3 4 5 6 (PRODUCT LEVEL)	SEE PAGE
YR	1	1	**125-1125**	1	TURBOCHARGER GP	166
M	2	1	**3E-8017**	4	LOCKNUT (M10X1.5-THD)	
	3	1	**7C-7431**	1	GASKET	

M - METRIC PART
R - REMANUFACTURED PART MAY BE AVAILABLE
Y - SEPARATE ILLUSTRATION

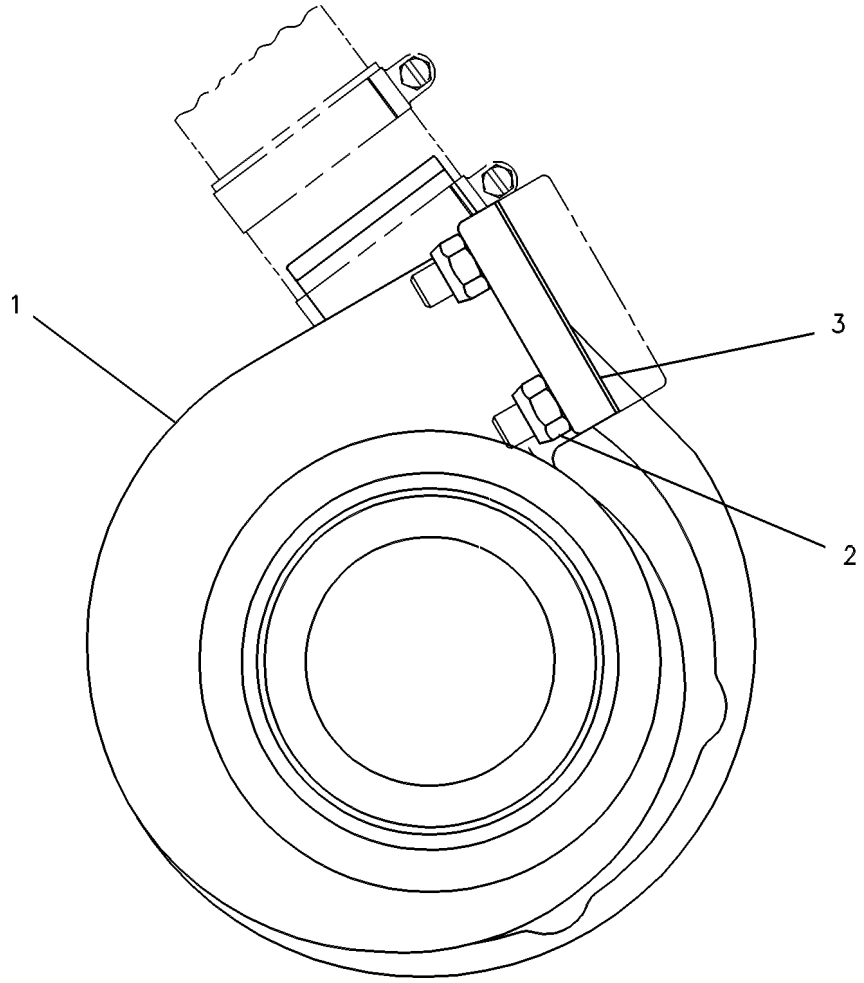

GRAPHIC #1 <END> g00266688

8V-5989 CAP GP-FUEL FILLER

S/N: 9BL1-UP
FUEL TANK-LOCKING-UNVENTED
PART OF 8Y-9458 TANK GP-FUEL

SMCS-1273 **i01398962**

NOTE	REF NO	GRAPHIC REF	PART NUMBER	QTY	PART NAME 1 2 3 4 5 6 (PRODUCT LEVEL)	SEE PAGE
	1	1	**5P-8502**	1	PADLOCK GP	
A		1	**5P-8500**	1	KEY	
A		1	**8Y-6364**	1	SLEEVE	
	2	1	**5F-9144**	1	SEAL-O-RING	
	3	1	**9M-1974**	2	WASHER-HARD (8.8X16X2-MM THK)	
	4	1	**1V-8523**	1	CAP-FILLER (FUEL TANK)	
	5	1	**2A-1763**	1	GASKET-CAP	
	6	1	**8F-9538**	1	SEAL-O-RING	
	7	1	**3B-4615**	2	PIN-COTTER	
	8	1	**4J-1105**	1	SHIM (0.79-MM THK)	
	9	1	**4V-8945**	1	COVER AS-TANK CAP	
	10	1	**4B-4310**	2	RIVET	

A - NOT PART OF THIS GROUP

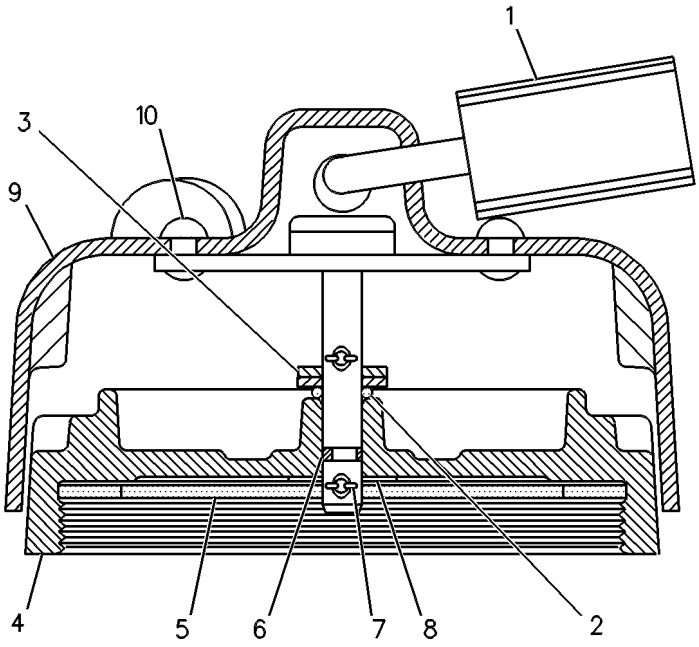

GRAPHIC #1 <END> g00247087

105-1695 CONTROL GP-FUEL INJECTION

S/N: 4TF17400-UP
PART OF 114-7159, 117-5187, 117-5188, 6I-3528 ENGINE AR
ALSO AN ATTACHMENT

SMCS-1265, 1298

i01379748

NOTE	REF NO	GRAPHIC REF	PART NUMBER	QTY	PART NAME 1 2 3 4 5 6 (PRODUCT LEVEL)	SEE PAGE
	1	1	**162-8756**	1	CONTROL GP-FUEL INJECTION	
M	2	1	**6V-5683**	4	BOLT (M6X1X16-MM)	

M - METRIC PART

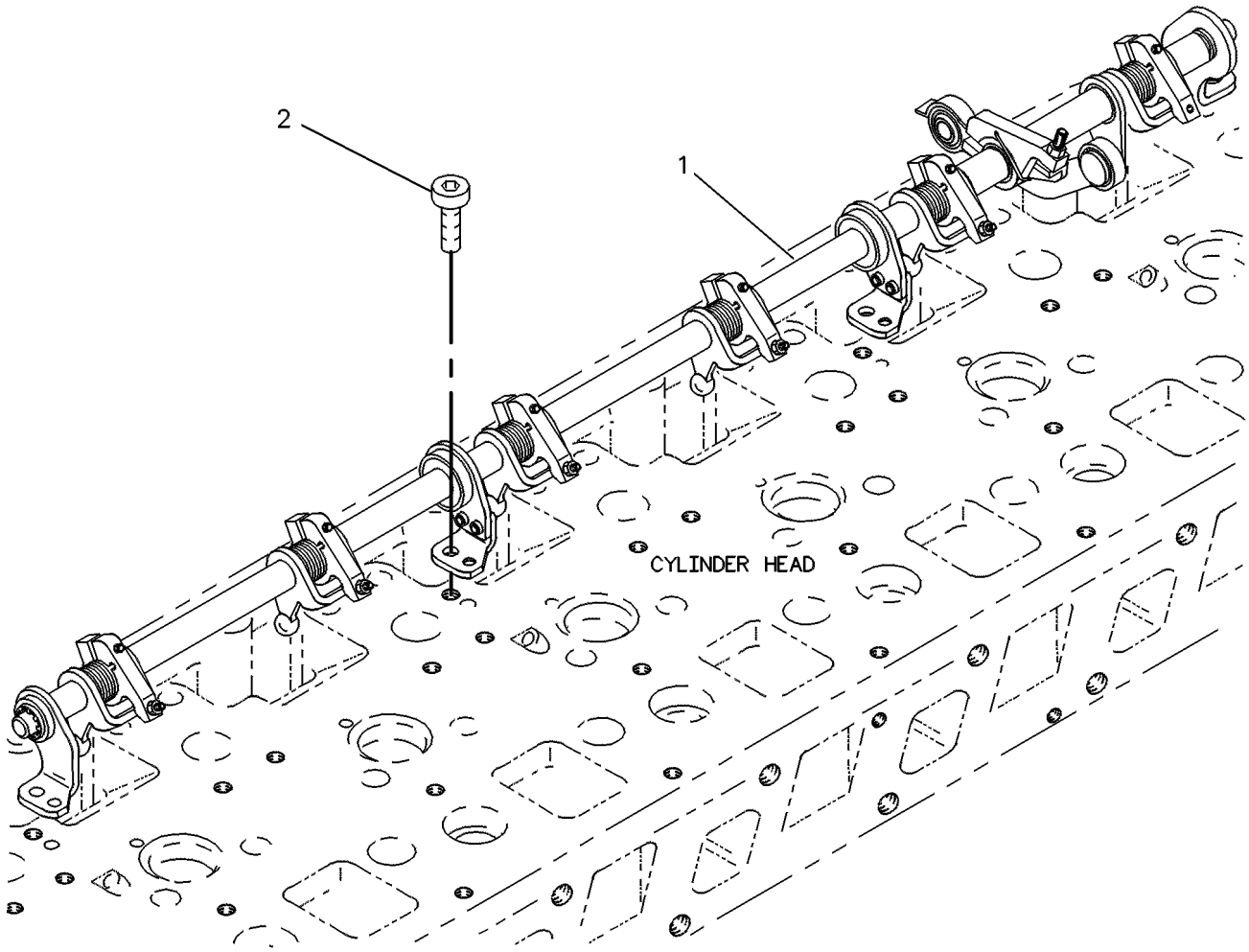

GRAPHIC #1 <END> g00108505

7W-6989 CONTROL GP-FUEL INJECTION

S/N: 4TF17400-18603
PART OF 114-7159 ENGINE AR
AN ATTACHMENT

SMCS-1265, 1298

i01186443

NOTE	REF NO	GRAPHIC REF	PART NUMBER	QTY	PART NAME 1 2 3 4 5 6 (PRODUCT LEVEL)	SEE PAGE
	1	1	**162-8756**	1	CONTROL GP-FUEL INJECTION	
M	2	1	**6V-5683**	4	BOLT (M6X1X16-MM)	

M - METRIC PART

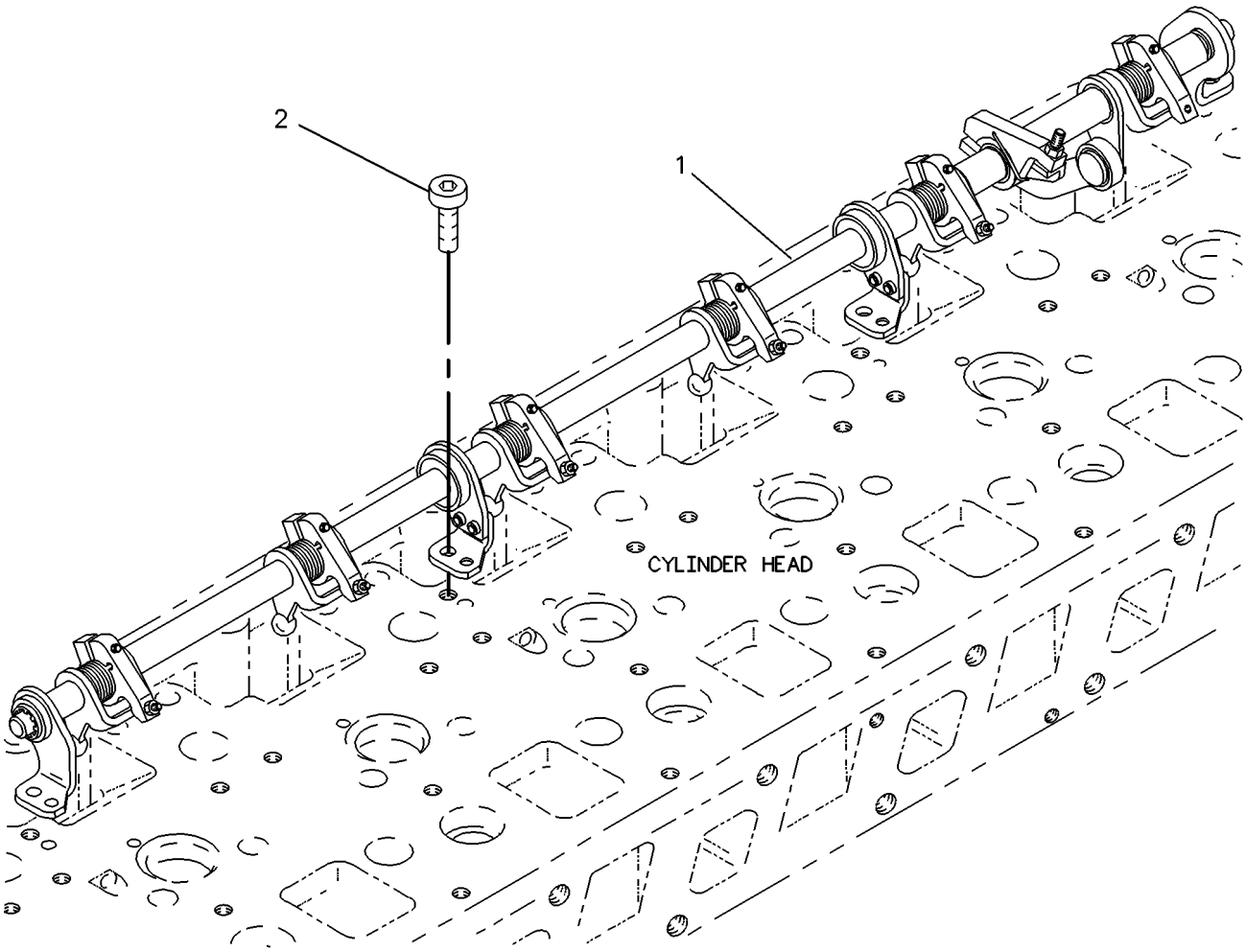

GRAPHIC #1 <END> g00108469

7E-9429 CONTROL GP-GOVERNOR

S/N: 4TF17400-UP

PART OF 114-7159, 117-5187, 117-5188, 6I-3528 ENGINE AR

ALSO AN ATTACHMENT

SMCS-1265, 1276

i01398968

NOTE	REF NO	GRAPHIC REF	PART NUMBER	QTY	PART NAME 1 2 3 4 5 6 (PRODUCT LEVEL)	SEE PAGE
	1	1	**6I-0484**	1	LEVER AS	
	2	1	**6I-0483**	2	SPRING	
	3	1	**6I-0482**	1	LEVER AS	
M	4	1	**5C-9553**	1	BOLT (M6X1X16-MM)	
		1	**6V-7646**	1	WASHER-HARD (7.2X25X2-MM THK)	
M	5	1	**8C-8451**	1	BOLT (M6X1X40-MM)	
		1	**8T-2228**	1	WASHER-HARD (6.5X17X2-MM THK)	

M - METRIC PART

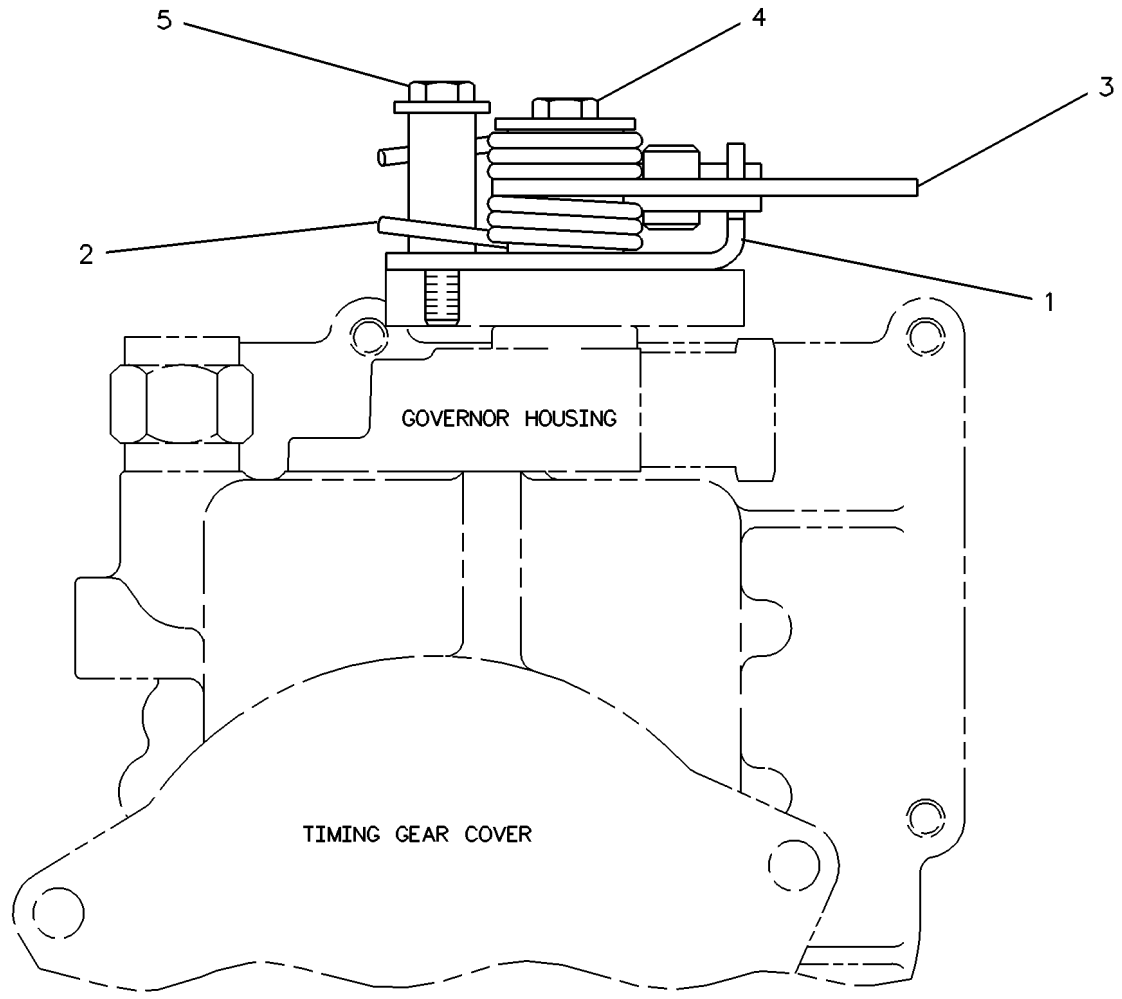

GRAPHIC #1 <END> g00117026

8Y-9464 CONTROL GP-GOVERNOR

S/N: 9BL1-UP

PART OF 117-1761, 8Y-9370 CHASSIS AR

SMCS-1265, 1276

i01398972

NOTE	REF NO	GRAPHIC REF	PART NUMBER	QTY	PART NAME 1 2 3 4 5 6 (PRODUCT LEVEL)	SEE PAGE
	1	1	**7P-4418**	1	PLATE AS	
		1	**3D-8823**	1	BUSHING	
		1	**7F-2776**	2	STOP	
	2	1	**5S-7379**	1	BOLT (3/8-16X0.875-IN)	
	3	1	**5P-1075**	1	WASHER-HARD (10.2X22.5X3-MM THK)	
	4	1	**2M-8340**	1	ROD END	
	5	1	**8G-1118**	1	SPRING-TORSION	
	6	1	**7V-9797**	1	PIN	
	7	1	**4M-2348**	1	PIN-COTTER	
	8	1	**7P-9283**	2	LEVER	
	9	1	**4L-9337**	2	BOLT (3/8-16X1.5-IN)	
	10	1	**6V-8801**	3	NUT (3/8-16-THD)	
	11	1	**4V-6698**	1	SPACER (10X16X16-MM THK)	
	12	1	**8T-2501**	1	BOLT (3/8-16X2-IN)	
	13	1	**9S-1303**	1	PIN	
	14	1	**2J-5038**	1	ROD END	
	15	1	**4D-4064**	2	ROD END (3/8-24-THD)	
	16	1	**8T-4896**	4	WASHER-HARD (10.2X18.5X2.5-MM THK)	
	17	1	**6V-8183**	7	NUT-FULL (3/8-24-THD)	
	18	1	**8Y-9178**	1	ROD	
	19	1	**4K-4726**	2	ROD END	
	20	1	**8Y-9179**	1	ROD AS	
		1	**6V-8187**	2	NUT (1/4-28-THD)	
		1	**8B-3768**	2	ROD END	
	21	1	**7X-3374**	2	NUT-FULL (1/2-20-THD)	
	22	1	**3B-4607**	1	PIN-COTTER	
	23	1	**8T-4205**	4	WASHER-HARD (7.2X14.5X2-MM THK)	
	24	1	**8G-1146**	1	TUBE AS	
	25	1	**8G-1144**	1	LINK AS	
	26	1	**8G-1141**	1	PLATE	
	27	1	**6D-2928**	2	BOLT (1/4-20X1.125-IN)	
	28	1	**2D-6235**	2	LOCKNUT (1/4-20-THD)	
	29	1	**6B-6863**	1	PIN-SPRING	
	30	2	**7X-0288**	1	BOLT (3/8-16X1.625-IN)	
	31	2	**031-4847**	1	SPACER (0.38X0.625X0.25-IN)	
	32	2	**4L-6454**	1	BOLT (3/8-16X1-IN)	
M	33	2	**6V-3822**	2	BOLT (M10X1.5X35-MM)	
	34	2	**1B-8701**	1	KEY-WOODRUFF	
	35	2	**8T-4223**	2	WASHER-HARD (13.5X25.5X3-MM THK)	
	36	2	**8G-1142**	1	DISC-FRICTION	
	37	2	**009-8670**	6	WASHER (SPRING)	
	38	2	**4L-9337**	1	BOLT (3/8-16X1.5-IN)	
	39	2	**6V-8801**	2	NUT (3/8-16-THD)	
	40	2	**5P-9209**	2	BEARING AS-NEEDLE	
	41	2	**8G-1210**	1	LEVER	
	42	2	**2K-0564**	2	LOCKNUT (1/2-20-THD)	
	43	2	**8G-1150**	1	BAR	

8Y-9464 **CONTROL GP-GOVERNOR (**contd.**)** **i01398972**

NOTE	REF NO	GRAPHIC REF	PART NUMBER	QTY	PART NAME 1 2 3 4 5 6 (PRODUCT LEVEL)	SEE PAGE
	44	2	**7X-0591**	1	WASHER-HARD (17X29X3-MM THK)	
	45	2	**8T-4896**	2	WASHER-HARD (10.2X18.5X2.5-MM THK)	
	46	2	**6V-8183**	1	NUT-FULL (3/8-24-THD)	
	47	2	**8F-4610**	1	RING-RETAINING	
	48	2	**7X-3338**	1	BOLT (3/8-16X1.75-IN)	
	49	2	**8G-1798**	2	SPACER	
	50	2	**6J-2256**	1	PIN	
	51	2	**3B-4607**	1	PIN-COTTER	
	52	2	**8T-4205**	1	WASHER-HARD (7.2X14.5X2-MM THK)	
	53	2	**7X-0467**	1	BOLT (3/8-24X1-IN)	
	54	2	**8G-1144**	1	LINK AS	
	55	2	**8Y-9180**	1	ANGLE AS	
M		2	**8T-3490**	1	NUT-WELD (M10X1.5-THD)	
	56	2	**8Y-9176**	1	SHAFT AS	
	57	2	**2L-6267**	2	LOCKNUT (3/8-24-THD)	
	58	2	**3W-4621**	1	PLATE	
	59	2	**6D-0679**	1	KNOB	
	60	2	**7P-8226**	1	ROD	
	61	2	**6V-5839**	2	WASHER (11X21X2.5-MM THK)	
	62	2	**7X-3374**	2	NUT-FULL (1/2-20-THD)	
	63	2	**8G-1143**	1	LINK AS	
		2	**1B-4203**	2	NUT-FULL (3/8-24-THD)	
		2	**3K-2366**	1	ROD-CONTROL	
		2	**5J-5315**	2	ROD END	
	64	2	**7P-8301**	1	SHAFT	
	65	2	**1B-8704**	2	KEY-WOODRUFF	
	66	2	**2J-5038**	1	ROD END	

M - METRIC PART

8Y-9464 **CONTROL GP-GOVERNOR (**contd.**)** **i01398972**

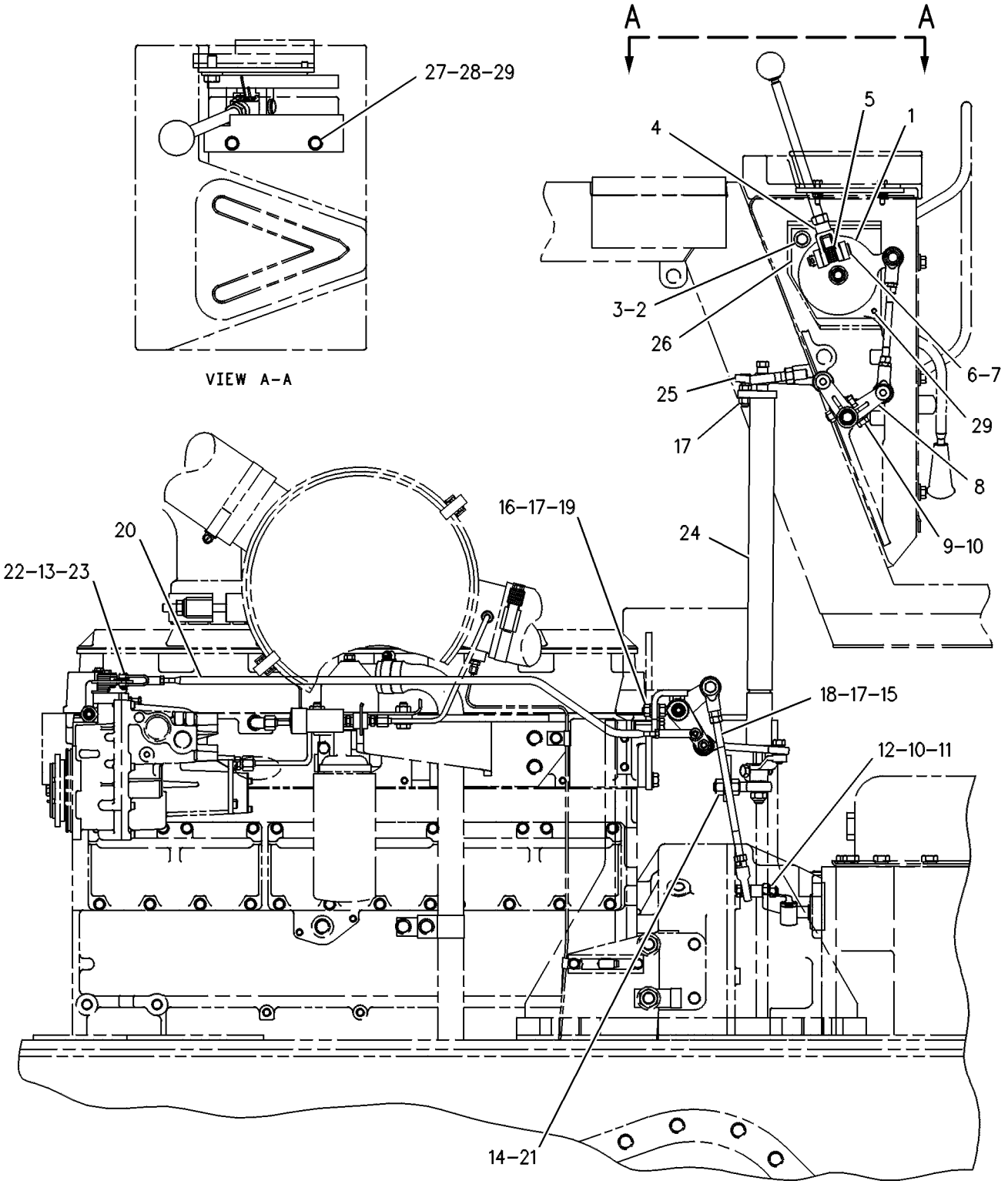

LEFT SIDE VIEW

REFER TO ALL ILLUSTRATIONS OF THIS GROUP FOR AUXILIARY VIEWS

GRAPHIC #1 g00247098

8Y-9464 **CONTROL GP-GOVERNOR** (contd.) **i01398972**

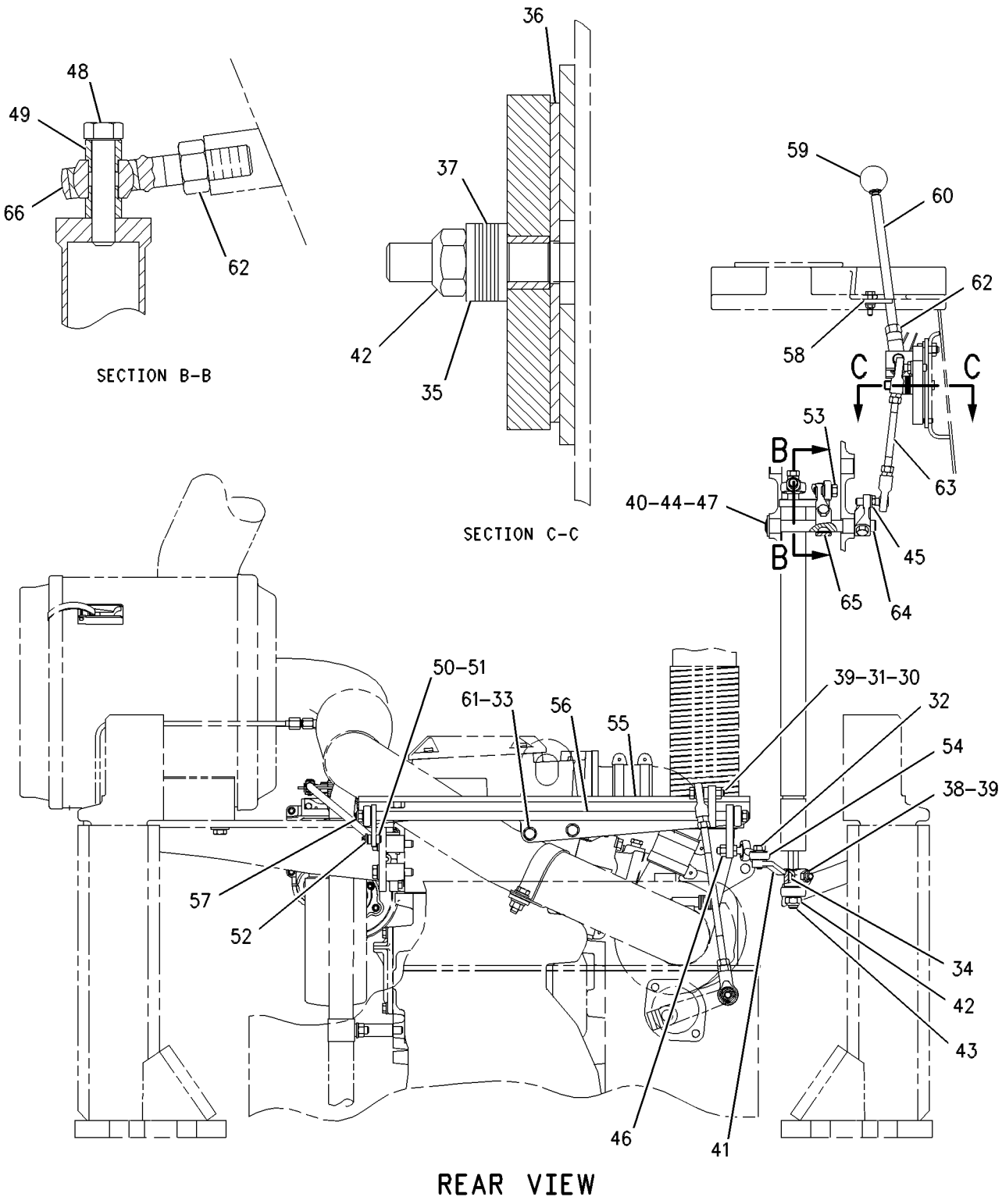

GRAPHIC #2 <END> g00395657

7E-8794 DRIVE GP-GOV & TRANSFER PUMP

S/N: 4TF17400-UP

PART OF 100-8271, 130-7323, 130-7326 GOVERNOR GP-UNIT INJECTOR

ALSO AN ATTACHMENT

SMCS-1288 **i02014082**

NOTE	REF NO	GRAPHIC REF	PART NUMBER	QTY	PART NAME 1 2 3 4 5 6 (PRODUCT LEVEL)	SEE PAGE
	1	1	**4P-5612**	1	HOUSING AS-FRONT	
		1	**7S-5005**	2	DOWEL	
		1	**7S-6798**	1	SEAL-LIP TYPE	
M		1	**9Y-3107**	1	BOLT (M8X1.25X45-MM)	
	2	1	**4P-8253**	1	SPRING-TORSION	
	3	1	**4P-9490**	1	SHAFT AS-SHUTOFF	
M	3A	1	**9X-8902**	4	BOLT-SOCKET HEAD (M3X0.5X8-MM)	
	3B	1	**4P-9492**	1	BRACKET-SHAFT	
	3C	1	**4P-9493**	1	LEVER-SHUTOFF (SOLENOID)	
	3D	1	**4P-9494**	1	SPRING-SHUTOFF	
	3E	1	**105-0585**	1	LEVER-SHUTOFF (OUTPUT)	
M	4	1	**6V-5213**	2	BOLT-SOCKET HEAD (M5X0.8X12-MM)	
	5	1	**7W-5615**	1	SLEEVE AS-PUMP	
		1	**1W-0565**	1	RING-RETAINING	
	6	1	**4D-9986**	2	SEAL-O-RING	
	7	1	**4P-3953**	1	PISTON AS	
	8	1	**7E-0156**	1	FITTING-INLET	
	9	1	**4P-4224**	1	COVER-TRANSFER PUMP	
	10	1	**7C-5294**	1	SPRING	
M	11	1	**8C-6364**	3	BOLT-SOCKET HEAD (M5X0.8X14-MM)	
	12	1	**7E-9898**	1	CONNECTOR	
	13	1	**3J-1907**	2	SEAL-O-RING	
	14	1	**7W-7383**	2	VALVE AS-CHECK	
	15	1	**7E-3943**	1	LEVER-CONTROL	
M	16	1	**9Y-9846**	1	SCREW-LOCATOR	
	17	1	**6L-8598**	2	RING-RETAINING	
	18	1	**4P-3538**	1	SHAFT-THROTTLE	
	19	1	**7E-3944**	1	SLEEVE	

M - METRIC PART

7E-8794 **DRIVE GP-GOV & TRANSFER PUMP** (contd.) **i02014082**

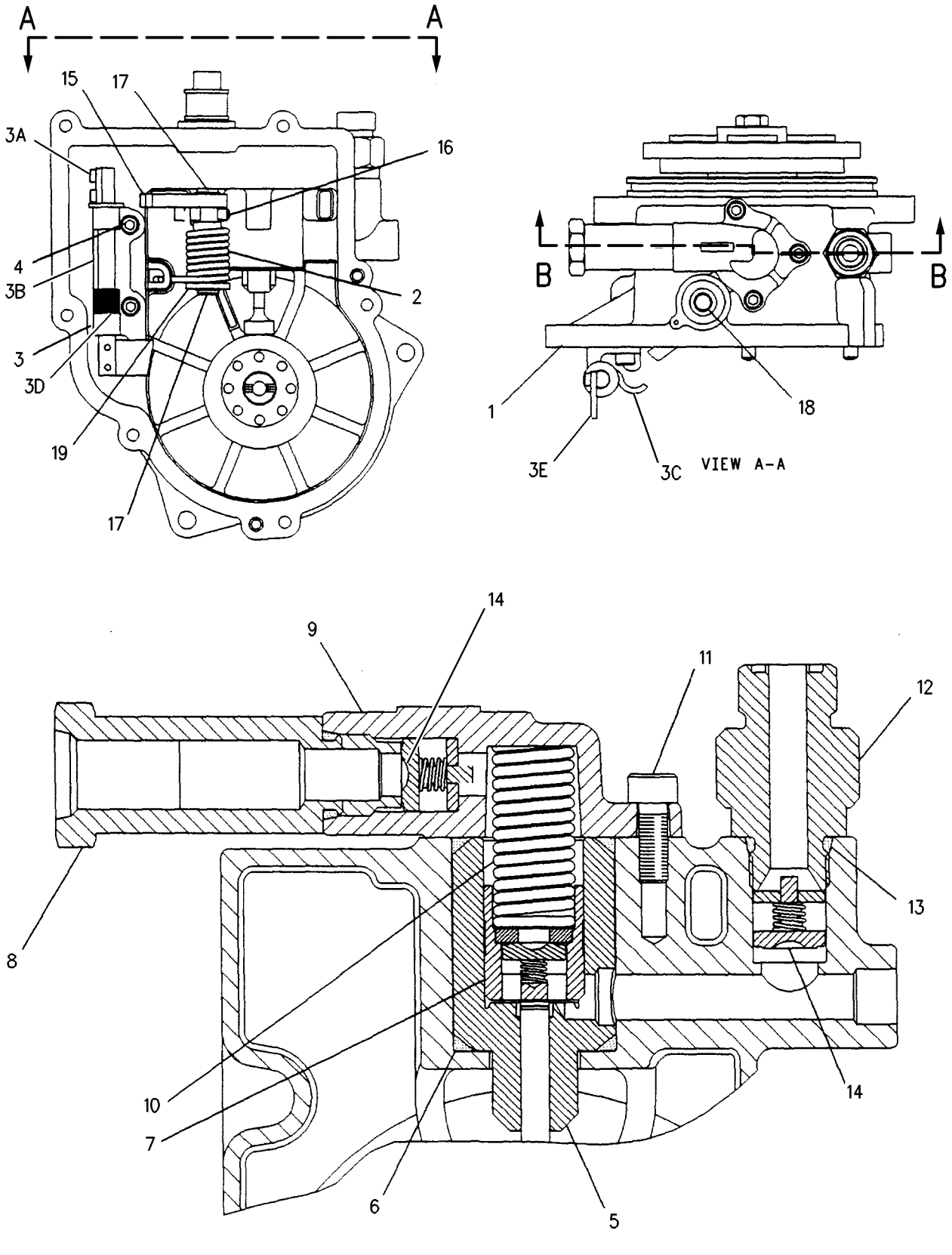

GRAPHIC #1 <END> g00692243

7W-4812 FASTENER GP-FUEL INJ PUMP

S/N: 4TF17400-UP

PART OF 107-7723 GOVERNOR GP, 119-3037, 129-1213 GOVERNOR GP-UNIT INJECTOR

ALSO AN ATTACHMENT

SMCS-1251 **i01640376**

NOTE	REF NO	GRAPHIC REF	PART NUMBER	QTY	PART NAME 1 2 3 4 5 6 (PRODUCT LEVEL)	SEE PAGE
J	1	1	**7W-3872**	1	SLEEVE	
	2	1	**9M-1974**	3	WASHER-HARD (8.8X16X2-MM THK)	
M	3	1	**6V-5218**	3	BOLT (M8X1.25X35-MM)	
	4	1	**9Y-5295**	1	TUBE	
	5	1	**6F-6673**	1	SEAL-O-RING	
	6	1	**7C-3839**	1	CLIP-SPRING	
	7	1	**7E-0844**	1	SEAL	
	8	1	**1T-1068**	1	SEAL-O-RING	

J - INSTALL SLEEVE IN FRONT HOUSING
M - METRIC PART

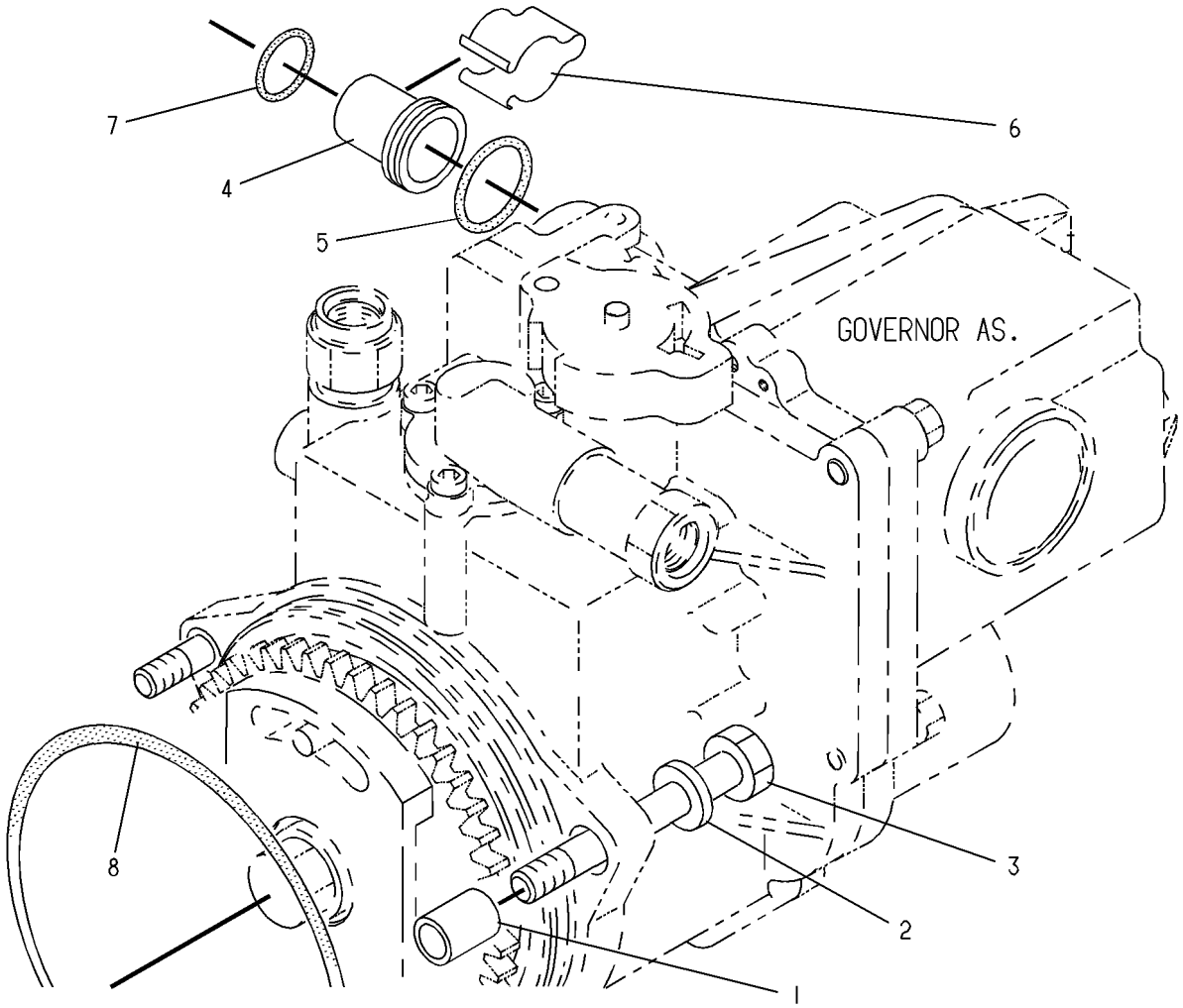

GRAPHIC #1 <END> g00108341

6I-2693 FILTER GP-FUEL

S/N: 4TF17400-UP
PART OF 114-7159, 117-5187, 117-5188, 6I-3528 ENGINE AR
ALSO AN ATTACHMENT

SMCS-1261 **i01398979**

NOTE	REF NO	GRAPHIC REF	PART NUMBER	QTY	PART NAME 1 2 3 4 5 6 (PRODUCT LEVEL)	SEE PAGE
B	1	1	**9M-1974**	1	WASHER-HARD (8.8X16X2-MM THK)	
BM	2	1	**6V-9607**	1	BOLT (M8X1.25X120-MM)	
	3	1	**3J-1907**	1	SEAL-O-RING	
	4	1	**7C-1159**	1	GASKET	
M	5	1	**6V-5218**	2	BOLT (M8X1.25X35-MM)	
	6	1	**1R-0751**	1	FILTER-FUEL (ADVANCED EFFICIENCY)	
	7	1	**9S-4191**	1	PLUG (9/16-18-THD)	
C	8	1	**6I-4802**	1	BASE AS	
C	9	1	**6I-4801**	1	INSERT-FILTER	
	10	1	**9M-1974**	3	WASHER-HARD (8.8X16X2-MM THK)	
M	11	1	**6V-9607**	1	BOLT (M8X1.25X120-MM)	

B - USE AS REQUIRED
C - CHANGE FROM PREVIOUS TYPE
M - METRIC PART

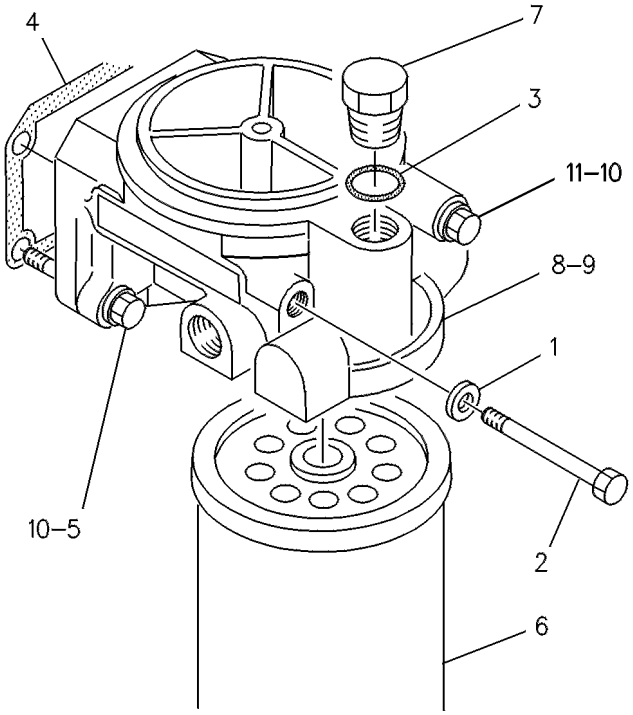

GRAPHIC #1 <END> g00108734

128-3937 FILTER GP-SECONDARY FUEL

S/N: 4TF32801-UP
PART OF 117-5187, 117-5188 ENGINE AR
ALSO AN ATTACHMENT

SMCS-1261 **i01640379**

NOTE	REF NO	GRAPHIC REF	PART NUMBER	QTY	PART NAME 1 2 3 4 5 6 (PRODUCT LEVEL)	SEE PAGE
	1	1	**6I-4802**	1	BASE AS	
		1	**112-6523**	1	INSERT-FUEL FILTER	
	2	1	**7C-1159**	1	GASKET	
	3	1	**1R-0753**	1	FILTER-FUEL (ADVANCED EFFICIENCY)	
	4	1	**9S-4191**	1	PLUG (9/16-18-THD)	
	5	1	**3J-1907**	1	SEAL-O-RING	
	6	1	**9M-1974**	4	WASHER-HARD (8.8X16X2-MM THK)	
M	7	1	**6V-9607**	2	BOLT (M8X1.25X120-MM)	
M	8	1	**6V-5218**	2	BOLT (M8X1.25X35-MM)	

M - METRIC PART

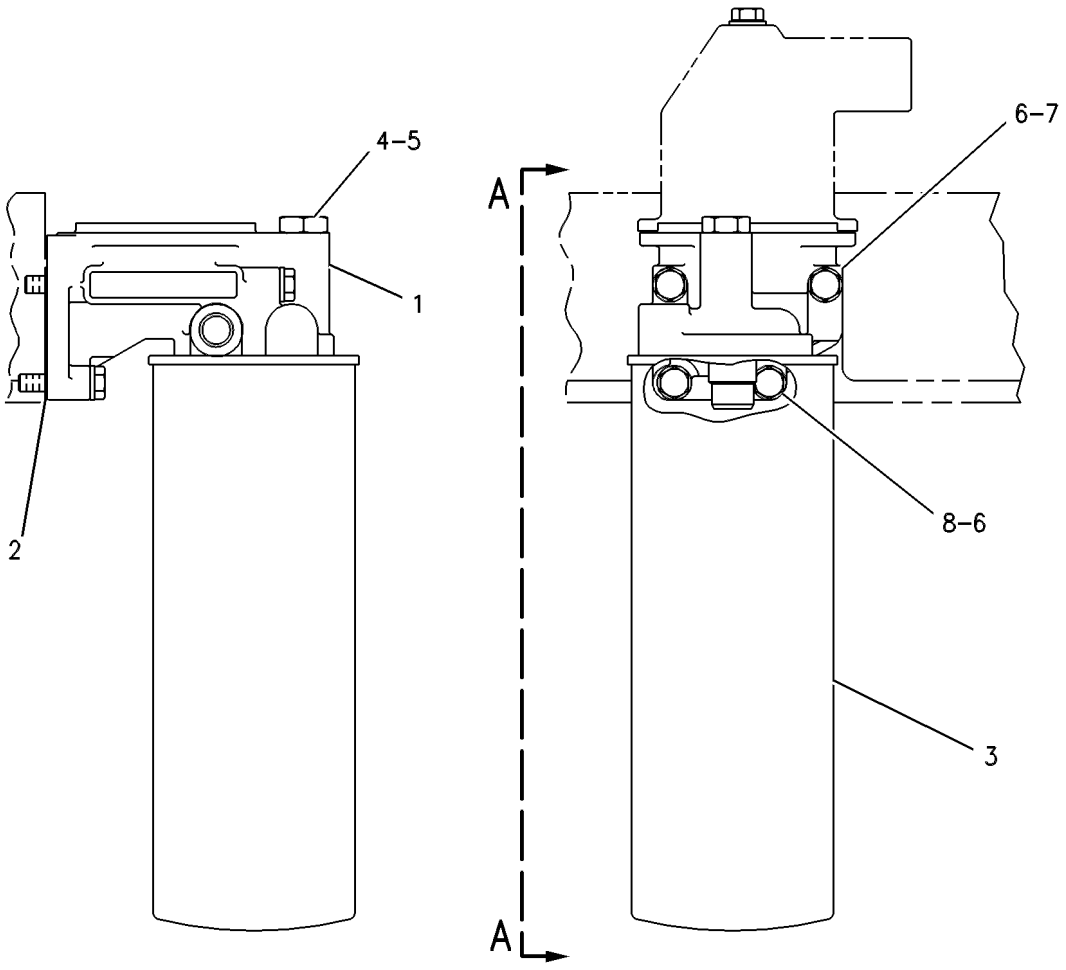

VIEW A-A

GRAPHIC #1 <END> g00109084

107-7723 GOVERNOR GP

S/N: 4TF17400-UP
PART OF 114-7159, 6I-3528 ENGINE AR
ALSO AN ATTACHMENT

SMCS-1264, 1908

i00569418

NOTE	PART NUMBER	QTY	PART NAME 1 2 3 4 5 6 (PRODUCT LEVEL)	SEE PAGE
Y	*7W-4812*	1	FASTENER GP-FUEL INJ PUMP	178
YR	**119-2896**	1	GOVERNOR GP-UNIT INJECTOR	192
Y	*7W-8434*	1	LINES GP-GOVERNOR OIL	218

R - REMANUFACTURED PART MAY BE AVAILABLE
Y - SEPARATE ILLUSTRATION

<END>

100-8271 GOVERNOR GP-UNIT INJECTOR

S/N: 4TF17400-UP
PART OF 119-2896 GOVERNOR GP-UNIT INJECTOR
ALSO AN ATTACHMENT
TYPE 1

SMCS-1264, 1287, 1908 **i01398982**

NOTE	REF NO	GRAPHIC REF	PART NUMBER	QTY	PART NAME 1 2 3 4 5 6 (PRODUCT LEVEL)	SEE PAGE
	1	1	**100-8272**	1	HOUSING AS	
					SHAFT	
	2	1	**100-6247**	1	PLUG-EXPANSION	
M	3	1	**3T-0849**	6	BOLT-SOCKET HEAD (M6X1X25-MM)	
	4	1	**4P-3539**	1	LEVER-THROTTLE	
	5	1	**4P-3537**	1	RING-TOLERANCE	
Y	6	1	**7E-8794**	1	DRIVE GP-GOV & TRANSFER PUMP	176
M	7	1	**8T-5435**	1	BOLT (M5X0.8X25-MM)	
M	8	1	**5C-2874**	1	NUT (M5X0.8-THD)	
M	9	1	**8T-0269**	1	BOLT-SOCKET HEAD (M6X1X20-MM)	
	10	1	**1N-3887**	1	SETSCREW-SOCKET (5/16-18X1.5-IN)	
	11	1	**6V-8189**	1	NUT (5/16-18-THD)	
	12	1	**100-5732**	1	LEVER-TORQUE CAM	
	13	1	**105-9790**	1	BRACKET AS	
		1	**8N-0984**	1	PIN-SPRING	
M	14	1	**100-5736**	1	SCREW (M6X0.5X22.5-MM)	
M	15	1	**100-5738**	1	NUT (M6X0.5-THD)	
M	16	1	**101-1167**	1	SCREW-BUTTON HEAD (M5X0.8X14-MM)	
	17	1	**7C-5480**	1	SPRING-TORSION	
M	18	1	**9X-2547**	2	SCREW-FLAT HEAD (M5X0.8X30-MM)	
	19	1	**4P-7351**	1	LEVER AS-SHAFT	
Z		1			PIN	
Z		1			SWIVEL	
Z		1			LEVER-FULCRUM	
	20	1	**107-7497**	1	WASHER-THRUST (8.25X20X0.5-MM THK)	
	21	1	**107-7498**	1	BLOCK AS-BEARING	
	22	1	**7E-3217**	1	LEVER AS	
Z		1			SWIVEL	
	23	1	**3P-3547**	1	RING-RETAINING	
M	24	1	**8C-8546**	1	BOLT-SOCKET HEAD (M5X0.8X14-MM)	
	25	1	**7C-4483**	1	SCREEN AS (OIL INLET)	
	26	1	**100-5742**	1	LEVER AS-CONTROL	
		1	**100-5733**	1	PIN	
	27	1	**100-5739**	1	SPRING-TORSION	
	28	1	**7W-4313**	1	WASHER (5X11X1.5-MM THK)	
	29	1	**8T-7060**	1	RING-RETAINING	
	30	1	**100-8311**	1	RING	
	31	1	**100-5740**	1	SPRING-TORSION	
	32	2	**7C-5148**	1	CARRIER-FLYWEIGHT	
	33	2	**2S-7316**	2	DOWEL	
	34	2	**6V-7699**	4	WASHER-HARD (5.5X13X1.6-MM THK)	
M	35	2	**8C-8545**	4	BOLT-SOCKET HEAD (M5X0.8X20-MM)	
	36	2	**4P-8947**	1	RISER	
	37	2	**4P-0737**	1	SHAFT-RISER	
	38	2	**7C-5885**	1	WASHER (24.5X41X3-MM THK)	
M	39	2	**8T-0269**	6	BOLT-SOCKET HEAD (M6X1X20-MM)	

100-8271 **GOVERNOR GP-UNIT INJECTOR (**contd.**)** **i01398982**

NOTE	REF NO	GRAPHIC REF	PART NUMBER	QTY	PART NAME 1 2 3 4 5 6 (PRODUCT LEVEL)	SEE PAGE
	40	2	**7L-3386**	1	SEAL-O-RING	
	41	2	**7C-5884**	1	COVER-OIL SUMP	
M	42	2	**6V-5213**	3	BOLT-SOCKET HEAD (M5X0.8X12-MM)	
	43	2	**4P-4231**	1	COVER-REAR	
	44	2	**6V-5100**	1	SEAL-O-RING	
B	45	2	**7C-5883**	7	SHIM (0.25-MM THK)	
	46	2	**7W-5591**	1	SEAT-GOVERNOR SPRING	
	47	2	**7C-3776**	1	PISTON AS	
		2	**4N-6407**	1	SPOOL-DASHPOT	
		2	**4N-6404**	1	RING-RETAINING	
	48	2	**4P-8948**	1	SEAT AS-SPRING	
		2	**4P-8946**	1	INSERT	
	49	2	**7W-8993**	2	WEIGHT	
	50	2	**7C-5541**	2	PLATE	
B	51	2	**7W-1440**	8	SHIM (0.12-MM THK)	
	52	2	**7W-5614**	1	SEAL-GOVERNOR HOUSING	
	53	2	**7C-2743**	2	RACE	
	54	2	**7W-5561**	1	BEARING-THRUST	
	55	2	**8C-5061**	1	RING-RETAINING	
M	56	2	**8C-8546**	8	BOLT-SOCKET HEAD (M5X0.8X14-MM)	
	57	2	**7C-5150**	1	PIN	
	58	2	**100-5743**	1	FLANGE	
	59	2	**9Y-1837**	1	SPRING	
	60	2	**4P-4983**	1	SLEEVE	
	61	2	**7W-7364**	1	SLEEVE-GOVERNOR SERVO	
	62	2	**5P-9757**	1	SEAL-O-RING	
	63	2	**109-4587**	1	RING-TOLERANCE	
	64	2	**6D-9953**	1	PIN-SPRING	
	65	2	**8T-1460**	2	RING-RETAINING	
	66	2	**108-1612**	1	CLEVIS	
	67	2	**7C-8854**	1	PIN-CLEVIS	
	68	2	**108-1613**	1	PISTON-SERVO	
	69	2	**8C-3312**	1	RING-RETAINING	
	70	2	**100-4387**	1	COVER-FUEL RATIO CONTROL	
	71	2	**100-4388**	1	STOP-PRELOAD	
	72	2	**7W-5324**	1	BEARING	
	73	2	**5P-6620**	1	SEAL-O-RING	
	74	2	**100-4390**	1	SPRING	
	75	2	**7W-1691**	1	WASHER (19.15X35X3-MM THK)	
	76	2	**100-4395**	1	SEAT-SPRING	
	77	2	**6I-1564**	1	DIAPHRAGM	
	78	2	**100-4389**	1	RETAINER-DIAPHRAGM	
	79	2	**100-4392**	1	SPRING-SERVO	
	80	2	**100-4394**	1	SEAT-SPRING	
	81	2	**8N-5763**	1	SEAL	
	82	2	**8N-5764**	1	PISTON	
	83	2	**100-4393**	1	SPRING-RETURN	
	84	2	**111-7221**	1	VALVE AS	
		2	**8C-5899**	1	PIN-SPRING	
M	85	2	**100-5737**	1	SETSCREW-ADJUSTMENT	
M	86	2	**100-5738**	1	NUT (M6X0.5-THD)	

100-8271 **GOVERNOR GP-UNIT INJECTOR (**contd.**)** **i01398982**

NOTE	REF NO	GRAPHIC REF	PART NUMBER	QTY	PART NAME 1 2 3 4 5 6 (PRODUCT LEVEL)	SEE PAGE
	87	2	**2M-9780**	1	SEAL-O-RING	
M	88	2	**105-4916**	1	PLUG	
	89	2	**101-2870**	1	RING-RETAINING	
	90	2	**105-2945**	1	VALVE-GOVERNOR SERVO	

B - USE AS REQUIRED
M - METRIC PART
Y - SEPARATE ILLUSTRATION
Z - NOT SERVICED SEPARATELY

100-8271 **GOVERNOR GP-UNIT INJECTOR** (contd.) **i01398982**

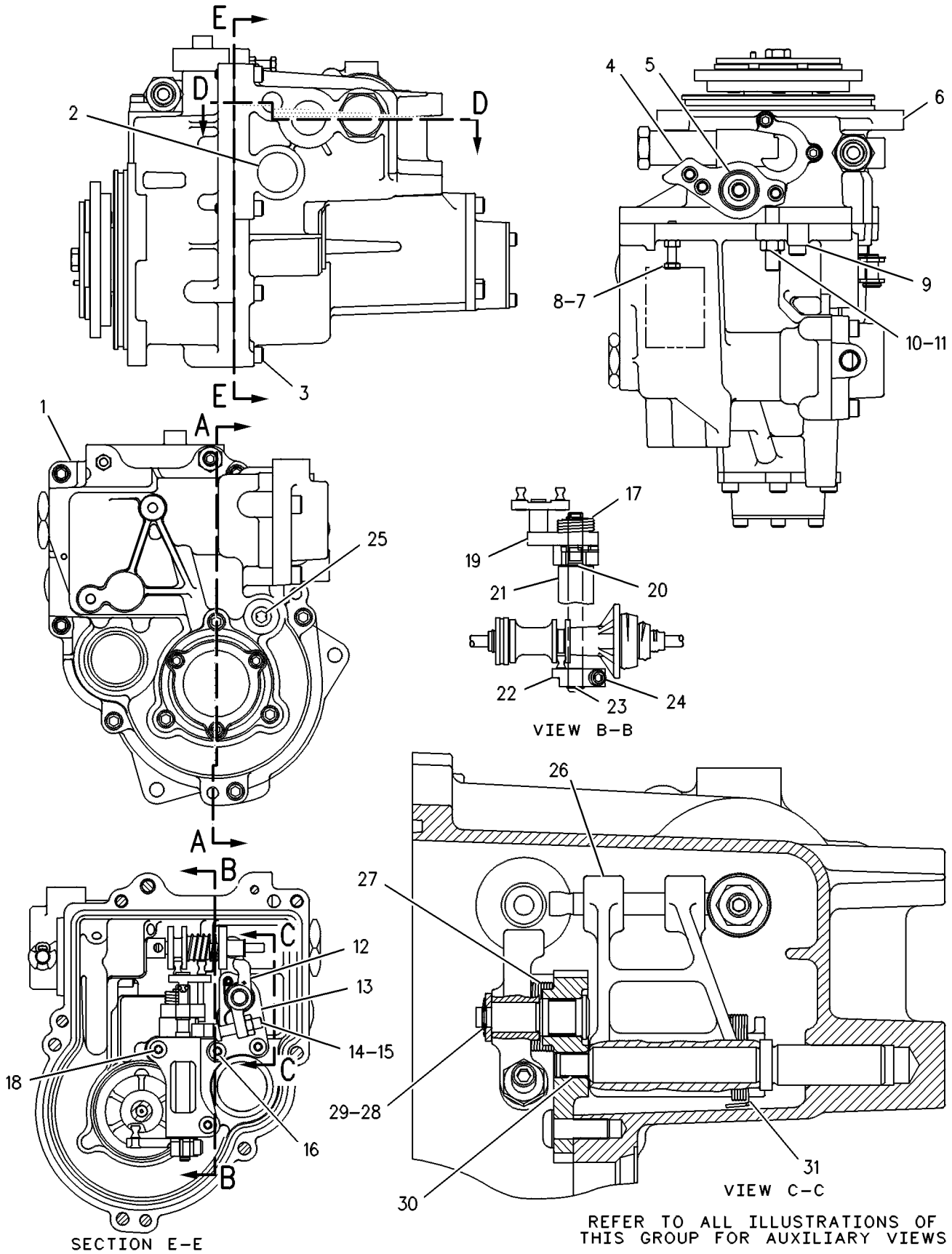

GRAPHIC #1 g00108490

100-8271 **GOVERNOR GP-UNIT INJECTOR** (contd.) **i01398982**

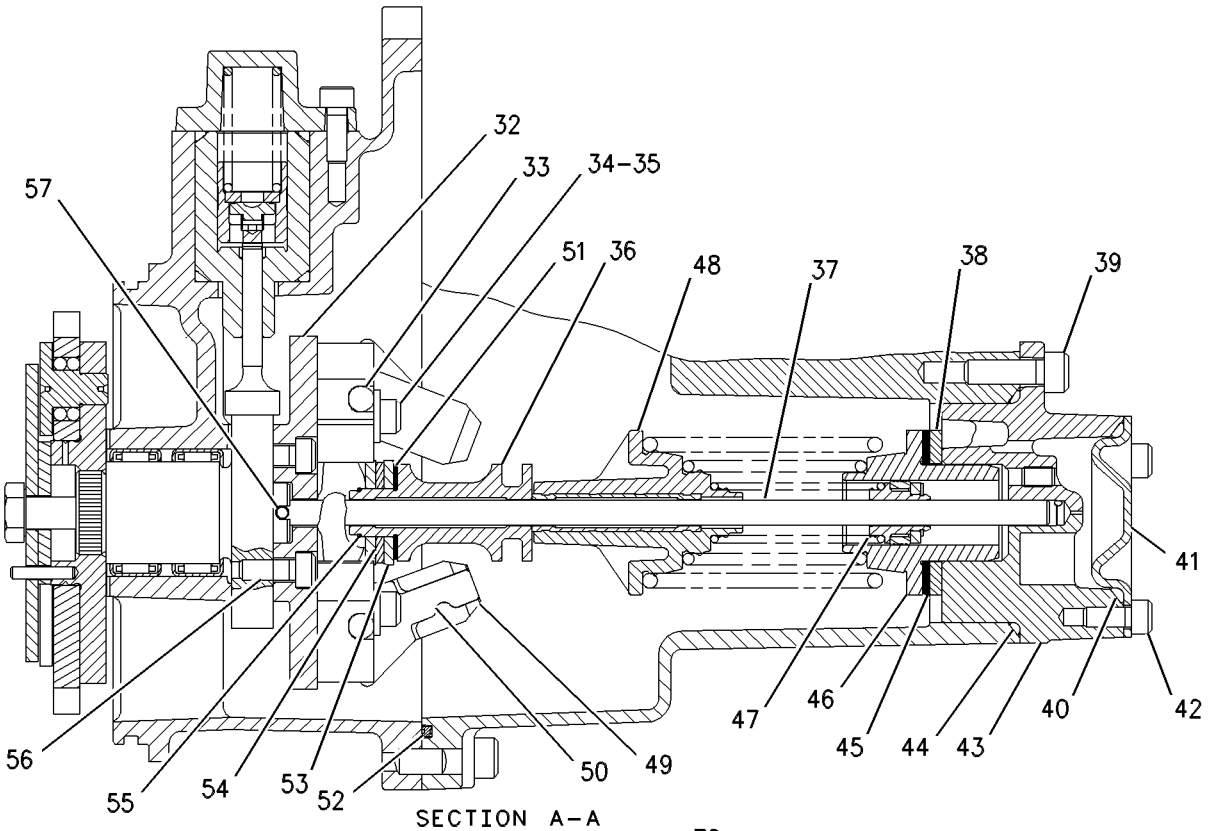

SECTION A-A

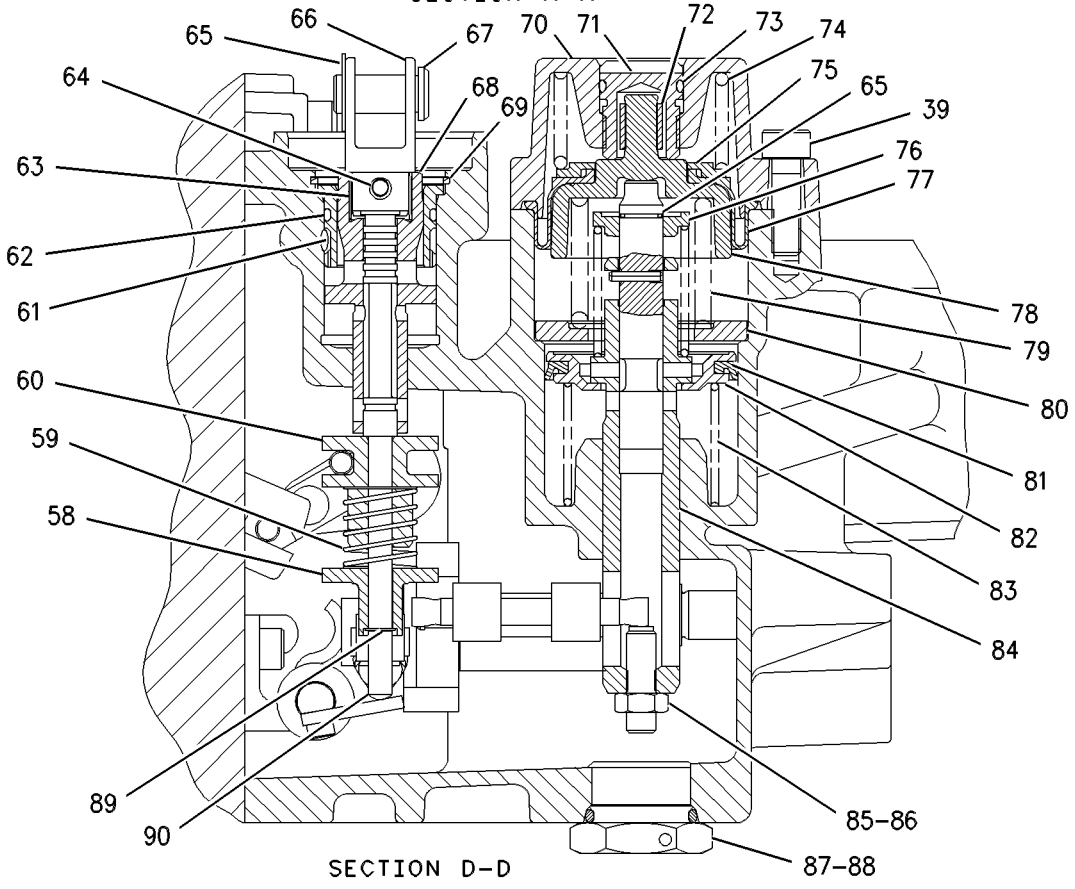

SECTION D-D

GRAPHIC #2 <END> g00331471

100-8271 GOVERNOR GP-UNIT INJECTOR

S/N: 4TF17400-UP
PART OF 119-2896 GOVERNOR GP-UNIT INJECTOR
ALSO AN ATTACHMENT
TYPE 2

SMCS-1264, 1287, 1908 **i01640387**

NOTE	REF NO	GRAPHIC REF	PART NUMBER	QTY	PART NAME 1 2 3 4 5 6 (PRODUCT LEVEL)	SEE PAGE
	1	1	**100-8272**	1	HOUSING AS	
					SHAFT	
	2	1	**100-6247**	1	PLUG-EXPANSION	
M	3	1	**3T-0849**	6	BOLT-SOCKET HEAD (M6X1X25-MM)	
	4	1	**4P-3539**	1	LEVER-THROTTLE	
	5	1	**4P-3537**	1	RING-TOLERANCE	
Y	6	1	**7E-8794**	1	DRIVE GP-GOV & TRANSFER PUMP	176
M	7	1	**8T-5435**	1	BOLT (M5X0.8X25-MM)	
M	8	1	**5C-2874**	1	NUT (M5X0.8-THD)	
M	9	1	**8T-0269**	1	BOLT-SOCKET HEAD (M6X1X20-MM)	
	10	1	**1N-3887**	1	SETSCREW-SOCKET (5/16-18X1.5-IN)	
	11	1	**6V-8189**	1	NUT (5/16-18-THD)	
	12	1	**100-5732**	1	LEVER-TORQUE CAM	
	13	1	**105-9790**	1	BRACKET AS	
		1	**8N-0984**	1	PIN-SPRING	
M	14	1	**100-5736**	1	SCREW (M6X0.5X22.5-MM)	
M	15	1	**100-5738**	1	NUT (M6X0.5-THD)	
M	16	1	**101-1167**	1	SCREW-BUTTON HEAD (M5X0.8X14-MM)	
	17	1	**7C-5480**	1	SPRING-TORSION	
M	18	1	**9X-2547**	2	SCREW-FLAT HEAD (M5X0.8X30-MM)	
	19	1	**4P-7351**	1	LEVER AS-SHAFT	
Z		1			PIN	
Z		1			SWIVEL	
Z		1			LEVER-FULCRUM	
	20	1	**107-7497**	1	WASHER-THRUST (8.25X20X0.5-MM THK)	
	21	1	**107-7498**	1	BLOCK AS-BEARING	
	22	1	**7E-3217**	1	LEVER AS	
Z		1			SWIVEL	
	23	1	**3P-3547**	1	RING-RETAINING	
M	24	1	**8C-8546**	1	BOLT-SOCKET HEAD (M5X0.8X14-MM)	
	25	1	**7C-4483**	1	SCREEN AS (OIL INLET)	
	26	1	**100-5742**	1	LEVER AS-CONTROL	
		1	**100-5733**	1	PIN	
	27	1	**100-5739**	1	SPRING-TORSION	
	28	1	**7W-4313**	1	WASHER (5X11X1.5-MM THK)	
	29	1	**8T-7060**	1	RING-RETAINING	
	30	1	**100-8311**	1	RING	
	31	1	**100-5740**	1	SPRING-TORSION	
	32	2	**7C-5148**	1	CARRIER-FLYWEIGHT	
	33	2	**2S-7316**	2	DOWEL	
	34	2	**6V-7699**	4	WASHER-HARD (5.5X13X1.6-MM THK)	
M	35	2	**8C-8545**	4	BOLT-SOCKET HEAD (M5X0.8X20-MM)	
	36	2	**4P-8947**	1	RISER	
	37	2	**4P-0737**	1	SHAFT-RISER	
	38	2	**7C-5885**	1	WASHER (24.5X41X3-MM THK)	
M	39	2	**8T-0269**	6	BOLT-SOCKET HEAD (M6X1X20-MM)	

100-8271 **GOVERNOR GP-UNIT INJECTOR (**contd.**)** **i01640387**

NOTE	REF NO	GRAPHIC REF	PART NUMBER	QTY	PART NAME 1 2 3 4 5 6 (PRODUCT LEVEL)	SEE PAGE
	40	2	**7L-3386**	1	SEAL-O-RING	
	41	2	**7C-5884**	1	COVER-OIL SUMP	
M	42	2	**6V-5213**	3	BOLT-SOCKET HEAD (M5X0.8X12-MM)	
	43	2	**4P-4231**	1	COVER-REAR	
	44	2	**6V-5100**	1	SEAL-O-RING	
B	45	2	**7C-5883**	7	SHIM (0.25-MM THK)	
	46	2	**7W-5591**	1	SEAT-GOVERNOR SPRING	
	47	2	**7C-3776**	1	PISTON AS	
		2	**4N-6407**	1	SPOOL-DASHPOT	
		2	**4N-6404**	1	RING-RETAINING	
	48	2	**4P-8948**	1	SEAT AS-SPRING	
		2	**4P-8946**	1	INSERT	
	49	2	**7W-8993**	2	WEIGHT	
	50	2	**7C-5541**	2	PLATE	
B	51	2	**7W-1440**	8	SHIM (0.12-MM THK)	
	52	2	**115-1192**	1	SEAL-GOVERNOR HOUSING	
	53	2	**7C-2743**	2	RACE	
	54	2	**7W-5561**	1	BEARING-THRUST	
	55	2	**8C-5061**	1	RING-RETAINING	
M	56	2	**8C-8546**	8	BOLT-SOCKET HEAD (M5X0.8X14-MM)	
	57	2	**7C-5150**	1	PIN	
C	58	2	**117-9099**	1	FLANGE	
	59	2	**9Y-1837**	1	SPRING	
C	60	2	**125-8158**	1	SLEEVE-RACK CONTROL	
	61	2	**7W-7364**	1	SLEEVE-GOVERNOR SERVO	
	62	2	**5P-9757**	1	SEAL-O-RING	
	63	2	**109-4587**	1	RING-TOLERANCE	
	64	2	**6D-9953**	1	PIN-SPRING	
	65	2	**8T-1460**	2	RING-RETAINING	
	66	2	**108-1612**	1	CLEVIS	
	67	2	**7C-8854**	1	PIN-CLEVIS	
	68	2	**108-1613**	1	PISTON-SERVO	
	69	2	**8C-3312**	1	RING-RETAINING	
	70	2	**114-2897**	1	COVER-FUEL RATIO CONTROL	
C	71	2	**7N-2171**	1	RING-RETAINING	
	72	2	**7W-5324**	1	BEARING	
C	73	2	**115-2553**	1	VALVE-GOVERNOR SERVO	
	74	2	**100-4390**	1	SPRING	
	75	2	**7W-1691**	1	WASHER (19.15X35X3-MM THK)	
	76	2	**100-4395**	1	SEAT-SPRING	
	77	2	**6I-1564**	1	DIAPHRAGM	
	78	2	**114-2899**	1	RETAINER-DIAPHRAGM	
	79	2	**100-4392**	1	SPRING-SERVO	
	80	2	**100-4394**	1	SEAT-SPRING	
	81	2	**8N-5763**	1	SEAL	
	82	2	**8N-5764**	1	PISTON	
	83	2	**100-4393**	1	SPRING-RETURN	
	84	2	**111-7221**	1	VALVE AS	
		2	**8C-5899**	1	PIN-SPRING	
M	85	2	**100-5737**	1	SETSCREW-ADJUSTMENT	
M	86	2	**100-5738**	1	NUT (M6X0.5-THD)	

100-8271 **GOVERNOR GP-UNIT INJECTOR (**contd.**)** **i01640387**

NOTE	REF NO	GRAPHIC REF	PART NUMBER	QTY	PART NAME 1 2 3 4 5 6 (PRODUCT LEVEL)	SEE PAGE
	87	2	**2M-9780**	1	SEAL-O-RING	
M	88	2	**105-4916**	1	PLUG	

B - USE AS REQUIRED
C - CHANGE FROM PREVIOUS TYPE
M - METRIC PART
Y - SEPARATE ILLUSTRATION
Z - NOT SERVICED SEPARATELY

100-8271 **GOVERNOR GP-UNIT INJECTOR** (contd.) **i01640387**

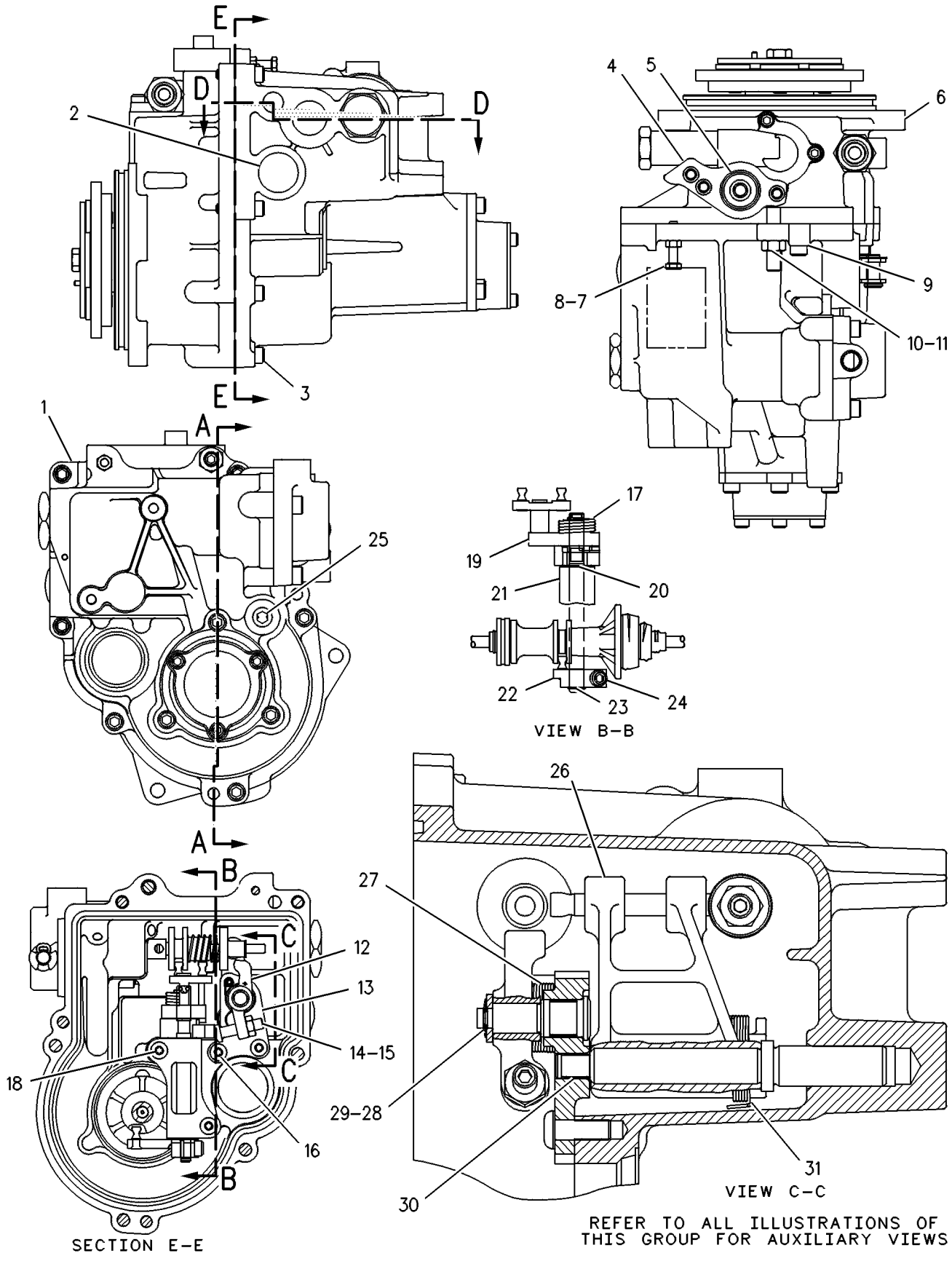

GRAPHIC #1 g00108490

100-8271 **GOVERNOR GP-UNIT INJECTOR** (contd.) **i01640387**

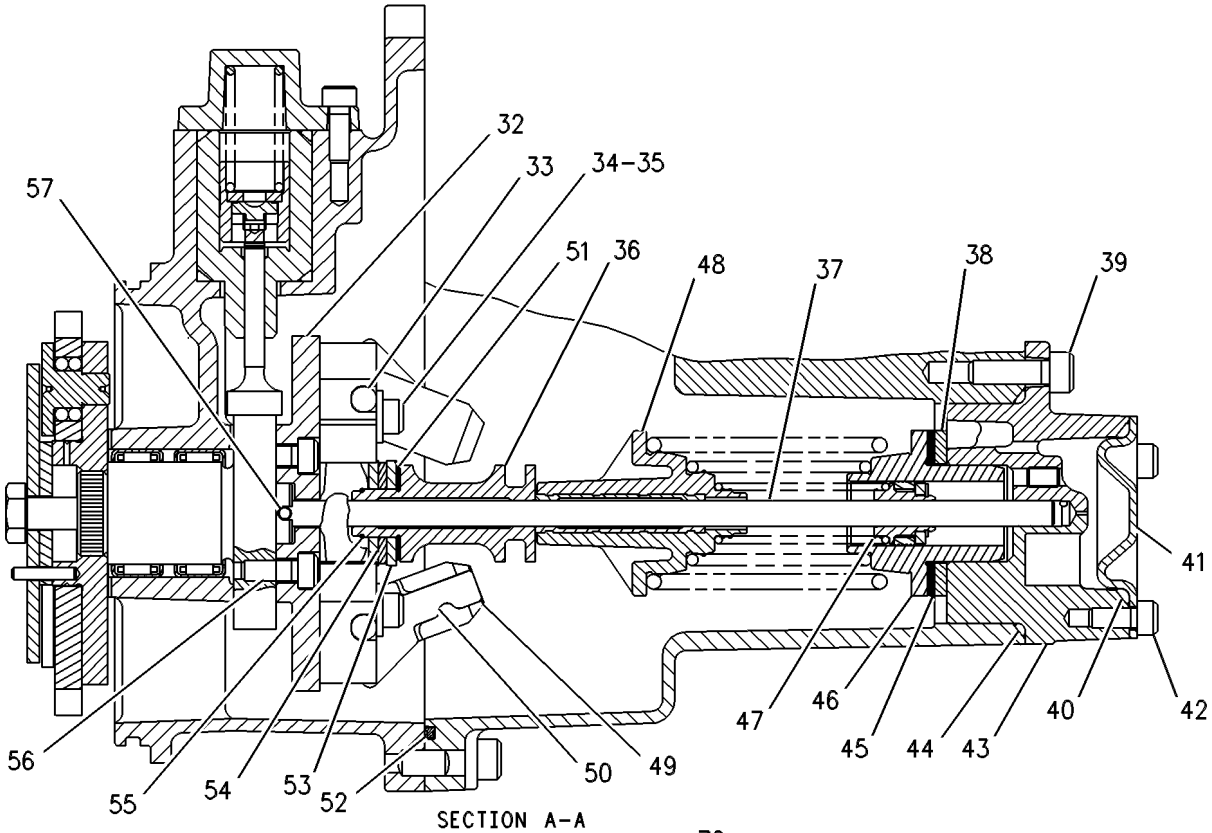

SECTION A-A

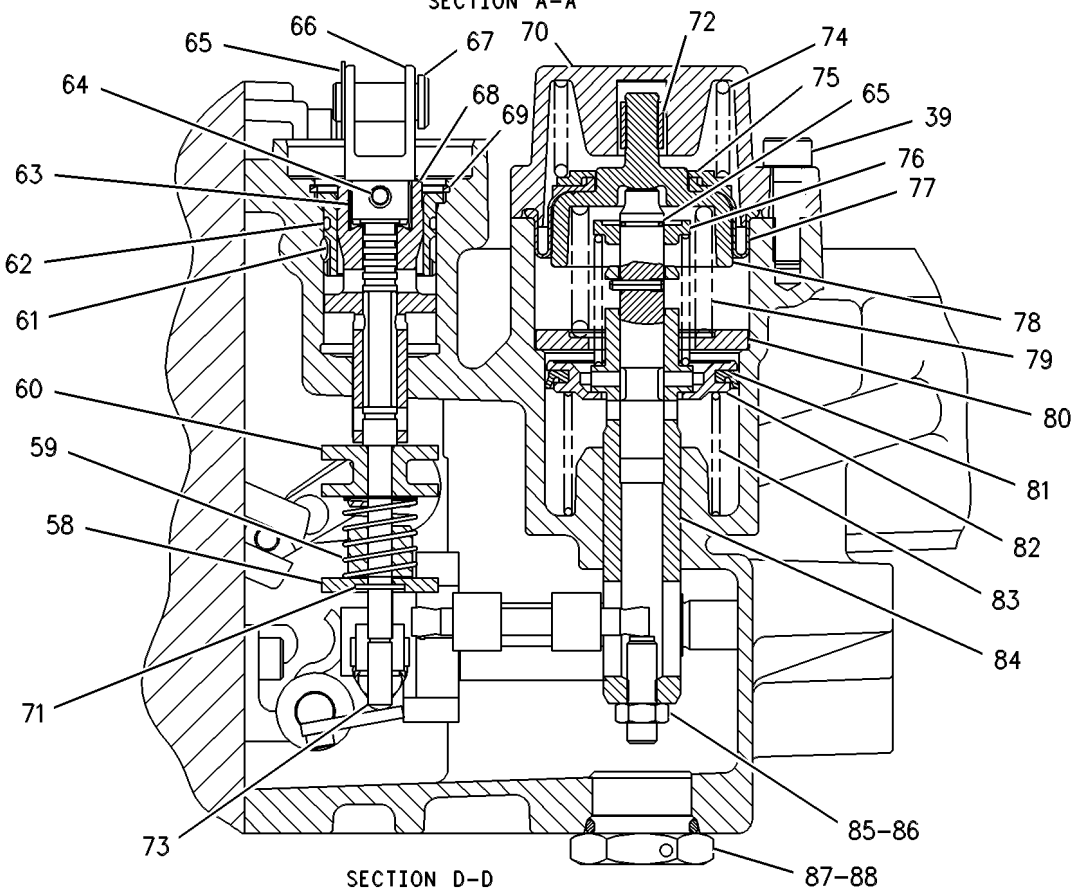

SECTION D-D

GRAPHIC #2 <END> g00332048

119-2896 GOVERNOR GP-UNIT INJECTOR*R

S/N: 4TF17400-UP
PART OF 107-7723 GOVERNOR GP
ALSO AN ATTACHMENT
TYPE 1

SMCS-1264, 1287, 1908 **i01398987**

NOTE	REF NO	GRAPHIC REF	PART NUMBER	QTY	PART NAME 1 2 3 4 5 6 (PRODUCT LEVEL)	SEE PAGE
Y	1	1	*100-8271*	1	GOVERNOR GP-UNIT INJECTOR	182
	2	1	**107-7872**	1	CAM AS	
	3	1	**4P-2467**	1	SPRING GP-GOVERNOR	
	4	1	**7C-4466**	1	SPRING-DASHPOT	
	5	1	**7C-0989**	1	PLUG-ORIFICE	
	6	1	**112-4056**	1	SPRING	
B	7	1	**4P-5605**	4	SHIM (0.5-MM THK)	

B - USE AS REQUIRED
Y - SEPARATE ILLUSTRATION

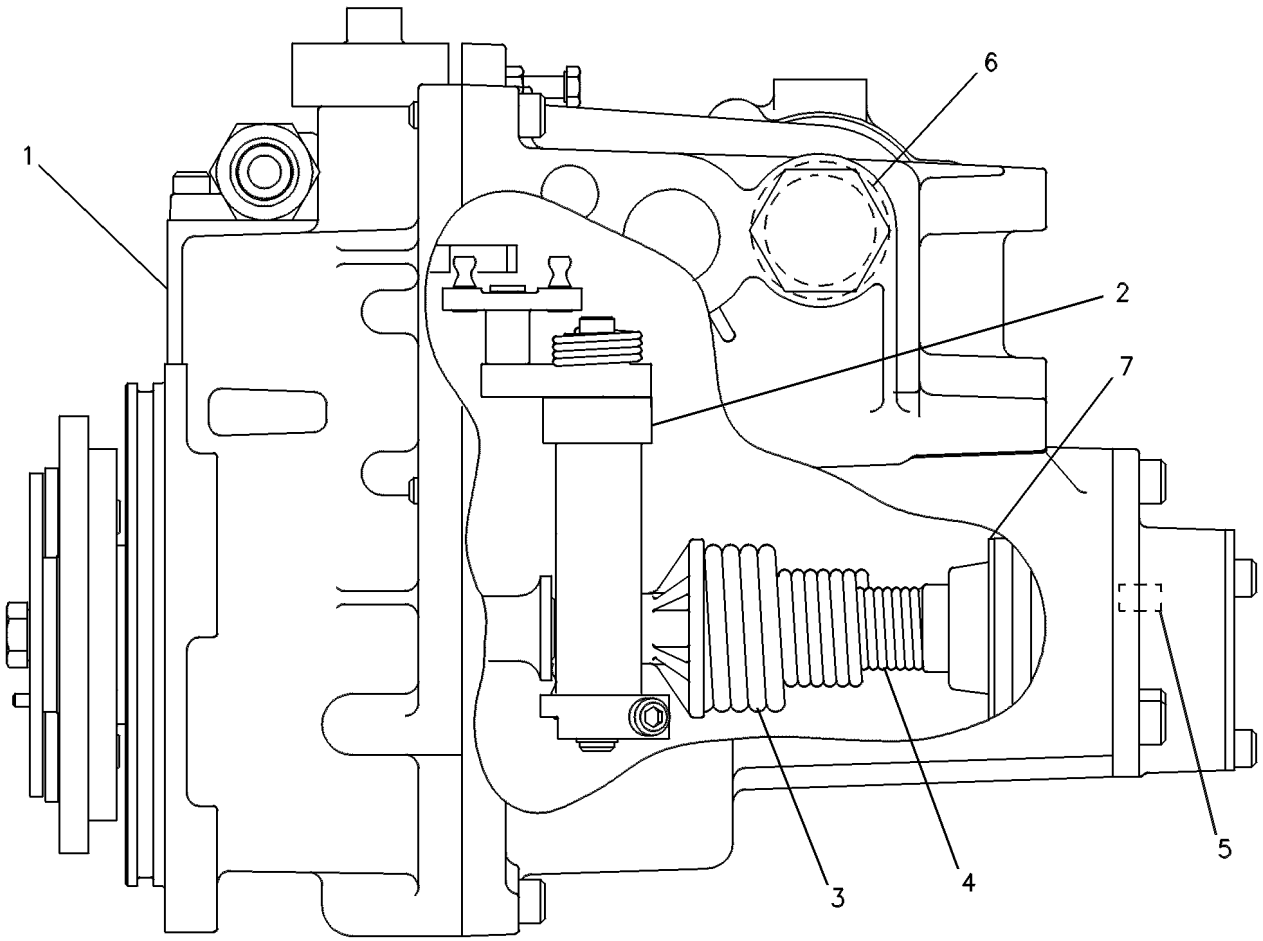

GRAPHIC #1 <END> g00120235

119-2896 GOVERNOR GP-UNIT INJECTOR*R

S/N: 4TF17400-UP
PART OF 107-7723 GOVERNOR GP
ALSO AN ATTACHMENT
TYPE 2

SMCS-1264, 1287, 1908 **i00687397**

NOTE	REF NO	GRAPHIC REF	PART NUMBER	QTY	PART NAME 1 2 3 4 5 6 (PRODUCT LEVEL)	SEE PAGE
YC	1	1	*130-7326*	1	GOVERNOR GP-UNIT INJECTOR	200
	2	1	**107-7872**	1	CAM AS	
	3	1	**4P-2467**	1	SPRING GP-GOVERNOR	
	4	1	**7C-4466**	1	SPRING-DASHPOT	
	5	1	**7C-0989**	1	PLUG-ORIFICE	
	6	1	**112-4056**	1	SPRING	
B	7	1	**4P-5605**	4	SHIM (0.5-MM THK)	

B - USE AS REQUIRED
C - CHANGE FROM PREVIOUS TYPE
Y - SEPARATE ILLUSTRATION

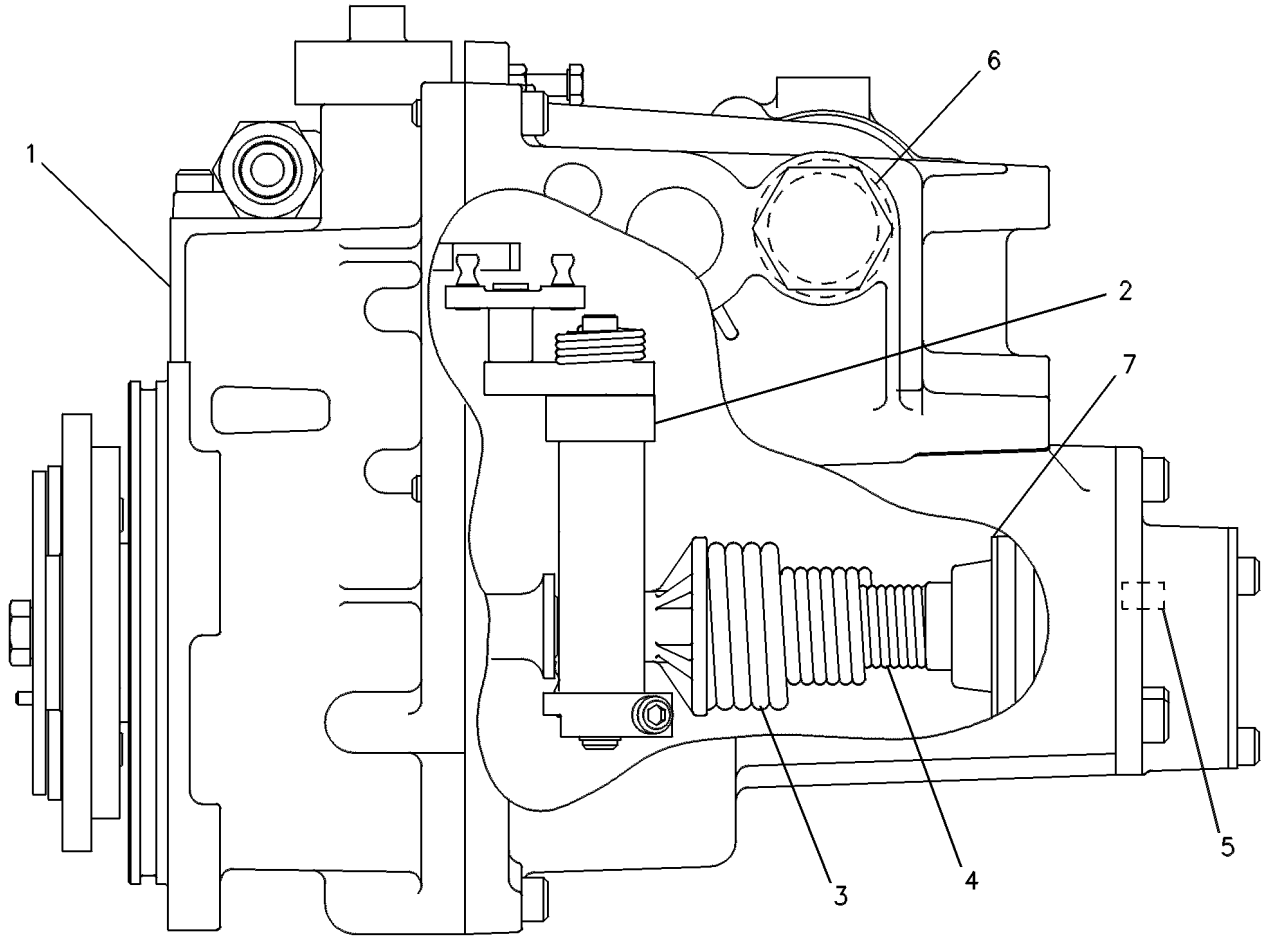

GRAPHIC #1 <END> g00120235

119-3037 GOVERNOR GP-UNIT INJECTOR

S/N: 4TF17400-32800
PART OF 117-5187, 117-5188 ENGINE AR
ALSO AN ATTACHMENT

SMCS-1264, 1287, 1908

i00568255

NOTE	PART NUMBER	QTY	PART NAME 1 2 3 4 5 6 (PRODUCT LEVEL)	SEE PAGE
Y	*7W-4812*	1	FASTENER GP-FUEL INJ PUMP	178
Y	**119-3038**	1	GOVERNOR GP-UNIT INJECTOR	195
Y	*7W-8434*	1	LINES GP-GOVERNOR OIL	218

Y - SEPARATE ILLUSTRATION

<END>

119-3038 GOVERNOR GP-UNIT INJECTOR

S/N: 4TF17400-32800
PART OF 119-3037 GOVERNOR GP-UNIT INJECTOR
ALSO AN ATTACHMENT

SMCS-1264, 1287, 1908 **i01398988**

NOTE	REF NO	GRAPHIC REF	PART NUMBER	QTY	PART NAME 1 2 3 4 5 6 (PRODUCT LEVEL)	SEE PAGE
Y	1	1	*130-7326*	1	GOVERNOR GP-UNIT INJECTOR	200
	2	1	**110-6243**	1	CAM AS	
	3	1	**4P-2467**	1	SPRING GP-GOVERNOR	
	4	1	**7C-4466**	1	SPRING-DASHPOT	
	5	1	**7C-0989**	1	PLUG-ORIFICE	
	6	1	**100-4391**	1	SPRING-OIL SIDE	
B	7	1	**4P-5605**	4	SHIM (0.5-MM THK)	

B - USE AS REQUIRED
Y - SEPARATE ILLUSTRATION

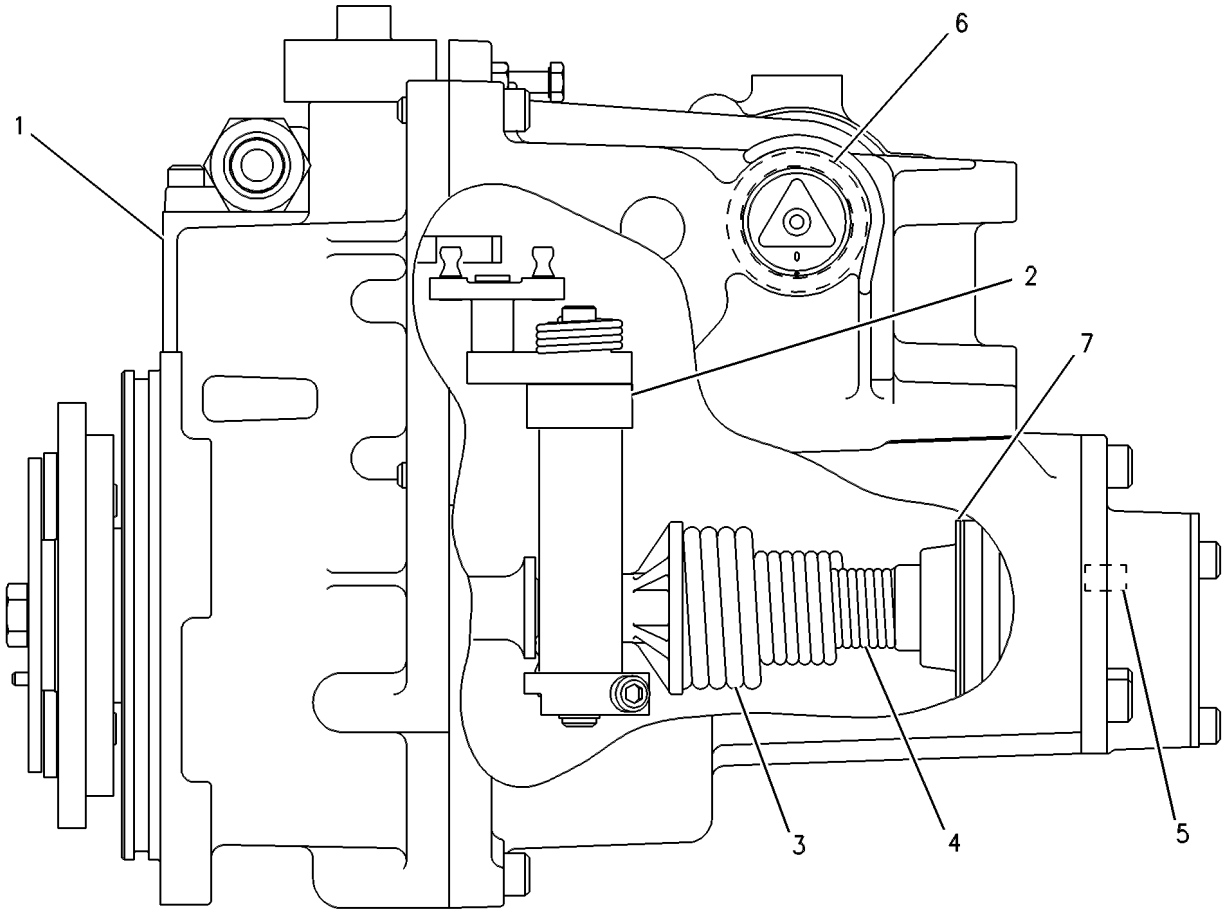

GRAPHIC #1 <END> g00117642

129-1213 GOVERNOR GP-UNIT INJECTOR

S/N: 4TF32801-UP

PART OF 117-5187, 117-5188 ENGINE AR

ALSO AN ATTACHMENT

SMCS-1264, 1287, 1908

i00568640

NOTE	PART NUMBER	QTY	PART NAME 1 2 3 4 5 6 (PRODUCT LEVEL)	SEE PAGE
Y	*7W-4812*	1	FASTENER GP-FUEL INJ PUMP	178
YR	**131-7899**	1	GOVERNOR GP-UNIT INJECTOR	205
Y	*7W-8434*	1	LINES GP-GOVERNOR OIL	218

R - REMANUFACTURED PART MAY BE AVAILABLE
Y - SEPARATE ILLUSTRATION

<END>

130-7323 GOVERNOR GP-UNIT INJECTOR

S/N: 4TF32801-UP

PART OF 131-7899 GOVERNOR GP-UNIT INJECTOR

ALSO AN ATTACHMENT

SMCS-1264, 1287, 1908 **i01398994**

NOTE	REF NO	GRAPHIC REF	PART NUMBER	QTY	PART NAME 1 2 3 4 5 6 (PRODUCT LEVEL)	SEE PAGE
	1	1	**8T-1460**	1	RING-RETAINING	
	2	1	**108-1612**	1	CLEVIS	
	3	1	**6D-9953**	1	PIN-SPRING	
	4	1	**7C-8854**	1	PIN-CLEVIS	
	5	1	**115-2553**	1	VALVE-GOVERNOR SERVO	
	6	1	**8C-3312**	1	RING-RETAINING	
	7	1	**7W-7364**	1	SLEEVE-GOVERNOR SERVO	
	8	1	**5P-9757**	1	SEAL-O-RING	
	9	1	**108-1613**	1	PISTON-SERVO	
	10	1	**125-8158**	1	SLEEVE-RACK CONTROL	
	11	1	**9Y-1837**	1	SPRING	
	12	1	**8T-7060**	1	RING-RETAINING	
	13	1	**117-9098**	1	SLEEVE-LIMITING	
	14	1	**7N-2171**	1	RING-RETAINING	
	15	1	**114-1803**	1	LEVER AS	
Z	16	1		1	PIN	
Z	17	1		2	SWIVEL	
Z	18	1		1	LEVER	
	19	1	**7W-5594**	1	SHAFT AS-PIVOT	
Z	20	1		1	PIN	
	21	1	**7C-5480**	1	SPRING-TORSION	
	22	1	**7C-8640**	1	SPRING-CAM	
	23	1	**123-6433**	1	ARBOR AS-TORQUE CAM	
	24	1	**5M-2057**	1	SEAL-O-RING	
	25	1	**7E-3216**	1	BLOCK AS-BEARING	
	26	1	**6F-5933**	2	BEARING AS-NEEDLE	
	27	1	**7E-3217**	1	LEVER AS	
Z	28	1		1	SWIVEL	
M	29	1	**8C-8546**	9	BOLT-SOCKET HEAD (M5X0.8X14-MM)	
	30	1	**3P-3547**	1	RING-RETAINING	
	31	1	**4P-5743**	1	LEVER AS-LIMIT	
	32	1	**4P-3537**	1	RING-TOLERANCE	
	33	1	**4P-3539**	1	LEVER-THROTTLE	
M	34	1	**8T-8895**	2	SETSCREW-SOCKET (M4X0.7X16-MM)	
	35	1	**4W-6630**	1	LEVER	
	36	1	**115-1192**	1	SEAL-GOVERNOR HOUSING	
M	37	1	**3T-0849**	6	BOLT-SOCKET HEAD (M6X1X25-MM)	
	38	1	**7W-4313**	1	WASHER (5X11X1.5-MM THK)	
	39	1	**130-7322**	1	HOUSING AS	
	40	1	**2S-4078**	1	SEAL-O-RING	
M	41	1	**5C-8312**	1	NUT (M4X0.7-THD)	
M	42	1	**8T-6702**	1	SETSCREW-SOCKET (M5X0.8X20-MM)	
	43	1	**6V-8189**	1	NUT (5/16-18-THD)	
	44	1	**128-4794**	1	PLUG	
	45	1	**7L-3386**	1	SEAL-O-RING	
	46	1	**7C-5884**	1	COVER-OIL SUMP	
M	47	1	**6V-5213**	3	BOLT-SOCKET HEAD (M5X0.8X12-MM)	

130-7323 **GOVERNOR GP-UNIT INJECTOR (**contd.**)** **i01398994**

NOTE	REF NO	GRAPHIC REF	PART NUMBER	QTY	PART NAME 1 2 3 4 5 6 (PRODUCT LEVEL)	SEE PAGE
M	48	1	**6V-5683**	1	BOLT (M6X1X16-MM)	
M	49	1	**8T-5435**	1	BOLT (M5X0.8X25-MM)	
	50	1	**1N-3887**	1	SETSCREW-SOCKET (5/16-18X1.5-IN)	
	51	1	**7C-4483**	1	SCREEN AS (OIL INLET)	
	52	1	**6V-5100**	1	SEAL-O-RING	
	53	1	**4P-4231**	1	COVER-REAR	
M	54	1	**5C-2874**	2	NUT (M5X0.8-THD)	
	55	1	**4W-6010**	1	CLAMP	
M	56	1	**8T-0269**	3	BOLT-SOCKET HEAD (M6X1X20-MM)	
Y	57	1	**7E-8794**	1	DRIVE GP-GOV & TRANSFER PUMP	176
	58	1	**7C-5150**	1	PIN	
	59	1	**4P-0737**	1	SHAFT-RISER	
	60	1	**7C-5148**	1	CARRIER-FLYWEIGHT	
M	61	1	**9X-2547**	2	SCREW-FLAT HEAD (M5X0.8X30-MM)	
	62	1	**2S-7316**	2	DOWEL	
	63	1	**6V-7699**	4	WASHER-HARD (5.5X13X1.6-MM THK)	
M	64	1	**8C-8545**	4	BOLT-SOCKET HEAD (M5X0.8X20-MM)	
	65	1	**7C-5541**	2	PLATE	
	66	1	**7W-8993**	2	WEIGHT	
	67	1	**8C-5061**	1	RING-RETAINING	
	68	1	**7C-2743**	2	RACE	
	69	1	**7W-5561**	1	BEARING-THRUST	
B	70	1	**7W-1440**	8	SHIM (0.12-MM THK)	
	71	1	**4P-8947**	1	RISER	
	72	1	**4P-8948**	1	SEAT AS-SPRING	
Z	73	1		1	INSERT	
	74	1	**7C-3776**	1	PISTON AS	
	75	1	**4N-6407**	1	SPOOL-DASHPOT	
	76	1	**4N-6406**	1	RING-SPACER	
	77	1	**4N-6404**	1	RING-RETAINING	
	78	1	**7W-5591**	1	SEAT-GOVERNOR SPRING	
B	79	1	**7C-5883**	7	SHIM (0.25-MM THK)	
	80	1	**7C-5885**	1	WASHER (24.5X41X3-MM THK)	
	81	1	**4P-4000**	1	SPRING-LEVER	
	82	1	**109-4587**	1	RING-TOLERANCE	

B - USE AS REQUIRED
M - METRIC PART
Y - SEPARATE ILLUSTRATION
Z - NOT SERVICED SEPARATELY

130-7323 **GOVERNOR GP-UNIT INJECTOR** (contd.) **i01398994**

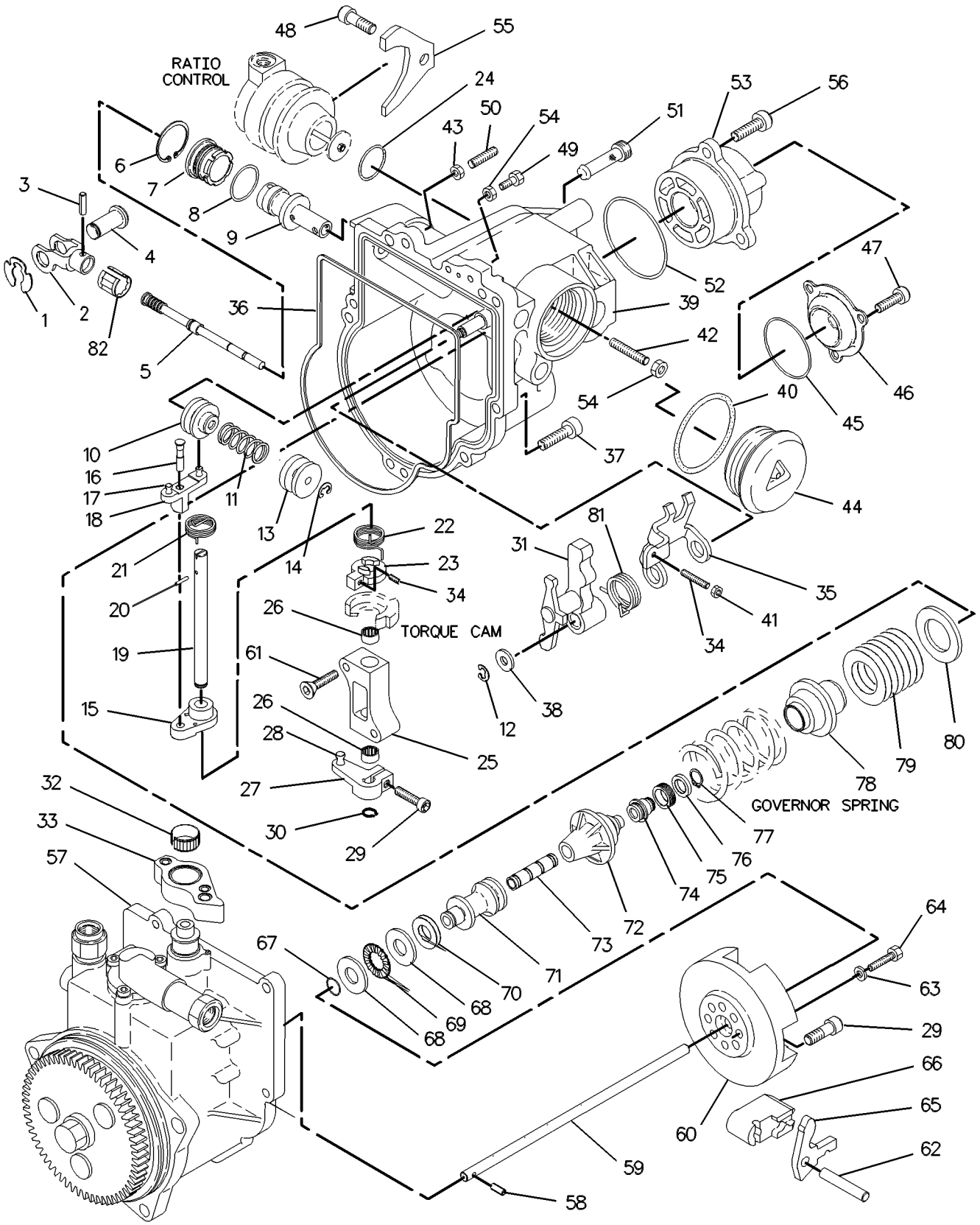

GRAPHIC #1 <END> g00283944

130-7326 GOVERNOR GP-UNIT INJECTOR

S/N: 4TF17400-UP

PART OF 119-2896, 119-3038 GOVERNOR GP-UNIT INJECTOR

ALSO AN ATTACHMENT

SMCS-1264, 1287, 1908 **i01399010**

NOTE	REF NO	GRAPHIC REF	PART NUMBER	QTY	PART NAME 1 2 3 4 5 6 (PRODUCT LEVEL)	SEE PAGE
	1	1	**130-7325**	1	HOUSING AS	
		1	**100-5734**	1	SHAFT-LIMIT	
	2	1	**100-6247**	1	PLUG-EXPANSION	
M	3	1	**3T-0849**	6	BOLT-SOCKET HEAD (M6X1X25-MM)	
	4	1	**4P-3539**	1	LEVER-THROTTLE	
	5	1	**4P-3537**	1	RING-TOLERANCE	
Y	6	1	**7E-8794**	1	DRIVE GP-GOV & TRANSFER PUMP	176
M	7	1	**8T-5435**	1	BOLT (M5X0.8X25-MM)	
M	8	1	**5C-2874**	1	NUT (M5X0.8-THD)	
M	9	1	**8T-0269**	1	BOLT-SOCKET HEAD (M6X1X20-MM)	
	10	1	**1N-3887**	1	SETSCREW-SOCKET (5/16-18X1.5-IN)	
	11	1	**6V-8189**	1	NUT (5/16-18-THD)	
	12	1	**100-5732**	1	LEVER-TORQUE CAM	
	13	1	**105-9790**	1	BRACKET AS	
		1	**8N-0984**	1	PIN-SPRING	
M	14	1	**100-5736**	1	SCREW (M6X0.5X22.5-MM)	
M	15	1	**100-5738**	1	NUT (M6X0.5-THD)	
M	16	1	**101-1167**	2	SCREW-BUTTON HEAD (M5X0.8X14-MM)	
	17	1	**7C-5480**	1	SPRING-TORSION	
M	18	1	**9X-2547**	2	SCREW-FLAT HEAD (M5X0.8X30-MM)	
	19	1	**4P-7351**	1	LEVER AS-SHAFT	
Z		1			PIN	
Z		1			SWIVEL	
Z		1			LEVER	
	20	1	**107-7497**	1	WASHER-THRUST (8.25X20X0.5-MM THK)	
	21	1	**107-7498**	1	BLOCK AS-BEARING	
	22	1	**7E-3217**	1	LEVER AS	
Z		1			SWIVEL	
	23	1	**3P-3547**	1	RING-RETAINING	
M	24	1	**8C-8546**	1	BOLT-SOCKET HEAD (M5X0.8X14-MM)	
	25	1	**7C-4483**	1	SCREEN AS (OIL INLET)	
	26	1	**100-5742**	1	LEVER AS-CONTROL	
		1	**100-5733**	1	PIN	
	27	1	**100-5739**	1	SPRING-TORSION	
	28	1	**7W-4313**	1	WASHER (5X11X1.5-MM THK)	
	29	1	**8T-7060**	1	RING-RETAINING	
	30	1	**100-8311**	1	RING	
	31	1	**100-5740**	1	SPRING-TORSION	
	32	2	**7C-5148**	1	CARRIER-FLYWEIGHT	
	33	2	**2S-7316**	2	DOWEL	
	34	2	**6V-7699**	4	WASHER-HARD (5.5X13X1.6-MM THK)	
M	35	2	**8C-8545**	4	BOLT-SOCKET HEAD (M5X0.8X20-MM)	
	36	2	**4P-8947**	1	RISER	
	37	2	**4P-0737**	1	SHAFT-RISER	
	38	2	**7C-5885**	1	WASHER (24.5X41X3-MM THK)	
M	39	2	**8T-0269**	6	BOLT-SOCKET HEAD (M6X1X20-MM)	

130-7326 **GOVERNOR GP-UNIT INJECTOR (**contd.**)** **i01399010**

NOTE	REF NO	GRAPHIC REF	PART NUMBER	QTY	PART NAME 1 2 3 4 5 6 (PRODUCT LEVEL)	SEE PAGE
	40	2	**7L-3386**	1	SEAL-O-RING	
	41	2	**7C-5884**	1	COVER-OIL SUMP	
M	42	2	**6V-5213**	3	BOLT-SOCKET HEAD (M5X0.8X12-MM)	
	43	2	**4P-4231**	1	COVER-REAR	
	44	2	**6V-5100**	1	SEAL-O-RING	
B	45	2	**7C-5883**	7	SHIM (0.25-MM THK)	
	46	2	**7W-5591**	1	SEAT-GOVERNOR SPRING	
	47	2	**7C-3776**	1	PISTON AS	
		2	**4N-6407**	1	SPOOL-DASHPOT	
		2	**4N-6404**	1	RING-RETAINING	
	48	2	**4P-8948**	1	SEAT AS-SPRING	
		2	**4P-8946**	1	INSERT	
	49	2	**7W-8993**	2	WEIGHT	
	50	2	**7C-5541**	2	PLATE	
B	51	2	**7W-1440**	8	SHIM (0.12-MM THK)	
	52	2	**115-1192**	1	SEAL-GOVERNOR HOUSING	
	53	2	**7C-2743**	2	RACE	
	54	2	**7W-5561**	1	BEARING-THRUST	
	55	2	**8C-5061**	1	RING-RETAINING	
M	56	2	**8C-8546**	8	BOLT-SOCKET HEAD (M5X0.8X14-MM)	
	57	2	**7C-5150**	1	PIN	
	58	2	**117-9099**	1	FLANGE	
	59	2	**9Y-1837**	1	SPRING	
	60	2	**125-8158**	1	SLEEVE-RACK CONTROL	
	61	2	**7W-7364**	1	SLEEVE-GOVERNOR SERVO	
	62	2	**5P-9757**	1	SEAL-O-RING	
	63	2	**109-4587**	1	RING-TOLERANCE	
	64	2	**6D-9953**	1	PIN-SPRING	
	65	2	**8T-1460**	2	RING-RETAINING	
	66	2	**108-1612**	1	CLEVIS	
	67	2	**7C-8854**	1	PIN-CLEVIS	
	68	2	**108-1613**	1	PISTON-SERVO	
	69	2	**8C-3312**	1	RING-RETAINING	
	70	2	**114-2897**	1	COVER-FUEL RATIO CONTROL	
	71	2	**7N-2171**	1	RING-RETAINING	
	72	2	**7W-5324**	1	BEARING	
	73	2	**115-2553**	1	VALVE-GOVERNOR SERVO	
	74	2	**100-4390**	1	SPRING	
	75	2	**7W-1691**	1	WASHER (19.15X35X3-MM THK)	
	76	2	**100-4395**	1	SEAT-SPRING	
	77	2	**6I-1564**	1	DIAPHRAGM	
	78	2	**114-2899**	1	RETAINER-DIAPHRAGM	
	79	2	**100-4392**	1	SPRING-SERVO	
	80	2	**100-4394**	1	SEAT-SPRING	
	81	2	**8N-5763**	1	SEAL	
	82	2	**8N-5764**	1	PISTON	
	83	2	**100-4393**	1	SPRING-RETURN	
	84	2	**111-7221**	1	VALVE AS	
		2	**8C-5899**	1	PIN-SPRING	
M	85	2	**100-5737**	1	SETSCREW-ADJUSTMENT	
M	86	2	**100-5738**	1	NUT (M6X0.5-THD)	

130-7326 **GOVERNOR GP-UNIT INJECTOR (**contd.**)** **i01399010**

NOTE	REF NO	GRAPHIC REF	PART NUMBER	QTY	PART NAME 1 2 3 4 5 6 (PRODUCT LEVEL)	SEE PAGE
	87	2	**2M-9780**	1	SEAL-O-RING	
	88	2	**128-4786**	1	PLUG	

B - USE AS REQUIRED
M - METRIC PART
Y - SEPARATE ILLUSTRATION
Z - NOT SERVICED SEPARATELY

130-7326 **GOVERNOR GP-UNIT INJECTOR** (contd.) **i01399010**

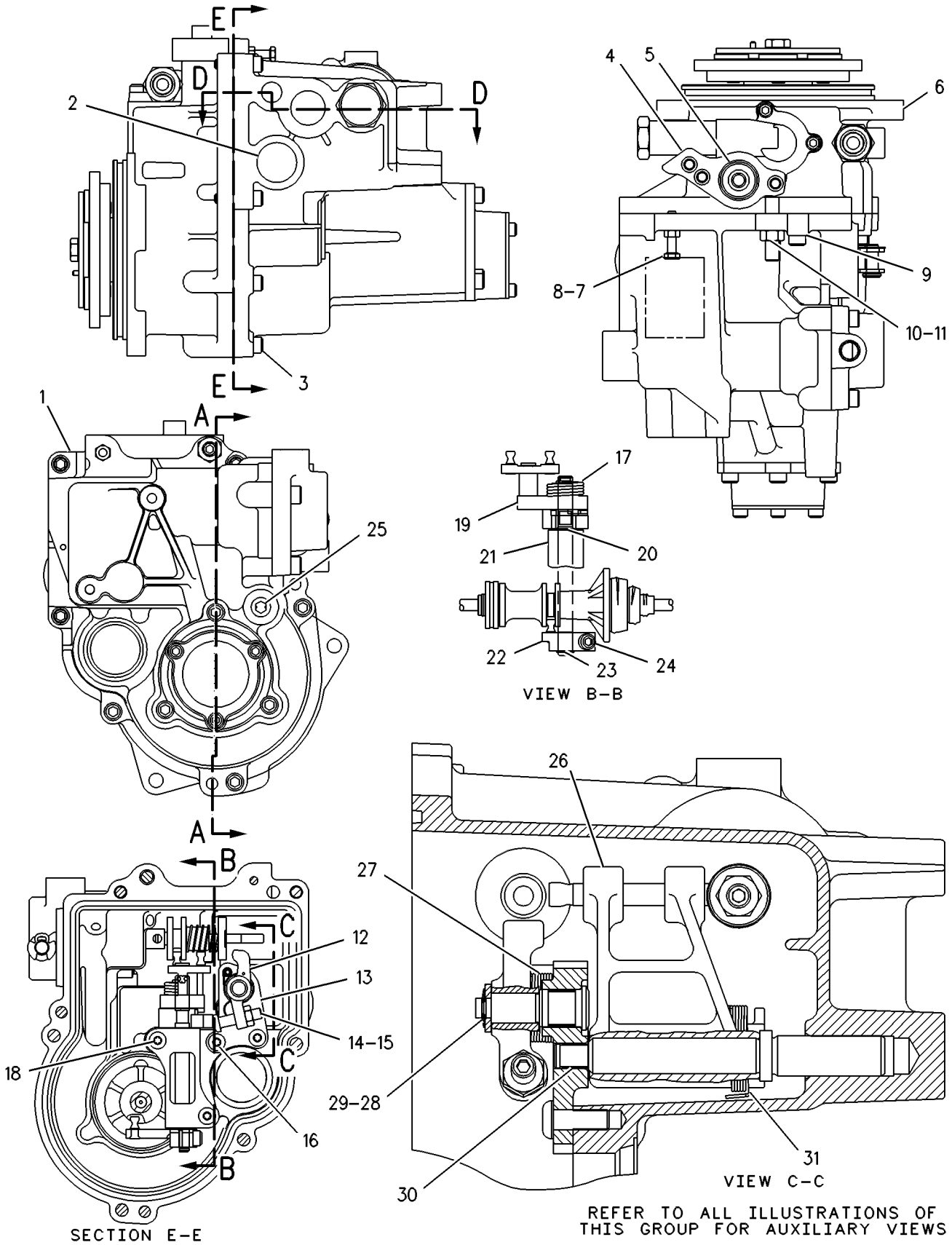

GRAPHIC #1 g00109224

130-7326 **GOVERNOR GP-UNIT INJECTOR** (contd.) **i01399010**

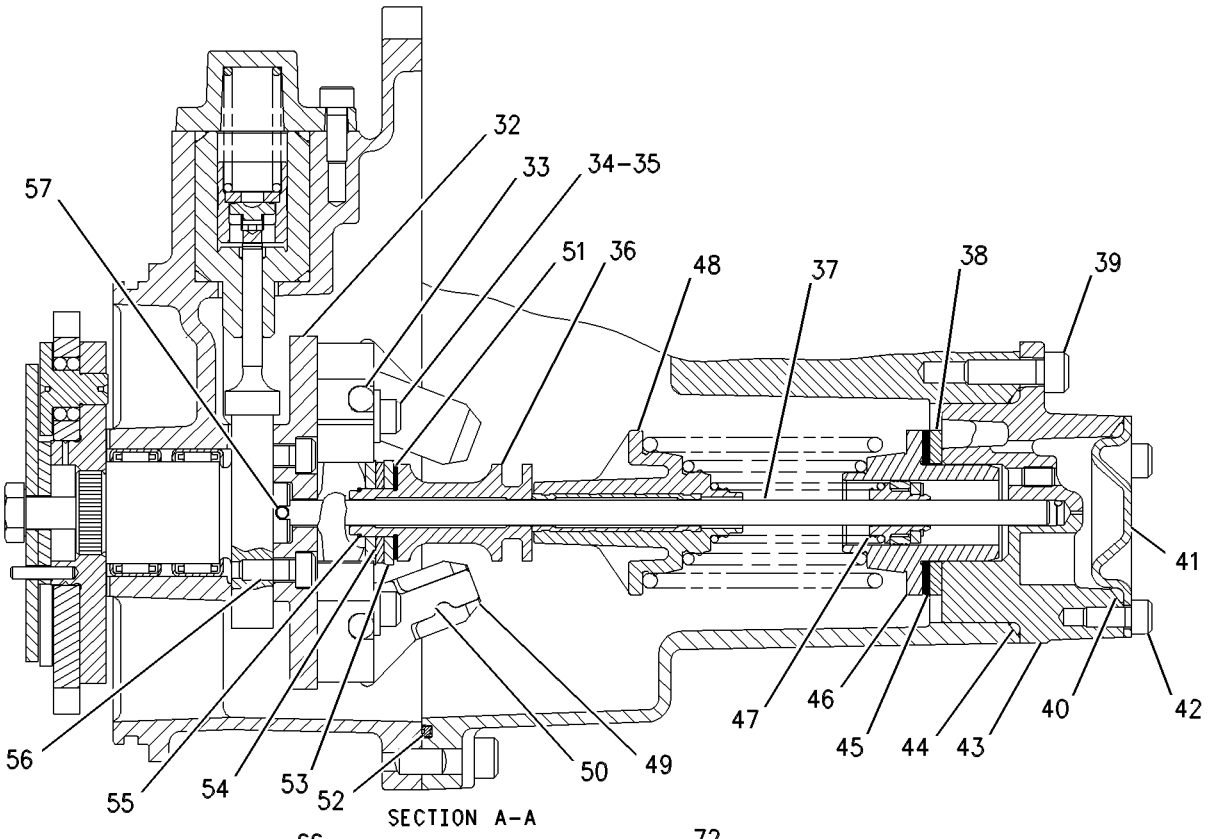

SECTION A-A

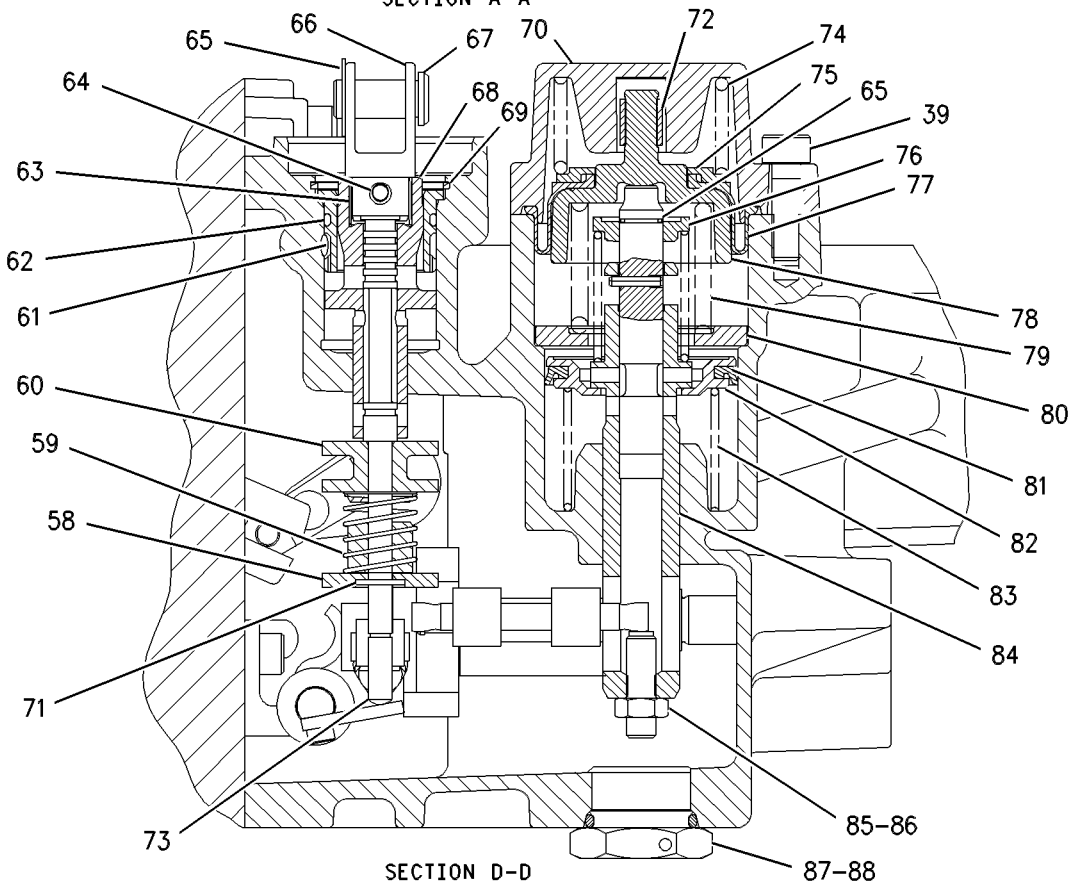

SECTION D-D

GRAPHIC #2 <END> g00521727

131-7899 GOVERNOR GP-UNIT INJECTOR*R

S/N: 4TF32801-UP
PART OF 129-1213 GOVERNOR GP-UNIT INJECTOR
ALSO AN ATTACHMENT

SMCS-1264, 1287, 1908 **i01399023**

NOTE	PART NUMBER	QTY	PART NAME 1 2 3 4 5 6 (PRODUCT LEVEL)	SEE PAGE
	131-7889	1	CAM-TORQUE	
	4P-5745	1	CONTROL AS-FUEL RATIO	
Y	*130-7323*	1	GOVERNOR GP-UNIT INJECTOR	197
	7C-0989	1	PLUG-ORIFICE	
	4P-2467	1	SPRING GP-GOVERNOR	
	7C-4466	1	SPRING-DASHPOT	

Y - SEPARATE ILLUSTRATION

<END>

390-9331 KIT-INJECTOR

S/N: 9BL1-UP
SINGLE FUEL INJECTOR
FOR USE WITH 117-5188—PAGE: 10
FIELD INSTALLATION

SMCS-1254, 1290, 7555 **i05934802**

NOTE	PART NUMBER	QTY	PART NAME 1 2 3 4 5 6 (PRODUCT LEVEL)	SEE PAGE
	114-8718	1	SEAL-O-RING	
	125-8274	1	SEAL-O-RING	

<END>

8Y-9459 LINES GP-FUEL

S/N: 9BL1-UP

PART OF 117-1761, 8Y-9370 CHASSIS AR

SMCS-1274 **i01399027**

NOTE	REF NO	GRAPHIC REF	PART NUMBER	QTY	PART NAME 1 2 3 4 5 6 (PRODUCT LEVEL)	SEE PAGE
I	1	1	**8Y-9856**	1	HOSE AS	
	2	1	**6V-8397**	6	SEAL-O-RING	
I	3	1	**8Y-9857**	1	HOSE AS	
	4	1	**8Y-9853**	1	TUBE AS	
	5	1	**162-3905**	1	PUMP AS-FUEL PRIMING	
	6	1	**1P-0436**	1	GASKET (FUEL PRIMING PUMP)	
	7	1	**8T-4224**	1	WASHER-HARD (8.8X16X2-MM THK)	
	8	1	**6V-8918**	1	BOLT (5/16-18X1.25-IN)	
	9	1	**7X-2501**	1	BOLT (1/4-20X1.25-IN)	
	10	1	**8T-4205**	2	WASHER-HARD (7.2X14.5X2-MM THK)	
	11	1	**8T-0080**	1	VALVE-BALL	
	12	1	**3J-1907**	3	SEAL-O-RING	
	13	1	**6V-8724**	1	ELBOW	
	14	1	**1P-4278**	1	CLAMP-HOSE	
E	15	1	**5P-1442**		HOSE (50CM)	
	16	1	**5P-4924**	1	ELBOW	
	17	1	**8M-2773**	2	CLIP (LOOP)	
	18	1	**5M-3062**	1	BOLT (3/8-16X0.75-IN)	
	19	1	**8T-4896**	1	WASHER-HARD (10.2X18.5X2.5-MM THK)	
M	20	1	**8T-0276**	1	BOLT (M8X1.25X45-MM)	
	21	1	**2B-0941**	1	SPACER (10.5X19X19-MM THK)	
	22	2	**6V-9850**	1	ELBOW	
	23	2	**6V-8397**	3	SEAL-O-RING	
	24	2	**6V-8636**	3	CONNECTOR	
	25	2	**3J-1907**	3	SEAL-O-RING	
	26	2	**6V-8723**	1	ELBOW	
	27	2	**3K-0360**	1	SEAL-O-RING	
	28	2	**6V-9872**	1	CONNECTOR	
	29	2	**3J-7354**	1	SEAL-O-RING	
	30	2	**5K-8451**	2	CLIP	
	31	2	**5P-1075**	5	WASHER-HARD (10.2X22.5X3-MM THK)	
	32	2	**5M-3062**	5	BOLT (3/8-16X0.75-IN)	
	33	2	**8M-2773**	1	CLIP (LOOP)	
	34	2	**7S-4244**	2	CLIP	
	35	2	**8Y-9855**	1	TUBE AS	
	36	2	**8Y-9854**	1	TUBE AS	

E - ORDER BY THE CENTIMETER
I - REFER TO HYDRAULIC INFORMATION SYSTEM
M - METRIC PART

8Y-9459 **LINES GP-FUEL (**contd.**)** **i01399027**

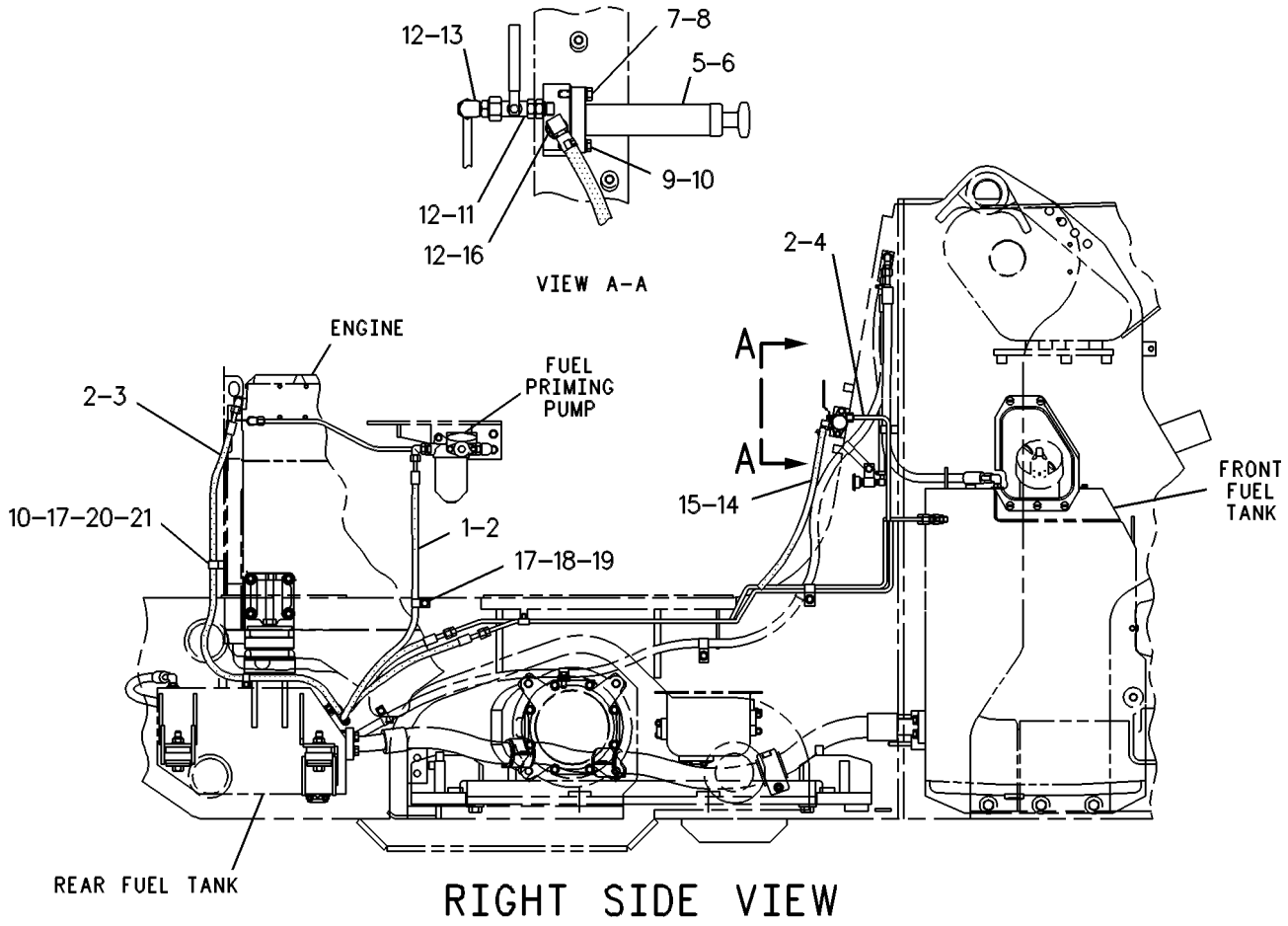

GRAPHIC #1 g00264808

8Y-9459 **LINES GP-FUEL (**contd.**)** **i01399027**

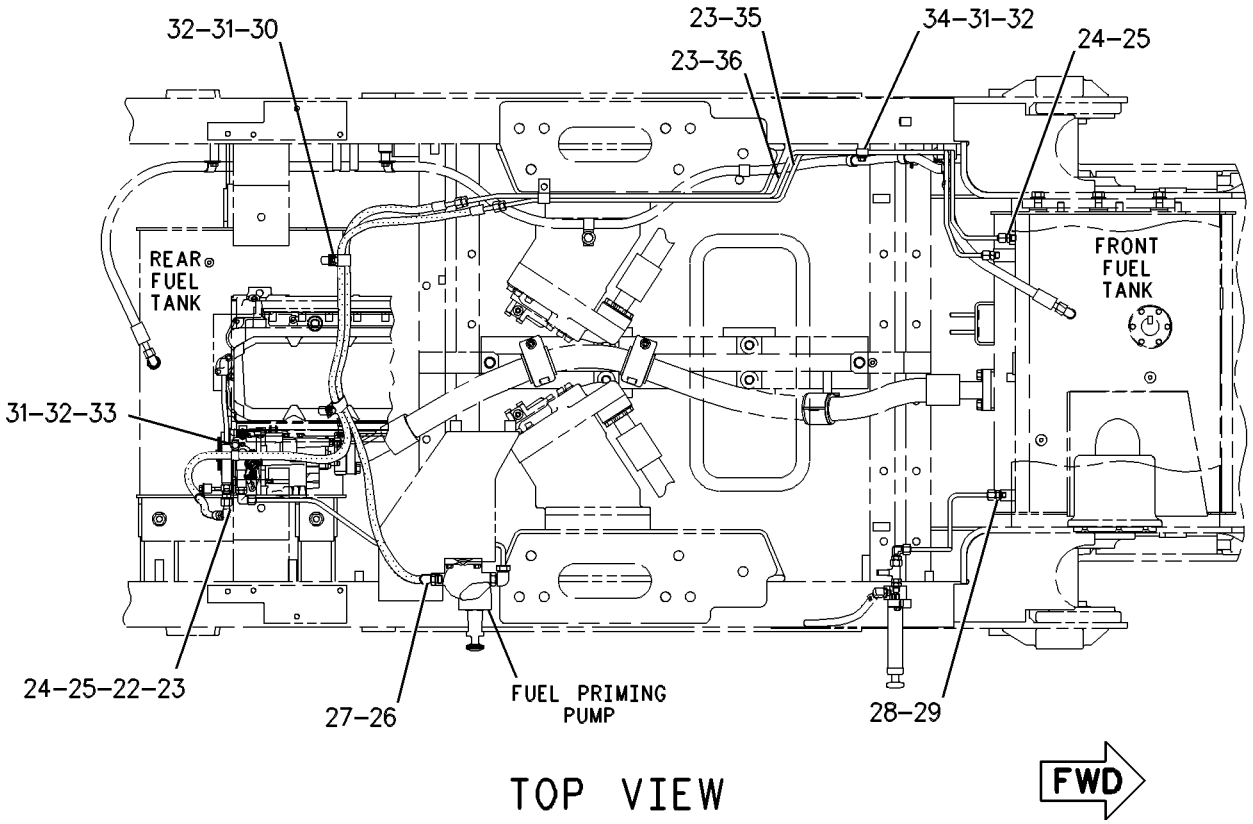

GRAPHIC #2 <END> g00520354

107-7219 LINES GP-FUEL FILTER

S/N: 9BL1-1842

PART OF 6I-3527 INSTALLATION AR, 117-5189 INSTALLATION AR-ENGINE

SMCS-1261, 1274 **i00569376**

NOTE	REF NO	GRAPHIC REF	PART NUMBER	QTY	PART NAME 1 2 3 4 5 6 (PRODUCT LEVEL)	SEE PAGE
	1	1	**9X-2134**	1	ELBOW	
	2	1	**121-9474**	1	TUBE AS	
M	3	1	**7X-2537**	2	BOLT (M8X1.25X35-MM)	
	4	1	**8T-4224**	2	WASHER-HARD (8.8X16X2-MM THK)	
	5	1	**9S-4185**	1	PLUG (3/4-16-THD)	
	6	1	**3K-0360**	1	SEAL-O-RING	
	7	1	**2M-9780**	1	SEAL-O-RING	
	8	1	**6V-8397**	2	SEAL-O-RING	
	9	1	**3J-1907**	1	SEAL-O-RING	
	10	1	**6V-8724**	1	ELBOW	

M - METRIC PART

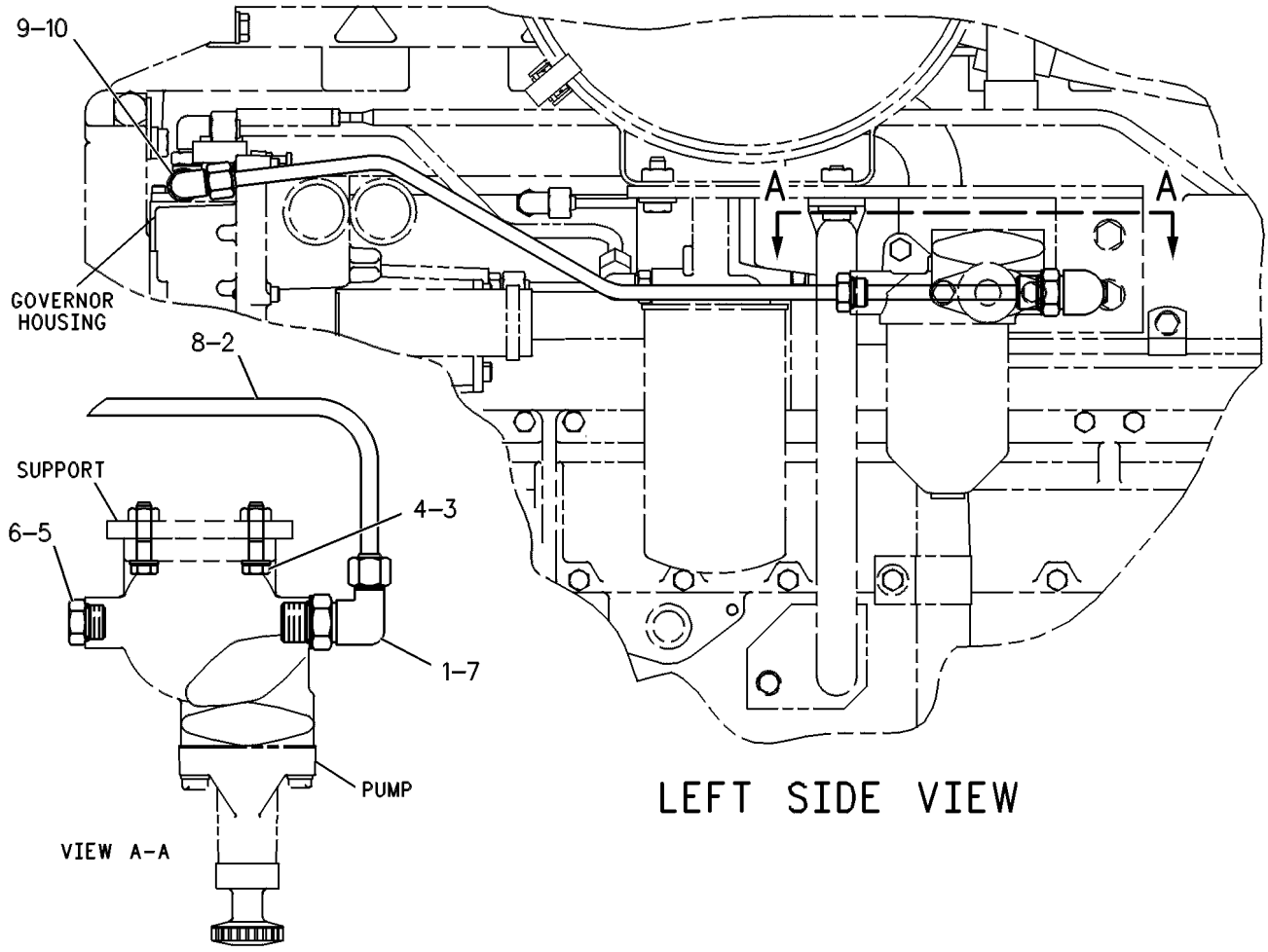

GRAPHIC #1 <END> g00247233

119-2899 LINES GP-FUEL FILTER

S/N: 4TF17400-UP

PART OF 114-7159, 117-5187, 117-5188, 6I-3528 ENGINE AR

ALSO AN ATTACHMENT

SMCS-1261, 1274

i01399031

NOTE	REF NO	GRAPHIC REF	PART NUMBER	QTY	PART NAME 1 2 3 4 5 6 (PRODUCT LEVEL)	SEE PAGE
	1	1	**8M-9024**	2	WASHER-HARD (10.2X22.5X5-MM THK)	
	2	1	**8T-4224**	1	WASHER-HARD (8.8X16X2-MM THK)	
M	3	1	**8T-4200**	1	BOLT (M8X1.25X16-MM)	
	4	1	**6V-8724**	1	ELBOW	
	5	1	**3J-1907**	8	SEAL-O-RING	
	6	1	**7W-0183**	1	TUBE AS	
	7	1	**9S-1350**	1	CLIP	
	8	1	**6V-8397**	5	SEAL-O-RING	
	9	1	**9S-4191**	1	PLUG (9/16-18-THD)	
M	10	1	**6V-6317**	2	BOLT (M10X1.5X20-MM)	
	11	1	**5F-7054**	1	SEAL-O-RING	
M	12	1	**8T-7547**	2	BOLT (M8X1.25X30-MM)	
	13	1	**7E-5190**	1	TUBE AS	
	14	1	**7E-5189**	1	VALVE AS (FUEL)	
	15	1	**8T-0151**	1	ADAPTER	
	16	1	**7X-2459**	1	ADAPTER-TEE	
	17	1	**3N-3252**	1	SPRING	
	18	1	**8L-5449**	1	SPACER (0.375X0.75X0.69-IN THK)	
	19	1	**115-4184**	1	TEE-O-RING PORT	
	20	1	**5P-7813**	1	SEAL-O-RING	
	21	1	**5P-1046**	1	CONNECTOR	
	22	1	**5P-4961**	2	CLAMP-HOSE	
	23	1	**115-4233**	1	TUBE AS	
	24	1	**6I-2422**	1	VALVE AS (FUEL PRESSURE RELIEF)	
		1	**2W-3294**	1	PLUNGER AS-VALVE	
		1	**2W-7400**	1	SPRING	
		1	**3K-0360**	1	SEAL-O-RING	
	25	1	**6V-8774**	1	TEE	
	26	1	**8T-0788**	1	ELBOW	
E	27	1	**5P-1442**		HOSE (80CM)	
	28	1	**6K-8178**	2	CLIP	
M	29	1	**6V-5219**	1	BOLT (M8X1.25X40-MM)	
	30	1	**9M-1974**	1	WASHER-HARD (8.8X16X2-MM THK)	

E - ORDER BY THE CENTIMETER
M - METRIC PART

119-2899 **LINES GP-FUEL FILTER (**contd.**)** **i01399031**

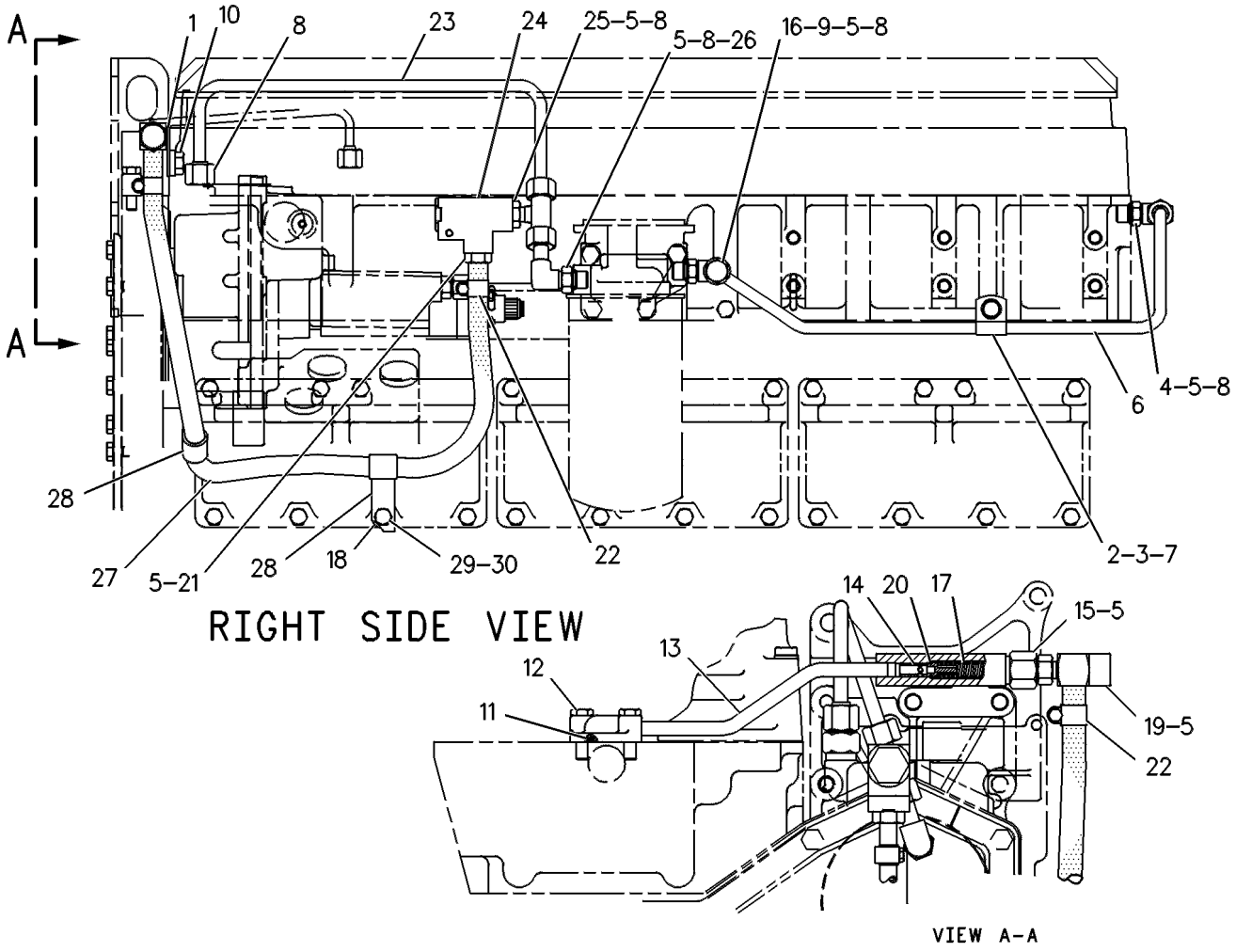

GRAPHIC #1 <END> g00247108

142-8167 LINES GP-FUEL FILTER

S/N: 4TF34944-UP
PART OF 117-5187, 117-5188 ENGINE AR
ALSO AN ATTACHMENT

SMCS-1261, 1274 **i01399045**

NOTE	REF NO	GRAPHIC REF	PART NUMBER	QTY	PART NAME 1 2 3 4 5 6 (PRODUCT LEVEL)	SEE PAGE
	1	1	**8M-9024**	2	WASHER-HARD (10.2X22.5X5-MM THK)	
M	2	1	**6V-6317**	2	BOLT (M10X1.5X20-MM)	
	3	1	**115-4233**	1	TUBE AS	
	4	1	**6V-8397**	7	SEAL-O-RING	
Y	5	1	**141-8288**	1	VALVE GP-FUEL RELIEF	233
	6	1	**6V-8774**	1	TEE	
	7	1	**3J-1907**	9	SEAL-O-RING	
	8	1	**8T-0788**	1	ELBOW	
	9	1	**1J-9671**	1	SEAL-O-RING	
M	10	1	**6V-4248**	2	BOLT (M10X1.5X25-MM)	
	11	1	**6V-5839**	2	WASHER (11X21X2.5-MM THK)	
M	12	1	**6V-3940**	1	BOLT (M8X1.25X25-MM)	
	13	1	**9M-1974**	4	WASHER-HARD (8.8X16X2-MM THK)	
M	14	1	**5P-8347**	1	BOLT (M8X1.25X70-MM)	
	15	1	**1R-0753**	1	FILTER-FUEL (ADVANCED EFFICIENCY)	
	16	1	**5P-4961**	2	CLAMP-HOSE	
M	17	1	**6V-5219**	1	BOLT (M8X1.25X40-MM)	
	18	1	**8L-5449**	1	SPACER (0.375X0.75X0.69-IN THK)	
	19	1	**5P-1046**	1	CONNECTOR	
E	20	1	**5P-1442**		HOSE	
	21	1	**6K-8178**	2	CLIP	
	22	1	**141-6711**	1	TUBE AS	
	23	1	**1P-0436**	1	GASKET (FUEL PRIMING PUMP)	
	24	1	**6N-4414**	1	COVER-FILTER BASE	
	25	1	**7B-2742**	1	BOLT (1/4-20X1.25-IN)	
	26	1	**5P-0537**	1	WASHER-HARD (7.2X14.5X2-MM THK)	
	27	1	**6V-8724**	2	ELBOW	
	28	1	**141-6712**	1	TUBE AS	
	29	1	**141-2620**	1	PLATE AS	
	30	1	**8T-5043**	1	ADAPTER	
	31	1	**119-2978**	1	BASE AS-FUEL FILTER	
		1	**112-6523**	1	INSERT-FUEL FILTER	
	32	1	**1B-7182**	1	BOLT (5/16-18X1.25-IN)	
	33	1	**9S-4191**	1	PLUG (9/16-18-THD)	
	34	1	**7X-2459**	1	ADAPTER-TEE	
	35	1	**5F-7054**	1	SEAL-O-RING	
M	36	1	**6V-2317**	2	BOLT (M8X1.25X30-MM)	
	37	1	**7E-5190**	1	TUBE AS	
	38	1	**7E-5189**	1	VALVE AS (FUEL)	
	39	1	**5P-7813**	1	SEAL-O-RING	
	40	1	**3N-3252**	1	SPRING	
	41	1	**8T-0151**	1	ADAPTER	

E - ORDER BY THE CENTIMETER
M - METRIC PART
Y - SEPARATE ILLUSTRATION

142-8167 **LINES GP-FUEL FILTER (**contd.**)** **i01399045**

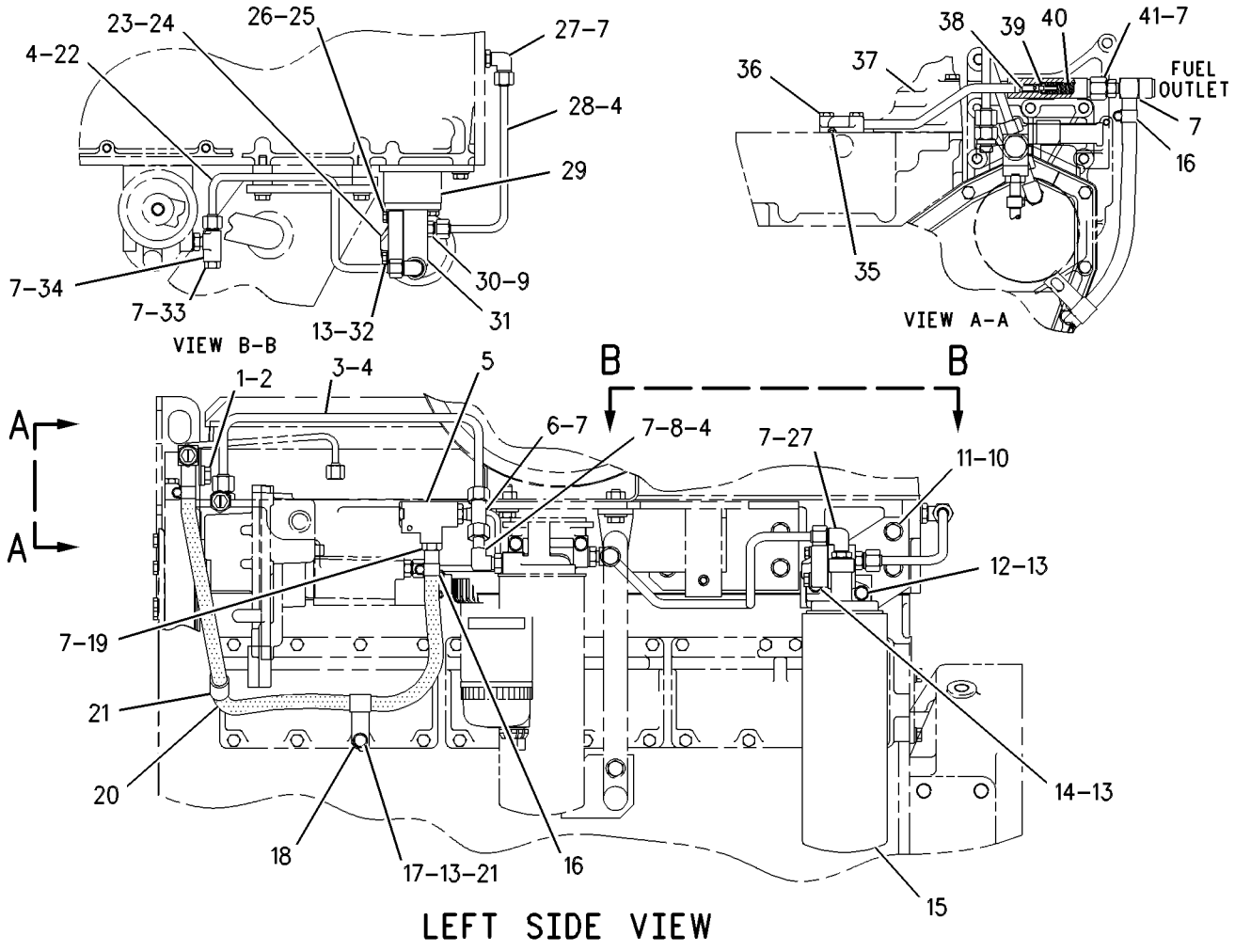

GRAPHIC #1 <END> g00290153

6I-2420 LINES GP-FUEL FILTER

S/N: 4TF17400-18603
PART OF 114-7159 ENGINE AR
AN ATTACHMENT

SMCS-1261, 1274

i01400950

NOTE	REF NO	GRAPHIC REF	PART NUMBER	QTY	PART NAME 1 2 3 4 5 6 (PRODUCT LEVEL)	SEE PAGE
	1	1	**8M-9024**	2	WASHER-HARD (10.2X22.5X5-MM THK)	
	2	1	**8T-4224**	1	WASHER-HARD (8.8X16X2-MM THK)	
M	3	1	**8T-4200**	1	BOLT (M8X1.25X16-MM)	
	4	1	**6V-8724**	1	ELBOW	
	5	1	**3J-1907**	8	SEAL-O-RING	
	6	1	**7W-0183**	1	TUBE AS	
	7	1	**9S-1350**	1	CLIP	
	8	1	**6V-8397**	5	SEAL-O-RING	
	9	1	**9S-4191**	1	PLUG (9/16-18-THD)	
M	10	1	**6V-6317**	2	BOLT (M10X1.5X20-MM)	
	11	1	**115-4233**	1	TUBE AS	
	12	1	**5F-7054**	1	SEAL-O-RING	
M	13	1	**8T-7547**	2	BOLT (M8X1.25X30-MM)	
	14	1	**7E-5190**	1	TUBE AS	
	15	1	**7E-5189**	1	VALVE AS (FUEL)	
	16	1	**8T-0151**	1	ADAPTER	
	17	1	**7X-2459**	1	ADAPTER-TEE	
	18	1	**3N-3252**	1	SPRING	
	19	1	**5P-7813**	1	SEAL-O-RING	
	20	1	**5P-1046**	1	CONNECTOR	
	21	1	**5P-4961**	2	CLAMP-HOSE	
E	22	1	**5P-1442**		HOSE (78 CM)	
	23	1	**6I-2422**	1	VALVE AS	
	24	1	**6V-8774**	1	TEE	
	25	1	**8T-0788**	1	ELBOW	
	26	1	**115-4184**	1	TEE-O-RING PORT	
	27	1	**4K-8864**	1	CLIP	
M	28	1	**6V-5219**	1	BOLT (M8X1.25X40-MM)	
	29	1	**9M-1974**	1	WASHER-HARD (8.8X16X2-MM THK)	
	30	1	**8L-5449**	1	SPACER (0.375X0.75X0.69-IN THK)	
	31	1	**068-9526**	1	CAP-TUBE	
M	32	1	**9X-2099**	1	STUD (M8X1.25X52.75-MM)	
M	33	1	**5C-7261**	1	NUT (M8X1.25-THD)	
	34	1	**3S-2093**	1	STRAP-CABLE	
	35	1	**119-2955**	1	CLIP	

E - ORDER BY THE CENTIMETER
M - METRIC PART

6I-2420 **LINES GP-FUEL FILTER** (contd.) **i01400950**

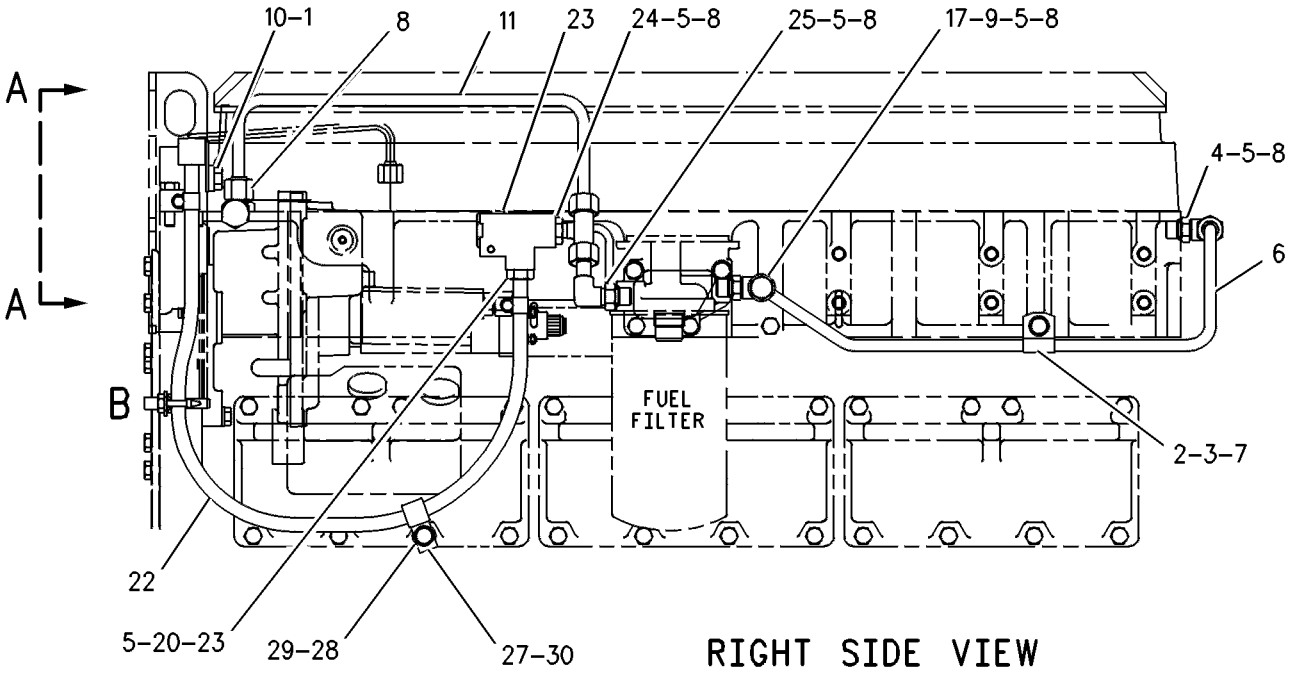

RIGHT SIDE VIEW

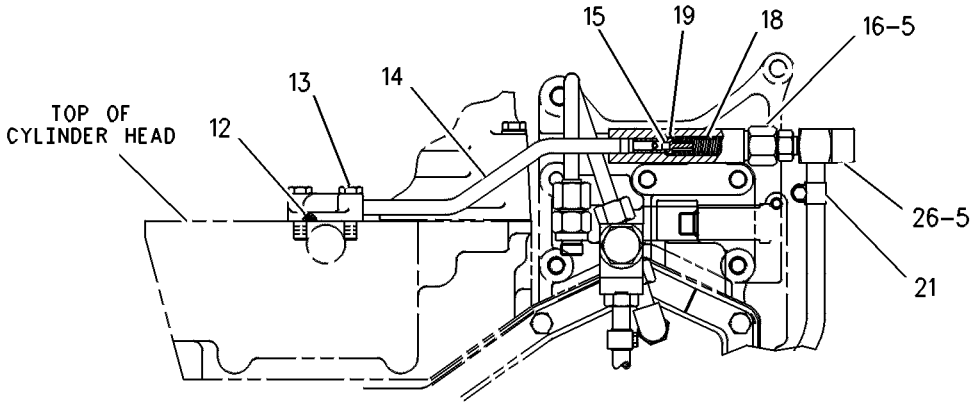

VIEW A-A

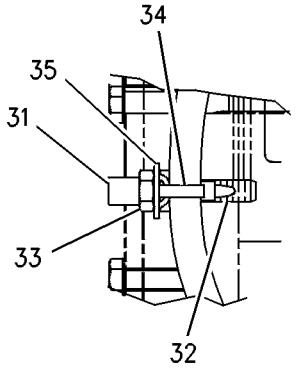

VIEW OF AREA B

GRAPHIC #1 <END> g00738182

107-7731 LINES GP-FUEL RATIO CONTROL

S/N: 4TF17400-UP
PART OF 114-7159, 117-5187, 117-5188, 6I-3528 ENGINE AR
ALSO AN ATTACHMENT

SMCS-1274, 1278

i01643858

NOTE	REF NO	GRAPHIC REF	PART NUMBER	QTY	PART NAME 1 2 3 4 5 6 (PRODUCT LEVEL)	SEE PAGE
	1	1	**6V-8647**	1	CONNECTOR	
	2	1	**6V-8723**	1	ELBOW	
	3	1	**107-7680**	1	TUBE AS	
	4	1	**3K-0360**	1	SEAL-O-RING	
	5	1	**4J-5477**	1	SEAL-O-RING	
	6	1	**3J-7354**	1	SEAL-O-RING	
	7	1	**9M-1974**	1	WASHER-HARD (8.8X16X2-MM THK)	
	8	1	**6V-8397**	1	SEAL-O-RING	
	9	1	**8M-2772**	1	CLIP (LOOP)	

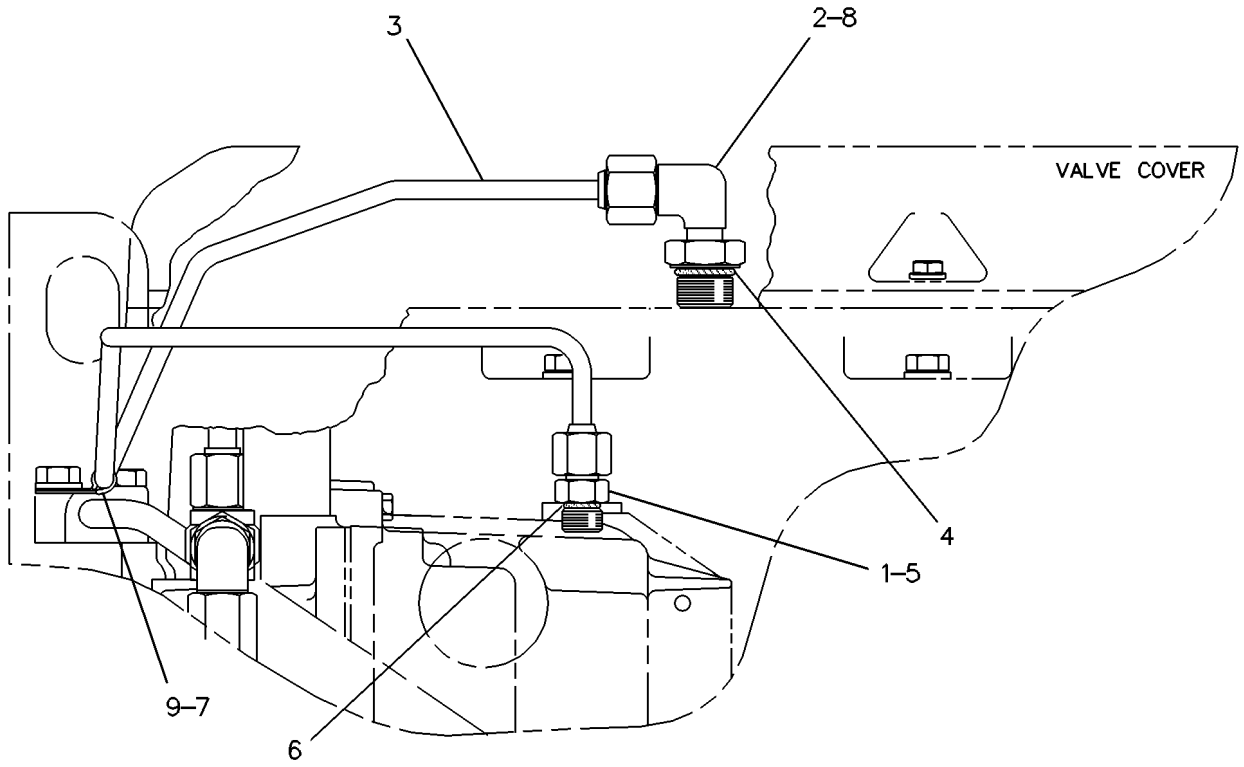

LEFT SIDE VIEW

GRAPHIC #1

<END>

g00117211

9Y-3943 LINES GP-FUEL RATIO CONTROL

S/N: 4TF17400-99999
PART OF 114-7159 ENGINE AR
AN ATTACHMENT

SMCS-1274, 1278 **i00568237**

NOTE	REF NO	GRAPHIC REF	PART NUMBER	QTY	PART NAME 1 2 3 4 5 6 (PRODUCT LEVEL)	SEE PAGE
	1	1	**6V-8647**	1	CONNECTOR	
	2	1	**6V-8723**	1	ELBOW	
	3	1	**7E-6325**	1	TUBE AS	
	4	1	**3K-0360**	1	SEAL-O-RING	
	5	1	**4J-5477**	1	SEAL-O-RING	
	6	1	**3J-7354**	1	SEAL-O-RING	
	7	1	**9M-1974**	1	WASHER-HARD (8.8X16X2-MM THK)	
	8	1	**6V-8397**	1	SEAL-O-RING	
	9	1	**8M-2772**	1	CLIP (LOOP)	

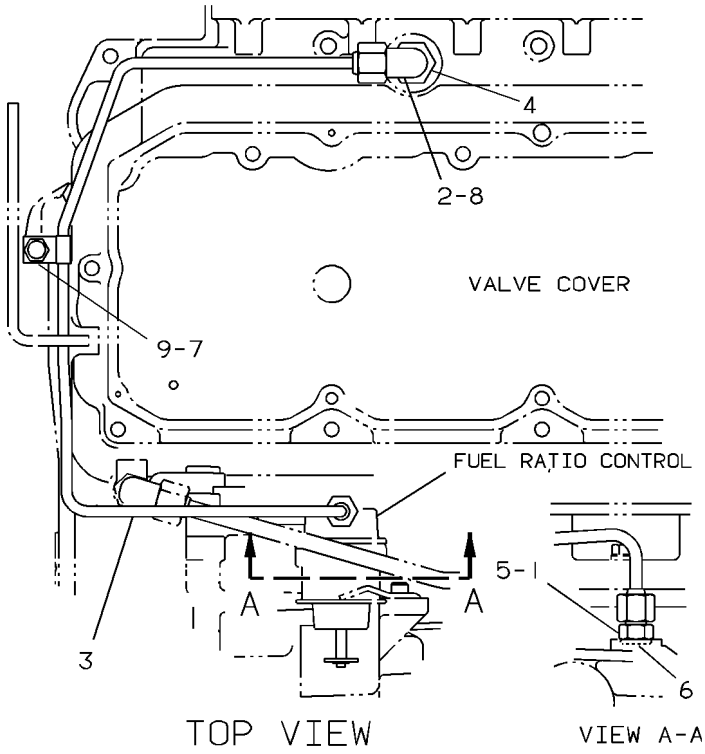

GRAPHIC #1

<END>

g00108391

7W-8434 LINES GP-GOVERNOR OIL

S/N: 4TF17400-UP

PART OF 107-7723 GOVERNOR GP, 119-3037, 129-1213 GOVERNOR GP-UNIT INJECTOR

ALSO AN ATTACHMENT

SMCS-1307 **i01640434**

NOTE	REF NO	GRAPHIC REF	PART NUMBER	QTY	PART NAME 1 2 3 4 5 6 (PRODUCT LEVEL)	SEE PAGE
	1	1	**6V-8628**	1	ELBOW	
	2	1	**3J-7354**	2	SEAL-O-RING	
	3	1	**6V-8647**	1	CONNECTOR	
	4	1	**7W-0367**	1	TUBE AS	
	5	1	**4J-5477**	2	SEAL-O-RING	

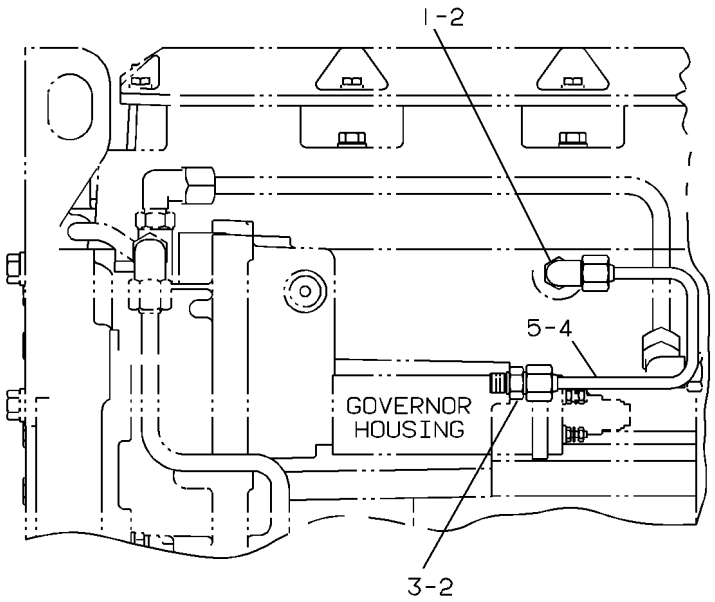

LEFT SIDE VIEW

GRAPHIC #1 <END> g00108395

107-7732 PUMP GP-FUEL INJECTION

S/N: 4TF17400-31057
PART OF 117-5187, 117-5188 ENGINE AR
ALSO AN ATTACHMENT

SMCS-1251, 1290

i01640448

NOTE	REF NO	GRAPHIC REF	PART NUMBER	QTY	PART NAME 1 2 3 4 5 6 (PRODUCT LEVEL)	SEE PAGE
M	1	1	**3T-0849**	1	BOLT-SOCKET HEAD (M6X1X25-MM)	
	2	1	**107-7733**	1	INJECTOR GP-FUEL	
	3	1	**114-8718**	1	SEAL-O-RING	
	4	1	**125-8274**	1	SEAL-O-RING	

M - METRIC PART

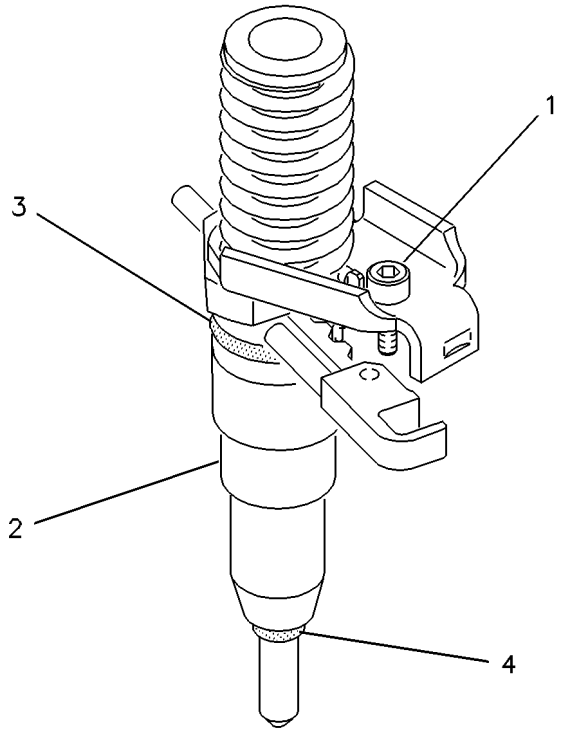

GRAPHIC #1

<END>

g00108390

107-7732 PUMP GP-FUEL INJECTION

S/N: 4TF31058-UP
PART OF 117-5187, 117-5188 ENGINE AR
ALSO AN ATTACHMENT

SMCS-1251, 1290

i01640449

NOTE	REF NO	GRAPHIC REF	PART NUMBER	QTY	PART NAME 1 2 3 4 5 6 (PRODUCT LEVEL)	SEE PAGE
CM	1	1	**139-5925**	1	BOLT-SOCKET HEAD (M6X1X30-MM)	
CR	2	1	**127-8216**	1	INJECTOR GP-FUEL	
	3	1	**114-8718**	1	SEAL-O-RING	
	4	1	**125-8274**	1	SEAL-O-RING	

C - CHANGE FROM PREVIOUS TYPE
M - METRIC PART
R - REMANUFACTURED PART MAY BE AVAILABLE

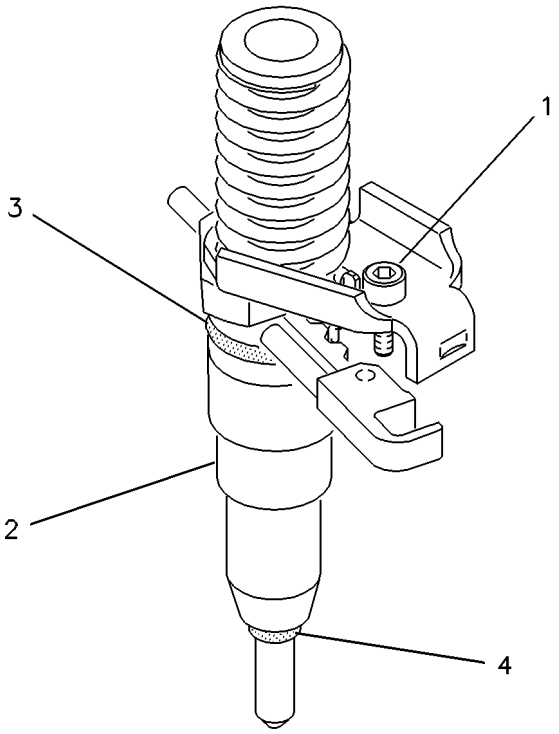

GRAPHIC #1 <END> g00108390

7E-7607 PUMP GP-FUEL INJECTION

S/N: 4TF17400-UP
PART OF 114-7159, 6I-3528 ENGINE AR
ALSO AN ATTACHMENT

SMCS-1251, 1290

i01399113

NOTE	REF NO	GRAPHIC REF	PART NUMBER	QTY	PART NAME 1 2 3 4 5 6 (PRODUCT LEVEL)	SEE PAGE
M	1	1	**3T-0849**	1	BOLT-SOCKET HEAD (M6X1X25-MM)	
R	2	1	**107-1230**	1	INJECTOR GP-FUEL	
	3	1	**6V-6228**	1	SEAL-O-RING	
	4	1	**032-8970**	1	SEAL-O-RING	

M - METRIC PART
R - REMANUFACTURED PART MAY BE AVAILABLE

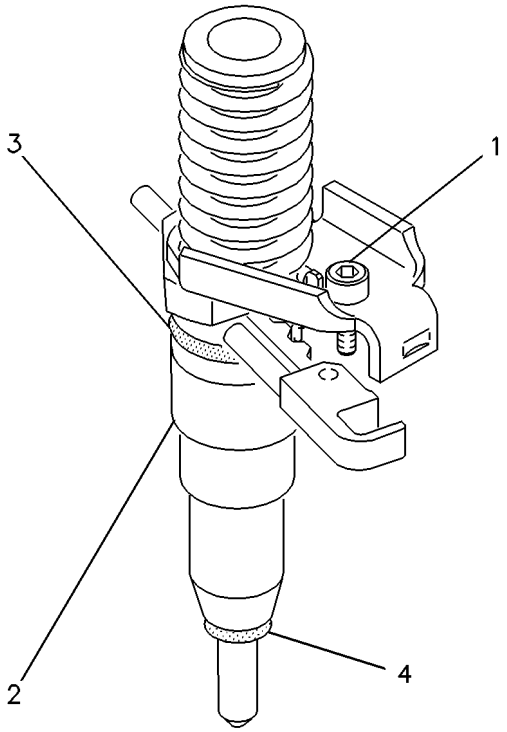

GRAPHIC #1 <END> g00116905

142-8169 PUMP GP-FUEL PRIMING

S/N: 9BL1843-1847, 1849-1861, 1863-1866, 1868-UP

PART OF 117-5189 INSTALLATION AR-ENGINE

SMCS-1258 **i00693421**

NOTE	REF NO	GRAPHIC REF	PART NUMBER	QTY	PART NAME 1 2 3 4 5 6 (PRODUCT LEVEL)	SEE PAGE
	1	1	**9Y-1760**	1	BRACKET-PRIMING PUMP	
	2	1	**1P-0436**	1	GASKET (FUEL PRIMING PUMP)	
	3	1	**2W-2605**	1	PUMP AS-FUEL PRIMING	
		1	**1H-8171**	1	SEAL-O-RING	
		1	**7E-5346**	1	VALVE AS	
M	4	1	**7X-2537**	1	BOLT (M8X1.25X35-MM)	
M	5	1	**8T-4956**	1	BOLT (M12X1.75X35-MM)	
M	6	1	**8T-4971**	1	BOLT (M6X1X30-MM)	
	7	1	**9X-8256**	1	WASHER (6.6X12X2-MM THK)	
M	8	1	**8T-7547**	1	BOLT (M8X1.25X30-MM)	
	9	1	**8T-4224**	1	WASHER-HARD (8.8X16X2-MM THK)	
	10	1	**7X-0901**	1	ELBOW	
	11	1	**1J-9671**	1	SEAL-O-RING	
	12	1	**141-6709**	1	TUBE AS	
	13	1	**6V-8397**	4	SEAL-O-RING	
	14	1	**6V-8724**	1	ELBOW	
	15	1	**3J-1907**	3	SEAL-O-RING	
	16	1	**141-6710**	1	TUBE AS	
	17	1	**8T-1779**	2	CONNECTOR	

M - METRIC PART

142-8169 **PUMP GP-FUEL PRIMING (**contd.**)** **i00693421**

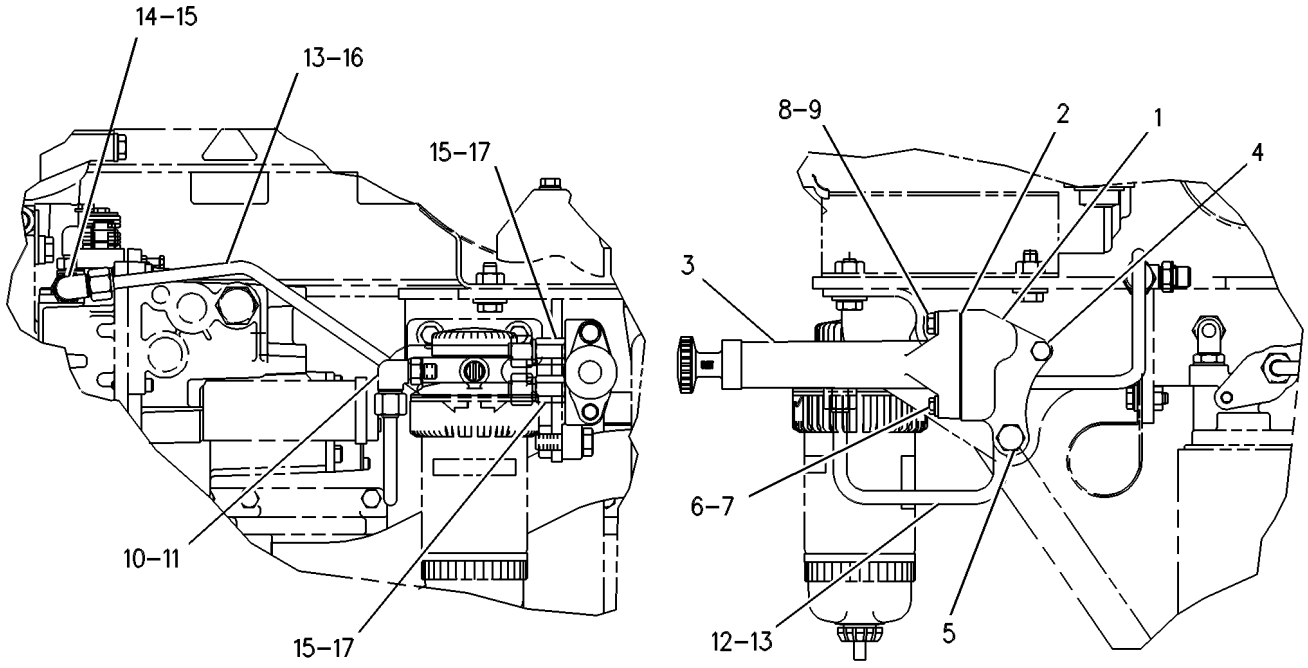

LEFT SIDE VIEW REAR VIEW

GRAPHIC #1 <END> g00277507

142-8169 PUMP GP-FUEL PRIMING

S/N: 9BL1868-UP

PART OF 117-5189 INSTALLATION AR-ENGINE

SMCS-1258 **i01251673**

NOTE	REF NO	GRAPHIC REF	PART NUMBER	QTY	PART NAME 1 2 3 4 5 6 (PRODUCT LEVEL)	SEE PAGE
	1	1	**9Y-1760**	1	BRACKET-PRIMING PUMP	
CY	2	1	*183-2824*	1	PUMP GP-FUEL PRIMING (MANUAL)	225
M	3	1	**7X-2537**	1	BOLT (M8X1.25X35-MM)	
M	4	1	**8T-4956**	1	BOLT (M12X1.75X35-MM)	
	5	1	**7X-0901**	1	ELBOW	
	6	1	**1J-9671**	1	SEAL-O-RING	
	7	1	**141-6709**	1	TUBE AS	
	8	1	**6V-8397**	4	SEAL-O-RING	
	9	1	**6V-8724**	1	ELBOW	
	10	1	**3J-1907**	3	SEAL-O-RING	
	11	1	**141-6710**	1	TUBE AS	
	12	1	**8T-1779**	2	CONNECTOR	

C - CHANGE FROM PREVIOUS TYPE
M - METRIC PART
Y - SEPARATE ILLUSTRATION

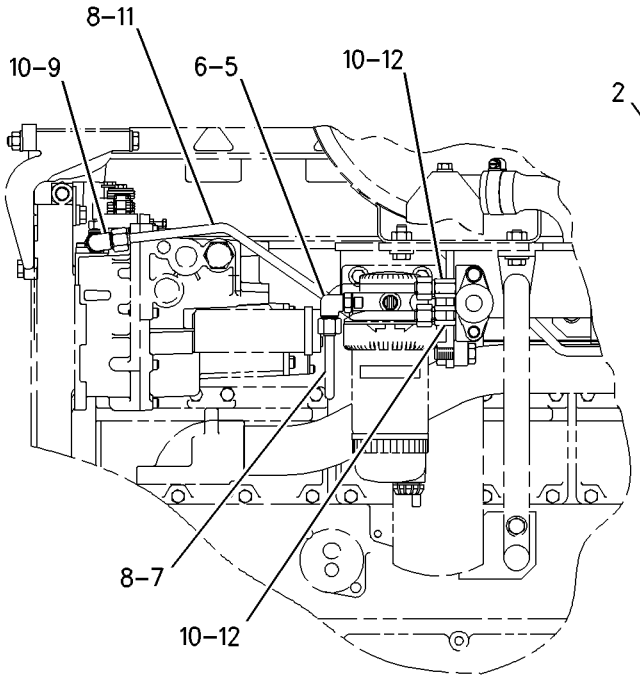

LEFT SIDE VIEW

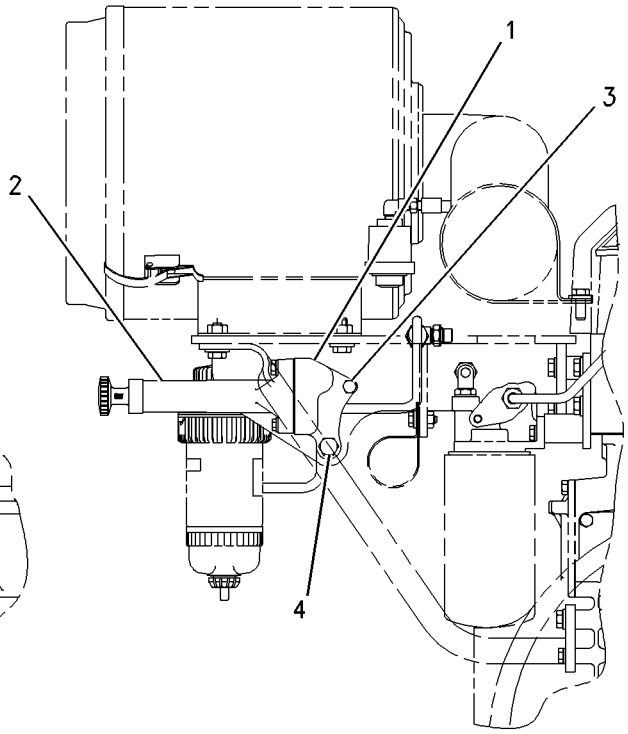

REAR VIEW

GRAPHIC #1 <END> g00675750

183-2824 PUMP GP-FUEL PRIMING—MANUAL

S/N: 9BL1868-UP

PART OF 142-8169 PUMP GP-FUEL PRIMING

SMCS-1258 **i03629253**

NOTE	REF NO	GRAPHIC REF	PART NUMBER	QTY	PART NAME 1 2 3 4 5 6 (PRODUCT LEVEL)	SEE PAGE
	1	1	**9Y-8389**	1	GASKET (FUEL PRIMING PUMP)	
	2	1	**183-2823**	1	PUMP AS-FUEL PRIMING	
		1	**229-3218**	2	VALVE AS (FUEL PRIMING PUMP)	
		1	**061-7539**	1	SEAL-O-RING	
	3	1	**8T-4205**	1	WASHER-HARD (7.2X14.5X2-MM THK)	
M	4	1	**8T-7547**	1	BOLT (M8X1.25X30-MM)	
M	5	1	**8T-4971**	1	BOLT (M6X1X30-MM)	
	6	1	**8T-4224**	1	WASHER-HARD (8.8X16X2-MM THK)	

M - METRIC PART

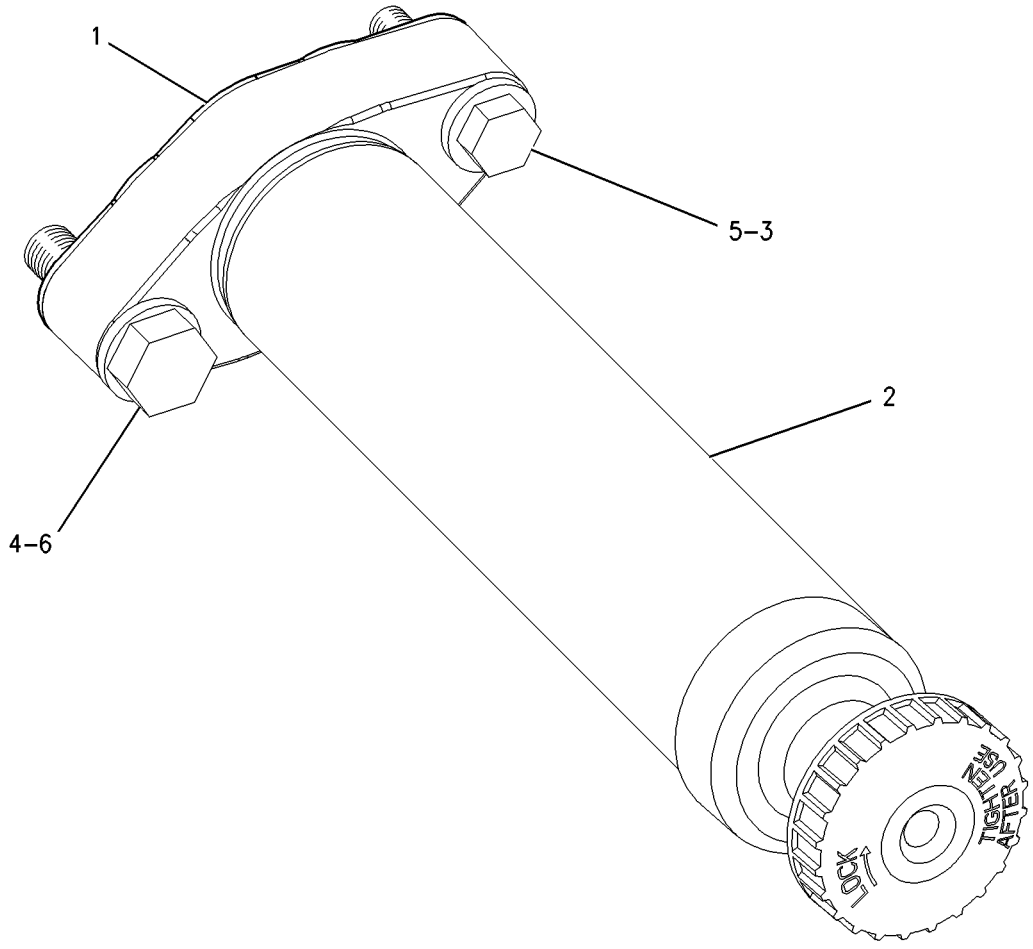

GRAPHIC #1 <END> g00671522

8N-6200 PUMP GP-FUEL PRIMING

S/N: 4TF17400-UP

PART OF 8N-6201 PUMP GP-FUEL PRM & PRIM FILTER

ALSO AN ATTACHMENT

SMCS-1258 **i03343510**

NOTE	REF NO	GRAPHIC REF	PART NUMBER	QTY	PART NAME 1 2 3 4 5 6 (PRODUCT LEVEL)	SEE PAGE
	1	1	**137-5541**	1	PUMP GP-FUEL PRIMING	
	2	1	**1B-7182**	1	BOLT (5/16-18X1.25-IN)	
	3	1	**9M-1974**	1	WASHER-HARD (8.8X16X2-MM THK)	
	4	1	**2W-6688**	1	BASE AS-FUEL FILTER	
		1	**8N-6199**	1	BASE-PUMP & FILTER	
	4A	1	**7E-5346**	1	VALVE AS (FUEL FILTER BASE CHECK)	
	5	1	**7B-2742**	1	BOLT (1/4-20X1.25-IN)	
	6	1	**1P-0436**	1	GASKET (FUEL PRIMING PUMP)	
	7	1	**5P-0537**	1	WASHER-HARD (7.2X14.5X2-MM THK)	

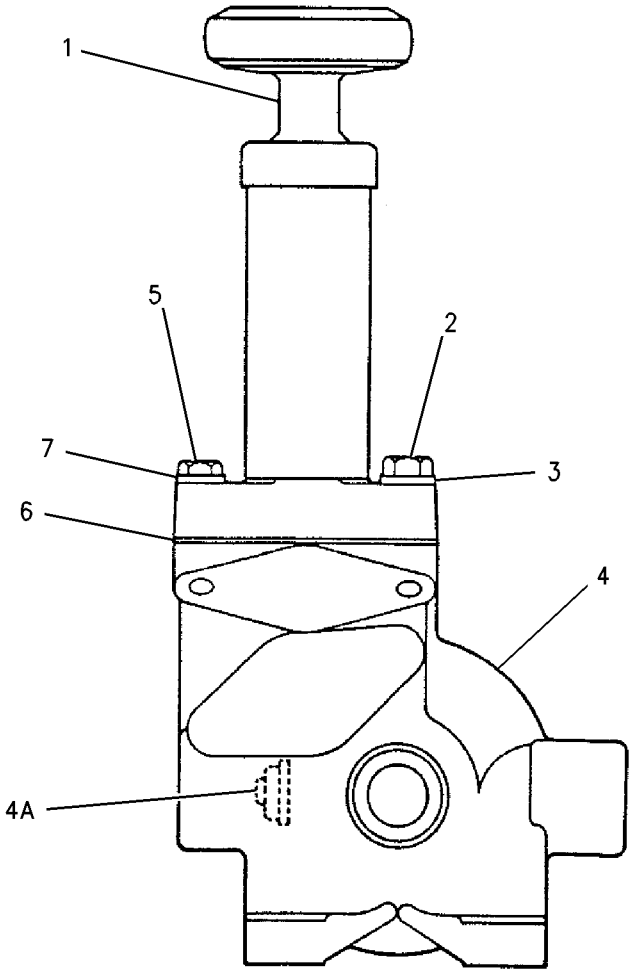

GRAPHIC #1 <END> g01007988

8N-6201 PUMP GP-FUEL PRM & PRIM FILTER

S/N: 4TF17400-UP

PART OF 114-7159, 117-5187, 117-5188, 6I-3528 ENGINE AR

ALSO AN ATTACHMENT

SMCS-1258, 1260, 1261 **i00569394**

NOTE	REF NO	GRAPHIC REF	PART NUMBER	QTY	PART NAME 1 2 3 4 5 6 (PRODUCT LEVEL)	SEE PAGE
	1	1	**8H-2807**	1	NUT (3/8-24-THD)	
	2	1	**2J-0157**	1	SEAL-O-RING	
Y	3	1	*8N-6200*	1	PUMP GP-FUEL PRIMING	226
	4	1	**1L-3769**	1	RING-RETAINING	
	5	1	**8H-2778**	1	SEAL-RING (PRIM FUEL FILT)	
	6	1	**9M-2341**	1	FILTER ELEMENT-WTR SEP & FUEL (STANDARD EFFICIENCY) (PRIMARY)	
	7	1	**8H-2810**	1	CASE AS-FILTER	
	8	1	**7H-9678**	1	RETAINER-ELEMENT	
	9	1	**2H-3429**	1	RING-RETAINING	
	10	1	**7S-9323**	1	SPRING	

Y - SEPARATE ILLUSTRATION

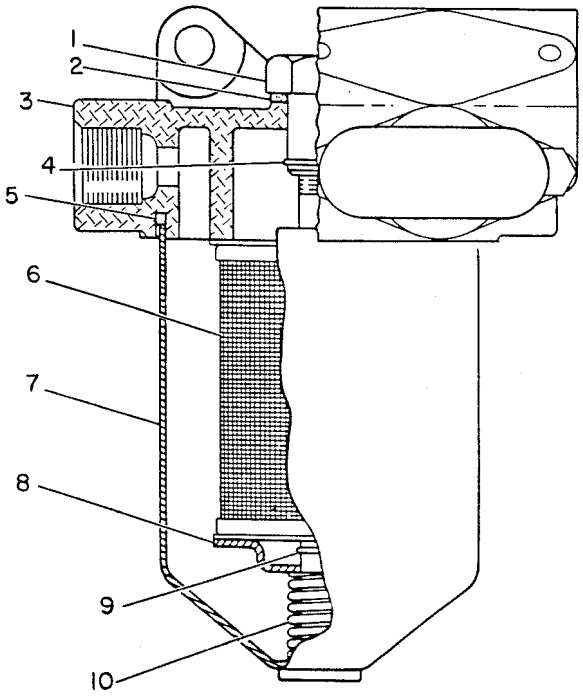

GRAPHIC #1 <END> g00108197

142-8166 SEPARATOR GP-WATER

S/N: 9BL1843-1847, 1849-1861, 1863-1866, 1868-UP
PART OF 117-5189 INSTALLATION AR-ENGINE

SMCS-1263 **i00569319**

NOTE	REF NO	GRAPHIC REF	PART NUMBER	QTY	PART NAME 1 2 3 4 5 6 (PRODUCT LEVEL)	SEE PAGE
Y	1	1	**145-8862**	1	SEPARATOR GP-WATER	229
M	2	1	**7X-2537**	2	BOLT (M8X1.25X35-MM)	
	3	1	**5P-4116**	2	WASHER-HARD (8.8X20.5X2-MM THK)	
	4	1	**1J-9671**	3	SEAL-O-RING	
	5	1	**3K-8460**	2	PLUG (1/2-20-THD)	
	6	1	**8T-5043**	1	ADAPTER	
	7	1	**6V-9850**	1	ELBOW	
	8	1	**6V-8397**	1	SEAL-O-RING	

M - METRIC PART
Y - SEPARATE ILLUSTRATION

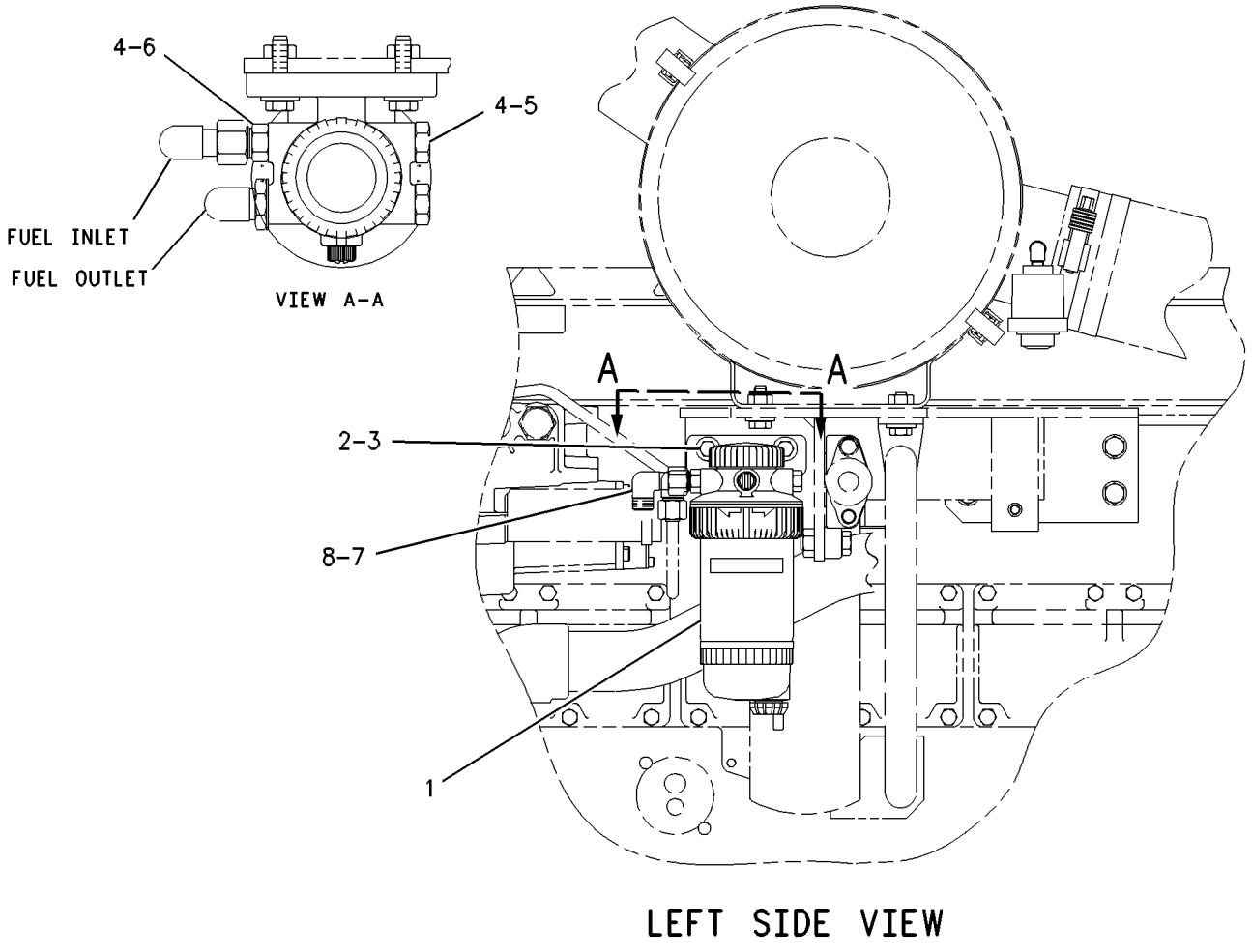

LEFT SIDE VIEW

GRAPHIC #1 <END> g00277627

145-8862 SEPARATOR GP-WATER

S/N: 9BL1816-UP

PART OF 142-8166 SEPARATOR GP-WATER

SMCS-1263 **i03480425**

NOTE	REF NO	GRAPHIC REF	PART NUMBER	QTY	PART NAME 1 2 3 4 5 6 (PRODUCT LEVEL)	SEE PAGE
	1	1	**117-4089**	1	ELEMENT-WATER SEPARATOR	
	2	1	**118-1461**	1	BASE AS	
	3	1	**118-8118**	1	RING-RETAINING	
	4	1	**118-8119**	1	NUT	
	5	1	**112-9401**	1	BOWL AS-WATER COLLECTION	
		1	**128-8614**	1	KIT-SEAL (WATER SEPARATOR)	
					AVAILABLE REPAIR KIT(S):	
			121-4480	1	KIT-WATER BASE (WATER SEPARATOR)	
					(INCLUCES CAP NUT, CAP SEAL, HEADER CAP, VENT PLUG, O-RING SEAL, RETAINING RING, DUST SEAL & VOLUME PLUG)	

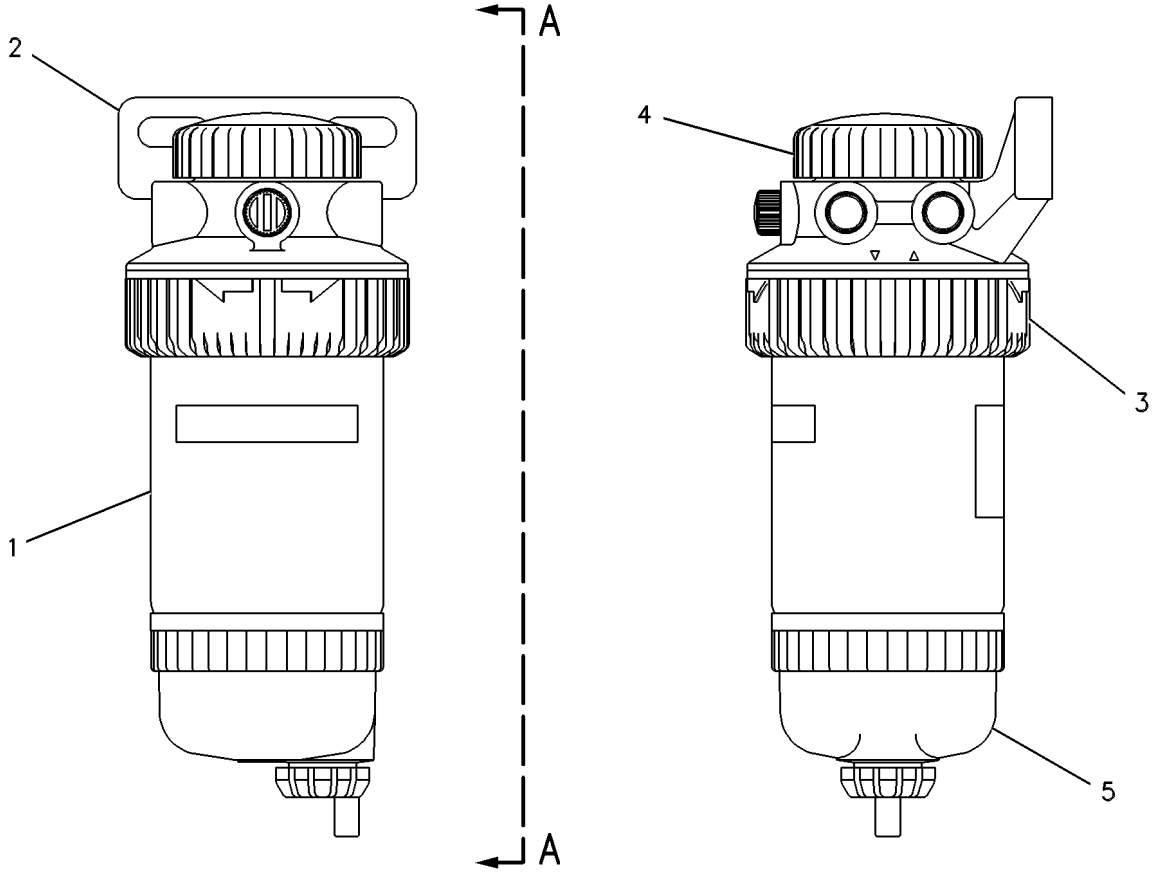

VIEW A-A

GRAPHIC #1 <END> g00278006

8Y-9458 TANK GP-FUEL

S/N: 9BL1-UP

PART OF 117-1761, 8Y-9370 CHASSIS AR

SMCS-1273 **i05641542**

NOTE	REF NO	GRAPHIC REF	PART NUMBER	QTY	PART NAME 1 2 3 4 5 6 (PRODUCT LEVEL)	SEE PAGE
I	1	1	**7I-4937**	1	HOSE AS	
	2	1	**7X-0346**	3	BOLT (5/8-11X2-IN)	
	3	1	**7X-0515**	6	WASHER-HARD (17X35X5-MM THK)	
	4	1	**6V-8724**	3	ELBOW	
	5	1	**8G-9571**	1	BOOT	
	6	1	**8Y-9675**	1	TANK AS-FRONT	
I	7	1	**8Y-9534**	1	HOSE AS	
	8	1	**1P-4579**	4	FLANGE-HALF	
	9	1	**4J-0524**	2	SEAL-O-RING	
	10	1	**5P-2566**	8	BOLT (1/2-13X1.5-IN)	
	11	1	**8T-4223**	8	WASHER-HARD (13.5X25.5X3-MM THK)	
	12	1	**5B-7431**	5	SCREW-MACHINE (3/8-16X1.25-IN)	
Y	13	1	*8V-5989*	1	CAP GP-FUEL FILLER	168
	14	1	**5P-8167**	5	BOLT (3/8-16X0.625-IN)	
	15	1	**8T-4896**	8	WASHER-HARD (10.2X18.5X2.5-MM THK)	
	16	1	**2K-4973**	4	LOCKNUT (3/8-16-THD)	
	17	1	**8Y-9544**	1	TANK AS-REAR	
	18	1	**7X-0350**	3	BOLT (5/8-11X3.5-IN)	
	19	1	**7D-0734**	3	WASHER (0.656X2.38X0.25-IN THK)	
	20	1	**8G-0841**	3	MOUNT AS	
	21	1	**3K-2889**	3	LOCKNUT (5/8-11-THD)	
	22	1	**1S-1015**	2	CLIP	
	23	1	**6V-8397**	4	SEAL-O-RING	
I	24	1	**8W-8779**	1	HOSE AS	
	25	1	**1S-0994**	4	CLIP (LOOP)	
	26	1	**5K-5068**	1	FITTING-PIPE (1/8-27 PTF)	
	27	1	**8Y-9536**	1	VALVE-CHECK	
	28	1	**3B-6552**	1	ELBOW-PIPE	
	29	1	**101-0387**	1	CONNECTOR	
	30	1	**8T-8917**	1	BOLT (1/2-13X1.25-IN)	
E	31	1	**5P-1442**		HOSE (60CM)	
	32	1	**3J-1907**	3	SEAL-O-RING	
	33	1	**8T-2173**	1	CONNECTOR-HOSE	
	34	1	**7X-0345**	3	BOLT (5/8-11X1.75-IN)	
	35	1	**7X-0583**	3	WASHER-HARD (17X45X6-MM THK)	
	36	1	**4Y-1213**	3	PAD-RUBBER	
	37	1	**4Y-1214**	3	SPACER (18X26X15-MM THK)	
	38	1	**7B-3039**	1	SPRING	
	39	1	**1U-2827**	1	GUIDE-VALVE	
	40	1	**8J-8783**	1	VALVE-DRAIN	
	41	1	**4J-0525**	1	SEAL-O-RING	
	42	1	**5M-2057**	1	SEAL-O-RING	
	43	1	**9J-7031**	1	PLUG-DRAIN	
	44	1	**3G-5886**	1	BODY-VALVE (DRAIN)	
	45	1	**8T-9364**	6	BOLT (1/4-20X0.625-IN)	
	46	1	**8T-4205**	6	WASHER-HARD (7.2X14.5X2-MM THK)	
	47	1	**6C-3060**	1	GASKET	
J	48	1	**118-0690**	1	SENDER AS-FUEL LEVEL	

8Y-9458 **TANK GP-FUEL (**contd.**)** **i05641542**

NOTE	REF NO	GRAPHIC REF	PART NUMBER	QTY	PART NAME 1 2 3 4 5 6 (PRODUCT LEVEL)	SEE PAGE
	49	1	**4F-9653**	1	SEAL-O-RING	
	50	1	**9G-5127**	1	BREATHER	
	51	1	**3B-6488**	1	COUPLING-PIPE	
	52	1	**067-2935**	1	FITTING-PIPE	
	53	1	**4D-7735**	1	CLIP	
	54	1	**1P-4278**	2	CLAMP-HOSE	
	55	1	**5P-1076**	3	WASHER-HARD (13.5X30X4-MM THK)	
	56	1	**5P-7470**	3	CLIP (SLOT)	
	57	1	**5P-7471**	3	CLIP (TAB)	
	58	1	**5P-7703**	3	GROMMET (52-MM ID)	
	59	1	**3W-6719**	3	ROD	
	60	1	**5P-1075**	4	WASHER-HARD (10.2X22.5X3-MM THK)	
	61	1	**6V-8801**	3	NUT (3/8-16-THD)	
	62	1	**8D-9671**	1	CLIP	
	63	1	**9P-7121**	1	STRAINER-FUEL (FUEL TANK)	
	64	1	**1B-5174**	1	PLUG-PIPE	
					AVAILABLE REPAIR KIT(S):	
JY			**139-8661**	1	KIT-DIAL SENSOR	280

E - ORDER BY THE CENTIMETER
I - REFER TO HYDRAULIC INFORMATION SYSTEM
J - KIT MARKED J SERVICES PART(S) MARKED J
Y - SEPARATE ILLUSTRATION

8Y-9458 **TANK GP-FUEL** (contd.) **i05641542**

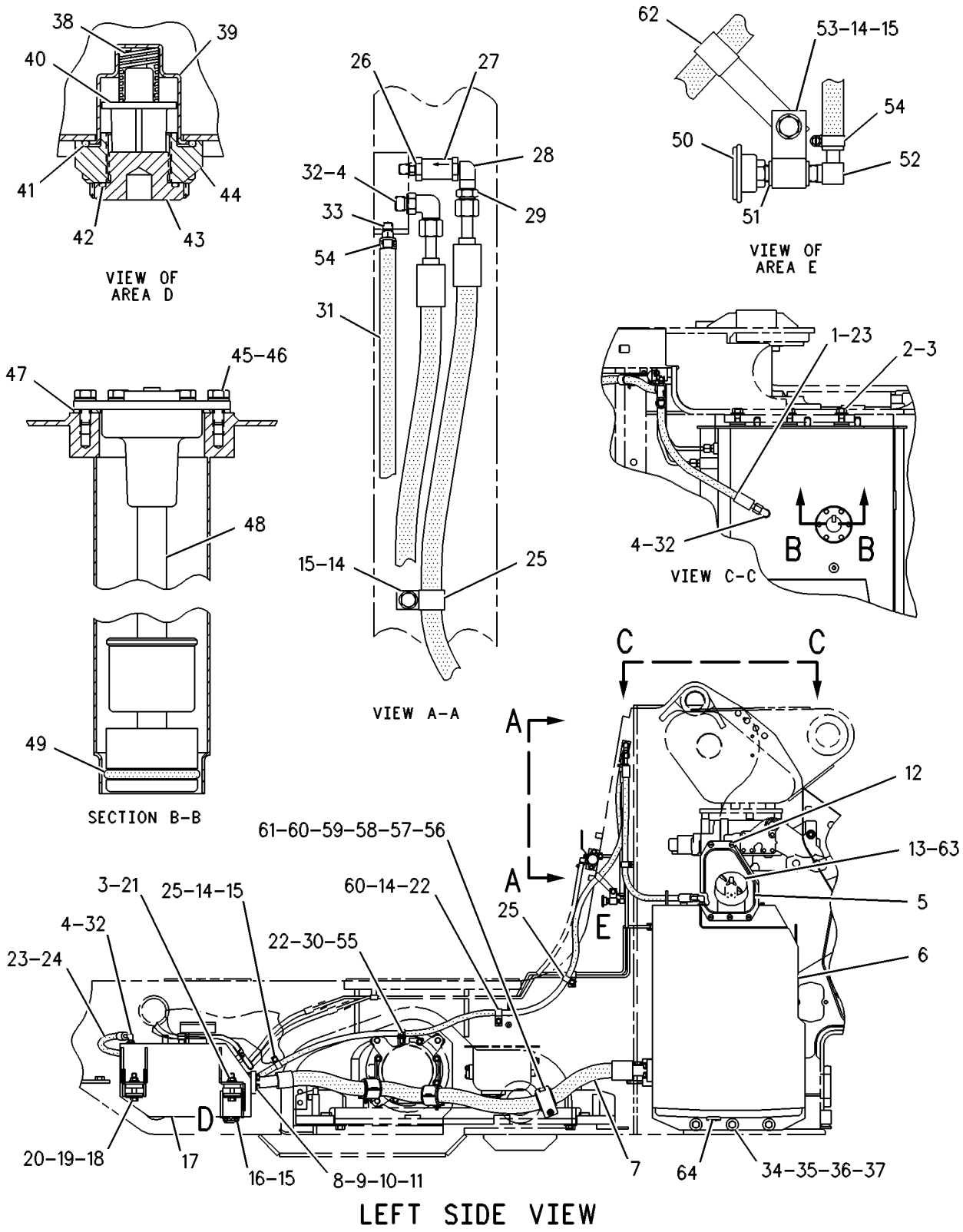

GRAPHIC #1 <END> g00251675

141-8288 VALVE GP-FUEL RELIEF

S/N: 4TF34944-UP

PART OF 142-8167 LINES GP-FUEL FILTER

ALSO AN ATTACHMENT

SMCS-1250 **i00677292**

NOTE	REF NO	GRAPHIC REF	PART NUMBER	QTY	PART NAME 1 2 3 4 5 6 (PRODUCT LEVEL)	SEE PAGE
	1	1	**2W-3294**	1	PLUNGER AS-VALVE	
	2	1	**3K-0360**	1	SEAL-O-RING	
	3	1	**6I-2424**	1	PLUG	
	4	1	**141-8287**	1	SPRING	

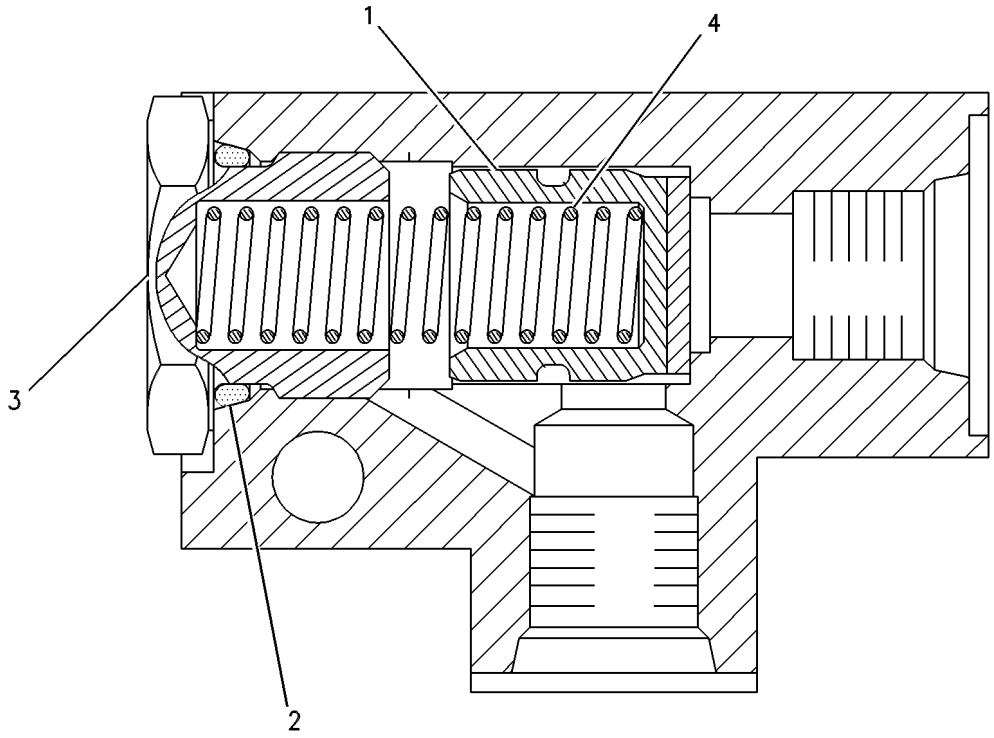

GRAPHIC #1 <END> g00290448

3E-6328 ALARM GP

S/N: 9BL1-UP
24-VOLT
PART OF 129-0081, 8Y-9467 WIRING GP-PLATFORM

SMCS-7400, 7402, 7407 **i07284282**

NOTE	REF NO	GRAPHIC REF	PART NUMBER	QTY	PART NAME 1 2 3 4 5 6 (PRODUCT LEVEL)	SEE PAGE
	1	1	**102-8802**	1	KIT-RECEPTACLE (2-PIN)	
					(INCLUDES RECEPTACLE AS & WEDGE)	
	2	1	**8T-8729**	2	PIN-CONNECTOR (16-GA TO 18-GA)	

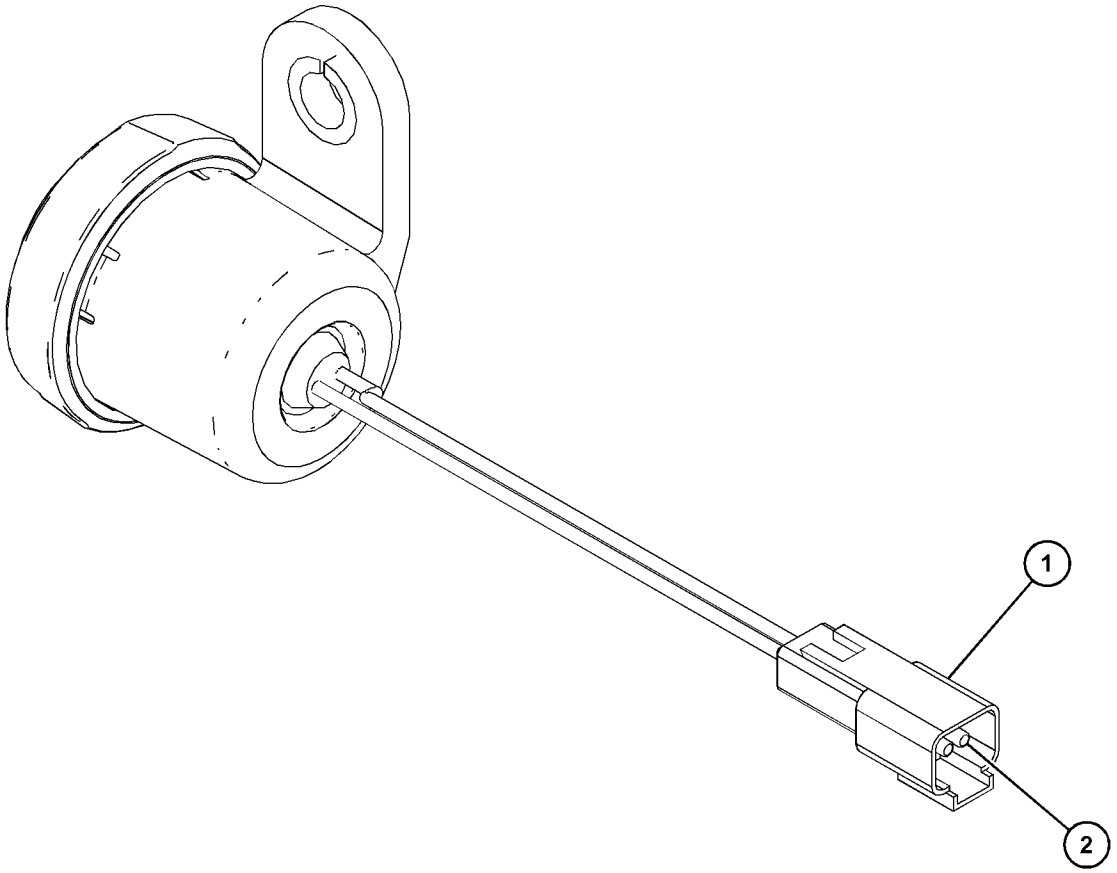

GRAPHIC #1 <END> g03798741

100-5045 ALTERNATOR GP-CHARGING

S/N: 4TF17400-33075
24 VOLT, 50 AMPERE
PART OF 100-5047 ALTERNATOR GP-CHARGING
ALSO AN ATTACHMENT

SMCS-1405 **i05421912**

NOTE	REF NO	GRAPHIC REF	PART NUMBER	QTY	PART NAME 1 2 3 4 5 6 (PRODUCT LEVEL)	SEE PAGE
	1	1	**7T-2793**	1	FAN AS (12-BLADE)	
	2	1	**7T-2790**	1	ROTOR AS	
	3	1	**7T-6418**	1	STATOR AS	
	4	1	**7T-2792**	1	FRAME AS	
	5	1	**7T-6417**	1	COIL AS	
	6	1	**7T-2798**	1	REGULATOR AS-VOLTAGE (24-VOLT)	
	7	1	**7T-2797**	1	COVER	
	8	1	**7T-6416**	1	HOLDER AS-BRUSH (ALTERNATOR)	
	9	1	**7T-2795**	1	FRAME AS	
	10	1	**2K-4821**	1	LOCKNUT (5/8-18-THD)	
	11	1	**5P-8247**	1	WASHER-HARD (17X32X3.5-MM THK)	
	12	1	**7T-2801**	1	CONDENSER	
	13	1	**7X-0447**	1	NUT (7/16-14-THD)	
	14	1	**2H-3920**	1	LOCKWASHER	
	15	1	**9L-6770**	1	CAP-DUST	
	16	1	**6V-8185**	1	NUT (1/4-20-THD)	
	17	1	**1H-3244**	1	LOCKWASHER	
	18	1	**7T-2802**	1	WIRE AS	
F		1	**1B-8705**	1	KEY-WOODRUFF	
					AVAILABLE REPAIR KIT(S):	
			7T-2799	1	KIT-BEARING	
			7T-2800	1	KIT-TERMINAL (ALTERNATOR AIR)	
					(INCLUDES INSULATORS, LOCKWASHERS, NUTS & WASHERS)	
			7T-2803	1	KIT-HARDWARE (ALTERNATOR AIR)	
					(INCLUDES SCREW ASSEMBLIES & BOLT ASSEMBLIES)	
			7T-2804	1	KIT-ALTERNATOR TERMINAL (RELAY)	
					(INCLUDES CAP, BOLT, WIRING AS & BUSHING)	
			7T-2805	1	KIT-ALTERNATOR TERMINAL (NEGATIVE)	
					(INCLUDES NUTS, LOCKWASHERS, WASHERS & INSULATORS)	
			7T-2816	1	KIT-HARDWARE (ALTERNATOR AIR)	
					(INCLUDES BOLT AS, PLATE, PLATE AS, RING, SPACERS & WASHERS)	

F - NOT SHOWN

100-5045 **ALTERNATOR GP-CHARGING (**contd.**)** **i05421912**

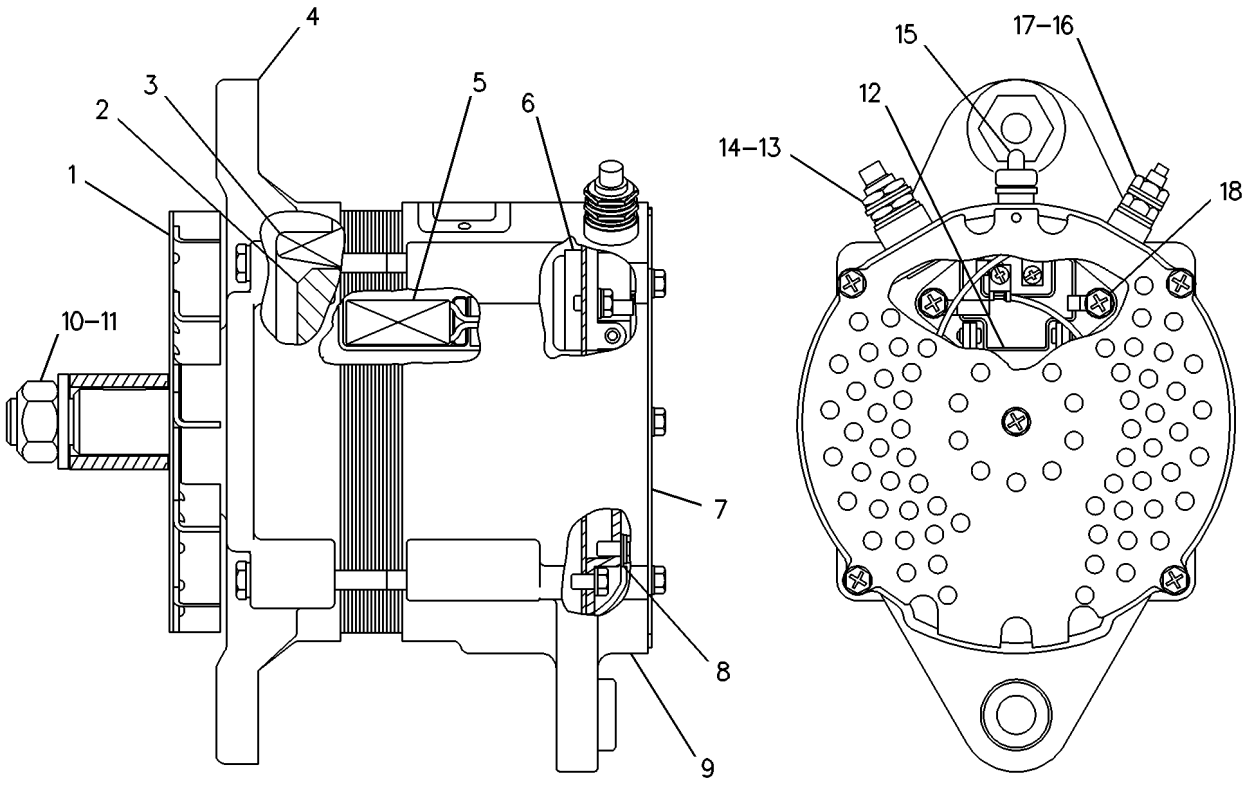

GRAPHIC #1 <END> g00083732

100-5046 ALTERNATOR GP-CHARGING*R

S/N: 4TF17400-33075
24 VOLT, 50 AMPERE
PART OF 100-5047 ALTERNATOR GP-CHARGING
ALSO AN ATTACHMENT

SMCS-1405 **i05422117**

NOTE	REF NO	GRAPHIC REF	PART NUMBER	QTY	PART NAME 1 2 3 4 5 6 (PRODUCT LEVEL)	SEE PAGE
	1	1	**9G-7566**	1	FRAME-DRIVE END	
	2	1	**2K-4821**	1	LOCKNUT (5/8-18-THD)	
	3	1	**5P-8247**	1	WASHER-HARD (17X32X3.5-MM THK)	
	4	1	**1B-8705**	1	KEY-WOODRUFF	
	5	1	**9G-7549**	1	SPACER (25X40X9.5-MM THK)	
	6	1	**9G-7551**	1	BEARING	
	7	1	**9G-7564**	1	FAN	
	8	1	**9G-7548**	1	RING	
	9	1	**3T-1886**	1	STATOR AS	
	10	1	**3T-1885**	1	COIL AS-FIELD	
	11	1	**9G-7560**	1	ROTOR AS	
	12	1	**3T-1887**	1	DIODE AS	
	13	1	**9G-7568**	1	FRAME AS-REAR	
	14	1	**9G-7562**	1	COVER AS	
	15	1	**9G-7553**	1	RING-COVER	
	16	1	**9G-7552**	1	BEARING	
	17	1	**9L-6770**	1	CAP-DUST	
	18	1	**9G-7567**	1	REGULATOR AS-VOLTAGE (24-VOLT)	
	19	1	**7X-0447**	1	NUT (7/16-14-THD)	
M	20	1	**5C-2874**	1	NUT (M5X0.8-THD)	
	21	1	**7X-0620**	1	WASHER-HARD (5.5X13X1.6-MM THK)	
M	22	1	**9X-6001**	4	BOLT (M5X0.8X150-MM)	
	23	1	**8T-0328**	4	WASHER-HARD (5.5X10X1-MM THK)	
	24	1	**8T-5360**	1	WASHER (12X22.5X2.5-MM THK)	
					AVAILABLE REPAIR KIT(S):	
			9G-7554	1	KIT-TERMINAL GROUND (ALTERNATOR AIR)	
					(INCLUDES LOCKWASHERS & NUTS)	
			9G-7555	1	KIT-OUTPUT TERMINAL (ALTERNATOR AIR)	
					(INCLUDES INSULATING BUSHING, LOCKWASHERS, & NUTS)	
			9G-7556	1	KIT-CAPACITOR (ALTERNATOR AIR)	
					(INCLUDES CAPACITOR, LOCKWASHER, & SCREW)	
			9G-7559	1	KIT-RELAY TERMINAL (ALTERNATOR AIR)	
					(INCLUDES END SPLICE, TUBE, NUT, TERMINAL, LOCKWASHER, WASHERS, BUSHING, & CAP)	
			9G-7565	1	KIT-REGULATOR TERMINAL (ALTERNATOR AIR)	
					(INCLUDES WASHERS, INSULATING BUSHING, NUTS, & LOCKWASHERS)	

M - METRIC PART

100-5046 **ALTERNATOR GP-CHARGING (**contd.**)** **i05422117**

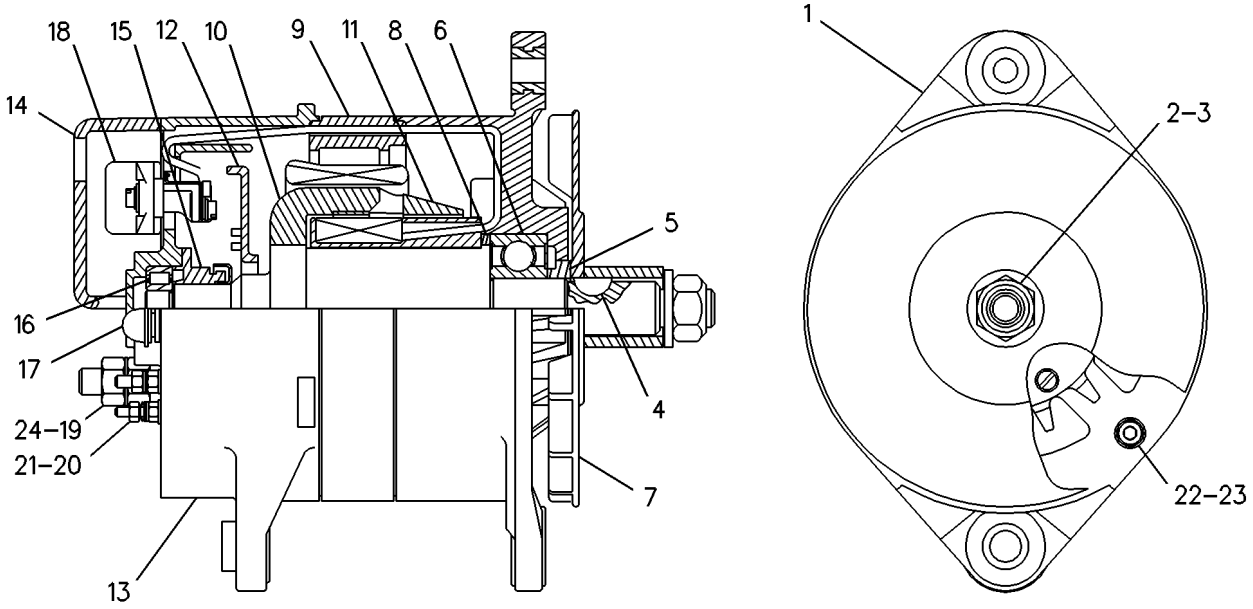

GRAPHIC #1 <END> g00083734

100-5047 ALTERNATOR GP-CHARGING*R

S/N: 4TF17400-33075
24 VOLT, 50 AMPERE
PART OF 107-2712 ALTERNATOR GP-CHARGING
ALSO AN ATTACHMENT

SMCS-1405 **i05422386**

NOTE	PART NUMBER	QTY	PART NAME 1 2 3 4 5 6 (PRODUCT LEVEL)	SEE PAGE
Y	*100-5045*	1	ALTERNATOR GP-CHARGING	235
			—OR—	
YR	*100-5046*	1	ALTERNATOR GP-CHARGING	237

R - REMANUFACTURED PART MAY BE AVAILABLE
Y - SEPARATE ILLUSTRATION

<END>

107-2712 ALTERNATOR GP-CHARGING

S/N: 4TF17400-UP
24 VOLT, 50 AMPERE
PART OF 114-7159, 117-5187, 117-5188, 6I-3528 ENGINE AR
ALSO AN ATTACHMENT

SMCS-1405 **i00684324**

NOTE	REF NO	GRAPHIC REF	PART NUMBER	QTY	PART NAME 1 2 3 4 5 6 (PRODUCT LEVEL)	SEE PAGE
YR	1	1	**100-5047**	1	ALTERNATOR GP-CHARGING (24-VOLT, 50-AMPERE)	239
	2	1	**7C-1356**	1	BRACKET	
	3	1	**7X-0341**	1	BOLT (1/2-13X7-IN)	
	4	1	**8T-4223**	2	WASHER-HARD (13.5X25.5X3-MM THK)	
	5	1	**9S-1240**	1	BRACKET AS	
		1	**1F-0748**	1	NUT-WELD (1/2-13-THD)	
M	6	1	**8T-4197**	2	BOLT (M8X1.25X40-MM)	
M	7	1	**8T-4908**	2	BOLT (M8X1.25X25-MM)	
	8	1	**4P-5665**	1	BRACKET	
	9	1	**107-2957**	1	STRAP	
	10	1	**8T-8919**	1	BOLT (1/2-13X1.75-IN)	
M	11	1	**8T-4186**	1	BOLT (M10X1.5X40-MM)	
	12	1	**8T-4121**	1	WASHER-HARD (11X21X2.5-MM THK)	
	13	1	**9G-8140**	1	SPACER (10.5X25X15-MM THK)	
	14	1	**5P-1076**	2	WASHER-HARD (13.5X30X4-MM THK)	
	15	1	**123-7418**	1	GUARD AS-ALTERNATOR	

M - METRIC PART
R - REMANUFACTURED PART MAY BE AVAILABLE
Y - SEPARATE ILLUSTRATION

107-2712 **ALTERNATOR GP-CHARGING** (contd.) **i00684324**

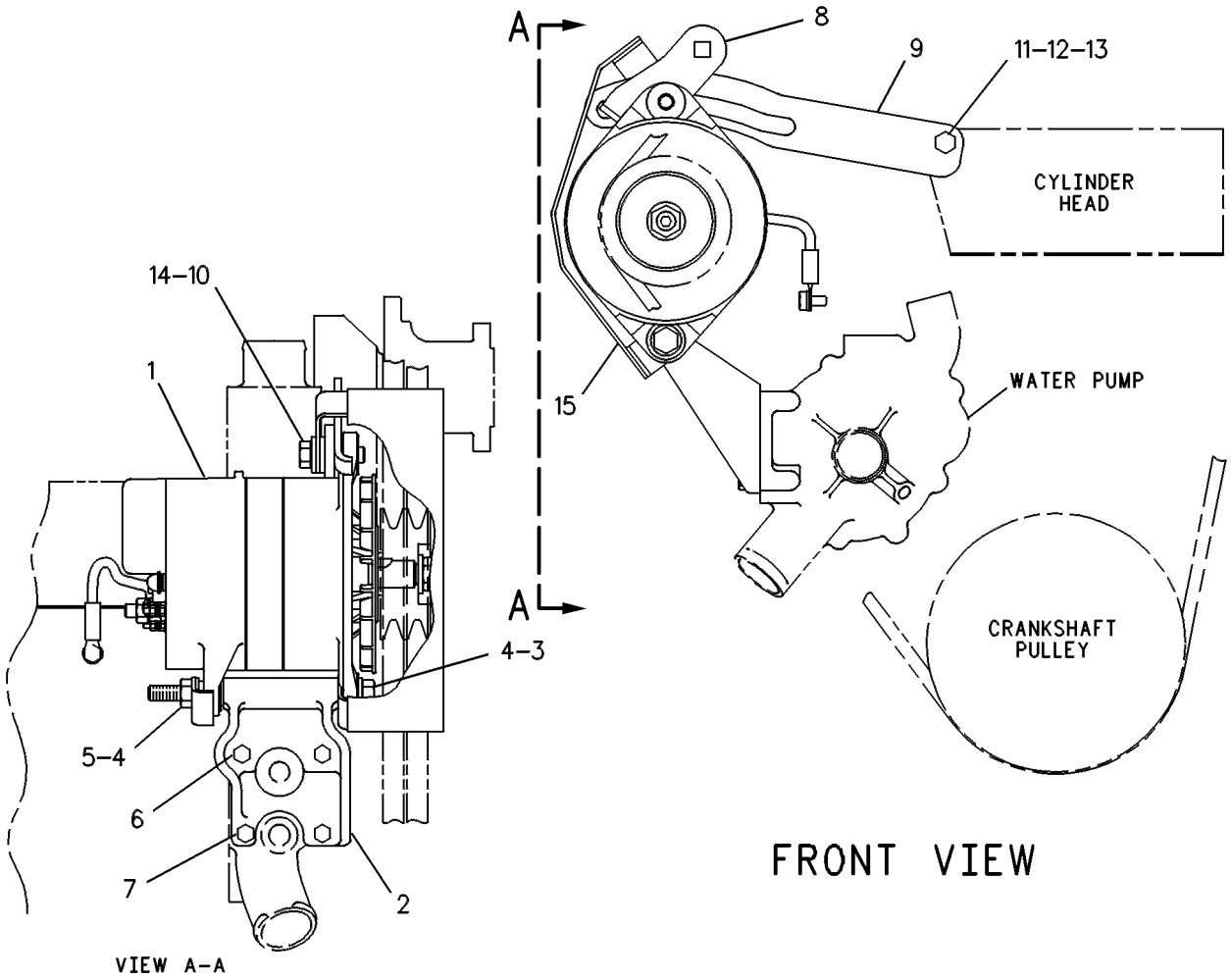

GRAPHIC #1 <END> g00247006

107-2712 ALTERNATOR GP-CHARGING

S/N: 4TF33076-44461
24 VOLT, 50 AMPERE
PART OF 114-7159, 117-5188, 6I-3528 ENGINE AR
ALSO AN ATTACHMENT

SMCS-1405 **i01268978**

NOTE	REF NO	GRAPHIC REF	PART NUMBER	QTY	PART NAME 1 2 3 4 5 6 (PRODUCT LEVEL)	SEE PAGE
CYR	1	1	*132-2156*	1	ALTERNATOR GP-CHARGING	248
	2	1	**7C-1356**	1	BRACKET	
	3	1	**7X-0341**	1	BOLT (1/2-13X7-IN)	
	4	1	**8T-4223**	2	WASHER-HARD (13.5X25.5X3-MM THK)	
	5	1	**9S-1240**	1	BRACKET AS	
M	6	1	**8T-4197**	2	BOLT (M8X1.25X40-MM)	
M	7	1	**8T-4908**	2	BOLT (M8X1.25X25-MM)	
	8	1	**4P-5665**	1	BRACKET	
	9	1	**107-2957**	1	STRAP	
	10	1	**8T-8919**	1	BOLT (1/2-13X1.75-IN)	
M	11	1	**8T-4186**	1	BOLT (M10X1.5X40-MM)	
	12	1	**8T-4121**	1	WASHER-HARD (11X21X2.5-MM THK)	
	13	1	**9G-8140**	1	SPACER (10.5X25X15-MM THK)	
	14	1	**5P-1076**	2	WASHER-HARD (13.5X30X4-MM THK)	
	15	1	**123-7418**	1	GUARD AS-ALTERNATOR	

C - CHANGE FROM PREVIOUS TYPE
M - METRIC PART
R - REMANUFACTURED PART MAY BE AVAILABLE
Y - SEPARATE ILLUSTRATION

107-2712 **ALTERNATOR GP-CHARGING** (contd.) **i01268978**

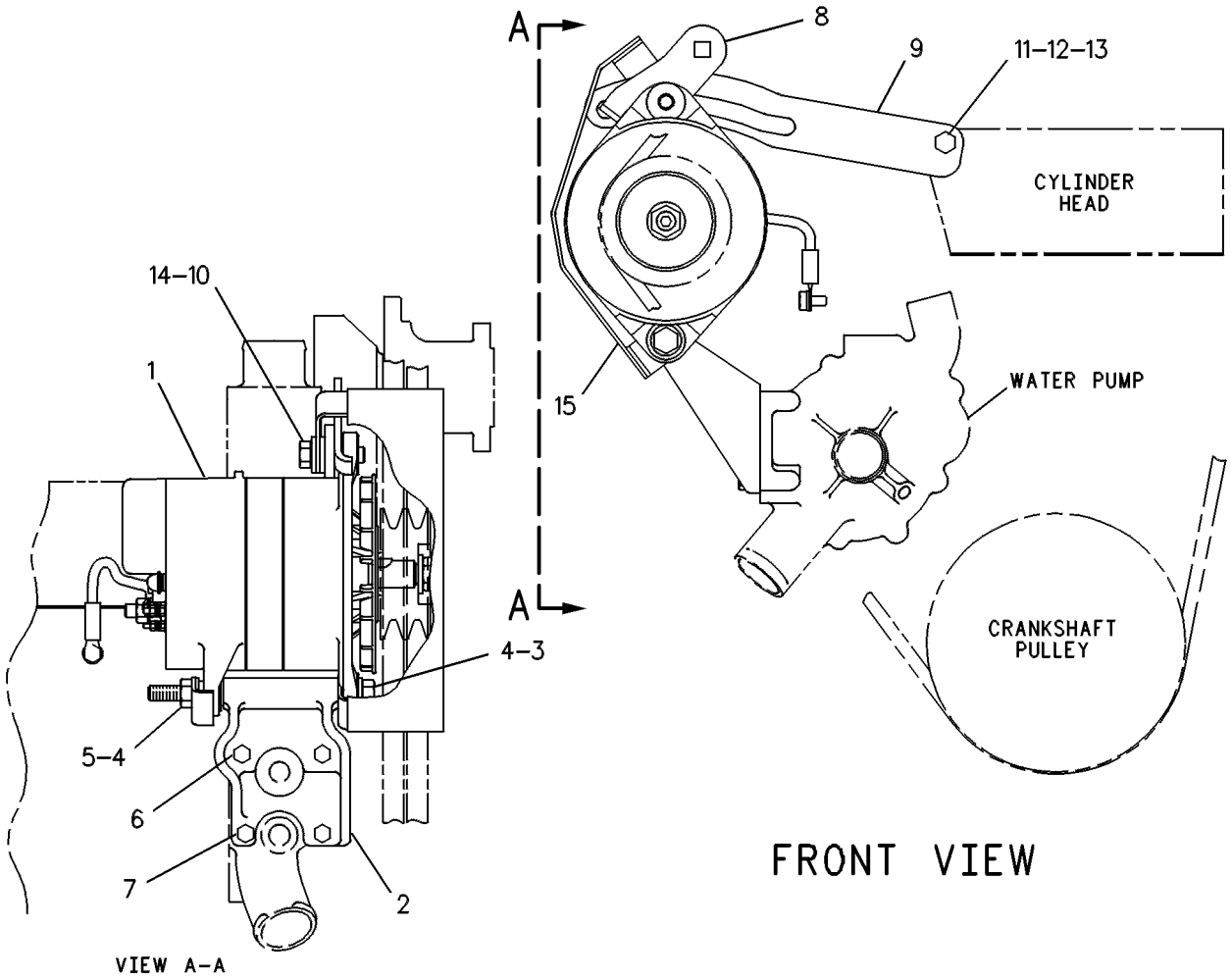

GRAPHIC #1 <END> g00247006

107-2712 ALTERNATOR GP-CHARGING

S/N: 4TF44462-99999
24 VOLT, 50 AMPERE
PART OF 117-5188 ENGINE AR
AN ATTACHMENT

SMCS-1405 **i01269035**

NOTE	REF NO	GRAPHIC REF	PART NUMBER	QTY	PART NAME 1 2 3 4 5 6 (PRODUCT LEVEL)	SEE PAGE
CYR	1	1	*132-2156*	1	ALTERNATOR GP-CHARGING	248
	2	1	**7C-1356**	1	BRACKET	
	3	1	**7X-0341**	1	BOLT (1/2-13X7-IN)	
	4	1	**8T-4223**	5	WASHER-HARD (13.5X25.5X3-MM THK)	
	5	1	**9S-1240**	1	BRACKET AS	
M	6	1	**8T-4197**	2	BOLT (M8X1.25X40-MM)	
M	7	1	**8T-4908**	2	BOLT (M8X1.25X25-MM)	
	8	1	**4P-5665**	1	BRACKET	
	9	1	**107-2957**	1	STRAP	
	10	1	**8T-4835**	1	BOLT (1/2-13X2-IN)	
M	11	1	**8T-4186**	1	BOLT (M10X1.5X40-MM)	
	12	1	**8T-4121**	1	WASHER-HARD (11X21X2.5-MM THK)	
	13	1	**9G-8140**	1	SPACER (10.5X25X15-MM THK)	
	14	1	**5P-1076**	1	WASHER-HARD (13.5X30X4-MM THK)	
	15	1	**1D-5117**	1	NUT-JAM (1/2-13-THD)	
	16	1	**151-0170**	1	GUARD AS-ALTERNATOR	

C - CHANGE FROM PREVIOUS TYPE
M - METRIC PART
R - REMANUFACTURED PART MAY BE AVAILABLE
Y - SEPARATE ILLUSTRATION

107-2712 **ALTERNATOR GP-CHARGING (**contd.**)** **i01269035**

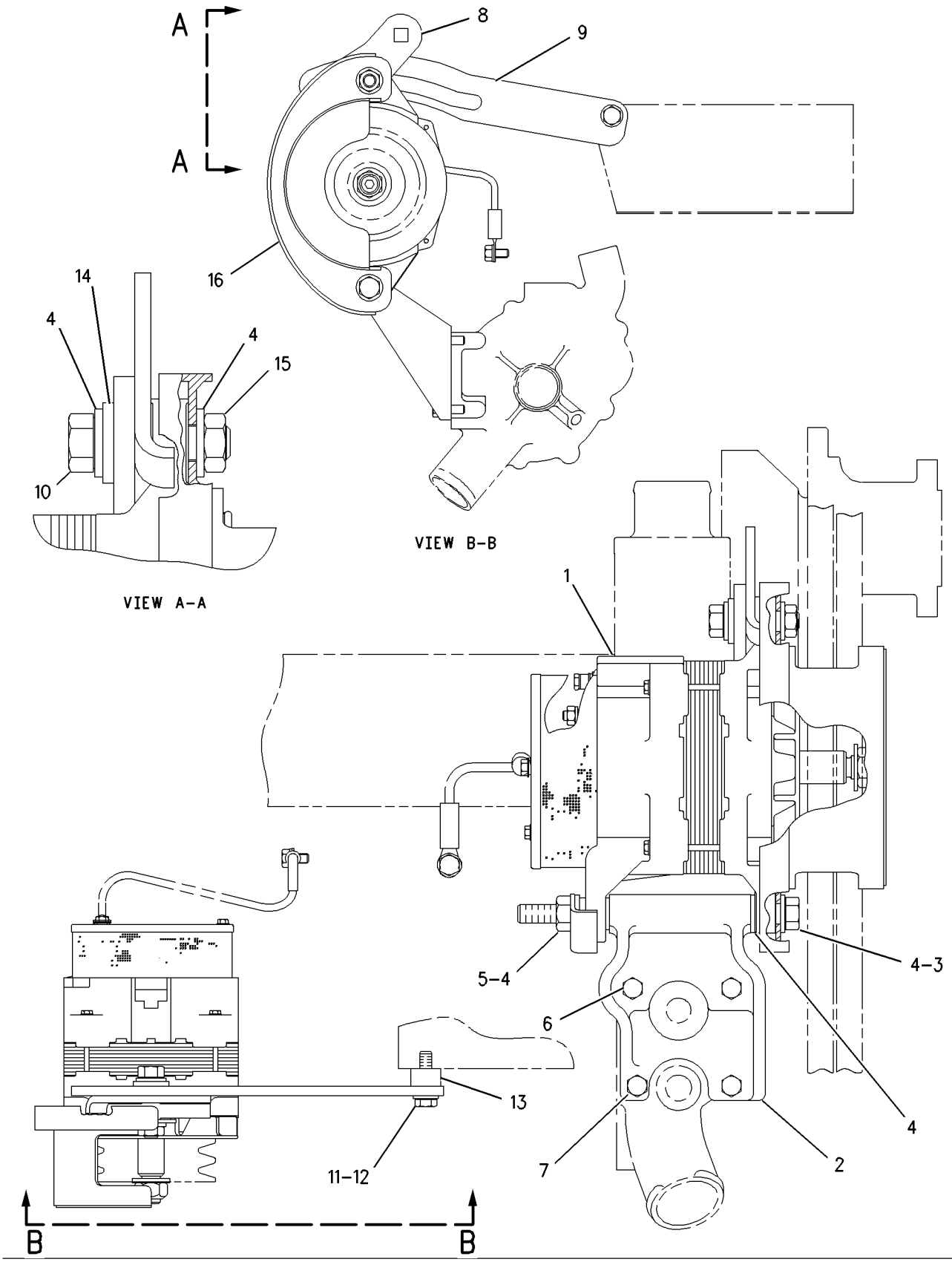

GRAPHIC #1 <END> g00674372

107-7977 ALTERNATOR GP-CHARGING*R

S/N: 4TF32065-UP

24 VOLT, 70 AMPERE

FIELD REPLACEMENT FOR 132-2156—PAGE: 248

SMCS-1405 **i05325676**

NOTE	REF NO	GRAPHIC REF	PART NUMBER	QTY	PART NAME 1 2 3 4 5 6 (PRODUCT LEVEL)	SEE PAGE
	1	1	**1H-3244**	2	LOCKWASHER	
	2	1	**6V-8187**	1	NUT (1/4-28-THD)	
	3	1	**8T-4205**	2	WASHER-HARD (7.2X14.5X2-MM THK)	
	4	1	**3T-6354**	1	REGULATOR AS-VOLTAGE (24-VOLT) (ALTERNATOR)	
	5	1	**9L-6770**	1	CAP-DUST	
	6	1	**2K-4821**	1	LOCKNUT (5/8-18-THD)	
	8	1	**4B-2047**	1	NUT (10-24-THD)	
	9	1	**8T-0328**	1	WASHER-HARD (5.5X10X1-MM THK)	
	10	1	**8F-1434**	1	LOCKWASHER	
	11	1	**3E-5450**	1	COVER	
	12	1	**4B-2043**	4	NUT (8-32-THD)	
	13	1	**9B-7233**	4	LOCKWASHER	
	14	1	**3E-5448**	1	CONNECTOR	
	15	1	**3E-5446**	1	CONNECTOR	
	16	1	**3E-5457**	1	DIODE AS	
	18	1	**7N-9023**	3	SCREW AS (8-32X26.9-MM)	
	19	1	**3E-5460**	1	HOLDER AS-BRUSH	
	20	1	**3E-5459**	2	BRUSH AS-ALTERNATOR	
	21	1	**3N-3718**	2	SCREW AS	
	22	1	**3E-5458**	1	CAPACITOR AS-ALTERNATOR	
	23	1	**4M-5281**	1	BOLT (1/4-20X0.75-IN)	
	24	1	**3E-5454**	1	FAN-ALTERNATOR (11-BLADE)	
	25	1	**3E-5455**	1	HOUSING	
	26	1	**5P-7807**	1	BALL BEARING	
	27	1	**3E-5447**	1	PLATE	
	28	1	**030-9612**	3	SCREW-FORMING (10-24X0.5-IN)	
	29	1	**132-1222**	1	ROTOR AS-ALTERNATOR (24-VOLT)	
	30	1	**132-1223**	1	STATOR AS-ALTERNATOR (24-VOLT)	
	31	1	**132-1224**	1	FRAME AS-ALTERNATOR	
	32	1	**5P-6920**	1	BEARING-ROLLER	
	33	1	**132-1228**	1	KIT-ALTERNATOR TERMINAL (BATTERY)	
					(INCLUDES NUTS, TERMINAL, LOCKWASHER, INSULATOR & ADAPTER)	
	34	1	**132-1230**	1	KIT-ALTERNATOR TERMINAL (RELAY)	
					(INCLUDES INSULATOR, WASHER, NUT & TERMINAL)	

107-7977 **ALTERNATOR GP-CHARGING (**contd.**)** **i05325676**

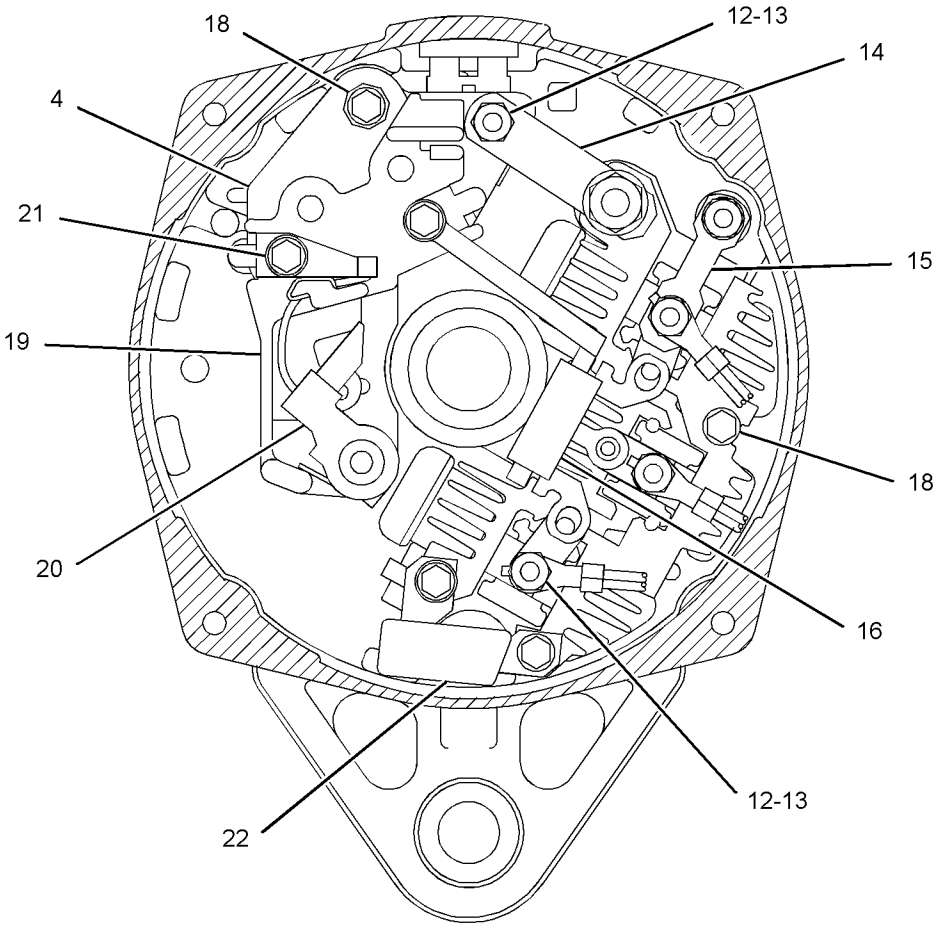

SECTION A-A

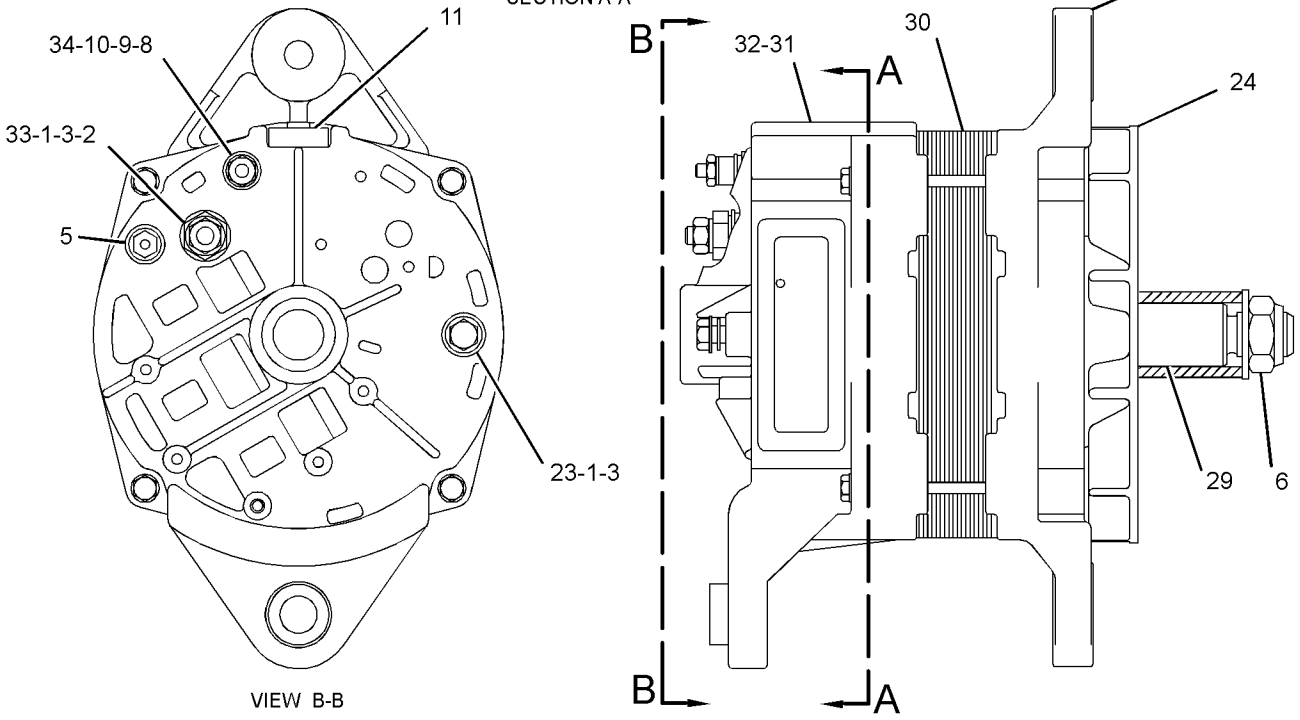

VIEW B-B

GRAPHIC #1 <END> g03376965

132-2156 ALTERNATOR GP-CHARGING*R

S/N: 4TF33076-UP
24 VOLT, 70 AMPERE
FIELD REPLACEMENT ORDER 107-7977—PAGE: 246, 1-126-2368 KIT-ALTERNATOR GUARD
PART OF 107-2712 ALTERNATOR GP-CHARGING
ALSO AN ATTACHMENT

SMCS-1405 **i02116957**

NOTE	REF NO	GRAPHIC REF	PART NUMBER	QTY	PART NAME 1 2 3 4 5 6 (PRODUCT LEVEL)	SEE PAGE
	1	1	**1H-3244**	2	LOCKWASHER	
	2	1	**6V-8187**	1	NUT (1/4-28-THD)	
	3	1	**8T-4205**	2	WASHER-HARD (7.2X14.5X2-MM THK)	
	4	1	**3T-6354**	1	REGULATOR AS-VOLTAGE (24-VOLT) (ALTERNATOR)	
	5	1	**9L-6770**	1	CAP-DUST	
	6	1	**2K-4821**	1	LOCKNUT (5/8-18-THD)	
	7	1	**7F-7621**	1	WASHER (0.635X1.25X0.09-IN THK)	
	8	1	**4B-2047**	1	NUT (10-24-THD)	
	9	1	**8T-0328**	1	WASHER-HARD (5.5X10X1-MM THK)	
	10	1	**8F-1434**	1	LOCKWASHER	
	11	1	**3E-5450**	1	COVER	
	12	1	**4B-2043**	4	NUT (8-32-THD)	
	13	1	**9B-7233**	4	LOCKWASHER	
	14	1	**3E-5448**	1	CONNECTOR	
	15	1	**3E-5446**	1	CONNECTOR	
	16	1	**3E-5457**	1	DIODE AS	
	17	1	**132-1225**	1	RECTIFIER AS-ALTERNATOR	
	18	1	**7N-9023**	3	SCREW AS (8-32X26.9-MM)	
	19	1	**3E-5460**	1	HOLDER AS-BRUSH (ALTERNATOR)	
	20	1	**3E-5459**	2	BRUSH AS-ALTERNATOR	
	21	1	**3N-3718**	2	SCREW AS	
	22	1	**3E-5458**	1	CAPACITOR AS-ALTERNATOR	
	23	1	**8T-9367**	1	BOLT (1/4-20X2-IN)	
	24	1	**3E-5454**	1	FAN-ALTERNATOR (11-BLADE)	
	25	1	**3E-5455**	1	HOUSING	
	26	1	**5P-7807**	1	BALL BEARING	
	27	1	**3E-5447**	1	PLATE	
	28	1	**030-9612**	3	SCREW-FORMING (10-24X0.5-IN)	
	29	1	**132-1222**	1	ROTOR AS-ALTERNATOR (24-VOLT)	
	30	1	**132-1223**	1	STATOR AS-ALTERNATOR (24-VOLT)	
	31	1	**132-1224**	1	FRAME AS-ALTERNATOR	
	32	1	**5P-6920**	1	BEARING-ROLLER	
	33	1	**126-2368**	1	KIT-ALTERNATOR GUARD	
					(INCLUDES BOLT, SCREW & LOCKWASHER)	
	34	1	**132-1229**	1	KIT-ALTERNATOR TERMINAL (INDICATOR LIGHT) (RELAY)	
					(INCLUDES BUSHINGS, NUTS, CONNECTOR, LOCKWASHER, WASHER, RECTIFIER & TERMINAL)	
	35	1	**132-1230**	1	KIT-ALTERNATOR TERMINAL (RELAY) (INDICATOR LIGHT)	
					(INCLUDES WASHER, NUT, TERMINAL & INSULATOR)	
	36	1	**132-1228**	1	KIT-ALTERNATOR TERMINAL (BATTERY)	
					(INCLUDES TERMINAL, NUTS, ADAPTER, LOCKWASHER, & INSULATOR)	

132-2156 **ALTERNATOR GP-CHARGING** (contd.) **i02116957**

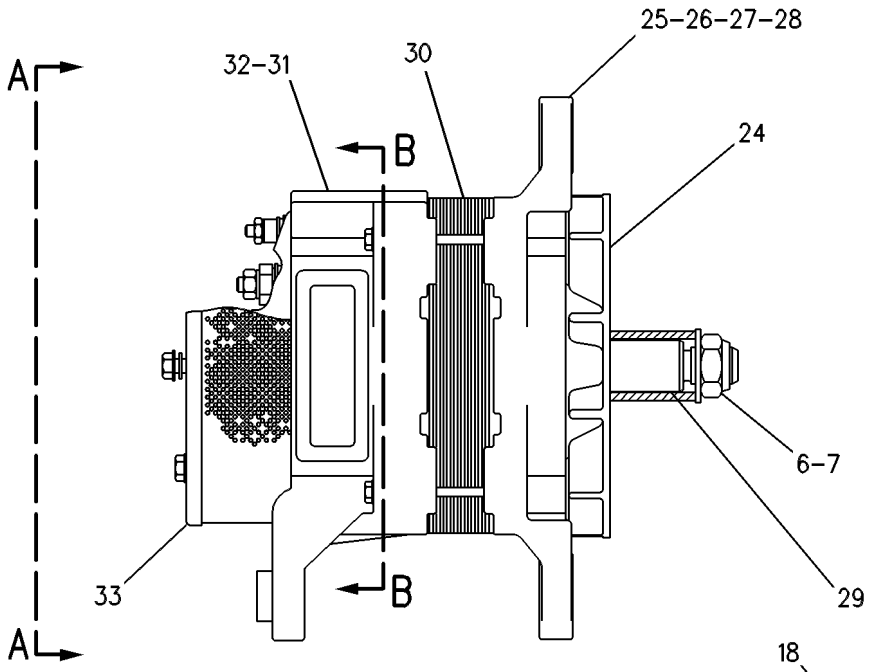

RIGHT SIDE VIEW

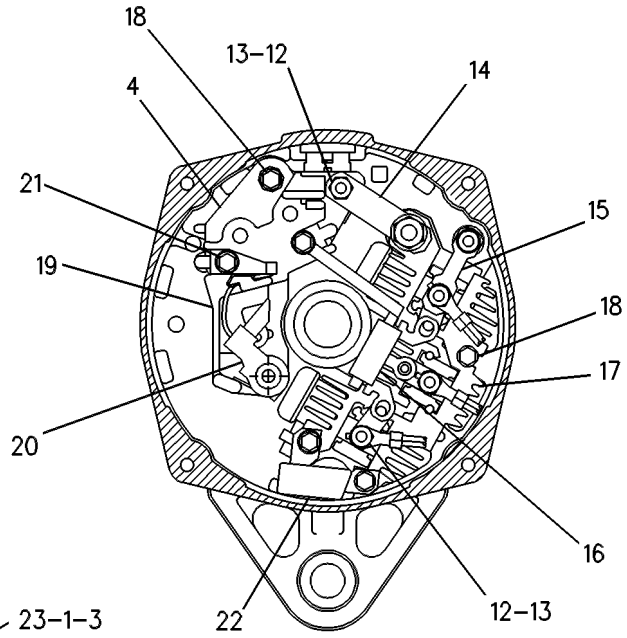

SECTION B-B

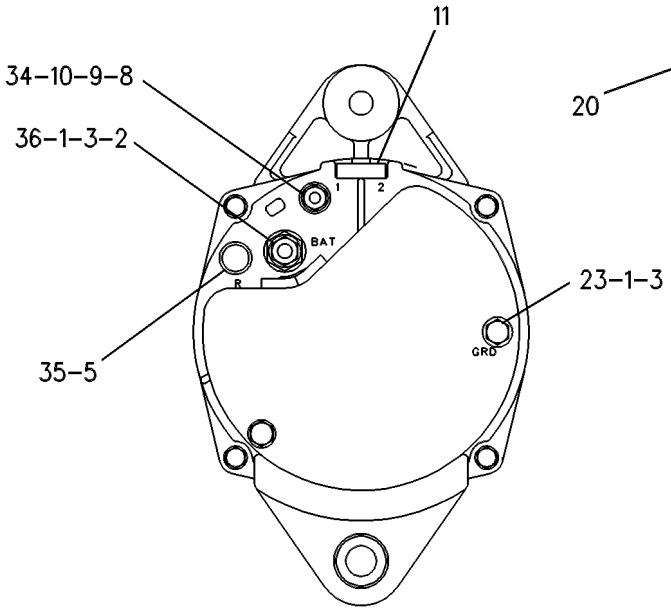

VIEW A-A

GRAPHIC #1 <END> g00262421

128-2209 BATTERY & WIRING GP

S/N: 9BL1488-1877

PART OF 117-1761 CHASSIS AR

SMCS-1401, 1408 **i01399152**

NOTE	REF NO	GRAPHIC REF	PART NUMBER	QTY	PART NAME 1 2 3 4 5 6 (PRODUCT LEVEL)	SEE PAGE
	1	1	**7N-3718**	1	CLIP	
	2	1	**3S-2093**	9	STRAP-CABLE	
	3	1	**4D-7794**	1	CLIP	
	4	1	**9M-8406**	6	CLIP (LOOP)	
	5	1	**3E-6454**	1	SWITCH AS-PRESSURE	
		1	**102-8802**	1	KIT-RECEPTACLE (2-PIN)	
					(INCLUDES RECEPTACLE AS & WEDGE)	
		1	**8T-8729**	2	PIN-CONNECTOR (16-GA TO 18-GA)	
	6	1	**3J-1907**	3	SEAL-O-RING	
M	7	1	**6V-5219**	2	BOLT (M8X1.25X40-MM)	
	8	1	**8T-4224**	3	WASHER-HARD (8.8X16X2-MM THK)	
	9	1	**3S-6696**	1	SPACER	
	10	1	**3E-7692**	1	SWITCH AS-PRESSURE (ENGINE OIL)	
		1	**102-8802**	1	KIT-RECEPTACLE (2-PIN)	
					(INCLUDES RECEPTACLE AS & WEDGE)	
		1	**8T-8729**	2	PIN-CONNECTOR (16-GA TO 18-GA)	
	11	1	**3K-0360**	1	SEAL-O-RING	
	12	1	**8N-2248**	1	SWITCH AS-TEMPERATURE (TRANSMISSION OIL)	
		1	**6V-8376**	2	SCREW-MACHINE (8-32X0.25-IN)	
		1	**9B-7233**	2	LOCKWASHER	
	13	1	**8N-3844**	1	SENDER-TEMPERATURE	
	14	1	**5P-9085**	1	CLIP	
	15	1	**118-2270**	1	HARNESS AS-TRANSMISSION	
	16	1	**4S-1962**	2	CLIP (LOOP)	
M	17	1	**8T-4200**	1	BOLT (M8X1.25X16-MM)	
	18	1	**118-2269**	1	HARNESS AS-ENGINE	
	19	1	**3S-8665**	1	CLIP	
	20	1	**2B-0941**	1	SPACER (10.5X19X19-MM THK)	
	22	1	**5P-9297**	5	CLIP	
	23	1	**5M-3062**	1	BOLT (3/8-16X0.75-IN)	
	24	1	**8T-4896**	1	WASHER-HARD (10.2X18.5X2.5-MM THK)	
M	25	2	**8T-4200**	5	BOLT (M8X1.25X16-MM)	
	26	2	**8T-4224**	7	WASHER-HARD (8.8X16X2-MM THK)	
	27	2	**4D-7794**	3	CLIP	
	28	2	**3S-2093**	2	STRAP-CABLE	
	29	2	**9M-8406**	5	CLIP (LOOP)	
	30	2	**5P-4295**	4	CLIP	
	31	2	**6V-8188**	1	NUT (1/2-13-THD)	
	32	2	**8T-4223**	1	WASHER-HARD (13.5X25.5X3-MM THK)	
	33	2	**3E-6451**	1	SWITCH GP-TEMPERATURE (ENGINE COOLANT)	
		2	**102-8802**	1	KIT-RECEPTACLE (2-PIN)	
					(INCLUDES RECEPTACLE AS & WEDGE)	
		2	**8T-8729**	2	PIN-CONNECTOR (16-GA TO 18-GA)	
	34	2	**3K-0360**	2	SEAL-O-RING	
	35	2	**8N-3844**	1	SENDER-TEMPERATURE (ENGINE COOLANT GAUGE)	
	36	2	**3J-1907**	1	SEAL-O-RING	
	37	2	**2B-0941**	1	SPACER (10.5X19X19-MM THK)	
M	38	2	**8T-4172**	1	BOLT (M10X1.5X80-MM)	

128-2209 **BATTERY & WIRING GP (**contd.**)** **i01399152**

NOTE	REF NO	GRAPHIC REF	PART NUMBER	QTY	PART NAME 1 2 3 4 5 6 (PRODUCT LEVEL)	SEE PAGE
	39	2	**8T-4205**	2	WASHER-HARD (7.2X14.5X2-MM THK)	
	40	2	**5M-3062**	3	BOLT (3/8-16X0.75-IN)	
	41	2	**8T-4896**	4	WASHER-HARD (10.2X18.5X2.5-MM THK)	
	42	2	**6K-8178**	1	CLIP	
	43	2	**9X-8250**	1	CLIP	
M	44	2	**8T-0100**	1	BOLT (M8X1.25X60-MM)	
	45	2	**4D-1432**	1	SPACER (12.52X17.14X45.72-MM THK)	
	46	2	**7P-6682**	1	CABLE AS	
		2	**1S-7251**	2	TERMINAL-CABLE (00-GA, 1/2-IN SCREW)	
E		2	**5P-0747**		CABLE (00-GA, BLACK) (40CM)	
	47	2	**8Y-9603**	1	CABLE AS-STARTING MOTOR	
E		2	**5P-0747**		CABLE (00-GA, BLACK) (28CM)	
		2	**1S-7252**	1	TERMINAL-CABLE (00-GA, 3/8-IN SCREW)	
		2	**1S-7251**	1	TERMINAL-CABLE (00-GA, 1/2-IN SCREW)	
	48	2	**115-1834**	1	WIRE AS	
		2	**9G-4343**	1	TERMINAL-RING (4-GA, 1/4-IN SCREW)	
D		2	**6V-2369**		CABLE (4-GA, BLACK) (.9M)	
		2	**2L-0273**	2	FITTING (RUBBER)	
M	49	2	**5C-2890**	1	NUT (M6X1-THD)	
	50	2	**9X-8256**	1	WASHER (6.6X12X2-MM THK)	
	51	2	**115-1836**	1	PLATE AS	
	52	2	**9F-6445**	2	NUT-WELD (1/4-20-THD)	
	53	2	**9X-8257**	1	WASHER (17.5X30X3.5-MM THK)	
M	54	2	**8T-4190**	1	BOLT (M16X2X25-MM)	
	55	2	**115-1833**	1	WIRE AS	
		2	**9G-4343**	1	TERMINAL-RING (4-GA, 1/4-IN SCREW)	
		2	**9G-4344**	1	TERMINAL-RING (4-GA, 1/2-IN SCREW)	
D		2	**6V-2369**		CABLE (4-GA, BLACK) (.3M)	
		2	**9X-6932**	1	BOOT-TERMINAL	
	56	2	**4L-6454**	1	BOLT (3/8-16X1-IN)	
	57	2	**3S-8664**	1	CLIP (LOOP)	
	58	2	**8Y-9414**	1	BRACKET AS	
	59	2	**1F-0750**	2	NUT-WELD (3/8-16-THD)	
	60	2	**3E-6449**	1	SWITCH AS-TEMPERATURE (AIR INLET HEATER)	
		2	**102-8802**	1	KIT-RECEPTACLE (2-PIN)	
					(INCLUDES RECEPTACLE AS & WEDGE)	
		2	**8T-8729**	2	PIN-CONNECTOR (16-GA TO 18-GA)	
Y	61	2	**3E-0075**	1	SWITCH GP-MAGNETIC (24-VOLT)	317
M	62	2	**6V-3918**	1	BOLT (M8X1.25X50-MM)	
	63	2	**5P-9297**	1	CLIP	
	64	2	**8T-9364**	2	BOLT (1/4-20X0.625-IN)	
	65	3	**9M-8406**	14	CLIP (LOOP)	
	66	3	**8T-4896**	14	WASHER-HARD (10.2X18.5X2.5-MM THK)	
	67	3	**4L-9337**	2	BOLT (3/8-16X1.5-IN)	
	68	3	**6V-8801**	3	NUT (3/8-16-THD)	
	69	3	**5P-8167**	2	BOLT (3/8-16X0.625-IN)	
	70	3	**3W-3622**	1	CABLE AS	
E		3	**5P-0761**		CABLE (00-GA, RED) (234CM)(POS)	
	71	3	**8N-1725**	1	COVER AS-TERMINAL (RED)	
	72	3	**7N-5274**	1	COVER AS-TERMINAL (BLACK)	
	73	3	**3S-6050**	1	TERMINAL AS-BATTERY (NEGATIVE)	

128-2209 **BATTERY & WIRING GP (**contd.**)** **i01399152**

NOTE	REF NO	GRAPHIC REF	PART NUMBER	QTY	PART NAME 1 2 3 4 5 6 (PRODUCT LEVEL)	SEE PAGE
	74	3	**1M-6119**	2	BOLT (5/16-18X1.375-IN)	
	75	3	**1M-6120**	2	NUT (5/16-18-THD)	
	76	3	**3S-6049**	1	TERMINAL AS-BATTERY (POSITIVE)	
		3	**1M-6119**	1	BOLT (5/16-18X1.375-IN)	
		3	**1M-6120**	1	NUT (5/16-18-THD)	
	77	3	**3T-5760**	2	BATTERY GP (12-VOLT, 750-CCA)	
	78	3	**4L-6454**	2	BOLT (3/8-16X1-IN)	
	79	3	**5M-3062**	7	BOLT (3/8-16X0.75-IN)	
	80	3	**8Y-9792**	1	CABLE AS	
E		3	**5P-0747**		CABLE (00-GA, BLACK) (70CM)	
		3	**1S-7252**	2	TERMINAL-CABLE (00-GA, 3/8-IN SCREW)	
	81	3	**5P-9297**	6	CLIP	
	82	3	**3S-2093**	2	STRAP-CABLE	
	83	3	**7N-3718**	1	CLIP	
	84	3	**5P-1075**	1	WASHER-HARD (10.2X22.5X3-MM THK)	
	85	3	**5P-9085**	7	CLIP	
	86	3	**031-4155**	4	LOCKNUT (5/16-18-THD)	
	87	3	**8T-4224**	6	WASHER-HARD (8.8X16X2-MM THK)	
	88	3	**6T-1847**	4	ROD-RETAINING	
	89	3	**6T-1832**	2	ANGLE-HOLD-DOWN	
	90	3	**8Y-9793**	1	CABLE AS	
E		3	**5P-0747**		CABLE (00-GA, BLACK) (120CM)	
	91	3	**3S-6050**	1	TERMINAL AS-BATTERY (NEGATIVE)	
		3	**1M-6119**	1	BOLT (5/16-18X1.375-IN)	
		3	**1M-6120**	1	NUT (5/16-18-THD)	
		3	**7N-5274**	1	COVER AS-TERMINAL (BLACK)	
	92	3	**1S-7252**	1	TERMINAL-CABLE (00-GA, 3/8-IN SCREW)	
		3	**037-5197**	1	BOOT	
Y	93	3	**7N-0718**	1	SWITCH GP-DISCONNECT (BATTERY)	313
	94	3	**5K-0906**	2	BOLT (5/16-18X0.625-IN)	
	95	3	**8Y-9850**	1	BRACKET	
	96	3	**8Y-9795**	1	CABLE AS	
E		3	**5P-0761**		CABLE (00-GA, RED) (170CM)	
	97	3	**3S-6049**	1	TERMINAL AS-BATTERY (POSITIVE)	
		3	**8N-1725**	1	COVER AS-TERMINAL (RED)	
		3	**1M-6119**	1	BOLT (5/16-18X1.375-IN)	
		3	**1M-6120**	1	NUT (5/16-18-THD)	
	98	3	**1S-7251**	1	TERMINAL-CABLE (00-GA, 1/2-IN SCREW)	
		3	**8N-0869**	1	COVER-TERMINAL (RED)	

D - ORDER BY THE METER
E - ORDER BY THE CENTIMETER
M - METRIC PART
Y - SEPARATE ILLUSTRATION

128-2209 **BATTERY & WIRING GP (**contd.**)** **i01399152**

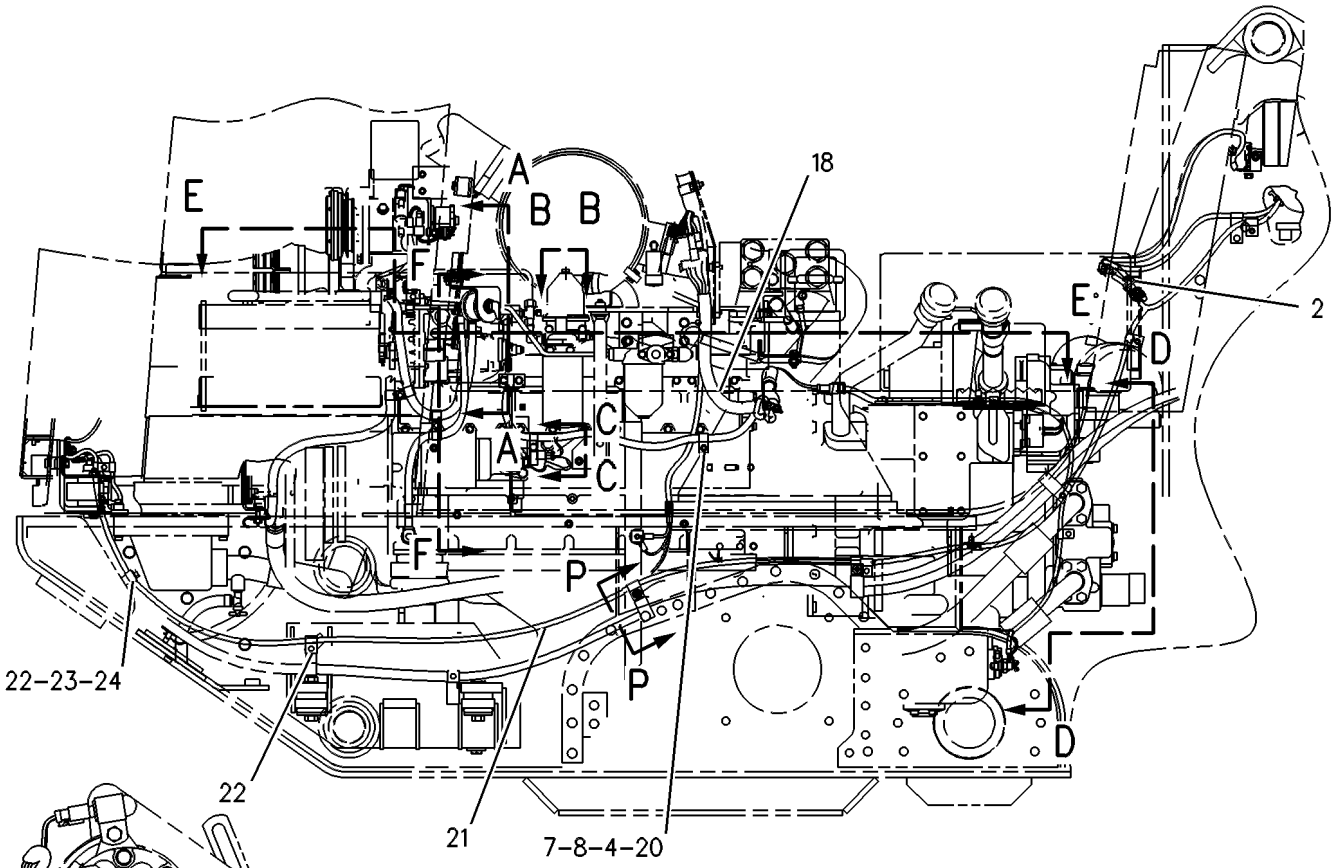

RIGHT SIDE VIEW

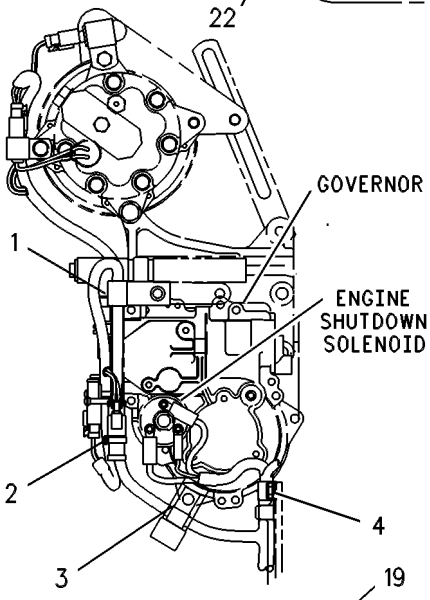

VIEW A-A

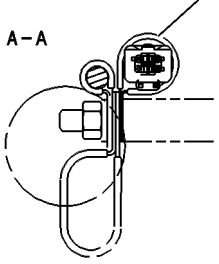

VIEW P-P

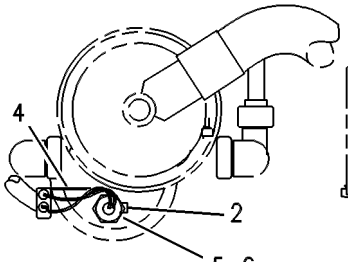

VIEW B-B

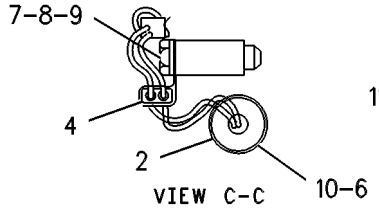

VIEW C-C

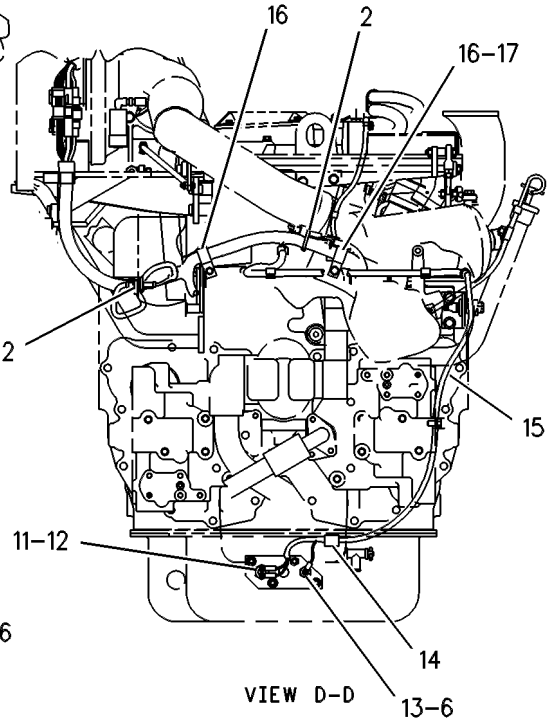

VIEW D-D

REFER TO ALL ILLUSTRATIONS OF THIS GROUP FOR AUXILIARY VIEWS

GRAPHIC #1 g00390222

128-2209 **BATTERY & WIRING GP** (contd.) **i01399152**

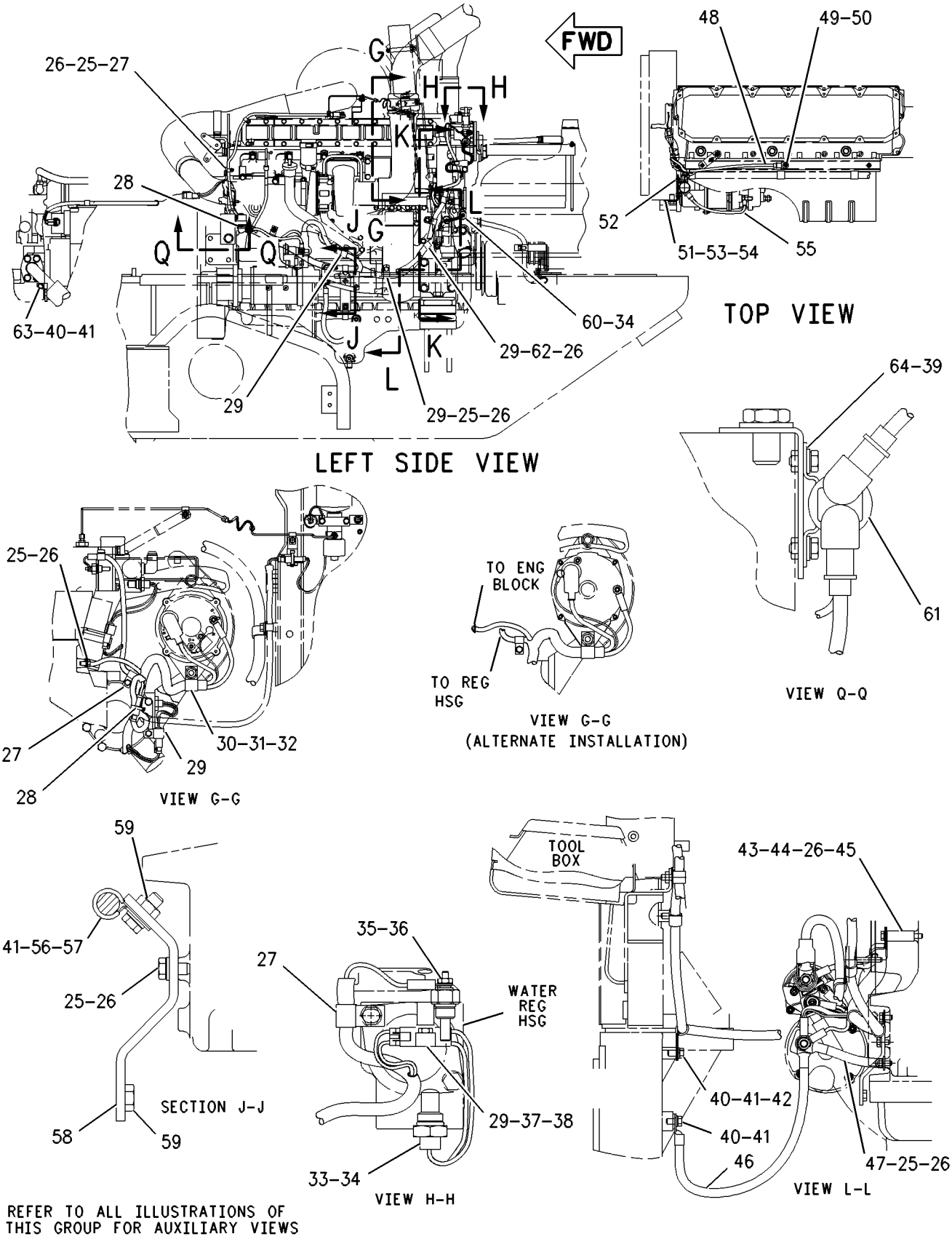

GRAPHIC #2 g00421718

128-2209 **BATTERY & WIRING GP** (contd.) **i01399152**

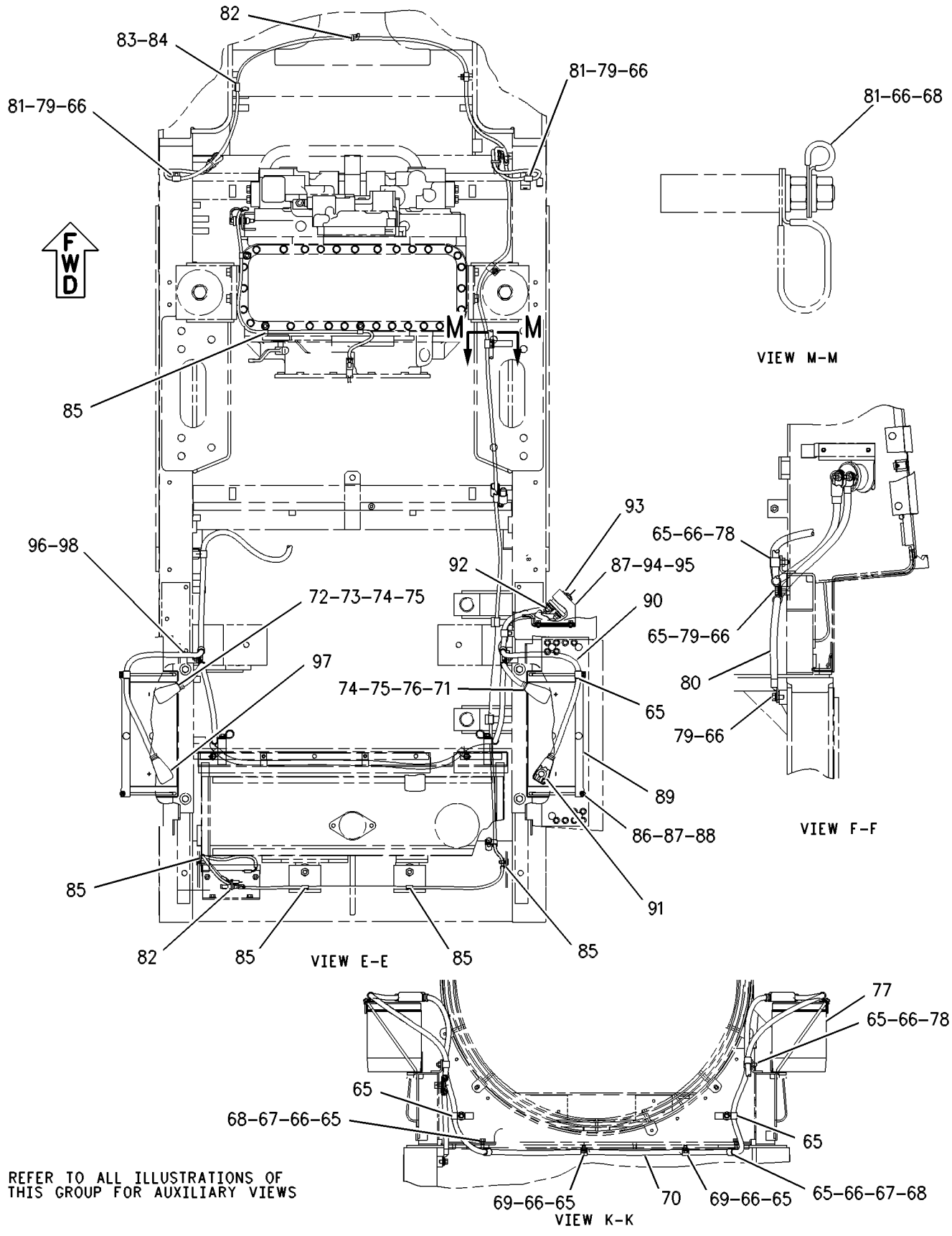

REFER TO ALL ILLUSTRATIONS OF THIS GROUP FOR AUXILIARY VIEWS

GRAPHIC #3 <END> g00421719

128-2209 BATTERY & WIRING GP

S/N: 9BL1878-UP

PART OF 117-1761 CHASSIS AR

SMCS-1401, 1408 **i01708340**

NOTE	REF NO	GRAPHIC REF	PART NUMBER	QTY	PART NAME 1 2 3 4 5 6 (PRODUCT LEVEL)	SEE PAGE
	1	1,3	**7N-3718**	2	CLIP	
	2	1,2,3	**3S-2093**	14	STRAP-CABLE	
	3	1	**143-2812**	1	HARNESS AS-ENGINE	
		1	**155-2270**	10	KIT-CONNECTING PLUG (2-PIN)	
		1	**155-2255**	1	KIT-CONNECTING PLUG (12-PIN)	
					(EACH PLUG KIT INCLUDES PLUG AS & WEDGE)	
		1	**102-8802**	4	KIT-RECEPTACLE (2-PIN)	
		1	**102-8805**	1	KIT-RECEPTACLE (6-PIN)	
					(EACH RECEPTACLE KIT INCLUDES RECEPTACLE AS & WEDGE)	
		1	**8T-8737**	9	PLUG-SEAL	
		1	**8T-8827**	1	BOOT (RED)	
		1	**9G-4352**	1	HOUSING-RECEPTACLE (8-GA TO 10-GA)	
		1	**9W-0844**	8	SOCKET-CONNECTOR (14-GA TO 16-GA)	
	4	1	**118-2270**	1	HARNESS AS-TRANSMISSION	
		1	**8T-8737**	1	PLUG-SEAL	
		1	**155-2274**	1	KIT-CONNECTING PLUG (6-PIN)	
					(INCLUDES PLUG AS & WEDGE)	
	5	1	**3E-6454**	1	SWITCH AS-PRESSURE (FUEL)	
		1	**8T-8729**	2	PIN-CONNECTOR (16-GA TO 18-GA)	
		1	**102-8802**	1	KIT-RECEPTACLE (2-PIN)	
					(INCLUDES RECEPTACLE AS & WEDGE)	
	6	1,2	**3J-1097**	4	SEAL	
M	7	1	**6V-5219**	2	BOLT (M8X1.25X40-MM)	
	8	1,2,3	**8T-4224**	16	WASHER-HARD (8.8X16X2-MM THK)	
	9	1	**3S-6696**	1	SPACER (0.88MM THK)	
	10	1,2,3	**5P-9297**	12	CLIP	
	11	1,2,3	**9M-8406**	25	CLIP (LOOP)	
M	12	1,2	**8T-4200**	6	BOLT (M8X1.25X16-MM)	
	13	2	**9X-8250**	1	CLIP	
	14	1,2,3	**5M-3062**	10	BOLT (3/8-16X0.75-IN)	
	15	1,2,3	**8T-4896**	18	WASHER-HARD (10.2X18.5X2.5-MM THK)	
	16	1,2	**148-5743**	2	SENDER-TEMPERATURE (TRANSMISSION OIL)	
	17	1	**203-3223**	1	SWITCH AS-TEMPERATURE (TRANSMISSION OIL)	
		1	**6V-8376**	2	SCREW-MACHINE (8-32X0.25-IN)	
		1	**9B-7233**	2	LOCKWASHER	
	18	1,2	**3K-0360**	3	SEAL-O-RING	
M	19	2	**8T-0100**	1	BOLT (M8X1.25X60-MM)	
	20	2	**4D-1432**	1	SPACER (12.52X17.14X45.72-MM THK)	
	21	1	**3S-8665**	1	CLIP	
	22	3	**8Y-9792**	1	CABLE AS (DISCONNECT TO GROUND)	
		3	**1S-7252**	2	TERMINAL-CABLE (00-GA, 3/8-IN SCREW)	
E		3	**5P-0747**		CABLE (00-GA, BLACK) (70CM)	
	23	2	**8Y-9795**	1	CABLE AS (STARTER TO BATTERY)	
		2	**1S-7251**	1	TERMINAL-CABLE (00-GA, 1/2-IN SCREW)	
E		2	**5P-0761**		CABLE (00-GA, RED) (170CM)	
		2	**8N-0869**	1	COVER-TERMINAL (RED)	
		2	**8N-1725**	1	COVER AS-TERMINAL (RED)	

128-2209 **BATTERY & WIRING GP (**contd.**)** **i01708340**

NOTE	REF NO	GRAPHIC REF	PART NUMBER	QTY	PART NAME 1 2 3 4 5 6 (PRODUCT LEVEL)	SEE PAGE
		2	**3S-6049**	1	TERMINAL AS-BATTERY (POSITIVE)	
		2	**1M-6119**	1	BOLT (5/16-18X1.375-IN)	
		2	**1M-6120**	1	NUT (5/16-18-THD)	
	24	2	**8Y-9414**	1	BRACKET AS	
		2	**1F-0750**	2	NUT-WELD (3/8-16-THD)	
	25	2,3	**4L-6454**	3	BOLT (3/8-16X1-IN)	
	26	2	**6K-8178**	1	CLIP	
	27	1,2	**4D-7794**	5	CLIP	
	28	2	**5P-4295**	1	CLIP	
	29	2	**6V-8188**	1	NUT (1/2-13-THD)	
	30	2	**8T-4223**	1	WASHER-HARD (13.5X25.5X3-MM THK)	
	31	2	**3E-6451**	1	SWITCH GP-TEMPERATURE (ENGINE COOLANT)	
		2	**102-8802**	1	KIT-RECEPTACLE (2-PIN)	
					(INCLUDES RECEPTACLE AS & WEDGE)	
	32	3	**3W-3622**	1	CABLE AS (BATTERY TO BATTERY)	
		3	**3S-6049**	1	TERMINAL AS-BATTERY (POSITIVE)	
		3	**1M-6119**	1	BOLT (5/16-18X1.375-IN)	
		3	**1M-6120**	1	NUT (5/16-18-THD)	
		3	**3S-6050**	1	TERMINAL AS-BATTERY (NEGATIVE)	
		3	**1M-6119**	1	BOLT (5/16-18X1.375-IN)	
		3	**1M-6120**	1	NUT (5/16-18-THD)	
E		3	**5P-0747**		CABLE (00-GA, BLACK) (234CM)	
		3	**7N-5274**	1	COVER AS-TERMINAL (BLACK)	
		3	**8N-1725**	1	COVER AS-TERMINAL (RED)	
	33	2	**7P-6682**	1	CABLE AS (STARTER GROUND TO FRAME GROUND)	
		2	**1S-7251**	2	TERMINAL-CABLE (00-GA, 1/2-IN SCREW)	
E		2	**5P-0747**		CABLE (00-GA, BLACK) (40CM)	
Y	34	3	**7N-0718**	1	SWITCH GP-DISCONNECT (BATTERY)	313
		3	**2H-3922**	2	LOCKWASHER	
		3	**6F-7045**	2	NUT-FULL (3/8-24-THD)	
		3	**8H-5303**	1	NUT (3/4-16-THD)	
		3	**8H-5306**	1	KEY (BATTERY DISCONNECT)	
		3	**9F-5644**	2	LOCKWASHER	
	35	3	**8Y-9850**	1	BRACKET	
	36	3	**5P-8167**	2	BOLT (3/8-16X0.625-IN)	
	37	3	**3T-5760**	2	BATTERY GP (12-VOLT, 750-CCA)	
	38	3	**5K-0906**	2	BOLT (5/16-18X0.625-IN)	
	39	3	**8Y-9793**	1	CABLE AS (DISCONNECT TO BATTERY)	
		3	**1S-7252**	1	TERMINAL-CABLE (00-GA, 3/8-IN SCREW)	
E		3	**5P-0747**		CABLE (00-GA, BLACK) (120CM)	
		3	**7N-5274**	1	COVER AS-TERMINAL (BLACK)	
		3	**037-5197**	1	BOOT	
		3	**3S-6050**	1	TERMINAL AS-BATTERY (NEGATIVE)	
		3	**1M-6119**	1	BOLT (5/16-18X1.375-IN)	
		3	**1M-6120**	1	NUT (5/16-18-THD)	
	40	3	**6T-1832**	2	ANGLE-HOLD-DOWN	
	41	3	**6T-1847**	4	ROD-RETAINING	
	42	3	**031-4155**	4	LOCKNUT (5/16-18-THD)	
	43	1	**8Y-9796**	1	HARNESS AS-CHASSIS	
		1	**155-2269**	1	PLUG AS-CONNECTOR (2-PIN)	
		1	**102-8802**	1	KIT-RECEPTACLE (2-PIN)	

128-2209 **BATTERY & WIRING GP (**contd.**)** **i01708340**

NOTE	REF NO	GRAPHIC REF	PART NUMBER	QTY	PART NAME 1 2 3 4 5 6 (PRODUCT LEVEL)	SEE PAGE
		1	**102-8804**	1	KIT-RECEPTACLE (4-PIN)	
		1	**8T-8729**	2	PIN-CONNECTOR (16-GA TO 18-GA)	
		1	**8T-8737**	2	PLUG-SEAL	
		1	**9W-0844**	2	SOCKET-CONNECTOR (14-GA TO 16-GA)	
		1	**9W-0852**	2	PIN-CONNECTOR (14-GA TO 16-GA)	
	44	3	**4L-9337**	2	BOLT (3/8-16X1.5-IN)	
	45	3	**6V-8801**	3	NUT (3/8-16-THD)	
	46	1	**4S-1962**	2	CLIP (LOOP)	
	47	1,3	**5P-9085**	8	CLIP	
M	48	2	**6V-3918**	1	BOLT (M8X1.25X50-MM)	
	49	3	**5P-1075**	1	WASHER-HARD (10.2X22.5X3-MM THK)	
	50	2	**8Y-9603**	1	CABLE AS-STARTING MOTOR (STARTER TO ENGINE GROUND)	
		2	**1S-7251**	1	TERMINAL-CABLE (00-GA, 1/2-IN SCREW)	
		2	**1S-7252**	1	TERMINAL-CABLE (00-GA, 3/8-IN SCREW)	
E		2	**5P-0747**		CABLE (00-GA, BLACK) (28CM)	
	51	2	**3S-8664**	1	CLIP (LOOP)	
	52	1,2	**2B-0941**	2	SPACER (10.5X19X19-MM THK)	
M	53	2	**8T-4172**	1	BOLT (M10X1.5X80-MM)	
	54	2	**115-1836**	1	PLATE AS	
	55	2	**9X-8257**	1	WASHER (17.5X30X3.5-MM THK)	
M	56	2	**8T-4190**	1	BOLT (M16X2X25-MM)	
	57	2	**115-1833**	1	WIRE AS	
	58	2	**115-1834**	1	WIRE AS	
M	59	2	**5C-2890**	1	NUT (M6X1-THD)	
	60	2	**9X-8256**	1	WASHER (6.6X12X2-MM THK)	
	61	2	**8T-9364**	2	BOLT (1/4-20X0.625-IN)	
	62	2	**8T-4205**	2	WASHER-HARD (7.2X14.5X2-MM THK)	
Y	63	2	**3E-0075**	1	SWITCH GP-MAGNETIC (24-VOLT) (STARTER SOLENOID)	317
		2	**1H-3338**	2	LOCKWASHER (EXTERNAL TOOTH)	
M		2	**5C-2890**	2	NUT (M6X1-THD)	
BE		2	**9X-1813**		SLEEVE	
		2	**012-0380**	2	LOCKWASHER (6.5X12.5X1.6-MM THK)	
		2	**102-8802**	1	KIT-RECEPTACLE (2-PIN)	
					(INCLUDES RECEPTACLE AS & WEDGE)	
		2	**186-3735**	2	PIN-CONNECTOR (16-GA TO 18-GA)	
	64	2	**3E-6449**	1	SWITCH AS-TEMPERATURE (AIR INTAKE HEATER)	
		2	**102-8802**	1	KIT-RECEPTACLE (2-PIN)	
					(INCLUDES RECEPTACLE AS & WEDGE)	
	65	1	**3E-7692**	1	SWITCH AS-PRESSURE (ENGINE OIL)	
		1	**102-8802**	1	KIT-RECEPTACLE (2-PIN)	
					(INCLUDES RECEPTACLS AS & WEDGE)	
		1	**8T-8729**	2	PIN-CONNECTOR (16-GA TO 18-GA)	

B - USE AS REQUIRED
E - ORDER BY THE CENTIMETER
M - METRIC PART
Y - SEPARATE ILLUSTRATION

128-2209 **BATTERY & WIRING GP** (contd.) **i01708340**

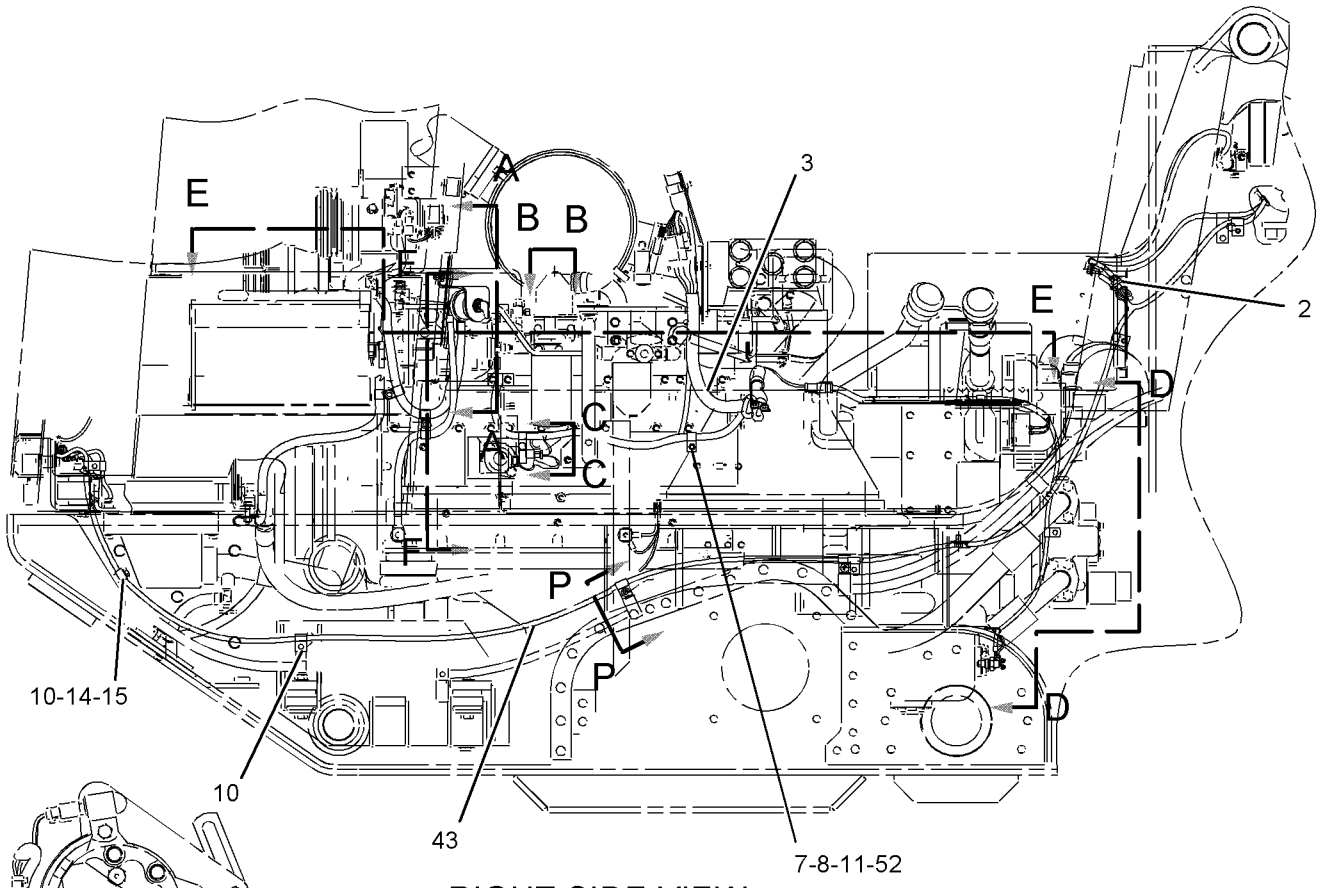

RIGHT SIDE VIEW

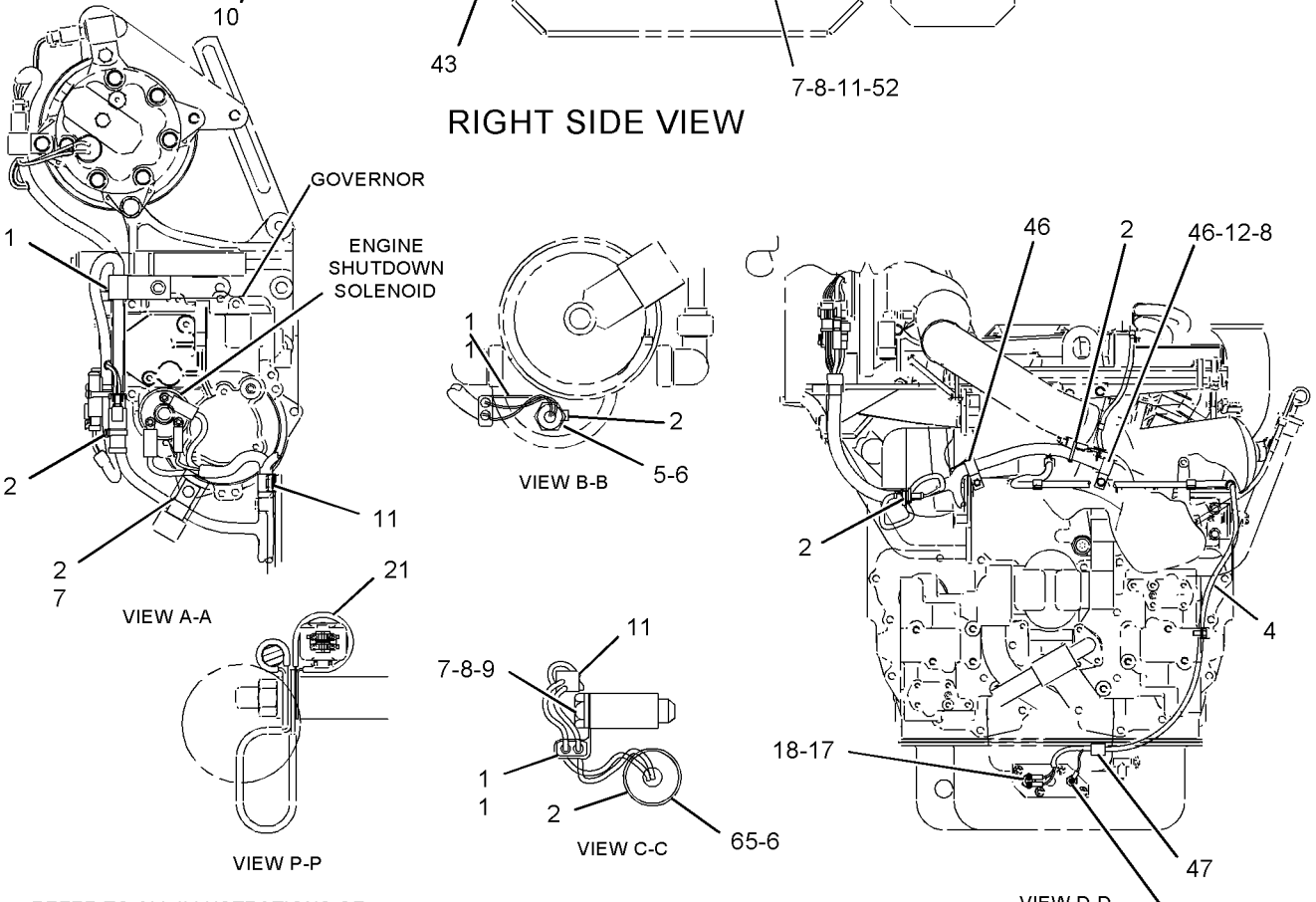

REFER TO ALL ILLUSTRATIONS OF THIS GROUP FOR AUXILIARY VIEWS

GRAPHIC #1

g00955838

128-2209 **BATTERY & WIRING GP** (contd.) **i01708340**

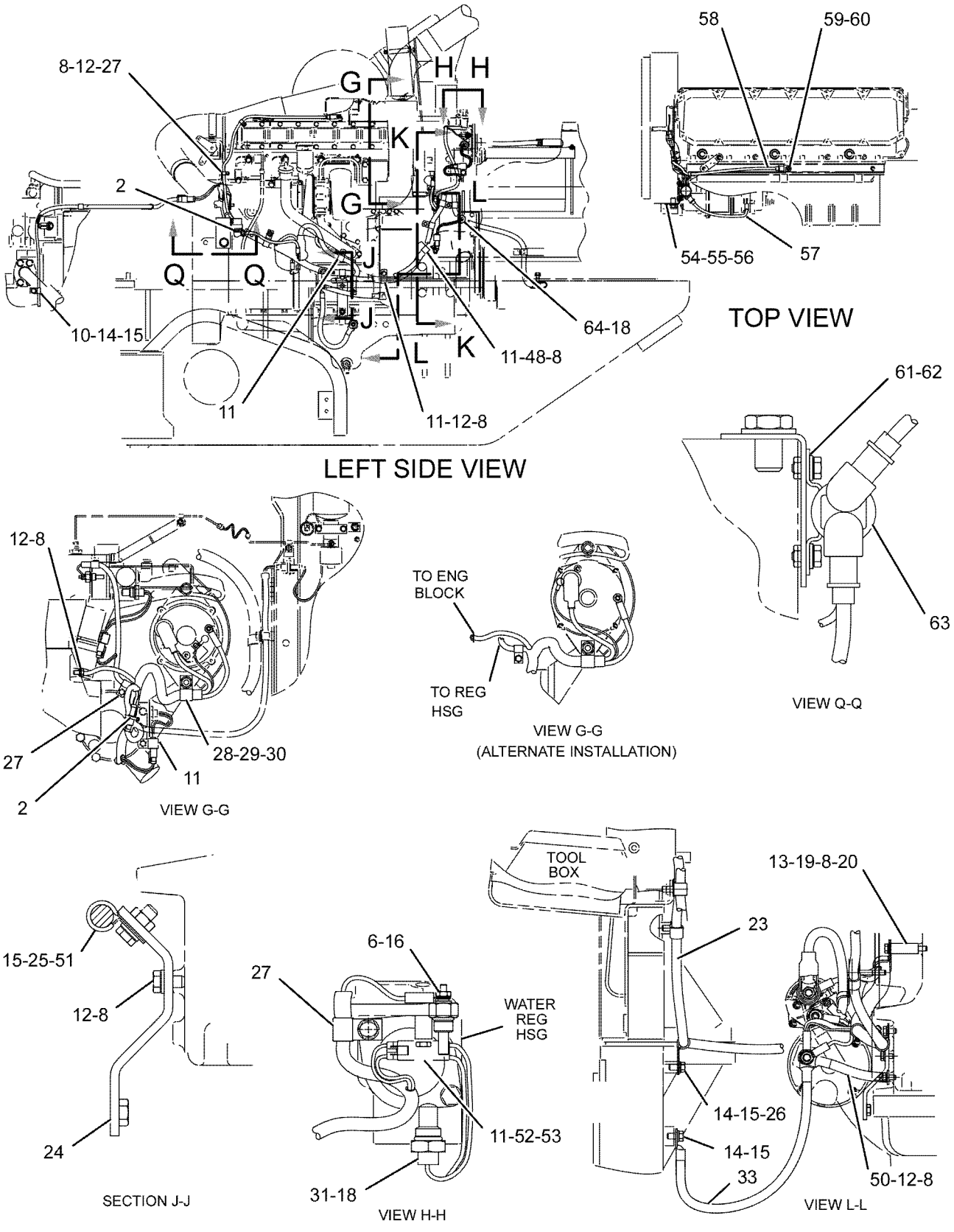

REFER TO ALL ILLUSTRATIONS OF THIS GROUP FOR AUXILIARY VIEWS

GRAPHIC #2 g01011441

128-2209 **BATTERY & WIRING GP** (contd.) **i01708340**

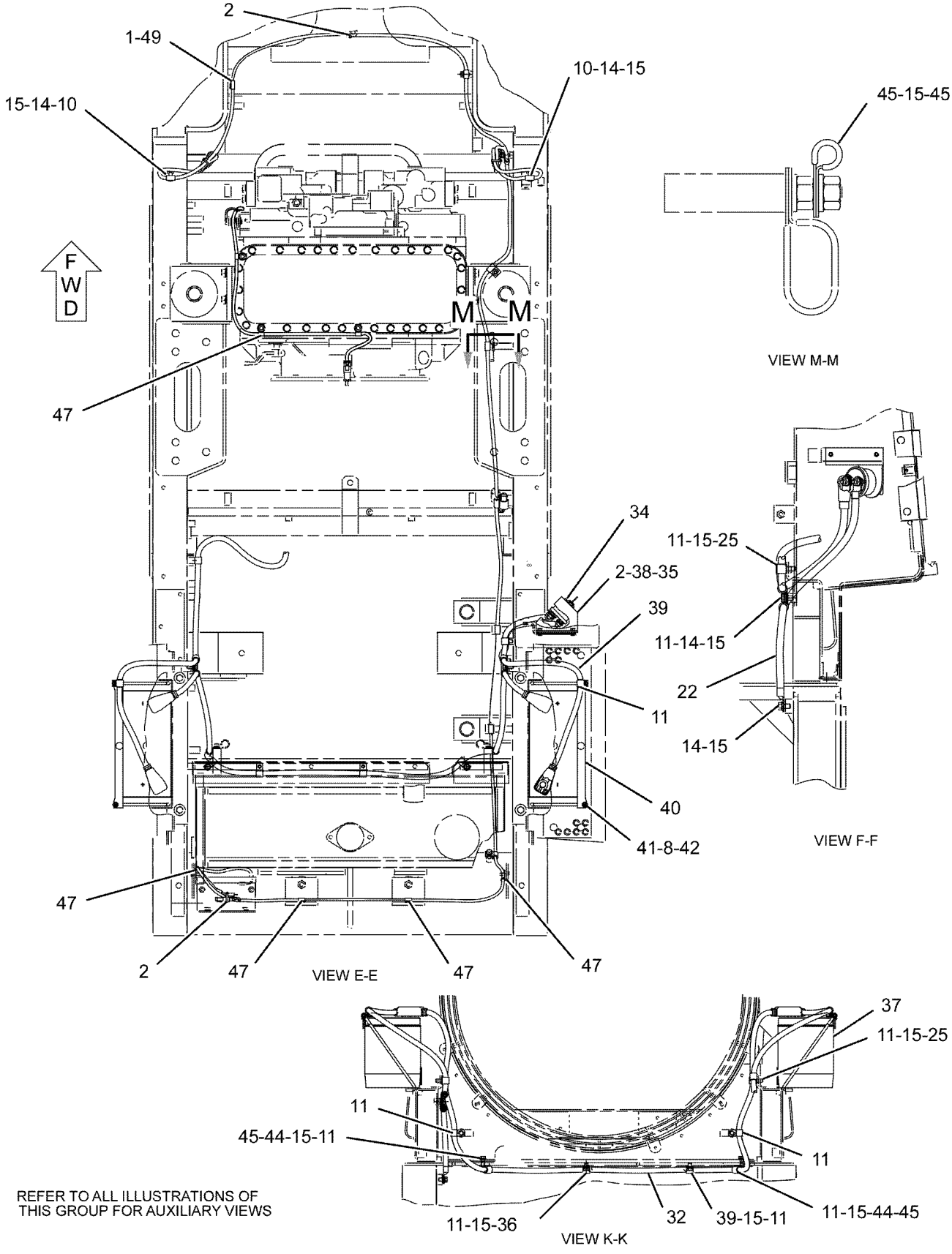

REFER TO ALL ILLUSTRATIONS OF THIS GROUP FOR AUXILIARY VIEWS

GRAPHIC #3 <END> g01011443

8Y-9466 BATTERY & WIRING GP

S/N: 9BL1-1487

PART OF 8Y-9370 CHASSIS AR

SMCS-1401, 1408 **i01401117**

NOTE	REF NO	GRAPHIC REF	PART NUMBER	QTY	PART NAME 1 2 3 4 5 6 (PRODUCT LEVEL)	SEE PAGE
	1	1	**7N-3718**	1	CLIP	
	2	1	**3S-2093**	4	STRAP-CABLE	
	3	1	**5P-9085**	7	CLIP	
	4	1	**118-2269**	1	HARNESS AS-ENGINE	
M	5	1	**6V-5219**	1	BOLT (M8X1.25X40-MM)	
	6	1	**8T-4224**	7	WASHER-HARD (8.8X16X2-MM THK)	
	7	1	**9M-8406**	14	CLIP (LOOP)	
	8	1	**8Y-9796**	1	HARNESS AS-CHASSIS	
	9	1	**5P-9297**	11	CLIP	
	10	1	**5M-3062**	8	BOLT (3/8-16X0.75-IN)	
	11	1	**8T-4896**	15	WASHER-HARD (10.2X18.5X2.5-MM THK)	
	12	1	**3S-8665**	1	CLIP	
	13	1	**5P-1075**	1	WASHER-HARD (10.2X22.5X3-MM THK)	
	14	1	**6K-8178**	2	CLIP	
	15	1	**8Y-9792**	1	CABLE AS	
		1	**1S-7252**	2	TERMINAL-CABLE (00-GA, 3/8-IN SCREW)	
BE		1	**5P-0747**		CABLE (00-GA, BLACK)	
	16	1	**4L-6454**	2	BOLT (3/8-16X1-IN)	
	17	1	**3T-5760**	2	BATTERY GP (12-VOLT, 750-CCA)	
	18	1	**4L-9337**	2	BOLT (3/8-16X1.5-IN)	
	19	1	**6V-8801**	3	NUT (3/8-16-THD)	
	20	1	**5P-8167**	2	BOLT (3/8-16X0.625-IN)	
	21	1	**3W-3622**	1	CABLE AS	
		1	**1M-4967**	1	TERMINAL-BATTERY	
		1	**1M-6119**	2	BOLT (5/16-18X1.375-IN)	
		1	**1M-6120**	2	NUT (5/16-18-THD)	
BE		1	**5P-0747**		CABLE (00-GA, BLACK)	
		1	**7N-5274**	1	COVER AS-TERMINAL (BLACK)	
		1	**8N-1725**	1	COVER AS-TERMINAL (RED)	
	22	1	**8Y-9850**	1	BRACKET	
	23	1	**5K-0906**	2	BOLT (5/16-18X0.625-IN)	
Y	24	1	**7N-0718**	1	SWITCH GP-DISCONNECT (BATTERY) (BATTERY)	313
	25	1	**8Y-9793**	1	CABLE AS	
		1	**1S-7252**	1	TERMINAL-CABLE (00-GA, 3/8-IN SCREW)	
BE		1	**5P-0747**		CABLE (00-GA, BLACK)	
		1	**7N-5274**	1	COVER AS-TERMINAL (BLACK)	
		1	**3S-6050**	1	TERMINAL AS-BATTERY (NEGATIVE)	
		1	**1M-6119**	1	BOLT (5/16-18X1.375-IN)	
		1	**1M-6120**	1	NUT (5/16-18-THD)	
		1	**037-5197**	1	BOOT	
	26	1	**6T-1832**	2	ANGLE-HOLD-DOWN	
	27	1	**6T-1847**	4	ROD-RETAINING	
	28	1	**031-4155**	4	LOCKNUT (5/16-18-THD)	
	29	1	**2B-0941**	1	SPACER (10.5X19X19-MM THK)	
	30	2	**7N-3718**	1	CLIP	
	31	2	**3S-2093**	8	STRAP-CABLE	
	32	2	**3S-8664**	1	CLIP (LOOP)	

8Y-9466 **BATTERY & WIRING GP (**contd.**)** **i01401117**

NOTE	REF NO	GRAPHIC REF	PART NUMBER	QTY	PART NAME 1 2 3 4 5 6 (PRODUCT LEVEL)	SEE PAGE
	33	2	**118-2270**	1	HARNESS AS-TRANSMISSION	
	34	2	**3E-6454**	1	SWITCH AS-PRESSURE (FUEL)	
		2	**8T-8729**	2	PIN-CONNECTOR (16-GA TO 18-GA)	
		2	**102-8802**	1	KIT-RECEPTACLE (2-PIN)	
					(INCLUDES RECEPTACLE AS & WEDGE)	
	35	2	**3J-1907**	4	SEAL-O-RING	
	36	2	**5P-9085**	1	CLIP	
M	37	2	**6V-5219**	1	BOLT (M8X1.25X40-MM)	
	38	2	**8T-4224**	8	WASHER-HARD (8.8X16X2-MM THK)	
	39	2	**3S-6696**	1	SPACER	
	40	2	**5P-9297**	1	CLIP	
	41	2	**3E-7692**	1	SWITCH AS-PRESSURE (ENGINE OIL)	
		2	**8T-8729**	2	PIN-CONNECTOR (16-GA TO 18-GA)	
		2	**102-8802**	1	KIT-RECEPTACLE (2-PIN)	
					(INCLUDES RECEPTACLE AS & WEDGE)	
	42	2	**9M-8406**	9	CLIP (LOOP)	
M	43	2	**8T-4200**	5	BOLT (M8X1.25X16-MM)	
	44	2	**9X-8250**	1	CLIP	
	45	2	**5M-3062**	3	BOLT (3/8-16X0.75-IN)	
	46	2	**8T-4896**	4	WASHER-HARD (10.2X18.5X2.5-MM THK)	
	47	2	**8N-3844**	1	SENDER-TEMPERATURE (ENGINE COOLANT)	
	48	2	**8N-2248**	1	SWITCH AS-TEMPERATURE (TRANSMISSION OIL)	
		2	**6V-8376**	2	SCREW-MACHINE (8-32X0.25-IN)	
		2	**9B-7233**	2	LOCKWASHER	
	49	2	**3K-0360**	2	SEAL-O-RING	
M	50	2	**8T-0100**	1	BOLT (M8X1.25X60-MM)	
	51	2	**4D-1432**	1	SPACER (12.52X17.14X45.72-MM THK)	
	52	2	**8Y-9795**	1	CABLE AS	
		2	**1S-7251**	1	TERMINAL-CABLE (00-GA, 1/2-IN SCREW)	
BE		2	**5P-0761**		CABLE (00-GA, RED)	
		2	**8N-0869**	1	COVER-TERMINAL (RED)	
		2	**8N-1725**	1	COVER AS-TERMINAL (RED)	
		2	**3S-6049**	1	TERMINAL AS-BATTERY (POSITIVE)	
		2	**1M-6119**	1	BOLT (5/16-18X1.375-IN)	
		2	**1M-6120**	1	NUT (5/16-18-THD)	
	53	2	**8Y-9414**	1	BRACKET AS	
		2	**9F-2978**	2	NUT-WELD (3/8-16-THD)	
	54	2	**4L-6454**	1	BOLT (3/8-16X1-IN)	
	55	2	**6K-8178**	1	CLIP	
	56	2	**4D-7794**	3	CLIP	
	57	2	**5P-4295**	1	CLIP	
	58	2	**6V-8188**	1	NUT (1/2-13-THD)	
	59	2	**5P-4295**	1	CLIP	
	60	2	**3E-6451**	1	SWITCH GP-TEMPERATURE (ENGINE COOLANT)	
		2	**102-8802**	1	KIT-RECEPTACLE (2-PIN)	
					(INCLUDES RECEPTACLE AS & WEDGE)	
		2	**3E-3365**	1	WEDGE-RECEPTACLE LOCK (2-PIN)	
		2	**8T-8729**	2	PIN-CONNECTOR (16-GA TO 18-GA)	
	61	2	**7P-6682**	1	CABLE AS	
		2	**1S-7251**	2	TERMINAL-CABLE (00-GA, 1/2-IN SCREW)	
BE		2	**5P-0747**		CABLE (00-GA, BLACK)	

8Y-9466 **BATTERY & WIRING GP (**contd.**)** **i01401117**

NOTE	REF NO	GRAPHIC REF	PART NUMBER	QTY	PART NAME 1 2 3 4 5 6 (PRODUCT LEVEL)	SEE PAGE
	62	2	**4S-1962**	2	CLIP (LOOP)	
M	63	2	**6V-3918**	1	BOLT (M8X1.25X50-MM)	
	64	2	**8Y-9603**	1	CABLE AS-STARTING MOTOR	
		2	**1S-7251**	1	TERMINAL-CABLE (00-GA, 1/2-IN SCREW)	
		2	**1S-7252**	1	TERMINAL-CABLE (00-GA, 3/8-IN SCREW)	
BE		2	**5P-0747**		CABLE (00-GA, BLACK)	
	65	2	**8N-3844**	1	SENDER-TEMPERATURE (TRANSMISSION OIL)	
M	66	2	**8T-4172**	1	BOLT (M10X1.5X80-MM)	
	67	2	**2B-0941**	1	SPACER (10.5X19X19-MM THK)	

B - USE AS REQUIRED
E - ORDER BY THE CENTIMETER
M - METRIC PART
Y - SEPARATE ILLUSTRATION

8Y-9466 **BATTERY & WIRING GP (**contd.**)** **i01401117**

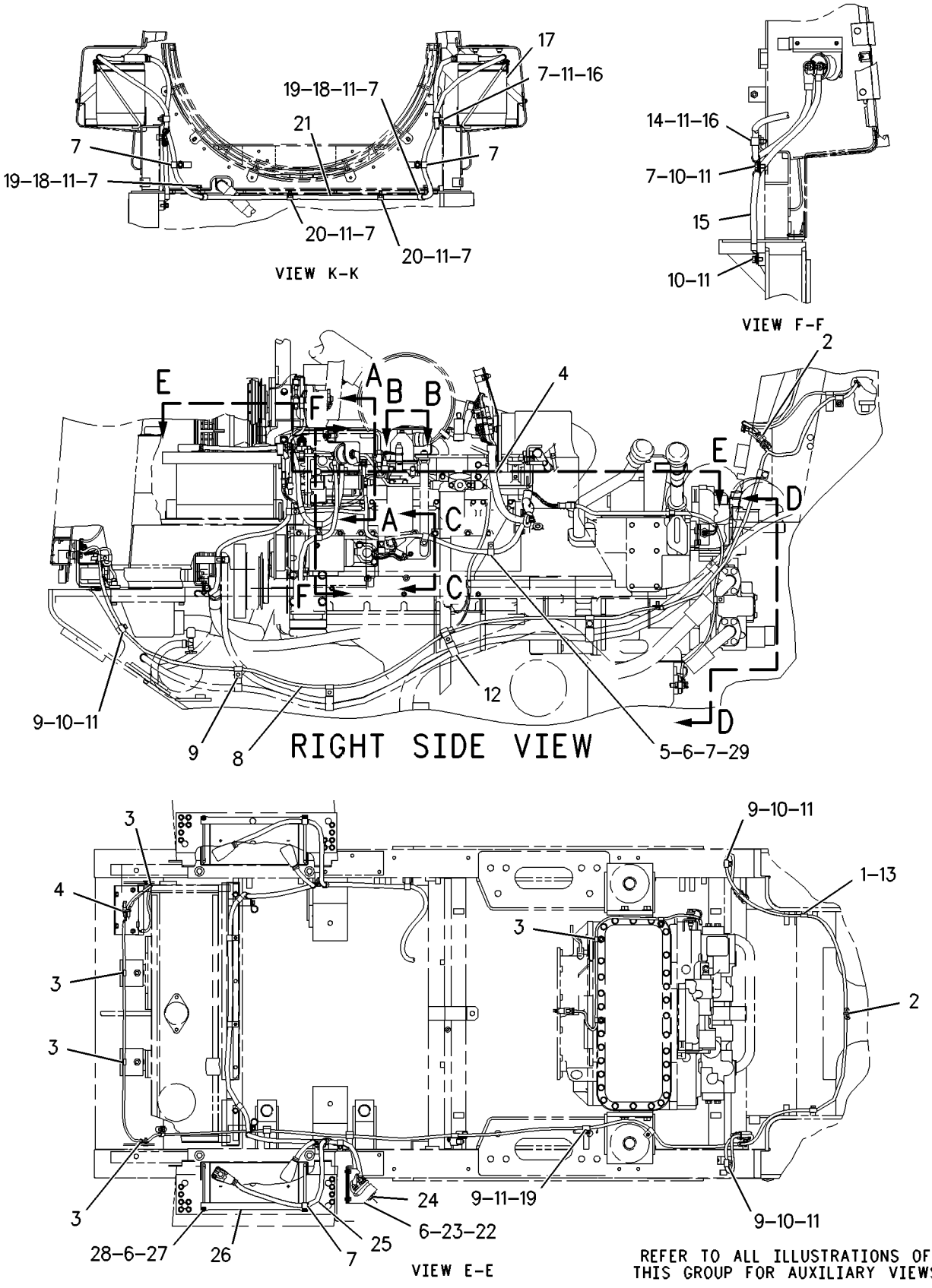

GRAPHIC #1 g00738246

8Y-9466 **BATTERY & WIRING GP** (contd.) **i01401117**

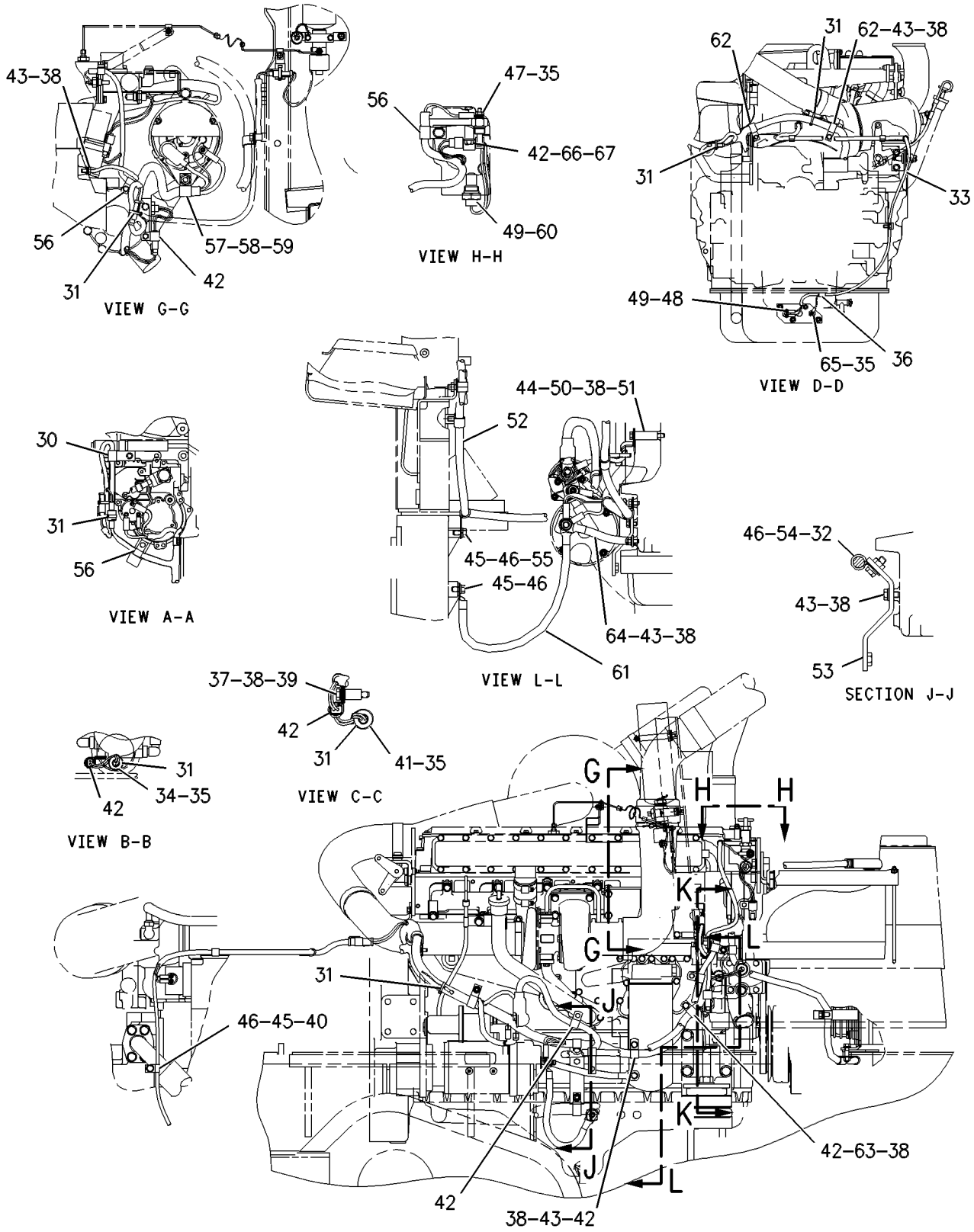

GRAPHIC #2 <END> g00395656

6Y-6870 BATTERY GP

S/N: 9BL1-UP

AN ATTACHMENT

SMCS-1401 **i01516639**

NOTE	REF NO	GRAPHIC REF	PART NUMBER	QTY	PART NAME 1 2 3 4 5 6 (PRODUCT LEVEL)	SEE PAGE
	1	1	**8G-6287**	1	HOLD-DOWN AS	
	2	1	**9X-9721**	2	BATTERY (12-VOLT, 1000-CCA) (12 VOLT)	
	3	1	**6Y-7455**	1	CABLE AS	
BE		1	**5P-0747**		CABLE (00-GA, BLACK)	
		1	**9G-0003**	1	COVER AS-TERMINAL (BLACK)	
		1	**9G-0004**	1	COVER AS-TERMINAL (RED)	
		1	**8C-5917**	1	TERMINAL AS-BATTERY (POSITIVE)	
		1	**8T-9757**	1	TERMINAL AS-BATTERY (NEGATIVE)	
					(EACH INCLUDES)	
		1	**1M-6119**	1	BOLT (5/16-18X1.375-IN)	
		1	**1M-6120**	1	NUT (5/16-18-THD)	
	4	1	**8G-6291**	2	ROD	
	5	1	**8T-4896**	2	WASHER-HARD (10.2X18.5X2.5-MM THK)	
	6	1	**2K-4973**	2	LOCKNUT (3/8-16-THD)	
	7	1	**3S-8665**	1	CLIP	

B - USE AS REQUIRED
E - ORDER BY THE CENTIMETER

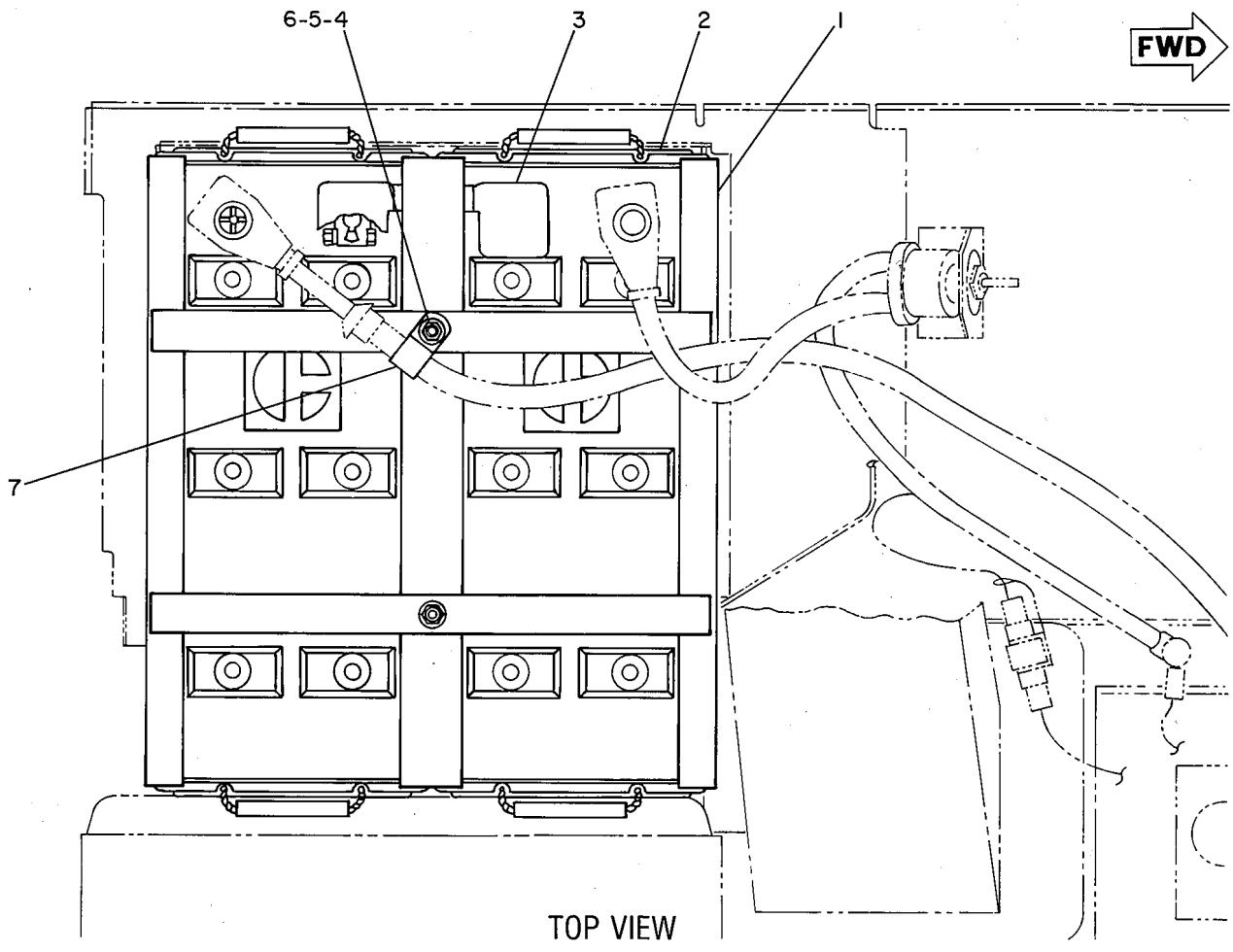

GRAPHIC #1 <END> g00212898

8R-8714 BATTERY GP—MAINTENANCE FREE

S/N: 9BL1-UP
HEAVY DUTY
AN ATTACHMENT

SMCS-1401 **i03211288**

NOTE	PART NUMBER	QTY	PART NAME 1 2 3 4 5 6 (PRODUCT LEVEL)	SEE PAGE
	9X-3404	2	BATTERY (12-VOLT, MAINTENANCE FREE, WET)	

<END>

8C-9759 CONTROL GP-BUCKET POSITIONER

S/N: 9BL1399-UP

PART OF 8G-0516 KICKOUT & POSITIONER GP

SMCS-5112 **i03916369**

NOTE	REF NO	GRAPHIC REF	PART NUMBER	QTY	PART NAME 1 2 3 4 5 6 (PRODUCT LEVEL)	SEE PAGE
	1	1	**7N-7782**	1	HOUSING-PLUG (14-GA TO 18-GA)	
	2	1	**254-0697**	1	FILM-IDENTIFICATION (SOLENOID, BUCKET POSITIONER)	

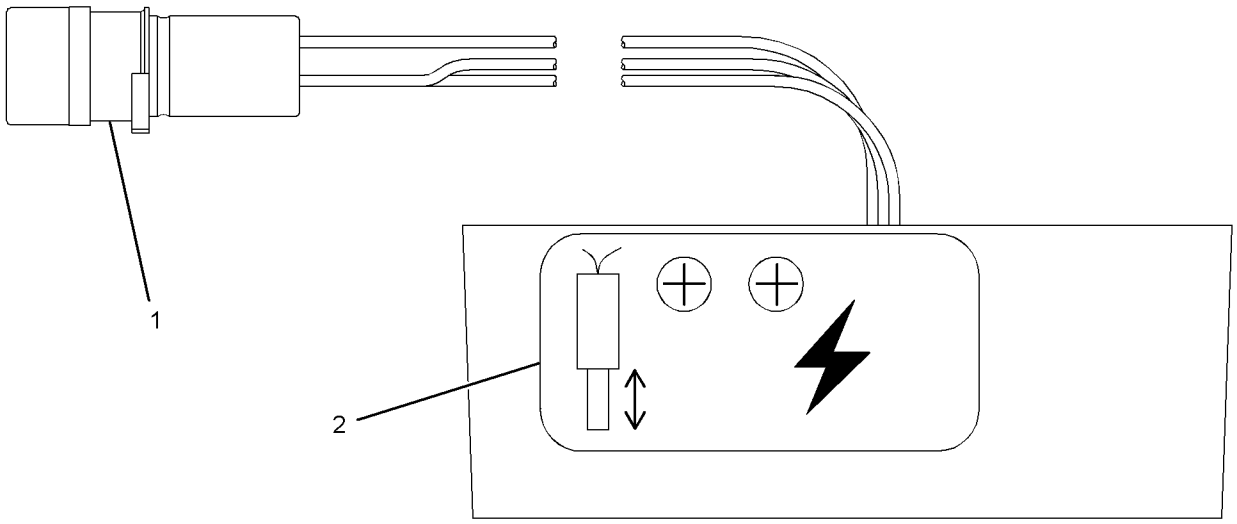

GRAPHIC #1 <END> g01175371

8C-9763 CONTROL GP-LIFT KICKOUT

S/N: 9BL1399-UP

PART OF 8G-0516 KICKOUT & POSITIONER GP

SMCS-5109 **i03862269**

NOTE	REF NO	GRAPHIC REF	PART NUMBER	QTY	PART NAME 1 2 3 4 5 6 (PRODUCT LEVEL)	SEE PAGE
	1	1	**7N-7781**	1	HOUSING-RECEPTACLE (14-GA TO 18-GA)	
	2	1	**7N-7780**	2	PIN-CONNECTOR (14-GA TO 18-GA)	
	3	1	**7N-7779**	1	SOCKET-CONNECTOR (14-GA TO 18-GA)	
	4	1	**254-0697**	1	FILM-IDENTIFICATION (SOLENOID, BUCKET POSITIONER)	

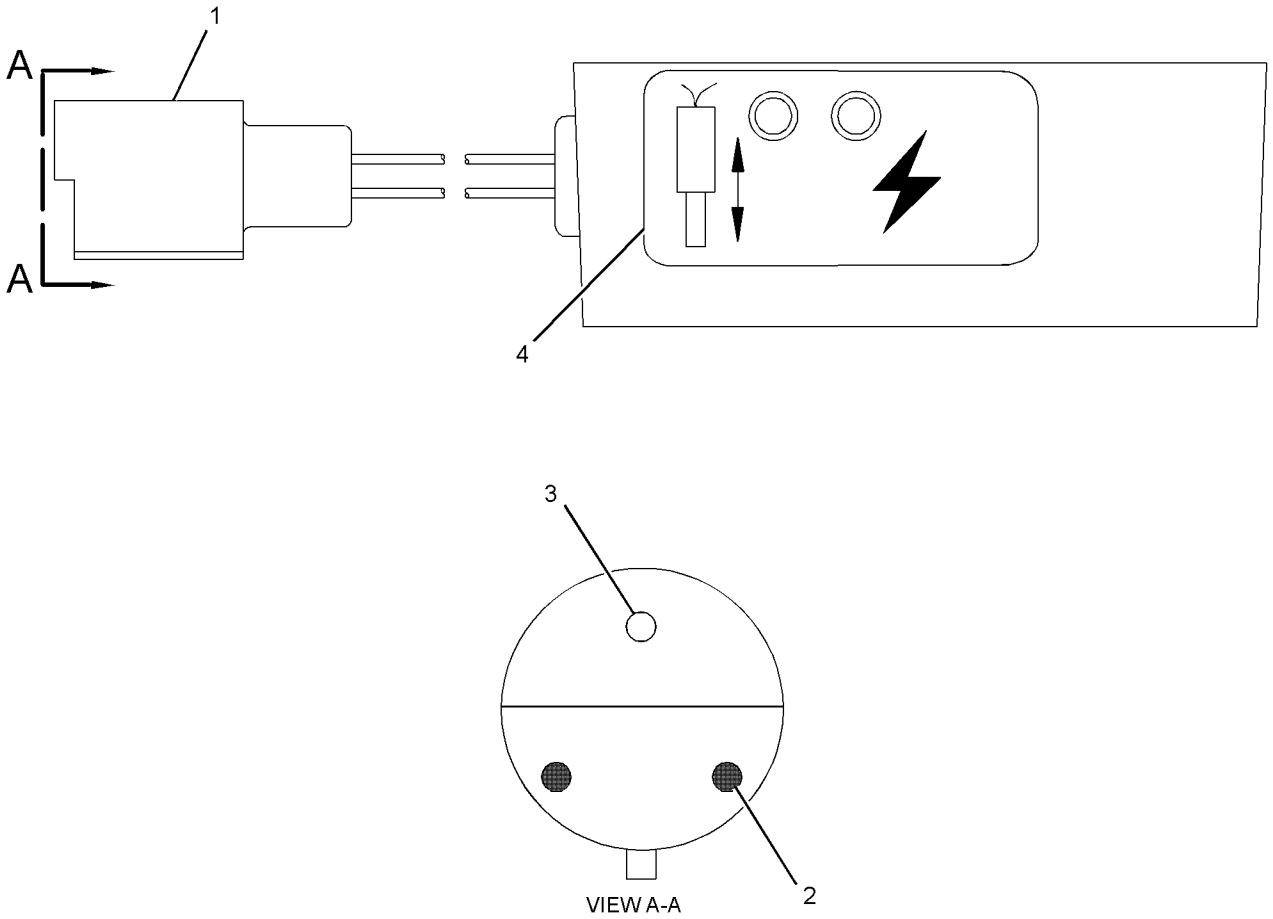

GRAPHIC #1

<END>

g01166048

112-6139 CONVERTER GP-ELECTRICAL

S/N: 9BL1-UP
24 VOLTS TO 12 VOLTS
FOR USE WITH RADIO
AN ATTACHMENT

SMCS-1421 **i00694588**

NOTE	PART NUMBER	QTY	PART NAME 1 2 3 4 5 6 (PRODUCT LEVEL)	SEE PAGE
	119-1733	1	CONVERTER-POWER (24-VOLT TO 12-VOLT)	
M	**6V-9673**	2	SCREW-MACHINE (M5X0.8X12-MM)	
	4B-4863	2	WASHER (4.7X11X1.2-MM THK)	

M - METRIC PART

<END>

114-9841 HEATER AR-AIR INLET

S/N: 9BL1-1487
PART OF 8Y-9729 MACHINE AR
AN ATTACHMENT

SMCS-1090 **i01399204**

NOTE	REF NO	GRAPHIC REF	PART NUMBER	QTY	PART NAME 1 2 3 4 5 6 (PRODUCT LEVEL)	SEE PAGE
M	1	1	**6V-4298**	2	BOLT (M5X0.8X16-MM)	
	2	1	**8T-0328**	2	WASHER-HARD (5.5X10X1-MM THK)	
	3	1	**4Y-7948**	1	TIMER AS-INLET HEATER	
	4	1	**8M-2773**	1	CLIP (LOOP)	
	5	1	**115-1835**	1	PLATE	
	6	1	**7N-5876**	1	LAMP (24-VOLT, 0.2-AMPERE)	
	7	1	**9D-3721**	1	SWITCH-TOGGLE (SINGLE POLE) (HEATER ON/OFF)	
	8	1	**8J-1256**	1	CLIP	
	9	2	**3S-2093**	2	STRAP-CABLE	
	10	1	**4P-6422**	1	FILM-WARNING (NO ETHER SPRAY/AIR INTAKE)	
	11	1	**3E-0075**	1	SWITCH GP-MAGNETIC (24-VOLT)	
M		1	**5C-2890**	2	NUT (M6X1-THD)	
	12	1	**115-1836**	1	PLATE AS	
	13	1	**9X-8257**	1	WASHER (17.5X30X3.5-MM THK)	
M	14	1	**8T-4190**	1	BOLT (M16X2X25-MM)	
	15	1	**8T-9364**	2	BOLT (1/4-20X0.625-IN)	
	16	1	**8T-4205**	2	WASHER-HARD (7.2X14.5X2-MM THK)	
	17	2	**4D-7794**	2	CLIP	
M	18	2	**8T-4200**	1	BOLT (M8X1.25X16-MM)	
	19	2	**8T-4224**	1	WASHER-HARD (8.8X16X2-MM THK)	
	20	2	**115-1833**	1	WIRE AS	
	21	2	**115-1834**	1	WIRE AS	
M	22	2	**5C-2890**	1	NUT (M6X1-THD)	
	23	2	**9X-8256**	1	WASHER (6.6X12X2-MM THK)	
YR	24	1	**114-7159**	1	ENGINE AR	6
B	25	2	**3E-6449**	1	SWITCH AS-TEMPERATURE (WATER)	
		2	**102-8802**	1	KIT-RECEPTACLE (2-PIN)	
					(INCLUDES WEDGE & RECEPTACLE AS)	
		2	**3E-3365**	1	WEDGE-RECEPTACLE LOCK (2-PIN)	
		2	**8T-8729**	2	PIN-CONNECTOR (16-GA TO 18-GA)	
	26	2	**3K-0360**	1	SEAL-O-RING	

B - USE AS REQUIRED
M - METRIC PART
R - REMANUFACTURED PART MAY BE AVAILABLE
Y - SEPARATE ILLUSTRATION

114-9841 **HEATER AR-AIR INLET (**contd.**)** **i01399204**

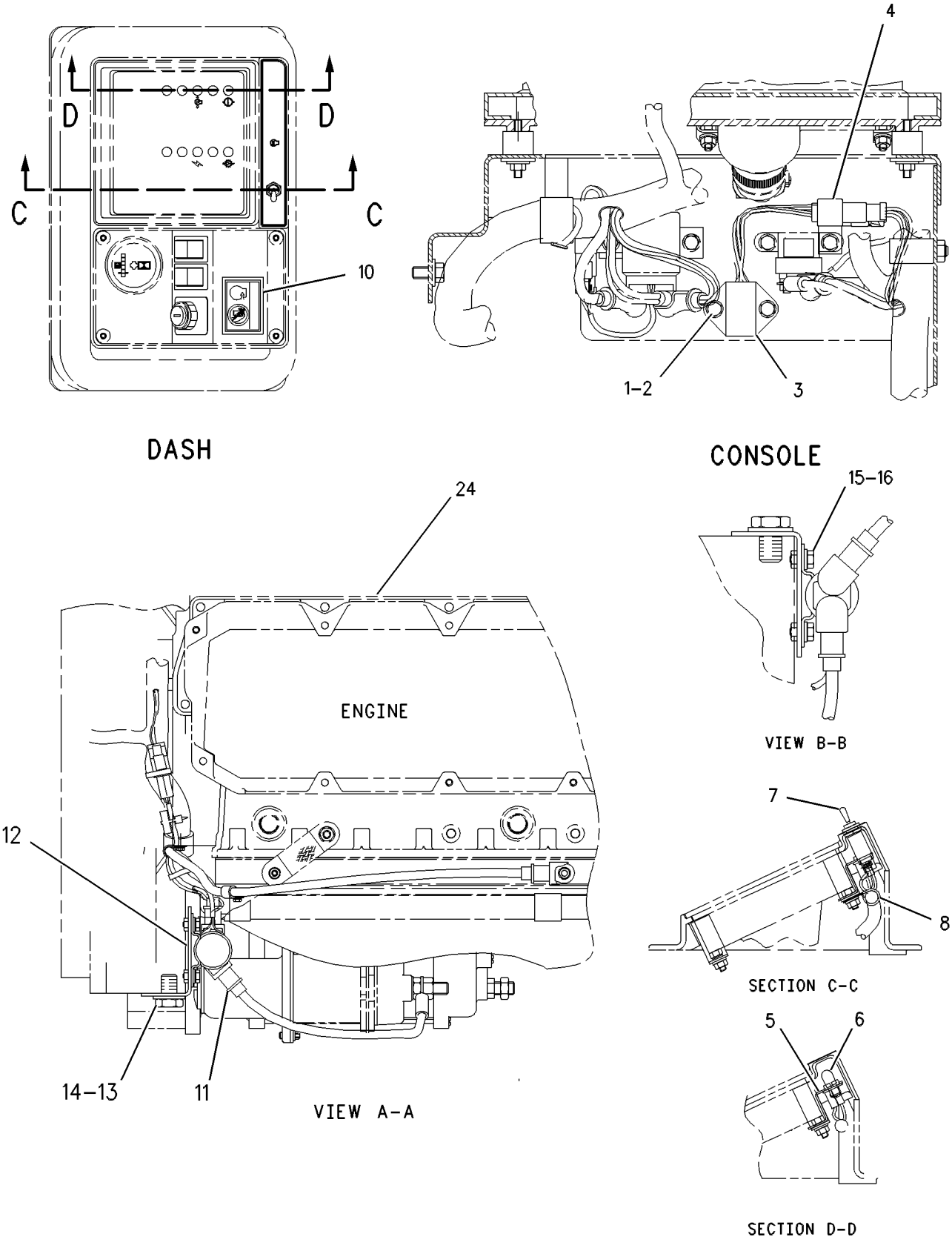

GRAPHIC #1 g00288913

114-9841 **HEATER AR-AIR INLET** (contd.) **i01399204**

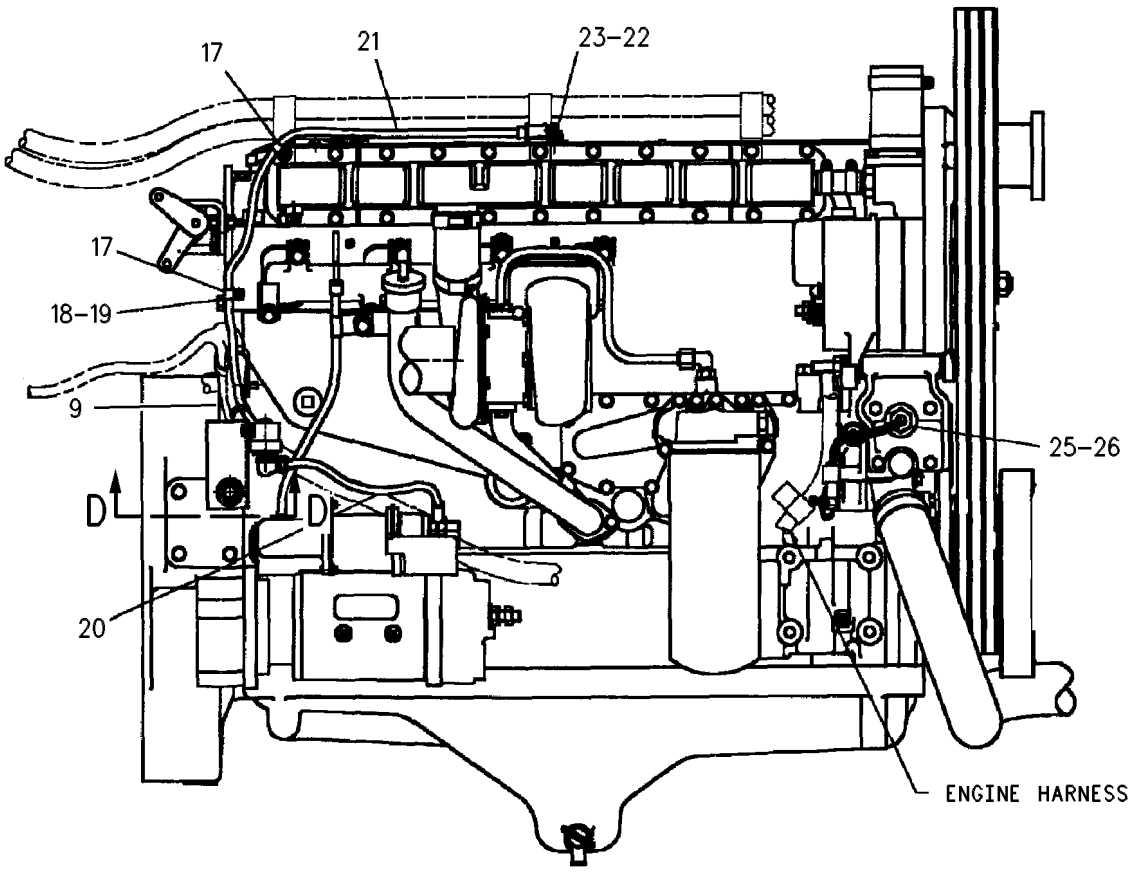

GRAPHIC #2 <END> g00289291

3T-8724 HEATER GP-JACKET WATER

S/N: 9BL1-UP
240 VOLT/1000 WATT
CANNOT BE USED WITH 9X-3294 HEATER GP-JACKET WATER
AN ATTACHMENT
TYPE 1

SMCS-1383 **i01399206**

NOTE	REF NO	GRAPHIC REF	PART NUMBER	QTY	PART NAME 1 2 3 4 5 6 (PRODUCT LEVEL)	SEE PAGE
	1	1	**4N-8227**	1	CORD AS-HEATER ELEMENT (240-VOLT, 15-AMPERE) (750 WATT)(220 VOLT)	
	2	1	**2R-1980**	1	NUT-HEX PLAIN	
	3	1	**6N-9123**	1	PLATE-CLAMP	
	4	1	**4F-7952**	1	SEAL-O-RING	
	5	1	**3T-8723**	1	ELEMENT AS-JACKET WATER HEATER (240VOLT)(1000 WATT)	
	6	1	**6N-9119**	1	ADAPTER	
	7	1	**6N-9121**	1	GASKET	
	8	1	**6N-9122**	1	RING-SPLIT	
	9	1	**2H-3924**	1	LOCKWASHER	

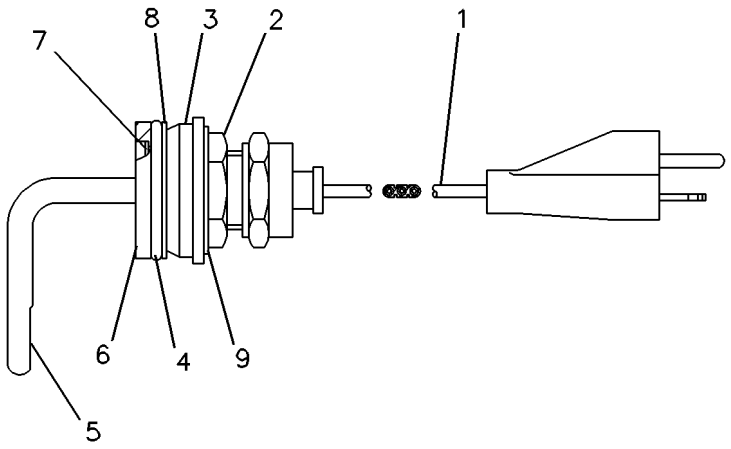

GRAPHIC #1 <END> g00119275

3T-8724 HEATER GP-JACKET WATER

S/N: 9BL1-UP
240 VOLT/1000 WATT
CANNOT BE USED WITH 9X-3294 HEATER GP-JACKET WATER
AN ATTACHMENT
TYPE 2

SMCS-1383 **i03928431**

NOTE	REF NO	GRAPHIC REF	PART NUMBER	QTY	PART NAME 1 2 3 4 5 6 (PRODUCT LEVEL)	SEE PAGE
	1	1	**4N-8227**	1	CORD AS-HEATER ELEMENT (240-VOLT, 15-AMPERE)	
C	2	1	**124-0687**	1	ELEMENT AS-JACKET WATER HEATER (240-VOLT, 1000-WATT)	
	2A	1	**133-6517**	1	CAP AS-DUST	
		1	**132-1448**	1	KIT-SEAL	
					(INCLUDES SEAL, SPACER, & RINGS)	

C - CHANGE FROM PREVIOUS TYPE

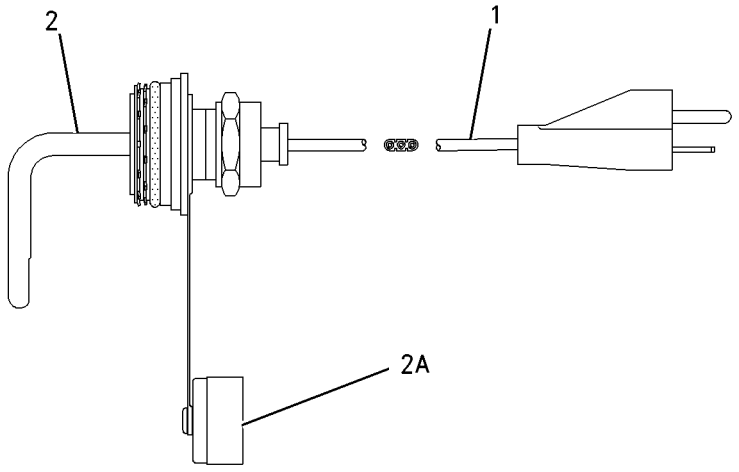

GRAPHIC #1 <END> g00934321

9X-3293 HEATER GP-JACKET WATER

S/N: 9BL1-947

PART OF 9X-3294 HEATER GP-JACKET WATER

AN ATTACHMENT

SMCS-1383 **i00569401**

NOTE	REF NO	GRAPHIC REF	PART NUMBER	QTY	PART NAME 1 2 3 4 5 6 (PRODUCT LEVEL)	SEE PAGE
	1	1	**124-0686**	1	ELEMENT AS-JACKET WATER HEATER (120-VOLT, 1000-WATT)	

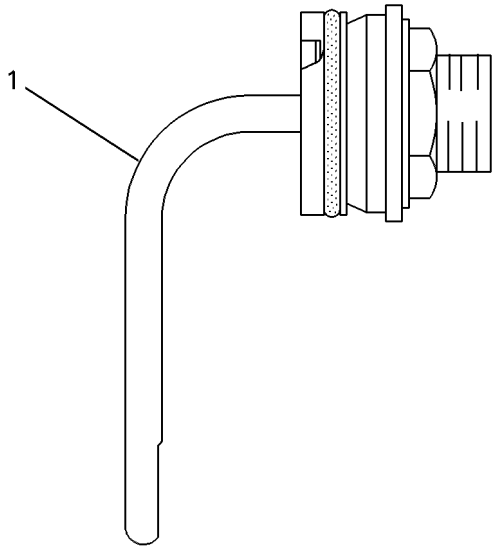

GRAPHIC #1 <END> g00121482

9X-3294 HEATER GP-JACKET WATER

S/N: 9BL1-947
120 VOLT/1000 WATT
CANNOT BE USED WITH 3T-8724 HEATER GP-JACKET WATER
AN ATTACHMENT

SMCS-1383 **i01399209**

NOTE	REF NO	GRAPHIC REF	PART NUMBER	QTY	PART NAME 1 2 3 4 5 6 (PRODUCT LEVEL)	SEE PAGE
	1	1	**9N-5253**	1	CORD AS-HEATER ELEMENT (120-VOLT, 15-AMPERE)	
Y	2	1	**9X-3293**	1	HEATER GP-JACKET WATER	277
	3	1	**6N-1604**	1	CAP AS-DUST	

Y - SEPARATE ILLUSTRATION

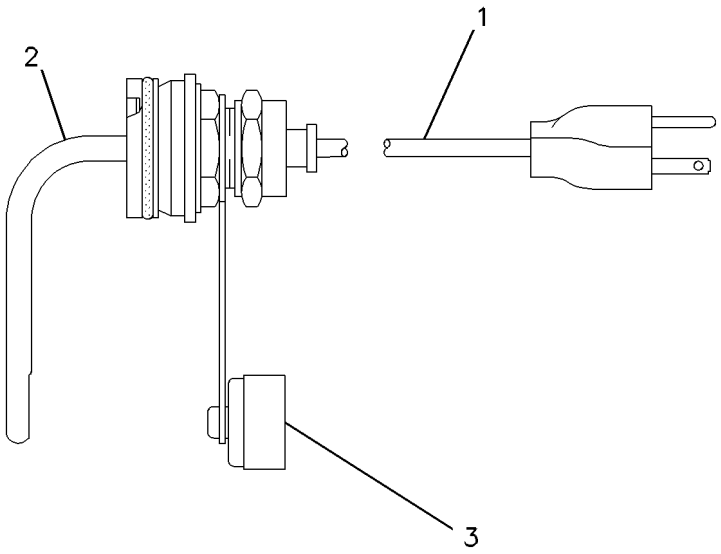

GRAPHIC #1 <END> g00118676

9X-3294 HEATER GP-JACKET WATER

S/N: 9BL948-UP
120 VOLT/1000 WATT
CANNOT BE USED WITH 3T-8724 HEATER GP-JACKET WATER
AN ATTACHMENT

SMCS-1383 **i03928451**

NOTE	REF NO	GRAPHIC REF	PART NUMBER	QTY	PART NAME 1 2 3 4 5 6 (PRODUCT LEVEL)	SEE PAGE
	1	1	**9N-5253**	1	CORD AS-HEATER ELEMENT (120-VOLT, 15-AMPERE)	
C	2	1	**124-0686**	1	ELEMENT AS-JACKET WATER HEATER (120-VOLT, 1000-WATT)	
		1	**132-1448**	1	KIT-SEAL	
					(INCLUDES SEAL, SPACER, & RINGS)	
	2A	1	**6N-1604**	1	CAP AS-DUST	

C - CHANGE FROM PREVIOUS TYPE

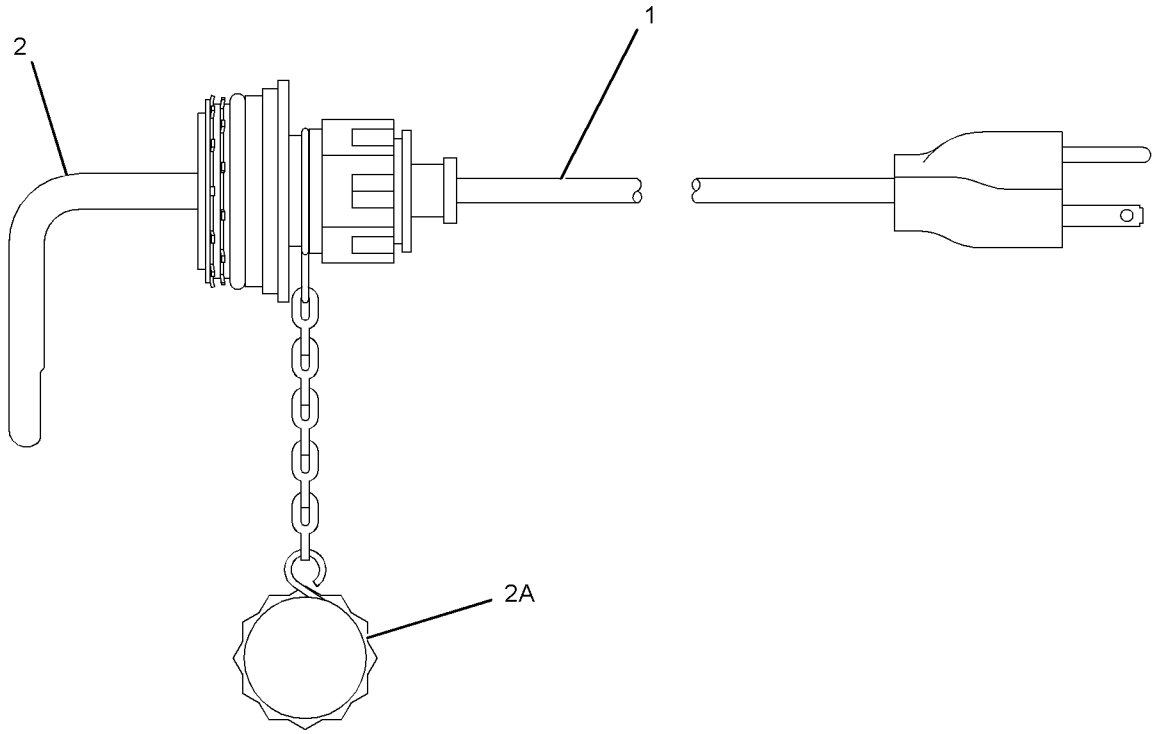

GRAPHIC #1 <END> g01134257

139-8661 KIT-DIAL SENSOR—FUEL LEVEL

S/N: 9BL1-UP
FIELD REPLACEMENT ORDER 376-1547—PAGE: 280
PART OF 8Y-9458 TANK GP-FUEL

SMCS-1273, 1408, 1439 **i05640700**

NOTE	PART NUMBER	QTY	PART NAME 1 2 3 4 5 6 (PRODUCT LEVEL)	SEE PAGE
	7N-9737	1	HOUSING-RECEPTACLE (14-GA TO 18-GA)	
	7N-7780	1	PIN-CONNECTOR (14-GA TO 18-GA)	
	7N-7779	1	SOCKET-CONNECTOR (14-GA TO 18-GA)	

<END>

376-1547 KIT-DIAL SENSOR—FUEL LEVEL

S/N: 9BL1-UP
FIELD REPLACEMENT FOR 139-8661—PAGE: 280
FIELD INSTALLATION

SMCS-1273, 1408, 1439 **i05640715**

NOTE	PART NUMBER	QTY	PART NAME 1 2 3 4 5 6 (PRODUCT LEVEL)	SEE PAGE
	7N-9737	1	HOUSING-RECEPTACLE (14-GA TO 18-GA)	
	7N-7780	1	PIN-CONNECTOR (14-GA TO 18-GA)	
	7N-7779	1	SOCKET-CONNECTOR (14-GA TO 18-GA)	

<END>

3E-6389 LAMP GP-DOME

S/N: 9BL1-UP
24-VOLT, WITH SWITCH
PART OF 8Y-9455 ROPS GP-ENCLOSED
ALSO AN ATTACHMENT

SMCS-1433 **i04952289**

NOTE	REF NO	GRAPHIC REF	PART NUMBER	QTY	PART NAME 1 2 3 4 5 6 (PRODUCT LEVEL)	SEE PAGE
	1	1	**7N-9943**	1	LAMP (24-VOLT)	
	2	1	**102-8803**	1	KIT-RECEPTACLE (3-PIN)	
					(INCLUDES RECEPTACLE AS & WEDGE)	
	3	1	**8T-8729**	3	PIN-CONNECTOR (16-GA TO 18-GA)	
	4	1	**7T-0020**	1	LENS-DOME LAMP	

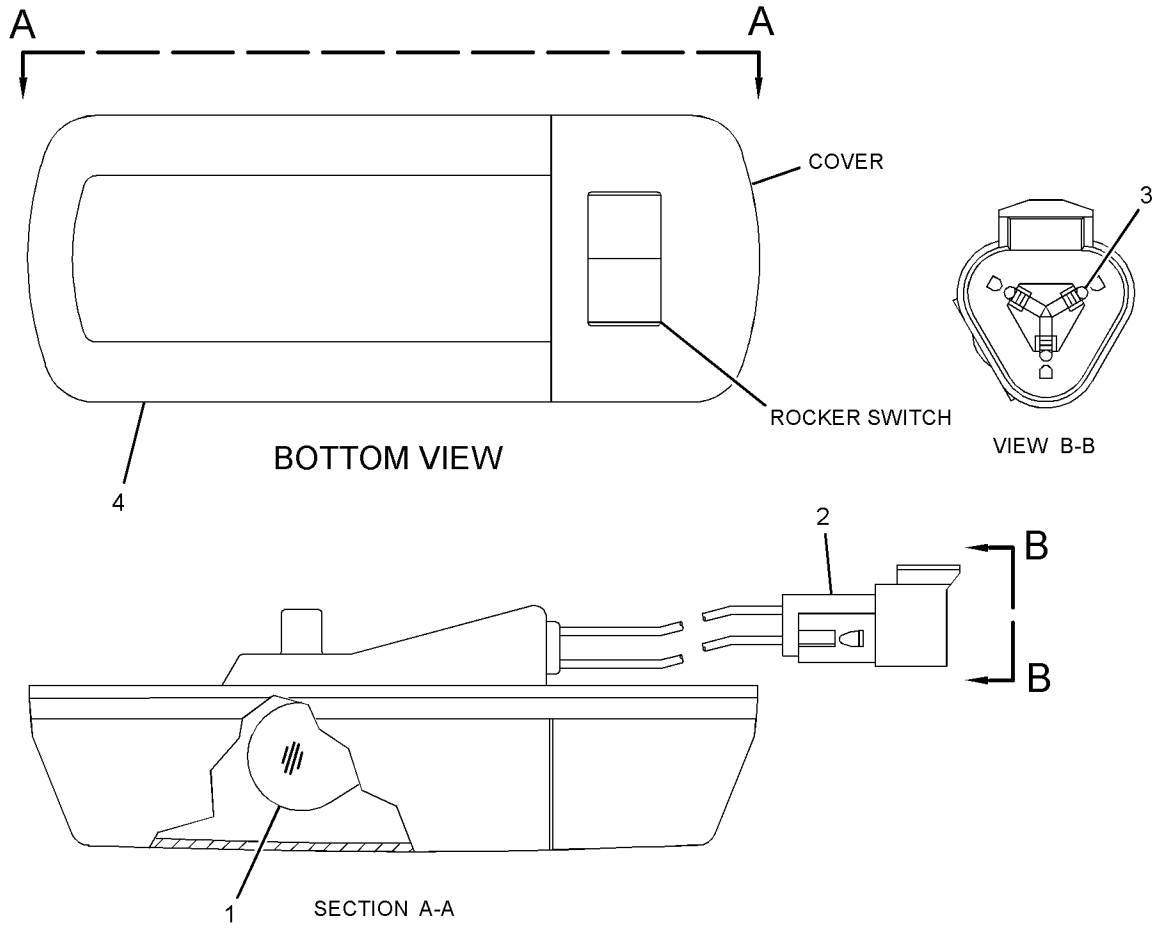

GRAPHIC #1 <END> g01428127

8Y-9600 LAMP GP-DOME

S/N: 9BL1-UP
CAB
PART OF 8Y-9729 MACHINE AR
AN ATTACHMENT

SMCS-1433 **i01399210**

NOTE	PART NUMBER	QTY	PART NAME 1 2 3 4 5 6 (PRODUCT LEVEL)	SEE PAGE
	6T-5600	4	BOSS	
	8Y-9497	1	CAP-PLASTIC	
	8Y-9209	4	CLIP	
	6V-1626	2	GROMMET	
	8Y-9527	2	LAMP AS	
			(EACH INCLUDES)	
	9X-3463	1	LAMP-HALOGEN (24-VOLT, 70-WATT)	
	7X-3317	4	SCREW-HEX SOCKET (5/16-18X0.87-IN)	
	8D-2676	1	SWITCH AS-TOGGLE (SINGLE POLE)	
	7X-0579	4	WASHER-HARD (8.8X25.5X2-MM THK)	

<END>

106-8964 LAMP GP-FLOOD

S/N: 9BL1-UP
24-VOLT
FIELD REPLACEMENT ORDER 171-2065—PAGE: 285, 2- 8T-8730 SOCKET-CONNECTOR, 1-155-2270 KIT-CONNECTING PLUG, 1-165-0699 KIT-MOUNTING BRACKET
PART OF 8Y-9311 LIGHTING GP, 121-7660, 5Q-6781, 8Y-9639, 8Y-9650 LIGHTING GP-FLOOD AN ATTACHMENT

SMCS-1434 **i02362327**

NOTE	REF NO	GRAPHIC REF	PART NUMBER	QTY	PART NAME 1 2 3 4 5 6 (PRODUCT LEVEL)	SEE PAGE
	1	1	**107-5851**	4	SCREW (M4X32-MM)	
	2	1	**107-5853**	1	LENS AS (FLOODLIGHT)	
	3	1	**107-5852**	1	SEAL	
	4	1	**107-5854**	1	BODY AS-LAMP	
	5	1	**9X-3463**	1	LAMP-HALOGEN (24-VOLT, 70-WATT)	
M	6	1	**8T-0337**	2	SCREW-MACHINE (M4X0.7X12-MM)	

M - METRIC PART

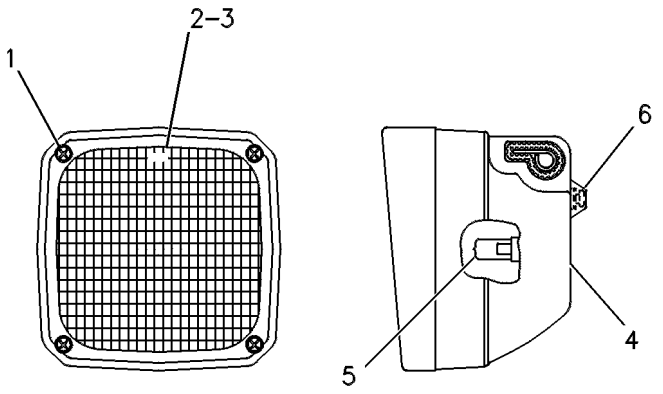

SIDE VIEW

GRAPHIC #1 <END> g00247382

107-6689 LAMP GP-FLOOD

S/N: 9BL1-UP
24 VOLT. VERTICAL
PART OF 121-7660, 5Q-6781, 8Y-9639 LIGHTING GP-FLOOD
AN ATTACHMENT

SMCS-1434 **i01336773**

NOTE	REF NO	GRAPHIC REF	PART NUMBER	QTY	PART NAME 1 2 3 4 5 6 (PRODUCT LEVEL)	SEE PAGE
	1	1	**107-5851**	4	SCREW (M4X32-MM)	
	2	1	**107-5853**	1	LENS AS (FLOODLIGHT)	
	3	1	**107-5852**	1	SEAL	
	4	1	**107-5854**	1	BODY AS-LAMP	
	5	1	**9X-3463**	1	LAMP-HALOGEN (24-VOLT, 70-WATT)	
M	6	1	**8T-0337**	2	SCREW-MACHINE (M4X0.7X12-MM)	

M - METRIC PART

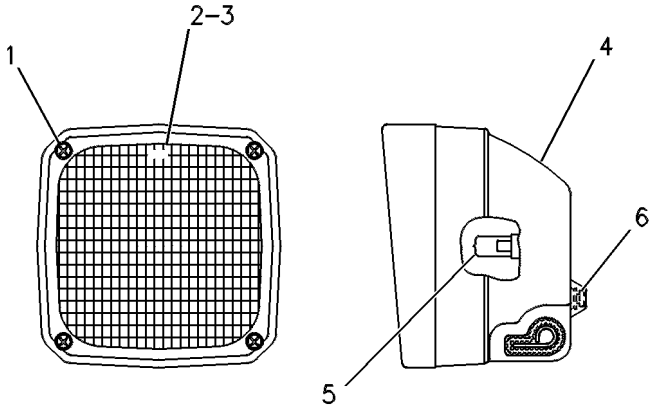

SIDE VIEW

GRAPHIC #1 <END> g00247373

171-2065 LAMP GP-FLOOD

S/N: 9BL1-UP
24-VOLT
FIELD REPLACEMENT FOR 106-8964—PAGE: 283

SMCS-1434 **i03496202**

NOTE	REF NO	GRAPHIC REF	PART NUMBER	QTY	PART NAME 1 2 3 4 5 6 (PRODUCT LEVEL)	SEE PAGE
	1	1	**9X-3463**	1	LAMP-HALOGEN (24-VOLT, 70-WATT) (FLOODLIGHT)	
	2	1	**162-5372**	1	BODY AS-LAMP	
	3	1	**336-7235**	1	LENS AS (FLOODLIGHT)	
	4	1	**158-0252**	1	BEZEL	
	5	1	**188-8849**	2	CLAMP	
	6	1	**186-3735**	2	PIN-CONNECTOR (16-GA TO 18-GA)	
	8	1	**102-8802**	1	KIT-RECEPTACLE (2-PIN)	
					(INCLUDES RECEPTACLE AS & WEDGE)	

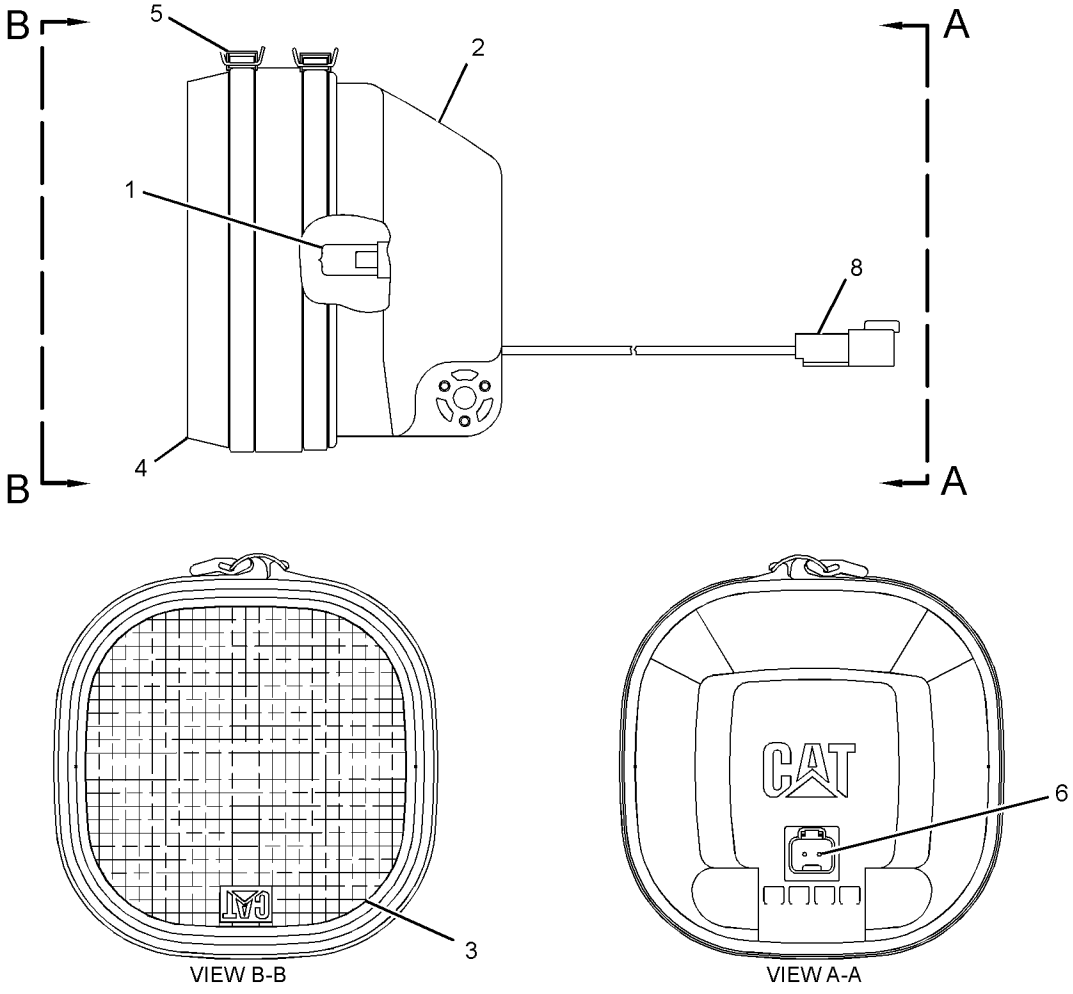

GRAPHIC #1 <END> g01838757

8Y-9311 LIGHTING GP

S/N: 9BL1-UP

AN ATTACHMENT

SMCS-1429 **i01399301**

NOTE	REF NO	GRAPHIC REF	PART NUMBER	QTY	PART NAME 1 2 3 4 5 6 (PRODUCT LEVEL)	SEE PAGE
	1	1	**8D-2676**	1	SWITCH AS-TOGGLE (SINGLE POLE) (FLOODLAMP)	
	2	1	**5M-3062**	2	BOLT (3/8-16X0.75-IN)	
		1	**8T-4896**	2	WASHER-HARD (10.2X18.5X2.5-MM THK)	
	3	1	**6V-1626**	2	GROMMET	
C	4	1	**115-1273**	2	BRACKET	
CY	5	1	*106-8964*	2	LAMP GP-FLOOD (24-VOLT)	283
	6	1	**8T-8912**	2	BOLT (5/16-18X2.25-IN)	
		1	**8T-4224**	4	WASHER-HARD (8.8X16X2-MM THK)	
	7	1	**3F-9556**	2	LOCKWASHER	
		1	**6V-8189**	2	NUT (5/16-18-THD)	

C - CHANGE FROM PREVIOUS TYPE
Y - SEPARATE ILLUSTRATION

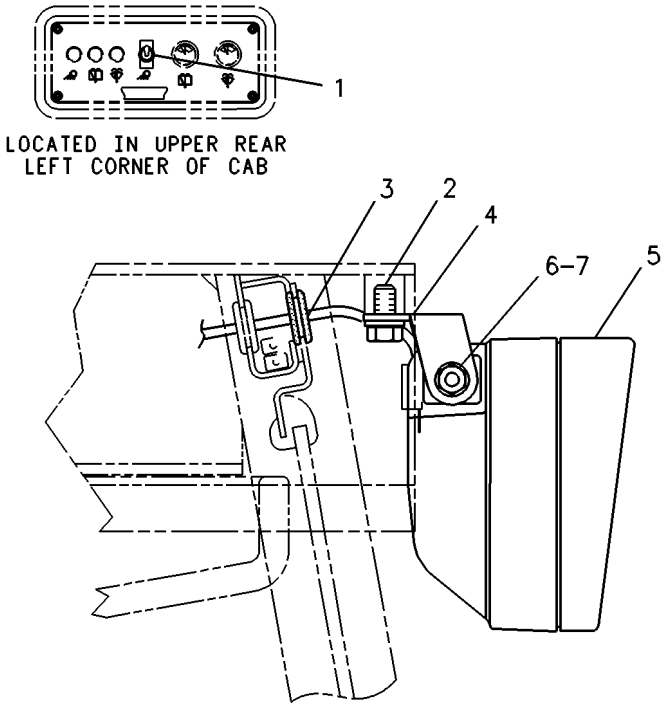

GRAPHIC #1 <END> g00229559

121-7660 LIGHTING GP-FLOOD

S/N: 9BL1-UP
COSA MARKET
FOR USE WITH 8Y-9774—PAGE: 476
AN ATTACHMENT

SMCS-1434 **i01399322**

NOTE	REF NO	GRAPHIC REF	PART NUMBER	QTY	PART NAME 1 2 3 4 5 6 (PRODUCT LEVEL)	SEE PAGE
	1	1	**8Y-9823**	1	GUARD AS	
	2	1	**4L-6454**	4	BOLT (3/8-16X1-IN)	
	3	1	**5P-1075**	12	WASHER-HARD (10.2X22.5X3-MM THK)	
	4	1	**2D-2751**	2	GROMMET	
	5	1	**8Y-9824**	1	GUARD AS	
	6	1	**6V-8189**	4	NUT (5/16-18-THD)	
	7	1	**3F-9556**	4	LOCKWASHER	
	8	1	**8T-4224**	8	WASHER-HARD (8.8X16X2-MM THK)	
	9	1	**5P-2955**	4	BOLT (5/16-18X2.5-IN)	
	10	1	**5M-3062**	4	BOLT (3/8-16X0.75-IN)	
	11	1	**121-8776**	1	GRILL AS	
	12	1	**8Y-9725**	1	BRACKET AS	
		1	**9F-2978**	1	NUT-WELD (3/8-16-THD)	
		1	**9D-4439**	2	STUD-WELD (3/8-16X1-IN)	
	13	1	**8Y-9724**	1	BRACKET AS	
		1	**9F-2978**	1	NUT-WELD (3/8-16-THD)	
		1	**9D-4439**	2	STUD-WELD (3/8-16X1-IN)	
	14	1	**8Y-9217**	1	HARNESS AS	
	15	1	**5P-9085**	8	CLIP	
	16	1	**6V-8801**	4	NUT (3/8-16-THD)	
Y	17	1	*107-6689*	2	LAMP GP-FLOOD (24-VOLT)	284
Y	18	1	*106-8964*	2	LAMP GP-FLOOD (24-VOLT)	283
	19	1	**115-8364**	2	BRACKET AS	
		1	**9F-2978**	1	NUT-WELD (3/8-16-THD)	
	20	1	**115-1273**	2	BRACKET	
	21	1	**8G-8462**	1	CHANNEL	

Y - SEPARATE ILLUSTRATION

121-7660 **LIGHTING GP-FLOOD** (contd.) **i01399322**

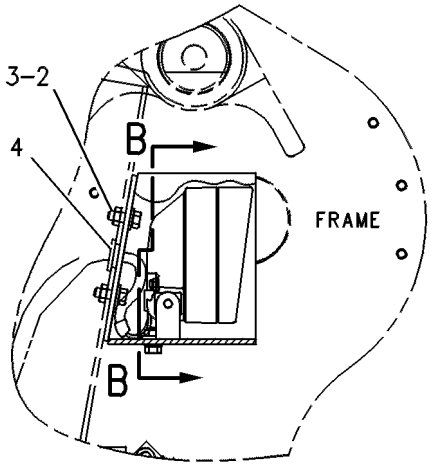

VIEW A-A

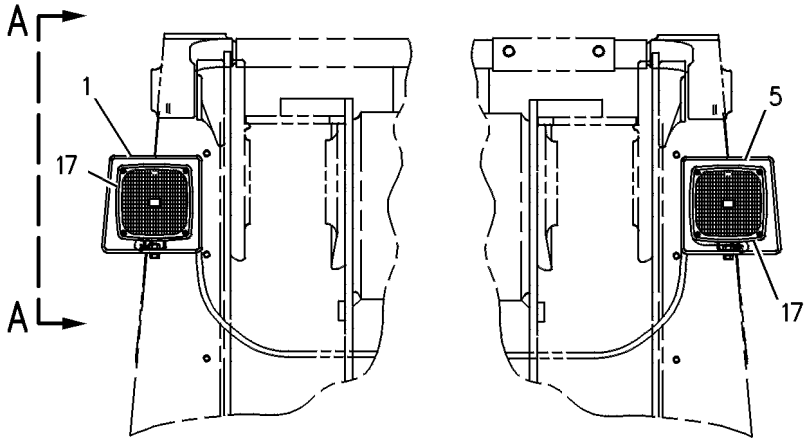

FRONT VIEW

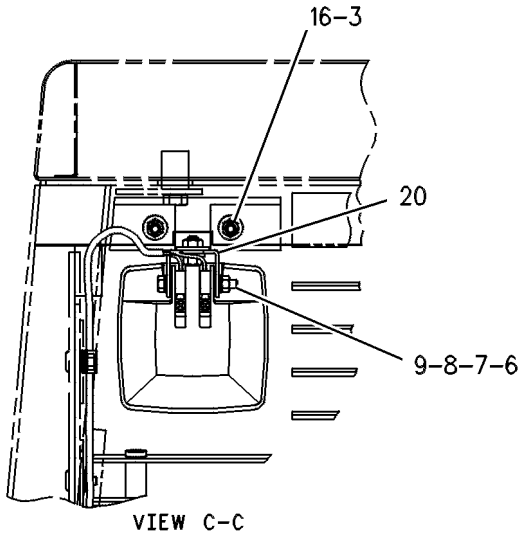

VIEW C-C

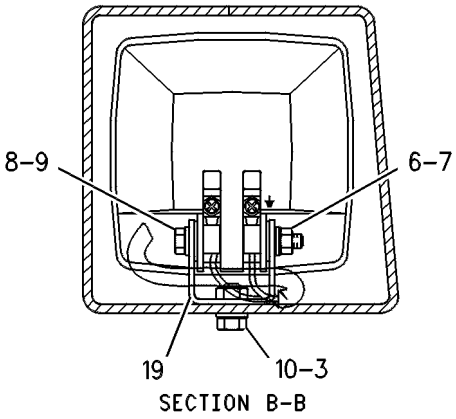

SECTION B-B

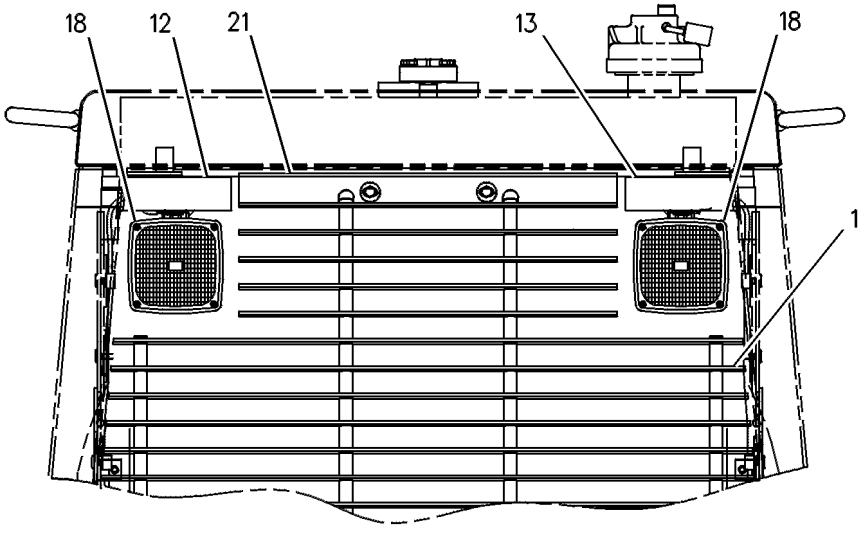

REAR VIEW

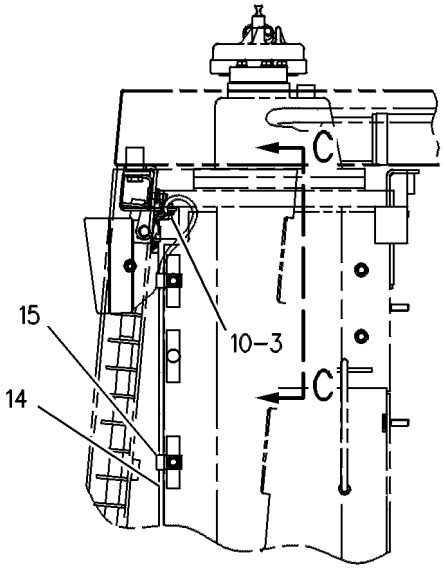

RIGHT SIDE VIEW

GRAPHIC #1 <END> g00247371

5Q-6781 LIGHTING GP-FLOOD

S/N: 9BL1-UP
4 LAMP
PART OF 133-0569, 133-3958 WASTE HANDLING AR
AN ATTACHMENT

SMCS-1434 **i01399306**

NOTE	REF NO	GRAPHIC REF	PART NUMBER	QTY	PART NAME 1 2 3 4 5 6 (PRODUCT LEVEL)	SEE PAGE
	1	1	**2D-2751**	2	GROMMET	
	2	1	**4L-6454**	16	BOLT (3/8-16X1-IN)	
	3	1	**5P-1075**	4	WASHER-HARD (10.2X22.5X3-MM THK)	
	4	1	**5Q-6776**	1	GUARD AS (FRONT, LH)	
	5	1	**1F-0750**	3	NUT-WELD (3/8-16-THD)	
	6	1	**5Q-6142**	1	SCREEN AS (RH)	
	7	1	**8T-4896**	18	WASHER-HARD (10.2X18.5X2.5-MM THK)	
	8	1	**5S-7379**	10	BOLT (3/8-16X0.875-IN)	
	9	1	**5Q-6803**	1	GUARD AS-FRONT (RH)	
	10	1	**1F-0750**	3	NUT-WELD (3/8-16-THD)	
	11	1	**3F-9556**	4	LOCKWASHER	
	12	1	**6V-8189**	4	NUT (5/16-18-THD)	
	13	1	**115-8364**	4	BRACKET AS	
	14	1	**1F-0750**	1	NUT-WELD (3/8-16-THD)	
	15	1	**8T-4224**	4	WASHER-HARD (8.8X16X2-MM THK)	
	16	1	**5P-2955**	4	BOLT (5/16-18X2.5-IN)	
Y	17	1	*106-8964*	2	LAMP GP-FLOOD (24-VOLT)	283
	18	1	**5P-9085**	10	CLIP	
	19	1	**5Q-6773**	1	HARNESS AS	
	20	1	**5Q-6782**	2	SCREEN AS	
	21	1	**8H-3526**	6	WASHER (0.468X0.81X0.12-IN THK)	
	22	1	**5Q-6141**	1	SCREEN AS (LH)	
Y	23	1	*107-6689*	2	LAMP GP-FLOOD (24-VOLT)	284
	24	1	**7X-0503**	4	WASHER-HARD (10.2X28.5X5-MM THK)	
	25	1	**5Q-6775**	2	GUARD AS	
	26	1	**1F-0750**	3	NUT-WELD (3/8-16-THD)	

Y - SEPARATE ILLUSTRATION

5Q-6781 **LIGHTING GP-FLOOD (**contd.**)** **i01399306**

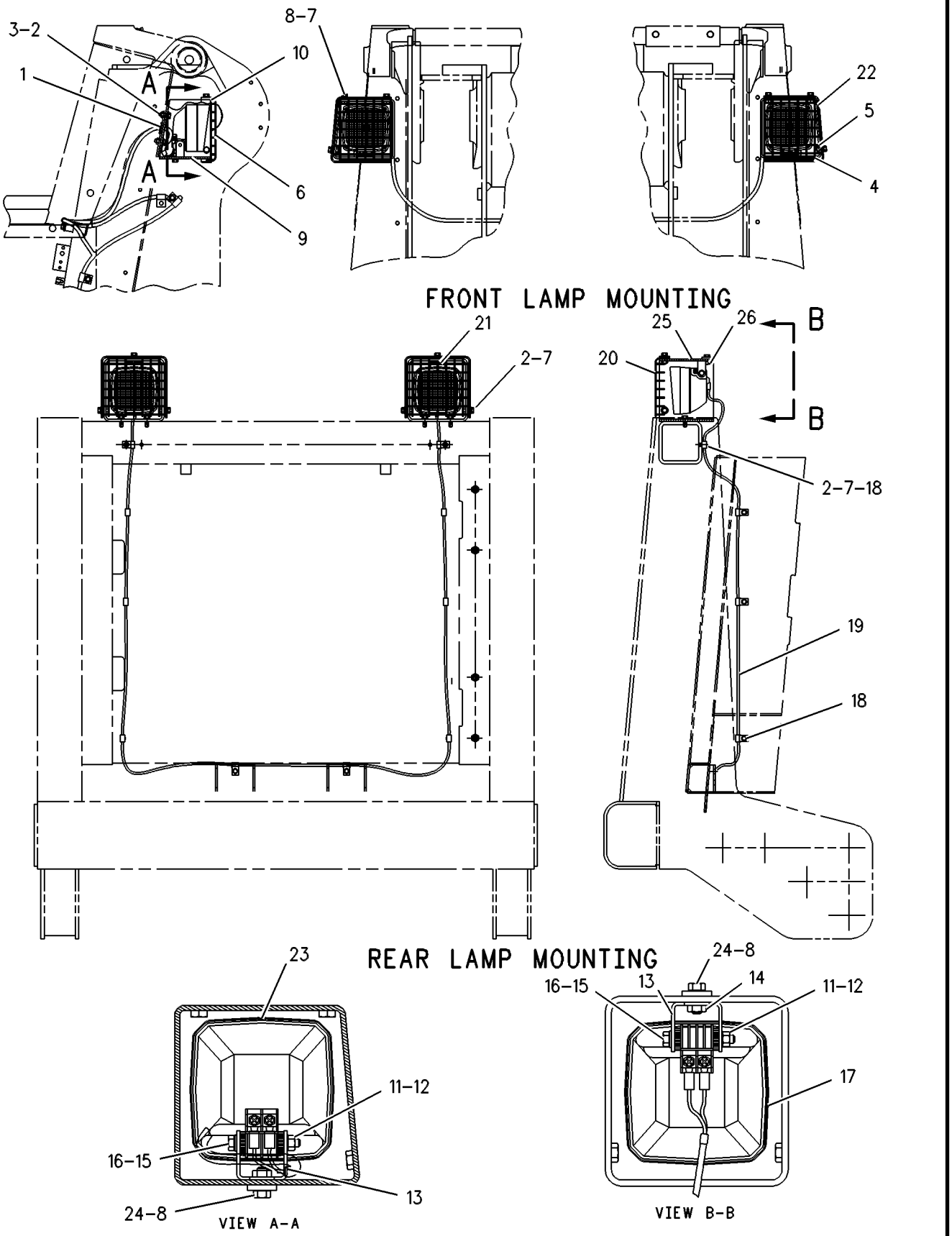

GRAPHIC #1 <END> g00295029

8Y-9639 LIGHTING GP-FLOOD

S/N: 9BL1-UP

AN ATTACHMENT

SMCS-1434 **i01401167**

NOTE	REF NO	GRAPHIC REF	PART NUMBER	QTY	PART NAME 1 2 3 4 5 6 (PRODUCT LEVEL)	SEE PAGE
	1	1	**8Y-9823**	1	GUARD AS	
	2	1	**4L-6454**	4	BOLT (3/8-16X1-IN)	
	3	1	**5P-1075**	12	WASHER-HARD (10.2X22.5X3-MM THK)	
	4	1	**2D-2751**	2	GROMMET	
	5	1	**8Y-9824**	1	GUARD AS	
	6	1	**6V-8189**	4	NUT (5/16-18-THD)	
		1	**3F-9556**	4	LOCKWASHER	
	7	1	**115-1273**	2	BRACKET	
	8	1	**8T-4224**	8	WASHER-HARD (8.8X16X2-MM THK)	
	9	1	**5P-2955**	4	BOLT (5/16-18X2.5-IN)	
	10	1	**5M-3062**	4	BOLT (3/8-16X0.75-IN)	
	11	1	**118-7981**	1	GUARD AS	
	12	1	**8Y-9725**	1	BRACKET AS	
		1	**9F-2978**	1	NUT-WELD (3/8-16-THD)	
		1	**9D-4439**	2	STUD-WELD (3/8-16X1-IN)	
	13	1	**8Y-9724**	1	BRACKET AS	
		1	**9F-2978**	1	NUT-WELD (3/8-16-THD)	
		1	**9D-4439**	2	STUD-WELD (3/8-16X1-IN)	
	14	1	**8Y-9217**	1	HARNESS AS	
	15	1	**5P-9085**	8	CLIP	
	16	1	**6V-8801**	4	NUT (3/8-16-THD)	
Y	17	1	*107-6689*	2	LAMP GP-FLOOD (24-VOLT)	284
Y	18	1	*106-8964*	2	LAMP GP-FLOOD (24-VOLT)	283
	19	1	**115-8364**	2	BRACKET AS	
					(EACH INCLUDES)	
		1	**9F-2978**	1	NUT-WELD (3/8-16-THD)	

Y - SEPARATE ILLUSTRATION

8Y-9639 **LIGHTING GP-FLOOD (**contd.**)** **i01401167**

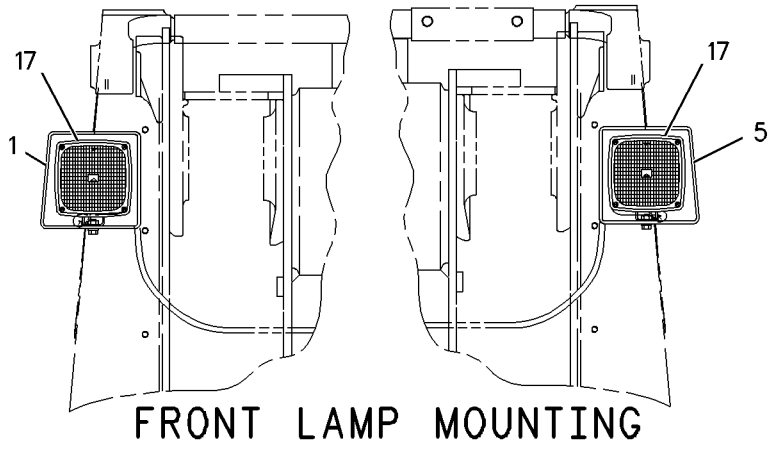

FRONT LAMP MOUNTING

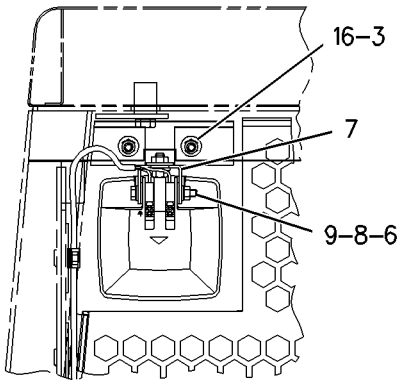

VIEW B-B

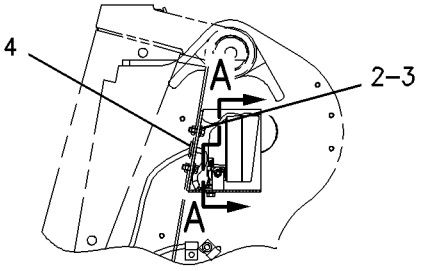

RIGHT
SIDE VIEW

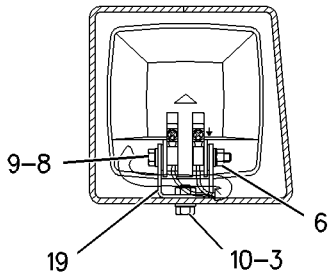

SECTION A-A

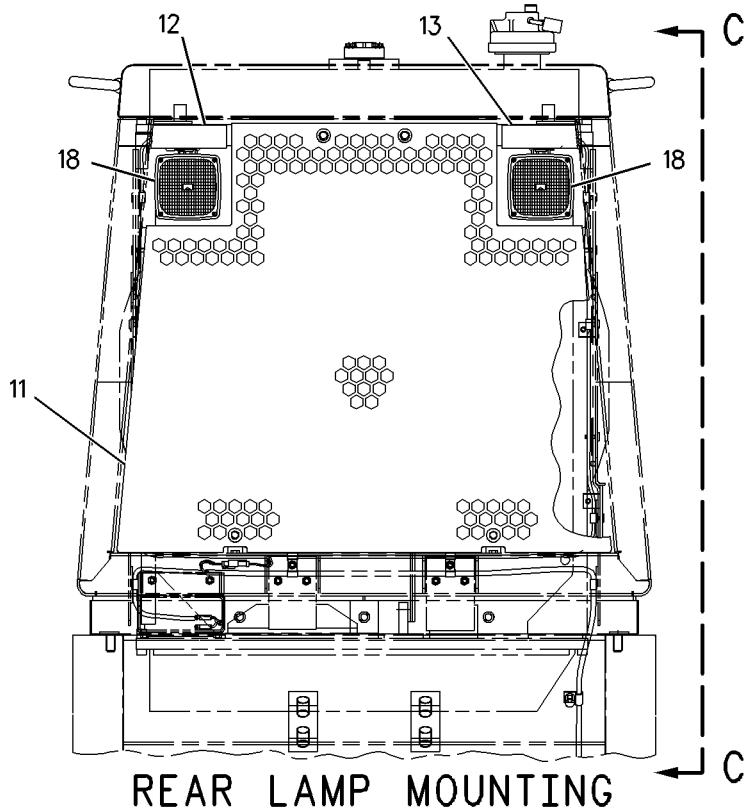

REAR LAMP MOUNTING

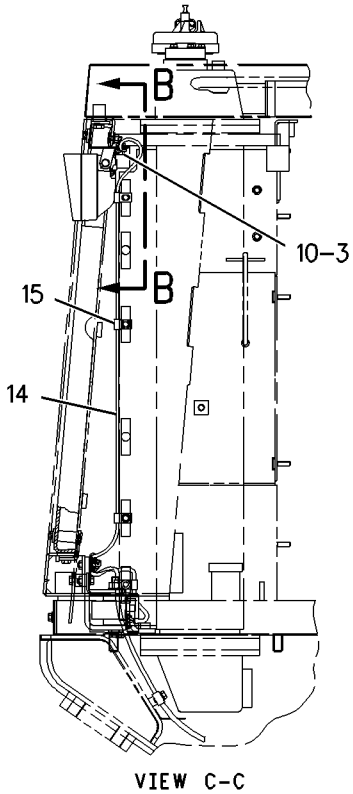

VIEW C-C

GRAPHIC #1 <END> g00738261

8Y-9650 LIGHTING GP-FLOOD

S/N: 9BL1-UP
OPEN ROPS
AN ATTACHMENT

SMCS-1434 **i01399313**

NOTE	REF NO	GRAPHIC REF	PART NUMBER	QTY	PART NAME 1 2 3 4 5 6 (PRODUCT LEVEL)	SEE PAGE
	1	1	**2V-8260**	1	GROMMET	
	2	1	**5S-7349**	4	BOLT (1/4-20X0.5-IN)	
		1	**5P-4115**	4	WASHER-HARD (7.2X19X2-MM THK)	
	3	1	**8Y-9602**	1	HARNESS AS-WIRING (OPEN ROPS)	
	4	1	**8T-8912**	2	BOLT (5/16-18X2.25-IN)	
		1	**8T-4224**	4	WASHER-HARD (8.8X16X2-MM THK)	
		1	**6V-8189**	2	NUT (5/16-18-THD)	
		1	**3F-9556**	2	LOCKWASHER	
	5	1	**8G-9986**	1	ANGLE AS	
		1	**9F-6445**	1	NUT-WELD (1/4-20-THD)	
	6	1	**5M-3062**	6	BOLT (3/8-16X0.75-IN)	
	7	1	**8Y-9651**	1	COVER AS	
M		1	**8T-8874**	3	NUT-WELD (M5X0.8-THD)	
	8	1	**4K-5122**	1	HOLDER AS-FUSE	
		1	**7N-2867**	1	CAP-FUSE HOLDER	
		1	**3K-8781**	1	FUSE (7.5-AMPERE)	
	9	1	**8T-4896**	2	WASHER-HARD (10.2X18.5X2.5-MM THK)	
	10	1	**8D-2676**	1	SWITCH AS-TOGGLE (SINGLE POLE) (LIGHT)	
	11	1	**102-2911**	1	FILM-IDENTIFICATION	
	12	1	**8C-9678**	1	LAMP GP-DOME (24-VOLT)	
		1	**7N-7779**	2	SOCKET-CONNECTOR (14-GA TO 18-GA)	
		1	**7N-7780**	1	PIN-CONNECTOR (14-GA TO 18-GA)	
		1	**7N-7782**	1	HOUSING-PLUG (14-GA TO 18-GA)	
		1	**7N-9943**	1	LAMP (24-VOLT)	
		1	**7T-0020**	1	LENS-DOME LAMP	
M	13	1	**8T-0326**	3	BOLT (M5X0.8X25-MM)	
		1	**7X-0620**	3	WASHER-HARD (5.5X13X1.6-MM THK)	
	14	1	**7P-7723**	1	CHANNEL	
	15	1	**7P-7718**	1	COVER AS	
		1	**5P-8167**	2	BOLT (3/8-16X0.625-IN)	
	16	1	**5P-8524**	2	GROMMET	
C	17	1	**115-1273**	2	BRACKET	
CY	18	1	*106-8964*	2	LAMP GP-FLOOD (24-VOLT)	283
	19	1	**8G-0918**	1	COVER	
	20	1	**5P-1075**	6	WASHER-HARD (10.2X22.5X3-MM THK)	

C - CHANGE FROM PREVIOUS TYPE
M - METRIC PART
Y - SEPARATE ILLUSTRATION

8Y-9650 **LIGHTING GP-FLOOD (**contd.**)** **i01399313**

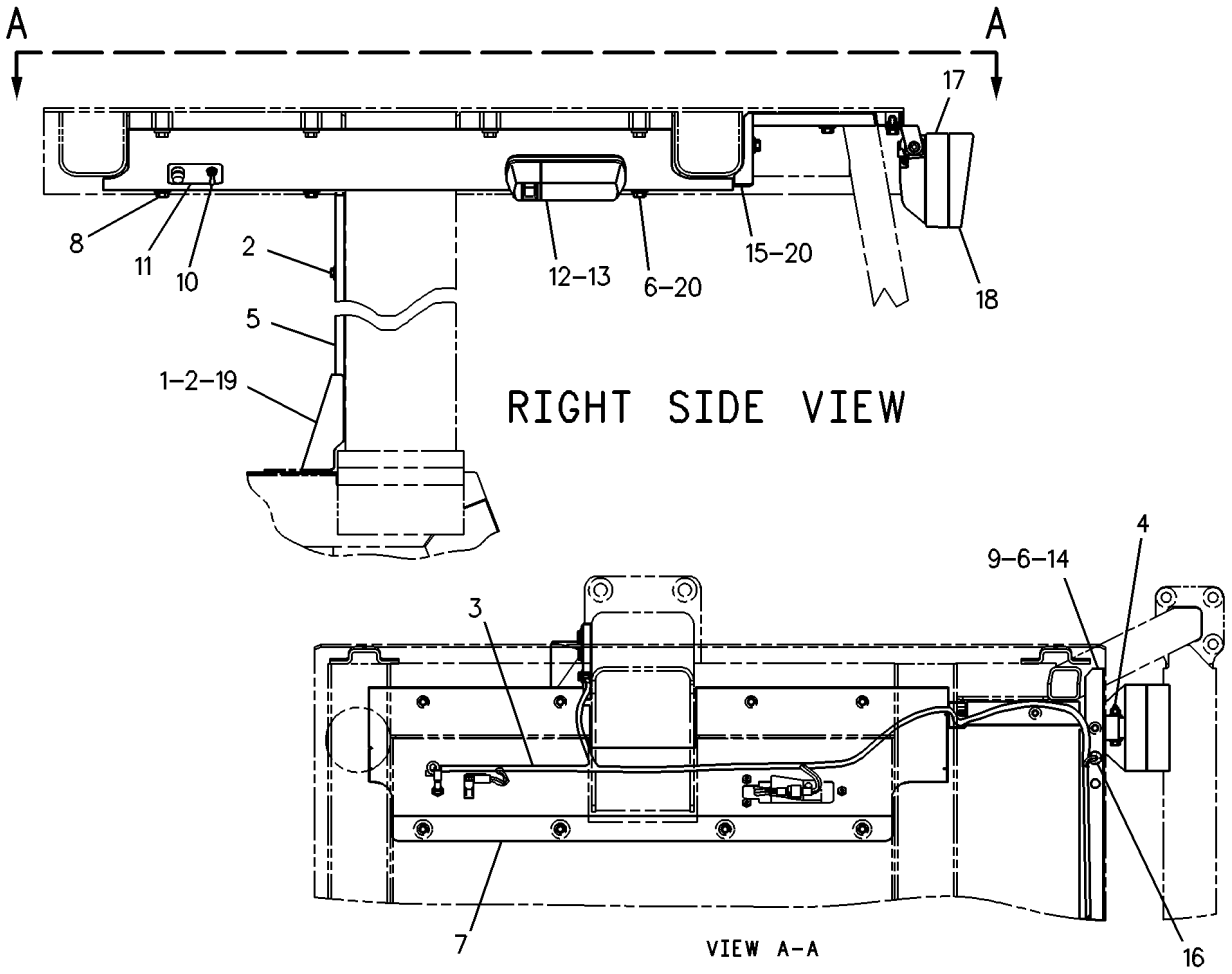

GRAPHIC #1 <END> g00229753

160-6411 SOLENOID GP-SHUTOFF

S/N: 4TF49535-50041

PART OF 117-5187 ENGINE AR

SMCS-1259 **i02014196**

NOTE	REF NO	GRAPHIC REF	PART NUMBER	QTY	PART NAME 1 2 3 4 5 6 (PRODUCT LEVEL)	SEE PAGE
	1	1	**155-4652**	1	SOLENOID AS	
	2	1	**6V-8377**	2	NUT (8-32-THD)	
	3	1	**9B-7233**	2	LOCKWASHER	
	4	1	**6V-8378**	1	NUT (10-32-THD)	
	5	1	**4B-4274**	1	WASHER (5.5X13X1.2-MM THK)	
	6	1	**4K-1388**	1	SEAL-O-RING	

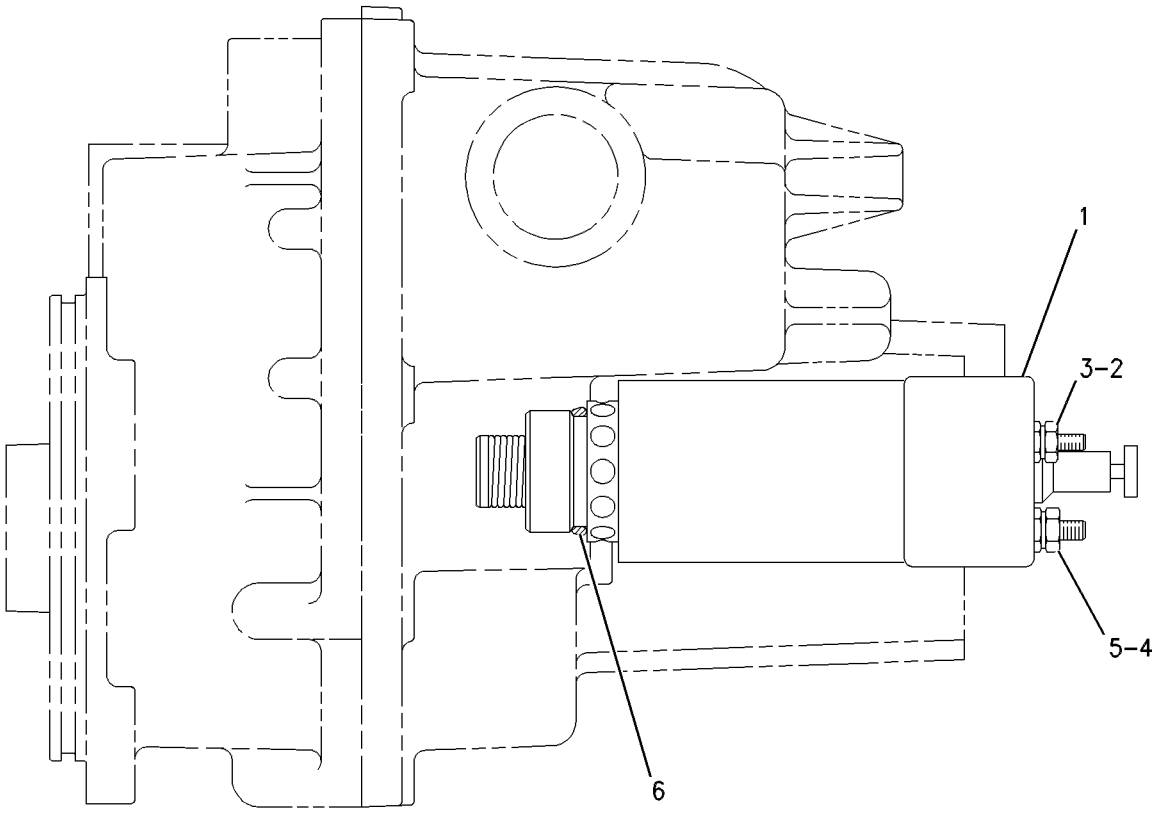

GRAPHIC #1 <END> g00570608

7C-4028 SOLENOID GP-SHUTOFF

S/N: 4TF17400-UP
24 VOLT
FOR USE WITH ENERGIZED TO SHUTOFF CONTROL SYSTEMS,EMCP OR ELECTRO-MECHANICAL, & ON APPLICATIONS REQUIRING A 24-VOLT LATCHING TYPE SHUT-OFF SOLENOID—BOSS MOUNTED
PART OF 114-7159, 117-5187, 117-5188, 6I-3528 ENGINE AR
ALSO AN ATTACHMENT

SMCS-1259 **i01641192**

NOTE	REF NO	GRAPHIC REF	PART NUMBER	QTY	PART NAME 1 2 3 4 5 6 (PRODUCT LEVEL)	SEE PAGE
	1	1	**155-4652**	1	SOLENOID AS	
		1	**6V-8377**	2	NUT (8-32-THD)	
		1	**9B-7233**	2	LOCKWASHER	
		1	**6V-8378**	1	NUT (10-32-THD)	
		1	**4B-4274**	1	WASHER (5.5X13X1.2-MM THK)	
	2	1	**4K-1388**	1	SEAL-O-RING	

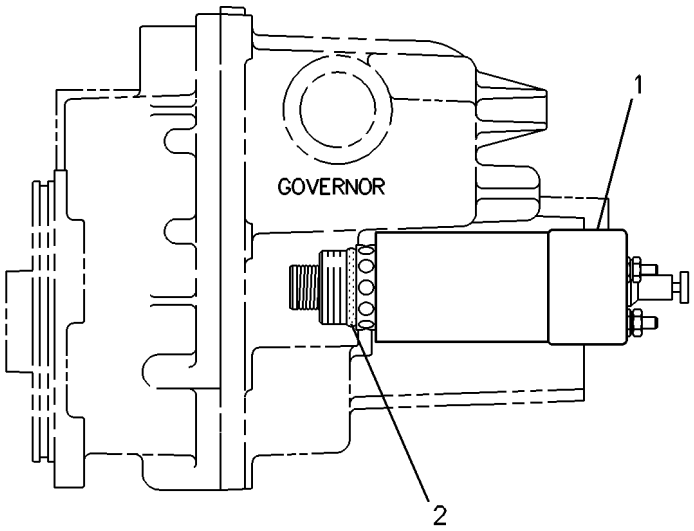

GRAPHIC #1 <END> g00108439

106-9086 STARTING AID GP

S/N: 4TF17400-UP
22 VOLTS AT 98 AMPERES
PART OF 114-7159, 117-5187, 117-5188 ENGINE AR
ALSO AN ATTACHMENT

SMCS-1090 **i01175149**

NOTE	REF NO	GRAPHIC REF	PART NUMBER	QTY	PART NAME 1 2 3 4 5 6 (PRODUCT LEVEL)	SEE PAGE
	1	1	**107-9652**	1	HEATER AS (22-VOLT, 2160-WATT)	
M		1	**5C-2890**	2	NUT (M6X1-THD)	
	2	1	**7C-1152**	2	GASKET	
M	3	1	**129-3179**	1	STUD-TAPERLOCK (M8X1.25X130-MM)	
M	4	1	**5P-8347**	22	BOLT (M8X1.25X70-MM)	
	5	1	**9M-1974**	24	WASHER-HARD (8.8X16X2-MM THK)	
M	6	1	**5P-7970**	1	NUT (M8X1.25-THD)	
	7	1	**108-5747**	1	STRAP-GROUNDING	
	8	1	**108-5746**	1	HOSE	
	9	1	**3D-2824**	1	SEAL-O-RING	
	10	1	**3E-4075**	1	FITTING	

M - METRIC PART

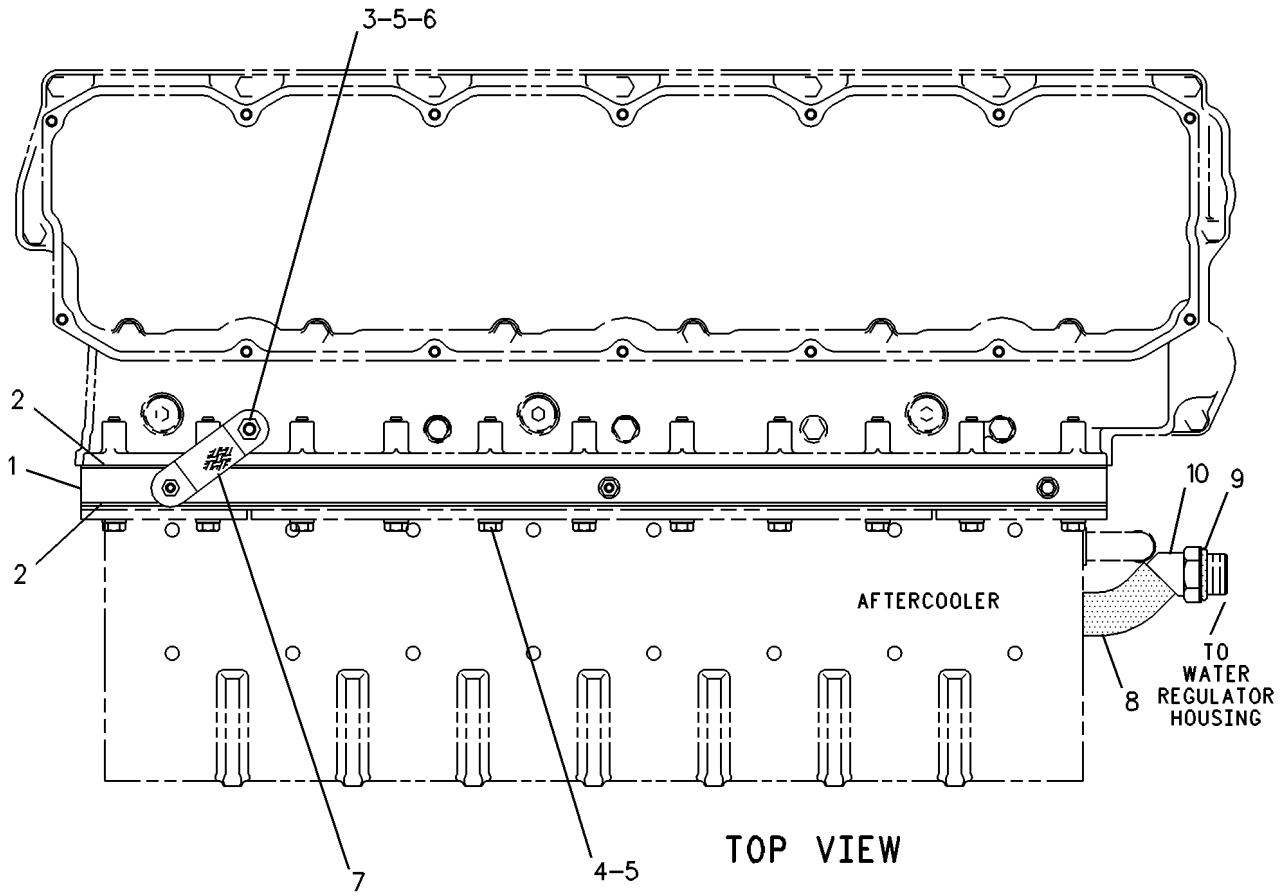

GRAPHIC #1 <END> g00108485

8Y-9638 STARTING AID GP-ETHER

S/N: 9BL1-UP

AN ATTACHMENT

SMCS-1456 **i01399324**

NOTE	REF NO	GRAPHIC REF	PART NUMBER	QTY	PART NAME 1 2 3 4 5 6 (PRODUCT LEVEL)	SEE PAGE
	1	1	**6N-9995**	1	ATOMIZER-ETHER	
	2	1	**8J-7844**	1	ADAPTER	
	3	1	**3K-0360**	1	SEAL-O-RING	
	4	1	**116-6312**	1	TUBE	
	5	1	**1V-3113**	2	CLIP	
	6	1	**116-6314**	1	BRACKET AS	
	7	1	**5P-2948**	1	FITTING AS	
	8	1	**2V-1713**	1	TAG-NOTICE (STARTING AID)	
	9	1	**1C-0569**	4	BOLT (5/16-18X0.5-IN)	
	10	1	**3E-6332**	1	VALVE GP-ETHER STARTING (24-VOLT)	
M	11	1	**8T-4171**	1	BOLT (M6X1X12-MM)	
	12	1	**5P-9085**	1	CLIP	
	13	1	**5P-0537**	2	WASHER-HARD (7.2X14.5X2-MM THK)	
	14	1	**8T-4224**	4	WASHER-HARD (8.8X16X2-MM THK)	
	15	1	**8T-9364**	1	BOLT (1/4-20X0.625-IN)	
	16	1	**116-6313**	1	TUBE	
	17	1	**7N-2059**	1	CLAMP AS (CYLINDER)	
	18	1	**7N-0140**	1	TUBE AS-COIL	
	19	1	**4P-7581**	1	CLIP (LADDER)	
	20	1	**3S-2093**	1	STRAP-CABLE	
A		1	**7N-0296**	1	CYLINDER AS-ETHER	

A - NOT PART OF THIS GROUP
M - METRIC PART

8Y-9638 **STARTING AID GP-ETHER (**contd.**)** **i01399324**

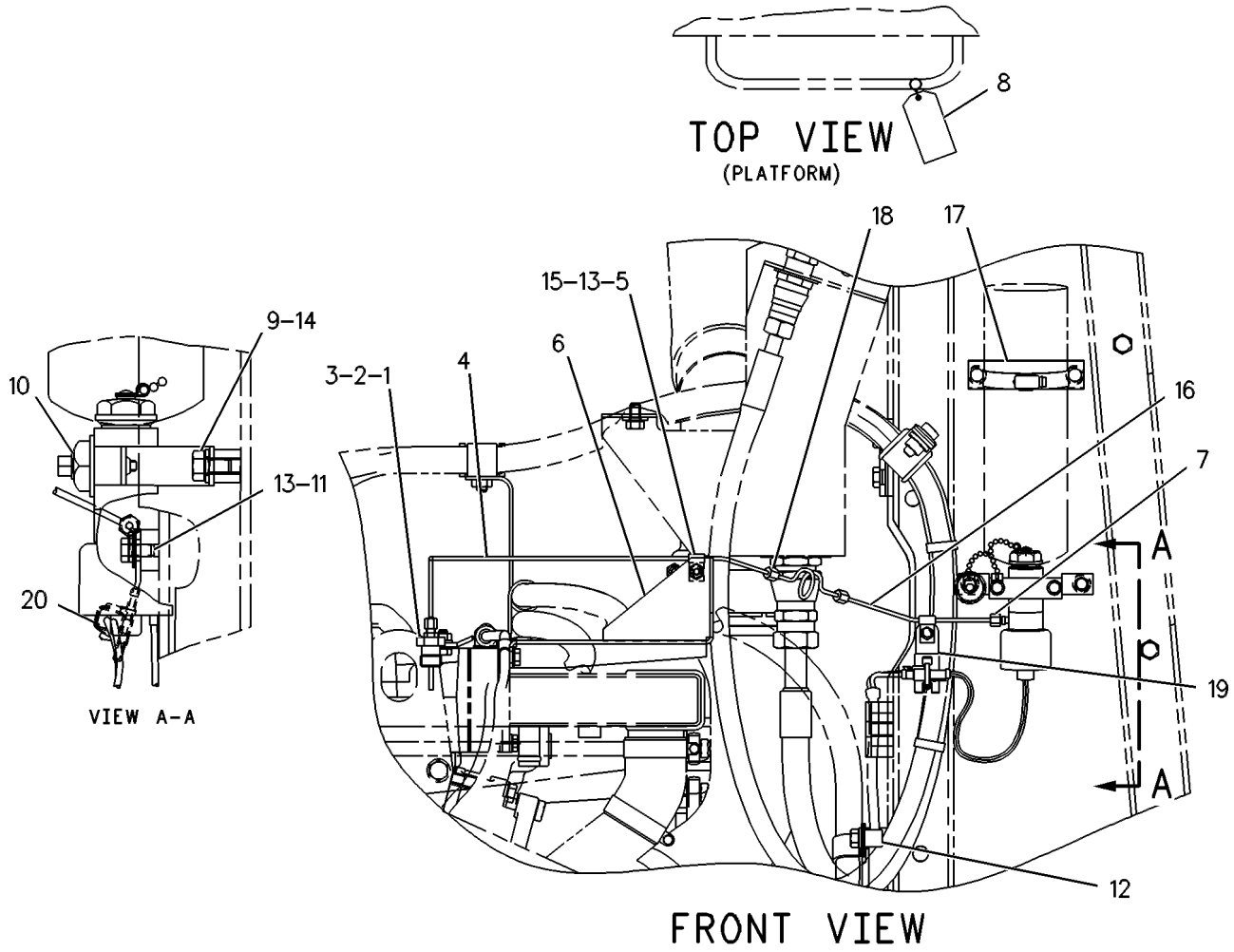

GRAPHIC #1 <END> g00271165

104-7040 STARTING MOTOR GP-ELECTRIC

S/N: 4TF17400-UP
24 VOLT
FIELD REPLACEMENT ORDER 106-8558—PAGE: 302
PART OF 108-3858 STARTING MOTOR GP-ELECTRIC
ALSO AN ATTACHMENT

SMCS-1453 **i01365815**

NOTE	PART NUMBER	QTY	PART NAME 1 2 3 4 5 6 (PRODUCT LEVEL)	SEE PAGE
Y	*106-8557*	1	STARTING MOTOR GP-ELECTRIC	301
			—OR—	
Y	*6V-5720*	1	STARTING MOTOR GP-ELECTRIC	310

Y - SEPARATE ILLUSTRATION

<END>

106-8557 STARTING MOTOR GP-ELECTRIC

S/N: 4TF17400-UP
24 VOLT
PART OF 104-7040 STARTING MOTOR GP-ELECTRIC
ALSO AN ATTACHMENT

SMCS-1453 **i01399327**

NOTE	REF NO	GRAPHIC REF	PART NUMBER	QTY	PART NAME 1 2 3 4 5 6 (PRODUCT LEVEL)	SEE PAGE
M	1	1	**8T-4244**	3	NUT (M12X1.75-THD)	
	2	1	**7X-0562**	3	WASHER-HARD (13.5X19X0.8-MM THK)	
M	3	1	**8T-4133**	1	NUT (M10X1.5-THD)	
M	4	1	**9X-2036**	2	SCREW-PAN HEAD	
	5	1	**8F-1434**	1	LOCKWASHER	
	6	1	**8T-0328**	1	WASHER-HARD (5.5X10X1-MM THK)	
	7	1	**8T-4121**	1	WASHER-HARD (11X21X2.5-MM THK)	

M - METRIC PART

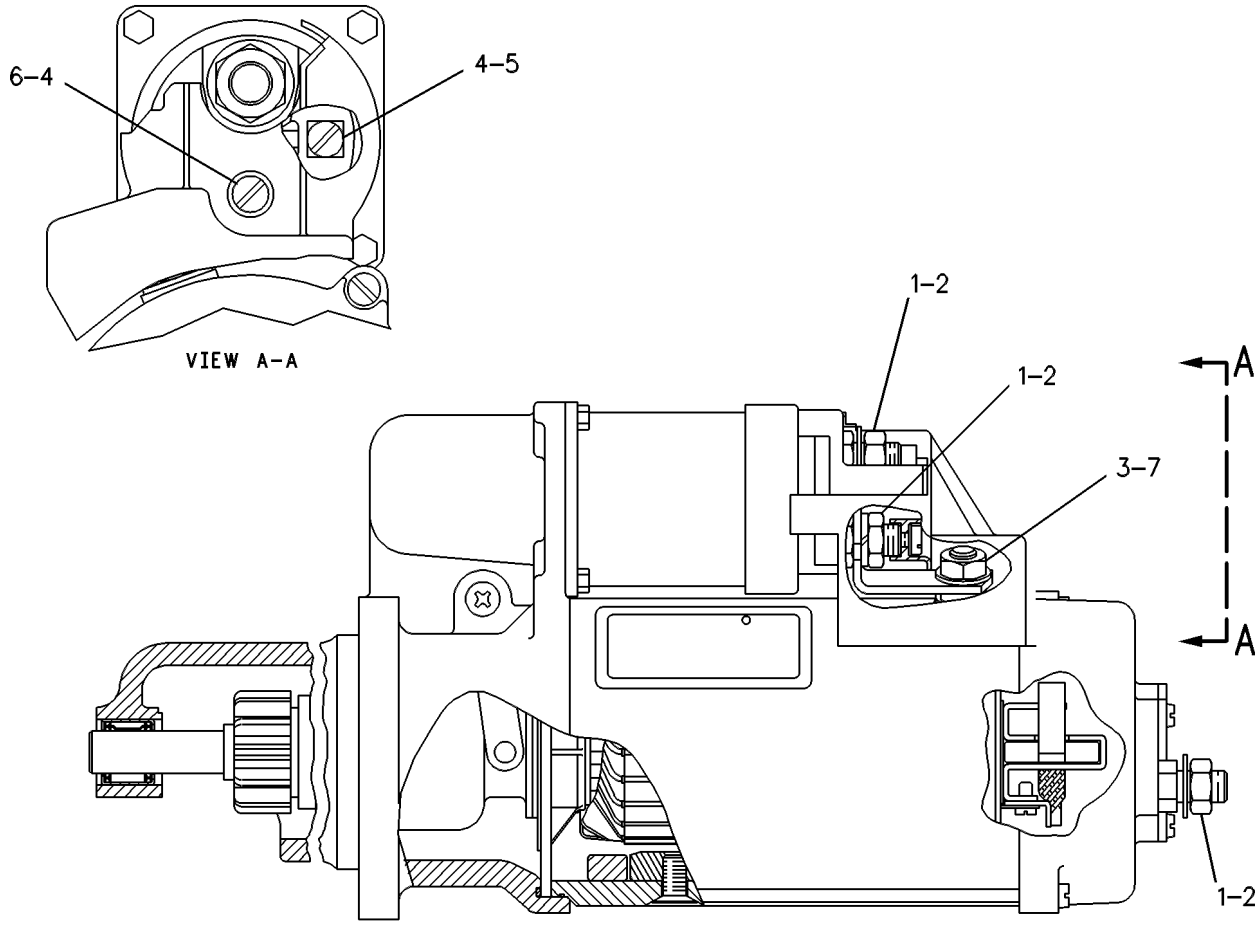

GRAPHIC #1 <END> g00262830

106-8558 STARTING MOTOR GP-ELECTRIC*R

S/N: 4TF17400-UP

24 VOLT

FIELD REPLACEMENT FOR 104-7040—PAGE: 300

SMCS-1453 **i01617947**

NOTE	PART NUMBER	QTY	PART NAME 1 2 3 4 5 6 (PRODUCT LEVEL)	SEE PAGE
Y	*106-8559*	1	STARTING MOTOR GP-ELECTRIC	303

Y - SEPARATE ILLUSTRATION

<END>

106-8559 STARTING MOTOR GP-ELECTRIC

S/N: 4TF17400-UP

24 VOLT

PART OF 106-8558 STARTING MOTOR GP-ELECTRIC

SMCS-1453 **i02005925**

NOTE	REF NO	GRAPHIC REF	PART NUMBER	QTY	PART NAME 1 2 3 4 5 6 (PRODUCT LEVEL)	SEE PAGE
	1	1	**3E-7859**	1	SOLENOID AS-STARTER (24-VOLT)	
	2	1	**5S-7349**	4	BOLT (1/4-20X0.5-IN)	
	3	1	**6V-8188**	4	NUT (1/2-13-THD)	
	4	1	**4M-1828**	1	RETAINER-SPRING	
J	5	1	**036-9821**	1	WASHER	
	6	1	**7T-3269**	1	BOOT	
	7	1	**7T-3270**	1	PLUNGER AS	
	8	1	**9M-7609**	1	SPRING (SHIFT LEVER)	
	9	1	**4M-1827**	1	RETAINER-SPRING	
	10	1	**102-9863**	1	TERMINAL AS	
	11	1	**4M-1831**	1	PLUG-LEVER HOUSING	
JLP	12	1	**7L-2894**	1	GASKET	
	13	1	**7X-1952**	1	HOUSING AS-LEVER	
	14	1	**3E-7858**	1	HOUSING AS	
	15	1	**3E-7857**	1	DRIVE AS-STARTING MOTOR	
	16	1	**036-9823**	5	BOLT (1/4-28X1-IN)	
	17	1	**7X-3373**	6	BOLT (5/16-18X0.88-IN)	
	18	1	**3F-0379**	8	SCREW-POLE SHOE (3/8-24-THD)	
	19	1	**3E-7855**	1	ARMATURE AS-STARTER (24-VOLT)	
	20	1	**7X-1950**	4	SHOE-POLE	
	21	1	**3E-7852**	1	COIL-STARTING MOTOR	
	22	1	**106-7149**	1	HOUSING AS	
	23	1	**9X-4821**	1	PLATE AS	
JZ	24	1		1	SPACER	
PZ	25	1		1	RING	
	26	1	**8T-4205**	4	WASHER-HARD (7.2X14.5X2-MM THK)	
	27	1	**8T-0328**	2	WASHER-HARD (5.5X10X1-MM THK)	
	28	1	**4B-2049**	2	NUT (10-32-THD)	
	29	1	**8F-1434**	1	LOCKWASHER	
	30	1	**2H-3429**	1	RING-RETAINING	
LZ	31	1		4	SCREW	
JZ	32	1		1	RETAINER	
PZ	33	1		1	LEVER AS	
	34	1	**3E-7853**	1	TERMINAL	
PZ	35	1		1	SHAFT AS	
JZ	36	1		1	RING	
JZ	37	1		1	WASHER	
	38	1	**7X-0562**	4	WASHER-HARD (13.5X19X0.8-MM THK)	
	39	1	**7T-3454**	1	INSULATOR	
	40	1	**7T-3451**	1	KIT-INSULATOR (STARTING MOTOR)	
	41	1	**8T-8569**	1	INSULATOR-TERMINAL	
	42	1	**9X-4271**	1	CONNECTOR	
JLZ	43	1		1	SEAL-O-RING	
LZ	44	1		4	SCREW	
LZ	45	1		4	SCREW AS	
LZ	46	1		4	BRUSH	

106-8559 **STARTING MOTOR GP-ELECTRIC** (contd.) **i02005925**

NOTE	REF NO	GRAPHIC REF	PART NUMBER	QTY	PART NAME 1 2 3 4 5 6 (PRODUCT LEVEL)	SEE PAGE
LZ	47	1		4	SPRING	
JZ	48	1		2	BUSHING	
JZ	49	1		1	BUSHING	
JZ	50	1		3	PLUG	
JZ	51	1		3	CUP	
JZ	52	1		1	WASHER	
JPZ	53	1		1	NUT	
PZ	54	1		1	SEAL	
JPZ	55	1		1	SEAL-O-RING	
JPZ	56	1		1	SEAL-O-RING	
JZ	57	1		1	SEAL-O-RING	
Z	58	1		1	HOUSING	
PZ	59	1		1	RETAINER	
	60	1	**9X-4824**	1	COVER-STARTING MOTOR	
NZ	61	1		3	INSULATOR	
NZ	62	1		1	BUSHING	
					AVAILABLE REPAIR KIT(S):	
J			**3E-7860**	1	KIT-BUSHING (STARTING MOTOR)	
L			**9X-4825**	1	KIT-BRUSH (24-VOLT)	
P			**3E-7861**	1	KIT-LEVER (STARTING MOTOR)	
N			**8T-9884**	1	KIT-INSULATOR (STARTING MOTOR)	

J - KIT MARKED J INCLUDES PART(S) MARKED J
L - KIT MARKED L INCLUDES PART(S) MARKED L
N - KIT MARKED N INCLUDES PART(S) MARKED N
P - KIT MARKED P INCLUDES PART(S) MARKED P
Z - NOT SERVICED SEPARATELY

106-8559 **STARTING MOTOR GP-ELECTRIC (**contd.**)** **i02005925**

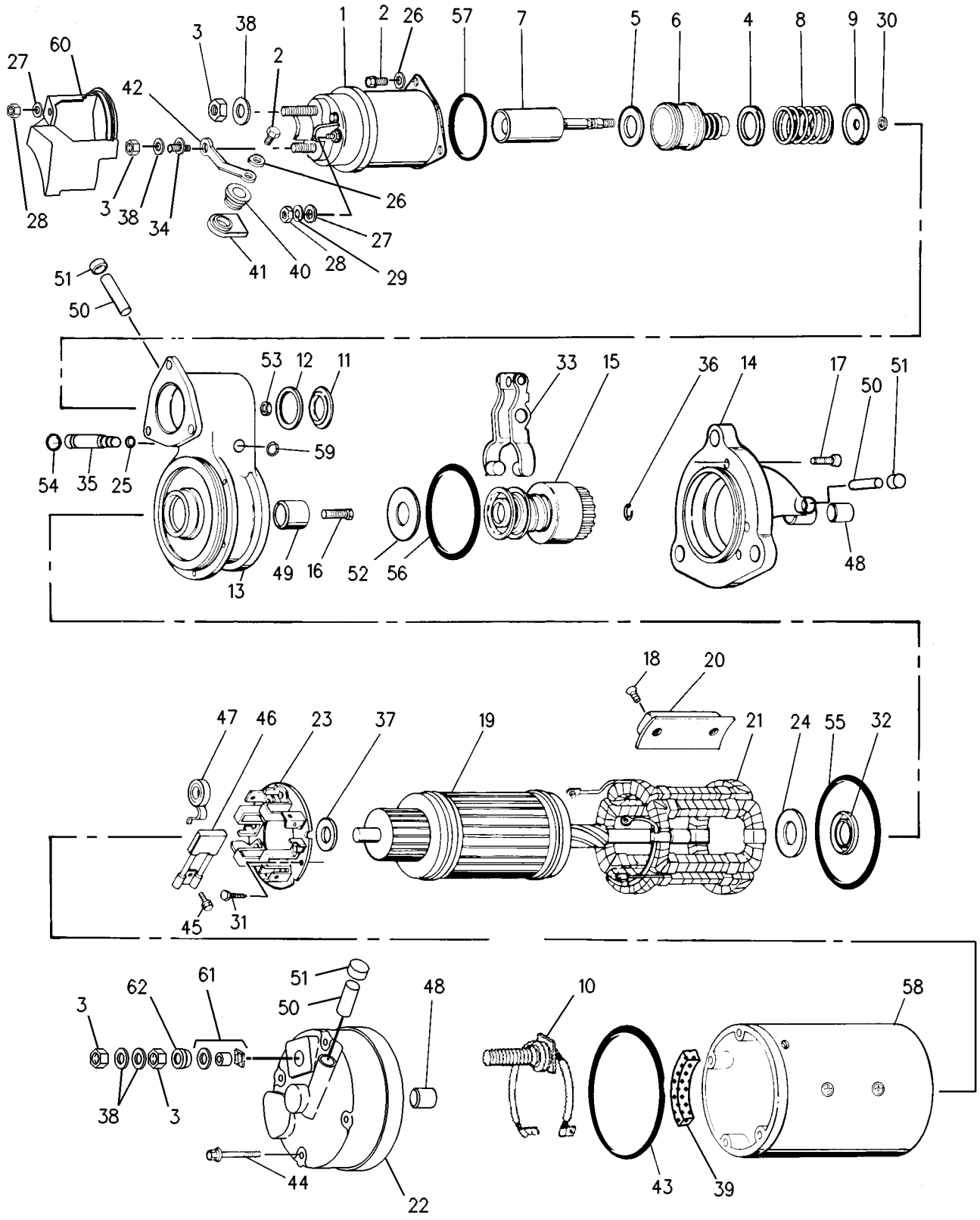

GRAPHIC #1 <END> g00262839

108-3858 STARTING MOTOR GP-ELECTRIC

S/N: 4TF17400-UP
24 VOLT
PART OF 114-7159, 117-5187, 117-5188, 6I-3528 ENGINE AR
ALSO AN ATTACHMENT

SMCS-1453 **i01365065**

NOTE	REF NO	GRAPHIC REF	PART NUMBER	QTY	PART NAME 1 2 3 4 5 6 (PRODUCT LEVEL)	SEE PAGE
M	1	1	**118-9573**	3	BOLT-12 POINT HEAD (M10X1.5X35-MM)	
	2	1	**6V-5839**	3	WASHER (11X21X2.5-MM THK)	
	3	1	**3K-3257**	1	GASKET	
	4	1	**134-2730**	1	WIRE AS	
M	5	1	**8T-4191**	1	BOLT (M10X1.5X16-MM)	
	6	1	**8T-4121**	1	WASHER-HARD (11X21X2.5-MM THK)	
Y	7	1	*104-7040*	1	STARTING MOTOR GP-ELECTRIC	300

M - METRIC PART
Y - SEPARATE ILLUSTRATION

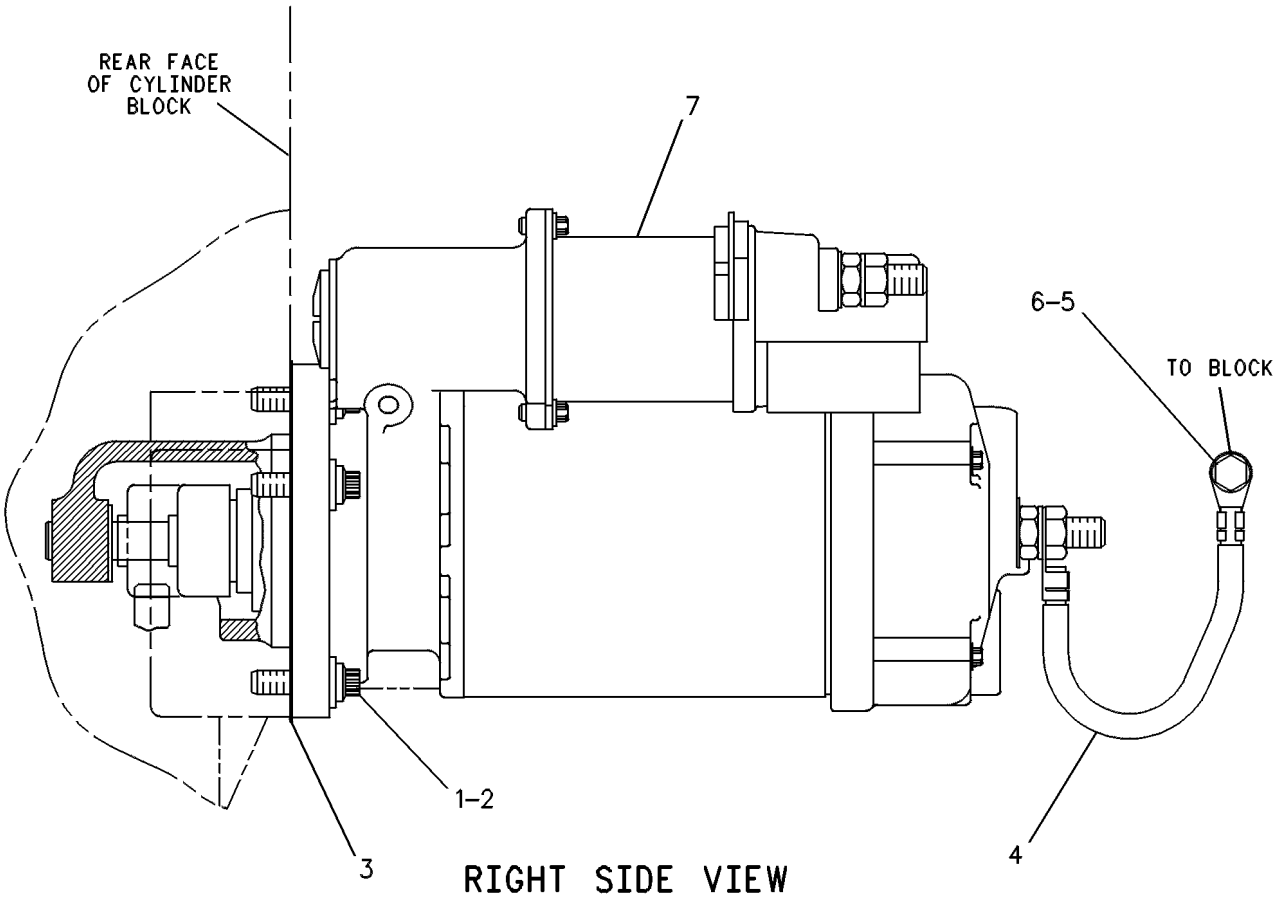

RIGHT SIDE VIEW

GRAPHIC #1 <END> g00117461

108-3858 STARTING MOTOR GP-ELECTRIC

S/N: 4TF17400-UP
24 VOLT
PART OF 117-5187 ENGINE AR

SMCS-1453 **i01619418**

NOTE	REF NO	GRAPHIC REF	PART NUMBER	QTY	PART NAME 1 2 3 4 5 6 (PRODUCT LEVEL)	SEE PAGE
	1	1	**3K-3257**	1	GASKET	
CY	2	1	*207-1511*	1	STARTING MOTOR GP-ELECTRIC	308
M	3	1	**118-9573**	3	BOLT-12 POINT HEAD (M10X1.5X35-MM)	
	4	1	**134-2730**	1	WIRE AS	
	5	1	**8T-4121**	1	WASHER-HARD (11X21X2.5-MM THK)	
M	6	1	**8T-4191**	1	BOLT (M10X1.5X16-MM)	

C - CHANGE FROM PREVIOUS TYPE
M - METRIC PART
Y - SEPARATE ILLUSTRATION

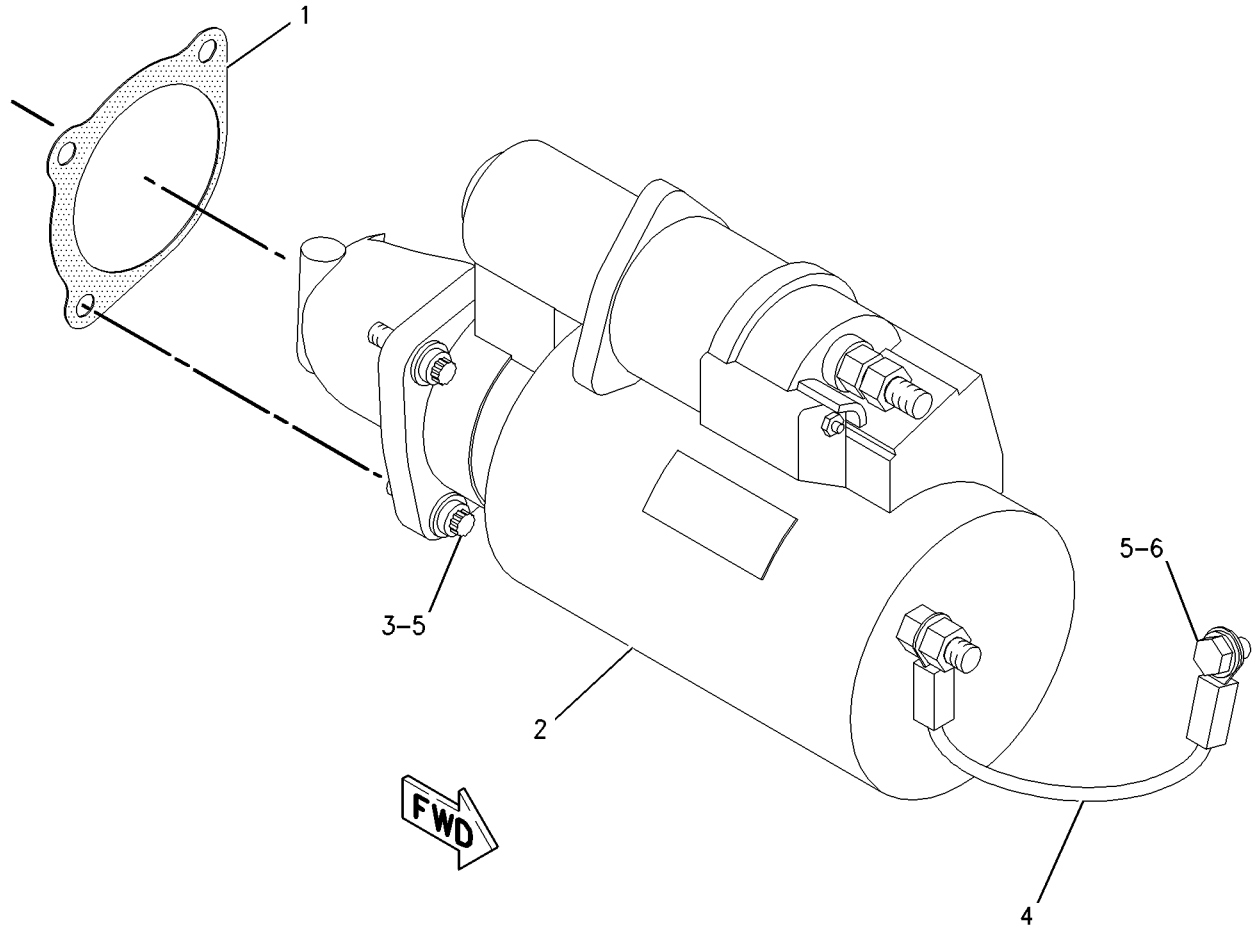

GRAPHIC #1 <END> g00846665

207-1511 STARTING MOTOR GP-ELECTRIC

S/N: 4TF17400-UP

24 VOLT

PART OF 108-3858 STARTING MOTOR GP-ELECTRIC

SMCS-1453 **i05767682**

NOTE	REF NO	GRAPHIC REF	PART NUMBER	QTY	PART NAME 1 2 3 4 5 6 (PRODUCT LEVEL)	SEE PAGE
	1	1	**8T-9884**	1	KIT-INSULATOR (STARTING MOTOR)	
					(INCLUDES INSULATORS & BUSHING)	
	2	1	**106-7149**	1	HOUSING AS	
	3	1	**102-9863**	1	TERMINAL AS	
	4	1	**6V-8188**	4	NUT (1/2-13-THD)	
	5	1	**7X-0562**	4	WASHER-HARD (13.5X19X0.8-MM THK)	
	6	1	**3E-7853**	1	TERMINAL	
	7	1	**9X-4821**	1	PLATE AS	
	8	1	**9X-4822**	1	COIL AS	
	9	1	**7T-3454**	1	INSULATOR	
	10	1	**9X-4271**	1	CONNECTOR	
	11	1	**7T-3451**	1	KIT-INSULATOR (STARTING MOTOR)	
	12	1	**8T-8569**	1	INSULATOR-TERMINAL	
	13	1	**5S-7349**	4	BOLT (1/4-20X0.5-IN)	
	14	1	**8T-4205**	4	WASHER-HARD (7.2X14.5X2-MM THK)	
	15	1	**7X-1950**	4	SHOE-POLE	
	16	1	**7X-1958**	1	KIT-LEVER (STARTING MOTOR)	
					(INCLUDES LEVER AS, SHAFT AS, GASKET, SEALS, RINGS, STOP & NUT)	
	17	1	**3R-8797**	8	SCREW & WASHER AS (3/8-24X0.72-IN)	
	18	1	**7X-1951**	1	ARMATURE AS (24-VOLT)	
	19	1	**7X-1952**	1	HOUSING AS-LEVER	
	20	1	**4M-1831**	1	PLUG-LEVER HOUSING	
	21	1	**7L-2894**	1	GASKET	
	22	1	**0S-1597**	5	BOLT (1/4-28X1-IN)	
	23	1	**7X-1953**	1	DRIVE AS-MOTOR	
	24	1	**7X-1954**	1	HOUSING AS-DRIVE	
	25	1	**7X-3373**	6	BOLT (5/16-18X0.88-IN)	
	26	1	**379-5569**	1	KIT-SOLENOID (24-VOLT, STARTING MOTOR)	
	27	1	**6V-8378**	2	NUT (10-32-THD)	
	28	1	**8F-1434**	1	LOCKWASHER	
	29	1	**8T-0328**	2	WASHER-HARD (5.5X10X1-MM THK)	
	30	1	**9X-4824**	1	COVER-STARTING MOTOR	
	31	1	**9X-4825**	1	KIT-BRUSH (24-VOLT)	
					(INCLUDES BRUSHES, SEAL, SCREWS & SPRINGS)	
					AVAILABLE REPAIR KIT(S):	
			9X-4270	1	KIT-BUSHING (STARTING MOTOR)	
					(INCLUDES BUSHINGS, SEALS, CUPS, SPACER, STOP, PLUGS, GASKET, WASHERS, RING & SCREW AS)	

207-1511 **STARTING MOTOR GP-ELECTRIC** (contd.) **i05767682**

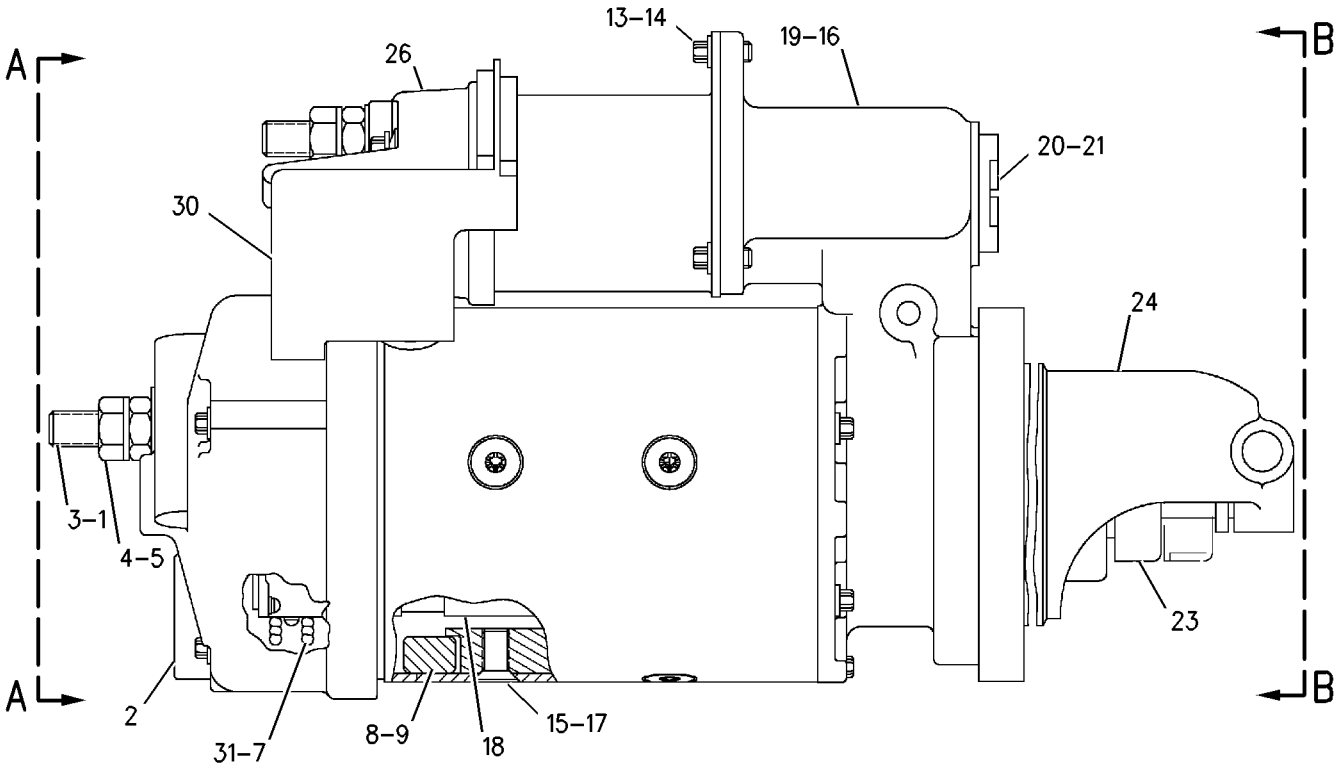

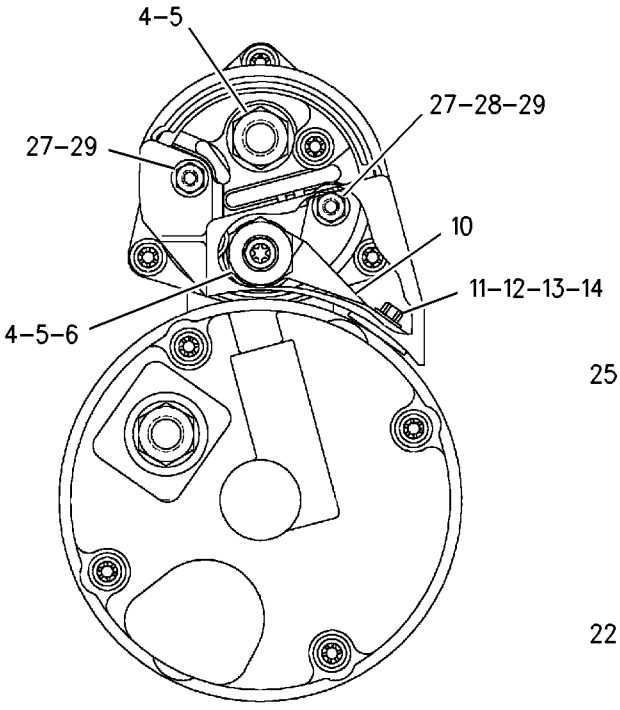

VIEW A-A

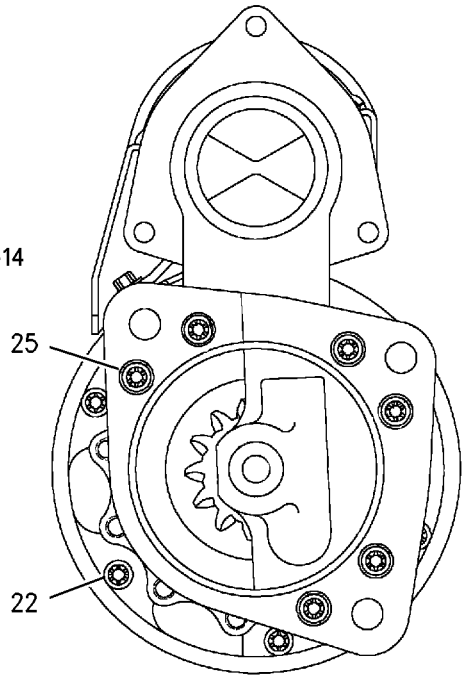

VIEW B-B

GRAPHIC #1 <END> g00865809

6V-5720 STARTING MOTOR GP-ELECTRIC

S/N: 4TF17400-UP
24 VOLT
FIELD REPLACEMENT ORDER 106-8558—PAGE: 302
PART OF 104-7040 STARTING MOTOR GP-ELECTRIC
ALSO AN ATTACHMENT

SMCS-1453 **i02014203**

NOTE	REF NO	GRAPHIC REF	PART NUMBER	QTY	PART NAME 1 2 3 4 5 6 (PRODUCT LEVEL)	SEE PAGE
	1	1	**4M-1828**	1	RETAINER-SPRING	
	2	1	**036-9821**	1	WASHER	
	3	1	**7T-3269**	1	BOOT	
	4	1	**8T-9884**	1	KIT-INSULATOR (STARTING MOTOR)	
	5	1	**9M-7609**	1	SPRING (SHIFT LEVER)	
	6	1	**4M-1827**	1	RETAINER-SPRING	
	8	1	**7L-2894**	1	GASKET	
	9	1	**9X-4824**	1	COVER-STARTING MOTOR	
	10	1	**7X-1953**	1	DRIVE AS-MOTOR	
	11	1	**7X-0562**	4	WASHER-HARD (13.5X19X0.8-MM THK)	
	12	1	**6V-8188**	4	NUT (1/2-13-THD)	
	13	1	**4B-2049**	2	NUT (10-32-THD)	
	14	1	**8T-0328**	2	WASHER-HARD (5.5X10X1-MM THK)	
	15	1	**8F-1434**	1	LOCKWASHER	
	16	1	**2H-3429**	1	RING-RETAINING	
	17	1	**9X-4823**	1	SOLENOID AS	
	18	1	**9X-4821**	1	PLATE AS	
	19	1	**7X-1951**	1	ARMATURE AS (24-VOLT)	
	20	1	**5S-7349**	4	BOLT (1/4-20X0.5-IN)	
	21	1	**8T-4205**	4	WASHER-HARD (7.2X14.5X2-MM THK)	
	22	1	**3E-7853**	1	TERMINAL	
	23	1	**102-9863**	1	TERMINAL AS	
	24	1	**106-7149**	1	HOUSING AS	
	25	1	**9X-4822**	1	COIL AS	
	26	1	**7T-3454**	1	INSULATOR	
	27	1	**9X-4271**	1	CONNECTOR	
	28	1	**8T-8569**	1	INSULATOR-TERMINAL	
	29	1	**7T-3451**	1	KIT-INSULATOR (STARTING MOTOR)	
	30	1	**7X-1950**	4	SHOE-POLE	
	31	1	**3F-0379**	8	SCREW-POLE SHOE (3/8-24-THD)	
	32	1	**7X-1952**	1	HOUSING AS-LEVER	
	33	1	**036-9823**	5	BOLT (1/4-28X1-IN)	
	34	1	**7X-1954**	1	HOUSING AS-DRIVE	
	35	1	**7X-3373**	6	BOLT (5/16-18X0.88-IN)	
	36	1	**7T-3270**	1	PLUNGER AS	
					AVAILABLE REPAIR KIT(S):	
			7X-1958	1	KIT-LEVER (STARTING MOTOR)	
					(INCLUDES LEVER AS, SHAFT AS, GASKET, O-RINGS, RINGS, STOP & NUT)	
			9X-4270	1	KIT-BUSHING (STARTING MOTOR)	
					(INCLUDES BUSHINGS, SEAL, O-RINGS, CUPS, SPACER, STOP, PLUGS, GASKET, WASHERS, RING, & SCREW AS.)	
			9X-4825	1	KIT-BRUSH (24-VOLT)	
					(INCLUDES BRUSHES, O-RING, SCREWS & SPRINGS)	

6V-5720 **STARTING MOTOR GP-ELECTRIC** (contd.) **i02014203**

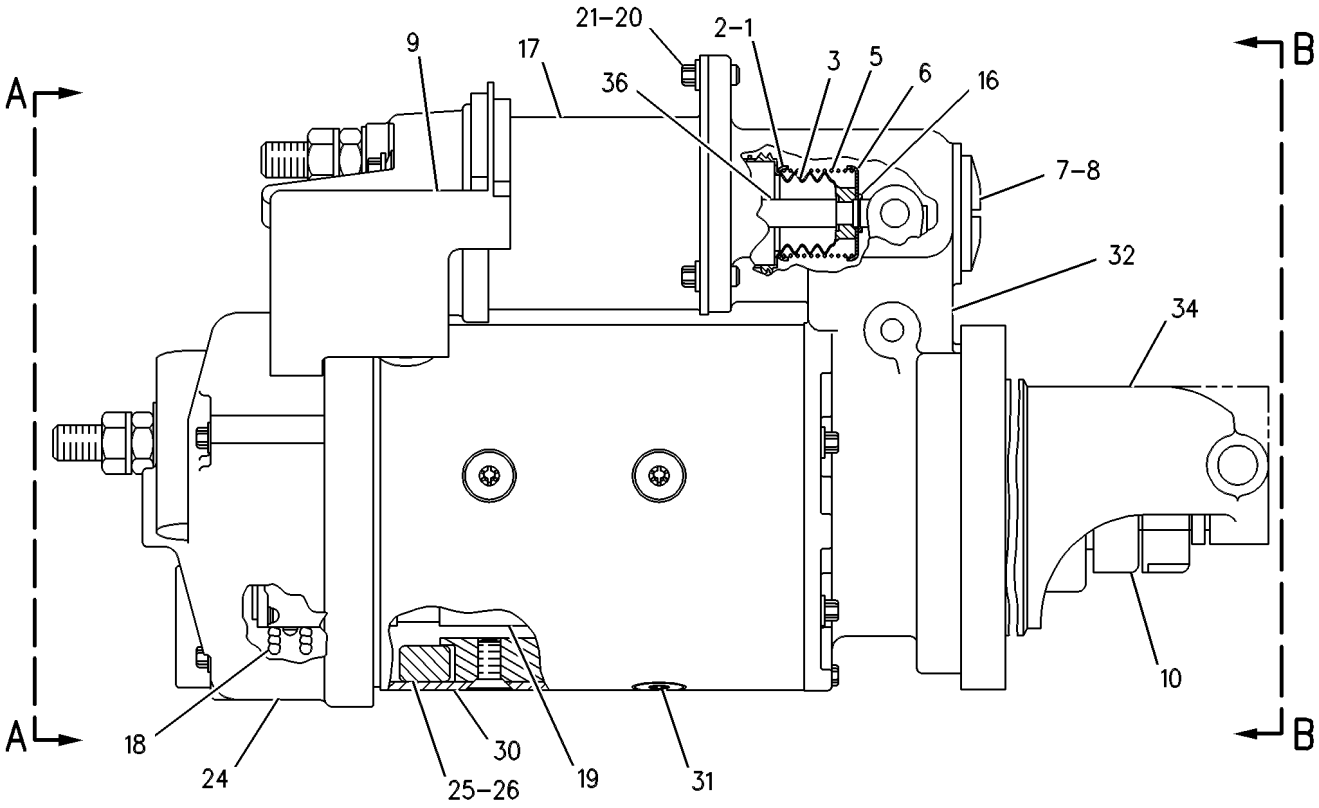

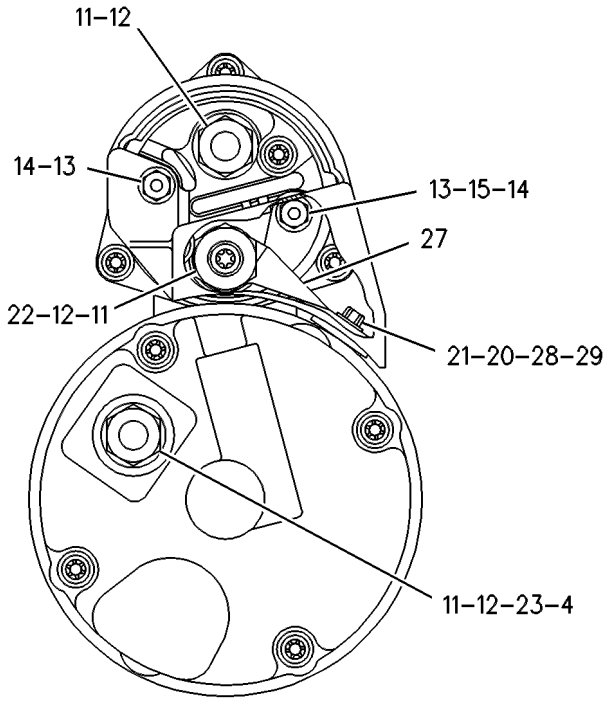

VIEW A–A

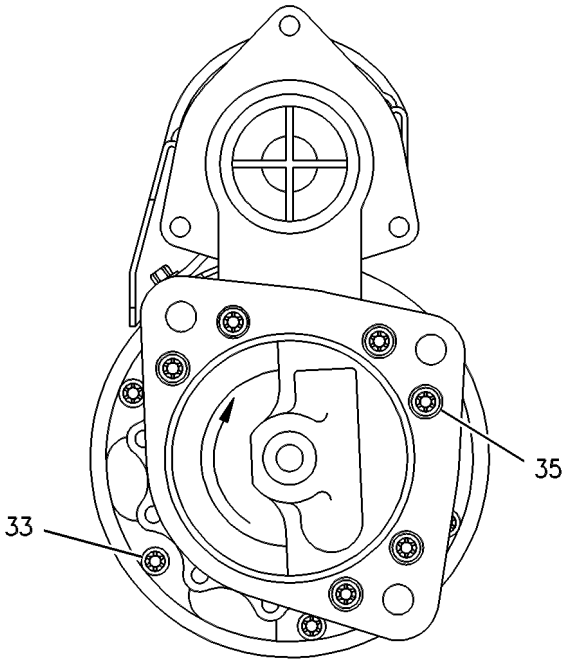

VIEW B–B

GRAPHIC #1 <END> g00117462

105-8827 SUPPRESSOR GP-ELECTRONIC

S/N: 9BL1-1877

PART OF 141-5991, 8Y-9331 AIR CONDITIONER GP

AN ATTACHMENT

SMCS-4466 **i01231980**

NOTE	REF NO	GRAPHIC REF	PART NUMBER	QTY	PART NAME 1 2 3 4 5 6 (PRODUCT LEVEL)	SEE PAGE
	1	1	**7N-9738**	1	HOUSING-RECEPTACLE (14-GA TO 18-GA)	
	2	1	**7N-9737**	1	HOUSING-RECEPTACLE (14-GA TO 18-GA)	
	3	1	**7N-7780**	2	PIN-CONNECTOR (14-GA TO 18-GA)	
	4	1	**7N-7779**	2	SOCKET-CONNECTOR (14-GA TO 18-GA)	

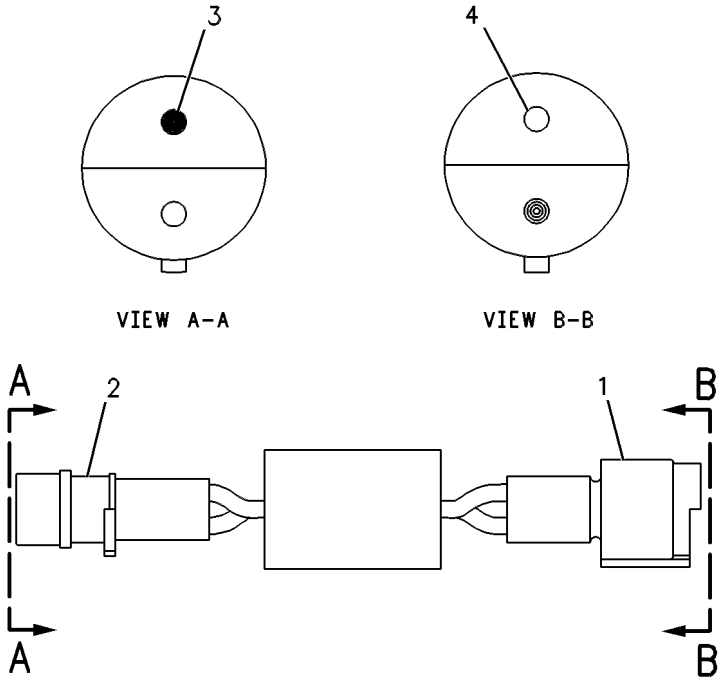

GRAPHIC #1 <END> g00086140

7N-0718 SWITCH GP-DISCONNECT–BATTERY

S/N: 9BL1-UP

PART OF 128-2209, 8Y-9466 BATTERY & WIRING GP

SMCS-1411 **i07351011**

NOTE	REF NO	GRAPHIC REF	PART NUMBER	QTY	PART NAME 1 2 3 4 5 6 (PRODUCT LEVEL)	SEE PAGE
	1	1	**2H-3922**	2	LOCKWASHER	
	2	1	**8H-5303**	1	NUT (3/4-16-THD)	
	3	1	**264-3617**	2	LOCKWASHER	
	4	1	**6F-7045**	2	NUT-FULL (3/8-24-THD)	
	5	1	**8H-5306**	1	KEY (BATTERY DISCONNECT)	

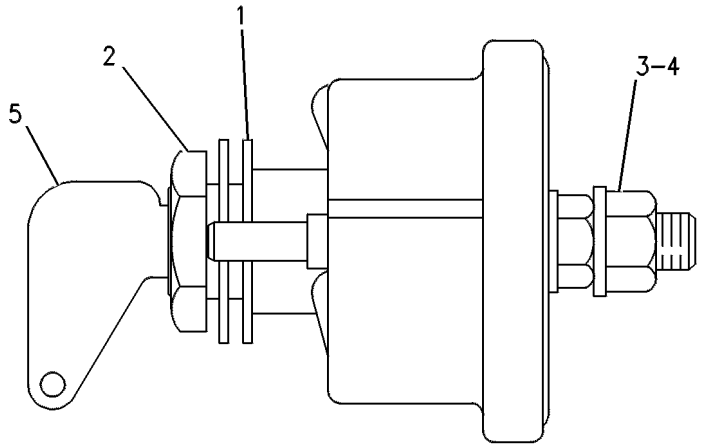

GRAPHIC #1 <END> g00246536

167-0138 SWITCH GP-MAGNETIC

S/N: 9BL1-UP

PART OF 128-2210, 8Y-9462 WIRING GP-CONSOLE

SMCS-7499 **i04434117**

NOTE	REF NO	GRAPHIC REF	PART NUMBER	QTY	PART NAME 1 2 3 4 5 6 (PRODUCT LEVEL)	SEE PAGE
	1	1	**4F-2294**	2	NUT-JAM (5/16-24-THD)	
	2	1	**6V-8186**	2	NUT-FULL (5/16-24-THD)	
	3	1	**155-2270**	1	KIT-CONNECTING PLUG (2-PIN)	
					(INCLUDES PLUG AS & WEDGE)	
	4	1	**186-3736**	2	SOCKET-CONNECTOR (16-GA TO 18-GA)	
	5	1	**155-2261**	1	WEDGE-PLUG LOCK (2-PIN)	

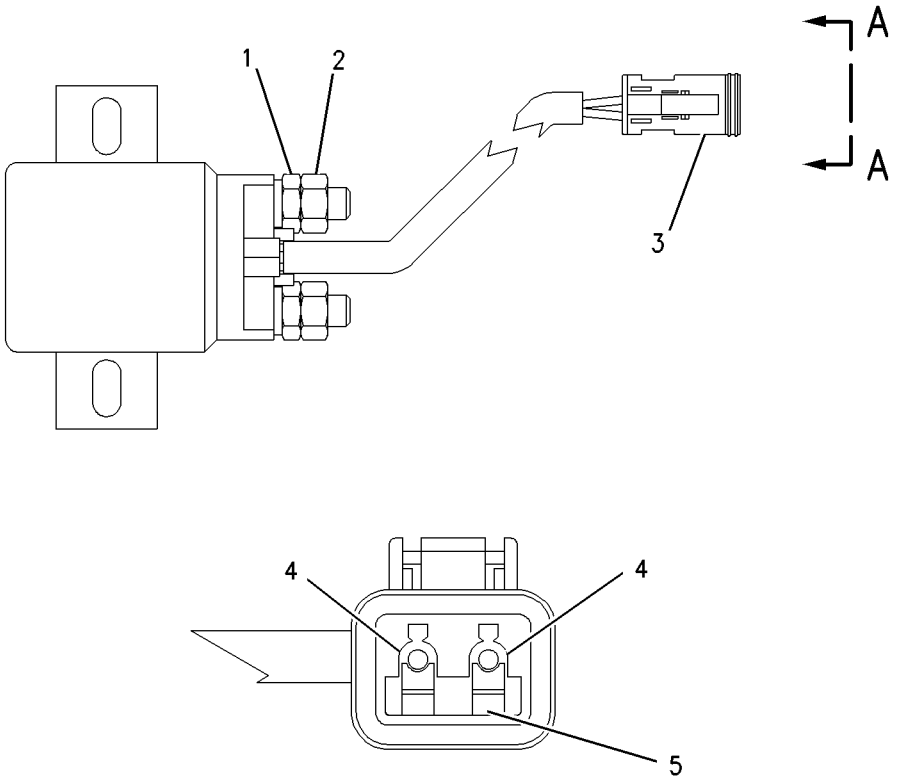

VIEW A-A

GRAPHIC #1 <END> g00831588

175-2322 SWITCH GP-MAGNETIC

S/N: 9BL1-UP
24 VOLT
FIELD REPLACEMENT ORDER 3E-0075—PAGE: 317
PART OF 3E-0075 SWITCH GP-MAGNETIC

SMCS-7499 **i02063252**

NOTE	REF NO	GRAPHIC REF	PART NUMBER	QTY	PART NAME 1 2 3 4 5 6 (PRODUCT LEVEL)	SEE PAGE
	1	1	**102-8802**	1	KIT-RECEPTACLE (2-PIN)	
					(INCLUDES RECEPTACLE AS & WEDGE)	
	2	1	**186-3735**	2	PIN-CONNECTOR (16-GA TO 18-GA)	
	3	1	**1H-3338**	2	LOCKWASHER (EXTERNAL TOOTH)	
	4	1	**012-0380**	2	LOCKWASHER (6.5X12.5X1.6-MM THK)	
M	5	1	**5C-2890**	2	NUT (M6X1-THD)	
E	6	1	**9X-1813**		SLEEVE (16-CM)	

E - ORDER BY THE CENTIMETER
M - METRIC PART

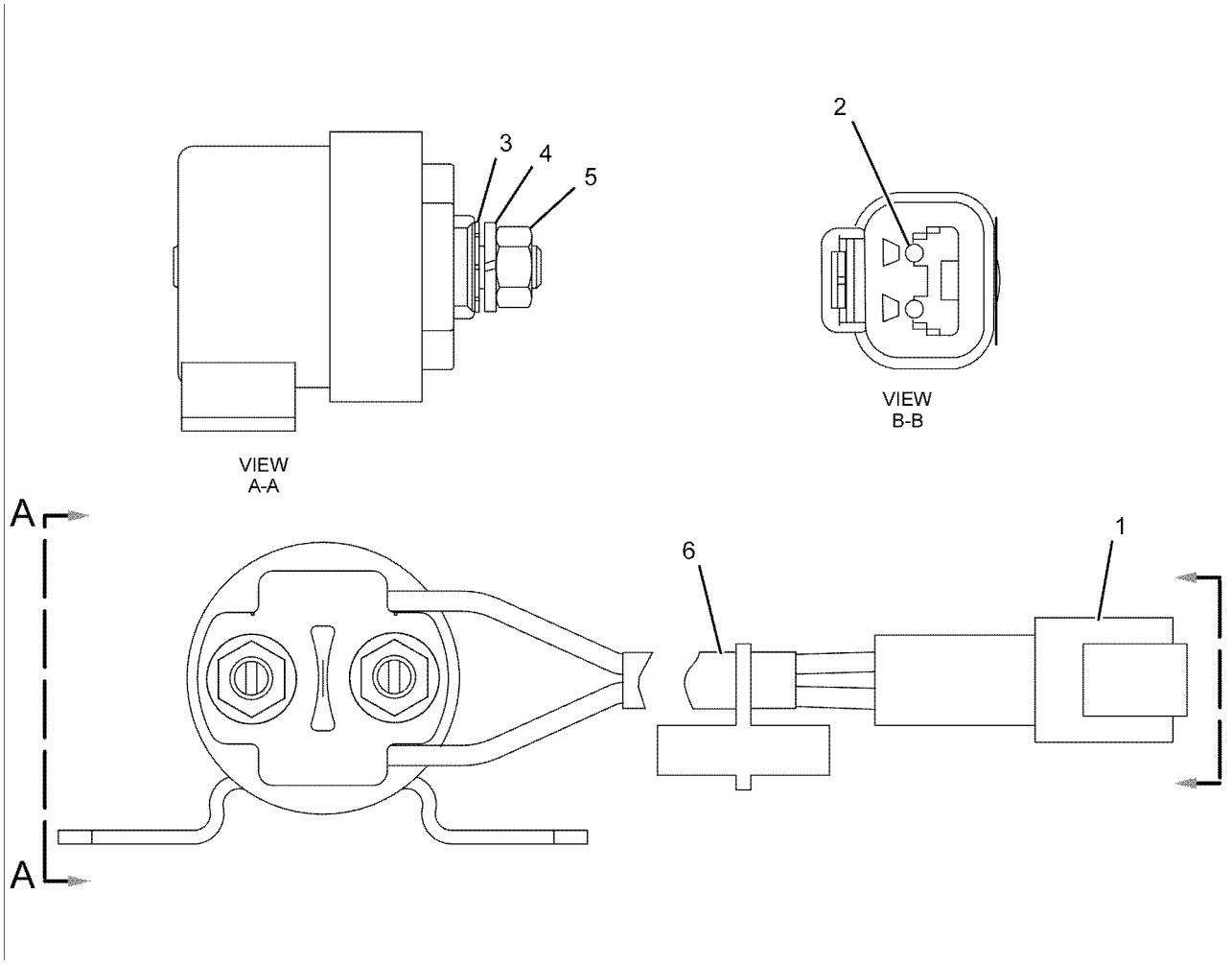

GRAPHIC #1 <END> g01057972

175-2324 SWITCH GP-MAGNETIC

S/N: 9BL1-UP

PART OF 3E-0075 SWITCH GP-MAGNETIC

SMCS-7499 **i02170726**

NOTE	REF NO	GRAPHIC REF	PART NUMBER	QTY	PART NAME 1 2 3 4 5 6 (PRODUCT LEVEL)	SEE PAGE
	1	1	**175-2317**	1	SWITCH AS-MAGNETIC	
	2	1	**102-8802**	1	KIT-RECEPTACLE (2-PIN)	
					(INCLUDES RECEPTACLE AS & WEDGE)	
	3	1	**186-3735**	2	PIN-CONNECTOR (16-GA TO 18-GA)	
	4	1	**1H-3338**	2	LOCKWASHER (EXTERNAL TOOTH)	
	5	1	**012-0380**	2	LOCKWASHER (6.5X12.5X1.6-MM THK)	
M	6	1	**5C-2890**	2	NUT (M6X1-THD)	
E	7	1	**9X-1813**		SLEEVE (16CM)	

E - ORDER BY THE CENTIMETER
M - METRIC PART

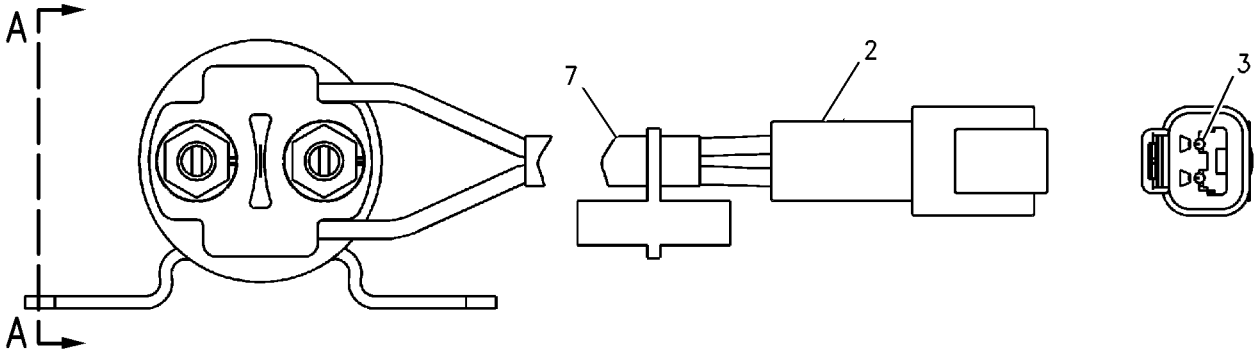

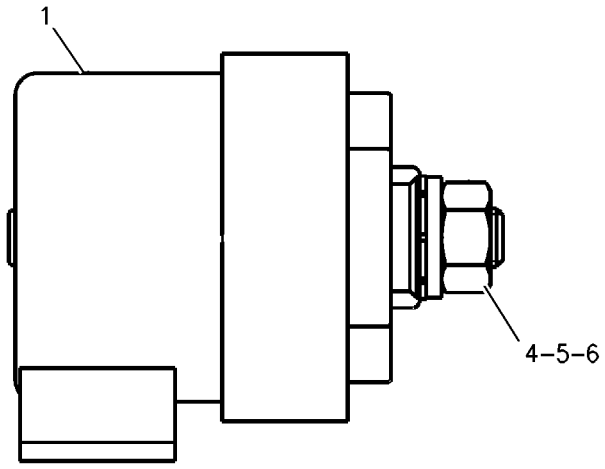

VIEW A–A

GRAPHIC #1 <END> g00985960

3E-0075 SWITCH GP-MAGNETIC

S/N: 9BL1-UP

PART OF 128-2209 BATTERY & WIRING GP, 128-2210, 8Y-9462 WIRING GP-CONSOLE

SMCS-7499 **i03568778**

NOTE	PART NUMBER	QTY	PART NAME 1 2 3 4 5 6 (PRODUCT LEVEL)	SEE PAGE
Y	*175-2322*	1	SWITCH GP-MAGNETIC (24-VOLT)	315
			—OR—	
Y	*175-2324*	1	SWITCH GP-MAGNETIC (24-VOLT)	316

Y - SEPARATE ILLUSTRATION

<END>

9G-7641 SWITCH GP-START–ENGINE, KEY

S/N: 9BL1-UP

PART OF 128-2210, 8Y-9462 WIRING GP-CONSOLE

SMCS-1416 **i03480861**

NOTE	REF NO	GRAPHIC REF	PART NUMBER	QTY	PART NAME 1 2 3 4 5 6 (PRODUCT LEVEL)	SEE PAGE
	1	1	**6V-8362**	4	SCREW-MACHINE (8-32X0.31-IN)	
	2	1	**9B-7233**	4	LOCKWASHER	
	3	1	**7T-6799**	1	NUT-MOUNTING (1-32-THD)	
					(REQUIRES CORPORATE KEY)	

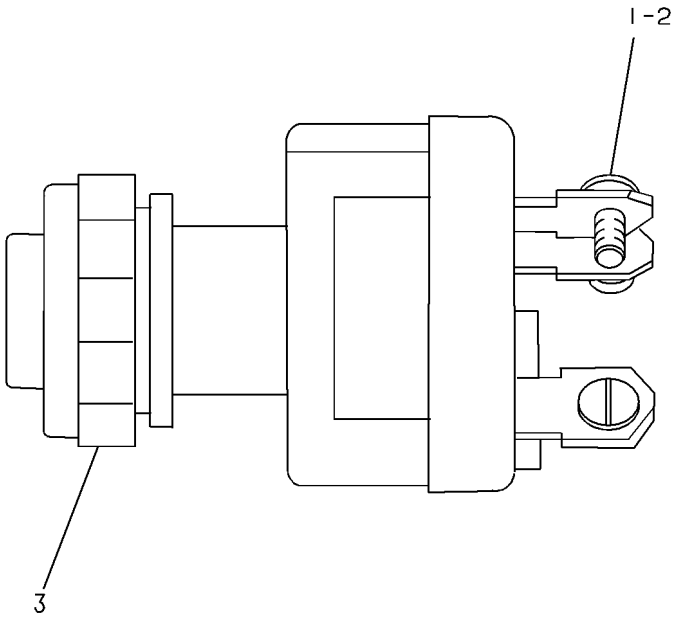

GRAPHIC #1 <END> g00081868

8Y-9830 WARNING GP-BACKUP

S/N: 9BL1-UP

AN ATTACHMENT

SMCS-7406 **i01178769**

NOTE	REF NO	GRAPHIC REF	PART NUMBER	QTY	PART NAME 1 2 3 4 5 6 (PRODUCT LEVEL)	SEE PAGE
	1	1	**3T-1815**	1	ALARM GP (BACKUP)	
	2	1	**8T-9378**	1	BOLT (3/8-16X4-IN)	
	3	1	**5P-1075**	7	WASHER-HARD (10.2X22.5X3-MM THK)	
	4	1	**5S-7379**	4	BOLT (3/8-16X0.875-IN)	
	5	1	**8G-3160**	1	PLATE AS	
		1	**9F-2978**	2	NUT-WELD (3/8-16-THD)	
	6	1	**170-5553**	1	BRACKET	
	7	1	**8T-9379**	1	BOLT (3/8-16X4.25-IN)	
	8	1	**6V-8801**	1	NUT (3/8-16-THD)	
	9	1	**5P-9085**	1	CLIP	
	10	1	**129-6466**	1	SWITCH AS-ROLLER (BACKUP ALARM)	
		1	**2H-3922**	1	LOCKWASHER	
		1	**6V-8363**	2	SCREW (10-32X0.312-IN)	
		1	**6V-8370**	1	NUT-HEX (3/4-32-THD)	
		1	**8F-1434**	2	LOCKWASHER	
		1	**9X-0199**	1	BOOT-SWITCH	

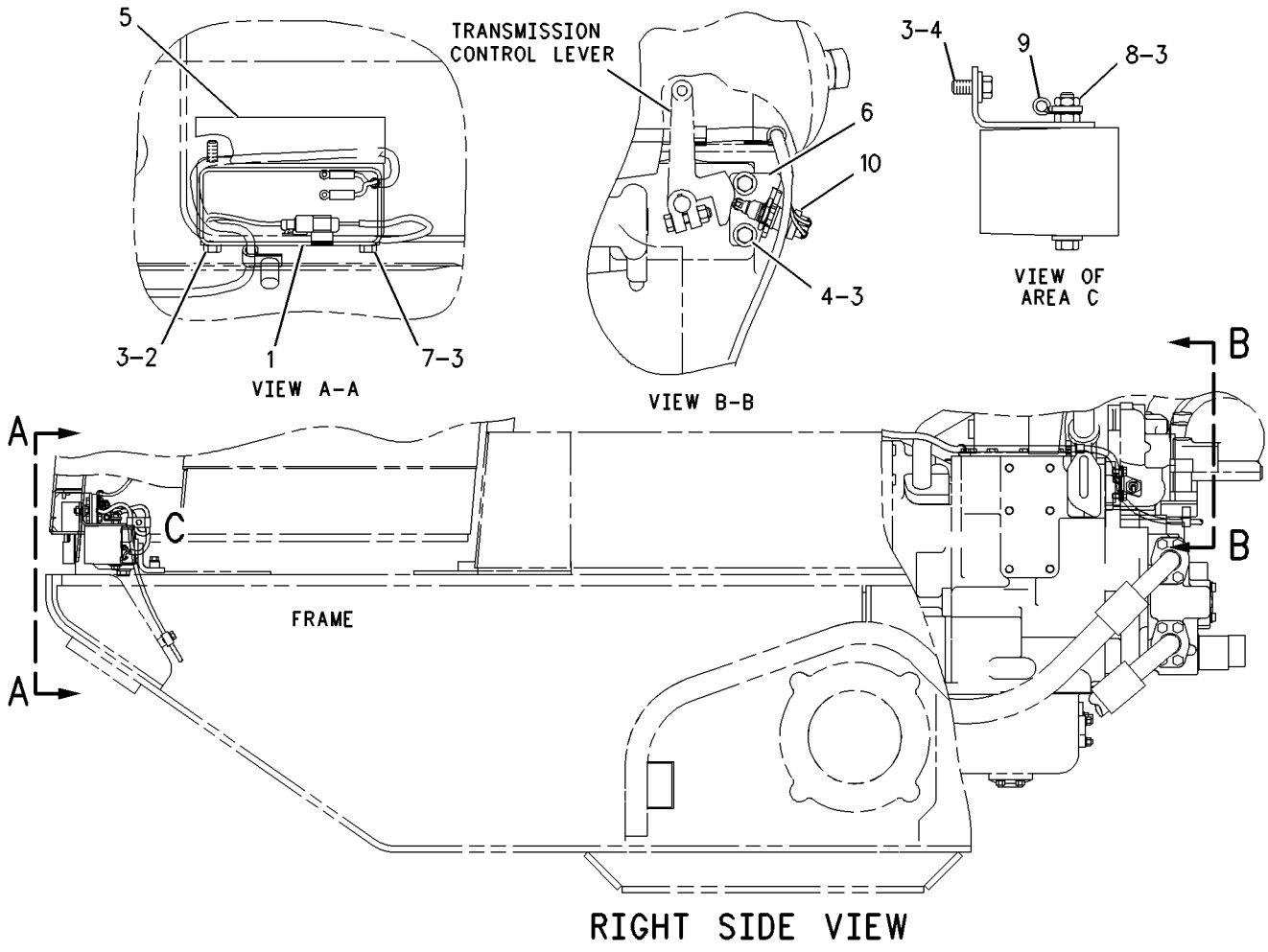

GRAPHIC #1 <END> g00629431

128-2210 WIRING GP-CONSOLE

S/N: 9BL1488-UP

PART OF 117-1761 CHASSIS AR

SMCS-1408 **i01399330**

NOTE	REF NO	GRAPHIC REF	PART NUMBER	QTY	PART NAME 1 2 3 4 5 6 (PRODUCT LEVEL)	SEE PAGE
	1	2	**7P-5850**	1	SUPPORT AS	
		2	**1F-0750**	7	NUT-WELD (3/8-16-THD)	
		2	**4D-6293**	1	BOSS (3/8-16X1.31-IN)	
M		2	**8T-8874**	2	NUT-WELD (M5X0.8-THD)	
		2	**9F-6445**	4	NUT-WELD (1/4-20-THD)	
	2	2	**8Y-9517**	1	DASH AS	
	3	1	**8Y-9791**	1	HARNESS AS	
	4	1,2	**5P-1075**	10	WASHER-HARD (10.2X22.5X3-MM THK)	
	5	1,2	**5M-3062**	9	BOLT (3/8-16X0.75-IN)	
	6	1,2	**3S-2093**	6	STRAP-CABLE	
	7	2	**8T-9364**	4	BOLT (1/4-20X0.625-IN)	
	8	2	**8T-4205**	8	WASHER-HARD (7.2X14.5X2-MM THK)	
	9	1	**6V-6502**	1	FILM-FACE	
	10	1	**7N-5876**	1	LAMP (24-VOLT, 0.2-AMPERE)	
	11	1	*3E-2210*	1	SWITCH AS-ROCKER (24-VOLT) (RUNNING LAMPS)	
		1	**3E-8769**	1	SWITCH AS (24-VOLT)	
		1	**3E-8814**	1	ACTUATOR	
		1	**3E-8825**	1	LAMP (24-VOLT)	
	12	1	*9X-9628*	1	SWITCH AS-ROCKER (START AID)	
		1	**3E-8775**	1	SWITCH AS (24-VOLT)	
		1	**3E-8811**	1	ACTUATOR	
		1	**3E-8825**	2	LAMP (24-VOLT)	
	13	1	**115-1835**	1	PLATE	
	14	1	**9W-1494**	1	KIT-SERVICE METER (24-VOLT)	
					(INCLUDES SERVICE METER & FILM)	
Y	15	1	**9G-7641**	1	SWITCH GP-START (ENGINE, KEY)	318
	16	1	**6V-8969**	4	SCREW-BUTTON HEAD (1/4-20X0.5-IN)	
	17	1	**8Y-9514**	1	PLATE AS	
	18	1	**6V-5645**	2	SCREW-MACHINE (10-32X0.87-IN)	
	19	1	**9S-0174**	1	CIRCUIT BREAKER AS (60-AMPERE) (STARTER)	
		1	**1H-3244**	2	LOCKWASHER	
		1	**6V-8187**	2	NUT (1/4-28-THD)	
		1	**8T-4205**	2	WASHER-HARD (7.2X14.5X2-MM THK)	
	20	1	**9X-8486**	2	SCREW-MACHINE (8-32X0.75-IN)	
	21	1	**5M-2555**	1	CIRCUIT BREAKER AS (40-AMPERE) (BLOWER & A/C)	
		1	**6V-8376**	2	SCREW-MACHINE (8-32X0.25-IN)	
		1	**9B-7233**	2	LOCKWASHER	
	22	1	**8Y-9515**	1	PLATE	
	23	1	**7K-1181**	2	STRAP-CABLE	
	24	1	**4K-5122**	8	HOLDER AS-FUSE	
					(EACH INCLUDES)	
		1	**6T-8115**	1	NUT (1/2-24-THD)	
		1	**139-0178**	1	CAP	
	25	1	**8M-0456**	2	FUSE (20-AMPERE)	
	26	1	**3K-8782**	6	FUSE (10-AMPERE)	
	27	1	**7P-7914**	1	SEAL	
CR	28	1	**171-9816**	1	CONTROL GP-MONITOR (ELECTRONIC MONITORING SYSTEM)	
B	29	2	**6J-8696**	8	SHIM (1.22-MM THK)	

128-2210 **WIRING GP-CONSOLE (**contd.**)** **i01399330**

NOTE	REF NO	GRAPHIC REF	PART NUMBER	QTY	PART NAME 1 2 3 4 5 6 (PRODUCT LEVEL)	SEE PAGE
	30	2	**8G-0034**	4	BRACKET	
	31	2	**4S-4455**	1	CLIP	
	32	1	**4D-1432**	1	SPACER (12.52X17.14X45.72-MM THK)	
Y	33	2	**167-0138**	1	SWITCH GP-MAGNETIC (24-VOLT) (MAIN POWER RELAY)	314
	34	1	**8T-9101**	1	BOLT (3/8-16X2.75-IN)	
	35	2	**7P-7913**	4	MOUNT	
	36	2	**6V-8185**	8	NUT (1/4-20-THD)	
	37	2	**5P-4115**	4	WASHER-HARD (7.2X19X2-MM THK)	
	38	2	**8C-9987**	4	WASHER (8.3X28X2.5-MM THK)	
	39	2	**4K-8864**	2	CLIP	
	40	1	**6D-4246**	1	CLIP (LOOP)	
Y	41	2	**3E-0075**	1	SWITCH GP-MAGNETIC (24-VOLT) (NEUTRAL START RELAY)	317
	42	2	**8Y-9512**	1	FILM-IDENTIFICATION	
	43	2	**8M-2770**	1	CLIP (LOOP)	
	44	2	**5P-8167**	2	BOLT (3/8-16X0.625-IN)	
	45	2	**8T-4896**	2	WASHER-HARD (10.2X18.5X2.5-MM THK)	
	46	1,2	**6D-4636**	3	CLIP (LOOP)	
	47	1	**3T-3047**	1	CLIP AS	
	48	2	**4Y-7948**	1	TIMER AS-INLET HEATER	
		2	**8T-8729**	4	PIN-CONNECTOR (16-GA TO 18-GA)	
		2	**102-8804**	1	KIT-RECEPTACLE (4-PIN)	
					(INCLUDES WEDGE & RECEPTACLE AS)	
	49	2	**8T-0328**	2	WASHER-HARD (5.5X10X1-MM THK)	
M	50	2	**6V-4298**	2	BOLT (M5X0.8X16-MM)	
	51	2	**8M-2773**	1	CLIP (LOOP)	
	52	1	**4P-6422**	1	FILM-WARNING (NO ETHER SPRAY/AIR INTAKE)	
	53	1	**8J-1256**	1	CLIP	
	54	1	**9D-3721**	1	SWITCH-TOGGLE (SINGLE POLE) (AIR INLET HEATER)	
	55	1	**109-8899**	1	FILM-NOTICE	
	56	1	**8Y-9513**	1	FILM-IDENTIFICATION	

B - USE AS REQUIRED
C - CHANGE FROM PREVIOUS TYPE
M - METRIC PART
R - REMANUFACTURED PART MAY BE AVAILABLE
Y - SEPARATE ILLUSTRATION

128-2210 **WIRING GP-CONSOLE (**contd.**)** **i01399330**

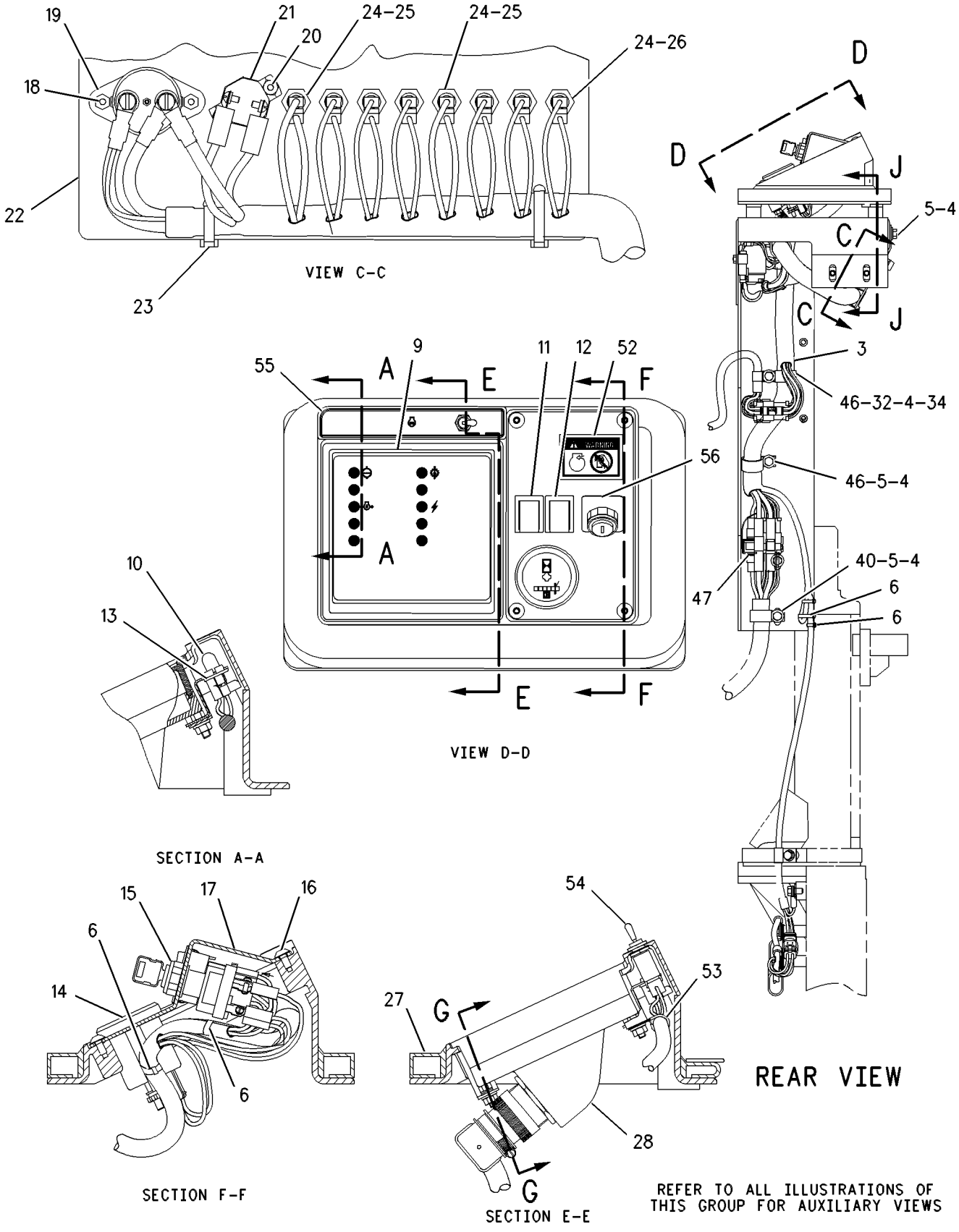

GRAPHIC #1 g00601228

128-2210 **WIRING GP-CONSOLE (**contd.**)** **i01399330**

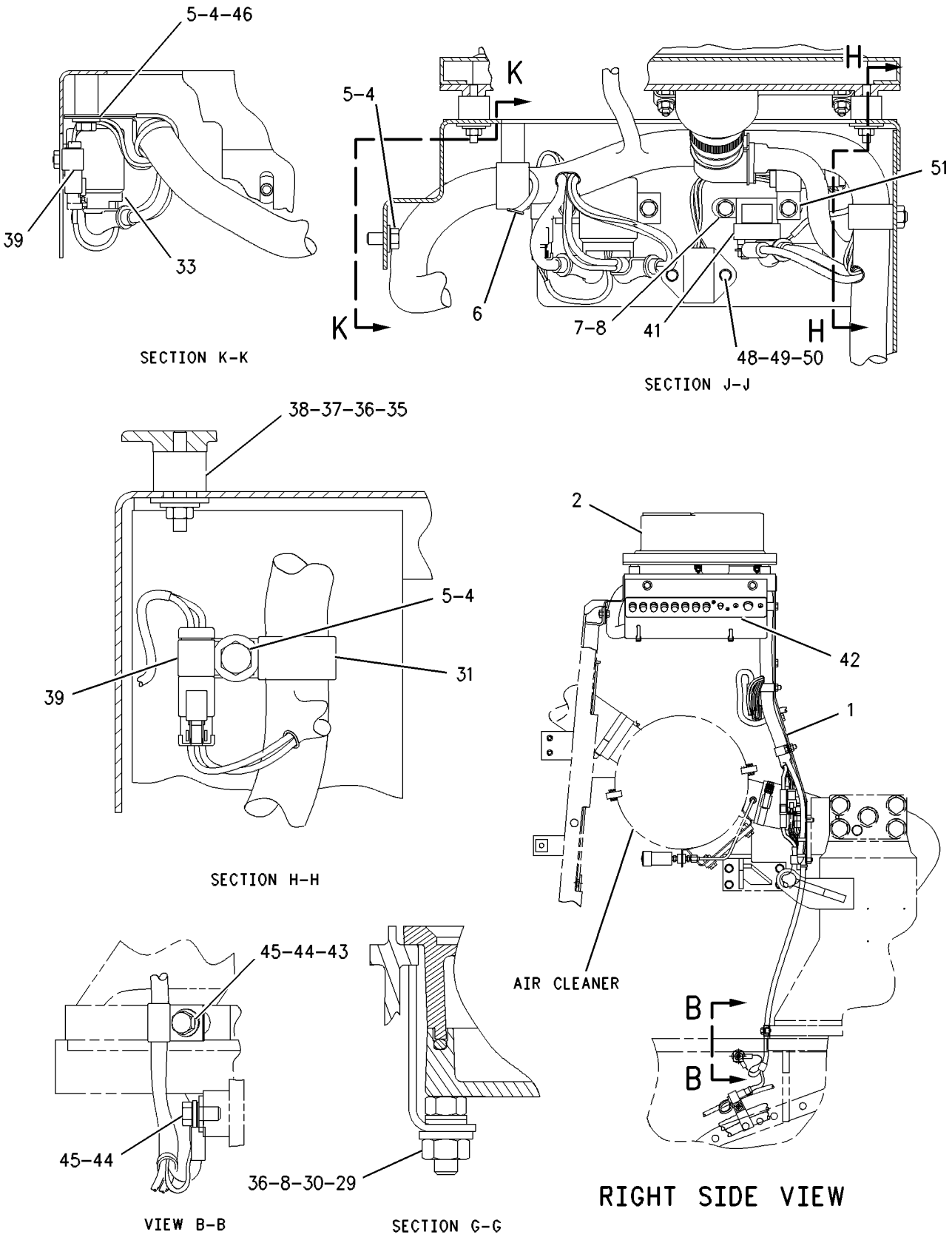

GRAPHIC #2 <END> g00601246

8Y-9462 WIRING GP-CONSOLE

S/N: 9BL1-1487

PART OF 8Y-9370 CHASSIS AR

SMCS-1408 **i01167763**

NOTE	REF NO	GRAPHIC REF	PART NUMBER	QTY	PART NAME 1 2 3 4 5 6 (PRODUCT LEVEL)	SEE PAGE
	1	1	**7P-5850**	1	SUPPORT AS	
		1	**1F-0750**	7	NUT-WELD (3/8-16-THD)	
		1	**4D-6293**	1	BOSS (3/8-16X1.31-IN)	
M		1	**8T-8874**	2	NUT-WELD (M5X0.8-THD)	
		1	**9F-6445**	4	NUT-WELD (1/4-20-THD)	
	2	1	**8Y-9517**	1	DASH AS	
	3	1	**8Y-9791**	1	HARNESS AS	
	4	1	**5P-1075**	10	WASHER-HARD (10.2X22.5X3-MM THK)	
	5	1	**5M-3062**	9	BOLT (3/8-16X0.75-IN)	
	6	1	**3S-2093**	7	STRAP-CABLE	
	7	1	**8T-9364**	4	BOLT (1/4-20X0.625-IN)	
	8	1	**8T-4205**	8	WASHER-HARD (7.2X14.5X2-MM THK)	
	9	1	**6V-6502**	1	FILM-FACE (OPERATOR MONITOR PANEL)	
	10	1	**3E-3079**	1	FILM-NOTICE (NEUTRAL START SYSTEM)	
	11	1	*3E-2210*	1	SWITCH AS-ROCKER (24-VOLT) (INSTRUMENT PANEL LIGHTS)	
		1	**3E-8769**	1	SWITCH AS (24-VOLT)	
		1	**3E-8814**	1	ACTUATOR	
		1	**3E-8825**	1	LAMP (24-VOLT)	
	12	1	*9X-9628*	1	SWITCH AS-ROCKER (ETHER STARTING AID)	
		1	**3E-8775**	1	SWITCH AS (24-VOLT)	
		1	**3E-8811**	1	ACTUATOR	
		1	**3E-8825**	2	LAMP (24-VOLT)	
	13	1	**3T-3047**	1	CLIP AS	
	14	1	**9W-1494**	1	KIT-SERVICE METER (24-VOLT)	
					(INCLUDES METER & FILM)	
Y	15	1	**9G-7641**	1	SWITCH GP-START (ENGINE, KEY)	318
	16	1	**6V-8969**	4	SCREW-BUTTON HEAD (1/4-20X0.5-IN)	
	17	1	**8Y-9514**	1	PLATE AS	
	18	1	**9S-0174**	1	CIRCUIT BREAKER AS (60-AMPERE) (ALTERNATOR)	
		1	**1H-3244**	2	LOCKWASHER	
		1	**6V-8187**	2	NUT (1/4-28-THD)	
		1	**8T-4205**	2	WASHER-HARD (7.2X14.5X2-MM THK)	
	19	1	**6V-5645**	2	SCREW-MACHINE (10-32X0.87-IN)	
	20	1	**5M-2555**	1	CIRCUIT BREAKER AS (40-AMPERE) (AIR CONDITIONER)	
	21	1	**9X-8486**	2	SCREW-MACHINE (8-32X0.75-IN)	
	22	1	**8Y-9515**	1	PLATE	
	23	1	**7K-1181**	2	STRAP-CABLE	
	24	1	**4K-5122**	8	HOLDER AS-FUSE	
					(EACH INCLUDES)	
		1	**139-0178**	1	CAP	
	25	1	**8M-0456**	2	FUSE (20-AMPERE)	
	26	1	**3K-8782**	6	FUSE (10-AMPERE)	
	27	1	**7P-7914**	1	SEAL	
R	28	1	**171-9816**	1	CONTROL GP-MONITOR (ELECTRONIC MONITORING SYSTEM)	
B	29	1	**6J-8696**	8	SHIM (1.22-MM THK)	
	30	1	**8G-0034**	4	BRACKET	

8Y-9462 **WIRING GP-CONSOLE (**contd.**)** **i01167763**

NOTE	REF NO	GRAPHIC REF	PART NUMBER	QTY	PART NAME 1 2 3 4 5 6 (PRODUCT LEVEL)	SEE PAGE
	31	1	**4S-4455**	1	CLIP	
	32	1	**4D-1432**	1	SPACER (12.52X17.14X45.72-MM THK)	
Y	33	1	**167-0138**	1	SWITCH GP-MAGNETIC (24-VOLT) (MAIN POWER RELAY)	314
	34	1	**8T-9101**	1	BOLT (3/8-16X2.75-IN)	
	35	1	**7P-7913**	4	MOUNT	
	36	1	**6V-8185**	8	NUT (1/4-20-THD)	
	37	1	**5P-4115**	4	WASHER-HARD (7.2X19X2-MM THK)	
	38	1	**8C-9987**	4	WASHER (8.3X28X2.5-MM THK)	
	39	1	**4K-8864**	2	CLIP	
	40	1	**6D-4244**	1	CLIP	
Y	41	1	**3E-0075**	1	SWITCH GP-MAGNETIC (24-VOLT) (NEUTRAL START RELAY)	317
	42	1	**8Y-9512**	1	FILM-IDENTIFICATION (FUSE PANEL)	
	43	1	**8M-2770**	1	CLIP (LOOP)	
	44	1	**5P-8167**	2	BOLT (3/8-16X0.625-IN)	
	45	1	**8T-4896**	2	WASHER-HARD (10.2X18.5X2.5-MM THK)	
	46	1	**6D-4636**	3	CLIP (LOOP)	
	47	1	**8Y-9513**	1	FILM-IDENTIFICATION (START SWITCH)	

B - USE AS REQUIRED
M - METRIC PART
R - REMANUFACTURED PART MAY BE AVAILABLE
Y - SEPARATE ILLUSTRATION

8Y-9462 **WIRING GP-CONSOLE** (contd.) **i01167763**

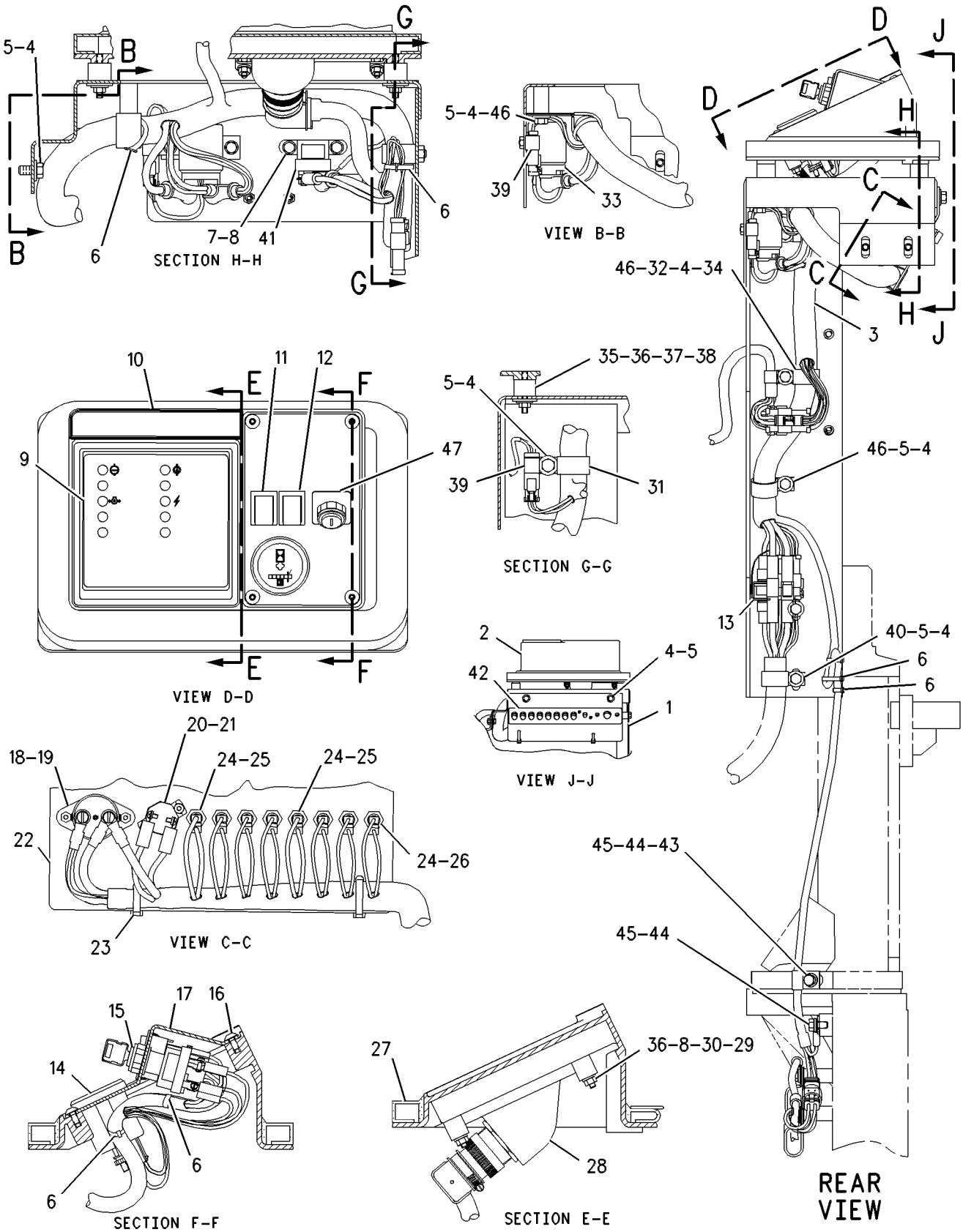

GRAPHIC #1 <END> g00626426

129-0081 WIRING GP-PLATFORM

S/N: 9BL1399-UP

PART OF 117-1761, 8Y-9370 CHASSIS AR

SMCS-1408 **i01399341**

NOTE	REF NO	GRAPHIC REF	PART NUMBER	QTY	PART NAME 1 2 3 4 5 6 (PRODUCT LEVEL)	SEE PAGE
	1	2	**4S-1936**	1	CLIP	
	2	3	**3T-2357**	1	SWITCH GP-PUSH BUTTON (HORN)	
		3	**9X-0199**	1	BOOT-SWITCH	
	3	1	**7X-2058**	3	LAMP (24-VOLT)	
	4	1	**8Y-9415**	1	BRACKET AS	
		1	**5D-9629**	3	ROD	
		1	**6V-5044**	1	NUT-WELD (5/16-18-THD)	
M	5	1	**9X-2045**	4	SCREW-TRUSS HEAD (M6X1X20-MM)	
	6	1	**8Y-5746**	1	ASHTRAY	
	7	1	**8Y-6333**	1	GASKET (ASHTRAY)	
	8	1	**9W-0335**	1	LIGHTER AS-CIGAR (24-VOLT)	
		1	**3M-6018**	1	TERMINAL	
	9	1	**8K-4915**	1	INDICATOR (LIGHT)	
	10	1	**7N-5876**	1	LAMP (24-VOLT, 0.2-AMPERE)	
Y	11	1	**3E-6328**	1	ALARM GP (24-VOLT)	234
	12	1	**5K-0906**	1	BOLT (5/16-18X0.625-IN)	
	13	1	**8T-4224**	1	WASHER-HARD (8.8X16X2-MM THK)	
	14	1	**9X-3496**	1	GAUGE GP-FUEL LEVEL	
		1	**3L-8187**	3	LOCKWASHER	
		1	**4B-2043**	2	NUT (8-32-THD)	
		1	**4B-5324**	3	WASHER (3.9X9.6X1.2-MM THK)	
		1	**9B-7233**	2	LOCKWASHER	
		1	**6V-8368**	3	NUT (6-32-THD)	
	15	1	**6V-3507**	3	SEAL-RECTANGULAR	
	16	1	**4W-2064**	1	INDICATOR (TRANSMISSION OIL TEMPERATURE)	
	17	1	**126-2865**	1	INDICATOR (COOLANT TEMP)	
	18	1,2,3	**3S-2093**	19	STRAP-CABLE	
	19	3	**9G-9150**	1	CLIP	
	20	1,3	**5P-1075**	3	WASHER-HARD (10.2X22.5X3-MM THK)	
	21	2	**128-1446**	1	HARNESS AS-PLATFORM	
	22	2	**4K-8864**	1	CLIP	
	23	2	**6V-8188**	1	NUT (1/2-13-THD)	
	24	2	**8T-4223**	1	WASHER-HARD (13.5X25.5X3-MM THK)	
	25	2	**5P-8522**	1	GROMMET	
	26	2	**1P-7009**	1	CLIP	
	27	2,3	**5M-3062**	5	BOLT (3/8-16X0.75-IN)	
	28	2,3	**8T-4896**	5	WASHER-HARD (10.2X18.5X2.5-MM THK)	
	29	2,3	**9M-8406**	3	CLIP (LOOP)	
	30	2	**5P-8440**	1	GROMMET	
	31	3	**3W-6992**	1	RETAINER	
	32	3	**6Y-6584**	1	STRAP AS-GROUND	
	33	3	**7T-0969**	1	HORN AS (24-VOLT, LOW TONE)	
M		3	**8C-7581**	2	SCREW-MACHINE (M4X0.7X8-MM)	
		3	**9B-7233**	2	LOCKWASHER	
	34	3	**8Y-6496**	1	BRACKET AS	
		3	**1F-0750**	1	NUT-WELD (3/8-16-THD)	
		3	**9F-2978**	1	NUT-WELD (3/8-16-THD)	

129-0081 **WIRING GP-PLATFORM (**contd.**)** **i01399341**

NOTE	REF NO	GRAPHIC REF	PART NUMBER	QTY	PART NAME 1 2 3 4 5 6 (PRODUCT LEVEL)	SEE PAGE
	35	3	**4D-7794**	1	CLIP	
	36	2	**6H-4005**	1	GROMMET	
	37	2	**5F-9757**	1	GROMMET	
	38	1	**8M-2773**	2	CLIP (LOOP)	
	39	1,3	**5P-8167**	3	BOLT (3/8-16X0.625-IN)	
D	40	1	**6V-5819**		CONDUIT-FLEXIBLE (12.54-MM ID, SPLIT) (.6M)	
	41	1	**9G-9152**	1	CLIP	
	42	1	**3T-3045**	1	CLIP AS	
	43	2	**8Y-9617**	1	BRACKET	
	44	2	**8Y-9616**	1	BRACKET	
	45	3	**3S-8665**	1	CLIP	
	46	1	**8Y-9797**	1	HARNESS AS-FRONT	
	47	1	**5D-7635**	1	GROMMET	
	48	2	**7K-1181**	1	STRAP-CABLE	
	49	3	**5P-9085**	2	CLIP	
	50	3	**8M-2770**	1	CLIP (LOOP)	

D - ORDER BY THE METER
M - METRIC PART
Y - SEPARATE ILLUSTRATION

129-0081 **WIRING GP-PLATFORM** (contd.) **i01399341**

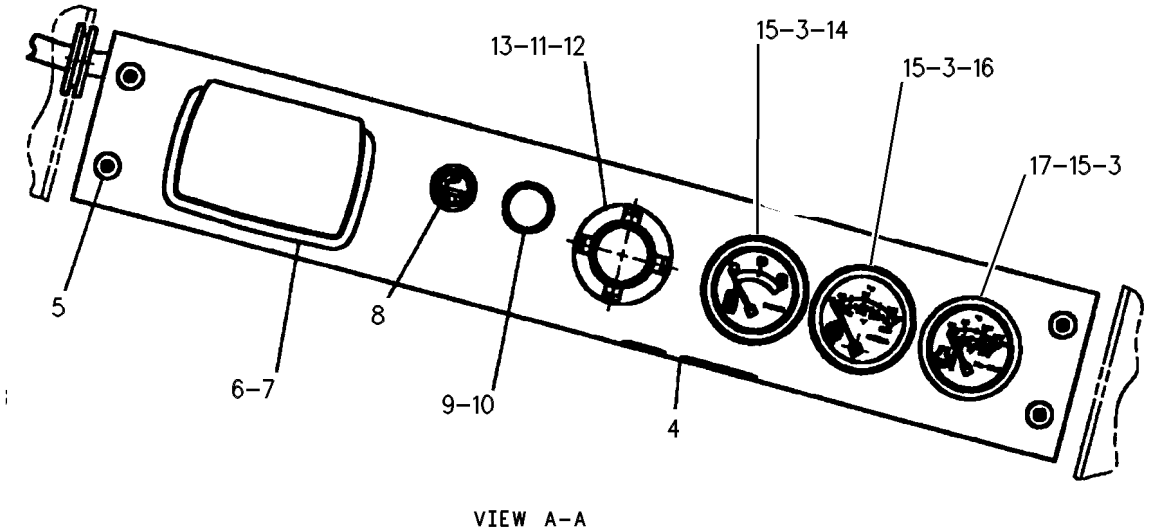

VIEW A–A

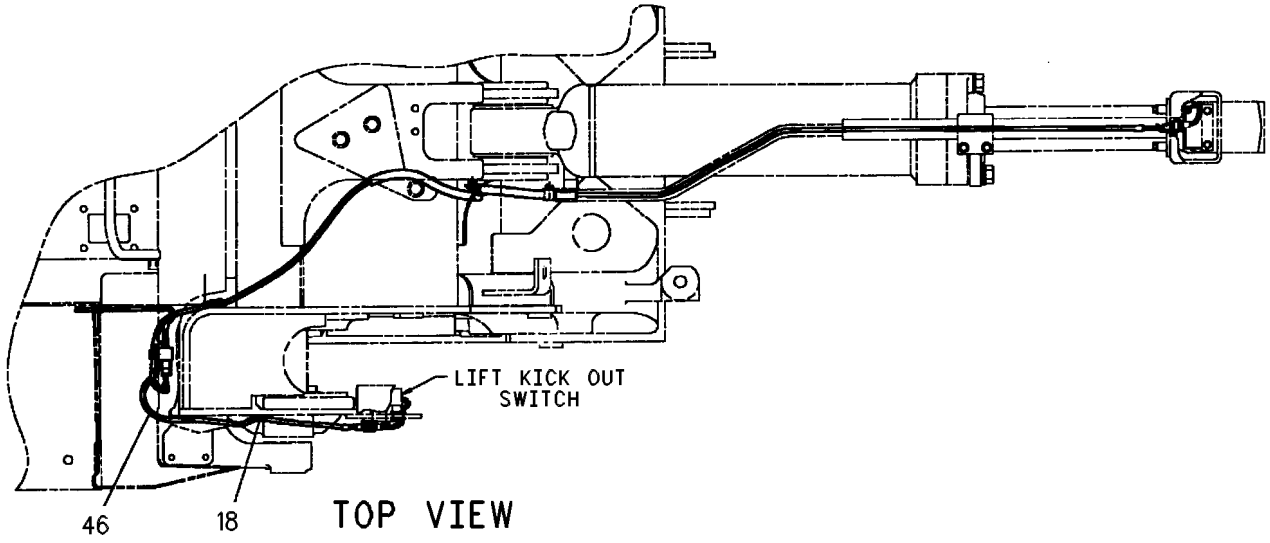

TOP VIEW

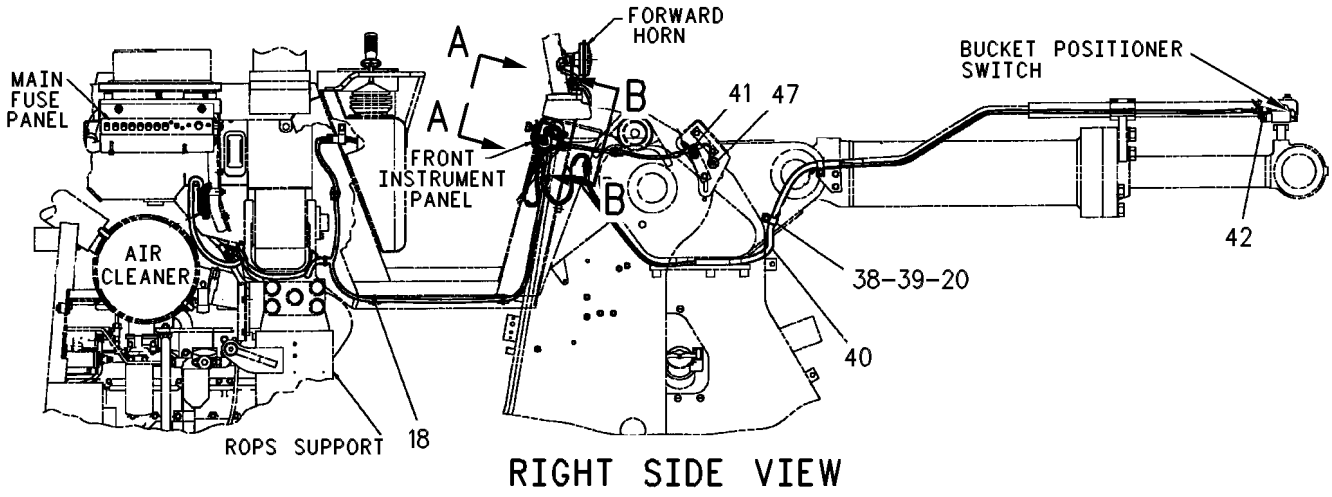

RIGHT SIDE VIEW

GRAPHIC #1 g00292145

129-0081 **WIRING GP-PLATFORM (**contd.**)** **i01399341**

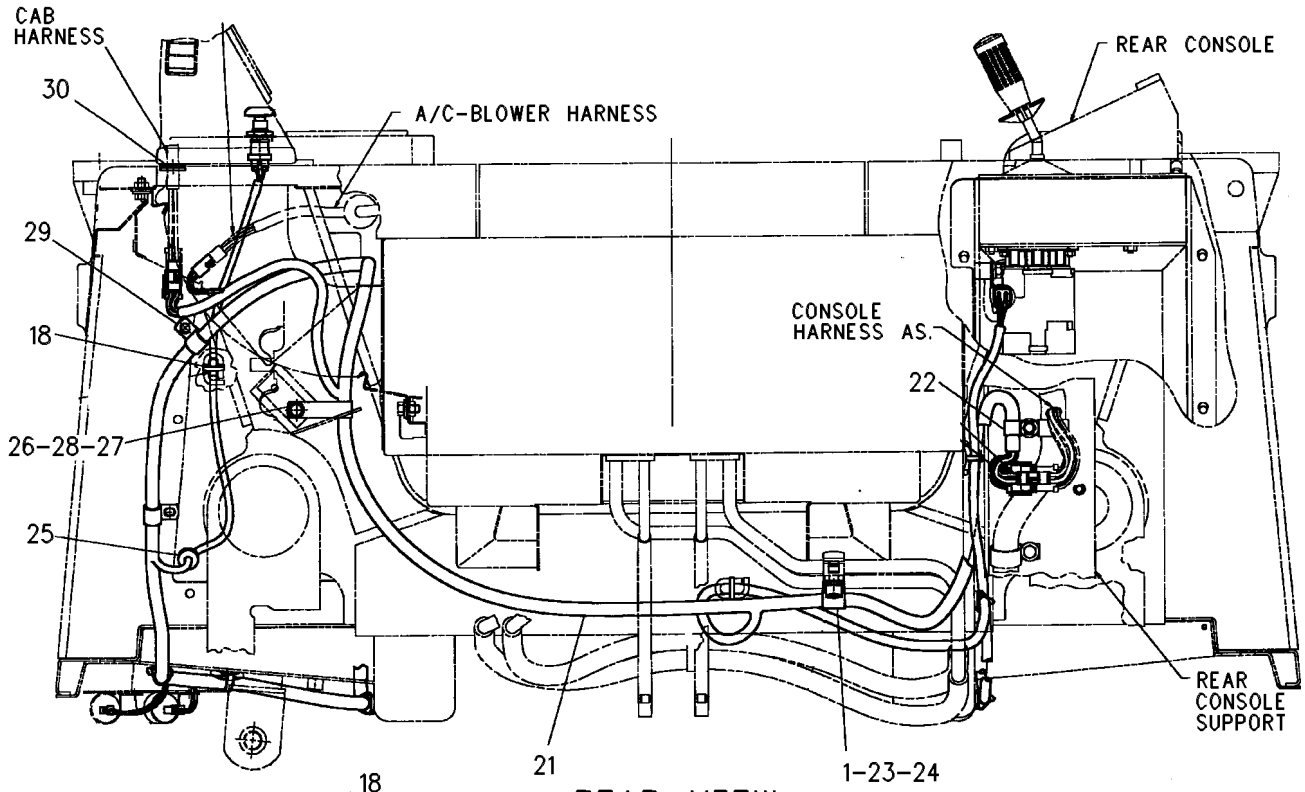

REAR VIEW

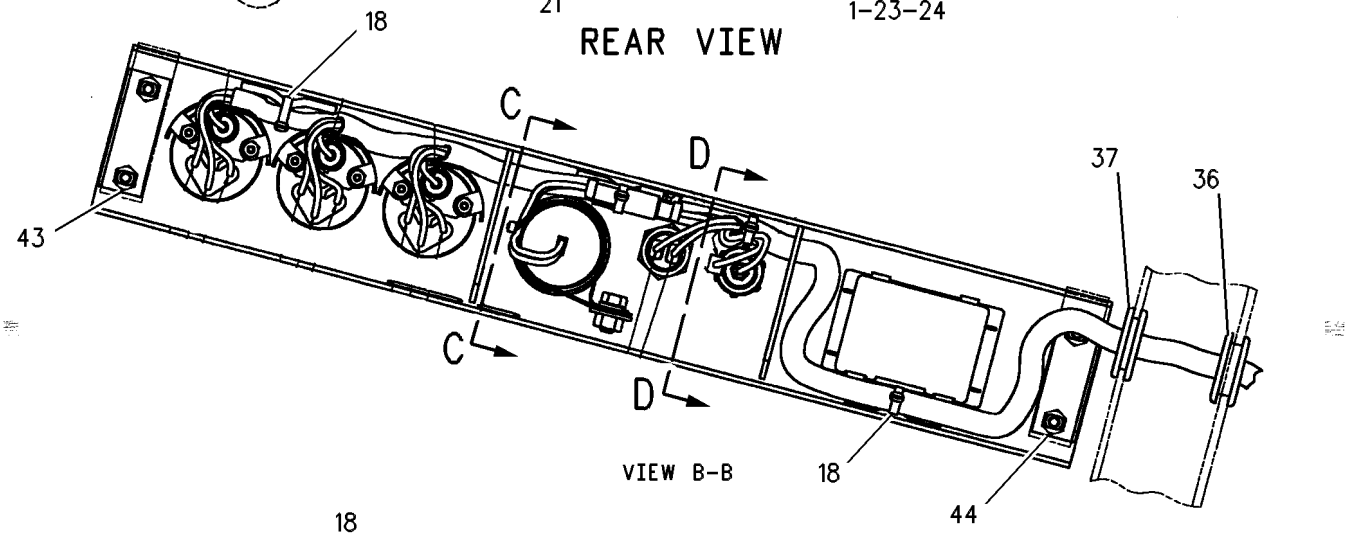

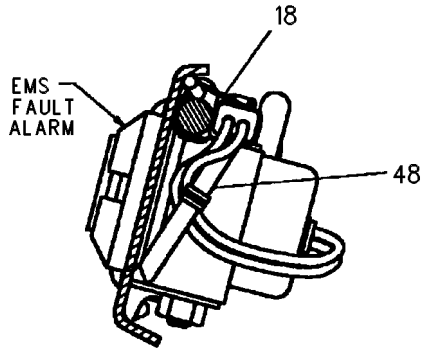

SECTION C-C

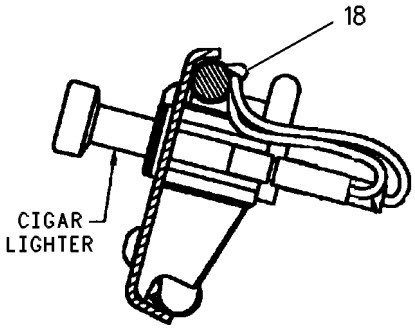

SECTION D-D

GRAPHIC #2 g00292146

129-0081 **WIRING GP-PLATFORM (**contd.**)** **i01399341**

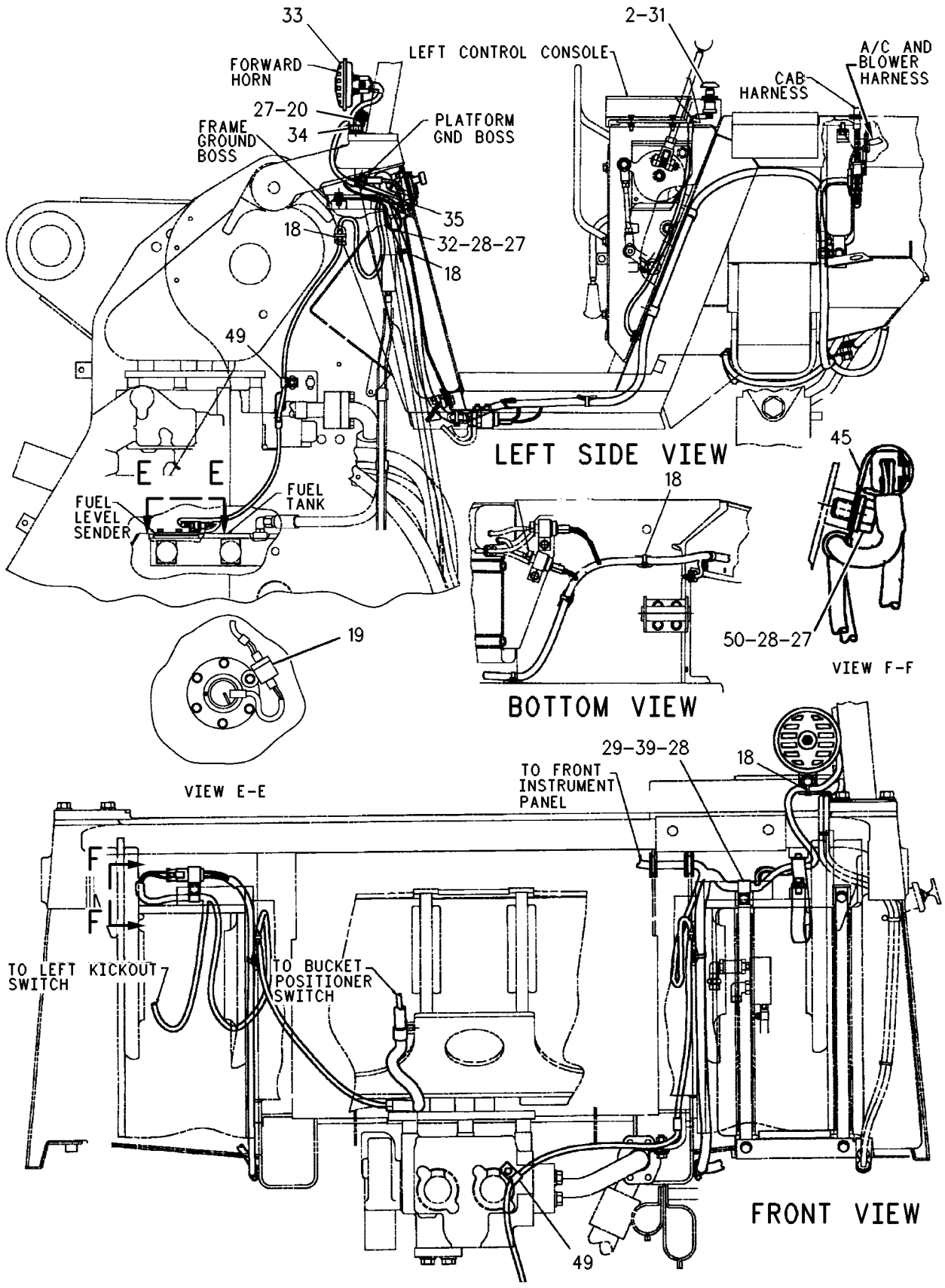

GRAPHIC #3 <END> g00292156

8Y-9467 WIRING GP-PLATFORM

S/N: 9BL1-1398

PART OF 8Y-9370 CHASSIS AR

SMCS-1408 **i01399335**

NOTE	REF NO	GRAPHIC REF	PART NUMBER	QTY	PART NAME 1 2 3 4 5 6 (PRODUCT LEVEL)	SEE PAGE
	1	1	**8T-4224**	1	WASHER-HARD (8.8X16X2-MM THK)	
Y	2	1	**3E-6328**	1	ALARM GP (24-VOLT) (EMS FAULT)	234
	3	1	**5K-0906**	1	BOLT (5/16-18X0.625-IN)	
	4	1	**6V-3507**	3	SEAL-RECTANGULAR	
	5	1	**7X-2058**	3	LAMP (24-VOLT)	
	6	1	**9X-3496**	1	GAUGE GP-FUEL LEVEL	
		1	**3L-8187**	3	LOCKWASHER	
		1	**4B-2043**	2	NUT (8-32-THD)	
		1	**4B-5324**	3	WASHER (3.9X9.6X1.2-MM THK)	
		1	**6V-3507**	1	SEAL-RECTANGULAR	
		1	**6V-8368**	3	NUT (6-32-THD)	
		1	**9B-7233**	2	LOCKWASHER	
	7	1	**4W-2064**	1	INDICATOR (TRANSMISSION OIL TEMPERATURE)	
	8	1	**9W-0335**	1	LIGHTER AS-CIGAR (24-VOLT)	
	9	1	**8K-4915**	1	INDICATOR (ACTION WARNING LIGHT)	
	10	1	**7N-5876**	1	LAMP (24-VOLT, 0.2-AMPERE)	
	11	1	**8Y-9415**	1	BRACKET AS	
	12	1	**8Y-5746**	1	ASHTRAY	
	13	1	**8Y-6333**	1	GASKET (ASHTRAY)	
M	14	1	**9X-2045**	1	SCREW-TRUSS HEAD (M6X1X20-MM)	
	15	1	**4W-0483**	1	GAUGE GP-COOLANT TEMPERATURE (24-VOLT)	
	16	1	**5D-7635**	1	GROMMET	
	17	1	**9G-9152**	1	CLIP	
	18	1	**3S-2093**	13	STRAP-CABLE	
	19	1	**8Y-9797**	1	HARNESS AS-FRONT	
	20	1	**3T-3045**	1	CLIP AS	
	21	1	**5P-1075**	3	WASHER-HARD (10.2X22.5X3-MM THK)	
	22	1	**5P-8167**	2	BOLT (3/8-16X0.625-IN)	
	23	1	**8M-2773**	2	CLIP (LOOP)	
DB	24	1	**6V-5819**		CONDUIT-FLEXIBLE (12.54-MM ID, SPLIT)	
	25	1	**7T-0969**	1	HORN AS (24-VOLT, LOW TONE)	
M		1	**8C-7581**	2	SCREW-MACHINE (M4X0.7X8-MM)	
		1	**9B-7233**	2	LOCKWASHER	
	26	1	**5M-3062**	3	BOLT (3/8-16X0.75-IN)	
	27	1	**8Y-6496**	1	BRACKET AS	
	28	1	**4D-7794**	1	CLIP	
	29	1	**6Y-6584**	1	STRAP AS-GROUND	
	30	1	**8T-4896**	2	WASHER-HARD (10.2X18.5X2.5-MM THK)	
	31	1	**9G-9150**	1	CLIP	
	32	1	**2V-3216**	1	CLIP	
	33	1	**3W-6992**	1	RETAINER	
	34	1	**3T-2357**	1	SWITCH GP-PUSH BUTTON (HORN)	
		1	**2H-3922**	1	LOCKWASHER	
		1	**3B-4501**	1	LOCKWASHER	
		1	**5L-7200**	1	SCREW (8-32X0.375-IN)	
		1	**6V-8363**	2	SCREW (10-32X0.312-IN)	
		1	**6V-8370**	1	NUT-HEX (3/4-32-THD)	

8Y-9467 **WIRING GP-PLATFORM (**contd.**)** **i01399335**

NOTE	REF NO	GRAPHIC REF	PART NUMBER	QTY	PART NAME 1 2 3 4 5 6 (PRODUCT LEVEL)	SEE PAGE
		1	**7T-9515**	1	KNOB-HORN	
		1	**8F-1434**	2	LOCKWASHER	
		1	**9X-0199**	1	BOOT-SWITCH	
	35	1	**5P-9085**	1	CLIP (7.94MM ID)	
	36	1	**5P-8439**	1	GROMMET	
	37	1	**3E-5239**	2	RELAY AS (24-VOLT)	
	38	1	**8T-4205**	2	WASHER-HARD (7.2X14.5X2-MM THK)	
	39	1	**4M-5281**	2	BOLT (1/4-20X0.75-IN)	
	40	2	**4S-1936**	1	CLIP	
	41	2	**6V-8188**	1	NUT (1/2-13-THD)	
	42	2	**8T-4223**	1	WASHER-HARD (13.5X25.5X3-MM THK)	
	43	2	**8Y-9794**	1	HARNESS AS-PLATFORM	
	44	2	**5P-8522**	1	GROMMET	
	45	2	**1P-7009**	1	CLIP	
	46	2	**5M-3062**	2	BOLT (3/8-16X0.75-IN)	
	47	2	**8T-4896**	3	WASHER-HARD (10.2X18.5X2.5-MM THK)	
	48	2	**3S-2093**	6	STRAP-CABLE	
	49	2	**9M-8406**	3	CLIP (LOOP)	
	50	2	**5P-8440**	1	GROMMET	
	51	2	**8Y-9617**	1	BRACKET	
	52	2	**7K-1181**	1	STRAP-CABLE	
	53	2	**5F-9757**	1	GROMMET	
	54	2	**6H-4005**	1	GROMMET	
	55	2	**8Y-9616**	1	BRACKET	
	56	2	**4K-8864**	1	CLIP	
	57	2	**3S-8665**	1	CLIP	
	58	2	**8M-2770**	1	CLIP (LOOP)	
	59	2	**5P-8167**	1	BOLT (3/8-16X0.625-IN)	
	60	2	**5P-9085**	1	CLIP	

B - USE AS REQUIRED
D - ORDER BY THE METER
M - METRIC PART
Y - SEPARATE ILLUSTRATION

8Y-9467 **WIRING GP-PLATFORM (**contd.**)** **i01399335**

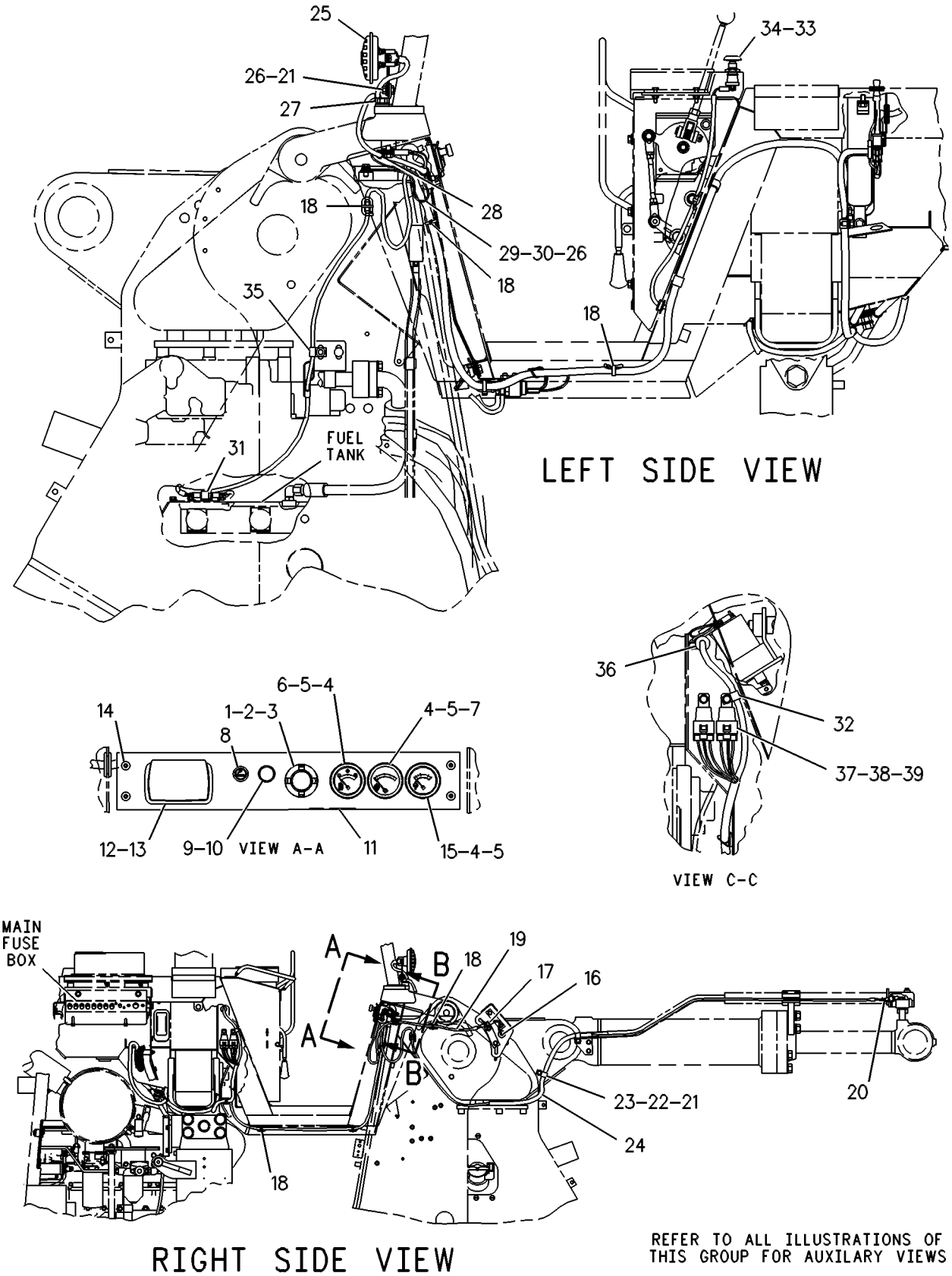

GRAPHIC #1 g00292147

8Y-9467 **WIRING GP-PLATFORM (**contd.**)** **i01399335**

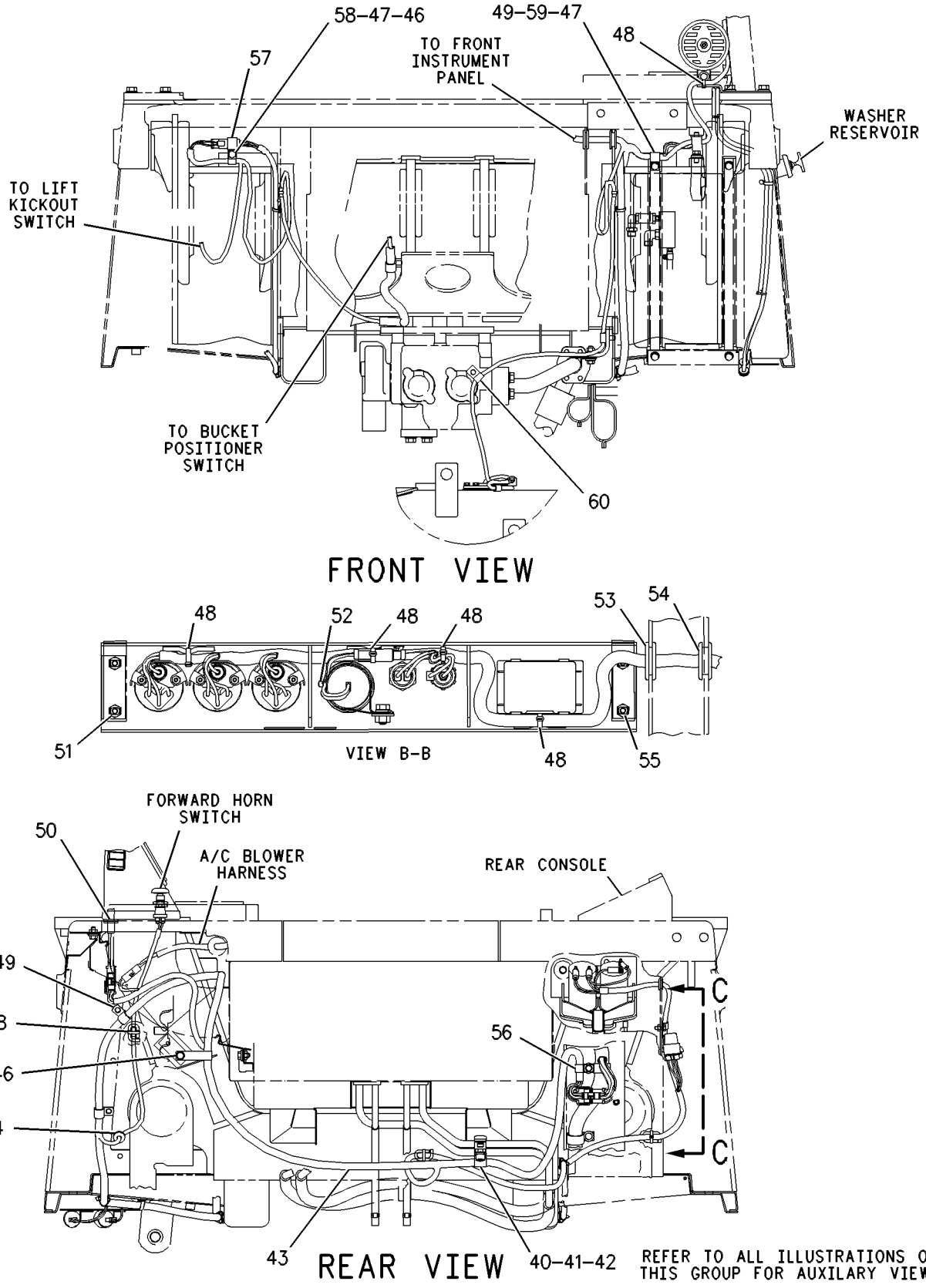

GRAPHIC #2 <END> g00520457

104-6209 CASE GP-HYDROSTATIC POWER

S/N: 8EX1-UP

PART OF 104-6208 CONTROL AR-HYDROSTATIC POWER

SMCS-3221 **i03852910**

NOTE	REF NO	GRAPHIC REF	PART NUMBER	QTY	PART NAME 1 2 3 4 5 6 (PRODUCT LEVEL)	SEE PAGE
	1	1	**6E-2802**	1	GASKET	
	2	1	**3G-9683**	1	COVER AS	
		1	**7J-5544**	7	FITTING (3/4X16-THD)	
	3	1,3	**5K-9107**	70	BOLT-LOCKING (3/8-16X0.75-IN)	
	4	1,3	**5M-2894**	83	WASHER-HARD (10.2X18.5X2.5-MM THK)	
	5	1	**2J-7590**	1	COVER	
	6	1	**5P-3863**	1	SEAL-O-RING	
	7	1	**5B-9603**	1	BOLT (3/8-16X5-IN)	
	8	1	**3G-8973**	1	GASKET	
	9	1	**1A-5964**	4	BOLT (3/8-16X4.5-IN)	
	10	1,3	**0T-0065**	5	BOLT (3/8-16X3.5-IN)	
	11	1	**5B-2638**	2	BOLT (3/8-16X5.25-IN)	
	12	1	**5H-2767**	1	SEAL-O-RING	
	13	1	**8H-9208**	1	DOWEL	
	14	1	**6F-5559**	1	SEAL-O-RING	
	15	1	**4F-8946**	1	SEAL-O-RING	
	16	1	**1D-4703**	4	BOLT (7/16-14X2.5-IN)	
	17	1	**1U-3191**	1	LEVER	
	18	1	**1H-9696**	2	SEAL-O-RING	
	19	1	**1B-8705**	1	KEY-WOODRUFF	
	20	1	**3G-1832**	1	PLATE	
	21	1	**3G-1845**	1	GASKET	
	22	1	**7J-9016**	10	BOLT-SOCKET HEAD (5/16-18X1-IN)	
	23	1	**0S-1591**	1	BOLT (3/8-16X1.5-IN)	
	24	1	**1D-4717**	1	NUT (3/8-16-THD)	
	25	1	**1D-4566**	19	BOLT (1/2-13X3.5-IN)	
	26	1	**5P-8245**	28	WASHER-HARD (13.5X25.5X3-MM THK)	
	27	1,3	**5P-4268**	6	SEAL-O-RING	
	28	1	**6F-6673**	4	SEAL-O-RING	
	29	1	**1P-5767**	8	FLANGE-HALF	
	30	1	**1A-1460**	16	BOLT (1/2-13X2-IN)	
	31	1	**1P-3704**	4	SEAL-RECTANGULAR	
	32	1	**2K-4973**	6	LOCKNUT (3/8-16-THD)	
	33	1,3	**1A-2029**	14	BOLT (3/8-16X1.125-IN)	
	34	1	**3G-8600**	1	BLOCK	
	35	1	**5P-6718**	1	SEAL-O-RING	
	36	1	**9S-8004**	1	PLUG (9/16-18-THD)	
	37	1	**3J-1907**	1	SEAL-O-RING	
	38	1	**3P-1155**	2	SEAL-O-RING	
	39	1	**9S-4185**	4	PLUG (3/4-16-THD)	
	40	1	**3K-0360**	4	SEAL-O-RING	
	41	1	**9J-9293**	1	COVER AS	
		1	**8J-6910**	12	STUD-WELD (3/8-16X1.25-IN)	
	42	1	**9J-1174**	1	GASKET	
	43	1	**1D-4572**	4	BOLT (1/2-13X5.5-IN)	
	44	1	**8F-8804**	4	BOLT (1/2-13X5.75-IN)	
	45	1	**6V-0913**	2	SEAL-O-RING	

104-6209 **CASE GP-HYDROSTATIC POWER (**contd.**)** **i03852910**

NOTE	REF NO	GRAPHIC REF	PART NUMBER	QTY	PART NAME 1 2 3 4 5 6 (PRODUCT LEVEL)	SEE PAGE
	46	1	**3P-0439**	2	SEAL-O-RING	
	47	1	**9J-1209**	2	PIN	
	48	1	**8J-4437**	2	SPRING	
	49	1	**9S-4190**	2	PLUG-O-RING (7/8-14-THD)	
	50	1	**2M-9780**	2	SEAL-O-RING	
	51	1	**5H-6005**	4	SEAL-O-RING	
	52	1	**1B-2886**	4	BOLT (1/2-13X3.75-IN)	
	53	1	**9T-6930**	2	COVER	
	54	1	**034-4160**	6	BOLT-LOCKING (5/16-18X1-IN)	
	55	1	**1Y-0462**	6	WASHER (0.328X0.81X0.125-IN THK)	
	56	1	**2J-3118**	13	BOLT-LOCKING (3/8-16X1.25-IN)	
	57	1	**5B-5821**	4	DOWEL	
	58	1	**5P-8131**	2	GROMMET	
	59	1	**0S-1619**	2	BOLT (3/8-16X3-IN)	
	60	1	**6V-2664**	1	BOLT-LOCKING (5/16-18X2.25-IN)	
	61	1	**9M-1974**	1	WASHER-HARD (8.8X16X2-MM THK)	
	62	1	**1U-3889**	1	PLATE	
	63	1	**0L-1006**	3	PLATE-SPACER	
	64	1	**030-8537**	3	BOLT-LOCKING (3/8-16X1.5-IN)	
	65	1	**9L-9132**	3	WASHER (10.2X25.5X2.5-MM THK)	
	66	1	**4T-0842**	1	PLATE AS	
		1	**9F-2978**	2	NUT-WELD (3/8-16-THD)	
BE	67	1	**103-1214**	1	TUBE	
	68	1	**6F-0711**	3	SEAL-O-RING	
	70	2	**5M-2894**	49	WASHER-HARD (10.2X18.5X2.5-MM THK)	
	73	2	**2K-4973**	6	LOCKNUT (3/8-16-THD)	
	75	3	**3B-1915**	2	BOLT (3/8-16X1.375-IN)	
B	76	2	**6E-2712**	2	SHIM (0.68-MM THK)	
	77	2	**1U-3141**	1	HOUSING	
	78	2	**1U-3882**	1	CASE AS	
		2	**1P-2636**	1	CUP-BEARING	
		2	**3B-0645**	1	PLUG-CUP	
		2	**3G-8598**	2	TUBE	
		2	**4D-6473**	2	DOWEL	
		2	**7J-8894**	2	CUP-BEARING	
	79	2	**3G-6732**	1	CAP (TOP, LH)	
	80	2	**3L-9409**	4	CUP-BEARING	
	81	2	**128-7957**	2	JOINT AS	
					(EACH INCLUDES)	
		2	**128-7959**	2	PIN	
	82	2	**9L-6479**	2	SPRING	
	83	2	**034-6681**	4	BOLT-SOCKET HEAD (5/16-18X0.625-IN)	
	84	2	**128-7958**	2	CUP	
	85	2	**3G-0284**	1	CAP-TOP (RH)	
B	86	2	**9J-9408**	20	SHIM (0.05-MM THK)	
B	87	2	**9J-9858**	20	SHIM (0.18-MM THK)	
	88	2	**9J-8061**	4	SPRING	
	89	2	**9S-8008**	2	PLUG (1-1/16-12-THD)	
	90	2	**3D-2824**	2	SEAL-O-RING	
B	91	2	**1U-1049**	2	SHIM (2.24-MM THK)	
B	92	2	**1U-1050**	2	SHIM (2.41-MM THK)	

104-6209 **CASE GP-HYDROSTATIC POWER (**contd.**)** **i03852910**

NOTE	REF NO	GRAPHIC REF	PART NUMBER	QTY	PART NAME 1 2 3 4 5 6 (PRODUCT LEVEL)	SEE PAGE
B	93	2	**1U-1051**	2	SHIM (2.59-MM THK)	
B	94	2	**1U-1052**	2	SHIM (2.76-MM THK)	
B	95	2	**1U-1053**	2	SHIM (2.94-MM THK)	
	96	2	**8J-0412**	2	CUP-BEARING	
	97	2	**9T-7485**	1	HEAD-TRANSMISSION	
	98	2	**3G-8596**	1	GASKET	
	99	2	**1U-2827**	1	GUIDE-VALVE	
	100	2	**7B-3039**	1	SPRING	
	101	2	**8J-8783**	1	VALVE-DRAIN	
	102	2	**5F-8000**	1	SEAL-O-RING	
	103	2	**3G-5886**	1	BODY-VALVE (DRAIN)	
	104	2	**9J-7031**	1	PLUG-DRAIN	
	105	2	**5M-2057**	1	SEAL-O-RING	
BE	106	2	**1U-1570**	1	TUBE	
	107	2	**6F-0711**	1	SEAL-O-RING	
BE	108	2	**1U-1571**	1	SLEEVE	
	109	2	**1U-1569**	1	ADAPTER	
	110	2	**3G-0595**	2	CAP-BOTTOM	
	111	3	**1U-3893**	1	PLATE AS	
	112	2	**6E-0631**	2	GEAR (78 TEETH)	
	113	2	**1D-4270**	2	WASHER (0.188-IN THK)	
	114	2	**2J-6384**	2	NUT-SELF LOCKING (1-1/4-12-THD)	
	115	2	**9J-1208**	2	PIN	
	116	2	**2R-0364**	2	RING-RETAINING	
	117	2	**103-1212**	1	SHAFT AS	
	118	2	**103-1215**	1	GEAR (66 TEETH)	
	119	2	**5P-7032**	1	SEAL-LIP TYPE	
	120	2	**1P-2662**	2	CONE-BEARING	
B	121	2	**1U-1043**	1	SHIM (2.21-MM THK)	
B	122	2	**1U-1044**	1	SHIM (2.39-MM THK)	
B	123	2	**1U-1045**	1	SHIM (2.56-MM THK)	
B	124	2	**1U-1046**	1	SHIM (2.74-MM THK)	
B	125	2	**1U-1047**	1	SHIM (2.91-MM THK)	
B	126	2	**1U-1048**	1	SHIM (3.09-MM THK)	
	127	2	**1P-2636**	1	CUP-BEARING	
	128	3	**3G-8446**	1	GASKET	
	129	3	**031-0219**	3	BOLT-LOCKING (3/8-16X1.75-IN)	
	130	3	**4T-4031**	1	CLAMP	
BE	131	3	**1U-3923**	1	TUBE	
	132	3	**0L-1143**	2	BOLT (3/8-16X2.5-IN)	
	133	3	**4T-2069**	1	PLUG-DRAIN	
	134	3	**2H-3932**	1	SEAL-O-RING	
	135	2	**6V-3382**	3	SEAL-LIP TYPE	
B	136	2	**4T-3081**	2	SHIM (2.33-MM THK)	
B	137	2	**4T-3082**	2	SHIM (2.5-MM THK)	
B	138	2	**4T-3083**	2	SHIM (2.68-MM THK)	
B	139	2	**4T-3084**	1	SHIM (2.48-MM THK)	
B	140	2	**4T-3085**	1	SHIM (2.66-MM THK)	
B	141	2	**4T-3086**	1	SHIM (2.83-MM THK)	
	142	3	**030-8535**	1	BOLT-LOCKING (3/8-16X0.875-IN)	
B	143	2	**8C-8422**		SEALANT	

104-6209 **CASE GP-HYDROSTATIC POWER (**contd.**)** **i03852910**

NOTE	REF NO	GRAPHIC REF	PART NUMBER	QTY	PART NAME 1 2 3 4 5 6 (PRODUCT LEVEL)	SEE PAGE
M	144	2	**5P-9938**	14	BOLT-HEAD LOCKING (3/8-16X1.375-IN)	
B	145	2	**6E-2704**	2	SHIM (2.06-MM THK)	
B	146	2	**6E-2705**	2	SHIM (1.89-MM THK)	
B	147	2	**6E-2706**	2	SHIM (1.71-MM THK)	
B	148	2	**6E-2707**	2	SHIM (1.54-MM THK)	
B	149	2	**6E-2708**	2	SHIM (1.36-MM THK)	
B	150	2	**6E-2709**	2	SHIM (1.19-MM THK)	
B	151	2	**6E-2710**	2	SHIM (1-MM THK)	
B	152	2	**6E-2711**	2	SHIM (0.84-MM THK)	

B - USE AS REQUIRED
E - ORDER BY THE CENTIMETER
M - METRIC PART

104-6209 **CASE GP-HYDROSTATIC POWER** (contd.) **i03852910**

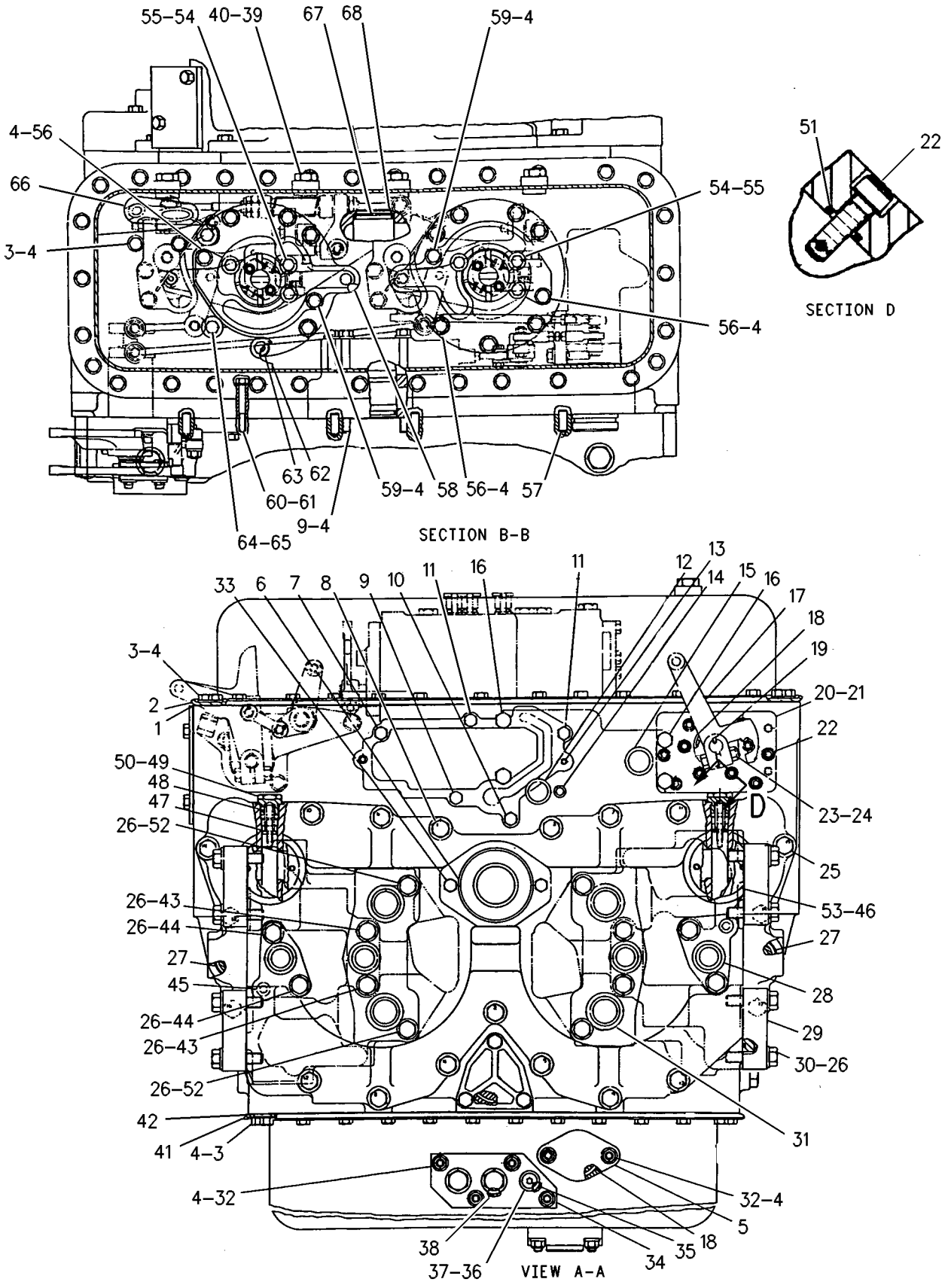

GRAPHIC #1 g00603717

104-6209 **CASE GP-HYDROSTATIC POWER (**contd.**)** **i03852910**

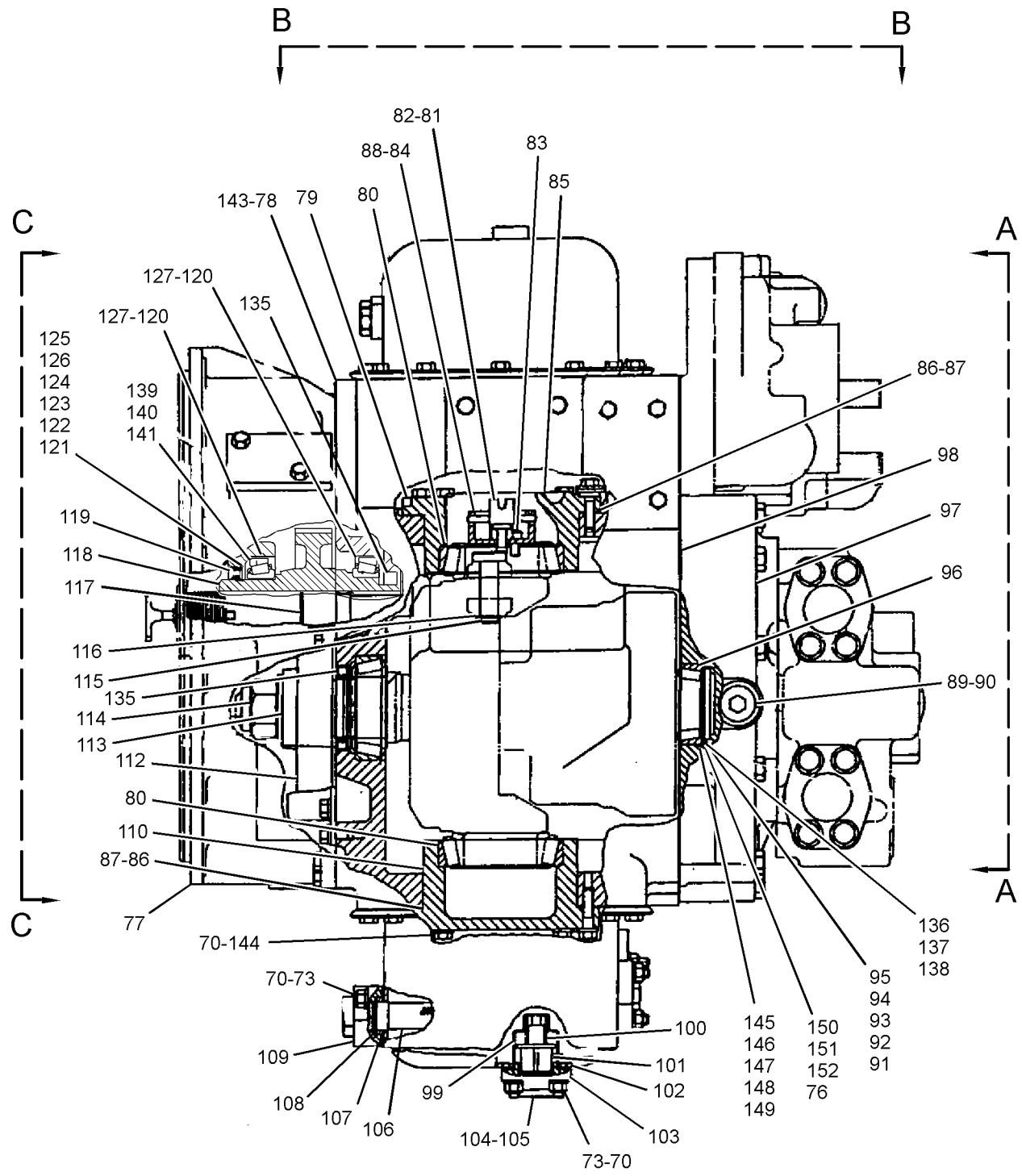

REFER TO ALL ILLUSTRATIONS OF THIS GROUP FOR AUXILIARY VIEWS

GRAPHIC #2

g02097834

104-6209 **CASE GP-HYDROSTATIC POWER (**contd.**)** **i03852910**

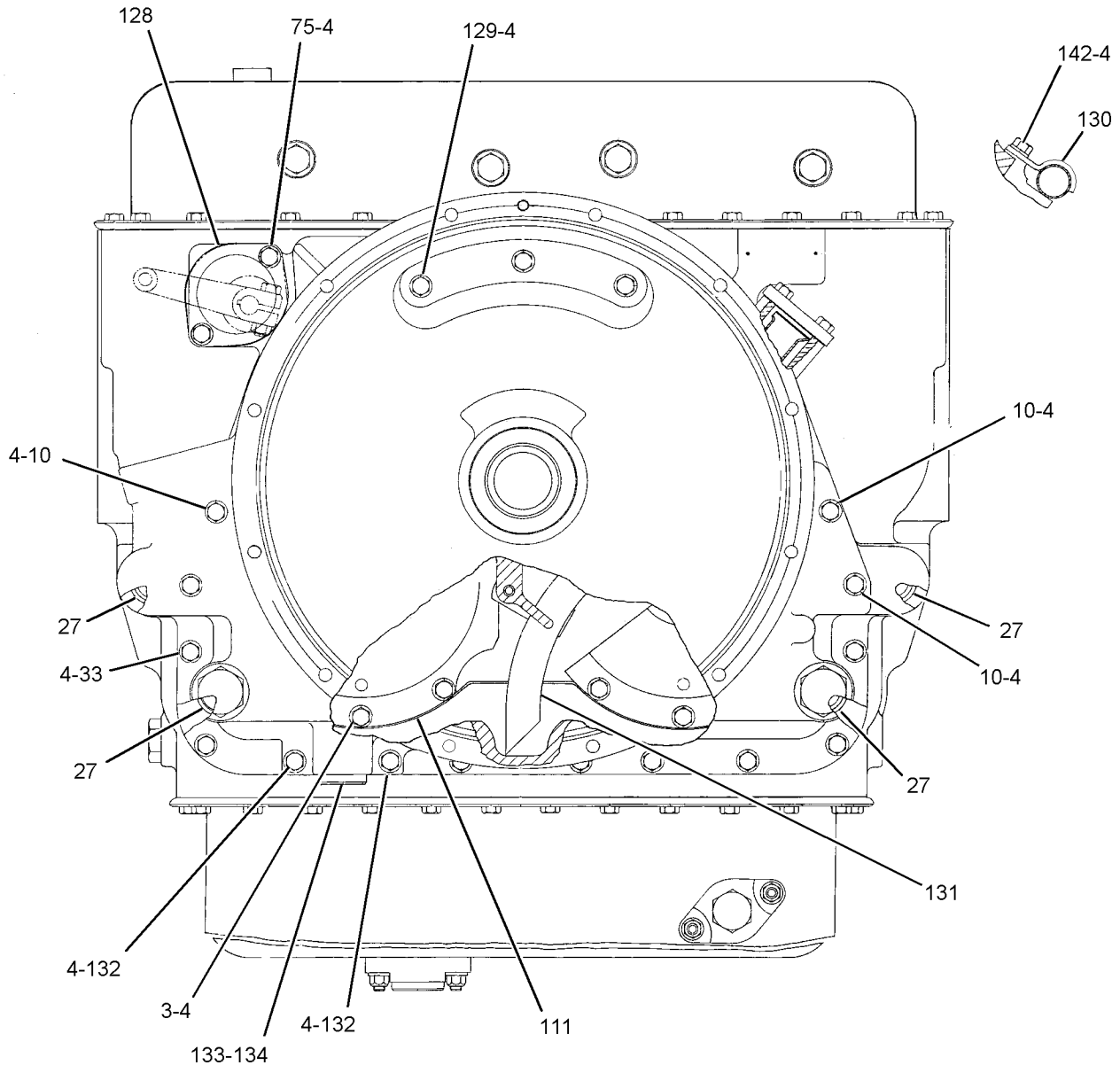

VIEW C-C

GRAPHIC #3 <END> g02097874

104-6208 CONTROL AR-HYDROSTATIC POWER

S/N: 8EX1-UP

PART OF 104-9590 POWER TRAIN AR

SMCS-3225 **i01399372**

NOTE	PART NUMBER	QTY	PART NAME 1 2 3 4 5 6 (PRODUCT LEVEL)	SEE PAGE
Y	*104-6209*	1	CASE GP-HYDROSTATIC POWER	336
Y	**3G-3304**	1	CONTROL GP-TRANSMISSION	719
Y	**1U-2828**	1	COVER GP-SHIPPING	349
Y	*116-2011*	1	COVER GP-SHIPPING	348
Y	**3G-5016**	1	CYLINDER GP-SERVO (LH)	351
Y	**3G-5017**	1	CYLINDER GP-SERVO (RH)	352
Y	**9T-4730**	1	FILTER GP-OIL	362
Y	**1U-2623**	1	LIFTING GP-TRANSMISSION	369
Y	*104-6210*	1	LINES GP-HYDROSTATIC	371
Y	*3G-5931*	1	LINKAGE GP-HYDRO POWER CASE	381
Y	*8Y-9743*	1	PUMP & MOUNTING GP	598
Y	*9T-0608*	1	ROTATING GP-PUMP (RH)	395
Y	*9T-0609*	1	ROTATING GP-PUMP (LH)	397
Y	**9T-1939**	1	VALVE GP-ACTUATOR	400
Y	**1U-2043**	1	VALVE GP-BYPASS	403
Y	**1U-4773**	1	VALVE GP-PILOT	658
Y	**9T-1319**	1	VALVE GP-RELIEF	408
Y	**9J-0365**	1	VALVE GP-REPLENISHING	416
Y	**9J-8554**	1	VALVE GP-REPLENISHING	419
Y	**3G-4595**	1	VALVE GP-PUMP CONTROL (RH)	407
Y	**3G-4594**	1	VALVE GP-PUMP CONTROL (LH)	406
Y	**1U-1723**	1	VALVE GP-CONTROL (UNDERSPEED OVERRIDE)	404
	6V-0992	1	PLATE-SERIAL NUMBER	
	4B-4158	2	SCREW-DRIVE (NO 4X0.25-IN)	

Y - SEPARATE ILLUSTRATION

<END>

7P-2563 CONTROL GP-SPD OVERRIDE & BRK

S/N: 9BL1-1398

PART OF 8Y-9370 CHASSIS AR

SMCS-3220 **i00567229**

NOTE	REF NO	GRAPHIC REF	PART NUMBER	QTY	PART NAME 1 2 3 4 5 6 (PRODUCT LEVEL)	SEE PAGE
	1	1	**7P-7533**	1	SHAFT AS	
	2	1	**1B-8706**	1	KEY-WOODRUFF	
	3	1	**6D-3787**	2	BEARING-ROLLER	
	4	1	**7P-7532**	1	PEDAL	
	5	1	**1D-5117**	1	NUT-JAM (1/2-13-THD)	
		1	**4B-3615**	1	SETSCREW-SQUARE HEAD	
	6	1	**7P-7536**	1	SUPPORT	
	7	1	**0S-1594**	6	BOLT (3/8-16X1-IN)	
	8	1	**5M-2894**	7	WASHER-HARD (10.2X18.5X2.5-MM THK)	
	9	1	**8G-1349**	1	LEVER	
	10	1	**3B-1915**	1	BOLT (3/8-16X1.375-IN)	
	11	1	**1B-4203**	2	NUT-FULL (3/8-24-THD)	
	12	1	**7P-8745**	1	ROD	
C	13	1	**1A-9252**	2	END-ADJUSTMENT ROD	
C	14	1	**1B-0676**	2	PIN	
C		1	**3B-4615**	2	PIN-COTTER	
	15	1	**1B-2578**	1	NUT (3/8-16-THD)	
		1	**010-2461**	1	SETSCREW-SQUARE HEAD (3/8-16X2-IN)	
	16	1	**8G-1300**	1	SPRING	
	17	1	**0S-0509**	1	BOLT (3/8-16X0.75-IN)	
	18	1	**8G-1301**	1	SPRING	
	19	1	**5J-5315**	1	ROD END	

C - CHANGE FROM PREVIOUS TYPE

7P-2563 **CONTROL GP-SPD OVERRIDE & BRK (**contd.**)** **i00567229**

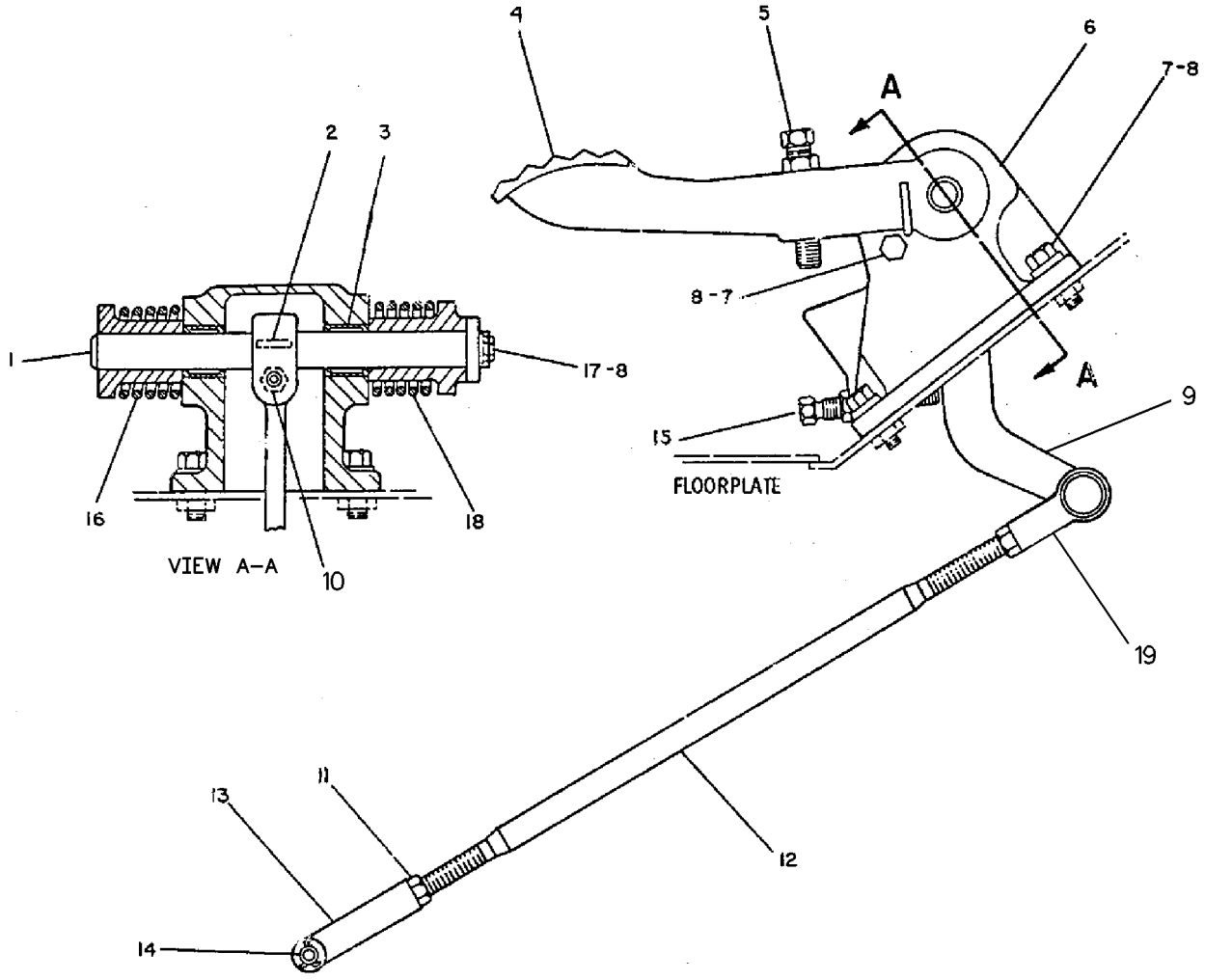

GRAPHIC #1 <END> g00220058

7P-2563 CONTROL GP-SPD OVERRIDE & BRK

S/N: 9BL1-UP

PART OF 117-1761, 8Y-9370 CHASSIS AR

SMCS-3220 **i00703580**

NOTE	REF NO	GRAPHIC REF	PART NUMBER	QTY	PART NAME 1 2 3 4 5 6 (PRODUCT LEVEL)	SEE PAGE
	1	1	**7P-7533**	1	SHAFT AS	
	2	1	**1B-8706**	1	KEY-WOODRUFF	
	3	1	**6D-3787**	2	BEARING-ROLLER	
	4	1	**7P-7536**	1	SUPPORT	
C	5	1	**3W-3321**	1	PLUNGER AS	
		1	**1D-5117**	1	NUT-JAM (1/2-13-THD)	
	6	1	**7P-7536**	1	SUPPORT	
	7	1	**0S-1594**	6	BOLT (3/8-16X1-IN)	
	8	1	**5M-2894**	7	WASHER-HARD (10.2X18.5X2.5-MM THK)	
C	9	1	**3W-0626**	1	LEVER	
C	10	1	**1A-9252**	2	END-ADJUSTMENT ROD	
	11	1	**1B-4203**	2	NUT-FULL (3/8-24-THD)	
	12	1	**7P-8745**	1	ROD	
	13	1	**3B-1915**	1	BOLT (3/8-16X1.375-IN)	
C	14	1	**1B-0676**	2	PIN	
C		1	**3B-4615**	2	PIN-COTTER	
	15	1	**010-2461**	1	SETSCREW-SQUARE HEAD (3/8-16X2-IN)	
		1	**1B-2578**	1	NUT (3/8-16-THD)	
	16	1	**8G-1300**	1	SPRING	
	17	1	**0S-0509**	1	BOLT (3/8-16X0.75-IN)	
	18	1	**8G-1301**	1	SPRING	

C - CHANGE FROM PREVIOUS TYPE

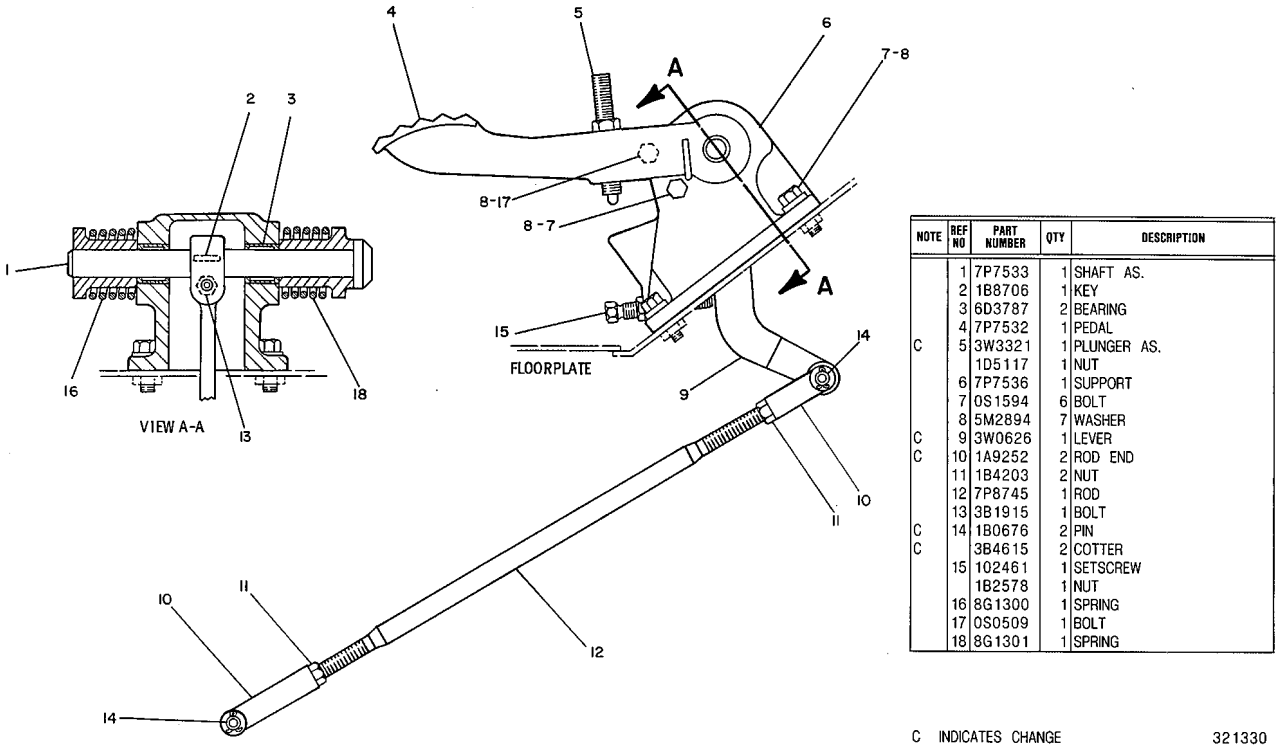

NOTE	REF NO	PART NUMBER	QTY	DESCRIPTION
	1	7P7533	1	SHAFT AS.
	2	1B8706	1	KEY
	3	6D3787	2	BEARING
	4	7P7532	1	PEDAL
C	5	3W3321	1	PLUNGER AS.
		1D5117	1	NUT
	6	7P7536	1	SUPPORT
	7	0S1594	6	BOLT
	8	5M2894	7	WASHER
C	9	3W0626	1	LEVER
C	10	1A9252	2	ROD END
	11	1B4203	2	NUT
	12	7P8745	1	ROD
	13	3B1915	1	BOLT
C	14	1B0676	2	PIN
C		3B4615	2	COTTER
	15	102461	1	SETSCREW
		1B2578	1	NUT
	16	8G1300	1	SPRING
	17	0S0509	1	BOLT
	18	8G1301	1	SPRING

C INDICATES CHANGE 321330

GRAPHIC #1 <END> g00163925

1N-4422 COOLER GP-TRANSMISSION OIL

S/N: 9BL1-UP

PART OF 114-6645 RADIATOR & HYD OIL COOLER GP

SMCS-1375 **i01700868**

NOTE	REF NO	GRAPHIC REF	PART NUMBER	QTY	PART NAME 1 2 3 4 5 6 (PRODUCT LEVEL)	SEE PAGE
	1	1	**4Q-5044**	1	CORE AS-OIL COOLER	
	2	1	**8T-2502**	2	BOLT (3/8-16X1.125-IN)	
	3	1	**8T-4896**	5	WASHER-HARD (10.2X18.5X2.5-MM THK)	
	4	1	**7B-9506**	1	PLATE-SCREW	
	5	1	**4L-6459**	2	BOLT (3/8-16X2.5-IN)	
	6	1	**7X-0328**	1	BOLT (1/2-13X3.5-IN)	
	7	1	**8T-4223**	2	WASHER-HARD (13.5X25.5X3-MM THK)	
	8	1	**6V-8188**	1	NUT (1/2-13-THD)	
	9	1	**141-1784**	1	BLOCK	
	10	1	**8T-7008**	1	BOLT (3/8-16X3-IN)	

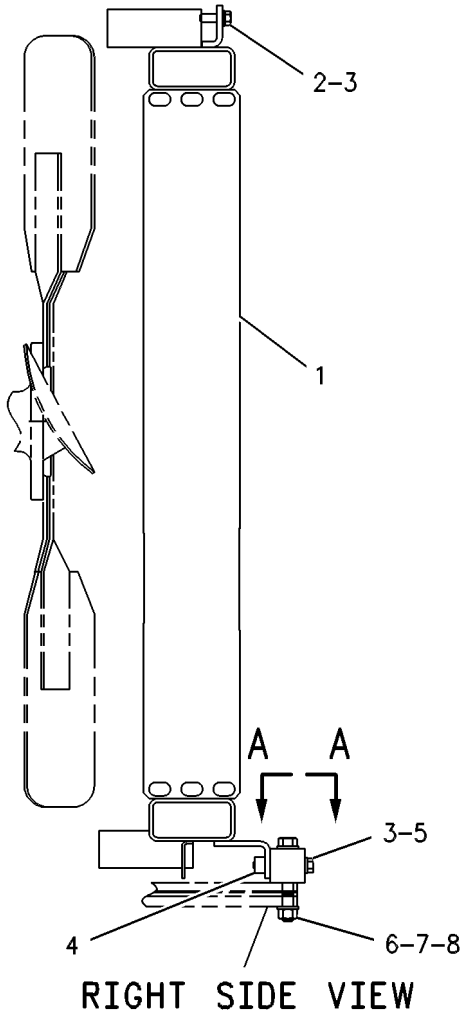

RIGHT SIDE VIEW

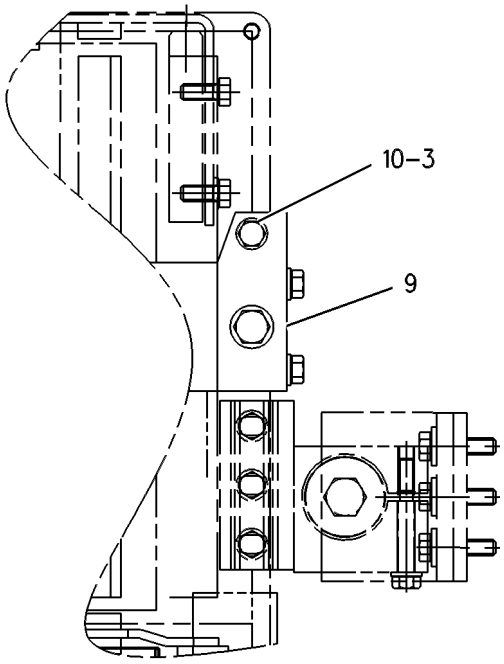

VIEW A-A

GRAPHIC #1 <END> g00284412

116-2011 COVER GP-SHIPPING

S/N: 8EX1-UP

PART OF 104-6208 CONTROL AR-HYDROSTATIC POWER

SMCS-3064 **i00694589**

NOTE	PART NUMBER	QTY	PART NAME 1 2 3 4 5 6 (PRODUCT LEVEL)	SEE PAGE
	0S-1620	2	BOLT (1/2-13X0.75-IN)	
	0T-0102	2	BOLT (3/8-16X0.625-IN)	
	5P-0060	4	BOLT (7/16-14X0.75-IN)	
	1S-3725	1	COVER	
	7J-3555	1	COVER	
	7J-7666	1	COVER	
	3J-5554	1	GASKET	
	3J-6933	1	GASKET	
	7J-7667	1	GASKET	

<END>

1U-2828 COVER GP-SHIPPING

S/N: 8EX1-UP

PART OF 104-6208 CONTROL AR-HYDROSTATIC POWER

SMCS-3064 **i01399468**

NOTE	REF NO	GRAPHIC REF	PART NUMBER	QTY	PART NAME 1 2 3 4 5 6 (PRODUCT LEVEL)	SEE PAGE
	1	1	**7G-2132**	1	COVER	
	2	1	**0L-2070**	12	BOLT (3/8-16X2.25-IN)	
		1	**0T-0431**	12	WASHER (10.3X19X2.5-MM THK)	
		1	**1D-4717**	12	NUT (3/8-16-THD)	

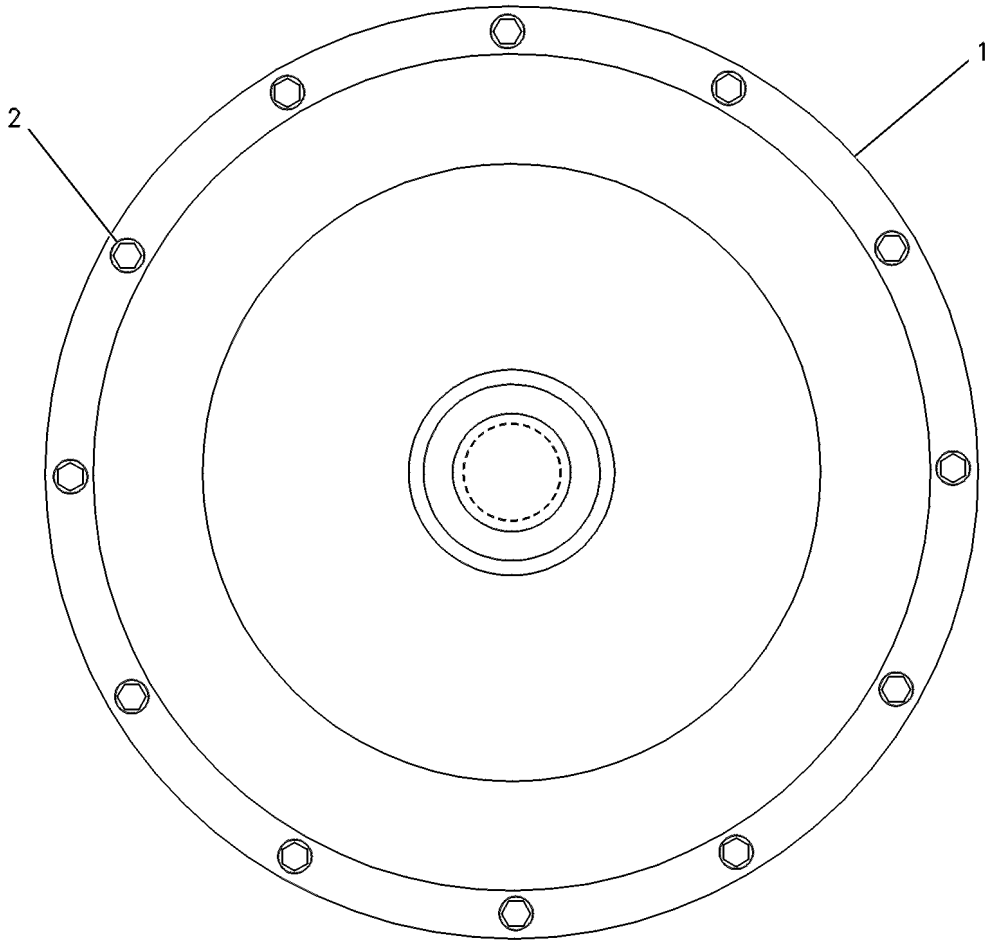

GRAPHIC #1 <END> g00247745

7K-5636 COVER GP-XMSN OIL FILLER CAP

S/N: 9BL1-1799

PART OF 9T-1383 TANK & FILTER GP-HYDRAULIC

SMCS-3030 **i00768215**

NOTE	REF NO	GRAPHIC REF	PART NUMBER	QTY	PART NAME 1 2 3 4 5 6 (PRODUCT LEVEL)	SEE PAGE
	1	1	**1L-5072**	1	DOWEL	
	2	1	**9M-7394**	1	LEVER	
	3	1	**7K-5634**	1	COVER	
	4	1	**2J-7761**	1	RING-RETAINING	
	5	1	**5P-8502**	1	PADLOCK GP	
A		1	**5P-8500**	1	KEY	
A		1	**8Y-6364**	1	SLEEVE	

A - NOT PART OF THIS GROUP

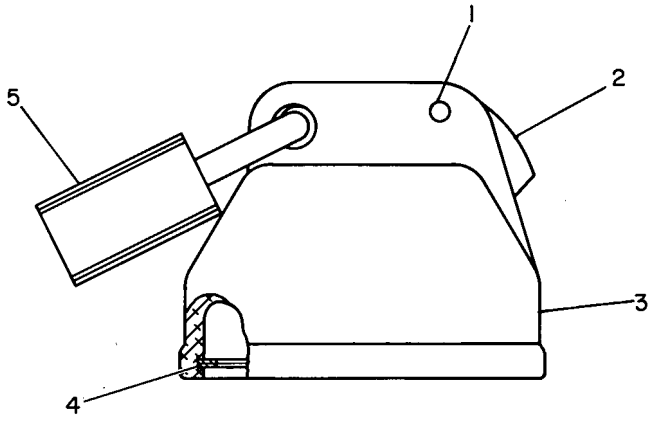

GRAPHIC #1 <END> g00118377

3G-5016 CYLINDER GP-SERVO—LH

S/N: 8EX1-UP
82.55MM (3.25 IN) BORE X 84.0MM (3.31 IN) STROKE
PART OF 104-6208 CONTROL AR-HYDROSTATIC POWER

SMCS-3207 **i05372532**

NOTE	REF NO	GRAPHIC REF	PART NUMBER	QTY	PART NAME 1 2 3 4 5 6 (PRODUCT LEVEL)	SEE PAGE
	1	1	**3G-5001**	1	HOUSING AS (LH)	
	2	1	**3G-5003**	2	BUSHING	
J	3	1	**6J-0793**	1	SEAL AS	
	4	1	**3G-4991**	1	PISTON	
	5	1	**3G-4725**	1	HEAD	
J	6	1	**9J-8116**	1	SEAL-QUAD RING	
	7	1	**3G-4659**	1	ROD	
BD	8	1	**4T-4948**	1	WIRE	
J	9	1	**1H-7339**	1	SEAL-O-RING	
	10	1	**5P-8244**	1	WASHER-HARD (12X22.5X2.5-MM THK)	
	11	1	**5P-8864**	1	BOLT (7/16-14X2-IN-THD)	
					AVAILABLE REPAIR KIT(S):	
J			**392-5197**	1	KIT-HYD CYLINDER SEAL	
					(INCLUDES SEAL O-RING, SEAL AS & SEAL QUAD RING)	

B - USE AS REQUIRED
D - ORDER BY THE METER
J - KIT MARKED J SERVICES PART(S) MARKED J

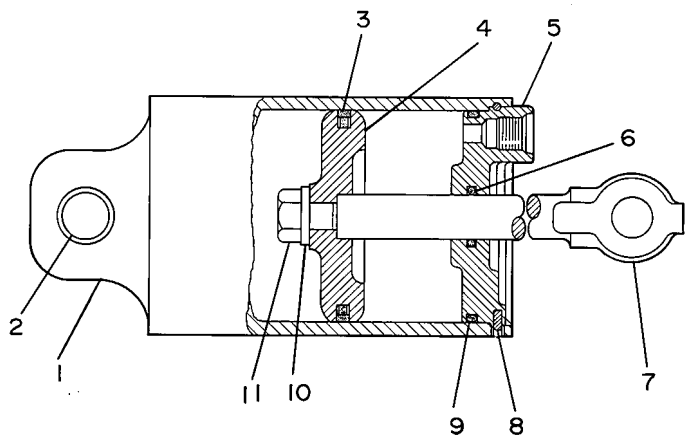

GRAPHIC #1 <END> g00147667

3G-5017 CYLINDER GP-SERVO–RH

S/N: 8EX1-UP
82.55MM (3.25 IN) BORE X 84.0MM (3.31 IN) STROKE
PART OF 104-6208 CONTROL AR-HYDROSTATIC POWER

SMCS-3207 **i05372534**

NOTE	REF NO	GRAPHIC REF	PART NUMBER	QTY	PART NAME 1 2 3 4 5 6 (PRODUCT LEVEL)	SEE PAGE
	1	1	**3G-5002**	1	HOUSING AS	
	2	1	**3G-5003**	2	BUSHING	
J	3	1	**6J-0793**	1	SEAL AS	
	4	1	**3G-4991**	1	PISTON	
	5	1	**3G-4725**	1	HEAD	
J	6	1	**9J-8116**	1	SEAL-QUAD RING	
	7	1	**3G-4659**	1	ROD	
	8	1	**4T-4948**	1	WIRE	
J	9	1	**1H-7339**	1	SEAL-O-RING	
	10	1	**5P-8244**	1	WASHER-HARD (12X22.5X2.5-MM THK)	
	11	1	**5P-8864**	1	BOLT (7/16-14X2-IN-THD)	
					AVAILABLE REPAIR KIT(S):	
J			**392-5197**	1	KIT-HYD CYLINDER SEAL	
					(INCLUDES SEAL AS, SEAL O-RING & SEAL QUAD RING)	

J - KIT MARKED J SERVICES PART(S) MARKED J

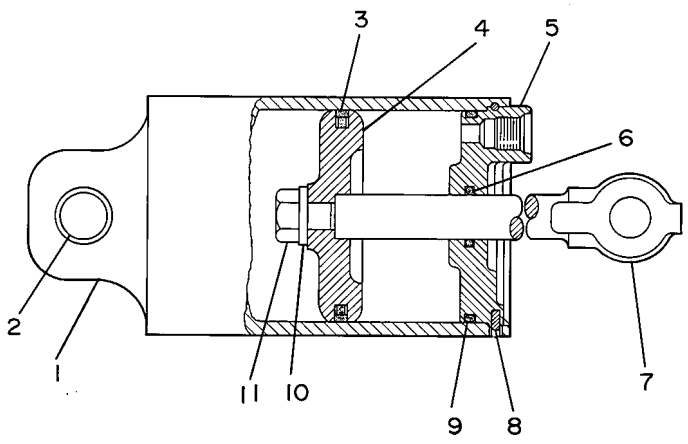

GRAPHIC #1 <END> g00147667

156-4114 DRIVE GP-FINAL

S/N: 9BL1-UP
PART OF 136-7802 GUARD AR-SEAL
AN ATTACHMENT

SMCS-4050 **i01399683**

NOTE	REF NO	GRAPHIC REF	PART NUMBER	QTY	PART NAME 1 2 3 4 5 6 (PRODUCT LEVEL)	SEE PAGE
	1	1	**8T-6871**	48	BOLT (5/8-11X2.5-IN)	
	2	1	**8T-4122**	48	WASHER-HARD (17X32X3.5-MM THK)	
	3	1	**6Y-0857**	2	SEAL GP-DUO-CONE	
					(EACH INCLUDES)	
		1	**4M-0736**	2	RING-SEALING	
	4	1	**3S-9182**	2	PLUG-MAGNETIC	
	5	1	**1P-4696**	4	CONE-BEARING	
	6	1	**1P-4695**	4	CUP-BEARING	
	7	1	**3W-6141**	2	SPINDLE	
	8	1	**7X-0369**	18	BOLT (3/4-10X3.25-IN)	
	9	1	**8T-4994**	54	WASHER-HARD (20X36.5X3.5-MM THK)	
	10	1	**5P-4921**	2	RACE-BEARING OUTER	
	11	1	**5P-4920**	2	RACE & ROLLER AS	
	12	1	**7P-6487**	2	GEAR-FINAL DRIVE (48-TEETH)	
	13	1	**7P-9577**	2	RETAINER	
	14	1	**030-8535**	12	BOLT-LOCKING (3/8-16X0.875-IN)	
	15	1	**3W-5424**	2	SHAFT	
	16	1	**4F-8824**	2	SEAL-O-RING	
	17	1	**5Q-7357**	2	HUB AS	
	18	1	**7H-2621**	4	CONE-BEARING	
	19	1	**5P-9532**	4	CUP-BEARING	
	20	1	**8T-8924**	26	BOLT (3/4-10X2.5-IN)	
	21	1	**8G-5413**	1	CASE AS (LH)	
	22	1	**8G-5414**	1	CASE AS (RH)	
	23	1	**3W-5157**	2	GEAR-PINION (12-TEETH)	
	24	1	**5P-9147**	2	SEAL-O-RING	
	25	1	**7X-0345**	48	BOLT (5/8-11X1.75-IN)	
	26	1	**7P-9873**	2	RING-INTERNAL	
	27	1	**8G-1479**	2	HUB-RING GEAR (103-TEETH)	
	28	1	**7P-9872**	2	GEAR-RING (60-TEETH)	
	29	1	**8G-7133**	1	CARRIER AS	
	30	1	**6V-0440**	4	PLUG	
	31	1	**2S-4078**	6	SEAL-O-RING	
	32	1	**5S-7379**	12	BOLT (3/8-16X0.875-IN)	
	33	1	**7P-6531**	2	SHAFT-SUN GEAR (12-TEETH)	
	34	1	**8G-7110**	2	COVER AS	
	35	1	**7P-2429**	2	PLATE-RETAINER	
	36	1	**6V-1997**	18	BOLT-SELF-LOCKING (5/8-11X2.75-IN)	
	37	1	**3W-5501**	6	GEAR-PLANETARY (23-TEETH)	
	38	1	**7P-6521**	6	SHAFT-PLANETARY	
	39	1	**7T-9122**	12	CONE-BEARING	
	40	1	**068-8099**	12	CUP-BEARING	
	41	1	**6V-0439**	2	PLUG-MAGNETIC	
	42	1	**6V-2452**	6	DOWEL	
	43	1	**6V-6204**	2	SEAL-O-RING	
	44	1	**7X-0368**	10	BOLT (3/4-10X3-IN)	
	45	1	**6V-6640**		SEALANT	

156-4114 **DRIVE GP-FINAL (**contd.**)** **i01399683**

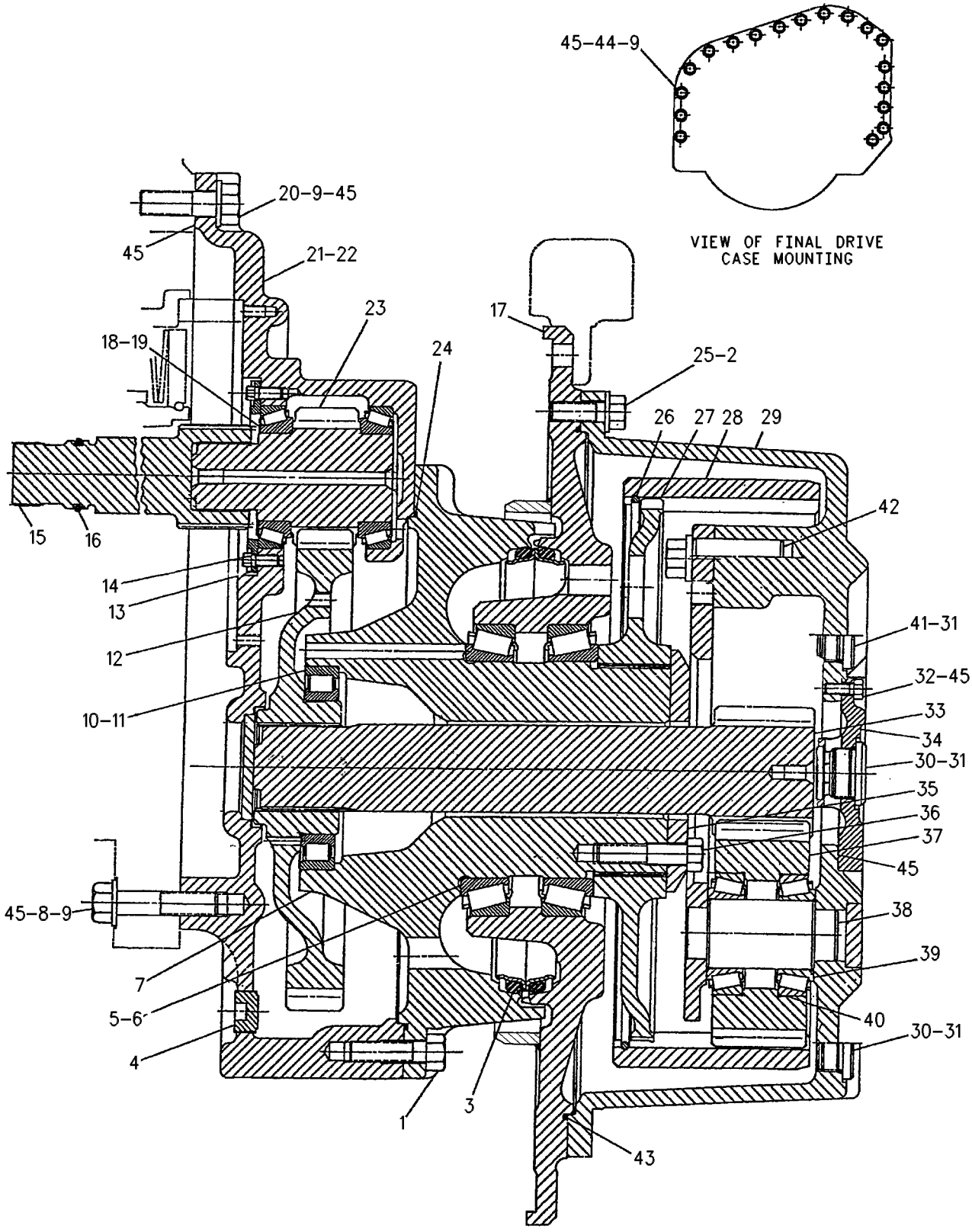

GRAPHIC #1 <END> g00493028

7P-9735 DRIVE GP-FINAL

S/N: 9BL1-UP

PART OF 8Y-9345 POWER TRAIN AR

SMCS-4050 **i01399620**

NOTE	REF NO	GRAPHIC REF	PART NUMBER	QTY	PART NAME 1 2 3 4 5 6 (PRODUCT LEVEL)	SEE PAGE
	1	1	**8T-6871**	48	BOLT (5/8-11X2.5-IN)	
	2	1	**8T-4122**	48	WASHER-HARD (17X32X3.5-MM THK)	
	3	1	**9G-5347**	2	SEAL GP-DUO-CONE	
					(EACH INCLUDES)	
		1	**4M-0736**	2	RING-SEALING	
	4	1	**3S-9182**	2	PLUG-MAGNETIC	
	5	1	**1P-4696**	4	CONE-BEARING	
	6	1	**1P-4695**	4	CUP-BEARING	
	7	1	**3W-6141**	2	SPINDLE	
	8	1	**7X-0369**	18	BOLT (3/4-10X3.25-IN)	
	9	1	**8T-4994**	54	WASHER-HARD (20X36.5X3.5-MM THK)	
	10	1	**5P-4921**	2	RACE-BEARING OUTER	
	11	1	**5P-4920**	2	RACE & ROLLER AS	
	12	1	**7P-6487**	2	GEAR-FINAL DRIVE (48-TEETH)	
	13	1	**7P-9577**	2	RETAINER	
	14	1	**030-8535**	12	BOLT-LOCKING (3/8-16X0.875-IN)	
	15	1	**3W-5424**	2	SHAFT	
	16	1	**4F-8824**	2	SEAL-O-RING	
	17	1	**3W-6144**	2	HUB-SPROCKET	
	18	1	**7H-2621**	4	CONE-BEARING	
	19	1	**5P-9532**	4	CUP-BEARING	
	20	1	**8T-8924**	26	BOLT (3/4-10X2.5-IN)	
	21	1	**8G-5413**	1	CASE AS (LH)	
		1	**3W-5436**	1	BUTTON-THRUST	
	22	1	**8G-5414**	1	CASE AS (RH)	
		1	**3W-5436**	1	BUTTON-THRUST	
	23	1	**3W-5157**	2	GEAR-PINION (12-TEETH)	
	24	1	**5P-9147**	2	SEAL-O-RING	
	25	1	**7X-0345**	48	BOLT (5/8-11X1.75-IN)	
	26	1	**7P-9873**	2	RING-INTERNAL	
	27	1	**8G-1479**	2	HUB-RING GEAR (103-TEETH)	
	28	1	**7P-9872**	2	GEAR-RING (60-TEETH)	
	29	1	**8G-7133**	2	CARRIER AS	
					(EACH INCLUDES)	
		1	**6V-2452**	3	DOWEL	
	30	1	**6V-0440**	4	PLUG	
	31	1	**2S-4078**	6	SEAL-O-RING	
	32	1	**5S-7379**	12	BOLT (3/8-16X0.875-IN)	
	33	1	**7P-6531**	2	SHAFT-SUN GEAR (12-TEETH)	
	34	1	**8G-7110**	2	COVER AS	
					(EACH INCLUDES)	
		1	**8G-6307**	1	BUTTON-THRUST	
	35	1	**7P-2429**	2	PLATE-RETAINER	
	36	1	**6V-1997**	18	BOLT-SELF-LOCKING (5/8-11X2.75-IN)	
	37	1	**3W-5501**	6	GEAR-PLANETARY (23-TEETH)	
	38	1	**7P-6521**	6	SHAFT-PLANETARY	
	39	1	**7T-9122**	12	CONE-BEARING	
	40	1	**068-8099**	12	CUP-BEARING	

7P-9735 **DRIVE GP-FINAL (**contd.**)** **i01399620**

NOTE	REF NO	GRAPHIC REF	PART NUMBER	QTY	PART NAME 1 2 3 4 5 6 (PRODUCT LEVEL)	SEE PAGE
	41	1	**6V-0439**	2	PLUG-MAGNETIC	
	42	1	**6V-2452**	6	DOWEL	
	43	1	**6V-6204**	2	SEAL-O-RING	
	44	1	**7X-0368**	10	BOLT (3/4-10X3-IN)	
B	45	1	**6V-6640**		SEALANT	

B - USE AS REQUIRED

7P-9735 **DRIVE GP-FINAL (**contd.**)** **i01399620**

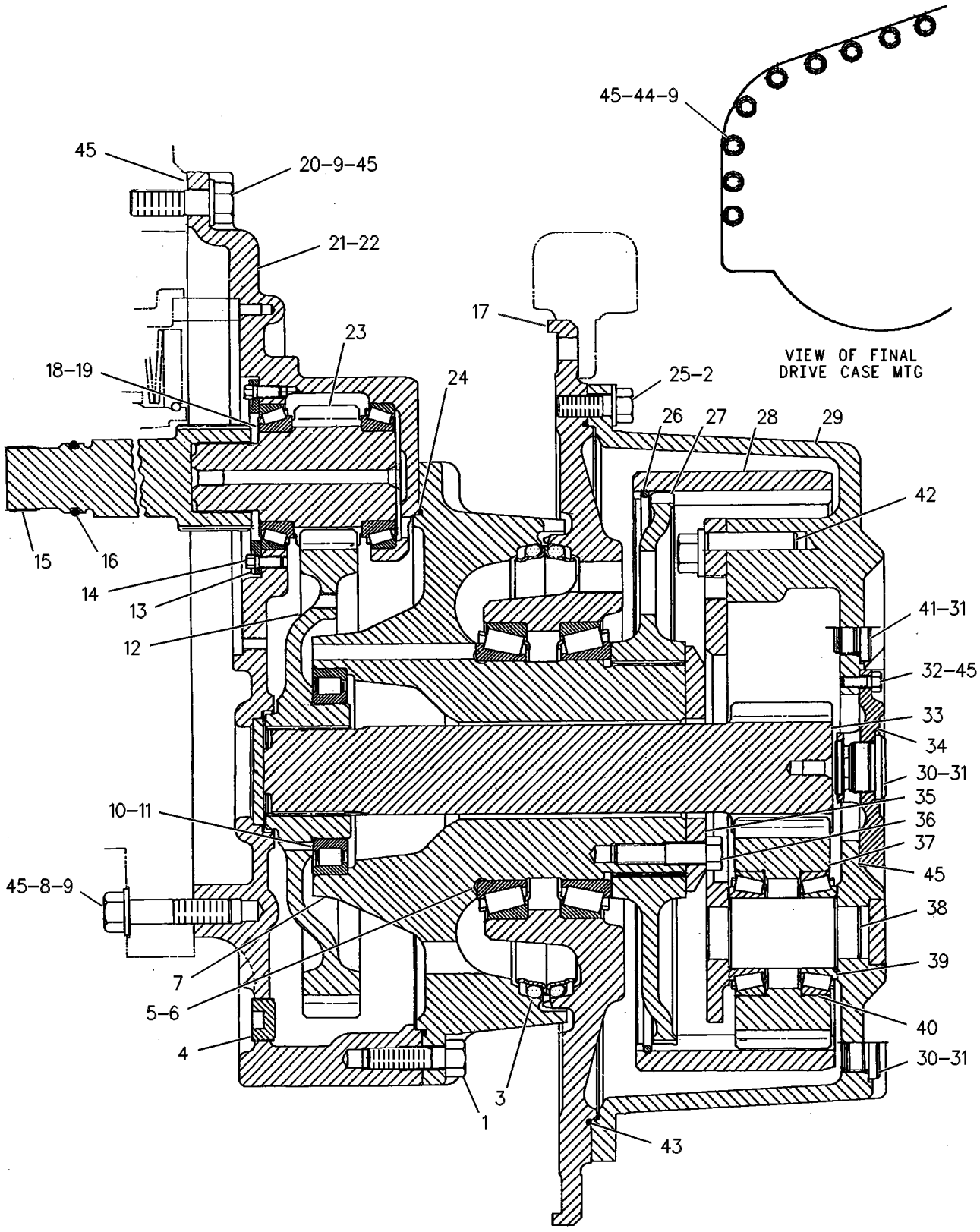

GRAPHIC #1 <END> g00247267

8Y-9343 DRIVE GP-FLEXIBLE COUPLING

S/N: 9BL1-UP

PART OF 8Y-9345 POWER TRAIN AR

SMCS-3252 **i01399537**

NOTE	REF NO	GRAPHIC REF	PART NUMBER	QTY	PART NAME 1 2 3 4 5 6 (PRODUCT LEVEL)	SEE PAGE
	1	1	**7P-2372**	1	JOINT AS	
		1	**4B-4344**	5	RIVET	
	2	1	**7X-0349**	4	BOLT (5/8-11X3-IN)	
	3	1	**8T-4122**	4	WASHER-HARD (17X32X3.5-MM THK)	
	4	1	**8Y-9344**	1	DRIVER	
	5	1	**5H-7153**	1	SEAL-O-RING	
	6	1	**5S-7383**	8	BOLT (3/8-16X1.75-IN)	
	7	1	**8T-4896**	8	WASHER-HARD (10.2X18.5X2.5-MM THK)	

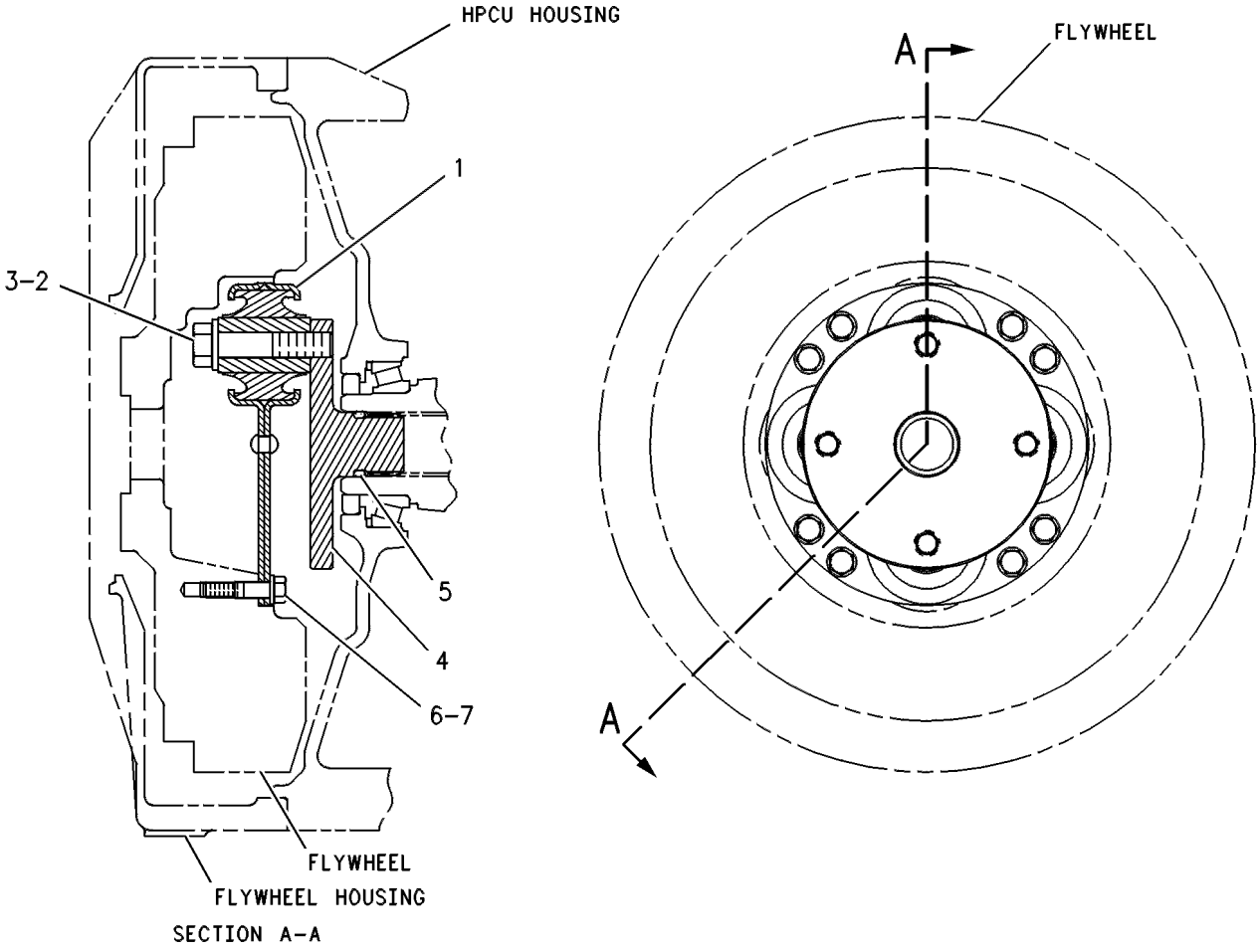

GRAPHIC #1 <END> g00247095

8Y-9705 FASTENER GP-XMSN & DRIVE MOTOR

S/N: 9BL1-UP

PART OF 8Y-9345 POWER TRAIN AR

SMCS-7553 **i00568590**

NOTE	REF NO	GRAPHIC REF	PART NUMBER	QTY	PART NAME 1 2 3 4 5 6 (PRODUCT LEVEL)	SEE PAGE
	1	1	**5S-7382**	12	BOLT (3/8-16X1.375-IN)	
	2	1	**8T-4896**	12	WASHER-HARD (10.2X18.5X2.5-MM THK)	
	3	1	**4H-6520**	2	SEAL-O-RING	

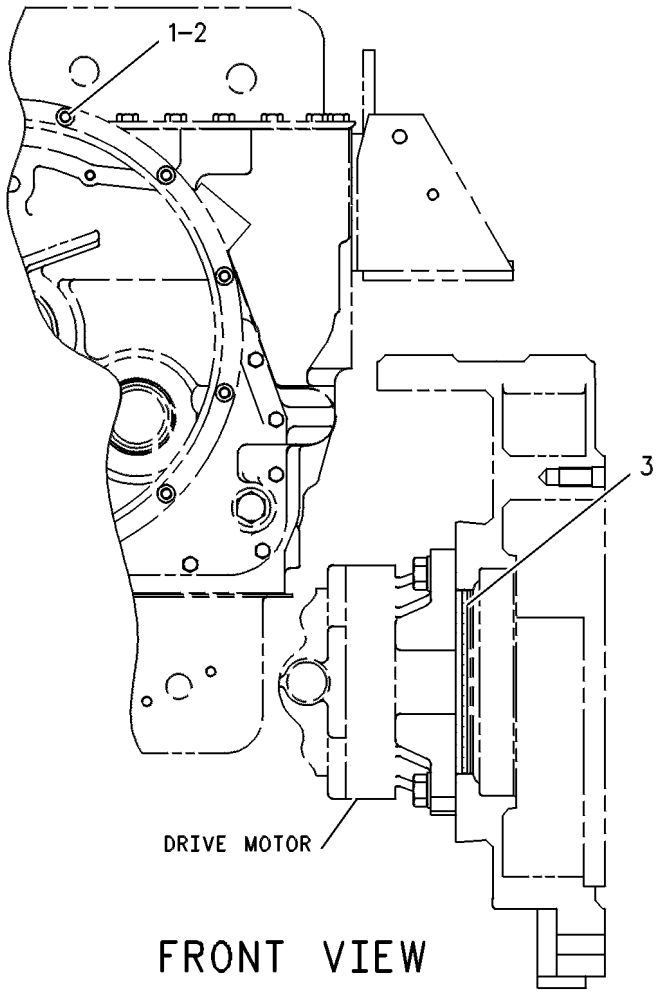

GRAPHIC #1 <END> g00247185

7P-2101 FILLER GP-POWER TRAIN OIL

S/N: 9BL1-UP

PART OF 8Y-9345 POWER TRAIN AR

SMCS-3005, 3081 **i01399565**

NOTE	REF NO	GRAPHIC REF	PART NUMBER	QTY	PART NAME 1 2 3 4 5 6 (PRODUCT LEVEL)	SEE PAGE
	1	1	**8G-6631**	1	TUBE AS	
	2	1	**8T-9379**	3	BOLT (3/8-16X4.25-IN)	
	3	1	**8T-4896**	7	WASHER-HARD (10.2X18.5X2.5-MM THK)	
	4	1	**8G-1560**	1	RETAINER	
	5	1	**5K-5959**	1	SEAL-O-RING	
	6	1	**9B-7237**	2	BOLT (3/8-16X1.25-IN)	
	7	1	**8G-1559**	1	GAUGE-SIGHT	
		1	**6F-8146**	1	SEAL-O-RING	
	8	1	**1H-1023**	1	SEAL-O-RING	
	9	1	**3W-8898**	1	PLATE AS	
	10	1	**5S-7383**	2	BOLT (3/8-16X1.75-IN)	
	11	1	**7K-1402**	1	BRACKET	
	12	1	**3W-6585**	1	GAUGE-OIL LEVEL (DIPSTICK)	
	13	1	**8G-1609**	1	GASKET	
	14	1	**7X-0288**	4	BOLT (3/8-16X1.625-IN)	
C	15	1	**8Y-4394**	1	TUBE AS	
	16	1	**7K-1401**	1	CLIP	
	17	1	**6V-8801**	2	NUT (3/8-16-THD)	
	18	1	**5K-1568**	2	CAP-FILLER	
		1	**4B-9782**	2	BALL	
		1	**3W-6586**	2	PLATE	
		1	**9H-6454**	2	GASKET	
	19	1	**8G-1558**	1	PLATE	
		1	**4B-4158**	2	SCREW-DRIVE (NO 4X0.25-IN)	
	20	1	**006-6586**	1	CONNECTOR-HOSE	
	21	1	**5P-4961**	2	CLAMP-HOSE	
	22	1	**6K-0806**	1	STRAP-CABLE	
E	23	1	**5P-1442**		HOSE (37CM)	
	24	1	**6K-6165**	1	CLIP	
	25	1	**6K-6166**	1	BRACKET	
	26	1	**5P-1075**	6	WASHER-HARD (10.2X22.5X3-MM THK)	
C	27	1	**9G-5127**	1	BREATHER (PRESSURE RELIEF)	

C - CHANGE FROM PREVIOUS TYPE
E - ORDER BY THE CENTIMETER

7P-2101 **FILLER GP-POWER TRAIN OIL** (contd.) **i01399565**

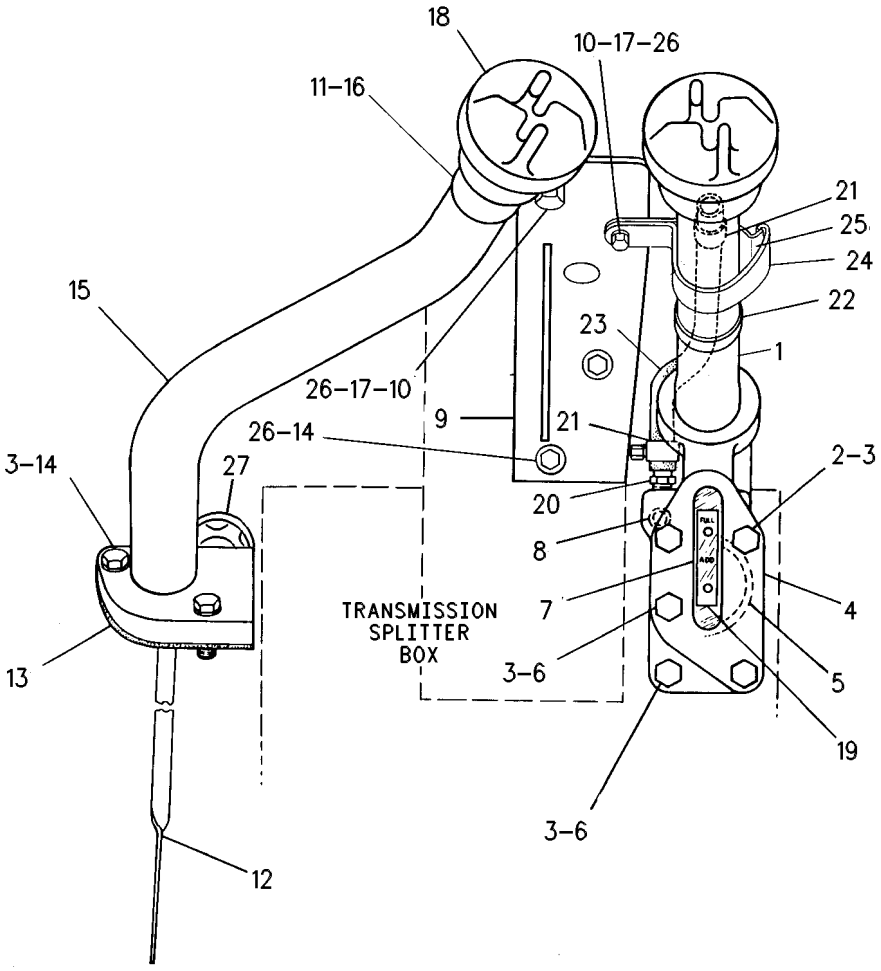

GRAPHIC #1 <END> g00251650

9T-4730 FILTER GP-OIL

S/N: 8EX1-UP

PART OF 104-6208 CONTROL AR-HYDROSTATIC POWER

SMCS-3004, 3067 **i01516494**

NOTE	REF NO	GRAPHIC REF	PART NUMBER	QTY	PART NAME 1 2 3 4 5 6 (PRODUCT LEVEL)	SEE PAGE
	1	1	**9T-4745**	1	BASE-FILTER	
C	2	1	**9S-8004**	1	PLUG (9/16-18-THD)	
C		1	**3J-1907**	1	SEAL-O-RING	
	3	1	**5P-3620**	1	SEAL-O-RING	
	4	1	**132-8876**	1	FILTER ELEMENT AS-OIL (ULTRA HIGH EFFICIENCY) (HYDROSTATIC TRANSMISSION)	
	5	1	**2J-6356**	1	RING-RETAINING	
	6	1	**6P-5332**	1	RETAINER	
	7	1	**3S-8652**	1	SPRING	
	8	1	**9S-8002**	1	PLUG (7/16-20-THD)	
		1	**3J-7354**	1	SEAL-O-RING	
	9	1	**9S-8006**	4	PLUG (7/8-14-THD)	
		1	**2M-9780**	4	SEAL-O-RING	
C	10	1	**9G-8629**	1	HOUSING AS-OIL FILTER	

C - CHANGE FROM PREVIOUS TYPE

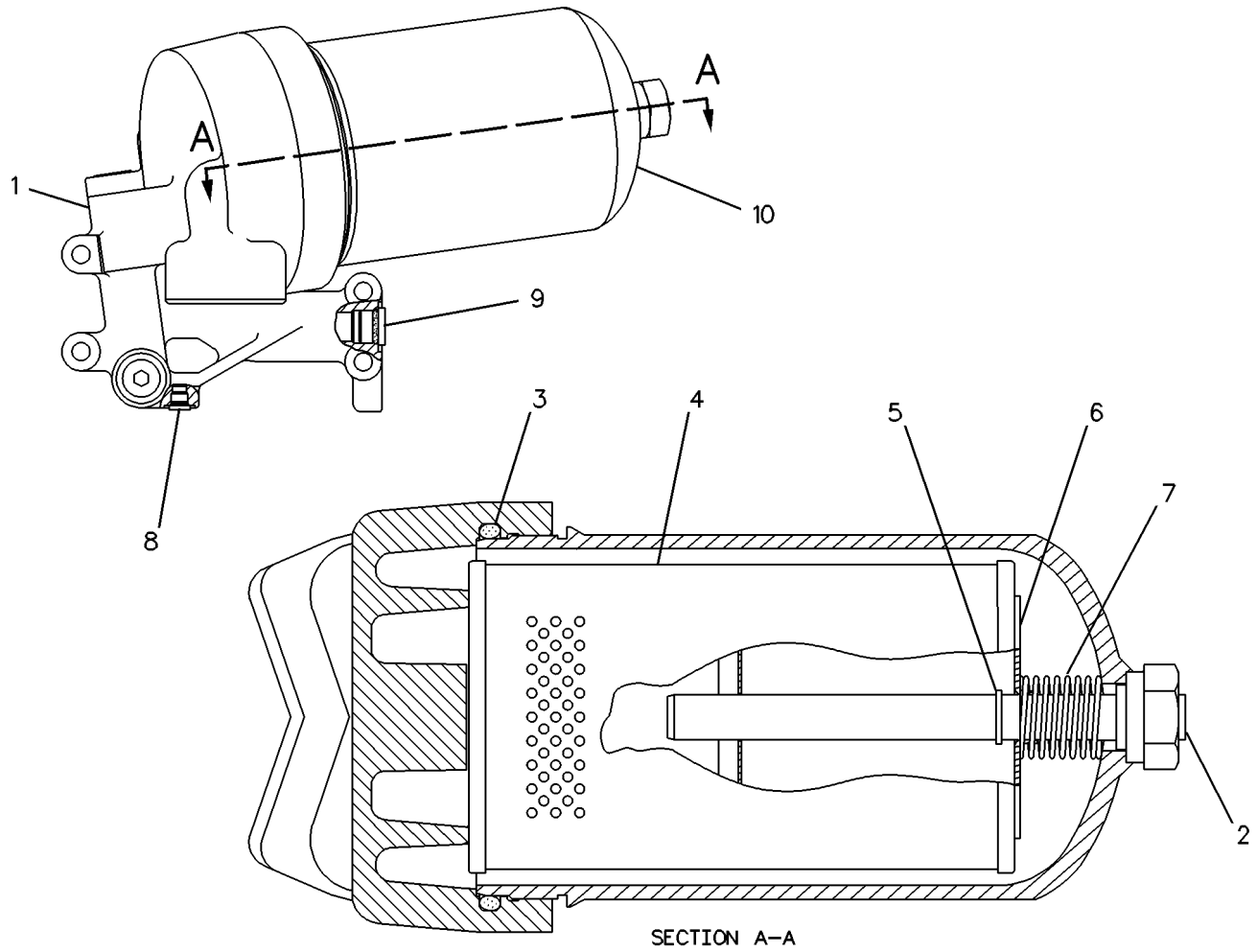

SECTION A–A

GRAPHIC #1 <END> g00233049

5Q-5568 FINAL DRIVE & BRAKE GP–RH

S/N: 9BL1-UP

PART OF 136-7802 GUARD AR-SEAL, 5Q-5567 MODIFICATION AR

AN ATTACHMENT

SMCS-4050, 4056

i01399576

NOTE	REF NO	GRAPHIC REF	PART NUMBER	QTY	PART NAME 1 2 3 4 5 6 (PRODUCT LEVEL)	SEE PAGE
	1	1	**8T-6871**	24	BOLT (5/8-11X2.5-IN)	
	2	1	**8T-4122**	24	WASHER-HARD (17X32X3.5-MM THK)	
	3	1	**9G-5347**	1	SEAL GP-DUO-CONE	
		1	**4M-0736**	2	RING-SEALING	
	4	1	**3S-9182**	1	PLUG-MAGNETIC	
	5	1	**1P-4696**	2	CONE-BEARING	
	6	1	**1P-4695**	2	CUP-BEARING	
	7	1	**3W-6141**	1	SPINDLE	
	8	1	**6V-6204**	1	SEAL-O-RING	
	9	1	**7P-6531**	1	SHAFT-SUN GEAR (12-TEETH)	
	10	1	**5P-4921**	1	RACE-BEARING OUTER	
	11	1	**5P-4920**	1	RACE & ROLLER AS	
	12	1	**7P-6487**	1	GEAR-FINAL DRIVE (48-TEETH)	
	13	1	**7P-9577**	1	RETAINER	
	14	1	**030-8535**	6	BOLT-LOCKING (3/8-16X0.875-IN)	
	15	1	**3W-5424**	1	SHAFT	
	16	1	**4F-8824**	1	SEAL-O-RING	
	17	1	**5Q-7357**	1	HUB AS	
	18	1	**5Q-6086**	1	RING	
	19	1	**5P-9532**	2	CUP-BEARING	
	20	1	**7H-2621**	2	CONE-BEARING	
	21	1	**8G-5414**	1	CASE AS (RH)	
		1	**3W-5436**	2	BUTTON-THRUST	
	22	1	**6V-0439**	1	PLUG-MAGNETIC	
	23	1	**3W-5157**	1	GEAR-PINION (12-TEETH)	
	24	1	**5P-9147**	1	SEAL-O-RING	
	25	1	**7X-0345**	24	BOLT (5/8-11X1.75-IN)	
	26	1	**7P-9873**	1	RING-INTERNAL	
	27	1	**8G-1479**	1	HUB-RING GEAR (103-TEETH)	
	28	1	**7P-9872**	1	GEAR-RING (60-TEETH)	
	29	1	**8G-7133**	1	CARRIER AS	
	30	1	**1A-8063**	6	BOLT (3/4-10X2.5-IN)	
	31	1	**5P-8248**	6	WASHER-HARD (20X36.5X3.5-MM THK)	
	32	1	**7P-9571**	3	PLUG	
	33	1	**6V-2452**	3	DOWEL	
	34	1	**8G-7110**	1	COVER AS	
	35	1	**8G-6307**	1	BUTTON-THRUST	
	36	1	**6V-1997**	9	BOLT-SELF-LOCKING (5/8-11X2.75-IN)	
	37	1	**3W-5501**	3	GEAR-PLANETARY (23-TEETH)	
	38	1	**7P-6521**	3	SHAFT-PLANETARY	
	39	1	**7T-9122**	6	CONE-BEARING	
	40	1	**068-8099**	6	CUP-BEARING	
	41	1	**6V-0440**	2	PLUG	
	42	1	**2S-4078**	3	SEAL-O-RING	
	43	1	**5S-7379**	6	BOLT (3/8-16X0.875-IN)	

5Q-5568 **FINAL DRIVE & BRAKE GP** (contd.) **i01399576**

NOTE	REF NO	GRAPHIC REF	PART NUMBER	QTY	PART NAME 1 2 3 4 5 6 (PRODUCT LEVEL)	SEE PAGE
	44	1	**7P-2429**	1	PLATE-RETAINER	
B	45	1	**6V-6640**		SEALANT	

B - USE AS REQUIRED

5Q-5568 **FINAL DRIVE & BRAKE GP** (contd.) **i01399576**

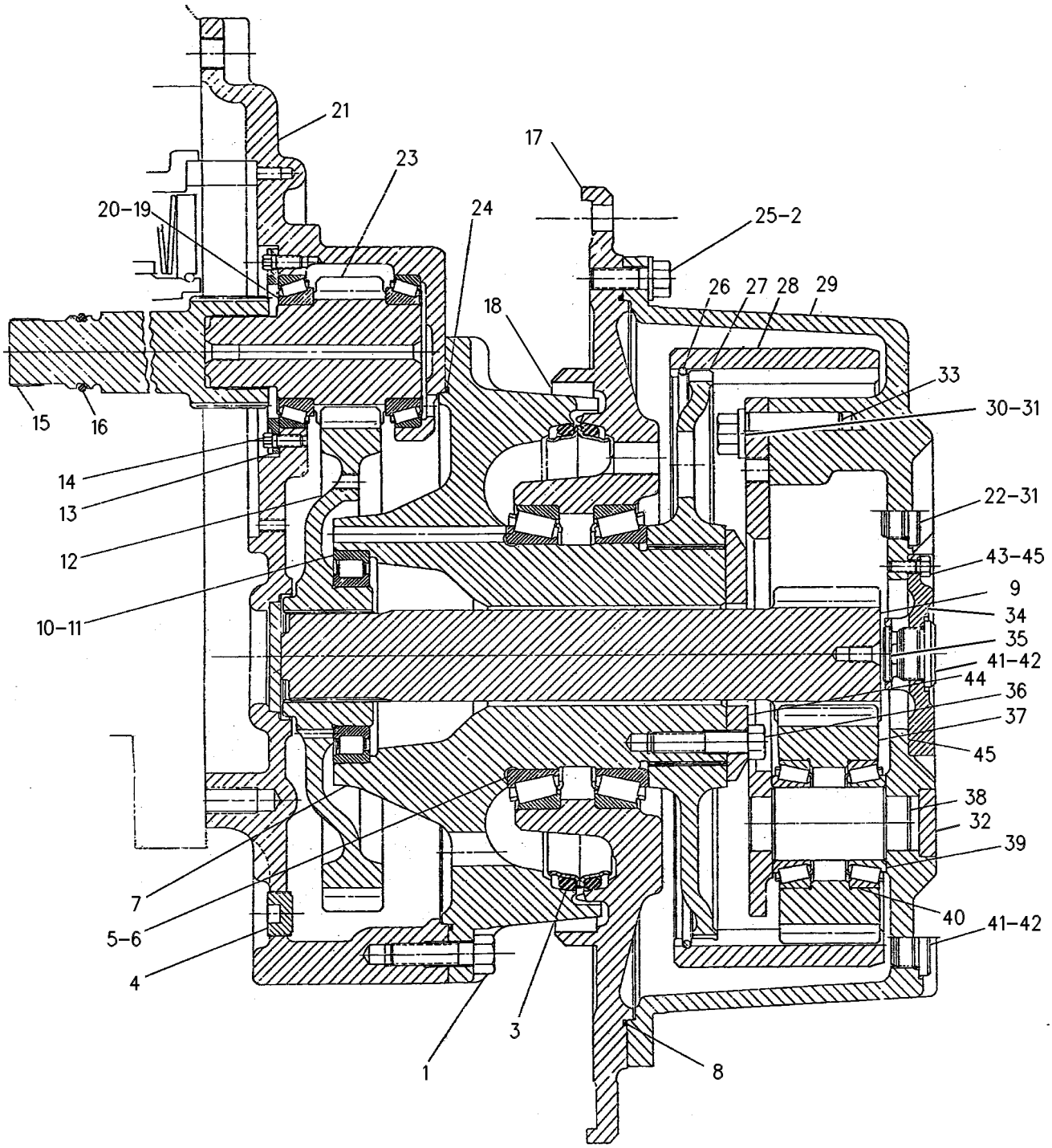

GRAPHIC #1 <END> g00294432

5Q-5569 FINAL DRIVE & BRAKE GP–LH

S/N: 9BL1-UP

PART OF 136-7802 GUARD AR-SEAL, 5Q-5567 MODIFICATION AR

AN ATTACHMENT

SMCS-4050, 4056

i01399606

NOTE	REF NO	GRAPHIC REF	PART NUMBER	QTY	PART NAME 1 2 3 4 5 6 (PRODUCT LEVEL)	SEE PAGE
	1	1	**8T-6871**	24	BOLT (5/8-11X2.5-IN)	
	2	1	**8T-4122**	24	WASHER-HARD (17X32X3.5-MM THK)	
	3	1	**9G-5347**	1	SEAL GP-DUO-CONE	
		1	**4M-0736**	2	RING-SEALING	
	4	1	**3S-9182**	1	PLUG-MAGNETIC	
	5	1	**1P-4696**	2	CONE-BEARING	
	6	1	**1P-4695**	2	CUP-BEARING	
	7	1	**3W-6141**	1	SPINDLE	
	8	1	**6V-6204**	1	SEAL-O-RING	
	9	1	**7P-6531**	1	SHAFT-SUN GEAR (12-TEETH)	
	10	1	**5P-4921**	1	RACE-BEARING OUTER	
	11	1	**5P-4920**	1	RACE & ROLLER AS	
	12	1	**7P-6487**	1	GEAR-FINAL DRIVE (48-TEETH)	
	13	1	**7P-9577**	1	RETAINER	
	14	1	**030-8535**	6	BOLT-LOCKING (3/8-16X0.875-IN)	
	15	1	**3W-5424**	1	SHAFT	
	16	1	**4F-8824**	1	SEAL-O-RING	
	17	1	**5Q-7357**	1	HUB AS	
	18	1	**5Q-6086**	1	RING	
	19	1	**5P-9532**	2	CUP-BEARING	
	20	1	**7H-2621**	2	CONE-BEARING	
	21	1	**8G-5413**	1	CASE AS (LH)	
		1	**3W-5436**	2	BUTTON-THRUST	
	22	1	**6V-0439**	1	PLUG-MAGNETIC	
	23	1	**3W-5157**	1	GEAR-PINION (12-TEETH)	
	24	1	**5P-9147**	1	SEAL-O-RING	
	25	1	**7X-0345**	24	BOLT (5/8-11X1.75-IN)	
	26	1	**7P-9873**	1	RING-INTERNAL	
	27	1	**8G-1479**	1	HUB-RING GEAR (103-TEETH)	
	28	1	**7P-9872**	1	GEAR-RING (60-TEETH)	
	29	1	**8G-7133**	1	CARRIER AS	
	30	1	**1A-8063**	6	BOLT (3/4-10X2.5-IN)	
	31	1	**5P-8248**	6	WASHER-HARD (20X36.5X3.5-MM THK)	
	32	1	**7P-9571**	3	PLUG	
	33	1	**6V-2452**	3	DOWEL	
	34	1	**8G-7110**	1	COVER AS	
	35	1	**8G-6307**	1	BUTTON-THRUST	
	36	1	**6V-1997**	9	BOLT-SELF-LOCKING (5/8-11X2.75-IN)	
	37	1	**3W-5501**	3	GEAR-PLANETARY (23-TEETH)	
	38	1	**7P-6521**	3	SHAFT-PLANETARY	
	39	1	**7T-9122**	6	CONE-BEARING	
	40	1	**068-8099**	6	CUP-BEARING	
	41	1	**6V-0440**	2	PLUG	
	42	1	**2S-4078**	3	SEAL-O-RING	
	43	1	**5S-7379**	6	BOLT (3/8-16X0.875-IN)	

5Q-5569 **FINAL DRIVE & BRAKE GP (**contd.**)** **i01399606**

NOTE	REF NO	GRAPHIC REF	PART NUMBER	QTY	PART NAME 1 2 3 4 5 6 (PRODUCT LEVEL)	SEE PAGE
	44	1	**7P-2429**	1	PLATE-RETAINER	
B	45	1	**6V-6640**		SEALANT	

B - USE AS REQUIRED

5Q-5569 **FINAL DRIVE & BRAKE GP** (contd.) **i01399606**

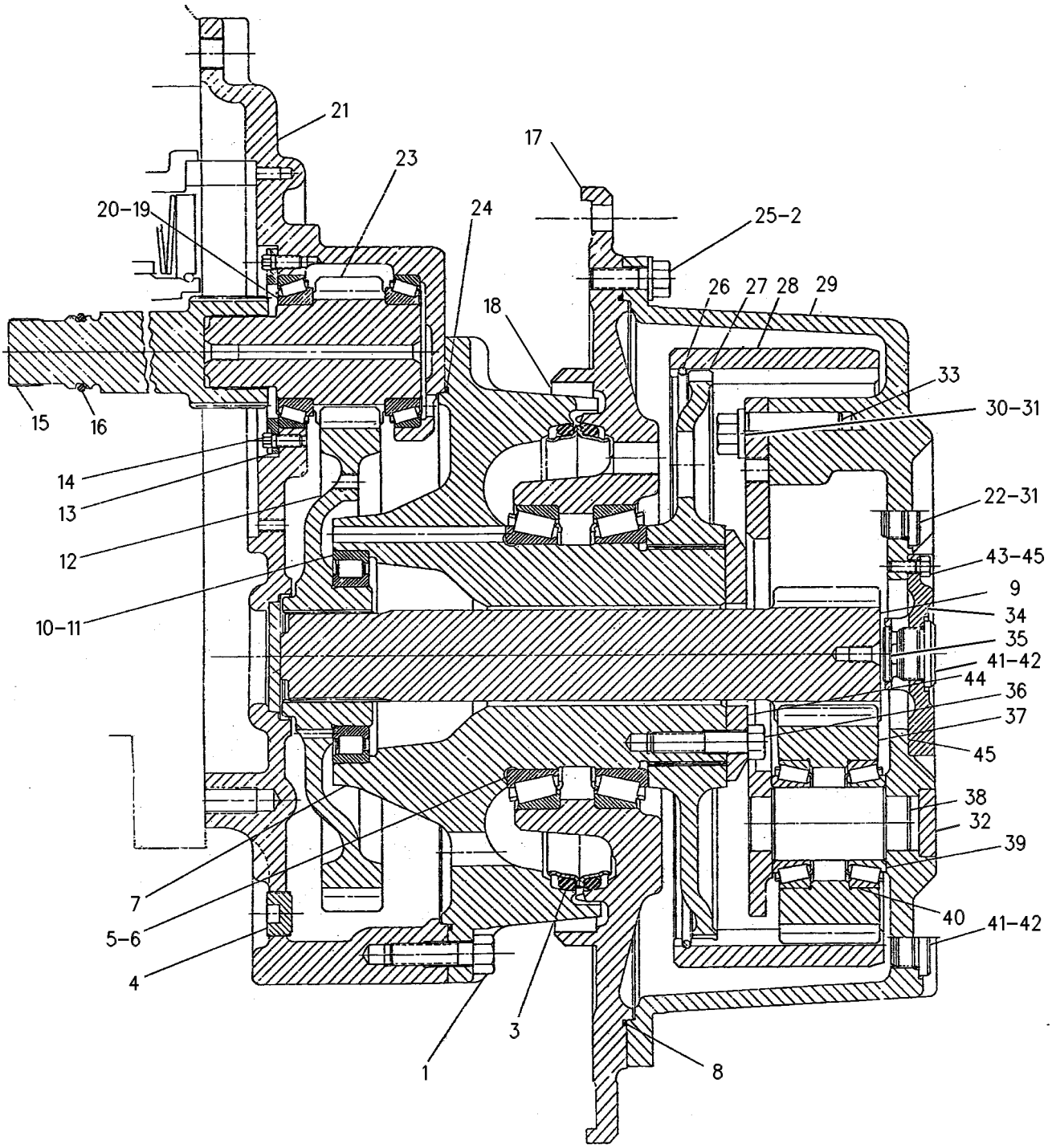

GRAPHIC #1 <END> g00294434

1U-2623 LIFTING GP-TRANSMISSION

S/N: 8EX1-99999

PART OF 104-6208 CONTROL AR-HYDROSTATIC POWER

SMCS-1122 **i01391177**

NOTE	PART NUMBER	QTY	PART NAME 1 2 3 4 5 6 (PRODUCT LEVEL)	SEE PAGE
	0S-1566	2	BOLT (5/8-11X1.5-IN)	
	7S-9372	6	BOLT (5/8-11X1.125-IN)	
	6E-4461	1	PLATE	
	6E-4462	1	PLATE	

<END>

8Y-9858 LINES GP-DRAIN

S/N: 9BL1-UP

PART OF 8Y-9345 POWER TRAIN AR

SMCS-3016 **i01399711**

NOTE	REF NO	GRAPHIC REF	PART NUMBER	QTY	PART NAME 1 2 3 4 5 6 (PRODUCT LEVEL)	SEE PAGE
	1	1	**6V-7238**	1	VALVE-SHUTOFF	
		1	**3K-0360**	1	SEAL-O-RING	
	2	1	**5P-0743**		HOSE	
	3	1	**5D-1026**	1	CLAMP-BAND	
	4	1	**3S-8665**	1	CLIP	
	5	1	**7D-7233**	1	CLIP	
	6	1	**5P-2228**	1	BOLT (1/2-13X1-IN)	
		1	**5P-1076**	1	WASHER-HARD (13.5X30X4-MM THK)	
		1	**6D-4636**	1	CLIP (LOOP)	
	7	1	**7B-9008**	1	NIPPLE-PIPE	
	8	1	**5P-0743**		HOSE	

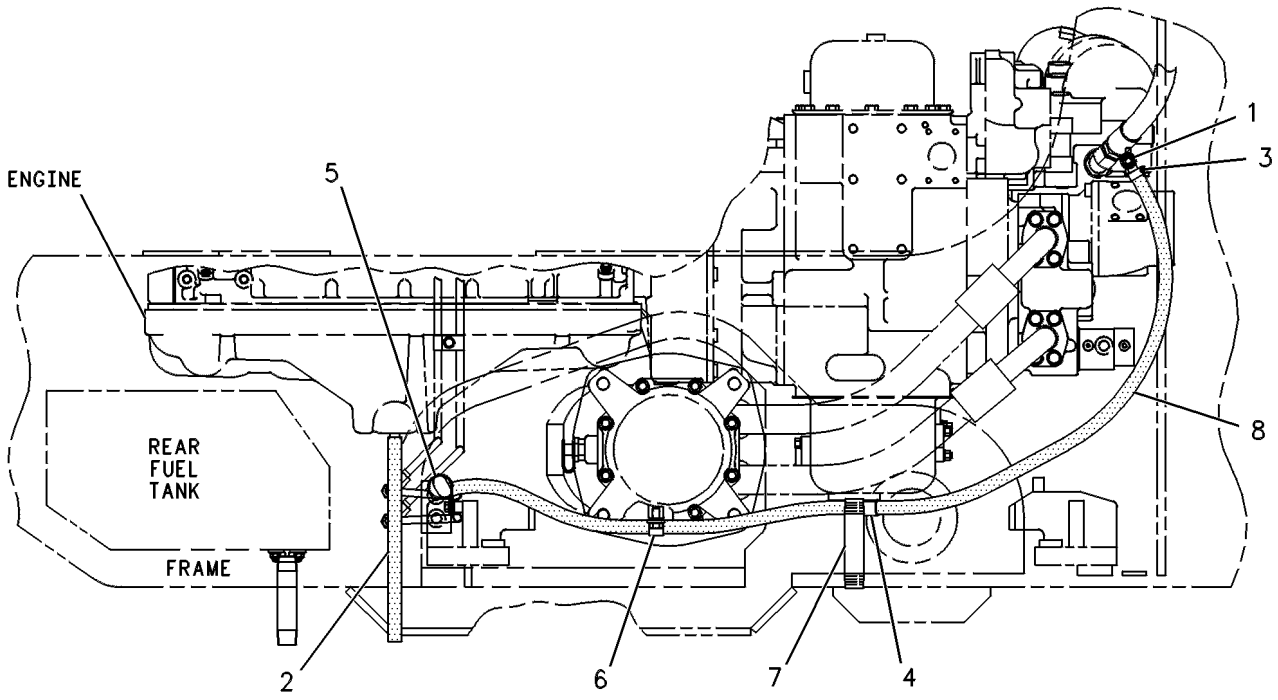

RIGHT SIDE VIEW

GRAPHIC #1 <END> g00247345

104-6210 LINES GP-HYDROSTATIC

S/N: 8EX1-UP

PART OF 104-6208 CONTROL AR-HYDROSTATIC POWER

SMCS-3154 **i01399745**

NOTE	REF NO	GRAPHIC REF	PART NUMBER	QTY	PART NAME 1 2 3 4 5 6 (PRODUCT LEVEL)	SEE PAGE
	1	1	**0S-1588**	1	BOLT (3/8-16X1.25-IN)	
	2	1	**5M-2894**	10	WASHER-HARD (10.2X18.5X2.5-MM THK)	
	3	1	**1A-2029**	4	BOLT (3/8-16X1.125-IN)	
	4	1	**2K-4973**	2	LOCKNUT (3/8-16-THD)	
	5	1	**8J-8332**	4	CLIP	
	6	1	**8S-9191**	1	BOLT (3/8-16X4-IN)	
	7	1	**0S-1617**	5	BOLT (5/16-18X0.75-IN)	
	8	1	**2R-6806**	6	CONNECTOR	
	9	1	**3J-1907**	11	SEAL-O-RING	
	10	1	**3G-5402**	1	HOSE	
	11	1	**3G-5962**	1	TUBE	
	12	1	**6J-1038**	4	SEAL-O-RING	
		1	**3G-5233**	4	RING-BACKUP	
	13	1	**4T-1947**	1	PLATE	
	14	1	**3G-2208**	1	TUBE	
	15	1	**3G-5432**	1	TUBE	
	16	1	**5P-8549**	2	CONNECTOR	
	17	1	**4T-1946**	1	PLATE	
	18	1	**3G-5404**	3	HOSE	
	19	1	**9T-0118**	4	RING-BACKUP	
		1	**3P-1155**	4	SEAL-O-RING	
	20	1	**4T-1948**	1	TUBE	
	21	1	**1U-4785**	1	TUBE	
		1	**5P-9036**	1	ELBOW	
	22	1	**6V-0825**	2	BOLT-LOCKING (5/16-18X2.5-IN)	
	23	1	**9M-1974**	10	WASHER-HARD (8.8X16X2-MM THK)	
	24	1	**4D-9986**	1	SEAL-O-RING	
	25	1	**3G-8482**	1	SPACER (12.7X21X23-MM THK)	
	26	1	**4T-8519**	1	FLANGE	
	27	1	**031-4155**	5	LOCKNUT (5/16-18-THD)	
	28	1	**4T-8051**	1	MANIFOLD	
	29	1	**4T-8050**	1	SPACER (11X19X57-MM THK)	
	30	1	**1U-2163**	3	SCREEN	
	31	1	**0T-0065**	2	BOLT (3/8-16X3.5-IN)	
	32	1	**6V-8723**	2	ELBOW	
		1	**6V-8397**	2	SEAL-O-RING	
	33	1	**3K-0360**	4	SEAL-O-RING	
	34	1	**2G-8768**	1	WASHER (10.5X53.8X3-MM THK)	
	35	1	**1B-3310**	1	WASHER (13.5X41.3X3-MM THK)	
	36	1	**5P-8547**	1	TEE-O-RING	
	37	1	**5P-8548**	1	CONNECTOR	
	38	1	**1U-3246**	1	SCREEN	
	39	1	**4T-7509**	1	TUBE	
	40	1	**4F-7391**	2	SEAL-O-RING	
I	41	1	**3G-6885**	1	HOSE AS	
	42	1	**4T-4222**	1	COVER	
		1	**7F-8268**	1	SEAL-O-RING	

104-6210 **LINES GP-HYDROSTATIC (**contd.**)** **i01399745**

NOTE	REF NO	GRAPHIC REF	PART NUMBER	QTY	PART NAME 1 2 3 4 5 6 (PRODUCT LEVEL)	SEE PAGE
	43	1	**3G-6883**	1	CLIP (SLOT)	
	44	1	**0L-1351**	1	BOLT (3/8-16X0.875-IN)	
	45	1	**3G-6884**	1	CLIP (TAB)	
I	46	1	**9T-7469**	1	HOSE AS	
	47	1	**030-7948**	1	ELBOW	
	48	1	**2J-3118**	2	BOLT-LOCKING (3/8-16X1.25-IN)	
	49	1	**7F-8268**	2	SEAL-O-RING	
	50	1	**1U-3928**	1	TUBE AS	
	51	1	**5P-1075**	1	WASHER-HARD (10.2X22.5X3-MM THK)	
	52	1	**6V-0871**	1	GROMMET	
	53	1	**3B-1915**	3	BOLT (3/8-16X1.375-IN)	
	54	1	**5P-4961**	3	CLAMP-HOSE	
	55	1	**8M-2773**	3	CLIP (LOOP)	
	56	1	**130-4634**	1	BREATHER	
	57	1	**149-8142**	1	CONNECTOR	
BE	58	1	**5P-1442**		HOSE (106CM)	

B - USE AS REQUIRED
E - ORDER BY THE CENTIMETER
I - REFER TO HYDRAULIC INFORMATION SYSTEM

104-6210 **LINES GP-HYDROSTATIC** (contd.) **i01399745**

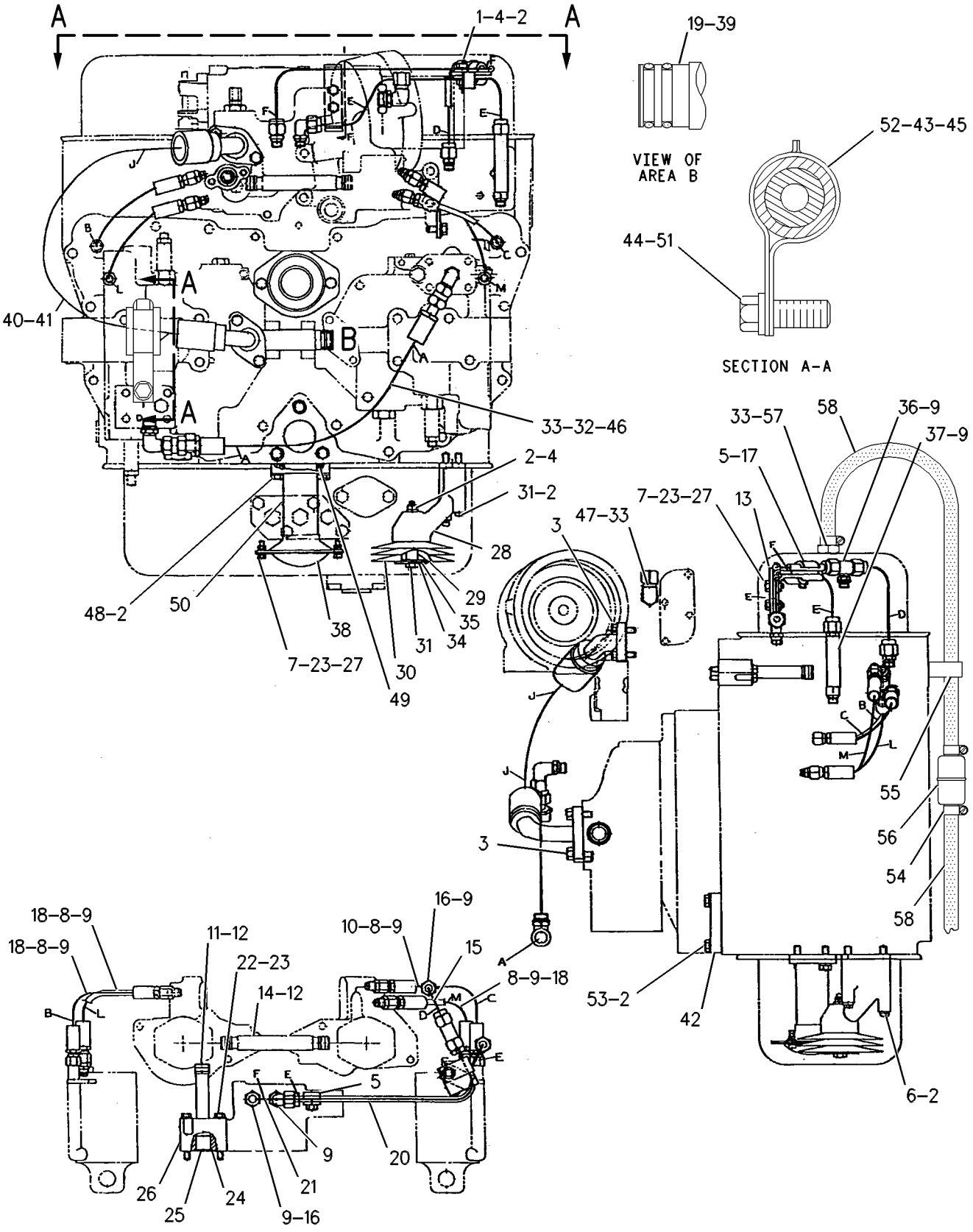

GRAPHIC #1 <END> g00377952

3W-5393 LINES GP-HYDROSTATIC

S/N: 9BL1-UP

PART OF 104-9590 POWER TRAIN AR

SMCS-3154 **i01399716**

NOTE	REF NO	GRAPHIC REF	PART NUMBER	QTY	PART NAME 1 2 3 4 5 6 (PRODUCT LEVEL)	SEE PAGE
I	1	1	**8Y-4659**	2	HOSE AS	
I	2	1	**8Y-4660**	2	HOSE AS	
	3	1	**1P-5767**	8	FLANGE-HALF	
	4	1	**1P-3704**	8	SEAL-RECTANGULAR	
	5	1	**8T-4835**	16	BOLT (1/2-13X2-IN)	
	6	1	**8T-4223**	16	WASHER-HARD (13.5X25.5X3-MM THK)	
	7	1	**6V-9007**	4	ELBOW	
	8	1	**3D-2824**	6	SEAL-O-RING	
I	9	1	**3W-7594**	1	HOSE AS	
	10	1	**6V-9746**	4	SEAL-O-RING	
I	11	1	**121-2980**	1	HOSE AS	
	12	1	**6V-0852**	2	CAP-DUST	
	13	1	**6V-3965**	2	FITTING (QUICK DISCONNECT)	
		1	**3J-1907**	2	SEAL-O-RING	
	14	1	**2P-8421**	2	ADAPTER-O-RING	

I - REFER TO HYDRAULIC INFORMATION SYSTEM

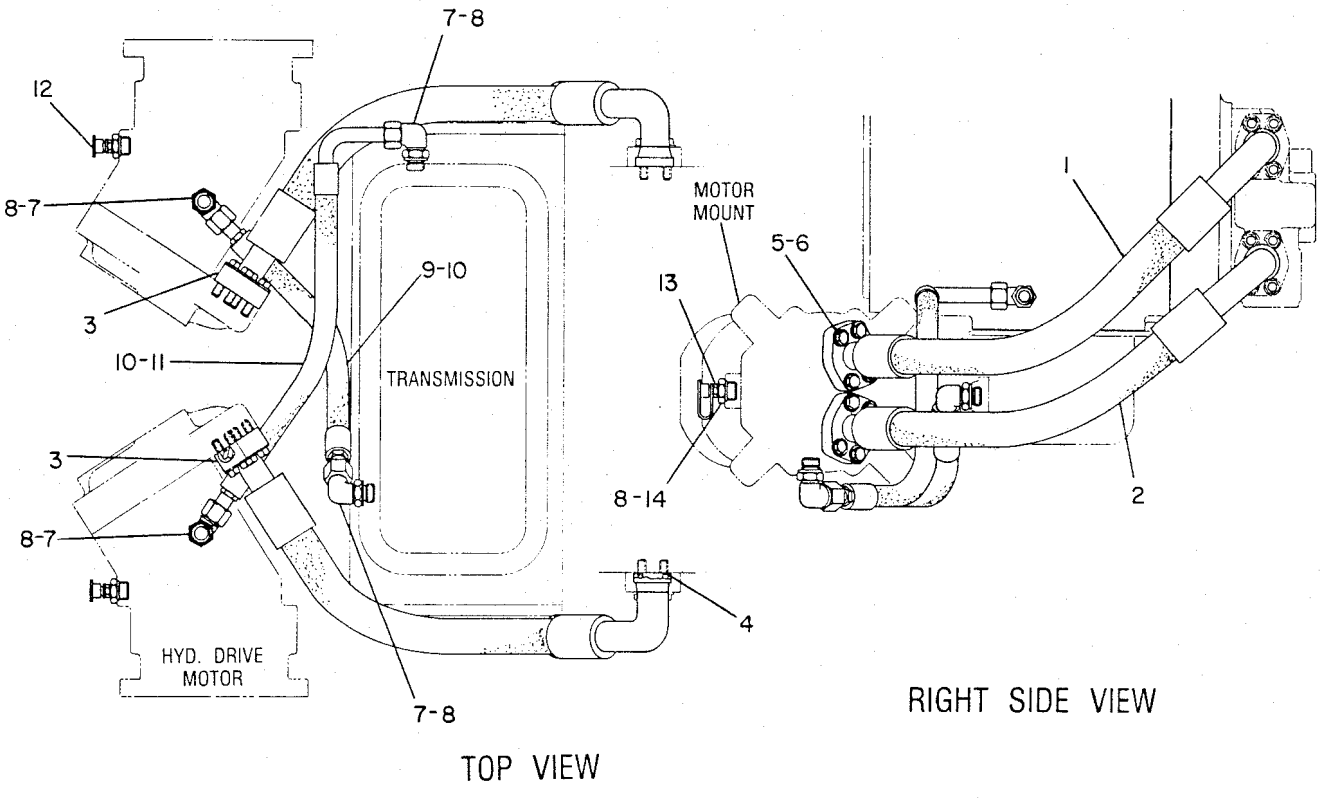

GRAPHIC #1 <END> g00189366

8Y-9346 LINES GP-POWER TRAIN COOLER

S/N: 9BL1-UP

PART OF 8Y-9345 POWER TRAIN AR

SMCS-1375, 3016

i01399763

NOTE	REF NO	GRAPHIC REF	PART NUMBER	QTY	PART NAME 1 2 3 4 5 6 (PRODUCT LEVEL)	SEE PAGE
	1	1	**030-7935**	2	CONNECTOR	
	2	1	**7M-8485**	4	SEAL-O-RING	
	3	1	**7P-7603**	1	PLATE AS	
		1	**1F-0750**	1	NUT-WELD (3/8-16-THD)	
M	4	1	**8T-7547**	1	BOLT (M8X1.25X30-MM)	
	5	1	**5P-4116**	1	WASHER-HARD (8.8X20.5X2-MM THK)	
	6	1	**5S-6981**	1	RETAINER	
I	7	1	**8Y-9726**	1	HOSE AS	
	8	1	**5M-3062**	4	BOLT (3/8-16X0.75-IN)	
	9	1	**8T-4896**	5	WASHER-HARD (10.2X18.5X2.5-MM THK)	
	10	1	**4D-7388**	4	CLIP	
	11	1	**5P-4248**	2	CONNECTOR-PORT	
	12	1	**031-5744**	1	ELBOW	
I	13	1	**8Y-9727**	1	HOSE AS	
	14	1	**5S-7379**	1	BOLT (3/8-16X0.875-IN)	
	15	1	**5P-8444**	1	GROMMET (37-MM ID)	
	16	1	**5P-7469**	1	CLIP (TAB)	
	17	1	**5P-7468**	1	CLIP (SLOT)	

I - REFER TO HYDRAULIC INFORMATION SYSTEM
M - METRIC PART

8Y-9346 **LINES GP-POWER TRAIN COOLER** (contd.) **i01399763**

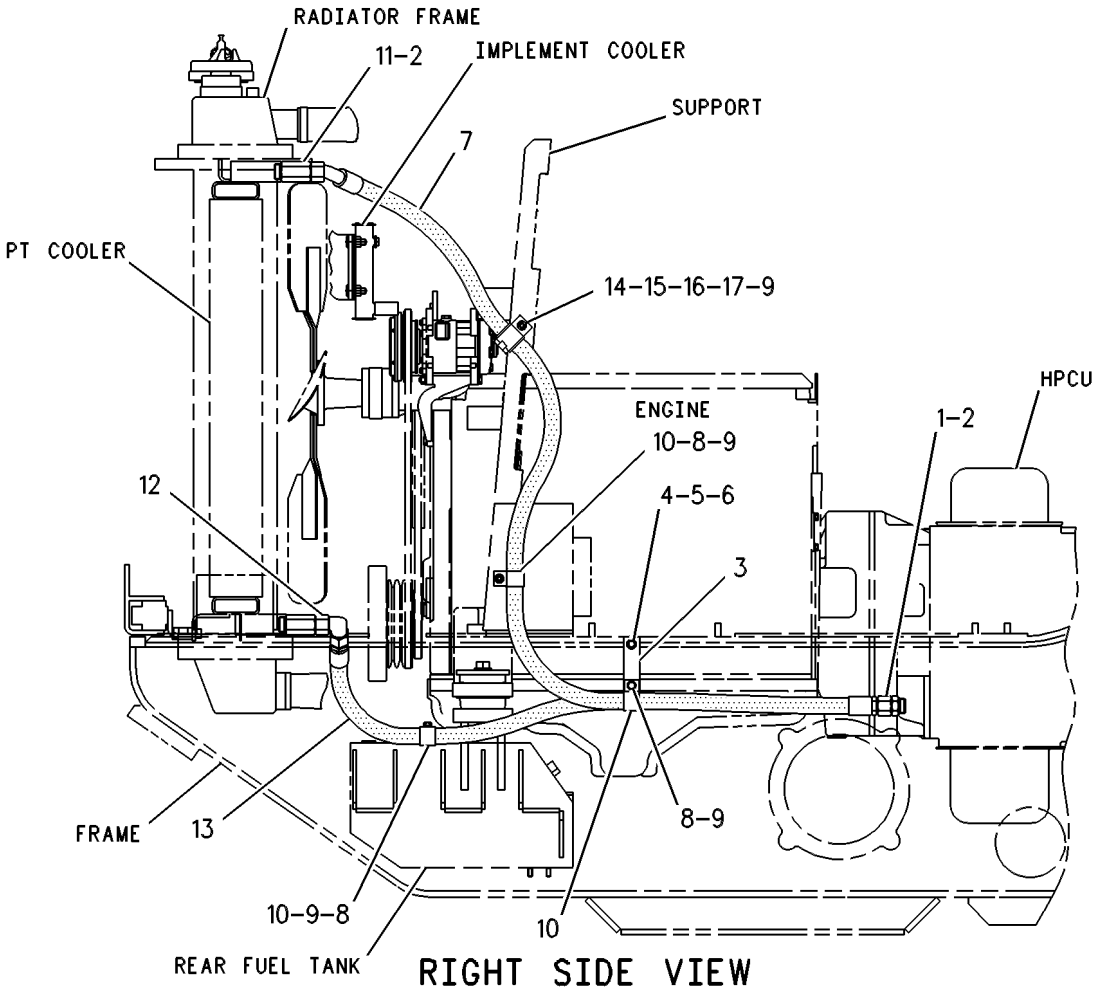

GRAPHIC #1 <END> g00292138

8Y-9347 LINES GP-TRANSMISSION OIL

S/N: 9BL1-1839

PART OF 104-9590 POWER TRAIN AR

SMCS-3016, 3154 **i01399766**

NOTE	REF NO	GRAPHIC REF	PART NUMBER	QTY	PART NAME 1 2 3 4 5 6 (PRODUCT LEVEL)	SEE PAGE
I	1	1	**8Y-9723**	1	HOSE AS	
	2	1	**4J-0520**	2	SEAL-O-RING	
	3	1	**4L-6459**	3	BOLT (3/8-16X2.5-IN)	
	4	1	**8T-4896**	10	WASHER-HARD (10.2X18.5X2.5-MM THK)	
	5	1	**8Y-9721**	1	TUBE AS	
	6	1	**4J-0526**	1	SEAL-O-RING	
	7	1	**5S-7382**	3	BOLT (3/8-16X1.375-IN)	
	8	1	**6V-0852**	1	CAP-DUST	
	9	1	**6V-3965**	1	FITTING (QUICK DISCONNECT)	
	10	1	**3J-1907**	1	SEAL-O-RING	
	11	1	**8Y-9664**	1	MANIFOLD	
	12	1	**4J-0521**	1	SEAL-O-RING	
	13	1	**030-7945**	1	ELBOW	
	14	1	**7M-8485**	1	SEAL-O-RING	
	15	1	**6F-0295**	2	CLIP	
	16	1	**6V-8801**	2	NUT (3/8-16-THD)	
M	17	1	**8T-4189**	1	BOLT (M8X1.25X20-MM)	
	18	1	**8Y-9722**	1	TUBE AS	
	19	1	**4J-0527**	1	SEAL-O-RING	
	20	1	**5P-2566**	2	BOLT (1/2-13X1.5-IN)	
	21	1	**8T-9389**	2	BOLT (1/2-13X2.75-IN)	
	22	1	**8T-4223**	4	WASHER-HARD (13.5X25.5X3-MM THK)	
	23	1	**1P-4577**	2	FLANGE-HALF	
	24	1	**8T-2501**	4	BOLT (3/8-16X2-IN)	
	25	1	**8Y-9742**	1	PLATE	
	26	1	**8T-6703**	2	CLAMP-HOSE	
E	27	1	**5P-1259**		HOSE (15CM)	
	28	1	**5P-1075**	3	WASHER-HARD (10.2X22.5X3-MM THK)	
	29	1	**3R-4792**	1	ROD	
	30	1	**5P-7468**	1	CLIP (SLOT)	
	31	1	**5P-7469**	1	CLIP (TAB)	
	32	1	**5P-8444**	1	GROMMET (37-MM ID)	

E - ORDER BY THE CENTIMETER
I - REFER TO HYDRAULIC INFORMATION SYSTEM
M - METRIC PART

8Y-9347 **LINES GP-TRANSMISSION OIL (**contd.**)** **i01399766**

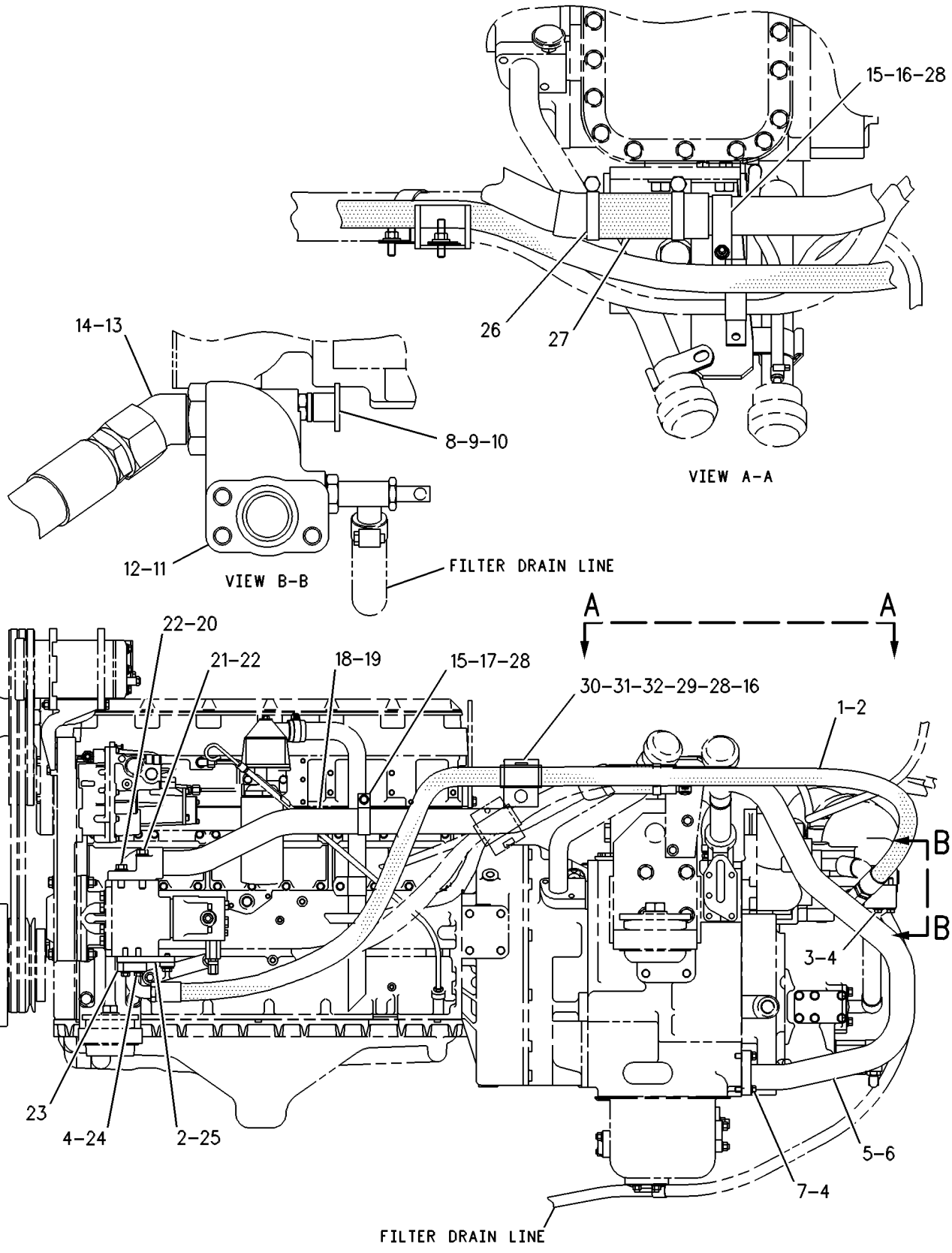

GRAPHIC #1 <END> g00251663

8Y-9347 LINES GP-TRANSMISSION OIL

S/N: 9BL1840-UP

PART OF 104-9590 POWER TRAIN AR

SMCS-3016, 3154 **i01399770**

NOTE	REF NO	GRAPHIC REF	PART NUMBER	QTY	PART NAME 1 2 3 4 5 6 (PRODUCT LEVEL)	SEE PAGE
CI	1	1	**142-1592**	1	HOSE AS	
	2	1	**4J-0520**	2	SEAL-O-RING	
	3	1	**4L-6459**	3	BOLT (3/8-16X2.5-IN)	
	4	1	**8T-4896**	10	WASHER-HARD (10.2X18.5X2.5-MM THK)	
	5	1	**8Y-9721**	1	TUBE AS	
	6	1	**4J-0526**	1	SEAL-O-RING	
	7	1	**5S-7382**	3	BOLT (3/8-16X1.375-IN)	
	8	1	**6V-0852**	1	CAP-DUST	
	9	1	**6V-3965**	1	FITTING (QUICK DISCONNECT)	
	10	1	**3J-1907**	1	SEAL-O-RING	
	11	1	**8Y-9664**	1	MANIFOLD	
	12	1	**4J-0521**	1	SEAL-O-RING	
C	13	1	**030-7951**	1	ELBOW-FLARED	
	14	1	**7M-8485**	1	SEAL-O-RING	
	15	1	**6F-0295**	2	CLIP	
	16	1	**6V-8801**	2	NUT (3/8-16-THD)	
M	17	1	**8T-4189**	1	BOLT (M8X1.25X20-MM)	
	18	1	**8Y-9722**	1	TUBE AS	
	19	1	**4J-0527**	1	SEAL-O-RING	
	20	1	**5P-2566**	2	BOLT (1/2-13X1.5-IN)	
	21	1	**8T-9389**	2	BOLT (1/2-13X2.75-IN)	
	22	1	**8T-4223**	4	WASHER-HARD (13.5X25.5X3-MM THK)	
	23	1	**1P-4577**	2	FLANGE-HALF	
	24	1	**8T-2501**	4	BOLT (3/8-16X2-IN)	
	25	1	**8Y-9742**	1	PLATE	
	26	1	**8T-6703**	2	CLAMP-HOSE	
E	27	1	**5P-1259**		HOSE (18CM)	
	28	1	**5P-1075**	3	WASHER-HARD (10.2X22.5X3-MM THK)	
	29	1	**3R-4792**	1	ROD	
	30	1	**5P-7468**	1	CLIP (SLOT)	
	31	1	**5P-7469**	1	CLIP (TAB)	
	32	1	**5P-8444**	1	GROMMET (37-MM ID)	

C - CHANGE FROM PREVIOUS TYPE
E - ORDER BY THE CENTIMETER
I - REFER TO HYDRAULIC INFORMATION SYSTEM
M - METRIC PART

8Y-9347 **LINES GP-TRANSMISSION OIL (**contd.**)** **i01399770**

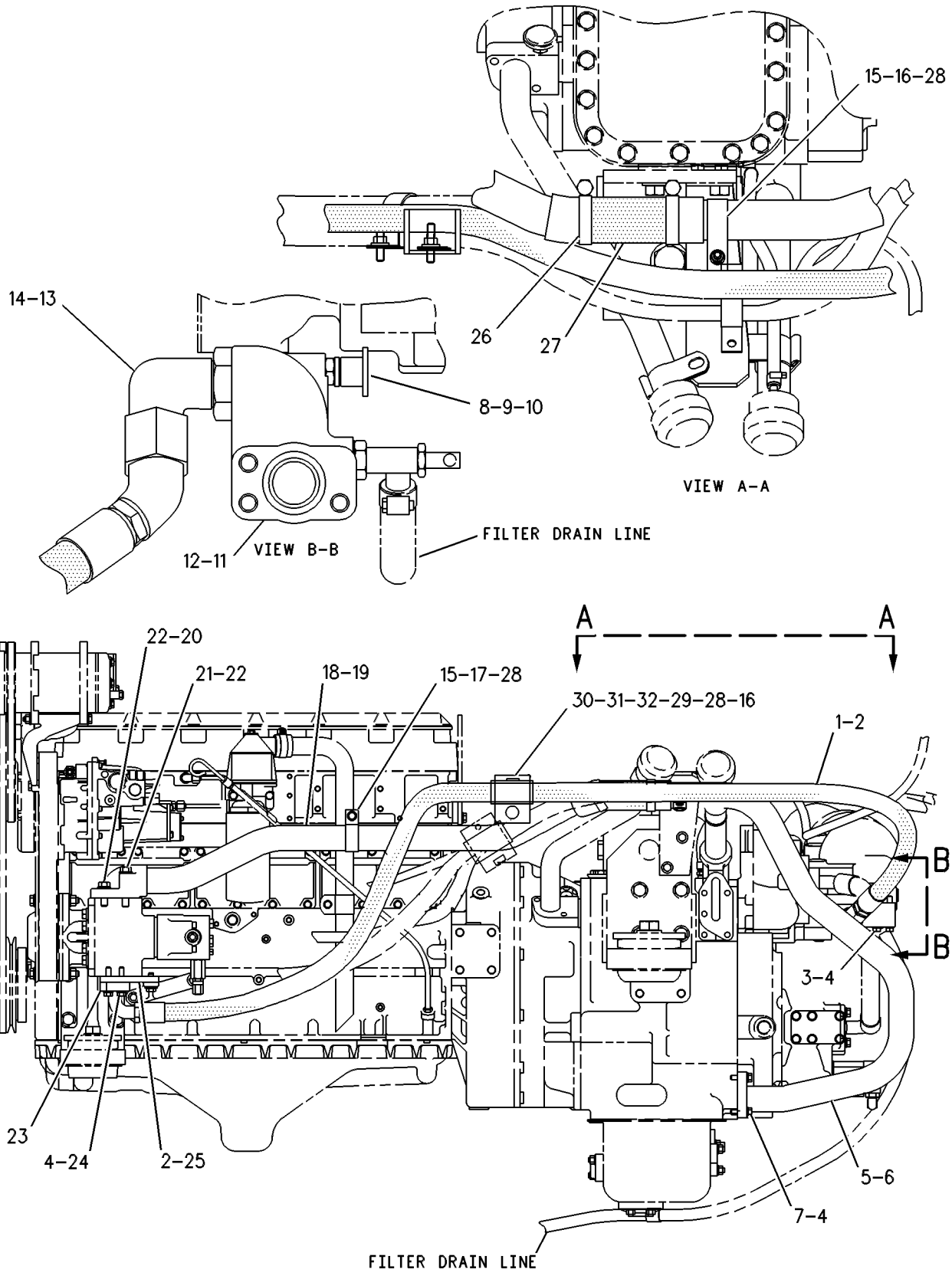

GRAPHIC #1 <END> g00295614

3G-5931 LINKAGE GP-HYDRO POWER CASE

S/N: 8EX1-UP

PART OF 104-6208 CONTROL AR-HYDROSTATIC POWER

SMCS-3215 **i02930720**

NOTE	REF NO	GRAPHIC REF	PART NUMBER	QTY	PART NAME 1 2 3 4 5 6 (PRODUCT LEVEL)	SEE PAGE
	1	1	**0S-1591**	1	BOLT (3/8-16X1.5-IN)	
	2	1	**0S-1590**	1	BOLT (3/8-16X2-IN)	
	3	1	**5M-2894**	5	WASHER-HARD (10.2X18.5X2.5-MM THK)	
	4	1	**3B-4615**	2	PIN-COTTER	
	5	1	**3G-8583**	1	ROD	
	6	1	**9M-1974**	5	WASHER-HARD (8.8X16X2-MM THK)	
	7	1	**2N-8611**	2	RING-RETAINING	
	8	1	**5P-6859**	1	SEAL-LIP TYPE	
	9	1	**5P-6860**	1	SEAL-LIP TYPE	
	10	1	**8F-6711**	1	SEAL-O-RING	
	11	1	**4J-3363**	2	BEARING AS-NEEDLE	
	12	1	**1F-4503**	2	BEARING AS-NEEDLE	
	13	1	**1A-2812**	2	WASHER (0.06-MM THK)	
	14	1	**6H-0411**	1	WASHER (32.5X50.8X1.6-MM THK)	
	15	1	**2M-4287**	1	RING-SNAP	
	16	1	**1B-8705**	2	KEY-WOODRUFF	
	17	1	**1A-8285**	1	NUT-JAM (5/16-24-THD)	
	18	1	**6V-1033**	1	END-BEARING ROD	
	19	1	**2J-3118**	1	BOLT-LOCKING (3/8-16X1.25-IN)	
	20	1	**3G-8092**	2	LINK	
	21	1	**5D-0353**	2	BOLT-LOCKING (3/8-16X1-IN)	
	22	1	**1D-4717**	1	NUT (3/8-16-THD)	
	23	1	**3G-8403**	1	BRACKET AS	
	24	1	**6V-0833**	1	BEARING-ALIGNING	
	25	1	**3G-8176**	1	PIN	
		1	**5H-1592**	1	BUSHING-TERMINAL	
	26	2	**3G-7630**	1	LEVER	
	27	2	**4T-0309**	1	BRACKET AS	
C	28	2	**4T-5159**	1	LEVER	
	29	2	**3G-5925**	1	LEVER AS	
	30	2	**3G-5759**	1	LEVER AS	
	31	2	**3G-8582**	1	ROD	
Y	32	2	*3G-0623*	1	LINKAGE GP-SERVO	384
	33	2	**3G-2772**	1	ROD	
	34	2	**9L-3334**	1	NUT-PLATED (1/4-28-THD, LH)	
	35	2	**8L-4496**	1	NUT-JAM (5/16-24 LH-THD)	
	36	2	**1B-4201**	1	NUT-FULL (1/4-28-THD)	
	37	2	**2D-6235**	4	LOCKNUT (1/4-20-THD)	
	38	2	**6L-7751**	1	ROD END	
	39	2	**3G-8612**	2	SPACER (7X15X4-MM THK)	
	40	2	**7B-2742**	2	BOLT (1/4-20X1.25-IN)	
	41	2	**3G-8609**	1	ROD	
	42	2	**031-0219**	2	BOLT-LOCKING (3/8-16X1.75-IN)	
C	43	2	**5M-2894**	2	WASHER-HARD (10.2X18.5X2.5-MM THK)	
	44	2	**036-7232**	1	ROD END	
	45	2	**3G-8481**	2	LINK	
	46	2	**4F-7957**	2	BOLT (1/4-20X0.875-IN)	

3G-5931 **LINKAGE GP-HYDRO POWER CASE** (contd.) **i02930720**

NOTE	REF NO	GRAPHIC REF	PART NUMBER	QTY	PART NAME 1 2 3 4 5 6 (PRODUCT LEVEL)	SEE PAGE
	47	2	**6V-1780**	1	BEARING-ROLLER	
C	48	2	**6V-6571**	1	LOCKNUT	
C	49	2	**4T-3317**	1	LEVER	
	50	2	**5P-9209**	2	BEARING AS-NEEDLE	
	51	2	**1A-2812**	2	WASHER (0.06-MM THK)	
	52	2	**6V-0828**	1	RING-RETAINING	
	53	2	**1J-4384**	2	PIN-CLEVIS	
	54	2	**3G-5811**	1	SPACER	
	55	2	**2A-1723**	1	LOCKNUT	
		2	**4T-0302**	1	WASHER-FELT	

C - CHANGE FROM PREVIOUS TYPE
Y - SEPARATE ILLUSTRATION

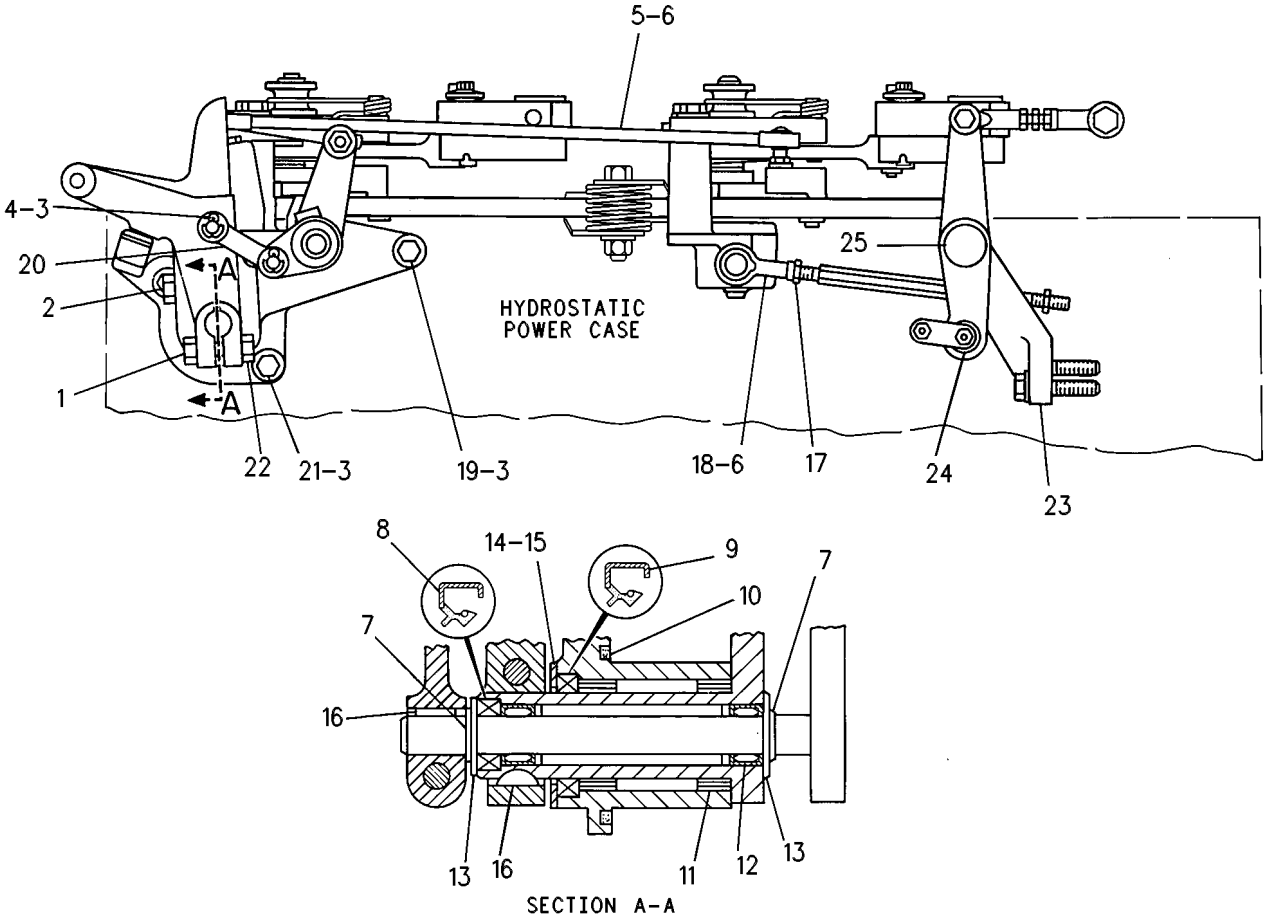

GRAPHIC #1 g00440720

3G-5931 **LINKAGE GP-HYDRO POWER CASE** (contd.) **i02930720**

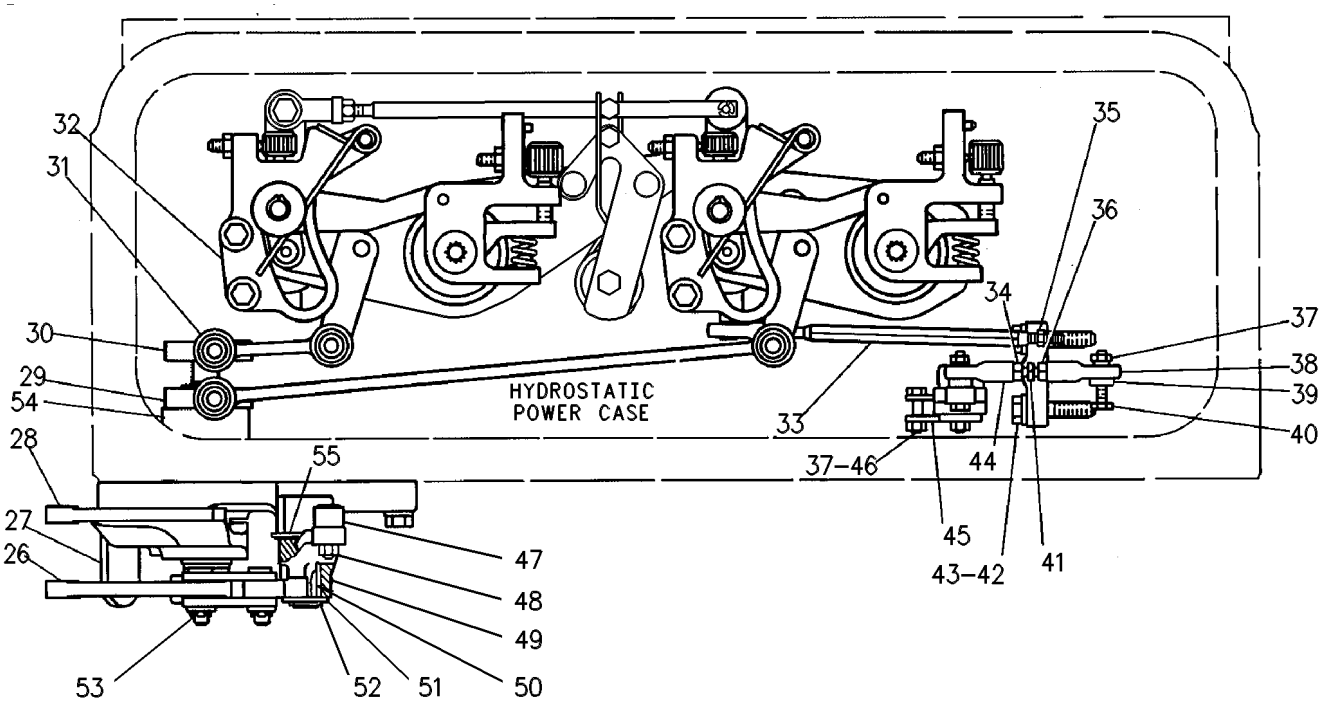

GRAPHIC #2 <END> g00440721

3G-0623 LINKAGE GP-SERVO

S/N: 8EX1-UP

PART OF 3G-5931 LINKAGE GP-HYDRO POWER CASE

SMCS-3215 **i01399798**

NOTE	REF NO	GRAPHIC REF	PART NUMBER	QTY	PART NAME 1 2 3 4 5 6 (PRODUCT LEVEL)	SEE PAGE
C	1	1	**9J-7828**	4	DETENT	
C	2	1	**1D-4716**	4	NUT-FULL (5/16-18-THD)	
C	3	1	**4T-5529**	1	SPRING-TORSION	
C	4	1	**4T-5651**	1	SPACER	
C	5	1	**2B-2694**	1	BOLT (5/16-18X2-IN)	
C	6	1	**4T-5650**	1	BOLT (5/16-18X1.18-IN)	
C	7	1	**7N-2171**	1	RING-RETAINING	
C	8	1	**9S-8751**	1	NUT-FULL (5/16-24-THD)	
	9	1	**5M-2894**	4	WASHER-HARD (10.2X18.5X2.5-MM THK)	
	10	1	**030-8537**	4	BOLT-LOCKING (3/8-16X1.5-IN)	
	11	1	**4H-0094**	2	RING-RETAINING	
	12	1	**9J-8596**	2	SPACER	
	13	1	**9J-8595**	2	CAMSHAFT	
	14	1	**9J-7826**	2	SCREW	
	15	1	**2J-5850**	2	PIN	
	16	1	**9J-2004**	2	SPRING-TORSION	
	17	1	**3G-2838**	2	BOLT (3/8-16X1.63-IN)	
	18	1	**6J-5727**	2	WASHER-SPRING	
	19	1	**3G-1800**	2	LEVER AS	
					(EACH INCLUDES)	
		1	**1T-0068**	1	PIN-SPRING	
	20	1	**9J-8580**	1	PIN	
	21	1	**4H-8380**	1	PIN-SPRING	
	22	1	**3G-2855**	2	SCREW	
	23	1	**3G-2856**	2	SPRING	
	24	1	**3G-2742**	2	LEVER	
C	25	1	**1D-4533**	2	BOLT (1/4-20X2.25-IN)	
C	26	1	**2D-6235**	2	LOCKNUT (1/4-20-THD)	
C	27	1	**5P-0537**	8	WASHER-HARD (7.2X14.5X2-MM THK)	
C	28	1	**4T-5655**	2	SPACER	
C	29	2	**031-4155**	1	LOCKNUT (5/16-18-THD)	
C	30	2	**9M-1974**	2	WASHER-HARD (8.8X16X2-MM THK)	
	31	2	**3G-0622**	2	RING-RETAINING	
	32	2	**5P-4693**	4	CONE-BEARING	
	33	2	**3G-8575**	2	BRACKET AS	
					(EACH INCLUDES)	
		2	**5P-4692**	2	CUP-BEARING	
		2	**8L-6565**	1	PIN-SPRING	
C	34	2	**4T-5653**	1	ROD	
C	35	2	**7H-3641**	1	END-ROD (5/16-24-THD)	
C	36	2	**9J-8606**	6	WASHER-SPRING	
	37	2	**9J-8593**	2	LEVER AS	
					(EACH INCLUDES)	
		2	**9J-8589**	1	PIN	
	38	2	**9J-8590**	1	PIN	
	39	2	**9J-8563**	2	LEVER AS	
					(EACH INCLUDES)	
		2	**032-9710**	2	BEARING AS-NEEDLE	

3G-0623 **LINKAGE GP-SERVO** (contd.) **i01399798**

NOTE	REF NO	GRAPHIC REF	PART NUMBER	QTY	PART NAME 1 2 3 4 5 6 (PRODUCT LEVEL)	SEE PAGE
	40	2	**9J-1841**	2	PLUNGER	
	41	2	**8D-5294**	2	RING	
C	42	2	**9T-0380**	1	PLATE AS	
		2	**3K-6583**	2	BEARING	
	43	2	**9J-8586**	2	PIN	
C	44	2	**1Y-0462**	1	WASHER (0.328X0.81X0.125-IN THK)	
	45	2	**8S-7803**	2	RING-RETAINING	
C	46	2	**031-2701**	1	BOLT-LOCKING (5/16-18X1.25-IN)	
C	47	2	**4T-5652**	3	SPACER	

C - CHANGE FROM PREVIOUS TYPE

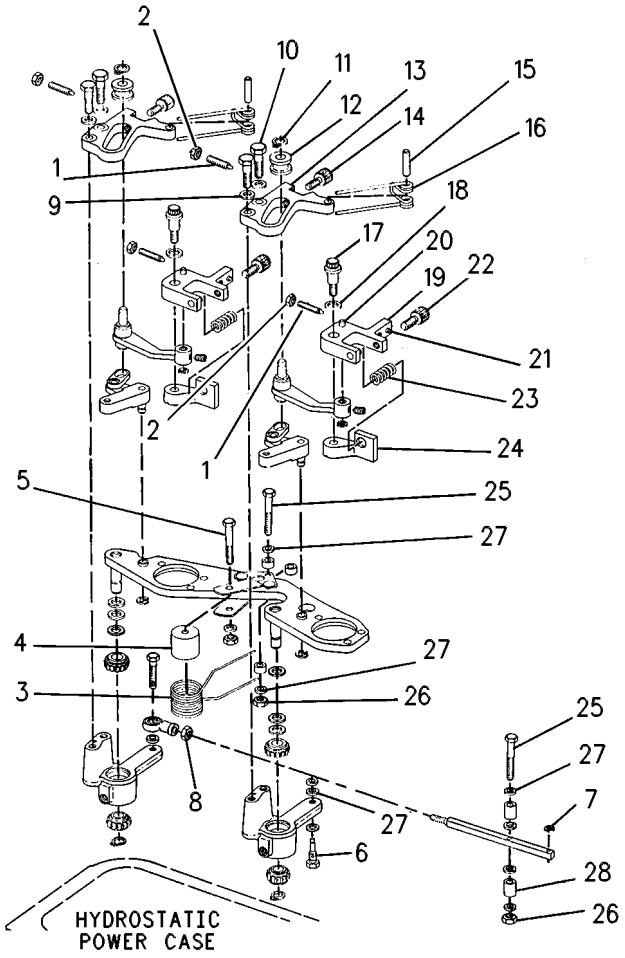

GRAPHIC #1 g00409678

3G-0623 **LINKAGE GP-SERVO** (contd.) **i01399798**

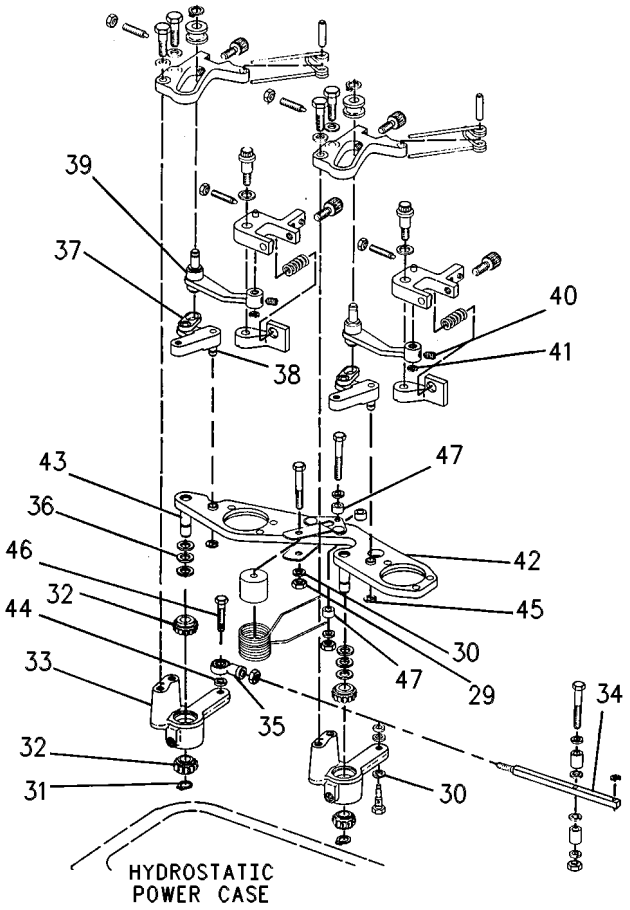

GRAPHIC #2 <END> g00409679

6E-3516 MOTOR GP-PISTON*R

S/N: 9BL1-UP

PART OF 104-9590 POWER TRAIN AR

SMCS-5058 **i01399805**

NOTE	REF NO	GRAPHIC REF	PART NUMBER	QTY	PART NAME 1 2 3 4 5 6 (PRODUCT LEVEL)	SEE PAGE
	1	1	**4T-0971**	1	HEAD-MOTOR	
	2	1	**9D-8042**	1	SEAL-O-RING	
	3	1	**3G-3101**	1	BODY-UPPER	
R	4	1	**1U-4805**	9	PISTON AS	
					(EACH INCLUDES)	
		1	**6J-7836**	1	RING-SNAP	
		1	**8J-6276**	1	RETAINER (19.6 MM)	
		1	**9J-8051**	1	RETAINER (30 MM)	
	5	1	**9T-8126**	1	TUBE	
	6	1	**9S-8008**	1	PLUG (1-1/16-12-THD)	
		1	**3D-2824**	1	SEAL-O-RING	
	7	1	**1A-1460**	8	BOLT (1/2-13X2-IN)	
		1	**5P-8245**	8	WASHER-HARD (13.5X25.5X3-MM THK)	
	8	1	**9X-8919**	9	RING-RETAINING	
	9	1	**1J-2176**	1	SEAL-O-RING	
	10	1	**1P-5767**	4	FLANGE-HALF	
	11	1	**9S-9739**	14	BOLT (1/2-13X2.7-IN)	
	12	1	**2B-2695**	6	BOLT (5/16-18X0.875-IN)	
		1	**9M-1974**	6	WASHER-HARD (8.8X16X2-MM THK)	
	13	1	**0S-0130**	1	PIN	
	14	1	**8B-1312**	2	DOWEL	
R	15	1	**9T-8770**	1	PLATE-PORT	
	16	1	**2K-5097**	1	CONE-BEARING	
	17	1	**3F-5792**	1	SEAL-O-RING	
	18	1	**3G-5940**	1	NUT	
	19	1	**3G-2673**	1	SEAL-LIP TYPE	
	20	1	**5H-3182**	1	PIN-SPRING	
	21	1	**6E-3393**	1	PLATE AS-DRIVE	
		1	**4T-3259**	9	INSERT-BEARING	
	22	1	**0S-1618**	2	BOLT (5/16-18X1-IN)	
	23	1	**5P-8248**	4	WASHER-HARD (20X36.5X3.5-MM THK)	
	24	1	**8J-6239**	1	LOCKNUT	
	25	1	**4T-1579**	1	RETAINER	
B	26	1	**8J-6279**	5	SHIM (0.127-MM THK)	
B		1	**8J-6278**	5	SHIM (0.076-MM THK)	
	27	1	**1A-8063**	4	BOLT (3/4-10X2.5-IN)	
B	28	1	**8J-6277**	1	SHIM (1.25-MM THK)	
	29	1	**1H-5338**	1	CUP-BEARING	
	30	1	**3G-3098**	1	BODY-LOWER	
	31	1	**9J-0747**	1	BEARING AS	
	32	1	**9T-6526**	1	UNIVERSAL JOINT AS	
		1	**2R-1256**	2	RING-RETAINING	
		1	**4T-1692**	1	YOKE	
		1	**4T-7479**	1	YOKE	
		1	**6J-8253**	4	SEAL-SLOTTED	
		1	**6J-8251**	2	BLOCK	
		1	**6J-8252**	2	PIN	
		1	**9T-7031**	1	LINK-UNIVERSAL JOINT	

6E-3516 **MOTOR GP-PISTON (**contd.**)** **i01399805**

NOTE	REF NO	GRAPHIC REF	PART NUMBER	QTY	PART NAME 1 2 3 4 5 6 (PRODUCT LEVEL)	SEE PAGE
R	33	1	**1U-1965**	1	BARREL AS-CYLINDER	
	34	1	**4T-2675**	1	RACE-THRUST BEARING	
	35	1	**1U-1967**	1	BEARING-ROLLER	
	36	1	**4T-2674**	1	RACE-THRUST BEARING	
	37	1	**8J-0438**	1	SPRING	
	38	1	**9T-8125**	1	SHAFT	
	39	1	**5H-6005**	2	SEAL-O-RING	
Y	40	1	**4T-3056**	1	VALVE GP-SHUTTLE	422
	41	1	**1B-9575**	4	BOLT (5/16-18X1.56-IN)	
	42	1	**7F-8268**	1	SEAL-O-RING	
	43	1	**0S-1566**	1	BOLT (5/8-11X1.5-IN)	
	44	1	**8J-6236**	1	LOCK	
	45	1	**4T-3066**	1	RETAINER	
	46	1	**7J-4169**	1	RING-SNAP	
	47	1	**4T-2625**	1	RETAINER	
	48	1	**4T-2603**	1	BEARING-THRUST	
	49	1	**5J-9393**	6	BOLT-12 POINT HEAD (1/2-13X3.75-IN)	
	50	1	**8J-2559**	1	PLATE-WARNING (OIL FILL)	
	51	1	**4B-4158**	4	SCREW-DRIVE (NO 4X0.25-IN)	
	52	1	**035-2297**	1	RING-RETAINING	
	53	1	**4T-2676**	1	RETAINER	
	54	1	**4T-3055**	1	SPRING	

B - USE AS REQUIRED
R - REMANUFACTURED PART MAY BE AVAILABLE
Y - SEPARATE ILLUSTRATION

6E-3516 **MOTOR GP-PISTON** (contd.) **i01399805**

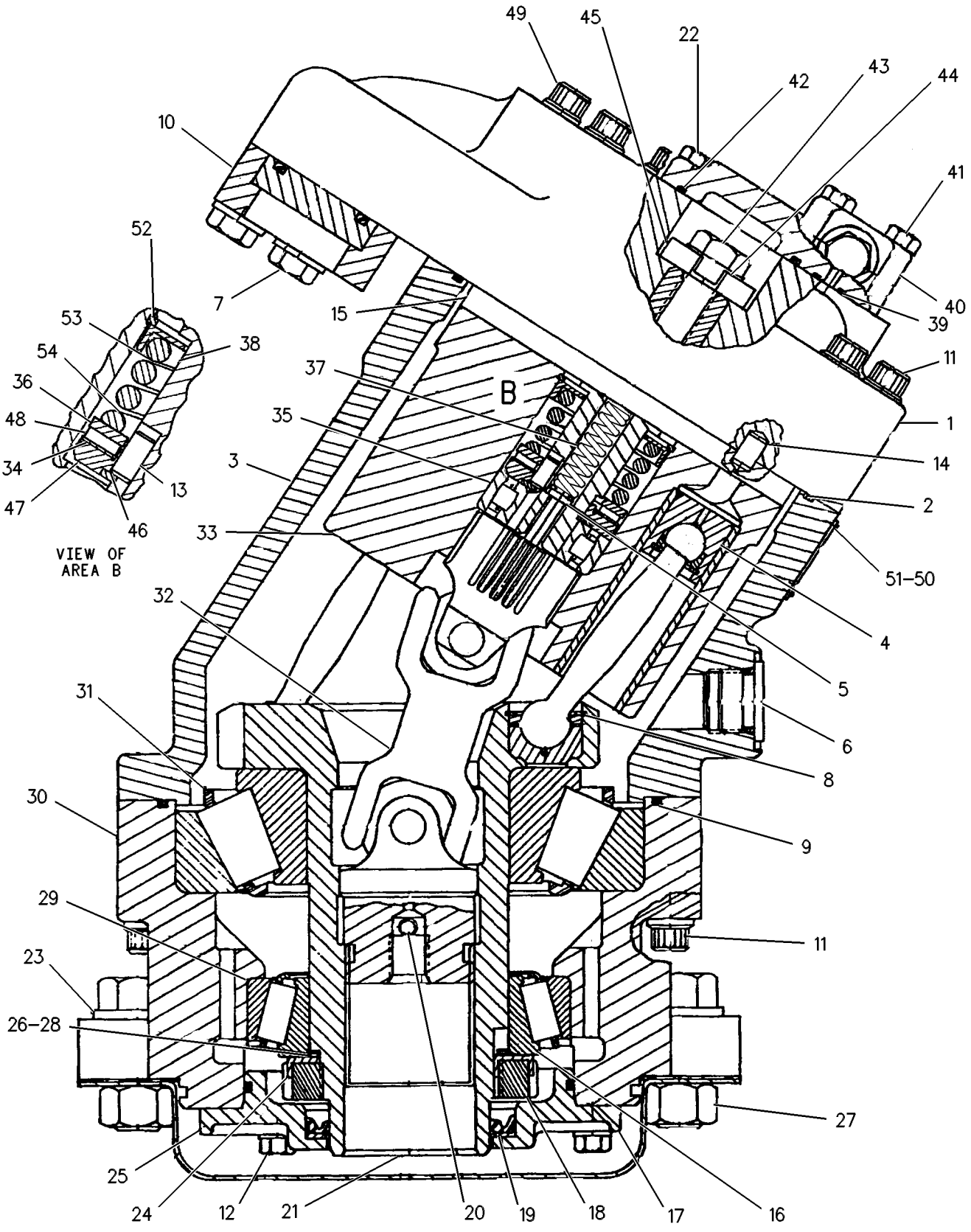

GRAPHIC #1 <END> g00242121

104-9590 POWER TRAIN AR

S/N: 9BL1-UP

PART OF 8Y-9345 POWER TRAIN AR

SMCS-3000, 4000 **i00477639**

NOTE	PART NUMBER	QTY	PART NAME 1 2 3 4 5 6 (PRODUCT LEVEL)	SEE PAGE
Y	*104-6208*	1	CONTROL AR-HYDROSTATIC POWER	343
Y	*3W-5393*	1	LINES GP-HYDROSTATIC	374
Y	*8Y-9347*	1	LINES GP-TRANSMISSION OIL	377
YR	*6E-3516*	2	MOTOR GP-PISTON	387
Y	*8Y-9740*	1	PUMP & MOUNTING GP	597

R - REMANUFACTURED PART MAY BE AVAILABLE
Y - SEPARATE ILLUSTRATION

<END>

8Y-9345 POWER TRAIN AR

S/N: 9BL1-UP

PART OF 117-1760, 8Y-9163 GENERAL AR

SMCS-3000, 4000 **i00417099**

NOTE	PART NUMBER	QTY	PART NAME 1 2 3 4 5 6 (PRODUCT LEVEL)	SEE PAGE
Y	*7P-9986*	1	BRAKE GP-PARKING	535
Y	*3W-2668*	1	CONTROL GP-PARKING BRAKE	537
Y	*7P-9735*	1	DRIVE GP-FINAL	355
Y	*8Y-9343*	1	DRIVE GP-FLEXIBLE COUPLING	358
Y	*8Y-9705*	1	FASTENER GP-XMSN & DRIVE MOTOR	359
Y	*7P-2101*	1	FILLER GP-POWER TRAIN OIL (TRANSMISSION, PUMP DRIVE)	360
Y	*8Y-9858*	1	LINES GP-DRAIN	370
Y	*8Y-9346*	1	LINES GP-POWER TRAIN COOLER	375
Y	*104-9590*	1	POWER TRAIN AR	390
Y	*7P-2706*	2	SEGMENT GP-SPROCKET	399

Y - SEPARATE ILLUSTRATION

<END>

6E-6045 PUMP GP-GEAR–HYDRAULIC

S/N: 8EX1-1371

PART OF 8Y-9743 PUMP & MOUNTING GP

SMCS-3066, 5073

i02510090

NOTE	REF NO	GRAPHIC REF	PART NUMBER	QTY	PART NAME 1 2 3 4 5 6 (PRODUCT LEVEL)	SEE PAGE
	1	1	**5P-7213**	8	WASHER-HARD (13.5X20.5X2-MM THK)	
	2	1	**0S-1595**	8	BOLT (1/2-13X1.25-IN)	
	3	1	**104-7524**	1	SHAFT	
	4	1	**134-4796**	1	FLANGE AS	
	5	1	**9T-9980**	1	GEAR-IDLER	
	6	1	**4T-9298**	4	BUSHING	
	7	1	**6J-2386**	2	DOWEL	
	8	1	**104-7522**	1	BODY AS	
	9	1	**4T-8729**	2	PLATE-PRESSURE	
	10	1	**4T-9426**	1	PLATE-ISOLATION	
	11	1	**4T-9425**	1	PLATE-ISOLATION	
	12	1	**6E-2943**	1	PLUG (DRAIN)	
	13	1	**008-3214**	1	RING-RETAINING (INTERNAL)	
	14	1	**6V-1899**	2	SEAL-LIP TYPE	
					AVAILABLE REPAIR KIT(S):	
			104-7525	1	KIT-SEAL (HYDRAULIC PUMP)	
					(INCLUDES SEALS, RINGS, BREATHER, & RETAINERS)	

6E-6045 **PUMP GP-GEAR** (contd.) **i02510090**

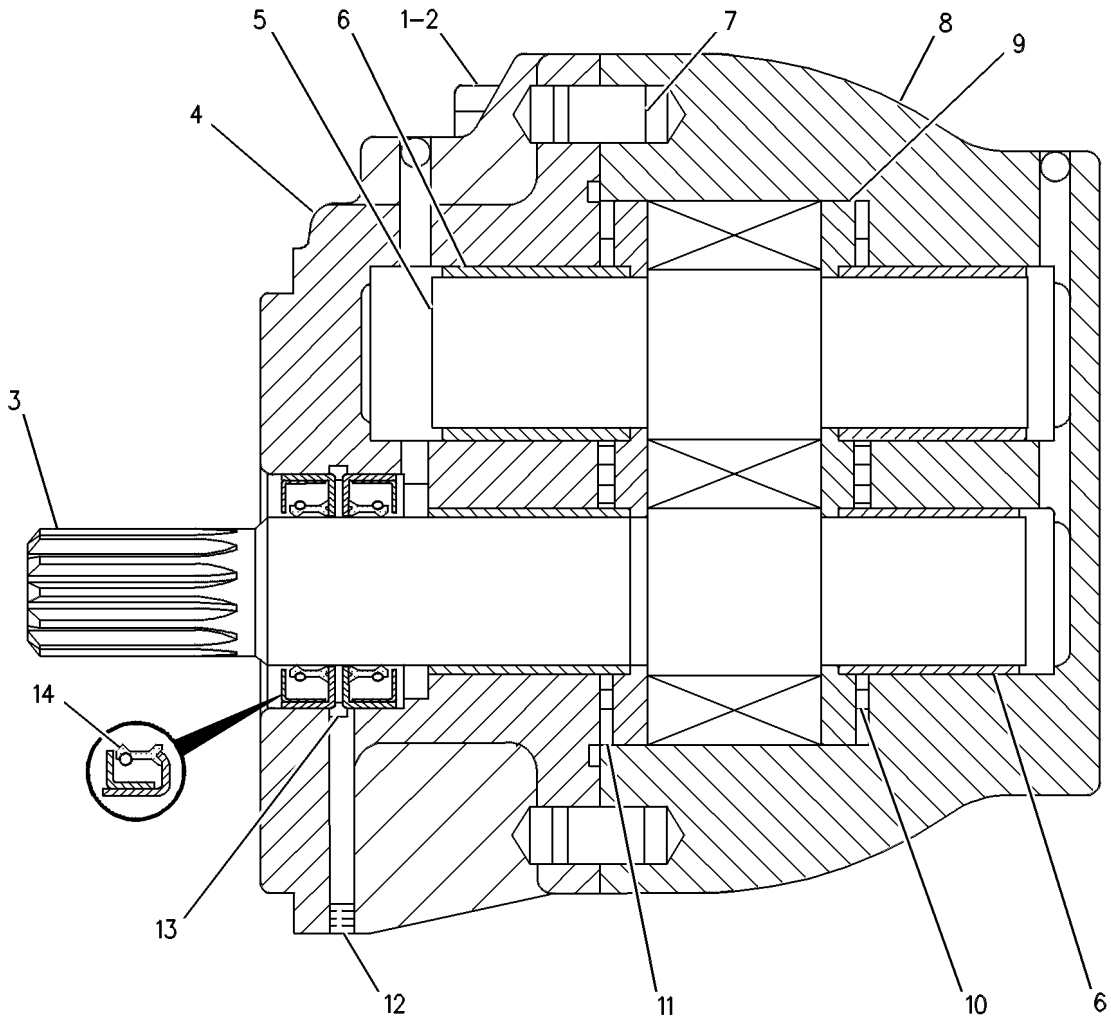

GRAPHIC #1 <END> g00247072

6E-6046 PUMP GP-GEAR

S/N: 9BL1-UP

PART OF 8Y-9740 PUMP & MOUNTING GP

SMCS-3066, 5073

i01399810

NOTE	REF NO	GRAPHIC REF	PART NUMBER	QTY	PART NAME 1 2 3 4 5 6 (PRODUCT LEVEL)	SEE PAGE
J	1	1	**107-0628**	1	BODY AS	
J	2	1	**4T-9219**	1	FLANGE AS	
	3	1	**107-0629**	1	PLATE	
	4	1	**107-0630**	1	SHAFT-DRIVE	
	5	1	**107-0631**	1	GEAR-IDLER	
	6	1	**4T-8729**	2	PLATE-PRESSURE	
	7	1	**4T-9425**	1	PLATE-ISOLATION	
	8	1	**4T-9426**	1	PLATE-ISOLATION	
	9	1	**6J-2386**	2	DOWEL	
	10	1	**1A-9759**	2	PIN	
	11	1	**8T-4657**	2	SEAL-LIP TYPE	
	12	1	**008-3214**	1	RING-RETAINING (INTERNAL)	
	13	1	**5P-8217**	2	SEAL-LIP TYPE	
	14	1	**6E-2943**	2	PLUG	
	15	1	**0S-1595**	8	BOLT (1/2-13X1.25-IN)	
	16	1	**8S-4721**	2	BOLT (5/16-24X4.5-IN)	
	17	1	**5P-7213**	8	WASHER-HARD (13.5X20.5X2-MM THK)	
	18	1	**104-9416**	1	KIT-VALVE	
	19	1	**107-4321**	1	KIT-REAR SECTION	
					AVAILABLE REPAIR KIT(S):	
			107-4323	1	KIT-SEAL	
			107-4320	1	KIT-FRONT SECTION	

J - INCLUDES BUSHINGS

6E-6046 **PUMP GP-GEAR** (contd.) **i01399810**

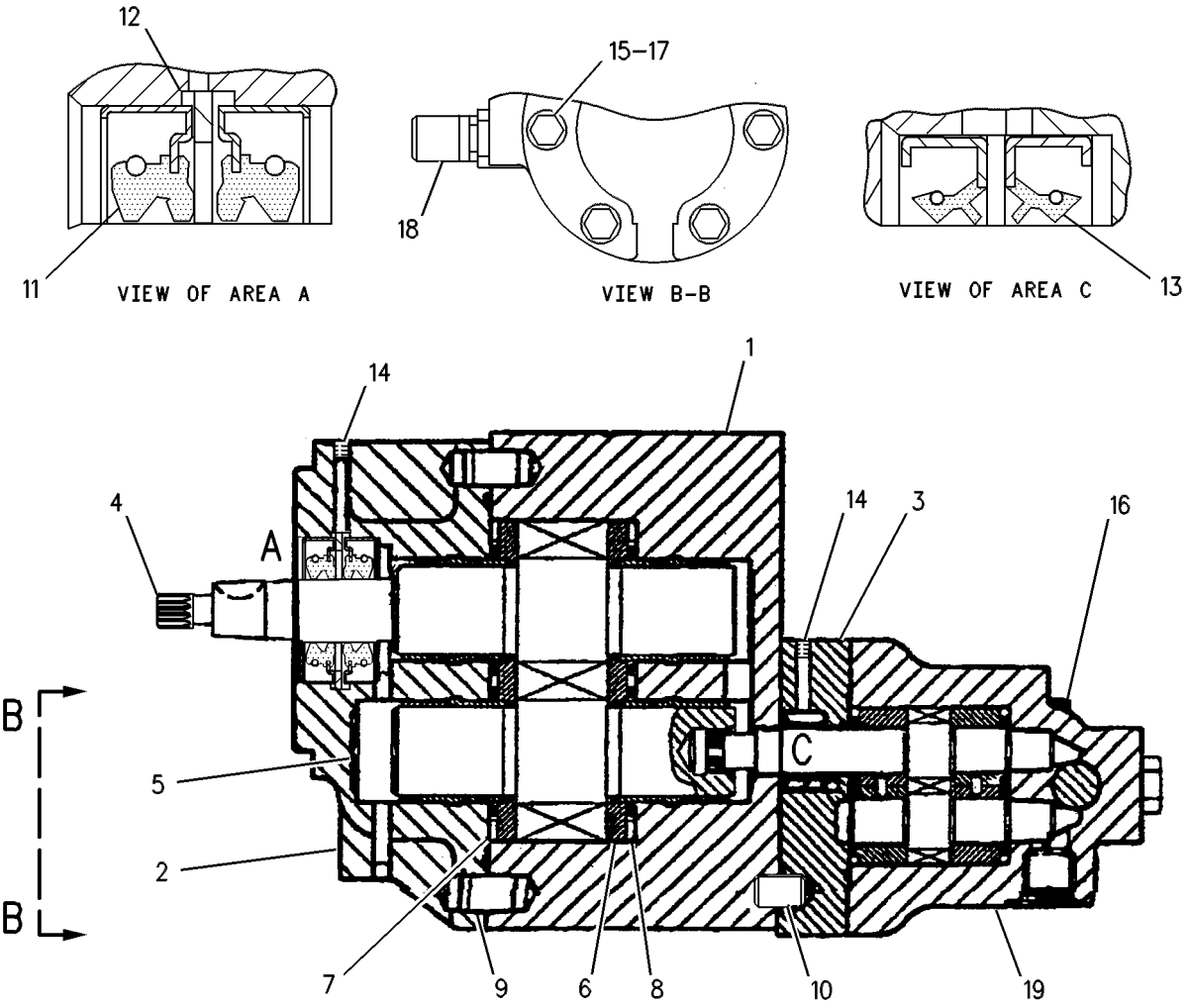

GRAPHIC #1 <END> g00247069

9T-0608 ROTATING GP-PUMP—RH

S/N: 8EX1-UP

SLIPPER

PART OF 104-6208 CONTROL AR-HYDROSTATIC POWER

SMCS-3203, 5070

i00567153

NOTE	REF NO	GRAPHIC REF	PART NUMBER	QTY	PART NAME 1 2 3 4 5 6 (PRODUCT LEVEL)	SEE PAGE
	1	1	**6E-0407**	1	SHAFT	
	2	1	**7J-8893**	1	CONE-BEARING	
	3	1	**3G-3150**	1	PLATE-RETRACTION	
	4	1	**034-4160**	8	BOLT-LOCKING (5/16-18X1-IN)	
		1	**9M-1974**	8	WASHER-HARD (8.8X16X2-MM THK)	
R	5	1	**9J-8667**	1	BARREL AS	
	6	1	**8J-6890**	1	SPRING	
R	7	1	**6E-1530**	1	PLATE-PORT	
	8	1	**3P-1210**	1	CONE-BEARING	
	9	1	**1K-6985**	1	RING-RETAINING	
	10	1	**8J-0237**	2	SPACER	
R	11	1	**117-1234**	9	PISTON AS	
	12	1	**3G-5750**	2	BEARING-PLATE (RETRACTION)	
B	13	1	**8J-0218**	6	SHIM (0.127-MM THK)	
B		1	**8J-0217**	4	SHIM (0.051-MM THK)	
	14	1	**3G-4779**	1	PLATE-WEAR	
	15	1	**3G-6450**	1	SWASHPLATE AS	
	16	1	**3G-4600**	2	BUSHING-TERMINAL	
	17	1	**4H-1641**	1	PIN-SPRING	
	18	1	**8M-8489**	1	DOWEL	
	19	1	**5B-5821**	1	DOWEL	
	20	1	**5P-6663**	2	CONE-BEARING	

B - USE AS REQUIRED
R - REMANUFACTURED PART MAY BE AVAILABLE

9T-0608 **ROTATING GP-PUMP** (contd.) **i00567153**

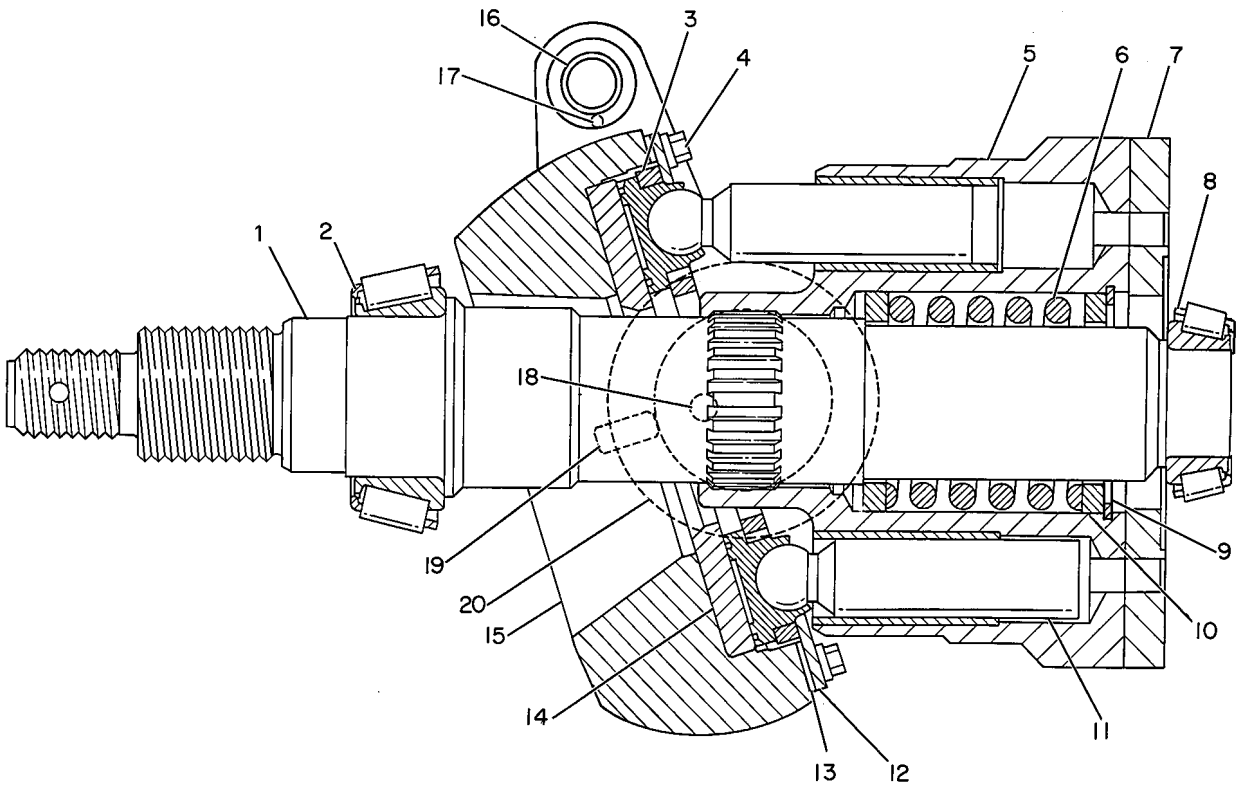

GRAPHIC #1 <END> g00217314

9T-0609 ROTATING GP-PUMP–LH

S/N: 8EX1-UP

SLIPPER

PART OF 104-6208 CONTROL AR-HYDROSTATIC POWER

SMCS-3203, 5070

i00567159

NOTE	REF NO	GRAPHIC REF	PART NUMBER	QTY	PART NAME 1 2 3 4 5 6 (PRODUCT LEVEL)	SEE PAGE
	1	1	**6E-0407**	1	SHAFT	
	2	1	**7J-8893**	1	CONE-BEARING	
	3	1	**3G-3150**	1	PLATE-RETRACTION	
	4	1	**034-4160**	8	BOLT-LOCKING (5/16-18X1-IN)	
		1	**9M-1974**	8	WASHER-HARD (8.8X16X2-MM THK)	
R	5	1	**9J-8667**	1	BARREL AS	
	6	1	**8J-6890**	1	SPRING	
R	7	1	**6E-1530**	1	PLATE-PORT	
	8	1	**3P-1210**	1	CONE-BEARING	
	9	1	**1K-6985**	1	RING-RETAINING	
	10	1	**8J-0237**	2	SPACER	
R	11	1	**117-1234**	9	PISTON AS	
	12	1	**3G-5750**	2	BEARING-PLATE (RETRACTION)	
B	13	1	**8J-0218**	6	SHIM (0.127-MM THK)	
B		1	**8J-0217**	4	SHIM (0.051-MM THK)	
	14	1	**3G-4779**	1	PLATE-WEAR	
	15	1	**3G-6449**	1	SWASHPLATE AS	
	16	1	**3G-4600**	2	BUSHING-TERMINAL	
	17	1	**4H-1641**	1	PIN-SPRING	
	18	1	**8M-8489**	1	DOWEL	
	19	1	**5B-5821**	1	DOWEL	
	20	1	**5P-6663**	2	CONE-BEARING	

B - USE AS REQUIRED
R - REMANUFACTURED PART MAY BE AVAILABLE

9T-0609 **ROTATING GP-PUMP** (contd.) **i00567159**

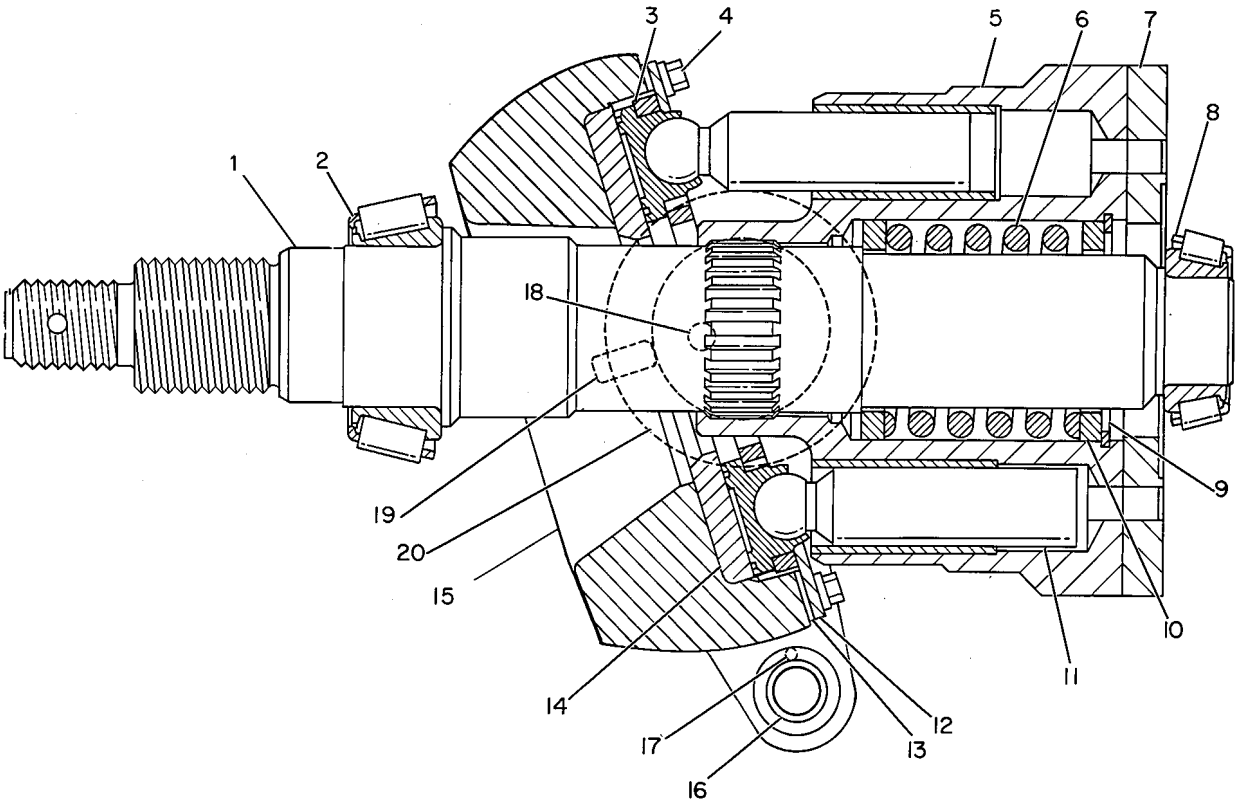

GRAPHIC #1 <END> g00211241

7P-2706 SEGMENT GP-SPROCKET

S/N: 9BL1-UP

PART OF 8Y-9345 POWER TRAIN AR

SMCS-4155 **i03646303**

NOTE	REF NO	GRAPHIC REF	PART NUMBER	QTY	PART NAME 1 2 3 4 5 6 (PRODUCT LEVEL)	SEE PAGE
	1	1	**3S-8182**	20	BOLT (5/8-18X1.84-IN)	
	2	1	**7H-3607**	20	NUT (5/8-18-THD)	
	3	1	**8E-4365**	5	SEGMENT-SPROCKET	

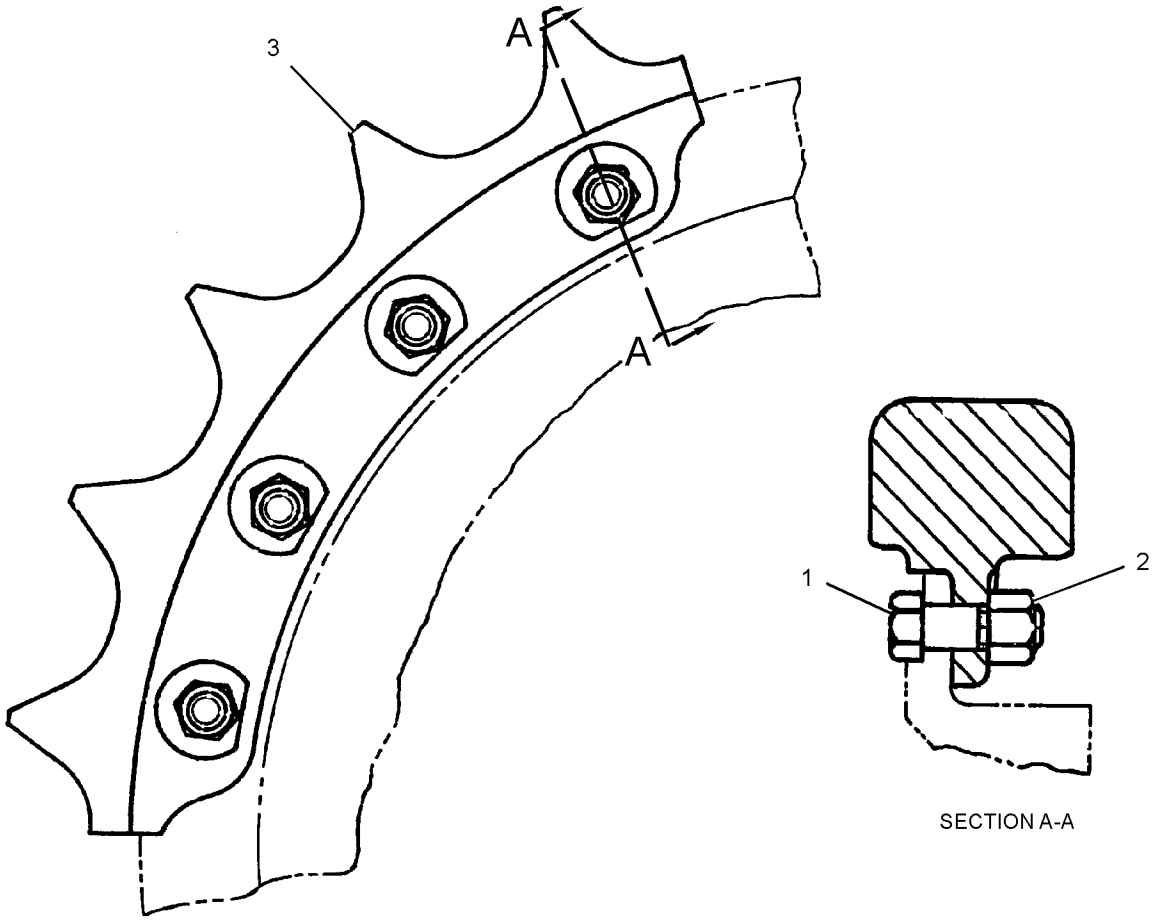

SECTION A-A

GRAPHIC #1 <END> g01958308

9T-1939 VALVE GP-ACTUATOR

S/N: 8EX1-UP

PART OF 104-6208 CONTROL AR-HYDROSTATIC POWER

SMCS-5078 **i01399814**

NOTE	REF NO	GRAPHIC REF	PART NUMBER	QTY	PART NAME 1 2 3 4 5 6 (PRODUCT LEVEL)	SEE PAGE
	1	1	**9J-8600**	1	VALVE GP	
	2	1	**9J-8668**	1	SPRING	
	3	1	**9J-8672**	2	RETAINER-SPRING	
	4	1	**2S-4078**	1	SEAL-O-RING	
	5	1	**9J-8677**	1	PLUG	
	6	1	**7S-5757**	1	RING-RETAINING	
	7	1	**1U-4043**	1	LEVER AS	
	8	1	**1U-3415**	1	GUIDE	
	9	1	**2M-1672**	2	BEARING AS-NEEDLE	
	10	1	**4J-4144**	1	WASHER (13.1X25.4X2.5-MM THK)	
	11	1	**3G-4717**	2	PIN	
	12	1	**3G-5745**	1	LEVER AS	
	13	1	**3G-4728**	2	RETAINER	
	14	1	**3G-4711**	2	SPRING	
	15	1	**3G-4729**	4	RETAINER	
	16	1	**3G-8669**	1	LEVER AS	
	17	1	**3G-8471**	1	PIN	
	18	1	**3G-8479**	1	PIN	
	19	1	**5D-4822**	1	RING-RETAINING	
	20	1	**5H-8432**	1	GASKET-FUEL PUMP	
	21	1	**8L-8598**	1	ROD END	
	22	1	**1B-2578**	2	NUT (3/8-16-THD)	
	23	1	**6V-2665**	2	SETSCREW	
	24	1	**9J-8737**	1	SHAFT	
	25	1	**4L-2236**	2	BALL BEARING	
	26	1	**5F-0548**	2	WASHER (9.9X17.5X2.5-MM THK)	
	27	1	**034-4160**	2	BOLT-LOCKING (5/16-18X1-IN)	
	28	1	**9M-1974**	6	WASHER-HARD (8.8X16X2-MM THK)	
	29	1	**3G-8588**	2	PIN	
	30	1	**2N-8611**	1	RING-RETAINING	
	31	1	**1A-2812**	1	WASHER (0.06-MM THK)	
	32	1	**5P-6859**	1	SEAL-LIP TYPE	
	33	1	**3G-8166**	1	BRACKET	
		1	**1F-4503**	2	BEARING AS-NEEDLE	
	34	1	**6V-9665**	4	BOLT (5/16-18X2-IN)	
	35	1	**5P-8211**	1	SEAL-O-RING	
	36	1	**9J-8669**	1	SPRING	
	37	1	**9J-8718**	1	RETAINER	
	38	1	**3G-8473**	1	BOLT (3/8-16X2.16-IN)	
	39	1	**2K-4973**	1	LOCKNUT (3/8-16-THD)	
	40	1	**5M-2894**	1	WASHER-HARD (10.2X18.5X2.5-MM THK)	
	41	1	**3G-2713**	2	RETAINER	
	42	1	**9T-1941**	1	SPACER	

9T-1939 **VALVE GP-ACTUATOR** (contd.) **i01399814**

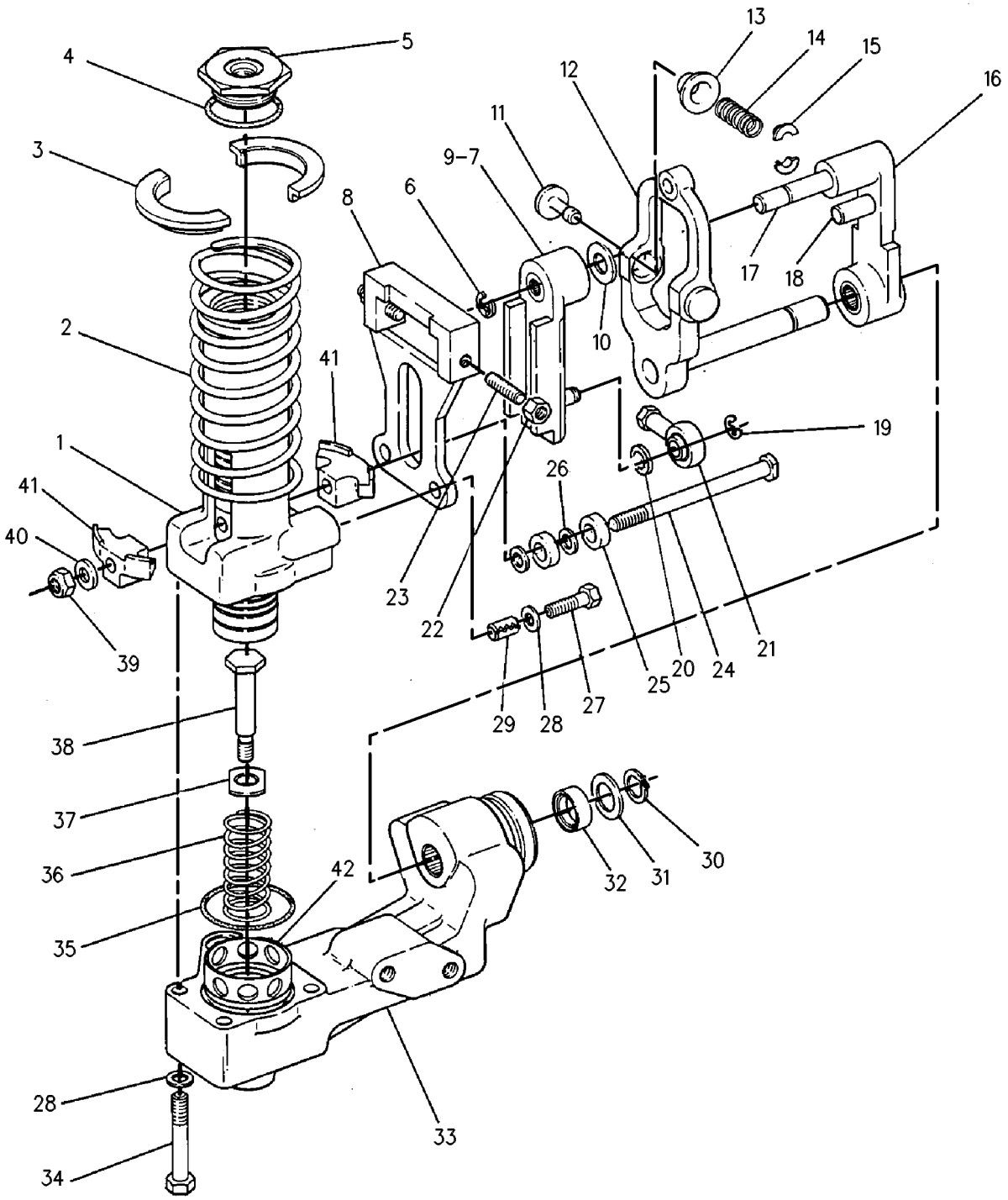

GRAPHIC #1 <END> g00387545

4T-2718 VALVE GP-BLOCKER

S/N: 8EX1-UP

PART OF 9J-8554 VALVE GP-REPLENISHING

SMCS-5127 **i01399833**

NOTE	REF NO	GRAPHIC REF	PART NUMBER	QTY	PART NAME 1 2 3 4 5 6 (PRODUCT LEVEL)	SEE PAGE
	1	1	**9S-8005**	2	PLUG (3/4-16-THD)	
	2	1	**3K-0360**	2	SEAL-O-RING	
	3	1	**9S-8001**	2	PLUG	
	4	1	**4J-7533**	2	SEAL-O-RING	
	5	1	**9J-8553**	1	VALVE GP	
	6	1	**2D-6642**	1	BALL	
	7	1	**1U-4833**	2	SEAT	
	8	1	**033-6039**	2	SEAL-O-RING	
	9	1	**030-0167**	2	RING-BACKUP	

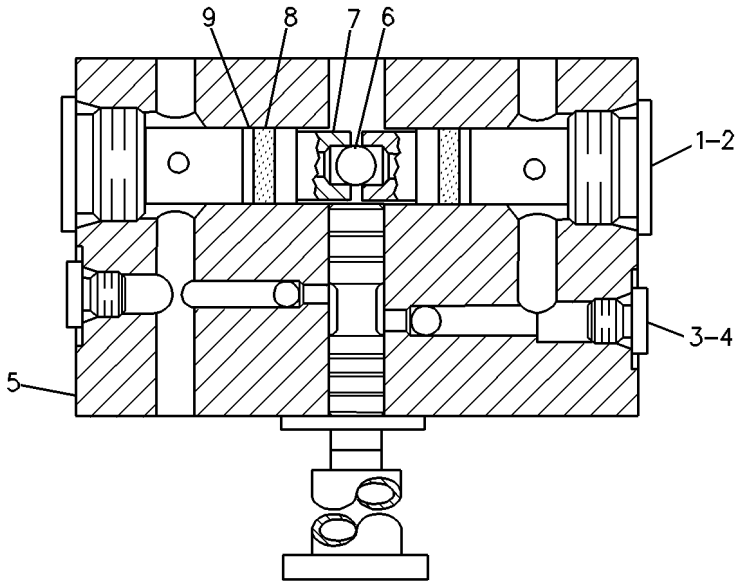

GRAPHIC #1 <END> g00233151

1U-2043 VALVE GP-BYPASS

S/N: 8EX1-UP

PART OF 104-6208 CONTROL AR-HYDROSTATIC POWER

SMCS-5093 **i00842731**

NOTE	REF NO	GRAPHIC REF	PART NUMBER	QTY	PART NAME 1 2 3 4 5 6 (PRODUCT LEVEL)	SEE PAGE
	1	1	**3G-3956**	1	HOUSING	
C	2	1	**5P-6718**	1	SEAL-O-RING	
	3	1	**2J-6088**	1	SPRING	
C	4	1	**4T-0956**	1	RETAINER	
C	5	1	**5P-7701**	1	SEAL-O-RING	
C	6	1	**033-6036**	1	SEAL-O-RING	
	7	1	**3G-0666**	1	VALVE	
C	8	1	**6V-5184**	1	PLUG	

C - CHANGE FROM PREVIOUS TYPE

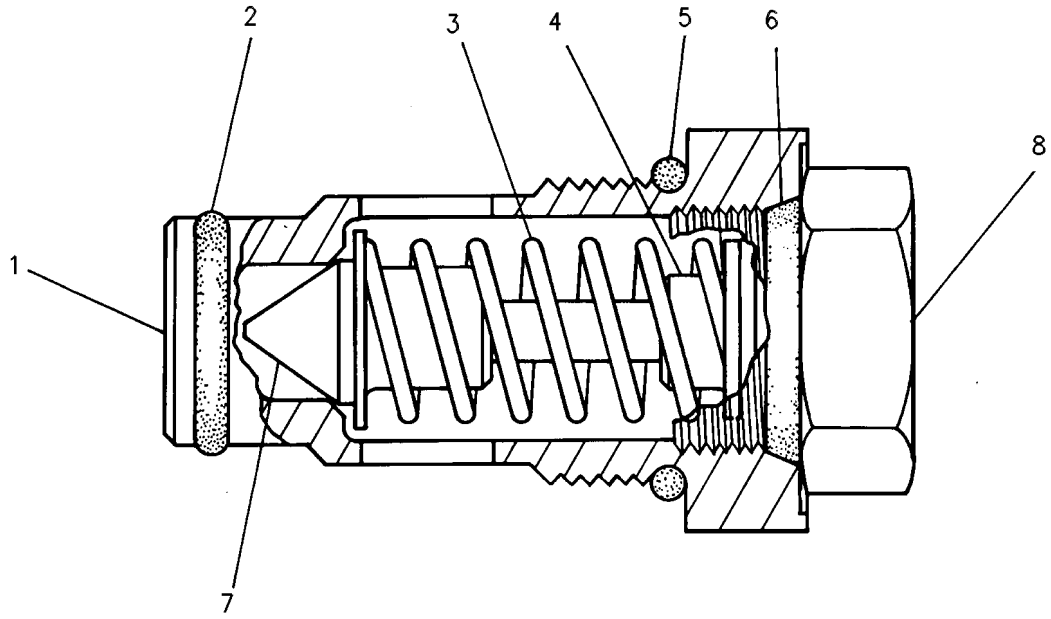

GRAPHIC #1 <END> g00387546

1U-1723 VALVE GP-CONTROL

S/N: 8EX1-UP

PART OF 104-6208 CONTROL AR-HYDROSTATIC POWER

SMCS-3205 **i00701152**

NOTE	REF NO	GRAPHIC REF	PART NUMBER	QTY	PART NAME 1 2 3 4 5 6 (PRODUCT LEVEL)	SEE PAGE
	1	1	**8G-0538**	1	LEVER	
	2	1	**1B-8705**	1	KEY-WOODRUFF	
	3	1	**0S-1591**	1	BOLT (3/8-16X1.5-IN)	
		1	**1D-4717**	1	NUT (3/8-16-THD)	
Y	4	1	**4T-5570**	1	VALVE GP-CONTROL (UNDERSPEED OVERRIDE)	405

Y - SEPARATE ILLUSTRATION

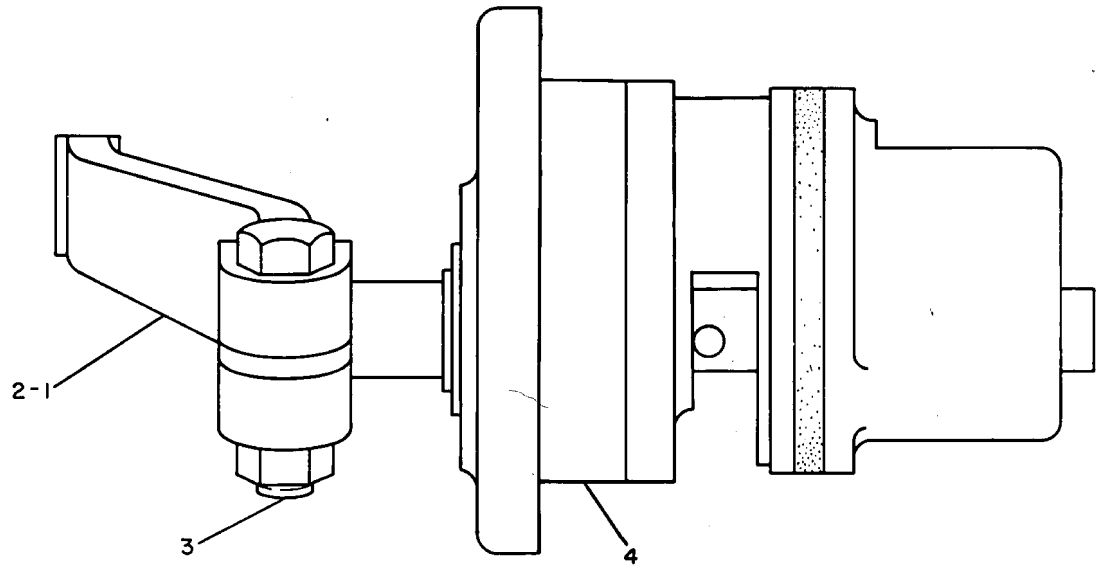

C INDICATES CHANGE
Y SEPARATE ILLUSTRATION

NOTE	REF NO	PART NUMBER	QTY	DESCRIPTION
	1	8G538	1	LEVER
	2	1B8705	1	KEY
	3	S1591	1	BOLT
		1D4717	1	NUT
CY	4	4T5570	1	VALVE GROUP

311049

GRAPHIC #1 <END> g00157761

4T-5570 VALVE GP-CONTROL

S/N: 8EX1-UP

PART OF 1U-1723 VALVE GP-CONTROL

SMCS-3205 **i00767515**

NOTE	REF NO	GRAPHIC REF	PART NUMBER	QTY	PART NAME 1 2 3 4 5 6 (PRODUCT LEVEL)	SEE PAGE
	1	1	**5P-6859**	1	SEAL-LIP TYPE	
	2	1	**3G-4710**	1	PLUNGER	
	3	1	**8M-4390**	1	SEAL-O-RING	
	4	1	**3G-8447**	1	STEM	
	5	1	**3S-5907**	2	PLUG	
	6	1	**1H-1200**	1	PIN-SPRING	
	7	1	**1A-2812**	1	WASHER (0.06-MM THK)	
	8	1	**2N-8611**	1	RING-RETAINING	

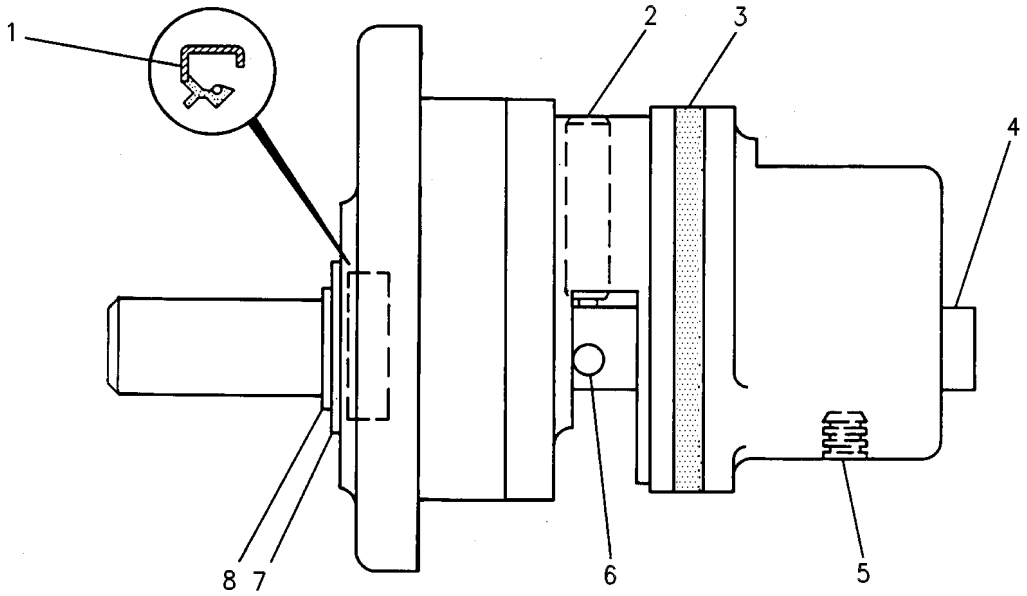

GRAPHIC #1 <END> g00350200

3G-4594 VALVE GP-PUMP CONTROL–LH

S/N: 8EX1-UP

PART OF 104-6208 CONTROL AR-HYDROSTATIC POWER

SMCS-5455 **i01401376**

NOTE	REF NO	GRAPHIC REF	PART NUMBER	QTY	PART NAME 1 2 3 4 5 6 (PRODUCT LEVEL)	SEE PAGE
	1	1	**9S-8002**	2	PLUG (7/16-20-THD)	
		1	**3J-7354**	2	SEAL-O-RING	
	2	1	**9J-8049**	1	RETAINER	
	3	1	**3G-8987**	1	VALVE GP-ROTARY	
	4	1	**9S-8004**	4	PLUG (9/16-18-THD)	
	5	1	**3J-1907**	4	SEAL-O-RING	

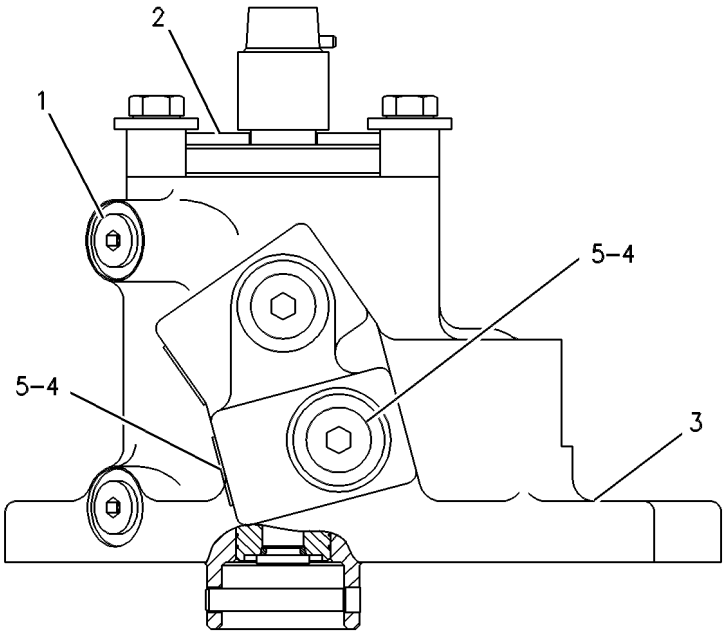

GRAPHIC #1 <END> g00387543

3G-4595 VALVE GP-PUMP CONTROL–RH

S/N: 8EX1-UP

PART OF 104-6208 CONTROL AR-HYDROSTATIC POWER

SMCS-5455 **i01399866**

NOTE	REF NO	GRAPHIC REF	PART NUMBER	QTY	PART NAME 1 2 3 4 5 6 (PRODUCT LEVEL)	SEE PAGE
	1	1	**9S-8005**	2	PLUG (3/4-16-THD)	
	2	1	**3K-0360**	2	SEAL-O-RING	
	3	1	**9J-8049**	1	RETAINER	
	4	1	**3G-8985**	1	VALVE GP-ROTARY	
	5	1	**9S-8002**	2	PLUG (7/16-20-THD)	
		1	**3J-7354**	2	SEAL-O-RING	
	6	1	**9S-8004**	2	PLUG (9/16-18-THD)	
	7	1	**3J-1907**	2	SEAL-O-RING	

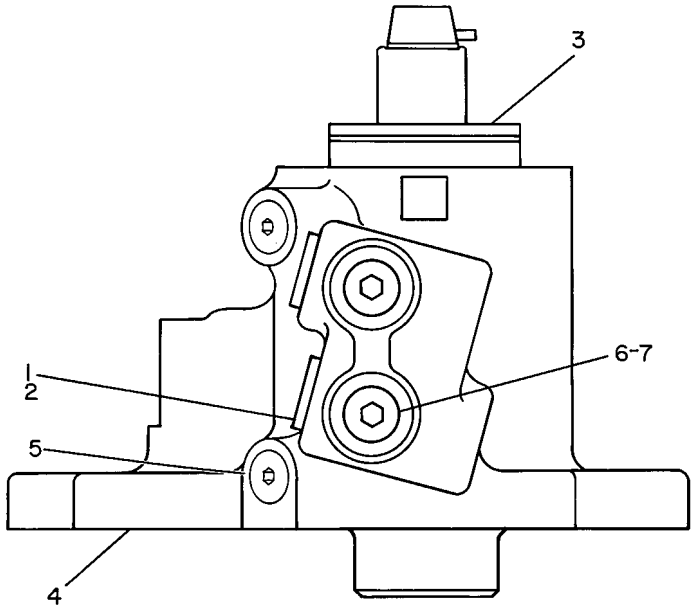

GRAPHIC #1 <END> g00205356

9T-1319 VALVE GP-RELIEF

S/N: 8EX1-UP

PART OF 104-6208 CONTROL AR-HYDROSTATIC POWER

SMCS-3133, 3182

i01399843

NOTE	PART NUMBER	QTY	PART NAME 1 2 3 4 5 6 (PRODUCT LEVEL)	SEE PAGE
Y	*9T-5909*	1	VALVE GP-RELIEF (DIRECT OPENING)	412
			–OR–	
Y	*9T-5911*	1	VALVE GP-RELIEF (DIRECT OPENING)	414

Y - SEPARATE ILLUSTRATION

<END>

9T-1320 VALVE GP-RELIEF

S/N: 8EX1-UP
PILOT OPERATED
PART OF 3G-3304 CONTROL GP-TRANSMISSION
TYPE 2

SMCS-3133, 3182

i01399849

NOTE	REF NO	GRAPHIC REF	PART NUMBER	QTY	PART NAME 1 2 3 4 5 6 (PRODUCT LEVEL)	SEE PAGE
	1	1	**3G-3726**	1	NUT (3/8-40-THD)	
	2	1	**3G-3857**	2	GASKET	
	3	1	**3G-3854**	1	CAP	
	4	1	**5P-8356**	1	SEAL-O-RING	
	5	1	**061-7539**	1	SEAL-O-RING	
	6	1	**6V-5142**	1	SEAL-O-RING	

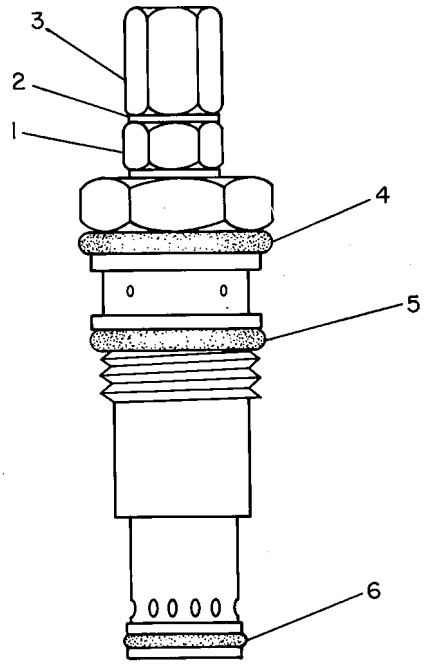

GRAPHIC #1 <END> g00169211

9T-1320 VALVE GP-RELIEF

S/N: 8EX1-UP
PILOT OPERATED
PART OF 3G-3304 CONTROL GP-TRANSMISSION
TYPE 1

SMCS-3133, 3182

i02567510

NOTE	PART NUMBER	QTY	PART NAME 1 2 3 4 5 6 (PRODUCT LEVEL)	SEE PAGE
Y	*9T-5880*	1	VALVE GP-RELIEF	411
			—OR—	
Y	*9T-5910*	1	VALVE GP-RELIEF	413

Y - SEPARATE ILLUSTRATION

<END>

9T-5880 VALVE GP-RELIEF

S/N: 8EX1-UP

PART OF 9T-1320 VALVE GP-RELIEF

SMCS-3133, 3182

i02016094

NOTE	REF NO	GRAPHIC REF	PART NUMBER	QTY	PART NAME 1 2 3 4 5 6 (PRODUCT LEVEL)	SEE PAGE
	1	1	**6V-5142**	1	SEAL-O-RING	
	2	1	**061-7539**	1	SEAL-O-RING	
	3	1	**5P-8356**	1	SEAL-O-RING	
	4	1	**3G-3726**	1	NUT (3/8-40-THD)	
	5	1	**3G-3857**	2	GASKET	
	6	1	**3G-3854**	1	CAP	

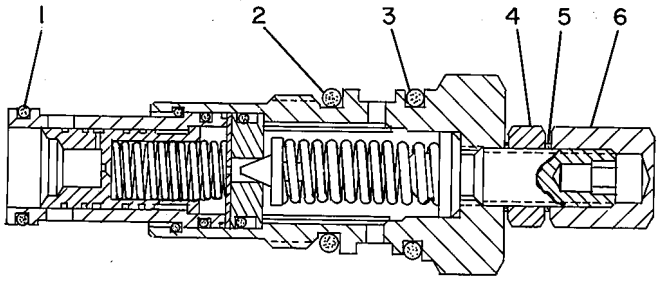

GRAPHIC #1 <END> g00082386

9T-5909 VALVE GP-RELIEF

S/N: 8EX1-UP
DIRECT OPERATED
PART OF 9T-1319 VALVE GP-RELIEF

SMCS-3133, 3182

i01399855

NOTE	REF NO	GRAPHIC REF	PART NUMBER	QTY	PART NAME 1 2 3 4 5 6 (PRODUCT LEVEL)	SEE PAGE
	1	1	**6V-5142**	1	SEAL-O-RING	
	2	1	**061-7539**	1	SEAL-O-RING	
	3	1	**5P-8356**	1	SEAL-O-RING	
	4	1	**1B-4430**	1	NUT-JAM (1/2-20-THD)	

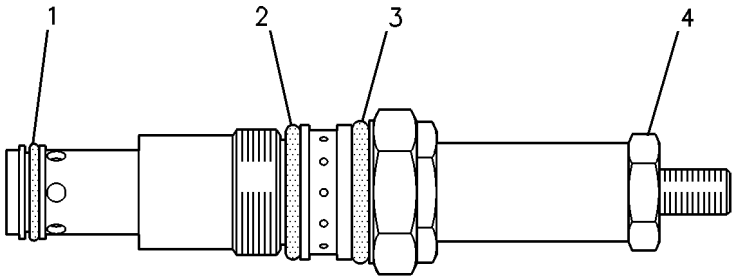

GRAPHIC #1

<END>

g00232994

9T-5910 VALVE GP-RELIEF

S/N: 8EX1-UP

PART OF 9T-1320 VALVE GP-RELIEF

SMCS-3133, 3182

i02016096

NOTE	REF NO	GRAPHIC REF	PART NUMBER	QTY	PART NAME 1 2 3 4 5 6 (PRODUCT LEVEL)	SEE PAGE
	1	1	**6V-5142**	1	SEAL-O-RING	
	2	1	**061-7539**	1	SEAL-O-RING	
	3	1	**5P-8356**	1	SEAL-O-RING	
	4	1	**3G-3726**	1	NUT (3/8-40-THD)	
	5	1	**3G-3857**	2	GASKET	
	6	1	**3G-3854**	1	CAP	

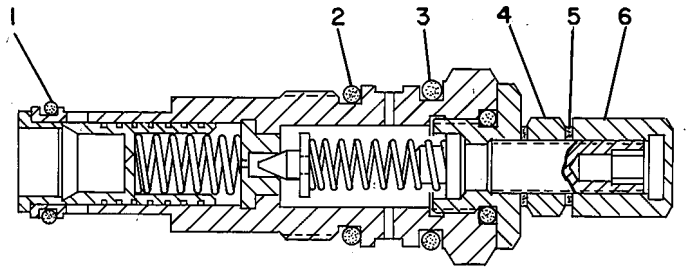

GRAPHIC #1

<END>

g00082402

9T-5911 VALVE GP-RELIEF

S/N: 8EX1-UP
PILOT OPERATED
PART OF 9T-1319 VALVE GP-RELIEF

SMCS-3133, 3182

i01399858

NOTE	REF NO	GRAPHIC REF	PART NUMBER	QTY	PART NAME 1 2 3 4 5 6 (PRODUCT LEVEL)	SEE PAGE
	1	1	**6V-5142**	1	SEAL-O-RING	
	2	1	**061-7539**	1	SEAL-O-RING	
	3	1	**5P-8356**	1	SEAL-O-RING	
	4	1	**1B-4430**	1	NUT-JAM (1/2-20-THD)	

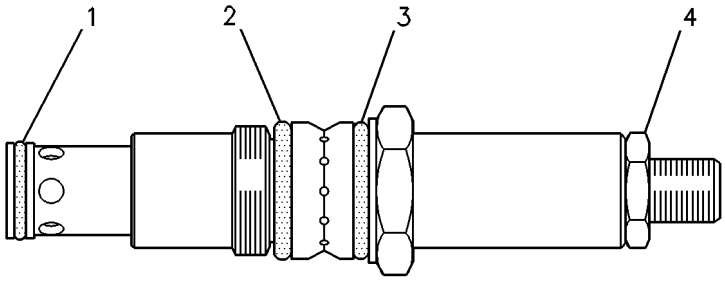

GRAPHIC #1

<END>

g00232995

9T-9059 VALVE GP-RELIEF

S/N: 8EX1-UP
PILOT OPERATED
PART OF 9J-0365, 9J-8554 VALVE GP-REPLENISHING

SMCS-3133, 3182

i01402876

NOTE	REF NO	GRAPHIC REF	PART NUMBER	QTY	PART NAME 1 2 3 4 5 6 (PRODUCT LEVEL)	SEE PAGE
J	1	1	**6V-5142**	1	SEAL-O-RING	
J	2	1	**061-7539**	1	SEAL-O-RING (20.22MM ID)	
J	3	1	**9J-6367**	1	RING-BACKUP	
JM	4	1	**4T-8691**	1	NUT (M10X0.75-6H THD)	
					AVAILABLE REPAIR KIT(S):	
J			**4T-8692**	1	KIT-RELIEF VALVE SEAL	

J - KIT MARKED J INCLUDES PART(S) MARKED J
M - METRIC PART

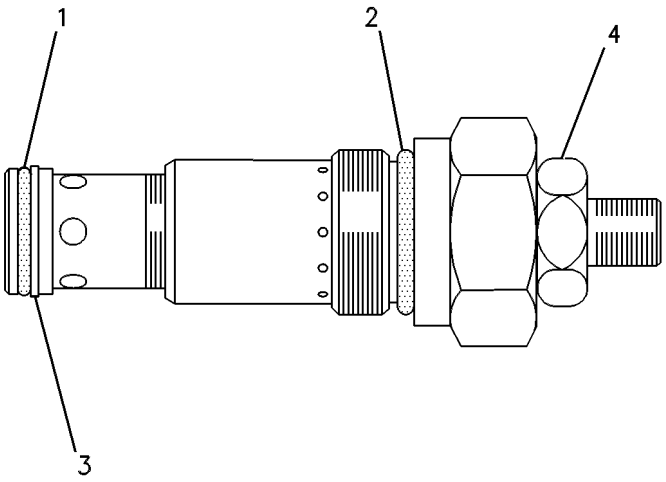

GRAPHIC #1

<END>

g00259690

9J-0365 VALVE GP-REPLENISHING

S/N: 8EX1-UP

PART OF 104-6208 CONTROL AR-HYDROSTATIC POWER

SMCS-5137 **i01399862**

NOTE	REF NO	GRAPHIC REF	PART NUMBER	QTY	PART NAME 1 2 3 4 5 6 (PRODUCT LEVEL)	SEE PAGE
C	1	1	**100-7355**	1	VALVE GP	
Y	2	1	**9T-9059**	1	VALVE GP-RELIEF (PILOT OPERATED)	415
	3	1	**9S-4190**	2	PLUG-O-RING (7/8-14-THD)	
		1	**2M-9780**	2	SEAL-O-RING	
	4	1	**9S-8001**	2	PLUG	
		1	**4J-7533**	2	SEAL-O-RING	
C	5	1	**0S-1571**	4	BOLT (3/8-16X1.75-IN)	
		1	**5M-2894**	4	WASHER-HARD (10.2X18.5X2.5-MM THK)	
	6	2	**6V-0852**	1	CAP-DUST	
	7	2	**0S-1571**	6	BOLT (3/8-16X1.75-IN)	
	8	2	**5M-2894**	10	WASHER-HARD (10.2X18.5X2.5-MM THK)	
	9	2	**7H-3606**	1	NUT (9/16-18-THD)	
	10	2	**9J-8574**	1	PLUNGER AS	
	11	2	**3J-1907**	1	SEAL-O-RING	
	12	2	**9S-8001**	1	PLUG	
		2	**4J-7533**	1	SEAL-O-RING	
C	13	2	**100-7354**	1	BLOCK	
C	14	2	**100-6879**	1	PLUG	
C		2	**3K-0360**	1	SEAL-O-RING	
C	15	2	**9S-8009**	1	PLUG-O-RING	
C		2	**4K-1388**	1	SEAL-O-RING	
	16	2	**2H-3932**	1	SEAL-O-RING	
	17	2	**6V-3965**	1	FITTING (QUICK DISCONNECT)	
C	18	2	**1P-3705**	1	SEAL-RECTANGULAR	
	19	2	**3G-4781**	1	BODY-VALVE	
	20	2	**4J-5309**	1	SEAL-O-RING	
	21	2	**0S-1591**	4	BOLT (3/8-16X1.5-IN)	
	22	2	**1P-3703**	2	SEAL-RECTANGULAR	
	23	2	**9J-8684**	1	COVER	

C - CHANGE FROM PREVIOUS TYPE
Y - SEPARATE ILLUSTRATION

9J-0365 **VALVE GP-REPLENISHING** (contd.) **i01399862**

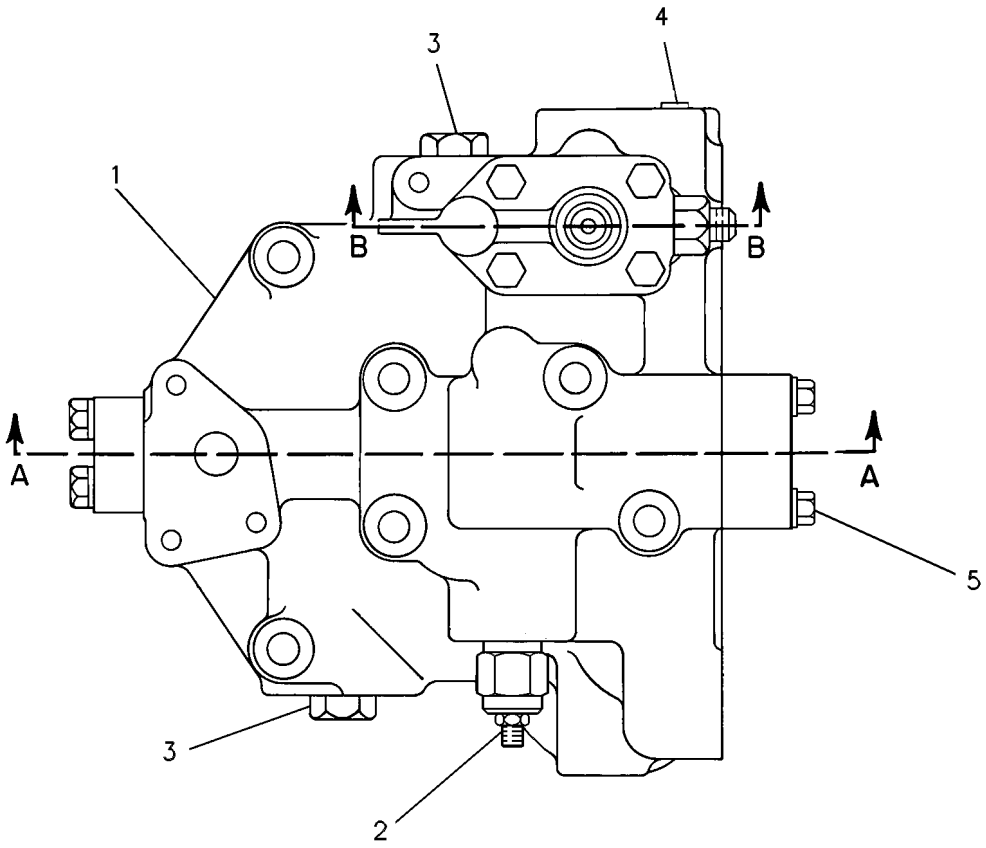

REFER TO ALL ILLUSTRATIONS OF
THIS GROUP FOR AUXILIARY VIEWS

GRAPHIC #1 g00426149

9J-0365 **VALVE GP-REPLENISHING** (contd.) **i01399862**

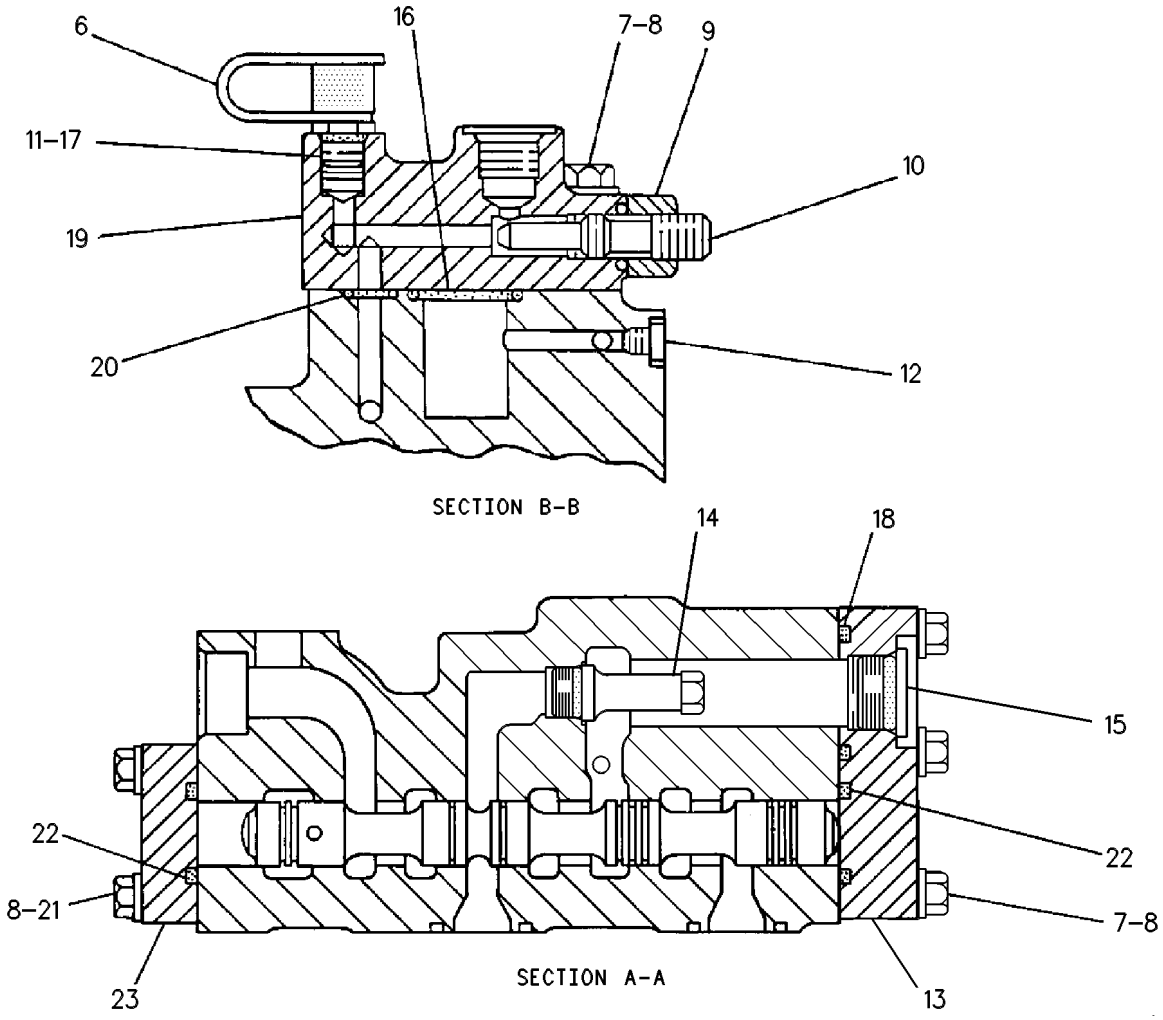

GRAPHIC #2 <END> g00426150

9J-8554 VALVE GP-REPLENISHING

S/N: 8EX1-UP

CHARGE & MAIN RELIEF

PART OF 104-6208 CONTROL AR-HYDROSTATIC POWER

SMCS-5137 **i01399865**

NOTE	REF NO	GRAPHIC REF	PART NUMBER	QTY	PART NAME 1 2 3 4 5 6 (PRODUCT LEVEL)	SEE PAGE
C	1	1	**100-7355**	1	VALVE GP	
	2	1	**9S-4190**	2	PLUG-O-RING (7/8-14-THD)	
	3	1	**2M-9780**	2	SEAL-O-RING	
	4	1	**8M-2518**	4	BOLT-12 POINT HEAD (3/8-16X3.75-IN)	
	5	1	**9S-8001**	2	PLUG	
		1	**4J-7533**	2	SEAL-O-RING	
Y	6	1	**9T-9059**	1	VALVE GP-RELIEF	415
C	7	1	**0T-0573**	2	BOLT (3/8-16X2.75-IN)	
C		1	**5M-2894**	2	WASHER-HARD (10.2X18.5X2.5-MM THK)	
	8	2	**6B-0852**	1	CAP	
	9	2	**4J-5351**	1	SEAL-O-RING	
	10	2	**3G-8168**	1	BLOCK	
	11	2	**9S-8001**	2	PLUG	
		2	**4J-7533**	2	SEAL-O-RING	
	12	2	**4J-5309**	3	SEAL-O-RING	
	13	2	**6V-3965**	1	FITTING (QUICK DISCONNECT)	
		2	**3J-1907**	1	SEAL-O-RING	
	14	2	**3G-3284**	1	SPRING	
	15	2	**2H-3932**	2	SEAL-O-RING	
Y	16	2	*4T-2718*	1	VALVE GP-BLOCKER	402
	17	2	**9F-7170**	1	FLANGE	
	18	2	**0S-1594**	2	BOLT (3/8-16X1-IN)	
C	19	2	**5M-2894**	10	WASHER-HARD (10.2X18.5X2.5-MM THK)	
C	20	2	**9S-8009**	1	PLUG-O-RING	
C		2	**4K-1388**	1	SEAL-O-RING	
C	21	2	**100-6879**	1	PLUG	
C		2	**3K-0360**	1	SEAL-O-RING	
C	22	2	**100-7354**	1	BLOCK	
	23	2	**0S-1591**	4	BOLT (3/8-16X1.5-IN)	
	24	2	**9J-8684**	1	COVER	
C	25	2	**1P-3705**	1	SEAL-RECTANGULAR	
	26	2	**0S-1571**	2	BOLT (3/8-16X1.75-IN)	
	27	2	**1P-3703**	2	SEAL-RECTANGULAR	

C - CHANGE FROM PREVIOUS TYPE
Y - SEPARATE ILLUSTRATION

9J-8554 **VALVE GP-REPLENISHING** (contd.) **i01399865**

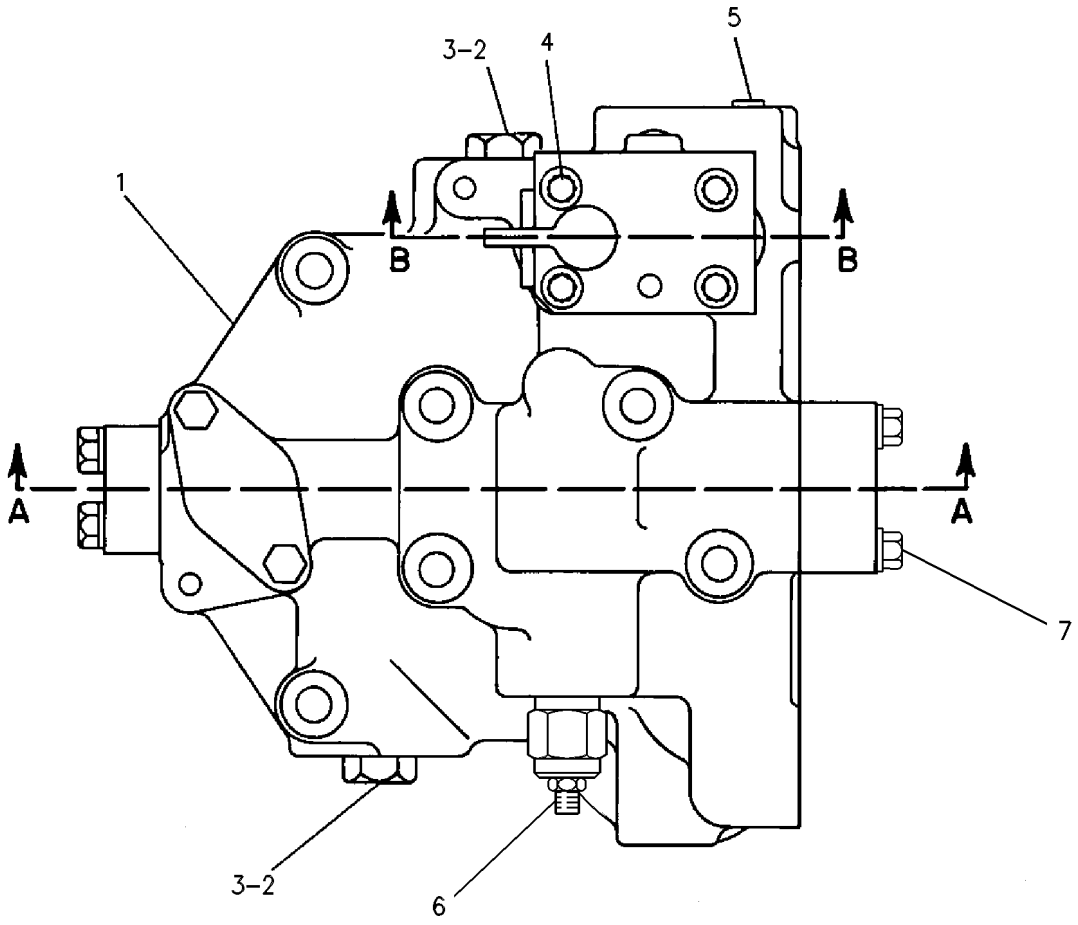

GRAPHIC #1 g00409692

9J-8554 **VALVE GP-REPLENISHING** (contd.) **i01399865**

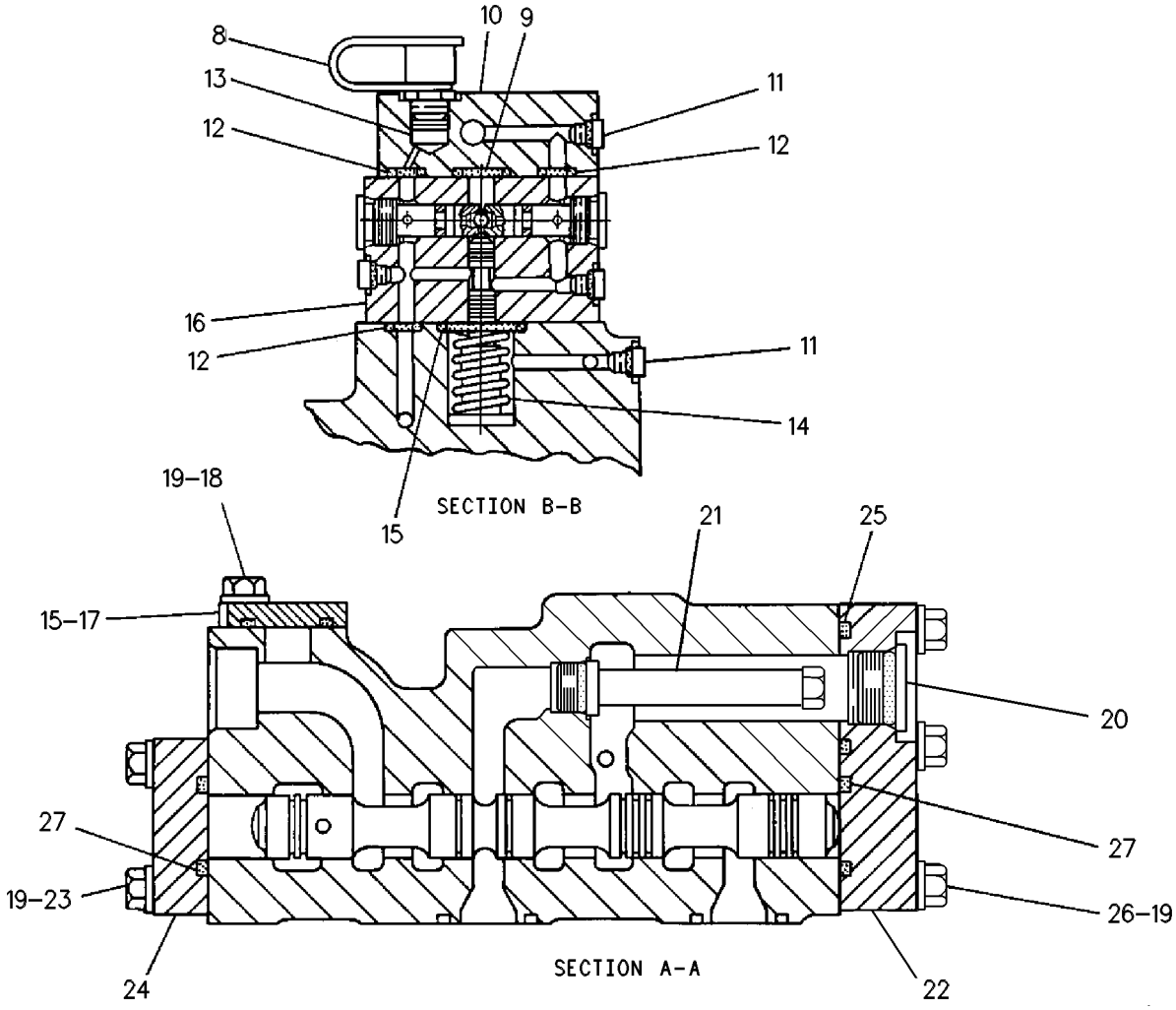

GRAPHIC #2 <END> g00409693

4T-3056 VALVE GP-SHUTTLE

S/N: 9BL1-UP

PART OF 6E-3516 MOTOR GP-PISTON

SMCS-5079 **i00564384**

NOTE	REF NO	GRAPHIC REF	PART NUMBER	QTY	PART NAME 1 2 3 4 5 6 (PRODUCT LEVEL)	SEE PAGE
	1	1	**3G-3838**	2	PLUG AS	
					(EACH INCLUDES)	
	2	1	**9L-9766**	1	PIN-PLUNGER LIFT	
	3	1	**3J-1907**	2	SEAL-O-RING	
	4	1	**4B-9783**	2	BALL	
	5	1	**4T-3057**	1	BODY AS-VALVE	
	6	1	**3G-3835**	1	PIN	

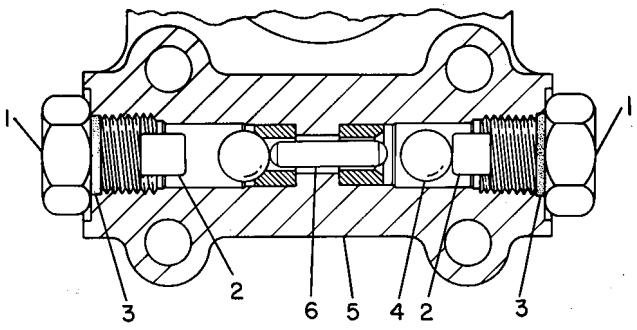

GRAPHIC #1 <END> g00153136

8Y-9465 BOX GP-BATTERY

S/N: 9BL1-UP

PART OF 117-1761, 8Y-9370 CHASSIS AR

SMCS-7257 **i00568210**

NOTE	REF NO	GRAPHIC REF	PART NUMBER	QTY	PART NAME 1 2 3 4 5 6 (PRODUCT LEVEL)	SEE PAGE
	1	1	**8G-0868**	2	PLATE AS	
					(EACH INCLUDES)	
		1	**9D-4439**	6	STUD-WELD (3/8-16X1-IN)	
	2	1	**7X-0328**	4	BOLT (1/2-13X3.5-IN)	
	3	1	**5P-1076**	8	WASHER-HARD (13.5X30X4-MM THK)	
	4	1	**8Y-9519**	1	BOX AS	
		1	**9F-2978**	2	NUT-WELD (3/8-16-THD)	
		1	**7M-6492**	2	HINGE	
	5	1	**6V-8801**	12	NUT (3/8-16-THD)	
	6	1	**8Y-9520**	1	BOX AS	
		1	**8G-2326**	1	ANGLE	
		1	**9F-2978**	2	NUT-WELD (3/8-16-THD)	
		1	**7M-6492**	2	HINGE	
	7	1	**5P-2228**	4	BOLT (1/2-13X1-IN)	
	8	1	**114-3875**	2	PLATE	
	9	1	**8T-4896**	12	WASHER-HARD (10.2X18.5X2.5-MM THK)	

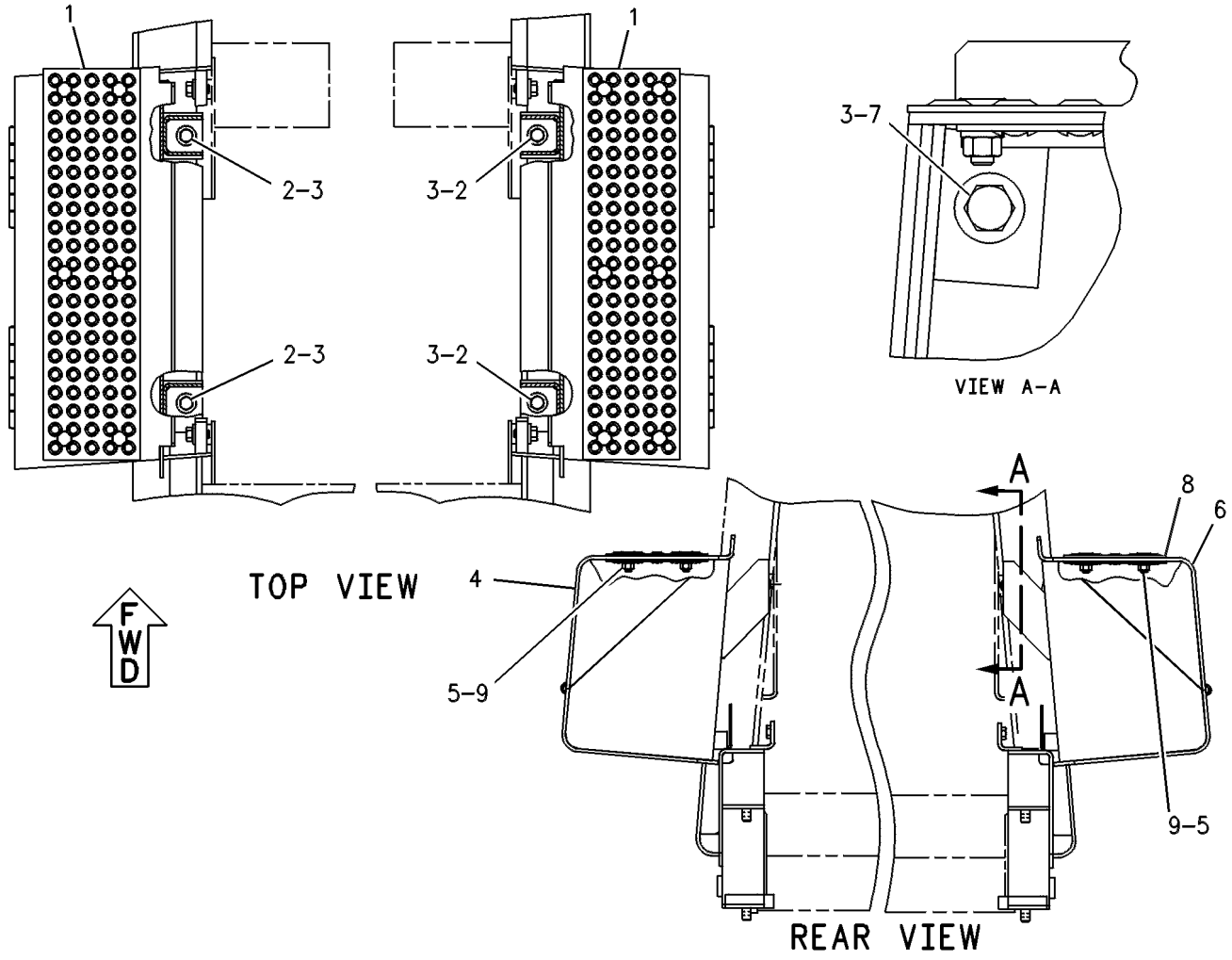

GRAPHIC #1 <END> g00247255

8G-1847 BRACE GP

S/N: 9BL1-UP

PART OF 117-1761, 8Y-9370 CHASSIS AR

SMCS-7212 **i00567188**

NOTE	REF NO	GRAPHIC REF	PART NUMBER	QTY	PART NAME 1 2 3 4 5 6 (PRODUCT LEVEL)	SEE PAGE
	1	1	**7X-0370**	1	BOLT (3/4-10X3.5-IN)	
		1	**6V-8182**	1	NUT (3/4-10-THD)	
	2	1	**8G-1397**	1	BRACKET AS	
	3	1	**8G-1849**	1	PLATE	
	4	1	**7X-0365**	2	BOLT (3/4-10X1.5-IN)	
		1	**8T-4994**	2	WASHER-HARD (20X36.5X3.5-MM THK)	
	5	1	**7P-8560**	1	SUPPORT AS	
	6	1	**8T-8917**	2	BOLT (1/2-13X1.25-IN)	
		1	**5P-1076**	2	WASHER-HARD (13.5X30X4-MM THK)	

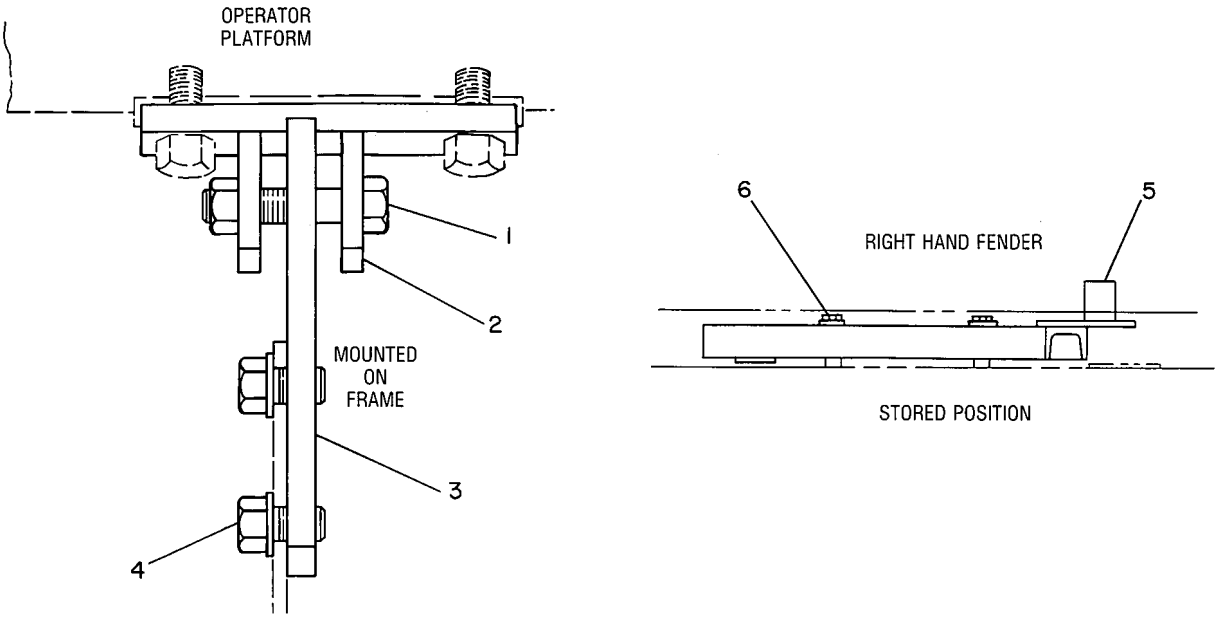

GRAPHIC #1 <END> g00204105

5Q-6770 BUMPER GP

S/N: 9BL1-UP
PART OF 133-3958 WASTE HANDLING AR
AN ATTACHMENT

SMCS-7156 **i01399867**

NOTE	PART NUMBER	QTY	PART NAME 1 2 3 4 5 6 (PRODUCT LEVEL)	SEE PAGE
	1J-6004	2	PIN	
	2Q-5416	1	GRILL AS	
	1F-0750	52	NUT-WELD (3/8-16-THD)	
	2Q-5552	1	CLIP	
	9W-8766	2	BRACKET	
	2Q-5428	2	BRACKET AS	
	2Q-5550	1	ROD AS	
	5P-8245	1	WASHER-HARD (13.5X25.5X3-MM THK)	
	3B-4611	1	PIN-COTTER	
	3B-4628	2	PIN-COTTER	
	4L-6454	12	BOLT (3/8-16X1-IN)	
	5P-2566	4	BOLT (1/2-13X1.5-IN)	
	5P-8502	1	PADLOCK GP	
A	**5P-8500**	1	KEY	
A	**8Y-6364**	1	SLEEVE	
	5P-9085	2	CLIP	
	5Q-6767	1	BUMPER AS	
	1F-0750	8	NUT-WELD (3/8-16-THD)	
	5Q-7085	8	SHIM (2MM THK)	
	7X-0413	12	BOLT (1-8X7-IN)	
	8C-6500	1	LATCH AS	
	6H-3956	1	PIN	
	7X-0766	1	SPRING-LATCH	
	8C-6822	1	HANDLE-LATCH	
	8Y-3966	1	WASHER (14.7X35X1.57-MM THK)	
	8Y-8306	1	SHAFT-LATCH	
	8T-1578	2	PAWL (LATCH)	
	8T-4223	5	WASHER-HARD (13.5X25.5X3-MM THK)	
	8T-4896	12	WASHER-HARD (10.2X18.5X2.5-MM THK)	
	8T-5361	12	WASHER-HARD (28X49X5-MM THK)	
	8T-9496	2	LOCKNUT (9/16-18-THD)	
	8Y-9435	1	GUARD AS-RADIATOR	
			S/N: 9BL1-1487	
	1F-0748	8	NUT-WELD (1/2-13-THD)	
	8G-2613	4	PLATE	
	8G-4081	2	PLATE	
	9P-2512	2	BOSS (82-MM HIGH)	
	5M-9621	4	STUD-WELD (3/8-16-THD)	
	1F-0750	26	NUT-WELD (3/8-16-THD)	
	118-7401	1	GUARD AS-RADIATOR	
			S/N: 9BL1488-UP	
	1F-0750	26	NUT-WELD (3/8-16-THD)	
	5M-9621	4	STUD-WELD (3/8-16-THD)	
	9P-2512	2	BOSS (82-MM HIGH)	
	8G-4081	2	PLATE	
	8G-2613	4	PLATE	
	1F-0748	8	NUT-WELD (1/2-13-THD)	

5Q-6770 **BUMPER GP** (contd.) **i01399867**

NOTE	PART NUMBER	QTY	PART NAME 1 2 3 4 5 6 (PRODUCT LEVEL)	SEE PAGE
	035-2017	4	SCREW-BUTTON HEAD (3/8-16X1-IN)	
	5Q-6775	2	GUARD AS	
	9F-2978	3	NUT-WELD (3/8-16-THD)	
	5Q-6782	2	SCREEN AS	
	8H-3526	3	WASHER (0.468X0.81X0.12-IN THK)	
A - NOT PART OF THIS GROUP				

<END>

5Q-8901 BUMPER GP

S/N: 9BL1-UP
PART OF 133-3958 WASTE HANDLING AR
AN ATTACHMENT

SMCS-7156 **i01400000**

NOTE	PART NUMBER	QTY	PART NAME 1 2 3 4 5 6 (PRODUCT LEVEL)	SEE PAGE
	2Q-5428	1	BRACKET AS	
	2Q-5550	1	ROD AS	
	5P-8245	1	WASHER-HARD (13.5X25.5X3-MM THK)	
	5Q-6767	1	BUMPER AS	
	1F-0748	4	NUT-WELD (1/2-13-THD)	
	2Q-5416	1	GRILL AS	
	1F-0750	4	NUT-WELD (3/8-16-THD)	
	9W-8766	2	BRACKET	
	118-7401	1	GUARD AS-RADIATOR	
	8G-2613	4	PLATE	
	8G-4081	2	PLATE	
	9P-2512	2	BOSS (82-MM HIGH)	
	8Y-4000	2	LATCH AS (T-BAR, COMPARTMENT)	
			(EACH INCLUDES)	
	6H-3956	1	PIN	
	7X-0766	1	SPRING-LATCH	
	8Y-3966	1	WASHER (14.7X35X1.57-MM THK)	
	8Y-3998	1	HANDLE-LATCH	
	8Y-3999	1	BRACKET-MOUNTING	
	8Y-8306	1	SHAFT-LATCH	
	4L-6454	12	BOLT (3/8-16X1-IN)	
	5P-2566	4	BOLT (1/2-13X1.5-IN)	
	7X-0413	12	BOLT (1-8X7-IN)	
	5P-9085	2	CLIP	
	3B-4628	2	PIN-COTTER	
	8T-9496	2	LOCKNUT (9/16-18-THD)	
	8T-1578	2	PAWL (LATCH)	
	3B-4611	1	PIN-COTTER	
	035-2017	4	SCREW-BUTTON HEAD (3/8-16X1-IN)	
	5Q-7085	8	SHIM (2MM THK)	
	8T-4223	5	WASHER-HARD (13.5X25.5X3-MM THK)	
	8T-4896	12	WASHER-HARD (10.2X18.5X2.5-MM THK)	
	8T-5361	12	WASHER-HARD (28X49X5-MM THK)	
	5P-8502	1	PADLOCK GP	
A	**5P-8500**	1	KEY	
A	**8Y-6364**	1	SLEEVE	

A - NOT PART OF THIS GROUP

<END>

8Y-9336 BUMPER GP

S/N: 9BL1-UP

PART OF 117-1761, 8Y-9370 CHASSIS AR

SMCS-7156 **i01400010**

NOTE	REF NO	GRAPHIC REF	PART NUMBER	QTY	PART NAME 1 2 3 4 5 6 (PRODUCT LEVEL)	SEE PAGE
	1	1	**8Y-9701**	1	BUMPER AS	
	2	1	**8Y-9702**	1	PLATE	
	3	1	**7X-0405**	12	BOLT (1-8X2.75-IN)	
	4	1	**8T-5361**	8	WASHER-HARD (28X49X5-MM THK)	
	5	1	**8Y-9703**	1	PLATE	
B	6	1	**9S-1328**	16	WASHER (26X41X1.6-MM THK)	
M	7	1	**8T-4179**	2	BOLT (M12X1.75X20-MM)	
	8	1	**4T-8898**	2	PLATE	

B - USE AS REQUIRED
M - METRIC PART

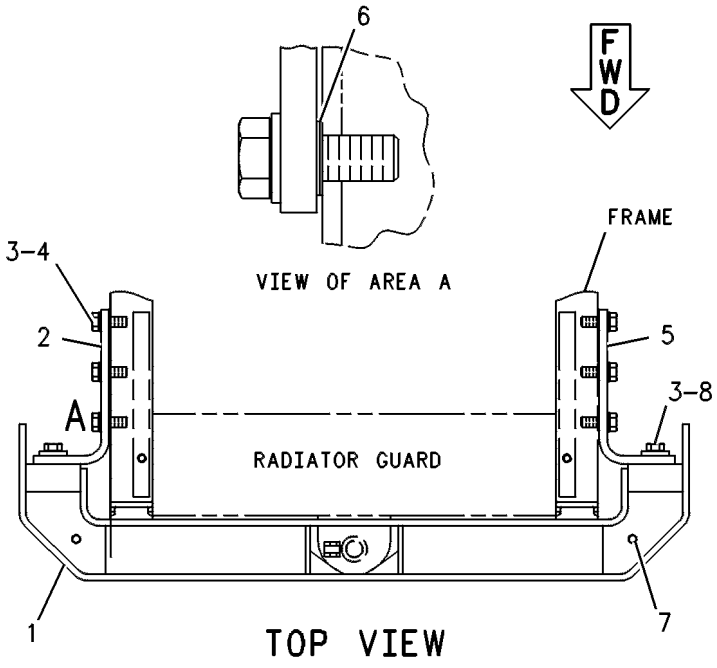

GRAPHIC #1 <END> g00247085

8Y-9817 CONVERSION AR-NON-ROPS

S/N: 9BL1-UP
NON ROPS
AN ATTACHMENT

SMCS-7253 **i01400165**

NOTE	PART NUMBER	QTY	PART NAME 1 2 3 4 5 6 (PRODUCT LEVEL)	SEE PAGE
Y	*8Y-9493*	1	GUARD GP-LINES	459
Y	*8Y-9827*	1	HEATER GP-CAB (OPEN ROPS)	735
Y	*8Y-9224*	1	PRESSURIZER GP-CAB	754
			—OR—	
Y	*8Y-9851*	1	PRESSURIZER GP-CAB	762
Y	*8Y-6179*	1	SEAT GP-SUSPENSION	791
			S/N: 9BL1488-UP	
Y	*8Y-9591*	1	VANDALISM AR-OPEN ROPS	798
			S/N: 9BL1488-UP	
	125-9404	1	GUARD AS	
	8G-0499	2	STEP AS	
	4L-6454	4	BOLT (3/8-16X1-IN)	
	5P-2228	2	BOLT (1/2-13X1-IN)	
	7X-0326	4	BOLT (1/2-13X3-IN)	
	8T-8737	4	PLUG-SEAL	
	102-8804	1	KIT-RECEPTACLE (4-PIN)	
			(INCLUDES RECEPTACLE AS & WEDGE)	
	5P-1075	4	WASHER-HARD (10.2X22.5X3-MM THK)	
	5P-1076	2	WASHER-HARD (13.5X30X4-MM THK)	

Y - SEPARATE ILLUSTRATION

<END>

5Q-7126 DOOR AS–LH

S/N: 9BL1-UP
PART OF 133-3958 WASTE HANDLING AR
AN ATTACHMENT

SMCS-7267 **i00686084**

NOTE	REF NO	GRAPHIC REF	PART NUMBER	QTY	PART NAME 1 2 3 4 5 6 (PRODUCT LEVEL)	SEE PAGE
	1	1	**5Q-7128**	1	LINER	
	2	1	**5Q-7121**	1	DOOR AS	
	3	1	**7P-7427**	2	HINGE	
	4	1	**8G-8919**	1	HOUSING AS	
	5	1	**7P-9464**	1	HANDLE	
	6	1	**8G-0816**	1	BUSHING-TERMINAL	

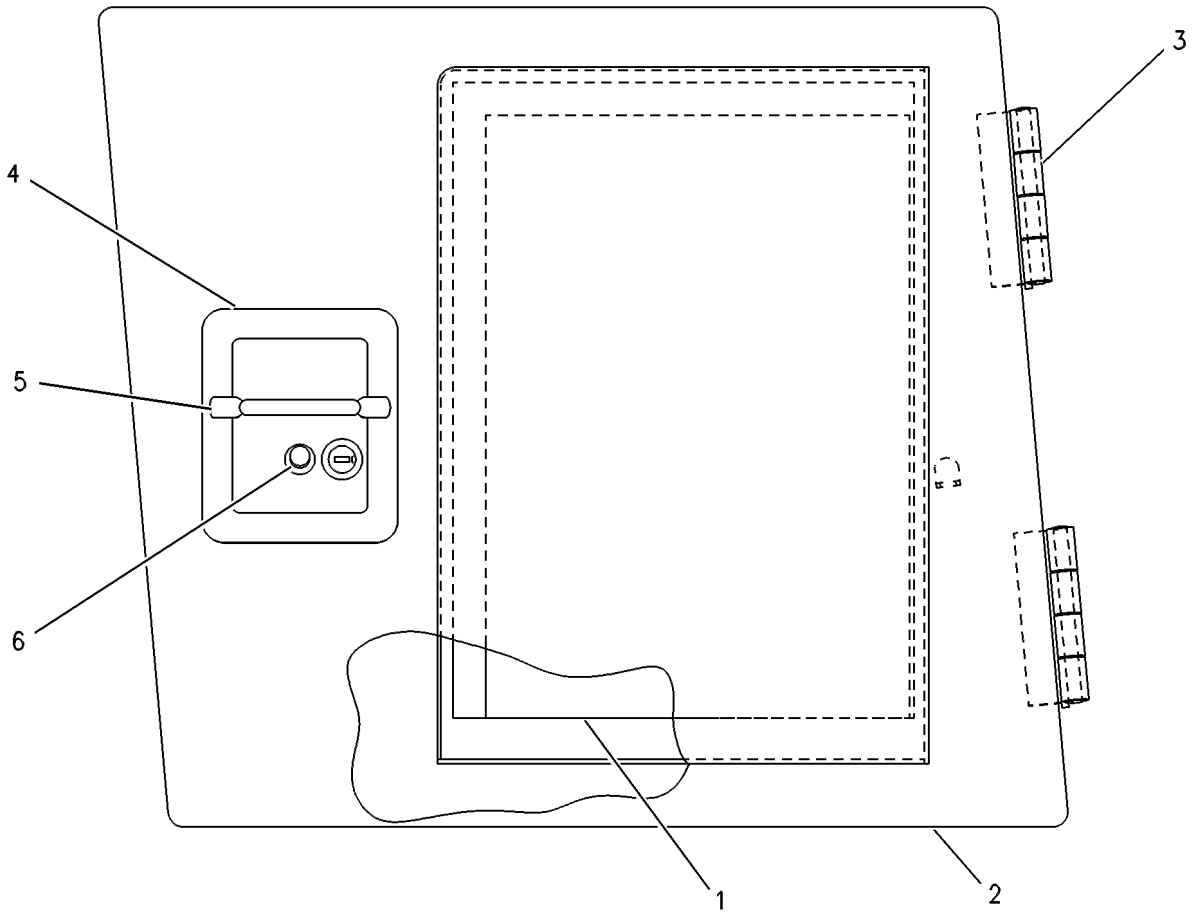

GRAPHIC #1 <END> g00295037

5Q-7127 DOOR AS–RH

S/N: 9BL1-UP
PART OF 133-3958 WASTE HANDLING AR
AN ATTACHMENT

SMCS-7267 **i00686086**

NOTE	REF NO	GRAPHIC REF	PART NUMBER	QTY	PART NAME 1 2 3 4 5 6 (PRODUCT LEVEL)	SEE PAGE
	1	1	**5Q-7128**	1	LINER	
	2	1	**5Q-7071**	1	DOOR AS	
	3	1	**7P-7427**	2	HINGE	
	4	1	**8G-8919**	1	HOUSING AS	
	5	1	**7P-9464**	1	HANDLE	
	6	1	**8G-0816**	1	BUSHING-TERMINAL	

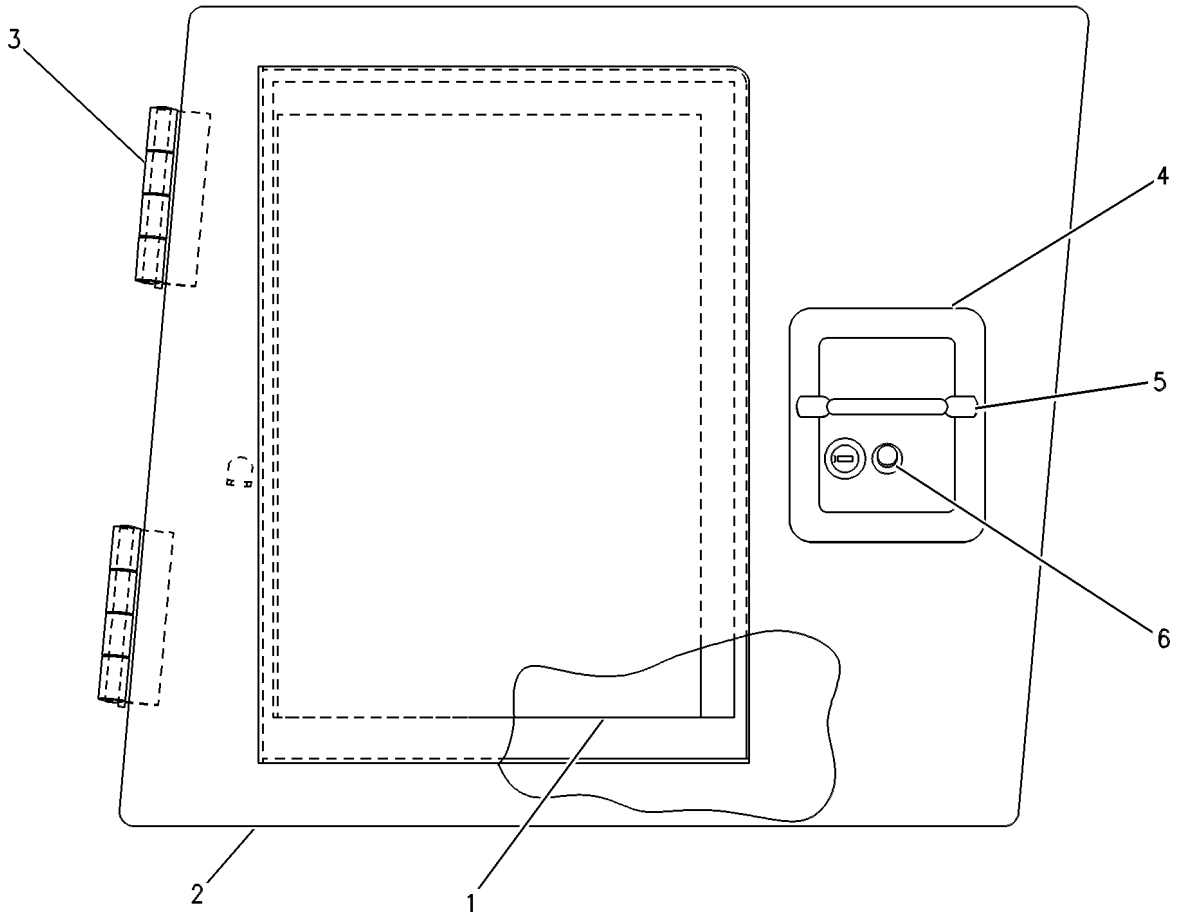

GRAPHIC #1 <END> g00295038

117-1762 ENCLOSURE GP-ENGINE

S/N: 9BL1488-UP

PART OF 117-1761 CHASSIS AR

SMCS-7263 **i01400016**

NOTE	REF NO	GRAPHIC REF	PART NUMBER	QTY	PART NAME 1 2 3 4 5 6 (PRODUCT LEVEL)	SEE PAGE
	1	2	**8Y-9831**	1	SUPPORT AS	
		2	**3W-1701**	1	PLATE	
	2	2	**8J-1196**	2	LUG (3/8-16-THD)	
	3	2	**8F-9836**	1	BOSS (3/8-16-THD)	
	4	2	**1F-0750**	12	NUT-WELD (3/8-16-THD)	
	5	2	**7M-7794**	2	STUD-WELD (9.4X21.5X25.5-MM)	
	6	1	**8G-4081**	2	PLATE	
		1	**4K-9097**	4	NUT-WELD (5/16-18-THD)	
	7	1,2	**5P-1075**	24	WASHER-HARD (10.2X22.5X3-MM THK)	
	8	2	**5C-6565**	4	BOLT (1/2-13X1.125-IN)	
	9	2	**5P-1076**	4	WASHER-HARD (13.5X30X4-MM THK)	
	10	1	**7X-0325**	6	BOLT (1/2-13X2.5-IN)	
	11	1	**1K-4649**	6	SPACER (0.516X1X1-IN THK)	
	12	2	**8Y-9768**	1	DOOR AS	
	13	2	**8Y-9769**	1	DOOR AS	
					(EACH DOOR AS. INCLUDES)	
	14	2	**7P-7427**	2	HINGE	
	15	1	**8G-8919**	1	HOUSING AS	
	16	1	**8G-0816**	1	BUSHING-TERMINAL	
	17	1	**7P-9464**	1	HANDLE	
	18	1	**8T-8917**	4	BOLT (1/2-13X1.25-IN)	
	19	2	**7P-7393**	1	ANGLE	
	20	2	**3W-6327**	2	PLATE	
	21	2	**7P-9131**	2	HANDRAIL	
	22	2	**6V-8801**	2	NUT (3/8-16-THD)	
	23	2	**7P-8288**	2	SPRING	
	24	2	**7P-7394**	1	ANGLE	
	25	1	**8T-4223**	4	WASHER-HARD (13.5X25.5X3-MM THK)	
	26	2	**7P-7975**	2	LATCH	
	27	2	**7P-7305**	2	PIN	
	28	1,2	**5P-2566**	4	BOLT (1/2-13X1.5-IN)	
	29	1	**8G-7715**	2	PLATE	
	30	1	**037-7461**	2	GROMMET	
	31	2	**8T-5361**	2	WASHER-HARD (28X49X5-MM THK)	
	32	2	**8G-1113**	2	WASHER (26X48X15-MM)	
	33	2	**8F-6437**	2	WASHER (13.5X50.8X4.76-MM THK)	
	34	2	**3B-4615**	2	PIN-COTTER	
	35	2	**4B-5271**	2	WASHER (25.5X11.2X2-MM THK)	
	36	2	**7P-7308**	2	PIN	
	37	2	**1S-4244**	2	PIN (9.4-MM OD)	
	38	2	**7P-7405**	1	ANGLE	
	39	2	**7P-7406**	1	ANGLE	
D	40	2	**5P-0801**		SEAL (1.1M)	
	41	2	**1T-0765**	4	BOLT (3/8-16X1-IN)	
	42	2	**8T-4896**	4	WASHER-HARD (10.2X18.5X2.5-MM THK)	
	43	2	**3W-3559**	1	SUPPORT AS	
		2	**7J-9451**	4	BOSS	
		2	**3W-1701**	1	PLATE	

117-1762 **ENCLOSURE GP-ENGINE (**contd.**)** **i01400016**

NOTE	REF NO	GRAPHIC REF	PART NUMBER	QTY	PART NAME 1 2 3 4 5 6 (PRODUCT LEVEL)	SEE PAGE
	44	2	**8F-9836**	1	BOSS (3/8-16-THD)	
	45	2	**8B-1910**	1	BOSS (3/8-16X0.95-IN)	
	46	2	**1F-0750**	10	NUT-WELD (3/8-16-THD)	
	47	2	**7M-7794**	2	STUD-WELD (9.4X21.5X25.5-MM)	
	48	1	**8G-4081**	1	PLATE	
	49	2	**118-4233**	1	BEAM AS	
	50	2	**8G-1284**	1	COVER	
	51	2	**8G-1285**	1	COVER	
	52	1,2	**5S-7379**	12	BOLT (3/8-16X0.875-IN)	
D	53	1	**5P-5755**		SEAL (1.1M)	
J	54	1	**6V-1516**	1	LOCK AS-CYLINDER	
	55	2	**5M-3062**	10	BOLT (3/8-16X0.75-IN)	
	56	1	**118-1897**	1	HOOD AS	
	57	2	**5H-9394**	4	BOSS (1/2-13X1-IN)	

D - ORDER BY THE METER
J - REQUIRES 5P8500 KEY

117-1762 **ENCLOSURE GP-ENGINE (**contd.**)** **i01400016**

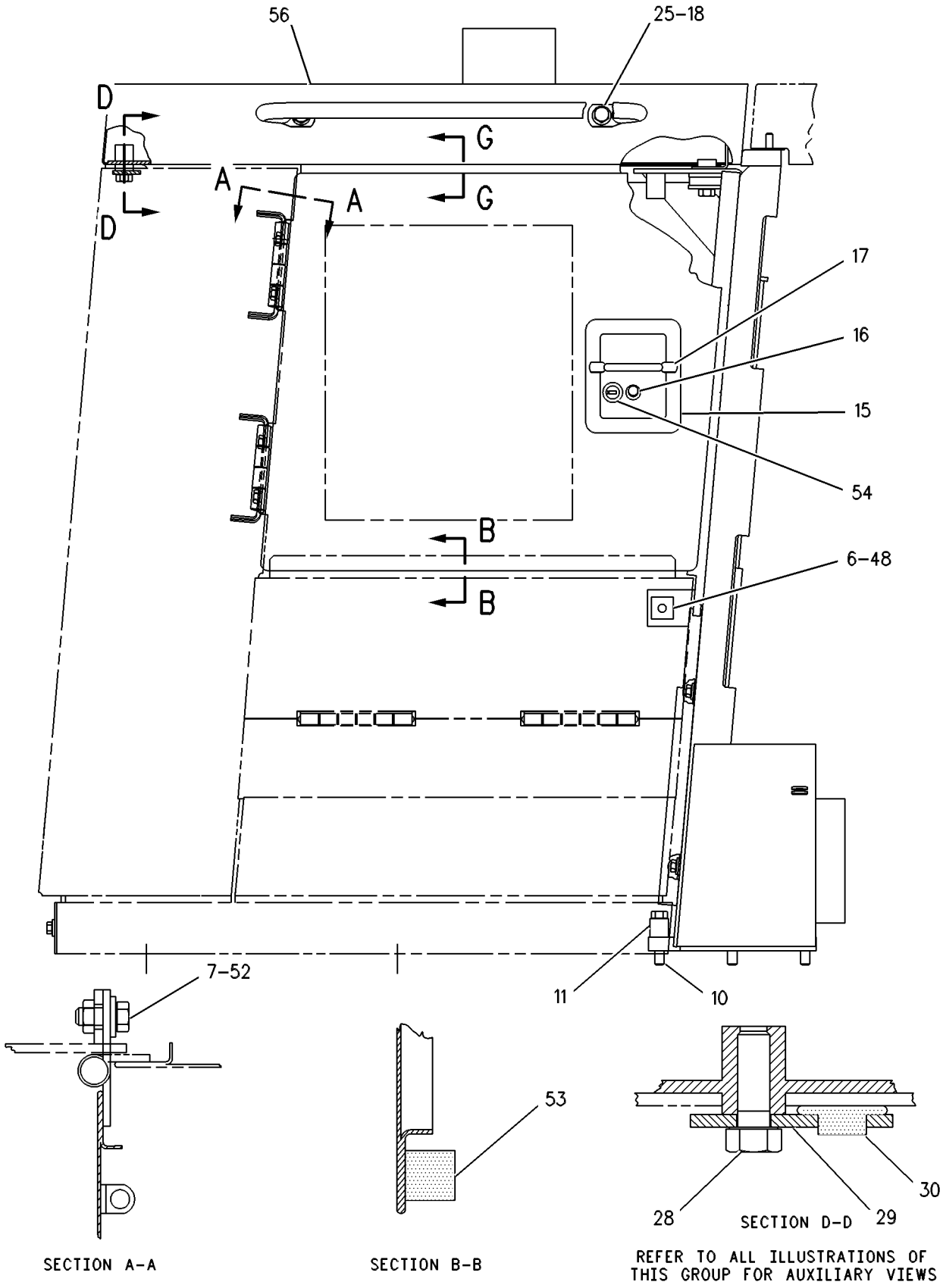

GRAPHIC #1 g00292163

117-1762 **ENCLOSURE GP-ENGINE (**contd.**)** **i01400016**

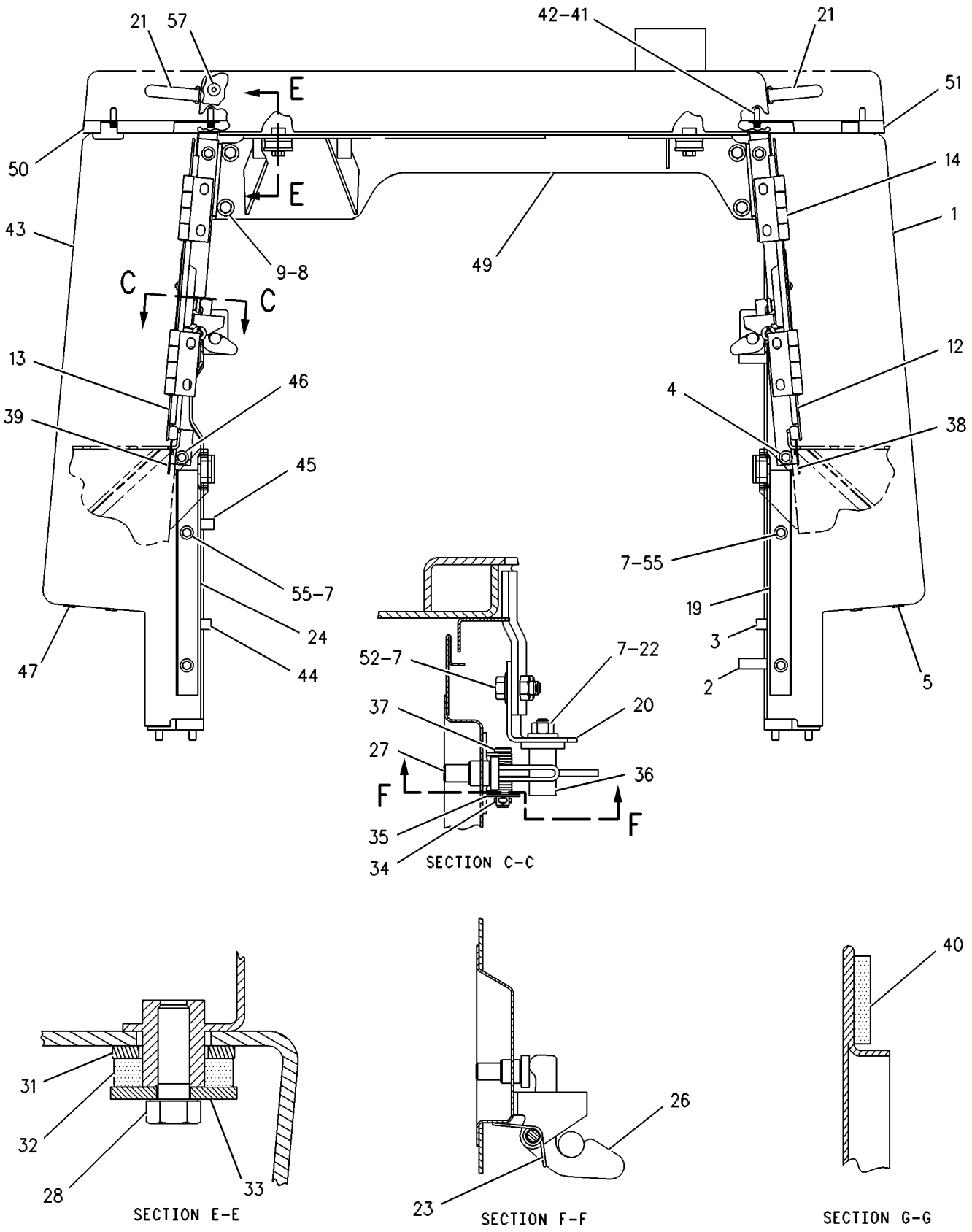

GRAPHIC #2 <END> g00292164

8Y-9456 ENCLOSURE GP-ENGINE

S/N: 9BL1-1487

PART OF 8Y-9370 CHASSIS AR

SMCS-7263 **i01401199**

NOTE	REF NO	GRAPHIC REF	PART NUMBER	QTY	PART NAME 1 2 3 4 5 6 (PRODUCT LEVEL)	SEE PAGE
	1	1	**8Y-9831**	1	SUPPORT AS	
		1	**8F-9836**	1	BOSS (3/8-16-THD)	
		1	**8J-1196**	2	LUG (3/8-16-THD)	
	2	1	**3W-3559**	1	SUPPORT AS	
		1	**7J-9451**	4	BOSS	
		1	**8B-1910**	1	BOSS (3/8-16X0.95-IN)	
		1	**8F-9836**	1	BOSS (3/8-16-THD)	
	3	1	**7P-8169**	1	BEAM AS	
		1	**2S-1654**	2	WASHER (3.5X44.5X6-MM THK)	
	4	1	**8G-1284**	1	COVER	
	5	1	**8G-1285**	1	COVER	
	6	1	**5S-7379**	4	BOLT (3/8-16X0.875-IN)	
	7	1	**5P-1075**	16	WASHER-HARD (10.2X22.5X3-MM THK)	
	8	1	**5C-6565**	4	BOLT (1/2-13X1.125-IN)	
	9	1	**5P-1076**	4	WASHER-HARD (13.5X30X4-MM THK)	
	10	1	**1T-0765**	4	BOLT (3/8-16X1-IN)	
	11	1	**7P-7406**	1	ANGLE	
	12	1	**8Y-9768**	1	DOOR AS	
		1	**7P-7427**	2	HINGE	
		1	**8G-8919**	1	HOUSING AS	
		1	**8Y-9809**	1	DOOR	
	13	1	**7P-7405**	1	ANGLE	
	14	1	**8Y-9769**	1	DOOR AS	
		1	**7P-7427**	2	HINGE	
		1	**8G-8919**	1	HOUSING AS	
		1	**8Y-9810**	1	DOOR	
	15	1	**1S-4244**	2	PIN (9.4-MM OD)	
	16	1	**5M-3062**	10	BOLT (3/8-16X0.75-IN)	
	17	1	**7P-7308**	2	PIN	
	18	1	**2V-9166**	2	WASHER (0.391X1X0.06-IN THK)	
	19	1	**7P-7393**	1	ANGLE	
	20	1	**3W-6327**	2	PLATE	
	21	1	**7P-9131**	2	HANDRAIL	
	22	1	**6V-8801**	2	NUT (3/8-16-THD)	
	23	1	**7P-8288**	2	SPRING	
	24	1	**7P-7394**	1	ANGLE	
	25	1	**3B-4615**	2	PIN-COTTER	
	26	1	**7P-7975**	2	LATCH	
	27	1	**7P-7305**	2	PIN	
	28	1	**5P-2566**	2	BOLT (1/2-13X1.5-IN)	
	29	1	**8F-6437**	2	WASHER (13.5X50.8X4.76-MM THK)	
	30	1	**8G-1113**	2	WASHER (26X48X15-MM)	
	31	1	**8T-5361**	2	WASHER-HARD (28X49X5-MM THK)	
	32	1	**8T-4896**	4	WASHER-HARD (10.2X18.5X2.5-MM THK)	
	33	2	**037-7461**	2	GROMMET	
	34	2	**8G-7715**	2	PLATE	
	35	2	**5P-2566**	2	BOLT (1/2-13X1.5-IN)	

8Y-9456 **ENCLOSURE GP-ENGINE (**contd.**)** **i01401199**

NOTE	REF NO	GRAPHIC REF	PART NUMBER	QTY	PART NAME 1 2 3 4 5 6 (PRODUCT LEVEL)	SEE PAGE
	36	2	**8T-4223**	4	WASHER-HARD (13.5X25.5X3-MM THK)	
	37	2	**8T-8917**	4	BOLT (1/2-13X1.25-IN)	
	38	2	**5S-7379**	8	BOLT (3/8-16X0.875-IN)	
	39	2	**5P-1075**	8	WASHER-HARD (10.2X22.5X3-MM THK)	
	40	2	**8Y-9770**	1	HOOD AS	
J	41	2	**6V-1516**	2	LOCK AS-CYLINDER	
	42	2	**7X-0325**	6	BOLT (1/2-13X2.5-IN)	
	43	2	**1K-4649**	6	SPACER (0.516X1X1-IN THK)	
BD	44	2	**5P-5641**		SEAL	

B - USE AS REQUIRED
D - ORDER BY THE METER
J - REQUIRES 5P8500 KEY

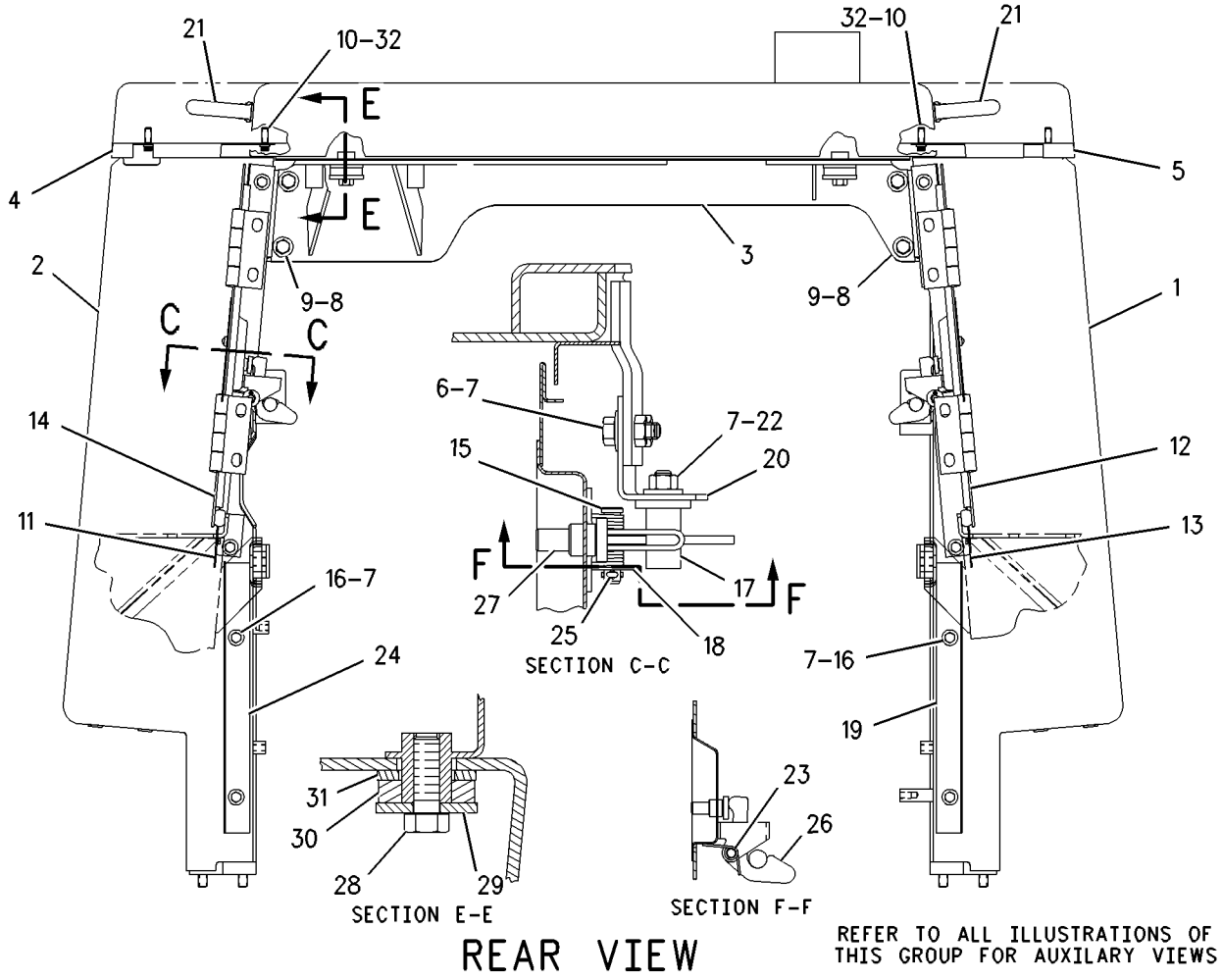

GRAPHIC #1 g00738282

8Y-9456 **ENCLOSURE GP-ENGINE** (contd.) **i01401199**

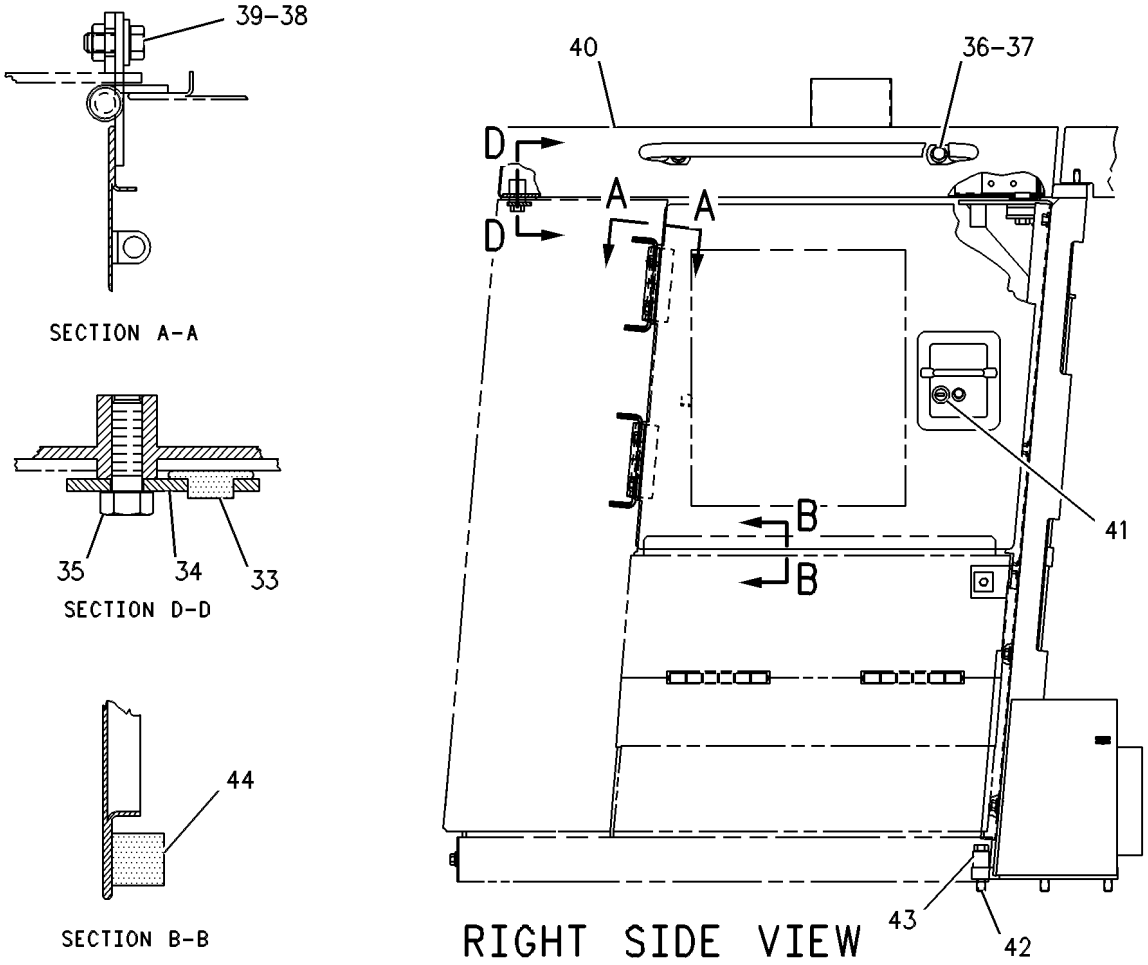

GRAPHIC #2 <END> g00387698

7P-2598 ENCLOSURE GP-ENGINE & XMSN

S/N: 9BL1-UP

PART OF 117-1761, 8Y-9370 CHASSIS AR

SMCS-7263 **i01400021**

NOTE	REF NO	GRAPHIC REF	PART NUMBER	QTY	PART NAME 1 2 3 4 5 6 (PRODUCT LEVEL)	SEE PAGE
	1	1	**4L-6454**	14	BOLT (3/8-16X1-IN)	
	2	1	**5P-1075**	16	WASHER-HARD (10.2X22.5X3-MM THK)	
B	3	1	**7P-3296**	8	SHIM (.8MM THK)	
BD	4	1	**140-1320**		SEAL	
C	5	1	**3W-1703**	1	DOOR AS (RH)	
C	6	1	**3W-1705**	1	DOOR AS (LH)	
					(EACH DOOR AS INCLUDES)	
		1	**8G-6035**	1	CLIP	
		1	**9M-5733**	1	RIVET-POP	
		1	**8F-9836**	1	BOSS (3/8-16-THD)	
	7	1	**7P-3265**	2	HINGE	
	8	1	**8G-8919**	1	HOUSING AS	
J	9	1	**6V-1516**	2	LOCK AS-CYLINDER	
	10	1	**8T-2561**	14	WASHER-HARD (10.5X28.5X5-MM THK)	
	11	1	**7P-8444**	1	CORNER AS (RH)	
		1	**7P-8440**	1	CORNER AS (LH)	
	12	1	**6V-8801**	16	NUT (3/8-16-THD)	
	13	1	**7P-3291**	2	ANGLE	
	14	1	**7P-8453**	2	ANGLE	
	15	1	**7P-9490**	2	ANGLE	
	16	1	**8T-9383**	8	BOLT (1/2-13X0.75-IN)	
		1	**5P-1076**	8	WASHER-HARD (13.5X30X4-MM THK)	
	17	1	**7P-8450**	1	PLATE AS (LH)	
		1	**7P-8448**	1	PLATE AS (RH)	
	18	1	**7P-3293**	2	ANGLE	
	19	1	**8G-4898**	2	DOOR AS	
					(EACH INCLUDES)	
		1	**038-7676**	2	STUD-WELD	
		1	**8B-1910**	2	BOSS (3/8-16X0.95-IN)	
	20	1	**7P-3265**	1	HINGE	
	21	2	**3W-1719**	1	PLATE (RH)	
		2	**3W-1691**	1	PLATE (LH)	
	22	2	**4L-6454**	8	BOLT (3/8-16X1-IN)	
	23	2	**8T-2561**	11	WASHER-HARD (10.5X28.5X5-MM THK)	
	24	2	**8G-9870**	1	BOX AS	
	25	2	**5P-1075**	8	WASHER-HARD (10.2X22.5X3-MM THK)	
	26	2	**6V-8801**	11	NUT (3/8-16-THD)	
	27	2	**7P-7308**	2	PIN	
	28	2	**3B-4615**	2	PIN-COTTER	
	29	2	**2V-9166**	2	WASHER (0.391X1X0.06-IN THK)	
	30	2	**7P-8288**	2	SPRING	
	31	2	**7P-8463**	2	ANGLE	
	32	2	**8T-9371**	4	BOLT (3/8-16X0.5-IN)	
	33	2	**7X-0578**	4	WASHER-HARD (10.2X32X2.5-MM THK)	
	34	2	**4B-4909**	2	SPRING	
	35	2	**8S-6377**	1	PIN-LOCK	
	36	2	**1S-4244**	2	PIN (9.4-MM OD)	
	37	2	**7P-7305**	2	PIN	

7P-2598 **ENCLOSURE GP-ENGINE & XMSN (**contd.**)** **i01400021**

NOTE	REF NO	GRAPHIC REF	PART NUMBER	QTY	PART NAME 1 2 3 4 5 6 (PRODUCT LEVEL)	SEE PAGE
	38	2	**7P-7975**	2	LATCH	
	39	2	**7P-7403**	2	ROD	
	40	2	**7P-8452**	1	ANGLE	
BD	41	2	**140-1320**		SEAL	
B	42	2	**7P-9486**	20	SHIM (.8MM THK)	

B - USE AS REQUIRED
C - CHANGE FROM PREVIOUS TYPE
D - ORDER BY THE METER
J - REQUIRES 5P8500 KEY

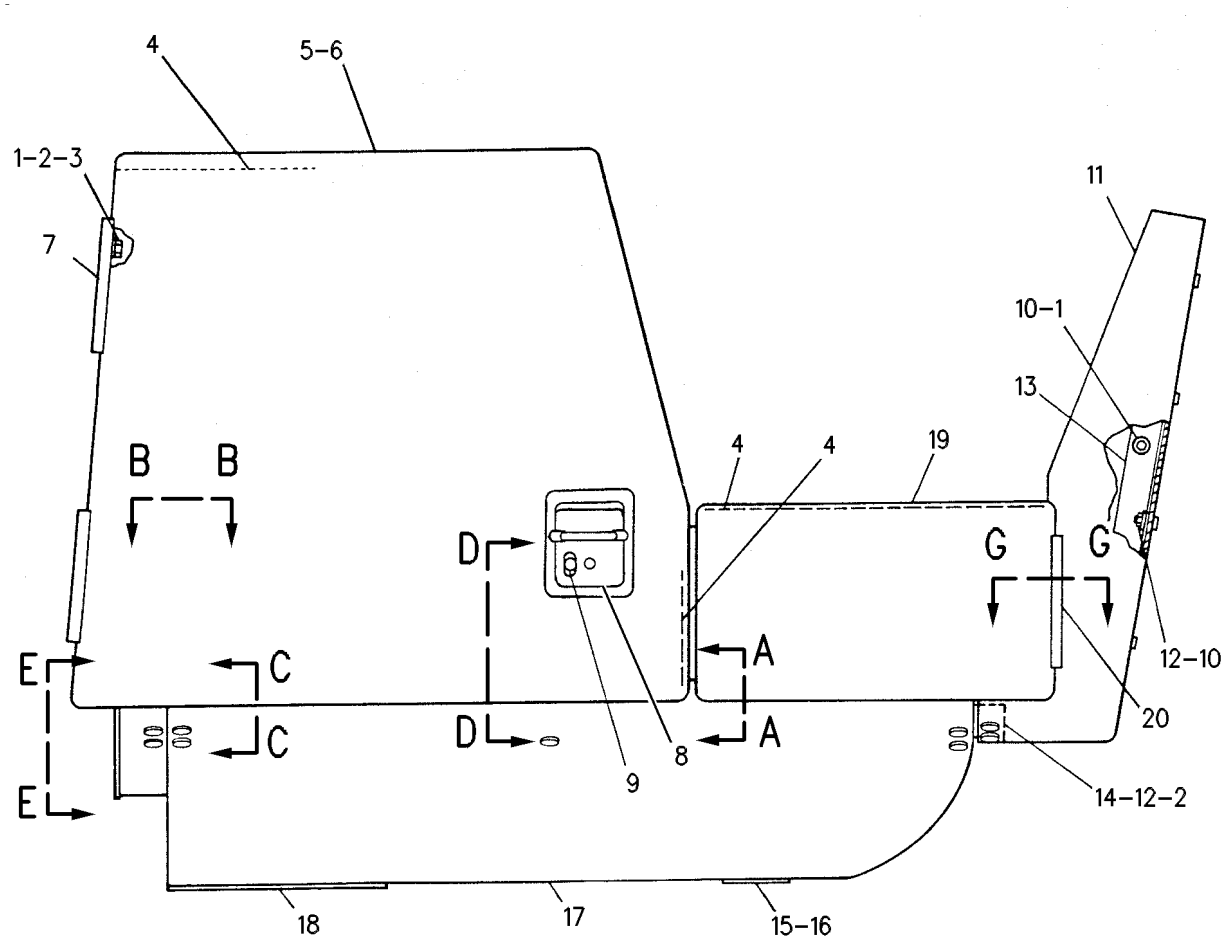

REFER TO ALL ILLUSTRATIONS OF THIS GROUP FOR AUXILIARY VIEWS

GRAPHIC #1 g00448300

7P-2598 **ENCLOSURE GP-ENGINE & XMSN** (contd.) **i01400021**

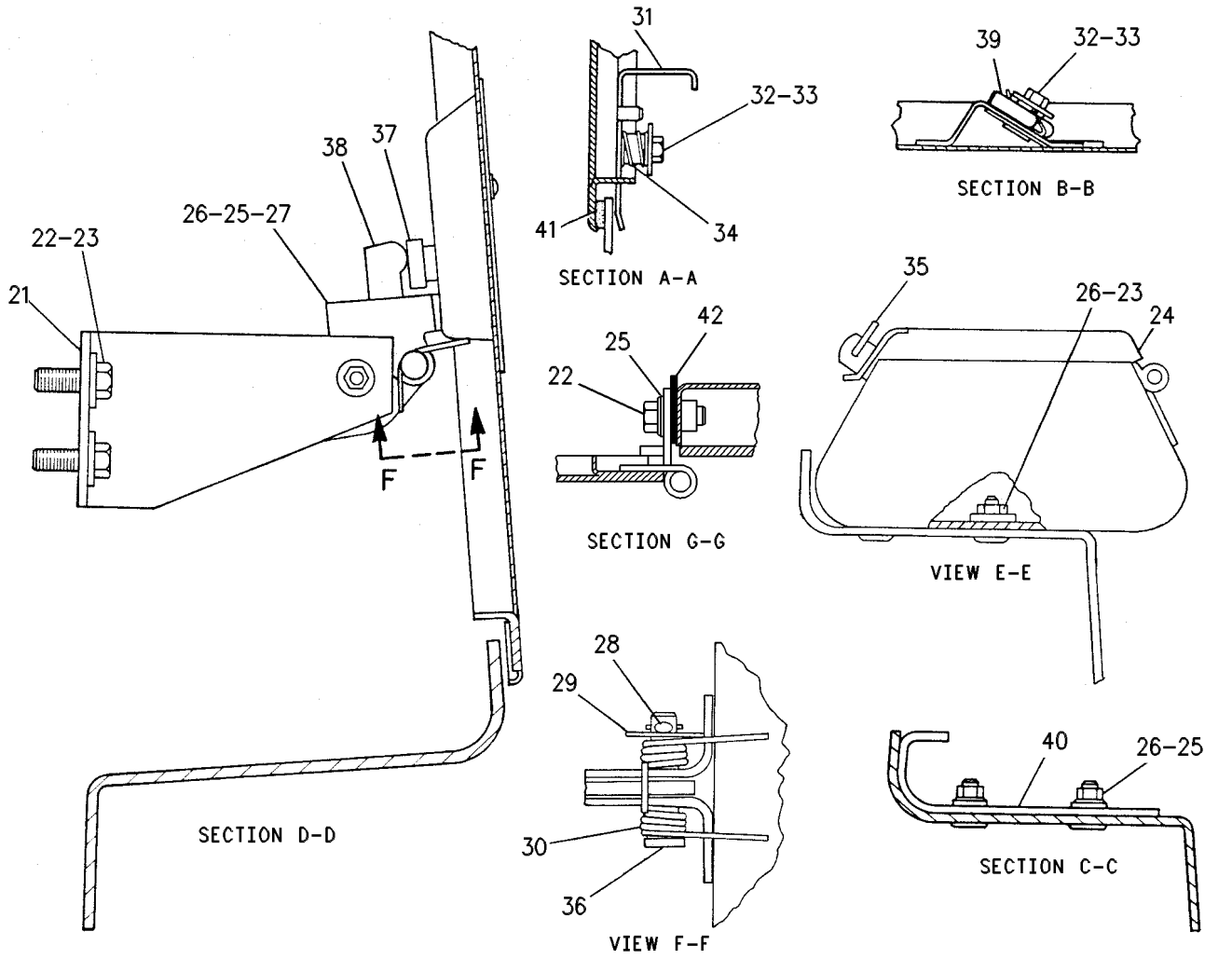

GRAPHIC #2 <END> g00448301

5Q-5790 FRAME GP-LOADER

S/N: 9BL1-UP

PART OF 133-0569, 133-3958 WASTE HANDLING AR

AN ATTACHMENT

SMCS-7054 **i01401403**

NOTE	REF NO	GRAPHIC REF	PART NUMBER	QTY	PART NAME 1 2 3 4 5 6 (PRODUCT LEVEL)	SEE PAGE
	1	1	**5P-1075**	2	WASHER-HARD (10.2X22.5X3-MM THK)	
	2	1	**8T-4896**	6	WASHER-HARD (10.2X18.5X2.5-MM THK)	
	3	1	**4L-6454**	2	BOLT (3/8-16X1-IN)	
	4	1	**7P-5388**	1	PLATE	
	5	1	**8T-9371**	6	BOLT (3/8-16X0.5-IN)	
	6	1	**4F-5982**	8	PLUG-CORE	
	7	1	**6K-8987**	4	DOWEL	
E	8	1	**3E-3805**		SEAL (87CM)	
	9	1	**5Q-5788**	1	FRAME AS	
		1	**8B-1910**	12	BOSS (3/8-16X0.95-IN)	
		1	**8J-1196**	7	LUG (3/8-16-THD)	
		1	**9P-2512**	1	BOSS (82-MM HIGH)	
		1	**8F-9836**	1	BOSS (3/8-16-THD)	
		1	**8Y-0458**	2	PLATE	
	10	1	**8G-3515**	2	PLATE	
	11	1	**8G-0794**	6	BAR	
	12	1	**5V-0704**	1	PLATE	
	13	1	**1F-0750**	2	NUT-WELD (3/8-16-THD)	
	14	1	**8Y-9565**	4	BOSS AS	
	15	1	**6J-0499**	4	LUG (1/2-13-THD)	
	16	1	**7T-1099**	5	LINK	
	17	1	**8Y-1688**	2	BOSS	
	18	1	**4K-7627**	4	BAR	
	19	1	**5B-1983**	2	BOSS (3/8-16-THD)	
	20	1	**8Y-9342**	1	DRAWBAR AS	
	21	1	**8J-7236**	5	NUT-WELD (3/4-10-THD)	
	22	1	**8B-1910**	5	BOSS (3/8-16X0.95-IN)	

E - ORDER BY THE CENTIMETER

5Q-5790 **FRAME GP-LOADER** (contd.) **i01401403**

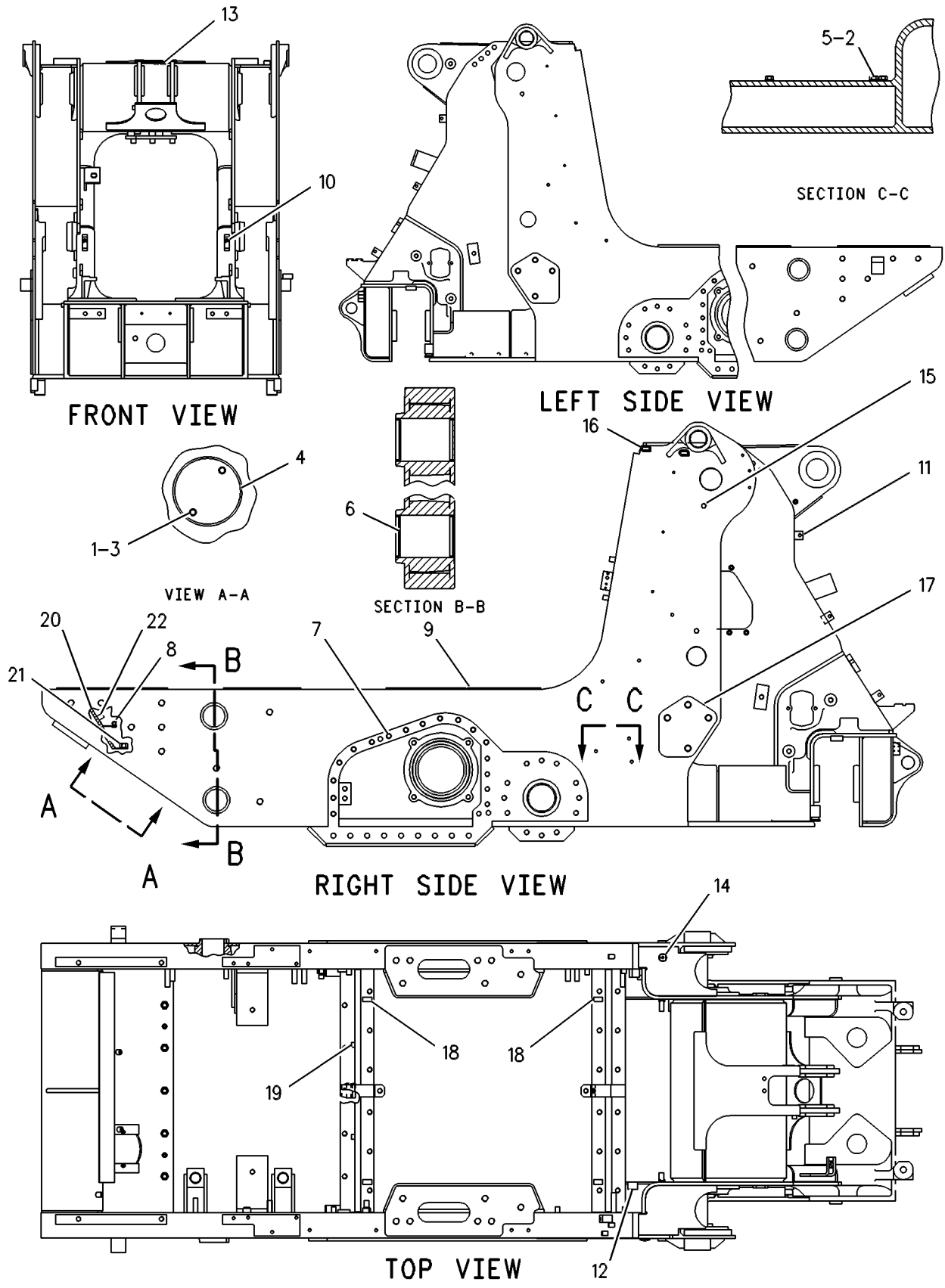

GRAPHIC #1 <END> g00297352

8Y-9348 FRAME GP-LOADER

S/N: 9BL1-UP

PART OF 117-1761, 8Y-9370 CHASSIS AR

SMCS-7054 **i00568065**

NOTE	REF NO	GRAPHIC REF	PART NUMBER	QTY	PART NAME 1 2 3 4 5 6 (PRODUCT LEVEL)	SEE PAGE
	1	1	**5P-1075**	2	WASHER-HARD (10.2X22.5X3-MM THK)	
	2	1	**8Y-9228**	1	HITCH AS	
	3	1	**8T-5361**	4	WASHER-HARD (28X49X5-MM THK)	
	4	1	**7X-0404**	4	BOLT (1-8X2.5-IN)	
	5	1	**8T-4896**	6	WASHER-HARD (10.2X18.5X2.5-MM THK)	
	6	1	**4L-6454**	2	BOLT (3/8-16X1-IN)	
	7	1	**7P-5388**	1	PLATE	
	8	1	**8T-9371**	6	BOLT (3/8-16X0.5-IN)	
	9	1	**4F-5982**	8	PLUG-CORE	
	10	1	**6K-8987**	4	DOWEL	
BE	11	1	**3E-3805**		SEAL (87 CM)	
	12	1	**8Y-9349**	1	FRAME AS	
	13	1	**5V-0704**	1	PLATE	
	14	1	**7T-1099**	5	LINK	
	15	1	**8B-1910**	16	BOSS (3/8-16X0.95-IN)	
	16	1	**8F-9836**	4	BOSS (3/8-16-THD)	
	17	1	**8J-1196**	5	LUG (3/8-16-THD)	
	18	1	**8Y-9342**	1	DRAWBAR AS	
	19	1	**8Y-9565**	4	BOSS AS	
	20	1	**9G-4505**	8	BOSS (3/8-16X1.6-IN)	
	21	1	**9P-2512**	1	BOSS (82-MM HIGH)	
	22	1	**8G-0794**	6	BAR	

B - USE AS REQUIRED
E - ORDER BY THE CENTIMETER

8Y-9348 **FRAME GP-LOADER (**contd.**)** **i00568065**

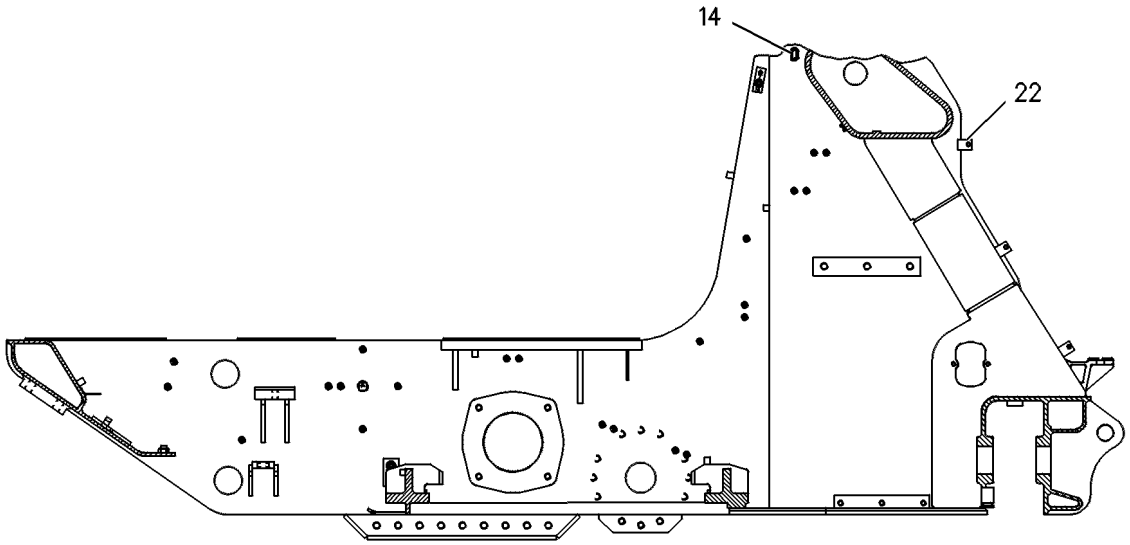

SECTION A-A

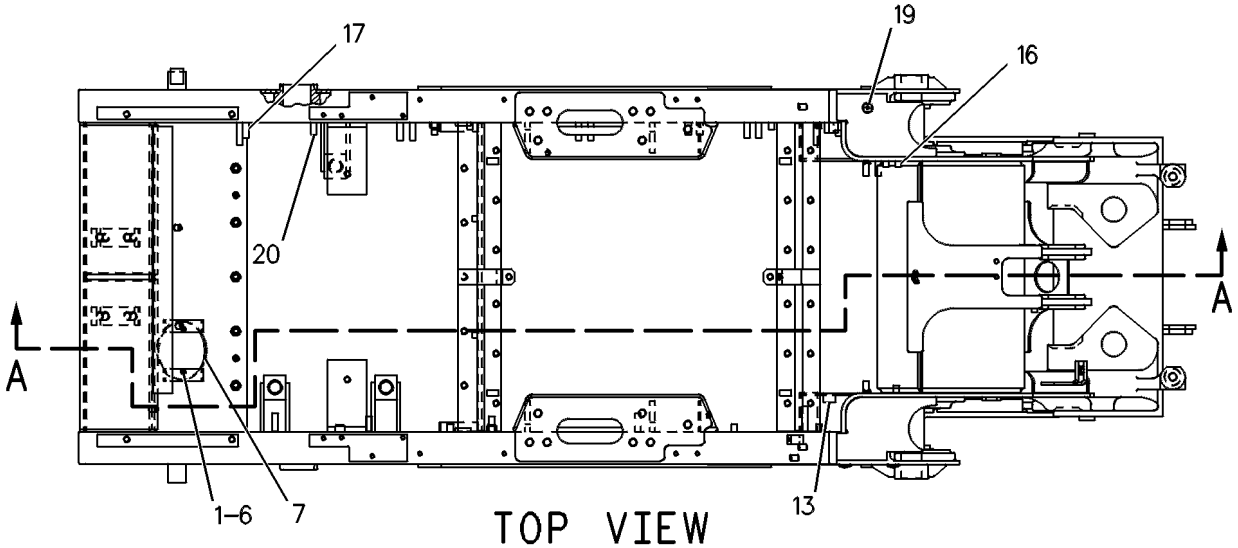

TOP VIEW

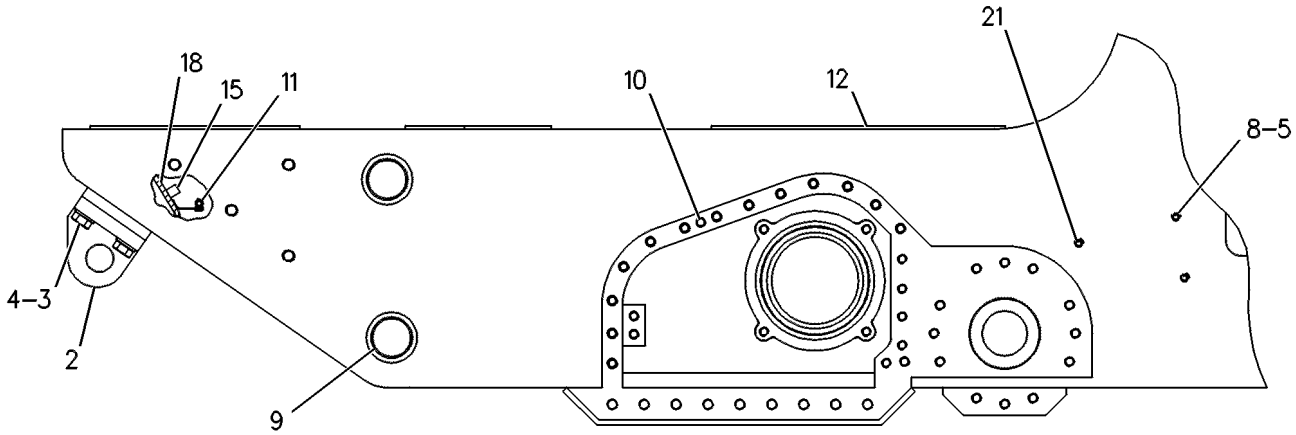

RIGHT SIDE VIEW

GRAPHIC #1 <END> g00247119

133-0568 GUARD AR-RADIATOR

S/N: 9BL1-UP

AN ATTACHMENT

SMCS-7155 **i00768204**

NOTE	PART NUMBER	QTY	PART NAME 1 2 3 4 5 6 (PRODUCT LEVEL)	SEE PAGE
Y	*5Q-6822*	1	GUARD GP-RADIATOR	462
Y	*5Q-5567*	1	MODIFICATION AR	4
			—OR—	
Y	*136-7802*	1	GUARD AR-SEAL	486
Y	*9S-0603*	1	PRESCREENER GP	161

Y - SEPARATE ILLUSTRATION

<END>

5Q-5831 GUARD GP-BOTTOM

S/N: 9BL1-UP
PART OF 133-0569, 133-3958 WASTE HANDLING AR
AN ATTACHMENT

SMCS-7153 **i01400026**

NOTE	REF NO	GRAPHIC REF	PART NUMBER	QTY	PART NAME 1 2 3 4 5 6 (PRODUCT LEVEL)	SEE PAGE
	1	1	**2Q-5347**	1	PLATE AS	
	2	1	**7P-2143**	1	BAR	
	3	1	**3W-1817**	4	HINGE AS	
	4	1	**3W-4922**	2	HINGE AS	
					(EACH INCLUDES)	
		1	**3K-0925**	1	WASHER (10.3X25.4X3-MM THK)	
	5	1	**2Q-5345**	1	SUPPORT AS	
	6	1	**8J-1196**	1	LUG (3/8-16-THD)	
	7	1	**7X-0582**	2	WASHER-HARD (20X44.5X6-MM THK)	
	8	1	**2Q-5497**	4	SPACER	
	9	1	**7X-0366**	29	BOLT (3/4-10X2-IN)	
	10	1	**7X-0607**	33	WASHER-HARD (20X55X8-MM THK)	
	11	1	**3W-1814**	33	SPACER (20.6X30.16X13-MM THK)	
	12	1	**8T-9398**	4	BOLT (3/4-10X1.75-IN)	
	13	1	**2Q-5349**	2	PLATE AS	
					(EACH INCLUDES)	
	14	1	**053-9335**	2	BAR	
	15	1	**8T-4896**	1	WASHER-HARD (10.2X18.5X2.5-MM THK)	
	16	1	**5M-3062**	1	BOLT (3/8-16X0.75-IN)	
	17	1	**5Q-5992**	1	PLATE AS	
	18	1	**8T-8919**	2	BOLT (1/2-13X1.75-IN)	
	19	1	**5P-1076**	2	WASHER-HARD (13.5X30X4-MM THK)	
	20	1	**6P-6253**	1	LOCK	
	21	1	**7X-0371**	2	BOLT (3/4-10X3.75-IN)	
	22	1	**5Q-5853**	1	PLATE AS	

5Q-5831 **GUARD GP-BOTTOM (**contd.**)** **i01400026**

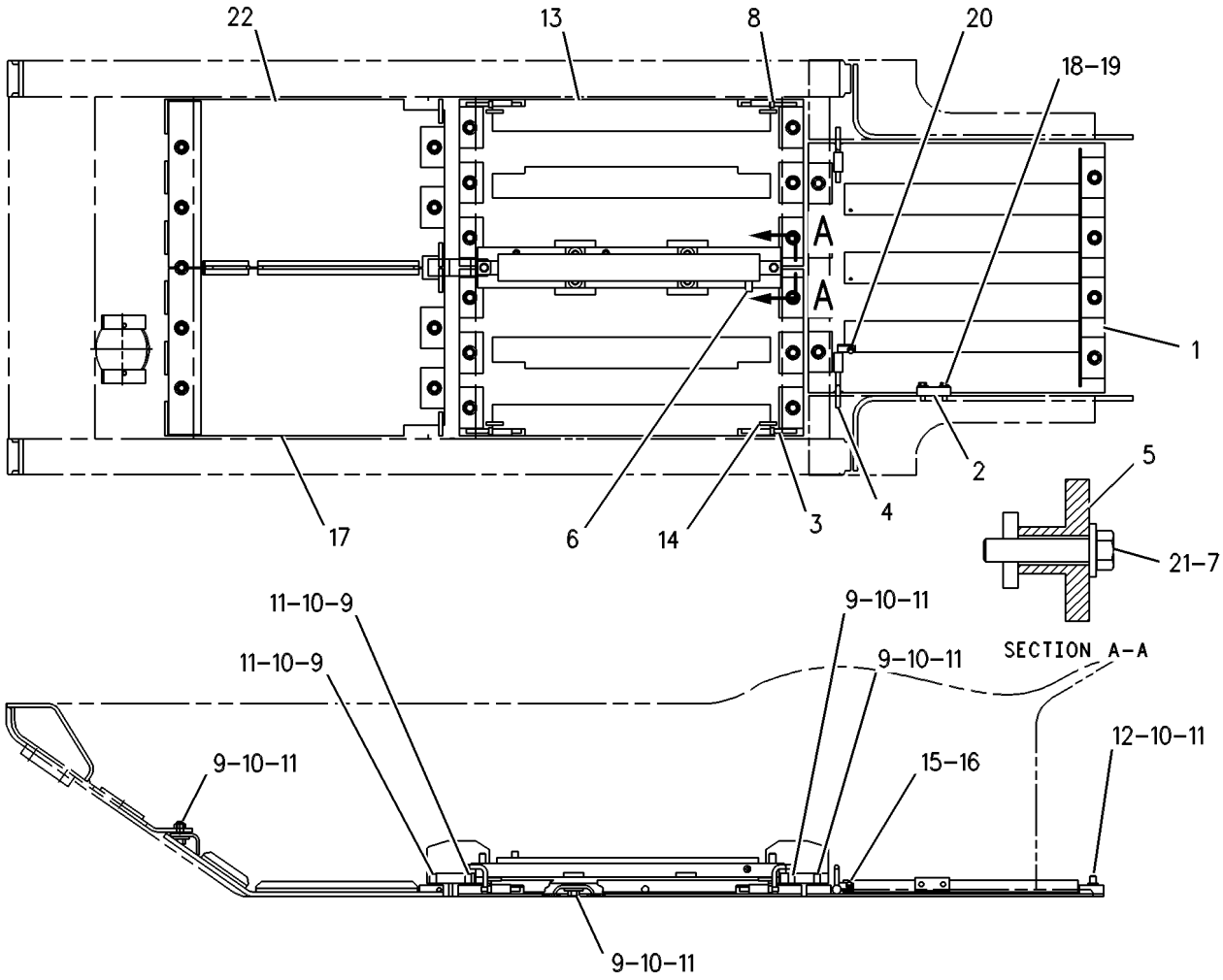

GRAPHIC #1 <END> g00295014

8Y-9428 GUARD GP-BOTTOM

S/N: 9BL1-UP

PART OF 117-1761, 8Y-9370 CHASSIS AR

SMCS-7153 **i01400031**

NOTE	REF NO	GRAPHIC REF	PART NUMBER	QTY	PART NAME 1 2 3 4 5 6 (PRODUCT LEVEL)	SEE PAGE
	1	1	**3W-1804**	1	PLATE AS	
	2	1	**7P-2143**	1	BAR	
	3	1	**3W-1817**	4	HINGE AS	
	4	1	**3W-4922**	2	HINGE AS	
	5	1	**3W-5113**	1	SUPPORT AS	
	6	1	**7X-0371**	2	BOLT (3/4-10X3.75-IN)	
	7	1	**7X-0582**	2	WASHER-HARD (20X44.5X6-MM THK)	
	8	1	**1B-6182**	4	SPACER (13.11X19.05X1.18-MM THK)	
	9	1	**7X-0366**	30	BOLT (3/4-10X2-IN)	
	10	1	**7X-0607**	34	WASHER-HARD (20X55X8-MM THK)	
	11	1	**3W-1814**	34	SPACER (20.6X30.16X13-MM THK)	
	12	1	**8T-9398**	4	BOLT (3/4-10X1.75-IN)	
	13	1	**3W-1800**	2	PLATE AS	
	14	1	**4L-6454**	2	BOLT (3/8-16X1-IN)	
	15	1	**8T-4896**	3	WASHER-HARD (10.2X18.5X2.5-MM THK)	
	16	1	**5M-3062**	1	BOLT (3/8-16X0.75-IN)	
	17	1	**8Y-9429**	1	PLATE AS	
	18	1	**8Y-9434**	1	PLATE	
	19	1	**8T-8919**	2	BOLT (1/2-13X1.75-IN)	
	20	1	**5P-1076**	2	WASHER-HARD (13.5X30X4-MM THK)	
	21	1	**6P-6253**	1	LOCK	

8Y-9428 **GUARD GP-BOTTOM (**contd.**)** **i01400031**

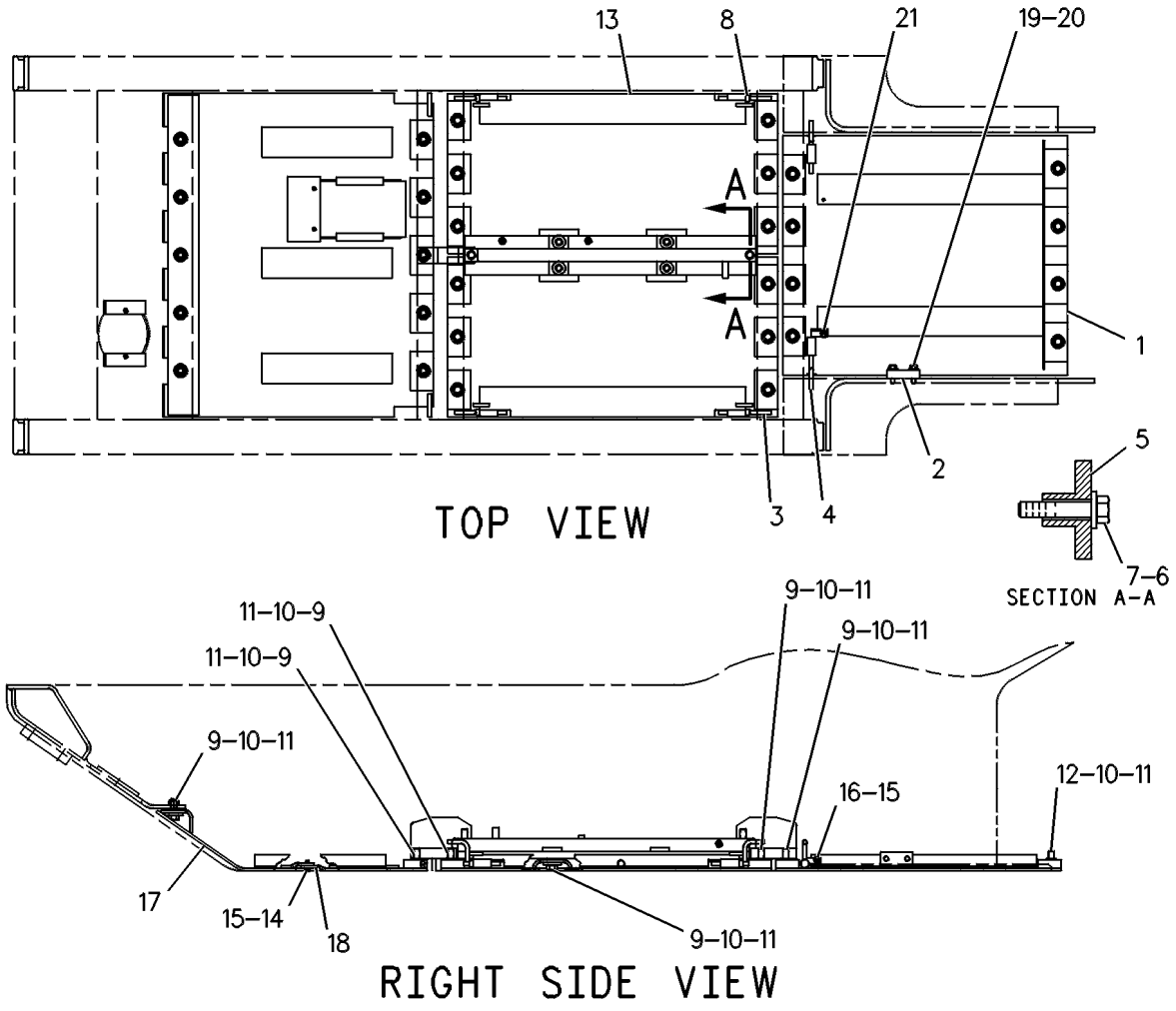

GRAPHIC #1 <END> g00247256

5Q-5755 GUARD GP-FENDER

S/N: 9BL1-UP
PART OF 133-0569, 133-3958 WASTE HANDLING AR
AN ATTACHMENT

SMCS-7150 **i00686041**

NOTE	REF NO	GRAPHIC REF	PART NUMBER	QTY	PART NAME 1 2 3 4 5 6 (PRODUCT LEVEL)	SEE PAGE
	1	1	**5Q-5754**	1	SUPPORT AS	
		1	**1F-0748**	1	NUT-WELD (1/2-13-THD)	
		1	**1F-0750**	12	NUT-WELD (3/8-16-THD)	
		1	**8J-1196**	2	LUG (3/8-16-THD)	
		1	**8F-9836**	1	BOSS (3/8-16-THD)	
		1	**3W-1701**	1	PLATE	
		1	**7M-7794**	2	STUD-WELD (9.4X21.5X25.5-MM)	
		1	**8G-4081**	1	PLATE	
		1	**4K-9097**	4	NUT-WELD (5/16-18-THD)	
	2	1	**2Q-5354**	1	SUPPORT AS	
		1	**1F-0748**	1	NUT-WELD (1/2-13-THD)	
		1	**1F-0750**	10	NUT-WELD (3/8-16-THD)	
		1	**7J-9451**	4	BOSS	
		1	**8B-1910**	1	BOSS (3/8-16X0.95-IN)	
		1	**8F-9836**	1	BOSS (3/8-16-THD)	
		1	**3W-1701**	1	PLATE	
		1	**7M-7794**	2	STUD-WELD (9.4X21.5X25.5-MM)	
		1	**8G-4081**	1	PLATE	
	3	1	**2Q-5357**	2	ANGLE AS	
					(EACH INCLUDES)	
		1	**1F-0748**	1	NUT-WELD (1/2-13-THD)	
	4	1	**2Q-5355**	2	ANGLE AS	
					(EACH INCLUDES)	
		1	**1F-0748**	2	NUT-WELD (1/2-13-THD)	
	5	1	**2Q-5359**	1	GUARD AS-FENDER (RH)	
		1	**6M-4263**	2	BOSS	
		1	**6V-3234**	1	BOSS-WELD (3/8-16X2.55-IN)	
	6	1	**7M-7794**	4	STUD-WELD (9.4X21.5X25.5-MM)	
	7	1	**5F-3743**	1	PLATE	
	8	1	**3J-3708**	7	SPACER (1.5X2X0.62-IN THK)	
	9	1	**2Q-5370**	1	GUARD AS-FENDER (LH)	
		1	**6M-4263**	2	BOSS	
		1	**6V-3234**	1	BOSS-WELD (3/8-16X2.55-IN)	
	10	1	**5F-3743**	1	PLATE	
	11	1	**7M-7794**	5	STUD-WELD (9.4X21.5X25.5-MM)	
	12	1	**3J-3708**	7	SPACER (1.5X2X0.62-IN THK)	
	13	1	**5P-2566**	14	BOLT (1/2-13X1.5-IN)	
	14	1	**5P-1076**	14	WASHER-HARD (13.5X30X4-MM THK)	

5Q-5755 **GUARD GP-FENDER (**contd.**)** **i00686041**

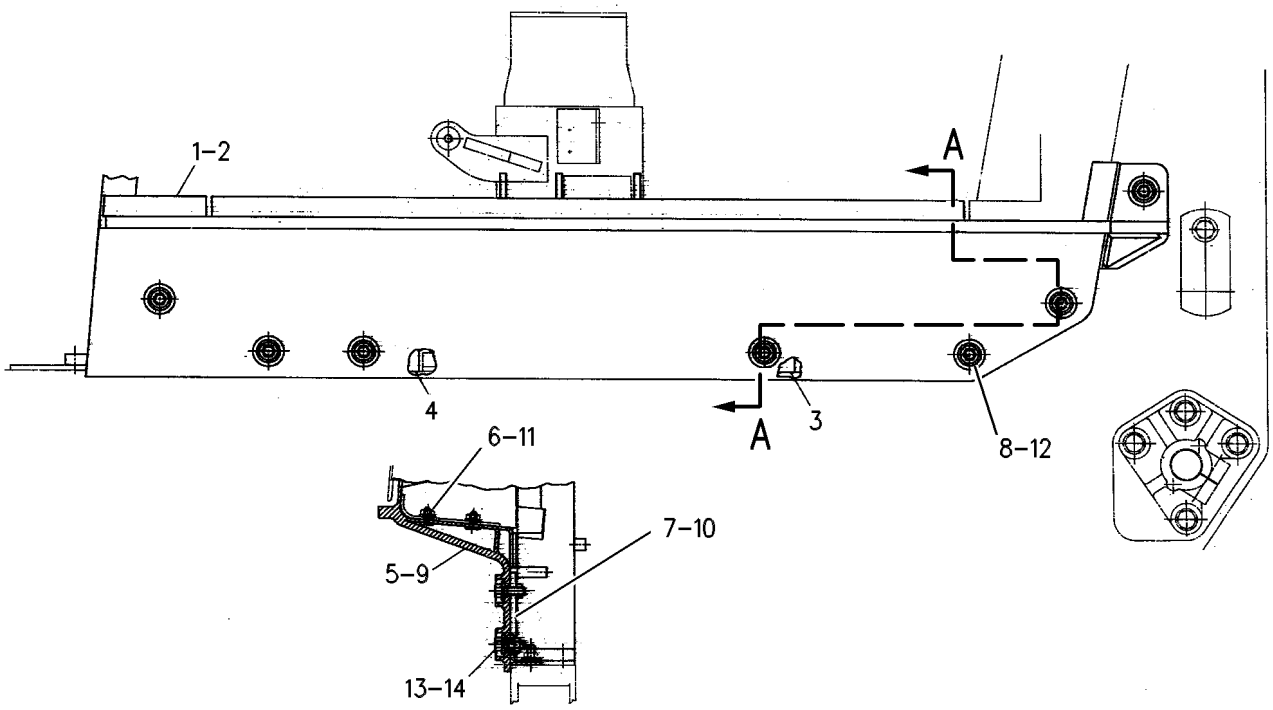

GRAPHIC #1 <END> g00295020

2Q-5344 GUARD GP-FRONT

S/N: 9BL1-UP
PART OF 133-0569, 133-3958 WASTE HANDLING AR
AN ATTACHMENT

SMCS-7167 **i01400035**

NOTE	REF NO	GRAPHIC REF	PART NUMBER	QTY	PART NAME 1 2 3 4 5 6 (PRODUCT LEVEL)	SEE PAGE
	1	1	**2Q-5336**	1	PLATE AS	
	2	1	**4L-9337**	10	BOLT (3/8-16X1.5-IN)	
	3	1	**5P-1075**	10	WASHER-HARD (10.2X22.5X3-MM THK)	
	4	1	**2Q-5338**	1	GROMMET	
	5	1	**5P-8502**	1	PADLOCK GP	
A		1	**5P-8500**	1	KEY	
A		1	**8Y-6364**	1	SLEEVE	
	6	1	**2Q-5334**	1	PLATE AS	
	7	1	**7P-7427**	1	HINGE	
	8	1	**7X-0365**	4	BOLT (3/4-10X1.5-IN)	
	9	1	**8T-4994**	4	WASHER-HARD (20X36.5X3.5-MM THK)	
	10	1	**8T-8917**	8	BOLT (1/2-13X1.25-IN)	
	11	1	**7D-1649**	2	WASHER-HARD (13.5X32X5-MM THK)	
	12	1	**2Q-5342**	1	PLATE AS (RH)	
	13	1	**1F-0750**	5	NUT-WELD (3/8-16-THD)	
	14	1	**5P-1076**	8	WASHER-HARD (13.5X30X4-MM THK)	
	15	1	**2Q-5654**	1	COVER AS	
	16	1	**5P-2228**	2	BOLT (1/2-13X1-IN)	
	17	1	**2Q-5326**	1	GUARD AS	
	18	1	**1F-0748**	2	NUT-WELD (1/2-13-THD)	
	19	1	**2Q-5339**	1	PLATE AS (LH)	
	20	1	**1F-0750**	5	NUT-WELD (3/8-16-THD)	

A - NOT PART OF THIS GROUP

2Q-5344 **GUARD GP-FRONT** (contd.) **i01400035**

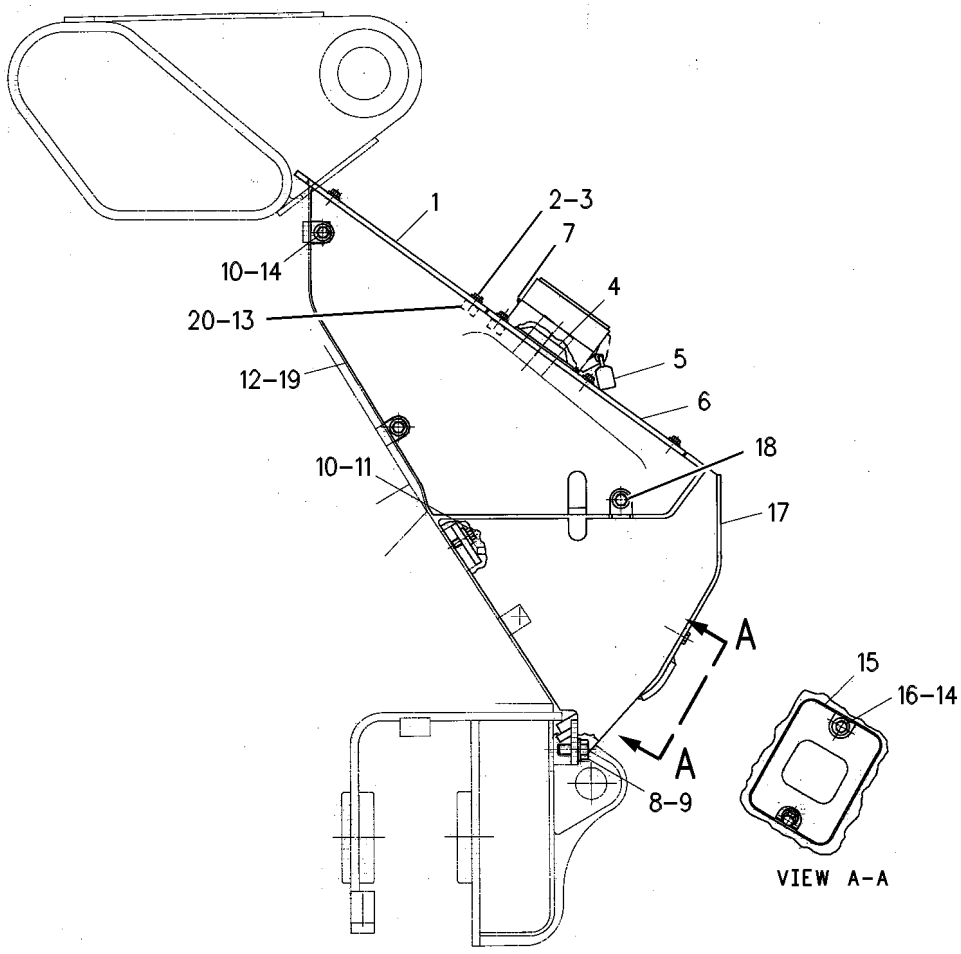

GRAPHIC #1 <END> g00295023

8G-0191 GUARD GP-FRONT

S/N: 9BL1-UP

PART OF 117-1761, 8Y-9370 CHASSIS AR

SMCS-7167 **i01400037**

NOTE	REF NO	GRAPHIC REF	PART NUMBER	QTY	PART NAME 1 2 3 4 5 6 (PRODUCT LEVEL)	SEE PAGE
C	1	1	**3W-6856**	1	PLATE AS	
	2	1	**0S-1594**	24	BOLT (3/8-16X1-IN)	
	3	1	**7P-8037**	1	PLATE	
	4	1	**8G-1264**	1	PLATE AS	
	5	1	**3W-4334**	1	PLATE	
	6	1	**0S-1595**	6	BOLT (1/2-13X1.25-IN)	
		1	**5P-1076**	6	WASHER-HARD (13.5X30X4-MM THK)	
	7	1	**7P-8042**	1	GUARD AS	
		1	**7P-8044**	1	GUARD AS	
					(EACH GUARD AS INCLUDES)	
		1	**9F-2978**	10	NUT-WELD (3/8-16-THD)	
	8	1	**7P-8039**	1	GROMMET	
	9	1	**4H-1225**	4	WASHER (11X22X6-MM THK)	
	10	1	**6V-8513**	4	WASHER-HARD (11X35X2.5-MM THK)	
	11	1	**5P-1075**	20	WASHER-HARD (10.2X22.5X3-MM THK)	

C - CHANGE FROM PREVIOUS TYPE

8G-0191 **GUARD GP-FRONT** (contd.) **i01400037**

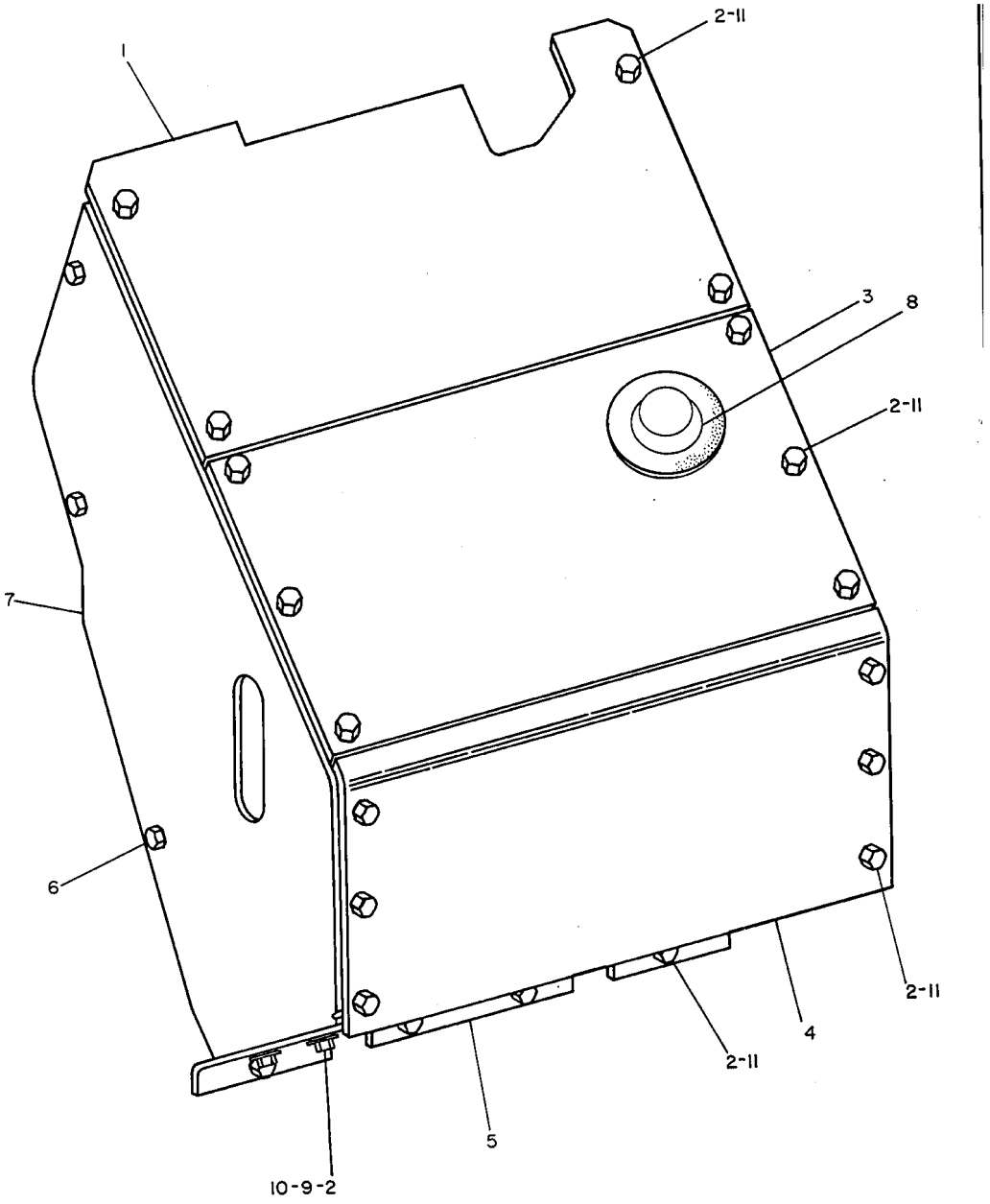

NOTE	REF NO	PART NUMBER	QTY	DESCRIPTION
C	1	3W6856	1	PLATE AS.
	2	0S1594	24	BOLT
	3	7P8037	1	PLATE
	4	8G1264	1	PLATE AS.
	5	3W4334	1	PLATE
	6	0S1595	6	BOLT
		5P1076	6	WASHER
	7	7P8042	1	GUARD AS. (R.H.)
		7P8044	1	GUARD AS. (L.H.)
				(EA. GUARD AS. INCL.)
		9F2978	10	NUT
	8	7P8039	1	GROMMET
	9	4H1225	4	SPACER
	10	6V8513	4	WASHER
	11	5P1075	20	WASHER

C INDICATES CHANGE 339732

GRAPHIC #1 <END> g00174638

3W-8578 GUARD GP-IDLER–ENHANCED EXTENDED WEAR LIFE

S/N: 9BL1-UP

CANNOT BE USED WITH SYSTEMONE IDLER GP OR ENHANCED EXTENDED WEAR LIFE SCRAPER GP-IDLER

PART OF 133-3958 WASTE HANDLING AR

AN ATTACHMENT

SMCS-7169 **i05095372**

NOTE	REF NO	GRAPHIC REF	PART NUMBER	QTY	PART NAME 1 2 3 4 5 6 (PRODUCT LEVEL)	SEE PAGE
	1	1	**3W-8775**	2	GUARD AS	
	2	1	**8Y-1899**	4	PLATE	
	3	1	**3W-8772**	2	GUARD AS	
M	4	1	**8T-4194**	4	BOLT (M12X1.75X50-MM)	
	5	1	**5P-8245**	8	WASHER-HARD (13.5X25.5X3-MM THK)	
M	6	1	**8T-4176**	4	BOLT (M12X1.75X90-MM)	
	7	1	**8Y-1778**	2	BAR	
M	8	1	**8T-4192**	16	BOLT (M12X1.75X25-MM)	
	9	1	**5P-1076**	28	WASHER-HARD (13.5X30X4-MM THK)	
M	10	1	**8T-4956**	4	BOLT (M12X1.75X35-MM)	
	11	1	**8Y-1900**	2	GUARD AS	
					QUANTITIES SHOWN ARE THOSE REQUIRED FOR BOTH LH & RH SIDES	

M - METRIC PART

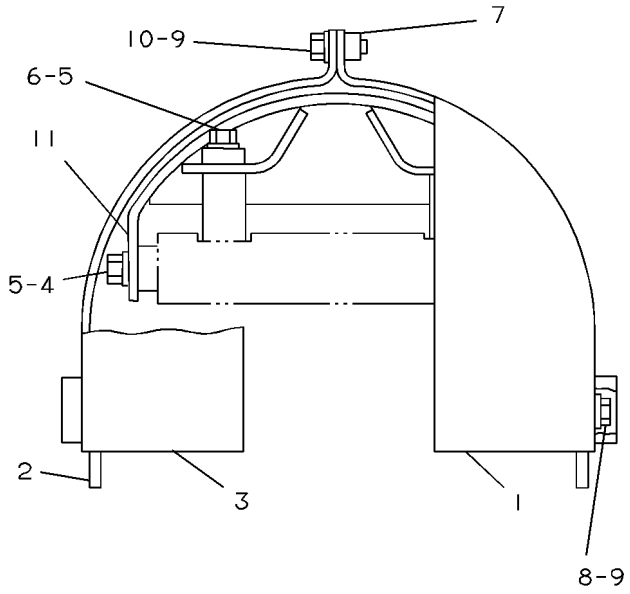

GRAPHIC #1 <END> g00192218

3W-4827 GUARD GP-LINES

S/N: 9BL1-UP
LIFT
PART OF 119-5868 MODIFICATION AR
AN ATTACHMENT

SMCS-7167 **i01400039**

NOTE	REF NO	GRAPHIC REF	PART NUMBER	QTY	PART NAME 1 2 3 4 5 6 (PRODUCT LEVEL)	SEE PAGE
	1	1	**3W-4023**	1	GUARD AS (RH)	
		1	**3W-4024**	1	GUARD AS (LH)	
	2	1	**8T-9397**	6	BOLT (3/4-10X1.25-IN)	
		1	**8T-4994**	6	WASHER-HARD (20X36.5X3.5-MM THK)	

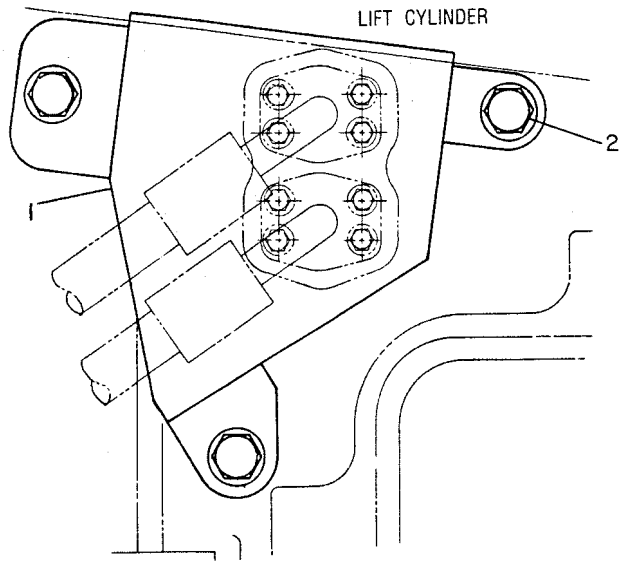

GRAPHIC #1 <END> g00193220

8Y-9493 GUARD GP-LINES

S/N: 9BL1-UP

PART OF 8Y-9817 CONVERSION AR-NON-ROPS, 8Y-9636 ROPS AR-OPEN AN ATTACHMENT

SMCS-7167 **i00568460**

NOTE	REF NO	GRAPHIC REF	PART NUMBER	QTY	PART NAME 1 2 3 4 5 6 (PRODUCT LEVEL)	SEE PAGE
	1	1	**8Y-9494**	1	GUARD	
	2	1	**8Y-9496**	1	GUARD	
	3	1	**8Y-9495**	1	GUARD	
	4	1	**8T-8916**	2	BOLT (7/16-14X1.5-IN)	
	5	1	**4L-9337**	4	BOLT (3/8-16X1.5-IN)	

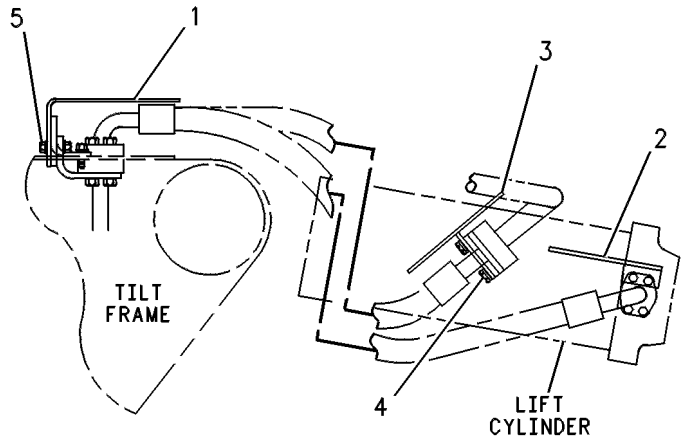

GRAPHIC #1 <END> g00242099

117-1763 GUARD GP-RADIATOR

S/N: 9BL1488-UP

PART OF 117-1761 CHASSIS AR

SMCS-7155 **i01400049**

NOTE	REF NO	GRAPHIC REF	PART NUMBER	QTY	PART NAME 1 2 3 4 5 6 (PRODUCT LEVEL)	SEE PAGE
	1	1	**118-7401**	1	GUARD AS-RADIATOR	
		1	**9P-2512**	2	BOSS (82-MM HIGH)	
		1	**8G-2613**	4	PLATE	
	2	1	**5M-9621**	8	STUD-WELD (3/8-16-THD)	
	3	1	**1F-0750**	37	NUT-WELD (3/8-16-THD)	
	4	1	**8G-4081**	2	PLATE	
	5	1	**8T-8924**	4	BOLT (3/4-10X2.5-IN)	
	6	1	**5P-1075**	7	WASHER-HARD (10.2X22.5X3-MM THK)	
	7	1	**8G-1182**	2	PLATE AS	
					(EACH INCLUDES)	
	8	1	**7M-7794**	1	STUD-WELD (9.4X21.5X25.5-MM)	
	9	1	**1F-0750**	1	NUT-WELD (3/8-16-THD)	
	10	1	**8T-4994**	4	WASHER-HARD (20X36.5X3.5-MM THK)	
	11	1	**8Y-9452**	1	SKIRT	
	12	1	**7P-7827**	1	PLATE	
	13	1	**118-7979**	1	GUARD AS	
	14	1	**8Y-9841**	1	SKIRT	
E	15	1	**118-0021**		SEAL (7CM)	
	16	1	**8T-9101**	2	BOLT (3/8-16X2.75-IN)	
	17	1	**8T-2561**	4	WASHER-HARD (10.5X28.5X5-MM THK)	
	18	1	**4L-6454**	9	BOLT (3/8-16X1-IN)	
	19	1	**8G-8574**	2	SPACER	
	20	1	**4M-7470**	2	GROMMET	

E - ORDER BY THE CENTIMETER

117-1763 **GUARD GP-RADIATOR (**contd.**)** **i01400049**

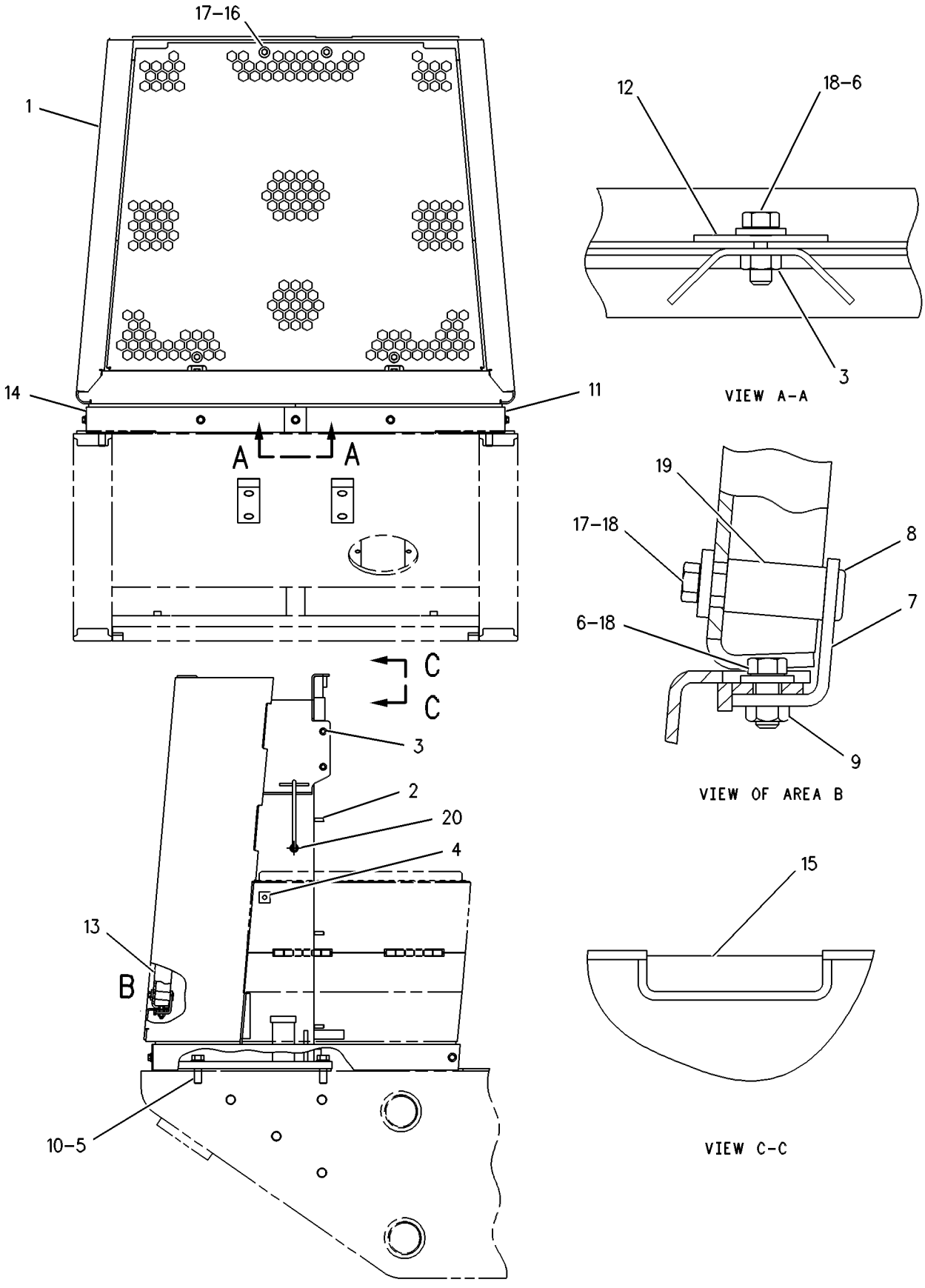

GRAPHIC #1 <END> g00292165

5Q-6822 GUARD GP-RADIATOR

S/N: 9BL1-UP

PART OF 133-0568 GUARD AR-RADIATOR, 133-0569 WASTE HANDLING AR

AN ATTACHMENT

SMCS-7155 **i01400042**

NOTE	PART NUMBER	QTY	PART NAME 1 2 3 4 5 6 (PRODUCT LEVEL)	SEE PAGE
	3B-4628	2	PIN-COTTER	
	5B-2183	2	NUT-JAM (9/16-18-THD)	
	5P-8502	1	PADLOCK GP	
A	**5P-8500**	1	KEY	
A	**8Y-6364**	1	SLEEVE	
	5Q-5060	1	PAWL	
	5Q-6826	1	GUARD AS-RADIATOR	
	0L-2119	2	WASHER (16.7X30.2X5-MM THK)	
	7K-6536	1	RIVET-POP	
	8F-9836	1	BOSS (3/8-16-THD)	
	8G-6035	1	CLIP	
	9W-8766	1	BRACKET	
	5Q-7911	1	GUARD AS	
	5Q-5061	1	PLATE	
	8G-2613	16	PLATE	
	8G-4081	8	PLATE	
	9P-2512	4	BOSS (82-MM HIGH)	
	9F-2978	12	NUT-WELD (3/8-16-THD)	
	5M-9621	16	STUD-WELD (3/8-16-THD)	
	6L-3656	8	STUD-WELD	
	8G-2613	16	PLATE	
	8G-4081	8	PLATE	
	9P-2512	4	BOSS (82-MM HIGH)	
	1F-0750	32	NUT-WELD (3/8-16-THD)	
	1F-0748	4	NUT-WELD (1/2-13-THD)	
	6V-8801	2	NUT (3/8-16-THD)	
	7P-7403	1	ROD	
	8Y-4000	1	LATCH AS (T-BAR, COMPARTMENT)	
	6H-3956	1	PIN	
	7X-0766	1	SPRING-LATCH	
	8Y-3998	1	HANDLE-LATCH	
	8Y-3966	1	WASHER (14.7X35X1.57-MM THK)	
	8Y-8306	1	SHAFT-LATCH	
	8T-2502	2	BOLT (3/8-16X1.125-IN)	
	8T-2561	1	WASHER-HARD (10.5X28.5X5-MM THK)	
	8T-4121	2	WASHER-HARD (11X21X2.5-MM THK)	
	8T-9371	1	BOLT (3/8-16X0.5-IN)	

A - NOT PART OF THIS GROUP

<END>

8Y-9457 GUARD GP-RADIATOR

S/N: 9BL1-1487

PART OF 8Y-9370 CHASSIS AR

SMCS-7155 **i01400045**

NOTE	REF NO	GRAPHIC REF	PART NUMBER	QTY	PART NAME 1 2 3 4 5 6 (PRODUCT LEVEL)	SEE PAGE
	1	1	**8Y-9435**	1	GUARD AS-RADIATOR	
		1	**8Y-9448**	1	PLATE AS (RH)	
		1	**9P-2512**	2	BOSS (82-MM HIGH)	
	2	1	**8T-9101**	2	BOLT (3/8-16X2.75-IN)	
	3	1	**8T-2561**	4	WASHER-HARD (10.5X28.5X5-MM THK)	
	4	1	**4L-6454**	9	BOLT (3/8-16X1-IN)	
	5	1	**8G-8574**	2	SPACER	
	6	1	**5P-1075**	7	WASHER-HARD (10.2X22.5X3-MM THK)	
	7	1	**8G-1182**	2	PLATE AS	
		1	**1F-0750**	1	NUT-WELD (3/8-16-THD)	
		1	**7M-7794**	1	STUD-WELD (9.4X21.5X25.5-MM)	
	8	1	**4M-7470**	2	GROMMET	
	9	1	**8T-8924**	4	BOLT (3/4-10X2.5-IN)	
	10	1	**8T-4994**	4	WASHER-HARD (20X36.5X3.5-MM THK)	
	11	1	**8Y-9452**	1	SKIRT	
	12	1	**7P-7827**	1	PLATE	
	13	1	**118-7979**	1	GUARD AS	
	14	1	**8Y-9841**	1	SKIRT	

8Y-9457 **GUARD GP-RADIATOR** (contd.) **i01400045**

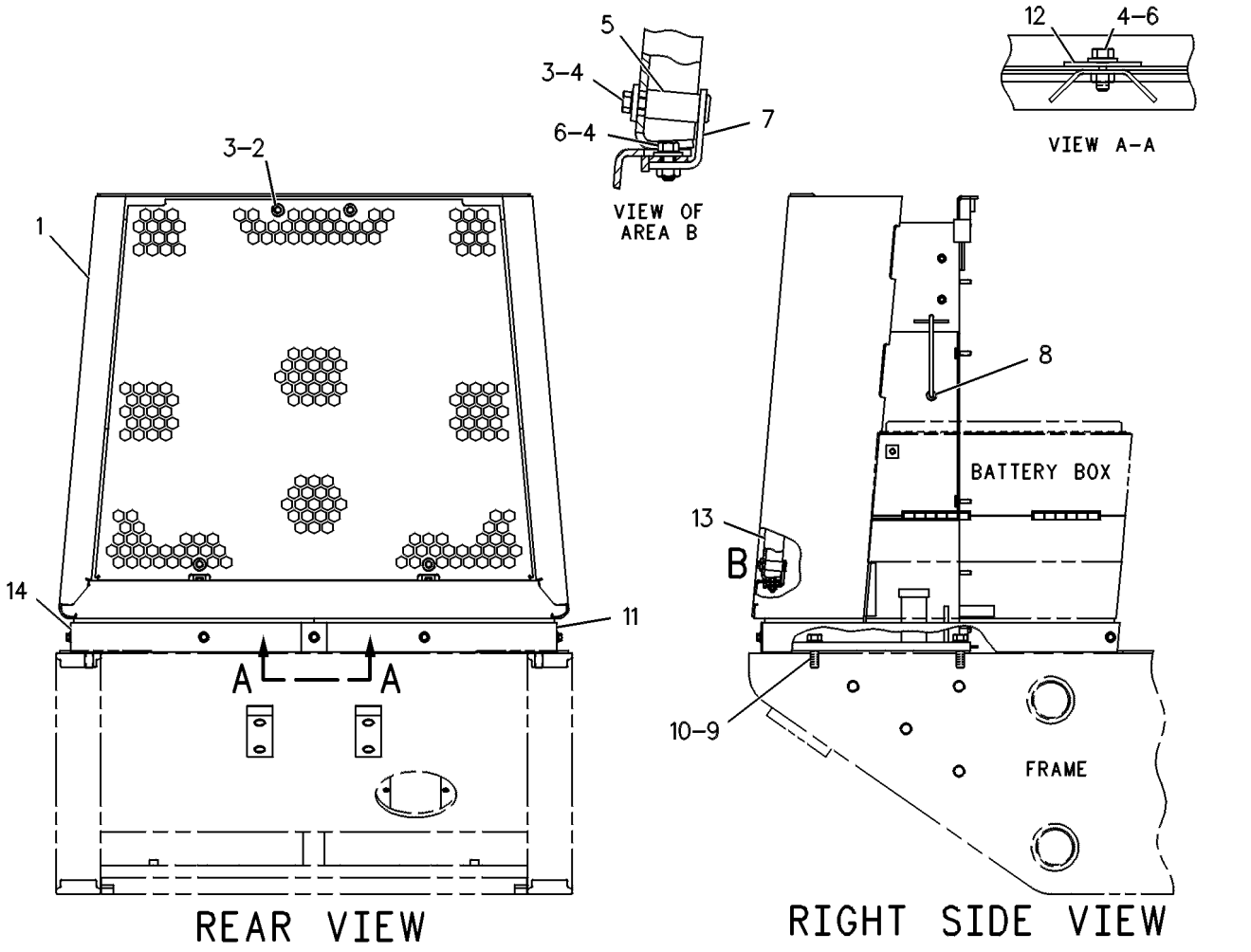

GRAPHIC #1 <END> g00247112

5G-9258 HITCH GP

S/N: 9BL1-UP
PART OF 119-5868 MODIFICATION AR
AN ATTACHMENT

SMCS-7100, 7106, 7116, 7117 **i00564227**

NOTE	REF NO	GRAPHIC REF	PART NUMBER	QTY	PART NAME 1 2 3 4 5 6 (PRODUCT LEVEL)	SEE PAGE
	1	1	**7X-0347**	1	BOLT (5/8-11X2.25-IN)	
		1	**2H-3789**	1	NUT (5/8-11-THD)	
	2	1	**7B-0863**	1	LATCH-PIN	
	3	1	**5G-9429**	1	PIN AS	
		1	**9S-8184**	1	PIN AS-DRAWBAR	
	4	1	**5G-9259**	1	HITCH AS	
	5	1	**7X-0404**	4	BOLT (1-8X2.5-IN)	
		1	**8T-5361**	4	WASHER-HARD (28X49X5-MM THK)	

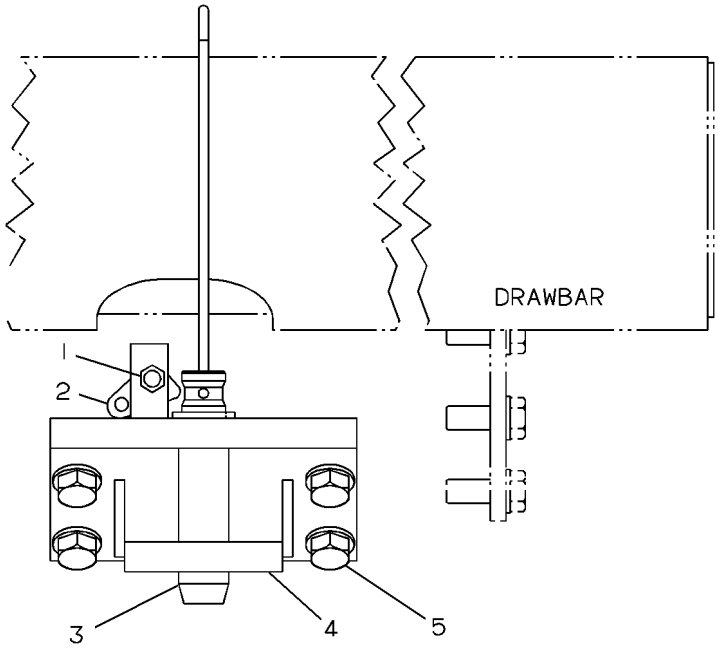

GRAPHIC #1 <END> g00205604

3W-8281 KIT-SEAL

S/N: 9BL1-UP
PIVOT SHAFT
FIELD INSTALLATION

SMCS-7050 **i00569508**

NOTE	PART NUMBER	QTY	PART NAME 1 2 3 4 5 6 (PRODUCT LEVEL)	SEE PAGE
	3W-7963	1	PLATE	
	3W-7962	1	SEAL	
	3W-7964	1	SLEEVE	

<END>

154-6274 LIFTING GP-MACHINE

S/N: 9BL1-UP

AN ATTACHMENT

SMCS-7000 **i01400058**

NOTE	REF NO	GRAPHIC REF	PART NUMBER	QTY	PART NAME 1 2 3 4 5 6 (PRODUCT LEVEL)	SEE PAGE
	1	1	**3W-2573**	2	EYE	
	2	1	**7V-5138**	2	BUMPER	
	3	1	**154-6275**	2	EYE AS	
					(EACH INCLUDES)	
		1	**2J-6643**	1	PLATE	
	4	1	**0S-1626**	8	BOLT (3/4-10X1.5-IN)	
	5	1	**1A-5576**	4	BOLT (7/8-9X4.5-IN)	
M	6	1	**5A-3604**	2	BOLT-SOCKET HEAD (M8X1.25X25-MM)	
M	7	1	**5C-7261**	2	NUT (M8X1.25-THD)	
	8	1	**5P-8248**	8	WASHER-HARD (20X36.5X3.5-MM THK)	
	9	1	**5P-8249**	4	WASHER-HARD (24X41.5X4-MM THK)	
	10	1	**8T-4224**	2	WASHER-HARD (8.8X16X2-MM THK)	

M - METRIC PART

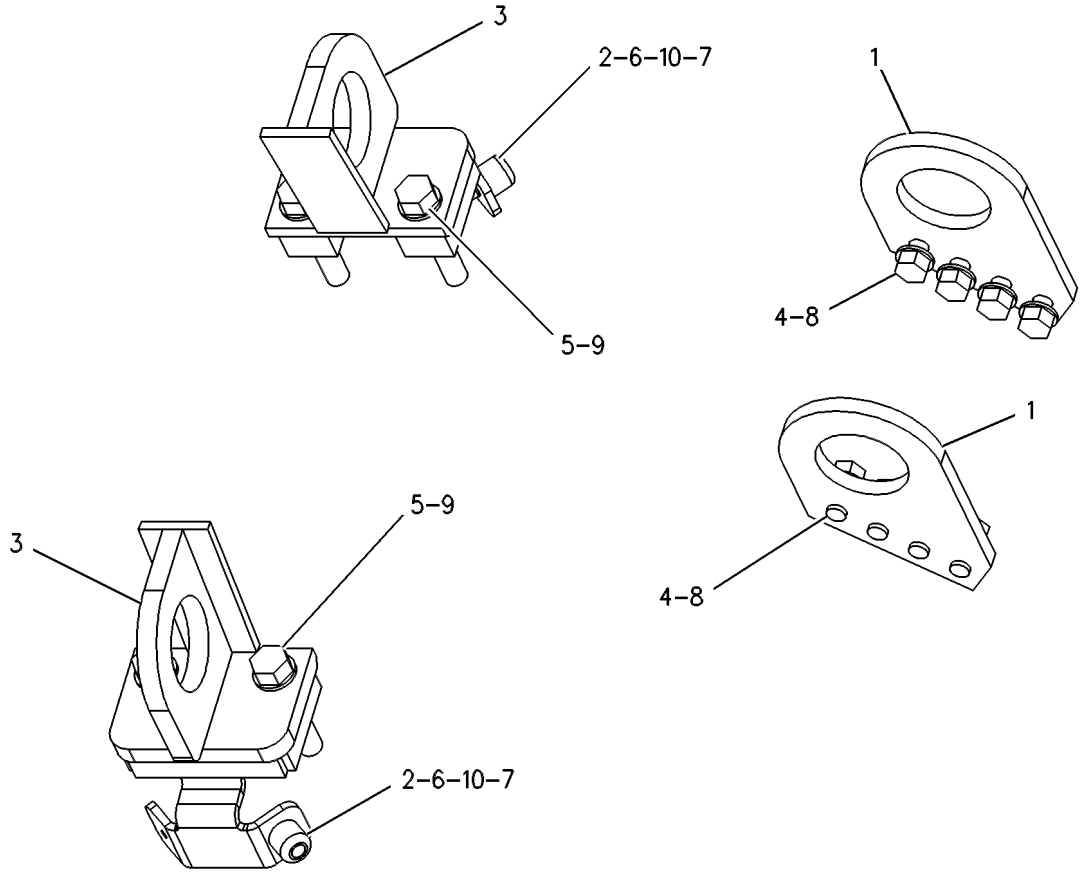

GRAPHIC #1 <END> g00387544

3W-2577 LIFTING GP-MACHINE

S/N: 9BL1-UP

FOR USE WITH MACHINES EQUIPPED WITH CAB OR OPEN ROPS

AN ATTACHMENT

SMCS-7000 **i01400055**

NOTE	REF NO	GRAPHIC REF	PART NUMBER	QTY	PART NAME 1 2 3 4 5 6 (PRODUCT LEVEL)	SEE PAGE
	1	1	**3W-2578**	2	EYE AS	
	2	1	**1A-5576**	4	BOLT (7/8-9X4.5-IN)	
	3	1	**5P-8249**	4	WASHER-HARD (24X41.5X4-MM THK)	
	4	1	**3W-2573**	2	EYE	
	5	1	**0S-1626**	8	BOLT (3/4-10X1.5-IN)	
	6	1	**5P-8248**	8	WASHER-HARD (20X36.5X3.5-MM THK)	

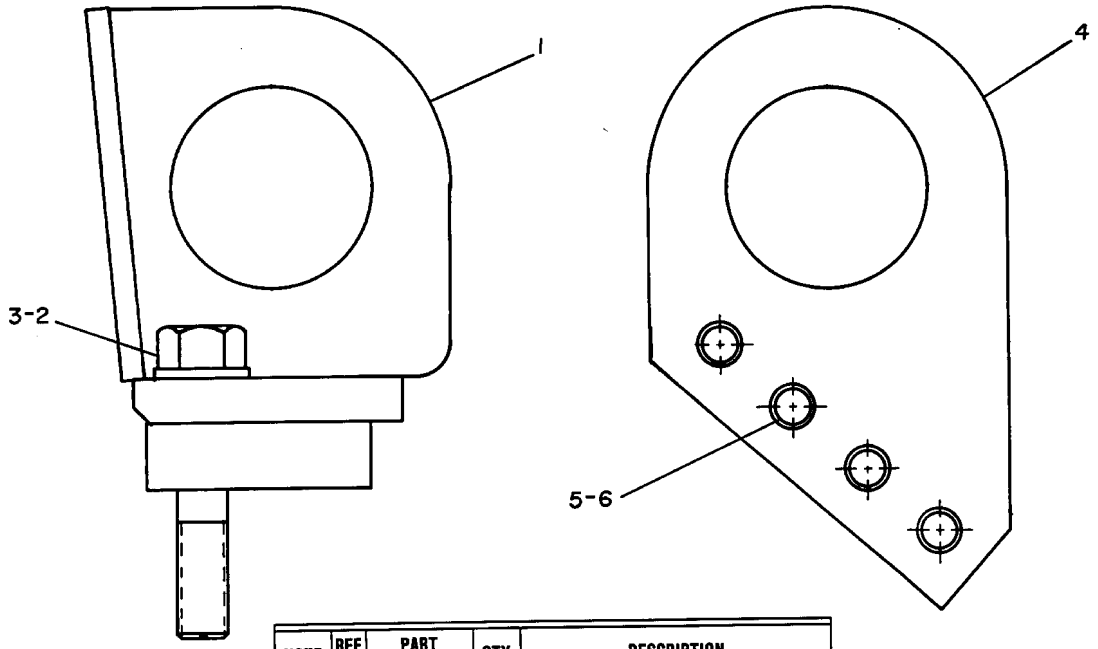

NOTE	REF NO	PART NUMBER	QTY	DESCRIPTION
	1	3W2578	2	EYE AS.
	2	1A5576	4	BOLT
	3	5P8249	4	WASHER
	4	3W2573	2	EYE
	5	0S1626	8	BOLT
	6	5P8248	8	WASHER

322722

GRAPHIC #1 <END> g00164725

3W-3524 LIFTING GP-MACHINE

S/N: 9BL1-UP

FOR USE WITH MACHINES NOT EQUIPPED WITH CAB OR ROPS

AN ATTACHMENT

SMCS-7000 **i01400056**

NOTE	REF NO	GRAPHIC REF	PART NUMBER	QTY	PART NAME 1 2 3 4 5 6 (PRODUCT LEVEL)	SEE PAGE
	1	1	**3W-3525**	2	EYE AS	
	2	1	**1D-4625**	4	BOLT (7/8-9X2.5-IN)	
	3	1	**5P-8249**	4	WASHER-HARD (24X41.5X4-MM THK)	
	4	1	**3W-2573**	2	EYE	
	5	1	**0S-1626**	8	BOLT (3/4-10X1.5-IN)	
	6	1	**5P-8248**	8	WASHER-HARD (20X36.5X3.5-MM THK)	

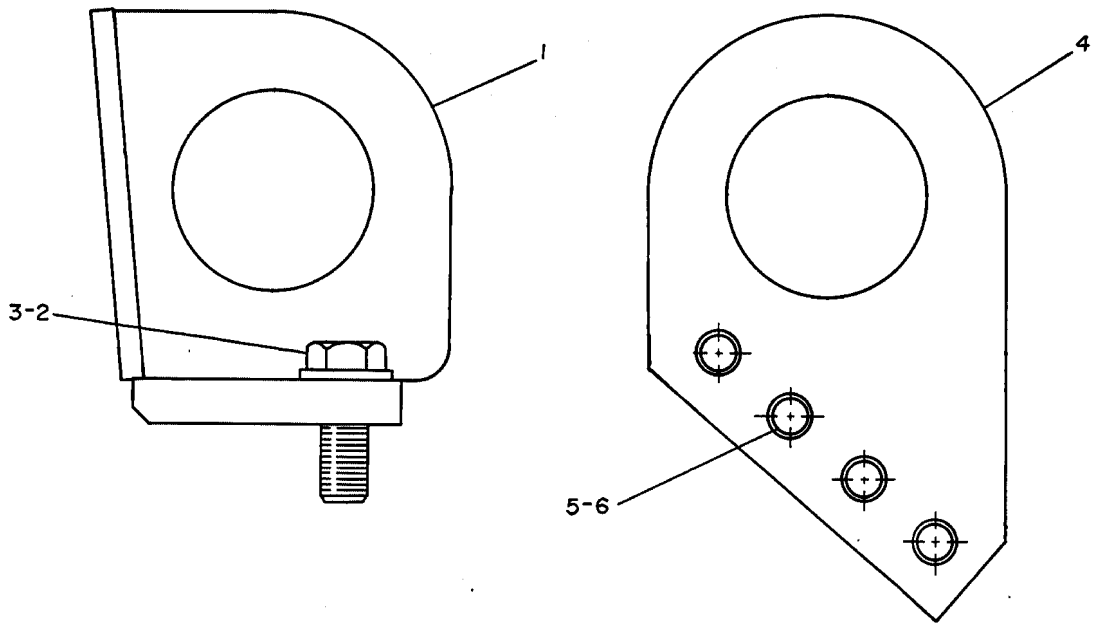

NOTE	REF NO	PART NUMBER	QTY	DESCRIPTION
	1	3W3525	2	EYE AS.
	2	1D4625	4	BOLT
	3	5P8249	4	WASHER
	4	3W2573	2	EYE
	5	0S1626	8	BOLT
	6	5P8248	8	WASHER

342601

GRAPHIC #1 <END> g00176087

5Q-7094 SCREEN GP

S/N: 9BL1-UP
PART OF 133-3958 WASTE HANDLING AR
AN ATTACHMENT

SMCS-7150 **i00686088**

NOTE	REF NO	GRAPHIC REF	PART NUMBER	QTY	PART NAME 1 2 3 4 5 6 (PRODUCT LEVEL)	SEE PAGE
	1	1	**8E-1356**	2	KNOB AS	
	2	1	**8T-7566**	1	PIN-SPRING	
BD	3	1	**5P-9205**		SEAL	
	4	1	**5Q-7111**	1	SCREEN AS	
	5	1	**6P-6256**	2	RETAINER-SPRING	

B - USE AS REQUIRED
D - ORDER BY THE METER

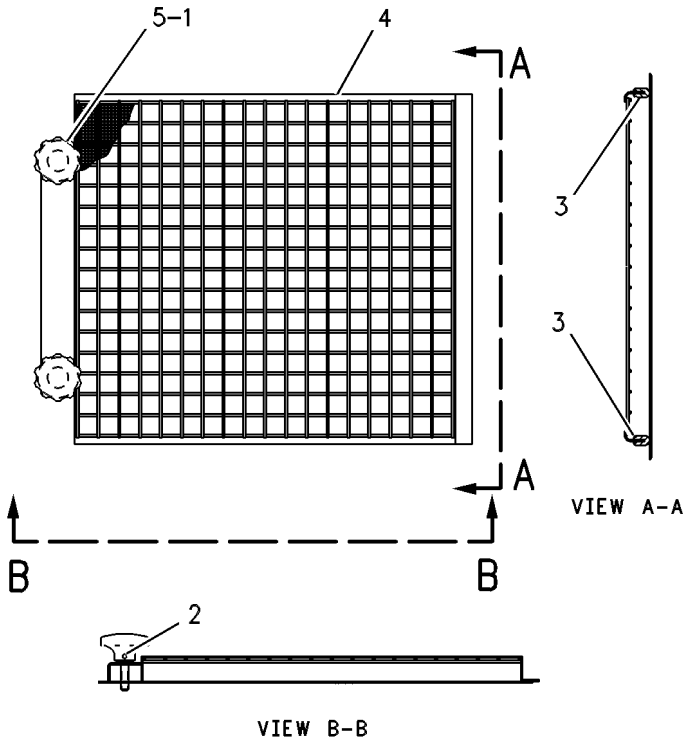

GRAPHIC #1 <END> g00295046

5Q-5461 SEAL GP-ENCLOSURE

S/N: 9BL1-UP
PART OF 133-0569, 133-3958 WASTE HANDLING AR
AN ATTACHMENT

SMCS-7000 **i00686080**

NOTE	REF NO	GRAPHIC REF	PART NUMBER	QTY	PART NAME 1 2 3 4 5 6 (PRODUCT LEVEL)	SEE PAGE
D	1	1	**5P-7211**		SEAL	
	2	1	**5Q-5227**	1	BAFFLE AS	
		1	**4M-5281**	2	BOLT (1/4-20X0.75-IN)	
		1	**5P-0537**	2	WASHER-HARD (7.2X14.5X2-MM THK)	
		1	**5Q-5209**	14	RIVET-POP	
		1	**6V-8185**	2	NUT (1/4-20-THD)	
DB	3	1	**5P-5939**		SEAL	
DB	4	1	**5P-5926**		SEAL	

B - USE AS REQUIRED
D - ORDER BY THE METER

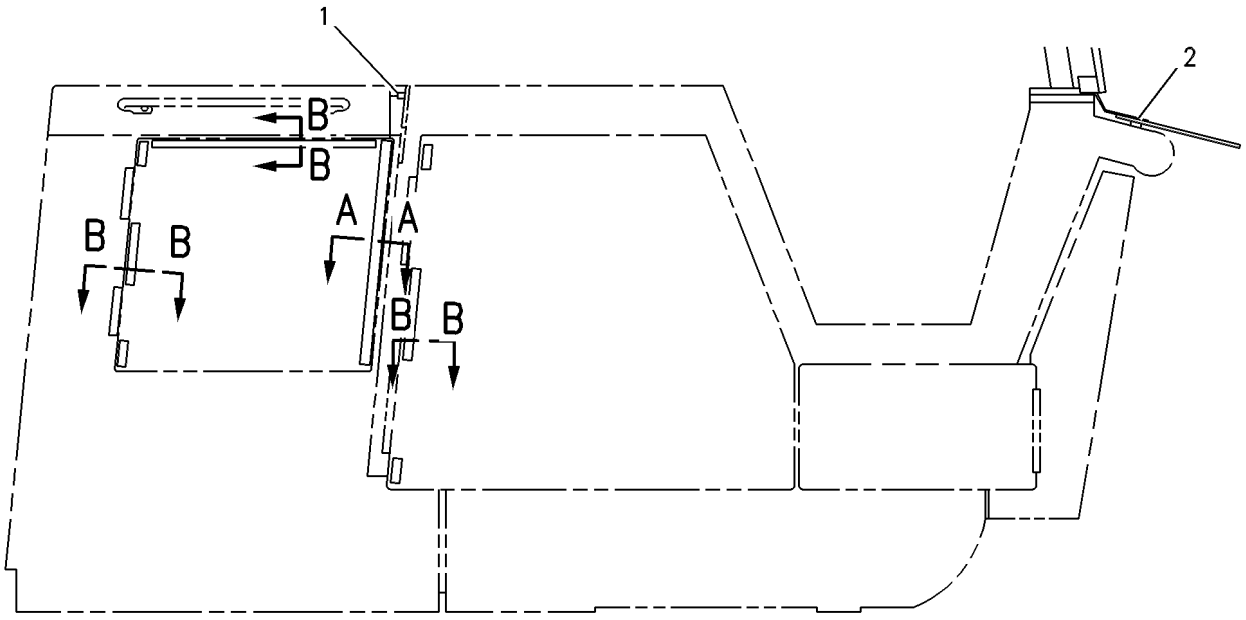

RIGHT SIDE VIEW

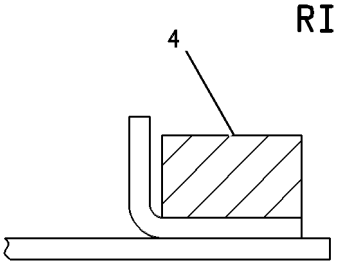

SECTION A-A

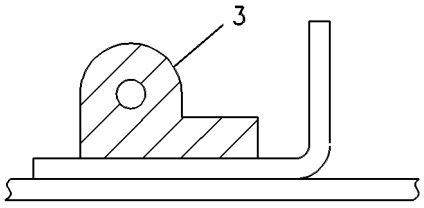

SECTION B-B

GRAPHIC #1 <END> g00294681

8Y-9461 SUPPORT GP-TILT PLATFORM

S/N: 9BL1-UP

PART OF 117-1761, 8Y-9370 CHASSIS AR

SMCS-7253 **i01402880**

NOTE	REF NO	GRAPHIC REF	PART NUMBER	QTY	PART NAME 1 2 3 4 5 6 (PRODUCT LEVEL)	SEE PAGE
	1	1	**2A-1420**	10	BOLT (1-8X4.75-IN)	
	2	1	**5P-8250**	22	WASHER (28X49X5-MM THK)	
	3	1	**8Y-9693**	1	SUPPORT AS	
	4	1	**8G-0383**	1	SUPPORT AS	
	5	1	**9S-1363**	12	BOLT (1-8X2.75-IN)	
	6	1	**7P-8237**	1	BRACKET AS	
	7	1	**1A-2029**	3	BOLT (3/8-16X1.125-IN)	
	8	1	**5P-1075**	3	WASHER-HARD (10.2X22.5X3-MM THK)	

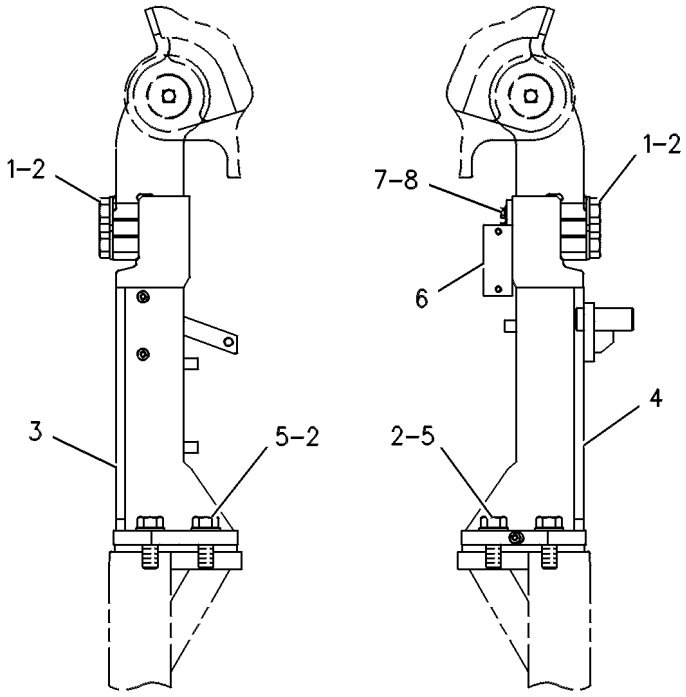

GRAPHIC #1 <END> g00247110

8Y-9644 SUPPRESSION AR-SOUND

S/N: 9BL1-UP
108 DECIBEL, EEC
AN ATTACHMENT

SMCS-7076 **i01400065**

NOTE	PART NUMBER	QTY	PART NAME 1 2 3 4 5 6 (PRODUCT LEVEL)	SEE PAGE
Y	*8Y-9774*	1	SUPPRESSION GP-SOUND	476

Y - SEPARATE ILLUSTRATION

<END>

117-5662 SUPPRESSION GP-SOUND

S/N: 9BL1488-UP

PART OF 117-5637 SUPPRESSION AR-SOUND

AN ATTACHMENT

SMCS-7076 **i00906972**

NOTE	REF NO	GRAPHIC REF	PART NUMBER	QTY	PART NAME 1 2 3 4 5 6 (PRODUCT LEVEL)	SEE PAGE
	1	1	**8Y-2709**	1	LINER (RH)	
	2	1	**8Y-2773**	1	LINER (LH)	
	3	1	**8Y-2707**	1	LINER (LH)	
	4	1	**8Y-2776**	1	LINER (RH)	
	5	1	**8Y-2708**	1	LINER (LH)	
	6	1	**8Y-2775**	1	LINER (RH)	
	7	1	**8Y-2606**	1	LINER (LH)	
	8	1	**8Y-2774**	1	LINER (RH)	
	9	1	**8Y-2710**	1	DOOR AS (LH)	
	10	1	**8Y-2711**	1	DOOR AS (RH)	
					(EACH DOOR AS INCLUDES)	
		1	**8F-9836**	1	BOSS (3/8-16-THD)	
		1	**8G-6035**	1	CLIP	
		1	**9M-5733**	1	RIVET-POP	
	11	1	**7P-3265**	2	HINGE	
	12	1	**8G-8919**	1	HOUSING AS	
	13	1	**7P-9464**	1	HANDLE	
	14	1	**8G-0816**	1	BUSHING-TERMINAL	
	15	1	**3W-1707**	1	DOOR AS (RH)	
	16	1	**3W-1709**	1	DOOR AS (LH)	
					(EACH DOOR AS INCLUDES)	
	17	1	**7P-7427**	2	HINGE	
	18	1	**8G-8919**	1	HOUSING AS	
	19	1	**7P-9464**	1	HANDLE	
	20	1	**8G-0816**	1	BUSHING-TERMINAL	

117-5662 **SUPPRESSION GP-SOUND (**contd.**)** **i00906972**

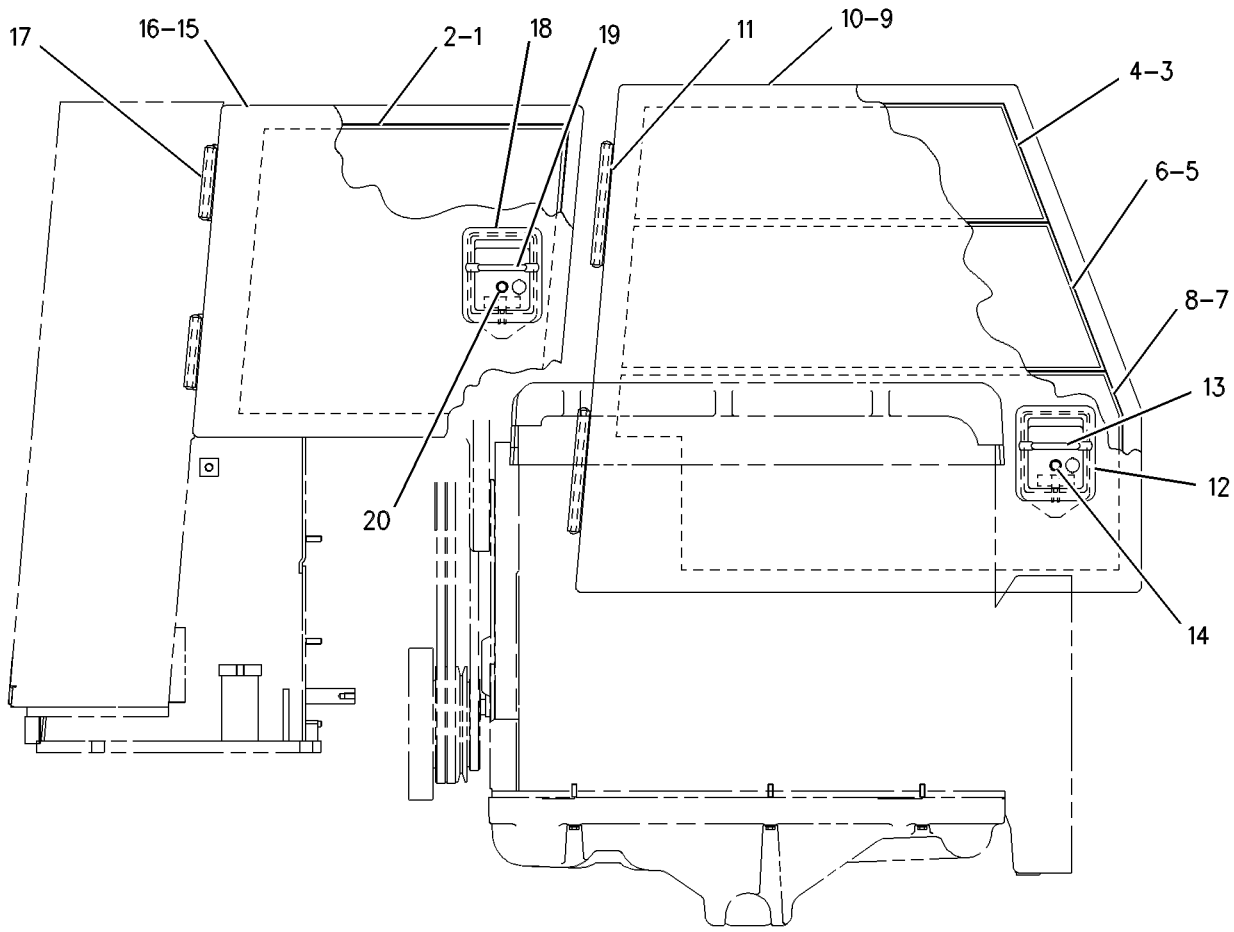

GRAPHIC #1 <END> g00292186

8Y-9774 SUPPRESSION GP-SOUND

S/N: 9BL1-UP

PART OF 8Y-9644 SUPPRESSION AR-SOUND

AN ATTACHMENT

SMCS-7076 **i00568615**

NOTE	REF NO	GRAPHIC REF	PART NUMBER	QTY	PART NAME 1 2 3 4 5 6 (PRODUCT LEVEL)	SEE PAGE
Y	1	1	**9Y-1224**	1	COVER GP-VALVE MECHANISM (SOUND SUPPRESSION)	24
Y	2	1	*111-4657*	1	COVER GP-SOUND SUPPRESSION	21
	3	1	**3W-1707**	1	DOOR AS (RH)	
		1	**7P-7427**	2	HINGE	
		1	**8G-8919**	1	HOUSING AS	
		1	**7P-9464**	1	HANDLE	
		1	**8G-0816**	1	BUSHING-TERMINAL	
	4	1	**3W-1709**	1	DOOR AS (LH)	
		1	**7P-7427**	2	HINGE	
		1	**8G-8919**	1	HOUSING AS	
		1	**7P-9464**	1	HANDLE	
		1	**8G-0816**	1	BUSHING-TERMINAL	
	5	1	**8Y-2710**	1	DOOR AS (LH)	
		1	**7P-3265**	2	HINGE	
		1	**8F-9836**	1	BOSS (3/8-16-THD)	
		1	**8G-6035**	1	CLIP	
		1	**8G-8919**	1	HOUSING AS	
		1	**7P-9464**	1	HANDLE	
		1	**8G-0816**	1	BUSHING-TERMINAL	
		1	**9M-5733**	1	RIVET-POP	
	6	1	**8Y-2711**	1	DOOR AS (RH)	
		1	**7P-3265**	2	HINGE	
		1	**8F-9836**	1	BOSS (3/8-16-THD)	
		1	**8G-6035**	1	CLIP	
		1	**8G-8919**	1	HOUSING AS	
		1	**7P-9464**	1	HANDLE	
		1	**8G-0816**	1	BUSHING-TERMINAL	
		1	**9M-5733**	1	RIVET-POP	
	7	1	**5P-1075**	4	WASHER-HARD (10.2X22.5X3-MM THK)	
	8	1	**5S-7379**	2	BOLT (3/8-16X0.875-IN)	
	9	1	**6V-8801**	2	NUT (3/8-16-THD)	
	10	1	**7P-7831**	2	ANGLE	
	11	1	**8Y-2709**	1	LINER (RH) (RH)	
	12	1	**8Y-2773**	1	LINER (LH) (LH)	
	13	1	**8G-8460**	1	CHANNEL	
	14	1	**8G-8458**	1	GRILL AS	
	15	1	**8Y-2707**	1	LINER (LH) (LH)	
	16	1	**8Y-2776**	1	LINER (RH) (RH)	
	17	1	**8Y-2708**	1	LINER (LH) (LH)	
	18	1	**8Y-2775**	1	LINER (RH) (RH)	
	19	1	**8Y-2606**	1	LINER (LH) (LH)	
	20	1	**8Y-2774**	1	LINER (RH) (RH)	

Y - SEPARATE ILLUSTRATION

8Y-9774 **SUPPRESSION GP-SOUND (**contd.**)** **i00568615**

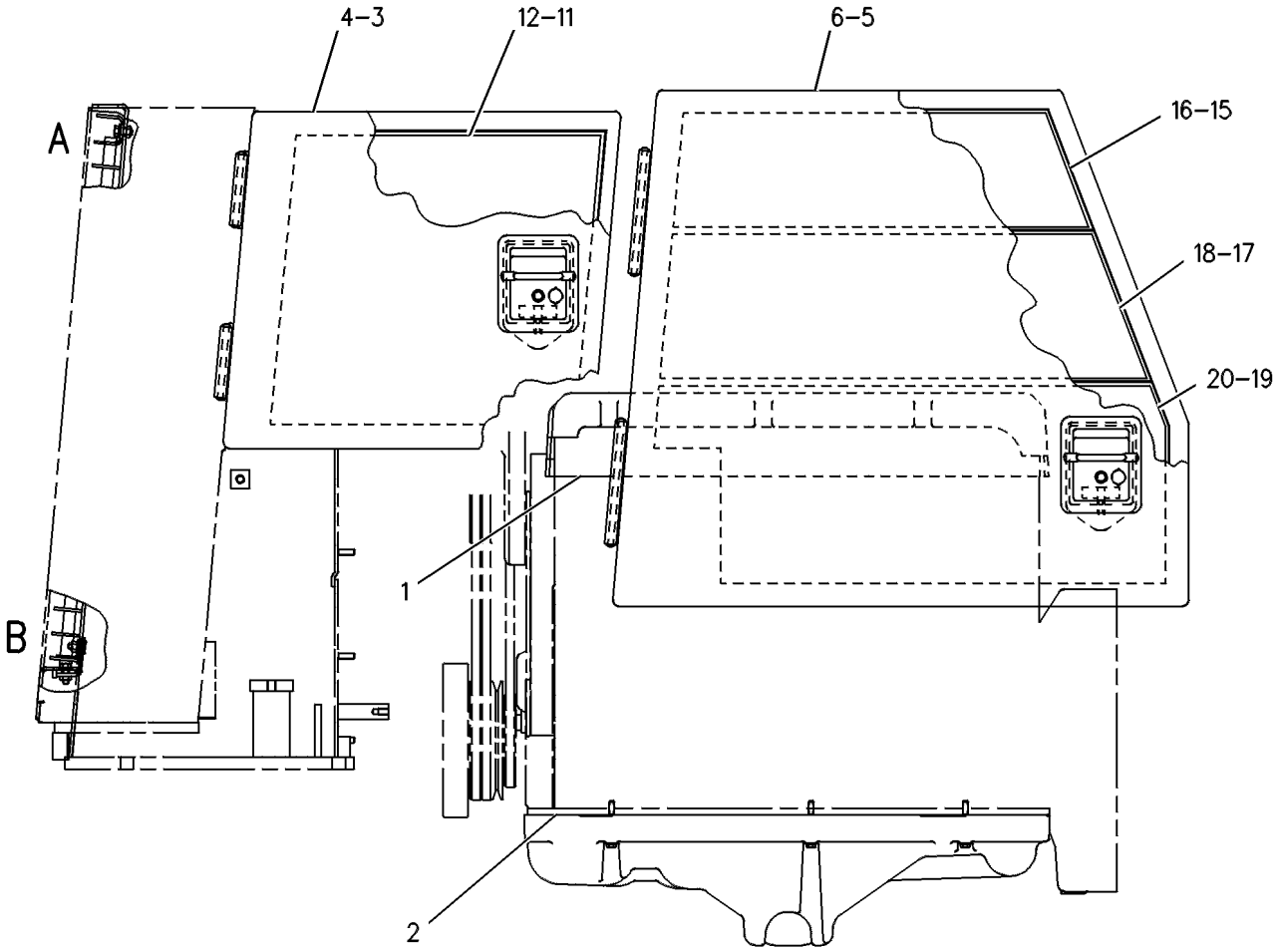

RIGHT SIDE VIEW

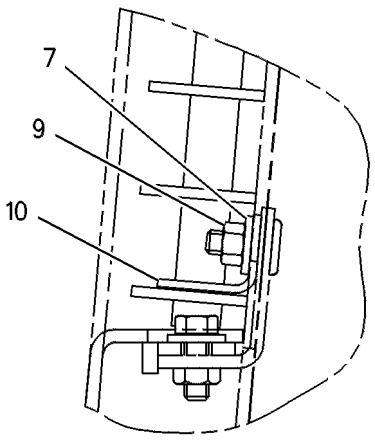

VIEW OF AREA B

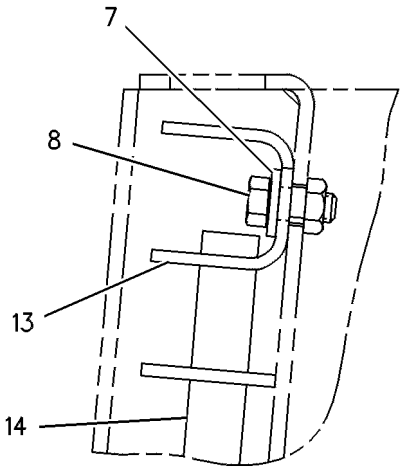

VIEW OF AREA A

GRAPHIC #1 <END> g00247240

7P-8908 TILT GP-PLATFORM

S/N: 9BL1-UP

AN ATTACHMENT

SMCS-7341 **i01400066**

NOTE	REF NO	GRAPHIC REF	PART NUMBER	QTY	PART NAME 1 2 3 4 5 6 (PRODUCT LEVEL)	SEE PAGE
C	1	1	**5P-0370**	1	LOCK PIN	
	2	1	**5S-7598**	1	PIN	
C	3	1	**5P-2228**	1	BOLT (1/2-13X1-IN)	
	4	1	**8G-3980**	1	PLATE AS	
C	5	1	**5P-1835**	4	BOLT-SOCKET HEAD (5/16-18X1-IN)	
C		1	**5P-4116**	4	WASHER-HARD (8.8X20.5X2-MM THK)	
C		1	**6V-8189**	4	NUT (5/16-18-THD)	
C	6	1	**8T-4895**	1	WASHER (13.5X50X5-MM THK)	
C	7	1	**3W-2617**	1	JACK GP-HYDRAULIC	
C	8	1	**3W-2618**	1	HANDLE	
					AVAILABLE REPLACEMENT PART(S):	
C			**3W-2619**	1	KIT-REPAIR (JACK ACTUATOR)	
					(INCLUDES FILTER BALLS, PINS & RINGS)	

C - CHANGE FROM PREVIOUS TYPE

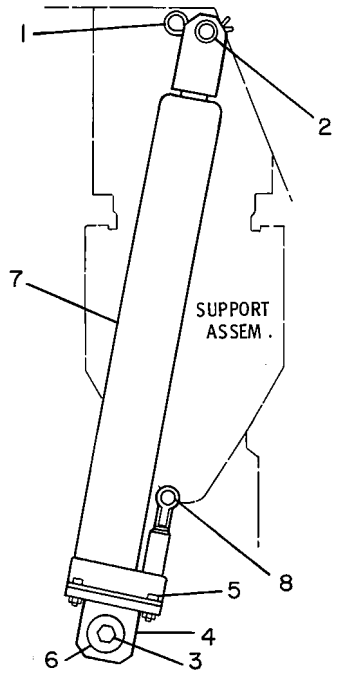

GRAPHIC #1 <END> g00203782

3W-8497 BAR GP-EQUALIZER

S/N: 9BL1-UP

PART OF 3W-8187 UNDERCARRIAGE AR

SMCS-7206 **i04921350**

NOTE	REF NO	GRAPHIC REF	PART NUMBER	QTY	PART NAME 1 2 3 4 5 6 (PRODUCT LEVEL)	SEE PAGE
	1	1	**3W-8575**	1	BAR AS	
		1	**7P-7698**	1	BEARING	
	2	1	**3W-8572**	2	PIN AS	
	3	1	**8Y-1840**	2	SPACER	
M	4	1	**8T-6430**	2	BOLT (M20X2.5X50-MM)	
	5	1	**3W-0241**	1	PIN AS	
	6	1	**3W-2207**	2	BLOCK	
	7	1	**3W-2196**	2	HOUSING AS	
	8	1	**4B-4550**	4	FITTING-PRESSURE RELIEF (1/8-27 PTF) (EQUALIZER BAR)	
	9	1	**3B-8489**	2	FITTING-GREASE (1/8-27 PTF) (EQUALIZER BAR)	
	10	1	**3W-2197**	2	PLATE AS	
	11	1	**7K-9213**	2	SEAL-LIP TYPE	
M	12	1	**8T-5379**	1	BOLT (M24X3X50-MM)	
	13	1	**0S-1822**	1	WASHER (26.2X76.2X6-MM THK)	
	14	1	**8Y-1727**	1	SPACER (26X50X16-MM THK)	
	15	1	**8T-9044**	4	RING-RETAINING	
	16	1	**3W-8571**	4	SEAL AS	
	17	1	**3W-8570**	2	BEARING	

M - METRIC PART

3W-8497 **BAR GP-EQUALIZER** (contd.) **i04921350**

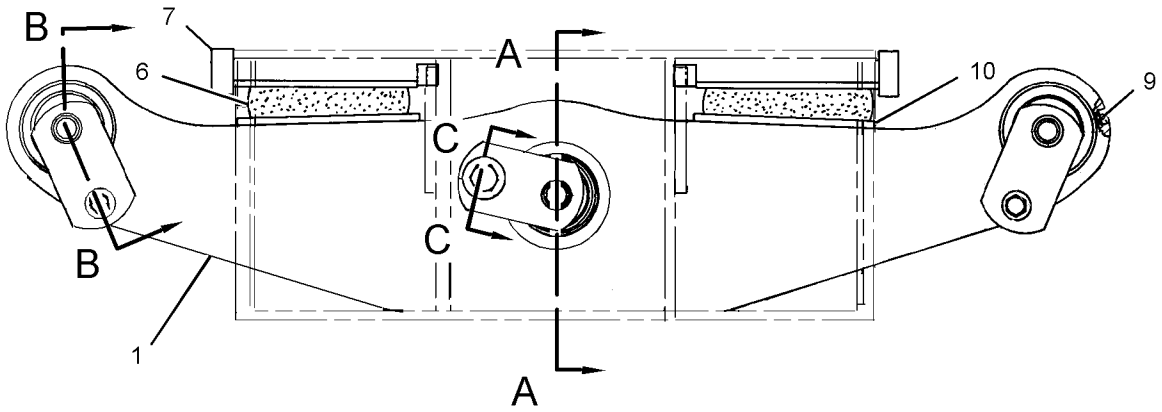

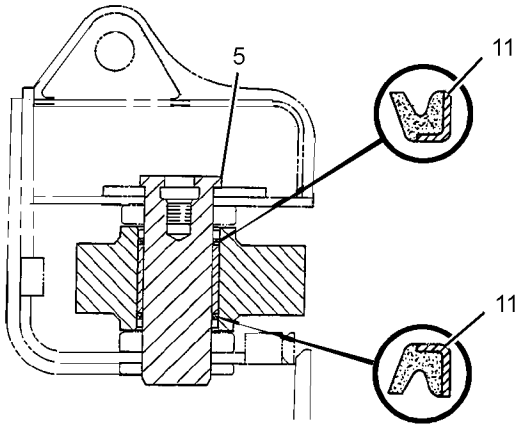

VIEW OF SECTION A-A

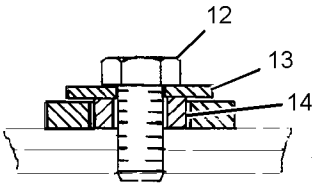

VIEW OF SECTION C-C

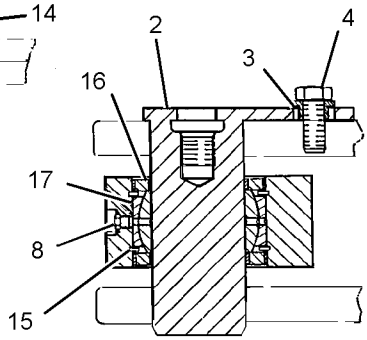

VIEW OF SECTION B-B

GRAPHIC #1 <END> g03087097

6Y-4765 CAP GP-TRACK ROLLER

S/N: 9BL1-1064

PART OF 3W-8187 UNDERCARRIAGE AR

SMCS-4180 **i00568098**

NOTE	REF NO	GRAPHIC REF	PART NUMBER	QTY	PART NAME 1 2 3 4 5 6 (PRODUCT LEVEL)	SEE PAGE
M	1	1	**8T-0360**	2	BOLT (M20X2.5X90-MM)	
	2	1	**8T-3282**	2	WASHER-HARD (22X35X3.5-MM THK)	
	3	1	**6T-4861**	1	CAP	

M - METRIC PART

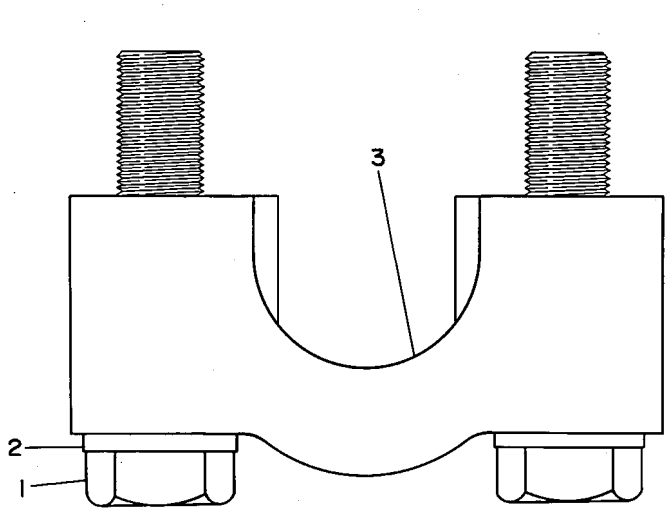

GRAPHIC #1 <END> g00173613

7G-5690 CAP GP-TRACK ROLLER

S/N: 9BL1-UP

PART OF 9W-2784 CAP GP-TRACK ROLLER

SMCS-4180 **i00568158**

NOTE	REF NO	GRAPHIC REF	PART NUMBER	QTY	PART NAME 1 2 3 4 5 6 (PRODUCT LEVEL)	SEE PAGE
	1	1	**1D-4610**	2	BOLT (3/4-10X3.25-IN)	
	2	1	**5P-8248**	2	WASHER-HARD (20X36.5X3.5-MM THK)	
	3	1	**6T-4861**	1	CAP	

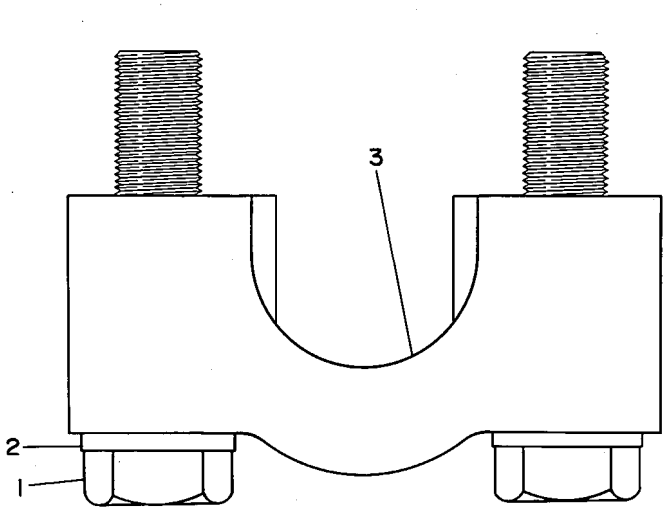

GRAPHIC #1 <END> g00173613

9W-2784 CAP GP-TRACK ROLLER

S/N: 9BL1-UP

FIELD INSTALLATION

SMCS-4180 **i00568136**

NOTE	PART NUMBER	QTY	PART NAME 1 2 3 4 5 6 (PRODUCT LEVEL)	SEE PAGE
Y	*7G-5690*	24	CAP GP-TRACK ROLLER	482

Y - SEPARATE ILLUSTRATION

<END>

3W-8146 FRAME GP-TRACK ROLLER

S/N: 9BL1-UP

PART OF 3W-8187 UNDERCARRIAGE AR

SMCS-4151 **i02373484**

NOTE	REF NO	GRAPHIC REF	PART NUMBER	QTY	PART NAME 1 2 3 4 5 6 (PRODUCT LEVEL)	SEE PAGE
	1	1	**3W-7814**	1	FRAME AS (LH)	
	2	1	**3W-7813**	1	FRAME AS (RH)	
					(EACH FRAME AS INCLUDES)	
		1	**7P-6348**	1	BEARING	
		1	**7J-2604**	1	BUSHING	
M	3	1	**7X-2489**	8	BOLT (M24X3X100-MM)	
	4	1	**8T-4167**	8	WASHER-HARD (26X44X4-MM THK)	
M	5	1	**8T-4139**	8	BOLT (M12X1.75X30-MM)	
	6	1	**8T-4223**	8	WASHER-HARD (13.5X25.5X3-MM THK)	
	7	1	**3W-8149**	2	COVER AS	
					(EACH INCLUDES)	
		1	**8Y-1733**	1	SEAL	
		1	**271-1368**	1	PLATE-WARNING (HIGH PRESSURE, READ OMM)	
		1	**7B-3028**	4	SCREW-DRIVE (NO 4X 3/16-IN)	
	8	1	**6V-0440**	4	PLUG	
	9	1	**2S-4078**	4	SEAL-O-RING	
	10	1	**8Y-4145**	2	BRACKET	
M	11	1	**7X-2566**	4	BOLT (M20X2.5X110-MM)	
	12	1	**8T-4123**	8	WASHER (3.62X5.75X0.375-MM THK)	
M	13	1	**8T-4131**	4	NUT (M20X2.5-THD)	

M - METRIC PART

3W-8146 **FRAME GP-TRACK ROLLER (**contd.**)** **i02373484**

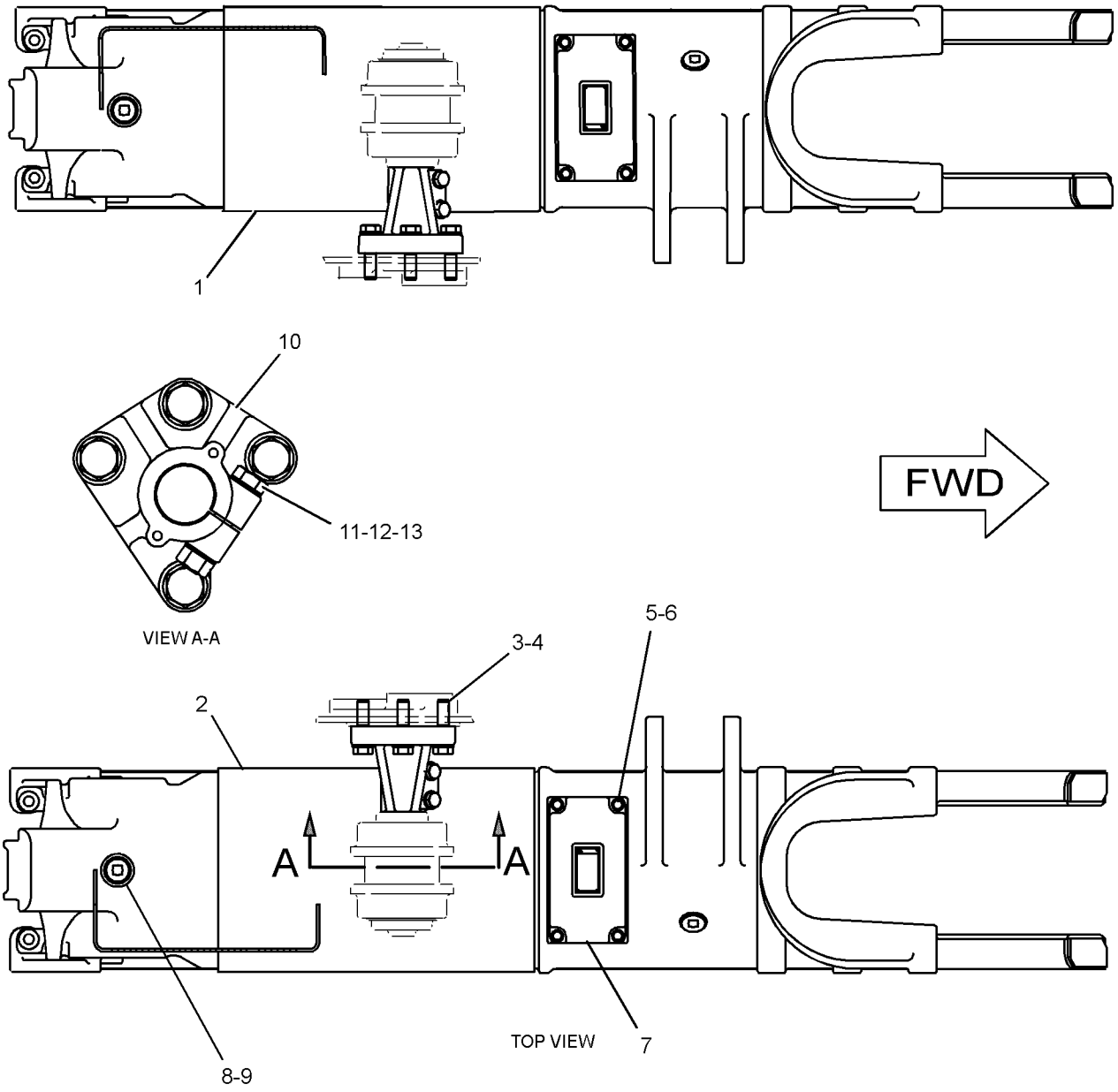

GRAPHIC #1 <END> g01185246

136-7802 GUARD AR-SEAL

S/N: 9BL1-UP

PART OF 133-0568 GUARD AR-RADIATOR, 133-0569, 133-3958 WASTE HANDLING AR AN ATTACHMENT

SMCS-4159 **i01402871**

NOTE	PART NUMBER	QTY	PART NAME 1 2 3 4 5 6 (PRODUCT LEVEL)	SEE PAGE
Y	*5Q-5568*	1	FINAL DRIVE & BRAKE GP (RH)	363
Y	*5Q-5569*	1	FINAL DRIVE & BRAKE GP (LH)	366
Y	**156-4114**	1	DRIVE GP-FINAL	353

Y - SEPARATE ILLUSTRATION

<END>

3W-8117 GUARD GP-TRACK GUIDE

S/N: 9BL1-UP

PART OF 3W-8187 UNDERCARRIAGE AR

SMCS-4177 **i01400053**

NOTE	REF NO	GRAPHIC REF	PART NUMBER	QTY	PART NAME 1 2 3 4 5 6 (PRODUCT LEVEL)	SEE PAGE
	1	1	**3W-8134**	2	ROD	
C	2	1	**7P-4695**	2	TUBE	
	3	1	**3W-8123**	2	GUARD AS (RH INNER/LH OUTER)	
M	4	1	**7X-2563**	8	BOLT (M20X2.5X60-MM)	
C	5	1	**8Y-6629**	2	GUARD (RH OUTER/LH INNER)	
M	6	1	**7X-2564**	4	BOLT (M20X2.5X90-MM)	
M	7	1	**8T-6381**	4	BOLT (M20X2.5X120-MM)	
C	8	1	**8Y-6630**	2	GUARD (RH INNER/LH OUTER)	
	9	1	**3W-8120**	2	GUARD AS (RH OUTER/LH INNER)	
M	10	1	**8C-8478**	8	BOLT (M20X2.5X140-MM)	
M	11	1	**8T-4192**	24	BOLT (M12X1.75X25-MM)	
		1	**8T-4223**	24	WASHER-HARD (13.5X25.5X3-MM THK)	
	12	1	**8T-4123**	24	WASHER (3.62X5.75X0.375-MM THK)	
M	13	1	**8T-4132**	4	NUT (M16X2-THD)	
C	14	1	**8T-4122**	32	WASHER-HARD (17X32X3.5-MM THK)	
C	15	1	**8Y-6631**	4	PLATE	
CM	16	1	**7X-2553**	8	BOLT (M16X2X40-MM)	
	17	1	**3W-8429**	4	PLATE	
M	18	1	**8T-4779**	20	BOLT (M16X2X35-MM)	
					QUANTITIES SHOWN ARE THOSE REQUIRED FOR BOTH LH & RH SIDES	

C - CHANGE FROM PREVIOUS TYPE
M - METRIC PART

3W-8117 **GUARD GP-TRACK GUIDE** (contd.) **i01400053**

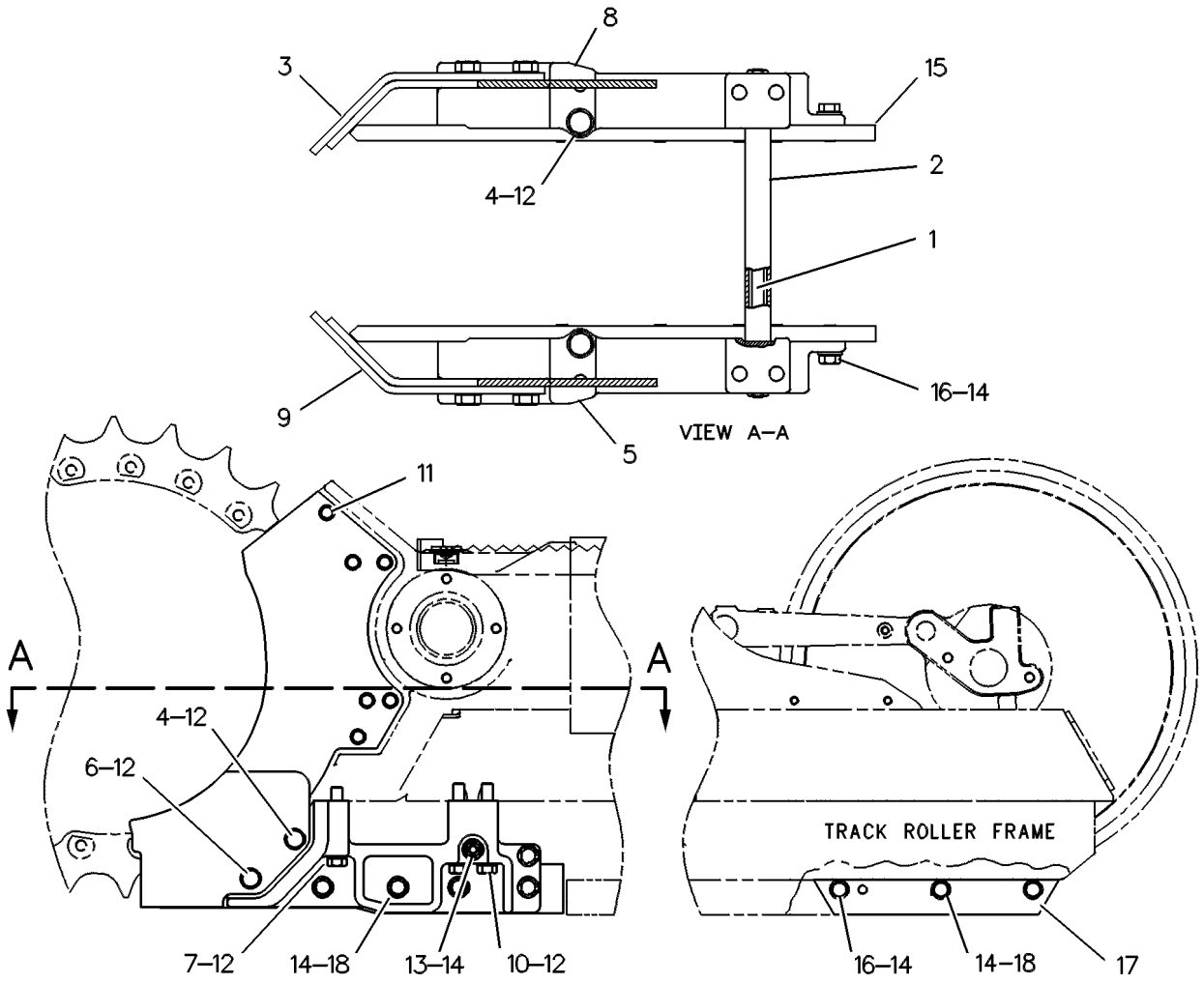

GRAPHIC #1 <END> g00246884

3W-8488 GUARD GP-TRACK ROLLER

S/N: 9BL1-UP

AN ATTACHMENT

SMCS-7152 **i01903840**

NOTE	REF NO	GRAPHIC REF	PART NUMBER	QTY	PART NAME 1 2 3 4 5 6 (PRODUCT LEVEL)	SEE PAGE
	1	1	**8Y-6625**	4	PLATE	
M	2	1	**8T-4193**	12	BOLT (M16X2X50-MM)	
	3	1	**8T-4122**	44	WASHER-HARD (17X32X3.5-MM THK)	
BE	4	1	**7P-4695**	10	TUBE	
	5	1	**8Y-1779**	24	SPACER (22.5X38X20-MM THK)	
M	6	1	**7X-2563**	24	BOLT (M20X2.5X60-MM)	
		1	**8T-4123**	24	WASHER (3.62X5.75X0.375-MM THK)	
	7	1	**8Y-1944**	10	ROD	
M	8	1	**8T-4132**	20	NUT (M16X2-THD)	
M	9	1	**7X-2553**	12	BOLT (M16X2X40-MM)	
	10	1	**3W-8489**	2	GUARD AS (INNER, RH; OUTER, LH)	
	11	1	**3W-8495**	4	PLATE	
	12	1	**3W-8140**	4	PLATE	
	13	1	**3W-8492**	2	GUARD AS (OUTER, RH; INNER, LH)	
					QUANTITIES SHOWN ARE THOSE REQUIRED FOR BOTH LH & RH SIDES	

B - USE AS REQUIRED
E - ORDER BY THE CENTIMETER
M - METRIC PART

3W-8488 **GUARD GP-TRACK ROLLER (**contd.**)** **i01903840**

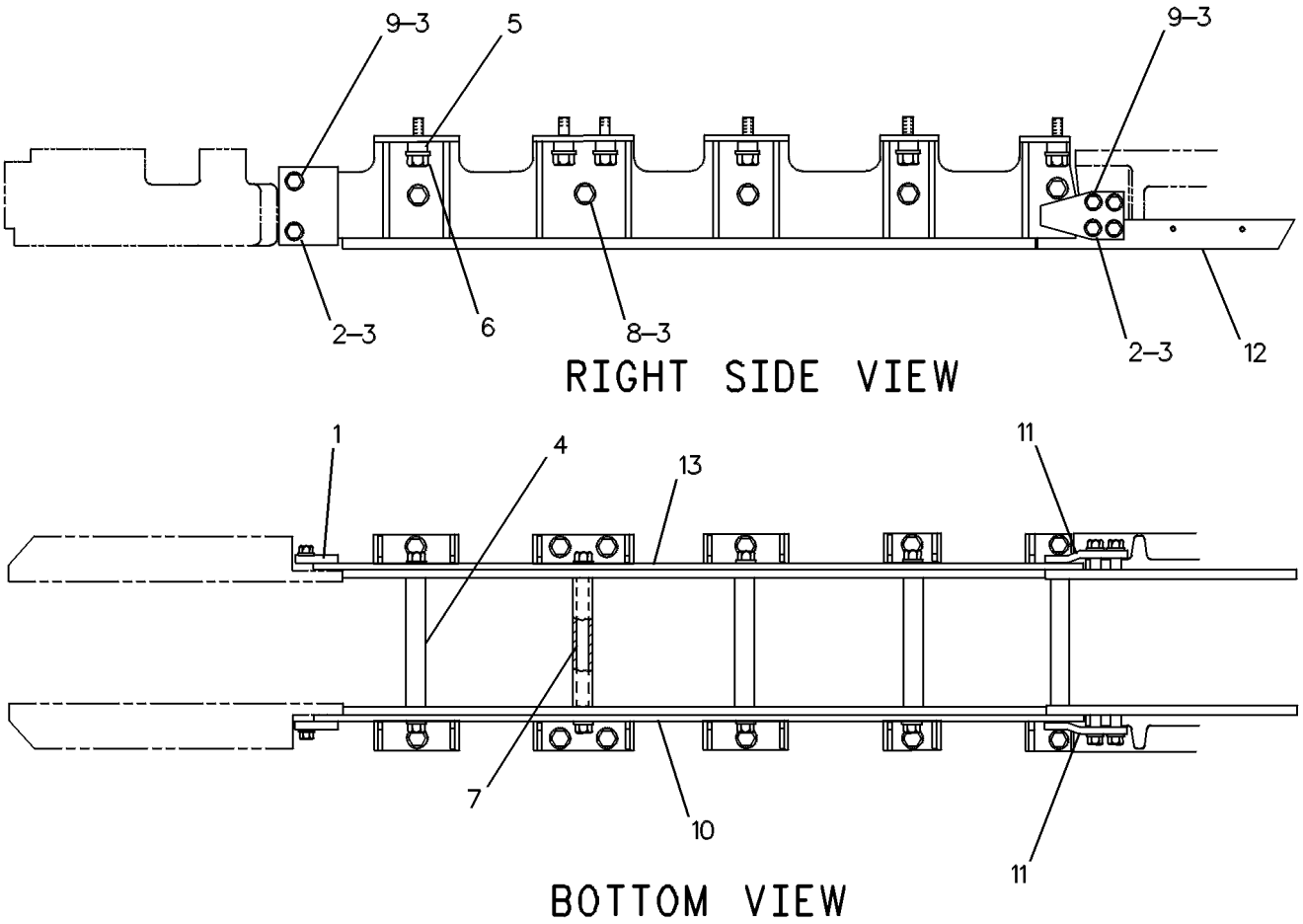

GRAPHIC #1 <END> g00247281

3W-8157 IDLER GP-FRONT

S/N: 9BL1-UP

PART OF 3W-8187 UNDERCARRIAGE AR

SMCS-4159 **i05065271**

NOTE	REF NO	GRAPHIC REF	PART NUMBER	QTY	PART NAME 1 2 3 4 5 6 (PRODUCT LEVEL)	SEE PAGE
	1	1	**7X-0318**	4	BOLT (7/16-14X4-IN)	
	2	1	**7X-0563**	4	WASHER-HARD (12X35X8-MM THK)	
	3	1	**8Y-2203**	2	LINK AS (RH OUTER, LH INNER)	
					(EACH INCLUDES)	
		1	**3W-8403**	1	SLEEVE	
	4	1	**7T-4562**	2	IDLER AS	
	5	1	**8Y-2204**	2	LINK AS (RH INNER, LH OUTER)	
					(EACH INCLUDES)	
		1	**3W-8403**	1	SLEEVE	
	6	1	**8Y-6671**	2	GUARD AS (RH INNER, LH OUTER)	
					(EACH INCLUDES)	
		1	**3W-8398**	2	BUSHING	
	7	1	**7X-0462**	4	BOLT (1-14X3.25-IN)	
	8	1	**3B-8489**	8	FITTING-GREASE (1/8-27 PTF)	
	9	1	**3W-7522**	2	GUARD	
	10	1	**3W-8158**	2	PISTON AS	
	11	1	**8Y-0039**	2	PLATE-PRESSURE	
	12	1	**251-3353**	2	SPRING-RECOIL	
	13	1	**7P-7245**	2	VALVE	
	14	1	**2J-6274**	2	SEAL-O-RING	
	15	1	**3W-8175**	2	SUPPORT AS	
					(EACH INCLUDES)	
		1	**7P-6348**	2	BEARING	
	16	1	**8Y-0035**	2	YOKE AS	
					(EACH INCLUDES)	
		1	**7P-7334**	2	BUSHING	
	17	1	**8Y-6672**	2	GUARD AS (RH OUTER, LH INNER)	
					(EACH INCLUDES)	
		1	**3W-8398**	2	BUSHING	
	18	1	**3W-8160**	2	PISTON AS	
					(EACH INCLUDES)	
		1	**7P-7335**	1	BUSHING	
	19	1	**5G-9672**	2	PLATE	
M	20	1	**8T-4195**	4	BOLT (M10X1.5X30-MM)	
	21	1	**8T-4121**	4	WASHER-HARD (11X21X2.5-MM THK)	
	22	1	**269-6989**	4	PIN	
	23	1	**1F-0636**	4	SEAL-LIP TYPE	
	24	1	**8Y-0037**	2	SEAL AS	
	25	1	**7X-4799**	2	SEAL-O-RING	
	26	1	**3W-8177**	2	RETAINER	
M	27	1	**7X-2563**	4	BOLT (M20X2.5X60-MM)	
	28	1	**8T-4123**	12	WASHER (3.62X5.75X0.375-MM THK)	
M	29	1	**7X-2565**	8	BOLT (M20X2.5X100-MM)	
	30	1	**5M-5000**	4	LOCK-PIN	
	31	1	**7K-9209**	8	SEAL-LIP TYPE	
	32	1	**7P-8733**	8	SPRING-DISC	
	33	1	**3W-8406**	4	CAP	
M	34	1	**8T-4176**	14	BOLT (M12X1.75X90-MM)	

3W-8157 **IDLER GP-FRONT (**contd.**)** **i05065271**

NOTE	REF NO	GRAPHIC REF	PART NUMBER	QTY	PART NAME 1 2 3 4 5 6 (PRODUCT LEVEL)	SEE PAGE
	35	2	**3P-1900**	4	BUSHING AS-IDLER	
					(EACH INCLUDES)	
	35A	2	**9B-2289**	2	PIN	
	36	2	**9B-7237**	24	BOLT (3/8-16X1.25-IN)	
	37	2	**8T-4896**	24	WASHER-HARD (10.2X18.5X2.5-MM THK)	
	38	2	**255-8060**	2	SHAFT-TRACK IDLER	
	39	2	**6V-1915**	4	SEAL GP-DUO-CONE	
					(EACH INCLUDES)	
	39A	2	**6V-1914**	1	RING	
	39B	2	**8H-2262**	1	RING-TORIC	
	40	2	**1H-6227**	4	SEAL-O-RING	
M	41	1	**8T-6868**	4	BOLT (M12X1.75X80-MM)	
M	42	1	**8T-4244**	6	NUT (M12X1.75-THD)	
	43	1	**7P-2355**	4	PIN	
	44	1	**1J-1902**	8	SEAL-LIP TYPE	
	45	1	**7P-2358**	2	PIN	
	46	1	**7K-9202**	4	SEAL-LIP TYPE	
	47	2	**7G-4332**	2	STOPPER	
	48	2	**6Y-0473**	2	PLUG-CLEAR	
	49	1	**2J-7426**	2	SEAL-LIP TYPE	
	50	1	**8Y-5306**	2	RETAINER	
	52	1	**8T-5361**	4	WASHER-HARD (28X49X5-MM THK)	
					QUANTITIES SHOWN ARE THOSE REQUIRED FOR BOTH LH & RH SIDES	

M - METRIC PART

3W-8157 **IDLER GP-FRONT (**contd.**)** **i05065271**

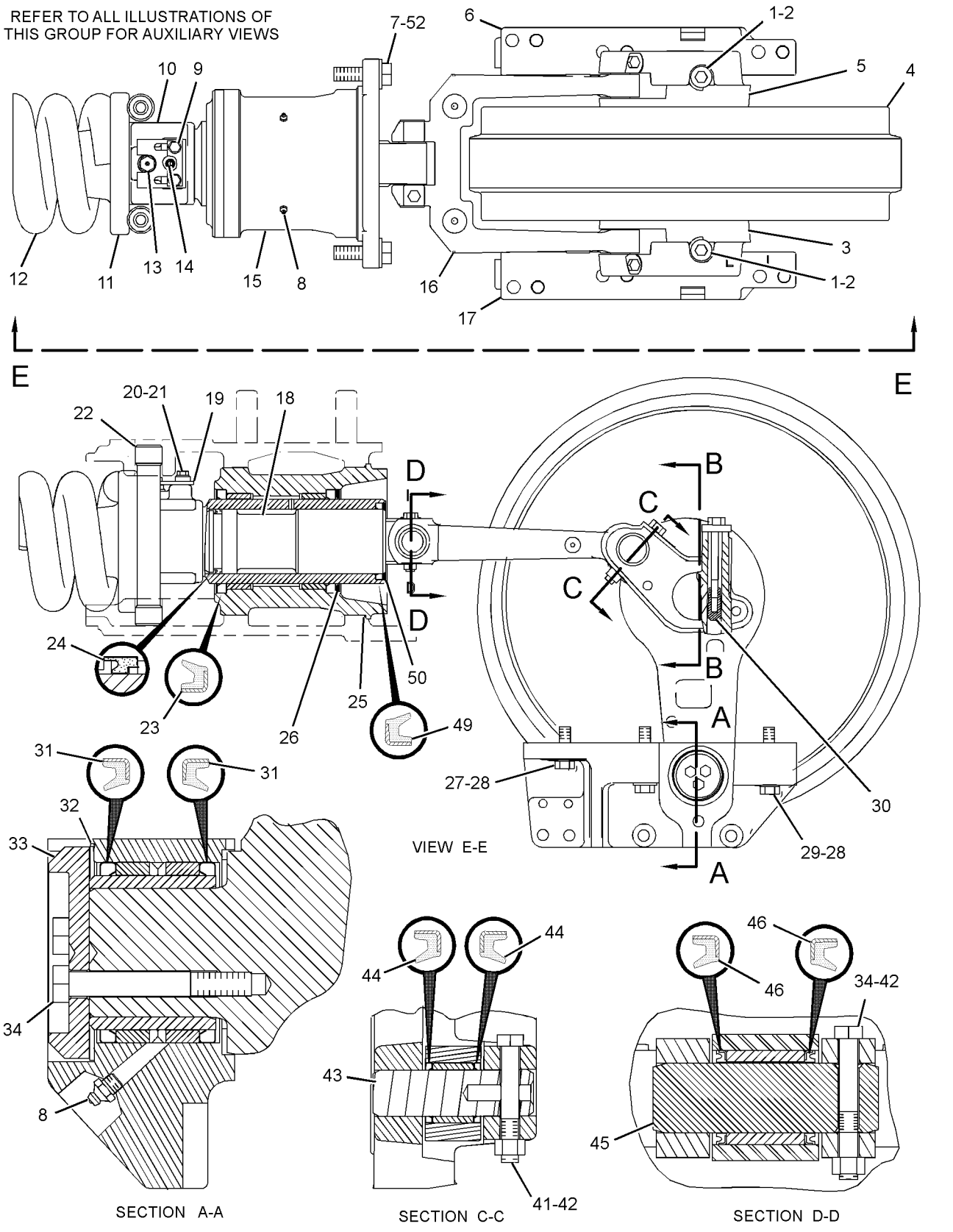

GRAPHIC #1 g03235537

3W-8157 **IDLER GP-FRONT (**contd.**)** **i05065271**

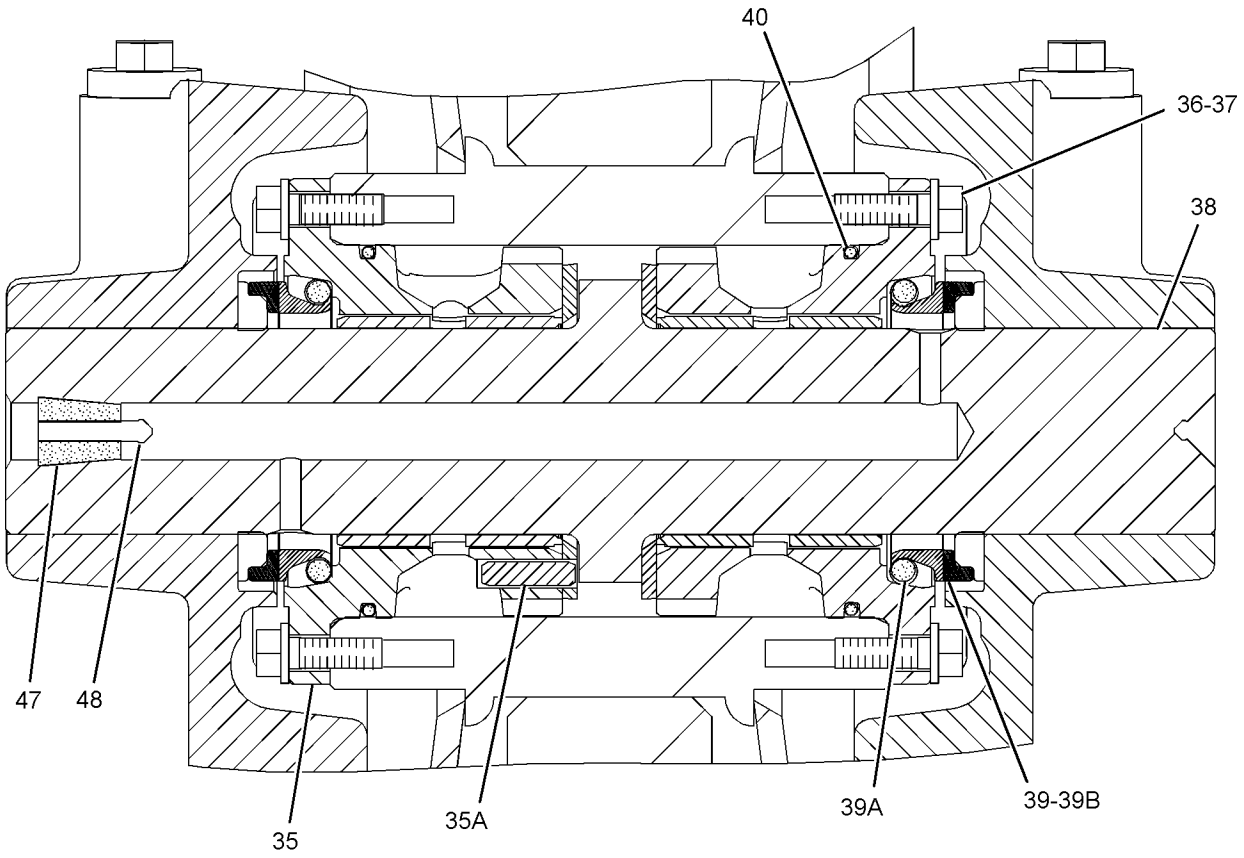

SECTION B-B

GRAPHIC #2 <END> g03114556

5Q-5566 IDLER GP-FRONT

S/N: 9BL1-UP

PART OF 136-7802 GUARD AR-SEAL, 5Q-5567 MODIFICATION AR

AN ATTACHMENT

SMCS-4159 **i01400083**

NOTE	REF NO	GRAPHIC REF	PART NUMBER	QTY	PART NAME 1 2 3 4 5 6 (PRODUCT LEVEL)	SEE PAGE
	1	1	**7X-0318**	4	BOLT (7/16-14X4-IN)	
	2	1	**7X-0563**	4	WASHER-HARD (12X35X8-MM THK)	
	3	1	**5Q-5564**	2	LINK AS (INNER, RH; OUTER, LH)	
					(EACH INCLUDES)	
		1	**3W-8403**	1	SLEEVE	
	4	1	**2Q-5528**	2	IDLER AS	
	5	1	**5Q-5563**	2	LINK AS (OUTER, RH; INNER, LH)	
					(EACH INCLUDES)	
		1	**3W-8403**	1	SLEEVE	
	6	1	**8Y-6671**	2	GUARD AS	
					(EACH INCLUDES)	
	7	1	**3W-8398**	2	BUSHING	
	8	1	**3B-8489**	8	FITTING-GREASE (1/8-27 PTF)	
	9	1	**3W-7522**	2	GUARD	
	10	1	**3W-8158**	2	PISTON AS	
	11	1	**8Y-0039**	2	PLATE-PRESSURE	
	12	1	**8Y-1584**	2	SPRING-RECOIL	
	13	1	**7P-7245**	2	VALVE	
	14	1	**2J-6274**	2	SEAL-O-RING	
	15	1	**3W-8175**	2	SUPPORT AS	
					(EACH INCLUDES)	
	16	1	**7P-6348**	2	BEARING	
	17	1	**8Y-6672**	2	GUARD AS	
					(EACH INCLUDES)	
	18	1	**3W-8398**	2	BUSHING	
	19	1	**5G-9672**	2	PLATE	
M	20	1	**8T-4195**	4	BOLT (M10X1.5X30-MM)	
	21	1	**8T-4121**	4	WASHER-HARD (11X21X2.5-MM THK)	
	22	1	**8Y-0038**	4	PIN	
	23	1	**1F-0636**	4	SEAL-LIP TYPE	
	24	1	**8Y-0037**	2	SEAL AS	
	25	1	**8T-6404**	2	SEAL-O-RING	
	26	1	**3W-8177**	2	RETAINER	
M	27	1	**7X-2563**	4	BOLT (M20X2.5X60-MM)	
	28	1	**8T-4123**	12	WASHER (3.62X5.75X0.375-MM THK)	
M	29	1	**7X-2565**	8	BOLT (M20X2.5X100-MM)	
	30	1	**5M-5000**	4	LOCK-PIN	
	31	1	**7K-9209**	8	SEAL-LIP TYPE	
	32	1	**7P-8733**	8	SPRING-DISC	
	33	1	**3W-8406**	4	CAP	
M	34	1	**8T-4176**	14	BOLT (M12X1.75X90-MM)	
	35	1	**3P-1900**	4	BUSHING AS-IDLER	
					(EACH INCLUDES)	
	36	1	**8P-5197**	1	BEARING AS	
	37	1	**9B-2289**	2	PIN	
	38	1	**8G-1450**	2	SHAFT-TRACK IDLER	
	39	1	**9W-7235**	4	SEAL GP-DUO-CONE	
					(EACH INCLUDES)	

5Q-5566 **IDLER GP-FRONT (**contd.**)** **i01400083**

NOTE	REF NO	GRAPHIC REF	PART NUMBER	QTY	PART NAME 1 2 3 4 5 6 (PRODUCT LEVEL)	SEE PAGE
		1	**1U-8840**	1	INSTALLER AS-DUO-CONE SEAL	
		1	**9B-2596**	1	RIVET	
	40	1	**1H-6227**	4	SEAL-O-RING	
M	41	1	**8T-6868**	4	BOLT (M12X1.75X80-MM)	
M	42	1	**8T-4244**	6	NUT (M12X1.75-THD)	
	43	1	**7P-2355**	4	PIN	
	44	1	**1J-1902**	8	SEAL-LIP TYPE	
	45	1	**7P-2358**	2	PIN	
	46	1	**7K-9202**	4	SEAL-LIP TYPE	
	47	1	**7G-4332**	2	STOPPER	
	48	1	**6Y-0473**	2	PLUG-CLEAR	
	49	1	**2J-7426**	2	SEAL-LIP TYPE	
	50	1	**8Y-5306**	2	RETAINER	
	51	1	**7X-0463**	4	BOLT (1-14X3-IN)	
	52	1	**8Y-0035**	2	YOKE AS	
					(EACH INCLUDES)	
		1	**7P-7334**	2	BUSHING	
	53	1	**3W-8160**	2	PISTON AS	
					(EACH INCLUDES)	
		1	**7P-7335**	1	BUSHING	
	54	1	**9B-7237**	24	BOLT (3/8-16X1.25-IN)	
	55	1	**8T-4896**	24	WASHER-HARD (10.2X18.5X2.5-MM THK)	

M - METRIC PART

5Q-5566 **IDLER GP-FRONT** (contd.) **i01400083**

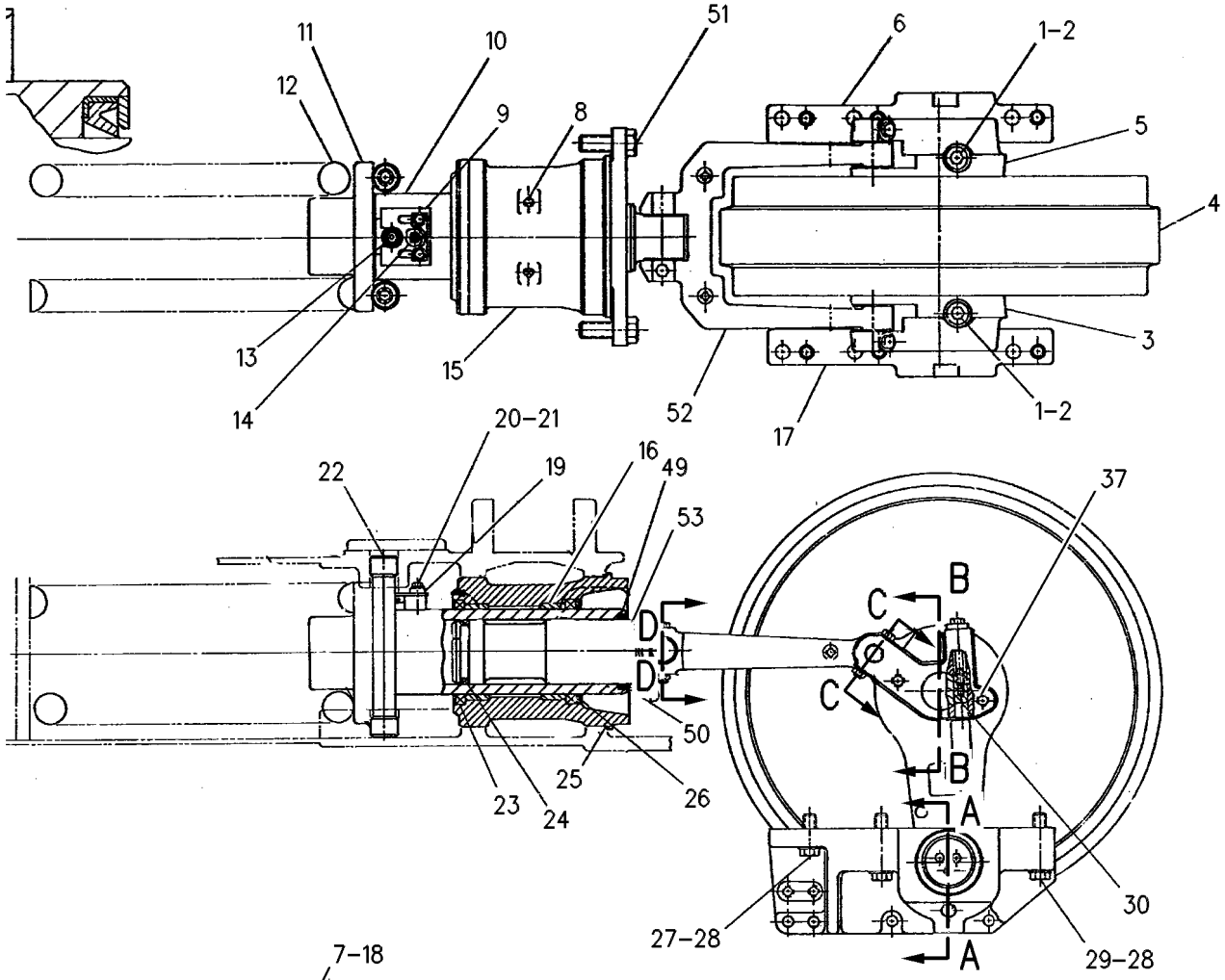

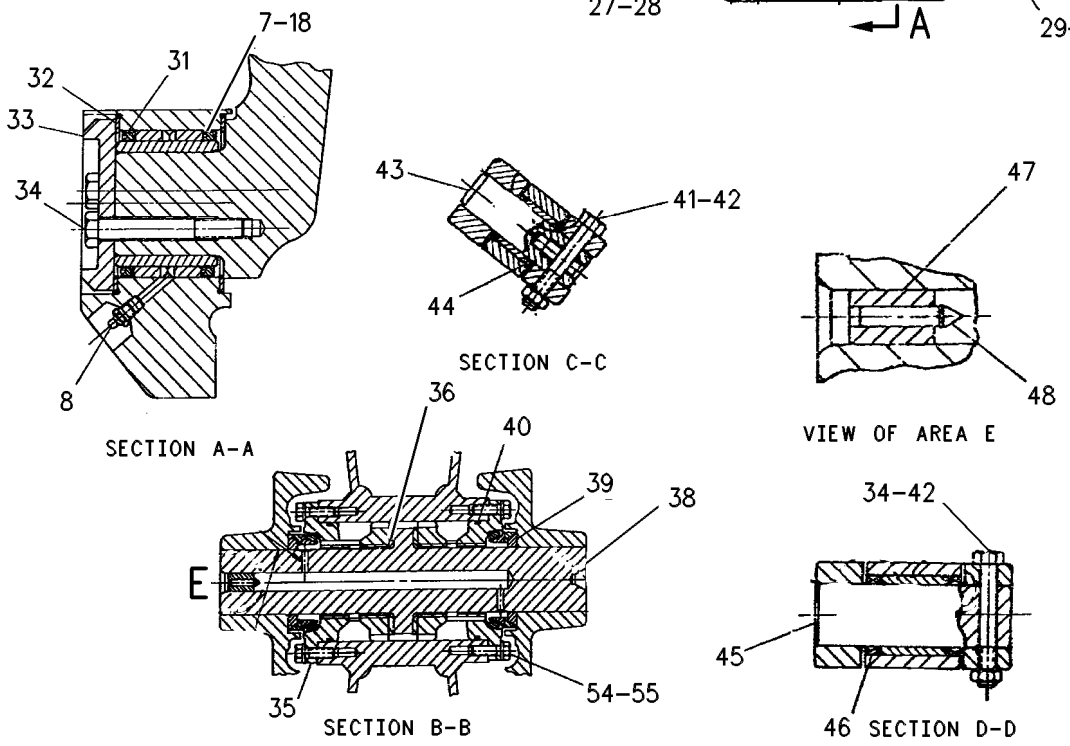

GRAPHIC #1 <END> g00294430

117-1023 LINK AS-TRACK

S/N: 9BL1-UP
SEALED, LUBRICATED
FIELD REPLACEMENT ORDER 230-6167—PAGE: 499
PART OF 8E-5249, 8E-5250, 8E-7002 TRACK GP
ALSO AN ATTACHMENT

SMCS-4169, 4171 **i06844008**

NOTE	REF NO	GRAPHIC REF	PART NUMBER	QTY	PART NAME 1 2 3 4 5 6 (PRODUCT LEVEL)	SEE PAGE
	1	1	**7T-4645**	36	LINK-TRACK (RH)	
	2	1	**6Y-6747**	1	LINK-TRACK MASTER (PIN END, RH)	
	3	1	**7T-4646**	36	LINK-TRACK (LH)	
	4	1	**6Y-6749**	1	LINK-TRACK MASTER (BUSHING END, RH)	
	5	1	**250-3996**	74	SEAL AS	
	6	1	**3P-1104**	74	RING-THRUST	
	7	1	**5G-2247**	37	STOPPER-RUBBER	
		1	**6Y-0473**	37	PLUG-CLEAR	
	8	1	**160-7819**	37	PIN-TRACK	
	9	1	**8E-5257**	37	BUSHING-TRACK	
	10	1	**6Y-6748**	1	LINK-TRACK MASTER (PIN END, LH)	
	11	1	**6Y-6750**	1	LINK-TRACK MASTER (BUSHING END, LH)	

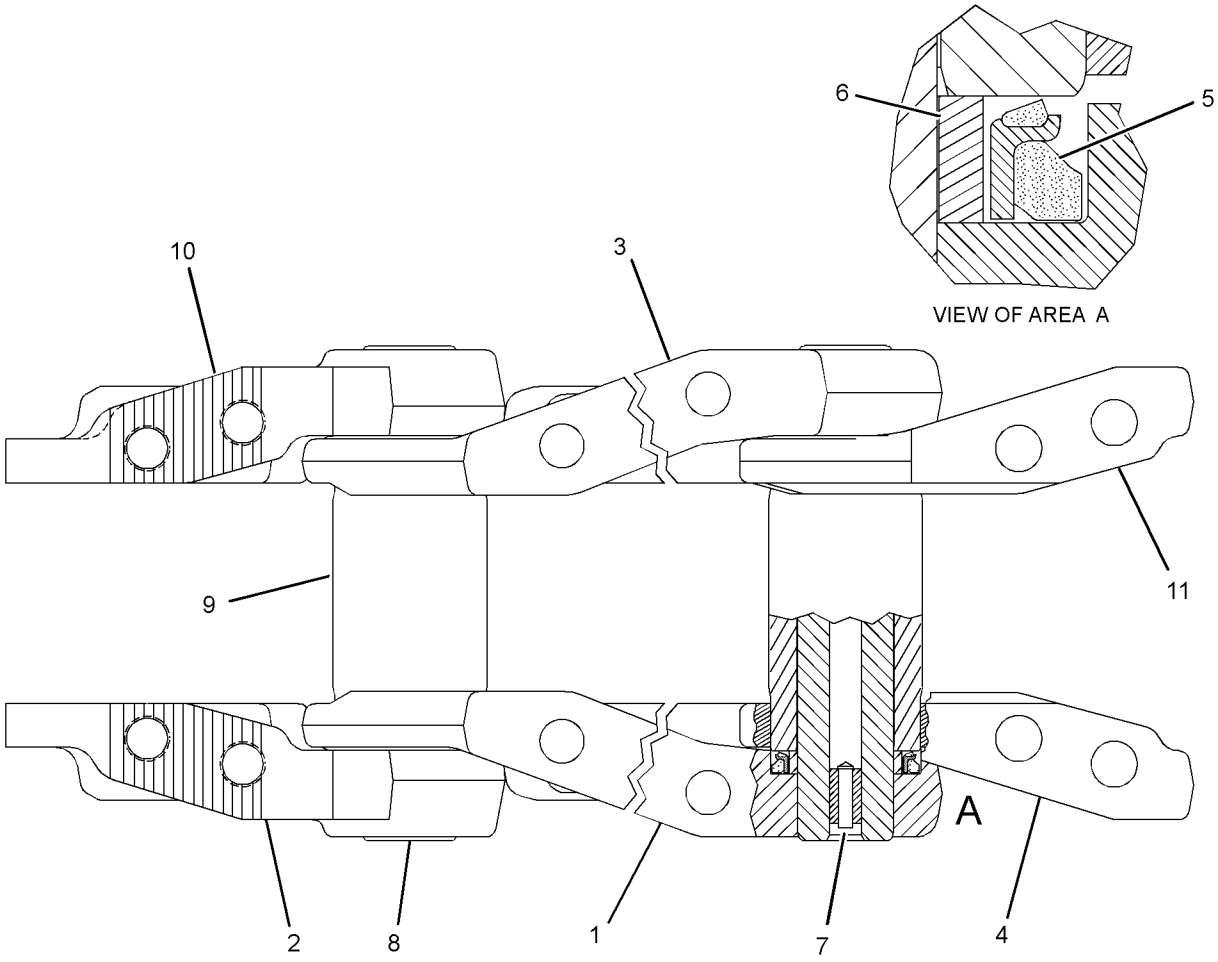

GRAPHIC #1 <END> g01168872

230-6167 LINK AS-TRACK

S/N: 9BL1-UP
SEALED, LUBRICATED
FIELD REPLACEMENT FOR 117-1023—PAGE: 498
PART OF 230-6170, 230-6173 TRACK GP
FIELD INSTALLATION

SMCS-4169, 4171

i02341736

NOTE	REF NO	GRAPHIC REF	PART NUMBER	QTY	PART NAME 1 2 3 4 5 6 (PRODUCT LEVEL)	SEE PAGE
	1	1	**228-2735**	36	LINK-TRACK (RH)	
	2	1	**228-2737**	1	LINK-TRACK MASTER (PIN END, RH)	
	3	1	**228-2736**	36	LINK-TRACK (LH)	
	4	1	**228-2739**	1	LINK-TRACK MASTER (BUSHING END, RH)	
	5	1	**207-0544**	74	SEAL AS	
	6	1	**152-8071**	74	RING-THRUST	
	7	1	**6Y-0473**	37	PLUG-CLEAR	
			5G-2247	37	STOPPER-RUBBER	
	8	1	**160-7819**	37	PIN-TRACK	
	9	1	**230-4512**	37	BUSHING-TRACK	
	10	1	**228-2738**	1	LINK-TRACK MASTER (PIN END, LH)	
	11	1	**228-2740**	1	LINK-TRACK MASTER (BUSHING END, LH)	

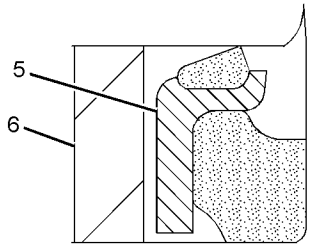

VIEW OF AREA A

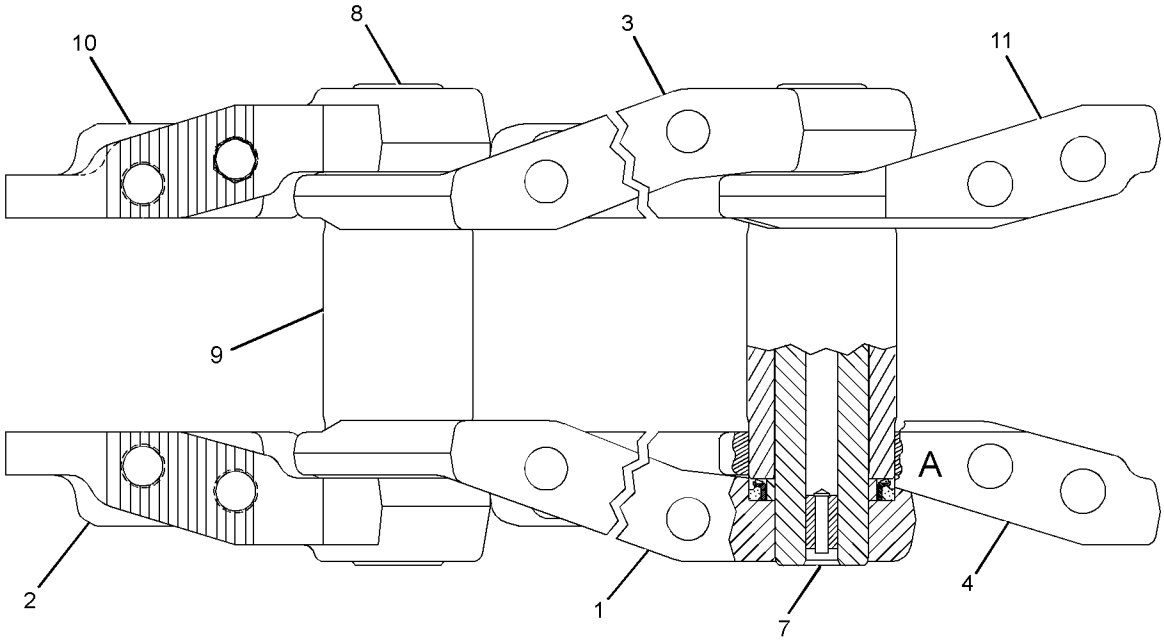

GRAPHIC #1

<END>

g01169292

231-3714 LINK AS-TRACK—SYSTEMONE

S/N: 9BL1-UP
37-JOINTS. SEALED, LUBRICATED
FOR USE WITH SYSTEMONE ROLLERS, GUARDS, GUIDESTRIPS & SHOES
PART OF 231-3715, 231-3716, 256-4990, 256-4991 TRACK GP
FIELD INSTALLATION

SMCS-4169, 4171

i05949815

NOTE	PART NUMBER	QTY	PART NAME 1 2 3 4 5 6 (PRODUCT LEVEL)	SEE PAGE
Y	**234-9679**	17	LINK AS-TRACK BOX (SYSTEMONE)	503
Y	**234-9681**	1	LINK AS-TRACK BOX (SYSTEMONE, OFFSET)	504
	234-9699	34	LINK-TRACK	

Y - SEPARATE ILLUSTRATION

<END>

236-9865 LINK AS-TRACK

S/N: 9BL1-UP
SEALED, LUBRICATED, HYBRID 40-SECTION
FIELD INSTALLATION

SMCS-4169, 4171

i02535457

NOTE	REF NO	GRAPHIC REF	PART NUMBER	QTY	PART NAME 1 2 3 4 5 6 (PRODUCT LEVEL)	SEE PAGE
	1	1	*6Y-1198*	40	STOP AS	
					(EACH INCLUDES)	
		1	**5G-2247**	1	STOPPER-RUBBER	
		1	**6Y-0473**	1	PLUG-CLEAR	
	2	1	**152-8071**	80	RING-THRUST	
	3	1	**207-0544**	80	SEAL AS	
	4	1	**228-2736**	39	LINK-TRACK (LH)	
	5	1	**228-2735**	39	LINK-TRACK (RH)	
	6	1	**228-2738**	1	LINK-TRACK MASTER (PIN END, LH)	
	7	1	**228-2737**	1	LINK-TRACK MASTER (PIN END, RH)	
	8	1	**228-2740**	1	LINK-TRACK MASTER (BUSHING END, LH)	
	9	1	**228-2739**	1	LINK-TRACK MASTER (BUSHING END, RH)	
	10	1	**230-4512**	40	BUSHING-TRACK	
	11	1	**160-7819**	40	PIN-TRACK	

236-9865 **LINK AS-TRACK (**contd.**)** **i02535457**

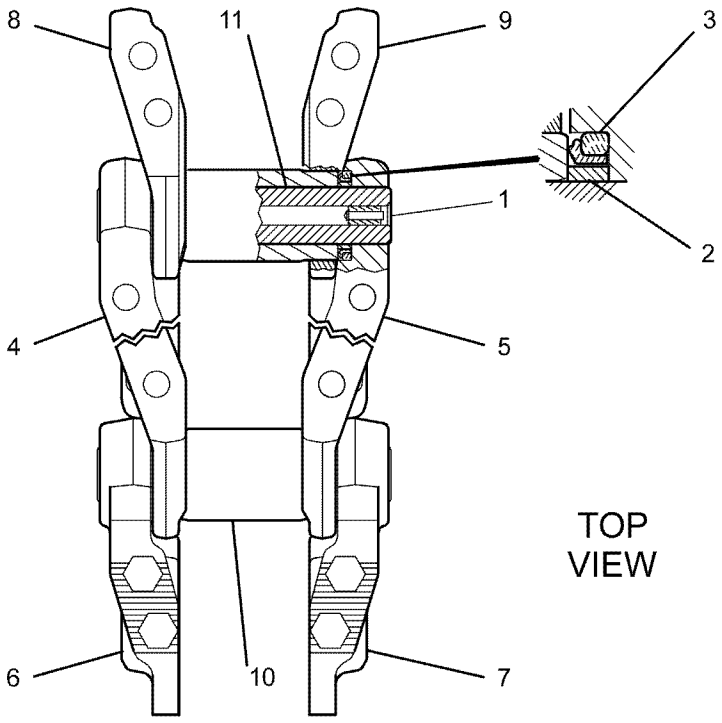

GRAPHIC #1 <END> g01088373

234-9679 LINK AS-TRACK BOX—SYSTEMONE

S/N: 9BL1-UP

SEALED, LUBRICATED, FOR FIELD REPLACEMENT OF LINK BOX THAT IS MORE THAN 40% WORN, ORDER 351-0955 LINK AS, FOR FIELD REPLACEMENT OF LINK BOX THAT IS LESS THAN 40% WORN, ORDER 351-0955 LINK AS

PART OF 231-3714 LINK AS-TRACK, 234-9681 LINK AS-TRACK BOX

SMCS-4169 **i06170943**

NOTE	REF NO	GRAPHIC REF	PART NUMBER	QTY	PART NAME 1 2 3 4 5 6 (PRODUCT LEVEL)	SEE PAGE
	1	1	**234-9699**	2	LINK-TRACK	
	2	1	*447-9949*	2	CARTRIDGE AS	
					(EACH INCLUDES)	
		1	**6Y-0473**	2	PLUG-CLEAR	
		1	**9G-1642**	2	STOPPER-RUBBER	

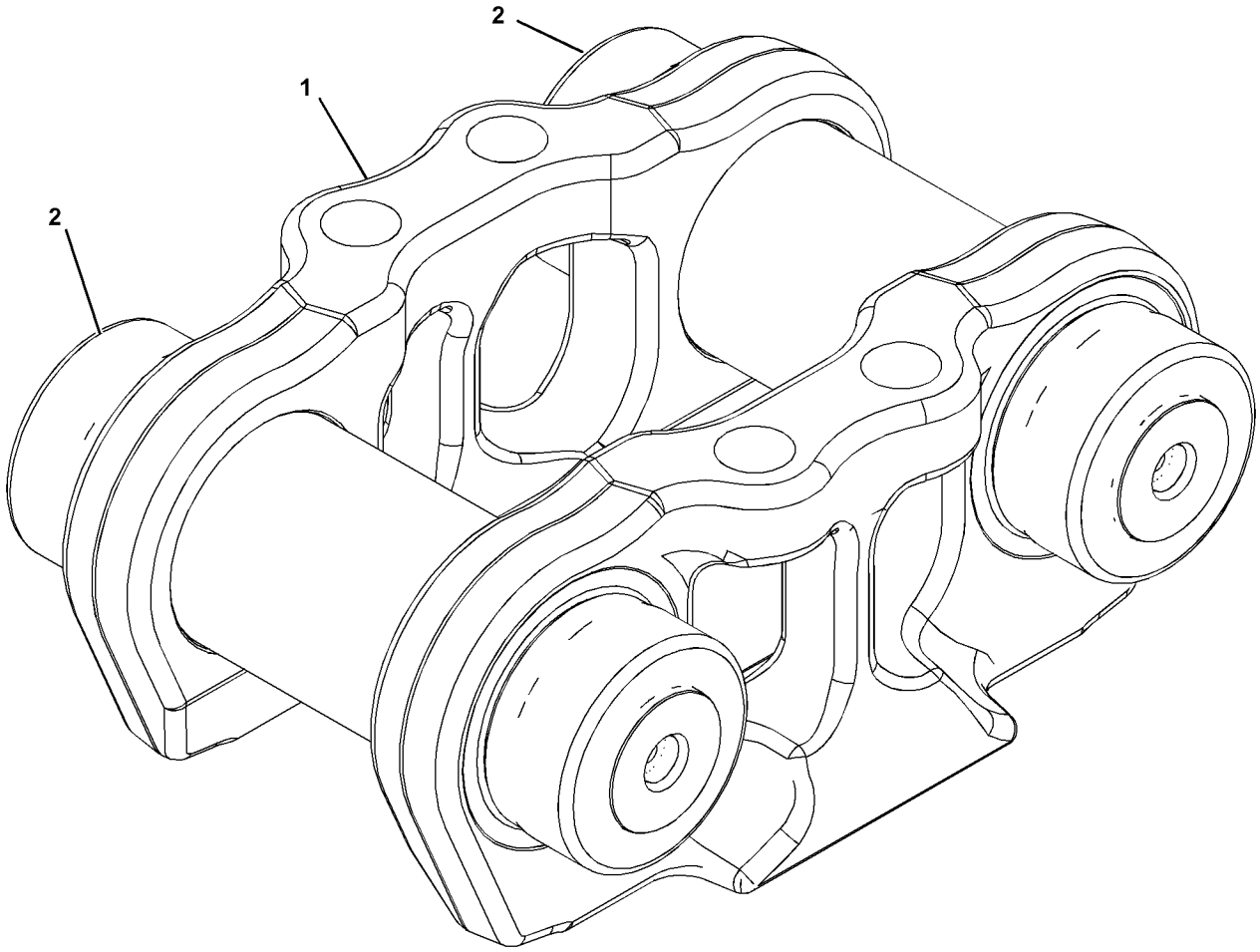

GRAPHIC #1 <END> g01378067

234-9681 LINK AS-TRACK BOX—SYSTEMONE, OFFSET

S/N: 9BL1-UP

SEALED, LUBRICATED, FOR FIELD REPLACEMENT OF LINK BOX THAT IS MORE THAN 40% WORN, ORDER 264-9768 LINK AS, FOR FIELD REPLACEMENT OF LINK BOX THAT IS LESS THAN 40% WORN, ORDER 297-4787 LINK AS

PART OF 231-3714 LINK AS-TRACK

SMCS-4169 **i05835830**

NOTE	REF NO	GRAPHIC REF	PART NUMBER	QTY	PART NAME 1 2 3 4 5 6 (PRODUCT LEVEL)	SEE PAGE
Y	1	1	**234-9679**	1	LINK AS-TRACK BOX (SYSTEMONE) (LINK BOX)	503
	2	1	*447-9949*	1	CARTRIDGE AS	
		1	**6Y-0473**	2	PLUG-CLEAR	
		1	**9G-1642**	2	STOPPER-RUBBER	
					PARTS SHOWN IN GRAPHIC(S) WITHOUT A REFERENCE NUMBER ARE NOT SERVICED SEPARATELY	

Y - SEPARATE ILLUSTRATION

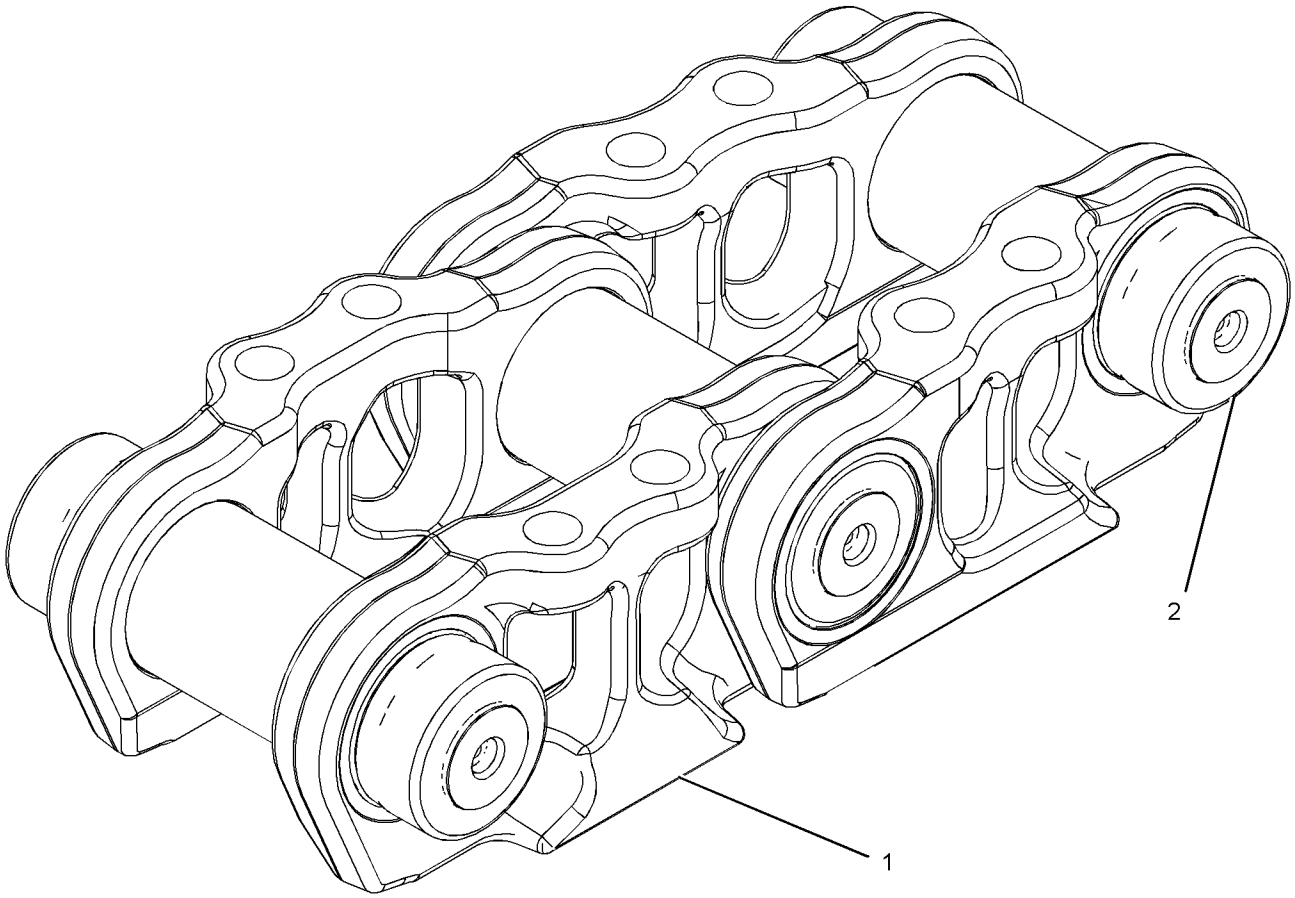

GRAPHIC #1 <END> g02131698

264-9763 LINK AS-TRACK BOX

S/N: 9BL1-UP
70% WORN. SEALED, LUBRICATED
FIELD REPLACEMENT FOR 234-9679—PAGE: 503, LINK AS MORE THAN 40% WORN: FOR 297-4786—PAGE: 507, LINK AS MORE THAN 40% WORN
PART OF 264-9768 LINK AS-TRACK BOX
FIELD INSTALLATION

SMCS-4169 **i02840302**

NOTE	REF NO	GRAPHIC REF	PART NUMBER	QTY	PART NAME 1 2 3 4 5 6 (PRODUCT LEVEL)	SEE PAGE
	1	1	*297-4785*	2	CARTRIDGE AS-TRACK LINK	
					(EACH INCLUDES)	
		1	**6Y-0473**	2	PLUG-CLEAR	
		1	**9G-1642**	2	STOPPER-RUBBER	
					PARTS SHOWN IN GRAPHIC(S) WITHOUT A REFERENCE NUMBER ARE NOT SERVICED SEPARATELY	

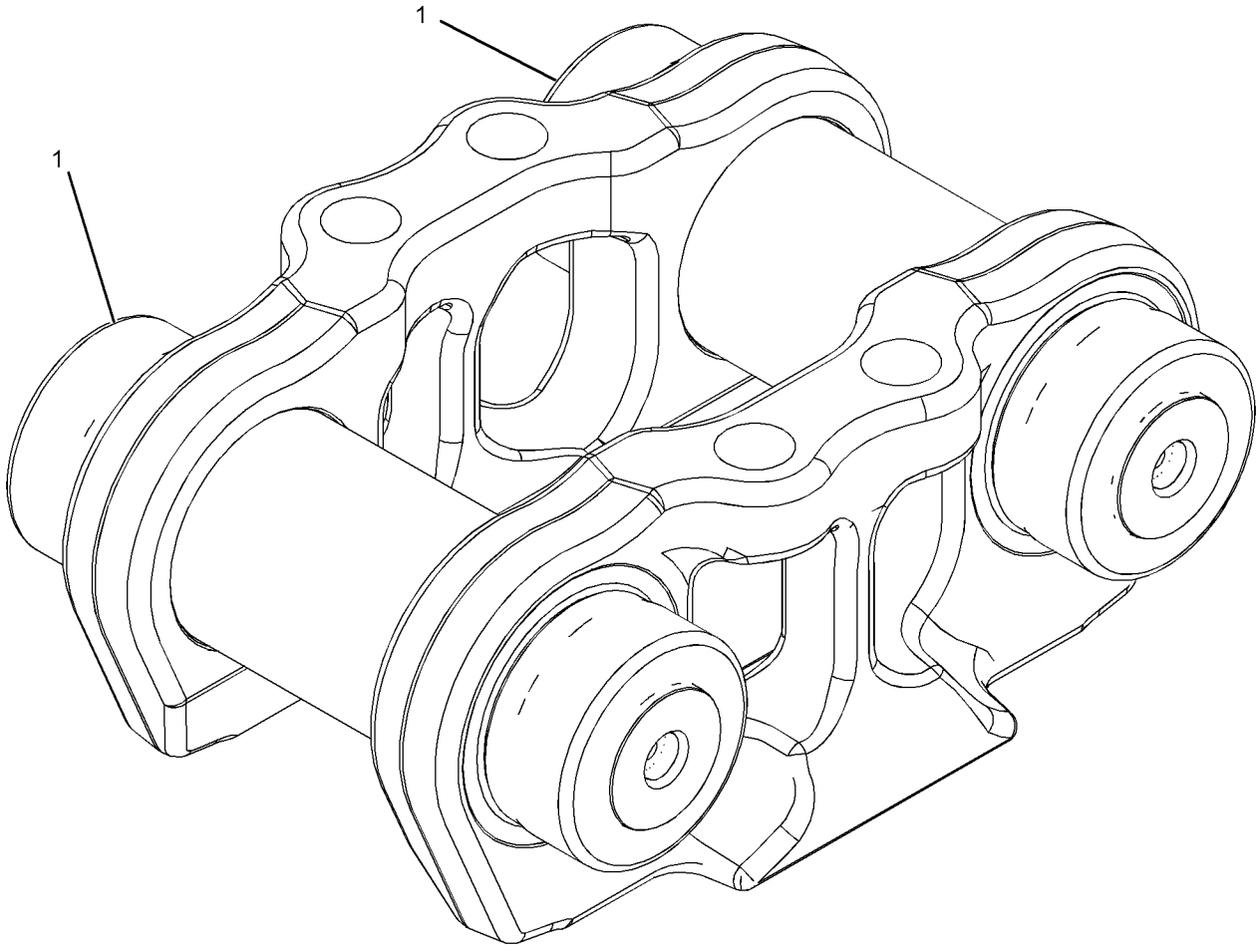

GRAPHIC #1 <END> g01416784

264-9768 LINK AS-TRACK BOX—OFFSET

S/N: 9BL1-UP
70% WORN. SEALED, LUBRICATED
FIELD REPLACEMENT FOR 234-9681—PAGE: 504, LINK AS THAT IS MORE THAN 40% WORN: FOR 297-4787—PAGE: 508, LINK AS THAT IS MORE THAN 40% WORN
REPLACED BY 351-0964—PAGE: 510
FIELD INSTALLATION

SMCS-4169 **i04004601**

NOTE	REF NO	GRAPHIC REF	PART NUMBER	QTY	PART NAME 1 2 3 4 5 6 (PRODUCT LEVEL)	SEE PAGE
Y	1	1	**264-9763**	1	LINK AS-TRACK BOX (LINK BOX)	505
	2	1	*347-3188*	1	CARTRIDGE AS-TRACK LINK	
		1	**6Y-1199**	2	STOP AS	
					(EACH INCLUDES)	
		1	**6Y-0473**	1	PLUG-CLEAR	
		1	**9G-1642**	1	STOPPER-RUBBER	
					PARTS SHOWN IN GRAPHIC(S) WITHOUT A REFERENCE NUMBER ARE NOT SERVICED SEPARATELY	

Y - SEPARATE ILLUSTRATION

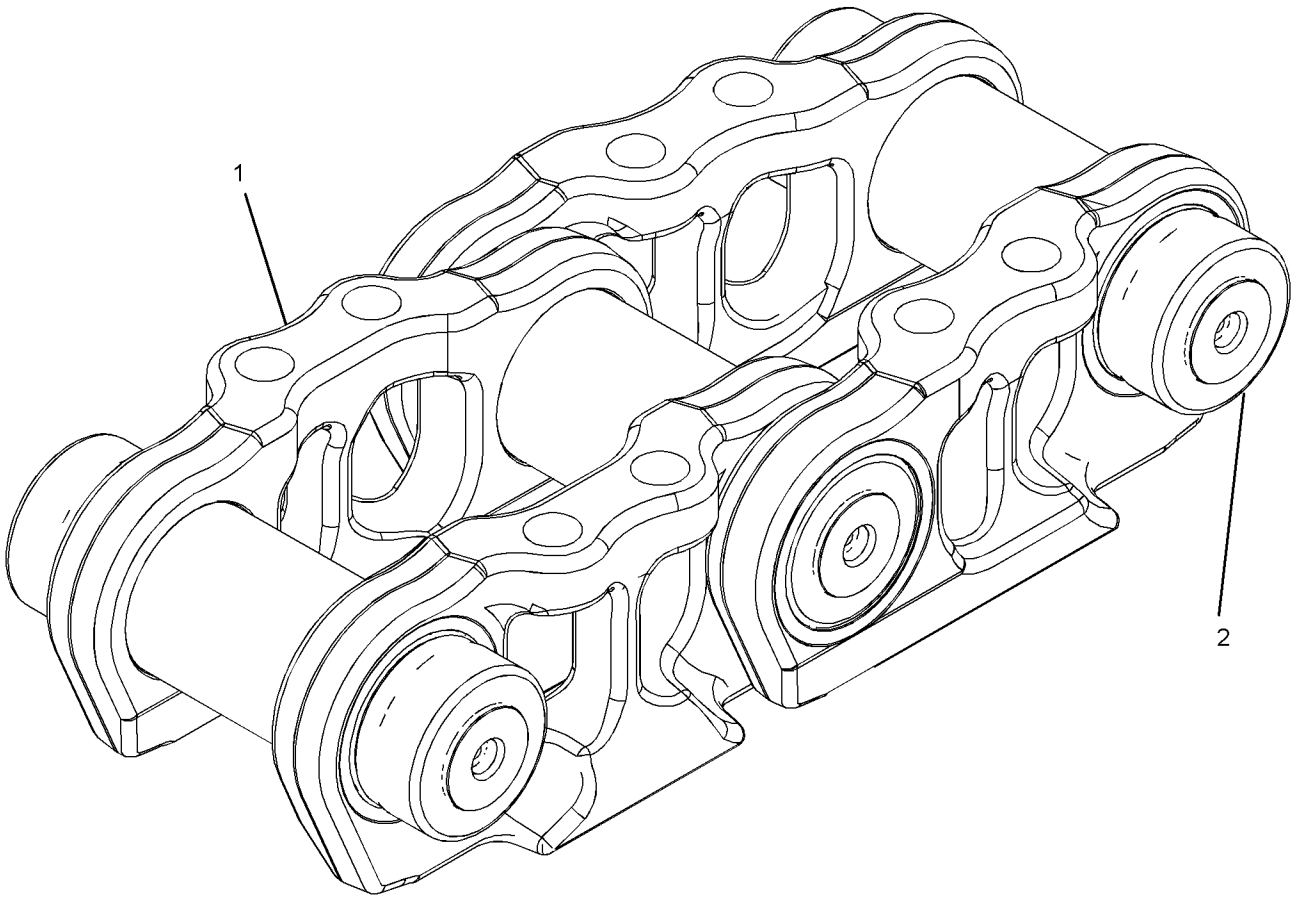

GRAPHIC #1 <END> g02031533

297-4786 LINK AS-TRACK BOX—SYSTEMONE

S/N: 9BL1-UP

SEALED, LUBRICATED, FOR FIELD REPLACMENT OF LINK BOX THAT IS MORE THAN 40% WORN, ORDER 264-9763 LINK AS

FIELD REPLACEMENT FOR 234-9679—PAGE: 503, LINK AS LESS THAN 40% WORN

PART OF 297-4787 LINK AS-TRACK BOX

FIELD INSTALLATION

SMCS-4169 **i04006176**

NOTE	REF NO	GRAPHIC REF	PART NUMBER	QTY	PART NAME 1 2 3 4 5 6 (PRODUCT LEVEL)	SEE PAGE
	1	1	**234-9699**	2	LINK-TRACK	
	2	1	*347-3188*	2	CARTRIDGE AS-TRACK LINK	
					(EACH INCLUDES)	
		1	**6Y-0473**	2	PLUG-CLEAR	
		1	**9G-1642**	2	STOPPER-RUBBER	

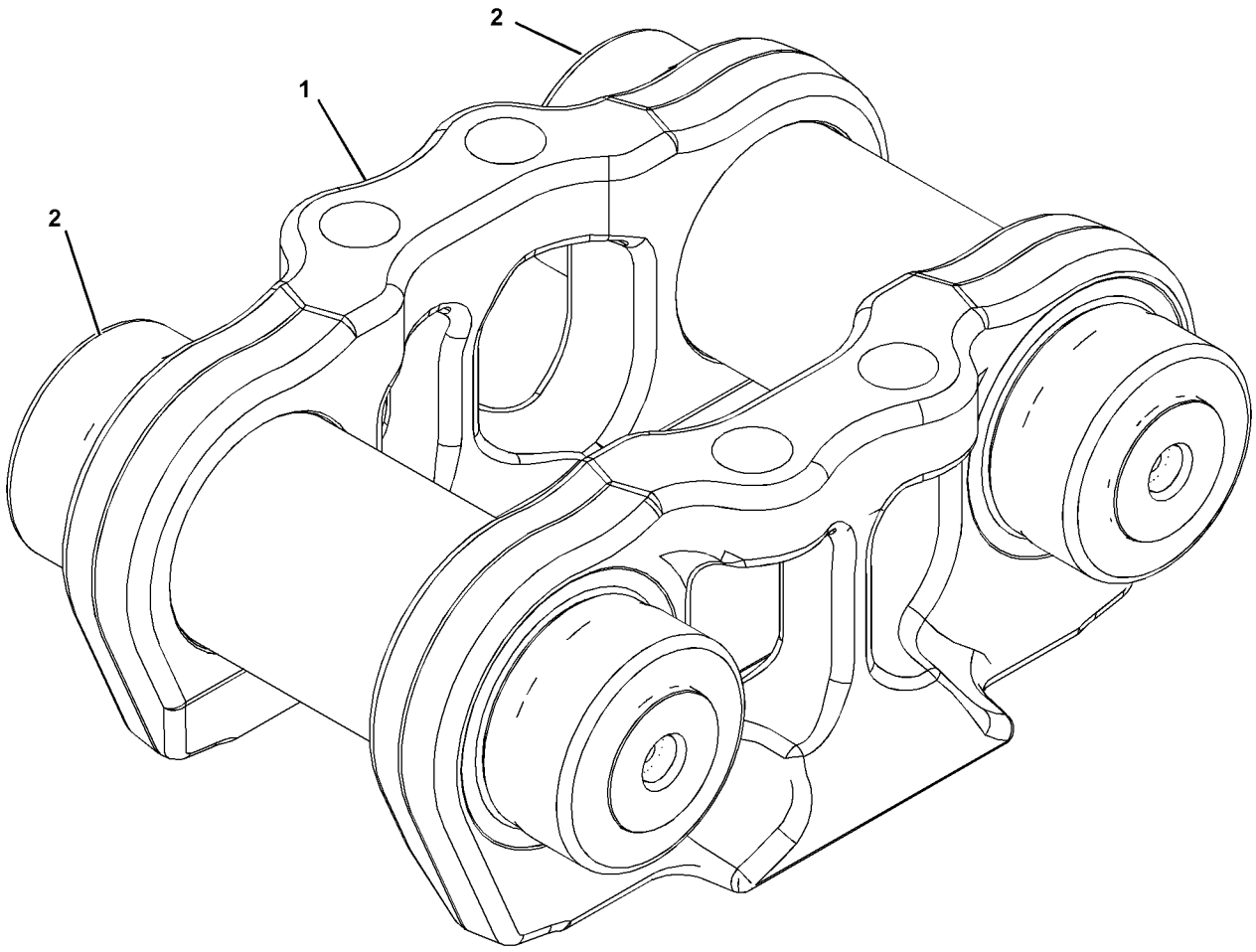

GRAPHIC #1 <END> g01378067

297-4787 LINK AS-TRACK BOX—SYSTEMONE, OFFSET

S/N: 9BL1-UP

SEALED, LUBRICATED, FOR FIELD REPLACEMENT OF LINK BOX THAT IS MORE THAN 40% WORN, ORDER 264-9768 LINK AS

FIELD REPLACEMENT FOR 234-9681—PAGE: 504, LINK AS THAT IS LESS THAN 40% WORN FIELD INSTALLATION

SMCS-4169 **i04006191**

NOTE	REF NO	GRAPHIC REF	PART NUMBER	QTY	PART NAME 1 2 3 4 5 6 (PRODUCT LEVEL)	SEE PAGE
Y	1	1	**297-4786**	1	LINK AS-TRACK BOX (SYSTEMONE) (LINK BOX)	507
	2	1	*347-3188*	1	CARTRIDGE AS-TRACK LINK	
		1	**6Y-0473**	2	PLUG-CLEAR	
		1	**9G-1642**	2	STOPPER-RUBBER	
					PARTS SHOWN IN GRAPHIC(S) WITHOUT A REFERENCE NUMBER ARE NOT SERVICED SEPARATELY	

Y - SEPARATE ILLUSTRATION

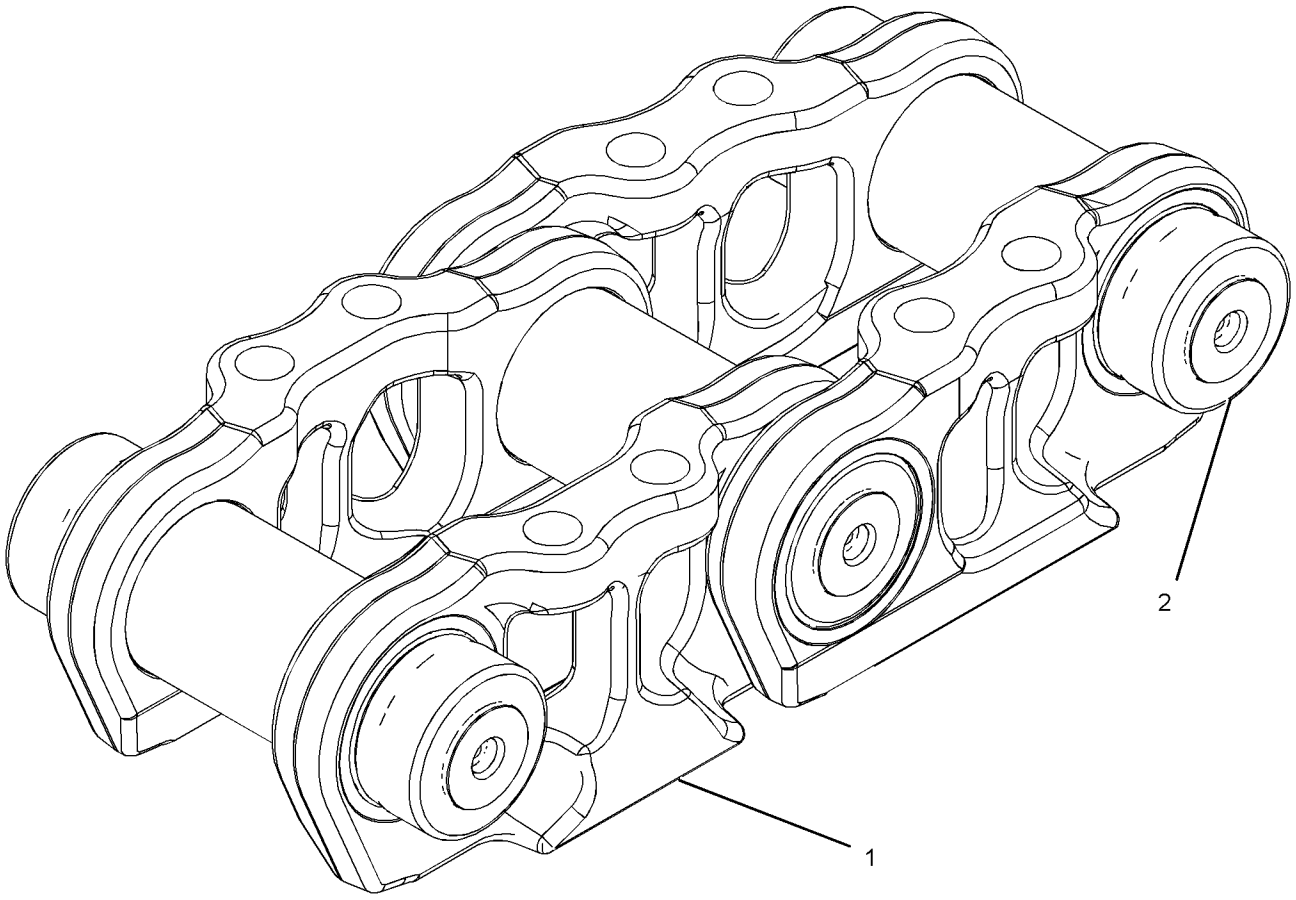

GRAPHIC #1 <END> g02131696

351-0963 LINK AS-TRACK BOX

S/N: 9BL1-UP
70% WORN. SEALED, LUBRICATED
PART OF 351-0964 LINK AS-TRACK BOX
FIELD INSTALLATION

SMCS-4169 **i03917589**

NOTE	REF NO	GRAPHIC REF	PART NUMBER	QTY	PART NAME 1 2 3 4 5 6 (PRODUCT LEVEL)	SEE PAGE
	1	1	*331-8464*	2	CARTRIDGE AS-TRACK LINK	
					(EACH INCLUDES)	
		1	**6Y-0473**	2	PLUG-CLEAR	
		1	**9G-1642**	2	STOPPER-RUBBER	

PARTS SHOWN IN GRAPHIC(S) WITHOUT A REFERENCE NUMBER ARE NOT SERVICED SEPARATELY

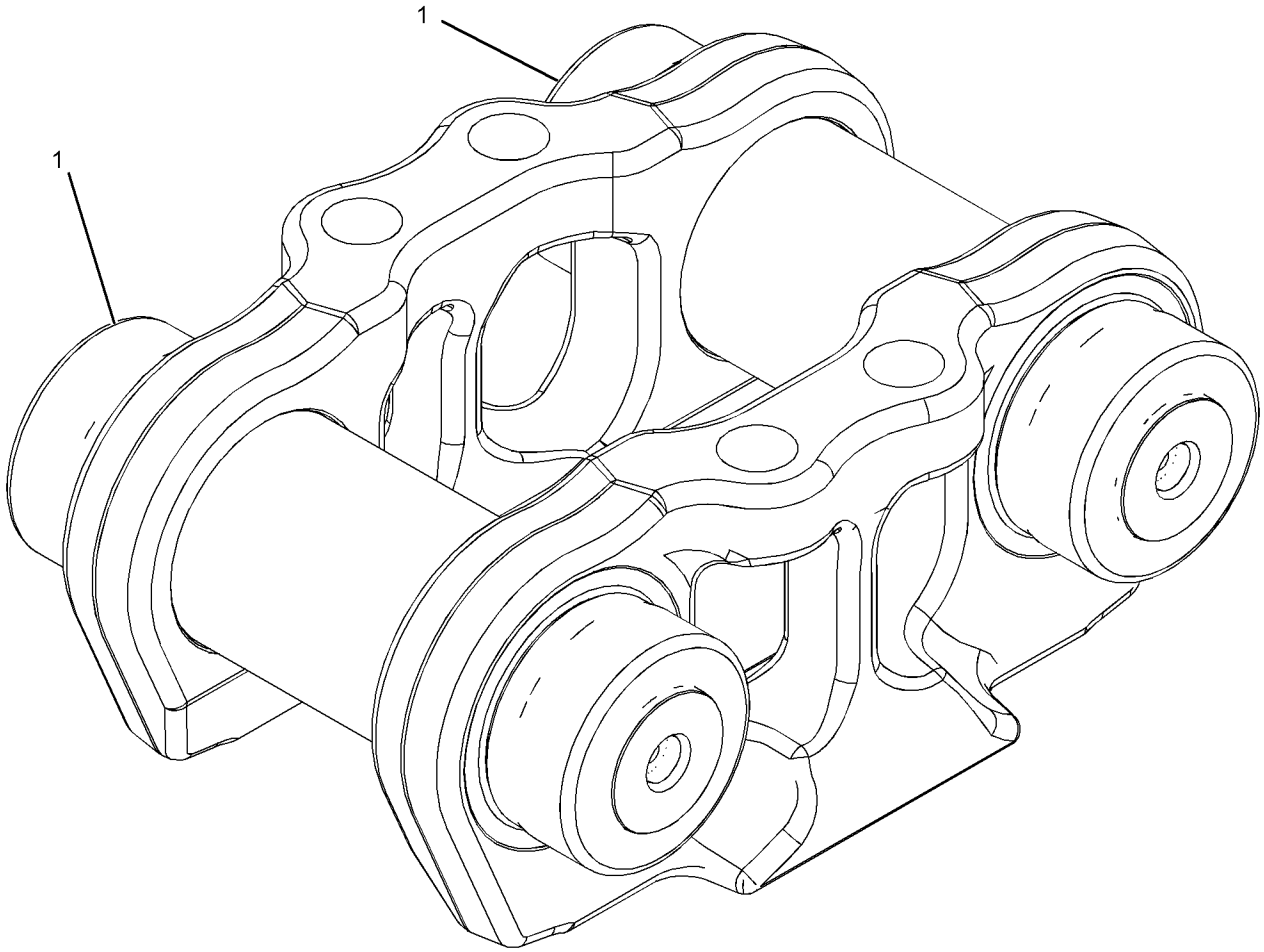

GRAPHIC #1 <END> g01416784

351-0964 LINK AS-TRACK BOX–OFFSET

S/N: 9BL1-UP
70% WORN. SEALED, LUBRICATED
FIELD INSTALLATION

SMCS-4169 **i03917171**

NOTE	REF NO	GRAPHIC REF	PART NUMBER	QTY	PART NAME 1 2 3 4 5 6 (PRODUCT LEVEL)	SEE PAGE
Y	1	1	**351-0963**	1	LINK AS-TRACK BOX	509
	2	1	*331-8464*	1	CARTRIDGE AS-TRACK LINK	
		1	**6Y-0473**	2	PLUG-CLEAR	
		1	**9G-1642**	2	STOPPER-RUBBER	
					PARTS SHOWN IN GRAPHIC(S) WITHOUT A REFERENCE NUMBER ARE NOT SERVICED SEPARATELY	

Y - SEPARATE ILLUSTRATION

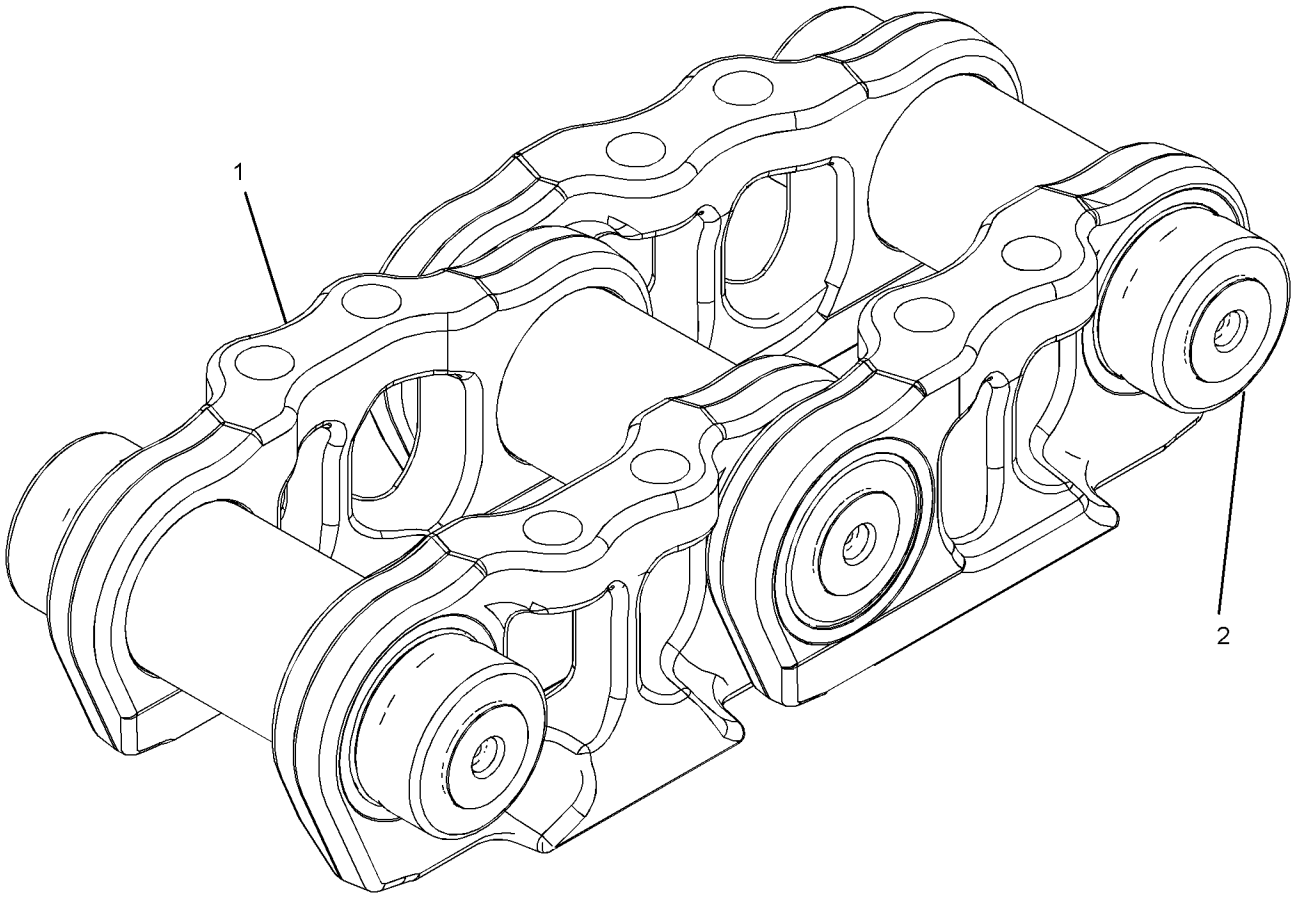

GRAPHIC #1 <END> g02031533

3W-8154 PIVOT BAR GP

S/N: 9BL1-UP

PART OF 3W-8187 UNDERCARRIAGE AR

SMCS-4153 **i01400087**

NOTE	REF NO	GRAPHIC REF	PART NUMBER	QTY	PART NAME 1 2 3 4 5 6 (PRODUCT LEVEL)	SEE PAGE
M	1	1	**7X-2563**	24	BOLT (M20X2.5X60-MM)	
	2	1	**3W-8155**	2	SHAFT AS	
					(EACH INCLUDES)	
	3	1	**3W-7967**	1	RING	
	4	1	**3W-7968**	2	SEAL	
	5	1	**8T-4122**	8	WASHER-HARD (17X32X3.5-MM THK)	
M	6	1	**8T-7338**	14	BOLT (M16X2X45-MM)	
	7	1	**5P-1979**	2	SEAL-O-RING	
	8	1	**3W-7824**	2	PLATE	
	9	1	**8Y-1969**	2	COVER	
	10	1	**8Y-6151**	2	PLATE	
					QUANTITIES SHOWN ARE THOSE REQUIRED FOR BOTH LH & RH SIDES	

M - METRIC PART

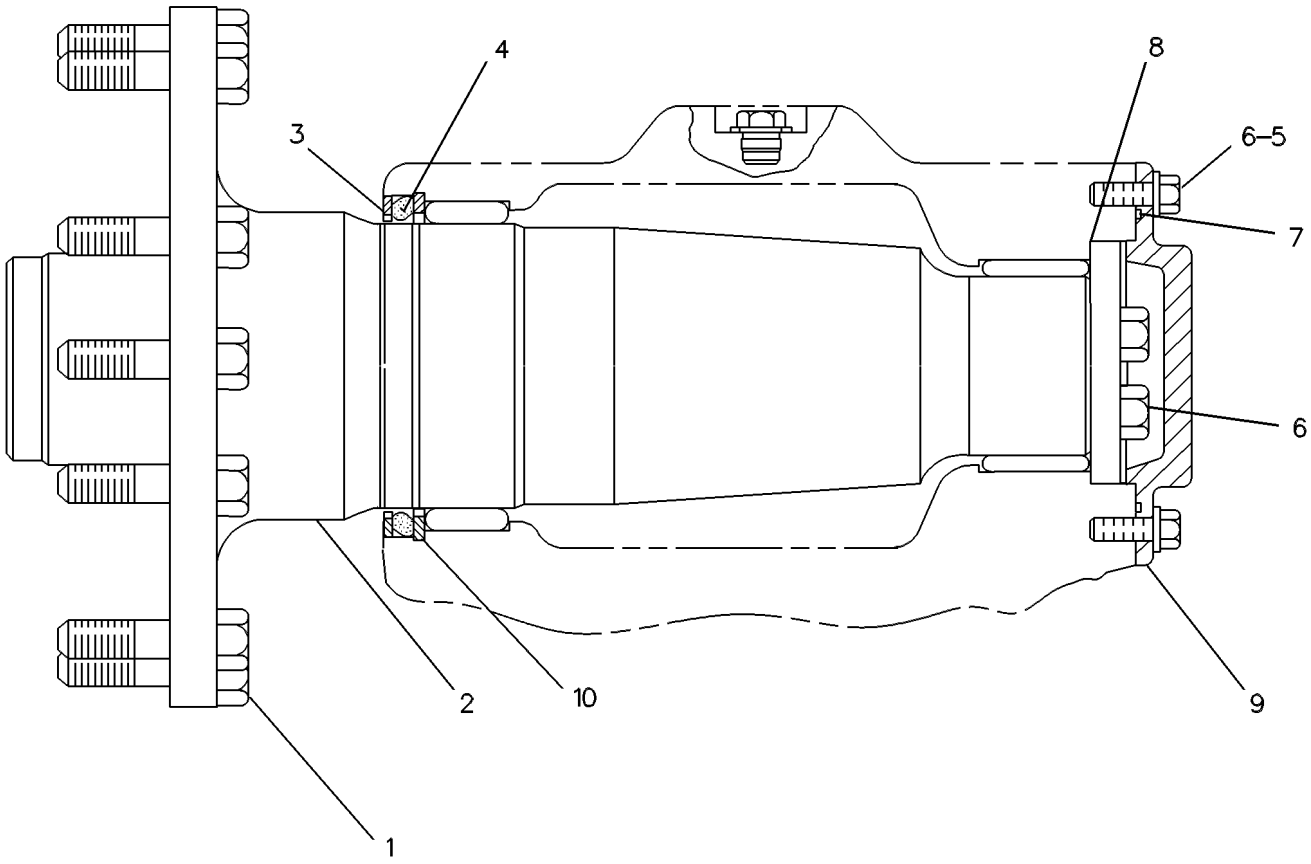

GRAPHIC #1 <END> g00294433

5Q-5565 PIVOT BAR GP

S/N: 9BL1-UP

PART OF 136-7802 GUARD AR-SEAL, 5Q-5567 MODIFICATION AR

AN ATTACHMENT

SMCS-4153 **i01400089**

NOTE	REF NO	GRAPHIC REF	PART NUMBER	QTY	PART NAME 1 2 3 4 5 6 (PRODUCT LEVEL)	SEE PAGE
	1	1	**5Q-5562**	2	SHAFT AS	
					(EACH INCLUDES)	
	2	1	**2Q-5468**	1	RING	
	3	1	**8Y-6151**	2	PLATE	
	4	1	**3W-7968**	2	SEAL	
M	5	1	**8T-7338**	14	BOLT (M16X2X45-MM)	
	6	1	**8Y-1969**	2	COVER	
	7	1	**3W-7824**	2	PLATE	
M	8	1	**7X-2563**	24	BOLT (M20X2.5X60-MM)	
	9	1	**8T-4122**	8	WASHER-HARD (17X32X3.5-MM THK)	
	10	1	**5P-1979**	2	SEAL-O-RING	
					QUANTITIES SHOWN ARE THOSE REQUIRED FOR BOTH LH & RH SIDES	

M - METRIC PART

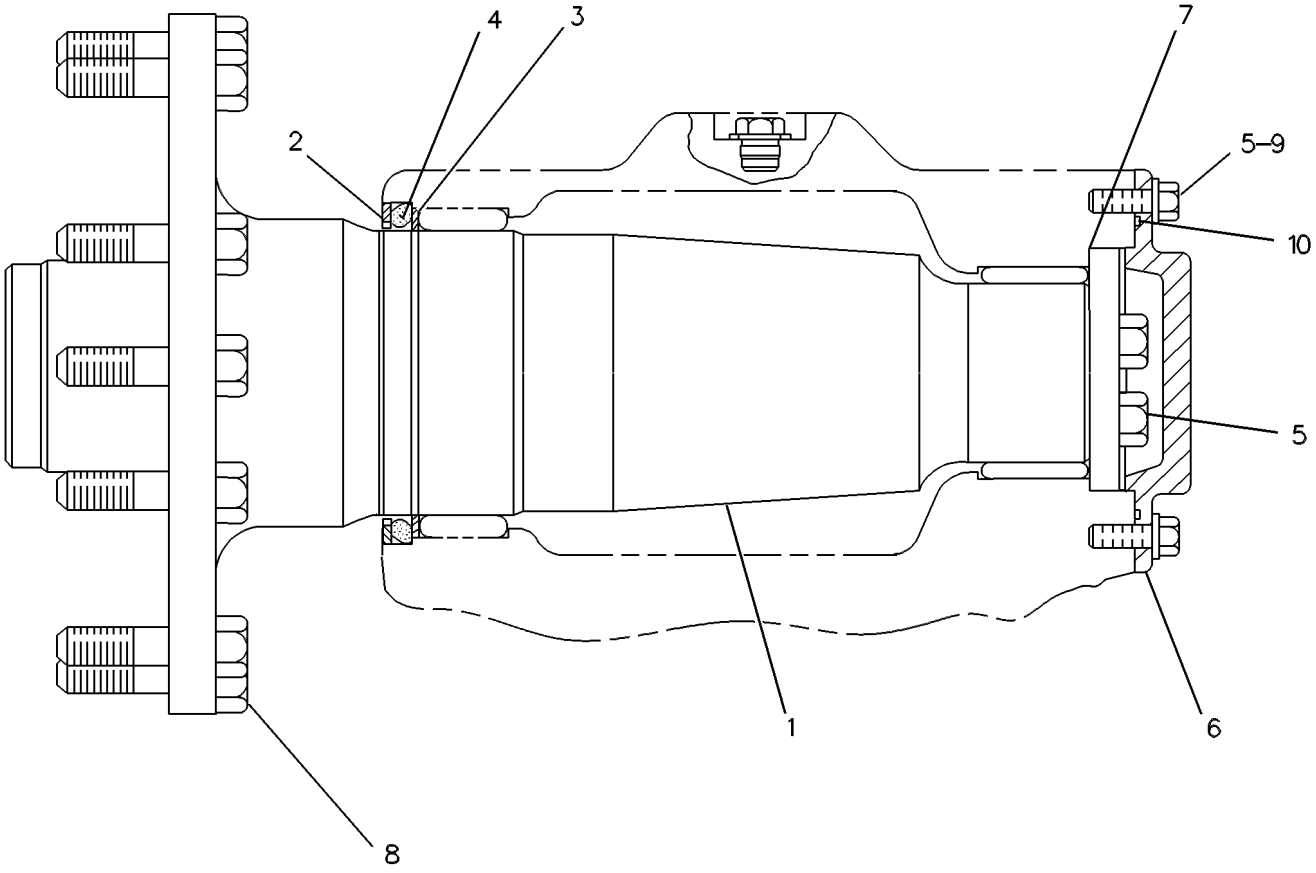

GRAPHIC #1 <END> g00295050

6Y-1781 ROLLER GP-TRACK CARRIER

S/N: 9BL1-UP

PART OF 3W-8187 UNDERCARRIAGE AR

SMCS-4154 **i01572257**

NOTE	REF NO	GRAPHIC REF	PART NUMBER	QTY	PART NAME 1 2 3 4 5 6 (PRODUCT LEVEL)	SEE PAGE
	1	1	**7H-4574**	1	RING	
	2	1	**7H-4571**	1	COLLAR AS	
	3	1	**1M-4291**	2	DOWEL	
R	4	1	**9W-6647**	1	SEAL GP-DUO-CONE	
Z	5	1		2	SEAL-RING	
	6	1	**8H-2262**	2	RING-TORIC	
	7	1	**126-1347**	2	BEARING AS-SPECIAL	
					(EACH INCLUDES)	
	8	1	**9S-3582**	1	CONE-BEARING	
	9	1	**9S-3581**	1	CUP-BEARING	
	10	1	**9S-8320**	1	ROLLER AS	
	11	1	**2P-0347**	1	PLUG	
	12	1	**1S-8947**	1	SEAL-O-RING	
	13	1	**0S-1594**	3	BOLT (3/8-16X1-IN)	
	14	1	**8P-6188**	1	PLATE-RETAINER	
	15	1	**5M-2043**	1	COVER-ROLLER	
	16	1	**2H-6338**	1	SEAL-O-RING	
	17	1	**5K-9107**	2	BOLT-LOCKING (3/8-16X0.75-IN)	
	18	1	**6Y-2043**	1	SHAFT-CARRIER ROLLER	
	19	1	**1H-8720**	1	SEAL-O-RING	
	20	1	**5M-2894**	3	WASHER-HARD (10.2X18.5X2.5-MM THK)	

R - REMANUFACTURED PART MAY BE AVAILABLE
Z - NOT SERVICED SEPARATELY

6Y-1781 **ROLLER GP-TRACK CARRIER (**contd.**)** **i01572257**

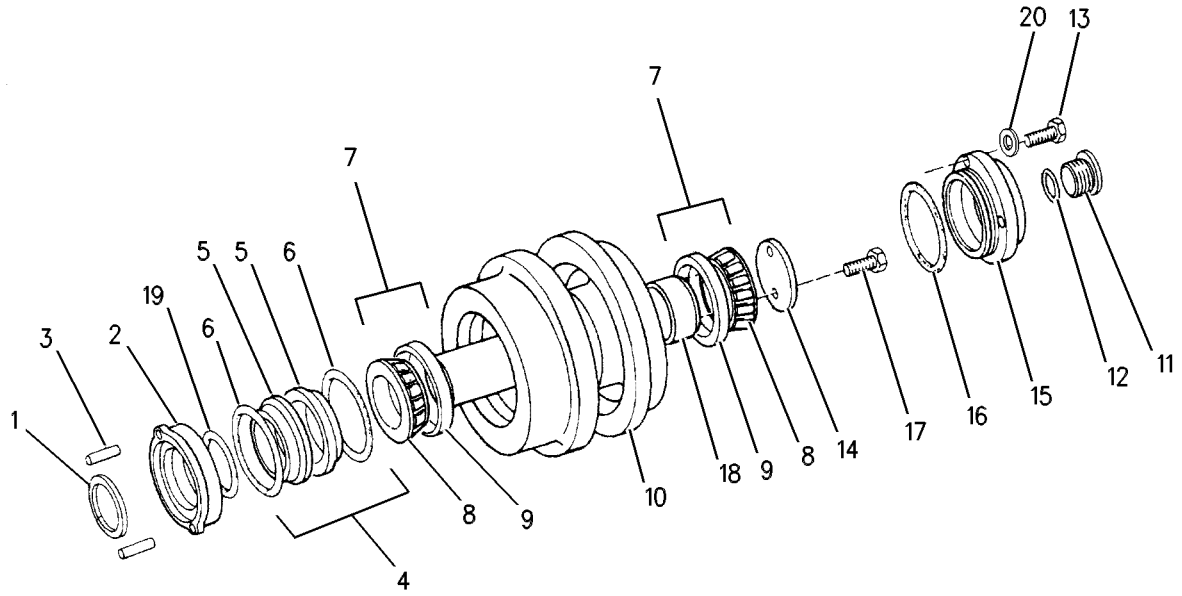

GRAPHIC #1 <END> g00592961

120-5766 ROLLER GP-TRACK-DOUBLE FLANGE

S/N: 9BL1065-UP
FIELD REPLACEMENT FOR 7T-4107—PAGE: 521: FOR 125-4176—PAGE: 516
PART OF 125-4176 ROLLER GP-TRACK-DOUBLE FLANGE
ALSO FIELD INSTALLATION

SMCS-4180 **i01572260**

NOTE	REF NO	GRAPHIC REF	PART NUMBER	QTY	PART NAME 1 2 3 4 5 6 (PRODUCT LEVEL)	SEE PAGE
	1	1	**5M-4443**	2	RING-LOCK	
	2	1	**116-6702**	1	SHAFT-TRACK ROLLER	
	3	1	**120-5767**	1	RIM AS-DOUBLE FLANGE	
	4	1	**117-9748**	2	RING-RETAINING	
	5	1	**2H-3928**	2	SEAL-O-RING	
	6	1	**120-5785**	2	COLLAR-END	
	7	1	**116-6698**	2	BUSHING AS	
					(EACH INCLUDES)	
		1	**9B-2289**	2	PIN	
	8	1	**1M-8747**	2	SEAL GP-DUO-CONE	
					(EACH INCLUDES)	
		1	**8H-2262**	2	RING-TORIC	
	9	1	**5F-8000**	2	SEAL-O-RING	
	10	1	**6Y-0473**	1	PLUG-CLEAR	
	11	1	**7G-4332**	1	STOPPER	

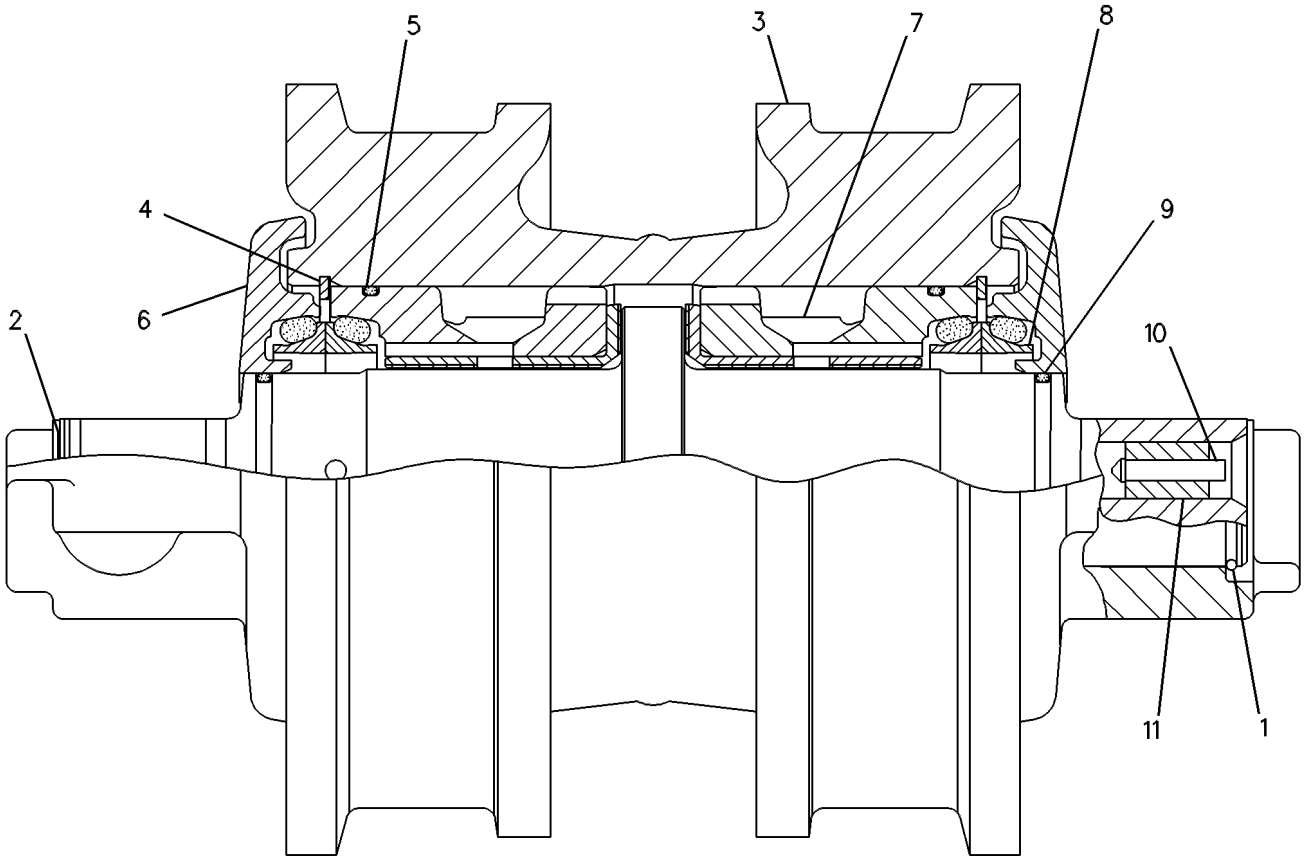

GRAPHIC #1 <END> g00254290

125-4176 ROLLER GP-TRACK-DOUBLE FLANGE

S/N: 9BL1065-UP

FIELD REPLACEMENT ORDER 120-5766—PAGE: 515, 231-3088—PAGE: 517

PART OF 3W-8187 UNDERCARRIAGE AR

SMCS-4180 **i01400091**

NOTE	PART NUMBER	QTY	PART NAME 1 2 3 4 5 6 (PRODUCT LEVEL)	SEE PAGE
Y	**120-5766**	1	ROLLER GP-TRACK-DOUBLE FLANGE	515
M	**6V-5845**	4	BOLT (M20X2.5X70-MM)	
	8T-3282	4	WASHER-HARD (22X35X3.5-MM THK)	

M - METRIC PART
Y - SEPARATE ILLUSTRATION

<END>

231-3088 ROLLER GP-TRACK-DOUBLE FLANGE*R

S/N: 9BL1065-UP

FIELD REPLACEMENT FOR 125-4176—PAGE: 516

SMCS-4180 **i02299237**

NOTE	REF NO	GRAPHIC REF	PART NUMBER	QTY	PART NAME 1 2 3 4 5 6 (PRODUCT LEVEL)	SEE PAGE
	1	1	**116-6702**	1	SHAFT-TRACK ROLLER	
	2	1	**120-5785**	2	COLLAR-END	
	3	1	**117-9748**	2	RING-RETAINING	
	4	1	**2H-3928**	2	SEAL-O-RING	
	5	1	**120-5767**	1	RIM AS-DOUBLE FLANGE	
	6	1	**116-6698**	2	BUSHING AS	
					(EACH INCLUDES)	
	6A	1	**8P-5197**	1	BEARING AS	
	6B	1	**9B-2289**	2	PIN	
	7	1	**171-5882**	2	SEAL GP-DUO-CONE	
					(EACH INCLUDES)	
	7A	1	**162-2166**	2	RING-TORIC	
Z	7B	1		2	SEAL-RING	
	8	1	**5F-8000**	2	SEAL-O-RING	
	9	1	**5M-4443**	2	RING-LOCK	
	10	1	**6Y-0473**	1	PLUG-CLEAR	
	10A	1	**7G-4332**	1	STOPPER	

Z - NOT SERVICED SEPARATELY

231-3088 **ROLLER GP-TRACK-DOUBLE FLANGE (**contd.**)** **i02299237**

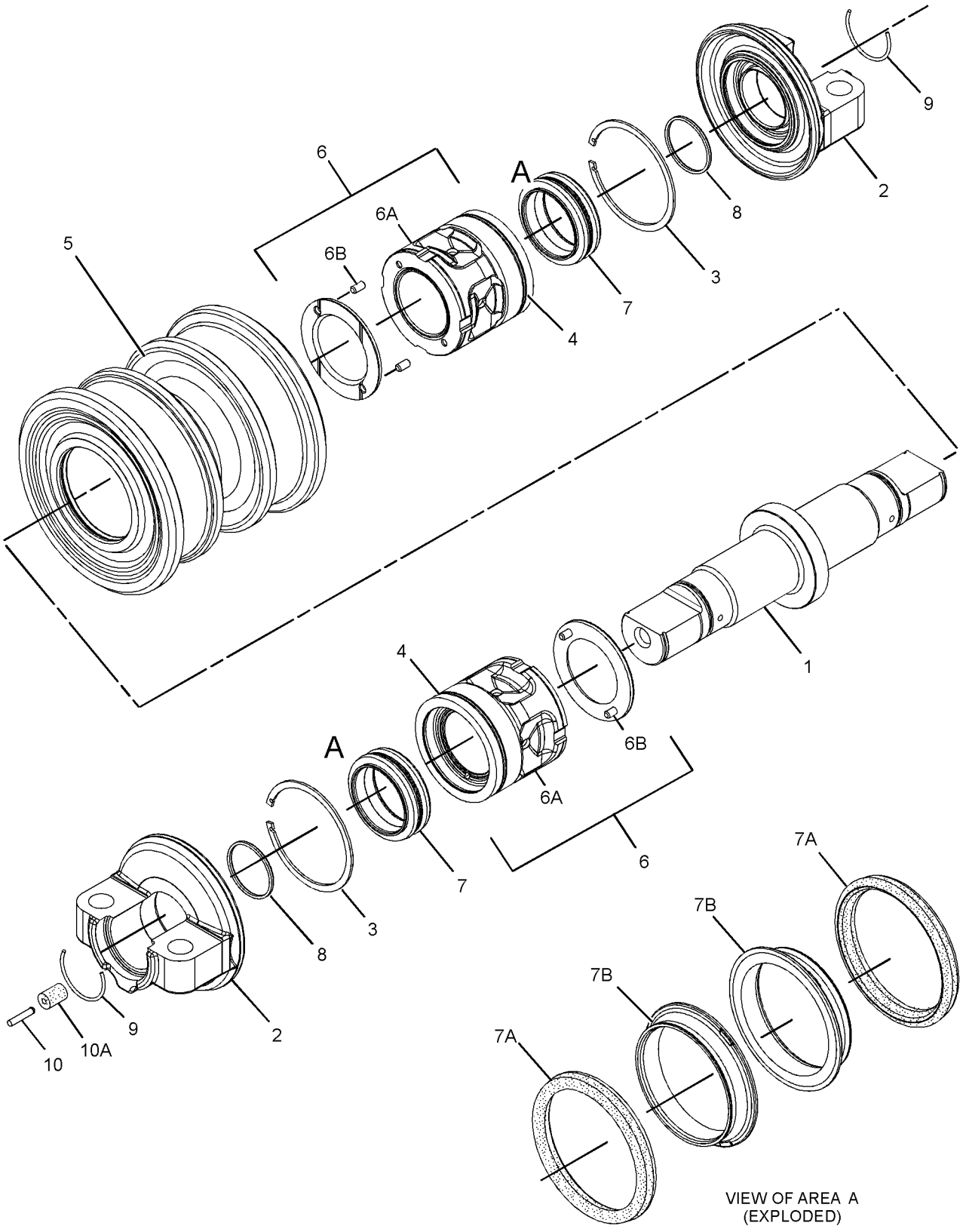

GRAPHIC #1 <END> g01157776

288-0946 ROLLER GP-TRACK-DOUBLE FLANGE—COLD WEATHER

S/N: 9BL1-UP

FOR USE WITH HEAVY DUTY, HYBRID, ROTATING BUSHING TRACK, SEALED, LUBRICATED TRACK

CANNOT BE USED WITH SYSTEMONE TRACK

FIELD INSTALLATION

SMCS-4180 **i02794739**

NOTE	REF NO	GRAPHIC REF	PART NUMBER	QTY	PART NAME 1 2 3 4 5 6 (PRODUCT LEVEL)	SEE PAGE
					(INDIVIDUAL PARTS ARE NOT SERVICED SEPARATELY)	

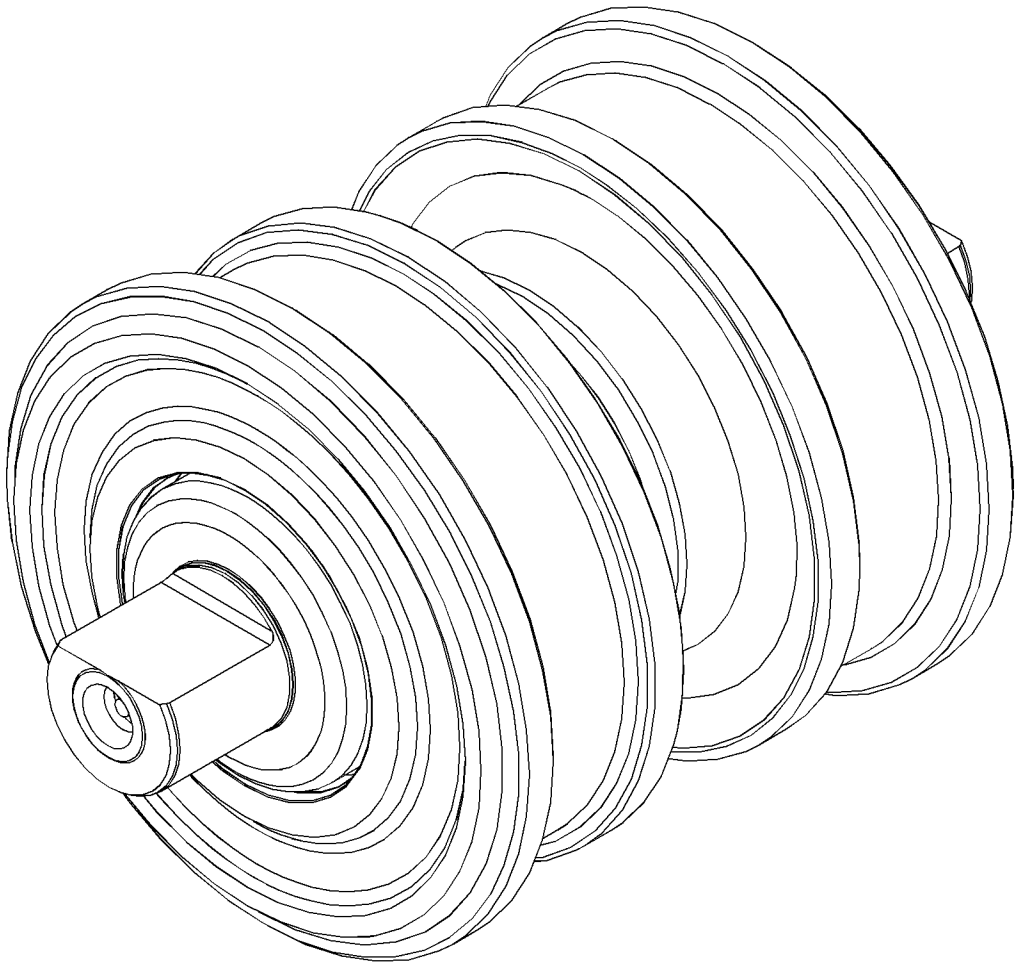

GRAPHIC #1 <END> g01395970

288-0948 ROLLER GP-TRACK-DOUBLE FLANGE–HIGH HEAT

S/N: 9BL1-UP

FOR USE WITH HEAVY DUTY, HYBRID, ROTATING BUSHING TRACK, SEALED, LUBRICATED TRACK

CANNOT BE USED WITH SYSTEMONE TRACK

FIELD INSTALLATION

SMCS-4180 **i07185660**

NOTE	REF NO	GRAPHIC REF	PART NUMBER	QTY	PART NAME 1 2 3 4 5 6 (PRODUCT LEVEL)	SEE PAGE

(NO SERVICED PARTS)

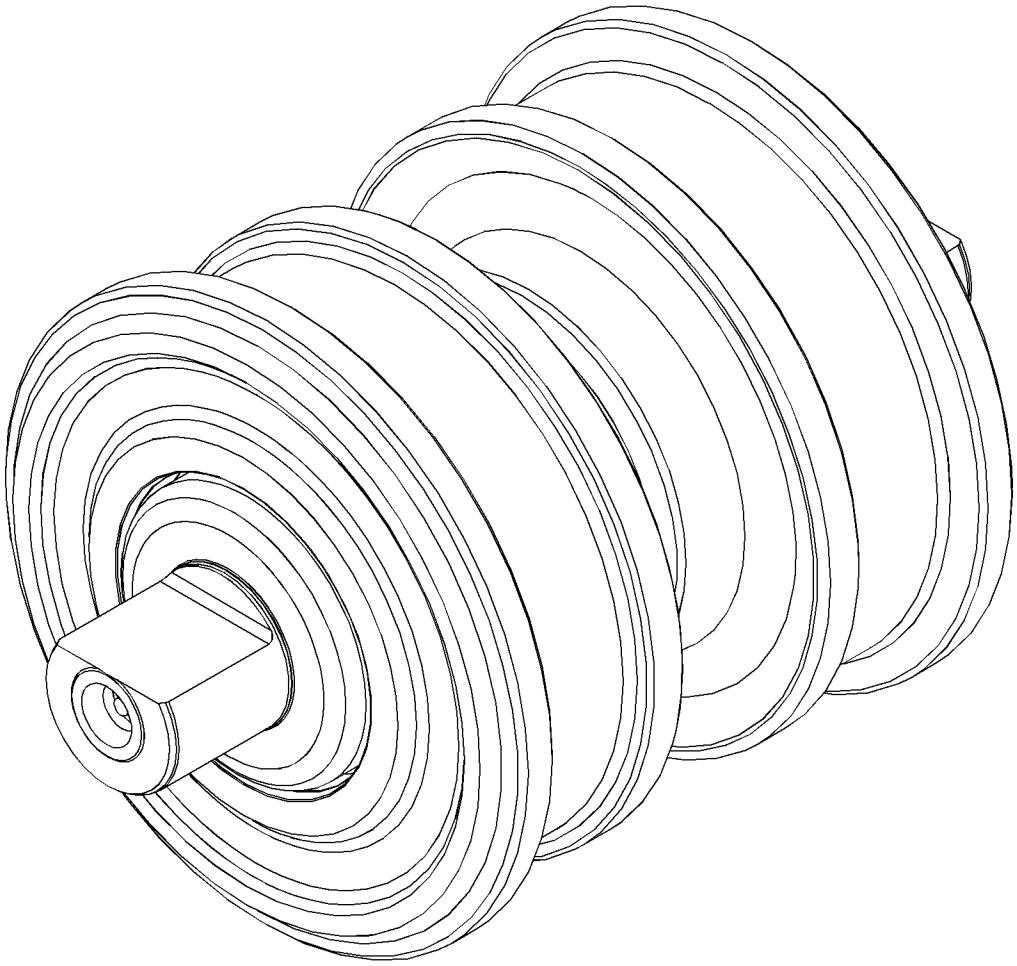

GRAPHIC #1 <END> g01395970

7T-4107 ROLLER GP-TRACK-DOUBLE FLANGE

S/N: 9BL1-1064

FIELD REPLACEMENT ORDER 120-5766—PAGE: 515

PART OF 3W-8187 UNDERCARRIAGE AR

SMCS-4180 **i01338965**

NOTE	REF NO	GRAPHIC REF	PART NUMBER	QTY	PART NAME 1 2 3 4 5 6 (PRODUCT LEVEL)	SEE PAGE
L	1	1	**0S-1594**	12	BOLT (3/8-16X1-IN)	
L		1	**5M-2894**	12	WASHER-HARD (10.2X18.5X2.5-MM THK)	
					—OR—	
L		1	**2P-3201**	12	BOLT-WASHER HEAD (3/8-16X1-IN)	
	2	1	**7T-4106**	1	ROLLER AS-BEARING	
	3	1	**5F-3144**	2	SEAL-O-RING	
	4	1	**7T-4152**	2	RETAINER AS	
	5	1	**9W-2423**	1	WASHER-THRUST	
		1	**2H-1190**	4	DOWEL	
	6	1	**7T-4031**	2	STABILIZER-SEAL	
	7	1	**7T-0158**	2	SEAL GP-DUO-CONE	
					(EACH INCLUDES)	
		1	**6P-8912**	1	RING	
		1	**6V-2701**	1	SEAL-O-RING	
	8	1	**6T-0720**	1	SHAFT-TRACK ROLLER	
	9	1	**6Y-0473**	1	PLUG-CLEAR	
	10	1	**7G-4332**	1	STOPPER	

L - THESE PARTS ARE DIRECTLY INTERCHANGEABLE

7T-4107 **ROLLER GP-TRACK-DOUBLE FLANGE** (contd.) **i01338965**

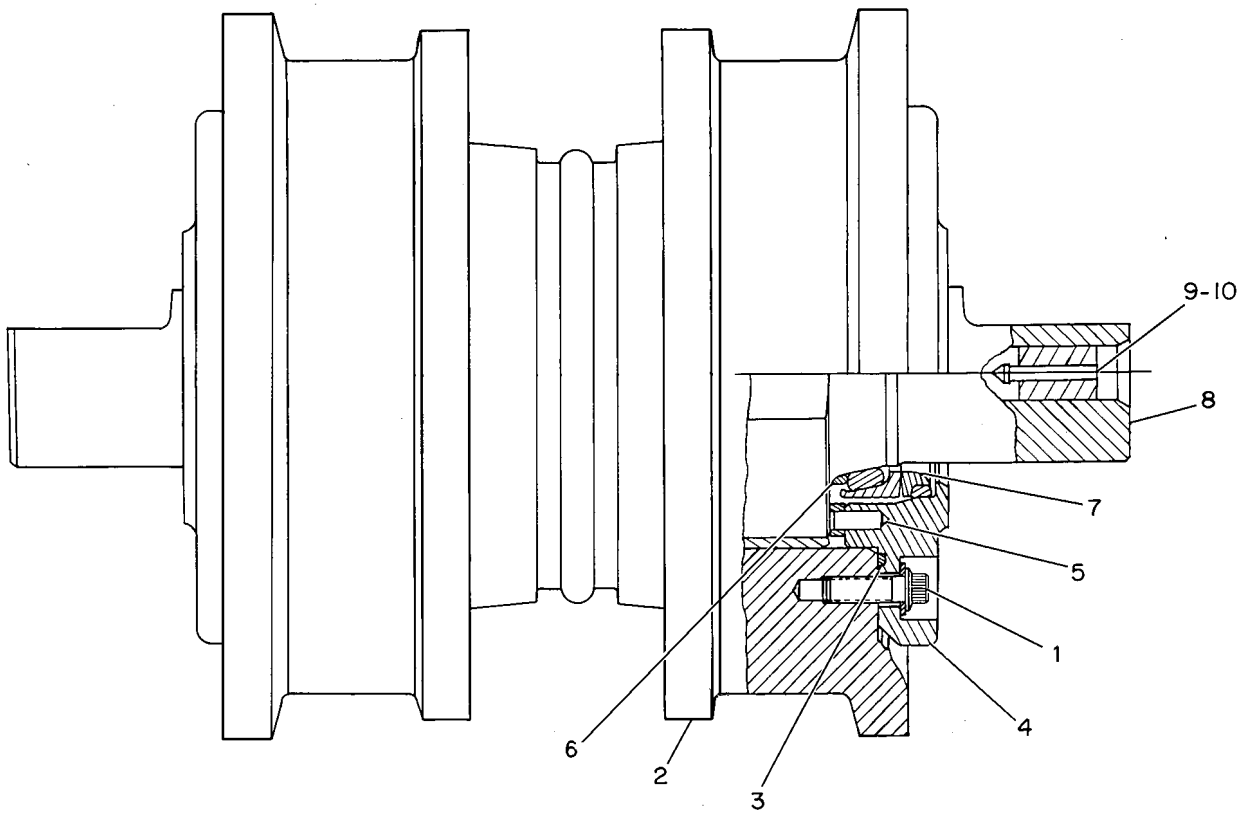

GRAPHIC #1 <END> g00222165

120-5746 ROLLER GP-TRACK-SINGLE FLANGE

S/N: 9BL1065-UP
FIELD REPLACEMENT FOR 7T-4102—PAGE: 528: FOR 125-4175—PAGE: 524
PART OF 125-4175 ROLLER GP-TRACK-SINGLE FLANGE
ALSO FIELD INSTALLATION

SMCS-4180 **i01572261**

NOTE	REF NO	GRAPHIC REF	PART NUMBER	QTY	PART NAME 1 2 3 4 5 6 (PRODUCT LEVEL)	SEE PAGE
	1	1	**5M-4443**	2	RING-LOCK	
	2	1	**116-6702**	1	SHAFT-TRACK ROLLER	
	3	1	**120-5785**	2	COLLAR-END	
	4	1	**117-9748**	2	RING-RETAINING	
	5	1	**2H-3928**	2	SEAL-O-RING	
	6	1	**120-5753**	1	RIM AS-SINGLE FLANGE	
	7	1	**116-6698**	2	BUSHING AS	
					(EACH INCLUDES)	
		1	**9B-2289**	2	PIN	
	8	1	**1M-8747**	2	SEAL GP-DUO-CONE	
					(EACH INCLUDES)	
		1	**8H-2262**	2	RING-TORIC	
	9	1	**5F-8000**	2	SEAL-O-RING	
	10	1	**6Y-0473**	1	PLUG-CLEAR	
	11	1	**7G-4332**	1	STOPPER	

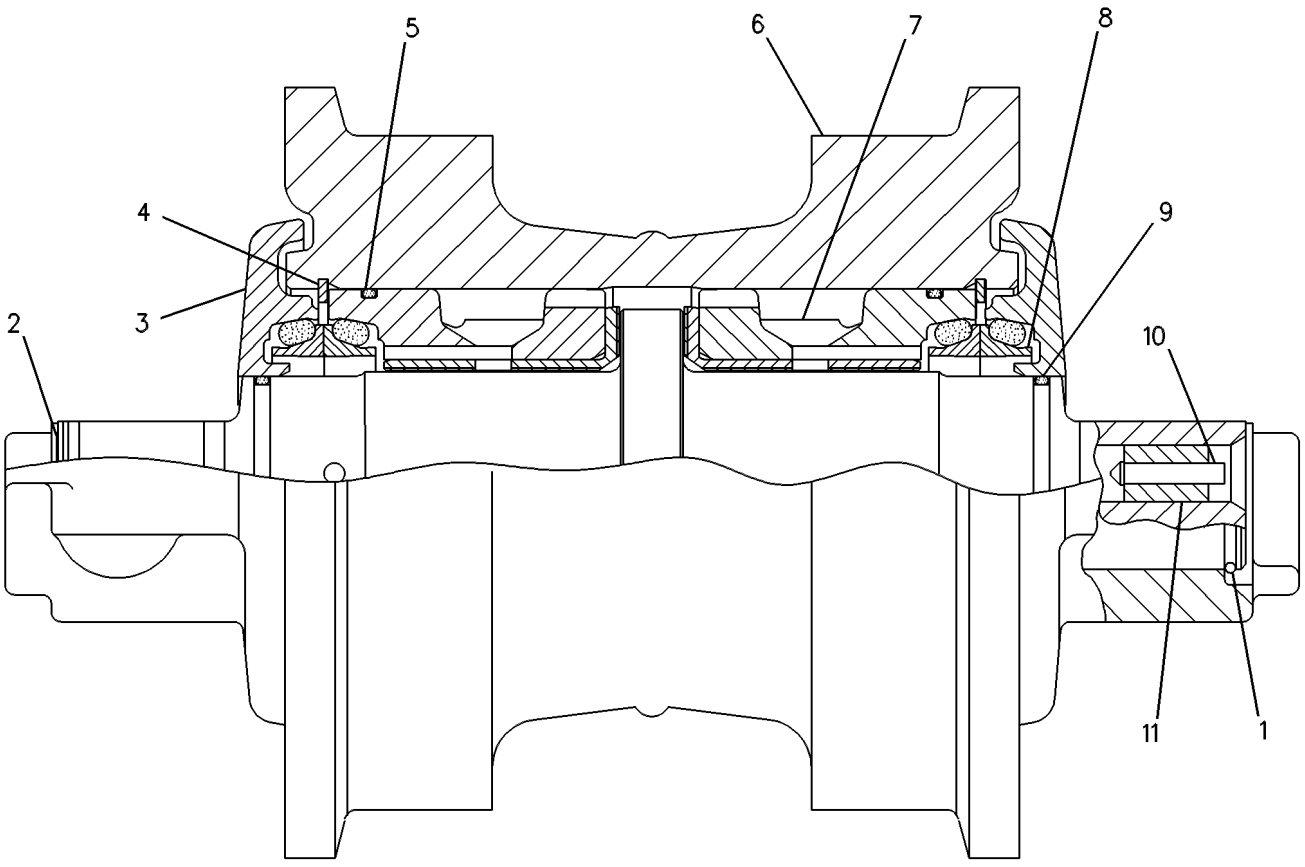

GRAPHIC #1 <END> g00254275

125-4175 ROLLER GP-TRACK-SINGLE FLANGE

S/N: 9BL1065-UP

FIELD REPLACEMENT ORDER 120-5746—PAGE: 523, 231-3087—PAGE: 525

PART OF 3W-8187 UNDERCARRIAGE AR

SMCS-4180 **i01400106**

NOTE	PART NUMBER	QTY	PART NAME 1 2 3 4 5 6 (PRODUCT LEVEL)	SEE PAGE
Y	**120-5746**	1	ROLLER GP-TRACK-SINGLE FLANGE	523
M	**6V-5845**	4	BOLT (M20X2.5X70-MM)	
	8T-3282	4	WASHER-HARD (22X35X3.5-MM THK)	

M - METRIC PART
Y - SEPARATE ILLUSTRATION

<END>

231-3087 ROLLER GP-TRACK-SINGLE FLANGE*R

S/N: 9BL1065-UP

FIELD REPLACEMENT FOR 125-4175—PAGE: 524

SMCS-4180 **i02292193**

NOTE	REF NO	GRAPHIC REF	PART NUMBER	QTY	PART NAME 1 2 3 4 5 6 (PRODUCT LEVEL)	SEE PAGE
	1	1	**116-6702**	1	SHAFT-TRACK ROLLER	
	2	1	**120-5785**	2	COLLAR-END	
	3	1	**117-9748**	2	RING-RETAINING	
	4	1	**2H-3928**	2	SEAL-O-RING	
	5	1	**120-5753**	1	RIM AS-SINGLE FLANGE	
	6	1	**5M-4443**	2	RING-LOCK	
	7	1	**171-5882**	2	SEAL GP-DUO-CONE	
					(EACH INCLUDES)	
	7A	1	**162-2166**	2	RING-TORIC	
Z	7B	1		2	SEAL-RING	
	8	1	**5F-8000**	2	SEAL-O-RING	
	9	1	**6Y-0473**	1	PLUG-CLEAR	
	10	1	**7G-4332**	1	STOPPER	
	11	1	**116-6698**	2	BUSHING AS	
					(EACH INCLUDES)	
	11A	1	**8P-5197**	1	BEARING AS	
	11B	1	**9B-2289**	1	PIN	

Z - NOT SERVICED SEPARATELY

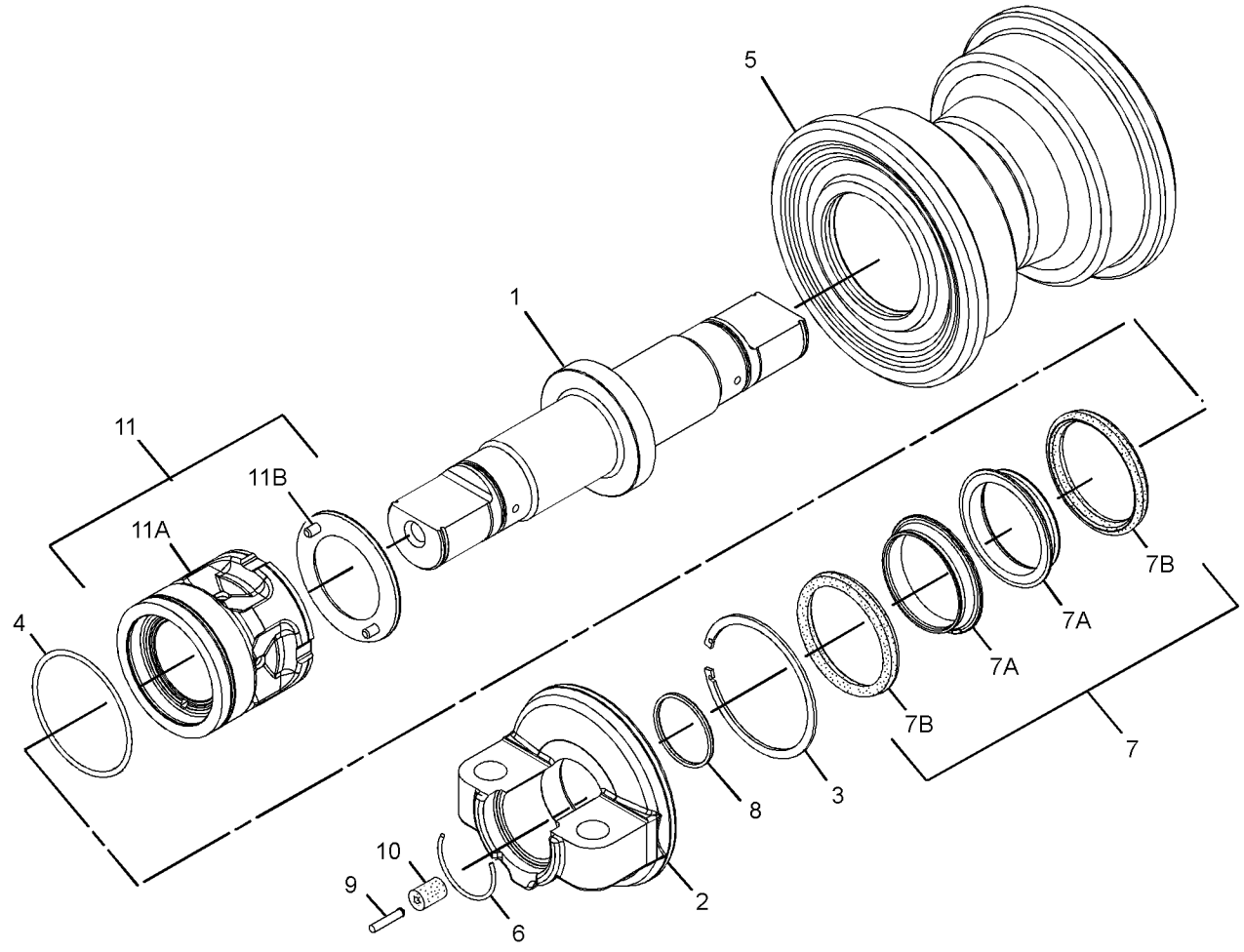

GRAPHIC #1 <END> g01166127

288-0945 ROLLER GP-TRACK-SINGLE FLANGE—COLD WEATHER

S/N: 9BL1-UP

FOR USE WITH HEAVY DUTY, HYBRID, ROTATING BUSHING TRACK, SEALED, LUBRICATED TRACK

CANNOT BE USED WITH SYSTEMONE TRACK

FIELD INSTALLATION

SMCS-4180 **i02794586**

NOTE	REF NO	GRAPHIC REF	PART NUMBER	QTY	PART NAME 1 2 3 4 5 6 (PRODUCT LEVEL)	SEE PAGE
					(INDIVIDUAL PARTS ARE NOT SERVICED SEPARATELY)	

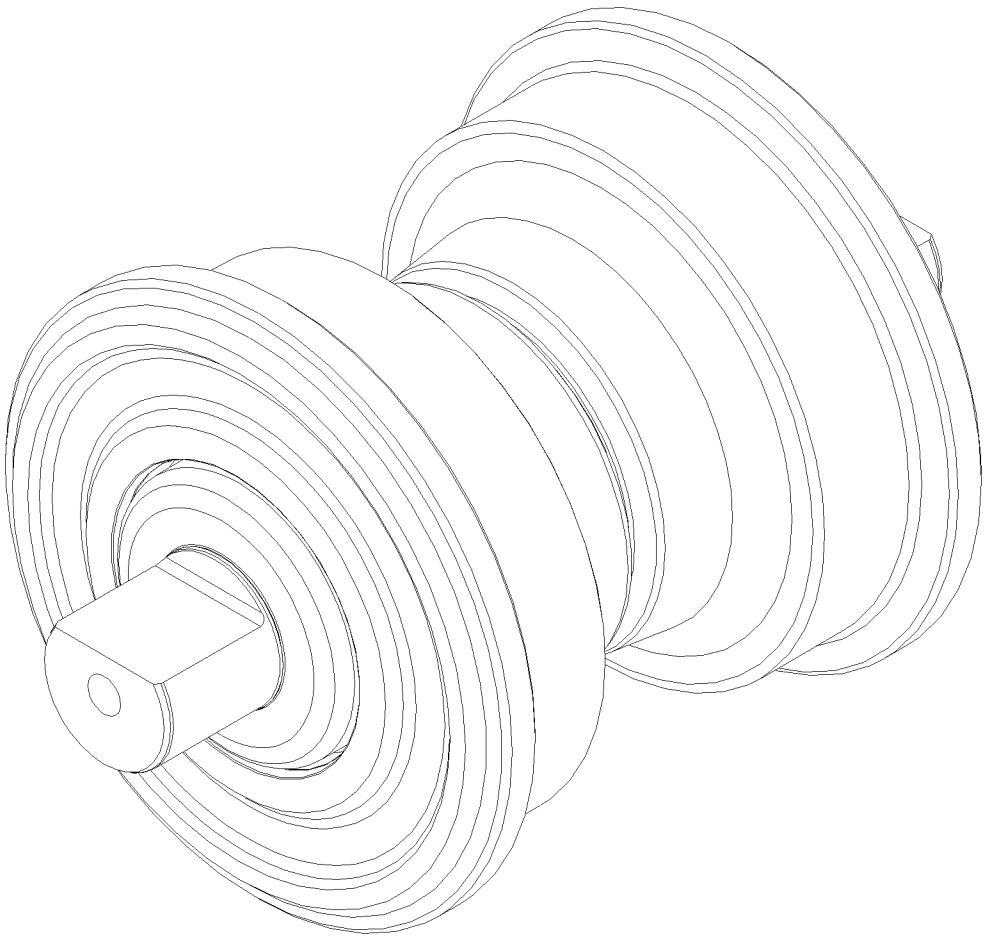

GRAPHIC #1 <END> g01395989

288-0947 ROLLER GP-TRACK-SINGLE FLANGE—HIGH HEAT

S/N: 9BL1-UP

FOR USE WITH HEAVY DUTY, HYBRID, ROTATING BUSHING TRACK, SEALED, LUBRICATED TRACK

CANNOT BE USED WITH SYSTEMONE TRACK

FIELD INSTALLATION

SMCS-4180 **i07185680**

NOTE	REF NO	GRAPHIC REF	PART NUMBER	QTY	PART NAME 1 2 3 4 5 6 (PRODUCT LEVEL)	SEE PAGE
					(NO SERVICED PARTS)	

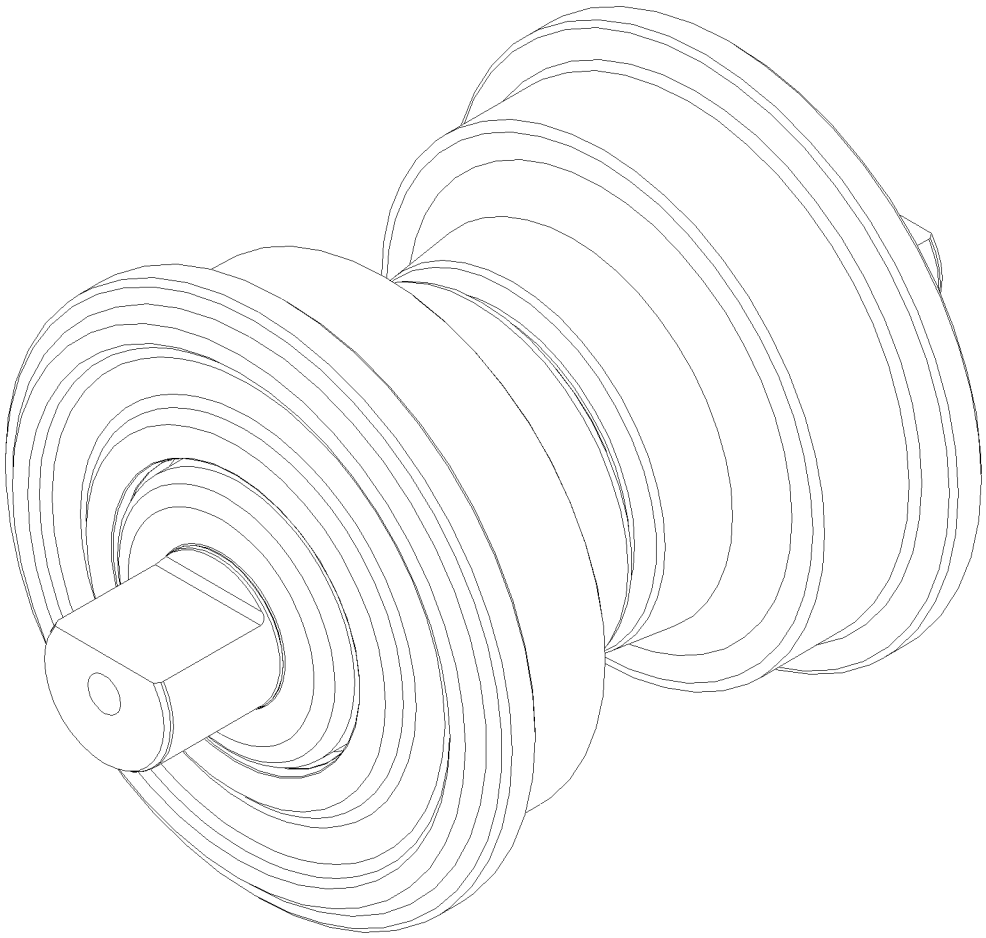

GRAPHIC #1 <END> g01395989

7T-4102 ROLLER GP-TRACK-SINGLE FLANGE

S/N: 9BL1-1064
FIELD REPLACEMENT ORDER 120-5746—PAGE: 523
PART OF 3W-8187 UNDERCARRIAGE AR

SMCS-4180 **i01400094**

NOTE	REF NO	GRAPHIC REF	PART NUMBER	QTY	PART NAME 1 2 3 4 5 6 (PRODUCT LEVEL)	SEE PAGE
	1	1	**7T-4031**	2	STABILIZER-SEAL	
	2	1	**7T-4101**	1	ROLLER AS-BEARING	
	3	1	**5F-3144**	2	SEAL-O-RING	
	4	1	**7T-4152**	2	RETAINER AS	
					(EACH INCLUDES)	
		1	**9G-9346**	1	WASHER-THRUST (86X108X4.52-MM THK)	
					—OR—	
J		1	**9W-2423**	1	WASHER-THRUST	
J		1	**2H-1190**	4	DOWEL	
L	5	1	**0S-1594**	12	BOLT (3/8-16X1-IN)	
L		1	**5M-2894**	12	WASHER-HARD (10.2X18.5X2.5-MM THK)	
					—OR—	
L		1	**2P-3201**	12	BOLT-WASHER HEAD (3/8-16X1-IN)	
	6	1	**7G-4332**	1	STOPPER	
	7	1	**7T-0158**	2	SEAL GP-DUO-CONE	
					(EACH INCLUDES)	
		1	**6P-8912**	1	RING	
		1	**6V-2701**	1	SEAL-O-RING	
	8	1	**6T-0720**	1	SHAFT-TRACK ROLLER	
	9	1	**6Y-0473**	1	PLUG-CLEAR	

J - OPTIONAL DESIGN
L - THESE PARTS ARE DIRECTLY INTERCHANGED

7T-4102 **ROLLER GP-TRACK-SINGLE FLANGE** (contd.) **i01400094**

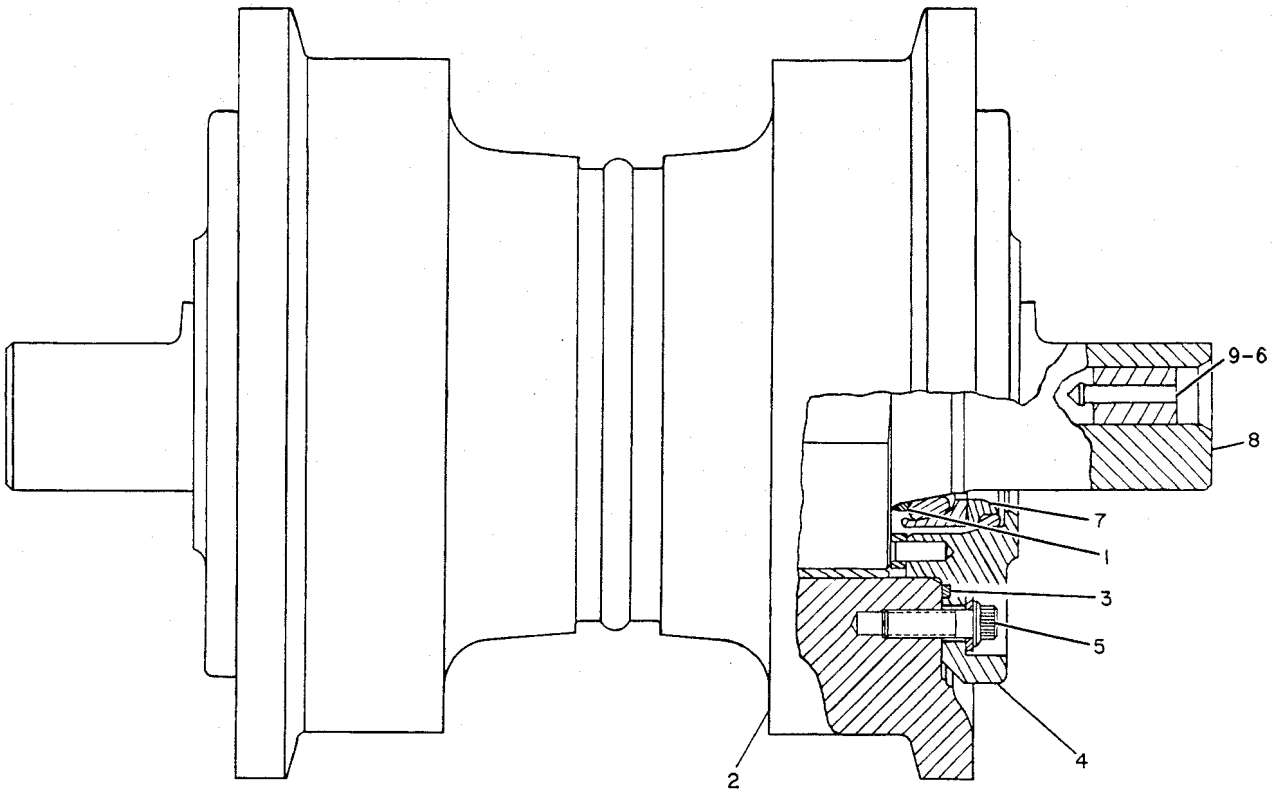

GRAPHIC #1 <END> g00229026

230-6170 TRACK GP–2-REQUIRED

S/N: 9BL1-UP

450-MM (17.7-IN) DOUBLE GROUSER SHOE. SEALED, LUBRICATED

FIELD REPLACEMENT FOR 8E-5250–PAGE: 533

SMCS-4170 **i01908985**

NOTE	PART NUMBER	QTY	PART NAME 1 2 3 4 5 6 (PRODUCT LEVEL)	SEE PAGE
Y	**230-6167**	1	LINK AS-TRACK	499
	1S-1859	144	BOLT-TRACK (3/4-16X2.16-IN)	
	9S-1838	4	BOLT-TRACK MASTER (3/4-16X4.13-IN)	
	1S-1860	144	NUT-TRACK (3/4-16-THD)	
	8E-4495	1	SHOE-TRACK MASTER	
	8E-4494	36	SHOE-TRACK	
Y - SEPARATE ILLUSTRATION				

<END>

230-6173 TRACK GP–2-REQUIRED

S/N: 9BL1-UP

550-MM (21.7-IN) DOUBLE GROUSER SHOE. SEALED, LUBRICATED

FIELD REPLACEMENT FOR 8E-5249–PAGE: 533

SMCS-4170 **i05898657**

NOTE	PART NUMBER	QTY	PART NAME 1 2 3 4 5 6 (PRODUCT LEVEL)	SEE PAGE
Y	**230-6167**	1	LINK AS-TRACK	499
	1S-1859	144	BOLT-TRACK (3/4-16X2.16-IN)	
	9S-1838	4	BOLT-TRACK MASTER (3/4-16X4.13-IN)	
	1S-1860	144	NUT-TRACK (3/4-16-THD)	
	8E-4496	36	SHOE-TRACK	
	8E-4497	1	SHOE-TRACK MASTER	
Y - SEPARATE ILLUSTRATION				

<END>

231-3715 TRACK GP—2-REQUIRED, SYSTEMONE

S/N: 9BL1-UP
550-MM (22-IN) DOUBLE GROUSER SHOE. SEALED, LUBRICATED
FOR USE WITH SYSTEMONE ROLLERS, GUARDS, GUIDESTRIPS
FIELD INSTALLATION

SMCS-4170 **i04825927**

NOTE	PART NUMBER	QTY	PART NAME 1 2 3 4 5 6 (PRODUCT LEVEL)	SEE PAGE
Y	**231-3714**	1	LINK AS-TRACK (SYSTEMONE)	500
M	**6Y-9024**	148	BOLT-TRACK (M22X1.5X67-MM)	
			—OR—	
M	**6Y-9024**	144	BOLT-TRACK (M22X1.5X67-MM)	
	254-0224	4	BOLT-TRACK MASTER (M22X1.5X108-MM)	
	234-9699	2	LINK-TRACK	
			—OR—	
	318-1064	2	LINK-TRACK MASTER (CLAMP)	
M	**9W-4381**	148	NUT-TRACK (M22X1.5-THD)	
			—OR—	
M	**9W-4381**	144	NUT-TRACK (M22X1.5-THD)	
	292-6379	37	SHOE-TRACK	
			—OR—	
	292-6379	36	SHOE-TRACK	
	292-6380	1	SHOE-TRACK MASTER	

M - METRIC PART
Y - SEPARATE ILLUSTRATION

<END>

231-3716 TRACK GP—2-REQUIRED, SYSTEMONE

S/N: 9BL1-UP
450-MM (17.7-IN) DOUBLE GROUSER SHOE. SEALED, LUBRICATED
FOR USE WITH SYSTEMONE ROLLERS & GUARDS
FIELD INSTALLATION

SMCS-4170 **i03159506**

NOTE	PART NUMBER	QTY	PART NAME 1 2 3 4 5 6 (PRODUCT LEVEL)	SEE PAGE
Y	**231-3714**	1	LINK AS-TRACK (SYSTEMONE)	500
M	**6Y-9024**	148	BOLT-TRACK (M22X1.5X67-MM)	
	234-9699	2	LINK-TRACK	
M	**9W-4381**	148	NUT-TRACK (M22X1.5-THD)	
	231-3713	37	SHOE-TRACK	

M - METRIC PART
Y - SEPARATE ILLUSTRATION

<END>

256-4990 TRACK GP–2-REQUIRED, SYSTEMONE

S/N: 9BL1-UP

550-MM (22-IN) DOUBLE GROUSER SHOE. SEALED, LUBRICATED, CLAMP MASTER

FOR USE WITH SYSTEMONE ROLLERS, GUARDS, & GUIDESTRIPS

FIELD INSTALLATION

SMCS-4170 **i03159508**

NOTE	PART NUMBER	QTY	PART NAME 1 2 3 4 5 6 (PRODUCT LEVEL)	SEE PAGE
Y	**231-3714**	1	LINK AS-TRACK (SYSTEMONE)	500
M	**6Y-9024**	144	BOLT-TRACK (M22X1.5X67-MM)	
	254-0224	4	BOLT-TRACK MASTER (M22X1.5X108-MM)	
	198-7722	2	LINK-TRACK MASTER (CLAMP)	
M	**9W-4381**	144	NUT-TRACK (M22X1.5-THD)	
	292-6379	36	SHOE-TRACK	
	292-6380	1	SHOE-TRACK MASTER	

M - METRIC PART
Y - SEPARATE ILLUSTRATION

<END>

256-4991 TRACK GP–2-REQUIRED, SYSTEMONE

S/N: 9BL1-UP

450-MM (17.7-IN) DOUBLE GROUSER SHOE. SEALED, LUBRICATED, CLAMP MASTER

FOR USE WITH SYSTEMONE ROLLERS, GUARDS, & GUIDESTRIPS

FIELD INSTALLATION

SMCS-4170 **i03159509**

NOTE	PART NUMBER	QTY	PART NAME 1 2 3 4 5 6 (PRODUCT LEVEL)	SEE PAGE
Y	**231-3714**	1	LINK AS-TRACK (SYSTEMONE)	500
M	**6Y-9024**	144	BOLT-TRACK (M22X1.5X67-MM)	
	254-0224	4	BOLT-TRACK MASTER (M22X1.5X108-MM)	
	198-7722	2	LINK-TRACK MASTER (CLAMP)	
M	**9W-4381**	144	NUT-TRACK (M22X1.5-THD)	
	231-3713	36	SHOE-TRACK	
	256-4971	1	SHOE-TRACK MASTER	

M - METRIC PART
Y - SEPARATE ILLUSTRATION

<END>

8E-5249 TRACK GP—2 REQUIRED

S/N: 9BL1-UP
550MM (21.7 IN) DOUBLE GROUSER SHOE. SEALED, LUBRICATED
FIELD REPLACEMENT ORDER 230-6173—PAGE: 530
AN ATTACHMENT

SMCS-4170 **i06844016**

NOTE	PART NUMBER	QTY	PART NAME 1 2 3 4 5 6 (PRODUCT LEVEL)	SEE PAGE
Y	*117-1023*	1	LINK AS-TRACK	498
	1S-1859	144	BOLT-TRACK (3/4-16X2.16-IN)	
	9S-1838	4	BOLT-TRACK MASTER (3/4-16X4.13-IN)	
	1S-1860	144	NUT-TRACK (3/4-16-THD)	
	8E-4497	1	SHOE-TRACK MASTER	
	8E-4496	36	SHOE-TRACK	
Y - SEPARATE ILLUSTRATION				

<END>

8E-5250 TRACK GP—2 REQUIRED

S/N: 9BL1-UP
450MM (18-IN)DOUBLE GROUSER SHOE. SEALED, LUBRICATED
FIELD REPLACEMENT ORDER 230-6170—PAGE: 530
PART OF 3W-8187 UNDERCARRIAGE AR

SMCS-4170 **i01400115**

NOTE	PART NUMBER	QTY	PART NAME 1 2 3 4 5 6 (PRODUCT LEVEL)	SEE PAGE
Y	**117-1023**	1	LINK AS-TRACK	498
	1S-1859	144	BOLT-TRACK (3/4-16X2.16-IN)	
	9S-1838	4	BOLT-TRACK MASTER (3/4-16X4.13-IN)	
	1S-1860	144	NUT-TRACK (3/4-16-THD)	
	8E-4495	1	SHOE-TRACK MASTER	
	8E-4494	36	SHOE-TRACK	
Y - SEPARATE ILLUSTRATION				

<END>

8E-7002 TRACK GP

S/N: 9BL1-UP
450MM (17.7 IN) CHOPPING SHOE. SEALED & LUBRICATED
AN ATTACHMENT

SMCS-4170 **i02115088**

NOTE	PART NUMBER	QTY	PART NAME 1 2 3 4 5 6 (PRODUCT LEVEL)	SEE PAGE
Y	*117-1023*	1	LINK AS-TRACK	498
	1S-1859	144	BOLT-TRACK (3/4-16X2.16-IN)	
	1S-1860	144	NUT-TRACK (3/4-16-THD)	
	8E-6978	1	SHOE-TRACK MASTER	
	8E-6977	36	SHOE-TRACK	
	9S-1838	4	BOLT-TRACK MASTER (3/4-16X4.13-IN)	
Y - SEPARATE ILLUSTRATION				

<END>

3W-8187 UNDERCARRIAGE AR

S/N: 9BL1-UP

PART OF 117-1760, 8Y-9163 GENERAL AR

SMCS-4150 **i00574073**

NOTE	PART NUMBER	QTY	PART NAME 1 2 3 4 5 6 (PRODUCT LEVEL)	SEE PAGE
Y	*3W-8497*	1	BAR GP-EQUALIZER	479
Y	*6Y-4765*	24	CAP GP-TRACK ROLLER	481
			S/N: 9BL1-1064	
Y	*3W-8146*	1	FRAME GP-TRACK ROLLER	484
Y	*3W-8157*	1	IDLER GP-FRONT	491
Y	*3W-8154*	1	PIVOT BAR GP	511
Y	*6Y-1781*	2	ROLLER GP-TRACK CARRIER	513
Y	*7T-4107*	6	ROLLER GP-TRACK-DOUBLE FLANGE	521
			S/N: 9BL1-1064	
Y	*125-4176*	6	ROLLER GP-TRACK-DOUBLE FLANGE	516
			S/N: 9BL1065-UP	
Y	*7T-4102*	6	ROLLER GP-TRACK-SINGLE FLANGE	528
			S/N: 9BL1-1064	
Y	*125-4175*	6	ROLLER GP-TRACK-SINGLE FLANGE	524
			S/N: 9BL1065-UP	

Y - SEPARATE ILLUSTRATION

<END>

7P-9986 BRAKE GP-PARKING

S/N: 9BL1-UP

PART OF 8Y-9345 POWER TRAIN AR

SMCS-4061, 4267 **i01400119**

NOTE	REF NO	GRAPHIC REF	PART NUMBER	QTY	PART NAME 1 2 3 4 5 6 (PRODUCT LEVEL)	SEE PAGE
	1	1	**8M-0505**	4	ADAPTER	
	2	1	**3K-0360**	8	SEAL-O-RING	
	3	1	**8B-4967**	4	SEAL-O-RING	
	4	1	**3W-0542**	1	TUBE AS (LH)	
		1	**3W-0540**	1	TUBE AS (RH)	
	5	1	**030-7948**	4	ELBOW	
	6	1	**8G-1255**	2	PISTON	
	7	1	**3W-0543**	1	TUBE AS (LH)	
		1	**3W-0541**	1	TUBE AS (RH)	
	8	1	**8G-1739**	2	SEAL GP	
					(EACH INCLUDES)	
		1	**9M-2092**	1	SEAL-O-RING	
	9	1	**8G-1259**	2	RING-LOCK	
	10	1	**3W-5159**	12	PLATE-PARKING BRAKE	
	11	1	**163-8838**	14	DISC-FRICTION	
	12	1	**8G-1257**	2	RING	
	13	1	**8G-1258**	2	PLATE-PRESSURE	
	14	1	**8G-4392**	4	SPRING-DISC	
	15	1	**8G-1256**	2	HOUSING	
	16	1	**7X-0295**	22	BOLT (3/8-16X5.25-IN)	
	17	1	**5H-4081**	2	SEAL-O-RING	
	18	1	**8G-1740**	2	SEAL GP	
					(EACH INCLUDES)	
		1	**5M-7142**	1	SEAL-O-RING	
		1	**5P-5589**	1	SEAL-RING	
	19	1	**8T-4896**	22	WASHER-HARD (10.2X18.5X2.5-MM THK)	
B	20	1	**6V-6640**		SEALANT	
					QUANTITIES SHOWN ARE THOSE REQUIRED FOR BOTH LH & RH SIDES	

B - USE AS REQUIRED

7P-9986 **BRAKE GP-PARKING** (contd.) **i01400119**

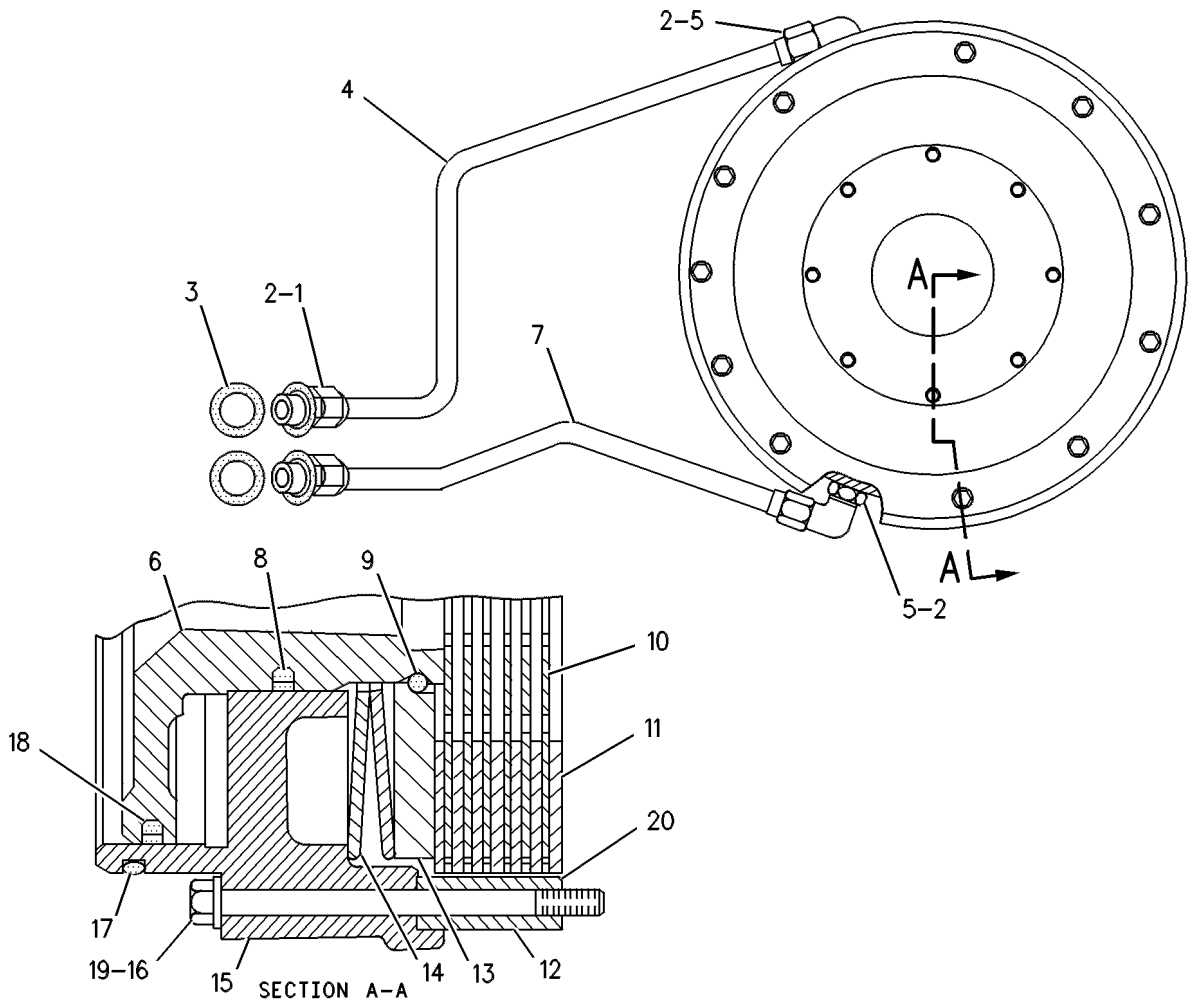

GRAPHIC #1 <END> g00247395

3W-2668 CONTROL GP-PARKING BRAKE

S/N: 9BL1-UP

PART OF 8Y-9345 POWER TRAIN AR

SMCS-4267 **i01400122**

NOTE	REF NO	GRAPHIC REF	PART NUMBER	QTY	PART NAME 1 2 3 4 5 6 (PRODUCT LEVEL)	SEE PAGE
	1	1	**030-7948**	1	ELBOW	
	2	1	**3K-0360**	7	SEAL-O-RING	
	3	1	**8T-2501**	2	BOLT (3/8-16X2-IN)	
	4	1	**8T-4896**	7	WASHER-HARD (10.2X18.5X2.5-MM THK)	
	5	1	**8M-0505**	6	ADAPTER	
	6	1	**6D-4636**	2	CLIP (LOOP)	
I	7	1	**3W-2660**	1	HOSE AS	
	8	1	**6V-8801**	1	NUT (3/8-16-THD)	
	9	1	**9B-7237**	1	BOLT (3/8-16X1.25-IN)	
	10	1	**5M-3062**	3	BOLT (3/8-16X0.75-IN)	
	11	1	**3W-2657**	1	TUBE AS	
	12	1	**3W-2658**	1	TUBE AS	
	13	1	**4B-0418**	2	CLIP	
	14	1	**3W-2659**	4	TUBE AS	
	15	1	**032-1270**	2	TEE	
	16	1	**3W-0305**	1	MANIFOLD	
	17	1	**1C-1895**	1	PIN	
	18	1	**4B-9785**	1	BALL	
	19	1	**3A-2433**	4	CLIP	
	20	1	**5P-1075**	1	WASHER-HARD (10.2X22.5X3-MM THK)	
	21	1	**5S-7379**	1	BOLT (3/8-16X0.875-IN)	

I - REFER TO HYDRAULIC INFORMATION SYSTEM

3W-2668 **CONTROL GP-PARKING BRAKE** (contd.) **i01400122**

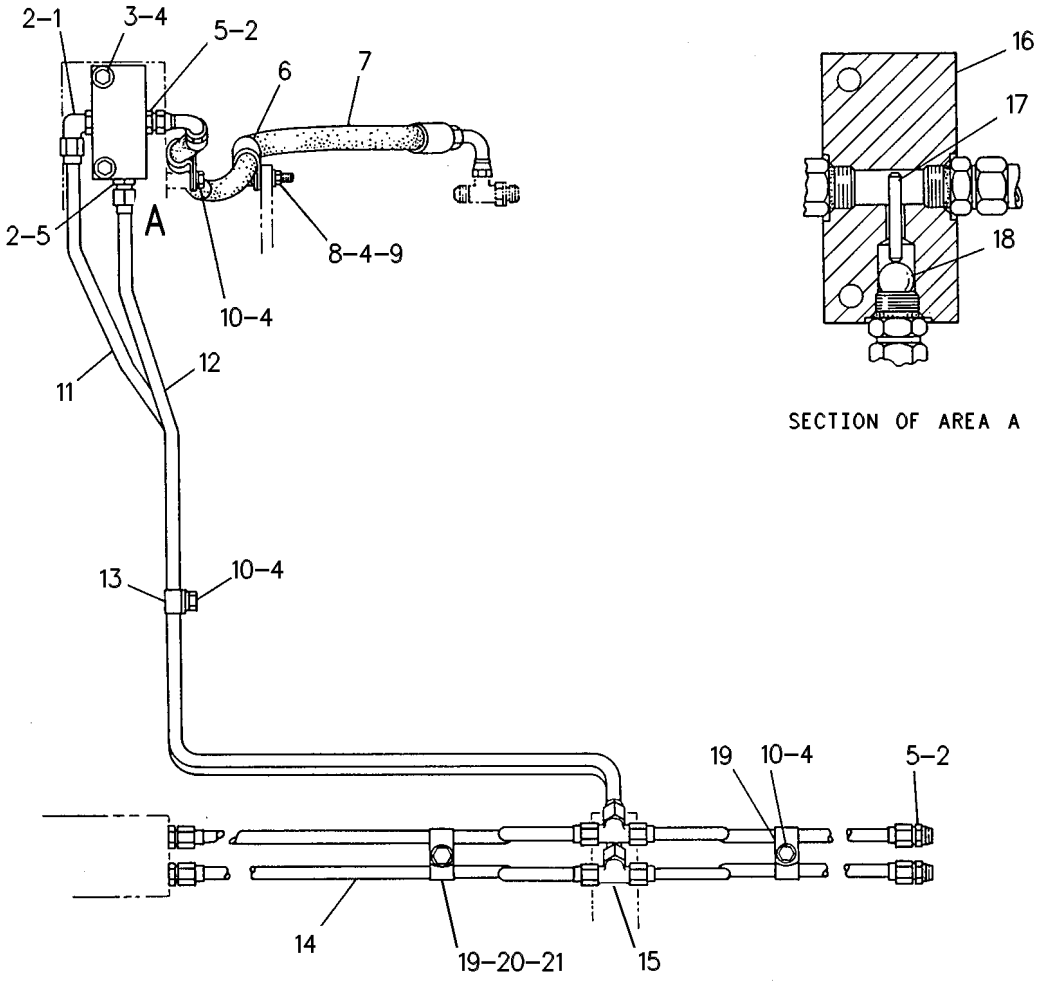

GRAPHIC #1 <END> g00249635

8G-0986 CONTROL GP-DIVERTER & VALVE

S/N: 9BL1-UP

PART OF 129-1543, 129-1565, 8Y-9629, 8Y-9632 HYDRAULIC AR-3 VALVE AN ATTACHMENT

SMCS-5066 **i01400132**

NOTE	REF NO	GRAPHIC REF	PART NUMBER	QTY	PART NAME 1 2 3 4 5 6 (PRODUCT LEVEL)	SEE PAGE
	1	1	**6V-2759**	1	GROMMET	
	2	1	**8L-5832**	1	NUT-HEX (10-32-THD)	
C	3	1	**6T-7017**	1	CABLE AS	
C	4	1	**0L-1352**	2	BOLT (3/8-16X3.25-IN)	
	5	1	**5M-2894**	2	WASHER-HARD (10.2X18.5X2.5-MM THK)	
	6	1	**0L-1351**	3	BOLT (3/8-16X0.875-IN)	
	7	1	**8G-2097**	1	BRACKET AS	
	8	1	**1B-0676**	1	PIN	
		1	**3B-4615**	1	PIN-COTTER	
		1	**8G-0891**	1	ROD	
Y	9	1	**9J-7128**	1	VALVE GP-DIVERTER	626
C	10	1	**8V-6117**	1	SPACER-SPECIAL (THREADED)	
C	11	1	**9S-8752**	1	NUT-FULL (3/8-16-THD)	
	12	1	**8G-2094**	1	LEVER AS (DIVERTER VALVE)	
	13	1	**2R-0364**	1	RING-RETAINING	
	14	1	**2N-8613**	1	WASHER (0.63X1.06X0.059-IN THK)	
	15	1	**7K-2135**	2	BEARING-ROLLER	
	16	1	**7K-7565**	1	YOKE-END	
	17	1	**1A-2457**	1	PIN-CLEVIS	
		1	**3B-4610**	1	PIN-COTTER	

C - CHANGE FROM PREVIOUS TYPE
Y - SEPARATE ILLUSTRATION

8G-0986 **CONTROL GP-DIVERTER & VALVE** (contd.) **i01400132**

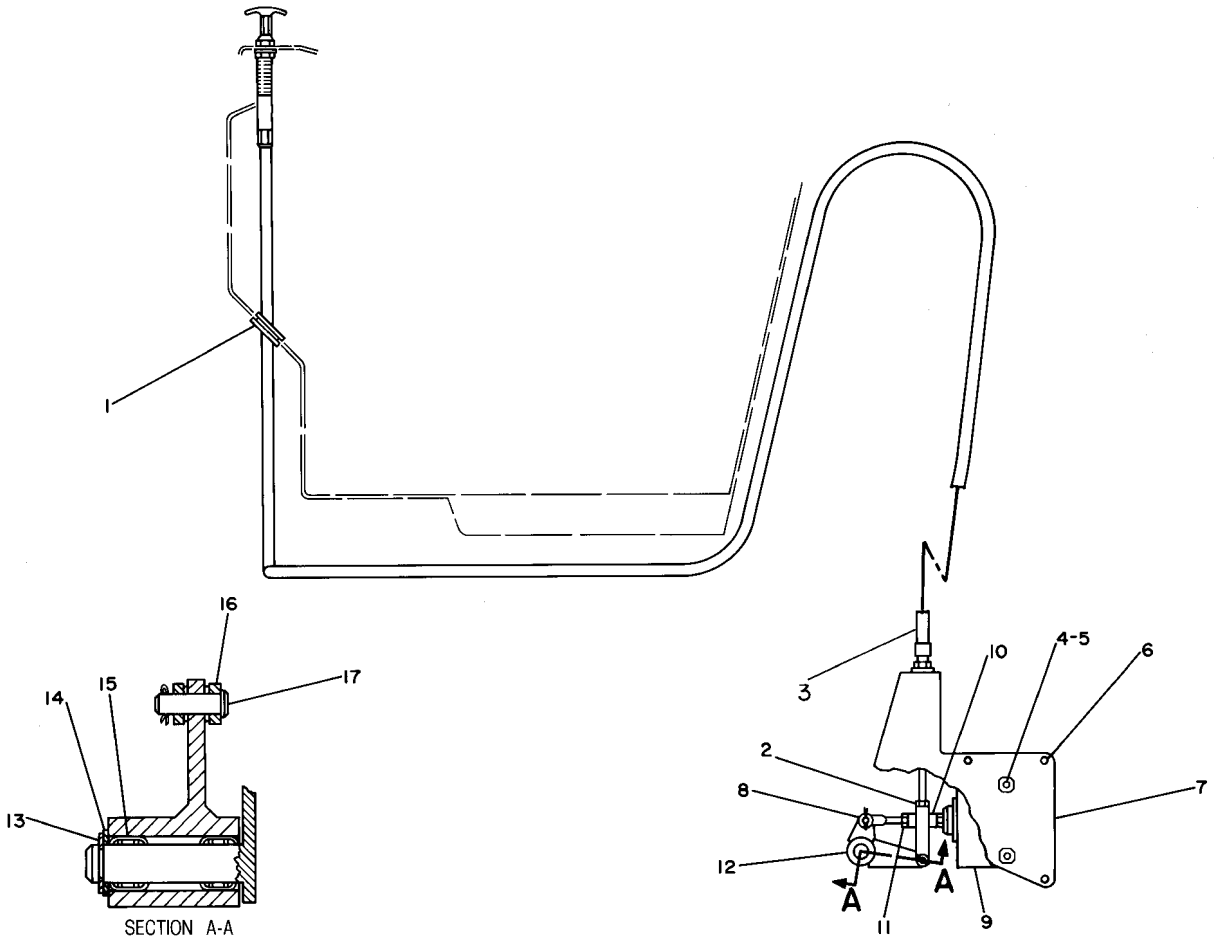

GRAPHIC #1 <END> g00198436

106-7670 COOLER & MTG GP-HYDRAULIC OIL

S/N: 9BL1-1487

PART OF 6I-3527 INSTALLATION AR

SMCS-1374 **i00569293**

NOTE	REF NO	GRAPHIC REF	PART NUMBER	QTY	PART NAME 1 2 3 4 5 6 (PRODUCT LEVEL)	SEE PAGE
	1	1	**8T-4223**	8	WASHER-HARD (13.5X25.5X3-MM THK)	
	2	1	**5C-6565**	4	BOLT (1/2-13X1.125-IN)	
	3	1	**118-6633**	1	CORE AS-HYDRAULIC OIL COOLER	
	4	1	**6V-8188**	4	NUT (1/2-13-THD)	
	5	1	**106-8202**	1	PLATE AS	
	6	1	**106-8203**	1	PLATE AS	

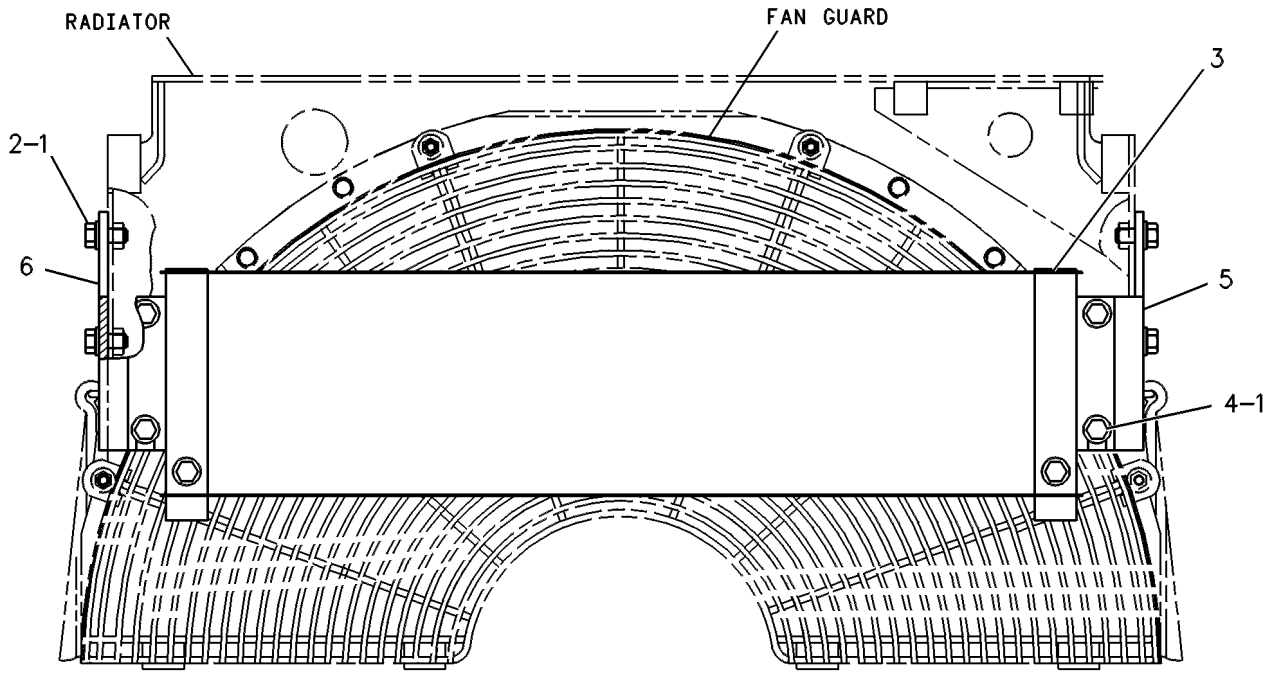

GRAPHIC #1 <END> g00247215

120-6883 COOLER & MTG GP-HYDRAULIC OIL

S/N: 9BL1488-UP

PART OF 117-5189 INSTALLATION AR-ENGINE

SMCS-1374 **i00675825**

NOTE	REF NO	GRAPHIC REF	PART NUMBER	QTY	PART NAME 1 2 3 4 5 6 (PRODUCT LEVEL)	SEE PAGE
	1	1	**8T-4223**	4	WASHER-HARD (13.5X25.5X3-MM THK)	
	2	1	**5C-6565**	4	BOLT (1/2-13X1.125-IN)	
	3	1	**118-6633**	1	CORE AS-HYDRAULIC OIL COOLER	
	4	1	**6V-8188**	4	NUT (1/2-13-THD)	
	5	1	**118-5555**	1	PLATE AS	
	6	1	**118-5544**	1	PLATE AS	
	7	1	**5P-1076**	4	WASHER-HARD (13.5X30X4-MM THK)	

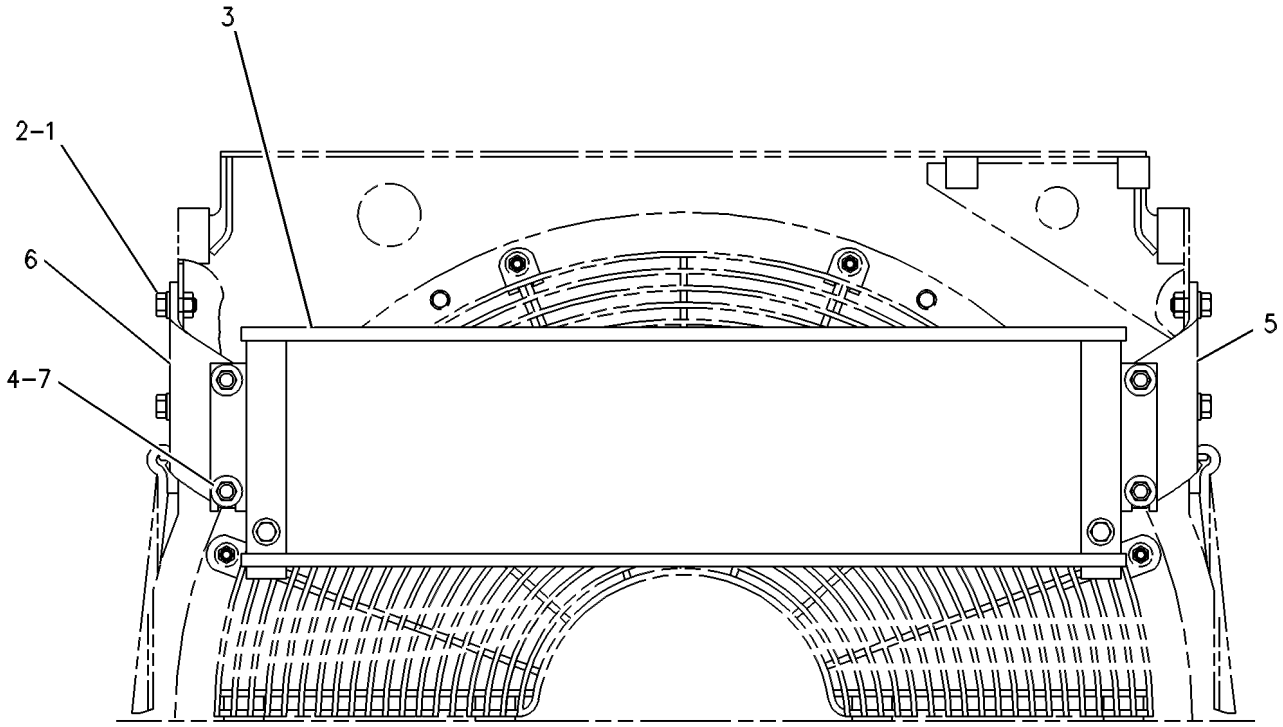

REAR VIEW

GRAPHIC #1 <END> g00289525

8E-6128 CYLINDER & MTG GP-RIPPER

S/N: 9JH1-UP
PART OF 8E-6126 RIPPER AR
AN ATTACHMENT

SMCS-5352 **i03159604**

NOTE	REF NO	GRAPHIC REF	PART NUMBER	QTY	PART NAME 1 2 3 4 5 6 (PRODUCT LEVEL)	SEE PAGE
Y	1	1	**122-8421**	1	CYLINDER GP-RIPPER (RH) (LIFT)	551
Y	2	1	**122-8420**	1	CYLINDER GP-RIPPER (LH) (LIFT)	550
	3	1	**3G-1078**	2	BEARING	
	4	1	**105-5996**	2	PIN	
	5	1	**7K-9208**	4	SEAL-LIP TYPE	
	6	1	**3G-1076**	2	BEARING	
	7	1	**8T-9378**	2	BOLT (3/8-16X4-IN)	
	8	1	**2K-4973**	2	LOCKNUT (3/8-16-THD)	
	9	1	**7B-2289**	2	BOLT (1-1/4-12X2.25-IN)	
	10	1	**3G-1066**	2	SPACER (34X90X18-MM THK)	
	11	1	**3G-0471**	2	PIN	
	12	1	**7K-9203**	4	SEAL-LIP TYPE	
	13	1	**4T-2466**	2	SPACER	
	14	1	**2G-2885**	2	WASHER (20.6X114.3X12-MM THK)	
	15	1	**2H-3725**	2	BOLT (3/4-16X1.5-IN)	

Y - SEPARATE ILLUSTRATION

8E-6128 **CYLINDER & MTG GP-RIPPER (**contd.**)** **i03159604**

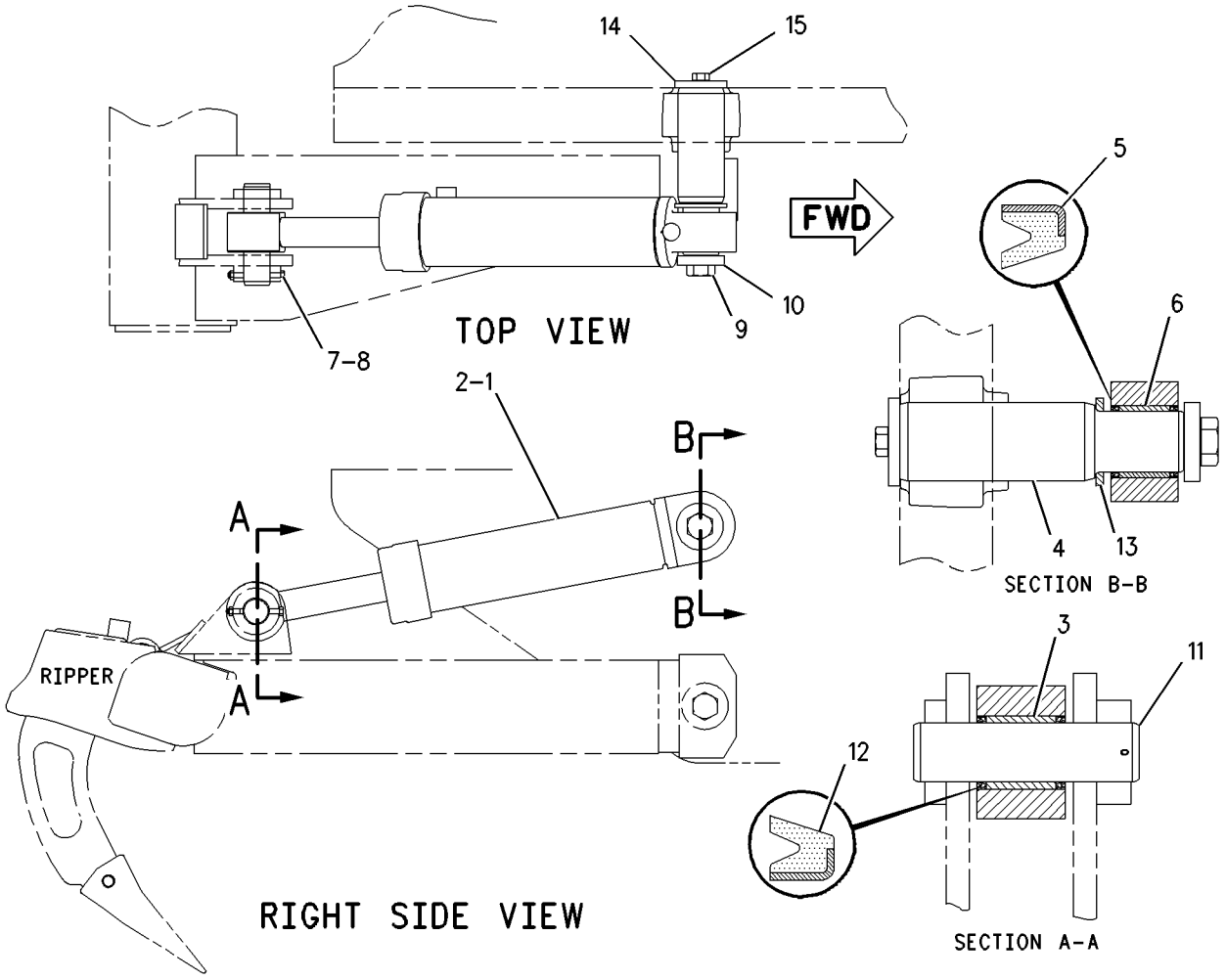

GRAPHIC #1 <END> g00726609

9K-8659 CYLINDER & SEAL GP-BUCKET

S/N: 9BL1-UP

PART OF 8Y-9625 BUCKET AR-MULTIPURPOSE

AN ATTACHMENT

SMCS-5457 **i01379378**

NOTE	REF NO	GRAPHIC REF	PART NUMBER	QTY	PART NAME 1 2 3 4 5 6 (PRODUCT LEVEL)	SEE PAGE
Y	1	1	**8J-8498**	1	CYLINDER GP-BUCKET	546
	2	1	**7K-9204**	2	SEAL-LIP TYPE (57.15MM ID)	
	3	1	**7K-9202**	2	SEAL-LIP TYPE (44.5MM ID)	

Y - SEPARATE ILLUSTRATION

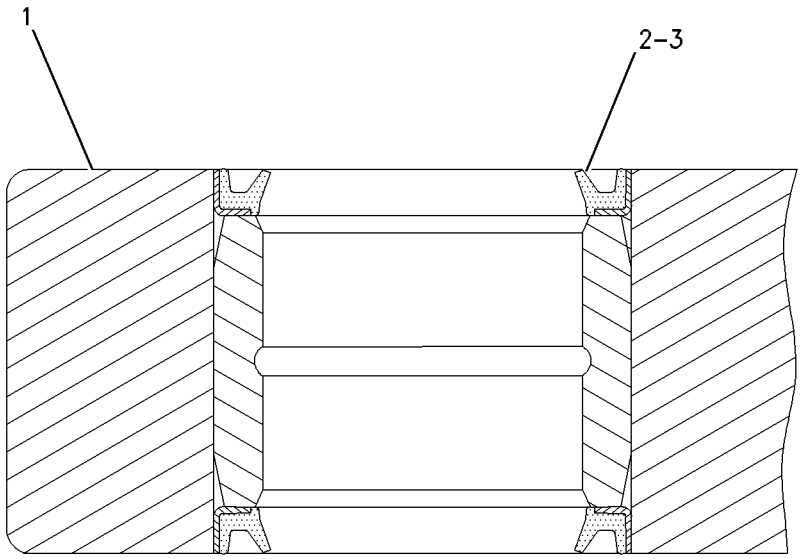

GRAPHIC #1 <END> g00728543

8J-8498 CYLINDER GP-BUCKET

S/N: 9BL1-UP
114.3-MM (4.5-IN) BORE X 317.5-MM (12.5-IN) STROKE
PART OF 9K-8659 CYLINDER & SEAL GP-BUCKET
AN ATTACHMENT

SMCS-5457 **i04564170**

NOTE	REF NO	GRAPHIC REF	PART NUMBER	QTY	PART NAME 1 2 3 4 5 6 (PRODUCT LEVEL)	SEE PAGE
	1	1	**8J-8495**	1	CYLINDER AS	
	2	1	**7J-9708**	1	BUSHING	
	3	1	**2J-3950**	1	LOCKNUT (1-1/2-12-THD)	
P	4	1	**4J-3745**	1	RING-WEAR	
NP	5	1	**5J-4986**	1	SEAL AS	
NP	6	1	**2H-3928**	1	SEAL-O-RING	
NP	7	1	**1K-7095**	1	RING-BACKUP	
JP	8	1	**4T-5613**	1	RING-WEAR	
JNP	9	1	**308-1845**	1	SEAL-WIPER	
R	10	1	**8J-5711**	1	ROD AS	
	11	1	**7J-9688**	1	BUSHING	
JP	12	1	**289-2935**	1	SEAL AS-BUFFER	
JP	13	1	**289-2946**	1	SEAL-U-CUP	
N	14	1	**4J-3747**	1	PISTON	
	15	1	**4D-4248**	1	WASHER (38.88X66.67X7.92-MM THK)	
	16	1	**0S-1625**	4	BOLT (5/8-11X2.5-IN)	
	17	1	**5P-8247**	4	WASHER-HARD (17X32X3.5-MM THK)	
	18	1	**9T-8988**	1	HEAD	
					AVAILABLE REPAIR KIT(S):	
J			**233-9205**	1	KIT-SEAL (HYDRAULIC CYLINDER)	
					(INCLUDES RINGS & SEALS)	
N			**238-6882**	1	KIT-SEAL (HYDRAULIC CYLINDER)	
					(INCLUDES RINGS & SEALS)	
P			**240-9936**	1	KIT-SEAL (HYDRAULIC CYLINDER)	
					(INCLUDES RINGS & SEALS) (ALL KITS ABOVE FOR USE WITH REHS1392)	

J - KIT MARKED J SERVICES PART(S) MARKED J
N - KIT MARKED N SERVICES PART(S) MARKED N
P - KIT MARKED P SERVICES PART(S) MARKED P
R - REMANUFACTURED PART MAY BE AVAILABLE

8J-8498 **CYLINDER GP-BUCKET (**contd.**)** **i04564170**

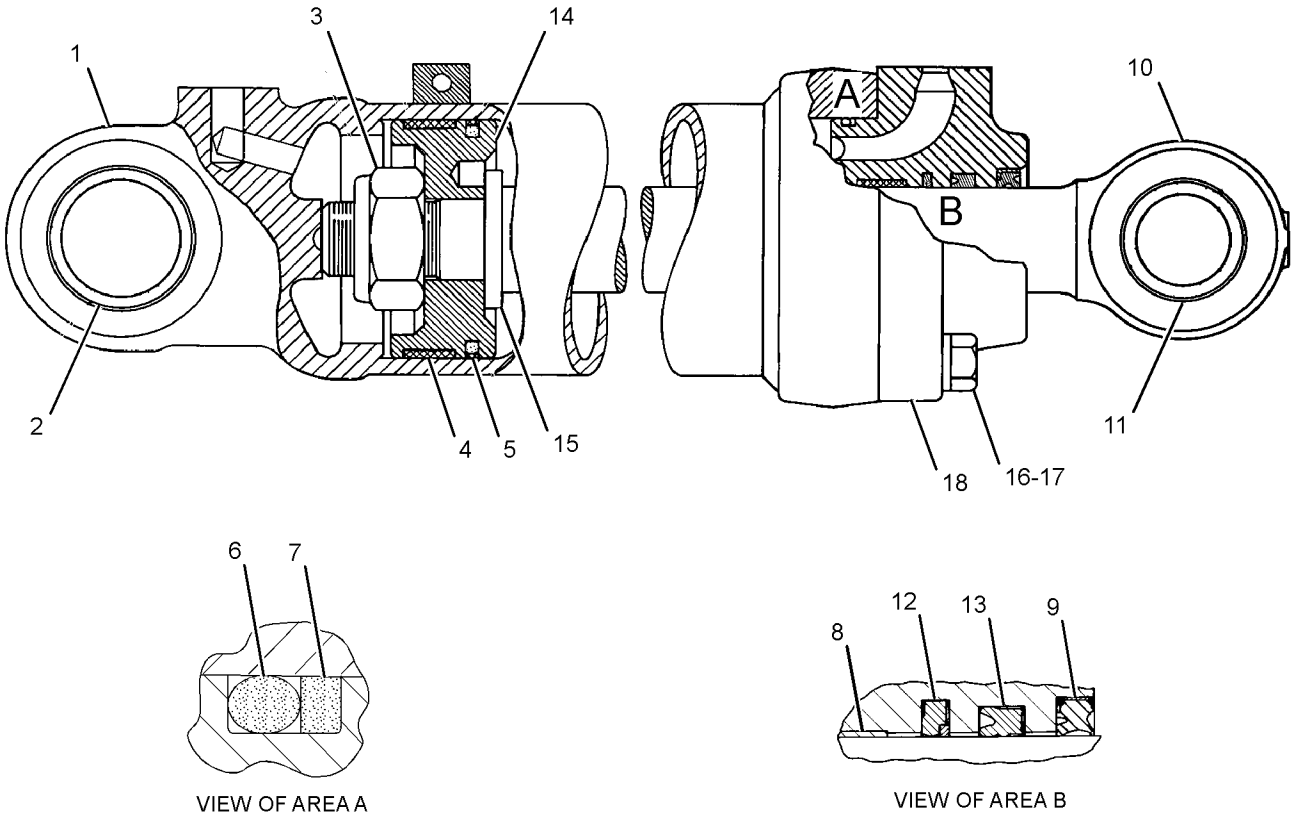

GRAPHIC #1 <END> g01112607

6E-6632 CYLINDER GP-LIFT

S/N: 9BL1-UP
139.7MM (5.5 IN) BORE X 837MM (33 IN) STROKE
PART OF 8Y-9369 HYDRAULIC AR

SMCS-5102 **i01400177**

NOTE	REF NO	GRAPHIC REF	PART NUMBER	QTY	PART NAME 1 2 3 4 5 6 (PRODUCT LEVEL)	SEE PAGE
R	1	1	**6E-6633**	1	CYLINDER AS	
		1	**4V-8674**	1	BUSHING	
	2	1	**2J-0564**	1	LOCKNUT (2-12-THD)	
	3	1	**4J-4606**	1	RING-WEAR	
	4	1	**6E-0465**	1	SEAL AS	
	5	1	**9J-8006**	1	PISTON	
	6	1	**6E-6635**	1	HEAD	
	7	1	**8C-9200**	1	RING-WEAR	
	8	1	**3G-2789**	1	CROWN	
R	9	1	**3G-5061**	1	ROD AS	
	10	1	**8J-1689**	1	RING-BACKUP	
	11	1	**8J-1688**	1	SEAL-O-RING	
	12	1	**8C-3841**	1	SEAL AS	
	13	1	**5J-8275**	1	SEAL-U-CUP	
	14	1	**8C-3842**	1	SEAL-LIP TYPE	

R - REMANUFACTURED PART MAY BE AVAILABLE

6E-6632 **CYLINDER GP-LIFT (**contd.**)** **i01400177**

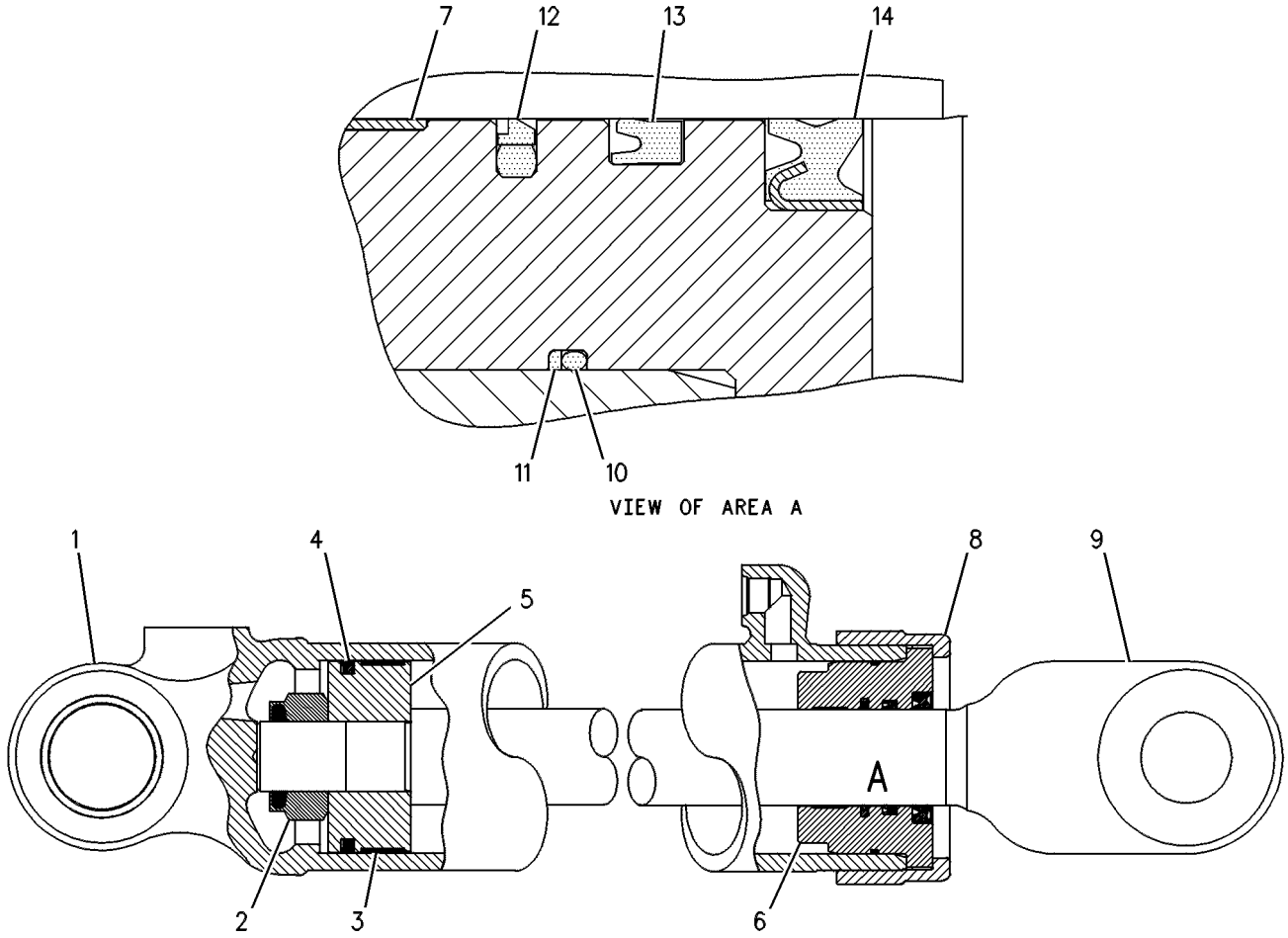

GRAPHIC #1 <END> g00247075

122-8420 CYLINDER GP-RIPPER–LH

S/N: 9JH1-UP
114.3-MM (4.5-IN) BORE X 289-MM (11.4-IN) STROKE
PART OF 8E-6128 CYLINDER & MTG GP-RIPPER
AN ATTACHMENT

SMCS-5352, 5356 **i02098015**

NOTE	REF NO	GRAPHIC REF	PART NUMBER	QTY	PART NAME 1 2 3 4 5 6 (PRODUCT LEVEL)	SEE PAGE
	1	1	**122-8423**	1	CYLINDER AS (LH)	
	1A	1	**4B-4626**	1	LUG (3/8-16-THD)	
	2	1	**7J-8287**	1	BOLT-LOCKING (1-1/4-12X3.25-IN)	
	3	1	**4K-0684**	3	WASHER-HARD (34X55X6-MM THK)	
	4	1	**8J-5549**	1	PISTON	
	5	1	**4J-3745**	1	RING-WEAR	
	6	1	**5J-4986**	1	SEAL AS	
	7	1	**8J-5550**	1	CROWN	
	8	1	**8T-4958**	1	RING-WEAR	
	9	1	**231-3538**	1	SEAL-WIPER	
	10	1	**3G-0199**	1	ROD AS	
	11	1	**167-2307**	1	SEAL-U-CUP	
	12	1	**167-2200**	1	SEAL AS	
	13	1	**1K-7095**	1	RING-BACKUP	
	14	1	**2H-3928**	1	SEAL-O-RING	
	15	1	**9T-9257**	1	HEAD	

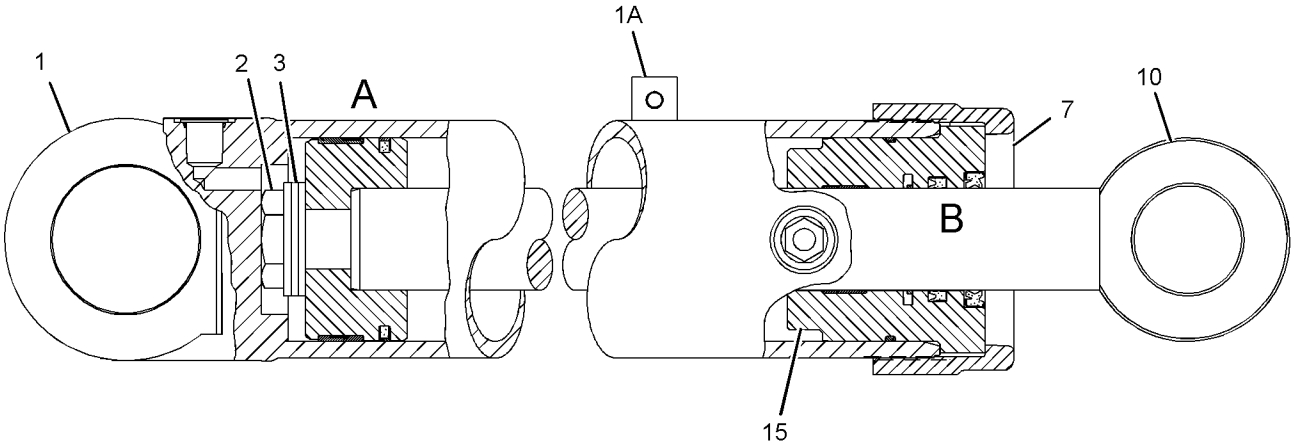

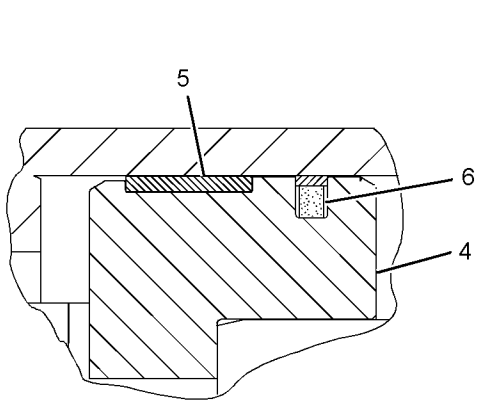

VIEW OF AREA A

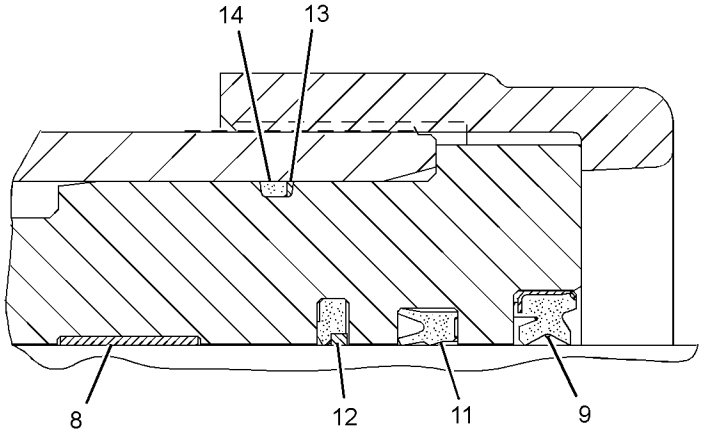

VIEW OF AREA B

GRAPHIC #1 <END> g01172639

122-8421 CYLINDER GP-RIPPER–RH

S/N: 9JH1-UP
114.3-MM (4.5-IN) BORE X 289-MM (11.4-IN) STROKE
PART OF 8E-6128 CYLINDER & MTG GP-RIPPER
AN ATTACHMENT

SMCS-5352, 5356

i03159649

NOTE	REF NO	GRAPHIC REF	PART NUMBER	QTY	PART NAME 1 2 3 4 5 6 (PRODUCT LEVEL)	SEE PAGE
	1	1	**122-8422**	1	CYLINDER AS (RH)	
	1A	1	**4B-4626**	1	LUG (3/8-16-THD)	
	2	1	**7J-8287**	1	BOLT-LOCKING (1-1/4-12X3.25-IN)	
	3	1	**4K-0684**	3	WASHER-HARD (34X55X6-MM THK)	
	4	1	**8J-5549**	1	PISTON	
	5	1	**4J-3745**	1	RING-WEAR	
	6	1	**5J-4986**	1	SEAL AS	
	7	1	**8J-5550**	1	CROWN	
	8	1	**8T-4958**	1	RING-WEAR	
	9	1	**231-3538**	1	SEAL-WIPER	
	10	1	**3G-0199**	1	ROD AS	
	11	1	**167-2307**	1	SEAL-U-CUP	
	12	1	**167-2200**	1	SEAL AS	
	13	1	**1K-7095**	1	RING-BACKUP	
	14	1	**2H-3928**	1	SEAL-O-RING	
	15	1	**9T-9257**	1	HEAD	

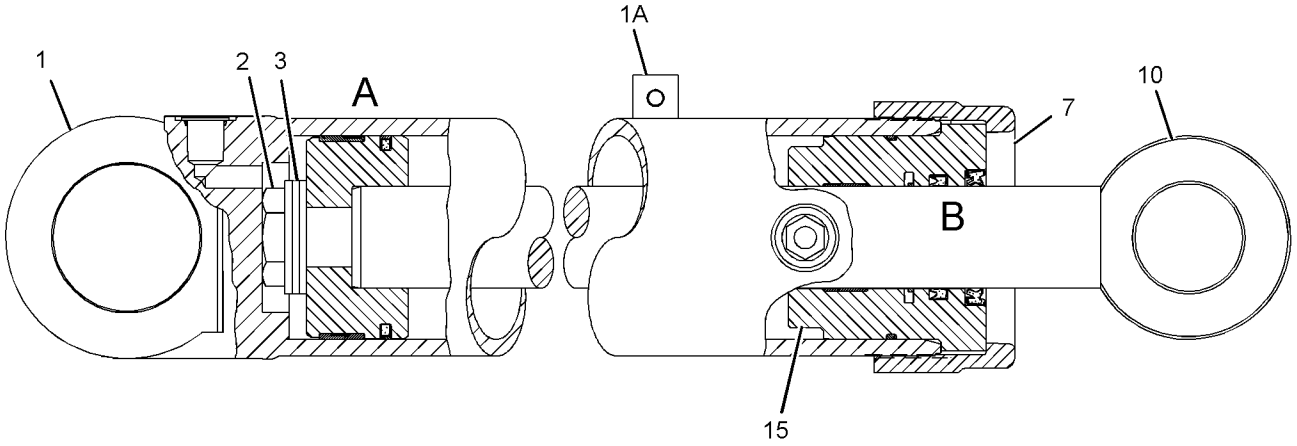

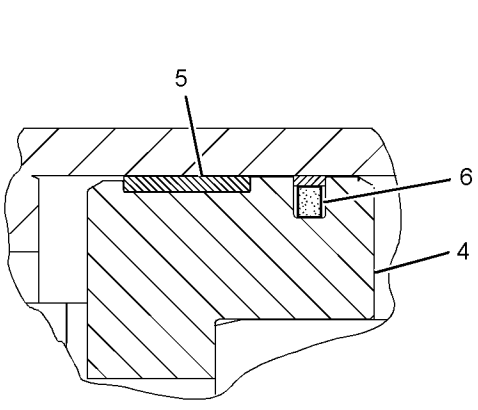

VIEW OF AREA A

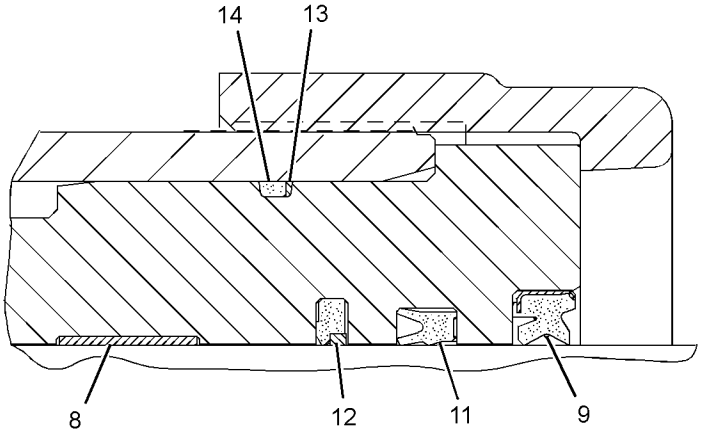

VIEW OF AREA B

GRAPHIC #1

<END>

g01159669

3G-3874 CYLINDER GP-TILT

S/N: 9BL1-UP
165.1MM (6.5 IN) BORE X 623.6MM (24.55 IN) STROKE
PART OF 8Y-9369 HYDRAULIC AR

SMCS-5104 **i01979420**

NOTE	REF NO	GRAPHIC REF	PART NUMBER	QTY	PART NAME 1 2 3 4 5 6 (PRODUCT LEVEL)	SEE PAGE
	4	1	**2J-7686**	1	LOCKNUT (2.5X12-THD)	
	5	1	**7J-1938**	1	RING-WEAR	
	6	1	**4T-8695**	1	SEAL AS	
	7	1	**9T-8420**	1	PISTON	
	8	1	**1D-4628**	3	BOLT (7/8-9X3.25-IN)	
	9	1	**5P-8249**	6	WASHER-HARD (24X41.5X4-MM THK)	
	10	1	**2H-3856**	3	BOLT (7/8-9X3.75-IN)	
	11	1	**7J-8956**	1	SEAL-O-RING	
	12	1	**7J-8955**	1	RING-BACKUP	
	13	1	**167-2214**	1	SEAL AS-BUFFER	
	14	1	**167-2328**	1	SEAL-U-CUP	
R	15	1	**9T-8404**	1	ROD AS	
		1	**3G-0222**	1	BUSHING	
	16	1	**227-1149**	1	SEAL-WIPER	
	17	1	**6E-5528**	1	HEAD	
R	18	1	**3G-3867**	1	CYLINDER AS	
		1	**3G-0222**	1	BUSHING	
	19	1	**9F-2167**	1	SCREW-PURGE (3/8-24X1.164-IN)	
	20	1	**8T-7848**	1	RING-WEAR	
	21	1	**8T-8379**	1	SEAL-HEAD	

R - REMANUFACTURED PART MAY BE AVAILABLE

3G-3874 **CYLINDER GP-TILT (**contd.**)** **i01979420**

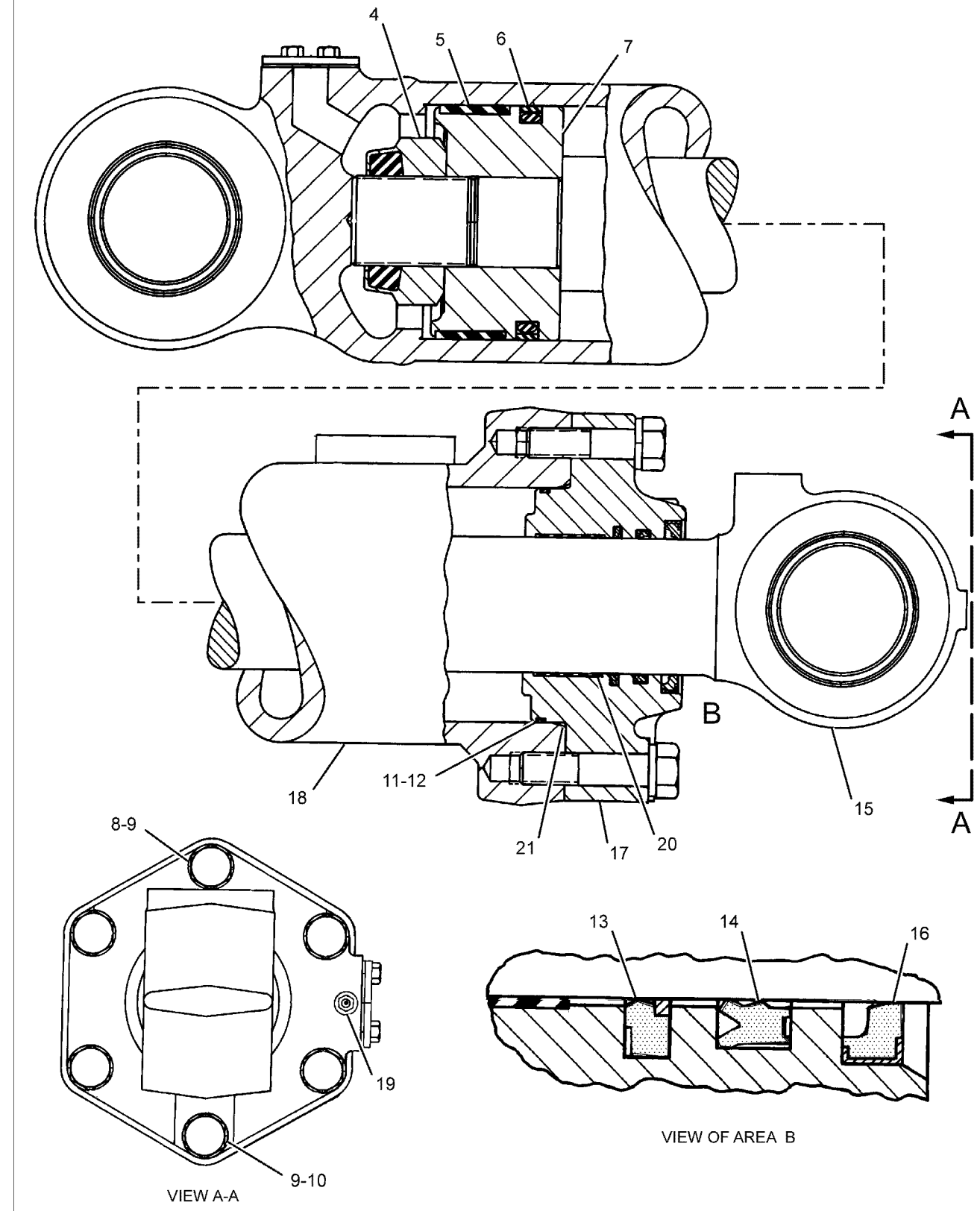

GRAPHIC #1 <END> g01046112

8Y-9369 HYDRAULIC AR

S/N: 9BL1-UP
PART OF 117-1760, 8Y-9163 GENERAL AR

SMCS-5051, 5057, 5073, 5115 **i00907604**

NOTE	PART NUMBER	QTY	PART NAME 1 2 3 4 5 6 (PRODUCT LEVEL)	SEE PAGE
Y	*7P-9729*	1	CONTROL GP-PILOT OPERATED HYD	707
			S/N: 9BL1-1398	
Y	*128-1904*	1	CONTROL GP-PILOT OPERATED HYD	705
			S/N: 9BL1399-UP	
Y	*6E-6632*	2	CYLINDER GP-LIFT	548
Y	*3G-3874*	1	CYLINDER GP-TILT	552
Y	*8G-0516*	1	KICKOUT & POSITIONER GP	564
Y	*8Y-9476*	1	LINES GP-HYDRAULIC OIL COOLER	573
Y	*8Y-9623*	1	LINES GP-LIFT CYLINDER	574
Y	*8Y-9477*	1	LINES GP-PILOT	583
			S/N: 9BL1-1398	
Y	*128-1889*	1	LINES GP-PILOT	578
			S/N: 9BL1399-UP	
Y	*8Y-9474*	1	LINES GP-PUMP	585
Y	*3W-3358*	1	LINES GP-TILT CYLINDER	592
Y	*7P-2675*	1	MOUNTING GP-HYDRAULIC TANK	596
Y	*9T-1383*	1	TANK & FILTER GP-HYDRAULIC	602
Y	*4T-7006*	1	VALVE GP-CONTROL	617

Y - SEPARATE ILLUSTRATION

<END>

123-2859 HYDRAULIC AR-3 VALVE

S/N: 9BL1-1398
FRONT/WITHOUT LINES
AN ATTACHMENT

SMCS-5051 **i01400278**

NOTE	PART NUMBER	QTY	PART NAME 1 2 3 4 5 6 (PRODUCT LEVEL)	SEE PAGE
Y	*8G-0987*	1	CONTROL GP-PILOT OPERATED HYD	712
Y	*8Y-9633*	1	LINES GP-PUMP	587
Y	*5G-7862*	1	MOUNTING GP-ATTACHMENT	594
Y	**4T-7003**	1	VALVE GP-CONTROL	611
	3H-5368	8	BOLT (7/16-14X1.375-IN)	
	5H-4020	2	COVER	
	1P-4578	4	FLANGE-HALF	
	4J-0522	2	SEAL-O-RING	
	5P-8244	8	WASHER-HARD (12X22.5X2.5-MM THK)	

Y - SEPARATE ILLUSTRATION

<END>

129-1475 HYDRAULIC AR-3 VALVE

S/N: 9BL1399-UP
SINGLE LEVER-REAR LINES
AN ATTACHMENT

SMCS-5051 **i01400287**

NOTE	PART NUMBER	QTY	PART NAME 1 2 3 4 5 6 (PRODUCT LEVEL)	SEE PAGE
Y	*128-1906*	1	CONTROL GP-PILOT OPERATED HYD	706
Y	*128-1898*	1	LINES GP-PILOT	582
Y	*8Y-9633*	1	LINES GP-PUMP	587
Y	*8Y-9500*	1	LINES GP-REAR ATTACHMENT	589
Y	**4T-7003**	1	VALVE GP-CONTROL	611
	6V-2435	1	FILM-INSTRUCTION (RIPPER)	
			(LOCATE TO THE RIGHT OF LIFT/TILT CONTROL FILM IN OPERATORS COMPARTMENT)	

Y - SEPARATE ILLUSTRATION

<END>

129-1541 HYDRAULIC AR-3 VALVE

S/N: 9BL1399-UP
SINGLE LEVER-FRONT LINES
AN ATTACHMENT

SMCS-5051 **i01400298**

NOTE	PART NUMBER	QTY	PART NAME 1 2 3 4 5 6 (PRODUCT LEVEL)	SEE PAGE
Y	*128-1906*	1	CONTROL GP-PILOT OPERATED HYD	706
Y	*5G-7865*	1	LINES GP-FRONT	572
Y	*128-1898*	1	LINES GP-PILOT	582
Y	*8Y-9633*	1	LINES GP-PUMP	587
Y	*5G-7862*	1	MOUNTING GP-ATTACHMENT	594
Y	**4T-7003**	1	VALVE GP-CONTROL	611
	6V-2436	1	FILM-INSTRUCTION (MULTIPURPOSE BUCKET)	
			(LOCATE TO THE RIGHT OF RIPPER CONTROL FILM IN OPERATORS COMPARTMENT)	

Y - SEPARATE ILLUSTRATION

<END>

129-1543 HYDRAULIC AR-3 VALVE

S/N: 9BL1399-UP
SINGLE LEVER-DIVERTER & LINES
AN ATTACHMENT

SMCS-5051 **i01400306**

NOTE	PART NUMBER	QTY	PART NAME 1 2 3 4 5 6 (PRODUCT LEVEL)	SEE PAGE
Y	*8G-0986*	1	CONTROL GP-DIVERTER & VALVE	539
Y	*128-1906*	1	CONTROL GP-PILOT OPERATED HYD	706
Y	*8Y-9634*	1	LINES GP-DIVERTER VALVE	568
Y	*128-1898*	1	LINES GP-PILOT	582
Y	*8Y-9633*	1	LINES GP-PUMP	587
Y	*5G-7862*	1	MOUNTING GP-ATTACHMENT	594
Y	**4T-7003**	1	VALVE GP-CONTROL	611
	6V-2436	1	FILM-INSTRUCTION (MULTIPURPOSE BUCKET)	
			LOCATE TO THE RIGHT OF RIPPER CONTROL FILM IN OPERATORS COMPARTMENT	
	6V-2435	1	FILM-INSTRUCTION (RIPPER)	
			LOCATE TO THE RIGHT OF LIFT/TILT CONTROL FILM IN OPERATORS COMPARTMENT	

Y - SEPARATE ILLUSTRATION

<END>

129-1548 HYDRAULIC AR-3 VALVE

S/N: 9BL1399-UP
AN ATTACHMENT

SMCS-5051 **i01400314**

NOTE	PART NUMBER	QTY	PART NAME 1 2 3 4 5 6 (PRODUCT LEVEL)	SEE PAGE
Y	*128-1906*	1	CONTROL GP-PILOT OPERATED HYD	706
Y	*128-1898*	1	LINES GP-PILOT	582
Y	*8Y-9633*	1	LINES GP-PUMP	587
Y	*5G-7862*	1	MOUNTING GP-ATTACHMENT	594
Y	**4T-7003**	1	VALVE GP-CONTROL	611
	3H-5368	8	BOLT (7/16-14X1.375-IN)	
	5H-4020	2	COVER	
	1P-4578	4	FLANGE-HALF	
	4J-0522	2	SEAL-O-RING	
	5P-8244	8	WASHER-HARD (12X22.5X2.5-MM THK)	

Y - SEPARATE ILLUSTRATION

<END>

129-1550 HYDRAULIC AR-3 VALVE

S/N: 9BL1399-UP
2 LEVER-FRONT LINES
AN ATTACHMENT

SMCS-5051 **i01400318**

NOTE	PART NUMBER	QTY	PART NAME 1 2 3 4 5 6 (PRODUCT LEVEL)	SEE PAGE
Y	*128-1911*	1	CONTROL GP-PILOT OPERATED HYD	706
Y	*5G-7865*	1	LINES GP-FRONT	572
Y	*128-1898*	1	LINES GP-PILOT	582
Y	*8Y-9633*	1	LINES GP-PUMP	587
Y	*5G-7862*	1	MOUNTING GP-ATTACHMENT	594
Y	**4T-7003**	1	VALVE GP-CONTROL	611
	6V-2436	1	FILM-INSTRUCTION (MULTIPURPOSE BUCKET)	
			LOCATE TO THE RIGHT OF LIFT/TILT CONTROL FILM IN OPERATORS COMPARTMENT	
	6V-2453	1	FILM-INSTRUCTION (SGL LEVER IMPLEMENT CONTROL) (BUCKET LEVER)	

Y - SEPARATE ILLUSTRATION

<END>

129-1559 HYDRAULIC AR-3 VALVE

S/N: 9BL1399-UP
2 LEVER-REAR LINES
AN ATTACHMENT

SMCS-5051 **i01400328**

NOTE	PART NUMBER	QTY	PART NAME 1 2 3 4 5 6 (PRODUCT LEVEL)	SEE PAGE
Y	*128-1911*	1	CONTROL GP-PILOT OPERATED HYD	706
Y	*128-1898*	1	LINES GP-PILOT	582
Y	*8Y-9633*	1	LINES GP-PUMP	587
Y	*8Y-9500*	1	LINES GP-REAR ATTACHMENT	589
Y	**4T-7003**	1	VALVE GP-CONTROL	611
	6V-2435	1	FILM-INSTRUCTION (RIPPER)	
			LOCATE TO THE RIGHT OF LIFT/TILT CONTROL FILM IN OPERATORS COMPARTMENT	
	6V-2453	1	FILM-INSTRUCTION (SGL LEVER IMPLEMENT CONTROL) (BUCKET LEVER)	

Y - SEPARATE ILLUSTRATION

<END>

129-1565 HYDRAULIC AR-3 VALVE

S/N: 9BL1399-UP
2 LEVER-DIVERTER & LINES
AN ATTACHMENT

SMCS-5051 **i01400335**

NOTE	PART NUMBER	QTY	PART NAME 1 2 3 4 5 6 (PRODUCT LEVEL)	SEE PAGE
Y	*8G-0986*	1	CONTROL GP-DIVERTER & VALVE	539
Y	*128-1911*	1	CONTROL GP-PILOT OPERATED HYD	706
Y	*8Y-9634*	1	LINES GP-DIVERTER VALVE	568
Y	*128-1898*	1	LINES GP-PILOT	582
Y	*8Y-9633*	1	LINES GP-PUMP	587
Y	*5G-7862*	1	MOUNTING GP-ATTACHMENT	594
Y	**4T-7003**	1	VALVE GP-CONTROL	611
	6V-2436	1	FILM-INSTRUCTION (MULTIPURPOSE BUCKET)	
			LOCATE TO THE RIGHT OF RIPPER CONTROL FILM IN OPERATORS COMPARTMENT	
	6V-2435	1	FILM-INSTRUCTION (RIPPER)	
			LOCATE TO THE RIGHT OF LIFT/TILT CONTROL FILM IN OPERATORS COMPARTMENT	
	6V-2453		FILM-INSTRUCTION (SGL LEVER IMPLEMENT CONTROL) (BUCKET LEVER)	

Y - SEPARATE ILLUSTRATION

<END>

8Y-9627 HYDRAULIC AR-3 VALVE

S/N: 9BL1-1398
SINGLE LEVER-FRONT LINES
AN ATTACHMENT

SMCS-5051 **i01400189**

NOTE	PART NUMBER	QTY	PART NAME 1 2 3 4 5 6 (PRODUCT LEVEL)	SEE PAGE
Y	*8G-0987*	1	CONTROL GP-PILOT OPERATED HYD	712
Y	**5G-7865**	1	LINES GP-FRONT	572
Y	**8Y-9633**	1	LINES GP-PUMP	587
Y	**5G-7862**	1	MOUNTING GP-ATTACHMENT	594
Y	**5G-7862**	1	MOUNTING GP-ATTACHMENT	594
	6V-2436	1	FILM-INSTRUCTION (MULTIPURPOSE BUCKET)	
			(LOCATE TO THE RIGHT OF RIPPER CONTROL FILM IN OPERATORS COMPARTMENT)	

Y - SEPARATE ILLUSTRATION

<END>

8Y-9628 HYDRAULIC AR-3 VALVE

S/N: 9BL1-1398
SINGLE LEVER-REAR LINES
AN ATTACHMENT

SMCS-5051 **i01400198**

NOTE	PART NUMBER	QTY	PART NAME 1 2 3 4 5 6 (PRODUCT LEVEL)	SEE PAGE
Y	*8G-0987*	1	CONTROL GP-PILOT OPERATED HYD	712
Y	*8Y-9633*	1	LINES GP-PUMP	587
Y	*8Y-9500*	1	LINES GP-REAR ATTACHMENT	589
Y	**4T-7003**	1	VALVE GP-CONTROL	611
	6V-2435	1	FILM-INSTRUCTION (RIPPER)	
			(LOCATE TO THE RIGHT OF LIFT/TILT CONTROL FILM IN OPERATORS COMPARTMENT)	

Y - SEPARATE ILLUSTRATION

<END>

8Y-9629 HYDRAULIC AR-3 VALVE

S/N: 9BL1-1398
DIVERTER & LINES
AN ATTACHMENT

SMCS-5051 **i01400236**

NOTE	PART NUMBER	QTY	PART NAME 1 2 3 4 5 6 (PRODUCT LEVEL)	SEE PAGE
Y	*8G-0986*	1	CONTROL GP-DIVERTER & VALVE	539
Y	*8G-0987*	1	CONTROL GP-PILOT OPERATED HYD	712
Y	*8Y-9634*	1	LINES GP-DIVERTER VALVE	568
Y	*8Y-9633*	1	LINES GP-PUMP	587
Y	*5G-7862*	1	MOUNTING GP-ATTACHMENT	594
Y	**4T-7003**	1	VALVE GP-CONTROL	611
	6V-2436	1	FILM-INSTRUCTION (MULTIPURPOSE BUCKET)	
			(LOCATE TO THE RIGHT OF RIPPER CONTROL FILM IN OPERATORS COMPARTMENT)	
	6V-2435	1	FILM-INSTRUCTION (RIPPER)	
			(LOCATE TO THE RIGHT OF LIFT/TILT CONTROL FILM IN OPERATOR COMPARTMENT)	

Y - SEPARATE ILLUSTRATION

<END>

8Y-9630 HYDRAULIC AR-3 VALVE

S/N: 9BL1-1398
FRONT LINES
AN ATTACHMENT

SMCS-5051 **i01400251**

NOTE	PART NUMBER	QTY	PART NAME 1 2 3 4 5 6 (PRODUCT LEVEL)	SEE PAGE
Y	*8G-1618*	1	CONTROL GP-PILOT OPERATED HYD	714
Y	*5G-7865*	1	LINES GP-FRONT	572
Y	*8Y-9633*	1	LINES GP-PUMP	587
Y	*5G-7862*	1	MOUNTING GP-ATTACHMENT	594
Y	**4T-7003**	1	VALVE GP-CONTROL	611
	6V-2436	1	FILM-INSTRUCTION (MULTIPURPOSE BUCKET)	
			(LOCATE TO THE RIGHT OF RIPPER CONTROL FILM IN OPERATORS COMPARTMENT)	

Y - SEPARATE ILLUSTRATION

<END>

8Y-9631 HYDRAULIC AR-3 VALVE

S/N: 9BL1-1398
REAR LINES
AN ATTACHMENT

SMCS-5051 **i01400256**

NOTE	PART NUMBER	QTY	PART NAME 1 2 3 4 5 6 (PRODUCT LEVEL)	SEE PAGE
Y	*8G-1618*	1	CONTROL GP-PILOT OPERATED HYD	714
Y	*8Y-9633*	1	LINES GP-PUMP	587
Y	*8Y-9500*	1	LINES GP-REAR ATTACHMENT	589
Y	**4T-7003**	1	VALVE GP-CONTROL	611
	6V-2435	1	FILM-INSTRUCTION (RIPPER)	
			(LOCATE TO THE RIGHT OF LIFT/TILT CONTROL FILM IN OPERATORS COMPARTMENT)	

Y - SEPARATE ILLUSTRATION

<END>

8Y-9632 HYDRAULIC AR-3 VALVE

S/N: 9BL1-1398
DIVERTER & LINES
AN ATTACHMENT

SMCS-5051 **i01400259**

NOTE	PART NUMBER	QTY	PART NAME 1 2 3 4 5 6 (PRODUCT LEVEL)	SEE PAGE
Y	*8G-0986*	1	CONTROL GP-DIVERTER & VALVE	539
Y	*8G-1618*	1	CONTROL GP-PILOT OPERATED HYD	714
Y	*8Y-9634*	1	LINES GP-DIVERTER VALVE	568
Y	*8Y-9633*	1	LINES GP-PUMP	587
Y	*5G-7862*	1	MOUNTING GP-ATTACHMENT	594
Y	**4T-7003**	1	VALVE GP-CONTROL	611
	6V-2436	1	FILM-INSTRUCTION (MULTIPURPOSE BUCKET)	
			(LOCATE TO THE RIGHT OF RIPPER CONTROL FILM IN OPERATORS COMPARTMENT)	
	6V-2435	1	FILM-INSTRUCTION (RIPPER)	
			(LOCATE TO RIGHT OF LIFT/TILT CONTROL FILM IN OPERATORS COMPARTMENT)	

Y - SEPARATE ILLUSTRATION

<END>

8G-0516 KICKOUT & POSITIONER GP

S/N: 9BL1-1398

PART OF 8Y-9369 HYDRAULIC AR

SMCS-5109, 5112 **i00686289**

NOTE	REF NO	GRAPHIC REF	PART NUMBER	QTY	PART NAME 1 2 3 4 5 6 (PRODUCT LEVEL)	SEE PAGE
	1	1	**8G-0424**	2	BAR	
	2	1	**8G-0418**	1	MAGNET AS	
	3	1	**8G-0420**	1	BRACKET AS	
	4	1	**8G-0423**	1	PLATE	
	5	1	**033-8248**	1	CLIP	
	6	1	**4L-9337**	4	BOLT (3/8-16X1.5-IN)	
	7	1	**2B-0941**	4	SPACER (10.5X19X19-MM THK)	
	8	1	**4V-4760**	1	COVER	
	9	1	**9B-7237**	4	BOLT (3/8-16X1.25-IN)	
C	10	1	**8T-4896**	10	WASHER-HARD (10.2X18.5X2.5-MM THK)	
	11	1	**8G-1409**	1	TUBE AS	
	12	1	**5S-7383**	2	BOLT (3/8-16X1.75-IN)	
C	13	1	**8T-9404**	1	SETSCREW-SQUARE HEAD	
	14	1	**8G-1408**	1	BRACKET	
	15	1	**1A-5576**	2	BOLT (7/8-9X4.5-IN)	
		1	**5P-8249**	2	WASHER-HARD (24X41.5X4-MM THK)	
	16	1	**8G-1351**	1	TUBE AS	
C	17	1	**9G-0117**	1	CONTROL GP-LIFT KICKOUT	
		1	**9X-5617**	1	FILM-INSTRUCTION (SOLENOID, ELECTRICAL POWER)	
	18	1	**3V-6909**	1	BLOCK	
	19	1	**8T-8912**	4	BOLT (5/16-18X2.25-IN)	
		1	**8T-4224**	4	WASHER-HARD (8.8X16X2-MM THK)	
	20	1	**8G-1406**	1	MAGNET AS	
	21	1	**1L-8793**	2	BOLT-SOCKET HEAD (3/8-16X2-IN)	
C	22	1	**3E-0461**	1	CONTROL GP-ELECTRONIC (BUCKET POSITIONER)	
		1	**7N-7779**	2	SOCKET-CONNECTOR (14-GA TO 18-GA)	
		1	**7N-7780**	1	PIN-CONNECTOR (14-GA TO 18-GA)	
		1	**7N-7782**	1	HOUSING-PLUG (14-GA TO 18-GA)	
		1	**9X-5617**	1	FILM-INSTRUCTION (SOLENOID, ELECTRICAL POWER)	

C - CHANGE FROM PREVIOUS TYPE

8G-0516 **KICKOUT & POSITIONER GP** (contd.) **i00686289**

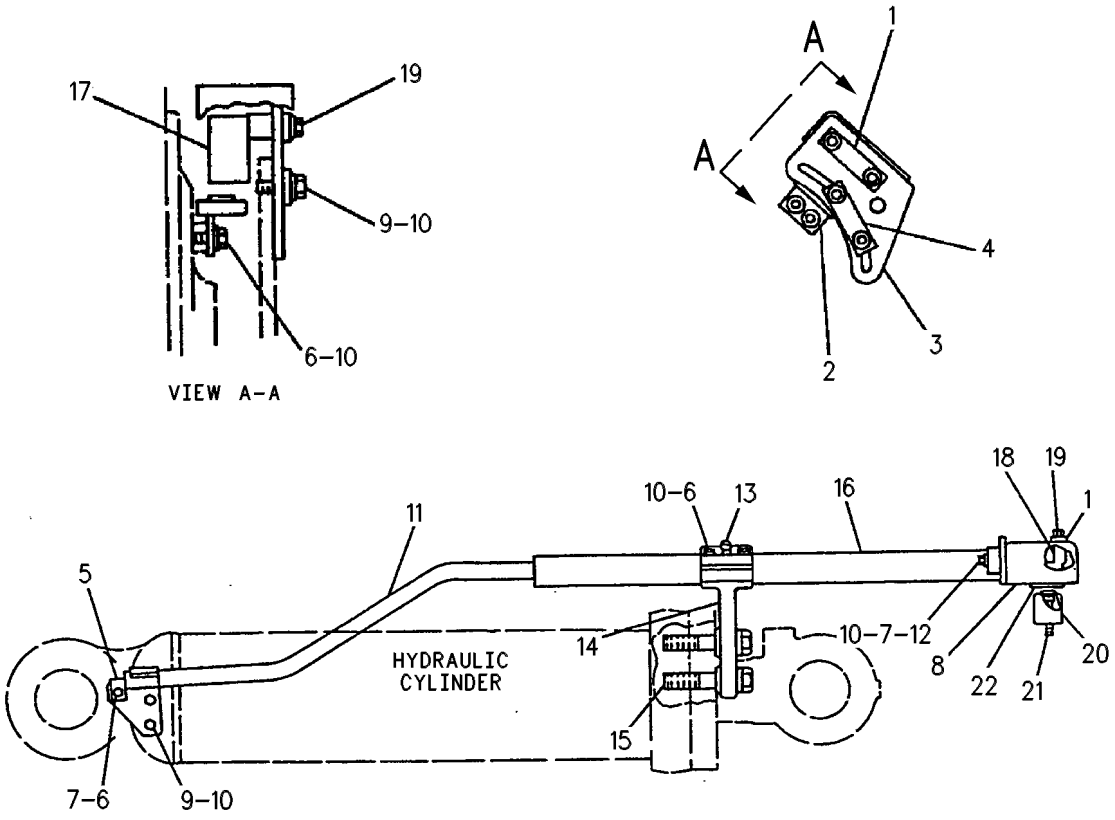

GRAPHIC #1 <END> g00247490

8G-0516 KICKOUT & POSITIONER GP

S/N: 9BL1399-UP

PART OF 8Y-9369 HYDRAULIC AR

SMCS-5109, 5112 **i01400405**

NOTE	REF NO	GRAPHIC REF	PART NUMBER	QTY	PART NAME 1 2 3 4 5 6 (PRODUCT LEVEL)	SEE PAGE
	1	1	**8G-0424**	2	BAR	
	2	1	**8G-0418**	1	MAGNET AS	
	3	1	**8G-0420**	1	BRACKET AS	
	4	1	**8G-0423**	1	PLATE	
	5	1	**033-8248**	1	CLIP	
	6	1	**4L-9337**	4	BOLT (3/8-16X1.5-IN)	
	7	1	**2B-0941**	4	SPACER (10.5X19X19-MM THK)	
	8	1	**4V-4760**	1	COVER	
	9	1	**9B-7237**	4	BOLT (3/8-16X1.25-IN)	
	10	1	**8T-4896**	10	WASHER-HARD (10.2X18.5X2.5-MM THK)	
	11	1	**8G-1409**	1	TUBE AS	
	12	1	**5S-7383**	2	BOLT (3/8-16X1.75-IN)	
	13	1	**2H-3881**	1	SETSCREW-SQUARE HEAD	
	14	1	**8G-1408**	1	BRACKET	
	15	1	**1A-5576**	2	BOLT (7/8-9X4.5-IN)	
		1	**5P-8249**	2	WASHER-HARD (24X41.5X4-MM THK)	
	16	1	**8G-1351**	1	TUBE AS	
CY	17	1	**8C-9763**	1	CONTROL GP-LIFT KICKOUT	270
	18	1	**3V-6909**	1	BLOCK	
CM	19	1	**8T-6869**	4	BOLT (M8X1.25X60-MM)	
		1	**8T-4224**	4	WASHER-HARD (8.8X16X2-MM THK)	
	20	1	**8G-1406**	1	MAGNET AS	
	21	1	**1L-8793**	2	BOLT-SOCKET HEAD (3/8-16X2-IN)	
CY	22	1	**8C-9759**	1	CONTROL GP-BUCKET POSITIONER	269

C - CHANGE FROM PREVIOUS TYPE
M - METRIC PART
Y - SEPARATE ILLUSTRATION

8G-0516 **KICKOUT & POSITIONER GP** (contd.) **i01400405**

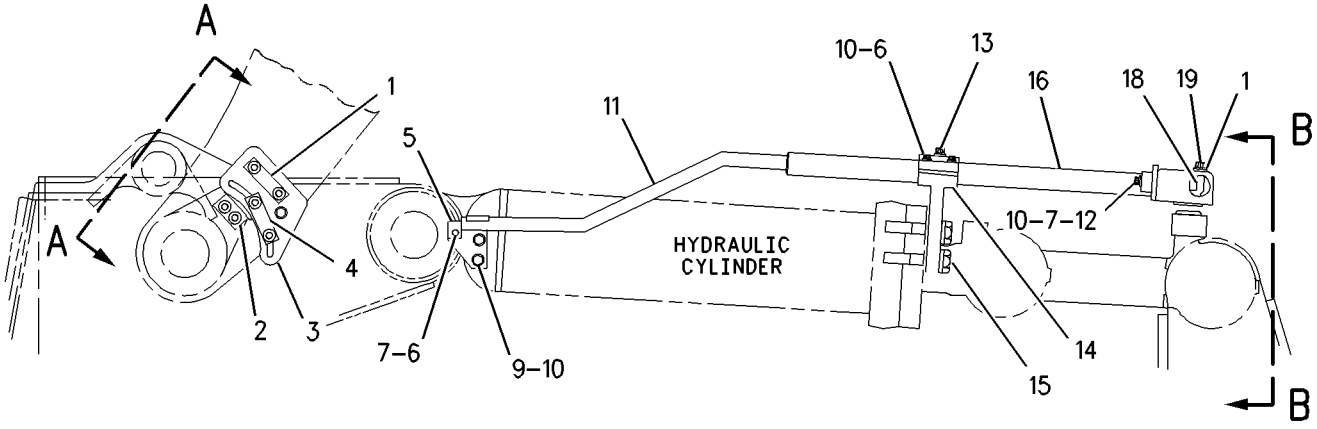

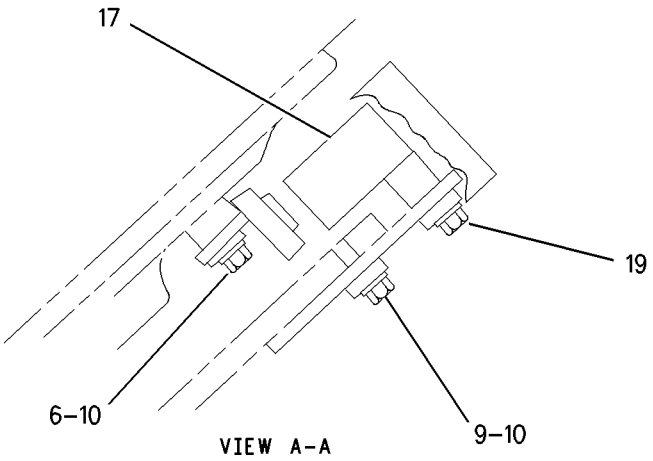

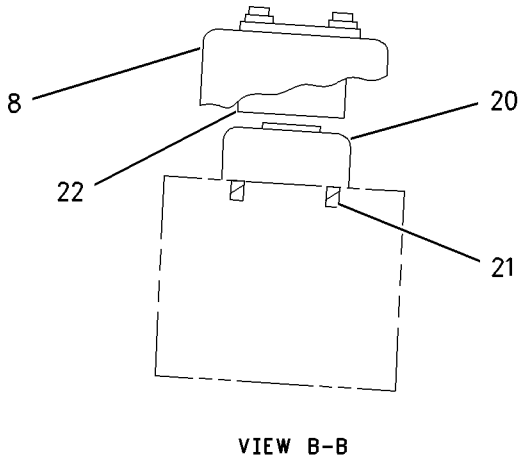

GRAPHIC #1 <END> g00737846

8V-7368 LINES GP-BUCKET—MULTIPURPOSE

S/N: 9BL1-UP

PART OF 8Y-9625 BUCKET AR-MULTIPURPOSE

AN ATTACHMENT

SMCS-5057 **i01378584**

NOTE	REF NO	GRAPHIC REF	PART NUMBER	QTY	PART NAME 1 2 3 4 5 6 (PRODUCT LEVEL)	SEE PAGE
	1	1	**9K-8778**	1	PLATE (LH)	
	2	1	**8T-7008**	4	BOLT (3/8-16X3-IN)	
	3	1	**6V-8801**	6	NUT (3/8-16-THD)	
	4	1	**8T-4896**	12	WASHER-HARD (10.2X18.5X2.5-MM THK)	
	5	1	**9K-8776**	2	CLAMP	
	6	1	**8T-9384**	10	BOLT (1/2-13X0.875-IN)	
	7	1	**4V-4961**	1	PLATE (LH)	
	8	1	**4V-4959**	2	MANIFOLD	
	9	1	**9S-4183**	2	PLUG (1-1/16-12-THD)	
	10	1	**4V-4962**	1	PLATE (RH)	
I	11	1	**9V-1092**	2	HOSE AS	
	12	1	**3W-3016**	1	GUARD AS	
	13	1	**3W-3014**	1	GUARD AS	
	14	1	**6F-0944**	6	COLLAR	
	15	1	**9K-8779**	1	PLATE (RH)	
	16	1	**6V-5782**	16	BOLT (5/16-18X1.125-IN)	
		1	**8T-4224**	16	WASHER-HARD (8.8X16X2-MM THK)	
	17	1	**9K-8773**	4	TUBE AS	
		1	**1P-3700**	4	SEAL-RECTANGULAR	
I	18	1	**9V-1093**	2	HOSE AS	
	19	1	**4L-6454**	4	BOLT (3/8-16X1-IN)	
	20	1	**2R-6276**	2	CONNECTOR	
	21	1	**8T-9378**	2	BOLT (3/8-16X4-IN)	
	22	1	**030-8190**	4	CONNECTOR	
I	23	1	**9G-2124**	2	HOSE AS	
	24	1	**5P-2228**	6	BOLT (1/2-13X1-IN)	
					—OR—	
M		1	**8T-4192**	6	BOLT (M12X1.75X25-MM)	
	25	1	**5P-1076**	16	WASHER-HARD (13.5X30X4-MM THK)	
	26	1	**3D-2824**	8	SEAL-O-RING	
	27	1	**9V-1376**	2	CLIP	

I - REFER TO HYDRAULIC INFORMATION SYSTEM
M - METRIC PART

8V-7368 **LINES GP-BUCKET** (contd.) **i01378584**

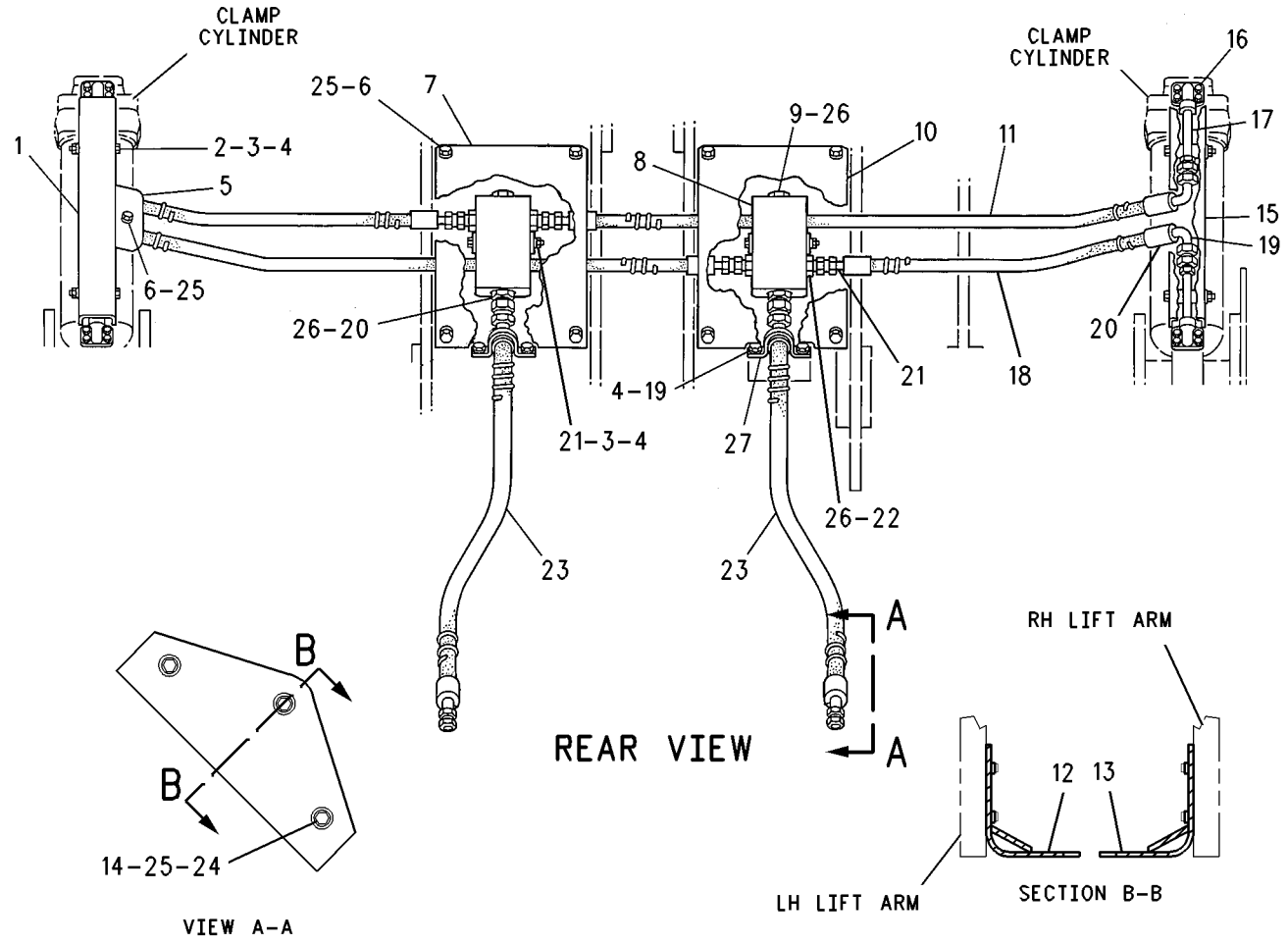

GRAPHIC #1 <END> g00728527

8Y-9634 LINES GP-DIVERTER VALVE

S/N: 9BL1-UP

PART OF 129-1543, 129-1565, 8Y-9629, 8Y-9632 HYDRAULIC AR-3 VALVE AN ATTACHMENT

SMCS-5057 **i00568498**

NOTE	REF NO	GRAPHIC REF	PART NUMBER	QTY	PART NAME 1 2 3 4 5 6 (PRODUCT LEVEL)	SEE PAGE
	1	1	**8Y-9719**	1	PLATE	
	2	1	**8Y-9559**	1	PLATE	
	3	1	**8Y-9713**	1	TUBE AS	
	4	1	**8Y-9714**	1	TUBE AS	
	5	1	**5P-3621**	4	ELBOW-FLARED	
	6	1	**9S-8896**	6	CAP (FLARED 37-DEG)	
	7	1	**8Y-9715**	1	TUBE AS	
	8	1	**8Y-9716**	1	TUBE AS	
	9	1	**6K-8420**	4	LOCKNUT (1-1/16-12-THD)	
	10	1	**5P-1075**	20	WASHER-HARD (10.2X22.5X3-MM THK)	
	11	1	**9B-7237**	17	BOLT (3/8-16X1.25-IN)	
	12	1	**8T-1887**	6	CLIP (SLOT)	
	13	1	**8T-1888**	6	CLIP (TAB)	
I	14	1	**8G-1809**	1	HOSE AS	
I	15	1	**9D-8078**	1	HOSE AS	
	16	1	**005-9702**	2	TEE-UNION	
	17	1	**7G-3832**	7	GROMMET	
	18	1	**7G-3833**	7	CLIP (TAB)	
	19	1	**7G-3834**	7	CLIP (SLOT)	
	20	1	**4S-6680**	4	CONNECTOR	
	21	1	**7M-8485**	6	SEAL-O-RING	
	22	1	**5P-3466**	2	ELBOW (FLARED)	
	23	1	**3R-9704**	1	ELBOW	
	24	1	**5P-7466**	6	CLIP (SLOT)	
	25	1	**5P-7467**	6	CLIP (TAB)	
	26	1	**5P-8112**	6	GROMMET	
I	27	1	**3W-3497**	1	HOSE AS	
I	28	1	**3W-3498**	1	HOSE AS	
	29	1	**3W-6854**	1	PLATE AS	
	30	1	**9S-7739**	2	UNION-FLARED	
	31	1	**5C-6565**	2	BOLT (1/2-13X1.125-IN)	
	32	1	**5P-1076**	2	WASHER-HARD (13.5X30X4-MM THK)	
	33	1	**1F-4192**	2	CLIP	
	34	1	**6V-8801**	3	NUT (3/8-16-THD)	
	35	1	**8T-5360**	8	WASHER (12X22.5X2.5-MM THK)	
	36	1	**1P-4578**	4	FLANGE-HALF	
	37	1	**4J-0522**	2	SEAL-O-RING	
	38	1	**7X-0308**	8	BOLT (7/16-14X1.375-IN)	
I	39	1	**3W-3499**	1	HOSE AS	
I	40	1	**8G-2353**	1	HOSE AS	

I - REFER TO HYDRAULIC INFORMATION SYSTEM

8Y-9634 **LINES GP-DIVERTER VALVE** (contd.) **i00568498**

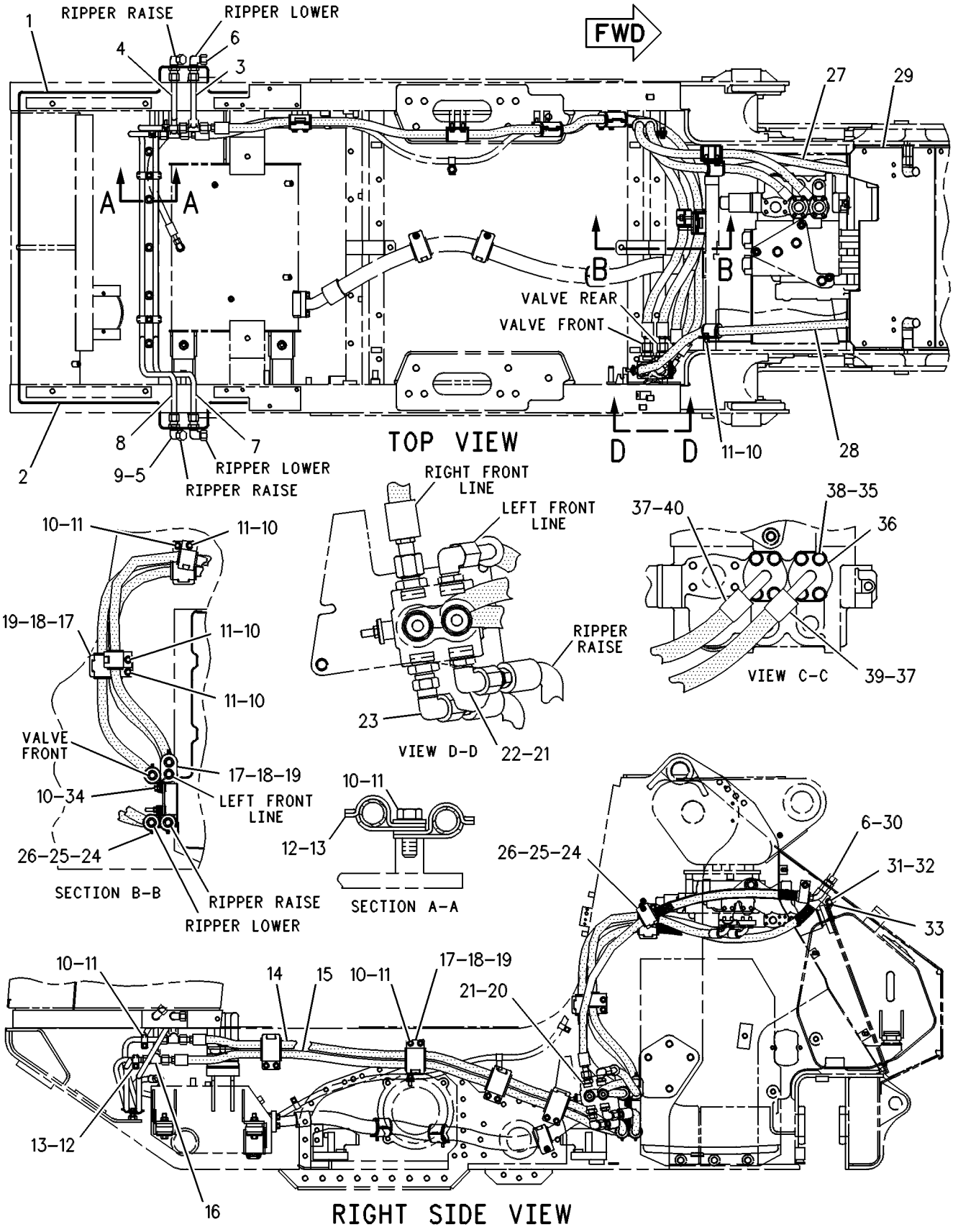

GRAPHIC #1 <END> g00247265

175-3557 LINES GP-FRONT–LIFT ARM

S/N: 9BL1-UP
PART OF 8Y-9624 CONVERSION AR-BUCKET
AN ATTACHMENT

SMCS-5057 **i01904826**

NOTE	REF NO	GRAPHIC REF	PART NUMBER	QTY	PART NAME 1 2 3 4 5 6 (PRODUCT LEVEL)	SEE PAGE
	1	1	**8C-7313**	2	ADAPTER	
	2	1	**175-3559**	2	TUBE AS	
I	3	1	**175-3560**	2	HOSE AS	
	4	1	**193-0555**	2	GUARD	
	5	1	**6V-9746**	4	SEAL-O-RING	
	6	1	**8T-1889**	4	CLIP (SLOT)	
	7	1	**8T-1890**	4	CLIP (TAB)	
	8	1	**8T-4121**	4	WASHER-HARD (11X21X2.5-MM THK)	
M	9	1	**8T-4137**	4	BOLT (M10X1.5X20-MM)	
					QUANTITIES SHOWN ARE THOSE REQUIRED FOR BOTH LH & RH SIDES	

I - REFER TO HYDRAULIC INFORMATION SYSTEM
M - METRIC PART

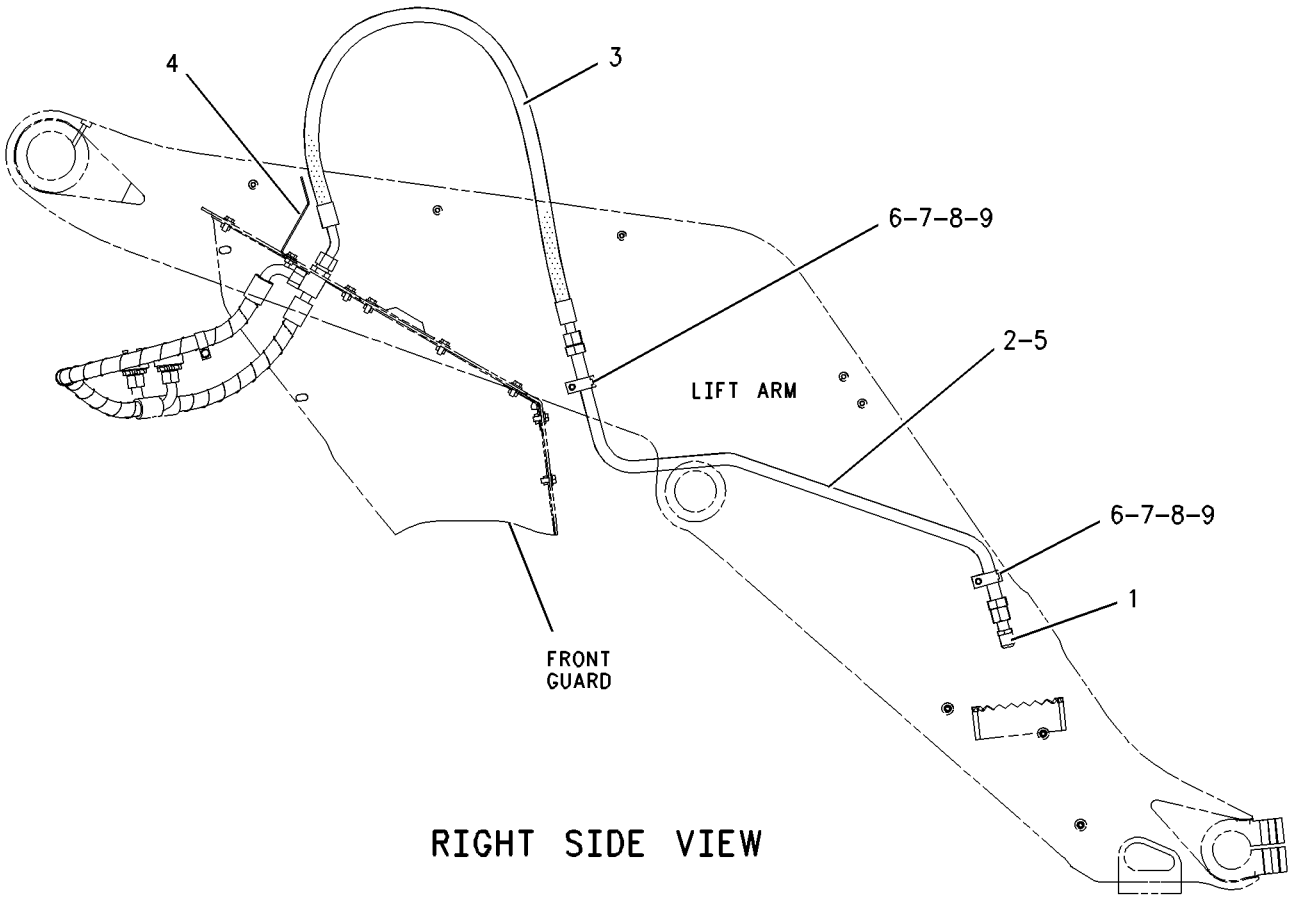

RIGHT SIDE VIEW

GRAPHIC #1 <END> g00772755

5G-7496 LINES GP-FRONT

S/N: 9BL1-UP
PART OF 8Y-9624 CONVERSION AR-BUCKET
AN ATTACHMENT

SMCS-5057 **i01106046**

NOTE	REF NO	GRAPHIC REF	PART NUMBER	QTY	PART NAME 1 2 3 4 5 6 (PRODUCT LEVEL)	SEE PAGE
I	1	1	**4V-6591**	2	HOSE AS	
	2	1	**1F-4192**	2	CLIP	
	3	1	**7P-8651**	2	TUBE AS	
	4	1	**6K-8420**	2	LOCKNUT (1-1/16-12-THD)	
	5	1	**4L-6454**	6	BOLT (3/8-16X1-IN)	
		1	**7X-0772**	6	WASHER-HARD (10.2X25.5X2.5-MM THK)	
	6	1	**8Y-9492**	2	GUARD	

I - REFER TO HYDRAULIC INFORMATION SYSTEM

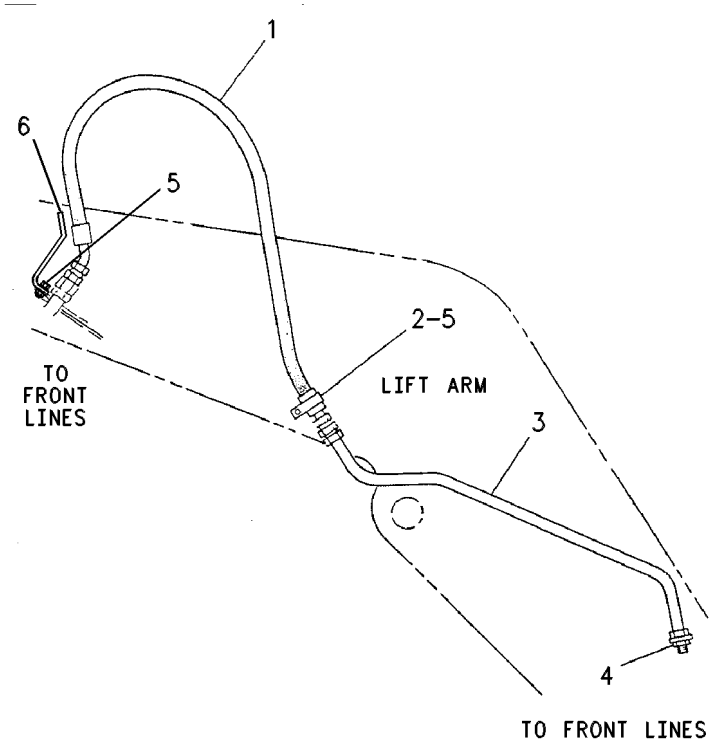

GRAPHIC #1 <END> g00246707

5G-7865 LINES GP-FRONT

S/N: 9BL1-UP

PART OF 129-1541, 129-1550, 8Y-9627, 8Y-9630 HYDRAULIC AR-3 VALVE AN ATTACHMENT

SMCS-5057 **i00567195**

NOTE	REF NO	GRAPHIC REF	PART NUMBER	QTY	PART NAME 1 2 3 4 5 6 (PRODUCT LEVEL)	SEE PAGE
	1	1	**6H-1717**	2	BOLT (1/2-13X1.125-IN)	
		1	**5P-1076**	2	WASHER-HARD (13.5X30X4-MM THK)	
	2	1	**1P-0043**	2	NUT-FLARED (1-5/16-12-THD)	
		1	**067-6684**	2	REDUCER-FLARED	
	3	1	**9S-8896**	2	CAP (FLARED 37-DEG)	
	4	1	**6K-4934**	2	CLIP (SLOT)	
		1	**6K-4935**	2	CLIP (TAB)	
	5	1	**0T-0768**	8	BOLT (7/16-14X1.75-IN)	
		1	**5P-8244**	8	WASHER-HARD (12X22.5X2.5-MM THK)	
	6	1	**1P-3704**	2	SEAL-RECTANGULAR	
	7	1	**7P-5808**	1	TUBE AS	
	8	1	**7P-5807**	1	TUBE AS	
	9	1	**3W-6854**	1	PLATE AS	
		1	**9F-2978**	4	NUT-WELD (3/8-16-THD)	

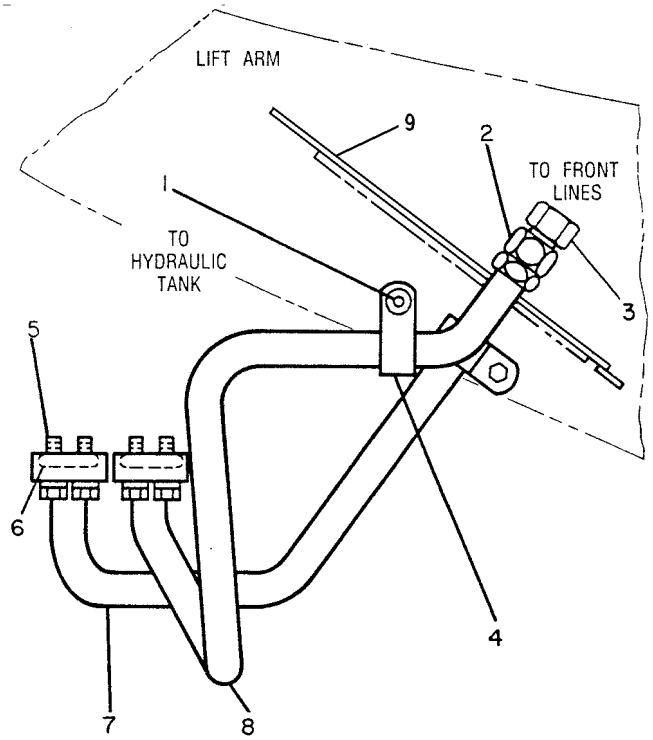

GRAPHIC #1 <END> g00232110

8Y-9476 LINES GP-HYDRAULIC OIL COOLER

S/N: 9BL1-UP

PART OF 8Y-9369 HYDRAULIC AR

SMCS-1374, 5057 **i00568269**

NOTE	REF NO	GRAPHIC REF	PART NUMBER	QTY	PART NAME 1 2 3 4 5 6 (PRODUCT LEVEL)	SEE PAGE
	1	1	**6K-3607**	2	CONNECTOR	
	2	1	**2M-9780**	4	SEAL-O-RING	
	3	1	**100-4336**	7	CLIP	
	4	1	**5M-3062**	7	BOLT (3/8-16X0.75-IN)	
	5	1	**8T-4896**	12	WASHER-HARD (10.2X18.5X2.5-MM THK)	
	6	1	**3R-4792**	5	ROD	
		1	**6V-8801**	5	NUT (3/8-16-THD)	
	7	1	**3K-0360**	2	SEAL-O-RING	
		1	**030-7943**	2	ELBOW	
	8	1	**6V-1722**	2	ADAPTER	
I	9	1	**8Y-9663**	1	HOSE AS	
I	10	1	**8Y-9662**	1	HOSE AS	
	11	1	**8S-0948**	1	CLIP	
	12	1	**1S-0994**	5	CLIP (LOOP)	

I - REFER TO HYDRAULIC INFORMATION SYSTEM

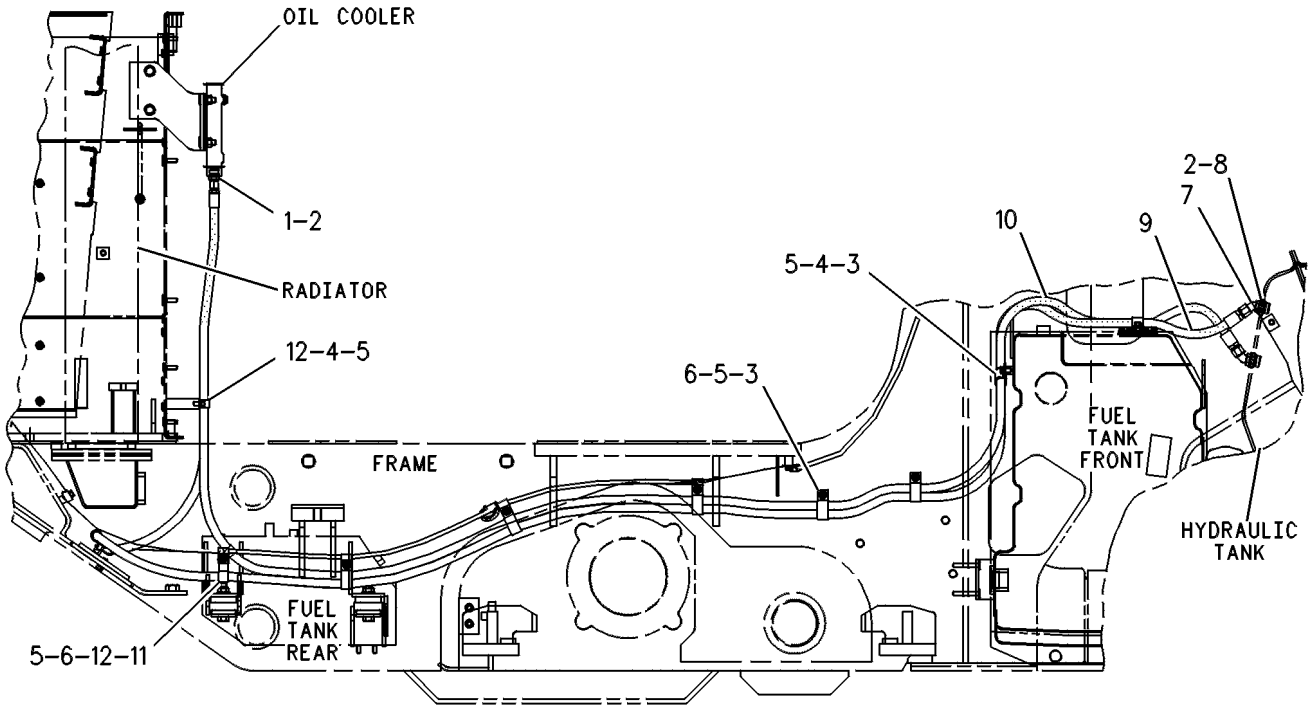

RIGHT SIDE VIEW

GRAPHIC #1 <END> g00247289

8Y-9623 LINES GP-LIFT CYLINDER

S/N: 9BL1-1355

PART OF 8Y-9369 HYDRAULIC AR

SMCS-5057, 5102 **i01400425**

NOTE	REF NO	GRAPHIC REF	PART NUMBER	QTY	PART NAME 1 2 3 4 5 6 (PRODUCT LEVEL)	SEE PAGE
I	1	1	**3W-4161**	1	HOSE AS	
I	2	1	**3W-4160**	1	HOSE AS	
I	3	1	**3W-4157**	1	HOSE AS	
	4	1	**3W-4055**	1	TUBE AS	
	5	1	**4J-5477**	2	SEAL-O-RING	
	6	1	**6V-8628**	1	ELBOW	
	7	1	**3J-7354**	2	SEAL-O-RING	
	8	1	**6V-8647**	1	CONNECTOR	
	9	1	**1P-4577**	8	FLANGE-HALF	
	10	1	**4J-0520**	4	SEAL-O-RING	
	11	1	**5S-7382**	64	BOLT (3/8-16X1.375-IN)	
	12	1	**8T-4896**	72	WASHER-HARD (10.2X18.5X2.5-MM THK)	
I	13	1	**3W-4154**	1	HOSE AS	
	14	1	**1P-4576**	24	FLANGE-HALF	
	15	1	**4J-5267**	12	SEAL-O-RING	
I	16	1	**3W-4158**	1	HOSE AS	
I	17	1	**3W-4159**	1	HOSE AS	
I	18	1	**3W-4155**	1	HOSE AS	
I	19	1	**3W-4156**	1	HOSE AS	
	20	1	**3R-6790**	2	CONNECTOR-PORT	
	21	1	**1P-3703**	2	SEAL-RECTANGULAR	
	22	1	**8T-8917**	4	BOLT (1/2-13X1.25-IN)	
	23	1	**8T-4223**	6	WASHER-HARD (13.5X25.5X3-MM THK)	
	24	1	**3W-4162**	2	MANIFOLD	
	25	1	**3W-4163**	1	ELBOW	
	26	1	**3W-4164**	1	ELBOW	
	27	1	**9F-2167**	2	SCREW-PURGE (3/8-24X1.164-IN)	
	28	1	**8T-7008**	8	BOLT (3/8-16X3-IN)	
	29	1	**5P-2228**	2	BOLT (1/2-13X1-IN)	
	30	1	**6K-5535**	2	CLIP (SLOT)	
	31	1	**6K-5536**	2	CLIP (TAB)	
	32	1	**8Y-9738**	2	TUBE AS	
	33	1	**3D-2824**	2	SEAL-O-RING	

I - REFER TO HYDRAULIC INFORMATION SYSTEM

8Y-9623 **LINES GP-LIFT CYLINDER** (contd.) **i01400425**

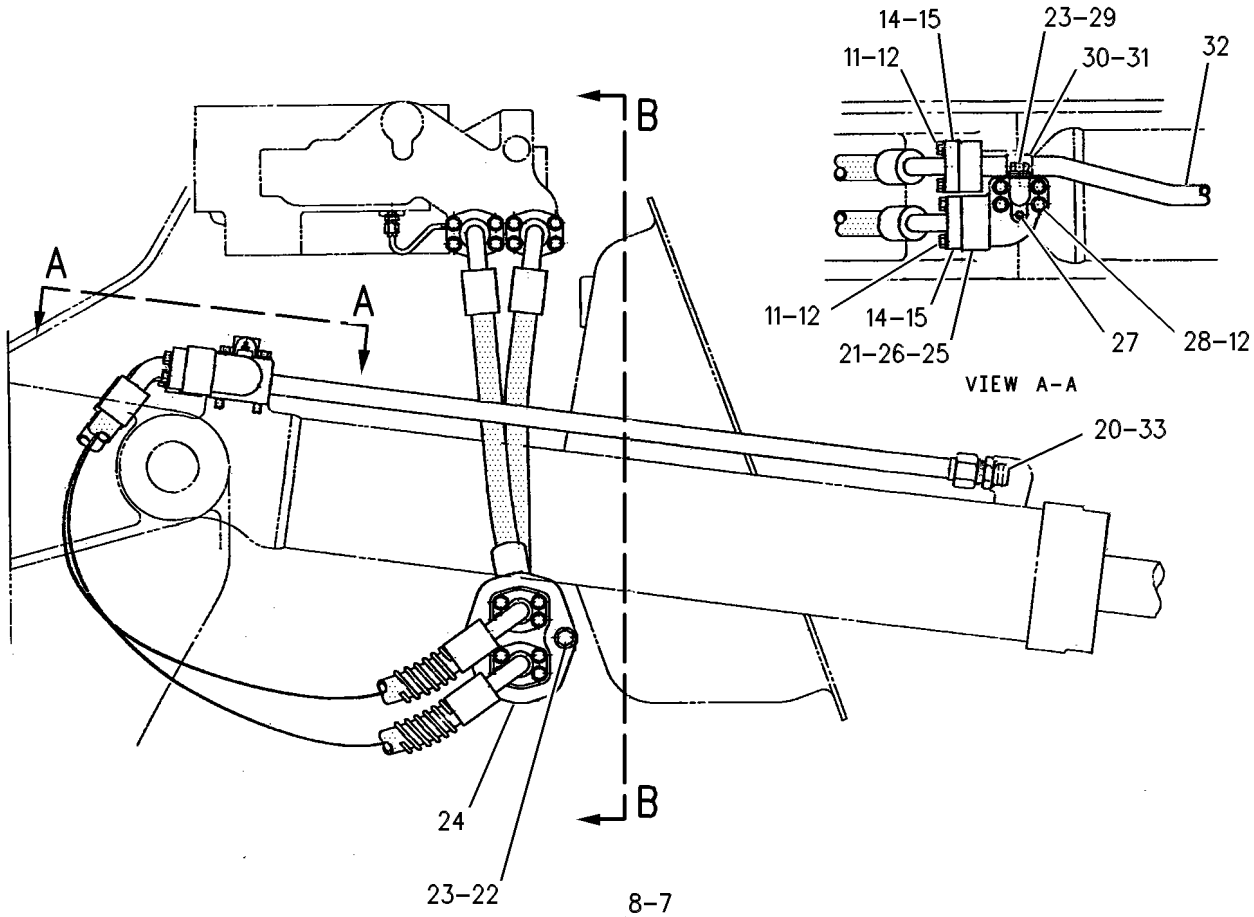

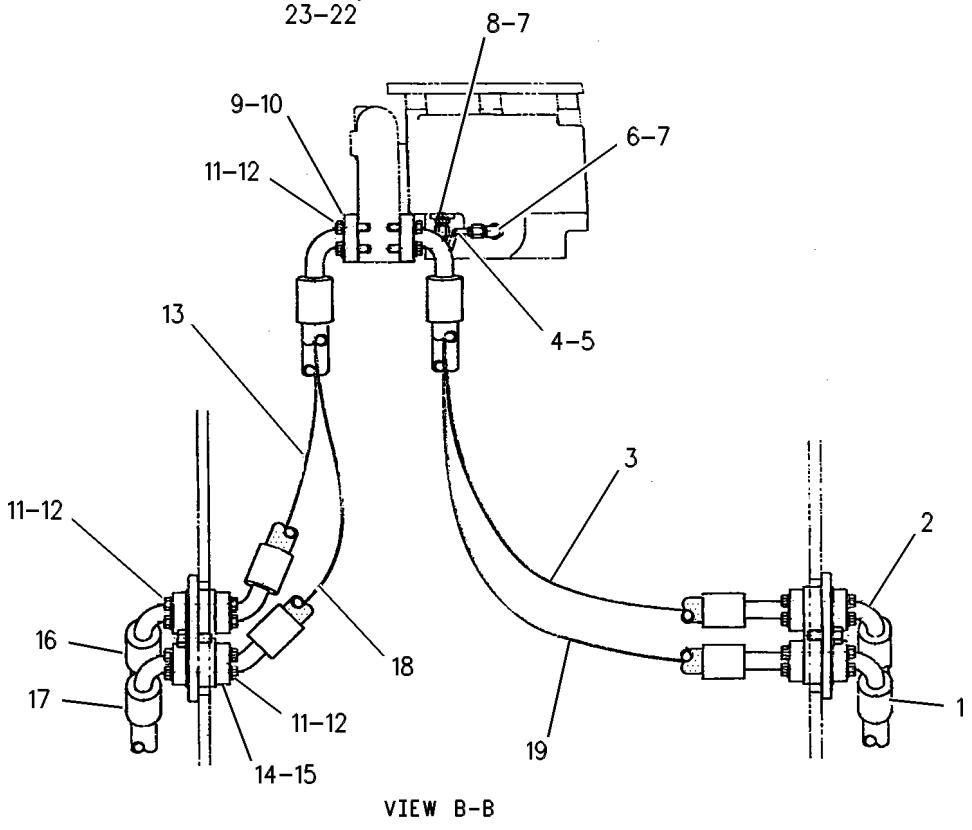

GRAPHIC #1 <END> g00267807

8Y-9623 LINES GP-LIFT CYLINDER

S/N: 9BL1356-UP

PART OF 8Y-9369 HYDRAULIC AR

SMCS-5057, 5102 **i01400419**

NOTE	REF NO	GRAPHIC REF	PART NUMBER	QTY	PART NAME 1 2 3 4 5 6 (PRODUCT LEVEL)	SEE PAGE
I	1	1	**3W-4161**	1	HOSE AS	
I	2	1	**3W-4160**	1	HOSE AS	
I	3	1	**3W-4157**	1	HOSE AS	
	4	1	**3W-4055**	1	TUBE AS	
	5	1	**4J-5477**	2	SEAL-O-RING	
	6	1	**6V-8628**	1	ELBOW	
	7	1	**3J-7354**	2	SEAL-O-RING	
	8	1	**6V-8647**	1	CONNECTOR	
	9	1	**1P-4577**	8	FLANGE-HALF	
	10	1	**4J-0520**	4	SEAL-O-RING	
	11	1	**5S-7382**	64	BOLT (3/8-16X1.375-IN)	
	12	1	**8T-4896**	72	WASHER-HARD (10.2X18.5X2.5-MM THK)	
I	13	1	**3W-4154**	1	HOSE AS	
	14	1	**1P-4576**	24	FLANGE-HALF	
	15	1	**4J-5267**	12	SEAL-O-RING	
I	16	1	**3W-4158**	1	HOSE AS	
I	17	1	**3W-4159**	1	HOSE AS	
I	18	1	**3W-4155**	1	HOSE AS	
I	19	1	**3W-4156**	1	HOSE AS	
C	20	1	**6V-8714**	2	CONNECTOR	
	21	1	**1P-3703**	2	SEAL-RECTANGULAR	
	22	1	**8T-8917**	4	BOLT (1/2-13X1.25-IN)	
	23	1	**8T-4223**	6	WASHER-HARD (13.5X25.5X3-MM THK)	
	24	1	**3W-4162**	2	MANIFOLD	
	25	1	**3W-4163**	1	ELBOW	
	26	1	**3W-4164**	1	ELBOW	
	27	1	**9F-2167**	2	SCREW-PURGE (3/8-24X1.164-IN)	
	28	1	**8T-7008**	8	BOLT (3/8-16X3-IN)	
	29	1	**5P-2228**	2	BOLT (1/2-13X1-IN)	
	30	1	**6K-5535**	2	CLIP (SLOT)	
	31	1	**6K-5536**	2	CLIP (TAB)	
C	32	1	**131-9261**	2	TUBE AS	
	33	1	**3D-2824**	2	SEAL-O-RING	
C	34	1	**5K-9090**	2	SEAL-O-RING	

C - CHANGE FROM PREVIOUS TYPE
I - REFER TO HYDRAULIC INFORMATION SYSTEM

8Y-9623 **LINES GP-LIFT CYLINDER** (contd.) **i01400419**

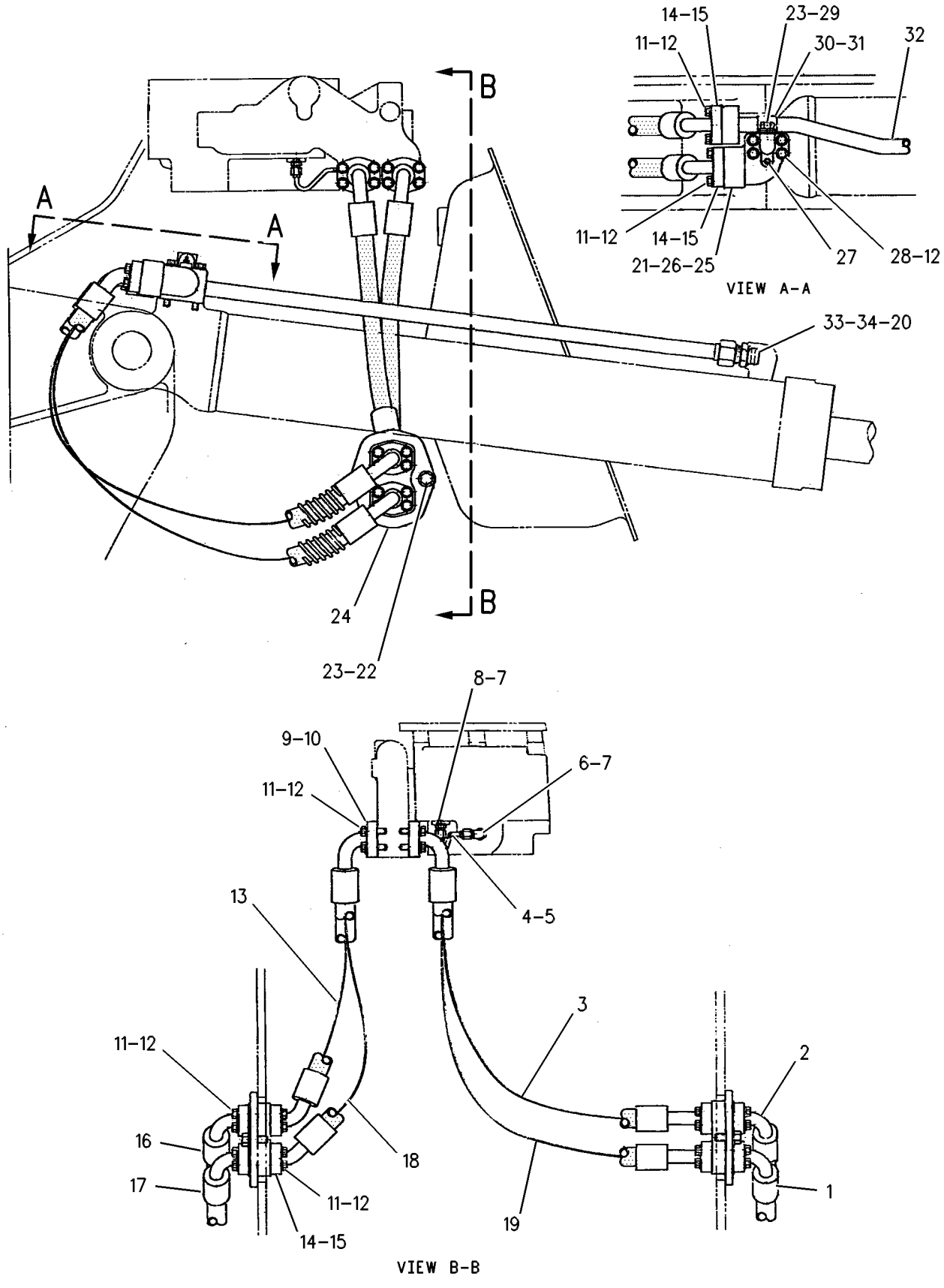

GRAPHIC #1 <END> g00267808

128-1889 LINES GP-PILOT

S/N: 9BL1399-UP

PART OF 8Y-9369 HYDRAULIC AR

SMCS-5057 **i02023823**

NOTE	REF NO	GRAPHIC REF	PART NUMBER	QTY	PART NAME 1 2 3 4 5 6 (PRODUCT LEVEL)	SEE PAGE
	1	2	**6V-8782**	1	TEE	
	2	1,2	**3K-0360**	5	SEAL-O-RING	
B	3	1,2	**6V-8636**	9	CONNECTOR	
	4	1	**6V-3965**	1	FITTING (QUICK DISCONNECT)	
	5	1	**6V-0852**	1	CAP-DUST	
I	6	1	**135-4602**	1	HOSE AS	
	7	1,2	**3D-2824**	2	SEAL-O-RING	
I	8	1	**135-6498**	1	HOSE AS	
I	9	1	**135-6497**	1	HOSE AS	
I	10	2	**122-1608**	2	HOSE AS	
J	11	1	**112-1817**	1	VALVE-BALL	
	12	1	**6V-1573**	1	CLIP (TAB)	
	13	1,2	**3R-4792**	6	ROD	
	14	1,2	**5P-1075**	9	WASHER-HARD (10.2X22.5X3-MM THK)	
	15	1,2	**6V-8801**	8	NUT (3/8-16-THD)	
I	16	2	**122-1611**	2	HOSE AS	
I	17	2	**122-1609**	1	HOSE AS	
	18	1	**030-7947**	2	ELBOW	
	19	1	**7K-1181**	4	STRAP-CABLE	
	20	2	**5K-5338**	1	CLIP	
	21	1	**1U-3175**	1	TUBE AS	
I	22	2	**122-1613**	1	HOSE AS	
	23	1,2	**5P-4325**	6	CLIP	
	24	2	**5P-7462**	1	CLIP (SLOT)	
	25	2	**5P-7463**	1	CLIP (TAB)	
	26	2	**6V-0683**	1	GROMMET	
	27	2	**4L-6454**	1	BOLT (3/8-16X1-IN)	
I	28	1	**122-1615**	1	HOSE AS	
	29	2	**8T-1905**	2	ELBOW	
I	30	1	**122-1617**	1	HOSE AS	
I	31	1	**122-1618**	1	HOSE AS	
	32	1	**6V-9007**	1	ELBOW	
	33	2	**6V-8637**	1	CONNECTOR	
B	34	1,2	**8T-7521**	1	ELBOW	
I	35	2	**135-4684**	1	HOSE AS	
B	36	1,2	**6V-9873**	1	CONNECTOR	
M	37	1	**6V-5698**	4	SCREW-BUTTON HEAD (M4X0.7X10-MM)	
	38	1,2	**6V-8398**	6	SEAL-O-RING	
Y	39	2	**1U-2226**	1	VALVE GP-SELECTOR & PRESS CONT	665
	40	2	**8T-4896**	2	WASHER-HARD (10.2X18.5X2.5-MM THK)	
	41	2	**8T-2501**	2	BOLT (3/8-16X2-IN)	
	42	1	**6V-1574**	1	GROMMET	
	43	1	**6V-1572**	1	CLIP (SLOT)	
	44	1	**5P-7470**	1	CLIP (SLOT)	
	45	1	**5P-7471**	1	CLIP (TAB)	
	46	1	**5P-8182**	1	GROMMET (46-MM ID)	
	47	1,2	**3J-1907**	23	SEAL-O-RING	

128-1889 **LINES GP-PILOT (**contd.**)** **i02023823**

NOTE	REF NO	GRAPHIC REF	PART NUMBER	QTY	PART NAME 1 2 3 4 5 6 (PRODUCT LEVEL)	SEE PAGE
	48	1	**8T-0788**	2	ELBOW	
	49	1,2	**6V-8397**	22	SEAL-O-RING	
Y	50	1	**9T-3096**	2	VALVE GP-CHECK	610
	51	1	**8T-6663**	2	ADAPTER-PORT	
	52	1	**6V-9836**	1	TEE-SWIVEL	
	53	1,2	**6V-8724**	3	ELBOW	
	54	2	**5P-8874**	1	ADAPTER	
	55	1,2	**6V-8625**	3	ELBOW	
	56	1	**6V-8723**	1	ELBOW	
	57	1,2	**6V-9746**	2	SEAL-O-RING	
					AVAILABLE REPAIR KIT(S):	
J			**112-9861**	1	KIT-SEAL	
					(INCLUDES SEAL & O-RINGS)	

B - USE AS REQUIRED
I - REFER TO HYDRAULIC INFORMATION SYSTEM
J - KIT MARKED J INCLUDES PART MARK J
M - METRIC PART
Y - SEPARATE ILLUSTRATION

128-1889 **LINES GP-PILOT (**contd.**)** **i02023823**

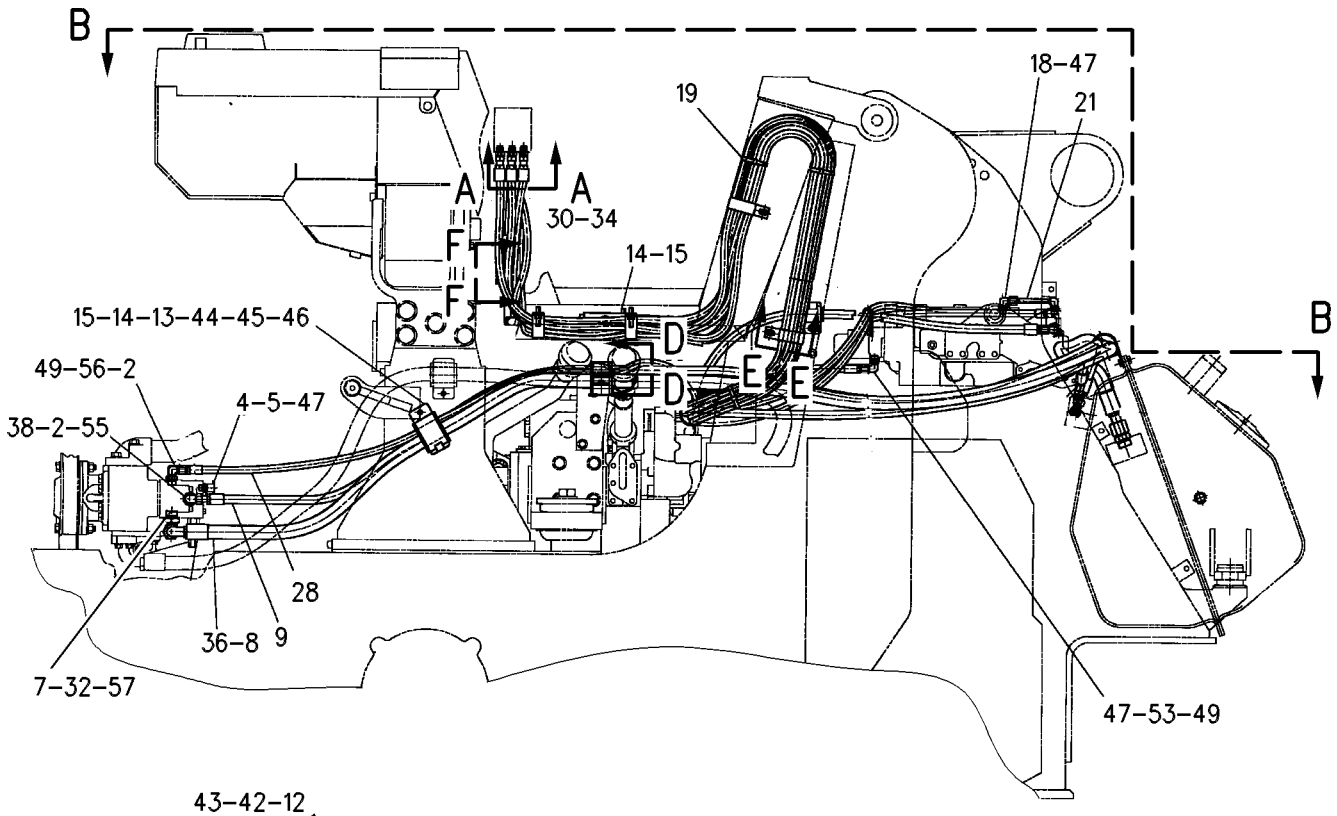

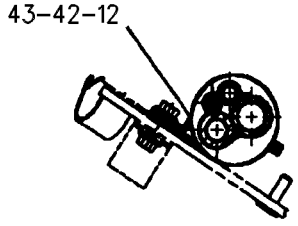

SECTION D-D

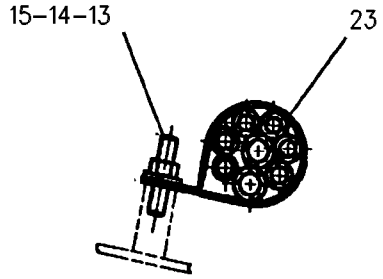

SECTION E-E

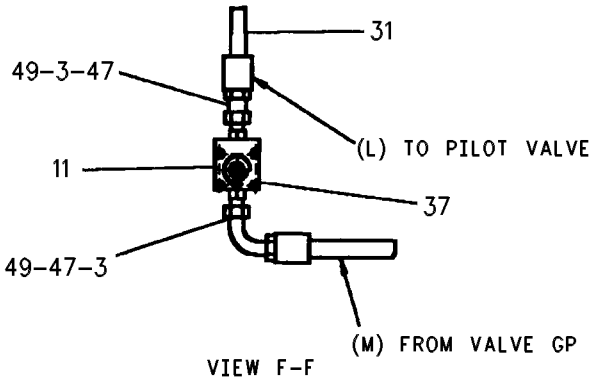

VIEW F-F

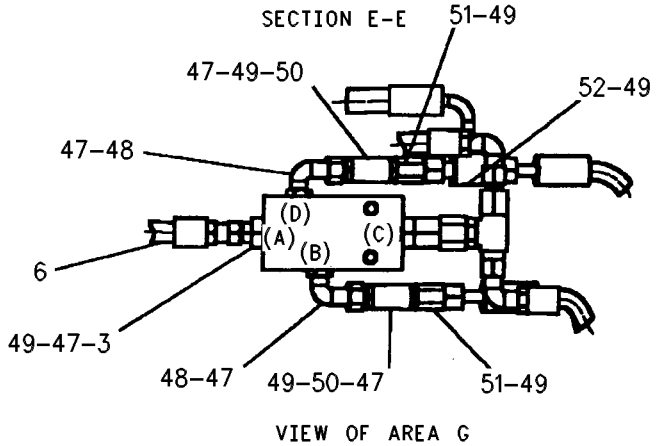

VIEW OF AREA G

GRAPHIC #1 g00625971

128-1889 **LINES GP-PILOT (**contd.**)** **i02023823**

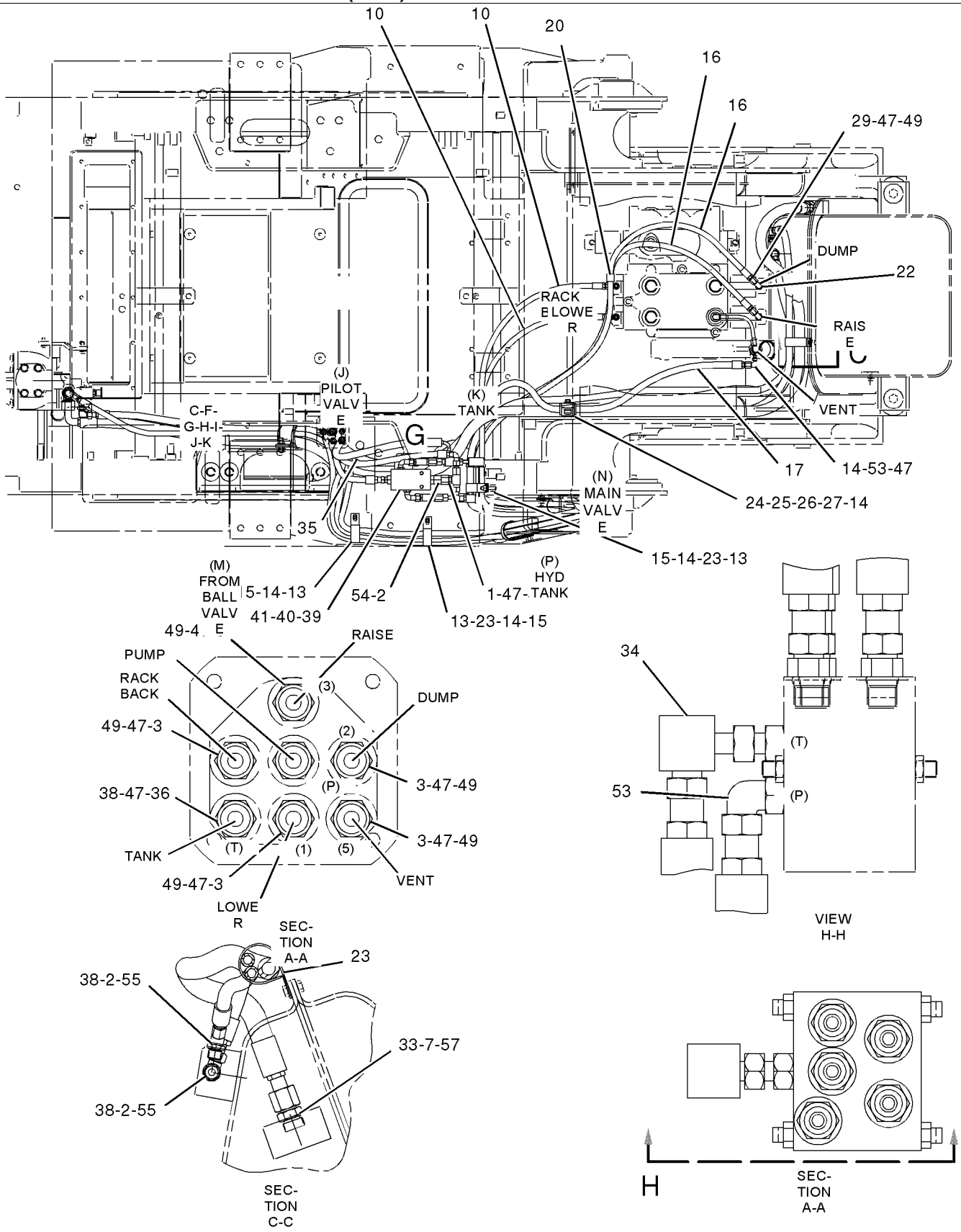

GRAPHIC #2 <END> g01044999

128-1898 LINES GP-PILOT

S/N: 9BL1399-UP

PART OF 129-1475, 129-1541, 129-1543, 129-1548, 129-1550, 129-1559, 129-1565 HYDRAULIC AR-3 VALVE

AN ATTACHMENT

SMCS-5057 **i01400446**

NOTE	REF NO	GRAPHIC REF	PART NUMBER	QTY	PART NAME 1 2 3 4 5 6 (PRODUCT LEVEL)	SEE PAGE
	1	1	**3J-1907**	4	SEAL-O-RING	
	2	1	**5K-5338**	1	CLIP	
I	3	1	**122-1614**	1	HOSE AS	
I	4	1	**122-1611**	1	HOSE AS	
	5	1	**3P-9847**	5	CLIP	
	6	1	**7K-1181**	3	STRAP-CABLE	
	7	1	**6V-8724**	1	ELBOW	
	8	1	**6V-8397**	4	SEAL-O-RING	
	9	1	**8T-1905**	1	ELBOW	
	10	1	**6V-8636**	2	CONNECTOR	

I - REFER TO HYDRAULIC INFORMATION SYSTEM

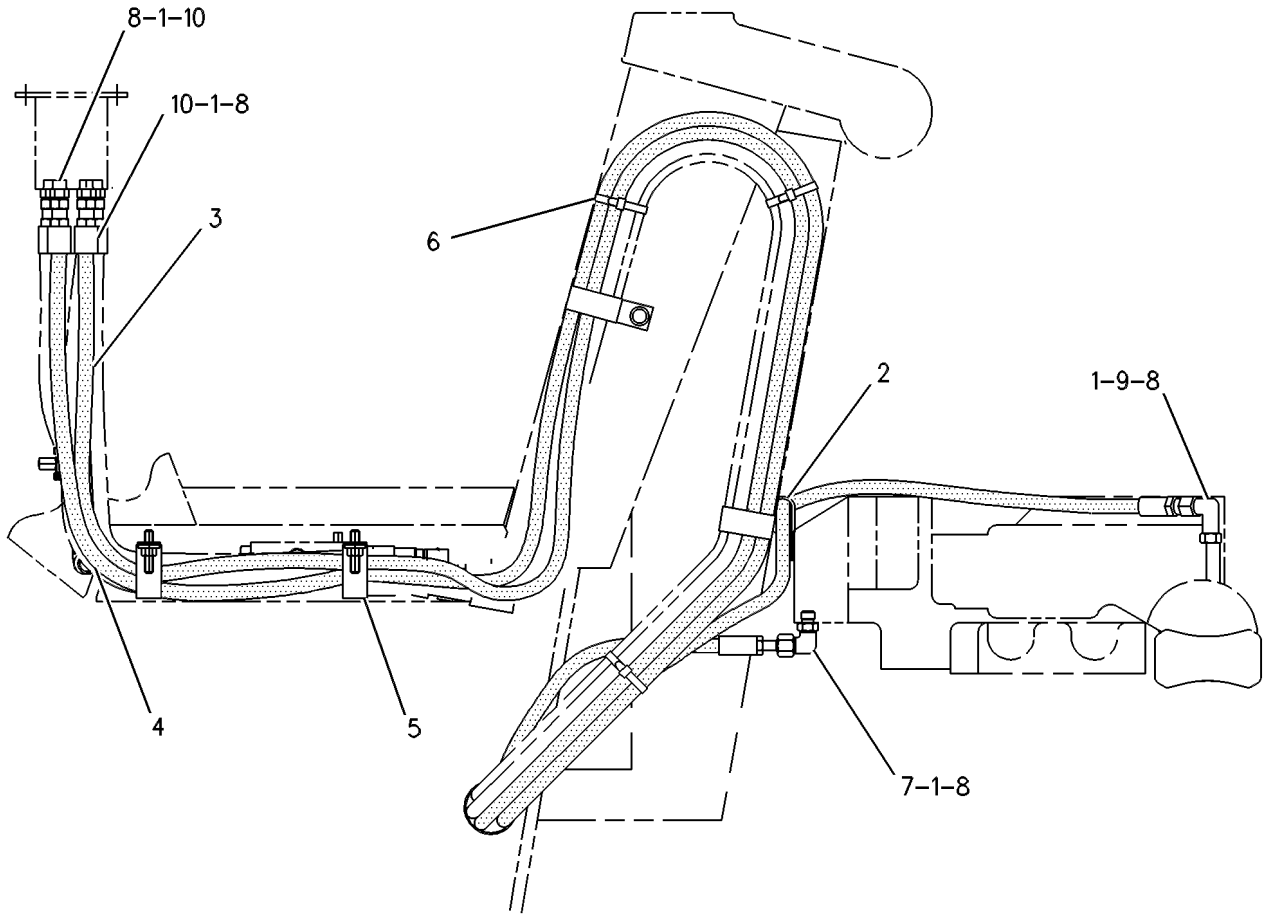

SIDE VIEW

GRAPHIC #1 <END> g00289985

8Y-9477 LINES GP-PILOT

S/N: 9BL1-1398

PART OF 8Y-9369 HYDRAULIC AR

SMCS-5057 **i01400430**

NOTE	REF NO	GRAPHIC REF	PART NUMBER	QTY	PART NAME 1 2 3 4 5 6 (PRODUCT LEVEL)	SEE PAGE
	1	1	**030-7948**	2	ELBOW	
	2	1	**3K-0360**	5	SEAL-O-RING	
	3	1	**005-4362**	1	ELBOW	
	4	1	**6V-3965**	1	FITTING (QUICK DISCONNECT)	
	5	1	**6V-0852**	1	CAP-DUST	
	6	1	**3J-1907**	15	SEAL-O-RING	
	7	1	**3R-9704**	1	ELBOW	
	8	1	**3D-2824**	2	SEAL-O-RING	
I	9	1	**8Y-9333**	1	HOSE AS	
I	10	1	**8Y-9334**	1	HOSE AS	
I	11	1	**8Y-9335**	1	HOSE AS	
	12	1	**2R-6276**	2	CONNECTOR	
	13	1	**6V-1572**	1	CLIP (SLOT)	
	14	1	**3R-4792**	5	ROD	
	15	1	**5P-1075**	6	WASHER-HARD (10.2X22.5X3-MM THK)	
	16	1	**6V-8801**	5	NUT (3/8-16-THD)	
	17	1	**3V-4791**	1	GROMMET	
	18	1	**8G-3905**	1	HOSE AS	
	19	1	**030-7947**	7	ELBOW	
	20	1	**7K-1181**	4	STRAP-CABLE	
	21	1	**5K-5338**	1	CLIP	
	22	1	**1U-3175**	1	TUBE AS	
	23	1	**8M-2773**	1	CLIP (LOOP)	
	24	1	**5P-4325**	5	CLIP	
	25	1	**5P-7462**	1	CLIP (SLOT)	
	26	1	**5P-7463**	1	CLIP (TAB)	
	27	1	**6V-0683**	1	GROMMET (19MM ID)	
	28	1	**4L-6454**	1	BOLT (3/8-16X1-IN)	
I	29	1	**8G-1315**	1	HOSE AS	
	30	1	**030-7943**	1	ELBOW	
I	31	1	**8G-3904**	1	HOSE AS	
	32	1	**2M-9780**	1	SEAL-O-RING	
I	33	1	**8G-1316**	1	HOSE AS	
	34	1	**8M-0505**	1	ADAPTER	
I	35	1	**8G-3903**	1	HOSE AS	
	36	1	**2R-6806**	5	CONNECTOR	
I	37	1	**3W-6659**	1	HOSE AS	
	38	1	**030-8194**	1	CONNECTOR	
	39	1	**2P-7214**	2	ELBOW	
I	40	1	**8G-1318**	1	HOSE AS	
	41	1	**6V-1573**	1	CLIP (TAB)	
	42	1	**6V-1574**	1	GROMMET	
	43	1	**5P-8182**	1	GROMMET (46-MM ID) (46MM ID)	
	44	1	**5P-7471**	1	CLIP (TAB)	
	45	1	**5P-7470**	1	CLIP (SLOT)	

I - REFER TO HYDRAULIC INFORMATION SYSTEM

8Y-9477 **LINES GP-PILOT (**contd.**)** **i01400430**

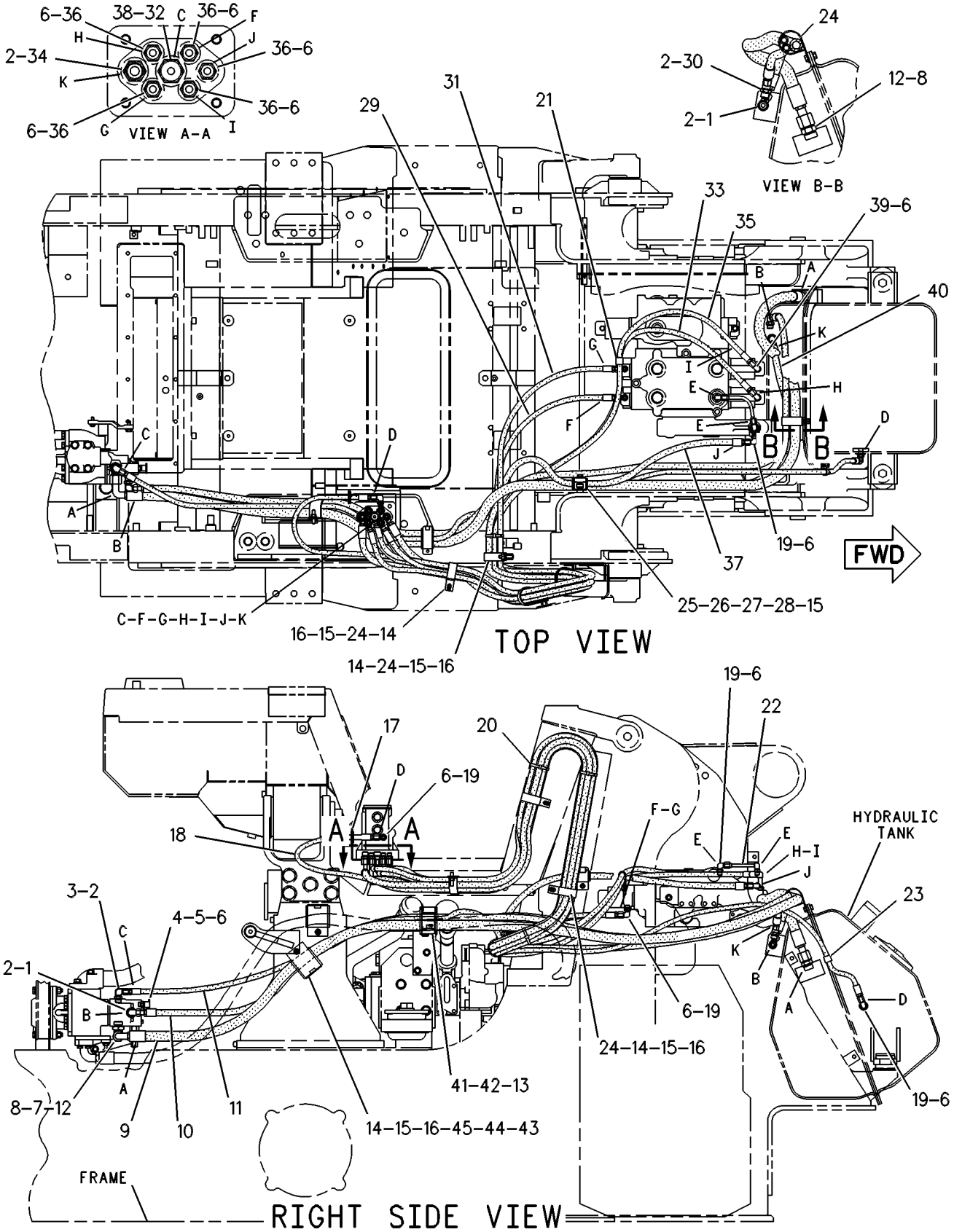

GRAPHIC #1 <END> g00251680

8Y-9474 LINES GP-PUMP

S/N: 9BL1-UP

PART OF 8Y-9369 HYDRAULIC AR

SMCS-5057 **i01400454**

NOTE	REF NO	GRAPHIC REF	PART NUMBER	QTY	PART NAME 1 2 3 4 5 6 (PRODUCT LEVEL)	SEE PAGE
	1	1	**8T-4223**	20	WASHER-HARD (13.5X25.5X3-MM THK)	
	2	1	**8T-4835**	6	BOLT (1/2-13X2-IN)	
	3	1	**8Y-9710**	1	MANIFOLD	
	4	1	**4J-0522**	3	SEAL-O-RING	
	5	1	**1P-4578**	4	FLANGE-HALF	
	6	1	**7X-0308**	4	BOLT (7/16-14X1.375-IN)	
	7	1	**8T-5360**	12	WASHER (12X22.5X2.5-MM THK)	
	8	1	**7X-0318**	4	BOLT (7/16-14X4-IN)	
	9	1	**6V-3965**	1	FITTING (QUICK DISCONNECT)	
		1	**6V-0852**	1	CAP-DUST	
		1	**6V-8077**	1	ELBOW	
	10	1	**6V-1867**	1	CLIP (SLOT)	
		1	**6V-1868**	1	CLIP (TAB)	
		1	**6V-1869**	1	GROMMET (65-MM ID)	
	11	1	**3J-1907**	2	SEAL-O-RING	
	12	1	**5P-2566**	4	BOLT (1/2-13X1.5-IN)	
	13	1	**8Y-9711**	1	TUBE AS	
		1	**1P-3708**	1	SEAL-RECTANGULAR	
	14	1	**3W-0438**	1	TUBE AS	
	15	1	**8T-6703**	4	CLAMP-HOSE	
I	16	1	**8Y-9707**	1	HOSE AS	
	17	1	**8T-8916**	4	BOLT (7/16-14X1.5-IN)	
	18	1	**4L-6454**	1	BOLT (3/8-16X1-IN)	
	19	1	**5P-1075**	1	WASHER-HARD (10.2X22.5X3-MM THK)	
	20	1	**8Y-9708**	1	BRACKET	
	21	1	**6V-8188**	1	NUT (1/2-13-THD)	
	22	1	**8Y-9709**	1	HOSE	
	23	1	**8Y-9712**	1	TUBE AS	
		1	**1P-3705**	1	SEAL-RECTANGULAR	
	24	1	**8G-1531**	1	TUBE AS	
		1	**5F-3092**	1	SEAL-O-RING	
	25	1	**5P-2424**	7	BOLT (1/2-13X2.25-IN)	
	26	1	**1S-6181**	2	BOLT (9/16-12X6.75-IN)	
	27	1	**9L-9009**	3	WASHER (0.594X1.062X0.188-IN THK)	
	28	1	**8S-4742**	1	BOLT (9/16-12X6-IN)	
	29	1	**5P-0597**	3	CLAMP-HOSE	
	30	1	**6V-7287**	1	HOSE	
	31	1	**8G-9069**	1	TUBE AS	
	32	1	**4J-0524**	2	SEAL-O-RING	
	33	1	**5P-7466**	1	CLIP (SLOT)	
	34	1	**5P-2228**	2	BOLT (1/2-13X1-IN)	
	35	1	**8T-8919**	1	BOLT (1/2-13X1.75-IN)	
	36	1	**5P-8112**	1	GROMMET	
	37	1	**5P-7467**	1	CLIP (TAB)	

I - REFER TO HYDRAULIC INFORMATION SYSTEM

8Y-9474 **LINES GP-PUMP** (contd.) **i01400454**

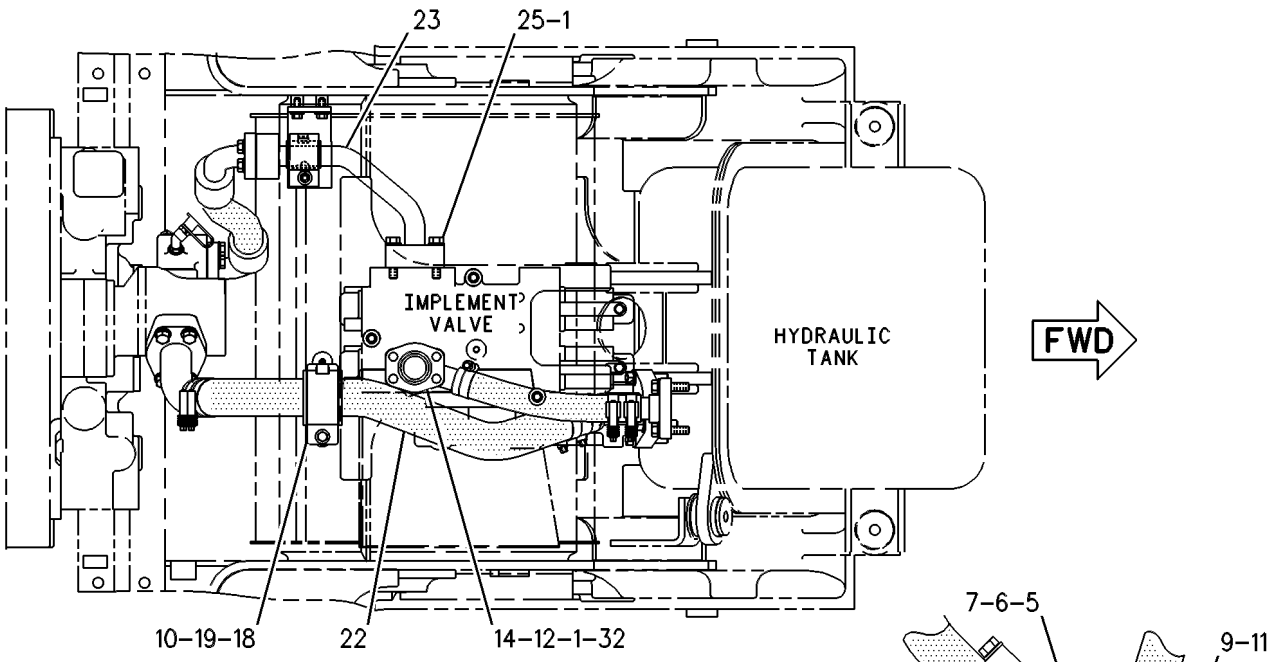

TOP VIEW

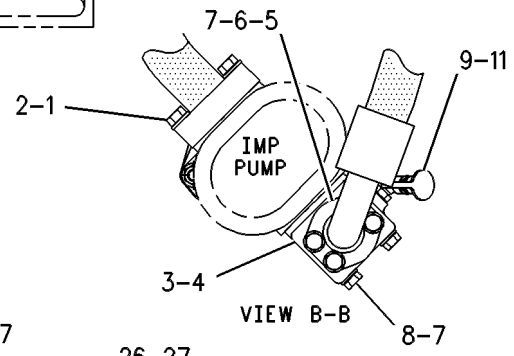

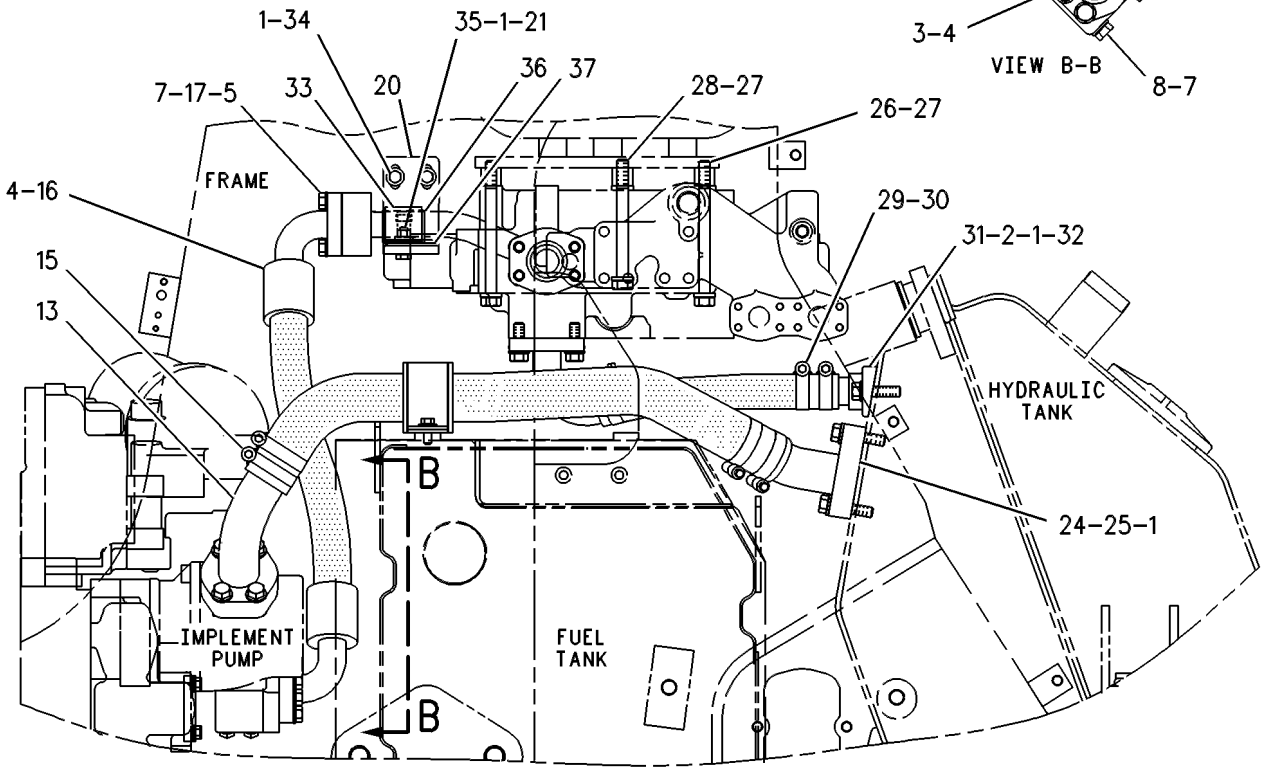

RIGHT SIDE VIEW

GRAPHIC #1 <END> g00251678

8Y-9633 LINES GP-PUMP

S/N: 9BL1-UP

PART OF 123-2859, 129-1475, 129-1541, 129-1543, 129-1548, 129-1550, 129-1559, 129-1565, 8Y-9627, 8Y-9628, 8Y-9629, 8Y-9630, 8Y-9631, 8Y-9632 HYDRAULIC AR-3 VALVE AN ATTACHMENT

SMCS-5057 **i01400462**

NOTE	REF NO	GRAPHIC REF	PART NUMBER	QTY	PART NAME 1 2 3 4 5 6 (PRODUCT LEVEL)	SEE PAGE
	1	1	**8T-4223**	20	WASHER-HARD (13.5X25.5X3-MM THK)	
	2	1	**8T-4835**	6	BOLT (1/2-13X2-IN)	
	3	1	**8Y-9710**	1	MANIFOLD	
	4	1	**4J-0522**	3	SEAL-O-RING	
	5	1	**1P-4578**	4	FLANGE-HALF	
	6	1	**7X-0308**	4	BOLT (7/16-14X1.375-IN)	
	7	1	**8T-5360**	12	WASHER (12X22.5X2.5-MM THK)	
	8	1	**7X-0318**	4	BOLT (7/16-14X4-IN)	
	9	1	**6V-3965**	1	FITTING (QUICK DISCONNECT)	
		1	**6V-0852**	1	CAP-DUST	
		1	**6V-8077**	1	ELBOW	
	10	1	**5P-2566**	4	BOLT (1/2-13X1.5-IN)	
	11	1	**3J-1907**	2	SEAL-O-RING	
	12	1	**6V-1867**	1	CLIP (SLOT)	
		1	**6V-1868**	1	CLIP (TAB)	
		1	**6V-1869**	1	GROMMET (65-MM ID)	
	13	1	**8Y-9711**	1	TUBE AS	
		1	**1P-3708**	1	SEAL-RECTANGULAR	
	14	1	**3W-0438**	1	TUBE AS	
	15	1	**8T-6703**	4	CLAMP-HOSE	
I	16	1	**8Y-9707**	1	HOSE AS	
	17	1	**8T-8916**	4	BOLT (7/16-14X1.5-IN)	
	18	1	**4L-6454**	1	BOLT (3/8-16X1-IN)	
	19	1	**5P-1075**	1	WASHER-HARD (10.2X22.5X3-MM THK)	
	20	1	**8Y-9708**	1	BRACKET	
	21	1	**6V-8188**	1	NUT (1/2-13-THD)	
	22	1	**8Y-9709**	1	HOSE	
	23	1	**8Y-9706**	1	TUBE AS	
		1	**1P-3705**	1	SEAL-RECTANGULAR	
	24	1	**8G-1531**	1	TUBE AS	
		1	**5F-3092**	1	SEAL-O-RING	
	25	1	**5P-2424**	7	BOLT (1/2-13X2.25-IN)	
	26	1	**1S-6181**	2	BOLT (9/16-12X6.75-IN)	
	27	1	**9L-9009**	3	WASHER (0.594X1.062X0.188-IN THK)	
	28	1	**8S-4742**	1	BOLT (9/16-12X6-IN)	
	29	1	**5P-0597**	3	CLAMP-HOSE	
BG	30	1	**9X-2379**	1	HOSE	
	31	1	**8G-9069**	1	TUBE AS	
	32	1	**4J-0524**	2	SEAL-O-RING	
	33	1	**5P-7466**	1	CLIP (SLOT)	
	34	1	**5P-2228**	2	BOLT (1/2-13X1-IN)	
	35	1	**5P-7467**	1	CLIP (TAB)	
	36	1	**5P-8112**	1	GROMMET	
	37	1	**8T-8919**	1	BOLT (1/2-13X1.75-IN)	

B - USE AS REQUIRED
G - ORDER BY THE INCH
I - REFER TO HYDRAULIC INFORMATION SYSTEM

8Y-9633 **LINES GP-PUMP (**contd.**)** **i01400462**

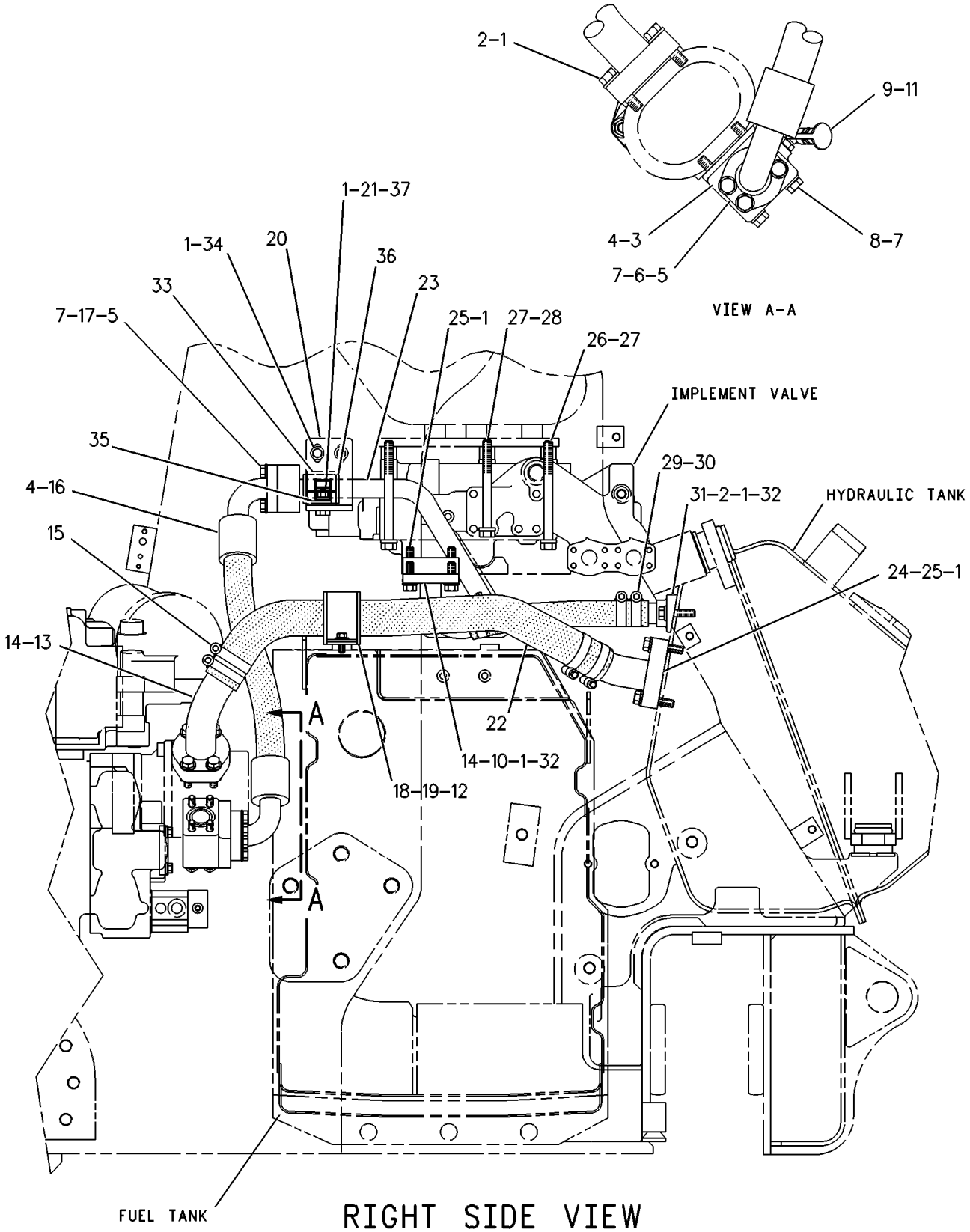

GRAPHIC #1 <END> g00274180

8Y-9500 LINES GP-REAR ATTACHMENT

S/N: 9BL1-UP

PART OF 129-1475, 129-1559, 8Y-9628, 8Y-9631 HYDRAULIC AR-3 VALVE AN ATTACHMENT

SMCS-5057 **i00568297**

NOTE	REF NO	GRAPHIC REF	PART NUMBER	QTY	PART NAME 1 2 3 4 5 6 (PRODUCT LEVEL)	SEE PAGE
	1	1	**8Y-9719**	1	PLATE	
	2	1	**8Y-9559**	1	PLATE	
	3	1	**8Y-9713**	1	TUBE AS	
	4	1	**8Y-9714**	1	TUBE AS	
	5	1	**5P-3621**	4	ELBOW-FLARED	
	6	1	**9S-8896**	4	CAP (FLARED 37-DEG)	
	7	1	**8Y-9715**	1	TUBE AS	
	8	1	**8Y-9716**	1	TUBE AS	
	9	1	**6K-8420**	4	LOCKNUT (1-1/16-12-THD)	
	10	1	**4L-6454**	14	BOLT (3/8-16X1-IN)	
	11	1	**5P-1075**	14	WASHER-HARD (10.2X22.5X3-MM THK)	
	12	1	**8T-1887**	6	CLIP (SLOT)	
	13	1	**8T-1888**	6	CLIP (TAB)	
	14	1	**005-9702**	2	TEE-UNION	
	15	1	**7G-3832**	5	GROMMET	
	16	1	**7G-3833**	5	CLIP (TAB)	
	17	1	**7G-3834**	5	CLIP (SLOT)	
	18	1	**4J-0522**	2	SEAL-O-RING	
	19	1	**7X-0308**	8	BOLT (7/16-14X1.375-IN)	
	20	1	**8T-5360**	8	WASHER (12X22.5X2.5-MM THK)	
	21	1	**1P-4578**	4	FLANGE-HALF	
I	22	1	**8Y-9717**	2	HOSE AS	

I - REFER TO HYDRAULIC INFORMATION SYSTEM

8Y-9500 **LINES GP-REAR ATTACHMENT** (contd.) **i00568297**

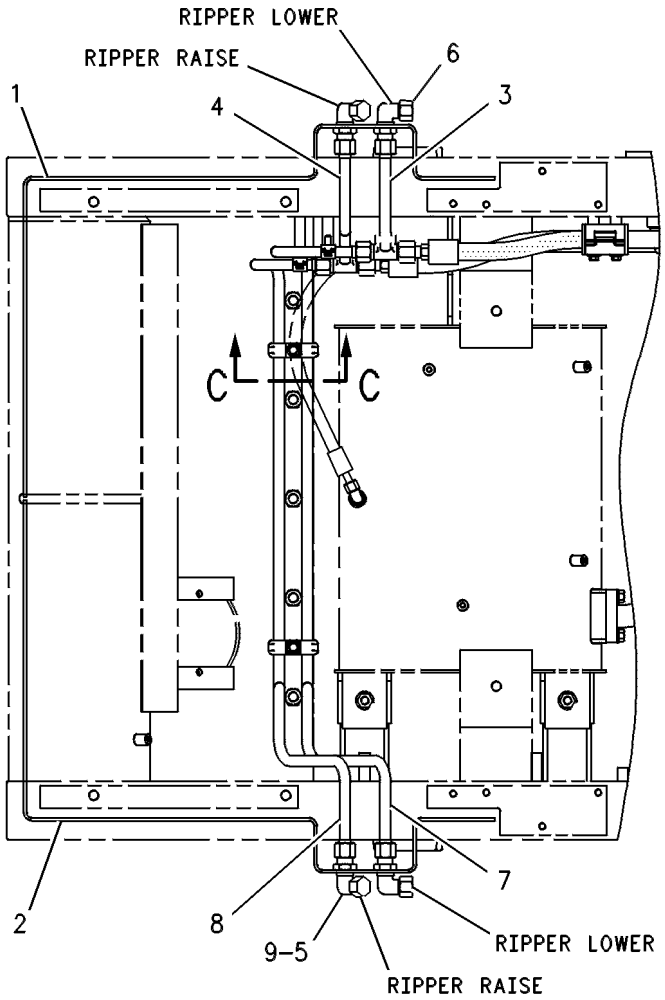

VIEW A-A

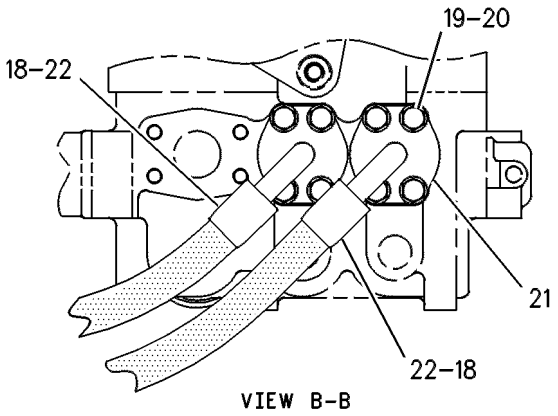

VIEW B-B

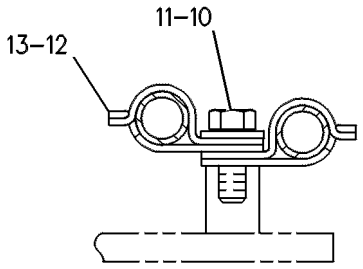

SECTION C-C

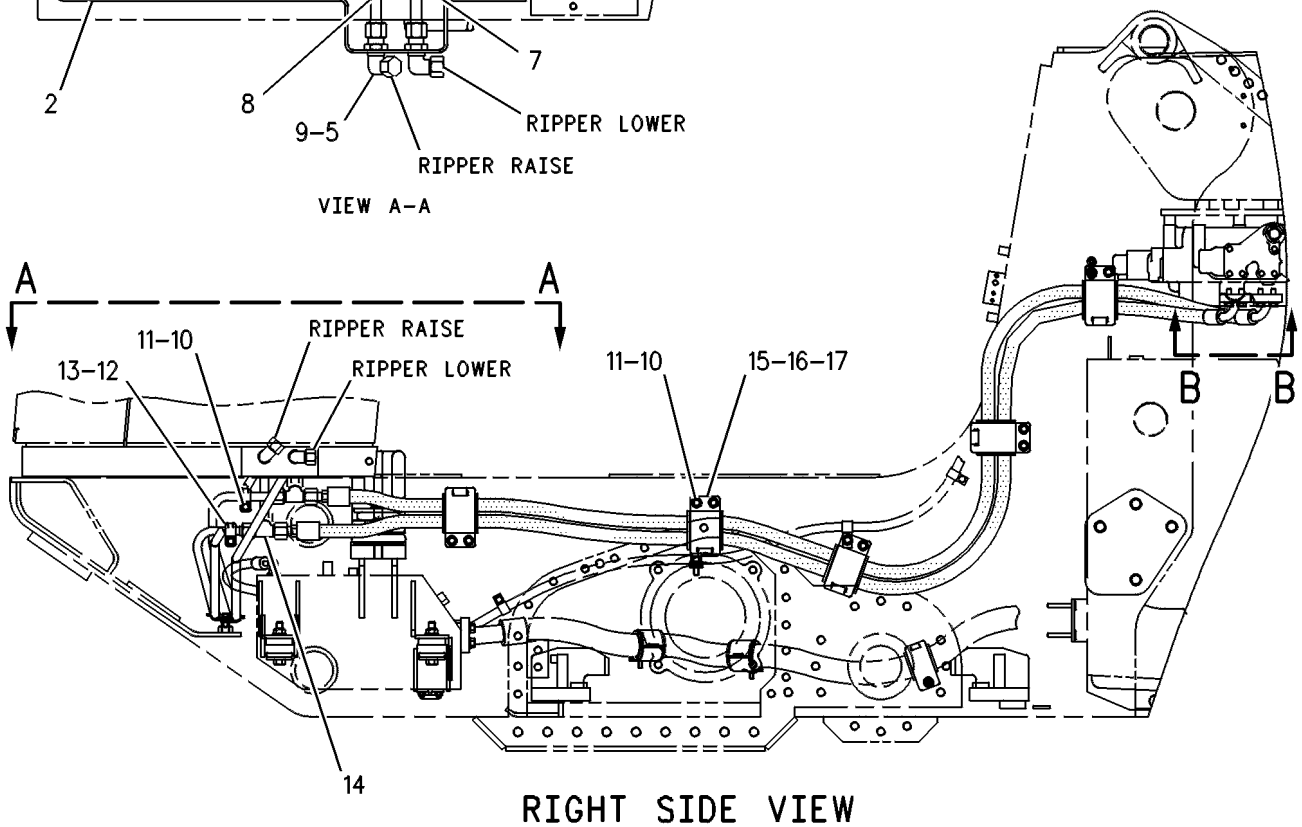

RIGHT SIDE VIEW

GRAPHIC #1 <END> g00247241

8Y-9704 LINES GP-RIPPER

S/N: 9JH1-UP
PART OF 8E-6126 RIPPER AR
AN ATTACHMENT

SMCS-5057, 5352, 5356

i01400480

NOTE	REF NO	GRAPHIC REF	PART NUMBER	QTY	PART NAME 1 2 3 4 5 6 (PRODUCT LEVEL)	SEE PAGE
I	1	1	**8Y-9332**	2	HOSE AS	
I	2	1	**8Y-9337**	2	HOSE AS	
	3	1	**068-4174**	4	ELBOW	
		1	**2M-9780**	4	SEAL-O-RING	
	4	1	**3W-2167**	1	TUBE AS	
	5	1	**3W-2175**	1	CLAMP AS	
	6	1	**5P-8091**	4	BOLT-LOCKING (1/2-13X3.25-IN)	
		1	**7X-0550**	4	WASHER-HARD (13.5X32X5-MM THK)	
	7	1	**3W-2172**	1	CLAMP AS	
	8	1	**6D-4246**	2	CLIP (LOOP)	
		1	**6K-4936**	2	BOLT-LOCKING (3/8-16X0.625-IN)	
		1	**8T-4896**	2	WASHER-HARD (10.2X18.5X2.5-MM THK)	
	9	1	**3W-2168**	1	TUBE AS	

I - REFER TO HYDRAULIC INFORMATION SYSTEM

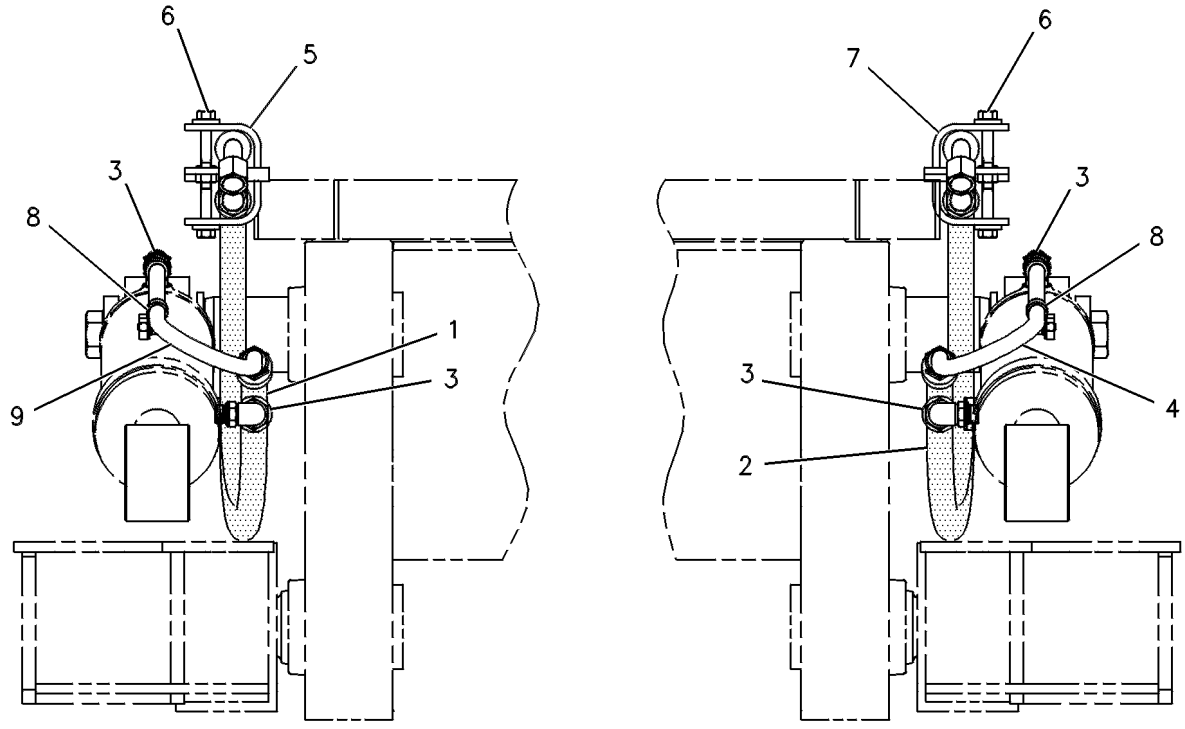

REAR VIEW

GRAPHIC #1 <END> g00247280

3W-3358 LINES GP-TILT CYLINDER

S/N: 9BL1-UP

PART OF 8Y-9369 HYDRAULIC AR

SMCS-5057, 5104 **i01400491**

NOTE	REF NO	GRAPHIC REF	PART NUMBER	QTY	PART NAME 1 2 3 4 5 6 (PRODUCT LEVEL)	SEE PAGE
	1	1	**6K-3317**	1	CLAMP	
	2	1	**5S-7379**	2	BOLT (3/8-16X0.875-IN)	
	3	1	**8T-4896**	10	WASHER-HARD (10.2X18.5X2.5-MM THK)	
	4	1	**1P-4578**	6	FLANGE-HALF	
	5	1	**4J-0522**	3	SEAL-O-RING	
	6	1	**7X-0308**	4	BOLT (7/16-14X1.375-IN)	
	7	1	**8T-5360**	28	WASHER (12X22.5X2.5-MM THK)	
	8	1	**1P-3704**	3	SEAL-RECTANGULAR	
	9	1	**8G-5809**	1	FLANGE	
	10	1	**8G-5808**	1	CHOKE	
	11	1	**4J-5573**	1	SEAL-O-RING	
	12	1	**7X-0315**	6	BOLT (7/16-14X3.25-IN)	
	13	1	**3W-3330**	1	BODY	
	14	1	**8Y-1972**	1	TUBE AS	
	15	1	**7X-0310**	4	BOLT (7/16-14X2-IN)	
	16	1	**8Y-1971**	1	TUBE AS	
	17	1	**8C-6877**	4	BOLT (7/16-14X1.75-IN)	
	18	1	**4L-9337**	6	BOLT (3/8-16X1.5-IN)	
	19	1	**3W-4252**	1	PLATE	
	20	1	**1P-3705**	2	SEAL-RECTANGULAR	
	21	1	**6V-8801**	4	NUT (3/8-16-THD)	
	22	1	**3W-4253**	2	PLATE	
	23	1	**7X-0314**	8	BOLT (7/16-14X3-IN)	
	24	1	**7X-0447**	8	NUT (7/16-14-THD)	
	25	1	**8T-9101**	4	BOLT (3/8-16X2.75-IN)	
I	26	1	**3W-4255**	1	HOSE AS	
I	27	1	**3W-4254**	1	HOSE AS	
	28	1	**3W-3384**	1	TUBE AS	
	29	1	**9F-2167**	1	SCREW-PURGE (3/8-24X1.164-IN)	
C	30	1	**8K-4107**	1	PLUG	
C		1	**7M-8485**	1	SEAL-O-RING	
	31	1	**1P-4577**	2	FLANGE-HALF	
	32	1	**4J-0520**	1	SEAL-O-RING	
	33	1	**7X-0772**	10	WASHER-HARD (10.2X25.5X2.5-MM THK)	
	34	1	**5S-7382**	4	BOLT (3/8-16X1.375-IN)	

C - CHANGE FROM PREVIOUS TYPE
I - REFER TO HYDRAULIC INFORMATION SYSTEM

3W-3358 **LINES GP-TILT CYLINDER** (contd.) **i01400491**

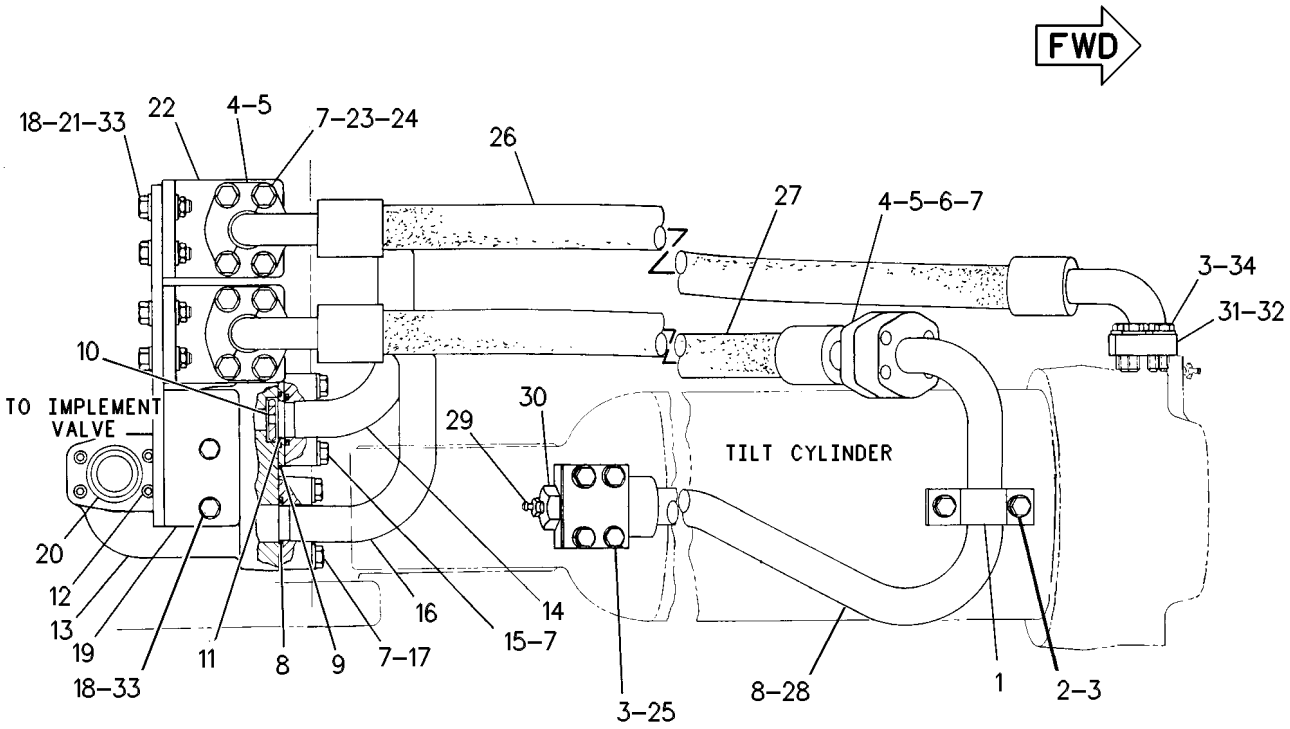

TOP VIEW

GRAPHIC #1 <END> g00251294

5G-7862 MOUNTING GP-ATTACHMENT

S/N: 9BL1-UP

PART OF 123-2859, 129-1541, 129-1543, 129-1548, 129-1550, 129-1565, 8Y-9627, 8Y-9629, 8Y-9630, 8Y-9632 HYDRAULIC AR-3 VALVE

AN ATTACHMENT

SMCS-5116 **i01106049**

NOTE	REF NO	GRAPHIC REF	PART NUMBER	QTY	PART NAME 1 2 3 4 5 6 (PRODUCT LEVEL)	SEE PAGE
	1	1	**6H-3609**	6	BOSS	
	2	1	**9P-5054**	2	BOSS (3/8-16-THD)	
	3	1	**7P-2261**	2	PLATE	

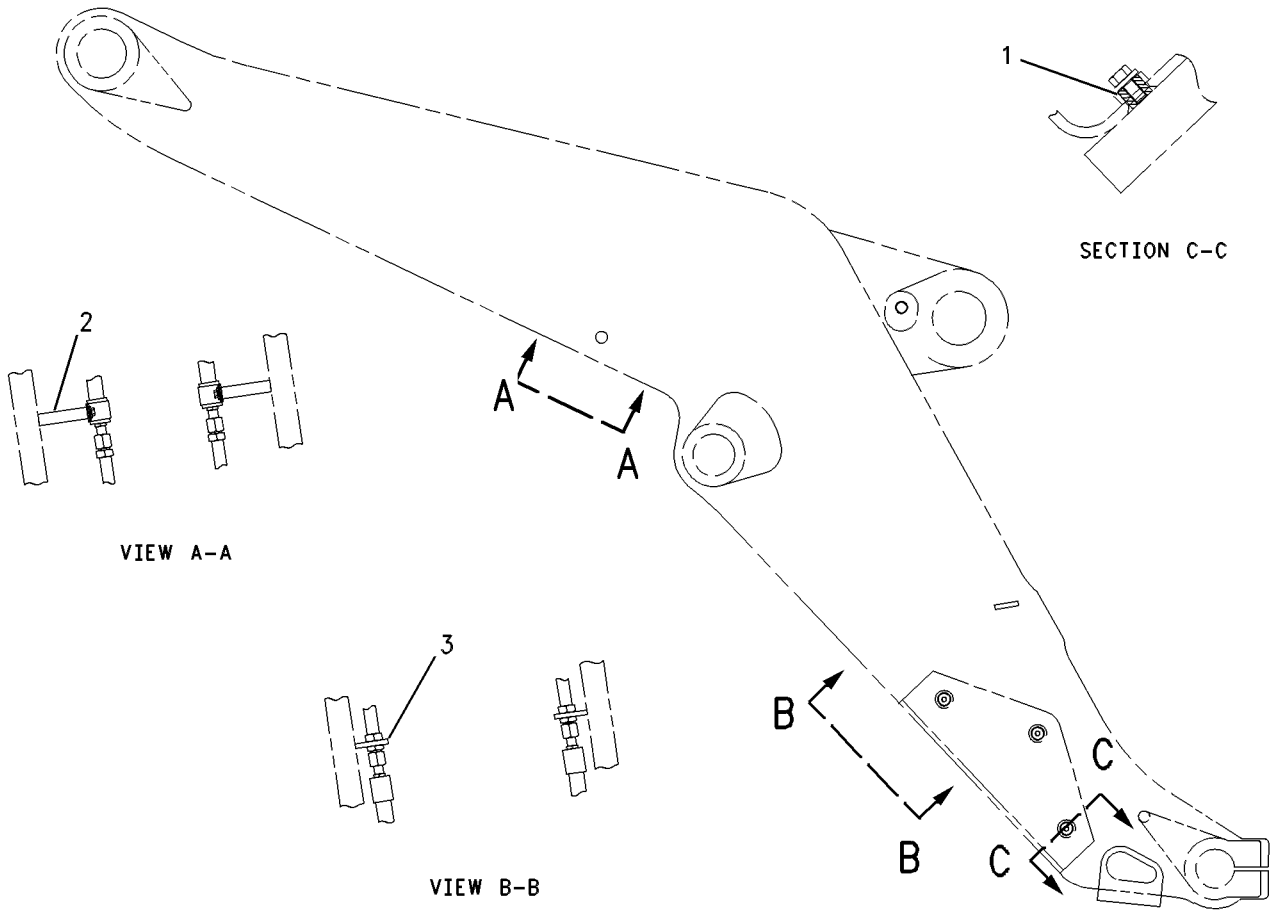

GRAPHIC #1 <END> g00584003

9V-1120 MOUNTING GP-CYLINDER

S/N: 9BL1-UP
PART OF 8Y-9625 BUCKET AR-MULTIPURPOSE
AN ATTACHMENT

SMCS-6068, 7562 **i01400500**

NOTE	REF NO	GRAPHIC REF	PART NUMBER	QTY	PART NAME 1 2 3 4 5 6 (PRODUCT LEVEL)	SEE PAGE
	1	1	**9V-1097**	2	PIN AS	
	2	1	**5B-0651**	2	FITTING-STRAIGHT	
	3	1	**8T-9393**	2	BOLT (5/8-11X1.5-IN)	
	4	1	**8S-1069**	2	WASHER (0.656X1.125X0.5-IN THK)	
	5	1	**9V-1105**	2	PIN	
	6	1	**7X-0333**	2	BOLT (1/2-13X4.75-IN)	
	7	1	**1K-6872**	2	LOCKNUT (1/2-13-THD)	
	8	1	**8T-4223**	2	WASHER-HARD (13.5X25.5X3-MM THK)	
	9	1	**7K-6627**	2	FITTING-HYDRAULIC	
	10	1	**7X-0583**	2	WASHER-HARD (17X45X6-MM THK)	

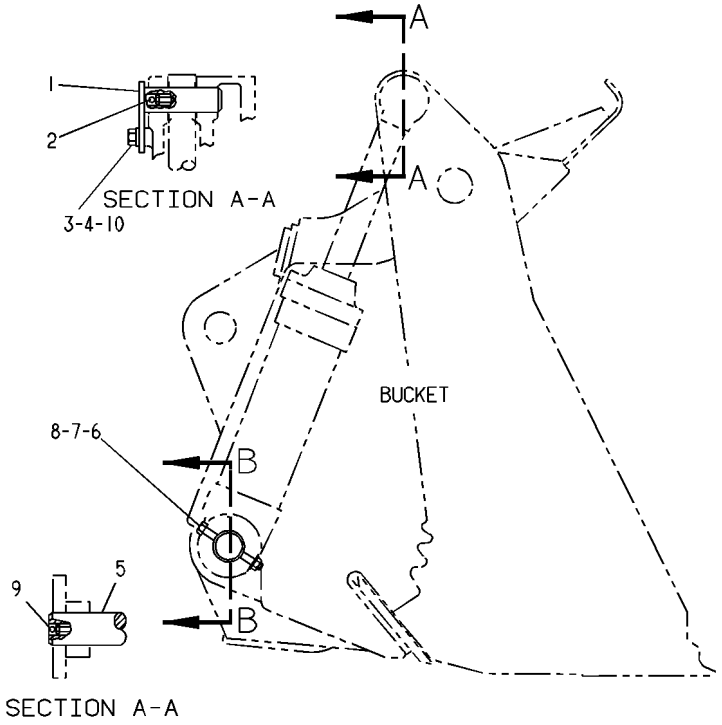

GRAPHIC #1 <END> g00210478

7P-2675 MOUNTING GP-HYDRAULIC TANK

S/N: 9BL1-UP

PART OF 8Y-9369 HYDRAULIC AR

SMCS-5056 **i02159625**

NOTE	REF NO	GRAPHIC REF	PART NUMBER	QTY	PART NAME 1 2 3 4 5 6 (PRODUCT LEVEL)	SEE PAGE
	1	1	**3G-4783**	1	VALVE-BREAKER RELIEF (HYDRAULIC TANK)	
	2	1	**7P-7571**	1	PLATE	
	3	1	**7X-0352**	3	BOLT (5/8-11X4-IN)	
	4	1	**8T-2502**	3	BOLT (3/8-16X1.125-IN)	
		1	**8T-4896**	3	WASHER-HARD (10.2X18.5X2.5-MM THK)	
C	5	1	**7X-0583**	3	WASHER-HARD (17X45X6-MM THK)	
	6	1	**3K-2889**	3	LOCKNUT (5/8-11-THD)	
	7	1	**7D-0734**	3	WASHER (0.656X2.38X0.25-IN THK)	
	8	1	**8G-0841**	3	MOUNT AS	
	9	1	**030-2179**	6	WASHER (0.64X2.875X0.187-IN THK)	
	10	1	**3D-2824**	1	SEAL-O-RING	

C - CHANGE FROM PREVIOUS TYPE

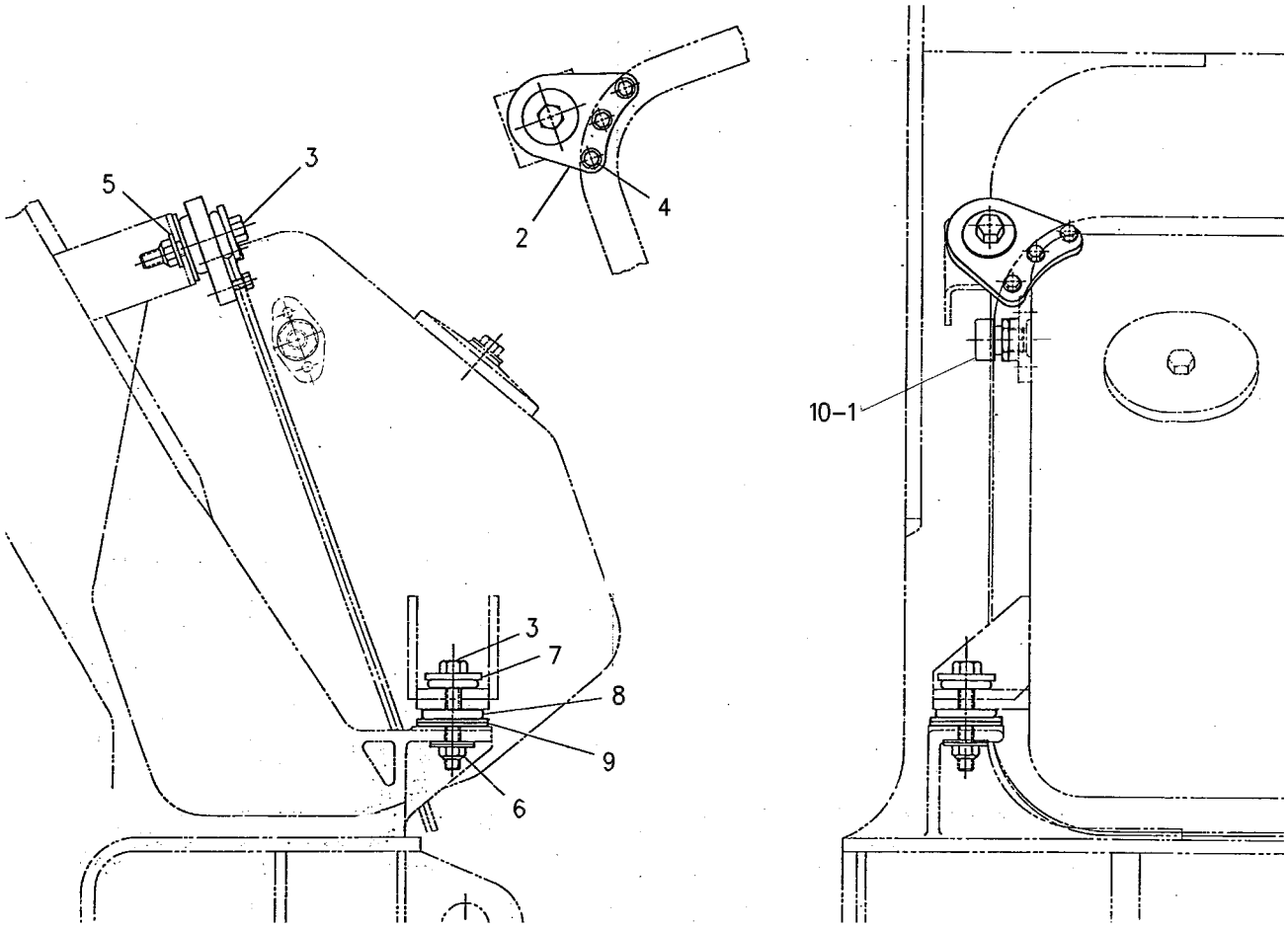

GRAPHIC #1 <END> g00294483

8Y-9740 PUMP & MOUNTING GP

S/N: 9BL1-UP

PART OF 104-9590 POWER TRAIN AR

SMCS-5057, 5084 **i02135863**

NOTE	REF NO	GRAPHIC REF	PART NUMBER	QTY	PART NAME 1 2 3 4 5 6 (PRODUCT LEVEL)	SEE PAGE
Y	1	1	*6E-6046*	1	PUMP GP-GEAR	393
M	2	1	**8T-4176**	2	BOLT (M12X1.75X90-MM)	
	3	1	**8T-4223**	4	WASHER-HARD (13.5X25.5X3-MM THK)	
M	4	1	**8T-4244**	2	NUT (M12X1.75-THD)	
	5	1	**159-3003**	1	GEAR (50-TEETH)	
	6	1	**6B-6683**	1	NUT (5/8-18-THD)	
	7	1	**7X-0517**	1	WASHER-HARD (17X38X2.5-MM THK)	
	8	1	**106-7669**	1	ADAPTER	
M	9	1	**8T-4195**	2	BOLT (M10X1.5X30-MM)	
	10	1	**7X-7729**	2	WASHER (11X25X3-MM THK)	
	11	1	**8Y-9741**	1	SUPPORT	
M	12	1	**8T-4908**	1	BOLT (M8X1.25X25-MM)	
	13	1	**5P-4116**	1	WASHER-HARD (8.8X20.5X2-MM THK)	
	14	1	**3K-0715**	1	SEAL-O-RING	
	15	1	**135-9819**	1	SEAL-INTEGRAL	

M - METRIC PART
Y - SEPARATE ILLUSTRATION

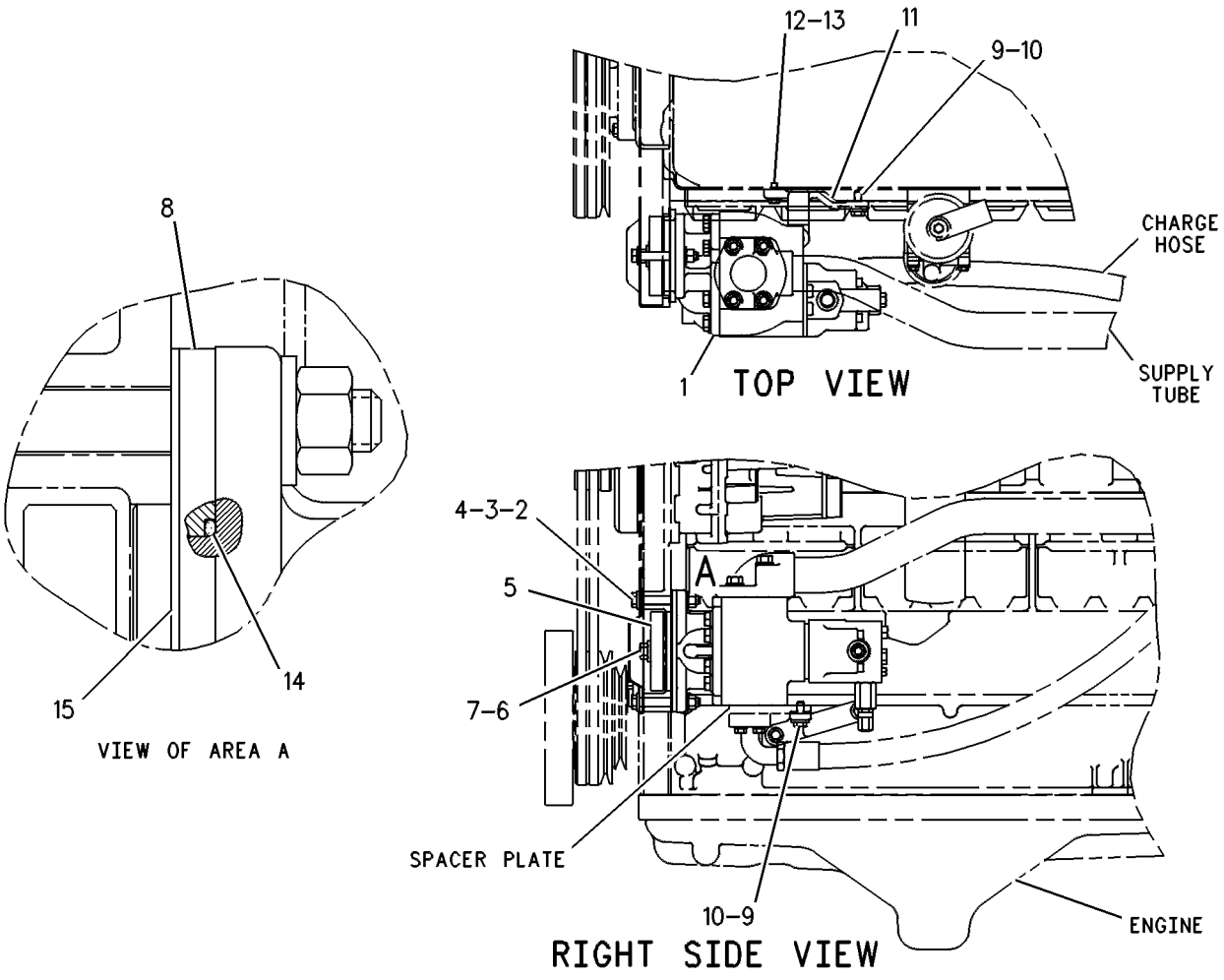

GRAPHIC #1 <END> g00247186

8Y-9743 PUMP & MOUNTING GP

S/N: 8EX1-1371

PART OF 104-6208 CONTROL AR-HYDROSTATIC POWER

SMCS-5057, 5084 **i01400519**

NOTE	REF NO	GRAPHIC REF	PART NUMBER	QTY	PART NAME 1 2 3 4 5 6 (PRODUCT LEVEL)	SEE PAGE
Y	1	1	*6E-6045*	1	PUMP GP-GEAR	391
	2	1	**8Y-9744**	1	ADAPTER	
	3	1	**8Y-9745**	1	ADAPTER	
	4	1	**4D-3120**	6	BOLT-SOCKET HEAD (3/8-16X1.5-IN)	
	5	1	**7X-0608**	6	WASHER-HARD (10.2X16X2-MM THK)	
	6	1	**2D-8155**	3	STUD-TAPERLOCK (1/2-13X3.58-IN)	
	7	1	**7X-3392**	3	WASHER-HARD (13.5X22.5X3-MM THK)	
	8	1	**6V-8188**	3	NUT (1/2-13-THD)	
	9	1	**7X-9372**	1	SEAL-O-RING	
	10	1	**7R-8872**	2	SEAL-O-RING	

Y - SEPARATE ILLUSTRATION

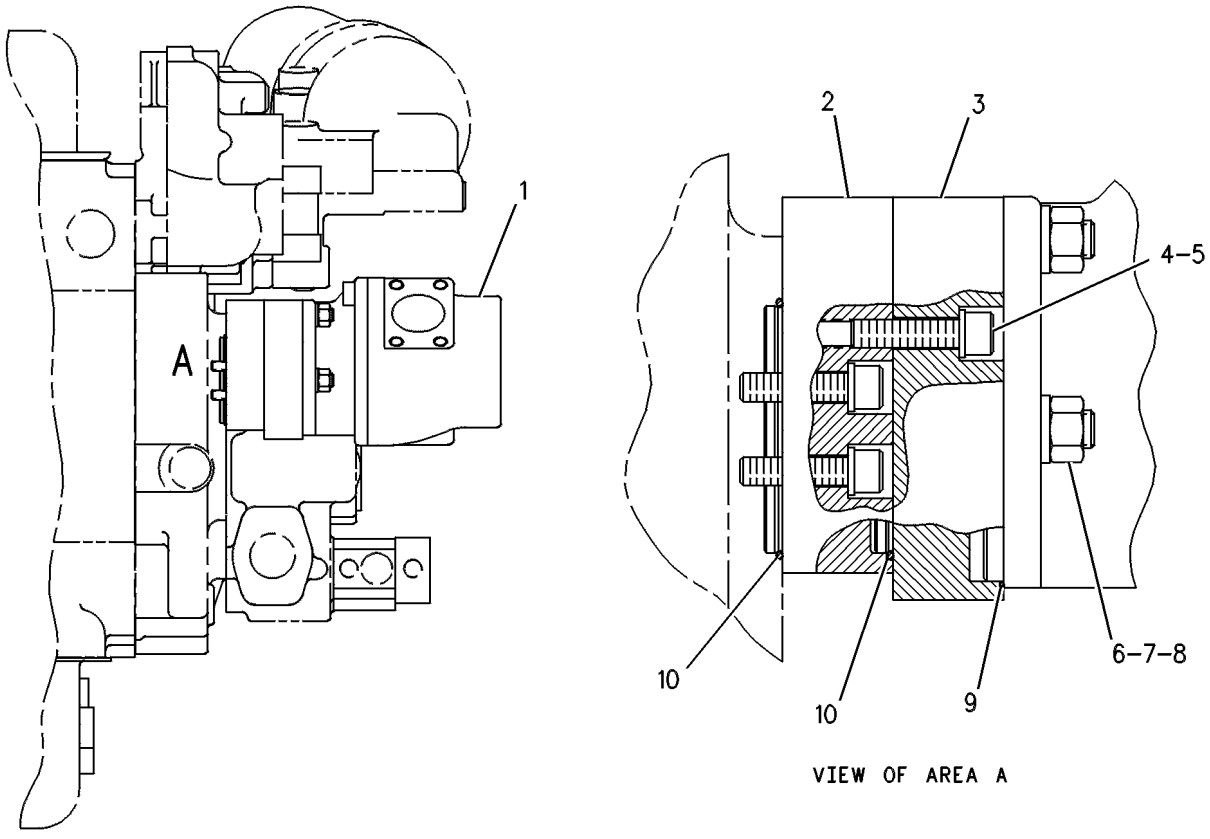

VIEW OF AREA A

GRAPHIC #1 <END> g00247191

8Y-9743 PUMP & MOUNTING GP

S/N: 8EX1372-UP

PART OF 104-6208 CONTROL AR-HYDROSTATIC POWER

SMCS-5057, 5084 **i01400523**

NOTE	REF NO	GRAPHIC REF	PART NUMBER	QTY	PART NAME 1 2 3 4 5 6 (PRODUCT LEVEL)	SEE PAGE
YCR	1	1	**134-4795**	1	PUMP GP-GEAR	600
	2	1	**8Y-9744**	1	ADAPTER	
	3	1	**8Y-9745**	1	ADAPTER	
	4	1	**4D-3120**	6	BOLT-SOCKET HEAD (3/8-16X1.5-IN)	
	5	1	**7X-0608**	6	WASHER-HARD (10.2X16X2-MM THK)	
	6	1	**2D-8155**	3	STUD-TAPERLOCK (1/2-13X3.58-IN)	
	7	1	**7X-3392**	3	WASHER-HARD (13.5X22.5X3-MM THK)	
	8	1	**6V-8188**	3	NUT (1/2-13-THD)	
	9	1	**7X-9372**	1	SEAL-O-RING	
	10	1	**7R-8872**	2	SEAL-O-RING	

C - CHANGE FROM PREVIOUS TYPE
R - REMANUFACTURED PART MAY BE AVAILABLE
Y - SEPARATE ILLUSTRATION

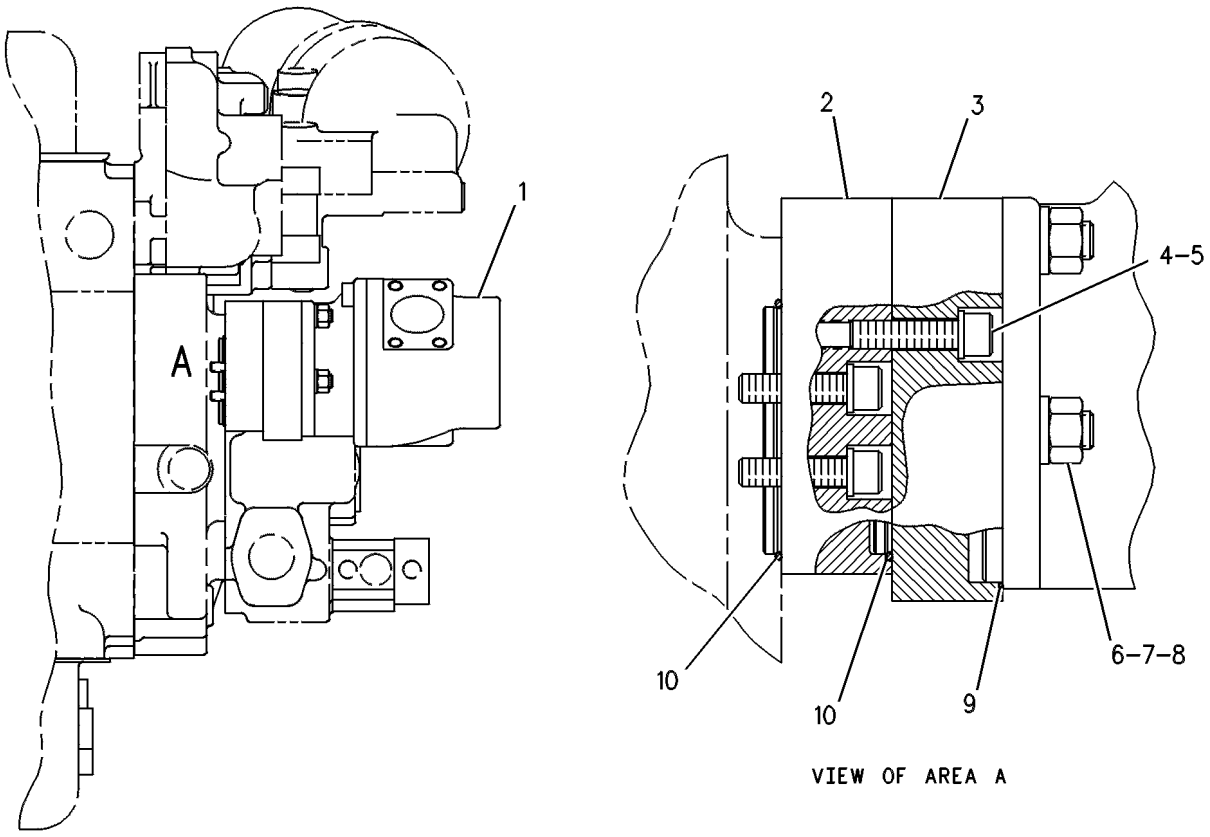

VIEW OF AREA A

GRAPHIC #1 <END> g00247191

134-4795 PUMP GP-GEAR–HYDRAULIC*R

S/N: 8EX1372-UP

PART OF 8Y-9743 PUMP & MOUNTING GP

SMCS-5073 **i06871414**

NOTE	REF NO	GRAPHIC REF	PART NUMBER	QTY	PART NAME 1 2 3 4 5 6 (PRODUCT LEVEL)	SEE PAGE
	1	1	**5P-7213**	8	WASHER-HARD (13.5X20.5X2-MM THK)	
	2	1	**0S-1595**	8	BOLT (1/2-13X1.25-IN)	
	3	1	**104-7524**	1	SHAFT	
	4	1	**134-4796**	1	FLANGE AS	
	5	1	**9T-9980**	1	GEAR-IDLER	
	6	1	**4T-9298**	4	BUSHING	
	7	1	**6J-2386**	2	DOWEL	
	8	1	**104-7522**	1	BODY AS	
	9	1	**364-6561**	1	PLATE-PRESSURE (BOTTOM)	
	10	1	**364-6560**	1	PLATE-PRESSURE (TOP)	
	11	1	**6V-1899**	2	SEAL-LIP TYPE	
	12	1	**6E-2943**	1	PLUG (DRAIN)	
	13	1	**008-3214**	1	RING-RETAINING (INTERNAL)	
					AVAILABLE REPAIR KIT(S):	
			104-7525	1	KIT-SEAL (HYDRAULIC PUMP)	
					(INCLUDES SEALS, RINGS, BREATHER, & RETAINERS)	

134-4795 **PUMP GP-GEAR (**contd.**)** **i06871414**

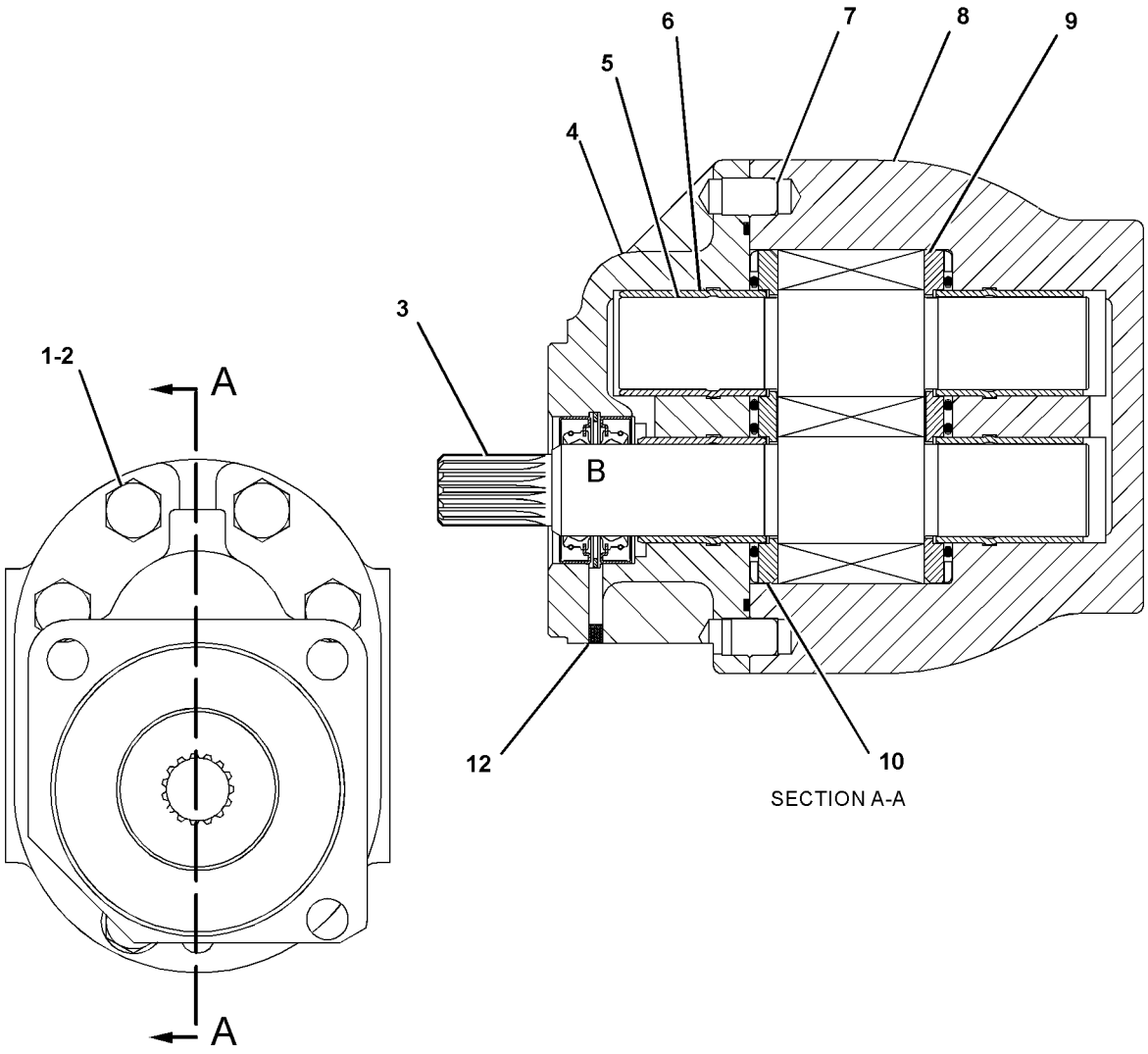

SECTION A-A

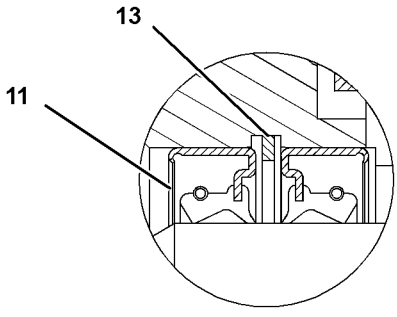

VIEW OF AREA B

GRAPHIC #1 <END> g06160265

9T-1383 TANK & FILTER GP-HYDRAULIC

S/N: 9BL1-1799

PART OF 8Y-9369 HYDRAULIC AR

SMCS-5056, 5068 **i04457809**

NOTE	REF NO	GRAPHIC REF	PART NUMBER	QTY	PART NAME 1 2 3 4 5 6 (PRODUCT LEVEL)	SEE PAGE
	1	1	**3G-6014**	1	TANK AS	
	2	1	**9T-1382**	1	TANK AS	
	3	1,2	**2K-4973**	73	LOCKNUT (3/8-16-THD)	
	4	1,2	**5M-2894**	38	WASHER-HARD (10.2X18.5X2.5-MM THK)	
	5	1	**5F-3092**	1	SEAL-O-RING	
	6	1	**0L-1351**	2	BOLT (3/8-16X0.875-IN)	
	7	1	**5H-6733**	2	SEAL-O-RING	
	8	1	**9T-1380**	2	COVER	
	9	1	**9T-1373**	2	GUIDE	
	10	1	**5P-8245**	8	WASHER-HARD (13.5X25.5X3-MM THK)	
	11	1	**9J-6379**	12	SPRING-DISC	
	12	1	**9H-7759**	2	RING-RETAINING	
	13	1	**9J-6381**	2	SPACER (71X108X3-MM THK)	
	14	1	**6V-0852**	1	CAP-DUST	
	15	1	**6V-3965**	1	FITTING (QUICK DISCONNECT)	
	16	1	**3G-5979**	3	ADAPTER	
	17	1,2	**5M-5860**	4	SEAL-O-RING	
	18	1	**4B-7739**	1	PLUG-DRAIN	
	19	1	**9T-1376**	1	TUBE AS	
	20	1	**2B-0858**	1	PLUG-PIPE	
	21	1	**4J-0521**	1	SEAL-O-RING	
	22	1	**0S-1594**	60	BOLT (3/8-16X1-IN)	
	23	1	**3G-3824**	1	TUBE AS	
	24	1,2	**5D-0353**	4	BOLT-LOCKING (3/8-16X1-IN)	
	25	1	**3G-3823**	1	FLANGE	
	26	1	**3G-3820**	1	SPRING	
	27	1	**3G-3821**	1	VALVE	
Y	28	2	*7K-5636*	1	COVER GP-XMSN OIL FILLER CAP	350
	29	1,2	**5F-7054**	20	SEAL-O-RING	
	31	1	**9T-1379**	1	BASE (FILTER)	
	32	1	**5K-7143**	4	BOLT-SELF-LOCKING (1/2-13X1.5-IN)	
	33	1,2	**2H-3927**	2	SEAL-O-RING	
	34	1	**3G-5978**	1	TUBE	
	35	1	**1R-0722**	2	FILTER ELEMENT AS-OIL (STANDARD EFFICIENCY)	
	36	1	**3G-5018**	1	ELBOW	
	37	1	**3G-6017**	1	COVER	
	38	1	**6F-0711**	2	SEAL-O-RING	
	39	1	**2S-4078**	2	SEAL-O-RING	
	40	2	**4B-9302**	1	CLIP	
	41	2	**9S-9238**	1	SPACER (13.49X23.88X16.13-MM THK)	
	42	2	**8M-4446**	2	SEAL-O-RING	
	43	1	**3B-1915**	10	BOLT (3/8-16X1.375-IN)	
	44	2	**2J-0157**	2	SEAL-O-RING	
	45	1	**1A-2029**	7	BOLT (3/8-16X1.125-IN)	
	46	1,2	**4F-7390**	2	SEAL-O-RING	
	47	1,2	**9S-4183**	3	PLUG (1-1/16-12-THD)	
	48	1,2	**3D-2824**	4	SEAL-O-RING	

9T-1383 **TANK & FILTER GP-HYDRAULIC (**contd.**)** **i04457809**

NOTE	REF NO	GRAPHIC REF	PART NUMBER	QTY	PART NAME 1 2 3 4 5 6 (PRODUCT LEVEL)	SEE PAGE
	49	1	**0S-1587**	4	BOLT (1/2-13X1.75-IN)	
	53	1	**0S-1585**	3	BOLT (1/2-13X1.5-IN)	
	56	1	**9S-4191**	2	PLUG (9/16-18-THD)	
	57	1	**3J-1907**	3	SEAL-O-RING	
	58	2	**9S-4185**	2	PLUG (3/4-16-THD)	
	59	2	**3K-0360**	2	SEAL-O-RING	
	60	2	**5H-8038**	1	SEAL-O-RING	
	61	2	**136-9768**	1	TUBE	
	62	2	**4T-5864**	1	BLOCK	
	63	2	**0L-1143**	2	BOLT (3/8-16X2.5-IN)	
	64	2	**167-7513**	1	BLOCK	
	65	2	**1U-2819**	1	TUBE AS	
Y	66	2	*4T-3176*	1	VALVE GP-COOLER BYPASS	625
	67	1	**9S-8010**	2	PLUG	
	68	2	**3H-2652**	2	SEAL-O-RING	
	69	2	**3G-8101**	1	TUBE	
	70	2	**4T-0355**	1	MANIFOLD	
B	71	2	**5P-9119**		GASKET-TAPE (ADHESIVE BACKED)	
	72	2	**4B-9782**	1	BALL	
	73	2	**6H-5139**	1	PLATE-PRESSURE	
	74	2	**9H-6454**	1	GASKET	
	75	2	**9J-3047**	1	STRAINER	
	76	2	**3G-0361**	1	GASKET	
	77	2	**5K-1568**	1	CAP-FILLER (HYDRAULIC OIL)	
	78	2	**0T-0055**	4	BOLT (3/8-16X4.25-IN)	
	79	2	**3G-4683**	1	RETAINER	
	80	2	**3G-4770**	1	GLASS-SIGHT (HYDRAULIC OIL LEVEL)	
	81	2	**9F-4446**	1	SEAL-O-RING	
	82	2	**1U-0387**	1	SPACER-SPECIAL	
	83	2	**2M-4453**	2	SEAL-O-RING	
	84	2	**3G-4771**	1	PLATE	
	85	2	**2K-3219**	2	SCREW-DRIVE (NO 6X0.25-IN)	
	86	1	**9S-8008**	1	PLUG (1-1/16-12-THD)	
	87	1	**3G-4708**	1	ADAPTER	
	88	1	**8M-4991**	1	SEAL-O-RING	

B - USE AS REQUIRED
Y - SEPARATE ILLUSTRATION

9T-1383 **TANK & FILTER GP-HYDRAULIC** (contd.) **i04457809**

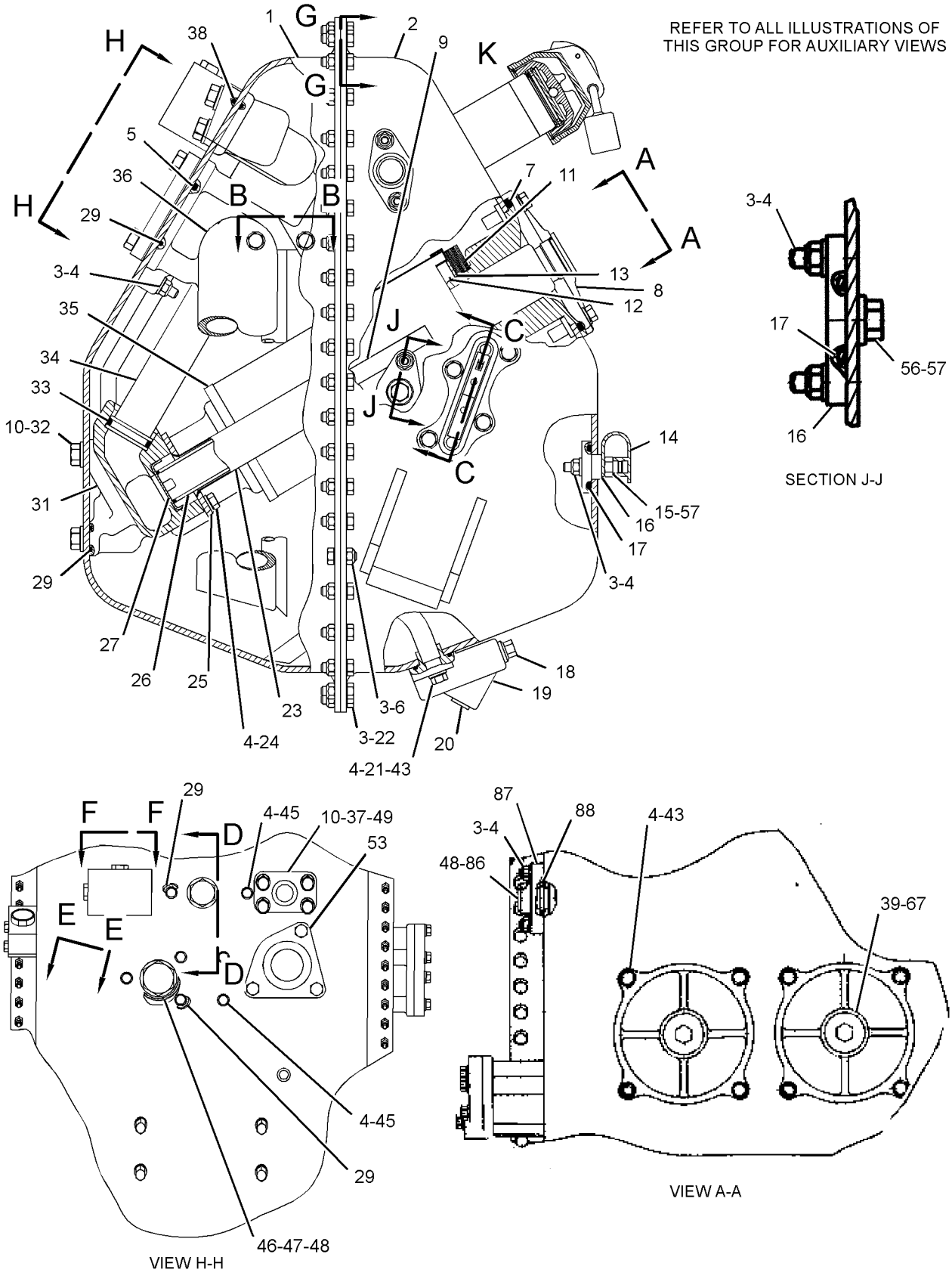

GRAPHIC #1 g02659996

9T-1383 **TANK & FILTER GP-HYDRAULIC (**contd.**)** **i04457809**

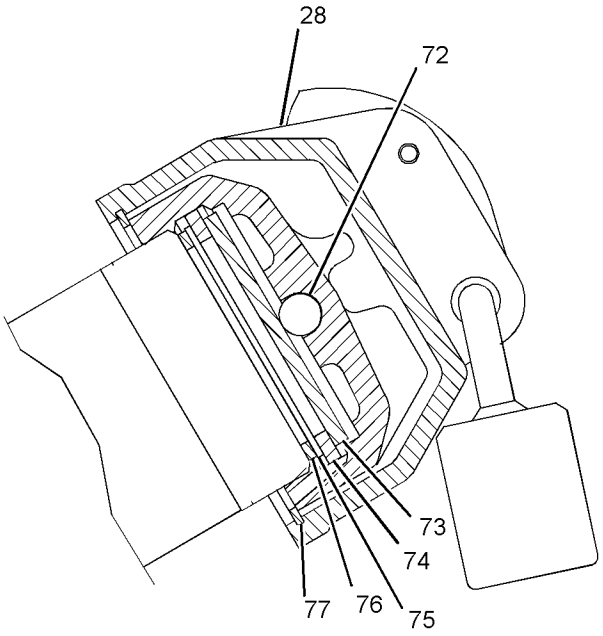

VIEW OF AREA K

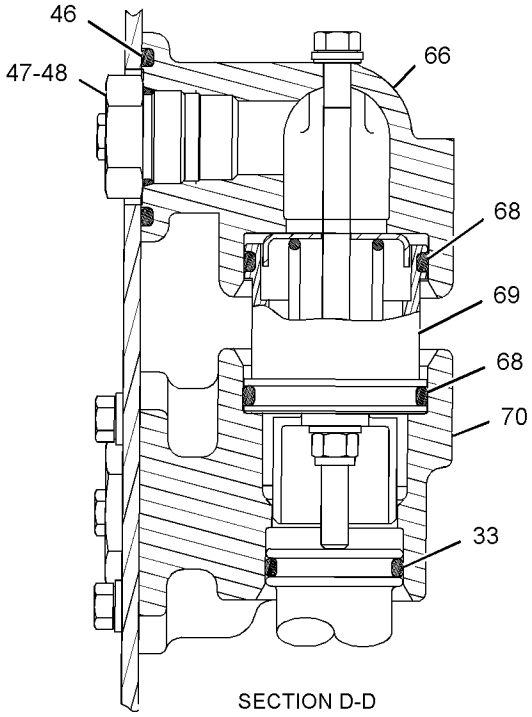

SECTION D-D

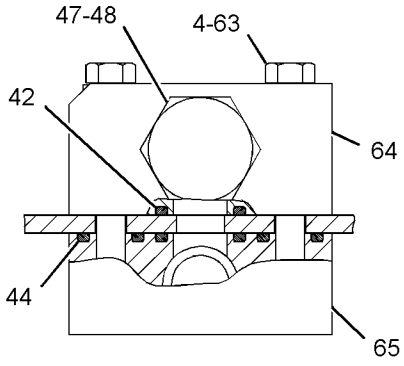

VIEW B-B

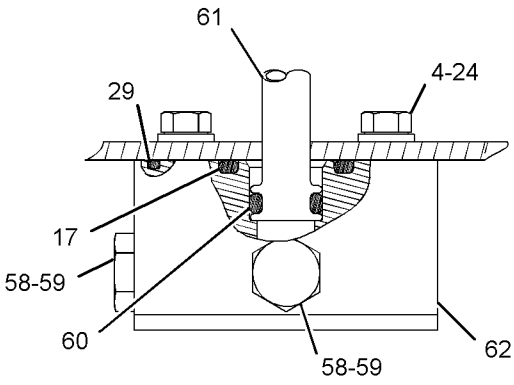

VIEW F-F

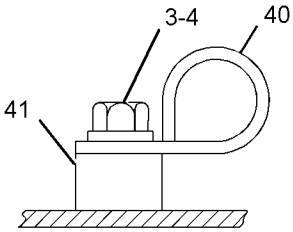

VIEW E-E

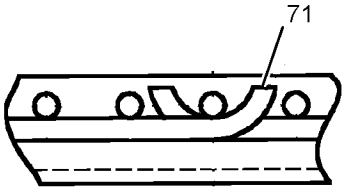

SECTION G-G

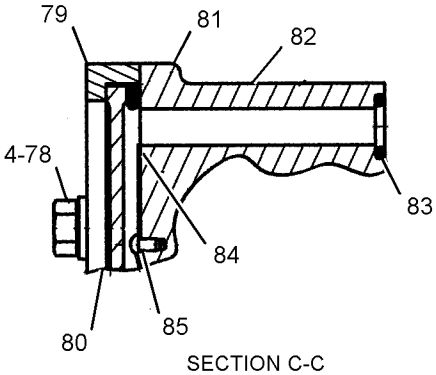

SECTION C-C

GRAPHIC #2 <END> g02659997

9T-1383 TANK & FILTER GP-HYDRAULIC

S/N: 9BL1800-UP

PART OF 8Y-9369 HYDRAULIC AR

SMCS-5056, 5068 **i04457810**

NOTE	REF NO	GRAPHIC REF	PART NUMBER	QTY	PART NAME 1 2 3 4 5 6 (PRODUCT LEVEL)	SEE PAGE
	1	1	**3G-6014**	1	TANK AS	
	2	1	**9T-1382**	1	TANK AS	
	3	1,2	**2K-4973**	73	LOCKNUT (3/8-16-THD)	
	4	1,2	**5M-2894**	38	WASHER-HARD (10.2X18.5X2.5-MM THK)	
	5	1	**5F-3092**	1	SEAL-O-RING	
	6	1	**0L-1351**	2	BOLT (3/8-16X0.875-IN)	
	7	1	**5H-6733**	2	SEAL-O-RING	
	8	1	**9T-1380**	2	COVER	
	9	1	**9T-1373**	2	GUIDE	
	10	1	**5P-8245**	4	WASHER-HARD (13.5X25.5X3-MM THK)	
	11	1	**9J-6379**	12	SPRING-DISC	
	12	1	**9H-7759**	2	RING-RETAINING	
	13	1	**9J-6381**	2	SPACER (71X108X3-MM THK)	
	14	1	**6V-0852**	1	CAP-DUST	
	15	1	**6V-3965**	1	FITTING (QUICK DISCONNECT)	
	16	1	**3G-5979**	3	ADAPTER	
	17	1,2	**5M-5860**	4	SEAL-O-RING	
	18	1	**4B-7739**	1	PLUG-DRAIN	
	19	1	**9T-1376**	1	TUBE AS	
	20	1	**2B-0858**	1	PLUG-PIPE	
	21	1	**4J-0521**	1	SEAL-O-RING	
	22	1	**0S-1594**	60	BOLT (3/8-16X1-IN)	
	23	1	**3G-3824**	1	TUBE AS	
	24	1,2	**5D-0353**	4	BOLT-LOCKING (3/8-16X1-IN)	
	25	1	**3G-3823**	1	FLANGE	
	26	1	**3G-3820**	1	SPRING	
	27	1	**3G-3821**	1	VALVE	
	28	2	**5D-1911**	1	COVER-HYDRAULIC CAP	
	29	1,2	**5F-7054**	20	SEAL-O-RING	
	30	1	**9T-1379**	1	BASE (FILTER)	
	31	1	**5K-7143**	4	BOLT-SELF-LOCKING (1/2-13X1.5-IN)	
	32	1,2	**2H-3927**	2	SEAL-O-RING	
	33	1	**3G-5978**	1	TUBE	
	34	1	**1R-0722**	2	FILTER ELEMENT AS-OIL (STANDARD EFFICIENCY)	
	35	1	**3G-5018**	1	ELBOW	
	36	1	**6F-0711**	1	SEAL-O-RING	
	37	1	**2S-4078**	2	SEAL-O-RING	
	38	2	**4B-9302**	1	CLIP	
	39	2	**9S-9238**	1	SPACER (13.49X23.88X16.13-MM THK)	
	40	2	**5H-2767**	2	SEAL-O-RING	
	41	1	**3B-1915**	10	BOLT (3/8-16X1.375-IN)	
	42	2	**2J-0157**	2	SEAL-O-RING	
	43	1	**1A-2029**	7	BOLT (3/8-16X1.125-IN)	
	44	1,2	**4F-7390**	2	SEAL-O-RING	
	45	1	**9S-4191**	1	PLUG (9/16-18-THD)	
	46	1	**3J-1907**	2	SEAL-O-RING	
	47	2	**5H-8038**	1	SEAL-O-RING	

9T-1383 **TANK & FILTER GP-HYDRAULIC (**contd.**)** **i04457810**

NOTE	REF NO	GRAPHIC REF	PART NUMBER	QTY	PART NAME 1 2 3 4 5 6 (PRODUCT LEVEL)	SEE PAGE
	48	2	**4T-5864**	1	BLOCK	
	49	2	**0L-1143**	2	BOLT (3/8-16X2.5-IN)	
	50	2	**167-7513**	1	BLOCK	
	51	2	**1U-2819**	1	TUBE AS	
Y	52	2	*4T-3176*	1	VALVE GP-COOLER BYPASS	625
	53	2	**136-9768**	1	TUBE	
	54	1	**9S-8010**	2	PLUG	
	55	2	**3H-2652**	2	SEAL-O-RING	
	56	2	**3G-8101**	1	TUBE	
	57	2	**4T-0355**	1	MANIFOLD	
B	58	2	**5P-9119**		GASKET-TAPE (ADHESIVE BACKED)	
	59	2	**4B-9782**	1	BALL	
	60	2	**6H-5139**	1	PLATE-PRESSURE	
	61	2	**9H-6454**	1	GASKET	
	62	2	**9J-3047**	1	STRAINER	
	63	2	**3G-0361**	1	GASKET	
	64	2	**5K-1568**	1	CAP-FILLER (HYDRAULIC OIL)	
	65	2	**0T-0055**	4	BOLT (3/8-16X4.25-IN)	
	66	2	**3G-4683**	1	RETAINER	
	67	2	**3G-4770**	1	GLASS-SIGHT (HYDRAULIC OIL LEVEL)	
	68	2	**9F-4446**	1	SEAL-O-RING	
	69	2	**1U-0387**	1	SPACER-SPECIAL	
	70	2	**2M-4453**	2	SEAL-O-RING	
	71	2	**3G-4771**	1	PLATE	
	72	2	**2K-3219**	2	SCREW-DRIVE (NO 6X0.25-IN)	
	73	1	**3G-4708**	1	ADAPTER	
	74	1	**5H-7370**	1	SEAL-O-RING	
	75	2	**2J-7761**	1	RING-RETAINING	
	76	2	**1L-5072**	1	DOWEL	
	77	2	**9M-7394**	1	LEVER	
	78	2	**246-2641**	1	PADLOCK GP	
		2	**5P-8500**	1	KEY	

B - USE AS REQUIRED
Y - SEPARATE ILLUSTRATION

9T-1383 **TANK & FILTER GP-HYDRAULIC (**contd.**)** **i04457810**

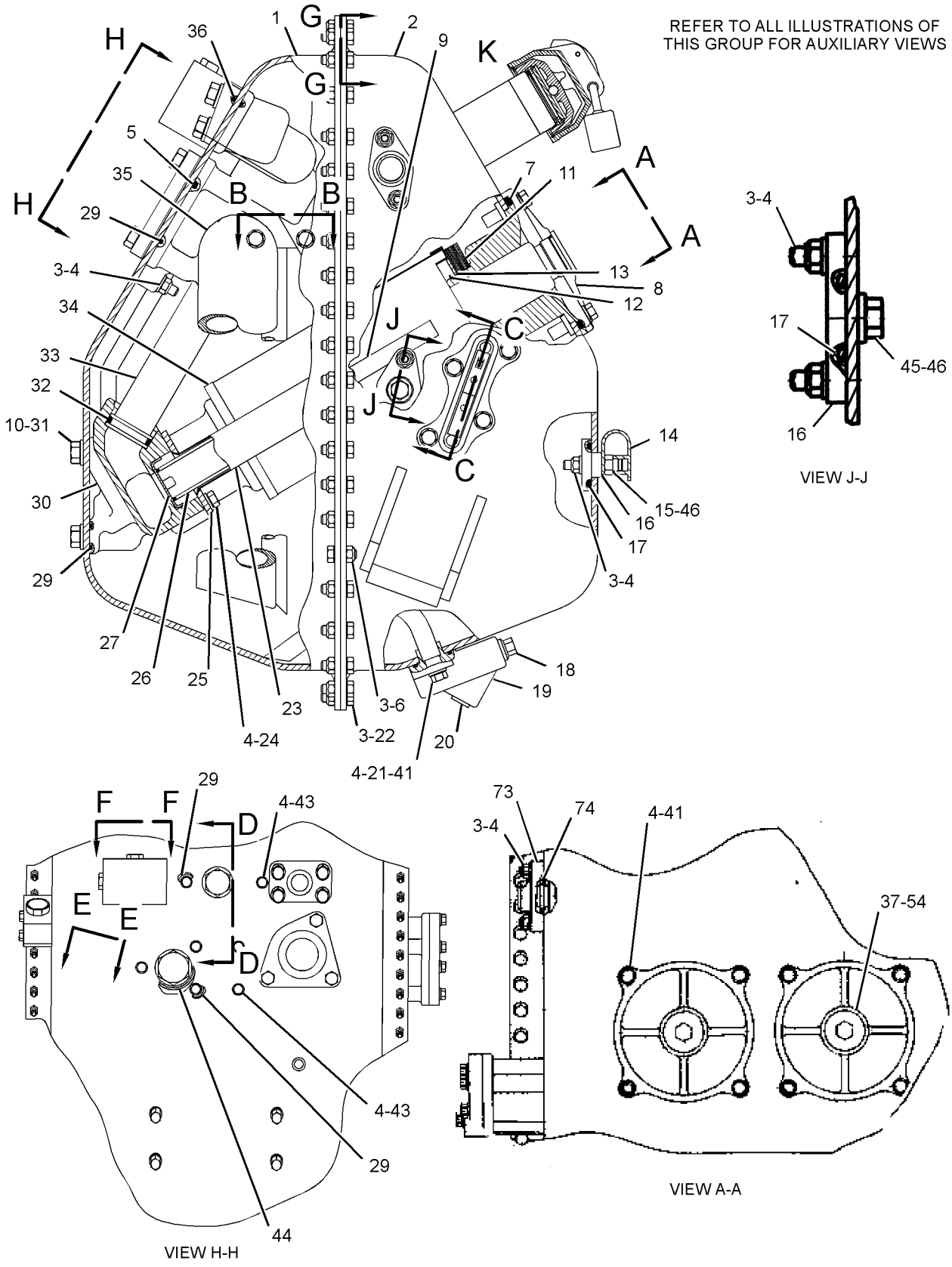

GRAPHIC #1 g02653842

9T-1383 **TANK & FILTER GP-HYDRAULIC (**contd.**)** **i04457810**

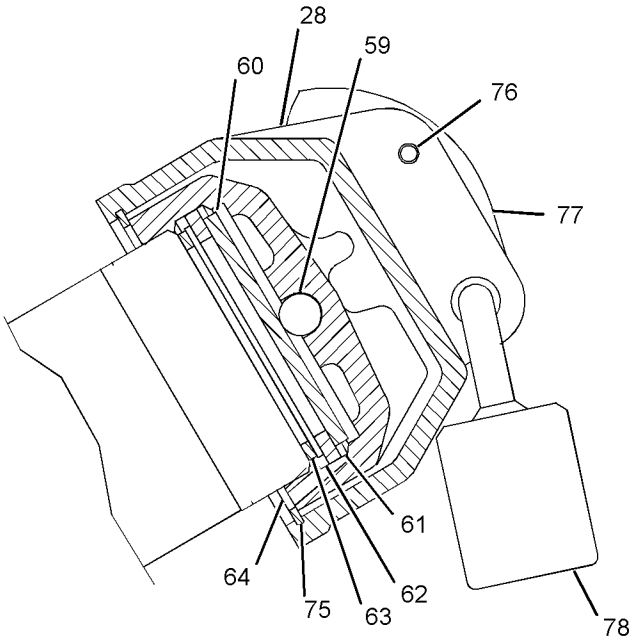

VIEW OF AREA K

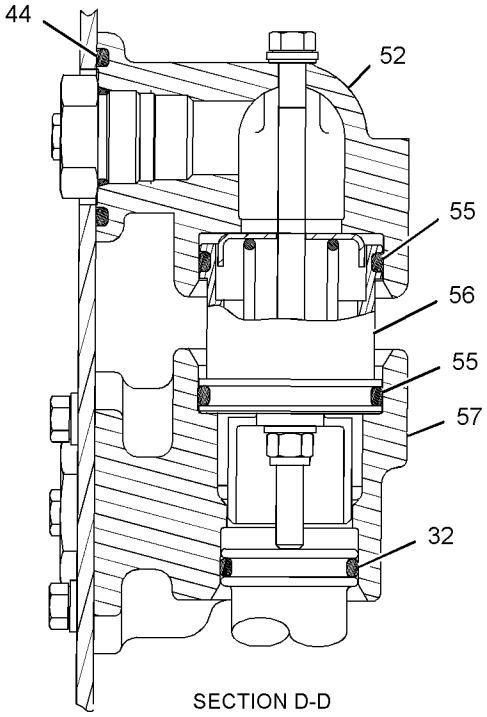

SECTION D-D

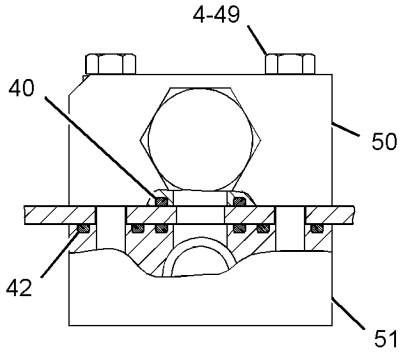

VIEW B-B

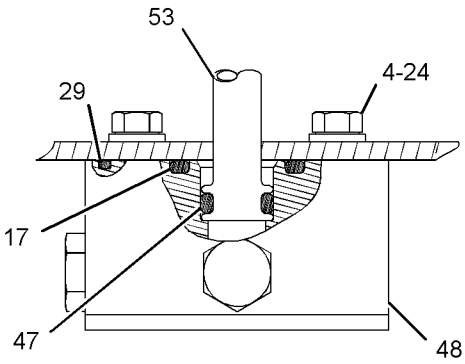

VIEW F-F

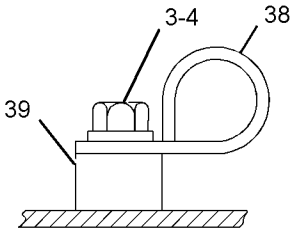

VIEW E-E

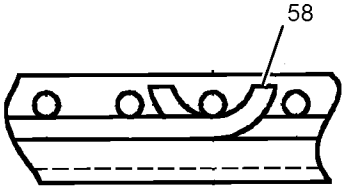

SECTION G-G

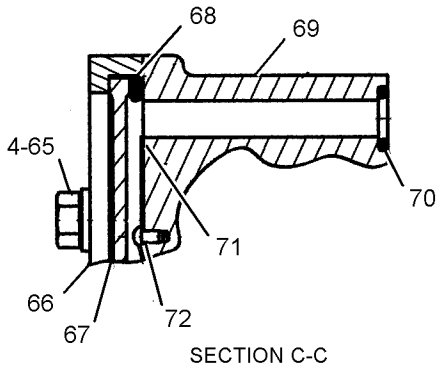

SECTION C-C

GRAPHIC #2 <END> g02653843

9T-3096 VALVE GP-CHECK

S/N: 9BL1399-UP

PART OF 128-1889 LINES GP-PILOT

SMCS-5067 **i01775193**

NOTE	PART NUMBER	QTY	PART NAME 1 2 3 4 5 6 (PRODUCT LEVEL)	SEE PAGE
	201-3434	1	VALVE GP-CHECK	
			—OR—	
	200-4002	1	VALVE GP-CHECK	
	3J-1907	1	SEAL-O-RING	
			<END>	

4T-7003 VALVE GP-CONTROL

S/N: 9BL1-1396

PART OF 123-2859, 8Y-9628, 8Y-9629, 8Y-9630, 8Y-9631, 8Y-9632 HYDRAULIC AR-3 VALVE AN ATTACHMENT

SMCS-5051 **i01400531**

NOTE	REF NO	GRAPHIC REF	PART NUMBER	QTY	PART NAME 1 2 3 4 5 6 (PRODUCT LEVEL)	SEE PAGE
	1	1	**6E-3700**	1	BODY	
CY	2	1	**6E-6195**	1	VALVE GP-RELIEF	663
	3	1	**4J-0522**	2	SEAL-O-RING	
Y	4	1	**9T-0760**	1	VALVE GP-CONTROL	624
	5	1	**3D-9348**	5	BOLT (1/2-13X7.75-IN)	
CY	6	1	**6E-6184**	1	VALVE GP-RELIEF	662
	7	1	**4T-9311**	3	HOUSING	
		1	**004-1963**	3	SEAL-O-RING	
	8	1	**8S-9191**	6	BOLT (3/8-16X4-IN)	
	9	1	**5M-2894**	12	WASHER-HARD (10.2X18.5X2.5-MM THK)	
	10	1	**4J-0523**	1	SEAL-O-RING	
	11	1	**0S-1571**	6	BOLT (3/8-16X1.75-IN)	
	12	1	**4T-9312**	3	HOUSING	
		1	**1H-9696**	3	SEAL-O-RING	
Y	13	1	**4T-7581**	1	VALVE GP-RELIEF (DIRECT OPERATED)	661
	14	1	**1P-3703**	1	SEAL-RECTANGULAR	
Y	15	1	**4T-7581**	1	VALVE GP-RELIEF (DIRECT OPERATED)	661
	16	1	**4F-5192**	5	BOLT (7/16-14X3-IN)	
	17	1	**1P-3704**	2	SEAL-RECTANGULAR	
	18	1	**3B-8428**	1	BOLT (7/16-14X3.25-IN)	
	19	1	**9S-4183**	1	PLUG (1-1/16-12-THD)	
		1	**3D-2824**	1	SEAL-O-RING	
Y	20	1	**9T-0534**	1	VALVE GP-CONTROL	623
	21	1	**3G-4135**	1	PLUG	
		1	**7M-8485**	1	SEAL-O-RING	
Y	22	2	**9T-0762**	2	VALVE GP-RELIEF	664
	23	2	**9S-4182**	1	PLUG (7/16-20-THD)	
		2	**3J-7354**	1	SEAL-O-RING	
	24	2	**7J-7423**	4	VALVE-CONTROL (MAKE UP)	
	25	2	**2S-4078**	4	SEAL-O-RING	
	26	2	**1U-0323**	4	PLUG AS	
					(EACH INCLUDES)	
		2	**1U-0322**	1	BUSHING	
	27	2	**7S-8491**	4	SPRING	
	28	2	**1J-8960**	1	SPRING	
	29	2	**1U-1577**	1	PLUG	
		2	**6K-6307**	1	SEAL-O-RING	
	30	2	**1U-3176**	1	CONNECTOR	
	31	2	**3K-0360**	1	SEAL-O-RING	
Y	32	2	**4T-4073**	1	VALVE GP-SHUTTLE	666
	33	2	**1U-1578**	1	VALVE-CONTROL	

C - CHANGE FROM PREVIOUS TYPE
Y - SEPARATE ILLUSTRATION

4T-7003 **VALVE GP-CONTROL** (contd.) **i01400531**

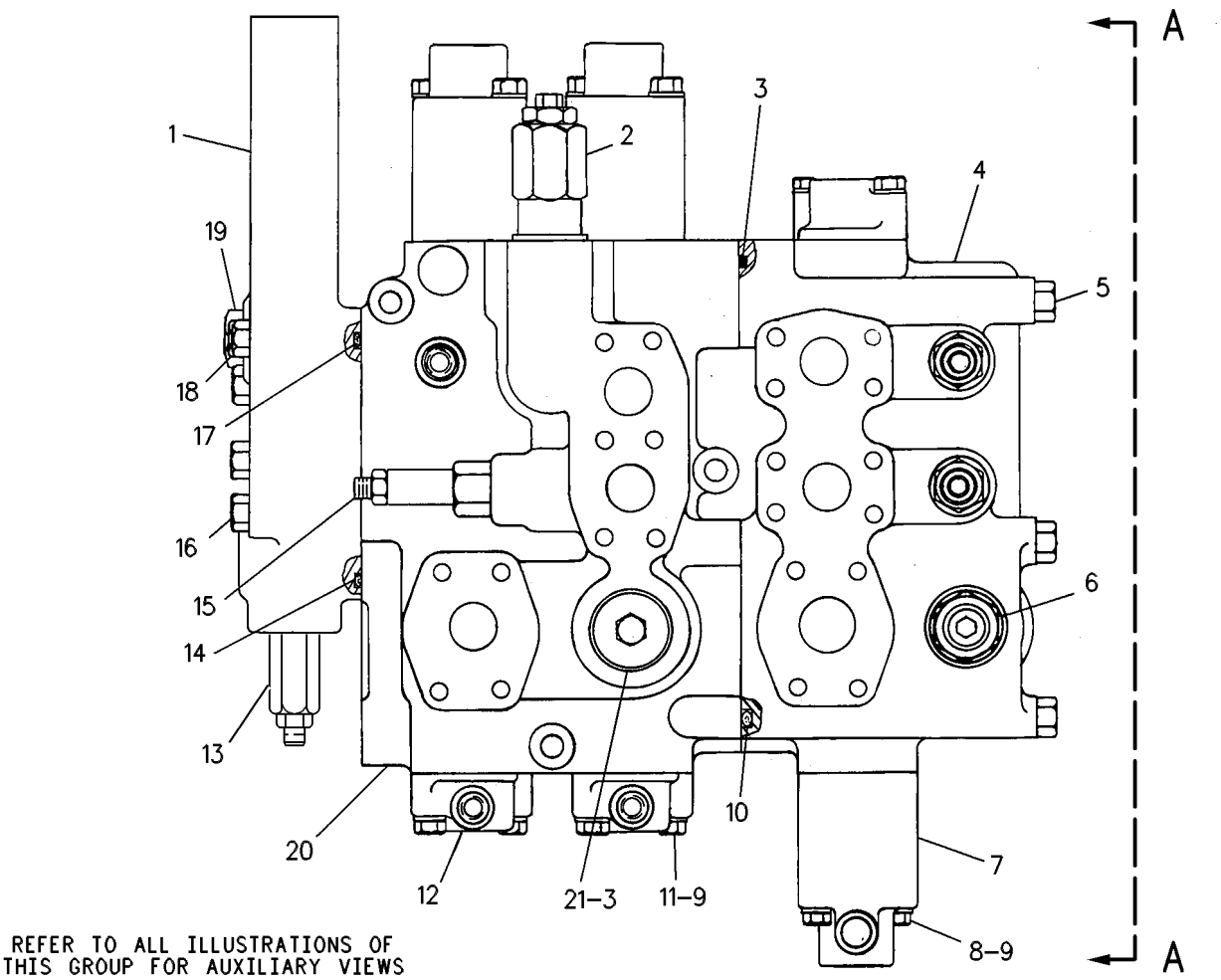

GRAPHIC #1 g00417966

4T-7003 **VALVE GP-CONTROL** (contd.) **i01400531**

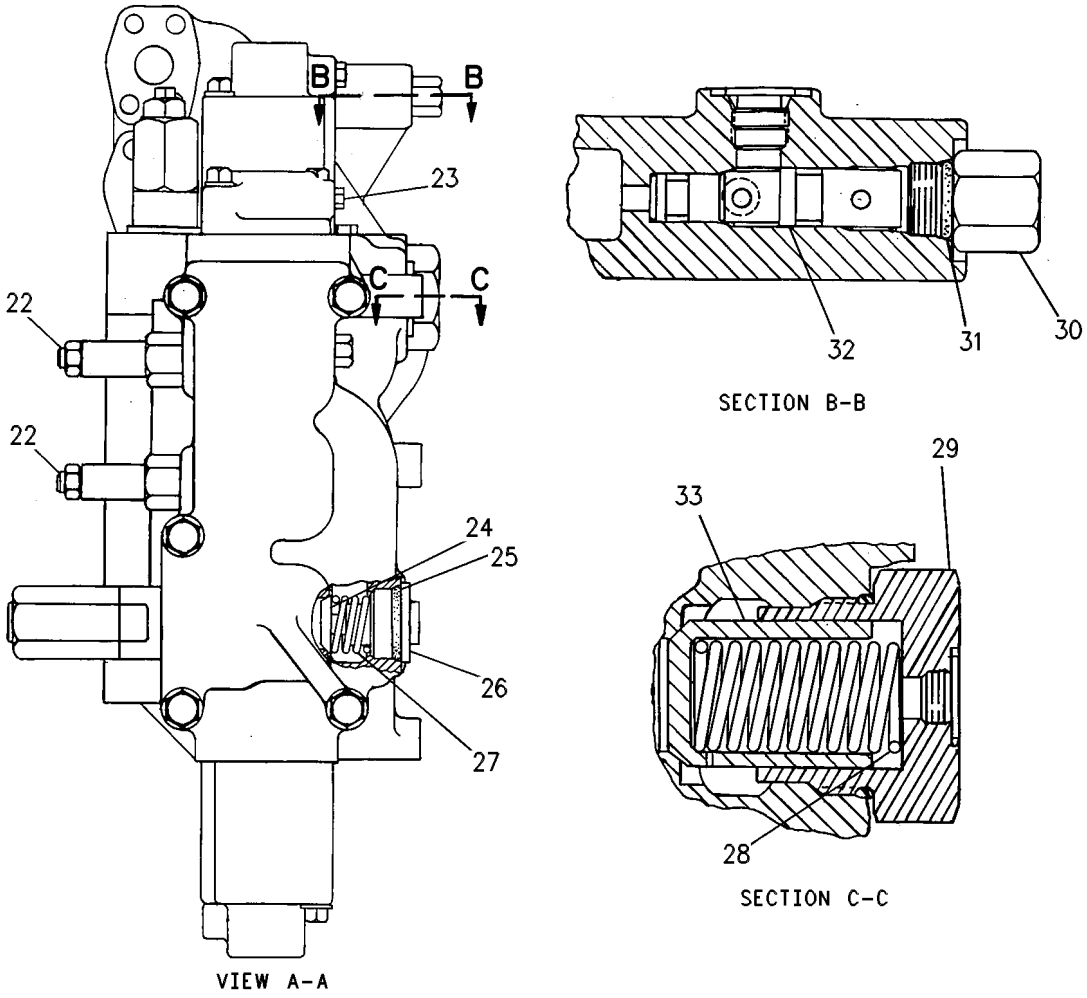

GRAPHIC #2 <END> g00417965

4T-7003 VALVE GP-CONTROL

S/N: 9BL1397-UP

PART OF 123-2859, 129-1475, 129-1541, 129-1543, 129-1548, 129-1550, 129-1559, 129-1565, 8Y-9628, 8Y-9629, 8Y-9630, 8Y-9631, 8Y-9632 HYDRAULIC AR-3 VALVE AN ATTACHMENT

SMCS-5051 **i01400533**

NOTE	REF NO	GRAPHIC REF	PART NUMBER	QTY	PART NAME 1 2 3 4 5 6 (PRODUCT LEVEL)	SEE PAGE
Y	1	1	**9T-0760**	1	VALVE GP-CONTROL	624
Y	2	1	**9T-0534**	1	VALVE GP-CONTROL	623
	3	1	**1P-3704**	2	SEAL-RECTANGULAR	
	4	1	**6E-3700**	1	BODY	
	5	1	**1P-3703**	1	SEAL-RECTANGULAR	
	6	1	**9S-4183**	1	PLUG (1-1/16-12-THD)	
	7	1	**3D-2824**	1	SEAL-O-RING	
C	8	1	**7X-0314**	5	BOLT (7/16-14X3-IN)	
C	9	1	**7X-0315**	1	BOLT (7/16-14X3.25-IN)	
	10	1	**9S-4182**	1	PLUG (7/16-20-THD)	
Y	11	1	**4T-7581**	2	VALVE GP-RELIEF (DIRECT OPERATED)	661
	12	1	**1H-9696**	3	SEAL-O-RING	
	13	1	**4T-9312**	3	HOUSING	
C	14	1	**8T-4896**	12	WASHER-HARD (10.2X18.5X2.5-MM THK)	
C	15	1	**5S-7383**	6	BOLT (3/8-16X1.75-IN)	
	16	1	**4T-9311**	3	HOUSING	
	17	1	**004-1963**	3	SEAL-O-RING	
C	18	1	**8T-9378**	6	BOLT (3/8-16X4-IN)	
	19	1	**3J-7354**	1	SEAL-O-RING	
	20	1	**4J-0523**	1	SEAL-O-RING	
	21	2	**7J-7423**	4	VALVE-CONTROL (MAKE UP)	
	22	2	**2S-4078**	4	SEAL-O-RING	
	23	2	**1U-0323**	4	PLUG AS	
					(EACH INCLUDES)	
		2	**1U-0322**	1	BUSHING	
	24	2	**7S-8491**	4	SPRING	
Y	25	2	**9T-0762**	2	VALVE GP-RELIEF	664
CY	26	1	**135-5489**	1	VALVE GP-RELIEF	660
	27	1	**3G-4135**	1	PLUG	
	28	1	**4J-0522**	2	SEAL-O-RING	
	29	1	**7M-8485**	1	SEAL-O-RING	
	30	2	**6K-6307**	1	SEAL-O-RING	
	31	2	**1U-1577**	1	PLUG	
	32	2	**1U-1578**	1	VALVE-CONTROL	
Y	33	1	**6E-6195**	1	VALVE GP-RELIEF	663
	34	1	**3D-9348**	5	BOLT (1/2-13X7.75-IN)	
	35	2	**1U-3176**	1	CONNECTOR	
	36	2	**3K-0360**	1	SEAL-O-RING	
Y	37	2	**4T-4073**	1	VALVE GP-SHUTTLE	666
	38	2	**1J-8960**	1	SPRING	

C - CHANGE FROM PREVIOUS TYPE
Y - SEPARATE ILLUSTRATION

4T-7003 **VALVE GP-CONTROL (**contd.**)** **i01400533**

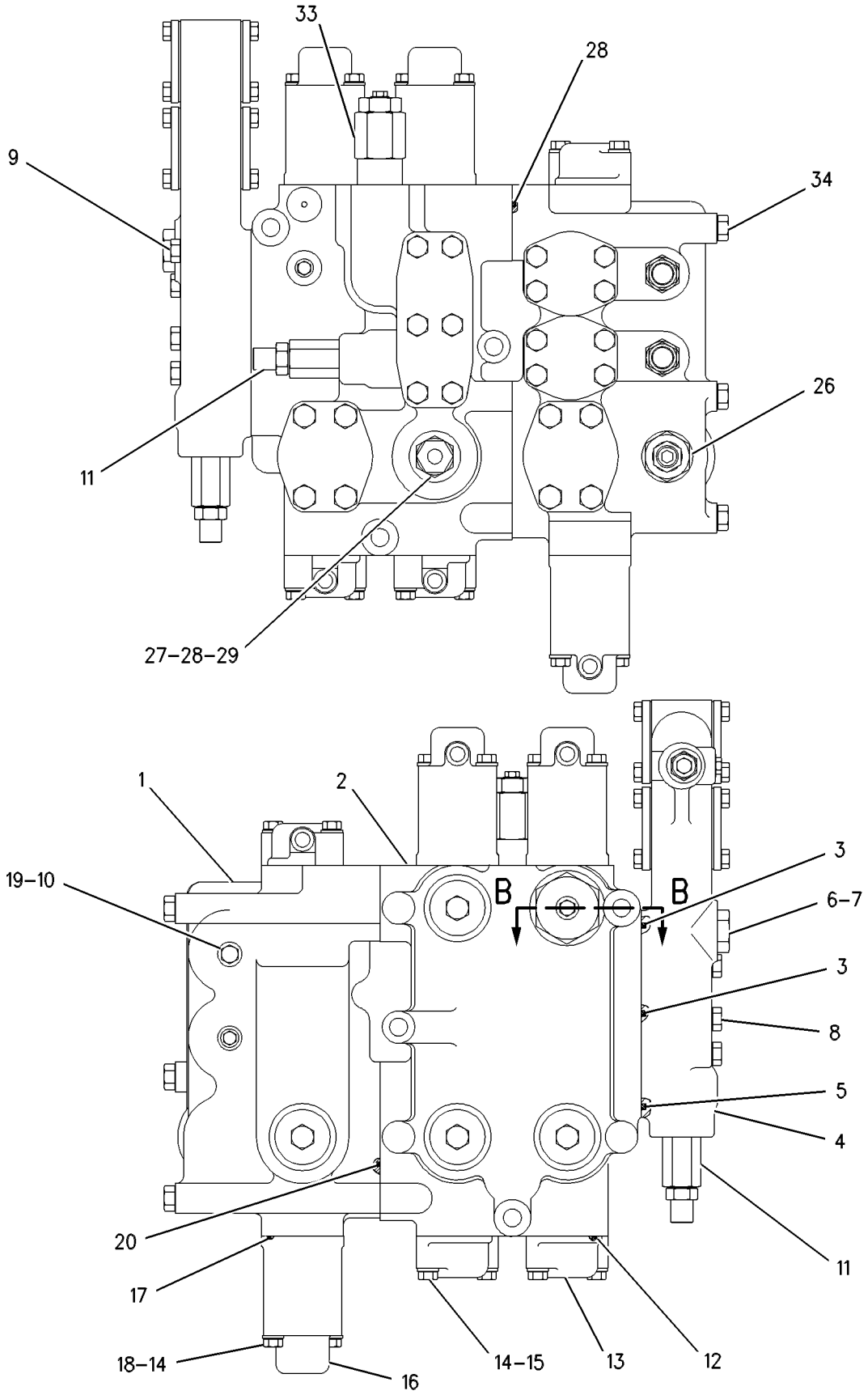

GRAPHIC #1 g00456546

4T-7003 **VALVE GP-CONTROL** (contd.) **i01400533**

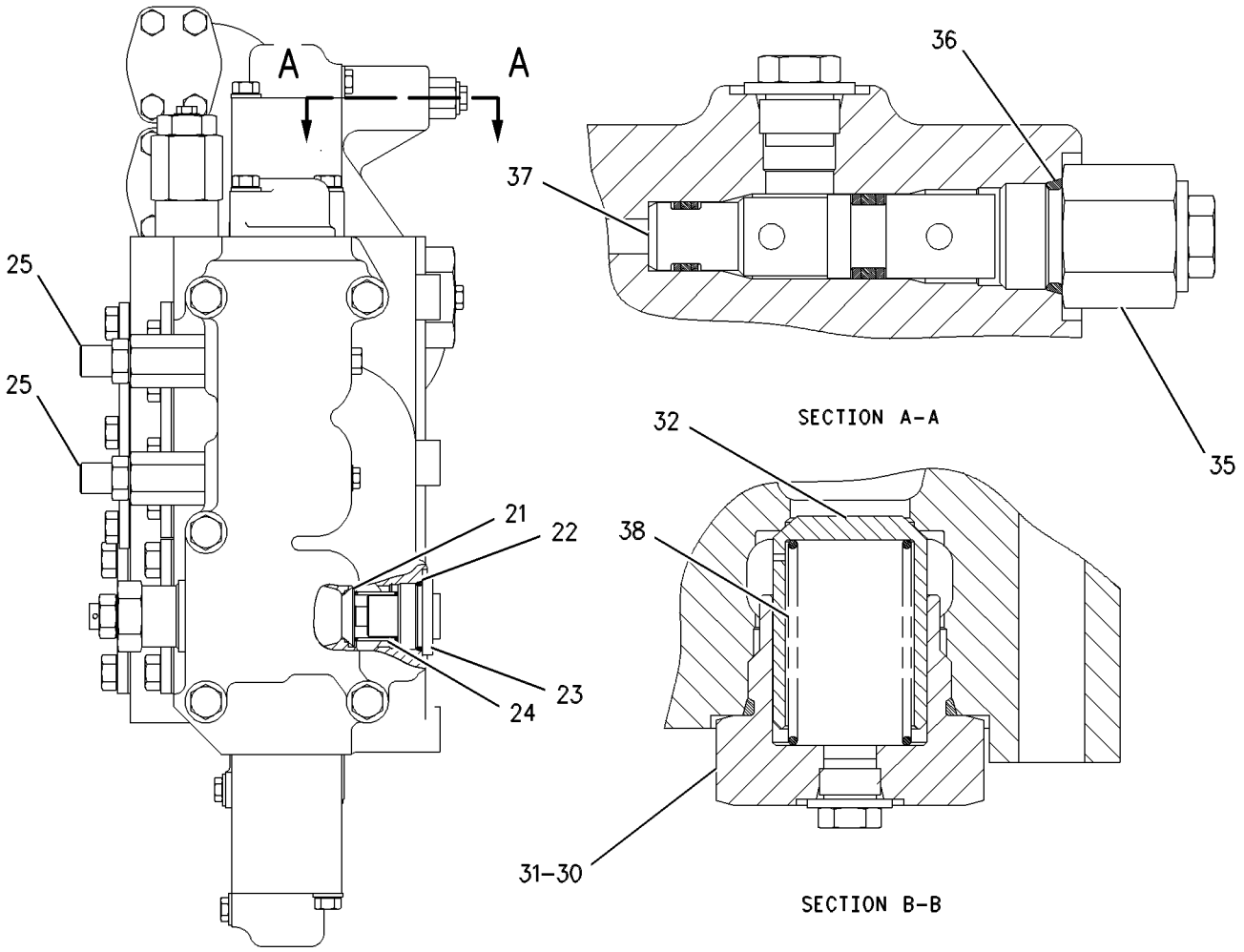

GRAPHIC #2 <END> g00456455

4T-7006 VALVE GP-CONTROL

S/N: 9BL1-1396
PILOT OPERATED
PART OF 8Y-9369 HYDRAULIC AR

SMCS-5051 **i01400535**

NOTE	REF NO	GRAPHIC REF	PART NUMBER	QTY	PART NAME 1 2 3 4 5 6 (PRODUCT LEVEL)	SEE PAGE
Y	1	1	**9T-0534**	1	VALVE GP-CONTROL	623
	2	1	**1P-3703**	1	SEAL-RECTANGULAR	
	3	1	**4F-5192**	5	BOLT (7/16-14X3-IN)	
Y	4	1	**4T-7581**	2	VALVE GP-RELIEF (DIRECT OPERATED)	661
	5	1	**9S-4183**	1	PLUG (1-1/16-12-THD)	
		1	**3D-2824**	1	SEAL-O-RING	
	6	1	**3B-8428**	1	BOLT (7/16-14X3.25-IN)	
	7	1	**4T-9362**	1	BODY	
	8	1	**1P-3704**	2	SEAL-RECTANGULAR	
Y	9	1	**6E-6195**	1	VALVE GP-RELIEF	663
	10	1	**8S-9191**	4	BOLT (3/8-16X4-IN)	
		1	**5M-2894**	4	WASHER-HARD (10.2X18.5X2.5-MM THK)	
	11	1	**4T-9311**	2	HOUSING	
		1	**004-1963**	2	SEAL-O-RING	
	12	2	**1U-1577**	1	PLUG	
		2	**6K-6307**	1	SEAL-O-RING	
	13	2	**1J-8960**	1	SPRING	
	14	2	**1U-1578**	1	VALVE-CONTROL	
	15	2	**7S-8491**	3	SPRING	
	16	2	**7J-7423**	3	VALVE-CONTROL (MAKE UP)	
CY	17	2	**4T-4073**	1	VALVE GP-SHUTTLE	666
	18	2	**3K-0360**	1	SEAL-O-RING	
	19	2	**1U-3176**	1	CONNECTOR	
	20	2	**3G-4117**	1	COVER	
	21	2	**4J-0522**	1	SEAL-O-RING	
	22	2	**0S-1621**	2	BOLT (1/2-13X1-IN)	
Y	23	2	**6E-6184**	1	VALVE GP-RELIEF	662
	24	2	**1H-9696**	2	SEAL-O-RING	
	25	2	**4T-9312**	2	HOUSING	
	26	2	**0S-1571**	4	BOLT (3/8-16X1.75-IN)	
		2	**5M-2894**	4	WASHER-HARD (10.2X18.5X2.5-MM THK)	
	27	2	**1U-0323**	3	PLUG AS	
					(EACH PLUG AS INCLUDES)	
		2	**1U-0322**	1	BUSHING	
		2	**2S-4078**	3	SEAL-O-RING	

C - CHANGE FROM PREVIOUS TYPE
Y - SEPARATE ILLUSTRATION

4T-7006 **VALVE GP-CONTROL** (contd.) **i01400535**

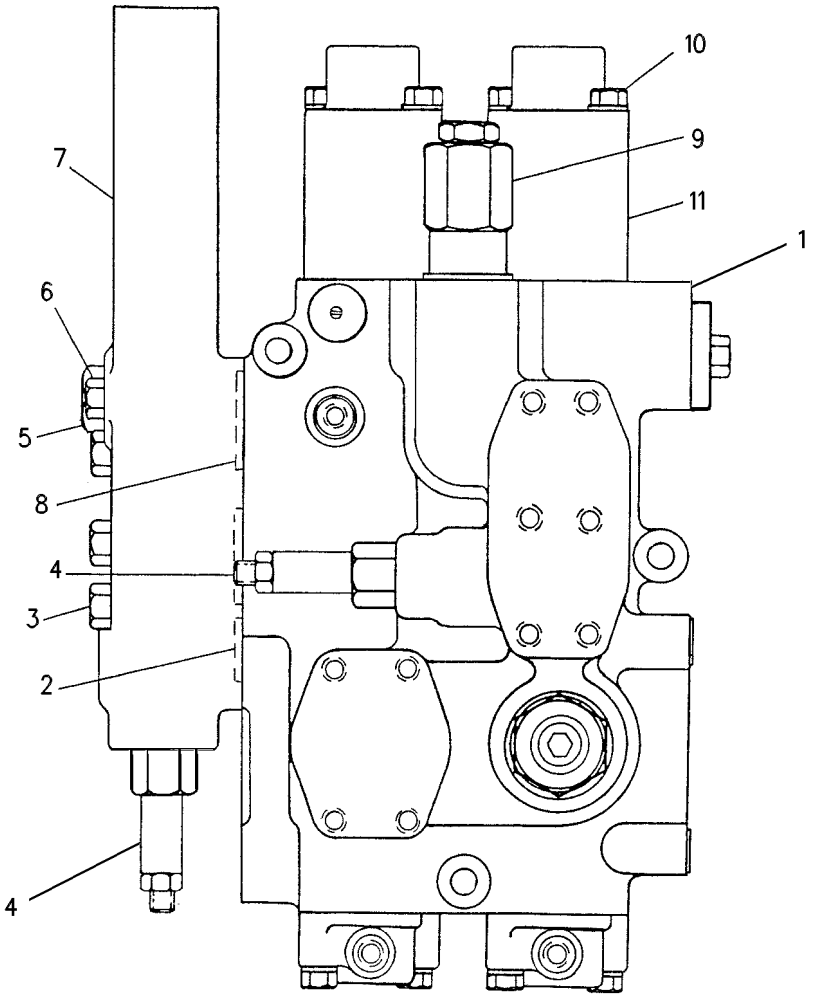

GRAPHIC #1 g00417970

4T-7006 **VALVE GP-CONTROL (**contd.**)** **i01400535**

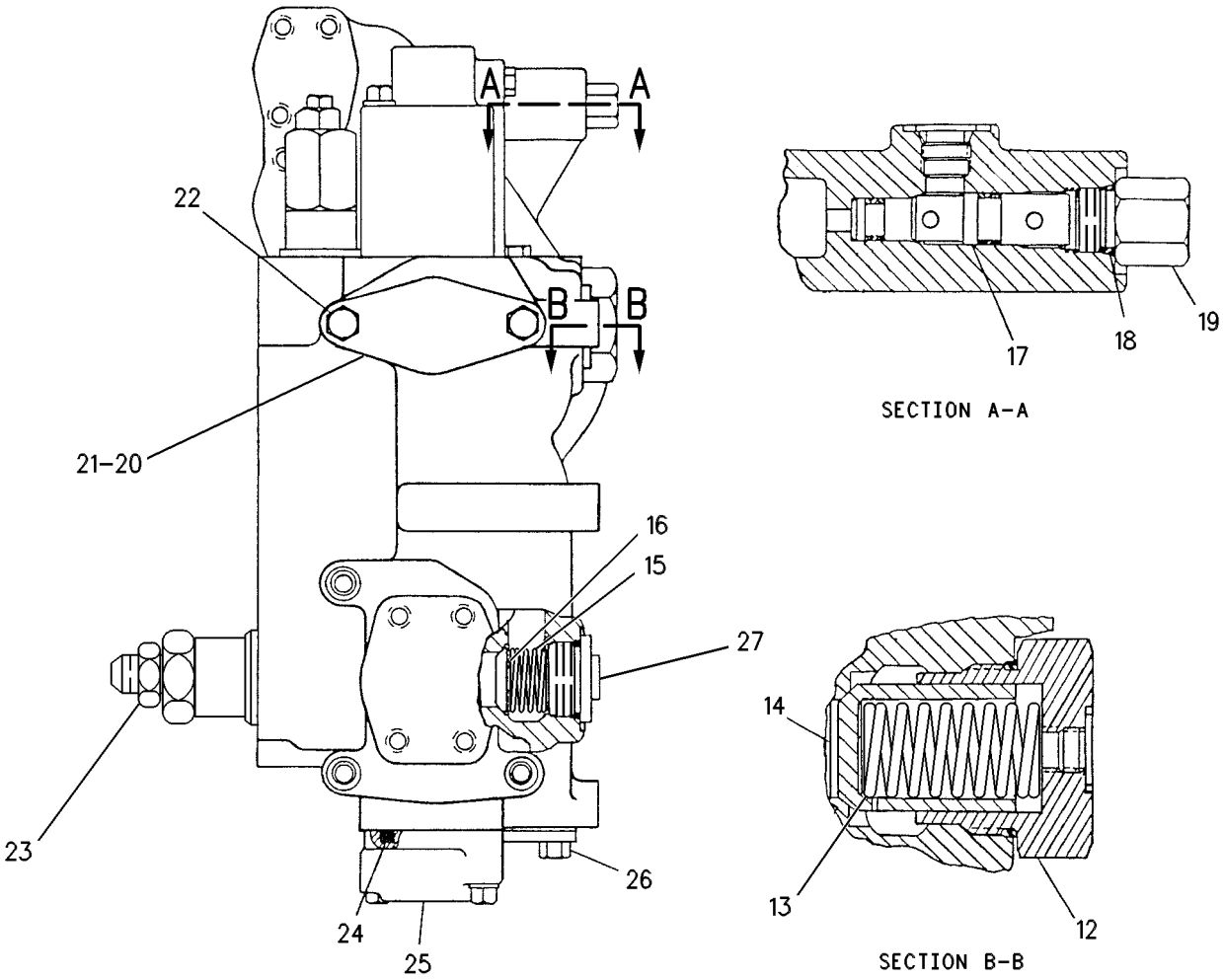

GRAPHIC #2 <END> g00417976

4T-7006 VALVE GP-CONTROL

S/N: 9BL1397-UP
PILOT OPERATED
PART OF 8Y-9369 HYDRAULIC AR

SMCS-5051 **i01400536**

NOTE	REF NO	GRAPHIC REF	PART NUMBER	QTY	PART NAME 1 2 3 4 5 6 (PRODUCT LEVEL)	SEE PAGE
Y	1	1	**9T-0534**	1	VALVE GP-CONTROL	623
	2	1	**1P-3703**	1	SEAL-RECTANGULAR	
C	3	1	**7X-0314**	5	BOLT (7/16-14X3-IN)	
Y	4	1	**4T-7581**	2	VALVE GP-RELIEF (DIRECT OPERATED)	661
	5	1	**9S-4183**	1	PLUG (1-1/16-12-THD)	
		1	**3D-2824**	1	SEAL-O-RING	
C	6	1	**7X-0315**	1	BOLT (7/16-14X3.25-IN)	
	7	1	**4T-9362**	1	BODY	
	8	1	**1P-3704**	2	SEAL-RECTANGULAR	
Y	9	1	**6E-6195**	1	VALVE GP-RELIEF	663
C	10	1	**8T-9378**	4	BOLT (3/8-16X4-IN)	
C		1	**8T-4896**	4	WASHER-HARD (10.2X18.5X2.5-MM THK)	
	11	1	**4T-9311**	2	HOUSING	
		1	**004-1963**	2	SEAL-O-RING	
	12	2	**1U-1577**	1	PLUG	
		2	**6K-6307**	1	SEAL-O-RING	
	13	2	**1J-8960**	1	SPRING	
	14	2	**1U-1578**	1	VALVE-CONTROL	
	15	2	**7S-8491**	3	SPRING	
	16	2	**7J-7423**	3	VALVE-CONTROL (MAKE UP)	
Y	17	2	**4T-4073**	1	VALVE GP-SHUTTLE	666
	18	2	**3K-0360**	1	SEAL-O-RING	
	19	2	**1U-3176**	1	CONNECTOR	
	20	2	**3G-4117**	1	COVER	
	21	2	**4J-0522**	1	SEAL-O-RING	
C	22	2	**8T-9383**	2	BOLT (1/2-13X0.75-IN)	
YC	23	2	**135-5489**	1	VALVE GP-RELIEF	660
	24	2	**1H-9696**	2	SEAL-O-RING	
	25	2	**4T-9312**	2	HOUSING	
C	26	2	**5S-7383**	4	BOLT (3/8-16X1.75-IN)	
C		2	**8T-4896**	4	WASHER-HARD (10.2X18.5X2.5-MM THK)	
	27	2	**1U-0323**	3	PLUG AS	
					(EACH PLUG AS INCLUDES)	
		2	**1U-0322**	1	BUSHING	
		2	**2S-4078**	3	SEAL-O-RING	

C - CHANGE FROM PREVIOUS TYPE
Y - SEPARATE ILLUSTRATION

4T-7006 **VALVE GP-CONTROL (**contd.**)** **i01400536**

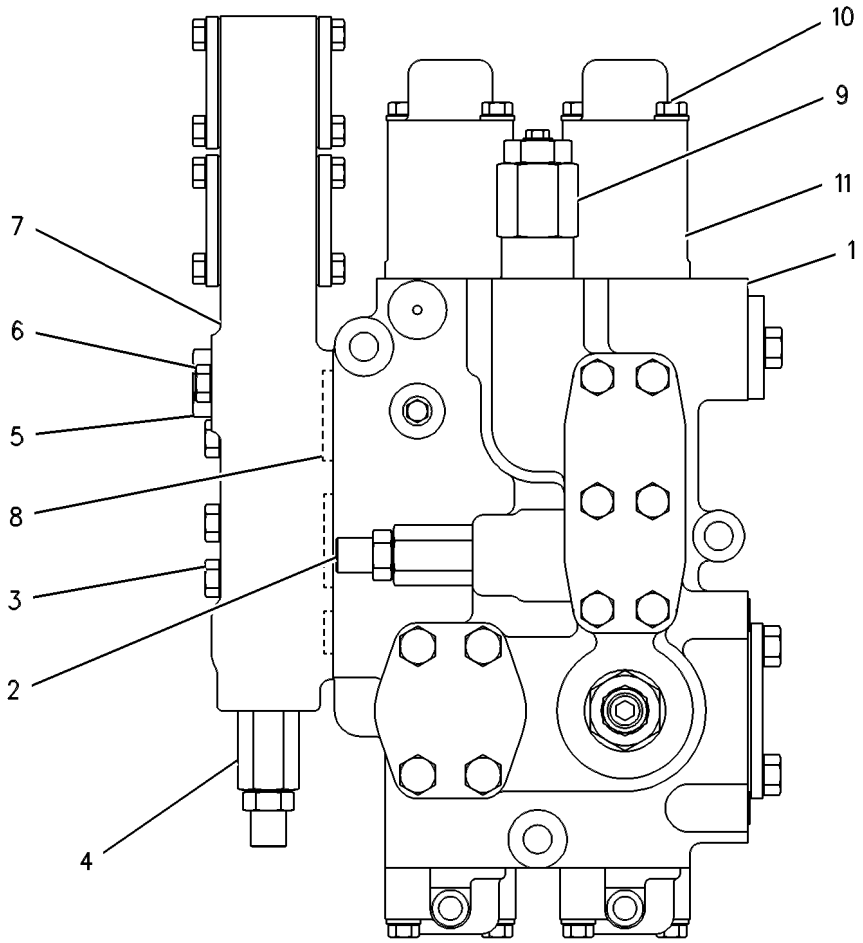

GRAPHIC #1 g00294420

4T-7006 **VALVE GP-CONTROL (**contd.**)** **i01400536**

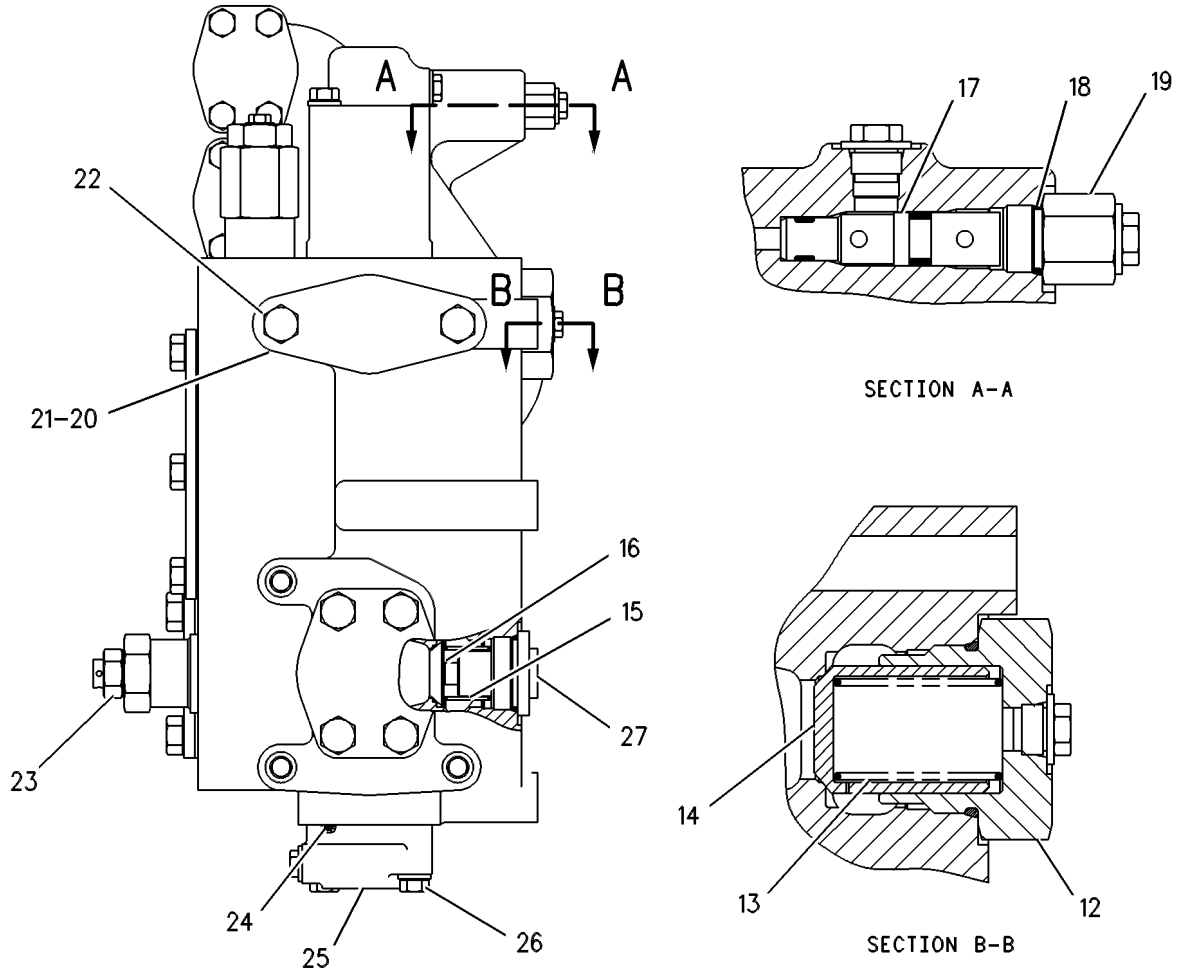

GRAPHIC #2 <END> g00417969

9T-0534 VALVE GP-CONTROL

S/N: 9BL1-UP

PART OF 4T-7003, 4T-7006 VALVE GP-CONTROL

ALSO AN ATTACHMENT

SMCS-5051 **i01400565**

NOTE	REF NO	GRAPHIC REF	PART NUMBER	QTY	PART NAME 1 2 3 4 5 6 (PRODUCT LEVEL)	SEE PAGE
	1	1	**9S-8005**	1	PLUG (3/4-16-THD)	
		1	**3K-0360**	1	SEAL-O-RING	
	2	1	**3G-8992**	2	SPRING	
	3	1	**3G-8991**	2	SPRING	
	4	1	**4T-2598**	4	RETAINER	
B	5	1	**1U-0470**	4	SHIM (0.178-MM THK)	
B		1	**1U-0471**	6	SHIM (0.25-MM THK)	
B	6	1	**8J-1898**	40	SHIM (0.01-IN THK)	
	7	1	**7K-0734**	2	BOLT-LOCKING (7/16-14X0.75-IN)	
		1	**4D-6433**	2	WASHER-HARD (12X25.5X2-MM THK)	

B - USE AS REQUIRED

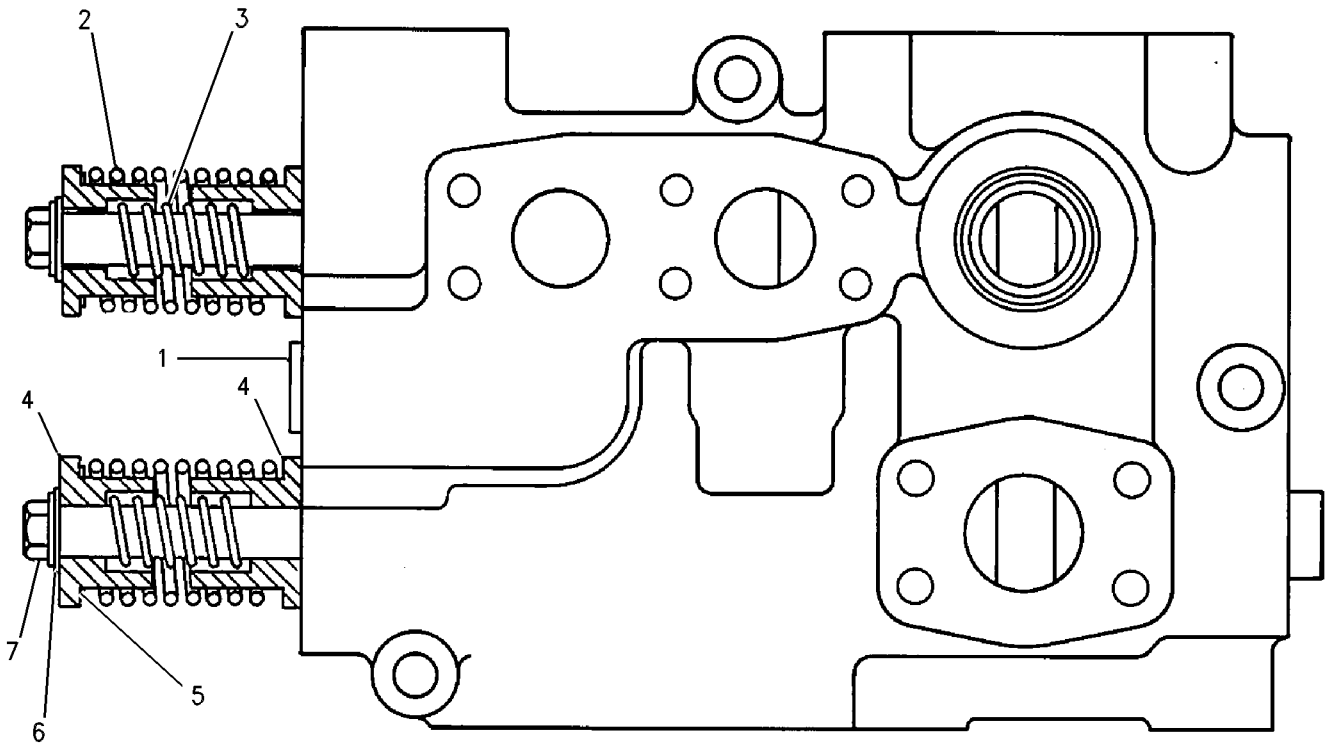

GRAPHIC #1 <END> g00607194

9T-0760 VALVE GP-CONTROL

S/N: 9BL1-UP

PART OF 4T-7003 VALVE GP-CONTROL

AN ATTACHMENT

SMCS-5051 **i01400566**

NOTE	REF NO	GRAPHIC REF	PART NUMBER	QTY	PART NAME 1 2 3 4 5 6 (PRODUCT LEVEL)	SEE PAGE
	1	1	**9S-4182**	1	PLUG (7/16-20-THD)	
	2	1	**3J-7354**	1	SEAL-O-RING	
	3	1	**3G-8992**	1	SPRING	
	4	1	**4T-2598**	2	RETAINER	
	5	1	**7K-0734**	1	BOLT-LOCKING (7/16-14X0.75-IN) (7/16-14 THD)	
	6	1	**4D-6433**	1	WASHER-HARD (12X25.5X2-MM THK)	
	7	1	**8J-1898**	20	SHIM (0.01-IN THK)	
B	8	1	**1U-0470**	2	SHIM (0.178-MM THK)	
B	9	1	**1U-0471**	3	SHIM (0.25-MM THK)	
	10	1	**3G-8991**	1	SPRING	

B - USE AS REQUIRED

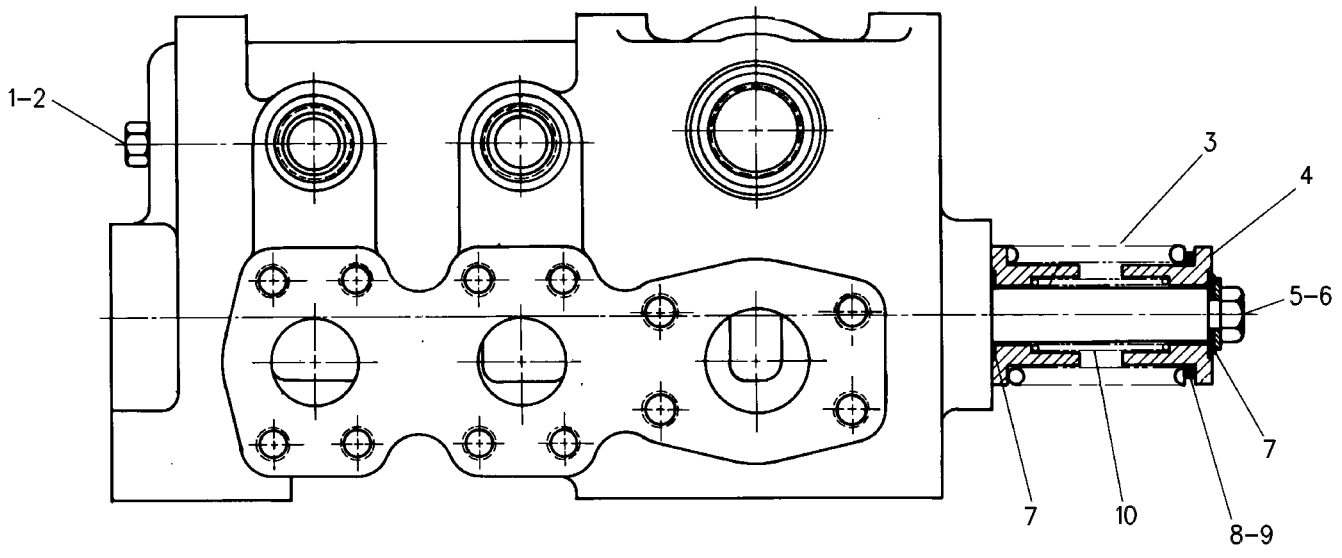

GRAPHIC #1 <END> g00584128

4T-3176 VALVE GP-COOLER BYPASS

S/N: 9BL1-UP

PART OF 9T-1383 TANK & FILTER GP-HYDRAULIC

SMCS-5071 **i01400537**

NOTE	REF NO	GRAPHIC REF	PART NUMBER	QTY	PART NAME 1 2 3 4 5 6 (PRODUCT LEVEL)	SEE PAGE
	1	1	**9L-4238**	1	BOLT (3/8-16X8.5-IN)	
	2	1	**5M-2894**	2	WASHER-HARD (10.2X18.5X2.5-MM THK)	
	3	1	**5L-5840**	1	WASHER (9.25X16.92X1.83-MM THK)	
	4	1	**4J-8265**	1	NUT (3/8-16-THD)	
	5	1	**4T-3171**	1	RETAINER	
	6	1	**9J-8752**	1	SPRING	
	7	1	**4T-0357**	1	VALVE	
	8	1	**4T-0354**	1	MANIFOLD	

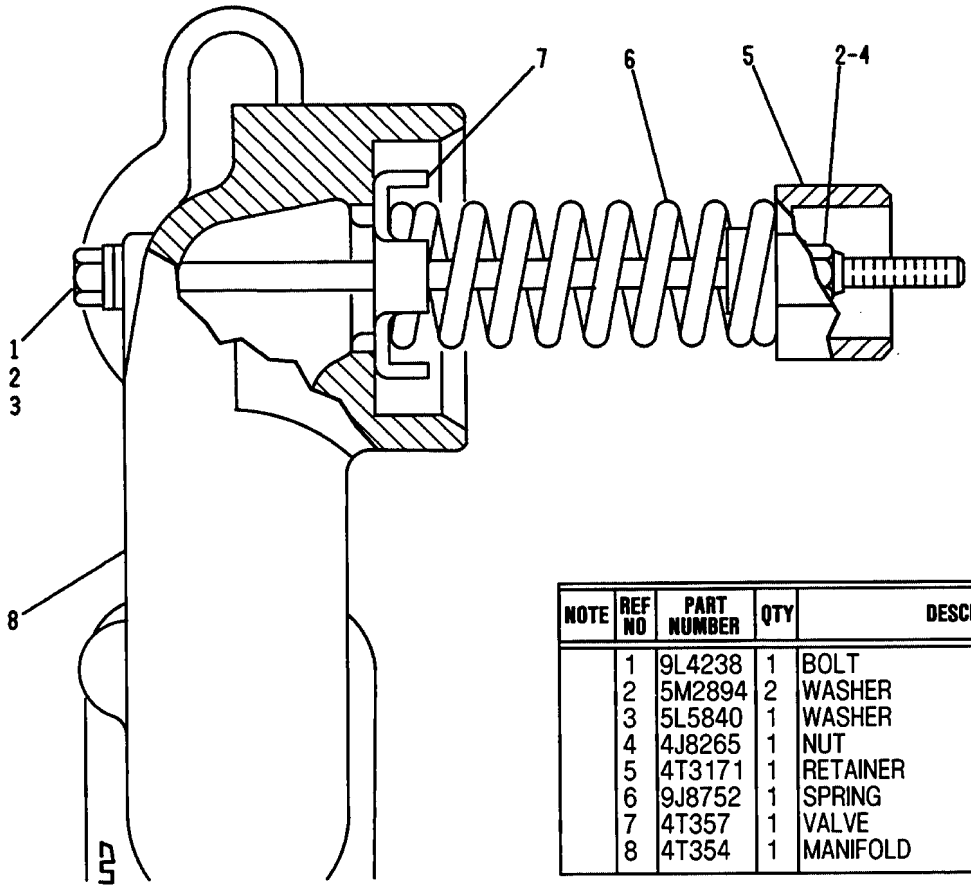

NOTE	REF NO	PART NUMBER	QTY	DESCRIPTION
	1	9L4238	1	BOLT
	2	5M2894	2	WASHER
	3	5L5840	1	WASHER
	4	4J8265	1	NUT
	5	4T3171	1	RETAINER
	6	9J8752	1	SPRING
	7	4T357	1	VALVE
	8	4T354	1	MANIFOLD

* 302243

GRAPHIC #1 <END> g00152182

9J-7128 VALVE GP-DIVERTER

S/N: 9BL1-UP

PART OF 8G-0986 CONTROL GP-DIVERTER & VALVE AN ATTACHMENT

SMCS-5066 **i02000215**

NOTE	REF NO	GRAPHIC REF	PART NUMBER	QTY	PART NAME 1 2 3 4 5 6 (PRODUCT LEVEL)	SEE PAGE
	1	1	**022-3097**	1	SETSCREW (3/8-16X1.75-IN)	
	2	1	**1B-2578**	1	NUT (3/8-16-THD)	
	3	1	**3G-0604**	2	STOP	
	4	1	**5F-1678**	2	SEAL-O-RING	
	5	1	**3G-9893**	2	WIPER	
	6	1	**0S-0509**	1	BOLT (3/8-16X0.75-IN)	

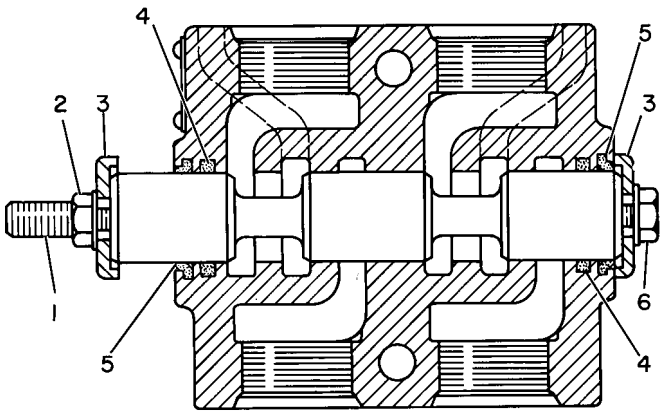

GRAPHIC #1 <END> g00145649

127-0860 VALVE GP-PILOT

S/N: 9BL1399-UP
PART OF 129-3152 CONTROL GP-HYDRAULIC
AN ATTACHMENT

SMCS-5059 **i02219131**

NOTE	REF NO	GRAPHIC REF	PART NUMBER	QTY	PART NAME 1 2 3 4 5 6 (PRODUCT LEVEL)	SEE PAGE
M	1	1	**096-5866**	2	BOLT (M8X1.25X75-MM)	
	2	1	**102-8805**	1	KIT-RECEPTACLE (6-PIN)	
					(INCLUDES RECEPTACLE AS & WEDGE)	
	3	1	**6V-8724**	1	ELBOW	
	4	1	**3J-1907**	7	SEAL-O-RING	
	5	1	**8T-7521**	1	ELBOW	
	6	1	**127-8489**	1	PLATE	
M	7	1	**5P-7970**	2	NUT (M8X1.25-THD)	
Y	8	1	**138-8142**	1	VALVE GP-PILOT (BUCKET)	644
Y	9	1	**138-8141**	1	VALVE GP-PILOT (LIFT)	642
	10	1	**6V-8636**	5	CONNECTOR	

M - METRIC PART
Y - SEPARATE ILLUSTRATION

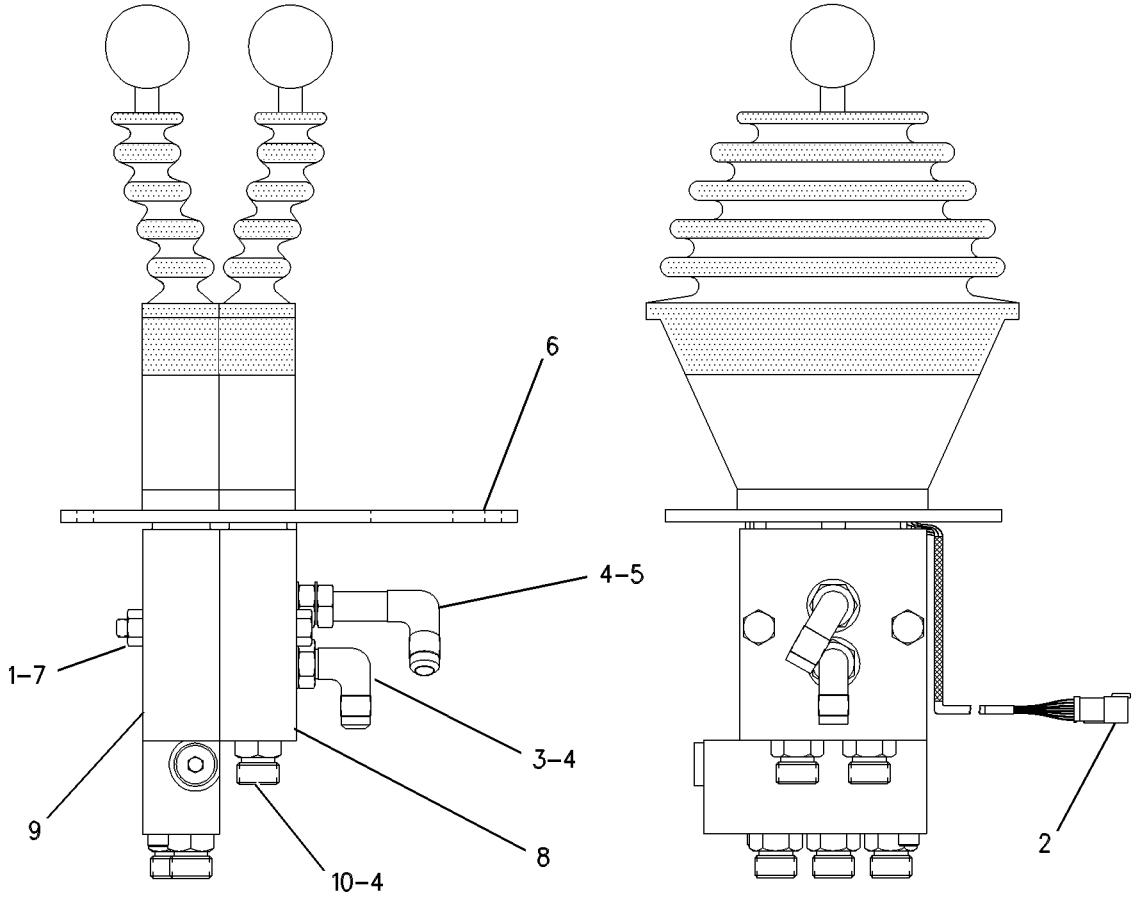

GRAPHIC #1 <END> g00654667

127-0861 VALVE GP-PILOT

S/N: 9BL1399-UP
PART OF 128-1911 CONTROL GP-PILOT OPERATED HYD
AN ATTACHMENT
TYPE 1

SMCS-5059 **i01400545**

NOTE	REF NO	GRAPHIC REF	PART NUMBER	QTY	PART NAME 1 2 3 4 5 6 (PRODUCT LEVEL)	SEE PAGE
J	1	1	**3E-3383**	1	WEDGE-RECEPTACLE LOCK (6-PIN)	
	2	1	**102-8805**	1	KIT-RECEPTACLE (6-PIN)	
					(INCLUDES RECEPTACLE AS & WEDGE)	
	3	1	**030-7947**	1	ELBOW	
	4	1	**3J-1907**	2	SEAL-O-RING	
	5	1	**6K-9194**	1	ELBOW	
	6	1	**127-8489**	1	PLATE	
	7	1	**2R-6806**	1	CONNECTOR	
Y	8	1	**152-4819**	1	VALVE GP-PILOT (BUCKET)	648
Y	9	1	**138-8143**	1	VALVE GP-PILOT (AUXILIARY)	646
M	10	1	**7X-2541**	2	BOLT (M8X1.25X140-MM)	
M	11	1	**5P-7970**	2	NUT (M8X1.25-THD)	
Y	12	1	**138-8141**	1	VALVE GP-PILOT (LIFT)	642

J - INCLUDED IN 102-8805 RECEPTACLE KIT
M - METRIC PART
Y - SEPARATE ILLUSTRATION

127-0861 **VALVE GP-PILOT (**contd.**)** **i01400545**

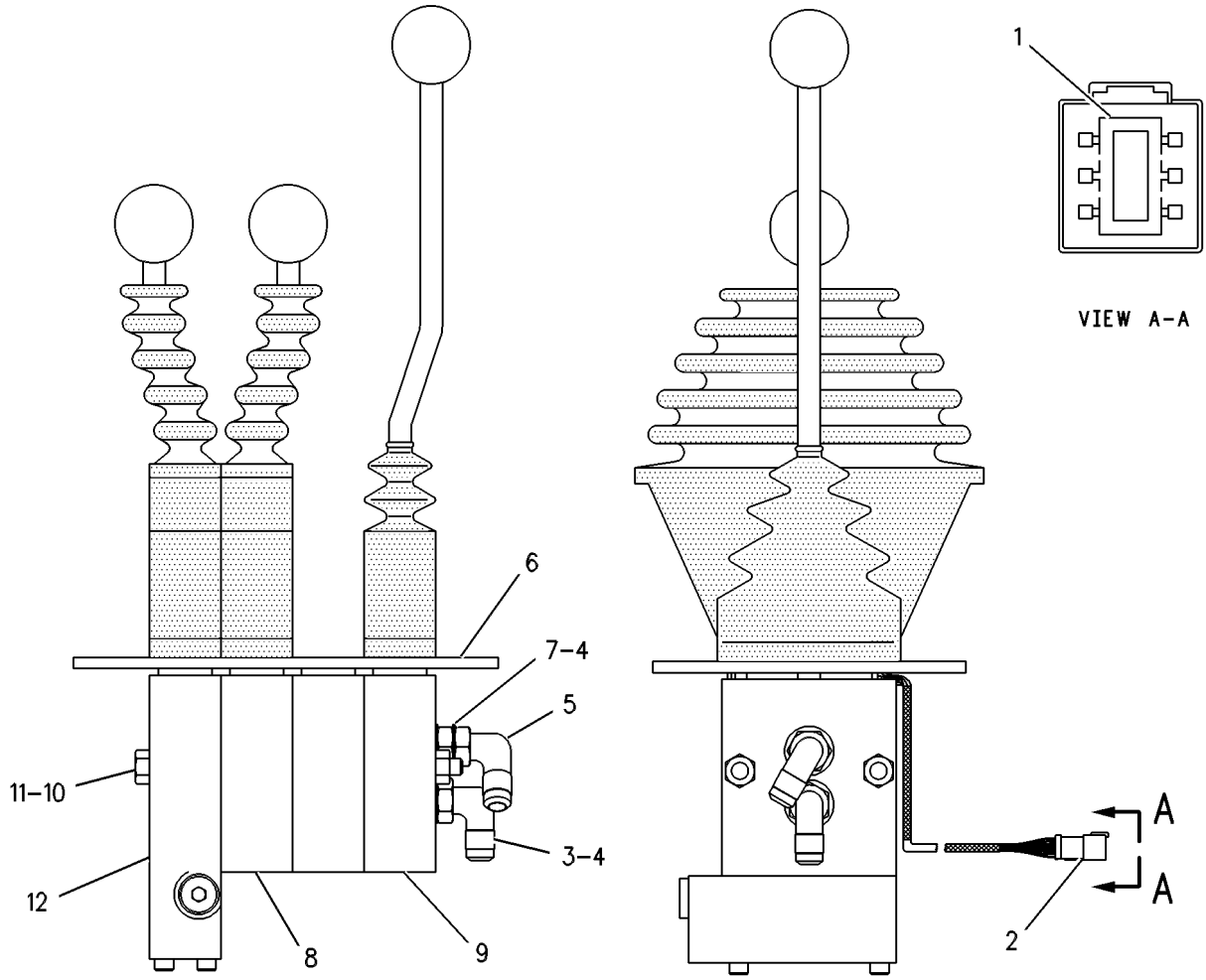

GRAPHIC #1 <END> g00388981

127-0861 VALVE GP-PILOT

S/N: 9BL1399-UP
PART OF 128-1911 CONTROL GP-PILOT OPERATED HYD
AN ATTACHMENT
TYPE 2

SMCS-5059 **i01659899**

NOTE	REF NO	GRAPHIC REF	PART NUMBER	QTY	PART NAME 1 2 3 4 5 6 (PRODUCT LEVEL)	SEE PAGE
J	1	1	**3E-3383**	1	WEDGE-RECEPTACLE LOCK (6-PIN)	
	2	1	**102-8805**	1	KIT-RECEPTACLE (6-PIN)	
					(INCLUDES RECEPTACLE AS & PARTS MARKED J)	
C	3	1	**6V-8724**	1	ELBOW	
	4	1	**3J-1907**	2	SEAL-O-RING	
C	5	1	**8T-7521**	1	ELBOW	
	6	1	**127-8489**	1	PLATE	
M	7	1	**7X-2541**	2	BOLT (M8X1.25X140-MM)	
M	8	1	**5P-7970**	2	NUT (M8X1.25-THD)	
Y	9	1	**138-8141**	1	VALVE GP-PILOT (LIFT)	642
Y	10	1	**138-8143**	1	VALVE GP-PILOT (AUXILIARY)	646
Y	11	1	**152-4819**	1	VALVE GP-PILOT (BUCKET)	648
C	12	1	**184-7405**	1	PLATE	
C	13	1	**112-0034**	6	SEAL-O-RING	
	14	1	**198-6498**	2	BOOT	
	15	1	**8U-5892**	1	BOOT	

C - CHANGE FROM PREVIOUS TYPE
J - INCLUDED IN 102-8805 RECEPTACLE KIT
M - METRIC PART
Y - SEPARATE ILLUSTRATION

127-0861 **VALVE GP-PILOT (**contd.**)** **i01659899**

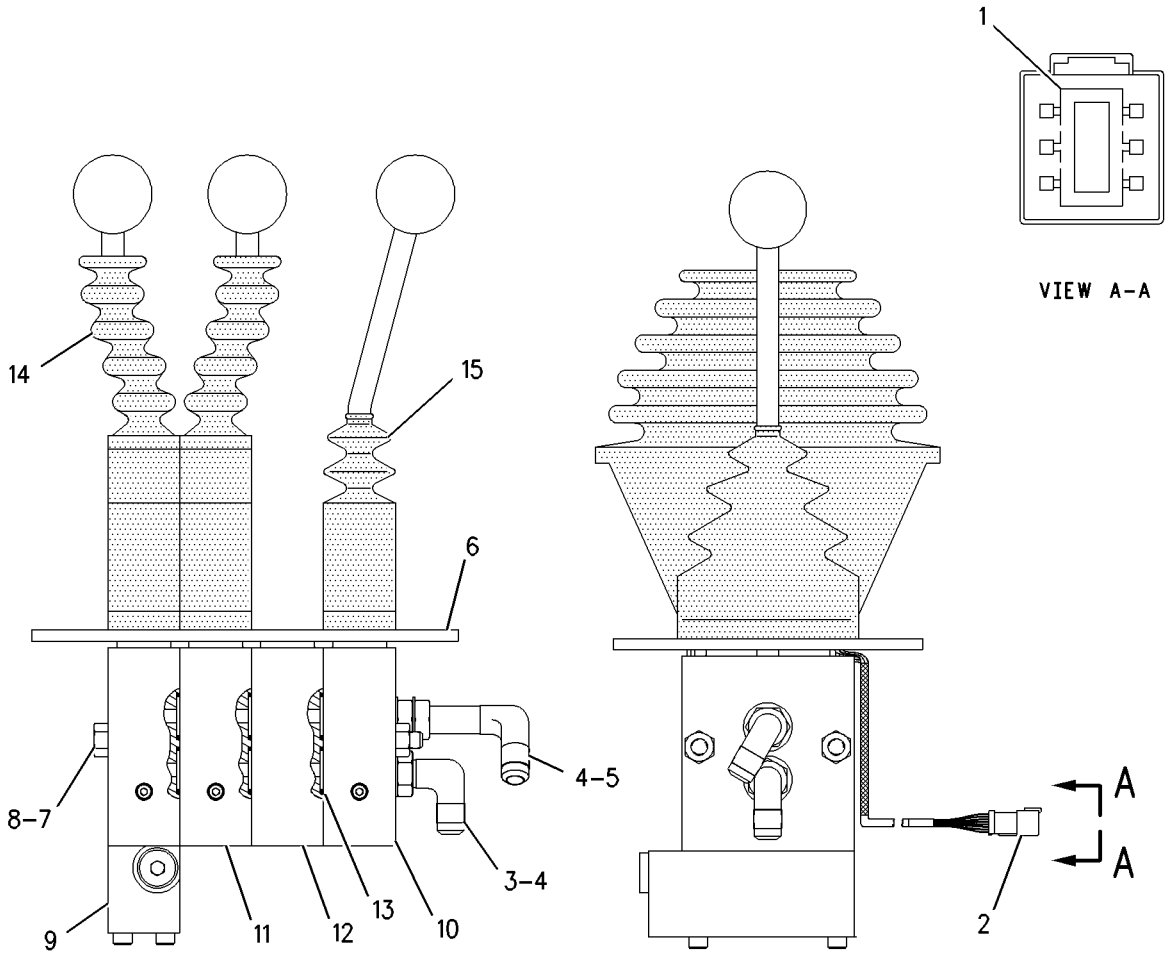

GRAPHIC #1 <END> g00859050

127-0862 VALVE GP-PILOT

S/N: 9BL1399-UP

PART OF 128-1904, 128-1911 CONTROL GP-PILOT OPERATED HYD

ALSO AN ATTACHMENT

SMCS-5059 **i05717830**

NOTE	REF NO	GRAPHIC REF	PART NUMBER	QTY	PART NAME 1 2 3 4 5 6 (PRODUCT LEVEL)	SEE PAGE
	1	1	**113-8224**	1	HANDLE	
	2	1	**123-3438**	1	KIT-BOOT	
					(INCLUDES BOOT & PARTS MARKED J)	
JM	3	1	**3E-8020**	4	SCREW-TRUSS HEAD (M6X1X25-MM)	
LM	4	1	**095-1207**	1	NUT (M12X1.75-THD)	
	5	1	**154-1207**	1	KIT-LEVER	
					(INCLUDES LEVER, PIN, NUT-LOCK & PARTS MARKED L)	
	6	1	**154-1208**	1	KIT-PILOT VALVE (FLANGE)	
					(INCLUDES 3 SHIMS, U-JOINT, FLANGE, PLUGS, ELECTRIC BRACKET & CARDAN BRACKET; DOES NOT INCLUDE PART MARKED P)	
P	7	1	**127-8488**	1	PLATE	
J	8	1	**9X-8256**	8	WASHER (6.6X12X2-MM THK)	
JM	9	1	**5C-2890**	4	NUT (M6X1-THD)	
	10	1	**154-1273**	3	KIT-PILOT VALVE (CONNECTOR JOINT)	
					(EACH INCLUDES NUT-LOCK, 2 FRICTION WASHERS, JOINT, ARMATURE & SPRING-RING)	
	11	1	**129-4508**	3	COIL AS	
					(EACH INCLUDES)	
		1	**8T-8729**	2	PIN-CONNECTOR (16-GA TO 18-GA)	
	12	1	**154-1274**	1	KIT-PLUNGER	
					(INCLUDES SWITCHPLATE SCREW, COUNTER NUT, NUT, SCREW, PLUNGER & PLUNGER GUIDE)	
S	13	1	**203-1088**	3	KIT-PILOT VALVE (REGULATING) (PORTS 1A, 1B & 2B)	
					(EACH INCLUDES PLATE, SPRING, RETAINING WASHER, 2 HALF WASHERS, 9 SHIMS & PARTS MARKED Q)	
S	14	1	**203-1089**	2	KIT-PILOT VALVE (PLUNGER) (PORTS 1A & 1B)	
					(EACH INCLUDES PLUNGER, PLUNGER GUIDE, SEAL & SEAL-O-RING)	
T	15	1	**216-6886**	2	KIT-PLUNGER (PORTS 2A & 2B)	
					(EACH INCLUDES PLUNGER, PLUNGER GUIDE, SEAL & SEAL-O-RING)	
QW	16	1	**9T-2832**	8	RETAINER	
QW	17	1	**9T-2831**	4	RETAINER	
	18	1	**154-1657**	2	KIT-PILOT VALVE (SPRING) (PORTS 1A & 1B)	
					(EACH INCLUDES SPRING & SOCKET)	
	19	1	**154-1658**	1	KIT-PILOT VALVE (PISTON)	
					(INCLUDES 2 M4X10 SCREWS, 1 M6X8 SCREW, NUT, PLATE, SEAL-O-RING, PISTON, SPRING, WASHER & PLUG)	
	20	1	**102-8805**	1	KIT-RECEPTACLE (6-PIN)	
					(INCLUDES RECEPTACLE AS & PART MARKED U)	
U	21	1	**3E-3383**	1	WEDGE-RECEPTACLE LOCK (6-PIN)	
	22	1	**159-3809**	1	KIT-PILOT VALVE (SPRING) (PORT 2B)	
					(INCLUDES SPRING & SOCKET)	
T	23	1	**203-1092**	1	KIT-PILOT VALVE (SPOOL) (PORT 2A)	
					(INCLUDES PLATE, SPRING, RETAINING WASHER, 2 HALF WASHERS, 9 SHIMS & PARTS MARKED W)	
	24	1	**160-6778**	1	KIT-PILOT VALVE (SPRING)	
					(INCLUDES 4 SPRINGS)	

127-0862 **VALVE GP-PILOT (**contd.**)** **i05717830**

NOTE	REF NO	GRAPHIC REF	PART NUMBER	QTY	PART NAME 1 2 3 4 5 6 (PRODUCT LEVEL)	SEE PAGE
	25	1	**160-6779**	1	KIT-PILOT VALVE (BUSHING)	
					(INCLUDES 8 O-RING SEALS & 4 PROTECTION BUSHINGS)	
	26	1	**6V-8636**	6	CONNECTOR	
	27	1	**6V-9873**	1	CONNECTOR	
	28	1	**3J-1907**	7	SEAL-O-RING	

J - INCLUDED IN 123-3438 BOOT KIT
L - INCLUDED IN 154-1207 LEVER KIT
M - METRIC PART
P - NOT INCLUDED IN 154-1208 FLANGE KIT
Q - INCLUDED IN 154-1655 REGULATING KIT
S - REPLACE KITS MARKED S AS A SET
T - REPLACE KITS MARKED T AS A SET
U - INCLUDED IN 102-8805 RECEPTACLE KIT
W - INCLUDED IN 159-3354 REGULATING KIT

127-0862 **VALVE GP-PILOT (**contd.**)** **i05717830**

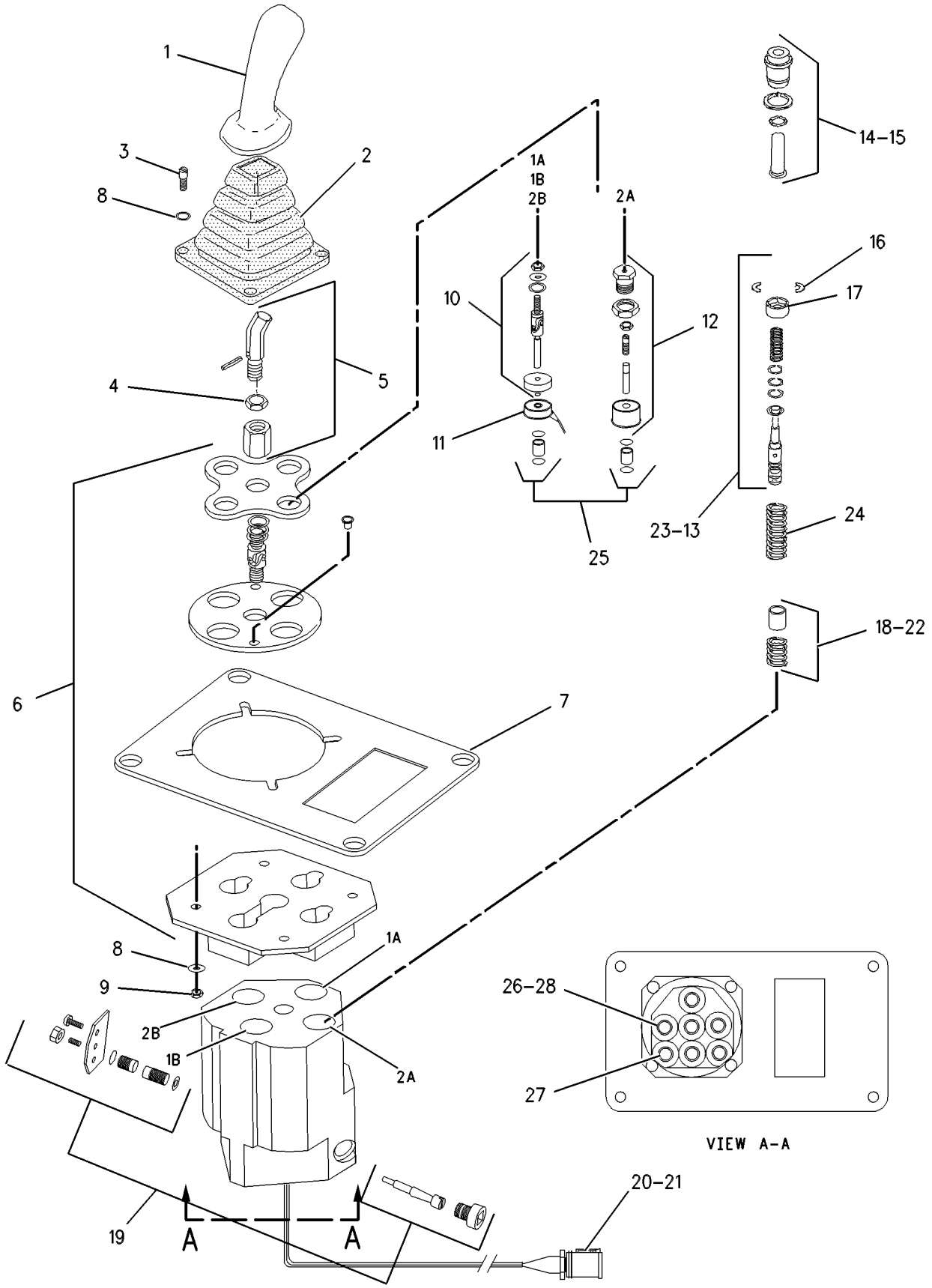

GRAPHIC #1 <END> g00654657

127-0863 VALVE GP-PILOT

S/N: 9BL1399-UP

PART OF 128-1906 CONTROL GP-PILOT OPERATED HYD

AN ATTACHMENT

SMCS-5059 **i01745230**

NOTE	REF NO	GRAPHIC REF	PART NUMBER	QTY	PART NAME 1 2 3 4 5 6 (PRODUCT LEVEL)	SEE PAGE
	1	1	**127-8488**	1	PLATE	
	2	1	**102-8805**	1	KIT-RECEPTACLE (6-PIN)	
					(INCLUDES RECEPTACLE AS & PART MARKED J)	
J	3	1	**3E-3383**	1	WEDGE-RECEPTACLE LOCK (6-PIN)	
NM	4	1	**3E-8020**	4	SCREW-TRUSS HEAD (M6X1X25-MM)	
N	5	1	**9X-8256**	8	WASHER (6.6X12X2-MM THK)	
NM	6	1	**5C-2890**	4	NUT (M6X1-THD)	
Y	7	1	**129-4497**	1	VALVE GP-PILOT (AUXILIARY)	637
LM	8	1	**8T-0338**	2	BOLT-SOCKET HEAD (M8X1.25X45-MM)	
PY	9	1	**129-4600**	1	VALVE GP-PILOT (BUCKET/LIFT)	639
	10	1	**159-1571**	1	KIT-PLATE	
					(INCLUDES O-RING SEALS, SCREWS, TIE RODS & PARTS MARKED L)	
	11	1	*148-8336*	8	CONNECTOR AS	
					(EACH INCLUDES)	
		1	**3J-1907**	1	SEAL-O-RING	
		1	**6V-8397**	1	SEAL-O-RING	
		1	**6V-8636**	1	CONNECTOR	
	12	1	*150-4043*	1	CONNECTOR AS	
		1	**3J-1907**	1	SEAL-O-RING	
		1	**6V-8398**	1	SEAL-O-RING	
		1	**6V-9873**	1	CONNECTOR	
P	13	1	**8U-5892**	1	BOOT	
	14	1	**192-7115**	2	SEAL-O-RING	
	15	1	**112-0034**	2	SEAL-O-RING	
M	16	1	**3T-0849**	4	BOLT-SOCKET HEAD (M6X1X25-MM)	
					AVAILABLE REPAIR KIT(S):	
P			**123-3438**	1	KIT-BOOT	
					(INCLUDES BOOT & PARTS MARKED N)	

J - INCLUDED IN 102-8805 RECEPTACLE KIT
L - INCLUDED IN 159-1571 PLATE KIT
M - METRIC PART
N - INCLUDED IN 123-3438 BOOT KIT
P - REPAIR KIT(S) MARKED P AVAILABLE FOR PART MARKED P
Y - SEPARATE ILLUSTRATION

127-0863 **VALVE GP-PILOT (**contd.**)** **i01745230**

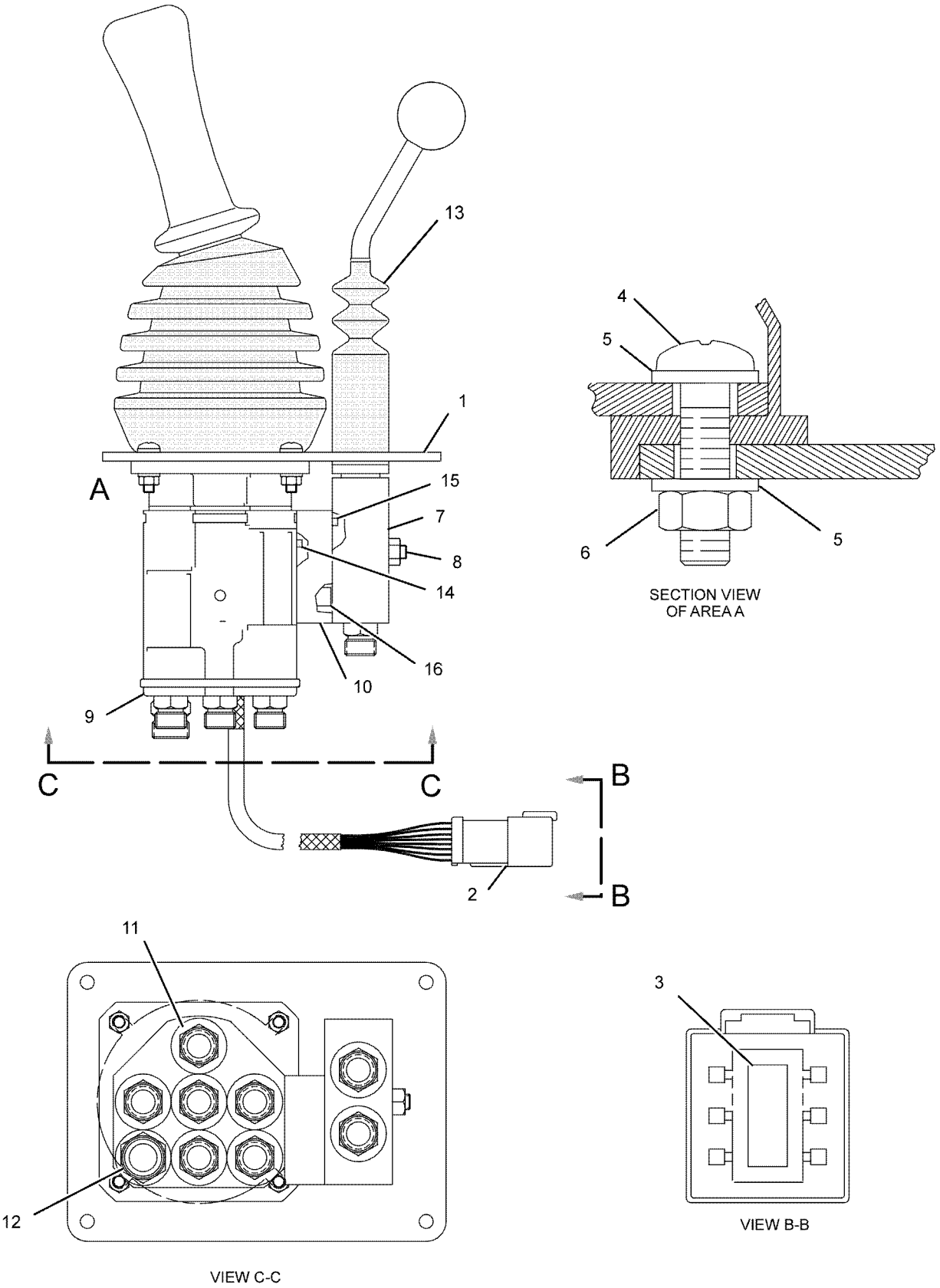

GRAPHIC #1 <END> g01007296

129-4497 VALVE GP-PILOT

S/N: 9BL1399-UP

PART OF 127-0863 VALVE GP-PILOT

AN ATTACHMENT

SMCS-5059 **i02024701**

NOTE	REF NO	GRAPHIC REF	PART NUMBER	QTY	PART NAME 1 2 3 4 5 6 (PRODUCT LEVEL)	SEE PAGE
	1	1	**127-9644**	2	KIT-PLUNGER (PILOT VALVE)	
					(EACH KIT INCLUDES PLUNGER, GUIDE, SEAL & O-RING)	
	2	1	**159-3254**	1	KIT-SPRING (PILOT VALVE)	
					(INCLUDES SPRINGS)	
	3	1	**112-0034**	2	SEAL-O-RING	
	4	1	**204-0158**	2	KIT-REGULATING (PILOT VALVE)	
					(EACH KIT INCLUDES RETAINERS, SPRING, SPOOL, WASHERS, & SHIMS)	
JM	5	1	**8T-9534**	2	BOLT (M6X1X50-MM)	
JM	6	1	**095-1259**	2	SETSCREW-SOCKET (M4X0.7-THD)	
JM	7	1	**5C-8312**	2	NUT (M4X0.7-THD)	
J	8	1	**203-1097**	1	KIT-LEVER (PILOT VALVE)	
					(INCLUDES LEVER, LEVER PIN, CAM, BOLT, COVER, SETSCREW, NUT-LOCK & PIN-LOCK ARMATURE)	
	9	1	**8U-5892**	1	BOOT	
	10	1	**149-8652**	1	BALL	

J - KIT MARKED J INCLUDES PART(S) MARKED J
M - METRIC PART

129-4497 **VALVE GP-PILOT (**contd.**)** **i02024701**

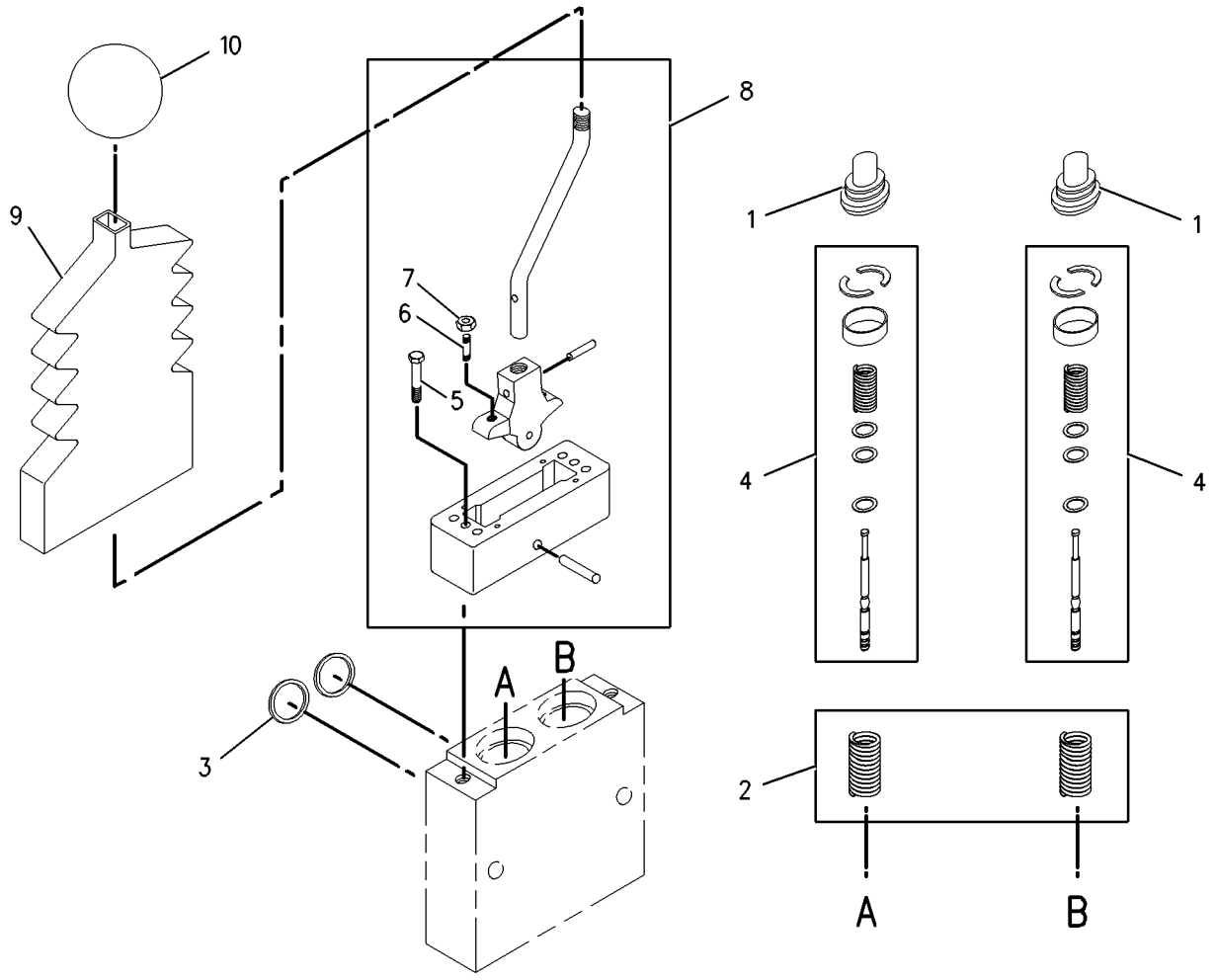

GRAPHIC #1 <END> g00996034

129-4600 VALVE GP-PILOT

S/N: 9BL1399-UP
PART OF 127-0863 VALVE GP-PILOT
AN ATTACHMENT

SMCS-5059 **i02290592**

NOTE	REF NO	GRAPHIC REF	PART NUMBER	QTY	PART NAME 1 2 3 4 5 6 (PRODUCT LEVEL)	SEE PAGE
	1	1	**195-3510**	1	HANDLE AS-CONTROL (LH)	
	2	1	**203-1086**	1	BOOT (PILOT VALVE)	
M	3	1	**3E-8020**	4	SCREW-TRUSS HEAD (M6X1X25-MM)	
	4	1	**196-4937**	1	NUT-LOCKING	
	5	1	**158-3770**	1	KIT-PILOT VALVE (LEVER) (PILOT VALVE)	
					(INCLUDES LEVER, PIN & NUT-LOCK)	
	6	1	**154-1208**	1	KIT-PILOT VALVE (FLANGE) (PILOT VALVE)	
					(INCLUDES SHIMS, U-JOINT, FLANGE, PLUGS & BRACKETS)	
	7	1	**9X-8256**	8	WASHER (6.6X12X2-MM THK)	
M	8	1	**5C-2890**	4	NUT (M6X1-THD)	
	9	1	**154-1273**	3	KIT-PILOT VALVE (CONNECTOR JOINT)	
					(EACH INCLUDES NUT-LOCK, FRICTION WASHERS, JOINT, ARMATURE & SNAP RING)	
	10	1	**129-4508**	3	COIL AS	
					(EACH INCLUDES)	
		1	**186-3735**	2	PIN-CONNECTOR (16-GA TO 18-GA)	
	11	1	**203-1087**	1	KIT-PILOT VALVE (PLUNGER)	
					(INCLUDES SCREWS, NUT & SNAP RING)	
	12	1	**203-1088**	1	KIT-PILOT VALVE (REGULATING)	
					(INCLUDES SPRING, RETAINING WASHER, SPOOL, SHIMS, SPRING RETAINER & WASHER RETAINER)	
	13	1	**203-1089**	1	KIT-PILOT VALVE (PLUNGER)	
					(INCLUDES PLUNGER, PLUNGER GUIDE, SNAP RING, SPRING RETAINER & WASHER RETAINER)	
	14	1	**203-1090**	1	KIT-PILOT VALVE (PLUNGER)	
					(INCLUDES PLUNGER, PLUNGER GUIDE, SNAP RING, RETAINER WASHER & SPRING RETAINER)	
	15	1	**203-1093**	1	KIT-PILOT VALVE (PLUNGER)	
					(INCLUDES PLUNGER, WASHER & SNAP RING)	
	16	1	**203-1094**	1	GUIDE	
	17	1	**154-1657**	2	KIT-PILOT VALVE (SPRING)	
					(EACH INCLUDES SPRING & SOCKET)	
	18	1	**154-1658**	1	KIT-PILOT VALVE (PISTON)	
					(INCLUDES SCREWS, NUT, PLUG, O-RING SEAL, PISTON, SPRING, WASHER & PLATE)	
	19	1	**203-1092**	1	KIT-PILOT VALVE (SPOOL)	
					(INCLUDES SPRING, RETAINING WASHERS, SHIMS, SPRING RETAINER, SPOOL & WASHER RETAINER)	
	20	1	**159-3809**	1	KIT-PILOT VALVE (SPRING)	
					(INCLUDES SPRING & SOCKET)	
	21	1	**160-6778**	1	KIT-PILOT VALVE (SPRING)	
					(INCLUDES SPRINGS)	
	22	1	**160-6779**	1	KIT-PILOT VALVE (BUSHING)	
					(INCLUDES PROTECTION BUSHINGS)	
S	23	1	**102-8805**	1	KIT-RECEPTACLE (6-PIN)	
					(INCLUDES RECEPTACLE AS & WEDGE)	
S	24	1	**3E-3383**	1	WEDGE-RECEPTACLE LOCK (6-PIN)	
	25	1	**245-3854**	2	KIT-PILOT VALVE (REGULATING)	
					(EACH INCLUDES SNAP RING, PLATE, SPRING, SHIMS, WASHER RETAINING & SPOOL)	

129-4600 **VALVE GP-PILOT (**contd.**)** **i02290592**

NOTE	REF NO	GRAPHIC REF	PART NUMBER	QTY	PART NAME 1 2 3 4 5 6 (PRODUCT LEVEL)	SEE PAGE

M - METRIC PART
S - KIT MARKED S SERVICES PART(S) MARKED S

129-4600 **VALVE GP-PILOT (**contd.**)** **i02290592**

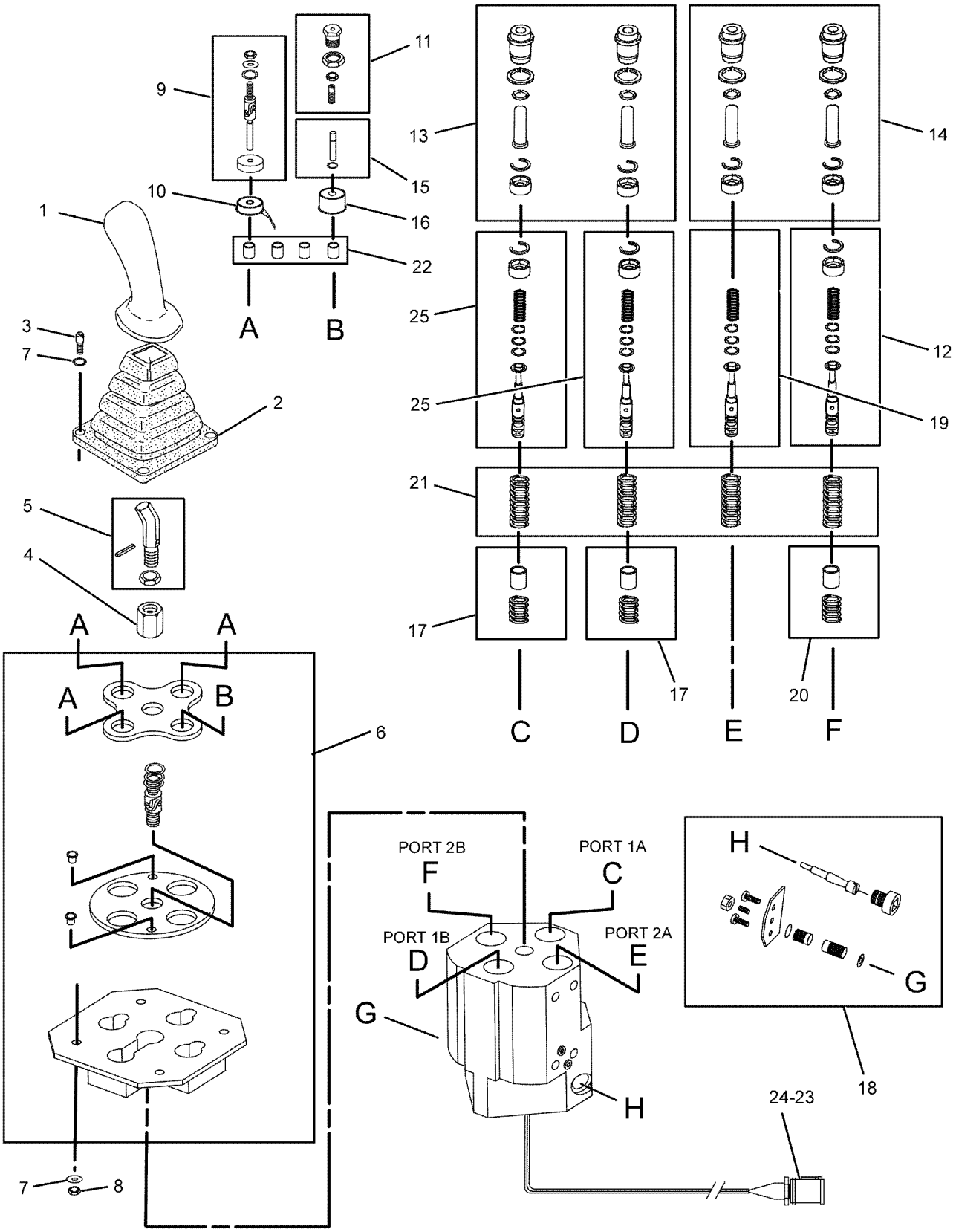

GRAPHIC #1 <END> g01147413

138-8141 VALVE GP-PILOT

S/N: 9BL1399-UP

PART OF 127-0860, 127-0861 VALVE GP-PILOT

AN ATTACHMENT

SMCS-5059 **i05165134**

NOTE	REF NO	GRAPHIC REF	PART NUMBER	QTY	PART NAME 1 2 3 4 5 6 (PRODUCT LEVEL)	SEE PAGE
	1	1	**192-2105**	2	KIT-PLUNGER (PILOT VALVE)	
					(EACH INCLUDES PLUNGER, PLUNGER GUIDE, SNAP RING, RETAINER WASHER, & RETAINER SPRING CUP)	
	2	1	**192-2108**	2	KIT-REGULATOR (PILOT VALVE)	
					(EACH INCLUDES RETAINER-WASHER(CLIP), RETAINER-SPRING (CUP), SPRING, WASHER-RETAINING, SPOOL, & SHIMS)	
	3	1	**159-3254**	1	KIT-SPRING (PILOT VALVE)	
					(INCLUDES SPRINGS)	
	4	1	**131-0434**	2	KIT-SPRING (PILOT VALVE)	
					(EACH INCLUDES SPRING & SOCKET)	
	5	1	**198-6498**	1	BOOT	
	6	1	**2Y-5818**	2	SEAL	
M	7	1	**8T-0352**	2	BOLT (M5X0.8X45-MM)	
J	8	1	**203-1098**	1	KIT-FLANGE (PILOT VALVE)	
					(INCLUDES FLANGE, SPOOL, PLUG AS., SPRING, SEALS & BOLTS)	
	9	1	**8T-6850**	1	SEAL-O-RING	
L	10	1	**203-1099**	1	KIT-CONTROL LEVER (PILOT VALVE)	
					(INCLUDES LEVER, CAM, LOCKING PIN, SETSCREWS, NUTS, BOLTS, LEVER PIN, ARMATURE & SNAP RING)	
M	11	1	**8T-9534**	2	BOLT (M6X1X50-MM)	
HM	12	1	**133-8861**	2	SETSCREW-HEX SOCKET (M5X0.8X16-MM)	
M	13	1	**5C-2874**	2	NUT (M5X0.8-THD)	
	14	1	**148-9243**	2	COIL AS	
					(EACH INCLUDES)	
		1	**186-3735**	2	PIN-CONNECTOR (16-GA TO 18-GA)	
M		1	**3E-4302**	1	SCREW-FLAT HEAD (M4X0.7X10-MM)	
	15	1	**149-8652**	1	BALL	
					AVAILABLE REPAIR KIT(S):	
			198-6515	1	KIT-SEAL (PILOT VALVE)	
					(INCLUDES O-RING SEALS)	

H - NOT INCLUDED IN CONTROL LEVER KIT
J - KIT MARKED J SERVICES PART(S) MARKED J
L - KIT MARKED L SERVICES PART(S) MARKED L
M - METRIC PART

138-8141 **VALVE GP-PILOT (**contd.**)** **i05165134**

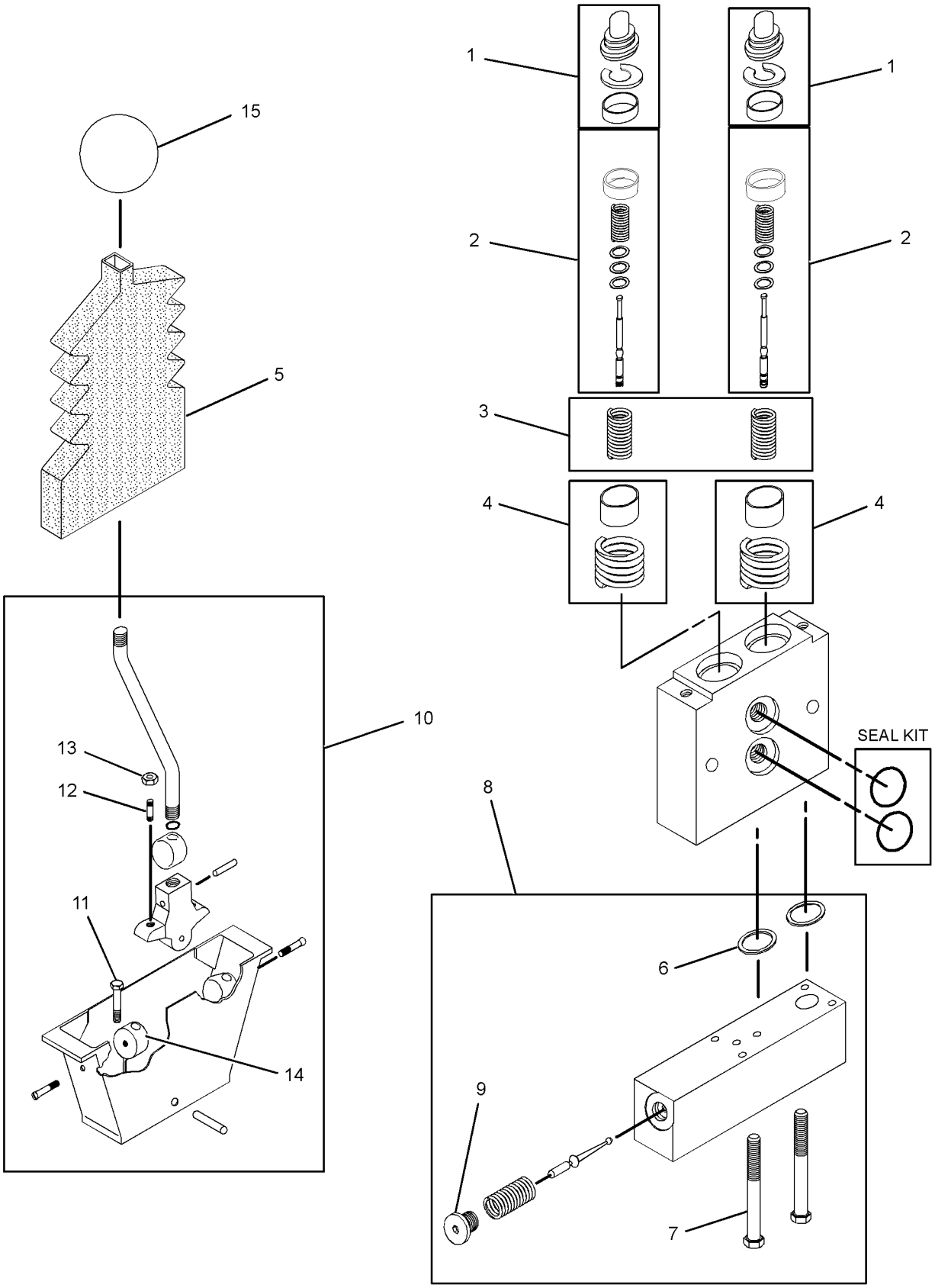

GRAPHIC #1 <END> g03317599

138-8142 VALVE GP-PILOT

S/N: 9BL1399-UP
FIELD REPLACEMENT ORDER 152-4819—PAGE: 648
PART OF 127-0860 VALVE GP-PILOT
AN ATTACHMENT

SMCS-5059 **i02000239**

NOTE	REF NO	GRAPHIC REF	PART NUMBER	QTY	PART NAME 1 2 3 4 5 6 (PRODUCT LEVEL)	SEE PAGE
	1	1	**8U-9427**	1	KIT-PLUNGER (PILOT VALVE)	
	2	1	**159-3254**	1	KIT-SPRING (PILOT VALVE)	
					(INCLUDES 2 SPRINGS)	
	3	1	**152-7481**	1	KIT-SPRING (PILOT VALVE)	
					(INCLUDES SPRING & SOCKET)	
	4	1	**203-1100**	1	KIT-PLUNGER (PILOT VALVE)	
					(INCLUDES PLUNGER, PLUNGER GUIDE, SNAP RING, RETAINER WASHER (CLIP),RETAINER SPRING (CUP)	
JM	5	1	**8T-9534**	2	BOLT (M6X1X50-MM)	
M	6	1	**095-1259**	2	SETSCREW-SOCKET (M4X0.7-THD) (M4X0.7 THD)	
M	7	1	**5C-8312**	2	NUT (M4X0.7-THD)	
N	8	1	**148-9243**	1	COIL AS	
		1	**186-3735**	2	PIN-CONNECTOR (16-GA TO 18-GA)	
M		1	**3E-4302**	1	SCREW-FLAT HEAD (M4X0.7X10-MM)	
	9	1	**203-1099**	1	KIT-CONTROL LEVER (PILOT VALVE)	
					(INCLUDES COVER, LEVER, CAM, LOCKING PIN, LEVER PIN, ARMATURE, SNAP RING, 2 SETSCREWS, 2 NUTS & PARTS MARKED J) (DOES NOT INCLUDE PARTS MARKED N)	
	10	1	**198-6498**	1	BOOT	
	11	1	**149-8652**	1	BALL	
	12	1	**192-2109**	1	KIT-REGULATOR (PILOT VALVE)	
					(INCLUDES RETAINING-WASHER (CLIP), RETAINING-SPRING (CUP), SPRING,2 WASHER-RETAINERS,SPOOL & 9 SHIMS)	
	13	1	**192-2110**	1	KIT-VALVE REPAIR (PILOT VALVE)	
					(INCLUDES RETAINER-WASHER (CLIP), RETAINER-SPRING (CUP),SPRING,2 WASHERS-RETAINING, SPOOL & 9 SHIMS)	

J - INCLUDED IN 203-1099 KIT-CONTROL LEVER
M - METRIC PART
N - NOT INCLUDED IN 203-1099 KIT-CONTROL LEVER

138-8142 **VALVE GP-PILOT (**contd.**)** **i02000239**

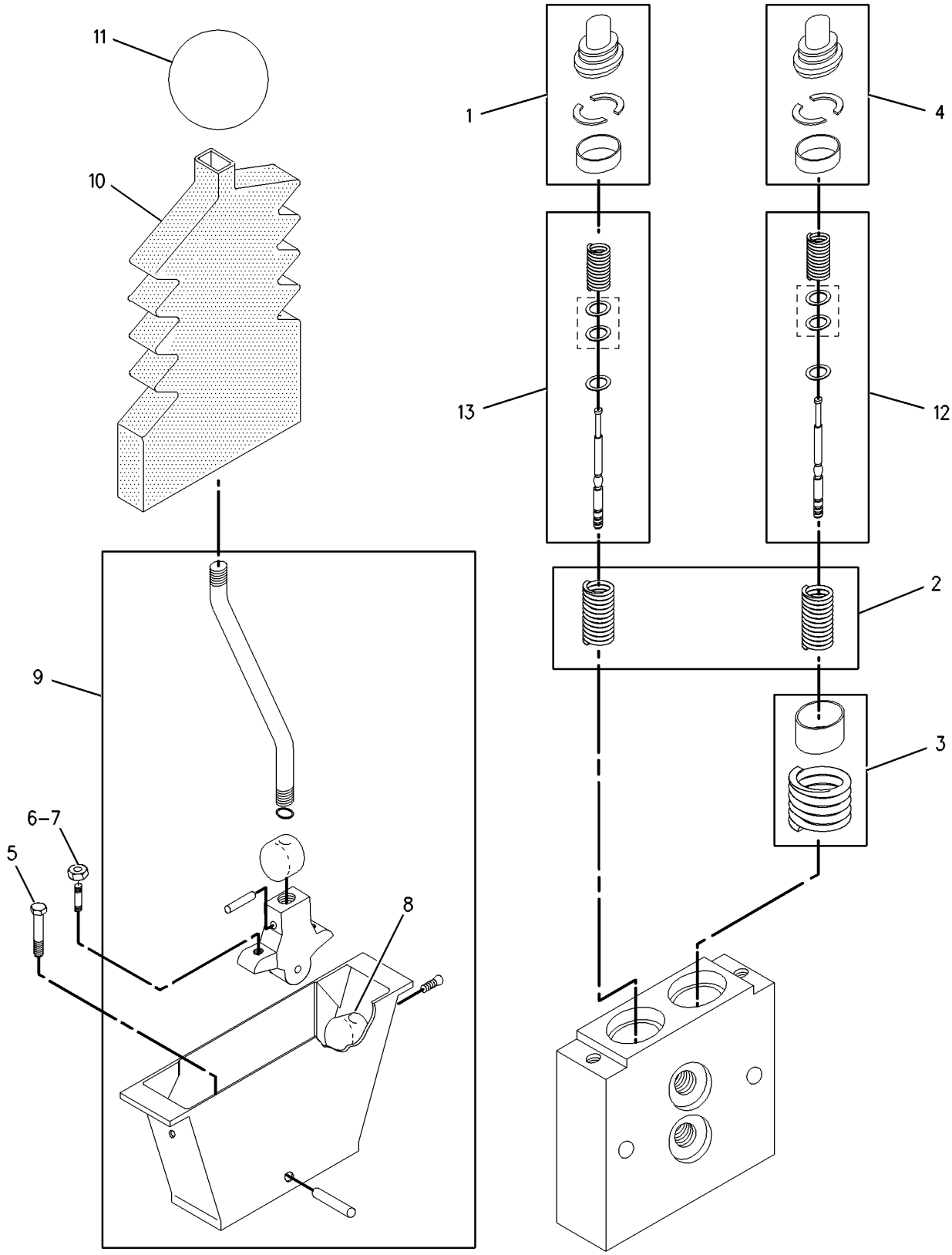

GRAPHIC #1 <END> g00892322

138-8143 VALVE GP-PILOT

S/N: 9BL1399-UP

PART OF 127-0861 VALVE GP-PILOT

AN ATTACHMENT

SMCS-5059 **i01708125**

NOTE	REF NO	GRAPHIC REF	PART NUMBER	QTY	PART NAME 1 2 3 4 5 6 (PRODUCT LEVEL)	SEE PAGE
JL	1	1	**192-2105**	2	KIT-PLUNGER	
					(EACH INCLUDES PLUNGER, PLUNGER GUIDE, SNAP RING, RETAINER WASHER CLIP & RETAINER SPRING CUP)	
	2	1	**159-3254**	1	KIT-SPRING	
					(INCLUDES 2 SPRINGS)	
	3	1	**112-0034**	2	SEAL-O-RING	
L	4	1	**204-0158**	2	KIT-REGULATING	
					(EACH INCLUDES RETAINER WASHER CLIP, RETAINER SPRING CUP, SPRING, WASHER RETAINERS, SPOOL & SHIMS)	
JM	5	1	**8T-9534**	2	BOLT (M6X1X50-MM)	
JM	6	1	**095-1259**	2	SETSCREW-SOCKET (M4X0.7-THD)	
JM	7	1	**5C-8312**	2	NUT (M4X0.7-THD)	
J	8	1	**203-1097**	1	KIT-LEVER	
					(INCLUDES LEVER, CAM, LOCKING PIN, SETSCREWS, NUTS, COVER, BOLTS, & LEVER PIN)	
	9	1	**8U-5892**	1	BOOT	
	10	1	**149-8652**	1	BALL	

J - PARTS MARKED J CONTAINED IN KIT MARKED J
L - KITS MARKED L INCLUDES PARTS MARKED L IN ILLUSTRATION
M - METRIC PART

138-8143 **VALVE GP-PILOT (**contd.**)** **i01708125**

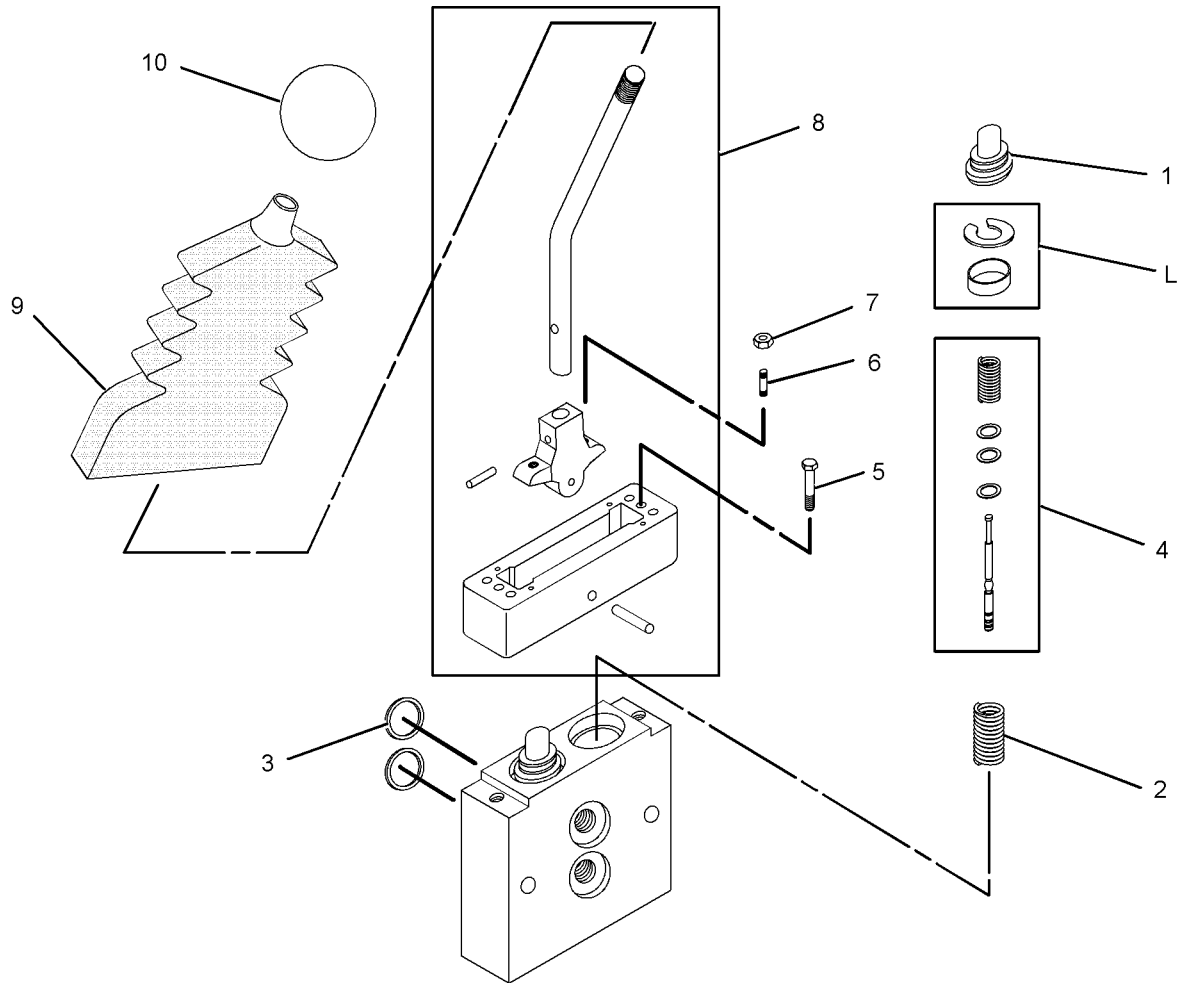

GRAPHIC #1 <END> g00953627

152-4819 VALVE GP-PILOT

S/N: 9BL1399-UP
FIELD REPLACEMENT FOR 138-8142—PAGE: 644
PART OF 127-0861 VALVE GP-PILOT
AN ATTACHMENT

SMCS-5059 **i02133200**

NOTE	REF NO	GRAPHIC REF	PART NUMBER	QTY	PART NAME 1 2 3 4 5 6 (PRODUCT LEVEL)	SEE PAGE
	1	1	**8U-9427**	1	KIT-PLUNGER (PILOT VALVE)	
					(INCLUDES PLUNGER & RETAINERS)	
	2	1	**159-3254**	1	KIT-SPRING (PILOT VALVE)	
					(INCLUDES 2 SPRINGS)	
J	3	1	**152-7481**	1	KIT-SPRING (PILOT VALVE)	
					(INCLUDES SPRING & SOCKET)	
	4	1	**192-2110**	1	KIT-VALVE REPAIR (PILOT VALVE)	
					(INCLUDES RETAINER CLIP, RETAINER SPRING, SPRING, RETAINING WASHERS, SPOOL, & SHIMS)	
	5	1	**203-1100**	1	KIT-PLUNGER (PILOT VALVE)	
					(INCLUDES PLUNGER, SNAP RING, GUIDE PLUNGER, & RETAINERS)	
HM	6	1	**8T-9534**	2	BOLT (M6X1X50-MM)	
JM	7	1	**133-8861**	2	SETSCREW-HEX SOCKET (M5X0.8X16-MM)	
HM	8	1	**3C-6970**	2	NUT (M5X0.8-THD)	
L	9	1	**148-9243**	1	COIL AS	
M		1	**3E-4302**	1	SCREW-FLAT HEAD (M4X0.7X10-MM)	
		1	**186-3735**	2	PIN-CONNECTOR (16-GA TO 18-GA)	
H	10	1	**203-1099**	1	KIT-CONTROL LEVER (PILOT VALVE)	
					(INCLUDES LEVER, CAM, LOCKING PIN, SETSCREW, NUT, COVER, BOLT, LEVER PIN, ARMATURE & SNAP RING)	
	11	1	**198-6498**	1	BOOT	
	12	1	**149-8652**	1	BALL (CONTROL LEVER)	
	13	1	**192-2109**	1	KIT-REGULATOR (PILOT VALVE)	
					(INCLUDES RETAINER CLIP, RETAINER SPRING, SPRING, RETAINING WASHERS, SPOOL, & SHIMS)	
					AVAILABLE REPAIR KIT(S):	
			198-6515	1	KIT-SEAL (PILOT VALVE)	
					(INCLUDES O-RINGS)	

H - (KIT MARKED H SERVICES PARTS MARKED H)
J - (KIT MARKED J SERVICES PARTS MARKED J)
L - (NOT INCLUDED IN CONTROL LEVER KIT)
M - METRIC PART

152-4819 **VALVE GP-PILOT (**contd.**)** **i02133200**

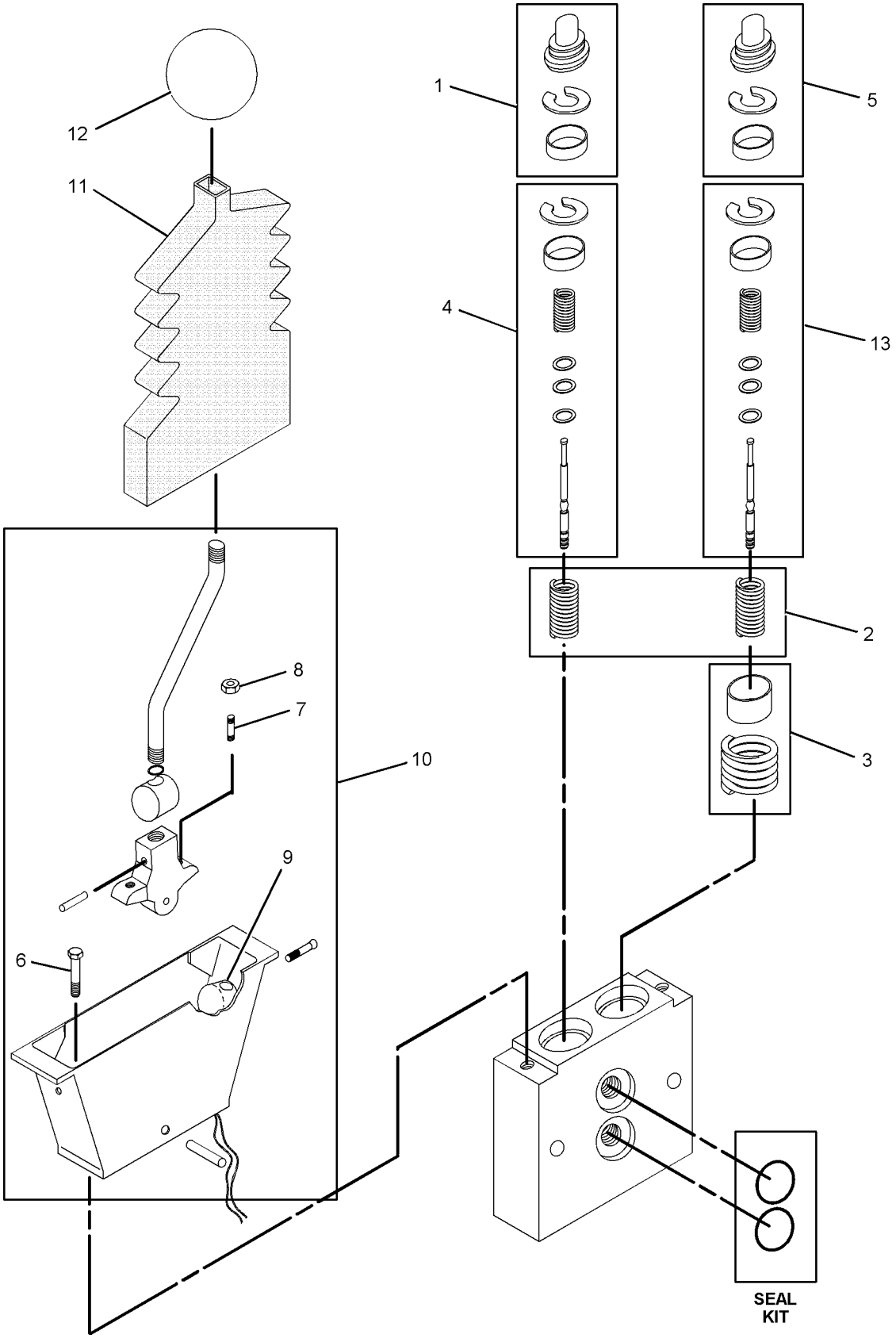

GRAPHIC #1 <END> g01085581

1U-2169 VALVE GP-PILOT

S/N: 9BL1-UP

PART OF 8G-0985 CONTROL GP-PILOT OPERATED HYD

AN ATTACHMENT

SMCS-5059 **i01400538**

NOTE	REF NO	GRAPHIC REF	PART NUMBER	QTY	PART NAME 1 2 3 4 5 6 (PRODUCT LEVEL)	SEE PAGE
	1	1	**0L-0723**	4	WASHER (0.656X0.906X0.049-IN THK)	
	2	1	**4J-3044**	4	BEARING AS-NEEDLE	
	3	1	**3G-9004**	2	SHAFT	
	4	1	**9S-4190**	4	PLUG-O-RING (7/8-14-THD)	
	5	1	**2M-9780**	4	SEAL-O-RING	
	6	1	**1U-2067**	1	RETAINER	
	7	1	**1U-2175**	1	SCREEN AS	
	8	1	**7J-7673**	2	SEAL-LIP TYPE	
C	9	1	**0T-0431**	1	WASHER (10.3X19X2.5-MM THK)	
	10	2	**0S-1619**	2	BOLT (3/8-16X3-IN)	
		2	**6M-5062**	2	SEAL-O-RING	
	11	2	**9S-8006**	2	PLUG (7/8-14-THD)	
	12	2	**2M-9780**	2	SEAL-O-RING	
	13	2	**5H-3182**	2	PIN-SPRING	
	14	2	**3G-9005**	2	ACTUATOR	
	15	2	**1U-2176**	4	SLEEVE	
	16	2	**1U-2234**	4	NUT	
	17	2	**6V-2483**	1	SEAL-O-RING	
	18	2	**1U-2071**	4	RETAINER	
	19	2	**5M-7883**	4	SPRING (OUTER)	
	20	2	**1U-2170**	1	VALVE GP	
	21	2	**9S-4191**	1	PLUG (9/16-18-THD)	
		2	**3J-1907**	1	SEAL-O-RING	
	22	2	**9S-4180**	1	PLUG	
		2	**4J-7533**	1	SEAL-O-RING	
	23	2	**3G-9859**	4	SPRING (INNER)	
	24	2	**1U-2070**	4	RETAINER	
B	25	2	**5S-7018**	8	SPACER (7.54X14.15X0.25-MM THK)	
	26	2	**3G-8998**	4	PLUNGER	
	27	2	**009-0008**	4	SETSCREW-SOCKET (3/8-16X0.5-IN)	
	28	2	**1U-2074**	1	COVER	

B - USE AS REQUIRED
C - CHANGE FROM PREVIOUS TYPE

1U-2169 **VALVE GP-PILOT (**contd.**)** **i01400538**

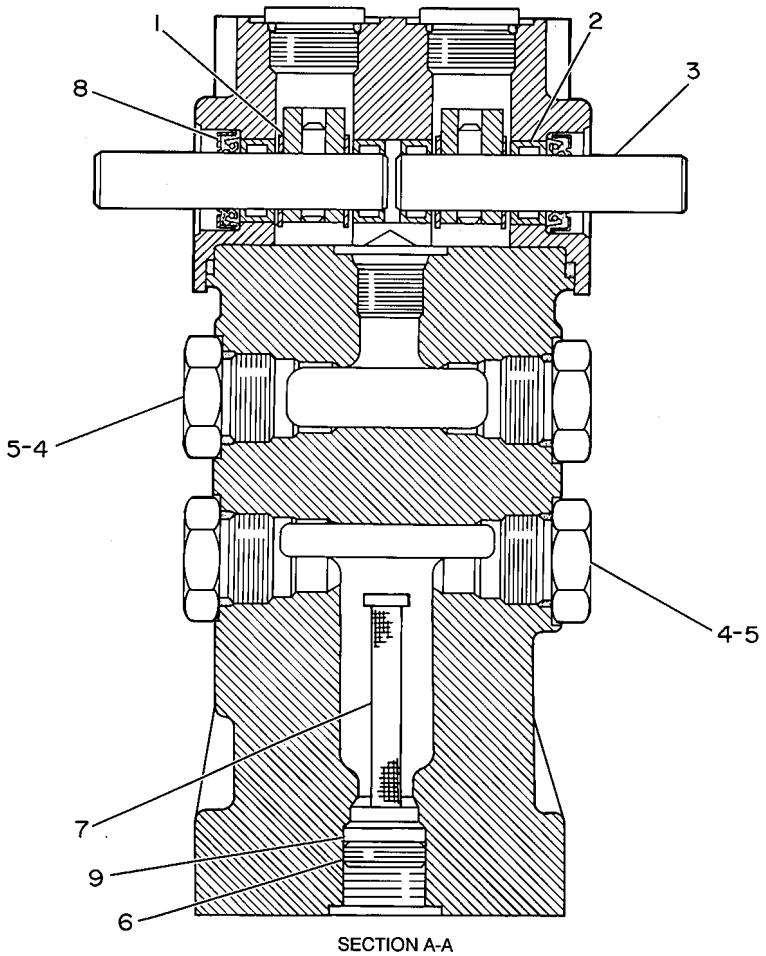

SECTION A-A

GRAPHIC #1 g00187669

1U-2169 **VALVE GP-PILOT** (contd.) **i01400538**

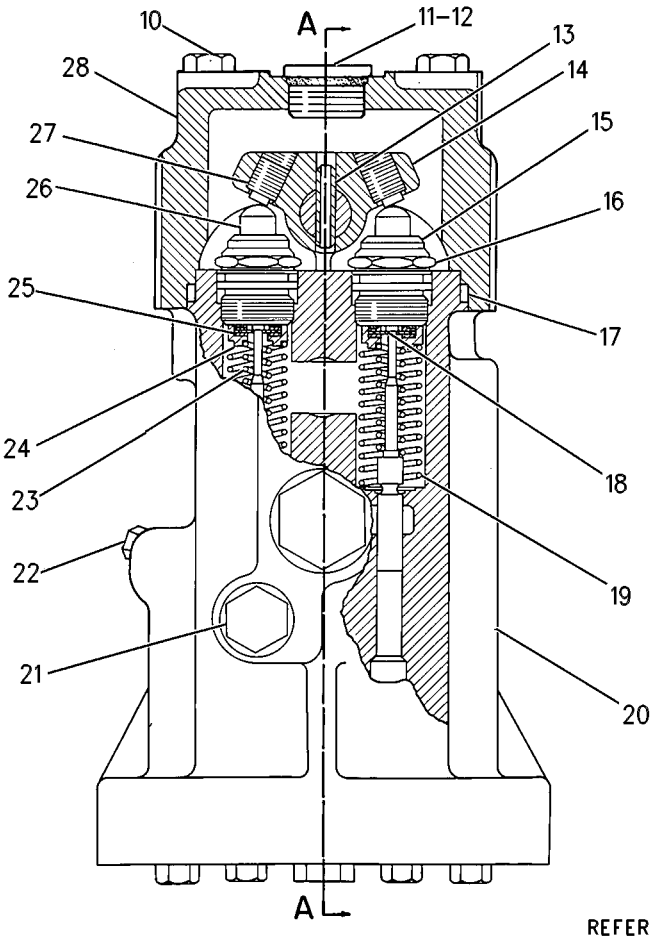

REFER TO ALL ILLUSTRATIONS OF
THIS GROUP FOR AUXILIARY VIEWS

GRAPHIC #2 <END> g00522049

1U-2169 VALVE GP-PILOT

S/N: 9BL1-1398

PART OF 7P-9729 CONTROL GP-PILOT OPERATED HYD

SMCS-5059 **i01400539**

NOTE	REF NO	GRAPHIC REF	PART NUMBER	QTY	PART NAME 1 2 3 4 5 6 (PRODUCT LEVEL)	SEE PAGE
B	1	1	**0L-0723**	12	WASHER (0.656X0.906X0.049-IN THK)	
	2	1	**4J-3044**	4	BEARING AS-NEEDLE	
	3	1	**3G-9004**	2	SHAFT	
	4	1	**9S-4190**	4	PLUG-O-RING (7/8-14-THD)	
	5	1	**2M-9780**	4	SEAL-O-RING	
	6	1	**1U-2067**	1	RETAINER	
	7	1	**1U-2175**	1	SCREEN AS	
	8	1	**7J-7673**	2	SEAL-LIP TYPE	
	9	1	**0T-0431**	1	WASHER (10.3X19X2.5-MM THK)	
C	10	2	**0T-0573**	2	BOLT (3/8-16X2.75-IN)	
C		2	**5H-6005**	2	SEAL-O-RING	
	11	2	**9S-8006**	2	PLUG (7/8-14-THD)	
	12	2	**2M-9780**	2	SEAL-O-RING	
	13	2	**5H-3182**	2	PIN-SPRING	
	14	2	**3G-9005**	2	ACTUATOR	
	15	2	**1U-2176**	4	SLEEVE	
	16	2	**1U-2234**	4	NUT	
	17	2	**6V-2483**	1	SEAL-O-RING	
	18	2	**1U-2071**	4	RETAINER	
	19	2	**5M-7883**	4	SPRING (OUTER)	
C	20	2	**9T-3064**	1	VALVE GP	
	21	2	**9S-4191**	1	PLUG (9/16-18-THD)	
		2	**3J-1907**	1	SEAL-O-RING	
	22	2	**9S-4180**	1	PLUG	
		2	**4J-7533**	1	SEAL-O-RING	
	23	2	**3G-9859**	4	SPRING (INNER)	
	24	2	**1U-2070**	4	RETAINER	
B	25	2	**5S-7018**	8	SPACER (7.54X14.15X0.25-MM THK)	
	26	2	**3G-8998**	4	PLUNGER	
	27	2	**009-0008**	4	SETSCREW-SOCKET (3/8-16X0.5-IN)	
	28	2	**1U-2074**	1	COVER	

B - USE AS REQUIRED
C - CHANGE FROM PREVIOUS TYPE

1U-2169 **VALVE GP-PILOT** (contd.) **i01400539**

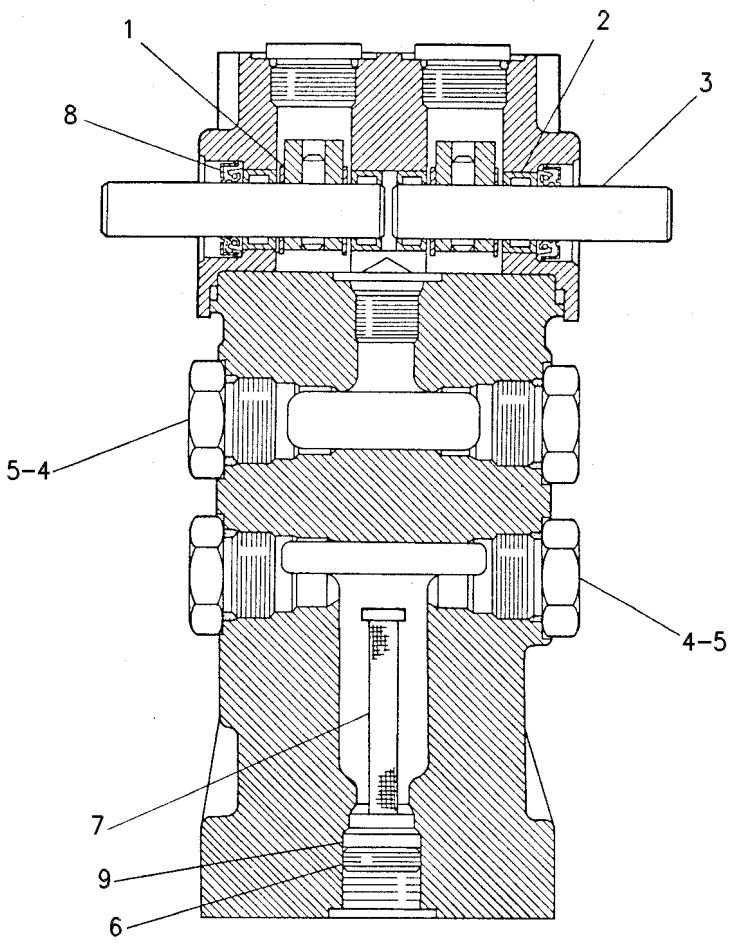

SECTION A-A

GRAPHIC #1 g00426136

1U-2169 **VALVE GP-PILOT (**contd.**)** **i01400539**

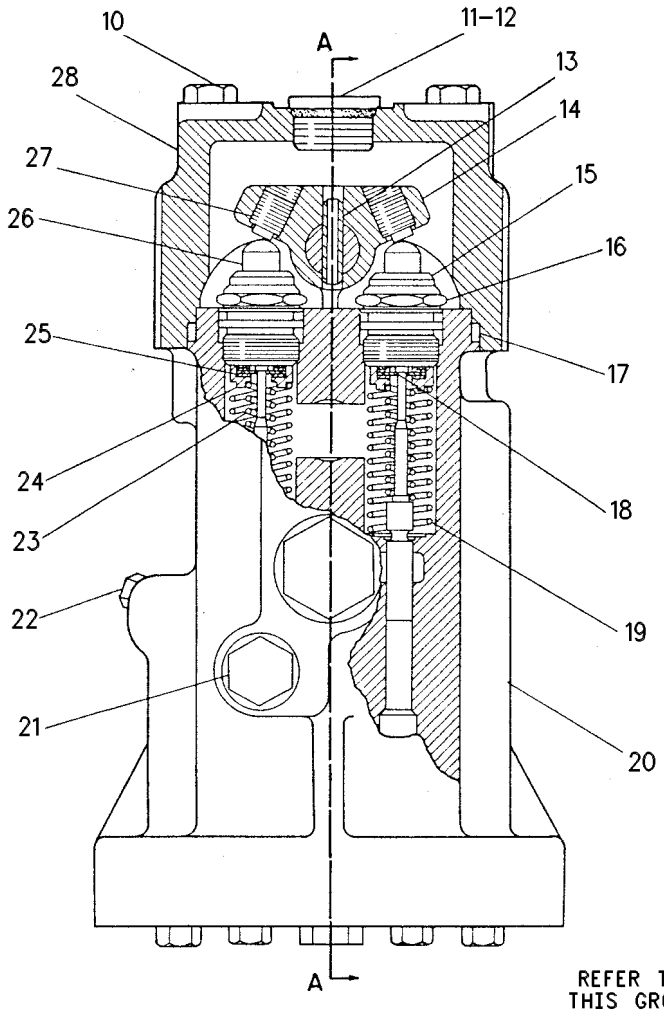

REFER TO ALL ILLUSTRATIONS OF THIS GROUP FOR AUXILIARY VIEWS

GRAPHIC #2 <END> g00426137

1U-2620 VALVE GP-PILOT

S/N: 9BL1-1398

PART OF 8G-0987, 8G-1618 CONTROL GP-PILOT OPERATED HYD

AN ATTACHMENT

SMCS-5059 **i01400542**

NOTE	REF NO	GRAPHIC REF	PART NUMBER	QTY	PART NAME 1 2 3 4 5 6 (PRODUCT LEVEL)	SEE PAGE
	1	1	**1U-2764**	1	ACTUATOR	
	2	1	**1B-4427**	2	NUT-JAM (1/4-20-THD)	
	3	1	**2A-0762**	2	BOLT (1/4-20X0.625-IN)	
	4	1	**044-3165**	1	PIN	
	5	1	**1U-3147**	4	SEAL-U-CUP	
	6	1	**033-6044**	2	SEAL-O-RING	
	7	1	**9S-4191**	5	PLUG (9/16-18-THD)	
	8	1	**9S-4182**	1	PLUG (7/16-20-THD)	
		1	**3J-7354**	1	SEAL-O-RING	
	9	1	**1U-2621**	1	VALVE GP	
	10	1	**3G-9003**	2	SPRING	
	11	1	**3G-9859**	2	SPRING	
	12	1	**1U-2070**	2	RETAINER	
	13	1	**5S-7018**	4	SPACER (7.54X14.15X0.25-MM THK)	
	14	1	**1U-2071**	2	RETAINER	
	15	1	**1U-2762**	1	BRACKET-PIVOT	
	16	1	**8J-1622**	2	NUT (7/8-20-THD)	
	17	1	**9T-2378**	2	SLEEVE	
	18	1	**1U-2752**	2	PLUNGER	
	19	1	**1U-2765**	1	BOOT	
	20	1	**9M-4252**	2	BUSHING	
	21	1	**3D-4603**	1	PLUG-PIPE	
	22	1	**9S-8004**	2	PLUG (9/16-18-THD)	
	23	1	**3J-1907**	7	SEAL-O-RING	

1U-2620 **VALVE GP-PILOT (**contd.**)** **i01400542**

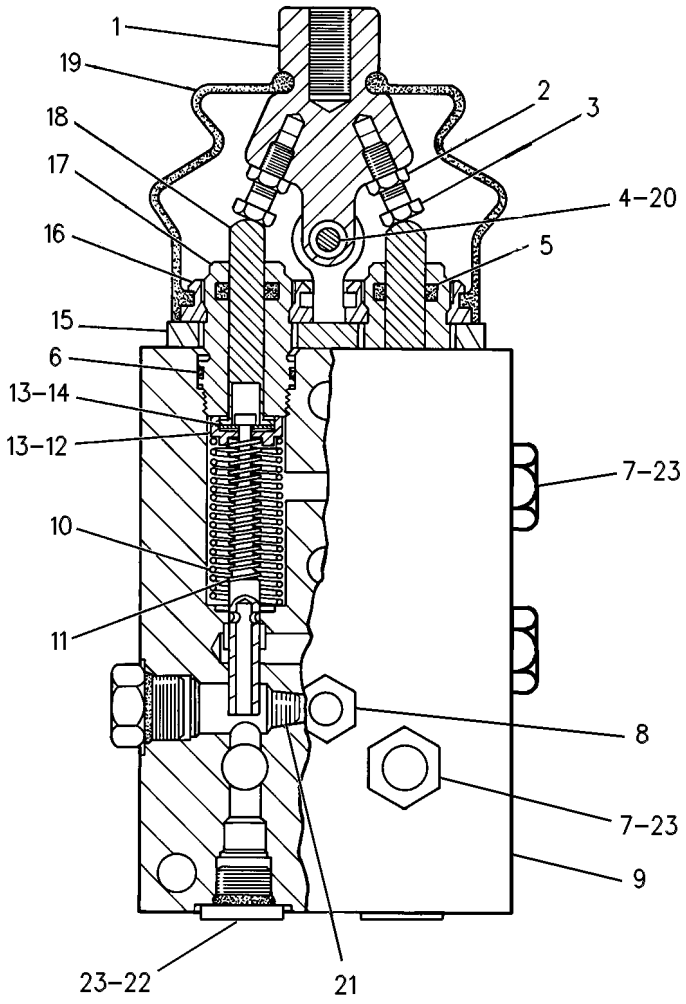

GRAPHIC #1 <END> g00447313

1U-4773 VALVE GP-PILOT

S/N: 8EX1-UP

PART OF 104-6208 CONTROL AR-HYDROSTATIC POWER

SMCS-5059 **i01399839**

NOTE	REF NO	GRAPHIC REF	PART NUMBER	QTY	PART NAME 1 2 3 4 5 6 (PRODUCT LEVEL)	SEE PAGE
	1	1	**1U-4790**	1	SCREW-ADJUSTMENT	
	2	1	**1B-4203**	1	NUT-FULL (3/8-24-THD)	
	3	1	**1U-4780**	1	PLUG	
	4	1	**2M-9780**	1	SEAL-O-RING	
	5	1	**1U-4772**	1	VALVE GP	
		1	**1U-4774**	1	PISTON	
		1	**4N-5533**	2	PLUG AS	
	6	1	**4T-0363**	1	SPRING	
	7	1	**9S-8005**	1	PLUG (3/4-16-THD)	
		1	**3K-0360**	1	SEAL-O-RING	
	8	1	**3G-8478**	1	PLATE	
	9	1	**031-4630**	2	BOLT-LOCKING (5/16-18X0.75-IN)	
		1	**9M-1974**	2	WASHER-HARD (8.8X16X2-MM THK)	
C	10	1	**1B-4201**	1	NUT-FULL (1/4-28-THD)	
	11	1	**1U-0425**	1	ROD END	
	12	1	**3G-8477**	2	RETAINER	
	13	1	**2L-8202**	1	SPRING	
	14	1	**3G-8476**	2	RETAINER	
	15	1	**5M-2894**	1	WASHER-HARD (10.2X18.5X2.5-MM THK)	
		1	**8J-6775**	1	SEAL-THREAD	

C - CHANGE FROM PREVIOUS TYPE

1U-4773 **VALVE GP-PILOT (**contd.**)** **i01399839**

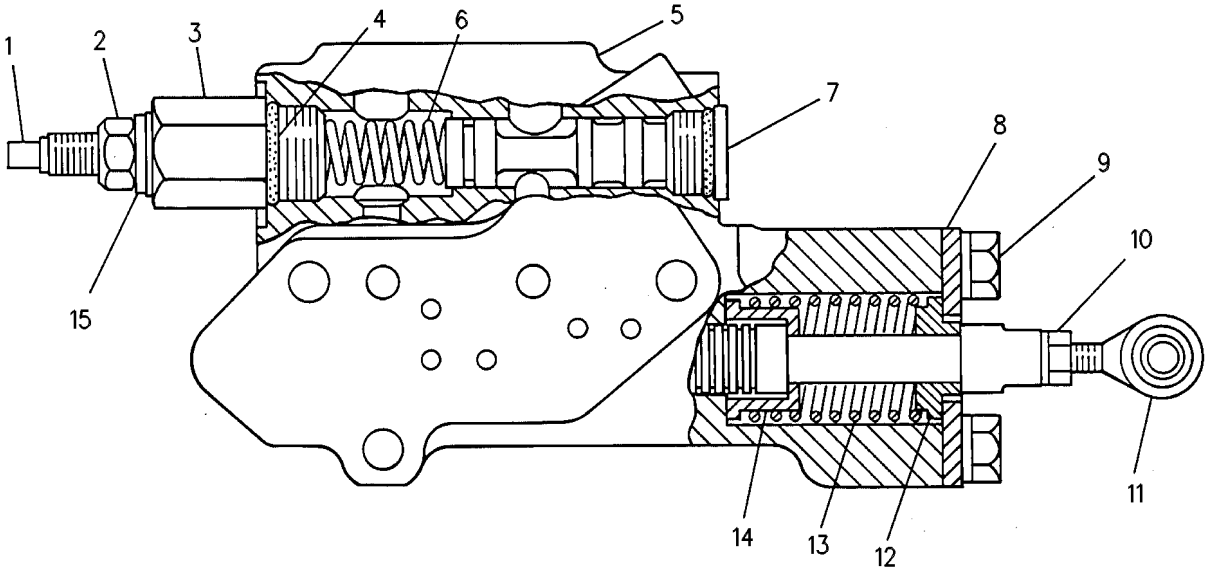

GRAPHIC #1 <END> g00387547

135-5489 VALVE GP-RELIEF

S/N: 9BL1397-UP
PART OF 4T-7003, 4T-7006 VALVE GP-CONTROL
ALSO AN ATTACHMENT

SMCS-5069, 5117

i01400563

NOTE	REF NO	GRAPHIC REF	PART NUMBER	QTY	PART NAME 1 2 3 4 5 6 (PRODUCT LEVEL)	SEE PAGE
	1	1	**7M-8485**	2	SEAL-O-RING	
	2	1	**4J-0522**	1	SEAL-O-RING	
	3	1	**8J-0322**	1	SPRING	
	4	1	**3K-0360**	1	SEAL-O-RING	
	5	1	**4Y-5812**	1	PLATE	
	6	1	**6E-5510**	1	RETAINER AS	
	7	1	**9X-6395**	1	NUT (3/4-16-THD)	
	8	1	**6E-1127**	1	CAP	
	9	1	**8J-0331**	1	VALVE	
	10	1	**6E-6138**	1	VALVE GP-RELIEF	
	11	1	**8H-3532**	1	SPRING-VALVE	
	12	1	**118-5615**	1	DOWEL	

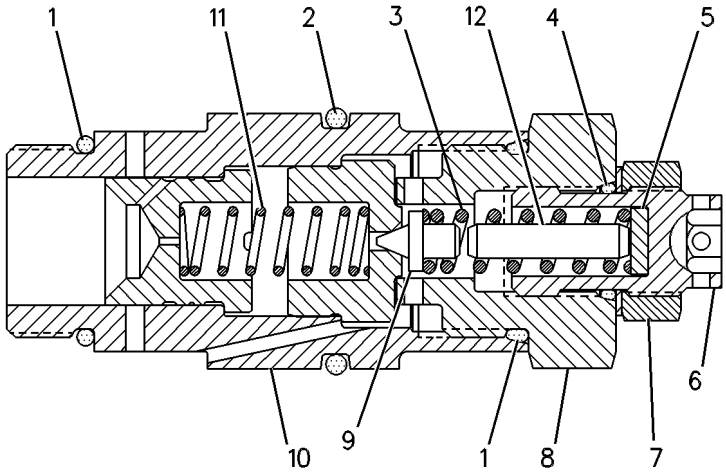

GRAPHIC #1 <END> g00288919

4T-7581 VALVE GP-RELIEF

S/N: 9BL1-UP
DIRECT OPERATED
PART OF 4T-7003, 4T-7006 VALVE GP-CONTROL
ALSO AN ATTACHMENT

SMCS-5069, 5117

i01665784

NOTE	REF NO	GRAPHIC REF	PART NUMBER	QTY	PART NAME 1 2 3 4 5 6 (PRODUCT LEVEL)	SEE PAGE
C	1	1	**6E-1835**	1	RETAINER AS	
C	2	1	**9X-6395**	1	NUT (3/4-16-THD)	
	3	1	**7J-9933**	1	SEAL-O-RING	
	4	1	**4T-7571**	1	PLATE	
	5	1	**6J-6439**	1	VALVE-POPPET	
	6	1	**3K-0360**	2	SEAL-O-RING	
	7	1	**4T-4942**	1	SPRING	
	8	1	**9M-1974**	2	WASHER-HARD (8.8X16X2-MM THK)	

C - CHANGE FROM PREVIOUS TYPE

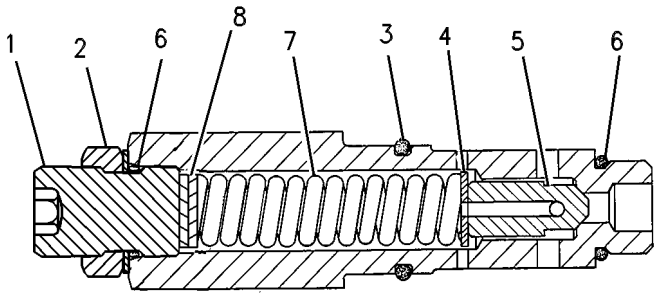

GRAPHIC #1

<END>

g00121410

6E-6184 VALVE GP-RELIEF

S/N: 9BL1-1396
PILOT OPERATED
PART OF 4T-7003, 4T-7006 VALVE GP-CONTROL
ALSO AN ATTACHMENT

SMCS-5069, 5117 **i01400558**

NOTE	REF NO	GRAPHIC REF	PART NUMBER	QTY	PART NAME 1 2 3 4 5 6 (PRODUCT LEVEL)	SEE PAGE
	1	1	**7M-8485**	2	SEAL-O-RING	
	2	1	**4J-0522**	1	SEAL-O-RING	
	3	1	**8J-0322**	1	SPRING	
	4	1	**3K-0360**	1	SEAL-O-RING	
	5	1	**4Y-5812**	1	PLATE	
	6	1	**6E-5510**	1	RETAINER AS	
	7	1	**9X-6395**	1	NUT (3/4-16-THD)	
	8	1	**6E-1127**	1	CAP	
	9	1	**8J-0331**	1	VALVE	
	10	1	**6E-6138**	1	VALVE GP-RELIEF	
	11	1	**8H-3532**	1	SPRING-VALVE	
D	12	1	**8C-8418**		LOCKWIRE (.2M)	
	13	1	**8S-8158**	1	SEAL-WIRE	
	14	1	**118-5615**	1	DOWEL	

D - ORDER BY THE METER

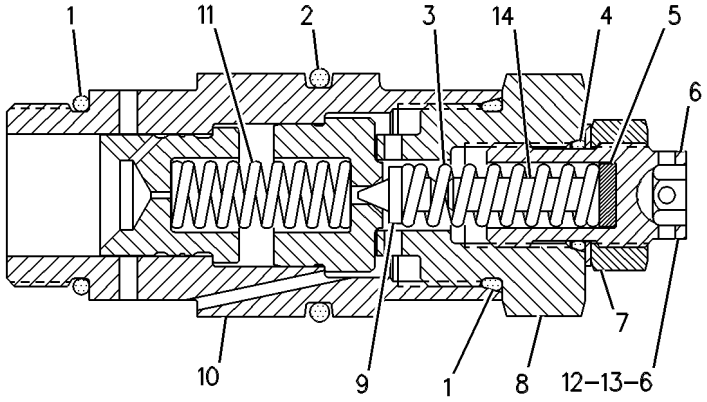

GRAPHIC #1 <END> g00251255

6E-6195 VALVE GP-RELIEF

S/N: 9BL1-UP
PART OF 4T-7003, 4T-7006 VALVE GP-CONTROL
ALSO AN ATTACHMENT

SMCS-5069, 5117

i05200930

NOTE	REF NO	GRAPHIC REF	PART NUMBER	QTY	PART NAME 1 2 3 4 5 6 (PRODUCT LEVEL)	SEE PAGE
	1	1	**7M-8485**	2	SEAL-O-RING	
	2	1	**4J-0522**	1	SEAL-O-RING	
	3	1	**4T-5988**	1	VALVE GP-RELIEF	
	4	1	**8J-4437**	1	SPRING	
B	5	1	**3J-7473**	1	SHIM (0.12-MM THK)	
B	6	1	**3H-2549**	4	SHIM (0.254-MM THK)	
B	7	1	**4T-4660**	1	SHIM (0.08-MM THK)	
	8	1	**3D-2824**	1	SEAL-O-RING	
	9	1	**8J-0331**	1	VALVE	
	10	1	**103-8652**	1	VALVE GP-RELIEF	
	11	1	**8H-3532**	1	SPRING-VALVE	
	12	1	**4T-4605**	1	RETAINER	
B	13	1	**4M-6978**	2	SHIM (0.05-MM THK)	
B	14	1	**4M-6979**	2	SHIM (0.13-MM THK)	
B	15	1	**4M-6980**	7	SHIM (0.25-MM THK)	
B	16	1	**4T-4659**	5	SHIM (0.8-MM THK)	
	17	1	**6P-4975**	1	ADAPTER	

B - USE AS REQUIRED

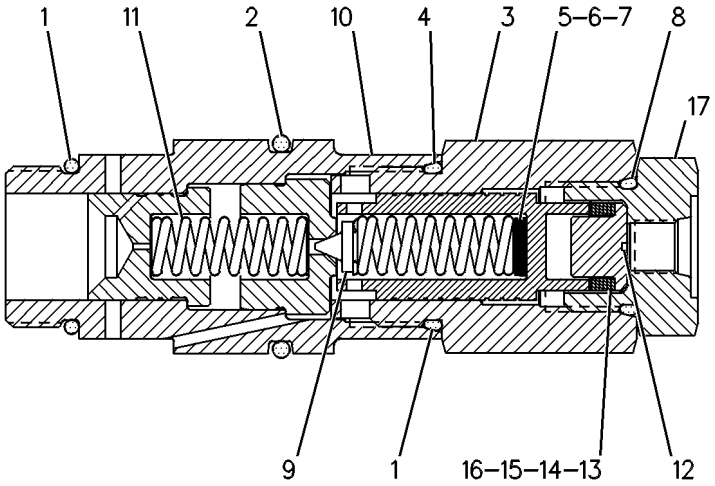

GRAPHIC #1

<END>

g00246910

9T-0762 VALVE GP-RELIEF

S/N: 9BL1-UP
DIRECT OPERATED
PART OF 4T-7003 VALVE GP-CONTROL
AN ATTACHMENT

SMCS-5069, 5117 **i01665845**

NOTE	REF NO	GRAPHIC REF	PART NUMBER	QTY	PART NAME 1 2 3 4 5 6 (PRODUCT LEVEL)	SEE PAGE
	1	1	**6E-1835**	1	RETAINER AS	
	2	1	**9X-6395**	1	NUT (3/4-16-THD)	
	3	1	**6J-6439**	1	VALVE-POPPET	
	4	1	**4T-7571**	1	PLATE	
	5	1	**7J-9933**	1	SEAL-O-RING	
	6	1	**3K-0360**	2	SEAL-O-RING	
	7	1	**4T-4942**	1	SPRING	

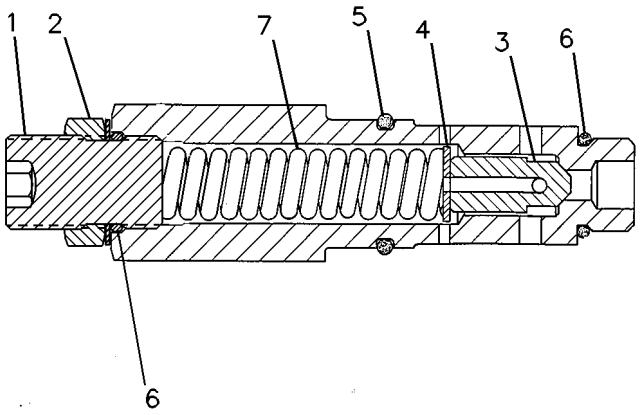

GRAPHIC #1 <END> g00213270

1U-2226 VALVE GP-SELECTOR & PRESS CONT

S/N: 9BL1399-UP

PART OF 128-1889 LINES GP-PILOT

SMCS-5065, 5117 **i01665796**

NOTE	REF NO	GRAPHIC REF	PART NUMBER	QTY	PART NAME 1 2 3 4 5 6 (PRODUCT LEVEL)	SEE PAGE
	1	1	**7S-8553**	1	SPRING	
B	2	1	**5S-7001**	2	SPACER (7.54X14.15X0.9-MM THK)	
	3	1	**108-3866**	2	ADAPTER	
	4	1	**2M-9780**	2	SEAL-O-RING	
B	5	1	**5S-7018**	3	SPACER (7.54X14.15X0.25-MM THK)	
	6	1	**180-9935**	1	SHIM (2.7-MM THK)	

B - USE AS REQUIRED

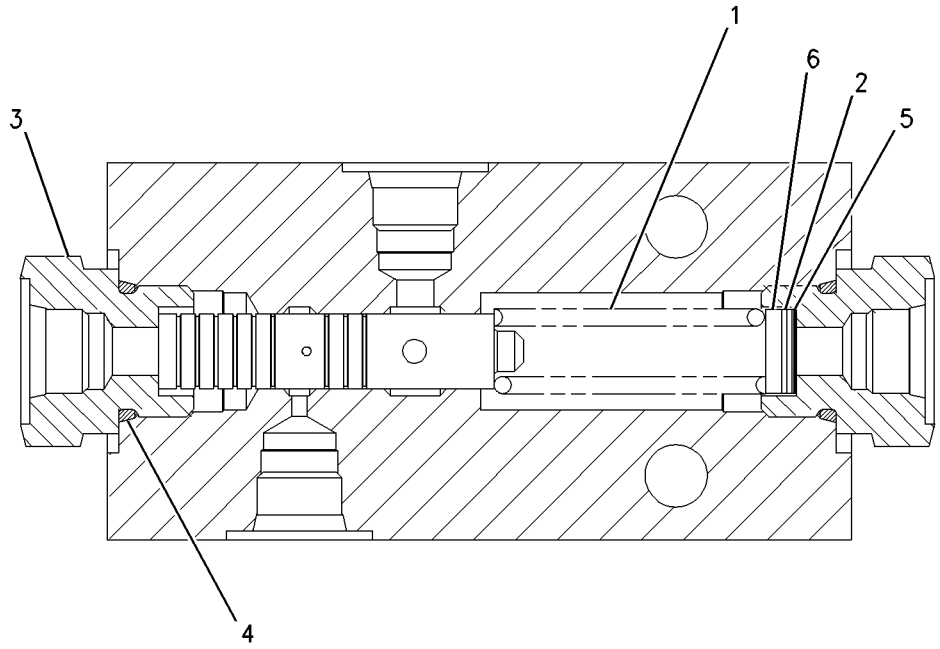

GRAPHIC #1 <END> g00674728

4T-4073 VALVE GP-SHUTTLE

S/N: 9BL1-UP

PART OF 4T-7003, 4T-7006 VALVE GP-CONTROL

ALSO AN ATTACHMENT

SMCS-5079 **i02010085**

NOTE	REF NO	GRAPHIC REF	PART NUMBER	QTY	PART NAME 1 2 3 4 5 6 (PRODUCT LEVEL)	SEE PAGE
	1	1	**033-6039**	1	SEAL-O-RING	
	2	1	**8L-2777**	1	SEAL-O-RING	
	3	1	**6E-0382**	2	RING-BACKUP	
	4	1	**6E-0381**	2	RING-BACKUP	
	5	1	**4B-9782**	1	BALL	

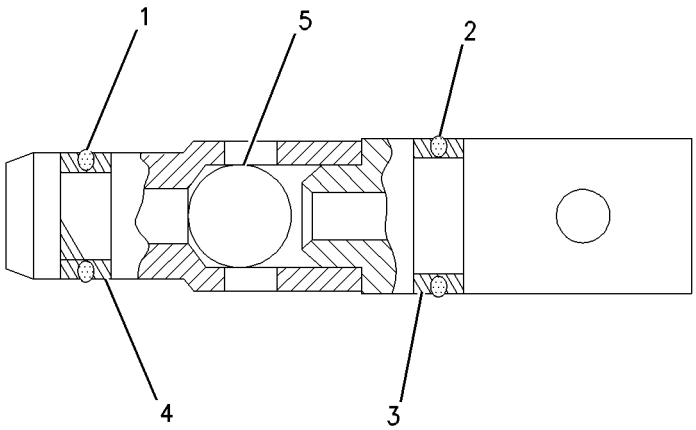

GRAPHIC #1 <END> g00703649

7P-2515 CONTROL GP-BUCKET

S/N: 9BL1-UP

PART OF 117-1761, 8Y-9370 CHASSIS AR

SMCS-6107 **i01400129**

NOTE	REF NO	GRAPHIC REF	PART NUMBER	QTY	PART NAME 1 2 3 4 5 6 (PRODUCT LEVEL)	SEE PAGE
	1	1	**3B-8489**	7	FITTING-GREASE (1/8-27 PTF)	
C	2	1	**8Y-0395**	4	PIN AS	
	3	1	**7K-9212**	12	SEAL-LIP TYPE	
C	4	1	**7X-0582**	10	WASHER-HARD (20X44.5X6-MM THK)	
C	5	1	**9K-9731**	10	SPACER (20.4X28.5X14.2-MM THK)	
C	6	1	**7X-0366**	8	BOLT (3/4-10X2-IN)	
C	7	1	**0S-1596**	4	BOLT (7/8-14X2.75-IN)	
C	8	1	**128-0957**	4	WASHER (24X85X8-MM THK)	
C	9	1	**131-6001**	2	PIN AS	
					(EACH INCLUDES)	
		1	**6V-2765**	2	PLUG-THREADED	
	10	1	**7V-3719**	4	COLLET AS	
					(EACH INCLUDES)	
		1	**1J-5799**	1	PIN-SPRING	
C	11	1	**5G-8484**	1	LEVER & BUSHING AS	
		1	**7P-6893**	1	BUSHING	
C	12	1	**7X-0404**	1	BOLT (1-8X2.5-IN)	
C	13	1	**4V-1718**	1	SPACER (27.5X50X17-MM THK)	
	14	1	**7P-6865**	1	PIN AS	
	15	1	**7K-9218**	2	SEAL-LIP TYPE	
C	16	1	**7X-0358**	6	BOLT (5/8-11X5.5-IN)	
C	17	1	**8T-4122**	6	WASHER-HARD (17X32X3.5-MM THK)	
	18	1	**8G-1615**	2	BAR	
C	19	1	**3W-3978**	1	LINK & BEARING AS	
		1	**3G-0222**	2	BUSHING	
	20	1	**4V-7105**	2	PIN AS	
	21	1	**7K-9209**	8	SEAL-LIP TYPE	
	22	1	**7P-2281**	2	PIN AS	
	23	1	**7P-6887**	2	PIN AS	
C	24	1	**124-0332**	2	HANDLE AS	
	25	1	**3B-8491**	4	FITTING-GREASE (1/8-27 PTF)	
	26	1	**7P-9168**	2	HANDRAIL AS	
C	27	1	**4L-6454**	10	BOLT (3/8-16X1-IN)	
	28	1	**5P-1075**	10	WASHER-HARD (10.2X22.5X3-MM THK)	
C	29	1	**7X-0365**	2	BOLT (3/4-10X1.5-IN)	
C	30	1	**4F-6464**	1	WASHER-HARD (26.2X60.3X5-MM THK)	
	31	1	**7P-7776**	1	ARM & BEARING AS-LIFT	
		1	**5J-6304**	10	BOSS (3/8-16-THD)	
	32	1	**7J-9705**	2	BUSHING	
	33	1	**9K-8423**	2	BUSHING	
	34	1	**132-2966**	2	STEP AS	

C - CHANGE FROM PREVIOUS TYPE

7P-2515 **CONTROL GP-BUCKET (**contd.**)** **i01400129**

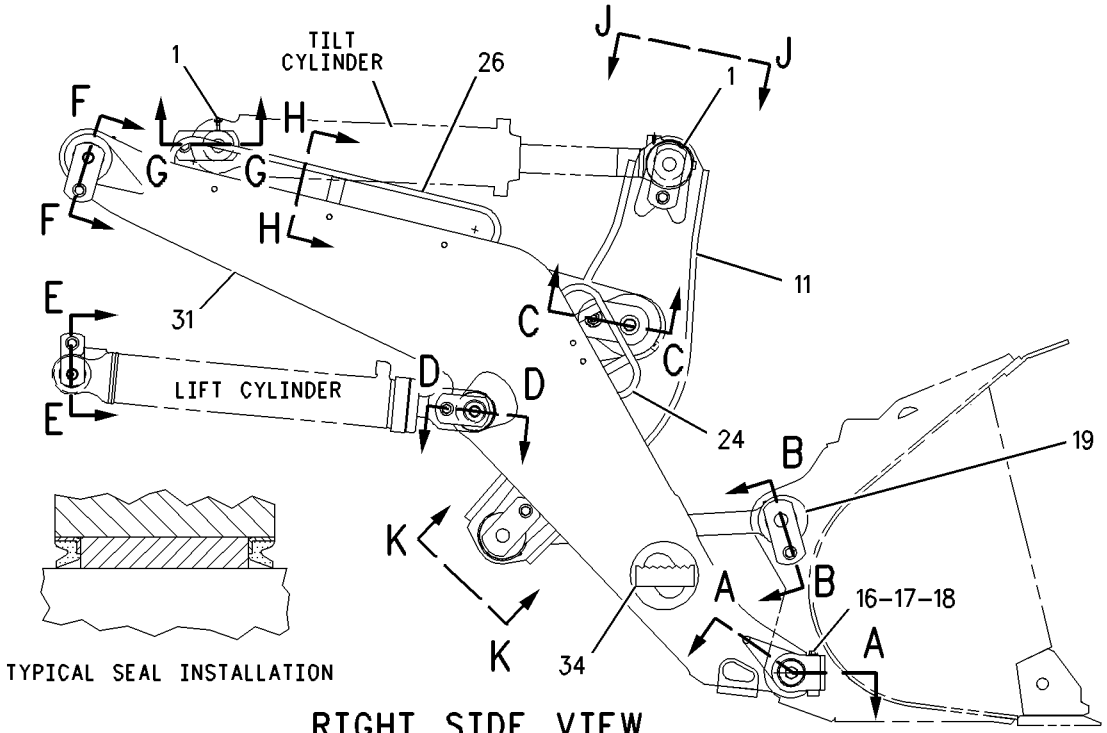

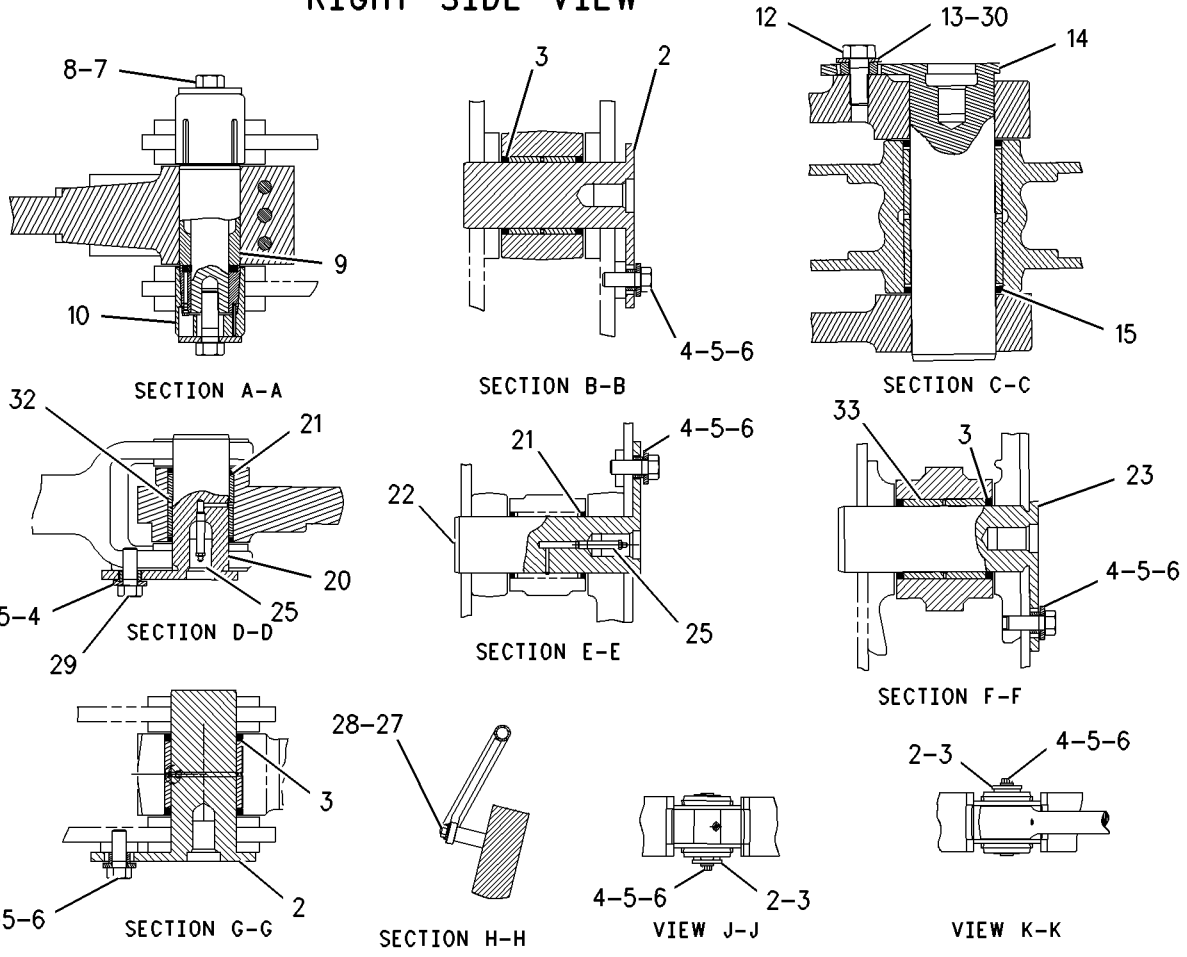

GRAPHIC #1 <END> g00653272

5G-7896 CONVERSION AR-IMPLEMENT CNTLS

S/N: 9BL1-UP

FIELD INSTALLATION

SMCS-6000 **i00707270**

NOTE	PART NUMBER	QTY	PART NAME 1 2 3 4 5 6 (PRODUCT LEVEL)	SEE PAGE
	7K-2135	4	BEARING-ROLLER	
	0S-1588	1	BOLT (3/8-16X1.25-IN)	
	8G-2536	1	BOOT	
	3W-1010	1	BRACKET AS	
	3W-6311	1	CAM	
	6V-1033	2	END-BEARING ROD	
	6V-2680	1	FILM-INSTRUCTION (SINGLE LEVER CONTROL)	
	3V-1974	1	HANDLE	
	3W-2390	1	LEVER	
	8G-0557	1	LEVER AS	
	8G-1537	1	LINK AS	
	3D-8752	4	LOCKNUT (5/16-24-THD)	
	6V-8186	2	NUT-FULL (5/16-24-THD)	
	4K-0367	1	NUT-FULL (5/8-11-THD)	
	2R-0364	2	RING-RETAINING	
	8G-1825	1	ROD	
	8G-0562	1	ROD	
	3P-4347	1	SPACER (0.656X1.25X0.036-IN THK)	
	4F-6123	1	SPRING	
	4V-0152	1	WASHER-THRUST	

<END>

5G-7897 CONVERSION AR-IMPLEMENT CNTLS

S/N: 9BL1-UP

FIELD INSTALLATION

SMCS-6000 **i00564192**

NOTE	PART NUMBER	QTY	PART NAME 1 2 3 4 5 6 (PRODUCT LEVEL)	SEE PAGE
	7K-2135	4	BEARING-ROLLER	
	1A-9579	2	BOLT (5/16-18X1.5-IN)	
	4B-3388	2	BOLT (5/16-18X1.125-IN)	
	3W-0333	1	BRACKET AS	
	3W-6310	1	CAM	
	7M-0706	2	KNOB	
	8G-1564	1	LEVER	
	8G-1563	1	LEVER	
	8G-6079	1	LINK AS	
	5S-0003	4	NUT (5/16-18-THD)	
	9S-8751	2	NUT-FULL (5/16-24-THD)	
	4H-3119	1	PIN	
	8G-1825	1	ROD	
	7H-3641	2	END-ROD (5/16-24-THD)	
	8G-1565	1	SHAFT	
	6N-1172	2	SLEEVE	
	1A-4790	3	WASHER (16.7X31.8X1.6-MM THK)	

<END>

117-1783 AIR CONDITIONER GP

S/N: 9BL1-UP
COSA
AN ATTACHMENT

SMCS-7320 **i00687358**

NOTE	PART NUMBER	QTY	PART NAME 1 2 3 4 5 6 (PRODUCT LEVEL)	SEE PAGE
Y	*8Y-9331*	1	AIR CONDITIONER GP	683
			S/N: 9BL1-1487	
Y	*141-5991*	1	AIR CONDITIONER GP	671
			S/N: 9BL1488-UP	
	111-5681	1	CAP-PLASTIC	

Y - SEPARATE ILLUSTRATION

<END>

141-5991 AIR CONDITIONER GP

S/N: 9BL1488-1877
PART OF 117-1783 AIR CONDITIONER GP
AN ATTACHMENT

SMCS-7320 **i05399019**

NOTE	REF NO	GRAPHIC REF	PART NUMBER	QTY	PART NAME 1 2 3 4 5 6 (PRODUCT LEVEL)	SEE PAGE
Y	1	1	*106-1260*	1	CONDENSER GP-REFRIGERANT	698
Y	2	1	*141-1558*	1	COMPRESSOR GP-REFRIGERANT	691
	3	1	**7D-7735**	1	CLIP	
I	4	1	**123-3586**	1	HOSE AS	
	5	1	**7K-1181**	2	STRAP-CABLE	
I	6	1	**123-3587**	1	HOSE AS	
	7	1,3	**5M-3062**	8	BOLT (3/8-16X0.75-IN)	
	8	1,2,3	**5P-1075**	12	WASHER-HARD (10.2X22.5X3-MM THK)	
	9	2	**7D-4092**	1	CLIP	
		2	**5P-3945**	1	CAP	
		2	**5P-3946**	1	PLUG	
M	10	1	**8T-0276**	2	BOLT (M8X1.25X45-MM)	
		1	**8T-4896**	2	WASHER-HARD (10.2X18.5X2.5-MM THK)	
	11	3	**110-6393**	1	PLATE-INSTRUCTION (AIR CONDITIONER)	
	12	1,2	**5P-3948**	2	COUPLING AS-REFRIGERANT (SELF-SEALING)	
	13	1,2	**7K-3304**	2	NUT-JAM (1-20-THD)	
	14	1,2	**2H-3924**	2	LOCKWASHER	
	15	1	**8Y-9806**	1	TUBE AS	
	16	3	**1P-6356**	1	PLATE	
	17	3	**3E-4053**	1	FITTING AS-AIR CONDITIONER	
		3	**3E-4052**	1	CAP-SEAL (HIGH SIDE CHARGE PORT)	
		3	**3E-4058**	1	VALVE AS (REFRIGERANT, HIGH SIDE)	
	18	3	**9X-7385**	2	SEAL-O-RING	
	19	3	**3E-4054**	1	FITTING AS-AIR CONDITIONER	
		3	**3E-4051**	1	CAP-SEAL (LOW SIDE CHARGE PORT)	
		3	**3E-4057**	1	VALVE AS (REFRIGERANT, LOW SIDE)	
M	20	3	**085-8091**	1	BOLT (M10X1.5X55-MM)	
	21	3	**4H-2678**	1	CONNECTOR	
	22	2,3	**5P-4829**	18	TUBE	
	23	1,2,3	**5P-4961**	4	CLAMP-HOSE	
	24	3	**8G-3072**	1	TEE	
	25	3	**1D-5121**	1	NUT-JAM (7/8-14-THD)	
	26	3	**6V-1640**	1	GROMMET	
	27	3	**5S-7349**	4	BOLT (1/4-20X0.5-IN)	
		3	**5P-4115**	4	WASHER-HARD (7.2X19X2-MM THK)	
	28	3	**8Y-9807**	1	BRACKET AS	
		3	**1F-0750**	1	NUT-WELD (3/8-16-THD)	
	29	3	**5P-0808**	5	SEAL	
	30	3	**8Y-8606**	1	GROMMET	
	31	3	**9P-5456**	1	COIL-EVAPORATOR	
I	32	2	**123-3581**	1	HOSE AS	
	33	1,2	**7K-3176**	2	COUPLING AS-REFRIGERANT (SELF-SEALING)	
	34	2	**7P-8336**	1	BRACKET	
	35	2	**119-7186**	1	TUBE AS	
	36	2,3	**6D-1641**	2	CLIP	
	37	2	**5P-3951**	2	PLUG	

141-5991 **AIR CONDITIONER GP (**contd.**)** **i05399019**

NOTE	REF NO	GRAPHIC REF	PART NUMBER	QTY	PART NAME 1 2 3 4 5 6 (PRODUCT LEVEL)	SEE PAGE
	38	2	**5P-3950**	2	CAP	
	39	2	**8Y-9843**	1	TUBE AS	
	40	2	**8Y-9845**	1	BRACKET	
	41	2	**3P-2404**	2	CLIP	
	42	2	**4L-6454**	1	BOLT (3/8-16X1-IN)	
	43	2,3	**7V-6571**	2	GROMMET	
	44	2	**6V-8801**	1	NUT (3/8-16-THD)	
	45	2	**6V-3582**	2	CLAMP-HOSE	
	46	1	**101-8789**	1	ACCUMULATOR-REFRIGERANT	
	47	2	**5P-3928**	1	COUPLING AS-REFRIGERANT (SELF-SEALING)	
	48	2	**5P-4107**	1	LOCKWASHER	
	49	2	**5P-4106**	1	NUT (1-7/16-16-THD)	
	50	2	**5P-3929**	1	COUPLING AS-REFRIGERANT (SELF-SEALING)	
	51	2	**7G-8271**	2	ORIFICE-AIR	
I	52	3	**123-3585**	1	HOSE AS	
	53	3	**8Y-9844**	1	BRACKET AS	
		3	**1F-0750**	1	NUT-WELD (3/8-16-THD)	
	54	2	**3W-2440**	1	COVER AS	
		2	**1V-8442**	1	NUT (1/4-20-THD)	
	55	2	**8Y-9808**	1	COVER AS	
		2	**9F-6445**	1	NUT-WELD (1/4-20-THD)	
	56	2	**5P-8882**	1	GROMMET	
	57	2	**8Y-9805**	1	TUBE AS	
	58	2	**9X-7380**	4	SEAL-O-RING	
Y	59	3	**105-8827**	1	SUPPRESSOR GP-ELECTRONIC	312
		3	**3T-3048**	1	CLIP AS	
	60	2	**5P-8167**	1	BOLT (3/8-16X0.625-IN)	
	61	2	**9F-4831**	1	SPACER (13.5X38X38-MM THK)	
	62	2	**103-6100**	2	FITTING AS-AIR CONDITIONER (QUICK DISCONNECT)	
	63	2	**3E-3535**	1	DRYER AS-REFRIGERANT (IN-LINE)	
	64	2	**119-7187**	1	CLIP AS	
	65	2	**5P-7471**	1	CLIP (TAB)	
	66	2	**8T-8917**	1	BOLT (1/2-13X1.25-IN)	
I	67	2	**123-3582**	1	HOSE AS	
	68	3	**7P-8331**	2	CLIP AS	
	69	3	**5P-2228**	3	BOLT (1/2-13X1-IN)	
	70	3	**5P-1076**	6	WASHER-HARD (13.5X30X4-MM THK)	
	71	3	**5P-2424**	3	BOLT (1/2-13X2.25-IN)	
	72	3	**3E-5465**	1	THERMOSTAT (CAB AIR)	
		3	**2P-4339**	1	NUT-JAM (7/16-28-THD)	
	73	3	**6N-8589**	1	CIRCUIT BREAKER AS (15-AMPERE)	
		3	**6T-3643**	1	CIRCUIT BREAKER AS (15-AMPERE)	
		3	**6V-8376**	2	SCREW-MACHINE (8-32X0.25-IN)	
		3	**9B-7233**	2	LOCKWASHER	
	74	3	**9X-6016**	2	SCREW-HEX SOCKET (8-32X0.875-IN)	
	75	3	**3E-9565**	1	FILM	
	76	3	**2V-0099**	1	KNOB-CONTROL	
	77	3	**5P-7137**	1	FILM-INSTRUCTION (AIR CONDITIONER)	
	78	1	**9X-7378**	1	SEAL-O-RING	
	79	3	**3S-8664**	1	CLIP (LOOP)	
	80	1,3	**9X-7382**	3	SEAL-O-RING	

141-5991 **AIR CONDITIONER GP (**contd.**)** **i05399019**

NOTE	REF NO	GRAPHIC REF	PART NUMBER	QTY	PART NAME 1 2 3 4 5 6 (PRODUCT LEVEL)	SEE PAGE
	81	1,2	**9X-7384**	2	SEAL-O-RING	
	82	1,2	**9X-7381**	3	SEAL-O-RING	
	83	1,2	**9X-7383**	6	SEAL-O-RING	
	84	3	**7P-8341**	3	CLIP AS	
	85	2	**9S-1310**	1	CLIP	
	86	1	**9M-8406**	1	CLIP (LOOP)	
	87	1	**9G-9150**	1	CLIP	
M	88	1	**8T-4186**	1	BOLT (M10X1.5X40-MM)	
		1	**8T-4121**	2	WASHER-HARD (11X21X2.5-MM THK)	
M		1	**8T-4133**	1	NUT (M10X1.5-THD)	
	89	1	**3S-2093**	3	STRAP-CABLE	
	90	2	**8T-4223**	2	WASHER-HARD (13.5X25.5X3-MM THK)	
	91	2,3	**8T-9364**	8	BOLT (1/4-20X0.625-IN)	
	92	2	**8Y-9842**	1	TUBE AS	
	93	1	**114-5333**	1	SWITCH AS-PRESSURE	
		1	**102-8802**	1	KIT-RECEPTACLE (2-PIN)	
					(INCLUDES RECEPTACLE AS & WEDGE)	
		1	**3E-3365**	1	WEDGE-RECEPTACLE LOCK (2-PIN)	
		1	**8T-8729**	2	PIN-CONNECTOR (16-GA TO 18-GA)	
	94	2	**7X-0325**	1	BOLT (1/2-13X2.5-IN)	

I - REFER TO HYDRAULIC INFORMATION SYSTEM
M - METRIC PART
Y - SEPARATE ILLUSTRATION

141-5991 **AIR CONDITIONER GP** (contd.) **i05399019**

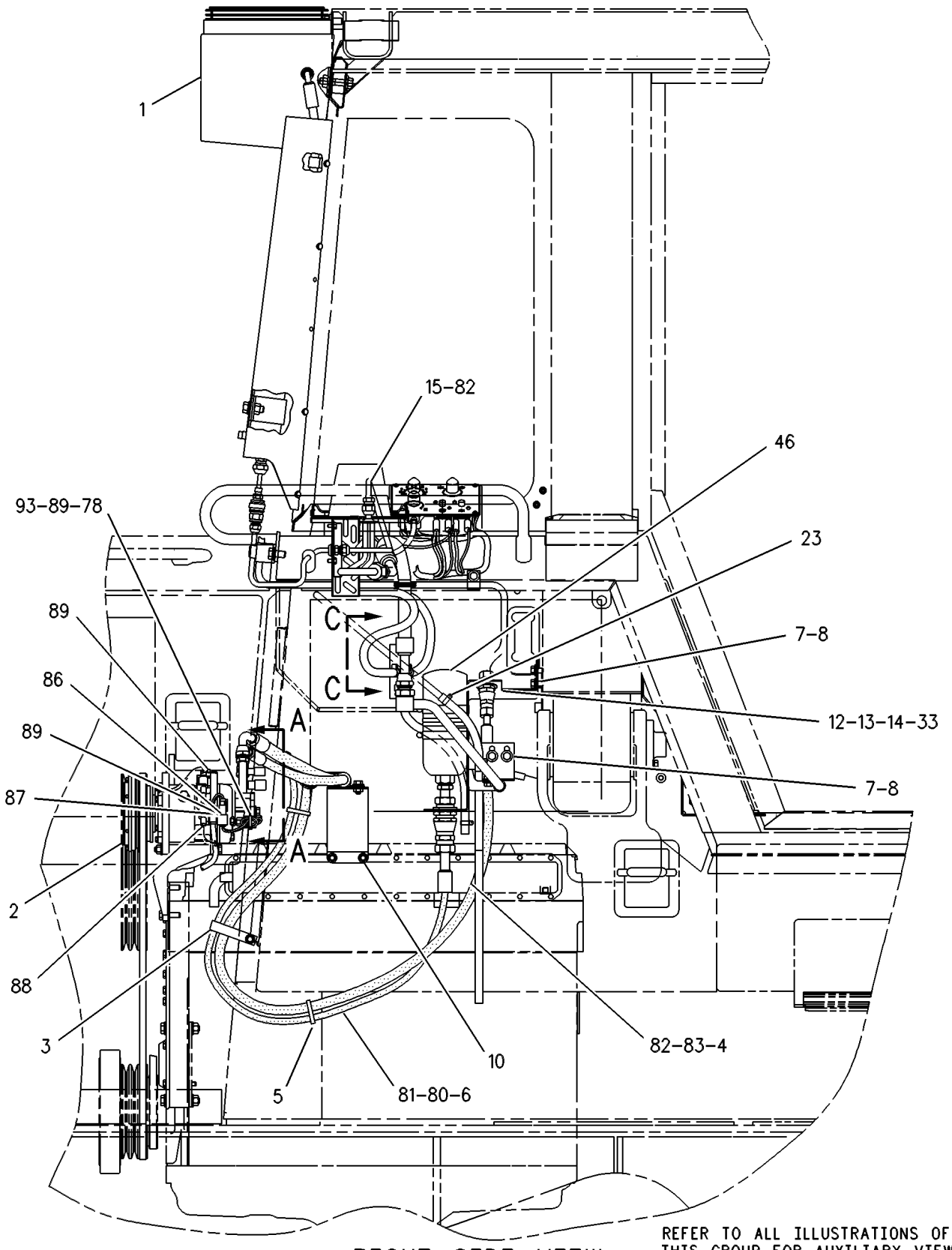

RIGHT SIDE VIEW

GRAPHIC #1 g00458488

141-5991 **AIR CONDITIONER GP (**contd.**)** **i05399019**

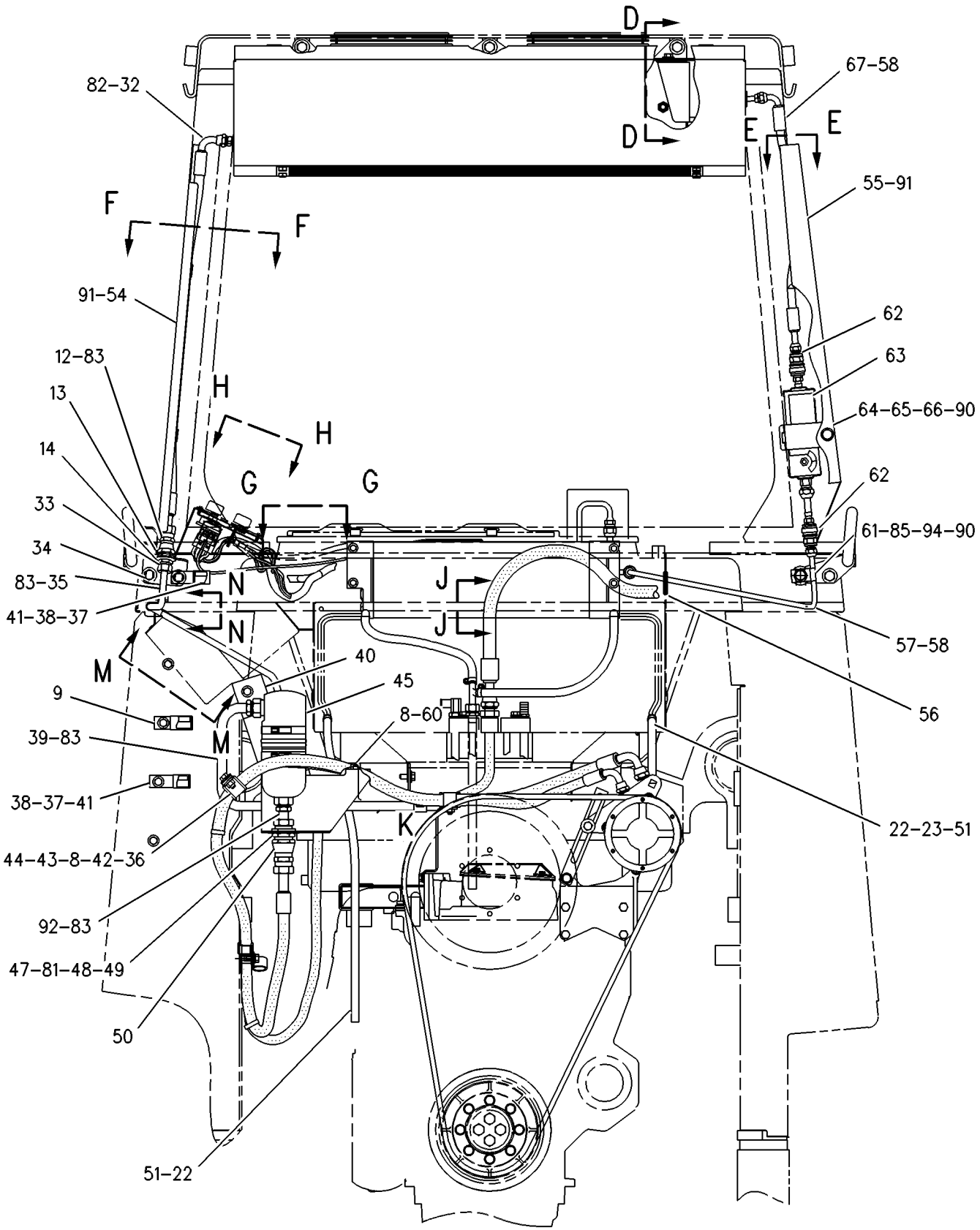

REAR VIEW

GRAPHIC #2 g00458489

141-5991 **AIR CONDITIONER GP (**contd.**)** **i05399019**

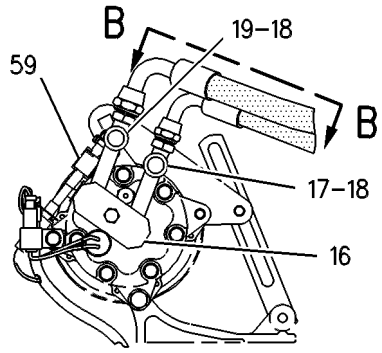

VIEW A-A

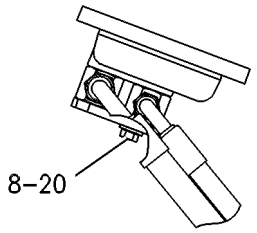

VIEW B-B

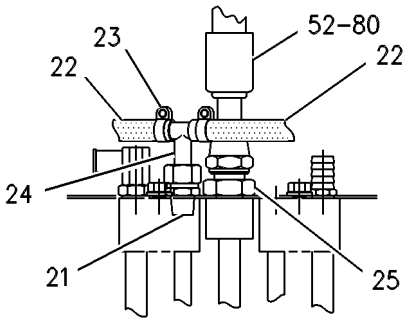

VIEW C-C

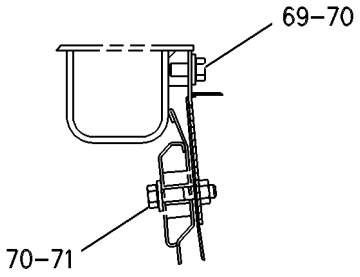

SECTION D-D

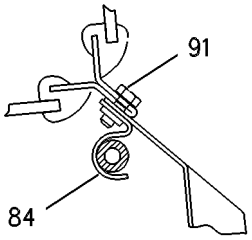

SECTION E-E

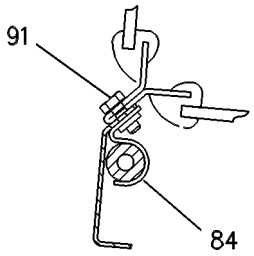

SECTION F-F

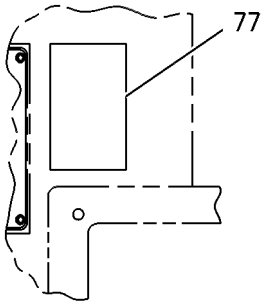

VIEW G-G

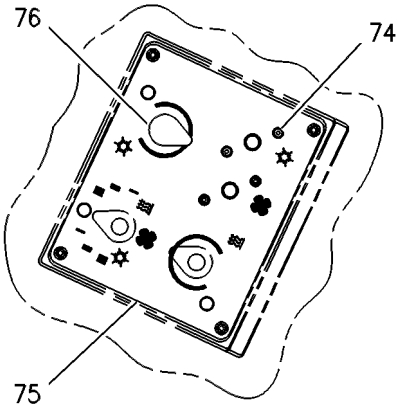

VIEW H-H

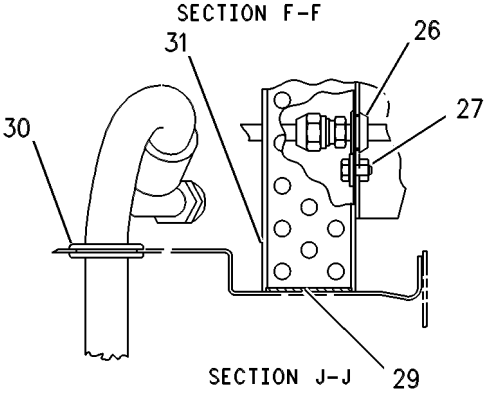

SECTION J-J

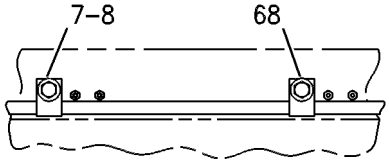

VIEW N-N

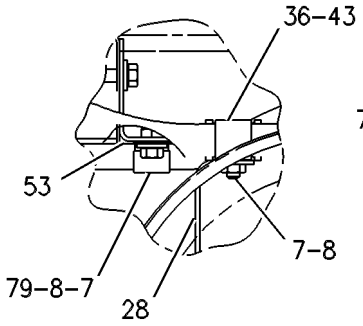

VIEW OF AREA K

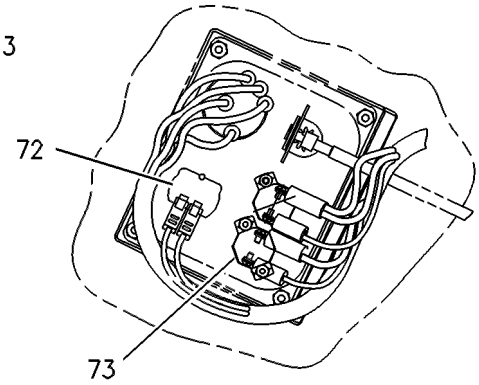

VIEW M-M

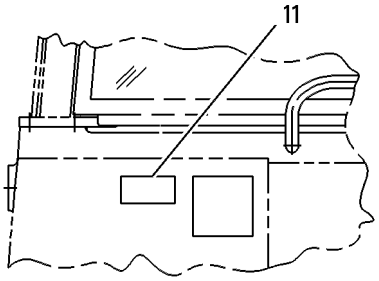

INSIDE VIEW
OF OPERATORS COMPARTMENT

GRAPHIC #3 <END> g00458490

141-5991 AIR CONDITIONER GP

S/N: 9BL1878-UP
PART OF 117-1783 AIR CONDITIONER GP
AN ATTACHMENT

SMCS-7320 **i05399021**

NOTE	REF NO	GRAPHIC REF	PART NUMBER	QTY	PART NAME 1 2 3 4 5 6 (PRODUCT LEVEL)	SEE PAGE
Y	1	1	*106-1260*	1	CONDENSER GP-REFRIGERANT	698
Y	2	1	*141-1558*	1	COMPRESSOR GP-REFRIGERANT	691
	3	1	**7D-7735**	1	CLIP	
I	4	1	**123-3586**	1	HOSE AS	
	5	1	**7K-1181**	2	STRAP-CABLE	
I	6	1	**123-3587**	1	HOSE AS	
	7	1,3	**5M-3062**	8	BOLT (3/8-16X0.75-IN)	
	8	1,2,3	**5P-1075**	12	WASHER-HARD (10.2X22.5X3-MM THK)	
	9	2	**7D-4092**	1	CLIP	
		2	**5P-3945**	1	CAP	
		2	**5P-3946**	1	PLUG	
M	10	1	**8T-0276**	2	BOLT (M8X1.25X45-MM)	
		1	**8T-4896**	2	WASHER-HARD (10.2X18.5X2.5-MM THK)	
	11	3	**110-6393**	1	PLATE-INSTRUCTION (AIR CONDITIONER)	
	12	1,2	**5P-3948**	2	COUPLING AS-REFRIGERANT (SELF-SEALING)	
	13	1,2	**7K-3304**	2	NUT-JAM (1-20-THD)	
	14	1,2	**2H-3924**	2	LOCKWASHER	
	15	1	**8Y-9806**	1	TUBE AS	
	16	3	**1P-6356**	1	PLATE	
	17	3	**3E-4053**	1	FITTING AS-AIR CONDITIONER	
		3	**3E-4052**	1	CAP-SEAL (HIGH SIDE CHARGE PORT)	
		3	**3E-4058**	1	VALVE AS (REFRIGERANT, HIGH SIDE)	
	18	3	**9X-7385**	2	SEAL-O-RING	
	19	3	**3E-4054**	1	FITTING AS-AIR CONDITIONER	
		3	**3E-4051**	1	CAP-SEAL (LOW SIDE CHARGE PORT)	
		3	**3E-4057**	1	VALVE AS (REFRIGERANT, LOW SIDE)	
M	20	3	**085-8091**	1	BOLT (M10X1.5X55-MM)	
	21	3	**4H-2678**	1	CONNECTOR	
	22	2,3	**5P-4829**	18	TUBE	
	23	1,2,3	**5P-4961**	4	CLAMP-HOSE	
	24	3	**8G-3072**	1	TEE	
	25	3	**1D-5121**	1	NUT-JAM (7/8-14-THD)	
	26	3	**6V-1640**	1	GROMMET	
	27	3	**5S-7349**	4	BOLT (1/4-20X0.5-IN)	
		3	**5P-4115**	4	WASHER-HARD (7.2X19X2-MM THK)	
	28	3	**8Y-9807**	1	BRACKET AS	
		3	**1F-0750**	1	NUT-WELD (3/8-16-THD)	
	29	3	**5P-0808**	5	SEAL	
	30	3	**8Y-8606**	1	GROMMET	
	31	3	**9P-5456**	1	COIL-EVAPORATOR	
I	32	2	**123-3581**	1	HOSE AS	
	33	1,2	**7K-3176**	2	COUPLING AS-REFRIGERANT (SELF-SEALING)	
	34	2	**7P-8336**	1	BRACKET	
	35	2	**119-7186**	1	TUBE AS	
	36	2,3	**6D-1641**	2	CLIP	
	37	2	**5P-3951**	2	PLUG	

141-5991 **AIR CONDITIONER GP (**contd.**)** **i05399021**

NOTE	REF NO	GRAPHIC REF	PART NUMBER	QTY	PART NAME 1 2 3 4 5 6 (PRODUCT LEVEL)	SEE PAGE
	38	2	**5P-3950**	2	CAP	
	39	2	**8Y-9843**	1	TUBE AS	
	40	2	**8Y-9845**	1	BRACKET	
	41	2	**3P-2404**	2	CLIP	
	42	2	**4L-6454**	1	BOLT (3/8-16X1-IN)	
	43	2,3	**7V-6571**	2	GROMMET	
	44	2	**6V-8801**	1	NUT (3/8-16-THD)	
	45	2	**6V-3582**	2	CLAMP-HOSE	
	46	1	**101-8789**	1	ACCUMULATOR-REFRIGERANT	
	47	2	**5P-3928**	1	COUPLING AS-REFRIGERANT (SELF-SEALING)	
	48	2	**5P-4107**	1	LOCKWASHER	
	49	2	**5P-4106**	1	NUT (1-7/16-16-THD)	
	50	2	**5P-3929**	1	COUPLING AS-REFRIGERANT (SELF-SEALING)	
	51	2	**7G-8271**	2	ORIFICE-AIR	
I	52	3	**123-3585**	1	HOSE AS	
	53	3	**8Y-9844**	1	BRACKET AS	
		3	**1F-0750**	1	NUT-WELD (3/8-16-THD)	
	54	2	**3W-2440**	1	COVER AS	
		2	**1V-8442**	1	NUT (1/4-20-THD)	
	55	2	**8Y-9808**	1	COVER AS	
		2	**9F-6445**	1	NUT-WELD (1/4-20-THD)	
	56	2	**5P-8882**	1	GROMMET	
	57	2	**8Y-9805**	1	TUBE AS	
	58	2	**9X-7380**	4	SEAL-O-RING	
C	59	3	**106-8704**	1	SUPPRESSOR AS-ARC	
	60	2	**5P-8167**	1	BOLT (3/8-16X0.625-IN)	
	61	2	**9F-4831**	1	SPACER (13.5X38X38-MM THK)	
	62	2	**103-6100**	2	FITTING AS-AIR CONDITIONER (QUICK DISCONNECT)	
	63	2	**3E-3535**	1	DRYER AS-REFRIGERANT (IN-LINE)	
	64	2	**119-7187**	1	CLIP AS	
	65	2	**5P-7471**	1	CLIP (TAB)	
	66	2	**8T-8917**	1	BOLT (1/2-13X1.25-IN)	
I	67	2	**123-3582**	1	HOSE AS	
	68	3	**7P-8331**	2	CLIP AS	
	69	3	**5P-2228**	3	BOLT (1/2-13X1-IN)	
	70	3	**5P-1076**	6	WASHER-HARD (13.5X30X4-MM THK)	
	71	3	**5P-2424**	3	BOLT (1/2-13X2.25-IN)	
	72	3	**3E-5465**	1	THERMOSTAT (CAB AIR)	
		3	**2P-4339**	1	NUT-JAM (7/16-28-THD)	
	73	3	**6N-8589**	1	CIRCUIT BREAKER AS (15-AMPERE)	
		3	**6T-3643**	1	CIRCUIT BREAKER AS (15-AMPERE)	
		3	**6V-8376**	2	SCREW-MACHINE (8-32X0.25-IN)	
		3	**9B-7233**	2	LOCKWASHER	
	74	3	**9X-6016**	2	SCREW-HEX SOCKET (8-32X0.875-IN)	
	75	3	**3E-9565**	1	FILM	
	76	3	**2V-0099**	1	KNOB-CONTROL	
	77	3	**5P-7137**	1	FILM-INSTRUCTION (AIR CONDITIONER)	
	78	1	**9X-7378**	1	SEAL-O-RING	
	79	3	**3S-8664**	1	CLIP (LOOP)	
	80	1,3	**9X-7382**	3	SEAL-O-RING	
	81	1,2	**9X-7384**	2	SEAL-O-RING	

141-5991 **AIR CONDITIONER GP (**contd.**)** **i05399021**

NOTE	REF NO	GRAPHIC REF	PART NUMBER	QTY	PART NAME 1 2 3 4 5 6 (PRODUCT LEVEL)	SEE PAGE
	82	1,2	**9X-7381**	3	SEAL-O-RING	
	83	1,2	**9X-7383**	6	SEAL-O-RING	
	84	3	**7P-8341**	3	CLIP AS	
	85	2	**9S-1310**	1	CLIP	
C	86	1	**9M-8406**	2	CLIP (LOOP)	
C	87	1	**8M-2770**	1	CLIP (LOOP)	
M	88	1	**8T-4186**	1	BOLT (M10X1.5X40-MM)	
		1	**8T-4121**	2	WASHER-HARD (11X21X2.5-MM THK)	
M		1	**8T-4133**	1	NUT (M10X1.5-THD)	
C	89	1	**3S-2093**	1	STRAP-CABLE	
	90	2	**8T-4223**	2	WASHER-HARD (13.5X25.5X3-MM THK)	
	91	2,3	**8T-9364**	8	BOLT (1/4-20X0.625-IN)	
	92	2	**8Y-9842**	1	TUBE AS	
	93	1	**114-5333**	1	SWITCH AS-PRESSURE	
		1	**102-8802**	1	KIT-RECEPTACLE (2-PIN)	
					(INCLUDES RECEPTACLE AS & WEDGE)	
		1	**3E-3365**	1	WEDGE-RECEPTACLE LOCK (2-PIN)	
		1	**8T-8729**	2	PIN-CONNECTOR (16-GA TO 18-GA)	
	94	2	**7X-0325**	1	BOLT (1/2-13X2.5-IN)	
C	95	3	**1S-0994**	1	CLIP (LOOP)	

C - CHANGE FROM PREVIOUS TYPE
I - REFER TO HYDRAULIC INFORMATION SYSTEM
M - METRIC PART
Y - SEPARATE ILLUSTRATION

141-5991 **AIR CONDITIONER GP** (contd.) **i05399021**

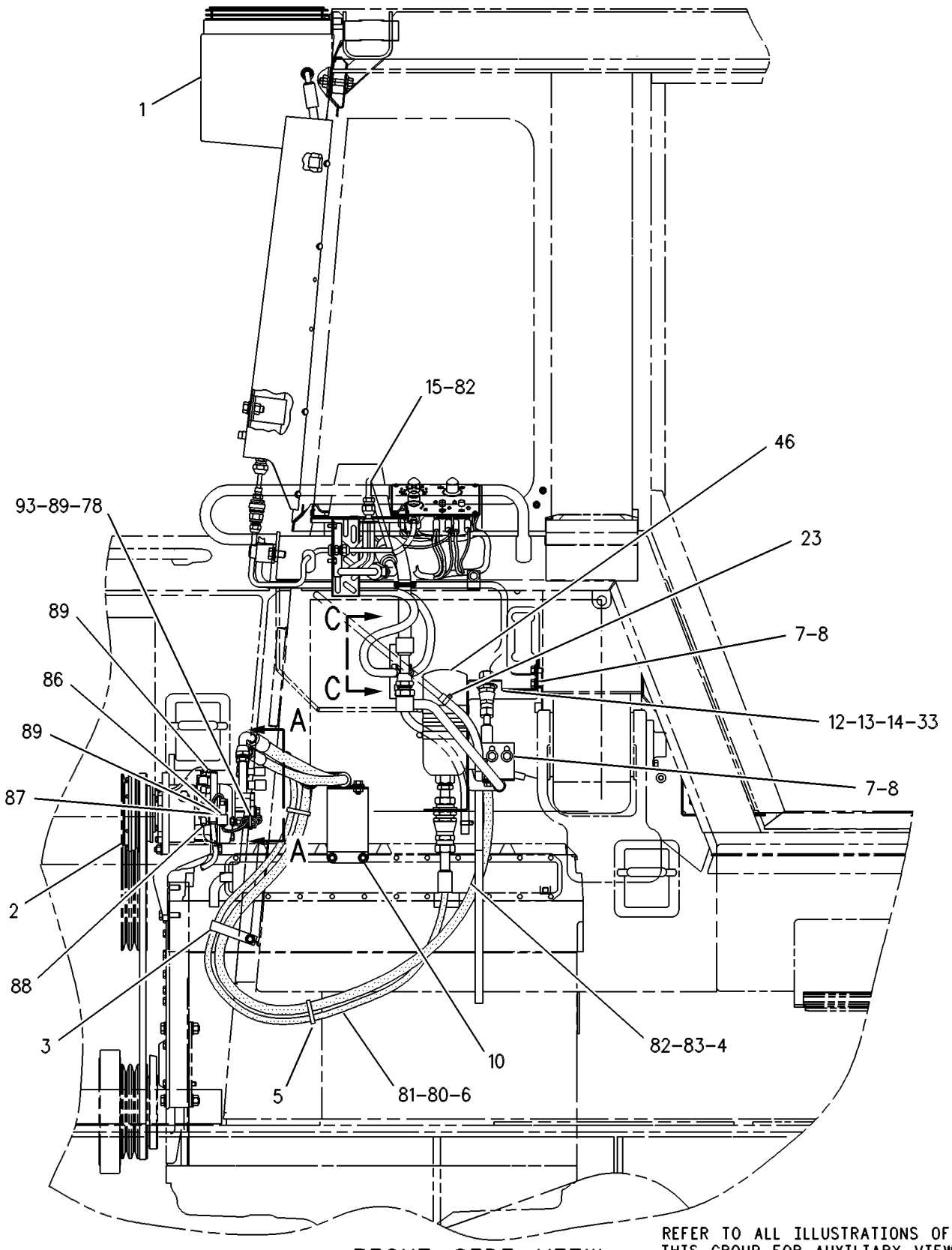

RIGHT SIDE VIEW

GRAPHIC #1 g00458492

141-5991 **AIR CONDITIONER GP (**contd.**)** **i05399021**

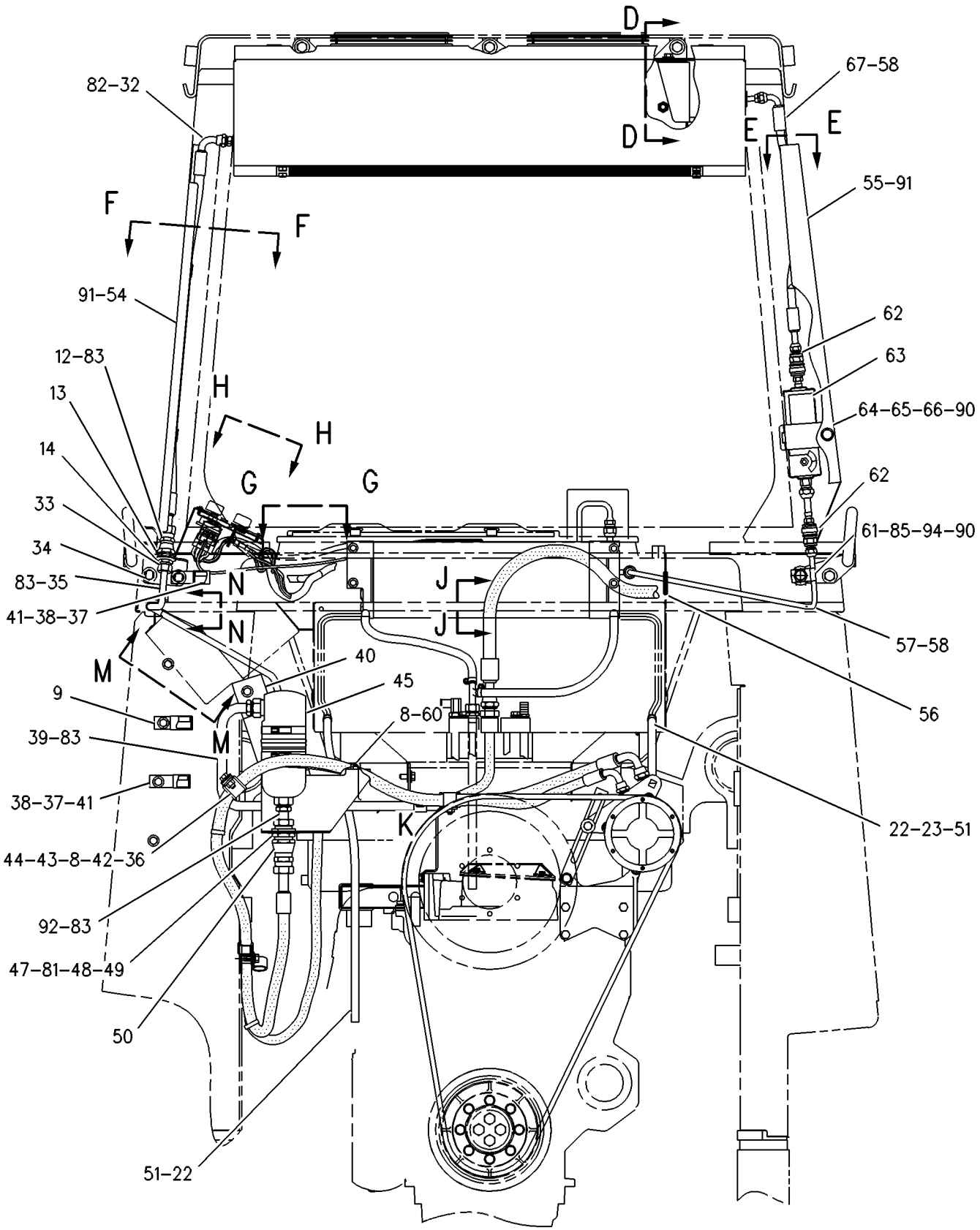

REAR VIEW

GRAPHIC #2 g00458493

141-5991 **AIR CONDITIONER GP (**contd.**)** **i05399021**

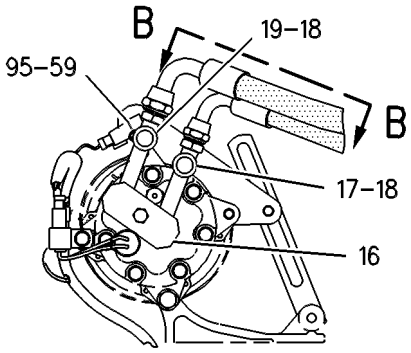

VIEW A-A

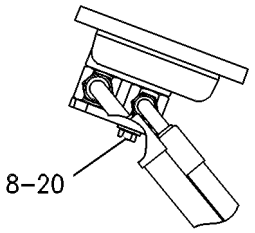

VIEW B-B

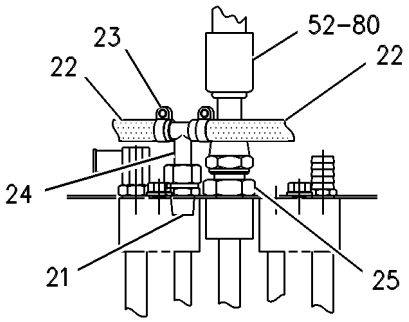

VIEW C-C

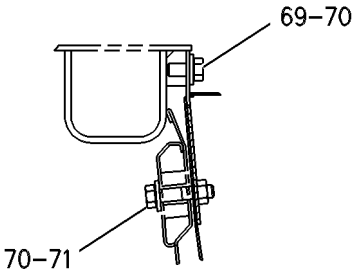

SECTION D-D

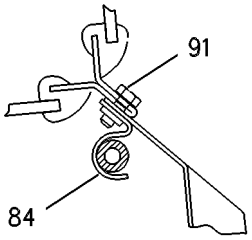

SECTION E-E

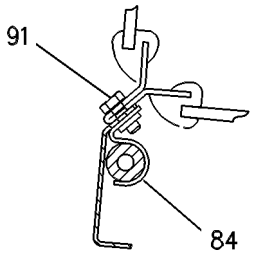

SECTION F-F

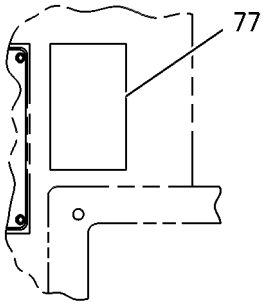

VIEW G-G

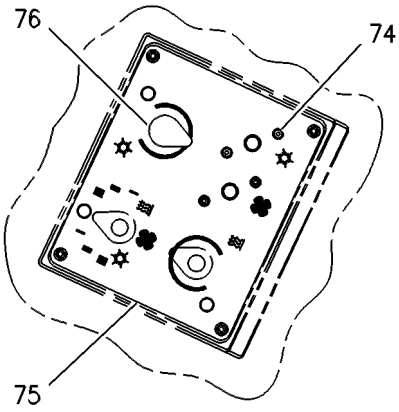

VIEW H-H

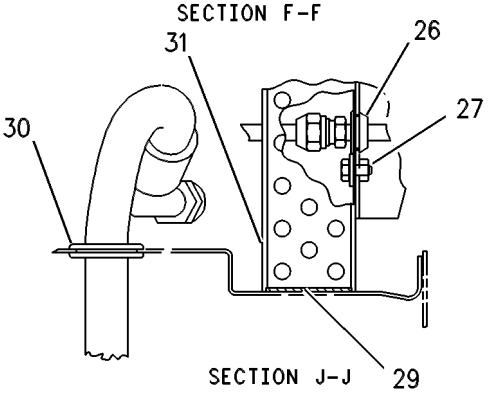

SECTION J-J

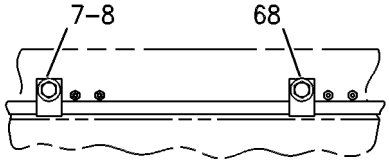

VIEW N-N

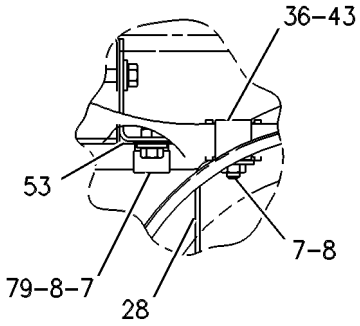

VIEW OF AREA K

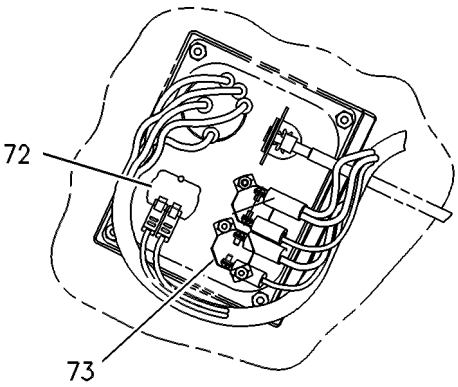

VIEW M-M

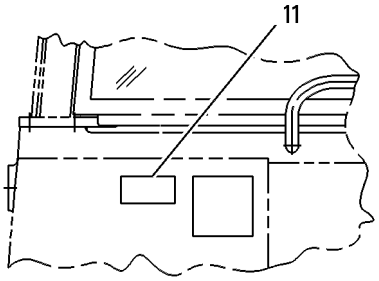

INSIDE VIEW
OF OPERATORS COMPARTMENT

GRAPHIC #3 <END> g00458494

8Y-9331 AIR CONDITIONER GP

S/N: 9BL1-1487

PART OF 117-1783 AIR CONDITIONER GP

AN ATTACHMENT

SMCS-7320 **i01400652**

NOTE	REF NO	GRAPHIC REF	PART NUMBER	QTY	PART NAME 1 2 3 4 5 6 (PRODUCT LEVEL)	SEE PAGE
Y	1	1	*106-1260*	1	CONDENSER GP-REFRIGERANT	698
Y	2	1	*100-4603*	1	COMPRESSOR GP-REFRIGERANT	689
	3	1	**8Y-9844**	1	BRACKET AS	
		1	**1F-0750**	1	NUT-WELD (3/8-16-THD)	
I	4	1	**123-3586**	1	HOSE AS	
	5	1	**7K-1181**	2	STRAP-CABLE	
I	6	1	**123-3587**	1	HOSE AS	
	7	1	**5M-3062**	6	BOLT (3/8-16X0.75-IN)	
	8	1	**5P-1075**	7	WASHER-HARD (10.2X22.5X3-MM THK)	
	9	1	**5P-3948**	1	COUPLING AS-REFRIGERANT (SELF-SEALING)	
	10	1	**7K-3304**	1	NUT-JAM (1-20-THD)	
	11	1	**2H-3924**	1	LOCKWASHER	
	12	1	**7K-3176**	1	COUPLING AS-REFRIGERANT (SELF-SEALING)	
M	13	1	**085-8091**	1	BOLT (M10X1.5X55-MM)	
Y	14	1	**105-8827**	1	SUPPRESSOR GP-ELECTRONIC	312
	15	1	**3T-3048**	1	CLIP AS	
	16	1	**1P-6356**	1	PLATE	
	17	1	**3E-4053**	1	FITTING AS-AIR CONDITIONER	
		1	**3E-4052**	1	CAP-SEAL (HIGH SIDE CHARGE PORT)	
		1	**3E-4058**	1	VALVE AS (REFRIGERANT, HIGH SIDE)	
	18	1	**9X-7385**	2	SEAL-O-RING	
	19	1	**3E-4054**	1	FITTING AS-AIR CONDITIONER	
		1	**3E-4051**	1	CAP-SEAL (LOW SIDE CHARGE PORT)	
		1	**3E-4057**	1	VALVE AS (REFRIGERANT, LOW SIDE)	
	20	1	**9X-7383**	1	SEAL-O-RING	
	21	1	**9X-7381**	2	SEAL-O-RING	
	22	1	**6D-1641**	1	CLIP	
	23	1	**7V-6571**	1	GROMMET	
	24	1	**3S-8664**	1	CLIP (LOOP)	
	25	1	**8Y-9807**	1	BRACKET AS	
		1	**1F-0750**	1	NUT-WELD (3/8-16-THD)	
	26	1	**5P-7137**	1	FILM-INSTRUCTION (AIR CONDITIONER)	
	27	1	**9X-7382**	3	SEAL-O-RING	
	28	1	**9X-7384**	1	SEAL-O-RING	
M	29	1	**8T-4186**	1	BOLT (M10X1.5X40-MM)	
	30	1	**8T-4121**	2	WASHER-HARD (11X21X2.5-MM THK)	
M	31	1	**8T-4133**	1	NUT (M10X1.5-THD)	
	32	1	**110-6393**	1	PLATE-INSTRUCTION (AIR CONDITIONER)	
	33	1	**9G-9150**	1	CLIP	
	34	1	**3S-2093**	3	STRAP-CABLE	
	35	1	**9M-8406**	1	CLIP (LOOP)	
	36	1	**9X-7378**	1	SEAL-O-RING	
	37	1	**114-5333**	1	SWITCH AS-PRESSURE	
		1	**3E-3365**	1	WEDGE-RECEPTACLE LOCK (2-PIN)	
		1	**8T-8729**	2	PIN-CONNECTOR (16-GA TO 18-GA)	
D	38	1	**5P-5929**		SEAL	

8Y-9331 **AIR CONDITIONER GP (**contd.**)** **i01400652**

NOTE	REF NO	GRAPHIC REF	PART NUMBER	QTY	PART NAME 1 2 3 4 5 6 (PRODUCT LEVEL)	SEE PAGE
	39	1	**5P-4115**	4	WASHER-HARD (7.2X19X2-MM THK)	
	40	1	**5S-7349**	4	BOLT (1/4-20X0.5-IN)	
	41	1	**6V-1640**	1	GROMMET	
	42	1	**8Y-8606**	1	GROMMET	
	43	1	**9P-5456**	1	COIL-EVAPORATOR	
	44	1	**1D-5121**	1	NUT-JAM (7/8-14-THD)	
	45	1	**4H-2678**	1	CONNECTOR	
	46	1	**8G-3072**	1	TEE	
	47	1	**5P-4961**	3	CLAMP-HOSE	
D	48	1	**5P-6129**		TUBE (.8M)	
I	49	1	**123-3585**	1	HOSE AS	
	50	1	**101-8789**	1	ACCUMULATOR-REFRIGERANT	
	51	1	**8Y-9806**	1	TUBE AS	
	52	1	**8T-4896**	2	WASHER-HARD (10.2X18.5X2.5-MM THK)	
M	53	1	**8T-0276**	2	BOLT (M8X1.25X45-MM)	
	54	1	**7D-7735**	1	CLIP	
	55	2	**5M-3062**	2	BOLT (3/8-16X0.75-IN)	
	56	2	**5P-1075**	5	WASHER-HARD (10.2X22.5X3-MM THK)	
	57	2	**7D-4092**	1	CLIP	
	58	2	**5P-3945**	1	CAP	
	59	2	**5P-3946**	1	PLUG	
D	60	2	**5P-6129**		TUBE (1.8M)	
	61	2	**5P-4961**	1	CLAMP-HOSE	
I	62	2	**123-3581**	1	HOSE AS	
	63	2	**7K-3176**	1	COUPLING AS-REFRIGERANT (SELF-SEALING)	
	64	2	**7P-8336**	1	BRACKET	
	65	2	**119-7186**	1	TUBE AS	
	66	2	**6D-1641**	1	CLIP	
	67	2	**5P-3951**	2	PLUG	
	68	2	**5P-3950**	2	CAP	
	69	2	**8Y-9843**	1	TUBE AS	
	70	2	**8Y-9845**	1	BRACKET	
	71	2	**3P-2404**	2	CLIP	
	72	2	**4L-6454**	1	BOLT (3/8-16X1-IN)	
	73	2	**7V-6571**	1	GROMMET	
	74	2	**6V-8801**	1	NUT (3/8-16-THD)	
	75	2	**6V-3582**	2	CLAMP-HOSE	
	76	2	**5P-3928**	1	COUPLING AS-REFRIGERANT (SELF-SEALING)	
	77	2	**5P-4107**	1	LOCKWASHER	
	78	2	**5P-4106**	1	NUT (1-7/16-16-THD)	
	79	2	**9X-7384**	1	SEAL-O-RING	
	80	2	**5P-3929**	1	COUPLING AS-REFRIGERANT (SELF-SEALING)	
	81	2	**7G-8271**	2	ORIFICE-AIR	
	82	2	**3W-2440**	1	COVER AS	
		2	**9F-6445**	2	NUT-WELD (1/4-20-THD)	
	83	2	**8Y-9808**	1	COVER AS	
		2	**9F-6445**	3	NUT-WELD (1/4-20-THD)	
	84	2	**8T-9364**	8	BOLT (1/4-20X0.625-IN)	
	85	2	**5P-3948**	1	COUPLING AS-REFRIGERANT (SELF-SEALING)	
	86	2	**7K-3304**	1	NUT-JAM (1-20-THD)	
	87	2	**2H-3924**	1	LOCKWASHER	

8Y-9331 **AIR CONDITIONER GP (**contd.**)** **i01400652**

NOTE	REF NO	GRAPHIC REF	PART NUMBER	QTY	PART NAME 1 2 3 4 5 6 (PRODUCT LEVEL)	SEE PAGE
	88	2	**9X-7383**	5	SEAL-O-RING	
	89	2	**5P-8167**	1	BOLT (3/8-16X0.625-IN)	
	90	2	**7P-8341**	3	CLIP AS	
	91	2	**5P-8882**	1	GROMMET	
	92	2	**8Y-9805**	1	TUBE AS	
	93	2	**9X-7380**	4	SEAL-O-RING	
	94	2	**9F-4831**	1	SPACER (13.5X38X38-MM THK)	
	95	2	**103-6100**	2	FITTING AS-AIR CONDITIONER (QUICK DISCONNECT)	
	96	2	**3E-3535**	1	DRYER AS-REFRIGERANT (IN-LINE)	
	97	2	**119-7187**	1	CLIP AS	
	98	2	**5P-7471**	1	CLIP (TAB)	
	99	2	**8T-8917**	1	BOLT (1/2-13X1.25-IN)	
	100	2	**8T-4223**	2	WASHER-HARD (13.5X25.5X3-MM THK)	
	101	2	**7X-0325**	1	BOLT (1/2-13X2.5-IN)	
	102	2	**9S-1310**	1	CLIP	
I	103	2	**123-3582**	1	HOSE AS	
	104	2	**3E-9565**	1	FILM	
	105	2	**9X-6016**	2	SCREW-HEX SOCKET (8-32X0.875-IN)	
	106	2	**2V-0099**	1	KNOB-CONTROL	
	107	2	**5P-1076**	6	WASHER-HARD (13.5X30X4-MM THK)	
	108	2	**5P-2424**	3	BOLT (1/2-13X2.25-IN)	
	109	2	**5P-2228**	3	BOLT (1/2-13X1-IN)	
	110	2	**7P-8331**	2	CLIP AS	
	111	2	**6N-8589**	1	CIRCUIT BREAKER AS (15-AMPERE)	
	112	2	**2P-4339**	1	NUT-JAM (7/16-28-THD)	
	113	2	**3E-5465**	1	THERMOSTAT (CAB AIR)	
	114	2	**8Y-9842**	1	TUBE AS	
	115	2	**9X-7381**	1	SEAL-O-RING	

D - ORDER BY THE METER
I - REFER TO HYDRAULIC INFORMATION SYSTEM
M - METRIC PART
Y - SEPARATE ILLUSTRATION

8Y-9331 **AIR CONDITIONER GP (**contd.**)** **i01400652**

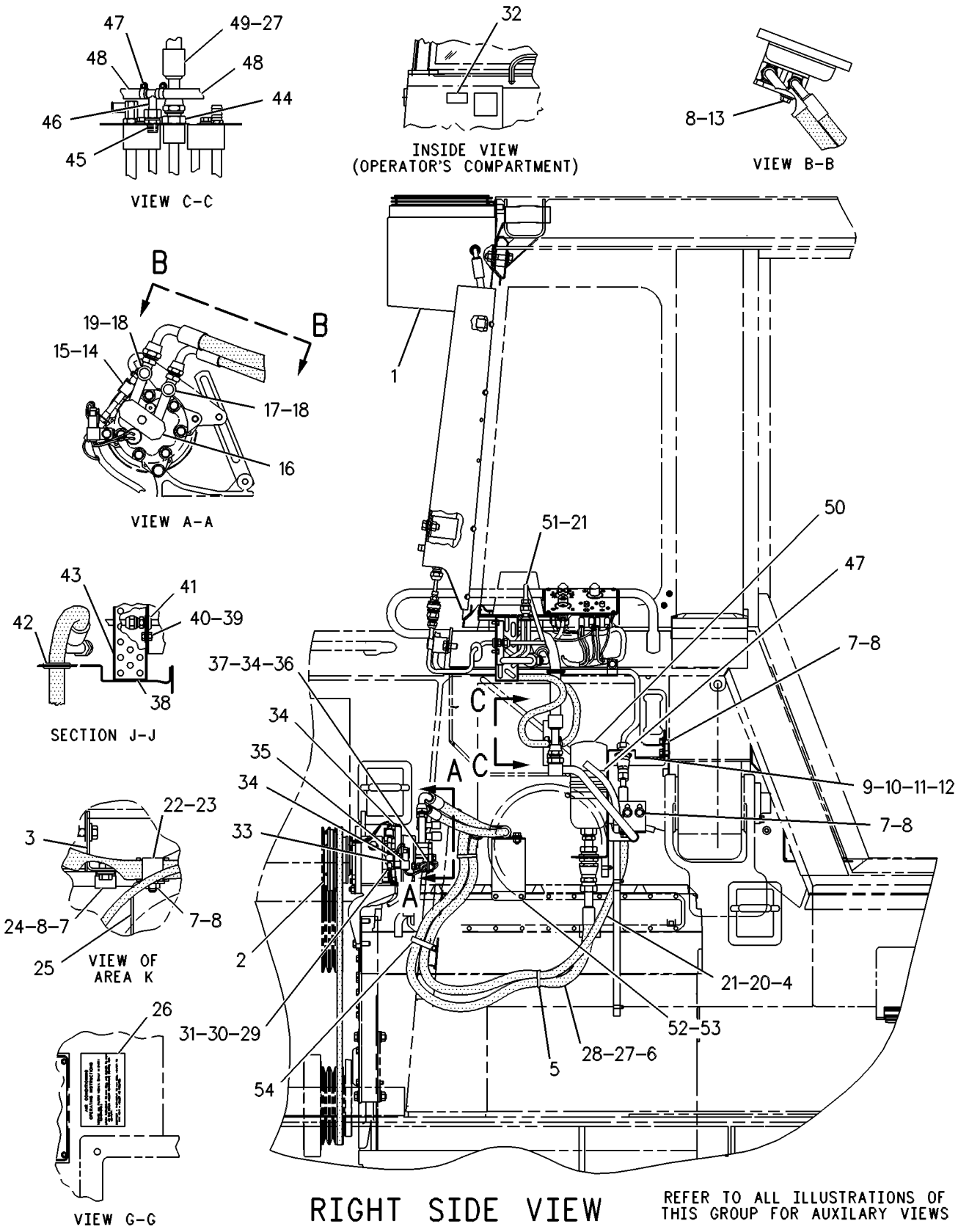

GRAPHIC #1 g00387541

8Y-9331 **AIR CONDITIONER GP (**contd.**)** **i01400652**

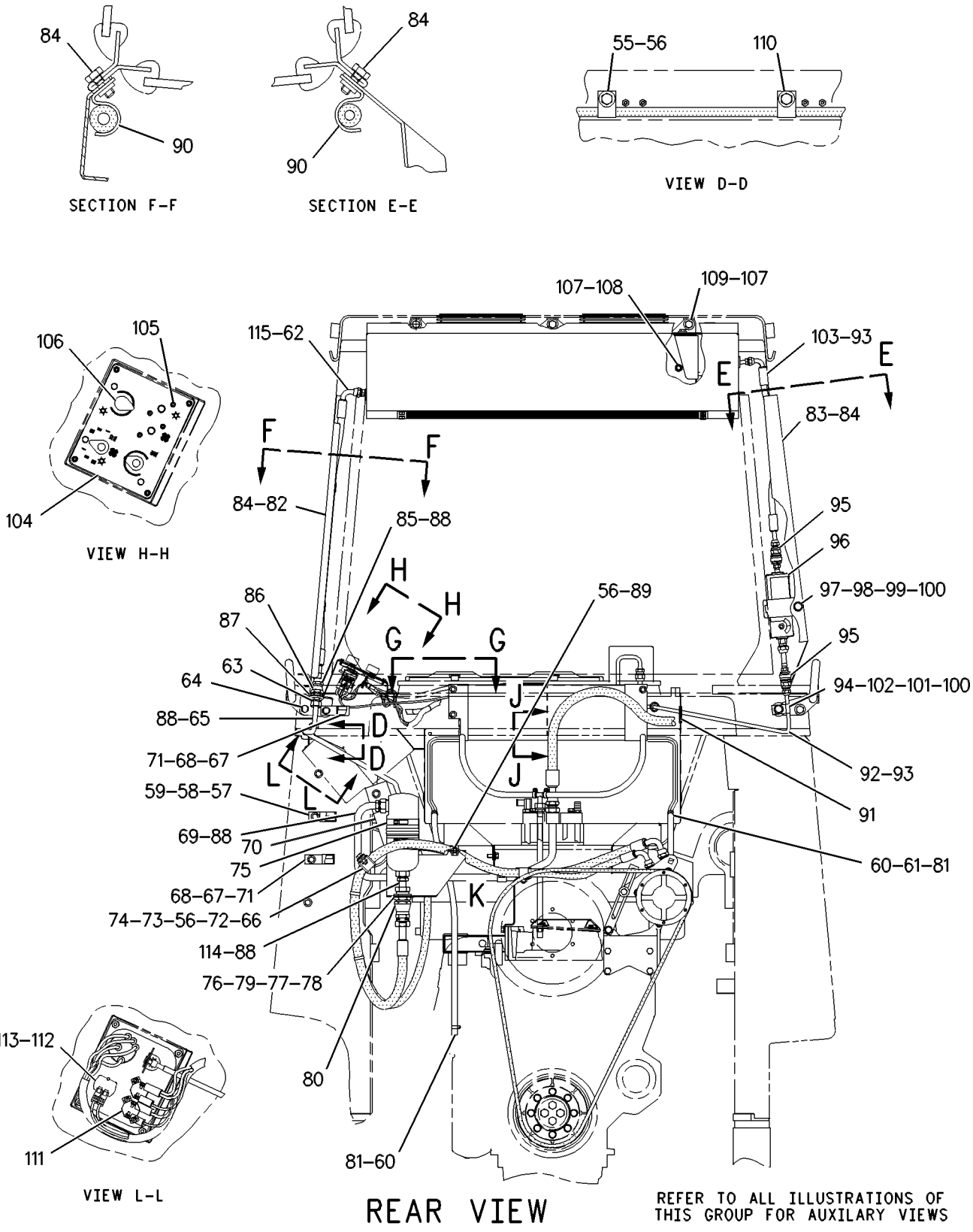

GRAPHIC #2 <END> g00421065

8Y-9371 CAB AR

S/N: 9BL1-UP

PART OF 117-1761, 8Y-9370 CHASSIS AR

SMCS-7301 **i00417119**

NOTE	PART NUMBER	QTY	PART NAME 1 2 3 4 5 6 (PRODUCT LEVEL)	SEE PAGE
Y	*8Y-9826*	1	HEATER GP-CAB	733
Y	*7P-6122*	1	MOUNTING GP-ROPS	746
Y	*8Y-9812*	1	PRESSURIZER GP-CAB	758
Y	*8Y-9455*	1	ROPS GP-ENCLOSED	772
Y	*8G-1626*	1	TANK GP-WINDOW WASHER	797
	9D-3737	2	PLUG-BUTTON	

Y - SEPARATE ILLUSTRATION

<END>

100-4603 COMPRESSOR GP-REFRIGERANT

S/N: 9BL1-1487
PART OF 8Y-9331 AIR CONDITIONER GP
AN ATTACHMENT

SMCS-1802 **i00568295**

NOTE	REF NO	GRAPHIC REF	PART NUMBER	QTY	PART NAME 1 2 3 4 5 6 (PRODUCT LEVEL)	SEE PAGE
	1	1	**1W-8908**	1	V-BELT	
M	2	1	**8T-4196**	5	BOLT (M10X1.5X35-MM)	
	3	1	**9Y-1285**	1	STRAP	
M	4	1	**8T-4133**	4	NUT (M10X1.5-THD)	
	5	1	**8T-4121**	9	WASHER-HARD (11X21X2.5-MM THK)	
M	6	1	**8T-5436**	1	BOLT (M10X1.5X130-MM)	
	7	1	**7C-3941**	1	PLATE	
M	8	1	**8T-4182**	2	BOLT (M10X1.5X45-MM)	
Y	9	1	**3E-1909**	1	COMPRESSOR GP-REFRIGERANT	694
M	10	1	**8T-4136**	2	BOLT (M10X1.5X25-MM)	
	11	1	**8T-4222**	1	WASHER-PLATED (11X32X2.5-MM THK)	
	12	1	**7E-7302**	1	BRACKET	
	13	1	**7W-6423**	1	GUARD AS	
		1	**2L-6243**	2	BRACKET	

M - METRIC PART
Y - SEPARATE ILLUSTRATION

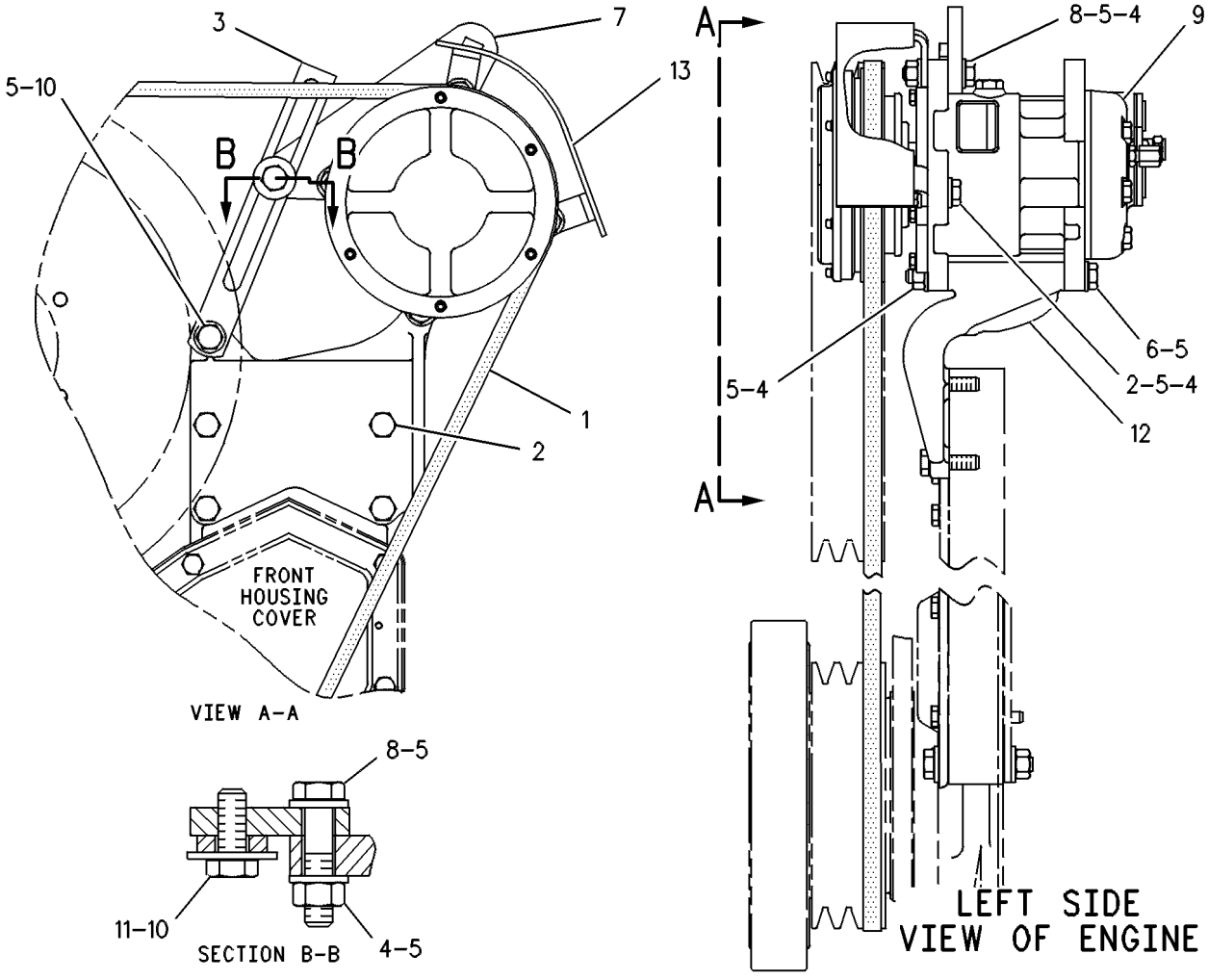

GRAPHIC #1 <END> g00247232

106-5122 COMPRESSOR GP-REFRIGERANT

S/N: 9BL1-UP
FIELD REPLACEMENT FOR 3E-1909—PAGE: 694
PART OF 141-1558 COMPRESSOR GP-REFRIGERANT
AN ATTACHMENT AND FIELD INSTALLATION

SMCS-1802 **i02847063**

NOTE	REF NO	GRAPHIC REF	PART NUMBER	QTY	PART NAME 1 2 3 4 5 6 (PRODUCT LEVEL)	SEE PAGE
	1	1	**180-9339**	2	PIN-CONNECTOR (14-GA TO 18-GA)	
	2	1	**314-4018**	1	VALVE AS-PRESSURE RELIEF (REFRIGERANT COMPRESSOR)	
		1	**9X-7378**	1	SEAL-O-RING	
	3	1	**7T-4532**	1	PLUG AS	
	4	1	**9X-7385**	2	SEAL-O-RING	
	6	1	**102-8802**	1	KIT-RECEPTACLE (2-PIN)	
					(INCLUDES RECEPTACLE AS & WEDGE)	

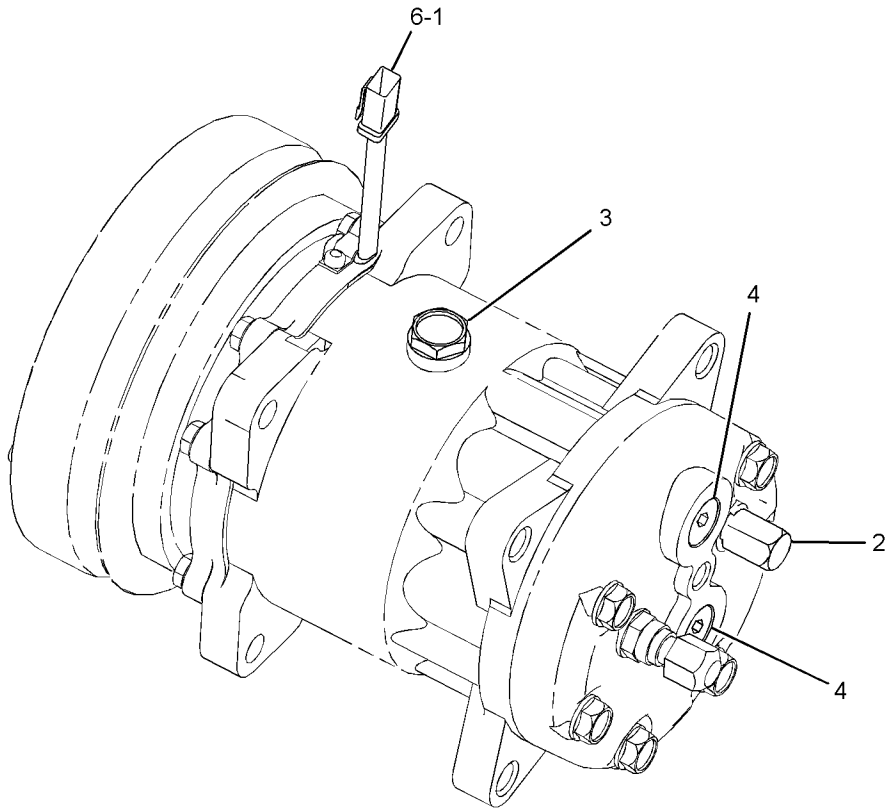

GRAPHIC #1 <END> g01419571

141-1558 COMPRESSOR GP-REFRIGERANT

S/N: 9BL1488-1877
PART OF 141-5991 AIR CONDITIONER GP
AN ATTACHMENT

SMCS-1802 **i00687360**

NOTE	REF NO	GRAPHIC REF	PART NUMBER	QTY	PART NAME 1 2 3 4 5 6 (PRODUCT LEVEL)	SEE PAGE
	1	1	**7E-3898**	1	V-BELT	
M	2	1	**8T-4196**	5	BOLT (M10X1.5X35-MM)	
	3	1	**9Y-1285**	1	STRAP	
M	4	1	**8T-4133**	4	NUT (M10X1.5-THD)	
	5	1	**8T-4121**	9	WASHER-HARD (11X21X2.5-MM THK)	
M	6	1	**8T-5436**	1	BOLT (M10X1.5X130-MM)	
	7	1	**7C-3941**	1	PLATE	
M	8	1	**8T-4182**	2	BOLT (M10X1.5X45-MM)	
Y	9	1	**3E-1909**	1	COMPRESSOR GP-REFRIGERANT	694
M	10	1	**8T-4136**	2	BOLT (M10X1.5X25-MM)	
	11	1	**8T-4222**	1	WASHER-PLATED (11X32X2.5-MM THK)	
	12	1	**7E-7302**	1	BRACKET	
	13	1	**7W-6423**	1	GUARD AS	
		1	**2L-6243**	2	BRACKET	

M - METRIC PART
Y - SEPARATE ILLUSTRATION

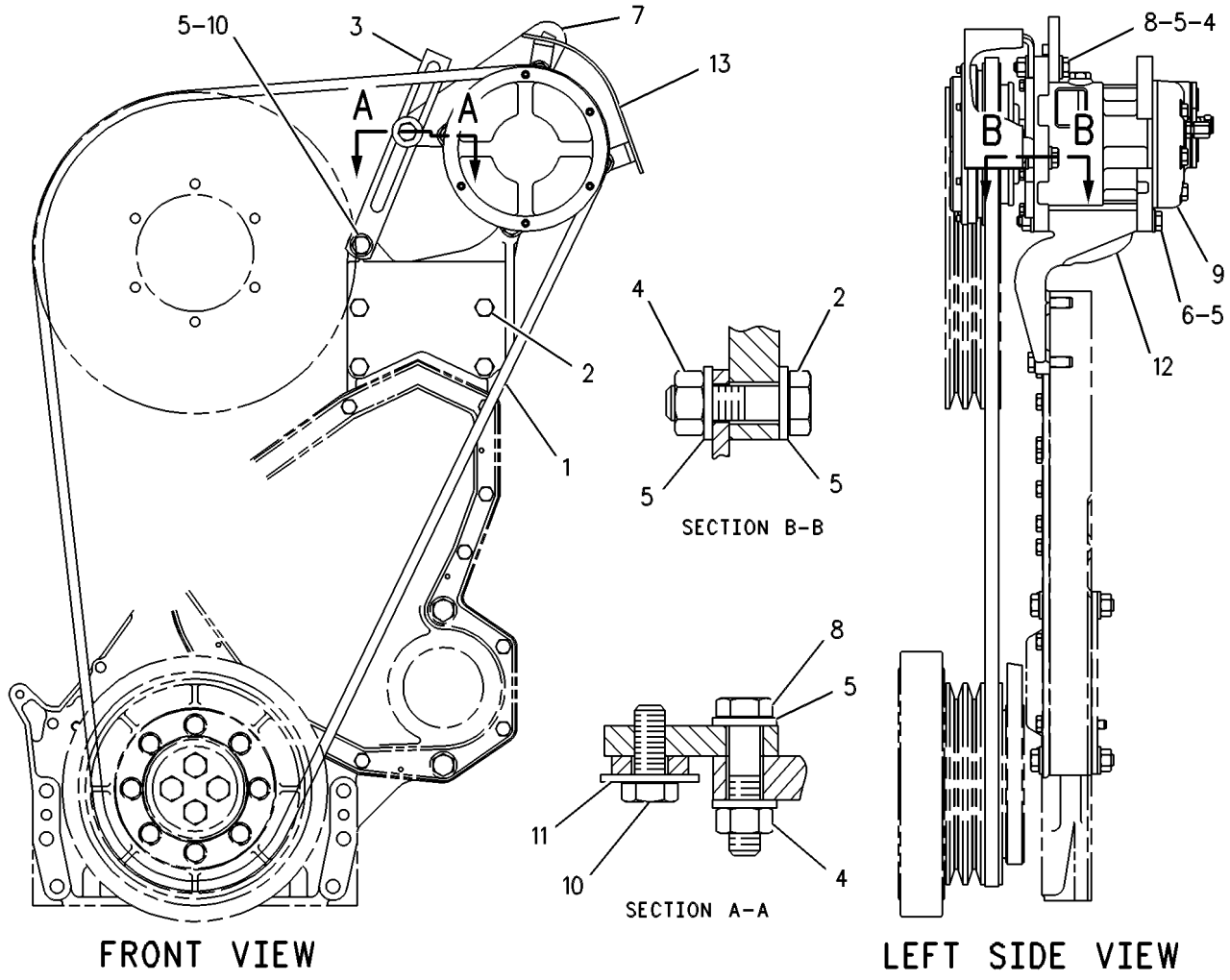

GRAPHIC #1 <END> g00268272

141-1558 COMPRESSOR GP-REFRIGERANT

S/N: 9BL1878-UP
PART OF 141-5991 AIR CONDITIONER GP
AN ATTACHMENT

SMCS-1802 **i00767511**

NOTE	REF NO	GRAPHIC REF	PART NUMBER	QTY	PART NAME 1 2 3 4 5 6 (PRODUCT LEVEL)	SEE PAGE
	1	1	**7E-3898**	1	V-BELT	
M	2	1	**8T-4196**	5	BOLT (M10X1.5X35-MM)	
	3	1	**9Y-1285**	1	STRAP	
M	4	1	**8T-4133**	4	NUT (M10X1.5-THD)	
	5	1	**8T-4121**	9	WASHER-HARD (11X21X2.5-MM THK)	
M	6	1	**8T-5436**	1	BOLT (M10X1.5X130-MM)	
	7	1	**7C-3941**	1	PLATE	
M	8	1	**8T-4182**	2	BOLT (M10X1.5X45-MM)	
CY	9	1	**106-5122**	1	COMPRESSOR GP-REFRIGERANT	690
M	10	1	**8T-4136**	2	BOLT (M10X1.5X25-MM)	
	11	1	**8T-4222**	1	WASHER-PLATED (11X32X2.5-MM THK)	
	12	1	**7E-7302**	1	BRACKET	
	13	1	**7W-6423**	1	GUARD AS	
		1	**2L-6243**	2	BRACKET	

C - CHANGE FROM PREVIOUS TYPE
M - METRIC PART
Y - SEPARATE ILLUSTRATION

141-1558 **COMPRESSOR GP-REFRIGERANT (**contd.**)** **i00767511**

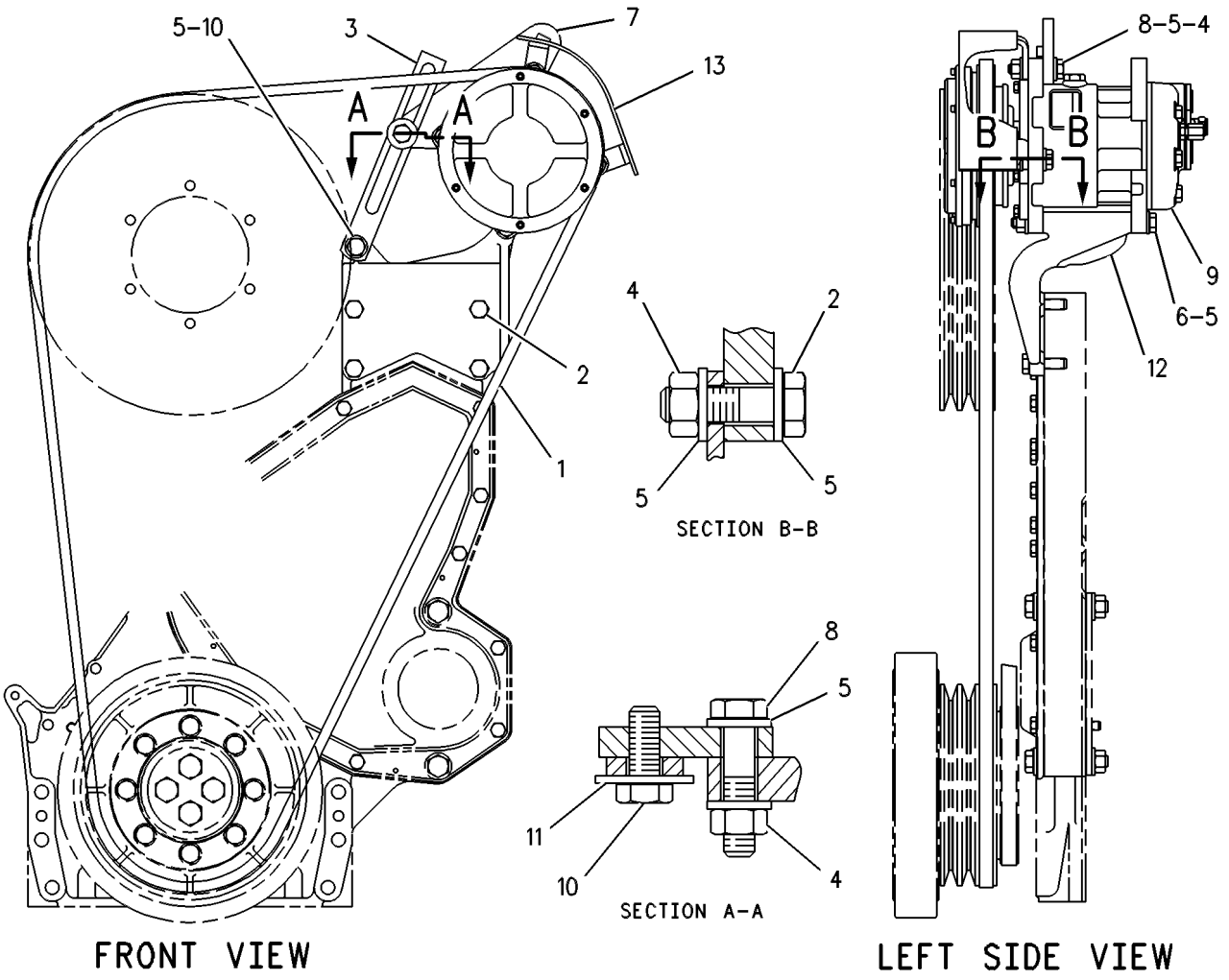

GRAPHIC #1 <END> g00268272

3E-1909 COMPRESSOR GP-REFRIGERANT

S/N: 9BL1-1877
FIELD REPLACEMENT ORDER 142-2387 HARNESS AS, 106-5122–PAGE: 690
PART OF 100-4603, 141-1558 COMPRESSOR GP-REFRIGERANT
AN ATTACHMENT

SMCS-1802 **i01643621**

NOTE	REF NO	GRAPHIC REF	PART NUMBER	QTY	PART NAME 1 2 3 4 5 6 (PRODUCT LEVEL)	SEE PAGE
	1	1	**7T-4532**	1	PLUG AS	
	2	1	**9X-7385**	2	SEAL-O-RING	

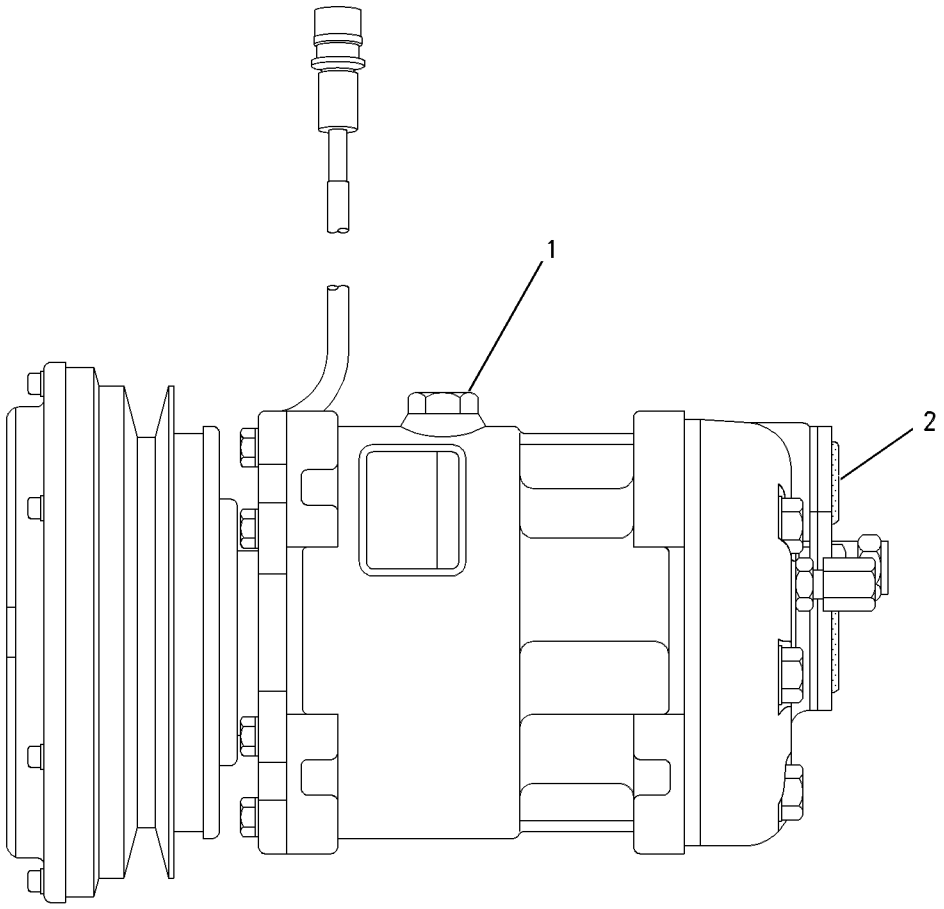

GRAPHIC #1 <END> g00514630

106-1260 CONDENSER GP-REFRIGERANT

S/N: 9BL1488-UP
PART OF 141-5991 AIR CONDITIONER GP
AN ATTACHMENT

SMCS-1805 **i01504302**

NOTE	REF NO	GRAPHIC REF	PART NUMBER	QTY	PART NAME 1 2 3 4 5 6 (PRODUCT LEVEL)	SEE PAGE
C	1	1	**127-9083**	2	PLATE	
	2	1	**7X-0291**	4	BOLT (3/8-16X3.75-IN)	
C	3	1	**130-3598**	1	PLATE	
	4	1	**9D-3767**	3	PLUG-BUTTON	
	5	1	**8M-2773**	1	CLIP (LOOP)	
	6	1	**7T-5868**	4	CLAMP AS	
	7	1	**9P-6980**	1	COIL-CONDENSER	
	8	1	**174-1495**	2	MOTOR GP-ELECTRIC	
					(EACH INCLUDES)	
		1	**3E-3365**	1	WEDGE-RECEPTACLE LOCK (2-PIN)	
		1	**9W-0852**	2	PIN-CONNECTOR (14-GA TO 16-GA)	
		1	**102-8802**	1	KIT-RECEPTACLE (2-PIN)	
					(INCLUDES RECEPTACLE AS & WEDGE)	
C	9	1	**119-5825**	1	HARNESS AS	
	10	1	**9X-3073**	1	HOUSING AS	
		1	**9F-2978**	18	NUT-WELD (3/8-16-THD)	
		1	**1F-0748**	3	NUT-WELD (1/2-13-THD)	
		1	**7D-8627**	2	LUG	
		1	**3H-5366**	2	STUD-WELD (1/4-20X0.625-IN)	
	11	1	**9P-6987**	1	COVER AS	
		1	**1F-0750**	8	NUT-WELD (3/8-16-THD)	
	12	1	**9P-6981**	2	GUARD AS	
C	13	1	**9X-4292**	4	TUBE	
	14	1	**9P-6977**	2	SHROUD	
	15	1	**8K-1433**	2	GROMMET	
C	16	1	**5P-8440**	2	GROMMET	
	17	1	**9P-6984**	1	TUBE AS	
	18	1	**1B-3057**	1	CLIP	
BD	19	1	**6V-2685**		SEAL	
	20	1	**9B-7237**	4	BOLT (3/8-16X1.25-IN)	
	21	1	**3P-7995**	2	FAN	
	22	1	**9X-1424**	1	TUBE AS	
		1	**5F-9144**	1	SEAL-O-RING	
	23	1	**7N-3718**	1	CLIP	
	24	1	**5P-8441**	1	GROMMET	
	25	1	**8M-2770**	4	CLIP (LOOP)	
	26	1	**6M-5062**	1	SEAL-O-RING	
	27	1	**5M-3062**	19	BOLT (3/8-16X0.75-IN)	
	28	1	**5P-1075**	24	WASHER-HARD (10.2X22.5X3-MM THK)	
CM	29	1	**8T-4138**	2	BOLT (M6X1X20-MM)	
	30	1	**3E-5239**	1	RELAY AS (24-VOLT)	
	31	1	**6D-4246**	2	CLIP (LOOP) (19.05MM ID)	
	32	1	**8C-3756**	1	FILM-IDENTIFICATION (AIR CONDITIONER)	
CM	33	1	**5C-2890**	1	NUT (M6X1-THD)	
C	34	1	**3S-2093**	1	STRAP-CABLE	

106-1260 **CONDENSER GP-REFRIGERANT (**contd.**)** **i01504302**

NOTE	REF NO	GRAPHIC REF	PART NUMBER	QTY	PART NAME 1 2 3 4 5 6 (PRODUCT LEVEL)	SEE PAGE

B - USE AS REQUIRED
C - CHANGE FROM PREVIOUS TYPE
D - ORDER BY THE METER
M - METRIC PART

106-1260 **CONDENSER GP-REFRIGERANT (**contd.**)** **i01504302**

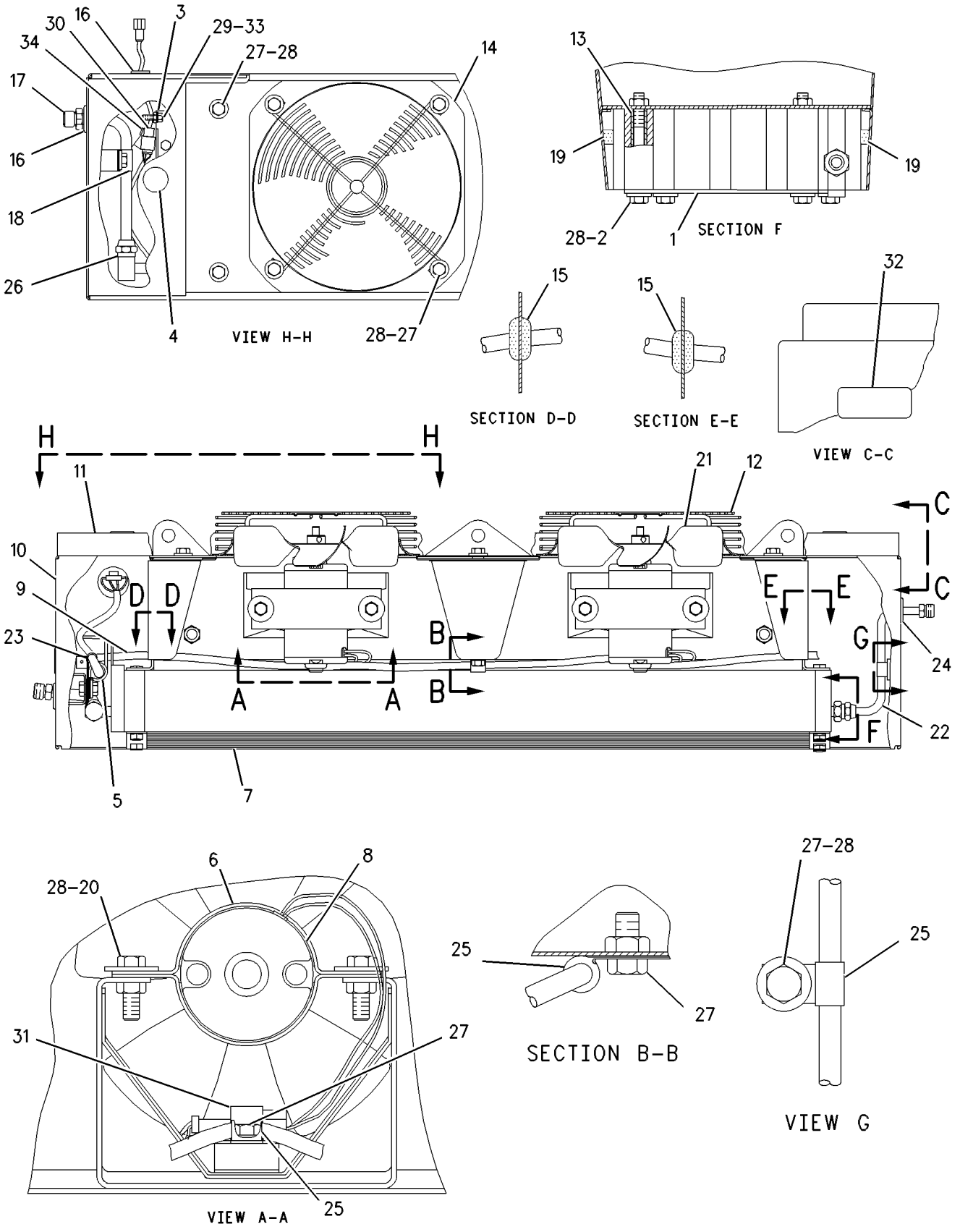

GRAPHIC #1 <END> g00290033

106-1260 CONDENSER GP-REFRIGERANT

S/N: 9BL1-UP
PART OF 141-5991, 8Y-9331 AIR CONDITIONER GP
AN ATTACHMENT

SMCS-1805 **i01400689**

NOTE	REF NO	GRAPHIC REF	PART NUMBER	QTY	PART NAME 1 2 3 4 5 6 (PRODUCT LEVEL)	SEE PAGE
	1	1	**117-0128**	2	STRIP	
	2	1	**7X-0291**	4	BOLT (3/8-16X3.75-IN)	
	3	1	**8S-8820**	1	CLIP	
	4	1	**9D-3767**	3	PLUG-BUTTON	
	5	1	**8M-2773**	1	CLIP (LOOP)	
	6	1	**7T-5868**	4	CLAMP AS	
	7	1	**9P-6980**	1	COIL-CONDENSER	
	8	1	**106-2721**	2	MOTOR AS	
					(EACH INCLUDES)	
		1	**3E-3365**	1	WEDGE-RECEPTACLE LOCK (2-PIN)	
		1	**9W-0852**	2	PIN-CONNECTOR (14-GA TO 16-GA)	
		1	**102-8802**	1	KIT-RECEPTACLE (2-PIN)	
					(INCLUDES RECEPTACLE AS & WEDGE)	
	9	1	**111-7218**	1	HARNESS AS	
	10	1	**9X-3073**	1	HOUSING AS	
		1	**9F-2978**	18	NUT-WELD (3/8-16-THD)	
		1	**1F-0748**	3	NUT-WELD (1/2-13-THD)	
		1	**7D-8627**	2	LUG	
		1	**3H-5366**	2	STUD-WELD (1/4-20X0.625-IN)	
	11	1	**9P-6987**	1	COVER AS	
		1	**1F-0750**	8	NUT-WELD (3/8-16-THD)	
	12	1	**9P-6981**	2	GUARD AS	
	13	1	**7K-3245**	4	TUBE	
	14	1	**9P-6977**	2	SHROUD	
	15	1	**8K-1433**	2	GROMMET	
	16	1	**5P-8440**	1	GROMMET	
	17	1	**9P-6984**	1	TUBE AS	
	18	1	**1B-3057**	1	CLIP	
BD	19	1	**6V-2685**		SEAL	
	20	1	**9B-7237**	4	BOLT (3/8-16X1.25-IN)	
	21	1	**3P-7995**	2	FAN	
	22	1	**9X-1424**	1	TUBE AS	
		1	**5F-9144**	1	SEAL-O-RING	
	23	1	**7N-3718**	1	CLIP	
	24	1	**5P-8441**	1	GROMMET	
	25	1	**8M-2770**	4	CLIP (LOOP)	
	26	1	**6M-5062**	1	SEAL-O-RING	
	27	1	**5M-3062**	19	BOLT (3/8-16X0.75-IN)	
	28	1	**5P-1075**	24	WASHER-HARD (10.2X22.5X3-MM THK)	
	29	1	**8T-4205**	2	WASHER-HARD (7.2X14.5X2-MM THK)	
		1	**6V-8185**	2	NUT (1/4-20-THD)	
	30	1	**3E-5239**	1	RELAY AS (24-VOLT)	
	31	1	**6D-4246**	2	CLIP (LOOP)	
	32	1	**8C-3756**	1	FILM-IDENTIFICATION (AIR CONDITIONER)	

B - USE AS REQUIRED
D - ORDER BY THE METER

106-1260 **CONDENSER GP-REFRIGERANT (**contd.**)** **i01400689**

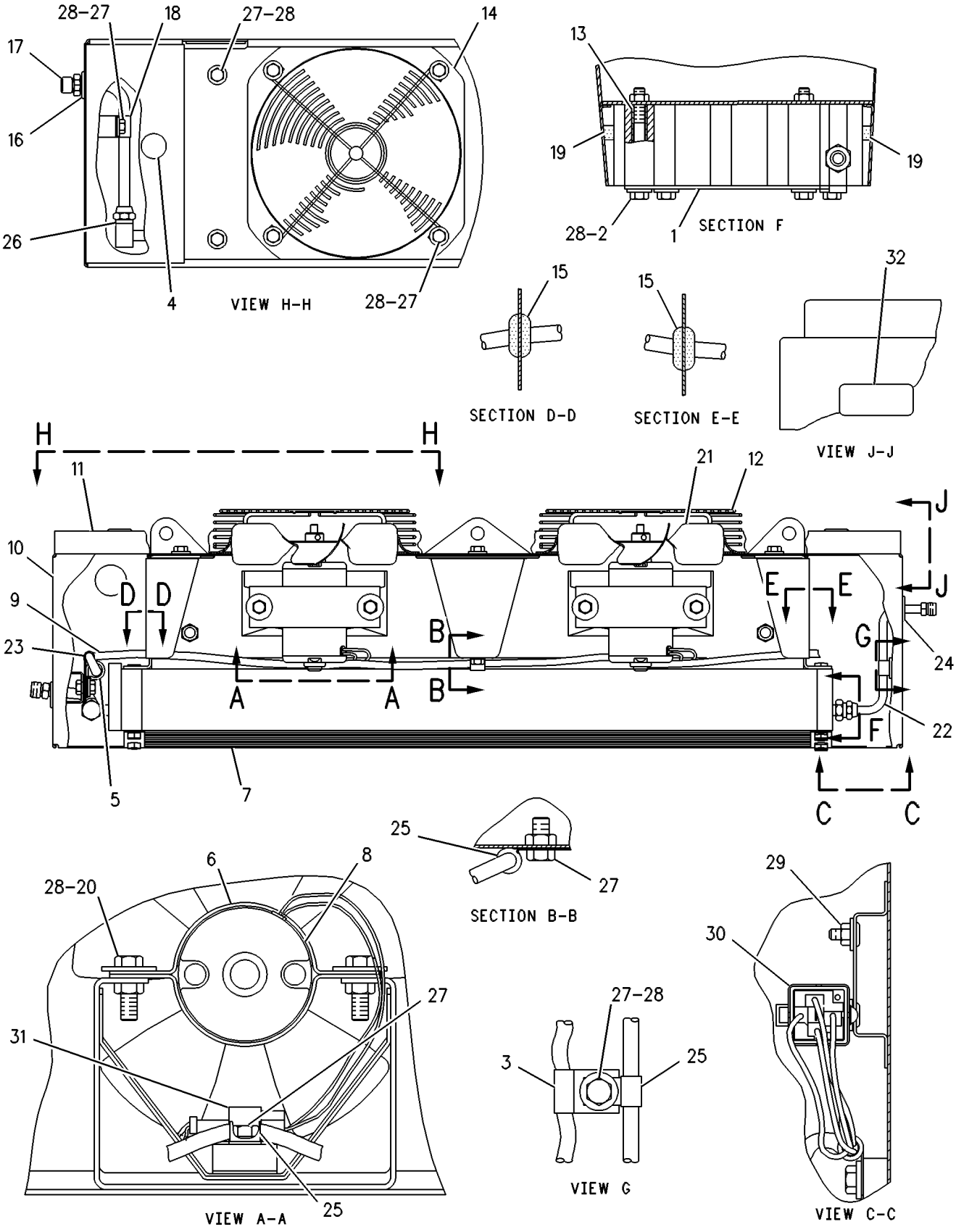

GRAPHIC #1 <END> g00250407

8G-1260 CONTROL GP-DIRECTION & SPEED

S/N: 9BL1-UP

PART OF 117-1761, 8Y-9370 CHASSIS AR

SMCS-5705 **i01399383**

NOTE	REF NO	GRAPHIC REF	PART NUMBER	QTY	PART NAME 1 2 3 4 5 6 (PRODUCT LEVEL)	SEE PAGE
	1	1	**7P-9733**	1	YOKE	
	2	1	**6V-8188**	1	NUT (1/2-13-THD)	
	3	1	**6V-0395**	2	BOLT-12 POINT HEAD (1/4-20X0.625-IN)	
	4	1	**9B-7237**	10	BOLT (3/8-16X1.25-IN)	
C	5	1	**6V-8801**	3	NUT (3/8-16-THD)	
	6	1	**8G-1120**	1	LINK AS	
C	7	1	**7X-0467**	2	BOLT (3/8-24X1-IN)	
C	8	1	**6V-7692**	2	BOLT-12 POINT HEAD (3/8-16X1.5-IN)	
	9	1	**8G-1322**	1	SUPPORT AS	
	10	1	**7X-0591**	3	WASHER-HARD (17X29X3-MM THK)	
C	11	1	**4L-9337**	1	BOLT (3/8-16X1.5-IN)	
	12	1	**7P-7577**	1	LEVER	
	13	1	**8G-1320**	1	LEVER AS	
	14	1	**2L-4582**	1	TIE ROD	
	15	1	**6V-8183**	2	NUT-FULL (3/8-24-THD)	
	16	1	**1A-9252**	2	END-ADJUSTMENT ROD	
C	17	1	**1B-0676**	3	PIN	
C	18	1	**4M-2348**	4	PIN-COTTER	
	19	1	**8G-1121**	1	ROD AS	
		1	**5D-1935**	1	ROD-CONTROL	
	20	1	**6V-1243**	2	ROD END	
	21	1	**1B-4203**	2	NUT-FULL (3/8-24-THD)	
	22	1	**7P-9283**	2	LEVER	
C	23	1	**8G-8273**	1	CONSOLE AS	
		1	**9F-2978**	21	NUT-WELD (3/8-16-THD)	
		1	**1K-0368**	1	PIN	
		1	**4K-4658**	1	STUD	
	24	1	**9F-6445**	3	NUT-WELD (1/4-20-THD)	
	25	1	**7P-9740**	1	SUPPORT	
C	26	1	**8T-4896**	11	WASHER-HARD (10.2X18.5X2.5-MM THK)	
C	27	1	**4H-3865**	1	PIN	
	28	1	**8G-1130**	1	PIN	
C	29	1	**7S-9885**	1	WASHER (13.5X22.2X4.5-MM THK)	
	30	1	**8F-4610**	1	RING-RETAINING	
	31	1	**5P-9209**	2	BEARING AS-NEEDLE	
	32	1	**7P-8301**	1	SHAFT	
C	33	1	**5P-0372**	1	LOCK PIN	
	34	1	**1B-8704**	3	KEY-WOODRUFF	
C	35	1	**031-4847**	1	SPACER (0.38X0.625X0.25-IN)	
C	36	1	**8V-2671**	1	SPACER (10X13.1X3.7-MM THK)	
C	37	1	**5M-3062**	10	BOLT (3/8-16X0.75-IN)	
	38	1	**5P-1075**	10	WASHER-HARD (10.2X22.5X3-MM THK)	
C	39	2	**1D-1313**	1	SPRING	
	40	2	**1H-1200**	2	PIN-SPRING (SMALL)	
	41	2	**7K-2135**	6	BEARING-ROLLER	
	42	2	**7P-8223**	1	SHAFT	
	43	2	**7P-9732**	1	LEVER	

8G-1260 **CONTROL GP-DIRECTION & SPEED (**contd.**)** **i01399383**

NOTE	REF NO	GRAPHIC REF	PART NUMBER	QTY	PART NAME 1 2 3 4 5 6 (PRODUCT LEVEL)	SEE PAGE
	44	2	**4H-3119**	1	PIN	
	45	2	**009-8670**	6	WASHER (SPRING)	
	46	2	**8T-4223**	2	WASHER-HARD (13.5X25.5X3-MM THK)	
	47	2	**2K-0564**	1	LOCKNUT (1/2-20-THD)	
	48	2	**7P-8222**	1	COLLAR	
	49	2	**8G-1119**	2	DISC	
	50	2	**8G-1115**	1	SHAFT AS	
C	51	2	**3W-3426**	1	BAIL	
	52	2	**7P-7583**	1	COVER	
C	53	2	**8T-6413**	2	BOLT-12 POINT HEAD (3/8-16X2.5-IN)	
C	54	2	**8T-4896**	4	WASHER-HARD (10.2X18.5X2.5-MM THK)	
	55	2	**1D-4677**	2	BOLT-CARRIAGE (3/8-16X1-IN)	
C	56	2	**6V-8801**	4	NUT (3/8-16-THD)	
	57	2	**7P-7584**	1	GUIDE	
	58	2	**7P-8303**	1	ROD	
	59	2	**2A-1736**	1	HANDLE	
C	60	2	**5J-5933**	1	ROD-CONTROL	
	61	2	**6V-8183**	1	NUT-FULL (3/8-24-THD)	
C	62	2	**8G-8775**	1	PIN (LARGE)	
C	63	2	**1M-1341**	1	END-YOKE ROD	
	64	2	**7P-9312**	1	COVER	
C	65	2	**8G-4575**	1	LEVER AS	
C	66	2	**5M-3062**	11	BOLT (3/8-16X0.75-IN)	
		2	**5P-1075**	11	WASHER-HARD (10.2X22.5X3-MM THK)	
	67	2	**2M-8908**	1	KNOB	
	68	2	**7P-9299**	1	COVER AS	
C	69	2	**4L-9337**	2	BOLT (3/8-16X1.5-IN)	

C - CHANGE FROM PREVIOUS TYPE

8G-1260 **CONTROL GP-DIRECTION & SPEED** (contd.) **i01399383**

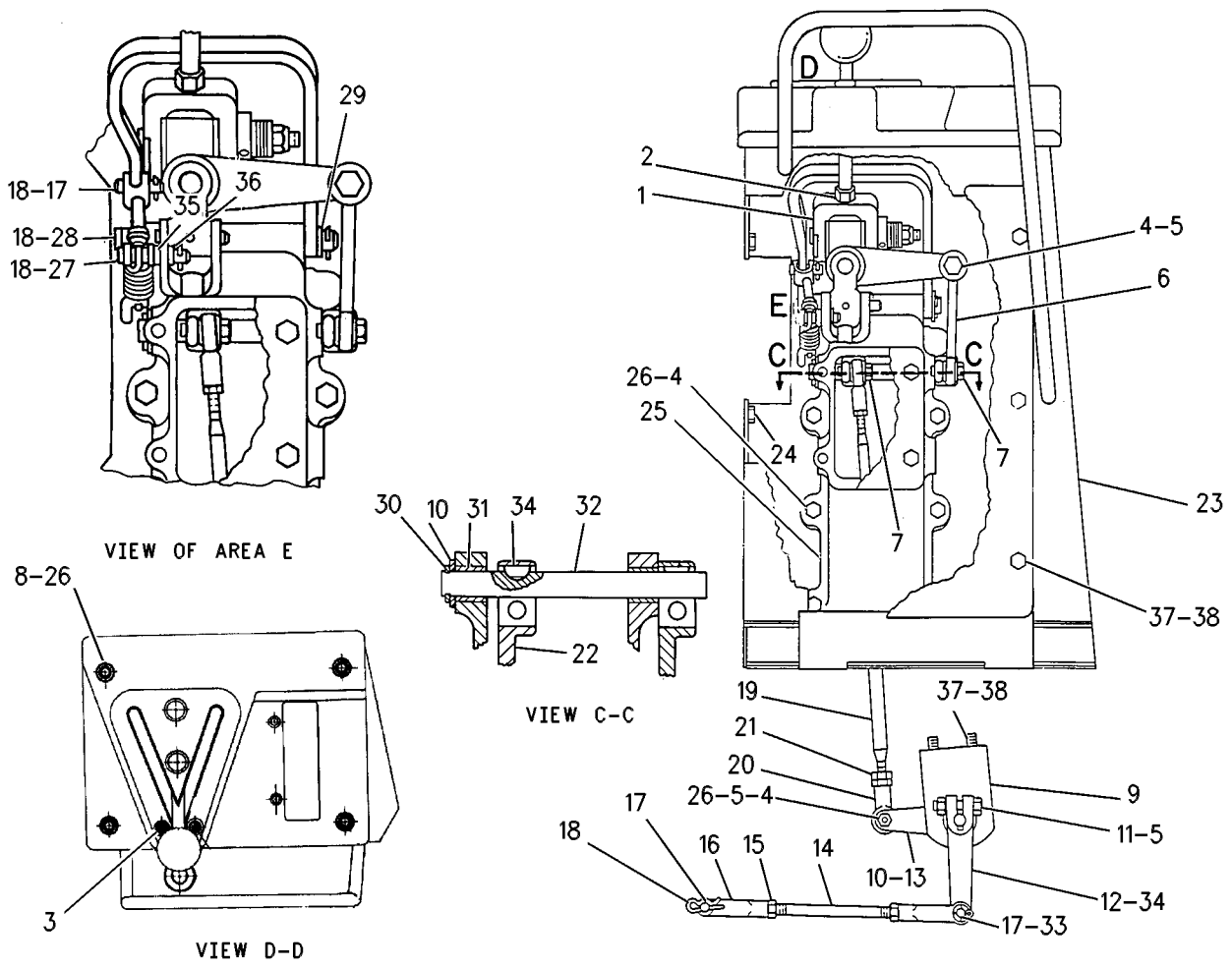

GRAPHIC #1 g00608691

8G-1260 **CONTROL GP-DIRECTION & SPEED** (contd.) **i01399383**

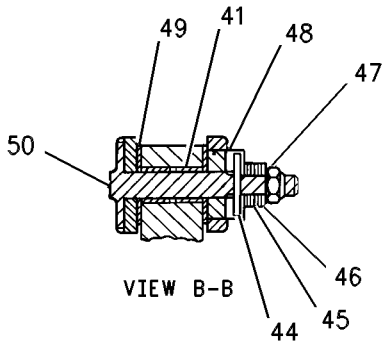

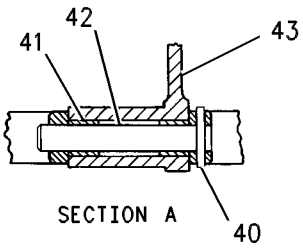

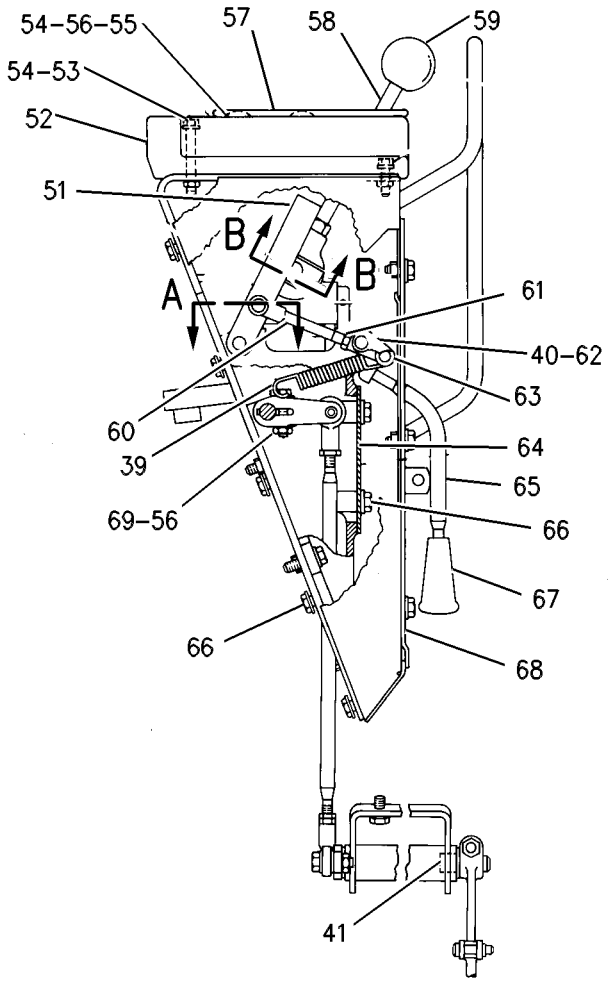

GRAPHIC #2 <END> g00608693

129-3152 CONTROL GP-HYDRAULIC

S/N: 9BL1399-UP

AN ATTACHMENT

SMCS-5063 **i01400141**

NOTE	PART NUMBER	QTY	PART NAME 1 2 3 4 5 6 (PRODUCT LEVEL)	SEE PAGE
Y	**127-0860**	1	VALVE GP-PILOT	627
	6V-2453	1	FILM-INSTRUCTION (SGL LEVER IMPLEMENT CONTROL) (BUCKET LEVER)	
I	**139-3365**	1	HOSE AS	

I - REFER TO HYDRAULIC INFORMATION SYSTEM
Y - SEPARATE ILLUSTRATION

<END>

128-1904 CONTROL GP-PILOT OPERATED HYD

S/N: 9BL1399-UP

PART OF 8Y-9369 HYDRAULIC AR

SMCS-5059 **i01400157**

NOTE	REF NO	GRAPHIC REF	PART NUMBER	QTY	PART NAME 1 2 3 4 5 6 (PRODUCT LEVEL)	SEE PAGE
	1	1	**7P-3895**	1	BUTTON-PLUG	
Y	2	1	**127-0862**	1	VALVE GP-PILOT	632
	3	1	**127-8486**	1	GUARD AS	
		1	**4V-7412**	1	BOSS (3/8-16-THD)	
M		1	**6V-9632**	4	NUT-WELD (M6X1-THD)	
		1	**9F-6445**	2	NUT-WELD (1/4-20-THD)	
	4	1	**5P-1075**	6	WASHER-HARD (10.2X22.5X3-MM THK)	
	5	1	**5P-8167**	7	BOLT (3/8-16X0.625-IN)	
	6	1	**8T-4896**	1	WASHER-HARD (10.2X18.5X2.5-MM THK)	
M	7	1	**9X-2044**	4	SCREW-TRUSS HEAD (M6X1X16-MM)	
	8	1	**9X-8250**	1	CLIP	

M - METRIC PART
Y - SEPARATE ILLUSTRATION

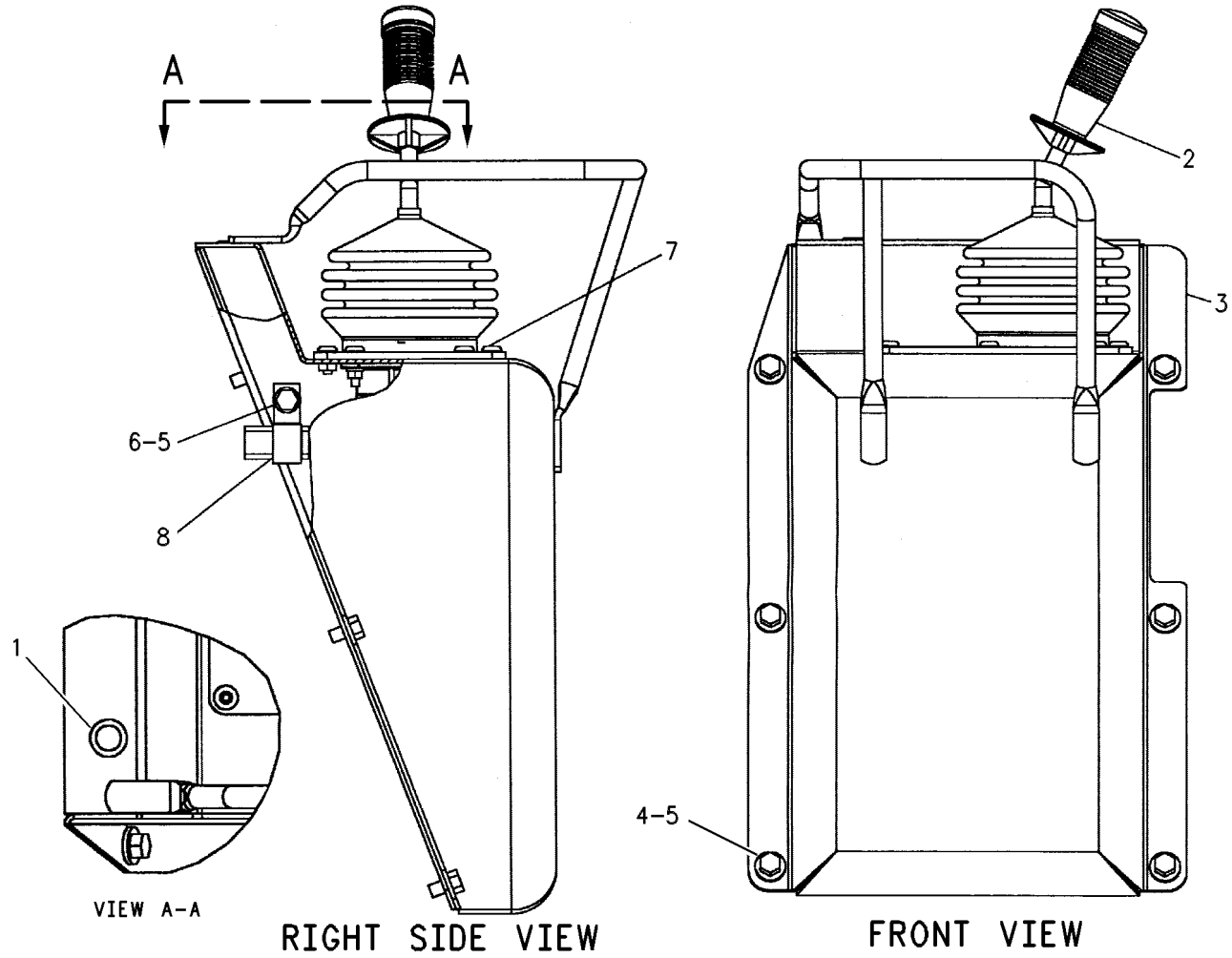

GRAPHIC #1 <END> g00292139

128-1906 CONTROL GP-PILOT OPERATED HYD

S/N: 9BL1399-UP

PART OF 129-1475, 129-1541, 129-1543, 129-1548 HYDRAULIC AR-3 VALVE AN ATTACHMENT

SMCS-5059 **i00767885**

NOTE	PART NUMBER	QTY	PART NAME 1 2 3 4 5 6 (PRODUCT LEVEL)	SEE PAGE
Y	**127-0863**	1	VALVE GP-PILOT	635

Y - SEPARATE ILLUSTRATION

<END>

128-1911 CONTROL GP-PILOT OPERATED HYD

S/N: 9BL1399-UP

PART OF 129-1550, 129-1559, 129-1565 HYDRAULIC AR-3 VALVE AN ATTACHMENT

SMCS-5059 **i01400160**

NOTE	PART NUMBER	QTY	PART NAME 1 2 3 4 5 6 (PRODUCT LEVEL)	SEE PAGE
Y	**127-0861**	1	VALVE GP-PILOT	628
Y	**127-0862**	1	VALVE GP-PILOT	632
I	**122-1618**	1	HOSE AS	
I	**139-3365**	1	HOSE AS	

I - REFER TO HYDRAULIC INFORMATION SYSTEM
Y - SEPARATE ILLUSTRATION

<END>

7P-9729 CONTROL GP-PILOT OPERATED HYD

S/N: 9BL1-1398
SINGLE LEVER
PART OF 8Y-9369 HYDRAULIC AR

SMCS-5059 **i01400146**

NOTE	REF NO	GRAPHIC REF	PART NUMBER	QTY	PART NAME 1 2 3 4 5 6 (PRODUCT LEVEL)	SEE PAGE
C	1	1	**7P-3895**	1	BUTTON-PLUG	
	2	1	**8G-0562**	1	ROD	
C	3	1	**7X-0448**	1	NUT (5/8-11-THD)	
	4	1	**3V-1974**	1	HANDLE	
	5	1	**8G-2536**	1	BOOT	
	6	1	**3W-2390**	1	LEVER	
	7	1	**2R-0364**	2	RING-RETAINING	
	8	1	**9J-5846**	2	ROLLER-CAM	
C		1	**5S-9607**	2	LOCKNUT	
	9	1	**5P-8167**	6	BOLT (3/8-16X0.625-IN)	
	10	1	**5P-1075**	6	WASHER-HARD (10.2X22.5X3-MM THK)	
	11	1	**4L-6454**	4	BOLT (3/8-16X1-IN)	
		1	**8T-4896**	4	WASHER-HARD (10.2X18.5X2.5-MM THK)	
Y	12	1	*1U-2169*	1	VALVE GP-PILOT	650
	13	1	**5S-7383**	2	BOLT (3/8-16X1.75-IN)	
		1	**6V-8801**	2	NUT (3/8-16-THD)	
	14	1	**3W-1010**	1	BRACKET AS	
	15	1	**8G-0617**	2	LEVER AS	
	16	1	**7S-5757**	2	RING-RETAINING	
		1	**6V-2830**	4	BEARING-ROLLER	
	17	1	**3P-4347**	1	SPACER (0.656X1.25X0.036-IN THK)	
	18	1	**9X-5300**	2	SOLENOID AS	
	19	1	**9B-7237**	1	BOLT (3/8-16X1.25-IN)	
	20	1	**4V-0152**	1	WASHER-THRUST	
	21	1	**8G-0557**	1	LEVER AS	
	22	1	**7K-2135**	4	BEARING-ROLLER	
	23	2	**3W-0331**	1	GUARD AS	
C	24	2	**3W-6311**	1	CAM	
	25	2	**4F-6123**	2	SPRING	
	26	2	**8G-1537**	1	LINK AS	
	27	2	**8T-9364**	4	BOLT (1/4-20X0.625-IN)	
	28	2	**8G-1825**	1	ROD	
	29	2	**8T-8915**	1	BOLT (3/8-16X3.25-IN)	
	30	2	**8T-4896**	3	WASHER-HARD (10.2X18.5X2.5-MM THK)	
	31	2	**8G-0563**	1	CAM	
	32	2	**3D-8752**	4	LOCKNUT (5/16-24-THD)	
	33	2	**5S-7379**	2	BOLT (3/8-16X0.875-IN)	
	34	2	**6V-1033**	2	END-BEARING ROD	
	35	2	**6V-8186**	2	NUT-FULL (5/16-24-THD)	
	36	2	**8G-1813**	1	PIN AS	

C - CHANGE FROM PREVIOUS TYPE
Y - SEPARATE ILLUSTRATION

7P-9729 **CONTROL GP-PILOT OPERATED HYD** (contd.) **i01400146**

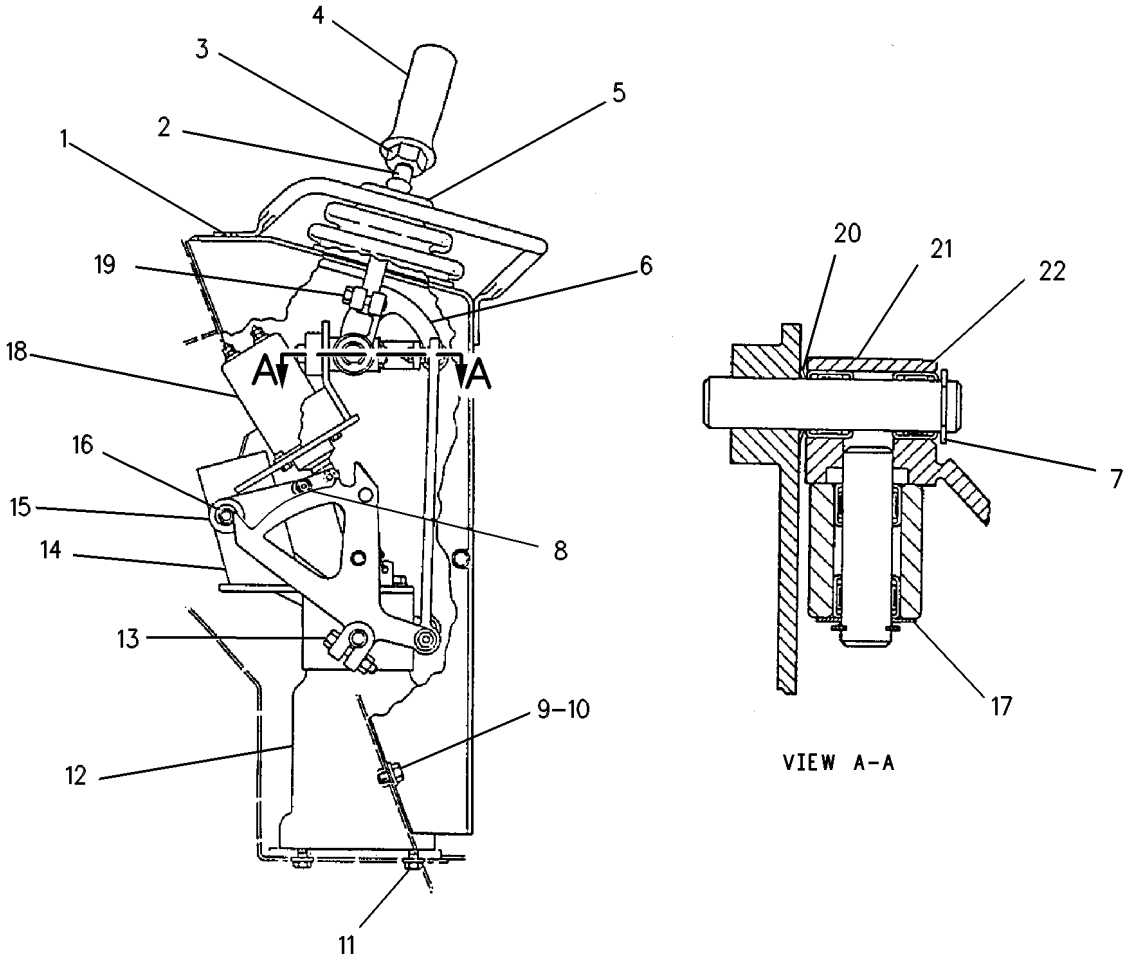

GRAPHIC #1 g00387709

7P-9729 **CONTROL GP-PILOT OPERATED HYD (**contd.**)** **i01400146**

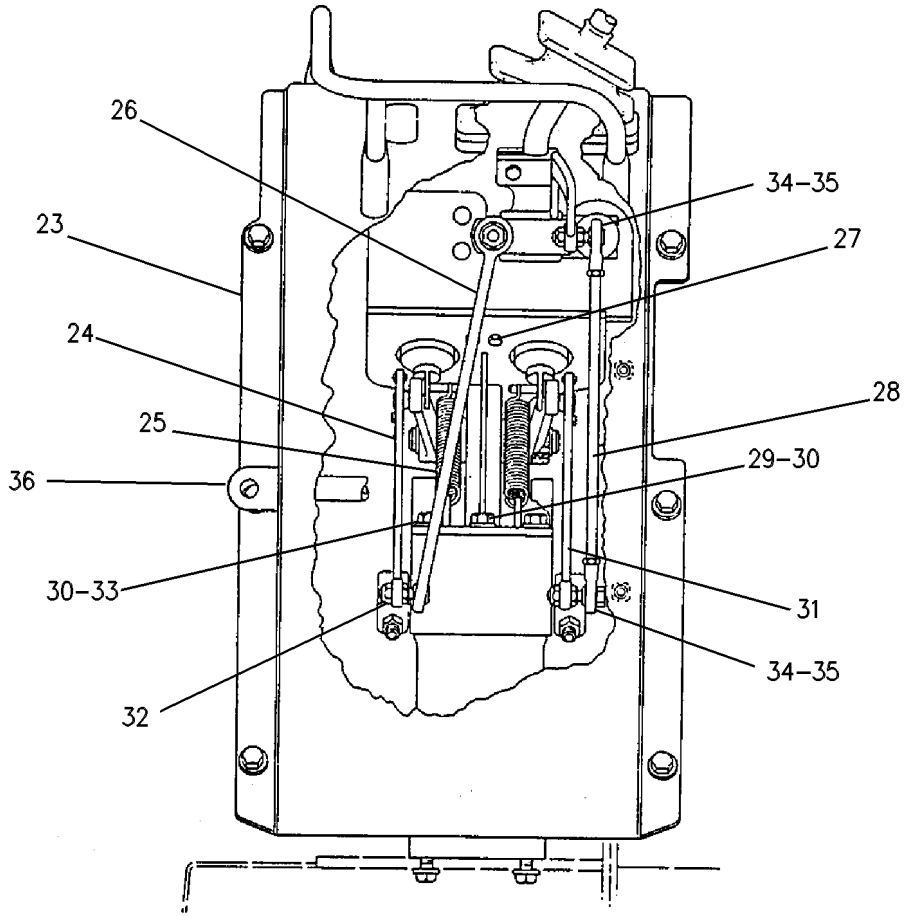

GRAPHIC #2 <END> g00387710

8G-0985 CONTROL GP-PILOT OPERATED HYD

S/N: 9BL1-1398
2 LEVER
AN ATTACHMENT

SMCS-5059 **i01400148**

NOTE	REF NO	GRAPHIC REF	PART NUMBER	QTY	PART NAME 1 2 3 4 5 6 (PRODUCT LEVEL)	SEE PAGE
	1	1	**4H-3119**	1	PIN	
	2	1	**5P-1075**	6	WASHER-HARD (10.2X22.5X3-MM THK)	
	3	1	**9X-5300**	2	SOLENOID AS	
					(EACH INCLUDES)	
	4	1	**6V-8377**	2	NUT (8-32-THD)	
		1	**9B-7233**	2	LOCKWASHER	
C	5	1	**3W-0331**	1	GUARD AS	
		1	**9F-6445**	2	NUT-WELD (1/4-20-THD)	
		1	**6K-0142**	1	PIPE	
	6	1	**8T-4896**	7	WASHER-HARD (10.2X18.5X2.5-MM THK)	
C	7	1	**3W-6310**	1	CAM	
	8	1	**5P-8167**	6	BOLT (3/8-16X0.625-IN)	
	9	1	**4L-6454**	4	BOLT (3/8-16X1-IN)	
Y	10	1	*1U-2169*	1	VALVE GP-PILOT	650
	11	1	**5S-7383**	2	BOLT (3/8-16X1.75-IN)	
		1	**6V-8801**	2	NUT (3/8-16-THD)	
C	12	1	**3W-0333**	1	BRACKET AS	
	13	1	**8G-0617**	2	LEVER AS	
	14	1	**7S-5757**	2	RING-RETAINING	
		1	**6V-2830**	4	BEARING-ROLLER	
C	15	1	**5S-9607**	2	LOCKNUT	
		1	**9J-5846**	2	ROLLER-CAM	
C	16	1	**7P-3895**	1	BUTTON-PLUG	
	17	1	**8G-1565**	1	SHAFT	
	18	1	**7K-2135**	4	BEARING-ROLLER	
CB	19	1	**1A-4790**	3	WASHER (16.7X31.8X1.6-MM THK)	
	20	1	**8G-0563**	1	CAM	
	21	1	**8G-1564**	1	LEVER (TILT)	
	22	1	**7M-0706**	2	KNOB	
	23	1	**8G-1563**	1	LEVER (LIFT)	
C	24	1	**3W-6485**	2	SPRING	
	25	1	**5S-7379**	2	BOLT (3/8-16X0.875-IN)	
	26	1	**8C-3121**	2	BOLT (5/16-18X1.5-IN)	
	27	1	**6V-8189**	4	NUT (5/16-18-THD)	
	28	1	**6V-8186**	4	NUT-FULL (5/16-24-THD)	
	29	1	**8T-8915**	1	BOLT (3/8-16X3.25-IN)	
C	30	1	**8G-1825**	2	ROD	
	31	1	**8T-9364**	4	BOLT (1/4-20X0.625-IN)	
	32	1	**6V-5782**	2	BOLT (5/16-18X1.125-IN)	
C	33	1	**7H-3641**	4	END-ROD (5/16-24-THD)	
C	34	1	**6N-1172**	2	SLEEVE	
	35	1	**8G-1813**	1	PIN AS	

B - USE AS REQUIRED
C - CHANGE FROM PREVIOUS TYPE
Y - SEPARATE ILLUSTRATION

8G-0985 **CONTROL GP-PILOT OPERATED HYD (**contd.**)** **i01400148**

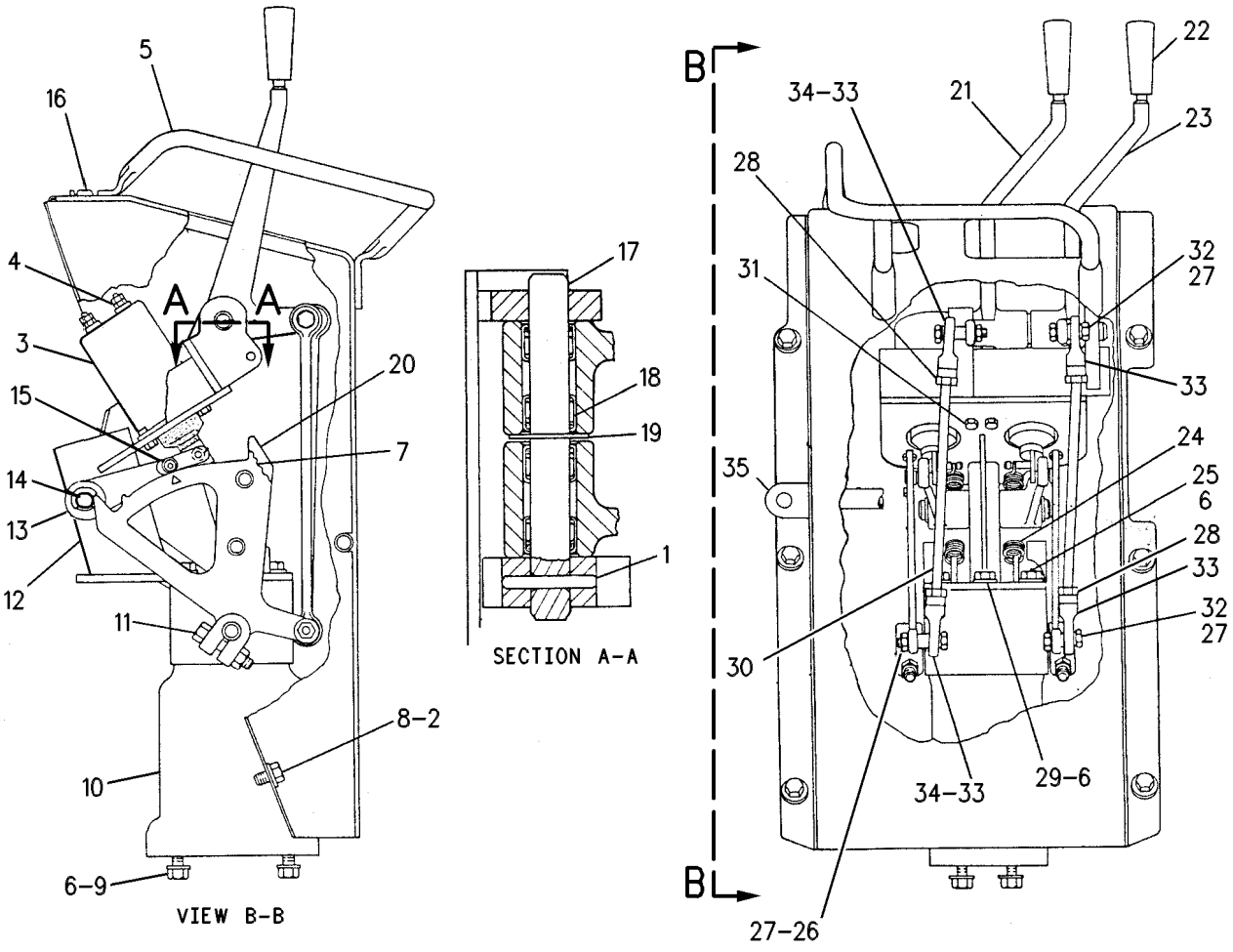

GRAPHIC #1 <END> g00247126

8G-0987 CONTROL GP-PILOT OPERATED HYD

S/N: 9BL1-1398

PART OF 123-2859, 8Y-9627, 8Y-9628, 8Y-9629 HYDRAULIC AR-3 VALVE AN ATTACHMENT

SMCS-5059 **i01400153**

NOTE	REF NO	GRAPHIC REF	PART NUMBER	QTY	PART NAME 1 2 3 4 5 6 (PRODUCT LEVEL)	SEE PAGE
	1	1	**0S-1629**	1	BOLT (1/2-20X1-IN)	
C	2	1	**3W-0334**	1	LEVER AS	
	3	1	**8G-1824**	1	LEVER	
	4	1	**3V-1974**	1	HANDLE	
	5	1	**6V-1033**	2	END-BEARING ROD	
	6	1	**3D-8752**	4	LOCKNUT (5/16-24-THD)	
	7	1	**8G-1825**	1	ROD	
I	8	1	**8G-1588**	1	HOSE AS	
C	9	1	**7K-1181**	3	STRAP-CABLE	
I	10	1	**8G-1823**	1	HOSE AS	
	11	1	**5P-3426**	1	ELBOW	
	12	1	**3J-7354**	2	SEAL-O-RING	
C	13	1	**030-7947**	1	ELBOW	
	14	1	**3J-1907**	8	SEAL-O-RING	
I	15	1	**8G-1587**	1	HOSE AS	
	16	1	**2R-6806**	2	CONNECTOR	
	17	1	**3J-7352**	1	CONNECTOR	
	18	1	**8G-1486**	1	BRACKET AS	
BE	19	1	**3W-0317**	2	TUBE	
	20	1	**6V-2606**	2	ADAPTER	
		1	**2M-9780**	2	SEAL-O-RING	
	21	1	**5P-7963**	2	ELBOW-FLARELESS	
	22	1	**3D-8087**	4	NUT-FITTING	
BE		1	**3D-8088**	4	SLEEVE-FITTING	
	23	1	**8T-2501**	3	BOLT (3/8-16X2-IN)	
	24	1	**8G-1490**	1	ROD	
	25	1	**1A-4790**	1	WASHER (16.7X31.8X1.6-MM THK)	
C	26	1	**7X-0448**	1	NUT (5/8-11-THD)	
	27	1	**2R-0364**	1	RING-RETAINING	
	28	1	**7K-2135**	2	BEARING-ROLLER	
Y	29	1	**1U-2620**	1	VALVE GP-PILOT	656
	30	1	**4L-6454**	2	BOLT (3/8-16X1-IN)	
C		1	**6V-8801**	2	NUT (3/8-16-THD)	
		1	**8T-4896**	2	WASHER-HARD (10.2X18.5X2.5-MM THK)	
C	31	1	**6V-8186**	2	NUT-FULL (5/16-24-THD)	
	32	1	**9B-7237**	1	BOLT (3/8-16X1.25-IN)	
C	33	1	**5P-7960**	2	CONNECTOR	
C	34	1	**2P-7214**	1	ELBOW	
C	35	1	**3P-9847**	4	CLIP	
C	36	1	**5K-5338**	1	CLIP	
C	37	1	**8G-1489**	1	LEVER	

B - USE AS REQUIRED
C - CHANGE FROM PREVIOUS TYPE
E - ORDER BY THE CENTIMETER
I - REFER TO HYDRAULIC INFORMATION SYSTEM
Y - SEPARATE ILLUSTRATION

8G-0987 **CONTROL GP-PILOT OPERATED HYD** (contd.) **i01400153**

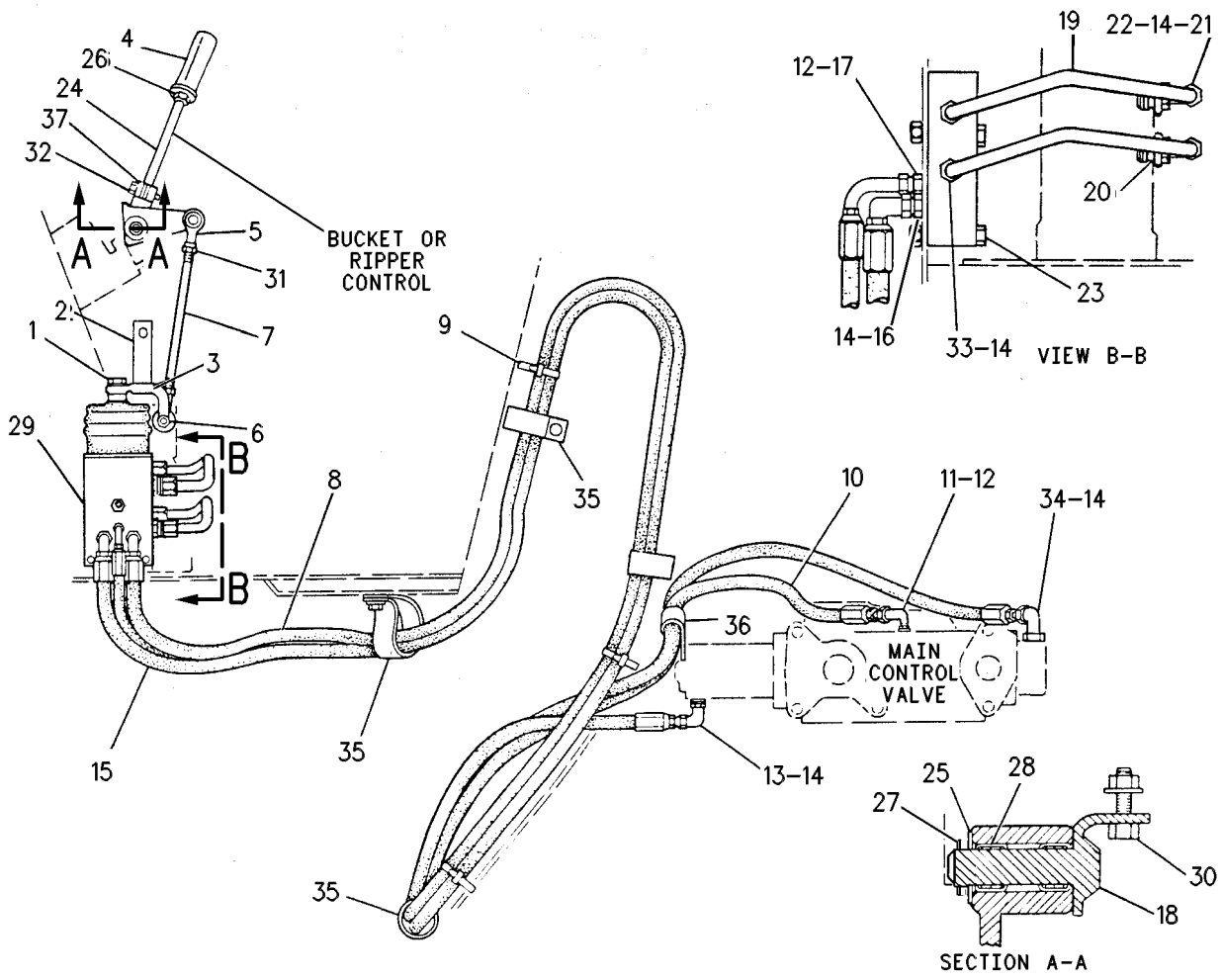

GRAPHIC #1 <END> g00247369

8G-1618 CONTROL GP-PILOT OPERATED HYD

S/N: 9BL1-1398

PART OF 8Y-9630, 8Y-9631, 8Y-9632 HYDRAULIC AR-3 VALVE AN ATTACHMENT

SMCS-5059 **i01400156**

NOTE	REF NO	GRAPHIC REF	PART NUMBER	QTY	PART NAME 1 2 3 4 5 6 (PRODUCT LEVEL)	SEE PAGE
	1	1	**0S-1629**	1	BOLT (1/2-20X1-IN)	
C	2	1	**3W-0334**	1	LEVER AS	
		1	**8G-1824**	1	LEVER	
	3	1	**8G-1619**	1	LEVER	
	4	1	**7M-0706**	1	KNOB	
	5	1	**6V-1033**	2	END-BEARING ROD	
C	6	1	**3D-8752**	2	LOCKNUT (5/16-24-THD)	
	7	1	**8G-1825**	1	ROD	
I	8	1	**8G-1588**	1	HOSE AS	
C	9	1	**7K-1181**	3	STRAP-CABLE	
I	10	1	**8G-1823**	1	HOSE AS	
	11	1	**030-7946**	1	ELBOW	
	12	1	**3J-7354**	2	SEAL-O-RING	
C	13	1	**030-7947**	1	ELBOW	
	14	1	**3J-1907**	8	SEAL-O-RING	
I	15	1	**8G-1587**	1	HOSE AS	
	16	1	**2R-6806**	2	CONNECTOR	
	17	1	**3J-7352**	1	CONNECTOR	
	18	1	**4H-3119**	1	PIN	
	19	1	**3W-0317**	2	TUBE	
	20	1	**6V-2606**	2	ADAPTER	
		1	**2M-9780**	2	SEAL-O-RING	
	21	1	**5P-7963**	2	ELBOW-FLARELESS	
	22	1	**3D-8087**	4	NUT-FITTING	
		1	**3D-8088**	4	SLEEVE-FITTING	
	23	1	**0S-1590**	3	BOLT (3/8-16X2-IN)	
C	24	1	**9H-2404**	1	STUD-TAPERLOCK	
B	25	1	**1A-2812**	1	WASHER (0.06-MM THK)	
	26	1	**8G-1620**	1	SHAFT	
	27	1	**2R-0364**	1	RING-RETAINING	
	28	1	**7K-2135**	2	BEARING-ROLLER	
Y	29	1	**1U-2620**	1	VALVE GP-PILOT	656
	30	1	**5P-7960**	2	CONNECTOR	
C	31	1	**9S-8751**	2	NUT-FULL (5/16-24-THD)	
C	32	1	**2P-7214**	1	ELBOW	
C	33	1	**3P-9847**	4	CLIP	
C	34	1	**5K-5338**	1	CLIP	

B - USE AS REQUIRED
C - CHANGE FROM PREVIOUS TYPE
I - REFER TO HYDRAULIC INFORMATION SYSTEM
Y - SEPARATE ILLUSTRATION

8G-1618 **CONTROL GP-PILOT OPERATED HYD** (contd.) **i01400156**

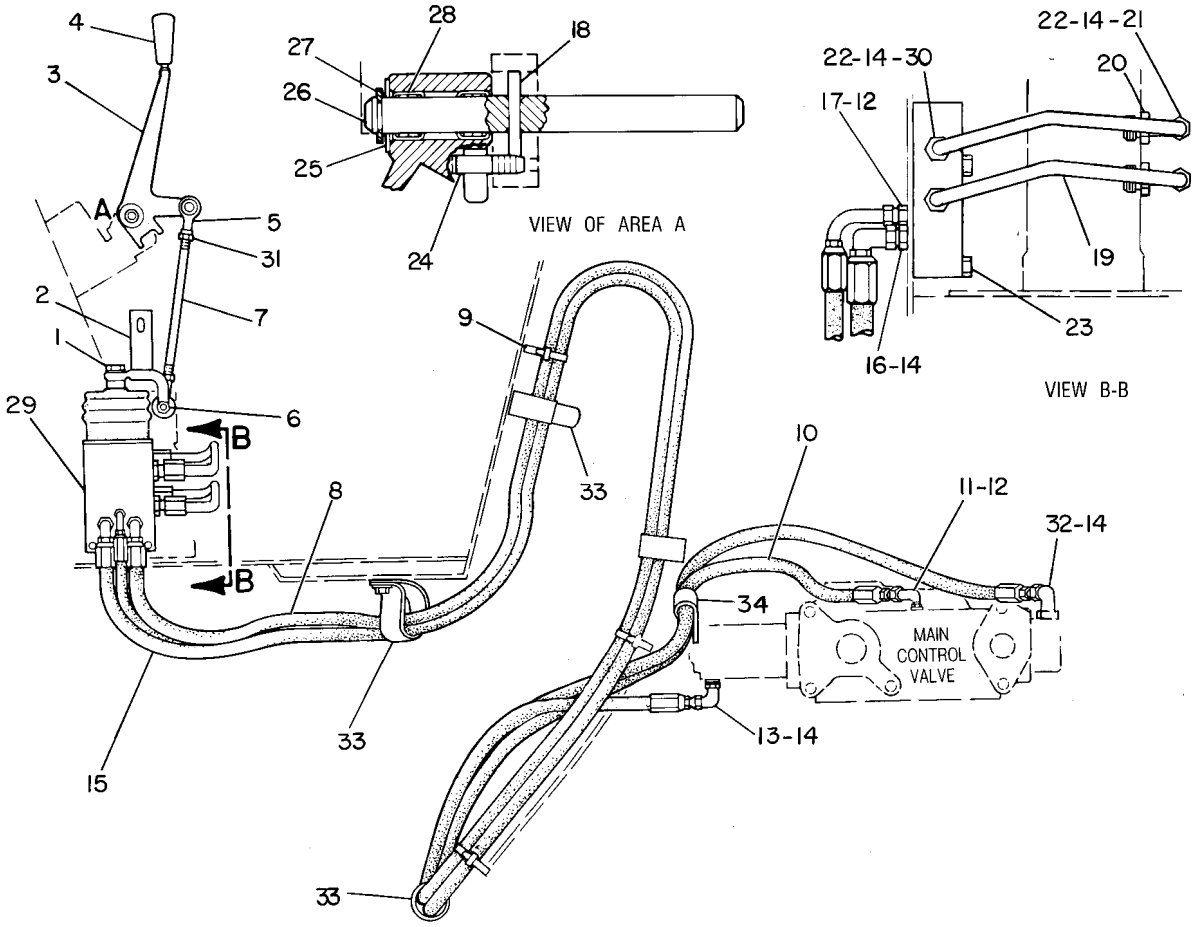

GRAPHIC #1 <END> g00196203

8G-1267 CONTROL GP-STEERING

S/N: 9BL1-UP

PART OF 117-1761, 8Y-9370 CHASSIS AR

SMCS-4135 **i01400126**

NOTE	REF NO	GRAPHIC REF	PART NUMBER	QTY	PART NAME 1 2 3 4 5 6 (PRODUCT LEVEL)	SEE PAGE
	1	1	**8T-1177**	6	BEARING-ROLLER	
	2	1	**5S-7379**	10	BOLT (3/8-16X0.875-IN)	
	3	1	**5P-1075**	10	WASHER-HARD (10.2X22.5X3-MM THK)	
	4	1	**8Y-5695**	2	BRACKET AS	
	5	1	**2J-6356**	2	RING-RETAINING	
	6	1	**8T-4994**	4	WASHER-HARD (20X36.5X3.5-MM THK)	
C	7	1	**5J-5315**	2	ROD END	
	8	1	**1B-4203**	6	NUT-FULL (3/8-24-THD)	
	9	1	**8G-1235**	2	ROD	
	10	1	**1B-0676**	2	PIN	
	11	1	**5P-0372**	2	LOCK PIN	
	12	1	**1A-9252**	2	END-ADJUSTMENT ROD	
	13	1	**8G-1269**	1	GUARD	
	14	1	**2L-5039**	2	SCREW-MACHINE	
	15	1	**3B-8489**	2	FITTING-GREASE (1/8-27 PTF)	
	16	1	**8G-0958**	2	SHAFT AS	
	17	1	**8T-0706**	2	RING-RETAINING	
	18	1	**8F-7702**	12	SEAL-LIP TYPE	
	19	2	**8G-0947**	2	LEVER	
	20	2	**1B-8706**	2	KEY-WOODRUFF	
	21	2	**5S-7382**	2	BOLT (3/8-16X1.375-IN)	
C	22	2	**010-2461**	2	SETSCREW-SQUARE HEAD (3/8-16X2-IN)	
C	23	2	**1B-2578**	2	NUT (3/8-16-THD)	
	24	2	**7P-7509**	2	PEDAL AS	
	25	2	**7P-7507**	2	SUPPORT	
	26	2	**5M-3062**	12	BOLT (3/8-16X0.75-IN)	
	27	2	**8T-4896**	9	WASHER-HARD (10.2X18.5X2.5-MM THK)	
	28	2	**8G-1238**	2	LEVER	
	29	2	**1B-4203**	4	NUT-FULL (3/8-24-THD)	
	30	2	**5S-7379**	1	BOLT (3/8-16X0.875-IN)	
	31	2	**5P-1075**	5	WASHER-HARD (10.2X22.5X3-MM THK)	
	32	2	**8G-1288**	1	LINK AS	
	33	2	**8G-0244**	1	LINK AS	
	34	2	**4D-9721**	2	SPRING	
	35	2	**8G-1237**	2	LEVER	
	36	2	**3V-9184**	1	SPACER	
	37	2	**8G-1066**	1	SHAFT AS	
	38	2	**8T-4122**	4	WASHER-HARD (17X32X3.5-MM THK)	
	39	2	**8T-0798**	4	BEARING-ROLLER	
	40	2	**8G-1287**	1	LINK AS	
	41	2	**8G-0243**	1	LINK AS	
	42	2	**8G-0939**	1	BRACKET AS	
	43	2	**9F-2978**	1	NUT-WELD (3/8-16-THD)	
	44	2	**8T-0741**	4	SEAL-LIP TYPE	

C - CHANGE FROM PREVIOUS TYPE

8G-1267 **CONTROL GP-STEERING** (contd.) **i01400126**

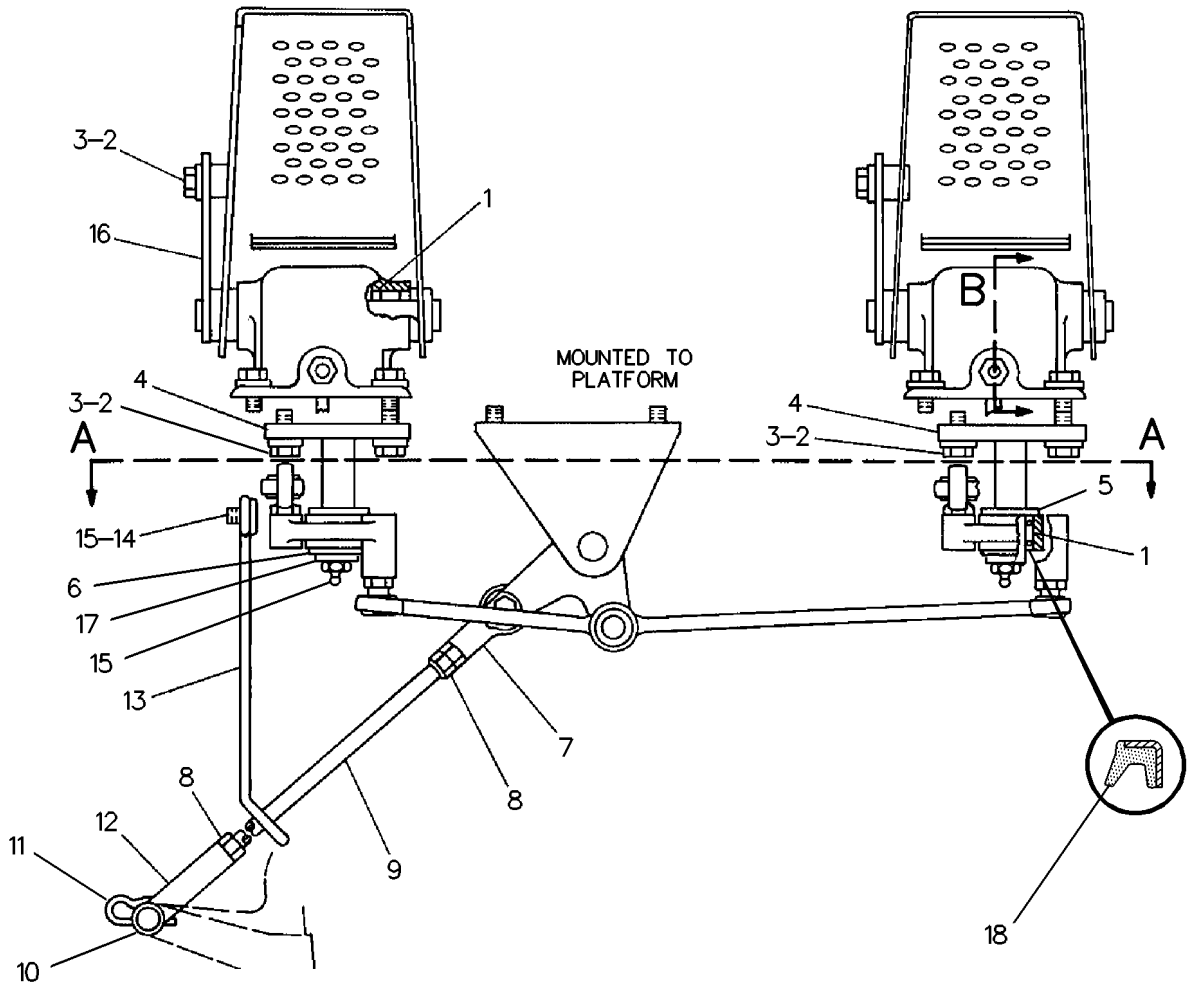

GRAPHIC #1 g00213045

8G-1267 **CONTROL GP-STEERING** (contd.) **i01400126**

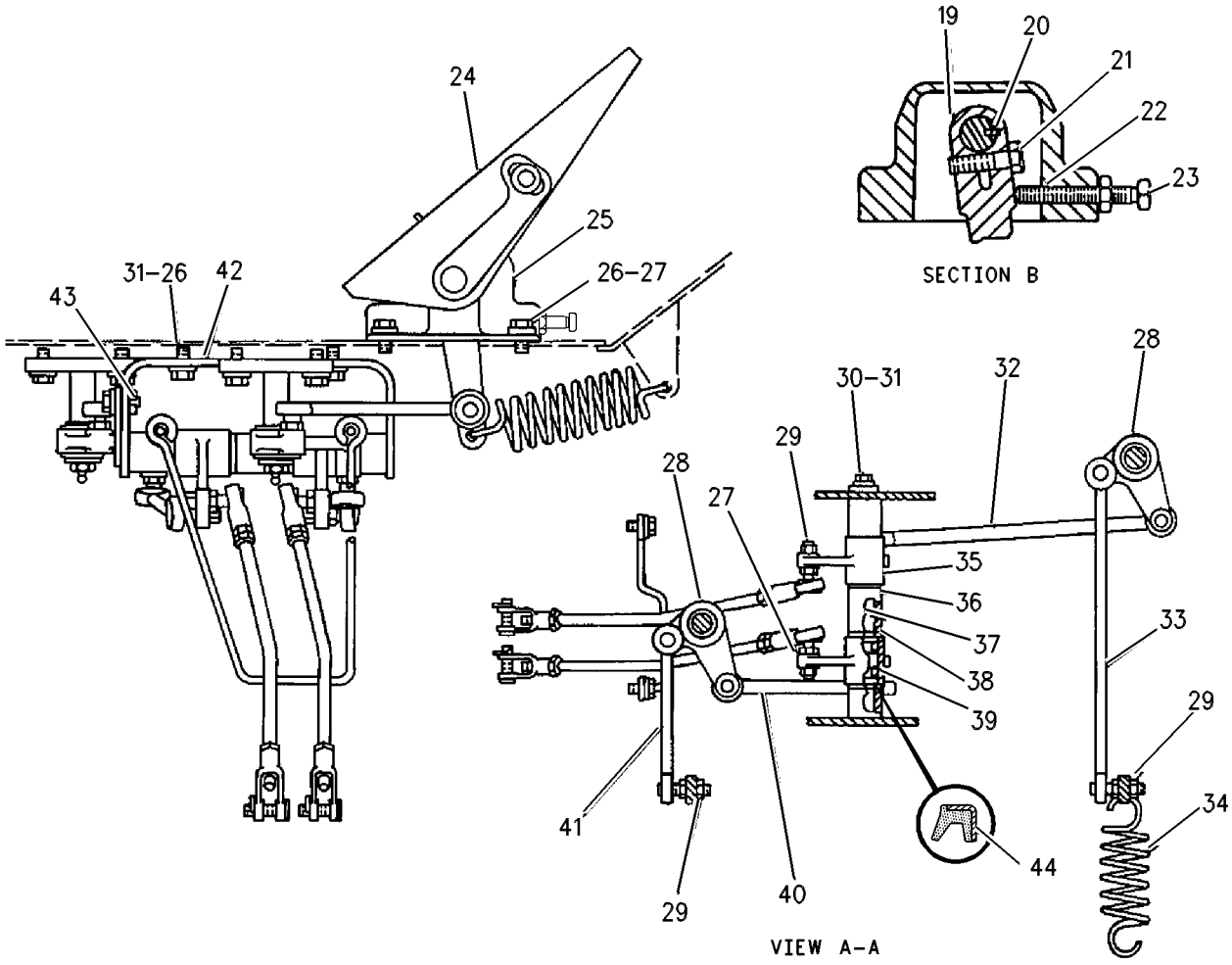

GRAPHIC #2 <END> g00348986

3G-3304 CONTROL GP-TRANSMISSION

S/N: 8EX1-UP

PART OF 104-6208 CONTROL AR-HYDROSTATIC POWER

SMCS-3065 **i01399390**

NOTE	REF NO	GRAPHIC REF	PART NUMBER	QTY	PART NAME 1 2 3 4 5 6 (PRODUCT LEVEL)	SEE PAGE
	1	1	**1U-2165**	1	LEVER	
		1	**1B-8705**	1	KEY-WOODRUFF	
	2	1	**0S-1591**	1	BOLT (3/8-16X1.5-IN)	
		1	**1B-5355**	1	NUT-FULL (3/8-16-THD)	
C	3	1	**3J-1907**	11	SEAL-O-RING	
Y	4	1	**9T-1320**	1	VALVE GP-RELIEF	409
	5	1	**6V-0852**	6	CAP-DUST	
		1	**6V-3965**	6	FITTING (QUICK DISCONNECT)	
J	6	1	**9S-4180**	1	PLUG	
J		1	**4J-7533**	1	SEAL-O-RING	
	7	1	**3G-8708**	1	SPRING	
	8	1	**9S-9334**	1	PLUG-O-RING	
C	9	1	**9S-4191**	5	PLUG (9/16-18-THD)	
	10	1	**2S-5816**	1	SPRING	
	11	1	**3G-4490**	1	COVER	
	12	1	**8J-5456**	1	ADAPTER	
	13	1	**7M-8485**	1	SEAL-O-RING	
CJ	14	1	**3D-2824**	2	SEAL-O-RING	
	15	1	**2K-8198**	4	SEAL-O-RING	
	16	1	**3G-8709**	1	SPRING	
	17	1	**3G-8673**	2	SHIM (3-MM THK)	
	18	1	**5H-2767**	1	SEAL-O-RING	
	19	1	**4J-8997**	1	SEAL-O-RING	
	20	1	**1U-2103**	1	ORIFICE	
	21	1	**9J-8119**	1	SPACER	
	22	1	**2P-8421**	1	ADAPTER-O-RING	
	23	1	**5P-6859**	1	SEAL-LIP TYPE	
	24	1	**3G-4500**	1	GUIDE	
	25	1	**2R-0364**	2	RING-RETAINING	
J	26	1	**9J-5450**	2	PLUG	
	27	1	**9T-8203**	1	PLUNGER	
	28	1	**3G-3726**	1	NUT (3/8-40-THD)	
J	29	1	**9S-4182**	1	PLUG (7/16-20-THD)	
J		1	**3J-7354**	1	SEAL-O-RING	
	30	2	**8F-3469**	1	SEAL-O-RING	
	31	2	**1U-1648**	1	SPRING	
	32	2	**3G-4788**	1	COVER	
	33	2	**6V-0852**	1	CAP-DUST	
		2	**6V-3965**	1	FITTING (QUICK DISCONNECT)	
	34	2	**9S-8010**	1	PLUG	
		2	**2S-4078**	1	SEAL-O-RING	
	35	2	**3G-4493**	1	VALVE GP-CHECK	
	36	2	**5P-5599**	1	SEAL-O-RING	
	37	2	**6F-4855**	2	SEAL-O-RING	
C	38	2	**4B-3388**	7	BOLT (5/16-18X1.125-IN)	
C	39	2	**9M-1974**	11	WASHER-HARD (8.8X16X2-MM THK)	
	40	2	**2B-2695**	1	BOLT (5/16-18X0.875-IN)	

3G-3304 **CONTROL GP-TRANSMISSION** (contd.) **i01399390**

NOTE	REF NO	GRAPHIC REF	PART NUMBER	QTY	PART NAME 1 2 3 4 5 6 (PRODUCT LEVEL)	SEE PAGE
	41	2	**3G-8704**	1	PLUG	
	42	2	**1U-4795**	1	MANIFOLD	
	43	2	**1H-5514**	7	BOLT (5/16-18X1.625-IN)	
C	44	2	**116-7830**	1	SEAL-O-RING	
	45	2	**3K-0360**	1	SEAL-O-RING	
C	46	2	**3J-1907**	1	SEAL-O-RING	
	47	2	**4T-3070**	1	VALVE GP-CHECK	
	48	2	**8L-2746**	1	SEAL-O-RING	
	49	2	**5P-9757**	1	SEAL-O-RING	
	50	2	**3G-4502**	1	VALVE GP	
					(ALSO INCL PARTS MARKED J IN ILLUS PART 1)	
	51	2	**8J-6815**	1	PLUG-ORIFICE	
	52	2	**9S-4182**	3	PLUG (7/16-20-THD)	
	53	2	**3J-7354**	4	SEAL-O-RING	
	54	2	**9S-8002**	1	PLUG (7/16-20-THD)	
	55	2	**9J-4049**	1	PLUG	
	56	2	**9J-8126**	1	PLUG-ORIFICE	
	57	2	**9J-5450**	1	PLUG	
	58	2	**9S-4180**	4	PLUG	
	59	2	**4J-7533**	4	SEAL-O-RING	
	60	2	**6J-3134**	1	SEAL-O-RING	

C - CHANGE FROM PREVIOUS TYPE
J - PART OF VALVE GP SHOWN IN ILLUS PART 2
Y - SEPARATE ILLUSTRATION

3G-3304 **CONTROL GP-TRANSMISSION** (contd.) **i01399390**

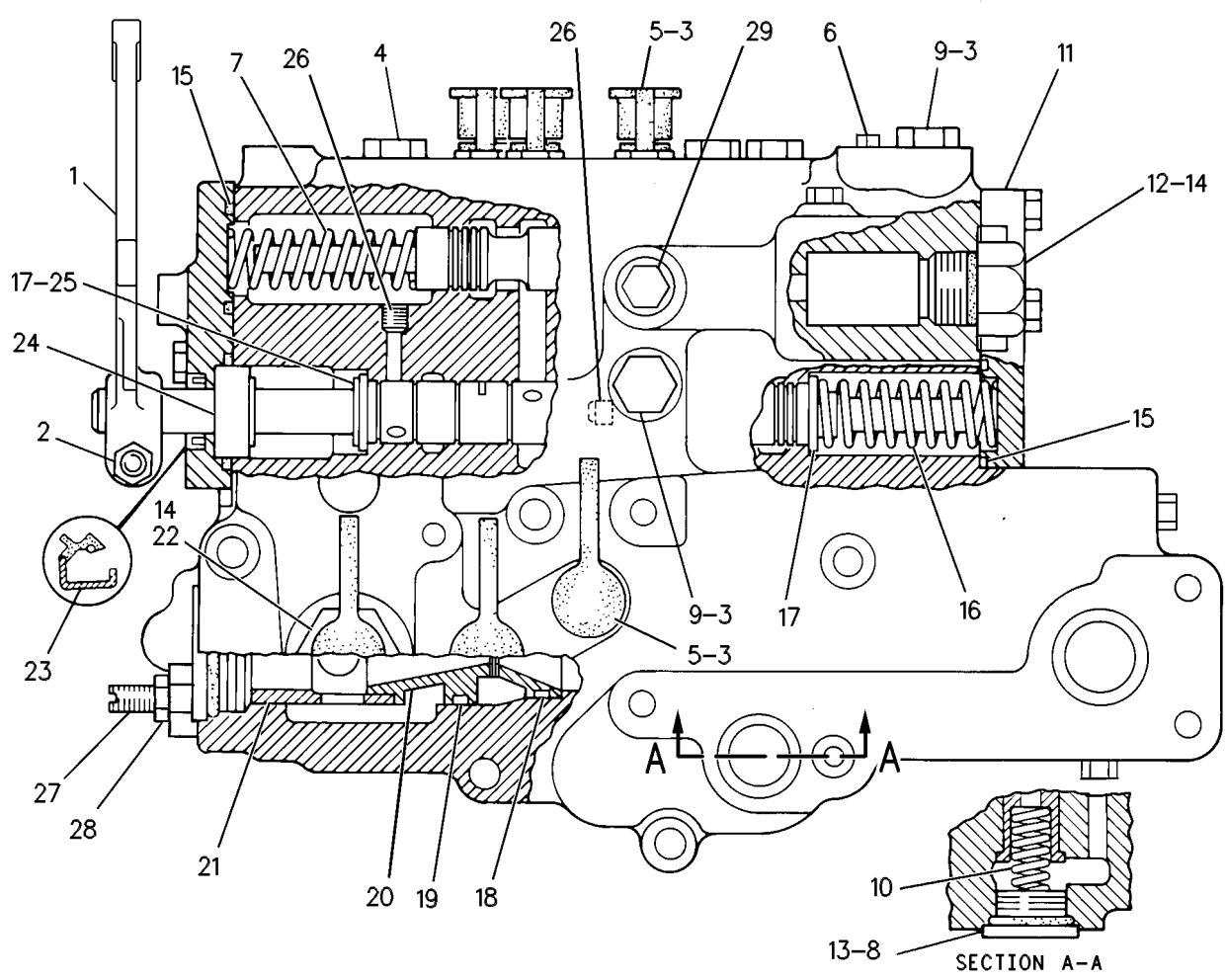

GRAPHIC #1 g00438708

3G-3304 **CONTROL GP-TRANSMISSION** (contd.) **i01399390**

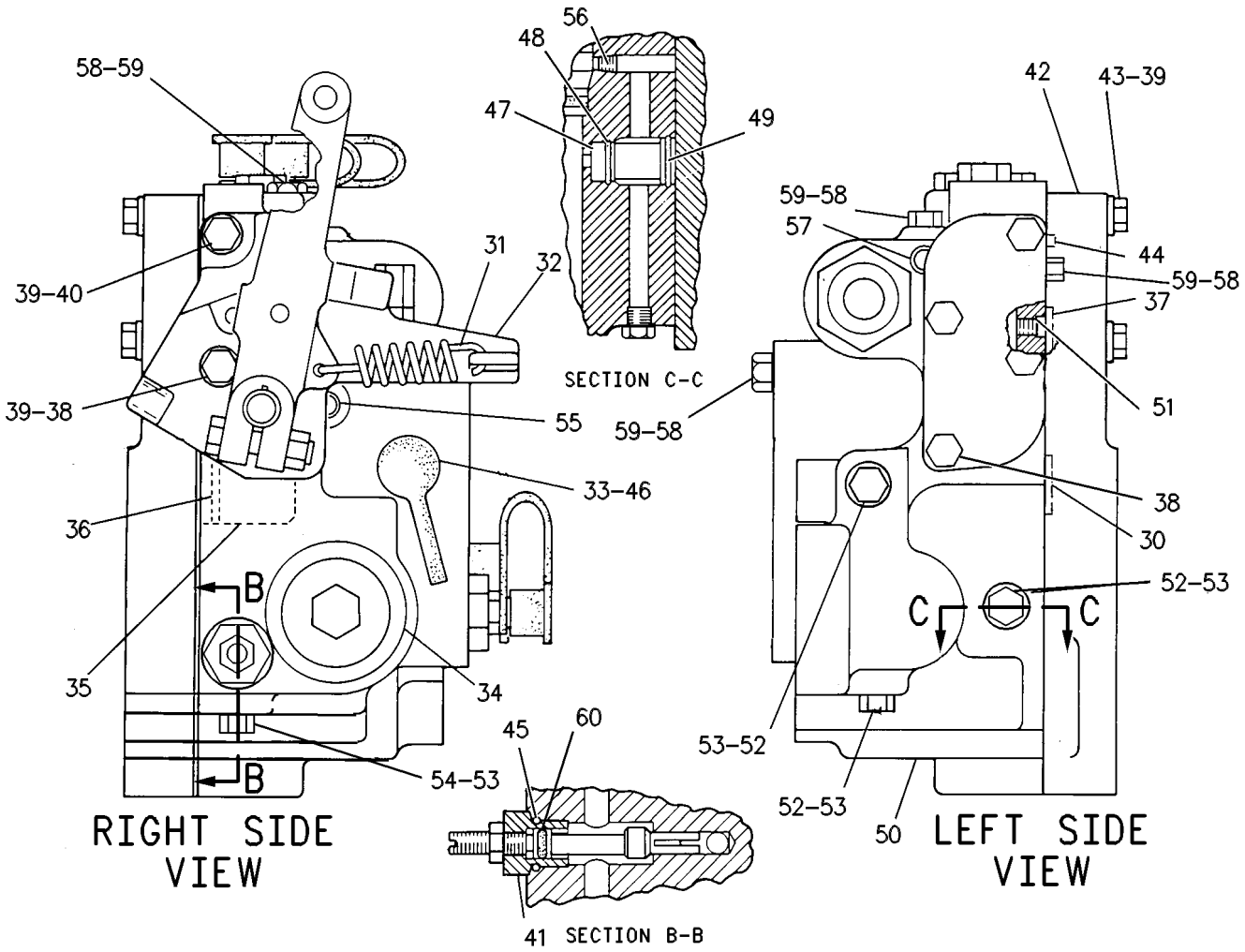

GRAPHIC #2 <END> g00438709

8G-0478 DOOR GP-CAB

S/N: 9BL1-UP
PART OF 8Y-9455 ROPS GP-ENCLOSED
ALSO AN ATTACHMENT

SMCS-7308 **i01400719**

NOTE	REF NO	GRAPHIC REF	PART NUMBER	QTY	PART NAME 1 2 3 4 5 6 (PRODUCT LEVEL)	SEE PAGE
C	1	1	**7V-5138**	1	BUMPER	
C		1	**9F-5975**	1	BOLT (5/16-18X0.75-IN)	
	2	1	**6V-1995**	1	HANDLE AS-LOCK	
		1	**5K-4340**	2	KEY	
	3	1	**3P-4571**	2	SCREW-MACHINE	
		1	**3F-1147**	2	LOCKWASHER	
	4	1	**4M-5282**	4	BOLT (1/4-20X1.5-IN)	
	5	1	**3B-4617**	1	PIN-COTTER	
	6	1	**7P-2449**	1	WINDOW	
	7	1	**8G-2807**	1	PLATE	
	8	1	**9P-0438**	1	BLOCK	
	9	1	**5P-0537**	4	WASHER-HARD (7.2X14.5X2-MM THK)	
	10	1	**8G-2805**	1	LATCH AS-DOOR	
BD	11	1	**5P-5968**		SEAL	
	12	1	**2H-3769**	1	PIN-COTTER	
	13	1	**8G-0486**	1	HINGE	
		1	**6V-6945**	8	SCREW-BUTTON HEAD (3/8-16X1.2-IN)	
		1	**8T-4896**	8	WASHER-HARD (10.2X18.5X2.5-MM THK)	
	14	1	**8G-2803**	1	LEVER AS	
	15	1	**9F-2289**	2	SPACER	
	16	1	**033-9139**	2	RING-RETAINING	
	17	1	**7P-2807**	1	WINDOW	
	18	1	**1B-8074**	1	WASHER (9.52-MM THK)	
	19	1	**7P-2015**	1	DOOR AS	
	20	1	**5P-2669**	3	SCREW-MACHINE (1/4-20X0.5-IN)	
		1	**5P-4115**	3	WASHER-HARD (7.2X19X2-MM THK)	
	21	1	**9P-0435**	1	HANDLE	
	22	1	**8G-0454**	1	COVER	
	23	1	**8G-2801**	1	LINK AS	
	24	1	**4H-3521**	1	SPRING	
BD	25	1	**5P-5768**		SEAL	

B - USE AS REQUIRED
C - CHANGE FROM PREVIOUS TYPE
D - ORDER BY THE METER

8G-0478 **DOOR GP-CAB** (contd.) **i01400719**

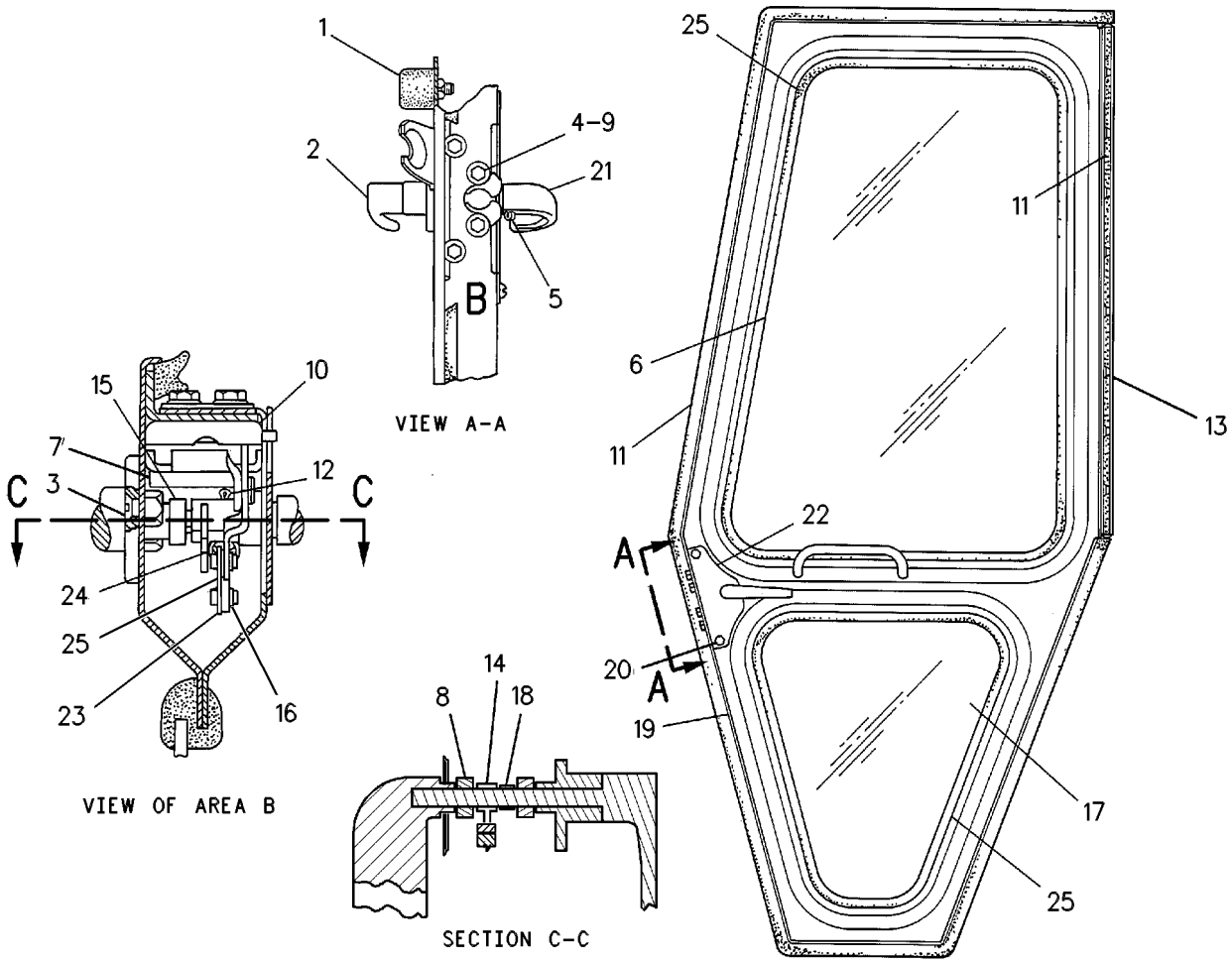

GRAPHIC #1 <END> g00256700

8G-0479 DOOR GP-CAB

S/N: 9BL1-UP
PART OF 8Y-9455 ROPS GP-ENCLOSED
ALSO AN ATTACHMENT

SMCS-7308 **i01400708**

NOTE	REF NO	GRAPHIC REF	PART NUMBER	QTY	PART NAME 1 2 3 4 5 6 (PRODUCT LEVEL)	SEE PAGE
C	1	1	**7V-5138**	1	BUMPER	
C		1	**9F-5975**	1	BOLT (5/16-18X0.75-IN)	
	2	1	**6V-1995**	1	HANDLE AS-LOCK	
		1	**5K-4340**	2	KEY	
	3	1	**3P-4571**	2	SCREW-MACHINE	
		1	**3F-1147**	2	LOCKWASHER	
	4	1	**4M-5282**	4	BOLT (1/4-20X1.5-IN)	
	5	1	**3B-4617**	1	PIN-COTTER	
	6	1	**7P-2449**	1	WINDOW	
	7	1	**8G-2807**	1	PLATE	
	8	1	**9P-0438**	1	BLOCK	
	9	1	**5P-0537**	4	WASHER-HARD (7.2X14.5X2-MM THK)	
C	10	1	**8G-2806**	1	LATCH AS-DOOR	
BD	11	1	**5P-5968**		SEAL	
	12	1	**2H-3769**	1	PIN-COTTER	
	13	1	**8G-0486**	1	HINGE	
		1	**6V-6945**	8	SCREW-BUTTON HEAD (3/8-16X1.2-IN)	
		1	**8T-4896**	8	WASHER-HARD (10.2X18.5X2.5-MM THK)	
	14	1	**8G-2803**	1	LEVER AS	
		1	**9P-0438**	1	BLOCK	
	15	1	**9F-2289**	2	SPACER	
	16	1	**033-9139**	2	RING-RETAINING	
	17	1	**7P-2807**	1	WINDOW	
	18	1	**1B-8074**	1	WASHER (9.52-MM THK)	
	19	1	**7P-2024**	1	DOOR AS	
		1	**1F-0750**	8	NUT-WELD (3/8-16-THD)	
		1	**3W-0828**	1	BRACKET	
		1	**4K-9097**	1	NUT-WELD (5/16-18-THD)	
		1	**6D-4299**		NUT-WELD	
		1	**9F-6445**	3	NUT-WELD (1/4-20-THD)	
	20	1	**5P-2669**	3	SCREW-MACHINE (1/4-20X0.5-IN)	
		1	**5P-4115**	3	WASHER-HARD (7.2X19X2-MM THK)	
	21	1	**9P-0435**	1	HANDLE	
	22	1	**8G-0454**	1	COVER	
	23	1	**8G-2801**	1	LINK AS	
	24	1	**4H-3521**	1	SPRING	
BD	25	1	**5P-5768**		SEAL	

B - USE AS REQUIRED
C - CHANGE FROM PREVIOUS TYPE
D - ORDER BY THE METER

8G-0479 **DOOR GP-CAB** (contd.) **i01400708**

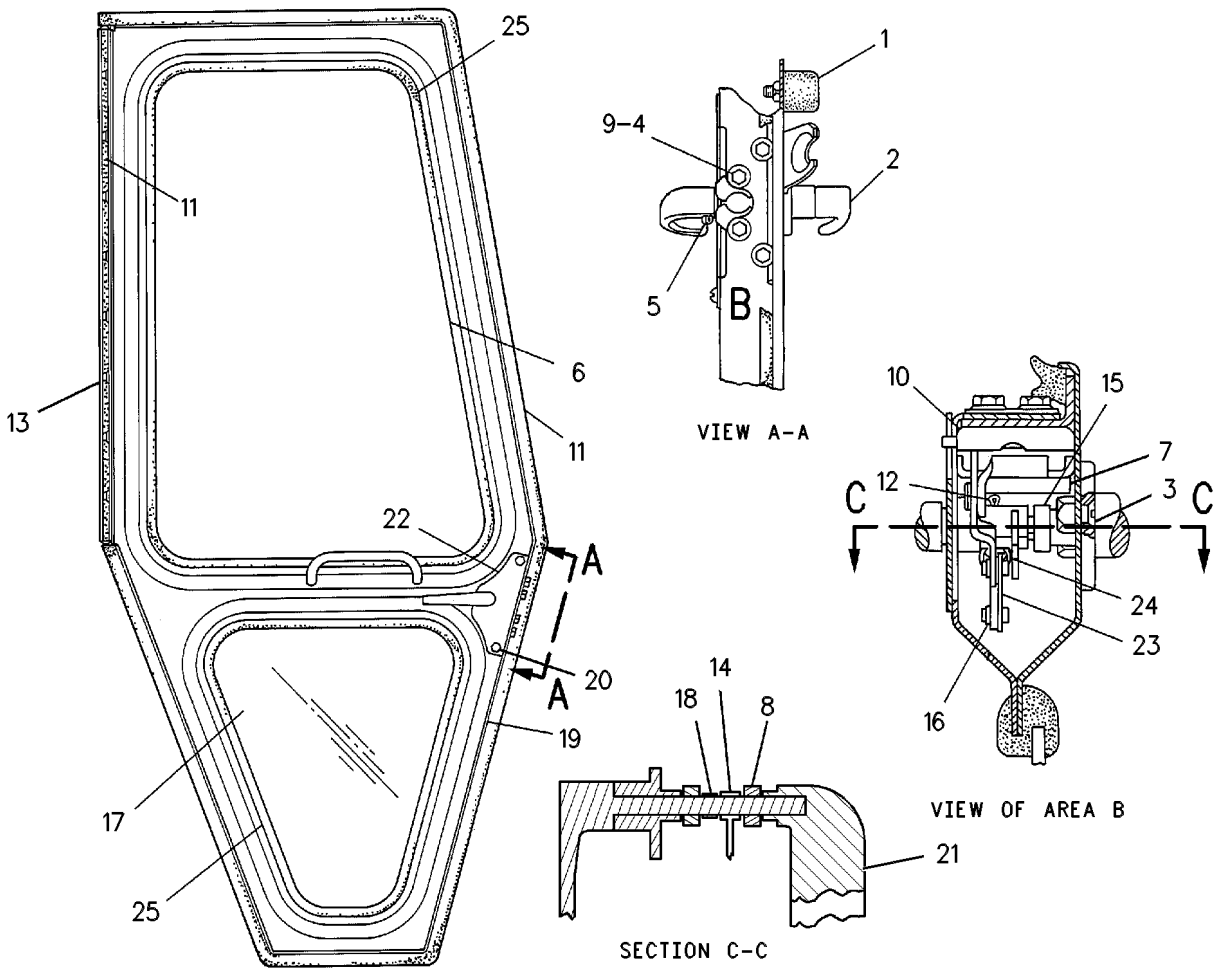

GRAPHIC #1 <END> g00251401

8Y-5874 EXTENSION GP-BACKREST

S/N: 9BL1-UP

PART OF 8Y-6138 SEAT GP-SUSPENSION

SMCS-7312 **i01682470**

NOTE	REF NO	GRAPHIC REF	PART NUMBER	QTY	PART NAME 1 2 3 4 5 6 (PRODUCT LEVEL)	SEE PAGE
	1	1	**8Y-5877**	1	PAN AS-EXTENSION	
J	2	1	**8Y-5947**	2	FASTENER	
JZ	3	1		1	CUSHION AS	
					AVAILABLE REPAIR KIT(S):	
			8Y-5943	1	KIT-CUSHION	
					(INCLUDES PARTS MARKED J)	

J - INCLUDED IN 8Y5943 CUSHION KIT
Z - NOT SERVICED SEPARATELY

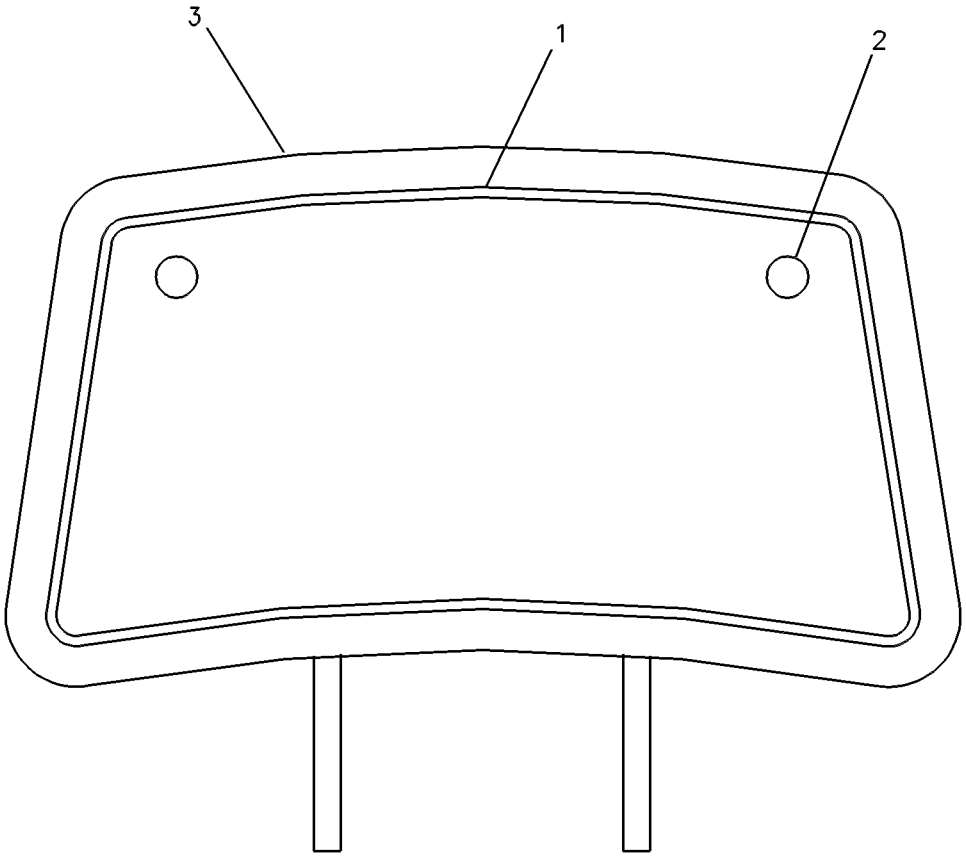

GRAPHIC #1 <END> g00514579

8Y-5959 EXTENSION GP-BACKREST–VINYL

S/N: 9BL1-UP
PART OF 8Y-6179 SEAT GP-SUSPENSION
AN ATTACHMENT

SMCS-7312 **i01682471**

NOTE	REF NO	GRAPHIC REF	PART NUMBER	QTY	PART NAME 1 2 3 4 5 6 (PRODUCT LEVEL)	SEE PAGE
	1	1	**8Y-5877**	1	PAN AS-EXTENSION	
J	2	1	**8Y-5947**	2	FASTENER	
JZ	3	1		1	CUSHION AS	
					AVAILABLE REPAIR KIT(S):	
			8Y-5960	1	KIT-CUSHION (VINYL BACK REST)	
					(INCLUDES PARTS MARKED J)	

J - INCLUDED IN 8Y5960 CUSHION KIT
Z - NOT SERVICED SEPARATELY

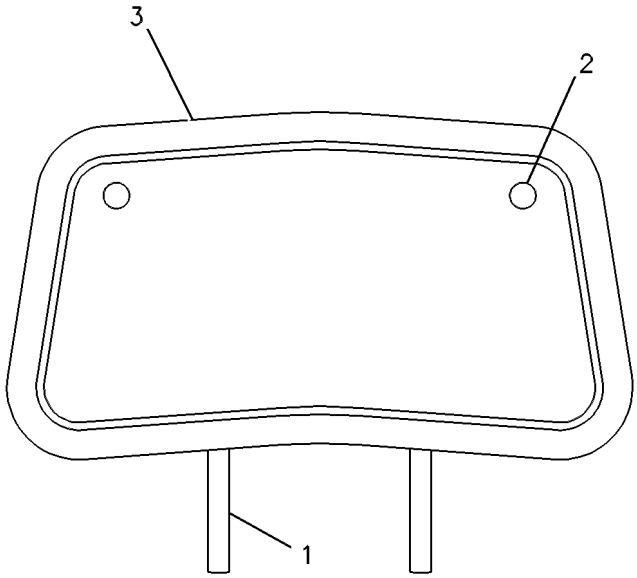

GRAPHIC #1 <END> g00326278

117-2962 GUARD GP-VANDALISM

S/N: 9BL1488-UP
PART OF 8Y-9591 VANDALISM AR-OPEN ROPS
AN ATTACHMENT

SMCS-7315 **i00567300**

NOTE	REF NO	GRAPHIC REF	PART NUMBER	QTY	PART NAME 1 2 3 4 5 6 (PRODUCT LEVEL)	SEE PAGE
	1	1	**8Y-9818**	1	GUARD AS	
		1	**9W-8766**	1	BRACKET	
	2	1	**8Y-9820**	1	GUARD AS	
		1	**5L-8957**	2	STUD-WELD (3/8-16X1-IN)	
	3	1	**115-9286**	1	PLATE	
	4	1	**8Y-9949**	1	PIN	
	5	1	**5P-1075**	4	WASHER-HARD (10.2X22.5X3-MM THK)	
	6	1	**1D-4717**	4	NUT (3/8-16-THD)	
	7	1	**1B-2693**	2	BOLT (1/4-20X0.62-IN)	
	8	1	**5C-5440**	2	LOCKNUT (1/4-20-THD)	
	9	1	**5P-4115**	2	WASHER-HARD (7.2X19X2-MM THK)	
	10	1	**5P-8502**	1	PADLOCK GP	
A		1	**5P-8500**	1	KEY	
A		1	**8Y-6364**	1	SLEEVE	
	11	1	**2B-0941**	2	SPACER (10.5X19X19-MM THK)	

A - NOT PART OF THIS GROUP

117-2962 **GUARD GP-VANDALISM (**contd.**)** **i00567300**

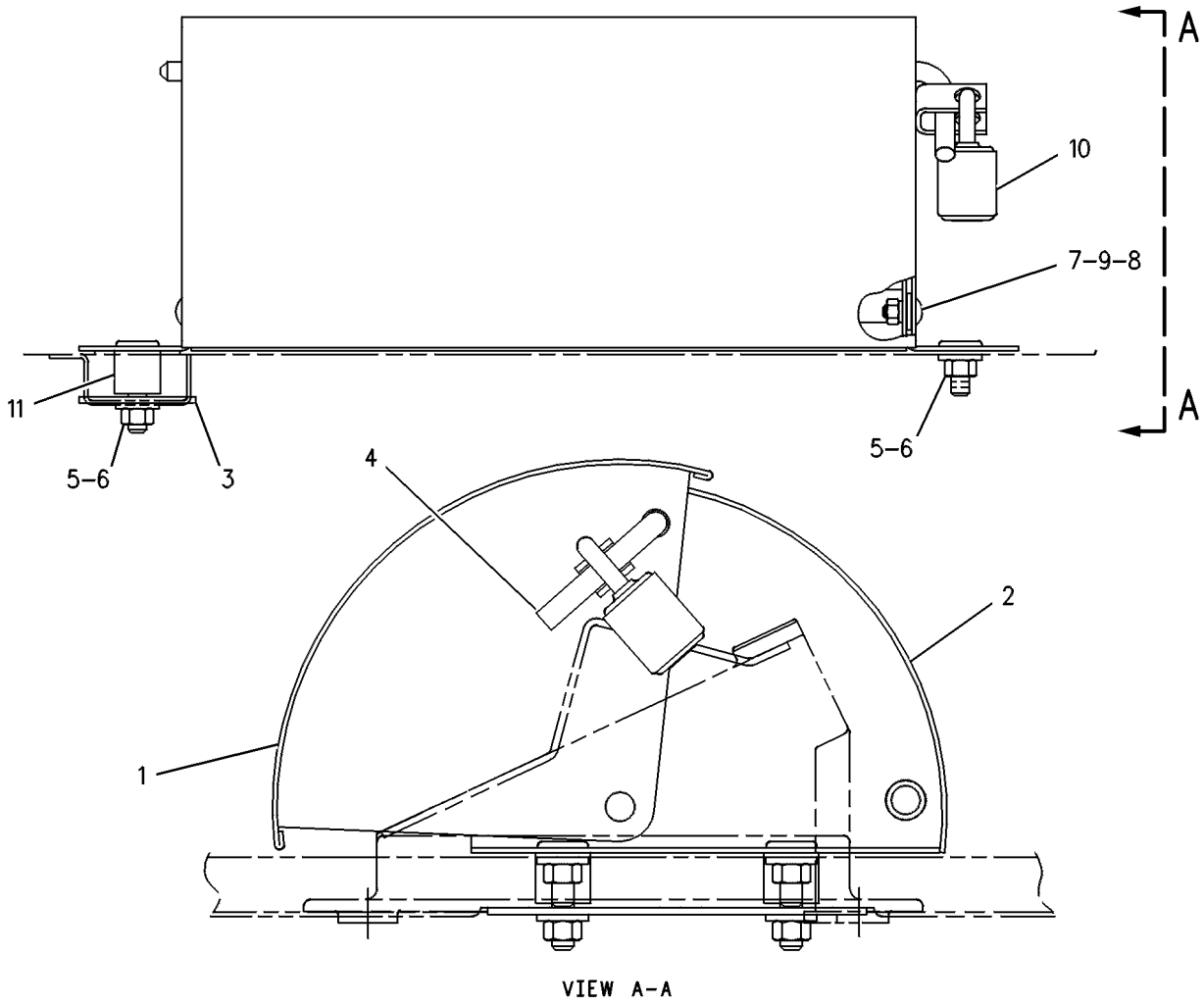

VIEW A–A

GRAPHIC #1 <END> g00246942

3W-0916 GUARD GP-VANDALISM

S/N: 9BL1-UP

PART OF 8Y-9591 VANDALISM AR-OPEN ROPS

AN ATTACHMENT

SMCS-7315 **i01400730**

NOTE	REF NO	GRAPHIC REF	PART NUMBER	QTY	PART NAME 1 2 3 4 5 6 (PRODUCT LEVEL)	SEE PAGE
	1	1	**5P-8502**	1	PADLOCK GP	
A		1	**8Y-6364**	1	SLEEVE	
A	2	1	**5P-8500**	1	KEY	
	3	1	**1K-4061**	1	LOCK-IDLER SHAFT	
	4	1	**5P-8167**	4	BOLT (3/8-16X0.625-IN)	
	5	1	**5P-1075**	4	WASHER-HARD (10.2X22.5X3-MM THK)	
	6	1	**8G-4422**	1	GUARD AS	
	7	1	**2K-7051**	4	BAR	

A - NOT PART OF THIS GROUP

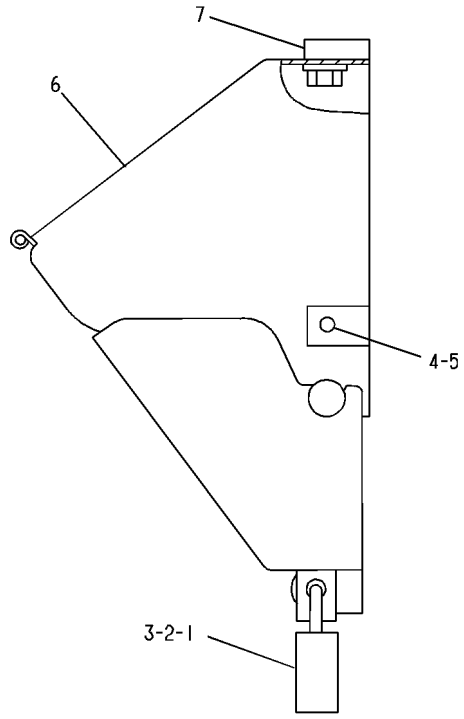

GRAPHIC #1 <END> g00176394

8Y-6498 GUARD GP-VANDALISM

S/N: 9BL1488-UP

PART OF 8Y-9591 VANDALISM AR-OPEN ROPS

AN ATTACHMENT

SMCS-7315 **i00569525**

NOTE	REF NO	GRAPHIC REF	PART NUMBER	QTY	PART NAME 1 2 3 4 5 6 (PRODUCT LEVEL)	SEE PAGE
	1	1	**8Y-6499**	1	GUARD AS	
	2	1	**5P-8502**	1	PADLOCK GP	
A		1	**5P-8500**	1	KEY	
A		1	**8Y-6364**	1	SLEEVE	
	3	1	**1B-2693**	2	BOLT (1/4-20X0.62-IN)	
	4	1	**4N-3884**	2	WASHER-SPRING	
	5	1	**3E-9865**	2	LOCKNUT (1/4-20-THD)	
	6	1	**8T-4205**	4	WASHER-HARD (7.2X14.5X2-MM THK)	

A - NOT PART OF THIS GROUP

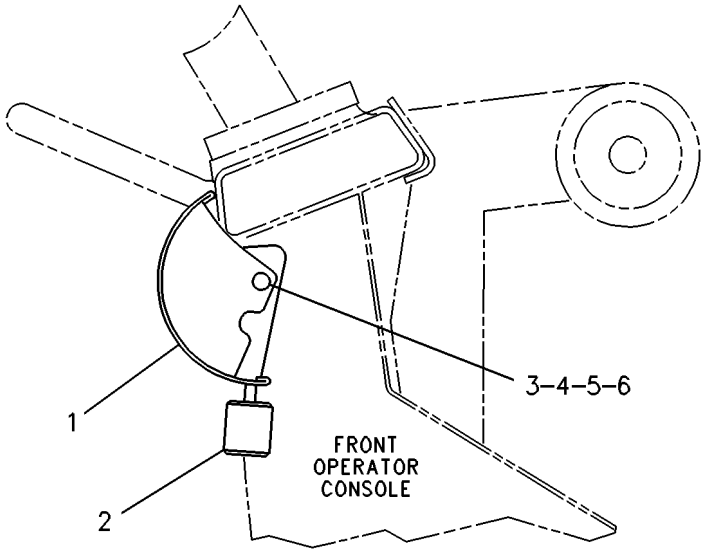

SIDE VIEW

GRAPHIC #1 <END> g00229758

8Y-9826 HEATER GP-CAB

S/N: 9BL1-UP

PART OF 8Y-9371 CAB AR

SMCS-7304 **i01402885**

NOTE	REF NO	GRAPHIC REF	PART NUMBER	QTY	PART NAME 1 2 3 4 5 6 (PRODUCT LEVEL)	SEE PAGE
	1	1	**6V-0395**	4	BOLT-12 POINT HEAD (1/4-20X0.625-IN)	
	2	1	**8T-4205**	8	WASHER-HARD (7.2X14.5X2-MM THK)	
	3	1	**7D-7026**	1	CONNECTOR-HOSE	
	4	1	**3P-5903**	2	CLIP (TAB)	
		1	**3P-5904**	2	CLIP (SLOT)	
	5	1	**2V-8259**	1	GROMMET	
	6	1	**3D-0490**	1	STUD-TAPERLOCK (1/2-13X1.97-IN)	
		1	**6V-8188**	1	NUT (1/2-13-THD)	
		1	**8T-4223**	1	WASHER-HARD (13.5X25.5X3-MM THK)	
	7	1	**8T-1715**	1	ADAPTER	
	8	1	**9X-8250**	1	CLIP	
	9	1	**5M-3062**	7	BOLT (3/8-16X0.75-IN)	
		1	**8T-4896**	7	WASHER-HARD (10.2X18.5X2.5-MM THK)	
	10	1	**5D-1026**	10	CLAMP-BAND	
	11	1	**6D-1641**	4	CLIP	
E	12	1	**5P-0767**		HOSE (185.5 CM)	
	13	1	**8M-2770**	1	CLIP (LOOP)	
	14	1	**6V-7238**	2	VALVE-SHUTOFF	
	15	1	**3K-0360**	4	SEAL-O-RING	
	16	1	**8T-0119**	1	ELBOW	
	17	1	**7G-8271**	1	ORIFICE-AIR	
	18	1	**2V-0099**	1	KNOB-CONTROL	
	19	1	**3E-8753**	1	CABLE AS	
		1	**9L-9596**	2	SETSCREW-SOCKET (8-32X0.25-IN)	
	20	1	**8Y-9314**	1	TUBE AS	
D	21	1	**5P-6129**		TUBE (.4 M)	
	22	1	**1P-4278**	2	CLAMP-HOSE	
	23	1	**8G-7096**	1	TUBE AS	
	24	1	**8G-5408**	1	STRIP	
	25	1	**3T-8207**	1	COIL-HEATER	
	26	1	**3J-5390**	1	PLUG (3/8-18-THD)	
	27	1	**9D-3767**	1	PLUG-BUTTON	
	28	1	**9P-6020**	1	BRACKET	
	29	1	**5S-7349**	4	BOLT (1/4-20X0.5-IN)	
	30	1	**2L-5317**	2	SCREW-MACHINE (10-32X7.9-MM)	
		1	**8F-1434**	2	LOCKWASHER	
	31	1	**3K-7928**	1	ELBOW	
		1	**3B-7255**	1	BUSHING-REDUCER	
	32	1	**8Y-9171**	1	BRACKET AS	
D	33	1	**5P-9205**		SEAL (.9 M)	
	34	1	**8P-7755**	2	SPRING	
	35	1	**100-3342**	1	VALVE AS-WATER	
E	36	1	**5P-0767**		HOSE (245 CM)	
E	37	1	**5P-0767**		HOSE (35 CM)	
E	38	1	**5P-0767**		HOSE (28 CM)	
E	39	1	**5P-0767**		HOSE (21 CM)	

D - ORDER BY THE METER
E - ORDER BY THE CENTIMETER

8Y-9826 **HEATER GP-CAB** (contd.) **i01402885**

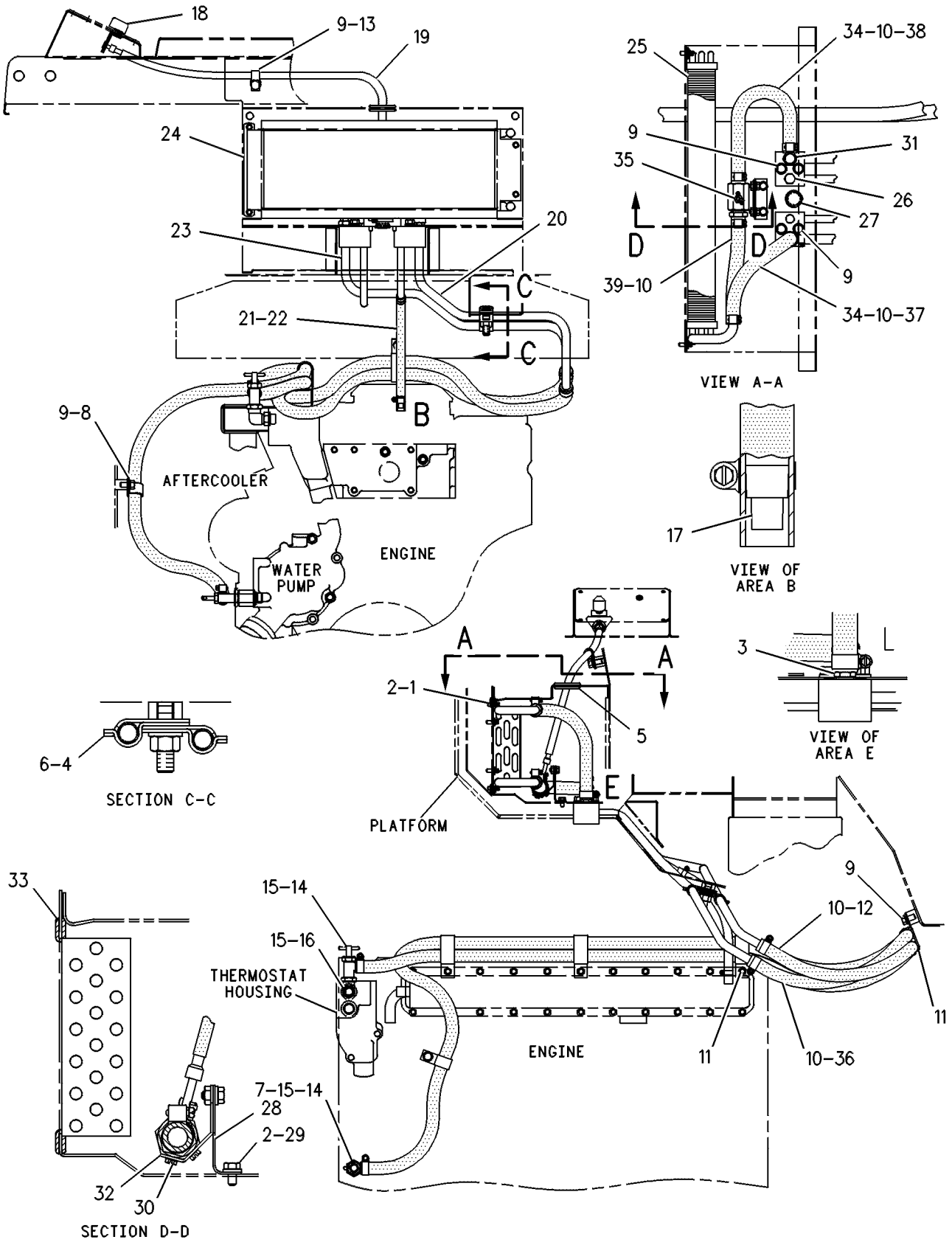

GRAPHIC #1 <END> g00247389

8Y-9827 HEATER GP-CAB

S/N: 9BL1-UP

PART OF 8Y-9817 CONVERSION AR-NON-ROPS, 8Y-9636 ROPS AR-OPEN AN ATTACHMENT

SMCS-7304 **i01400733**

NOTE	REF NO	GRAPHIC REF	PART NUMBER	QTY	PART NAME 1 2 3 4 5 6 (PRODUCT LEVEL)	SEE PAGE
	1	1	**6V-0395**	4	BOLT-12 POINT HEAD (1/4-20X0.625-IN)	
	2	1	**8T-4205**	4	WASHER-HARD (7.2X14.5X2-MM THK)	
	3	1	**9D-3769**	2	GROMMET	
	4	1	**8J-8197**	2	CLIP	
	5	1	**3D-0490**	1	STUD-TAPERLOCK (1/2-13X1.97-IN)	
	6	1	**6V-8188**	1	NUT (1/2-13-THD)	
	7	1	**8T-4223**	1	WASHER-HARD (13.5X25.5X3-MM THK)	
	8	1	**5M-3062**	3	BOLT (3/8-16X0.75-IN)	
	9	1	**5D-1026**	4	CLAMP-BAND	
	10	1	**6D-1641**	4	CLIP	
E	11	1	**5P-0767**		HOSE (235 CM)	
	12	1	**8T-4896**	3	WASHER-HARD (10.2X18.5X2.5-MM THK)	
	13	1	**6V-7238**	2	VALVE-SHUTOFF	
	14	1	**3K-0360**	4	SEAL-O-RING	
	15	1	**8T-0119**	1	ELBOW	
	16	1	**2V-0099**	1	KNOB-CONTROL	
	17	1	**3E-8753**	1	CABLE AS	
		1	**9L-9596**	2	SETSCREW-SOCKET (8-32X0.25-IN)	
	18	1	**8G-5408**	1	STRIP	
	19	1	**8M-2770**	1	CLIP (LOOP)	
	20	1	**3W-1039**	2	TUBE	
	21	1	**9X-8250**	1	CLIP	
	22	1	**8T-1715**	1	ADAPTER	
E	23	1	**5P-0767**		HOSE (295 CM)	
	24	2	**5S-7349**	4	BOLT (1/4-20X0.5-IN)	
	25	2	**8T-4205**	4	WASHER-HARD (7.2X14.5X2-MM THK)	
	26	2	**9P-6020**	1	BRACKET	
	27	2	**2L-5317**	2	SCREW-MACHINE (10-32X7.9-MM)	
	28	2	**8F-1434**	2	LOCKWASHER	
	29	2	**8Y-9171**	1	BRACKET AS	
		2	**9V-7451**	2	NUT-WELD (1/4-20-THD)	
E	30	2	**5P-9205**		SEAL (45 CM)	
E	31	2	**5P-0767**		HOSE (45 CM)	
	32	2	**5D-1026**	6	CLAMP-BAND	
	33	2	**8P-7755**	2	SPRING	
	34	2	**100-3342**	1	VALVE AS-WATER	
	35	2	**3W-0689**	1	PLATE	
	36	2	**3T-8207**	1	COIL-HEATER	
E	37	2	**5P-0767**		HOSE (21 CM)	
E	38	2	**5P-0767**		HOSE (54 CM)	

E - ORDER BY THE CENTIMETER

8Y-9827 **HEATER GP-CAB** (contd.) **i01400733**

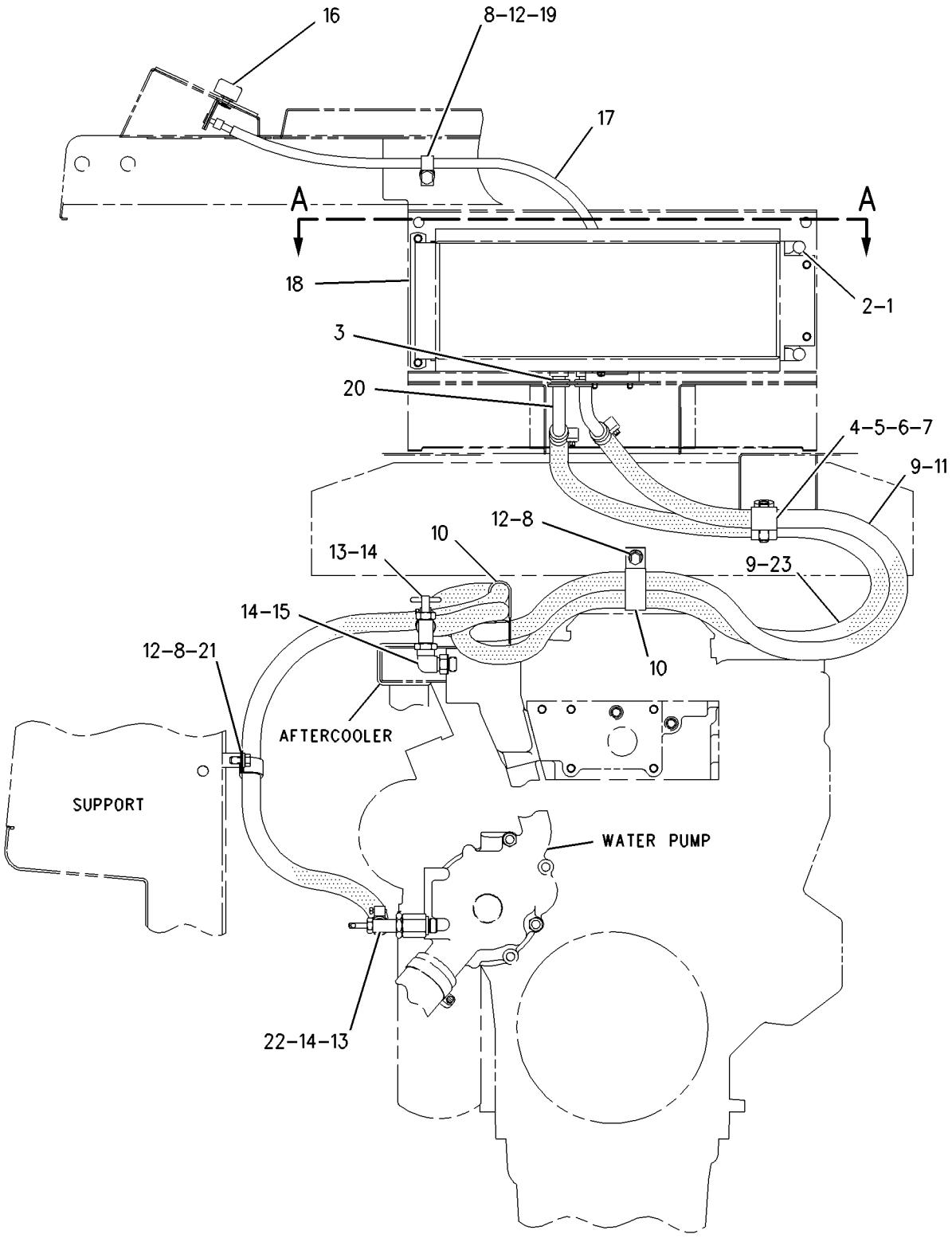

FRONT VIEW

GRAPHIC #1 g00738014

8Y-9827 **HEATER GP-CAB (**contd.**)** **i01400733**

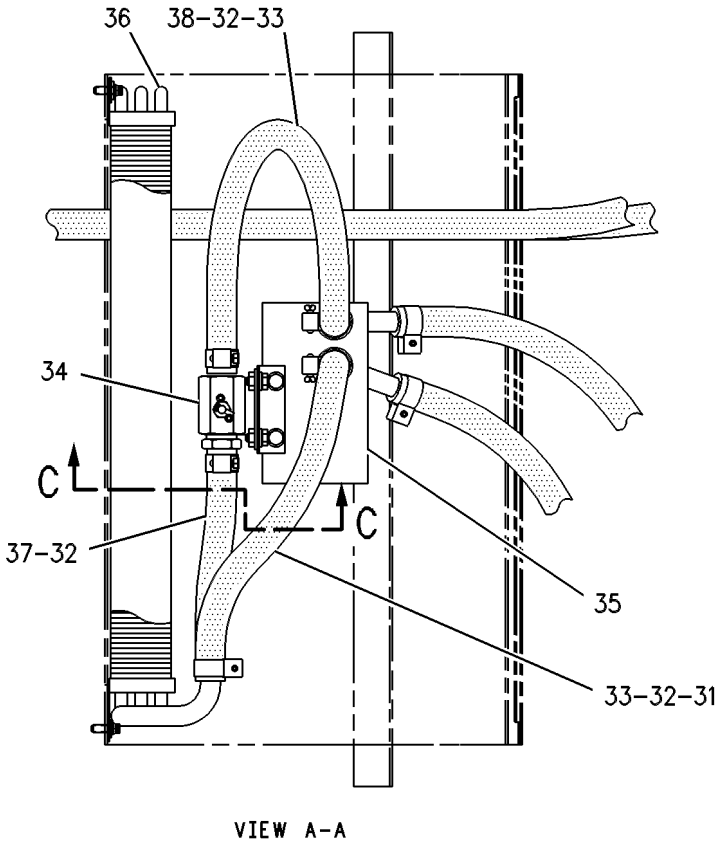

VIEW A-A

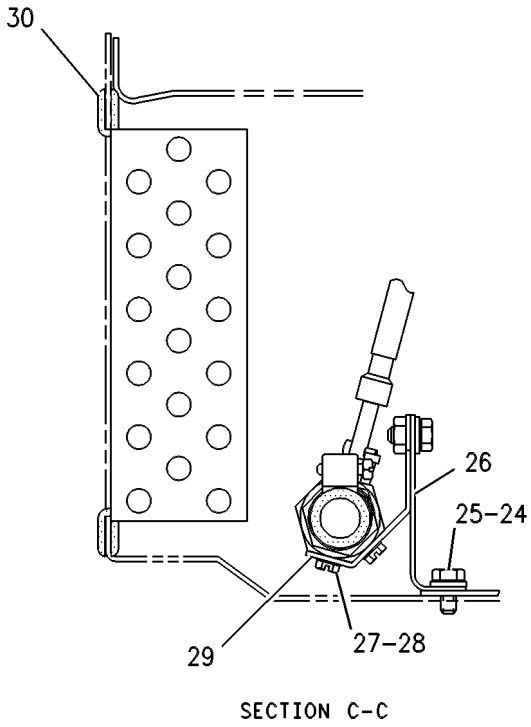

SECTION C-C

GRAPHIC #2 <END> g00427529

108-4582 HOUSING GP-SEAT SUSPENSION

S/N: 9BL1-UP

PART OF 108-4082 SUSPENSION GP-SEAT

ALSO AN ATTACHMENT

SMCS-7321, 7324

i03491720

NOTE	REF NO	GRAPHIC REF	PART NUMBER	QTY	PART NAME 1 2 3 4 5 6 (PRODUCT LEVEL)	SEE PAGE
	1	1	**161-5967**	1	SHAFT	
	2	1	**8Y-6066**	1	SPRING	
	3	1	**8Y-6069**	1	ADJUSTER AS	
	4	1	**8Y-6068**	1	NUT (3/8X16-THD)	
	5	1	**8Y-6029**	1	HOUSING-SEAT SUSPENSION	
	6	1	**8Y-6047**	2	PIN	
	7	1	**2M-7819**	4	RING-RETAINING	
	8	1	**8Y-6041**	1	ARM AS	
	9	1	**8Y-6045**	1	CAM	
	10	1	**8Y-6046**	1	PIN	
	11	1	**8S-7803**	4	RING-RETAINING	
	12	1	**131-4242**	1	BOLT (3/8-16X5.18-IN)	
	13	1	**7M-7219**	1	BEARING-THRUST	
J	14	1	**3D-2975**	2	RING-RETAINING	
	15	1	**095-0878**	1	PIN-SPRING	
	16	1	**9X-8918**	3	SCREW-FLAT HEAD (8-32X0.5-IN)	
	17	1	**5P-8445**	4	RING-RETAINING	
	18	1	**4B-5059**	6	WASHER (15X29.5X2.5-MM THK)	
	19	1	**8Y-6060**	2	ROLLER	
	20	1	**1Y-7927**	1	PIN	
	21	1	**7V-5191**	2	SPACER (28X10X7.1-MM THK)	
	22	1	**5D-4822**	2	RING-RETAINING	
	23	1	**8Y-6062**	1	LINK-ACTUATOR	
	24	1	**8Y-6063**	1	LINK-ACTUATOR	
	25	1	**5V-0770**	2	BOLT-CARRIAGE (1/4-20X0.74-IN)	
	26	1	**8Y-6064**	2	ROLLER-SLIDER	
	27	1	**131-5167**	1	KNOB AS-ADJUSTMENT	
	28	1	**8Y-6067**	1	SPACER (10.54-MM THK)	
L	29	1	**8L-8413**	2	STRAP-CABLE (WHITE)	
	30	1	**4N-2927**	2	RACE-THRUST BEARING	
	31	1	**2D-6235**	2	LOCKNUT (1/4-20-THD)	
					AVAILABLE REPAIR KIT(S):	
			100-5179	1	KIT-BUMPER (WEIGHT ADJUSTMENT) (SUSPENSION SEAT)	
					(INCLUDES BUMPER)	
			8Y-5945	1	KIT-SUSPENSION KNOB (HEIGHT ADJUSTMENT) (SUSPENSION SEAT)	
					(INCLUDES KNOBS)	
			8Y-6860	1	KIT-SPRING (HEIGHT ADJUSTMENT) (SUSPENSION SEAT)	
					(INCLUSES BUSHING, SPRING, ROD & SPACER)	
J			**8Y-6859**	1	KIT-SPRING (SUSPENSION SEAT)	
					(INCLUDES SPRING, BUSHING & RING)	
			108-4086	1	KIT-FOLLOWER (SUSPENSION SEAT)	
					(INCLUDES PIN & FOLLOWER)	
L			**100-3224**	1	KIT-INDICATOR (WEIGHT ADJUSTMENT) (SUSPENSION SEAT)	
					(INCLUDES TAPE, GUIDE & STRAP)	
			108-4087	1	KIT-FOLLOWER (SUSPENSION SEAT)	

108-4582 **HOUSING GP-SEAT SUSPENSION (**contd.**)** **i03491720**

NOTE	REF NO	GRAPHIC REF	PART NUMBER	QTY	PART NAME 1 2 3 4 5 6 (PRODUCT LEVEL)	SEE PAGE
					(INCLUDES FOLLOWER & PIN)	
			108-4103	1	KIT-BEARING (SUSPENSION SEAT)	
					(INCLUDES ROLLER AS)	

J - KIT MARKED J SERVICES PART(S) MARKED J
L - KIT MARKED L SERVICES PART(S) MARKED L

108-4582 **HOUSING GP-SEAT SUSPENSION** (contd.) **i03491720**

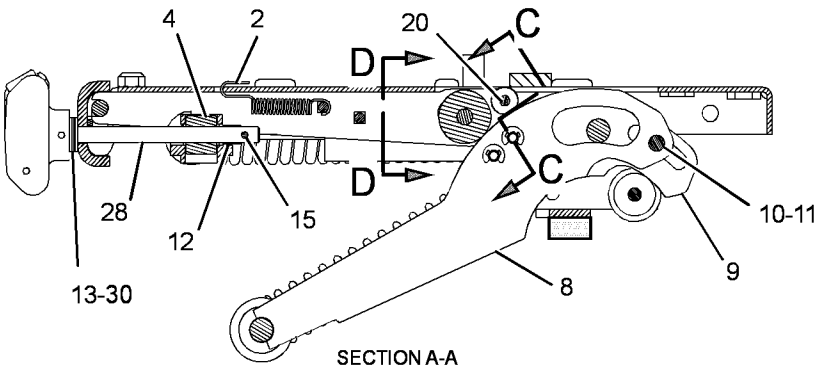

SECTION A-A

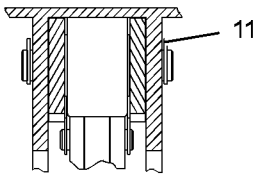

SECTION D-D

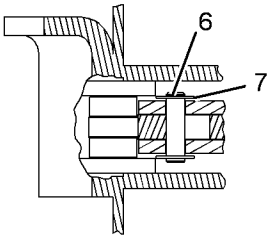

SECTION C-C

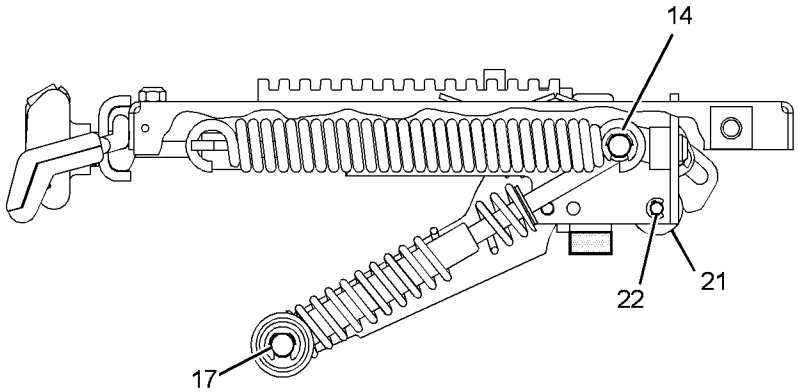

VIEW B-B

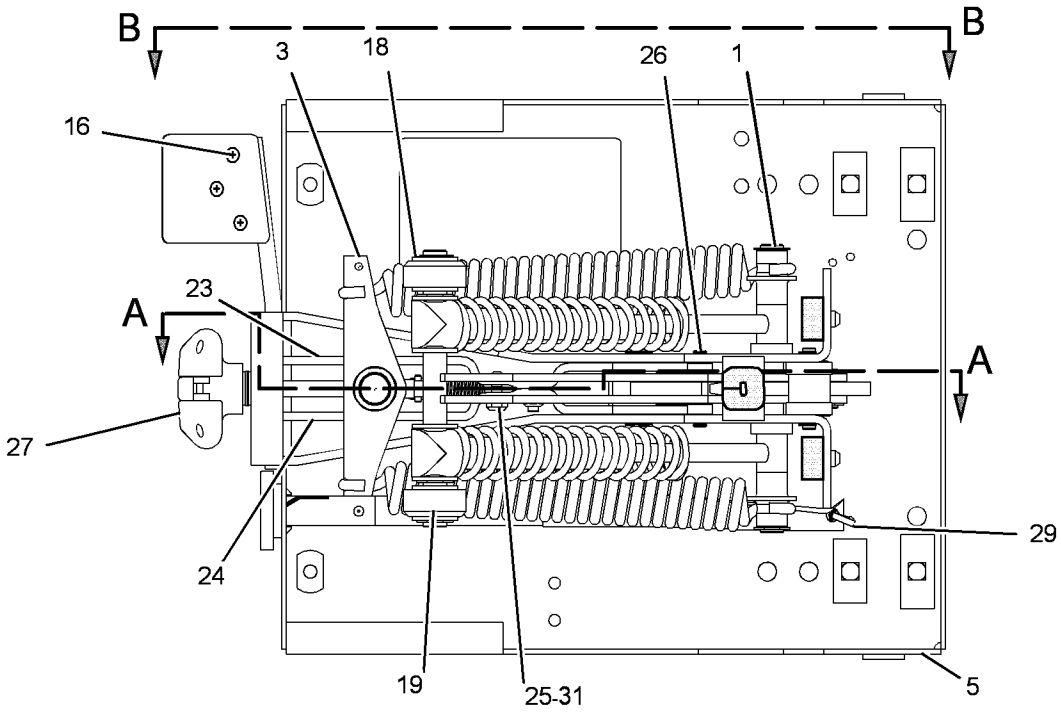

BOTTOM VIEW

GRAPHIC #1 <END> g01829093

125-1988 INSTALLATION GP-RADIO

S/N: 9BL1-UP
12 VOLT
AN ATTACHMENT

SMCS-7338 **i00596756**

NOTE	PART NUMBER	QTY	PART NAME 1 2 3 4 5 6 (PRODUCT LEVEL)	SEE PAGE
Y	*8Y-9506*	1	INSTALLATION GP-RADIO	742

Y - SEPARATE ILLUSTRATION

<END>

125-1989 INSTALLATION GP-RADIO

S/N: 9BL1-UP
24 VOLT
FOR USE WITH MACHINES EQUIPPED WITH A CAB
AN ATTACHMENT

SMCS-7338 **i00690461**

NOTE	PART NUMBER	QTY	PART NAME 1 2 3 4 5 6 (PRODUCT LEVEL)	SEE PAGE
Y	*8Y-9507*	1	INSTALLATION GP-RADIO	743

Y - SEPARATE ILLUSTRATION

<END>

8Y-9506 INSTALLATION GP-RADIO

S/N: 9BL1-UP
12 VOLT
PART OF 125-1988 INSTALLATION GP-RADIO, 119-5869 ROPS GP-ENCLOSED
AN ATTACHMENT

SMCS-7338 **i01400765**

NOTE	REF NO	GRAPHIC REF	PART NUMBER	QTY	PART NAME 1 2 3 4 5 6 (PRODUCT LEVEL)	SEE PAGE
	1	1	**6T-7695**	2	SPEAKER AS-RADIO	
	2	1	**8C-8564**	8	SCREW-LOCK	
	3	1	**8Y-9501**	1	BRACKET	
	4	1	**8T-0797**	1	LOCKNUT	
	5	1	**5P-4115**	1	WASHER-HARD (7.2X19X2-MM THK)	
	6	1	**3A-8746**	1	ANTENNA	
	7	1	**150-3212**	1	CONVERTER AS	
M	8	1	**6V-9673**	2	SCREW-MACHINE (M5X0.8X12-MM)	
	9	1	**4B-4863**	2	WASHER (4.7X11X1.2-MM THK)	
	10	1	**3E-6601**	1	FILM-NOTICE (RADIO) (RADIO)	
	11	1	**8Y-9504**	1	PLATE	

M - METRIC PART

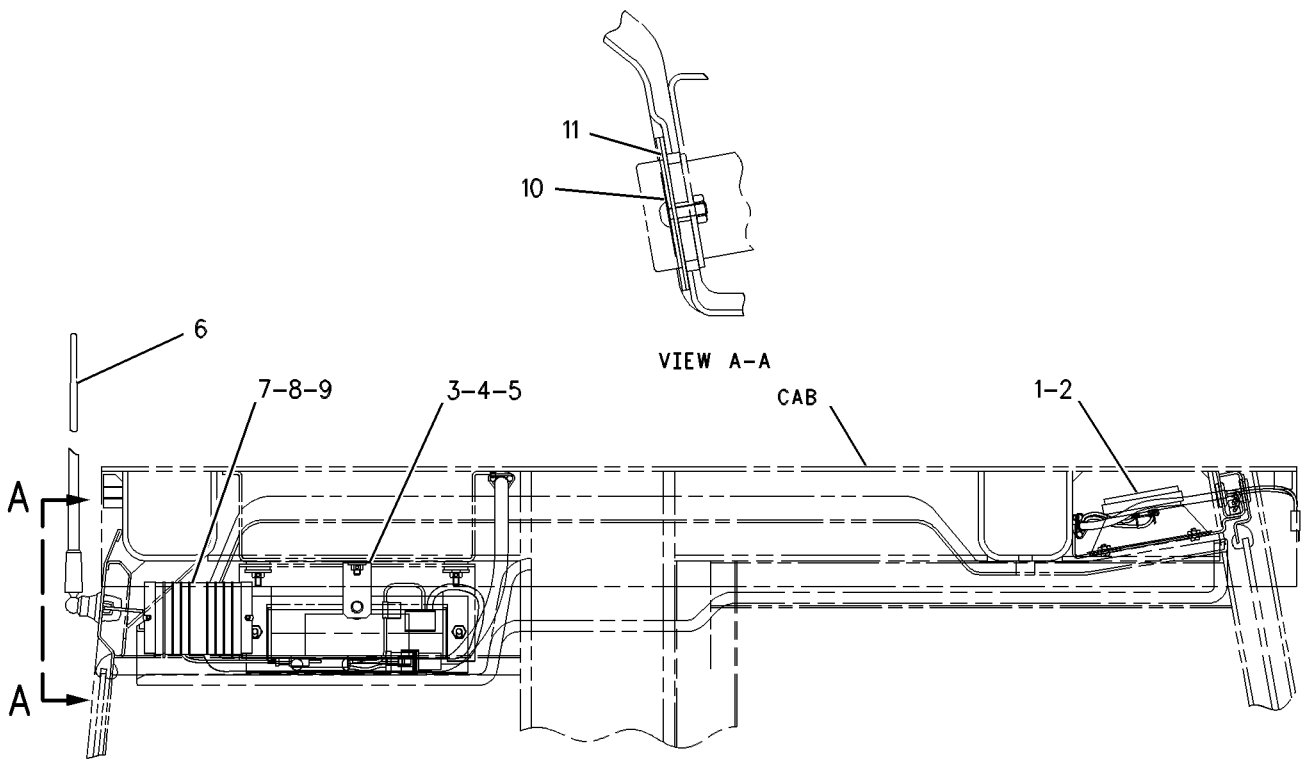

RIGHT SIDE VIEW

GRAPHIC #1 <END> g00595273

8Y-9507 INSTALLATION GP-RADIO

S/N: 9BL1-UP
24 VOLT
PART OF 125-1989 INSTALLATION GP-RADIO
AN ATTACHMENT

SMCS-7338 **i01400771**

NOTE	REF NO	GRAPHIC REF	PART NUMBER	QTY	PART NAME 1 2 3 4 5 6 (PRODUCT LEVEL)	SEE PAGE
	1	1	**6T-7695**	2	SPEAKER AS-RADIO	
	2	1	**8C-8564**	8	SCREW-LOCK	
	3	1	**8Y-9501**	1	BRACKET	
	4	1	**8T-0797**	1	LOCKNUT	
	5	1	**5P-4115**	1	WASHER-HARD (7.2X19X2-MM THK)	
	6	1	**3A-8746**	1	ANTENNA	
	7	1	**3E-6601**	1	FILM-NOTICE (RADIO) (RADIO)	
	8	1	**8Y-9504**	1	PLATE	

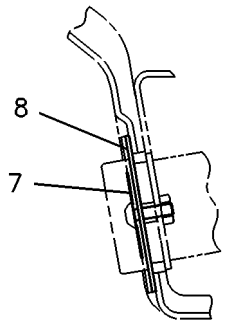

VIEW A-A

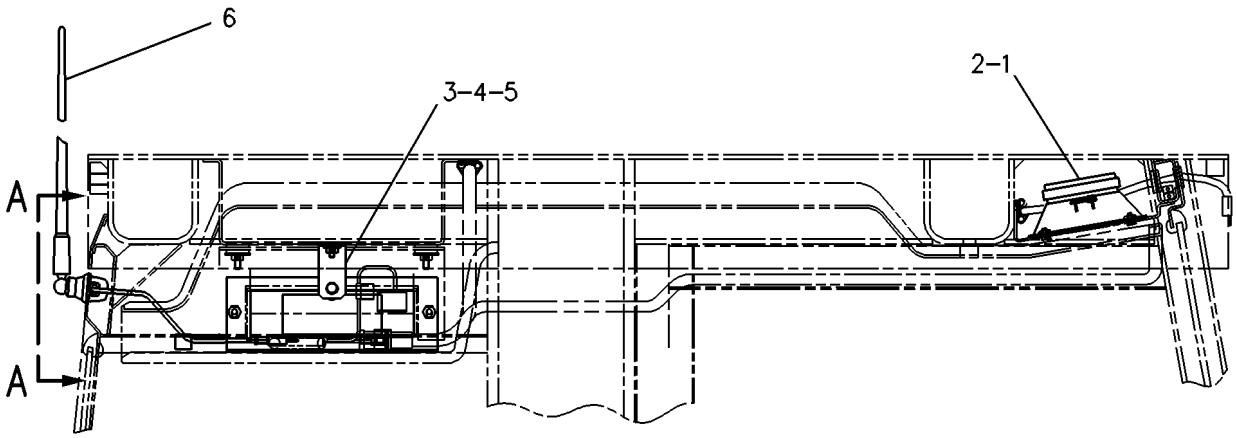

GRAPHIC #1 <END> g00229719

355-7400 MOTOR GP-WINDOW WIPER–24-VOLT

S/N: 9BL1-UP

SMCS-7305 **i04892647**

NOTE	REF NO	GRAPHIC REF	PART NUMBER	QTY	PART NAME 1 2 3 4 5 6 (PRODUCT LEVEL)	SEE PAGE
	1	1	**3F-9556**	1	LOCKWASHER	
M	2	1	**5C-7261**	1	NUT (M8X1.25-THD)	
	3	1	**101-0744**	1	MOTOR GP-WINDOW WIPER (24-VOLT)	
		1	**7K-4474**	1	CONNECTOR AS	
		1	**7N-7779**	2	SOCKET-CONNECTOR (14-GA TO 18-GA)	
		1	**7N-7780**	2	PIN-CONNECTOR (14-GA TO 18-GA)	
		1	**7N-8204**	1	HOUSING-RECEPTACLE (14-GA TO 18-GA)	
	4	1	**206-5823**	1	CAP	

M - METRIC PART

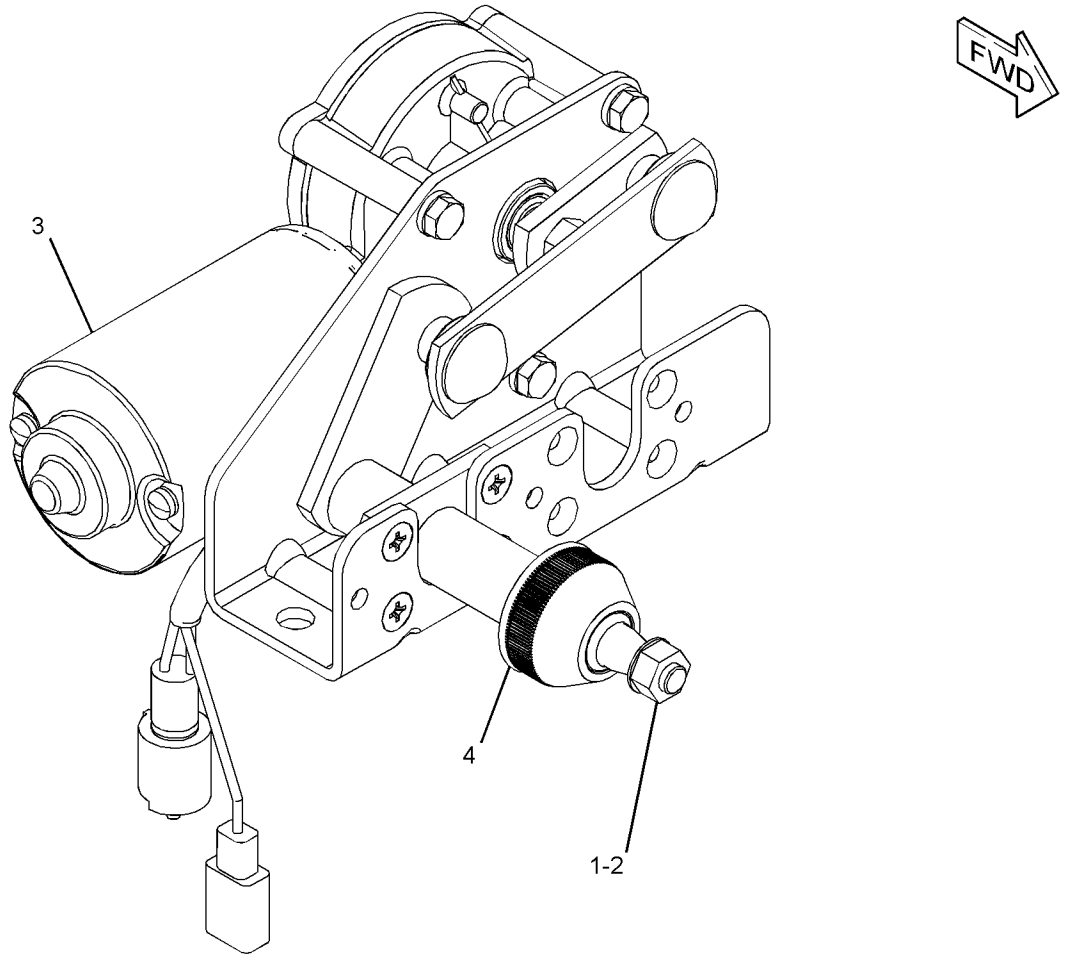

GRAPHIC #1 <END> g03033420

9X-5601 MOTOR GP-WINDOW WIPER

S/N: 9BL1-UP
24 VOLT
PART OF 8Y-9455 ROPS GP-ENCLOSED
ALSO AN ATTACHMENT

SMCS-7305 **i01682475**

NOTE	REF NO	GRAPHIC REF	PART NUMBER	QTY	PART NAME 1 2 3 4 5 6 (PRODUCT LEVEL)	SEE PAGE
	1	1	**7N-8204**	1	HOUSING-RECEPTACLE (14-GA TO 18-GA)	
	2	1	**7N-7780**	2	PIN-CONNECTOR (14-GA TO 18-GA)	
	3	1	**7N-7779**	2	SOCKET-CONNECTOR (14-GA TO 18-GA)	
	4	1	**7K-4474**	1	CONNECTOR AS	
	5	1	**6A-9708**	1	NUT	
		1	**6A-9709**	1	WASHER (16.5X24X1-MM THK)	
		1	**6A-9710**	1	WASHER (LEATHER)	
M	6	1	**6V-6889**	1	NUT (M8X1.25-THD)	
		1	**6A-9718**	1	WASHER (8.1X12.5X1-MM THK)	
	7	1	**5C-8814**	1	SEAL	
	8	1	**7T-9096**	1	CAP	

M - METRIC PART

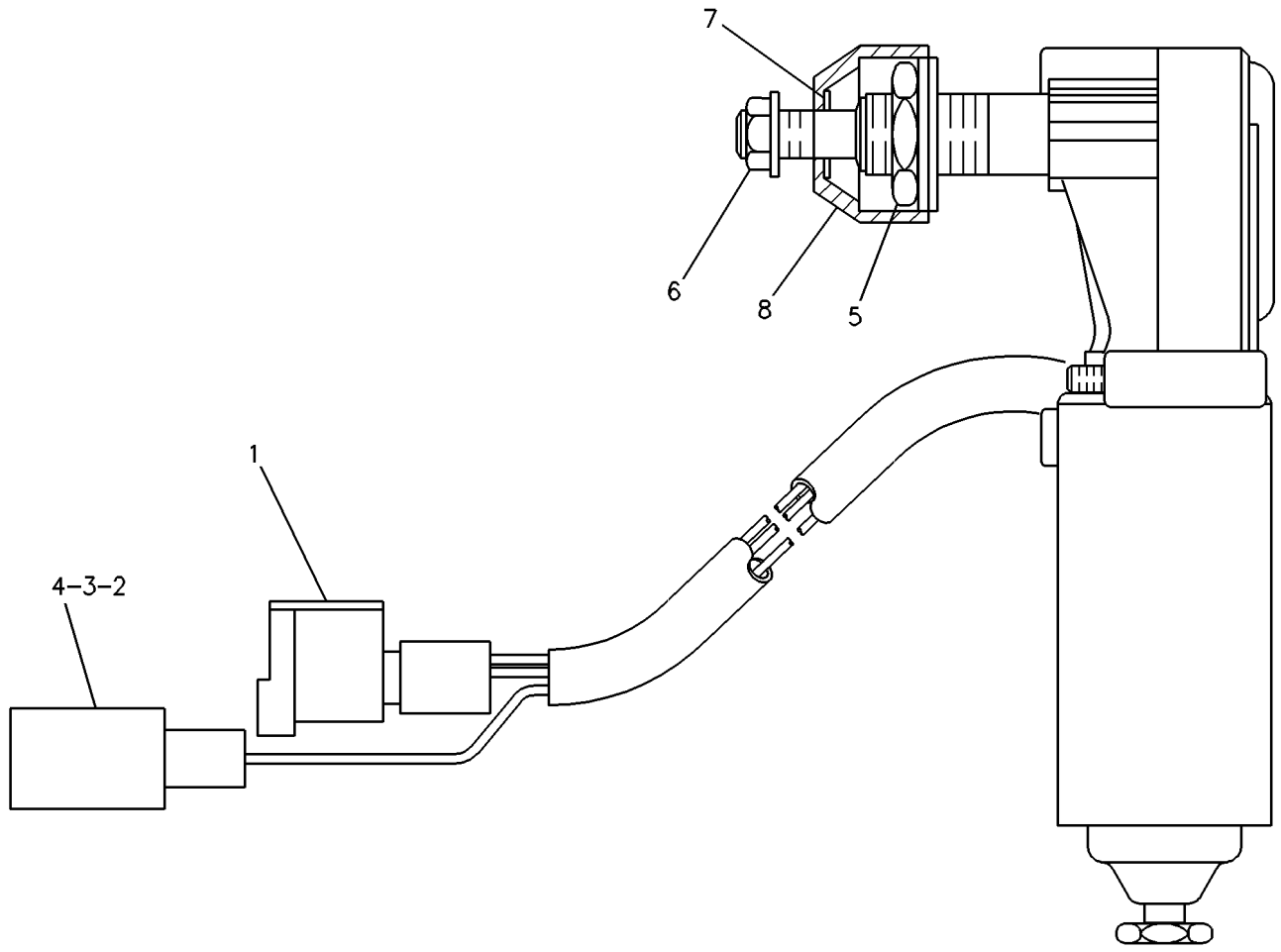

GRAPHIC #1 <END> g00230108

7P-6122 MOUNTING GP-ROPS

S/N: 9BL1-UP

PART OF 8Y-9371 CAB AR

SMCS-7266 **i01400773**

NOTE	REF NO	GRAPHIC REF	PART NUMBER	QTY	PART NAME 1 2 3 4 5 6 (PRODUCT LEVEL)	SEE PAGE
CD	1	1	**5P-5671**		SEAL (2.4M)	
	2	1	**9M-1853**	2	MOUNTING	
	3	1	**8T-8919**	2	BOLT (1/2-13X1.75-IN)	
	4	1	**2J-7258**	2	WASHER (0.531X1.81X0.164-IN THK)	
	5	1	**8G-0898**	4	WASHER (32X54X2-MM THK)	
	6	1	**7X-0383**	12	BOLT (7/8-9X2.75-IN)	
		1	**8C-6913**	12	WASHER-HARD (24X41.5X4-MM THK)	
	7	1	**5P-2566**	6	BOLT (1/2-13X1.5-IN)	
		1	**8T-4223**	6	WASHER-HARD (13.5X25.5X3-MM THK)	
D	8	1	**5P-5934**		SEAL (1.24M)	
	9	1	**4D-1212**	4	GROMMET	
	10	1	**8G-5031**	4	ROD	
CD	11	1	**5P-5671**	2	SEAL (1.53M EACH)	

C - CHANGE FROM PREVIOUS TYPE
D - ORDER BY THE METER

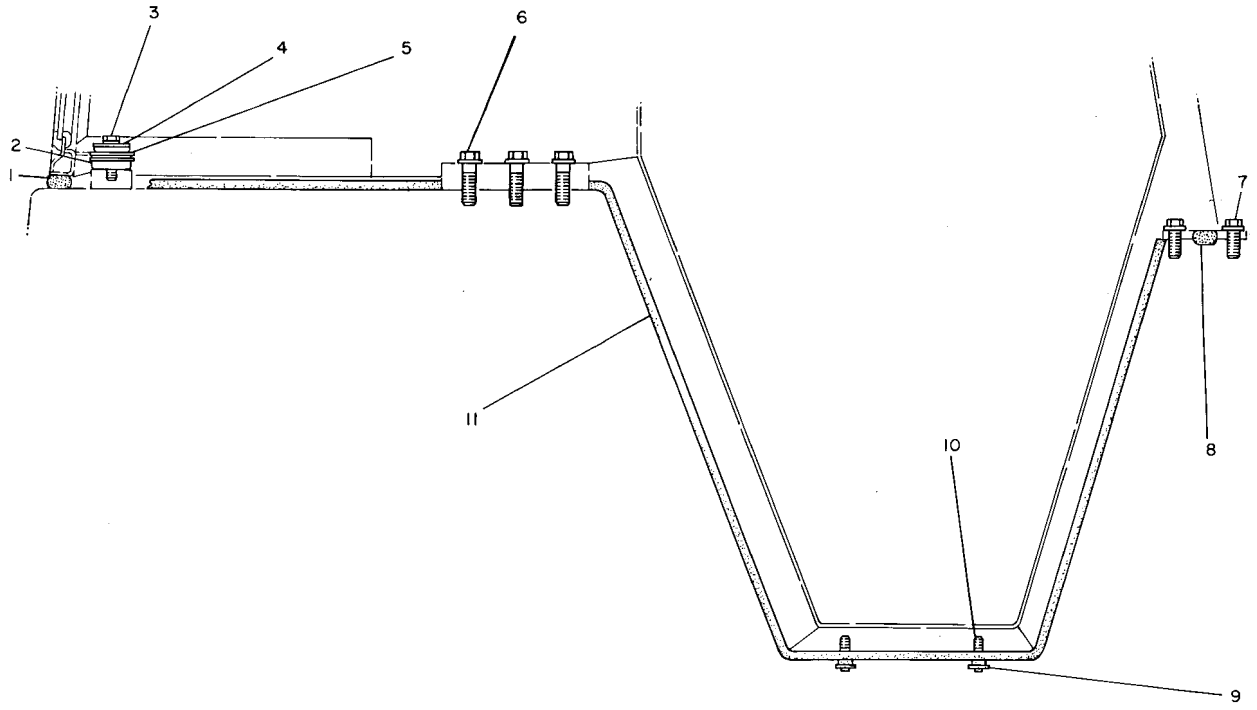

GRAPHIC #1 <END> g00196639

108-8421 PAN GP-BACKREST

S/N: 9BL1-UP
PART OF 8Y-5976, 8Y-5986 SEAT GP
ALSO AN ATTACHMENT

SMCS-7312 **i01342254**

NOTE	REF NO	GRAPHIC REF	PART NUMBER	QTY	PART NAME 1 2 3 4 5 6 (PRODUCT LEVEL)	SEE PAGE
	1	1	**9M-5733**	2	RIVET-POP	
	2	1	**8Y-6006**	1	LID AS	
	3	1	**8Y-6010**	1	LANYARD	
	4	1	**4S-8287**	8	RIVET-POP	
	5	1	**8Y-5972**	1	LATCH	
	6	1	**108-8423**	1	SHAFT AS-LUMBAR	
	7	1	**3E-4336**	1	STUD-BALL	
	8	1	**3E-4335**	1	CLIP	
	9	1	**2F-7306**	1	SCREW-MACHINE (6-32X0.25-IN)	
	10	1	**8F-1462**	1	WASHER-PLATED	
E	11	1	**3E-6575**		SEAL (76CM)	
	12	1	**108-8424**	1	PAN-LUMBAR	
	13	1	**8Y-5903**	2	CAM	
	14	1	**3E-4362**	2	PIN-SPRING	

E - ORDER BY THE CENTIMETER

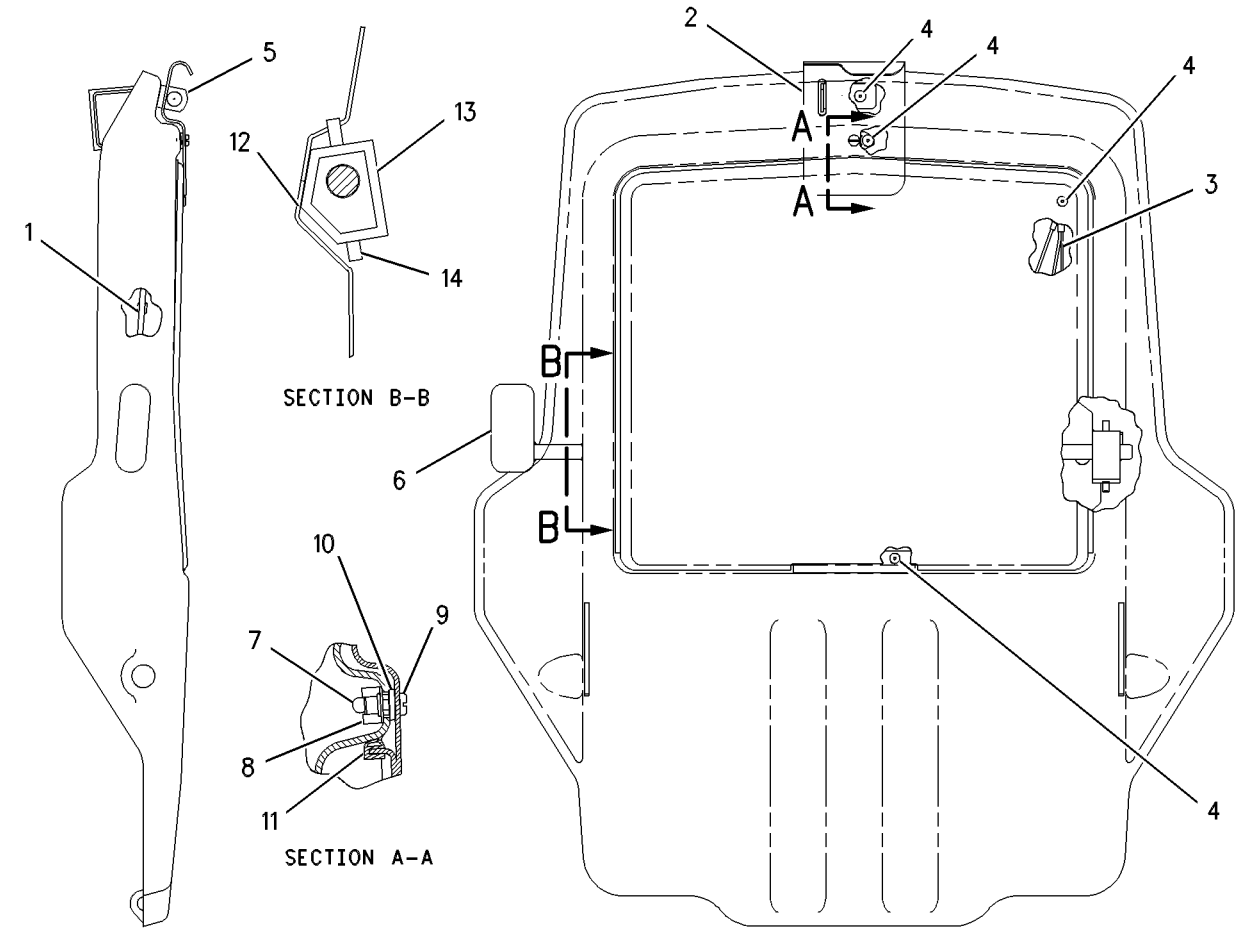

GRAPHIC #1 <END> g00383446

8Y-5992 PAN GP-SEAT

S/N: 9BL1-UP
PART OF 8Y-5976, 8Y-5986 SEAT GP
ALSO AN ATTACHMENT

SMCS-7312 **i02001629**

NOTE	REF NO	GRAPHIC REF	PART NUMBER	QTY	PART NAME 1 2 3 4 5 6 (PRODUCT LEVEL)	SEE PAGE
	1	1	**8Y-5892**	1	PAN AS-SEAT	
JL	2	1	**3K-4897**	4	PIN-SPRING	
N	3	1	**9M-5733**	1	RIVET-POP	
N	4	1	**6V-2456**	2	RING-RETAINING	
JZ	5	1		2	ROD AS	
JLZ	6	1		2	SPRING	
LZ	7	1		1	ROD AS	
LZ	8	1		1	BUSHING-TERMINAL	
NZ	9	1		1	BRACKET	
NZ	10	1		1	CABLE AS	
NZ	11	1		1	PIN	
NZ	12	1		1	ADJUSTER AS	
					AVAILABLE REPAIR KIT(S):	
			8Y-5995	1	KIT-SEAT TILT	
					(INCLUDES BUSHING, LOCKPIN & PARTS MARKED J)	
			8Y-5998	1	KIT-BACK TILT (SEAT)	
					(INCLUDES BUSHING & PARTS MARKED L)	
			8Y-5999	1	KIT-ADJUSTER (BOTTOM SEAT PAN)	
					(INCLUDES PARTS MARKED N)	

J - INCLUDED IN 8Y-5995 SEAT TILT KIT
L - INCLUDED IN 8Y-5998 BACK TILT KIT
N - INCLUDED IN 8Y-5999 ADJUSTER KIT
Z - NOT SERVICED SEPARATELY

8Y-5992 **PAN GP-SEAT (**contd.**)** **i02001629**

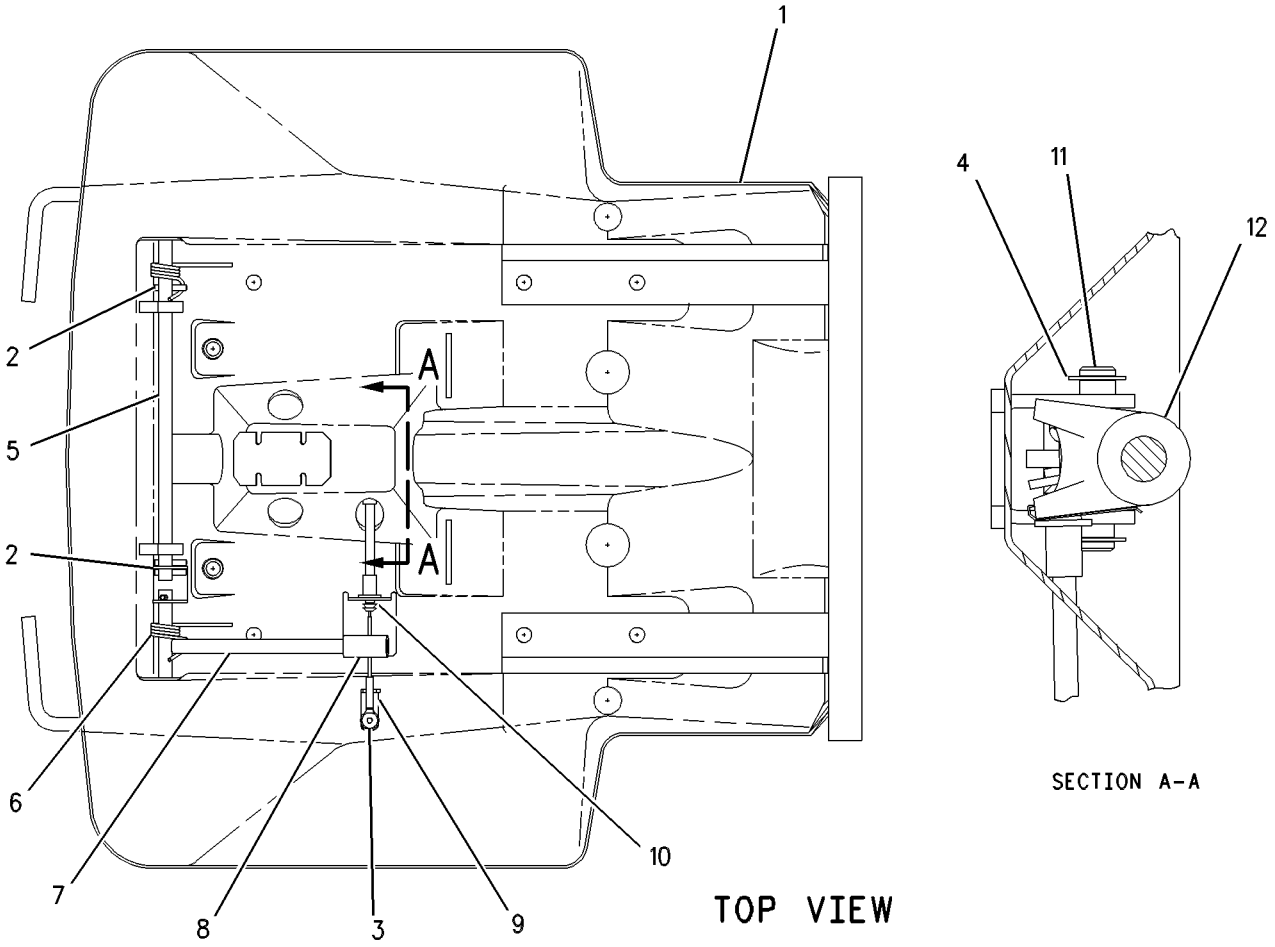

GRAPHIC #1 <END> g00315615

129-1453 PLATFORM GP-TILT

S/N: 9BL1399-UP

PART OF 117-1761, 8Y-9370 CHASSIS AR

SMCS-7253 **i01400782**

NOTE	REF NO	GRAPHIC REF	PART NUMBER	QTY	PART NAME 1 2 3 4 5 6 (PRODUCT LEVEL)	SEE PAGE
	1	1	**128-0485**	1	PLATFORM AS	
		1	**1F-0748**	11	NUT-WELD (1/2-13-THD)	
		1	**1F-0750**	12	NUT-WELD (3/8-16-THD)	
		1	**4D-9376**	6	BOSS (3/8-16-THD)	
		1	**5B-1983**	2	BOSS (3/8-16-THD)	
		1	**5F-7845**	1	BOSS (50.8-MM LG)	
		1	**5K-5165**	1	BAR	
M		1	**6V-9632**	4	NUT-WELD (M6X1-THD)	
		1	**7T-1099**	12	LINK	
		1	**8B-8204**	1	LUG	
		1	**8Y-9565**	1	BOSS AS	
		1	**9F-2978**	11	NUT-WELD (3/8-16-THD)	
		1	**9F-6445**	4	NUT-WELD (1/4-20-THD)	
	2	1	**7P-9131**	4	HANDRAIL	
	3	1	**7P-7051**	2	RETAINER	
	4	1	**9B-7237**	2	BOLT (3/8-16X1.25-IN)	
	5	1	**8T-4896**	2	WASHER-HARD (10.2X18.5X2.5-MM THK)	
	6	1	**7P-6939**	4	BUSHING-TERMINAL	
	7	1	**8G-3008**	1	SUPPORT	
	8	1	**7P-7047**	2	PIN AS	
	9	1	**5S-7349**	14	BOLT (1/4-20X0.5-IN)	
	10	1	**5P-4115**	10	WASHER-HARD (7.2X19X2-MM THK)	
	11	1	**7P-8234**	1	SUPPORT	
	12	1	**7P-3953**	1	COVER	
	13	1	**8G-2795**	2	PLATE	
	14	1	**7P-6446**	2	BUSHING-TERMINAL	
	15	1	**7P-8050**	2	PIN	
	16	1	**3W-0832**	1	HANDRAIL AS	
	17	1	**6V-5031**	2	PLUG-BUTTON	
	18	1	**8T-4223**	14	WASHER-HARD (13.5X25.5X3-MM THK)	
	19	1	**5P-2228**	14	BOLT (1/2-13X1-IN)	
	20	1	**3W-0831**	1	HANDRAIL AS	
	21	1	**6H-3616**	2	PLUG-PROTECTION	
	22	1	**6H-3689**	2	CAP-PROTECTION	
	23	1	**7P-8330**	1	FLOOR MAT	
	24	1	**8T-9398**	2	BOLT (3/4-10X1.75-IN)	
	25	1	**9K-1615**	2	SPACER	
	26	1	**8G-2718**	1	COVER AS	
D		1	**5P-5927**		SEAL	
		1	**9M-5733**	4	RIVET-POP	
	27	1	**9M-5733**	4	RIVET-POP	
	28	1	**8G-2796**	1	LATCH	
	29	1	**8T-4205**	4	WASHER-HARD (7.2X14.5X2-MM THK)	

D - ORDER BY THE METER
M - METRIC PART

129-1453 **PLATFORM GP-TILT** (contd.) **i01400782**

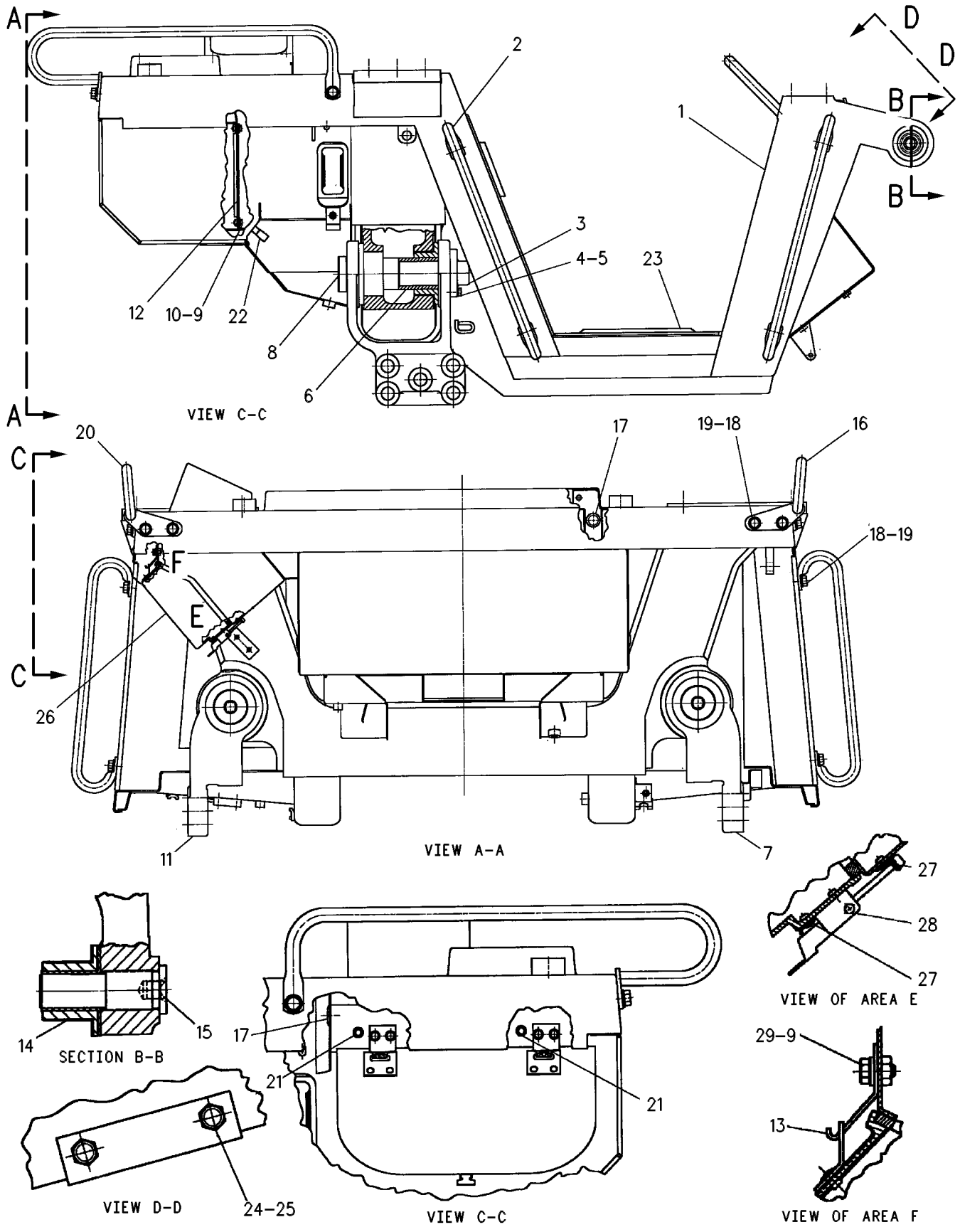

GRAPHIC #1 <END> g00292144

8Y-9468 PLATFORM GP-TILT

S/N: 9BL1-1398

PART OF 8Y-9370 CHASSIS AR

SMCS-7253 **i01400777**

NOTE	REF NO	GRAPHIC REF	PART NUMBER	QTY	PART NAME 1 2 3 4 5 6 (PRODUCT LEVEL)	SEE PAGE
	1	1	**8Y-9813**	1	PLATFORM AS	
		1	**1F-0748**	4	NUT-WELD (1/2-13-THD)	
		1	**9F-2978**	12	NUT-WELD (3/8-16-THD)	
		1	**4D-9376**	4	BOSS (3/8-16-THD)	
		1	**5B-1983**	2	BOSS (3/8-16-THD)	
		1	**5F-7845**	1	BOSS (50.8-MM LG)	
		1	**5K-5165**	4	BAR	
M		1	**6V-9632**	2	NUT-WELD (M6X1-THD)	
	2	1	**7P-9131**	4	HANDRAIL	
	3	1	**7P-7051**	2	RETAINER	
	4	1	**9B-7237**	2	BOLT (3/8-16X1.25-IN)	
	5	1	**8T-4896**	5	WASHER-HARD (10.2X18.5X2.5-MM THK)	
	6	1	**7P-6939**	4	BUSHING-TERMINAL	
	7	1	**8G-3008**	1	SUPPORT	
	8	1	**7P-7047**	2	PIN AS	
	9	1	**5S-7349**	14	BOLT (1/4-20X0.5-IN)	
	10	1	**5P-4115**	10	WASHER-HARD (7.2X19X2-MM THK)	
	11	1	**7P-8234**	1	SUPPORT	
	12	1	**7P-3953**	1	COVER	
	13	1	**8G-2795**	2	PLATE	
	14	1	**7P-6446**	2	BUSHING-TERMINAL	
	15	1	**7P-8050**	2	PIN	
	16	1	**3W-0832**	1	HANDRAIL AS	
	17	1	**6V-5031**	2	PLUG-BUTTON	
	18	1	**8T-4223**	14	WASHER-HARD (13.5X25.5X3-MM THK)	
	19	1	**5P-2228**	14	BOLT (1/2-13X1-IN)	
	20	1	**3W-0831**	1	HANDRAIL AS	
	21	1	**6H-3616**	2	PLUG-PROTECTION	
	22	1	**6H-3689**	2	CAP-PROTECTION	
	23	1	**7P-8330**	1	FLOOR MAT	
	24	1	**8T-9398**	2	BOLT (3/4-10X1.75-IN)	
	25	1	**9K-1615**	2	SPACER	
	26	1	**8G-2718**	1	COVER AS	
BD		1	**5P-5927**		SEAL	
	27	1	**9M-5733**	4	RIVET-POP	
	28	1	**8G-2796**	1	LATCH	
	29	1	**8T-4205**	4	WASHER-HARD (7.2X14.5X2-MM THK)	
	30	1	**8G-1439**	1	COVER	
	31	1	**5M-3062**	3	BOLT (3/8-16X0.75-IN)	
	32	1	**6V-2760**	1	PLUG	
	33	1	**4H-3001**	1	PLUG-BUTTON	

B - USE AS REQUIRED
D - ORDER BY THE METER
M - METRIC PART

8Y-9468 **PLATFORM GP-TILT (**contd.**)** **i01400777**

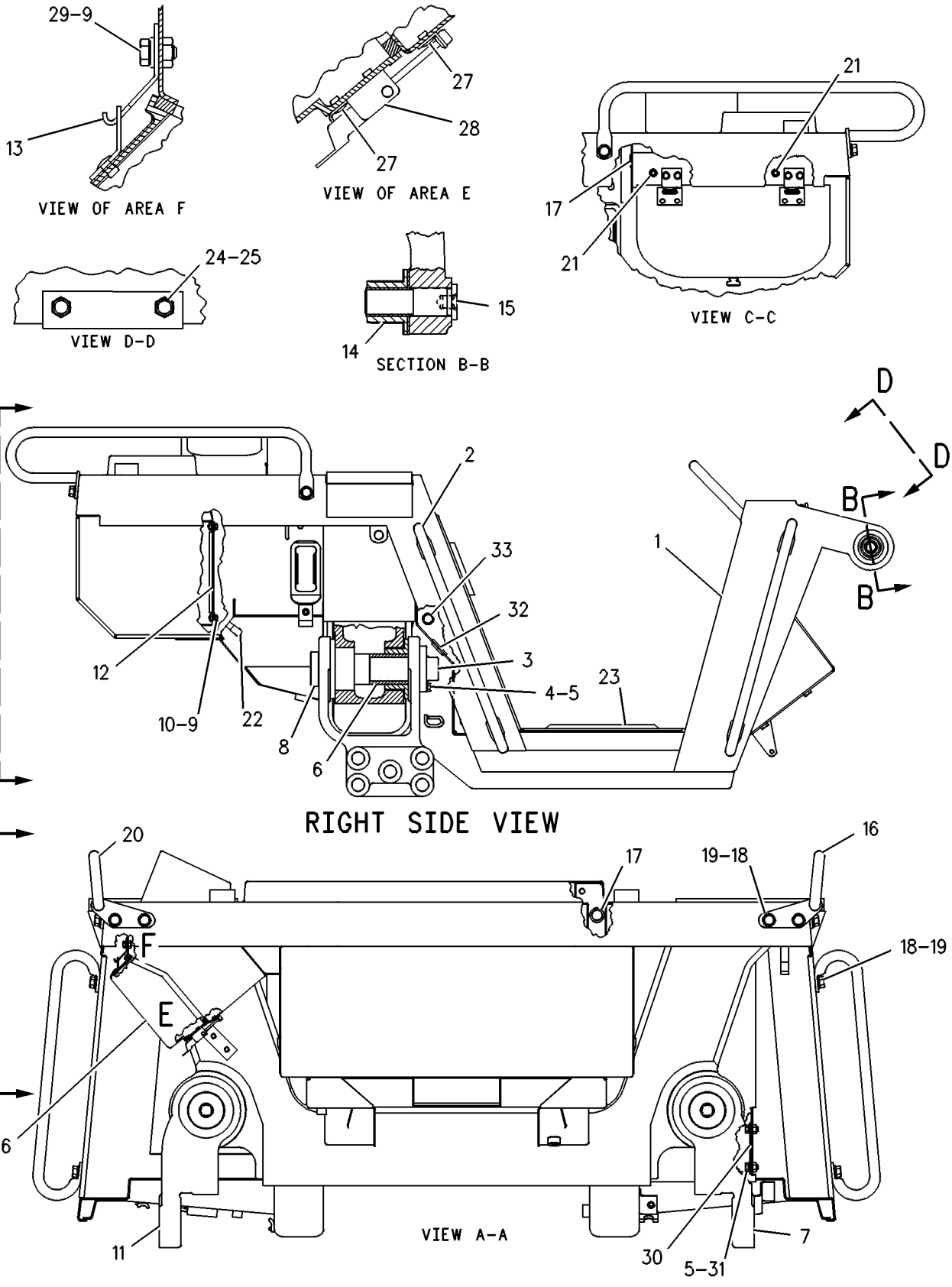

GRAPHIC #1 <END> g00246554

8Y-9224 PRESSURIZER GP-CAB

S/N: 9BL1-1487

PART OF 8Y-9817 CONVERSION AR-NON-ROPS

AN ATTACHMENT

SMCS-7311 **i01400790**

NOTE	REF NO	GRAPHIC REF	PART NUMBER	QTY	PART NAME 1 2 3 4 5 6 (PRODUCT LEVEL)	SEE PAGE
	1	1	**2V-0099**	1	KNOB-CONTROL	
		1	**2P-4339**	1	NUT-JAM (7/16-28-THD)	
	2	1	**5P-8441**	1	GROMMET (9.5 IDX31.75 OD)	
					—OR—	
		1	**5P-9135**	1	GROMMET (12.7 IDX41.28 OD)	
	3	1	**3S-2093**	1	STRAP-CABLE	
	4	1	**9G-1950**	1	RESISTOR	
		1	**8G-0241**	1	ROD	
C		1	**5C-5440**	2	LOCKNUT (1/4-20-THD)	
		1	**6V-1668**	2	WASHER (6.5X29.1X3-MM THK)	
		1	**8G-0901**	2	INSULATOR	
	5	1	**5P-8438**	1	GROMMET	
	6	1	**2D-6235**	4	LOCKNUT (1/4-20-THD)	
	7	1	**3W-2060**	4	PLATE	
	8	1	**3W-2061**	2	COVER AS	
					(EACH INCLUDES)	
		1	**4B-5324**	2	WASHER (3.9X9.6X1.2-MM THK)	
		1	**034-7044**	2	RIVET	
BD	9	1	**5P-9205**		SEAL	
	10	1	**5M-3062**	2	BOLT (3/8-16X0.75-IN)	
		1	**5P-1075**	2	WASHER-HARD (10.2X22.5X3-MM THK)	
	11	1	**9G-9503**	1	BLOWER AS	
		1	**3B-9191**	1	SETSCREW-SOCKET	
J	12	1	**3E-6387**	1	MOTOR AS-BLOWER (24-VDC, CCW)	
		1	**3E-3361**	1	PLUG AS-CONNECTOR (2-PIN)	
		1	**9W-0844**	2	SOCKET-CONNECTOR (14-GA TO 16-GA)	
		1	**3E-3362**	1	WEDGE-PLUG LOCK (2-PIN)	
	13	1	**8J-1256**	2	CLIP	
J	14	1	**3E-6386**	1	MOTOR AS-BLOWER (24-VDC, CW)	
		1	**102-8802**	1	KIT-RECEPTACLE (2-PIN)	
					(INCLUDES RECEPTACLE AS & WEDGE)	
		1	**9W-0852**	2	PIN-CONNECTOR (14-GA TO 16-GA)	
		1	**3E-3365**	1	WEDGE-RECEPTACLE LOCK (2-PIN)	
	15	1	**9G-9504**	1	BLOWER AS	
		1	**3B-9191**	1	SETSCREW-SOCKET	
	16	1	**8Y-9610**	1	COVER AS	
		1	**4V-6981**	12	SCREW-BUTTON HEAD (1/4-20X0.75-IN)	
	17	2	**7P-4749**	2	LOUVER AS	
	18	2	**8G-8282**	2	HOUSING	
	19	2	**8G-8280**	1	COVER AS	
		2	**9F-6445**	2	NUT-WELD (1/4-20-THD)	
	20	2	**4M-5281**	15	BOLT (1/4-20X0.75-IN)	
		2	**5P-4115**	15	WASHER-HARD (7.2X19X2-MM THK)	
	21	2	**8G-8283**	2	LOUVER	
BD	22	2	**6V-7326**		SEAL	
	23	2	**5K-3546**	4	PLUG-BUTTON	
	24	2	**5P-8439**	4	GROMMET	

8Y-9224 **PRESSURIZER GP-CAB (**contd.**)** **i01400790**

NOTE	REF NO	GRAPHIC REF	PART NUMBER	QTY	PART NAME 1 2 3 4 5 6 (PRODUCT LEVEL)	SEE PAGE
		2	**8G-8284**	4	SPACER	
	25	2	**3S-2093**	2	STRAP-CABLE	
	26	2	**6V-6886**	1	PLUG-BUTTON	
	27	2	**3W-2058**	1	COVER AS	
BD	28	2	**5P-5942**		SEAL	
	29	2	**3W-2056**	1	COVER AS	
	30	2	**8G-0894**	2	BRACKET AS	
		2	**9F-6445**	1	NUT-WELD (1/4-20-THD)	
	31	2	**9G-9502**	2	ORIFICE	
BD	32	2	**5P-5908**		SEAL	
	33	2	**8T-9394**	4	BOLT-SOCKET HEAD (10-24X0.5-IN)	
	34	2	**8Y-9338**	1	PLATE	
		2	**100-7054**	1	FILM-HEATER	
		2	**8Y-9822**		SEAL	
	35	2	**9X-6016**	2	SCREW-HEX SOCKET (8-32X0.875-IN)	
	36	2	**6P-3236**	1	SWITCH AS-ROTARY (O-ROPS HEATER CONTROL)	
		2	**6V-8362**	5	SCREW-MACHINE (8-32X0.31-IN)	
		2	**9B-7233**	5	LOCKWASHER	
C	37	2	**114-1095**	1	HARNESS AS	
	38	2	**6N-8589**	1	CIRCUIT BREAKER AS (15-AMPERE)	
		2	**6V-8376**	2	SCREW-MACHINE (8-32X0.25-IN)	
		2	**9B-7233**	2	LOCKWASHER	
					AVAILABLE REPAIR KIT(S):	
J			**9G-0398**	1	KIT-MOTOR BRUSH	

B - USE AS REQUIRED
C - CHANGE FROM PREVIOUS TYPE
D - ORDER BY THE METER
J - REPAIR KIT(S) MARKED J AVAILABLE FOR PART(S) MARKED J

8Y-9224 **PRESSURIZER GP-CAB** (contd.) **i01400790**

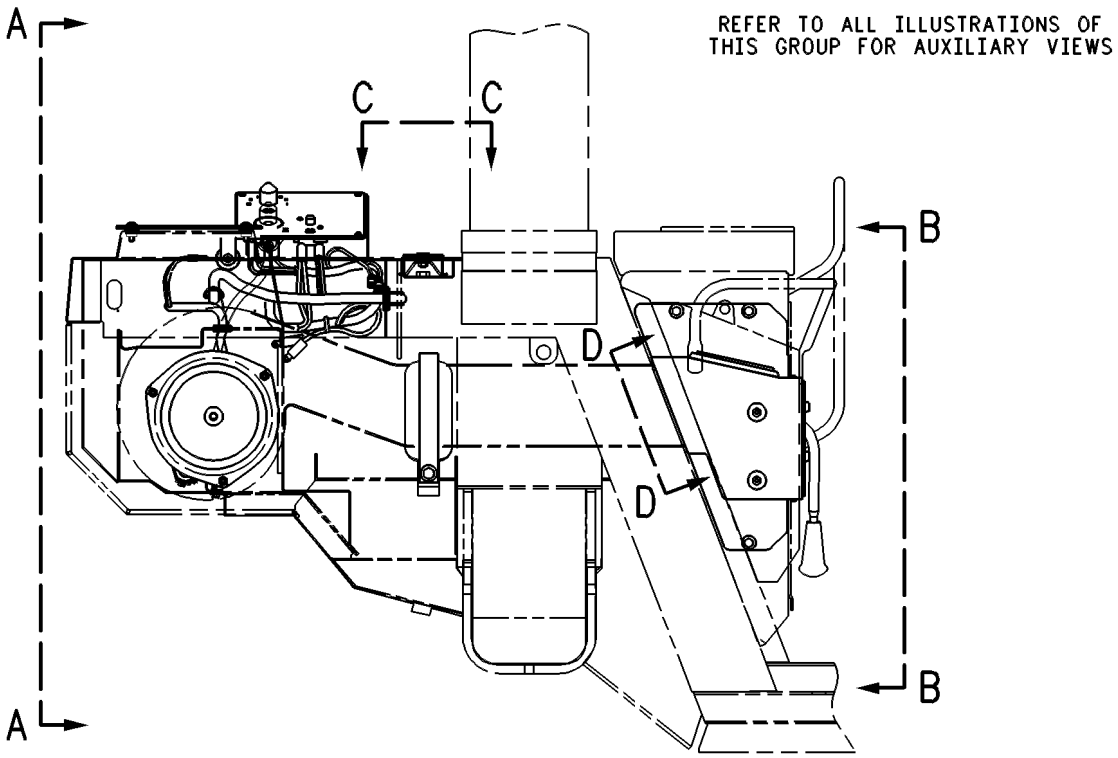

RIGHT SIDE VIEW

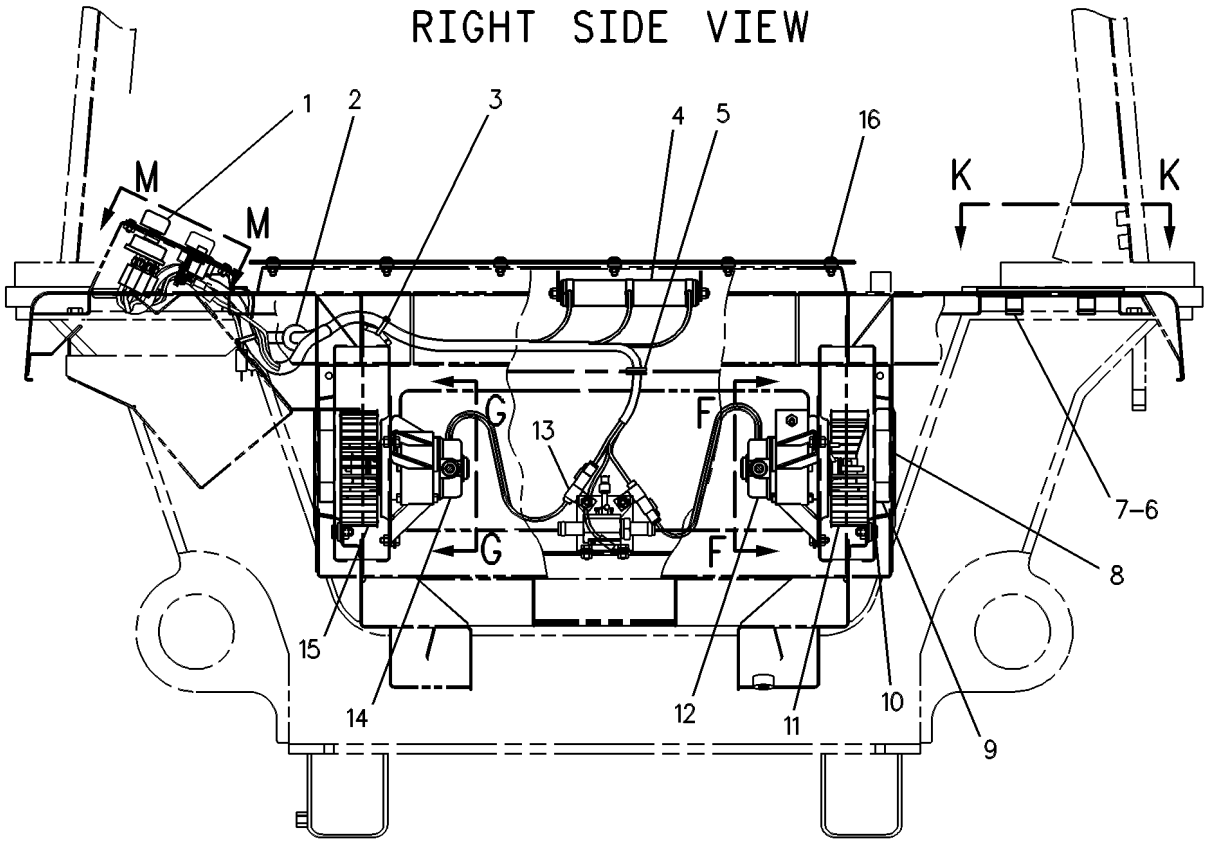

VIEW A-A

GRAPHIC #1 g00440705

8Y-9224 **PRESSURIZER GP-CAB (**contd.**)** **i01400790**

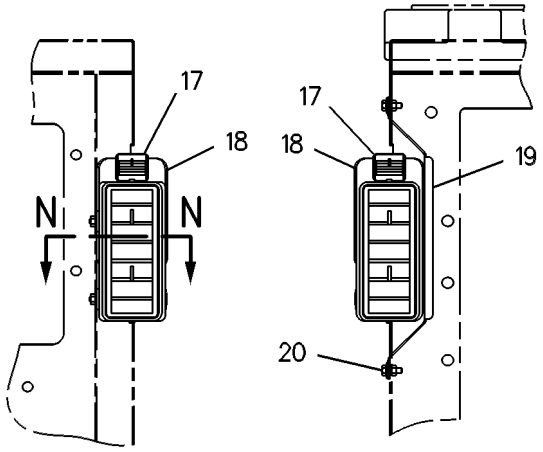

VIEW B-B

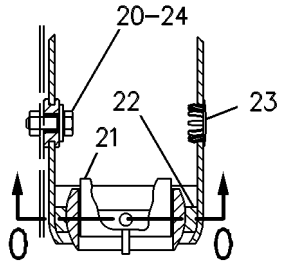

SECTION N-N

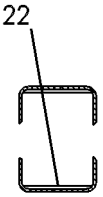

SECTION O-O

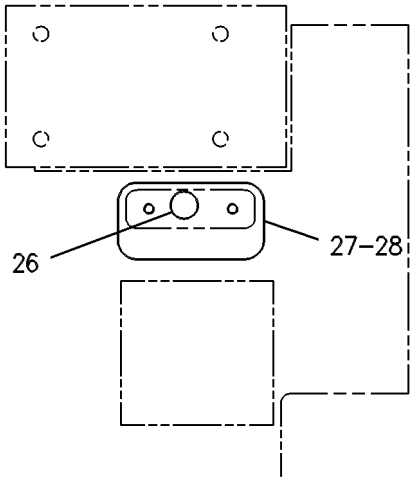

VIEW C-C

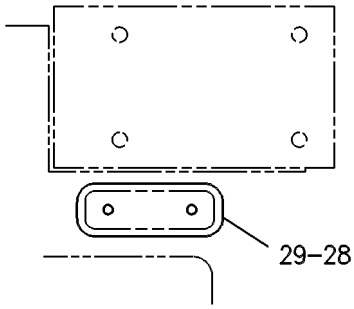

SECTION K-K

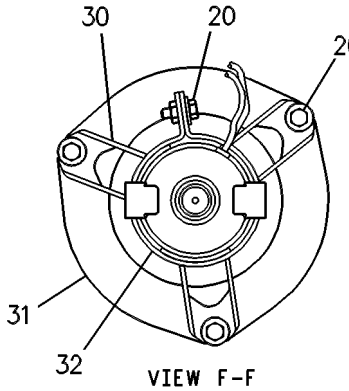

VIEW F-F

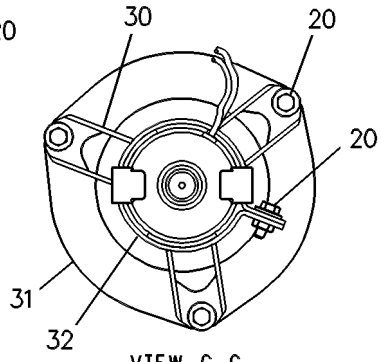

VIEW G-G

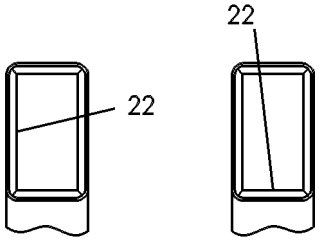

VIEW D-D

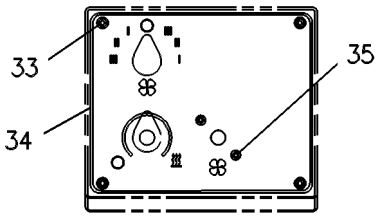

VIEW M-M

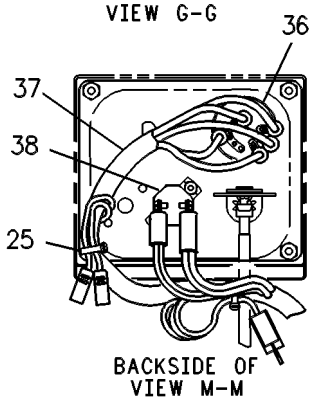

BACKSIDE OF VIEW M-M

GRAPHIC #2 <END> g00440706

8Y-9812 PRESSURIZER GP-CAB

S/N: 9BL1-UP

PART OF 8Y-9371 CAB AR

SMCS-7311 **i01400792**

NOTE	REF NO	GRAPHIC REF	PART NUMBER	QTY	PART NAME 1 2 3 4 5 6 (PRODUCT LEVEL)	SEE PAGE
	1	1	**3W-2051**	1	HOUSING	
	2	1	**2V-0099**	1	KNOB-CONTROL	
	3	1	**2P-4339**	1	NUT-JAM (7/16-28-THD)	
	4	1	**5P-8438**	1	GROMMET	
	5	1	**8G-8286**	1	COVER	
	6	1,2	**3S-2093**	3	STRAP-CABLE	
	7	1	**9G-1950**	1	RESISTOR	
	8	1	**8Y-9523**	1	COVER AS	
	9	1	**8G-0241**	1	ROD	
	10	1	**3E-9865**	2	LOCKNUT (1/4-20-THD)	
	11	1	**6V-1668**	2	WASHER (6.5X29.1X3-MM THK)	
	12	1	**8G-0901**	2	INSULATOR	
	13	1,2	**7P-4749**	6	LOUVER AS	
	14	1	**3W-2052**	1	HOUSING	
	15	1	**5P-9205**		SEAL	
	16	1	**5M-3062**	4	BOLT (3/8-16X0.75-IN)	
	17	1	**5P-1075**	4	WASHER-HARD (10.2X22.5X3-MM THK)	
	18	1	**3W-2050**	2	BRACKET	
	19	1	**3W-2049**	2	DUCT	
	20	1	**3W-2080**	2	BRACKET	
	21	1	**9G-9503**	1	BLOWER AS	
		1	**3B-9191**	1	SETSCREW-SOCKET	
	22	1	**3E-6387**	1	MOTOR AS-BLOWER (24-VDC, CCW)	
		1	**3E-3362**	1	WEDGE-PLUG LOCK (2-PIN)	
		1	**9G-0398**	1	KIT-MOTOR BRUSH	
		1	**9W-0844**	2	SOCKET-CONNECTOR (14-GA TO 16-GA)	
		1	**102-8807**	1	KIT-CONNECTING PLUG (2-PIN)	
					(INCLUDES PLUG AS & WEDGE)	
	23	1	**8J-1256**	2	CLIP	
	24	1	**3E-6386**	1	MOTOR AS-BLOWER (24-VDC, CW)	
		1	**3E-3365**	1	WEDGE-RECEPTACLE LOCK (2-PIN)	
		1	**9G-0398**	1	KIT-MOTOR BRUSH	
		1	**9W-0852**	2	PIN-CONNECTOR (14-GA TO 16-GA)	
	25	1	**9G-9504**	1	BLOWER AS	
	26	1	**9G-1518**	2	FILTER ELEMENT-CAB AIR	
	27	2	**6P-3236**	1	SWITCH AS-ROTARY	
		2	**6V-8362**	5	SCREW-MACHINE (8-32X0.31-IN)	
		2	**9B-7233**	5	LOCKWASHER	
	28	1	**5P-9135**	1	GROMMET	
	29	2	**6N-8589**	1	CIRCUIT BREAKER AS (15-AMPERE)	
		2	**6V-8376**	2	SCREW-MACHINE (8-32X0.25-IN)	
		2	**9B-7233**	2	LOCKWASHER	
	30	2	**4M-5281**	16	BOLT (1/4-20X0.75-IN)	
	31	2	**8G-8284**	6	SPACER	
	32	2	**2L-8402**	2	SPACER	
	33	2	**9D-3769**	2	GROMMET	
	34	1	**8T-9394**	4	BOLT-SOCKET HEAD (10-24X0.5-IN)	
	35	1	**8Y-9338**	1	PLATE	

8Y-9812 **PRESSURIZER GP-CAB (**contd.**)** **i01400792**

NOTE	REF NO	GRAPHIC REF	PART NUMBER	QTY	PART NAME 1 2 3 4 5 6 (PRODUCT LEVEL)	SEE PAGE
	36	1	**100-7054**	1	FILM-HEATER	
	37	1	**9X-6016**	2	SCREW-HEX SOCKET (8-32X0.875-IN)	
	38	2	**8G-0894**	2	BRACKET AS	
		2	**9F-6445**	1	NUT-WELD (1/4-20-THD)	
	39	2	**5P-4115**	17	WASHER-HARD (7.2X19X2-MM THK)	
	40	2	**9G-9502**	2	ORIFICE	
	41	2	**5P-5908**		SEAL	
	42	2	**8G-8288**	4	CLIP	
	43	2	**8T-1572**	6	SCREW-HEX SOCKET (1/4-20X1-IN)	
	44	2	**8G-8287**	1	FILTER ELEMENT-CAB AIR	
	45	2	**8Y-9526**	1	GASKET	
	46	2	**2D-6235**	1	LOCKNUT (1/4-20-THD)	
	47	2	**3W-2045**	1	BRACKET AS	
	48	2	**5S-7349**	2	BOLT (1/4-20X0.5-IN)	
	49	2	**8G-8282**	2	HOUSING	
	50	2	**8G-8280**	1	COVER AS	
		2	**9F-6445**	2	NUT-WELD (1/4-20-THD)	
	51	2	**8G-8283**	2	LOUVER	
	52	2	**5K-3546**	4	PLUG-BUTTON	
	53	1,2	**6V-7326**	26	SEAL	
	54	2	**5P-8439**	4	GROMMET	
	55	1	**1L-6377**	1	BUTTON-PLUG	
	56	2	**8Y-9799**	1	HARNESS AS (PRESSURIZER & A/C)	
	57	1	**8Y-9822**	1	SEAL	

8Y-9812 **PRESSURIZER GP-CAB** (contd.) **i01400792**

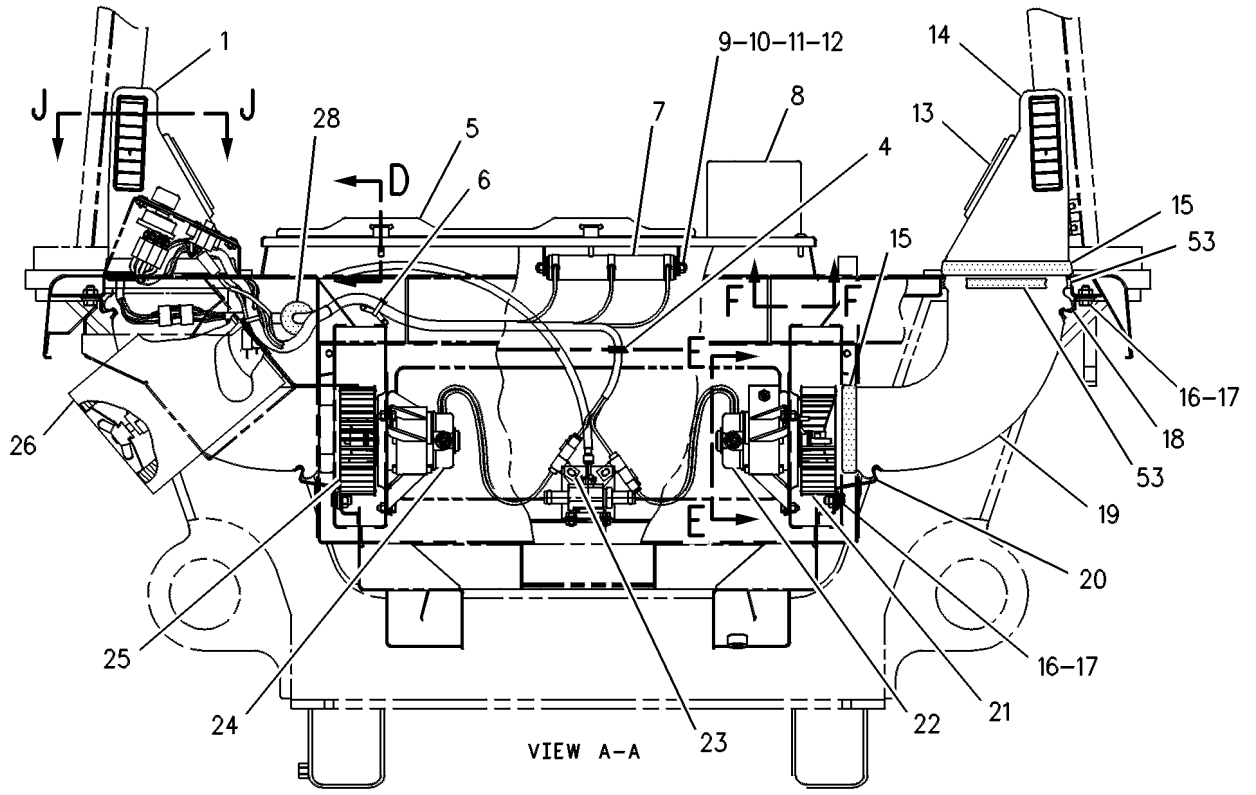

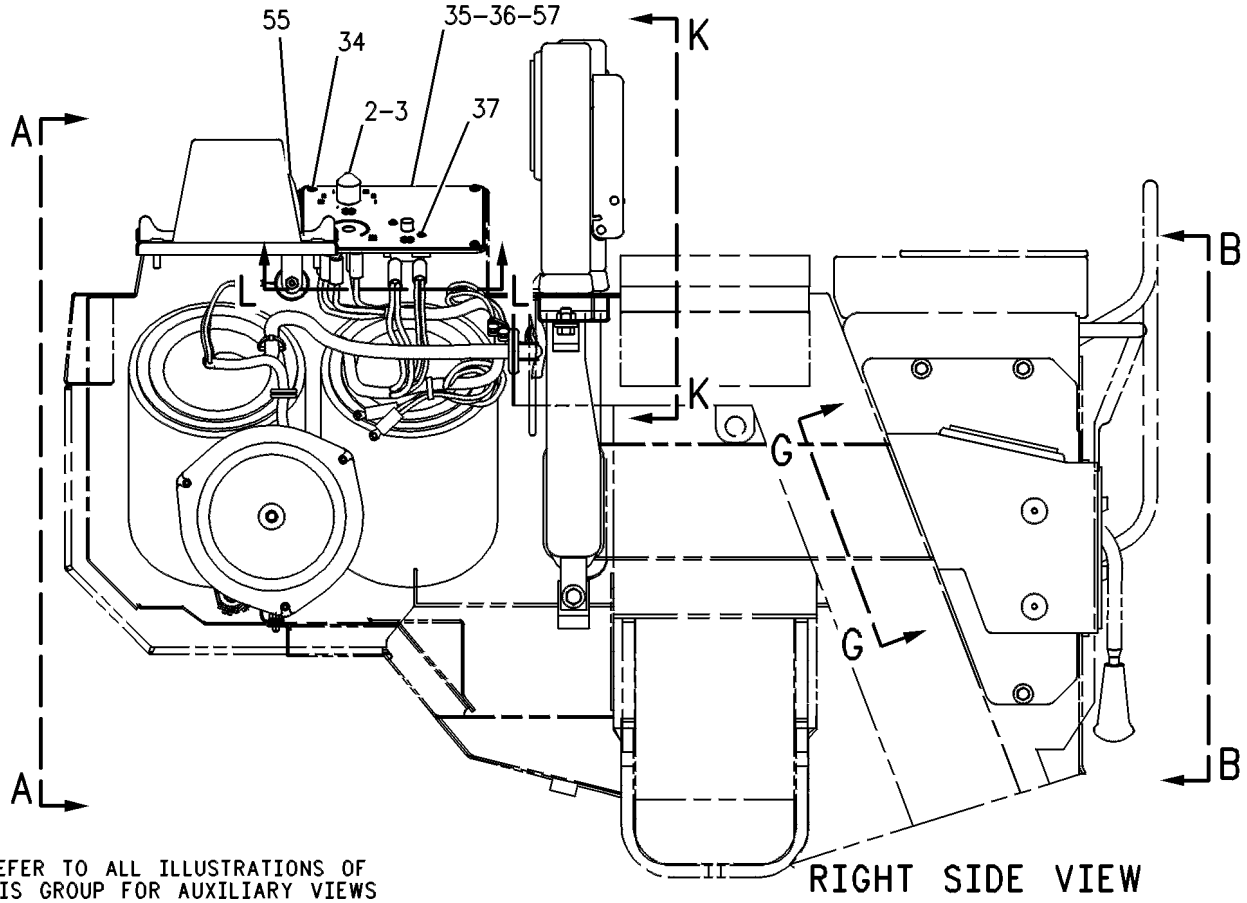

GRAPHIC #1 g00246620

8Y-9812 **PRESSURIZER GP-CAB (**contd.**)** **i01400792**

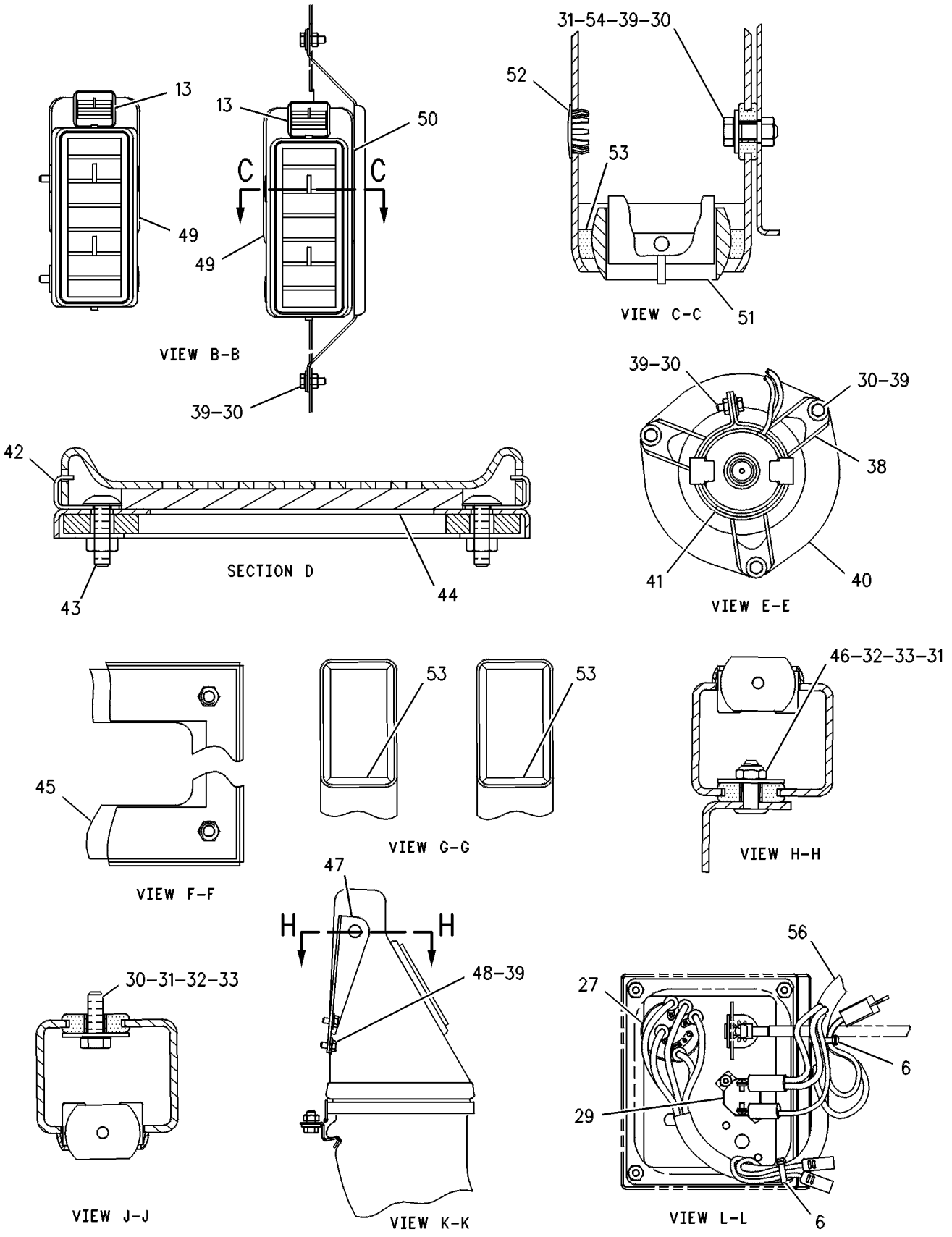

GRAPHIC #2 <END> g00246621

8Y-9851 PRESSURIZER GP-CAB

S/N: 9BL1-UP

PART OF 8Y-9817 CONVERSION AR-NON-ROPS, 8Y-9636 ROPS AR-OPEN

AN ATTACHMENT

SMCS-7311 **i04025362**

NOTE	REF NO	GRAPHIC REF	PART NUMBER	QTY	PART NAME 1 2 3 4 5 6 (PRODUCT LEVEL)	SEE PAGE
	1	1	**2V-0099**	1	KNOB-CONTROL	
	2	1	**2P-4339**	1	NUT-JAM (7/16-28-THD)	
	3	1	**5P-9135**	1	GROMMET	
	4	1	**3S-2093**	1	STRAP-CABLE	
	5	1	**9G-1950**	1	RESISTOR	
	6	1	**8G-0241**	1	ROD	
	7	1	**3E-9865**	2	LOCKNUT (1/4-20-THD)	
	8	1	**6V-1668**	2	WASHER (6.5X29.1X3-MM THK)	
	9	1	**8G-0901**	2	INSULATOR	
	10	1	**5P-8438**	1	GROMMET	
	11	1	**2D-6235**	2	LOCKNUT (1/4-20-THD)	
	12	1	**3W-2060**	2	PLATE	
	13	1	**3W-2061**	2	COVER AS	
		1	**4B-5324**	2	WASHER (3.9X9.6X1.2-MM THK)	
		1	**034-7044**	2	RIVET	
B	14	1	**5P-9205**		SEAL	
	15	1	**5M-3062**	2	BOLT (3/8-16X0.75-IN)	
	16	1	**5P-1075**	2	WASHER-HARD (10.2X22.5X3-MM THK)	
	17	1	**9G-9503**	1	BLOWER AS	
		1	**3B-9191**	1	SETSCREW-SOCKET	
	18	1	**174-1505**	1	MOTOR AS-BLOWER (24-VOLT, A/C, HEATER) (COUNTERCLOCKWISE, LEAD END)	
		1	**155-2261**	1	WEDGE-PLUG LOCK (2-PIN)	
		1	**155-2270**	1	KIT-CONNECTING PLUG (2-PIN)	
					(INCLUDES PLUG AS & WEDGE)	
		1	**9W-0844**	2	SOCKET-CONNECTOR (14-GA TO 16-GA)	
	19	1	**8J-1256**	2	CLIP	
	20	1	**174-1504**	1	MOTOR AS-BLOWER (24-VOLT, A/C, HEATER) (CLOCKWISE, LEAD END)	
		1	**102-8802**	1	KIT-RECEPTACLE (2-PIN)	
					(INCLUDES RECEPTACLE AS & WEDGE)	
		1	**3E-3365**	1	WEDGE-RECEPTACLE LOCK (2-PIN)	
		1	**9W-0852**	2	PIN-CONNECTOR (14-GA TO 16-GA)	
	21	1	**9G-9504**	1	BLOWER AS	
		1	**3B-9191**	1	SETSCREW-SOCKET	
	22	2	**3S-2093**	2	STRAP-CABLE	
	23	2	**2D-6235**	2	LOCKNUT (1/4-20-THD)	
	24	2	**3W-2060**	2	PLATE	
	25	2	**6P-3236**	1	SWITCH AS-ROTARY	
		2	**6V-8362**	5	SCREW-MACHINE (8-32X0.31-IN)	
		2	**6V-8369**	1	NUT (7/16-28-THD)	
		2	**9B-7233**	5	LOCKWASHER	
	26	2	**8Y-9799**	1	HARNESS AS	
		2	**102-8802**	1	KIT-RECEPTACLE (2-PIN)	
					(INCLUDES RECEPTACLE AS & WEDGE)	
		2	**9W-0852**	2	PIN-CONNECTOR (14-GA TO 16-GA)	
		2	**9W-0844**	2	SOCKET-CONNECTOR (14-GA TO 16-GA)	
		2	**3E-3362**	1	WEDGE-PLUG LOCK (2-PIN)	

8Y-9851 **PRESSURIZER GP-CAB (**contd.**)** **i04025362**

NOTE	REF NO	GRAPHIC REF	PART NUMBER	QTY	PART NAME 1 2 3 4 5 6 (PRODUCT LEVEL)	SEE PAGE
	27	2	**6N-8589**	1	CIRCUIT BREAKER AS (15-AMPERE)	
		2	**6V-8376**	2	SCREW-MACHINE (8-32X0.25-IN)	
		2	**9B-7233**	2	LOCKWASHER	
	28	2	**4M-5281**	15	BOLT (1/4-20X0.75-IN)	
	29	2	**8G-8284**	4	SPACER	
	30	2	**5P-8439**	4	GROMMET (CONDENSER)	
	31	2	**8T-9394**	4	BOLT-SOCKET HEAD (10-24X0.5-IN)	
	32	2	**8Y-9338**	1	PLATE	
	33	2	**100-7054**	1	FILM-HEATER	
	34	2	**9X-6016**	2	SCREW-HEX SOCKET (8-32X0.875-IN)	
	35	2	**8G-0894**	2	BRACKET AS	
	36	2	**5P-4115**	15	WASHER-HARD (7.2X19X2-MM THK)	
	37	2	**9G-9502**	2	ORIFICE	
B	38	2	**5P-5908**		SEAL	
	39	2	**3W-2056**	1	COVER AS	
B	40	2	**5P-5942**		SEAL	
	41	2	**8G-8282**	2	HOUSING	
	42	2	**8G-8280**	1	COVER AS	
		2	**9F-6445**	2	NUT-WELD (1/4-20-THD)	
	43	2	**8G-8283**	2	LOUVER	
	44	2	**5K-3546**	4	PLUG-BUTTON	
B	45	2	**6V-7326**		SEAL	
	46	2	**7P-4749**	2	LOUVER AS	
	47	2	**8Y-9610**	1	COVER AS	
		2	**3W-3165**	12	SPACER (10X18X6-MM THK)	
	48	2	**8T-1572**	12	SCREW-HEX SOCKET (1/4-20X1-IN)	
	49	2	**3W-2058**	1	COVER AS	
	50	2	**6V-6886**	1	PLUG-BUTTON	
	51	2	**8Y-9822**	1	SEAL	

B - USE AS REQUIRED

8Y-9851 **PRESSURIZER GP-CAB** (contd.) **i04025362**

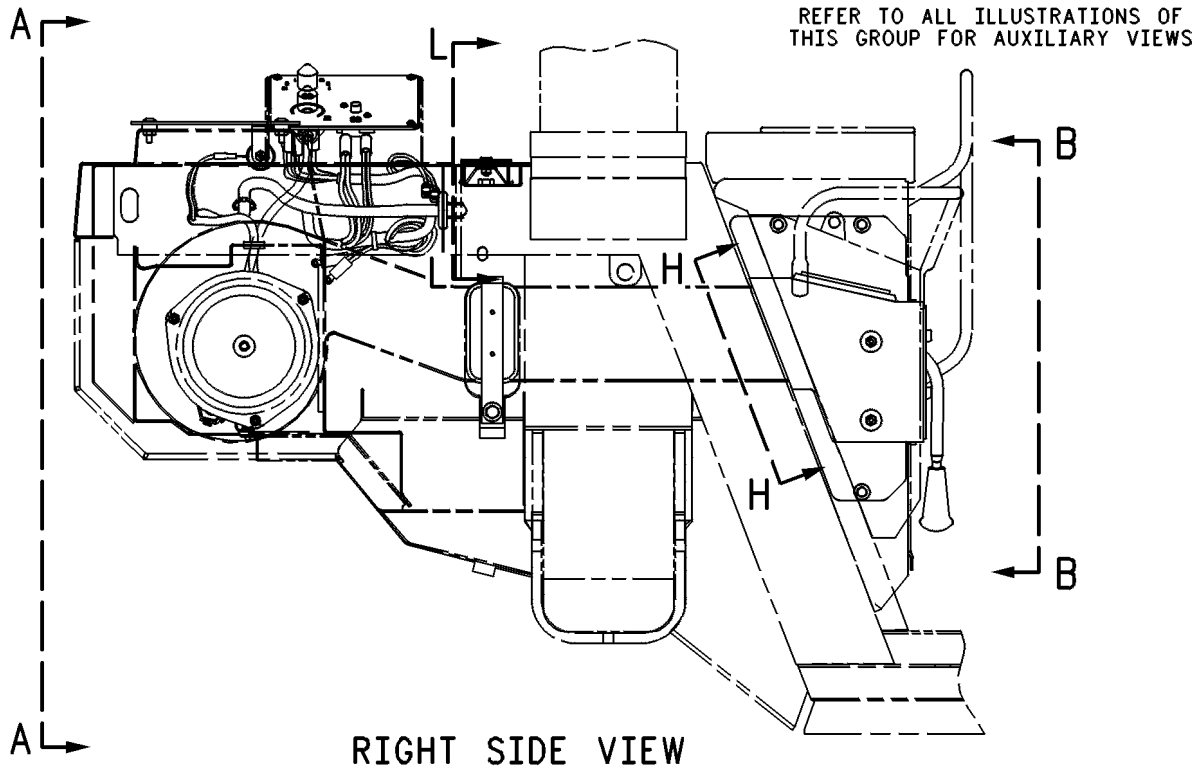

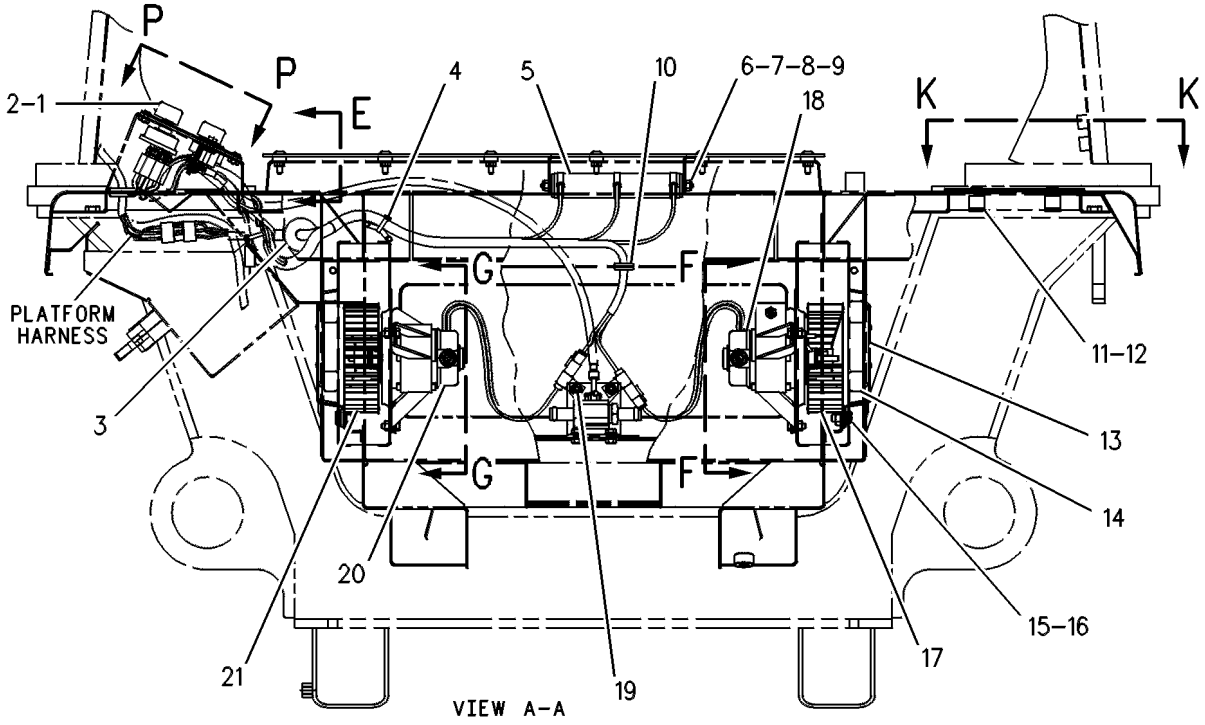

GRAPHIC #1 g00246947

8Y-9851 **PRESSURIZER GP-CAB (**contd.**)** **i04025362**

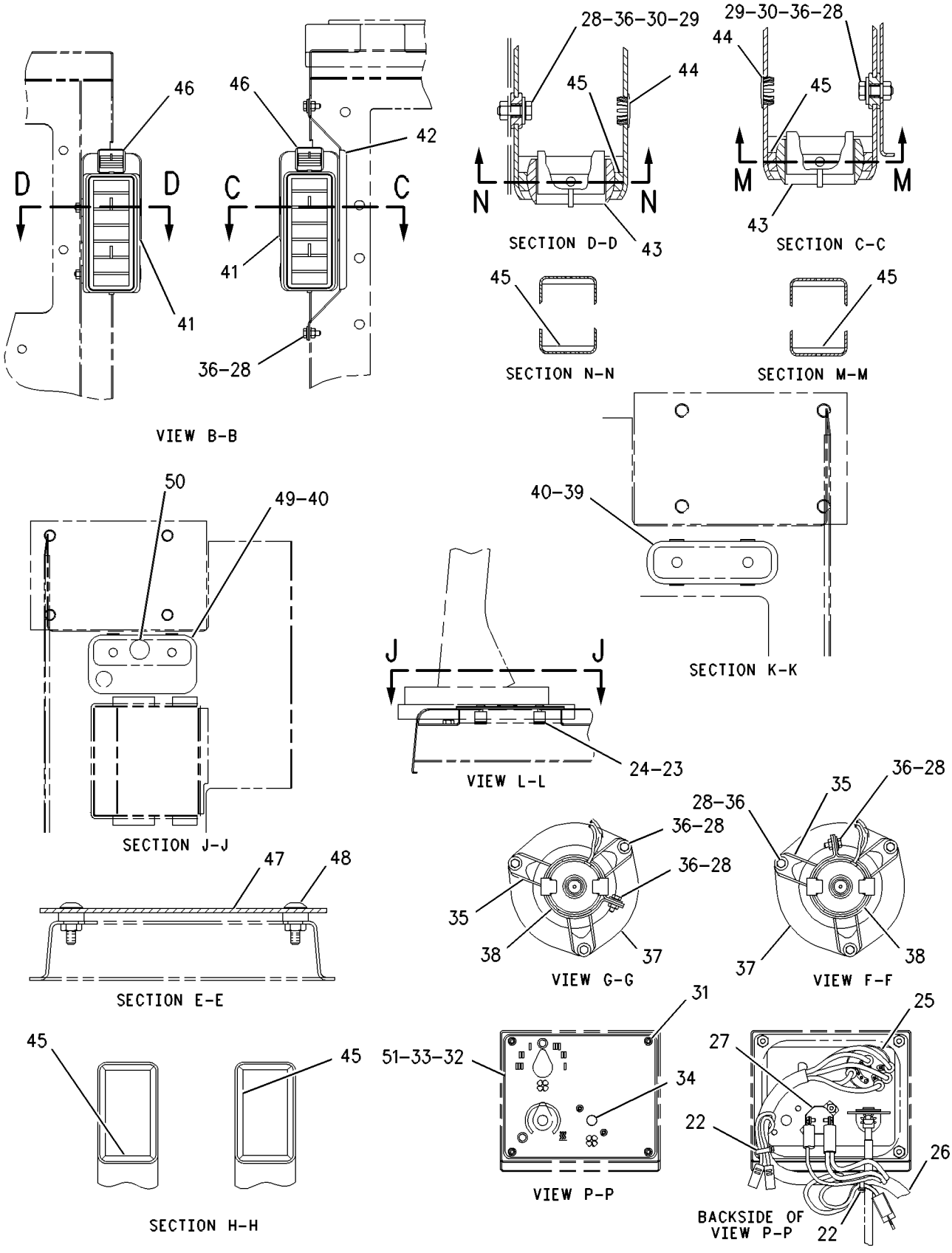

GRAPHIC #2 <END> g00470677

3E-6106 RADIO GP

S/N: 9BL1-UP
12 VOLT. CASSETTE, EUROPEAN VERSION
FIELD INSTALLATION

SMCS-7338 **i01400800**

NOTE	REF NO	GRAPHIC REF	PART NUMBER	QTY	PART NAME 1 2 3 4 5 6 (PRODUCT LEVEL)	SEE PAGE
	1	1	**102-8806**	1	KIT-RECEPTACLE (8-PIN)	
					(INCLUDES RECEPTACLE AS & WEDGE)	
	2	1	**8T-8729**	6	PIN-CONNECTOR (16-GA TO 18-GA)	
	3	1	**8T-8737**	2	PLUG-SEAL	
	4	1	**3E-3389**	1	WEDGE-RECEPTACLE LOCK (8-PIN)	
					AVAILABLE REPAIR KIT(S):	
			3E-7755	1	KIT-KNOB	

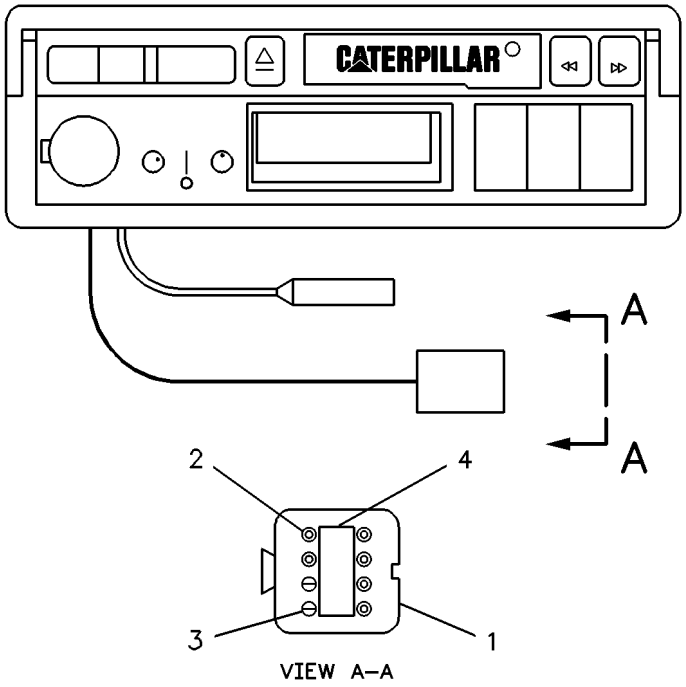

GRAPHIC #1 <END> g00224126

3E-7141 RADIO GP

S/N: 9BL1-UP

12 VOLT

FIELD INSTALLATION

SMCS-7338 **i01402998**

NOTE	REF NO	GRAPHIC REF	PART NUMBER	QTY	PART NAME 1 2 3 4 5 6 (PRODUCT LEVEL)	SEE PAGE
	1	1	**102-8806**	1	KIT-RECEPTACLE (8-PIN)	
					(INCLUDES RECEPTACLE AS & WEDGE)	
		1	**3E-3389**	1	WEDGE-RECEPTACLE LOCK (8-PIN)	
		1	**8T-8729**	6	PIN-CONNECTOR (16-GA TO 18-GA)	
		1	**8T-8737**	2	PLUG-SEAL	
					AVAILABLE REPAIR KIT(S):	
			3E-7755	1	KIT-KNOB	

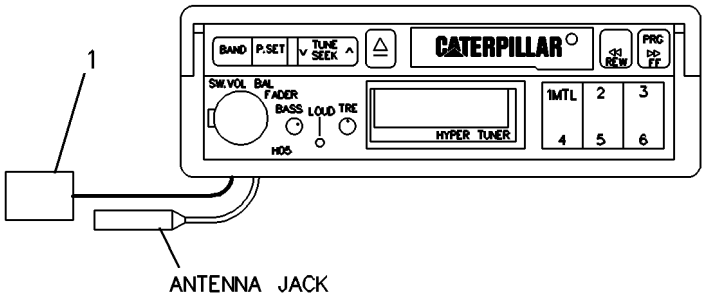

GRAPHIC #1 <END> g00227275

9X-5288 RADIO GP

S/N: 9BL1-UP
24 VOLT. CASSETTE, EUROPEAN VERSION
FIELD INSTALLATION

SMCS-7338 **i01400811**

NOTE	REF NO	GRAPHIC REF	PART NUMBER	QTY	PART NAME 1 2 3 4 5 6 (PRODUCT LEVEL)	SEE PAGE
	1	1	**102-8806**	1	KIT-RECEPTACLE (8-PIN)	
					(INCLUDES RECEPTACLE AS & WEDGE)	
	2	1	**8T-8729**	6	PIN-CONNECTOR (16-GA TO 18-GA)	
	3	1	**8T-8737**	2	PLUG-SEAL	
	4	1	**3E-3389**	1	WEDGE-RECEPTACLE LOCK (8-PIN)	
					AVAILABLE REPAIR KIT(S):	
			3E-7755	1	KIT-KNOB	

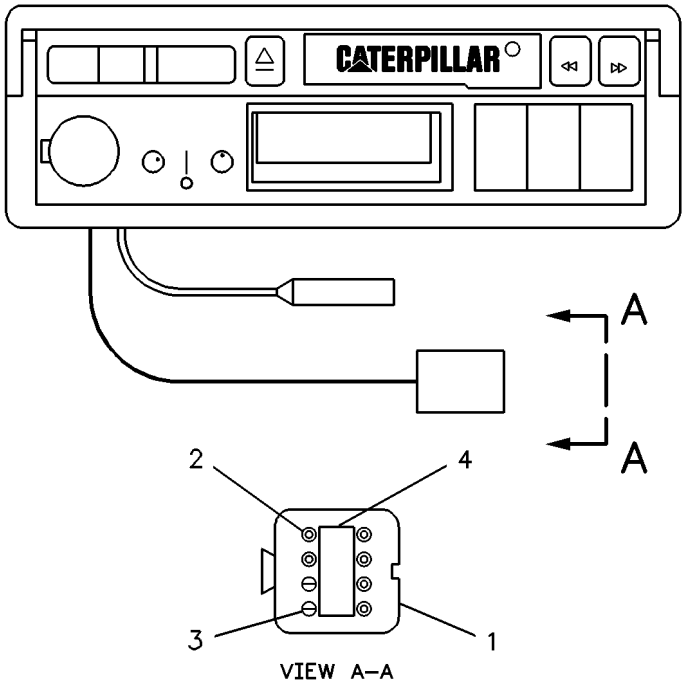

GRAPHIC #1 <END> g00224126

9X-6778 RADIO GP

S/N: 9BL1-UP
24 VOLT
FIELD INSTALLATION

SMCS-7338 **i01400823**

NOTE	REF NO	GRAPHIC REF	PART NUMBER	QTY	PART NAME 1 2 3 4 5 6 (PRODUCT LEVEL)	SEE PAGE
	1	1	**102-8806**	1	KIT-RECEPTACLE (8-PIN)	
					(INCLUDES RECEPTACLE AS & WEDGE)	
	2	1	**8T-8729**	6	PIN-CONNECTOR (16-GA TO 18-GA)	
	3	1	**8T-8737**	2	PLUG-SEAL	
	4	1	**3E-3389**	1	WEDGE-RECEPTACLE LOCK (8-PIN)	
					AVAILABLE REPAIR KIT(S):	
			3E-7755	1	KIT-KNOB	

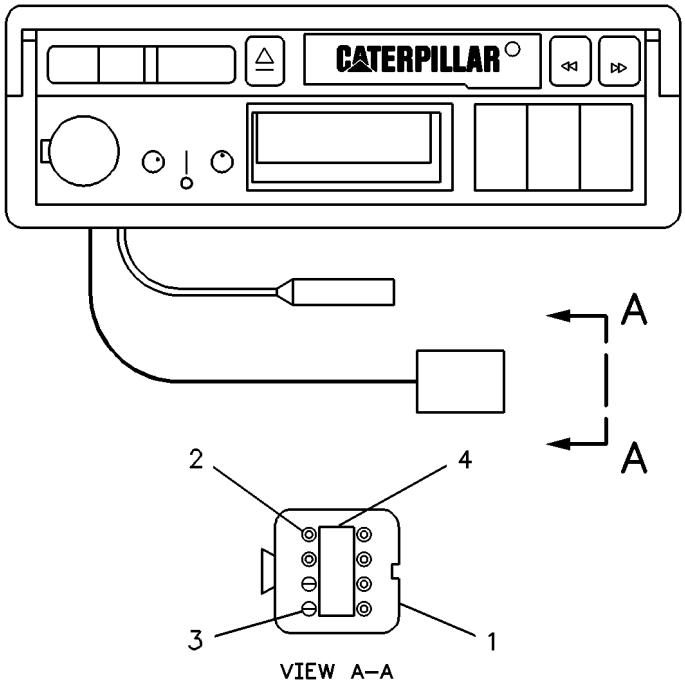

GRAPHIC #1 <END> g00224126

8Y-9635 ROPS AR-OPEN

S/N: 9BL1-UP
AN ATTACHMENT

SMCS-7323 **i00768235**

NOTE	PART NUMBER	QTY	PART NAME 1 2 3 4 5 6 (PRODUCT LEVEL)	SEE PAGE
Y	*8Y-9636*	1	ROPS AR-OPEN	770
Y	**8Y-6179**	1	SEAT GP-SUSPENSION	791
Y	*8Y-9591*	1	VANDALISM AR-OPEN ROPS	798

Y - SEPARATE ILLUSTRATION

<END>

8Y-9636 ROPS AR-OPEN

S/N: 9BL1-UP
PART OF 8Y-9635 ROPS AR-OPEN
AN ATTACHMENT

SMCS-7323 **i01400833**

NOTE	PART NUMBER	QTY	PART NAME 1 2 3 4 5 6 (PRODUCT LEVEL)	SEE PAGE
Y	*8Y-9493*	1	GUARD GP-LINES	459
Y	*8Y-9827*	1	HEATER GP-CAB (OPEN ROPS)	735
Y	*8Y-9851*	1	PRESSURIZER GP-CAB	762
Y	*8Y-9637*	1	ROPS GP-OPEN	778
	4L-6454	4	BOLT (3/8-16X1-IN)	
	7X-0326	4	BOLT (1/2-13X3-IN)	
	7P-8473	1	GUARD AS	
			S/N: 9BL1-1487	
	125-9404	1	GUARD AS	
			S/N: 9BL1488-UP	
	102-8804	1	KIT-RECEPTACLE (4-PIN)	
			(INCLUDES RECEPTACLE AS & WEDGE)	
	8T-8737	4	PLUG-SEAL	
	8G-0499	2	STEP AS	
	5P-1075	4	WASHER-HARD (10.2X22.5X3-MM THK)	

Y - SEPARATE ILLUSTRATION

<END>

119-5869 ROPS GP-ENCLOSED

S/N: 9BL1-UP
PART OF 119-5868 MODIFICATION AR
AN ATTACHMENT

SMCS-7301 **i00768158**

NOTE	PART NUMBER	QTY	PART NAME 1 2 3 4 5 6 (PRODUCT LEVEL)	SEE PAGE
	8T-8908	2	BOLT (1/4-20X1-IN)	
	3A-8798	1	BRACKET	
	3A-8690	1	HOLDER	
Y	*8Y-9506*	1	INSTALLATION GP-RADIO	742
	2D-6235	2	LOCKNUT (1/4-20-THD)	
Y	*8Y-9455*	1	ROPS GP-ENCLOSED	772
	3A-8717	1	VISOR	
	8T-4205	4	WASHER-HARD (7.2X14.5X2-MM THK)	

Y - SEPARATE ILLUSTRATION

<END>

8Y-9455 ROPS GP-ENCLOSED

S/N: 9BL1-UP

PART OF 8Y-9371 CAB AR, 119-5869 ROPS GP-ENCLOSED

ALSO AN ATTACHMENT

SMCS-7301 **i01400872**

NOTE	REF NO	GRAPHIC REF	PART NUMBER	QTY	PART NAME 1 2 3 4 5 6 (PRODUCT LEVEL)	SEE PAGE
	1	1	**8Y-9620**	1	ROPS AS-ENCLOSED	
		1	**8G-0401**	2	HANDRAIL	
		1	**3P-3604**	1	STUD-WELD (1/4-20X0.62-IN)	
		1	**4F-9101**	2	LUG (1/4-20-THD)	
		1	**7T-1099**	7	LINK	
		1	**8F-9836**	2	BOSS (3/8-16-THD)	
Y	2	1	*8G-0478*	1	DOOR GP-CAB	723
Y	3	1	*8G-0479*	1	DOOR GP-CAB	725
	4	1	**8Y-5400**	1	CLIP	
D	5	1	**5P-5768**		SEAL (3.9M)	
	6	1	**3A-8354**	8	PLUG	
	7	1	**2M-5795**	2	PIN-CLEVIS	
	8	1	**3B-4607**	2	PIN-COTTER	
	9	1	**8G-0363**	4	PLATE	
	10	1	**3A-7839**	4	SEAL	
	11	1	**9M-3835**	2	LATCH-RUBBER	
M	12	1	**8Y-9208**	4	SCREW-SELF-TAPPING (M6X1X12-MM)	
	13	1	**126-2433**	1	WINDOW-REAR	
	14	1	**6V-5158**	2	STRIKER AS-BODY	
	15	1	**4J-3915**	4	SHIM (1.52-MM THK)	
	16	1	**5P-1075**	14	WASHER-HARD (10.2X22.5X3-MM THK)	
	17	1	**035-2017**	18	SCREW-BUTTON HEAD (3/8-16X1-IN)	
	18	1	**6V-7689**	2	SHIELD-STRIKER	
	19	1	**5P-1005**	3	PLUG-SEAL	
	20	1	**9D-3767**	1	PLUG-BUTTON	
	21	1	**3Y-6047**	1	PLUG-BUTTON	
	22	1	**8Y-4615**	1	BLADE AS-WIPER (400-MM)	
	23	1	**8T-1118**	2	NOZZLE AS-WASHER	
	24	1	**8L-8413**	4	STRAP-CABLE (WHITE)	
	25	1	**8T-0789**	3	CLIP-HOSE	
D	26	1	**5P-5992**		HOSE (4.6M)	
	27	2	**8Y-9202**	1	COVER	
M	28	2	**7X-2533**	1	BOLT (M6X1X35-MM)	
	29	2	**4D-3365**	2	WASHER (6.76X12.7X0.8-MM THK)	
M	30	2	**5C-9553**	2	BOLT (M6X1X16-MM)	
Y	31	2	**9X-5601**	1	MOTOR GP-WINDOW WIPER	745
	32	2	**8Y-9162**	1	WASHER (16X28X3-MM THK)	
	33	2	**9S-1319**	1	WASHER (16.7X28.6X2.5-MM THK)	
	34	2	**8Y-9196**	1	PLATE AS	
D	35	2	**5P-9205**		SEAL (.7M)	
	36	2	**8Y-9198**	1	WASHER (21X40X2-MM THK)	
	37	2	**8Y-9199**	1	WASHER (5X28X3-MM THK)	
	38	2	**5N-1811**	1	WASHER (7X28X2.5-MM THK)	
	39	2	**8Y-9201**	1	PLUG	
	40	2	**8Y-9200**	1	WASHER (7X30X11-MM THK)	
	41	2	**8Y-9203**	1	SEAL	

8Y-9455 **ROPS GP-ENCLOSED** (contd.) **i01400872**

NOTE	REF NO	GRAPHIC REF	PART NUMBER	QTY	PART NAME 1 2 3 4 5 6 (PRODUCT LEVEL)	SEE PAGE
	42	2	**3T-3045**	1	CLIP AS	
	43	2	**6V-8100**	1	ARM AS-WIPER	
	44	2	**5P-8524**	7	GROMMET	
D	45	2	**5P-5992**		HOSE (2.3M)	
	46	2	**8T-3680**	1	ARM AS-WIPER	
	47	2	**5C-8813**	1	BLADE AS-WIPER (600-MM)	
	48	2	**8G-0480**	1	SEAL	
	49	2	**7P-3299**	1	WINDOW	
	50	2	**8G-8479**	3	CLIP	
	51	2	**8Y-9204**	2	CLIP	
Y	52	2	**3T-7065**	1	WIPER GP-WINDOW	799
Y	53	2	*6V-6561*	1	WIPER PIVOT GP	802
	54	2	**2D-7563**	1	BOLT (1/4-28X1.75-IN)	
	55	2	**1H-3244**	1	LOCKWASHER	
	56	2	**8H-5305**	1	WASHER (0.266X0.5X0.105-IN THK)	
	57	3	**8Y-9205**	2	WINDOW	
D	58	3	**5P-5768**		SEAL (4.8M)	
	59	3	**8M-6701**	1	WASHER (0.281X0.5X0.032-IN THK)	
	60	3	**1H-3337**	1	BOLT (1/4-20X0.875-IN)	
	61	3	**6V-8928**	1	HOOK-COAT	
	62	3	**5P-8524**	2	GROMMET	
	63	3	**6V-7646**	4	WASHER-HARD (7.2X25X2-MM THK)	
	64	3	**8T-0797**	4	LOCKNUT	
	65	3	**2D-9535**	4	GROMMET	
	66	3	**8Y-9087**	1	PLATE	
M	67	3	**9X-2045**	6	SCREW-TRUSS HEAD (M6X1X20-MM)	
	68	3	**8Y-9503**	1	BRACKET AS	
M		3	**6V-9632**	2	NUT-WELD (M6X1-THD)	
	69	3	**9R-2860**	2	SPACER (11X16.5X11-MM THK)	
	70	3	**8T-4222**	6	WASHER-PLATED (11X32X2.5-MM THK)	
M	71	3	**7Y-7394**	6	SCREW-BUTTON HEAD (M8X1.25X25-MM)	
	72	3	**8Y-9017**	1	COVER-ROPS	
	73	3	**8Y-9015**	1	LINER-CAB	
	74	3	**8Y-6497**	1	PLATE	
	75	3	**8Y-9340**	1	FILM-IDENTIFICATION	
	76	3	**8Y-9016**	1	COVER-ROPS	
	77	3	**7X-0620**	3	WASHER-HARD (5.5X13X1.6-MM THK)	
M	78	3	**8T-0326**	3	BOLT (M5X0.8X25-MM)	
Y	79	3	**3E-6389**	1	LAMP GP-DOME (24-VOLT)	281
	80	3	**8Y-9062**	1	BRACKET	
	81	3	**8Y-9061**	1	BRACKET	
	82	3	**3P-9900**	2	WASHER (10.5X30X3-MM THK)	
	83	3	**4L-6454**	2	BOLT (3/8-16X1-IN)	
	84	3	**1D-4717**	2	NUT (3/8-16-THD)	
	85	3	**5P-1075**	6	WASHER-HARD (10.2X22.5X3-MM THK)	
	86	3	**5G-4313**	4	SPACER (10.34X15.88X12-MM THK)	
	87	3	**4L-9337**	4	BOLT (3/8-16X1.5-IN)	
	88	3	**5P-6875**	1	MIRROR (2-POINT MOUNT)	
	89	3	**3V-4694**	1	PLUG-BUTTON	
	90	3	**3K-8781**	3	FUSE (7.5-AMPERE)	
	91	3	**4K-5122**	3	HOLDER AS-FUSE	

8Y-9455 **ROPS GP-ENCLOSED (**contd.**)** **i01400872**

NOTE	REF NO	GRAPHIC REF	PART NUMBER	QTY	PART NAME 1 2 3 4 5 6 (PRODUCT LEVEL)	SEE PAGE
	92	3	**8L-8413**	7	STRAP-CABLE (WHITE)	
	93	3	**8Y-9798**	1	HARNESS AS-CAB	
	94	3	**3T-6655**	2	SWITCH AS-ROTARY (WIPER, WASHER)	
					(EACH INCLUDES)	
		3	**7T-9302**	1	KNOB AS-WIPER SWITCH (WASHER)	
		3	**2H-3920**	1	LOCKWASHER	
		3	**6V-8369**	1	NUT (7/16-28-THD)	

D - ORDER BY THE METER
M - METRIC PART
Y - SEPARATE ILLUSTRATION

8Y-9455 **ROPS GP-ENCLOSED** (contd.) **i01400872**

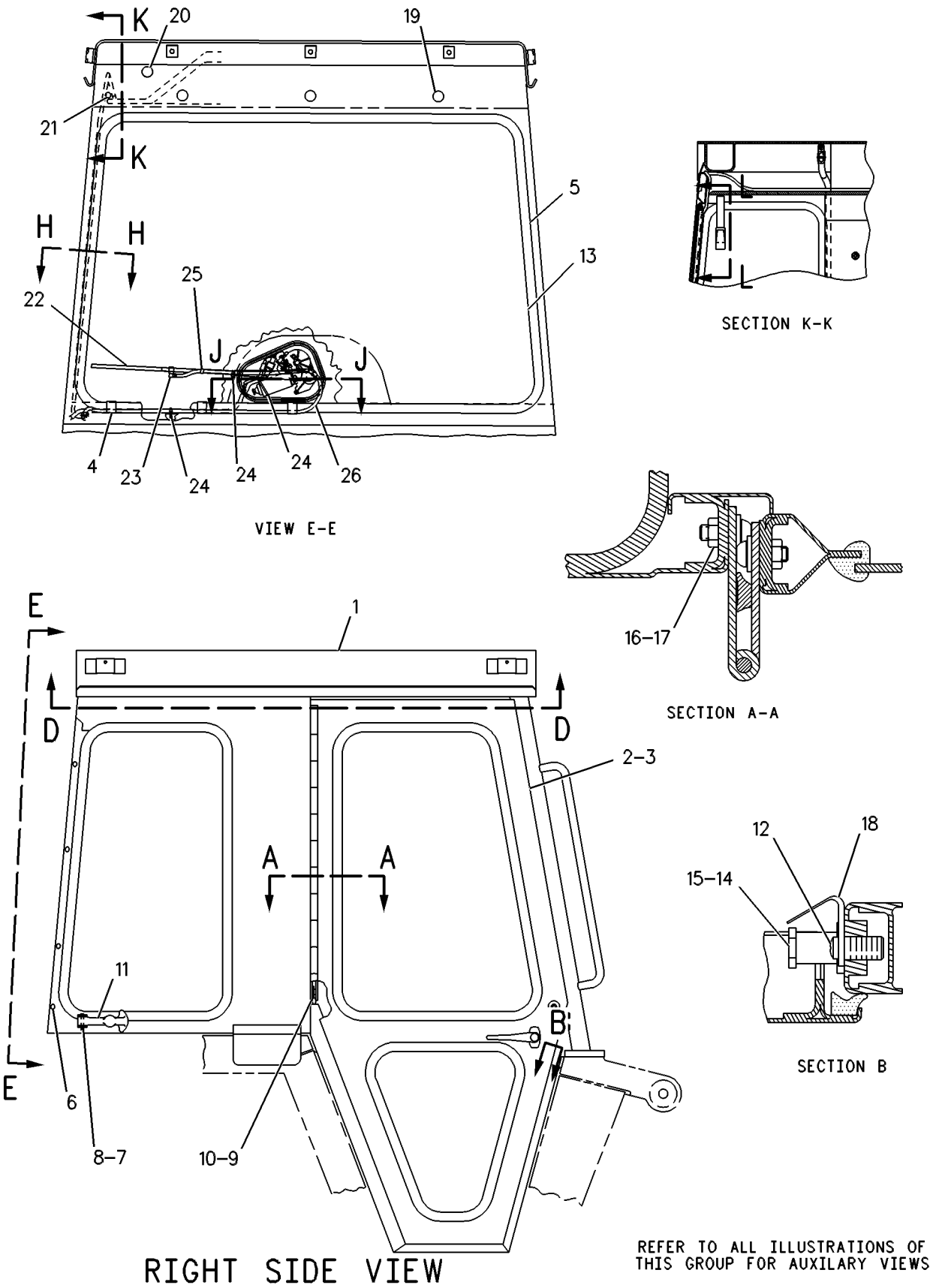

GRAPHIC #1 g00426111

8Y-9455 **ROPS GP-ENCLOSED** (contd.) **i01400872**

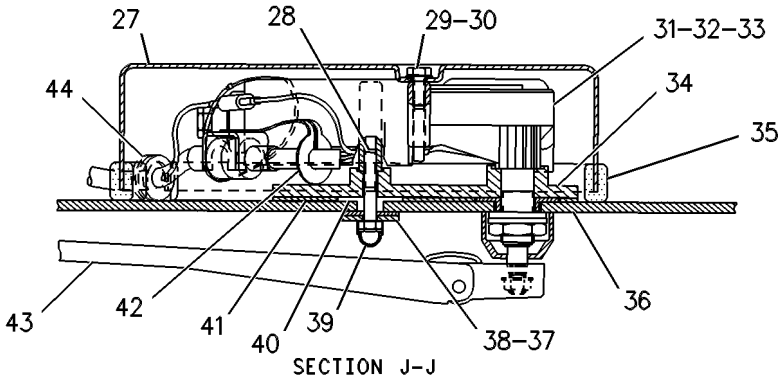

SECTION J-J

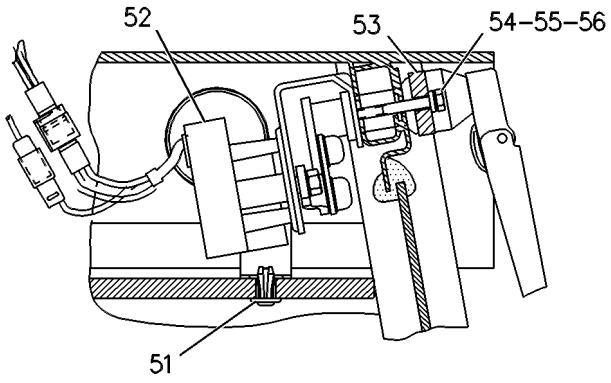

SECTION F-F

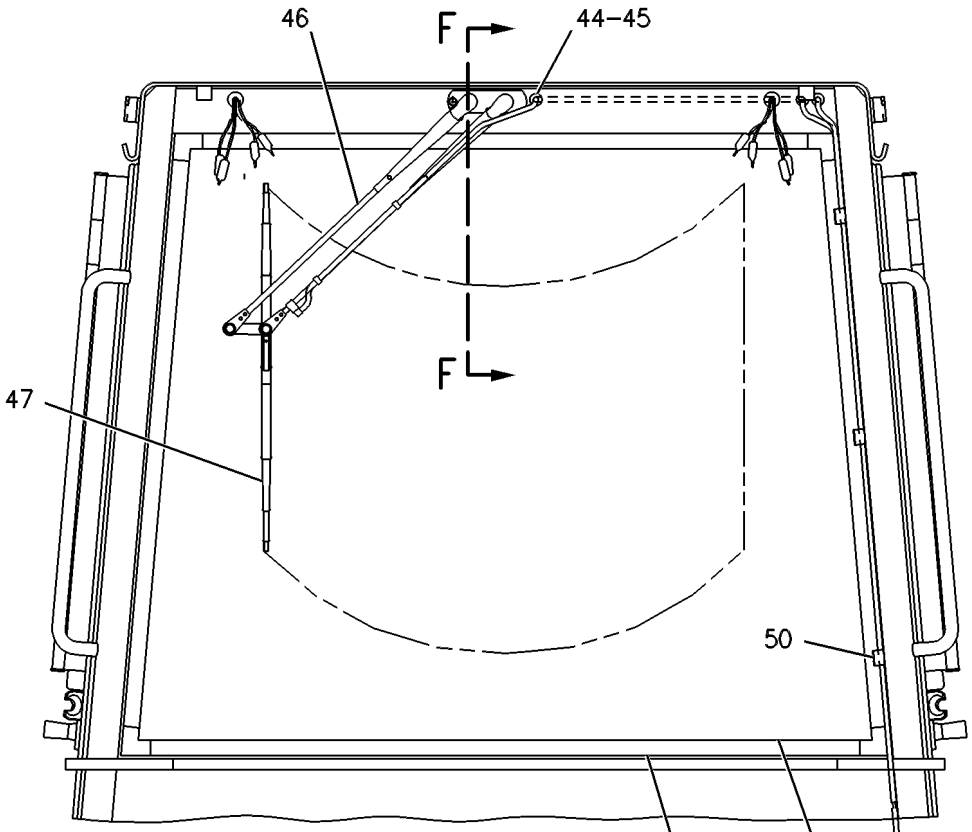

FRONT VIEW

REFER TO ALL ILLUSTRATIONS OF THIS GROUP FOR AUXILARY VIEWS

GRAPHIC #2 g00426112

8Y-9455 **ROPS GP-ENCLOSED** (contd.) **i01400872**

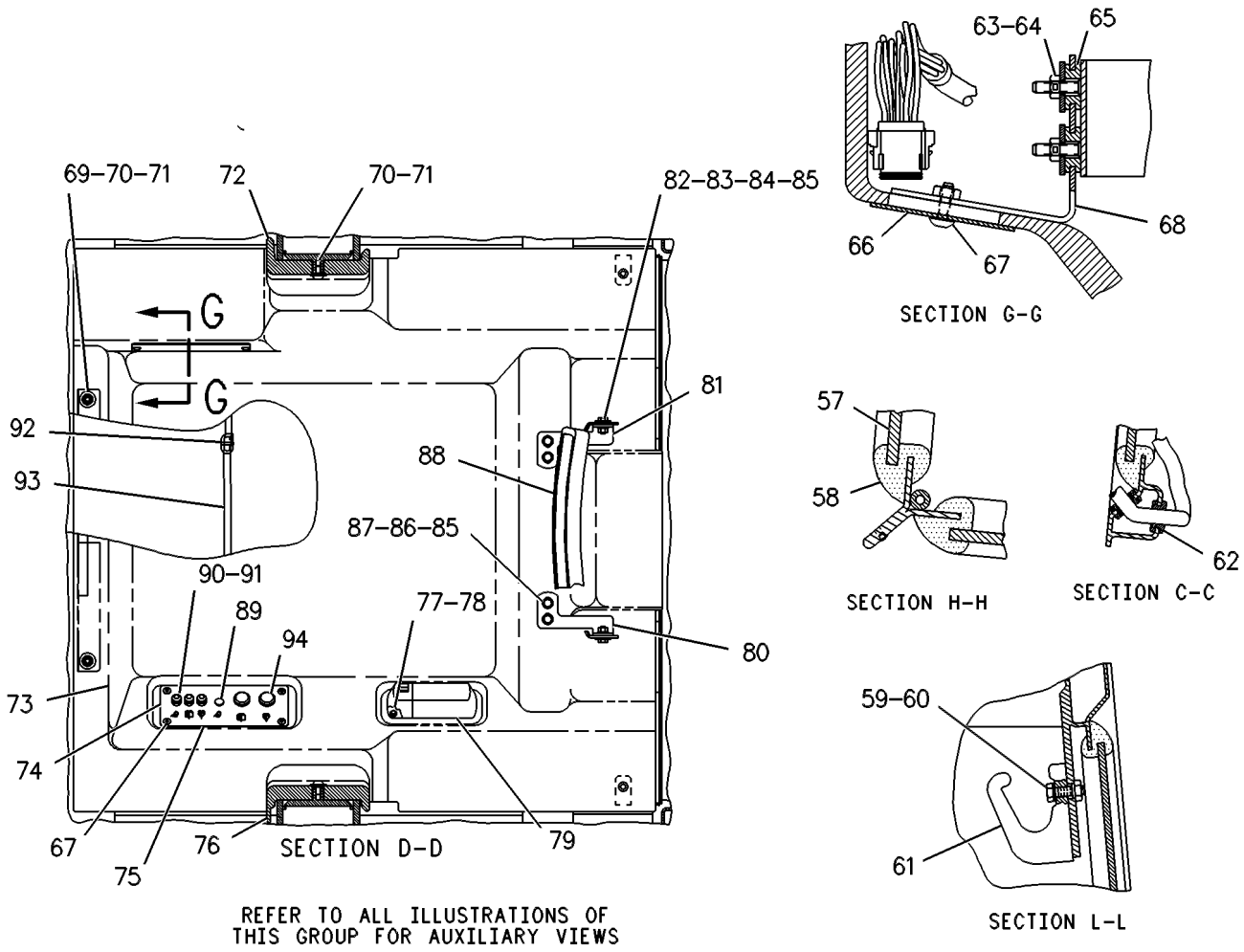

GRAPHIC #3 <END> g00426113

8Y-9637 ROPS GP-OPEN

S/N: 9BL1-UP
PART OF 8Y-9636 ROPS AR-OPEN
AN ATTACHMENT

SMCS-7323 **i01400876**

NOTE	REF NO	GRAPHIC REF	PART NUMBER	QTY	PART NAME 1 2 3 4 5 6 (PRODUCT LEVEL)	SEE PAGE
	1	1	**8Y-9619**	1	CANOPY AS	
		1	**9F-2978**	4	NUT-WELD (3/8-16-THD)	
		1	**4D-9376**	1	BOSS (3/8-16-THD)	
		1	**4F-9101**	3	LUG (1/4-20-THD)	
		1	**5F-7844**	1	BOSS (3/8-16-THD)	
	2	1	**5P-2566**	6	BOLT (1/2-13X1.5-IN)	
	3	1	**8T-4223**	6	WASHER-HARD (13.5X25.5X3-MM THK)	
	4	1	**7X-0383**	12	BOLT (7/8-9X2.75-IN)	
	5	1	**8C-6913**	12	WASHER-HARD (24X41.5X4-MM THK)	
	6	1	**7P-8650**	1	LINER-CAB	
	7	1	**8G-0767**	2	PLATE	
	8	1	**5M-3062**	4	BOLT (3/8-16X0.75-IN)	
	9	1	**5P-1075**	10	WASHER-HARD (10.2X22.5X3-MM THK)	
	10	1	**8Y-9062**	1	BRACKET	
	11	1	**3P-9900**	2	WASHER (10.5X30X3-MM THK)	
	12	1	**1D-4717**	2	NUT (3/8-16-THD)	
	13	1	**5P-6875**	1	MIRROR (2-POINT MOUNT)	
	14	1	**4L-6454**	6	BOLT (3/8-16X1-IN)	
	15	1	**8Y-9061**	1	BRACKET	

8Y-9637 **ROPS GP-OPEN (**contd.**)** **i01400876**

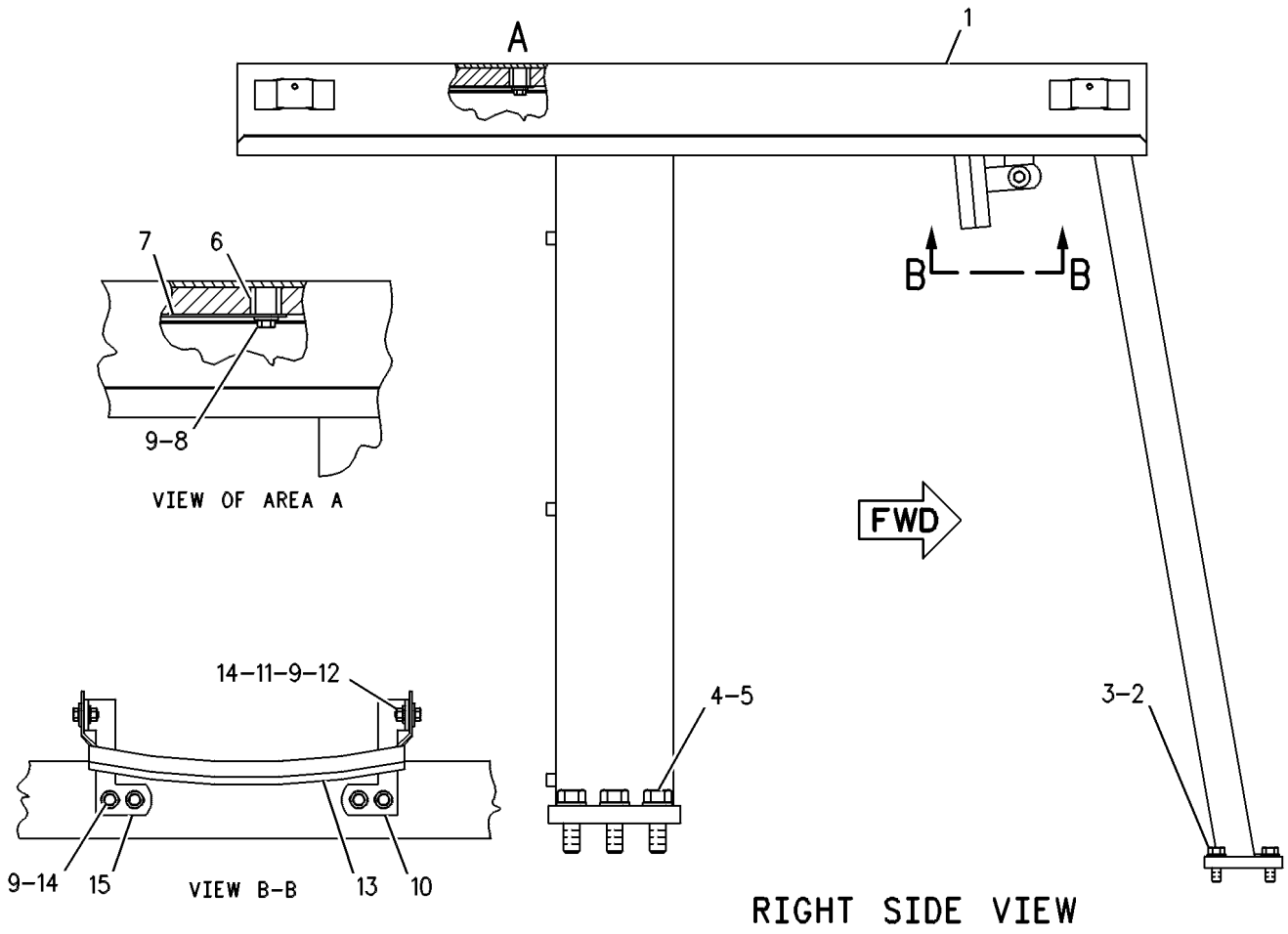

GRAPHIC #1 <END> g00246946

122-4617 SEAT BELT GP

S/N: 9BL1488-UP
FIELD REPLACEMENT ORDER 156-1148—PAGE: 781
PART OF 8Y-6138, 8Y-6179 SEAT GP-SUSPENSION
ALSO AN ATTACHMENT

SMCS-7327 **i01742026**

NOTE	REF NO	GRAPHIC REF	PART NUMBER	QTY	PART NAME 1 2 3 4 5 6 (PRODUCT LEVEL)	SEE PAGE
	1	1	**4D-6432**	1	LOCKNUT (7/16-20-THD)	
	2	1	**8T-5360**	1	WASHER (12X22.5X2.5-MM THK)	
	3	1	**8Y-5953**	1	BOLT (7/16-20X1.5-IN)	
	4	1	**1A-4350**	1	BOLT (7/16-20X1.75-IN)	

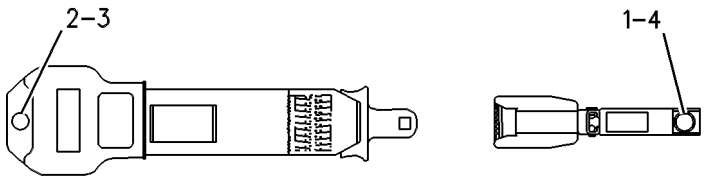

GRAPHIC #1 <END> g00086974

156-1148 SEAT BELT GP

S/N: 9BL1488-UP
FIELD REPLACEMENT FOR 122-4617—PAGE: 780
PART OF 8Y-6138, 8Y-6179 SEAT GP-SUSPENSION
ALSO AN ATTACHMENT

SMCS-7327 **i01742035**

NOTE	REF NO	GRAPHIC REF	PART NUMBER	QTY	PART NAME 1 2 3 4 5 6 (PRODUCT LEVEL)	SEE PAGE
	1	1	**1L-9080**	1	BOLT (7/16-20X1.5-IN)	
	2	1	**8T-5360**	1	WASHER (12X22.5X2.5-MM THK)	
	3	1	**1A-4350**	1	BOLT (7/16-20X1.75-IN)	
	4	1	**4D-6432**	1	LOCKNUT (7/16-20-THD)	

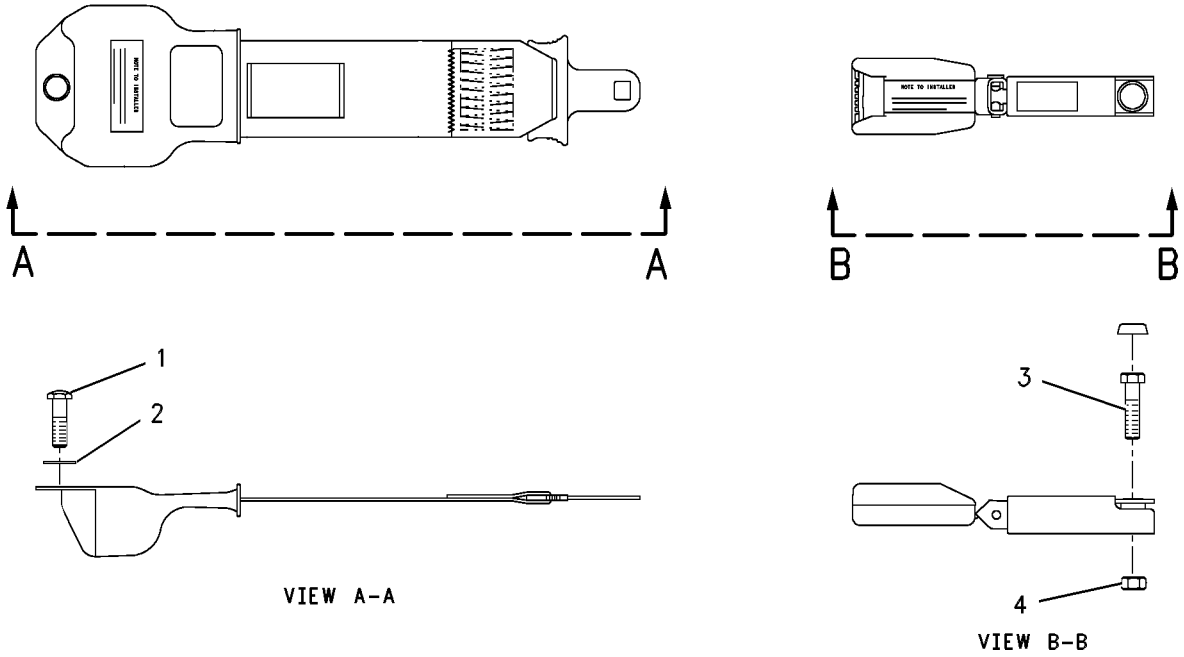

GRAPHIC #1 <END> g00495409

8Y-3792 SEAT BELT GP

S/N: 9BL1-UP
RETRACTABLE
PART OF 8Y-6138, 8Y-6179 SEAT GP-SUSPENSION
ALSO AN ATTACHMENT

SMCS-7327 **i01742005**

NOTE	REF NO	GRAPHIC REF	PART NUMBER	QTY	PART NAME 1 2 3 4 5 6 (PRODUCT LEVEL)	SEE PAGE
	1	1	**8S-0934**	1	LOCKNUT-FLANGE (7/16-20-THD)	
	2	1	**8T-5360**	1	WASHER (12X22.5X2.5-MM THK)	
	3	1	**8Y-5953**	2	BOLT (7/16-20X1.5-IN)	

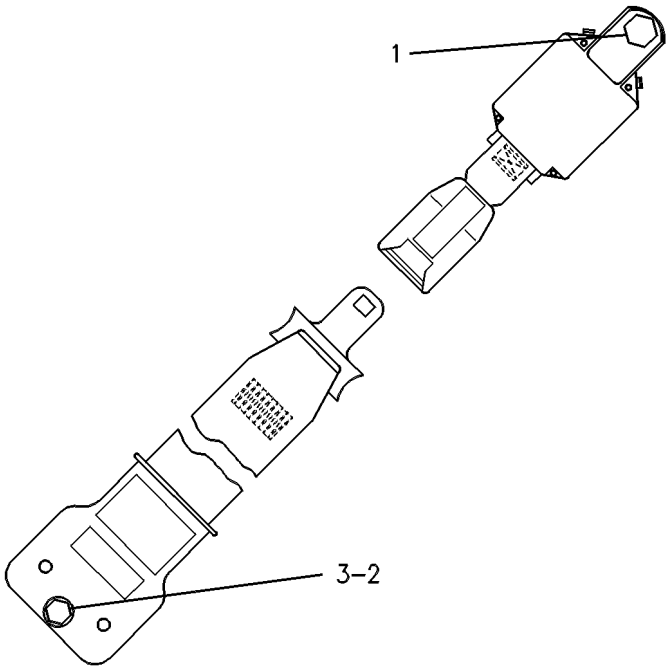

GRAPHIC #1 <END> g00084568

8Y-5976 SEAT GP–VINYL, LUMBAR

S/N: 9BL1-UP
PART OF 8Y-6179 SEAT GP-SUSPENSION
AN ATTACHMENT

SMCS-7312 **i02162138**

NOTE	REF NO	GRAPHIC REF	PART NUMBER	QTY	PART NAME 1 2 3 4 5 6 (PRODUCT LEVEL)	SEE PAGE
JN	1	1	**8Y-5947**	4	FASTENER	
Y	2	1	*8Y-5992*	1	PAN GP-SEAT	748
L	3	1	**113-0899**	10	SCREW-FLAT HEAD (6-20X0.5-IN)	
J	4	1	**9L-7469**	2	LOCK PIN	
	5	1	**7B-7525**	2	BOLT-SOCKET HEAD (7/16-14X1.25-IN)	
	6	1	**2K-4973**	6	LOCKNUT (3/8-16-THD)	
	7	1	**8Y-5929**	1	PLATE AS-SLIDE	
		1	**4K-9097**	6	NUT-WELD (5/16-18-THD)	
	8	1	**8Y-5930**	1	BAR AS	
	9	1	**8Y-5931**	1	BAR AS	
	10	1	**8S-7803**	2	RING-RETAINING	
	11	1	**8Y-5932**	1	LATCH AS	
	12	1	**8Y-5936**	1	SPRING	
	13	1	**095-0878**	1	PIN-SPRING	
	14	1	**8Y-5981**	2	BUSHING-BACKREST	
	15	1	**8Y-5928**	2	SPRING	
	16	1	**2B-2695**	4	BOLT (5/16-18X0.875-IN)	
	17	1	**8Y-5937**	1	BRACKET AS (RH)	
	18	1	**8Y-5938**	1	BRACKET AS (LH)	
	19	1	**7U-4898**	6	SCREW (3/8-16X0.75-IN)	
	20	1	**1C-0569**	2	BOLT (5/16-18X0.5-IN)	
	21	1	**8Y-5979**	1	PIN	
	22	1	**6V-2456**	2	RING-RETAINING	
	23	1	**8Y-6834**	1	SPRING (LH)	
	24	1	**8Y-6833**	1	SPRING (RH)	
CY	25	1	**108-8421**	1	PAN GP-BACKREST (LUMBAR)	747
B	26	1	**061-8803**	4	SHIM (1.52-MM THK)	
C	27	1	**108-8425**	1	CUSHION-BACK (VINYL)	
	28	1	**8Y-6051**	2	SPACER (11.19X14.21X14.24-MM THK)	
LZ	29	1		1	KNOB	
LZ	30	1		1	KNOB	
LZ	31	1		1	KNOB	
LZ	32	1		1	KNOB	
LZ	33	1		1	KNOB	
LZ	34	1		1	KNOB	
NZ	35	1		1	CUSHION AS	
JZ	36	1		1	PAN AS	
					AVAILABLE REPAIR KIT(S):	
			8Y-6933	1	KIT-TILT PAN (SEAT)	
					(INCLUDES PARTS MARKED J)	
			112-4577	1	KIT-SEAT KNOB (SUSPENSION)	
					(INCLUDES PARTS MARKED L)	
			8Y-5957	1	KIT-SEAT CUSHION (VINYL)	
					(INCLUDES PARTS MARKED N)	

8Y-5976 **SEAT GP** (contd.) **i02162138**

NOTE	REF NO	GRAPHIC REF	PART NUMBER	QTY	PART NAME 1 2 3 4 5 6 (PRODUCT LEVEL)	SEE PAGE

B - USE AS REQUIRED
C - CHANGE FROM PREVIOUS TYPE
J - INCLUDED IN 8Y-6933 TILT PAN KIT
L - INCLUDED IN 112-4577 SEAT KNOB KIT
N - INCLUDED IN 8Y-5957 SEAT CUSHION KIT
Y - SEPARATE ILLUSTRATION
Z - NOT SERVICED SEPARATELY

8Y-5976 **SEAT GP** (contd.) **i02162138**

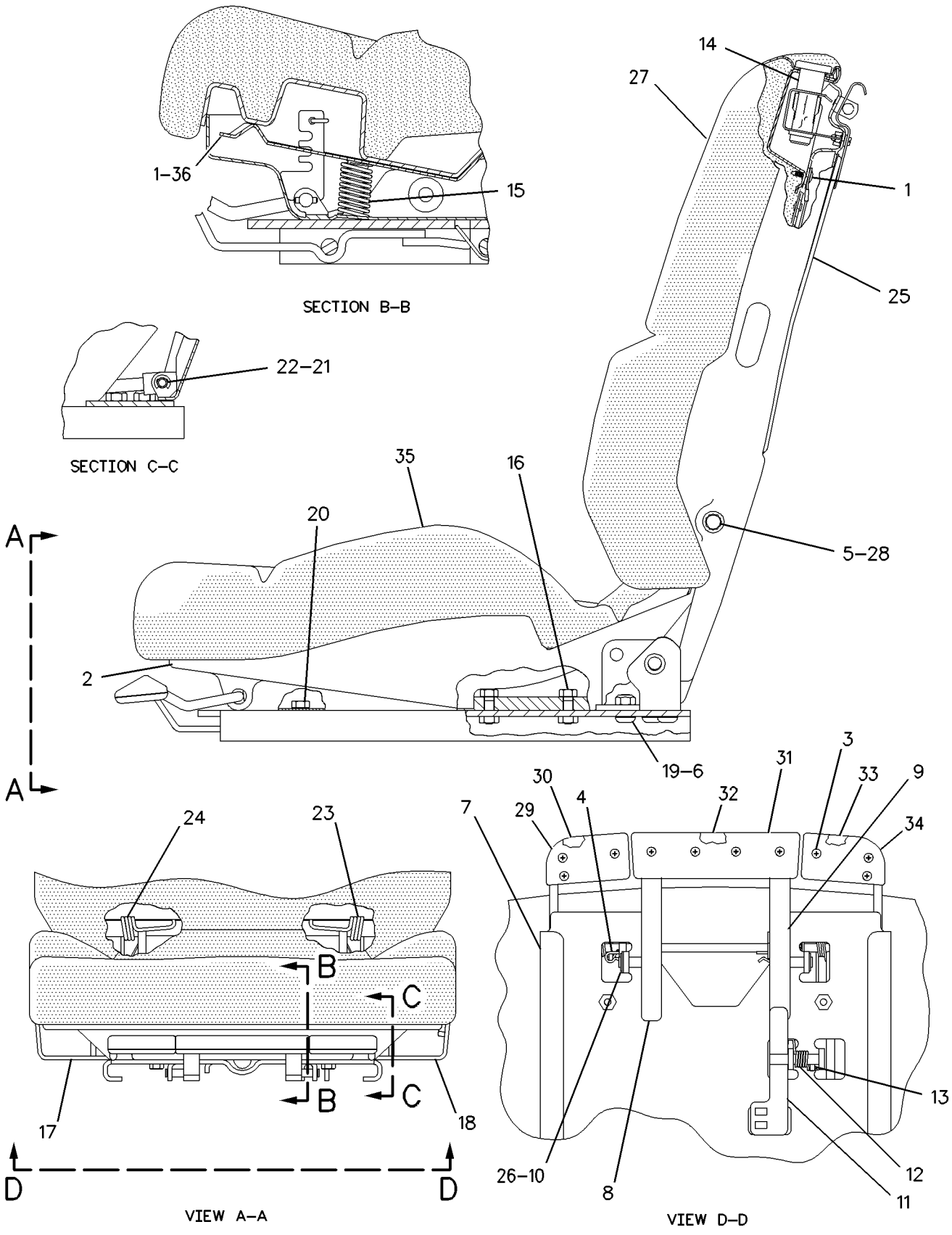

GRAPHIC #1 <END> g00709206

8Y-5986 SEAT GP—CLOTH, LUMBAR

S/N: 9BL1-UP

PART OF 8Y-6138 SEAT GP-SUSPENSION

SMCS-7312 **i02126730**

NOTE	REF NO	GRAPHIC REF	PART NUMBER	QTY	PART NAME 1 2 3 4 5 6 (PRODUCT LEVEL)	SEE PAGE
JN	1	1	**8Y-5947**	4	FASTENER	
Y	2	1	*8Y-5992*	1	PAN GP-SEAT	748
L	3	1	**113-0899**	10	SCREW-FLAT HEAD (6-20X0.5-IN)	
J	4	1	**9L-7469**	3	LOCK PIN	
	5	1	**7B-7525**	2	BOLT-SOCKET HEAD (7/16-14X1.25-IN)	
	6	1	**2K-4973**	6	LOCKNUT (3/8-16-THD)	
	7	1	**8Y-5929**	1	PLATE AS-SLIDE	
		1	**4K-9097**	6	NUT-WELD (5/16-18-THD)	
	8	1	**8Y-5930**	1	BAR AS	
	9	1	**8Y-5931**	1	BAR AS	
	10	1	**8S-7803**	2	RING-RETAINING	
	11	1	**8Y-5932**	1	LATCH AS	
	12	1	**8Y-5936**	1	SPRING	
	13	1	**095-0878**	1	PIN-SPRING	
	14	1	**8Y-5981**	2	BUSHING-BACKREST	
	15	1	**8Y-5928**	2	SPRING	
	16	1	**2B-2695**	4	BOLT (5/16-18X0.875-IN)	
	17	1	**8Y-5937**	1	BRACKET AS (RH)	
	18	1	**8Y-5938**	1	BRACKET AS (LH)	
	19	1	**7U-4898**	6	SCREW (3/8-16X0.75-IN)	
	20	1	**1C-0569**	2	BOLT (5/16-18X0.5-IN)	
	21	1	**095-1314**	1	PIN-CLEVIS	
	23	1	**8Y-6834**	1	SPRING (LH)	
	24	1	**8Y-6833**	1	SPRING (RH)	
CY	25	1	**108-8421**	1	PAN GP-BACKREST (LUMBAR)	747
B	26	1	**061-8803**	4	SHIM (1.52-MM THK)	
C	27	1	**108-8426**	1	CUSHION AS-BACK (CLOTH)	
	28	1	**8Y-6051**	2	SPACER (11.19X14.21X14.24-MM THK)	
LZ	29	1		1	KNOB-SEAT TILT	
LZ	30	1		1	KNOB-SEAT TILT	
LZ	31	1		1	KNOB-SLIDE	
LZ	32	1		1	KNOB-SLIDE	
LZ	33	1		1	KNOB-BACK TILT	
LZ	34	1		1	KNOB-BACK TILT	
NZ	35	1		1	CUSHION AS-SEAT	
JZ	36	1		1	PAN AS	
					AVAILABLE REPAIR KIT(S):	
J			**8Y-6933**	1	KIT-TILT PAN (SUSPENSION SEAT)	
L			**112-4577**	1	KIT-SEAT KNOB (SUSPENSION SEAT)	
N			**8Y-5891**	1	KIT-SEAT CUSHION (SUSPENSION SEAT)	

B - USE AS REQUIRED
C - CHANGE FROM PREVIOUS TYPE
J - KIT MARKED J SERVICES PART(S) MARKED J
L - KIT MARKED L SERVICES PART(S) MARKED L
N - KIT MARKED N SERVICES PART(S) MARKED N
Y - SEPARATE ILLUSTRATION
Z - NOT SERVICED SEPARATELY

8Y-5986 **SEAT GP** (contd.) **i02126730**

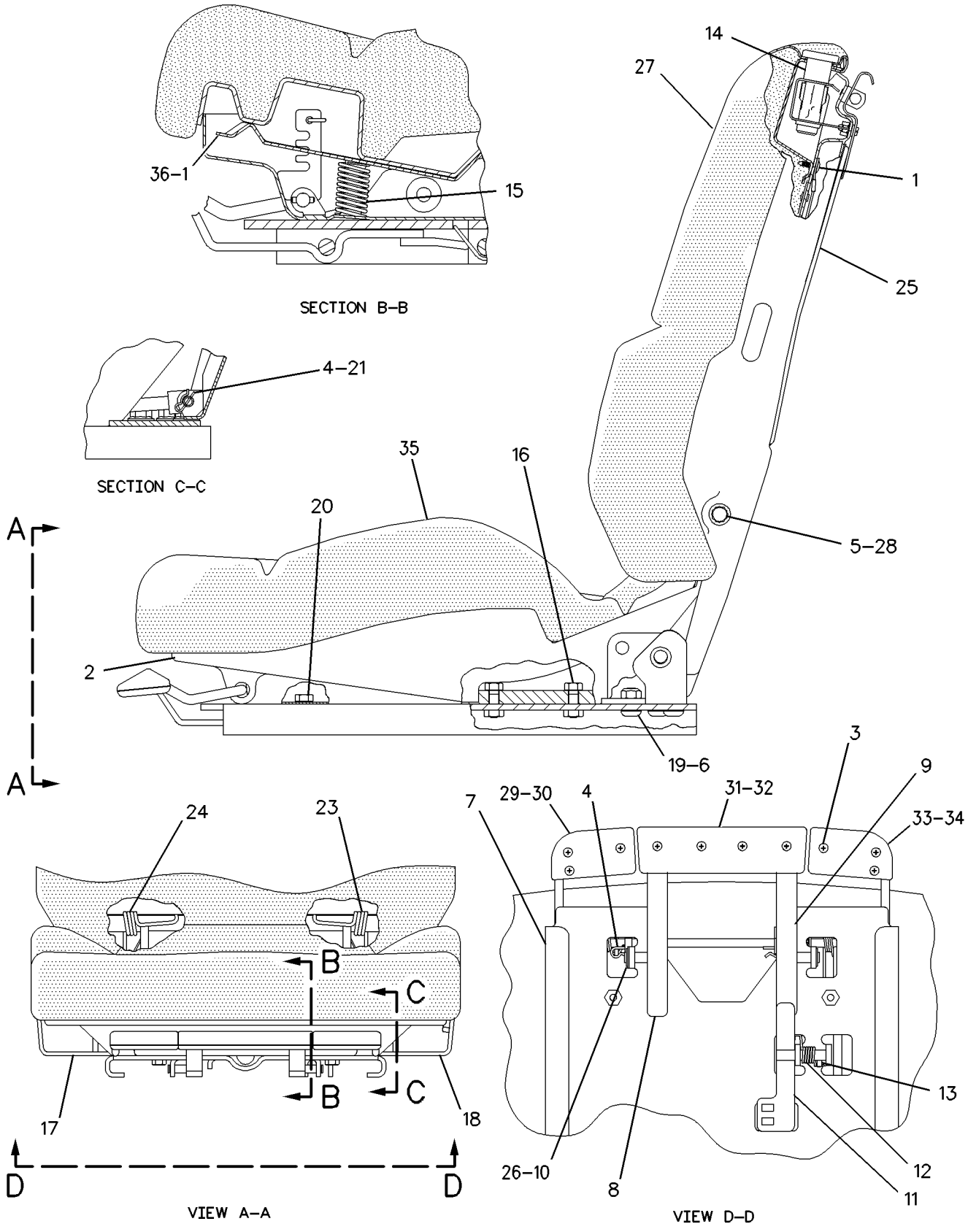

GRAPHIC #1 <END> g00883253

8Y-6138 SEAT GP-SUSPENSION—CLOTH, LUMBAR

S/N: 9BL1-1487

PART OF 8Y-9141 SEAT GP-SUSPENSION

SMCS-7324, 7336 **i02020486**

NOTE	REF NO	GRAPHIC REF	PART NUMBER	QTY	PART NAME 1 2 3 4 5 6 (PRODUCT LEVEL)	SEE PAGE
Y	1	1	**8Y-5874**	1	EXTENSION GP-BACKREST	727
Y	2	1	**8Y-5986**	1	SEAT GP (CLOTH, LUMBAR) (FABRIC)	786
CY	3	1	**108-4082**	1	SUSPENSION GP-SEAT	795
Y	4	1	**8Y-3792**	1	SEAT BELT GP (RETRACTABLE)	782
JZ	5	1		4	BLOCK-SLIDER	
J	6	1	**4F-4879**	1	BOLT (3/8-16X0.5-IN)	
					AVAILABLE REPAIR KIT(S):	
			8Y-5889	1	KIT-SLIDER BLOCK (SEAT)	
					(INCLUDES PARTS MARKED J)	

C - CHANGE FROM PREVIOUS TYPE
J - INCLUDED IN 8Y-5889 SLIDER BLOCK KIT
Y - SEPARATE ILLUSTRATION
Z - NOT SERVICED SEPARATELY

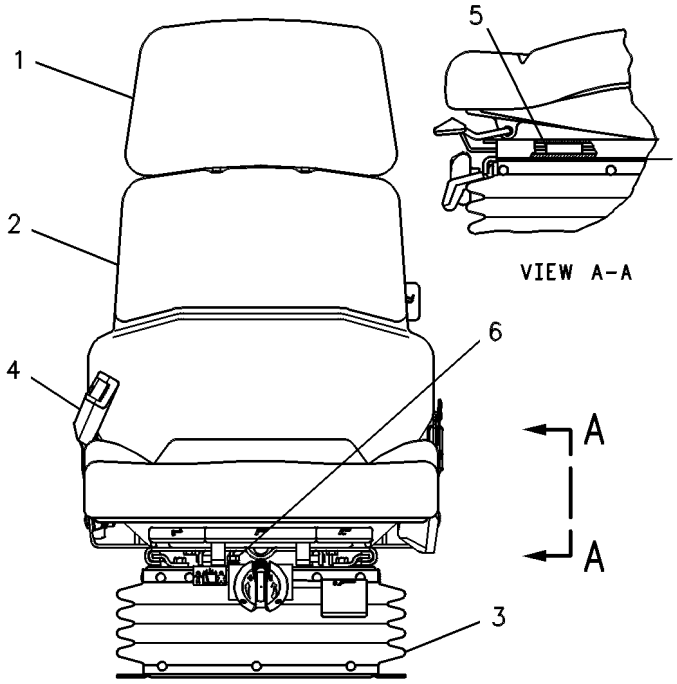

GRAPHIC #1 <END> g00128658

8Y-6138 SEAT GP-SUSPENSION—CLOTH, LUMBAR

S/N: 9BL1488-UP

PART OF 8Y-9141 SEAT GP-SUSPENSION

TYPE 1

SMCS-7324, 7336 **i03571029**

NOTE	REF NO	GRAPHIC REF	PART NUMBER	QTY	PART NAME 1 2 3 4 5 6 (PRODUCT LEVEL)	SEE PAGE
Y	1	1	**8Y-5874**	1	EXTENSION GP-BACKREST	727
Y	2	1	**8Y-5986**	1	SEAT GP (CLOTH, LUMBAR) (CLOTH)	786
CY	3	1	**108-4082**	1	SUSPENSION GP-SEAT	795
CY	4	1	*122-4617*	1	SEAT BELT GP (RETRACTABLE)	780
JZ	5	1		4	BLOCK-SLIDER	
J	6	1	**4F-4879**	1	BOLT (3/8-16X0.5-IN)	
					AVAILABLE REPAIR KIT(S):	
CJ			**149-4745**	1	KIT-SLIDER BLOCK (SUSPENSION SEAT)	
					(INCLUDES BLOCKS & BOLTS)	

C - CHANGE FROM PREVIOUS TYPE
J - KIT MARKED J INCLUDES PART(S) MARKED J
Y - SEPARATE ILLUSTRATION
Z - NOT SERVICED SEPARATELY

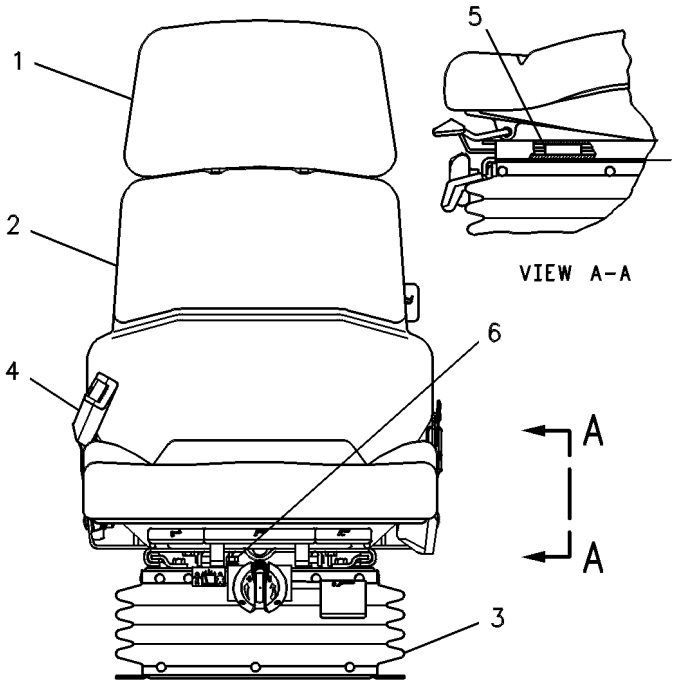

GRAPHIC #1 <END> g00128658

8Y-6138 SEAT GP-SUSPENSION—CLOTH, LUMBAR

S/N: 9BL1488-UP

PART OF 8Y-9141 SEAT GP-SUSPENSION

TYPE 2

SMCS-7324, 7336 **i04805855**

NOTE	REF NO	GRAPHIC REF	PART NUMBER	QTY	PART NAME 1 2 3 4 5 6 (PRODUCT LEVEL)	SEE PAGE
Y	1	1	**8Y-5874**	1	EXTENSION GP-BACKREST	727
Y	2	1	**8Y-5986**	1	SEAT GP (CLOTH, LUMBAR)	786
Y	3	1	**108-4082**	1	SUSPENSION GP-SEAT	795
CY	4	1	**156-1148**	1	SEAT BELT GP (RETRACTABLE, 3-IN)	781
JZ	5	1		4	BLOCK-SLIDER	
	6	1	**4F-4879**	1	BOLT (3/8-16X0.5-IN)	
					AVAILABLE REPAIR KIT(S):	
J			**149-4745**	1	KIT-SLIDER BLOCK (SUSPENSION SEAT)	

C - CHANGE FROM PREVIOUS TYPE
J - REPAIR KIT MARKED J AVAILABLE FOR PART MARKED J
Y - SEPARATE ILLUSTRATION
Z - NOT SERVICED SEPARATELY

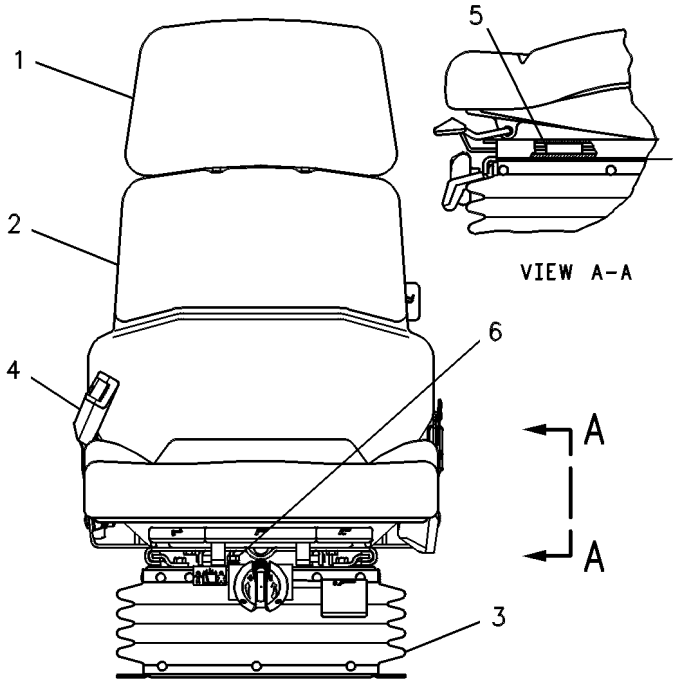

GRAPHIC #1 <END> g00128658

8Y-6179 SEAT GP-SUSPENSION

S/N: 9BL1-UP
VINYL
PART OF 8Y-9635 ROPS AR-OPEN
AN ATTACHMENT
TYPE 1

SMCS-7324, 7336 **i01341012**

NOTE	REF NO	GRAPHIC REF	PART NUMBER	QTY	PART NAME 1 2 3 4 5 6 (PRODUCT LEVEL)	SEE PAGE
Y	1	1	**8Y-5959**	1	EXTENSION GP-BACKREST (VINYL)	728
Y	2	1	**8Y-5976**	1	SEAT GP (VINYL, LUMBAR)	783
CY	3	1	**108-4082**	1	SUSPENSION GP-SEAT	795
Y	4	1	**8Y-3792**	1	SEAT BELT GP (RETRACTABLE)	782
JZ	5	1		4	BLOCK-SLIDER	
J	6	1	**4F-4879**	1	BOLT (3/8-16X0.5-IN)	
					AVAILABLE REPAIR KIT(S):	
C			**8Y-5889**	1	KIT-SLIDER BLOCK	
					(INCLUDES PARTS MARKED J)	

C - CHANGE FROM PREVIOUS TYPE
J - INCLUDED IN 8Y-5889 SLIDER BLOCK KIT
Y - SEPARATE ILLUSTRATION
Z - NOT SERVICED SEPARATELY

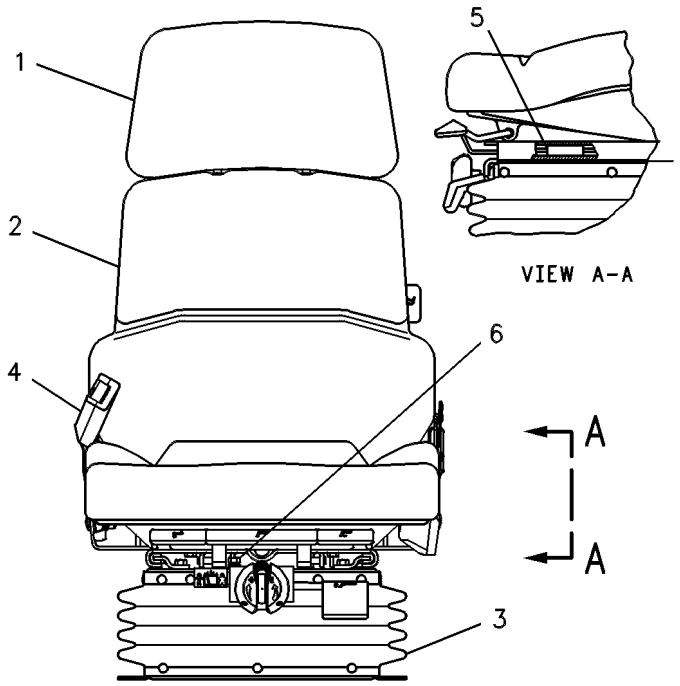

GRAPHIC #1 <END> g00128658

8Y-6179 SEAT GP-SUSPENSION

S/N: 9BL1-UP
VINYL
PART OF 8Y-9817 CONVERSION AR-NON-ROPS, 8Y-9635 ROPS AR-OPEN
AN ATTACHMENT
TYPE 2

SMCS-7324, 7336 **i02003641**

NOTE	REF NO	GRAPHIC REF	PART NUMBER	QTY	PART NAME 1 2 3 4 5 6 (PRODUCT LEVEL)	SEE PAGE
Y	1	1	**8Y-5959**	1	EXTENSION GP-BACKREST (VINYL)	728
Y	2	1	**8Y-5976**	1	SEAT GP (VINYL, LUMBAR)	783
Y	3	1	**108-4082**	1	SUSPENSION GP-SEAT	795
YC	4	1	*122-4617*	1	SEAT BELT GP (RETRACTABLE)	780
JZ	5	1		4	BLOCK-SLIDER	
J	6	1	**4F-4879**	1	BOLT (3/8-16X0.5-IN)	
					AVAILABLE REPAIR KIT(S):	
CJ			**149-4745**	1	KIT-SLIDER BLOCK (SUSPENSION SEAT) (SEAT)	
					(INCLUDES PARTS MARKED J)	

C - CHANGE FROM PREVIOUS TYPE
J - KIT MARKED J INCLUDES PART(S) MARKED J
Y - SEPARATE ILLUSTRATION
Z - NOT SERVICED SEPARATELY

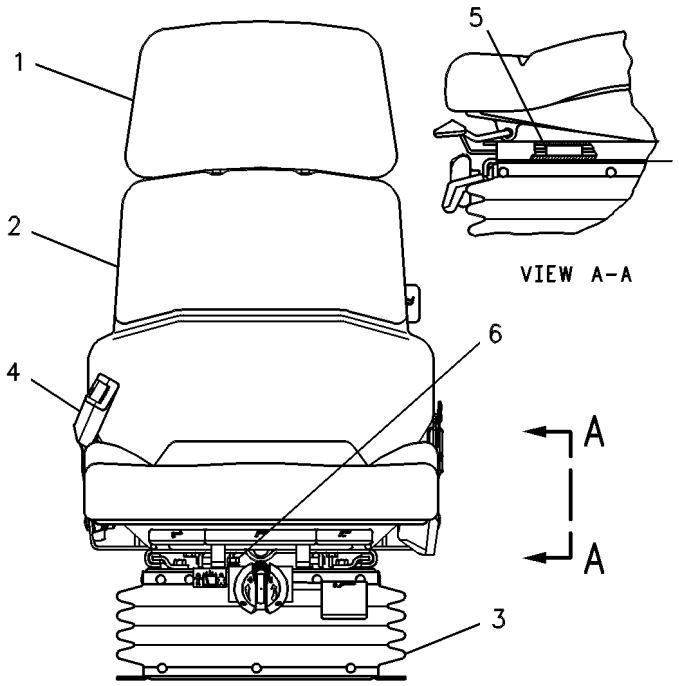

GRAPHIC #1 <END> g00128658

8Y-6179 SEAT GP-SUSPENSION

S/N: 9BL1-UP
VINYL
PART OF 8Y-9817 CONVERSION AR-NON-ROPS, 8Y-9635 ROPS AR-OPEN
AN ATTACHMENT
TYPE 3

SMCS-7324, 7336 **i03571032**

NOTE	REF NO	GRAPHIC REF	PART NUMBER	QTY	PART NAME 1 2 3 4 5 6 (PRODUCT LEVEL)	SEE PAGE
Y	1	1	**8Y-5959**	1	EXTENSION GP-BACKREST (VINYL)	728
Y	2	1	**8Y-5976**	1	SEAT GP (VINYL, LUMBAR)	783
Y	3	1	**108-4082**	1	SUSPENSION GP-SEAT	795
YC	4	1	**156-1148**	1	SEAT BELT GP (RETRACTABLE, 3-IN)	781
JZ	5	1		4	BLOCK-SLIDER	
J	6	1	**4F-4879**	1	BOLT (3/8-16X0.5-IN)	
					AVAILABLE REPAIR KIT(S):	
J			**149-4745**	1	KIT-SLIDER BLOCK (SUSPENSION SEAT)	
					(INCLUDES BLOCKS & BOLT)	

C - CHANGE FROM PREVIOUS TYPE
J - KIT MARKED J INCLUDES PART(S) MARKED J
Y - SEPARATE ILLUSTRATION
Z - NOT SERVICED SEPARATELY

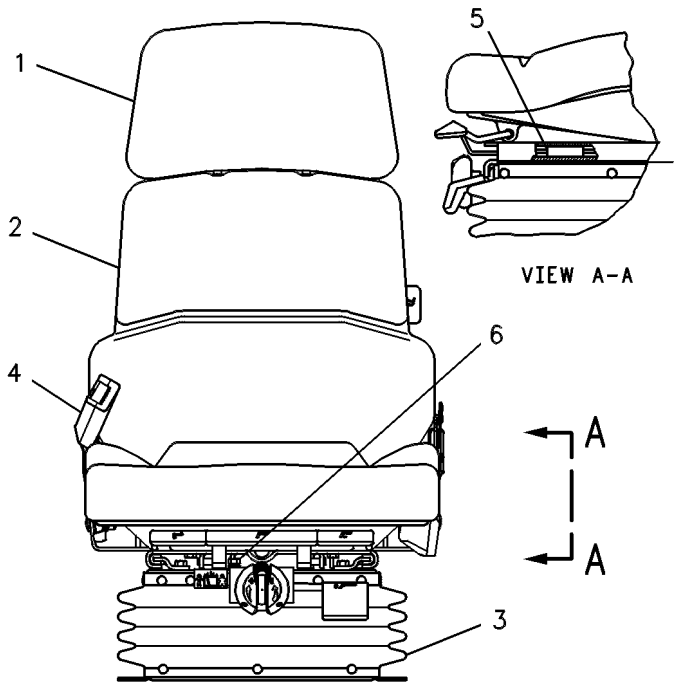

GRAPHIC #1 <END> g00128658

8Y-9141 SEAT GP-SUSPENSION

S/N: 9BL1-UP

PART OF 117-1761, 8Y-9370 CHASSIS AR

SMCS-7324, 7336 **i00768217**

NOTE	REF NO	GRAPHIC REF	PART NUMBER	QTY	PART NAME 1 2 3 4 5 6 (PRODUCT LEVEL)	SEE PAGE
Y	1	1	**8Y-6138**	1	SEAT GP-SUSPENSION (CLOTH)	788
	2	1	**030-8535**	4	BOLT-LOCKING (3/8-16X0.875-IN)	
		1	**8T-4896**	4	WASHER-HARD (10.2X18.5X2.5-MM THK)	
	3	1	**2N-3680**	4	SCREW-HEAD (1/4-20X0.75-IN)	
	4	1	**8Y-9188**	1	HINGE AS (RH)	
	5	1	**8Y-9189**	1	HINGE AS (LH)	
	6	1	**8Y-9190**	2	ARMREST AS	
	7	1	**4M-5281**	6	BOLT (1/4-20X0.75-IN)	
		1	**8M-6701**	6	WASHER (0.281X0.5X0.032-IN THK)	
	8	1	**6J-0488**	4	SCREW-BUTTON HEAD (3/8-16X0.875-IN)	
		1	**4B-5271**	4	WASHER (25.5X11.2X2-MM THK)	
	9	1	**8Y-9191**	4	BUMPER	

Y - SEPARATE ILLUSTRATION

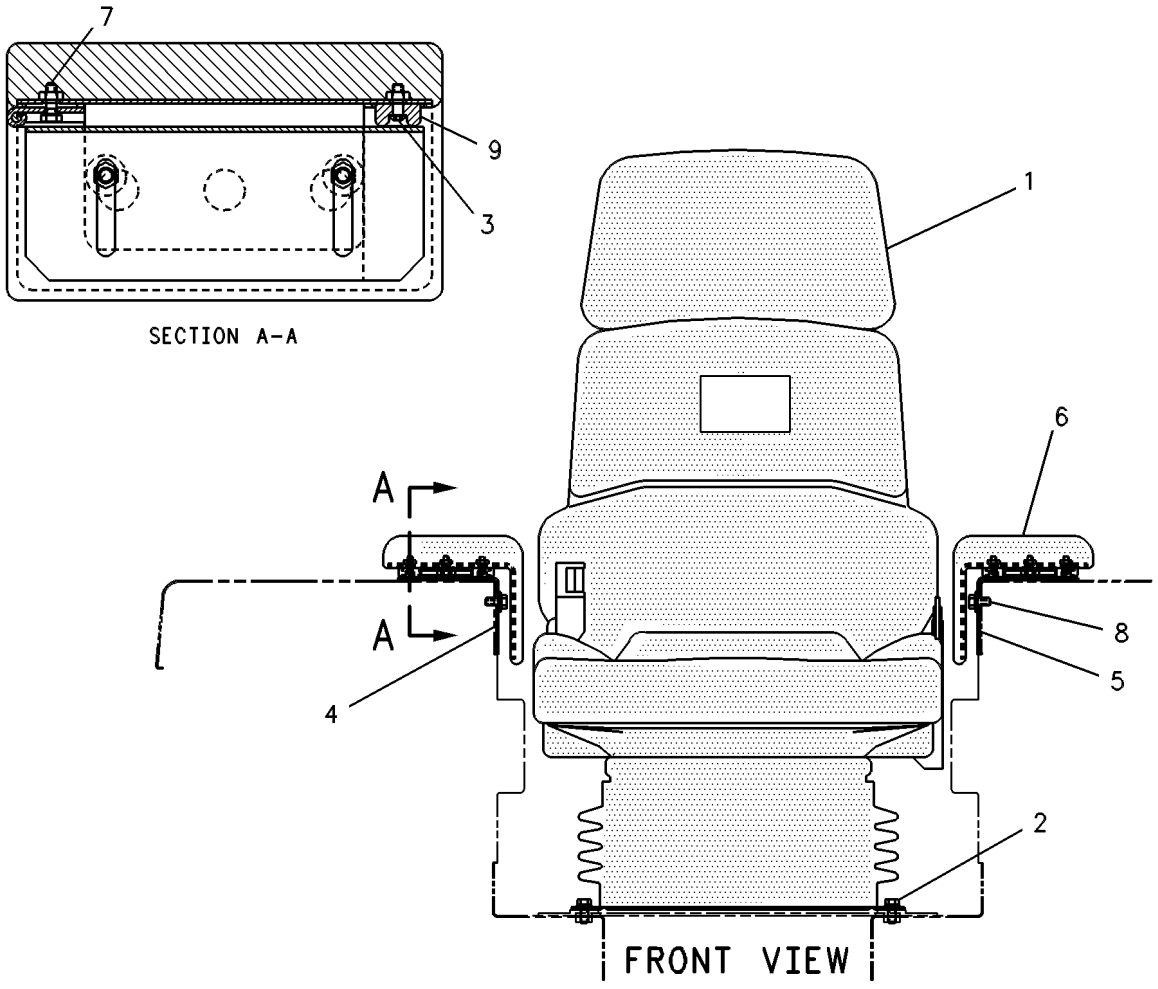

GRAPHIC #1 <END> g00259652

108-4082 SUSPENSION GP-SEAT

S/N: 9BL1-UP

PART OF 8Y-6138, 8Y-6179 SEAT GP-SUSPENSION

ALSO AN ATTACHMENT

SMCS-7324 **i01569879**

NOTE	REF NO	GRAPHIC REF	PART NUMBER	QTY	PART NAME 1 2 3 4 5 6 (PRODUCT LEVEL)	SEE PAGE
	1	1	**8Y-6022**	1	PLATE-SLIDE	
	2	1	**8Y-6023**	1	PLATE-SLIDE	
	3	1	**5M-3062**	2	BOLT (3/8-16X0.75-IN)	
	4	1	**5P-1075**	4	WASHER-HARD (10.2X22.5X3-MM THK)	
	5	1	**2K-4973**	6	LOCKNUT (3/8-16-THD)	
	6	1	**1D-4677**	4	BOLT-CARRIAGE (3/8-16X1-IN)	
	7	1	**8Y-6014**	1	HOUSING AS (LOWER)	
	8	1	**8Y-6012**	1	ARM AS-SUSPENSION	
J	9	1	**101-0003**	20	FASTENER	
Y	10	1	**108-4582**	1	HOUSING GP-SEAT SUSPENSION	738
J	11	1	**166-6781**	6	FASTENER	
	12	1	**8Y-5965**	1	ABSORBER AS-SHOCK	
	13	1	**5V-1497**	1	RETAINER	
	14	1	**4V-7884**	2	BEARING	
	15	1	**4V-8577**	4	BEARING	
	16	1	**8Y-6024**	2	SHAFT AS	
J	17	1	**163-1146**	3	FASTENER	
	18	1	**145-0326**	1	FILM-INSTRUCTION (SEAT ADJUSTMENT)	
	19	1	**197-7689**	3	FASTENER	
					AVAILABLE REPAIR KIT(S):	
			101-4194	1	KIT-TETHER BELT (SUSPENSION SEAT)	
					(INCLUDES 2 BELTS)	
			101-4195	1	KIT-SUSPENSION ROLLER (SUSPENSION SEAT)	
					(INCLUDES 4 ROLLERS)	
			8Y-5944	1	KIT-SUSPENSION BOOT (SEAT)	
					(INCLUDES BOOT, 2 RETAINERS & PARTS MARKED J)	

J - INCLUDED IN 8Y-5944 SUSPENSION BOOT KIT
Y - SEPARATE ILLUSTRATION

108-4082 **SUSPENSION GP-SEAT (**contd.**)** **i01569879**

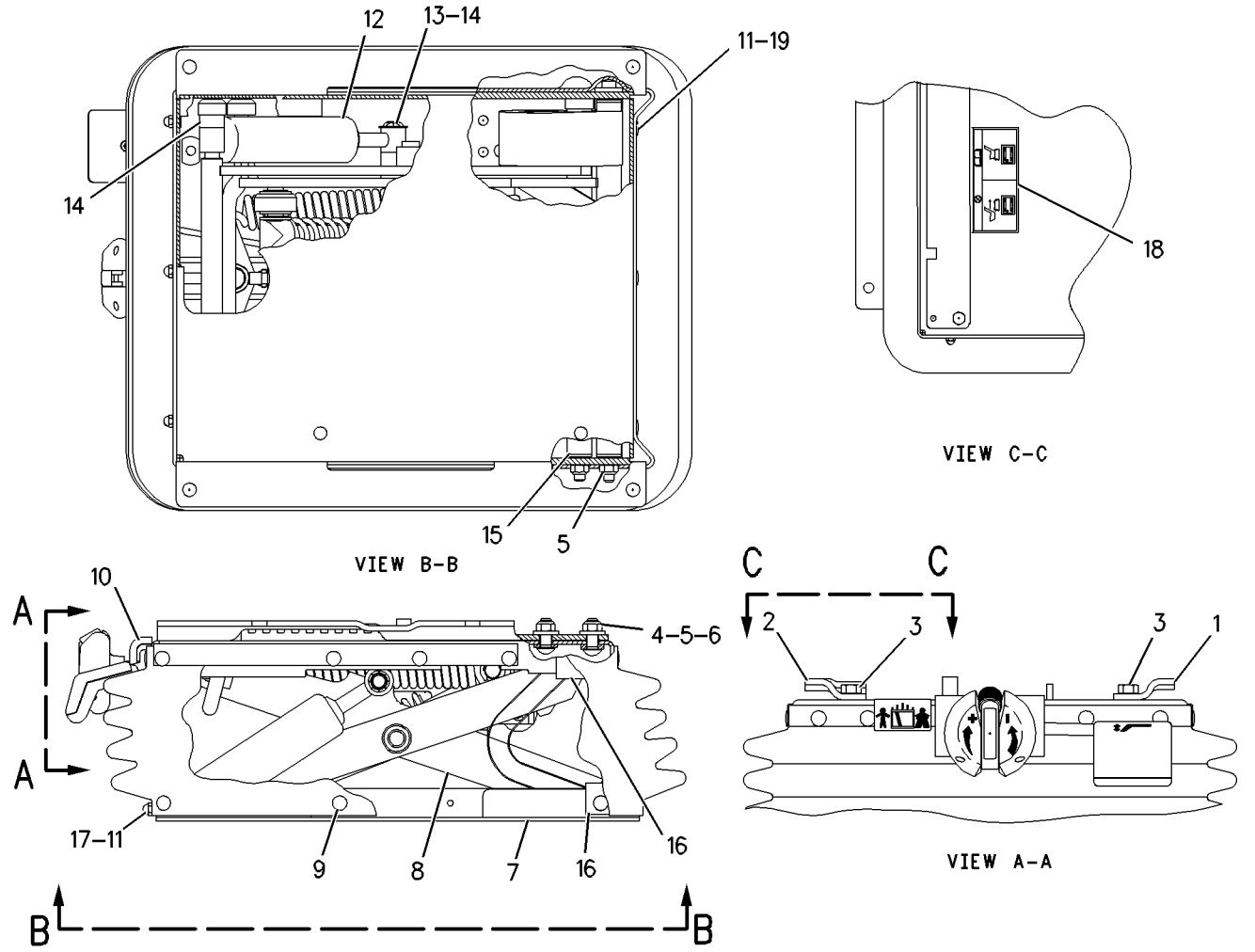

GRAPHIC #1 <END> g00818265

8G-1626 TANK GP-WINDOW WASHER

S/N: 9BL1-UP

PART OF 8Y-9371 CAB AR

SMCS-7306 **i00813067**

NOTE	REF NO	GRAPHIC REF	PART NUMBER	QTY	PART NAME 1 2 3 4 5 6 (PRODUCT LEVEL)	SEE PAGE
	1	1	**5P-8167**	4	BOLT (3/8-16X0.625-IN)	
C	2	1	**8T-4896**	6	WASHER-HARD (10.2X18.5X2.5-MM THK)	
	3	1	**8G-8476**	1	BRACKET AS	
C	4	1	**5P-8524**	2	GROMMET	
C	5	1	**1P-4022**	2	FITTING	
	6	1	**8G-2707**	1	RESERVOIR	
	7	1	**8L-8413**	1	STRAP-CABLE (WHITE)	
CD	8	1	**5P-5992**	2	HOSE (.81M EA)	
	9	1	**8G-8478**	1	STRAP	
	10	1	**9L-8439**	1	CAP-OIL FILLER	
	11	1	**3V-3263**	2	CONNECTOR (HOSE)	
	12	1	**8G-2708**	2	STRIP	
BD	13	1	*5P-5923*		SEAL	
C	14	1	**7T-8891**	2	PUMP AS-WASHER	
C	15	1	**5M-3062**	2	BOLT (3/8-16X0.75-IN)	
C	16	1	**2S-2053**	2	CLIP	
CD	17	1	**5P-5992**	2	HOSE (.1M EA)	

B - USE AS REQUIRED
C - CHANGE FROM PREVIOUS TYPE
D - ORDER BY THE METER

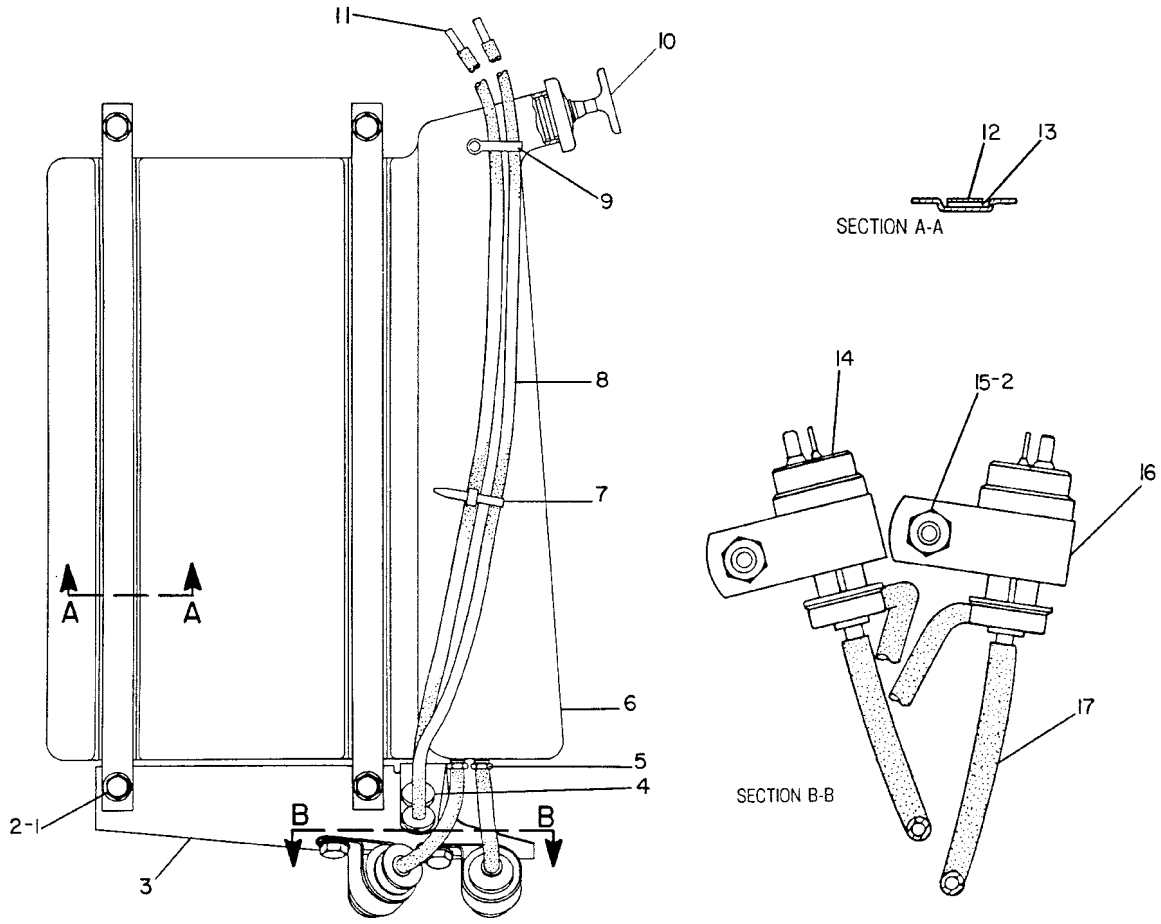

GRAPHIC #1 <END> g00192049

8Y-9591 VANDALISM AR-OPEN ROPS

S/N: 9BL1-UP

PART OF 8Y-9817 CONVERSION AR-NON-ROPS, 8Y-9635 ROPS AR-OPEN

AN ATTACHMENT

SMCS-7315 **i00778649**

NOTE	PART NUMBER	QTY	PART NAME 1 2 3 4 5 6 (PRODUCT LEVEL)	SEE PAGE
Y	*8Y-6498*	1	GUARD GP-VANDALISM	732
Y	*3W-0916*	1	GUARD GP-VANDALISM	731
			—OR—	
Y	*117-2962*	1	GUARD GP-VANDALISM	729
	5P-8502	3	PADLOCK GP	
			(EACH INCLUDES)	
	5P-8500	1	KEY	
	8Y-6364	1	SLEEVE	

Y - SEPARATE ILLUSTRATION

<END>

3T-7065 WIPER GP-WINDOW

S/N: 9BL1-UP

PART OF 8Y-9455 ROPS GP-ENCLOSED

ALSO AN ATTACHMENT

SMCS-7305 **i02114996**

NOTE	REF NO	GRAPHIC REF	PART NUMBER	QTY	PART NAME 1 2 3 4 5 6 (PRODUCT LEVEL)	SEE PAGE
	1	1	**101-0744**	1	MOTOR GP-WINDOW WIPER (24-VOLT)	
		1	**7N-8204**	1	HOUSING-RECEPTACLE (14-GA TO 18-GA)	
		1	**7N-7780**	2	PIN-CONNECTOR (14-GA TO 18-GA)	
		1	**7N-7779**	2	SOCKET-CONNECTOR (14-GA TO 18-GA)	
		1	**7K-4474**	1	CONNECTOR AS	
M	2	1	**5C-9553**	3	BOLT (M6X1X16-MM)	
	3	1	**5P-0537**	3	WASHER-HARD (7.2X14.5X2-MM THK)	
	4	1	**3T-7086**	1	CRANK AS	
M	5	1	**6V-6889**	2	NUT (M8X1.25-THD)	
	6	1	**6V-6888**	1	WASHER-SPRING (8.31X15.54X1.07-MM THK)	
	7	1	**6V-6219**	1	LINK-CONNECTING	
M	8	1	**3C-1884**	4	SCREW-MACHINE (M5X0.8-THD)	
	9	1	**6V-6796**	1	SHAFT AS-DRIVE	
M	10	1	**6V-6213**	1	NUT (M20X1-THD)	
	11	1	**6V-6214**	1	WASHER (20.15X29.6X1-MM THK)	
	12	1	**6V-6209**	1	CAP-WIPER	
	13	1	**6A-9718**	1	WASHER (8.1X12.5X1-MM THK)	
	14	1	**3T-7059**	1	BRACKET	

M - METRIC PART

3T-7065 **WIPER GP-WINDOW (**contd.**)** **i02114996**

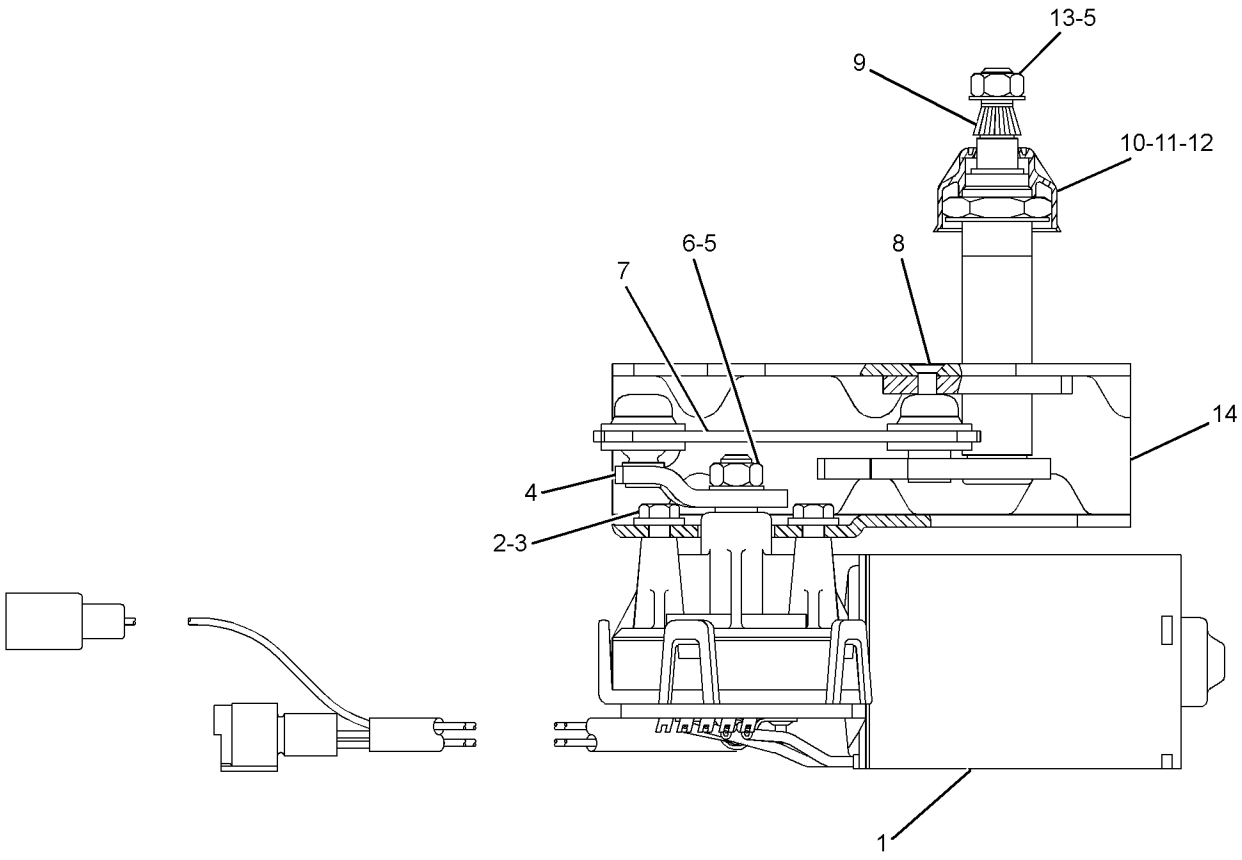

GRAPHIC #1 <END> g01173025

3T-7065 WIPER GP-WINDOW

S/N: 9BL1-UP

PART OF 8Y-9455 ROPS GP-ENCLOSED

AN ATTACHMENT

SMCS-7305 **i04892607**

NOTE	REF NO	GRAPHIC REF	PART NUMBER	QTY	PART NAME 1 2 3 4 5 6 (PRODUCT LEVEL)	SEE PAGE
(NO SERVICED PARTS)						

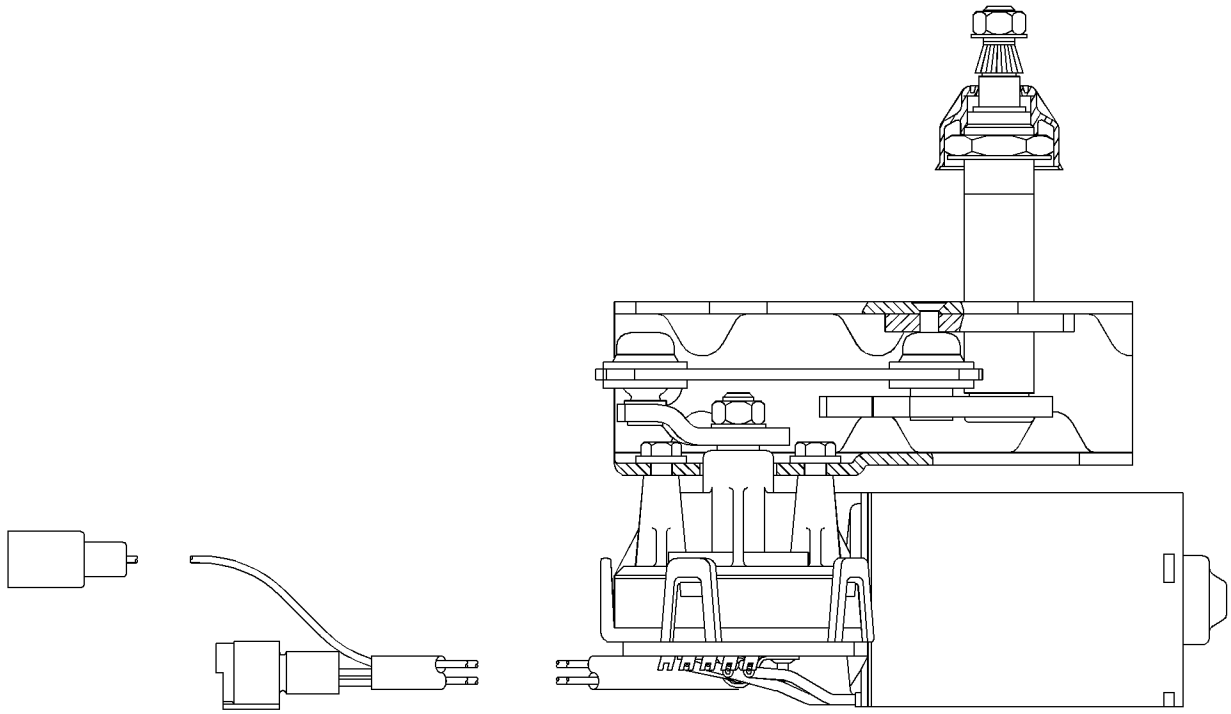

GRAPHIC #1 <END> g03042116

6V-6561 WIPER PIVOT GP

S/N: 9BL1-UP
PART OF 8Y-9455 ROPS GP-ENCLOSED
ALSO AN ATTACHMENT

SMCS-7305 **i02408443**

NOTE	REF NO	GRAPHIC REF	PART NUMBER	QTY	PART NAME 1 2 3 4 5 6 (PRODUCT LEVEL)	SEE PAGE
	1	1	**101-0742**	1	WIPER PIVOT GP	
	1A	1	**206-5823**	1	CAP	
	1B	1	**3F-9556**	1	LOCKWASHER	
M	1C	1	**5C-7261**	1	NUT (M8X1.25-THD)	
	1D	1	**6V-6210**	1	GASKET-SHAFT	

M - METRIC PART

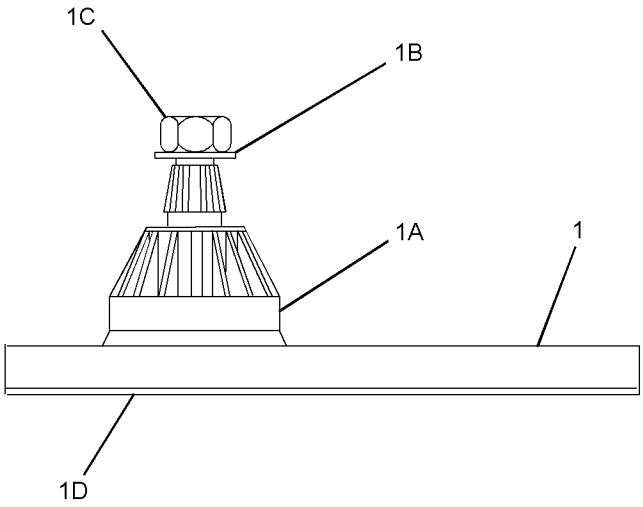

GRAPHIC #1 <END> g01217770

8Y-9625 BUCKET AR-MULTIPURPOSE

S/N: 9BL1-UP

PART OF 8Y-9624 CONVERSION AR-BUCKET

AN ATTACHMENT

SMCS-6104 **i01379406**

NOTE	PART NUMBER	QTY	PART NAME 1 2 3 4 5 6 (PRODUCT LEVEL)	SEE PAGE
Y	**8Y-9626**	1	BUCKET GP-MULTIPURPOSE	807
Y	*9K-8659*	2	CYLINDER & SEAL GP-BUCKET	545
Y	*8V-7368*	1	LINES GP-BUCKET	566
Y	*9V-1120*	1	MOUNTING GP-CYLINDER	595

Y - SEPARATE ILLUSTRATION

<END>

8Y-9401 BUCKET GP-GENERAL PURPOSE

S/N: 9BL1-UP
2.3 CU METER (3.0 CU YD) CAPACITY
AN ATTACHMENT

SMCS-6101 **i01400567**

NOTE	REF NO	GRAPHIC REF	PART NUMBER	QTY	PART NAME 1 2 3 4 5 6 (PRODUCT LEVEL)	SEE PAGE
	1	1	**8Y-9110**	1	BUCKET AS-GENERAL PURPOSE	
	2	1	**3A-6294**	4	HINGE AS	
	3	1	**3A-6296**	1	HINGE AS	
	4	1	**3A-8877**	1	HINGE AS	
	5	1	**6V-3607**	1	FILM-NOTICE (BUCKET CORNER GUARD SYSTEM)	
	6	1	**8V-4981**	2	PLATE (RH)	
	7	1	**8V-4982**	2	PLATE (LH)	
	8	1	**8Y-9403**	1	PLATE AS (RH)	
		1	**5V-2772**	1	CORNER (RH)	
		1	**8Y-9107**	1	BAR	
	9	1	**8Y-6263**	1	EDGE-CUTTING	
	10	1	**8Y-9402**	1	PLATE AS (LH)	
		1	**5V-2773**	1	CORNER (LH)	
		1	**8Y-9106**	1	BAR	
	11	1	**9W-6748**	2	PLATE-WEAR	
	12	1	**4F-7827**	8	BOLT-PLOW (3/4-10X2.25-IN)	
	13	1	**5P-8248**	8	WASHER-HARD (20X36.5X3.5-MM THK)	
	14	1	**2J-3506**	8	NUT-FULL (3/4-10-THD)	

8Y-9401 **BUCKET GP-GENERAL PURPOSE** (contd.) **i01400567**

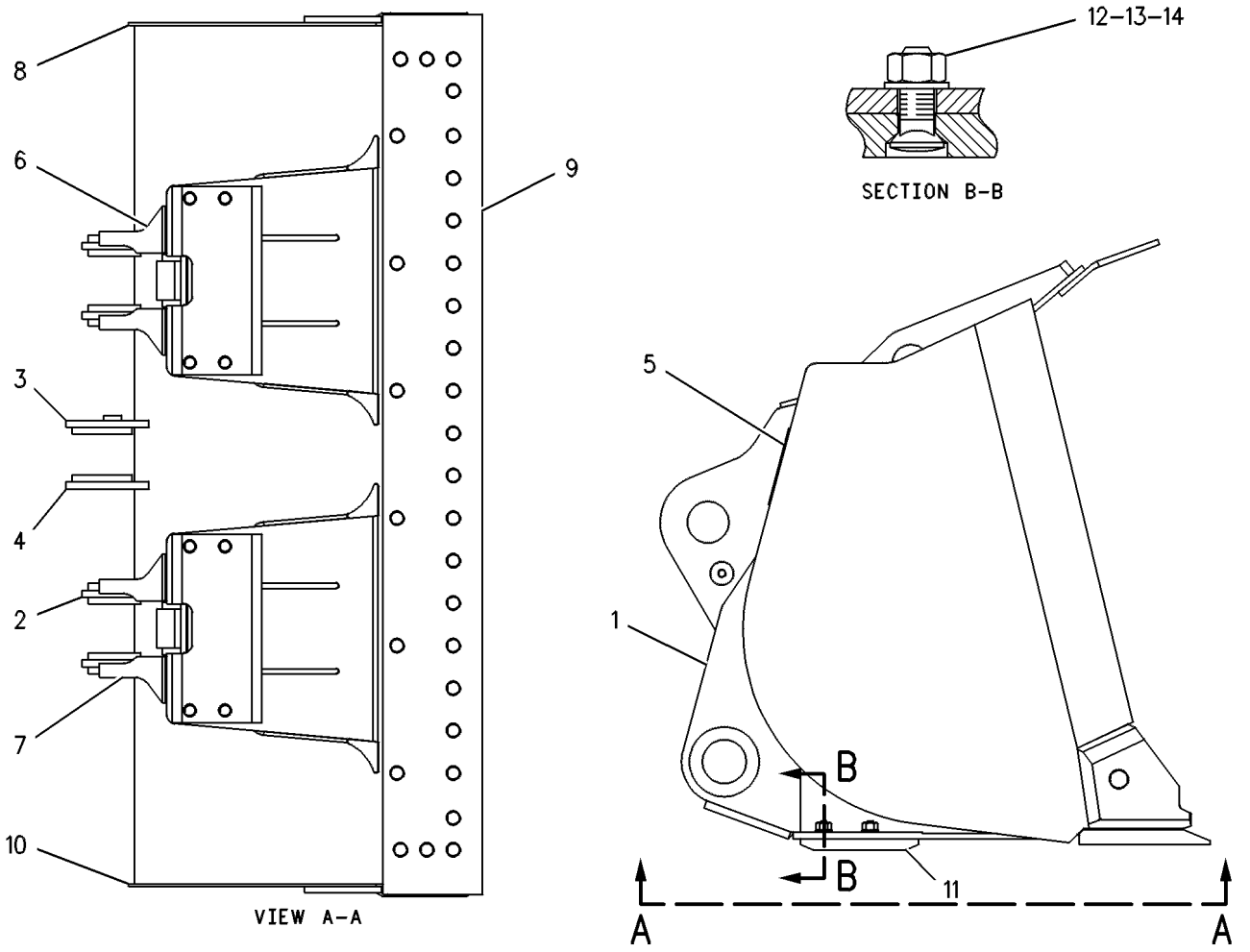

GRAPHIC #1 <END> g00247089

8Y-9408 BUCKET GP-GENERAL PURPOSE

S/N: 9BL1-UP
2.17 CU M (2.85 CU YD) CAPACITY
AN ATTACHMENT

SMCS-6101 **i00568075**

NOTE	REF NO	GRAPHIC REF	PART NUMBER	QTY	PART NAME 1 2 3 4 5 6 (PRODUCT LEVEL)	SEE PAGE
	1	1	**8Y-9409**	1	BUCKET AS-GENERAL PURPOSE	
	2	1	**3A-8877**	1	HINGE AS	
	3	1	**8V-4981**	2	PLATE (RH)	
	4	1	**8V-4982**	2	PLATE (LH)	
	5	1	**8Y-9107**	1	BAR (RH)	
	6	1	**8Y-9405**	1	EDGE AS-CUTTING	
	7	1	**1U-1354**	8	ADAPTER	
	8	1	**6W-2453**	1	CORNER (LH)	
	9	1	**8Y-9106**	1	BAR (LH)	
	10	1	**6W-2454**	1	CORNER (RH)	
	11	1	**5P-8248**	8	WASHER-HARD (20X36.5X3.5-MM THK)	
	12	1	**9W-6748**	2	PLATE-WEAR	
	13	1	**2J-3506**	8	NUT-FULL (3/4-10-THD)	
	14	1	**4F-7827**	8	BOLT-PLOW (3/4-10X2.25-IN)	

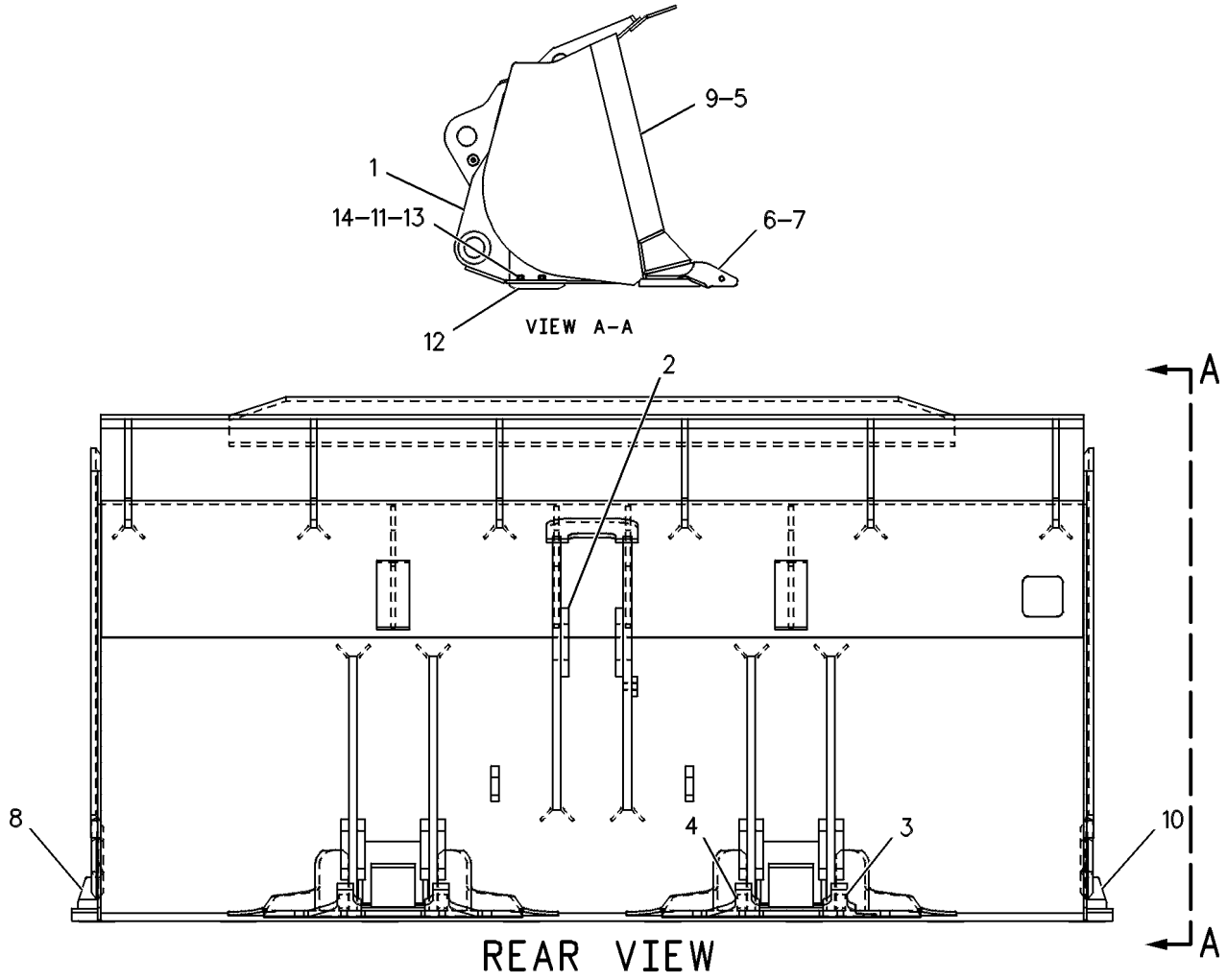

GRAPHIC #1 <END> g00247202

8Y-9626 BUCKET GP-MULTIPURPOSE

S/N: 9BL1-UP
1.9 CUBIC METER (2.5 CUBIC YARD) CAPACITY
PART OF 8Y-9625 BUCKET AR-MULTIPURPOSE
AN ATTACHMENT

SMCS-6104 **i04001577**

NOTE	REF NO	GRAPHIC REF	PART NUMBER	QTY	PART NAME 1 2 3 4 5 6 (PRODUCT LEVEL)	SEE PAGE
	1	1	**143-6184**	1	BOWL AS	
	2	1	**5G-7610**	1	EDGE-WEAR	
	3	1	**5G-7611**	2	BIT-END	
	4	1	**6V-3607**	1	FILM-NOTICE (BUCKET CORNER GUARD SYSTEM)	
	5	1	**6W-2980**	1	EDGE-CUTTING	
	6	1	**8P-9770**	1	PLATE	
	7	1	**4K-0149**	4	PLUG-CUP	
	8	1	**5V-1783**	1	CORNER (RH)	
	9	1	**143-8477**	4	BAR	
	10	1	**143-6178**	2	HINGE	
	11	1	**5V-1784**	1	CORNER (LH)	
	12	1	**110-4429**	1	BULLDOZER AS	
	13	1	**3B-8489**	4	FITTING-GREASE (1/8-27 PTF)	
	14	1	**7K-9204**	8	SEAL-LIP TYPE	
	15	1	**7P-1576**	4	BUSHING	
	16	1	**1V-8098**	4	BLOCK	
	17	1	**4V-4912**	4	BLOCK	
	18	1	**8P-9770**	3	PLATE	
	19	1	**8Y-6473**	1	HINGE AS (CENTER, LH)	
	20	1	**8Y-6474**	1	HINGE AS (CENTER, RH)	
	21	1	**9V-1109**	4	HINGE AS	
	22	1	**9V-1427**	1	BAR	
	23	1	**3F-5108**	17	BOLT-PLOW (5/8-11X2.25-IN)	
B	24	1	**3K-8150**	1	LUG	
B	25	1	**4F-2699**	1	BLOCK-STOP	
	26	1	**4T-8084**	1	EDGE-CUTTING	
	27	1	**4T-8085**	2	BIT-END	
B	28	1	**5B-3807**	1	PLATE-FILLER	
	29	1	**7X-0365**	2	BOLT (3/4-10X1.5-IN)	
	30	1	**7X-0448**	17	NUT (5/8-11-THD)	
	31	1	**7X-0582**	2	WASHER-HARD (20X44.5X6-MM THK)	
	32	1	**9K-9731**	2	SPACER (20.4X28.5X14.2-MM THK)	
	33	1	**9V-1094**	2	PIN AS	

B - USE AS REQUIRED

8Y-9626 **BUCKET GP-MULTIPURPOSE (**contd.**)** **i04001577**

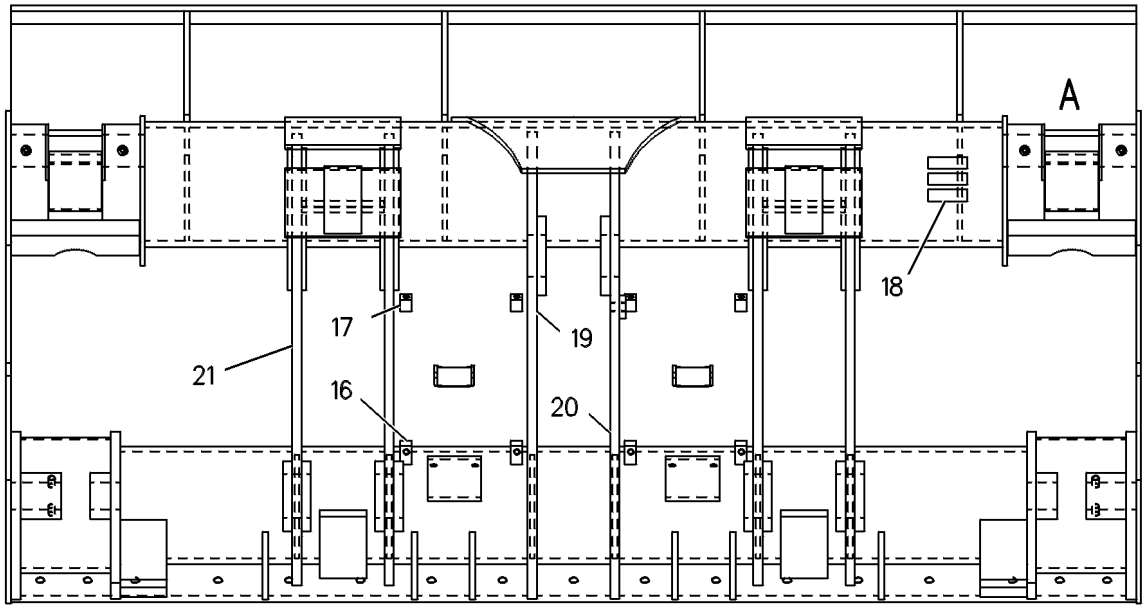

REAR VIEW

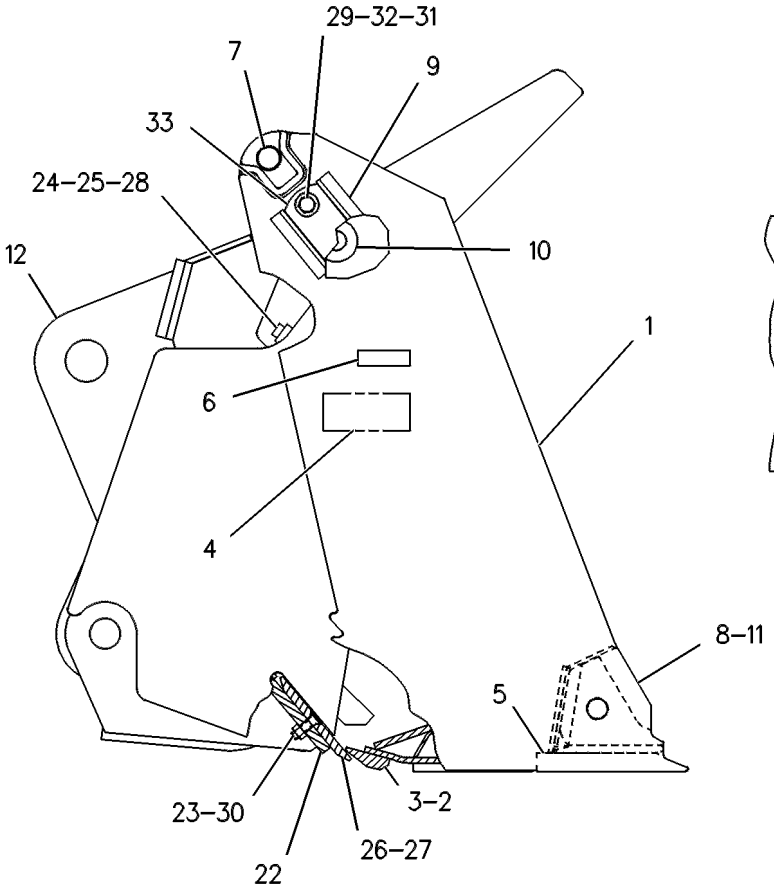

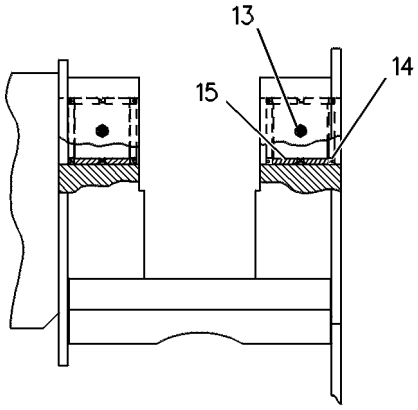

VIEW OF AREA A

RIGHT SIDE VIEW

GRAPHIC #1 <END> g00247209

8Y-9624 CONVERSION AR-BUCKET

S/N: 9BL1-UP
MULTI-PURPOSE BUCKET
AN ATTACHMENT

SMCS-6001 **i01442473**

NOTE	PART NUMBER	QTY	PART NAME 1 2 3 4 5 6 (PRODUCT LEVEL)	SEE PAGE
Y	**8Y-9625**	1	BUCKET AR-MULTIPURPOSE	803
Y	*5G-7496*	1	LINES GP-FRONT	571
			—OR—	
Y	*175-3557*	1	LINES GP-FRONT (LIFT ARMS)	570

Y - SEPARATE ILLUSTRATION

<END>

3G-3625 EDGE GP-BIT & CUTTING

S/N: 9BL1-UP

FOR USE WITH MULTIPURPOSE BUCKETS ONLY

AN ATTACHMENT

SMCS-6801, 6804

i02883406

NOTE	REF NO	GRAPHIC REF	PART NUMBER	QTY	PART NAME 1 2 3 4 5 6 (PRODUCT LEVEL)	SEE PAGE
	1	1	**4T-8101**	2	EDGE-END	
	2	1	**253-0062**	1	GUARD-BUCKET CORNER (RH)	
	3	1	**253-0063**	1	GUARD-BUCKET CORNER (LH)	
	4	1	**1U-0600**	2	EDGE-CUTTING	
	5	1	**2J-3507**	12	NUT-FULL (1-8-THD)	
	6	1	**3K-9770**	4	NUT-FULL (1-1/4-7-THD)	
	7	1	**4F-4042**	12	BOLT-PLOW (1-8X3-IN)	
	8	1	**8T-9079**	4	BOLT-PLOW (1-1/4-7X3.35-IN)	

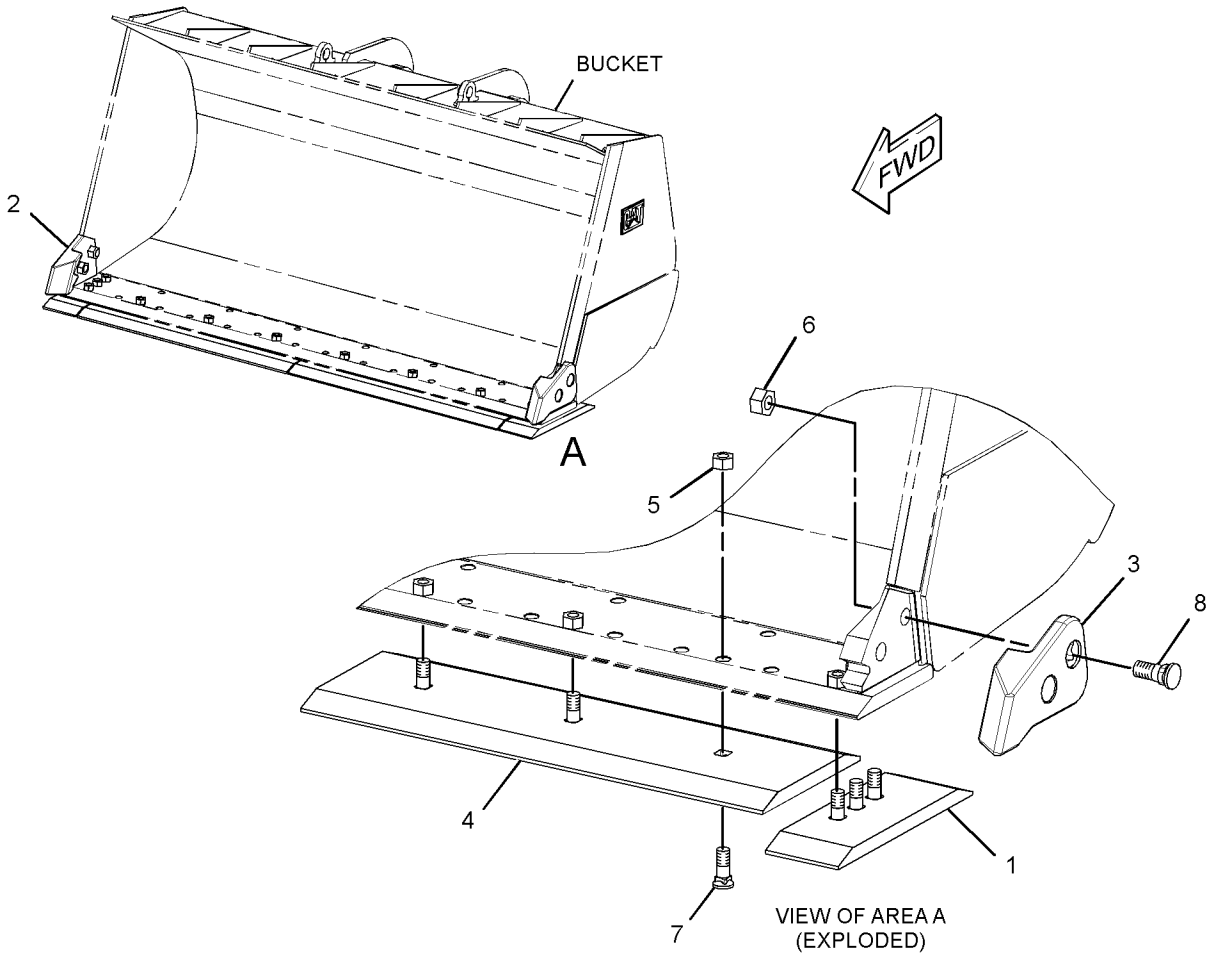

GRAPHIC #1

<END>

g01438823

8E-5792 EDGE GP-CUTTING

S/N: 9BL1-UP
FOR USE WITH GENERAL PURPOSE BUCKETS ONLY
AN ATTACHMENT

SMCS-6801 **i07186615**

NOTE	REF NO	GRAPHIC REF	PART NUMBER	QTY	PART NAME 1 2 3 4 5 6 (PRODUCT LEVEL)	SEE PAGE
	1	1	**3G-6395**	2	EDGE-END	
	2	1	**8E-5793**	2	EDGE-CUTTING	
	3	1	**253-0064**	1	GUARD-BUCKET CORNER (RH)	
	4	1	**253-0065**	1	GUARD-BUCKET CORNER (LH)	
	5	1	**3K-9770**	16	NUT-FULL (1-1/4-7-THD)	
	6	1	**6V-6535**	16	BOLT-PLOW (1-1/4-7X3.74-IN)	

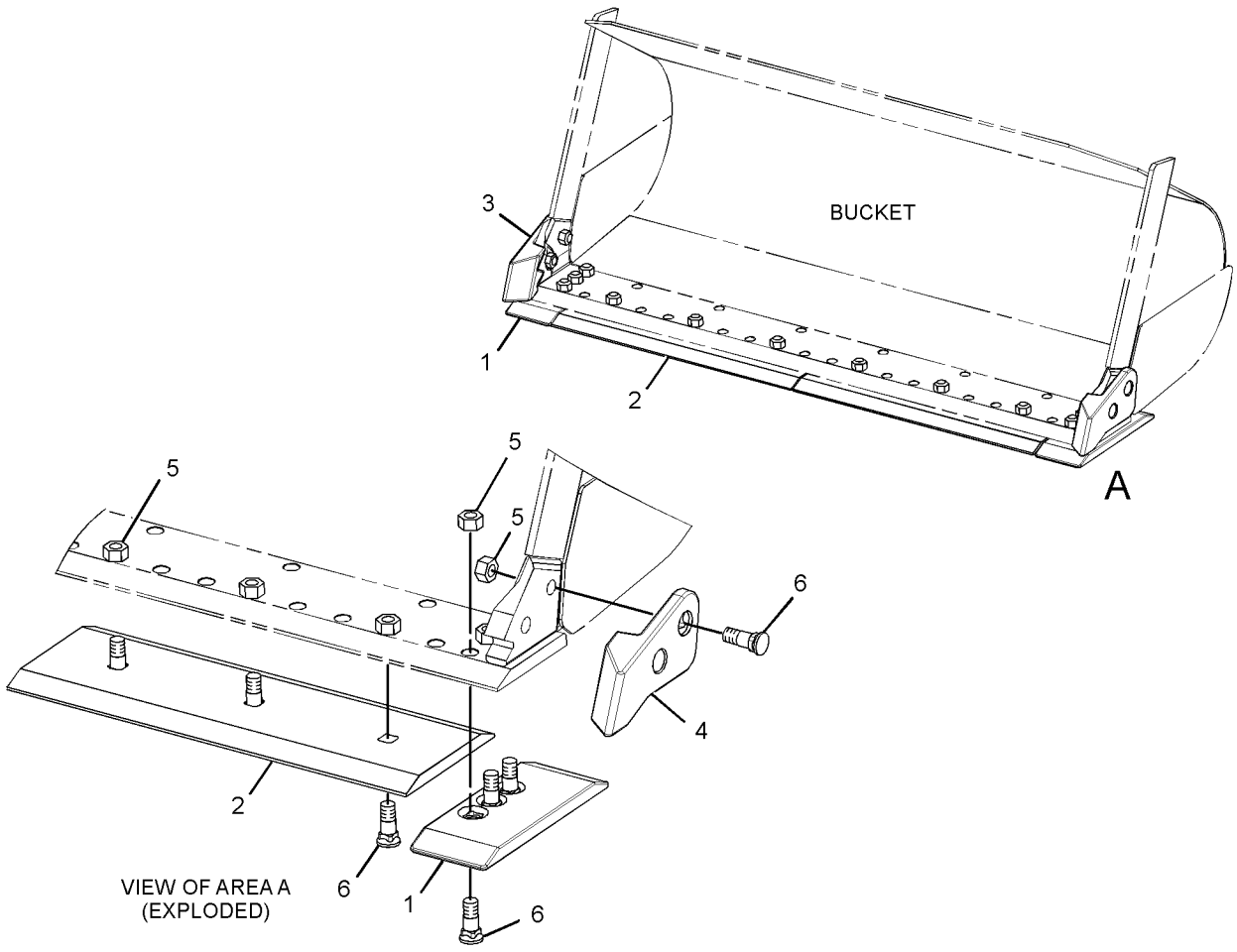

GRAPHIC #1 <END> g01386667

6Y-7239 EDGE GP-SEGMENT

S/N: 9BL1-UP
FOR USE WITH MULTIPURPOSE BUCKET ONLY
AN ATTACHMENT

SMCS-6818 **i00568132**

NOTE	REF NO	GRAPHIC REF	PART NUMBER	QTY	PART NAME 1 2 3 4 5 6 (PRODUCT LEVEL)	SEE PAGE
	1	1	**4T-6694**	7	EDGE-SEGMENT	
	2	1	**4F-4042**	14	BOLT-PLOW (1-8X3-IN)	
		1	**2J-3507**	14	NUT-FULL (1-8-THD)	

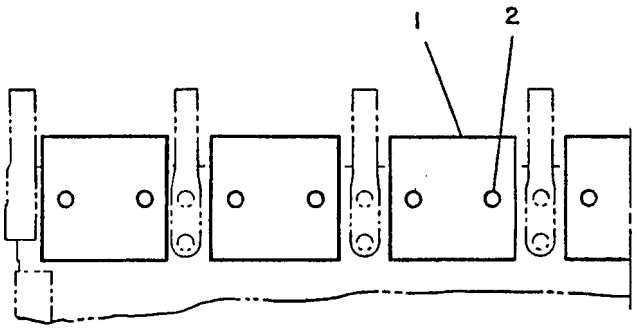

GRAPHIC #1 <END> g00125544

8E-5788 EDGE GP-SEGMENT

S/N: 9BL1-UP
FOR USE WITH GENERAL PURPOSE BUCKET ONLY
AN ATTACHMENT

SMCS-6818 **i02772107**

NOTE	REF NO	GRAPHIC REF	PART NUMBER	QTY	PART NAME 1 2 3 4 5 6 (PRODUCT LEVEL)	SEE PAGE
	1	1	**4T-6697**	5	EDGE-SEGMENT (210 MM WIDE)	
	2	1	**308-4325**	2	EDGE-SEGMENT (190 MM WIDE)	
	3	1	**3K-9770**	14	NUT-FULL (1-1/4-7-THD)	
	4	1	**6V-6535**	14	BOLT-PLOW (1-1/4-7X3.74-IN)	

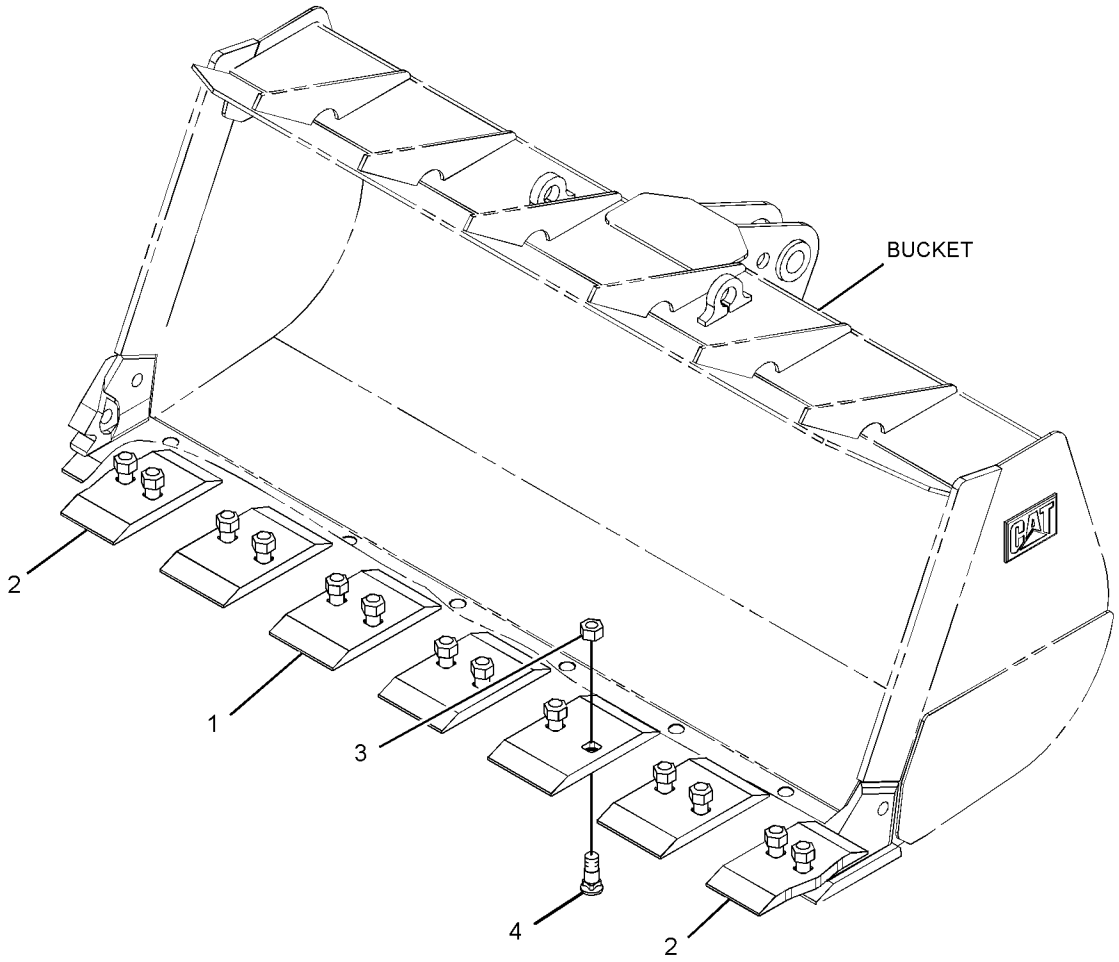

GRAPHIC #1 <END> g01423494

519-8491 GUARD-BUCKET CORNER–RH

S/N: 9BL1-UP

FIELD INSTALLATION

SMCS-6816 **i07165632**

NOTE	REF NO	GRAPHIC REF	PART NUMBER	QTY	PART NAME 1 2 3 4 5 6 (PRODUCT LEVEL)	SEE PAGE
					(NO SERVICED PARTS)	

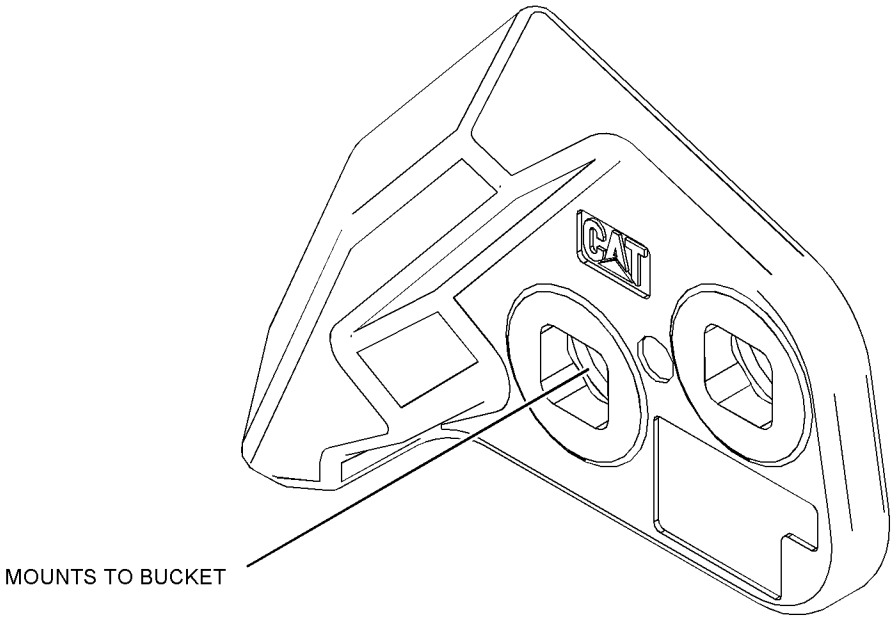

GRAPHIC #1 <END> g06241271

519-8492 GUARD-BUCKET CORNER–LH

S/N: 9BL1-UP

FIELD INSTALLATION

SMCS-6816 **i07165646**

NOTE	REF NO	GRAPHIC REF	PART NUMBER	QTY	PART NAME 1 2 3 4 5 6 (PRODUCT LEVEL)	SEE PAGE
					(NO SERVICED PARTS)	

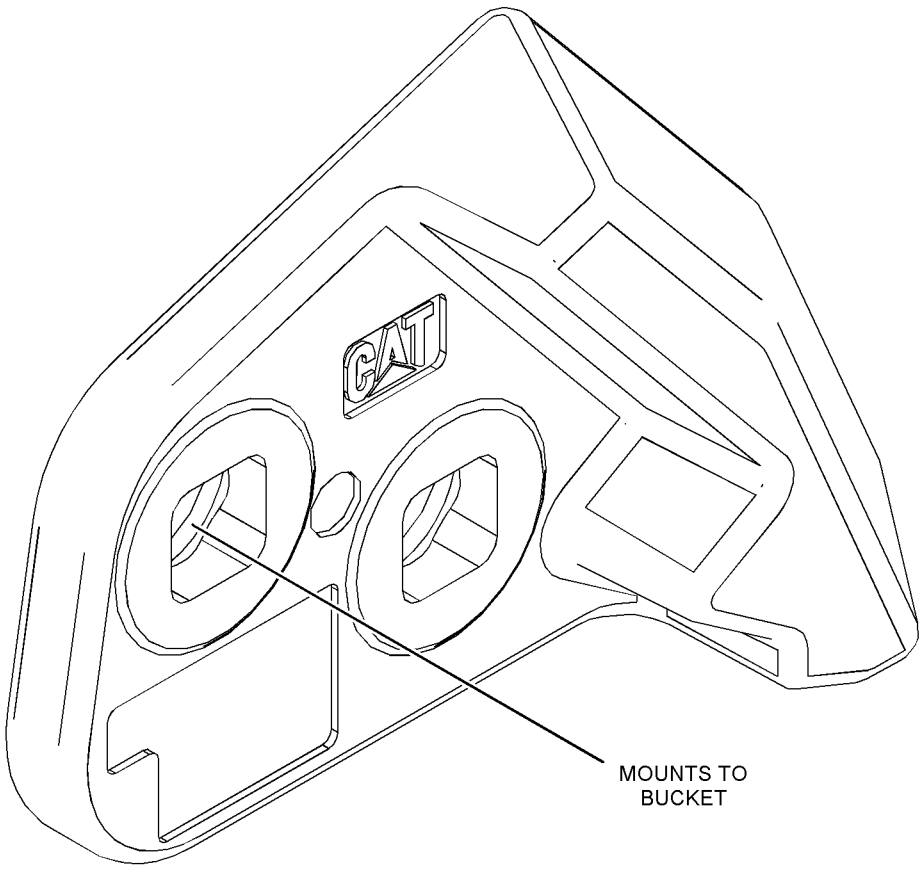

GRAPHIC #1 <END> g06241295

519-8493 GUARD-BUCKET CORNER—RH

S/N: 9BL1-UP

FIELD INSTALLATION

SMCS-6816 **i07157658**

NOTE	REF NO	GRAPHIC REF	PART NUMBER	QTY	PART NAME 1 2 3 4 5 6 (PRODUCT LEVEL)	SEE PAGE

(NO SERVICED PARTS)

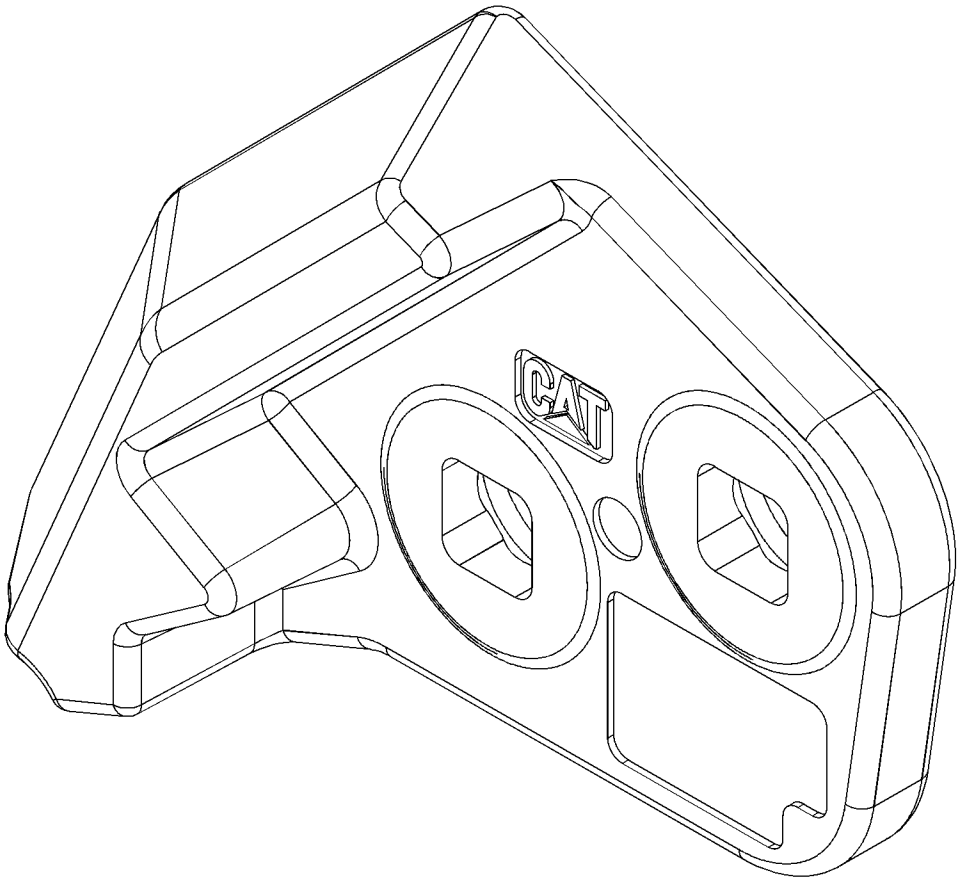

GRAPHIC #1 <END> g06239469

519-8494 GUARD-BUCKET CORNER–LH

S/N: 9BL1-UP

FIELD INSTALLATION

SMCS-6816 **i07157669**

NOTE	REF NO	GRAPHIC REF	PART NUMBER	QTY	PART NAME 1 2 3 4 5 6 (PRODUCT LEVEL)	SEE PAGE
					(NO SERVICED PARTS)	

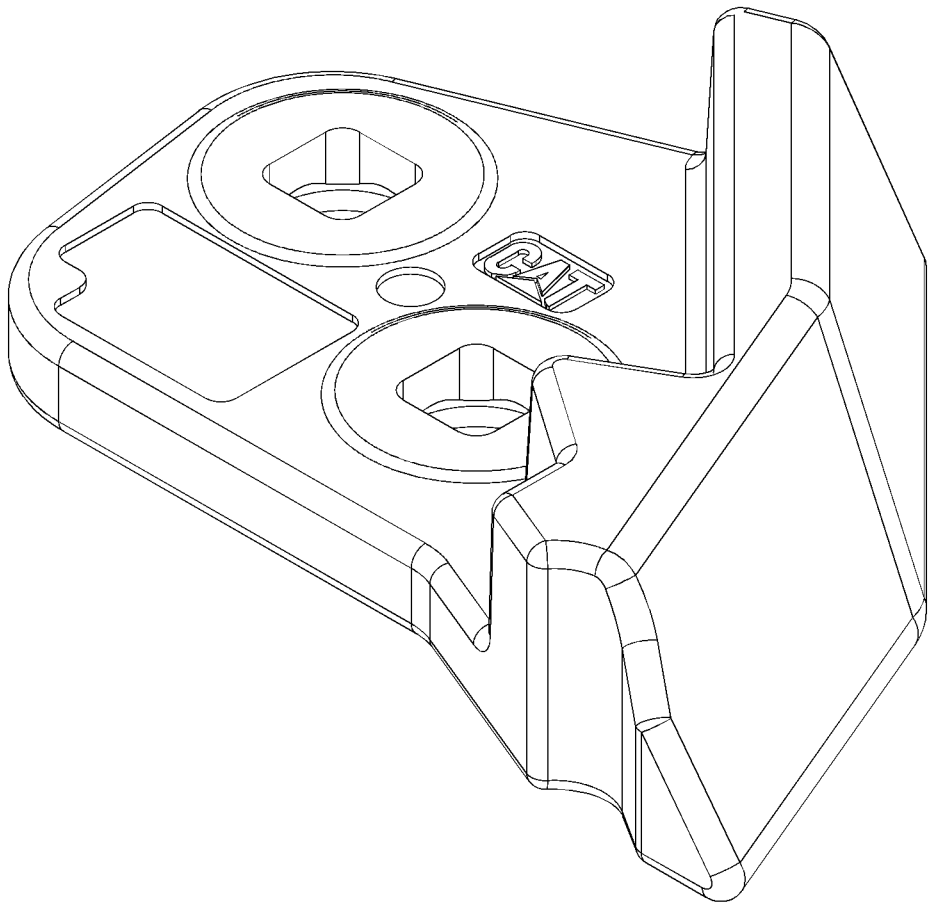

GRAPHIC #1 <END> g06239735

8E-6127 MOUNTING GP-RIPPER

S/N: 9JH1-UP
PART OF 8E-6126 RIPPER AR
AN ATTACHMENT

SMCS-6165, 6310, 6324

i00569341

NOTE	REF NO	GRAPHIC REF	PART NUMBER	QTY	PART NAME 1 2 3 4 5 6 (PRODUCT LEVEL)	SEE PAGE
	1	1	**2H-3725**	2	BOLT (3/4-16X1.5-IN)	
	2	1	**7K-9208**	4	SEAL-LIP TYPE	
	3	1	**7B-2289**	2	BOLT (1-1/4-12X2.25-IN)	
	4	1	**3G-1066**	2	SPACER (34X90X18-MM THK)	
	5	1	**6D-4986**	8	STUD-TAPERLOCK (7/8-9X5.51-IN)	
	6	1	**6K-0545**	8	LOCKNUT (7/8-9-THD)	
	7	1	**105-9692**	2	PIN	
	8	1	**2G-2885**	2	WASHER (20.6X114.3X12-MM THK)	
	9	1	**122-6686**	2	BLOCK AS	
					(EACH INCLUDES)	
	10	1	**3G-1077**	1	BEARING	
	11	1	**8K-0589**	2	DOWEL	

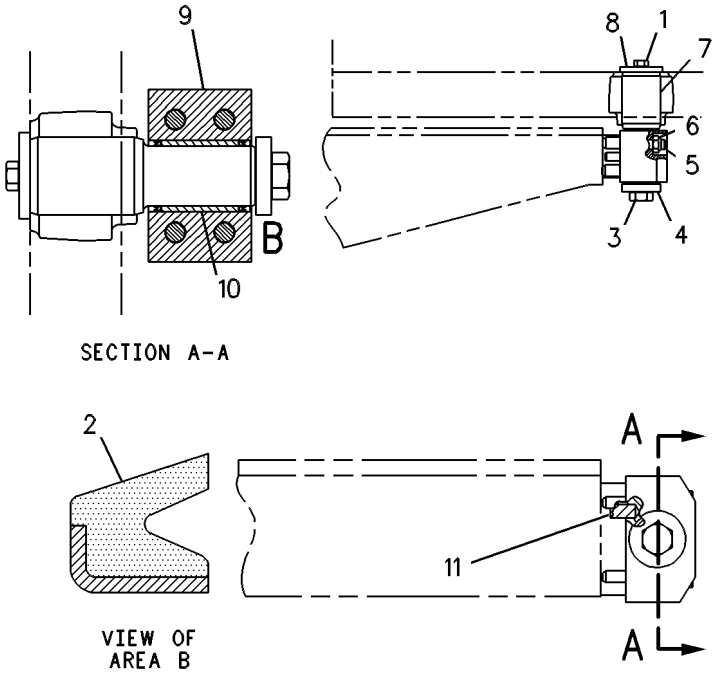

GRAPHIC #1

<END>

g00267945

8E-6126 RIPPER AR

S/N: 9JH1-UP

AN ATTACHMENT

SMCS-6310 **i00569338**

NOTE	PART NUMBER	QTY	PART NAME 1 2 3 4 5 6 (PRODUCT LEVEL)	SEE PAGE
Y	*8E-6128*	1	CYLINDER & MTG GP-RIPPER	543
Y	*8Y-9704*	1	LINES GP-RIPPER	591
Y	*8E-6127*	1	MOUNTING GP-RIPPER	818
Y	*122-6688*	1	RIPPER GP	820

Y - SEPARATE ILLUSTRATION

<END>

122-6688 RIPPER GP

S/N: 9JH1-UP
PART OF 8E-6126 RIPPER AR
AN ATTACHMENT

SMCS-6310, 6325

i01985738

NOTE	REF NO	GRAPHIC REF	PART NUMBER	QTY	PART NAME 1 2 3 4 5 6 (PRODUCT LEVEL)	SEE PAGE
	1	1	**3B-5325**	3	PIN-COTTER	
Y	2	1	*3G-0109*	3	TOOTH GP-RIPPER	830
	3	1	**122-6687**	1	CARRIAGE AS	
	3A	1	**4T-9566**	1	PIN	
	3B	1	**160-2379**	1	PIN	
	3C	1	**4T-9565**	2	PLATE	
	3D	1	**160-2377**	1	CHANNEL AS	
	3E	1	**160-2378**	1	CHANNEL	

Y - SEPARATE ILLUSTRATION

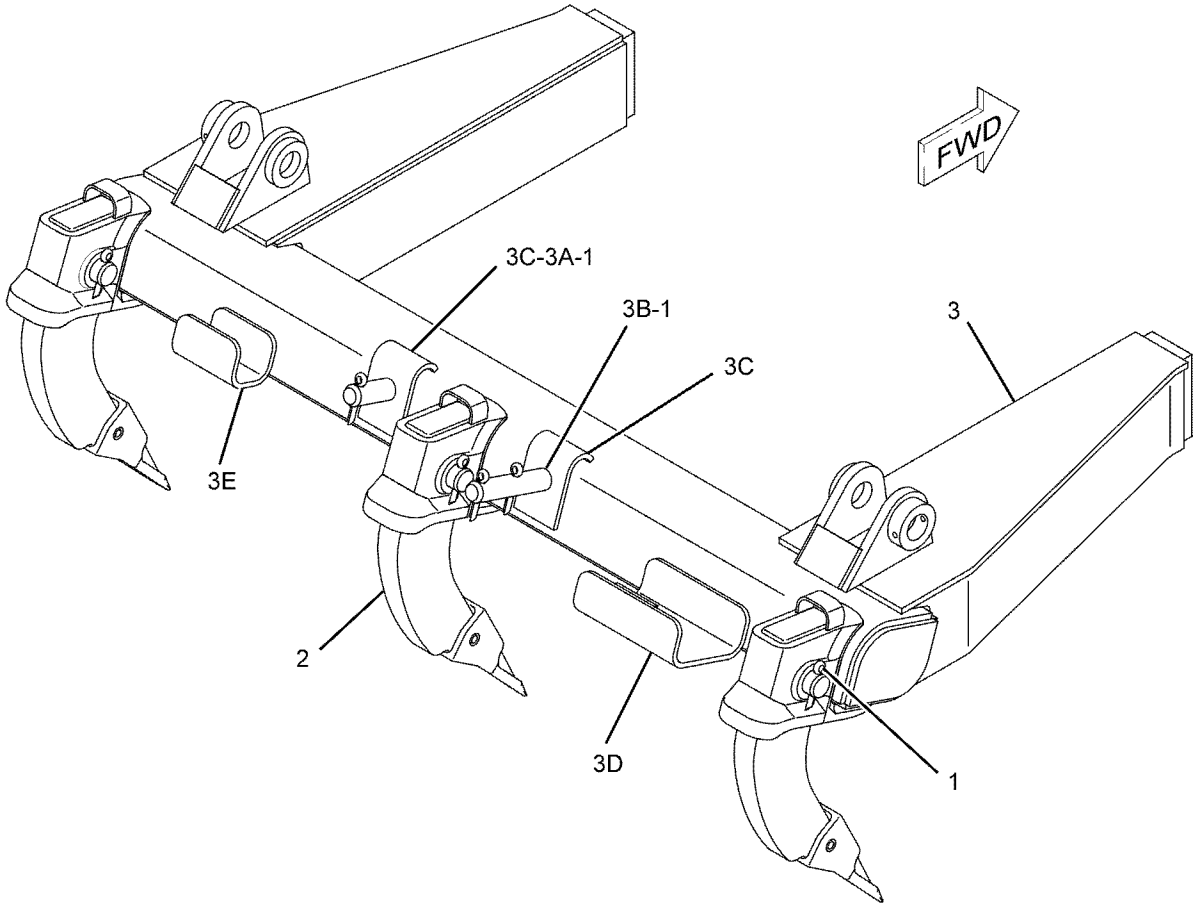

GRAPHIC #1 <END> g01032327

8J-4955 TIP GP-LONG–J-350

S/N: 9JH1-UP; 9BL1-UP
PART OF 8Y-9646 TIP GP-LONG, 3G-4055 TOOTH GP-LONG
AN ATTACHMENT

SMCS-6805 **i05335149**

NOTE	REF NO	GRAPHIC REF	PART NUMBER	QTY	PART NAME 1 2 3 4 5 6 (PRODUCT LEVEL)	SEE PAGE
	1	1	**114-0359**	1	RETAINER AS	
	2	1	**1U-3352**	1	TIP-LONG	
	3	1	**114-0358**	1	PIN	

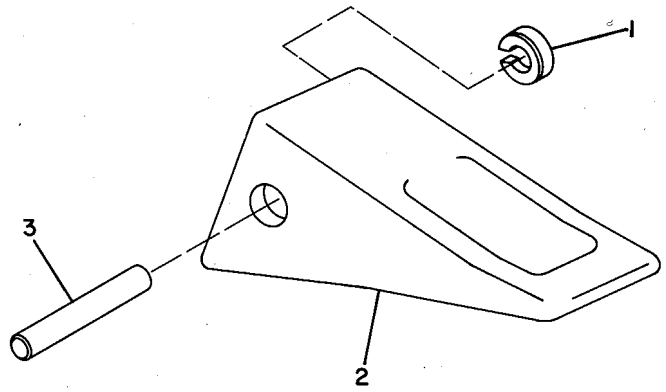

GRAPHIC #1 <END> g00112122

8Y-9646 TIP GP-LONG

S/N: 9JH1-UP

FOR USE WITH FLUSH MOUNTED TEETH BUCKETS ONLY

AN ATTACHMENT

SMCS-6805 **i00568569**

NOTE	PART NUMBER	QTY	PART NAME 1 2 3 4 5 6 (PRODUCT LEVEL)	SEE PAGE
Y	*8J-4955*	8	TIP GP-LONG (J-350)	821

Y - SEPARATE ILLUSTRATION

<END>

9J-3167 TIP GP-LONG–J-300

S/N: 9BL1-UP
PART OF 3G-4013 TOOTH GP-LONG
AN ATTACHMENT

SMCS-6805 **i01749780**

NOTE	REF NO	GRAPHIC REF	PART NUMBER	QTY	PART NAME 1 2 3 4 5 6 (PRODUCT LEVEL)	SEE PAGE
	1	1	**107-3308**	1	PIN	
	2	1	**8E-6259**	1	RETAINER AS	
	3	1	**1U-3302**	1	TIP-LONG	

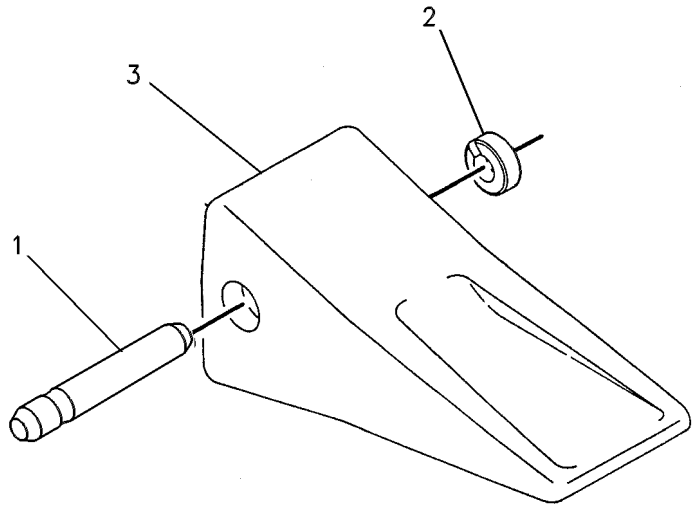

GRAPHIC #1 <END> g00245534

8J-4954 TIP GP-SHORT–J-350

S/N: 9BL1-UP
PART OF 8Y-9766 TIP GP-SHORT
AN ATTACHMENT

SMCS-6805 **i00569370**

NOTE	REF NO	GRAPHIC REF	PART NUMBER	QTY	PART NAME 1 2 3 4 5 6 (PRODUCT LEVEL)	SEE PAGE
	1	1	**114-0358**	1	PIN	
	2	1	**114-0359**	1	RETAINER AS	
	3	1	**1U-3351**	1	TIP-SHORT (J-350)	

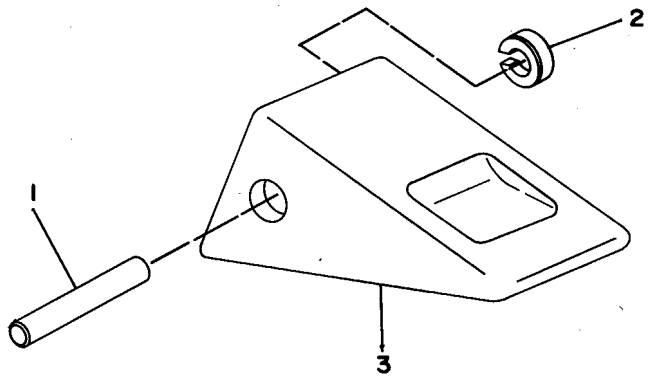

GRAPHIC #1 <END> g00118345

8Y-9766 TIP GP-SHORT

S/N: 9BL1-UP

FOR USE WITH FLUSH MOUNTED TEETH BUCKET ONLY

AN ATTACHMENT

SMCS-6805 **i00568611**

NOTE	PART NUMBER	QTY	PART NAME 1 2 3 4 5 6 (PRODUCT LEVEL)	SEE PAGE
Y	*8J-4954*	8	TIP GP-SHORT (J-350)	824

Y - SEPARATE ILLUSTRATION

<END>

9J-3175 TIP GP-SHORT–J-300

S/N: 9BL1-UP

PART OF 3G-4014 TOOTH GP-SHORT

AN ATTACHMENT

SMCS-6805 **i01749759**

NOTE	REF NO	GRAPHIC REF	PART NUMBER	QTY	PART NAME 1 2 3 4 5 6 (PRODUCT LEVEL)	SEE PAGE
	1	1	**107-3308**	1	PIN	
	2	1	**8E-6259**	1	RETAINER AS	
	3	1	**1U-3301**	1	TIP-SHORT	

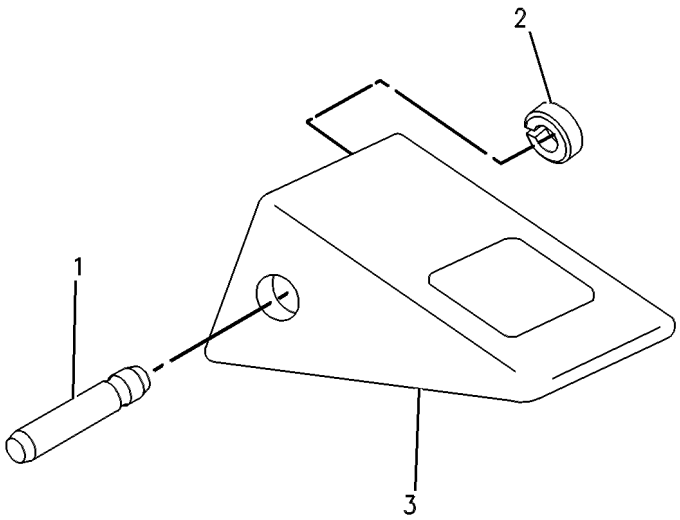

GRAPHIC #1 <END> g00121917

3G-4013 TOOTH GP-LONG

S/N: 9BL1-UP
FOR USE WITH MULTIPURPOSE BUCKET ONLY
AN ATTACHMENT

SMCS-6822 **i00567252**

NOTE	REF NO	GRAPHIC REF	PART NUMBER	QTY	PART NAME 1 2 3 4 5 6 (PRODUCT LEVEL)	SEE PAGE
	1	1	**6V-6535**	2	BOLT-PLOW (1-1/4-7X3.74-IN)	
	2	1	**8J-2933**	12	NUT (1-8-THD)	
	3	1	**3G-4309**	1	ADAPTER-STRAP (RH)	
		1	**3G-4308**	1	ADAPTER-STRAP (LH)	
Y	4	1	*9J-3167*	8	TIP GP-LONG (J-300)	823
	5	1	**4T-4307**	6	ADAPTER-STRAP	
	6	1	**8J-2928**	6	BOLT-PLOW (1-8X3.75-IN)	
	7	1	**5P-8136**	6	BOLT-PLOW (1-8X4-IN)	
	8	1	**5P-8362**	2	NUT (1-1/4-7-THD)	

Y - SEPARATE ILLUSTRATION

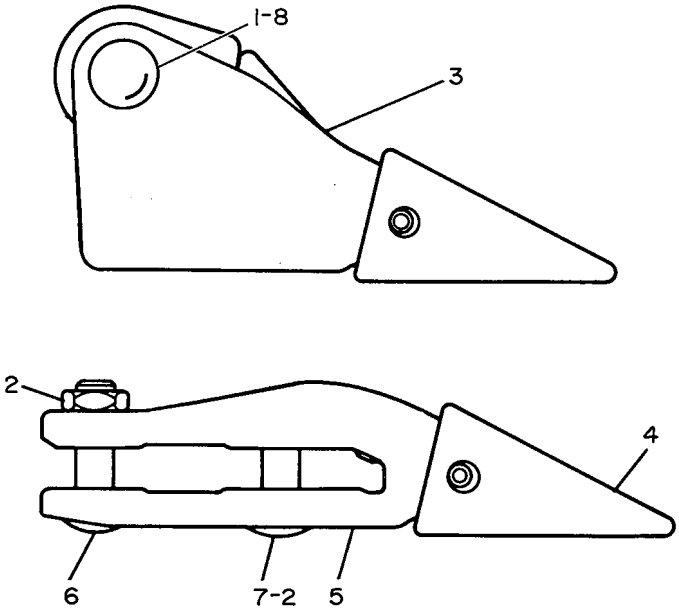

GRAPHIC #1 <END> g00138818

3G-4055 TOOTH GP-LONG

S/N: 9BL1-UP

FOR USE WITH GENERAL PURPOSE OR MULTIPURPOSE BUCKET

AN ATTACHMENT

SMCS-6822 **i00786528**

NOTE	REF NO	GRAPHIC REF	PART NUMBER	QTY	PART NAME 1 2 3 4 5 6 (PRODUCT LEVEL)	SEE PAGE
	1	1	**5P-8823**	2	BOLT-PLOW (1-1/4-7X4.13-IN)	
	2	1	**5P-8362**	14	NUT (1-1/4-7-THD)	
	3	1	**3G-5359**	1	ADAPTER-STRAP (RH)	
		1	**3G-5358**	1	ADAPTER-STRAP (LH)	
Y	4	1	*8J-4955*	8	TIP GP-LONG (J-350)	821
	5	1	**3G-3357**	6	ADAPTER	
	6	1	**5P-8361**	12	BOLT-PLOW (1-1/4-7X4.92-IN)	

Y - SEPARATE ILLUSTRATION

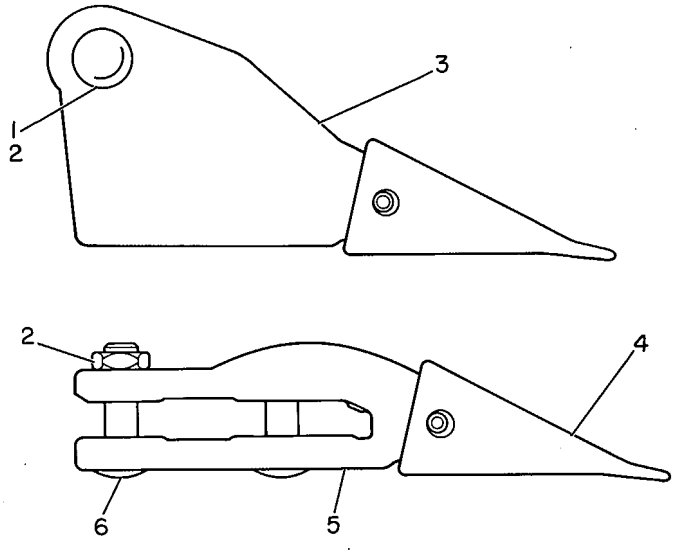

GRAPHIC #1 <END> g00123672

8E-5797 TOOTH GP-LONG

S/N: 9BL1-UP

FOR USE WITH GENERAL PURPOSE BUCKET

AN ATTACHMENT

SMCS-6822 **i01196486**

NOTE	REF NO	GRAPHIC REF	PART NUMBER	QTY	PART NAME 1 2 3 4 5 6 (PRODUCT LEVEL)	SEE PAGE
	1	1	**5P-8823**	2	BOLT-PLOW (1-1/4-7X4.13-IN)	
		1	**6V-8360**	12	BOLT-PLOW (1-1/4-7X4.53-IN)	
	2	1	**5P-8362**	14	NUT (1-1/4-7-THD)	
	3	1	**3G-5359**	1	ADAPTER-STRAP (RH)	
		1	**3G-5358**	1	ADAPTER-STRAP (LH)	
	4	1	**1U-3352**	1	TIP-LONG	
		1	**8E-6358**	1	PIN	
		1	**8E-6359**	1	RETAINER AS	
	5	1	**170-0073**	6	ADAPTER	

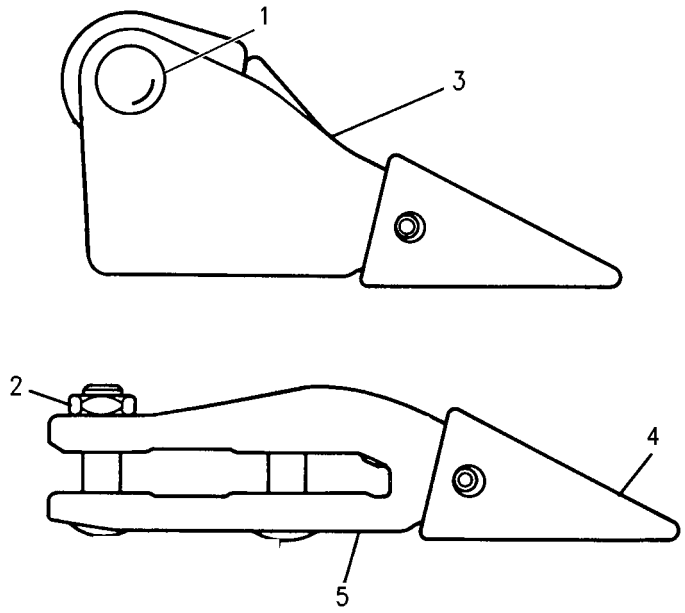

GRAPHIC #1 <END> g00640008

3G-0109 TOOTH GP-RIPPER—CURVED

S/N: 9JH1-UP
PART OF 122-6688 RIPPER GP
AN ATTACHMENT

SMCS-6808, 6810

i01139798

NOTE	REF NO	GRAPHIC REF	PART NUMBER	QTY	PART NAME 1 2 3 4 5 6 (PRODUCT LEVEL)	SEE PAGE
	1	1	**3B-5325**	2	PIN-COTTER	
	2	1	**2K-6413**	1	PIN	
	3	1	**9J-8913**	1	SHANK-RIPPER	
	4	1	**136-8308**	1	PIN	
	5	1	**6Y-0309**	1	TIP-RIPPER	
	6	1	**114-0359**	1	RETAINER AS	

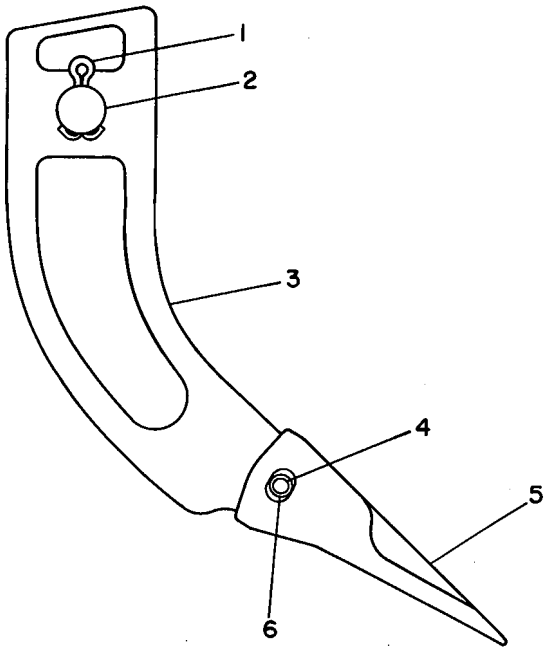

GRAPHIC #1 <END> g00173601

3G-4014 TOOTH GP-SHORT

S/N: 9BL1-UP
FOR USE WITH MULTIPURPOSE BUCKETS ONLY
AN ATTACHMENT

SMCS-6822 **i00567258**

NOTE	REF NO	GRAPHIC REF	PART NUMBER	QTY	PART NAME 1 2 3 4 5 6 (PRODUCT LEVEL)	SEE PAGE
	1	1	**6V-6535**	2	BOLT-PLOW (1-1/4-7X3.74-IN)	
	2	1	**5P-8362**	2	NUT (1-1/4-7-THD)	
	3	1	**3G-4309**	1	ADAPTER-STRAP (RH)	
		1	**3G-4308**	1	ADAPTER-STRAP (LH)	
CY	4	1	*9J-3175*	8	TIP GP-SHORT	826
	5	1	**3G-4307**	6	ADAPTER-STRAP	
	6	1	**8J-2928**	6	BOLT-PLOW (1-8X3.75-IN) (9.53CM)	
	7	1	**8J-2933**	12	NUT (1-8-THD)	
	8	1	**5P-8136**	6	BOLT-PLOW (1-8X4-IN)	

C - CHANGE FROM PREVIOUS TYPE
Y - SEPARATE ILLUSTRATION

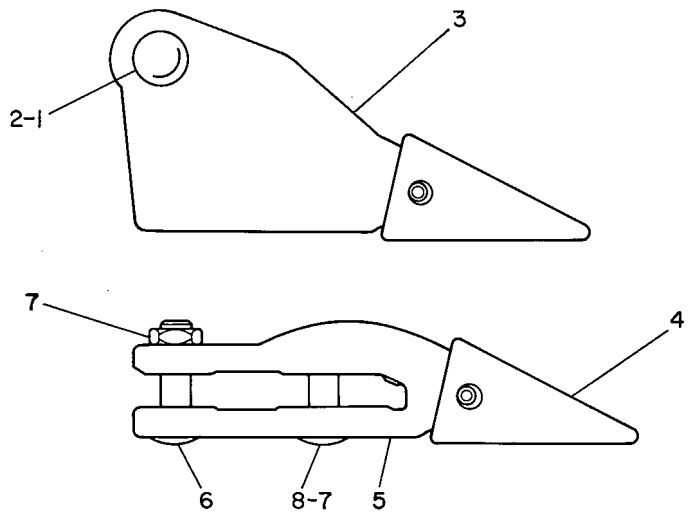

GRAPHIC #1 <END> g00207480

8E-5796 TOOTH GP-SHORT

S/N: 9BL1-UP

FOR USE WITH GENERAL PURPOSE BUCKET ONLY

AN ATTACHMENT

SMCS-6822 **i01196482**

NOTE	REF NO	GRAPHIC REF	PART NUMBER	QTY	PART NAME 1 2 3 4 5 6 (PRODUCT LEVEL)	SEE PAGE
	1	1	**6V-8360**	14	BOLT-PLOW (1-1/4-7X4.53-IN)	
	2	1	**5P-8362**	14	NUT (1-1/4-7-THD)	
	3	1	**3G-5358**	1	ADAPTER-STRAP (LH)	
		1	**3G-5359**	1	ADAPTER-STRAP (RH)	
	4	1	**1U-3351**	1	TIP-SHORT (J-350)	
		1	**8E-6358**	1	PIN	
		1	**8E-6359**	1	RETAINER AS	
	5	1	**170-0073**	6	ADAPTER	

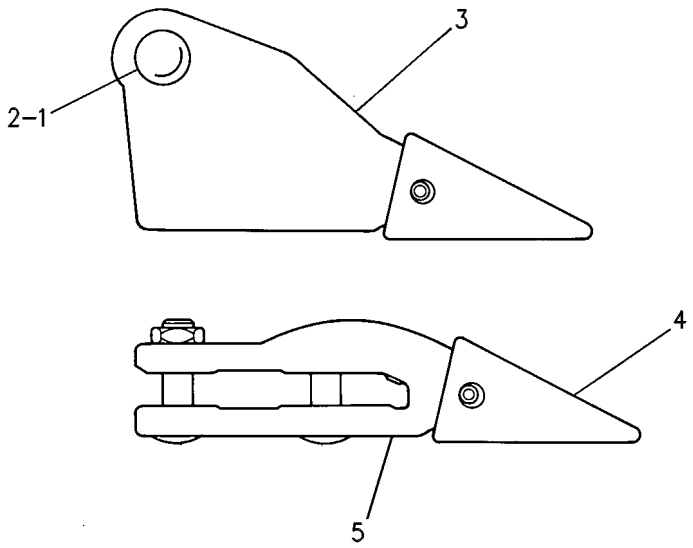

GRAPHIC #1 <END> g00247293

1U-2427 TOOTH GP-UNI

S/N: 9BL1-UP

FOR USE WITH GENERAL PURPOSE BUCKETS ONLY

AN ATTACHMENT

SMCS-6822 **i02362403**

NOTE	REF NO	GRAPHIC REF	PART NUMBER	QTY	PART NAME 1 2 3 4 5 6 (PRODUCT LEVEL)	SEE PAGE
	1	1	**6V-8360**	12	BOLT-PLOW (1-1/4-7X4.53-IN)	
	2	1	**5P-8362**	14	NUT (1-1/4-7-THD)	
	3	1	**5P-8823**	2	BOLT-PLOW (1-1/4-7X4.13-IN)	
	4	1	**1U-1888**	1	TOOTH	
	5	1	**1U-1887**	6	TOOTH-UNI	
	6	1	**1U-1889**	1	TOOTH-UNI (RH)	

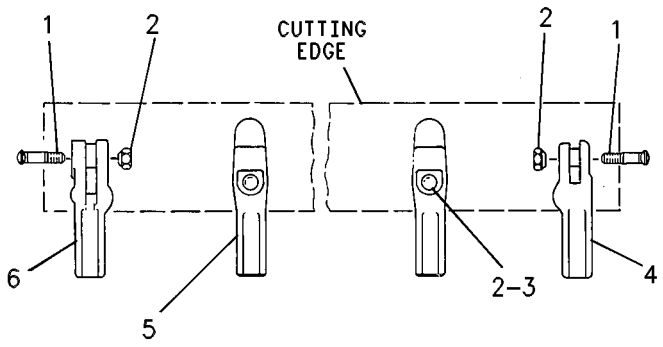

GRAPHIC #1 <END> g01180058

105-4555 FILM GP

S/N: 9BL1-UP

PART OF 104-2690 PLATE & FILM GP

SMCS-7405, 7557

i01401219

NOTE	REF NO	GRAPHIC REF	PART NUMBER	QTY	PART NAME 1 2 3 4 5 6 (PRODUCT LEVEL)	SEE PAGE
	1	1	**9X-2904**	1	FILM-STRIPE (REAR)	
	2	1	**110-4659**	2	FILM-STRIPE	
	3	1	**110-4661**	1	FILM-STRIPE (LEFT SIDE)	
		1	**110-4660**	1	FILM-STRIPE (RIGHT SIDE)	
	4	1	**086-0636**	2	FILM-IDENTIFICATION (CAT)	

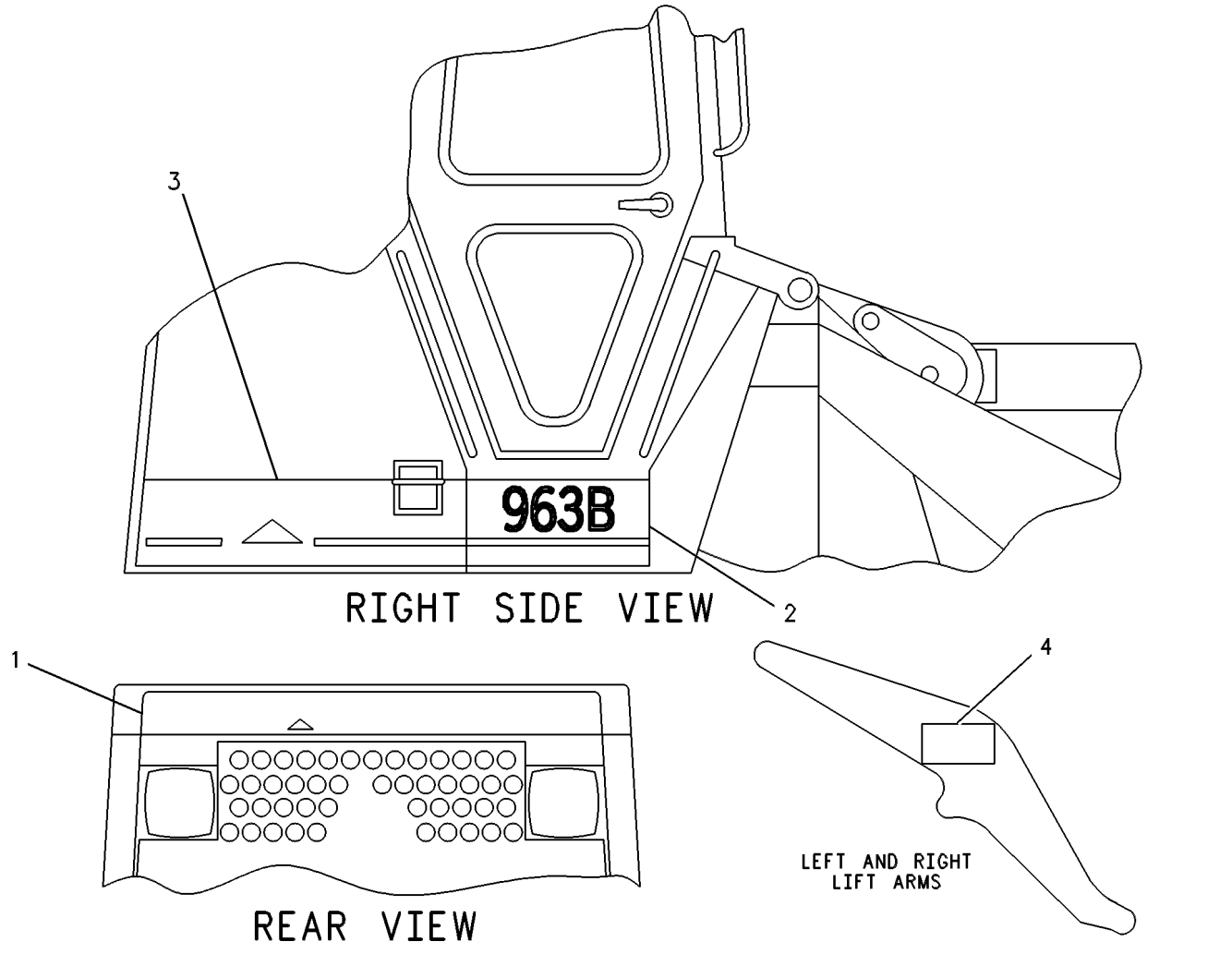

GRAPHIC #1 <END> g00259269

8F-9866 GREASE GUN GP

S/N: 9BL1-UP
PART OF 6V-2121 TOOL GP-HAND
AN ATTACHMENT

SMCS-0646 **i01400900**

NOTE	REF NO	GRAPHIC REF	PART NUMBER	QTY	PART NAME 1 2 3 4 5 6 (PRODUCT LEVEL)	SEE PAGE
	1	1	**190-1669**	1	HOSE AS	
	2	1	**9F-2637**	1	FITTING	
	3	1	**190-1668**	1	COUPLER-GREASE	

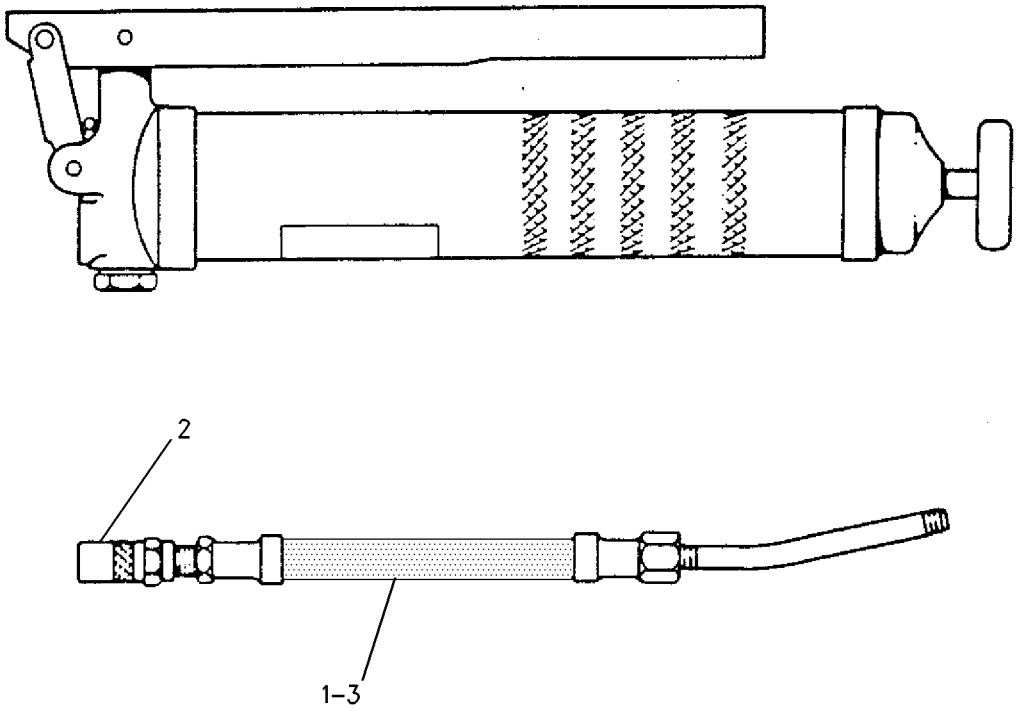

GRAPHIC #1 <END> g00738117

196-6931 KIT-GASKET—OIL COOLER, LINES

S/N: 9BL1-UP

KIT CONTAINS GASKETS AND SEALS TO ASSEMBLE AND REINSTALL THE OIL COOLERS, OIL FILTER BASE, AND ATTACHING LINES.

FOR USE WITH 117-5188—PAGE: 10

FIELD INSTALLATION

SMCS-7555 **i07431279**

NOTE	PART NUMBER	QTY	PART NAME 1 2 3 4 5 6 (PRODUCT LEVEL)	SEE PAGE
	240-2767	1	GASKET	
	300-7933	1	GASKET (ENGINE OIL FILTER BASE)	
	3J-1907	1	SEAL-O-RING	
	3P-1156	2	SEAL-O-RING	
	238-5081	2	SEAL-O-RING	
			FOR A LIST OF RELATED PARTS THAT MAY BE REQUIRED FOR THE ENGINE REBUILD TO THE KIT CONSIST, PLEASE VISIT	
			HTTP://DEALER.CAT.COM/RELATED	
			<END>	

266-7276 KIT-GASKET—CENTRAL, LOWER STRUCTURE

S/N: 9BL1-UP

KIT CONTAINS THE GASKETS, SEALS & BENDABLE LOCKS TO REINSTALL THE OIL PAN, INTERNAL OIL PUMP & BLOCK COVERS

FOR USE WITH 117-5188—PAGE: 10

FIELD INSTALLATION

SMCS-7555 **i06197669**

NOTE	PART NUMBER	QTY	PART NAME 1 2 3 4 5 6 (PRODUCT LEVEL)	SEE PAGE
	4Y-9652	3	GASKET	
	7C-0358	1	GASKET	
	7C-1159	1	GASKET	
	7W-5340	1	GASKET	
	261-3816	1	GASKET-OIL PAN (ENGINE)	
	2M-9780	1	SEAL-O-RING	
	3D-2824	2	SEAL-O-RING	
	3J-1907	3	SEAL-O-RING	
	3K-0360	3	SEAL-O-RING	
	3P-1156	2	SEAL-O-RING	
	4F-7391	1	SEAL-O-RING	
	4F-9653	1	SEAL-O-RING	
	4K-1388	1	SEAL-O-RING	
	5F-9657	1	SEAL-O-RING	
	6L-2609	1	SEAL-RUBBER	
			FOR A LIST OF RELATED PARTS THAT MAY BE REQUIRED FOR THE ENGINE REBUID TO THE KIT CONSIST, PLEASE VISIT	
			HTTP://DEALER.CAT.COM/RELATED	
			<END>	

269-9174 KIT-GASKET

S/N: 9BL1-UP

KIT CONTAINS GASKETS AND SEALS TO REINSTALL THE TURBOS AND ATTACHING LINES

FOR USE WITH 117-5187—PAGE: 8

FIELD INSTALLATION

SMCS-7555 **i06034746**

NOTE	REF NO	GRAPHIC REF	PART NUMBER	QTY	PART NAME 1 2 3 4 5 6 (PRODUCT LEVEL)	SEE PAGE
	1	1	**1S-7057**	1	GASKET	
	2	1	**7C-7431**	1	GASKET (TURBOCHARGER)	
	3	1	**7W-2398**	1	GASKET (OIL DRAIN)	
M	4	1	**3E-8017**	4	LOCKNUT (M10X1.5-THD)	
	5	1	**3J-1907**	1	SEAL-O-RING	
	6	1	**4F-7391**	1	SEAL-O-RING	
	7	1	**6V-8397**	1	SEAL-O-RING	
	8	1	**9M-4849**	1	SEAL-O-RING	
M	9	1	**418-6781**	4	STUD-TAPERLOCK (M10X1.5X40-MM)	
					FOR A LIST OF RELATED PARTS THAT MAY BE REQUIRED FOR THE ENGINE REBUILD TO THE KIT CONSIST, PLEASE VISIT	
					HTTP://DEALER.CAT.COM/RELATED	

M - METRIC PART

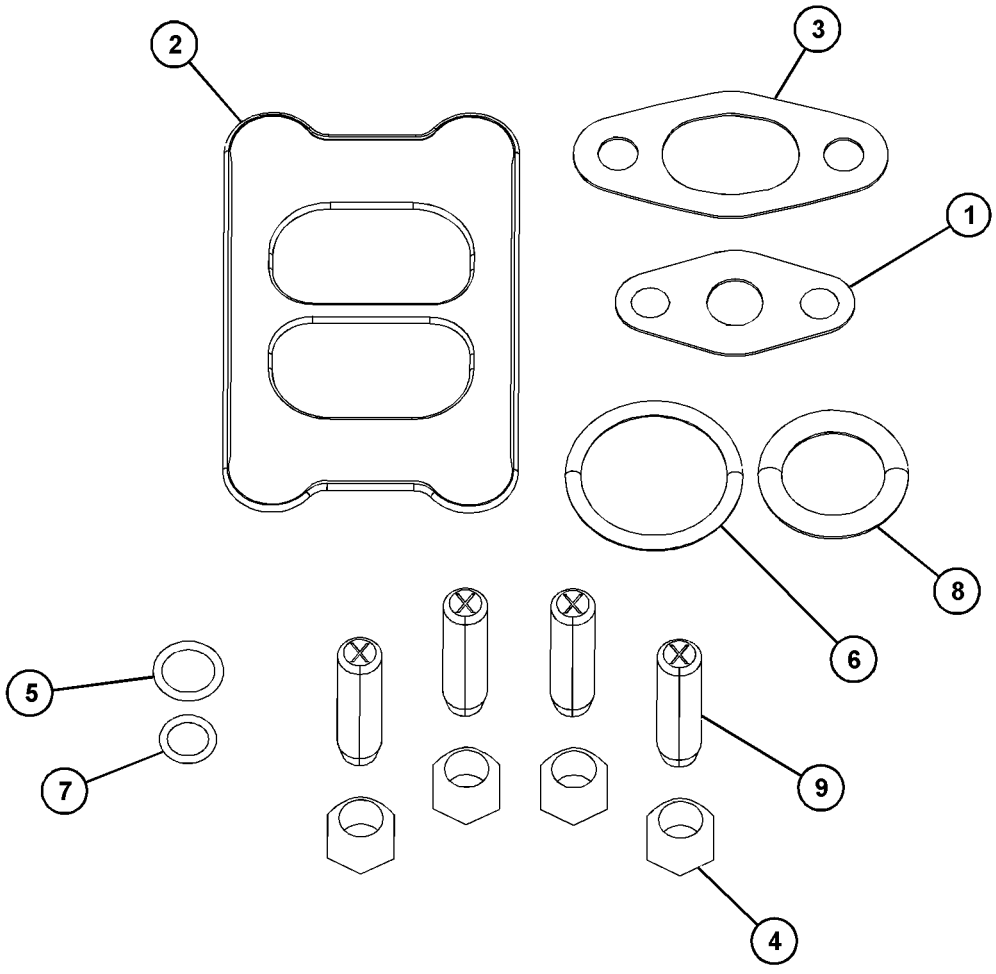

GRAPHIC #1 <END> g03750861

288-0554 KIT-GASKET—FRONT STRUCTURE

S/N: 9BL1-UP

CONTAINS GASKETS, SEAL, & BENDABLE LOCKS TO REINSTALL THE FRONT COVER. THIS KIT DOES NOT INCLUDE THE OIL PAN GASKET.

FOR USE WITH 117-5188—PAGE: 10

FIELD INSTALLATION

SMCS-7555 **i06203603**

NOTE	PART NUMBER	QTY	PART NAME 1 2 3 4 5 6 (PRODUCT LEVEL)	SEE PAGE
	4R-9999	1	EXCLUDER-CRANKSHAFT SEAL	
	7W-6552	1	GASKET	
	7E-0844	1	SEAL	
	245-7339	1	SEAL-CRANKSHAFT (FRONT)	
	135-9819	1	SEAL-INTEGRAL	
	2J-0157	1	SEAL-O-RING	
	2M-9780	1	SEAL-O-RING	
	3K-0360	1	SEAL-O-RING	
	1T-1068	1	SEAL-O-RING	
	3D-2824	1	SEAL-O-RING	
	3J-1907	2	SEAL-O-RING	
	6F-6673	1	SEAL-O-RING	
	6V-8397	2	SEAL-O-RING	
	6V-9746	2	SEAL-O-RING	
			FOR A LIST OF RELATED PARTS THAT MAY BE REQUIRED FOR THE ENGINE REBUILD IN ADDITION TO THE KIT CONSIST, PLEASE VISIT	
			HTTPS://DEALER.CAT.COM/RELATED	
			<END>	

290-0186 KIT-GASKET—REAR STRUCTURE

S/N: 9BL1-UP

KIT CONTAINS GASKETS, SEALS, AND BENDABLE LOCKS TO REINSTALL THE REAR COVER, KIT DOES NOT INCLUDE OIL PAN GASKET.

FOR USE WITH 117-5188—PAGE: 10

FIELD INSTALLATION

SMCS-7555 **i06569846**

NOTE	PART NUMBER	QTY	PART NAME 1 2 3 4 5 6 (PRODUCT LEVEL)	SEE PAGE
	3K-3257	1	GASKET	
	239-0583	1	GASKET	
	7L-2894	1	GASKET	
	2P-1294	1	PLUG-SEAL	
	247-1876	1	SEAL	
	222-3909	1	SEAL GP-CRANKSHAFT (REAR)	
	214-7566	1	SEAL-O-RING	
			FOR A LIST OF RELATED PARTS THAT REQUIRED FOR THE ENGINE REBUILD TO THE KIT CONSIST, PLEASE VISIT	
			HTTP://DEALER.CAT.COM/RELATED	
			<END>	

437-3810 KIT-GASKET—SINGLE CYLINDER HEAD

S/N: 9BL1-UP

CONTAINS THE GASKETS, SEALS, & BENDABLE LOCKS TO REBUILD & REINSTALL A SINGLE CYLINDER HEAD. KIT INCLUDES THE TURBO GASKETS, BUT DOES NOT INCLUDE THE FUEL INJECTOR SEALS. ORDER A SINGLE INJECTOR SEAL KIT, AS NEEDED. FOR IN LINE 4 & 6 CYLINDER ENGINES WITH ONE CYLINDER HEAD ONLY. THE FOLLOWING TURBO MOUNTING HARDWARE WILL BE INCLUDED: BOLTS, NUTS, STUDS, WASHERS, SPACERS. APPLIES TO SINGLE CYLINDER HEAD KIT PART NUMBERS 317-8750-UP

FOR USE WITH 6I-3528—PAGE: 12

FIELD INSTALLATION

SMCS-7555 **i05523514**

NOTE	PART NUMBER	QTY	PART NAME 1 2 3 4 5 6 (PRODUCT LEVEL)	SEE PAGE
	1S-7057	2	GASKET	
	7C-1152	1	GASKET	
	7C-1159	1	GASKET	
	7C-7431	1	GASKET (TURBOCHARGER)	
	7W-2398	2	GASKET (OIL DRAIN)	
	8H-9788	1	GASKET	
	107-7832	1	GASKET	
	113-6200	3	GASKET	
	113-6250	1	GASKET	
	119-2940	1	GASKET (VALVE COVER)	
	125-8842	2	GASKET	
	188-6126	1	GASKET	
	2W-7212	1	GASKET-WATER REGULATOR	
	195-7339	1	GASKET-WATER REGULATOR	
	156-0235	6	LOCK	
M	**3E-8017**	4	LOCKNUT (M10X1.5-THD)	
	7E-0844	1	SEAL	
	1J-9671	3	SEAL-O-RING	
	3D-2824	2	SEAL-O-RING	
	3J-1907	13	SEAL-O-RING	
	3J-7354	2	SEAL-O-RING	
	3K-0360	7	SEAL-O-RING	
	4J-5477	2	SEAL-O-RING	
	4L-9564	1	SEAL-O-RING	
	5F-7054	1	SEAL-O-RING	
	5P-7813	2	SEAL-O-RING	
	6F-6673	1	SEAL-O-RING	
	6V-8397	7	SEAL-O-RING	
	8H-2046	1	SEAL-O-RING	
	9M-4849	2	SEAL-O-RING	
	119-3036	12	SEAL-VALVE STEM	
M	**418-6781**	4	STUD-TAPERLOCK (M10X1.5X40-MM)	

FOR A LIST OF RELATED PARTS THAT REQUIRED FOR THE ENGINE REBUILD TO THE KIT CONSISST, PLEASE VISIT

HTTPS://DEALER.CAT.COM/RELATED

M - METRIC PART

<END>

438-4341 KIT-GASKET—OIL COOLER, LINES

S/N: 9BL1-UP

CONTAINS THE GASKETS & SEALS TO ASSEMBLE & REINSTALL THE OIL COOLER(S), OIL FILTER BASE & ATTACHING LINES

FOR USE WITH 6I-3528—PAGE: 12

FIELD INSTALLATION

SMCS-7555 **i07432377**

NOTE	PART NUMBER	QTY	PART NAME 1 2 3 4 5 6 (PRODUCT LEVEL)	SEE PAGE
	1S-7057	1	GASKET	
	240-2767	1	GASKET	
	300-7933	1	GASKET (ENGINE OIL FILTER BASE)	
	214-7568	1	SEAL-O-RING	
	228-7089	1	SEAL-O-RING	
	2M-9780	1	SEAL-O-RING	
	3J-1907	1	SEAL-O-RING	
	3P-1156	2	SEAL-O-RING	
	6V-8397	1	SEAL-O-RING	
	238-5081	2	SEAL-O-RING	
			FOR A LIST OF RELATED PARTS THAT REQUIRED FOR THE ENGINE REBUILD TO THE KIT CONSISST, PLEASE VISIT	
			HTTPS://DEALER.CAT.COM/RELATED	
			<END>	

461-6551 KIT-GASKET—SINGLE CYLINDER HEAD

S/N: 9BL1-UP

KIT CONTAINS GASKETS, SEALS, AND BENDABLE LOCKS TO REBUILD AND REINSTALL A CYLINDER HEAD. KIT INCLUDES TURBO GASKETS. KIT DOES NOT INCLUDE THE FUEL INJECTOR SEALS. ORDER A SINGLE INJECTOR SEAL KIT AS NEEDED. FOR IN-LINE 4 AND 6 CYLINDER ENGINE WITH ONE CYLINDER HEAD ONLY. KIT INCLUDES TURBO MOUNTING HARDWARE

FOR USE WITH 117-5187—PAGE: 8

FIELD INSTALLATION

SMCS-7555 **i06158088**

NOTE	PART NUMBER	QTY	PART NAME 1 2 3 4 5 6 (PRODUCT LEVEL)	SEE PAGE
	1S-7057	1	GASKET	
	7C-1152	3	GASKET	
	7C-1159	1	GASKET	
	7C-7431	1	GASKET	
	7W-2398	1	GASKET (OIL DRAIN)	
	107-7832	1	GASKET	
	113-6200	3	GASKET	
	113-6250	1	GASKET	
	119-2940	1	GASKET (VALVE COVER)	
	2W-7212	1	GASKET-WATER REGULATOR	
	4W-0549	1	GASKET-WATER REGULATOR	
	195-7339	1	GASKET-WATER REGULATOR	
	156-0235	6	LOCK	
M	**3E-8017**	4	LOCKNUT (M10X1.5-THD)	
	7E-0844	1	SEAL	
	1J-9671	3	SEAL-O-RING	
	3D-2824	3	SEAL-O-RING	
	3J-1907	4	SEAL-O-RING	
	3J-7354	3	SEAL-O-RING	
	3K-0360	5	SEAL-O-RING	
	4J-5477	2	SEAL-O-RING	
	6F-6673	1	SEAL-O-RING	
	6V-8397	3	SEAL-O-RING	
	5F-7054	1	SEAL-O-RING	
	8H-2046	1	SEAL-O-RING	
	9M-4849	1	SEAL-O-RING	
M	**418-6781**	4	STUD-TAPERLOCK (M10X1.5X40-MM)	
			FOR A LIST OF RELATED PARTS THAT MAY BE REQUIRED FOR THE ENGINE TO THE KIT CONSIST, PLEASE VISIT	
			HTTP://DEALER.CAT.COM/RELATED	

M - METRIC PART

<END>

104-2690 PLATE & FILM GP

S/N: 9BL1-UP

PART OF 117-1761, 8Y-9370 CHASSIS AR

SMCS-7557, 7563

i01400926

NOTE	PART NUMBER	QTY	PART NAME 1 2 3 4 5 6 (PRODUCT LEVEL)	SEE PAGE
Y	*105-4555*	1	FILM GP	834
A	**3N-3790**	1	PLATE-SERIAL NUMBER (ENGINE)	
			ON LOWER RH SIDE OF CYLINDER BLOCK TOWARDS THE REAR.	
	9X-1878	1	PLATE-IDENTIFICATION (PRODUCT IDENTIFICATION)	
			ON LH TOWER PLATE UNDER LIFT ARM PIVOT PIN.	
	3E-8154	1	PLATE-INFORMATION (SERVICE)	
			IN OPERATORS COMPARTMENT ON LEFT FRONT PANEL TO LEFT OF UNIVERSAL WARNING PLATE.	
	105-3329	1	PLATE-INSTRUCTION	
			OVER BATTERY DISCONNECT SWITCH	
	107-2746	1	PLATE-WARNING-ROPS/FOPS	
			ON LEFT SIDE OF VEHICLE MIDDLE OF THE ROPS POST.	
	6V-2674	2	PLATE-WARNING	
			ON ROPS SUPPORT ASSEMBLY BELOW PLATFORM MOUNTING BOLTS.	
	5P-8197	1	PLATE-WARNING (READ OMM)	
			IN OPERATORS COMPARTMENT ON LEFT FRONT PANEL NEAR TOP.	
	7B-3028	8	SCREW-DRIVE (NO 4X 3/16-IN)	
	8T-9530	16	TACK (METAL)	
A	**4B-4158**	4	SCREW-DRIVE (NO 4XO.25-IN)	
	4P-6464	1	FILM-INFORMATION (AIR CLEANER)	
			ON AIR CLEANER END COVER ASSEMBLY.	
	8C-4535	1	FILM-IDENTIFICATION (DIESEL FUEL)	
			ON RH SIDE OF FRAME, ON LIFT TOWER, TO RIGHT OF & CENTERED WITH THE FUEL FILLER CAP	
	6V-5868	1	FILM-HYDROSTATIC FILTER DRAIN	
			ON LEFT SIDE OF FILTER HOUSING WHEN INSTALLED ON VEHICLE, FILM SHOULD BE PLACED ON SMOOTH SURFACE & VISIBLE WHEN SIDE DOOR IS OPEN.	
	134-7258	1	FILM-INFORMATION (EXTENDED LIFE COOLANT)	
			ON RADIATOR SUPPORT, INSIDE RIGHT REAR ENGINE ENCLOSURE DOOR.	
	3E-3010	1	FILM-INSTRUCTION (HYDRAULIC OIL)	
			TO LEFT OF HYDRAULIC OIL FILL TUBE.	
	3E-3072	1	FILM-INSTRUCTION	
			IN OPERATORS COMPARTMENT ON LEFT SIDE NEXT TO GOVERNOR LEVER.	
	9X-6340	1	FILM-INSTRUCTION (ENGINE OIL)	
			ON OR NEAR THE ENGINE OIL FILL TUBE.	
	6V-2679	1	FILM-INSTRUCTION (WIPER)	
			ON LEFT SIDE OF PLATFORM ABOVE RESERVOIR CAP	
	6V-2680	1	FILM-INSTRUCTION (SINGLE LEVER CONTROL)	
			IN OPERATORS COMPARTMENT (90) DOWN FROM TOP OF RIGHT FRONT PANEL & (60) RIGHT OF TOE-BOX OPENING	
	109-8898	1	FILM-INSTRUCTION	
			NEXT TO THE ACTION LIGHT.	
	6V-5381	1	FILM-INSTRUCTION (CONDENSATE PUMP)	
			INSIDE RIGHT SMALL SERVICE DOOR CENTERED IN LEFT HALF.	

104-2690 **PLATE & FILM GP (**contd.**)** **i01400926**

NOTE	PART NUMBER	QTY	PART NAME 1 2 3 4 5 6 (PRODUCT LEVEL)	SEE PAGE
	9X-6702	1	FILM-NOTICE	
			LEFT SIDE OF FRAME, ON LIFT TOWER.	
	6V-3607	1	FILM-NOTICE (BUCKET CORNER GUARD SYSTEM)	
			LOCATE FILM ADJACENT TO SERIAL NUMBER ON BUCKET WHERE IT CAN BE CLEARLY SEEN.	
	7X-7644	5	FILM-IDENTIFICATION (TIE-DOWN)	
			4-ON SIDE OF TRACK ROLLER FRAME, NEAR FRONT AND REAR LIFT SYMBOLS (2 EA. SIDE) 1-FRONT PULL HOOK EYES. TO RIGHT OF AND SAME HEIGHT AS FRONT PULL HOOK EYES ON FRAME EQUALIZER BAR SUPPORT AS.	
	1P-2807	4	FILM-IDENTIFICATION (LIFT EYE LOCATION)	
			ON TRACK ROLLER FRAMES. UNDER FRONT IDLER & OVER REAR ROLLER	
	9X-2269	1	FILM-INFORMATION (TRANSMISSION, PARKING BRAKE)	
			ON FRONT COVER OF TRANSMISSION CONTROL CONSOLE NEXT TO SAFETY LEVER.	
	5P-9883	2	FILM-INFORMATION	
			ON OR NEAR THE TRANSMISSION OIL FILL TUBE.	
	6V-4611	2	FILM-WARNING (JUMP START, READ OMM)	
			ON INSIDE VERTICAL SURFACE OF BATTERY BOX LID.	

A - NOT PART OF THIS GROUP
Y - SEPARATE ILLUSTRATION

<END>

6V-2121 TOOL GP-HAND

S/N: 9BL1-UP

AN ATTACHMENT

SMCS-0600 **i00567162**

NOTE	REF NO	GRAPHIC REF	PART NUMBER	QTY	PART NAME 1 2 3 4 5 6 (PRODUCT LEVEL)	SEE PAGE
	1	1	**1U-7057**	1	WRENCH (9/16-IN)	
		1	**1U-7060**	1	WRENCH (3/4-IN)	
		1	**1U-7056**	1	WRENCH-COMBINATION (1/2-IN)	
	2	1	**1P-3567**	1	BIT-TOOL (19.05MM)	
	3	1	**5P-1763**	1	SOCKET-VALVE	
	4	1	**1U-7102**	1	SOCKET (9/16-IN)	
		1	**1U-7107**	1	SOCKET (7/8-IN)	
		1	**1U-7109**	1	SOCKET (1-IN)	
		1	**1U-7105**	1	SOCKET (3/4-IN)	
	5	1	**5F-4764**	1	BAR-PRY	
	6	1	**1U-7264**	1	SCREWDRIVER	
	7	1	**6V-0092**	1	SOCKET-PLUG (9.52MM)	
	8	1	**2P-8250**	1	WRENCH AS-STRAP	
	9	1	**9U-7509**	1	PLIERS	
	10	1	**1U-7115**	1	RATCHET-REVERSE	
	11	1	**1U-7118**	1	EXTENSION	
Y	12	1	**8F-9866**	1	GREASE GUN GP (LEVER)	835
	13	1	**9U-6219**	1	TOOL BOX	

Y - SEPARATE ILLUSTRATION

6V-2121 **TOOL GP-HAND** (contd.) **i00567162**

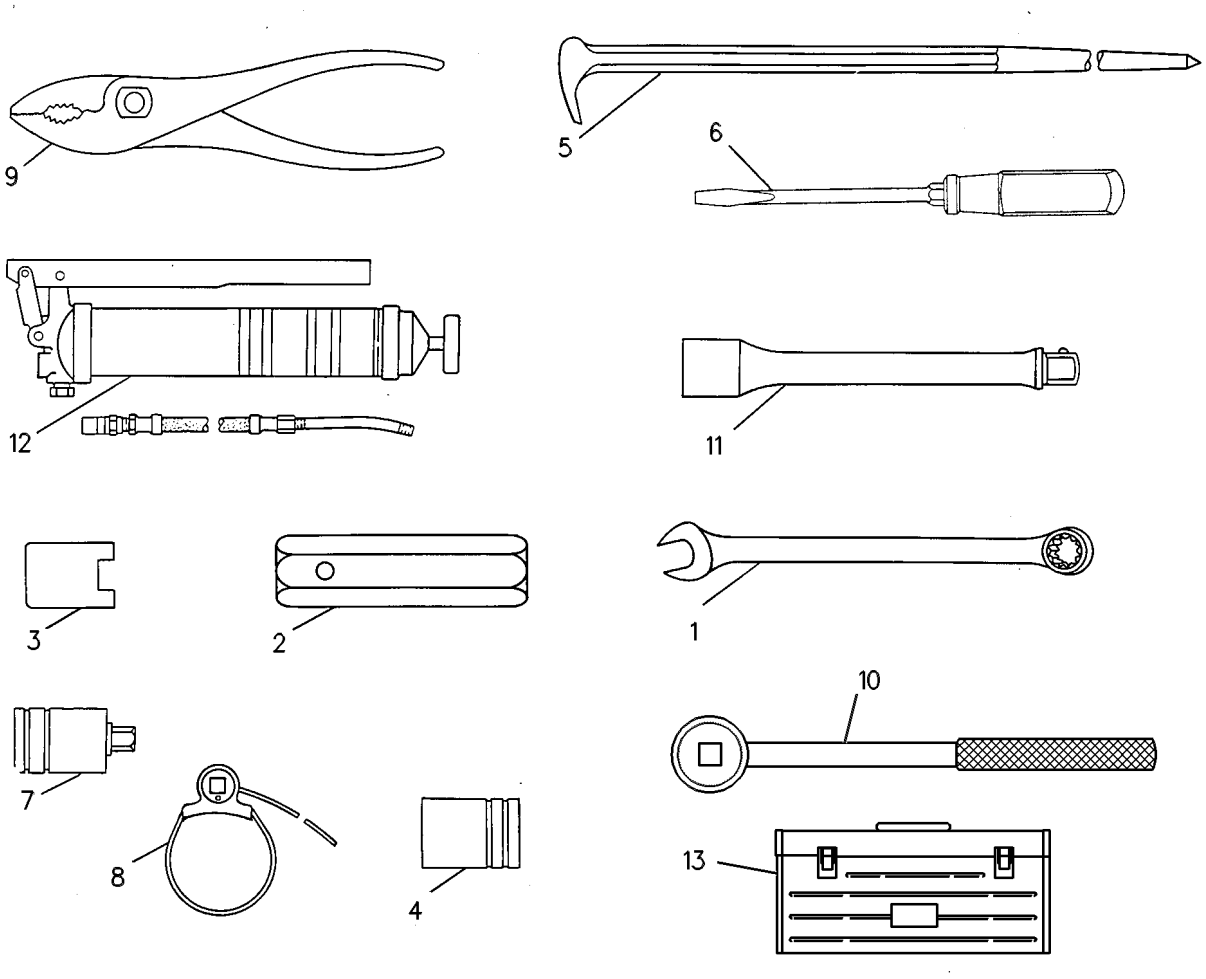

GRAPHIC #1 <END> g00247346

PART NUMBER INDEX

Part Page

0

0L-0723 650
653
0L-1006 337
0L-1026 81
0L-1143 338
603
607
0L-1351 372
539
602
606
0L-1352 539
0L-2070 349
0L-2119 462
0S-0130 387
0S-0509 344
346
626
0S-1566 369
388
0S-1571 416
419
611
617
0S-1585 603
0S-1587 603
0S-1588 371
669
0S-1590 381
714
0S-1591 336
381
404
416
419
719
0S-1594 344
346
419
455
513
521
528
602
606
0S-1595 391
393
455
600
0S-1596 667
0S-1597 308
0S-1617 371
0S-1618 387
0S-1619 337
650
0S-1620 348
0S-1621 617
0S-1625 546
0S-1626 467
468
469
0S-1629 712
714
0S-1822 479
0T-0055 603
607
0T-0065 336
371
0T-0102 348
0T-0431 349
650
653
0T-0573 419
653
0T-0768 572

1

1A-1460 336
387
1A-2029 336
371
472
602
606
1A-2457 539
1A-2812 381
382
400
405
714
1A-4350 780
781
1A-4790 669
710
712
1A-5576 467
468
562
564
1A-5964 336
1A-8063 363
366
387
1A-8285 381
1A-9252 344
346
700
716
1A-9579 669
1A-9759 393
1B-0676 344
346
539
700
716
1B-2578 344
346
400
626
716
1B-2693 729
732
1B-2886 337
1B-3057 695
698
1B-3310 371
1B-4201 381
658
1B-4203 173
344
346
658
700
716
1B-4427 656
1B-4430 412
414
1B-5174 231
1B-5355 719
1B-6182 449
1B-7182 212
226
1B-8074 723
725
1B-8701 172
1B-8704 173
700
1B-8705 15
16
25
27
235
237
336
381
404
719
1B-8706 344
346
716
1B-9575 388
1C-0569 298
783
786
1C-1895 537
1D-1313 700
1D-4270 338
1D-4533 384
1D-4566 336
1D-4572 336
1D-4610 482
1D-4625 469
1D-4628 552
1D-4677 701
795
1D-4703 336
1D-4716 384
1D-4717 336
349
381
404
729
773
778
1D-5117 244
344
346
1D-5121 671
677
684
1F-0636 491
495
1F-0748 240
425
427
451
453
462
695
698
750
752
1F-0750 70
251
257
289
320
324
327
375
425
427
432
433
442
451
453
460
462
463
671
672
677
678
683
695
698
725
750
1F-4192 568
571
1F-4503 381
400
1H-1023 360
1H-1200 405
700
1H-3244 235
246
248
320
324
773
1H-3337 773
1H-3338 258
315
316
1H-5338 387
1H-5514 720
1H-6227 492
496
1H-7339 351
352
1H-8171 222
1H-8720 513
1H-9696 336
611
614
617
620
1J-1902 492
496
1J-2176 387
1J-4384 382
1J-5799 667
1J-6004 425
1J-8960 611
614
617
620
1J-9671 41
43
45
46
50
51
54
55
116
119
212
222
224
228
839
841
1K-0368 700
1K-4061 731
1K-4649 432
437
1K-6872 595
1K-6985 395

PART NUMBER INDEX

Part	Page
	397
1K-7095	546
	550
	551
1L-3769	227
1L-5072	350
	607
1L-6377	759
1L-8793	562
	564
1L-9080	781
1M-1341	701
1M-4291	513
1M-4967	262
1M-6119	252
	257
	262
	263
	267
1M-6120	252
	257
	262
	263
	267
1M-8649	105
1M-8747	515
	523
1N-3477	6
	8
	10
	12
	▶89
1N-3599	▶105
	121
	126
1N-3806	140
	142
1N-3887	182
	187
	198
	200
1N-4110	124
1N-4122	124
1N-4125	124
1N-4126	124
1N-4128	124
1N-4130	124
1N-4135	121
	126
1N-4137	121
	126
1N-4142	121
	126
1N-4146	121
	126
1N-4148	124
1N-4149	124
1N-4150	124
1N-4422	120
	▶347
1P-0043	572
1P-0436	206
	212
	222
	226
1P-2636	337
	338
1P-2662	338
1P-2807	843
1P-3567	844
1P-3700	566
1P-3703	416
	419
	574
	576
	611
	614
	617
	620
1P-3704	336
	374
	572
	592
	611
	614
	617
	620
1P-3705	416
	419
	585
	587
	592
1P-3708	585
	587
1P-4022	797
1P-4278	206
	231
	733
1P-4576	574
	576
1P-4577	377
	379
	574
	576
	592
1P-4578	554
	556
	568
	585
	587
	589
	592
1P-4579	230
1P-4695	353
	355
	363
	366
1P-4696	353
	355
	363
	366
1P-5767	336
	374
	387
1P-6356	671
	677
	683
1P-7009	327
	333
1R-0722	602
	606
1R-0751	179
1R-0753	180
	212
1R-1807	92
1S-0286	124
1S-0994	230
	573
	679
1S-1015	230
1S-1859	530
	533
1S-1860	530
	533
1S-2563	94
1S-3725	348
1S-4244	432
	436
	439
1S-6181	585
	587
1S-7057	90
	97
	143
	837
	839
	840
	841
1S-7251	251
	252
	256
	257
	258
	263
	264
1S-7252	251
	252
	256
	257
	258
	262
	264
1S-8947	513
1T-0068	384
1T-0765	432
	436
1T-1068	178
	838
1U-0322	611
	614
	617
	620
1U-0323	611
	614
	617
	620
1U-0387	603
	607
1U-0425	658
1U-0470	623
	624
1U-0471	623
	624
1U-0600	810
1U-1043	338
1U-1044	338
1U-1045	338
1U-1046	338
1U-1047	338
1U-1048	338
1U-1049	337
1U-1050	337
1U-1051	338
1U-1052	338
1U-1053	338
1U-1354	806
1U-1569	338
1U-1570	338
1U-1571	338
1U-1577	611
	614
	617
	620
1U-1578	611
	614
	617
	620
1U-1648	719
1U-1723	343
	▶404
1U-1887	833
1U-1888	833
1U-1889	833
1U-1965	388
1U-1967	388
1U-2043	343
	▶403
1U-2067	650
	653
1U-2070	650
	653
	656
1U-2071	650
	653
	656
1U-2074	650
	653
1U-2103	719
1U-2163	371
1U-2165	719
1U-2169	▶650
	▶653
	707
	710
1U-2170	650
1U-2175	650
	653
1U-2176	650
	653
1U-2226	578
	▶665
1U-2234	650
	653
1U-2427	▶833
1U-2620	▶656
	712
	714
1U-2621	656
1U-2623	343
	▶369
1U-2752	656
1U-2762	656
1U-2764	656
1U-2765	656
1U-2819	603
	607
1U-2827	230
	338
1U-2828	343
	▶349
1U-3141	337
1U-3147	656
1U-3175	578
	583
1U-3176	611
	614
	617
	620
1U-3191	336
1U-3246	371
1U-3301	826
1U-3302	823
1U-3351	824
	832
1U-3352	821
	829
1U-3415	400
1U-3882	337
1U-3889	337
1U-3893	338
1U-3923	338
1U-3928	372
1U-4043	400
1U-4772	658
1U-4773	343
	▶658

▶ PRIMARY REFERENCE

PART NUMBER INDEX

Part	Page
1U-4774	658
1U-4780	658
1U-4785	371
1U-4790	658
1U-4795	720
1U-4805	387
1U-4833	402
1U-7056	844
1U-7057	844
1U-7060	844
1U-7102	844
1U-7105	844
1U-7107	844
1U-7109	844
1U-7115	844
1U-7118	844
1U-7264	844
1U-8840	496
1U-8846	18
	20
	67
	68
1V-3113	298
1V-8098	807
1V-8442	672
	678
1V-8523	168
1W-0565	176
1W-2713	40
	42
	44
	47
1W-2715	48
	49
	52
	53
1W-4289	124
1W-4795	162
	166
1W-8407	33
	36
	37
	38
	39
1W-8908	689
1Y-0462	337
	385
1Y-7927	738

2

Part	Page
2A-0762	656
2A-1420	472
2A-1723	382
2A-1736	701
2A-1763	168
2B-0858	602
	606
2B-0941	206
	250
	258
	262
	264
	562
	564
	729
2B-2694	384
2B-2695	387
	719
	783
	786
2D-2751	287
	289
	291
2D-6235	172
	381
	384
	738
	754
	759
	762
	771
2D-6642	81
	88
	402
2D-7563	773
2D-8155	598
	599
2D-9535	773
2F-7306	747
2G-2885	543
	818
2G-8768	371
2H-1190	521
	528
2H-3429	227
	303
	310
2H-3725	543
	818
2H-3769	723
	725
2H-3789	465
2H-3856	552
2H-3881	564
2H-3920	235
	774
2H-3922	257
	313
	319
	332
2H-3924	275
	671
	677
	683
	684
2H-3927	602
	606
2H-3928	515
	517
	523
	525
	546
	550
	551
2H-3932	338
	416
	419
2H-6338	513
2J-0157	227
	602
	606
	838
2J-0564	548
2J-3118	337
	372
	381
2J-3506	804
	806
2J-3507	810
	812
2J-3950	546
2J-5038	172
	173
2J-5850	384
2J-6088	403
2J-6274	491
	495
2J-6356	362
	716
2J-6384	338
2J-6643	467
2J-7258	746
2J-7426	492
	496
2J-7590	336
2J-7686	552
2J-7761	350
	607
2K-0564	172
	701
2K-3219	603
	607
2K-4821	235
	237
	246
	248
2K-4973	106
	107
	230
	267
	336
	337
	371
	400
	543
	602
	606
	783
	786
	795
2K-5097	387
2K-6413	830
2K-7051	731
2K-8198	719
2L-0273	251
2L-4582	700
2L-5039	716
2L-5317	733
	735
2L-6243	689
	691
	692
2L-6267	173
2L-8202	658
2L-8402	758
2L-8509	61
2M-1672	400
2M-4287	381
2M-4453	117
	118
	603
	607
2M-5795	772
2M-6471	29
	30
	31
	34
	41
	43
	45
	46
	50
	51
	54
	55
2M-7819	738
2M-8340	172
2M-8908	701
2M-9780	29
	30
	31
	184
	189
	202
	209
	337
	362
	416
	419
	573
	583
	591
	650
	653
	658
	665
	712
	714
	836
	838
	840
2N-3680	794
2N-8611	381
	400
	405
2N-8613	539
2P-0347	513
2P-1294	66
	838
2P-2537	92
2P-3201	521
	528
2P-3230	105
2P-4339	672
	678
	685
	754
	758
	762
2P-7214	583
	712
	714
2P-8250	844
2P-8421	374
	719
2Q-5275	4
2Q-5276	4
2Q-5277	4
2Q-5278	4
2Q-5279	4
2Q-5326	453
2Q-5334	453
2Q-5336	453
2Q-5338	453
2Q-5339	453
2Q-5342	453
2Q-5344	5
	►453
2Q-5345	447
2Q-5347	447
2Q-5349	447
2Q-5354	451
2Q-5355	451
2Q-5357	451
2Q-5359	451
2Q-5370	451
2Q-5416	425
	427
2Q-5428	425
	427
2Q-5468	512
2Q-5497	447

PART NUMBER INDEX

Part	Page
2Q-5528	495
2Q-5550	425
	427
2Q-5552	425
2Q-5654	453
2Q-7954	5
2R-0364	338
	539
	669
	707
	712
	714
	719
2R-1256	387
2R-1980	275
2R-6276	566
	583
2R-6806	371
	583
	628
	712
	714
2S-1212	121
	126
2S-1654	436
2S-2053	797
2S-2846	105
2S-4078	197
	353
	355
	363
	366
	400
	484
	602
	606
	611
	614
	617
	620
	719
2S-5816	719
2S-6097	105
2S-7316	182
	187
	198
	200
2V-0099	672
	678
	685
	733
	735
	754
	758
	762
2V-1713	298
2V-3216	332
2V-8259	733
2V-8260	293
2V-9166	436
	439
2W-0027	72
	73
2W-2605	222
2W-3055	124
2W-3294	210
	233
2W-4681	107
2W-6544	18
2W-6546	17
2W-6688	226
2W-7211	29
	30
	34
2W-7212	108
	110
	112
	839
	841
2W-7213	29
	30
	31
	34
2W-7381	77
2W-7400	210
2W-7565	65
2W-7566	63
	64
	65
2W-8077	98
2W-8078	98
2W-8079	98
2W-8085	98
2W-8087	98
2W-8090	98
2W-8091	98
2W-8147	25
	27
2W-8475	6
	12
	►65
2W-8476	63
	64
	65
2W-9128	72
	75
2W-9162	89
2W-9607	7
	9
	11
	13
	►88
2W-9608	6
	12
	►16
2W-9746	6
	►33
2Y-5818	642
2Y-5829	81

3

Part	Page
3A-2433	537
3A-6294	804
3A-6296	804
3A-7839	772
3A-8354	772
3A-8687	4
3A-8690	771
3A-8717	771
3A-8746	742
	743
3A-8798	771
3A-8877	804
	806
3B-0645	337
3B-1915	337
	344
	346
	372
	602
	606
3B-4501	332
3B-4607	172
	173
	772
3B-4610	539
3B-4611	425
	427
3B-4615	168
	344
	346
	381
	432
	436
	439
	539
3B-4617	723
	725
3B-4628	425
	427
	462
3B-5325	820
	830
3B-6487	130
	134
	136
	138
3B-6488	231
3B-6552	130
	134
	136
	138
	230
3B-7255	733
3B-8428	611
	617
3B-8489	479
	491
	495
	667
	716
	807
3B-8491	667
3B-9191	754
	758
	762
3C-1884	799
3C-6970	648
3D-0490	733
	735
3D-2824	29
	30
	31
	34
	108
	110
	112
	116
	119
	129
	297
	337
	374
	387
	566
	574
	576
	578
	583
	596
	602
	611
	614
	617
	620
	663
	719
	836
	838
	839
	841
3D-2975	738
3D-4603	656
3D-8087	712
	714
3D-8088	712
	714
3D-8752	669
	707
	712
	714
3D-8823	172
3D-9348	611
	614
3E-0075	251
	258
	272
	►317
	321
	325
3E-0461	562
3E-1909	689
	691
	►694
3E-2210	320
	324
3E-3010	842
3E-3072	842
3E-3079	324
3E-3361	754
3E-3362	754
	758
	762
3E-3365	263
	272
	673
	679
	683
	695
	698
	754
	758
	762
3E-3383	628
	630
	632
	635
	639
3E-3389	766
	767
	768
	769
3E-3535	672
	678
	685
3E-3805	442
	444
3E-4051	671
	677
	683
3E-4052	671
	677
	683
3E-4053	671
	677
	683
3E-4054	671
	677
	683
3E-4057	671
	677
	683
3E-4058	671

► PRIMARY REFERENCE

PART NUMBER INDEX

Part	Page
	677
	683
3E-4075	297
3E-4302	642
	644
	648
3E-4335	747
3E-4336	747
3E-4352	61
3E-4362	747
3E-5239	333
	695
	698
3E-5446	246
	248
3E-5447	246
	248
3E-5448	246
	248
3E-5450	246
	248
3E-5454	246
	248
3E-5455	246
	248
3E-5457	246
	248
3E-5458	246
	248
3E-5459	246
	248
3E-5460	246
	248
3E-5465	672
	678
	685
3E-6106	▶766
3E-6328	▶234
	327
	332
3E-6332	298
3E-6386	754
	758
3E-6387	754
	758
3E-6389	▶281
	773
3E-6449	251
	258
	272
3E-6451	250
	257
	263
3E-6454	250
	256
	263
3E-6575	747
3E-6601	742
	743
3E-7141	▶767
3E-7428	144
3E-7692	250
	258
	263
3E-7755	766
	767
	768
	769
3E-7852	303
3E-7853	303
	308
	310
3E-7855	303
3E-7857	303
3E-7858	303
3E-7859	303
3E-7860	304
3E-7861	304
3E-8017	143
	163
	164
	167
	837
	839
	841
3E-8020	632
	635
	639
3E-8154	842
3E-8753	733
	735
3E-8769	320
	324
3E-8775	320
	324
3E-8811	320
	324
3E-8814	320
	324
3E-8825	320
	324
3E-9412	88
3E-9565	672
	678
	685
3E-9865	732
	758
	762
3F-0379	303
	310
3F-1147	723
	725
3F-5108	807
3F-5792	387
3F-9556	286
	287
	289
	291
	293
	744
	802
3G-0109	820
	▶830
3G-0199	550
	551
3G-0222	552
	667
3G-0284	337
3G-0361	603
	607
3G-0471	543
3G-0595	338
3G-0604	626
3G-0622	384
3G-0623	381
	▶384
3G-0666	403
3G-1066	543
	818
3G-1076	543
3G-1077	818
3G-1078	543
3G-1800	384
3G-1832	336
3G-1845	336
3G-2208	371
3G-2673	387
3G-2713	400
3G-2742	384
3G-2772	381
3G-2789	548
3G-2838	384
3G-2855	384
3G-2856	384
3G-3098	387
3G-3101	387
3G-3150	395
	397
3G-3284	419
3G-3304	343
	▶719
3G-3357	828
3G-3625	▶810
3G-3726	409
	411
	413
	719
3G-3820	602
	606
3G-3821	602
	606
3G-3823	602
	606
3G-3824	602
	606
3G-3835	422
3G-3838	422
3G-3854	409
	411
	413
3G-3857	409
	411
	413
3G-3867	552
3G-3874	▶552
	554
3G-3956	403
3G-4013	▶827
3G-4014	▶831
3G-4055	▶828
3G-4117	617
	620
3G-4135	611
	614
3G-4307	831
3G-4308	827
	831
3G-4309	827
	831
3G-4490	719
3G-4493	719
3G-4500	719
3G-4502	720
3G-4594	343
	▶406
3G-4595	343
	▶407
3G-4600	395
	397
3G-4659	351
	352
3G-4683	603
	607
3G-4708	603
	607
3G-4710	405
3G-4711	400
3G-4717	400
3G-4725	351
	352
3G-4728	400
3G-4729	400
3G-4770	603
	607
3G-4771	603
	607
3G-4779	395
	397
3G-4781	416
3G-4783	596
3G-4788	719
3G-4991	351
	352
3G-5001	351
3G-5002	352
3G-5003	351
	352
3G-5016	343
	▶351
3G-5017	343
	▶352
3G-5018	602
	606
3G-5061	548
3G-5233	371
3G-5358	828
	829
	832
3G-5359	828
	829
	832
3G-5402	371
3G-5404	371
3G-5432	371
3G-5745	400
3G-5750	395
	397
3G-5759	381
3G-5811	382
3G-5886	230
	338
3G-5925	381
3G-5931	343
	▶381
3G-5940	387
3G-5962	371
3G-5978	602
	606
3G-5979	602
	606
3G-6014	602
	606
3G-6017	602
3G-6395	811
3G-6449	397
3G-6450	395
3G-6732	337
3G-6883	372
3G-6884	372
3G-6885	371
3G-7630	381
3G-8092	381
3G-8101	603
	607
3G-8166	400
3G-8168	419
3G-8176	381
3G-8403	381
3G-8446	338
3G-8447	405
3G-8471	400
3G-8473	400
3G-8476	658
3G-8477	658
3G-8478	658
3G-8479	400

▶ PRIMARY REFERENCE

PART NUMBER INDEX

Part	Page
3G-8481	381
3G-8482	371
3G-8575	384
3G-8582	381
3G-8583	381
3G-8588	400
3G-8596	338
3G-8598	337
3G-8600	336
3G-8609	381
3G-8612	381
3G-8669	400
3G-8673	719
3G-8704	720
3G-8708	719
3G-8709	719
3G-8973	336
3G-8985	407
3G-8987	406
3G-8991	623
	624
3G-8992	623
	624
3G-8998	650
	653
3G-9003	656
3G-9004	650
	653
3G-9005	650
	653
3G-9683	336
3G-9859	650
	653
	656
3G-9893	626
3H-2549	663
3H-2652	603
	607
3H-5366	695
	698
3H-5368	554
	556
3H-5552	29
	30
	31
	34
3J-1097	256
3J-1907	18
	90
	97
	108
	110
	112
	143
	176
	179
	180
	206
	209
	210
	212
	214
	222
	224
	230
	250
	263
	336
	362
	371
	374
	377
	379
	406
	407
	416
	419
	422
	578
	582
	583
	585
	587
	603
	606
	610
	627
	628
	630
	633
	635
	650
	653
	656
	712
	714
	719
	720
	836
	837
	838
	839
	840
	841
3J-3679	116
3J-3708	451
3J-5390	733
3J-5554	348
3J-6933	348
3J-7352	712
	714
3J-7354	46
	50
	51
	54
	129
	206
	216
	217
	218
	362
	406
	407
	574
	576
	611
	614
	624
	656
	712
	714
	719
	720
	839
	841
3J-7473	663
3K-0360	29
	30
	31
	34
	59
	71
	108
	110
	112
	116
	119
	121
	126
	153
	206
	209
	210
	216
	217
	233
	250
	256
	263
	272
	298
	336
	370
	371
	402
	407
	416
	419
	535
	537
	573
	578
	583
	603
	611
	614
	617
	620
	623
	658
	660
	661
	662
	664
	720
	733
	735
	836
	838
	839
	841
3K-0715	597
3K-0925	447
3K-2366	173
3K-2889	230
	596
3K-3257	306
	307
	838
3K-4897	748
3K-6583	385
3K-7928	733
3K-8150	807
3K-8460	228
3K-8781	293
	773
3K-8782	320
	324
3K-9770	810
	811
	813
3L-8187	327
	332
3L-9409	337
3M-6018	327
3N-3252	210
	212
	214
3N-3718	246
	248
3N-3790	842
3P-0439	337
3P-1104	498
3P-1155	336
	371
3P-1156	95
	96
	103
	836
	840
3P-1210	395
	397
3P-1900	492
	495
3P-2404	672
	678
	684
3P-3547	182
	187
	197
	200
3P-3604	772
3P-4347	669
	707
3P-4571	723
	725
3P-5903	733
3P-5904	733
3P-7995	695
	698
3P-9847	582
	712
	714
3P-9900	773
	778
3R-4792	377
	379
	573
	578
	583
3R-6790	574
3R-8797	308
3R-9704	568
	583
3S-2093	214
	250
	252
	256
	262
	272
	298
	320
	324
	327
	332
	333
	673
	679
	683
	695
	754
	755
	758
	762
3S-5907	405
3S-6049	252
	257
	263
3S-6050	251
	252
	257
	262
3S-6696	250
	256
	263
3S-8182	399

► PRIMARY REFERENCE

PART NUMBER INDEX

Part	Page
3S-8652	362
3S-8664	251
	258
	262
	672
	678
	683
3S-8665	250
	256
	262
	267
	328
	333
	370
3S-9182	353
	355
	363
	366
3T-0849	182
	187
	197
	200
	219
	221
	635
3T-1815	319
3T-1885	237
3T-1886	237
3T-1887	237
3T-2357	327
	332
3T-3045	328
	332
	773
3T-3047	321
	324
3T-3048	672
	683
3T-5760	252
	257
	262
3T-6354	246
	248
3T-6655	774
3T-7059	799
3T-7065	773
	▶799
	▶801
3T-7086	799
3T-8207	733
	735
3T-8723	275
3T-8724	▶275
	▶276
3V-1974	669
	707
	712
3V-3263	797
3V-4694	773
3V-4791	583
3V-6909	562
	564
3V-9184	716
3W-0241	479
3W-0305	537
3W-0317	712
	714
3W-0331	707
	710
3W-0333	669
	710
3W-0334	712
	714
3W-0438	585
	587
3W-0540	535
3W-0541	535
3W-0542	535
3W-0543	535
3W-0626	346
3W-0689	735
3W-0828	725
3W-0831	750
	752
3W-0832	750
	752
3W-0916	▶731
	798
3W-1010	669
	707
3W-1039	735
3W-1691	439
3W-1701	432
	451
3W-1703	439
3W-1705	439
3W-1707	474
	476
3W-1709	474
	476
3W-1719	439
3W-1800	449
3W-1804	449
3W-1814	447
	449
3W-1817	447
	449
3W-2045	759
3W-2049	758
3W-2050	758
3W-2051	758
3W-2052	758
3W-2056	755
	763
3W-2058	755
	763
3W-2060	754
	762
3W-2061	754
	762
3W-2080	758
3W-2167	591
3W-2168	591
3W-2172	591
3W-2175	591
3W-2196	479
3W-2197	479
3W-2207	479
3W-2390	669
	707
3W-2440	672
	678
	684
3W-2573	467
	468
	469
3W-2577	▶468
3W-2578	468
3W-2617	478
3W-2618	478
3W-2619	478
3W-2657	537
3W-2658	537
3W-2659	537
3W-2660	537
3W-2668	390
	▶537
3W-3014	566
3W-3016	566
3W-3165	763
3W-3321	346
3W-3330	592
3W-3358	554
	▶592
3W-3384	592
3W-3426	701
3W-3497	568
3W-3498	568
3W-3499	568
3W-3524	▶469
3W-3525	469
3W-3559	432
	436
3W-3622	251
	257
	262
3W-3978	667
3W-4023	458
3W-4024	458
3W-4055	574
	576
3W-4154	574
	576
3W-4155	574
	576
3W-4156	574
	576
3W-4157	574
	576
3W-4158	574
	576
3W-4159	574
	576
3W-4160	574
	576
3W-4161	574
	576
3W-4162	574
	576
3W-4163	574
	576
3W-4164	574
	576
3W-4252	592
3W-4253	592
3W-4254	592
3W-4255	592
3W-4334	455
3W-4621	173
3W-4827	4
	▶458
3W-4922	447
	449
3W-5113	449
3W-5157	353
	355
	363
	366
3W-5159	535
3W-5393	▶374
	390
3W-5424	353
	355
	363
	366
3W-5436	355
	363
	366
3W-5501	353
	355
	363
	366
3W-6141	353
	355
	363
	366
3W-6144	355
3W-6310	669
	710
3W-6311	669
	707
3W-6327	432
	436
3W-6485	710
3W-6585	360
3W-6586	360
3W-6659	583
3W-6719	231
3W-6854	568
	572
3W-6856	455
3W-6992	327
	332
3W-7522	491
	495
3W-7594	374
3W-7813	484
3W-7814	484
3W-7824	511
	512
3W-7962	466
3W-7963	466
3W-7964	466
3W-7967	511
3W-7968	511
	512
3W-8117	▶487
3W-8120	487
3W-8123	487
3W-8134	487
3W-8140	489
3W-8146	▶484
	534
3W-8149	484
3W-8154	▶511
	534
3W-8155	511
3W-8157	▶491
	534
3W-8158	491
	495
3W-8160	491
	496
3W-8175	491
	495
3W-8177	491
	495
3W-8187	2
	3
	▶534
3W-8281	▶466
3W-8398	491
	495
3W-8403	491
	495
3W-8406	491
	495
3W-8429	487
3W-8488	▶489
3W-8489	489
3W-8492	489
3W-8495	489
3W-8497	▶479
	534
3W-8570	479
3W-8571	479

▶ PRIMARY REFERENCE

PART NUMBER INDEX

Part	Page
3W-8572	479
3W-8575	479
3W-8578	5
	►457
3W-8772	457
3W-8775	457
3W-8898	360
3Y-6047	772
4	
4B-0418	537
4B-2043	246
	248
	327
	332
4B-2047	246
	248
4B-2049	303
	310
4B-3388	669
	719
4B-3615	344
4B-4158	343
	360
	388
	842
4B-4274	295
	296
4B-4310	168
4B-4344	358
4B-4550	479
4B-4626	550
	551
4B-4863	271
	742
4B-4909	439
4B-5059	738
4B-5271	432
	794
4B-5324	327
	332
	754
	762
4B-7739	602
	606
4B-9302	602
	606
4B-9782	360
	603
	607
	666
4B-9783	422
4B-9785	537
4C-9612	17
	71
4D-1212	746
4D-1432	251
	256
	263
	321
	325
4D-3120	598
	599
4D-3365	772
4D-4064	172
4D-4248	546
4D-6293	320
	324
4D-6432	780
	781
4D-6433	623
	624
4D-6473	337
4D-7388	93
	375
4D-7735	231
4D-7794	250
	257
	263
	272
	328
	332
4D-9376	750
	752
	778
4D-9721	716
4D-9986	176
	371
4F-2294	314
4F-2699	807
4F-3714	61
4F-4042	810
	812
4F-4879	788
	789
	790
	791
	792
	793
4F-5192	611
	617
4F-5982	442
	444
4F-6123	669
	707
4F-6464	667
4F-7390	602
	606
4F-7391	90
	97
	143
	371
	836
	837
4F-7827	804
	806
4F-7952	275
4F-7957	381
4F-8824	353
	355
	363
	366
4F-8946	336
4F-9101	772
	778
4F-9653	18
	231
	836
4H-0094	384
4H-1225	455
4H-1641	395
	397
4H-2678	671
	677
	684
4H-3001	752
4H-3119	669
	701
	710
	714
4H-3521	723
	725
4H-3865	700
4H-5076	130
	134
	►159
4H-6520	359
4H-8380	384
4J-0520	377
	379
	574
	576
	592
4J-0521	377
	379
	602
	606
4J-0522	554
	556
	568
	585
	587
	589
	592
	611
	614
	617
	620
	660
	662
	663
4J-0523	611
	614
4J-0524	117
	118
	230
	585
	587
4J-0525	230
4J-0526	377
	379
4J-0527	377
	379
4J-1105	168
4J-3044	650
	653
4J-3363	381
4J-3745	546
	550
	551
4J-3747	546
4J-3915	772
4J-4144	400
4J-4606	548
4J-5267	574
	576
4J-5309	416
	419
4J-5351	419
4J-5477	216
	217
	218
	574
	576
	839
	841
4J-5573	592
4J-7533	402
	416
	419
	650
	653
	719
	720
4J-8265	625
4J-8997	719
4K-0149	807
4K-0367	669
4K-0684	550
	551
4K-1388	71
	295
	296
	416
	419
	836
4K-4658	700
4K-4726	172
4K-5122	293
	320
	324
	773
4K-7627	442
4K-8864	214
	321
	325
	327
	333
4K-9097	432
	451
	725
	783
	786
4L-2236	400
4L-6454	107
	124
	127
	172
	251
	252
	257
	262
	263
	287
	289
	291
	425
	427
	429
	439
	442
	444
	449
	460
	463
	566
	571
	578
	583
	585
	587
	589
	667
	672
	678
	684
	707
	710
	712
	770
	773
	778
4L-6459	347
	377
	379
4L-9337	121
	124
	126
	172
	251
	258
	262
	453

► PRIMARY REFERENCE

PART NUMBER INDEX

Part	Page
	459
	562
	564
	592
	700
	701
	773
4L-9564	839
4M-0736	353
	355
	363
	366
4M-1827	303
	310
4M-1828	303
	310
4M-1831	303
	308
4M-2348	172
	700
4M-5281	246
	333
	471
	754
	758
	763
	794
4M-5282	723
	725
4M-6978	663
4M-6979	663
4M-6980	663
4M-7470	460
	463
4N-2927	738
4N-3884	732
4N-5533	658
4N-6404	183
	188
	198
	201
4N-6406	198
4N-6407	183
	188
	198
	201
4N-8227	275
	276
4P-0737	182
	187
	198
	200
4P-1555	93
4P-1556	6
	8
	10
	12
	▶93
4P-1806	75
4P-2457	33
4P-2467	192
	193
	195
	205
4P-2590	54
	55
4P-2685	108
	112
4P-2843	56
	57
4P-2844	8
	▶57
4P-3537	182
	187
	197
	200
4P-3538	176
4P-3539	182
	187
	197
	200
4P-3953	176
4P-4000	198
4P-4224	176
4P-4231	183
	188
	198
	201
4P-4983	183
4P-4997	79
4P-5524	132
	133
4P-5605	192
	193
	195
4P-5612	176
4P-5651	36
	37
	38
	39
4P-5665	240
	242
	244
4P-5743	197
4P-5745	205
4P-6422	272
	321
4P-6464	842
4P-6549	161
4P-7351	182
	187
	200
4P-7581	298
4P-7703	12
	▶97
4P-7738	88
4P-7750	48
4P-7790	81
4P-8183	6
	8
	10
	12
	▶92
4P-8184	6
	▶104
4P-8253	176
4P-8263	▶52
	▶53
	54
4P-8264	6
	8
	10
	12
	▶54
4P-8378	40
4P-8577	88
4P-8946	183
	188
	201
4P-8947	182
	187
	198
	200
4P-8948	183
	188
	198
	201
4P-9490	176
4P-9492	176
4P-9493	176
4P-9494	176
4Q-5044	102
	347
4R-9999	83
	838
4S-1936	327
	333
4S-1962	250
	258
	264
4S-4455	321
	325
4S-6680	568
4S-8287	747
4T-0302	382
4T-0309	381
4T-0354	625
4T-0355	603
	607
4T-0357	625
4T-0363	658
4T-0842	337
4T-0956	403
4T-0971	387
4T-1579	387
4T-1692	387
4T-1946	371
4T-1947	371
4T-1948	371
4T-2069	338
4T-2466	543
4T-2598	623
	624
4T-2603	388
4T-2625	388
4T-2674	388
4T-2675	388
4T-2676	388
4T-2718	▶402
	419
4T-3055	388
4T-3056	388
	▶422
4T-3057	422
4T-3066	388
4T-3070	720
4T-3081	338
4T-3082	338
4T-3083	338
4T-3084	338
4T-3085	338
4T-3086	338
4T-3171	625
4T-3176	603
	607
	▶625
4T-3259	387
4T-3317	382
4T-4031	338
4T-4073	611
	614
	617
	620
	▶666
4T-4222	371
4T-4307	827
4T-4605	663
4T-4659	663
4T-4660	663
4T-4942	661
	664
4T-4948	351
	352
4T-5159	381
4T-5529	384
4T-5570	404
	▶405
4T-5613	546
4T-5650	384
4T-5651	384
4T-5652	385
4T-5653	384
4T-5655	384
4T-5864	603
	607
4T-5988	663
4T-6694	812
4T-6697	813
4T-7003	554
	555
	556
	557
	558
	559
	560
	561
	▶611
	▶614
4T-7006	554
	▶617
	▶620
4T-7479	387
4T-7509	371
4T-7571	661
	664
4T-7581	611
	614
	617
	620
	▶661
4T-8050	371
4T-8051	371
4T-8084	807
4T-8085	807
4T-8101	810
4T-8519	371
4T-8691	415
4T-8692	415
4T-8695	552
4T-8729	391
	393
4T-8898	428
4T-9219	393
4T-9298	391
	600
4T-9311	611
	614
	617
	620
4T-9312	611
	614
	617
	620
4T-9362	617
	620
4T-9425	391
	393
4T-9426	391
	393
4T-9565	820
4T-9566	820
4V-0152	669
	707
4V-1718	667
4V-4760	562
	564

▶ PRIMARY REFERENCE

PART NUMBER INDEX

Part Page

4V-4912 807
4V-4959 566
4V-4961 566
4V-4962 566
4V-6591 571
4V-6698 172
4V-6981 754
4V-7105 667
4V-7412 705
4V-7884 795
4V-8577 795
4V-8674 548
4V-8945 168
4W-0253 116
119
4W-0269 7
9
11
12
▶71
4W-0483 332
4W-0549 110
841
4W-1016 7
13
▶84
▶85
4W-1203 60
4W-1204 60
4W-1682 69
4W-1683 69
4W-2026 20
4W-2042 60
4W-2064 327
332
4W-2172 6
8
10
12
▶23
4W-2195 7
9
11
12
▶100
▶101
4W-2197 6
8
10
12
▶25
▶27
4W-2515 6
8
10
12
▶69
4W-2914 6
8
12
▶96
4W-3462 6
8
10
12
▶17
4W-3480 7
9
11
12
▶153
4W-5428 6
8
10
12
▶61
4W-5429 7
9
11
12
▶77
4W-6010 198
4W-6620 7
9
11
12
▶108
4W-6630 197
4W-7589 7
9
11
12
▶117
▶118
4W-7592 116
119
4W-8661 153
4Y-1213 230
4Y-1214 230
4Y-5812 660
662
4Y-7948 272
321
4Y-9652 18
836

5

5A-3604 467
5B-0651 595
5B-1983 442
750
752
5B-2183 462
5B-2638 336
5B-3807 807
5B-5821 337
395
397
5B-7431 230
5B-7890 146
148
5B-9603 336
5B-9627 121
5C-2874 182
187
198
200
237
642
5C-2890 251
258
272
297
315
316
632
635
639
695
5C-5440 729
754
5C-6565 432
436
541
542
568
5C-7261 214
467
744
802
5C-8312 197
637
644
646
5C-8813 773
5C-8814 745
5C-9553 171
772
799
5D-0353 381
602
606
5D-1026 370
733
735
5D-1911 606
5D-1935 700
5D-4822 400
738
5D-7635 328
332
5D-9629 327
5F-0548 400
5F-1678 626
5F-3092 585
587
602
606
5F-3144 521
528
5F-3743 451
5F-4764 844
5F-7054 210
212
214
602
606
839
841
5F-7844 778
5F-7845 750
752
5F-8000 338
515
517
523
525
5F-9144 168
695
698
5F-9657 836
5F-9757 328
333
5G-2247 498
499
501
5G-4313 773
5G-7496 . . . . . ▶571
809
5G-7610 807
5G-7611 807
5G-7862 554
555
556
557
558
559
560
561
▶594
5G-7865 555
557
558
560
▶572
5G-7896 . . . . . ▶669
5G-7897 . . . . . ▶669
5G-8484 667
5G-9258 4
▶465
5G-9259 465
5G-9429 465
5G-9672 491
495
5H-1592 381
5H-2767 336
606
719
5H-3182 387
650
653
5H-4020 554
556
5H-4081 535
5H-6005 337
388
653
5H-6733 602
606
5H-7153 358
5H-7370 607
5H-8038 603
606
5H-8432 400
5H-9394 433
5J-4986 546
550
551
5J-5315 173
344
716
5J-5933 701
5J-6304 667
5J-8275 548
5J-9393 388
5K-0906 252
257
262
327
332
5K-1568 360
603
607
5K-3546 754
759
763
5K-4340 723
725
5K-5068 134
136
138
230
5K-5165 750
752
5K-5338 578
582
583
712
714
5K-5959 360
5K-7143 602
606
5K-8451 206

▶ PRIMARY REFERENCE

PART NUMBER INDEX

Part	Page
5K-9090	576
5K-9107	336
	513
5L-2952	90
5L-5840	625
5L-7200	332
5L-7942	▶160
5L-8957	729
5M-2043	513
5M-2057	197
	230
	338
5M-2555	320
	324
5M-2894	336
	337
	344
	346
	371
	381
	384
	400
	416
	419
	513
	521
	528
	539
	602
	606
	611
	617
	625
	658
5M-3062	206
	250
	251
	252
	256
	262
	263
	286
	287
	291
	293
	320
	324
	327
	332
	333
	375
	433
	436
	447
	449
	537
	573
	671
	677
	683
	684
	695
	698
	700
	701
	716
	733
	735
	752
	754
	758
	762
	778
	795
	797
5M-4443	515
	517
	523
	525
5M-5000	491
	495
5M-5860	602
	606
5M-6214	121
5M-7142	535
5M-7883	650
	653
5M-9621	425
	460
	462
5M-9679	124
5N-1811	772
5P-0060	348
5P-0370	478
5P-0372	700
	716
5P-0537	23
	212
	226
	298
	384
	471
	723
	725
	799
5P-0597	110
	121
	126
	585
	587
5P-0599	144
	146
	148
5P-0743	370
5P-0747	251
	252
	256
	257
	258
	262
	263
	264
	267
5P-0761	251
	252
	256
	263
5P-0763	110
	112
5P-0767	121
	126
	733
	735
5P-0801	432
5P-0808	671
	677
5P-1005	772
5P-1046	210
	212
	214
5P-1075	106
	107
	122
	124
	127
	172
	206
	231
	252
	258
	262
	287
	289
	291
	293
	319
	320
	324
	327
	332
	360
	372
	377
	379
	429
	432
	436
	437
	439
	442
	444
	453
	455
	460
	463
	472
	476
	537
	568
	578
	583
	585
	587
	589
	667
	671
	677
	683
	684
	695
	698
	700
	701
	705
	707
	710
	716
	729
	731
	754
	758
	762
	770
	772
	773
	778
	795
5P-1076	155
	231
	240
	242
	244
	370
	423
	424
	429
	432
	436
	439
	447
	449
	451
	453
	455
	457
	542
	566
	568
	572
	672
	678
	685
5P-1259	121
	377
	379
5P-1262	121
5P-1442	206
	210
	212
	214
	230
	360
	372
5P-1717	144
	146
	148
5P-1763	844
5P-1835	478
5P-1979	511
	512
5P-2136	144
	146
	148
5P-2228	370
	423
	429
	453
	478
	566
	574
	576
	585
	587
	672
	678
	685
	750
	752
5P-2424	585
	587
	672
	678
	685
5P-2566	230
	377
	379
	425
	427
	432
	436
	451
	585
	587
	746
	778
5P-2669	723
	725
5P-2948	298
5P-2955	287
	289
	291
5P-3426	712
5P-3466	568
5P-3620	362
5P-3621	568
	589

▶ PRIMARY REFERENCE

PART NUMBER INDEX

Part	Page
5P-3863	336
5P-3928	672
	678
	684
5P-3929	672
	678
	684
5P-3945	671
	677
	684
5P-3946	671
	677
	684
5P-3948	671
	677
	683
	684
5P-3950	672
	678
	684
5P-3951	671
	677
	684
5P-4106	672
	678
	684
5P-4107	672
	678
	684
5P-4115	293
	321
	325
	671
	677
	684
	723
	725
	729
	742
	743
	750
	752
	754
	759
	763
5P-4116	121
	126
	228
	375
	478
	597
5P-4248	375
5P-4268	336
5P-4295	250
	257
	263
5P-4325	578
	583
5P-4692	384
5P-4693	384
5P-4829	671
	677
5P-4868	122
	127
5P-4920	353
	355
	363
	366
5P-4921	353
	355
	363
	366
5P-4924	206
5P-4961	210
	212
	214
	360
	372
	671
	677
	684
5P-5589	535
5P-5599	719
5P-5641	437
5P-5671	746
5P-5755	433
5P-5768	723
	725
	772
	773
5P-5908	755
	759
	763
5P-5923	797
5P-5926	471
5P-5927	750
	752
5P-5929	683
5P-5931	124
5P-5934	746
5P-5939	127
	471
5P-5942	755
	763
5P-5968	723
	725
5P-5992	772
	773
	797
5P-6129	684
	733
5P-6620	183
5P-6663	395
	397
5P-6718	336
	403
5P-6859	381
	400
	405
	719
5P-6860	381
5P-6875	773
	778
5P-6920	246
	248
5P-7032	338
5P-7137	672
	678
	683
5P-7211	471
5P-7213	391
	393
	600
5P-7462	578
	583
5P-7463	578
	583
5P-7466	568
	585
	587
5P-7467	568
	585
	587
5P-7468	375
	377
	379
5P-7469	375
	377
	379
5P-7470	231
	578
	583
5P-7471	231
	578
	583
	672
	678
	685
5P-7701	403
5P-7703	231
5P-7807	246
	248
5P-7813	210
	212
	214
	839
5P-7960	712
	714
5P-7963	712
	714
5P-7970	297
	627
	628
	630
5P-8091	591
5P-8112	568
	585
	587
5P-8131	337
5P-8136	827
	831
5P-8167	230
	251
	257
	262
	293
	321
	325
	328
	332
	333
	672
	678
	685
	705
	707
	710
	731
	797
5P-8182	578
	583
5P-8197	842
5P-8211	400
5P-8217	393
5P-8244	351
	352
	554
	556
	572
5P-8245	20
	62
	67
	68
	157
	158
	336
	387
	425
	427
	457
	602
	606
5P-8246	86
5P-8247	29
	30
	31
	34
	235
	237
	546
5P-8248	363
	366
	387
	467
	468
	469
	482
	804
	806
5P-8249	467
	468
	469
	552
	562
	564
5P-8250	472
5P-8347	21
	22
	153
	212
	297
5P-8356	409
	411
	412
	413
	414
5P-8361	828
5P-8362	827
	828
	829
	831
	832
	833
5P-8438	754
	758
	762
5P-8439	333
	754
	759
	763
5P-8440	327
	333
	695
	698
5P-8441	695
	698
	754
5P-8444	375
	377
	379
5P-8445	738
5P-8500	105
	168
	350
	425
	427
	453
	462
	607
	729
	731
	732
	798
5P-8502	105
	168
	350

► PRIMARY REFERENCE

PART NUMBER INDEX

Part	Page
	425
	427
	453
	462
	729
	731
	732
	798
5P-8522	327
	333
5P-8524	293
	773
	797
5P-8547	371
5P-8548	371
5P-8549	371
5P-8823	828
	829
	833
5P-8864	351
	352
5P-8874	579
5P-8882	672
	678
	685
5P-9036	371
5P-9085	250
	252
	258
	262
	263
	287
	289
	291
	298
	319
	328
	333
	425
	427
5P-9119	603
	607
5P-9135	754
	758
	762
5P-9147	353
	355
	363
	366
5P-9205	470
	733
	735
	754
	758
	762
	772
5P-9209	172
	382
	700
5P-9297	250
	251
	252
	256
	262
	263
5P-9532	353
	355
	363
	366
5P-9757	183
	188
	197
	201
	720
5P-9883	843
5P-9938	339
5Q-5060	462
5Q-5061	462
5Q-5209	471
5Q-5227	471
5Q-5461	5
	▶471
5Q-5562	512
5Q-5563	495
5Q-5564	495
5Q-5565	4
	▶512
5Q-5566	4
	▶495
5Q-5567	▶4
	5
	446
5Q-5568	4
	▶363
	486
5Q-5569	4
	▶366
	486
5Q-5754	451
5Q-5755	5
	▶451
5Q-5788	442
5Q-5790	5
	▶442
5Q-5791	▶4
	5
5Q-5831	5
	▶447
5Q-5853	447
5Q-5992	447
5Q-6086	363
	366
5Q-6141	289
5Q-6142	289
5Q-6767	425
	427
5Q-6770	5
	▶425
5Q-6773	289
5Q-6775	289
	426
5Q-6776	289
5Q-6781	5
	▶289
5Q-6782	289
	426
5Q-6803	289
5Q-6822	5
	446
	▶462
5Q-6826	462
5Q-6890	5
	▶102
5Q-7071	431
5Q-7085	425
	427
5Q-7094	5
	▶470
5Q-7111	470
5Q-7121	430
5Q-7126	5
	▶430
5Q-7127	5
	▶431
5Q-7128	430
	431
5Q-7357	353
	363
	366
5Q-7911	462
5Q-8075	4
5Q-8901	5
	▶427
5S-0003	669
5S-1211	121
	126
5S-1213	121
	126
5S-1218	121
	126
5S-4629	121
	126
5S-6981	375
5S-7001	665
5S-7018	650
	653
	656
	665
5S-7349	293
	303
	308
	310
	671
	677
	684
	733
	735
	750
	752
	759
5S-7379	121
	124
	126
	172
	289
	319
	353
	355
	363
	366
	375
	433
	436
	437
	476
	537
	592
	707
	710
	716
5S-7382	359
	377
	379
	574
	576
	592
	716
5S-7383	124
	358
	360
	562
	564
	614
	620
	707
	710
5S-7598	478
5S-9062	60
5S-9607	707
	710
5V-0704	442
	444
5V-0770	738
5V-1497	795
5V-1783	807
5V-1784	807
5V-2772	804
5V-2773	804
	6
6A-9708	745
6A-9709	745
6A-9710	745
6A-9718	745
	799
6B-0852	419
6B-6683	597
6B-6863	172
6C-3060	230
6D-0679	173
6D-1641	671
	677
	683
	684
	733
	735
6D-2928	172
6D-3787	344
	346
6D-4244	325
6D-4246	321
	591
	695
	698
6D-4299	725
6D-4636	321
	325
	370
	537
6D-4986	818
6D-9953	183
	188
	197
	201
6E-0381	666
6E-0382	666
6E-0407	395
	397
6E-0465	548
6E-0631	338
6E-1127	660
	662
6E-1530	395
	397
6E-1835	661
	664
6E-2704	339
6E-2705	339
6E-2706	339
6E-2707	339
6E-2708	339
6E-2709	339
6E-2710	339
6E-2711	339
6E-2712	337
6E-2802	336
6E-2943	391
	393
	600
6E-3393	387
6E-3516	▶387
	390
6E-3700	611

PART NUMBER INDEX

Part	Page
	614
6E-4461	369
6E-4462	369
6E-5510	660
	662
6E-5528	552
6E-6045	▶391
	598
6E-6046	▶393
	597
6E-6138	660
	662
6E-6184	611
	617
	▶662
6E-6195	611
	614
	617
	620
	▶663
6E-6632	▶548
	554
6E-6633	548
6E-6635	548
6F-0295	377
	379
6F-0711	337
	338
	602
	606
6F-0944	566
6F-4855	719
6F-5559	336
6F-5933	197
6F-6673	178
	336
	838
	839
	841
6F-7045	257
	313
6F-7062	29
	30
	31
	34
6F-8146	360
6H-0411	381
6H-1717	572
6H-3609	594
6H-3616	750
	752
6H-3689	750
	752
6H-3956	425
	427
	462
6H-4005	328
	333
6H-5139	603
	607
6H-8021	138
	159
	160
6H-8381	159
6I-0177	140
	142
6I-0181	140
	142
6I-0182	140
	142
6I-0273	132
	133
6I-0274	132
	133
6I-0275	132
	133
6I-0482	171
6I-0483	171
6I-0484	171
6I-0924	81
6I-1564	183
	188
	201
6I-2420	7
	▶214
6I-2422	210
	214
6I-2424	233
6I-2693	6
	8
	10
	12
	▶179
6I-3035	152
6I-3527	▶3
6I-3528	3
	▶12
6I-4065	144
6I-4801	179
6I-4802	179
	180
6J-0488	794
6J-0499	442
6J-0793	351
	352
6J-1038	371
6J-2256	173
6J-2386	391
	393
	600
6J-3134	720
6J-5727	384
6J-6439	661
	664
6J-7836	387
6J-8251	387
6J-8252	387
6J-8253	387
6J-8696	320
	324
6K-0142	710
6K-0545	818
6K-0806	360
6K-3317	592
6K-3607	573
6K-4934	572
6K-4935	572
6K-4936	591
6K-5535	574
	576
6K-5536	574
	576
6K-6165	360
6K-6166	360
6K-6307	611
	614
	617
	620
6K-8178	210
	212
	251
	257
	262
	263
6K-8420	568
	571
	589
6K-8987	442
	444
6K-9194	628
6L-2609	836
6L-3656	462
6L-3929	108
6L-4381	126
6L-4570	126
6L-7751	381
6L-8598	176
6M-4263	451
6M-5062	650
	695
	698
6N-0009	144
	146
	148
6N-1172	669
	710
6N-1604	278
	279
6N-4414	212
6N-7061	121
6N-7068	121
6N-8589	672
	678
	685
	755
	758
	763
6N-9119	275
6N-9121	275
6N-9122	275
6N-9123	275
6N-9995	298
6P-3236	755
	758
	762
6P-4975	663
6P-5332	362
6P-6253	447
	449
6P-6256	470
6P-8912	521
	528
6T-0720	521
	528
6T-1832	252
	257
	262
6T-1847	252
	257
	262
6T-3643	672
	678
6T-4861	481
	482
6T-5600	282
6T-7017	539
6T-7695	742
	743
6T-8115	320
6V-0092	844
6V-0395	700
	733
	735
6V-0439	353
	356
	363
	366
6V-0440	353
	355
	363
	366
	484
6V-0683	578
	583
6V-0825	371
6V-0828	382
6V-0833	381
6V-0852	374
	377
	379
	416
	578
	583
	585
	587
	602
	606
	719
6V-0871	372
6V-0913	336
6V-0992	343
6V-1033	381
	669
	707
	712
	714
6V-1243	700
6V-1516	433
	437
	439
6V-1572	578
	583
6V-1573	578
	583
6V-1574	578
	583
6V-1626	282
	286
6V-1640	671
	677
	684
6V-1668	754
	758
	762
6V-1722	573
6V-1780	382
6V-1867	585
	587
6V-1868	585
	587
6V-1869	585
	587
6V-1899	391
	600
6V-1914	492
6V-1915	492
6V-1995	723
	725
6V-1997	353
	355
	363
	366
6V-2121	▶844
6V-2315	23
6V-2317	18
	20
	61
	90
	92
	97
	212
6V-2369	251
6V-2435	555
	556
	557

▶ PRIMARY REFERENCE

PART NUMBER INDEX

Part	Page
	558
	559
	560
	561
6V-2436	555
	556
	557
	558
	559
	560
	561
6V-2452	353
	355
	356
	363
	366
6V-2453	557
	558
	704
6V-2456	748
	783
6V-2483	650
	653
6V-2606	712
	714
6V-2664	337
6V-2665	400
6V-2674	842
6V-2679	842
6V-2680	669
	842
6V-2685	695
	698
6V-2701	521
	528
6V-2759	539
6V-2760	752
6V-2765	667
6V-2830	707
	710
6V-3234	451
6V-3382	338
6V-3507	327
	332
6V-3538	17
	33
	36
	37
	38
	39
6V-3582	672
	678
	684
6V-3607	804
	807
	843
6V-3821	89
6V-3822	63
	64
	65
	76
	95
	172
6V-3918	67
	68
	71
	93
	116
	119
	251
	258
	264
6V-3940	15
	16
	17
	33
	36
	37
	38
	39
	76
	95
	96
	97
	108
	110
	112
	212
6V-3965	374
	377
	379
	416
	419
	578
	583
	585
	587
	602
	606
	719
6V-4248	69
	96
	212
6V-4249	60
6V-4298	272
	321
6V-4611	843
6V-5031	750
	752
6V-5044	327
6V-5100	183
	188
	198
	201
6V-5142	409
	411
	412
	413
	414
	415
6V-5158	772
6V-5184	403
6V-5213	176
	183
	188
	197
	201
6V-5215	61
	98
6V-5217	18
	67
	68
6V-5218	153
	178
	179
	180
6V-5219	98
	129
	210
	212
	214
	250
	256
	262
	263
6V-5223	88
	153
6V-5230	56
	57
	58
	108
	110
	112
6V-5381	842
6V-5645	320
	324
6V-5683	169
	170
	198
6V-5698	578
6V-5720	300
	►310
6V-5782	566
	710
6V-5815	100
	101
6V-5819	328
	332
6V-5839	18
	56
	69
	76
	95
	96
	100
	101
	173
	212
	306
6V-5842	18
	66
6V-5843	63
	64
6V-5845	516
	524
6V-5868	842
6V-6204	353
	356
	363
	366
6V-6209	799
6V-6210	802
6V-6213	799
6V-6214	799
6V-6219	799
6V-6228	221
6V-6317	210
	212
	214
6V-6502	320
	324
6V-6535	811
	813
	827
	831
6V-6561	773
	►802
6V-6571	382
6V-6640	353
	356
	364
	367
	535
6V-6796	799
6V-6886	755
	763
6V-6888	799
6V-6889	745
	799
6V-6945	723
	725
6V-7238	59
	370
	733
	735
6V-7287	585
6V-7326	754
	759
	763
6V-7646	171
	773
6V-7689	772
6V-7692	700
6V-7699	182
	187
	198
	200
6V-8004	60
6V-8077	585
	587
6V-8100	773
6V-8149	20
6V-8182	424
6V-8183	172
	173
	700
	701
6V-8185	235
	321
	325
	471
	698
6V-8186	314
	669
	707
	710
	712
6V-8187	172
	246
	248
	320
	324
6V-8188	250
	257
	263
	303
	308
	310
	327
	333
	347
	541
	542
	585
	587
	598
	599
	700
	733
	735
6V-8189	121
	126
	182
	187
	197
	200
	286
	287
	289
	291
	293
	478
	710
6V-8336	20
	67
	68

► PRIMARY REFERENCE

PART NUMBER INDEX

Part	Page
6V-8360	829
	832
	833
6V-8362	318
	755
	758
	762
6V-8363	319
	332
6V-8368	327
	332
6V-8369	762
	774
6V-8370	319
	332
6V-8376	250
	256
	263
	320
	672
	678
	755
	758
	763
6V-8377	295
	296
	710
6V-8378	295
	296
	308
6V-8397	90
	97
	143
	206
	209
	210
	212
	214
	216
	217
	222
	224
	228
	230
	371
	579
	582
	635
	837
	838
	839
	840
	841
6V-8398	578
	635
6V-8513	455
6V-8625	579
6V-8628	218
	574
	576
6V-8636	206
	578
	582
	627
	633
	635
6V-8637	578
6V-8647	216
	217
	218
	574
	576
6V-8676	140
	141
	142
6V-8714	576
6V-8723	206
	216
	217
	371
	579
6V-8724	90
	97
	206
	209
	210
	212
	214
	222
	224
	230
	579
	582
	627
	630
6V-8774	210
	212
	214
6V-8782	578
6V-8801	124
	161
	172
	231
	251
	258
	262
	287
	291
	319
	360
	377
	379
	423
	432
	436
	439
	462
	476
	537
	566
	568
	573
	578
	583
	592
	672
	678
	684
	700
	701
	707
	710
	712
6V-8918	206
6V-8928	773
6V-8969	320
	324
6V-9007	374
	578
6V-9607	179
	180
6V-9632	705
	750
	752
	773
6V-9665	400
6V-9673	271
	742
6V-9746	374
	570
	579
	838
6V-9748	60
6V-9836	579
6V-9850	206
	228
6V-9872	206
6V-9873	578
	633
	635
6W-2453	806
6W-2454	806
6W-2980	807
6Y-0309	830
6Y-0473	492
	496
	498
	499
	501
	503
	504
	505
	506
	507
	508
	509
	510
	515
	517
	521
	523
	525
	528
6Y-0857	353
6Y-1198	501
6Y-1199	506
6Y-1781	▶513
	534
6Y-2043	513
6Y-4765	▶481
	534
6Y-6584	327
	332
6Y-6747	498
6Y-6748	498
6Y-6749	498
6Y-6750	498
6Y-6870	▶267
6Y-7239	▶812
6Y-7455	267
6Y-9024	531
	532
6Y-9960	70
	7
7B-0863	465
7B-1597	94
7B-2289	543
	818
7B-2742	212
	226
	381
7B-3028	484
	842
7B-3039	230
	338
7B-7525	783
	786
7B-9008	370
7B-9506	347
7C-0044	6
	8
	10
	12
	▶60
7C-0111	72
	73
	75
7C-0115	75
7C-0299	6
	8
	10
	12
	▶18
7C-0358	90
	836
7C-0748	90
	97
7C-0989	192
	193
	195
	205
7C-1152	129
	297
	839
	841
7C-1159	179
	180
	836
	839
	841
7C-1160	104
7C-1356	240
	242
	244
7C-1377	144
	146
	148
7C-1493	92
7C-1891	79
	80
7C-1958	97
7C-2177	90
7C-2428	6
	12
	▶58
7C-2743	183
	188
	198
	201
7C-3571	84
	85
7C-3615	129
7C-3776	183
	188
	198
	201
7C-3839	178
7C-3901	72
7C-3938	78
	79
	80
7C-3941	689
	691
	692
7C-4028	7
	9
	11
	13
	▶296
7C-4163	84
7C-4273	48
	49

PART NUMBER INDEX

Part	Page
	52
	53
7C-4466	192
	193
	195
	205
7C-4483	182
	187
	198
	200
7C-4508	117
	▶119
7C-4532	6
	8
	10
	12
	▶59
7C-4868	21
	22
7C-4869	22
7C-5033	11
	▶22
7C-5034	11
	▶76
7C-5148	182
	187
	198
	200
7C-5150	183
	188
	198
	201
7C-5232	72
	73
7C-5294	176
7C-5480	182
	187
	197
	200
7C-5541	183
	188
	198
	201
7C-5626	162
7C-5802	162
	166
7C-5826	33
	▶34
	36
7C-5859	140
	142
7C-5883	183
	188
	198
	201
7C-5884	183
	188
	197
	201
7C-5885	182
	187
	198
	200
7C-6078	88
7C-6155	166
7C-6208	34
7C-6219	129
7C-6656	140
	142
7C-6657	140
	141
	142
7C-6658	140
	141
	142
7C-6670	162
	165
	166
7C-6671	162
	166
7C-6672	162
	165
	166
7C-6961	25
7C-6962	25
7C-6963	25
7C-6964	25
7C-6965	25
7C-6966	25
7C-6967	25
7C-6968	25
7C-6969	25
7C-6970	25
7C-6971	25
7C-6972	25
7C-6973	25
7C-6974	25
7C-6975	25
7C-6976	73
	75
7C-6977	73
	75
7C-7301	7
7C-7412	75
7C-7431	143
	163
	164
	167
	837
	839
	841
7C-7705	150
7C-7980	25
7C-8365	60
7C-8366	60
7C-8369	60
7C-8370	60
7C-8555	151
7C-8634	60
7C-8640	197
7C-8854	183
	188
	197
	201
7C-9446	6
	12
	▶150
7D-0734	230
	596
7D-1649	453
7D-4092	671
	677
	684
7D-7026	733
7D-7233	370
7D-7735	671
	677
	684
7D-8627	695
	698
7E-0156	176
7E-0844	178
	838
	839
	841
7E-1364	78
7E-2482	6
	8
	10
	12
	▶36
	37
	38
	39
7E-2968	29
	30
	31
	34
7E-3216	197
7E-3217	182
	187
	197
	200
7E-3870	144
	146
	148
7E-3898	691
	692
7E-3943	176
7E-3944	176
7E-4199	88
7E-4761	121
	126
7E-5189	210
	212
	214
7E-5190	210
	212
	214
7E-5346	222
	226
7E-5786	72
	73
	75
7E-5984	88
7E-6192	80
7E-6325	217
7E-6366	68
7E-6794	88
7E-7302	689
	691
	692
7E-7607	7
	12
	▶221
7E-7779	48
	49
	52
	53
7E-8794	▶176
	182
	187
	198
	200
7E-9429	6
	8
	10
	12
	▶171
7E-9898	176
7F-2776	172
7F-7621	248
7F-8268	371
	372
	388
7G-2132	349
7G-3832	568
	589
7G-3833	568
	589
7G-3834	568
	589
7G-4332	492
	496
	515
	517
	521
	523
	525
	528
7G-5186	126
7G-5690	▶482
	483
7G-8271	672
	678
	684
	733
7H-2621	353
	355
	363
	366
7H-3606	416
7H-3607	399
7H-3641	384
	669
	710
7H-4571	513
7H-4574	513
7H-9678	227
7I-4937	230
7J-1938	552
7J-2604	484
7J-3555	348
7J-4169	388
7J-5544	336
7J-7423	611
	614
	617
	620
7J-7666	348
7J-7667	348
7J-7673	650
	653
7J-8287	550
	551
7J-8893	395
	397
7J-8894	337
7J-8955	552
7J-8956	552
7J-9016	336
7J-9451	432
	436
	451
7J-9688	546
7J-9705	667
7J-9708	546
7J-9933	661
	664
7K-0734	623
	624
7K-1181	320
	324
	328
	333
	578
	582
	583
	671
	677
	683
	712
	714
7K-1401	360
7K-1402	360
7K-2135	539

▶ PRIMARY REFERENCE

PART NUMBER INDEX

Part	Page
	669
	700
	707
	710
	712
	714
7K-3176	671
	677
	683
	684
7K-3245	698
7K-3304	671
	677
	683
	684
7K-4474	744
	745
	799
7K-5634	350
7K-5636	▶350
	602
7K-6536	462
7K-6627	595
7K-7565	539
7K-9202	492
	496
	545
7K-9203	543
7K-9204	545
	807
7K-9208	543
	818
7K-9209	491
	495
	667
7K-9212	667
7K-9213	479
7K-9218	667
7L-0002	6
	12
	▶68
7L-0004	6
	8
	10
	12
	▶20
7L-2894	303
	308
	310
	838
7L-3386	183
	188
	197
	201
7M-0706	669
	710
	714
7M-5130	81
7M-6492	423
7M-7219	738
7M-7794	432
	433
	451
	460
	463
7M-8485	375
	377
	379
	568
	592
	611
	614
	660
	662
	663
	719
7N-0140	298
7N-0296	298
7N-0476	106
7N-0718	252
	257
	262
	▶313
7N-2059	298
7N-2171	188
	197
	201
	384
7N-2867	293
7N-2957	105
7N-3718	250
	252
	256
	262
	695
	698
7N-5274	251
	252
	257
	262
7N-5565	105
7N-5683	33
	36
	37
	38
	39
7N-5685	161
7N-5876	272
	320
	327
	332
7N-6100	121
	126
7N-7779	270
	280
	293
	312
	562
	744
	745
	799
7N-7780	270
	280
	293
	312
	562
	744
	745
	799
7N-7781	270
7N-7782	269
	293
	562
7N-8204	744
	745
	799
7N-9023	246
	248
7N-9283	124
7N-9737	280
	312
7N-9738	312
7N-9943	281
	293
7P-1576	807
7P-2015	723
7P-2024	725
7P-2101	▶360
	390
7P-2143	447
	449
7P-2261	594
7P-2281	667
7P-2355	492
	496
7P-2358	492
	496
7P-2372	358
7P-2429	353
	355
	364
	367
7P-2449	723
	725
7P-2515	1
	2
	▶667
7P-2563	1
	2
	▶344
	▶346
7P-2598	1
	2
	▶439
7P-2675	554
	▶596
7P-2706	390
	▶399
7P-2807	723
	725
7P-3265	439
	474
	476
7P-3291	439
7P-3293	439
7P-3296	439
7P-3299	773
7P-3895	705
	707
	710
7P-3953	750
	752
7P-4418	172
7P-4695	487
	489
7P-4749	754
	758
	763
7P-5388	442
	444
7P-5807	572
7P-5808	572
7P-5850	320
	324
7P-6122	688
	▶746
7P-6348	484
	491
	495
7P-6446	750
	752
7P-6487	353
	355
	363
	366
7P-6521	353
	355
	363
	366
7P-6531	353
	355
	363
	366
7P-6682	251
	257
	263
7P-6865	667
7P-6887	667
7P-6893	667
7P-6939	750
	752
7P-7047	750
	752
7P-7051	750
	752
7P-7245	491
	495
7P-7305	432
	436
	439
7P-7308	432
	436
	439
7P-7334	491
	496
7P-7335	491
	496
7P-7393	432
	436
7P-7394	432
	436
7P-7403	440
	462
7P-7405	432
	436
7P-7406	432
	436
7P-7427	430
	431
	432
	436
	453
	474
	476
7P-7507	716
7P-7509	716
7P-7532	344
7P-7533	344
	346
7P-7536	344
	346
7P-7571	596
7P-7577	700
7P-7583	701
7P-7584	701
7P-7603	375
7P-7698	479
7P-7718	293
7P-7723	293
7P-7776	667
7P-7827	460
	463
7P-7831	476
7P-7913	321
	325
7P-7914	320
	324
7P-7975	432
	436
	440
7P-8037	455
7P-8039	455
7P-8042	455
7P-8044	455
7P-8050	750
	752

▶ PRIMARY REFERENCE

PART NUMBER INDEX

Part	Page
7P-8169	436
7P-8222	701
7P-8223	700
7P-8226	173
7P-8234	750
	752
7P-8237	472
7P-8288	432
	436
	439
7P-8301	173
	700
7P-8303	701
7P-8330	750
	752
7P-8331	672
	678
	685
7P-8336	671
	677
	684
7P-8341	673
	679
	685
7P-8440	439
7P-8444	439
7P-8448	439
7P-8450	439
7P-8452	440
7P-8453	439
7P-8463	439
7P-8473	770
7P-8560	424
7P-8650	778
7P-8651	571
7P-8733	491
	495
7P-8745	344
	346
7P-8908	▶478
7P-9131	432
	436
	750
	752
7P-9168	667
7P-9283	172
	700
7P-9299	701
7P-9312	701
7P-9464	430
	431
	432
	474
	476
7P-9486	440
7P-9490	439
7P-9571	363
	366
7P-9577	353
	355
	363
	366
7P-9729	554
	▶707
7P-9732	700
7P-9733	700
7P-9735	▶355
	390
7P-9740	700
7P-9872	353
	355
	363
	366
7P-9873	353
	355
	363
	366
7P-9986	390
	▶535
7R-8872	598
	599
7S-4244	206
7S-5005	176
7S-5757	400
	707
	710
7S-6798	176
7S-8491	611
	614
	617
	620
7S-8553	665
7S-9323	227
7S-9372	369
7S-9885	700
7T-0020	281
	293
7T-0158	521
	528
7T-0969	327
	332
7T-1099	442
	444
	750
	772
7T-2790	235
7T-2792	235
7T-2793	235
7T-2795	235
7T-2797	235
7T-2798	235
7T-2799	235
7T-2800	235
7T-2801	235
7T-2802	235
7T-2803	235
7T-2804	235
7T-2805	235
7T-2816	235
7T-3269	303
	310
7T-3270	303
	310
7T-3451	303
	308
	310
7T-3454	303
	308
	310
7T-4031	521
	528
7T-4101	528
7T-4102	▶528
	534
7T-4106	521
7T-4107	▶521
	534
7T-4152	521
	528
7T-4532	690
	694
7T-4562	491
7T-4645	498
7T-4646	498
7T-5868	695
	698
7T-6416	235
7T-6417	235
7T-6418	235
7T-6799	318
7T-8891	797
7T-9096	745
7T-9122	353
	355
	363
	366
7T-9302	774
7T-9515	333
7U-4898	783
	786
7V-3719	667
7V-5138	467
	723
	725
7V-5191	738
7V-6571	672
	678
	683
	684
7V-9797	172
7W-0183	210
	214
7W-0367	218
7W-1440	183
	188
	198
	201
7W-1691	183
	188
	201
7W-2398	90
	97
	143
	837
	839
	841
7W-3773	77
7W-3780	114
	115
7W-3872	18
	178
7W-3980	81
7W-3981	81
7W-3983	81
7W-4070	15
	16
7W-4117	81
7W-4137	81
7W-4313	182
	187
	197
	200
7W-4812	▶178
	181
	194
	196
7W-5095	62
7W-5324	183
	188
	201
7W-5340	95
	96
	836
7W-5341	96
7W-5426	16
7W-5561	183
	188
	198
	201
7W-5591	183
	188
	198
	201
7W-5594	197
7W-5614	183
7W-5615	176
7W-5903	104
7W-6423	689
	691
	692
7W-6552	20
	838
7W-6989	6
	▶170
7W-7364	183
	188
	197
	201
7W-7383	176
7W-8064	48
7W-8065	42
7W-8434	181
	194
	196
	▶218
7W-8993	183
	188
	198
	201
7W-9248	7
	9
	11
	12
	▶152
7W-9395	18
7W-9415	72
	75
7W-9737	64
	65
	99
7W-9738	64
	65
	99
7W-9740	64
	65
	99
7W-9930	64
	65
	99
7X-0288	124
	172
	360
7X-0290	161
7X-0291	695
	698
7X-0295	535
7X-0308	568
	585
	587
	589
	592
7X-0310	592
7X-0314	592
	614
	620
7X-0315	592
	614
	620
7X-0318	491
	495
	585
	587
7X-0325	432
	437
	673
	679

▶ PRIMARY REFERENCE

PART NUMBER INDEX

Part	Page
	685
7X-0326	429
	770
7X-0328	347
	423
7X-0333	595
7X-0341	240
	242
	244
7X-0345	230
	353
	355
	363
	366
7X-0346	70
	230
7X-0347	465
7X-0349	358
7X-0350	230
7X-0352	596
7X-0358	667
7X-0365	424
	453
	667
	807
7X-0366	447
	449
	667
7X-0368	353
	356
7X-0369	353
	355
7X-0370	424
7X-0371	447
	449
7X-0383	746
	778
7X-0404	444
	465
	667
7X-0405	428
7X-0413	70
	425
	427
7X-0447	235
	237
	592
7X-0448	707
	712
	807
7X-0462	491
7X-0463	496
7X-0467	173
	700
7X-0503	289
7X-0510	121
	126
7X-0515	230
7X-0517	597
7X-0550	591
7X-0562	301
	303
	308
	310
7X-0563	491
	495
7X-0575	144
7X-0578	439
7X-0579	282
7X-0582	447
	449
	667
	807
7X-0583	230
	595
	596
7X-0591	173
	700
7X-0607	447
	449
7X-0608	598
	599
7X-0620	237
	293
	773
7X-0766	425
	427
	462
7X-0772	571
	592
7X-0818	78
	79
	80
7X-0901	222
	224
7X-1950	303
	308
	310
7X-1951	308
	310
7X-1952	303
	308
	310
7X-1953	308
	310
7X-1954	308
	310
7X-1958	308
	310
7X-2058	327
	332
7X-2459	210
	212
	214
7X-2489	484
7X-2501	206
7X-2526	7
	13
7X-2528	7
	13
7X-2533	772
7X-2537	209
	222
	224
	228
7X-2541	628
	630
7X-2553	487
	489
7X-2563	487
	489
	491
	495
	511
	512
7X-2564	487
7X-2565	491
	495
7X-2566	484
7X-3317	282
7X-3338	173
7X-3373	303
	308
	310
7X-3374	172
	173
7X-3392	598
	599
7X-4799	491
7X-7644	843
7X-7729	130
	134
	136
	138
	146
	148
	597
7X-9372	598
	599
7Y-7394	773
8	
8B-1312	387
8B-1910	433
	436
	439
	442
	444
	451
8B-3768	172
8B-4967	535
8B-8204	750
8C-3121	121
	126
	710
8C-3312	183
	188
	197
	201
8C-3756	695
	698
8C-3841	548
8C-3842	548
8C-4535	842
8C-5061	183
	188
	198
	201
8C-5899	183
	188
	201
8C-5917	267
8C-6364	176
8C-6500	425
8C-6822	425
8C-6855	86
8C-6877	592
8C-6913	746
	778
8C-7313	570
8C-7575	130
8C-7581	327
	332
8C-8418	662
8C-8422	338
8C-8451	171
8C-8478	487
8C-8545	182
	187
	198
	200
8C-8546	182
	183
	187
	188
	197
	200
	201
8C-8564	742
	743
8C-9200	548
8C-9678	293
8C-9759	►269
	564
8C-9763	►270
	564
8C-9987	321
	325
8D-2676	282
	286
	293
8D-5294	385
8D-9671	231
8E-1356	470
8E-4365	399
8E-4494	530
	533
8E-4495	530
	533
8E-4496	530
	533
8E-4497	530
	533
8E-5249	►533
8E-5250	►533
8E-5257	498
8E-5788	►813
8E-5792	►811
8E-5793	811
8E-5796	►832
8E-5797	►829
8E-6126	►819
8E-6127	►818
	819
8E-6128	►543
	819
8E-6259	823
	826
8E-6358	829
	832
8E-6359	829
	832
8E-6977	533
8E-6978	533
8E-7002	►533
8F-1434	246
	248
	301
	303
	308
	310
	319
	333
	733
	735
8F-1462	747
8F-3469	719
8F-4610	173
	700
8F-6437	432
	436
8F-6711	381
8F-7702	716
8F-8804	336
8F-9538	168
8F-9836	432
	433
	436
	439
	442
	444
	451
	462

► PRIMARY REFERENCE

PART NUMBER INDEX

Part	Page
	474
	476
	772
8F-9866	►835
	844
8G-0034	321
	324
8G-0191	1
	2
	►455
8G-0241	754
	758
	762
8G-0243	716
8G-0244	716
8G-0363	772
8G-0383	472
8G-0401	772
8G-0418	562
	564
8G-0420	562
	564
8G-0423	562
	564
8G-0424	562
	564
8G-0454	723
	725
8G-0478	►723
	772
8G-0479	►725
	772
8G-0480	773
8G-0486	723
	725
8G-0499	429
	770
8G-0516	554
	►562
	►564
8G-0538	404
8G-0557	669
	707
8G-0562	669
	707
8G-0563	707
	710
8G-0617	707
	710
8G-0767	778
8G-0794	442
	444
8G-0816	430
	431
	432
	474
	476
8G-0841	230
	596
8G-0868	423
8G-0891	539
8G-0894	755
	759
	763
8G-0898	746
8G-0901	754
	758
	762
8G-0918	293
8G-0939	716
8G-0947	716
8G-0958	716
8G-0985	►710
8G-0986	►539
	556
	558
	559
	561
8G-0987	554
	558
	559
	►712
8G-1066	716
8G-1113	432
	436
8G-1115	701
8G-1118	172
8G-1119	701
8G-1120	700
8G-1121	700
8G-1130	700
8G-1141	172
8G-1142	172
8G-1143	173
8G-1144	172
	173
8G-1146	172
8G-1150	172
8G-1182	460
	463
8G-1210	172
8G-1235	716
8G-1237	716
8G-1238	716
8G-1255	535
8G-1256	535
8G-1257	535
8G-1258	535
8G-1259	535
8G-1260	1
	2
	►700
8G-1264	455
8G-1267	1
	2
	►716
8G-1269	716
8G-1284	433
	436
8G-1285	433
	436
8G-1287	716
8G-1288	716
8G-1300	344
	346
8G-1301	344
	346
8G-1315	583
8G-1316	583
8G-1318	583
8G-1320	700
8G-1322	700
8G-1349	344
8G-1351	562
	564
8G-1397	424
8G-1406	562
	564
8G-1408	562
	564
8G-1409	562
	564
8G-1439	752
8G-1450	495
8G-1479	353
	355
	363
	366
8G-1486	712
8G-1489	712
8G-1490	712
8G-1531	585
	587
8G-1537	669
	707
8G-1558	360
8G-1559	360
8G-1560	360
8G-1563	669
	710
8G-1564	669
	710
8G-1565	669
	710
8G-1587	712
	714
8G-1588	712
	714
8G-1609	360
8G-1615	667
8G-1618	560
	561
	►714
8G-1619	714
8G-1620	714
8G-1626	688
	►797
8G-1739	535
8G-1740	535
8G-1798	173
8G-1809	568
8G-1813	707
	710
8G-1823	712
	714
8G-1824	712
	714
8G-1825	669
	707
	710
	712
	714
8G-1847	1
	2
	►424
8G-1849	424
8G-2094	539
8G-2097	539
8G-2326	423
8G-2353	568
8G-2536	669
	707
8G-2613	425
	427
	460
	462
8G-2707	797
8G-2708	797
8G-2718	750
	752
8G-2795	750
	752
8G-2796	750
	752
8G-2801	723
	725
8G-2803	723
	725
8G-2805	723
8G-2806	725
8G-2807	723
	725
8G-3008	750
	752
8G-3072	671
	677
	684
8G-3160	319
8G-3515	442
8G-3903	583
8G-3904	583
8G-3905	583
8G-3980	478
8G-4081	425
	427
	432
	433
	451
	460
	462
8G-4392	535
8G-4422	731
8G-4575	701
8G-4898	439
8G-5031	746
8G-5408	733
	735
8G-5413	353
	355
	366
8G-5414	353
	355
	363
8G-5808	592
8G-5809	592
8G-6035	439
	462
	474
	476
8G-6079	669
8G-6287	267
8G-6291	267
8G-6307	355
	363
	366
8G-6631	360
8G-7096	733
8G-7110	353
	355
	363
	366
8G-7133	353
	355
	363
	366
8G-7715	432
	436
8G-8273	700
8G-8280	754
	759
	763
8G-8282	754
	759
	763
8G-8283	754
	759
	763
8G-8284	755
	758
	763
8G-8286	758
8G-8287	759
8G-8288	759
8G-8458	476
8G-8460	476
8G-8462	287

► PRIMARY REFERENCE

PART NUMBER INDEX

Part	Page
8G-8476	797
8G-8478	797
8G-8479	773
8G-8574	460
	463
8G-8775	701
8G-8919	430
	431
	432
	436
	439
	474
	476
8G-9069	585
	587
8G-9571	230
8G-9870	439
8G-9986	293
8H-2046	89
	839
	841
8H-2262	492
	513
	515
	523
8H-2778	227
8H-2807	227
8H-2810	227
8H-3526	289
	426
8H-3532	660
	662
	663
8H-3710	162
	166
8H-5303	257
	313
8H-5305	773
8H-5306	257
	313
8H-9208	336
8H-9788	839
8J-0217	395
	397
8J-0218	395
	397
8J-0237	395
	397
8J-0322	660
	662
8J-0331	660
	662
	663
8J-0412	338
8J-0438	388
8J-1196	432
	436
	442
	444
	447
	451
8J-1256	272
	321
	754
	758
	762
8J-1622	656
8J-1688	548
8J-1689	548
8J-1898	623
	624
8J-2559	388
8J-2928	827
	831
8J-2933	827
	831
8J-4437	337
	663
8J-4954	▶824
	825
8J-4955	▶821
	822
	828
8J-5456	719
8J-5549	550
	551
8J-5550	550
	551
8J-5711	546
8J-6236	388
8J-6239	387
8J-6276	387
8J-6277	387
8J-6278	387
8J-6279	387
8J-6775	658
8J-6815	720
8J-6890	395
	397
8J-6910	336
8J-7236	442
8J-7844	298
8J-8197	735
8J-8332	371
8J-8495	546
8J-8498	545
	▶546
8J-8783	230
	338
8K-0589	818
8K-1433	695
	698
8K-4107	592
8K-4915	327
	332
8L-2746	720
8L-2777	666
8L-4496	381
8L-5449	210
	212
	214
8L-5832	539
8L-6565	384
8L-8413	738
	772
	774
	797
8L-8598	400
8M-0456	320
	324
8M-0505	535
	537
	583
8M-2518	419
8M-2770	321
	325
	328
	333
	679
	695
	698
	733
	735
8M-2772	216
	217
8M-2773	206
	272
	321
	328
	332
	372
	583
	695
	698
8M-4390	405
8M-4445	104
8M-4446	602
8M-4991	603
8M-5860	40
	42
	44
	47
8M-6701	773
	794
8M-8489	395
	397
8M-9024	210
	212
	214
8N-0869	252
	256
	263
8N-0984	182
	187
	200
8N-1725	251
	252
	256
	257
	262
	263
8N-2248	250
	263
8N-2694	130
	134
	136
	138
8N-3844	250
	263
	264
8N-4045	144
	146
	148
8N-5763	183
	188
	201
8N-5764	183
	188
	201
8N-6199	226
8N-6200	▶226
	227
8N-6201	7
	9
	11
	12
	▶227
8N-9889	121
8N-9928	124
8N-9937	124
8P-5197	495
	517
	525
8P-6188	513
8P-7755	733
	735
8P-9770	807
8R-8714	▶268
8S-0934	782
8S-0948	573
8S-1069	595
8S-4721	393
8S-4742	585
	587
8S-5150	121
	126
8S-6377	439
8S-7803	385
	738
	783
	786
8S-8158	662
8S-8820	698
8S-9191	371
	611
	617
8T-0080	206
8T-0100	20
	251
	256
	263
8T-0119	733
	735
8T-0151	210
	212
	214
8T-0154	122
	127
8T-0226	66
8T-0269	182
	187
	198
	200
8T-0276	92
	97
	206
	671
	677
	684
8T-0293	29
	30
	31
	34
8T-0326	293
	773
8T-0328	237
	246
	248
	272
	301
	303
	308
	310
	321
8T-0337	283
	284
8T-0338	635
8T-0352	642
8T-0360	481
8T-0644	117
	118
8T-0706	716
8T-0741	716
8T-0788	210
	212
	214
	579
8T-0789	772
8T-0797	742
	743
	773
8T-0798	716
8T-1118	772
8T-1177	716
8T-1460	183
	188

▶ PRIMARY REFERENCE

PART NUMBER INDEX

Part	Page
	197
	201
8T-1572	759
	763
8T-1578	425
	427
8T-1715	733
	735
8T-1779	222
	224
8T-1887	568
	589
8T-1888	568
	589
8T-1889	570
8T-1890	570
8T-1905	578
	582
8T-2173	230
8T-2228	171
8T-2501	124
	172
	377
	379
	537
	578
	712
8T-2502	121
	126
	347
	462
	596
8T-2561	439
	460
	462
	463
8T-3282	50
	54
	55
	481
	516
	524
8T-3490	173
8T-3597	138
8T-3612	130
	138
8T-3653	86
8T-3666	77
8T-3680	773
8T-4121	94
	107
	130
	134
	136
	138
	144
	240
	242
	244
	301
	306
	307
	462
	491
	495
	570
	673
	679
	683
	689
	691
	692
8T-4122	70
	353
	355
	358
	363
	366
	487
	489
	511
	512
	667
	716
8T-4123	484
	487
	489
	491
	495
8T-4131	484
8T-4132	487
	489
8T-4133	94
	144
	301
	673
	679
	683
	689
	691
	692
8T-4136	130
	134
	136
	138
	146
	148
	689
	691
	692
8T-4137	94
	148
	570
8T-4138	695
8T-4139	484
8T-4167	484
8T-4171	298
8T-4172	250
	258
	264
8T-4176	457
	491
	495
	597
8T-4177	90
8T-4179	428
8T-4182	689
	691
	692
8T-4185	130
	134
	136
	138
8T-4186	146
	240
	242
	244
	673
	679
	683
8T-4189	377
	379
8T-4190	251
	258
	272
8T-4191	306
	307
8T-4192	457
	487
	566
8T-4193	489
8T-4194	457
8T-4195	107
	130
	134
	136
	138
	144
	491
	495
	597
8T-4196	144
	146
	148
	689
	691
	692
8T-4197	240
	242
	244
8T-4200	210
	214
	250
	256
	263
	272
8T-4205	172
	173
	206
	225
	230
	246
	248
	251
	258
	272
	303
	308
	310
	320
	324
	333
	698
	732
	733
	735
	750
	752
	771
8T-4222	689
	691
	692
	773
8T-4223	121
	126
	154
	155
	156
	172
	230
	240
	242
	244
	250
	257
	327
	333
	347
	374
	377
	379
	425
	427
	432
	437
	484
	487
	541
	542
	574
	576
	585
	587
	595
	597
	673
	679
	685
	701
	733
	735
	746
	750
	752
	778
8T-4224	18
	90
	121
	126
	130
	134
	136
	138
	206
	209
	210
	214
	222
	225
	250
	252
	256
	262
	263
	272
	286
	287
	289
	291
	293
	298
	327
	332
	467
	562
	564
	566
8T-4244	301
	492
	496
	597
8T-4657	393
8T-4779	487
8T-4835	121
	126
	154
	156
	244
	374
	585
	587
8T-4895	478
8T-4896	121
	124
	126
	161

PART NUMBER INDEX

Part	Page	Part	Page	Part	Page	Part	Page
	172		136	8T-6869	564		432
	173		138	8T-6871	353		437
	206		240		355		453
	230		242		363		574
	250		244		366		576
	251		597	8T-7008	121		672
	256	8T-4956	222		126		678
	262		224		347		685
	263		457		566	8T-8919	240
	267	8T-4958	550		574		242
	286		551		576		447
	289	8T-4971	222	8T-7044	152		449
	293		225	8T-7060	182		585
	321	8T-4983	108		187		587
	325	8T-4985	146		197		746
	327	8T-4986	146		200	8T-8924	353
	332		148	8T-7338	511		355
	333	8T-4994	70		512		460
	347		353	8T-7521	578		463
	358		355		627	8T-8925	70
	359		424		630	8T-9044	479
	360		453	8T-7547	210	8T-9079	810
	375		458		214	8T-9101	121
	377		460		222		126
	379		463		225		321
	423		716		375		325
	425	8T-5030	50	8T-7566	470		460
	427		54	8T-7848	552		463
	432		55	8T-8379	552		592
	436	8T-5043	212	8T-8442	88	8T-9364	230
	442		228	8T-8569	303		251
	444	8T-5360	237		308		258
	447		568		310		272
	449		585	8T-8729	234		298
	492		587		250		320
	496		589		251		324
	535		592		256		673
	537		780		258		679
	562		781		263		684
	564		782		272		707
	566	8T-5361	70		281		710
	573		425		321	8T-9367	248
	574		427		632	8T-9371	439
	576		428		673		442
	578		432		679		444
	591		436		683		462
	592		444		766	8T-9378	319
	596		465		767		543
	614		492		768		566
	620	8T-5379	479		769		614
	671	8T-5435	182	8T-8737	256		620
	677		187		258	8T-9379	319
	684		198		429		360
	700		200		766	8T-9383	439
	701	8T-5436	689		767		620
	705		691		768	8T-9384	566
	707		692		769	8T-9389	377
	710	8T-6381	487		770		379
	712	8T-6404	495	8T-8827	256	8T-9393	595
	716	8T-6413	701	8T-8874	293	8T-9394	755
	723	8T-6430	479		320		758
	725	8T-6663	579		324		763
	733	8T-6675	144	8T-8895	197	8T-9397	458
	735	8T-6702	197	8T-8908	771	8T-9398	447
	750	8T-6703	150	8T-8912	286		449
	752		151		293		750
	794		377		562		752
	797		379	8T-8915	707	8T-9402	129
8T-4908	78		585		710	8T-9404	562
	79		587	8T-8916	459	8T-9496	425
	80	8T-6764	126		585		427
	90	8T-6850	642		587	8T-9530	842
	130	8T-6868	492	8T-8917	230	8T-9534	637
	134		496		424		642

► PRIMARY REFERENCE

PART NUMBER INDEX

Part	Page
	644
	646
	648
8T-9543	129
8T-9757	267
8T-9884	304
	308
	310
8U-5892	630
	635
	637
	646
8U-9427	644
	648
8V-2671	700
8V-4981	804
	806
8V-4982	804
	806
8V-5989	▶168
	230
8V-6117	539
8V-7368	▶566
	803
8W-8779	230
8Y-0035	491
	496
8Y-0037	491
	495
8Y-0038	495
8Y-0039	491
	495
8Y-0395	667
8Y-0458	442
8Y-1584	495
8Y-1688	442
8Y-1727	479
8Y-1733	484
8Y-1778	457
8Y-1779	489
8Y-1840	479
8Y-1899	457
8Y-1900	457
8Y-1944	489
8Y-1969	511
	512
8Y-1971	592
8Y-1972	592
8Y-2203	491
8Y-2204	491
8Y-2606	474
	476
8Y-2707	474
	476
8Y-2708	474
	476
8Y-2709	474
	476
8Y-2710	474
	476
8Y-2711	474
	476
8Y-2773	474
	476
8Y-2774	474
	476
8Y-2775	474
	476
8Y-2776	474
	476
8Y-3792	▶782
	788
	791
8Y-3966	425
	427
	462
8Y-3998	427
	462
8Y-3999	427
8Y-4000	427
	462
8Y-4145	484
8Y-4394	360
8Y-4615	772
8Y-4659	374
8Y-4660	374
8Y-5306	492
	496
8Y-5400	772
8Y-5695	716
8Y-5746	327
	332
8Y-5874	▶727
	788
	789
	790
8Y-5877	727
	728
8Y-5889	788
	791
8Y-5891	786
8Y-5892	748
8Y-5903	747
8Y-5928	783
	786
8Y-5929	783
	786
8Y-5930	783
	786
8Y-5931	783
	786
8Y-5932	783
	786
8Y-5936	783
	786
8Y-5937	783
	786
8Y-5938	783
	786
8Y-5943	727
8Y-5944	795
8Y-5945	738
8Y-5947	727
	728
	783
	786
8Y-5953	780
	782
8Y-5957	783
8Y-5959	▶728
	791
	792
	793
8Y-5960	728
8Y-5965	795
8Y-5972	747
8Y-5976	▶783
	791
	792
	793
8Y-5979	783
8Y-5981	783
	786
8Y-5986	▶786
	788
	789
	790
8Y-5992	▶748
	783
	786
8Y-5995	748
8Y-5998	748
8Y-5999	748
8Y-6006	747
8Y-6010	747
8Y-6012	795
8Y-6014	795
8Y-6022	795
8Y-6023	795
8Y-6024	795
8Y-6029	738
8Y-6041	738
8Y-6045	738
8Y-6046	738
8Y-6047	738
8Y-6051	783
	786
8Y-6060	738
8Y-6062	738
8Y-6063	738
8Y-6064	738
8Y-6066	738
8Y-6067	738
8Y-6068	738
8Y-6069	738
8Y-6138	▶788
	789
	790
	794
8Y-6151	511
	512
8Y-6179	429
	770
	▶791
	792
	793
8Y-6263	804
8Y-6333	327
	332
8Y-6364	105
	168
	350
	425
	427
	453
	462
	729
	731
	732
	798
8Y-6473	807
8Y-6474	807
8Y-6496	327
	332
8Y-6497	773
8Y-6498	▶732
	798
8Y-6499	732
8Y-6625	489
8Y-6629	487
8Y-6630	487
8Y-6631	487
8Y-6671	491
	495
8Y-6672	491
	495
8Y-6833	783
	786
8Y-6834	783
	786
8Y-6859	738
8Y-6860	738
8Y-6933	783
	786
8Y-8306	425
	427
	462
8Y-8606	671
	677
	684
8Y-9015	773
8Y-9016	773
8Y-9017	773
8Y-9061	773
	778
8Y-9062	773
	778
8Y-9087	773
8Y-9106	804
	806
8Y-9107	804
	806
8Y-9110	804
8Y-9141	1
	2
	▶794
8Y-9162	772
8Y-9163	▶3
8Y-9171	733
	735
8Y-9176	173
8Y-9178	172
8Y-9179	172
8Y-9180	173
8Y-9188	794
8Y-9189	794
8Y-9190	794
8Y-9191	794
8Y-9196	772
8Y-9198	772
8Y-9199	772
8Y-9200	772
8Y-9201	772
8Y-9202	772
8Y-9203	772
8Y-9204	773
8Y-9205	773
8Y-9208	772
8Y-9209	282
8Y-9217	287
	291
8Y-9224	429
	▶754
8Y-9228	444
8Y-9311	▶286
8Y-9314	733
8Y-9331	670
	▶683
8Y-9332	591
8Y-9333	583
8Y-9334	583
8Y-9335	583
8Y-9336	1
	2
	▶428
8Y-9337	591
8Y-9338	755
	758
	763
8Y-9340	773
8Y-9342	442
	444
8Y-9343	▶358
	390
8Y-9344	358
8Y-9345	2

PART NUMBER INDEX

Part	Page
	3
	►390
8Y-9346	►375
	390
8Y-9347	►377
	►379
	390
8Y-9348	1
	2
	►444
8Y-9349	444
8Y-9369	2
	3
	►554
8Y-9370	►2
	3
8Y-9371	1
	►688
8Y-9401	►804
8Y-9402	804
8Y-9403	804
8Y-9405	806
8Y-9408	►806
8Y-9409	806
8Y-9414	251
	257
	263
8Y-9415	327
	332
8Y-9428	1
	2
	►449
8Y-9429	449
8Y-9434	449
8Y-9435	425
	463
8Y-9448	463
8Y-9452	460
	463
8Y-9455	688
	771
	►772
8Y-9456	2
	►436
8Y-9457	2
	►463
8Y-9458	1
	2
	►230
8Y-9459	1
	2
	►206
8Y-9461	1
	2
	►472
8Y-9462	2
	►324
8Y-9464	1
	2
	►172
8Y-9465	1
	2
	►423
8Y-9466	2
	►262
8Y-9467	2
	►332
8Y-9468	2
	►752
8Y-9474	554
	►585
8Y-9476	554
	►573
8Y-9477	554
	►583
8Y-9492	571
8Y-9493	429
	►459
	770
8Y-9494	459
8Y-9495	459
8Y-9496	459
8Y-9497	282
8Y-9500	555
	557
	559
	560
	►589
8Y-9501	742
	743
8Y-9503	773
8Y-9504	742
	743
8Y-9506	741
	►742
	771
8Y-9507	741
	►743
8Y-9512	321
	325
8Y-9513	321
	325
8Y-9514	320
	324
8Y-9515	320
	324
8Y-9517	320
	324
8Y-9519	423
8Y-9520	423
8Y-9523	758
8Y-9526	759
8Y-9527	282
8Y-9534	230
8Y-9536	230
8Y-9544	230
8Y-9559	568
	589
8Y-9565	442
	444
	750
8Y-9591	429
	770
	►798
8Y-9600	3
	►282
8Y-9602	293
8Y-9603	251
	258
	264
8Y-9610	754
	763
8Y-9616	328
	333
8Y-9617	328
	333
8Y-9619	778
8Y-9620	772
8Y-9623	554
	►574
	►576
8Y-9624	►809
8Y-9625	►803
	809
8Y-9626	803
	►807
8Y-9627	►558
8Y-9628	►559
8Y-9629	►559
8Y-9630	►560
8Y-9631	►560
8Y-9632	►561
8Y-9633	554
	555
	556
	557
	558
	559
	560
	561
	►587
8Y-9634	556
	558
	559
	561
	►568
8Y-9635	►770
8Y-9636	►770
8Y-9637	770
	►778
8Y-9638	►298
8Y-9639	►291
8Y-9644	►473
8Y-9646	►822
8Y-9650	►293
8Y-9651	293
8Y-9662	573
8Y-9663	573
8Y-9664	377
	379
8Y-9675	230
8Y-9693	472
8Y-9701	428
8Y-9702	428
8Y-9703	428
8Y-9704	►591
	819
8Y-9705	►359
	390
8Y-9706	587
8Y-9707	585
	587
8Y-9708	585
	587
8Y-9709	585
	587
8Y-9710	585
	587
8Y-9711	585
	587
8Y-9712	585
8Y-9713	568
	589
8Y-9714	568
	589
8Y-9715	568
	589
8Y-9716	568
	589
8Y-9717	589
8Y-9719	568
	589
8Y-9721	377
	379
8Y-9722	377
	379
8Y-9723	377
8Y-9724	287
	291
8Y-9725	287
	291
8Y-9726	375
8Y-9727	375
8Y-9729	►3
8Y-9738	574
8Y-9740	390
	►597
8Y-9741	597
8Y-9742	377
	379
8Y-9743	343
	►598
	►599
8Y-9744	598
	599
8Y-9745	598
	599
8Y-9766	►825
8Y-9768	432
	436
8Y-9769	432
	436
8Y-9770	437
8Y-9774	473
	►476
8Y-9775	2
	►156
8Y-9776	156
8Y-9791	320
	324
8Y-9792	252
	256
	262
8Y-9793	252
	257
	262
8Y-9794	333
8Y-9795	252
	256
	263
8Y-9796	257
	262
8Y-9797	328
	332
8Y-9798	774
8Y-9799	759
	762
8Y-9805	672
	678
	685
8Y-9806	671
	677
	684
8Y-9807	671
	677
	683
8Y-9808	672
	678
	684
8Y-9809	436
8Y-9810	436
8Y-9812	688
	►758
8Y-9813	752
8Y-9817	►429
8Y-9818	729
8Y-9820	729
8Y-9822	755
	759
	763
8Y-9823	287
	291
8Y-9824	287
	291
8Y-9826	688

► PRIMARY REFERENCE

PART NUMBER INDEX

Part	Page
	▶733
8Y-9827	429
	▶735
	770
8Y-9830	▶319
8Y-9831	432
	436
8Y-9841	460
	463
8Y-9842	673
	679
	685
8Y-9843	672
	678
	684
8Y-9844	672
	678
	683
8Y-9845	672
	678
	684
8Y-9850	252
	257
	262
8Y-9851	429
	▶762
	770
8Y-9853	206
8Y-9854	206
8Y-9855	206
8Y-9856	206
8Y-9857	206
8Y-9858	▶370
	390
8Y-9949	729

9

Part	Page
9B-2289	492
	495
	515
	517
	523
	525
9B-2596	496
9B-7233	246
	248
	250
	256
	263
	295
	296
	318
	320
	327
	332
	672
	678
	710
	755
	758
	762
	763
9B-7237	106
	124
	360
	492
	496
	537
	562
	564
	568
	695
	698
	700
	707
	712
	750
	752
9D-3721	272
	321
9D-3737	688
9D-3767	695
	698
	733
	772
9D-3769	735
	758
9D-4439	287
	291
	423
9D-8042	387
9D-8078	568
9F-2167	552
	574
	576
	592
9F-2289	723
	725
9F-2637	835
9F-2978	263
	287
	291
	319
	327
	337
	423
	426
	455
	462
	572
	695
	698
	700
	716
	750
	752
	778
9F-4446	603
	607
9F-4831	672
	678
	685
9F-5644	257
9F-5975	723
	725
9F-6445	251
	293
	320
	324
	672
	678
	684
	700
	705
	710
	725
	750
	754
	755
	759
	763
9F-7170	419
9G-0003	267
9G-0004	267
9G-0117	562
9G-0398	755
	758
9G-1518	758
9G-1642	503
	504
	505
	506
	507
	508
	509
	510
9G-1950	754
	758
	762
9G-2124	566
9G-4343	251
9G-4344	251
9G-4352	256
9G-4505	444
9G-5127	231
	360
9G-5347	355
	363
	366
9G-7548	237
9G-7549	237
9G-7551	237
9G-7552	237
9G-7553	237
9G-7554	237
9G-7555	237
9G-7556	237
9G-7559	237
9G-7560	237
9G-7562	237
9G-7564	237
9G-7565	237
9G-7566	237
9G-7567	237
9G-7568	237
9G-7641	▶318
	320
	324
9G-8140	146
	240
	242
	244
9G-8629	362
9G-9150	327
	332
	673
	683
9G-9152	328
	332
9G-9346	528
9G-9502	755
	759
	763
9G-9503	754
	758
	762
9G-9504	754
	758
	762
9H-2404	714
9H-6454	360
	603
	607
9H-7759	602
	606
9J-0365	343
	▶416
9J-0747	387
9J-1174	336
9J-1208	338
9J-1209	337
9J-1841	385
9J-2004	384
9J-3047	603
	607
9J-3167	▶823
	827
9J-3175	▶826
	831
9J-4049	720
9J-5450	719
	720
9J-5846	707
	710
9J-6367	415
9J-6379	602
	606
9J-6381	602
	606
9J-7031	230
	338
9J-7128	539
	▶626
9J-7826	384
9J-7828	384
9J-8006	548
9J-8049	406
	407
9J-8051	387
9J-8061	337
9J-8116	351
	352
9J-8119	719
9J-8126	720
9J-8553	402
9J-8554	343
	▶419
9J-8563	384
9J-8574	416
9J-8580	384
9J-8586	385
9J-8589	384
9J-8590	384
9J-8593	384
9J-8595	384
9J-8596	384
9J-8600	400
9J-8606	384
9J-8667	395
	397
9J-8668	400
9J-8669	400
9J-8672	400
9J-8677	400
9J-8684	416
	419
9J-8718	400
9J-8737	400
9J-8752	625
9J-8913	830
9J-9293	336
9J-9408	337
9J-9858	337
9K-1615	750
	752
9K-8423	667
9K-8659	▶545
	803
9K-8773	566
9K-8776	566
9K-8778	566
9K-8779	566
9K-9731	667

PART NUMBER INDEX

Part	Page
	807
9L-3334	381
9L-4238	625
9L-6479	337
9L-6770	235
	237
	246
	248
9L-7469	783
	786
9L-7669	72
	75
9L-8439	797
9L-9009	585
	587
9L-9132	337
9L-9596	733
	735
9L-9766	422
9L-9813	121
	126
9M-1853	746
9M-1974	17
	18
	21
	22
	61
	67
	68
	71
	76
	92
	93
	95
	96
	97
	98
	108
	110
	112
	116
	119
	129
	153
	168
	178
	179
	180
	210
	212
	214
	216
	217
	226
	297
	337
	371
	381
	384
	387
	395
	397
	400
	658
	661
	719
9M-2092	535
9M-2341	227
9M-2904	93
9M-3835	772
9M-4252	656
9M-4849	90
	97
	143
	837
	839
	841
9M-5201	138
	159
	160
9M-5733	439
	474
	476
	747
	748
	750
	752
9M-7394	350
	607
9M-7609	303
	310
9M-8406	250
	251
	256
	262
	263
	327
	333
	673
	679
	683
9N-0869	89
9N-3832	72
	75
9N-5253	278
	279
9N-6152	92
9P-0435	723
	725
9P-0438	723
	725
9P-2512	425
	427
	442
	444
	460
	462
	463
9P-5054	594
9P-5456	671
	677
	684
9P-6020	733
	735
9P-6977	695
	698
9P-6980	695
	698
9P-6981	695
	698
9P-6984	695
	698
9P-6987	695
	698
9P-7121	231
9R-2860	773
9S-0174	320
	324
9S-0601	161
9S-0603	5
	►161
	446
9S-1240	240
	242
	244
9S-1303	172
9S-1310	673
	679
	685
9S-1319	772
9S-1328	428
9S-1350	210
	214
9S-1363	472
9S-1366	157
	158
9S-1838	530
	533
9S-3581	513
9S-3582	513
9S-4180	650
	653
	719
	720
9S-4182	66
	129
	611
	614
	624
	656
	719
	720
9S-4183	66
	566
	602
	611
	614
	617
	620
9S-4185	209
	336
	603
9S-4188	71
9S-4190	337
	416
	419
	650
	653
9S-4191	18
	179
	180
	210
	212
	214
	603
	606
	650
	653
	656
	719
9S-7739	568
9S-8001	402
	416
	419
9S-8002	46
	50
	51
	54
	362
	406
	407
	720
9S-8003	41
	43
	45
	46
	50
	51
	54
	55
	116
	119
9S-8004	108
	110
	112
	336
	362
	406
	407
	656
9S-8005	29
	30
	31
	34
	108
	110
	112
	116
	119
	153
	402
	407
	623
	658
9S-8006	29
	30
	31
	34
	362
	650
	653
9S-8008	29
	30
	31
	34
	108
	110
	112
	116
	119
	337
	387
	603
9S-8009	416
	419
9S-8010	603
	607
	719
9S-8184	465
9S-8320	513
9S-8751	384
	669
	714
9S-8752	539
9S-8896	568
	572
	589
9S-9238	602
	606
9S-9334	719
9S-9739	387
9S-9979	105
9T-0118	371
9T-0380	385
9T-0534	611
	614
	617
	620
	►623
9T-0608	343
	►395
9T-0609	343
	►397
9T-0760	611
	614
	►624

► PRIMARY REFERENCE

PART NUMBER INDEX

Part	Page
9T-0762	611
	614
	▶664
9T-1319	343
	▶408
9T-1320	▶409
	▶410
	719
9T-1373	602
	606
9T-1376	602
	606
9T-1379	602
	606
9T-1380	602
	606
9T-1382	602
	606
9T-1383	554
	▶602
	▶606
9T-1939	343
	▶400
9T-1941	400
9T-2378	656
9T-2831	632
9T-2832	632
9T-3064	653
9T-3096	579
	▶610
9T-4730	343
	▶362
9T-4745	362
9T-5880	410
	▶411
9T-5909	408
	▶412
9T-5910	410
	▶413
9T-5911	408
	▶414
9T-6526	387
9T-6930	337
9T-7031	387
9T-7469	372
9T-7485	338
9T-8125	388
9T-8126	387
9T-8203	719
9T-8404	552
9T-8420	552
9T-8770	387
9T-8988	546
9T-9059	▶415
	416
	419
9T-9257	550
	551
9T-9980	391
	600
9U-6219	844
9U-7509	844
9V-1092	566
9V-1093	566
9V-1094	807
9V-1097	595
9V-1105	595
9V-1109	807
9V-1120	▶595
	803
9V-1376	566
9V-1427	807
9V-7451	735
9W-0335	327
	332
9W-0844	256
	258
	754
	758
	762
9W-0852	258
	695
	698
	754
	758
	762
9W-1494	320
	324
9W-2423	521
	528
9W-2784	▶483
9W-4381	531
	532
9W-6582	70
9W-6584	70
9W-6647	513
9W-6748	804
	806
9W-7235	495
9W-7385	70
9W-7388	70
9W-8766	425
	427
	462
	729
9W-9930	70
9X-0199	319
	327
	333
9X-1424	695
	698
9X-1813	258
	315
	316
9X-1878	842
9X-2036	301
9X-2044	705
9X-2045	327
	332
	773
9X-2099	18
	214
9X-2134	209
9X-2201	144
9X-2212	121
	126
9X-2269	843
9X-2305	64
	65
	99
9X-2379	587
9X-2547	182
	187
	198
	200
9X-2904	834
9X-3073	695
	698
9X-3293	▶277
	278
9X-3294	▶278
	▶279
9X-3404	268
9X-3463	282
	283
	284
	285
9X-3496	327
	332
9X-4270	308
	310
9X-4271	303
	308
	310
9X-4292	695
9X-4821	303
	308
	310
9X-4822	308
	310
9X-4823	310
9X-4824	304
	308
	310
9X-4825	304
	308
	310
9X-5288	▶768
9X-5300	707
	710
9X-5601	▶745
	772
9X-5617	562
9X-6001	237
9X-6005	88
9X-6016	672
	678
	685
	755
	759
	763
9X-6340	842
9X-6395	660
	661
	662
	664
9X-6702	843
9X-6778	▶769
9X-6932	251
9X-7378	672
	678
	683
	690
9X-7380	672
	678
	685
9X-7381	673
	679
	683
	685
9X-7382	672
	678
	683
9X-7383	673
	679
	683
	685
9X-7384	673
	678
	683
	684
9X-7385	671
	677
	683
	690
	694
9X-8250	251
	256
	263
	705
	733
	735
9X-8256	222
	251
	258
	272
	632
	635
	639
9X-8257	251
	258
	272
9X-8486	320
	324
9X-8902	176
9X-8916	29
	30
	31
	34
9X-8918	738
9X-8919	387
9X-9628	320
	324
9X-9721	267
9Y-0054	6
	8
	10
	12
	▶66
9Y-0747	18
9Y-1224	10
	▶24
	476
9Y-1285	689
	691
	692
9Y-1582	81
9Y-1760	222
	224
9Y-1837	183
	188
	197
	201
9Y-3107	176
9Y-3943	7
	▶217
9Y-4968	6
	8
	10
	▶151
9Y-4973	81
9Y-5277	110
9Y-5295	178
9Y-6984	6
	8
	10
	12
	▶129
9Y-7633	62
9Y-8389	225
9Y-8534	81
9Y-8848	41
	43
	45
	46
	48
	49
	52
	53
9Y-8871	6
	▶55
9Y-9179	90
9Y-9846	176

▶ PRIMARY REFERENCE

PART NUMBER INDEX

Part	Page
0	
004-1963	611
	614
	617
	620
005-4362	583
005-9702	568
	589
006-6586	360
008-3214	391
	393
	600
009-0008	650
	653
009-8670	172
	701
010-2461	344
	346
	716
012-0380	258
	315
	316
022-3097	626
030-0167	402
030-2179	596
030-7935	375
030-7943	573
	583
030-7945	377
030-7946	714
030-7947	578
	583
	628
	712
	714
030-7948	372
	535
	537
	583
030-7951	379
030-8190	566
030-8194	583
030-8535	338
	353
	355
	363
	366
	794
030-8537	337
	384
030-9612	246
	248
031-0219	338
	381
031-2701	385
031-4155	252
	257
	262
	371
	384
031-4630	658
031-4847	172
	700
031-5744	375
032-1270	537
032-8970	221
032-9710	384
033-6036	403
033-6039	402
	666
033-6044	656
033-6783	129
033-8248	562
	564
033-9139	723
	725
034-4160	337
	395
	397
	400
034-6681	337
034-7044	754
	762
035-2017	426
	427
	772
035-2297	388
036-6775	61
036-7232	381
036-9821	303
	310
036-9823	303
	310
037-5197	252
	257
	262
037-7461	432
	436
038-7676	439
039-2281	18
	93
044-3165	656
053-9335	447
061-7539	225
	409
	411
	412
	413
	414
	415
061-8803	783
	786
067-2935	231
067-6684	572
068-4174	591
068-8099	353
	355
	363
	366
068-9526	214
085-8091	671
	677
	683
086-0636	834
095-0878	738
	783
	786
095-1207	632
095-1259	637
	644
	646
095-1314	786
096-5866	627
1	
100-3224	738
100-3342	733
	735
100-3649	6
	8
	10
	12
	►62
100-4199	110
100-4336	573
100-4387	183
100-4388	183
100-4389	183
100-4390	183
	188
	201
100-4391	195
100-4392	183
	188
	201
100-4393	183
	188
	201
100-4394	183
	188
	201
100-4395	183
	188
	201
100-4591	121
	126
100-4593	3
	►157
100-4594	157
100-4595	3
	►130
100-4596	130
	►132
100-4598	3
	14
	►144
	►146
100-4601	7
	12
	►78
100-4602	78
	79
100-4603	683
	►689
100-4871	144
100-4948	►29
	37
100-5045	►235
	239
100-5046	►237
	239
100-5047	►239
	240
100-5179	738
100-5732	182
	187
	200
100-5733	182
	187
	200
100-5734	200
100-5736	182
	187
	200
100-5737	183
	188
	201
100-5738	182
	183
	187
	188
	200
	201
100-5739	182
	187
	200
100-5740	182
	187
	200
100-5742	182
	187
	200
100-5743	183
100-5869	162
	166
100-6247	182
	187
	200
100-6267	61
100-6269	6
	8
	10
	12
	►103
100-6550	66
100-6879	416
	419
100-6917	►140
	162
100-7054	755
	759
	763
100-7354	416
	419
100-7355	416
	419
100-8271	►182
	►187
	192
100-8272	182
	187
100-8311	182
	187
	200
101-0003	795
101-0387	230
101-0742	802
101-0744	744
	799
101-1167	182
	187
	200
101-1530	25
101-2850	132
	133
101-2870	184
101-3170	3
	►121
101-3207	63
	64
101-3208	63
	64
101-4194	795
101-4195	795
101-4539	8
	10
	►67
101-4540	8
	10
	►63
	►64
101-7322	3
	14
	►70
101-7323	7
	9
	11
	13
	►86
101-8789	672
	678
	684

► PRIMARY REFERENCE

PART NUMBER INDEX

Part	Page
102-2911	293
102-8802	234
	250
	251
	256
	257
	258
	263
	272
	285
	315
	316
	673
	679
	690
	695
	698
	754
	762
102-8803	281
102-8804	258
	321
	429
	770
102-8805	256
	627
	628
	630
	632
	635
	639
102-8806	766
	767
	768
	769
102-8807	758
102-9863	303
	308
	310
103-0169	70
103-1212	338
103-1214	337
103-1215	338
103-6100	672
	678
	685
103-8652	663
104-2690	1
	2
	▶842
104-6208	▶343
	390
104-6209	▶336
	343
104-6210	343
	▶371
104-7040	▶300
	306
104-7522	391
	600
104-7524	391
	600
104-7525	391
	600
104-7566	70
104-9416	393
104-9590	▶390
105-0585	176
105-1568	75
105-1695	6
	8
	10
	12
	▶169
105-1725	25
105-1738	152
105-1776	81
105-1779	48
	52
105-1805	98
105-1857	70
105-1977	165
105-2945	184
105-3329	842
105-4555	▶834
	842
105-4916	184
	189
105-5057	▶162
	163
105-5996	543
105-7170	144
	146
	148
105-8827	▶312
	672
	683
105-9692	818
105-9790	182
	187
	200
106-0826	4
106-1260	671
	677
	683
	▶695
	▶698
106-2721	698
106-5122	▶690
	692
106-7149	303
	308
	310
106-7666	3
	▶106
106-7667	106
106-7669	597
106-7670	3
	▶541
106-7920	20
106-8202	541
106-8203	541
106-8557	300
	▶301
106-8558	▶302
106-8559	302
	▶303
106-8704	678
106-8964	▶283
	286
	287
	289
	291
	293
106-9086	6
	8
	10
	▶297
106-9699	121
	126
106-9700	121
	126
107-0628	393
107-0629	393
107-0630	393
107-0631	393
107-1230	221
107-2712	6
	8
	10
	12
	▶240
	▶242
	▶244
107-2746	842
107-2957	240
	242
	244
107-3308	823
	826
107-4320	393
107-4321	393
107-4323	393
107-5851	283
	284
107-5852	283
	284
107-5853	283
	284
107-5854	283
	284
107-6689	▶284
	287
	289
	291
107-7219	3
	14
	▶209
107-7497	182
	187
	200
107-7498	182
	187
	200
107-7545	72
	73
107-7563	75
107-7602	25
107-7609	▶40
	41
	52
107-7610	42
107-7611	67
107-7639	7
	9
	11
	12
	▶72
	▶73
107-7680	216
107-7694	15
	16
107-7708	25
	27
107-7720	▶41
107-7722	▶81
	88
107-7723	6
	12
	▶181
107-7731	7
	8
	10
	12
	▶216
107-7732	9
	11
	▶219
	▶220
107-7733	219
107-7747	7
	13
	▶163
107-7750	58
107-7787	72
	73
107-7791	72
107-7832	50
	54
	55
	839
	841
107-7872	192
	193
107-7977	▶246
107-9652	297
108-1612	183
	188
	197
	201
108-1613	183
	188
	197
	201
108-2303	144
	146
108-2825	90
108-2826	94
108-2827	94
108-2828	6
	8
	10
	12
	▶94
108-2829	6
	8
	10
	12
	▶90
108-3858	7
	9
	11
	13
	▶306
	▶307
108-3866	665
108-4082	788
	789
	790
	791
	792
	793
	▶795
108-4086	738
108-4087	738
108-4103	739
108-4582	▶738
	795
108-5746	297
108-5747	297
108-5758	7
	▶75
108-5759	8
	10
	▶15
108-7045	110
108-8421	▶747
	783
	786
108-8423	747
108-8424	747
108-8425	783
108-8426	786
108-8533	86
108-8625	144

PART NUMBER INDEX

Part	Page
	146
	148
109-1211	78
109-4587	183
	188
	198
	201
109-8898	842
109-8899	321
110-2425	130
	134
	136
110-4429	807
110-4659	834
110-4660	834
110-4661	834
110-6243	195
110-6393	671
	677
	683
110-7618	18
110-9523	10
	►56
111-3425	144
	146
	148
111-3426	144
	146
	148
111-4656	21
111-4657	►21
	476
111-5681	670
111-7218	698
111-7221	183
	188
	201
111-9335	130
	134
	136
	138
112-0034	630
	635
	637
	646
112-1817	578
112-4056	192
	193
112-4401	121
	126
112-4577	783
	786
112-5516	121
	126
112-5517	122
	127
112-5518	122
	127
112-5519	121
	126
112-6139	►271
112-6523	180
	212
112-9401	229
112-9861	579
113-0899	783
	786
113-6180	52
	53
113-6200	152
	839
	841
113-6250	153
	839
	841
113-8224	632
114-0358	821
	824
114-0359	821
	824
	830
114-1095	755
114-1803	197
114-2739	4
114-2897	188
	201
114-2899	188
	201
114-3875	423
114-5333	673
	679
	683
114-5502	121
	126
114-6643	124
114-6644	120
	►124
114-6645	►120
	121
	126
114-6659	121
	126
114-7159	►6
	272
114-8718	205
	219
	220
114-9841	3
	►272
115-1192	188
	197
	201
115-1273	286
	287
	291
	293
115-1833	251
	258
	272
115-1834	251
	258
	272
115-1835	272
	320
115-1836	251
	258
	272
115-2553	188
	197
	201
115-4073	95
115-4107	►42
	43
	48
115-4108	►43
115-4109	84
115-4143	10
	►95
115-4165	►48
	55
115-4184	210
	214
115-4203	9
	11
	►83
115-4204	61
115-4233	210
	212
	214
115-4237	61
115-5858	►141
	165
115-8364	287
	289
	291
115-9286	729
116-2011	343
	►348
116-4178	158
116-6312	298
116-6313	298
116-6314	298
116-6698	515
	517
	523
	525
116-6702	515
	517
	523
	525
116-7077	71
116-7830	720
116-9548	140
	142
116-9550	140
	141
	142
116-9553	140
	142
116-9556	140
	142
117-0128	698
117-1023	►498
	533
117-1234	395
	397
117-1760	►2
117-1761	►1
	2
117-1762	1
	►432
117-1763	1
	►460
117-1764	1
	►154
	►155
117-1783	►670
117-2962	►729
	798
117-4089	229
117-4648	76
117-5179	14
	►148
117-5187	2
	►8
117-5188	►10
	87
117-5189	2
	►14
117-5190	14
	►158
117-5192	14
	►126
117-5193	14
	►107
117-5200	107
117-5637	►87
117-5662	87
	►474
117-9013	124
117-9014	124
117-9098	197
117-9099	188
	201
117-9748	515
	517
	523
	525
118-0021	122
	460
118-0690	230
118-1461	229
118-1897	433
118-1899	154
118-2269	250
	262
118-2270	250
	256
	263
118-3619	71
118-4233	433
118-5544	542
118-5555	542
118-5615	660
	662
118-6633	541
	542
118-7401	425
	427
	460
118-7979	460
	463
118-7981	291
118-8118	229
118-8119	229
118-9573	306
	307
119-1733	271
119-2896	181
	►192
	►193
119-2899	7
	8
	10
	12
	►210
119-2919	90
	97
119-2921	85
119-2924	►98
	100
119-2936	7
	8
	11
	12
	►110
	►112
119-2940	23
	839
	841
119-2955	214
119-2960	23
119-2978	212
119-3036	41
	43
	45
	46
	49
	52
	53
	839
119-3037	8
	10
	►194
119-3038	194
	►195

► PRIMARY REFERENCE

PART NUMBER INDEX

Part	Page
119-3061	40
	42
	44
	47
119-3065	▶44
	45
	53
119-3067	▶45
119-3084	9
	11
	▶164
119-3372	124
119-3812	141
119-3813	141
119-3814	141
119-3815	141
119-3816	141
119-3818	141
119-3820	141
119-3824	141
119-5825	695
119-5868	▶4
119-5869	4
	▶771
119-5902	124
119-7186	671
	677
	684
119-7187	672
	678
	685
119-9479	126
119-9480	126
120-5276	144
120-5746	▶523
	524
120-5753	523
	525
120-5766	▶515
	516
120-5767	515
	517
120-5785	515
	517
	523
	525
120-5867	144
120-6883	14
	▶542
121-2980	374
121-4480	229
121-7554	165
121-7660	▶287
121-8776	287
121-9474	209
121-9799	165
122-1608	578
122-1609	578
122-1611	578
	582
122-1613	578
122-1614	582
122-1615	578
122-1617	578
122-1618	578
	706
122-4617	▶780
	789
	792
122-6686	818
122-6687	820
122-6688	819
	▶820
122-8420	543
	▶550
122-8421	543
	▶551
122-8422	551
122-8423	550
123-2859	▶554
123-3438	632
	635
123-3581	671
	677
	684
123-3582	672
	678
	685
123-3585	672
	678
	684
123-3586	671
	677
	683
123-3587	671
	677
	683
123-6433	197
123-7418	240
	242
124-0332	667
124-0686	277
	279
124-0687	276
124-3237	136
	138
124-3686	7
	13
124-3690	7
124-9340	164
	▶165
125-1125	▶166
	167
125-1130	▶142
	166
125-1137	166
125-1300	165
125-1383	9
	11
	▶79
	▶80
125-1988	▶741
125-1989	▶741
125-4175	▶524
	534
125-4176	▶516
	534
125-5466	165
125-8158	188
	197
	201
125-8274	205
	219
	220
125-8842	839
125-9404	429
	770
126-0447	108
126-0449	112
126-0453	44
126-1123	9
	11
	▶167
126-1347	513
126-2368	248
126-2433	772
126-2865	327
126-5869	108
	112
126-7947	146
	148
127-0860	▶627
	704
127-0861	▶628
	▶630
	706
127-0862	▶632
	705
	706
127-0863	▶635
	706
127-4471	112
127-4833	148
127-4836	50
	54
	55
127-4837	146
127-5532	148
127-8216	220
127-8486	705
127-8488	632
	635
127-8489	627
	628
	630
127-9083	695
127-9644	637
127-9909	▶133
	134
	136
	138
127-9917	3
	14
	▶134
	▶136
128-0485	750
128-0533	146
128-0957	667
128-1446	327
128-1889	554
	▶578
128-1898	555
	556
	557
	558
	▶582
128-1904	554
	▶705
128-1906	555
	556
	▶706
128-1911	557
	558
	▶706
128-2209	1
	▶250
	▶256
128-2210	1
	▶320
128-2612	146
128-3937	8
	10
	▶180
128-4786	202
128-4794	197
128-7957	337
128-7958	337
128-7959	337
128-8614	229
129-0081	1
	2
	▶327
129-1095	▶30
	38
129-1213	8
	10
	▶196
129-1453	1
	2
	▶750
129-1475	▶555
129-1541	▶555
129-1543	▶556
129-1548	▶556
129-1550	▶557
129-1559	▶557
129-1565	▶558
129-3152	▶704
129-3179	297
129-4497	635
	▶637
129-4508	632
	639
129-4600	635
	▶639
129-6466	319
129-6652	7
	13
130-1304	13
130-1306	7
	13
130-1309	7
	13
130-1457	7
	13
130-3598	695
130-4634	372
130-5101	87
130-5155	87
130-7322	197
130-7323	▶197
	205
130-7325	200
130-7326	193
	195
	▶200
130-8212	148
131-0434	642
131-4242	738
131-5167	738
131-6001	667
131-7889	205
131-7899	196
	▶205
131-9261	576
132-1222	246
	248
132-1223	246
	248
132-1224	246
	248
132-1225	248
132-1228	246
	248
132-1229	248
132-1230	246
	248
132-1448	276
	279
132-2156	242
	244
	▶248
132-2966	667
132-5242	67
132-8876	362
133-0568	▶446

PART NUMBER INDEX

Part	Page
133-0569	▶5
133-3958	▶5
133-6517	276
133-8861	642
	648
134-2730	306
	307
134-4795	599
	▶600
134-4796	391
	600
134-5276	15
134-7258	842
135-4602	578
135-4684	578
135-5489	614
	620
	▶660
135-6497	578
135-6498	578
135-9819	20
	597
	838
136-0819	49
	53
136-7802	5
	446
	▶486
136-7804	5
	▶102
136-8308	830
136-9768	603
	607
137-5541	226
138-8141	627
	628
	630
	▶642
138-8142	627
	▶644
138-8143	628
	630
	▶646
138-8865	80
139-0178	320
	324
139-3365	704
	706
139-5925	220
139-8661	231
	▶280
140-1320	439
	440
140-7371	▶49
	50
	51
140-7373	▶46
141-1558	671
	677
	▶691
	▶692
141-1784	347
141-2620	212
141-5153	138
141-5991	670
	▶671
	▶677
141-6348	152
141-6709	222
	224
141-6710	222
	224
141-6711	212
141-6712	212
141-8287	233
141-8288	212
	▶233
142-1592	379
142-2986	155
142-8166	14
	▶228
142-8167	8
	10
	▶212
142-8168	14
	▶138
142-8169	14
	▶222
	▶224
143-2812	256
143-6178	807
143-6184	807
143-8477	807
145-0162	27
145-0164	27
145-0168	27
145-0170	27
145-0326	795
145-8862	228
	▶229
146-8147	88
147-5088	114
148-5743	256
148-8336	635
148-8378	97
148-8395	116
148-8409	116
148-9243	642
	644
	648
149-4745	789
	790
	792
	793
149-5402	31
149-5403	▶31
	39
149-8142	372
149-8652	637
	642
	644
	646
	648
150-3212	742
150-4043	635
151-0170	244
152-3952	114
	115
152-4819	628
	630
	▶648
152-7481	644
	648
152-8071	499
	501
153-9648	126
154-1207	632
154-1208	632
	639
154-1273	632
	639
154-1274	632
154-1657	632
	639
154-1658	632
	639
154-6274	▶467
154-6275	467
155-2255	256
155-2261	314
	762
155-2269	257
155-2270	256
	314
	762
155-2274	256
155-4652	295
	296
156-0235	839
	841
156-1148	▶781
	790
	793
156-1871	61
156-4114	▶353
	486
158-0252	285
158-3770	639
159-0305	8
	10
	▶50
159-1571	635
159-3003	597
159-3137	▶114
	119
159-3254	637
	642
	644
	646
	648
159-3809	632
	639
160-2377	820
160-2378	820
160-2379	820
160-5130	▶51
160-6411	9
	▶295
160-6778	632
	639
160-6779	633
	639
160-7819	498
	499
	501
161-4280	49
161-5967	738
162-2166	517
	525
162-3905	206
162-5372	285
162-8756	169
	170
163-1146	795
163-8838	535
163-9063	47
166-6781	795
167-0138	▶314
	321
	325
167-2200	550
	551
167-2214	552
167-2307	550
	551
167-2328	552
167-7513	603
	607
167-8121	56
170-0073	829
	832
170-5553	319
171-2065	▶285
171-5882	517
	525
171-9816	320
	324
174-1495	695
174-1504	762
174-1505	762
175-2317	316
175-2322	▶315
	317
175-2324	▶316
	317
175-3557	▶570
	809
175-3559	570
175-3560	570
177-1058	114
	115
180-9339	690
180-9935	665
183-2823	225
183-2824	224
	▶225
184-7405	630
186-3735	258
	285
	315
	316
	639
	642
	644
	648
186-3736	314
187-8995	62
188-6126	839
188-8849	285
189-8777	99
190-1668	835
190-1669	835
190-9066	46
	▶47
	49
192-2105	642
	646
192-2108	642
192-2109	644
	648
192-2110	644
	648
192-7115	635
193-0555	570
195-0303	114
	115
195-3510	639
195-7339	108
	112
	839
	841
196-4937	639
196-6931	▶836
197-7689	795
198-6498	630
	642
	644
	648
198-6515	642
	648
198-7722	532

PART NUMBER INDEX

Part Page

2

200-4002 610
200-4497 . . . . . ▶99
101
201-3434 610
203-1086 639
203-1087 639
203-1088 632
639
203-1089 632
639
203-1090 639
203-1092 632
639
203-1093 639
203-1094 639
203-1097 637
646
203-1098 642
203-1099 642
644
648
203-1100 644
648
203-3223 256
203-6088 57
58
204-0158 637
646
206-5823 744
802
207-0544 499
501
207-1511 307
▶308
212-4893 27
213-3193 73
214-7566 838
214-7568 840
216-5586 31
216-6886 632
222-3909 83
838
224-6638 73
227-1149 552
228-2735 499
501
228-2736 499
501
228-2737 499
501
228-2738 499
501
228-2739 499
501
228-2740 499
501
228-7089 840
229-3218 225
229-5153 27
229-5154 27
229-5155 27
229-5156 27
229-6266 73
230-4512 499
501
230-6167 . . . . . ▶499
530
230-6170 . . . . . ▶530
230-6173 . . . . . ▶530
231-3087 . . . . . ▶525
231-3088 . . . . . ▶517
231-3538 550
551
231-3713 531
532
231-3714 . . . . . ▶500
531
532
231-3715 . . . . . ▶531
231-3716 . . . . . ▶531
233-9205 546
234-9679 500
▶503
504
234-9681 500
▶504
234-9699 500
503
507
531
236-9865 . . . . . ▶501
238-2716 73
238-5081 92
836
840
238-6882 546
239-0583 17
838
240-2767 103
836
840
240-9936 546
242-3864 92
245-3854 639
245-7339 83
838
246-2641 607
247-1876 17
838
250-3996 498
251-3353 491
253-0062 810
253-0063 810
253-0064 811
253-0065 811
254-0224 531
532
254-0697 269
270
255-8060 492
256-4971 532
256-4990 . . . . . ▶532
256-4991 . . . . . ▶532
260-7524 81
261-3816 71
836
264-3617 313
264-9763 . . . . . ▶505
506
264-9768 . . . . . ▶506
266-7276 . . . . . ▶836
267-4743 103
269-6989 491
269-9174 . . . . . ▶837
271-1368 484
277-7089 114
115
288-0554 . . . . . ▶838
288-0945 . . . . . ▶526
288-0946 . . . . . ▶519
288-0947 . . . . . ▶527
288-0948 . . . . . ▶520
289-2935 546
289-2946 546
290-0186 . . . . . ▶838
292-6379 531
532
292-6380 531
532
297-4785 505
297-4786 . . . . . ▶507
508
297-4787 . . . . . ▶508

3

300-7933 92
836
840
308-1845 546
308-4325 813
314-4018 690
318-1064 531
331-8464 509
510
336-7235 285
342-4977 18
347-3188 506
507
508
350-5417 115
351-0963 . . . . . ▶509
510
351-0964 . . . . . ▶510
352-2150 . . . . . ▶115
116
352-2151 . . . . . ▶116
118
355-7400 . . . . . ▶744
364-6560 600
364-6561 600
375-2467 143
376-1547 . . . . . ▶280
377-9593 92
379-5569 308
379-8870 73
390-9331 . . . . . ▶205
392-5197 351
352
392-5358 92

4

418-6781 143
837
839
841
419-6371 73
437-3733 . . . . . ▶143
437-3810 . . . . . ▶839
438-4341 . . . . . ▶840
438-8638 95
96
447-9949 503
504
456-4322 . . . . . ▶143
461-6551 . . . . . ▶841
489-2731 27

5

519-8491 . . . . . ▶814
519-8492 . . . . . ▶815
519-8493 . . . . . ▶816
519-8494 . . . . . ▶817

524-7982 73



©2018 Caterpillar
All Rights Reserved

CAT, CATERPILLAR, their respective logos, “Caterpillar Yellow”, and the POWER EDGE trade dress as well as corporate and product identity used herein, are trademarks of Caterpillar and may not be used without permission.